This content is from the eCFR and is authoritative but unofficial.

Title 26 —Internal Revenue
Chapter I —Internal Revenue Service, Department of the Treasury
Subchapter A —Income Tax

Part 1 Income Taxes

Related Rules

§ 1.0-1 Internal Revenue Code of 1954 and regulations.

Normal Taxes and Surtaxes

§ 1.1-1 Income tax on individuals.
§ 1.1-2 Limitation on tax.
§ 1.1-3 Change in rates applicable to taxable year.
§ 1.1(h)-1 Capital gains look-through rule for sales or exchanges of interests in a partnership, S corporation, or trust.
§ 1.1(i)-1T Questions and answers relating to the tax on unearned income certain minor children (Temporary).
§ 1.2-1 Tax in case of joint return of husband and wife or the return of a surviving spouse.
§ 1.2-2 Definitions and special rules.
§ 1.3-1 Application of optional tax.
§ 1.4-1 Number of exemptions.
§ 1.4-2 Elections.
§ 1.4-3 Husband and wife filing separate returns.
§ 1.4-4 Short taxable year caused by death.

Tax on Corporations

§ 1.11-1 Tax on corporations.

Changes in Rates During a Taxable Year

§ 1.15-1 Changes in rate during a taxable year.
§ 1.21-1 Expenses for household and dependent care services necessary for gainful employment.
§ 1.21-2 Limitations on amount creditable.
§ 1.21-3 Special rules applicable to married taxpayers.
§ 1.21-4 Payments to certain related individuals.
§ 1.24-1 Partial credit allowed for certain other dependents.
§ 1.25-1T Credit for interest paid on certain home mortgages (Temporary).
§ 1.25-2T Amount of credit (Temporary).
§ 1.25-3 Qualified mortgage credit certificate.
§ 1.25-3T Qualified mortgage credit certificate (Temporary).
§ 1.25-4T Qualified mortgage credit certificate program (Temporary).

§ 1.25-5T Limitation on aggregate amount of mortgage credit certificates (Temporary).
§ 1.25-6T Form of qualified mortgage credit certificate (Temporary).
§ 1.25-7T Public notice (Temporary).
§ 1.25-8T Reporting requirements (Temporary).
§ 1.25A-0 Table of contents.
§ 1.25A-1 Calculation of education tax credit and general eligibility requirements.
§ 1.25A-2 Definitions.
§ 1.25A-3 Hope Scholarship Credit.
§ 1.25A-4 Lifetime Learning Credit.
§ 1.25A-5 Special rules relating to characterization and timing of payments.
§ 1.25E-0 Table of contents.
§ 1.25E-1 Credit for previously-owned clean vehicles.
§ 1.25E-2 Special rules.
§ 1.25E-3 Transfer of credit.
§ 1.28-0 Credit for clinical testing expenses for certain drugs for rare diseases or conditions; table of contents.
§ 1.28-1 Credit for clinical testing expenses for certain drugs for rare diseases or conditions.
Credits Against Tax
credits allowable under sections 30 through 45D
§ 1.30-1 Definition of qualified electric vehicle and recapture of credit for qualified electric vehicle.
§§ 1.30C-1-1.30C-2 [Reserved]
§ 1.30C-3 Rules relating to the increased credit amount for prevailing wage and apprenticeship.
§ 1.30D-0 Table of contents.
§ 1.30D-1 Credit for new clean vehicles.
§ 1.30D-2 Definitions for purposes of section 30D.
§ 1.30D-3 Critical minerals and battery components requirements.
§ 1.30D-4 Special rules.
§ 1.30D-5 Transfer of credit.
§ 1.30D-6 Foreign entity of concern restriction.
§ 1.31-1 Credit for tax withheld on wages.
§ 1.31-2 Credit for “special refunds” of employee social security tax.
§ 1.32-2 Earned income credit for taxable years beginning after December 31, 1978.
§ 1.32-3 Eligibility requirements after denial of the earned income credit.
§ 1.34-1 Special rule for owners of certain business entities.
§ 1.35-1 Partially tax-exempt interest received by individuals.
§ 1.35-2 Taxpayers not entitled to credit.
§ 1.36B-0 Table of contents.

§ 1.36B-1 Premium tax credit definitions.
§ 1.36B-2 Eligibility for premium tax credit.
§ 1.36B-3 Computing the premium assistance credit amount.
§ 1.36B-4 Reconciling the premium tax credit with advance credit payments.
§ 1.36B-5 Information reporting by Exchanges.
§ 1.36B-6 Minimum value.
§ 1.37-1 General rules for the credit for the elderly.
§ 1.37-2 Credit for individuals age 65 or over.
§ 1.37-3 Credit for individuals under age 65 who have public retirement system income.
General Business Credits
§ 1.38-1 Investment in certain depreciable property.
§ 1.40-1 Questions and answers relating to the meaning of the term “qualified mixture” in section 40(b)(1).
§ 1.41-0 Table of contents.
§ 1.41-1 Credit for increasing research activities.
§ 1.41-2 Qualified research expenses.
§ 1.41-3 Base amount for taxable years beginning on or after January 3, 2001.
§ 1.41-4 Qualified research for expenditures paid or incurred in taxable years ending on or after December 31, 2003.
§ 1.41-4A Qualified research for taxable years beginning before January 1, 1986.
§ 1.41-5 Basic research for taxable years beginning after December 31, 1986. [Reserved]
§ 1.41-5A Basic research for taxable years beginning before January 1, 1987.
§ 1.41-6 Aggregation of expenditures.
§ 1.41-7 Special rules.
§ 1.41-8 Alternative incremental credit applicable for taxable years beginning on or before December 31, 2008.
§ 1.41-9 Alternative simplified credit.
§ 1.42-0 Table of contents.
§ 1.42-0T Table of contents.
§ 1.42-1 Limitation on low-income housing credit allowed with respect to qualified low-income buildings receiving housing credit allocations from a State or local housing credit agency.
§ 1.42-1T Limitation on low-income housing credit allowed with respect to qualified low-income buildings receiving housing credit allocations from a State or local housing credit agency (temporary).
§ 1.42-2 [Reserved]
§ 1.42-3 Treatment of buildings financed with proceeds from a loan under an Affordable Housing Program established pursuant to section 721 of the Financial Institutions Reform, Recovery, and Enforcement Act of 1989 (FIRREA).

§ 1.42-4 Application of not-for-profit rules of section 183 to low-income housing credit activities.
§ 1.42-5 Monitoring compliance with low-income housing credit requirements.
§ 1.42-6 Buildings qualifying for carryover allocations.
§ 1.42-7 Substantially bond-financed buildings. [Reserved]
§ 1.42-8 Election of appropriate percentage month.
§ 1.42-9 For use by the general public.
§ 1.42-10 Utility allowances.
§ 1.42-11 Provision of services.
§ 1.42-12 Effective dates and transitional rules.
§ 1.42-13 Rules necessary and appropriate; housing credit agencies' correction of administrative errors and omissions.
§ 1.42-14 Allocation rules for post-2000 State housing credit ceiling amount.
§ 1.42-15 Available unit rule.
§ 1.42-16 Eligible basis reduced by federal grants.
§ 1.42-17 Qualified allocation plan.
§ 1.42-18 Qualified contracts.
§ 1.42-19 Average income test.
§ 1.42A-1 General tax credit for taxable years ending after December 31, 1975, and before January 1, 1979.
§ 1.43-0 Table of contents.
§ 1.43-1 The enhanced oil recovery credit—general rules.
§ 1.43-2 Qualified enhanced oil recovery project.
§ 1.43-3 Certification
§ 1.43-4 Qualified enhanced oil recovery costs.
§ 1.43-5 At-risk limitation. [Reserved]
§ 1.43-6 Election out of section 43.
§ 1.43-7 Effective date of regulations.
§ 1.44-1 Allowance of credit for purchase of new principal residence after March 12, 1975, and before January 1, 1977.
§ 1.44-2 Property to which credit for purchase of new principal residence applies.
§ 1.44-3 Certificate by seller.
§ 1.44-4 Recapture for certain dispositions.
§ 1.44-5 Definitions.
§ 1.44B-1 Credit for employment of certain new employees.
Research Credit—For Taxable Years Beginning Before January 1, 1990
§ 1.41-0A Table of contents.
§ 1.41-3A Base period research expense.
Rules for Computing Credit for Investment in Certain Depreciable

Property
§ 1.45-0 Table of contents.
§§ 1.45-1-1.45-5 [Reserved]
§ 1.45-6 Increased credit amount.
§ 1.45-7 Prevailing wage requirements.
§ 1.45-8 Apprenticeship requirements.
§§ 1.45-9-1.45.11 [Reserved]
§ 1.45-12 Recordkeeping and reporting.
§ 1.45D-0 Table of contents.
§ 1.45D-1 New markets tax credit.
§ 1.45G-0 Table of contents for the railroad track maintenance credit rules.
§ 1.45G-1 Railroad track maintenance credit.
§§ 1.45L-1-1.45L-2 [Reserved]
§ 1.45L-3 Rules relating to the increased credit amount for prevailing wage.
§ 1.45Q-0 Table of Contents
§ 1.45Q-1 Credit for Carbon Oxide Sequestration.
§ 1.45Q-2 Definitions for Purposes of §§ 1.45Q-1 through 1.45Q-5.
§ 1.45Q-3 Secure Geological Storage.
§ 1.45Q-4 Utilization of Qualified Carbon Oxide.
§ 1.45Q-5 Recapture of Credit.
§ 1.45Q-6 Rules relating to the increased credit amount for prevailing wage and apprenticeship.
§ 1.45R-0 Table of contents.
§ 1.45R-1 Definitions.
§ 1.45R-2 Eligibility for the credit.
§ 1.45R-3 Calculating the credit.
§ 1.45R-4 Uniform percentage of premium paid.
§ 1.45R-5 Claiming the credit.
§§ 1.45U-1-1.45U-2 [Reserved]
§ 1.45U-3 Rules relating to the increased credit amount for prevailing wage.
§ 1.45V-0 Table of contents.
§ 1.45V-1 Credit for production of clean hydrogen.
§ 1.45V-2 Special rules.
§ 1.45V-3 Rules relating to the increased credit amount for prevailing wage and apprenticeship.
§ 1.45V-4 Procedures for determining lifecycle greenhouse gas emissions rates for qualified clean hydrogen.
§ 1.45V-5 Procedures for verification of qualified clean hydrogen production and sale or use.

§ 1.45V-6 Rules for determining the placed in service date for an existing facility that is modified or retrofitted to produce qualified clean hydrogen.
§ 1.45X-0 Table of contents.
§ 1.45X-1 General rules applicable to the advanced manufacturing production credit.
§ 1.45X-2 Sale to unrelated person.
§ 1.45X-3 Eligible components.
§ 1.45X-4 Applicable critical minerals.
§ 1.45Y-0 Table of contents.
§ 1.45Y-1 Clean electricity production credit.
§ 1.45Y-2 Qualified facility for purposes of section 45Y.
§ 1.45Y-3 Rules relating to the increased credit amount for prevailing wage and apprenticeship.
§ 1.45Y-4 Rules of general application.
§ 1.45Y-5 Greenhouse gas emissions rates for qualified facilities under section 45Y.
§§ 1.45Z-1-1.45Z-2 [Reserved]
§ 1.45Z-3 Rules relating to the increased credit amount for prevailing wage and apprenticeship.
§ 1.46-1 Determination of amount.
§ 1.46-2 Carryback and carryover of unused credit.
§ 1.46-3 Qualified investment.
§ 1.46-4 Limitations with respect to certain persons.
§ 1.46-5 Qualified progress expenditures.
§ 1.46-6 Limitation in case of certain regulated companies.
§ 1.46-7 Statutory provisions; plan requirements for taxpayers electing additional investment credit, etc.
§ 1.46-8 Requirements for taxpayers electing additional one-percent investment credit (TRASOP's).
§ 1.46-9 Requirements for taxpayers electing an extra one-half percent additional investment credit.
§ 1.46-10 [Reserved]
§ 1.47-1 Recomputation of credit allowed by section 38.
§ 1.47-2 “Disposition” and “cessation”.
§ 1.47-3 Exceptions to the application of § 1.47-1.
§ 1.47-4 Electing small business corporation.
§ 1.47-5 Estates and trusts.
§ 1.47-6 Partnerships.
§ 1.47-7 Rehabilitation credit allocated over a 5-year period.
§ 1.48-1 Definition of section 38 property.
§ 1.48-2 New section 38 property.

§ 1.48-3 Used section 38 property.
§ 1.48-4 Election of lessor of new section 38 property to treat lessee as purchaser.
§ 1.48-5 Electing small business corporations.
§ 1.48-6 Estates and trusts.
§ 1.48-9 Definition of energy property.
§ 1.48-10 Single purpose agricultural or horticultural structures.
§ 1.48-11 Qualified rehabilitated building; expenditures incurred before January 1, 1982.
§ 1.48-12 Qualified rehabilitated building; expenditures incurred after December 31, 1981.
§ 1.48-13 Rules relating to the increased credit amount for prevailing wage and apprenticeship.
§ 1.48-14 Rules applicable to energy property.
§ 1.48-15 Election to treat clean hydrogen production facility as energy property.
§§ 1.48C-1-1.48C-2 [Reserved]
§ 1.48C-3 Rules relating to the increased credit amount for prevailing wage and apprenticeship.
§ 1.48D-0 Table of contents.
§ 1.48D-1 Advanced manufacturing investment credit determined.
§ 1.48D-2 Definitions.
§ 1.48D-3 Qualified property.
§ 1.48D-4 Advanced manufacturing facility of an eligible taxpayer.
§ 1.48D-5 Beginning of construction.
§ 1.48D-6 Elective payment election.
§ 1.48(e)-0 Table of contents.
§ 1.48(e)-1 Low-Income Communities Bonus Credit Program.
§ 1.48E-0 Table of contents.
§ 1.48E-1 Clean electricity investment credit.
§ 1.48E-2 Qualified investments in qualified facilities and EST for purposes of section 48E.
§ 1.48E-3 Rules relating to the increased credit for prevailing wage and apprenticeship.
§ 1.48E-4 Rules of general application.
§ 1.48E-5 Greenhouse gas emissions rates for qualified facilities under section 48E.
§ 1.48E(h)-0 Table of contents.
§ 1.48E(h)-1 Clean Electricity Low-Income Communities Bonus Credit Amount Program.
§ 1.50-0 Table of contents.
§ 1.50-1 Lessee's income inclusion following election of lessor of investment credit property to treat lessee as acquirer.
§ 1.50-2 Recapture of the advanced manufacturing investment credit in the case of certain expansions.
Rules for Computing Credit for Expenses of Work Incentive Programs
§ 1.50A-1 Determination of amount.

§ 1.50A-2 Carryback and carryover of unused credit.
§ 1.50A-3 Recomputation of credit allowed by section 40.
§ 1.50A-4 Exceptions to the application of § 1.50A-3.
§ 1.50A-5 Electing small business corporations.
§ 1.50A-6 Estates and trusts.
§ 1.50A-7 Partnerships.
§ 1.50B-1 Definitions of WIN expenses and WIN employees.
§ 1.50B-2 Electing small business corporations.
§ 1.50B-3 Estates and trusts.
§ 1.50B-4 Partnerships.
§ 1.50B-5 Limitations with respect to certain persons.
§ 1.51-1 Amount of credit.
Tax Surcharge
§ 1.52-1 Trades or businesses that are under common control.
§ 1.52-2 Adjustments for acquisitions and dispositions.
§ 1.52-3 Limitations with respect to certain persons.
§ 1.53-1 Limitation based on amount of tax.
§ 1.53-2 Carryback and carryover of unused credit.
§ 1.53-3 Separate rule for pass-through of jobs credit.
§ 1.55-1 Alternative minimum taxable income.
§ 1.56-0 Table of contents to § 1.56-1, adjustment for book income of corporations.
Regulations Applicable to Taxable Years Beginning in 1969 and Ending in 1970
§ 1.56(g)-0 Table of Contents.
§ 1.56(g)-1 Adjusted current earnings.
Tax Preference Regulations
§ 1.57-0 Scope.
§ 1.57-1 Items of tax preference defined.
§§ 1.57-2-1.57-3 [Reserved]
§ 1.57-4 Limitation on amounts treated as items of tax preference for taxable years beginning before January 1, 1976.
§ 1.57-5 Records to be kept.
§ 1.58-1 [Reserved]
§ 1.58-2 General rules for conduit entities; partnerships and partners.
§ 1.58-3 Estates and trusts.
§ 1.58-3T Treatment of non-alternative tax itemized deductions by trusts and estates and their beneficiaries in taxable years beginning after December 31, 1982 (temporary).
§ 1.58-4 Electing small business corporations.
§ 1.58-5 Common trust funds.

§ 1.58-6 Regulated investment companies; real estate investment trusts.
§ 1.58-7 Tax preferences attributable to foreign sources; preferences other than capital gains and stock options.
§ 1.58-8 Capital gains and stock options.
§ 1.59-1 Optional 10-year writeoff of certain tax preferences.
§ 1.59A-0 Table of contents.
§ 1.59A-1 Base erosion and anti-abuse tax.
§ 1.59A-2 Applicable taxpayer.
§ 1.59A-3 Base erosion payments and base erosion tax benefits.
§ 1.59A-4 Modified taxable income.
§ 1.59A-5 Base erosion minimum tax amount.
§ 1.59A-6 Qualified derivative payment.
§ 1.59A-7 Application of base erosion and anti-abuse tax to partnerships.
§ 1.59A-8 [Reserved]
§ 1.59A-9 Anti-abuse and recharacterization rules.
§ 1.59A-10 Applicability date.
§ 1.60 [Reserved]
Computation of Taxable Income
Definition of Gross Income, Adjusted Gross Income, and Taxable Income
§ 1.61-1 Gross income.
§ 1.61-2 Compensation for services, including fees, commissions, and similar items.
§ 1.61-3 Gross income derived from business.
§ 1.61-4 Gross income of farmers.
§ 1.61-5 Allocations by cooperative associations; per-unit retain certificates—tax treatment as to cooperatives and patrons.
§ 1.61-6 Gains derived from dealings in property.
§ 1.61-7 Interest.
§ 1.61-8 Rents and royalties.
§ 1.61-9 Dividends.
§ 1.61-10 Alimony and separate maintenance payments; annuities; income from life insurance and endowment contracts.
§ 1.61-11 Pensions.
§ 1.61-12 Income from discharge of indebtedness.
§ 1.61-13 Distributive share of partnership gross income; income in respect of a decedent; income from an interest in an estate or trust.
§ 1.61-14 Miscellaneous items of gross income.
§ 1.61-15 Options received as payment of income.
§ 1.61-21 Taxation of fringe benefits.
§ 1.61-22 Taxation of split-dollar life insurance arrangements.

§ 1.62-1 Adjusted gross income.
§ 1.62-1T Adjusted gross income (temporary).
§ 1.62-2 Reimbursements and other expense allowance arrangements.
§ 1.63-1 Change of treatment with respect to the zero bracket amount and itemized deductions.
§ 1.63-2 Cross reference.
§ 1.66-1 Treatment of community income.
§ 1.66-2 Treatment of community income where spouses live apart.
§ 1.66-3 Denial of the Federal income tax benefits resulting from the operation of community property law where spouse not notified.
§ 1.66-4 Request for relief from the Federal income tax liability resulting from the operation of community property law.
§ 1.66-5 Effective date.
§ 1.67-1T 2-percent floor on miscellaneous itemized deductions (temporary).
§ 1.67-2T Treatment of pass-through entities (temporary).
§ 1.67-3 Allocation of expenses by real estate mortgage investment conduits.
§ 1.67-3T Allocation of expenses by real estate mortgage investment conduits (temporary).
§ 1.67-4 Costs paid or incurred by estates or non-grantor trusts.

Items Specifically Included in Gross Income

§ 1.71-1 Alimony and separate maintenance payments; income to wife or former wife.
§ 1.71-1T Alimony and separate maintenance payments (temporary).
§ 1.71-2 Effective date; taxable years ending after March 31, 1954, subject to the Internal Revenue Code of 1939.
§ 1.72-1 Introduction.
§ 1.72-2 Applicability of section.
§ 1.72-3 Excludable amounts not income.
§ 1.72-4 Exclusion ratio.
§ 1.72-5 Expected return.
§ 1.72-6 Investment in the contract.
§ 1.72-7 Adjustment in investment where a contract contains a refund feature.
§ 1.72-8 Effect of certain employer contributions with respect to premiums or other consideration paid or contributed by an employee.
§ 1.72-9 Tables.
§ 1.72-10 Effect of transfer of contracts on investment in the contract.
§ 1.72-11 Amounts not received as annuity payments.
§ 1.72-12 Effect of taking an annuity in lieu of a lump sum upon the maturity of a contract.
§ 1.72-13 Special rule for employee contributions recoverable in three years.
§ 1.72-14 Exceptions from application of principles of section 72.
§ 1.72-15 Applicability of section 72 to accident or health plans.

§ 1.72-16 Life insurance contracts purchased under qualified employee plans.
§ 1.72-17 Special rules applicable to owner-employees.
§ 1.72-17A Special rules applicable to employee annuities and distributions under deferred compensation plans to self-employed individuals and owner-employees.
§ 1.72-18 Treatment of certain total distributions with respect to self-employed individuals.
§ 1.72(e)-1T Treatment of distributions where substantially all contributions are employee contributions (temporary).
§ 1.72(p)-1 Loans treated as distributions.
§ 1.73-1 Services of child.
§ 1.74-1 Prizes and awards.
§ 1.75-1 Treatment of bond premiums in case of dealers in tax-exempt securities.
§ 1.77-1 Election to consider Commodity Credit Corporation loans as income.
§ 1.77-2 Effect of election to consider commodity credit loans as income.
§ 1.78-1 Gross up for deemed paid foreign tax credit.
§ 1.79-0 Group-term life insurance—definitions of certain terms.
§ 1.79-1 Group-term life insurance—general rules.
§ 1.79-2 Exceptions to the rule of inclusion.
§ 1.79-3 Determination of amount equal to cost of group-term life insurance.
§ 1.79-4T Questions and answers relating to the nondiscrimination requirements for group-term life insurance (temporary).
§ 1.82-1 Payments for or reimbursements of expenses of moving from one residence to another residence attributable to employment or self-employment.
§ 1.83-1 Property transferred in connection with the performance of services.
§ 1.83-2 Election to include in gross income in year of transfer.
§ 1.83-3 Meaning and use of certain terms.
§ 1.83-4 Special rules.
§ 1.83-5 Restrictions that will never lapse.
§ 1.83-6 Deduction by employer.
§ 1.83-7 Taxation of nonqualified stock options.
§ 1.83-8 Applicability of section and transitional rules.
§ 1.84-1 Transfer of appreciated property to political organizations.
§ 1.85-1 Unemployment compensation.
§ 1.88-1 Nuclear decommissioning costs.

Items Specifically Excluded From Gross Income

§ 1.101-1 Exclusion from gross income of proceeds of life insurance contracts payable by reason of death.
§ 1.101-2 Employees' death benefits.
§ 1.101-3 Interest payments.
§ 1.101-4 Payment of life insurance proceeds at a date later than death.

§ 1.101-5 [Reserved]
§ 1.101-6 Effective date.
§ 1.101-7 Mortality table used to determine exclusion for deferred payments of life insurance proceeds.
§ 1.102-1 Gifts and inheritances.
§ 1.103-1 Interest upon obligations of a State, territory, etc.
§§ 1.103-2-1.103-6 [Reserved]
§ 1.103-7 Industrial development bonds.
§ 1.103-8 Interest on bonds to finance certain exempt facilities.
§ 1.103-9 Interest on bonds to finance industrial parks.
§ 1.103-10 Exemption for certain small issues of industrial development bonds.
§ 1.103-11 Bonds held by substantial users.
§ 1.103-16 Obligations of certain volunteer fire departments.
§ 1.103A-2 Qualified mortgage bond.
§ 1.104-1 Compensation for injuries or sickness.
§ 1.105-1 Amounts attributable to employer contributions.
§ 1.105-2 Amounts expended for medical care.
§ 1.105-3 Payments unrelated to absence from work.
§ 1.105-5 Accident and health plans.
§ 1.105-11 Self-insured medical reimbursement plan.
§ 1.106-1 Contributions by employer to accident and health plans.
§ 1.107-1 Rental value of parsonages.
§ 1.108-1 [Reserved]
§ 1.108-2 Acquisition of indebtedness by a person related to the debtor.
§ 1.108-3 Intercompany losses and deductions.
§ 1.108-4 Election to reduce basis of depreciable property under section 108(b)(5) of the Internal Revenue Code .
§ 1.108-5 Time and manner for making election under the Omnibus Budget Reconciliation Act of 1993.
§ 1.108-6 Limitations on the exclusion of income from the discharge of qualified real property business indebtedness.
§ 1.108-7 Reduction of attributes.
§ 1.108-8 Indebtedness satisfied by partnership interest.
§ 1.108-9 Application of the bankruptcy and the insolvency provisions of section 108 to grantor trusts and disregarded entities.
§ 1.108(c)-1T [Reserved]
§ 1.108(i)-0 Definitions and effective/applicability dates.
§ 1.108(i)-1 Deferred discharge of indebtedness income and deferred original issue discount deductions of C corporations.

§ 1.108(i)-2 Application of section 108(i) to partnerships and S corporations.
§ 1.108(i)-3 Rules for the deduction of OID.
§ 1.109-1 Exclusion from gross income of lessor of real property of value of improvements erected by lessee.
§ 1.110-1 Qualified lessee construction allowances.
§ 1.111-1 Recovery of certain items previously deducted or credited.
§ 1.112-1 Combat zone compensation of members of the Armed Forces.
§ 1.113-1 Mustering-out payments for members of the Armed Forces.
§ 1.117-1 Exclusion of amounts received as a scholarship or fellowship grant.
§ 1.117-2 Limitations.
§ 1.117-3 Definitions.
§ 1.117-4 Items not considered as scholarships or fellowship grants.
§ 1.117-5 Federal grants requiring future service as a Federal employee.
§ 1.118-1 Contributions to the capital of a corporation.
§ 1.118-2 Contribution in aid of construction.
§ 1.119-1 Meals and lodging furnished for the convenience of the employer.
§ 1.120-1 Statutory subsistence allowance received by police.
§ 1.120-3 Notice of application for recognition of status of qualified group legal services plan.
§ 1.121-1 Exclusion of gain from sale or exchange of a principal residence.
§ 1.121-2 Limitations.
§ 1.121-3 Reduced maximum exclusion for taxpayers failing to meet certain requirements.
§ 1.121-4 Special rules.
§ 1.121-5 Suspension of 5-year period for certain members of the uniformed services and Foreign Service.
§ 1.122-1 Applicable rules relating to certain reduced uniformed services retirement pay.
§ 1.123-1 Exclusion of insurance proceeds for reimbursement of certain living expenses.
§ 1.125-3 Effect of the Family and Medical Leave Act (FMLA) on the operation of cafeteria plans.
§ 1.125-4 Permitted election changes.
§ 1.127-1 Amounts received under a qualified educational assistance program.
§ 1.127-2 Qualified educational assistance program.
§ 1.132-0 Outline of regulations under section 132.
§ 1.132-1 Exclusion from gross income for certain fringe benefits.
§ 1.132-2 No-additional-cost services.
§ 1.132-3 Qualified employee discounts.
§ 1.132-4 Line of business limitation.
§ 1.132-5 Working condition fringes.
§ 1.132-6 De minimis fringes.

§ 1.132-7 Employer-operated eating facilities.
§ 1.132-8 Fringe benefit nondiscrimination rules.
§ 1.132-9 Qualified transportation fringes.
§ 1.133-1T Questions and answers relating to interest on certain loans used to acquire employer securities (temporary).
§ 1.139E-0 Table of contents.
§ 1.139E-1 Tribal general welfare benefits.
§ 1.139E-2 Alaska Native regional or village corporations.
§ 1.141-0 Table of contents.
Tax Exemption Requirements for State and Local Bonds
§ 1.141-1 Definitions and rules of general application.
§ 1.141-2 Private activity bond tests.
§ 1.141-3 Definition of private business use.
§ 1.141-4 Private security or payment test.
§ 1.141-5 Private loan financing test.
§ 1.141-6 Allocation and accounting rules.
§ 1.141-7 Special rules for output facilities.
§ 1.141-8 $15 million limitation for output facilities.
§ 1.141-9 Unrelated or disproportionate use test.
§ 1.141-10 Coordination with volume cap. [Reserved]
§ 1.141-11 Acquisition of nongovernmental output property. [Reserved]
§ 1.141-12 Remedial actions.
§ 1.141-13 Refunding issues.
§ 1.141-14 Anti-abuse rules.
§ 1.141-15 Effective/applicability dates.
§ 1.141-16 Effective dates for qualified private activity bond provisions.
§ 1.142-0 Table of contents.
§ 1.142-1 Exempt facility bonds.
§ 1.142-2 Remedial actions.
§ 1.142-3 Refunding Issues. [Reserved]
§ 1.142-4 Use of proceeds to provide a facility.
§ 1.142(a)(5)-1 Exempt facility bonds: Sewage facilities.
§ 1.142(a)(6)-1 Exempt facility bonds: solid waste disposal facilities.
§ 1.142(f)(4)-1 Manner of making election to terminate tax-exempt bond financing.
§ 1.143(g)-1 Requirements related to arbitrage.
§ 1.144-0 Table of contents.
§ 1.144-1 Qualified small issue bonds, qualified student loan bonds, and qualified redevelopment bonds.
§ 1.144-2 Remedial actions.

§ 1.145-0 Table of contents.
§ 1.145-1 Qualified 501(c)(3) bonds.
§ 1.145-2 Application of private activity bond regulations.
§ 1.147-0 Table of contents.
§ 1.147-1 Other requirements applicable to certain private activity bonds.
§ 1.147-2 Remedial actions.
§ 1.147(b)-1 Bond maturity limitation-treatment of working capital.
§ 1.147(f)-1 Public approval of private activity bonds.
§ 1.148-0 Scope and table of contents.
§ 1.148-1 Definitions and elections.
§ 1.148-2 General arbitrage yield restriction rules.
§ 1.148-3 General arbitrage rebate rules.
§ 1.148-4 Yield on an issue of bonds.
§ 1.148-5 Yield and valuation of investments.
§ 1.148-6 General allocation and accounting rules.
§ 1.148-7 Spending exceptions to the rebate requirement.
§ 1.148-8 Small issuer exception to rebate requirement.
§ 1.148-9 Arbitrage rules for refunding issues.
§ 1.148-10 Anti-abuse rules and authority of Commissioner.
§ 1.148-11 Effective/applicability dates.
§ 1.149(b)-1 Federally guaranteed bonds.
§ 1.149(d)-1 Limitations on advance refundings.
§ 1.149(e)-1 Information reporting requirements for tax-exempt bonds.
§ 1.149(g)-1 Hedge bonds.
§ 1.150-1 Definitions.
§ 1.150-2 Proceeds of bonds used for reimbursement.
§ 1.150-3 Retirement standards for state and local bonds.
§ 1.150-4 Change in use of facilities financed with tax-exempt private activity bonds.
§ 1.150-5 Filing notices and elections.

Regulations Applicable to Certain Bonds Sold Prior to July 8, 1997

§§ 1.148-1A-1.148-6A [Reserved]
§§ 1.148-9A-1.148-10A [Reserved]
§ 1.148-11A Effective dates.

Deductions for Personal Exemptions

§ 1.151-1 Deductions for personal exemptions.
§ 1.151-2 Additional exemptions for dependents.
§ 1.151-3 Definitions.
§ 1.151-4 Amount of deduction for each exemption under section 151.
§ 1.152-1 General definition of a dependent.

§ 1.152-2 Rules relating to general definition of dependent.
§ 1.152-3 Multiple support agreements.
§ 1.152-4 Special rule for a child of divorced or separated parents or parents who live apart.
§ 1.153-1 Determination of marital status.
§ 1.154 Statutory provisions; cross references.
Itemized Deductions for Individuals and Corporations
§ 1.161-1 Allowance of deductions.
§ 1.162-1 Business expenses.
§ 1.162-2 Traveling expenses.
§ 1.162-3 Materials and supplies.
§ 1.162-4 Repairs.
§ 1.162-5 Expenses for education.
§ 1.162-7 Compensation for personal services.
§ 1.162-8 Treatment of excessive compensation.
§ 1.162-9 Bonuses to employees.
§ 1.162-10 Certain employee benefits.
§ 1.162-10T Questions and answers relating to the deduction of employee benefits under the Tax Reform Act of 1984; certain limits on amounts deductible (temporary).
§ 1.162-11 Rentals.
§ 1.162-12 Expenses of farmers.
§ 1.162-13 Depositors' guaranty fund.
§ 1.162-14 Expenditures for advertising or promotion of good will.
§ 1.162-15 Contributions, dues, etc.
§ 1.162-16 Cross reference.
§ 1.162-17 Reporting and substantiation of certain business expenses of employees.
§ 1.162-18 Illegal bribes and kickbacks.
§ 1.162-19 Capital contributions to Federal National Mortgage Association.
§ 1.162-20 Expenditures attributable to lobbying, political campaigns, attempts to influence legislation, etc., and certain advertising.
§ 1.162-21 Denial of deduction for certain fines, penalties, and other amounts.
§ 1.162-22 Treble damage payments under the antitrust laws.
§ 1.162-24 Travel expenses of state legislators.
§ 1.162-25 Deductions with respect to noncash fringe benefits.
§ 1.162-25T Deductions with respect to noncash fringe benefits (temporary).
§ 1.162-27 Certain employee remuneration in excess of $1,000,000 not deductible for taxable years beginning on or after January 1, 1994, and for taxable years beginning prior to January 1, 2018.
§ 1.162-28 Allocation of costs to lobbying activities.
§ 1.162-29 Influencing legislation.

§ 1.162-31	The $500,000 deduction limitation for remuneration provided by certain health insurance providers.
§ 1.162-32	Expenses paid or incurred for lodging when not traveling away from home.
§ 1.162-33	Certain employee remuneration in excess of $1,000,000 not deductible for taxable years beginning after December 31, 2017.
§ 1.162(k)-1	Disallowance of deduction for reacquisition payments.
§ 1.162(l)-0	Table of Contents.
§ 1.162(l)-1	Deduction for health insurance costs of self-employed individuals.
§ 1.163-1	Interest deduction in general.
§ 1.163-2	Installment purchases where interest charge is not separately stated.
§ 1.163-3	Deduction for discount on bond issued on or before May 27, 1969.
§ 1.163-4	Deduction for original issue discount on certain obligations issued after May 27, 1969.
§ 1.163-5	Denial of interest deduction on certain obligations issued after December 31, 1982, unless issued in registered form.
§ 1.163-5T	Denial of interest deduction on certain obligations issued after December 31, 1982, unless issued in registered form (temporary).
§ 1.163-6T	Reduction of deduction where section 25 credit taken (temporary).
§ 1.163-7	Deduction for OID on certain debt instruments.
§ 1.163-8T	Allocation of interest expense among expenditures (temporary).
§ 1.163-9T	Personal interest (temporary).
§ 1.163-10T	Qualified residence interest (temporary).
§ 1.163-11	Allocation of certain prepaid qualified mortgage insurance premiums.
§ 1.163-12	Deduction of original issue discount on instrument held by related foreign person.
§ 1.163-13	Treatment of bond issuance premium.
§ 1.163-15	Debt proceeds distributed from any taxpayer account or from cash.
§ 1.163(d)-1	Time and manner for making elections under the Omnibus Budget Reconciliation Act of 1993 and the Jobs and Growth Tax Relief Reconciliation Act of 2003.
§ 1.163(j)-0	Table of contents.
§ 1.163(j)-1	Definitions.
§ 1.163(j)-2	Deduction for business interest expense limited.
§ 1.163(j)-3	Relationship of the section 163(j) limitation to other provisions affecting interest.
§ 1.163(j)-4	General rules applicable to C corporations (including REITs, RICs, and members of consolidated groups) and tax-exempt corporations.
§ 1.163(j)-5	General rules governing disallowed business interest expense carryforwards for C corporations.

§ 1.163(j)-6 Application of the section 163(j) limitation to partnerships and subchapter S corporations.
§ 1.163(j)-7 Application of the section 163(j) limitation to foreign corporations and United States shareholders.
§ 1.163(j)-8 [Reserved]
§ 1.163(j)-9 Elections for excepted trades or businesses; safe harbor for certain REITs.
§ 1.163(j)-10 Allocation of interest expense, interest income, and other items of expense and gross income to an excepted trade or business.
§ 1.163(j)-11 Transition rules.
§ 1.164-1 Deduction for taxes.
§ 1.164-2 Deduction denied in case of certain taxes.
§ 1.164-3 Definitions and special rules.
§ 1.164-4 Taxes for local benefits.
§ 1.164-5 Certain retail sales taxes and gasoline taxes.
§ 1.164-6 Apportionment of taxes on real property between seller and purchaser.
§ 1.164-7 Taxes of shareholder paid by corporation.
§ 1.164-8 Payments for municipal services in atomic energy communities.
§ 1.165-1 Losses.
§ 1.165-2 Obsolescence of nondepreciable property.
§ 1.165-3 Demolition of buildings.
§ 1.165-4 Decline in value of stock.
§ 1.165-5 Worthless securities.
§ 1.165-6 Farming losses.
§ 1.165-7 Casualty losses.
§ 1.165-8 Theft losses.
§ 1.165-9 Sale of residential property.
§ 1.165-10 Wagering losses.
§ 1.165-11 Election to take disaster loss deduction for preceding year.
§ 1.165-12 Denial of deduction for losses on registration-required obligations not in registered form.
§ 1.166-1 Bad debts.
§ 1.166-2 Evidence of worthlessness.
§ 1.166-3 Partial or total worthlessness.
§ 1.166-4 Reserve for bad debts.
§ 1.166-5 Nonbusiness debts.
§ 1.166-6 Sale of mortgaged or pledged property.
§ 1.166-7 Worthless bonds issued by an individual.
§ 1.166-8 Losses of guarantors, endorsers, and indemnitors incurred on agreements made before January 1, 1976.

§ 1.166-9	Losses of guarantors, endorsers, and indemnitors incurred, on agreements made after December 31, 1975, in taxable years beginning after such date.
§ 1.166-10	Reserve for guaranteed debt obligations.
§ 1.167(a)-1	Depreciation in general.
§ 1.167(a)-2	Tangible property.
§ 1.167(a)-3	Intangibles.
§ 1.167(a)-4	Leased property.
§ 1.167(a)-5	Apportionment of basis.
§ 1.167(a)-5T	Application of section 1060 to section 167 (temporary).
§ 1.167(a)-6	Depreciation in special cases.
§ 1.167(a)-7	Accounting for depreciable property.
§ 1.167(a)-8	Retirements.
§ 1.167(a)-9	Obsolescence.
§ 1.167(a)-10	When depreciation deduction is allowable.
§ 1.167(a)-11	Depreciation based on class lives and asset depreciation ranges for property placed in service after December 31, 1970.
§ 1.167(a)-12	Depreciation based on class lives for property first placed in service before January 1, 1971.
§ 1.167(a)-13T	Certain elections for intangible property (temporary).
§ 1.167(a)-14	Treatment of certain intangible property excluded from section 197.
§ 1.167(b)-0	Methods of computing depreciation.
§ 1.167(b)-1	Straight line method.
§ 1.167(b)-2	Declining balance method.
§ 1.167(b)-3	Sum of the years-digits method.
§ 1.167(b)-4	Other methods.
§ 1.167(c)-1	Limitations on methods of computing depreciation under section 167(b) (2), (3), and (4).
§ 1.167(d)-1	Agreement as to useful life and rates of depreciation.
§ 1.167(e)-1	Change in method.
§ 1.167(f)-1	Reduction of salvage value taken into account for certain personal property.
§ 1.167(g)-1	Basis for depreciation.
§ 1.167(h)-1	Life tenants and beneficiaries of trusts and estates.
§ 1.167(i)-1	Depreciation of improvements in the case of mines, etc.
§ 1.167(l)-1	Limitations on reasonable allowance in case of property of certain public utilities.
§ 1.167(l)-2	Public utility property; election as to post-1969 property representing growth in capacity.
§ 1.167(l)-3	Multiple regulation, asset acquisitions, reorganizations, etc.
§ 1.167(l)-4	Public utility property; election to use asset depreciation range system.

§ 1.167(m)-1 Class lives.
§ 1.168-5 Special rules.
§ 1.168(a)-1 Modified accelerated cost recovery system.
§ 1.168(b)-1 Definitions.
§ 1.168(d)-0 Table of contents for the applicable convention rules.
§ 1.168(d)-1 Applicable conventions—half-year and mid-quarter conventions.
§ 1.168(h)-1 Like-kind exchanges involving tax-exempt use property.
§ 1.168(i)-0 Table of contents for the general asset account rules.
§ 1.168(i)-1 General asset accounts.
§ 1.168(i)-2 Lease term.
§ 1.168(i)-3 Treatment of excess deferred income tax reserve upon disposition of deregulated public utility property.
§ 1.168(i)-4 Changes in use.
§ 1.168(i)-5 Table of contents.
§ 1.168(i)-6 Like-kind exchanges and involuntary conversions.
§ 1.168(i)-7 Accounting for MACRS property.
§ 1.168(i)-8 Dispositions of MACRS property.
§ 1.168(j)-1T Questions and answers concerning tax-exempt entity leasing rules (temporary).
§ 1.168(k)-0 Table of contents.
§ 1.168(k)-1 Additional first year depreciation deduction.
§ 1.168(k)-2 Additional first year depreciation deduction for property acquired and placed in service after September 27, 2017.
§ 1.168A-1 Amortization of emergency facilities; general rule.
§ 1.168A-2 Election of amortization.
§ 1.168A-3 Election to discontinue amortization.
§ 1.168A-4 Definitions.
§ 1.168A-5 Adjusted basis of emergency facility.
§ 1.168A-6 Depreciation of portion of emergency facility not subject to amortization.
§ 1.168A-7 Payment by United States of unamortized cost of facility.
§ 1.169-1 Amortization of pollution control facilities.
§ 1.169-2 Definitions.
§ 1.169-3 Amortizable basis.
§ 1.169-4 Time and manner of making elections.

Computation of Taxable Income (Continued)

Itemized Deductions for Individuals and Corporations (Continued)

§ 1.170-3 Contributions or gifts by corporations (before amendment by Tax Reform Act of 1969).
§ 1.170A-1 Charitable, etc., contributions and gifts; allowance of deduction.
§ 1.170A-2 Amounts paid to maintain certain students as members of the taxpayer's

household.
§ 1.170A-3 Reduction of charitable contribution for interest on certain indebtedness.
§ 1.170A-4 Reduction in amount of charitable contributions of certain appreciated property.
§ 1.170A-4A Special rule for the deduction of certain charitable contributions of inventory and other property.
§ 1.170A-5 Future interests in tangible personal property.
§ 1.170A-6 Charitable contributions in trust.
§ 1.170A-7 Contributions not in trust of partial interests in property.
§ 1.170A-8 Limitations on charitable deductions by individuals.
§ 1.170A-9 Definition of section 170(b)(1)(A) organization.
§ 1.170A-10 Charitable contributions carryovers of individuals.
§ 1.170A-11 Limitation on, and carryover of, contributions by corporations.
§ 1.170A-12 Valuation of a remainder interest in real property for contributions made after July 31, 1969.
§ 1.170A-13 Recordkeeping and return requirements for deductions for charitable contributions.
§ 1.170A-14 Qualified conservation contributions.
§ 1.170A-15 Substantiation requirements for charitable contribution of a cash, check, or other monetary gift.
§ 1.170A-16 Substantiation and reporting requirements for noncash charitable contributions.
§ 1.170A-17 Qualified appraisal and qualified appraiser.
§ 1.170A-18 Contributions of clothing and household items.
§ 1.171-1 Bond premium.
§ 1.171-2 Amortization of bond premium.
§ 1.171-3 Special rules for certain bonds.
§ 1.171-4 Election to amortize bond premium on taxable bonds.
§ 1.171-5 Effective date and transition rules.
§ 1.172-1 Net operating loss deduction.
§ 1.172-2 Net operating loss in case of a corporation.
§ 1.172-3 Net operating loss in case of a taxpayer other than a corporation.
§ 1.172-4 Net operating loss carrybacks and net operating loss carryovers.
§ 1.172-5 Taxable income which is subtracted from net operating loss to determine carryback or carryover.
§ 1.172-6 Illustration of net operating loss carrybacks and carryovers.
§ 1.172-7 Joint return by husband and wife.
§ 1.172-8 Net operating loss carryovers for regulated transportation corporations.
§ 1.172-9 Election with respect to portion of net operating loss attributable to foreign expropriation loss.
§ 1.172-10 Net operating losses of real estate investment trusts.

§ 1.172-13 Product liability losses.
§ 1.173-1 Circulation expenditures.
§ 1.174-1 Research and experimental expenditures; in general.
§ 1.174-2 Definition of research and experimental expenditures.
§ 1.174-3 Treatment as expenses.
§ 1.174-4 Treatment as deferred expenses.
§ 1.175-1 Soil and water conservation expenditures; in general.
§ 1.175-2 Definition of soil and water conservation expenditures.
§ 1.175-3 Definition of "the business of farming."
§ 1.175-4 Definition of "land used in farming."
§ 1.175-5 Percentage limitation and carryover.
§ 1.175-6 Adoption or change of method.
§ 1.175-7 Allocation of expenditures in certain circumstances.
§ 1.178-1 Depreciation or amortization of improvements on leased property and cost of acquiring a lease.
§ 1.179-0 Table of contents for section 179 expensing rules.
§ 1.179-1 Election to expense certain depreciable assets.
§ 1.179-2 Limitations on amount subject to section 179 election.
§ 1.179-3 Carryover of disallowed deduction.
§ 1.179-4 Definitions.
§ 1.179-5 Time and manner of making election.
§ 1.179-6 Effective/applicability dates.
§ 1.179A-1 [Reserved]
§ 1.179B-1T Deduction for capital costs incurred in complying with Environmental Protection Agency sulfur regulations (temporary).
§ 1.179C-1 Election to expense certain refineries.
§§ 1.179D-1-1.179D-2 [Reserved]
§ 1.179D-3 Rules relating to the increased deduction for prevailing wage and apprenticeship.
§ 1.180-1 Expenditures by farmers for fertilizer, etc.
§ 1.180-2 Time and manner of making election and revocation.
§ 1.181-0 Table of contents.
§ 1.181-1 Deduction for qualified film and television production costs.
§ 1.181-2 Election to deduct production costs.
§ 1.181-3 Qualified film or television production.
§ 1.181-4 Special rules.
§ 1.181-5 Examples.
§ 1.181-6 Effective/applicability date.
§ 1.182-1 Expenditures by farmers for clearing land; in general.
§ 1.182-2 Definition of "the business of farming."

§ 1.182-3 Definition, exceptions, etc., relating to deductible expenditures.
§ 1.182-4 Definition of "land suitable for use in farming", etc.
§ 1.182-5 Limitation.
§ 1.182-6 Election to deduct land clearing expenditures.
§ 1.183-1 Activities not engaged in for profit.
§ 1.183-2 Activity not engaged in for profit defined.
§ 1.183-3 Election to postpone determination with respect to the presumption described in section 183(d). [Reserved]
§ 1.183-4 Taxable years affected.
§ 1.186-1 Recoveries of damages for antitrust violations, etc.
§ 1.187-1 Amortization of certain coal mine safety equipment.
§ 1.187-2 Definitions.
§ 1.188-1 Amortization of certain expenditures for qualified on-the-job training and child care facilities.
§ 1.190-1 Expenditures to remove architectural and transportation barriers to the handicapped and elderly.
§ 1.190-2 Definitions.
§ 1.190-3 Election to deduct architectural and transportation barrier removal expenses.
§ 1.193-1 Deduction for tertiary injectant expenses.
§ 1.194-1 Amortization of reforestation expenditures.
§ 1.194-2 Amount of deduction allowable.
§ 1.194-3 Definitions.
§ 1.194-4 Time and manner of making election.
§ 1.195-1 Election to amortize start-up expenditures.
§ 1.195-2 Technical termination of a partnership.
§ 1.197-0 Table of contents.
§ 1.197-1T Certain elections for intangible property (temporary).
§ 1.197-2 Amortization of goodwill and certain other intangibles.
§ 1.199A-0 Table of contents.
§ 1.199A-1 Operational rules.
§ 1.199A-2 Determination of W-2 wages and unadjusted basis immediately after acquisition of qualified property.
§ 1.199A-3 Qualified business income, qualified REIT dividends, and qualified PTP income.
§ 1.199A-4 Aggregation.
§ 1.199A-5 Specified service trades or businesses and the trade or business of performing services as an employee.
§ 1.199A-6 Relevant passthrough entities (RPEs), publicly traded partnerships (PTPs), trusts, and estates.
§ 1.199A-7 Section 199A(a) Rules for Cooperatives and their patrons.

§ 1.199A-8 Deduction for income attributable to domestic production activities of specified agricultural or horticultural cooperatives.
§ 1.199A-9 Domestic production gross receipts.
§ 1.199A-10 Allocation of cost of goods sold (COGS) and other deductions to domestic production gross receipts (DPGR), and other rules.
§ 1.199A-11 Wage limitation for the section 199A(g) deduction.
§ 1.199A-12 Expanded affiliated groups.

Additional Itemized Deductions for Individuals

§ 1.211-1 Allowance of deductions.
§ 1.212-1 Nontrade or nonbusiness expenses.
§ 1.213-1 Medical, dental, etc., expenses.
§ 1.215-1 Periodic alimony, etc., payments.
§ 1.215-1T Alimony, etc., payments (temporary).
§ 1.216-1 Amounts representing taxes and interest paid to cooperative housing corporation.
§ 1.216-2 Treatment as property subject to depreciation.
§ 1.217-1 Deduction for moving expenses paid or incurred in taxable years beginning before January 1, 1970.
§ 1.217-2 Deduction for moving expenses paid or incurred in taxable years beginning after December 31, 1969.
§ 1.219-1 Deduction for retirement savings.
§ 1.219-2 Definition of active participant.
§ 1.221-1 Deduction for interest paid on qualified education loans after December 31, 2001.
§ 1.221-2 Deduction for interest due and paid on qualified education loans before January 1, 2002.

Special Deductions for Corporations

§ 1.241-1 Allowance of special deductions.
§ 1.242-1 Deduction for partially tax-exempt interest.
§ 1.243-1 Deduction for dividends received by corporations.
§ 1.243-2 Special rules for certain distributions.
§ 1.243-3 Certain dividends from foreign corporations.
§ 1.243-4 Qualifying dividends.
§ 1.243-5 Effect of election.
§ 1.245-1 Dividends received from certain foreign corporations.
§§ 1.245A-1-1.245A-4 [Reserved]
§ 1.245A-5 Limitation of section 245A deduction and section 954(c)(6) exception.
§ 1.245A-6 Coordination of extraordinary disposition and disqualified basis rules.
§ 1.245A-7 Coordination rules for simple cases.
§ 1.245A-8 Coordination rules for complex cases.
§ 1.245A-9 Other rules and definitions.

§ 1.245A-10 Examples.
§ 1.245A-11 Applicability dates.
§ 1.245A(d)-1 Disallowance of foreign tax credit or deduction.
§ 1.245A(e)-1 Special rules for hybrid dividends.
§ 1.246-1 Deductions not allowed for dividends from certain corporations.
§ 1.246-2 Limitation on aggregate amount of deductions.
§ 1.246-3 Exclusion of certain dividends.
§ 1.246-4 Dividends from a DISC or former DISC.
§ 1.246-5 Reduction of holding periods in certain situations.
§ 1.247-1 Deduction for dividends paid on preferred stock of public utilities.
§ 1.248-1 Election to amortize organizational expenditures.
§ 1.249-1 Limitation on deduction of bond premium on repurchase.
§ 1.250-0 Table of contents.
§ 1.250-1 Introduction.
§ 1.250(a)-1 Deduction for foreign-derived intangible income (FDII) and global intangible low-taxed income (GILTI).
§ 1.250(b)-1 Computation of foreign-derived intangible income (FDII).
§ 1.250(b)-2 Qualified business asset investment (QBAI).
§ 1.250(b)-3 Foreign-derived deduction eligible income (FDDEI) transactions.
§ 1.250(b)-4 Foreign-derived deduction eligible income (FDDEI) sales.
§ 1.250(b)-5 Foreign-derived deduction eligible income (FDDEI) services.
§ 1.250(b)-6 Related party transactions.

Items Not Deductible

§ 1.261-1 General rule for disallowance of deductions.
§ 1.262-1 Personal, living, and family expenses.
§ 1.263(a)-0 Outline of regulations under section 263(a).
§ 1.263(a)-1 Capital expenditures; in general.
§ 1.263(a)-2 Amounts paid to acquire or produce tangible property.
§ 1.263(a)-3 Amounts paid to improve tangible property.
§ 1.263(a)-4 Amounts paid to acquire or create intangibles.
§ 1.263(a)-5 Amounts paid or incurred to facilitate an acquisition of a trade or business, a change in the capital structure of a business entity, and certain other transactions.
§ 1.263(a)-6 Election to deduct or capitalize certain expenditures.
§ 1.263(b)-1 Expenditures for advertising or promotion of good will.
§ 1.263(c)-1 Intangible drilling and development costs in the case of oil and gas wells.
§ 1.263(e)-1 Expenditures in connection with certain railroad rolling stock.
§ 1.263(f)-1 Reasonable repair allowance.
§ 1.263A-0 Outline of regulations under section 263A.

§ 1.263A-1 Uniform capitalization of costs.
§ 1.263A-2 Rules relating to property produced by the taxpayer.
§ 1.263A-3 Rules relating to property acquired for resale.
§ 1.263A-4 Rules for property produced in a farming business.
§ 1.263A-5 Exception for qualified creative expenses incurred by certain free-lance authors, photographers, and artists. [Reserved]
§ 1.263A-6 Rules for foreign persons. [Reserved]
§ 1.263A-7 Changing a method of accounting under section 263A.
§ 1.263A-8 Requirement to capitalize interest.
§ 1.263A-9 The avoided cost method.
§ 1.263A-10 Unit of property.
§ 1.263A-11 Accumulated production expenditures.
§ 1.263A-12 Production period.
§ 1.263A-13 Oil and gas activities.
§ 1.263A-14 Rules for related persons.
§ 1.263A-15 Effective dates, transitional rules, and anti-abuse rule.
§ 1.264-1 Premiums on life insurance taken out in a trade or business.
§ 1.264-2 Single premium life insurance, endowment, or annuity contracts.
§ 1.264-3 Effective date; taxable years ending after March 1, 1954, subject to the Internal Revenue Code of 1939.
§ 1.264-4 Other life insurance, endowment, or annuity contracts.
§ 1.265-1 Expenses relating to tax-exempt income.
§ 1.265-2 Interest relating to tax exempt income.
§ 1.265-3 Nondeductibility of interest relating to exempt-interest dividends.
§ 1.266-1 Taxes and carrying charges chargeable to capital account and treated as capital items.
§ 1.267A-1 Disallowance of certain interest and royalty deductions.
§ 1.267A-2 Hybrid and branch arrangements.
§ 1.267A-3 Income inclusions and amounts not treated as disqualified hybrid amounts.
§ 1.267A-4 Disqualified imported mismatch amounts.
§ 1.267A-5 Definitions and special rules.
§ 1.267A-6 Examples.
§ 1.267A-7 Applicability dates.
§ 1.267(a)-1 Deductions disallowed.
§ 1.267(a)-2T Temporary regulations; questions and answers arising under the Tax Reform Act of 1984 (temporary).
§ 1.267(a)-3 Deduction of amounts owed to related foreign persons.
§ 1.267(b)-1 Relationships.
§ 1.267(c)-1 Constructive ownership of stock.

§ 1.267(d)-1 Amount of gain where loss previously disallowed.
§ 1.267(d)-2 Effective/applicability dates.
§ 1.267(f)-1 Controlled groups.
§ 1.268-1 Items attributable to an unharvested crop sold with the land.
§ 1.269-1 Meaning and use of terms.
§ 1.269-2 Purpose and scope of section 269.
§ 1.269-3 Instances in which section 269(a) disallows a deduction, credit, or other allowance.
§ 1.269-4 Power of district director to allocate deduction, credit, or allowance in part.
§ 1.269-5 Time of acquisition of control.
§ 1.269-6 Relationship of section 269 to section 382 before the Tax Reform Act of 1986.
§ 1.269-7 Relationship of section 269 to sections 382 and 383 after the Tax Reform Act of 1986.
§ 1.269B-1 Stapled foreign corporations.
§ 1.270-1 Limitation on deductions allowable to individuals in certain cases.
§ 1.271-1 Debts owed by political parties.
§ 1.272-1 Expenditures relating to disposal of coal or domestic iron ore.
§ 1.273-1 Life or terminable interests.
§ 1.274-1 Disallowance of certain entertainment, gift and travel expenses.
§ 1.274-2 Disallowance of deductions for certain expenses for entertainment, amusement, recreation, or travel.
§ 1.274-3 Disallowance of deduction for gifts.
§ 1.274-4 Disallowance of certain foreign travel expenses.
§ 1.274-5 Substantiation requirements.
§ 1.274-5T Substantiation requirements (temporary).
§ 1.274-6 Expenditures deductible without regard to trade or business or other income producing activity.
§ 1.274-6T Substantiation with respect to certain types of listed property for taxable years beginning after 1985 (temporary).
§ 1.274-7 Treatment of certain expenditures with respect to entertainment-type facilities.
§ 1.274-8 Effective/applicability date.
§ 1.274-9 Entertainment provided to specified individuals.
§ 1.274-10 Special rules for aircraft used for entertainment.
§ 1.274-11 Disallowance of deductions for certain entertainment, amusement, or recreation expenditures paid or incurred after December 31, 2017.
§ 1.274-12 Limitation on deductions for certain food or beverage expenses paid or incurred after December 31, 2017.
§ 1.274-13 Disallowance of deductions for certain qualified transportation fringe expenditures.

§ 1.274-14 Disallowance of deductions for certain transportation and commuting benefit expenditures.
§ 1.275-1 Deduction denied in case of certain taxes.
§ 1.276-1 Disallowance of deductions for certain indirect contributions to political parties.
§ 1.278-1 Capital expenditures incurred in planting and developing citrus and almond groves.
§ 1.279-1 General rule; purpose.
§ 1.279-2 Amount of disallowance of interest on corporate acquisition indebtedness.
§ 1.279-3 Corporate acquisition indebtedness.
§ 1.279-4 Special rules.
§ 1.279-5 Rules for application of section 279(b).
§ 1.279-6 Application of section 279 to certain affiliated groups.
§ 1.279-7 Effect on other provisions.
§ 1.280B-1 Demolition of structures.
§ 1.280C-1 Disallowance of certain deductions for wage or salary expenses.
§ 1.280C-3 Disallowance of certain deductions for qualified clinical testing expenses when section 28 credit is allowable.
§ 1.280C-4 Credit for increasing research activities.
§ 1.280F-1T Limitations on investment tax credit and recovery deductions under section 168 for passenger automobiles and certain other listed property; overview of regulations (temporary).
§ 1.280F-2T Limitations on recovery deductions and the investment tax credit for certain passenger automobiles (temporary).
§ 1.280F-3T Limitations on recovery deductions and the investment tax credit when the business use percentage of listed property is not greater than 50 percent (temporary).
§ 1.280F-4T Special rules for listed property (temporary).
§ 1.280F-5T Leased property (temporary).
§ 1.280F-6 Special rules and definitions.
§ 1.280F-7 Property leased after December 31, 1986.
§ 1.280G-1 Golden parachute payments.
§ 1.280H-0T Table of contents (temporary).
§ 1.280H-1T Limitation on certain amounts paid to employee-owners by personal service corporations electing alternative taxable years (temporary).

Taxable Years Beginning Prior to January 1, 1986

§ 1.274-5A Substantiation requirements.

Terminal Railroad Corporations and Their Shareholders

§ 1.281-1 In general.
§ 1.281-2 Effect of section 281 upon the computation of taxable income.

§ 1.281-3 Definitions.
§ 1.281-4 Taxable years affected.
§§ 1.282-1.300 [Reserved]
Corporate Distributions and Adjustments
Effects on Recipients
§ 1.301-1 Rules applicable with respect to distributions of money and other property.
§ 1.302-1 General.
§ 1.302-2 Redemptions not taxable as dividends.
§ 1.302-3 Substantially disproportionate redemption.
§ 1.302-4 Termination of shareholder's interest.
§ 1.303-1 General.
§ 1.303-2 Requirements.
§ 1.303-3 Application of other sections.
§ 1.304-1 General.
§ 1.304-2 Acquisition by related corporation (other than subsidiary).
§ 1.304-3 Acquisition by a subsidiary.
§ 1.304-4 Special rules for the use of related corporations to avoid the application of section 304.
§ 1.304-5 Control.
§ 1.304-6 Amount constituting a dividend. [Reserved]
§ 1.304-7 Certain acquisitions by foreign acquiring corporations.
§ 1.305-1 Stock dividends.
§ 1.305-2 Distributions in lieu of money.
§ 1.305-3 Disproportionate distributions.
§ 1.305-4 Distributions of common and preferred stock.
§ 1.305-5 Distributions on preferred stock.
§ 1.305-6 Distributions of convertible preferred.
§ 1.305-7 Certain transactions treated as distributions.
§ 1.305-8 Effective dates.
§ 1.306-1 General.
§ 1.306-2 Exception.
§ 1.306-3 Section 306 stock defined.
§ 1.306-4 Effective/applicability date.
§ 1.307-1 General.
§ 1.307-2 Exception.
Effects on Corporation
§ 1.312-1 Adjustment to earnings and profits reflecting distributions by corporations.
§ 1.312-2 Distribution of inventory assets.
§ 1.312-3 Liabilities.

§ 1.312-4 Examples of adjustments provided in section 312(c).
§ 1.312-5 Special rule for partial liquidations and certain redemptions.
§ 1.312-6 Earnings and profits.
§ 1.312-7 Effect on earnings and profits of gain or loss realized after February 28, 1913.
§ 1.312-8 Effect on earnings and profits of receipt of tax-free distributions requiring adjustment or allocation of basis of stock.
§ 1.312-9 Adjustments to earnings and profits reflecting increase in value accrued before March 1, 1913.
§ 1.312-10 Allocation of earnings in certain corporate separations.
§ 1.312-11 Effect on earnings and profits of certain other tax-free exchanges, tax-free distributions, and tax-free transfers from one corporation to another.
§ 1.312-12 Distributions of proceeds of loans guaranteed by the United States.
§ 1.312-15 Effect of depreciation on earnings and profits.

Definitions; Constructive Ownership of Stock

§ 1.316-1 Dividends.
§ 1.316-2 Sources of distribution in general.
§ 1.317-1 Property defined.
§ 1.318-1 Constructive ownership of stock; introduction.
§ 1.318-2 Application of general rules.
§ 1.318-3 Estates, trusts, and options.
§ 1.318-4 Constructive ownership as actual ownership; exceptions.

Corporate Liquidations

Effects on Recipients

§ 1.331-1 Corporate liquidations.
§ 1.332-1 Distributions in liquidation of subsidiary corporation; general.
§ 1.332-2 Requirements for nonrecognition of gain or loss.
§ 1.332-3 Liquidations completed within one taxable year.
§ 1.332-4 Liquidations covering more than one taxable year.
§ 1.332-5 Distributions in liquidation as affecting minority interests.
§ 1.332-6 Records to be kept and information to be filed with return.
§ 1.332-7 Indebtedness of subsidiary to parent.
§ 1.332-8 Recognition of gain on liquidation of certain holding companies.
§ 1.334-1 Basis of property received in liquidations.
§ 1.336-0 Table of contents.
§ 1.336-1 General principles, nomenclature, and definitions for a section 336(e) election.
§ 1.336-2 Availability, mechanics, and consequences of section 336(e) election.
§ 1.336-3 Aggregate deemed asset disposition price; various aspects of taxation of the deemed asset disposition.
§ 1.336-4 Adjusted grossed-up basis.

§ 1.336-5 Applicability dates.

Effects on Corporation

§ 1.337-1 Nonrecognition for property distributed to parent in complete liquidation of subsidiary.

§ 1.337(d)-1 Transitional loss limitation rule.

§ 1.337(d)-1T [Reserved]

§ 1.337(d)-2 Loss limitation rules.

§ 1.337(d)-3 Gain recognition upon certain partnership transactions involving a partner's stock.

§ 1.337(d)-4 Taxable to tax-exempt.

§ 1.337(d)-5 Old transitional rules imposing tax on property owned by a C corporation that becomes property of a RIC or REIT

§ 1.337(d)-6 New transitional rules imposing tax on property owned by a C corporation that becomes property of a RIC or REIT.

§ 1.337(d)-7 Tax on property owned by a C corporation that becomes property of a RIC or REIT.

§ 1.338-0 Outline of topics.

§ 1.338-1 General principles; status of old target and new target.

§ 1.338-2 Nomenclature and definitions; mechanics of the section 338 election.

§ 1.338-3 Qualification for the section 338 election.

§ 1.338-4 Aggregate deemed sale price; various aspects of taxation of the deemed asset sale.

§ 1.338-5 Adjusted grossed-up basis.

§ 1.338-6 Allocation of ADSP and AGUB among target assets.

§ 1.338-7 Allocation of redetermined ADSP and AGUB among target assets.

§ 1.338-8 Asset and stock consistency.

§ 1.338-9 International aspects of section 338.

§ 1.338-10 Filing of returns.

§ 1.338-11 Effect of section 338 election on insurance company targets.

§ 1.338(h)(10)-1 Deemed asset sale and liquidation.

§ 1.338(i)-1 Effective/applicability date.

Definition

§ 1.346-1 Partial liquidation.

§ 1.346-2 Treatment of certain redemptions.

§ 1.346-3 Effect of certain sales.

Corporate Organizations and Reorganizations

Corporate Organizations

§ 1.351-1 Transfer to corporation controlled by transferor.

§ 1.351-2 Receipt of property.

§ 1.351-3 Records to be kept and information to be filed.

Effects on Shareholders and Security Holders

§ 1.354-1 Exchanges of stock and securities in certain reorganizations.
§ 1.355-0 Outline of sections.
§ 1.355-1 Distribution of stock and securities of a controlled corporation.
§ 1.355-2 Limitations.
§ 1.355-3 Active conduct of a trade or business.
§ 1.355-4 Non pro rata distributions, etc.
§ 1.355-5 Records to be kept and information to be filed.
§ 1.355-6 Recognition of gain on certain distributions of stock or securities in controlled corporation.
§ 1.355-7 Recognition of gain on certain distributions of stock or securities in connection with an acquisition.
§ 1.355-8 Definition of predecessor and successor and limitations on gain recognition under section 355(e) and section 355(f).
§ 1.356-1 Receipt of additional consideration in connection with an exchange.
§ 1.356-2 Receipt of additional consideration not in connection with an exchange.
§ 1.356-3 Rules for treatment of securities as “other property”.
§ 1.356-4 Exchanges for section 306 stock.
§ 1.356-5 Transactions involving gift or compensation.
§ 1.356-6 Rules for treatment of nonqualified preferred stock as other property.
§ 1.356-7 Rules for treatment of nonqualified preferred stock and other preferred stock received in certain transactions.
§ 1.357-1 Assumption of liability.
§ 1.357-2 Liabilities in excess of basis.
§ 1.358-1 Basis to distributees.
§ 1.358-2 Allocation of basis among nonrecognition property.
§ 1.358-3 Treatment of assumption of liabilities.
§ 1.358-4 Exceptions.
§ 1.358-5 Special rules for assumption of liabilities.
§ 1.358-6 Stock basis in certain triangular reorganizations.
§ 1.358-7 Transfers by partners and partnerships to corporations.

Effects on Corporation

§ 1.361-1 Nonrecognition of gain or loss to corporations.
§ 1.362-1 Basis to corporations.
§ 1.362-2 Certain contributions to capital.
§ 1.362-3 Basis of importation property acquired in loss importation transaction.
§ 1.362-4 Basis of loss duplication property.
§ 1.367(a)-0 Table of contents.

§ 1.367(a)-1 Transfers to foreign corporations subject to section 367(a): In general.
§ 1.367(a)-1T Transfers to foreign corporations subject to section 367(a): In general (temporary).
§ 1.367(a)-2 Exceptions for transfers of property for use in the active conduct of a trade or business.
§ 1.367(a)-3 Treatment of transfers of stock or securities to foreign corporations.
§ 1.367(a)-4 Special rule applicable to U.S. depreciated property.
§ 1.367(a)-5 [Reserved]
§ 1.367(a)-6 Transfer of foreign branch with previously deducted losses.
§ 1.367(a)-6T Transfer of foreign branch with previously deducted losses (temporary).
§ 1.367(a)-7 Outbound transfers of property described in section 361(a) or (b).
§ 1.367(a)-8 Gain recognition agreement requirements.
§ 1.367(a)-9T Treatment of deemed section 351 exchanges pursuant to section 304(a)(1) (temporary).
§ 1.367(b)-0 Table of contents.
§ 1.367(b)-1 Other transfers.
§ 1.367(b)-2 Definitions and special rules.
§ 1.367(b)-3 Repatriation of foreign corporate assets in certain nonrecognition transactions.
§ 1.367(b)-3T Repatriation of foreign corporate assets in certain nonrecognition transactions (temporary).
§ 1.367(b)-4 Acquisition of foreign corporate stock or assets by a foreign corporation in certain nonrecognition transactions.
§ 1.367(b)-5 Distributions of stock described in section 355.
§ 1.367(b)-6 Effective/applicability dates and coordination rules.
§ 1.367(b)-7 Carryover of earnings and profits and foreign income taxes in certain foreign-to-foreign nonrecognition transactions.
§ 1.367(b)-8 Allocation of earnings and profits and foreign income taxes in certain foreign corporate separations. [Reserved]
§ 1.367(b)-9 Special rule for F reorganizations and similar transactions.
§ 1.367(b)-10 Acquisition of parent stock or securities for property in triangular reorganizations.
§ 1.367(b)-12 Subsequent treatment of amounts attributed or included in income.
§ 1.367(b)-13 Special rules for determining basis and holding period.
§ 1.367(d)-1 Transfers of intangible property to foreign corporations.
§ 1.367(d)-1T Transfers of intangible property to foreign corporations (temporary).
§ 1.367(e)-0 Outline of §§ 1.367(e)-1 and 1.367(e)-2.
§ 1.367(e)-1 Distributions described in section 367(e)(1).
§ 1.367(e)-2 Distributions described in section 367(e)(2).
Special Rule; Definitions

§ 1.368-1 Purpose and scope of exception of reorganization exchanges.
§ 1.368-2 Definition of terms.
§ 1.368-3 Records to be kept and information to be filed with returns.
Insolvency Reorganizations
Carryovers
§ 1.381(a)-1 General rule relating to carryovers in certain corporate acquisitions.
§ 1.381(b)-1 Operating rules applicable to carryovers in certain corporate acquisitions.
§ 1.381(c)(1)-1 Net operating loss carryovers in certain corporate acquisitions.
§ 1.381(c)(1)-2 Net operating loss carryovers; two or more dates of distribution or transfer in the taxable year.
§ 1.381(c)(2)-1 Earnings and profits.
§ 1.381(c)(3)-1 Capital loss carryovers.
§ 1.381(c)(4)-1 Method of accounting.
§ 1.381(c)(5)-1 Inventory method.
§ 1.381(c)(6)-1 Depreciation method.
§ 1.381(c)(8)-1 Installment method.
§ 1.381(c)(9)-1 Amortization of bond discount or premium.
§ 1.381(c)(10)-1 Deferred exploration and development expenditures.
§ 1.381(c)(11)-1 Contributions to pension plan, employees' annuity plans, and stock bonus and profit-sharing plans.
§ 1.381(c)(12)-1 Recovery of bad debts, prior taxes, or delinquency amounts.
§ 1.381(c)(13)-1 Involuntary conversions.
§ 1.381(c)(14)-1 Dividend carryover to personal holding company.
§ 1.381(c)(15)-1 Indebtedness of certain personal holding companies.
§ 1.381(c)(16)-1 Obligations of distributor or transferor corporation.
§ 1.381(c)(17)-1 Deficiency dividend of personal holding company.
§ 1.381(c)(18)-1 Depletion on extraction of ores or minerals from the waste or residue of prior mining.
§ 1.381(c)(19)-1 Charitable contribution carryovers in certain acquisitions.
§ 1.381(c)(20)-1 Carryforward of disallowed business interest.
§ 1.381(c)(21)-1 Pre-1954 adjustments resulting from change in method of accounting.
§ 1.381(c)(22)-1 Successor life insurance company.
§ 1.381(c)(23)-1 Investment credit carryovers in certain corporate acquisitions.
§ 1.381(c)(24)-1 Work incentive program credit carryovers in certain corporate acquisitions.
§ 1.381(c)(25)-1 Deficiency dividend of a qualified investment entity.
§ 1.381(c)(26)-1 Credit for employment of certain new employees.
§ 1.381(d)-1 Operations loss carryovers of life insurance companies.
§ 1.382-1 Table of contents.
§ 1.382-1T Table of contents (temporary).

§ 1.382-2 General rules for ownership change.
§ 1.382-2T Definition of ownership change under section 382, as amended by the Tax Reform Act of 1986 (temporary).
§ 1.382-3 Definitions and rules relating to a 5-percent shareholder.
§ 1.382-4 Constructive ownership of stock.
§ 1.382-5 Section 382 limitation.
§ 1.382-6 Allocation of income and loss to periods before and after the change date for purposes of section 382.
§ 1.382-7 Built-in gains and losses.
§ 1.382-8 Controlled groups.
§ 1.382-9 Special rules under section 382 for corporations under the jurisdiction of a court in a title 11 or similar case.
§ 1.382-10 Special rules for determining time and manner of acquisition of an interest in a loss corporation.
§ 1.382-11 Reporting requirements.
§ 1.382-12 Determination of adjusted Federal long-term rate.
§ 1.383-0 Effective date.
§ 1.383-1 Special limitations on certain capital losses and excess credits.
§ 1.383-2 Limitations on certain capital losses and excess credits in computing alternative minimum tax. [Reserved]
§ 1.385-1 General provisions.
§ 1.385-3 Certain distributions of debt instruments and similar transactions.
§ 1.385-4 Treatment of consolidated groups.
§§ 1.386-1.400 [Reserved]
Deferred Compensation, Etc.
Pension, Profit-Sharing, Stock Bonus Plans, etc.
§ 1.401-0 Scope and definitions.
§ 1.401-1 Qualified pension, profit-sharing, and stock bonus plans.
§ 1.401-2 Impossibility of diversion under the trust instrument.
§ 1.401-3 Requirements as to coverage.
§§ 1.401-4-1.401-5 [Reserved]
§ 1.401-6 Termination of a qualified plan.
§ 1.401-7 Forfeitures under a qualified pension plan.
§ 1.401-8 [Reserved]
§ 1.401-9 Face-amount certificates—nontransferable annuity contracts.
§ 1.401-10 Definitions relating to plans covering self-employed individuals.
§ 1.401-11-1.401.13 [Reserved]
§ 1.401-14 Inclusion of medical benefits for retired employees in qualified pension or annuity plans.

§ 1.401(a)-1	Post-ERISA qualified plans and qualified trusts; in general.
§ 1.401(a)-2	Impossibility of diversion under qualified plan or trust.
§ 1.401(a)-4	Optional forms of benefit (before 1994).
§ 1.401(a)-11	Qualified joint and survivor annuities.
§ 1.401(a)-12	Mergers and consolidations of plans and transfers of plan assets.
§ 1.401(a)-13	Assignment or alienation of benefits.
§ 1.401(a)-14	Commencement of benefits under qualified trusts.
§ 1.401(a)-15	Requirement that plan benefits are not decreased on account of certain Social Security increases.
§ 1.401(a)-16	Limitations on benefits and contributions under qualified plans.
§ 1.401(a)-19	Nonforfeitability in case of certain withdrawals.
§ 1.401(a)-20	Requirements of qualified joint and survivor annuity and qualified preretirement survivor annuity.
§ 1.401(a)-21	Rules relating to the use of an electronic medium to provide applicable notices and to make participant elections.
§ 1.401(a)-30	Limit on elective deferrals.
§ 1.401(a)-50	Puerto Rican trusts; election to be treated as a domestic trust.
§ 1.401(a)(2)-1	Refund of mistaken employer contributions and withdrawal liability payments to multiemployer plans.
§ 1.401(a)(4)-0	Table of contents.
§ 1.401(a)(4)-1	Nondiscrimination requirements of section 401(a)(4).
§ 1.401(a)(4)-2	Nondiscrimination in amount of employer contributions under a defined contribution plan.
§ 1.401(a)(4)-3	Nondiscrimination in amount of employer-provided benefits under a defined benefit plan.
§ 1.401(a)(4)-4	Nondiscriminatory availability of benefits, rights, and features.
§ 1.401(a)(4)-5	Plan amendments and plan terminations.
§ 1.401(a)(4)-6	Contributory defined benefit plans.
§ 1.401(a)(4)-7	Imputation of permitted disparity.
§ 1.401(a)(4)-8	Cross-testing.
§ 1.401(a)(4)-9	Plan aggregation and restructuring.
§ 1.401(a)(4)-10	Testing of former employees.
§ 1.401(a)(4)-11	Additional rules.
§ 1.401(a)(4)-12	Definitions.
§ 1.401(a)(4)-13	Effective dates and fresh-start rules.
§ 1.401(a)(5)-1	Special rules relating to nondiscrimination requirements.
§ 1.401(a)(9)-0	Required minimum distributions; table of contents.
§ 1.401(a)(9)-1	Minimum distribution requirement in general.
§ 1.401(a)(9)-2	Distributions commencing during an employee's lifetime.

§ 1.401(a)(9)-3 Death before required beginning date.
§ 1.401(a)(9)-4 Determination of the designated beneficiary.
§ 1.401(a)(9)-5 Required minimum distributions from defined contribution plans.
§ 1.401(a)(9)-6 Required minimum distributions for defined benefit plans and annuity contracts.
§ 1.401(a)(9)-7 Rollovers and transfers.
§ 1.401(a)(9)-8 Special rules.
§ 1.401(a)(9)-9 Life expectancy and Uniform Lifetime tables.
§ 1.401(a)(17)-1 Limitation on annual compensation.
§ 1.401(a)(26)-0 Table of contents.
§ 1.401(a)(26)-1 Minimum participation requirements.
§ 1.401(a)(26)-2 Minimum participation rule.
§ 1.401(a)(26)-3 Rules applicable to a defined benefit plan's prior benefit structure.
§ 1.401(a)(26)-4 Testing former employees.
§ 1.401(a)(26)-5 Employees who benefit under a plan.
§ 1.401(a)(26)-6 Excludable employees.
§ 1.401(a)(26)-7 Testing methods.
§ 1.401(a)(26)-8 Definitions.
§ 1.401(a)(26)-9 Effective dates and transition rules.
§ 1.401(a)(31)-1 Requirement to offer direct rollover of eligible rollover distributions; questions and answers.
§ 1.401(a)(35)-1 Diversification requirements for certain defined contribution plans.
§ 1.401(b)-1 Certain retroactive changes in plan.
§ 1.401(f)-1 Certain custodial accounts and annuity contracts.
§ 1.401(k)-0 Table of contents.
§ 1.401(k)-1 Certain cash or deferred arrangements.
§ 1.401(k)-2 ADP test.
§ 1.401(k)-3 Safe harbor requirements.
§ 1.401(k)-4 SIMPLE 401(k) plan requirements.
§ 1.401(k)-5 Special rules for mergers, acquisitions and similar events. [Reserved]
§ 1.401(k)-6 Definitions.
§ 1.401(l)-0 Table of contents.
§ 1.401(l)-1 Permitted disparity in employer-provided contributions or benefits.
§ 1.401(l)-2 Permitted disparity for defined contribution plans.
§ 1.401(l)-3 Permitted disparity for defined benefit plans.
§ 1.401(l)-4 Special rules for railroad plans.
§ 1.401(l)-5 Overall permitted disparity limits.
§ 1.401(l)-6 Effective dates and transition rules.
§ 1.401(m)-0 Table of contents.

§ 1.401(m)-1 Employee contributions and matching contributions.
§ 1.401(m)-2 ACP test.
§ 1.401(m)-3 Safe harbor requirements.
§ 1.401(m)-4 Special rules for mergers, acquisitions and similar events. [Reserved]
§ 1.401(m)-5 Definitions.
§ 1.402(a)-1 Taxability of beneficiary under a trust which meets the requirements of section 401(a).
§ 1.402(a)(5)-1T Rollovers of partial distributions from qualified trusts and annuities. (Temporary)
§ 1.402(b)-1 Treatment of beneficiary of a trust not exempt under section 501(a).
§ 1.402(c)-1 Taxability of beneficiary of certain foreign situs trusts.
§ 1.402(c)-2 Eligible rollover distributions.
§ 1.402(d)-1 Effect of section 402(d).
§ 1.402(e)-1 [Reserved]
§ 1.402(f)-1 Required explanation of eligible rollover distributions; questions and answers.
§ 1.402(g)-0 Limitation on exclusion for elective deferrals, table of contents.
§ 1.402(g)-1 Limitation on exclusion for elective deferrals.
§ 1.402(g)-2 Increased limit for catch-up contributions.
§ 1.402(g)(3)-1 Employer contributions to purchase a section 403(b) contract under a salary reduction agreement.
§ 1.402A-1 Designated Roth Accounts.
§ 1.402A-2 Reporting and recordkeeping requirements with respect to designated Roth accounts.
§ 1.403(a)-1 Taxability of beneficiary under a qualified annuity plan.
§ 1.403(a)-2 Capital gains treatment for certain distributions.
§ 1.403(b)-0 Taxability under an annuity purchased by a section 501(c)(3) organization or a public school.
§ 1.403(b)-1 General overview of taxability under an annuity contract purchased by a section 501(c)(3) organization or a public school.
§ 1.403(b)-2 Definitions.
§ 1.403(b)-3 Exclusion for contributions to purchase section 403(b) contracts.
§ 1.403(b)-4 Contribution limitations.
§ 1.403(b)-5 Nondiscrimination rules.
§ 1.403(b)-6 Timing of distributions and benefits.
§ 1.403(b)-7 Taxation of distributions and benefits.
§ 1.403(b)-8 Funding.
§ 1.403(b)-9 Special rules for church plans.
§ 1.403(b)-10 Miscellaneous provisions.

§ 1.403(b)-11 Applicable dates.
§ 1.403(c)-1 Taxability of beneficiary under a nonqualified annuity.
§ 1.404(a)-1 Contributions of an employer to an employees' trust or annuity plan and compensation under a deferred payment plan; general rule.
§ 1.404(a)-1T Questions and answers relating to deductibility of deferred compensation and deferred benefits for employees. (Temporary)
§ 1.404(a)-2 Information to be furnished by employer claiming deductions; taxable years ending before December 31, 1971.
§ 1.404(a)-3 Contributions of an employer to or under an employees' pension trust or annuity plan that meets the requirements of section 401(a); application of section 404(a)(1).
§ 1.404(a)-4-1.404(a)-7 [Reserved]
§ 1.404(a)-8 Contributions of an employer under an employees' annuity plan which meets the requirements of section 401(a); application of section 404(a)(2).
§ 1.404(a)-9 [Reserved]
§ 1.404(a)-10 Profit-sharing plan of an affiliated group; application of section 404(a)(3)(B).
§ 1.404(a)-11 Trusts created or organized outside the United States; application of section 404(a)(4).
§ 1.404(a)-12 Contributions of an employer under a plan that does not meet the requirements of section 401(a); application of section 404(a)(5).
§ 1.404(a)-13 Contributions of an employer where deductions are allowable under section 404(a) (1) or (2) and also under section 404(a)(3); application of section 404(a)(7).
§ 1.404(a)-14 Special rules in connection with the Employee Retirement Income Security Act of 1974.
§ 1.404(b)-1 Method of contribution, etc., having the effect of a plan; effect of section 404(b).
§ 1.404(b)-1T Method or arrangement of contributions, etc., deferring the receipt of compensation or providing for deferred benefits. (Temporary)
§ 1.404(c)-1 Certain negotiated plans; effect of section 404(c).
§ 1.404(d)-1T Questions and answers relating to deductibility of deferred compensation and deferred benefits for independent contractors. (Temporary)
§ 1.404(e)-1 [Reserved]
§ 1.404(e)-1A Contributions on behalf of a self-employed individual to or under a qualified pension, annuity, or profit-sharing plan.
§ 1.404(g)-1 Deduction of employer liability payments.
§ 1.404(k)-1T Questions and answers relating to the deductibility of certain dividend

distributions. (Temporary)
§ 1.404(k)-3 Disallowance of deduction for reacquisition payments.
§ 1.406-1 Treatment of certain employees of foreign subsidiaries as employees of the domestic corporation.
§ 1.407-1 Treatment of certain employees of domestic subsidiaries engaged in business outside the United States as employees of the domestic parent corporation.
§ 1.408-1 General rules.
§ 1.408-2 Individual retirement accounts.
§ 1.408-3 Individual retirement annuities.
§ 1.408-4 Treatment of distributions from individual retirement arrangements.
§ 1.408-5 Annual reports by trustees or issuers.
§ 1.408-6 Disclosure statements for individual retirement arrangements.
§ 1.408-7 Reports on distributions from individual retirement plans.
§ 1.408-8 Distribution requirements for individual retirement plans.
§ 1.408-11 Net income calculation for returned or recharacterized IRA contributions.
§ 1.408(q)-1 Deemed IRAs in qualified employer plans.
§ 1.408A-0 Roth IRAs; table of contents.
§ 1.408A-1 Roth IRAs in general.
§ 1.408A-2 Establishing Roth IRAs.
§ 1.408A-3 Contributions to Roth IRAs.
§ 1.408A-4 Converting amounts to Roth IRAs.
§ 1.408A-5 Recharacterized contributions.
§ 1.408A-6 Distributions.
§ 1.408A-7 Reporting.
§ 1.408A-8 Definitions.
§ 1.408A-9 Effective date.
§ 1.408A-10 Coordination between designated Roth accounts and Roth IRAs.
§ 1.409-1 Retirement bonds.
§ 1.409A-0 Table of contents.
§ 1.409A-1 Definitions and covered plans.
§ 1.409A-2 Deferral elections.
§ 1.409A-3 Permissible payments.
§ 1.409A-4 Calculation of income inclusion. [Reserved]
§ 1.409A-5 Funding. [Reserved]
§ 1.409A-6 Application of section 409A and effective dates.
§ 1.409(p)-1 Prohibited allocation of securities in an S corporation.
§ 1.409(p)-1T Prohibited allocations of securities in an S corporation (temporary).
Deferred Compensation, Etc.

Pension, Profit-Sharing, Stock Bonus Plans, etc.

§ 1.410(a)-1 Minimum participation standards; general rules.
§ 1.410(a)-2 Effective dates.
§ 1.410(a)-3 Minimum age and service conditions.
§ 1.410(a)-3T Minimum age and service conditions (temporary).
§ 1.410(a)-4 Maximum age conditions and time of participation.
§ 1.410(a)-5 Year of service; break in service.
§ 1.410(a)-6 Amendment of break in service rules; Transition period.
§ 1.410(a)-7 Elapsed time.
§ 1.410(a)-8 Five consecutive 1-year breaks in service, transitional rules under the Retirement Equity Act of 1984.
§ 1.410(a)-8T Year of service; break in service (temporary).
§ 1.410(a)-9 Maternity and paternity absence.
§ 1.410(a)-9T Elapsed time (temporary).
§ 1.410(b)-0 Table of contents.
§ 1.410(b)-1 [Reserved]
§ 1.410(b)-2 Minimum coverage requirements (after 1993).
§ 1.410(b)-3 Employees and former employees who benefit under a plan.
§ 1.410(b)-4 Nondiscriminatory classification test.
§ 1.410(b)-5 Average benefit percentage test.
§ 1.410(b)-6 Excludable employees.
§ 1.410(b)-7 Definition of plan and rules governing plan disaggregation and aggregation.
§ 1.410(b)-8 Additional rules.
§ 1.410(b)-9 Definitions.
§ 1.410(b)-10 Effective dates and transition rules.
§ 1.410(d)-1 Election by church to have participation, vesting, funding, etc. provisions apply.
§ 1.411(a)-1 Minimum vesting standards; general rules.
§ 1.411(a)-2 Effective dates.
§ 1.411(a)-3 Vesting in employer-derived benefits.
§ 1.411(a)-3T Vesting in employer-derived benefits (temporary).
§ 1.411(a)-4 Forfeitures, suspensions, etc.
§ 1.411(a)-4T Forfeitures, suspensions, etc. (temporary).
§ 1.411(a)-5 Service included in determination of nonforfeitable percentage.
§ 1.411(a)-6 Year of service; hours of service; breaks in service.
§ 1.411(a)-7 Definitions and special rules.
§ 1.411(a)-8 Changes in vesting schedule.
§ 1.411(a)-8T Changes in vesting schedule (temporary).
§ 1.411(a)-9 [Reserved]
§ 1.411(a)-11 Restriction and valuation of distributions.

§ 1.411(a)(13)-1 Statutory hybrid plans.
§ 1.411(b)-1 Accrued benefit requirements.
§ 1.411(b)(5)-1 Reduction in rate of benefit accrual under a defined benefit plan.
§ 1.411(c)-1 Allocation of accrued benefits between employer and employee contributions.
§ 1.411(d)-1 Coordination of vesting and discrimination requirements. [Reserved]
§ 1.411(d)-2 Termination or partial termination; discontinuance of contributions.
§ 1.411(d)-3 Section 411(d)(6) protected benefits.
§ 1.411(d)-4 Section 411(d)(6) protected benefits.
§ 1.411(d)-5 [Reserved]
§ 1.412(b)-2 Amortization of experience gains in connection with certain group deferred annuity contracts.
§ 1.412(c)(1)-1 Determinations to be made under funding method—terms defined.
§ 1.412(c)(1)-2 Shortfall method.
§ 1.412(c)(1)-3 Applying the minimum funding requirements to restored plans.
§ 1.412(c)(2)-1 Valuation of plan assets; reasonable actuarial valuation methods.
§ 1.412(c)(3)-1 Reasonable funding methods.
§ 1.412(c)(3)-2 Effective dates and transitional rules relating to reasonable funding methods.
§ 1.412(i)-1 Certain insurance contract plans.
§ 1.413-1 Special rules for collectively bargained plans.
§ 1.413-2 Special rules for plans maintained by more than one employer.
§ 1.414(b)-1 Controlled group of corporations.
§ 1.414(c)-1 Commonly controlled trades or businesses.
§ 1.414(c)-2 Two or more trades or businesses under common control.
§ 1.414(c)-3 Exclusion of certain interests or stock in determining control.
§ 1.414(c)-4 Rules for determining ownership.
§ 1.414(c)-5 Certain tax-exempt organizations.
§ 1.414(c)-6 Effective date.
§ 1.414(e)-1 Definition of church plan.
§ 1.414(f)-1 Definition of multiemployer plan.
§ 1.414(g)-1 Definition of plan administrator.
§ 1.414(l)-1 Mergers and consolidations of plans or transfers of plan assets.
§ 1.414(q)-1 Highly compensated employee.
§ 1.414(q)-1T Highly compensated employee (temporary).
§ 1.414(r)-0 Table of contents.
§ 1.414(r)-1 Requirements applicable to qualified separate lines of business.
§ 1.414(r)-2 Line of business.
§ 1.414(r)-3 Separate line of business.
§ 1.414(r)-4 Qualified separate line of business—fifty-employee and notice requirements.
§ 1.414(r)-5 Qualified separate line of business—administrative scrutiny requirement—safe

harbors.
§ 1.414(r)-6 Qualified separate line of business—administrative scrutiny requirement—individual determinations.
§ 1.414(r)-7 Determination of the employees of an employer's qualified separate lines of business.
§ 1.414(r)-8 Separate application of section 410(b).
§ 1.414(r)-9 Separate application of section 401(a)(26).
§ 1.414(r)-10 Separate application of section 129(d)(8). [Reserved]
§ 1.414(r)-11 Definitions and special rules.
§ 1.414(s)-1 Definition of compensation.
§ 1.414(v)-1 Catch-up contributions.
§ 1.414(v)-2 Catch-up contributions required to be designated Roth contributions under section 414(v)(7).
§ 1.414(w)-1 Permissible withdrawals from eligible automatic contribution arrangements.
§ 1.415(a)-1 General rules with respect to limitations on benefits and contributions under qualified plans.
§ 1.415(b)-1 Limitations for defined benefit plans.
§ 1.415(b)-2 Multiple annuity starting dates. [Reserved]
§ 1.415(c)-1 Limitations for defined contribution plans.
§ 1.415(c)-2 Compensation.
§ 1.415(d)-1 Cost-of-living adjustments.
§ 1.415(f)-1 Aggregating plans.
§ 1.415(g)-1 Disqualification of plans and trusts.
§ 1.415(j)-1 Limitation year.
§ 1.416-1 Questions and answers on top-heavy plans.
§ 1.417(a)(3)-1 Required explanation of qualified joint and survivor annuity and qualified preretirement survivor annuity.
§ 1.417(e)-1 Restrictions and valuations of distributions from plans subject to sections 401(a)(11) and 417.
§ 1.417(e)-1T Restrictions and valuations of distributions from plans subject to sections 401(a)(11) and 417. (Temporary)
§ 1.419-1T Treatment of welfare benefit funds. (Temporary)
§ 1.419A-1T Qualified asset account limitation of additions to account. (Temporary)
§ 1.419A-2T Qualified asset account limitation for collectively bargained funds. (Temporary)
§ 1.419A(f)(6)-1 Exception for 10 or more employer plan.
§ 1.420-1 Significant reduction in retiree health coverage during the cost maintenance period.
Certain Stock Options

§ 1.421-1 Meaning and use of certain terms.
§ 1.421-2 General rules.
§ 1.422-1 Incentive stock options; general rules.
§ 1.422-2 Incentive stock options defined.
§ 1.422-3 Stockholder approval of incentive stock option plans.
§ 1.422-4 $100,000 limitation for incentive stock options.
§ 1.422-5 Permissible provisions.
§ 1.423-1 Applicability of section 421(a).
§ 1.423-2 Employee stock purchase plan defined.
§ 1.424-1 Definitions and special rules applicable to statutory options.
§§ 1.425-1.429 [Reserved]
§ 1.430(a)-1 Determination of minimum required contribution.
§ 1.430(d)-1 Determination of target normal cost and funding target.
§ 1.430(f)-1 Effect of prefunding balance and funding standard carryover balance.
§ 1.430(g)-1 Valuation date and valuation of plan assets.
§ 1.430(h)(2)-1 Interest rates used to determine present value.
§ 1.430(h)(3)-1 Mortality tables used to determine present value.
§ 1.430(h)(3)-2 Plan-specific substitute mortality tables used to determine present value.
§ 1.430(i)-1 Special rules for plans in at-risk status.
§ 1.430(j)-1 Payment of minimum required contributions.
§ 1.431(c)(6)-1 Mortality tables used to determine current liability.
§ 1.432 [Reserved]
§ 1.432(e)(9)-1 Benefit suspensions for multiemployer plans in critical and declining status.
§ 1.433(h)(3)-1 Mortality tables used to determine current liability.
§§ 1.434-1.435 [Reserved]
§ 1.436-0 Table of contents.
§ 1.436-1 Limits on benefits and benefit accruals under single employer defined benefit plans.
§§ 1.437-1.440 [Reserved]
Deferred Compensation, Etc. (Continued)
Accounting Periods
§ 1.441-0 Table of contents.
§ 1.441-1 Period for computation of taxable income.
§ 1.441-2 Election of taxable year consisting of 52-53 weeks.
§ 1.441-3 Taxable year of a personal service corporation.
§ 1.441-4 Effective date.
§ 1.442-1 Change of annual accounting period.
§ 1.443-1 Returns for periods of less than 12 months.
§ 1.444-0T Table of contents (temporary).

§ 1.444-1T Election to use a taxable year other than the required taxable year (temporary).
§ 1.444-2T Tiered structure (temporary).
§ 1.444-3T Manner and time of making section 444 election (temporary).
§ 1.444-4 Tiered structure.
Methods of Accounting
Methods of Accounting in General
§ 1.446-1 General rule for methods of accounting.
§ 1.446-2 Method of accounting for interest.
§ 1.446-3 Notional principal contracts.
§ 1.446-3T Notional principal contracts (temporary).
§ 1.446-4 Hedging transactions.
§ 1.446-5 Debt issuance costs.
§ 1.446-6 REMIC inducement fees.
§ 1.446-7 Net asset value method for certain money market fund shares.
§ 1.448-1 Limitation on the use of the cash receipts and disbursements method of accounting.
§ 1.448-1T Limitation on the use of the cash receipts and disbursements method of accounting (temporary).
§ 1.448-2 Limitation on the use of the cash receipts and disbursements method of accounting for taxable years beginning after December 31, 2017.
§ 1.448-3 Nonaccrual of certain amounts by service providers.
Taxable Year for Which Items of Gross Income Included
§ 1.451-1 General rule for taxable year of inclusion.
§ 1.451-2 Constructive receipt of income.
§ 1.451-3 Timing of income inclusion for taxpayers with an applicable financial statement using an accrual method of accounting.
§ 1.451-4 Accounting for redemption of trading stamps and coupons.
§ 1.451-6 Election to include crop insurance proceeds in gross income in the taxable year following the taxable year of destruction or damage.
§ 1.451-7 Election relating to livestock sold on account of drought.
§ 1.451-8 Advance payments for goods, services, and certain other items.
§§ 1.453-1-1.453-2 [Reserved]
§ 1.453-3 Purchaser evidences of indebtedness payable on demand or readily tradable.
§§ 1.453-4-1.453-8 [Reserved]
§ 1.453-9 Gain or loss on disposition of installment obligations.
§ 1.453-10 [Reserved]
§ 1.453-11 Installment obligations received from a liquidating corporation.
§ 1.453-12 Allocation of unrecaptured section 1250 gain reported on the installment method.
§ 1.453A-0 Table of contents.

§ 1.453A-1 Installment method of reporting income by dealers on personal property.
§ 1.453A-2 [Reserved]
§ 1.453A-3 Requirements for adoption of or change to installment method by dealers in personal property.
§ 1.454-1 Obligations issued at discount.
§ 1.455-1 Treatment of prepaid subscription income.
§ 1.455-2 Scope of election under section 455.
§ 1.455-3 Method of allocation.
§ 1.455-4 Cessation of taxpayer's liability.
§ 1.455-5 Definitions and other rules.
§ 1.455-6 Time and manner of making election.
§ 1.456-1 Treatment of prepaid dues income.
§ 1.456-2 Scope of election under section 456.
§ 1.456-3 Method of allocation.
§ 1.456-4 Cessation of liability or existence.
§ 1.456-5 Definitions and other rules.
§ 1.456-6 Time and manner of making election.
§ 1.456-7 Transitional rule.
§ 1.457-1 General overviews of section 457.
§ 1.457-2 Definitions.
§ 1.457-3 General introduction to eligible plans.
§ 1.457-4 Annual deferrals, deferral limitations, and deferral agreements under eligible plans.
§ 1.457-5 Individual limitation for combined annual deferrals under multiple eligible plans
§ 1.457-6 Timing of distributions under eligible plans.
§ 1.457-7 Taxation of Distributions Under Eligible Plans.
§ 1.457-8 Funding rules for eligible plans.
§ 1.457-9 Effect on eligible plans when not administered in accordance with eligibility requirements.
§ 1.457-10 Miscellaneous provisions.
§ 1.457-11 Tax treatment of participants if plan is not an eligible plan.
§ 1.457-12 Effective dates.
§ 1.458-1 Exclusion for certain returned magazines, paperbacks, or records.
§ 1.458-2 Manner of and time for making election.
§ 1.460-0 Outline of regulations under section 460.
§ 1.460-1 Long-term contracts.
§ 1.460-2 Long-term manufacturing contracts.
§ 1.460-3 Long-term construction contracts.
§ 1.460-4 Methods of accounting for long-term contracts.
§ 1.460-5 Cost allocation rules.

§ 1.460-6 Look-back method.

Taxable Year for Which Deductions Taken

§ 1.461-0 Table of contents.
§ 1.461-1 General rule for taxable year of deduction.
§ 1.461-2 Contested liabilities.
§ 1.461-3 Prepaid interest. [Reserved]
§ 1.461-4 Economic performance.
§ 1.461-5 Recurring item exception.
§ 1.461-6 Economic performance when certain liabilities are assigned or are extinguished by the establishment of a fund.
§ 1.465-1T Aggregation of certain activities (temporary).
§ 1.465-8 General rules; interest other than that of a creditor.
§ 1.465-20 Treatment of amounts borrowed from certain persons and amounts protected against loss.
§ 1.465-27 Qualified nonrecourse financing.
§ 1.466-1 Method of accounting for the redemption cost of qualified discount coupons.
§ 1.466-2 Special protective election for certain taxpayers.
§ 1.466-3 Manner of and time for making election under section 466.
§ 1.466-4 Manner of and time for making election under section 373(c) of the Revenue Act of 1978.
§ 1.467-0 Table of contents.
§ 1.467-1 Treatment of lessors and lessees generally.
§ 1.467-2 Rent accrual for section 467 rental agreements without adequate interest.
§ 1.467-3 Disqualified leasebacks and long-term agreements.
§ 1.467-4 Section 467 loan.
§ 1.467-5 Section 467 rental agreements with variable interest.
§ 1.467-6 Section 467 rental agreements with contingent payments. [Reserved]
§ 1.467-7 Section 467 recapture and other rules relating to dispositions and modifications.
§ 1.467-8 Automatic consent to change to constant rental accrual for certain rental agreements.
§ 1.467-9 Effective/applicability dates and automatic method changes for certain agreements.
§ 1.468A-0 Nuclear decommissioning costs; table of contents.
§ 1.468A-1 Nuclear decommissioning costs; general rules.
§ 1.468A-2 Treatment of electing taxpayer.
§ 1.468A-3 Ruling amount.
§ 1.468A-4 Treatment of nuclear decommissioning fund.
§ 1.468A-5 Nuclear decommissioning fund—miscellaneous provisions.
§ 1.468A-6 Disposition of an interest in a nuclear power plant.

§ 1.468A-7 Manner of and time for making election.
§ 1.468A-8 Special transfers to qualified funds pursuant to section 468A(f).
§ 1.468A-9 Applicability dates.
§ 1.468B Designated settlement funds.
§ 1.468B-0 Table of contents.
§ 1.468B-1 Qualified settlement funds.
§ 1.468B-2 Taxation of qualified settlement funds and related administrative requirements.
§ 1.468B-3 Rules applicable to the transferor.
§ 1.468B-4 Taxability of distributions to claimants.
§ 1.468B-5 Effective dates and transition rules applicable to qualified settlement funds.
§ 1.468B-6 Escrow accounts, trusts, and other funds used during deferred exchanges of like-kind property under section 1031(a)(3).
§ 1.468B-7 Pre-closing escrows.
§ 1.468B-8 Contingent-at-closing escrows. [Reserved]
§ 1.468B-9 Disputed ownership funds.
§ 1.469-0 Table of contents.
§ 1.469-1 General rules.
§ 1.469-1T General rules (temporary).
§ 1.469-2 Passive activity loss.
§ 1.469-2T Passive activity loss (temporary).
§ 1.469-3 Passive activity credit.
§ 1.469-3T Passive activity credit (temporary).
§ 1.469-4 Definition of activity.
§ 1.469-4T Definition of activity (temporary).
§ 1.469-5 Material participation.
§ 1.469-5T Material participation (temporary).
§ 1.469-6 Treatment of losses upon certain dispositions. [Reserved]
§ 1.469-7 Treatment of self-charged items of interest income and deduction.
§ 1.469-8 Application of section 469 to trust, estates, and their beneficiaries. [Reserved]
§ 1.469-9 Rules for certain rental real estate activities.
§ 1.469-10 Application of section 469 to publicly traded partnerships.
§ 1.469-11 Applicability date and transition rules.

Inventories

§ 1.471-1 Need for inventories.
§ 1.471-2 Valuation of inventories.
§ 1.471-3 Inventories at cost.
§ 1.471-4 Inventories at cost or market, whichever is lower.
§ 1.471-5 Inventories by dealers in securities.
§ 1.471-6 Inventories of livestock raisers and other farmers.

§ 1.471-7 Inventories of miners and manufacturers.
§ 1.471-8 Inventories of retail merchants.
§ 1.471-9 Inventories of acquiring corporations.
§ 1.471-10 Applicability of long-term contract methods.
§ 1.471-11 Inventories of manufacturers.
§ 1.472-1 Last-in, first-out inventories.
§ 1.472-2 Requirements incident to adoption and use of LIFO inventory method.
§ 1.472-3 Time and manner of making election.
§ 1.472-4 Adjustments to be made by taxpayer.
§ 1.472-5 Revocation of election.
§ 1.472-6 Change from LIFO inventory method.
§ 1.472-7 Inventories of acquiring corporations.
§ 1.472-8 Dollar-value method of pricing LIFO inventories.
§ 1.475-0 Table of contents.
§§ 1.475(a)-1-1.475(a)-2 [Reserved]
§ 1.475(a)-3 Acquisition by a dealer of a security with a substituted basis.
§ 1.475(a)-4 Valuation safe harbor.
§ 1.475(b)-1 Scope of exemptions from mark-to-market requirement.
§ 1.475(b)-2 Exemptions—identification requirements.
§ 1.475(b)-3 [Reserved]
§ 1.475(c)-1 Definitions—dealer in securities.
§ 1.475(c)-2 Definitions—security.
§ 1.475(d)-1 Character of gain or loss.
§ 1.475(g)-1 Effective dates.
Adjustments
§ 1.481-1 Adjustments in general.
§ 1.481-2 Limitation on tax.
§ 1.481-3 Adjustments attributable to pre-1954 years where change was not initiated by taxpayer.
§ 1.481-4 Adjustments taken into account with consent.
§ 1.481-5 Eligible terminated S corporation.
§ 1.481-6 Effective dates; applicability dates.
§ 1.482-0 Outline of regulations under section 482.
§ 1.482-1 Allocation of income and deductions among taxpayers.
§ 1.482-1T Allocation of income and deductions among taxpayers (temporary).
§ 1.482-2 Determination of taxable income in specific situations.
§ 1.482-3 Methods to determine taxable income in connection with a transfer of tangible property.
§ 1.482-4 Methods to determine taxable income in connection with a transfer of intangible

property.
§ 1.482-5 Comparable profits method.
§ 1.482-6 Profit split method.
§ 1.482-7 Methods to determine taxable income in connection with a cost sharing arrangement.
§ 1.482-8 Examples of the best method rule.
§ 1.482-9 Methods to determine taxable income in connection with a controlled services transaction.
§ 1.483-1 Interest on certain deferred payments.
§ 1.483-2 Unstated interest.
§ 1.483-3 Test rate of interest applicable to a contract.
§ 1.483-4 Contingent payments.
Regulations Applicable for Taxable Years Beginning on or Before April 21, 1993
§ 1.482-1A Allocation of income and deductions among taxpayers.
§ 1.482-2A Determination of taxable income in specific situations.
Regulations applicable on or before January 4, 2009.
§ 1.482-7A Methods to determine taxable income in connection with a cost sharing arrangement.
§§ 1.484-1.500 [Reserved]
Exempt Organizations
§ 1.501(a)-1 Exemption from taxation.
§ 1.501(c)(2)-1 Corporations organized to hold title to property for exempt organizations.
§ 1.501(c)(3)-1 Organizations organized and operated for religious, charitable, scientific, testing for public safety, literary, or educational purposes, or for the prevention of cruelty to children or animals.
§ 1.501(c)(4)-1 Civic organizations and local associations of employees.
§ 1.501(c)(5)-1 Labor, agricultural, and horticultural organizations.
§ 1.501(c)(6)-1 Business leagues, chambers of commerce, real estate boards, and boards of trade.
§ 1.501(c)(7)-1 Social clubs.
§ 1.501(c)(8)-1 Fraternal beneficiary societies.
§ 1.501(c)(9)-1 Voluntary employees' beneficiary associations, in general.
§ 1.501(c)(9)-2 Membership in a voluntary employees' beneficiary association; employees; voluntary association of employees.
§ 1.501(c)(9)-3 Voluntary employees' beneficiary associations; life, sick, accident, or other benefits.
§ 1.501(c)(9)-4 Voluntary employees' beneficiary associations; inurement.
§ 1.501(c)(9)-5 Voluntary employees' beneficiary associations; recordkeeping requirements.

§ 1.501(c)(9)-6 Voluntary employees' beneficiary associations; benefits includible in gross income.
§ 1.501(c)(9)-7 Voluntary employees' beneficiary associations; section 3(4) of ERISA.
§ 1.501(c)(9)-8 Voluntary employees' beneficiary associations; effective date.
§ 1.501(c)(10)-1 Certain fraternal beneficiary societies.
§ 1.501(c)(12)-1 Local benevolent life insurance associations, mutual irrigation and telephone companies, and like organizations.
§ 1.501(c)(13)-1 Cemetery companies and crematoria.
§ 1.501(c)(14)-1 Credit unions and mutual insurance funds.
§ 1.501(c)(15)-1 Mutual insurance companies or associations.
§ 1.501(c)(16)-1 Corporations organized to finance crop operations.
§ 1.501(c)(17)-1 Supplemental unemployment benefit trusts.
§ 1.501(c)(17)-2 General rules.
§ 1.501(c)(17)-3 Relation to other sections of the Code.
§ 1.501(c)(18)-1 Certain funded pension trusts.
§ 1.501(c)(19)-1 War veterans organizations.
§ 1.501(c)(21)-1 Black lung trusts—certain terms.
§ 1.501(c)(21)-2 Same—trust instrument.
§ 1.501(c)(29)-1 CO-OP Health Insurance Issuers.
§ 1.501(d)-1 Religious and apostolic associations or corporations.
§ 1.501(e)-1 Cooperative hospital service organizations.
§ 1.501(h)-1 Application of the *expenditure test* to expenditures to influence legislation; introduction.
§ 1.501(h)-2 Electing the expenditure test.
§ 1.501(h)-3 Lobbying or grass roots expenditures normally in excess of ceiling amount.
§ 1.501(r)-0 Outline of regulations.
§ 1.501(r)-1 Definitions.
§ 1.501(r)-2 Failures to satisfy section 501(r).
§ 1.501(r)-3 Community health needs assessments.
§ 1.501(r)-4 Financial assistance policy and emergency medical care policy.
§ 1.501(r)-5 Limitation on charges.
§ 1.501(r)-6 Billing and collection.
§ 1.501(r)-7 Effective/applicability dates.
§ 1.502-1 Feeder organizations.
§ 1.503(a)-1 Denial of exemption to certain organizations engaged in prohibited transactions.
§ 1.503(b)-1 Prohibited transactions.
§ 1.503(c)-1 Future status of organizations denied exemption.
§ 1.503(d)-1 Cross references.

§ 1.503(e)-1 Special rules.
§ 1.503(e)-2 Requirements.
§ 1.503(e)-3 Effective dates.
§ 1.503(f)-1 Loans by employers who are prohibited from pledging assets.
§ 1.504-1 Attempts to influence legislation; certain organizations formerly described in section 501(c)(3) denied exemption.
§ 1.504-2 Certain transfers made to avoid section 504(a).
§ 1.505(c)-1T Questions and answers relating to the notification requirement for recognition of exemption under paragraphs (9), (17) and (20) of Section 501(c) (temporary).
§ 1.506-1 Organizations required to notify Commissioner of intent to operate under section 501(c)(4).

Private Foundations

§ 1.507-1 General rule.
§ 1.507-2 Special rules; transfer to, or operation as, public charity.
§ 1.507-3 Special rules; transferee foundations.
§ 1.507-4 Imposition of tax.
§ 1.507-5 Aggregate tax benefit; in general.
§ 1.507-6 Substantial contributor defined.
§ 1.507-7 Value of assets.
§ 1.507-8 Liability in case of transfers.
§ 1.507-9 Abatement of taxes.
§ 1.508-1 Notices.
§ 1.508-2 Disallowance of certain charitable, etc., deductions.
§ 1.508-3 Governing instruments.
§ 1.508-4 Effective date.
§ 1.509(a)-1 Definition of private foundation.
§ 1.509(a)-2 Exclusion for certain organizations described in section 170(b)(1)(A).
§ 1.509(a)-3 Broadly, publicly supported organizations.
§ 1.509(a)-4 Supporting organizations.
§ 1.509(a)-5 Special rules of attribution.
§ 1.509(a)-6 Classification under section 509(a).
§ 1.509(a)-7 Reliance by grantors and contributors to section 509(a) (1), (2), and (3) organizations.
§ 1.509(b)-1 Continuation of private foundation status.
§ 1.509(c)-1 Status of organization after termination of private foundation status.
§ 1.509(d)-1 Definition of support.
§ 1.509(e)-1 Definition of gross investment income.

Taxation of Business Income of Certain Exempt Organizations

§ 1.511-1 Imposition and rates of tax.
§ 1.511-2 Organizations subject to tax.
§ 1.511-3 Provisions generally applicable to the tax on unrelated business income.
§ 1.511-4 Minimum tax for tax preferences.
§ 1.512(a)-1 Definition.
§ 1.512(a)-2 Definition applicable to taxable years beginning before December 13, 1967.
§ 1.512(a)-3 [Reserved]
§ 1.512(a)-4 Special rules applicable to war veterans organizations.
§ 1.512(a)-5 Questions and answers relating to the unrelated business taxable income of organizations described in paragraphs (9) or (17) of section 501(c).
§ 1.512(a)-6 Special rule for organizations with more than one unrelated trade or business.
§ 1.512(b)-1 Modifications.
§ 1.512(c)-1 Special rules applicable to partnerships; in general.
§ 1.513-1 Definition of unrelated trade or business.
§ 1.513-2 Definition of unrelated trade or business applicable to taxable years beginning before December 13, 1967.
§ 1.513-3 Qualified convention and trade show activity.
§ 1.513-4 Certain sponsorship not unrelated trade or business.
§ 1.513-5 Certain bingo games not unrelated trade or business.
§ 1.513-6 Certain hospital services not unrelated trade or business.
§ 1.513-7 Travel and tour activities of tax exempt organizations.
§ 1.514(a)-1 Unrelated debt-financed income and deductions.
§ 1.514(a)-2 Business lease rents and deductions for taxable years beginning before January 1, 1970.
§ 1.514(b)-1 Definition of debt-financed property.
§ 1.514(c)-1 Acquisition indebtedness.
§ 1.514(c)-2 Permitted allocations under section 514(c)(9)(E).
§ 1.514(d)-1 Basis of debt-financed property acquired in corporate liquidation.
§ 1.514(e)-1 Allocation rules.
§ 1.514(f)-1 Definition of business lease.
§ 1.514(g)-1 Business lease indebtedness.

Farmers' Cooperatives

§ 1.521-1 Farmers' cooperative marketing and purchasing associations; requirements for exemption under section 521.
§ 1.522-1 Tax treatment of farmers' cooperative marketing and purchasing associations exempt under section 521.
§ 1.522-2 Manner of taxation of cooperative associations subject to section 522.
§ 1.522-3 Patronage dividends, rebates, or refunds; treatment as to cooperative associations entitled to tax treatment under section 522.

§ 1.522-4 Taxable years affected.
§ 1.527-1 Political organizations; generally.
§ 1.527-2 Definitions.
§ 1.527-3 Exempt function income.
§ 1.527-4 Special rules for computation of political organization taxable income.
§ 1.527-5 Activities resulting in gross income to an individual or political organization.
§ 1.527-6 Inclusion of certain amounts in the gross income of an exempt organization which is not a political organization.
§ 1.527-7 Newsletter funds.
§ 1.527-8 Effective date; filing requirements; and miscellaneous provisions.
§ 1.527-9 Special rule for principal campaign committees.

Homeowners Associations

§ 1.528-1 Homeowners associations.
§ 1.528-2 Organized and operated to provide for the acquisition, construction, management, maintenance and care of association property.
§ 1.528-3 Association property.
§ 1.528-4 Substantiality test.
§ 1.528-5 Source of income test.
§ 1.528-6 Expenditure test.
§ 1.528-7 Inurement.
§ 1.528-8 Election to be treated as a homeowners association.
§ 1.528-9 Exempt function income.
§ 1.528-10 Special rules for computation of homeowners association taxable income and tax.

Qualified ABLE Programs

§ 1.529A-0 Table of contents.
§ 1.529A-1 Exempt status of qualified ABLE program and definitions.
§ 1.529A-2 Qualified ABLE program.
§ 1.529A-3 Tax treatment.
§ 1.529A-4 Gift, estate, and generation-skipping transfer taxes.
§ 1.529A-5 Reporting of the establishment of and contributions to an ABLE account.
§ 1.529A-6 Reporting of distributions from and termination of an ABLE account.
§ 1.529A-7 Electronic furnishing of statements to designated beneficiaries and contributors.
§ 1.529A-8 Applicability dates and transition relief.

Corporations Used To Avoid Income Tax on Shareholders

§ 1.531-1 Imposition of tax.
§ 1.532-1 Corporations subject to accumulated earnings tax.
§ 1.533-1 Evidence of purpose to avoid income tax.
§ 1.533-2 Statement required.
§ 1.534-1 Burden of proof as to unreasonable accumulations generally.

§ 1.534-2 Burden of proof as to unreasonable accumulations in cases before the Tax Court.
§ 1.534-3 Jeopardy assessments in Tax Court cases.
§ 1.535-1 Definition.
§ 1.535-2 Adjustments to taxable income.
§ 1.535-3 Accumulated earnings credit.
§ 1.536-1 Short taxable years.
§ 1.537-1 Reasonable needs of the business.
§ 1.537-2 Grounds for accumulation of earnings and profits.
§ 1.537-3 Business of the corporation.
Personal Holding Companies
§ 1.541-1 Imposition of tax.
§ 1.542-1 General rule.
§ 1.542-2 Gross income requirement.
§ 1.542-3 Stock ownership requirement.
§ 1.542-4 Corporations filing consolidated returns.
§ 1.543-1 Personal holding company income.
§ 1.543-2 Limitation on gross income and personal holding company income in transactions involving stocks, securities, and commodities.
§ 1.544-1 Constructive ownership.
§ 1.544-2 Constructive ownership by reason of indirect ownership.
§ 1.544-3 Constructive ownership by reason of family and partnership ownership.
§ 1.544-4 Options.
§ 1.544-5 Convertible securities.
§ 1.544-6 Constructive ownership as actual ownership.
§ 1.544-7 Option rule in lieu of family and partnership rule.
§ 1.545-1 Definition.
§ 1.545-2 Adjustments to taxable income.
§ 1.545-3 Special adjustment to taxable income.
§ 1.547-1 General rule.
§ 1.547-2 Requirements for deficiency dividends.
§ 1.547-3 Claim for credit or refund.
§ 1.547-4 Effect on dividends paid deduction.
§ 1.547-5 Deduction denied in case of fraud or wilful failure to file timely return.
§ 1.547-6 Suspension of statute of limitations and stay of collection.
§ 1.547-7 Effective date.
Foreign Personal Holding Companies
§ 1.551-1 General rule.
§ 1.551-2 Amount included in gross income.
Deduction for Dividends Paid

§ 1.561-1 Deduction for dividends paid.
§ 1.561-2 When dividends are considered paid.
§ 1.562-1 Dividends for which the dividends paid deduction is allowable.
§ 1.562-2 Preferential dividends.
§ 1.562-3 Distributions by a member of an affiliated group.
§ 1.563-1 Accumulated earnings tax.
§ 1.563-2 Personal holding company tax.
§ 1.563-3 Dividends considered as paid on last day of taxable year.
§ 1.564-1 Dividend carryover.
§ 1.565-1 General rule.
§ 1.565-2 Limitations.
§ 1.565-3 Effect of consent.
§ 1.565-4 Consent dividends and other distributions.
§ 1.565-5 Nonresident aliens and foreign corporations.
§ 1.565-6 Definitions.

Banking Institutions

§ 1.581-1 Banks.
§ 1.581-2 Mutual savings banks, building and loan associations, and cooperative banks.
§ 1.581-3 Definition of bank prior to September 28, 1962.
§ 1.582-1 Bad debts, losses, and gains with respect to securities held by financial institutions.
§ 1.584-1 Common trust funds.
§ 1.584-2 Income of participants in common trust fund.
§ 1.584-3 Computation of common trust fund income.
§ 1.584-4 Admission and withdrawal of participants in the common trust fund.
§ 1.584-5 Returns of banks with respect to common trust funds.
§ 1.584-6 Net operating loss deduction.
§ 1.585-1 Reserve for losses on loans of banks.
§ 1.585-2 Addition to reserve.
§ 1.585-3 Special rules.
§ 1.585-4 Reorganizations and asset acquisitions.
§ 1.585-5 Denial of bad debt reserves for large banks.
§ 1.585-6 Recapture method of changing from the reserve method of section 585.
§ 1.585-7 Elective cut-off method of changing from the reserve method of section 585.
§ 1.585-8 Rules for making and revoking elections under §§ 1.585-6 and 1.585-7.

Mutual Savings Banks, Etc.

§ 1.591-1 Deduction for dividends paid on deposits.
§ 1.592-1 Repayment of certain loans by mutual savings banks, building and loan associations, and cooperative banks.
§ 1.594-1 Mutual savings banks conducting life insurance business.

§ 1.596-1 Limitation on dividends received deduction.
§ 1.597-1 Definitions.
§ 1.597-2 Taxation of FFA.
§ 1.597-3 Other rules.
§ 1.597-4 Bridge Banks and Agency Control.
§ 1.597-5 Taxable Transfers.
§ 1.597-6 Limitation on collection of federal income tax.
§ 1.597-7 Effective/applicability dates.
§ 1.597-8 Transitional rules for Federal financial assistance.
Bank Affiliates
§ 1.601-1 Special deduction for bank affiliates.
Natural Resources
§ 1.611-0 Regulatory authority.
§ 1.611-1 Allowance of deduction for depletion.
§ 1.611-2 Rules applicable to mines, oil and gas wells, and other natural deposits.
§ 1.611-3 Rules applicable to timber.
§ 1.611-4 Depletion as a factor in computing earnings and profits for dividend purposes.
§ 1.611-5 Depreciation of improvements.
§ 1.612-1 Basis for allowance of cost depletion.
§ 1.612-2 Allowable capital additions in case of mines.
§ 1.612-3 Depletion; treatment of bonus and advanced royalty.
§ 1.612-4 Charges to capital and to expense in case of oil and gas wells.
§ 1.612-5 Charges to capital and to expense in case of geothermal wells.
§ 1.613-1 Percentage depletion; general rule.
§ 1.613-2 Percentage depletion rates.
§ 1.613-3 Gross income from the property.
§ 1.613-4 Gross income from the property in the case of minerals other than oil and gas.
§ 1.613-5 Taxable income from the property.
§ 1.613-6 Statement to be attached to return when depletion is claimed on percentage basis.
§ 1.613-7 Application of percentage depletion rates provided in section 613(b) to certain taxable years ending in 1954.
§ 1.613A-0 Limitations on percentage depletion in the case of oil and gas wells; table of contents.
§ 1.613A-1 Post-1974 limitations on percentage depletion in case of oil and gas wells; general rule.
§ 1.613A-2 Exemption for certain domestic gas wells.
§ 1.613A-3 Exemption for independent producers and royalty owners.
§ 1.613A-4 Limitations on application of § 1.613A-3 exemption.
§ 1.613A-5 Election under section 613A(c)(4).

§ 1.613A-6 Recordkeeping requirements.
§ 1.613A-7 Definitions.
§ 1.614-0 Introduction.
§ 1.614-1 Definition of property.
§ 1.614-2 Election to aggregate separate operating mineral interests under section 614(b) prior to its amendment by Revenue Act of 1964.
§ 1.614-3 Rules relating to separate operating mineral interests in the case of mines.
§ 1.614-4 Treatment under the Internal Revenue Code of 1939 with respect to separate operating mineral interests for taxable years beginning before January 1, 1964, in the case of oil and gas wells.
§ 1.614-5 Special rules as to aggregating nonoperating mineral interests.
§ 1.614-6 Rules applicable to basis, holding period, and abandonment losses where mineral interests have been aggregated or combined.
§ 1.614-7 Extension of time for performing certain acts.
§ 1.614-8 Elections with respect to separate operating mineral interests for taxable years beginning after December 31, 1963, in the case of oil and gas wells.
§ 1.615-1 Pre-1970 exploration expenditures.
§ 1.615-2 Deduction of pre-1970 exploration expenditures in the year paid or incurred.
§ 1.615-3 Election to defer pre-1970 exploration expenditures.
§ 1.615-4 Limitation of amount deductible.
§ 1.615-5 Time for making election with respect to returns due on or before May 2, 1960.
§ 1.615-6 Election to deduct under section 615.
§ 1.615-7 Effect of transfer of mineral property.
§ 1.615-8 Termination of section 615.
§ 1.615-9 Notification under Tax Reform Act of 1969.
§ 1.616-1 Development expenditures.
§ 1.616-2 Election to defer.
§ 1.616-3 Time for making election with respect to returns due on or before May 2, 1960.
§ 1.617-1 Exploration expenditures.
§ 1.617-2 Limitation on amount deductible.
§ 1.617-3 Recapture of exploration expenditures.
§ 1.617-4 Treatment of gain from disposition of certain mining property.
§ 1.617-5 Effective/applicability date.

Sales and Exchanges

§ 1.631-1 Election to consider cutting as sale or exchange.
§ 1.631-2 Gain or loss upon the disposal of timber under cutting contract.
§ 1.631-3 Gain or loss upon the disposal of coal or domestic iron ore with a retained economic interest.
§ 1.632-1 Tax on sale of oil or gas properties.

Mineral Production Payments
§ 1.636-1 Treatment of production payments as loans.
§ 1.636-2 Production payments retained in leasing transactions.
§ 1.636-3 Definitions.
§ 1.636-4 Effective dates of section 636.
Continental Shelf Areas
§ 1.638-1 Continental Shelf areas.
§ 1.638-2 Effective date.
§§ 1.639-1.640 [Reserved]
Estates, Trusts, Beneficiaries, and Decedents
Estates, Trusts, and Beneficiaries
§ 1.641 [Reserved]
§ 1.641(a)-0 Scope of subchapter J.
§ 1.641(a)-1 Imposition of tax; application of tax.
§ 1.641(a)-2 Gross income of estates and trusts.
§ 1.641(b)-1 Computation and payment of tax; deductions and credits of estates and trusts.
§ 1.641(b)-2 Filing of returns and payment of the tax.
§ 1.641(b)-3 Termination of estates and trusts.
§ 1.641(c)-0 Table of contents.
§ 1.641(c)-1 Electing small business trust.
§ 1.642(a)(1)-1 Partially tax-exempt interest.
§ 1.642(a)(2)-1 Foreign taxes.
§ 1.642(a)(3)-1 Dividends received by an estate or trust.
§ 1.642(a)(3)-2 Time of receipt of dividends by beneficiary.
§ 1.642(a)(3)-3 Cross reference.
§ 1.642(b)-1 Deduction for personal exemption.
§ 1.642(c)-0 Effective dates.
§ 1.642(c)-1 Unlimited deduction for amounts paid for a charitable purpose.
§ 1.642(c)-2 Unlimited deduction for amounts permanently set aside for a charitable purpose.
§ 1.642(c)-3 Adjustments and other special rules for determining unlimited charitable contributions deduction.
§ 1.642(c)-4 Nonexempt private foundations.
§ 1.642(c)-5 Definition of pooled income fund.
§ 1.642(c)-6 Valuation of a remainder interest in property transferred to a pooled income fund.
§ 1.642(c)-7 Transitional rules with respect to pooled income funds.
§ 1.642(d)-1 Net operating loss deduction.
§ 1.642(e)-1 Depreciation and depletion.

§ 1.642(f)-1 Amortization deductions.
§ 1.642(g)-1 Disallowance of double deductions; in general.
§ 1.642(g)-2 Deductions included.
§ 1.642(h)-1 Unused loss carryovers on termination of an estate or trust.
§ 1.642(h)-2 Excess deductions on termination of an estate or trust.
§ 1.642(h)-3 Meaning of “beneficiaries succeeding to the property of the estate or trust”.
§ 1.642(h)-4 Allocation.
§ 1.642(h)-5 Examples.
§ 1.642(i)-1 Certain distributions by cemetery perpetual care funds.
§ 1.642(i)-2 Definitions.
§ 1.643(a)-0 Distributable net income; deduction for distributions; in general.
§ 1.643(a)-1 Deduction for distributions.
§ 1.643(a)-2 Deduction for personal exemption.
§ 1.643(a)-3 Capital gains and losses.
§ 1.643(a)-4 Extraordinary dividends and taxable stock dividends.
§ 1.643(a)-5 Tax-exempt interest.
§ 1.643(a)-6 Income of foreign trust.
§ 1.643(a)-7 Dividends.
§ 1.643(a)-8 Certain distributions by charitable remainder trusts.
§ 1.643(b)-1 Definition of income.
§ 1.643(b)-2 Dividends allocated to corpus.
§ 1.643(c)-1 Definition of “beneficiary”.
§ 1.643(d)-1 Definition of “foreign trust created by a United States person”.
§ 1.643(d)-2 Illustration of the provisions of section 643.
§ 1.643(f)-1 Treatment of multiple trusts.
§ 1.643(h)-1 Distributions by certain foreign trusts through intermediaries.

Pooled Income Fund Actuarial Tables Applicable Before June 1, 2023

§ 1.642(c)-6A Valuation of charitable remainder interests for which the valuation date is before June 1, 2023.

Election to Treat Trust as Part of an Estate

§ 1.645-1 Election by certain revocable trusts to be treated as part of estate.

Trusts Which Distribute Current Income Only

§ 1.651(a)-1 Simple trusts; deduction for distributions; in general.
§ 1.651(a)-2 Income required to be distributed currently.
§ 1.651(a)-3 Distribution of amounts other than income.
§ 1.651(a)-4 Charitable purposes.
§ 1.651(a)-5 Estates.
§ 1.651(b)-1 Deduction for distributions to beneficiaries.
§ 1.652(a)-1 Simple trusts; inclusion of amounts in income of beneficiaries.

§ 1.652(a)-2 Distributions in excess of distributable net income.
§ 1.652(b)-1 Character of amounts.
§ 1.652(b)-2 Allocation of income items.
§ 1.652(b)-3 Allocation of deductions.
§ 1.652(c)-1 Different taxable years.
§ 1.652(c)-2 Death of individual beneficiaries.
§ 1.652(c)-3 Termination of existence of other beneficiaries.
§ 1.652(c)-4 Illustration of the provisions of sections 651 and 652.
Estates and Trusts Which May Accumulate Income or Which Distribute Corpus
§ 1.661(a)-1 Estates and trusts accumulating income or distributing corpus; general.
§ 1.661(a)-2 Deduction for distributions to beneficiaries.
§ 1.661(b)-1 Character of amounts distributed; in general.
§ 1.661(b)-2 Character of amounts distributed when charitable contributions are made.
§ 1.661(c)-1 Limitation on deduction.
§ 1.661(c)-2 Illustration of the provisions of section 661.
§ 1.662(a)-1 Inclusion of amounts in gross income of beneficiaries of estates and complex trusts; general.
§ 1.662(a)-2 Currently distributable income.
§ 1.662(a)-3 Other amounts distributed.
§ 1.662(a)-4 Amounts used in discharge of a legal obligation.
§ 1.662(b)-1 Character of amounts; when no charitable contributions are made.
§ 1.662(b)-2 Character of amounts; when charitable contributions are made.
§ 1.662(c)-1 Different taxable years.
§ 1.662(c)-2 Death of individual beneficiary.
§ 1.662(c)-3 Termination of existence of other beneficiaries.
§ 1.662(c)-4 Illustration of the provisions of sections 661 and 662.
§ 1.663(a)-1 Special rules applicable to sections 661 and 662; exclusions; gifts, bequests, etc.
§ 1.663(a)-2 Charitable, etc., distributions.
§ 1.663(a)-3 Denial of double deduction.
§ 1.663(b)-1 Distributions in first 65 days of taxable year; scope.
§ 1.663(b)-2 Election.
§ 1.663(c)-1 Separate shares treated as separate trusts or as separate estates; in general.
§ 1.663(c)-2 Rules of administration.
§ 1.663(c)-3 Applicability of separate share rule to certain trusts.
§ 1.663(c)-4 Applicability of separate share rule to estates and qualified revocable trusts.
§ 1.663(c)-5 Examples.
§ 1.663(c)-6 Effective dates.
§ 1.664-1 Charitable remainder trusts.

§ 1.664-2 Charitable remainder annuity trust.
§ 1.664-3 Charitable remainder unitrust.
§ 1.664-4 Calculation of the fair market value of the remainder interest in a charitable remainder unitrust.

Treatment of Excess Distributions of Trusts Applicable to Taxable Years Beginning Before January 1, 1969

§ 1.665(a)-0 Excess distributions by trusts; scope of subpart D.
§ 1.665(a)-1 Undistributed net income.
§ 1.665(b)-1 Accumulation distributions of trusts other than certain foreign trusts; in general.
§ 1.665(b)-2 Exclusions from accumulation distributions in the case of trusts (other than a foreign trust created by a U.S. person).
§ 1.665(b)-3 Exclusions under section 663(a)(1).
§ 1.665(c)-1 Accumulation distributions of certain foreign trusts; in general.
§ 1.665(c)-2 Indirect payments to the beneficiary.
§ 1.665(d)-1 Taxes imposed on the trust.
§ 1.665(e)-1 Preceding taxable year.
§ 1.665(e)-2 Application of separate share rule.
§ 1.666(a)-1A Amount allocated.
§ 1.666(b)-1A Total taxes deemed distributed.
§ 1.666(c)-1A Pro rata portion of taxes deemed distributed.
§ 1.666(c)-2A Illustration of the provisions of section 666 (a), (b), and (c).
§ 1.666(d)-1A Information required from trusts.
§ 1.666(a)-1 Amount allocated.
§ 1.666(b)-1 Total taxes deemed distributed.
§ 1.666(c)-1 Pro rata portion of taxes deemed distributed.
§ 1.666(c)-2 Illustration of the provisions of section 666.
§ 1.667-1 Denial of refund to trusts.
§ 1.667(a)-1A [Reserved]
§ 1.667(b)-1A Authorization of credit to beneficiary for taxes imposed on the trust.
§ 1.668(a)-1A Amounts treated as received in prior taxable years; inclusion in gross income.
§ 1.668(a)-2A Allocation among beneficiaries; in general.
§ 1.668(a)-3A Determination of tax.
§ 1.668(b)-1A Tax on distribution.
§ 1.668(b)-2A Special rules applicable to section 668.
§ 1.668(b)-3A Computation of the beneficiary's income and tax for a prior taxable year.
§ 1.668(b)-4A Information requirements with respect to beneficiary.
§ 1.668(a)-1 Amounts treated as received in prior taxable years; inclusion in gross income.
§ 1.668(a)-2 Allocation among beneficiaries; in general.
§ 1.668(a)-3 Excluded amounts.

§ 1.668(a)-4 Tax attributable to throwback.
§ 1.668(b)-1 Credit for taxes paid by the trust.
§ 1.668(b)-2 Illustration of the provisions of subpart D.
§ 1.669(a)-1 Limitation on tax.
§ 1.669(a)-2 Rules applicable to section 669 computations.
§ 1.669(a)-3 Tax computed by the exact throwback method.
§ 1.669(a)-4 Tax attributable to short-cut throwback method.
§ 1.669(b)-1 Information requirements.
§ 1.669(b)-2 Manner of exercising election.
Unitrust Actuarial Tables Applicable Before June 1, 2023.
§ 1.664-4A Valuation of charitable remainder interests for which the valuation date is before June 1, 2023.
Treatment of Excess Distributions of Trusts Applicable to Taxable Years Beginning on or After January 1, 1969
§ 1.665(a)-0A Excess distributions by trusts; scope of subpart D.
§ 1.665(a)-1A Undistributed net income.
§ 1.665(b)-1A Accumulation distributions.
§ 1.665(b)-2A Special rules for accumulation distributions made in taxable years beginning before January 1, 1974.
§ 1.665(c)-1A Special rule applicable to distributions by certain foreign trusts.
§ 1.665(d)-1A Taxes imposed on the trust.
§ 1.665(e)-1A Preceding taxable year.
§ 1.665(f)-1A [Reserved]
§ 1.665(g)-1A [Reserved]
§ 1.665(g)-2A Application of separate share rule.
Grantors and Others Treated as Substantial Owners
§ 1.671-1 Grantors and others treated as substantial owners; scope.
§ 1.671-2 Applicable principles.
§ 1.671-3 Attribution or inclusion of income, deductions, and credits against tax.
§ 1.671-4 Method of reporting.
§ 1.671-5 Reporting for widely held fixed investment trusts.
§ 1.672(a)-1 Definition of adverse party.
§ 1.672(b)-1 Nonadverse party.
§ 1.672(c)-1 Related or subordinate party.
§ 1.672(d)-1 Power subject to condition precedent.
§ 1.672(f)-1 Foreign persons not treated as owners.
§ 1.672(f)-2 Certain foreign corporations.
§ 1.672(f)-3 Exceptions to general rule.
§ 1.672(f)-4 Recharacterization of purported gifts.

§ 1.672(f)-5 Special rules.
§ 1.673(a)-1 Reversionary interests; income payable to beneficiaries other than certain charitable organizations; general rule.
§ 1.673(b)-1 Income payable to charitable beneficiaries before amendment by Tax Reform Act of 1969).
§ 1.673(c)-1 Reversionary interest after income beneficiary's death.
§ 1.673(d)-1 Postponement of date specified for reacquisition.
§ 1.674(a)-1 Power to control beneficial enjoyment; scope of section 674.
§ 1.674(b)-1 Excepted powers exercisable by any person.
§ 1.674(c)-1 Excepted powers exercisable only by independent trustees.
§ 1.674(d)-1 Excepted powers exercisable by any trustee other than grantor or spouse.
§ 1.674(d)-2 Limitations on exceptions in section 674 (b), (c), and (d).
§ 1.675-1 Administrative powers.
§ 1.676(a)-1 Power to revest title to portion of trust property in grantor; general rule.
§ 1.676(b)-1 Powers exercisable only after a period of time.
§ 1.677(a)-1 Income for benefit of grantor; general rule.
§ 1.677(b)-1 Trusts for support.
§ 1.678(a)-1 Person other than grantor treated as substantial owner; general rule.
§ 1.678(b)-1 If grantor is treated as the owner.
§ 1.678(c)-1 Trusts for support.
§ 1.678(d)-1 Renunciation of power.
§ 1.679-0 Outline of major topics.
§ 1.679-1 U.S. transferor treated as owner of foreign trust.
§ 1.679-2 Trusts treated as having a U.S. beneficiary.
§ 1.679-3 Transfers.
§ 1.679-4 Exceptions to general rule.
§ 1.679-5 Pre-immigration trusts.
§ 1.679-6 Outbound migrations of domestic trusts.
§ 1.679-7 Effective dates.
Miscellaneous
§ 1.681(a)-1 Limitation on charitable contributions deductions of trusts; scope of section 681.
§ 1.681(a)-2 Limitation on charitable contributions deduction of trusts with trade or business income.
§ 1.681(b)-1 Cross reference.
§ 1.682(a)-1 Income of trust in case of divorce, etc.
§ 1.682(b)-1 Application of trust rules to alimony payments.
§ 1.682(c)-1 Definitions.
§ 1.683-1 Applicability of provisions; general rule.
§ 1.683-2 Exceptions.

§ 1.683-3 Application of the 65-day rule of the Internal Revenue Code of 1939.
§ 1.684-1 Recognition of gain on transfers to certain foreign trusts and estates.
§ 1.684-2 Transfers.
§ 1.684-3 Exceptions to general rule of gain recognition.
§ 1.684-4 Outbound migrations of domestic trusts.
§ 1.684-5 Effective/applicability dates.
Income in Respect of Decedents
§ 1.691(a)-1 Income in respect of a decedent.
§ 1.691(a)-2 Inclusion in gross income by recipients.
§ 1.691(a)-3 Character of gross income.
§ 1.691(a)-4 Transfer of right to income in respect of a decedent.
§ 1.691(a)-5 Installment obligations acquired from decedent.
§ 1.691(b)-1 Allowance of deductions and credit in respect to decedents.
§ 1.691(c)-1 Deduction for estate tax attributable to income in respect of a decedent.
§ 1.691(c)-2 Estates and trusts.
§ 1.691(d)-1 Amounts received by surviving annuitant under joint and survivor annuity contract.
§ 1.691(e)-1 Installment obligations transmitted at death when prior law applied.
§ 1.691(f)-1 Cross reference.
§ 1.692-1 Abatement of income taxes of certain members of the Armed Forces of the United States upon death.
Partners and Partnerships
§ 1.701-1 Partners, not partnership, subject to tax.
§ 1.701-2 Anti-abuse rule.
§ 1.702-1 Income and credits of partner.
§ 1.702-2 Net operating loss deduction of partner.
§ 1.702-3T 4-Year spread (temporary).
§ 1.703-1 Partnership computations.
§ 1.704-1 Partner's distributive share.
§ 1.704-1T Partner's distributive share (temporary).
§ 1.704-2 Allocations attributable to nonrecourse liabilities.
§ 1.704-3 Contributed property.
§ 1.704-4 Distribution of contributed property.
§ 1.705-1 Determination of basis of partner's interest.
§ 1.705-2 Basis adjustments coordinating sections 705 and 1032.
§ 1.706-0 Table of contents.
§ 1.706-1 Taxable years of partner and partnership.
§ 1.706-2 Certain allocable cash to as is items. [Reserved]
§ 1.706-2T Temporary regulations; question and answer under the Tax Reform Act of 1984.
§ 1.706-3 Items attributable to interest in lower-tier partnership.

§ 1.706-4 Determination of distributive share when a partner's interest varies.
§ 1.706-5 Taxable year determination.
§ 1.707-0 Table of contents.
§ 1.707-1 Transactions between partner and partnership.
§ 1.707-2 Disguised payments for services. [Reserved]
§ 1.707-3 Disguised sales of property to partnership; general rules.
§ 1.707-4 Disguised sales of property to partnership; special rules applicable to guaranteed payments, preferred returns, operating cash flow distributions, and reimbursements of preformation expenditures.
§ 1.707-5 Disguised sales of property to partnership; special rules relating to liabilities.
§ 1.707-6 Disguised sales of property by partnership to partner; general rules.
§ 1.707-7 Disguised sales of partnership interests. [Reserved]
§ 1.707-8 Disclosure of certain information.
§ 1.707-9 Effective dates and transitional rules.
§ 1.708-1 Continuation of partnership.
§ 1.709-1 Treatment of organization and syndication costs.
§ 1.709-2 Definitions.
Contributions, Distributions, and Transfers
Contributions to a Partnership
§ 1.721-1 Nonrecognition of gain or loss on contribution.
§ 1.721(c)-1 Overview, definitions, and rules of general application.
§ 1.721(c)-2 Recognition of gain on certain contributions of property to partnerships with related foreign partners.
§ 1.721(c)-3 Gain deferral method.
§ 1.721(c)-4 Acceleration events.
§ 1.721(c)-5 Acceleration event exceptions.
§ 1.721(c)-6 Procedural and reporting requirements.
§ 1.721(c)-7 Examples.
§ 1.721-2 Noncompensatory options.
§ 1.722-1 Basis of contributing partner's interest.
§ 1.723-1 Basis of property contributed to partnership.
Distributions by a Partnership
§ 1.731-1 Extent of recognition of gain or loss on distribution.
§ 1.731-2 Partnership distributions of marketable securities.
§ 1.732-1 Basis of distributed property other than money.
§ 1.732-2 Special partnership basis of distributed property.
§ 1.732-3 Corresponding adjustment to basis of assets of a distributed corporation controlled by a corporate partner.
§ 1.733-1 Basis of distributee partner's interest.

§ 1.734-1 Optional adjustment to basis of undistributed partnership property.
§ 1.734-2 Adjustment after distribution to transferee partner.
§ 1.735-1 Character of gain or loss on disposition of distributed property.
§ 1.736-1 Payments to a retiring partner or a deceased partner's successor in interest.
§ 1.737-1 Recognition of precontribution gain.
§ 1.737-2 Exceptions and special rules.
§ 1.737-3 Basis adjustments; Recovery rules.
§ 1.737-4 Anti-abuse rule.
§ 1.737-5 Effective dates.
Transfers of Interests in a Partnership
§ 1.741-1 Recognition and character of gain or loss on sale or exchange.
§ 1.742-1 Basis of transferee partner's interest.
§ 1.743-1 Optional adjustment to basis of partnership property.
Provisions Common to Part II, Subchapter K, Chapter 1 of the Code
§ 1.751-1 Unrealized receivables and inventory items.
§ 1.752-0 Table of contents.
§ 1.752-1 Treatment of partnership liabilities.
§ 1.752-2 Partner's share of recourse liabilities.
§ 1.752-2T Partner's share of recourse liabilities (temporary).
§ 1.752-3 Partner's share of nonrecourse liabilities.
§ 1.752-4 Special rules.
§ 1.752-5 Applicability dates and transition rules.
§ 1.752-6 Partnership assumption of partner's section 358(h)(3) liability after October 18, 1999, and before June 24, 2003.
§ 1.752-7 Partnership assumption of partner's § 1.752-7 liability on or after June 24, 2003.
§ 1.753-1 Partner receiving income in respect of decedent.
§ 1.754-1 Time and manner of making election to adjust basis of partnership property.
§ 1.755-1 Rules for allocation of basis.
Definitions
§ 1.761-1 Terms defined.
§ 1.761-2 Exclusion of certain unincorporated organizations from the application of all or part of subchapter K of chapter 1 of the Internal Revenue Code.
§ 1.761-3 Certain option holders treated as partners.
Effective Date for Subchapter K, Chapter 1 of the Code
§ 1.771-1 Effective date.
Life Insurance Companies
Definition; Tax Imposed
§ 1.801-1 Definitions.
§ 1.801-2 Taxable years affected.

§ 1.801-3 Definitions.
§ 1.801-4 Life insurance reserves.
§ 1.801-5 Total reserves.
§ 1.801-6 Adjustments in reserves for policy loans.
§ 1.801-7 [Reserved]
§ 1.801-8 Contracts with reserves based on segregated asset accounts.
§ 1.802(b)-1 [Reserved]
§ 1.802-2 [Reserved]
§ 1.802-3 Tax imposed on life insurance companies.
Investment Income
§ 1.804-3 Gross investment income of a life insurance company.
§ 1.804-4 Investment yield of a life insurance company.
§§ 1.806-1-1.806-2 [Reserved]
§ 1.806-3 Certain changes in reserves and assets.
§ 1.807-1 Computation of life insurance reserves.
§ 1.807-2 Cross-reference.
§ 1.807-3 Reporting of reserves.
§ 1.807-4 Adjustment for change in computing reserves.
Gain and Loss from Operations
§§ 1.809-1-1.809-3 [Reserved]
§ 1.809-4 Gross amount.
§ 1.809-5 Deductions.
§ 1.809-6 Modifications.
§ 1.810-1 [Reserved]
§ 1.810-2 Rules for certain reserves.
§ 1.811-1 Taxable years affected.
§ 1.811-2 Dividends to policyholders.
§ 1.811-3 Cross-reference.
§ 1.812-1 Taxable years affected.
§ 1.812-2 Operations loss deduction.
§ 1.812-3 Computation of loss from operations.
§ 1.812-4 Operations loss carrybacks and operations loss carryovers.
§ 1.812-5 Offset.
§ 1.812-6 New company defined.
§ 1.812-7 Application of subtitle A and subtitle F.
§ 1.812-8 Illustration of operations loss carrybacks and carryovers.
§ 1.812-9 Cross-reference.
Distributions to Shareholders
§ 1.815-1 Taxable years affected.

§ 1.815-2 Distributions to shareholders.
§ 1.815-3 Shareholders surplus account.
§ 1.815-4 Policyholders surplus account.
§ 1.815-5 Other accounts defined.
§ 1.815-6 Special rules.
§ 1.816-1 Life insurance reserves.
Miscellaneous Provisions
§ 1.817-1 Taxable years affected.
§ 1.817-2 Treatment of capital gains and losses.
§ 1.817-3 Gain on property held on December 31, 1958, and certain substituted property acquired after 1958.
§ 1.817-4 Special rules.
§ 1.817-5 Diversification requirements for variable annuity, endowment, and life insurance contracts.
§ 1.817A-0 Table of contents.
§ 1.817A-1 Certain modified guaranteed contracts.
§ 1.818-1 Taxable years affected.
§ 1.818-2 Accounting provisions.
§ 1.818-3 Amortization of premium and accrual of discount.
§ 1.818-4 [Reserved]
§ 1.818-5 Short taxable years.
§ 1.818-6 Transitional rule for change in method of accounting.
§ 1.818-7 Denial of double deductions.
§ 1.818-8 Special rules relating to consolidated returns and certain capital losses.
§ 1.819-1 Taxable years affected.
§ 1.819-2 Foreign life insurance companies.
Mutual Insurance Companies (Other Than Life and Certain Marine Insurance Companies and Other Than Fire or Flood Insurance Companies Which Operate on Basis of Perpetual Policies or Premium Deposits)
§§ 1.822-1-1.822-2 [Reserved]
§ 1.822-3 Amortization of premium and accrual of discount.
§ 1.822-4 Taxable years affected.
§ 1.822-5 Mutual insurance company taxable income.
§ 1.822-6 Real estate owned and occupied.
§ 1.822-7 Amortization of premium and accrual of discount.
§ 1.822-8 Determination of taxable investment income.
§ 1.822-9 Real estate owned and occupied.
§ 1.822-10 Amortization of premium and accrual of discount.

§ 1.822-11 Net premiums.
§ 1.822-12 Dividends to policyholders.
§ 1.826-1 Election by reciprocal underwriters and interinsurers.
§ 1.826-2 Special rules applicable to electing reciprocals.
§ 1.826-3 Attorney-in-fact of electing reciprocals.
§ 1.826-4 Allocation of expenses.
§ 1.826-5 Attribution of tax.
§ 1.826-6 Credit or refund.
§ 1.826-7 Examples.

Other Insurance Companies

§ 1.831-1 Tax on insurance companies (other than life or mutual), mutual marine insurance companies, and mutual fire insurance companies issuing perpetual policies.
§ 1.831-2 Taxable years affected.
§ 1.831-3 Tax on insurance companies (other than life or mutual), mutual marine insurance companies, mutual fire insurance companies issuing perpetual policies, and mutual fire or flood insurance companies operating on the basis of premium deposits; taxable years beginning after December 31, 1962.
§ 1.832-1 Gross income.
§ 1.832-2 Deductions.
§ 1.832-3 Taxable years affected.
§ 1.832-4 Gross income.
§ 1.832-5 Deductions.
§ 1.832-6 Policyholders of mutual fire or flood insurance companies operating on the basis of premium deposits.
§ 1.833-1 Medical loss ratio under section 833(c)(5).
§ 1.846-1 Application of discount factors.
§ 1.848-0 Outline of regulations under section 848.
§ 1.848-1 Definitions and special provisions.
§ 1.848-2 Determination of net premiums.
§ 1.848-3 Interim rules for certain reinsurance agreements.
§§ 1.849-1.850 [Reserved]

Regulated Investment Companies and Real Estate Investment Trusts

§ 1.851-1 Definition of regulated investment company.
§ 1.851-2 Limitations.
§ 1.851-3 Rules applicable to section 851(b)(3).
§ 1.851-4 Determination of status.
§ 1.851-5 Examples.
§ 1.851-6 Investment companies furnishing capital to development corporations.
§ 1.851-7 Certain unit investment trusts.

§ 1.852-1 Taxation of regulated investment companies.
§ 1.852-2 Method of taxation of regulated investment companies.
§ 1.852-3 Investment company taxable income.
§ 1.852-4 Method of taxation of shareholders of regulated investment companies.
§ 1.852-5 Earnings and profits of a regulated investment company.
§ 1.852-6 Records to be kept for purpose of determining whether a corporation claiming to be a regulated investment company is a personal holding company.
§ 1.852-7 Additional information required in returns of shareholders.
§ 1.852-8 Information returns.
§ 1.852-9 Special procedural requirements applicable to designation under section 852(b)(3)(D).
§ 1.852-10 Distributions in redemption of interests in unit investment trusts.
§ 1.852-11 Treatment of certain losses attributable to periods after October 31 of a taxable year.
§ 1.852-12 Non-RIC earnings and profits.
§ 1.853-1 Foreign tax credit allowed to shareholders.
§ 1.853-2 Effect of election.
§ 1.853-3 Notice to shareholders.
§ 1.853-4 Manner of making election.
§ 1.854-1 Limitations applicable to dividends received from regulated investment company.
§ 1.854-2 Notice to shareholders.
§ 1.854-3 Definitions.
§ 1.855-1 Dividends paid by regulated investment company after close of taxable year.

Real Estate Investment Trusts

§ 1.856-0 Revenue Act of 1978 amendments not included.
§ 1.856-1 Definition of real estate investment trust.
§ 1.856-2 Limitations.
§ 1.856-3 Definitions.
§ 1.856-4 Rents from real property.
§ 1.856-5 Interest.
§ 1.856-6 Foreclosure property.
§ 1.856-7 Certain corporations, etc., that are considered to meet the gross income requirements.
§ 1.856-8 Revocation or termination of election.
§ 1.856-9 Treatment of certain qualified REIT subsidiaries.
§ 1.856-10 Definition of real property.
§ 1.857-1 Taxation of real estate investment trusts.
§ 1.857-2 Real estate investment trust taxable income and net capital gain.
§ 1.857-3 Net income from foreclosure property.

§ 1.857-4 Tax imposed by reason of the failure to meet certain source-of-income requirements.
§ 1.857-5 Net income and loss from prohibited transactions.
§ 1.857-6 Method of taxation of shareholders of real estate investment trusts.
§ 1.857-7 Earnings and profits of a real estate investment trust.
§ 1.857-8 Records to be kept by a real estate investment trust.
§ 1.857-9 Information required in returns of shareholders.
§ 1.857-10 Information returns.
§ 1.857-11 Non-REIT earnings and profits.
§ 1.858-1 Dividends paid by a real estate investment trust after close of taxable year.
§ 1.860-1 Deficiency dividends.
§ 1.860-2 Requirements for deficiency dividends.
§ 1.860-3 Interest and additions to tax.
§ 1.860-4 Claim for credit or refund.
§ 1.860-5 Effective date.
§ 1.860A-0 Outline of REMIC provisions.
§ 1.860A-1 Effective dates and transition rules.
§ 1.860C-1 Taxation of holders of residual interests.
§ 1.860C-2 Determination of REMIC taxable income or net loss.
§ 1.860D-1 Definition of a REMIC.
§ 1.860E-1 Treatment of taxable income of a residual interest holder in excess of daily accruals.
§ 1.860E-2 Tax on transfers of residual interests to certain organizations.
§ 1.860F-1 Qualified liquidations.
§ 1.860F-2 Transfers to a REMIC.
§ 1.860F-4 REMIC reporting requirements and other administrative rules.
§ 1.860G-1 Definition of regular and residual interests.
§ 1.860G-2 Other rules.
§ 1.860G-3 Treatment of foreign persons.

Tax Based on Income from Sources Within or Without the United States

Determination of Sources of Income

§ 1.861-1 Income from sources within the United States.
§ 1.861-2 Interest.
§ 1.861-3 Dividends and income inclusions under sections 951, 951A, and 1293 and associated section 78 dividends.
§ 1.861-4 Compensation for labor or personal services.
§ 1.861-5 Rentals and royalties.
§ 1.861-6 Sale of real property.
§ 1.861-7 Sale of personal property.

§ 1.861-8 Computation of taxable income from sources within the United States and from other sources and activities.
§ 1.861-8T Computation of taxable income from sources within the United States and from other sources and activities (temporary).
§ 1.861-9 Allocation and apportionment of interest expense and rules for asset-based apportionment.
§ 1.861-9T Allocation and apportionment of interest expense (temporary).
§ 1.861-10 Special allocations of interest expense.
§ 1.861-10T Special allocations of interest expense (temporary).
§ 1.861-11 Special rules for allocating and apportioning interest expense of an affiliated group of corporations.
§ 1.861-11T Special rules for allocating and apportioning interest expense of an affiliated group of corporations (temporary).
§ 1.861-12 Characterization rules and adjustments for certain assets.
§ 1.861-12T Characterization rules and adjustments for certain assets (temporary).
§ 1.861-13 Special rules for characterization of controlled foreign corporation stock.
§ 1.861-14 Special rules for allocating and apportioning certain expenses (other than interest expense) of an affiliated group of corporations.
§ 1.861-14T Special rules for allocating and apportioning certain expenses (other than interest expense) of an affiliated group of corporations (temporary).
§ 1.861-15 Income from certain aircraft or vessels first leased on or before December 28, 1980.
§ 1.861-16 Income from certain craft first leased after December 28, 1980.
§ 1.861-17 Allocation and apportionment of research and experimental expenditures.
§ 1.861-18 Classification of, and source of gross income from, digital content transactions.
§ 1.861-19 Classification of cloud transactions.
§ 1.861-20 Allocation and apportionment of foreign income taxes.
§ 1.862-1 Income specifically from sources without the United States.
§ 1.863-0 Table of contents.
§ 1.863-0A Table of contents.
§ 1.863-1 Allocation of gross income under section 863(a).
§ 1.863-2 Allocation and apportionment of taxable income.
§ 1.863-3 Allocation and apportionment of income from certain sales of inventory.
Regulations Applicable to Taxable Years Prior to December 30, 1996
§ 1.863-3A Income from the sale of personal property derived partly from within and partly from without the United States.
§ 1.863-3AT Income from the sale of personal property derived partly from within and partly from without the United States (temporary regulations).
§ 1.863-4 Certain transportation services.

§ 1.863-6 Income from sources within a foreign country.
§ 1.863-7 Allocation of income attributable to certain notional principal contracts under section 863(a).
§ 1.863-8 Source of income derived from space and ocean activity under section 863(d).
§ 1.863-9 Source of income derived from communications activity under section 863(a), (d), and (e).
§ 1.863-10 Source of income from a qualified fails charge.
§ 1.864-1 Meaning of sale, etc.
§ 1.864-2 Trade or business within the United States.
§ 1.864-3 Rules for determining income effectively connected with U.S. business of nonresident aliens or foreign corporations.
§ 1.864-4 U.S. source income effectively connected with U.S. business.
§ 1.864-5 Foreign source income effectively connected with U.S. business.
§ 1.864-6 Income, gain, or loss attributable to an office or other fixed place of business in the United States.
§ 1.864-7 Definition of office or other fixed place of business.
§ 1.864-8T Treatment of related person factoring income (temporary).
§ 1.864(c)(8)-1 Gain or loss by foreign persons on the disposition of certain partnership interests.
§ 1.864(c)(8)-2 Notification and reporting requirements.
§ 1.865-1 Loss with respect to personal property other than stock.
§ 1.865-2 Loss with respect to stock.
§ 1.865-3 Source of gross income from sales of personal property (including inventory property) by a nonresident attributable to an office or other fixed place of business in the United States.

Nonresident Aliens and Foreign Corporations

Nonresident Alien Individuals

§ 1.871-1 Classification and manner of taxing alien individuals.
§ 1.871-2 Determining residence of alien individuals.
§ 1.871-3 Residence of alien seamen.
§ 1.871-4 Proof of residence of aliens.
§ 1.871-5 Loss of residence by an alien.
§ 1.871-6 Duty of withholding agent to determine status of alien payees.
§ 1.871-7 Taxation of nonresident alien individuals not engaged in U.S. business.
§ 1.871-8 Taxation of nonresident alien individuals engaged in U.S. business or treated as having effectively connected income.
§ 1.871-9 Nonresident alien students or trainees deemed to be engaged in U.S. business.
§ 1.871-10 Election to treat real property income as effectively connected with U.S. business.
§ 1.871-11 Gains from sale or exchange of patents, copyrights, or similar property.

§ 1.871-12 Determination of tax on treaty income.
§ 1.871-13 Taxation of individuals for taxable year of change of U.S. citizenship or residence.
§ 1.871-14 Rules relating to repeal of tax on interest of nonresident alien individuals and foreign corporations received from certain portfolio debt investments.
§ 1.871-15 Treatment of dividend equivalents.
§ 1.872-1 Gross income of nonresident alien individuals.
§ 1.872-2 Exclusions from gross income of nonresident alien individuals.
§ 1.873-1 Deductions allowed nonresident alien individuals.
§ 1.874-1 Allowance of deductions and credits to nonresident alien individuals.
§ 1.875-1 Partnerships.
§ 1.875-2 Beneficiaries of estates or trusts.
§ 1.876-1 Alien residents of Puerto Rico, Guam, American Samoa, or the Northern Mariana Islands.
§ 1.879-1 Treatment of community income.

Foreign Corporations

§ 1.881-0 Table of contents.
§ 1.881-1 Manner of taxing foreign corporations.
§ 1.881-2 Taxation of foreign corporations not engaged in U.S. business.
§ 1.881-3 Conduit financing arrangements.
§ 1.881-4 Recordkeeping requirements concerning conduit financing arrangements.
§ 1.881-5 Exception for certain possessions corporations.
§ 1.882-0 Table of contents.
§ 1.882-1 Taxation of foreign corporations engaged in U.S. business or of foreign corporations treated as having effectively connected income.
§ 1.882-2 Income of foreign corporations treated as effectively connected with U.S. business.
§ 1.882-3 Gross income of a foreign corporation.
§ 1.882-4 Allowance of deductions and credits to foreign corporations.
§ 1.882-5 Determination of interest deduction.
§ 1.883-0 Outline of major topics.
§ 1.883-1 Exclusion of income from the international operation of ships or aircraft.
§ 1.883-2 Treatment of publicly-traded corporations.
§ 1.883-3 Treatment of controlled foreign corporations.
§ 1.883-4 Qualified shareholder stock ownership test.
§ 1.883-5 Effective/applicability dates.
§ 1.884-0 Overview of regulation provisions for section 884.
§ 1.884-1 Branch profits tax.
§ 1.884-2 Special rules for termination or incorporation of a U.S. trade or business or liquidation or reorganization of a foreign corporation or its domestic subsidiary.
§ 1.884-2T Special rules for termination or incorporation of a U.S. trade or business or

liquidation or reorganization of a foreign corporation or its domestic subsidiary (temporary).

§ 1.884-3T Coordination of branch profits tax with second-tier withholding (temporary). [Reserved]

§ 1.884-4 Branch-level interest tax.

§ 1.884-5 Qualified resident.

Miscellaneous Provisions

§ 1.891 Statutory provisions; doubling of rates of tax on citizens and corporations of certain foreign countries.

§ 1.892-1T Purpose and scope of regulations (temporary regulations).

§ 1.892-2T Foreign government defined (temporary regulations).

§ 1.892-3 Income of foreign governments.

§ 1.892-3T Income of foreign governments (temporary regulations).

§ 1.892-4 Commercial activities.

§ 1.892-4T Commercial activities (temporary regulations).

§1.892-5 Controlled commercial entity.

§ 1.892-5T Controlled commercial entity (temporary regulations).

§ 1.892-6T Income of international organizations (temporary regulations).

§ 1.892-7T Relationship to other Internal Revenue Code sections (temporary regulations).

§ 1.893-1 Compensation of employees of foreign governments or international organizations.

§ 1.894-1 Income affected by treaty.

§ 1.895-1 Income derived by a foreign central bank of issue, or by Bank for International Settlements, from obligations of the United States or from bank deposits.

§ 1.897-1 Taxation of foreign investment in United States real property interests, definition of terms.

§ 1.897-2 United States real property holding corporations.

§ 1.897-3 Election by foreign corporation to be treated as a domestic corporation under section 897(i).

§ 1.897-4AT Table of contents (temporary).

§ 1.897-5 Corporate distributions.

§ 1.897-5T Corporate distributions (temporary).

§ 1.897-6T Nonrecognition exchanges applicable to corporations, their shareholders, and other taxpayers, and certain transfers of property in corporate reorganizations (temporary).

§ 1.897-7 Treatment of certain partnership interests, trusts and estates under section 897(g).

§ 1.897-7T Treatment of certain partnership interests as entirely U.S. real property interests under sections 897(g) and 1445(e) (temporary).
§ 1.897-8T Status as a U.S. real property holding corporation as a condition for electing section 897(i) pursuant to § 1.897-3 (temporary).
§ 1.897-9T Treatment of certain interest in publicly traded corporations, definition of foreign person, and foreign governments and international organizations (temporary).
§ 1.897(l)-1 Exception for interests held by foreign pension funds.
Income from Sources Without the United States
Foreign Tax Credit
§ 1.901-1 Allowance of credit for foreign income taxes.
§ 1.901-2 Income, war profits, or excess profits tax paid or accrued.
§ 1.901-2A Dual capacity taxpayers.
§ 1.901-3 Reduction in amount of foreign taxes on foreign mineral income allowed as a credit.
§ 1.901(j)-1 Denial of foreign tax credit with respect to certain foreign countries.
§ 1.901(m)-1 Definitions.
§ 1.901(m)-2 Covered asset acquisitions and relevant foreign assets.
§ 1.901(m)-3 Disqualified tax amount and aggregate basis difference carryover.
§ 1.901(m)-4 Determination of basis difference.
§ 1.901(m)-5 Basis difference taken into account.
§ 1.901(m)-6 Successor rules.
§ 1.901(m)-7 De minimis rules.
§ 1.901(m)-8 Miscellaneous.
§ 1.902-0 Outline of regulations provisions for section 902.
§ 1.902-1 Credit for domestic corporate shareholder of a foreign corporation for foreign income taxes paid by the foreign corporation.
§ 1.902-2 Treatment of deficits in post-1986 undistributed earnings and pre-1987 accumulated profits of a first- or lower-tier corporation for purposes of computing an amount of foreign taxes deemed paid under § 1.902-1.
§ 1.902-3 Credit for domestic corporate shareholder of a foreign corporation for foreign income taxes paid with respect to accumulated profits of taxable years of the foreign corporation beginning before January 1, 1987.
§ 1.902-4 Rules for distributions attributable to accumulated profits for taxable years in which a first-tier corporation was a less developed country corporation.
§ 1.903-1 Taxes in lieu of income taxes.
§ 1.904-1 Limitation on credit for foreign income taxes.
§ 1.904-2 Carryback and carryover of unused foreign tax.
§ 1.904-3 Carryback and carryover of unused foreign tax by spouses making a joint return.

§ 1.904-4 Separate application of section 904 with respect to certain categories of income.
§ 1.904-5 Look-through rules as applied to controlled foreign corporations and other entities.
§ 1.904-6 Allocation and apportionment of foreign income taxes.
§ 1.904-7 Transition rules.
§ 1.904(b)-0 Outline of regulation provisions.
§ 1.904(b)-1 Special rules for capital gains and losses.
§ 1.904(b)-2 Special rules for application of section 904(b) to alternative minimum tax foreign tax credit.
§ 1.904(b)-3 Disregard of certain dividends and deductions under section 904(b)(4).
§ 1.904(f)-0 Outline of regulation provisions.
§ 1.904(f)-1 Overall foreign loss and the overall foreign loss account.
§ 1.904(f)-2 Recapture of overall foreign losses.
§ 1.904(f)-3 Allocation of net operating losses and net capital losses.
§ 1.904(f)-4 Recapture of foreign losses out of accumulation distributions from a foreign trust.
§ 1.904(f)-5 Special rules for recapture of overall foreign losses of a domestic trust.
§ 1.904(f)-6 Transitional rule for recapture of FORI and general limitation overall foreign losses incurred in taxable years beginning before January 1, 1983, from foreign source taxable income subject to the general limitation in taxable years beginning after December 31, 1982.
§ 1.904(f)-7 Separate limitation loss and the separate limitation loss account.
§ 1.904(f)-8 Recapture of separate limitation loss accounts.
§§ 1.904(f)-9-1.904(f)-11 [Reserved]
§ 1.904(f)-12 Transition rules.
§ 1.904(g)-0 Outline of regulation provisions.
§ 1.904(g)-1 Overall domestic loss and the overall domestic loss account.
§ 1.904(g)-2 Recapture of overall domestic losses.
§ 1.904(g)-3 Ordering rules for the allocation of net operating losses, net capital losses, U.S. source losses, and separate limitation losses, and for the recapture of separate limitation losses, overall foreign losses, and overall domestic losses.
§ 1.904(i)-0 Outline of regulation provisions.
§ 1.904(i)-1 Limitation on use of deconsolidation to avoid foreign tax credit limitations.
§ 1.904(j)-0 Outline of regulation provisions.
§ 1.904(j)-1 Certain individuals exempt from foreign tax credit limitation.
§ 1.905-1 When credit for foreign income taxes may be taken.
§ 1.905-2 Conditions of allowance of credit.
§ 1.905-3 Adjustments to U.S. tax liability and to current earnings and profits as a result of a foreign tax redetermination.

§ 1.905-4 Notification of foreign tax redetermination.
§ 1.905-5 Foreign tax redeterminations of foreign corporations that relate to taxable years of the foreign corporation beginning before January 1, 2018.
§ 1.907-0 Outline of regulation provisions for section 907.
§ 1.907(a)-0 Introduction (for taxable years beginning after December 31, 1982).
§ 1.907(a)-1 Reduction in taxes paid on FOGEI (for taxable years beginning after December 31, 1982).
§ 1.907(b)-1 Reduction of creditable FORI taxes (for taxable years beginning after December 31, 1982).
§ 1.907(c)-1 Definitions relating to FOGEI and FORI (for taxable years beginning after December 31, 1982).
§ 1.907(c)-2 Section 907(c)(3) items (for taxable years beginning after December 31, 1982).
§ 1.907(c)-3 FOGEI and FORI taxes (for taxable years beginning after December 31, 1982).
§ 1.907(d)-1 Disregard of posted prices for purposes of chapter 1 of the Code (for taxable years beginning after December 31, 1982).
§ 1.907(e)-1 [Reserved]
§ 1.907(f)-1 Carryback and carryover of credits disallowed by section 907(a) (for amounts carried between taxable years that each begin after December 31, 1982).
Earned Income of Citizens or Residents of United States
§ 1.908 [Reserved]
§ 1.909-0 Outline of regulation provisions for section 909.
§ 1.909-1 Definitions and special rules.
§ 1.909-2 Splitter arrangements.
§ 1.909-3 Rules regarding related income and split taxes.
§ 1.909-4 Coordination rules.
§ 1.909-5 2011 and 2012 splitter arrangements.
§ 1.909-6 Pre-2011 foreign tax credit splitting events.
§ 1.910 [Reserved]
§ 1.911-1 Partial exclusion for earned income from sources within a foreign country and foreign housing costs.
§ 1.911-2 Qualified individuals.
§ 1.911-3 Determination of amount of foreign earned income to be excluded.
§ 1.911-4 Determination of housing cost amount eligible for exclusion or deduction.
§ 1.911-5 Special rules for married couples.
§ 1.911-6 Disallowance of deductions, exclusions, and credits.
§ 1.911-7 Procedural rules.
§ 1.911-8 Former deduction for certain expenses of living abroad.
Earned Income of Citizens of United States
§ 1.912-1 Exclusion of certain cost-of-living allowances.

§ 1.912-2 Exclusion of certain allowances of Foreign Service personnel.
§ 1.921-1T Temporary regulations providing transition rules for DISCs and FSCs.
§ 1.921-2 Foreign Sales Corporation—general rules.
§ 1.927(a)-1T Temporary regulations; definition of export property.
§ 1.927(b)-1T [Reserved]
§ 1.927(d)-1 [Reserved]
§ 1.927(d)-2T Temporary regulations; definitions and special rules relating to Foreign Sales Corporation.
Possessions of the United States
§ 1.931-1 Exclusion of certain income from sources within Guam, American Samoa, or the Northern Mariana Islands.
§ 1.932-1 Coordination of United States and Virgin Islands income taxes.
§ 1.933-1 Exclusion of certain income from sources within Puerto Rico.
§ 1.934-1 Limitation on reduction in income tax liability incurred to the Virgin Islands.
§ 1.935-1 Coordination of individual income taxes with Guam and the Northern Mariana Islands.
§ 1.936-1 Elections.
§ 1.936-4 Intangible property income in the absence of an election out.
§ 1.936-5 Intangible property income when an election out is made: Product, business presence, and contract manufacturing.
§ 1.936-6 Intangible property income when an election out is made: Cost sharing and profit split options; covered intangibles.
§ 1.936-7 Manner of making election under section 936 (h)(5); special election for export sales; revocation of election under section 936(a).
§ 1.936-8T Qualified possession source investment income (temporary). [Reserved]
§ 1.936-9T Source of qualified possession source investment income (temporary). [Reserved]
§ 1.936-10 Qualified investments.
§ 1.936-11 New lines of business prohibited.
§ 1.937-1 Bona fide residency in a possession.
§ 1.937-2 Income from sources within a possession.
§ 1.937-3 Income effectively connected with the conduct of a trade or business in a possession.
Controlled Foreign Corporations
§ 1.951-1 Amounts included in gross income of United States shareholders.
§ 1.951-2 [Reserved]
§ 1.951-3 Coordination of subpart F with foreign personal holding company provisions.
§ 1.951A-1 General provisions.
§ 1.951A-2 Tested income and tested loss.
§ 1.951A-3 Qualified business asset investment.

§ 1.951A-4 Tested interest expense and tested interest income.
§ 1.951A-5 Treatment of GILTI inclusion amounts.
§ 1.951A-6 Adjustments related to tested losses.
§ 1.951A-7 Applicability dates.
§ 1.952-1 Subpart F income defined.
§ 1.952-2 Determination of gross income and taxable income of a foreign corporation.
§ 1.953-1 Income from insurance of United States risks.
§ 1.953-2 Actual United States risks.
§ 1.953-3 Risks deemed to be United States risks.
§ 1.953-4 Taxable income to which section 953 applies.
§ 1.953-5 Corporations not qualifying as insurance companies.
§ 1.953-6 Relationship of sections 953 and 954.
§ 1.954-0 Introduction.
§ 1.954-1 Foreign base company income.
§ 1.954-2 Foreign personal holding company income.
§ 1.954-3 Foreign base company sales income.
§ 1.954-4 Foreign base company services income.
§ 1.954-5 Increase in qualified investments in less developed countries; taxable years of controlled foreign corporations beginning before January 1, 1976.
§ 1.954-6 Foreign base company shipping income.
§ 1.954-7 Increase in qualified investments in foreign base company shipping operations.
§ 1.954-8 Foreign base company oil related income.
§ 1.954(c)(6)-1 Certain cases in which section 954(c)(6) exception not available.
§ 1.955-0 Effective dates.
§ 1.955-1 Shareholder's pro rata share of amount of previously excluded subpart F income withdrawn from investment in less developed countries.
§ 1.955-2 Amount of a controlled foreign corporation's qualified investments in less developed countries.
§ 1.955-3 Election as to date of determining qualified investments in less developed countries.
§ 1.955-4 Definition of less developed country.
§ 1.955-5 Definition of less developed country corporation.
§ 1.955-6 Gross income from sources within less developed countries.
§ 1.955A-1 Shareholder's pro rata share of amount of previously excluded subpart F income withdrawn from investment in foreign base company shipping operations.
§ 1.955A-2 Amount of a controlled foreign corporation's qualified investments in foreign base company shipping operations.
§ 1.955A-3 Election as to qualified investments by related persons.
§ 1.955A-4 Election as to date of determining qualified investment in foreign base company

shipping operations.
§ 1.956-1 Shareholder's pro rata share of the average of the amounts of United States property held by a controlled foreign corporation.
§ 1.956-1T Shareholder's pro rata share of the average of the amounts of United States property held by a controlled foreign corporation (temporary).
§ 1.956-2 Definition of United States property.
§ 1.956-2T Definition of United States Property (temporary).
§ 1.956-3 Certain trade or service receivables acquired from United States persons.
§ 1.956-4 Certain rules applicable to partnerships.
§ 1.957-1 Definition of controlled foreign corporation.
§ 1.957-2 Controlled foreign corporation deriving income from insurance of United States risks.
§ 1.957-3 United States person defined.
§ 1.958-1 Direct and indirect ownership of stock.
§ 1.958-2 Constructive ownership of stock.
§ 1.959-1 Exclusion from gross income of United States persons of previously taxed earnings and profits.
§ 1.959-2 Exclusion from gross income of controlled foreign corporations of previously taxed earnings and profits.
§ 1.959-3 Allocation of distributions to earnings and profits of foreign corporations.
§ 1.959-4 Distributions to United States persons not counting as dividends.
§ 1.960-1 Overview, definitions, and computational rules for determining foreign income taxes deemed paid under section 960(a), (b), and (d).
§ 1.960-2 Foreign income taxes deemed paid under sections 960(a) and (d).
§ 1.960-3 Foreign income taxes deemed paid under section 960(b).
§ 1.960-4 Additional foreign tax credit in year of receipt of previously taxed earnings and profits.
§ 1.960-5 Credit for taxable year of inclusion binding for taxable year of exclusion.
§ 1.960-6 Overpayments resulting from increase in limitation for taxable year of exclusion.
§ 1.960-7 Applicability dates.
§ 1.961-1 Increase in basis of stock in controlled foreign corporations and of other property.
§ 1.961-2 Reduction in basis of stock in foreign corporations and of other property.
§ 1.962-1 Limitation of tax for individuals on amounts included in gross income under section 951(a).
§ 1.962-2 Election of limitation of tax for individuals.
§ 1.962-3 Treatment of actual distributions.
§ 1.963-0 Repeal of section 963; effective dates.
§ 1.963-1 [Reserved]

§ 1.963-2 Determination of the amount of the minimum distribution.
§ 1.963-3 Distributions counting toward a minimum distribution.
§ 1.963-4--1.963-5 [Reserved]
§ 1.963-6 Deficiency distribution.
§ 1.964-1 Determination of the earnings and profits of a foreign corporation.
§ 1.964-2 Treatment of blocked earnings and profits.
§ 1.964-3 Records to be provided by United States shareholders.
§ 1.964-4 Verification of certain classes of income.
§ 1.964-5 Effective date of subpart F.
§ 1.965-0 Outline of section 965 regulations.
§ 1.965-1 Overview, general rules, and definitions.
§ 1.965-2 Adjustments to earnings and profits and basis.
§ 1.965-3 Section 965(c) deductions.
§ 1.965-4 Disregard of certain transactions.
§ 1.965-5 Allowance of credit or deduction for foreign income taxes.
§ 1.965-6 Computation of foreign income taxes deemed paid and allocation and apportionment of deductions.
§ 1.965-7 Elections, payment, and other special rules.
§ 1.965-8 Affiliated groups (including consolidated groups).
§ 1.965-9 Applicability dates.

Export Trade Corporations

§ 1.970-1 Export trade corporations.
§ 1.970-2 Elections as to date of determining investments in export trade assets.
§ 1.970-3 Effective date of subpart G.
§ 1.971-1 Definitions with respect to export trade corporations.
§ 1.972-1 Consolidation of group of export trade corporations.
§ 1.981-0 Repeal of section 981; effective dates.
§ 1.981-1 Foreign law community income for taxable years beginning after December 31, 1966, and before January 1, 1977.
§ 1.981-2 Foreign law community income for taxable years beginning before January 1, 1967.
§ 1.981-3 Definitions and other special rules.

Foreign Currency Transactions

§ 1.985-0 Outline of regulation.
§ 1.985-1 Functional currency.
§ 1.985-2 Election to use the United States dollar as the functional currency of a QBU.
§ 1.985-3 United States dollar approximate separate transactions method.
§ 1.985-4 Method of accounting.
§ 1.985-5 Adjustments required upon change in functional currency.
§ 1.985-6 Transition rules for a QBU that uses the dollar approximate separate transactions

method for its first taxable year beginning in 1987.
§ 1.985-7 Adjustments required in connection with a change to DASTM.
§ 1.985-8 Special rules applicable to the European Monetary Union (conversion to euro).
§ 1.986(a)-1 Translation of foreign income taxes for purposes of the foreign tax credit.
§ 1.986(c)-1 Coordination with section 965.
§ 1.987-0 Table of contents.
§ 1.987-1 Scope, definitions, and special rules.
§ 1.987-2 Attribution of items to eligible QBUs; definition of a transfer and related rules.
§ 1.987-3 Determination of section 987 taxable income or loss of an owner of a section 987 QBU.
§ 1.987-3T Determination of section 987 taxable income or loss of an owner of a section 987 QBU (temporary).
§ 1.987-4 Determination of net unrecognized section 987 gain or loss of a section 987 QBU.
§ 1.987-5 Recognition of section 987 gain or loss.
§ 1.987-6 Character and source of section 987 gain or loss.
§ 1.987-6T Character and source of section 987 gain or loss (temporary).
§ 1.987-7 Application of the section 987 regulations to partnerships and S corporations.
§ 1.987-8 Termination of a section 987 QBU.
§ 1.987-8T Termination of a section 987 QBU (temporary).
§ 1.987-9 Recordkeeping requirements.
§ 1.987-10 Transition rules.
§ 1.987-11 Suspended section 987 loss relating to certain elections; loss-to-the-extent-of-gain rule.
§ 1.987-12 Deferral of section 987 gain or loss.
§ 1.987-13 Suspended section 987 loss upon terminations.
§ 1.987-14 Section 987 hedging transactions.
§ 1.987-15 Applicability date.
§ 1.988-0 Taxation of gain or loss from a section 988 transaction; Table of Contents.
§ 1.988-1 Certain definitions and special rules.
§ 1.988-1T Certain definitions and special rules (temporary).
§ 1.988-2 Recognition and computation of exchange gain or loss.
§ 1.988-2T Recognition and computation of exchange gain or loss (temporary).
§ 1.988-3 Character of exchange gain or loss.
§ 1.988-4 Source of gain or loss realized on a section 988 transaction.
§ 1.988-5 Section 988(d) hedging transactions.
§ 1.988-6 Nonfunctional currency contingent payment debt instruments.
§ 1.989(a)-1 Definition of a qualified business unit.
§ 1.989(b)-1 Definition of weighted average exchange rate.
Domestic International Sales Corporations

§ 1.991-1 Taxation of a domestic international sales corporation.
§ 1.992-1 Requirements of a DISC.
§ 1.992-2 Election to be treated as a DISC.
§ 1.992-3 Deficiency distributions to meet qualification requirements.
§ 1.992-4 Coordination with personal holding company provisions in case of certain produced film rents.
§ 1.993-1 Definition of qualified export receipts.
§ 1.993-2 Definition of qualified export assets.
§ 1.993-3 Definition of export property.
§ 1.993-4 Definition of producer's loans.
§ 1.993-5 Definition of related foreign export corporation.
§ 1.993-6 Definition of gross receipts.
§ 1.993-7 Definition of United States.
§ 1.994-1 Inter-company pricing rules for DISC's.
§ 1.994-2 Marginal costing rules.
§ 1.995-1 Taxation of DISC income to shareholders.
§ 1.995-2 Deemed distributions in qualified years.
§ 1.995-3 Distributions upon disqualification.
§ 1.995-4 Gain on disposition of stock in a DISC.
§ 1.995-5 Foreign investment attributable to producer's loans.
§ 1.995-6 Taxable income attributable to military property.
§ 1.996-1 Rules for actual distributions and certain deemed distributions.
§ 1.996-2 Ordering rules for losses.
§ 1.996-3 Divisions of earnings and profits.
§ 1.996-4 Subsequent effect of previous disposition of DISC stock.
§ 1.996-5 Adjustment to basis.
§ 1.996-6 Effectively connected income.
§ 1.996-7 Carryover of DISC tax attributes.
§ 1.996-8 Effect of carryback of capital loss or net operating loss to prior DISC taxable year.
§ 1.997-1 Special rules for subchapter C of the Code.
§§ 1.998-1.1000 [Reserved]

Gain or Loss on Disposition of Property

Determination of Amount of and Recognition of Gain or Loss

§ 1.1001-1 Computation of gain or loss.
§ 1.1001-2 Discharge of liabilities.
§ 1.1001-3 Modifications of debt instruments.
§ 1.1001-4 Modifications of certain derivative contracts.
§ 1.1001-5 European Monetary Union (conversion to the euro).
§ 1.1001-6 Transition from certain interbank offered rates.

§ 1.1001-7 Computation of gain or loss for digital assets.
§ 1.1002-1 Sales or exchanges.
Basis Rules of General Application
§ 1.1011-1 Adjusted basis.
§ 1.1011-2 Bargain sale to a charitable organization.
§ 1.1012-1 Basis of property.
§ 1.1012-2 Transfers in part a sale and in part a gift.
§ 1.1013-1 Property included in inventory.
§ 1.1014-0 Table of contents.
§ 1.1014-1 Basis of property acquired from a decedent.
§ 1.1014-2 Property acquired from a decedent.
§ 1.1014-3 Other basis rules.
§ 1.1014-4 Uniformity of basis; adjustment to basis.
§ 1.1014-5 Gain or loss.
§ 1.1014-6 Special rule for adjustments to basis where property is acquired from a decedent prior to his death.
§ 1.1014-7 Example applying rules of §§ 1.1014-4 through 1.1014-6 to case involving multiple interests.
§ 1.1014-8 Bequest, devise, or inheritance of a remainder interest.
§ 1.1014-9 Special rule with respect to DISC stock.
§ 1.1014-10 Basis of property acquired from a decedent must be consistent with property's Federal estate tax value.
§ 1.1015-1 Basis of property acquired by gift after December 31, 1920.
§ 1.1015-2 Transfer of property in trust after December 31, 1920.
§ 1.1015-3 Gift or transfer in trust before January 1, 1921.
§ 1.1015-4 Transfers in part a gift and in part a sale.
§ 1.1015-5 Increased basis for gift tax paid.
§ 1.1016-1 Adjustments to basis; scope of section.
§ 1.1016-2 Items properly chargeable to capital account.
§ 1.1016-3 Exhaustion, wear and tear, obsolescence, amortization, and depletion for periods since February 28, 1913.
§ 1.1016-4 Exhaustion, wear and tear, obsolescence, amortization, and depletion; periods during which income was not subject to tax.
§ 1.1016-5 Miscellaneous adjustments to basis.
§ 1.1016-6 Other applicable rules.
§ 1.1016-10 Substituted basis.
§ 1.1017-1 Basis reductions following a discharge of indebtedness.
§ 1.1019-1 Property on which lessee has made improvements.
§ 1.1020-1 Election as to amounts allowed in respect of depreciation, etc., before 1952.

§ 1.1021-1 Sale of annuities.

Common Nontaxable Exchanges

§ 1.1031-0 Table of contents.
§ 1.1031(a)-1 Property held for productive use in trade or business or for investment.
§ 1.1031(a)-2 Additional rules for exchanges of personal property.
§ 1.1031(a)-3 Definition of real property.
§ 1.1031(b)-1 Receipt of other property or money in tax-free exchange.
§ 1.1031(b)-2 Safe harbor for qualified intermediaries.
§ 1.1031(c)-1 Nonrecognition of loss.
§ 1.1031(d)-1 Property acquired upon a tax-free exchange.
§ 1.1031(d)-1T Coordination of section 1060 with section 1031 (temporary).
§ 1.1031(d)-2 Treatment of assumption of liabilities.
§ 1.1031(e)-1 Exchange of livestock of different sexes.
§ 1.1031(j)-1 Exchanges of multiple properties.
§ 1.1031(k)-1 Treatment of deferred exchanges.
§ 1.1032-1 Disposition by a corporation of its own capital stock.
§ 1.1032-2 Disposition by a corporation of stock of a controlling corporation in certain triangular reorganizations.
§ 1.1032-3 Disposition of stock or stock options in certain transactions not qualifying under any other nonrecognition provision.
§ 1.1033(a)-1 Involuntary conversions; nonrecognition of gain.
§ 1.1033(a)-2 Involuntary conversion into similar property, into money or into dissimilar property.
§ 1.1033(a)-3 Involuntary conversion of principal residence.
§ 1.1033(b)-1 Basis of property acquired as a result of an involuntary conversion.
§ 1.1033(c)-1 Disposition of excess property within irrigation project deemed to be involuntary conversion.
§ 1.1033(d)-1 Destruction or disposition of livestock because of disease.
§ 1.1033(e)-1 Sale or exchange of livestock solely on account of drought.
§ 1.1033(g)-1 Condemnation of real property held for productive use in trade or business or for investment.
§ 1.1033(h)-1 Effective date.
§ 1.1035-1 Certain exchanges of insurance policies.
§ 1.1036-1 Stock for stock of the same corporation.
§ 1.1037-1 Certain exchanges of United States obligations.
§ 1.1038-1 Reacquisitions of real property in satisfaction of indebtedness.
§ 1.1038-2 Reacquisition and resale of property used as a principal residence.
§ 1.1038-3 Election to have section 1038 apply for taxable years beginning after December 31, 1957.

§ 1.1039-1 Certain sales of low-income housing projects.
§ 1.1041-1T Treatment of transfer of property between spouses or incident to divorce (temporary).
§ 1.1041-2 Redemptions of stock.
§ 1.1042-1T Questions and answers relating to the sales of stock to employee stock ownership plans or certain cooperatives (temporary).
§ 1.1044(a)-1 Time and manner for making election under the Omnibus Budget Reconciliation Act of 1993.
§ 1.1045-1 Application to partnerships.

Special Rules

§ 1.1051-1 Basis of property acquired during affiliation.
§ 1.1052-1 Basis of property established by Revenue Act of 1932.
§ 1.1052-2 Basis of property established by Revenue Act of 1934.
§ 1.1052-3 Basis of property established by the Internal Revenue Code of 1939.
§ 1.1053-1 Property acquired before March 1, 1913.
§ 1.1054-1 Certain stock of Federal National Mortgage Association.
§ 1.1055-1 General rule with respect to redeemable ground rents.
§ 1.1055-2 Determination of amount realized on the transfer of the right to hold real property subject to liabilities under a redeemable ground rent.
§ 1.1055-3 Basis of real property held subject to liabilities under a redeemable ground rent.
§ 1.1055-4 Basis of redeemable ground rent reserved or created in connection with transfers of real property before April 11, 1963.
§ 1.1059(e)-1 Non-pro rata redemptions.
§ 1.1059A-1 Limitation on taxpayer's basis or inventory cost in property imported from related persons.
§ 1.1060-1 Special allocation rules for certain asset acquisitions.
§ 1.1061-0 Table of contents.
§ 1.1061-1 Section 1061 definitions.
§ 1.1061-2 Applicable partnership interests and applicable trades or businesses.
§ 1.1061-3 Exceptions to the definition of an API.
§ 1.1061-4 Section 1061 computations.
§ 1.1061-5 Section 1061(d) transfers to related persons.
§ 1.1061-6 Reporting rules.

Changes To Effectuate F.C.C. Policy

§ 1.1071-1 Gain from sale or exchange to effectuate policies of Federal Communications Commission.
§ 1.1071-2 Nature and effect of election.
§ 1.1071-3 Reduction of basis of property pursuant to election under section 1071.
§ 1.1071-4 Manner of election.

Exchanges in Obedience to S.E.C. Orders

§ 1.1081-1 Terms used.
§ 1.1081-2 Purpose and scope of exception.
§ 1.1081-3 Exchanges of stock or securities solely for stock or securities.
§ 1.1081-4 Exchanges of property for property by corporations.
§ 1.1081-5 Distribution solely of stock or securities.
§ 1.1081-6 Transfers within system group.
§ 1.1081-7 Sale of stock or securities received upon exchange by members of system group.
§ 1.1081-8 Exchanges in which money or other nonexempt property is received.
§ 1.1081-9 Requirements with respect to order of Securities and Exchange Commission.
§ 1.1081-10 Nonapplication of other provisions of the Internal Revenue Code of 1954.
§ 1.1081-11 Records to be kept and information to be filed with returns.
§ 1.1082-1 Basis for determining gain or loss.
§ 1.1082-2 Basis of property acquired upon exchanges under section 1081 (a) or (e).
§ 1.1082-3 Reduction of basis of property by reason of gain not recognized under section 1081(b).
§ 1.1082-4 Basis of property acquired by corporation under section 1081(a), 1081(b), or 1081(e) as contribution of capital or surplus, or in consideration for its own stock or securities.
§ 1.1082-5 Basis of property acquired by shareholder upon tax-free distribution under section 1081(c) (1) or (2).
§ 1.1082-6 Basis of property acquired under section 1081(d) in transactions between corporations of the same system group.
§ 1.1083-1 Definitions.

Wash Sales of Stock or Securities

§ 1.1091-1 Losses from wash sales of stock or securities.
§ 1.1091-2 Basis of stock or securities acquired in “wash sales”.
§ 1.1092(b)-1T Coordination of loss deferral rules and wash sale rules (temporary).
§ 1.1092(b)-2T Treatment of holding periods and losses with respect to straddle positions (temporary).
§ 1.1092(b)-3T Mixed straddles; straddle-by-straddle identification under section 1092(b)(2)(A)(i)(I) (Temporary).
§ 1.1092(b)-4T Mixed straddles; mixed straddle account (temporary).
§ 1.1092(b)-5T Definitions (temporary).
§ 1.1092(b)-6 Mixed straddles; accrued gain and loss associated with a position that becomes part of a section 1092(b)(2) identified mixed straddle that is established after August 18, 2014.
§ 1.1092(c)-1 Qualified covered calls.
§ 1.1092(c)-2 Equity options with flexible terms.

§ 1.1092(c)-3 Qualifying over-the-counter options.
§ 1.1092(c)-4 Definitions.
§ 1.1092(d)-1 Definitions and special rules.
§ 1.1092(d)-2 Personal property.
§ 1.1201-1 Alternative tax.
§ 1.1202-0 Table of contents.
§ 1.1202-1 Deduction for capital gains.
§ 1.1202-2 Qualified small business stock; effect of redemptions.
Treatment of Capital Losses
§ 1.1211-1 Limitation on capital losses.
§ 1.1212-1 Capital loss carryovers and carrybacks.
General Rules for Determining Capital Gains and Losses
§ 1.1221-1 Meaning of terms.
§ 1.1221-2 Hedging transactions.
§ 1.1221-3 Time and manner for electing capital asset treatment for certain self-created musical works.
§ 1.1222-1 Other terms relating to capital gains and losses.
§ 1.1223-1 Determination of period for which capital assets are held.
§ 1.1223-3 Rules relating to the holding periods of partnership interests.
Special Rules for Determining Capital Gains and Losses
§ 1.1231-1 Gains and losses from the sale or exchange of certain property used in the trade or business.
§ 1.1231-2 Livestock held for draft, breeding, dairy, or sporting purposes.
§ 1.1232-1 Bonds and other evidences of indebtedness; scope of section.
§ 1.1232-2 [Reserved]
§ 1.1232-3 Gain upon sale or exchange of obligations issued at a discount after December 31, 1954.
§ 1.1232-3A Inclusion as interest of original issue discount on certain obligations issued after May 27, 1969.
§ 1.1233-1 Gains and losses from short sales.
§ 1.1233-2 Hedging transactions.
§ 1.1234-1 Options to buy or sell.
§ 1.1234-2 Special rule for grantors of straddles applicable to certain options granted on or before September 1, 1976.
§ 1.1234-3 Special rules for the treatment of grantors of certain options granted after September 1, 1976.
§ 1.1234-4 Hedging transactions.
§ 1.1235-1 Sale or exchange of patents.
§ 1.1235-2 Definition of terms.

§ 1.1236-1 Dealers in securities.
§ 1.1237-1 Real property subdivided for sale.
§ 1.1238-1 Amortization in excess of depreciation.
§ 1.1239-1 Gain from sale or exchange of depreciable property between certain related taxpayers after October 4, 1976.
§ 1.1239-2 Gain from sale or exchange of depreciable property between certain related taxpayers on or before October 4, 1976.
§ 1.1240-1 Capital gains treatment of certain termination payments.
§ 1.1241-1 Cancellation of lease or distributor's agreement.
§ 1.1242-1 Losses on small business investment company stock.
§ 1.1243-1 Loss of small business investment company.
§ 1.1244(a)-1 Loss on small business stock treated as ordinary loss.
§ 1.1244(b)-1 Annual limitation.
§ 1.1244(c)-1 Section 1244 stock defined.
§ 1.1244(c)-2 Small business corporation defined.
§ 1.1244(d)-1 Contributions of property having basis in excess of value.
§ 1.1244(d)-2 Increases in basis of section 1244 stock.
§ 1.1244(d)-3 Stock dividend, recapitalizations, changes in name, etc.
§ 1.1244(d)-4 Net operating loss deduction.
§ 1.1244(e)-1 Records to be kept.
§ 1.1245-1 General rule for treatment of gain from dispositions of certain depreciable property.
§ 1.1245-2 Definition of recomputed basis.
§ 1.1245-3 Definition of section 1245 property.
§ 1.1245-4 Exceptions and limitations.
§ 1.1245-5 Adjustments to basis.
§ 1.1245-6 Relation of section 1245 to other sections.
§ 1.1248-1 Treatment of gain from certain sales or exchanges of stock in certain foreign corporations.
§ 1.1248-2 Earnings and profits attributable to a block of stock in simple cases.
§ 1.1248-3 Earnings and profits attributable to stock in complex cases.
§ 1.1248-4 Limitation on tax applicable to individuals.
§ 1.1248-5 Stock ownership requirements for less developed country corporations.
§ 1.1248-6 Sale or exchange of stock in certain domestic corporations.
§ 1.1248-7 Taxpayer to establish earnings and profits and foreign taxes.
§ 1.1248-8 Earnings and profits attributable to stock following certain non-recognition transactions.
§ 1.1248(f)-1 Certain nonrecognition distributions.
§ 1.1248(f)-2 Exceptions for certain distributions and attribution rules.

§ 1.1248(f)-3 Reasonable cause and effective/applicability dates.
§ 1.1249-1 Gain from certain sales or exchanges of patents, etc., to foreign corporations.
§ 1.1250-1 Gain from dispositions of certain depreciable realty.
§ 1.1250-2 Additional depreciation defined.
§ 1.1250-3 Exceptions and limitations.
§ 1.1250-4 Holding period.
§ 1.1250-5 Property with two or more elements.
§ 1.1251-1 General rule for treatment of gain from disposition of property used in farming where farm losses offset nonfarm income.
§ 1.1251-2 Excess deductions account.
§ 1.1251-3 Definitions relating to section 1251.
§ 1.1251-4 Exceptions and limitations.
§ 1.1252-1 General rule for treatment of gain from disposition of farm land.
§ 1.1252-2 Special rules.
§ 1.1254-0 Table of contents for section 1254 recapture rules.
§ 1.1254-1 Treatment of gain from disposition of natural resource recapture property.
§ 1.1254-2 Exceptions and limitations.
§ 1.1254-3 Section 1254 costs immediately after certain acquisitions.
§ 1.1254-4 Special rules for S corporations and their shareholders.
§ 1.1254-5 Special rules for partnerships and their partners.
§ 1.1254-6 Effective/applicability date.
§ 1.1256(e)-1 Identification of hedging transactions.
§ 1.1256(e)-2 Special rules for syndicates.
§ 1.1258-1 Netting rule for certain conversion transactions.
§ 1.1271-0 Original issue discount; effective date; table of contents.
§ 1.1271-1 Special rules applicable to amounts received on retirement, sale, or exchange of debt instruments.
§ 1.1272-1 Current inclusion of OID in income.
§ 1.1272-2 Treatment of debt instruments purchased at a premium.
§ 1.1272-3 Election by a holder to treat all interest on a debt instrument as OID.
§ 1.1273-1 Definition of OID.
§ 1.1273-2 Determination of issue price and issue date.
§ 1.1274-1 Debt instruments to which section 1274 applies.
§ 1.1274-2 Issue price of debt instruments to which section 1274 applies.
§ 1.1274-3 Potentially abusive situations defined.
§ 1.1274-4 Test rate.
§ 1.1274-5 Assumptions.
§ 1.1274A-1 Special rules for certain transactions where stated principal amount does not exceed $2,800,000.

§ 1.1275-1 Definitions.
§ 1.1275-2 Special rules relating to debt instruments.
§ 1.1275-3 OID information reporting requirements.
§ 1.1275-4 Contingent payment debt instruments.
§ 1.1275-5 Variable rate debt instruments.
§ 1.1275-6 Integration of qualifying debt instruments.
§ 1.1275-7 Inflation-indexed debt instruments.
§ 1.1286-1 Tax treatment of certain stripped bonds and stripped coupons.
§ 1.1286-2 Stripped inflation-protected debt instruments.
§ 1.1287-1 Denial of capital gains treatment for gains on registration-required obligations not in registered form.
§ 1.1288-1 Adjustment of applicable Federal rate for tax-exempt obligations.
§ 1.1291-0 Treatment of shareholders of certain passive foreign investment companies; table of contents.
§ 1.1291-1 Taxation of U.S. persons that are shareholders of section 1291 funds.
§ 1.1291-9 Deemed dividend election.
§ 1.1291-10 Deemed sale election.
§ 1.1293-0 Table of contents.
§ 1.1293-1 Current taxation of income from qualified electing funds.
§ 1.1294-0 Table of contents.
§ 1.1294-1T Election to extend the time for payment of tax on undistributed earnings of a qualified electing fund (temporary).
§ 1.1295-0 Table of contents.
§ 1.1295-1 Qualified electing funds.
§ 1.1295-3 Retroactive elections.
§ 1.1296-1 Mark to market election for marketable stock.
§ 1.1296-2 Definition of marketable stock.
§ 1.1297-0 Table of contents.
§ 1.1297-1 Definition of passive foreign investment company.
§ 1.1297-2 Special rules regarding look-through subsidiaries and look-through partnerships.
§ 1.1297-3 Deemed sale or deemed dividend election by a U.S. person that is a shareholder of a section 1297(e) PFIC.
§ 1.1297-4 Qualifying insurance corporation.
§ 1.1297-5 [Reserved]
§ 1.1297-6 Exception from the definition of passive income for active insurance income.
§ 1.1298-0 Passive foreign investment company—table of contents.
§ 1.1298-1 Section 1298(f) annual reporting requirements for United States persons that are shareholders of a passive foreign investment company.
§ 1.1298-2 Rules for certain corporations changing businesses.

§ 1.1298-3 Deemed sale or deemed dividend election by a U.S. person that is a shareholder of a former PFIC.
§ 1.1298-4 Rules for certain foreign corporations owning stock in 25-percent-owned domestic corporations.
Income Averaging
§ 1.1301-1 Averaging of farm and fishing income.
Readjustment of Tax Between Years and Special Limitations
§ 1.1311(a)-1 Introduction.
§ 1.1311(a)-2 Purpose and scope of section 1311.
§ 1.1311(b)-1 Maintenance of an inconsistent position.
§ 1.1311(b)-2 Correction not barred at time of erroneous action.
§ 1.1311(b)-3 Existence of relationship in case of adjustment by way of deficiency assessment.
§ 1.1312-1 Double inclusion of an item of gross income.
§ 1.1312-2 Double allowance of a deduction or credit.
§ 1.1312-3 Double exclusion of an item of gross income.
§ 1.1312-4 Double disallowance of a deduction or credit.
§ 1.1312-5 Correlative deductions and inclusions for trusts or estates and legatees, beneficiaries, or heirs.
§ 1.1312-6 Correlative deductions and credits for certain related corporations.
§ 1.1312-7 Basis of property after erroneous treatment of a prior transaction.
§ 1.1312-8 Law applicable in determination of error.
§ 1.1313(a)-1 Decision by Tax Court or other court as a determination.
§ 1.1313(a)-2 Closing agreement as a determination.
§ 1.1313(a)-3 Final disposition of claim for refund as a determination.
§ 1.1313(a)-4 Agreement pursuant to section 1313(a)(4) as a determination.
§ 1.1313(c)-1 Related taxpayer.
§ 1.1314(a)-1 Ascertainment of amount of adjustment in year of error.
§ 1.1314(a)-2 Adjustment to other barred taxable years.
§ 1.1314(b)-1 Method of adjustment.
§ 1.1314(c)-1 Adjustment unaffected by other items.
Involuntary Liquidation and Replacement of Lifo Inventories
§ 1.1321-1 Involuntary liquidation of lifo inventories.
§ 1.1321-2 Liquidation and replacement of lifo inventories by acquiring corporations.
War Loss Recoveries
§ 1.1331-1 Recoveries in respect of war losses.
§ 1.1332-1 Inclusion in gross income of war loss recoveries.
§ 1.1333-1 Tax adjustment measured by prior benefits.
§ 1.1334-1 Restoration of value of investments.
§ 1.1335-1 Elective method; time and manner of making election and effect thereof.

§ 1.1336-1 Basis of recovered property.
§ 1.1337-1 Determination of tax benefits from allowable deductions.
Claim of Right
§ 1.1341-1 Restoration of amounts received or accrued under claim of right.
§ 1.1342-1 Computation of tax where taxpayer recovers substantial amount held by another under claim of right; effective date.
Other Limitations
§ 1.1346-1 Recovery of unconstitutional taxes.
§ 1.1347-1 Tax on certain amounts received from the United States.
§ 1.1348-1 Fifty-percent maximum tax on earned income.
§ 1.1348-2 Computation of the fifty-percent maximum tax on earned income.
§ 1.1348-3 Definitions.
Small Business Corporations and Their Shareholders
§ 1.1361-0 Table of contents.
§ 1.1361-1 S corporation defined.
§ 1.1361-2 Definitions relating to S corporation subsidiaries.
§ 1.1361-3 QSub election.
§ 1.1361-4 Effect of QSub election.
§ 1.1361-5 Termination of QSub election.
§ 1.1361-6 Effective date.
§ 1.1362-0 Table of contents.
§ 1.1362-1 Election to be an S corporation.
§ 1.1362-2 Termination of election.
§ 1.1362-3 Treatment of S termination year.
§ 1.1362-4 Inadvertent terminations and inadvertently invalid elections.
§ 1.1362-5 Election after termination.
§ 1.1362-6 Elections and consents.
§ 1.1362-7 Effective dates.
§ 1.1362-8 Dividends received from affiliated subsidiaries.
§ 1.1363-1 Effect of election on corporation.
§ 1.1363-2 Recapture of LIFO benefits.
§ 1.1366-0 Table of contents.
§ 1.1366-1 Shareholder's share of items of an S corporation.
§ 1.1366-2 Limitations on deduction of passthrough items of an S corporation to its shareholders.
§ 1.1366-3 Treatment of family groups.
§ 1.1366-4 Special rules limiting the passthrough of certain items of an S corporation to its shareholders.
§ 1.1366-5 Effective/applicability date.

§ 1.1367-0 Table of contents.
§ 1.1367-1 Adjustments to basis of shareholder's stock in an S corporation.
§ 1.1367-2 Adjustments to basis of indebtedness to shareholder.
§ 1.1367-3 Effective/Applicability date.
§ 1.1368-0 Table of contents.
§ 1.1368-1 Distributions by S corporations.
§ 1.1368-2 Accumulated adjustments account (AAA).
§ 1.1368-3 Examples.
§ 1.1368-4 Effective date and transition rule.
§ 1.1371-1 Distributions of money by an eligible terminated S corporation.
§ 1.1371-2 Impact of Audit PTTP on ETSC Period.
§ 1.1374-0 Table of contents.
§ 1.1374-1 General rules and definitions.
§ 1.1374-2 Net recognized built-in gain.
§ 1.1374-3 Net unrealized built-in gain.
§ 1.1374-4 Recognized built-in gain or loss.
§ 1.1374-5 Loss carryforwards.
§ 1.1374-6 Credits and credit carryforwards.
§ 1.1374-7 Inventory.
§ 1.1374-8 Section 1374(d)(8) transactions.
§ 1.1374-9 Anti-stuffing rule.
§ 1.1374-10 Effective date and additional rules.
§ 1.1375-1 Tax imposed when passive investment income of corporation having subchapter C earnings and profits exceed 25 percent of gross receipts.
§ 1.1377-0 Table of contents.
§ 1.1377-1 Pro rata share.
§ 1.1377-2 Post-termination transition period.
§ 1.1377-3 Applicability dates.
§ 1.1378-1 Taxable year of S corporation.

Section 1374 Before the Tax Reform Act of 1986

§ 1.1374-1A Tax imposed on certain capital gains.

Cooperatives and Their Patrons

§ 1.1381-1 Organizations to which part applies.
§ 1.1381-2 Tax on certain farmers' cooperatives.
§ 1.1382-1 Taxable income of cooperatives; gross income.
§ 1.1382-2 Taxable income of cooperatives; treatment of patronage dividends.
§ 1.1382-3 Taxable income of cooperatives; special deductions for exempt farmers' cooperatives.
§ 1.1382-4 Taxable income of cooperatives; payment period for each taxable year.

§ 1.1382-5 Taxable income of cooperatives; products marketed under pooling arrangements.
§ 1.1382-6 Taxable income of cooperatives; treatment of earnings received after patronage occurred.
§ 1.1382-7 Special rules applicable to cooperative associations exempt from tax before January 1, 1952.
§ 1.1383-1 Computation of tax where cooperative redeems nonqualified written notices of allocation.
Tax Treatment by Patrons of Patronage Dividends
§ 1.1385-1 Amounts includible in patron's gross income.
Definitions; Special Rules
§ 1.1388-1 Definitions and special rules.
§ 1.1394-0 Table of contents.
§ 1.1394-1 Enterprise zone facility bonds.
Empowerment Zone Employment Credit
§ 1.1396-1 Qualified zone employees.
§ 1.1397E-1 Qualified zone academy bonds.
Rules Relating to Individuals' Title 11 Cases
§ 1.1398-1 Treatment of passive activity losses and passive activity credits in individuals' title 11 cases.
§ 1.1398-2 Treatment of section 465 losses in individuals' title 11 cases.
§ 1.1398-3 Treatment of section 121 exclusion in individuals' title 11 cases.
§ 1.1400L(b)-1 Additional first year depreciation deduction for qualified New York Liberty Zone property.
§ 1.1400Z2-0 Table of Contents.
§ 1.1400Z2(a)-1 Deferring tax on capital gains by investing in opportunity zones.
§ 1.1400Z2(b)-1 Inclusion of gains that have been deferred under section 1400Z-2(a).
§ 1.1400Z2(c)-1 Investments held for at least 10 years.
§ 1.1400Z2(d)-1 Qualified opportunity funds and qualified opportunity zone businesses.
§ 1.1400Z2(d)-2 Qualified opportunity zone business property.
§ 1.1400Z2(e)-1 [Reserved]
§ 1.1400Z2(f)-1 Administrative rules- penalties, anti-abuse, etc.
Tax on Self-Employment Income
§ 1.1401-1 Tax on self-employment income.
§ 1.1402(a)-1 Definition of net earnings from self-employment.
§ 1.1402(a)-2 Computation of net earnings from self-employment.
§ 1.1402(a)-3 Special rules for computing net earnings from self-employment.
§ 1.1402(a)-4 Rentals from real estate.
§ 1.1402(a)-5 Dividends and interest.
§ 1.1402(a)-6 Gain or loss from disposition of property.

§ 1.1402(a)-7 Net operating loss deduction.
§ 1.1402(a)-8 Community income.
§ 1.1402(a)-9 Puerto Rico.
§ 1.1402(a)-10 Personal exemption deduction.
§ 1.1402(a)-11 Ministers and members of religious orders.
§ 1.1402(a)-12 Continental shelf and certain possessions of the United States.
§ 1.1402(a)-13 Income from agricultural activity.
§ 1.1402(a)-14 Options available to farmers in computing net earnings from self-employment for taxable years ending after 1954 and before December 31, 1956.
§ 1.1402(a)-15 Options available to farmers in computing net earnings from self-employment for taxable years ending on or after December 31, 1956.
§ 1.1402(a)-16 Exercise of option.
§ 1.1402(a)-17 Retirement payments to retired partners.
§ 1.1402(a)-18 Split-dollar life insurance arrangements.
§ 1.1402(b)-1 Self-employment income.
§ 1.1402(c)-1 Trade or business.
§ 1.1402(c)-2 Public office.
§ 1.1402(c)-3 Employees.
§ 1.1402(c)-4 Individuals under Railroad Retirement System.
§ 1.1402(c)-5 Ministers and members of religious orders.
§ 1.1402(c)-6 Members of certain professions.
§ 1.1402(c)-7 Members of religious groups opposed to insurance.
§ 1.1402(d)-1 Employee and wages.
§ 1.1402(e)-1A Application of regulations under section 1402(e).
§ 1.1402(e)-2A Ministers, members of religious orders and Christian Science practitioners; application for exemption from self-employment tax.
§ 1.1402(e)-3A Time limitation for filing application for exemption.
§ 1.1402(e)-4A Period for which exemption is effective.
§ 1.1402(e)-5A Applications for exemption from self-employment taxes filed after December 31, 1986, by ministers, certain members of religious orders, and Christian Science practitioners.
§ 1.1402(e)(1)-1 Election by ministers, members of religious orders, and Christian Science practitioners for self-employment coverage.
§ 1.1402(e)(2)-1 Time limitation for filing waiver certificate.
§ 1.1402(e)(3)-1 Effective date of waiver certificate.
§ 1.1402(e)(4)-1 Treatment of certain remuneration paid in 1955 and 1956 as wages.
§ 1.1402(e)(5)-1 Optional provision for certain certificates filed before April 15, 1962.
§ 1.1402(e)(5)-2 Optional provisions for certain certificates filed on or before April 17, 1967.
§ 1.1402(e)(6)-1 Certificates filed by fiduciaries or survivors on or before April 15, 1962.

§ 1.1402(f)-1 Computation of partner's net earnings from self-employment for taxable year which ends as result of his death.
§ 1.1402(g)-1 Treatment of certain remuneration erroneously reported as net earnings from self-employment.
§ 1.1402(h)-1 Members of certain religious groups opposed to insurance.
§ 1.1403-1 Cross references.
Net Investment Income Tax
§ 1.1411-0 Table of contents of provisions applicable to section 1411.
§ 1.1411-1 General rules.
§ 1.1411-2 Application to individuals.
§ 1.1411-3 Application to estates and trusts.
§ 1.1411-4 Definition of net investment income.
§ 1.1411-5 Trades or businesses to which tax applies.
§ 1.1411-6 Income on investment of working capital subject to tax.
§ 1.1411-7 Exception for dispositions of interests in partnerships and S corporations. [Reserved]
§ 1.1411-8 Exception for distributions from qualified plans.
§ 1.1411-9 Exception for self-employment income.
§ 1.1411-10 Controlled foreign corporations and passive foreign investment companies.
Withholding of Tax on Nonresident Aliens and Foreign Corporations and Tax-Free Covenant Bonds
§ 1.1441-0 Outline of regulation provisions for section 1441.
§ 1.1441-1 Requirement for the deduction and withholding of tax on payments to foreign persons.
§ 1.1441-2 Amounts subject to withholding.
§ 1.1441-3 Determination of amounts to be withheld.
§ 1.1441-4 Exemptions from withholding for certain effectively connected income and other amounts.
§ 1.1441-5 Withholding on payments to partnerships, trusts, and estates.
§ 1.1441-6 Claim of reduced withholding under an income tax treaty.
§ 1.1441-7 General provisions relating to withholding agents.
§ 1.1441-8 Exemption from withholding for payments to foreign governments, international organizations, foreign central banks of issue, and the Bank for International Settlements.
§ 1.1441-9 Exemption from withholding on exempt income of a foreign tax-exempt organization, including foreign private foundations.
§ 1.1441-10 Withholding agents with respect to fast-pay arrangements.
§ 1.1442-1 Withholding of tax on foreign corporations.
§ 1.1442-2 Exemption under a tax treaty.
§ 1.1442-3 Tax exempt income of a foreign tax-exempt corporation.

§ 1.1443-1 Foreign tax-exempt organizations.
§ 1.1445-1 Withholding on dispositions of U.S. real property interests by foreign persons: In general.
§ 1.1445-2 Situations in which withholding is not required under section 1445(a).
§ 1.1445-3 Adjustments to amount required to be withheld pursuant to withholding certificate.
§ 1.1445-4 Liability of agents.
§ 1.1445-5 Special rules concerning distributions and other transactions by corporations, partnerships, trusts, and estates.
§ 1.1445-6 Adjustments pursuant to withholding certificate of amount required to be withheld under section 1445(e).
§ 1.1445-7 Treatment of foreign corporation that has made an election under section 897(i) to be treated as a domestic corporation.
§ 1.1445-8 Special rules regarding publicly traded partnerships, publicly traded trusts and real estate investment trusts (REITs).
§ 1.1445-10T Special rule for Foreign governments (temporary).
§ 1.1445-11T Special rules requiring withholding under § 1.1445-5 (temporary).
§ 1.1446-0 Table of contents.
§ 1.1446-1 Withholding tax on foreign partners' share of effectively connected taxable income.
§ 1.1446-2 Determining a partnership's effectively connected taxable income allocable to foreign partners under section 704.
§ 1.1446-3 Time and manner of calculating and paying over the 1446 tax.
§ 1.1446-4 Publicly traded partnerships.
§ 1.1446-5 Tiered partnership structures.
§ 1.1446-6 Special rules to reduce a partnership's 1446 tax with respect to a foreign partner's allocable share of effectively connected taxable income.
§ 1.1446-7 Applicability dates.
§ 1.1446(f)-1 General rules.
§ 1.1446(f)-2 Withholding on the transfer of a non-publicly traded partnership interest.
§ 1.1446(f)-3 Partnership's requirement to withhold under section 1446(f)(4) on distributions to transferee.
§ 1.1446(f)-4 Withholding on the transfer of a publicly traded partnership interest.
§ 1.1446(f)-5 Liability for failure to withhold.

Tax-Free Covenant Bonds

§ 1.1451-1 Tax-free covenant bonds issued before January 1, 1934.
§ 1.1451-2 Exemptions from withholding under section 1451.

Application of Withholding Provisions

§ 1.1461-1 Payment and returns of tax withheld.

§ 1.1461-2 Adjustments for overwithholding or underwithholding of tax.
§ 1.1461-3 Withholding under section 1446.
§ 1.1462-1 Withheld tax as credit to recipient of income.
§ 1.1463-1 Tax paid by recipient of income.
§ 1.1464-1 Refunds or credits.
Information Reporting by Foreign Financial Institutions
§ 1.1471-0 Outline of regulation provisions for sections 1471 through 1474.
§ 1.1471-1 Scope of chapter 4 and definitions.
§ 1.1471-2 Requirement to deduct and withhold tax on withholdable payments to certain FFIs.
§ 1.1471-3 Identification of payee.
§ 1.1471-4 FFI agreement.
§ 1.1471-5 Definitions applicable to section 1471.
§ 1.1471-6 Payments beneficially owned by exempt beneficial owners.
§ 1.1472-1 Withholding on NFFEs.
§ 1.1473-1 Section 1473 definitions.
§ 1.1474-1 Liability for withheld tax and withholding agent reporting.
§ 1.1474-2 Adjustments for overwithholding or underwithholding of tax.
§ 1.1474-3 Withheld tax as credit to beneficial owner of income.
§ 1.1474-4 Tax paid only once.
§ 1.1474-5 Refunds or credits.
§ 1.1474-6 Coordination of chapter 4 with other withholding provisions.
§ 1.1474-7 Confidentiality of information.
Mitigation of Effect of Renegotiation of Government Contracts
§ 1.1481-1 [Reserved]
Consolidated Returns

Consolidated Return Regulations
§ 1.1502-0 Effective/applicability dates.
§ 1.1502-1 Definitions.
Consolidated Tax Liability
§ 1.1502-2 Computation of tax liability.
§ 1.1502-3 Consolidated tax credits.
§ 1.1502-4 Consolidated foreign tax credit.
§ 1.1502-5 Estimated tax.
§ 1.1502-6 Liability for tax.
§ 1.1502-9 Consolidated overall foreign losses, separate limitation losses, and overall domestic losses.
Computation of Consolidated Taxable Income
§ 1.1502-11 Consolidated taxable income.
Computation of Separate Taxable Income
§ 1.1502-12 Separate taxable income.
§ 1.1502-13 Intercompany transactions.
§ 1.1502-14Z Application of opportunity zone rules to members of a consolidated group.
§ 1.1502-15 SRLY limitation on built-in losses.
§ 1.1502-16 Mine exploration expenditures.
§ 1.1502-17 Methods of accounting.
§ 1.1502-19 Excess loss accounts.
Computation of Consolidated Items
§ 1.1502-21 Net operating losses.
§ 1.1502-22 Consolidated capital gain and loss.
§ 1.1502-23 Consolidated net section 1231 gain or loss.
§ 1.1502-24 Consolidated charitable contributions deduction.
§ 1.1502-26 Consolidated dividends received deduction.
§ 1.1502-28 Consolidated section 108.
Basis, Stock Ownership, and Earnings and Profits Rules
§ 1.1502-30 Stock basis after certain triangular reorganizations.
§ 1.1502-31 Stock basis after a group structure change.
§ 1.1502-32 Investment adjustments.
§ 1.1502-33 Earnings and profits.
§ 1.1502-34 Special aggregate stock ownership rules.
§ 1.1502-35 Transfers of subsidiary stock and deconsolidations of subsidiaries.
§ 1.1502-36 Unified loss rule.
Special Taxes and Taxpayers
§ 1.1502-43 Consolidated accumulated earnings tax.
§ 1.1502-44 Percentage depletion for independent producers and royalty owners.

§ 1.1502-45 Limitation on losses to amount at risk.
§ 1.1502-47 Consolidated returns by life-nonlife groups.
§ 1.1502-50 Consolidated section 250.
§ 1.1502-51 Consolidated section 951A.
§ 1.1502-55 Computation of alternative minimum tax of consolidated groups.
§ 1.1502-59A Application of section 59A to consolidated groups.
§ 1.1502-68 Additional first year depreciation deduction for property acquired and placed in service after September 27, 2017.

Administrative Provisions and Other Rules

§ 1.1502-75 Filing of consolidated returns.
§ 1.1502-76 Taxable year of members of group.
§ 1.1502-77 Agent for the group.
§ 1.1502-78 Tentative carryback adjustments.
§ 1.1502-79 Separate return years.
§ 1.1502-80 Applicability of other provisions of law.
§ 1.1502-90 Table of contents.
§ 1.1502-91 Application of section 382 with respect to a consolidated group.
§ 1.1502-92 Ownership change of a loss group or a loss subgroup.
§ 1.1502-93 Consolidated section 382 limitation (or subgroup section 382 limitation).
§ 1.1502-94 Coordination with section 382 and the regulations thereunder when a corporation becomes a member of a consolidated group.
§ 1.1502-95 Rules on ceasing to be a member of a consolidated group (or loss subgroup).
§ 1.1502-96 Miscellaneous rules.
§ 1.1502-97 Special rules under section 382 for members under the jurisdiction of a court in a title 11 or similar case. [Reserved]
§ 1.1502-98 Coordination with sections 383 and 163(j).
§ 1.1502-99 Effective/applicability dates.
§ 1.1502-100 Corporations exempt from tax.
§ 1.1503-1 Computation and payment of tax.
§ 1.1503(d)-0 Table of contents.
§ 1.1503(d)-1 Definitions, special rules, and filings.
§ 1.1503(d)-2 Domestic use.
§ 1.1503(d)-3 Foreign use.
§ 1.1503(d)-4 Domestic use limitation and related operating rules.
§ 1.1503(d)-5 Attribution of items and basis adjustments.
§ 1.1503(d)-6 Exceptions to the domestic use limitation rule.
§ 1.1503(d)-7 Examples.
§ 1.1503(d)-8 Applicability dates.
§ 1.1504-0 Outline of provisions.

§ 1.1504-1 Definitions.
§ 1.1504-2 [Reserved]
§ 1.1504-3 Treatment of stock in a QOF C corporation for purposes of consolidation.
§ 1.1504-4 Treatment of warrants, options, convertible obligations, and other similar interests.
Regulations Applicable for Tax Years for Which a Return Is Due on or Before August 11, 1999
Regulations Applicable to Taxable Years Before January 1, 1997
Regulations Applicable to Taxable Years Beginning Before June 28, 2002
§ 1.1502-77A Common parent agent for subsidiaries applicable for consolidated return years beginning before June 28, 2002.
Regulations Applicable to Taxable Years Beginning on or After June 28, 2002, and Before April 1, 2015
§ 1.1502-77B Agent for the group applicable for consolidated return years beginning on or after June 28, 2002, and before April 1, 2015.
Regulations Applicable to Taxable Years Before January 1, 1997
Regulations Applying Section 382 with Respect to Testing Dates (and Corporations Joining or Leaving Consolidated Groups) Before June 25, 1999
Dual Consolidated Losses Incurred in Taxable Years Beginning Before October 1, 1992
§ 1.1551-1 Disallowance of surtax exemption and accumulated earnings credit.
§ 1.1552-1 Earnings and profits.
Certain Controlled Corporations
§ 1.1561-0 Table of contents.
§ 1.1561-1 General rules regarding certain tax benefits available to the component members of a controlled group of corporations.
§ 1.1561-2 Special rules for allocating reductions of certain section 1561(a) tax-benefit items.
§ 1.1561-3 Allocation of the section 1561(a) tax items.
§ 1.1563-1 Definition of controlled group of corporations and component members and related concepts.
§ 1.1563-2 Excluded stock.
§ 1.1563-3 Rules for determining stock ownership.
§ 1.1563-4 Franchised corporations.
Individual Shared Responsibility Payment for Not Maintaining Minimum Essential Coverage
Information and Returns
§ 1.5000A-0 Table of contents.
§ 1.5000A-1 Maintenance of minimum essential coverage and liability for the shared

responsibility payment.
§ 1.5000A-2 Minimum essential coverage.
§ 1.5000A-3 Exempt individuals.
§ 1.5000A-4 Computation of shared responsibility payment.
§ 1.5000A-5 Administration and procedure.
§ 1.5000C-0 Outline of regulation provisions for section 5000C.
§ 1.5000C-1 Tax on specified Federal procurement payments.
§ 1.5000C-2 Withholding on specified Federal procurement payments.
§ 1.5000C-3 Payment and returns of tax withheld by the acquiring agency.
§ 1.5000C-4 Requirement for the foreign contracting party to file a return and pay tax, and procedures for the contracting party to seek a refund.
§ 1.5000C-5 Anti-abuse rule.
§ 1.5000C-6 Examples.
§ 1.5000C-7 Effective/applicability date.
Records, Statements, and Special Returns
§ 1.6001-1 Records.
§ 1.6001-2 Returns.
Tax Returns or Statements
§ 1.6011-1 General requirement of return, statement, or list.
§ 1.6011-2 Returns, etc., of DISC's and former DISC's.
§ 1.6011-3 Requirement of statement from payees of certain gambling winnings.
§ 1.6011-4 Requirement of statement disclosing participation in certain transactions by taxpayers.
§ 1.6011-5 Required use of magnetic media for corporate income tax returns.
§ 1.6011-6 [Reserved]
§ 1.6011-7 Specified tax return preparers required to file individual income tax returns using magnetic media.
§ 1.6011-8 Requirement of income tax return for taxpayers who claim the premium tax credit under section 36B.
§ 1.6011-9 Syndicated conservation easement listed transactions.
§ 1.6011-10 Micro-captive listed transaction.
§ 1.6011-11 Micro-captive transaction of interest.
§ 1.6011-18 Certain partnership related-party basis adjustment transactions as transactions of interest.
§ 1.6012-1 Individuals required to make returns of income.
§ 1.6012-2 Corporations required to make returns of income.
§ 1.6012-3 Returns by fiduciaries.
§ 1.6012-4 Miscellaneous returns.
§ 1.6012-5 Composite return in lieu of specified form.

§ 1.6012-6 Returns by political organizations.
§ 1.6013-1 Joint returns.
§ 1.6013-2 Joint return after filing separate return.
§ 1.6013-3 Treatment of joint return after death of either spouse.
§ 1.6013-4 Applicable rules.
§ 1.6013-6 Election to treat nonresident alien individual as resident of the United States.
§ 1.6013-7 Joint return for year in which nonresident alien becomes resident of the United States.
§ 1.6014-1 Tax not computed by taxpayer for taxable years beginning before January 1, 1970.
§ 1.6014-2 Tax not computed by taxpayer for taxable years beginning after December 31, 1969.
§ 1.6015-0 Table of contents.
§ 1.6015-1 Relief from joint and several liability on a joint return.
§ 1.6015-2 Relief from liability applicable to all qualifying joint filers.
§ 1.6015-3 Allocation of deficiency for individuals who are no longer married, are legally separated, or are not members of the same household.
§ 1.6015-4 Equitable relief.
§ 1.6015-5 Time and manner for requesting relief.
§ 1.6015-6 Nonrequesting spouse's notice and opportunity to participate in administrative proceedings.
§ 1.6015-7 Tax Court review.
§ 1.6015-8 Applicable liabilities.
§ 1.6015-9 Effective date.
§ 1.6016-1 Declarations of estimated income tax by corporations.
§ 1.6016-2 Contents of declaration of estimated tax.
§ 1.6016-3 Amendment of declaration.
§ 1.6016-4 Short taxable year.
§ 1.6017-1 Self-employment tax returns.
Information Returns
§ 1.6031(a)-1 Return of partnership income.
§ 1.6031(b)-1T Statements to partners (temporary).
§ 1.6031(b)-2T REMIC reporting requirements (temporary). [Reserved]
§ 1.6031(c)-1T Nominee reporting of partnership information (temporary).
§ 1.6031(c)-2T Nominee reporting of REMIC information (temporary). [Reserved]
§ 1.6032-1 Returns of banks with respect to common trust funds.
§ 1.6033-1 Returns by exempt organizations; taxable years beginning before January 1, 1970.
§ 1.6033-2 Returns by exempt organizations and returns by certain nonexempt organizations.

§ 1.6033-3 Additional provisions relating to private foundations.
§ 1.6033-4 Required filing in electronic form for returns by organizations required to file returns under section 6033.
§ 1.6033-5 Disclosure by tax-exempt entities that are parties to certain reportable transactions.
§ 1.6033-6 Notification requirement for entities not required to file an annual information return under section 6033(a)(1) (taxable years beginning after December 31, 2006).
§ 1.6034-1 Information returns required of trusts described in section 4947(a)(2) or claiming charitable or other deductions under section 642(c).
§ 1.6035-0 Table of contents.
§ 1.6035-1 Basis information to persons acquiring property from decedent.
§ 1.6035-2 Transitional relief.
§ 1.6036-1 Notice of qualification as executor or receiver.
§ 1.6037-1 Return of electing small business corporation.
§ 1.6037-2 Required use of electronic form for income tax returns of electing small business corporations.
§ 1.6038-1 Information returns required of domestic corporations with respect to annual accounting periods of certain foreign corporations beginning before January 1, 1963.
§ 1.6038-2 Information returns required of United States persons with respect to annual accounting periods of certain foreign corporations.
§ 1.6038-3 Information returns required of certain United States persons with respect to controlled foreign partnerships (CFPs).
§ 1.6038-4 Information returns required of certain United States persons with respect to such person's U.S. multinational enterprise group.
§ 1.6038-5 Information returns required of certain United States persons to report amounts determined with respect to certain foreign corporations for global intangible low-taxed income (GILTI) purposes.
§ 1.6038A-0 Table of contents.
§ 1.6038A-1 General requirements and definitions.
§ 1.6038A-2 Requirement of return.
§ 1.6038A-3 Record maintenance.
§ 1.6038A-4 Monetary penalty.
§ 1.6038A-5 Authorization of agent.
§ 1.6038A-6 Failure to furnish information.
§ 1.6038A-7 Noncompliance.
§ 1.6038B-1 Reporting of certain transfers to foreign corporations.
§ 1.6038B-1T Reporting of certain transactions to foreign corporations (temporary).

§ 1.6038B-2 Reporting of certain transfers to foreign partnerships.
§ 1.6038D-0 Outline of regulation provisions.
§ 1.6038D-1 Reporting with respect to specified foreign financial assets, definition of terms.
§ 1.6038D-2 Requirement to report specified foreign financial assets.
§ 1.6038D-3 Specified foreign financial assets.
§ 1.6038D-4 Information required to be reported.
§ 1.6038D-5 Valuation guidelines.
§ 1.6038D-6 Specified domestic entities.
§ 1.6038D-7 Exceptions from the reporting of certain assets under section 6038D.
§ 1.6038D-8 Penalties for failure to disclose.
§ 1.6039-1 Returns required in connection with certain options.
§ 1.6039-2 Statements to persons with respect to whom information is reported.
§ 1.6039I-1 Reporting of certain employer-owned life insurance contracts.
§ 1.6041-1 Return of information as to payments of $600 or more.
§ 1.6041-2 Return of information as to payments to employees.
§ 1.6041-3 Payments for which no return of information is required under section 6041.
§ 1.6041-4 Foreign-related items and other exceptions.
§ 1.6041-5 Information as to actual owner.
§ 1.6041-6 Returns made on Forms 1096 and 1099 under section 6041; contents and time and place for filing.
§ 1.6041-7 Magnetic media requirement.
§ 1.6041-8 Cross-reference to penalties.
§ 1.6041-9 Coordination with reporting rules for widely held fixed investment trusts under § 1.671-5.
§ 1.6041-10 Return of information as to payments of winnings from bingo, keno, and slot machine play.
§ 1.6041A-1 Returns regarding payments of remuneration for services and certain direct sales.
§ 1.6042-1 Return of information as to dividends paid in calendar years before 1963.
§ 1.6042-2 Returns of information as to dividends paid.
§ 1.6042-3 Dividends subject to reporting.
§ 1.6042-4 Statements to recipients of dividend payments.
§ 1.6042-5 Coordination with reporting rules for widely held fixed investment trusts under § 1.671-5.
§ 1.6043-1 Return regarding corporate dissolution or liquidation.
§ 1.6043-2 Return of information respecting distributions in liquidation.
§ 1.6043-3 Return regarding liquidation, dissolution, termination, or substantial contraction of organizations exempt from taxation under section 501(a).
§ 1.6043-4 Information returns relating to certain acquisitions of control and changes in

capital structure.
§ 1.6044-1 Returns of information as to patronage dividends with respect to patronage occurring in taxable years beginning before 1963.
§ 1.6044-2 Returns of information as to payments of patronage dividends.
§ 1.6044-3 Amounts subject to reporting.
§ 1.6044-4 Exemption for certain consumer cooperatives.
§ 1.6044-5 Statements to recipients of patronage dividends.
§ 1.6045-0 Table of contents.
§ 1.6045-1 Returns of information of brokers and barter exchanges.
§ 1.6045-2 Furnishing statement required with respect to certain substitute payments.
§ 1.6045-3 Information reporting for an acquisition of control or a substantial change in capital structure.
§ 1.6045-4 Information reporting on real estate transactions.
§ 1.6045-5 Information reporting on payments to attorneys.
§ 1.6045A-1 Statements of information required in connection with transfers of securities.
§ 1.6045B-1 Returns relating to actions affecting basis of securities.
§ 1.6046-1 Returns as to organization or reorganization of foreign corporations and as to acquisitions of their stock.
§ 1.6046A-1 Return requirement for United States persons who acquire or dispose of an interest in a foreign partnership, or whose proportional interest in a foreign partnership changes substantially.
§ 1.6046-2 Returns as to foreign corporations which are created or organized, or reorganized, on or after September 15, 1960, and before January 1, 1963.
§ 1.6046-3 Returns as to formation or reorganization of foreign corporations prior to September 15, 1960.
§ 1.6047-1 Information to be furnished with regard to employee retirement plan covering an owner-employee.
§ 1.6047-2 Information relating to qualifying longevity annuity contracts.
§ 1.6049-1 Returns of information as to interest paid in calendar years before 1983 and original issue discount includible in gross income for calendar years before 1983.
§ 1.6049-2 Interest and original issue discount subject to reporting in calendar years before 1983.
§ 1.6049-3 Statements to recipients of interest payments and holders of obligations to which there is attributed original issue discount in calendar years before 1983.
§ 1.6049-4 Return of information as to interest paid and original issue discount includible in gross income after December 31, 1982.
§ 1.6049-5 Interest and original issue discount subject to reporting after December 31, 1982.

§ 1.6049(d)-5T Reporting by brokers of interest and original issue discount on and after January 1, 1986 (temporary).
§ 1.6049-6 Statements to recipients of interest payments and holders of obligations for attributed original issue discount.
§ 1.6049-7 Returns of information with respect to REMIC regular interests and collateralized debt obligations.
§ 1.6049-8 Interest and original issue discount paid to certain nonresident aliens.
§ 1.6049-9 Premium subject to reporting for a debt instrument acquired on or after January 1, 2014.
§ 1.6049-10 Reporting of original issue discount on a tax-exempt obligation.
§ 1.6050A-1 Reporting requirements of certain fishing boat operators.
§ 1.6050B-1 Information returns by person making unemployment compensation payments.
§ 1.6050D-1 Information returns relating to energy grants and financing.
§ 1.6050E-1 Reporting of State and local income tax refunds.
§ 1.6050H-0 Table of contents.
§ 1.6050H-1 Information reporting of mortgage interest received in a trade or business from an individual.
§ 1.6050H-2 Time, form, and manner of reporting interest received on qualified mortgage.
§ 1.6050H-3 Information reporting of mortgage insurance premiums.
§ 1.6050I-0 Table of contents.
§ 1.6050I-1 Returns relating to cash in excess of $10,000 received in a trade or business.
§ 1.6050I-2 Returns relating to cash in excess of $10,000 received as bail by court clerks.
§ 1.6050J-1T Questions and answers concerning information returns relating to foreclosures and abandonments of security (temporary).
§ 1.6050K-1 Returns relating to sales or exchanges of certain partnership interests.
§ 1.6050L-1 Information return by donees relating to certain dispositions of donated property.
§ 1.6050L-2 Information returns by donees relating to qualified intellectual property contributions.
§ 1.6050M-1 Information returns relating to persons receiving contracts from certain Federal executive agencies.
§ 1.6050N-1 Statements to recipients of royalties paid after December 31, 1986.
§ 1.6050N-2 Coordination with reporting rules for widely held fixed investment trusts under § 1.671-5.
§ 1.6050P-0 Table of contents.
§ 1.6050P-1 Information reporting for discharges of indebtedness by certain entities.
§ 1.6050P-2 Organization a significant trade or business of which is the lending of money.
§ 1.6050S-0 Table of contents.
§ 1.6050S-1 Information reporting for qualified tuition and related expenses.

§ 1.6050S-2 Information reporting for payments and reimbursements or refunds of qualified tuition and related expenses.
§ 1.6050S-3 Information reporting for payments of interest on qualified education loans.
§ 1.6050S-4 Information reporting for payments of interest on qualified education loans.
§ 1.6050W-1 Information reporting for payments made in settlement of payment card and third party network transactions.
§ 1.6050W-2 Electronic furnishing of information statements for payments made in settlement of payment card and third party network transactions.
§ 1.6050X-1 Information reporting for fines, penalties, and other amounts by governments, governmental entities, and nongovernmental entities treated as governmental entities.
§ 1.6050Y-1 Information reporting for reportable policy sales, transfers of life insurance contracts to foreign persons, and reportable death benefits.
§ 1.6050Y-2 Information reporting by acquirers for reportable policy sale payments.
§ 1.6050Y-3 Information reporting by 6050Y(b) issuers for reportable policy sales and transfers of life insurance contracts to foreign persons.
§ 1.6050Y-4 Information reporting by payors for reportable death benefits.
§ 1.6052-1 Information returns regarding payment of wages in the form of group-term life insurance.
§ 1.6052-2 Statements to be furnished employees with respect to wages paid in the form of group-term life insurance.
§ 1.6055-1 Information reporting for minimum essential coverage.
§ 1.6055-2 Electronic furnishing of statements.
§ 1.6060-1 Reporting requirements for tax return preparers.

Signing and Verifying of Returns and Other Documents

§ 1.6061-1 Signing of returns and other documents by individuals.
§ 1.6062-1 Signing of returns, statements, and other documents made by corporations.
§ 1.6063-1 Signing of returns, statements, and other documents made by partnerships.
§ 1.6065-1 Verification of returns.

Time for Filing Returns and Other Documents

§ 1.6071-1 Time for filing returns and other documents.
§ 1.6072-1 Time for filing returns of individuals, estates, and trusts.
§ 1.6072-2 Time for filing returns of corporations.
§ 1.6072-3 Income tax due dates postponed in case of China Trade Act corporations.
§ 1.6072-4 Time for filing other returns of income.
§ 1.6073-1 Time and place for filing declarations of estimated income tax by individuals.
§ 1.6073-2 Fiscal years.
§ 1.6073-3 Short taxable years.
§ 1.6073-4 Extension of time for filing declarations by individuals.

§ 1.6074-1 Time and place for filing declarations of estimated income tax by corporations.
§ 1.6074-2 Time for filing declarations by corporations in case of a short taxable year.
§ 1.6074-3 Extension of time for filing declarations by corporations.
Extension of Time for Filing Returns
§ 1.6081-1 Extension of time for filing returns.
§ 1.6081-2 Automatic extension of time to file certain returns filed by partnerships.
§ 1.6081-3 Automatic extension of time for filing corporation income tax returns.
§ 1.6081-4 Automatic extension of time for filing individual income tax return.
§ 1.6081-5 Extensions of time in the case of certain partnerships, corporations and U.S. citizens and residents.
§ 1.6081-6 Automatic extension of time to file estate or trust income tax return.
§ 1.6081-7 Automatic extension of time to file Real Estate Mortgage Investment Conduit (REMIC) income tax return.
§ 1.6081-8 Extension of time to file certain information returns.
§ 1.6081-9 Automatic extension of time to file exempt or political organization returns.
§ 1.6081-10 Automatic extension of time to file withholding tax return for U.S. source income of foreign persons.
§ 1.6081-11 Automatic extension of time for filing certain employee plan returns.
Place for Filing Returns or Other Documents
§ 1.6091-1 Place for filing returns or other documents.
§ 1.6091-2 Place for filing income tax returns.
§ 1.6091-3 Filing certain international income tax returns.
§ 1.6091-4 Exceptional cases.
Miscellaneous Provisions
§ 1.6102-1 Computations on returns or other documents.
§ 1.6107-1 Tax return preparer must furnish copy of return or claim for refund to taxpayer and must retain a copy or record.
§ 1.6107-2 Form and manner of furnishing copy of return and retaining copy or record.
§ 1.6109-1 Identifying numbers.
§ 1.6109-2 Tax return preparers furnishing identifying numbers for returns or claims for refund and related requirements.
§ 1.6115-1 Disclosure requirements for quid pro quo contributions.
Regulations Applicable to Returns or Claims for Refund Filed Prior to January 1, 2000
§ 1.6109-2A Furnishing identifying number of income tax return preparer.
Time and Place for Paying Tax
§ 1.6151-1 Time and place for paying tax shown on returns.
§ 1.6153-1 Payment of estimated tax by individuals.
§ 1.6153-2 Fiscal years.

§ 1.6153-3 Short taxable years.
§ 1.6153-4 Extension of time for paying the estimated tax.
Extensions of Time for Payment
§ 1.6161-1 Extension of time for paying tax or deficiency.
§ 1.6162-1 Extension of time for payment of tax on gain attributable to liquidation of personal holding companies.
§ 1.6164-1 Extensions of time for payment of taxes by corporations expecting carrybacks.
§ 1.6164-2 Amount of tax the time for payment of which may be extended.
§ 1.6164-3 Computation of the amount of reduction of the tax previously determined.
§ 1.6164-4 Payment of remainder of tax where extension relates to only part of the tax.
§ 1.6164-5 Period of extension.
§ 1.6164-6 Revised statements.
§ 1.6164-7 Termination by district director.
§ 1.6164-8 Payments on termination.
§ 1.6164-9 Cross references.
§ 1.6165-1 Bonds where time to pay the tax or deficiency has been extended.
General Provisions
§ 1.6302-1 Deposit rules for corporation income and estimated income taxes and certain taxes of tax-exempt organizations.
§ 1.6302-2 Deposit rules for tax withheld on nonresident aliens and foreign corporations.
§ 1.6302-3 Deposit rules for estimated taxes of certain trusts.
§ 1.6302-4 Voluntary payments by electronic funds transfer.
§ 1.6361-1 Collection and administration of qualified State individual income taxes.
Abatements, Credits, and Refunds
§ 1.6411-1 Tentative carryback adjustments.
§ 1.6411-2 Computation of tentative carryback adjustment.
§ 1.6411-3 Allowance of adjustments.
§ 1.6411-4 Consolidated groups.
§ 1.6414-1 Credit or refund of tax withheld on nonresident aliens and foreign corporations.
§ 1.6417-0 Table of Contents.
§ 1.6417-1 Elective payment election of applicable credits.
§ 1.6417-2 Rules for making elective payment elections.
§ 1.6417-3 Special rules for electing taxpayers.
§ 1.6417-4 Elective payment election for electing taxpayers that are partnerships or S corporations.
§ 1.6417-5 Additional information and registration.
§ 1.6417-6 Special rules.
§ 1.6418-0 Table of contents.
§ 1.6418-1 Transfer of eligible credits.

§ 1.6418-2 Rules for making transfer elections.
§ 1.6418-3 Additional rules for partnerships and S corporations.
§ 1.6418-4 Additional information and registration.
§ 1.6418-5 Special rules.
§ 1.6425-1 Adjustment of overpayment of estimated income tax by corporation.
§ 1.6425-2 Computation of adjustment of overpayment of estimated tax.
§ 1.6425-3 Allowance of adjustments.
Additions to the Tax, Additional Amounts, and Assessable Penalties
§ 1.6654-1 Addition to the tax in the case of an individual.
§ 1.6654-2 Exceptions to imposition of the addition to the tax in the case of individuals.
§ 1.6654-3 Short taxable years of individuals.
§ 1.6654-4 [Reserved]
§ 1.6654-5 Payments of estimated tax.
§ 1.6654-6 Nonresident alien individuals.
§ 1.6654-7 Applicability.
§ 1.6655-0 Table of contents.
§ 1.6655-1 Addition to the tax in the case of a corporation.
§ 1.6655-2 Annualized income installment method.
§ 1.6655-2T Safe harbor for certain installments of tax due before July 1, 1987 (temporary).
§ 1.6655-3 Adjusted seasonal installment method.
§ 1.6655-4 Large corporations.
§ 1.6655-5 Short taxable year.
§ 1.6655-6 Methods of accounting.
§ 1.6655-7 Addition to tax on account of excessive adjustment under section 6425.
§ 1.6655(e)-1 Time and manner for making election under the Omnibus Budget Reconciliation Act of 1993.
§ 1.6662-0 Table of contents.
§ 1.6662-1 Overview of the accuracy-related penalty.
§ 1.6662-2 Accuracy-related penalty.
§ 1.6662-3 Negligence or disregard of rules or regulations.
§ 1.6662-4 Substantial understatement of income tax.
§ 1.6662-5 Substantial and gross valuation misstatements under chapter 1.
§ 1.6662-5T Substantial and gross valuation misstatements under chapter 1 (temporary).
§ 1.6662-6 Transactions between persons described in section 482 and net section 482 transfer price adjustments.
§ 1.6662-7 Omnibus Budget Reconciliation Act of 1993 changes to the accuracy-related penalty.
§ 1.6662-9 Inconsistent estate basis reporting.
§ 1.6664-0 Table of contents.

§ 1.6664-1 Accuracy-related and fraud penalties; definitions, effective date and special rules.
§ 1.6664-2 Underpayment.
§ 1.6664-3 Ordering rules for determining the total amount of penalties imposed.
§ 1.6664-4 Reasonable cause and good faith exception to section 6662 penalties.
§ 1.6664-4T Reasonable cause and good faith exception to section 6662 penalties.
§ 1.6694-0 Table of contents.
§ 1.6694-1 Section 6694 penalties applicable to tax return preparers.
§ 1.6694-2 Penalty for understatement due to an unreasonable position.
§ 1.6694-3 Penalty for understatement due to willful, reckless, or intentional conduct.
§ 1.6694-4 Extension of period of collection when tax return preparer pays 15 percent of a penalty for understatement of taxpayer's liability and certain other procedural matters.
§ 1.6695-1 Other assessable penalties with respect to the preparation of tax returns for other persons.
§ 1.6695-2 Tax return preparer due diligence requirements for certain tax returns and claims.
§ 1.6696-1 Claims for credit or refund by tax return preparers or appraisers.
§ 1.6709-1T Penalties with respect to mortgage credit certificates (temporary).
§ 1.6851-1 Termination assessments of income tax.
§ 1.6851-2 Certificates of compliance with income tax laws by departing aliens.
§ 1.6851-3 Furnishing of bond to insure payment; cross reference.

Declaratory Judgments Relating to Qualification of Certain Retirement Plans

§ 1.7476-1 Interested parties.
§ 1.7476-2 Notice to interested parties.
§ 1.7476-3 Notice of determination.
§ 1.7519-0T Table of contents (temporary).
§ 1.7519-1T Required payments for entities electing not to have required year (temporary).
§ 1.7519-2T Required payments—procedures and administration (temporary).
§ 1.7519-3T Effective date (temporary).

General Actuarial Valuations

§ 1.7520-1 Valuation of annuities, unitrust interests, interests for life or terms of years, and remainder or reversionary interests.
§ 1.7520-2 Valuation of charitable interests.
§ 1.7520-3 Limitation on the application of section 7520.
§ 1.7520-4 Transitional rules.
§ 1.7701-1 Definitions; spouse, husband and wife, husband, wife, marriage.
§ 1.7701(l)-0 Table of contents.
§ 1.7701(l)-1 Conduit financing arrangements.
§ 1.7701(l)-3 Recharacterizing financing arrangements involving fast-pay stock.

§ 1.7701(l)-4 Rules regarding inversion transactions.
§ 1.7702-0 Table of contents.
§ 1.7702-2 Attained age of the insured under a life insurance contract.
§ 1.7702B-1 Consumer protection provisions.
§ 1.7702B-2 Special rules for pre-1997 long-term care insurance contracts.
§ 1.7703-1 Determination of marital status.
§ 1.7704-1 Publicly traded partnerships.
§ 1.7704-2 Transition provisions.
§ 1.7704-3 Qualifying income.
§ 1.7704-4 Qualifying income—mineral and natural resources.
§§ 1.7872-1-1.7872-4 [Reserved]
§ 1.7872-5 Exempted loans.
§ 1.7872-5T Exempted loans (temporary).
§ 1.7872-15 Split-dollar loans.
§ 1.7872-16 Loans to an exchange facilitator under § 1.468B-6.
§ 1.7874-1 Disregard of affiliate-owned stock.
§ 1.7874-2 Surrogate foreign corporation.
§ 1.7874-3 Substantial business activities.
§ 1.7874-4 Disregard of certain stock related to the domestic entity acquisition.
§ 1.7874-5 Effect of certain transfers of stock related to the acquisition.
§ 1.7874-6 Stock transferred by members of the EAG.
§ 1.7874-7 Disregard of certain stock attributable to passive assets.
§ 1.7874-8 Disregard of certain stock attributable to serial acquisitions.
§ 1.7874-9 Disregard of certain stock in third-country transactions.
§ 1.7874-10 Disregard of certain distributions.
§ 1.7874-11 Rules regarding inversion gain.
§ 1.7874-12 Definitions.
§ 1.9000-1 Statutory provisions.
§ 1.9000-2 Effect of repeal in general.
§ 1.9000-3 Requirement of statement showing increase in tax liability.
§ 1.9000-4 Form and content of statement.
§ 1.9000-5 Effect of filing statement.
§ 1.9000-6 Provisions for the waiver of interest.
§ 1.9000-7 Provisions for estimated tax.
§ 1.9000-8 Extension of time for making certain payments.
§ 1.9001 Statutory provisions; Retirement-Straight Line Adjustment Act of 1958.
§ 1.9001-1 Change from retirement to straight-line method of computing depreciation.
§ 1.9001-2 Basis adjustments for taxable years beginning on or after 1956 adjustment date.
§ 1.9001-3 Basis adjustments for taxable years between changeover date and 1956

adjustment date.
§ 1.9001-4 Adjustments required in computing excess-profits credit.
§ 1.9002 Statutory provisions; Dealer Reserve Income Adjustment Act of 1960 (74 Stat. 124).
§ 1.9002-1 Purpose, applicability, and definitions.
§ 1.9002-2 Election to have the provisions of section 481 of the Internal Revenue Code of 1954 apply.
§ 1.9002-3 Election to have the provisions of section 481 of the Internal Revenue Code of 1954 not apply.
§ 1.9002-4 Election to pay net increase in tax in installments.
§ 1.9002-5 Special rules relating to interest.
§ 1.9002-6 Acquiring corporation.
§ 1.9002-7 Statute of limitations.
§ 1.9002-8 Manner of exercising elections.
§ 1.9003 Statutory provisions; section 4 of the Act of September 14, 1960 (Pub. L. 86-781, 74 Stat. 1017).
§ 1.9003-1 Election to have the provisions of section 613(c) (2) and (4) of the 1954 Code, as amended, apply for past years.
§ 1.9003-2 Effect of election.
§ 1.9003-3 Statutes of limitation.
§ 1.9003-4 Manner of exercising election.
§ 1.9003-5 Terms; applicability of other laws.
§ 1.9004 Statutory provisions; the Act of September 26, 1961 (Pub. L. 87-312, 75 Stat. 674).
§ 1.9004-1 Election relating to the determination of gross income from the property for taxable years beginning prior to 1961 in the case of certain clays and shale.
§ 1.9004-2 Effect of election.
§ 1.9004-3 Statutes of limitation.
§ 1.9004-4 Manner of exercising election.
§ 1.9004-5 Terms; applicability of other laws.
§ 1.9005 Statutory provisions; section 2 of the Act of September 26, 1961 (Pub. L. 87-321, 75 Stat. 683).
§ 1.9005-1 Election relating to the determination of gross income from the property for taxable years beginning prior to 1961 in the case of clay and quartzite used in making refractory products.
§ 1.9005-2 Effect of election.
§ 1.9005-3 Statutes of limitation.
§ 1.9005-4 Manner of exercising election.
§ 1.9005-5 Terms; applicability of other laws.
Tax Reform Act of 1969

§ 1.9006 Statutory provisions; Tax Reform Act of 1969.
§ 1.9006-1 Interest and penalties in case of certain taxable years.
§ 1.9101-1 Permission to submit information required by certain returns and statements on magnetic tape.
§ 1.9200-1 Deduction for motor carrier operating authority.
§ 1.9200-2 Manner of taking deduction.
§ 1.9300-1 Reduction in taxable income for housing displaced individuals.

PART 1—INCOME TAXES

Authority: 26 U.S.C. 7805, unless otherwise noted.

Section 1.1(h)-1 also issued under 26 U.S.C. 1(h);
Section 1.21-1 also issued under 26 U.S.C. 21(f);
Section 1.21-2 also issued under 26 U.S.C. 21(f);
Section 1.21-3 also issued under 26 U.S.C. 21(f);
Section 1.21-4 also issued under 26 U.S.C. 21(f);
Section 1.25-1T also issued under 26 U.S.C. 25;
Section 1.25-2T also issued under 26 U.S.C. 25;
Section 1.25-3 also issued under 26 U.S.C. 25;
Section 1.25-3T also issued under 26 U.S.C. 25;
Section 1.25-4T also issued under 26 U.S.C. 25;
Section 1.25-5T also issued under 26 U.S.C. 25;
Section 1.25-6T also issued under 26 U.S.C. 25;
Section 1.25-7T also issued under 26 U.S.C. 25;
Section 1.25-8T also issued under 26 U.S.C. 25;
Section 1.25A-1 also issued under section 26 U.S.C. 25A(i);
Section 1.25A-2 also issued under section 26 U.S.C. 25A(i);
Section 1.25A-3 also issued under section 26 U.S.C. 25A(i);
Section 1.25A-4 also issued under section 26 U.S.C. 25A(i);
Section 1.25A-5 also issued under section 26 U.S.C. 25A(i);
Section 1.25E-1 also issued under 26 U.S.C. 25E.
Section 1.25E-2 also issued under 26 U.S.C. 25E.
Section 1.25E-3 also issued under 26 U.S.C. 25E, 26 U.S.C. 30D(g)(1) and (g)(10), and 26 U.S.C. 6011.
Section 1.28-0 also issued under 26 U.S.C. 28(d)(5);
Section 1.28-1 also issued under 26 U.S.C. 28(d)(5);
Section 1.30-1 also issued under 26 U.S.C. 30(d)(2);
Section 1.30C-3 also issued under 26 U.S.C. 30;
Section 1.30D-1 also issued under 26 U.S.C. 30D.

Section 1.30D-2 also issued under 26 U.S.C. 30D.
Section 1.30D-3 also issued under 26 U.S.C. 30D.
Section 1.30D-4 also issued under 26 U.S.C. 30D and 26 U.S.C. 45W(d)(3).
Section 1.30D-5 also issued under 26 U.S.C. 30D and 26 U.S.C. 6011.
Section 1.30D-6 also issued under 26 U.S.C. 30D.
Section 1.36B-1 also issued under 26 U.S.C. 36B(h).
Section 1.36B-2 also issued under 26 U.S.C. 36B(h).
Section 1.36B-3 also issued under 26 U.S.C. 36B(h).
Section 1.36B-4 also issued under 26 U.S.C. 36B(h).
Section 1.36B-5 also issued under 26 U.S.C. 36B(h).
Section 1.36B-6 also issued under 26 U.S.C. 36B(h).
Section 1.41-4 also issued under 26 U.S.C. 41(d)(4)(E).
Section 1.41-6 also issued under 26 U.S.C. 41(f)(1) and 1502;
Section 1.41-8 also issued under 26 U.S.C. 41(c)(4)(B);
Section 1.41-8T also issued under 26 U.S.C. 41(c)(4)(B);
Section 1.41-9 also issued under 26 U.S.C. 41(c)(5)(C);
Section 1.41-9T also issued under 26 U.S.C. 41(c)(5)(C);
Section 1.42-1 also issued under 26 U.S.C. 42(n);
Section 1.42-1T also issued under 26 U.S.C. 42(n);
Section 1.42-3 also issued under 26 U.S.C. 42(n);
Section 1.42-4 also issued under 26 U.S.C. 42(n);
Section 1.42-5 also issued under 26 U.S.C. 42(n);
Sections 1.42-6, 1.42-8, 1.42-9, 1.42-10, 1.42-11, and 1.42-12, also issued under 26 U.S.C. 42(n);
Section 1.42-13 also issued under 26 U.S.C. 42(n);
Section 1.42-14 also issued under 26 U.S.C. 42(n);
Section 1.42-15 also issued under 26 U.S.C. 42(n);
Section 1.42-16 also issued under 26 U.S.C. 42(n);
Section 1.42-17 also issued under 26 U.S.C. 42(n);
Section 1.42-18 also issued under 26 U.S.C. 42(h)(6)(F) and 42(h)(6)(K);
Section 1.42-19 also issued under 26 U.S.C. 42(n);
Sections 1.43-0—1.43-7 also issued under section 26 U.S.C. 43;
Section 1.45-6 also issued under 26 U.S.C. 45.
Section 1.45-7 also issued under 26 U.S.C. 45.
Section 1.45-8 also issued under 26 U.S.C. 45.
Section 1.45-12 also issued under 26 U.S.C. 45.
Section 1.45D-1 also issued under 26 U.S.C. 45D(e)(2) and (i);
Section 1.45G-1 also issued under 26 U.S.C. 45G(e)(2);
Section 1.45L-3 also issued under 26 U.S.C. 45L.
Sections 1.45Q-1, 1.45Q-2, 1.45Q-3, 1.45Q-4, and 1.45Q-5 also issued under 26 U.S.C. 45Q(h).
Section 1.45Q-3 also issued under 26 U.S.C. 45Q(f)(2).

Section 1.45Q-4 also issued under 26 U.S.C. 45Q(f)(5).
Section 1.45Q-5 also issued under 26 U.S.C. 45Q(f)(4).
Section 1.45Q-6 also issued under 26 U.S.C. 45Q.
Section 1.45U-3 also issued under 26 U.S.C. 45U.
Section 1.45V-1 also issued under 26 U.S.C. 45V(c)(1)(B) and 45V(f).
Section 1.45V-2 also issued under 26 U.S.C. 45V(c)(1)(B) and 45V(f).
Section 1.45V-3 also issued under 26 U.S.C. 45V.
Section 1.45V-4 also issued under 26 U.S.C. 45V(c)(1)(B) and 45V(f).
Section 1.45V-5 also issued under 26 U.S.C. 45V(c)(1)(B) and 45V(f).
Section 1.45V-6 also issued under 26 U.S.C. 45V(c)(1)(B) and 45V(f).
Section 1.45X-1 also issued under 26 U.S.C. 45X, 6001, 6417(h) and 6418(h).
Section 1.45X-2 also issued under 26 U.S.C. 45X and 1502.
Section 1.45X-3 also issued under 26 U.S.C. 6001.
Section 1.45X-4 also issued under 26 U.S.C. 6001.
Section 1.45Y-1 also issued under 26 U.S.C. 45Y(f).
Section 1.45Y-2 also issued under 26 U.S.C. 45Y(f).
Section 1.45Y-3 also issued under 26 U.S.C. 45Y(f).
Section 1.45Y-4 also issued under 26 U.S.C. 45Y(f).
Section 1.45Y-5 also issued under 26 U.S.C. 45Y(b) and (f).
Section 1.45Z-3 also issued under 26 U.S.C. 45Z.
Section 1.46-5 also issued under 26 U.S.C. 46(d)(6) and 26 U.S.C. 47(a)(3)(C);
Section 1.46-6 also issued under 26 U.S.C. 46(f)(7);
Section 1.47-1 also issued under 26 U.S.C. 47(a);
Section 1.48-9 also issued under 26 U.S.C. 48(a)(3)(D)(i) and (16).
Section 1.48-13 also issued under 26 U.S.C. 48(a)(10)(C) and (16).
Section 1.48-14 also issued under 26 U.S.C. 48(a)(16).
Section 1.48-15 also issued under 26 U.S.C. 48(a)(15)
Section 1.48D-6 also issued under 26 U.S.C. 48D(d)(6);
Section 1.48D-6T also issued under 26 U.S.C. 48D(d)(2)(E) and (6);
Section 1.48(e)-1 issued under 26 U.S.C. 48.
Section 1.48E-1 also issued under 26 U.S.C. 48E(i).
Section 1.48E-2 also issued under 26 U.S.C. 48E(i).
Section 1.48E-3 also issued under 26 U.S.C. 48E(i).
Section 1.48E-4 also issued under 26 U.S.C. 48E(i).
Section 1.48E-5 also issued under 26 U.S.C. 48E(i).
Section 1.48E(h)-1 also issued under 26 U.S.C. 48E(i).
Section 1.50-2 also issued under 26 U.S.C. 50(a)(3)(C), and 50(a)(6).
Sections 1.50A—1.50B also issued under 85 Stat. 553 (26 U.S.C. 40(b));
Section 1.52-1 also issued under 26 U.S.C. 52(b);

Section 1.56(g)-1 also issued under section 7611(g)(3) of the Omnibus Budget Reconciliation Act of 1989 (Pub. L. 101-239, 103 Stat. 2373).

Section 1.59A-0 also issued under 26 U.S.C. 59A(i).

Section 1.59A-1 also issued under 26 U.S.C. 59A(i).

Section 1.59A-2 also issued under 26 U.S.C. 59A(i).

Section 1.59A-3 also issued under 26 U.S.C. 59A(i).

Section 1.59A-4 also issued under 26 U.S.C. 59A(i).

Section 1.59A-5 also issued under 26 U.S.C. 59A(i).

Section 1.59A-6 also issued under 26 U.S.C. 59A(i).

Section 1.59A-7 also issued under 26 U.S.C. 59A(i).

Section 1.59A-8 also issued under 26 U.S.C. 59A(i).

Section 1.59A-9 also issued under 26 U.S.C. 59A(i).

Section 1.59A-10 also issued under 26 U.S.C. 59A(i).

Section 1.61-2T also issued under 26 U.S.C. 61.

Section 1.61-21 also issued under 26 U.S.C. 61.

Sections 1.62-1T and 1.62-2 also issued under 26 U.S.C. 62.

Section 1.66-4 also issued under 26 U.S.C. 66(c);

Sections 1.67-2T and 1.67-3T also issued under 26 U.S.C. 67(c).

Section 1.67-3 also issued under 26 U.S.C. 67(c).

Section 1.67-4 also issued under 26 U.S.C. 67(e).

Sections 1.72-4, 1.72-5, 1.72-6, 1.72-7, 1.72-8, and 1.72-11 also issued under 26 U.S.C. 72(c).

Section 1.78-1 also issued under 26 U.S.C. 245A(g).

Section 1.101-7 also issued under 26 U.S.C. 101(d)(2)(B)(ii).

Section 1.103-10 also issued under 26 U.S.C. 103(b)(6).

Section 1.103A-2 also issued under 26 U.S.C. 103A(j).

Section 1.108-1 also issued under 26 U.S.C. 108(e)(8) and 108(e)(10(B).

Section 1.108-2 also issued under 26 U.S.C. 108.

Section 1.108-3 also issued under 26 U.S.C. 108, 267, and 1502.

Section 1.108-4 also issued under 26 U.S.C. 108.

Section 1.108-5 also issued under 26 U.S.C. 108.

Section 1.108(c)-1 also issued under the authority of 26 U.S.C. 108(d)(9).

Section 1.108(i)-0 also issued under 26 U.S.C. 108(i)(7) and 1502.

Section 1.108(i)-1 also issued under 26 U.S.C. 108(i)(7) and 1502.

Section 1.108(i)-2 also issued under 26 U.S.C. 108(i)(7).

Section 1.108(i)-3 also issued under 26 U.S.C. 108(i)(7) and 1502.

Section 1.110-1 also issued under 26 U.S.C. 110(d).

Sections 1.132-0 through 1.132-8T also issued under 26 U.S.C. 132(o).

Section 1.139E-1 also issued under 26 U.S.C. 139E.

Section 1.139E-1(d)(6) also issued under 26 U.S.C. 7872.

Section 1.139E-2 also issued under 26 U.S.C. 139E.

Section 1.148-0 through 1.148-11 also issued under 26 U.S.C. 148(i).
Section 1.148-6 also issued under 26 U.S.C. 148 (f), (g), and (i).
Section 1.149(b)-1 also issued under 26 U.S.C. 149(b)(3)(B) (v).
Section 1.149(d)-1 also issued under 26 U.S.C. 149(d)(7).
Section 1.149(e)-1 also issued under 26 U.S.C. 149(e).
Section 1.149(g)-1 also issued under 26 U.S.C. 149(g)(5).
Section 1.150-4 also issued under 26 U.S.C. 150 (c)(5).
Section 1.152-4 also issued under 26 U.S.C. 152(e).
Section 1.162-24 also issued under 26 U.S.C. 162(h).
Section 1.162(k)-1 is also issued under section 26 U.S.C. 162(k).
Section 1.163-8T also issued under 26 U.S.C. 469(k)(4).
Section 1.163-9T also issued under 26 U.S.C. 163(h)(3)(D).
Section 1.163(j)-1 also issued under 26 U.S.C. 163(j)(8)(B) and 26 U.S.C. 1502.
Section 1.163(j)-2 also issued under 26 U.S.C. 1502.
Section 1.163(j)-3 also issued under 26 U.S.C. 1502.
Section 1.163(j)-4 also issued under 26 U.S.C. 163(j)(8)(B) and 26 U.S.C. 1502.
Section 1.163(j)-5 also issued under 26 U.S.C. 1502.
Section 1.163(j)-6 also issued under 26 U.S.C. 163(j)(8)(B) and 26 U.S.C. 1502.
Section 1.163(j)-7 also issued under 26 U.S.C. 163(j)(8)(B) and 26 U.S.C. 1502.
Section 1.163(j)-8 also issued under 26 U.S.C. 163(j)(8)(B).
Section 1.163(j)-9 also issued under 26 U.S.C. 163(j)(7)(B) and (C) and 26 U.S.C. 1502.
Section 1.163(j)-10 also issued under 26 U.S.C. 163(j)(8)(B) and 26 U.S.C. 1502.
Section 1.163(j)-11 also issued under 26 U.S.C. 1502.
Section 1.165-12 also issued under 26 U.S.C. 165(j)(3).
Section 1.166-10 also issued under 26 U.S.C. 166(f).
Section 1.168(d)-1 also issued under 26 U.S.C. 168(d)(3).
Section 1.168(f)(8)-1T also added under sec. 112(c), Black Lung Benefits Revenue Act of 1981 (Pub. L. 97-119).
Section 1.168(h)-1 also issued under 26 U.S.C. 168.
Section 1.168(i)-1 also issued under 26 U.S.C. 168(i)(4).
Section 1.168(i)-1T also issued under 26 U.S.C. 168(i)(4).
Section 1.168(i)-2 also issued under 26 U.S.C. 168.
Section 1.168(i)-4 also issued under 26 U.S.C. 168(i)(5).
Section 1.168(j)-1T also added under 26 U.S.C. 168(j)(10).
Section 1.170A-1 also issued under 26 U.S.C. 170(a).
Section 1.170A-6 also issued under 26 U.S.C. 170(f)(4); 26 U.S.C. 642(c)(5).
Section 1.170A-12 also issued under 26 U.S.C. 170(f)(4).
Section 1.170A-13 also issued under 26 U.S.C. 170(f)(8).
Section 1.170A-14 also issued under 26 U.S.C. 170(f)(11) and 170(h)(7).
Section 1.170A-15 also issued under 26 U.S.C. 170(a)(1).
Section 1.170A-16 also issued under 26 U.S.C. 170(f)(11), 170(f)(19), 170(h)(7)(G), 6001, and 6011.

Section 1.170A-17 also issued under 26 U.S.C. 170(a)(1) and 170(f)(11).
Section 1.170A-18 also issued under 26 U.S.C. 170(a)(1).
Section 1.171-2 also issued under 26 U.S.C. 171(e).
Section 1.171-3 also issued under 26 U.S.C. 171(e).
Section 1.171-4 also issued under 26 U.S.C. 171(c).
Section 1.179-1 also issued under 26 U.S.C. 179(d)(6) and (10).
Section 1.179-4 also issued under 26 U.S.C. 179(c).
Section 1.179-6 also issued under 26 U.S.C. 179(c).
Section 1.179D-3 also issued under 26 U.S.C. 179D.
Section 1.197-2 also issued under 26 U.S.C. 197.
Section 1.199A-1 also issued under 26 U.S.C. 199A(f)(4).
Section 1.199A-2 also issued under 26 U.S.C. 199A(b)(5), (f)(1)(A), (f)(4), and (h).
Section 1.199A-3 also issued under 26 U.S.C. 199A(c)(4)(C) and (f)(4).
Section 1.199A-4 also issued under 26 U.S.C. 199A(f)(4).
Section 1.199A-5 also issued under 26 U.S.C. 199A(f)(4).
Section 1.199A-6 also issued under 26 U.S.C. 199A(f)(1)(B) and (f)(4).
Section 1.199A-7 also issued under 26 U.S.C. 199A(f)(4) and (g)(6).
Section 1.199A-8 also issued under 26 U.S.C. 199A(g)(6).
Section 1.199A-9 also issued under 26 U.S.C. 199A(g)(6).
Section 1.199A-10 also issued under 26 U.S.C. 199A(g)(6).
Section 1.199A-11 also issued under 26 U.S.C. 199A(g)(6).
Section 1.199A-12 also issued under 26 U.S.C. 199A(g)(6).
Section 1.216-2 also issued under 26 U.S.C. 216(d).
Section 1.221-2 also issued under 26 U.S.C. 221(d).
Section 1.245A-5 also issued under 26 U.S.C. 245A(g), 951A(a), 954(c)(6)(A), and 965(o).
Sections 1.245A-6 through 1.245A-11 also issued under 26 U.S.C. 245A(g), 882(c)(1)(A), 951A, 954(b)(5), 954(c)(6), and 965(o).
Section 1.245A(d)-1 also issued under 26 U.S.C. 245A(g).
Section 1.245A(e)-1 also issued under 26 U.S.C. 245A(g).
Section 1.250-0 also issued under 26 U.S.C. 250(c).
Section 1.250-1 also issued under 26 U.S.C. 250(c).
Section 1.250(a)-1 also issued under 26 U.S.C. 250(c) and 6001.
Section 1.250(b)-1 also issued under 26 U.S.C. 250(c) and 6001.
Section 1.250(b)-2 also issued under 26 U.S.C. 250(c).
Section 1.250(b)-3 also issued under 26 U.S.C. 250(c).
Section 1.250(b)-4 also issued under 26 U.S.C. 250(c).
Section 1.250(b)-5 also issued under 26 U.S.C. 250(c).
Section 1.250(b)-6 also issued under 26 U.S.C. 250(c).
Section 1.263A-1 also issued under 26 U.S.C. 263A(j).
Section 1.263A-2 also issued under 26 U.S.C. 263A(j).

Section 1.263A-3 also issued under 26 U.S.C. 263A(j).
Section 1.263A-4 also issued under 26 U.S.C. 263A.
Section 1.263A-4T also issued under 26 U.S.C. 263A.
Section 1.263A-5 also issued under 26 U.S.C. 263A.
Section 1.263A-6 also issued under 26 U.S.C. 263A.
Section 1.263A-7 also issued under 26 U.S.C. 263A(j).
Section 1.263A-7T also issued under 26 U.S.C. 263A.
Sections 1.263A-8 through 1.263A-15 also issued under 26 U.S.C. 263A(j).
Sections 1.267A-1 through 1.267A-7 also issued under 26 U.S.C. 267A(e).
Section 1.267(a)-3 also issued under 26 U.S.C. 267(a)(3)(A) and (a)(3)(B)(ii).
Section 1.267(f)-1 also issued under 26 U.S.C. 267 and 1502.
Section 1.269-3(d) also issued under 26 U.S.C. 382(m).
Section 1.274-2 also issued under 26 U.S.C. 274(o).
Section 1.274-5 also issued under 26 U.S.C. 274(p).
Section 1.274-5T also issued under 26 U.S.C. 274(d).
Section 1.274-9 also issued under 26 U.S.C. 274(o).
Section 1.274-10 also issued under 26 U.S.C. 274(o).
Section 1.274-11 also issued under 26 U.S.C. 274.
Section 1.274-12 also issued under 26 U.S.C. 274.
Section 1.274-13 also issued under 26 U.S.C. 274.
Section 1.274-14 also issued under 26 U.S.C. 274.
Section 1.274(d)-1 also issued under 26 U.S.C. 274(d).
Section 1.274(d)-1T also issued under 26 U.S.C. 274(d).
Section 1.280C-4 also issued under 26 U.S.C. 280C(c)(4).
Section 1.280F-1T also issued under 26 U.S.C. 280F.
Section 1.280F-6 also issued under 26 U.S.C. 280F.
Section 1.280F-7 also issued under 26 U.S.C. 280F(c).
Section 1.280G-1 also issued under 26 U.S.C. 280G(b) and (e).
Section 1.301-1 also issued under 26 U.S.C. 357(d)(3).
Section 1.301-1T also issued under 26 U.S.C. 357(d)(3).
Section 1.304-5 also issued under 26 U.S.C. 304.
Section 1.304-7 also issued under 26 U.S.C. 304(b)(5)(C).
Section 1.305-3 also issued under 26 U.S.C. 305.
Section 1.305-5 also issued under 26 U.S.C. 305.
Section 1.305-7 also issued under 26 U.S.C. 305.
Section 1.332-8 also issued under 26 U.S.C. 332(d)(4).
Section 1.334-1 also issued under 26 U.S.C. 367(b).
Section 1.336-1 is also issued under 26 U.S.C. 336.
Section 1.336-2 is also issued under 26 U.S.C. 336.
Section 1.336-3 is also issued under 26 U.S.C. 336.

Section 1.336-4 is also issued under 26 U.S.C. 336.
Section 1.336-5 is also issued under 26 U.S.C. 336.
Section 1.337(d)-1 also issued under 26 U.S.C. 337(d).
Section 1.337(d)-2 also issued under 26 U.S.C. 337(d).
Section 1.337(d)-3 also issued under 26 U.S.C. 337(d).
Section 1.337(d)-4 also issued under 26 U.S.C. 337.
Section 1.337(d)-5 also issued under 26 U.S.C. 337.
Section 1.337(d)-6 also issued under 26 U.S.C. 337.
Section 1.337(d)-7 also issued under 26 U.S.C. 337.
Section 1.337(d)-7T also issued under 26 U.S.C. 337(d) and 355(h).
Section 1.338-1 also issued under 26 U.S.C. 337(d), 338, and 1502.
Section 1.338-2 also issued under 26 U.S.C. 337(d), 338, and 1502.
Section 1.338-3 also issued under 26 U.S.C. 337(d), 338, and 1502.
Section 1.338-4 also issued under 26 U.S.C. 337(d), 338, and 1502.
Section 1.338-5 also issued under 26 U.S.C. 337(d), 338, and 1502.
Section 1.338-6 also issued under 26 U.S.C. 337(d), 338, and 1502.
Section 1.338-7 also issued under 26 U.S.C. 337(d), 338, and 1502.
Section 1.338-8 also issued under 26 U.S.C. 337(d), 338, and 1502.
Section 1.338-9 also issued under 26 U.S.C. 337(d), 338, and 1502.
Section 1.338-10 also issued under 26 U.S.C. 337(d), 338, and 1502.
Section 1.338-11 also issued under 26 U.S.C. 338.
Section 1.338-11T also issued under 26 U.S.C. 338.
Section 1.338(h)(10)-1 also issued under 26 U.S.C. 337(d), 338, and 1502.
Section 1.338(h)(10)-1T also issued under 26 U.S.C. 337(d), 338 and 1502.
Section 1.338(i)-1 also issued under 26 U.S.C. 337(d), 338, and 1502.
Section 1.351-1 also issued under 26 U.S.C. 351.
Section 1.351-2 also issued under 26 U.S.C. 351(g)(4).
Section 1.354-1 also issued under 26 U.S.C. 351(g)(4).
Section 1.355-1 also issued under 26 U.S.C. 351(g)(4).
Section 1.355-2(g) and (i) also issued under 26 U.S.C. 355(b)(3)(D).
Section 1.355-2T(g) and (i) are also issued under 26 U.S.C. 355(b)(3)(D).
Section 1.355-6 also issued under 26 U.S.C. 355(d)(9).
Section 1.355-7 also issued under 26 U.S.C. 355(e)(5).
Section 1.355-8 also issued under 26 U.S.C. 336(e), 355(e)(3)(B), 355(e)(5), and 355(f).
Section 1.356-6 also issued under 26 U.S.C. 351(g)(4).
Section 1.356-7 also issued under 26 U.S.C. 351(g)(4).
Section 1.358-2 also issued under 26 U.S.C. 358(b)(1).
Section 1.358-5 also issued under 26 U.S.C. 358(h)(2).
Section 1.358-5T also issued under 26 U.S.C. 358(h)(2).
Section 1.358-7 also issued under Public Law 106-554, 114 Stat. 2763, 2763A-638 (2001).

Section 1.362-3 also issued under 26 U.S.C. 367(b).
Section 1.362-4 also issued under 26 U.S.C. 362(e)(2)(C)(ii).
Section 1.367(a)-1 also issued under 26 U.S.C. 367(a).
Section 1.367(a)-1T also issued under 26 U.S.C. 367(a).
Section 1.367(a)-3 also issued under 26 U.S.C. 367(a).
Section 1.367(a)-3T also issued under 26 U.S.C. 367(a).
Section 1.367(a)-7 also issued under 26 U.S.C. 367(a), (b), (c), and 337(d).
Section 1.367(a)-8 also issued under 26 U.S.C. 367(a) and (b).
Section 1.367(a)-9T also issued under 26 U.S.C. 367(a) and (b).
Section 1.367(b)-0 also issued under 26 U.S.C. 367(b).
Section 1.367(b)-1 also issued under 26 U.S.C. 367(a) and (b).
Section 1.367(b)-2 also issued under 26 U.S.C. 367(a) and (b).
Sections 1.367(b)-2(c)(1) and (2) also issued under 26 U.S.C. 367(b)(1) and (2).
Section 1.367(b)-2(d)(3) also issued under 26 U.S.C. 367(b)(1) and (2).
Section 1.367(b)-3 also issued under 26 U.S.C. 367(a) and (b).
Section 1.367(b)-3T also issued under 26 U.S.C. 367(a) and (b).
Section 1.367(b)-4 also issued under 26 U.S.C. 367(a) and (b) and 954(c)(6)(A).
Section 1.367(b)-4(b)(1) also issued under 26 U.S.C. 367(b).
Section 1.367(b)-4(d) also issued under 26 U.S.C. 367(b)(1) and (2).
Section 1.367(b)-6 also issued under 26 U.S.C. 367(b).
Section 1.367(b)-7 also issued under 26 U.S.C. 367(a) and (b), 26 U.S.C. 902, and 26 U.S.C. 904.
Section 1.367(b)-8 also issued under 26 U.S.C. 367(b).
Section 1.367(b)-9 also issued under 26 U.S.C. 367(a) and (b), 26 U.S.C. 902, and 26 U.S.C. 904.
Section 1.367(b)-10 also issued under 26 U.S.C. 367(b).
Section 1.367(b)-12 also issued under 26 U.S.C. 367(a) and (b).
Section 1.367(b)-13 also issued under 26 U.S.C. 367(b).
Section 1.367(d)-1 also issued under 26 U.S.C. 367(d).
Section 1.367(e)-1 also issued under 26 U.S.C. 367(e)(1).
Section 1.367(e)-1(a) also issued under 26 U.S.C. 367(e).
Section 1.367(e)-2 also issued under 26 U.S.C. 367(e)(2).
Section 1.382-1 also issued under 26 U.S.C. 382(m).
Section 1.382-2 also issued under 26 U.S.C. 382(k)(1), (l)(3), (m), and 26 U.S.C. 383.
Section 1.382-2T also issued under 26 U.S.C. 382(g)(4)(C), (i), (k)(1) and (6), (l)(3), (m), and 26 U.S.C. 383.
Section 1.382-3 also issued under 26 U.S.C. 382(g)(4)(C) and 26 U.S.C. 382(m).
Section 1.382-4 also issued under 26 U.S.C. 382(l)(3) and 382(m).
Section 1.382-5 also issued under 26 U.S.C. 382(m).
Section 1.382-5T also issued under 26 U.S.C. 382(m).
Section 1.382-6 also issued under 26 U.S.C. 382(b)(3)(A), 26 U.S.C.(d)(1), 26 U.S.C. 382(m), and 26 U.S.C.383(d).
Section 1.382-7 also issued under 26 U.S.C 382(m).
Section 1.382-7T also issued under 26 U.S.C. 382(m).

Section 1.382-8 also issued under 26 U.S.C. 382(m).
Section 1.382-9 also issued under 26 U.S.C. 382(l)(3) and (m).
Section 1.382-10 also issued under 26 U.S.C 382(m).
Section 1.382-10T is also issued under 26 U.S.C. 382(m).
Section 1.382-12 also issued under 26 U.S.C. 382(f) and 26 U.S.C. 382(m).
Section 1.383-0 also issued under 26 U.S.C. 382(m) and 26 U.S.C. 383.
Section 1.383-1 also issued under 26 U.S.C. 382(m) and 26 U.S.C. 383.
Section 1.383-2 also issued under 26 U.S.C. 383.
Section 1.385-1 also issued under 26 U.S.C. 385.
Section 1.385-3 also issued under 26 U.S.C. 385, 701, 1502, 1504(a)(5)(A), and 7701(l).
Section 1.385-4 also issued under 26 U.S.C. 385 and 1502.
Section 1.401-12 also issued under 26 U.S.C. 401(d)(1).
Section 1.401(a)-1 also issued under 26 U.S.C. 401
Section 1.401(a)(2)-1 also issued under Multiemployer Pension Plan Amendments Act, Public Law 96-364, 410, (94 Stat. 1208, 1308)(1980).
Section 1.401(a)(5)-1 also issued under 26 U.S.C. 401(a)(5).
Section 1.401(a)(9)-1 also issued under 26 U.S.C. 401(a)(9).
Section 1.401(a)(9)-2 also issued under 26 U.S.C. 401(a)(9).
Section 1.401(a)(9)-3 also issued under 26 U.S.C. 401(a)(9).
Section 1.401(a)(9)-4 also issued under 26 U.S.C. 401(a)(9).
Section 1.401(a)(9)-5 also issued under 26 U.S.C. 401(a)(9).
Section 1.401(a)(9)-6 also issued under 26 U.S.C. 401(a)(9).
Section 1.401(a)(9)-7 also issued under 26 U.S.C. 401(a)(9).
Section 1.401(a)(9)-8 also issued under 26 U.S.C. 401(a)(9).
Section 1.401(a)(9)-9 also issued under 26 U.S.C. 401(a)(9).
Section 1.401(a)(17)-1 also issued under 26 U.S.C. 401(a)(17).
Sections 1.401(a)(26)-1 through (a)(26)-9 also issued under 26 U.S.C. 401(a)(26).
Section 1.401(a)(35)-1 is also issued under 26 U.S.C. 401(a)(35).
Section 1.401(a)-21 also issued under 26 U.S.C. 401 and section 104 of the Electronic Signatures in Global and National Commerce Act, Public Law 106-229 (114 Stat. 464).
Section 1.401(b)-1 also issued under 26 U.S.C. 401(b).
Section 1.401(k)-1 also issued under 26 U.S.C. 401(m)(9).
Section 1.401(k)-3 is also issued under 26 U.S.C. 401(m)(9).
Section 1.401(l)-0 through 1.401(l)-6 also issued under 26 U.S.C. 401(l).
Section 1.402A-1 is also issued under 26 U.S.C. 402A
Section 1.403(b)-6 also issued under 26 U.S.C. 403(b)(10).
Section 1.404(k)-3 is also issued under sections 26 U.S.C. 162(k) and 404(k)(5)(A).
Section 1.408-2 also issued under 26 U.S.C. 408(a) and 26 U.S.C. 408(q).
Section 1.408-4 also issued under 26 U.S.C. 408.
Section 1.408-8 also issued under 26 U.S.C. 408(a)(6) and (b)(3).

Section 1.408-11 also issued under 26 U.S.C. 408.
Section 1.408(q)-1 also issued under 26 U.S.C. 408(q).
Section 1.408A-1 also issued under 26 U.S.C. 408A.
Section 1.408A-2 also issued under 26 U.S.C. 408A.
Section 1.408A-3 also issued under 26 U.S.C. 408A.
Section 1.408A-4 also issued under 26 U.S.C. 408A.
Section 1.408A-5 also issued under 26 U.S.C. 408A.
Section 1.408A-6 also issued under 26 U.S.C. 408A.
Section 1.408A-7 also issued under 26 U.S.C. 408A.
Section 1.408A-8 also issued under 26 U.S.C. 408A.
Section 1.408A-9 also issued under 26 U.S.C. 408A.
Section 1.409(p)-1 is also issued under 26 U.S.C. 409(p)(7).
Section 1.410(b)-2 also issued under 26 U.S.C. 410(b)(6).
Section 1.410(b)-3 also issued under 26 U.S.C. 410(b)(6).
Section 1.410(b)-4 also issued under 26 U.S.C. 410(b)(6).
Section 1.410(b)-5 also issued under 26 U.S.C. 410(b)(6).
Section 1.410(b)-6 also issued under 26 U.S.C. 410(b)(6) and section 664 of the Economic Growth and Tax Relief Reconciliation Act of 2001 (Public Law 107-16, 115 Stat. 38).
Section 1.410(b)-7 also issued under 26 U.S.C. 410(b)(6).
Section 1.410(b)-8 also issued under 26 U.S.C. 410(b)(6).
Section 1.410(b)-9 also issued under 26 U.S.C. 410(b)(6).
Section 1.410(b)-10 also issued under 26 U.S.C. 410(b)(6).
Section 1.411(a)-7 also issued under 26 U.S.C. 411(a)(7)(B)(i).
Section 1.411(a)(13)-1 also issued under 26 U.S.C. 411(a)(13).
Section 1.411(b)(5)-1 also issued under 26 U.S.C. 411(b)(5).
Section 1.411(d)-3 also issued under 26 U.S.C. 411(d)(6) and section 645(b) of the Economic Growth and Tax Relief Reconciliation Act of 2001, Public Law 107-16 (115 Stat. 38).
Section 1.411(d)-4 also issued under 26 U.S.C. 411(d)(6).
Section 1.411(d)-6 issued under Reorganization Plan No. 4 of 1978, 29 U.S.C. 1001nt.
§§ 1.414(c)-1 through 1.414(c)-5 also issued under 26 U.S.C. 414(c).
Section 1.414(c)-5 also issued under 26 U.S.C. 414(b), (c), and (o).
Section 1.414(q)-1T also issued under 26 U.S.C. 414(q).
Sections 1.414(r)-0 through 1.414(r)-7 also issued under 26 U.S.C. 414(r).
Section 1.414(r)-8 also issued under 26 U.S.C. 410(b) and 414(r).
Section 1.414(r)-9 also issued under 26 U.S.C. 401(a)(26) and 414(r).
Section 1.414(r)-10 also issued under 26 U.S.C. 129 and 414(r).
Section 1.414(r)-1 also issued under 26 U.S.C. 414(r).
Section 1.414(s)-1 also issued under 26 U.S.C. 414(s).
Section 1.414(v)-2 also issued under 26 U.S.C. 414(v)(7)(D).
Section 1.417(e)-1 also issued under 26 U.S.C. 417(e)(3)(A)(ii)(II).

Section 1.417(e)-1T also issued under 26 U.S.C. 417(e)(3)(A)(ii)(II).
Section 1.419A(f)(6)-1 also issued under 26 U.S.C. 419A(i).
Section 1.420-1 also issued under 26 U.S.C. 420(c)(3)(E).
Section 1.430(j) 1 also issued under 26 U.S.C. 430(j)(4)(F).
Section 1.441-2T also issued under 26 U.S.C. 441(f).
Section 1.441-3T also issued under 26 U.S.C. 441.
Section 1.442-2T and 1.442-3T also issued under 26 U.S.C. 422, 706, and 1378.
Section 1.444-0T through 1.444-3T and
Section 1.444-4 is also issued under 26 U.S.C. 444(g).
Section 1.446-1 also issued under 26 U.S.C. 446 and 461(h).
Section 1.446-4 also issued under 26 U.S.C. 1502.
Section 1.446-6 also issued under 26 U.S.C. 446 and 26 U.S.C. 860G.
Section 1.446-7 also issued under 26 U.S.C. 446.
Section 1.451-3 also issued under 26 U.S.C. 451(b)(1)(A)(ii), (b)(3)(C) and 461(h).
Section 1.451-8 also issued under 26 U.S.C. 451(c)(2)(A), (3), (4)(A)(iii), (4)(b)(vii), and 461(h).
Section 1.453-11 also issued under 26 U.S.C. 453(j)(1) and (k).
Section 1.453A-3 also issued under 26 U.S.C. 453A.
Section 1.458-1 also issued under 26 U.S.C. 458.
Section 1.460-1 also issued under 26 U.S.C. 460(h).
Section 1.460-2 also issued under 26 U.S.C. 460(h).
Section 1.460-3 also issued under 26 U.S.C. 460(h).
Section 1.460-4 also issued under 26 U.S.C. 460(h) and 1502.
Section 1.460-5 also issued under 26 U.S.C. 460(h).
Section 1.460-6 also issued under 26 U.S.C. 460(h).
Section 1.461-1 also issued under 26 U.S.C. 461(h).
Section 1.461-2 also issued under 26 U.S.C. 461(h).
Section 1.461-4 also issued under 26 U.S.C. 461(h).
Section 1.461-4(d) also issued under 26 U.S.C. 460 and 26 U.S.C. 461(h).
Section 1.461-5 also issued under 26 U.S.C. 461(h).
Section 1.461-6 also issued under 26 U.S.C. 461(h).
Section 1.465-8 also issued under 26 U.S.C. 465.
Section 1.465-20 also issued under 26 U.S.C. 465.
Section 1.465-27 also issued under 26 U.S.C. 465(b)(6)(B)(iii).
Section 1.466-1 through 1.466-4 also issued under 26 U.S.C. 466.
Section 1.467-1 is also issued under 26 U.S.C. 467.
Section 1.467-2 is also issued under 26 U.S.C. 467.
Section 1.467-3 is also issued under 26 U.S.C. 467.
Section 1.467-4 is also issued under 26 U.S.C. 467.
Section 1.467-5 is also issued under 26 U.S.C. 467.
Section 1.467-6 is also issued under 26 U.S.C. 467.

Section 1.467-7 is also issued under 26 U.S.C. 467.
Section 1.467-8 is also issued under 26 U.S.C. 467.
Section 1.467-9 is also issued under 26 U.S.C. 467.
Section 1.468A-5 also issued under 26 U.S.C. 468A(e)(5).
Section 1.468A-5T also issued under 26 U.S.C. 468A(e)(5).
Section 1.468B-1 also issued under 26 U.S.C. 461(h) and 468B(g).
Section 1.468B-2 also issued under 26 U.S.C. 461(h) and 468B(g).
Section 1.468B-3 also issued under 26 U.S.C. 461(h) and 468B(g).
Section 1.468B-4 also issued under 26 U.S.C. 461(h) and 468B(g).
Section 1.468B-5 also issued under 26 U.S.C. 461(h) and 468B(g).
Section 1.468B-7 also issued under 26 U.S.C. 461(h) and 468B(g).
Section 1.468B-9 also issued under 26 U.S.C. 461(h) and 468B(g).
Section 1.469-1 also issued under 26 U.S.C. 469.
Section 1.469-1T also issued under 26 U.S.C. 469.
Section 1.469-2 also issued under 26 U.S.C. 469(l).
Section 1.469-2T also issued under 26 U.S.C. 469(l).
Section 1.469-3 also issued under 26 U.S.C. 469(l).
Section 1.469-3T also issued under 26 U.S.C. 469(l).
Section 1.469-4 also issued under 26 U.S.C. 469(l).
Section 1.469-5 also issued under 26 U.S.C. 469(l).
Section 1.469-5T also issued under 26 U.S.C. 469(l).
Section 1.469-7 also issued under 26 U.S.C. 469(l).
Section 1.469-9 also issued under 26 U.S.C. 469(c)(6), (h)(2), and (l)(1).
Section 1.469-11 also issued under 26 U.S.C. 469(l).
Section 1.471 also issued under 26 U.S.C. 471.
Section 1.471-3 also issued under 26 U.S.C. 471(a).
Section 1.471-4 also issued under 26 U.S.C. 263A.
Section 1.471-5 also issued under 26 U.S.C. 263A.
Section 1.471-6 also issued under 26 U.S.C. 471.
Section 1.472-8 also issued under 26 U.S.C. 472.
Section 1.475(a)-3 also issued under 26 U.S.C. 475(e).
Section 1.475(a)-4 also issued under 26 U.S.C. 475(g).
Section 1.475(b)-1 also issued under 26 U.S.C. 475(b)(4) and 26 U.S.C. 475(e).
Section 1.475(b)-2 also issued under 26 U.S.C. 475(b)(2) and 26 U.S.C. 475(e).
Section 1.475(b)-4 also issued under 26 U.S.C. 475(b)(2), 26 U.S.C. 475(e), and 26 U.S.C. 6001.
Section 1.475(c)-1 also issued under 26 U.S.C. 475(e).
Section 1.475(c)-2 also issued under 26 U.S.C. 475(e) and 26 U.S.C. 860G(e).
Section 1.475(d)-1 also issued under 26 U.S.C. 475(e).
Section 1.475(e)-1 also issued under 26 U.S.C. 475(e).
Section 1.481-1 also issued under 26 U.S.C. 481.

Section 1.481-2 also issued under 26 U.S.C. 481.
Section 1.481-3 also issued under 26 U.S.C. 481.
Section 1.481-4 also issued under 26 U.S.C. 481.
Section 1.481-5 also issued under 26 U.S.C. 481.
Section 1.481-6 is also issued under 26 U.S.C. 481.
Section 1.482-1 also issued under 26 U.S.C. 482 and 936.
Sections 1.482-1 and 1.482-1T also issued under 26 U.S.C. 482.
Section 1.482-2 also issued under 26 U.S.C. 482.
Section 1.482-3 also issued under 26 U.S.C. 482.
Section 1.482-4 also issued under 26 U.S.C. 482.
Section 1.482-5 also issued under 26 U.S.C. 482.
Section 1.482-7 is also issued under 26 U.S.C. 482.
Section 1.482-9 also issued under 26 U.S.C. 482.
Section 1.482-2A also issued under 26 U.S.C. 482.
Section 1.482-7A also issued under 26 U.S.C. 482.
Section 1.483-1 through 1.483-3 also issued under 26 U.S.C. 483(f).
Section 1.483-4 also issued under 26 U.S.C. 483(f).
Section 1.501(c)(29)-1 also issued under 26 U.S.C. 501(c)(29)(B)(i).
Section 1.501(c)(29)-1T also issued under 26 U.S.C. 501(c)(29)(B)(i).
Sections 1.504-1 and 1.504-2 also issued under 26 U.S.C. 504(b).
Section 1.514(c)-2 also issued under 26 U.S.C. 514(c)(9)(E)(iii).
Section 1.527-9 also issued under 26 U.S.C. 527(h)(2)(B)(i).
Sections 1.529A-0 through 1.529A-8 also issued under 26 U.S.C. 529A(g).
Section1.585-5 through 1.585-8 also issued under 26 U.S.C. 585(b)(3).
Section1.597-1 through 1.597-7 also issued under 26 U.S.C. 597 and 1502.
Section1.597-8 also issued under 26 U.S.C. 597.
Section 1.642(c)-6 also issued under 26 U.S.C. 642(c)(5).
Section 1.642(h)-2 also issued under 26 U.S.C. 642(h).
Section 1.642(h)-5 also issued under 26 U.S.C. 642(h).
Section 1.643(a)-8 also issued under 26 U.S.C. 643(a)(7).
Section 1.643(f)-1 also issued under 26 U.S.C. 643(f).
Section 1.643(h)-1 also issued under 26 U.S.C. 643(a)(7).
Section 1.642(c)-6A also issued under 26 U.S.C. 642(c)(5).
Section 1.645-1 also issued under 26 U.S.C. 645.
Sections 1.663(c)-1, 1.663(c)-2, 1.663(c)-3, 1.663(c)-4, 1.663(c)-5, and 1.663(c)-6 also issued under 26 U.S.C. 663(c).
Section 1.664-1 also issued under 26 U.S.C. 664(a).
Section 1.664-2 also issued under 26 U.S.C. 664(a).
Section 1.664-3 also issued under 26 U.S.C. 664(a).
Section 1.664-4 also issued under 26 U.S.C. 664(a).

Section 1.664-4A also issued under 26 U.S.C. 664(a).
Section 1.671-2 also issued under 26 U.S.C. 643(a)(7) and 672(f)(6).
Section 1.672(f)-1 also issued under 26 U.S.C. 643(a)(7) and 672(f)(6).
Section 1.672(f)-2 also issued under 26 U.S.C. 643(a)(7) and 672(f)(3) and (6).
Section 1.672(f)-3 also issued under 26 U.S.C. 643(a)(7) and 672(f)(2) and (6).
Section 1.672(f)-4 also issued under 26 U.S.C. 643(a)(7) and 672(f)(4) and (6).
Section 1.672(f)-5 also issued under 26 U.S.C. 643(a)(7) and 672(f)(6).
Section 1.679-1 also issued under 26 U.S.C. 643(a)(7) and 679(d).
Section 1.679-2 also issued under 26 U.S.C. 643(a)(7) and 679(d).
Section 1.679-3 also issued under 26 U.S.C. 643(a)(7) and 679(d).
Section 1.679-4 also issued under 26 U.S.C. 643(a)(7), 679(a)(3) and 679(d).
Section 1.679-5 also issued under 26 U.S.C. 643(a)(7) and 679(d).
Section 1.679-6 also issued under 26 U.S.C. 643(a)(7) and 679(d).
Section 1.684-1 also issued under 26 U.S.C. 643(a)(7) and 684(a).
Section 1.684-2 also issued under 26 U.S.C. 643(a)(7) and 684(a).
Section 1.684-3 also issued under 26 U.S.C. 643(a)(7) and 684(a).
Section 1.684-4 also issued under 26 U.S.C. 643(a)(7) and 684(a).
Section 1.684-5 also issued under 26 U.S.C. 643(a)(7) and 684(a).
Section 1.701-2 also issued under 26 U.S.C. 701 through 761.
Section 1.704-3 also issued under 26 U.S.C. 704(c).
Section 1.704-4 also issued under 26 U.S.C. 704(c).
Section 1.705-2 also issued under 26 U.S.C. 705 and 1032.
Section 1.706-1T also issued under 26 U.S.C. 706(b).
Section 1.706-3 also issued under 26 U.S.C. 170(h)(7)(G).
Section 1.706-3T also issued under 26 U.S.C. 444(f).
Section 1.706-4 also issued under 26 U.S.C. 170(h)(7)(G).
Sections 1.707-2 through 1.707-9 also issued under 26 U.S.C. 707(a)(2).
Section 1.721-1 also issued under 26 U.S.C. 721.
Section 1.721(c)-1 also issued under 26 U.S.C. 721(c).
Section 1.721(c)-2 also issued under 26 U.S.C. 721(c).
Section 1.721(c)-3 also issued under 26 U.S.C. 721(c).
Section 1.721(c)-4 also issued under 26 U.S.C. 721(c).
Section 1.721(c)-5 also issued under 26 U.S.C. 721(c).
Section 1.721(c)-6 also issued under 26 U.S.C. 721(c).
Section 1.721(c)-7 also issued under 26 U.S.C. 721(c).
Section 1.731-2 also issued under 26 U.S.C. 731(c).
Section 1.732-1 also issued under 26 U.S.C. 732.
Section 1.732-2 also issued under 26 U.S.C. 732.
Section 1.732-3 also issued under 26 U.S.C. 337(d), 732(f)(8), and 1502.
Section 1.734-1 also issued under 26 U.S.C. 734.

Section 1.743-1 also issued under 26 U.S.C. 743.
Section 1.751-1 also issued under 26 U.S.C. 751.
Section 1.752-1(a) also issued under Public Law 106-554, 114 Stat. 2763, 2763A-638 (2001).
Section 1.752-6 also issued under Public Law 106-554, 114 Stat. 2763, 2763A-638 (2001).
Section 1.752-7 also issued under Public Law 106-554, 114 Stat. 2763, 2763A-638 (2001).
Section 1.754-1 also issued under 26 U.S.C. 754.
Section 1.755-1 also issued under 26 U.S.C. 755.
Section 1.755-2 also issued under 26 U.S.C. 755 and 26 U.S.C. 1060.
Section 1.761-2 also issued under 26 U.S.C. 446(b), 761(a), 6031(a), 6417(d), and 6417(h).
Section 1.807-2 also issued under 26 U.S.C. 817A(e).
Section 1.807-3 also issued under 26 U.S.C. 807(e)(6).
Section 1.809-10 also issued under 26 U.S.C. 809(b)(2) and (g)(3).
Section 1.811-3 also issued under 26 U.S.C. 817A(e).
Section 1.812-9 also issued under 26 U.S.C. 817A(e).
Section 1.817-5 also issued under 26 U.S.C. 817(h).
Section 1.817A-1 also issued under 26 U.S.C. 817A(e).
Section 1.832-4 also issued under 26 U.S.C. 832(b)(5)(A).
Section 1.846-1 also issued under 26 U.S.C. 846.
Section 1.848-2 also issued under 26 U.S.C. 845(b) and 26 U.S.C. 848(d)(4)(B).
Section 1.848-3 also issued under 26 U.S.C. 848(d)(4)(B).
Sections 1.851-3 and 1.851-5 are also issued under 26 U.S.C. 851(c).
Section 1.852-11 is also issued under 26 U.S.C. 852(b)(3)(C), 852(b)(8), and 852(c).
Section 1.853-1 also issued under 26 U.S.C. 901(j).
Section 1.853-2 also issued under 26 U.S.C. 901(j).
Section 1.853-3 also issued under 26 U.S.C. 901(j).
Section 1.853-4 also issued under 26 U.S.C. 901(j) and 26 U.S.C. 6011.
Section 1.860A-0 also issued under 26 U.S.C. 860G(e).
Section 1.860A-1 also issued under 26 U.S.C. 860G(b) and 860G(e).
Section 1.860C-2 also issued under 26 U.S.C. 860C(b)(1) and 860G(e).
Section 1.860D-1 also issued under 26 U.S.C. 860G(e).
Section 1.860E-1 also issued under 26 U.S.C. 860E and 860G(e).
Section 1.860E-2 also issued under 26 U.S.C. 860E(e).
Section 1.860F-2 also issued under 26 U.S.C. 860G(e).
Section 1.860F-4 also issued under 26 U.S.C. 860G(e) and 26 U.S.C. 6230(k).
Section 1.860F-4T also issued under 26 U.S.C. 860G(c)(3) and (e).
Section 1.860G-1 also issued under 26 U.S.C. 860G(a)(1)(B), (d)(2)(E), and (e).
Section 1.860G-2 also issued under 26 U.S.C. 860G(e).
Section 1.860G-3 also issued under 26 U.S.C. 860G(b) and 26 U.S.C. 860G(e).
Section 1.861-2 also issued under 26 U.S.C. 863(a).
Section 1.861-3 also issued under 26 U.S.C. 863(a).

Section 1.861-8 also issued under 26 U.S.C. 250(c), 26 U.S.C. 864(e)(7), and 26 U.S.C. 882(c).
Section 1.861-8T also issued under 26 U.S.C. 863(a), 864(e), 865(i), and 7701(f).
Section 1.861-9 also issued under 26 U.S.C. 861, 863(a), 864(e), 864(e)(7), 865(i), 987, and 989(c), and 7701(f).
Section 1.861-9T also issued under 26 U.S.C. 861, 863(a), 864(e), 864(e)(7), 865(i), and 7701(f).
Section 1.861-10(e) also issued under 26 U.S.C. 863(a), 26 U.S.C. 864(e)(7), 26 U.S.C. 865(i), and 26 U.S.C. 7701(f).
Section 1.861-10T also issued under 26 U.S.C. 863(a), 864(e), 865(i), and 7701(f).
Section 1.861-11 also issued under 26 U.S.C. 863(a), 26 U.S.C. 864(e)(7), 26 U.S.C. 865(i), and 26 U.S.C. 7701(f).
Section 1.861-11T also issued under 26 U.S.C. 863(a), 864(e), 865(i), and 7701(f).
Section 1.861-12 also issued under 26 U.S.C. 864(e)(7).
Section 1.861-12T also issued under 26 U.S.C. 863(a), 864(e), 865(i), and 7701(f).
Section 1.861-13 also issued under 26 U.S.C. 864(e)(7).
Section 1.861-13T also issued under 26 U.S.C. 863(a), 864(e), 865(i), and 7701(f).
Section 1.861-14 also issued under 26 U.S.C. 864(e)(7).
Section 1.861-14T also issued under 26 U.S.C. 863(a), 864(e), 865(i), and 7701(f).
Section 1.861-17 also issued under 26 U.S.C. 864(e)(7).
Section 1.863-1 also issued under 26 U.S.C. 863(a).
Section 1.863-2 also issued under 26 U.S.C. 863.
Section 1.863-3 also issued under 26 U.S.C. 863(a) and (b), and 26 U.S.C. 936(h).
Section 1.863-4 also issued under 26 U.S.C. 863.
Section 1.863-6 also issued under 26 U.S.C. 863.
Section 1.863-7 also issued under 26 U.S.C. 863(a) and 871(m).
Section 1.863-8 also issued under 26 U.S.C. 863(a), (b) and (d).
Section 1.863-9 also issued under 26 U.S.C. 863(a), (d) and (e).
Section 1.864-5 also issued under 26 U.S.C. 7701(l).
Section 1.864-8T also issued under 26 U.S.C. 864(d)(8).
Section 1.864(c)(8)-1 also issued under 26 U.S.C. 864(c)(8) and 897(g).
Section 1.864(c)(8)-2 also issued under 26 U.S.C. 864(c)(8)(E), 6001 and 6031(b).
Section 1.865-1 also issued under 26 U.S.C. 863(a) and 865(j)(1).
Section 1.865-2 also issued under 26 U.S.C. 863(a) and 865(j)(1).
Section 1.865-3 also issued under 26 U.S.C. 865(j).
Section 1.871-1 also issued under 26 U.S.C. 7701(l).
Section 1.871-7 also issued under 26 U.S.C. 7701(l).
Section 1.871-9 also issued under 26 U.S.C. 7701(b)(11).
Sections 1.871-15 and 1.871-15T also issued under 26 U.S.C. 871(m).
Section 1.874-1 also issued under 26 U.S.C. 874.
Section 1.881-2 also issued under 26 U.S.C. 7701(l).
Section 1.881-3 also issued under 26 U.S.C. 7701(l).
Section 1.881-4 also issued under 26 U.S.C. 7701(l).
Section 1.882-4 also issued under 26 U.S.C. 882(c).
Section 1.882-5 also issued under 26 U.S.C. 882(c), 26 U.S.C. 864(e), 26 U.S.C. 988(d), and 26 U.S.C. 7701(l).

Section 1.883-1 is also issued under 26 U.S.C. 883.
Section 1.883-2 is also issued under 26 U.S.C. 883.
Section 1.883-3 is also issued under 26 U.S.C. 883.
Section 1.883-4 is also issued under 26 U.S.C. 883.
Section 1.883-5 is also issued under 26 U.S.C. 883.
Section 1.884-0 also issued under 26 U.S.C. 884 (g).
Section 1.884-1 also issued under 26 U.S.C. 884.
Section 1.884-1 also issued under 26 U.S.C. 884 (g).
Section 1.884-1 (d) also issued under 26 U.S.C. 884 (c) (2) (A).
Section 1.884-1 (d) (13) (i) also issued under 26 U.S.C. 884 (c) (2).
Section 1.884-1 (e) also issued under 26 U.S.C. 884 (c) (2) (B).
Section 1.884-2 also issued under 26 U.S.C. 884(g).
Section 1.884-2T also issued under 26 U.S.C. 884 (g).
Section 1.884-4 also issued under 26 U.S.C. 884 (g).
Section 1.884-5 also issued under 26 U.S.C. 884 (g).
Section 1.884-5 (e) and (f) also issued under 26 U.S.C. 884 (e) (4) (C).
Section 1.892-1T also issued under 26 U.S.C. 892(c).
Section 1.892-2T also issued under 26 U.S.C. 892(c).
Section 1.892-3 also issued under 26 U.S.C. 892(c).
Section 1.892-3T also issued under 26 U.S.C. 892(c).
Section 1.892-4 also issued under 26 U.S.C. 892(c).
Section 1.892-4T also issued under 26 U.S.C. 892(c).
Section 1.892-5 also issued under 26 U.S.C. 892(c).
Section 1.892-5T also issued under 26 U.S.C. 892(c).
Section 1.892-6T also issued under 26 U.S.C. 892(c).
Section 1.892-7T also issued under 26 U.S.C. 892(c).
Section 1.894-1 also issued under 26 U.S.C. 894 and 7701(l).
Section 1.897-1 also issued under 26 U.S.C. 897 and 897(l)(3).
Section 1.897-2 also issued under 26 U.S.C. 897.
Sections 1.897-5T, 1.897-6T and 1.897-7T also issued under 26 U.S.C. 897 (d), (e), (g) and (j) and 26 U.S.C. 367(e)(2).
Section 1.897-7 also issued under 26 U.S.C. 897(g).
Section 1.897(l)-1 also issued under 26 U.S.C. 897(l).
Section 1.901(j)-1 also issued under 26 U.S.C. 901(j)(4).
Sections 1.901(m)-1 through 1.901-8 also issued under 26 U.S.C. 901(m)(7).
Section 1.901(m)-5 also issued under 26 U.S.C. 901(m)(3)(B)(ii).
Sections 1.902-1 and 902-2 also issued under 26 U.S.C. 902(c)(7).
Section 1.904-1 also issued under 26 U.S.C. 904(d)(7).
Section 1.904-2 also issued under 26 U.S.C. 904(d)(7).
Section 1.904-3 also issued under 26 U.S.C. 904(d)(7).

Section 1.904-4 also issued under 26 U.S.C. 250(c), 26 U.S.C. 865(j), 26. U.S.C. 904(d)(2)(J)(i), 26 U.S.C. 904(d)(6)(C), 26 U.S.C. 904(d)(7), and 26 U.S.C. 951A(f)(1)(B).

Section 1.904-5 also issued under 26 U.S.C. 904(d)(7) and 26 U.S.C. 951A(f)(1)(B).

Section 1.904-6 also issued under 26 U.S.C. 904(d)(7).

Section 1.904-7 also issued under 26 U.S.C. 904(d)(6).

Section 1.904(b)-1 also issued under 26 U.S.C. 1(h)(11)(C)(iv) and 904(b)(2)(C).

Section 1.904(b)-2 also issued under 26 U.S.C. 1(h)(11)(C)(iv) and 904(b)(2)(C).

Section 1.904(f)-(2) also issued under 26 U.S.C. 904 (f)(3)(b).

Section 1.904(g)-3 also issued under 26 U.S.C. 904(g)(4).

Section 1.904(g)-3T also issued under 26 U.S.C. 904(g)(4).

Section 1.904(i)-1 also issued under 26 U.S.C. 904(i).

Section 1.905-3 also issued under 26 U.S.C. 989(c)(4).

Sections 1.905-3T and 1.905-4T also issued under 26 U.S.C. 989(c)(4).

Section 1.905-4 also issued under 26 U.S.C. 989(c)(4), 26 U.S.C. 6227(d), 26 U.S.C. 6241(11), and 26 U.S.C. 6689(a).

Section 1.907(b)-1 is also issued under 26 U.S.C. 907(b).

Section 1.907(b)-1T also issued under 26 U.S.C. 907(b).

Sections 1.909-1 through 1.906-6 also issued under 26 U.S.C. 909(e).

Section 1.911-7 also issued under 26 U.S.C. 911(d)(9).

Section 1.931-1 also issued under 26 U.S.C. 7654(e).

Section 1.932-1 also issued under 26 U.S.C. 7654(e).

Section 1.934-1 also issued under 26 U.S.C. 934(b)(4).

Section 1.935-1 also issued under 26 U.S.C. 7654(e).

Section 1.936-4 also issued under 26 U.S.C. 936(h).

Section 1.936-5 also issued under 26 U.S.C. 936(h).

Section 1.936-6 also issued under 26 U.S.C. 863(a) and (b), and 26 U.S.C. 936(h).

Section 1.936-7 also issued under 26 U.S.C. 936(h).

Section 1.936-11 also issued under 26 U.S.C. 936(j).

Section 1.937-1 also issued under 26 U.S.C. 937(a).

Section 1.937-1T also issued under 26 U.S.C. 937(a).

Section 1.937-2 also issued under 26 U.S.C. 937(b).

Section 1.937-3 also issued under 26 U.S.C. 937(b).

Section 1.951-1 also issued under 26 U.S.C. 7701(a).

Section 1.951A-2 also issued under 26 U.S.C. 882(c)(1)(A) and 954(b)(5).

Section 1.951A-3 also issued under 26 U.S.C. 951A(d)(4).

Section 1.951A-5 also issued under 26 U.S.C. 951A(f)(1)(B).

Section 1.952-11T is also issued under 26 U.S.C. 852(b)(3)(C), 852(b)(8), and 852(c).

Section 1.953-2 also issued under 26 U.S.C. 7701(b)(11).

Section 1.954-0 also issued under 26 U.S.C. 954 (b) and (c).

Section 1.954-1 also issued under 26 U.S.C. 954 (b) and (c).

Section 1.954-2 also issued under 26 U.S.C. 954 (b) and (c).

Section 1.956-1 also issued under 26 U.S.C. 245A(g), 956(d), and 956(e).
Section 1.956-1T also issued under 26 U.S.C. 956(d) and 956(e).
Section 1.956-2 also issued under 26 U.S.C. 956(d) and 956(e).
Section 1.956-3 also issued under 26 U.S.C. 864(d)(8) and 956(e).
Section 1.956-4 also issued under 26 U.S.C. 956(d) and 956(e).
Section 1.957-1 also issued under 26 U.S.C. 957.
Section 1.957-3 also issued under 26 U.S.C. 957(c).
Section 1.960-1 also issued under 26 U.S.C. 960(f).
Section 1.960-2 also issued under 26 U.S.C. 960(f).
Section 1.960-3 also issued under 26 U.S.C. 960(f).
Section 1.960-4 also issued under 26 U.S.C. 951A(f)(1)(B) and 26 U.S.C. 960(f).
Section 1.962-1 also issued under 26 U.S.C. 965(o).
Section 1.965-1 also issued under 26 U.S.C. 965(c)(3)(B)(iii)(V), 965(d)(2), 965(o), 989(c), and 7701(a).
Section 1.965-2 also issued under 26 U.S.C. 965(b)(3)(A)(ii), 965(o), and 961(a) and (b).
Section 1.965-3 also issued under 26 U.S.C. 965(c)(3)(D) and 965(o).
Section 1.965-4 also issued under 26 U.S.C. 965(c)(3)(F) and 965(o).
Sections 1.965-5 through 1.965-6 also issued under 26 U.S.C. 965(o) and 26 U.S.C. 902(c)(8) (as in effect on December 21, 2017).
Section 1.965-7 also issued under 26 U.S.C. 965(h)(3), 965(h)(5), 965(i)(2), 965(i)(8)(B), 965(m)(2)(A), 965(n)(3), and 965(o).
Section 1.965-8 also issued under 26 U.S.C. 965(o).
Section 1.965-9 also issued under 26 U.S.C. 965(o).
Section 1.985-0 also issued under 26 U.S.C. 985.
Section 1.985-1 also issued under 26 U.S.C. 985.
Section 1.985-2 also issued under 26 U.S.C. 985.
Section 1.985-3 also issued under 26 U.S.C. 985.
Section 1.985-4 also issued under 26 U.S.C. 985.
Section 1.985-5 also issued under 26 U.S.C. 985, 987, and 989.
Section 1.986(a)-1 also issued under 26 U.S.C. 986(a)(1)(C) and 26 U.S.C. 986(a)(1)(D)(ii).
Section 1.986(c)-1 also issued under 26 U.S.C. 965(o) and 26 U.S.C. 989(c).
Section 1.987-1 also issued under 26 U.S.C. 987, 989, and 1502.
Section 1.987-2 also issued under 26 U.S.C. 987, 989, and 1502.
Section 1.987-3 also issued under 26 U.S.C. 987 and 989.
Section 1.987-4 also issued under 26 U.S.C. 987 and 989.
Section 1.987-5 also issued under 26 U.S.C. 987 and 989.
Section 1.987-6 also issued under 26 U.S.C. 904, 987, and 989.
Section 1.987-7 also issued under 26 U.S.C. 987 and 989.
Section 1.987-8 also issued under 26 U.S.C. 987 and 989.
Section 1.987-9 also issued under 26 U.S.C. 987, 989, and 6001.
Section 1.987-10 also issued under 26 U.S.C. 987, 989, and 6001.

Section 1.987-11 also issued under 26 U.S.C. 987, 989, and 1502.
Section 1.987-12 also issued under 26 U.S.C. 987 and 989.
Section 1.987-13 also issued under 26 U.S.C. 987 and 989.
Section 1.987-14 also issued under 26 U.S.C. 987 and 989.
Section 1.987-15 also issued under 26 U.S.C. 987 and 989.
Section 1.988-0 also issued under 26 U.S.C. 988.
Section 1.988-1 also issued under 26 U.S.C. 988 and 989.
Section 1.988-2 also issued under 26 U.S.C. 988.
Section 1.988-3 also issued under 26 U.S.C. 988.
Section 1.988-4 also issued under 26 U.S.C. 988 and 989.
Section 1.988-5 also issued under 26 U.S.C. 988.
Sections 1.989(a)-0T and 1.989(a)-1T also issued under 26 U.S.C. 989(c).
Section 1.989(a)-1 also issued under 26 U.S.C. 989.
Section 1.989(b)-1 also issued under 26 U.S.C. 989(b).
Section 1.989-1(c) also issued under 26 U.S.C. 989(c).
Section 1.1001-6 also issued under 26 U.S.C. 148(i), 26 U.S.C. 988(d), 26 U.S.C. 1275(d), and 26 U.S.C. 7701(l).
Section 1.1014-1 also issued under 26 U.S.C. 1014(f).
Section 1.1014-2 also issued under 26 U.S.C. 1014(f).
Section 1.1014-10 also issued under 26 U.S.C. 1014(f).
Section 1.1036-1 also issued under 26 U.S.C. 351(g)(4).
Section 1.1059(e)-1 also issued under 26 U.S.C. 1059 (e)(1) and (e)(2).
Section 1.1060-1 also issued under 26 U.S.C. 1060.
Section 1.1061-0 added under 26 U.S.C. 1061(f).
Section 1.1061-1 added under 26 U.S.C. 1061(f).
Section 1.1061-2 added under 26 U.S.C. 1061(f).
Section 1.1061-3 added under 26 U.S.C. 1(h)(9) and 1061(f).
Section 1.1061-4 added under 26 U.S.C. 1061(f).
Section 1.1061-5 added under 26 U.S.C. 1061(f).
Section 1.1061-6 added under 26 U.S.C. 1061(f).
Sections 1.1092(b)-1T and 1.1092(b)-2T also issued under 26 U.S.C. 1092 (b)(1).
Section 1.1092(b)-4T also issued under 26 U.S.C. 1092(b)(2).
Section 1.1092(b)-6 also issued under 26 U.S.C. 1092(b)(1).
Section 1.1092(b)-6 also issued under 26 U.S.C. 1092(b)(2).
Section 1.1092(c)-1 also issued under 26 U.S.C. 1092(c)(4)(H).
Section 1.1092(c)-2 also issued under 26 U.S.C. 1092(c)(4)(H).
Section 1.1092(c)-3 also issued under 26 U.S.C. 1092(c)(4)(H).
Section 1.1092(c)-4 also issued under 26 U.S.C. 1092(c)(4)(H).
Section 1.1092(d)-1 also issued under 26 U.S.C. 1092(b)(1).
Section 1.1092(d)-2 also issued under 26 U.S.C. 1092(d)(3)(B).
Section 1.1202-2 is also issued under 26 U.S.C. 1202(k).

Section 1.1221-2 also issued under 26 U.S.C. 1221(b)(2)(A)(iii), (b)(2)(B), and (b)(3); 1502 and 6001.
Section 1.1244(e)-1 also issued under 26 U.S.C. 1244(e).
Section 1.1248-8 also issued under 26 U.S.C. 1248(a) and (c)(1) and (2).
Section 1.1254-1 also issued under 26 U.S.C. 1254(b).
Section 1.1254-2 also issued under 26 U.S.C. 1254(b).
Section 1.1254-3 also issued under 26 U.S.C. 1254(b).
Section 1.1254-4 also issued under 26 U.S.C. 1254(b).
Section 1.1254-5 also issued under 26 U.S.C. 1254(b).
Section 1.1254-6 also issued under 26 U.S.C. 1254(b).
Section 1.1271-1 also issued under 26 U.S.C. 1275(d).
Section 1.1272-1 also issued under 26 U.S.C. 1275(d).
Section 1.1272-2 also issued under 26 U.S.C. 1275(d).
Section 1.1272-3 also issued under 26 U.S.C. 1275(d).
Section 1.1273-1 also issued under 26 U.S.C. 1275(d).
Section 1.1273-2 also issued under 26 U.S.C. 1275(d).
Section 1.1274-1 also issued under 26 U.S.C. 1275(d).
Section 1.1274-2 also issued under 26 U.S.C. 1275(d).
Section 1.1274-3 also issued under 26 U.S.C. 1275(d).
Section 1.1274-4 also issued under 26 U.S.C. 1275(d).
Section 1.1274-5 also issued under 26 U.S.C. 1275(d).
Section 1.1274A-1 also issued under 26 U.S.C. 1274A(e) and 26 U.S.C. 1275(d).
Section 1.1275-1 also issued under 26 U.S.C. 1275(d).
Section 1.1275-2 also issued under 26 U.S.C. 1275(d).
Section 1.1275-3 also issued under 26 U.S.C. 1275(d).
Section 1.1275-4 also issued under 26 U.S.C. 1275(d).
Section 1.1275-5 also issued under 26 U.S.C. 1275(d).
Section 1.1275-6 also issued under 26 U.S.C. 1275(d).
Section 1.1275-7 also issued under 26 U.S.C. 1275(d).
Section 1.1286-1 also issued under 26 U.S.C. 1275(D) and 1286(f).
Section 1.1286-2 also issued under 26 U.S.C. 1286(f).
Section 1.1287-1 also issued under 26 U.S.C. 165 (j)(3).
Section 1.1291-1 also issued under 26 U.S.C. 1291.
Section 1.1291-1 also issued under 26 U.S.C. 1298(a) and (g).
Section 1.1291-9, also issued under 26 U.S.C. 1298(a) and (g).
Section 1.1298-1 also issued under 26 U.S.C. 1298(f).
Section 1.1291-9 also issued under 26 U.S.C. 1291(d)(2).
Section 1.1291-10 also issued under 26 U.S.C. 1291(d)(2).
Section 1.1293-1 also issued under 26 U.S.C. 1293.
Section 1.1294-1T also issued under 26 U.S.C. 1294.
Section 1.1295-1 also issued under 26 U.S.C. 1295.

Section 1.1295-3 also issued under 26 U.S.C. 1295.
Section 1.1296-1 also issued under 26 U.S.C. 1296(g) and 26 U.S.C. 1298(f).
Section 1.1296(e)-1 also issued under 26 U.S.C. 1296(e).
Section 1.1297-1 also issued under 26 U.S.C. 1298(g).
Section 1.1297-2 also issued under 26 U.S.C. 1298(g).
Section 1.1297-3T also issued under 26 U.S.C. 1297(b)(1).
Section 1.1297-4 also issued under 26 U.S.C. 1297(b)(2)(B) and 1298(g).
Section 1.1297-5 also issued under 26 U.S.C. 1297(b)(2)(B) and 1298(g).
Section 1.1297-6 also issued under 26 U.S.C. 1297(b)(2)(B) and 1298(g).
Section 1.1298-1T also issued under 26 U.S.C. 1298(f) and (g).
Section 1.1298-2 also issued under 26 U.S.C. 1298(b)(3) and (g).
Section 1.1298-4 also issued under 26 U.S.C. 1298(g).
Section 1.1301-1 also issued under 26 U.S.C. 1301(c).
Section 1.1301-1T also issued under 26 U.S.C. 1301(c).
Section 1.1361-1(j) (6), (10) and (11) also issued under 26 U.S.C. 1361(d)(2)(B)(iii).
Section 1.1361-1(l) also issued under 26 U.S.C. 1361(c)(5)(C).
Sections 1.1362-1, 1.1362-2, 1.1362-3, 1.1362-4, 1.1362-5, 1.1362-6, 1.1362-7, and 1.1363-1 also issued under 26 U.S.C. 1377.
Section 1.1363-2 also issued under 26 U.S.C. 337(d).
Section 1.1368-1(f) and (g) also issued under 26 U.S.C. 1377(c).
Section 1.1368-2(b) also issued under 26 U.S.C. 1368(c).
Section 1.1374-1 also issued under 26 U.S.C. 1374(e) and 337(d).
Section 1.1374-2 also issued under 26 U.S.C. 1374(e) and 337(d).
Section 1.1374-3 also issued under 26 U.S.C. 1374(e) and 337(d).
Section 1.1374-4 also issued under 26 U.S.C. 1374(e) and 337(d).
Section 1.1374-5 also issued under 26 U.S.C. 1374(e) and 337(d).
Section 1.1374-6 also issued under 26 U.S.C. 1374(e) and 337(d).
Section 1.1374-7 also issued under 26 U.S.C. 1374(e) and 337(d).
Section 1.1374-8 also issued under 26 U.S.C. 337(d) and 1374(e).
Section 1.1374-8 also issued under 26 U.S.C. 1374(e) and 337(d).
Section 1.1374-8T also issued under 26 U.S.C. 337(d) and 1374(e).
Section 1.1374-9 also issued under 26 U.S.C. 1374(e) and 337(d).
Section 1.1374-10 also issued under 26 U.S.C. 337(d) and 1374(e).
Section 1.1374-10 also issued under 26 U.S.C. 1374(e) and 337(d).
Section 1.1374-10T also issued under 26 U.S.C. 337(d) and 1374(e).
Section 1.1377-1 also issued under 26 U.S.C. 1377(a)(2) and (c).
Section 1.1394-1 also issued under 26 U.S.C. 1397D.
Section 1.1396-1 also issued under 26 U.S.C. 1397D.
Section 1.1397E-1 also issued under 26 U.S.C. 1397E.
Section 1.1400Z2(a)-1 also issued under 26 U.S.C. 1400Z-2(e)(4).

Section 1.1400Z2(b)-1 also issued under 26 U.S.C. 1400Z-2(e)(4).
Section 1.1400Z2(c)-1 also issued under 26 U.S.C. 1400Z-2(e)(4).
Section 1.1400Z2(d)-1 also issued under 26 U.S.C. 1400Z-2(e)(4).
Section 1.1400Z2(d)-2 also issued under 26 U.S.C. 1400Z-2(e)(4).
Section 1.1400Z2(f)-1 also issued under 26 U.S.C. 1400Z-2(e)(4).
Section 1.1402 (e)-5T also is issued under 26 U.S.C. 1402(e)(1) and (2).
Section 1.1411-10 also issued under 26 U.S.C. 367.
Section 1.1441-2 also issued under 26 U.S.C. 1441(c)(4) and 26 U.S.C. 3401(a)(6).
Section 1.1441-3 also issued under 26 U.S.C. 1441(c)(4), 26 U.S.C. 3401(a)(6) and 26 U.S.C. 7701(l).
Section 1.1441-4 also issued under 26 U.S.C. 1441(c)(4) and 26 U.S.C. 3401(a)(6).
Section 1.1441-5 also issued under 26 U.S.C. 1441(c)(4), 26 U.S.C. 3401(a)(6) and 26 U.S.C. 7701(b)(11).
Section 1.1441-6 also issued under 26 U.S.C. 1441(c)(4) and 26 U.S.C. 3401(a)(6).
Section 1.1441-7 also issued under 26 U.S.C. 1441(c)(4), 26 U.S.C. 3401(a)(6) and 26 U.S.C. 7701(l).
Section 1.1443-1 also issued under 26 U.S.C. 1443(a).
Section 1.1445-2 also issued under 26 U.S.C. 1445.
Section 1.1445-5 also issued under 26 U.S.C. 1445(e)(7).
Section 1.1445-8 also issued under 26 U.S.C. 1445(e)(7).
Section 1.1446-3 also issued under 26 U.S.C. 1446(g).
Section 1.1446-4 also issued under 26 U.S.C. 1446(g).
Section 1.1446(f)-1 also issued under 26 U.S.C. 1446(f)(6) and 1446(g).
Section 1.1446(f)-2 also issued under 26 U.S.C. 1446(f)(6) and 1446(g).
Section 1.1446(f)-3 also issued under 26 U.S.C. 1446(f)(6) and 1446(g).
Section 1.1446(f)-4 also issued under 26 U.S.C. 1446(f)(6) and 1446(g).
Section 1.1446(f)-5 also issued under 26 U.S.C. 1446(f)(6) and 1446(g).
Section 1.1461-1 also issued under 26 U.S.C. 1441(c)(4) and 26 U.S.C. 3401(a)(6).
Section 1.1461-2 also issued under 26 U.S.C. 1441(c)(4) and 26 U.S.C. 3401(a)(6).
Section 1.1462-1 also issued under 26 U.S.C. 1441(c)(4) and 26 U.S.C. 3401(a)(6).
Section 1.1471-1 is also issued under 26 U.S.C. 1471
Section 1.1471-2 is also issued under 26 U.S.C. 1471
Section 1.1471-3 is also issued under 26 U.S.C. 1471
Section 1.1471-4 is also issued under 26 U.S.C. 1471
Section 1.1471-5 is also issued under 26 U.S.C. 1471
Section 1.1471-6 is also issued under 26 U.S.C. 1471
Section 1.1472-1 is also issued under 26 U.S.C. 1472
Section 1.1473-1 is also issued under 26 U.S.C. 1473
Section 1.1474-1 is also issued under 26 U.S.C. 1474
Section 1.1474-2 is also issued under 26 U.S.C. 1474
Section 1.1474-3 is also issued under 26 U.S.C. 1474
Section 1.1474-4 is also issued under 26 U.S.C. 1474
Section 1.1474-5 is also issued under 26 U.S.C. 1474

Section 1.1474-6 is also issued under 26 U.S.C. 1474
Section 1.1474-7 is also issued under 26 U.S.C. 1474
Section 1.1502-0 also issued under 26 U.S.C. 1502.
Section 1.1502-1 also issued under 26 U.S.C. 1502.
Section 1.1502-2 also issued under 26 U.S.C. 1502.
Section 1.1502-3 also issued under 26 U.S.C. 1502.
Section 1.1502-4 also issued under 26 U.S.C. 1502.
Section 1.1502-9 also issued under 26 U.S.C. 1502.
Section 1.1502-11 also issued under 26 U.S.C. 1502.
Section 1.1502-12 also issued under 26 U.S.C. 250(c) and 1502.
Section 1.1502-13 also issued under 26 U.S.C. 250(c), 987, 989, and 1502.
Section 1.1502-14Z also issued under 26 U.S.C. 1400Z-2(e)(4) and 1502.
Section 1.1502-15 also issued under 26 U.S.C. 1502.
Section 1.1502-17 also issued under 26 U.S.C. 446 and 1502.
Section 1.1502-18 also issued under 26 U.S.C. 1502.
Section 1.1502-19 also issued under 26 U.S.C. 301, 1502, and 1503.
Section 1.1502-20 also issued under 26 U.S.C. 337(d) and 1502.
Section 1.1502-20T also issued under 26 U.S.C. 337(d) and 1502.
Section 1.1502-21 also issued under 26 U.S.C. 1502 and 6402(i).
Section 1.1502-21(b)(1) and (b)(3)(v) also issued under 26 U.S.C. 1502.
Section 1.1502-21T also issued under 26 U.S.C. 1502.
Section 1.1502-21T(b)(1) and (b)(3)(v) also issued under 26 U.S.C. 1502.
Section 1.1502-22 also issued under 26 U.S.C. 1502.
Section 1.1502-23 also issued under 26 U.S.C. 1502.
Section 1.1502-26 also issued under 26 U.S.C. 1502.
Section 1.1502-28 also issued under 26 U.S.C. 1502.
Section 1.1502-30 also issued under 26 U.S.C. 1502.
Section 1.1502-31 also issued under 26 U.S.C. 1502.
Section 1.1502-32 also issued under 26 U.S.C. 301, 1502, and 1503.
Section 1.1502-32 also issued under 26 U.S.C. 1502.
Section 1.1502-32(a)(2), (b)(3)(iii)(C), (b)(3)(iii)(D), and (b)(4)(vi) also issued under 26 U.S.C. 1502.
Section 1.1502-32T also issued under 26 U.S.C. 1502.
Section 1.1502-33 also issued under 26 U.S.C. 1502.
Section 1.1502-34 also issued under 26 U.S.C. 1502.
Section 1.1502-35 also issued under 26 U.S.C. 1502.
Section 1.1502-35T also issued under 26 U.S.C. 1502.
Section 1.1502-36 also issued under 26 U.S.C. 1502.
Section 1.1502-36 also issued under 26 U.S.C. 337(d).
Section 1.1502-43 also issued under 26 U.S.C. 1502.
Section 1.1502-47 also issued under 26 U.S.C. 1502, 1503(c) and 1504(c).

Section 1.1502-50 also issued under 26 U.S.C. 250(c) and 1502.
Section 1.1502-51 also issued under 26 U.S.C. 1502.
Section 1.1502-55 also issued under 26 U.S.C. 1502.
Section 1.1502-59A also issued under 26 U.S.C. 1502.
Section 1.1502-68 also issued under 26 U.S.C. 1502.
Section 1.1502-75 also issued under 26 U.S.C. 1502.
Section 1.1502-76 also issued under 26 U.S.C. 1502.
Section 1.1502-77 also issued under 26 U.S.C. 1502 and 6402(j).
Section 1.1502-78 also issued under 26 U.S.C. 1502, 6402(j), and 6411(c).
Section 1.1502-79 also issued under 26 U.S.C. 1502.
Section 1.1502-80 also issued under 26 U.S.C. 1502.
Section 1.1502-81T also issued under 26 U.S.C. 1502.
Section 1.1502-90 also issued under 26 U.S.C. 382(m) and 26 U.S.C. 1502.
Section 1.1502-91 also issued under 26 U.S.C. 382(m) and 26 U.S.C. 1502.
Section 1.1502-92 also issued under 26 U.S.C. 382(m) and 26 U.S.C. 1502.
Section 1.1502-93 also issued under 26 U.S.C. 382(m) and 26 U.S.C. 1502.
Section 1.1502-94 also issued under 26 U.S.C. 382(m) and 26 U.S.C. 1502.
Section 1.1502-95 also issued under 26 U.S.C. 382(m) and 26 U.S.C. 1502.
Section 1.1502-96 also issued under 26 U.S.C. 382(m) and 26 U.S.C. 1502.
Section 1.1502-98 also issued under 26 U.S.C. 382(m) and 26 U.S.C. 1502.
Section 1.1502-99 also issued under 26 U.S.C. 382(m) and 26 U.S.C. 1502.
Section 1.1502-100 also issued under 26 U.S.C. 1502.
Sections 1.1503(d)-1 through 8 also issued under 26 U.S.C. 953(d), 1502, 1503(d) and (d)(2)(B), (d)(3), and (d)(4), and 7701.
Section 1.1503-2T also issued under 26 U.S.C. 1503(d).
Section 1.1504-3 also issued under 26 U.S.C. 1400Z-2(e)(4) and 1504(a)(5).
Section 1.1504-4 also issued under 26 U.S.C. 1504(a)(5).
Section 1.1502-77A also issued under 26 U.S.C. 1502 and 6402(j).
Section 1.1502-77B also issued under 26 U.S.C. 1502 and 6402(j).
Section 1.1561-2 also issued under 26 U.S.C. 1561.
Section 1.5000A-3 also issued under 26 U.S.C. 5000A(e)(4).
Section 1.5000C-1 is also issued under 26 U.S.C. 5000C
Section 1.5000C-2 is also issued under 26 U.S.C. 5000C
Section 1.5000C-3 is also issued under 26 U.S.C. 5000C
Section 1.5000C-4 is also issued under 26 U.S.C. 5000C
Section 1.5000C-5 is also issued under 26 U.S.C. 5000C
Section 1.5000C-6 is also issued under 26 U.S.C. 5000C
Section 1.6011-4T also issued under 26 U.S.C. 6001 and 6011(a).
Section 1.6011-4T also issued under 26 U.S.C. 6011.
Section 1.6011-6 also issued under 26 U.S.C. 6011(a).

Section 1.6011-7 also issued under 26 U.S.C. 6011(e).
Section 1.6011-9 also issued under 26 U.S.C. 6001 and 6011.
Section 1.6011-10 also issued under 26 U.S.C. 6001 and 6011.
Section 1.6011-11 also issued under 26 U.S.C. 6001 and 6011.
Section 1.6011-18 also issued under 26 U.S.C. 6001 and 26 U.S.C. 6011.
Section 1.6012-2 is also issued under the authority of 26 U.S.C. 6011 and 6012.
Section 1.6013-6 also issued under 26 U.S.C. 7701(b)(11).
Section 1.6015-1 also issued under 26 U.S.C. 6015(h).
Section 1.6015-2 also issued under 26 U.S.C. 6015(h).
Section 1.6015-3 also issued under 26 U.S.C. 6015(h).
Section 1.6015-4 also issued under 26 U.S.C. 6015(h).
Section 1.6015-5 also issued under 26 U.S.C. 6015(h).
Section 1.6015-6 also issued under 26 U.S.C. 6015(h).
Section 1.6015-7 also issued under 26 U.S.C. 6015(h).
Section 1.6015-8 also issued under 26 U.S.C. 6015(h).
Section 1.6015-9 also issued under 26 U.S.C. 6015(h).
Section 1.6031(a)-1 also issued under section 404 of the Tax Equity and Fiscal Responsibility Act of 1982 (Public Law 97-248; 96 Stat. 324, 669) (TEFRA).
Section 1.6033-4 also issued under 26 U.S.C. 6033.
Section 1.6033-6 also issued under 26 U.S.C. 6033(i)(1).
Section 1.6035-1 also issued under 26 U.S.C. 6035.
Section 1.6035-2 also issued under 26 U.S.C. 6035(b).
Section 1.6035-2T also issued under 26 U.S.C. 6035.
Section 1.6037-2 also issued under 26 U.S.C. 6037.
Section 1.6038-2 also issued under 26 U.S.C. 6038.
Section 1.6038-2T also issued under 26 U.S.C. 6038(d).
Section 1.6038-3 also issued under 26 U.S.C. 6038.
Section 1.6038-4 also issued under 26 U.S.C. 6001, 6011, 6012, 6031, and 6038.
Section 1.6038-5 also issued under 26 U.S.C. 6038.
Section 1.6038A-1 also issued under 26 U.S.C. 6001.
Section 1.6038A-2 also issued under 26 U.S.C. 6038A and 6038C.
Section 1.6038A-3 also issued under 26 U.S.C. 6038A and 7701(l).
Section 1.6038A-4 also issued under 26 U.S.C. 6038A.
Section 1.6038A-5 also issued under 26 U.S.C. 6038A.
Section 1.6038A-6 also issued under 26 U.S.C. 6038A.
Section 1.6038A-7 also issued under 26 U.S.C. 6038A.
Section 1.6038B-1 also issued under 26 U.S.C. 6038B.
Section 1.6038B-1T also issued under 26 U.S.C 6038B.
Section 1.6038B-2 also issued under 26 U.S.C. 6038B.
Section 1.6038B-2T also issued under 26 U.S.C. 6038B.

Section 1.6038D-0 also issued under 26 U.S.C. 6038D.
Section 1.6038D-1 also issued under 26 U.S.C. 6038D.
Section 1.6038D-2 also issued under 26 U.S.C. 6038D.
Section 1.6038D-3 also issued under 26 U.S.C. 6038D.
Section 1.6038D-4 also issued under 26 U.S.C. 6038D.
Section 1.6038D-5 also issued under 26 U.S.C. 6038D.
Section 1.6038D-6 also issued under 26 U.S.C. 6038D.
Section 1.6038D-7 also issued under 26 U.S.C. 6038D.
Section 1.6038D-8 also issued under 26 U.S.C. 6038D.
Section 1.6039I-1 also issued under 26 U.S.C. 6039I.
Section 1.6041-1 also issued under 26 U.S.C. 6041(a).
Section 1.6041-2 also issued under 26 U.S.C. 6041(d).
Section 1.6041-3 also issued under 26 U.S.C. 62 and 6041(a).
Section 1.6042-3 also issued under 26 U.S.C. 6045.
Section 1.6043-4 also issued under 26 U.S.C. 6043(c).
Section 1.6045-1 also issued under 26 U.S.C. 6045.
Section 1.6045-1 also issued under 26 U.S.C. 6045(a).
Section 1.6045-1T also issued under 26 U.S.C. 6045(g).
Section 1.6045-2 also issued under 26 U.S.C. 6045.
Section 1.6045-3 also issued under 26 U.S.C. 6045.
Section 1.6045-4 also issued under 26 U.S.C. 6045.
Section 1.6045A-1 also issued under 26 U.S.C. 6045A(a), (b), (c).
Section 1.6045B-1 also issued under 26 U.S.C. 6045B(a), (c), (e).
Section 1.6046-1 also issued 26 U.S.C. 6046(b).
Section 1.6046A-1 also issued under 26 U.S.C. 6046A.
Section 1.6047-2 is also issued under 26 U.S.C. 6047(d).
Section 1.6049-4 also issued under 26 U.S.C. 6049 (a), (b), and (d).
Section 1.6049-5 also issued under 26 U.S.C. 6049 (a), (b), and (d).
Section 1.6049-5T also issued under 26 U.S.C. 6049.
Section 1.6049-6 also issued under 6049(a), (b), and (d).
Section 1.6049-7 also issued under 26 U.S.C. 860G(e), 1275(c) and 26 U.S.C. 6049(d)(7)(D).
Section 1.6049-9 also issued under 26 U.S.C. 6049(a).
Section 1.6049-10 also issued under 26 U.S.C. 6049(a).
Section 1.6050E-1 also issued under 26 U.S.C. 6050E.
Section 1.6050H-1 also issued under 26 U.S.C. 6050H.
Section 1.6050H-2 also issued under 26 U.S.C. 6050H.
Section 1.6050H-3 also issued under 26 U.S.C. 6050H(h).
Section 1.6050I-1 also issued under 26 U.S.C. 6050I.
Section 1.6050I-2 also issued under 26 U.S.C. 6050I.
Section 1.6050K-1 also issued under 26 U.S.C. 6050K(a).

Section 1.6050M-1 also issued under 26 U.S.C. 6050M.
Section 1.6050P-1 also issued under 26 U.S.C. 6050P.
Section 1.6050P-2 also issued under 26 U.S.C. 6050P.
Section 1.6050S-1 also issued under 26 U.S.C. 6050S(g).
Section 1.6050S-2 also issued under 26 U.S.C. 6050S(g).
Section 1.6050S-3 also issued under 26 U.S.C. 6050S(g).
Section 1.6050S-4 also issued under 26 U.S.C. 6050S(g).
Section 1.6050X-1 also issued under 26 U.S.C. 6050X(a), (b).
Section 1.6050Y-2 also issued under 26 U.S.C. 6050Y(a).
Section 1.6050Y-3 also issued under 26 U.S.C. 6050Y(b).
Section 1.6050Y-4 also issued under 26 U.S.C. 6050Y(c).
Sections 1.6055-1 and 1.6055-2 also issued under 26 U.S.C. 6055.
Section 1.6060-1 also issued under 26 U.S.C. 6060(a).
Section 1.6061-2T also issued under 26 U.S.C. 6061.
Section 1.6065-2T also issued under 26 U.S.C. 6065.
Section 1.6081-1 also issued under 26 U.S.C. 6081.
Section 1.6081-2 also issued under 26 U.S.C. 6081.
Section 1.6081-2T also issued under 26 U.S.C. 6081.
Section 1.6081-3 also issued under 26 U.S.C. 6081.
Section 1.6081-4 also issued under 26 U.S.C. 6081.
Section 1.6081-5 also issued under 26 U.S.C. 6081.
Section 1.6081-6 also issued under 26 U.S.C. 6081.
Section 1.6081-6T also issued under 26 U.S.C. 6081.
Section 1.6081-7 also issued under 26 U.S.C. 6081.
Section 1.6081-8 also issued under 26 U.S.C. 6081(a).
Section 1.6081-9 also issued under 26 U.S.C. 6081(a).
Section 1.6081-10 also issued under 26 U.S.C. 6081.
Section 1.6081-11 also issued under 26 U.S.C. 6081.
Section 1.6109-2 also issued under 26 U.S.C. 6109(a).
Sections 1.6302-1, 1.6302-2, 1.6302-3 and 1.6302-4 also issued under 26 U.S.C. 6302(h).
Section 1.6411-4 also issued under 26 U.S.C. 6402(i) and 6411(c).
Section 1.6417-0 also issued under 26 U.S.C. 6417(h).
Section 1.6417-1 also issued under 26 U.S.C. 6417(h).
Section 1.6417-2 also issued under 26 U.S.C. 6417(h).
Section 1.6417-3 also issued under 26 U.S.C. 6417(h).
Section 1.6417-4 also issued under 26 U.S.C. 6417(h).
Section 1.6417-5 also issued under 26 U.S.C. 6417(h).
Section 1.6417-6 also issued under 26 U.S.C. 6417(h).
Section 1.6418-1 also issued under 26 U.S.C. 6418(g) and (h).
Section 1.6418-2 also issued under 26 U.S.C. 6418(g) and (h).

Section 1.6418-3 also issued under 26 U.S.C. 6418(g) and (h).
Section 1.6418-4 also issued under 26 U.S.C. 6418(g) and (h).
Section 1.6418-5 also issued under 26 U.S.C. 48(a)(10)(C) and 6418(g) and (h).
Section 1.6418-4T also issued under 26 U.S.C. 6418(g)(1) and (h).
Section 1.6654-2 also issued under 26 U.S.C. 6654(n).
Section 1.6655-5 also issued under 26 U.S.C. 6655(i)(2).
Section 1.6662-6 also issued under 26 U.S.C. 6662.
Section 1.6695-1 also issued under 26 U.S.C. 6060(b) and 6695(b).
Section 1.6695-1 also issued under 26 U.S.C. 6695(b).
Section 1.6695-2 also issued under 26 U.S.C. 6695(g).
Section 1.6695-2T also issued under 26 U.S.C. 6695(g).
Section 1.6851-2 also issued under 26 U.S.C 6851(d).
Section 1.7520-1 also issued under 26 U.S.C. 7520(c)(2).
Section 1.7520-1T also issued under 26 U.S.C. 7520(c)(2).
Section 1.7520-2 also issued under 26 U.S.C. 7520(c)(2).
Section 1.7520-3 also issued under 26 U.S.C. 7520(c)(2).
Section 1.7520-4 also issued under 26 U.S.C. 7520(c)(2).
Section 1.7701(l)-1 also issued under 26 U.S.C. 7701(l).
Section 1.7701(l)-3 also issued under 26 U.S.C. 7701(l).
Section 1.7701(l)-4 also issued under 26 U.S.C. 7701(l) and 954(c)(6)(A).
Section 1.7702-2 also issued under 26 U.S.C. 7702(k).
Section 1.7872-5(b)(17) also issued under 26 U.S.C. 7872.
Section 1.7872-5T also issued under 26 U.S.C. 7872.
Section 1.7872-15 also issued under 26 U.S.C. 1275 and 7872.
Section 1.7874-1 also issued under 26 U.S.C. 7874(c)(6) and (g).
Section 1.7874-1T also issued under 26 U.S.C. 7874(c)(6) and (g).
Section 1.7874-2 also issued under 26 U.S.C. 7874(c)(6) and (g).
Section 1.7874-3 is also issued under 26 U.S.C. 7874(c)(6) and (g).
Section 1.7874-4 also issued under 26 U.S.C. 7874(c)(6) and (g).
Section 1.7874-4T also issued under 26 U.S.C. 7874(c)(6) and (g).
Section 1.7874-5 also issued under 26 U.S.C. 7874(c)(6) and (g).
Section 1.7874-5T also issued under 26 U.S.C. 7874(c)(6) and (g).
Section 1.7874-6 also issued under 26 U.S.C. 7874(c)(6) and (g).
Section 1.7874-7 also issued under 26 U.S.C. 7874(c)(6) and (g).
Section 1.7874-8 also issued under 26 U.S.C. 7874(c)(6) and (g).
Section 1.7874-9 also issued under 26 U.S.C. 7874(c)(6) and (g).
Section 1.7874-10 also issued under 26 U.S.C. 7874(c)(4) and (g).
Section 1.7874-11 also issued under 26 U.S.C. 7874(g).
Section 1.7874-12 also issued under 26 U.S.C. 7874(g).

Source: T.D. 6500, 25 FR 11402, Nov. 26, 1960; 25 FR 14021, Dec. 21, 1960; T.D. 9989, 89 FR 17606, Mar. 11, 2024, unless otherwise noted.

Source: T.D. 6500, 25 FR 11402, Nov. 26, 1960; 25 FR 14021, Dec. 21, 1960, unless otherwise noted.

Source: T.D. 6500, 25 FR 11402, Nov. 26, 1960; 25 FR 14021, Dec. 31, 1960, T.D. 9381, 73 FR 8604, Feb. 15, 2008, unless otherwise noted.

Source: T.D. 6500, 25 FR 11607, Nov. 26, 1960; 25 FR 14021, Dec. 31, 1960, unless otherwise noted.

Source: T.D. 6500, 25 FR 11737, Nov. 26, 1960; 25 FR 14021, Dec. 31, 1960, unless otherwise noted.

Source: T.D. 6500, 25 FR 11814, Nov. 26, 1960; 25 FR 14021, Dec. 31, 1960, unless otherwise noted.

Source: T.D. 6500, 25 FR 11910, Nov. 26, 1960; 25 FR 14021, Dec. 31, 1960, unless otherwise noted.

Source: Sections 1.1401-1 through 1.1403-1 contained in T.D. 6691, 28 FR 12796, Dec. 3, 1963, unless otherwise noted.

Source: Sections 1.1401-1 through 1.1403-1 contained in T.D. 6691, 28 FR 12796, Dec. 3, 1963, unless otherwise noted. RELATED RULES

§ 1.0-1 Internal Revenue Code of 1954 and regulations.

(a) ***Enactment of law.*** The Internal Revenue Code of 1954 which became law upon enactment of Public Law 591, 83d Congress, approved August 16, 1954, provides in part as follows:

> *Be it enacted by the Senate and House of Representatives of the United States of America in Congress assembled,* That
>
> (a) *Citation.* (1) The provisions of this Act set forth under the heading “Internal Revenue Title” may be cited as the “Internal Revenue Code of 1954”
>
> (2) The Internal Revenue Code enacted on February 10, 1939, as amended, may be cited as the “Internal Revenue Code of 1939”.
>
> (b) *Publication.* This Act shall be published as volume 68A of the United States Statutes at Large, with a comprehensive table of contents and an appendix; but without an index or marginal references. The date of enactment, bill number, public law number, and chapter number, shall be printed as a headnote.
>
> (c) *Cross reference.* For saving provisions, effective date provisions, and other related provisions, see chapter 80 (sec. 7801 and following) of the Internal Revenue Code of 1954.
>
> (d) *Enactment of Internal Revenue Title into law.* The Internal Revenue Title referred to in subsection (a)(1) is as follows:

* * * * *

In general, the provisions of the Internal Revenue Code of 1954 are applicable with respect to taxable years beginning after December 31, 1953, and ending after August 16, 1954. Certain provisions of that Code are deemed to be included in the Internal Revenue Code of 1939. See section 7851.

(b) *Scope of regulations.* The regulations in this part deal with (1) the income taxes imposed under subtitle A of the Internal Revenue Code of 1954, and (2) certain administrative provisions contained in subtitle F of such Code relating to such taxes. In general, the applicability of such regulations is commensurate with the applicability of the respective provisions of the Internal Revenue Code of 1954 except that with respect to the provisions of the Internal Revenue Code of 1954 which are deemed to be included in the Internal Revenue Code of 1939, the regulations relating to such provisions are applicable to certain fiscal years and short taxable years which are subject to the Internal Revenue Code of 1939. Those provisions of the regulations which are applicable to taxable years subject to the Internal Revenue Code of 1939 and the specific taxable years to which such provisions are so applicable are identified in each instance. The regulations in 26 CFR (1939) part 39 (Regulations 118) are continued in effect until superseded by the regulations in this part. See Treasury Decision 6091, approved August 16, 1954 (19 FR 5167, C.B. 1954-2, 47).

NORMAL TAXES AND SURTAXES

DETERMINATION OF TAX LIABILITY

Tax on Individuals

§ 1.1-1 Income tax on individuals.

(a) ***General rule.***

(1) Section 1 of the Code imposes an income tax on the income of every individual who is a citizen or resident of the United States and, to the extent provided by section 871(b) or 877(b), on the income of a nonresident alien individual. For optional tax in the case of taxpayers with adjusted gross income of less than $10,000 (less than $5,000 for taxable years beginning before January 1, 1970) see section 3. The tax imposed is upon taxable income (determined by subtracting the allowable deductions from gross income). The tax is determined in accordance with the table contained in section 1. See subparagraph (2) of this paragraph for reference guides to the appropriate table for taxable years beginning on or after January 1, 1964, and before January 1, 1965, taxable years beginning after December 31, 1964, and before January 1, 1971, and taxable years beginning after December 31, 1970. In certain cases credits are allowed against the amount of the tax. See part IV (section 31 and following), subchapter A, chapter 1 of the Code. In general, the tax is payable upon the basis of returns rendered by persons liable therefor (subchapter A (sections 6001 and following), chapter 61 of the Code) or at the source of the income by withholding. For the computation of tax in the case of a joint return of a husband and wife, or a return of a surviving spouse, for taxable years beginning before January 1, 1971, see section 2. The computation of tax in such a case for taxable years beginning after December 31, 1970, is determined in accordance with the table contained in section 1(a) as amended by the Tax Reform Act of 1969. For other rates of tax on individuals, see section 5(a). For the imposition of an additional tax for the calendar years 1968, 1969, and 1970, see section 51(a).

(2)

(i) For taxable years beginning on or after January 1, 1964, the tax imposed upon a single individual, a head of a household, a married individual filing a separate return, and estates and trusts is the tax imposed by section 1 determined in accordance with the appropriate table contained in the following subsection of section 1:

	Taxable years beginning in 1964	Taxable years beginning after 1964 but before 1971	Taxable years beginning after Dec. 31, 1970 (references in this column are to the Code as amended by the Tax Reform Act of 1969)
Single individual	Sec. 1(a)(1)	Sec. 1(a)(2)	Sec. 1(c).
Head of a household	Sec. 1(b)(1)	Sec. 1(b)(2)	Sec. 1(b).
Married individual filing a separate return	Sec. 1(a)(1)	Sec. 1(a)(2)	Sec. 1(d).
Estates and trusts	Sec. 1(a)(1)	Sec. 1(a)(2)	Sec. 1(d).

(ii) For taxable years beginning after December 31, 1970, the tax imposed by section 1(d), as amended by the Tax Reform Act of 1969, shall apply to the income effectively connected with the conduct of a trade or business in the United States by a married alien individual who is a nonresident of the United States for all or part of the taxable year or by a foreign estate or trust. For such years the tax imposed by section 1(c), as amended by such Act, shall apply to the income effectively connected with the conduct of a trade or business in the United States by an unmarried alien individual (other than a surviving spouse) who is a nonresident of the United States for all or part of the taxable year. See paragraph (b)(2) of § 1.871-8.

(3) The income tax imposed by section 1 upon any amount of taxable income is computed by adding to the income tax for the bracket in which that amount falls in the appropriate table in section 1 the income tax upon the excess of that amount over the bottom of the bracket at the rate indicated in such table.

(4) The provisions of section 1 of the Code, as amended by the Tax Reform Act of 1969, and of this paragraph may be illustrated by the following examples:

> *Example 1.* A, an unmarried individual, had taxable income for the calendar year 1964 of $15,750. Accordingly, the tax upon such taxable income would be $4,507.50, computed as

follows from the table in section 1(a)(1):

Tax on $14,000 (from table)	$3,790.00
Tax on $1,750 (at 41 percent as determined from the table)	717.50
Total tax on $15,750	4,507.50

Example 2. Assume the same facts as in example (1), except the figures are for the calendar year 1965. The tax upon such taxable income would be $4,232.50, computed as follows from the table in section 1(a)(2):

Tax on $14,000 (from table)	$3,550.00
Tax on $1,750 (at 39 percent as determined from the table)	682.50
Total tax on $15,750	4,232.50

Example 3. Assume the same facts as in example (1), except the figures are for the calendar year 1971. The tax upon such taxable income would be $3,752.50, computed as follows from the table in section 1(c), as amended:

Tax on $14,000 (from table)	$3,210.00
Tax on $1,750 (at 31 percent as determined from the table)	542.50
Total tax on $15,750	3,752.50

(b) ***Citizens or residents of the United States liable to tax.*** In general, all citizens of the United States, wherever resident, and all resident alien individuals are liable to the income taxes imposed by the Code whether the income is received from sources within or without the United States. Pursuant to section 876, a nonresident alien individual who is a bona fide resident of a section 931 possession (as defined in § 1.931-1(c)(1) of this chapter) or Puerto Rico during the entire taxable year is, except as provided in section 931 or 933 with respect to income from sources within such possessions, subject to taxation in the same manner as a resident alien individual. As to tax on nonresident alien individuals, see sections 871 and 877.

(c) ***Who is a citizen.*** Every person born or naturalized in the United States and subject to its jurisdiction is a citizen. For other rules governing the acquisition of citizenship, see chapters 1 and 2 of title III of the Immigration and Nationality Act (8 U.S.C. 1401-1459). For rules governing loss of citizenship, see sections 349 to 357, inclusive, of such Act (8 U.S.C. 1481-1489), Schneider v. Rusk, (1964) 377 U.S. 163, and Rev. Rul. 70-506, C.B. 1970-2, 1. For rules pertaining to persons who are nationals but not citizens at

birth, e.g., a person born in American Samoa, see section 308 of such Act (8 U.S.C. 1408). For special rules applicable to certain expatriates who have lost citizenship with a principal purpose of avoiding certain taxes, see section 877. A foreigner who has filed his declaration of intention of becoming a citizen but who has not yet been admitted to citizenship by a final order of a naturalization court is an alien.

(d) ***Effective/applicability date.*** The second sentence of paragraph (b) of this section applies to taxable years ending after April 9, 2008.

[T.D. 6500, 25 FR 11402, Nov. 26, 1960, as amended by T.D. 7332, 39 FR 44216, Dec. 23, 1974; T.D. 9391, 73 FR 19358, Apr. 9, 2008]

§ 1.1-2 Limitation on tax.

(a) ***Taxable years ending before January 1, 1971.*** For taxable years ending before January 1, 1971, the tax imposed by section 1 (whether by subsection (a) or subsection (b) thereof) shall not exceed 87 percent of the taxable income for the taxable year. For purposes of determining this limitation the tax under section 1 (a) or (b) and the tax at the 87-percent rate shall each be computed before the allowance of any credits against the tax. Where the alternative tax on capital gains is imposed under section 1201(b), the 87-percent limitation shall apply only to the partial tax computed on the taxable income reduced by 50 percent of the excess of net long-term capital gains over net short-term capital losses. Where, for purposes of computations under the income averaging provisions, section 1201(b) is treated as imposing the alternative tax on capital gains computed under section 1304(e)(2), the 87-percent limitation shall apply only to the tax equal to the tax imposed by section 1, reduced by the amount of the tax imposed by section 1 which is attributable to capital gain net income for the computation year.

(b) ***Taxable years beginning after December 31, 1970.*** If, for any taxable year beginning after December 31, 1970, an individual has earned taxable income which exceeds his taxable income as defined by section 1348, the tax imposed by section 1, as amended by the Tax Reform Act of 1969, shall not exceed the sum computed under the provisions of section 1348. For imposition of minimum tax for tax preferences see sections 56 through 58.

[T.D. 7117, 36 FR 9397, May 25, 1971]

§ 1.1-3 Change in rates applicable to taxable year.

For computation of the tax for a taxable year during which a change in the tax rates occurs, see section 21 and the regulations thereunder.

[T.D. 6500, 25 FR 11402, Nov. 26, 1960. Redesignated by T.D. 7117, 36 FR 9397, May 25, 1971]

§ 1.1(h)-1 Capital gains look-through rule for sales or exchanges of interests in a partnership, S corporation, or trust.

(a) ***In general.*** When an interest in a partnership held for more than one year is sold or exchanged, the transferor may recognize ordinary income (e.g., under section 751(a)), collectibles gain, section 1250 capital gain, and residual long-term capital gain or loss. When stock in an S corporation held for more than one year is sold or exchanged, the transferor may recognize ordinary income (e.g., under sections 304, 306, 341, 1254), collectibles gain, and residual long-term capital gain or loss. When an interest in a

trust held for more than one year is sold or exchanged, a transferor who is not treated as the owner of the portion of the trust attributable to the interest sold or exchanged (sections 673 through 679) (a non-grantor transferor) may recognize collectibles gain and residual long-term capital gain or loss.

(b) ***Look-through capital gain*** —

(1) ***In general.*** Look-through capital gain is the share of collectibles gain allocable to an interest in a partnership, S corporation, or trust, plus the share of section 1250 capital gain allocable to an interest in a partnership, determined under paragraphs (b)(2) and (3) of this section.

(2) ***Collectibles gain*** —

(i) ***Definition.*** For purposes of this section, *collectibles gain* shall be treated as gain from the sale or exchange of a collectible (as defined in section 408(m) without regard to section 408(m)(3)) that is a capital asset held for more than 1 year.

(ii) ***Share of collectibles gain allocable to an interest in a partnership, S corporation, or a trust.*** When an interest in a partnership, S corporation, or trust held for more than one year is sold or exchanged in a transaction in which all realized gain is recognized, the transferor shall recognize as collectibles gain the amount of net gain (but not net loss) that would be allocated to that partner (taking into account any remedial allocation under § 1.704-3(d)), shareholder, or beneficiary (to the extent attributable to the portion of the partnership interest, S corporation stock, or trust interest transferred that was held for more than one year) if the partnership, S corporation, or trust transferred all of its collectibles for cash equal to the fair market value of the assets in a fully taxable transaction immediately before the transfer of the interest in the partnership, S corporation, or trust. If less than all of the realized gain is recognized upon the sale or exchange of an interest in a partnership, S corporation, or trust, the same methodology shall apply to determine the collectibles gain recognized by the transferor, except that the partnership, S corporation, or trust shall be treated as transferring only a proportionate amount of each of its collectibles determined as a fraction that is the amount of gain recognized in the sale or exchange over the amount of gain realized in the sale or exchange. With respect to the transfer of an interest in a trust, this paragraph (b)(2) applies only to transfers by non-grantor transferors (as defined in paragraph (a) of this section). This paragraph (b)(2) does not apply to a transaction that is treated, for Federal income tax purposes, as a redemption of an interest in a partnership, S corporation, or trust.

(3) ***Section 1250 capital gain*** —

(i) ***Definition.*** For purposes of this section, *section 1250 capital gain* means the capital gain (not otherwise treated as ordinary income) that would be treated as ordinary income if section 1250(b)(1) included all depreciation and the applicable percentage under section 1250(a) were 100 percent.

(ii) ***Share of section 1250 capital gain allocable to interest in partnership.*** When an interest in a partnership held for more than one year is sold or exchanged in a transaction in which all realized gain is recognized, there shall be taken into account under section 1(h)(7)(A)(i) in determining the partner's unrecaptured section 1250 gain the amount of section 1250 capital gain that would be allocated (taking into account any remedial allocation under § 1.704-3(d)) to that partner (to the extent attributable to the portion of the partnership interest transferred that was held for more than one year) if the partnership transferred all of its section 1250 property in a fully taxable transaction for cash equal to the fair market value of the assets immediately before the transfer of the interest in the partnership. If less than all of the realized gain is

recognized upon the sale or exchange of an interest in a partnership, the same methodology shall apply to determine the section 1250 capital gain recognized by the transferor, except that the partnership shall be treated as transferring only a proportionate amount of each section 1250 property determined as a fraction that is the amount of gain recognized in the sale or exchange over the amount of gain realized in the sale or exchange. This paragraph (b)(3) does not apply to a transaction that is treated, for Federal income tax purposes, as a redemption of a partnership interest.

(iii) ***Limitation with respect to net section 1231 gain.*** In determining a transferor partner's net section 1231 gain (as defined in section 1231(c)(3)) for purposes of section 1(h)(7)(B), the transferor partner's allocable share of section 1250 capital gain in partnership property shall not be treated as section 1231 gain, regardless of whether the partnership property is used in the trade or business (as defined in section 1231(b)).

(c) ***Residual long-term capital gain or loss.*** The amount of residual long-term capital gain or loss recognized by a partner, shareholder of an S corporation, or beneficiary of a trust on account of the sale or exchange of an interest in a partnership, S corporation, or trust shall equal the amount of long-term capital gain or loss that the partner would recognize under section 741, that the shareholder would recognize upon the sale or exchange of stock of an S corporation, or that the beneficiary would recognize upon the sale or exchange of an interest in a trust (pre-look-through long-term capital gain or loss) minus the amount of look-through capital gain determined under paragraph (b) of this section.

(d) ***Special rule for tiered entities.*** In determining whether a partnership, S corporation, or trust has gain from collectibles, such partnership, S corporation, or trust shall be treated as owning its proportionate share of the collectibles of any partnership, S corporation, or trust in which it owns an interest either directly or indirectly through a chain of such entities. In determining whether a partnership has section 1250 capital gain, such partnership shall be treated as owning its proportionate share of the section 1250 property of any partnership in which it owns an interest, either directly or indirectly through a chain of partnerships.

(e) ***Notification requirements.*** Reporting rules similar to those that apply to the partners and the partnership under section 751(a) shall apply in the case of sales or exchanges of interests in a partnership, S corporation, or trust that cause holders of such interests to recognize collectibles gain and in the case of sales or exchanges of interests in a partnership that cause holders of such interests to recognize section 1250 capital gain. See § 1.751-1(a)(3).

(f) ***Examples.*** The following examples illustrate the requirements of this section:

Example 1. Collectibles gain. (i) *A* and *B* are equal partners in a personal service partnership (*PRS*). *B* transfers *B*'s interest in *PRS* to *T* for $15,000 when *PRS*'s balance sheet (reflecting a cash receipts and disbursements method of accounting) is as follows:

	ASSETS	
	Adjusted basis	**Market value**
Cash	$3,000	$3,000
Loans Owed to Partnership	10,000	10,000
Collectibles	1,000	3,000

	ASSETS	
	Adjusted basis	Market value
Other Capital Assets	6,000	2,000
Capital Assets	7,000	5,000
Unrealized Receivables	0	14,000
Total	20,000	32,000

	LIABILITIES AND CAPITAL	
	Adjusted basis	Market value
Liabilities	2,000	2,000
Capital:		
A	9,000	15,000
B	9,000	15,000
Total	20,000	32,000

(ii) At the time of the transfer, *B* has held the interest in *PRS* for more than one year, and *B*'s basis for the partnership interest is $10,000 ($9,000 plus $1,000, *B*'s share of partnership liabilities). None of the property owned by *PRS* is section 704(c) property. The total amount realized by *B* is $16,000, consisting of the cash received, $15,000, plus $1,000, *B*'s share of the partnership liabilities assumed by *T*. See section 752. *B*'s undivided one-half interest in *PRS* includes a one-half interest in the partnership's unrealized receivables and a one-half interest in the partnership's collectibles.

(iii) If *PRS* were to sell all of its section 751 property in a fully taxable transaction for cash equal to the fair market value of the assets immediately prior to the transfer of *B's* partnership interest to *T*, *B* would be allocated $7,000 of ordinary income from the sale of *PRS*'s unrealized receivables. Therefore, *B* will recognize $7,000 of ordinary income with respect to the unrealized receivables. The difference between the amount of capital gain or loss that the partner would realize in the absence of section 751 ($6,000) and the amount of ordinary income or loss determined under § 1.751-1(a)(2) ($7,000) is the partner's capital gain or loss on the sale of the partnership interest under section 741. In this case, the transferor has a $1,000 pre-look-through long-term capital loss.

(iv) If *PRS* were to sell all of its collectibles in a fully taxable transaction for cash equal to the fair market value of the assets immediately prior to the transfer of *B's* partnership interest to *T*, *B* would be allocated $1,000 of gain from the sale of the collectibles. Therefore, *B* will recognize $1,000 of collectibles gain on account of the collectibles held by *PRS*.

(v) The difference between the transferor's pre-look-through long-term capital gain or loss (−$1,000) and the look-through capital gain determined under this section ($1,000) is the transferor's residual long-term capital gain or loss on the sale of the partnership interest. Under these facts, *B* will recognize a $2,000 residual long-term capital loss on account of the sale or exchange of the interest in *PRS*.

Example 2. Special allocations. Assume the same facts as in *Example 1,* except that under the partnership agreement, all gain from the sale of the collectibles is specially allocated to *B,* and *B* transfers *B*'s interest to *T* for $16,000. All items of income, gain, loss, or deduction of *PRS,* other than the gain from the collectibles, are divided equally between *A* and *B*. Under these facts, *B*'s amount realized is $17,000, consisting of the cash received, $16,000, plus $1,000, *B's* share of the partnership liabilities assumed by *T*. See section 752. *B* will recognize $7,000 of ordinary income with respect to the unrealized receivables (determined under § 1.751-1(a)(2)). Accordingly, *B*'s pre-look-through long-term capital gain would be $0. If *PRS* were to sell all of its collectibles in a fully taxable transaction for cash equal to the fair market value of the assets immediately prior to the transfer of *B's* partnership interest to *T, B* would be allocated $2,000 of gain from the sale of the collectibles. Therefore, *B* will recognize $2,000 of collectibles gain on account of the collectibles held by *PRS*. *B* will recognize a $2,000 residual long-term capital loss on account of the sale of *B's* interest in *PRS*.

Example 3. Net collectibles loss ignored. Assume the same facts as in *Example 1,* except that the collectibles held by *PRS* have an adjusted basis of $3,000 and a fair market value of $1,000, and the other capital assets have an adjusted basis of $4,000 and a fair market value of $4,000. (The total adjusted basis and fair market value of the partnership's capital assets are the same as in *Example 1*.) If *PRS* were to sell all of its collectibles in a fully taxable transaction for cash equal to the fair market value of the assets immediately prior to the transfer of *B*'s partnership interest to *T, B* would be allocated $1,000 of loss from the sale of the collectibles. Because none of the gain from the sale of the interest in *PRS* is attributable to unrealized appreciation in the value of collectibles held by *PRS,* the net loss in collectibles held by *PRS* is not recognized at the time *B* transfers the interest in *PRS*. *B* will recognize $7,000 of ordinary income (determined under § 1.751-1(a)(2)) and a $1,000 long-term capital loss on account of the sale of B's interest in *PRS*.

Example 4. Collectibles gain in an S corporation. (i) A corporation (*X*) has always been an S corporation and is owned by individuals *A, B,* and *C*. In 1996, *X* invested in antiques. Subsequent to their purchase, the antiques appreciated in value by $300. *A* owns one-third of the shares of *X* stock and has held that stock for more than one year. *A*'s adjusted basis in the *X* stock is $100. If *A* were to sell all of *A*'s *X* stock to *T* for $150, *A* would realize $50 of pre-look-through long-term capital gain.
(ii) If *X* were to sell its antiques in a fully taxable transaction for cash equal to the fair market value of the assets immediately before the transfer to *T, A* would be allocated $100 of gain on account of the sale. Therefore, *A* will recognize $100 of collectibles gain (look-through capital gain) on account of the collectibles held by *X*.

(iii) The difference between the transferor's pre-look-through long-term capital gain or loss ($50) and the look-through capital gain determined under this section ($100) is the transferor's residual long-term capital gain or loss on the sale of the S corporation stock. Under these facts, *A* will recognize $100 of collectibles gain and a $50 residual long-term capital loss on account of the sale of *A*'s interest in *X*.

Example 5. Sale or exchange of partnership interest where part of the interest has a short-term holding period. (i) *A, B,* and *C* form an equal partnership (*PRS*). In connection with the formation, *A* contributes $5,000 in cash and a capital asset with a fair market value of $5,000 and a basis of $2,000; *B* contributes $7,000 in cash and a collectible with a fair market value of $3,000 and a basis of $3,000; and *C* contributes $10,000 in cash. At the time of the contribution, *A* had held the contributed property for two years. Six months later, when *A*'s basis in *PRS* is $7,000, *A* transfers *A*'s interest in *PRS* to *T* for $14,000 at a time when *PRS*'s balance sheet (reflecting a cash receipts and disbursements method of accounting) is as follows:

	ASSETS	
	Adjusted basis	**Market value**
Cash	$22,000	$22,000
Unrealized Receivables	0	6,000
Capital Asset	2,000	5,000
Collectible	3,000	9,000
Capital Assets	5,000	14,000
Total	27,000	42,000

(ii) Although at the time of the transfer *A* has not held *A*'s interest in *PRS* for more than one year, 50 percent of the fair market value of *A*'s interest in *PRS* was received in exchange for a capital asset with a long-term holding period. Therefore, 50 percent of *A*'s interest in *PRS* has a long-term holding period. See § 1.1223-3(b)(1).
(iii) If *PRS* were to sell all of its section 751 property in a fully taxable transaction immediately before *A*'s transfer of the partnership interest, *A* would be allocated $2,000 of ordinary income. Accordingly, *A* will recognize $2,000 ordinary income and $5,000 ($7,000-$2,000) of capital gain on account of the transfer to *T* of *A*'s interest in *PRS.* Fifty percent ($2,500) of that gain is long-term capital gain and 50 percent ($2,500) is short-term capital gain. See § 1.1223-3(c)(1).

(iv) If the collectible were sold or exchanged in a fully taxable transaction immediately before *A*'s transfer of the partnership interest, *A* would be allocated $2,000 of gain attributable to the collectible. The gain attributable to the collectible that is allocable to the portion of the transferred interest in *PRS* with a long-term holding period is $1,000 (50 percent of $2,000). Accordingly, *A* will recognize $1,000 of collectibles gain on account of the transfer of *A*'s interest in *PRS*.

(v) The difference between the amount of pre-look-through long-term capital gain or loss ($2,500) and the look-through capital gain ($1,000) is the amount of residual long-term capital gain or loss that *A* will recognize on account of the transfer of *A*'s interest in *PRS*. Under these facts, *A* will recognize a residual long-term capital gain of $1,500 and a short-term capital gain of $2,500.

(g) ***Effective date.*** This section applies to transfers of interests in partnerships, S corporations, and trusts that occur on or after September 21, 2000.

[T.D. 8902, 65 FR 57096, Sept. 21, 2000]

§ 1.1(i)-1T Questions and answers relating to the tax on unearned income certain minor children (Temporary).

In General

Q-1. ***To whom does section 1(i) apply?***

A-1. Section 1(i) applies to any child who is under 14 years of age at the close of the taxable year, who has at least one living parent at the close of the taxable year, and who recognizes over $1,000 of unearned income during the taxable year.

Q-2. ***What is the effective date of section 1(i)?***

A-2. Section 1(i) applies to taxable years of the child beginning after December 31, 1986.

Computation of Tax

Q-3. ***What is the amount of tax imposed by section 1 on a child to whom section 1(i) applies?***

A-3. In the case of a child to whom section 1(i) applies, the amount of tax imposed by section 1 equals the greater of

(A) the tax imposed by section 1 without regard to section 1(i) or

(B) the sum of the tax that would be imposed by section 1 if the child's taxable income was reduced by the child's net unearned income, plus the child's share of the allocable parental tax.

Q-4. ***What is the allocable parental tax?***

A-4. The allocable parental tax is the excess of

(A) the tax that would be imposed by section 1 on the sum of the parent's taxable income plus the net unearned income of all children of such parent to whom section 1(i) applies, over

(B) the tax imposed by section 1 on the parent's taxable income. Thus, the allocable parental tax is not computed with reference to unearned income of a child over 14 or a child under 14 with less than $1,000 of unearned income. *See* A-10 through A-13 for rules regarding the determination of the parent(s) whose taxable income is taken into account under section 1(i). *See* A-14 for rules regarding the determination of children of the parent whose net unearned income is taken into account under section 1(i).

Q-5. ***What is the child's share of the allocable parental tax?***

A-5. The child's share of the allocable parental tax is an amount that bears the same ratio to the total allocable parental tax as the child's net unearned income bears to the total net unearned income of all children of such parent to whom section 1(i) applies. See A-14.

Example 1. During 1988, D, and a 12 year old, receives $5,000 of unearned income and no earned income. D has no itemized deductions and is not eligible for a personal exemption. D's parents have two other children, E, a 15 year old, and F, a 10 year old. E has $10,000 of unearned income and F has $100 of unearned income. D's parents file a joint return for 1988 and report taxable income of $70,000. Neither D's nor his parent's taxable income is attributable to net capital gain. D's tax liability for 1988, determined without regard to section 1(i), is $675 on $4,500 of taxable income ($5,000 less $500 allowable standard deduction). In applying section 1(i), D's tax would be equal to the sum of

(A) the tax that would be imposed on D's taxable income if it were reduced by any net unearned income, plus

(B) **D's share of the allocable parental tax. Only D's unearned income is taken into account in determining the allocable parental tax because E is over 14 and F has less than $1,000 of unearned income.** ***See A-4. D's net unearned income is $4,000 ($4,500 taxable unearned income less $500). The tax imposed on D's taxable income as reduced by D's net unearned income is $75 ($500 × 15%). The allocable parental tax is $1,225, the excess of $16,957.50 (the tax on $74,000, the parent's taxable income plus D's net unearned income) over $15,732.50 (the tax on $70,000, the parent's taxable income). See*** *A-4. Thus, D's tax under section 1(i)(1)(B) is $1,300 ($1,225 + $75). Since this amount is greater than the amount of D's tax liability as determined without regard to section 1(i), the amount of tax imposed on D for 1988 is $1,300. See A-3.*

Example 2. H and W have 3 children, A, B, and C, who are all under 14 years of age. For the taxable year 1988, H and W file a joint return and report taxable income of $129,750. The tax imposed by section 1 on H and W is $35,355. A has $5,000 of net unearned income and B and C each have $2,500 of net unearned income during 1988. The allocable parental tax imposed on A, B, and C's combined net unearned income of $10,000 is $3,300. This tax is the excess of $38,655, which is the tax imposed by section 1 on $139,750 ($129,750 + 10,000), over $35,355 (the tax imposed by section 1 on H and W's taxable income of $129,750). *See* A-4. Each child's share of the allocable parental tax is an amount that bears the same ratio to the total allocable parental tax as the child's net unearned income bears to the total net unearned income of A, B, and C. Thus, A's share of the allocable parental tax is $1,650 (5,000 ÷ 10,000 × 3,300) and B and C's share of the tax is $825 (2,500 ÷ 10,000 × 3,300) each. *See* A-5.

Definition of Net Unearned Income

Q-6. ***What is net unearned income?***

A-6. Net unearned income is the excess of the portion of adjusted gross income for the taxable year that is not "earned income" as defined in section 911(d)(2) (income that is not attributable to wages, salaries, or other amounts received as compensation for personal services), over the sum of the standard deduction amount provided for under section 63 (c)(5)(A) ($500 for 1987 and 1988; adjusted for inflation thereafter), plus the greater of

(A) $500 (adjusted for inflation after 1988) or

(B) the amount of allowable itemized deductions that are directly connected with the production of unearned income. A child's net unearned income for any taxable year shall not exceed the child's taxable income for such year.

Example 3. A is a child who is under 14 years of age at the end of the taxable year 1987. Both of A's parents are alive at this time. During 1987, A receives $3,000 of interest from a bank savings account and earns $1,000 from a paper route and performing odd jobs. A has no itemized deductions for 1987. A's standard deduction is $1,000, which is an amount equal to A's earned income for 1987. Of this amount, $500 is applied against A's unearned income and the remaining $500 is applied against A's earned income. Thus, A's $500 of taxable earned income ($1,000 less the remaining $500 of the standard deduction) is taxed without regard to section 1 (i); A has $2,500 of taxable unearned income ($3,000 gross unearned income less $500 of the standard deduction) of which $500 is taxed without regard to section 1(i). The remaining $2,000 of taxable unearned income is A's net unearned income and is taxed under section 1(i).

Example 4. B is a child who is subject to tax under section 1(i). B has $400 of earned income and $2,000 of unearned income. B has itemized deductions of $800 (net of the 2 percent of adjusted gross income (AGI) floor on miscellaneous itemized deductions under section 67) of which $200 are directly connected with the production of unearned income. The amount of itemized deductions that B may apply against unearned income is equal to the greater of $500 or the deductions directly connected with the production of unearned income. *See* A-6. Thus, $500 of B's itemized deductions are applied against the $2,000 of unearned income and the remaining $300 of deductions are applied against earned income. As a result, B has taxable earned income of $100 and taxable unearned income of $1,500. Of these amounts, all of the earned income and $500 of the unearned income are taxed without regard to section 1(i). The remaining $1,000 of unearned income is net unearned income and is taxed under section 1(i).

Unearned Income Subject to tax Under Section 1(i)

Q-7. ***Will a child be subject to tax under section 1(i) on net unearned income (as defined in section 1(i) (4) and A-6 of this section) that is attributable to property transferred to the child prior to 1987?***

A-7. Yes. The tax imposed by section 1(i) on a child's net unearned income applies to any net unearned income of the child for taxable years beginning after December 31, 1986, regardless of when the underlying assets were transferred to the child.

Q-8. ***Will a child be subject to tax under section 1(i) on net unearned income that is attributable to gifts from persons other than the child's parents or attributable to assets resulting from the child's earned income?***

A-8. Yes. The tax imposed by section 1(i) applies to all net unearned income of the child, regardless of the source of the assets that produced such income. Thus, the rules of section 1(i) apply to income attributable to gifts not only from the parents but also from any other source, such as the child's grandparents. Section 1(i) also applies to unearned income derived with respect to assets resulting from earned income of the child, such as interest earned on bank deposits.

Example 5. A is a child who is under 14 years of age at the end of the taxable year beginning on January 1, 1987. Both of A's parents are alive at the end of the taxable year. During 1987, A receives $2,000 in interest from his bank account and $1,500 from a paper route. Some of the interest earned by A from the bank account is attributable to A's paper route earnings that were deposited in the account. The balance of the account is attributable to cash gifts from A's parents and grandparents and interest earned prior to 1987. Some cash gifts were received by A prior to 1987. A has no itemized deductions and is eligible to be claimed as a dependent on his parent's return. Therefore, for the taxable year 1987, A's standard deduction is $1,500, the amount of A's earned income. Of this standard deduction amount, $500 is allocated against unearned income and $1,000 is allocated against earned income. A's taxable unearned income is $1,500 of which $500 is taxed without regard to section 1(i). The remaining taxable unearned income of $1,000 is net unearned income and is taxed under section 1(i). The fact that some of A's unearned income is attributable to interest on principal created by earned income and gifts from persons other than A's parents or that some of the unearned income is attributable to property transferred to A prior to 1987, will not affect the tax treatment of this income under section 1(i). *See* A-8.

Q-9. ***For purposes of section 1(i), does income which is not earned income (as defined in section 911(d)(2)) include social security benefits or pension benefits that are paid to the child?***

A-9. Yes. For purposes of section 1(i), earned income (as defined in section 911(d)(2)) does not include any social security or pension benefits paid to the child. Thus, such amounts are included in unearned income to the extent they are includible in the child's gross income.

Determination of the Parent's Taxable Income

Q-10. ***If a child's parents file a joint return, what is the taxable income that must be taken into account by the child in determining tax liability under section 1(i)?***

A-10. In the case of parents who file a joint return, the parental taxable income to be taken into account in determining the tax liability of a child is the total taxable income shown on the joint return.

Q-11. ***If a child's parents are married and file separate tax returns, which parent's taxable income must be taken into account by the child in determining tax liability under section 1(i)?***

A-11. For purposes of determining the tax liability of a child under section 1(i), where such child's parents are married and file separate tax returns, the parent whose taxable income is the greater of the two for the taxable year shall be taken into account.

Q-12. ***If the parents of a child are divorced, legally separated, or treated as not married under section 7703(b), which parent's taxable income is taken into account in computing the child's tax liability?***

A-12. If the child's parents are divorced, legally separated, or treated as not married under section 7703(b), the taxable income of the custodial parent (within the meaning of section 152(e)) of the child is taken into account under section 1(i) in determining the child's tax liability.

Q-13. ***If a parent whose taxable income must be taken into account in determining a child's tax liability under section 1(i) files a joint return with a spouse who is not a parent of the child, what taxable income must the child take into account?***

A-13. The amount of a parent's taxable income that a child must take into account for purposes of section 1(i) where the parent files a joint return with a spouse who is not a parent of the child is the total taxable income shown on such joint return.

Children of the Parent

Q-14. ***In determining a child's share of the allocable parental tax, is the net unearned income of legally adopted children, children related to such child by half-blood, or children from a prior marriage of the spouse of such child's parent taken into account in addition to the natural children of such child's parent?***

A-14. Yes. In determining a child's share of the allocable parental tax, the net unearned income of all children subject to tax under section 1(i) and who use the same parent's taxable income as such child to determine their tax liability under section 1(i) must be taken into account. Such children are taken into account regardless of whether they are adopted by the parent, related to such child by half-blood, or are children from a prior marriage of the spouse of such child's parent.

Rules Regarding Income From a Trust or Similar Instrument

Q-15. ***Will the unearned income of a child who is subject to section 1(i) that is attributable to gifts given to the child under the Uniform Gift to Minors Act (UGMA) be subject to tax under section 1(i)?***

A-15. Yes. A gift under the UGMA vests legal title to the property in the child although an adult custodian is given certain rights to deal with the property until the child attains majority. Any unearned income attributable to such a gift is the child's unearned income and is subject to tax under section 1(i), whether distributed to the child or not.

Q-16. ***Will a child who is a beneficiary of a trust be required to take into account the income of a trust in determining the child's tax liability under section 1(i)?***

A-16. The income of a trust must be taken into account for purposes of determining the tax liability of a beneficiary who is subject to section 1(i) only to the extent it is included in the child's gross income for the taxable year under sections 652(a) or 662(a). Thus, income from a trust for the fiscal taxable year of a trust ending during 1987, that is included in the gross income of a child who is subject to section 1(i) and who has a calendar taxable year, will be subject to tax under section 1(i) for the child's 1987 taxable year.

Subsequent Adjustments

Q-17. ***What effect will a subsequent adjustment to a parent's taxable income have on the child's tax liability if such parent's taxable income was used to determine the child's tax liability under section 1(i) for the same taxable year?***

A-17. If the parent's taxable income is adjusted and if, for the same taxable year as the adjustment, the child paid tax determined under section 1(i) with reference to that parent's taxable income, then the child's tax liability under section 1(i) must be recomputed using the parent's taxable income as adjusted.

Q-18. ***In the case where more than one child who is subject to section 1(i) uses the same parent's taxable income to determine their allocable parental tax, what effect will a subsequent adjustment to the net unearned income of one child have on the other child's share of the allocable parental tax?***

A-18. If, for the same taxable year, more than one child uses the same parent's taxable income to determine their share of the allocable parental tax and a subsequent adjustment is made to one or more of such children's net unearned income, each child's share of the allocable parental tax must be recomputed using the combined net unearned income of all such children as adjusted.

Q-19. ***If a recomputation of a child's tax under section 1(i), as a result of an adjustment to the taxable income of the child's parents or another child's net unearned income, results in additional tax being imposed by section 1(i) on the child, is the child subject to interest and penalties on such additional tax?***

A-19. Any additional tax resulting from an adjustment to the taxable income of the child's parents or the net unearned income of another child shall be treated as an underpayment of tax and interest shall be imposed on such underpayment as provided in section 6601. However, the child shall not be liable for any penalties on the underpayment resulting from additional tax being imposed under section 1(i) due to such an adjustment.

Example 6. D and M are the parents of C, a child under the age of 14. D and M file a joint return for 1988 and report taxable income of $69,900. C has unearned income of $3,000 and no itemized deductions for 1988. C properly reports a total tax liability of $635 for 1988. This amount is the sum of the allocable parental tax of $560 on C's net unearned income of $2,000 (the excess of $3,000 over the sum of $500 standard deduction and the first $500 of taxable unearned income) plus $75 (the tax imposed on C's first $500 of taxable unearned income). *See* A-3. One year later, D and M's 1988 tax return is adjusted on audit by adding an additional $1,000 of taxable income. No adjustment is made to the amount reported as C's net unearned income for 1988. However, the adjustment to D and M's taxable income causes C's tax liability under section 1(i) for 1988 to be increased by $50 as a result of the phase-out of the 15 percent rate bracket. *See* A-20. In addition to this further tax liability, C will be liable for interest on the $50. However, C will not have to pay any penalty on the delinquent amount.

Miscellaneous Rules

Q-20. ***Does the phase-out of the parent's 15 percent rate bracket and personal exemptions under section 1(g), if applicable, have any effect on the calculation of the allocable parental tax imposed on a child's net unearned income under section 1(i)?***

A-20. Yes. Any phase-out of the parent's 15 percent rate bracket or personal exemptions under section 1(g) is given full effect in determining the tax that would be imposed on the sum of the parent's taxable income and the total net unearned income of all children of the parent. Thus, any additional tax on a child's net unearned income resulting from the phase-out of the 15 percent rate bracket and the personal exemptions is reflected in the tax liability of the child.

Q-21. ***For purposes of calculating a parent's tax liability or the allocable parental tax imposed on a child, are other phase-outs, limitations, or floors on deductions or credits, such as the phase-out of the $25,000 passive loss allowance for rental real estate activities under section 469(i)(3) or the 2 percent of AGI floor on miscellaneous itemized deductions under section 67, affected by the addition of a child's net unearned income to the parent's taxable income?***

A-21. No. A child's net unearned income is not taken into account in computing any deduction or credit for purposes of determining the parent's tax liability or the child's allocable parental tax. Thus, for example, although the amounts allowable to the parent as a charitable contribution deduction, medical expense deduction, section 212 deduction, or a miscellaneous itemized deduction are affected by the amount of the parent's adjusted gross income, the amount of these deductions that is allowed does not change as a result of the application of section 1(i) because the amount of the parent's adjusted gross income does not include the child's net unearned income. Similarly, the amount of itemized deductions that is allowed to a child does not change as a result of section 1(i) because section 1(i) only affects the amount of tax liability and not the child's adjusted gross income.

*Q-22. **If a child is unable to obtain information concerning the tax return of the child's parents directly from such parents, how may the child obtain information from the parent's tax return which is necessary to determine the child's tax liability under section 1(i)?***

A-22. Under section 6103(e)(1)(A)(iv), a return of a parent shall, upon written request, be open to inspection or disclosure to a child of that individual (or the child's legal representative) to the extent necessary to comply with section 1(i). Thus, a child may request the Internal Revenue Service to disclose sufficient tax information about the parent to the child so that the child can properly file his or her return.

[T.D. 8158, 52 FR 33579, Sept. 4, 1987; 52 FR 36133, Sept. 25, 1987]

§ 1.2-1 Tax in case of joint return of husband and wife or the return of a surviving spouse.

(a) ***Taxable year ending before January 1, 1971.***

(1) For taxable years ending before January 1, 1971, in the case of a joint return of husband and wife, or the return of a surviving spouse as defined in section 2(b), the tax imposed by section 1 shall be twice the tax that would be imposed if the taxable income were reduced by one-half. For rules relating to the filing of joint returns of husband and wife, see section 6013 and the regulations thereunder.

(2) The method of computing, under section 2(a), the tax of husband and wife in the case of a joint return, or the tax of a surviving spouse, is as follows:

(i) First, the taxable income is reduced by one-half. Second, the tax is determined as provided by section 1 by using the taxable income so reduced. Third, the tax so determined, which is the tax that would be determined if the taxable income were reduced by one-half, is then multiplied by two to produce the tax imposed in the case of the joint return or the return of a surviving spouse, subject, however, to the allowance of any credits against the tax under the provisions of sections 31 through 38 and the regulations thereunder.

(ii) The limitation under section 1(c) of the tax to an amount not in excess of a specified percent of the taxable income for the taxable year is to be applied before the third step above, that is, the limitation to be applied upon the tax is determined as the applicable specified percent of one-half of the taxable income for the taxable year (such one-half of the taxable income being the actual aggregate taxable income of the spouses, or the total taxable income of the surviving spouse, as the case may be, reduced by one-half). For the percent applicable in determining the limitation of the tax under section 1(c), see § 1.1-2(a). After such limitation is applied, then the tax so limited is multiplied by two as provided in section 2(a) (the third step above).

(iii) The following computation illustrates the method of application of section 2(a) in the determination of the tax of a husband and wife filing a joint return for the calendar year 1965. If the combined gross income is $8,200, and the only deductions are the two exemptions of the taxpayers under section 151(b) and the standard deduction under section 141, the tax on the joint return for 1965, without regard to any credits against the tax, is $1,034.20 determined as follows:

1. Gross income	$8,200.00	
2. Less:		
Standard deduction, section 141	$820	
Deduction for personal exemption, section 151	1,200	2,020.00
3. Taxable income	6,180.00	
4. Taxable income reduced by one-half	3,090.00	
5. Tax computed by the tax table provided under section 1(a)(2) ($310 plus 19 percent of excess over $2,000)	517.10	
6. Twice the tax in item 5	1,034.20	

(b) *Taxable years beginning after December 31, 1970.*

(1) For taxable years beginning after December 31, 1970, in the case of a joint return of husband and wife, or the return of a surviving spouse as defined in section 2(a) of the Code as amended by the Tax Reform Act of 1969, the tax shall be determined in accordance with the table contained in section 1(a) of the Code as so amended. For rules relating to the filing of joint returns of husband and wife see section 6013 as amended and the regulations thereunder.

(2) The following computation illustrates the method of computing the tax of a husband and wife filing a joint return for calendar year 1971. If the combined gross income is $8,200, and the only deductions are the two exemptions of the taxpayers under section 151(b), as amended, and the standard deduction under section 141, as amended, the tax on the joint return for 1971, without regard to any credits against the tax, is $968.46, determined as follows:

1. Gross income	$8,200.00	
2. Less:		
Standard deduction, section 141	$1,066.00	
Deduction for personal exemption, section 151	1,300.00	2,366.00
3. Taxable income	5,834.00	
4. Tax computed by the tax table provided under section 1(a) ($620 plus 19	968.46	

percent of excess over $4,000)

(3) The limitation under section 1348 with respect to the maximum rate of tax on earned income shall apply to a married individual only if such individual and his spouse file a joint return for the taxable year.

(c) ***Death of a spouse.*** If a joint return of a husband and wife is filed under the provisions of section 6013 and if the husband and wife have different taxable years solely because of the death of either spouse, the taxable year of the deceased spouse covered by the joint return shall, for the purpose of the computation of the tax in respect of such joint return, be deemed to have ended on the date of the closing of the surviving spouse's taxable year.

(d) ***Computation of optional tax.*** For computation of optional tax in the case of a joint return or the return of a surviving spouse, see section 3 and the regulations thereunder.

(e) ***Change in rates.*** For treatment of taxable years during which a change in the tax rates occurs see section 21 and the regulations thereunder.

[T.D. 7117, 36 FR 9398, May 25, 1971]

§ 1.2-2 Definitions and special rules.

(a) ***Surviving spouse.***

(1) If a taxpayer is eligible to file a joint return under the Internal Revenue Code of 1954 without regard to section 6013(a) (3) thereof for the taxable year in which his spouse dies, his return for each of the next 2 taxable years following the year of the death of the spouse shall be treated as a joint return for all purposes if all three of the following requirements are satisfied:

(i) He has not remarried before the close of the taxable year the return for which is sought to be treated as a joint return, and

(ii) He maintains as his home a household which constitutes for the taxable year the principal place of abode as a member of such household of a person who is (whether by blood or adoption) a son, stepson, daughter, or stepdaughter of the taxpayer, and

(iii) He is entitled for the taxable year to a deduction under section 151 (relating to deductions for dependents) with respect to such son, stepson, daughter, or stepdaughter.

(2) See paragraphs (c)(1) and (d) of this section for rules for the determination of when the taxpayer maintains as his home a household which constitutes for the taxable year the principal place of abode, as a member of such household, of another person.

(3) If the taxpayer does not qualify as a surviving spouse he may nevertheless qualify as a head of a household if he meets the requirements of § 1.2-2(b).

(4) The following example illustrates the provisions relating to a surviving spouse:

Example: Assume that the taxpayer meets the requirements of this paragraph for the years 1967 through 1971, and that the taxpayer, whose wife died during 1966 while married to him, remarried in 1968. In 1969, the taxpayer's second wife died while married to him, and he remained single thereafter. For 1967 the taxpayer will qualify as a surviving spouse, provided that neither the taxpayer nor the first wife was a nonresident alien at any time during 1966 and that she (immediately prior to her death) did not have a taxable year different from that of the taxpayer. For 1968 the taxpayer does not qualify as a surviving spouse because he remarried before the close of the taxable year. The taxpayer will qualify as a surviving spouse for 1970 and 1971, provided that neither the taxpayer nor the second wife was a nonresident alien at any time during 1969 and that she (immediately prior to her death) did not have a taxable year different from that of the taxpayer. On the other hand, if the taxpayer, in 1969, was divorced or legally separated from his second wife, the taxpayer will not qualify as a surviving spouse for 1970 or 1971, since he could not have filed a joint return for 1969 (the year in which his second wife died).

(b) ***Head of household.***

(1) A taxpayer shall be considered the head of a household if, and only if, he is not married at the close of his taxable year, is not a surviving spouse (as defined in paragraph (a) of this section, and

(i) maintains as his home a household which constitutes for such taxable year the principal place of abode, as a member of such household, of at least one of the individuals described in subparagraph (3), or

(ii) maintains (whether or not as his home) a household which constitutes for such taxable year the principal place of abode of one of the individuals described in subparagraph (4).

(2) Under no circumstances shall the same person be used to qualify more than one taxpayer as the head of a household for the same taxable year.

(3) Any of the following persons may qualify the taxpayer as a head of a household:

(i) A son, stepson, daughter, or stepdaughter of the taxpayer, or a descendant of a son or daughter of the taxpayer. For the purpose of determining whether any of the stated relationships exist, a legally adopted child of a person is considered a child of such person by blood. If any such person is not married at the close of the taxable year of the taxpayer, the taxpayer may qualify as the head of a household by reason of such person even though the taxpayer may not claim a deduction for such person under section 151, for example, because the taxpayer does not furnish more than half of the support of such person. However, if any such person is married at the close of the taxable year of the taxpayer, the taxpayer may qualify as the head of a household by reason of such person only if the taxpayer is entitled to a deduction for such person under section 151 and the regulations thereunder. In applying the preceding sentence there shall be disregarded any such person for whom a deduction is allowed under section 151 only by reason of section 152(c) (relating to persons covered by a multiple support agreement).

(ii) Any other person who is a dependent of the taxpayer, if the taxpayer is entitled to a deduction for the taxable year for such person under section 151 and paragraphs (3) through (8) of section 152(a) and the regulations thereunder. Under section 151 the taxpayer may be entitled to a deduction for any of the following persons:

(*a*) His brother, sister, stepbrother, or stepsister;

(*b*) His father or mother, or an ancestor of either;

(c) His stepfather or stepmother;

(d) A son or a daughter of his brother or sister;

(e) A brother or sister of his father or mother; or

(f) His son-in-law, daughter-in-law, father-in-law, mother-in-law, brother- in-law, or sister-in-law;

if such person has a gross income of less than the amount determined pursuant to § 1.151-2 applicable to the calendar year in which the taxable year of the taxpayer begins, if the taxpayer supplies more than one-half of the support of such person for such calendar year and if such person does not make a joint return with his spouse for the taxable year beginning in such calendar year. The taxpayer may not be considered to be a head of a household by reason of any person for whom a deduction is allowed under section 151 only by reason of sections 152 (a)(9), 152 (a)(10), or 152(c) (relating to persons not related to the taxpayer, persons receiving institutional care, and persons covered by multiple support agreements).

(4) The father or mother of the taxpayer may qualify the taxpayer as a head of a household, but only if the taxpayer is entitled to a deduction for the taxable year for such father or mother under section 151 (determined without regard to section 152(c)). For example, an unmarried taxpayer who maintains a home for his widowed mother may not qualify as the head of a household by reason of his maintenance of a home for his mother if his mother has gross income equal to or in excess of the amount determined pursuant to § 1.151-2 applicable to the calendar year in which the taxable year of the taxpayer begins, or if he does not furnish more than one-half of the support of his mother for such calendar year. For this purpose, a person who legally adopted the taxpayer is considered the father or mother of the taxpayer.

(5) For the purpose of this paragraph, the status of the taxpayer shall be determined as of the close of the taxpayer's taxable year. A taxpayer shall be considered as not married if at the close of his taxable year he is legally separated from his spouse under a decree of divorce or separate maintenance, or if at any time during the taxable year the spouse to whom the taxpayer is married at the close of his taxable year was a nonresident alien. A taxpayer shall be considered married at the close of his taxable year if his spouse (other than a spouse who is a nonresident alien) dies during such year.

(6) If the taxpayer is a nonresident alien during any part of the taxable year he may not qualify as a head of a household even though he may comply with the other provisions of this paragraph. See the regulations prescribed under section 871 for a definition of nonresident alien.

(c) ***Household.***

(1) In order for a taxpayer to be considered as maintaining a household by reason of any individual described in paragraph (a)(1) or (b)(3) of this section, the household must actually constitute the home of the taxpayer for his taxable year. A physical change in the location of such home will not prevent a taxpayer from qualifying as a head of a household. Such home must also constitute the principal place of abode of at least one of the persons specified in such paragraph (a)(1) or (b)(3) of this section. It is not sufficient that the taxpayer maintain the household without being its occupant. The taxpayer and such other person must occupy the household for the entire taxable year of the taxpayer. However, the fact that such other person is born or dies within the taxable year will not prevent the taxpayer from qualifying as a head of household if the household constitutes the principal place of abode of such other person for the remaining or preceding part of such taxable year. The taxpayer and such other person will be considered as occupying the household for such

entire taxable year notwithstanding temporary absences from the household due to special circumstances. A nonpermanent failure to occupy the common abode by reason of illness, education, business, vacation, military service, or a custody agreement under which a child or stepchild is absent for less than 6 months in the taxable year of the taxpayer, shall be considered temporary absence due to special circumstances. Such absence will not prevent the taxpayer from being considered as maintaining a household if

(i) it is reasonable to assume that the taxpayer or such other person will return to the household, and

(ii) the taxpayer continues to maintain such household or a substantially equivalent household in anticipation of such return.

(2) In order for a taxpayer to be considered as maintaining a household by reason of any individual described in paragraph (b)(4) of this section, the household must actually constitute the principal place of abode of the taxpayer's dependent father or mother, or both of them. It is not, however, necessary for the purposes of such subparagraph for the taxpayer also to reside in such place of abode. A physical change in the location of such home will not prevent a taxpayer from qualifying as a head of a household. The father or mother of the taxpayer, however, must occupy the household for the entire taxable year of the taxpayer. They will be considered as occupying the household for such entire year notwithstanding temporary absences from the household due to special circumstances. For example, a nonpermanent failure to occupy the household by reason of illness or vacation shall be considered temporary absence due to special circumstances. Such absence will not prevent the taxpayer from qualifying as the head of a household if

(i) it is reasonable to assume that such person will return to the household, and

(ii) the taxpayer continues to maintain such household or a substantially equivalent household in anticipation of such return. However, the fact that the father or mother of the taxpayer dies within the year will not prevent the taxpayer from qualifying as a head of a household if the household constitutes the principal place of abode of the father or mother for the preceding part of such taxable year.

(d) ***Cost of maintaining a household.*** A taxpayer shall be considered as maintaining a household only if he pays more than one-half the cost thereof for his taxable year. The cost of maintaining a household shall be the expenses incurred for the mutual benefit of the occupants thereof by reason of its operation as the principal place of abode of such occupants for such taxable year. The cost of maintaining a household shall not include expenses otherwise incurred. The expenses of maintaining a household include property taxes, mortgage interest, rent, utility charges, upkeep and repairs, property insurance, and food consumed on the premises. Such expenses do not include the cost of clothing, education, medical treatment, vacations, life insurance, and transportation. In addition, the cost of maintaining a household shall not include any amount which represents the value of services rendered in the household by the taxpayer or by a person qualifying the taxpayer as a head of a household or as a surviving spouse.

(e) ***Certain married individuals living apart.*** For taxable years beginning after December 31, 1969, an individual who is considered as not married under section 143(b) shall be considered as not married for purposes of determining whether he or she qualifies as a single individual, a married individual, a head of household or a surviving spouse under sections 1 and 2 of the Code.

[T.D. 7117, 36 FR 9398, May 25, 1971]

§ 1.3-1 Application of optional tax.

(a) *General rules.*

(1) For taxable years ending before January 1, 1970, an individual whose adjusted gross income is less than $5,000 (or a husband and wife filing a joint return whose combined adjusted gross income is less than $5,000) may elect to pay the tax imposed by section 3 in place of the tax imposed by section 1 (a) or (b). For taxable years beginning after December 31, 1969 and before January 1, 1971 an individual whose adjusted gross income is less than $10,000 (or a husband and wife filing a joint return whose combined adjusted gross income is less than $10,000) may elect to pay the tax imposed by section 3 as amended by the Tax Reform Act of 1969 in place of the tax imposed by section 1 (a) or (b). For taxable years beginning after December 31, 1970 an individual whose adjusted gross income is less than $10,000 (or a husband and wife filing a joint return whose combined adjusted gross income is less than $10,000) may elect to pay the tax imposed by section 3 as amended in place of the tax imposed by section 1 as amended. See § 1.4-2 for the manner of making such election. A taxpayer may make such election regardless of the sources from which his income is derived and regardless of whether his income is computed by the cash method or the accrual method. See section 62 and the regulations thereunder for the determination of adjusted gross income. For the purpose of determining whether a taxpayer may elect to pay the tax under section 3, the amount of the adjusted gross income is controlling, without reference to the number of exemptions to which the taxpayer may be entitled. See section 4 and the regulations thereunder for additional rules applicable to section 3.

(2) The following examples illustrate the rule that section 3 applies only if the adjusted gross income is less than $10,000 ($5,000 for taxable years ending before January 1, 1970).

Example 1. A is employed at a salary of $9,200 for the calendar year 1970. In the course of such employment, he incurred travel expenses of $1,500 for which he was reimbursed during the year. Such items constitute his sole income for 1970. In such case the gross income is $10,700 but the amount of $1,500 is deducted from gross income in the determination of adjusted gross income and thus A's adjusted gross income for 1970 is $9,200. Hence, the adjusted gross income being less than $10,000, he may elect to pay his tax for 1970 under section 3. Similarly, in the case of an individual engaged in trade or business (excluding from the term “engaged in trade or business” the performance of personal services as an employee), there may be deducted from gross income in ascertaining adjusted gross income those expenses directly relating to the carrying on of such trade or business.

Example 2. If B has, as his only income for 1970, a salary of $11,600 and his spouse has no gross income, then B's adjusted gross income is $11,600 (not $11,600 reduced by exemptions of $1,250) and he is not for such year, entitled to pay his tax under section 3. If, however, B has for 1970 a salary of $13,000 and incident to his employment he incurs expenses in the amount of $3,400 for travel, meals, and lodging while away from home, for which he is not reimbursed, the adjusted gross income is $13,000 minus $3,400 or $9,600. In such case his adjusted gross income being less than $10,000, B may elect to pay the tax under section 3. However, if B's wife has adjusted gross income of $400, the total adjusted gross income is $10,000. In such case, if B and his wife file a joint return, they may not elect to pay the optional tax since the combined adjusted gross income is not less than $10,000. B may nevertheless elect to pay the optional tax, but if he makes this election he must file a separate return and, since his wife has gross income, he may not claim an exemption for her in computing the optional tax.

(b) ***Surviving spouse.*** The return of a surviving spouse is treated as a joint return for purposes of section 3. See section 2, and the regulations thereunder, with respect to the qualifications of a taxpayer as a surviving spouse. Accordingly, if the taxpayer qualifies as a surviving spouse and elects to pay the optional tax, he shall use the column in the tax table, appropriate to his number of exemptions, provided for cases in which a joint return is filed.

(c) ***Use of tax table.***

(1) To determine the amount of the tax, the individual ascertains the amount of his adjusted gross income, refers to the appropriate table set forth in section 3 or the regulations thereunder, ascertains the income bracket into which such income falls, and, using the number of exemptions applicable to his case, finds the tax in the vertical column having at the top thereof a number corresponding to the number of exemptions to which the taxpayer is entitled.

(2) Section 3(b) (relating to taxable years beginning after Dec. 31, 1964 and ending before Jan. 1, 1970) contains 5 tables for use in computing the tax. Table I is to be used by a single person who is not a head of household. Table II is to be used by a head of household. Table III is to be used by married persons filing joint returns and by a surviving spouse. Table IV is to be used by married persons filing separate returns using the 10 percent standard deduction. Table V is to be used by married persons filing separate returns using the minimum standard deduction. For an explanation of the standard deduction see section 141 and the regulations thereunder.

(3) 30 tables are provided for use in computing the tax under the Tax Reform Act of 1969. Tables I through XV apply for taxable years beginning after December 31, 1969 and ending before January 1, 1971. Tables XVI through XXX apply for taxable years beginning after December 31, 1970. The standard deduction for Tables I through XV, applicable to taxable years beginning in 1970, is 10 percent. The standard deduction for Tables XVI through XXX, applicable to taxable years beginning in 1971, is 13 percent. For an explanation of the standard deduction and the low income allowance see section 141 as amended by the Tax Reform Act of 1969.

(4) In the case of married persons filing separate returns who qualify to use the optional tax imposed by section 3, such persons shall use the tax imposed by the table for the applicable year in accordance with the rules prescribed by sections 4(c) and 141 and the regulations thereunder governing the use and application of the standard deduction and the low income allowance.

(5) The tax shown in the tax tables set forth in section 3 or the regulations thereunder reflects full income splitting in the case of a joint return (including the return of a surviving spouse) and lesser income splitting in the case of a head of household. Therefore, it is possible for the tax shown in the tables relating to joint returns, or relating to a return of a head of a household, to be lower than that shown in the table for separate returns even though the amounts of adjusted gross income and the number of exemptions are the same.

[T.D. 7117, 36 FR 9420, May 25, 1971]

§ 1.4-1 Number of exemptions.

(a) For the purpose of determining the optional tax imposed under section 3, the taxpayer shall use the number of exemptions allowable to him as deductions under section 151. See sections 151, 152, and 153, and the regulations thereunder. In general, one exemption is allowed for the taxpayer; one exemption for his spouse if a joint return is made, or if a separate return is made by the taxpayer and his spouse has no gross income for the calendar year in which the taxable year of the taxpayer begins and is not the

dependent of another taxpayer for such calendar year; and one exemption for each dependent whose gross income for the calendar year in which the taxable year of the taxpayer begins is less than the applicable amount determined pursuant to § 1.151-2. No exemption is allowed for any dependent who has made a joint return with his spouse for the taxable year beginning in the calendar year in which the taxable year of the taxpayer begins. The taxpayer may, in certain cases, be allowed an exemption for a dependent child of the taxpayer notwithstanding the fact that such child has gross income equal to or in excess of the amount determined pursuant to § 1.151-2 applicable to the calendar year in which the taxable year of the taxpayer begins. The requirements for the allowance of such an exemption are set forth in paragraph (c) of § 1.152-1. See paragraphs (c) and (d) of § 1.151-1 with respect to additional exemptions for a taxpayer or spouse who has attained the age 65 years and for a blind taxpayer or blind spouse

(b) The application of this section may be illustrated by the following examples:

Example 1. A, a married man whose duties as an employee require traveling away from his home, has as his sole gross income a salary of $5,600 for the calendar year 1954. His traveling expenses, including cost of meals and lodging, amount in such year to $750, and hence, his adjusted gross income is $4,850. His wife, B, has as her sole income interest in the amount of $85, and thus the aggregate adjusted gross income of A and B is $4,935. A has two dependent children neither of whom has any income. A and B file a joint return for 1954 on Form 1040. In such case four exemptions are allowable. The adjusted gross income falls within the tax bracket $4,900-4,950. By referring to such tax bracket in the tax table in section 3 and to the column headed “4” therein, the tax is found to be $407.

Example 2. C, a married man, has as his sole income in 1954 wages of $4,600, and has two dependent children neither of whom has any income. His wife, D, has adjusted gross income of $400. C files a separate return for 1954 and is entitled to claim three exemptions. C's income falls within the tax bracket $4,600-4,650 and hence, with three exemptions his tax is $480. No exemption is allowed with respect to since D has gross income and a joint return was not filed.

Example 3. D, a married man with no dependents, attains the age of 65 on September 1, 1954. The aggregate adjusted gross income of D and his wife for 1954 is $4,840. D and his wife file a joint return for 1954 and are entitled to three exemptions, one for each taxpayer and one additional exemption for D because of his age. Since the adjusted gross income of D and his wife falls within the tax bracket $4,800-4,850, the tax on a joint return is $509.

[T.D. 6500, 25 FR 11402, Nov. 26, 1960, as amended by T.D. 7114, 36 FR 9018, May 18, 1971]

§ 1.4-2 Elections.

(a) ***Making of election.*** The election to pay the optional tax imposed under section 3 shall be made by

(1) filing a return on Form 1040A, or

(2) filing a return on Form 1040 and electing in such return, in accordance with the provisions of section 144 and the regulations thereunder, to take the standard deduction provided by section 141.

(b) ***Election under section 3 and election of standard deduction.*** Section 144 (a) and the regulations thereunder provide rules for treating an election to pay the tax under section 3 as an election to take the standard deduction, and for treating an election to take the standard deduction as an election to pay the tax under

section 3. For example, if the taxpayer's return shows $5,000 or more of adjusted gross income and he elects to take the standard deduction, he will be deemed to have elected to pay the tax under section 3 if it is subsequently determined that his correct adjusted gross income is less than $5,000.

(c) [Reserved]

(d) ***Change of election.*** For rules relating to a change of election to pay, or not to pay, the optional tax imposed under section 3, see section 144 (b) and the regulations thereunder.

[T.D. 6500, 25 FR 11402, Nov. 26, 1960, as amended by T.D. 6581, 26 FR 11677, Dec. 6, 1961; T.D. 7269, 38 FR 9295, Apr. 13, 1973]

§ 1.4-3 Husband and wife filing separate returns.

(a) ***In general.*** If the separate adjusted gross income of a husband is less than $5,000 and the separate adjusted gross income of his wife is less than $5,000, and if each is required to file a return, the husband and the wife must each elect to pay the optional tax imposed under section 3 or neither may so elect. If the separate adjusted gross income of each spouse is $5,000 or more, then neither spouse can elect to pay the optional tax imposed under section 3. If the adjusted gross income of one spouse is $5,000 or more and that of the other spouse is less than $5,000, the election to pay the optional tax imposed under section 3 may be exercised by the spouse having adjusted gross income of less than $5,000 only if the spouse having adjusted gross income of $5,000 or more, in computing taxable income, uses the standard deduction provided by section 141. If the spouse having adjusted gross income of $5,000 or more does not use the standard deduction, then the spouse having adjusted gross income of less than $5,000 may not elect to pay the optional tax and must compute taxable income without regard to the standard deduction. Accordingly, if the spouse having adjusted gross income of $5,000 or more itemizes the deductions allowed by sections 161 and 211 in computing taxable income, the spouse having adjusted gross income of less than $5,000 must also compute taxable income by itemizing the deductions allowed by sections 161 and 211, and must pay the tax imposed by section 1. For rules relative to the election to take the standard deduction by husband and wife, see part IV (section 141 and following), subchapter B, chapter 1 of the Code, and the regulations thereunder.

(b) ***Taxable years beginning after December 31, 1963, and before January 1, 1970.***

(1) In the case of a husband and wife filing a separate return for a taxable year beginning after December 31, 1963, and before January 1, 1970, the optional tax imposed by section 3 shall be—

(i) For taxable years beginning in 1964, the lesser of the tax shown in Table IV (relating to the 10-percent standard deduction for married persons filing separate returns) or Table V (relating to the minimum standard deduction for married persons filing separate returns) of section 3(a), and

(ii) For a taxable year beginning after December 31, 1964, and before January 1, 1970, the lesser of the tax shown in Table IV (relating to the 10-percent standard deduction for married persons filing separate returns) or Table V (relating to minimum standard deduction for married persons filing separate returns) of section 3(b).

(2) If the tax of one spouse is determined with regard to the 10-percent standard deduction provided for in Table IV of section 3(a) or 3(b) or if such spouse in computing taxable income uses the 10-percent standard deduction provided for in section 141(b), then the minimum standard deduction provided for in Table V of section 3(a) or 3(b) shall not apply in the case of the other spouse, if such spouse elects to pay the optional tax imposed under section

(3) . Thus, if a husband and wife compute their tax with reference to the standard deduction, one cannot elect to use the 10-percent standard deduction and the other elect to use the minimum standard deduction. However, an individual described in section 141(d)(2) may elect pursuant to such section and the regulations thereunder to pay the tax shown in Table V of section 3(a) or 3(b) in lieu of the tax shown in Table IV of section 3(a) or 3(b). See section 141(d) and the regulations thereunder for rules relating to the standard deduction in the case of married individuals filing separate returns.

(c) ***Taxable years beginning after December 31, 1969.***

(1) In the case of a husband and wife filing a separate return for a taxable year beginning after December 31, 1969, the optional tax imposed by section 3 shall be the lesser of the tax shown in—

(i) The table prescribed under section 3 applicable to such taxable year in the case of married persons filing separate returns which applies the percentage standard deduction, or

(ii) The table prescribed under section 3 applicable to such taxable year in the case of married persons filing separate returns which applies the low income allowance.

(2) If the tax of one spouse is determined by the table described in subparagraph (1)(i) of this paragraph or if such spouse in computing taxable income uses the percentage standard deduction provided for in section 141(b), then the table described in subparagraph (1)(ii) of this paragraph shall not apply in the case of the other spouse, if such other spouse elects to pay the optional tax imposed under section 3. Thus, if a husband and wife compute the tax with reference to the standard deduction, one cannot elect to use the percentage standard deduction and the other elect to use the low income allowance. A married individual described in section 141(d)(2) may elect pursuant to such section and the regulations thereunder to pay the tax shown in the table described by subparagraph (1)(ii) of this paragraph in lieu of the tax shown in the table described by subparagraph (1)(i) of this paragraph. See section 141(d) and the regulations thereunder for rules relating to the standard deduction in the case of married individuals filing separate returns.

(d) ***Determination of marital status.*** For the purpose of applying the restrictions upon the right of a married person to elect to pay the tax under section 3,

(1) the determination of marital status is made as of the close of the taxpayer's taxable year or, if his spouse died during such year, as of the date of death;

(2) a person legally separated from his spouse under a decree of divorce or separate maintenance on the last day of his taxable year (or the date of death of his spouse, whichever is applicable) is not considered as married; and

(3) with respect to taxable years beginning after December 31, 1969, a person, although considered as married within the meaning of section 143(a), is considered as not married if he lives apart from his spouse and satisfies the requirements set forth in section 143(b). See section 143 and the regulations thereunder.

[T.D. 6792, 30 FR 529, Jan. 15, 1965, as amended by T.D. 7123, 36 FR 11084, June 9, 1971]

§ 1.4-4 Short taxable year caused by death.

An individual making a return for a period of less than 12 months on account of a change in his accounting period may not elect to pay the optional tax under section 3. However, the fact that the taxable year is less than 12 months does not prevent the determination of the tax for the taxable year under section 3 if the short taxable year results from the death of the taxpayer.

TAX ON CORPORATIONS

§ 1.11-1 Tax on corporations.

(a) Every corporation, foreign or domestic, is liable to the tax imposed under section 11 except

(1) corporations specifically excepted under such section from such tax;

(2) corporations expressly exempt from all taxation under subtitle A of the Code (see section 501); and

(3) corporations subject to tax under section 511(a). For taxable years beginning after December 31, 1966, foreign corporations engaged in trade or business in the United States shall be taxable under section 11 only on their taxable income which is effectively connected with the conduct of a trade or business in the United States (see section 882(a)(1)). For definition of the terms “corporations,” “domestic,” and “foreign,” see section 7701(a) (3), (4), and (5), respectively. It is immaterial that a domestic corporation, and for taxable years beginning after December 31, 1966, a foreign corporation engaged in trade or business in the United States, which is subject to the tax imposed by section 11 may derive no income from sources within the United States. The tax imposed by section 11 is payable upon the basis of the returns rendered by the corporations liable thereto, except that in some cases a tax is to be paid at the source of the income. See subchapter A (sections 6001 and following), chapter 61 of the Code, and section 1442.

(b) The tax imposed by section 11 consists of a normal tax and a surtax. The normal tax and the surtax are both computed upon the taxable income of the corporation for the taxable year, that is, upon the gross income of the corporation minus the deductions allowed by chapter 1 of the Code. However, the deduction provided in section 242 for partially tax-exempt interest is not allowed in computing the taxable income subject to the surtax.

(c) The normal tax is at the rate of 22 percent and is applied to the taxable income for the taxable year. However, in the case of a taxable year ending after December 31, 1974, and before January 1, 1976, the normal tax is at the rate of 20 percent of so much of the taxable income as does not exceed $25,000 and at the rate of 22 percent of so much of the taxable income as does exceed $25,000 and is applied to the taxable income for the taxable year.

(d) The surtax is at the rate of 26 percent and is upon the taxable income (computed without regard to the deduction, if any, provided in section 242 for partially tax-exempt interest) in excess of $25,000. However, in the case of a taxable year ending after December 31, 1974, and before January 1, 1976, the surtax is upon the taxable income (computed as provided in the preceding sentence) in excess of $50,000. In certain circumstances the exemption from surtax may be disallowed in whole or in part. See sections 269, 1551, 1561, and 1564 and the regulations thereunder. For purposes of sections 244, 247, 804, 907, 922 and §§ 1.51-1 and 1.815-4, when the phrase “the sum of the normal tax rate and the surtax rate for the taxable year” is used in any such section, the normal tax rate for all taxable years beginning after December 31, 1963, and ending before January 1, 1976, shall be considered to be 22 percent.

(e) The computation of the tax on corporations imposed under section 11 may be illustrated by the following example:

Example. The X Corporation, a domestic corporation, has gross income of $86,000 for the calendar year 1964. The gross income includes interest of $5,000 on United States obligations for which a deduction under section 242 is allowable in determining taxable income subject to the normal tax. It has other deductions of $11,000. The tax of the X Corporation under section 11 for the calendar year is $28,400 ($15,400 normal tax and $13,000 surtax) computed as follows:

Computation of Normal Tax		
Gross income	$86,000	
Deductions:		
Partially tax-exempt interest	$5,000	
Other	11,000	16,000
Taxable income	70,000	
Normal tax (22 percent of $70,000)	15,400	
Computation of Surtax		
Taxable income	70,000	
Add: Amount of partially tax-exempt interest deducted in computing taxable income	5,000	
Taxable income subject to surtax	75,000	
Less: Exemption from surtax	25,000	
Excess of taxable income subject to surtax over exemption	50,000	
Surtax (26 percent of $50,000)	13,000	

(f) For special rules applicable to foreign corporations engaged in trade or business within the United States, see section 882 and the regulations thereunder. For additional tax on personal holding companies, see part II (section 541 and following), subchapter G, chapter 1 of the Code, and the regulations thereunder. For additional tax on corporations improperly accumulating surplus, see part I (section 531 and following), subchapter G, chapter 1 of the Code, and the regulations thereunder. For treatment of China Trade Act corporations, see sections 941 and 942 and the regulations thereunder. For treatment of Western Hemisphere trade corporations, see sections 921 and 922 and the regulations thereunder. For treatment of capital gains and losses, see subchapter P (section 1201 and following), chapter 1 of the Code. For computation of the tax for a taxable year during which a change in the tax rates occurs, see section 21 and the regulations thereunder.

[T.D. 6500, 25 FR 11402, Nov. 26, 1960, as amended by T.D. 7293, 38 FR 32792, Nov. 28, 1973; T.D. 74-13, 41 FR 12639, Mar. 26, 1976]

Changes in Rates During a Taxable Year

§ 1.15-1 Changes in rate during a taxable year.

(a) Section 21 applies to all taxpayers, including individuals and corporations. It provides a general rule applicable in any case where

(1) any rate of tax imposed by chapter 1 of the Code upon the taxpayer is increased or decreased, or any such tax is repealed, and

(2) the taxable year includes the effective date of the change, except where that date is the first day of the taxable year. For example, the normal tax on corporations under section 11(b) was decreased from 30 percent to 22 percent in the case of a taxable year beginning after December 31, 1963. Accordingly, the tax for a taxable year of a corporation beginning on January 1, 1964, would be computed under section 11(b) at the new rate without regard to section 21. However, for any taxable year beginning before January 1, 1964, and ending on or after that date, the tax would be computed under section 21. For additional circumstances under which section 21 is not applicable, see paragraph (k) of this section.

(b) In any case in which section 21 is applicable, a tentative tax shall be computed by applying to the taxable income for the entire taxable year the rate for the period within the taxable year before the effective date of change, and another tentative tax shall be computed by applying to the taxable income for the entire taxable year the rate for the period within the taxable year on or after such effective date. The tax imposed on the taxpayer is the sum of—

(1) An amount which bears the same ratio to the tentative tax computed at the rate applicable to the period within the taxable year before the effective date of the change that the number of days in such period bears to the number of days in the taxable year, and

(2) An amount which bears the same ratio to the tentative tax computed at the rate applicable to the period within the taxable year on and after the effective date of the change that the number of days in such period bears to the number of days in the taxable year.

(c) If the rate of tax is changed for taxable years “beginning after” or “ending after” a certain date, the following day is considered the effective date of the change for purposes of section 21. If the rate is changed for taxable years “beginning on or after” a certain date, that date is considered the effective date of the change for purposes of section 21. This rule may be illustrated by the following examples:

Example 1. Assume that the law provides that a change in a certain rate of tax shall be effective only with respect to taxable years beginning after December 31, 1969. The effective date of change for purposes of section 21 is January 1, 1970, and section 21 must be applied to any taxable year which begins before and ends on or after January 1, 1970.

Example 2. Assume that the law provides that a change in a certain rate of tax shall be applicable only with respect to taxable years ending after December 31, 1970. For purposes of section 21, the effective date of change is January 1, 1971, and section 21 must be applied to any taxable year which begins before and ends on or after January 1, 1971.

Example 3. Assume that the law provides that a change in a certain rate of tax shall be effective only with respect to taxable years beginning on or after January 1, 1971. The effective date of change for purposes of section 21 is January 1, 1971, and section 21 must be applied to any taxable year which begins before and ends on or after January 1, 1971.

(d) If a tax is repealed, the repeal will be treated as a change of rate for purposes of section 21, and the rate for the period after the repeal (for purposes of computing the tentative tax with respect to that period) will be considered zero. For example, the Tax Reform Act of 1969 repealed section 1562, which imposed a 6 percent additional tax on controlled corporations electing multiple surtax exemptions, effective for taxable years beginning after December 31, 1974. For such controlled corporations having taxable years beginning in 1974 and ending in 1975, the rate for the period ending before January 1, 1975, would be 6 percent; the rate for the period beginning after December 31, 1974, would be zero. However, subject to the rules stated in this section, section 21 does not apply to the imposition of a new tax. For example, if a new tax is imposed for taxable years beginning on or after July 1, 1972, a computation under section 21 would not be required with respect to such new tax in the case of taxable years beginning before July 1, 1972, and ending on or after that date. If the effective date of the imposition of a new tax and the effective date of a change in rate of such tax fall in the same taxable year, section 21 is not applicable in computing the taxpayer's liability for such tax for such year unless the new tax is expressly imposed upon the taxpayer for a portion of his taxable year prior to the change in rate.

(e) If a husband and wife have different taxable years because of the death of either spouse, and if a joint return is filed with respect to the taxable year of each, then, for purposes of section 21, the joint return shall be treated as if the taxable years of both spouses ended on the date of the closing of the surviving spouse's taxable year. See section 6013 (c), relating to treatment of joint return after death of either spouse. Accordingly, if a change in the rate of tax is effective during the taxable year of the surviving spouse, the tentative taxes with respect to the joint return shall be computed on the basis of the number of days during which each rate of tax was in effect for the taxable year of the surviving spouse.

(f) Section 21 applies whether or not the taxpayer has a taxable year of less than 12 months. Moreover, section 21 applies whether or not the taxable income for a taxable year of less than 12 months is required to be placed on an annual basis under section 443. If the taxable income is required to be computed under section 443(b) then the tentative taxes under section 21 are computed as provided in paragraph (1) or (2) of section 443(b) and are reduced as provided in those paragraphs. The tentative taxes so computed and reduced are then apportioned as provided in section 21(a)(2) to determine the tax for such taxable year as computed under section 21.

(g) If a taxpayer has made the election under section 441(f) (relating to computation of taxable income on the basis of an annual accounting period varying from 52 to 53 weeks), the rules provided in section 441(f)(2) shall be applicable for purposes of determining whether section 21 applies to the taxable year of the taxpayer. Where a taxpayer has made the election under section 441(f) and where section 21 applies to the taxable year of the taxpayer the computation under section 21(a)(2) shall be made upon the basis of the actual number of days in the taxable year and in each period thereof.

(h)

(1) Section 21 is applicable only if the rate of tax imposed by chapter 1 changes. Sections in which rates of tax are specified or incorporated by reference include the following: 1, 2, 3, 11, 511, 531, 541, 821, 831, 871, 881, 1201, and 1348 (for taxable years beginning after December 31, 1970). Except as provided in subparagraph (3) of this paragraph, section 21 is not applicable with respect to changes in the law relating to deductions from gross income, exclusions from or inclusions in gross income, or other items taken into account in determining the amount or character of income subject to tax. Moreover, section 21 is not applicable with respect to changes in the law relating to credits against the tax or with respect to changes in the law relating to limitations on the amount of tax. Section 21 is applicable, however, to all those computations specified in the section providing the rate of tax which are implicit in determining the rate. For example, if one of the tax brackets in the tax tables

under section 3 were to be changed, section 21 would be applicable to that change. Thus, if the bracket relating to "at least $4,200 but not less than $4,250" for heads of households should be changed to increase or decrease the last sum specified, with corresponding changes being made in subsequent brackets, section 21 would be applicable. The enactment of sections 1561 and 1562 is considered a change in section 11(d) which constitutes a change in rate for the period ending after December 31, 1963. The amendment of section 1561 and the repeal of section 1562 by the Tax Reform Act of 1969 is considered a change in section 11(d) which constitutes a change in rate for the period ending after December 31, 1974. The repeal of the 2 percent additional tax imposed under section 1503 on corporations filing consolidated returns constitutes a change in rate for the period ending after December 31, 1963. The addition to the Code of section 1348 (relating to 50 percent maximum rate on earned income) is a change in rate to which section 21(a) is applicable. The amendment of section 11(d) by the Tax Reduction Act of 1975 which increases to $50,000 the surtax exemption for a taxable year ending during 1975 constitutes a change in rate for such portion of the taxable year (if less than the entire taxable year) as follows December 31, 1974. Similarly, the return of the surtax exemption to $25,000 for a taxable year ending during 1976 constitutes a change in rate for such portion of the taxable year (if less than the entire taxable year) as follows December 31, 1975.

(2) Ordinarily, both the old and the new rates are applied to the same amount of taxable income. However, where the rate of tax is itself taken into account in determining taxable income (for example, the special deduction for Western Hemisphere trade corporations under section 922), the taxable income used in determining the tentative tax employing the rate before the effective date of change shall be determined by reference to that rate of tax, and the taxable income for the purpose of determining the tentative tax employing the rate for the period on and after the effective date of the change shall be determined by reference to the new tax rate.

(3) Section 21 is applicable with respect to changes in the law relating to the standard deduction for individuals provided in part IV of subchapter B and to the deduction for personal exemptions for individuals provided in part V of subchapter B.

(i) If the rate of tax changes more than once during the taxable year, section 21 is applicable to each change in rate. For example, if the rate of normal tax changed for taxable years beginning on or after March 1, 1954, and changed again for taxable years beginning on or after June 1, 1954, section 21 requires computation of 3 tentative taxes for any taxable year which began before March 1, 1954, and ended on or after June 1, 1954: One tentative tax at the rate in effect before the March 1 change; another tentative tax at the rate in effect from March 1 to May 31; and a third tentative tax at the rate in effect from June 1 to the end of the taxable year. The proportion of each such tentative tax taken into account in determining the tax imposed on the taxpayer is computed by reference to the portion of the taxable year before March 1, 1954, by reference to the portion of the taxable year from March 1, 1954, through May 31, 1954, and by reference to the portion of the taxable year from June 1, 1954, to the end of the taxable year, respectively.

(j)

(1) If a change in the rate of one tax imposed by chapter 1 of the Code does not affect the amount of other taxes imposed by chapter 1 of the Code the other taxes may be determined without regard to section 21 and section 21 will be applied only to the tax for which a change in rate is made. However, if the change of rate of one tax does affect the amount of other taxes imposed under chapter 1 of the Code, then the computation of the taxes under chapter 1 of the Code so affected shall be made by applying section 21. For example, if section 1201 applies to an individual taxpayer for a taxable year containing the effective date of a change in a rate of tax provided in section 1, then under

section 21 the taxpayer must compute a tentative tax for each period for which a different rate of tax is effective under section 1. The tentative tax for each such period as computed under section 1201 will reflect the rate of tax provided by section 1 for such period.

(2) In certain cases chapter 1 of the Code provides that the particular tax to be imposed upon the taxpayer shall be one of several taxes, the basis of selection being the tax that is greater or lesser. See, for example, sections 821 and 1201. If in any such case the rate of any one of these taxes changes, then the tentative taxes computed as provided by section 21 for each period shall be computed employing the tax selected in accordance with the general rule of selection for such a case, at the rate of tax in effect for such period. Thus, if a change in the rate of the alternative tax under section 1201 is such that the alternative tax under section 1201 is applicable if the old rate is used and is not applicable if the new rate is used, one tentative tax will consist of the alternative tax under section 1201 and the other tentative tax will consist of the tax imposed by the other applicable sections of chapter 1 of the Code. The two tentative taxes so computed are then prorated in accordance with section 21(a)(2) and the sum of the proportionate amounts is the tax imposed for the taxable year under chapter 1 of the Code. See the examples in paragraph (n) of this section.

(k) Section 21 does not apply in the following situations:

(1) The provisions of section 21 do not apply to the imposition of the tax surcharge by section 51. The proration rules of section 51(a) apply in the case of a taxable year ending on or after the effective date of the surcharge and beginning before July 1, 1970.

(2) The provisions of section 21 do not apply to the imposition of the minimum tax for tax preferences by section 56. The proration rules of section 301(c) of the Tax Reform Act of 1969 (83 Stat. 586) apply in the case of a taxable year beginning in 1969 and ending in 1970.

(l) In computing the number of days each rate of tax is in effect during the taxable year for purposes of section 21(a)(2), the effective date of the change in rate shall be counted in the period for which the new rate is in effect.

(m) Any credits against tax, and any limitation in any credit against tax, shall be based upon the tax computed under section 21. For credits against tax, see part IV (section 31 and following), subchapter A, chapter 1 of the Code.

(n) The application of section 21 may be illustrated by the following examples: (See also the examples in § 1.1561-2A(a)(3).)

Example 1. A, a married taxpayer filing a joint return, reports his income on the basis of a fiscal year ending June 30. For his fiscal year ending June 30, 1970, A reports taxable income (exclusive of capital gains and losses) of $50,000 and net long-term capital gain (section 1201 gain (net capital gain for taxable years beginning after December 31, 1976)) of $75,000. The rate of tax on capital gains under section 1201(b) relating to the alternative tax has been increased from 25 percent to a maximum rate of $29^1/_2$ percent with respect to gain in excess of $50,000 and the effective date of the change in rate is January 1, 1970. The income tax for the taxable year ended June 30, 1970, would be computed under section 21 as

follows:

Tentative Tax		
Taxable income exclusive of capital gains and losses	$50,000	
Long-term capital gain	75,000	
	125,000	
Deduct 50% of long-term capital gain	37,500	
Taxable income	87,500	
Tax under section 1 (1969 and 1970 rates)	37,690	
Alternative Tax Under Section 1201(b) (1969 R **ates**)		
Taxable income ($50,000 + 50% of $75,000)	$87,500	
Less 50% of long-term capital gain	37,500	
Taxable income exclusive of capital gains	50,000	
Partial tax (tax on $50,000)	17,060	
Plus 25% of $75,000	18,750	
Alternative tax under section 1201(b) at 1969 rates	35,810	
Alternative Tax Under Section 1201(b) (1970 **Rates**)		
step i		
Taxable income ($50,000 + 50% of $75,000)	$87,500	
Deduct 50% of net section 1201 gain (net capital gain for taxable years beginning after December 31, 1976)	37,500	
	50,000	
Tax on $50,000 (taxable income exclusive of capital gains)		$17,060
step ii		
(a) Net section 1201 gain (net capital gain for taxable years beginning after December 31, 1976)	75,000	
(b) Subsection (d) gain	50,000	
25% of $50,000 (lesser of (a) or (b))		12,500
step iii		
(c) $29\frac{1}{2}$% of $25,000 (excess of (a) over (b))	7,375	
(d) Ordinary income	$50,000	
50% of net section 1201 gain (net capital gain for taxable years beginning after December 31, 1976)	37,500	
	87,500	
Tax on $87,500	$37,690	
Ordinary income	$50,000	
50% of subsection (d) gain	25,000	
	75,000	
Tax on $75,000	30,470	

Difference	7,220
Lesser of (c) or (d)	$7,220
Alternative tax (total of 3 steps) at rates effective on and after January 1, 1970	36,780

Since the alternative tax is less than the tax imposed under section 1 for both the period in 1969 and the period in 1970, the alternative tax applies for both periods. Thus, since the effective date of the change in the rate of tax on capital gains is January 1, 1970, the old rate of alternative tax is effective for 184 days of the taxable year and the new rate of alternative tax is effective for 181 days of the taxable year. The alternative taxes are apportioned as follows:

1969—184/365 of $35,810	$18,052.16
1970—181/365 of $36,780	18,238.85
	36,291.01
Tax surcharge (See § 1.51-1(d)(1)(i))	2,729.28
Total tax for the taxable year	39,020.29

Example 2. B, a single individual not a head of a household, has a taxable year ending March 31. For the taxable year ending March 31, 1971, B has adjusted gross income of $18,500. His computation of the tax imposed is as follows:

1970 **Tentative Tax**		
Adjusted gross income	$18,500.00	
Less:		
Standard deduction	$1,000.00	
Personal exemption	625.00	1,625.00
Taxable income under 1970 deduction provisions	16,875.00	
Tax on $16,875 (1970 rates):		
Tax on first $16,000	4,330.00	
42 percent of $875	367.50	
Tentative tax at rates and deduction provisions effective on or after January 1, 1970	4,697.50	
1971 **Tentative Tax**		
Adjusted gross income	$18,500.00	

Less:		
Standard deduction	$1,500	
Personal exemption	650	2,150.00
Taxable income under 1971 deduction provisions	16,350.00	
Tax on $16,350 (1971 rates):		
Tax on first $16,000	3,830	
34 percent of $350	119	
Tentative tax at rates and deduction provisions effective on or after Januray 1, 1971	3,949.00	
The 1970 and 1971 tentative taxes are apportioned as follows:		
1970—275/365 of $4,697.50	3,539.21	
1971—90/365 of $3,949.00	973.73	
	4,512.94	
Tax surcharge (see § 1.51-1(d)(1)(i))	56.26	
Total tax for the taxable year	4,569.20	

Example 3. H and W, husband and wife, have a foster child, C, who qualifies as a dependent under section 152(b)(2) for the period beginning after December 31, 1969. H and W file a joint return on the basis of a taxable year ending August 31. For the taxable year ending August 31, 1970, H and W have adjusted gross income of $12,500. Their computation of the tax imposed is as follows:

1969 **Tentative Tax**		
Adjusted gross income	$12,500.00	
Less:		
Standard deduction	$1,000.00	
Personal exemption (2)	1,200.00	2,200.00
Taxable income under 1969 deduction provisions	10,300.00	
Taxable income reduced by one-half		5,150.00
Tax on $5,150 (1969 rates):		
Tax on first $4,000	$690.00	
22 percent of $1,150	253.00	943.00
Twice the tax on $5,150	$1,886.00	
Tentative tax at rates and deduction provisions effective on or after January 1, 1969	1,886.00	
1970 **Tentative Tax**		
Adjusted gross income	$12,500.00	

Less:		
Standard deduction	$1,000.00	
Personal exemption (3)	1,875.00	2,875.00
Taxable income under 1970 deduction provisions	$9,625.00	
Tax on $9,625 (1970 rates):		
Tax on first $8,000	$1,380.00	
22 percent of $1,625	357.50	
Tentative tax at rates and deduction provisions effective on or after January 1, 1970	1,737.50	
The 1969 and 1970 tentative taxes are apportioned as follows:		
1969—122/365 of $1,886	$630.39	
1970—243/365 of $1,737.50	1,156.75	
	1,787.14	
Tax surcharge (see § 1.51-1(d)(1)(i))	104.05	
Total tax for the taxable year	1,891.19	

Example 4. B, a single individual with one exemption, reports his income on the basis of a fiscal year ending June 30. For fiscal year ending June 30, 1971, B reports adjusted gross income of $250,000, consisting of earned net income of $240,000 and investment income of $10,000. In addition, on April 24, 1971, stock was transferred to B pursuant to his exercise of a qualified stock option, and the fair market value of such stock at that time exceeded the option price by $175,000. This $175,000 constitutes an item of tax preference described in section 57(a)(6). B claims itemized deductions in the amount of $34,000. By reason of section 1348, the maximum rate of tax on earned taxable income for a taxable year beginning after 1970 but before 1972 is 60 percent. The income tax for the taxable year ending June 30, 1971, would be computed under section 21 as follows:

1970 **Tentative Tax**

Adjusted gross income	$250,000.00	
Less:		
Itemized deductions	$34,000.00	
Personal exemption	625.00	34,625.00
Taxable income under 1970 deduction provisions	215,375.00	
Tax on $215,375 (1970 rates)		
Tax on first $100,000	$55,490.00	
70 percent of $115,375	80,762.50	
Tentative tax at rates and deduction provisions effective on or after	136,252.50	

January 1, 1970		
Minimum tax:		
Total tax preference items	175,000.00	
Less:		
Exemption	$30,000.00	
Income tax	136,252.50	166,252.50
Subject to 10 percent tax	8,747.50	
10 percent tax	874.75	
Total tentative tax ($136,252.50 + $874.75)	137,127.25	
1971 **Tentative Tax**		
Adjusted gross income	$250,000.00	
Less:		
Itemized deductions	$34,000.00	
Personal exemption	650.00	34,650.00
Taxable income under 1971 deduction provisions	215,350.00	
(a) Tax on highest amount of taxable income on which rate does not exceed 60 percent ($50,000) (1971 rates)	20,190.00	
(b) Earned taxable income:		
($215,350 × $240,000/ $250,000)	$206,736.00	
Less: Tax preference offset: ($175,000 −$30,000)	145,000.00	
	61,736.00	
(c) 60% of the amount by which $61,736 exceeds $50,000	7,041.60	
(d) Tax on $215,350 (1971 rates)		
Tax on first $100,000	53,090.00	
70% of $115,350	80,745.00	
Total	133,835.00	
(e) Tax on $61,736 (1971 rates)		
Tax on first $60,000	26,390.00	
64% of $1,736	1,111.04	
Total	27,501.04	
(f) Excess of $133,835 over $27,501.04	106,333.96	
Tentative tax (total of Steps (a), (c), and (f)) at rates and deduction provisions effective on or after January 1, 1971	133,565.56	

Minimum tax:		
Total tax preference items	175,000.00	
Less:		
Exemption	$30,000.00	
Income tax	133,565.56	163,565.56
Subject to 10 percent tax	$11,434.44	
10 percent tax	1,143.44	
Total tentative tax ($133,565.56 + $1,143.44)	134,709.00	
The 1970 and 1971 tentative taxes are apportioned as follows:		
1970—184/365 of $137,127.25	69,127.16	
1971—181/365 of $134,709	66,800.90	
Total tax for the taxable year	135,928.06	

Example 5. The surtax exemption of corporation M (one of 4 subsidiary corporations of W corporation), which files its income tax returns on the basis of a fiscal year ending March 31, 1964, is less than $25,000, by reason of section 1561 of the Code applicable to taxable years ending after December 31, 1963, and beginning before January 1, 1975. The taxable income of corporation M is $100,000, and the amount of the surtax exemption determined under the new rule for the 1964 taxable year is $5,000 ($25,000 ÷ 5). M's income tax liability for the taxable year ending March 31, 1964, is computed as follows:

1963 **Tentative Tax**	
Taxable income	$100,000
Normal tax on $100,000 (1963 rates) 30 percent of $100,000	$30,000
Surtax on $75,000 (1963 rates and $25,000 surtax exemption) 22 percent of $75,000	16,500
Total tentative tax at rates and surtax exemption effective before January 1, 1964	46,500
1964 **Tentative Tax**	
Taxable income	$100,000
Normal tax on $100,000 (1964 rates) 22 percent of $100,000	$22,000
Surtax on $95,000 (1964 rates and a $5,000 surtax exemption) 28 percent of $95,000	26,600
Total tentative tax at rates and surtax exemption effective after January 1, 1964	48,600
The 1963 and 1964 tentative taxes are apportioned as follows:	
1963—275/366 of $46,500	34,938.52
1964—91/366 of $48,600	12,083.61
Total tax for the taxable year	47,022.13

M has the same amount of taxable income in 1965. Its income tax liability for the fiscal year ending March 31, 1965, is computed as follows:

1964 **Tentative Tax**

Taxable income	$100,000
Normal tax on $100,000 (1964 rates) 22 percent of $100,000	$22,000
Surtax on $95,000 (1964 rates and a $5,000 surtax exemption) 28 percent of $95,000	26,600
Total tentative tax at the 1964 rates	48,600

1965 **Tentative Tax**

Taxable income	$100,000
Normal tax on $100,000 (1965 rates) 22 percent of $100,000	$22,000
Surtax on $95,000 (1965 rates and a $5,000 surtax exemption) 26 percent of $95,000	24,700
Total tentative tax at the 1965 rates	46,700

The 1964 and 1965 tentative taxes are apportioned as follows:

1964—275/365 of $48,600	$36,616.44
1965—90/365 of $46,700	11,515.07
Total tax for the taxable year	48,131.51

Example 6. Assume the same facts as in example (5), except that M elected the additional tax under section 1562 for its fiscal year ending March 31, 1964. M's tax liability is completed as follows:

1963 **Tentative Tax**

Taxable income	$100,000
Normal tax on $100,000 (1963 rates) 30 percent of $100,000	$30,000
Surtax on $75,000 (1963 rates and $25,000 surtax exemption) 22 percent of $75,000	16,500
Total tentative tax at rates and surtax exemption effective before January 1, 1964	46,500

1964 **Tentative Tax**

Taxable income	$100,000
Normal tax on $100,000 (1964 rates) 22 percent of $100,000	$22,000
Surtax on $75,000 (1964 rates and $25,000 surtax exemption) 28 percent of $75,000	21,000
Additional tax on $25,000 6 percent of $25,000	1,500
Total tentative tax at rates and surtax exemption effective on and after January 1, 1964	44,500

The 1963 and 1964 tentative taxes are apportioned as follows:

1963—275/366 of $46,500	$34,938.52
1964—91/366 of $44,500	11,064.21

Total tax for the taxable year	46,002.73

Example 7. Corporation N files its income tax returns on the basis of a fiscal year ending June 30. For its taxable year ending in 1976, the taxable income of N is $100,000. N's income tax liability is determined for the period July 1, 1975, through December 31, 1975, by taking into account two rates of normal tax under section 11(b)(2) (A) and (B) and the increase to $50,000 in the surtax exemption under section 11(d). For the period January 1, 1976, through June 30, 1976, N's income tax liability is determined by taking into account the single normal tax rate under section 11(b)(1) and the $25,000 surtax exemption under section 11(d). N's tax liability for the taxable year ending June 30, 1976, is computed as follows:

1975 **Tentative Tax**	
Taxable income	$100,000
Normal tax on $100,000 (1975 rates) 20 percent of $25,000	$5,000
22 percent of $75,000	16,500
Surtax on $50,000 (1975 rates and $50,000 surtax exemption) 26 percent of $50,000	13,000
Total tentative tax at rates and surtax exemption effective on and after January 1, 1975	34,500
1976 **Tentative Tax**	
Taxable income	$100,000
Normal tax on $100,000 (1976 rates) 22 percent of $100,000	$22,000
Surtax on $75,000 (1976 rates and $25,000 surtax exemption) 26 percent of $75,000	19,500
Total tentative tax at rates and surtax exemption effective on and after January 1, 1976	41,500
The 1975 and 1976 tentative taxes are apportioned as follows:	
1975—184/366 of $34,500	$17,344
1976—182/366 of $41,500	20,637
Total tax for the taxable year	37,981

(Secs. 1561(a) (83 Stat. 599; 26 U.S.C. 1561(a)) of the Internal Revenue Code)

[T.D. 6500, 25 FR 11402, Nov. 26, 1960; 25 FR 14021, Dec. 31, 1960, as amended by T.D. 7164, 37 FR 4190, Feb. 29, 1972; T.D. 74-13, 41 FR 12639, Mar. 26, 1976; T.D. 7528, 42 FR 64694, Dec. 28, 1977; T.D. 7728, 45 FR 72651, Nov. 3, 1980. Redesignated by T.D. 9354, 72 FR 45341, Aug. 14, 2007]

§ 1.21-1 Expenses for household and dependent care services necessary for gainful employment.

(a) ***In general.***

(1) Section 21 allows a credit to a taxpayer against the tax imposed by chapter 1 for employment-related expenses for household services and care (as defined in paragraph (d) of this section) of a qualifying individual (as defined in paragraph (b) of this section). The purpose of the expenses must be to enable the taxpayer to be gainfully employed (as defined in paragraph (c) of this section). For taxable years beginning after December 31, 2004, a qualifying individual must have the same principal place of abode (as defined in paragraph (g) of this section) as the taxpayer for more than one-half of the taxable year. For taxable years beginning before January 1, 2005, the taxpayer must maintain a household (as defined in paragraph (h) of this section) that includes one or more qualifying individuals.

(2) The amount of the credit is equal to the applicable percentage of the employment-related expenses that may be taken into account by the taxpayer during the taxable year (but subject to the limits prescribed in § 1.21-2). *Applicable percentage* means 35 percent reduced by 1 percentage point for each $2,000 (or fraction thereof) by which the taxpayer's adjusted gross income for the taxable year exceeds $15,000, but not less than 20 percent. For example, if a taxpayer's adjusted gross income is $31,850, the applicable percentage is 26 percent.

(3) Expenses may be taken as a credit under section 21, regardless of the taxpayer's method of accounting, only in the taxable year the services are performed or the taxable year the expenses are paid, whichever is later.

(4) The requirements of section 21 and §§ 1.21-1 through 1.21-4 are applied at the time the services are performed, regardless of when the expenses are paid.

(5) ***Examples.*** The provisions of this paragraph (a) are illustrated by the following examples.

Example 1. In December 2007, B pays for the care of her child for January 2008. Under paragraph (a)(3) of this section, B may claim the credit in 2008, the later of the years in which the expenses are paid and the services are performed.

Example 2. The facts are the same as in *Example 1*, except that B's child turns 13 on February 1, 2008, and B pays for the care provided in January 2008 on February 3, 2008. Under paragraph (a)(4) of this section, the determination of whether the expenses are employment-related expenses is made when the services are performed. Assuming other requirements are met, the amount B pays will be an employment-related expense under section 21, because B's child is a qualifying individual when the services are performed, even though the child is not a qualifying individual when B pays the expenses.

(b) ***Qualifying individual*** —

(1) ***In general.*** For taxable years beginning after December 31, 2004, a qualifying individual is—

(i) The taxpayer's dependent (who is a qualifying child within the meaning of section 152) who has not attained age 13;

(ii) The taxpayer's dependent (as defined in section 152, determined without regard to subsections (b)(1), (b)(2), and (d)(1)(B)) who is physically or mentally incapable of self-care and who has the same principal place of abode as the taxpayer for more than one-half of the taxable year; or

(iii) The taxpayer's spouse who is physically or mentally incapable of self-care and who has the same principal place of abode as the taxpayer for more than one-half of the taxable year.

(2) ***Taxable years beginning before January 1, 2005.*** For taxable years beginning before January 1, 2005, a qualifying individual is—

(i) The taxpayer's dependent for whom the taxpayer is entitled to a deduction for a personal exemption under section 151(c) and who is under age 13;

(ii) The taxpayer's dependent who is physically or mentally incapable of self-care; or

(iii) The taxpayer's spouse who is physically or mentally incapable of self-care.

(3) ***Qualification on a daily basis.*** The status of an individual as a qualifying individual is determined on a daily basis. An individual is not a qualifying individual on the day the status terminates.

(4) ***Physical or mental incapacity.*** An individual is physically or mentally incapable of self-care if, as a result of a physical or mental defect, the individual is incapable of caring for the individual's hygiene or nutritional needs, or requires full-time attention of another person for the individual's own safety or the safety of others. The inability of an individual to engage in any substantial gainful activity or to perform the normal household functions of a homemaker or care for minor children by reason of a physical or mental condition does not of itself establish that the individual is physically or mentally incapable of self-care.

(5) ***Special test for divorced or separated parents or parents living apart*** —

(i) Scope. This paragraph (b)(5) applies to a child (as defined in section 152(f)(1) for taxable years beginning after December 31, 2004, and in section 151(c)(3) for taxable years beginning before January 1, 2005) who—

(A) Is under age 13 or is physically or mentally incapable of self-care;

(B) Receives over one-half of his or her support during the calendar year from one or both parents who are divorced or legally separated under a decree of divorce or separate maintenance, are separated under a written separation agreement, or live apart at all times during the last 6 months of the calendar year; and

(C) Is in the custody of one or both parents for more than one-half of the calendar year.

(ii) ***Custodial parent allowed the credit.*** A child to whom this paragraph (b)(5) applies is the qualifying individual of only one parent in any taxable year and is the qualifying child of the custodial parent even if the noncustodial parent may claim the dependency exemption for that child for that taxable year. See section 21(e)(5). The custodial parent is the parent having custody for the greater portion of the calendar year. See section 152(e)(4)(A).

(6) ***Example.*** The provisions of this paragraph (b) are illustrated by the following examples.

Example. C pays $420 for the care of her child, a qualifying individual, to be provided from January 2 through January 31, 2008 (21 days of care). On January 20, 2008, C's child turns 13 years old. Under paragraph (b)(3) of this section, C's child is a qualifying individual from January 2 through January 19, 2008 (13 days of care). C may take into account $260, the pro rata amount C pays for the care of her child for 13 days, under section 21. See § 1.21-2(a)(4).

(c) ***Gainful employment*** —

(1) ***In general.*** Expenses are employment-related expenses only if they are for the purpose of enabling the taxpayer to be gainfully employed. The expenses must be for the care of a qualifying individual or household services performed during periods in which the taxpayer is gainfully employed or is in

active search of gainful employment. Employment may consist of service within or outside the taxpayer's home and includes self-employment. An expense is not employment-related merely because it is paid or incurred while the taxpayer is gainfully employed. The purpose of the expense must be to enable the taxpayer to be gainfully employed. Whether the purpose of an expense is to enable the taxpayer to be gainfully employed depends on the facts and circumstances of the particular case. Work as a volunteer or for a nominal consideration is not gainful employment.

(2) ***Determination of period of employment on a daily basis*** —

(i) ***In general.*** Expenses paid for a period during only part of which the taxpayer is gainfully employed or in active search of gainful employment must be allocated on a daily basis.

(ii) ***Exception for short, temporary absences.*** A taxpayer who is gainfully employed is not required to allocate expenses during a short, temporary absence from work, such as for vacation or minor illness, provided that the care-giving arrangement requires the taxpayer to pay for care during the absence. An absence of 2 consecutive calendar weeks is a short, temporary absence. Whether an absence longer than 2 consecutive calendar weeks is a short, temporary absence is determined based on all the facts and circumstances.

(iii) ***Part-time employment.*** A taxpayer who is employed part-time generally must allocate expenses for dependent care between days worked and days not worked. However, if a taxpayer employed part-time is required to pay for dependent care on a periodic basis (such as weekly or monthly) that includes both days worked and days not worked, the taxpayer is not required to allocate the expenses. A day on which the taxpayer works at least 1 hour is a day of work.

(3) ***Examples.*** The provisions of this paragraph (c) are illustrated by the following examples:

Example 1. D works during the day and her husband, E, works at night and sleeps during the day. D and E pay for care for a qualifying individual during the hours when D is working and E is sleeping. Under paragraph (c)(1) of this section, the amount paid by D and E for care may be for the purpose of allowing D and E to be gainfully employed and may be an employment-related expense under section 21.

Example 2. F works at night and pays for care for a qualifying individual during the hours when F is working. Under paragraph (c)(1) of this section, the amount paid by F for care may be for the purpose of allowing F to be gainfully employed and may be an employment-related expense under section 21.

Example 3. G, the custodial parent of two children who are qualifying individuals, hires a housekeeper for a monthly salary to care for the children while G is gainfully employed. G becomes ill and as a result is absent from work for 4 months. G continues to pay the housekeeper to care for the children while G is absent from work. During this 4-month period, G performs no employment services, but receives payments under her employer's wage continuation plan. Although G may be considered to be gainfully employed during her absence from work, the absence is not a short, temporary absence within the meaning of paragraph (c)(2)(ii) of this section, and her payments for household and dependent care services during the period of illness are not for the purpose of enabling her to be gainfully employed. G's expenses are not employment-related expenses, and she may not take the expenses into account under section 21.

Example 4. To be gainfully employed, H sends his child to a dependent care center that complies with all state and local requirements. The dependent care center requires payment for days when a child is absent from the center. H takes 8 days off from work as vacation days. Because the

absence is less than 2 consecutive calendar weeks, under paragraph (c)(2)(ii) of this section, H's absence is a short, temporary absence. H is not required to allocate expenses between days worked and days not worked. The entire fee for the period that includes the 8 vacation days may be an employment-related expense under section 21.

Example 5. J works 3 days per week and her child attends a dependent care center (that complies with all state and local requirements) to enable her to be gainfully employed. The dependent care center allows payment for any 3 days per week for $150 or 5 days per week for $250. J enrolls her child for 5 days per week, and her child attends the care center for 5 days per week. Under paragraph (c)(2)(iii) of this section, J must allocate her expenses for dependent care between days worked and days not worked. Three-fifths of the $250, or $150 per week, may be an employment-related expense under section 21.

Example 6. The facts are the same as in *Example 5,* except that the dependent care center does not offer a 3-day option. The entire $250 weekly fee may be an employment-related expense under section 21.

(d) ***Care of qualifying individual and household services*** —

(1) ***In general.*** To qualify for the dependent care credit, expenses must be for the care of a qualifying individual. Expenses are for the care of a qualifying individual if the primary function is to assure the individual's well-being and protection. Not all expenses relating to a qualifying individual are for the individual's care. Amounts paid for food, lodging, clothing, or education are not for the care of a qualifying individual. If, however, the care is provided in such a manner that the expenses cover other goods or services that are incidental to and inseparably a part of the care, the full amount is for care.

(2) ***Allocation of expenses.*** If an expense is partly for household services or for the care of a qualifying individual and partly for other goods or services, a reasonable allocation must be made. Only so much of the expense that is allocable to the household services or care of a qualifying individual is an employment-related expense. An allocation must be made if a housekeeper or other domestic employee performs household duties and cares for the qualifying children of the taxpayer and also performs other services for the taxpayer. No allocation is required, however, if the expense for the other purpose is minimal or insignificant or if an expense is partly attributable to the care of a qualifying individual and partly to household services.

(3) ***Household services.*** Expenses for household services may be employment-related expenses if the services are performed in connection with the care of a qualifying individual. The household services must be the performance in and about the taxpayer's home of ordinary and usual services necessary to the maintenance of the household and attributable to the care of the qualifying individual. Services of a housekeeper are household services within the meaning of this paragraph (d)(3) if the services are provided, at least in part, to the qualifying individual. Such services as are performed by chauffeurs, bartenders, or gardeners are not household services.

(4) ***Manner of providing care.*** The manner of providing care need not be the least expensive alternative available to the taxpayer. The cost of a paid caregiver may be an expense for the care of a qualifying individual even if another caregiver is available at no cost.

(5) ***School or similar program.*** Expenses for a child in nursery school, pre-school, or similar programs for children below the level of kindergarten are for the care of a qualifying individual and may be employment-related expenses. Expenses for a child in kindergarten or a higher grade are not for the care of a qualifying individual. However, expenses for before- or after-school care of a child in kindergarten or a higher grade may be for the care of a qualifying individual.

(6) ***Overnight camps.*** Expenses for overnight camps are not employment-related expenses.

(7) ***Day camps.***

(i) The cost of a day camp or similar program may be for the care of a qualifying individual and an employment-related expense, without allocation under paragraph (d)(2) of this section, even if the day camp specializes in a particular activity. Summer school and tutoring programs are not for the care of a qualifying individual and the costs are not employment-related expenses.

(ii) A day camp that meets the definition of *dependent care center* in section 21(b)(2)(D) and paragraph (e)(2) of this section must comply with the requirements of section 21(b)(2)(C) and paragraph (e)(2) of this section.

(8) ***Transportation.*** The cost of transportation by a dependent care provider of a qualifying individual to or from a place where care of that qualifying individual is provided may be for the care of the qualifying individual. The cost of transportation not provided by a dependent care provider is not for the care of the qualifying individual.

(9) ***Employment taxes.*** Taxes under sections 3111 (relating to the Federal Insurance Contributions Act) and 3301 (relating to the Federal Unemployment Tax Act) and similar state payroll taxes are employment-related expenses if paid in respect of wages that are employment-related expenses.

(10) ***Room and board.*** The additional cost of providing room and board for a caregiver over usual household expenditures may be an employment-related expense.

(11) ***Indirect expenses.*** Expenses that relate to, but are not directly for, the care of a qualifying individual, such as application fees, agency fees, and deposits, may be for the care of a qualifying individual and may be employment-related expenses if the taxpayer is required to pay the expenses to obtain the related care. However, forfeited deposits and other payments are not for the care of a qualifying individual if care is not provided.

(12) ***Examples.*** The provisions of this paragraph (d) are illustrated by the following examples:

Example 1. To be gainfully employed, K sends his 3-year old child to a pre-school. The pre-school provides lunch and snacks. Under paragraph (d)(1) of this section, K is not required to allocate expenses between care and the lunch and snacks, because the lunch and snacks are incidental to and inseparably a part of the care. Therefore, K may treat the full amount paid to the pre-school as for the care of his child.

Example 2. L, a member of the armed forces, is ordered to a combat zone. To be able to comply with the orders, L places her 10-year old child in boarding school. The school provides education, meals, and housing to L's child in addition to care. Under paragraph (d)(2) of this section, L must allocate the cost of the boarding school between expenses for care and expenses for education and other services not constituting care. Only the part of the cost of the boarding school that is for the care of L's child is an employment-related expense under section 21.

Example 3. To be gainfully employed, M employs a full-time housekeeper to care for M's two children, aged 9 and 13 years. The housekeeper regularly performs household services of cleaning and cooking and drives M to and from M's place of employment, a trip of 15 minutes each way. Under paragraph (d)(3) of this section, the chauffeur services are not household services. M is not required to allocate a portion of the expense of the housekeeper to the chauffeur services under paragraph (d)(2) of this section, however, because the chauffeur services are minimal and insignificant. Further, no allocation under paragraph (d)(2) of this section is required to

determine the portion of the expenses attributable to the care of the 13-year old child (not a qualifying individual) because the household expenses are in part attributable to the care of the 9-year-old child. Accordingly, the entire expense of employing the housekeeper is an employment-related expense. The amount that M may take into account as an employment-related expense under section 21, however, is limited to the amount allowable for one qualifying individual.

Example 4. To be gainfully employed, N sends her 9-year-old child to a summer day camp that offers computer activities and recreational activities such as swimming and arts and crafts. Under paragraph (d)(7)(i) of this section, the full cost of the summer day camp may be for care.

Example 5. To be gainfully employed, O sends her 9-year-old child to a math tutoring program for two hours per day during the summer. Under paragraph (d)(7)(i) of this section, the cost of the tutoring program is not for care.

Example 6. To be gainfully employed, P hires a full-time housekeeper to care for her 8-year old child. In order to accommodate the housekeeper, P moves from a 2-bedroom apartment to a 3-bedroom apartment that otherwise is comparable to the 2-bedroom apartment. Under paragraph (d)(10) of this section, the additional cost to rent the 3-bedroom apartment over the cost of the 2-bedroom apartment and any additional utilities attributable to the housekeeper's residence in the household may be employment-related expenses under section 21.

Example 7. Q pays a fee to an agency to obtain the services of an au pair to care for Q's children, qualifying individuals, to enable Q to be gainfully employed. An au pair from the agency subsequently provides care for Q's children. Under paragraph (d)(11) of this section, the fee may be an employment-related expense.

Example 8. R places a deposit with a pre-school to reserve a place for her child. R sends the child to a different pre-school and forfeits the deposit. Under paragraph (d)(11) of this section, the forfeited deposit is not an employment-related expense.

(e) ***Services outside the taxpayer's household*** —

(1) ***In general.*** The credit is allowable for expenses for services performed outside the taxpayer's household only if the care is for one or more qualifying individuals who are described in this section at—

(i) Paragraph (b)(1)(i) or (b)(2)(i); or

(ii) Paragraph (b)(1)(ii), (b)(2)(ii), (b)(1)(iii), or (b)(2)(iii) and regularly spend at least 8 hours each day in the taxpayer's household.

(2) ***Dependent care centers*** —

(i) ***In general.*** The credit is allowable for services performed by a dependent care center only if—

(A) The center complies with all applicable laws and regulations, if any, of a state or local government, such as state or local licensing requirements and building and fire code regulations; and

(B) The requirements provided in this paragraph (e) are met.

(ii) ***Definition.*** The term *dependent care center* means any facility that provides full-time or part-time care for more than six individuals (other than individuals who reside at the facility) on a regular basis during the taxpayer's taxable year, and receives a fee, payment, or grant for providing services for the individuals (regardless of whether the facility is operated for profit). For purposes of the preceding sentence, a facility is presumed to provide full-time or part-time care for six or fewer individuals on a regular basis during the taxpayer's taxable year if the facility has six or fewer individuals (including the taxpayer's qualifying individual) enrolled for full-time or part-time care on the day the qualifying individual is enrolled in the facility (or on the first day of the taxable year the qualifying individual attends the facility if the qualifying individual was enrolled in the facility in the preceding taxable year) unless the Internal Revenue Service demonstrates that the facility provides full-time or part-time care for more than six individuals on a regular basis during the taxpayer's taxable year.

(f) ***Reimbursed expenses.*** Employment-related expenses for which the taxpayer is reimbursed (for example, under a dependent care assistance program) may not be taken into account for purposes of the credit.

(g) ***Principal place of abode.*** For purposes of this section, the term *principal place of abode* has the same meaning as in section 152.

(h) ***Maintenance of a household*** —

(1) ***In general.*** For taxable years beginning before January 1, 2005, the credit is available only to a taxpayer who maintains a household that includes one or more qualifying individuals. A taxpayer maintains a household for the taxable year (or lesser period) only if the taxpayer (and spouse, if applicable) occupies the household and furnishes over one-half of the cost for the taxable year (or lesser period) of maintaining the household. The household must be the principal place of abode for the taxable year of the taxpayer and the qualifying individual or individuals.

(2) ***Cost of maintaining a household.***

(i) Except as provided in paragraph (h)(2)(ii) of this section, for purposes of this section, the term *cost of maintaining a household* has the same meaning as in § 1.2-2(d) without regard to the last sentence thereof.

(ii) The cost of maintaining a household does not include the value of services performed in the household by the taxpayer or by a qualifying individual described in paragraph (b) of this section or any expense paid or reimbursed by another person.

(3) ***Monthly proration of annual costs.*** In determining the cost of maintaining a household for a period of less than a taxable year, the cost for the entire taxable year must be prorated on the basis of the number of calendar months within that period. A period of less than a calendar month is treated as a full calendar month.

(4) ***Two or more families.*** If two or more families occupy living quarters in common, each of the families is treated as maintaining a separate household. A taxpayer is maintaining a household if the taxpayer provides more than one-half of the cost of maintaining the separate household. For example, if two unrelated taxpayers with their respective children occupy living quarters in common and each taxpayer pays more than one-half of the household costs for each respective family, each taxpayer is treated as maintaining a household.

(i) Reserved.

(j) ***Expenses qualifying as medical expenses*** —

(1) ***In general.*** A taxpayer may not take an amount into account as both an employment-related expense under section 21 and an expense for medical care under section 213.

(2) ***Examples.*** The provisions of this paragraph (j) are illustrated by the following examples:

Example 1. S has $6,500 of employment-related expenses for the care of his child who is physically incapable of self-care. The expenses are for services performed in S's household that also qualify as expenses for medical care under section 213. Of the total expenses, S may take into account $3,000 under section 21. S may deduct the balance of the expenses, or $3,500, as expenses for medical care under section 213 to the extent the expenses exceed 7.5 percent of S's adjusted gross income.

Example 2. The facts are the same as in *Example 1,* however, S first takes into account the $6,500 of expenses under section 213. S deducts $500 as an expense for medical care, which is the amount by which the expenses exceed 7.5 percent of his adjusted gross income. S may not take into account the $6,000 balance as employment-related expenses under section 21, because he has taken the full amount of the expenses into account in computing the amount deductible under section 213.

(k) ***Substantiation.*** A taxpayer claiming a credit for employment-related expenses must maintain adequate records or other sufficient evidence to substantiate the expenses in accordance with section 6001 and the regulations thereunder.

(l) ***Effective/applicability date.*** This section and §§ 1.21-2 through 1.21-4 apply to taxable years ending after August 14, 2007.

[T.D. 9354, 72 FR 45341, Aug. 14, 2007]

§ 1.21-2 Limitations on amount creditable.

(a) ***Annual dollar limitation.***

(1) The amount of employment-related expenses that may be taken into account under § 1.21-1(a) for any taxable year cannot exceed—

(i) $2,400 ($3,000 for taxable years beginning after December 31, 2002, and before January 1, 2011) if there is one qualifying individual with respect to the taxpayer at any time during the taxable year; or

(ii) $4,800 ($6,000 for taxable years beginning after December 31, 2002, and before January 1, 2011) if there are two or more qualifying individuals with respect to the taxpayer at any time during the taxable year.

(2) The amount determined under paragraph (a)(1) of this section is reduced by the aggregate amount excludable from gross income under section 129 for the taxable year.

(3) A taxpayer may take into account the total amount of employment-related expenses that do not exceed the annual dollar limitation although the amount of employment-related expenses attributable to one qualifying individual is disproportionate to the total employment-related expenses. For example, a taxpayer with expenses in 2007 of $4,000 for one qualifying individual and $1,500 for a second qualifying individual may take into account the full $5,500.

(4) A taxpayer is not required to prorate the annual dollar limitation if a qualifying individual ceases to qualify (for example, by turning age 13) during the taxable year. However, the taxpayer may take into account only amounts that qualify as employment-related expenses before the disqualifying event. See also § 1.21-1(b)(6).

(b) ***Earned income limitation*** —

(1) ***In general.*** The amount of employment-related expenses that may be taken into account under section 21 for any taxable year cannot exceed—

(i) For a taxpayer who is not married at the close of the taxable year, the taxpayer's earned income for the taxable year; or

(ii) For a taxpayer who is married at the close of the taxable year, the lesser of the taxpayer's earned income or the earned income of the taxpayer's spouse for the taxable year.

(2) ***Determination of spouse.*** For purposes of this paragraph (b), a taxpayer must take into account only the earned income of a spouse to whom the taxpayer is married at the close of the taxable year. The spouse's earned income for the entire taxable year is taken into account, however, even though the taxpayer and the spouse were married for only part of the taxable year. The taxpayer is not required to take into account the earned income of a spouse who died or was divorced or separated from the taxpayer during the taxable year. See § 1.21-3(b) for rules providing that certain married taxpayers legally separated or living apart are treated as not married.

(3) ***Definition of earned income.*** For purposes of this section, the term *earned income* has the same meaning as in section 32(c)(2) and the regulations thereunder.

(4) ***Attribution of earned income to student or incapacitated spouse.***

(i) For purposes of this section, a spouse is deemed, for each month during which the spouse is a full-time student or is a qualifying individual described in § 1.21-1(b)(1)(iii) or (b)(2)(iii), to be gainfully employed and to have earned income of not less than—

(A) $200 ($250 for taxable years beginning after December 31, 2002, and before January 1, 2011) if there is one qualifying individual with respect to the taxpayer at any time during the taxable year; or

(B) $400 ($500 for taxable years beginning after December 31, 2002, and before January 1, 2011) if there are two or more qualifying individuals with respect to the taxpayer at any time during the taxable year.

(ii) For purposes of this paragraph (b)(4), a full-time student is an individual who, during each of 5 calendar months of the taxpayer's taxable year, is enrolled as a student for the number of course hours considered to be a full-time course of study at an educational organization as defined in section 170(b)(1)(A)(ii). The enrollment for 5 calendar months need not be consecutive.

(iii) Earned income may be attributed under this paragraph (b)(4), in the case of any husband and wife, to only one spouse in any month.

(c) ***Examples.*** The provisions of this section are illustrated by the following examples:

Example 1. In 2007, T, who is married to U, pays employment-related expenses of $5,000 for the care of one qualifying individual. T's earned income for the taxable year is $40,000 and her husband's earned income is $2,000. T did not exclude any dependent care assistance under section 129. Under paragraph (b)(1) of this section, T may take into account under section 21 only the amount of employment-related expenses that does not exceed the lesser of her earned income or the earned income of U, or $2,000.

Example 2. The facts are the same as in *Example 1* except that U is a full-time student at an educational organization within the meaning of section 170(b)(1)(A)(ii) for 9 months of the taxable year and has no earned income. Under paragraph (b)(4) of this section, U is deemed to have earned income of $2,250. T may take into account $2,250 of employment-related expenses under section 21.

Example 3. For all of 2007, V is a full-time student and W, V's husband, is an individual who is incapable of self-care (as defined in § 1.21-1(b)(1)(iii)). V and W have no earned income and pay expenses of $5,000 for W's care. Under paragraph (b)(4) of this section, either V or W may be deemed to have $3,000 of earned income. However, earned income may be attributed to only one spouse under paragraph (b)(4)(iii) of this section. Under the limitation in paragraph (b)(1)(ii) of this section, the lesser of V's and W's earned income is zero. V and W may not take the expenses into account under section 21.

(d) ***Cross-reference.*** For an additional limitation on the credit under section 21, see section 26.

[T.D. 9354, 72 FR 45341, Aug. 14, 2007]

§ 1.21-3 Special rules applicable to married taxpayers.

(a) ***Joint return requirement.*** No credit is allowed under section 21 for taxpayers who are married (within the meaning of section 7703 and the regulations thereunder) at the close of the taxable year unless the taxpayer and spouse file a joint return for the taxable year. See section 6013 and the regulations thereunder relating to joint returns of income tax by husband and wife.

(b) ***Taxpayers treated as not married.*** The requirements of paragraph (a) of this section do not apply to a taxpayer who is legally separated under a decree of divorce or separate maintenance or who is treated as not married under section 7703(b) and the regulations thereunder (relating to certain married taxpayers living apart). A taxpayer who is treated as not married under this paragraph (b) is not required to take into account the earned income of the taxpayer's spouse for purposes of applying the earned income limitation on the amount of employment-related expenses under § 1.21-2(b).

(c) ***Death of married taxpayer.*** If a married taxpayer dies during the taxable year and the survivor may make a joint return with respect to the deceased spouse under section 6013(a)(3), the credit is allowed for the year only if a joint return is made. If, however, the surviving spouse remarries before the end of the taxable year in which the deceased spouse dies, a credit may be allowed on the decedent spouse's separate return.

[T.D. 9354, 72 FR 45341, Aug. 14, 2007]

§ 1.21-4 Payments to certain related individuals.

(a) ***In general.*** A credit is not allowed under section 21 for any amount paid by the taxpayer to an individual—

(1) For whom a deduction under section 151(c) (relating to deductions for personal exemptions for dependents) is allowable either to the taxpayer or the taxpayer's spouse for the taxable year;

(2) Who is a child of the taxpayer (within the meaning of section 152(f)(1) for taxable years beginning after December 31, 2004, and section 151(c)(3) for taxable years beginning before January 1, 2005) and is under age 19 at the close of the taxable year;

(3) Who is the spouse of the taxpayer at any time during the taxable year; or

(4) Who is the parent of the taxpayer's child who is a qualifying individual described in § 1.21-1(b)(1)(i) or (b)(2)(i).

(b) ***Payments to partnerships or other entities.*** In general, paragraph (a) of this section does not apply to services performed by partnerships or other entities. If, however, the partnership or other entity is established or maintained primarily to avoid the application of paragraph (a) of this section to permit the taxpayer to claim the credit, for purposes of section 21, the payments of employment-related expenses are treated as made directly to each partner or owner in proportion to that partner's or owner's ownership interest. Whether a partnership or other entity is established or maintained to avoid the application of paragraph (a) of this section is determined based on the facts and circumstances, including whether the partnership or other entity is established for the primary purpose of caring for the taxpayer's qualifying individual or providing household services to the taxpayer.

(c) ***Examples.*** The provisions of this section are illustrated by the following examples:

Example 1. During 2007, X pays $5,000 to her mother for the care of X's 5-year old child who is a qualifying individual. The expenses otherwise qualify as employment-related expenses. X's mother is not her dependent. X may take into account under section 21 the amounts paid to her mother for the care of X's child.

Example 2. Y is divorced and has custody of his 5-year old child, who is a qualifying individual. Y pays $6,000 during 2007 to Z, who is his ex-wife and the child's mother, for the care of the child. The expenses otherwise qualify as employment-related expenses. Under paragraph (a)(4) of this section, Y may not take into account under section 21 the amounts paid to Z because Z is the child's mother.

Example 3. The facts are the same as in Example 2, except that Z is not the mother of Y's child. Y may take into account under section 21 the amounts paid to Z.

[T.D. 9354, 72 FR 45341, Aug. 14, 2007]

§ 1.24-1 Partial credit allowed for certain other dependents.

(a) ***In general.*** For purposes of section 24(h)(4)(A), a taxpayer may be eligible to increase the credit determined under section 24(a) by $500 for a dependent of the taxpayer, as defined in section 152, other than a qualifying child described in section 24(c).

(b) ***Applicability date.*** This section applies to taxable years beginning on or after October 13, 2020.

[T.D. 9913, 85 FR 64385, Oct. 13, 2020]

§ 1.25-1T Credit for interest paid on certain home mortgages (Temporary).

(a) ***In general.*** Section 25 permits States and political subdivisions to elect to issue mortgage credit certificates in lieu of qualified mortgage bonds. An individual who holds a qualified mortgage credit certificate (as defined in § 1.25-3T) is entitled to a credit against his Federal income taxes. The amount of the credit depends upon

(1) the amount of mortgage interest paid or accrued during the year and

(2) the applicable certificate credit rate. See § 1.25-2T. The amount of the deduction under section 163 for interest paid or accrued during any taxable year is reduced by the amount of the credit allowable under section 25 for such year. See § 1.163-6T. The holder of a qualified mortgage credit certificate may be entitled to additional withholding allowances. See section 3402 (m) and the regulations thereunder.

(b) ***Definitions.*** For purposes of §§ 1.25-2T through 1.25-8T and this section, the following definitions apply:

(1) ***Mortgage.*** The term "mortgage" includes deeds of trust, conditional sales contracts, pledges, agreements to hold title in escrow, and any other form of owner financing.

(2) ***State.***

(i) The term "State" includes a possession of the United States and the District of Columbia.

(ii) Mortgage credit certificates issued by or on behalf of any State or political subdivision ("governmental unit") by constituted authorities empowered to issue such certificates are the certificates of such governmental unit.

(3) ***Qualified home improvement loan.*** The term "qualified home improvement loan" has the meaning given that term under section 103A (1)(6) and the regulations thereunder.

(4) ***Qualified rehabilitation loan.*** The term "qualified rehabilitation loan" has the meaning given that term under section 103A (1)(7)(A) and the regulations thereunder.

(5) ***Single-family and owner-occupied residences.*** The terms "single-family" and "owner-occupied" have the meaning given those terms under section 103A (1)(9) and the regulations thereunder.

(6) ***Constitutional home rule city.*** The term "constitutional home rule city" means, with respect to any calendar year, any political subdivision of a State which, under a State constitution which was adopted in 1970 and effective on July 1, 1971, had home rule powers on the 1st day of the calendar year.

(7) ***Targeted area residence.*** The term "targeted area residence" has the meaning given that term under section 103A (k) and the regulations thereunder.

(8) ***Acquisition cost.*** The term "acquisition cost" has the meaning given that term under section 103A (1)(5) and the regulations thereunder.

(9) ***Average area purchase price.*** The term "average area purchase price" has the meaning given that term under subparagraphs (2), (3), and (4) of section 103A (f) and the regulations thereunder. For purposes of this paragraph (b)(9), all determinations of average area purchase price shall be made with respect to residences as that term is defined in section 103A and the regulations thereunder.

(10) ***Total proceeds.*** The "total proceeds" of an issue is the sum of the products determined by multiplying—

(i) The certified indebtedness amount of each mortgage credit certificate issued pursuant to such issue, by

(ii) The certificate credit rate specified in such certificate.

Each qualified mortgage credit certificate program shall be treated as a separate issue of mortgage credit certificates.

(11) ***Residence.*** The term "residence" includes stock held by a tenant-stockholder in a cooperative housing corporation (as those terms are defined in section 216(b) (1) and (2)). It does not include property such as an appliance, a piece of furniture, a radio, etc., which, under applicable local law, is not a fixture. The term also includes any manufactured home which has a minimum of 400 square feet of living space and a minimum width in excess of 102 inches and which is of a kind customarily used at a fixed location. The preceding sentence shall not apply for purposes of determining the average area purchase price for single-family residences, nor shall it apply for purposes of determining the State ceiling amount. The term "residence" does not, however, include recreational vehicles, campers, and other similar vehicles.

(12) ***Related person.*** The term "related person" has the meaning given that term under section 103(b)(6)(C)(i) and § 1.103-10(e)(1).

(13) ***Date of issue.*** A mortgage credit certificate is considered issued on the date on which a closing agreement is signed with respect to the certified indebtedness amount.

(c) ***Affidavits.*** For purposes of §§ 1.25-1T through 1.25-8T, an affidavit filed in connection with the requirements of §§ 1.25-1T through 1.25-8T shall be made under penalties of perjury. Applicants for mortgage credit certificates who are required by a lender or the issuer to sign affidavits must be informed that any fraudulent statement will result in

(1) the revocation of the individual's mortgage credit certificate, and

(2) a $10,000 penalty under section 6709. Other persons required by a lender or an issuer to provide affidavits must receive similar notice. A person may not rely on an affidavit where that person knows or has reason to know that the information contained in the affidavit is false.

[T.D. 8023, 50 FR 19346, May 8, 1985]

§ 1.25-2T Amount of credit (Temporary).

(a) ***In general.*** Except as otherwise provided, the amount of the credit allowable for any taxable year to an individual who holds a qualified mortgage credit certificate is equal to the product of the certificate credit rate (as defined in paragraph (b)) and the amount of the interest paid or accrued by the taxpayer during the taxable year on the certified indebtedness amount (as defined in paragraph (c)).

(b) ***Certificate credit rate*** —

(1) ***In general.*** For purposes of §§ 1.25-1T through 1.25-8T, the term "certificate credit rate" means the rate specified by the issuer on the mortgage credit certificate. The certificate credit rate shall not be less than 10 percent nor more than 50 percent.

(2) ***Limitation in certain States.***

(i) In the case of a State which—

(A) Has a State ceiling for the calendar year in which an election is made that exceeds 20 percent of the average annual aggregate principal amount of mortgages executed during the immediately preceding 3 calendar years for single-family owner-occupied residences located within the jurisdiction of such State, or

(B) Issued qualified mortgage bonds in an aggregate amount less than $150 million for calendar year 1983.

the certificate credit rate for any mortgage credit certificate issued under such program shall not exceed 20 percent unless the issuing authority submits a plan to the Commissioner to ensure that the weighted average of the certificate credit rates in such mortgage credit certificate program does not exceed 20 percent and the Commissioner approves such plan. For purposes of determining the average annual aggregate principal amount of mortgages executed during the immediately preceding 3 calendar years for single-family owner-occupied residences located within the jurisdiction of such State, an issuer may rely upon the amount published by the Treasury Department for such calendar years. An issuer may rely on a different amount from that safe-harbor limitation where the issuer has made a more accurate and comprehensive determination of that amount. The weighted average of the certificate credit rates in a mortgage credit certificate program is determined by dividing the sum of the products obtained by multiplying the certificate credit rate of each certificate by the certified indebtedness amount with respect to that certificate by the sum of the certified indebtedness amounts of the certificates issued. See section 103A(g) and the regulations thereunder for the definition of the term “State ceiling”.

(ii) The following example illustrates the application of this paragraph (b)(2):

Example. City Z issues four qualified mortgage credit certificates pursuant to its qualified mortgage credit certificate program. H receives a certificate with a certificate credit rate of 30 percent and a certified indebtedness amount of $50,000. I receives a certificate with a certificate credit rate of 25 percent and a certified indebtedness amount of $100,000. J and K each receive certificates with certificate credit rates of 10 percent; their certified indebtedness amounts are $50,000 and $100,000, respectively. The weighted average of the certificate credit rates is determined by dividing the sum of the products obtained by multiplying the certificate credit rate of each certificate by the certified indebtedness amount with respect to that certificate ((.3 × $50,000) + (.25 × $100,000) + (.1 × $50,000) + (.1 × $100,000)) by the sum of the certified indebtedness amounts of the certificates issued ($50,000 + $100,000 + $50,000 + $100,000). Thus, the weighted average of the certificate credit rates is 18.33 percent ($55,000/$300,000).

(c) ***Certified indebtedness amount*** —

(1) ***In general.*** The term “certified indebtedness amount” means the amount of indebtedness which is—

(i) Incurred by the taxpayer—

(A) To acquire his principal residence, § 1.25-2T(c)(1)(i),

(B) As a qualified home improvement loan, or

(C) As a qualified rehabilitation loan, and

(ii) Specified in the mortgage credit certificate.

(2) ***Example.*** The following example illustrates the application of this paragraph:

Example. On March 1, 1986, State X, pursuant to its qualified mortgage credit certificate program, provides a mortgage credit certificate to B. State X specifies that the maximum amount of the mortgage loan for which B may claim a credit is $65,000. On March 15, B purchases for $67,000 a single-family dwelling for use as his principal residence. B obtains from Bank M a mortgage loan for $60,000. State X, or Bank M acting on behalf of State X, indicates on B's mortgage credit certificate that the certified indebtedness amount of B's loan is $60,000. B may claim a credit under section 25 (e) based on this amount.

(d) ***Limitation on credit*** —

(1) ***Limitation where certificate credit rate exceeds 20 percent.***

(i) If the certificate credit rate of any mortgage credit certificate exceeds 20 percent, the amount of the credit allowed to the taxpayer by section 25(a)(1) for any year shall not exceed $2,000. Any amount denied under this paragraph (d)(1) may not be carried forward under section 25(e)(1) and paragraph (d)(2) of this section.

(ii) If two or more persons hold interests in any residence, the limitation of paragraph (d)(1)(i) shall be allocated among such persons in proporation to their respective interests in the residence.

(2) ***Carryforward of unused credit.***

(i) If the credit allowable under section 25 (a) and § 1.25-2T for any taxable year exceeds the applicable tax limit for that year, the excess (the "unused credit") will be a carryover to each of the 3 succeeding taxable years and, subject to the limitations of paragraph (d)(2)(ii), will be added to the credit allowable by section 25 (a) and § 1.25-2T for that succeeding year.

(ii) The amount of the unused credit for any taxable year (the "unused credit year") which may be taken into account under this paragraph (d)(2) for any subsequent taxable year may not exceed the amount by which the applicable tax limit for that subsequent taxable year exceeds the sum of

(A) the amount of the credit allowable under section 25 (a) and § 1.25-1T for the current taxable year, and

(B) the sum of the unused credits which, by reason of this paragraph (d)(2), are carried to that subsequent taxable year and are attributable to taxable years before the unused credit year. Thus, if by reason of this paragraph (d)(2), unused credits from 2 prior taxable years are carried forward to a subsequent taxable year, the unused credit from the earlier of those 2 prior years must be taken into account before the unused credit from the later of those 2 years is taken into account.

(iii) For purposes of this paragraph (d)(2) the term "applicable tax limit" means the limitation imposed by section 26 (a) for the taxable year reduced by the sum of the credits allowable for that year under section 21, relating to expenses for household and dependent care services necessary for gainful employment, section 22, relating to the credit for the elderly and the permanently disabled, section 23, relating to the residential energy credit, and section 24, relating to contributions to candidates for public office. The limitation imposed by section 26 (a) for any taxable year is equal to the taxpayer's tax liability (as defined in section 26 (b)) for that year.

(iv) The following examples illustrate the application of this paragraph (d)(2):

Example 1. (i) B, a calendar year taxpayer, holds a qualified mortgage credit certificate. For 1986 B's applicable tax limit (*i.e.,* tax liability) is $1,100. The amount of the credit under section 25 (a) and § 1.25-2T for 1986 is $1,700. For 1986 B is not entitled to any of the credits described in sections 21 through 24. Under § 1.25-2T (d)(2), B's unused credit for 1986 is $600, and B is entitled to carry forward that amount to the 3 succeeding years.
(ii) For 1987 B's applicable tax limit is $1,500, the amount of the credit under section 25 (a) and § 1.25-2T is $1,700, and the unused credit is $200. For 1988 B's applicable tax limit is $2,000, the amount of the credit under section 25 (a) and § 1.25-2T is $1,300, and there is no unused credit. For 1987 and 1988 B is not entitled to any of the credits described in sections 21 through 24. No portion of the unused credit for 1986 my be used in 1987. For 1988 B is entitled to claim a credit of $2,000 under section 25 (a) and § 1.25-2T, consisting of a $1,300 credit for 1988, the $600 unused credit for 1986, and $100 of the $200 unused credit for 1987. In addition, B may carry forward the remaining unused credit for 1987 ($100) to 1989 and 1990.

Example 2. The facts are the same as in Example (1) except that for 1988 B is entitled to a credit of $400 under section 23. B's applicable tax limit for 1988 is $1,600 ($2,000 less $400). For 1988 B is entitled to claim a credit of $1,600 under section 25 (a) and § 1.25-2T, consisting of a $1,300 credit for 1988 and $300 of the unused credit for 1986. In addition, B may carry forward the remaining unused credits of $300 for 1986 to 1989 and of $200 for 1987 to 1989 and 1990.

[T.D. 8023, 50 FR 19346, May 8, 1985]

§ 1.25-3 Qualified mortgage credit certificate.

(a)-(g) (1)(ii) [Reserved]. For further guidance, see § 1.25-3T(a) through (g)(1)(ii).

(g) (1)(iii) *Reissued certificate exception.* See paragraph (p) of this section for rules regarding the exception in the case of refinancing existing mortgages.

(g) (2) - (o) [Reserved]. For further guidance, see § 1.25-3T(g)(2) through (o).

(p) *Reissued certificates for certain refinancings*—(1) *In general.* If the issuer of a qualified mortgage credit certificate reissues a certificate in place of an existing mortgage credit certificate to the holder of that existing certificate, the reissued certificate is treated as satisfying the requirements of this section. The period for which the reissued certificate is in effect begins with the date of the refinancing (that is, the date on which interest begins accruing on the refinancing loan).

(2) ***Meaning of existing certificate.*** For purposes of this paragraph (p), a mortgage credit certificate is an existing certificate only if it satisfies the requirements of this section. An existing certificate may be the original certificate, a certificate issued to a transferee under § 1.25-3T(h)(2)(ii), or a certificate previously reissued under this paragraph (p).

(3) ***Limitations on reissued certificate.*** An issuer may reissue a mortgage credit certificate only if all of the following requirements are satisfied:

(i) The reissued certificate is issued to the holder of an existing certificate with respect to the same property to which the existing certificate relates.

(ii) The reissued certificate entirely replaces the existing certificate (that is, the holder cannot retain the existing certificate with respect to any portion of the outstanding balance of the certified mortgage indebtedness specified on the existing certificate).

(iii) The certified mortgage indebtedness specified on the reissued certificate does not exceed the remaining outstanding balance of the certified mortgage indebtedness specified on the existing certificate.

(iv) The reissued certificate does not increase the certificate credit rate specified in the existing certificate.

(v) The reissued certificate does not result in an increase in the tax credit that would otherwise have been allowable to the holder under the existing certificate for any taxable year. The holder of a reissued certificate determines the amount of tax credit that would otherwise have been allowable by multiplying the interest that was scheduled to have been paid on the refinanced loan by the certificate rate of the existing certificate. In the case of a series of refinancings, the tax credit that would otherwise have been allowable is determined from the amount of interest that was scheduled to have been paid on the original loan and the certificate rate of the original certificate.

(A) In the case of a refinanced loan that is a fixed interest rate loan, the interest that was scheduled to be paid on the refinanced loan is determined using the scheduled interest method described in paragraph (p)(3)(v)(C) of this section.

(B) In the case of a refinanced loan that is not a fixed interest rate loan, the interest that was scheduled to be paid on the refinanced loan is determined using either the scheduled interest method described in paragraph (p)(3)(v)(C) of this section or the hypothetical interest method described in paragraph (p)(3)(v)(D) of this section.

(C) The scheduled interest method determines the amount of interest for each taxable year that was scheduled to have been paid in the taxable year based on the terms of the refinanced loan including any changes in the interest rate that would have been required by the terms of the refinanced loan and any payments of principal that would have been required by the terms of the refinanced loan (other than repayments required as a result of any refinancing of the loan).

(D) The hypothetical interest method (which is available only for refinanced loans that are not fixed interest rate loans) determines the amount of interest treated as having been scheduled to be paid for a taxable year by constructing an amortization schedule for a hypothetical self-amortizing loan with level payments. The hypothetical loan must have a principal amount equal to the remaining outstanding balance of the certified mortgage indebtedness specified on the existing certificate, a maturity equal to that of the refinanced loan, and interest equal to the annual percentage rate (APR) of the refinancing loan that is required to be calculated for the Federal Truth in Lending Act.

(E) A holder must consistently apply the scheduled interest method or the hypothetical interest method for all taxable years beginning with the first taxable year the tax credit is claimed by the holder based upon the reissued certificate.

(4) ***Examples.*** The following examples illustrate the application of paragraph (p)(3)(v) of this section:

Example 1. A holder of an existing certificate that meets the requirements of this section seeks to refinance the mortgage on the property to which the existing certificate relates. The final payment on the holder's existing mortgage is due on December 31, 2000; the final payment on the new mortgage would not be due until January 31, 2004. The holder requests that the issuer provide to the holder a reissued mortgage credit certificate in place of the existing certificate. The requested certificate would have the same certificate credit rate as the existing certificate. For each calendar year through the year 2000, the credit that would be allowable to the holder with respect to the new mortgage under the requested certificate would not exceed the credit allowable for that year under the existing certificate. The requested certificate, however, would allow the holder credits for the years 2001 through 2004, years for which, due to the earlier scheduled retirement of the existing mortgage, no credit would be allowable under the existing certificate. Under paragraph (p)(3)(v) of this section, the issuer may not reissue the certificate as requested because, under the existing certificate, no credit would be allowable for the years 2001 through 2004. The issuer may, however, provide a reissued certificate that limits the amount of the credit allowable in each year to the amount allowable under the existing certificate. Because the existing certificate would allow no credit after December 31, 2000, the reissued certificate could expire on December 31, 2000.

Example 2. (a) The facts are the same as *Example 1* except that the existing mortgage loan has a variable rate of interest and the refinancing loan will have a fixed rate of interest. To determine whether the limit under paragraph (p)(3)(v) of this section is met for any taxable year, the holder must calculate the amount of credit that otherwise would have been allowable absent the refinancing. This requires a determination of the amount of interest that would have been payable on the refinanced loan for the taxable year. The holder may determine this amount by—

(1) Applying the terms of the refinanced loan, including the variable interest rate or rates, for the taxable year as though the refinanced loan continued to exist; or

(2) Obtaining the amount of interest, and calculating the amount of credit that would have been available, from the schedule of equal payments that fully amortize a hypothetical loan with the principal amount equal to the remaining outstanding balance of the certified mortgage indebtedness specified on the existing certificate, the interest equal to the annual percentage rate (APR) of the refinancing loan, and the maturity equal to that of the refinanced loan.

(b) The holder must apply the same method for each taxable year the tax credit is claimed based upon the reissued mortgage credit certificate.

(5) ***Coordination with Section 143(m)(3).*** A refinancing loan underlying a reissued mortgage credit certificate that replaces a mortgage credit certificate issued on or before December 31, 1990, is not a federally subsidized indebtedness for the purposes of section 143(m)(3) of the Internal Revenue Code.

[T.D. 8692, 61 FR 66214, Dec. 17, 1996]

§ 1.25-3T Qualified mortgage credit certificate (Temporary).

(a) ***Definition of qualified mortgage credit certificate.*** For purposes of §§ 1.25-1T through 1.25-8T, the term "qualified mortgage credit certificate" means a certificate that meets all of the requirements of this section.

(b) ***Qualified mortgage credit certificate program.*** A certificate meets the requirements of this paragraph if it is issued under a qualified mortgage credit certificate program (as defined in § 1.25-4T).

(c) ***Required form and information.*** A certificate meets the requirements of this paragraph if it is in the form specified in § 1.25-6T and if all the information required by the form is specified on the form.

(d) ***Residence requirement*** —

(1) ***In general.*** A certificate meets the requirements of this paragraph only if it is provided in connection with the acquisition, qualified rehabilitation, or qualified home improvement of a residence, that is—

(i) A single-family residence (as defined in § 1.25-1T(b)(5)) which, at the time the financing on the residence is executed or assumed, can reasonably be expected by the issuer to become (or, in the case of a qualified home improvement loan, to continue to be) the principal residence (as defined in section 1034 and the regulations thereunder) of the holder of the certificate within a reasonable time after the financing is executed or assumed, and

(ii) Located within the jurisdiction of the governmental unit issuing the certificate.

See section 103a(d) and the regulations thereunder for further definitions and requirements.

(2) ***Certification procedure.*** The requirements of this paragraph will be met if the issuer or its agent obtains from the holder of the certificate an affidavit stating his intent to use (or, in the case of a qualified home improvement loan, that he is currently using and intends to continue to use) the residence as his principal residence within a reasonable time (e.g., 60 days) after the mortgage credit certificate is issued and stating that the holder will notify the issuer of the mortgage credit certificate if the residence ceases to be his principal residence. The affidavit must also state facts that are sufficient for the issuer or his agent to determine whether the residence is located within the jurisdiction of the issuer that issued the mortgage credit certificate.

(e) ***3-year requirement*** —

(1) ***In general.*** A certificate meets the requirements of this paragraph only if the holder of the certificate had no present ownership interest in a principal residence at any time during the 3-year period prior to the date on which the mortgage on the residence in connection with which the certificate is provided is executed. For purposes of the preceding sentence, the holder's interest in the residence with respect to which the certificate is being provided shall not be taken into account. See section 103A(e) and the regulations thereunder for further definitions and requirements.

(2) ***Exceptions.*** Paragraph (e)(1) shall not apply with respect to—

(i) Any certificate provided with respect to a targeted area residence (as defined in § 1.25-1T(b)(7)),

(ii) Any qualified home improvement loan (as defined in § 1.25-1T(b)(3)), and

(iii) Any qualified rehabilitation loan (as defined in § 1.25-1T(b)(4)).

(3) ***Certification procedure.*** The requirements of paragraph (e)(1) will be met if the issuer or its agent obtains from the holder of the certificate an affidavit stating that he had no present ownership interest in a principal residence at any time during the 3-year period prior to the date of which the certificate is issued and the issuer or its agent obtains from the applicant copies of the applicant's Federal tax returns for the preceding 3 years and examines each statement to determine whether the applicant has claimed a deduction for taxes on property which was the applicant's principal residence pursuant to section 164(a)(1) or a deduction pursuant to section 163 for interest paid on a mortgage secured by property which was the applicant's principal residence. Where the mortgage is executed during the period between January 1 and February 15 and the applicant has not yet filed has Federal income tax return with the Internal Revenue Service, the issuer may, with respect to such year, rely on an affidavit of the applicant that the applicant is not entitled to claim deductions for taxes or interest on indebtedness with respect to property constituting his principal residence for the preceding calendar year. In the alternative, when applicable, the holder may provide an affidavit stating that one of the exceptions provided in paragraph (e)(2) applies.

(4) ***Special rule.*** An issuer may submit a plan to the Commissioner for distributing certificates, in an amount not to exceed 10 percent of the proceeds of the issue, to individuals who do not meet the requirements of this paragraph. Such plan must describe a procedure for ensuring that no more than 10 percent of the proceeds of a such issue will be used to provide certificates to such individuals. If the Commissioner approves the issuer's plan, certificates issued in accordance with the terms of the plan to holders who do not meet the 3-year requirement do not fail to satisfy the requirements of this paragraph.

(f) ***Purchase price requirement*** —

(1) ***In general.*** A certificate meets the requirements of this paragraph only if the acquisition cost (as defined in § 1.25-1T(b)(8)) of the residence, other than a targeted area residence, in connection with which the certificate is provided does not exceed 110 percent of the average area purchase price (as defined in § 1.25-1T(b)(9)) applicable to that residence. In the case of a targeted area residence (as defined in § 1.251T(b)(7)) the acquisition cost may not exceed 120 percent of the average area purchase price applicable to such residence. See section 1093A(f) and the regulations thereunder for further definitions and requirements.

(2) ***Certification procedure.*** The requirements of paragraph (f)(1) will be met if the issuer or its agent obtains affidavits executed by the seller and the buyer that state these requirements have been met. Such affidavits must include an itemized list of—

(i) Any payments made by the buyer (or a related person) or for the benefit of the buyer,

(ii) If the residence is incomplete, an estimate of the reasonable cost of completing the residence, and

(iii) If the residence is purchased subject to a ground rent, the capitalized value of the ground rent.

The issuer or his agent must examine such affidavits and determine whether, on the basis of information contained therein, the purchase price requirement is met.

(g) ***New mortgage requirement*** —

(1) ***In general.***

(i) A certificate meets the requirements of this paragraph only if the certificate is not issued in connection with the acquisition or replacement of an existing mortgage. Except in the case of a qualified home improvement loan, the certificate must be issued to an individual who did not have a mortgage (whether or not paid off) on the residence with respect to which the certificate is issued at any time prior to the execution of the mortgage.

(ii) ***Exceptions.*** For purposes of this paragraph, a certificate used in connection with the replacement of—

(A) Construction period loans,

(B) Bridge loans or similar temporary initial financing, and

(C) In the case of a qualified rehabilitation loan, an existing mortgage,

shall not be treated as being used to acquire or replace an existing mortgage. Generally, temporary initial financing is any financing which has a term of 24 months or less. See section 103A(j)(1) and the regulations thereunder for examples illustrating the application of these requirements.

(2) ***Certification procedure.*** The requirements of paragraph (g)(1) will be met if the issuer or its agent obtains from the holder of the certificate an affidavit stating that the mortage being acquired in connection with the certificate will not be used to acquire or replace an existing mortgage (other than one that falls within the exceptions described in paragraph (g)(1)(ii)).

(h) ***Transfer of mortgage credit certificates*** —

(1) ***In general.*** A certificate meets the requirements of this paragraph only if it is (i) not transferable or (ii) transferable only with the approval of the issuer.

(2) ***Transfer procedure.*** A certificate that is transferred with the approval of the issuer is a qualified mortgage credit certificate in the hands of the transferee only if each of the following requirements is met:

(i) The transferee assumed liability for the remaining balance of the certified indebtedness amount in connection with the acquisition of the residence from the transferor,

(ii) The issuer issues a new certificate to the transferee, and

(iii) The new certificate meets each of the requirements of paragraphs (d), (e), (f), and (i) of this section based on the facts as they exist at the time of the transfer as if the mortgage credit certificate were being issued for the first time. For example, the purchase price requirement is to be determined by reference to the average area purchase price at the time of the assumption and not when the mortgage credit certificate was originally issued.

(3) ***Statement on certificate.*** The requirements of paragraph (h)(1) will be met if the mortgage credit certificate states that the certificate may not be transferred or states that the certificate may not be transferred unless the issuer issues a new certificate in place of the original certificate.

(i) ***Prohibited mortgages*** —

(1) ***In general.*** A certificate meets the requirements of this paragraph only if it is issued in connection with the acquisition of a residence none of the financing of which is provided from the proceeds of—

(i) A qualified mortgage bond (as defined under section 103A(c)(1) and the regulations thereunder), or

(ii) A qualified veterans' mortgage bond (as defined under section 103A(c)(3) and the regulations thereunder).

Thus, for example, if a mortgagor has a mortgage on his principal residence that was obtained from the proceeds of a qualified mortgage bond, a mortgage credit certificate issued to such mortgagor in connection with a qualified home improvement loan with respect to such residence is not a qualified mortgage credit certificate. If, however, the financing provided from the proceeds of the qualified mortgage bond had been paid off in full, the certificate would be a qualified mortgage credit certificate (assuming all the requirements of this paragraph are met).

(2) ***Certification procedure.*** The requirements of paragraph (i)(1) will be met if the issuer or its agent obtains from the holder of the certificate an affidavit stating that no portion of the financing of the residence in connection with which the certificate is issued is provided from the proceeds of a qualified mortgage bond or a qualified veterans' mortgage bond.

(j) ***Particular lenders*** —

(1) ***In general.*** Except as otherwise provided in paragraph (j)(2), a certificate meets the requirements of this paragraph only if the certificate is not limited to indebtedness incurred from particular lenders. A certificate is limited to indebtedness from particular lenders if the issuer, directly or indirectly, prohibits the holder of a certificate from obtaining financing from one or more lenders or requires the holder of a certificate to obtain financing from one or more lenders. For purposes of this paragraph, a lender is any person, including an issuer of mortgage credit certificates, that provides financing for the acquisition, qualified rehabilitation, or qualified home improvement of a residence.

(2) ***Exception.*** A mortgage credit certificate that is limited to indebtedness incurred from particular lenders will not cease to meet the requirements of this paragraph if the Commissioner approves the basis for such limitation. The Commissioner may approve the basis for such limitation if the issuer establishes to the satisfaction of the Commissioner that it will result in a significant economic benefit to the holders of mortgage credit certificates (e.g., substantially lower financing costs) compared to the result without such limitation.

(3) ***Taxable bonds.*** The requirements of this paragraph do not prevent an issuer of mortgage credit certificates from issuing mortgage subsidy bonds (other than obligations described in section 103 (a)) the proceeds of which are to be used to provide mortgages to holders of mortgage credit certificates provided that the holders of such certificates are not required to obtain financing from the proceeds of the bond issue. See § 1.25-4T (h) with respect to permissible fees.

(4) ***Lists of participating lenders.*** The requirements of this paragraph do not prohibit an issuer from maintaining a list of lenders that have stated that they will make loans to qualified holders of mortgage credit certificates, provided that

(i) the issuer solicits such statements in a public notice similar to the notice described in § 1.25-7T,

(ii) lenders are provided a reasonable period of time in which to express their interest in being included in such a list, and

(iii) holders of mortgage credit certificates are not required to obtain financing from the lenders on the list. If an issuer maintains such a list, it must update the list at least annually.

(5) ***Certification procedure.*** The requirements of this paragraph will be met if

(i) the issuer or its agent obtains from the holder of the certificate an affidavit stating that the certificate was not limited to indebtedness incurred from particular lenders or

(ii) the issuer obtains a ruling from the Commissioner under paragraph (j)(2).

(6) ***Examples.*** The following examples illustrate the application of this paragraph:

Example 1. Under its mortgage credit certificate program, County Z distributes all the certificates to be issued to a group of 60 participating lenders. Residents of County Z may obtain mortgage credit certificates only from the participating lenders and only in connection with the acquisition of mortgage financing from that lender or one of the other participating lenders. Certificates issued under this program do not meet the requirements of this paragraph since the certificates are limited to indebtedness incurred from particular lenders. The certificates, therefore, are not qualified mortgage credit certificates.

Example 2. In connection with its mortgage credit certificate program, County Y arranges with Bank P for a line of credit to be used to provide mortgage financing to holders of mortgage credit certificates. County Y, pursuant to paragraph (j)(4), maintains a list of lenders participating in the mortgage credit certificate program. County Y distributes the certificates directly to applicants. Holders of the certificates are not required to obtain mortgage financing through the line of credit or through a lender on the list of participating lenders. Certificates issued pursuant to County Y's program satisfy the requirements of this paragraph.

(k) ***Developer certification*** —

(1) ***In general.*** A mortgage credit certificate that is allocated by the issuer to any particular development meets the requirements of this paragraph only if the developer provides a certification to the purchaser of the residence and the issuer stating that the purchase price of that residence is not higher than the price would be if the issuer had not allocated mortgage credit certificates to the development. The certification must be made by the developer if a natural person or, if not, by a duly authorized official of the developer.

(2) ***Certification procedure.*** The requirements of this paragraph will be met if the issuer or its agent obtains from the holder of the certificate an affidavit stating that he has received from the developer the certification described in this paragraph.

(l) ***Expiration*** —

(1) ***In general.*** A certificate meets the requirements of this paragraph if the certified indebtedness amount is incurred prior to the close of the second calendar year following the calendar year for which the issuer elected not to issue qualified mortgage bonds under § 1.25-4T with respect to that issue of mortgage credit certificates. Thus, for example, if on October 1, 1984, an issuing authority elects under § 1.25-4T not to issue qualified mortgage bonds, a mortgage credit certificate provided under that program does not meet the requirements of this paragraph unless the indebtedness is incurred on or before December 31, 1986.

(2) ***Issuer-imposed expiration dates.*** An issuer of mortgage credit certificates may provide that a certificate shall expire if the holder of the certificate does not incure certified indebtedness by a date that is prior to the expiration date provided in paragraph (l)(1). A certificate that expires prior to the date provided in paragraph (l)(1) may be reissued provided that the requirements of this paragraph are met.

(m) ***Revocation.*** A certificate meets the requirements of this paragraph only if it has not been revoked. Thus, the credit provided by section 25 and § 1.25-1T does not apply to interest paid or accrued following the revocation of a certificate. A certificate is treated as revoked when the residence to which the certificate relates ceases to be the holder's principal residence. An issuer may revoke a mortgage credit certificate if the certificate does not meet all the requirements of § 1.25-3T (d), (e), (f), (g), (h), (i), (j), (k), and (n). The certificate is revoked by the issure's notifying the holder of the certificate and the Internal Revenue Service that the certificate is revoked. The notice to the Internal Revenue Service shall be made as part of the report requred by § 1.25-8T (b)(2).

(n) ***Interest paid to related person*** —

(1) ***In general.*** A certificate does not meet the requirements of this paragraph if interest on the certified indebtedness amount is paid to a person who is a related person to the holder of the certificate.

(2) ***Certification procedure.*** The requirements of this paragraph will be met if the issuer or its agent obtains from the holder of the certificate an affidavit stating that a related person does not have, and is not expected to have, an interest as a creditor in the certified indebtedness amount.

(o) ***Fraud.*** Notwithstanding any other provision of this section, a mortgage credit certificate does not meet the requirements of this section and, therefore, the certificate is not a qualified mortgage credit certificate for any calendar year, if the holder of the certificate provides a certification or any other information to the lender providing the mortgage or to the issuer of the certificate containing a material misstatement and such misstatement is due to fraud. In determining whether any misstatement is due to fraud, the rules generally applicable to underpayments of tax due to fraud (including rules relating to the statute of limitations) shall apply. See § 1.6709-1T with respect to the penalty for filing negligent or fraudulent statements.

[T.D. 8023, 50 FR 19348, May 8, 1985, as amended at T.D. 8502, 58 FR 67689, Dec. 22, 1993; T.D. 8692, 61 FR 66215, Dec. 17, 1996]

§ 1.25-4T Qualified mortgage credit certificate program (Temporary).

(a) ***In general*** —

(1) ***Definition of qualified mortgage credit certificate program.*** For purposes of §§ 1.25-1T through 1.25-8T, the term “qualified mortgage credit certificate program” means a program to issue qualified mortgage credit certificates which meets all of the requirements of paragraphs (b) through (i) of this section.

(2) ***Requirements are a minimum.*** Except as otherwise provided in this section, the requirements of this section are minimum requirements. Issuers may establish more stringent criteria for participation in a qualified mortgage credit certificate program. Thus, for example, an issuer may target 30 percent of the proceeds of an issue of mortgage credit certificates to targeted areas. Further, issuers may establish additional eligibility criteria for participation in a qualified mortgage credit certificate program. Thus, for example, issuers may impose an income limitation designed to ensure that only those individuals who could not otherwise purchase a residence will benefit from the credit.

(3) Except as otherwise provided in this section and § 1.25-3T, issuers may use mortgage credit certificates in connection with other Federal, State, and local programs provided that such use complies with the requirements of § 1.25-3T(j). Thus, for example, a mortgage credit certificate may be issued in connection with the qualified rehabilitation of a residence part of the cost of which will be paid from the proceeds of a State grant.

(b) ***Establishment of program.*** A program meets the requirements of this paragraph only if it is established by a State or political subdivision thereof for any calendar year for which it has the authority to issue qualified mortgage bonds.

(c) ***Election not to issue qualified mortgage bonds*** —

(1) ***In general.*** A program meets the requirements of this paragraph only if the issuer elects, in the time and manner specified in this paragraph, not to issue an amount of qualified mortgage bonds that it may otherwise issue during the calendar year under section 103A and the regulations thereunder.

(2) ***Manner of making election.*** On or before the earlier of the date of distribution of mortgage credit certificates under a program or December 31, 1987, the issuer must file an election not to issue an amount of qualified mortgage bonds. The election (and the certification (or affidavit) described in paragraph (d)) shall be filed with the Internal Revenue Service Center, Philadelphia, Pennsylvania 19255. The election should be titled “Mortgage Credit Certificate Election” and must include—

(i) The name, address, and TIN of the issuer,

(ii) The issuer's applicable limit, as defined in section 103A (g) and the regulations thereunder,

(iii) The aggregate amount of qualified mortgage bonds issued by the issuing authority during the calendar year,

(iv) The amount of the issuer's applicable limit that it has surrendered to other issuers during the calendar year,

(v) The date and amount of any previous elections under this paragraph for the calendar year, and

(vi) The amount of qualfied mortgage bonds that the issuer elects not to issue.

(3) ***Revocation of election.*** Any election made under this paragraph may be revoked, in whole or in part, at any time during the calendar year in which the election was made. The revocation, however, may not be made with respect to any part of the nonissued bond amount that has been used to issue mortgage credit certificates pursuant to the election. The revocation shall be filed with the Internal Revenue Service Center, Philadelphia, Pennsylvania 19255. The revocation should be titled “Revocation of Mortgage Credit Certificate Election” and must include—

(i) The name, address, and TIN of the issuer,

(ii) The nonissued bond amount as originally elected, and

(iii) The portion of the nonissued bond amount with respect to which the election is being revoked.

(4) ***Special rule.*** If at the time that an issuer makes an election under this paragraph it does not know its applicable limit, the issuer may elect not to use all of its remaining authority to issue qualified mortgage bonds; this form of election will be treated as meeting the requirements of paragraph (c)(2) if, prior to the later of the end of the calendar year and December 31, 1985, the issuer amends its election so as to indicate the exact amount of qualified mortgage bond authority that it elected not to issue.

(5) ***Limitation on nonissued bond amount.*** The amount of qualified mortgage bonds which an issuer elects not to issue may not exceed the issuer's applicable limit (as determined under section 103A (g) and the regulations thereunder). For example, a governmental unit that, pursuant to section 103A

(g)(3), may issue $10 million of qualified mortgage bonds that elects to trade in $11 million in qualified mortgage bond authority has not met the requirements of this paragraph, and mortgage credit certificates issued pursuant to such election are not qualified mortgage credit certificates.

(d) ***State certification requirement*** —

(1) ***In general.*** A program meets the requirements of this paragraph only if the State official designated by law (or, where there is no State official, the Governor) certifies, based on facts and circumstances as of the date on which the certification is requested, following a request for such certification, that the issue meets the requirements of section 103A(g) (relating to volume limitation) and the regulations thereunder. A copy of the State certification must be attached to the issuer's election not to issue qualified mortgage bonds, except that, in the case of elections made during calendar year 1984, the certification may be filed with the Service prior to July 8, 1985 provided that mortgage credit certificates may not be distributed until the certification is filed. In the case of any constitutional home rule city, the certification shall be made by the chief executive officer of the city.

(2) ***Certification procedure.*** The official making the certification described in this paragraph (d) need not perform an independent investigation to determine whether the issuer has met the requirements of section 103A(g). In determining the aggregate amount of qualified mortgage bonds previously issued by that issuer during the calendar year the official may rely on copies of prior elections under paragraph (c) of this section made by the issuer for that year, together with an affidavit executed by an official of the issuer who is responsible for issuing bonds stating that the issuer has not, to date, issued any other issues of qualified mortgage bonds during the calendar year and stating the amount, if any, of the issuer's applicable limit that it has surrendered to other issuers during the calendar year; for any calendar year prior to 1985, the official may rely on an affidavit executed by a duly authorized official of the issuer who states the aggregate amount of qualified mortgage bonds issued by the issuer during the year. In determining the aggregate amount of qualified mortgage bonds that the issuer has previously elected not to issue during that calendar year, the official may rely on copies of any elections not to issue qualified mortgage bonds filed by the issuer for that calendar year, together with an affidavit executed by an official of the issuer responsible for issuing mortgage credit certificates stating that the issuer has not, to date, made any other elections not to issue qualified mortgage bonds. If, based on such information, the certifying official determines that the issuer has not, as of the date on which the certification is provided, exceeded its applicable limit for the year, the official may certify that the issue meets the requirements of section 103A(g). The fact that the certification described in this paragraph (d) is provided does not ensure that the issuer has met the requirements of section 103A(g) and the regulations thereunder, nor does it preclude the application of the penalty for over-issuance of mortgage credit certificates if such over-issuance actually occurs. See § 1.25-5T.

(3) ***Special rule.*** If within 30 days after the issuer files a proper request for the certification described in this paragraph (d) the issuer has not received from the State official designated by law (or, if there is no State official, the Governor) certification that the issue meets the requirements of section 103A(g) or, in the alternative, a statement that the issue does not meet such requirements, the issuer may submit, in lieu of the certification required by this paragraph (d), an affidavit executed by an officer of the issuer responsible for issuing mortgage credit certificates stating that—

(i) The issue meets the requirements of section 103A(g) and the regulations thereunder,

(ii) At least 30 days before the execution of the affidavit the issuer filed a proper request for the certification described in this paragraph (d), and

(iii) The State official designated by law (or, if there is no State official, the Governor) has not provided the certification described in this paragraph (d) or a statement that the issue does not meet such requirements.

For purposes of this paragraph, a request for certification is proper if the request includes the reports and affidavits described in paragraph (d)(2).

(e) ***Information reporting requirement*** —

(1) ***Reports.*** With respect to mortgage credit certificates issued after September 30, 1985, a program meets the requirements of this paragraph only if the issuer submits a report containing the information concerning the holders of certificates issued during the preceding reporting period required by this paragraph. The report must be filed for each reporting period in which certificates (other than transferred certificates) are issued under the program. The issuer is not responsible for false information provided by a holder if the issuer did not know or have reason to know that the information was false. The report must be filed on the form prescribed by the Internal Revenue Service. If no form is prescribed, or if the form prescribed is not readily available, the issuer may use its own form provided that such form is in the format set forth in this paragraph and contains the information required by this paragraph. The report must be titled “Mortgage Credit Certificate Information Report” and must include the name, address, and TIN of the issuer, the reporting period for which the information is provided, and the following tables containing information concerning the holders of certificates issued during the reporting period for which the report is filed:

(i) A table titled “Number of Mortgage Credit Certificates by Income and Acquisition Cost” showing the number of mortgage credit certificates issued (other than those issued in connection with qualified home improvement and rehabilitation loans) according to the annualized gross income of the holders (categorized in the following intervals of income:

$0-$9,999;

$10,000-$19,999;

$20,000-$29,999;

$30,000-$39,999;

$40,000-$49,999;

$50,000-$74,999; and

$75,000 or more)

and according to the acquisition cost of the residences acquired in connection with the mortgage credit certificates (categorized in the following intervals of acquisition cost:

$0-$19,999;

$20,000-$39,999;

$40,000-$59,999;

$60,000-$79,999;

$80,000-$99,999;

$100,000-$119,999;

$120,000-$149,999;

$150,000-$199,999; and

$200,000 or more).

For each interval of income and acquisition cost the table must also be categorized according to—

(A) The aggregate amount of fees charged to holders to cover any administrative costs incurred by the issuer in issuing mortgage credit certificates, and

(B) The number of holders that—

(*1*) Did not have a present ownership interest in a principal residence at any time during the 3-year period ending on the date the mortgage credit certificate is executed (*i.e.,* satisfied the 3-year requirement) and purchased residences in targeted areas,

(*2*) Satisfied the 3-year requirement and purchased residences not located in targeted areas,

(*3*) Did have a present ownership interest in a principal residence at any time during the 3-year period ending on the date the mortgage credit certificate is executed (*i.e.,* did not satisfy the 3-year requirement) and purchased residences in targeted areas, and

(*4*) Did not satisfy the 3-year requirement and purchased residences not located in targeted areas.

(ii) A table titled “Volume of Mortgage Credit Certificates by Income and Acquisition Cost” containing data on—

(A) The total of the certified indebtedness amounts of the certificates issued (other than those issued in connection with qualified home improvement and rehabilitation loans);

(B) The sum of the products of the certified indebtedness amount and the certificate credit rate for each certificate (other than those issued in connection with qualified home improvement and rehabilitation loans) according to annualized gross income (categorized in the same intervals of income as the preceding table) and according to the acquisition cost of the residences acquired in connection with mortgage credit certificates (categorized in the same intervals of acquisition cost as the preceding table); and

(C) For each interval of income and acquisition cost, the information described in paragraph (e)(1)(ii) (A) and (B) categorized according to the holders that—

(*1*) Satisfied the 3-year requirement and purchased residences in targeted areas,

(*2*) Satisfied the 3-year requirement and purchased residences not located in targeted areas,

(3) Did not satisfy the 3-year requirement and purchased residences in targeted areas, and

(4) Did not satisfy the 3-year requirement and purchased residences not located in targeted areas.

(iii) A table titled "Mortgage Credit Certificates for Qualified Home Improvement and Rehabilitation Loans" showing the number of mortgage credit certificates issued in connection with qualified home improvement loans and qualified rehabilitation loans, the total of the certified indebtedness amount with respect to such certificates, and the sum of the products of the certified indebtedness amount and the certificate credit rate for each certificate; the information contained in the table must also be categorized according to whether the residences with respect to which the certificates were provided are located in targeted areas.

(2) ***Format.*** If no form is prescribed by the Internal Revenue Service, or if the prescribed form is not readily available, the issuer must submit the report in the format specified in this paragraph (e)(2). The specified format of the report is the following:

Mortgage Credit Certificate Information Report

Name of issuer:

Address of issuer:

TIN of issuer:

Reporting period:

NUMBER OF MORTGAGE CREDIT CERTIFICATES BY INCOME AND ACQUISITION COST

3-year requirement: Annualized gross monthly income of borrowers	Satisfied		Not satisfied		Totals fees
	Nontargeted area	Targeted area	Nontargeted area	Targeted area	
$0 to $9,999					
$10,000 to $19,999					
$20,000 to $29,999					
$30,000 to $39,999					
$40,000 to $49,999					
$50,000 to $74,999					
$75,000 or more					
Total					
Acquisition Cost					
0 to $19,999					
$20,000 to $39,999					

3-year requirement: Annualized gross monthly income of borrowers	Satisfied		Not satisfied		Totals fees
	Nontargeted area	Targeted area	Nontargeted area	Targeted area	
$40,000 to $59,999					
$60,000 to $79,999					
$80,000 to $99,999					
$100,000 to $119,999					
$120,000 to $149,999					
$150,000 to $199,999					
$200,000 or more					
Total					

Volume of Mortgage Credit Certificates by Income and Acquisition Cost

Annualized gross monthly income of holders	Holders satisfying the 3-year requirement				3-year requirement not satisfied				Totals	
	Nontargeted area		Targeted area		Nontargeted area		Targeted area			
	Total of the certified indebtedness amounts	Sum of products of certified indebtedness amounts and credit rates	Total of the certified indebtedness amounts	Sum of products of certified indebtedness amounts and credit rates	Total of the certified indebtedness amounts	Sum of products of certified indebtedness amounts and credit rates	Total of the certified indebtedness amounts	Sum of products of certified indebtedness amounts and credit rates	Total of the certified indebtedness amounts	Total sum of products of certified indebtedness amounts and credit rates
$0 to $9,999										
$10,000 to $19,999										
$20,000 to $29,999										
$30,000 to $39,999										
$40,000 to $49,999										
$50,000 to $74,999										
$75,000 to more										
Total										
Acquisition Cost										
$0 to $19,999										
$20,000 to $39,999										
$40,000 to $59,999										
$60,000 to $79,999										
$80,000 to $99,999										
$100,000										

Annualized gross monthly income of holders	Holders satisfying the 3-year requirement				3-year requirement not satisfied				Totals	
	Nontargeted area		Targeted area		Nontargeted area		Targeted area			
	Total of the certified indebtedness amounts	Sum of products of certified indebtedness amounts and credit rates	Total of the certified indebtedness amounts	Sum of products of certified indebtedness amounts and credit rates	Total of the certified indebtedness amounts	Sum of products of certified indebtedness amounts and credit rates	Total of the certified indebtedness amounts	Sum of products of certified indebtedness amounts and credit rates	Total of the certified indebtedness amounts	Total sum of products of certified indebtedness amounts and credit rates
to $119,999										
$120,000 to $149,999										
$150,000 to $199,999										
$200,000 or more										
Total										

Mortgage Credit Certificates for Qualified Home Improvement and Rehabilitation Loans

	Nontargeted area	Targeted area	Totals
Home Improvement Loans			
Number of mortgage credit certificates			
Total of the certified indebtedness amounts			
Product of certified indebtedness amounts and credit rates			
Rehabilitation Loans			
Number of mortgage credit certificates			
Total of the certified indebtedness amounts			
Product of certified indebtedness amounts and credit rates			

(3) ***Definitions and special rules.***

(i) For purposes of this paragraph the term “annualized gross income” means the borrower's gross monthly income multiplied by 12. Gross monthly income is the sum of monthly gross pay, any additional income from investments, pensions, Veterans Administration (VA) compensation, part-time employment, bonuses, dividends, interest, current overtime pay, net rental income, etc., and other income (such as alimony and child support, if the borrower chooses to disclose such income). Information with respect to gross monthly income may be obtained from available loan documents, e.g., the sum of lines 23D and 23E on the Application for VA or FmHA Home Loan Guaranty or for HUD/FHA Insured Mortgage (VA Form 26-1802a, HUD 92900, Jan. 1982), or the total line from the Gross Monthly Income section of FHLMC Residential Loan Application form (FHLMC 65 Rev. 8/78).

(ii) For purposes of this paragraph, the term “reporting period” means each one year period beginning July 1 and ending June 30, except that issuers need not provide data with respect to the period prior to October 1, 1985.

(iii) For purposes of this paragraph, verification of information concerning a holder's gross monthly income by utilizing other available information concerning the holder's income (e.g., Federal income tax returns) is not required. In determining whether the holder of a mortgage credit certificate acquiring a residence in a targeted area satisfies the 3-year requirement, the issuer may rely on a statement signed by the holder.

(4) ***Time for filing.*** The report required by this paragraph shall be filed not later than the 15th day of the second calendar month after the close of the reporting period. The Commissioner may grant an extension of time for the filing of a report required by this paragraph if there is reasonable cause for the failure to file such report in a timely fashion. The report may be filed at any time before such date

but must be complete based on facts and reasonable expectations as of the date the report is filed. The report need not be amended to reflect information learned subsequent to the date of filing, or to reflect changed circumstances with respect to any holder.

(5) ***Place for filing.*** The report required by this paragraph is to be filed at the Internal Revenue Service Center, Philadelphia, Pennsylvania 19255.

(f) ***Policy statement.*** A program established pursuant to an election under paragraph (c) made after 1984 meets the requirements of this paragraph only if the applicable elected representative of the governmental unit—

(1) Which is the issuer, or

(2) On whose behalf the certificates were issued,

has published (after a public hearing following reasonable public notice) a policy statement described in § 1.103A-2(1) by the last day of the year preceding the year in which the election under paragraph (c) is made, and a copy of such report has been submitted to the Commissioner on or before such last day. See § 1.103A-2(1) for further definitions and requirements.

(g) ***Targeted areas requirement*** —

(1) ***In general.*** A program meets the requirements of this paragraph only if—

(i) The portion of the total proceeds of the issue specified in paragraph (g)(2) is made available to provide mortgage credit certificates in connection with owner financing of targeted area residents for at least 1 year after the date on which mortgage credit certificates are first made available with respect to targeted area residences, and

(ii) The issuer attempts with reasonable diligence to place such proceeds with qualified persons.

Mortgage credit certificates are considered first made available with respect to targeted area residences on the date on which the issuer first begins to accept applications for mortgage credit certificates provided under that issue.

(2) ***Specified portion.***

(i) The specified portion of the total proceeds of an issue is the lesser of—

(A) 20 percent of the total proceeds, or

(B) 8 percent of the average annual aggregate principal amount of mortgages executed during the immediately preceding 3 calendar years for single-family, owner-occupied residences in targeted areas within the jurisdiction of the issuing authority.

For purposes of computing the required portion of the total proceeds specified in paragraph (g)(2)(i)(B) where such provision is applicable, an issuer may rely upon the safe-harbor formula provided in the regulations under section 103A(h).

(ii) See § 1.25-1T(b)(10)(ii) for the definition of “total proceeds”.

(h) ***Fees*** —

(1) ***In general.*** A program meets the requirements of this paragraph only if each applicant is required to pay, directly or indirectly, no fee other than those fees permitted under this paragraph.

(2) ***Permissible fees.*** Applicants may be required to pay the following fees provided that they are reasonable:

(i) Points, origination fees, servicing fees, and other fees in amounts that are customarily charged with respect to mortgages not provided in connection with mortgage credit certificates,

(ii) Application fees, survey fees, credit report fees, insurance fees, or similar settlement or financing costs to the extent such amounts do not exceed the amounts charged in the area in cases where mortgages are not provided in connection with mortgage credit certificates. For example, amounts charged for FHA, VA, or similar private mortgage insurance on an individual's mortgage are permissible so long as such amounts do not exceed the amounts charged in the area with respect to a similar mortgage that is not provided in connection with a mortgage credit certificate, and

(iii) Other fees that, taking into account all the facts and circumstances, are reasonably necessary to cover any administrative costs incurred by the issuer or its agent in issuing mortgage credit certificates.

(i) ***Qualified mortgage credit certificate.*** A program meets the requirements of this paragraph only if each mortgage credit certificate issued under the program meets each of the requirements of paragraphs (c) through (o) of § 1.25-3T.

(j) ***Good faith compliance efforts*** —

(1) ***Eligibility requirements.***

(i) A program under which each of the mortgage credit certificates issued does not meet each of the requirements of paragraphs (c) through (o) of § 1.25-3T shall be treated as meeting the requirements of paragraph (i) of this section if each of the requirements of this paragraph (j)(1) is satisfied. A mortgage credit certificate program meets the requirements of this paragraph (j)(1) only if each of the following provisions is met:

(A) The issuer in good faith attempted to issue mortgage credit certificates only to individuals meeting each of the requirements of paragraphs (c) through (o) of § 1.25-3T. Good faith requires that agreements with lenders and agents and other relevant instruments contain restrictions that permit the approval of mortgage credit certificates only in accordance with the requirements of paragraphs (c) through (o) of § 1.25-3T. In addition, the issuer must establish reasonable procedures to ensure compliance with those requirements. Reasonable procedures include reasonable investigations by the issuer to determine whether individuals satisfy the requirements of paragraphs (c) through (o) of § 1.25-3T.

(B) 95 percent or more of the total proceeds of the issue were devoted to individuals with respect to whom, at the time that the certificate was issued, all the requirements of paragraphs (c) through (o) of § 1.25-3T were met. If a holder of a mortgage credit certificate fails to meet more than one of these requirements, the amount of the certificate (*i.e.,* the certificate credit rate multiplied by the certified indebtedness amount) issued to that individual will be taken into account only once in determining whether the 95-percent requirement is met. However, all of the defects in that individual's certificate must be corrected pursuant to paragraph (j)(1)(i)(C).

(C) Any failure to meet the requirements of paragraphs (c) through (o) of § 1.25-3T is corrected within a reasonable period after that failure is discovered. For example, if an individual fails to meet one or more of such requirements those failures can be corrected by revoking that individual's certificate.

(ii) ***Examples.*** The following examples illustrate the application of this paragraph (j)(1):

Example 1. County X only distributes mortgage credit certificates to individuals who have contracted to purchase a principal residence. County X requires that applicants for mortgage credit certificates present the following information:
(i) An affidavit stating that the applicant intends to use the residence in connection with which the mortgage credit certificate is issued as his principal residence within a reasonable time after the certificate is issued by County X, that the applicant will notify the County if the residence ceases to be his principal residence, and facts that are sufficient for County X to determine whether the residence is located within the jurisdiction of County X,

(ii) An affidavit stating that the applicant had no present ownership interest in a principal residence at any time during the 3-year period prior to the date on which the certificate is issued,

(iii) Copies of the applicant's Federal tax returns for the preceding 3 years,

(iv) Affidavits from the seller of the residence with respect to which the certificate is issued and the applicant stating the purchase price of the residence, including an itemized list of (A) payments made by or for the benefit of the applicant, (B) if the residence is incomplete, an estimate of the reasonable cost of completing the residence, and (C) if the residence is subject to a ground rent, the capitalized value of the ground rent,

(v) An affidavit executed by the applicant stating that the mortgage being acquired in connection with the certificate will not be used to acquire or replace an existing mortgage,

(vi) An affidavit executed by the applicant stating that no portion of the financing for the residence in connection with which the certificate is issued is provided from the proceeds of a qualified mortgage bond or qualified veterans' mortgage bond and that no portion of the mortgage for the residence is provided by a person related to the applicant (as defined in § 1.25-3T(n)),

(vii) An affidavit executed by the applicant stating that the certificate was not limited to indebtedness incurred from particular lenders, and

(viii) In the case of a mortgate credit certificate allocated for use in connection with a particular development, and affidavit executed by the applicant stating that the applicant received from the developer a certification stating that the price of the residence with respect to which the certificate was issued is no higher than it would be without the use of a mortgage credit certificate.

County X examines the information submitted by the applicant to determine whether the requirements of paragraphs (c), (d), (e), (f), (g), (i), (j), (k), and (n) of § 1.25-3T are met. County X determines that the certificate has not expired. The mortgage credit certificates issued by County X are in the form prescribed by § 1.25-6T and County X provides all the required information and statements. After determining that the applicant meets all these requirements County X issues a mortgage credit certificate to the applicant. This procedure for issuing mortgage credit certificates is sufficient evidence of the good faith of County X to meet the requirements of § 1.25-4T(j)(1)(i)(A).

Example 2. County W distributes preliminary mortgage credit certificates to individuals who have not entered into contracts to purchase a principal residence. County W issues preliminary certificates in the form prescribed by § 1.25-6T to those applicants that have submitted statements that they (i) intend to purchase a single-family residence located within the jurisdiction of County W which they will occupy as a principal residence, (ii) have had no present ownership interest in a principal residence within the preceding 3-year period, and (iii) will not use the certificate in connection with the acquisition or replacement of an existing mortgage. The certificates contain a maximum purchase price, the certificate credit rate, and a statement that the certificate will expire if the applicant does not enter into a closing agreement with respect to a loan within 6 months from the date of preliminary issuance. Holders of these certificates may apply for a mortgage loan from any lender. When the holder of the certificate applies for a loan the lender requires that he submit the following:
(i) An affidavit stating that the applicant intends to use the residence in connection with which the mortgage credit certificate is issued as his principal residence within a reasonable time after the certificate is issued by County W, that the applicant will notify the County if the residence ceases to be his principal residence, and facts that are sufficient for County W to determine whether the residence is located within the jurisdication of County W,

(ii) An affidavit stating that the applicant had no present ownership interest in a principal residence at any time during the 3-year period prior to the date on which the certificate is issued,

(iii) Copies of the applicant's Federal tax returns for the preceding 3 years,

(iv) Affidavits from the seller of the residence with respect to which the certificate is issued and the applicant stating the purchase price of the residence, including an itemized list of (A) payments made by or for the benefit of the applicant, (B) if the residence is incomplete, an estimate of the reasonable cost of completing the residence, and (C) if the residence is subject to a ground rent, the capitalized value of the ground rent,

(v) An affidavit executed by the applicant stating that the mortgage being acquired in connection with the certificate will not be used to acquire or replace an existing mortgage,

(vi) An affidavit executed by the applicant stating that no portion of the financing for the residence in connection with which the certificate is issued in provided from the proceeds of a qualified mortgage bond or qualified veterans' mortgage bond and that no portion of the mortgage for the residence is provided by a person related to the applicant (as defined in § 1.25-3T(n)),

(vii) An affidavit executed by the applicant stating that the certificate was not limited to indebtedness incurred from particular lenders, and

(viii) In the case of a mortgage credit certificate allocated for use in connection with a particular development, an affidavit executed by the applicant stating that the applicant received from the developer a certification stating that the price of the residence with respect to which the certificate was issued is no higher than it would be without the use of a mortgage credit certificate.

The lender then submits those affidavits, together with its statement as to the amount of the indebtedness incurred, to County W. After determining that the requirements of paragraphs (c), (d), (e), (f), (g), (i), (j), (k) and (n) of § 1.25-3T are met and determining that the certificate has not expired, County W completes the mortgage credit certificate. This procedure for issuing mortgage credit certificates is sufficient evidence of the good faith of County W to meet the requirements of § 1.25-4T(j)(1)(i)(A).

(2) ***Program requirements.***

(i) A mortgage credit certificate program which fails to meet one or more of the requirements of paragraphs (b) through (h) of this section shall be treated as meeting such requirements if the requirements of this paragraph (j)(2) are satisfied. A mortgage credit certificate program meets the requirements of this paragraph (j)(2) only if each of the following provisions is met:

(A) The issuer in good faith attempted to meet all of the requirements of paragraphs (b) through (h) of this section. This good faith requirement will be met if all reasonable steps are taken by the issuer to ensure that the program complies with these requirements.

(B) Any failure to meet such requirements is due to inadvertent error, e.g., mathematical error, after taking reasonable steps to comply with such requirements.

(ii) The following example illustrate the application of this paragraph (j)(2):

Example. City X issues an issue of mortgage credit certificates. However, despite taking all reasonable steps to determine accurately the size of the applicable limit, as provided in section 103A (g)(3) and the regulations thereunder, the limit is exceeded because the amount of the mortgages, originated in the area during the past 3 years is incorrectly computed as a result of mathematical error. Such facts are sufficient evidence of the good faith of the issuer to meet the requirements of paragraph (j)(2).

[T.D. 8023, 50 FR 19350, May 8, 1985, as amended by T.D. 8048, 50 FR 35538, Sept. 3, 1985]

§ 1.25-5T Limitation on aggregate amount of mortgage credit certificates (Temporary).

(a) ***In general.*** If the aggregate amount of qualified mortgage credit certificates (as defined in paragraph (b)) issued by an issuer under a qualified mortgage credit certificate program exceeds 20 percent of the nonissued bond amount (as defined in paragraph (c)), the provisions of paragraph (d) shall apply.

(b) ***Aggregate amount of mortgage credit certificates*** —

(1) ***In general.*** The aggregate amount of qualified mortgage credit certificates issued under a qualified mortgage credit certificate program is the sum of the products determined by multiplying—

(i) The certified indebtedness amount of each qualified mortgage credit certificate issued under that program, by

(ii) The certificate credit rate with respect to such certificate.

(2) ***Examples.*** The following examples illustrate the application of this paragraph (b):

Example 1. For 1986 City Q has a nonissued bond amount of $100 million. After making a proper election, Q issues 2,000 qualified mortgage credit certificates each with a certificate credit rate of 20 percent and a certified indebtedness amount of $50,000. The aggregate amount of qualified mortgage credit certificates is $20 million (2,000 × (.2 × $50,000)). Since this amount does not exceed 20 percent of the nonissued bond amount (.2 × $100 million = $20 million), Q has complied with the limitation on the aggregate amount of mortgage credit certificates, provided that it does not issue any additional certificates.

Example 2. The facts are the same as in example (1) except that instead of issuing all its certificates at the 20 percent rate, Q issues

(i) qualified mortgage credit certificates with a certificate credit rate of 10 percent and an aggregate principal amount of $25 million,

(ii) qualified mortgage credit certificates with a certificate credit rate of 40 percent and an aggregate principal amount of $25 million, and

(iii) qualified mortgage credit certificates with a certificate credit rate of 30 percent and an aggregate principal amount of $25 million. The aggregate amount of qualified mortgage credit certificates is $20 million ((10 percent of $25 million) plus (40 percent of $25 million) plus (30 percent of $25 million)). Q has complied with the limitation on the aggregate amount of qualified mortgage credit certificates, provided that it does not issue any additional certificates pursuant to the same program.

(c) ***Nonissued bond amount.*** The term "nonissued bond amount" means, with respect to any qualified mortgage credit certificate program, the amount of qualified mortgage bonds (as defined in section 103A(c)(1) and the regulations thereunder) which the issuer is otherwise authorized to issue and elects not to issue under section 25(c)(2) and § 1.25-4T(b). The amount of qualified mortgage bonds which an issuing authority is authorized to issue is determined under section 103A(g) and the regulations thereunder; such determination shall take into account any prior elections by the issuer not to issue qualified mortgage bonds, the amount of any reduction in the State ceiling under paragraph (d) of this section, and the aggregate amount of qualified mortgage bonds issued by the issuer prior to its election not to issue qualified mortgage bonds.

(d) ***Noncompliance with limitation on aggregate amount of mortgage credit certificates*** —

(1) ***In general.*** If the provisions of this paragraph apply, the State ceiling under section 103A(g)(4) and the regulations thereunder for the calendar year following the calendar year in which the Commissioner determines the correction amount for the State in which the issuer which exceeded the limitation on the aggregate amount of mortgage credit certificates is located shall be reduced by 1.25 times the correction amount with respect to such failure.

(2) ***Correction amount.***

(i) The term "correction amount" means an amount equal to the excess credit amount divided by .20.

(ii) The term "excess credit amount" means the excess of—

(A) The credit amount for any mortgage credit certificate program, over

(B) The amount which would have been the credit amount for such program had such program met the requirements of section 25(d)(2) and paragraph (a) of this section.

(iii) The term "credit amount" means the sum of the products determined by multiplying—

(A) The certified indebtedness amount of each qualified mortgage credit certificate issued under the program, by

(B) The certificate credit rate with respect to such certificate.

(3) ***Example.*** The following example illustrates the application of this paragraph:

Example. For 1987 City R has a nonissued bond amount of $100 million. City R issues all of its mortgage credit certificates with a certificate credit rate of 20 percent. City R issues certificates with an aggregate certified indebtedness amount of $120 million. The aggregate amount of mortgage credit certificates issued by City R is $24 million, which exceeds 20 percent of the nonissued bond amount. The State ceiling for the calendar year following the calendar year in which the Commissioner determines the correction amount is reduced by $25 million (the correction amount multiplied by 1.25). The correction amount is determined as follows: The credit amount is $24 million (.2 × $120 million); the amount which would have been the credit amount for the program had it met the requirements of section 25(d)(2) is $20 million (.2 × $100 million); the excess credit amount is $4 million ($24 million—$20 million); therefore, the correction amount is $20 million ($4 million/.2).

(4) ***Cross-references.*** See section 103A(g)(4) and the regulations thereunder with respect to the reduction of the applicable State ceiling.

[T.D. 8023, 50 FR 19353, May 8, 1985]

§ 1.25-6T Form of qualified mortgage credit certificate (Temporary).

(a) ***In general.*** Qualified mortgage credit certificates are to be issued on the form prescribed by the Internal Revenue Service. If no form is prescribed by the Internal Revenue Service, or if the form prescribed by the Internal Revenue Service is not readily available, the issuer may use its own form provided that such form contains the information required by this section. Each mortgage credit certificate must be issued in a form such that there are at least three copies of the form. One copy of the certificate shall be retained by the issuer; one copy shall be retained by the lender; and one copy shall be forwarded to the State official who issued the certification required by § 1.25-4T(d), unless that State official has stated in writing that he does not want to receive such copies.

(b) ***Required information.*** Each qualified mortgage credit certificate must include the following information:

(1) The name, address, and TIN of the issuer,

(2) The date of the issuer's election not to issue qualified mortgage bonds pursuant to which the certificate is being issued,

(3) The number assigned to the certificate,

(4) The name, address, and TIN of the holder of the certificate,

(5) The certificate credit rate,

(6) The certified indebtness amount,

(7) The acquisition cost of the residence being acquired in connection with the certificate,

(8) The average area purchase price applicable to the residence,

(9) Whether the certificate meets the requirements of § 1.25-3T(d), relating to residence requirement,

(10) Whether the certificate meets the requirements of § 1.25-3T(e), relating to 3-year requirement,

(11) Whether the certificate meets the requirements of § 1.25-3T(g), relating to new mortgage requirement,

(12) Whether the certificate meets the requirements of § 1.25-3T(i), relating to prohibited mortgages,

(13) Whether the certificate meets the requirements of § 1.25-3T(j), relating to particular lenders,

(14) Whether the certificate meets the requirements of § 1.25-3T(k), relating to allocations to particular developments,

(15) Whether the certificate meets the requirements of § 1.25-3T(n), relating to interest paid to related persons,

(16) Whether the residence in connection with which the certificate is issued is a targeted area residence,

(17) The date on which a closing agreement is signed with respect to the certified indebtness amount,

(18) The expiration date of the certificate,

(19) A statement that the certificate is not transferable or a statement that the certificate may be transferred only if the issuer issues a new certificate, and

(20) A statement, signed under penalties of perjury by an authorized official of the issuer or its agent, that such person has made the determinations specified in paragraph (b) (9) through (16).

[T.D. 8023, 50 FR 19354, May 8, 1985]

§ 1.25-7T Public notice (Temporary).

(a) ***In general.*** At least 90 days prior to the issuance of any mortgage credit certificate under a qualified mortgage credit certificate program, the issuer shall provide reasonable public notice of—

(1) The eligibility requirements for such certificate,

(2) The methods by which such certificates are to be issued, and

(3) The other information required by this section.

(b) ***Reasonable public notice*** —

(1) ***In general.*** Reasonable public notice means published notice which is reasonably designed to inform individuals who would be eligible to receive mortgage credit certificates of the proposed issuance. Reasonable public notice may be provided through newspapers of general circulation.

(2) ***Contents of notice.*** The public notice required by paragraph (a) must include a brief description of the principal residence requirement, 3-year requirement, purchase price requirement, and new mortgage requirement. The notice must also provide a brief description of the methods by which the certificates are to be issued and the address and telephone number for obtaining further information.

[T.D. 8023, 50 FR 19354, May 8, 1985]

§ 1.25-8T Reporting requirements (Temporary).

(a) ***Lender*** —

(1) ***In general.*** Each person who makes a loan that is a certified indebtedness amount with respect to any mortgage credit certificate must file the report described in paragraph (a)(2) and must retain on its books and records the information described in paragraph (a)(3). The report described in paragraph (a)(2) is an annual report and must be filed on or before January 31 of the year following the calendar year to which the report relates. See section 6709(c) and the regulations thereunder for the applicable penalties with respect to failure to file reports.

(2) ***Information required.*** The report shall be submitted on Form 8329 and shall contain the information required therein. A separate Form 8329 shall be filed for each issue of mortgage credit certificates with respect to which the lender made mortgage loans during the preceding calendar year. Thus, for example, if during 1986 Bank M makes three mortgage loans which are certified indebtedness amounts with respect to State Z's January 15, 1986, issue of mortgage credit certificates, and two mortgage loans which are certified indebtedness amounts with respect to State Z's April 15, 1986, issue of mortgage credit certificates, and fifty mortgage loans which are certified indebtedness amounts with respect to County X's December 31, 1985, issue of mortgage credit certificates, Bank M must file three separate reports for calendar year 1986. The lender must submit the Form 8329 with the information required therein, including—

(i) The name, address, and TIN of the issuer of the mortgage credit certificates,

(ii) The date on which the election not to issue qualified mortgage bonds with respect to that mortgage credit certificate was made,

(iii) The name, address, and TIN of the lender, and

(iv) The sum of the products determined by multiplying—

(A) The certified indebtedness amount of each mortgage credit certificate issued under such program, by

(B) The certificate credit rate with respect to such certificate.

(3) ***Recordkeeping requirements.*** Each person who makes a loan that is a certified indebtedness amount with respect to any mortgage credit certificate must retain the information specified in this paragraph (a)(3) on its books and records for 6 years following the year in which the loan was made. With respect to each loan the lender must retain the following information:

(i) The name, address, and TIN of each holder of a qualified mortgage credit certificate with respect to which a loan is made,

(ii) The name, address, and TIN of the issuer of such certificate, and

(iii) The date the loan for the certified indebtedness amount is closed, the certified indebtedness amount, and the certificate credit rate of such certificate.

(b) ***Issuers*** —

(1) ***In general.*** Each issuer of mortgage credit certificates shall file the report described in paragraph (b)(2) of this section.

(2) ***Quarterly reports.***

(i) Each issuer which elects to issue mortgage credit certificates shall file reports on Form 8330. These reports shall be filed on a quarterly basis, beginning with the quarter in which the election is made, and are due on the following dates: April 30 (for the quarter ending March 31), July 31 (for the quarter ending June 30), October 31 (for the quarter ending September 30), and January 31 (for the quarter ending December 31). For elections made prior to May 8, 1985, the first report need not be filed until July 31, 1985. An issuer shall file a separate report for each issue of mortgage credit certificates. In the quarter in which the last qualified mortgage credit certificate that may be issued under a program is issued, the issuer must state that fact on the report to be filed for that quarter; the issuer is not required to file any subsequent reports with respect to that program. See section 6709(c) for the penalties with respect to failure to file a report.

(ii) The report shall be submitted on Form 8330 and shall contain the information required therein, including—

(A) The name, address, and TIN of the issuer of the mortgage credit certificates,

(B) The date of the issuer's election not to issue qualified mortgage bonds with respect to the mortgage credit certificate program and the nonissued bond amount of the program,

(C) The sum of the products determined by multiplying—

(*1*) The certified indebtedness amount of each qualified mortgage credit certificate issued under that program during the calendar quarter, by

(2) The certificate credit rate with respect to such certificate, and

(D) A listing of the name, address, and TIN of each holder of a qualified mortgage credit certificate which has been revoked during the calendar quarter.

(c) ***Extensions of time for filing reports.*** The Commissioner may grant an extension of time for the filing of a report required by this section if there is reasonable cause for the failure to file such report in a timely fashion.

(d) ***Place for filing.*** The reports required by this section are to be filed at the Internal Revenue Service Center, Philadelphia, Pennsylvania 19225.

(e) ***Cross reference.*** See section 6709 and the regulations thereunder with respect to the penalty for failure to file a report required by this section.

[T.D. 8023, 50 FR 19354, May 8, 1985]

§ 1.25A-0 Table of contents.

This section lists captions contained in §§ 1.25A-1, 1.25A-2, 1.25A-3, 1.25A-4, and 1.25A-5.

§ 1.25A-1 Calculation of Education Tax Credit and General Eligibility Requirements

(a) Amount of education tax credit.

(b) Coordination of Hope Scholarship Credit and Lifetime Learning Credit.

(1) In general.

(2) Hope Scholarship Credit.

(3) Lifetime Learning Credit.

(4) Examples.

(c) Limitation based on modified adjusted gross income.

(1) In general.

(2) Modified adjusted gross income defined.

(3) Inflation adjustment.

(d) Election.

(e) Identification requirement.

(f) Claiming the credit in the case of a dependent.

(1) In general.

(2) Examples.

(g) Married taxpayers.

(h) Nonresident alien taxpayers and dependents.

§ 1.25A-2 Definitions

(a) Claimed dependent.

(b) Eligible educational institution.

(1) In general.

(2) Rules on Federal financial aid programs.

(c) Academic period.

(d) Qualified tuition and related expenses.

(1) In general.

(2) Required fees.

(i) In general.

(ii) Books, supplies, and equipment.

(iii) Nonacademic fees.

(3) Personal expenses.

(4) Treatment of a comprehensive or bundled fee.

(5) Hobby courses.

(6) Examples.

§ 1.25A-3 Hope Scholarship Credit

(a) Amount of the credit.

(1) In general.

(2) Maximum credit.

(b) Per student credit.

(1) In general.

(2) Example.

(c) Credit allowed for only two taxable years.

(d) Eligible student.

(1) Eligible student defined.

(i) Degree requirement.

(ii) Work load requirement.

(iii) Year of study requirement.

(iv) No felony drug conviction.

(2) Examples.

(e) Academic period for prepayments.

(1) In general.

(2) Example.

(f) Effective date.

§ 1.25A-4 Lifetime Learning Credit

(a) Amount of the credit.

(1) Taxable years beginning before January 1, 2003.

(2) Taxable years beginning after December 31, 2002.

(3) Coordination with the Hope Scholarship Credit.

(4) Examples.

(b) Credit allowed for unlimited number of taxable years.

(c) Both degree and nondegree courses are eligible for the credit.

(1) In general.

(2) Examples.

(d) Effective date.

§ 1.25A-5 Special Rules Relating to Characterization and Timing of Payments

(a) Educational expenses paid by claimed dependent.

(b) Educational expenses paid by a third party.

(1) In general.

(2) Special rule for tuition reduction included in gross income of employee.

(3) Examples.

(c) Adjustment to qualified tuition and related expenses for certain excludable educational assistance.

(1) In general.

(2) No adjustment for excludable educational assistance attributable to expenses paid in a prior year.

(3) Scholarships and fellowship grants.

(4) Examples.

(d) No double benefit.

(e) Timing rules.

(1) In general.

(2) Prepayment rule.

(i) In general.

(ii) Example.

(3) Expenses paid with loan proceeds.

(4) Expenses paid through third party installment payment plans.

(i) In general.

(ii) Example.

(f) Refund of qualified tuition and related expenses.

(1) Payment and refund of qualified tuition and related expenses in the same taxable year.

(2) Payment of qualified tuition and related expenses in one taxable year and refund in subsequent taxable year before return filed for prior taxable year.

(3) Payment of qualified tuition and related expenses in one taxable year and refund in subsequent taxable year.

(i) In general.

(ii) Recapture amount.

(4) Refund of loan proceeds treated as refund of qualified tuition and related expenses.

(5) Excludable educational assistance received in a subsequent taxable year treated as a refund.

(6) Examples.

[T.D. 9034, 67 FR 78691, Dec. 26, 2002]

§ 1.25A-1 Calculation of education tax credit and general eligibility requirements.

(a) ***Amount of education tax credit.*** An individual taxpayer is allowed a nonrefundable education tax credit against income tax imposed by chapter 1 of the Internal Revenue Code for the taxable year. The amount of the education tax credit is the total of the Hope Scholarship Credit (as described in § 1.25A-3) plus the Lifetime Learning Credit (as described in § 1.25A-4). For limitations on the credits allowed by subpart A of part IV of subchapter A of chapter 1 of the Internal Revenue Code, see section 26.

(b) ***Coordination of Hope Scholarship Credit and Lifetime Learning Credit*** —

(1) ***In general.*** In the same taxable year, a taxpayer may claim a Hope Scholarship Credit for each eligible student's qualified tuition and related expenses (as defined in § 1.25A-2(d)) and a Lifetime Learning Credit for one or more other students' qualified tuition and related expenses. However, a taxpayer may not claim both a Hope Scholarship Credit and a Lifetime Learning Credit with respect to the same student in the same taxable year.

(2) ***Hope Scholarship Credit.*** Subject to certain limitations, a Hope Scholarship Credit may be claimed for the qualified tuition and related expenses paid during a taxable year with respect to each eligible student (as defined in § 1.25A-3(d)). Qualified tuition and related expenses paid during a taxable year with respect to one student may not be taken into account in computing the amount of the Hope Scholarship Credit with respect to any other student. In addition, qualified tuition and related expenses paid during a taxable year with respect to any student for whom a Hope Scholarship Credit is claimed may not be taken into account in computing the amount of the Lifetime Learning Credit.

(3) ***Lifetime Learning Credit.*** Subject to certain limitations, a Lifetime Learning Credit may be claimed for the aggregate amount of qualified tuition and related expenses paid during a taxable year with respect to students for whom no Hope Scholarship Credit is claimed.

(4) ***Examples.*** The following examples illustrate the rules of this paragraph (b):

Example 1. In 1999, Taxpayer A pays qualified tuition and related expenses for his dependent, B, to attend College Y during 1999. Assuming all other relevant requirements are met, Taxpayer A may claim either a Hope Scholarship Credit or a Lifetime Learning Credit with respect to dependent B, but not both. See § 1.25A-3(a) and § 1.25A-4(a).

Example 2. In 1999, Taxpayer C pays $2,000 in qualified tuition and related expenses for her dependent, D, to attend College Z during 1999. In 1999, Taxpayer C also pays $500 in qualified tuition and related expenses to attend a computer course during 1999 to improve Taxpayer C's job skills. Assuming all other relevant requirements are met, Taxpayer C may claim a Hope Scholarship Credit for the $2,000 of qualified tuition and related expenses attributable to dependent D (see § 1.25A-3(a)) and a Lifetime Learning Credit (see § 1.25A-4(a)) for the $500 of qualified tuition and related expenses incurred to improve her job skills.

Example 3. The facts are the same as in *Example 2,* except that Taxpayer C pays $3,000 in qualified tuition and related expenses for her dependent, D, to attend College Z during 1999. Although a Hope Scholarship Credit is available only with respect to the first $2,000 of qualified tuition and related expenses paid with respect to D (see § 1.25A-3(a)), Taxpayer C may not add the $1,000 of excess expenses to her $500 of qualified tuition and related expenses in computing the amount of the Lifetime Learning Credit.

(c) ***Limitation based on modified adjusted gross income*** —

(1) ***In general.*** The education tax credit that a taxpayer may otherwise claim is phased out ratably for taxpayers with modified adjusted gross income between $40,000 and $50,000 ($80,000 and $100,000 for married individuals who file a joint return). Thus, taxpayers with modified adjusted gross income above $50,000 (or $100,000 for joint filers) may not claim an education tax credit.

(2) ***Modified adjusted gross income defined.*** The term *modified adjusted gross income* means the adjusted gross income (as defined in section 62) of the taxpayer for the taxable year increased by any amount excluded from gross income under section 911, 931, or 933 (relating to income earned abroad or from certain U.S. possessions or Puerto Rico).

(3) ***Inflation adjustment.*** For taxable years beginning after 2001, the amounts in paragraph (c)(1) of this section will be increased for inflation occurring after 2000 in accordance with section 1(f)(3). If any amount adjusted under this paragraph (c)(3) is not a multiple of $1,000, the amount will be rounded to the next lowest multiple of $1,000.

(d) ***Election.*** No education tax credit is allowed unless a taxpayer elects to claim the credit on the taxpayer's federal income tax return for the taxable year in which the credit is claimed. The election is made by attaching Form 8863, "Education Credits (Hope and Lifetime Learning Credits)," to the federal income tax return.

(e) ***Identification requirement.*** No education tax credit is allowed unless a taxpayer includes on the federal income tax return claiming the credit the name and the taxpayer identification number of the student for whom the credit is claimed. For rules relating to assessment for an omission of a correct taxpayer identification number, see section 6213(b) and (g)(2)(J).

(f) ***Claiming the credit in the case of a dependent*** —

(1) ***In general.*** If a student is a claimed dependent of another taxpayer, only that taxpayer may claim the education tax credit for the student's qualified tuition and related expenses. However, if another taxpayer is eligible to, but does not, claim the student as a dependent, only the student may claim the education tax credit for the student's qualified tuition and related expenses.

(2) ***Examples.*** The following examples illustrate the rules of this paragraph (f):

Example 1. In 1999, Taxpayer A pays qualified tuition and related expenses for his dependent, B, to attend University Y during 1999. Taxpayer A claims B as a dependent on his federal income tax return. Therefore, assuming all other relevant requirements are met, Taxpayer A is allowed an education tax credit on his federal income tax return, and B is not allowed an education tax credit on B's federal income tax return. The result would be the same if B paid the qualified tuition and related expenses. See § 1.25A-5(a).

Example 2. In 1999, Taxpayer C has one dependent, D. In 1999, D pays qualified tuition and related expenses to attend University Z during 1999. Although Taxpayer C is eligible to claim D as a dependent on her federal income tax return, she does not do so. Therefore, assuming all other relevant requirements are met, D is allowed an education tax credit on D's federal income tax return, and Taxpayer C is not allowed an education tax credit on her federal income tax return, with respect to D's education expenses. The result would be the same if C paid the qualified tuition and related expenses on behalf of D. See § 1.25A-5(b).

(g) ***Married taxpayers.*** If a taxpayer is married (within the meaning of section 7703), no education tax credit is allowed to the taxpayer unless the taxpayer and the taxpayer's spouse file a joint Federal income tax return for the taxable year.

(h) ***Nonresident alien taxpayers and dependents.*** If a taxpayer or the taxpayer's spouse is a nonresident alien for any portion of the taxable year, no education tax credit is allowed unless the nonresident alien is treated as a resident alien by reason of an election under section 6013(g) or (h). In addition, if a student is a nonresident alien, a taxpayer may not claim an education tax credit with respect to the qualified tuition and related expenses of the student unless the student is a claimed dependent (as defined in § 1.25A-2(a)).

[T.D. 9034, 67 FR 78691, Dec. 26, 2002]

§ 1.25A-2 Definitions.

(a) ***Claimed dependent.*** A *claimed dependent* means a dependent (as defined in section 152) for whom a deduction under section 151 is allowed on a taxpayer's federal income tax return for the taxable year. Among other requirements under section 152, a nonresident alien student must be a resident of a country contiguous to the United States in order to be treated as a dependent.

(b) ***Eligible educational institution*** —

(1) ***In general.*** In general, an *eligible educational institution* means a college, university, vocational school, or other postsecondary educational institution that is—

(i) Described in section 481 of the Higher Education Act of 1965 (20 U.S.C. 1088) as in effect on August 5, 1997, (generally all accredited public, nonprofit, and proprietary postsecondary institutions); and

(ii) Participating in a Federal financial aid program under title IV of the Higher Education Act of 1965 or is certified by the Department of Education as eligible to participate in such a program but chooses not to participate.

(2) ***Rules on Federal financial aid programs.*** For rules governing an educational institution's eligibility to participate in Federal financial aid programs, see 20 U.S.C. 1070; 20 U.S.C. 1094; and 34 CFR 600 and 668.

(c) ***Academic period. Academic period*** means a quarter, semester, trimester, or other period of study as reasonably determined by an eligible educational institution. In the case of an eligible educational institution that uses credit hours or clock hours, and does not have academic terms, each payment period (as defined in 34 CFR 668.4, revised as of July 1, 2002) may be treated as an academic period.

(d) ***Qualified tuition and related expenses*** —

(1) ***In general. Qualified tuition and related expenses*** means tuition and fees required for the enrollment or attendance of a student for courses of instruction at an eligible educational institution.

(2) ***Required fees*** —

(i) ***In general.*** Except as provided in paragraph (d)(3) of this section, the test for determining whether any fee is a qualified tuition and related expense is whether the fee is required to be paid to the eligible educational institution as a condition of the student's enrollment or attendance at the institution.

(ii) ***Books, supplies, and equipment.*** Qualified tuition and related expenses include fees for books, supplies, and equipment used in a course of study only if the fees must be paid to the eligible educational institution for the enrollment or attendance of the student at the institution.

(iii) ***Nonacademic fees.*** Except as provided in paragraph (d)(3) of this section, qualified tuition and related expenses include fees charged by an eligible educational institution that are not used directly for, or allocated to, an academic course of instruction only if the fee must be paid to the eligible educational institution for the enrollment or attendance of the student at the institution.

(3) ***Personal expenses.*** Qualified tuition and related expenses do not include the costs of room and board, insurance, medical expenses (including student health fees), transportation, and similar personal, living, or family expenses, regardless of whether the fee must be paid to the eligible educational institution for the enrollment or attendance of the student at the institution.

(4) ***Treatment of a comprehensive or bundled fee.*** If a student is required to pay a fee (such as a comprehensive fee or a bundled fee) to an eligible educational institution that combines charges for qualified tuition and related expenses with charges for personal expenses described in paragraph (d)(3) of this section, the portion of the fee that is allocable to personal expenses is not included in qualified tuition and related expenses. The determination of what portion of the fee relates to qualified tuition and related expenses and what portion relates to personal expenses must be made by the institution using a reasonable method of allocation.

(5) ***Hobby courses.*** Qualified tuition and related expenses do not include expenses that relate to any course of instruction or other education that involves sports, games, or hobbies, or any noncredit course, unless the course or other education is part of the student's degree program, or in the case of the Lifetime Learning Credit, the student takes the course to acquire or improve job skills.

(6) ***Examples.*** The following examples illustrate the rules of this paragraph (d). In each example, assume that the institution is an eligible educational institution and that all other relevant requirements to claim an education tax credit are met. The examples are as follows:

Example 1. University V offers a degree program in dentistry. In addition to tuition, all students enrolled in the program are required to pay a fee to University V for the rental of dental equipment. Because the equipment rental fee must be paid to University V for enrollment and attendance, the tuition and the equipment rental fee are qualified tuition and related expenses.

Example 2. First-year students at College W are required to obtain books and other reading materials used in its mandatory first-year curriculum. The books and other reading materials are not required to be purchased from College W and may be borrowed from other students or purchased from off-campus bookstores, as well as from College W's bookstore. College W bills students for any books and materials purchased from College W's bookstore. The fee that College W charges for the first-year books and materials purchased at its bookstore is not a qualified tuition and related expense because the books and materials are not required to be purchased from College W for enrollment or attendance at the institution.

Example 3. All students who attend College X are required to pay a separate student activity fee in addition to their tuition. The student activity fee is used solely to fund on-campus organizations and activities run by students, such as the student newspaper and the student government (no portion of the fee covers personal expenses). Although labeled as a student activity fee, the fee is required for enrollment or attendance at College X. Therefore, the fee is a qualified tuition and related expense.

Example 4. The facts are the same as in *Example 3,* except that College X offers an optional athletic fee that students may pay to receive discounted tickets to sports events. The athletic fee is not required for enrollment or attendance at College X. Therefore, the fee is not a qualified tuition and related expense.

Example 5. College Y requires all students to live on campus. It charges a single comprehensive fee to cover tuition, required fees, and room and board. Based on College Y's reasonable allocation, sixty percent of the comprehensive fee is allocable to tuition and other required fees not allocable to personal expenses, and the remaining forty percent of the comprehensive fee is allocable to charges for room and board and other personal expenses. Therefore, only sixty percent of College Y's comprehensive fee is a qualified tuition and related expense.

Example 6. As a degree student at College Z, Student A is required to take a certain number of courses outside of her chosen major in Economics. To fulfill this requirement, Student A enrolls in a square dancing class offered by the Physical Education Department. Because Student A receives credit toward her degree program for the square dancing class, the tuition for the square dancing class is included in qualified tuition and related expenses.

[T.D. 9034, 67 FR 78691, Dec. 26, 2002]

§ 1.25A-3 Hope Scholarship Credit.

(a) ***Amount of the credit*** —

(1) ***In general.*** Subject to the phaseout of the education tax credit described in § 1.25A-1(c), the Hope Scholarship Credit amount is the total of—

(i) 100 percent of the first $1,000 of qualified tuition and related expenses paid during the taxable year for education furnished to an eligible student (as defined in paragraph (d) of this section) who is the taxpayer, the taxpayer's spouse, or any claimed dependent during any academic period beginning in the taxable year (or treated as beginning in the taxable year, see § 1.25A-5(e)(2)); plus

(ii) 50 percent of the next $1,000 of such expenses paid with respect to that student.

(2) ***Maximum credit.*** For taxable years beginning before 2002, the maximum Hope Scholarship Credit allowed for each eligible student is $1,500. For taxable years beginning after 2001, the amounts used in paragraph (a)(1) of this section to determine the maximum credit will be increased for inflation occurring after 2000 in accordance with section 1(f)(3). If any amount adjusted under this paragraph (a)(2) is not a multiple of $100, the amount will be rounded to the next lowest multiple of $100.

(b) ***Per student credit*** —

(1) ***In general.*** A Hope Scholarship Credit may be claimed for the qualified tuition and related expenses of each eligible student (as defined in paragraph (d) of this section).

(2) ***Example.*** The following example illustrates the rule of this paragraph (b). In the example, assume that all the requirements to claim an education tax credit are met. The example is as follows:

Example. In 1999, Taxpayer A has two dependents, B and C, both of whom are eligible students. Taxpayer A pays $1,600 in qualified tuition and related expenses for dependent B to attend a community college. Taxpayer A pays $5,000 in qualified tuition and related expenses for dependent C to attend University X. Taxpayer A may claim a Hope Scholarship Credit of $1,300 ($1,000 + (.50 × $600)) for dependent B, and the maximum $1,500 Hope Scholarship Credit for dependent C, for a total Hope Scholarship Credit of $2,800.

(c) ***Credit allowed for only two taxable years.*** For each eligible student, the Hope Scholarship Credit may be claimed for no more than two taxable years.

(d) ***Eligible student*** —

(1) ***Eligible student defined.*** For purposes of the Hope Scholarship Credit, the term *eligible student* means a student who satisfies all of the following requirements—

(i) ***Degree requirement.*** For at least one academic period that begins during the taxable year, the student enrolls at an eligible educational institution in a program leading toward a postsecondary degree, certificate, or other recognized postsecondary educational credential;

(ii) ***Work load requirement.*** For at least one academic period that begins during the taxable year, the student enrolls for at least one-half of the normal full-time work load for the course of study the student is pursuing. The standard for what is half of the normal full-time work load is determined by each eligible educational institution. However, the standard for half-time may not be lower than the applicable standard for half-time established by the Department of Education under the Higher Education Act of 1965 and set forth in 34 CFR 674.2(b) (revised as of July 1, 2002) for a half-time undergraduate student;

(iii) ***Year of study requirement.*** As of the beginning of the taxable year, the student has not completed the first two years of postsecondary education at an eligible educational institution. Whether a student has completed the first two years of postsecondary education at an eligible

educational institution as of the beginning of a taxable year is determined based on whether the institution in which the student is enrolled in a degree program (as described in paragraph (d)(1)(i) of this section) awards the student two years of academic credit at that institution for postsecondary course work completed by the student prior to the beginning of the taxable year. Any academic credit awarded by the eligible educational institution solely on the basis of the student's performance on proficiency examinations is disregarded in determining whether the student has completed two years of postsecondary education; and

(iv) ***No felony drug conviction.*** The student has not been convicted of a Federal or State felony offense for possession or distribution of a controlled substance as of the end of the taxable year for which the credit is claimed.

(2) ***Examples.*** The following examples illustrate the rules of this paragraph (d). In each example, assume that the student has not been convicted of a felony drug offense, that the institution is an eligible educational institution unless otherwise stated, that the qualified tuition and related expenses are paid during the same taxable year that the academic period begins, and that a Hope Scholarship Credit has not previously been claimed for the student (see paragraph (c) of this section). The examples are as follows:

Example 1. Student A graduates from high school in June 1998 and is enrolled in an undergraduate degree program at College U for the 1998 Fall semester on a full-time basis. For the 1999 Spring semester, Student A again is enrolled at College U on a full-time basis. For the 1999 Fall semester, Student A is enrolled in less than half the normal full-time course work for her degree program. Because Student A is enrolled in an undergraduate degree program on at least a half-time basis for at least one academic period that begins during 1998 and at least one academic period that begins during 1999, Student A is an eligible student for taxable years 1998 and 1999 (including the 1999 Fall semester when Student A enrolls at College U on less than a half-time basis).

Example 2. Prior to 1998, Student B attended college for several years on a full-time basis. Student B transfers to College V for the 1998 Spring semester. College V awards Student B credit for some (but not all) of the courses he previously completed, and College V classifies Student B as a first-semester sophomore. During both the Spring and Fall semesters of 1998, Student B is enrolled in at least one-half the normal full-time work load for his degree program at College V. Because College V does not classify Student B as having completed the first two years of postsecondary education as of the beginning of 1998, Student B is an eligible student for taxable year 1998.

Example 3. The facts are the same as in *Example 2.* After taking classes on a half-time basis for the 1998 Spring and Fall semesters, Student B is enrolled at College V for the 1999 Spring semester on a full-time basis. College V classifies Student B as a second-semester sophomore for the 1999 Spring semester and as a first-semester junior for the 1999 Fall semester. Because College V does not classify Student B as having completed the first two years of postsecondary education as of the beginning of 1999, Student B is an eligible student for taxable year 1999. Therefore, the qualified expenses and required fees paid for the 1999 Spring semester and the 1999 Fall semester are taken into account in calculating any Hope Scholarship Credit.

Example 4. Prior to 1998, Student C was not enrolled at another eligible educational institution. At the time that Student C enrolls in a degree program at College W for the 1998 Fall semester, Student C takes examinations to demonstrate her proficiency in several subjects. On the basis of Student C's performance on these examinations, College W classifies Student C as a second-

semester sophomore as of the beginning of the 1998 Fall semester. Student C is enrolled at College W during the 1998 Fall semester and during the 1999 Spring and Fall semesters on a full-time basis and is classified as a first-semester junior as of the beginning of the 1999 Spring semester. Because Student C was not enrolled in a college or other eligible educational institution prior to 1998 (but rather was awarded three semesters of academic credit solely because of proficiency examinations), Student C is not treated as having completed the first two years of postsecondary education at an eligible educational institution as of the beginning of 1998 or as of the beginning of 1999. Therefore, Student C is an eligible student for both taxable years 1998 and 1999.

Example 5. During the 1998 Fall semester, Student D is a high school student who takes classes on a half-time basis at College X. Student D is not enrolled as part of a degree program at College X because College X does not admit students to a degree program unless the student has a high school diploma or equivalent. Because Student D is not enrolled in a degree program at College X during 1998, Student D is not an eligible student for taxable year 1998.

Example 6. The facts are the same as in *Example 5.* In addition, during the 1999 Spring semester, Student D again attends College X but not as part of a degree program. Student D graduates from high school in June 1999. For the 1999 Fall semester, Student D enrolls in College X as part of a degree program, and College X awards Student D credit for her prior course work at College X. During the 1999 Fall semester, Student D is enrolled in more than one-half the normal full-time work load of courses for her degree program at College X. Because Student D is enrolled in a degree program at College X for the 1999 Fall term on at least a half-time basis, Student D is an eligible student for all of taxable year 1999. Therefore, the qualified tuition and required fees paid for classes taken at College X during both the 1999 Spring semester (during which Student D was not enrolled in a degree program) and the 1999 Fall semester are taken into account in computing any Hope Scholarship Credit.

Example 7. Student E completed two years of undergraduate study at College S. College S is not an eligible educational institution for purposes of the education tax credit. At the end of 1998, Student E enrolls in an undergraduate degree program at College Z, an eligible educational institution, for the 1999 Spring semester on a full-time basis. College Z awards Student E two years of academic credit for his previous course work at College S and classifies Student E as a first-semester junior for the 1999 Spring semester. Student E is treated as having completed the first two years of postsecondary education at an eligible educational institution as of the beginning of 1999. Therefore, Student E is not an eligible student for taxable year 1999.

Example 8. Student F received a degree in 1998 from College R. College R is not an eligible educational institution for purposes of the education tax credit. During 1999, Student F is enrolled in a graduate-degree program at College Y, an eligible educational institution, for the 1999 Fall semester on a full-time basis. By admitting Student F to its graduate degree program, College Y treats Student F as having completed the first two years of postsecondary education as of the beginning of 1999. Therefore, Student F is not an eligible student for taxable year 1999.

Example 9. Student G graduates from high school in June 2001. In January 2002, Student G is enrolled in a one-year postsecondary certificate program on a full-time basis to obtain a certificate as a travel agent. Student G completes the program in December 2002 and is awarded a certificate. In January 2003, Student G enrolls in a one-year postsecondary certificate program on a full-time basis to obtain a certificate as a computer programer. Student

G meets the degree requirement, the work load requirement, and the year of study requirement for the taxable years 2002 and 2003. Therefore, Student G is an eligible student for both taxable years 2002 and 2003.

(e) ***Academic period for prepayments*** —

(1) ***In general.*** For purposes of determining whether a student meets the requirements in paragraph (d) of this section for a taxable year, if qualified tuition and related expenses are paid during one taxable year for an academic period that begins during January, February or March of the next taxable year (for taxpayers on a fiscal taxable year, use the first three months of the next taxable year), the academic period is treated as beginning during the taxable year in which the payment is made.

(2) ***Example.*** The following example illustrates the rule of this paragraph (e). In the example, assume that all the requirements to claim a Hope Scholarship Credit are met. The example is as follows:

Example. Student G graduates from high school in June 1998. After graduation, Student G works full-time for several months to earn money for college. Student G is enrolled on a full-time basis in an undergraduate degree program at University W, an eligible educational institution, for the 1999 Spring semester, which begins in January 1999. Student G pays tuition to University W for the 1999 Spring semester in December 1998. Because the tuition paid by Student G in 1998 relates to an academic period that begins during the first three months of 1999, Student G's eligibility to claim a Hope Scholarship Credit in 1998 is determined as if the 1999 Spring semester began in 1998. Thus, assuming Student G has not been convicted of a felony drug offense as of December 31, 1998, Student G is an eligible student for 1998.

(f) ***Effective date.*** The Hope Scholarship Credit is applicable for qualified tuition and related expenses paid after December 31, 1997, for education furnished in academic periods beginning after December 31, 1997.

[T.D. 9034, 67 FR 78691, Dec. 26, 2002; 68 FR 15940, Apr. 2, 2003]

§ 1.25A-4 Lifetime Learning Credit.

(a) ***Amount of the credit*** —

(1) ***Taxable years beginning before January 1, 2003.*** Subject to the phaseout of the education tax credit described in § 1.25A-1(c), for taxable years beginning before 2003, the Lifetime Learning Credit amount is 20 percent of up to $5,000 of qualified tuition and related expenses paid during the taxable year for education furnished to the taxpayer, the taxpayer's spouse, and any claimed dependent during any academic period beginning in the taxable year (or treated as beginning in the taxable year, see § 1.25A-5(e)(2)).

(2) ***Taxable years beginning after December 31, 2002.*** Subject to the phaseout of the education tax credit described in § 1.25A-1(c), for taxable years beginning after 2002, the Lifetime Learning Credit amount is 20 percent of up to $10,000 of qualified tuition and related expenses paid during the taxable year for education furnished to the taxpayer, the taxpayer's spouse, and any claimed dependent during any academic period beginning in the taxable year (or treated as beginning in the taxable year, see § 1.25A-5(e)(2)).

(3) ***Coordination with the Hope Scholarship Credit.*** Expenses paid with respect to a student for whom the Hope Scholarship Credit is claimed are not eligible for the Lifetime Learning Credit.

(4) ***Examples.*** The following examples illustrate the rules of this paragraph (a). In each example, assume that all the requirements to claim a Lifetime Learning Credit or a Hope Scholarship Credit, as applicable, are met. The examples are as follows:

Example 1. In 1999, Taxpayer A pays qualified tuition and related expenses of $3,000 for dependent B to attend an eligible educational institution, and Taxpayer A pays qualified tuition and related expenses of $4,000 for dependent C to attend an eligible educational institution. Taxpayer A does not claim a Hope Scholarship Credit with respect to either B or C. Although Taxpayer A paid $7,000 of qualified tuition and related expenses during the taxable year, Taxpayer A may claim the Lifetime Learning Credit with respect to only $5,000 of such expenses. Therefore, the maximum Lifetime Learning Credit Taxpayer A may claim for 1999 is $1,000 (.20 × $5,000).

Example 2. In 1999, Taxpayer D pays $6,000 of qualified tuition and related expenses for dependent E, and $2,000 of qualified tuition and related expenses for dependent F, to attend eligible educational institutions. Dependent F has already completed the first two years of postsecondary education. For 1999, Taxpayer D claims the maximum $1,500 Hope Scholarship Credit with respect to dependent E. In computing the amount of the Lifetime Learning Credit, Taxpayer D may not include any of the $6,000 of qualified tuition and related expenses paid on behalf of dependent E but may include the $2,000 of qualified tuition and related expenses of dependent F.

(b) ***Credit allowed for unlimited number of taxable years.*** There is no limit to the number of taxable years that a taxpayer may claim a Lifetime Learning Credit with respect to any student.

(c) ***Both degree and nondegree courses are eligible for the credit*** —

(1) ***In general.*** For purposes of the Lifetime Learning Credit, amounts paid for a course at an eligible educational institution are qualified tuition and related expenses if the course is either part of a postsecondary degree program or is not part of a postsecondary degree program but is taken by the student to acquire or improve job skills.

(2) ***Examples.*** The following examples illustrate the rule of this paragraph (c). In each example, assume that all the requirements to claim a Lifetime Learning Credit are met. The examples are as follows:

Example 1. Taxpayer A, a professional photographer, enrolls in an advanced photography course at a local community college. Although the course is not part of a degree program, Taxpayer A enrolls in the course to improve her job skills. The course fee paid by Taxpayer A is a qualified tuition and related expense for purposes of the Lifetime Learning Credit.

Example 2. Taxpayer B, a stockbroker, plans to travel abroad on a “photo-safari” for his next vacation. In preparation for the trip, Taxpayer B enrolls in a noncredit photography class at a local community college. Because Taxpayer B is not taking the photography course as part of a degree program or to acquire or improve his job skills, amounts paid by Taxpayer B for the course are not qualified tuition and related expenses for purposes of the Lifetime Learning Credit.

(d) ***Effective date.*** The Lifetime Learning Credit is applicable for qualified tuition and related expenses paid after June 30, 1998, for education furnished in academic periods beginning after June 30, 1998.

[T.D. 9034, 67 FR 78691, Dec. 26, 2002]

§ 1.25A-5 Special rules relating to characterization and timing of payments.

(a) ***Educational expenses paid by claimed dependent.*** For any taxable year for which the student is a claimed dependent of another taxpayer, qualified tuition and related expenses paid by the student are treated as paid by the taxpayer to whom the deduction under section 151 is allowed.

(b) ***Educational expenses paid by a third party*** —

(1) ***In general.*** Solely for purposes of section 25A, if a third party (someone other than the taxpayer, the taxpayer's spouse if the taxpayer is treated as married within the meaning of section 7703, or a claimed dependent) makes a payment directly to an eligible educational institution to pay for a student's qualified tuition and related expenses, the student is treated as receiving the payment from the third party and, in turn, paying the qualified tuition and related expenses to the institution.

(2) ***Special rule for tuition reduction included in gross income of employee.*** Solely for purposes of section 25A, if an eligible educational institution provides a reduction in tuition to an employee of the institution (or to the spouse or dependent child of an employee, as described in section 132(h)(2)) and the amount of the tuition reduction is included in the employee's gross income, the employee is treated as receiving payment of an amount equal to the tuition reduction and, in turn, paying such amount to the institution.

(3) ***Examples.*** The following examples illustrate the rules of this paragraph (b). In each example, assume that all the requirements to claim an education tax credit are met. The examples are as follows:

Example 1. Grandparent D makes a direct payment to an eligible educational institution for Student E's qualified tuition and related expenses. Student E is not a claimed dependent in 1999. For purposes of claiming an education tax credit, Student E is treated as receiving the money from her grandparent and, in turn, paying her qualified tuition and related expenses.

Example 2. Under a court-approved divorce decree, Parent A is required to pay Student C's college tuition. Parent A makes a direct payment to an eligible educational institution for Student C's 1999 tuition. Under paragraph (b)(1) of this section, Student C is treated as receiving the money from Parent A and, in turn, paying the qualified tuition and related expenses. Under the divorce decree, Parent B has custody of Student C for 1999. Parent B properly claims Student C as a dependent on Parent B's 1999 federal income tax return. Under paragraph (a) of this section, expenses paid by Student C are treated as paid by Parent B. Thus, Parent B may claim an education tax credit for the qualified tuition and related expenses paid directly to the institution by Parent A.

Example 3. University A, an eligible educational institution, offers reduced tuition charges to its employees and their dependent children. F is an employee of University A. F's dependent child, G, enrolls in a graduate-level course at University A. Section 117(d) does not apply, because it is limited to tuition reductions provided for education below the graduate level. Therefore, the amount of the tuition reduction received by G is treated as additional compensation from University A to F and is included in F's gross income. For purposes of claiming a Lifetime Learning Credit, F is treated as receiving payment of an amount equal to the tuition reduction from University A and, in turn, paying such amount to University A on behalf of F's child, G.

(c) ***Adjustment to qualified tuition and related expenses for certain excludable educational assistance*** —

(1) ***In general.*** In determining the amount of an education tax credit, qualified tuition and related expenses for any academic period must be reduced by the amount of any tax-free educational assistance allocable to such period. For this purpose, *tax-free educational assistance* means—

(i) A qualified scholarship that is excludable from income under section 117;

(ii) A veterans' or member of the armed forces' educational assistance allowance under chapter 30, 31, 32, 34 or 35 of title 38, United States Code, or under chapter 1606 of title 10, United States Code;

(iii) Employer-provided educational assistance that is excludable from income under section 127; or

(iv) Any other educational assistance that is excludable from gross income (other than as a gift, bequest, devise, or inheritance within the meaning of section 102(a)).

(2) ***No adjustment for excludable educational assistance attributable to expenses paid in a prior year.*** A reduction is not required under paragraph (c)(1) of this section if the amount of excludable educational assistance received during the taxable year is treated as a refund of qualified tuition and related expenses paid in a prior taxable year. See paragraph (f)(5) of this section.

(3) ***Scholarships and fellowship grants.*** For purposes of paragraph (c)(1)(i) of this section, a scholarship or fellowship grant is treated as a qualified scholarship excludable under section 117 except to the extent—

(i) The scholarship or fellowship grant (or any portion thereof) may be applied, by its terms, to expenses other than qualified tuition and related expenses within the meaning of section 117(b)(2) (such as room and board) and the student reports the grant (or the appropriate portion thereof) as income on the student's federal income tax return if the student is required to file a return; or

(ii) The scholarship or fellowship grant (or any portion thereof) must be applied, by its terms, to expenses other than qualified tuition and related expenses within the meaning of section 117(b)(2) (such as room and board) and the student reports the grant (or the appropriate portion thereof) as income on the student's federal income tax return if the student is required to file a return.

(4) ***Examples.*** The following examples illustrate the rules of this paragraph (c). In each example, assume that all the requirements to claim an education tax credit are met. The examples are as follows:

Example 1. University X charges Student A, who lives on University X's campus, $3,000 for tuition and $5,000 for room and board. University X awards Student A a $2,000 scholarship. The terms of the scholarship permit it to be used to pay any of a student's costs of attendance at University X, including tuition, room and board, and other incidental expenses. University X applies the $2,000 scholarship against Student A's $8,000 total bill, and Student A pays the $6,000 balance of her bill from University X with a combination of savings and amounts she earns from a summer job. University X does not require A to pay any additional fees beyond the $3,000 in tuition in order to enroll in or attend classes. Student A does not report any portion of the scholarship as income on her federal income tax return. Since Student A does not report the scholarship as income, the scholarship is treated under paragraph (c)(3) of this section as a qualified scholarship that is excludable under section 117. Therefore, for purposes of calculating an education tax credit, Student A is treated as having paid only $1,000 ($3,000 tuition−$2,000 scholarship) in qualified tuition and related expenses to University X.

Example 2. The facts are the same as in *Example 1,* except that Student A reports the entire scholarship as income on the student's federal income tax return. Since the full amount of the scholarship may be applied to expenses other than qualified expenses (room and board) and Student A reports the scholarship as income, the exception in paragraph (c)(3) of this section applies and the scholarship is not treated as a qualified scholarship excludable under section 117. Therefore, for purposes of calculating an education tax credit, Student A is treated as having paid $3,000 of qualified tuition and related expenses to University X.

Example 3. The facts are the same as in *Example 1,* except that the terms of the scholarship require it to be used to pay tuition. Under paragraph (c)(3) of this section, the scholarship is treated as a qualified scholarship excludable under section 117. Therefore, for purposes of calculating an education tax credit, Student A is treated as having paid only $1,000 ($3,000 tuition−$2,000 scholarship) in qualified tuition and related expenses to University X.

Example 4. The facts are the same as in *Example 1,* except that the terms of the scholarship require it to be used to pay tuition or room and board charged by University X, and the scholarship amount is $6,000. Under the terms of the scholarship, Student A may allocate the scholarship between tuition and room and board in any manner. However, because room and board totals $5,000, that is the maximum amount that can be applied under the terms of the scholarship to expenses other than qualified expenses and at least $1,000 of the scholarship must be applied to tuition. Therefore, the maximum amount of the exception under paragraph (c)(3) of this section is $5,000 and at least $1,000 is treated as a qualified scholarship excludable under section 117 ($6,000 scholarship−$5,000 room and board). If Student A reports $5,000 of the scholarship as income on the student's federal income tax return, then Student A will be treated as having paid $2,000 ($3,000 tuition−$1,000 qualified scholarship excludable under section 117) in qualified tuition and related expenses to University X.

Example 5. The facts are the same as in *Example 1,* except that in addition to the scholarship that University X awards to Student A, University X also provides Student A with an education loan and pays Student A for working in a work/study job in the campus dining hall. The loan is not excludable educational assistance within the meaning of paragraph (c) of this section. In addition, wages paid to a student who is performing services for the payor are neither a qualified scholarship nor otherwise excludable from gross income. Therefore, Student A is not required to reduce her qualified tuition and related expenses by the amounts she receives from the student loan or as wages from her work/study job.

Example 6. In 1999, Student B pays University Y $1,000 in tuition for the 1999 Spring semester. University Y does not require Student B to pay any additional fees beyond the $1,000 in tuition in order to enroll in classes. Student B is an employee of Company Z. At the end of the academic period and during the same taxable year that Student B paid tuition to University Y, Student B provides Company Z with proof that he has satisfactorily completed his courses at University Y. Pursuant to an educational assistance program described in section 127(b), Company Z reimburses Student B for all of the tuition paid to University Y. Because the reimbursement from Company Z is employer-provided educational assistance that is excludable from Student B's gross income under section 127, the reimbursement reduces Student B's qualified tuition and related expenses. Therefore, for purposes of calculating an education tax credit, Student B is treated as having paid no qualified tuition and related expenses to University Y during 1999.

Example 7. The facts are the same as in *Example 6* except that the reimbursement from Company Z is not pursuant to an educational assistance program described in section 127(b), is not otherwise excludable from Student B's gross income, and is taxed as additional compensation to Student B. Because the reimbursement is not excludable educational assistance within the meaning of paragraph (c)(1) of this section, Student B is not required to reduce his qualified tuition and related expenses by the $1,000 reimbursement he received from his employer. Therefore, for purposes of calculating an education tax credit, Student B is treated as paying $1,000 in qualified tuition and related expenses to University Y during 1999.

(d) ***No double benefit.*** Qualified tuition and related expenses do not include any expense for which a deduction is allowed under section 162, section 222, or any other provision of chapter 1 of the Internal Revenue Code.

(e) ***Timing rules*** —

(1) ***In general.*** Except as provided in paragraph (e)(2) of this section, an education tax credit is allowed only for payments of qualified tuition and related expenses for an academic period beginning in the same taxable year as the year the payment is made. Except for certain individuals who do not use the cash receipts and disbursements method of accounting, qualified tuition and related expenses are treated as paid in the year in which the expenses are actually paid. See § 1.461-1(a)(1).

(2) ***Prepayment rule*** —

(i) ***In general.*** If qualified tuition and related expenses are paid during one taxable year for an academic period that begins during the first three months of the taxpayer's next taxable year (*i.e.,* in January, February, or March of the next taxable year for calendar year taxpayers), an education tax credit is allowed with respect to the qualified tuition and related expenses only in the taxable year in which the expenses are paid.

(ii) ***Example.*** The following example illustrates the rule of this paragraph (e)(2). In the example, assume that all the requirements to claim an education tax credit are met. The example is as follows:

Example. In December 1998, Taxpayer A, a calendar year taxpayer, pays College Z $1,000 in qualified tuition and related expenses to attend classes during the 1999 Spring semester, which begins in January 1999. Taxpayer A may claim an education tax credit only in 1998 for payments made in 1998 for the 1999 Spring semester.

(3) ***Expenses paid with loan proceeds.*** An education tax credit may be claimed for qualified tuition and related expenses paid with the proceeds of a loan only in the taxable year in which the expenses are paid, and may not be claimed in the taxable year in which the loan is repaid. Loan proceeds disbursed directly to an eligible educational institution will be treated as paid on the date the institution credits the proceeds to the student's account. For example, in the case of any loan issued or guaranteed as part of a Federal student loan program under title IV of the Higher Education Act of 1965, loan proceeds will be treated as paid on the date of disbursement (as defined in 34 CFR 668.164(a), revised as of July 1, 2002) by the eligible educational institution. If a taxpayer does not know the date the institution credits the student's account, the taxpayer must treat the qualified tuition and related expenses as paid on the last date for payment prescribed by the institution.

(4) ***Expenses paid through third party installment payment plans*** —

(i) ***In general.*** A taxpayer, an eligible educational institution, and a third party installment payment company may enter into an agreement in which the company agrees to collect installment payments of qualified tuition and related expenses from the taxpayer and to remit the installment payments to the institution. If the third party installment payment company is the taxpayer's agent for purposes of paying qualified tuition and related expenses to the eligible educational institution, the taxpayer is treated as paying the qualified expenses on the date the company pays the institution. However, if the third party installment payment company is the eligible educational institution's agent for purposes of collecting payments of qualified tuition and related expenses from the taxpayer, the taxpayer is treated as paying the qualified expenses on the date the taxpayer pays the company.

(ii) ***Example.*** The following example illustrates the rule of this paragraph (e)(4). The example is as follows:

Example. Student A, Company B, and College C enter into a written agreement in which Student A agrees to pay the tuition required to attend College C in 10 equal monthly installments to Company B. Under the written agreement, Student A is not relieved of her obligation to pay College C until Company B remits the payments to College C. Under the written agreement, Company B agrees to disburse the monthly installment payments to College C within 30 days of receipt. Because Company B acts as Student A's agent for purposes of paying qualified expenses to College C, Student A is treated as paying qualified expenses on the date Company B disburses payments to College C.

(f) ***Refund of qualified tuition and related expenses—***

(1) ***Payment and refund of qualified tuition and related expenses in the same taxable year.*** With respect to any student, the amount of qualified tuition and related expenses for a taxable year is calculated by adding all qualified tuition and related expenses paid for the taxable year, and subtracting any refund of such expenses received from the eligible educational institution during the same taxable year (including refunds of loan proceeds described in paragraph (f)(4) of this section).

(2) ***Payment of qualified tuition and related expenses in one taxable year and refund in subsequent taxable year before return filed for prior taxable year.*** If, in a taxable year, a taxpayer or someone other than the taxpayer receives a refund (including refunds of loan proceeds described in paragraph (f)(4) of this section) of qualified tuition and related expenses paid on behalf of a student in a prior taxable year and the refund is received before the taxpayer files a federal income tax return for the prior taxable year, the amount of the qualified tuition and related expenses for the prior taxable year is reduced by the amount of the refund.

(3) ***Payment of qualified tuition and related expenses in one taxable year and refund in subsequent taxable year —***

(i) ***In general.*** If, in a taxable year (refund year), a taxpayer or someone other than the taxpayer receives a refund (including refunds of loan proceeds described in paragraph (f)(4) of this section) of qualified tuition and related expenses paid on behalf of a student for which the taxpayer claimed an education tax credit in a prior taxable year, the tax imposed by chapter 1 of the Internal Revenue Code for the refund year is increased by the recapture amount.

(ii) ***Recapture amount.*** The recapture amount is the difference in tax liability for the prior taxable year (taking into account any redetermination of such tax liability by audit or amended return) that results when the tax liability for the prior year is calculated using the taxpayer's redetermined credit. The redetermined credit is computed by reducing the amount of the

qualified tuition and related expenses taken into account in determining any credit claimed in the prior taxable year by the amount of the refund of the qualified tuition and related expenses (redetermined qualified expenses), and computing the allowable credit using the redetermined qualified expenses and the relevant facts and circumstances of the prior taxable year, such as modified adjusted gross income (redetermined credit).

(4) ***Refund of loan proceeds treated as refund of qualified tuition and related expenses.*** If loan proceeds used to pay qualified tuition and related expenses (as described in paragraph (e)(3) of this section) during a taxable year are refunded by an eligible educational institution to a lender on behalf of the borrower, the refund is treated as a refund of qualified tuition and related expenses for purposes of paragraphs (f)(1), (2), and (3) of this section.

(5) ***Excludable educational assistance received in a subsequent taxable year treated as a refund.*** If, in a taxable year, a taxpayer or someone other than the taxpayer receives any excludable educational assistance (described in paragraph (c)(1) of this section) for the qualified tuition and related expenses paid on behalf of a student during a prior taxable year (or attributable to enrollment at an eligible educational institution during a prior taxable year), the educational assistance is treated as a refund of qualified tuition and related expenses for purposes of paragraphs (f)(2) and (3) of this section. If the excludable educational assistance is received before the taxpayer files a federal income tax return for the prior taxable year, the amount of the qualified tuition and related expenses for the prior taxable year is reduced by the amount of the excludable educational assistance as provided in paragraph (f)(2) of this section. If the excludable educational assistance is received after the taxpayer has filed a federal income tax return for the prior taxable year, any education tax credit claimed for the prior taxable year is subject to recapture as provided in paragraph (f)(3) of this section.

(6) ***Examples.*** The following examples illustrate the rules of this paragraph (f). In each example, assume that all the requirements to claim an education tax credit are met. The examples are as follows:

> *Example 1.* In January 1998, Student A, a full-time freshman at University X, pays $2,000 for qualified tuition and related expenses for a 16-hour work load for the 1998 Spring semester. Prior to beginning classes, Student A withdraws from 6 course hours. On February 15, 1998, Student A receives a $750 refund from University X. In September 1998, Student A pays University X $1,000 to enroll half-time for the 1998 Fall semester. Prior to beginning classes, Student A withdraws from a 2-hour course, and she receives a $250 refund in October 1998. Student A computes the amount of qualified tuition and related expenses she may claim for 1998 by:
> (i) Adding all qualified expenses paid during the taxable year ($2,000 + 1,000 = $3,000);
>
> (ii) Adding all refunds of qualified tuition and related expenses received during the taxable year ($750 + $250 = $1,000); and, then
>
> (iii) Subtracting paragraph (ii) of this *Example 1* from paragraph (i) of this *Example 1* ($3,000 −$1,000 = $2,000). Therefore, Student A's qualified tuition and related expenses for 1998 are $2,000.

Example 2. (i) In December 1998, Student B, a senior at College Y, pays $2,000 for qualified tuition and related expenses for a 16-hour work load for the 1999 Spring semester. Prior to beginning classes, Student B withdraws from a 4-hour course. On January 15, 1999, Student B files her 1998 income tax return and claims a $400 Lifetime Learning Credit for the $2,000 qualified expenses paid in 1998, which reduces her tax liability for 1998 by $400. On February 15, 1999, Student B receives a $500 refund from College Y.
(ii) Student B calculates the increase in tax for 1999 by—

(A) Calculating the redetermined qualified expenses for 1998 ($2,000 − $500 = $1,500);

(B) Calculating the redetermined credit for the redetermined qualified expenses ($1,500 × .20 = $300); and

(C) Calculating the difference in tax liability for 1998 resulting from the redetermined credit. Because Student B's tax liability for 1998 was reduced by the full amount of the $400 education tax credit claimed on her 1998 income tax return, the difference in tax liability can be determined by subtracting the redetermined credit from the credit claimed in 1998 ($400−$300 = $100).

(iii) Therefore, Student B must increase the tax on her 1999 federal income tax return by $100.

Example 3. In September 1998, Student C pays College Z $1,200 in qualified tuition and related expenses to attend evening classes during the 1998 Fall semester. Student C is an employee of Company R. On January 15, 1999, Student C files a federal income tax return for 1998 claiming a Lifetime Learning Credit of $240 (.20 × $1,200), which reduces Student C's tax liability for 1998 by $240. Pursuant to an educational assistance program described in section 127(b), Company R reimburses Student C in February 1999 for the $1,200 of qualified tuition and related expenses paid by Student C in 1998. The $240 education tax credit claimed by Student C for 1998 is subject to recapture. Because Student C paid no net qualified tuition and related expenses for 1998, the redetermined credit for 1998 is zero. Student C must increase the amount of Student C's 1999 tax by the recapture amount, which is $240 (the difference in tax liability for 1998 resulting from the redetermined credit for 1998 ($0)). Because the $1,200 reimbursement relates to expenses for which the taxpayer claimed an education tax credit in a prior year, the reimbursement does not reduce the amount of any qualified tuition and related expenses that Student C paid in 1999.

[T.D. 9034, 67 FR 78691, Dec. 26, 2002; 68 FR 15940, Apr. 2, 2003]

§ 1.25E-0 Table of contents.

This section lists the captions contained in §§ 1.25E-1 through 1.25E-3.

§ 1.25E-1 Credit for previously-owned clean vehicles.

(a) In general.

(b) Definitions.

(1) Advance payment program.

(2) Credit transfer election.

(3) Dealer.

(4) Dealer tax compliance.

(5) Electing taxpayer.

(6) Eligible entity.

(7) Excessive payment.

(8) Incentive.

(i) For purposes of sale price.

(ii) For purposes of eligible entity requirements.

(9) Modified adjusted gross income.

(10) Placed in service.

(11) Previously-owned clean vehicle.

(12) Qualified buyer.

(13) Qualified manufacturer.

(14) Qualified sale.

(15) Registered dealer.

(16) Sale price.

(17) Section 25E regulations.

(18) Seller report.

(19) Time of sale.

(20) Vehicle history report.

(c) Limitation based on modified adjusted gross income.

(1) In general.

(2) Threshold amount.

(3) Special rule for change in filing status.

(d) Credit may be claimed on only one tax return.

(1) In general.

(2) Seller reporting.

(e) Examples.

(1) Example 1: First transfer since enactment of section 25E.

(2) Example 2: Multiple transfers since enactment of section 25E.

(3) Example 3: Multiple transfers; commercial purchaser.

(4) Example 4: Multiple transfers; buyer exceeds modified adjusted gross income limitation.

(5) Example 5: Multiple transfers; buyer elects to not take credit.

(6) Example 6: Multiple transfers; sale between dealers.

(f) Reliance on vehicle history report for purposes of determining whether sale is a qualified sale.

(g) Severability.

(h) Applicability date.

§ 1.25E-2 Special rules.

(a) In general.

(b) No double benefit.

(1) In general.

(2) Interaction between section 25E and 30D credits.

(c) Recapture.

(1) In general.

(i) Cancelled sale.

(ii) Vehicle return.

(iii) Resale.

(iv) Other returns and resales.

(2) Recapture rules in the case of a credit transfer election.

(3) Example: Vehicle return.

(d) Branded title.

(e) Seller registration.

(f) Requirement to file income tax return.

(g) Taxpayer reliance on manufacturer certifications and periodic written reports to IRS.

(h) Severability.

(i) Applicability date.

§ 1.25E-3 Transfer of credit.

(a) In general.

(b) Definitions.

(1) Advance payment program.

(2) Credit transfer election.

(3) Dealer tax compliance.

(4) Electing taxpayer.

(5) Eligible entity.

(6) Registered dealer.

(7) Time of sale.

(c) Dealer registration.

(1) In general.

(2) Dealer tax compliance required.

(3) Suspension of registration.

(4) Revocation of registration.

(d) Credit transfer election by electing taxpayer.

(e) Federal income tax consequences of credit transfer election.

(1) Tax consequences for electing taxpayer.

(2) Tax consequences for eligible entity.

(3) Form of payment from eligible entity to electing taxpayer.

(4) Additional requirements.

(5) Examples.

(i) Example 1: Electing taxpayer's regular tax liability less than amount of credit.

(A) Facts.

(B) Analysis.

(ii) Example 2: Non-cash payment by eligible entity to electing taxpayer.

(A) Facts.

(B) Analysis.

(iii) Example 3: Eligible entity is a partnership.

(A) Facts.

(B) Analysis.

(f) Advance payments received by eligible entities.

(1) In general.

(2) Requirements for a registered dealer to become an eligible entity.

(g) Increase in tax.

(1) Recapture if electing taxpayer exceeds modified adjusted gross income limitation.

(2) Excessive payments.

(i) In general.

(ii) Reasonable cause.

(iii) Excessive payment defined.

(iv) Special rule for cases in which electing taxpayer's modified adjusted gross income exceeds the limitation.

(3) Examples.

(i) Example 1: Registered dealer is not an eligible entity.

(A) Facts.

(B) Analysis.

(ii) Example 2: Incorrect manufacturer certifications.

(A) Facts.

(B) Analysis.

(h) Return requirement.

(i) Two credit transfer elections per year.

(j) Severability.

(k) Applicability date.

[T.D. 9995, 89 FR 37747, May 6, 2024]

§ 1.25E-1 Credit for previously-owned clean vehicles.

(a) ***In general.*** Section 25E(a) of the Internal Revenue Code (Code) allows as a credit against the tax imposed by chapter 1 of the Code (chapter 1) for the taxable year of a taxpayer an amount equal to the lesser of $4,000, or the amount equal to 30 percent of the sale price of a previously-owned clean vehicle, if that

previously-owned clean vehicle is placed in service during the taxable year by a taxpayer that acquired the previously-owned clean vehicle in a qualified sale in which that taxpayer is a qualified buyer. This section provides definitions and generally applicable rules that apply for purposes of determining the credit under section 25E and the section 25E regulations (section 25E credit). Section 1.25E-2 provides special rules under section 25E(e) and other special rules with respect to the section 25E credit. Section 1.25E-3 provides rules under section 25E(f).

(b) ***Definitions.*** The definitions in this paragraph (b) apply for purposes of section 25E and the section 25E regulations.

(1) ***Advance payment program. Advance payment program*** means advance payment program as defined in § 1.25E-3(b)(1).

(2) ***Credit transfer election. Credit transfer election*** means credit transfer election as defined in § 1.25E-3(b)(2).

(3) ***Dealer. Dealer*** has the meaning provided in section 25E(c)(2)(A) by reference to section 30D(g)(8) of the Code, except that the term does not include persons licensed solely by a territory of the United States, and includes a dealer licensed by any jurisdiction described in section 30D(g)(8) (other than one licensed solely by a territory of the United States) that makes sales at sites outside of the jurisdiction in which it is licensed.

(4) ***Dealer tax compliance. Dealer tax compliance*** means dealer tax compliance as defined in § 1.25E-3(b)(3).

(5) ***Electing taxpayer. Electing taxpayer*** means electing taxpayer as defined in § 1.25E-3(b)(4).

(6) ***Eligible entity. Eligible entity*** means eligible entity as defined in § 1.25E-3(b)(5).

(7) ***Excessive payment. Excessive payment*** means excessive payment as defined in § 1.25E-3(g)(2)(iii).

(8) ***Incentive*** —

(i) ***For purposes of sale price.*** For purposes of the definition of *sale price* in § 1.25E-1(b)(16), *incentive* means any reduction in price offered to and accepted by a taxpayer from the dealer or manufacturer, other than a reduction in the form of a partial payment or down payment for the purchase of a previously-owned clean vehicle pursuant to section 25E(f) and § 1.25E-3.

(ii) ***For purposes of eligible entity requirements.*** For purposes of the eligible entity requirements for a credit transfer election pursuant to sections 25E(f) and 30D(g)(2)(B) and (D), *incentive* means any reduction in price offered to the taxpayer by the dealer or manufacturer of the previously-owned clean vehicle, including in combination with other incentives, other than a reduction in the form of a partial payment or down payment for the purchase of a previously-owned clean vehicle pursuant to section 25E(f) and § 1.25E-3.

(9) ***Modified adjusted gross income. Modified adjusted gross income*** means adjusted gross income (as defined in section 62 of the Code) increased by any amount excluded from gross income under section 911, 931, or 933 of the Code.

(10) ***Placed in service.*** A previously-owned clean vehicle is considered to be placed in service on the date the taxpayer takes possession of the vehicle.

(11) ***Previously-owned clean vehicle. Previously-owned clean vehicle*** has the meaning provided in section 25E(c)(1). Vehicles that may qualify as previously-owned clean vehicles include battery electric vehicles, plug-in hybrid electric vehicles, fuel cell motor vehicles, and plug-in hybrid fuel cell motor vehicles.

(12) ***Qualified buyer.*** *Qualified buyer* means, with respect to a sale of a motor vehicle, a taxpayer—

(i) Who is an individual;

(ii) Who purchases such vehicle for use and not for resale;

(iii) With respect to whom no deduction is allowable to another taxpayer under section 151 of the Code; and

(iv) Who has not been allowed a credit under section 25E and this section for any sale during the three-year period beginning three years before the date of the sale of such vehicle and ending on the date of the sale of such vehicle.

(13) ***Qualified manufacturer. Qualified manufacturer*** means qualified manufacturer as defined in § 1.30D-2(b)(42).

(14) ***Qualified sale.*** *Qualified sale* means a sale of a motor vehicle—

(i) By a dealer;

(ii) For a sale price that does not exceed $25,000; and

(iii) That is a sale to a qualified buyer (other than the person with whom the original use of such vehicle commenced), and that is the first transfer of the motor vehicle since August 16, 2022 (other than a transfer to a dealer).

(15) ***Registered dealer. Registered dealer*** means registered dealer as defined in § 1.25E-3(b)(6).

(16) ***Sale price.*** The *sale price* of a previously-owned clean vehicle means the total price agreed upon by the taxpayer and dealer in a written contract at the time of sale, including any delivery charges and after the application of any incentives. The sale price of a previously-owned clean vehicle does not include separately stated taxes and fees required by State or local law. The sale price of a previously-owned clean vehicle is determined before the application of any trade-in value.

(17) ***Section 25E regulations. Section 25E regulations*** means this section and §§ 1.25E-2 and 1.25E-3.

(18) ***Seller report. Seller report*** means the report described in section 25E(c)(1)(D)(i) by reference to section 30D(d)(1)(H) that the seller of a previously-owned clean vehicle provides to the taxpayer and the IRS in the manner provided in, and containing the information described in, guidance published in the *Internal Revenue Bulletin* (see § 601.601 of this chapter). The seller report must be transmitted to the IRS electronically. The term *seller report* does not include a report rejected by the IRS due to the information contained therein not matching IRS records.

(19) ***Time of sale. Time of sale*** means time of sale as defined in § 1.25E-3(b)(7).

(20) ***Vehicle history report. Vehicle history report*** means a report that provides the ownership history of a motor vehicle. *Vehicle history report* includes a vehicle history report issued by a data provider approved by the National Motor Vehicle Title Information System.

(c) ***Limitation based on modified adjusted gross income*** —

(1) ***In general.*** Under section 25E(b)(1), no section 25E credit is allowed for any taxable year if—

(i) The lesser of—

(A) The modified adjusted gross income of the taxpayer for such taxable year, or

(B) The modified adjusted gross income of the taxpayer for the preceding taxable year, exceeds.

(ii) The threshold amount.

(2) ***Threshold amount.*** For purposes of section 25E(b)(1) and paragraph (c)(1) of this section, the threshold amount is determined based on the taxpayer's return filing status for the taxable year, as set forth in paragraphs (c)(2)(i) through (iii) of this section. *See* section 25E(b)(2).

(i) In the case of a joint return or a surviving spouse (as defined in section 2(a) of the Code), the threshold amount is $150,000.

(ii) In the case of a head of household (as defined in section 2(b)), the threshold amount is $112,500.

(iii) In the case of a taxpayer not described in paragraph (c)(2)(i) or (ii) of this section, the threshold amount is $75,000.

(3) ***Special rule for change in filing status.*** If the taxpayer's filing status for the taxable year differs from the taxpayer's filing status in the preceding taxable year, then the taxpayer satisfies the limitation in section 25E(b)(1) and paragraph (c)(1) of this section if the taxpayer's modified adjusted gross income does not exceed the threshold amount in either year based on the applicable filing status for that taxable year.

(d) ***Credit may be claimed on only one tax return*** —

(1) ***In general.*** The amount of the section 25E credit attributable to a previously-owned clean vehicle may be claimed on only one Federal income tax return, including on a joint return for which one of the spouses is listed on the seller report. In the event a previously-owned clean vehicle is placed in service by multiple taxpayers who do not file a joint return, such as married individuals filing separate returns, no allocation or proration of the section 25E credit is available.

(2) ***Seller reporting.*** The name and taxpayer identification number of the taxpayer claiming the section 25E credit must be listed on the seller report pursuant to sections 25E(c)(1)(D)(i) and 30D(d)(1)(H). The credit will be allowed only on the Federal income tax return of the taxpayer listed in the seller report.

(e) ***Examples.*** The following examples illustrate the application of the rules in this section.

(1) ***Example 1: First transfer since enactment of section 25E.*** On August 1, 2022, a dealer sells a previously-owned vehicle that satisfies the requirements of section 25E(c)(1)(A), (B), and (D). On May 7, 2024, a dealer sells the vehicle to a qualified buyer, X, for a sale price of $24,000. X places the vehicle in service the same day. The May 7, 2024, sale to X is the first transfer of the vehicle since the enactment of section 25E.. The May 7, 2024, sale is a qualified sale pursuant to section 25E(c)(2) and paragraph (b)(14) of this section. As a result, the vehicle also satisfies the requirement of section 25E(c)(1)(C) and is a previously-owned clean vehicle as defined in section 25E(c)(1) and paragraph (b)(11) of this section.

(2) ***Example 2: Multiple transfers since enactment of section 25E.*** On July 1, 2023, a dealer sells a previously-owned vehicle that satisfies the requirements of section 25E(c)(1)(A), (B), and (D) to an individual, X, for a sale price of $30,000. X places the vehicle in service the same day. This is the first transfer of the vehicle since the enactment of section 25E. On May 7, 2024, a dealer sells the vehicle to an individual, Y, for a sale price of $24,500. The July 1, 2023, sale of the vehicle to X is not a qualified sale because the sale price exceeds the $25,000 limitation described in section 25E(c)(2)(B) and paragraph (b)(14) of this section. The May 7, 2024, sale to Y is not a qualified sale because it is not the first transfer since the enactment of section 25E.

(3) ***Example 3: Multiple transfers; commercial purchaser.*** The facts are the same as in paragraph (e)(2) of this section (*Example 2*), except that X is a partnership and the July 1, 2023, sale is for a sale price of $24,000. Although the vehicle is a previously-owned clean vehicle as defined in section 25E(c)(1) and paragraph (b)(11) of this section, no section 25E credit is allowed in relation to the sale because X is not a qualified buyer. The May 7, 2024, sale to Y is not a qualified sale because it is not the first transfer since enactment of section 25E.

(4) ***Example 4: Multiple transfers; buyer exceeds modified adjusted gross income limitation.*** The facts are the same as in paragraph (e)(2) of this section (*Example 2*), except the July 1, 2023, sale is for a sale price of $24,000 and X's modified adjusted gross income exceeds the limitation described in section 25E(b)(2) and paragraph (c) of this section. No section 25E credit is allowed in relation to the July 1, 2023, sale to X because X's modified adjusted gross income exceeds the limitation described in section 25E(b)(2) and paragraph (c) of this section. The May 7, 2024, sale to Y is not a qualified sale because it is not the first transfer since the enactment of section 25E.

(5) ***Example 5: Multiple transfers; buyer elects to not take credit.*** The facts are the same as in paragraph (e)(2) of this section (*Example 2*), except the July 1, 2023, sale is for a sale price of $24,000 and X elects to not claim the section 25E credit. The May 7, 2024, sale to Y is not a qualified sale because it is not the first transfer since the enactment of section 25E.

(6) ***Example 6: Multiple transfers; sale between dealers.*** On July 1, 2023, a dealer, D1, sells a previously-owned vehicle that satisfies the requirements of section 25E(c)(1)(A), (B), and (D) to another dealer, D2, for $18,000. D1 and D2 are not individuals. On August 1, 2024, D2 sells the vehicle to an individual, Y, for a sale price of $24,500. Y places the vehicle in service the same day. Y satisfies the modified adjusted gross income limitation in section 25E(b)(2) and paragraph (c) of this section. The July 1, 2023, sale to D2 is ignored because it is a transfer between dealers. Further, with regard to the July 1, 2023, sale, D2 is not a qualified buyer because D2 is not an individual. The May 7, 2024, sale to Y is a qualified sale because it is the first transfer that is regarded since the enactment of section 25E.

(f) ***Reliance on vehicle history report for purposes of determining whether sale is a qualified sale.*** A taxpayer may rely on a vehicle history report obtained on the date of sale or as part of the sale transaction to determine whether the requirements of section 25E(c)(2)(C) and paragraph (b)(14) of this section are satisfied, including in the case where there has been a prior sale and return or resale described in § 1.25E-2(c).

(g) ***Severability.*** The provisions of this section are separate and severable from one another. If any provision of this section is stayed or determined to be invalid, it is the agencies' intention that the remaining provisions shall continue in effect.

(h) ***Applicability date.*** This section applies to previously-owned clean vehicles placed in service after December 31, 2022, in taxable years ending after October 10, 2023.

[T.D. 9995, 89 FR 37747, May 6, 2024]

§ 1.25E-2 Special rules.

(a) ***In general.*** This section provides guidance under section 25E(e) of the Internal Revenue Code (Code), which incorporates rules similar to the rules of section 30D(f) of the Code, other than section 30D(f)(10) or 30D(f)(11). Unless otherwise provided in this section, the rules of section 30D(f) apply to section 25E and the section 25E regulations in the same manner by replacing, if applicable, any reference to section 30D or the section 30D credit with a reference to section 25E or the section 25E credit. This section also provides guidance regarding other special rules with respect to the section 25E credit.

(b) ***No double benefit*** —

(1) ***In general.*** Under sections 25E(e) and 30D(f)(2), the amount of any deduction or other credit allowable under chapter 1 of the Code (chapter 1) for a vehicle for which a section 25E credit is allowable must be reduced by the amount of the section 25E credit allowed for such vehicle.

(2) ***Interaction between section 25E and section 30D credits.*** A section 30D credit that has been allowed with respect to a vehicle in a taxable year before the year in which a section 25E credit is allowable for that vehicle does not reduce the amount allowable under section 25E.

(c) ***Recapture*** —

(1) ***In general.*** This paragraph (c) provides rules regarding the recapture of the section 25E credit.

(i) ***Cancelled sale.*** If the sale of a previously-owned clean vehicle between the taxpayer and dealer is cancelled before the taxpayer places the vehicle in service, then—

(A) The taxpayer may not claim the section 25E credit with respect to the vehicle;

(B) The sale will be treated as not having occurred (and no transfer of the vehicle is considered to have occurred by reason of the cancelled sale), and the vehicle will, therefore, still be eligible for the section 25E credit upon a subsequent sale meeting the requirements of section 25E and the section 25E regulations;

(C) The seller report must be rescinded by the seller in the manner set forth in guidance published in the *Internal Revenue Bulletin* (see § 601.601 of this chapter); and

(D) The taxpayer cannot make a credit transfer election under section 25E(f) and § 1.25E-3 with respect to the cancelled sale.

(ii) ***Vehicle return.*** If a taxpayer returns a previously-owned clean vehicle to the dealer within 30 days of placing such vehicle in service, then—

(A) The taxpayer cannot claim the section 25E credit with respect to the vehicle;

(B) The sale will be treated as having occurred (and a transfer of the vehicle is therefore considered to have occurred by reason of the sale), and the vehicle will not qualify for the section 25E credit upon a subsequent sale;

(C) The seller report must be updated by the seller; and

(D) A credit transfer election made pursuant to section 25E(f) and § 1.25E-3, if applicable, will be treated as nullified and any advance payment made pursuant to section 25E(f) and § 1.25E-3, if applicable, will be collected from the eligible entity as an excessive payment pursuant to § 1.25E-3(g)(2).

(iii) ***Resale.*** If a taxpayer resells a previously-owned clean vehicle within 30 days of placing the vehicle in service, then the taxpayer is treated as having purchased such vehicle with the intent to resell, and—

(A) The taxpayer cannot claim the section 25E credit with respect to the vehicle;

(B) The sale to the taxpayer will be treated as having occurred (and a transfer of the vehicle is therefore considered to have occurred by reason of the sale), and the vehicle will not qualify for the section 25E credit upon a subsequent sale;

(C) The seller report will not be updated;

(D) A credit transfer election made pursuant to section 25E(f) and § 1.25E-3, if applicable, will remain in effect and any advance payment made pursuant to section 25E(f) and § 1.25E-3 will not be collected from the eligible entity; and

(E) The amount of any transferred credit will be collected from the taxpayer as an increase in tax imposed by chapter 1 of the Code for the taxable year in which the vehicle was placed in service.

(iv) ***Other returns and resales.*** In the case of a vehicle return not described in paragraph (c)(1)(ii) of this section or a resale not described in paragraph (c)(1)(iii) of this section, the previously-owned clean vehicle will not be eligible for the section 25E credit upon a subsequent sale.

(2) ***Recapture rules in the case of a credit transfer election.*** For additional recapture rules that apply in the case of a credit transfer election, see § 1.25E-3(g)(1). For excessive payment rules that apply in the case of an advance payment made to an eligible entity, see § 1.25E-3(g)(2).

(3) ***Example: Vehicle return.*** On May 1, 2024, a dealer, D, sells a vehicle that satisfies the requirements of section 25E(c)(1) to a qualified buyer, X. X returns the vehicle to D within 30 days of placing the vehicle in service, and does not claim the section 25E credit. On July 9, 2024, D sells the vehicle to a qualified buyer, Y, for a sale price of $24,000. The vehicle history report obtained on July 9, 2024, reflects the May 1, 2024, sale and subsequent return of the vehicle. The July 9, 2024, sale of the vehicle is not a qualified sale because it is not the first transfer of the vehicle after the enactment of section 25E. Therefore, no section 25E credit is allowed in relation to that sale. It is irrelevant that X did not claim the section 25E credit with respect to the May 1, 2024, sale.

(d) ***Branded title.*** A title to a previously-owned clean vehicle indicating that such vehicle has been damaged, or is otherwise a branded title, does not impact the vehicle's eligibility for a section 25E credit.

(e) ***Seller registration.*** A seller must register with the IRS in the manner set forth in guidance published in the *Internal Revenue Bulletin* (see § 601.601 of this chapter) for purposes of filing seller reports (as defined in § 1.25E-1(b)(18)).

(f) ***Requirement to file income tax return.*** No section 25E credit is allowed unless the taxpayer claiming such credit files a Federal income tax return for the taxable year in which the previously-owned clean vehicle is placed in service. The taxpayer must attach to such return a completed Form 8936, *Clean Vehicle Credits,* or successor form, that includes all information required by the form and instructions. The taxpayer must

also attach a completed Schedule A (Form 8936), *Clean Vehicle Credit Amount,* or successor form or schedule, that includes all information required by the schedule and instructions, such as the vehicle identification number of the previously-owned clean vehicle.

(g) ***Taxpayer reliance on manufacturer certifications and periodic written reports to IRS.*** A taxpayer who acquires a previously-owned clean vehicle in a qualified sale and places it in service may rely on the manufacturer's certification concerning the manufacturer's status as a qualified manufacturer. A taxpayer also may rely on the information and certifications contained in the qualified manufacturer's periodic written reports to the IRS for purposes of determining whether a vehicle is a previously-owned clean vehicle. The procedures for such written reports are established in guidance published in the *Internal Revenue Bulletin* (see § 601.601 of this chapter). To the extent a taxpayer relies on such certifications or information, the previously-owned clean vehicle the taxpayer acquires will be deemed to meet the requirements of section 25E(c)(1)(D) (except the section 30D(d)(1)(H) requirement cross-referenced in section 25E(c)(1)(D)(i), which must be satisfied separately), provided the certifications or information relied upon by the taxpayer support this result. *See* § 1.25E-3(g)(3)(ii) for an example that illustrates the interplay between the rule in this paragraph (g) and the excessive payment rule in § 1.25E-3(g)(2).

(h) ***Severability.*** The provisions of this section are separate and severable from one another. If any provision of this section is stayed or determined to be invalid, it is the agencies' intention that the remaining provisions shall continue in effect.

(i) ***Applicability date.*** This section applies to previously-owned clean vehicles placed in service after December 31, 2022, in taxable years ending after October 10, 2023.

[T.D. 9995, 89 FR 37747, May 6, 2024]

§ 1.25E-3 Transfer of credit.

(a) ***In general.*** This section provides rules related to the transfer and advance payment of the section 25E credit pursuant to section 25E(f) of the Internal Revenue Code (Code) by cross reference to section 30D(g) of the Code. Under the rules of section 30D(g) and this section, a taxpayer may elect to transfer a section 25E credit to an eligible entity, and the eligible entity may receive an advance payment for such credit, provided certain requirements are met. *See* paragraph (d) of this section for rules applicable to credit transfer elections. *See* paragraph (f) of this section for rules applicable to advance payments of transferred section 25E credits. Section 30D(g)(2) sets forth certain requirements that a dealer must satisfy to be an eligible entity for credit transfer and advance payment purposes. Section 30D(g)(2)(A) requires registration with the IRS. *See* paragraph (c) of this section for rules related to dealer registration. Section 30D(g)(2)(B) through (D) and paragraph (f)(2) of this section impose additional requirements that a registered dealer must satisfy in order to be an eligible entity for credit transfer and advance payment purposes.

(b) ***Definitions.*** This paragraph (b) provides definitions that apply for purposes of section 25E(f) and this section. *See* § 1.25E-1(b) for definitions that are generally applicable to section 25E and the section 25E regulations.

(1) ***Advance payment program. Advance payment program*** means the program described in paragraph (f)(1) of this section.

(2) ***Credit transfer election. Credit transfer election*** has the meaning provided in sections 25E(f) and 30D(g), and paragraph (d) of this section.

(3) ***Dealer tax compliance. Dealer tax compliance*** means that the dealer has filed all required Federal information and tax returns, including for Federal income and employment tax purposes, and the dealer has paid all Federal tax, penalties, and interest due as of the time of sale. A dealer that has entered into an installment agreement with the IRS for which a dealer is current on its obligations (including required filings) is treated as being in dealer tax compliance.

(4) ***Electing taxpayer. Electing taxpayer*** means an individual who purchases and places in service a previously-owned clean vehicle and elects to transfer the section 25E credit that would otherwise be allowable to such individual to an eligible entity pursuant to section 25E(f) and paragraph (d) of this section. A taxpayer is an electing taxpayer only if the taxpayer makes certain attestations to the registered dealer, pursuant to procedures provided in guidance published in the *Internal Revenue Bulletin* (see § 601.601 of this chapter), including that the taxpayer does not anticipate exceeding the modified adjusted gross income limitation of section 25E(b)(1) and § 1.25E-1(b).

(5) ***Eligible entity. Eligible entity*** has the meaning provided in section 30D(g)(2) and paragraph (f)(2) of this section.

(6) ***Registered dealer. Registered dealer*** means a dealer that has completed registration with the IRS as provided in paragraph (c) of this section.

(7) ***Time of sale. Time of sale*** means the date the previously-owned clean vehicle is placed in service, as defined in § 1.25E-1(b)(10).

(c) ***Dealer registration*** —

(1) ***In general.*** A dealer must register with the IRS in the manner set forth in guidance published in the *Internal Revenue Bulletin* (see § 601.601 of this chapter) for the dealer to receive credits transferred by an electing taxpayer pursuant to section 25E(f) and paragraph (d) of this section.

(2) ***Dealer tax compliance required.*** A dealer must be in dealer tax compliance to complete and maintain its registration with the IRS. If the dealer is not in dealer tax compliance for any of the taxable periods during the last five taxable years, then the dealer may complete its initial registration with the IRS, but the dealer will not be eligible for the advance payment program (and, therefore, the dealer will not be eligible to receive transferred section 25E credits) until the compliance issue is resolved. The IRS will notify the dealer in writing that the dealer is not in dealer tax compliance, and the dealer will have the opportunity to address any failure through regular procedures. If the failure is corrected, the IRS will complete the dealer's registration, and, provided all other requirements of section 25E(f) and this section are met, the dealer will then be allowed to receive transferred section 25E credits and participate in the advance payment program. Additional procedural guidance regarding this paragraph is set forth in guidance published in the *Internal Revenue Bulletin* (see § 601.601 of this chapter).

(3) ***Suspension of registration.*** A registered dealer's registration may be suspended pursuant to the procedures described in guidance published in the *Internal Revenue Bulletin* (see § 601.601 of this chapter). Any decision made by the IRS relating to the suspension of a registered dealer's registration is not subject to administrative appeal to the IRS Independent Office of Appeals unless the IRS and the IRS Independent Office of Appeals agree that such review is available and the IRS provides the time and manner for such review.

(4) ***Revocation of registration.*** A registered dealer's registration may be revoked pursuant to the procedures described in guidance published in the *Internal Revenue Bulletin* (see § 601.601). Any decision made by the IRS relating to the revocation of a dealer's registration is not subject to

administrative appeal to the IRS Independent Office of Appeals unless the IRS and the IRS Independent Office of Appeals agree that such review is available and the IRS provides the time and manner for such review.

(d) ***Clection by electing taxpayer.*** For a previously-owned clean vehicle placed in service after December 31, 2023, an electing taxpayer may elect to apply the rules of section 25E(f) and this section to make a credit transfer election with respect to the vehicle so that the section 25E credit is allowed to the eligible entity specified in the credit transfer election (and not to the electing taxpayer) pursuant to the advance payment program described in paragraph (f) of this section. The electing taxpayer, as part of the credit transfer election, must transfer the entire amount of the credit that would otherwise be allowable to the electing taxpayer under section 25E with respect to the vehicle, and the eligible entity specified in the credit transfer election must pay the electing taxpayer an amount equal to the amount of the credit included in the credit transfer election. A credit transfer election must be made no later than the time of sale, and must be made in the manner set forth in guidance published in the *Internal Revenue Bulletin* (see § 601.601 of this chapter). Once made, a credit transfer election is irrevocable.

(e) ***Federal income tax consequences of credit transfer election*** —

(1) ***Tax consequences for electing taxpayer.*** In the case of a credit transfer election, the Federal income tax consequences for the electing taxpayer are as follows—

(i) The amount of the section 25E credit that the electing taxpayer elects to transfer to the eligible entity under section 30D(g) (by reason of section 25E(f)) and paragraph (d) of this section may exceed the electing taxpayer's regular tax liability (as defined in section 26(b)(1) of the Code) for the taxable year in which the sale occurs, and the excess, if any, is not subject to recapture on the basis that it exceeded the electing taxpayer's regular tax liability;

(ii) The payment made by an eligible entity to an electing taxpayer under section 30D(g)(2)(C) (by reason of 25E(f)) and paragraph (d) of this section to an electing taxpayer pursuant to a credit transfer election is not includible in the gross income of the electing taxpayer; and

(iii) The payment made by an eligible entity under section 30D(g)(2)(C) (by reason of section 25E(f)) and paragraph (d) of this section is treated as repaid by the electing taxpayer to the eligible entity as partial payment of the sale price of the previously-owned clean vehicle. Thus, the repayment by the electing taxpayer is included in the electing taxpayer's basis in the previously-owned clean vehicle prior to the application of the basis reduction rule of section 30D(f)(1) that applies by reason of section 25E(e) and § 1.25E-2(a).

(2) ***Tax consequences for eligible entity.*** In the case of a credit transfer election, the Federal income tax consequences for the eligible entity are as follows—

(i) The eligible entity is allowed the section 25E credit with respect to the previously-owned clean vehicle and may receive an advance payment pursuant to section 30D(g)(7) (by reason of section 25E(f)) and paragraph (f) of this section;

(ii) Advance payments received by the eligible entity are not treated as a tax credit in the hands of the eligible entity and may exceed the eligible entity's regular tax liability (as defined in section 26(b)(1)) for the taxable year in which the sale occurs;

(iii) An advance payment received by the eligible entity is not included in the gross income of the eligible entity;

(iv) The payment made by an eligible entity under section 30D(g)(2)(C) (by reason of section 25E(f)) and paragraph (d) of this section to an electing taxpayer is not deductible by the eligible entity;

(v) The payment made by an eligible entity to the electing taxpayer under section 30D(g)(2)(C) (by reason of section 25E(f)) and paragraph (d) of this section is treated as paid by the electing taxpayer to the eligible entity as partial payment of the sale price of the previously-owned clean vehicle. Thus, the repayment by the electing taxpayer is treated as an amount realized by the eligible entity under section 1001 of the Code and the regulations under section 1001; and

(vi) If the eligible entity is a partnership or an S corporation, then—

(A) The IRS will make the advance payment to such partnership or S corporation equal to the amount of the section 25E credit allowed that is transferred to the eligible entity;

(B) Such section 25E credit is reduced to zero and is, for any other purpose of the Code, deemed to have been allowed solely to such entity (and not allocated or otherwise allowed to its partners or shareholders) for such taxable year; and

(C) The amount of the advance payment is not treated as tax exempt income to the partnership or S corporation for purposes of the Code.

(3) ***Form of payment from eligible entity to electing taxpayer.*** The tax treatment of the payment made by the eligible entity to the electing taxpayer described in paragraphs (e)(1) and (2) of this section is the same regardless of whether the payment is made in cash, in the form of a partial payment or down payment for the purchase of the previously-owned clean vehicle, or as a reduction in sale price (without the payment of cash) of the previously-owned clean vehicle.

(4) ***Additional requirements.*** In the case of a credit transfer election, the following additional rules apply:

(i) The requirements of section 30D(f)(1) (regarding basis reduction) and 30D(f)(2) (regarding no double benefit), by reason of section 25E(e), apply to the electing taxpayer as if the credit transfer election were not made (so, for example, the electing taxpayer must reduce the electing taxpayer's basis in the vehicle by the amount of the section 25E credit, regardless of the credit transfer election).

(ii) Section 30D(f)(6) (regarding the election not to take the credit), by reason of section 25E(e), will not apply (in other words, by electing to transfer the credit, the electing taxpayer is electing to take the credit).

(iii) Section 30D(f)(9) (regarding the vehicle identification number requirement), by reason of section 25E(e), and section 25E(d) (regarding the vehicle identification number requirement) will be treated as satisfied if the eligible entity provides the vehicle identification number of such vehicle to the IRS in the form and manner set forth in guidance published in the *Internal Revenue Bulletin* (see § 601.601 of this chapter). The electing taxpayer must also provide the vehicle identification number with their Federal income tax return for the taxable year in which the vehicle is placed in service. *See* section 6213(g)(2)(U) of the Code and § 301.6213-2 of this chapter for rules relating to the omission of a correct vehicle identification number.

(5) ***Examples.*** The following examples illustrate the rules of paragraph (e) of this section.

(i) ***Example 1: Electing taxpayer's regular tax liability less than amount of credit*** —

(A) ***Facts.*** T, an individual, purchases a previously-owned clean vehicle from a dealer, D, which is a C corporation. T satisfies the requirements to be an electing taxpayer and elects to transfer the section 25E credit to D. D is a registered dealer and satisfies the requirements to be an eligible entity. The sale price of the vehicle is $24,000. The section 25E credit otherwise allowable to T is $4,000. D makes the payment required to be made to T in the form of a cash payment of $4,000. T uses the $4,000 as a partial payment for the vehicle. T pays D an additional $20,000 from other funds. T's regular tax liability for the year is less than $4,000.

(B) ***Analysis.*** Under paragraph (e)(1)(i) of this section, T may transfer the credit to D, even though T's regular tax liability is less than $4,000, and no amount of the credit will be recaptured from T on the basis that the allowable credit exceeded T's regular tax liability. D's $4,000 payment to T is not included in T's gross income, and the sale price of the vehicle is $24,000 (including both the $4,000 payment and the additional $20,000 paid by T from other funds), prior to the application of the basis reduction rule of section 30D(f)(1) (by reason of section 25E(e)). After application of the basis reduction rule, T's basis in the vehicle is $20,000. D is eligible to receive an advance payment of $4,000 for the transferred section 25E credit as provided in section 30D(g)(7) (by reason of section 25E(e)) and paragraph (f) of this section. Under paragraph (e)(2) of this section, D may receive the advance payment regardless of whether D's regular tax liability is less than $4,000. The advance payment is not treated as a credit toward D's tax liability (if any), nor is it included in D's gross income. Further, D's $4,000 payment to T is not deductible, and D's amount realized is $24,000 upon the sale of the vehicle (including both the $4,000 payment from D to T that T uses as a partial payment, and the additional $20,000 paid by T from other funds).

(ii) ***Example 2: Non-cash payment by eligible entity to electing taxpayer*** —

(A) ***Facts.*** The facts are the same as in paragraph (e)(5)(i)(A) of this section (facts of *Example 1*), except that D makes the payment to T in the form of a reduction in the sale price of the vehicle (rather than as a cash payment).

(B) ***Analysis.*** Paragraph (e)(3) of this section provides that the application of paragraphs (e)(1) and (2) of this section is not dependent on the form of payment from an eligible entity to an electing taxpayer (for example, a payment in cash or a payment in the form of a reduction in sale price). Thus, the analysis is the same as in paragraph (e)(5)(i)(B) of this section (analysis of *Example 1*).

(iii) ***Example 3: Eligible entity is a partnership*** —

(A) ***Facts.*** The facts are the same as in paragraph (e)(5)(i)(A) of this section (facts of *Example 1*), except that D is a partnership.

(B) ***Analysis.*** The analysis as to T is the same as in paragraph (e)(5)(i)(B) of this section (analysis of *Example 1*). Because D is a partnership, paragraph (e)(2)(vi) of this section applies. Thus, the advance payment is made to the partnership, the credit is reduced to zero and is, for any other purpose of the Code, deemed to have been allowed solely to the partnership (and not allocated or otherwise allowed to its partners) for such taxable year. The amount of the advance payment is not treated as tax exempt income to the partnership for purposes of the Code.

(f) ***Advance payments received by eligible entities*** —

(1) ***In general.*** An eligible entity may receive advance payments from the IRS (corresponding to the amount of the section 25E credit for which a credit transfer election was made by an electing taxpayer to transfer the credit to the eligible entity pursuant to section 30D(g) (by reason of section 25E(f)) and paragraph (d) of this section) before the eligible entity files its Federal income tax return or information return, as appropriate, for the taxable year with respect to which the credit transfer election corresponds. This advance payment program is the exclusive mechanism for an eligible entity to receive the section 25E credit transferred pursuant to section 25E(f) and paragraph (d) of this section. An eligible entity receiving a transferred section 25E credit may not claim the credit on a tax return.

(2) ***Requirements for a registered dealer to become an eligible entity.*** A registered dealer qualifies as an eligible entity, and may therefore receive an advance payment in connection with a credit transfer election, if it meets the following requirements:

(i) The registered dealer submits all required registration information and is in dealer tax compliance;

(ii) The registered dealer retains information regarding the credit transfer election for three calendar years beginning with the year immediately after the year in which the vehicle is placed in service, as described in guidance published in the *Internal Revenue Bulletin* (see § 601.601 of this chapter);

(iii) The registered dealer meets any other requirements set forth in guidance published in the *Internal Revenue Bulletin* (see § 601.601 of this chapter) or in forms and instructions; and

(iv) The registered dealer meets any other requirements of section 25E(f) by reference to section 30D(g), including those in section 30D(g)(2)(B) through (E).

(g) ***Increase in tax*** —

(1) ***Recapture if electing taxpayer exceeds modified adjusted gross income limitation.*** If an electing taxpayer has modified adjusted gross income that exceeds the limitation in section 25E(b) and § 1.25E-1(b), then the income tax imposed on such taxpayer under chapter 1 of the Code (chapter 1) for the taxable year in which the vehicle was placed in service is increased by the amount of the payment received by the taxpayer. The electing taxpayer must recapture such amounts on the Federal income tax return described in paragraph (h) of this section.

(2) ***Excessive payments*** —

(i) ***In general.*** This paragraph provides rules under section 25E(f) by reference to section 30D(g)(7)(B), which provides that rules similar to the rules of section 6417(d)(6) of the Code apply to the advance payment program. In the case of any advance payment to an eligible entity that the IRS determines constitutes an excessive payment, the tax imposed on the eligible entity under chapter 1, regardless of whether such entity would otherwise be subject to tax under chapter 1, for the taxable year in which such determination is made will be increased by the sum of the following amounts—

(A) The amount of the excessive payment; plus

(B) An amount equal to 20 percent of such excessive payment.

(ii) ***Reasonable cause.*** The amount described in paragraph (g)(2)(i)(B) of this section will not apply to an eligible entity if the eligible entity demonstrates to the satisfaction of the IRS that the excessive payment resulted from reasonable cause. In the case of a previously-owned clean vehicle (with respect to which a credit transfer election was made by the electing taxpayer) that is returned to the eligible entity within 30 days of being placed in service, the eligible entity will be treated as having demonstrated that the excessive payment resulted from reasonable cause.

(iii) ***Excessive payment defined.*** Excessive payment means an advance payment made—

(A) To a registered dealer that fails to meet the requirements to be an eligible entity provided in paragraph (f)(2) of this section; or

(B) Except as provided in paragraph (g)(2)(iv) of this section, to an eligible entity with respect to a previously-owned clean vehicle to the extent the payment exceeds the amount of the credit that, without application of section 25E(f) and this section, would be otherwise allowable to the electing taxpayer with respect to the vehicle for such tax year.

(iv) ***Special rule for cases in which electing taxpayer's modified adjusted gross income exceeds the limitation.*** Any excess described in paragraph (g)(2)(iii)(B) of this section that arises due to the electing taxpayer exceeding the limitation based on modified adjusted gross income in section 25E(b) and § 1.25E-1(b) is not an excessive payment. Instead, the amount of the advance payment is recaptured from the taxpayer under section 25E(e) and paragraph (g)(1) of this section.

(3) ***Examples.*** The following examples illustrate the excessive payment rules in paragraph (g)(2) of this section.

(i) ***Example 1: Registered dealer is not an eligible entity*** —

(A) ***Facts.*** In 2024, D, a registered dealer, receives an advance payment of $4,000 with respect to a credit transferred pursuant to section 25E(f) and paragraph (d) of this section for a previously-owned clean vehicle, vehicle V. In 2025, the IRS determines that D was not an eligible entity with respect to vehicle V at the time it received the advance payment in 2024 because D failed to satisfy one of the requirements of section 30D(g)(2) (applicable by reason of section 25E(e)) and paragraph (f)(2) of this section. D is unable to show reasonable cause for the failure.

(B) ***Analysis.*** Under paragraph (g)(2)(i) of this section, the tax imposed on D is increased by the amount of the excessive payment if the advance payment received by D constitutes an excessive payment. Under paragraph (g)(2)(iii) of this section, the entire amount of the $4,000 advance payment received by D is an excessive payment because D did not meet the requirements to be an eligible entity under section 30D(g)(2) (applicable by reason of section 25E(f) and paragraph (f)(2) of this section). Additionally, because D cannot show reasonable cause for its failure to meet these requirements, the tax imposed under chapter 1 on D is increased by $4,800 in 2025 (the taxable year of the IRS determination). This is comprised of the $4,000 excessive payment plus the $800 penalty, calculated as 20% of the $4,000 excessive payment (20% × $4,000 = $800). This treatment applies regardless of whether D is otherwise subject to tax under chapter 1 (for example, if D is a partnership).

(ii) ***Example 2: Incorrect manufacturer certifications*** —

(A) ***Facts.*** In 2024, T, a taxpayer, makes an election to transfer a $4,000 credit pursuant to section 25E(f) and paragraph (d) of this section to registered dealer, E, with respect to vehicle V. M, the manufacturer of vehicle V, certified to the IRS that vehicle V has a battery with a capacity of not less than 7 kilowatt hours (kwh). T and vehicle V otherwise meet the eligibility requirements for the section 25E credit. T, in reliance on the manufacturer's certification to the IRS regarding vehicle V's battery capacity, transfers the section 25E credit to E. Subsequent to T's purchase of vehicle V and election to transfer the $4,000 credit to E, M reports to the IRS that vehicle V has a battery capacity of less than 7 kwh.

(B) ***Analysis.*** Section 1.25E-2(g) provides that T may rely on the information and certifications provided in M's written report to the IRS for purposes of determining whether vehicle V is a previously-owned clean vehicle, as defined in section 25E(c)(1) and § 1.25E-1(b)(11). Because T relied on M's certification to the IRS regarding vehicle V's battery capacity and T and vehicle V otherwise meet the eligibility requirements for the section 25E credit, vehicle V is deemed to meet the requirements of section 30D(d)(1)(F) (as cross-referenced in section 25E(c)(1)(D)(i)). Under paragraph (g)(2)(iii)(B) of this section, an advance payment to an eligible entity with respect to a vehicle is an excessive payment to the extent the payment exceeds the amount of the credit that, without a credit transfer election, would be otherwise allowable to the electing taxpayer with respect to the vehicle for such taxable year. Because the amount of the credit that would be allowable to T for 2024 is $4,000, and T transferred the $4,000 credit to E, there is no excessive payment with respect to E.

(h) ***Return requirement.*** An electing taxpayer that makes a credit transfer election must file a Federal income tax return for the taxable year in which the credit transfer election is made and indicate such election on the return in accordance with the instructions to the form on which the return is made. The electing taxpayer must attach to such return a completed Form 8936, *Clean Vehicle Credits,* or successor form, that includes all information required by the form and instructions. The electing taxpayer must also attach a completed Schedule A (Form 8936), *Clean Vehicle Credit Amount,* or successor form or schedule, that includes all information required by the schedule and instructions, such as the vehicle identification number of the previously-owned clean vehicle.

(i) ***Two credit transfer elections per year.*** A taxpayer may make no more than two credit transfer elections per taxable year, consisting of either two elections to transfer section 30D credits, or one section 30D credit and one election to transfer a section 25E credit. In the case of taxpayers who file a joint return, each individual taxpayer may make no more than two credit transfer elections per taxable year.

(j) ***Severability.*** The provisions of this section are separate and severable from one another. If any provision of this section is stayed or determined to be invalid, it is the agencies' intention that the remaining provisions will continue in effect.

(k) ***Applicability date.*** This section applies to previously-owned vehicles placed in service after December 31, 2023, in taxable years ending after December 31, 2023.

[T.D. 9995, 89 FR 37747, May 6, 2024]

§ 1.28-0 Credit for clinical testing expenses for certain drugs for rare diseases or conditions; table of contents.

In order to facilitate use of § 1.28-1, this section lists the paragraphs, subparagraphs, and subdivisions contained in § 1.28-1.

(a) General rule.

(b) Qualified clinical testing expenses.

(1) In general.

(2) Modification of section 41(b).

(3) Exclusion for amounts funded by another person.

(i) In general.

(ii) Clinical testing in which taxpayer retains no rights.

(iii) Clinical testing in which taxpayer retains substantial rights.

(A) In general.

(B) Drug by drug determination.

(iv) Funding for qualified clinical testing expenses determinable only in subsequent taxable years.

(4) Special rule governing the application of section 41(b) beyond its expiration date.

(c) Clinical testing.

(1) In general.

(2) Definition of “human clinical testing”.

(3) Definition of “carried out under” section 505(i).

(d) Definition and special rules.

(1) Definition of “rare disease or condition”.

(i) In general.

(ii) Cost of developing and making available the designated drug.

(A) In general.

(B) Exclusion of costs funded by another person.

(C) Computation of cost.

(D) Allocation of common costs. Costs for developing and making available the designated drug for both the disease or condition for which it is designated and one or more other diseases or conditions.

(iii) Recovery from sales.

(iv) Recordkeeping requirements.

(2) Tax liability limitation.

(i) Taxable years beginning after December 31, 1986.

(ii) Taxable years beginning before January 1, 1987, and after December 31, 1983.

(iii) Taxable years beginning before January 1, 1984.

(3) Special limitations on foreign testing.

(i) Clinical testing conducted outside the United States—In general.

(ii) Insufficient testing population in the United States.

(A) In general.

(B) “Insufficient testing population”.

(C) “Unrelated to the taxpayer”.

(4) Special limitations for certain corporations.

(i) Corporations to which section 936 applies.

(ii) Corporations to which section 934(b) applies.

(5) Aggregation of expenditures.

(i) Controlled group of corporations: organizations under common control.

(A) In general.

(B) Definition of controlled group of corporations.

(C) Definition of organization.

(D) Determination of common control.

(ii) Tax accounting periods used.

(A) In general.

(B) Special rule where the timing of clinical testing is manipulated.

(iii) Membership during taxable year in more than one group.

(iv) Intra-group transactions.

(A) In general.

(B) In-house research expenses.

(C) Contract research expenses.

(D) Lease payments.

(E) Payments for supplies.

(6) Allocations.

(i) Pass-through in the case of an S corporation

(ii) Pass-through in the case of an estate or a trust.

(iii) Pass-through in the case of a partnership.

(A) In general.

(B) Certain partnership non-business expenditures.

(C) Apportionment.

(iv) Year in which taken into account.

(v) Credit allowed subject to limitation.

(7) Manner of making an election.

[T.D. 8232, 53 FR 38710, Oct. 3, 1988; 53 FR 40879, Oct. 19, 1988]

§ 1.28-1 Credit for clinical testing expenses for certain drugs for rare diseases or conditions.

(a) ***General rule.*** Section 28 provides a credit against the tax imposed by chapter 1 of the Internal Revenue Code. The amount of the credit is equal to 50 percent of the qualified clinical testing expenses (as defined in paragraph (b) of this section) for the taxable year. The credit applies to qualified clinical testing expenses paid or incurred by the taxpayer after December 31, 1982, and before January 1, 1991. The credit may not exceed the taxpayer's tax liability for the taxable year (as determined under paragraph (d)(2) of this section).

(b) ***Qualified clinical testing expenses*** —

(1) ***In general.*** Except as otherwise provided in paragraph (b)(3) of this section, the term "qualified clinical testing expenses" means the amounts which are paid or incurred during the taxable year which would constitute "qualified research expenses" within the meaning of section 41(b) (relating to the credit for increasing research activities) as modified by section 28(b)(1)(B) and paragraph (b)(2) of this section. For example, amounts paid or incurred for the acquisition of depreciable property used in the conduct of clinical testing (as defined in paragraph (c) of this section) are not qualified clinical testing expenses.

(2) ***Modification of section 41(b).*** For purposes of paragraph (b)(1) of this section, section 41(b) is modified by substituting "clinical testing" for "qualified research" each place it appears in paragraph (2) of section 41(b) (relating to in-house research expenses) and paragraph (3) of section 41(b) (relating to contract research expenses). In addition, "100 percent" is substituted for "65 percent" in paragraph (3)(A) of section 41(b).

(3) ***Exclusion for amounts funded by another person*** —

(i) ***In general.*** The term "qualified clinical testing expenses" shall not include any amount which would otherwise constitute qualified clinical testing expenses, to the extent such amount is funded by a grant, contract, or otherwise by another person (or any governmental entity). The determination of the extent to which an amount is funded shall be made in light of all the facts and circumstances. For a special rule regarding funding between commonly controlled businesses, see paragraph (d)(5)(iv) of § 1.28-1.

(ii) ***Clinical testing in which taxpayer retains no rights.*** If a taxpayer conducting clinical testing with respect to the designated drug for another person retains no substantial rights in the clinical testing under the agreement providing for the clinical testing the taxpayer's clinical testing expenses are treated as fully funded for purposes of section 28(b)(1)(C). Thus, for example, if the taxpayer incurs clinical testing expenses under an agreement that confers on another person the exclusive right to exploit the results of the clinical testing, those expenses do not constitute qualified clinical testing expenses because they are fully funded under this paragraph (b)(3)(ii). Incidental benefits to the taxpayer from the conduct of the clinical testing (for example, increased experience in the field of human clinical testing) do not constitute substantial rights in the clinical testing.

(iii) ***Clinical testing in which taxpayer retains substantial rights*** —

(A) ***In general.*** If a taxpayer conducting clinical testing with respect to the designated drug for another person retains substantial rights in the clinical testing under the agreement providing for the clinical testing, the clinical testing expenses are funded to the extent of the payments (and fair market value of any property at the time of transfer) to which the taxpayer becomes entitled by conducting the clinical testing. The taxpayer shall reduce

the amount paid or incurred by the taxpayer for the clinical testing expenses that would, but for section 28(b)(1)(C) constitute qualified clinical testing expenses of the taxpayer by the amount of the funding determined under the preceding sentence. Rights retained in the clinical testing are not treated as property for purposes of this paragraph (b)(3)(iii)(A). If the property that is transferred to the taxpayer is to be consumed in the clinical testing (for example, supplies), the taxpayer should exclude the value of that property from both the payments received and the expenses paid or incurred for the clinical testing.

(B) ***Drug by drug determination.*** The provisions of this paragraph (b)(3) shall be applied separately to each designated drug tested by the taxpayer.

(iv) ***Funding for qualified clinical testing expenses determinable only in subsequent taxable years.*** If, at the time the taxpayer files its return for a taxable year, it is impossible to determine to what extent some or all of the qualified clinical testing expenses may be funded, the taxpayer shall treat the clinical testing expenses as fully funded for purposes of that return. When the amount of funding for qualified clinical testing expenses is finally determined, the taxpayer should amend the return and any interim returns to reflect the amount of funding for qualified clinical testing expenses.

(4) ***Special rule governing the application of section 41(b) beyond its expiration date.*** For purposes of section 28 and this section, section 41(b), as amended, and the regulations thereunder shall be deemed to remain in effect after December 31, 1988.

(c) ***Clinical testing*** —

(1) ***In general.*** The term "clinical testing" means any human clinical testing which—

(i) Is carried out under an exemption under section 505(i) of the Federal Food, Drug, and Cosmetic Act (21 U.S.C. 355(i)) and the regulations relating thereto (21 CFR part 312) for the purpose of testing a drug for a rare disease or condition as defined in paragraph (d)(1) of this section,

(ii) Occurs after the date the drug is designated as a drug for a rare disease or condition under section 526 of the Federal Food, Drug, and Cosmetic Act (21 U.S.C. 360bb),

(iii) Occurs before the date on which an application for the designated drug is approved under section 505(b) of the Federal Food, Drug, and Cosmetic Act (21 U.S.C. 355(b)) or, if the drug is a biological product (other than a radioactive biological product intended for human use), before the date on which a license for such drug is issued under section 351 of the Public Health Services Act (42 U.S.C. 262), and

(iv) Is conducted by or on behalf of the taxpayer to whom the designation under section 526 of the Federal Food, Drug, and Cosmetic Act applies.

Human clinical testing shall be taken into account under this paragraph (c)(1) only to the extent that the testing relates to the use of a drug for the rare disease or condition for which the drug was designated under section 526 of the Federal Food, Drug, and Cosmetic Act. For purposes of paragraph (c)(1)(i) of this section the testing under section 505(i) exemption procedures (21 CFR part 312) of a biological product (other than a radioactive biological product intended for human use) pursuant to 21 CFR § 601.21 is deemed to be carried out under an exemption under section 505(i) of the Federal Food, Drug, and Cosmetic Act.

(2) ***Definition of "human clinical testing."*** Testing is considered to be human clinical testing only to the extent that it uses human subjects to determine the effect of the designated drug on humans and is necessary for the designated drug either to be approved under section 505(b) of the Federal Food, Drug, and Cosmetic Act and the regulations thereunder (21 CFR part 314), or if the designated drug is a biological product (other than a radioactive biological product intended for human use), to be licensed under section 351 of the Public Health Services Act and the regulations thereunder (21 CFR part 601). For purposes of this paragraph (c)(2), a human subject is an individual who is a participant in research, either as a recipient of the drug or as a control. A subject may be either a healthy individual or a patient.

(3) ***Definition of "carried out under" section 505(i).*** Human clinical testing is not carried out under section 505(i) of the Federal Food, Drug, and Cosmetic Act and the regulations thereunder (21 CFR part 312) unless the primary purpose of the human clinical testing is to ascertain the data necessary to qualify the designated drug for sale in the United States, and not to ascertain data unrelated or only incidentally related to that needed to qualify the designated drug. Whether or not this primary purpose test is met shall be determined in light of all of the facts and circumstances.

(d) ***Definition and special rules*** —

(1) ***Definition of "rare disease or condition"*** —

(i) ***In general.*** The term "rare disease or condition" means any disease or condition which—

(A) Afflicts 200,000 or fewer persons in the United States, or

(B) Afflicts more than 200,000 persons in the United States but for which there is no reasonable expectation that the cost of developing and making available in the United States (as defined in section 7701(a)(9)) a drug for such disease or condition will be recovered from sales in the United States (as so defined) of such drug.

Determinations under paragraph (d)(1)(i)(B) of this section with respect to any drug shall be made on the basis of the facts and circumstances as of the date such drug is designated under section 526 of the Federal Food, Drug, and Cosmetic Act. Examples of diseases or conditions which in 1987 afflicted 200,000 or fewer persons in the United States are Duchenne dystrophy, one of the muscular dystrophies; Huntington's disease, a hereditary chorea; myoclonus; Tourette's syndrome; and amyotrophic lateral sclerosis (ALS or Lou Gehrig's disease).

(ii) ***Cost of developing and making available the designated drug*** —

(A) ***In general.*** Except as otherwise provided in this paragraph (d)(1)(ii), the taxpayer's computation of the cost of developing and making available in the United States the designated drug shall include only the costs that the taxpayer (or any person whose right to make sales of the drug is directly or indirectly derived from the taxpayer, e.g., a licensee or transferee) has incurred or reasonably expects to incur in developing and making available in the United States the designated drug for the disease or condition for which it is designated. For example, if, prior to designation under section 526, the taxpayer incurred costs of $125,000 to test the drug for the rare disease or condition for which it is subsequently designated and incurred $500,000 to test the same drug for other diseases, and if, on the date of designation, the taxpayer expects to incur costs of $1.2 million to test the drug for the rare disease or condition for which it is designated, the taxpayer shall include in its cost computation both the $125,000 incurred prior to designation and the

$1.2 million expected to be incurred after designation to test the drug for the rare disease or condition for which it is designated. The taxpayer shall not include the $500,000 incurred to test the drug for other diseases.

(B) ***Exclusion of costs funded by another person.*** In computing the cost of developing and making available in the United States the designated drug, the taxpayer shall not include any cost incurred or expected to be incurred by the taxpayer to the extent that the cost is funded or is reasonably expected to be funded (determined under the principles of paragraph (b)(3)) by a grant, contract, or otherwise by another person (or any governmental entity).

(C) ***Computation of cost.*** The cost computation shall use only reasonable costs incurred after the first indication of an orphan application for the designated drug. Such costs shall include the costs of obtaining data needed, and of meetings to be held, in connection with a request for FDA assistance under section 525 of the Federal, Food, Drug, and Cosmetic Act (21 U.S.C. 360aa) or a request for orphan designation under section 526 of that Act; costs of determining patentability of the drug; costs of screening, animal and clinical studies; costs associated with preparation of a Notice of Claimed Investigational Exemption for a New Drug (IND) and a New Drug Application (NDA); costs of possible distribution of drug under a “treatment” protocol; costs of development of a dosage form; manufacturing costs; distribution costs; promotion costs; costs to maintain required records and reports; and costs of the taxpayer in acquiring the right to market a drug from the owner of that right prior to designation. The taxpayer shall also include general overhead, depreciation costs and premiums for insurance against liability losses to the extent that the taxpayer can demonstrate that these costs are properly allocable to the designated drug under the established standards of financial accounting and reporting of research and development costs.

(D) ***Allocation of common costs. Costs for developing and making available the designated drug for both the disease or condition for which it is designated and one or more other diseases or conditions.*** In the case where the costs incurred or expected to be incurred in developing and making available the designated drug for the disease or condition for which it is designated are also incurred or expected to be incurred in developing and making available in the United States the same drug for one or more other diseases or conditions (whether or not they are also designated or expected to be designated), the costs shall be allocated between the cost of developing and making available the designated drug for the disease or condition for which the drug is designated and the cost of developing and making available the designated drug for the other diseases or conditions. The amount of the common costs to be allocated to the cost of developing and making available the designated drug for the disease or condition for which it is designated is determined by multiplying the common costs by a fraction the numerator of which is the sum of the expected amount of sales in the United States of the designated drug for the disease or condition for which the drug is designated and the denominator of which is the total expected amount of sales in the United States of the designated drug. For example, if prior to designation, the taxpayer incurs (among other costs) costs of $100,000 in testing the designated drug for its toxic effect on animals (without reference to any disease or condition), and if the taxpayer expects to recover $500,000 from sales in the United States of the designated drug for disease X, the disease for which the drug is designated, and further expects to recover another $1.5 million from the sales in the

United States of the designated drug for disease Y, the taxpayer must allocate a proportionate amount of the common costs of $100,000 to the cost of developing and making available the designated drug for both disease X and disease Y. Since the ratio of the expected amount of sales in the United States of the designated drug for disease X to the total of both the expected amount of sales in the United States of the designated drug for disease X and the expected amount of sales in the United States of the designated drug for disease Y is $500,000/$2,000,000, 25% of the common costs of $100,000 (*i.e.,* $25,000) is allocated to the cost of developing and making available the designated drug for disease X.

(iii) ***Recovery from sales.*** In determining whether the taxpayer's cost described in paragraph (d)(1)(ii) of this section will be recovered from sales in the United States of the designated drug for the disease or condition for which the drug is designated, the taxpayer shall include anticipated sales by the taxpayer or any person whose right to make such sales is directly or indirectly derived from the taxpayer (such as a licensee or transferee). The anticipated sales shall be based upon the size of the anticipated patient population for which the designated drug would be useful, including the following factors: the degree of effectiveness and safety of the designated drug, if known: the projected fraction of the anticipated patient population expected to be given the designated drug and to continue to take it; other available agents and other types of therapy; the likelihood that superior agents will become available within a few years; and the number of years during which the designated drug would be exclusively available, e.g., under a patent.

(iv) ***Recordkeeping requirements.*** The taxpayer shall keep records sufficient to substantiate the cost and sales estimates made pursuant to this paragraph (d)(1). The records required by this paragraph (d)(1)(iv) shall be retained so long as the contents thereof may become material in the administration of section 28.

(2) ***Tax liability limitation*** —

(i) ***Taxable years beginning after December 31, 1986.*** The credit allowed by section 28 shall not exceed the excess (if any) of—

(A) The taxpayer's regular tax liability for the taxable year (as defined in section 26(b)), reduced by the sum of the credits allowable under—

(*1*) Section 21 (relating to expenses for household and dependent care services necessary for gainful employment),

(*2*) Section 22 (relating to the elderly and permanently and totally disabled),

(*3*) Section 23 (relating to residential energy),

(*4*) Section 25 (relating to interest on certain home mortgages), and

(*5*) Section 27 (relating to taxes on foreign countries and possessions of the United States), over

(B) The tentative minimum tax for the taxable year (as determined under section 55(b)(1)).

(ii) ***Taxable years beginning before January 1, 1987, and after December 31, 1983.*** The credit allowed by section 28 shall not exceed the taxpayer's tax liability for the taxable year (as defined in section 26 (b) prior to its amendment by the Tax Reform Act of 1986 (Pub. L. 99-514)), reduced by the sum of the credits allowable under—

(A) Section 21 (relating to expenses for household dependent care services necessary for gainful employment),

(B) Section 22 (relating to the elderly and permanently and totally disabled),

(C) Section 23 (relating to residential energy),

(D) Section 24 (relating to contributions to candidates for public office),

(E) Section 25 (relating to interest on certain home mortgages), and

(F) Section 27 (relating to the taxes on foreign countries and possessions of the United States).

(iii) ***Taxable years beginning before January 1, 1984.*** The credit allowed by section 28 shall not exceed the amount of the tax imposed by chapter 1 of the Internal Revenue Code for the taxable year, reduced by the sum of the credits allowable under the following sections as designated prior to the enactment of the Tax Reform Act of 1984 (Pub. Law 98-369):

(A) Section 32 (relating to tax withheld at source on nonresident aliens and foreign corporations and on tax-free convenant bonds),

(B) Sections 33 (relating to taxes of foreign countries and possessions of the United States),

(C) Section 37 (relating to the retirement income),

(D) Section 38 (relating to investment in certain depreciable property),

(E) Section 40 (relating to expenses of work incentive programs).

(F) Section 41 (relating to contributions to candidates for public office).

(G) Section 44 (relating to purchase of new principal residence).

(H) Section 44A (relating to expenses for household and dependent care services necessary for gainful employment).

(I) Section 44B (relating to employment of certain new employees).

(J) Section 44C (relating to residential energy).

(K) Section 44D (relating to producing fuel from a nonconventional source).

(L) Section 44E (relating to alcohol used as fuel).

(M) Section 44F (relating to increasing research activities), and

(N) Section 44G (relating to employee stock ownership).

The term “tax imposed by chapter 1” as used in this paragraph (d)(2)(iii) does not include any tax treated as not imposed by chapter 1 of the Internal Revenue Code under the last sentence of section 53(a).

(3) ***Special limitations on foreign testing*** —

(i) ***Clinical testing conducted outside of the United States—In general.*** Except as otherwise provided in this paragraph (d)(3), expenses paid or incurred with respect to clinical testing conducted outside the United States (as defined in section 7701(a)(9)) are not eligible for credit under this section. Thus, for example, wages paid an employee clinical investigator for clinical testing conducted in medical facilities in the United States and Mexico generally must be apportioned between the clinical testing conducted within the United States and the clinical testing conducted outside the United States, and only the wages apportioned to the clinical testing conducted within the United States are qualified clinical testing expenses.

(ii) ***Insufficient testing population in the United States*** —

(A) ***In general.*** If clinical testing is conducted outside of the United States because there is an insufficient testing population in the United States, and if the clinical testing is conducted by a United States person (as defined in section 7701(a)(30)) or is conducted by any other person unrelated to the taxpayer to whom the designation under section 526 of the Federal Food, Drug, and Cosmetic Act applies, then the expenses paid or incurred for clinical testing conducted outside of the United States are eligible for the credit provided by section 28.

(B) ***"Insufficient testing population."*** The testing population in the United States is insufficient if there are not within the United States the number of available and appropriate human subjects needed to produce reliable data from the clinical investigation.

(C) ***"Unrelated to the taxpayer."*** For the purpose of determining whether a person is unrelated to the taxpayer to whom the designation under section 526 of the Federal Food, Drug, and Cosmetic Act and the regulations thereunder applies, the rules of section 613A(d)(3) shall apply except that the number "5" in section 613A(d)(3) (A), (B), and (C) shall be deleted and the number "10" inserted in lieu thereof.

(4) ***Special limitations for certain corporations*** —

(i) ***Corporations to which section 936 applies.*** Expenses paid or incurred for clinical testing conducted either inside or outside the United States by a corporation to which section 936 (relating to Puerto Rico and possessions tax credit) applies are not eligible for the credit under section 28.

(ii) ***Corporations to which section 934(b) applies.*** For taxable years beginning before January 1, 1987, expenses paid or incurred for clinical testing conducted either inside or outside the United States by a corporation to which section 934(b) (relating to the limitation on reduction in income tax liability incurred to the Virgin Islands), as in effect prior to its amendment by the Tax Reform Act of 1986, applies are not eligible for the credit under section 28. For taxable years beginning after December 31, 1986, see section 1277(c)(1) of the Tax Reform Act of 1986 (100 Stat. 2600) which makes the rule set forth in the preceding sentence inapplicable with respect to corporations created or organized in the Virgin Islands only if (and so long as) an implementing agreement described in that section is in effect between the United States and the Virgin Islands.

(5) ***Aggregation of expenditures*** —

(i) ***Controlled group of corporations; organizations under common control*** —

(A) ***In general.*** In determining the amount of the credit allowable with respect to an organization that at the end of its taxable year is a member of a controlled group of corporations or a member of a group of organizations under common control, all members of the group are treated as a single taxpayer and the credit (if any) allowable to the member is determined on the basis of its proportionate share of the qualified clinical testing expenses of the aggregated group.

(B) ***Definition of controlled group of corporations.*** For purposes of this section, the term "controlled group of corporations" shall have the meaning given to the term by section 41(f)(5).

(C) ***Definition of organization.*** For purposes of this section, an organization is a sole proprietorship, a partnership, a trust, an estate, or a corporation, that is carrying on a trade or business (within the meaning of section 162). For purposes of this section, any corporation that is a member of a commonly controlled group shall be deemed to be carrying on a trade or business if any other member of that group is carrying on any trade or business.

(D) ***Determination of common control.*** Whether organizations are under common control shall be determined under the principles set forth in paragraphs (b) through (g) of 26 CFR 1.52-1.

(ii) ***Tax accounting periods used*** —

(A) ***In general.*** The credit allowable to a member of a controlled group of corporations or a group of organizations under common control is that member's share of the aggregate credit computed as of the end of such member's taxable year.

(B) ***Special rule where the timing of clinical testing is manipulated.*** If the timing of clinical testing by members using different tax accounting periods is manipulated to generate a credit in excess of the amount that would be allowable if all members of the group used the same tax accounting period, the district director may require all members of the group to calculate the credit in the current taxable year and all future years by using the "conformed years" method. Each member computing a credit under the "conformed years" method shall compute the credit as if all members of the group had the same taxable year as the computing member.

(iii) ***Membership during taxable year in more than one group.*** An organization may be a member of only one group for a taxable year. If, without application of this paragraph (d)(5)(iii), an organization would be a member of more than one group at the end of its taxable year, the organization shall be treated as a member of the group in which it was included for its preceding taxable year. If the organization was not included for its preceding taxable year in any group in which it could be included as of the end of its taxable year, the organization shall designate in its timely filed return the group in which it is being included. If the return for a taxable year is due before May 1, 1985, the organization may designate its group membership through an amended return for that year filed on or before April 30, 1985. If the organization does not so designate, then the district director with audit jurisdiction of the return will determine the group in which the business is to be included.

(iv) ***Intra-group transactions*** —

(A) ***In general.*** Because all members of a group under common control are treated as a single taxpayer for purposes of determining the credit, transactions between members of the group are generally disregarded.

(B) ***In-house research expenses.*** If one member of a group conducts clinical testing on behalf of another member, the member conducting the clinical testing shall include in its qualified clinical testing expenses any in-house research expenses for that work and shall not treat any amount received or accrued from the other member as funding the clinical testing. Conversely, the member for whom the clinical testing is conducted shall not treat any part of any amount paid or incurred as a contract research expense. For purposes of determining whether the in-house research for that work is clinical testing, the member performing the clinical testing shall be treated as carrying on any trade or business carried on by the member on whose behalf the clinical testing is performed.

(C) ***Contract research expenses.*** If a member of a group pays or incurs contract research expenses to a person outside the group in carrying on the member's trade or business, that member shall include those expenses as qualified clinical testing expenses. However, if the expenses are not paid or incurred in carrying on any trade or business of that member, those expenses may be taken into account as contract research expenses by another member of the group provided that the other member—

(*1*) Reimburses the member paying or incurring the expenses, and

(*2*) Carries on a trade or business to which the clinical testing relates.

(D) ***Lease payments.*** Amounts paid or incurred to another member of the group for the lease of personal property owned by a person outside the group shall be taken into account as in-house research expenses for purposes of section 28 only to the extent of the lesser of—

(*1*) The amount paid or incurred to the other member, or

(*2*) The amount of the lease expense paid to a person outside the group.

The amount paid or incurred to another member of the group for the lease of personal property owned by a member of the group is not taken into account for purposes of section 28.

(E) ***Payment for supplies.*** Amounts paid or incurred to another member of the group for supplies shall be taken into account as in-house research expenses for purposes of section 28 only to the extent of the lesser of—

(*1*) The amount paid or incurred to the other member, or

(*2*) The amount of the other member's basis in the supplies.

(6) ***Allocations*** —

(i) ***Pass-through in the case of an S corporation.*** In the case of an S corporation (as defined in section 1361), the amount of the credit for qualified clinical testing expenses computed for the corporation for any taxable year shall be allocated among the persons who are shareholders of the corporation during the taxable year according to the provisions of section 1366 and section 1377.

(ii) ***Pass-through in the case of an estate or a trust.*** In the case of an estate or a trust, the amount of the credit for qualified clinical testing expenses computed for the estate or trust for any taxable year shall be apportioned between the estate or trust and the beneficiaries on the basis of the income of the estate or trust allocable to each.

(iii) ***Pass-through in the case of a partnership*** —

(A) ***In general.*** In the case of a partnership, the credit for qualified clinical testing expenses computed for the partnership for any taxable year shall be apportioned among the persons who are partners during the taxable year in accordance with section 704 and the regulations thereunder.

(B) ***Certain partnership non-business expenditures.*** A partner's share of an in-house research expense or contract research expense paid or incurred by a partnership other than in carrying on a trade or business of the partnership constitutes a qualified clinical testing expense of the partner if—

(*1*) The partner is entitled to make independent use of the result of the clinical testing, and

(*2*) The clinical testing expense paid or incurred in carrying on the clinical testing would have been paid or incurred by the partner in carrying on a trade or business of the partner if the partner had carried on the clinical testing that was in fact carried on by the partnership.

(C) ***Apportionment.*** Qualified clinical testing expenses to which paragraph (d)(6)(iii)(B) of this section applies shall be apportioned among the persons who are partners during the taxable year in accordance with section 704 and the regulations thereunder. For purposes of section 28, these expenses shall be treated as paid or incurred directly by the partners rather than by the partnership. Thus, the partnership shall disregard these expenses in computing the credit to be apportioned under paragraph (d)(6)(iii)(A) of this section, and each partner shall aggregate the portion of these expenses allocated to the partner with other qualified clinical testing expenses of the partner in making the computations under section 28.

(iv) ***Year in which taken into account.*** An amount apportioned to a person under paragraph (d)(6) of this section shall be taken into account by the person in the taxable year of such person in which or with which the taxable year of the corporation, estate, trust, or partnership (as the case may be) ends.

(v) ***Credit allowed subject to limitation.*** Any person to whom any amount has been apportioned under paragraph (d)(6)(i), (ii), or (iii) of this section is allowed, subject to the limitation provided in section 28(d)(2), a credit for that amount.

(7) ***Manner of making an election.*** To make an election to have section 28 apply for its taxable year, the taxpayer shall file Form 6765 (Credit for Increasing Research Activities (or for claiming the orphan drugs credit)) containing all the information required by that form.

[T.D. 8232, 53 FR 38711, Oct. 3, 1988; 53 FR 40879, Oct. 19, 1988; 53 FR 41013, Oct. 19, 1988]

Credits Against Tax

CREDITS ALLOWABLE UNDER SECTIONS 30 THROUGH 45D

§ 1.30-1 Definition of qualified electric vehicle and recapture of credit for qualified electric vehicle.

(a) ***Definition of qualified electric vehicle.*** A qualified electric vehicle is a motor vehicle that meets the requirements of section 30(c). Accordingly, a qualified electric vehicle does not include any motor vehicle that has ever been used (for either personal or business use) as a non-electric vehicle.

(b) ***Recapture of credit for qualified electric vehicle*** —

(1) ***In general*** —

(i) ***Addition to tax.*** If a recapture event occurs with respect to a taxpayer's qualified electric vehicle, the taxpayer must add the recapture amount to the amount of tax due in the taxable year in which the recapture event occurs. The recapture amount is not treated as income tax imposed on the taxpayer by chapter 1 of the Internal Revenue Code for purposes of computing the alternative minimum tax or determining the amount of any other allowable credits for the taxable year in which the recapture event occurs.

(ii) ***Reduction of carryover.*** If a recapture event occurs with respect to a taxpayer's qualified electric vehicle, and if a portion of the section 30 credit for the cost of that vehicle was disallowed under section 30(b)(3)(B) and consequently added to the taxpayer's minimum tax credit pursuant to section 53(d)(1)(B)(iii), the taxpayer must reduce its minimum tax credit carryover by an amount equal to the portion of any minimum tax credit carryover attributable to the disallowed section 30 credit, multiplied by the recapture percentage for the taxable year of recapture. Similarly, the taxpayer must reduce any other credit carryover amounts (such as under section 469) by the portion of the carryover attributable to section 30, multiplied by the recapture percentage.

(2) ***Recapture event*** —

(i) ***In general.*** A recapture event occurs if, within 3 full years from the date a qualified electric vehicle is placed in service, the vehicle ceases to be a qualified electric vehicle. A vehicle ceases to be a qualified electric vehicle if—

(A) The vehicle is modified so that it is no longer primarily powered by electricity;

(B) The vehicle is used in a manner described in section 50(b); or

(C) The taxpayer receiving the credit under section 30 sells or disposes of the vehicle and knows or has reason to know that the vehicle will be used in a manner described in paragraph (b)(2)(i)(A) or (B) of this section.

(ii) ***Exception for disposition.*** Except as provided in paragraph (b)(2)(i)(C) of this section, a sale or other disposition (including a disposition by reason of an accident or other casualty) of a qualified electric vehicle is not a recapture event.

(3) ***Recapture amount.*** The recapture amount is equal to the recapture percentage times the decrease in the credits allowed under section 30 for all prior taxable years that would have resulted solely from reducing to zero the cost taken into account under section 30 with respect to such vehicle, including any credits allowed attributable to section 30 (such as under sections 53 and 469).

(4) ***Recapture date.*** The recapture date is the actual date of the recapture event unless a recapture event described in paragraph (b)(2)(i)(B) of this section occurs, in which case the recapture date is the first day of the recapture year.

(5) ***Recapture percentage.*** For purposes of this section, the recapture percentage is—

(i) 100, if the recapture date is within the first full year after the date the vehicle is placed in service;

(ii) $66^{2}/_{3}$, if the recapture date is within the second full year after the date the vehicle is placed in service; or

(iii) $33^{1}/_{3}$, if the recapture date is within the third full year after the date the vehicle is placed in service.

(6) ***Basis adjustment.*** As of the first day of the taxable year in which the recapture event occurs, the basis of the qualified electric vehicle is increased by the recapture amount and the carryover reductions taken into account under paragraphs (b)(1)(i) and (ii) of this section, respectively. For a vehicle that is of a character that is subject to an allowance for depreciation, this increase in basis is recoverable over the remaining recovery period for the vehicle beginning as of the first day of the taxable year of recapture.

(7) ***Application of section 1245 for sales and other dispositions.*** For purposes of section 1245, the amount of the credit allowable under section 30(a) with respect to any qualified electric vehicle that is (or has been) of a character subject to an allowance for depreciation is treated as a deduction allowed for depreciation under section 167. Therefore, upon a sale or other disposition of a depreciable qualified electric vehicle, section 1245 will apply to any gain recognized to the extent the basis of the depreciable vehicle was reduced under section 30(d)(1) net of any basis increase described in paragraph (b)(6) of this section.

(8) ***Examples.*** The following examples illustrate the provisions of this section:

Example 1. A, a calendar-year taxpayer, purchases and places in service for personal use on January 1, 1995, a qualified electric vehicle costing $25,000. On A's 1995 federal income tax return, A claims a credit of $2,500. On January 2, 1996, A sells the vehicle to an unrelated third party who subsequently converts the vehicle into a non-electric vehicle on October 15, 1996. There is no recapture upon the sale of the vehicle by A provided A did not know or have reason to know that the purchaser intended to convert the vehicle to non-electric use.

Example 2. B, a calendar-year taxpayer, purchases and places in service for personal use on October 11, 1994, a qualified electric vehicle costing $20,000. On B's 1994 federal income tax return, B claims a credit of $2,000, which reduces B's tax by $2,000. The basis of the vehicle is reduced to $18,000 ($20,000–$2,000). On March 8, 1996, B sells the vehicle to a tax-exempt entity. Because B knowingly sold the vehicle to a tax-exempt entity described in section 50(b) in the second full year from the date the vehicle was placed in service, B must recapture $1,333 ($2,000 × $66^{2}/_{3}$ percent). This recapture amount increases B's tax by $1,333 on B's 1996 federal income tax return and is added to the basis of the vehicle as of January 1, 1996, the beginning of the taxable year in which the recapture event occurred.

Example 3. X, a calendar-year taxpayer, purchases and places in service for business use on January 1, 1994, a qualified electric vehicle costing $30,000. On X's 1994 federal income tax return, X claims a credit of $3,000, which reduces X's tax by $3,000. The basis of the vehicle is reduced

to $27,000 ($30,000−$3,000) prior to any adjustments for depreciation. On March 8, 1995, X converts the qualified electric vehicle into a gasoline-propelled vehicle. Because X modified the vehicle so that it is no longer primarily powered by electricity in the second full year from the date the vehicle was placed in service, X must recapture $2,000 ($3,000 × $66^{2}/_{3}$ percent). This recapture amount increases X's tax by $2,000 on X's 1995 federal income tax return. The recapture amount of $2,000 is added to the basis of the vehicle as of January 1, 1995, the beginning of the taxable year of recapture, and to the extent the property remains depreciable, the adjusted basis is recoverable over the remaining recovery period.

Example 4. The facts are the same as in *Example 3.* In 1996, X sells the vehicle for $31,000, recognizing a gain from this sale. Under paragraph (b)(7) of this section, section 1245 will apply to any gain recognized on the sale of a depreciable vehicle to the extent the basis of the vehicle was reduced by the section 30 credit net of any basis increase from recapture of the section 30 credit. Accordingly, the gain from the sale of the vehicle is subject to section 1245 to the extent of the depreciation allowance for the vehicle plus the credit allowed under section 30 ($3,000), less the previous recapture amount ($2,000). Any remaining amount of gain may be subject to other applicable provisions of the Internal Revenue Code.

(c) ***Effective date.*** This section is effective on October 14, 1994. If the recapture date is before the effective date of this section, a taxpayer may use any reasonable method to recapture the benefit of any credit allowable under section 30(a) consistent with section 30 and its legislative history. For this purpose, the recapture date is defined in paragraph (b)(4) of this section.

[60 FR 39649, Aug. 3, 1995]

§§ 1.30C-1-1.30C-2 [Reserved]

§ 1.30C-3 Rules relating to the increased credit amount for prevailing wage and apprenticeship.

(a) ***In general.*** If any qualified alternative fuel vehicle refueling project (as defined by section 30C(g)(1)(B)) placed in service during the taxable year satisfies the requirements in paragraph (b) of this section, the credit determined under section 30C(a) for any qualified alternative fuel vehicle refueling property of a character subject to an allowance for depreciation that is part of such project is multiplied by five.

(b) ***Qualified alternative fuel vehicle refueling project requirements.*** A qualified alternative fuel vehicle refueling project satisfies the requirements of this paragraph (b) if it is one of the following—

(1) A project the construction of which began prior to January 29, 2023; or

(2) A project that meets the prevailing wage requirements of section 45(b)(7) and § 1.45-7, the apprenticeship requirements of section 45(b)(8) and § 1.45-8, and the recordkeeping and reporting requirements of § 1.45-12, all with respect to the construction of any qualified alternative fuel refueling property within the meaning of section 30C before such project is placed in service.

(c) ***Applicability date.*** This section applies to qualified alternative fuel vehicle refueling projects placed in service in taxable years ending after June 25, 2024, and the construction of which begins after June 25, 2024. Taxpayers may apply this section to qualified alternative fuel vehicle refueling projects placed in service in taxable years ending on or before June 25, 2024, and qualified alternative fuel vehicle refueling projects placed in service in taxable years ending after June 25, 2024, the construction of which begins before June 25, 2024, provided that taxpayers follow this section in its entirety and in a consistent manner.

[T.D. 9998, 89 FR 53251, June 26, 2024]

§ 1.30D-0 Table of contents.

This section lists the captions contained in §§ 1.30D-1 through 1.30D-6.

§ 1.30D-1 Credit for new clean vehicles.

(a) In general.

(b) Application with other credits.

(1) Business credit treated as part of general business credit.

(2) Apportionment of section 30D credit.

(3) Personal credit limited based on tax liability.

(c) Severability.

(d) Applicability date.

§ 1.30D-2 Definitions for purposes of section 30D.

(a) In general.

(b) Definitions.

(1) Advance payment program.

(2) Applicable critical mineral.

(i) In general.

(ii) Example: Form of applicable critical mineral.

(3) Assembly.

(4) Associated constituent material.

(5) Battery.

(6) Battery cell.

(7) Battery cell production facility.

(8) Battery component.

(9) Battery materials.

(10) Clean vehicle battery.

(11) Compliant-battery ledger.

(12) Constituent materials.

(13) Country with which the United States has a free trade agreement in effect.

(i) In general.

(ii) Free trade agreements in effect.

(iii) Updates.

(14) Credit transfer election.

(15) Dealer.

(16) Dealer tax compliance.

(17) Depreciable vehicle.

(18) Electing taxpayer.

(19) Eligible entity.

(20) Excessive payment.

(21) Extraction.

(22) FEOC-compliant.

(23) Final assembly.

(24) Foreign entity of concern.

(25) Impracticable-to-trace battery materials.

(i) In general.

(ii) Identified impracticable-to-trace battery materials.

(26) Incentive.

(27) Incremental value.

(28) Manufacturer.

(i) In general.

(ii) Modification of a new motor vehicle.

(29) Manufacturer's suggested retail price.

(i) In general.

(ii) Retail price.

(iii) Retail delivered price.

(30) Manufacturing.

(31) Modified adjusted gross income.

(i) Individuals.

(ii) Estates and trusts.

(32) New clean vehicle.

(33) New qualified fuel cell motor vehicle.

(34) North America.

(35) North American battery component.

(36) Placed in service.

(37) Processing.

(38) Procurement chain.

(39) Qualifying battery component content.

(40) Qualifying critical mineral.

(41) Qualifying critical mineral content.

(42) Qualified manufacturer.

(43) Recycling.

(i) In general.

(ii) Example: Recycling of applicable critical mineral.

(44) Registered dealer.

(45) Section 30D regulations.

(46) Seller report.

(47) Time of sale.

(48) Total incremental value of battery components.

(49) Total incremental value of North American battery components.

(50) Total traced qualifying value.

(51) Total value of critical minerals.

(52) Total value of qualifying critical minerals.

(53) Traced qualifying value.

(54) Value.

(55) Value added.

(56) Vehicle classification.

(i) In general.

(ii) Van.

(iii) Sport utility vehicle.

(iv) Pickup truck.

(v) Other vehicle.

(c) Severability.

(d) Applicability date.

§ 1.30D-3 Critical minerals and battery components requirements.

(a) Critical minerals requirement.

(1) In general.

(2) Applicable critical minerals percentage.

(i) In general.

(ii) Vehicles placed in service between April 18, 2023, and December 31, 2023.

(iii) Vehicles placed in service during calendar year 2024.

(iv) Vehicles placed in service during calendar year 2025.

(v) Vehicles placed in service during calendar year 2026.

(vi) Vehicles placed in service during calendar year 2027 and later.

(3) Determining qualifying critical mineral content.

(i) In general.

(ii) Separate determinations required for each procurement chain.

(iii) Time for determining value.

(iv) Application of qualifying critical mineral content to vehicles.

(4) Temporary safe harbor for determining qualifying critical mineral content for vehicles for which a qualified manufacturer submits a periodic written report on or after May 6, 2024 and before January 1, 2027.

(i) In general.

(ii) Separate determinations required for each procurement chain.

(iii) Time for determining value.

(iv) Application of qualifying critical mineral content to vehicles.

(v) Consistent determination required for all procurement chains.

(5) Rule for determining qualifying critical mineral content for vehicles for which a qualified manufacturer submitted a periodic written report before May 6, 2024.

(b) Battery components requirement.

(1) In general.

(2) Applicable battery components percentage.

(i) In general.

(ii) Vehicles placed in service between April 18, 2023, and December 31, 2023.

(iii) Vehicles placed in service during calendar year 2024 or 2025.

(iv) Vehicles placed in service during calendar year 2026.

(v) Vehicles placed in service during calendar year 2027.

(vi) Vehicles placed in service during calendar year 2028.

(vii) Vehicles placed in service in calendar year 2029 and later.

(3) Determining qualifying battery component content.

(i) In general.

(ii) Time for determining value.

(iii) Application of qualifying battery component content to vehicles.

(iv) End point for determination.

(c) Definitions.

(1) Certain terms relevant to the critical minerals requirement.

(i) Procurement chain.

(ii) Qualifying critical mineral.

(A) In general.

(B) Extracted or processed in the United States or in any country with which the United States has a free trade agreement in effect.

(C) Recycled in North America.

(iii) Qualifying critical mineral content.

(iv) Total traced qualifying value.

(v) Total value of critical minerals.

(vi) Total value of qualifying critical minerals.

(vii) Traced qualifying value.

(A) Extracted or processed in the United States or in any country with which the United States has a free trade agreement in effect.

(B) Recycled in North America.

(viii) Value added.

(2) Certain terms relevant to the battery components requirement.

(i) Incremental value.

(ii) North American battery component.

(iii) Qualifying battery component content.

(iv) Total incremental value of battery components.

(v) Total incremental value of North American battery components.

(d) Upfront review of critical minerals and battery components requirements.

(e) New qualified fuel cell motor vehicles.

(f) Examples.

(1) Example 1: Critical minerals requirement.

(i) Facts.

(ii) Analysis.

(2) Example 2: Critical minerals requirement temporary safe harbor.

(i) Facts.

(ii) Analysis.

(3) Example 3: Battery components requirement.

(i) Facts.

(ii) Analysis.

(g) Severability.

(h) Applicability date.

(1) In general.

(2) Upfront review and traced qualifying value.

§ 1.30D-4 Special rules.

(a) No double benefit.

(1) In general.

(2) Interaction between section 30D and section 25E credits.

(3) Interaction between section 30D and section 45W credits.

(b) Limitation based on modified adjusted gross income.

(1) In general.

(2) Threshold amount.

(3) Special rule for change in filing status.

(4) Application to estates and trusts.

(i) Estates and non-grantor trusts.

(ii) Grantor trusts.

(5) Application to passthrough entities.

(6) Other taxpayers.

(c) Credit may generally be claimed on only one tax return.

(1) In general.

(2) Exception for passthrough entities.

(3) Seller reporting.

(i) In general.

(ii) Passthrough entities.

(4) Example.

(d) Grantor trusts.

(e) Recapture rules.

(1) In general.

(i) Cancelled sale.

(ii) Vehicle return.

(iii) Resale.

(iv) Other vehicle returns and resales.

(2) Recapture rules in the case of a credit transfer election.

(3) Example: Demonstrator vehicle.

(f) Seller registration.

(g) Requirement to file return.

(h) Taxpayer reliance on manufacturer certifications and periodic written reports to the IRS.

(i) Severability.

(j) Applicability date.

§ 1.30D-5 Transfer of credit.

(a) In general.

(b) Definitions.

(1) Advance payment program.

(2) Credit transfer election.

(3) Dealer.

(4) Dealer tax compliance.

(5) Electing taxpayer.

(6) Eligible entity.

(7) Incentive.

(8) Registered dealer.

(9) Sale price.

(10) Time of sale.

(c) Dealer registration.

(1) In general.

(2) Dealer tax compliance required.

(3) Suspension of registration.

(4) Revocation of registration.

(d) Credit transfer election by electing taxpayer.

(e) Federal income tax consequences of the credit transfer election.

(1) Tax consequences for electing taxpayer.

(2) Tax consequences for eligible entity.

(3) Form of payment from eligible entity to electing taxpayer.

(4) Additional requirements.

(5) Examples.

(i) Example 1: Electing taxpayer's regular tax liability less than amount of credit.

(A) Facts.

(B) Analysis.

(ii) Example 2: Non-cash payment by eligible entity to electing taxpayer.

(A) Facts.

(B) Analysis.

(iii) Example 3: Eligible entity is a partnership.

(A) Facts.

(B) Analysis.

(f) Advance payments received by eligible entities.

(1) In general.

(2) Requirements for a registered dealer to become an eligible entity.

(3) Suspension of registered dealer eligibility.

(4) Revocation of registered dealer eligibility.

(g) Increase in tax.

(1) Recapture if electing taxpayer exceeds modified adjusted gross income limitation.

(2) Excessive payments.

(i) In general.

(ii) Reasonable cause.

(iii) Excessive payment defined.

(iv) Special rule for cases in which the electing taxpayer's modified adjusted gross income exceeds the limitation.

(3) Examples.

(i) Example 1: Registered dealer is not an eligible entity.

(A) Facts.

(B) Analysis.

(ii) Example 2: Incorrect manufacturer certifications.

(A) Facts.

(B) Analysis.

(h) Return requirement.

(i) Two credit transfer elections per year.

(j) Severability.

(k) Applicability date.

§ 1.30D-6 Foreign entity of concern restriction.

(a) In general.

(b) Due diligence required.

(1) In general.

(2) Transition rule for impracticable-to-trace battery materials.

(c) FEOC compliance.

(1) In general.

(i) Step 1.

(ii) Step 2.

(iii) Step 3.

(2) FEOC-compliant batteries.

(3) FEOC-compliant battery cells.

(i) In general.

(ii) Allocation-based determination for applicable critical minerals and associated constituent materials of a battery cell.

(A) In general.

(B) Allocation limited to applicable critical minerals in the battery cell.

(C) Separate allocation required for each type of associated constituent material.

(*1*) In general.

(*2*) Example.

(D) Allocation within each product line of battery cells.

(E) Limitation on number of FEOC-compliant battery cells.

(iii) Transition rule for impracticable-to-trace battery materials.

(4) FEOC-compliant battery components and applicable critical minerals.

(i) In general.

(ii) Timing of determination of FEOC or FEOC-compliant status.

(iii) Example: Timing of FEOC compliance determination.

(5) Third-party manufacturers or suppliers.

(i) Due diligence required.

(ii) Provision of required information to qualified manufacturer.

(iii) Contractual obligations.

(iv) Additional requirements in case of multiple third-party manufacturers or suppliers.

(d) Compliant-battery ledger.

(1) In general.

(2) Determination of number of batteries.

(i) In general.

(ii) Upfront review.

(iii) Decrease or increase to compliant-battery ledger.

(3) Tracking FEOC-compliant batteries.

(4) Reconciliation of battery estimates.

(e) Rule for 2024.

(1) In general.

(2) Determination.

(f) Inaccurate attestations, certifications, or documentation.

(1) In general.

(2) Inadvertence.

(i) Inaccurate information may be cured by qualified manufacturer.

(ii) Consequences if errors not cured.

(3) Intentional disregard or fraud.

(i) All vehicles ineligible for credit.

(ii) Termination of written agreement.

(g) Rules inapplicable to new qualified fuel cell motor vehicles.

(h) Examples.

(1) Example 1: In general.

(i) Facts.

(ii) Analysis.

(2) Example 2: Rules for third-party suppliers.

(i) Facts.

(ii) Analysis.

(3) Example 3: Applicable critical minerals.

(i) Facts.

(ii) Analysis.

(4) Example 4: Comprehensive example.

(i) Facts.

(ii) Analysis.

(i) Severability.

(j) Applicability date.

[T.D. 9995, 89 FR 37754, May 6, 2024]

§ 1.30D-1 Credit for new clean vehicles.

(a) ***In general.*** Section 30D(a) of the Internal Revenue Code (Code) allows as a credit against the tax imposed by chapter 1 of the Code (chapter 1) for the taxable year of a taxpayer an amount equal to the sum of the credit amounts determined under section 30D(b) with respect to each new clean vehicle purchased by the taxpayer that the taxpayer places in service during the taxable year. This section provides generally applicable rules that apply for purposes of determining the credit under section 30D and the section 30D regulations (section 30D credit). Section 1.30D-2 provides definitions that apply for purposes of section 30D and the section 30D regulations. Section 1.30D-3 provides rules regarding the critical minerals and battery components requirements of section 30D(e). Section 1.30D-4 provides guidance regarding the limitations and special rules in section 30D(f) as well as other special rules with respect to the section 30D credit. Section 1.30D-5 provides rules for the credit transfer election and advance payment program and for recapture. Section 1.30D-6 provides rules regarding the foreign entities of concern (FEOC) restriction of section 30D(d)(7).

(b) ***Application with other credits*** —

(1) ***Business credit treated as part of general business credit.*** Section 30D(c)(1) requires that so much of the section 30D credit that would be allowed under section 30D(a) for any taxable year (determined without regard to section 30D(c) and this paragraph (b)) that is attributable to a depreciable vehicle must be treated as a general business credit under section 38 of the Code that is listed in section 38(b)(30) for such taxable year (and not allowed under section 30D(a)). In the case of a depreciable vehicle the use of which is 50 percent or more business use in the taxable year such vehicle is placed in service, the section 30D credit that would be allowed under section 30D(a) for that taxable year (determined without regard to section 30D(c) and this paragraph (b)) that is attributable to such depreciable vehicle must be treated as a general business credit under section 38(b)(30) for such taxable year (and not allowed under section 30D(a)). See paragraph (b)(2) of this section for rules applicable in the case of a depreciable vehicle the use of which is less than 50 percent business use in the taxable year such vehicle is placed in service. See paragraph (b)(3) of this section for rules applicable to a section 30D credit allowed under section 30D(a) pursuant to section 30D(c)(2) or paragraph (b)(2)(ii) or (b)(3) of this section.

(2) ***Apportionment of section 30D credit.*** Unless the taxpayer has elected to transfer the credit pursuant to section 30D(g) and § 1.30D-5(d), in the case of a depreciable vehicle the business use of which is less than 50 percent of a taxpayer's total use of the vehicle for the taxable year in which the vehicle is placed in service, the taxpayer's section 30D credit for that taxable year with respect to that vehicle must be apportioned as follows:

(i) The portion of the section 30D credit corresponding to the percentage of the taxpayer's business use of the vehicle is treated as a general business credit under section 30D(c)(1) and paragraph (b)(1) of this section (and not allowed under section 30D(a) or paragraph (b)(3) of this section).

(ii) The portion of the section 30D credit corresponding to the percentage of the taxpayer's personal use of the vehicle is treated as a section 30D credit allowed under section 30D(a) pursuant to section 30D(c)(2) and paragraph (b)(3) of this section.

(3) ***Personal credit limited based on tax liability.*** Section 26 of the Code limits the aggregate amount of credits allowed to a taxpayer by subpart A of part IV of subchapter A of chapter 1 (subpart A) based on the taxpayer's tax liability. Under section 26(a), the aggregate amount of credits allowed to a taxpayer by subpart A cannot exceed the sum of the taxpayer's regular tax liability (as defined in

section 26(b)) for the taxable year reduced by the foreign tax credit allowable under section 27 of the Code, and the alternative minimum tax imposed by section 55(a) of the Code for the taxable year. Section 30D(c)(2) provides that the section 30D credit allowed under section 30D(a) for any taxable year (determined after application of section 30D(c)(1) and paragraphs (b)(1) and (2) of this section) is treated as a credit allowable under subpart A for such taxable year, and the section 30D credit allowed under section 30D(a) is therefore subject to the limitation imposed by section 26.

(c) ***Severability.*** The provisions of this section are separate and severable from one another. If any provision of this section is stayed or determined to be invalid, it is the agencies' intention that the remaining provisions shall continue in effect.

(d) ***Applicability date.*** This section applies to taxable years ending after December 4, 2023.

[T.D. 9995, 89 FR 37754, May 6, 2024]

§ 1.30D-2 Definitions for purposes of section 30D.

(a) ***In general.*** The definitions in this section apply for purposes of section 30D of the Internal Revenue Code (Code) and the section 30D regulations.

(b) ***Definitions*** —

(1) ***Advance payment program. Advance payment program*** means advance payment program as defined in § 1.30D-5(b)(1).

(2) ***Applicable critical mineral*** —

(i) ***In general. Applicable critical mineral*** means an applicable critical mineral as defined in section 45X(c)(6) of the Code. The requirements of §§ 1.30D-3(a) and 1.30D-6 with respect to an applicable critical mineral take into account each step of extraction, processing, or recycling through the step in which such mineral is processed or recycled into a constituent material, even if the mineral is not in a form listed in section 45X(c)(6) at every step of production. However, an applicable critical mineral is disregarded for purposes of the requirements of §§ 1.30D-3(a) and 1.30D-6 if it is fully consumed in the production of the constituent material or battery component and no longer remains in any form in the battery.

(ii) ***Example: Form of applicable critical mineral.*** Mineral Y is extracted and is intended to be incorporated into the battery of an electric vehicle. Mineral Y is not in a form listed in section 45X(c)(6) at the time of such extraction, but subsequently it is refined into an applicable critical mineral form listed in section 45X(c)(6). Both the extraction and processing are taken into account for purposes of the requirements of §§ 1.30D-3(a) and 1.30D-6.

(3) ***Assembly.*** Assembly, with respect to battery components, means the process of combining battery components into battery cells and battery modules.

(4) ***Associated constituent material.*** Associated constituent material, with respect to an applicable critical mineral, means a constituent material that has been processed or recycled from such mineral into the constituent material with which it is associated, even if that processing or recycling transformed such mineral into a form not listed in section 45X(c)(6).

(5) ***Battery.*** Battery, for purposes of a new clean vehicle, means a collection of one or more battery modules, each of which has two or more electrically configured battery cells in series or parallel, to create voltage or current. The term *battery* does not include items such as thermal management systems or other parts of a battery cell or module that do not directly contribute to the electrochemical storage of energy within the battery, such as battery cell cases, cans, or pouches.

(6) ***Battery cell.*** Battery cell means a combination of battery components (other than battery cells) capable of electrochemically storing energy from which the electric motor of a new clean vehicle draws electricity.

(7) ***Battery cell production facility.*** Battery cell production facility means a facility in which battery cells are manufactured or assembled.

(8) ***Battery component.*** Battery component means a component that forms part of a clean vehicle battery and that is manufactured or assembled from one or more components or battery materials that are combined through industrial, chemical, and physical assembly steps. Battery components may include, but are not limited to, a cathode electrode, anode electrode, solid metal electrode, coated separator, liquid electrolyte, solid state electrolyte, battery cell, and battery module.

(9) ***Battery materials.*** Battery materials means direct and indirect inputs to battery components that are produced through processing rather than through manufacturing or assembly. Battery materials are not considered a type of battery component, although battery materials may be manufactured or assembled into battery components. The three categories of battery materials are applicable critical minerals, constituent materials, and battery materials without applicable critical minerals. Examples of battery materials that may or may not contain applicable critical minerals include a separator base film (if not manufactured or assembled) and separator coating. Examples of battery materials without applicable critical minerals include conductive additives, copper foils prior to graphite deposition, and electrolyte solvents.

(10) ***Clean vehicle battery.*** Clean vehicle battery, with respect to a new clean vehicle, means the battery from which the electric motor of the vehicle draws electricity to propel such vehicle.

(11) ***Compliant-battery ledger. A compliant-battery ledger,*** for a qualified manufacturer for a calendar year, is a ledger established under the rules of § 1.30D-6(d) that tracks the number of available FEOC-compliant batteries for such calendar year.

(12) ***Constituent materials.*** Constituent materials means battery materials that contain applicable critical minerals. Constituent materials may include, but are not limited to, powders of cathode active materials, powders of anode active materials, foils, metals for solid electrodes, binders, electrolyte salts, and electrolyte additives, as required for a battery cell. Battery materials without applicable critical minerals are not constituent materials.

(13) ***Country with which the United States has a free trade agreement in effect*** —

(i) ***In general.*** The term *country with which the United States has a free trade agreement in effect* means any of those countries identified in paragraph (b)(13)(ii) of this section or that the Secretary of the Treasury or her delegate (Secretary) may identify in the future. The criteria the Secretary will consider in determining whether to identify a country under this paragraph (b)(13) include whether an agreement between the United States and that country, as to the critical minerals contained in clean vehicle batteries or more generally, and in the context of the overall commercial and economic relationship between that country and the United States:

(A) Reduces or eliminates trade barriers on a preferential basis;

(B) Commits the parties to refrain from imposing new trade barriers;

(C) Establishes high-standard disciplines in key areas affecting trade (such as core labor and environmental protections); and/or

(D) Reduces or eliminates restrictions on exports or commits the parties to refrain from imposing such restrictions.

(ii) ***Free trade agreements in effect.*** The countries with which the United States currently has free trade agreements in effect are: Australia, Bahrain, Canada, Chile, Colombia, Costa Rica, Dominican Republic, El Salvador, Guatemala, Honduras, Israel, Japan, Jordan, South Korea, Mexico, Morocco, Nicaragua, Oman, Panama, Peru, and Singapore.

(iii) ***Updates.*** The list of countries in paragraph (b)(13)(ii) of this section may be revised and updated through guidance published in the FEDERAL REGISTER or in the *Internal Revenue Bulletin* (see § 601.601 of this chapter).

(14) ***Credit transfer election.*** Credit transfer election means credit transfer election as defined in § 1.30D-5(b)(2).

(15) ***Dealer.*** Dealer means dealer as defined in § 1.30D-5(b)(3).

(16) ***Dealer tax compliance.*** Dealer tax compliance means dealer tax compliance as defined in § 1.30D-5(b)(4).

(17) ***Depreciable vehicle.*** Depreciable vehicle means a vehicle of a character subject to an allowance for depreciation.

(18) ***Electing taxpayer.*** Electing taxpayer means electing taxpayer as defined in § 1.30D-5(b)(5).

(19) ***Eligible entity.*** Eligible entity means eligible entity as defined in § 1.30D-5(b)(6).

(20) ***Excessive payment.*** Excessive payment means excessive payment as defined in § 1.30D-5(g)(2)(iii).

(21) ***Extraction.*** Extraction means the activities performed to harvest minerals or natural resources from the ground or from a body of water. Extraction includes, but is not limited to, operating equipment to harvest minerals or natural resources from mines and wells and the physical processes involved in refining. Extraction also includes operating equipment to extract minerals or natural resources from the waste or residue of prior extraction, including crude oil extraction to the extent that processes applied to that crude oil yield an applicable critical mineral as a byproduct. Extraction concludes when activities are performed to convert raw mined or harvested products or raw well effluent to substances that can be readily transported or stored for direct use in critical mineral processing. Extraction does not include activities that begin with a recyclable commodity (as such activities are recycling). Extraction does not include the chemical and thermal processes involved in refining.

(22) ***FEOC-compliant.*** FEOC-compliant means in compliance with the applicable excluded entity requirement under section 30D(d)(7). In particular—

(i) A battery component (other than a battery cell), with respect to a new clean vehicle placed in service after December 31, 2023, is FEOC-compliant if it is not manufactured or assembled by a FEOC;

(ii) An applicable critical mineral, with respect to a new clean vehicle placed in service after December 31, 2024, is FEOC-compliant if it is not extracted, processed, or recycled by a FEOC;

(iii) A battery cell, with respect to a new clean vehicle placed in service after December 31, 2023, and before January 1, 2025, is FEOC-compliant if it is not manufactured or assembled by a FEOC and it contains only FEOC-compliant battery components;

(iv) A battery cell, with respect to a new clean vehicle placed in service after December 31, 2024, is FEOC-compliant if it is not manufactured or assembled by a FEOC and it contains only FEOC-compliant battery components and FEOC-compliant applicable critical minerals; and

(v) A clean vehicle battery, with respect to a new clean vehicle placed in service after December 31, 2023, is FEOC-compliant if it contains only FEOC-compliant battery components (other than battery cells) and FEOC-compliant battery cells (as described in paragraph (b)(22)(iii) or (iv) of this section, as applicable).

(23) ***Final assembly.*** Final assembly means the process by which a manufacturer produces a new clean vehicle at, or through the use of, a plant, factory, or other place from which the vehicle is delivered to a dealer or importer with all component parts necessary for the mechanical operation of the vehicle included with the vehicle, whether or not the component parts are permanently installed in or on the vehicle. To establish where final assembly of a new clean vehicle occurred for purposes of the requirement in section 30D(d)(1)(G) that final assembly of a new clean vehicle occur within North America, the taxpayer may rely on the following information:

(i) The vehicle's plant of manufacture as reported in the vehicle identification number pursuant to 49 CFR 565; or

(ii) The final assembly point reported on the label affixed to the vehicle as described in 49 CFR 583.5(a)(3).

(24) ***Foreign entity of concern.*** Foreign entity of concern (FEOC) has the meaning provided in section 40207(a)(5) of the Infrastructure Investment and Jobs Act (42 U.S.C. 18741(a)(5)) and guidance promulgated thereunder by the Department of Energy (DOE).

(25) ***Impracticable-to-trace battery materials*** —

(i) ***In general. Impracticable-to-trace battery materials*** means specifically identified, low-value battery materials that originate from multiple sources and are commingled during refining, processing, or other production processes by suppliers to such a degree that the qualified manufacturer cannot, due to current industry practice, feasibly determine and attest to the origin of such battery materials. For this purpose, impracticable-to-trace battery materials are those that have low value compared to the total value of the clean vehicle battery.

(ii) ***Identified impracticable-to-trace battery materials.*** Identified impracticable-to-trace battery materials means applicable critical minerals in the following circumstances: graphite contained in anode materials, and applicable critical minerals contained in electrolyte salts, electrolyte binders, or electrolyte additives.

(26) ***Incentive.*** Incentive means incentive as defined in § 1.30D-5(b)(7).

(27) ***Incremental value. Incremental value*** means incremental value as defined in § 1.30D-3(c)(2)(i).

(28) ***Manufacturer*** —

(i) ***In general. A manufacturer*** means any manufacturer within the meaning of the regulations prescribed by the Administrator of the Environmental Protection Agency (EPA) for purposes of the administration of title II of the Clean Air Act (42 U.S.C. 7521 *et seq.*) and as defined in 42 U.S.C. 7550(1). Except as provided in paragraph (b)(28)(ii) of this section, if multiple manufacturers are involved in the production of a vehicle, the requirements of section 30D(d)(3) must be met by the manufacturer that satisfies the reporting requirements of the greenhouse gas emissions standards set by the EPA under the Clean Air Act (42 U.S.C. 7521 *et seq.*) for the subject vehicle.

(ii) ***Modification of a new motor vehicle.***

(A) If a manufacturer modifies a new motor vehicle (as defined in 42 U.S.C. 7550(3)) that does not satisfy the requirements of section 30D(d)(1)(F) or (d)(6) so that the new motor vehicle, after modification, does satisfy such requirements, then such manufacturer may satisfy the requirements of section 30D(d)(3) if the modification occurred prior to the new motor vehicle being placed in service.

(B) If a manufacturer modifies a new motor vehicle (as defined in 42 U.S.C. 7550(3)) that does not satisfy the requirements of 45W(c)(3) so that the new motor vehicle, after modification, does satisfy such requirements, then such manufacturer may satisfy the requirements of 30D(d)(3) if the modification occurred prior to the new motor vehicle being placed in service.

(29) ***Manufacturer's suggested retail price*** —

(i) ***In general.*** Manufacturer's suggested retail price means the sum of the retail price and the retail delivered price (as defined in paragraphs (b)(29)(ii) and (iii) of this section) as reported on the label that is affixed to the windshield or side window of the vehicle, as described in 15 U.S.C. 1232.

(ii) ***Retail price.*** Retail price, for purposes of paragraph (b)(29)(i) of this section, means the retail price of the automobile suggested by the manufacturer as described in 15 U.S.C. 1232(f)(1).

(iii) ***Retail delivered price.*** Retail delivered price, for purposes of paragraph (b)(29)(i) of this section, means the retail delivered price suggested by the manufacturer for each accessory or item of optional equipment physically attached to such automobile at the time of its delivery to the dealer that is not included within the price of such automobile as stated pursuant to 15 U.S.C. 1232(f)(1), as described in 15 U.S.C. 1232(f)(2).

(30) ***Manufacturing.*** Manufacturing, with respect to a battery component, means the industrial and chemical steps taken to produce a battery component.

(31) ***Modified adjusted gross income*** —

(i) ***Individuals.*** Modified adjusted gross income, in the case of an individual, means adjusted gross income (as defined in section 62 of the Code) increased by any amount excluded from gross income under section 911, 931, or 933 of the Code.

(ii) ***Estates and trusts.*** Modified adjusted gross income, in the case of an estate or non-grantor trust, means adjusted gross income (as defined in section 67(e) of the Code).

(32) ***New clean vehicle.*** New clean vehicle means a vehicle that meets the requirements described in section 30D(d). Vehicles that may qualify as new clean vehicles include battery electric vehicles, plug-in hybrid electric vehicles, fuel cell motor vehicles, and plug-in hybrid fuel cell motor vehicles. A vehicle does not meet the requirements of section 30D(d) if—

(i) The qualified manufacturer fails to provide a periodic written report for such vehicle prior to the vehicle being placed in service reporting the vehicle identification number of such vehicle and certifying compliance with the requirement of section 30D(d);

(ii) The qualified manufacturer provides incorrect information with respect to the periodic written report for such vehicle;

(iii) The qualified manufacturer fails to update its periodic written report in the event of a material change with respect to such vehicle; or

(iv) For new clean vehicles placed in service after December 31, 2024, the qualified manufacturer fails to meet the requirements of § 1.30D-6(d).

(33) ***New qualified fuel cell motor vehicle.*** New qualified fuel cell motor vehicle means any new qualified fuel cell motor vehicle (as defined in section 30B(b)(3)) that meets the requirements under section 30D(d)(1)(G) (that is, the final assembly in North America requirement) and (H) (that is, the seller report requirement), and that does not have a clean vehicle battery.

(34) ***North America.*** North America means the territory of the United States, Canada, and Mexico as defined in 19 CFR part 182, appendix A, § 1(1).

(35) ***North American battery component.*** North American battery component means North American battery component as defined in § 1.30D-3(c)(2)(ii).

(36) ***Placed in service.*** A new clean vehicle is considered to be placed in service on the date the taxpayer takes possession of the vehicle.

(37) ***Processing.*** Processing means the non-physical processes involved in the refining of non-recycled substances or materials, including the treating, baking, and coating processes used to convert such substances and materials into constituent materials. Processing includes the chemical or thermal processes involved in refining. Processing does not include the physical processes involved in refining.

(38) ***Procurement chain.*** Procurement chain means procurement chain as defined in § 1.30D-3(c)(1)(i).

(39) ***Qualifying battery component content.*** Qualifying battery component content means qualifying battery component content as defined in § 1.30D-3(c)(2)(iii).

(40) ***Qualifying critical mineral. Qualifying critical mineral*** means qualifying critical mineral as defined in § 1.30D-3(c)(1)(ii).

(41) ***Qualifying critical mineral content.*** Qualifying critical mineral content means qualifying critical mineral content as defined in § 1.30D-3(c)(1)(iii).

(42) ***Qualified manufacturer.*** A qualified manufacturer means a manufacturer that meets the requirements described in section 30D(d)(3) at the time the manufacturer submits a periodic written report to the IRS under a written agreement described in section 30D(d)(3). The term qualified manufacturer does not include any manufacturer whose qualified manufacturer status has been terminated by the IRS. The IRS may terminate qualified manufacturer status for fraud, intentional disregard, or gross

negligence with respect to any requirements of section 30D, the section 30D regulations, or any guidance under section 30D, including with respect to the periodic written reports described in section 30D(d)(3) and paragraph (b)(32) of this section and any attestations, documentation, or certifications described in §§ 1.30D-3(d) and 1.30D-6(d), at the time and in the manner provided in the *Internal Revenue Bulletin* (see § 601.601 of this chapter). *See* § 1.30D-6(f) for additional rules regarding inaccurate determinations and documentation. The IRS may also terminate qualified manufacturer status for fraud, intentional disregard, or gross negligence with respect to any requirement of section 25E or section 45W or any regulations thereunder.

(43) ***Recycling*** —

(i) ***In general.*** Recycling means the series of activities during which recyclable materials containing critical minerals are transformed into specification-grade commodities and consumed in lieu of virgin materials to create new constituent materials; such activities result in new constituent materials contained in the clean vehicle battery. All physical, chemical, and thermal treatments or modifications that convert recycled feedstocks to specification grade constituent materials are included in recycling. However, recycled applicable critical minerals and associated constituent materials are only subject to the requirements under §§ 1.30D-3(a) and 1.30D-6 if the recyclable material contains an applicable critical mineral, contains material that was transformed from an applicable critical mineral, or if the recyclable material is used to produce an applicable critical mineral at any point during the recycling process. The requirements under §§ 1.30D-3(a) and 1.30D-6 only take into account activities that occurred during the recycling process.

(ii) ***Example: Recycling of applicable critical mineral.*** Mineral Z, an applicable critical mineral in a form listed in section 45X(c)(6), was processed by A in a prior production process. Mineral Z subsequently was derived from recyclable material in a form not listed in section 45X(c)(6). Mineral Z was recycled by B. The requirements under §§ 1.30D-3 and 1.30D-6 only take into account the activities conducted by B.

(44) ***Registered dealer.*** Registered dealer means registered dealer as defined in § 1.30D-5(b)(8).

(45) ***Section 30D regulations.*** Section 30D regulations means § 1.30D-1, this section, and §§ 1.30D-3 through 1.30D-6.

(46) ***Seller report.*** Seller report means the report described in section 30D(d)(1)(H) that the seller of a new clean vehicle provides to the taxpayer and the IRS in the manner provided in, and containing the information described in, guidance published in the *Internal Revenue Bulletin* (see § 601.601 of this chapter). The seller report must be transmitted to the IRS electronically. The term seller report does not include a report rejected by the IRS due to the information contained therein not matching IRS records.

(47) ***Time of sale.*** Time of sale means time of sale as defined in § 1.30D-5(b)(9).

(48) ***Total incremental value of battery components.*** Total incremental value of battery components means total incremental value of battery components as defined in § 1.30D-3(c)(2)(iv).

(49) ***Total incremental value of North American battery components.*** Total incremental value of North American battery components means total incremental value of North American battery components as defined in § 1.30D-3(c)(2)(v).

(50) ***Total traced qualifying value.*** Total traced qualifying value means total traced qualifying value as defined in § 1.30D-3(c)(1)(iv).

(51) ***Total value of critical minerals.*** Total value of critical minerals means total value of critical minerals as defined in § 1.30D-3(c)(1)(v).

(52) ***Total value of qualifying critical minerals.*** Total value of qualifying critical minerals means total value of qualifying critical minerals as defined in § 1.30D-3(c)(1)(vi).

(53) ***Traced qualifying value.*** Traced qualifying value means traced qualifying value as defined in § 1.30D-3(c)(1)(vii).

(54) ***Value.*** Value, with respect to property, means the arm's-length price that was paid or would be paid for the property by an unrelated purchaser determined in accordance with the principles of section 482 of the Code and regulations thereunder.

(55) ***Value added.*** Value added means value added as defined in § 1.30D-3(c)(1)(viii).

(56) ***Vehicle classification*** —

(i) ***In general.*** Vehicle classification means the vehicle classification of a new clean vehicle determined consistent with the rules and definitions provided in 40 CFR 600.315-08 and this paragraph (b)(56) for vans, sport utility vehicles, pickup trucks, and other vehicles.

(ii) ***Van.*** Van means a vehicle classified as a van or minivan under 40 CFR 600.315-08(a)(2)(iii) and (iv), or otherwise so classified by the Administrator of the EPA pursuant to 40 CFR 600.315-08(a).

(iii) ***Sport utility vehicle.*** Sport utility vehicle means a vehicle classified as a small sport utility vehicle or standard sport utility vehicle under 40 CFR 600.315-08(a)(2)(v) and (vi), or otherwise so classified by the Administrator of the EPA pursuant to 40 CFR 600.315-08(a).

(iv) ***Pickup truck.*** Pickup truck means a vehicle classified as a small pickup truck or standard pickup truck under 40 CFR 600.315-08(a)(2)(i) and (ii), or otherwise so classified by the Administrator of the EPA pursuant to 40 CFR 600.315-08(a).

(v) ***Other vehicle.*** Other vehicle means any vehicle classified in one of the classes of passenger automobiles listed in 40 CFR 600.315-08(a)(1), or otherwise so classified by the Administrator of the EPA pursuant to 40 CFR 600.315-08(a).

(c) ***Severability.*** The provisions of this section are separate and severable from one another. If any provision of this section is stayed or determined to be invalid, it is the agencies' intention that the remaining provisions shall continue in effect.

(d) ***Applicability date.*** This section applies to taxable years ending after December 4, 2023.

[T.D. 9995, 89 FR 37754, May 6, 2024]

§ 1.30D-3 Critical minerals and battery components requirements.

(a) ***Critical minerals requirement*** —

(1) ***In general.*** The critical minerals requirement described in section 30D(e)(1)(A) of the Internal Revenue Code (Code), with respect to a clean vehicle battery, is met if the qualifying critical mineral content of such battery is equal to or greater than the applicable critical minerals percentage (as defined in paragraph (a)(2) of this section), as certified by the qualified manufacturer, in such form or manner as prescribed by the Secretary of the Treasury or her delegate (Secretary).

(2) ***Applicable critical minerals percentage*** —

(i) ***In general.*** For purposes of paragraph (a)(1) of this section, the *applicable critical minerals percentage,* which is based on the year in which a vehicle is placed in service by the taxpayer, is set forth in paragraphs (a)(2)(ii) through (vi) of this section. *See* section 30D(e)(1)(B).

(ii) ***Vehicles placed in service between April 18, 2023, and December 31, 2023.*** In the case of a vehicle placed in service after April 17, 2023, and before January 1, 2024, the applicable critical minerals percentage is 40 percent.

(iii) ***Vehicles placed in service during calendar year 2024.*** In the case of a vehicle placed in service during calendar year 2024, the applicable critical minerals percentage is 50 percent.

(iv) ***Vehicles placed in service during calendar year 2025.*** In the case of a vehicle placed in service during calendar year 2025, the applicable critical minerals percentage is 60 percent.

(v) ***Vehicles placed in service during calendar year 2026.*** In the case of a vehicle placed in service during calendar year 2026, the applicable critical minerals percentage is 70 percent.

(vi) ***Vehicles placed in service during calendar year 2027 and later.*** In the case of a vehicle placed in service after December 31, 2026, the applicable critical minerals percentage is 80 percent.

(3) ***Determining qualifying critical mineral content*** —

(i) ***In general.*** Qualifying critical mineral content with respect to a clean vehicle battery is calculated as the percentage that results from dividing:

(A) The total traced qualifying value, by

(B) The total value of critical minerals.

(ii) ***Separate determinations required for each procurement chain.*** The traced qualifying value of an applicable critical mineral, including the percentage or percentages necessary to determine the traced qualifying value, must be determined separately for each procurement chain.

(iii) ***Time for determining value.*** A qualified manufacturer must select a date for determining the values described in paragraphs (a)(3)(i)(A) and (B) of this section. Such date must be after the final processing or recycling step for the applicable critical minerals relevant to the certification described in section 30D(e)(1)(A).

(iv) ***Application of qualifying critical mineral content to vehicles.*** A qualified manufacturer may determine qualifying critical mineral content based on the value of the applicable critical minerals actually contained in the clean vehicle battery of a specific vehicle. Alternatively, for purposes of calculating the qualifying critical mineral content for clean vehicle batteries in a group of vehicles, a qualified manufacturer may average the qualifying critical mineral content under this paragraph (a)(3)(iv) over a period of time (for example, a year, a calendar quarter, or

a month) with respect to vehicles from the same model line, plant, class, or some combination thereof, with final assembly (as defined in section 30D(d)(5) of the Code and § 1.30D-2(b)(23)) within North America.

(4) ***Temporary safe harbor for determining qualifying critical mineral content for vehicles for which a qualified manufacturer submits a periodic written report on or after May 6, 2024 and before January 1, 2027*** —

(i) ***In general.*** For vehicles for which a qualified manufacturer submits a periodic written report on or after May 6, 2024 and before January 1, 2027, qualifying critical mineral content with respect to a clean vehicle battery may be calculated as the percentage that results from dividing:

(A) The total value of qualifying critical minerals, by

(B) The total value of critical minerals.

(ii) ***Separate determinations required for each procurement chain.*** The portion of an applicable critical mineral that is a qualifying critical mineral must be determined separately for each procurement chain.

(iii) ***Time for determining value.*** A qualified manufacturer must select a date for determining the values described in paragraphs (a)(4)(i)(A) and (B) of this section. Such date must be after the final processing or recycling step for the applicable critical minerals relevant to the certification described in section 30D(e)(1)(A).

(iv) ***Application of qualifying critical mineral content to vehicles.*** A qualified manufacturer may determine qualifying critical mineral content based on the value of the applicable critical minerals actually contained in the clean vehicle battery of a specific vehicle. Alternatively, for purposes of calculating the qualifying critical mineral content for clean vehicle batteries in a group of vehicles, a qualified manufacturer may average the qualifying critical mineral content calculation over a period of time (for example, a year, quarter, or month) with respect to vehicles from the same model line, plant, class, or some combination of thereof, with final assembly (as defined in section 30D(d)(5) of the Code and § 1.30D-2(b)(23)) within North America.

(v) ***Consistent determination required for all procurement chains.*** A qualified manufacturer that makes a determination under this paragraph (a)(4) must use the rules of this paragraph for all procurement chains of the clean vehicle battery. If a qualified manufacturer averages qualifying critical mineral content as described in paragraph (a)(4)(iv) of this section, the qualified manufacturer must use the rules of such paragraph for all procurement chains for all clean vehicle batteries in the group of vehicles. Therefore, the qualified manufacturer may not use the rules of paragraph (a)(3) for some procurement chains and the rules of paragraph (a)(4) for other procurement chains for the same clean vehicle battery or clean vehicle batteries in the group of vehicles, as applicable.

(5) ***Rule for determining qualifying critical mineral content for vehicles for which a qualified manufacturer submitted a periodic written report before May 6, 2024.*** For vehicles for which a qualified manufacturer submitted a periodic written report before May 6, 2024, qualifying critical mineral content with respect to a clean vehicle battery must be calculated using the method described in paragraph (a)(4) of this section.

(b) ***Battery components requirement*** —

(1) ***In general.*** The battery components requirement described in section 30D(e)(2)(A), with respect to a clean vehicle battery, is met if the qualifying battery component content of such battery is equal to or greater than the applicable battery components percentage (as defined in paragraph (b)(2) of this section), as certified by the qualified manufacturer, in such form or manner as prescribed by the Secretary.

(2) ***Applicable battery components percentage*** —

(i) ***In general.*** For purposes of paragraph (b)(1) of this section, section 30D(e)(2)(B) provides the *applicable battery components percentage,* which is based on the year in which a vehicle is placed in service by the taxpayer as set forth in paragraphs (b)(2)(ii) through (vii) of this section.

(ii) ***Vehicles placed in service between April 18, 2023, and December 31, 2023.*** In the case of a vehicle placed in service after April 17, 2023, and before January 1, 2024, the applicable battery components percentage is 50 percent.

(iii) ***Vehicles placed in service during calendar year 2024 or 2025.*** In the case of a vehicle placed in service during calendar year 2024 or 2025, the applicable battery components percentage is 60 percent.

(iv) ***Vehicles placed in service during calendar year 2026.*** In the case of a vehicle placed in service during calendar year 2026, the applicable battery components percentage is 70 percent.

(v) ***Vehicles placed in service during calendar year 2027.*** In the case of a vehicle placed in service during calendar year 2027, the applicable battery components percentage is 80 percent.

(vi) ***Vehicles placed in service during calendar year 2028.*** In the case of a vehicle placed in service during calendar year 2028, the applicable battery components percentage is 90 percent.

(vii) ***Vehicles placed in service in calendar year 2029 and later.*** In the case of a vehicle placed in service after December 31, 2028, the applicable battery components percentage is 100 percent.

(3) ***Determining qualifying battery component content*** —

(i) ***In general.*** Qualifying battery component content with respect to a clean vehicle battery of the vehicle is calculated as the percentage that results from dividing—

(A) The total incremental value of North American battery components, by

(B) The total incremental value of battery components.

(ii) ***Time for determining value.*** A qualified manufacturer must select a date for determining the incremental values described in paragraphs (b)(3)(i)(A) and (B) of this section. Such date must be after the last manufacturing or assembly step for the battery components relevant to the certification described in section 30D(e)(2)(A).

(iii) ***Application of qualifying battery component content to vehicles.*** A qualified manufacturer may determine qualifying battery component content based on the incremental values of the battery components actually contained in the clean vehicle battery of a specific vehicle. Alternatively, for purposes of calculating the qualifying battery component content for clean vehicle batteries in a group of vehicles, a qualified manufacturer may average the qualifying battery component

content calculation over a period of time (for example, a year, quarter, or month) with respect to vehicles from the same model line, plant, class, or some combination of thereof, with final assembly (as defined in section 30D(d)(5) of the Code and § 1.30D-2(b)(23)) within North America.

(iv) ***End point for determination.*** For a clean vehicle battery that contains a battery module or modules containing battery cells, the calculation under this paragraph (b) takes into account the value of the module and battery components contained in the module. In the case of a clean vehicle battery that contains battery cells but no battery modules, the calculation under this paragraph (b) takes into account the value of the battery cells and battery components contained in the battery cells.

(c) ***Definitions*** —

(1) ***Certain terms relevant to the critical minerals requirement.*** The following definitions apply for purposes of the rules of section 30D(e)(1) and paragraph (a) of this section:

(i) ***Procurement chain.*** Procurement chain means a common sequence of extraction, processing, or recycling activities that occur in a common set of locations with respect to an applicable critical mineral, concluding in the production of constituent materials. Sources of a single applicable critical mineral may have multiple procurement chains if, for example, one source of the applicable critical mineral undergoes the same extraction, processing, or recycling process in different locations.

(ii) ***Qualifying critical mineral*** —

(A) ***In general.*** Qualifying critical mineral means an applicable critical mineral that is extracted or processed in the United States, or in any country with which the United States has a free trade agreement in effect, or that is recycled in North America.

(B) ***Extracted or processed in the United States or in any country with which the United States has a free trade agreement in effect.*** An applicable critical mineral is extracted or processed in the United States, or in any country with which the United States has a free trade agreement in effect, if:

(*1*) Fifty percent or more of the value added to the applicable critical mineral by extraction is derived from extraction that occurred in the United States or in any country with which the United States has a free trade agreement in effect; or

(*2*) Fifty percent or more of the value added to the applicable critical mineral by processing is derived from processing that occurred in the United States or in any country with which the United States has a free trade agreement in effect.

(C) ***Recycled in North America.*** An applicable critical mineral is recycled in North America if 50 percent or more of the value added to the applicable critical mineral by recycling is derived from recycling that occurred in North America.

(iii) ***Qualifying critical mineral content.*** Qualifying critical mineral content means the percentage of the value of the applicable critical minerals contained in a clean vehicle battery that is extracted or processed in the United States, or in any country with which the United States has a free trade agreement in effect, or that is recycled in North America.

(iv) ***Total traced qualifying value.*** Total traced qualifying value means the sum of the traced qualifying values of all applicable critical minerals contained in a clean vehicle battery.

(v) ***Total value of critical minerals.*** Total value of critical minerals means the sum of the values of all applicable critical minerals contained in a clean vehicle battery.

(vi) ***Total value of qualifying critical minerals.*** Total value of qualifying critical minerals means the sum of the values of all the qualifying critical minerals contained in a clean vehicle battery.

(vii) ***Traced qualifying value*** —

(A) ***Extracted or processed in the United States or in any country with which the United States has a free trade agreement in effect.*** Traced qualifying value means, with respect to an applicable critical mineral that is extracted and processed into a constituent material, the value of the applicable critical mineral multiplied by the greater of:

(*1*) The value added to the applicable critical mineral by extraction that occurred in the United States or in any country with which the United States has a free trade agreement in effect, divided by the total value added by from extraction of the applicable critical mineral; or

(*2*) The value added to the applicable critical mineral by processing that occurred in the United States or in any country with which the United States has a free trade agreement in effect, divided by the total value added by processing of the applicable critical mineral.

(B) ***Recycled in North America.*** Traced qualifying value means, with respect to an applicable critical mineral that is recycled into a constituent material, the value of the applicable critical mineral multiplied by the percentage obtained by dividing the value added to the applicable critical mineral by recycling that occurred in North America by the total value added by recycling of the applicable critical mineral.

(viii) ***Value added.*** Value added, with respect to recycling, extraction, or processing of an applicable critical mineral, means the increase in the value of the applicable critical mineral attributable to the relevant activity. In the case of multiple applicable critical mineral procurement chains that are part of the same processing or recycling activity, value added should be allocated to each procurement chain based on relative mass.

(2) ***Certain terms relevant to the battery components requirement.*** The following definitions apply for purposes of the rules of section 30D(e)(2) and paragraph (b) of this section:

(i) ***Incremental value.*** Incremental value, with respect to a battery component, means the value determined by subtracting from the value of that battery component the value of the manufactured or assembled battery components, if any, that are contained in that battery component.

(ii) ***North American battery component.*** North American battery component means a battery component substantially all of the manufacturing or assembly of which occurs in North America, without regard to the location of the manufacturing or assembly activities of any components that make up the particular battery component.

(iii) ***Qualifying battery component content.*** Qualifying battery component content means the percentage of the value of the battery components contained in a clean vehicle battery that were manufactured or assembled in North America.

(iv) ***Total incremental value of battery components.*** Total incremental value of battery components means the sum of the incremental values of each battery component contained in a clean vehicle battery.

(v) ***Total incremental value of North American battery components.*** Total incremental value of North American battery components means the sum of the incremental values of each North American battery component contained in a clean vehicle battery.

(d) ***Upfront review of critical minerals and battery components requirements.*** For new clean vehicles anticipated to be placed in service after December 31, 2024, the qualified manufacturer must provide attestations, certifications, and documentation demonstrating compliance with the requirements of section 30D(e), at the time and in the manner provided in the *Internal Revenue Bulletin* (see § 601.601 of this chapter). The IRS, with analytical assistance from the Department of Energy, will review the attestations, certifications, and documentation.

(e) ***New qualified fuel cell motor vehicles.*** The requirements of section 30D(e) and this section are deemed to be satisfied with respect to new qualified fuel cell motor vehicles. The amount of the credit with respect to such vehicles, under section 30D(b), is $7,500.

(f) ***Examples.*** The following examples illustrate the rules of this section.

(1) ***Example 1: Critical minerals requirement*** —

(i) ***Facts.*** In 2028, Company A uses a clean vehicle battery that contains three applicable critical minerals, which are used for the clean vehicle batteries of the same group of vehicles for the purposes of averaging qualifying critical mineral content under paragraph (a)(3)(iv) of this section.

(A) Applicable critical mineral 1 (ACM-1) has a value of $100. ACM-1 has one procurement chain; in this procurement chain, extraction accounts for 20% ($20) of the total value added of ACM-1 and processing accounts for 80% ($80) of the total value added of ACM-1. Of the value added by extraction, 100% ($20) is in the United States or in a country with which the United States has a free trade agreement in effect. Of the value added by processing, 100% ($80) is in the United States or in a country with which the United States has a free trade agreement in effect.

(B) Applicable critical mineral 2 (ACM-2) has a value of $200. ACM-2 has two procurement chains. The value of ACM-2 is $100 per procurement chain. In the first procurement chain for ACM-2, extraction accounts for 50% ($50) of the value added, while processing accounts for 50% ($50). Of the value added by extraction, 50% ($25) is in United States or in a country with which the United States has a free trade agreement in effect. Of the value added by processing, 25% ($12.50) is in the United States or in a country with which the United States has a free trade agreement in effect. In the second procurement chain for ACM-2, extraction accounts for 50% ($50) of the value added, and processing accounts for 50% ($50) of the value added. Of the value added by extraction, 75% ($37.50) is in the United States or in a country with which the United States has a free trade agreement in effect. Of the value added by processing, 100% ($50) is in the United States or in a country with which the United States has a free trade agreement in effect.

(C) Applicable critical mineral 3 (ACM-3) has a value of $100. ACM-3 has one procurement chain. Extraction accounts for 10% ($10) of the value added and processing accounts for 90% ($90) of the value added. Of the value added by extraction, 50% ($5) is in the United States or in a country with which the United States has a free trade agreement in effect. Of the value added by processing, 75% ($67.50) is in the United States or in a country with which the United States has a free trade agreement in effect.

(ii) ***Analysis.***

(A) First, Company A determines each procurement chain. ACM-1 has one procurement chain. ACM-2 has two procurement chains. ACM-3 has one procurement chain.

(B) Second, Company A determines, for each procurement chain, the traced qualifying value, and then determines the total traced qualifying value.

(*1*) With respect to ACM-1, Company A divides the value added by extraction that is in the United States or in any country with which the United States has a free trade agreement in effect by the total value added from extraction of the applicable critical mineral: $20/$20, which equals 100%. Company A divides the value added by processing that is in the United States or in any country with which the United States has a free trade agreement in effect by the total value added from processing of the applicable critical mineral: $80/$80, which equals 100%. Because the percentages for extraction and processing are equal, that percentage (100%) is used to determine traced qualifying value. Therefore, Company A multiplies 100% by the total value of the applicable critical mineral ($100) to obtain $100 as the traced qualifying value for the procurement chain of ACM-1.

(*2*) With respect to the first procurement chain of ACM-2, Company A divides the value added by extraction that is in the United States or a country with which the United States has a free trade agreement in effect by the total value added from extraction of the applicable critical mineral: $25/$50, which equals 50%. Company A divides the value added by processing that is in the United States or a country with which the United States has a free trade agreement in effect by the total value added from processing of the applicable critical mineral: $12.50/$50, which equals 25%. Of these percentages, the one for extraction is greater (50%). Therefore, Company A multiplies 50% by the total value of the applicable critical minerals ($100) to obtain $50 as the traced qualifying value for the first procurement chain of ACM-2.

(*3*) With respect to the second procurement chain of ACM-2, Company A divides the value added by extraction that is in the United States or a country with which the United States has a free trade agreement in effect by the total value added from extraction of the applicable critical mineral: $37.50/$50, which equals 75%. Company A divides the value added by processing that is in the United States or a country with which the United States has a free trade agreement in effect by the total value added from processing of the applicable critical mineral: $50/$50, which equals 100%. Of these percentages, the one for processing is greater (100%). Therefore, Company A multiplies 100% by the total value of the applicable critical mineral ($100) to obtain $100 as the traced qualifying value for the second procurement chain of ACM-2.

(4) With respect to ACM-3, Company A divides the value added by extraction that is in the United States or a country with which the United States has a free trade agreement in effect by the total value added from extraction of the applicable critical mineral: $5/$10, which equals 50%. Company A divides the value added by processing that is in the United States or a country with which the United States has a free trade agreement in effect by the total value added from processing of the applicable critical mineral: $67.50/$90, which equals 75%. Of these percentages, the one for processing is greater (75%). Company A therefore multiplies 75% by the total value of the applicable critical mineral ($100) to obtain $75 as the traced qualifying value for the procurement chain of ACM-3.

(5) The total traced qualifying value is the sum of the traced qualifying values of all applicable critical minerals contained in the clean vehicle battery of the vehicle, or $325 ($100 + $50 + $100 + $75).

(C) Third, Company A determines the qualifying critical mineral content by taking the total traced qualifying value ($325, determined in step 2) divided by the total value of the critical minerals in the battery ($400). The qualifying critical mineral content is therefore 81.25%. Company A uses this percentage to calculate the average qualifying critical mineral content for the clean vehicle batteries of a group of vehicles and compares that average percentage to the applicable critical minerals percentage of section 30D(e)(2) and § 1.30D-3(a)(2).

(2) ***Example 2: Critical minerals requirement temporary safe harbor*** —

(i) ***Facts.*** The facts are the same as in paragraph (f)(1)(i) of this section (facts of *Example 1*). However, Company A is eligible to apply the temporary safe harbor of § 1.30D-3(a)(4) to determine its qualifying critical mineral content and chooses to do so. The applicable critical minerals are used for the clean vehicle batteries of the same group of vehicles for the purposes of averaging qualifying critical mineral content under paragraph (a)(4)(iv) of this section.

(ii) ***Analysis.***

(A) First, Company A determines each procurement chain, as in paragraph (f)(1) of this section (*Example 1*).

(B) Second, Company A determines whether ACM-1, ACM-2, and ACM-3 are qualifying critical minerals. ACM-1 is a qualifying critical mineral because, for both extraction and processing, 100% of the value added is derived from extraction and processing that occurs in the United States or in a country with which the United States has a free trade agreement in effect. With respect to its first procurement chain, ACM-2 is a qualifying critical mineral because 50% of the value added from extraction is derived from extraction that occurs in the United States or a country with which the United States has a free trade agreement in effect. With respect to its second procurement chain, ACM-2 is a qualifying critical mineral because 75% of the value added from extraction, and 100% of the value added from processing are derived from extraction and processing, respectively, that occur in the United States or in a country with which the United States has a free trade agreement in effect. ACM-3 is a qualifying critical mineral because 50% of the value added for extraction, and 75% of the value added for processing, are derived from extraction and processing, respectively, that occur in the United States or in a country with which the

United States has a free trade agreement in effect. The total value of the qualifying critical minerals is the sum of the value of all of the qualifying critical minerals contained in the clean vehicle battery of the vehicle, or $400 ($100 + $100 + $100 + $100).

(C) Third, Company A determines qualifying critical mineral content by taking the total value of qualifying critical minerals ($400, determined in step 2) and dividing by the total value of critical minerals in the battery ($400). The qualifying critical mineral content of the battery is 100%. Company A uses this percentage to calculate average qualifying critical mineral content for the clean vehicle batteries of a group of vehicles and compares that average percentage to the applicable critical minerals percentage of section 30D(e)(2) and § 1.30D-3(a)(2).

(3) *Example 3: Battery components requirement* —

(i) ***Facts.*** Company B uses a battery cell comprised of a cathode electrode, anode electrode, separator, and electrolyte. The cathode electrode has a value of $4,000 and is manufactured in North America. The anode electrode has a value of $1,000 and is manufactured outside of North America. The separator has a value of $1,000 and is manufactured in North America. The electrolyte has a value of $800 and is manufactured in North America. The battery cell has a value of $7,500 and is manufactured in North America. The battery components are used for the clean vehicle batteries of the same group of vehicles for the purposes of averaging qualifying critical mineral content under paragraph (b)(3)(iii) of this section.

(ii) ***Analysis.***

(A) First, Company B determines whether each battery component in a battery is a North American battery component. The cathode electrode, separator, and battery cell are North American battery components.

(B) Second, Company B determines the total incremental value of North American battery components. The incremental value of the battery cell ($700) is determined by subtracting from the value of the battery cell ($7,500) the total value of its battery components ($6,800). The incremental value of the cathode electrode is $4,000. The incremental value of the separator is $1,000. The incremental value of the electrolyte is $800. The total incremental value of North American battery components is $6,500 ($700 + $4,000 + $1,000 + $800).

(C) Third, Company B determines the total incremental value of battery components. The anode electrode is not a North American battery component because it is manufactured outside of North America. The incremental value of the anode electrode is $1,000. The total incremental value of battery components is $6,500 plus $1,000 or $7,500.

(D) Fourth, Company B determines the qualifying battery component content by taking the total incremental value of North American battery components ($6,500, determined in Step 2) divided by the total incremental value of battery components ($7,500, determined in Step 3). The qualifying battery component content is therefore 86.7%. Company B uses this percentage to calculate the average battery component content for the clean vehicle batteries of a group of vehicles and compares that average percentage to the applicable battery components percentage of section 30D(e)(2) and § 1.30D-3(b)(2).

(g) ***Severability.*** The provisions of this section are separate and severable from one another. If any provision of this section is stayed or determined to be invalid, it is the agencies' intention that the remaining provisions shall continue in effect.

(h) ***Applicability date*** —

(1) ***In general.*** Except as provided in paragraph (h)(2) of this section, this section applies to new clean vehicles placed in service after April 17, 2023, in taxable years ending after April 17, 2023.

(2) ***Upfront review and traced qualifying value.*** Paragraphs (a)(3) and (4) (relating to traced qualifying value test) and (d) (relating to upfront review of critical minerals and battery components requirements) of this section apply to taxable years ending after May 6, 2024.

[T.D. 9995, 89 FR 37754, May 6, 2024]

§ 1.30D-4 Special rules.

(a) ***No double benefit*** —

(1) ***In general.*** Under section 30D(f)(2) of the Internal Revenue Code (Code), the amount of any deduction or other credit allowable under chapter 1 of the Code for a vehicle for which a credit is allowable under section 30D(a) must be reduced by the amount of the section 30D credit allowed for such vehicle (determined without regard to section 30D(c)).

(2) ***Interaction between section 30D and section 25E credits.*** A section 30D credit that has been allowed with respect to a vehicle in a taxable year before the year in which a credit under section 25E of the Code is allowable for that vehicle does not reduce the amount allowable under section 25E.

(3) ***Interaction between section 30D and section 45W credits.*** Pursuant to section 45W(d)(3) of the Code, no credit is allowed under section 45W with respect to any vehicle for which a credit was allowed under section 30D.

(b) ***Limitation based on modified adjusted gross income*** —

(1) ***In general.*** Under section 30D(f)(10)(A), no credit is allowed under section 30D(a) for any taxable year if—

(i) The lesser of—

(A) The modified adjusted gross income of the taxpayer for such taxable year, or

(B) The modified adjusted gross income of the taxpayer for the preceding taxable year, exceeds

(ii) The threshold amount.

(2) ***Threshold amount.*** For purposes of section 30D(f)(10)(A) and paragraph (b)(1) of this section, the threshold amount applies to taxpayers based on the return filing status for the taxable year, as set forth in paragraphs (b)(2)(i) through (iii) of this section. *See* section 30D(f)(10)(B).

(i) In the case of a joint return or a surviving spouse (as defined in section 2(a) of the Code), the threshold amount is $300,000,

(ii) In the case of a head of household (as defined in section 2(b)), the threshold amount is $225,000.

(iii) In the case of a taxpayer not described in paragraph (b)(2)(i) or (ii) of this section, the threshold amount is $150,000.

(3) ***Special rule for change in filing status.*** If the taxpayer's filing status for the taxable year differs from the taxpayer's filing status in the preceding taxable year, then the taxpayer satisfies the limitation described in section 30D(f)(10) and paragraph (b)(1) of this section if the taxpayer's modified adjusted gross income does not exceed the threshold amount in either year based on the applicable filing status for that taxable year.

(4) ***Application to estates and trusts*** —

(i) ***Estates and non-grantor trusts.*** In the case of a new clean vehicle placed in service by an estate or a non-grantor trust, the threshold amount of paragraph (b)(2)(iii) of this section applies for purposes of the modified adjusted gross income limitation of section 30D(f)(10) and this paragraph (b). For purposes of the modified adjusted gross income limitation, an estate or non-grantor trust is treated as having modified adjusted gross income above the threshold amount for any year in which the estate or non-grantor trust is not in existence.

(ii) ***Grantor trusts.*** In the case of a new clean vehicle placed in service by a grantor trust, the modified adjusted gross income limitation of section 30D(f)(10) and this paragraph (b) applies based on the modified adjusted gross income of the grantor or other deemed owner of the trust, and not the modified adjusted gross income of the trust or any beneficiary of the trust other than the grantor or other deemed owner.

(5) ***Application to passthrough entities.*** In the case of a new clean vehicle placed in service by a partnership or an S corporation, if the section 30D credit is claimed by individuals, non-grantor trusts, or estates who are direct or indirect partners of that partnership or shareholders of that S corporation, the modified gross income limitation of section 30D(f)(10) and this paragraph (b) applies at the partner or shareholder level in accordance with the rules of this paragraph (b).

(6) ***Other taxpayers.*** The modified adjusted gross income limitation of this paragraph (b) does not apply in the case of a new clean vehicle placed in service by a corporation or by a taxpayer that is not an individual, estate, trust, or entity as provided in paragraph (b)(4) or (b)(5) of this section.

(c) ***Credit may generally be claimed on only one tax return*** —

(1) ***In general.*** Except as provided in paragraph (c)(2) of this section, the amount of the section 30D credit attributable to a new clean vehicle may be claimed on only one Federal income tax return, including on a joint return in which one of the spouses is listed on the seller report. In the event a new clean vehicle is placed in service by multiple taxpayers who do not file a joint tax return (for example, in the case of married individuals filing separate returns), no allocation or proration of the section 30D credit is available.

(2) ***Exception for passthrough entities.*** In the case of a new clean vehicle placed in service by a partnership or an S corporation, the section 30D credit is allocated among the partners of the partnership under § 1.704-1(b)(4)(ii), or among the shareholder(s) of the S corporation under sections 1366(a) and 1377(a) of the Code, and claimed on the Federal income tax returns of the individual partners or S corporation shareholder(s).

(3) ***Seller reporting*** —

(i) ***In general.*** The name and taxpayer identification number of the taxpayer claiming the section 30D credit must be listed on the seller report pursuant to section 30D(d)(1)(H). The credit will be allowed only on the Federal income tax return of the taxpayer listed in the seller report.

(ii) ***Passthrough entities.*** In the case of a new clean vehicle placed in service by a partnership or S corporation, the name and tax identification number of the partnership or S corporation that placed the new clean vehicle in service must be listed on the seller report pursuant to section 30D(d)(1)(H).

(4) ***Example.*** A married couple jointly purchases and places in service a new clean vehicle that qualifies for the section 30D credit and puts both of their names on the title. The couple files separate Federal income tax returns by using the married filing separately filing status. Only one spouse may claim the section 30D credit with respect to the new clean vehicle on that spouse's respective return, and the other spouse may not claim any amount of the section 30D credit with respect to that new clean vehicle. The spouse that claims the section 30D credit must be the same spouse listed on the seller report.

(d) ***Grantor trusts.*** To the extent that the grantor or another person is treated as owning all or part of a trust under sections 671 through 679 of the Code, the section 30D credit is allocated to such grantor or other person in accordance with § 1.671-3(a)(1).

(e) ***Recapture rules*** —

(1) ***In general.*** This paragraph (e) provides rules under section 30D(f)(5) regarding the recapture of the section 30D credit.

(i) ***Cancelled sale.*** If the sale of a vehicle between the taxpayer and seller is cancelled before the taxpayer places the vehicle in service, then—

(A) The taxpayer may not claim the section 30D credit with respect to the vehicle;

(B) The sale will be treated as not having occurred and the vehicle will be considered available for original use by another taxpayer (regardless of the cancelled sale), and the vehicle will, therefore, still be eligible for the section 30D credit upon a subsequent sale that meets the requirements of section 30D and the section 30D regulations;

(C) The seller report must be rescinded by the seller in the manner set forth in guidance published in the *Internal Revenue Bulletin* (see § 601.601 of this chapter); and

(D) The taxpayer cannot make a credit transfer election under section 30D(g) and § 1.30D-5(d) with respect to the cancelled sale.

(ii) ***Vehicle return.*** If a taxpayer returns to the seller a vehicle within 30 days of placing such vehicle in service, then—

(A) The taxpayer cannot claim the section 30D credit with respect to the vehicle;

(B) The vehicle will no longer be considered available for original use by another taxpayer, and, therefore, the vehicle will no longer be eligible for the section 30D credit;

(C) The seller report must be updated by the seller in the manner set forth in guidance published in the *Internal Revenue Bulletin* (see § 601.601 of this chapter); and

(D) A credit transfer election under 30D(g) and § 1.30D-5(d), if applicable, will be treated as nullified and any advance payment made pursuant to section 30D(g) and § 1.30D-5(f), if applicable, will be collected from the eligible entity as an excessive payment pursuant to § 1.30D-5(g)(2).

(iii) ***Resale.*** If a taxpayer resells a vehicle within 30 days of placing the vehicle in service, then the taxpayer is treated as having purchased such vehicle with the intent to resell, and—

(A) The taxpayer cannot claim the section 30D credit with respect to the vehicle;

(B) The vehicle will no longer be considered available for original use by another taxpayer, and, therefore, the vehicle will no longer be eligible for the section 30D credit;

(C) The seller report will not be updated;

(D) A credit transfer election under 30D(g) and § 1.30D-5(d), if applicable, will remain in effect and any advance payment made pursuant to section 30D(g) and § 1.30D-5(f) will not be collected from the eligible entity; and

(E) The value of any transferred credit will be collected from the taxpayer as an increase in tax imposed by chapter 1 of the Code for the taxable year in which the vehicle is placed in service.

(iv) ***Other vehicle returns and resales.*** In the case of a return of a new clean vehicle not described in paragraph (e)(1)(ii) of this section or a resale not described in paragraph (e)(1)(iii) of this section, the vehicle will no longer be considered available for original use by another taxpayer, and, therefore, will no longer be eligible for the section 30D credit upon a subsequent sale.

(2) ***Recapture rules in the case of a credit transfer election.*** For additional recapture rules that apply in the case of a credit transfer election, see § 1.30D-5(g)(1). For excessive payment rules that apply in the case of an advance payment made to an eligible entity, see § 1.30D-5(g)(2).

(3) ***Example: Demonstrator vehicle.*** A dealer purchases, registers, and titles a vehicle in its name and uses it as a demonstrator vehicle for customers. The dealer resells the vehicle more than 30 days after placing the vehicle in service. The dealer claimed the section 30D credit on its Federal tax return for the tax year the vehicle is placed in service. The credit recapture provision in § 1.30D-4(e)(1)(iii) does not apply because the vehicle was resold more than 30 days after being placed in service.

(f) ***Seller registration.*** A seller must register with the IRS in the manner set forth in guidance published in the *Internal Revenue Bulletin* (see § 601.601 of this chapter) for purposes of filing seller reports (as defined in § 1.30D-2(b)(46)).

(g) ***Requirement to file return.*** No section 30D credit is allowed unless the taxpayer claiming such credit files a Federal income tax return or information return, as appropriate, for the taxable year in which the new clean vehicle is placed in service. The taxpayer must attach to such return a completed Form 8936, *Clean Vehicle Credits,* or successor form that includes all information required by the form and instructions. The taxpayer must also attach a completed Schedule A (Form 8936), *Clean Vehicle Credit Amount,* or successor form or schedule that includes all information required by the schedule and instructions, such as the vehicle identification number of the previously-owned clean vehicle.

(h) ***Taxpayer reliance on manufacturer certifications and periodic written reports to the IRS.*** A taxpayer that acquires a new clean vehicle and places it in service may rely on the manufacturer's certification concerning the manufacturer's status as a qualified manufacturer. A taxpayer also may rely on the information and certifications contained in the qualified manufacturer's written reports to the IRS. The procedures for such periodic written reports are established in guidance published in the *Internal Revenue Bulletin* (see § 601.601 of this chapter). To the extent a taxpayer relies on certifications or attestations from the qualified manufacturer regarding certain section 30D requirements, the new clean vehicle the taxpayer acquires will be deemed to meet the requirements of section 30D(d)(1)(C) through (F), (d)(7), and (e). *See* § 1.30D-5(g)(3)(ii) for an example that illustrates the interplay between the rule in this paragraph (h) and the excessive payment rule in § 1.30D-3(g)(2).

(i) ***Severability.*** The provisions of this section are separate and severable from one another. If any provision of this section is stayed or determined to be invalid, it is the agencies' intention that the remaining provisions shall continue in effect.

(j) ***Applicability date.*** This section applies to taxable years ending after December 4, 2023.

[T.D. 9995, 89 FR 37754, May 6, 2024]

§ 1.30D-5 Transfer of credit.

(a) ***In general.*** This section provides rules related to the transfer and advance payment of the section 30D credit pursuant to section 30D(g) of the Internal Revenue Code (Code). Under the rules of section 30D(g) and this section, a taxpayer may elect to transfer a section 30D credit to an eligible entity, and the eligible entity may receive an advance payment for such credit, provided certain requirements are met. *See* paragraph (d) of this section for rules applicable to credit transfer elections. *See* paragraph (f) of this section for rules applicable to advance payments of transferred section 30D credits. Section 30D(g)(2) sets forth certain requirements that a dealer must satisfy to be an eligible entity for credit transfer and advance payment purposes. Section 30D(g)(2)(A) requires registration with the IRS. *See* paragraph (c) of this section for rules related to dealer registration. Section 30D(g)(2)(B) through (D) and paragraph (f)(2) of this section impose additional requirements that a registered dealer must satisfy in order to be an eligible entity for credit transfer and advance payment purposes.

(b) ***Definitions.*** This paragraph (b) provides definitions that apply for purposes of section 30D(g) and this section. *See* § 1.30D-2(b) for definitions that are generally applicable to section 30D and the section 30D regulations.

(1) ***Advance payment program.*** Advance payment program means the program described in paragraph (f)(1) of this section.

(2) ***Credit transfer election.*** Credit transfer election has the meaning provided in section 30D(g) and paragraph (d) of this section.

(3) ***Dealer.*** Dealer has the meaning provided in section 30D(g)(8), except that, for purposes of this section, the term does not include persons licensed solely by a territory of the United States, and includes a dealer licensed by any jurisdiction (other than one licensed solely by a territory of the United States) that makes sales at sites outside of the jurisdiction in which it is licensed.

(4) ***Dealer tax compliance.*** Dealer tax compliance means the dealer has filed all required Federal information and tax returns, including for Federal income and employment tax purposes, and the dealer has paid all Federal tax, penalties, and interest due as of the time of sale. A dealer that has entered into an installment agreement with the IRS for which a dealer is current on its obligations (including filing obligations) is treated as in dealer tax compliance.

(5) ***Electing taxpayer.*** Electing taxpayer means an individual who purchases and places in service a new clean vehicle and elects to transfer the section 30D credit that would otherwise be allowable to such individual to an eligible entity pursuant to section 30D(g) and paragraph (d) of this section. A taxpayer is an electing taxpayer only if the taxpayer makes certain attestations to the registered dealer, pursuant to procedures provided in guidance published in the *Internal Revenue Bulletin* (see § 601.601 of this chapter), including that the taxpayer does not anticipate exceeding the modified adjusted gross income limitation of section 30D(b)(1) and § 1.30D-4(b) and that the taxpayer will use the vehicle predominantly for personal use.

(6) ***Eligible entity.*** Eligible entity has the meaning provided in section 30D(g)(2) and paragraph (f)(2) of this section.

(7) ***Incentive.*** For purposes of the eligible entity requirements of section 30D(g)(2)(B)(ii) and (D), incentive means any reduction in price available to the taxpayer from the dealer or manufacturer, including in combination with other incentives, other than a reduction in the form of a partial payment or down payment for the purchase of a new clean vehicle pursuant to section 30D(g)(2)(C).

(8) ***Registered dealer.*** Registered dealer means a dealer that has completed registration with the IRS as provided in paragraph (c) of this section.

(9) ***Sale price.*** The sale price of a new clean vehicle means the total price agreed upon by the taxpayer and dealer in a written contract at the time of sale, including any delivery charges and after the application of any incentives. The sale price of a new clean vehicle does not include separately stated taxes and fees required by State or local law. The sale price of a new clean vehicle is determined before the application of any trade-in value.

(10) ***Time of sale.*** Time of sale means the date the new clean vehicle is placed in service, as defined in § 1.30D-2(b)(36).

(c) ***Dealer registration*** —

(1) ***In general.*** A dealer must register with the IRS in the manner set forth in guidance published in the *Internal Revenue Bulletin* (see § 601.601 of this chapter) for the dealer to receive credits transferred by an electing taxpayer pursuant to section 30D(g) and paragraph (d) of this section.

(2) ***Dealer tax compliance required.*** A dealer must be in dealer tax compliance to complete and maintain its registration with the IRS and paragraph (d) of this section. If the dealer is not in dealer tax compliance for any of the taxable periods during the last five taxable years, then the dealer may complete its initial registration with the IRS, but the dealer will not be eligible for the advance payment program (and, therefore, the dealer will not be eligible to receive transferred section 30D credits) until the compliance issue is resolved. The IRS will notify the dealer in writing that the dealer is not in dealer tax compliance, and the dealer will have the opportunity to address any failure through regular procedures. If the failure is corrected, the IRS will complete the dealer's registration, and, provided all other requirements of section 30D(g) and this section are met, the dealer will then

be allowed to receive transferred section 30D credits and participate in the advance payment program. Additional procedural guidance regarding this paragraph is set forth in guidance published in the *Internal Revenue Bulletin* (see § 601.601 of this chapter).

(3) ***Suspension of registration.*** A registered dealer's registration may be suspended pursuant to the procedures described in guidance published in the *Internal Revenue Bulletin* (see § 601.601 of this chapter). Any decision made by the IRS relating to the suspension of a registered dealer's registration is not subject to administrative appeal to the IRS Independent Office of Appeals unless the IRS and the IRS Independent Office of Appeals agree that such review is available and the IRS provides the time and manner for such review.

(4) ***Revocation of registration.*** A registered dealer's registration may be revoked pursuant to the procedures described in guidance published in the *Internal Revenue Bulletin* (see § 601.601). Any decision made by the IRS relating to the revocation of a dealer's registration is not subject to administrative appeal to the IRS Independent Office of Appeals unless the IRS and the IRS Independent Office of Appeals agree that such review is available and the IRS provides the time and manner for such review.

(d) ***Credit transfer election by electing taxpayer.*** For a new clean vehicle placed in service after December 31, 2023, an electing taxpayer may elect to apply the rules of section 30D(g) and this section to make a credit transfer election with respect to the vehicle so that the section 30D credit with respect to the vehicle is allowed to the eligible entity specified in the credit transfer election (and not to the electing taxpayer) pursuant to the advance payment program described in paragraph (f) of this section. The electing taxpayer, as part of the credit transfer election, must transfer the entire amount of the credit that would otherwise be allowable to the electing taxpayer under section 30D with respect to the vehicle, and the eligible entity specified in the credit transfer election must pay the electing taxpayer an amount equal to the amount of the credit included in the credit transfer election. A credit transfer election must be made no later than the time of sale, and must be made in the manner set forth in guidance published in the *Internal Revenue Bulletin* (see § 601.601 of this chapter). Once made, a credit transfer election is irrevocable. No credit transfer election may be made to transfer an amount of credit that would otherwise be allowed to the electing taxpayer under section 38.

(e) ***Federal income tax consequences of the credit transfer election*** —

(1) ***Tax consequences for electing taxpayer.*** In the case of a credit transfer election, the Federal income tax consequences for the electing taxpayer are as follows—

(i) The credit amount under section 30D that the electing taxpayer elects to transfer to the eligible entity under section 30D(g) and paragraph (d) of this section may exceed the electing taxpayer's regular tax liability (as defined in section 26(b)(1) of the Code) for the taxable year in which the sale occurs, and the excess, if any, is not subject to recapture on the basis that it exceeded the electing taxpayer's regular tax liability;

(ii) The payment made by an eligible entity to an electing taxpayer under section 30D(g)(2)(C) and paragraph (d) of this section to an electing taxpayer pursuant to the credit transfer election is not includible in the gross income of the electing taxpayer; and

(iii) The payment made by an eligible entity to an electing taxpayer under section 30D(g)(2)(C) and paragraph (d) of this section is treated as repaid by the electing taxpayer to the eligible entity as partial payment of the sale price of the new clean vehicle. Thus, the repayment by the electing taxpayer is included in the electing taxpayer's basis in the new clean vehicle prior to the application of the basis reduction rule in section 30D(f)(1).

(2) ***Tax consequences for eligible entity.*** In the case of a credit transfer election, the Federal income tax consequences for the eligible entity are as follows—

(i) The eligible entity is allowed the section 30D credit with respect to the new clean vehicle and may receive an advance payment pursuant to section 30D(g)(7) and paragraph (f) of this section;

(ii) Advance payments received by the eligible entity are not treated as a tax credit in the hands of the eligible entity and may exceed the eligible entity's regular tax liability (as defined in section 26(b)(1)) for the taxable year in which the sale occurs;

(iii) An advance payment received by the eligible entity is not included in the gross income of the eligible entity;

(iv) The payment made by an eligible entity under section 30D(g)(2)(C) and paragraph (d) of this section to an electing taxpayer is not deductible by the eligible entity;

(v) The payment made by an eligible entity to an electing taxpayer under section 30D(g)(2)(C) and paragraph (d) of this section is treated as repaid by the electing taxpayer to the eligible entity as partial payment of the sale price of the new clean vehicle. Thus, the repayment by the electing taxpayer is treated as an amount realized by the eligible entity under section 1001 of the Code and the regulations under section 1001; and

(vi) If the eligible entity is a partnership or an S corporation, then—

(A) The IRS will make the advance payment to such partnership or S corporation equal to the amount of the section 30D credit allowed that is transferred to the eligible entity;

(B) Such section 30D credit is reduced to zero and is, for any other purpose of the Code, deemed to have been allowed solely to such entity (and not allocated or otherwise allowed to its partners or shareholders) for such taxable year; and

(C) The amount of the advance payment is not treated as tax exempt income to the partnership or S corporation for purposes of the Code.

(3) ***Form of payment from eligible entity to electing taxpayer.*** The tax treatment of the payment made by the eligible entity to the electing taxpayer described in paragraphs (e)(1) and (2) of this section is the same regardless of whether the payment is made in cash, in the form of a partial payment or down payment for the purchase of the new clean vehicle, or as a reduction in sale price (without the payment of cash) of the new clean vehicle.

(4) ***Additional requirements.*** In the case of a credit transfer election, the following additional rules apply—

(i) The requirements of section 30D(f)(1) (regarding basis reduction) and 30D(f)(2) (regarding no double benefit) apply to the electing taxpayer as if the credit transfer election were not made (so, for example, the electing taxpayer must reduce the electing taxpayer's basis in the vehicle by the amount of the section 30D credit, regardless of the credit transfer election);

(ii) Section 30D(f)(6) (regarding the election not to take the credit) will not apply (in other words, by electing to transfer the credit, the electing taxpayer is electing to take the credit);

(iii) Section 30D(f)(9) (regarding the vehicle identification number requirement) will be treated as satisfied if the eligible entity provides the vehicle identification number of such vehicle to the IRS in the form and manner set forth in guidance published in the *Internal Revenue Bulletin* (see

§ 601.601 of this chapter). The electing taxpayer must also provide the vehicle identification number with their tax return for the taxable year in which the vehicle is placed in service. *See* section 6213(g)(2)(T) of the Code and § 301.6213-2 of this chapter for rules relating to the omission of a correct vehicle identification number.

(5) ***Examples.*** The following examples illustrate the rules of paragraph (e) of this section.

(i) ***Example 1: Electing taxpayer's regular tax liability less than amount of credit*** —

(A) ***Facts.*** T, an individual, purchases a new clean sport utility vehicle from a dealer, D, which is a C corporation. T satisfies the requirements to be an electing taxpayer and elects to transfer the section 30D credit to D. D is a registered dealer and satisfies the requirements to be an eligible entity. The sale price of the vehicle is $57,500. The section 30D credit otherwise allowable to T is $7,500. D makes the payment required to be made to T in the form of a cash payment of $7,500. T uses the $7,500 as a partial payment for the vehicle. T pays D an additional $50,000 from other funds. T's regular tax liability for the year is less than $7,500.

(B) ***Analysis.*** Under paragraph (e)(1)(i) of this section, T may transfer the credit to D, even though T's regular tax liability is less than $7,500, and no amount of the credit will be recaptured from T on the basis that the allowable credit exceeds T's regular tax liability. D's $7,500 payment to T is not included in T's gross income, and the sale price of the vehicle is $57,500 (including both the $7,500 payment and the additional $50,000 paid by T from other funds), prior to the application of the basis reduction rule of section 30D(f)(1). After application of the basis reduction rule, T's basis in the vehicle is $50,000. D is eligible to receive an advance payment of $7,500 for the transferred section 30D credit as provided in section 30D(g)(7) and paragraph (f) of this section. Under paragraph (e)(2) of this section, D may receive the advance payment irrespective of the fact that D's regular tax liability is less than $7,500. The advance payment is not treated as a credit toward D's tax liability (if any), nor is it included in D's gross income. Further, D's $7,500 payment to T is not deductible, and D's amount realized is $57,500 upon the sale of the vehicle (including both the $7,500 payment from D to T that T uses as a partial payment, and the additional $50,000 paid by T from other funds).

(ii) ***Example 2: Non-cash payment by eligible entity to electing taxpayer*** —

(A) ***Facts.*** The facts are the same as in paragraph (e)(5)(i)(A) of this section (facts of *Example 1*), except that D makes the payment to T in the form of a reduction in the sale price of the vehicle (rather than as a cash payment).

(B) ***Analysis.*** Paragraph (e)(3) of this section provides that the application of paragraphs (e)(1) and (2) of this section is not dependent on the form of payment from an eligible entity to an electing taxpayer (for example, a payment in cash or a payment in the form of a reduction in sale price). Thus, the analysis is the same as in paragraph (e)(5)(i)(B) of this section (analysis of *Example 1*).

(iii) ***Example 3: Eligible entity is a partnership*** —

(A) ***Facts.*** The facts are the same as in paragraph (e)(5)(i)(A) of this section (facts of *Example 1*), except that D is a partnership.

(B) ***Analysis.*** The analysis as to T is the same as in paragraph (e)(5)(i)(B) of this section (analysis of *Example 1*). Because D is a partnership, paragraph (e)(2)(vi) of this section applies. Thus, the advance payment is made to the partnership, the credit is reduced to zero and is, for any other purpose of the Code, deemed to have been allowed solely to the partnership (and not allocated or otherwise allowed to its partners) for such taxable year. The amount of the advance payment is not treated as tax-exempt income to the partnership for purposes of the Code.

(f) ***Advance payments received by eligible entities*** —

(1) ***In general.*** An eligible entity may receive advance payments from the IRS (corresponding to the amount of the section 30D credit for which a credit transfer election was made by an electing taxpayer to transfer the credit to the eligible entity pursuant to section 30D(g) and paragraph (d) of this section) before the eligible entity files its Federal income tax return or information return, as appropriate, for the taxable year with respect to which the credit transfer election corresponds. This advance payment program is the exclusive mechanism for an eligible entity to receive the section 30D credit transferred pursuant to section 30D(g) and paragraph (d) of this section. An eligible entity receiving a transferred section 30D credit may not claim the credit on a tax return.

(2) ***Requirements for a registered dealer to become an eligible entity.*** A registered dealer qualifies as an eligible entity, and may therefore receive an advance payment, in connection with a credit transfer election, if it meets the following requirements:

(i) The registered dealer submits required registration information and is in dealer tax compliance;

(ii) The registered dealer retains information regarding the credit transfer election for three calendar years beginning with the year immediately after the year in which the vehicle is placed in service, as described in guidance published in the *Internal Revenue Bulletin* (see § 601.601 of this chapter);

(iii) The registered dealer meets any other requirements set forth in guidance published in the *Internal Revenue Bulletin* (see § 601.601 of this chapter) or in forms and instructions; and

(iv) The registered dealer meets any other requirements of section 30D(g), including those in section 30D(g)(2)(B) through (E).

(g) ***Increase in tax*** —

(1) ***Recapture if electing taxpayer exceeds modified adjusted gross income limitation.*** If an electing taxpayer has modified adjusted gross income that exceeds the limitation in section 30D(f)(10) and § 1.30D-4(b), then the income tax imposed on such taxpayer under chapter 1 of the Code (chapter 1) for the taxable year in which such vehicle was placed in service is increased by the amount of the payment received by the taxpayer. The electing taxpayer must recapture such amounts on the return described in paragraph (h) of this section.

(2) ***Excessive payments*** —

(i) ***In general.*** This paragraph provides rules under section 30D(g)(7)(B), which provides that rules similar to the rules of section 6417(d)(6) of the Code apply to the advance payment program. In the case of any advance payment to an eligible entity that the IRS determines constitutes an excessive payment, the tax imposed on the eligible entity under chapter 1, regardless of whether such entity would otherwise be subject to tax under chapter 1, for the taxable year in which such determination is made will be increased by the sum of the following amounts—

(A) The amount of the excessive payment; plus

(B) An amount equal to 20 percent of such excessive payment.

(ii) ***Reasonable cause.*** The amount described in paragraph (g)(2)(i)(B) of this section will not apply to an eligible entity if the eligible entity demonstrates to the satisfaction of the IRS that the excessive payment resulted from reasonable cause. In the case of a new clean vehicle (with respect to which a credit transfer election was made by the electing taxpayer) that is returned to the eligible entity within 30 days of being placed in service, the eligible entity will be treated as having demonstrated that the excessive payment resulted from reasonable cause.

(iii) ***Excessive payment defined.*** Excessive payment means an advance payment made—

(A) To a registered dealer that fails to meet the requirements to be an eligible entity provided in section 30D(g)(2) and paragraph (f)(2) of this section, or

(B) Except as provided in paragraph (g)(2)(iv) of this section, to an eligible entity with respect to a new clean vehicle to the extent the payment exceeds the amount of the credit that, without application of section 30D(g) and this section, would be otherwise allowable to the electing taxpayer with respect to the vehicle for such tax year.

(iv) ***Special rule for cases in which the electing taxpayer's modified adjusted gross income exceeds the limitation.*** Any excess described in paragraph (g)(2)(iii)(B) of this section that arises due to the electing taxpayer exceeding the limitation based on modified adjusted gross income in section 30D(f)(10) and § 1.30D-4(b) is not an excessive payment. Instead, the amount of the advance payment is recaptured from the electing taxpayer under section 30D(g)(10) and paragraph (g)(1) of this section.

(3) ***Examples.*** The following examples illustrate the excessive payment rules in paragraph (g)(2) of this section.

(i) ***Example 1: Registered dealer is not an eligible entity*** —

(A) ***Facts.*** In 2024, D, a registered dealer, receives an advance payment of $7,500 with respect to a credit transferred under section 30D(g)(1) and paragraph (d) of this section for a new clean vehicle V. In 2025, the IRS determines that D was not an eligible entity with respect to new clean vehicle V at the time of the receipt of the advance payment in 2024, because D failed to satisfy one of the requirements of section 30D(g)(2) and paragraph (f)(2) of this section. D is unable to show reasonable cause for the failure.

(B) ***Analysis.*** Under paragraph (g)(2)(i) of this section, the tax imposed on D is increased by the amount of the excessive payment if the advance payment received by D constitutes an excessive payment. Under paragraph (g)(2)(iii) of this section, the entire amount of the $7,500 advance payment received by D is an excessive payment because D did not meet the requirements to be an eligible entity under section 30D(g)(2) and paragraph (f)(2) of this section. Additionally, because D cannot show reasonable cause for its failure to meet these requirements, the tax imposed under chapter 1 on D is increased by $9,000 in 2025 (the taxable year of the IRS determination). This is comprised of the $7,500 value of the credit plus the $1,500 penalty, calculated as a 20% penalty on such $7,500 (20% × $7,500 = $1,500). This treatment applies regardless of whether D is otherwise subject to tax under chapter 1 (for example, if D is a partnership).

(ii) ***Example 2: Incorrect manufacturer certifications*** —

(A) ***Facts.*** In 2024, T, a taxpayer, makes an election to transfer a credit under section 30D(g)(1) and paragraph (d) of this section to E, a registered dealer, for a new clean vehicle V. M, the manufacturer of such vehicle, certified to the IRS that vehicle V was eligible for a $7,500 credit because it met both the critical minerals and the battery components requirements. T transfers the $7,500 credit to E. Subsequent to T's purchase and election to transfer the $7,500 credit to E, M reports to the IRS that vehicle V was only eligible for a $3,750 credit because it did not meet the critical minerals requirement.

(B) ***Analysis.*** Under § 1.30D-4(h), T may rely on the information and certifications provided in M's written report to the IRS regarding vehicle V's eligibility for the section 30D credit. Under paragraph (g)(2)(iii)(B) of this section, an advance payment to an eligible entity with respect to a vehicle is an excessive payment to the extent the payment exceeds the amount of the credit that, without a credit transfer election, would be otherwise allowable to the electing taxpayer with respect to the vehicle for such taxable year. Because the amount of the credit that would be allowable to T for 2024 is $7,500, and T transferred the $7,500 credit to E, there is no excessive payment with respect to E.

(h) ***Return requirement.*** An electing taxpayer that makes a credit transfer election must file a Federal income tax return or information return, as appropriate, for the taxable year in which the credit transfer election is made and indicate such election on the return in accordance with the instructions to the form on which the return is made. The electing taxpayer must attach a completed Form 8936, *Clean Vehicle Credits,* or successor form, and a completed Schedule A (Form 8936), *Clean Vehicle Credit Amount,* or successor form or schedule, including the vehicle identification number of the new clean vehicle and such other information as provided in forms and instructions.

(i) ***Two credit transfer elections per year.*** A taxpayer may make no more than two credit transfer elections per taxable year, consisting of either two elections to transfer section 30D credits, or one election to transfer a section 30D credit and one election to transfer a section 25E credit. In the case of taxpayers who file a joint return, each individual taxpayer may make no more than two credit transfer elections per taxable year.

(j) ***Severability.*** The provisions of this section are separate and severable from one another. If any provision of this section is stayed or determined to be invalid, it is the agencies' intention that the remaining provisions will continue in effect.

(k) ***Applicability date.*** This section applies to new clean vehicles placed in service after December 31, 2023, in taxable years ending after December 31, 2023.

[T.D. 9995, 89 FR 37754, May 6, 2024]

§ 1.30D-6 Foreign entity of concern restriction.

(a) ***In general.*** This section provides rules related to the excluded entities provision of section 30D(d)(7) of the Internal Revenue Code (Code), which imposes certain restrictions on the extraction, processing, or recycling of applicable critical minerals, and the manufacturing or assembly of battery components contained in a clean vehicle battery by a foreign entity of concern (FEOC). Specifically, section 30D(d)(7) provides that the term *new clean vehicle* does not include any vehicle placed in service after December 31, 2023, with respect to which any of the battery components in the clean vehicle battery were manufactured or assembled by a FEOC, or any vehicle placed in service after December 31, 2024, with

respect to which any of the applicable critical minerals contained in the clean vehicle battery were extracted, processed, or recycled by a FEOC (FEOC restriction). *See* § 1.30D-2(b) for definitions applicable to section 30D(d)(7) and this section.

(b) ***Due diligence required*** —

(1) ***In general.*** The qualified manufacturer must conduct due diligence with respect to all battery components and applicable critical minerals (and associated constituent materials) that are relevant to determining whether such components or minerals are FEOC-compliant. Such due diligence must comply with standards of tracing for battery materials available in the industry at the time of the attestation or certification that enables the qualified manufacturer to know with reasonable certainty the provenance of applicable critical minerals, associated constituent materials, and battery components. Reasonable reliance on a supplier attestation or certification will be considered due diligence if the qualified manufacturer, or any third-party manufacturer or supplier, does not know or have reason to know that such supplier attestation or certification is incorrect. *See* paragraph (c)(5) of this section for rules related to third-party manufacturers and suppliers. The qualified manufacturer must conduct due diligence prior to the qualified manufacturer determining the information necessary to establish any compliant-battery ledger under paragraph (d) of this section, and the qualified manufacturer must continue to conduct due diligence on an ongoing basis.

(2) ***Transition rule for impracticable-to-trace battery materials.*** For any new clean vehicles for which the qualified manufacturer provides a periodic written report before January 1, 2027, the due diligence requirement of paragraph (b)(1) of this section may be satisfied by excluding identified impracticable-to-trace battery materials. To use this transition rule, a qualified manufacturer must submit a report during the up-front review process described in paragraph (d)(2)(ii) of this section demonstrating how the qualified manufacturer will comply with the FEOC restriction of section 30D(d)(7) and this section, including information about efforts made to date to secure a FEOC-compliant supply of these battery materials once the transition rule is no longer in effect.

(c) ***FEOC compliance*** —

(1) ***In general.*** In the case of any new clean vehicle placed in service after December 31, 2023, the clean vehicle battery or batteries of the vehicle must be FEOC-compliant. A serial number or other identification system must be used to physically track FEOC-compliant batteries to specific new clean vehicles. The determination that a clean vehicle battery is FEOC-compliant is made as follows:

(i) ***Step 1.*** The qualified manufacturer determines whether battery components and applicable critical minerals (and associated constituent materials) are FEOC-compliant, in accordance with paragraph (c)(4) of this section.

(ii) ***Step 2.*** The FEOC-compliant battery components and FEOC-compliant applicable critical minerals (and associated constituent materials) are physically tracked to specific battery cells, in accordance with paragraph (c)(3)(i) of this section. Alternatively, FEOC-compliant applicable critical minerals and associated constituent materials (but not battery components) may be allocated to battery cells, without physical tracking, in accordance with paragraph (c)(3)(ii) of this section. In addition, the determination of whether a battery cell is FEOC-compliant may be made by applying the transition rule for impracticable-to-trace battery materials, in accordance with paragraph (c)(3)(iii) of this section.

(iii) ***Step 3.*** The battery components, including battery cells, are physically tracked to specific clean vehicle batteries, in accordance with paragraph (c)(2) of this section.

(2) ***FEOC-compliant batteries.*** The determination that a clean vehicle battery is FEOC-compliant must be made by physically tracking FEOC-compliant battery components (including battery cells) to such battery. With respect to battery cells, a serial number or other identification system must be used to physically track FEOC-compliant battery cells to such batteries.

(3) ***FEOC-compliant battery cells*** —

(i) ***In general.*** Except as provided in paragraph (c)(3)(ii) of this section, the determination that a battery cell contains FEOC-compliant battery components and FEOC-compliant applicable critical minerals and their associated constituent materials must be made by physically tracking FEOC-compliant battery components to specific battery cells, and by physically tracking the mass of FEOC-compliant applicable critical minerals and their associated constituent materials to specific battery cells.

(ii) ***Allocation-based determination for applicable critical minerals and associated constituent materials of a battery cell*** —

(A) ***In general.*** The determination that a battery cell is FEOC-compliant may be based on an allocation of available mass, procured or contracted for, of applicable critical minerals and their associated constituent materials to specific battery cells manufactured or assembled in a battery cell production facility, without the physical tracking of mass of applicable critical minerals and associated constituent materials to specific battery cells.

(B) ***Allocation limited to applicable critical minerals in the battery cell.*** The rules of this paragraph (c)(3)(ii) are limited to applicable critical minerals and their associated constituent materials that are incorporated into a battery cell or its battery components. Battery components must be physically tracked.

(C) ***Separate allocation required for each type of associated constituent material*** —

(*1*) ***In general.*** Any allocation under this paragraph (c)(3)(ii) with respect to the mass of an applicable critical mineral must be made within the type of associated constituent material (such as powders of cathode active materials, powders of anode active materials, or foils) in which such applicable critical mineral is contained. Masses of an applicable critical mineral may not be aggregated across constituent materials with which such applicable critical mineral is not associated, and an allocation of a mass of an applicable critical mineral may not be made from one type of constituent material to another.

(*2*) ***Example.*** M, a qualified manufacturer, operates a battery cell production facility. M manufactures a line of battery cells that contains applicable critical mineral Z (ACM-Z) in constituent material 1 and in constituent material 2. With respect to constituent material 1, M procures 20,000,000 kilograms (kg) of ACM-Z for the battery cell production facility, of which 4,000,000 kg are FEOC-compliant and 16,000,000 kg are not FEOC-compliant. With respect to constituent material 2, M procures another 15,000,000 kg of ACM-Z for the battery cell production facility, of which 7,500,000 kg are FEOC-compliant and 7,500,000 kg are not FEOC-compliant. M determines which battery cells are FEOC-compliant through an allocation-based determination with respect to battery cells manufactured or assembled in the battery cell production facility. Under this paragraph (c)(3)(ii)(C), any allocation with respect to the mass of ACM-Z must be made within the type of constituent material in which ACM-Z is contained. Thus, M may not aggregate the 4,000,000 kg of FEOC-compliant ACM-Z

contained in constituent material 1 with the 7,500,000 kg of FEOC-compliant ACM-Z contained in constituent material 2, and allocations may not be made from constituent material 1 to constituent material 2. As a result, overall FEOC compliance is constrained by the 20% of constituent material 1 that is FEOC-compliant due to having 4,000,000 kg of ACM-Z, even though 33% (4,000,000 + 7,500,000)/(20,000,000 + 15,000,000) of the total mass of ACM-Z is FEOC-compliant.

(D) ***Allocation within each product line of battery cells.*** Any allocation under this paragraph (c)(3)(ii) with respect to applicable critical minerals and their associated constituent materials must be allocated within one or more specific battery cell product lines of the battery cell production facility.

(E) ***Limitation on number of FEOC-compliant battery cells.*** If a qualified manufacturer uses an allocation-based determination described in this paragraph (c)(3)(ii), the number of FEOC-compliant battery cells that can be produced from such allocation may not exceed the total number of battery cells for which there is enough of every FEOC-compliant applicable critical mineral. That number will necessarily be limited by the applicable critical mineral that has the lowest percentage of FEOC-compliant supply. For example, if a qualified manufacturer allocates applicable critical mineral A, which is 20 percent FEOC-compliant, and applicable critical mineral B, which is 60 percent FEOC-compliant, to a battery cell product line, no more than 20 percent of the battery cells in that battery cell product line will be treated as FEOC-compliant.

(iii) ***Transition rule for impracticable-to-trace battery materials.*** For any new clean vehicles for which the qualified manufacturer provides a periodic written report before January 1, 2027, the qualified manufacturer's determination of whether a battery cell is FEOC-compliant under this paragraph (c)(3) may be satisfied by excluding identified impracticable-to-trace battery materials (and associated constituent materials).

(4) ***FEOC-compliant battery components and applicable critical minerals*** —

(i) ***In general.*** The determination of whether battery components and applicable critical minerals (and their associated constituent materials) are FEOC-compliant must be made prior to any determination under paragraphs (c)(2) and (3) of this section.

(ii) ***Timing of determination of FEOC or FEOC-compliant status.*** Whether an entity is a FEOC is determined at the time of the entity's performance of the relevant activity, which for applicable critical minerals is the time of extraction, processing, or recycling, and for battery components is the time of manufacturing or assembly. The determination of whether an applicable critical mineral is FEOC-compliant is determined at the end of processing or recycling the applicable critical mineral into a constituent material, taking into account all applicable steps through and including final processing or recycling.

(iii) ***Example: Timing of FEOC compliance determination.*** Mineral X, an applicable critical mineral, was not extracted by a FEOC but was later processed by a FEOC. Mineral X is not FEOC-compliant because one step of the extraction and processing was performed by a FEOC. Therefore, any battery containing Mineral X is not FEOC-compliant.

(5) ***Third-party manufacturers or suppliers.*** The determinations under paragraphs (c)(2) through (4) of this section, which are generally made by the qualified manufacturer, may be made by a third-party manufacturer or supplier that operates a battery cell production facility, provided the third-party manufacturer satisfies the requirements of paragraph (c)(5)(i) through (iii) of this section, and paragraph (c)(5)(iv) of this section, if applicable.

(i) ***Due diligence required.*** The third-party manufacturer or supplier must perform the due diligence described in paragraph (b) of this section.

(ii) ***Provision of required information to qualified manufacturer.*** The third-party manufacturer or supplier must provide the qualified manufacturer of the new clean vehicle information sufficient to establish a basis for the determinations under paragraphs (c)(2) through (4) of this section, including information related to the due diligence described in paragraph (c)(5)(i) of this section.

(iii) ***Contractual obligations.*** The third-party manufacturer or supplier must be contractually required to provide the information in paragraph (c)(5)(ii) of this section to the qualified manufacturer and must be contractually required to inform the qualified manufacturer of any change in the supply chain that affects the determinations of FEOC compliance under paragraph (c)(2) through (4) of this section.

(iv) ***Additional requirements in case of multiple third-party manufacturers or suppliers.*** If there are multiple third-party manufacturers or suppliers (such as a case in which a qualified manufacturer contracts with a battery manufacturer, that, in turn, contracts with a battery cell manufacturer or supplier that operates a battery cell production facility), the due diligence and information requirements of this paragraph (c) must be satisfied by each third-party manufacturer or supplier, either by providing all required information directly to the qualified manufacturer or indirectly through contractual relationships.

(d) ***Compliant-battery ledger*** —

(1) ***In general.*** For new clean vehicles placed in service after December 31, 2024, the qualified manufacturer must determine and provide information to the IRS to establish a compliant-battery ledger for each calendar year, as described in paragraphs (d)(2)(i) and (ii) of this section. The qualified manufacturer may establish one compliant-battery ledger for all vehicles for a calendar year, or separate ledgers for specific models or classes of vehicles to account for different battery cell chemistries or differing quantities of cells in each clean vehicle battery.

(2) ***Determination of number of batteries*** —

(i) ***In general.*** To establish a compliant-battery ledger for a calendar year, the qualified manufacturer must determine the number of clean vehicle batteries, with respect to new clean vehicles for which the qualified manufacturer anticipates providing a periodic written report during the calendar year, that it knows or reasonably anticipates will be FEOC-compliant, pursuant to the requirements of paragraphs (b) and (c) of this section. The determination is based on the battery components and applicable critical minerals (and associated constituent materials) that are procured or contracted for the calendar year and that are known or reasonably anticipated to be FEOC-compliant battery components or FEOC-compliant applicable critical minerals, as applicable.

(ii) ***Upfront review.*** The qualified manufacturer must attest to the number of FEOC-compliant clean vehicle batteries determined under paragraph (d)(2)(i) of this section and provide the basis for the determination, including attestations, certifications and documentation demonstrating compliance with paragraphs (b) and (c) of this section, at the time and in the manner provided in the *Internal Revenue Bulletin* (see § 601.601 of this chapter). The IRS, with analytical assistance from the Department of Energy (DOE), will review the attestations, certifications, and documentation. Once the IRS determines that the qualified manufacturer provided the required attestations, certifications, and documentation, the IRS will approve or reject the determined number of FEOC-compliant batteries. The IRS may approve the determined number in whole or part. The approved number is the initial balance in the compliant-battery ledger.

(iii) ***Decrease or increase to compliant-battery ledger*** —

(A) Once the compliant-battery ledger is established with respect to a calendar year, the qualified manufacturer must determine and take into account any decrease in the number of FEOC-compliant batteries for such calendar year and any of the prior three calendar years for which the qualified manufacturer had a compliant-battery ledger, within 30 days of discovery. In addition, the qualified manufacturer may determine and take into account any increase in the number of FEOC-compliant batteries. Such determinations, and any supporting attestations, certifications, and documentation, must be provided on a periodic basis, in accordance with paragraph (d)(2)(ii) of this section and the manner provided in the *Internal Revenue Bulletin* (see § 601.601 of this chapter).

(B) The decrease described in paragraph (d)(2)(iii)(A) of this section may decrease the compliant-battery ledger below zero, creating a negative balance in the compliant-battery ledger.

(C) If any decrease described in paragraph (d)(2)(iii)(A) of this section is determined subsequent to the calendar year to which it relates, the decrease must be taken into account in the year in which the change is discovered.

(D) Any remaining balance in the compliant-battery ledger at the end of the calendar year, whether positive or negative, will be included in the compliant-battery ledger for the subsequent calendar year. If a qualified manufacturer has multiple negative compliant-battery accounts, any negative balance will first be included in the compliant-battery ledger for the same model or class of vehicles for the subsequent calendar year. However, if there is no ledger for the same model or class of vehicles in the subsequent calendar year, the IRS can account for such negative balance in the ledger of a different model or class of vehicles of the qualified manufacturer.

(3) ***Tracking FEOC-compliant batteries.*** The compliant-battery ledger for a calendar year must be updated to track the qualified manufacturer's available FEOC-compliant batteries, by reducing the balance in the ledger as the qualified manufacturer submits periodic written reports reporting the vehicle identification numbers of new clean vehicles as eligible for the credit under section 30D, at the time and in the manner provided in the *Internal Revenue Bulletin* (see § 601.601 of this chapter). If the balance in the compliant-battery ledger of the qualified manufacturer for a calendar year is zero or less than zero, the qualified manufacturer may not submit additional periodic written reports with respect to section 30D until the number of available FEOC-compliant batteries is increased as described in paragraph (d)(2)(iii)(A) of this section.

(4) ***Reconciliation of battery estimates.*** After the end of any calendar year for which a compliant-battery ledger is established, the IRS may require a qualified manufacturer to provide attestations, certifications, and documentation to support the accuracy of the number of the qualified manufacturer's FEOC-compliant batteries for such calendar year, including with respect to any changes described in paragraph (d)(2)(iii) of this section, at the time and in the manner provided in the *Internal Revenue Bulletin* (see § 601.601 of this chapter).

(e) ***Rule for 2024*** —

(1) ***In general.*** For new clean vehicles that are placed in service after December 31, 2023, and prior to January 1, 2025, the qualified manufacturer must determine whether the battery components contained in the vehicles satisfy the requirements of section 30D(d)(7)(B), and whether batteries contained in the vehicles are FEOC-compliant under the rules of paragraphs (b) and (c) of this section. The qualified manufacturer must make an attestation with respect to such determinations at the time and in the manner provided in the *Internal Revenue Bulletin* (see § 601.601 of this chapter). However, for any new clean vehicles for which the qualified manufacturer provides a periodic written report before June 5, 2024, provided that the qualified manufacturer has determined that its supply chains for each battery component with respect such vehicles contain only FEOC-compliant battery components:

(i) For purposes of paragraphs (c)(2) and (3) of this section, the determination of which battery cells or clean vehicle batteries, as applicable, contain FEOC-compliant battery components may be made without physical tracking;

(ii) For purposes of paragraph (c)(2) of this section, the determination of which clean vehicle batteries contain FEOC-compliant battery cells may be made without physical tracking (and without the use of a serial number or other identification system); and

(iii) For purposes of paragraph (c)(1) of this section, the determination of which vehicles contain FEOC-compliant batteries may be made without physical tracking (and without the use of a serial number or other identification system).

(2) ***Determination.*** The determination that a qualified manufacturer's supply chains of each battery component contain only FEOC-compliant battery components may be made with respect to specific models or classes of vehicles.

(f) ***Inaccurate attestations, certifications, or documentation*** —

(1) ***In general.*** If the IRS determines, with analytical assistance from the DOE and after review of the attestations, certification, and documentation described in paragraph (d) of this section, that a qualified manufacturer has provided attestations, certifications, or documentation that contain inaccurate information, the IRS may take appropriate action, as described in paragraphs (f)(2) and (3) of this section. Such action would affect vehicles and qualified manufacturers on a prospective basis.

(2) ***Inadvertence*** —

(i) ***Inaccurate information may be cured by qualified manufacturer.*** If the IRS determines that the qualified manufacturer's attestations, certifications, or documentation for a specific new clean vehicle contain inaccurate information due to inadvertence, the qualified manufacturer may, within a reasonable period of time after discovery of the inaccurate information, cure the errors,

including by a decrease in the compliant-battery ledger as described in paragraph (d)(2)(iii) of this section. If the qualified manufacturer has multiple compliant-battery ledgers, the IRS may determine which ledger is to be decreased.

(ii) ***Consequences if errors not cured.*** If the qualified manufacturer does not cure the errors, the IRS may take any of the following actions:

(A) In the case of a new clean vehicle that has not been placed in service but for which the qualified manufacturer has submitted a periodic written report certifying compliance with the requirements of section 30D(d), the IRS may determine that such vehicle is no longer considered a new clean vehicle eligible for the section 30D credit.

(B) In the case of a new clean vehicle that has not been placed in service and for which the qualified manufacturer has not submitted a periodic written report certifying compliance with the requirements of section 30D(d), the qualified manufacturer may not submit such periodic written report.

(C) In the case of a new clean vehicle that has been placed in service, the IRS may require a decrease in the qualified manufacturer's compliant-battery ledger as described in paragraph (d)(2)(iii) of this section. If the qualified manufacturer has multiple compliant-battery ledgers, the IRS may determine which ledger is to be decreased.

(3) ***Intentional disregard or fraud.*** If the IRS determines that a qualified manufacturer intentionally disregarded attestation, certification, or documentation requirements, or reported information fraudulently or with intentional disregard, the IRS may take any of the actions described in paragraph (f)(3)(i) or (ii) of this section.

(i) ***All vehicles ineligible for credit.*** The IRS may determine that all vehicles manufactured by the qualified manufacturer that have not been placed in service are no longer considered new clean vehicles eligible for the section 30D credit.

(ii) ***Termination of written agreement.*** The IRS may terminate the written agreement between the IRS and the manufacturer, thereby terminating the manufacturer's status as a qualified manufacturer. In such instance, the manufacturer would be required to submit a new written agreement to reestablish qualified manufacturer status at the time and in the manner provided in the *Internal Revenue Bulletin* (see § 601.601 of this chapter).

(g) ***Rules inapplicable to new qualified fuel cell motor vehicles.*** The requirements of section 30D(d)(7) and this section do not apply to new qualified fuel cell motor vehicles.

(h) ***Examples.*** The following examples illustrate the rules under paragraphs (b) through (e) of this section:

(1) ***Example 1: In general —***

(i) ***Facts.*** M is a manufacturer of new clean vehicles and batteries. M also manufactures and assembles battery cells at its own battery cell production facility. M manufactures a line of new clean vehicles that it anticipates will be placed in service in calendar year 2025. Each vehicle contains one clean vehicle battery, and each clean vehicle battery contains 1,000 battery cells. All battery cells are produced at the same battery cell production facility. The battery cells are not manufactured or assembled by a FEOC. Each battery cell contains 10 units of battery component A. M has procured or is under contract to procure 10,000,000 units of battery component A for the battery cell production facility, of which 6,000,000 units are from supplier 1 and 4,000,000 units are from supplier 2.

(ii) *Analysis* —

(A) Under paragraph (b) of this section, M must conduct due diligence on all battery components and applicable critical minerals (and associated constituent materials) that are contained in the clean vehicle batteries to determine whether such components or minerals are FEOC-compliant.

(B) Under paragraph (c)(4) of this section, M must first determine whether the battery components and applicable critical minerals (and associated constituent materials) are FEOC-compliant. From its due diligence, M determines that, of the 10,000,000 units of battery component A, the 6,000,000 units from supplier 1 are FEOC-compliant while the 4,000,000 units from supplier 2 are not FEOC-compliant. M determines that all other battery components and applicable critical minerals (and associated constituent materials) of the battery cells are FEOC-compliant, that the battery cell is not manufactured or assembled by a FEOC, and that all battery components (excluding components of the battery cell) of the clean vehicle batteries are FEOC-compliant.

(C) Under paragraph (c)(3) of this section, M must determine which battery cells are FEOC-compliant through the physical tracking of the 6,000,000 units of FEOC-compliant battery component A to determine which 600,000 (6,000,000/10) battery cells are FEOC-compliant. Under paragraph (c)(2) of this section, M must use a serial number or other identification system to track the 600,000 FEOC-compliant battery cells to 600 (600,000/1,000) specific clean vehicle batteries.

(D) Under paragraph (d)(1) of this section, a compliant-battery ledger must be established for calendar year 2025. For purposes of paragraph (d)(2)(i) of this section, M determines that it will manufacture 600 batteries for calendar year 2025 that are FEOC-compliant. Under paragraph (d)(2)(ii) of this section, M attests to the 600 FEOC-compliant batteries and provides the basis for the determination, including attestations, certifications, and documentation demonstrating compliance with paragraphs (b) and (c) of this section. Once the IRS, with analytical assistance from the DOE, approves the number, a compliant-battery ledger is established with a balance of 600 FEOC-compliant batteries.

(E) M manufactures 100 vehicles that it anticipates will be placed in service in 2025, for which it provides periodic written reports providing the vehicle identification numbers of the vehicles and indicating that such vehicles qualify for the section 30D credit. Under paragraph (d)(3) of this section, the compliant-battery ledger is updated to track the number of FEOC-compliant batteries. The number of FEOC-compliant batteries contained in the compliant-battery ledger is reduced from 600 to 500. Assuming all of the other requirements of section 30D and the regulations thereunder are met, the 100 vehicles are new clean vehicles for purposes of section 30D.

(2) *Example 2: Rules for third-party suppliers* —

(i) ***Facts.*** The facts are the same as in paragraph (h)(1)(i) of this section (facts of *Example 1*), except that M contracts with a battery manufacturer, BM, for the provision of clean vehicle batteries, and BM contracts with a battery cell supplier, BCS, that operates a battery cell production facility, for the provision of battery cells.

(ii) ***Analysis.*** Under paragraph (c)(5) of this section, BCS may make the determination in paragraphs (c)(2) through (4) of this section, provided that M, BM, and BCS perform due diligence as described in paragraph (b) of this section. In addition, BM and BCS must provide M

with information sufficient to establish a basis for the determinations under paragraphs (c)(2) through (4) of this section, including information related to due diligence. Finally, BM and BCS must be contractually required to provide the required information to M, and must also be required to inform the qualified manufacturer of any change in supply chains that affects the determinations of FEOC compliance under paragraphs (c)(2) and (4) of this section. The contractual requirement may be satisfied if BM and BCS each have the contractual obligation to M. Alternatively, it may be satisfied if BCS has a contractual obligation to BM and BM, in turn, has a contractual obligation to M.

(3) Example *3: Applicable critical minerals*—

(i) ***Facts.*** The facts are the same as in paragraph (h)(1)(i) of this section (facts of *Example 1*). In addition, each battery cell contains 20 kilograms (kg) of applicable critical mineral Z (ACM-Z) contained in a constituent material. M has procured or is under contract to procure 20,000,000 kg of ACM-Z for the battery cell production facility, of which 4,000,000 kg are from supplier 3 and 16,000,000 kg are from supplier 4.

(ii) ***Analysis.*** The analysis is the same as in paragraph (h)(1)(ii) of this section (analysis of *Example 1*). In addition, from its due diligence, M determines that of the 20,000,000 kg of ACM-Z, the 4,000,000 kg from supplier 3 is FEOC-compliant while the 16,000,000 kg from supplier 4 is not FEOC-compliant. Under paragraph (c)(3) of this section, M may determine which battery cells are FEOC-compliant through the physical tracking of the 4,000,000 kg of FEOC-compliant ACM-Z to 200,000 (4,000,000/20) of the battery cells that also contain battery component A, in order to determine which 200,000 battery cells are FEOC-compliant. Alternatively, M may determine which 200,000 battery cells are FEOC-compliant through an allocation of ACM-Z (but not battery component A) to battery cells, without physical tracking, under paragraph (c)(3)(ii) of this section. Under paragraph (c)(2) of this section, M must use a serial number or other identification system to track the 200,000 FEOC-compliant battery cells to 200 (200,000/1,000) specific clean vehicle batteries.

(4) ***Example 4: Comprehensive example*** —

(i) ***Facts.*** M is a manufacturer of new clean vehicles and batteries. M also manufactures or assembles battery cells at its own battery cell production facility. M manufactures a line of new clean vehicles. Each vehicle contains one battery. All battery cells are produced at the same battery cell production facility. The battery cells are not manufactured or assembled by a FEOC. Each battery contains 1,000 NMC 811 battery cells. M anticipates manufacturing 1,000,000 such battery cells for a line of new clean vehicles that it anticipates will be placed in service in calendar year 2025.

(A) Each battery cell contains 1 cathode electrode, 1 anode electrode, 1 separator, and 1 liquid electrolyte. Thus, M procures 1,000,000 units of each battery component for the battery cell production facility.

(B) In addition, each NMC 811 cathode incorporates cathode active material (a constituent material) produced using 2.5 kg of applicable critical minerals, consisting of 0.5 kg of lithium hydroxide, 1.6 kg of nickel sulfate, 0.2 kg of cobalt sulfate, and 0.2 kg of manganese sulfate. Thus, M procures 2,500 metric tons (2.5 kg × 1,000,000/1,000) of applicable critical minerals for the battery cell production facility, resulting in purchase agreements for 500 metric tons of lithium, 1,600 metric tons of nickel, 200 metric tons of cobalt, and 200 metric tons of manganese.

(ii) *Analysis* —

(A) Under paragraph (b) of this section, M must conduct due diligence on all battery components and applicable critical minerals (and associated constituent materials) that are contained in the clean vehicle batteries to determine whether such components or minerals are FEOC-compliant.

(B) Under paragraph (c)(4) of this section, M must first determine whether the battery components and applicable critical minerals (and associated constituent materials) are FEOC-compliant. From its due diligence M determines that, of the cathode electrodes, 600,000 are not manufactured by a FEOC and are therefore FEOC-compliant; 400,000 are manufactured by a FEOC and are therefore non-compliant. Because each battery cell contains 1 cathode electrode, a maximum of 600,000 battery cells would be FEOC-compliant. Of the critical minerals that M has procured, M determines that 250 metric tons of lithium hydroxide, 1,200 metric tons of nickel sulfate, and all of the cobalt sulfate and manganese sulfate are FEOC-compliant. M determines that all other battery components and applicable critical minerals of the battery cells are FEOC-compliant.

(C) Under paragraph (c)(3) of this section, M must determine which battery cells are FEOC-compliant through the physical tracking of battery components. M may determine which battery cells are FEOC-compliant through the physical tracking of applicable critical minerals. Alternatively, M may determine which battery cells are FEOC-compliant through an allocation of applicable critical minerals (and associated constituent materials) but not battery components.

(D) Under an allocation-based determination, M has procured 500 metric tons of lithium hydroxide incorporated into a constituent material for the battery cell production facility, of which 50% (250/500 metric tons) is FEOC-compliant. M has procured 1,600 metric tons of nickel sulfate incorporated into a constituent material for the battery cell production facility, of which 75% (1,200/1,600 metric tons) is FEOC-compliant. Because the lithium hydroxide is the least compliant applicable critical mineral or component, M allocates the FEOC-compliant lithium hydroxide mass to 50% or 500,000 (50% × 1,000,000) of the total battery cells, and to battery cells that contain FEOC-compliant cathode electrodes and have been allocated FEOC-compliant nickel sulfate. Under paragraph (c)(3)(ii)(E) of this section, the quantity of FEOC-compliant battery cells is limited by the applicable critical mineral (lithium hydroxide) that has the lowest percentage (50%) of FEOC-compliant supply.

(E) Under paragraph (c)(2) of this section, M must use a serial number or other identification system to track the 500,000 FEOC-compliant battery cells to 500 (500,000/1,000) specific clean vehicle batteries.

(F) Under paragraph (d)(1) of this section, a compliant-battery ledger must be established for calendar year 2025. For purposes of paragraph (d)(2)(i) of this section, M determines that it will manufacture 500 batteries for calendar year 2025 that are FEOC-compliant, allocating its FEOC-compliant applicable critical minerals to the cells containing FEOC-compliant battery components. Under paragraph (d)(2)(ii) of this section, M attests to the 500 FEOC-compliant batteries and provides the basis for the determination, including attestations, certifications, and documentation demonstrating compliance with

paragraphs (b) and (c) of this section. Once the IRS, with analytical assistance from the DOE, has approved the number, a compliant-battery ledger is established with a balance of 500 FEOC-compliant batteries.

(i) ***Severability.*** The provisions of this section are separate and severable from one another. If any provision of this section is stayed or determined to be invalid, it is the agencies' intention that the remaining provisions will continue in effect.

(j) ***Applicability date.*** This section applies to new clean vehicles placed in service after December 31, 2023, in taxable years ending after December 31, 2023.

[T.D. 9995, 89 FR 37754, May 6, 2024]

§ 1.31-1 Credit for tax withheld on wages.

(a) The tax deducted and withheld at the source upon wages under chapter 24 of the Internal Revenue Code of 1954 (or in the case of amounts withheld in 1954, under subchapter D, chapter 9 of the Internal Revenue Code of 1939) is allowable as a credit against the tax imposed by Subtitle A of the Internal Revenue Code of 1954, upon the recipient of the income. If the tax has actually been withheld at the source, credit or refund shall be made to the recipient of the income even though such tax has not been paid over to the Government by the employer. For the purpose of the credit, the recipient of the income is the person subject to tax imposed under Subtitle A upon the wages from which the tax was withheld. For instance, if a husband and wife domiciled in a State recognized as a community property State for Federal tax purposes make separate returns, each reporting for income tax purposes one- half of the wages received by the husband, each spouse is entitled to one-half of the credit allowable for the tax withheld at source with respect to such wages.

(b) The tax withheld during any calendar year shall be allowed as a credit against the tax imposed by Subtitle A for the taxable year of the recipient of the income which begins in that calendar year. If such recipient has more than one taxable year beginning in that calendar year, the credit shall be allowed against the tax for the last taxable year so beginning.

§ 1.31-2 Credit for “special refunds” of employee social security tax.

(a) ***In general.***

(1) In the case of an employee receiving wages from more than one employer during the calendar year, amounts may be deducted and withheld as employee social security tax with respect to more than $3,600 of wages received during the calendar year 1954, and with respect to more than $4,200 of wages received during a calendar year after 1954. For example, employee social security tax may be deducted and withheld on $5,000 of wages received by an employee during a particular calendar year if the employee is paid wages in such year in the amount of $3,000 by one employer and in the amount of $2,000 by another employer. Section 6413(c) (as amended by section 202 of the Social Security Amendments of 1954 (68 Stat. 1089)), permits, under certain conditions, a so-called “special refund” of the amount of employee social security tax deducted and withheld with respect to wages paid to an employee in a calendar year after 1954 in excess of $4,200 ($3,600 for the calendar year 1954) by reason of the employee receiving wages from more than one employer during the calendar year. For provisions relating to the imposition of the employee tax and the limitation on wages, see with respect to the calendar year 1954, sections 1400 and 1426(a)(1) of the

Internal Revenue Code of 1939 and, with respect to calendar years after 1954, sections 3101 and 3121(a)(1) of the Internal Revenue Code of 1954, as amended by sections 208(b) and 204(a), respectively, of the Social Security Amendments of 1954 (68 Stat. 1094, 1091).

(2) An employee who is entitled to a special refund of employee tax with respect to wages received during a calendar year and who is also required to file an income tax return for such calendar year (or for his last taxable year beginning in such calendar year) may obtain the benefits of such special refund only by claiming credit for such special refund in the same manner as if such special refund were an amount deducted and withheld as income tax at the source. For provisions for claiming special refunds for 1955 and subsequent years in the case of employees not required to file income tax returns, see section 6413(c) and the regulations thereunder. For provisions relating to such refunds for 1954, see 26 CFR (1939) 408.802 (regulations 128).

(3) The amount of the special refund allowed as a credit shall be considered as an amount deducted and withheld as income tax at the source under chapter 24 of the Internal Revenue Code of 1954 (or, in the case of a special refund for 1954, subchapter D, chapter 9 of the Internal Revenue Code of 1939). If the amount of such special refund when added to amounts deducted and withheld as income tax exceeds the taxes imposed by subtitle A of the Internal Revenue Code of 1954, the amount of the excess constitutes an overpayment of income tax under Subtitle A, and interest on such overpayment is allowed to the extent provided under section 6611 upon an overpayment of income tax resulting from a credit for income tax withheld at source. See section 6401(b).

(b) ***Federal and State employees and employees of certain foreign corporations.*** The provisions of this section shall apply to the amount of a special refund allowable to an employee of a Federal agency or a wholly owned instrumentality of the United States, to the amount of a special refund allowable to an employee of any State or political subdivision thereof (or any instrumentality of any one or more of the foregoing), and to the amount of a special refund allowable to employees of certain foreign corporations. See, with respect to such special refunds for 1954, section 1401(d)(4) of the Internal Revenue Code of 1939, and with respect to such special refunds for 1955 and subsequent years, section 6413(c)(2) of the Internal Revenue Code of 1954, as amended by section 202 of the Social Security amendments of 1954.

§ 1.32-2 Earned income credit for taxable years beginning after December 31, 1978.

(a) [Reserved]

(b) ***Limitations.***

(1) [Reserved]

(2) ***Married individuals.*** No credit is allowed by section 32 in the case of an eligible individual who is married (within the meaning of section 7703 and the regulations thereunder) unless the individual and spouse file a single return jointly (a joint return) for the taxable year (see section 6013 and the regulations thereunder relating to joint returns of income tax by husband and wife). The requirements of the preceding sentence do not apply to an eligible individual who is not considered as married under section 7703(b) and the regulations thereunder (relating to certain married individuals living apart).

(3) ***Length of taxable year.*** No credit is allowed by section 32 in the case of a taxable year covering a period of less than 12 months. However, the rule of the preceding sentence does not apply to a taxable year closed by reason of the death of the eligible individual.

(c) ***Definitions.***

(1) [Reserved]

(2) ***Earned income.*** For purposes of this section, earned income is computed without regard to any community property laws which may otherwise be applicable. Earned income is reduced by any net loss in earnings from self-employment. Earned income does not include amounts received as a pension, an annuity, unemployment compensation, or workmen's compensation, or an amount to which section 871(a) and the regulations thereunder apply (relating to income of nonresident alien individuals not connected with United States business).

(d) [Reserved]

(e) ***Coordination of credit with advance payments*** —

(1) ***Recapture of excess advance payments.*** If any advance payment of earned income credit under section 3507 is made to an individual by an employer during any calendar year, then the total amount of these advance payments to the individual in that calendar year is treated as an additional amount of tax imposed (by chapter 1 of the Code) upon the individual on the tax return for the individual's last taxable year beginning in that calendar year.

(2) ***Reconciliation of payments advanced and credit allowed.*** Any additional amount of tax under paragraph (e)(1) of this section is not treated as a tax imposed by chapter 1 of the Internal Revenue Code for purposes of determining the amount of any credit (other than the earned income credit) allowable under part IV, subchapter A, chapter 1 of the Internal Revenue Code.

[T.D. 7683, 45 FR 16175, Mar. 13, 1980. Redesignated by T.D. 8448, 57 FR 54923, Nov. 23, 1992; T.D. 9045, 68 FR 10656, Mar. 6, 2003]

§ 1.32-3 Eligibility requirements after denial of the earned income credit.

(a) ***In general.*** A taxpayer who has been denied the earned income credit (EIC), in whole or in part, as a result of the deficiency procedures under subchapter B of chapter 63 (deficiency procedures) is ineligible to file a return claiming the EIC subsequent to the denial until the taxpayer demonstrates eligibility for the EIC in accordance with paragraph (c) of this section. If a taxpayer demonstrates eligibility for a taxable year in accordance with paragraph (c) of this section, the taxpayer need not comply with those requirements for any subsequent taxable year unless the Service again denies the EIC as a result of the deficiency procedures.

(b) ***Denial of the EIC as a result of the deficiency procedures.*** For purposes of this section, denial of the EIC as a result of the deficiency procedures occurs when a tax on account of the EIC is assessed as a deficiency (other than as a mathematical or clerical error under section 6213(b)(1)).

(c) ***Demonstration of eligibility.*** In the case of a taxpayer to whom paragraph (a) of this section applies, and except as otherwise provided by the Commissioner in the instructions for Form 8862, “Information To Claim Earned Income Credit After Disallowance,” no claim for the EIC filed subsequent to the denial is allowed unless the taxpayer properly completes Form 8862, demonstrating eligibility for the EIC, and otherwise is eligible for the EIC. If any item of information on Form 8862 is incorrect or inconsistent with any item on the return, the taxpayer will be treated as not demonstrating eligibility for the EIC. The taxpayer must follow the instructions for Form 8862 to determine the income tax return to which Form 8862 must be attached. If the taxpayer attaches Form 8862 to an incorrect tax return, the taxpayer will not be relieved of the requirement that the taxpayer attach Form 8862 to the correct tax return and will, therefore, not be treated as meeting the taxpayer's obligation under paragraph (a) of this section.

(d) ***Failure to demonstrate eligibility.*** If a taxpayer to whom paragraph (a) of this section applies fails to satisfy the requirements of paragraph (c) of this section with respect to a particular taxable year, the IRS can deny the EIC as a mathematical or clerical error under section 6213(g)(2)(K).

(e) ***Special rule where one spouse denied EIC.*** The eligibility requirements set forth in this section apply to taxpayers filing a joint return where one spouse was denied the EIC for a taxable year prior to marriage and has not established eligibility as either an unmarried or married taxpayer for a subsequent taxable year.

(f) ***Effective date.*** This section applies to returns claiming the EIC for taxable years beginning after December 31, 1997, where the EIC was denied for a taxable year beginning after December 31, 1996.

[T.D. 8953, 66 FR 33637, June 25, 2001]

§ 1.34-1 Special rule for owners of certain business entities.

Amounts payable under sections 6420, 6421, and 6427 to a business entity that is treated as separate from its owner under § 1.1361-4(a)(8) (relating to certain qualified subchapter S subsidiaries) or § 301.7701-2(c)(2)(v) of this chapter (relating to certain wholly-owned entities) are, for purposes of section 34, treated as payable to the owner of that entity.

[T.D. 9356, 72 FR 45893, Aug. 16, 2007]

§ 1.35-1 Partially tax-exempt interest received by individuals.

(a) The credit against tax under section 35 shall be allowed only to individuals and if the requirements of both paragraphs (1) and (2) of section 35(a) are met. Where the alternative tax on capital gains is imposed under section 1201(b), the taxable income for such taxable year is the taxable income as defined in section 63, which includes 50 percent of the excess of net long-term capital gain over net short-term capital loss.

(b) For the treatment of partially tax-exempt interest in the case of amounts not allocable to any beneficiary of an estate or trust, see section 642(a)(1), and for treatment of amounts allocable to a beneficiary, see sections 652 and 662. For treatment of partially tax-exempt interest received by a partnership, see section 702(a)(7). For treatment of such interest received by a common trust fund, see section 584(c)(2).

(c) The application of section 35 may be illustrated by the following example:

> *Example.* In his taxable year, 1955, A received $4,500 of partially tax-exempt interest. A's taxable income is $4,000 upon which the tax prior to any credits against tax is $840. His foreign tax credit under section 33 is $610, and his dividends received credit under section 34 is $120. A's credit under section 35 for partially tax-exempt interest is $110, determined as follows:

Section 35(a)	
Partially tax-exempt interest	$4,500
Credit computed under section 35(a); 3 percent of $4,500	135

Section 35(b)(1)		
Tax imposed by chapter 1		840
Less:		
Credit allowed under section 33	$610	
Credit allowed under section 34	120	
		$730
Limitation on credit under section 35(b)(1)		110
Section 35(b)(2)		
Taxable income		4,000
Limitation on credit under section 35(b)(2); 3 percent of $4,000		120

Since of the three figures ($135, $110, and $120), the lesser is $110, A's credit under section 35 is limited to $110.

§ 1.35-2 Taxpayers not entitled to credit.

For taxable years beginning after December 31, 1957, no credit shall be allowed under section 35 to a nonresident alien individual with respect to whom a tax is imposed for such taxable year under section 871(a).

§ 1.36B-0 Table of contents.

This section lists the captions contained in §§ 1.36B-1 through 1.36B-6.

§ 1.36B-1 Premium tax credit definitions.

(a) In general.

(b) Affordable Care Act.

(c) Qualified health plan.

(d) Family and family size.

(1) In general.

(2) Special rule for tax years to which section 151(d)(5) applies.

(e) Household income.

(1) In general.

(2) Modified adjusted gross income.

(f) Dependent.

(g) Lawfully present.

(h) Federal poverty line.

(i) [Reserved]

(j) Advance credit payment.

(k) Exchange.

(l) Self-only coverage.

(m) Family coverage.

(n) Rating area.

(o) Applicability dates.

§ 1.36B-2 Eligibility for premium tax credit.

(a) In general.

(b) Applicable taxpayer.

(1) In general.

(2) Married taxpayers must file joint return.

(i) In general.

(ii) Victims of domestic abuse and abandonment.

(iii) Domestic abuse.

(iv) Abandonment.

(v) Three-year rule.

(3) Dependents.

(4) Individuals not lawfully present or incarcerated.

(5) Individuals lawfully present.

(6) Special rule for taxpayers with household income below 100 percent of the Federal poverty line for the taxable year.

(i) In general.

(ii) Exceptions.

(7) Computation of premium assistance amounts for taxpayers with household income below 100 percent of the Federal poverty line.

(c) Minimum essential coverage.

(1) In general.

(2) Government-sponsored minimum essential coverage.

(i) In general.

(ii) Obligation to complete administrative requirements to obtain coverage.

(iii) Special rule for coverage for veterans and other individuals under chapter 17 or 18 of title 38, U.S.C.

(iv) Retroactive effect of eligibility determination.

(v) Determination of Medicaid or Children's Health Insurance Program (CHIP) ineligibility.

(vi) Examples.

(3) Employer-sponsored minimum essential coverage.

(i) In general.

(A) Plans other than health reimbursement arrangements (HRAs) or other account-based group health plans described in paragraph (c)(3)(i)(B) of this section.

(B) HRAs and other account-based group health plans integrated with individual health insurance coverage.

(ii) Plan year.

(iii) Eligibility for months during a plan year.

(A) Failure to enroll in plan.

(B) Waiting periods.

(C) Example.

(iv) Post employment coverage.

(v) Affordable coverage.

(A) In general.

(*1*) Affordability for employee.

(*2*) Affordability for related individual.

(*3*) Employee safe harbor.

(*4*) Wellness program incentives.

(*5*) Employer contributions to health reimbursement arrangements.

(*6*) Employer contributions to cafeteria plans.

(*7*) Opt-out arrangements.

(*8*) Multiple offers of coverage.

(B) Affordability for part-year period.

(C) Required contribution percentage.

(D) Examples.

(vi) Minimum value.

(vii) Enrollment in eligible employer-sponsored plan.

(A) In general.

(B) Automatic enrollment.

(C) Examples.

(4) Special eligibility rules.

(i) Related individual.

(ii) Exchange unable to discontinue advance credit payments.

(A) In general.

(B) Medicaid or CHIP.

(5) Affordable HRA or other account-based group health plan.

(i) In general.

(ii) Required HRA contribution.

(iii) Monthly amounts.

(A) Monthly lowest cost silver plan premium.

(B) Monthly HRA amount.

(iv) Employee safe harbor.

(v) Amounts used for affordability determination.

(vi) Affordability for part-year period.

(vii) Related individual not allowed as a personal exemption deduction.

(viii) Post-employment coverage.

(ix) Examples.

(d) Applicability date.

(e) Applicability dates.

§ 1.36B-3 Computing the premium assistance credit amount.

(a) In general.

(b) Definitions.

(c) Coverage month.

(1) In general.

(2) Certain individuals enrolled during a month.

(3) Premiums paid for a taxpayer.

(4) Scenarios for payments sufficient to avoid coverage termination.

(5) Appeals of coverage eligibility.

(6) Examples.

(d) Premium assistance amount.

(1) Premium assistance amount.

(2) Examples.

(i) In general.

(ii) Examples.

(e) Adjusted monthly premium.

(f) Applicable benchmark plan.

(1) In general.

(2) Family coverage.

(3) Silver-level plan not covering pediatric dental benefits.

(4) Family members residing in different locations.

(5) Single or multiple policies needed to cover the family.

(i) Policy covering a taxpayer's family.

(ii) Policy not covering a taxpayer's family.

(6) Plan not available for enrollment.

(7) Benchmark plan terminates or closes to enrollment during the year.

(8) Only one silver-level plan offered to the coverage family.

(9) Examples.

(g) Applicable percentage.

(1) In general.

(2) Applicable percentage table.

(3) Examples.

(h) Plan covering more than one family.

(1) In general.

(2) Example.

(i) [Reserved]

(j) Additional benefits.

(1) In general.

(2) Method of allocation.

(3) Examples.

(k) Pediatric dental coverage.

(1) In general.

(2) Method of allocation.

(3) Example.

(l) Families including individuals not lawfully present.

(1) In general.

(2) Revised household income computation.

(i) Statutory method.

(ii) Comparable method.

(m) Applicability date.

(n) Effective/applicability date.

§ 1.36B-4 Reconciling the premium tax credit with advance credit payments.

(a) Reconciliation.

(1) Coordination of premium tax credit with advance credit payments.

(i) In general.

(ii) Allocation rules and responsibility for advance credit payments.

(A) In general.

(B) Individuals enrolled by a taxpayer and claimed by another taxpayer.

(C) Responsibility for advance credit payments for an individual not reported on any taxpayer's return.

(iii) Advance credit payment for a month in which an issuer does not provide coverage.

(2) Credit computation.

(3) Limitation on additional tax.

(i) In general.

(ii) Additional tax limitation table.

(iii) Limitation on additional tax for taxpayers who claim a section 162(l) deduction for a qualified health plan.

(A) In general.

(B) Determining the limitation amount.

(C) Requirements.

(D) Specified premiums not paid through advance credit payments.

(E) Examples.

(4) Examples.

(b) Changes in filing status.

(1) In general.

(2) Taxpayers who marry during the taxable year.

(i) In general.

(ii) Alternative computation of additional tax liability.

(A) In general.

(B) Alternative premium assistance amounts for pre-marriage months.

(C) Premium assistance amounts for marriage months.

(3) Taxpayers not married to each other at the end of the taxable year.

(4) Taxpayers filing returns as married filing separately or head of household.

(i) Allocation of advance credit payments.

(ii) Allocation of premiums.

(5) Examples.

(c) Applicability dates.

§ 1.36B-5 Information reporting by Exchanges.

(a) In general.

(b) Individual filing a return.

(c) Information required to be reported.

(1) Information reported annually.

(2) Information reported monthly.

(3) Special rules for information reported.

(i) Multiple families enrolled in a single qualified health plan.

(ii) Alternative to reporting applicable benchmark plan.

(iii) Partial month of coverage.

(A) In general.

(B) Certain mid-month enrollments.

(4) Exemptions.

(d) Time for reporting.

(1) Annual reporting.

(2) Monthly reporting.

(i) In general.

(ii) Initial monthly reporting in 2014.

(3) Corrections to information reported.

(e) Electronic reporting.

(f) Annual statement to be furnished to individuals.

(1) In general.

(2) Form of statements.

(3) Time and manner for furnishing statements.

(g) Electronic furnishing of statements.

(1) In general.

(2) Consent.

(i) In general.

(ii) Withdrawal of consent.

(iii) Change in hardware or software requirements.

(iv) Examples.

(3) Required disclosures.

(i) In general.

(ii) Paper statement.

(iii) Scope and duration of consent.

(iv) Post-consent request for a paper statement.

(v) Withdrawal of consent.

(vi) Notice of termination.

(vii) Updating information.

(viii) Hardware and software requirements.

(4) Format.

(5) Notice.

(i) In general.

(ii) Undeliverable electronic address.

(iii) Corrected statement.

(6) Access period.

(7) Paper statements after withdrawal of consent.

§ 1.36B-6 Minimum value.

(a) In general.

(1) Employees.

(2) Related individuals

(i) In general.

(ii) Plans providing MV to employees.

(b) MV standard population.

(c) MV percentage.

(1) In general.

(2) Wellness program incentives.

(i) In general.

(ii) Example.

(3) Employer contributions to health savings accounts.

(4) Employer contributions to health reimbursement arrangements.

(5) Expected spending adjustments for health savings accounts and health reimbursement arrangements.

(d) Methods for determining MV.

(e) Scope of essential health benefits and adjustment for benefits not included in MV Calculator.

(f) Actuarial certification.

(1) In general.

(2) Membership in American Academy of Actuaries.

(3) Actuarial analysis.

(4) Use of MV Calculator.

(g) Effective/applicability date.

(1) In general.

(2) Exceptions.

[T.D. 9590, 77 FR 30385, May 23, 2012, as amended by T.D. 9663, 79 FR 26117, May 7, 2014; T.D. 9745, 80 FR 78974, Dec. 18, 2015; T.D. 9604, 81 FR 91763, Dec. 19, 2016; T.D. 9822, 82 FR 34605, July 26, 2017; T.D. 9867, 84 FR 28984, June 20, 2019; T.D. 9912, 85 FR 76978, Dec. 1, 2020; T.D. 9968, 87 FR 62000, Oct. 13, 2022; T.D. 10019, 89 FR 102725, Dec. 18, 2024]

§ 1.36B-1 Premium tax credit definitions.

(a) ***In general.*** Section 36B allows a refundable premium tax credit for taxable years ending after December 31, 2013. The definitions in this section apply to this section and §§ 1.36B-2 through 1.36B-5.

(b) ***Affordable Care Act.*** The term *Affordable Care Act* refers to the Patient Protection and Affordable Care Act, Public Law 111-148 (124 Stat. 119 (2010)), and the Health Care and Education Reconciliation Act of 2010, Public Law 111-152 (124 Stat. 1029 (2010)), as amended by the Medicare and Medicaid Extenders Act of 2010, Public Law 111-309 (124 Stat. 3285 (2010)), the Comprehensive 1099 Taxpayer Protection and Repayment of Exchange Subsidy Overpayments Act of 2011, Public Law 112-9 (125 Stat. 36 (2011)), the Department of Defense and Full-Year Continuing Appropriations Act, 2011, Public Law 112-10 (125 Stat. 38 (2011)), and the 3% Withholding Repeal and Job Creation Act, Public Law 112-56 (125 Stat. 711 (2011)).

(c) ***Qualified health plan.*** The term *qualified health plan* has the same meaning as in section 1301(a) of the Affordable Care Act (42 U.S.C. 18021(a)) but does not include a catastrophic plan described in section 1302(e) of the Affordable Care Act (42 U.S.C. 18022(e)).

(d) Family and family size—

(1) ***In general.*** A taxpayer's family means the individuals for whom a taxpayer properly claims a deduction for a personal exemption under section 151 for the taxable year. Family size means the number of individuals in the family. Family and family size may include individuals who are not subject to or are exempt from the penalty under section 5000A for failing to maintain minimum essential coverage.

(2) ***Special rule for tax years to which section 151(d)(5) applies.*** For taxable years to which section 151(d)(5) applies, a taxpayer's family means the taxpayer, including both spouses in the case of a joint return, except for individuals who qualify as a dependent of another taxpayer under section 152, and any other individual for whom the taxpayer is allowed a personal exemption deduction and whom the taxpayer properly reports on the taxpayer's income tax return for the taxable year. For

purposes of this paragraph (d)(2), an individual is reported on the taxpayer's income tax return if the individual's name and taxpayer identification number (TIN) are listed on the taxpayer's Form 1040 series return. *See* § 601.602 of this chapter.

(e) ***Household income*** —

(1) ***In general.*** Household income means the sum of—

(i) A taxpayer's modified adjusted gross income (including the modified adjusted gross income of a child for whom an election under section 1(g)(7) is made for the taxable year);

(ii) The aggregate modified adjusted gross income of all other individuals who—

(A) Are included in the taxpayer's family under paragraph (d) of this section; and

(B) Are required to file a return of tax imposed by section 1 for the taxable year.

(2) ***Modified adjusted gross income.*** Modified adjusted gross income means adjusted gross income (within the meaning of section 62) increased by—

(i) Amounts excluded from gross income under section 911;

(ii) Tax-exempt interest the taxpayer receives or accrues during the taxable year; and

(iii) Social security benefits (within the meaning of section 86(d)) not included in gross income under section 86.

(f) ***Dependent.*** Dependent has the same meaning as in section 152.

(g) ***Lawfully present.*** Lawfully present has the same meaning as in 45 CFR 155.20.

(h) ***Federal poverty line.*** The Federal poverty line means the most recently published poverty guidelines (updated periodically in the FEDERAL REGISTER by the Secretary of Health and Human Services under the authority of 42 U.S.C. 9902(2)) as of the first day of the regular enrollment period for coverage by a qualified health plan offered through an Exchange for a calendar year. Thus, the Federal poverty line for computing the premium tax credit for a taxable year is the Federal poverty line in effect on the first day of the initial or annual open enrollment period preceding that taxable year. See 45 CFR 155.410. If a taxpayer's primary residence changes during a taxable year from one state to a state with different Federal poverty guidelines or married taxpayers reside in separate states with different Federal poverty guidelines (for example, Alaska or Hawaii and another state), the Federal poverty line that applies for purposes of section 36B and the associated regulations is the higher Federal poverty guideline (resulting in a lower percentage of the Federal poverty line for the taxpayers' household income and family size).

(i) [Reserved]

(j) ***Advance credit payment.*** Advance credit payment means an advance payment of the premium tax credit as provided in section 1412 of the Affordable Care Act (42 U.S.C. 18082).

(k) ***Exchange.*** Exchange has the same meaning as in 45 CFR 155.20.

(l) ***Self-only coverage.*** Self-only coverage means health insurance that covers one individual and provides coverage for the essential health benefits as defined in section 1302(b)(1) of the Affordable Care Act (42 U.S.C. 18022).

(m) ***Family coverage.*** Family coverage means health insurance that covers more than one individual and provides coverage for the essential health benefits as defined in section 1302(b)(1) of the Affordable Care Act (42 U.S.C. 18022).

(n) ***Rating area.*** The term *rating area* has the same meaning as used in section 2701(a)(2) of the Public Health Service Act (42 U.S.C. 300gg(a)(2)) and 45 CFR 147.102(b).

(o) ***Applicability dates.***

(1) Except for paragraphs (d)(2), (l), and (m) of this section, this section applies to taxable years ending after December 31, 2013.

(2) Paragraph (d)(2) of this section applies to taxable years ending on or after December 31, 2020.

(3) Paragraphs (l) and (m) of this section apply to taxable years beginning after December 31, 2018. Paragraphs (l) and (m) of § 1.36B-1 as contained in 26 CFR part 1 edition revised as of April 1, 2016, apply to taxable years ending after December 31, 2013, and beginning before January 1, 2019.

[T.D. 9590, 77 FR 30385, May 23, 2012, as amended by T.D. 9745, 80 FR 78974, Dec. 18, 2015; T.D. 9804, 81 FR 91763, Dec. 19, 2016; T.D. 9912, 85 FR 76978, Dec. 1, 2020]

§ 1.36B-2 Eligibility for premium tax credit.

(a) ***In general.*** An applicable taxpayer (within the meaning of paragraph (b) of this section) is allowed a premium assistance amount only for any month that one or more members of the applicable taxpayer's family (the applicable taxpayer or the applicable taxpayer's spouse or dependent)—

(1) Is enrolled in one or more qualified health plans through an Exchange; and

(2) Is not eligible for minimum essential coverage (within the meaning of paragraph (c) of this section) other than coverage described in section 5000A(f)(1)(C) (relating to coverage in the individual market).

(b) ***Applicable taxpayer*** —

(1) ***In general.*** Except as otherwise provided in this paragraph (b), an applicable taxpayer is a taxpayer whose household income is at least 100 percent but not more than 400 percent of the Federal poverty line for the taxpayer's family size for the taxable year.

(2) ***Married taxpayers must file joint return*** —

(i) ***In general.*** Except as provided in paragraph (b)(2)(ii) of this section, a taxpayer who is married (within the meaning of section 7703) at the close of the taxable year is an applicable taxpayer only if the taxpayer and the taxpayer's spouse file a joint return for the taxable year.

(ii) ***Victims of domestic abuse and abandonment.*** Except as provided in paragraph (b)(2)(v) of this section, a married taxpayer satisfies the joint filing requirement of paragraph (b)(2)(i) of this section if the taxpayer files a tax return using a filing status of married filing separately and the taxpayer—

(A) Is living apart from the taxpayer's spouse at the time the taxpayer files the tax return;

(B) Is unable to file a joint return because the taxpayer is a victim of domestic abuse, as described in paragraph (b)(2)(iii) of this section, or spousal abandonment, as described in paragraph (b)(2)(iv) of this section; and

(C) Certifies on the return, in accordance with the relevant instructions, that the taxpayer meets the criteria of this paragraph (b)(2)(ii).

(iii) ***Domestic abuse.*** For purposes of paragraph (b)(2)(ii) of this section, domestic abuse includes physical, psychological, sexual, or emotional abuse, including efforts to control, isolate, humiliate, and intimidate, or to undermine the victim's ability to reason independently. All the facts and circumstances are considered in determining whether an individual is abused, including the effects of alcohol or drug abuse by the victim's spouse. Depending on the facts and circumstances, abuse of the victim's child or another family member living in the household may constitute abuse of the victim.

(iv) ***Abandonment.*** For purposes of paragraph (b)(2)(ii) of this section, a taxpayer is a victim of spousal abandonment for a taxable year if, taking into account all facts and circumstances, the taxpayer is unable to locate his or her spouse after reasonable diligence.

(v) ***Three-year rule.*** Paragraph (b)(2)(ii) of this section does not apply if the taxpayer met the requirements of paragraph (b)(2)(ii) of this section for each of the three preceding taxable years.

(3) ***Dependents.*** An individual is not an applicable taxpayer if another taxpayer may claim a deduction under section 151 for the individual for a taxable year beginning in the calendar year in which the individual's taxable year begins.

(4) ***Individuals not lawfully present or incarcerated.*** An individual who is not lawfully present in the United States or is incarcerated (other than incarceration pending disposition of charges) is not eligible to enroll in a qualified health plan through an Exchange. However, the individual may be an applicable taxpayer if a family member is eligible to enroll in a qualified health plan. See sections 1312(f)(1)(B) and 1312(f)(3) of the Affordable Care Act (42 U.S.C. 18032(f)(1)(B) and (f)(3)) and § 1.36B-3(b)(2).

(5) ***Individuals lawfully present.*** If a taxpayer's household income is less than 100 percent of the Federal poverty line for the taxpayer's family size and the taxpayer or a member of the taxpayer's family is an alien lawfully present in the United States, the taxpayer is treated as an applicable taxpayer if—

(i) The lawfully present taxpayer or family member is not eligible for the Medicaid program; and

(ii) The taxpayer would be an applicable taxpayer if the taxpayer's household income for the taxable year was between 100 and 400 percent of the Federal poverty line for the taxpayer's family size.

(6) ***Special rule for taxpayers with household income below 100 percent of the Federal poverty line for the taxable year*** —

(i) ***In general.*** A taxpayer (other than a taxpayer described in paragraph (b)(5) of this section) whose household income for a taxable year is less than 100 percent of the Federal poverty line for the taxpayer's family size is treated as an applicable taxpayer for the taxable year if—

(A) The taxpayer or a family member enrolls in a qualified health plan through an Exchange for one or more months during the taxable year;

(B) An Exchange estimates at the time of enrollment that the taxpayer's household income will be at least 100 percent but not more than 400 percent of the Federal poverty line for the taxable year;

(C) Advance credit payments are authorized and paid for one or more months during the taxable year; and

(D) The taxpayer would be an applicable taxpayer if the taxpayer's household income for the taxable year was at least 100 but not more than 400 percent of the Federal poverty line for the taxpayer's family size.

(ii) ***Exceptions.*** This paragraph (b)(6) does not apply for an individual who, with intentional or reckless disregard for the facts, provides incorrect information to an Exchange for the year of coverage. A reckless disregard of the facts occurs if the taxpayer makes little or no effort to determine whether the information provided to the Exchange is accurate under circumstances that demonstrate a substantial deviation from the standard of conduct a reasonable person would observe. A disregard of the facts is intentional if the taxpayer knows the information provided to the Exchange is inaccurate.

(iii) Advance credit payments are authorized and paid for one or more months during the taxable year; and

(iv) The taxpayer would be an applicable taxpayer if the taxpayer's household income for the taxable year was between 100 and 400 percent of the Federal poverty line for the taxpayer's family size.

(7) ***Computation of premium assistance amounts for taxpayers with household income below 100 percent of the Federal poverty line.*** If a taxpayer is treated as an applicable taxpayer under paragraph (b)(5) or (b)(6) of this section, the taxpayer's actual household income for the taxable year is used to compute the premium assistance amounts under § 1.36B-3(d).

(c) ***Minimum essential coverage*** —

(1) ***In general.*** Minimum essential coverage is defined in section 5000A(f) and regulations issued under that section. As described in section 5000A(f), government-sponsored programs, eligible employer-sponsored plans, grandfathered health plans, and certain other health benefits coverage are minimum essential coverage.

(2) ***Government-sponsored minimum essential coverage*** —

(i) ***In general.*** An individual is eligible for government-sponsored minimum essential coverage if the individual meets the criteria for coverage under a government-sponsored program described in section 5000A(f)(1)(A) as of the first day of the first full month the individual may receive benefits under the program, subject to the limitation in paragraph (c)(2)(ii) of this section. The Commissioner may define eligibility for specific government-sponsored programs further in additional published guidance, see § 601.601(d)(2) of this chapter.

(ii) ***Obligation to complete administrative requirements to obtain coverage.*** An individual who meets the criteria for eligibility for government-sponsored minimum essential coverage must complete the requirements necessary to receive benefits. An individual who fails by the last day of the third full calendar month following the event that establishes eligibility under paragraph (c)(2)(i) of this section to complete the requirements to obtain government-sponsored minimum essential coverage (other than a veteran's health care program) is treated as eligible for government-sponsored minimum essential coverage as of the first day of the fourth calendar month following the event that establishes eligibility.

(iii) ***Special rule for coverage for veterans and other individuals under chapter 17 or 18 of title 38, U.S.C.*** An individual is eligible for minimum essential coverage under a health care program under chapter 17 or 18 of title 38, U.S.C. only if the individual is enrolled in a health care program under chapter 17 or 18 of title 38, U.S.C. identified as minimum essential coverage in regulations issued under section 5000A.

(iv) ***Retroactive effect of eligibility determination.*** If an individual receiving advance credit payments is determined to be eligible for government-sponsored minimum essential coverage that is effective retroactively (such as Medicaid), the individual is treated as eligible for minimum essential coverage under that program no earlier than the first day of the first calendar month beginning after the approval.

(v) ***Determination of Medicaid or Children's Health Insurance Program (CHIP) ineligibility.*** An individual is treated as not eligible for Medicaid, CHIP, or a similar program such as a Basic Health Program, for a period of coverage under a qualified health plan if, when the individual enrolls in the qualified health plan, an Exchange conducts an eligibility determination or, if applicable, eligibility assessment (within the meaning of 45 CFR 155.302(b)) for Medicaid, CHIP, or a similar program and determines or assesses the individual to be not eligible for coverage under the program. This paragraph (c)(2)(v) does not apply for an individual who, with intentional or reckless disregard for the facts, provides incorrect information to an Exchange for the year of coverage. A reckless disregard of the facts occurs if the taxpayer makes little or no effort to determine whether the information provided to the Exchange is accurate under circumstances that demonstrate a substantial deviation from the standard of conduct a reasonable person would observe. A disregard of the facts is intentional if the taxpayer knows that information provided to the Exchange is inaccurate.

(vi) ***Examples.*** The following examples illustrate the provisions of this paragraph (c)(2):

Example 1. Delay in coverage effectiveness. On April 10, 2015, Taxpayer D applies for coverage under a government-sponsored health care program. D's application is approved on July 12, 2015, but her coverage is not effective until September 1, 2015. Under paragraph (c)(2)(i) of this section, D is eligible for government-sponsored minimum essential coverage on September 1, 2015.

Example 2. Time of eligibility. Taxpayer E turns 65 on June 3, 2015, and becomes eligible for Medicare. Under section 5000A(f)(1)(A)(i), Medicare is minimum essential coverage. However, E must enroll in Medicare to receive benefits. E enrolls in Medicare in September, which is the last month of E's initial enrollment period. Thus, E may receive Medicare benefits on December 1, 2015. Because E completed the requirements necessary to receive Medicare benefits by the last day of the third full calendar month after the event that establishes E's eligibility (E turning 65), under paragraph (c)(2)(i) and (c)(2)(ii) of this section E is eligible for government-sponsored minimum essential coverage on December 1, 2015, the first day of the first full month that E may receive benefits under the program.

Example 3. Time of eligibility, individual fails to complete necessary requirements. The facts are the same as in *Example 2,* except that E fails to enroll in the Medicare coverage during E's initial enrollment period. E is treated as eligible for government-sponsored minimum essential coverage under paragraph (c)(2)(ii) of this section as of October 1, 2015, the first day of the fourth month following the event that establishes E's eligibility (E turning 65).

Example 4. Retroactive effect of eligibility. In November 2014, Taxpayer F enrolls in a qualified health plan for 2015 and receives advance credit payments. F loses her part-time employment and on April 10, 2015 applies for coverage under the Medicaid program. F's application is approved on May 15, 2015, and her Medicaid coverage is effective as of April 1, 2015. Under paragraph (c)(2)(iv) of this section, F is eligible for government-sponsored minimum essential coverage on June 1, 2015, the first day of the first calendar month after approval.

Example 5. Determination of Medicaid ineligibility. In November 2014, Taxpayer G applies through the Exchange to enroll in health coverage for 2015. The Exchange determines that G is not eligible for Medicaid and estimates that G's household income will be 140 percent of the Federal poverty line for G's family size for purposes of determining advance credit payments. G enrolls in a qualified health plan and begins receiving advance credit payments. G experiences a reduction in household income during the year and his household income for 2015 is 130 percent of the Federal poverty line (within the Medicaid income threshold). However, under paragraph (c)(2)(v) of this section, G is treated as not eligible for Medicaid for 2015.

Example 6. Mid-year Medicaid eligibility redetermination. The facts are the same as in *Example 5,* except that G returns to the Exchange in July 2015 and the Exchange determines that G is eligible for Medicaid. Medicaid approves G for coverage and the Exchange discontinues G's advance credit payments effective August 1. Under paragraphs (c)(2)(iv) and (c)(2)(v) of this section, G is treated as not eligible for Medicaid for the months when G is covered by a qualified health plan. G is eligible for government-sponsored minimum essential coverage for the months after G is approved for Medicaid and can receive benefits, August through December 2015.

(3) ***Employer-sponsored minimum essential coverage*** —

(i)

(A) ***Plans other than health reimbursement arrangements (HRAs) or other account-based group health plans described in paragraph (c)(3)(i)(B) of this section.*** For purposes of section 36B, an employee who may enroll in an eligible employer-sponsored plan (as defined in section 5000A(f)(2) and the regulations under that section) that is minimum essential coverage, and an individual who may enroll in the plan because of a relationship to the employee (a related individual), are eligible for minimum essential coverage under the plan for any month only if the plan is affordable and provides minimum value. Except for the Nonappropriated Fund Health Benefits Program of the Department of Defense, established under section 349 of the National Defense Authorization Act for Fiscal Year 1995 (Public Law 103-337; 10 U.S.C. 1587 note), government-sponsored minimum essential coverage is not an eligible employer-sponsored plan. The Nonappropriated Fund Health Benefits Program of the Department of Defense is considered eligible employer-sponsored coverage, but not government-sponsored coverage, for purposes of determining if an individual is eligible for minimum essential coverage under this section.

(B) ***HRAs and other account-based group health plans integrated with individual health insurance coverage.*** An employee who is offered an HRA or other account-based group health plan that would be integrated with individual health insurance coverage (or Medicare Part A and B or Medicare Part C), within the meaning of §§ 54.9802-4 and 54.9815-2711(d)(4) of this chapter, if the employee enrolls in individual health insurance

coverage (or Medicare Part A and B or Medicare Part C), and an individual who is offered the HRA or other account-based group health plan because of a relationship to the employee (a related HRA individual), are eligible for minimum essential coverage under an eligible employer-sponsored plan for any month for which the HRA or other account-based group health plan is offered if the HRA or other account-based group health plan is affordable for the month under paragraph (c)(5) of this section or if the employee does not opt out of and waive future reimbursements from the HRA or other account-based group health plan. An HRA or other account-based group health plan described in this paragraph (c)(3)(i)(B) that is affordable for a month under paragraph (c)(5) of this section is treated as providing minimum value for the month. For purposes of paragraphs (c)(3) and (5) of this section, the definitions under § 54.9815-2711(d)(6) of this chapter apply.

(ii) ***Plan year.*** For purposes of this paragraph (c)(3), a plan year is an eligible employer-sponsored plan's regular 12-month coverage period (or the remainder of a 12-month coverage period for a new employee or an individual who enrolls during a special enrollment period). The plan year for an HRA or other account-based group health plan described in paragraph (c)(3)(i)(B) of this section is the plan's 12-month coverage period (or the remainder of the 12-month coverage period for a newly eligible individual or an individual who enrolls during a special enrollment period).

(iii) ***Eligibility for months during a plan year*** —

(A) ***Failure to enroll in plan.*** An employee or related individual may be eligible for minimum essential coverage under an eligible employer-sponsored plan for a month during a plan year if the employee or related individual could have enrolled in the plan for that month during an open or special enrollment period for the plan year. If an enrollment period relates to coverage for not only the upcoming plan year (or the current plan year in the case of an enrollment period other than an open enrollment period), but also coverage in one or more succeeding plan years, this paragraph (c)(3)(iii)(A) applies only to eligibility for the coverage in the upcoming plan year (or the current plan year in the case of an enrollment period other than an open enrollment period).

(B) ***Waiting periods.*** An employee or related individual is not eligible for minimum essential coverage under an eligible employer-sponsored plan during a required waiting period before the coverage becomes effective.

(C) ***Example.*** The following example illustrates the provisions of this paragraph (c)(3)(iii):

> *Example.* (i) Taxpayer B is an employee of Employer X. X offers its employees a health insurance plan that has a plan year (within the meaning of paragraph (c)(3)(ii) of this section) from October 1 through September 30. Employees may enroll during an open season from August 1 to September 15. B does not enroll in X's plan for the plan year October 1, 2014, to September 30, 2015. In November 2014, B enrolls in a qualified health plan through an Exchange for calendar year 2015.

> (ii) B could have enrolled in X's plan during the August 1 to September 15 enrollment period. Therefore, unless X's plan is not affordable for B or does not provide minimum value, B is eligible for minimum essential coverage under X's plan for the months that B is enrolled in the qualified health plan during X's plan year (January through September 2015).

(iv) ***Post-employment coverage.*** A former employee (including a retiree), or an individual related (within the meaning of paragraph (c)(3)(i) of this section) to a former employee, who may enroll in eligible employer-sponsored coverage or in continuation coverage required under Federal law or a State law that provides comparable continuation coverage is eligible for minimum essential coverage under this coverage only for months that the former employee or related individual is enrolled in the coverage.

(v) ***Affordable coverage*** —

(A) ***In general*** —

(*1*) ***Affordability for employee.*** Except as provided in paragraph (c)(3)(v)(A)(*3*) of this section, an eligible employer-sponsored plan is affordable for an employee if the portion of the annual premium the employee must pay, whether by salary reduction or otherwise (required contribution), for self-only coverage does not exceed the required contribution percentage (as defined in paragraph (c)(3)(v)(C) of this section) of the applicable taxpayer's household income for the taxable year. See paragraph (c)(5) of this section for rules for when an HRA or other account-based group health plan described in paragraph (c)(3)(i)(B) of this section is affordable for an employee for a month.

(*2*) ***Affordability for related individual.*** Except as provided in paragraph (c)(3)(v)(A)(*3*) of this section, an eligible employer-sponsored plan is affordable for a related individual if the employee's required contribution for family coverage under the plan does not exceed the required contribution percentage, as defined in paragraph (c)(3)(v)(C) of this section, of the applicable taxpayer's household income for the taxable year. For purposes of this paragraph (c)(3)(v)(A)(*2*), an employee's required contribution for family coverage is the portion of the annual premium the employee must pay for coverage of the employee and all other individuals included in the employee's family, as defined in § 1.36B-1(d), who are offered coverage under the eligible employer-sponsored plan.

(*3*) ***Employee safe harbor.*** An eligible employer-sponsored plan is not affordable for an employee or a related individual for a plan year if, when the employee or a related individual enrolls in a qualified health plan for a period coinciding with the plan year (in whole or in part), an Exchange determines that the eligible employer-sponsored plan is not affordable for that plan year. This paragraph (c)(3)(v)(A)(*3*) does not apply to a determination made as part of the redetermination process described in 45 CFR 155.335 unless the individual receiving an Exchange redetermination notification affirmatively responds and provides current information about affordability. This paragraph (c)(3)(v)(A)(*3*) does not apply for an individual who, with intentional or reckless disregard for the facts, provides incorrect information to an Exchange concerning the portion of the annual premium for coverage for the employee or

related individual under the plan. A reckless disregard of the facts occurs if the taxpayer makes little or no effort to determine whether the information provided to the Exchange is accurate under circumstances that demonstrate a substantial deviation from the standard of conduct a reasonable person would observe. A disregard of the facts is intentional if the taxpayer knows that the information provided to the Exchange is inaccurate. See paragraph (c)(5) of this section for an employee safe harbor that applies when an Exchange determines that an HRA or other account-based group health plan described in paragraph (c)(3)(i)(B) of this section is not affordable for an employee or a related HRA individual for the period of enrollment in a qualified health plan.

(*4*) ***Wellness program incentives.*** Nondiscriminatory wellness program incentives offered by an eligible employer-sponsored plan that affect premiums are treated as earned in determining an employee's required contribution for purposes of affordability of an eligible employer-sponsored plan to the extent the incentives relate exclusively to tobacco use. Wellness program incentives that do not relate to tobacco use or that include a component unrelated to tobacco use are treated as not earned for this purpose. For purposes of this section, the term *wellness program incentive* has the same meaning as the term *reward* in § 54.9802-1(f)(1)(i) of this chapter.

(*5*) ***Employer contributions to HRAs integrated with eligible employer-sponsored plans.*** Amounts newly made available for the current plan year under an HRA that an employee may use to pay premiums, or may use to pay cost-sharing or benefits not covered by the primary plan in addition to premiums, reduce the employee's required contribution if the HRA would be integrated, within the meaning of § 54.9815-2711(d)(2) of this chapter, with an eligible employer-sponsored plan for an employee enrolled in the plan. The eligible employer-sponsored plan and the HRA must be offered by the same employer. Employer contributions to an HRA described in this paragraph (c)(3)(v)(A)(*5*) reduce an employee's required contribution only to the extent the amount of the annual contribution is required under the terms of the plan or otherwise determinable within a reasonable time before the employee must decide whether to enroll in the eligible employer-sponsored plan.

(*6*) ***Employer contributions to cafeteria plans.*** Amounts made available for the current plan year under a cafeteria plan, within the meaning of section 125, reduce an employee's or a related individual's required contribution if—

(*i*) The employee may not opt to receive the amount as a taxable benefit;

(*ii*) The employee may use the amount to pay for minimum essential coverage; and

(*iii*) The employee may use the amount exclusively to pay for medical care, within the meaning of section 213.

(*7*) ***Opt-out arrangements.*** [Reserved]

(*8*) ***Multiple offers of coverage.*** An individual who has offers of coverage under eligible employer-sponsored plans from multiple employers, either as an employee or a related individual, has an offer of affordable coverage if at least one of the offers of coverage is affordable under paragraph (c)(3)(v)(A)(*1*) or (*2*) of this section.

(B) ***Affordability for part-year period.*** Affordability under paragraph (c)(3)(v)(A) of this section is determined separately for each employment period that is less than a full calendar year or for the portions of an employer's plan year that fall in different taxable years of an applicable taxpayer (a part-year period). Coverage under an eligible employer-sponsored plan is affordable for a part-year period if the annualized required contribution for self-only coverage, in the case of an employee, or family coverage, in the case of a related individual, under the plan for the part-year period does not exceed the required contribution percentage of the applicable taxpayer's household income for the taxable year. The employee's annualized required contribution is the employee's required contribution for the part-year period times a fraction, the numerator of which is 12 and the denominator of which is the number of months in the part-year period during the applicable taxpayer's taxable year. Only full calendar months are included in the computation under this paragraph (c)(3)(v)(B).

(C) ***Required contribution percentage.*** The required contribution percentage is 9.5 percent. For plan years beginning in a calendar year after 2014, the percentage will be adjusted by the ratio of premium growth to income growth for the preceding calendar year and may be further adjusted to reflect changes to the data used to compute the ratio of premium growth to income growth for the 2014 calendar year or the data sources used to compute the ratio of premium growth to income growth. Premium growth and income growth will be determined under published guidance, see § 601.601(d)(2) of this chapter. In addition, the percentage may be adjusted for plan years beginning in a calendar year after 2018 to reflect rates of premium growth relative to growth in the consumer price index.

(D) ***Examples.*** The following examples illustrate the provisions of this paragraph (c)(3)(v). Unless stated otherwise, in each example the taxpayer is single and has no dependents, the employer's plan is an eligible employer-sponsored plan and provides minimum value, the employee is not eligible for other minimum essential coverage, and the taxpayer, related individual, and employer-sponsored plan have a calendar taxable year:

(*1*) ***Example 1: Basic determination of affordability.*** For all of 2023, taxpayer C works for an employer, X, that offers its employees and their spouses a health insurance plan under which, to enroll in self-only coverage, C must contribute an amount for 2023 that does not exceed the required contribution percentage of C's 2023 household income. Because C's required contribution for self-only coverage does not exceed the required contribution percentage of C's household income, under paragraph (c)(3)(v)(A)(*1*) of this section, X's plan is affordable for C, and C is eligible for minimum essential coverage for all months in 2023.

(*2*) ***Example 2: Basic determination of affordability for a related individual.***

(*i*) The facts are the same as in paragraph (c)(3)(v)(D)(*1*) of this section (Example 1), except that C is married to J, they file a joint return, and to enroll C and J, X's plan requires C to contribute an amount for coverage for C and J for 2023 that exceeds the required contribution percentage of C's and J's household income. J does not work for an employer that offers employer-sponsored coverage.

(*ii*) J is a member of C's family as defined in § 1.36B-1(d). Because C's required contribution for coverage of C and J exceeds the required contribution percentage of C's and J's household income, under paragraph (c)(3)(v)(A)(*2*) of this section, X's plan is unaffordable for J. Accordingly, J is not eligible for

minimum essential coverage for 2023. However, under paragraph (c)(3)(v)(A)(*1*) of this section, X's plan is affordable for C, and C is eligible for minimum essential coverage for all months in 2023.

(*3*) ***Example 3: Multiple offers of coverage.*** The facts are the same as in paragraph (c)(3)(v)(D)(*2*) of this section (Example 2), except that J works all year for an employer that offers employer-sponsored coverage to employees. J's required contribution for the cost of self-only coverage from J's employer does not exceed the required contribution percentage of C's and J's household income. Although the coverage offered by C's employer for C and J is unaffordable for J, the coverage offered by J's employer is affordable for J. Consequently, under paragraphs (c)(3)(v)(A)(*1*) and (*8*) of this section, J is eligible for minimum essential coverage for all months in 2023.

(*4*) ***Example 4: Cost of covering individuals not part of taxpayer's family.***

(*i*) D and E are married, file a joint return, and have two children, F and G, under age 26. F is a dependent of D and E, but G is not. D works all year for an employer that offers employer-sponsored coverage to employees, their spouses, and their children under age 26. E, F, and G do not work for employers offering coverage. D's required contribution for self-only coverage under D's employer's coverage does not exceed the required contribution percentage of D's and E's household income. D's required contribution for coverage of D, E, F, and G exceeds the required contribution percentage of D's and E's household income, but D's required contribution for coverage of D, E, and F does not exceed the required contribution percentage of the household income.

(*ii*) E and F are members of D's family as defined in § 1.36B-1(d). G is not a member of D's family under § 1.36B-1(d), because G is not D's dependent. Under paragraph (c)(3)(v)(A)(*1*) of this section, D's employer's coverage is affordable for D because D's required contribution for self-only coverage does not exceed the required contribution percentage of D's and E's household income. D's employer's coverage also is affordable for E and F, because, under paragraph (c)(3)(v)(A)(*2*) of this section, D's required contribution for coverage of D, E, and F does not exceed the required contribution percentage of D's and E's household income. Although D's cost to cover D, E, F, and G exceeds the required contribution percentage of D's and E's household income, under paragraph (c)(3)(v)(A)(*2*) of this section, the cost to cover G is not considered in determining whether D's employer's coverage is affordable for E and F, regardless of whether G actually enrolls in the plan, because G is not in D's family. D, E, and F are eligible for minimum essential coverage for all months in 2023. Under paragraph (c)(4)(i) of this section, G is considered eligible for the coverage offered by D's employer only if G enrolls in the coverage.

(*5*) ***Example 5: More than one family member with an employer offering coverage.***

(*i*) K and L are married, file a joint return, and have one dependent child, M. K works all year for an employer that offers coverage to employees, spouses, and children under age 26. L works all year for an employer that offers coverage to employees only. K's required contribution for self-only coverage under K's employer's coverage does not exceed the required contribution percentage of

K's and L's household income. Likewise, L's required contribution for self-only coverage under L's employer's coverage does not exceed the required contribution percentage of K's and L's household income. However, K's required contribution for coverage of K, L, and M exceeds the required contribution percentage of K's and L's household income.

(*ii*) L and M are members of K's family as defined in § 1.36B-1(d). Under paragraph (c)(3)(v)(A)(*1*) of this section, K's employer's coverage is affordable for K because K's required contribution for self-only coverage does not exceed the required contribution percentage of K's and L's household income. Similarly, L's employer's coverage is affordable for L, because L's required contribution for self-only coverage does not exceed the required contribution percentage of K's and L's household income. Thus, K and L are eligible for minimum essential coverage for all months in 2023. However, under paragraph (c)(3)(v)(A)(*2*) of this section, K's employer's coverage is unaffordable for M, because K's required contribution for coverage of K, L, and M exceeds the required contribution percentage of K's and L's household income. Accordingly, M is not eligible for minimum essential coverage for 2023.

(*6*) ***Example 6: Multiple offers of coverage for a related individual.***

(*i*) The facts are the same as in paragraph (c)(3)(v)(D)(*5*) of this section (Example 5), except that L works all year for an employer that offers coverage to employees, spouses, and children under age 26. L's required contribution for coverage of K, L, and M does not exceed the required contribution percentage of K's and L's household income.

(*ii*) Although M is not eligible for affordable employer coverage under K's employer's coverage, paragraph (c)(3)(v)(A)(*8*) of this section dictates that L's employer coverage must be evaluated to determine whether L's employer coverage is affordable for M. Under paragraph (c)(3)(v)(A)(*2*) of this section, L's employer's coverage is affordable for M, because L's required contribution for K, L, and M does not exceed the required contribution percentage of K's and L's household income. Accordingly, M is eligible for minimum essential coverage for all months in 2023.

(*7*) ***Example 7: Determination of unaffordability at enrollment.***

(*i*) Taxpayer D is an employee of Employer X. In November 2013 the Exchange for D's rating area projects that D's 2014 household income will be $37,000. It also verifies that D's required contribution for self-only coverage under X's health insurance plan will be $3,700 (10 percent of household income). Consequently, the Exchange determines that X's plan is unaffordable. D enrolls in a qualified health plan and not in X's plan. In December 2014, X pays D a $2,500 bonus. Thus, D's actual 2014 household income is $39,500 and D's required contribution for coverage under X's plan is 9.4 percent of D's household income.

(*ii*) Based on D's actual 2014 household income, D's required contribution does not exceed 9.5 percent of household income and X's health plan is affordable for D. However, when D enrolled in a qualified health plan for 2014, the Exchange

determined that X's plan was not affordable for D for 2014. Consequently, under paragraph (c)(3)(v)(A)(*3*) of this section, X's plan is not affordable for D and D is not eligible for minimum essential coverage under X's plan for 2014.

(*8*) ***Example 8: Determination of unaffordability for plan year.*** The facts are the same as in paragraph (c)(3)(v)(D)(*7*) of this section (Example 7), except that X's employee health insurance plan year is September 1 to August 31. The Exchange for D's rating area determines in August 2014 that X's plan is unaffordable for D based on D's projected household income for 2014. D enrolls in a qualified health plan as of September 1, 2014. Under paragraph (c)(3)(v)(A)(*3*) of this section, X's plan is not affordable for D and D is not eligible for minimum essential coverage under X's plan for the coverage months September to December 2014 and January through August 2015.

(*9*) ***Example 9: No affordability information affirmatively provided for annual redetermination.***

(*i*) The facts are the same as in paragraph (c)(3)(v)(D)(*7*) of this section (Example 7), except the Exchange redetermines D's eligibility for advance credit payments for 2015. D does not affirmatively provide the Exchange with current information regarding affordability and the Exchange determines that D's coverage is not affordable for 2015 and approves advance credit payments based on information from the previous enrollment period. In 2015, D's required contribution for coverage under X's plan is 9.4 percent of D's household income.

(*ii*) Because D does not respond to the Exchange notification and the Exchange makes an affordability determination based on information from an earlier year, the employee safe harbor in paragraph (c)(3)(v)(A)(*3*) of this section does not apply. D's required contribution for 2015 does not exceed 9.5 percent of D's household income. Thus, X's plan is affordable for D for 2015 and D is eligible for minimum essential coverage for all months in 2015.

(*10*) ***Example 10: Determination of unaffordability for part of plan year (part-year period).***

(*i*) Taxpayer E is an employee of Employer X beginning in May 2015. X's employee health insurance plan year is September 1 to August 31. E's required contribution for self-only coverage for May through August is $150 per month ($1,800 for the full plan year). The Exchange for E's rating area projects E's household income for purposes of eligibility for advance credit payments as $18,000. E's actual household income for the 2015 taxable year is $20,000.

(*ii*) Under paragraph (c)(3)(v)(B) of this section, whether coverage under X's plan is affordable for E is determined for the remainder of X's plan year (May through August). E's required contribution for a full plan year ($1,800) exceeds 9.5 percent of E's household income (1,800/18,000 = 10 percent). Therefore, the Exchange determines that X's coverage is unaffordable for May through August. Although E's actual household income for 2015 is $20,000 (and E's required contribution of $1,800 does not exceed 9.5 percent of E's household income), under paragraph (c)(3)(v)(A)(*3*) of this section, X's plan is unaffordable for E for the part of the plan year May through August 2015. Consequently, E is not eligible for minimum essential coverage under X's plan for the period May through August 2015.

(*11*) ***Example 11: Affordability determined for part of a taxable year (part-year period).***

(*i*) Taxpayer F is an employee of Employer X. X's employee health insurance plan year is September 1 to August 31. F's required contribution for self-only coverage for the period September 2014 through August 2015 is $150 per month or $1,800 for the plan year. F does not enroll in X's plan during X's open season but enrolls in a qualified health plan for September through December 2014. F does not request advance credit payments and does not ask the Exchange for his rating area to determine whether X's coverage is affordable for F. F's household income in 2014 is $18,000.

(*ii*) Because F is a calendar year taxpayer and Employer X's plan is not a calendar year plan, F must determine the affordability of X's coverage for the part-year period in 2014 (September-December) under paragraph (c)(3)(v)(B) of this section. F determines the affordability of X's plan for the September through December 2014 period by comparing the annual premiums ($1,800) to F's 2014 household income. F's required contribution of $1,800 is 10 percent of F's 2014 household income. Because F's required contribution exceeds 9.5 percent of F's 2014 household income, X's plan is not affordable for F for the part-year period September through December 2014 and F is not eligible for minimum essential coverage under X's plan for that period.

(*iii*) F enrolls in Exchange coverage for 2015 and does not ask the Exchange to approve advance credit payments or determine whether X's coverage is affordable. F's 2015 household income is $20,000.

(*iv*) F must determine if X's plan is affordable for the part-year period January 2015 through August 2015. F's annual required contribution ($1,800) is 9 percent of F's 2015 household income. Because F's required contribution does not exceed 9.5 percent of F's 2015 household income, X's plan is affordable for F for the part-year period January through August 2015 and F is eligible for minimum essential coverage for that period.

(*12*) ***Example 12: Coverage unaffordable at year end.*** Taxpayer G is employed by Employer X. In November 2014, the Exchange for G's rating area determines that G is eligible for affordable employer-sponsored coverage for 2015. G nonetheless enrolls in a qualified health plan for 2015 but does not receive advance credit payments. G's 2015 household income is less than expected and G's required contribution for employer-sponsored coverage for 2015 exceeds 9.5 percent of G's actual 2015 household income. Under paragraph (c)(3)(v)(A)(*1*) of this section, G is not eligible for minimum essential coverage under X's plan for 2015.

(*13*) ***Wellness program incentives:***

(*i*) Employer X offers an eligible employer-sponsored plan with a nondiscriminatory wellness program that reduces premiums by $300 for employees who do not use tobacco products or who complete a smoking cessation course. Premiums are reduced by $200 if an employee completes cholesterol screening within the first six months of the plan year. Employee B does not use tobacco and the cost of his premiums is $3,700. Employee C uses tobacco and the cost of her premiums is $4,000.

(*ii*) Under paragraph (c)(3)(v)(A)(*4*) of this section, only the incentives related to tobacco use are counted toward the premium amount used to determine the affordability of X's plan. C is treated as having earned the $300 incentive for attending a smoking cessation course regardless of whether C actually attends the course. Thus, the required contribution for determining affordability for both Employee B and Employee C is $3,700. The $200 incentive for completing cholesterol screening is treated as not earned and does not reduce their required contribution.

(vi) ***Minimum value.*** See § 1.36B-6 for rules for determining whether an eligible employer-sponsored plan provides minimum value. An HRA or other account-based group health plan described in paragraph (c)(3)(i)(B) of this section that is affordable for a month under paragraph (c)(5) of this section is treated as providing minimum value for the month.

(vii) ***Enrollment in eligible employer-sponsored plan*** —

(A) ***In general.*** Except as provided in paragraph (c)(3)(vii)(B) of this section, the requirements of affordability and minimum value do not apply for months that an individual is enrolled in an eligible employer-sponsored plan.

(B) ***Automatic enrollment.*** An employee or related individual is treated as not enrolled in an eligible employer-sponsored plan for a month in a plan year or other period for which the employee or related individual is automatically enrolled if the employee or related individual terminates the coverage before the later of the first day of the second full calendar month of that plan year or other period or the last day of any permissible opt-out period provided by the employer-sponsored plan or in regulations to be issued by the Department of Labor, for that plan year or other period.

(C) ***Examples.*** The following examples illustrate the provisions of this paragraph (c)(3)(vii):

Example 1. Taxpayer H is employed by Employer X in 2014. H's required contribution for self-only employer coverage exceeds 9.5 percent of H's 2014 household income. H enrolls in X's calendar year plan for 2014. Under paragraph (c)(3)(vii)(A) of this section, H is eligible for minimum essential coverage for 2014 because H is enrolled in an eligible employer-sponsored plan for 2014.

Example 2. The facts are the same as in *Example 1*, except that H terminates plan coverage on June 30, 2014. Under paragraph (c)(3)(vii)(A) of this section, H is eligible for minimum essential coverage under X's plan for January through June 2014 but is not eligible for minimum essential coverage under X's plan for July through December 2014.

Example 3. The facts are the same as in *Example 1*, except that Employer X automatically enrolls H in the plan for calendar year 2015. H terminates the coverage on January 20, 2015. Under paragraph (c)(3)(vii)(B) of this section, H is not eligible for minimum essential coverage under X's plan for January 2015.

(4) ***Special eligibility rules*** —

(i) ***Related individual.*** An individual who may enroll in minimum essential coverage because of a relationship to another person eligible for the coverage, but is not included in the family, as defined in § 1.36B-1(d), of the other eligible person, is treated as eligible for such minimum essential coverage only for months that the related individual is enrolled in the coverage.

(ii) ***Exchange unable to discontinue advance credit payments*** —

(A) ***In general.*** If an individual who is enrolled in a qualified health plan for which advance credit payments are made informs the Exchange that the individual is or will soon be eligible for other minimum essential coverage and that advance credit payments should be discontinued, but the Exchange does not discontinue advance credit payments for the first calendar month beginning after the month the individual informs the Exchange, the individual is treated as eligible for the other minimum essential coverage no earlier than the first day of the second calendar month beginning after the first month the individual may enroll in the other minimum essential coverage.

(B) ***Medicaid or CHIP.*** If a determination is made that an individual who is enrolled in a qualified health plan for which advance credit payments are made is eligible for Medicaid or CHIP but the advance credit payments are not discontinued for the first calendar month beginning after the eligibility determination, the individual is treated as eligible for the Medicaid or CHIP no earlier than the first day of the second calendar month beginning after the eligibility determination.

(5) ***Affordable HRA or other account-based group health plan*** —

(i) ***In general.*** Except as otherwise provided in this paragraph (c)(5), an HRA or other account-based group health plan described in paragraph (c)(3)(i)(B) of this section is affordable for a month if the employee's required HRA contribution (as defined in paragraph (c)(5)(ii) of this section) for the month does not exceed 1/12 of the product of the employee's household income for the taxable year and the required contribution percentage (as defined in paragraph (c)(3)(v)(C) of this section).

(ii) ***Required HRA contribution.*** An employee's required HRA contribution is the excess of—

(A) The monthly premium for the lowest cost silver plan for self-only coverage of the employee offered in the Exchange for the rating area in which the employee resides, over

(B) The monthly self-only HRA or other account-based group health plan amount (or the monthly maximum amount available to the employee under the HRA or other account-based group health plan if the HRA or other account-based group health plan provides for reimbursements up to a single dollar amount regardless of whether an employee has self-only or other-than-self-only coverage).

(iii) ***Monthly amounts*** —

(A) ***Monthly lowest cost silver plan premium.*** For purposes of paragraph (c)(5)(ii)(A) of this section, the premium for the lowest cost silver plan is determined without regard to any wellness program incentive that affects premiums unless the wellness program incentive relates exclusively to tobacco use, in which case the incentive is treated as earned. If the premium differs for tobacco users and non-tobacco users, the premium for the lowest cost silver plan is the premium that applies to non-tobacco users. For the purpose of this paragraph (c)(5)(iii)(A), the term wellness program incentive has the same meaning as the

term reward in 26 CFR 54.9802-1(f)(1)(i). A silver-level qualified health plan that is used for purposes of determining a taxpayer's lowest cost silver plan for self-only coverage under paragraph (c)(5)(ii)(A) of this section does not cease to be the taxpayer's lowest cost silver plan for self-only coverage solely because the plan terminates or closes to enrollment during the taxable year.

(B) ***Monthly HRA amount.*** For purposes of paragraph (c)(5)(ii)(B) of this section, the monthly self-only HRA or other account-based group health plan amount is the self-only HRA or other account-based group health plan amount newly made available under the HRA for the plan year, divided by the number of months in the plan year the HRA or other account-based group health plan is available to the employee. The monthly maximum amount available to the employee under the HRA or other account-based group health plan is the maximum amount newly made available for the plan year to the employee under the plan, divided by the number of months in the plan year the HRA or other account-based group health plan is available to the employee.

(iv) ***Employee safe harbor.*** An HRA or other account-based group health plan described in paragraph (c)(3)(i)(B) of this section is not affordable for a month for an employee or a related HRA individual if, when the employee or related HRA individual enrolls in a qualified health plan for a period coinciding with the period the HRA or other account-based group health plan is available to the employee or related HRA individual (in whole or in part), an Exchange determines that the HRA or other account-based group health plan is not affordable for the period of enrollment in the qualified health plan. This paragraph (c)(5)(iv) does not apply to a determination made as part of the redetermination process described in 45 CFR 155.335 unless the individual receiving an Exchange redetermination notification affirmatively responds and provides current information about affordability. This paragraph (c)(5)(iv) does not apply for an individual who, with intentional or reckless disregard for the facts, provides incorrect information to an Exchange concerning the relevant HRA or other account-based group health plan amount offered by the employee's employer. A reckless disregard of the facts occurs if the taxpayer makes little or no effort to determine whether the information provided to the Exchange is accurate under circumstances that demonstrate a substantial deviation from the standard of conduct a reasonable person would observe. A disregard of the facts is intentional if the taxpayer knows that the information provided to the Exchange is inaccurate.

(v) ***Amounts used for affordability determination.*** Only amounts that are newly made available for the plan year of the HRA or other account-based group health plan described in paragraph (c)(3)(i)(B) of this section and determinable within a reasonable time before the beginning of the plan year of the HRA or other account-based health plan are considered in determining whether an HRA or other account-based group health plan described in paragraph (c)(3)(i)(B) of this section is affordable. Amounts made available for a prior plan year that carry over to the current plan year are not taken into account for purposes of this paragraph (c)(5). Similarly, amounts made available to account for amounts remaining in a different HRA or other account-based group health plan the employer previously provided to the employee and under which the employee is no longer covered are not taken into account for purposes of this paragraph (c)(5).

(vi) ***Affordability for part-year period.*** Affordability under this paragraph (c)(5) is determined separately for each employment period that is less than a full calendar year or for the portions of the plan year of an employer's HRA or other account-based group health plan that fall in different taxable years of an applicable taxpayer. An HRA or other account-based group health plan described in paragraph (c)(3)(i)(B) of this section is affordable for a part-year period if the

employee's annualized required HRA contribution for the part-year period does not exceed the required contribution percentage of the applicable taxpayer's household income for the taxable year. The employee's annualized required HRA contribution is the employee's required HRA contribution for the part-year period times a fraction, the numerator of which is 12 and the denominator of which is the number of months in the part-year period during the applicable taxpayer's taxable year. Only full calendar months are included in the computation under this paragraph (c)(5)(vi).

(vii) ***Related individual not allowed as a personal exemption deduction.*** A related HRA individual is treated as ineligible for minimum essential coverage under an HRA or other account-based group health plan described in paragraph (c)(3)(i)(B) of this section for months that the employee opted out of and waived future reimbursements from the HRA or other account-based group health plan and the employee is not allowed a personal exemption deduction under section 151 for the related HRA individual.

(viii) ***Post-employment coverage.*** An individual who is offered an HRA or other account-based group health plan described in paragraph (c)(3)(i)(B) of this section, for months after an employee terminates employment with the employer offering the HRA or other account-based group health plan, is eligible for minimum essential coverage under the HRA or other account-based group health plan for months after termination of employment only if the employee does not forfeit or opt out of and waive future reimbursements from the HRA or other account-based group health plan for months after termination of employment.

(ix) ***Examples.*** The following examples illustrate the provisions of this paragraph (c)(5). The required contribution percentage is defined in paragraph (c)(3)(v)(C) of this section and is updated annually. Because the required contribution percentage for 2020 has not yet been determined, the examples assume a required contribution percentage for 2020 of 9.78 percent.

(A) ***Example 1: Determination of affordability*** —

(*1*) ***Facts.*** In 2020 Taxpayer A is single, has no dependents, and has household income of $28,000. A is an employee of Employer X for all of 2020. X offers its employees an HRA described in paragraph (c)(3)(i)(B) of this section that reimburses $2,400 of medical care expenses for single employees with no children (the self-only HRA amount) and $4,000 for employees with a spouse or children for the medical expenses of the employees and their family members. A enrolls in a qualified health plan through the Exchange in the rating area in which A resides and remains enrolled for all of 2020. The monthly premium for the lowest cost silver plan for self-only coverage of A that is offered in the Exchange for the rating area in which A resides is $500.

(*2*) ***Conclusion.*** A's required HRA contribution, as defined in paragraph (c)(5)(ii) of this section, is $300, the excess of $500 (the monthly premium for the lowest cost silver plan for self-only coverage of A) over $200 (1/12 of the self-only HRA amount provided by Employer X to its employees). In addition, 1/12 of the product of 9.78 percent and A's household income is $228 ($28,000 × .0978 = $2,738; $2,738/12 = $228). Because A's required HRA contribution of $300 exceeds $228 (1/12 of the product of 9.78 percent and A's household income), the HRA is unaffordable for A for each month of 2020 under paragraph (c)(5) of this section. If A opts out of and

waives future reimbursements from the HRA, A is not eligible for minimum essential coverage under the HRA for each month of 2020 under paragraph (c)(3)(i)(B) of this section.

(B) ***Example 2: Determination of affordability for a related HRA individual*** —

(*1*) ***Facts.*** In 2020 Taxpayer B is married and has one child who is a dependent of B for 2020. B has household income of $28,000. B is an employee of Employer X for all of 2020. X offers its employees an HRA described in paragraph (c)(3)(i)(B) of this section that reimburses $3,600 of medical care expenses for single employees with no children (the self-only HRA amount) and $5,000 for employees with a spouse or children for the medical expenses of the employees and their family members. B, B's spouse, and B's child enroll in a qualified health plan through the Exchange in the rating area in which B resides and they remain enrolled for all of 2020. No advance credit payments are made for their coverage. The monthly premium for the lowest cost silver plan for self-only coverage of B that is offered in the Exchange for the rating area in which B resides is $500.

(*2*) ***Conclusion.*** B's required HRA contribution, as defined in paragraph (c)(5)(ii) of this section, is $200, the excess of $500 (the monthly premium for the lowest cost silver plan for self-only coverage for B) over $300 (1/12 of the self-only HRA amount provided by Employer X to its employees). In addition, 1/12 of the product of 9.78 percent and B's household income for 2020 is $228 ($28,000 × .0978 = $2,738; $2,738/12 = $228). Because B's required HRA contribution of $200 does not exceed $228 (1/12 of the product of 9.78 percent and B's household income for 2020), the HRA is affordable for B under paragraph (c)(5) of this section, and B is eligible for minimum essential coverage under an eligible employer-sponsored plan for each month of 2020 under paragraph (c)(3)(i)(B) of this section. In addition, B's spouse and child are also eligible for minimum essential coverage under an eligible employer-sponsored plan for each month of 2020 under paragraph (c)(3)(i)(B) of this section.

(C) ***Example 3: Exchange determines that HRA is unaffordable*** —

(*1*) ***Facts.*** The facts are the same as in paragraph (c)(5)(ix)(B) of this section (*Example 2*), except that B, when enrolling in Exchange coverage for B's family, received a determination by the Exchange that the HRA was unaffordable, because B believed B's household income would be lower than it turned out to be. Consequently, advance credit payments were made for their 2020 coverage.

(*2*) ***Conclusion.*** Under paragraph (c)(5)(iv) of this section, the HRA is considered unaffordable for B, B's spouse, and B's child for each month of 2020 provided that B did not, with intentional or reckless disregard for the facts, provide incorrect information to the Exchange concerning the HRA.

(D) ***Example 4: Affordability determined for part of a taxable year (part-year period)*** —

(*1*) ***Facts.*** Taxpayer C is an employee of Employer X. C's household income for 2020 is $28,000. X offers its employees an HRA described in paragraph (c)(3)(i)(B) of this section that reimburses medical care expenses of $3,600 for single employees without children (the self-only HRA amount) and $5,000 to employees with a spouse or children for the medical expenses of the employees and their family members. X's

HRA plan year is September 1 to August 31 and C is first eligible to participate in the HRA for the period beginning September 1, 2020. C enrolls in a qualified health plan through the Exchange in the rating area in which C resides for all of 2020. The monthly premium for the lowest cost silver plan for self-only coverage of C that is offered in the Exchange for the rating area in which C resides for 2020 is $500.

(2) ***Conclusion.*** Under paragraph (c)(3)(vi) of this section, the affordability of the HRA is determined separately for the period September 1 through December 31, 2020, and for the period January 1 through August 31, 2021. C's required HRA contribution, as defined in paragraph (c)(5)(ii) of this section, for the period September 1 through December 31, 2020, is $200, the excess of $500 (the monthly premium for the lowest cost silver plan for self-only coverage for C) over $300 (1/12 of the self-only HRA amount provided by X to its employees). In addition, 1/12 of the product of 9.78 percent and C's household income is $228 ($28,000 × .0978 = $2,738; $2,738/12 = $228). Because C's required HRA contribution of $200 does not exceed $228, the HRA is affordable for C for each month in the period September 1 through December 31, 2020, under paragraph (c)(5) of this section. Affordability for the period January 1 through August 31, 2021, is determined using C's 2021 household income and required HRA contribution.

(E) ***Example 5: Carryover amounts ignored in determining affordability*** —

(1) ***Facts.*** Taxpayer D is an employee of Employer X for all of 2020 and 2021. D is single. For each of 2020 and 2021, X offers its employees an HRA described in paragraph (c)(3)(i)(B) of this section that provides reimbursement for medical care expenses of $2,400 to single employees with no children (the self-only HRA amount) and $4,000 to employees with a spouse or children for the medical expenses of the employees and their family members. Under the terms of the HRA, amounts that an employee does not use in a calendar year may be carried over and used in the next calendar year. In 2020, D used only $1,500 of her $2,400 maximum reimbursement and the unused $900 is carried over and may be used by D in 2021.

(2) ***Conclusion.*** Under paragraph (c)(5)(v) of this section, only the $2,400 self-only HRA amount offered to D for 2021 is considered in determining whether D's HRA is affordable for D. The $900 carryover amount is not considered in determining the affordability of the HRA.

(d) ***Applicability date.*** Paragraphs (b)(2) and (c)(3)(v)(C) of this section apply to taxable years beginning after December 31, 2013.

(e) ***Applicability dates.***

(1) Except as provided in paragraphs (e)(2) through (6) of this section, this section applies to taxable years ending after December 31, 2013.

(2) Paragraph (b)(6)(ii), the last three sentences of paragraph (c)(2)(v), paragraph (c)(3)(i), paragraph (c)(3)(iii)(A), the last three sentences of paragraph (c)(3)(v)(A)(*3*), and paragraph (c)(4) of this section apply to taxable years beginning after December 31, 2016. Paragraphs (b)(6), (c)(3)(i), (c)(3)(iii)(A), and (c)(4) of § 1.36B-2 as contained in 26 CFR part I edition revised as of April 1, 2016, apply to taxable years ending after December 31, 2013, and beginning before January 1, 2017.

(3) Paragraphs (c)(3)(i)(B) and (c)(5) of this section, and the last sentences of paragraphs (c)(3)(ii), (c)(3)(v)(A)(*1*) through (*3*), and (c)(3)(vi) of this section apply to taxable years beginning on or after January 1, 2020.

(4) Paragraph (c)(4)(i) of this section applies to taxable years ending on or after December 31, 2020.

(5) The first two sentences of paragraph (c)(3)(v)(A)(*2*), paragraph (c)(3)(v)(A)(*8*), the second sentence of paragraph (c)(3)(v)(B), paragraphs (c)(3)(v)(D)(*1*) through (*6*), and the first sentences of paragraphs (c)(3)(v)(D)(*8*) and (*9*) of this section apply to taxable years beginning after December 31, 2022.

(6) The first sentence of paragraph (c)(2)(v) of this section applies to taxable years beginning on or after January 1, 2025. The first sentence of paragraph (c)(2)(v) of this section, as contained in 26 CFR part 1 edition revised as of April 1, 2024, applies to taxable years ending after December 31, 2013, and beginning before January 1, 2025.

[T.D. 9590, 77 FR 30385, May 23, 2012, as amended by T.D. 9611, 78 FR 7265, Feb. 1, 2013; T.D. 9683, 79 FR 43626, July 28, 2014; 80 FR 78974, Dec. 18, 2015; T.D. 9804, 81 FR 91764, Dec. 19, 2016; T.D. 9822, 82 FR 34606, July 26, 2017; T.D. 9867, 84 FR 28984, June 20, 2019; T.D. 9912, 85 FR 76978, Dec. 1, 2020; T.D. 9968, 87 FR 62002, Oct. 13, 2022; T.D. 10019, 89 FR 102725, Dec. 18, 2024]

§ 1.36B-3 Computing the premium assistance credit amount.

(a) ***In general.*** A taxpayer's premium assistance credit amount for a taxable year is the sum of the premium assistance amounts determined under paragraph (d) of this section for all coverage months for individuals in the taxpayer's family.

(b) ***Definitions.*** For purposes of this section—

(1) The cost of a qualified health plan is the premium the plan charges; and

(2) The term *coverage family* means, in each month, the members of a taxpayer's family for whom the month is a coverage month.

(c) ***Coverage month*** —

(1) ***In general.*** A month is a coverage month for an individual if—

(i) As of the first day of the month, the individual is enrolled in a qualified health plan through an Exchange;

(ii) The taxpayer pays the taxpayer's share of the premium for the individual's coverage under the plan for the month by the unextended due date for filing the taxpayer's income tax return for that taxable year, the full premium for the month is paid by advance credit payments, or the amount of the premium paid (including by advance credit payments) for the month is sufficient to avoid termination of the individual's coverage for that month under one of the scenarios described in paragraph (c)(4) of this section; and

(iii) The individual is not eligible for the full calendar month for minimum essential coverage (within the meaning of § 1.36B-2(c)) other than coverage described in section 5000A(f)(1)(C) (relating to coverage in the individual market).

(2) ***Certain individuals enrolled during a month.*** If an individual enrolls in a qualified health plan and the enrollment is effective on the date of the individual's birth, adoption, or placement for adoption or in foster care, or on the effective date of a court order, the individual is treated as enrolled as of the first day of that month for purposes of this paragraph (c).

(3) ***Premiums paid for a taxpayer.*** Premiums another person pays for coverage of the taxpayer, taxpayer's spouse, or dependent are treated as paid by the taxpayer.

(4) ***Scenarios for payments sufficient to avoid coverage termination.*** The scenarios under which the amount of the premium paid (including by advance credit payments) for the month is sufficient to avoid termination of an individual's coverage for that month under paragraph (c)(1)(ii) of this section are the following:

(i) The first month of a grace period described in 45 CFR 156.270(d) for the individual.

(ii) A month for which a premium payment threshold under 45 CFR 155.400(g) has been met and for which month the issuer of the individual's qualified health plan provides coverage.

(iii) A month for which a State department of insurance has, during a declared emergency, issued an order prohibiting the issuer of the individual's qualified health plan from terminating the individual's coverage for the month irrespective of whether the full premium for the month is paid.

(5) ***Appeals of coverage eligibility.*** A taxpayer who is eligible for advance credit payments pursuant to an eligibility appeal decision implemented under 45 CFR 155.545(c)(1)(ii) for coverage of a member of the taxpayer's coverage family who, based on the appeal decision, retroactively enrolls in a qualified health plan is considered to have met the requirement in paragraph (c)(1)(ii) of this section for a month if the taxpayer pays the taxpayer's share of the premiums for coverage under the plan for the month on or before the 120th day following the date of the appeals decision.

(6) ***Examples.*** The following examples illustrate the provisions of this paragraph (c):

> *Example 1.* (i) Taxpayer M is single with no dependents. In December 2013, M enrolls in a qualified health plan for 2014 and the Exchange approves advance credit payments. M pays M's share of the premiums. On May 15, 2014, M enlists in the U.S. Army and is eligible immediately for government-sponsored minimum essential coverage.
> (ii) Under paragraph (c)(1) of this section, January through May 2014 are coverage months for M. June through December 2014 are not coverage months because M is eligible for minimum essential coverage for those months. Thus, under paragraph (a) of this section, M's premium assistance credit amount for 2014 is the sum of the premium assistance amounts for the months January through May.

> *Example 2.* (i) Taxpayer N has one dependent, S. S is eligible for government-sponsored minimum essential coverage. N is not eligible for minimum essential coverage. N enrolls in a qualified health plan for 2014 and the Exchange approves advance credit payments. On August 1, 2014, S loses eligibility for minimum essential coverage. N terminates enrollment in the qualified health plan that covers only N and enrolls in a qualified health plan that covers N and S for August through December 2014. N pays all premiums not covered by advance

credit payments.
(ii) Under paragraph (c)(1) of this section, January through December of 2014 are coverage months for N and August through December are coverage months for N and S. N's premium assistance credit amount for 2014 is the sum of the premium assistance amounts for these coverage months.

Example 3. (i) O and P are the divorced parents of T. Under the divorce agreement between O and P, T resides with P and P claims T as a dependent. However, O must pay premiums for health insurance for T. P enrolls T in a qualified health plan for 2014. O pays the portion of T's qualified health plan premiums not covered by advance credit payments.
(ii) Because P claims T as a dependent, P (and not O) may claim a premium tax credit for coverage for T. See § 1.36B-2(a). Under paragraph (c)(2) of this section, the premiums that O pays for coverage for T are treated as paid by P. Thus, the months when T is covered by a qualified health plan and not eligible for other minimum essential coverage are coverage months under paragraph (c)(1) of this section in computing P's premium tax credit under paragraph (a) of this section.

Example 4. Q, an American Indian, enrolls in a qualified health plan for 2014. Q's tribe pays the portion of Q's qualified health plan premiums not covered by advance credit payments. Under paragraph (c)(2) of this section, the premiums that Q's tribe pays for Q are treated as paid by Q. Thus, the months when Q is covered by a qualified health plan and not eligible for other minimum essential coverage are coverage months under paragraph (c)(1) of this section in computing Q's premium tax credit under paragraph (a) of this section.

(d) ***Premium assistance amount*** —

(1) ***Premium assistance amount.*** The premium assistance amount for a coverage month is the lesser of—

(i) The enrollment premiums, which are the premiums for the month for one or more qualified health plans in which a taxpayer or a member of the taxpayer's family enrolls, reduced by any amounts—

(A) Refunded in the same taxable year as the premium liability is incurred; or

(B) Unpaid as of the unextended due date for filing the taxpayer's income tax return for the taxable year that includes the month; or

(ii) The excess of the adjusted monthly premium for the applicable benchmark plan (benchmark plan premium) over $^{1}/_{12}$ of the product of a taxpayer's household income and the applicable percentage for the taxable year (the taxpayer's contribution amount).

(2) ***Examples.*** The following examples illustrate the rules of paragraph (d)(1) of this section.

Example 1. Taxpayer Q is single and has no dependents. Q enrolls in a qualified health plan with a monthly premium of $400. Q's monthly benchmark plan premium is $500, and his monthly contribution amount is $80. Q's premium assistance amount for a coverage month is $400 (the lesser of $400, Q's monthly enrollment premium, and $420, the difference between Q's monthly benchmark plan premium and Q's contribution amount).

Example 2. (i) Taxpayer R is single and has no dependents. R enrolls in a qualified health plan with a monthly premium of $450. The difference between R's benchmark plan premium and contribution amount for the month is $420.
(ii) The issuer of R's qualified health plan is notified that R died on September 20. The issuer terminates coverage as of that date and refunds the remaining portion of the September enrollment premiums ($150) for R's coverage.

(iii) R's premium assistance amount for each coverage month from January through August is $420 (the lesser of $450 and $420). Under paragraph (d)(1) of this section, R's premium assistance amount for September is the lesser of the enrollment premiums for the month, reduced by any amounts that were refunded ($300 ($450-$150)) or the difference between the benchmark plan premium and the contribution amount for the month ($420). R's premium assistance amount for September is $300, the lesser of $420 and $300.

Example 3. The facts are the same as in *Example 2* of this paragraph (d)(2), except that the qualified health plan issuer does not refund any enrollment premiums for September. Under paragraph (d)(1) of this section, R's premium assistance amount for September is $420, the lesser of $450 and $420.

(e) ***Adjusted monthly premium.*** The adjusted monthly premium is the premium an issuer would charge for the applicable benchmark plan to cover all members of the taxpayer's coverage family, adjusted only for the age of each member of the coverage family as allowed under section 2701 of the Public Health Service Act (42 U.S.C. 300gg). The adjusted monthly premium is determined without regard to any premium discount or rebate under the wellness discount demonstration project under section 2705(d) of the Public Health Service Act (42 U.S.C. 300gg-4(d)) and may not include any adjustments for tobacco use. The adjusted monthly premium for a coverage month is determined as of the first day of the month.

(f) ***Applicable benchmark plan*** —

(1) ***In general.*** Except as otherwise provided in this paragraph (f), the applicable benchmark plan for each coverage month is the second-lowest-cost silver plan (as described in section 1302(d)(1)(B) of the Affordable Care Act (42 U.S.C. 18022(d)(1)(B))) offered to the taxpayer's coverage family through the Exchange for the rating area where the taxpayer resides for—

(i) Self-only coverage for a taxpayer—

(A) Who computes tax under section 1(c) (unmarried individuals other than surviving spouses and heads of household) and is not allowed a deduction under section 151 for a dependent for the taxable year;

(B) Who purchases only self-only coverage for one individual; or

(C) Whose coverage family includes only one individual; and

(ii) Family coverage for all other taxpayers.

(2) ***Family coverage.*** The applicable benchmark plan for family coverage is the second lowest-cost silver plan that would cover the members of the taxpayer's coverage family (such as a plan covering two adults if the members of a taxpayer's coverage family are two adults).

(3) ***Silver-level plan not covering pediatric dental benefits.*** If one or more silver-level qualified health plans offered through an Exchange do not cover pediatric dental benefits, the premium for the applicable benchmark plan is determined based on the second lowest-cost option among—

(i) The silver-level qualified health plans that are offered by the Exchange to the members of the coverage family and that provide pediatric dental benefits; and

(ii) The silver-level qualified health plans that are offered by the Exchange to the members of the coverage family that do not provide pediatric dental benefits in conjunction with the second lowest-cost portion of the premium for a stand-alone dental plan (within the meaning of section 1311(d)(2)(B)(ii) of the Affordable Care Act (42 U.S.C. 18031(d)(2)(B)(ii)) offered by the Exchange to the members of the coverage family that is properly allocable to pediatric dental benefits determined under guidance issued by the Secretary of Health and Human Services.

(4) ***Family members residing in different locations.*** If members of a taxpayer's coverage family reside in different locations, the taxpayer's benchmark plan premium is the sum of the premiums for the applicable benchmark plans for each group of coverage family members residing in different locations, based on the plans offered to the group through the Exchange where the group resides. If all members of a taxpayer's coverage family reside in a single location that is different from where the taxpayer resides, the taxpayer's benchmark plan premium is the premium for the applicable benchmark plan for the coverage family, based on the plans offered through the Exchange to the taxpayer's coverage family for the rating area where the coverage family resides.

(5) ***Single or multiple policies needed to cover the family*** —

(i) ***Policy covering a taxpayer's family.*** If a silver-level plan or a stand-alone dental plan offers coverage to all members of a taxpayer's coverage family who reside in the same location under a single policy, the premium (or allocable portion thereof, in the case of a stand-alone dental plan) taken into account for the plan for purposes of determining the applicable benchmark plan under paragraphs (f)(1), (f)(2), and (f)(3) of this section is the premium for this single policy.

(ii) ***Policy not covering a taxpayer's family.*** If a silver-level qualified health plan or a stand-alone dental plan would require multiple policies to cover all members of a taxpayer's coverage family who reside in the same location (for example, because of the relationships within the family), the premium (or allocable portion thereof, in the case of a standalone dental plan) taken into account for the plan for purposes of determining the applicable benchmark plan under paragraphs (f)(1), (f)(2), and (f)(3) of this section is the sum of the premiums (or allocable portion thereof, in the case of a stand-alone dental plan) for self-only policies under the plan for each member of the coverage family who resides in the same location.

(6) ***Plan not available for enrollment.*** A silver-level qualified health plan or a stand-alone dental plan that is not open to enrollment by a taxpayer or family member at the time the taxpayer or family member enrolls in a qualified health plan is disregarded in determining the applicable benchmark plan.

(7) ***Benchmark plan terminates or closes to enrollment during the year.*** A silver-level qualified health plan or a stand-alone dental plan that is used for purposes of determining the applicable benchmark plan under this paragraph (f) for a taxpayer does not cease to be the applicable benchmark plan for a taxable year solely because the plan or a lower cost plan terminates or closes to enrollment during the taxable year.

(8) ***Only one silver-level plan offered to the coverage family.*** If there is only one silver-level qualified health plan or one stand-alone dental plan offered through an Exchange that would cover all members of a taxpayer's coverage family who reside in the same location (whether under one policy or multiple policies), that plan is used for purposes of determining the taxpayer's applicable benchmark plan.

(9) ***Examples.*** The following examples illustrate the rules of this paragraph (f). Unless otherwise stated, in each example the plans are open to enrollment to a taxpayer or family member at the time of enrollment and are offered through the Exchange for the rating area where the taxpayer resides:

Example 1. Single taxpayer enrolls in Exchange coverage. Taxpayer A is single, has no dependents, and enrolls in a qualified health plan. The Exchange in the rating area in which A resides offers only silver-level qualified health plans that provide pediatric dental benefits. Under paragraphs (f)(1) and (f)(2) of this section, A's applicable benchmark plan is the second lowest cost silver plan providing self-only coverage for A.

Example 2. Single taxpayer enrolls with dependent child through an Exchange where all qualified health plans provide pediatric dental benefits.

Taxpayer B is single and claims her 12-year old daughter, C, as a dependent. B purchases family coverage for herself and C. The Exchange in the rating area in which B and C reside offers qualified health plans that provide pediatric dental benefits but does not offer qualified health plans without pediatric dental benefits. Under paragraphs (f)(1) and (f)(2) of this section, B's applicable benchmark plan is the second lowest-cost silver plan providing family coverage to B and C.

Example 3. Single taxpayer enrolls with dependent child through an Exchange where one or more qualified health plans do not provide pediatric dental benefits. (i) Taxpayer D is single and claims his 10-year old son, E, as a dependent. The Exchange in the rating area in which D and E reside offers three silver-level qualified health plans, one of which provides pediatric dental benefits (S1) and two of which do not (S2 and S3), in which D and E may enroll. The Exchange also offers two stand-alone dental plans (DP1 and DP2) available to D and E. The monthly premiums allocable to essential health benefits for the silver-level plans are as follows:

S1—$650

S2—$620

S3—$590

(ii) The monthly premiums, and the portion of the premium allocable to pediatric dental benefits, for the two dental plans are as follows:

DP1—$50 ($20 allocable to pediatric dental benefits)

DP2—$40 ($15 allocable to pediatric dental benefits).

(iii) Under paragraph (f)(3) of this section, D's applicable benchmark plan is the second lowest cost option among the following offered by the rating area in which D resides:

Silver-level qualified health plans providing pediatric dental benefits ($650 for S1) and the silver-level qualified health plans not providing pediatric dental benefits, in conjunction with the second lowest-cost portion of the premium for a stand-alone dental plan properly allocable to pediatric dental benefits ($590 for S3 in conjunction with $20 for DP1 = $610 and $620 for S2 in conjunction with $20 for DP1 = $640). Under paragraph (e) of this section, the adjusted monthly premium for D's applicable benchmark plan is $640.

Example 4. Single taxpayer enrolls with dependent adult through an Exchange where one or more qualified health plans do not provide pediatric dental benefits. (i) The facts are the same as in *Example 3,* except Taxpayer D's coverage family consists of D and D's 22-year old son, F, who is a dependent of D. The monthly premiums allocable to essential health benefits for the silver-level plans are as follows:
S1—$630

S2—$590

S3—$580

(ii) Because no one in D's coverage family is eligible for pediatric dental benefits, $0 of the premium for a stand-alone dental plan is allocable to pediatric dental benefits in determining A's applicable benchmark plan. Consequently, under paragraphs (f)(1), (f)(2), and (f)(3) of this section, D's applicable benchmark plan is the second lowest-cost option among the following options offered by the rating area in which D resides: Silver-level qualified health plans providing pediatric dental benefits ($630 for S1) and the silver-level qualified health plans not providing pediatric dental benefits, in conjunction with the second lowest-cost portion of the premium for a stand-alone dental plan properly allocable to pediatric dental benefits ($580 for S3 in conjunction with $0 for DP1 = $580 and $590 for S2 in conjunction with $0 for DP1 = $590). Under paragraph (e) of this section, the adjusted monthly premium for D's applicable benchmark plan is $590.

Example 5. Single taxpayer enrolls with dependent and nondependent. Taxpayer G is single and resides with his 25-year old daughter, H, and with his 14-year old son, I. G may claim I, but not H, as a dependent. G, H, and I enroll in coverage through the Exchange in the rating area in which they all reside. The Exchange offers only silver-level plans providing pediatric dental benefits. Under paragraphs (f)(1) and (f)(2) of this section, G's applicable benchmark plan is the second lowest-cost silver plan covering G and I. However, H may qualify for a premium tax credit if H is otherwise eligible. See paragraph (h) of this section.

Example 6. Change in coverage family. Taxpayer J is single and has no dependents when she enrolls in a qualified health plan. The Exchange in the rating area in which she resides offers only silver-level plans that provide pediatric dental benefits. On August 1, J has a child, K, whom she claims as a dependent. J enrolls in a qualified health plan covering J and K effective August 1. Under paragraphs (f)(1) and (f)(2) of this section, J's applicable benchmark plan for January through July is the second lowest-cost silver plan providing self-only coverage for J, and J's applicable benchmark plan for the months August through December is the second lowest-cost silver plan covering J and K.

Example 7. Minimum essential coverage for some coverage months. Taxpayer L claims his 6-year old daughter, M, as a dependent. L and M are enrolled for the entire year in a qualified health plan that offers only silver-level plans that provide pediatric dental benefits. L, but not M, is eligible for government-sponsored minimum essential coverage for September to December. Thus, under paragraph (c)(1)(iii) of this section, January through December are coverage months for M, and January through August are coverage months for L. Because, under paragraphs (d) and (f)(1) of this section, the premium assistance amount for a coverage month is computed based on the applicable benchmark plan for that coverage month, L's applicable benchmark plan for January through August is the second lowest-cost option covering L and M. Under paragraph (f)(1)(i)(C) of this section, L's applicable benchmark plan for September through December is the second lowest-cost silver plan providing self-only coverage for M.

Example 8. Family member eligible for minimum essential coverage for the taxable year. The facts are the same as in *Example 7,* except that L is not eligible for government-sponsored minimum essential coverage for any months and M is eligible for government sponsored minimum essential coverage for the entire year. Under paragraph (f)(1)(i)(C) of this section, L's applicable benchmark plan is the second lowest-cost silver plan providing self-only coverage for L.

> *Example 9. Benchmark plan premium for a coverage family with family members who reside in different locations.* (i) Taxpayer N's coverage family consists of N and her three dependents O, P, and Q. N, O, and P reside together but Q resides in a different location. The monthly applicable benchmark plan premium for N, O, and P is $1,000 and the monthly applicable benchmark plan premium for Q is $220.
> (ii) Under paragraph (f)(4) of this section, because the members of N's coverage family reside in different locations, the monthly premium for N's applicable benchmark plan is the sum of $1,000, the monthly premiums for the applicable benchmark plan for N, O, and P, who reside together, and $220, the monthly applicable benchmark plan premium for Q, who resides in a different location than N, O, and P. Consequently, the premium for N's applicable benchmark plan is $1,220.

> *Example 10. Aggregation of silver-level policies for plans not covering a family under a single policy.* (i) Taxpayers R and S are married and live with S's mother, T, whom they claim as a dependent. The Exchange for their rating area offers self-only and family coverage at the silver level through Issuers A, B, and C, which each offer only one silver-level plan. The silver-level plans offered by Issuers A and B do not cover R, S, and T under a single policy. The silver-level plan offered by Issuer A costs the following monthly

amounts for self-only coverage of R, S, and T, respectively: $400, $450, and $600. The silver-level plan offered by Issuer B costs the following monthly amounts for self-only coverage of R, S, and T, respectively: $250, $300, and $450. The silver-level plan offered by Issuer C provides coverage for R, S, and T under one policy for a $1,200 monthly premium.

(ii) Under paragraph (f)(5) of this section, Issuer C's silver-level plan that covers R, S, and T under one policy ($1,200 monthly premium) and Issuer A's and Issuer B's silver-level plans that do not cover R, S and T under one policy are considered in determining R's and S's applicable benchmark plan. In addition, under paragraph (f)(5)(ii) of this section, in determining R's and S's applicable benchmark plan, the premium taken into account for Issuer A's plan is $1,450 (the aggregate premiums for self-only policies covering R ($400), S ($450), and T ($600) and the premium taken into account for Issuer B's plan is $1,000 (the aggregate premiums for self-only policies covering R ($250), S ($300), and T ($450). Consequently, R's and S's applicable benchmark plan is the Issuer C silver-level plan covering R's and S's coverage family and the premium for their applicable benchmark plan is $1,200.

Example 11. Benchmark plan premium for a taxpayer with family members who cannot enroll in one policy and who reside in different locations. (i) Taxpayer U's coverage family consists of U, U's mother, V, and U's two daughters, W and X. U and V reside together in Location 1 and W and X reside together in Location 2. The Exchange in the rating area in which U and V reside does not offer a silver-level plan that covers U and V under a single policy, whereas all the silver-level plans offered through the Exchange in the rating area in which W and X reside cover W and X under a single policy. Both Exchanges offer only silver-level plans that provide pediatric dental benefits. The silver plan offered by the Exchange for the rating area in which U and V reside that would cover U and V under self-only policies with the second-lowest aggregate premium costs $400 a month for self-only coverage for U and $600 a month for self-only coverage for V. The monthly premium for the second-lowest cost silver plan covering W and X that is offered by the Exchange for the rating area in which W and X reside is $500.

(ii) Under paragraph (f)(5)(ii) of this section, because multiple policies are required to cover U and V, the members of U's coverage family who reside together in Location 1, the premium taken into account in determining U's benchmark plan is $1,000, the sum of the premiums for the second-lowest aggregate cost of self-only policies covering U ($400) and V ($600) offered by the Exchange to U and V for the rating area in which U and V reside. Under paragraph (f)(5)(i) of this section, because all silver-level plans offered by the Exchange in which W and X reside cover W and X under a single policy, the premium for W and X's coverage that is taken into account in determining U's benchmark plan is $500, the second-lowest cost silver policy covering W and X that is offered by the Exchange for the rating area in which W and X reside. Under paragraph (f)(4) of this

> section, because the members of U's coverage family reside in different locations, U's monthly benchmark plan premium is $1,500, the sum of the premiums for the applicable benchmark plans for each group of family members residing in different locations ($1,000 for U and V, who reside in Location 1, plus $500 for W and X, who reside in Location 2).

Example 12. Qualified health plan closed to enrollment. Taxpayer Y has two dependents, Z and AA. Y, Z, and AA enroll in a qualified health plan through the Exchange for the rating area where the family resides. The Exchange, which offers only qualified health plans that include pediatric dental benefits, offers silver-level plans J, K, L, and M, which are, respectively, the first, second, third, and fourth lowest cost silver plans covering Y's family. When Y's family enrolls, Plan J is closed to enrollment. Under paragraph (f)(6) of this section, Plan J is disregarded in determining Y's applicable benchmark plan, and Plan L is used in determining Y's applicable benchmark plan.

> *Example 13. Benchmark plan closes to new enrollees during the year.* (i) Taxpayers BB, CC, and DD each have coverage families consisting of two adults. In that rating area, Plan 2 is the second lowest cost silver plan and Plan 3 is the third lowest cost silver plan covering the two adults in each coverage family offered through the Exchange. The BB and CC families each enroll in a qualified health plan that is not the applicable benchmark plan (Plan 4) in November during the annual open enrollment period. Plan 2 closes to new enrollees the following June. Thus, on July 1, Plan 3 is the second lowest cost silver plan available to new enrollees through the Exchange. The DD family enrolls in a qualified health plan in July.
> (ii) Under paragraphs (f)(1), (f)(2), (f)(3), and (f)(7) of this section, the silver-level plan that BB and CC use to determine their applicable benchmark plan for all coverage months during the year is Plan 2. The applicable benchmark plan that DD uses to determine DD's applicable benchmark plan is Plan 3, because Plan 2 is not open to enrollment through the Exchange when the DD family enrolls.

Example 14. Benchmark plan terminates for all enrollees during the year. The facts are the same as in *Example 13,* except that Plan 2 terminates for all enrollees on June 30. Under paragraphs (f)(1), (f)(2), (f)(3), and (f)(7) of this section, Plan 2 is the silver-level plan that BB and CC use to determine their applicable benchmark plan for all coverage months during the year, and Plan 3 is the applicable benchmark plan that DD uses.

Example 15. Exchange offers only one silver-level plan. Taxpayer EE's coverage family consists of EE, his spouse FF, and their two dependent children GG and HH, who all reside together. The Exchange for the rating area in which they reside offers only one silver-level plan that EE's family may enroll in and the plan does not provide pediatric dental benefits. The Exchange also offers one stand-alone dental plan in which the family may enroll. Under paragraph (f)(8) of this section, the silver-level plan and the stand-alone dental plan offered by the Exchange are used for purposes of determining EE's applicable benchmark plan under paragraph (f)(3) of this

section. Moreover, the lone silver-level plan and the lone stand-alone dental plan offered by the Exchange are used for purposes of determining EE's applicable benchmark plan regardless of whether these plans cover EE's family under a single policy or multiples policies.

(g) *Applicable percentage* —

(1) ***In general.*** The applicable percentage multiplied by a taxpayer's household income determines the taxpayer's annual required share of premiums for the benchmark plan. The required share is divided by 12 and this monthly amount is subtracted from the adjusted monthly premium for the applicable benchmark plan when computing the premium assistance amount. The applicable percentage is computed by first determining the percentage that the taxpayer's household income bears to the Federal poverty line for the taxpayer's family size. The resulting Federal poverty line percentage is then compared to the income categories described in the table in paragraph (g)(2) of this section. An applicable percentage within an income category increases on a sliding scale in a linear manner and is rounded to the nearest one-hundredth of one percent. For taxable years beginning after December 31, 2014, the applicable percentages in the table will be adjusted by the ratio of premium growth to income growth for the preceding calendar year and may be further adjusted to reflect changes to the data used to compute the ratio of premium growth to income growth for the 2014 calendar year or the data sources used to compute the ratio of premium growth to income growth. Premium growth and income growth will be determined in accordance with published guidance, see § 601.601(d)(2) of this chapter. In addition, the applicable percentages in the table may be adjusted for taxable years beginning after December 31, 2018, to reflect rates of premium growth relative to growth in the consumer price index.

(2) ***Applicable percentage table.***

Household income percentage of Federal poverty line	Initial percentage	Final percentage
Less than 133%	2.0	2.0
At least 133% but less than 150%	3.0	4.0
At least 150% but less than 200%	4.0	6.3
At least 200% but less than 250%	6.3	8.05
At least 250% but less than 300%	8.05	9.5
At least 300% but not more than 400%	9.5	9.5

(3) ***Examples.*** The following examples illustrate the rules of this paragraph (g):

Example 1. A's household income is 275 percent of the Federal Poverty line for A's family size for that taxable year. In the table in paragraph (g)(2) of this section, the initial percentage for a taxpayer with household income of 250 to 300 percent of the Federal poverty line is 8.05 and the final percentage is 9.5. A's Federal poverty line percentage of 275 percent is halfway between 250 percent and 300 percent. Thus, rounded to the nearest one-hundredth of one percent, A's applicable percentage is 8.78, which is halfway between the initial percentage of 8.05 and the final percentage of 9.5.

Example 2. (i) B's household income is 210 percent of the Federal poverty line for B's family size. In the table in paragraph (g)(2) of this section, the initial percentage for a taxpayer with household income of 200 to 250 percent of the Federal poverty line is 6.3 and the final percentage is 8.05. B's applicable percentage is 6.65, computed as follows.
(ii) Determine the excess of B's Federal poverty line percentage (210) over the initial household income percentage in B's range (200), which is 10. Determine the difference between the initial household income percentage in the taxpayer's range (200) and the ending household income percentage in the taxpayer's range (250), which is 50. Divide the first amount by the second amount:

210 − 200 = 10

250 − 200 = 50

10 / 50 = .20

(iii) Compute the difference between the initial premium percentage (6.3) and the second premium percentage (8.05) in the taxpayer's range; 8.05−6.3 = 1.75.
(iv) Multiply the amount in the first calculation (.20) by the amount in the second calculation (1.75) and add the product (.35) to the initial premium percentage in B's range (6.3), resulting in B's applicable percentage of 6.65:

.20 × 1.75 = .35

6.3 + .35 = 6.65.

(h) ***Plan covering more than one family*** —

(1) ***In general.*** If a qualified health plan covers more than one family under a single policy, each applicable taxpayer covered by the plan may claim a premium tax credit, if otherwise allowable. Each taxpayer computes the credit using that taxpayer's applicable percentage, household income, and the benchmark plan that applies to the taxpayer under paragraph (f) of this section. In determining whether the amount computed under paragraph (d)(1)(i) of this section (the premiums for the qualified health plan in which the taxpayer enrolls) is less than the amount computed under paragraph (d)(1)(ii) of this section (the benchmark plan premium minus the product of household income and the applicable percentage), the premiums paid are allocated to each taxpayer in proportion to the premiums for each taxpayer's applicable benchmark plan.

(2) ***Example.*** The following example illustrates the rules of this paragraph (h):

Example. (i) Taxpayers A and B enroll in a single policy under a qualified health plan. B is A's 25-year old child who is not A's dependent. B has no dependents. The plan covers A, B, and A's two additional children who are A's dependents. The premium for the plan in which A and B enroll is $15,000. The premium for the second lowest cost silver family plan covering only A

and A's dependents is $12,000 and the premium for the second lowest cost silver plan providing self-only coverage to B is $6,000. A and B are applicable taxpayers and otherwise eligible to claim the premium tax credit.
(ii) Under paragraph (h)(1) of this section, both A and B may claim premium tax credits. A computes her credit using her household income, a family size of three, and a benchmark plan premium of $12,000. B computes his credit using his household income, a family size of one, and a benchmark plan premium of $6,000.

(iii) In determining whether the amount in paragraph (d)(1)(i) of this section (the premiums for the qualified health plan A and B purchase) is less than the amount in paragraph (d)(1)(ii) of this section (the benchmark plan premium minus the product of household income and the applicable percentage), the $15,000 premiums paid are allocated to A and B in proportion to the premiums for their applicable benchmark plans. Thus, the portion of the premium allocated to A is $10,000 ($15,000 × $12,000/$18,000) and the portion allocated to B is $5,000 ($15,000 × $6,000/$18,000).

(i) [Reserved]

(j) ***Additional benefits*** —

(1) ***In general.*** If a qualified health plan offers benefits in addition to the essential health benefits a qualified health plan must provide under section 1302 of the Affordable Care Act (42 U.S.C. 18022), or a State requires a qualified health plan to cover benefits in addition to these essential health benefits, the portion of the premium for the plan properly allocable to the additional benefits is excluded from the monthly premiums under paragraph (d)(1)(i) or (ii) of this section. Premiums are allocated to additional benefits before determining the applicable benchmark plan under paragraph (f) of this section.

(2) ***Method of allocation.*** The portion of the premium properly allocable to additional benefits is determined under guidance issued by the Secretary of Health and Human Services. See section 36B(b)(3)(D).

(3) ***Examples.*** The following examples illustrate the rules of this paragraph (j):

Example 1. (i) Taxpayer B enrolls in a qualified health plan that provides benefits in addition to essential health benefits (additional benefits). The monthly premiums for the plan in which B enrolls are $370, of which $35 is allocable to additional benefits. B's benchmark plan premium (determined after allocating premiums to additional benefits for all silver level plans) is $440, of which $40 is allocable to additional benefits. B's monthly contribution amount, which is the product of B's household income and the applicable percentage, is $60.
(ii) Under this paragraph (j), B's enrollment premiums and the benchmark plan premium are reduced by the portion of the premium that is allocable to the additional benefits provided under that plan. Therefore, B's monthly enrollment premiums are reduced to $335 ($370 − $35) and B's benchmark plan premium is reduced to $400 ($440 − $40). B's premium assistance amount for a coverage month is $335, the lesser of $335 (B's enrollment

premiums, reduced by the portion of the premium allocable to additional benefits) and $340 (B's benchmark plan premium, reduced by the portion of the premium allocable to additional benefits ($400), minus B's $60 contribution amount).

Example 2. The facts are the same as in *Example 1* of this paragraph (j)(3), except that the plan in which B enrolls provides no benefits in addition to the essential health benefits required to be provided by the plan. Thus, under paragraph (j) of this section, B's benchmark plan premium ($440) is reduced by the portion of the premium allocable to additional benefits provided under that plan ($40). B's enrollment premiums ($370) are not reduced under this paragraph (j). B's premium assistance amount for a coverage month is $340, the lesser of $370 (B's enrollment premiums) and $340 (B's benchmark plan premium, reduced by the portion of the premium allocable to additional benefits ($400), minus B's $60 contribution amount).

(k) ***Pediatric dental coverage*** —

(1) ***In general.*** For purposes of determining the amount of the monthly premium a taxpayer pays for coverage under paragraph (d)(1)(i) of this section, if an individual enrolls in both a qualified health plan and a plan described in section 1311(d)(2)(B)(ii) of the Affordable Care Act (42 U.S.C. 13031(d)(2)(B)(ii)) (a stand-alone dental plan), the portion of the premium for the stand-alone dental plan that is properly allocable to pediatric dental benefits that are essential benefits required to be provided by a qualified health plan is treated as a premium payable for the individual's qualified health plan.

(2) ***Method of allocation.*** The portion of the premium for a stand-alone dental plan properly allocable to pediatric dental benefits is determined under guidance issued by the Secretary of Health and Human Services.

(3) ***Example.*** The following example illustrates the rules of this paragraph (k):

Example. (i) Taxpayer C and C's dependent, R, enroll in a qualified health plan. The premium for the plan in which C and R enroll is $7,200 ($600/month) (Amount 1). The plan does not provide dental coverage. C also enrolls in a stand-alone dental plan covering C and R. The portion of the premium for the dental plan allocable to pediatric dental benefits that are essential health benefits is $240 ($20 per month). The excess of the premium for C's applicable benchmark plan over C's contribution amount (the product of C's household income and the applicable percentage) is $7,260 ($605/month) (Amount 2).
(ii) Under this paragraph (k), the amount C pays for premiums (Amount 1) for purposes of computing the premium assistance amount is increased by the portion of the premium for the stand-alone dental plan allocable to pediatric dental benefits that are essential health benefits. Thus, the amount of the premiums for the plan in which C enrolls is treated as $620 for purposes of computing the amount of the premium tax credit. C's premium assistance amount for each coverage month is $605 (Amount 2), the lesser of Amount 1 (increased by the premiums allocable to pediatric dental benefits) and Amount 2.

(l) ***Families including individuals not lawfully present*** —

(1) ***In general.*** If one or more individuals for whom a taxpayer is allowed a deduction under section 151 are not lawfully present (within the meaning of § 1.36B-1(g)), the percentage a taxpayer's household income bears to the Federal poverty line for the taxpayer's family size for purposes of determining the applicable percentage under paragraph (g) of this section is determined by excluding individuals who are not lawfully present from family size and by determining household income in accordance with paragraph (l)(2) of this section.

(2) ***Revised household income computation*** —

(i) ***Statutory method.*** For purposes of paragraph (l)(1) of this section, household income is equal to the product of the taxpayer's household income (determined without regard to this paragraph (l)(2)) and a fraction—

(A) The numerator of which is the Federal poverty line for the taxpayer's family size determined by excluding individuals who are not lawfully present; and

(B) The denominator of which is the Federal poverty line for the taxpayer's family size determined by including individuals who are not lawfully present.

(ii) ***Comparable method.*** The Commissioner may describe a comparable method in additional published guidance, see § 601.601(d)(2) of this chapter.

(m) ***Applicability date.*** Paragraph (g)(1) of this section applies to taxable years beginning after December 31, 2013.

(n) ***Applicability dates.***

(1) Except as provided in paragraphs (n)(2) through (4) of this section, this section applies to taxable years ending after December 31, 2013.

(2) Paragraphs (d)(1) (except for paragraph (d)(1)(i)) and (2) of this section apply to taxable years beginning after December 31, 2016. Paragraph (f) of this section applies to taxable years beginning after December 31, 2018. Paragraphs (d)(1) and (2) of § 1.36B-3, as contained in 26 CFR part 1 edition revised as of April 1, 2016, apply to taxable years ending after December 31, 2013, and beginning before January 1, 2017. Paragraph (f) of § 1.36B-3, as contained in 26 CFR part 1 edition revised as of April 1, 2016, applies to taxable years ending after December 31, 2013, and beginning before January 1, 2019.

(3) Paragraphs (c)(4) through (6) of this section apply to taxable years beginning on or after January 1, 2025. Paragraph (c)(4) of this section, as contained in 26 CFR part 1 edition revised as of April 1, 2024, applies to taxable years beginning after December 31, 2016, and beginning before January 1, 2025. Paragraph (c)(5) of this section, as contained in 26 CFR part 1 edition revised as of April 1, 2024, applies to taxable years ending after December 31, 2013, and beginning before January 1, 2025.

(4) Paragraph (d)(1)(i) of this section applies to taxable years beginning on or after January 1, 2025. Paragraph (d)(1)(i) of § 1.36B-3, as contained in 26 CFR part 1 edition revised as of April 1, 2016, applies to taxable years ending after December 31, 2013, and beginning before January 1, 2017. Paragraph (d)(1)(i) of § 1.36B-3, as contained in 26 CFR part 1 edition revised as of April 1, 2022, applies to taxable years beginning after December 31, 2016, and beginning before January 1, 2023. Paragraph (d)(1)(i) of § 1.36B-3, as contained in 26 CFR part 1 edition revised as of April 1, 2024, applies to taxable years beginning after December 31, 2022, and beginning before January 1, 2025.

[T.D. 9590, 77 FR 30385, May 23, 2012; 77 FR 41048, July 12, 2012; T.D. 9683, 79 FR 43627, July 28, 2014; T.D. 9745, 80 FR 78975, Dec. 18, 2015; 81 FR 2088, Jan. 15, 2016; T.D. 9804, 81 FR 91765, Dec. 19, 2016; T.D. 9822, 82 FR 34606, July 26, 2017; T.D. 9968, 87 FR 62002, Oct. 13, 2022; T.D. 10019, 89 FR 102725, Dec. 18, 2024]

§ 1.36B-4 Reconciling the premium tax credit with advance credit payments.

(a) ***Reconciliation*** —

(1) ***Coordination of premium tax credit with advance credit payments*** —

(i) ***In general.*** A taxpayer must reconcile the amount of credit allowed under section 36B with advance credit payments on the taxpayer's income tax return for a taxable year. A taxpayer whose premium tax credit for the taxable year exceeds the taxpayer's advance credit payments may receive the excess as an income tax refund. A taxpayer whose advance credit payments for the taxable year exceed the taxpayer's premium tax credit owes the excess as an additional income tax liability.

(ii) ***Allocation rules and responsibility for advance credit payments*** —

(A) ***In general.*** A taxpayer must reconcile all advance credit payments for coverage of any member of the taxpayer's family.

(B) ***Individuals enrolled by a taxpayer and claimed as a personal exemption deduction by another taxpayer*** —

(*1*) ***In general.*** If a taxpayer (the enrolling taxpayer) enrolls an individual in a qualified health plan and another taxpayer (the claiming taxpayer) claims a personal exemption deduction for the individual (the shifting enrollee), then for purposes of computing each taxpayer's premium tax credit and reconciling any advance credit payments, the enrollment premiums and advance credit payments for the plan in which the shifting enrollee was enrolled are allocated under this paragraph (a)(1)(ii)(B) according to the allocation percentage described in paragraph (a)(1)(ii)(B)(*2*) of this section. If advance credit payments are allocated under paragraph (a)(1)(ii)(B)(*4*) of this section, the claiming taxpayer and enrolling taxpayer must use this same allocation percentage to calculate their § 1.36B-3(d)(1)(ii) adjusted monthly premiums for the applicable benchmark plan (benchmark plan premiums). This paragraph (a)(1)(ii)(B) does not apply to amounts allocated under § 1.36B-3(h) (qualified health plan covering more than one family) or if the shifting enrollee or enrollees are the only individuals enrolled in the qualified health plan. For purposes of this paragraph (a)(1)(ii)(B)(*1*), a taxpayer who is expected at enrollment in a qualified health plan to be the taxpayer filing an income tax return for the year of coverage with respect to an individual enrolling in the plan has enrolled that individual. For taxable years to which section 151(d)(5) applies, the claiming taxpayer is the taxpayer who properly includes the shifting enrollee in his or her family for the taxable year.

(*2*) ***Allocation percentage.*** The enrolling taxpayer and claiming taxpayer may agree on any allocation percentage between zero and one hundred percent. If the enrolling taxpayer and claiming taxpayer do not agree on an allocation percentage, the percentage is equal to the number of shifting enrollees properly included in the enrolling taxpayer's family divided by the number of individuals enrolled by the enrolling taxpayer in the same qualified health plan as the shifting enrollee.

(3) ***Allocating premiums.*** In computing the premium tax credit, the claiming taxpayer is allocated a portion of the enrollment premiums for the plan in which the shifting enrollee was enrolled equal to the enrollment premiums times the allocation percentage. The enrolling taxpayer is allocated the remainder of the enrollment premiums not allocated to one or more claiming taxpayers.

(4) ***Allocating advance credit payments.*** In reconciling any advance credit payments, the claiming taxpayer is allocated a portion of the advance credit payments for the plan in which the shifting enrollee was enrolled equal to the enrolling taxpayer's advance credit payments for the plan times the allocation percentage. The enrolling taxpayer is allocated the remainder of the advance credit payments not allocated to one or more claiming taxpayers. This paragraph (a)(1)(ii)(B)(*4*) only applies in situations in which advance credit payments are made for coverage of a shifting enrollee.

(5) ***Premiums for the applicable benchmark plan.*** If paragraph (a)(1)(ii)(B)(*4*) of this section applies, the claiming taxpayer's benchmark plan premium is the sum of the benchmark plan premium for the claiming taxpayer's coverage family, excluding the shifting enrollee or enrollees, and the allocable portion. The allocable portion for purposes of this paragraph (a)(1)(ii)(B)(*5*) is the product of the benchmark plan premium for the enrolling taxpayer's coverage family if the shifting enrollee was a member of the enrolling taxpayer's coverage family and the allocation percentage. If the enrolling taxpayer's coverage family is enrolled in more than one qualified health plan, the allocable portion is determined as if the enrolling taxpayer's coverage family includes only the coverage family members who enrolled in the same plan as the shifting enrollee or enrollees. The enrolling taxpayer's benchmark plan premium is the benchmark plan premium for the enrolling taxpayer's coverage family had the shifting enrollee or enrollees remained a part of the enrolling taxpayer's coverage family, minus the allocable portion.

(C) ***Responsibility for advance credit payments for an individual not reported on any taxpayer's return.*** If advance credit payments are made for coverage of an individual who is not included in any taxpayer's family, as defined in § 1.36B-1(d), the taxpayer who attested to the Exchange to the intention to include such individual in the taxpayer's family as part of the advance credit payment eligibility determination for coverage of the individual must reconcile the advance credit payments.

(iii) ***Advance credit payment for a month in which an issuer does not provide coverage.*** For purposes of reconciliation, a taxpayer does not have an advance credit payment for a month if the issuer of the qualified health plan in which the taxpayer or a family member is enrolled does not provide coverage for that month.

(2) ***Credit computation.*** The premium assistance credit amount is computed on the taxpayer's return using the taxpayer's household income and family size for the taxable year. Thus, the taxpayer's contribution amount (household income for the taxable year times the applicable percentage) is determined using the taxpayer's household income and family size at the end of the taxable year. The applicable benchmark plan for each coverage month is determined under § 1.36B-3(f).

(3) ***Limitation on additional tax —***

(i) ***In general.*** The additional tax imposed under paragraph (a)(1) of this section on a taxpayer whose household income is less than 400 percent of the Federal poverty line is limited to the amounts provided in the table in paragraph (a)(3)(ii) of this section (or successor tables). For taxable years beginning after December 31, 2014, the limitation amounts may be adjusted in published guidance, see § 601.601(d)(2) of this chapter, to reflect changes in the consumer price index.

(ii) ***Additional tax limitation table.***

Household income percentage of Federal poverty line	Limitation amount for taxpayers whose tax is determined under section 1(c)	Limitation amount for all other taxpayers
Less than 200%	$300	$600
At least 200% but less than 300%	750	1,500
At least 300% but less than 400%	1,250	2,500

(iii) ***Limitation on additional tax for taxpayers who claim a section 162(l) deduction for a qualified health plan —***

(A) ***In general.*** A taxpayer who receives advance credit payments and deducts premiums for a qualified health plan under section 162(l) must use paragraph (a)(3)(iii)(B), and paragraph (a)(3)(iii)(C) or (D), of this section to determine the limitation on additional tax in this paragraph (a)(3) (limitation amount). Taxpayers must make this determination before calculating their section 162(l) deduction and premium tax credit. For additional rules for taxpayers who may claim a deduction under section 162(l) for a qualified health plan for which advance credit payments are made, see § 1.162(l)-1.

(B) ***Determining the limitation amount.*** A taxpayer described in paragraph (a)(3)(iii)(A) of this section must use the limitation amount for which the taxpayer qualifies under paragraph (a)(3)(iii)(C) or (D) of this section. The limitation amount determined under this paragraph (a)(3)(iii) replaces the limitation amount that would otherwise be determined under the additional tax limitation table in paragraph (a)(3)(ii) of this section. In applying paragraph (a)(3)(iii)(C) of this section, a taxpayer must first determine whether he or she qualifies for the limitation amount applicable to taxpayers with household income of less than 200 percent of the Federal poverty line for the taxpayer's family size. If the taxpayer does not qualify to use the limitation amount applicable to taxpayers with household income of less than 200 percent of the Federal poverty line for the taxpayer's family size, the taxpayer must next determine whether he or she qualifies for the limitation applicable to taxpayers with household income of less than 300 percent of the Federal poverty line for the taxpayer's family size. If the taxpayer does not qualify to use the limitation amount applicable to taxpayers with household income of less than 300 percent of the Federal poverty line for the taxpayer's family size, the taxpayer must next determine whether he or she qualifies for the limitation applicable to taxpayers with household income of less than

400 percent of the Federal poverty line for the taxpayer's family size. If the taxpayer does not qualify to use the limitation amount applicable to taxpayers with household income of less than 200 percent, 300 percent, or 400 percent of the Federal poverty line for the taxpayer's family size, the limitation on additional tax under section 36B(f)(2)(B) does not apply to the taxpayer.

(C) ***Requirements.*** A taxpayer meets the requirements of this paragraph (a)(3)(iii)(C) for a limitation amount if the taxpayer's household income as a percentage of the Federal poverty line is less than or equal to the maximum household income as a percentage of the Federal poverty line for which that limitation is available. Household income for this purpose is determined by using a section 162(l) deduction equal to the lesser of—

(*1*) The sum of the specified premiums for the plan not paid through advance credit payments, the limitation amount (determined without regard to paragraph (a)(1)(iii)(C)(*2*) of this section), and any deduction allowable under section 162(l) for premiums other than specified premiums, and

(*2*) The earned income from the trade or business with respect to which the health insurance plan is established.

(D) ***Specified premiums not paid through advance credit payments.*** For purposes of paragraph (a)(3)(iii)(C) of this section, specified premiums not paid through advance credit payments means specified premiums, as defined in § 1.162(l)-1(a)(2), minus advance credit payments made with respect to the specified premiums.

(E) ***Examples.*** For examples illustrating the rules of this paragraph (a)(3)(iii), see *Examples 13, 14,* and *15* of paragraph (a)(4) of this section.

(4) ***Examples.*** The following examples illustrate the rules of this paragraph (a). In each example the taxpayer enrolls in a higher cost qualified health plan than the applicable benchmark plan:

> *Example 1. Household income increases.* (i) Taxpayer A is single and has no dependents. The Exchange for A's rating area projects A's 2014 household income to be $27,925 (250 percent of the Federal poverty line for a family of one, applicable percentage 8.05). A enrolls in a qualified health plan. The annual premium for the applicable benchmark plan is $5,200. A's advance credit payments are $2,952, computed as follows: benchmark plan premium of $5,200 less contribution amount of $2,248 (projected household income of $27,925 × .0805) = $2,952.
> (ii) A's household income for 2014 is $33,622, which is 301 percent of the Federal poverty line for a family of one (applicable percentage 9.5). Consequently, A's premium tax credit for 2014 is $2,006 (benchmark plan premium of $5,200 less contribution amount of $3,194 (household income of $33,622 × .095)). Because A's advance credit payments for 2014 are $2,952 and A's 2014 credit is $2,006, A has excess advance payments of $946. Under paragraph (a)(1) of this section, A's tax liability for 2014 is increased by $946. Because A's household income is between 300 percent and 400 percent of the Federal poverty line, if A's excess advance payments exceeded $1,250, under the limitation of paragraph (a)(3) of this section, A's additional tax liability would be limited to that amount.

Example 2. Household income increases, repayment limitation applies. The facts are the same as in *Example 1,* except that A's household income for 2014 is $43,560 (390 percent of the Federal poverty line for a family of one, applicable percentage 9.5). Consequently, A's premium tax credit for 2014 is $1,062 ($5,200 benchmark plan premium less contribution amount of $4,138 (household income of $43,560 × .095)). A's advance credit payments for 2014 are $2,952; therefore, A has excess advance payments of $1,890. Because A's household income is between 300 percent and 400 percent of the Federal poverty line, A's additional tax liability for the taxable year is $1,250 under the repayment limitation of paragraph (a)(3) of this section.

Example 3. Household income decreases. The facts are the same as in *Example 1,* except that A's actual household income for 2014 is $22,340 (200 percent of the Federal poverty line for a family of one, applicable percentage 6.3). Consequently, A's premium tax credit for 2014 is $3,793 ($5,200 benchmark plan premium less contribution amount of $1,407 (household income of $22,340 × .063)). Because A's advance credit payments for 2014 are $2,952, A is allowed an additional credit of $841 ($3,793 less $2,952).

Example 4. Family size decreases. (i) Taxpayers B and C are married and have two children, K and L (ages 17 and 20), whom they claim as dependents in 2013. The Exchange for their rating area projects their 2014 household income to be $63,388 (275 percent of the Federal poverty line for a family of four, applicable percentage 8.78). B and C enroll in a qualified health plan for 2014 that covers the four family members. The annual premium for the applicable benchmark plan is $14,100. B's and C's advance credit payments for 2014 are $8,535, computed as follows: Benchmark plan premium of $14,100 less contribution amount of $5,565 (projected household income of $63,388 × .0878) = $8,535.

(ii) In 2014, B and C do not claim L as their dependent (and no taxpayer claims a personal exemption deduction for L). Consequently, B's and C's family size for 2014 is three, their household income of $63,388 is 332 percent of the Federal poverty line for a family of three (applicable percentage 9.5), and the annual premium for their applicable benchmark plan is $12,000. Their premium tax credit for 2014 is $5,978 ($12,000 benchmark plan premium less $6,022 contribution amount (household income of $63,388 × .095)). Because B's and C's advance credit payments for 2014 are $8,535 and their 2014 credit is $5,978, B and C have excess advance payments of $2,557. B's and C's additional tax liability for 2014 under paragraph (a)(1) of this section, however, is limited to $2,500 under paragraph (a)(3) of this section.

Example 5. Repayment limitation does not apply. (i) Taxpayer D is single and has no dependents. The Exchange for D's rating area approves advance credit payments for D based on 2014 household income of $39,095 (350 percent of the Federal poverty line for a family of one, applicable percentage 9.5). D enrolls in a qualified health plan. The annual premium for the applicable benchmark plan is $5,200. D's advance credit payments are $1,486, computed as follows: benchmark plan premium of $5,200 less contribution amount of $3,714 (projected household income of $39,095 × .095) =

$1,486.
(ii) D's actual household income for 2014 is $44,903, which is 402 percent of the Federal poverty line for a family of one. D is not an applicable taxpayer and may not claim a premium tax credit. Additionally, the repayment limitation of paragraph (a)(3) of this section does not apply. Consequently, D has excess advance payments of $1,486 (the total amount of the advance credit payments in 2014). Under paragraph (a)(1) of this section, D's tax liability for 2014 is increased by $1,486.

Example 6. Coverage for less than a full taxable year. (i) Taxpayer F is single and has no dependents. In November 2013, the Exchange for F's rating area projects F's 2014 household income to be $27,925 (250 percent of the Federal poverty line for a family of one, applicable percentage 8.05). F enrolls in a qualified health plan. The annual premium for the applicable benchmark plan is $5,200. F's monthly advance credit payment is $246, computed as follows: benchmark plan premium of $5,200 less contribution amount of $2,248 (projected household income of $27,925 × .0805) = $2,952; $2,952/12 = $246.
(ii) F begins a new job in August 2014 and is eligible for employer-sponsored minimum essential coverage for the period September through December 2014. F discontinues her Exchange coverage effective November 1, 2014. F's household income for 2014 is $28,707 (257 percent of the Federal poverty line for a family size of one, applicable percentage 8.25).

(iii) Under § 1.36B-3(a), F's premium assistance credit amount is the sum of the premium assistance amounts for the coverage months. Under § 1.36B-3(c)(1)(iii), a month in which an individual is eligible for minimum essential coverage other than coverage in the individual market is not a coverage month. Because F is eligible for employer-sponsored minimum essential coverage as of September 1, only the months January through August of 2014 are coverage months.

(iv) If F had 12 coverage months in 2014, F's premium tax credit would be $2,832 (benchmark plan premium of $5,200 less contribution amount of $2,368 (household income of $28,707 × .0825)). Because F has only eight coverage months in 2014, F's credit is $1,888 ($2,832/12 × 8). Because F does not discontinue her Exchange coverage until November 1, 2014, F's advance credit payments for 2014 are $2,460 ($246 × 10). Consequently, F has excess advance payments of $572 ($2,460 less $1,888) and F's tax liability for 2014 is increased by $572 under paragraph (a)(1) of this section.

Example 7. Changes in coverage months and applicable benchmark plan. (i) Taxpayer E claims one dependent, F. E is eligible for government-sponsored minimum essential coverage. E enrolls F in a qualified health plan for 2014. The Exchange for E's rating area projects E's 2014 household income to be $30,260 (200 percent of the Federal poverty

line for a family of two, applicable percentage 6.3). The annual premium for E's applicable benchmark plan is $5,200. E's monthly advance credit payment is $275, computed as follows: benchmark plan premium of $5,200 less contribution amount of $1,906 (projected household income of $30,260 × .063) = $3,294; $3,294/12 = $275.
(ii) On August 1, 2014, E loses her eligibility for government-sponsored minimum essential coverage. E enrolls in the qualified health plan that covers F for August through December 2014. The annual premium for the applicable benchmark plan is $10,000. The Exchange computes E's monthly advance credit payments for the period September through December to be $675 as follows: benchmark plan premium of $10,000 less contribution amount of $1,906 (projected household income of $30,260 × .063) = $8,094; $8,094/12 = $675. E's household income for 2014 is $28,747 (190 percent of the Federal poverty line, applicable percentage 5.84).

(iii) Under § 1.36B-3(c)(1), January through July of 2014 are coverage months for F and August through December are coverage months for E and F. Under paragraph (a)(2) of this section, E must compute her premium tax credit using the premium for the applicable benchmark plan for each coverage month. E's premium assistance credit amount for 2014 is the sum of the premium assistance amounts for all coverage months. E reconciles her premium tax credit with advance credit payments as follows:

Advance credit payments (Jan. to July)	$1,925	($275 × 7)
Advance credit payments (Aug. to Dec.)	3,375	($675 × 5)
Total advance credit payments	5,300	
Benchmark plan premium (Jan. to July)	3,033	(($5,200/12) × 7)
Benchmark plan premium (Aug. to Dec.)	4,167	(($10,000/12) × 5)
Total benchmark plan premium	7,200	
Contribution amount (taxable year household income × applicable percentage)	1,679	($28,747 × .0584)
Credit (total benchmark plan premium less contribution amount)	5,521	

(iv) E's advance credit payments for 2014 are $5,300. E's premium tax credit is $5,521. Thus, E is allowed an additional credit of $221.

Example 8. Part-year coverage and changes in coverage months and applicable benchmark plan. (i) The facts are the same as in *Example 7,* except that F is eligible for government-sponsored minimum essential coverage for January and February 2014,

and E enrolls F in a qualified health plan beginning in March 2014. Thus, March through July are coverage months for F and August through December are coverage months for E and F.
(ii) E reconciles her premium tax credit with advance credit payments as follows:

Advance credit payments (March to July)	$1,375	($275 × 5)
Advance credit payments (Aug. to Dec.)	3,375	($675 × 5)
Total advance credit payments	4,750	
Benchmark plan premium (March to July)	2,167	(($5,200/12) × 5)
Benchmark plan premium (Aug. to Dec.)	4,167	(($10,000/12) × 5)
Total benchmark plan premium	6,334	
Contribution amount for 10 coverage months (taxable year household income × applicable percentage × 10/12)	1,399	($28,747 × .0584 × 10/12)
Credit (total benchmark plan premium less contribution amount)	4,935	

(iii) E's advance credit payments for 2014 are $4,750. E's premium tax credit is $4,935. Thus, E is allowed an additional credit of $185.

Example 9. Advance credit payments for months an issuer does not provide coverage. (i) Taxpayer F enrolls in a qualified health plan for 2014 and the Exchange approves advance credit payments. F pays the portion of the premium not covered by advance credit payments for January through April of 2014 but fails to make payments in May, June, and July. As a result, the issuer of the qualified health plan initiates the 3-month grace period under section 1412(c)(2)(B)(iv)(II) of the Affordable Care Act and 45 CFR 156.270(d). During the grace period the issuer continues to receive advance credit payments on behalf of F. On July 1 the issuer rescinds F's coverage retroactive to the end of the first month of the grace period, May 31.
(ii) Under paragraph (a)(1)(iii) of this section, F does not take into account advance credit payments for June or July of 2014 when reconciling the premium tax credit with advance credit payments under paragraph (a)(1) of this section.

Example 10. Allocation percentage, agreement on allocation. (i) Taxpayers G and H are divorced and have two children, J and K. G enrolls herself and J and K in a qualified health plan for 2014. The premium for the plan in which G enrolls is $13,000. The Exchange in G's rating area approves advance credit payments for G based on a family

size of three, an annual benchmark plan premium of $12,000, and projected 2014 household income of $58,590 (300 percent of the Federal poverty line for a family of three, applicable percentage 9.5). G's advance credit payments for 2014 are $6,434 ($12,000 benchmark plan premium less $5,566 contribution amount (household income of $58,590 × .095)). G's actual household income for 2014 is $58,900.
(ii) K lives with H for more than half of 2014 and H claims K as a dependent for 2014. G and H agree to an allocation percentage, as described in paragraph (a)(1)(ii)(B)(2) of this section, of 20 percent. Under the agreement, H is allocated 20 percent of the items to be allocated, and G is allocated the remainder of those items.

(iii) If H is eligible for a premium tax credit, H takes into account $2,600 of the premiums for the plan in which K was enrolled ($13,000 x .20) and $2,400 of G's benchmark plan premium ($12,000 × .20). In addition, H is responsible for reconciling $1,287 ($6,434 × .20) of the advance credit payments for K's coverage.

(iv) G's family size for 2014 includes only G and J and G's household income of $58,900 is 380 percent of the Federal poverty line for a family of two (applicable percentage 9.5). G's benchmark plan premium for 2014 is $9,600 (the benchmark premium for the plan covering G, J, and K ($12,000), minus the amount allocated to H ($2,400). Consequently, G's premium tax credit is $4,004 (G's benchmark plan premium of $9,600 minus G's contribution amount of $5,596 ($58,900 × .095)). G has an excess advance payment of $1,143 (the excess of the advance credit payments of $5,147 ($6,434 − $1,287 allocated to H) over the premium tax credit of $4,004).

Example 11. *Allocation percentage, no agreement on allocation.* (i) The facts are the same as in *Example 10* of paragraph (a)(4) of this section, except that G and H do not agree on an allocation percentage. Under paragraph (a)(1)(ii)(B)(2) of this section, the allocation percentage is 33 percent, computed as follows: The number of shifting enrollees, 1 (K), divided by the number of individuals enrolled by the enrolling taxpayer on the same qualified health plan as the shifting enrollee, 3 (G, J, and K). Thus, H is allocated 33 percent of the items to be allocated, and G is allocated the remainder of those items.
(ii) If H is eligible for a premium tax credit, H takes into account $4,290 of the premiums for the plan in which K was enrolled ($13,000 × .33). H, in computing H's benchmark plan premium, must include $3,960 of G's benchmark plan premium ($12,000 x .33). In addition, H is responsible for reconciling $2,123 ($6,434 x .33) of the advance credit payments for K's coverage.

(iii) G's benchmark plan premium for 2014 is $8,040 (the benchmark premium for the plan covering G, J, and K ($12,000), minus the amount allocated to H ($3,960). Consequently, G's premium tax credit is $2,444 (G's benchmark plan premium of $8,040

minus G's contribution amount of $5,596 ($58,900 × .095)). G has an excess advance credit payment of $1,867 (the excess of the advance credit payments of $4,311 ($6,434 − $2,123 allocated to H) over the premium tax credit of $2,444).

Example 12. Allocations for an emancipated child. Spouses L and M enroll in a qualified health plan with their child, N. L and M attest that they will claim N as a dependent and advance credit payments are made for the coverage of all three family members. However, N files his own return and claims a personal exemption deduction for himself for the taxable year. Under paragraph (a)(1)(ii)(B)(*1*) of this section, L and M are enrolling taxpayers, N is a claiming taxpayer, and all are subject to the allocation rules in paragraph (a)(1)(ii)(B) of this section.

Example 13. Taxpayer with advance credit payments allowed a section 162(l) deduction but not a limitation on additional tax. (i) In 2014, B, B's spouse, and their two dependents enroll in the applicable second lowest cost silver plan with an annual premium of $14,000. B's advance credit payments attributable to the premiums are $8,000. B is self-employed for all of 2014 and derives $75,000 of earnings from B's trade or business. B's household income without including a deduction under section 162(l) for specified premiums is $103,700. The Federal poverty line for a family the size of B's family is $23,550.

(ii) Because B received the benefit of advance credit payments and deducts premiums for a qualified health plan under section 162(l), B must determine whether B is allowed a limitation on additional tax under paragraph (a)(3)(iii) of this section. B begins by testing eligibility for the $600 limitation amount for taxpayers with household income at less than 200 percent of the Federal poverty line for the taxpayer's family size. B determines household income as a percentage of the Federal poverty line by taking a section 162(l) deduction equal to the lesser of $6,600 (the sum of the amount of premiums not paid through advance credit payments, $6,000 ($14,000 − $8,000), and the limitation amount, $600) and $75,000 (the earned income from the trade or business with respect to which the health insurance plan is established). The result is $97,100 ($103,700 − $6,600) or 412 percent of the Federal poverty line for B's family size. Since 412 percent is not less than 200 percent, B may not use a $600 limitation amount.

(iii) B performs the same calculation for the $1,500 ($103,700 − $7,500 = $96,200 or 408 percent of the Federal poverty line) and $2,500 limitation amounts ($103,700 − $8,500 = $95,200 or 404 percent of the Federal poverty line), the amounts for taxpayers with household income of less than 300 percent or 400 percent, respectively, of the Federal poverty line for the taxpayer's family size, and determines that B may not use either of those limitation amounts. Because B does not meet the requirements of paragraph (a)(3)(iii) of this section for any of the limitation amounts in section 36B(f)(2)(B), B is not eligible for the limitation on additional tax for excess advance credit payments.

(iv) Although B may not claim a limitation on additional tax for excess advance credit payments, B may still be eligible for a premium tax credit. B would determine eligibility for the premium tax credit, the amount of the premium tax credit, and the section 162(l) deduction using the rules under section 36B and section 162(l), applying no limitation on additional tax.

Example 14. Taxpayer with advance credit payments allowed a section 162(l) deduction and a limitation on additional tax. (i) The facts are the same as in *Example 13* of paragraph (a)(4) of this section, except that B's household income without including a deduction under section 162(l) for specified premiums is $78,802.
(ii) Because B received the benefit of advance credit payments and deducts premiums for a qualified health plan under section 162(l), B must determine whether B is allowed a limitation on additional tax under paragraph (a)(3)(iii) of this section. B first determines that B does not meet the requirements of paragraph (a)(3)(iii)(C) of this section for using the $600 or $1,500 limitation amounts, the amounts for taxpayers with household income of less than 200 percent or 300 percent, respectively, of the Federal poverty line for the taxpayer's family size. That is because B's household income as a percentage of the Federal poverty line, determined by using a section 162(l) deduction for premiums for the qualified health plan equal to the lesser of the sum of the premiums for the plan not paid through advance credit payments and the limitation amount, and the earned income from the trade or business with respect to which the health insurance plan is established, is more than the maximum household income as a percentage of the Federal poverty line for which that limitation is available (using the $600 limitation, B's household income would be $72,202 ($78,802−($6,000 + $600)), which is 307 percent of the Federal poverty line for B's family size; and using the $1,500 limitation, B's household income would be $71,302 ($78,802−($6,000 + $1,500)), which is 303 percent of the Federal poverty line for B's family size).

(iii) However, B meets the requirements of paragraph (a)(3)(iii)(C) of this section using the $2,500 limitation amount for taxpayers with household income of less than 400 percent of the Federal poverty line for the taxpayer's family size. That is because B's household income as a percentage of the Federal poverty line by taking a section 162(l) deduction equal to the lesser of $8,500 (the sum of the amount of premiums not paid through advance credit payments, $6,000, and the limitation amount, $2,500) and $75,000 (the earned income from the trade or business with respect to which the health insurance plan is established), is $70,302 (299 percent of the Federal poverty line), which is below 400 percent of the Federal poverty line for B's family size, and is less than the maximum amount for which that limitation is available. Thus, B uses a limitation amount of $2,500 in computing B's additional tax on excess advance credit payments.

(iv) B may determine the amount of the premium tax credit and the section 162(l) deduction using the rules under section 36B and section 162(l), applying the $2,500 limitation amount determined above.

Example 15. Taxpayer with advance credit payments allowed a section 162(l) deduction and a limitation on additional tax limited to earned income from trade or business. (i) In 2017, C, C's spouse, and their two dependents enroll in the applicable second lowest cost silver plan with an annual premium of $14,000. C's advance credit payments attributable to the premiums are $8,000. C is self-employed for all of 2017 and derives $3,000 of earnings from C's trade or business. C's household income, without including a deduction under section 162(l) for specified premiums, is $39,100. The Federal poverty line for a family the size of C's family is $24,600.
(ii) Because C received the benefit of advance credit payments and deducts premiums for a qualified health plan under section 162(l), C must determine whether C is allowed a limitation on additional tax under paragraph (a)(3)(iii) of this section. C begins by testing eligibility for the $600 limitation amount for taxpayers with household income at less than 200 percent of the Federal poverty line for the taxpayer's family size. C determines household income as a percentage of the Federal poverty line by taking a section 162(l) deduction equal to the lesser of $6,600 (the sum of the amount of premiums not paid through advance credit payments, $6,000 ($14,000−$8,000), and the limitation amount, $600), and $3,000 (C's earned income from the trade or business with respect to which the health insurance plan is established). The result is $36,100 ($39,100−$3,000) or 147 percent of the Federal poverty line for C's family size. Because 147 percent is less than 200 percent, the limitation amount under paragraph (a)(3)(iii) of this section that C uses in computing C's additional tax on excess advance credit payments is $600.

(iii) C may determine the amount of the premium tax credit and the section 162(l) deduction using the rules under section 36B and section 162(l), applying the $600 limitation amount determined above.

(b) ***Changes in filing status*** —

(1) ***In general.*** Except as provided in paragraph (b)(2) or (b)(3) of this section, a taxpayer whose marital status changes during the taxable year computes the premium tax credit by using the applicable benchmark plan or plans for the taxpayer's marital status as of the first day of each coverage month. The taxpayer's contribution amount (household income for the taxable year times the applicable percentage) is determined using the taxpayer's household income and family size at the end of the taxable year.

(2) ***Taxpayers who marry during the taxable year*** —

(i) ***In general.*** Taxpayers who marry during and file a joint return for the taxable year may compute the additional tax imposed under paragraph (a)(1) of this section under paragraph (b)(2)(ii) of this section. Only taxpayers who are unmarried at the beginning of the taxable year and are married (within the meaning of section 7703) at the end of the taxable year, at least one of whom receives advance credit payments, may use this alternative computation.

(ii) ***Alternative computation of additional tax liability*** —

(A) ***In general.*** The additional tax liability determined under this paragraph (b)(2)(ii) is equal to the excess of the taxpayers' advance credit payments for the taxable year over the amount of the alternative marriage-year credit. The alternative marriage-year credit is the sum of both taxpayers' alternative premium assistance amounts for the pre-marriage months and the premium assistance amounts for the marriage months. This paragraph (b)(2)(ii) may not be used to increase the additional premium tax credit computed under paragraph (a)(1)(i) of this section.

(B) ***Alternative premium assistance amounts for pre-marriage months.*** Taxpayers compute the alternative premium assistance amounts for each taxpayer for each full or partial month the taxpayers are unmarried as described in paragraph (a)(2) of this section, except that each taxpayer treats the amount of household income as one-half of the actual household income for the taxable year and treats family size as the number of individuals in the taxpayer's family prior to the marriage. The taxpayers may include a dependent of the taxpayers for the taxable year in either taxpayer's family size for the pre-marriage months.

(C) ***Premium assistance amounts for marriage months.*** Taxpayers compute the premium assistance amounts for each full month the taxpayers are married as described in paragraph (a)(2) of this section.

(3) ***Taxpayers not married to each other at the end of the taxable year.*** Taxpayers who are married (within the meaning of section 7703) to each other during a taxable year but legally separate under a decree of divorce or of separate maintenance during the taxable year, and who are enrolled in the same qualified health plan at any time during the taxable year must allocate the benchmark plan premiums, the enrollment premiums, and the advance credit payments for the period the taxpayers are married during the taxable year. Taxpayers must also allocate these items if one of the taxpayers has a dependent enrolled in the same plan as the taxpayer's former spouse or enrolled in the same plan as a dependent of the taxpayer's former spouse. The taxpayers may allocate these items to each former spouse in any proportion but must allocate all items in the same proportion. If the taxpayers do not agree on an allocation that is reported to the IRS in accordance with the relevant forms and instructions, 50 percent of: The benchmark plan premiums; the enrollment premiums; and the advance credit payments for the married period, is allocated to each taxpayer. If for a period a plan covers only one of the taxpayers and no dependents, only one of the taxpayers and one or more dependents of that same taxpayer, or only one or more dependents of one of the taxpayers, then the benchmark plan premiums, the enrollment premiums, and the advance credit payments for that period are allocated entirely to that taxpayer.

(4) ***Taxpayers filing returns as married filing separately or head of household*** —

(i) ***Allocation of advance credit payments.*** Except as provided in § 1.36B-2(b)(2)(ii), the premium tax credit is allowed to married (within the meaning of section 7703) taxpayers only if they file joint returns. *See* § 1.36B-2(b)(2)(i). Taxpayers who receive advance credit payments as married taxpayers and who do not file a joint return must allocate the advance credit payments

for coverage under a qualified health plan equally to each taxpayer for any period the plan covers and in which advance credit payments are made for both taxpayers, only one of the taxpayers and one or more dependents of the other taxpayer, or one or more dependents of both taxpayers. If, for a period a plan covers, advance credit payments are made for only one of the taxpayers and no dependents, only one of the taxpayers and one or more dependents of that same taxpayer, or only one or more dependents of one of the taxpayers, the advance credit payments for that period are allocated entirely to that taxpayer. If one or both of the taxpayers is an applicable taxpayer eligible for a premium tax credit for the taxable year, the premium tax credit is computed by allocating the enrollment premiums under paragraph (b)(4)(ii) of this section. The repayment limitation described in paragraph (a)(3) of this section applies to each taxpayer based on the household income and family size reported on that taxpayer's return. This paragraph (b)(4) also applies to taxpayers who receive advance credit payments as married taxpayers and file a tax return using the head of household filing status.

(ii) ***Allocation of premiums.*** If taxpayers who are married within the meaning of section 7703, without regard to section 7703(b), do not file a joint return, 50 percent of the enrollment premiums are allocated to each taxpayer. However, all of the enrollment premiums are allocated to only one of the taxpayers for a period in which a qualified health plan covers only that taxpayer and no dependents, only that taxpayer and one or more dependents of that taxpayer, or only one or more dependents of that taxpayer.

(5) ***Examples.*** The following examples illustrate the provisions of this paragraph (b). In each example the taxpayer enrolls in a higher cost qualified health plan than the applicable benchmark plan:

Example 1. Taxpayers marry during the taxable year, general rule for computing additional tax. (i) P is a single taxpayer with no dependents. In 2013 the Exchange for the rating area where P resides determines that P's 2014 household income will be $40,000 (358 percent of the Federal poverty line, applicable percentage 9.5). P enrolls in a qualified health plan. The premium for the applicable benchmark plan is $5,200. P's monthly advance credit payment is $117, computed as follows: $5,200 benchmark plan premium minus contribution amount of $3,800 ($40,000 × .095) equals $1,400 (total advance credit payment); $1,400/12 = $117.
(ii) Q is a single taxpayer with two dependents. In 2013 the Exchange for the rating area where Q resides determines that Q's 2014 household income will be $35,000 (183 percent of the Federal poverty line, applicable percentage 5.52). Q enrolls in a qualified health plan. The premium for the applicable benchmark plan is $10,000. Q's monthly advance credit payment is $672, computed as follows: $10,000 benchmark plan premium minus contribution amount of $1,932 ($35,000 × .0552) equals $8,068 (total advance credit); $8,068/12 = $672.

(iii) P and Q marry on July 17, 2014 and enroll in a single policy for a qualified health plan covering four family members, effective August 1, 2014. The premium for the applicable benchmark plan is $14,000. Based on household income of $75,000 and a family size of four (325 percent of the Federal poverty line, applicable percentage 9.5), the Exchange approves advance credit payments of $573 per month, computed as follows: $14,000 benchmark plan premium minus contribution amount of $7,125 ($75,000 × .095) equals $6,875 (total advance credit); $6,875/12 = $573.

(iv) P and Q file a joint return for 2014 and report $75,000 in household income and a family size of four. P and Q compute their credit at reconciliation under paragraph (b)(1) of this section. They use the premiums for the applicable benchmark plans that apply for the months married and the months not married, and their contribution amount is based on their Federal poverty line percentage at the end of the taxable year. P and Q reconcile their premium tax credit with advance credit payments as follows:

Advance payments for P (Jan. to July)	$819
Advance payments for Q (Jan. to July)	4,704
Advance payments for P and Q (Aug. to Dec.)	2,865
Total advance payments	8,388
Benchmark plan premium for P (Jan. to July)	3,033
Benchmark plan premium for Q (Jan. to July)	5,833
Benchmark plan premium for P and Q (Aug. to Dec.)	5,833
Total benchmark plan premium	14,699
Contribution amount (taxable year household income × applicable percentage)	7,125
Credit (total benchmark plan premium less contribution amount)	7,574
Additional tax	814

(v) P's and Q's tax liability for 2014 is increased by $814 under paragraph (a)(1) of this section.

Example 2. Taxpayers marry during the taxable year, alternative computation of additional tax. (i) The facts are the same as in *Example 1,* except that P and Q compute their additional tax liability under paragraph (b)(2)(ii) of this section. P's and Q's additional tax is the excess of their advance credit payments for the taxable year ($8,388) over their alternative marriage-year credit, which is the sum of the alternative premium assistance amounts for the pre-marriage months and the premium assistance amounts for the marriage months.
(ii) P and Q compute the alternative marriage-year credit as follows:

Alternative premium assistance amounts for pre-marriage months:		
Benchmark plan premium for P (Jan. to July)	$3,033	(($5,200/12) × 7)
Contribution amount ($^1/_2$ taxable year household income × applicable percentage) × 7/12)	2,078	($37,500 × .095 × 7/12)
Alternative premium assistance amount for P's pre-marriage	955	($3,033−$2,078)

months		
Benchmark plan premium for Q (Jan. to July)	5,833	(($10,000/12) × 7)
Contribution amount ($^1/_2$ taxable year household income × applicable percentage × 7/12)	1,339	($37,500 × .0612 × 7/12)
Alternative premium assistance amount for Q's pre-marriage months	4,494	($5,833−$1,339)
Premium assistance amount for marriage months:		
Benchmark plan premium for P and Q (Aug. to Dec.)	5,833	(($14,000/12 × 5)
Contribution amount (taxable year household income × applicable percentage × 5/12)	2,969	($75,000 × .095 × 5/12)
Premium assistance amount for marriage months	2,864	($5,833−$2,969)

Alternative marriage-year credit (sum of premium assistance amounts for pre-marriage months and marriage months): $955 + $4,494 + $2,864 = $8,313.

(iii) P and Q reconcile their premium tax credit with advance credit payments by determining the excess of their advance credit payments ($8,388) over their alternative marriage-year credit ($8,313). P and Q must increase their tax liability by $75 under paragraph (a)(1) of this section.

Example 3. Taxpayers marry during the taxable year, alternative computation of additional tax, alternative marriage-year tax credit exceeds advance credit payments. The facts are the same as in *Example 2,* except that the amount of P's and Q's advance credit payments is $8,301. Thus, their alternative marriage-year credit ($8,313) exceeds the amount of their advance credit payments ($8,301). Under paragraph (b)(2)(ii)(A) of this section, the amount of additional tax liability and additional tax credit that P and Q report on their tax return is $0.

Example 4. Taxpayers marry during the taxable year, alternative computation of additional tax. (i) Taxpayer R is single and has no dependents. In 2013, the Exchange for the rating area where R resides determines that R's 2014 household income will be $40,000 (358 percent of the Federal poverty line, applicable percentage 9.5). R enrolls in a qualified health plan. The premium for the applicable benchmark plan is $5,200. R's monthly advance credit payment is $117, computed as follows: $5,200 benchmark plan premium minus contribution amount of $3,800 ($40,000 × .095) = $1,400 (total advance credit); $1,400/12 = $117.

(ii) Taxpayer S is single with no dependents. In 2013, the Exchange for the rating area where S resides determines that S's 2014 household income will be $20,000 (179 percent of the Federal poverty line, applicable percentage 5.33). S enrolls in a qualified

health plan. The premium for the applicable benchmark plan is $5,200. S's monthly advance credit payment is $345, computed as follows: $5,200 benchmark plan premium minus contribution amount of $1,066 ($20,000 × .0533) = $4,134 (total advance credit); $4,134/12 = $345.

(iii) R and S marry in September 2014 and enroll in a single policy for a qualified health plan covering them both, beginning October 1, 2014. The premium for the applicable benchmark plan is $10,000. Based on household income of $60,000 and a family size of two (397 percent of the Federal poverty line, applicable percentage 9.5), R's and S's monthly advance credit payment is $358, computed as follows: $10,000 benchmark plan premium minus contribution amount of $5,700 ($60,000 × .095) = $4,300; $4,300/12 = $358. R's and S's advance credit payments for 2014 are $5,232, computed as follows:

Advance payments for R (Jan. to Sept.)	$1,053	($117 × 9)
Advance payments for S (Jan. to Sept.)	3,105	($345 × 9)
Advance payments for R and S (Oct. to Dec.)	1,074	($358 × 3)
Total advance payments	5,232	

(iv) R and S file a joint return for 2014 and report $62,000 in household income and a family size of two (410 percent of the FPL for a family of 2). Thus, under § 1.36B-2(b)(2), R and S are not applicable taxpayers for 2014 and may not claim a premium tax credit for 2014. However, they compute their additional tax liability under paragraph (b)(2)(ii) of this section. R's and S's additional tax is the excess of their advance credit payments for the taxable year ($5,232) over their alternative marriage-year credit, which is the sum of the alternative premium assistance amounts for the pre-marriage months and the premium assistance amounts for the marriage months. In this case, R and S have no premium assistance amounts for the married months because their household income is over 400 percent of the Federal poverty line for a family of 2.
(v) R and S compute their alternative marriage-year credit as follows:

Premium assistance amount for pre-marriage months:		
Benchmark plan premium for R (Jan. to Sept.)	$3,900	(($5,200/12) × 9)
Contribution amount (($^1/_2$ taxable year household income × applicable percentage) × 9/12)	2,053	($31,000 × .0883 × 9/12)
Premium assistance amount for R's pre-marriage months	1,847	($3,900 −

		$2,053)
Benchmark plan premium for S (Jan. to Sept.)	3,900	(($5,200/12) × 9)
Contribution amount ((1/2 taxable year household income × applicable percentage) × 9/12)	2,053	($31,000 × .0883 × 9/12)
Premium assistance amount for S's pre-marriage months	1,847	($3,900−$2,053)
Premium assistance amount for marriage months	0	

Alternative marriage-year credit (sum of premium assistance amounts for pre-marriage months and marriage months): $1,847 + 1,847 + 0 = $3,694.

(vi) R and S reconcile their premium tax credit with advance credit payments by determining the excess of their advance credit payments ($5,232) over their alternative marriage-year credit ($3,694). R and S must increase their tax liability by $1,538 under paragraph (a)(1) of this section.

Example 5. (i) *Taxpayers marry during the taxable year, no additional tax liability.* The facts are the same as in *Example 4,* except that S has no income and is enrolled in Medicaid for January through September 2014 and R's and S's household income for 2014 is $37,000 (245 percent of the Federal poverty line, applicable percentage 7.88). Their advance credit payments for 2014 are $2,707 ($1,053 for R for January to September and $1,654 for R and S for October to December). Their premium tax credit for 2014 is $3,484 (total benchmark premium of $6,400 less contribution amount of $2,916).

(ii) Because R's and S's premium tax credit of $3,484 exceeds their advance credit payments of $2,707, R and S are allowed an additional credit of $777. Although R and S marry in 2014, paragraph (b)(2) of this section (the alternative computation of additional tax for taxpayers who marry during the taxable year) does not apply because they do not owe additional tax for 2014.

Example 6. Taxpayers divorce during the taxable year, 50 percent allocation. (i) Taxpayers V and W are married and have two dependents. In 2013, the Exchange for the rating area where the family resides determines that their 2014 household income will be $76,000 (330 percent of the Federal poverty line for a family of 4, applicable percentage 9.5). V and W enroll in a qualified health plan for 2014. The premium for the applicable benchmark plan is $14,100. The Exchange approves advance credit payments of $573 per month, computed as follows: $14,100 benchmark plan premium minus V and W's contribution amount of $7,220 ($76,000 × .095) equals $6,880 (total advance credit); $6,880/12 = $573.

(ii) V and W divorce on June 17, 2014, and obtain separate qualified health plans beginning July 1, 2014. V enrolls based on household income of $60,000 and a family size of three (314 percent of the Federal poverty line, applicable percentage 9.5). The premium for the applicable benchmark plan is $10,000. The Exchange approves advance credit payments of $358 per month, computed as follows: $10,000 benchmark plan premium minus V's contribution amount of $5,700 ($60,000 × .095) equals $4,300 (total advance credit); $4,300/12 = $358.

(iii) W enrolls based on household income of $16,420 and a family size of one (147 percent of the Federal poverty line, applicable percentage 3.82). The premium for the applicable benchmark plan is $5,200. The Exchange approves advance credit payments of $381 per month, computed as follows: $5,200 benchmark plan premium minus W's contribution amount of $627 ($16,420 × .0382) equals $4,573 (total advance credit); $4,573/12 = $381. V and W do not agree on an allocation of the premium for the applicable benchmark plan, the premiums for the plan in which they enroll, and the advance credit payments for the period they were married in the taxable year.

(iv) V and W each compute their credit at reconciliation under paragraph (b)(1) of this section, using the premiums for the applicable benchmark plans that apply to them for the months married and the months not married, and the contribution amount based on their Federal poverty line percentages at the end of the taxable year. Under paragraph (b)(3) of this section, because V and W do not agree on an allocation, V and W must equally allocate the benchmark plan premium ($7,050) and the advance credit payments ($3,438) for the six-month period January through June 2014 when they are married and enrolled in the same qualified health plan. Thus, V and W each are allocated $3,525 of the benchmark plan premium ($7,050/2) and $1,719 of the advance credit payments ($3,438/2) for January through June.

(v) V reports on his 2014 tax return $60,000 in household income and family size of three. W reports on her 2014 tax return $16,420 in household income and family size of one. V and W reconcile their premium tax credit with advance credit payments as follows:

	V	W
Allocated advance payments (Jan. to June)	$1,719	$1,719
Actual advance payments (July to Dec.)	2,148	2,286
Total advance payments	3,867	4,005
Allocated benchmark plan premium (Jan. to June)	3,525	3,525
Actual benchmark plan premium (July to Dec.)	5,000	2,600

	V	W
Total benchmark plan premium	8,525	6,125
Contribution amount (taxable year household income × applicable percentage)	5,700	627
Credit (total benchmark plan premium less contribution amount)	2,825	5,498
Additional credit		1,493
Additional tax	1,042	

(vi) Under paragraph (a)(1) of this section, on their tax returns V's tax liability is increased by $1,042 and W is allowed $1,493 as additional credit.

Example 7. Taxpayers divorce during the taxable year, allocation in proportion to household income. (i) The facts are the same as in *Example 6,* except that V and W decide to allocate the benchmark plan premium ($7,050) and the advance credit payments ($3,438) for January through June 2014 in proportion to their household incomes (79 percent and 21 percent). Thus, V is allocated $5,570 of the benchmark plan premiums ($7,050 × .79) and $2,716 of the advance credit payments ($3,438 × .79), and W is allocated $1,481 of the benchmark plan premiums ($7,050 × .21) and $722 of the advance credit payments ($3,438 × .21). V and W reconcile their premium tax credit with advance credit payments as follows:

	V	W
Allocated advance payments (Jan. to June)	$2,716	$722
Actual advance payments (July to Dec.)	2,148	2,286
Total advance payments	4,864	3,008
Allocated benchmark plan premium (Jan. to June)	5,570	1,481
Actual benchmark plan premium (July to Dec.)	5,000	2,600
Total benchmark plan premium	10,570	4,081
Contribution amount (taxable year household income × applicable percentage)	5,700	627
Credit (total benchmark plan premium less contribution amount)	4,870	3,454
Additional credit	6	446

(ii) Under paragraph (a)(1) of this section, on their tax returns V is allowed an additional credit of $6 and W is allowed an additional credit of $446.

Example 8. Married taxpayers filing separate tax returns. (i) Taxpayers X and Y are married and have two dependents. In 2013, the Exchange for the rating area where the family resides determines that their 2014 household income will be $76,000 (330 percent of the Federal poverty line for a family of 4, applicable percentage 9.5). W and Y enroll in a qualified health plan for 2014. The premium for the applicable benchmark plan is $14,100. X's and Y's monthly advance credit payment is $573, computed as follows: $14,100 benchmark plan premium minus X's and Y's contribution amount of $7,220 ($76,000 × .095) equals $6,880 (total advance credit); $6,880/12 = $573.
(ii) X and Y file income tax returns for 2014 using a married filing separately filing status. X reports household income of $60,000 and a family size of three (314 percent of the Federal poverty line). Y reports household income of $16,420 and a family size of one (147 percent of the Federal poverty line).

(iii) Because X and Y are married but do not file a joint return for 2014, X and Y are not applicable taxpayers and are not allowed a premium tax credit for 2014. See § 1.36B-2(b)(2). Under paragraph (b)(4) of this section, half of the advance credit payments ($6,880/2 = $3,440) is allocated to X and half is allocated to Y for purposes of determining their excess advance payments. The repayment limitation described in paragraph (a)(3) of this section applies to X and Y based on the household income and family size reported on each return. Consequently, X's tax liability for 2014 is increased by $2,500 and Y's tax liability for 2014 is increased by $600.

Example 9. (i) The facts are the same as in *Example 8* of paragraph (b)(5) of this section, except that X and Y live apart for over 6 months of the year and X properly files an income tax return as head of household. Under section 7703(b), X is treated as unmarried and therefore is not required to file a joint return. If X otherwise qualifies as an applicable taxpayer, X may claim the premium tax credit based on the household income and family size X reports on the return. Y is not an applicable taxpayer and is not eligible to claim the premium tax credit.
(ii) X must reconcile the amount of credit with advance credit payments under paragraph (a) of this section. The premium for the applicable benchmark plan covering X and his two dependents is $9,800. X's premium tax credit is computed as follows: $9,800 benchmark plan premium minus X's contribution amount of $5,700 ($60,000 × .095) equals $4,100.

(iii) Under paragraph (b)(4) of this section, half of the advance payments ($6,880/2 = $3,440) is allocated to X and half is allocated to Y. Thus, X is entitled to $660 additional premium tax credit ($4,100 − $3,440). Y has $3,440 excess advance payments, which is limited to $600 under paragraph (a)(3) of this section.

Example 10. (i) A is married to B at the close of 2014 and they have no dependents. A

and B are enrolled in a qualified health plan for 2014 with an annual premium of $10,000 and advance credit payments of $6,500. A is not eligible for minimum essential coverage (other than coverage described in section 5000A(f)(1)(C)) for any month in 2014. A is a victim of domestic abuse as described in § 1.36B-2(b)(2)(iii). At the time A files her tax return for 2014, A is unable to file a joint return with B for 2014 because of the domestic abuse. A certifies on her 2014 return, in accordance with relevant instructions, that she is living apart from B and is unable to file a joint return because of domestic abuse. Thus, under § 1.36B-2(b)(2)(ii), A satisfies the joint return filing requirement in section 36B(c)(1)(C) for 2014.
(ii) A's family size for 2014 for purposes of computing the premium tax credit is one, and A is the only member of her coverage family. Thus, A's benchmark plan for all months of 2014 is the second lowest cost silver plan offered by the Exchange for A's rating area that covers A. A's household income includes only A's modified adjusted gross income. Under paragraph (b)(4)(ii) of this section, A takes into account $5,000 ($10,000 x .50) of the premiums for the plan in which she was enrolled in determining her premium tax credit. Further, A must reconcile $3,250 ($6,500 x .50) of the advance credit payments for her coverage under paragraph (b)(4)(i) of this section.

(c) ***Applicability dates.*** Paragraphs (a)(1)(ii), (a)(3)(iii), (a)(4), *Examples 4, 10, 11, 12, 13, 14,* and *15,* (b)(3), (b)(4), and (b)(5), *Examples 9* and *10* apply to taxable years beginning after December 31, 2013. The last sentence of paragraph (a)(1)(ii)(B)(*1*), paragraph (a)(1)(ii)(B)(*2*), and paragraph (a)(1)(ii)(C) of this section apply to taxable years ending on or after December 31, 2020.

[T.D. 9590, 77 FR 30385, May 23, 2012; 77 FR 41048, July 12, 2012; 77 FR 41270, July 13, 2012, as amended by T.D. 9683, 79 FR 43627, July 28, 2014; T.D. 9822, 82 FR 34607, July 26, 2017; T.D. 9912, 85 FR 76978, Dec. 1, 2020]

§ 1.36B-5 Information reporting by Exchanges.

(a) ***In general.*** An Exchange must report to the Internal Revenue Service (IRS) information required by section 36B(f)(3) and this section relating to individual market qualified health plans in which individuals enroll through the Exchange. No reporting is required under this section for enrollment in plans through the Small Business Health Options Exchange.

(b) ***Individual filing a return.*** For purposes of this section, the terms *tax filer* and *responsible adult* describe the individual who is expected to be the taxpayer filing an income tax return for the year of coverage with respect to individuals enrolling in a qualified health plan. A tax filer is an individual on behalf of whom advance payments of the premium tax credit are made. A responsible adult is an individual on behalf of whom advance payments of the premium tax credit are not made. An individual may be a tax filer or responsible adult whether or not enrolled in coverage. If more than one family (within the meaning of § 1.36B-1(d)) enrolls in the same qualified health plan, there is a tax filer or responsible adult for each family.

(c) ***Information required to be reported*** —

(1) ***Information reported annually.*** An Exchange must report to the IRS the following information for each qualified health plan—

(i) The name, address, and taxpayer identification number (TIN), or date of birth if a TIN is not available, of the tax filer or responsible adult;

(ii) The name and TIN, or date of birth if a TIN is not available, of a tax filer's spouse;

(iii) The amount of the advance credit payments paid for coverage under the plan each month;

(iv) For plans for which advance credit payments are made, the premium (excluding the premium allocated to benefits in excess of essential health benefits, see § 1.36B-3(j)) for the applicable benchmark plan for purposes of computing advance credit payments;

(v) Except as provided in paragraph (c)(3)(ii) of this section, for plans for which advance credit payments are not made, the premium (excluding the premium allocated to benefits in excess of essential health benefits, see § 1.36B-3(j)) for the applicable benchmark plan that would apply to all individuals enrolled in the qualified health plan if advance credit payments were made for the coverage;

(vi) The name and TIN, or date of birth if a TIN is not available, and dates of coverage for each individual covered under the plan;

(vii) The coverage start and end dates of the qualified health plan;

(viii) The monthly premium for the plan in which the individuals enroll, however—

(A) The premium allocated to benefits in excess of essential health benefits is excluded, see § 1.36B-3(j);

(B) The premium for a stand-alone dental plan allocated to pediatric dental benefits is added, see § 1.36B-3(k), but if a family (within the meaning of § 1.36B-1(d)) is enrolled in more than one qualified health plan, the pediatric dental premium is added to the premium for only one qualified health plan; and

(C) The amount is not reduced for advance credit payments;

(ix) The name of the qualified health plan issuer;

(x) The Exchange-assigned policy identification number;

(xi) The Exchange's unique identifier; and

(xii) Any other information specified by forms or instructions or in published guidance, see § 601.601(d) of this chapter.

(2) ***Information reported monthly.*** For each calendar month, an Exchange must report to the IRS for each qualified health plan, the information described in paragraph (c)(1) of this section and the following information—

(i) For plans for which advance credit payments are made—

(A) The names, TINs, or dates of birth if no TIN is available, of the individuals enrolled in the qualified health plan who are expected to be the tax filer's dependent; and

(B) Information on employment (to the extent this information is provided to the Exchange) consisting of—

(*1*) The name, address, and EIN of each employer of the tax filer, the tax filer's spouse, and each individual covered by the plan; and

(2) An indication of whether an employer offered affordable minimum essential coverage that provided minimum value, and, if so, the amount of the employee's required contribution for self-only coverage;

(ii) The unique identifying number the Exchange uses to report data that enables the IRS to associate the data with the proper account from month to month;

(iii) The issuer's employer identification number (EIN); and

(iv) Any other information specified by forms or instructions or in published guidance, see § 601.601(d) of this chapter.

(3) *Special rules for information reported* —

(i) ***Multiple families enrolled in a single qualified health plan.*** An Exchange must report the information specified in paragraphs (c)(1) and (c)(2) of this section for each family (within the meaning of § 1.36B-1(d)) enrolled in a qualified health plan, including families submitting a single application or enrolled in a single qualified health plan. If advance credit payments are made for coverage under the plan, the enrollment premiums reported to each family under paragraph (c)(1)(viii) of this section are the premiums allocated to the family under § 1.36B-3(h) (allocating enrollment premiums to each taxpayer in proportion to the premiums for each taxpayer's applicable benchmark plan).

(ii) ***Alternative to reporting applicable benchmark plan.*** An Exchange satisfies the requirement in paragraph (c)(1)(v) of this section if, on or before January 1 of each year after 2014, the Exchange provides a reasonable method that a responsible adult may use to determine the premium (after adjusting for benefits in excess of essential health benefits) for the applicable benchmark plan that applies to the responsible adult's coverage family for the prior calendar year for purposes of determining the premium tax credit on the tax return.

(iii) ***Partial month of coverage.*** —

(A) ***In general.*** Except as provided in paragraph (c)(3)(iii)(B) of this section, if an individual is enrolled in a qualified health plan after the first day of a month, the amount reported for that month under paragraphs (c)(1)(iv), (c)(1)(v), and (c)(1)(viii) of this section is $0.

(B) ***Certain mid-month enrollments.*** For information reporting that is due on or after January 1, 2019, if an individual's qualified health plan is terminated before the last day of a month, or if an individual is enrolled in coverage after the first day of a month and the coverage is effective on the date of the individual's birth, adoption, or placement for adoption or in foster care, or on the effective date of a court order, the amount reported under paragraphs (c)(1)(iv) and (c)(1)(v) of this section is the premium for the applicable benchmark plan for a full month of coverage (excluding the premium allocated to benefits in excess of essential health benefits), and the amount reported under paragraph (c)(1)(viii) of this section is the enrollment premium for the month, reduced by any amounts that were refunded.

(4) ***Exemptions.*** For each calendar month, an Exchange must report to the IRS the name and TIN, or date of birth if a TIN is not available, of each individual for whom the Exchange has granted an exemption from coverage under section 5000A(e) and the related regulations, the months for which the exemption is in effect, and the exemption certificate number.

(d) *Time for reporting* —

(1) ***Annual reporting.*** An Exchange must submit to the IRS the annual report required under paragraph (c)(1) of this section on or before January 31 of the year following the calendar year of coverage.

(2) ***Monthly reporting*** —

(i) ***In general.*** Except as provided in paragraph (d)(2)(ii) of this section, an Exchange must submit to the IRS the monthly reports required under paragraphs (c)(2) and (c)(4) of this section on or before the 15th day following each month of coverage.

(ii) ***Initial monthly reporting in 2014.*** Exchanges must submit to the IRS the initial monthly report required under paragraphs (c)(2) and (c)(4) of this section on a date that the Commissioner may establish in other guidance, see § 601.601(d) of this section, but no earlier than June 15, 2014. The initial report must include cumulative information for enrollments for the period January 1, 2014, through the last day of the month preceding the month for submitting the initial monthly report.

(3) ***Corrections to information reported.*** In general, an Exchange must correct erroneous or outdated monthly-reported information in the next monthly report. If the information must be corrected after the final monthly submission on January 15 following the coverage year, corrections should be submitted by the 15th day of the month following the month in which the incorrect information is identified. However, no monthly report correction is permitted after April 15 following the year of coverage. Errors on the annual report must be corrected and reported to the IRS and to the individual recipient identified in paragraph (f) of this section as soon as possible.

(e) ***Electronic reporting.*** An Exchange must submit the reports to the IRS required under this section in electronic format. The information reported monthly will be submitted to the IRS through the Department of Health and Human Services.

(f) ***Annual statement to be furnished to individuals*** —

(1) ***In general.*** An Exchange must furnish to each tax filer or responsible adult (the recipient for purposes of paragraphs (f) and (g) of this section) a written statement showing—

(i) The name and address of the recipient and

(ii) The information described in paragraph (c)(1) of this section for the previous calendar year.

(2) ***Form of statements.*** A statement required under this paragraph (f) may be made by furnishing to the recipient identified in the annual report either a copy of the report filed with the IRS or a substitute statement. A substitute statement must include the information required to be shown on the report filed with the IRS and must comply with requirements in published guidance (see § 601.601(d)(2) of this chapter) relating to substitute statements. A reporting entity may use an IRS truncated taxpayer identification number as the identification number for an individual in lieu of the identification number appearing on the corresponding information report filed with the IRS.

(3) ***Time and manner for furnishing statements.*** An Exchange must furnish the statements required under this paragraph (f) on or before January 31 of the year following the calendar year of coverage. If mailed, the statement must be sent to the recipient's last known permanent address or, if no permanent address is known, to the recipient's temporary address. For purposes of this paragraph (f)(3), an Exchange's first class mailing to the last known permanent address, or if no permanent address is known, the temporary address, discharges the Exchange's requirement to furnish the statement. An Exchange may furnish the statement electronically in accordance with paragraph (g) of this section.

(g) *Electronic furnishing of statements* —

(1) ***In general.*** An Exchange required to furnish a statement under paragraph (f) of this section may furnish the statement to the recipient in an electronic format in lieu of a paper format. An Exchange that meets the requirements of paragraphs (g)(2) through (g)(7) of this section is treated as furnishing the statement in a timely manner.

(2) *Consent* —

(i) ***In general.*** A recipient must have affirmatively consented to receive the statement in an electronic format. The consent may be made electronically in any manner that reasonably demonstrates that the recipient is able to access the statement in the electronic format in which it will be furnished. Alternatively, the consent may be made in a paper document that is confirmed electronically.

(ii) ***Withdrawal of consent.*** The consent requirement of this paragraph (g)(2) is not satisfied if the recipient withdraws the consent and the withdrawal takes effect before the statement is furnished. An Exchange may provide that the withdrawal of consent takes effect either on the date the Exchange receives it or on another date no more than 60 days later. The Exchange may provide that a request by the recipient for a paper statement will be treated as a withdrawal of consent to receive the statement in an electronic format. If the Exchange furnishes a statement after the withdrawal of consent takes effect, the recipient has not consented to receive the statement in electronic format.

(iii) ***Change in hardware or software requirements.*** If a change in the hardware or software required to access the statement creates a material risk that a recipient will not be able to access a statement, an Exchange must, prior to changing the hardware or software, notify the recipient. The notice must describe the revised hardware and software required to access the statement and inform the recipient that a new consent to receive the statement in the revised electronic format must be provided to the Exchange. After implementing the revised hardware and software, the Exchange must obtain a new consent or confirmation of consent from the recipient to receive the statement electronically.

(iv) ***Examples.*** The following examples illustrate the rules of this paragraph (g)(2):

Example 1. Furnisher F sends Recipient R a letter stating that R may consent to receive the statement required under section 36B electronically on a Web site instead of in a paper format. The letter contains instructions explaining how to consent to receive the statement electronically by accessing the Web site, downloading and completing the consent document, and emailing the completed consent to F. The consent document posted on the Web site uses the same electronic format that F will use for the electronically furnished statement. R reads the instructions and submits the consent in the manner provided in the instructions. R has consented to receive the statement required under section 36B electronically in the manner described in paragraph (g)(2)(i) of this section.

Example 2. Furnisher F sends Recipient R an email stating that R may consent to receive the statement required under section 36B electronically instead of in a paper format. The email contains an attachment instructing R how to consent to receive the statement required under section 36B electronically. The email attachment uses the same electronic format that F will use for the electronically furnished statement. R opens the attachment,

reads the instructions, and submits the consent in the manner provided in the instructions. R has consented to receive the statement required under section 36B electronically in the manner described in paragraph (g)(2)(i) of this section.

Example 3. Furnisher F posts a notice on its Web site stating that Recipient R may receive the statement required under section 36B electronically instead of in a paper format. The Web site contains instructions on how R may access a secure Web page and consent to receive the statements electronically. R accesses the secure Web page and follows the instructions for giving consent. R has consented to receive the statement required under section 36B electronically in the manner described in paragraph (g)(2)(i) of this section.

(3) ***Required disclosures*** —

(i) ***In general.*** Prior to, or at the time of, a recipient's consent, an Exchange must provide to the recipient a clear and conspicuous disclosure statement containing each of the disclosures described in paragraphs (g)(3)(ii) through (g)(3)(viii) of this section.

(ii) ***Paper statement.*** An Exchange must inform the recipient that the statement will be furnished on paper if the recipient does not consent to receive it electronically.

(iii) ***Scope and duration of consent.*** An Exchange must inform the recipient of the scope and duration of the consent. For example, the Exchange must inform the recipient whether the consent applies to each statement required to be furnished after the consent is given until it is withdrawn or only to the first statement required to be furnished following the consent.

(iv) ***Post-consent request for a paper statement.*** An Exchange must inform the recipient of any procedure for obtaining a paper copy of the recipient's statement after giving the consent described in paragraph (g)(2)(i) of this section and whether a request for a paper statement will be treated as a withdrawal of consent.

(v) ***Withdrawal of consent.*** An Exchange must inform the recipient that—

(A) The recipient may withdraw consent by writing (electronically or on paper) to the person or department whose name, mailing address, telephone number, and email address is provided in the disclosure statement;

(B) An Exchange will confirm the withdrawal and the date on which it takes effect in writing (either electronically or on paper); and

(C) A withdrawal of consent does not apply to a statement that was furnished electronically in the manner described in this paragraph (g) before the date on which the withdrawal of consent takes effect.

(vi) ***Notice of termination.*** An Exchange must inform the recipient of the conditions under which the Exchange will cease furnishing statements electronically to the recipient.

(vii) ***Updating information.*** An Exchange must inform the recipient of the procedures for updating the information needed to contact the recipient and notify the recipient of any change in the Exchange's contact information.

(viii) ***Hardware and software requirements.*** An Exchange must provide the recipient with a description of the hardware and software required to access, print, and retain the statement, and the date when the statement will no longer be available on the Web site. The Exchange must advise the recipient that the statement may be required to be printed and attached to a Federal, State, or local income tax return.

(4) ***Format.*** The electronic version of the statement must contain all required information and comply with applicable published guidance (see § 601.601(d) of this chapter) relating to substitute statements to recipients.

(5) ***Notice*** —

(i) ***In general.*** If a statement is furnished on a Web site, the Exchange must notify the recipient. The notice may be delivered by mail, electronic mail, or in person. The notice must provide instructions on how to access and print the statement and include the following statement in capital letters, "IMPORTANT TAX RETURN DOCUMENT AVAILABLE." If the notice is provided by electronic mail, this statement must be on the subject line of the electronic mail.

(ii) ***Undeliverable electronic address.*** If an electronic notice described in paragraph (g)(5)(i) of this section is returned as undeliverable, and the Exchange cannot obtain the correct electronic address from the Exchange's records or from the recipient, the Exchange must furnish the notice by mail or in person within 30 days after the electronic notice is returned.

(iii) ***Corrected statement.*** An Exchange must furnish a corrected statement to the recipient electronically if the original statement was furnished electronically. If the original statement was furnished through a Web site posting, the Exchange must notify the recipient that it has posted the corrected statement on the Web site in the manner described in paragraph (g)(5)(i) of this section within 30 days of the posting. The corrected statement or the notice must be furnished by mail or in person if—

(A) An electronic notice of the Web site posting of an original statement or the corrected statement was returned as undeliverable; and

(B) The recipient has not provided a new email address.

(6) ***Access period.*** Statements furnished on a Web site must be retained on the Web site through October 15 of the year following the calendar year to which the statements relate (or the first business day after October 15, if October 15 falls on a Saturday, Sunday, or legal holiday). The furnisher must maintain access to corrected statements that are posted on the Web site through October 15 of the year following the calendar year to which the statements relate (or the first business day after October 15, if October 15 falls on a Saturday, Sunday, or legal holiday) or the date 90 days after the corrected forms are posted, whichever is later.

(7) ***Paper statements after withdrawal of consent.*** An Exchange must furnish a paper statement if a recipient withdraws consent to receive a statement electronically and the withdrawal takes effect before the statement is furnished. A paper statement furnished under this paragraph (g)(7) after the statement due date is timely if furnished within 30 days after the date the Exchange receives the withdrawal of consent.

(h) ***Effective/applicability date.*** Except for the last sentence of paragraph (c)(3)(i) of this section and paragraph (c)(3)(iii) of this section, this section applies to taxable years ending after December 31, 2013. The last sentence of paragraph (c)(3)(i) of this section and paragraph (c)(3)(iii) of this section apply to

taxable years beginning after December 31, 2018. Paragraph (c)(3) of § 1.36B-5 as contained in 26 CFR part I edition revised as of April 1, 2016, applies to information reporting for taxable years ending after December 31, 2013, and beginning before January 1, 2019.

[T.D. 9663, 79 FR 26117, May 7, 2014, as amended at 81 FR 91768, Dec. 19, 2016]

§ 1.36B-6 Minimum value.

(a) ***In general*** —

(1) ***Employees.*** An eligible employer-sponsored plan provides minimum value (MV) for an employee of the employer offering the coverage only if—

(i) The plan's MV percentage, as defined in paragraph (c) of this section, is at least 60 percent based on the plan's share of the total allowed costs of benefits provided to the employee; and

(ii) The plan provides substantial coverage of inpatient hospital services and physician services.

(2) ***Related individuals*** —

(i) ***In general.*** An eligible employer-sponsored plan provides MV for an individual who may enroll in the plan because of a relationship to an employee of the employer offering the coverage (a related individual) only if—

(A) The plan's MV percentage, as defined in paragraph (c) of this section, is at least 60 percent based on the plan's share of the total allowed costs of benefits provided to the related individual; and

(B) The plan provides substantial coverage of inpatient hospital services and physician services.

(ii) ***Plans providing MV to employees.*** If an eligible employer-sponsored plan provides MV to an employee under paragraph (a)(1) of this section, the plan also provides MV for related individuals if—

(A) The scope of benefits is the same for the employee and related individuals; and

(B) Cost sharing (including deductibles, co-payments, coinsurance, and out-of-pocket maximums) under the plan is the same for the employee and related individuals under the tier of coverage that would, if elected, include the employee and all related individuals (disregarding any differences in deductibles or out-of-pocket maximums that are attributable to a different tier of coverage, such as self plus one versus family coverage).

(b) ***MV standard population.*** [Reserved]

(c) ***MV percentage*** —

(1) ***In general.*** [Reserved]

(2) ***Wellness program incentives*** —

(i) ***In general.*** Nondiscriminatory wellness program incentives offered by an eligible employer-sponsored plan that affect deductibles, copayments, or other cost-sharing are treated as earned in determining the plan's MV percentage if the incentives relate exclusively to tobacco use. Wellness program incentives that do not relate to tobacco use or that include a component

unrelated to tobacco use are treated as not earned for this purpose. For purposes of this section, the term *wellness program incentive* has the same meaning as the term *reward* in § 54.9802-1(f)(1)(i) of this chapter.

(ii) ***Example.*** The following example illustrates the rules of this paragraph (c)(2):

> *Example.* (i) Employer X offers an eligible employer-sponsored plan that reduces the deductible by $300 for employees who do not use tobacco products or who complete a smoking cessation course. The deductible is reduced by $200 if an employee completes cholesterol screening within the first six months of the plan year. Employee B does not use tobacco and his deductible is $3,700. Employee C uses tobacco and her deductible is $4,000.
> (ii) Under paragraph (c)(2)(i) of this section, only the incentives related to tobacco use are considered in determining the plan's MV percentage. C is treated as having earned the $300 incentive for attending a smoking cessation course regardless of whether C actually attends the course. Thus, the deductible for determining for the MV percentage for both Employees B and C is $3,700. The $200 incentive for completing cholesterol screening is disregarded.

(3) ***Employer contributions to health savings accounts.*** Employer contributions for the current plan year to health savings accounts that are offered with an eligible employer-sponsored plan are taken into account for that plan year towards the plan's MV percentage.

(4) ***Employer contributions to health reimbursement arrangements.*** Amounts newly made available for the current plan year under a health reimbursement arrangement that would be integrated within the meaning of Notice 2013-54 (2013-40 IRB 287), see § 601.601(d) of this chapter, with an eligible employer-sponsored plan for an employee enrolled in the plan are taken into account for that plan year towards the plan's MV percentage if the amounts may be used to reduce only cost-sharing for covered medical expenses. A health reimbursement arrangement counts toward a plan's MV percentage only if the health reimbursement arrangement and the eligible employer-sponsored plan are offered by the same employer. Employer contributions to a health reimbursement arrangement count for a plan year towards the plan's MV percentage only to the extent the amount of the annual contribution is required under the terms of the plan or otherwise determinable within a reasonable time before the employee must decide whether to enroll in the eligible employer-sponsored plan.

(5) ***Expected spending adjustments for health savings accounts and health reimbursement arrangements.*** [Reserved]

(d) ***Methods for determining MV.*** [Reserved]

(e) ***Scope of essential health benefits and adjustment for benefits not included in MV Calculator.*** [Reserved]

(f) ***Actuarial certification.*** [Reserved]

(1) ***In general.*** [Reserved]

(2) ***Membership in American Academy of Actuaries.*** [Reserved]

(3) ***Actuarial analysis.*** [Reserved]

(4) ***Use of MV Calculator.*** [Reserved]

(g) ***Effective/applicability date—in general.***

(1) Except as provided in paragraph (g)(2) of this section, this section applies for taxable years ending after December 31, 2013.

(2) ***Exceptions.***

(i) Paragraph (a)(1)(ii) of this section applies for plan years beginning after November 3, 2014; and

(ii) Paragraph (a)(2) of this section applies to taxable years beginning after December 31, 2022.

[T.D. 9745, 80 FR 78976, Dec. 18, 2015, as amended by T.D. 9968, 87 FR 62002, Oct. 13, 2022]

§ 1.37-1 General rules for the credit for the elderly.

(a) ***In general.*** In the case of an individual, section 37 provides a credit against the tax imposed by chapter 1 of the Internal Revenue Code of 1954. This section and §§ 1.37-2 and 1.37-3 provide guidance in the computation of the credit for the elderly provided under section 37 for taxable years beginning after 1975. For rules relating to the computation of the retirement income credit provided under section 37 for taxable years beginning before 1976, see 26 CFR 1.37-1 through 1.37-5 (Rev. as of April 1, 1980). Note that section 403 of the Tax Reduction and Simplification Act of 1977 provides that a taxpayer may elect to compute the credit under section 37 for the taxpayer's first taxable year beginning in 1976 in accordance with the rules applicable to taxable years beginning before 1976.

(b) ***Limitation on the amount of the credit.*** The credit allowed by section 37 for a taxable year shall not exceed the tax imposed by chapter 1 of the Code for the taxable year (reduced, in the case of a taxable year beginning before 1979, by the general tax credit allowed by section 42).

(c) ***Married couples must file joint returns.*** If the taxpayer is married at the close of the taxable year, the credit provided by section 37 shall be allowed only if the taxpayer and the taxpayer's spouse file a joint return for the taxable year. The preceding sentence shall not apply in the case of a husband and wife who are not members of the same household at any time during the taxable year. For the determination of marital status, see §§ 143 and 1.143-1.

(d) ***Nonresident aliens ineligible.*** No credit is allowed under section 37 to any individual for any taxable year during which that individual is at any time a nonresident alien unless the individual is treated, by reason of an election under section 6013 (g) or (h), as a resident of the United States for that taxable year.

[T.D. 7743, 45 FR 84049, Dec. 22, 1980]

§ 1.37-2 Credit for individuals age 65 or over.

(a) ***In general.*** This section illustrates the computation of the credit for the elderly in the case of an individual who has attained the age of 65 before the close of the taxable year. This section shall not apply to an individual for any taxable year for which the individual makes the election described in section 37(e)(2) and paragraph (b) of § 1.37-3.

(b) ***Computation of credit.*** The credit for the elderly for an individual to whom this section applies equals 15 percent of the individual's “section 37 amount” for the taxable year. An individual's “section 37 amount” for a taxable year is the initial amount determined under section 37(b)(2), reduced as provided in section 37(b)(3) and (c)(1).

(c) ***Examples.*** The computation of the credit for the elderly for individuals to whom this section applies may be illustrated by the following examples:

Example 1. A, a single individual who is 67 years old, has adjusted gross income of $8,000 for the calendar year 1977. A also receives social security payments of $1,450 during 1977. A does not itemize deductions. A's credit for the elderly is $120, computed as follows:

Initial amount under section 37(b)(2)		$2,500
Reductions required by section 37 (b)(3) and (c)(1):		
Social security payments	$1,450	
One-half the excess of adjusted gross income over $7,500	250	1,700
Section 37 amount		800
15 pct. of $800		$120

A's tax from the tax tables, which reflect the allowance of the general tax credit, is $662. Accordingly, the limitation of section 37(c)(2) and paragraph (b) of § 1.37-1 does not reduce A's credit for the elderly.

Example 2. H and W, who have both attained the age of 65, file a joint return for calendar year 1977. For that year H and W have adjusted gross income of $8,120; H also receives a railroad retirement pension of $1,550, and W receives social security payments of $1,200. H and W do not itemize deductions. The credit for the elderly allowed to H and W for 1977 is $139, computed as follows:

Initial amount under section 37(b)(2)		$3,750
Reductions required by section 37 (b)(3):		
Railroad retirement pension	$1,550	
Social Security payments	1,200	2,750
Section 37 amount		1,000
15 pct. of $1,000		150
Limitation based upon amount of tax (derived from table reflecting allowance of general tax credit)		$139

Since the adjusted gross income of H and W is not greater than $10,000, no reduction of the initial amount is required under section 37 (c)(1).

[T.D. 7743, 45 FR 84050, Dec. 22, 1980]

§ 1.37-3 Credit for individuals under age 65 who have public retirement system income.

(a) ***In general.*** This section provides rules for the computation of the credit for the elderly under section 37(e) in the case of an individual who has not attained the age of 65 before the close of the taxable year and whose gross income for the taxable year includes retirement income within the meaning of paragraph (d)(1)(ii) of this section (*i.e.,* under a public retirement system). If such an individual is married within the meaning of section 143 at the close of the taxable year and the spouse of the individual has attained the age of 65 before the close of the taxable year, this section shall apply to the individual for the taxable year only if both spouses make the election described in paragraph (b) of this section. If both spouses make the election described in paragraph (b) of this section for the taxable year, the credit of each spouse shall be determined under the rules of this section. See paragraph (f)(2) of this section for a limitation on the effects of community property laws in making determinations and computations under section 37(e) and this section.

(b) ***Election by certain married taxpayers.*** If a married individual under age 65 at the close of the taxable year has retirement income and the spouse of that individual has attained the age of 65 before the close of the taxable year, both spouses may elect to compute the credit provided by section 37 under the rules of section 37(e) and this section. The spouses shall signify the election on the return (or amended return) for the taxable year in the manner prescribed in the instructions accompanying the return. The election may be made at any time before the expiration of the period of limitation for filing claim for credit or return for the taxable year. The election may be revoked without the consent of the Commissioner at any time before the expiration of that period by filing an amended return.

(c) ***Computation of credit.*** The credit of an individual under section 37(e) and this section equals 15 percent of the individual's credit base for the taxable year. The credit base of an individual for a taxable year is the lesser of—

(1) The retirement income of the individual for the taxable year, or

(2) The amount determined under section 37(e)(5), as modified by section 37(e) (6) and (7).

(d) ***Retirement income*** —

(1) ***General rule*** —

(i) ***For individuals 65 or over.*** Section 37(e)(4)(A) enumerates the kinds of income which may be treated as the retirement income of an individual who has attained the age of 65 before the close of the taxable year. They include income from pensions and annuities, interest, rents, dividends, certain bonds received under a qualified bond purchase plan, and certain individual retirement accounts or annuities.

(ii) ***For individuals under 65.*** In the case of an individual who has not attained the age of 65 before the close of the taxable year, retirement income consists only of income from pensions and annuities (including disability annuity payments) under a public retirement system which arises from services performed by that individual or by a present or former spouse of that individual. The term “public retirement system” means a pension, annuity, or retirement, or similar fund or system established by the United States, a State, a possession of the United States, any political subdivision of any of the foregoing, or the District of Columbia.

(2) ***Rents.*** For purposes of section 37(e)(4)(A)(iii), income from rents shall be the gross amount received, not reduced by depreciation or other expenses, except that beneficiaries of a trust or estate shall treat as retirement income only their proportionate shares, of the taxable rents of the trust or estate. In the case of an amount received for board and lodging, only the portion of the amount received for lodging is income from rents.

(3) ***Disability annuity payments received by individual under age 65.*** Disability annuity payments received under a public retirement system by an individual under age 65 at the close of the taxable year shall not be treated as retirement income unless the payments are for periods after the date on which the individual reached minimum retirement age, that is, the age at which the individual would be eligible to receive a pension or annuity without regard to disability, and any of the following conditions is satisfied—

(i) The individual is precluded from seeking the benefits of section 105(d) (relating to certain disability payments) for that taxable year by reason of an irrevocable election;

(ii) The individual was not permanently and totally disabled at the time of retirement (and was not permanently and totally disabled either on January 1, 1976, or on January 1, 1977, if the individual retired before the later date on disability or under circumstances which entitled the individual to retire on disability); or

(iii) The payments are for periods after the individual reached mandatory retirement age.

For purposes of this paragraph, disability annuity payments include payments to an individual who retired on partial or temporary disability.

(4) ***Compensation of personal services rendered during taxable year.*** Retirement income does not include any amount representing compensation for personal services rendered during the taxable year. For this purpose, amounts received as a pension shall not be treated as representing compensation for personal services rendered during the taxable year if the period of service during the taxable year is not substantial when compared with the total years of service. For example, an individual on the calendar year basis retires on November 30 after 5 years of service and receives a pension during the remainder of his taxable year. The pension is not treated as representing compensation for personal services rendered during such taxable year merely because it is paid by reason of the services of the individual for a period of 5 years which includes a portion of the taxable year.

(5) ***Amounts not includible in gross income.*** Retirement income does not include any amount not includible in the gross income of the individual for the taxable year. For example, if a portion of an annuity is excluded from gross income under section 72, relating to annuities, that portion of the annuity is not retirement income; similarly, the portion of dividend income excluded from gross income under section 116, relating to the partial exclusion of dividends received by individuals is not retirement income.

(e) ***Earned income*** —

(1) ***In general.*** The term “earned income” in section 37(e)(5)(B) generally has the same meaning as in section 911(b), except that earned income does not include any amount received as a pension or annuity. See section 911(b) and the regulations thereunder. Section 911(b) provides, in general, that earned income includes wages, salaries, professional fees, and other amounts received as compensation for personal services rendered.

(2) ***Earned income from self-employment.*** For purposes of section 37(e)(5)(B), the earned income of a taxpayer from self-employment in a trade or business shall not exceed—

(i) The taxpayer's share of the net profits from the trade or business if capital is not a material income-producing factor in that trade or business; or

(ii) Thirty percent of the taxpayer's share of the net profits from the trade or business if capital is a material income-producing factor in that trade or business.

For other rules relating to the determination of earned income from self-employment in a trade or business, see section 911(b) and the regulations thereunder.

(3) ***Disability annuity payments received by individuals under age 65.*** Disability annuity payments received under a public retirement system by an individual under age 65 at the close of the taxable year shall be treated as earned income for purposes of section 37(e)(5)(B) unless the payments are treated as retirement income under paragraph (d)(3) of this section.

(f) ***Computation of credit under section 37(e) in the case of joint returns*** —

(1) ***In general.*** In the case of a joint return of husband and wife, the credit base of each spouse under section 37(e) is computed separately. The spouses then combine their credit bases and compute a single credit. The limitation in section 37(c)(2) and paragraph (b) of § 1.37-1 on the amount of the credit is determined by reference to the joint tax liability of the spouses. Thus, regardless of whether a spouse would be liable for the tax imposed by chapter 1 of the Code if the joint return had not been filed, the credit base of that spouse is taken into account in computing the credit.

(2) ***Community property laws.*** For taxable years beginning after 1977, married individuals filing joint returns shall disregard community property laws in making any determination or computation required under section 37(e) or this section. Each item of income is attributed in full to the spouse whose income it would have been in the absence of community property laws. Thus, if a 67-year old individual files a joint return with a 62-year old spouse for 1979 and the only income of the couple is from a public pension of the older spouse, that public pension is attributed in full to the older spouse for purposes of section 37(e) even though the applicable community property law may treat one-half of the pension as the income of the 62-year old spouse. Since the younger spouse consequently has no retirement income within the meaning of paragraph (d) of this section, the couple may not make the election described in paragraph (b) of this section.

(g) ***Examples.*** The computation of the credit for the elderly under section 37(e) and this section is illustrated by the following examples:

Example 1. B, who is 62 years old and single, receives a fully taxable pension of $2,400 from a public retirement system during 1977. B performed the services giving rise to the pension. During that year, B also earns $2,650 from a part-time job. B receives no tax-exempt pension or annuity in 1977. Subject to the limitation of section 37(c)(2) and paragraph (b) of § 1.37-1, B's credit for the elderly for 1977 under section 37(e) is $195, computed as follows:

Maximum retirement income level under section 37(e)(5)	$2,500

Earned income offset under section 37(e)(5)(B)(ii):		
Earned income in excess of $1,700	$950	
One-half of earned income in excess of $1,200, but not in excess of $1,700	250	1,200
Amount determined under section 37(e)(5)		1,300
Retirement income		2,400
Credit for the elderly (15 pct. of $1,300)		195

Example 2. During 1978 H, who is 67 years old, has earnings of $1,300 and retirement income (rents, interest, etc.) of $6,000. H also receives social security payments totalling $1,400. During 1978 W, who is 63 years old, earns $1,600 and receives a fully taxable pension of $1,400 from a public retirement system that constitutes retirement income. W performed the services giving rise to the pension. H and W file a joint return for 1978 and elect to compute the credit for the elderly under section 37(e). Under the applicable law these items of income are community income, and both spouses share equally in each item. Because H and W are filing a joint return, they disregard community property laws in computing their credit under section 37(e). The couple allocates $1,600 of the $3,750 referred to in section 37(e)(6) to W and $2,150 to H. Subject to the limitation of section 37(c)(2) and paragraph (b) of § 1.37-1, their credit for the elderly is $315, computed as follows:

Credit base of H:		
Amount allocated to H under section 37(e)(6)		$2,150
Reductions required by section 37(e)(5):		
Social Security payments	$1,400	
One-half of excess of earnings over $1,200	50	1,450
Amount determined under section 37(e)(5)		700
Retirement income		6,000
Credit base of H		700
Credit base of W:		
Amount allocated to W under section 37(e)(6)		$1,600
Reduction required by section 37(e)(5)(B):		
One-half of excess of earnings over $1,200		$200
Amount determined under section 37(e)(5)		1,400
Retirement income		1,400
Credit base of W		1,400
Computation of credit:		
Credit base of H		700

Credit base of W	1,400
Combined credit base	2,100
Credit for the elderly (15 pct. of $2,100)	315

Example 3. (a) Assume the same facts as in example (2) of this paragraph, except that H and W live apart at all times during 1978 and file separate returns. Under these circumstances, H and W must give effect to the applicable community property law in determining their credits under section 37(e). Thus, each spouse must take into account one-half of each item of income.
(b) Subject to the limitation of section 37(c)(2) and paragraph (b) of § 1.37-1, H's credit for the elderly is $157.50, computed as follows:

Maximum retirement income level under section 37(e)(7)		$1,875
Reductions required by section 37(e)(5):		
Social security payments	$700	
One-half of excess of earnings over $1,200 (taking into account one-half of combined earnings of $2,900)	125	825
Amount determined under section 37(e)(5)		1,050
Retirement income		3,700
Credit of H (15 pct. of $1,050)		157.50

(c) Subject to the limitation of section 37(c)(2) and paragraph (b) of § 1.37-1, W's credit for the elderly is computed as follows:

Maximum retirement income level under section 37(e)(7)	$1,875	
Reductions required by section 37(e)(5):		
Social security payments	$700	
One-half of excess of earnings over $1,200	125	825
Amount determined under section 37(e)(5)	1,050	
Retirement income (limited to W's share of public pension)	700	
Credit of W (15 pct. of $700)	105	

[T.D. 7743, 45 FR 84050, Dec. 22, 1980]

GENERAL BUSINESS CREDITS

Source: T.D. 10024, 90 FR 4096, Jan. 15, 2025, unless otherwise noted.

§ 1.38-1 Investment in certain depreciable property.

Regulations under sections 46 through 50 are prescribed under the authority granted the Secretary by section 38(b) to prescribe regulations as may be necessary to carry out the purposes of section 38 and subpart B, part IV, subchapter A, chapter 1 of the Code.

[44 FR 20417, Apr. 5, 1979]

§ 1.40-1 Questions and answers relating to the meaning of the term "qualified mixture" in section 40(b)(1).

Q-1. What is a "qualified mixture" within the meaning of section 40(b)(1)?

A-1. A "qualified mixture" is a mixture of alcohol and gasoline or of alcohol and special fuel which

(1) is sold by the taxpayer producing such mixture to any person for use as a fuel, or

(2) is used as a fuel by the taxpayer producing such mixture.

Q-2. Must alcohol be present in a product in order for that product to be considered a mixture of alcohol and either gasoline or a special fuel?

A-2. No. A product is considered to be a mixture of alcohol and gasoline or of alcohol and a special fuel if the product is derived from alcohol and either gasoline or a special fuel even if the alcohol is chemically transformed in producing the product so that the alcohol is no longer present as a separate chemical in the final product, provided that there is no significant loss in the energy content of the alcohol. Thus, a product may be considered to be "mixture of alcohol and gasoline or of alcohol and a special fuel" within the meaning of section 40(b)(1)(B) if such product is produced in a chemical reaction between alcohol and either gasoline or a special fuel. Similarly a product may be considered to be a "mixture of alcohol and gasoline or of alcohol and a special fuel" if such product is produced by blending a chemical compound derived from alcohol with either gasoline or a special fuel.

Thus, for example, a blend of gasoline and ethyl tertiary butyl ether (ETBE), a compound derived from ethanol (a qualified alcohol), in a chemical reaction in which there is no significant loss in the energy content of the ethanol, is considered for purposes of section 40(b)(1)(B) to be a mixture of gasoline and the ethanol used to produce the ETBE, even though the ethanol is chemically transformed in the production of ETBE and is not present in the final product.

[T.D. 8291, 55 FR 8948, Mar. 9, 1990]

§ 1.41-0 Table of contents.

This section lists the table of contents for §§ 1.41-1 through 1.41-9.

§ 1.41-1 Credit for increasing research activities.

(a) Amount of credit.

(b) Introduction to regulations under section 41.

§ 1.41-2 Qualified research expenses.

(a) Trade or business requirement.

(1) In general.

(2) New business.

(3) Research performed for others.

(i) Taxpayer not entitled to results.

(ii) Taxpayer entitled to results.

(4) Partnerships.

(i) In general.

(ii) Special rule for certain partnerships and joint ventures.

(b) Supplies and personal property used in the conduct of qualified research.

(1) In general.

(2) Certain utility charges.

(i) In general.

(ii) Extraordinary expenditures.

(3) Right to use personal property.

(4) Use of personal property in taxable years beginning after December 31, 1985.

(c) Qualified services.

(1) Engaging in qualified research.

(2) Direct supervision.

(3) Direct support.

(d) Wages paid for qualified services.

(1) In general.

(2) “Substantially all.”

(e) Contract research expenses.

(1) In general.

(2) Performance of qualified research.

(3) “On behalf of.”

(4) Prepaid amounts.

(5) Examples.

§ 1.41-3 Base amount for taxable years beginning on or after January 3, 2001.

(a) New taxpayers.

(b) Special rules for short taxable years.

(1) Short credit year.

(2) Short taxable year preceding credit year.

(3) Short taxable year in determining fixed-base percentage.

(c) Definition of gross receipts.

(1) In general.

(2) Amounts excluded.

(3) Foreign corporations.

(d) Consistency requirement.

(1) In general.

(2) Illustrations.

(e) Effective date.

§ 1.41-4 Qualified research for expenditures paid or incurred in taxable years ending on or after December 31, 2003.

(a) Qualified research.

(1) General rule.

(2) Requirements of section 41(d)(1).

(3) Undertaken for the purpose of discovering information.

(i) In general.

(ii) Application of the discovering information requirement.

(iii) Patent safe harbor.

(4) Technological in nature.

(5) Process of experimentation.

(i) In general.

(ii) Qualified purpose.

(6) Substantially all requirement.

(7) Use of computers and information technology.

(8) Illustrations.

(b) Application of requirements for qualified research.

(1) In general.

(2) Shrinking-back rule.

(3) Illustration.

(c) Excluded activities.

(1) In general.

(2) Research after commercial production.

(i) In general.

(ii) Certain additional activities related to the business component.

(iii) Activities related to production process or technique.

(iv) Clinical testing.

(3) Adaptation of existing business components.

(4) Duplication of existing business component.

(5) Surveys, studies, research relating to management functions, etc.

(6) Internal use software.

(i) General rule.

(ii) Inapplicability of the high threshold of innovation test.

(iii) Software developed primarily for internal use.

(iv) Software not developed primarily for internal use.

(v) Time and manner of determination.

(vi) Software developed for both internal use and to enable interaction with third parties (dual function software).

(vii) High threshold of innovation test.

(viii) Illustrations.

(7) Activities outside the United States, Puerto Rico, and other possessions.

(i) In general.

(ii) Apportionment of in-house research expenses.

(iii) Apportionment of contract research expenses.

(8) Research in the social sciences, etc.

(9) Research funded by any grant, contract, or otherwise.

(10) Illustrations.

(d) Recordkeeping for the research credit.

(e) Effective dates.

§ 1.41-5 Basic research for taxable years beginning after December 31, 1986. [Reserved]

§ 1.41-6 Aggregation of expenditures.

(a) Controlled groups of corporations; trades or businesses under common control.

(1) In general.

(2) Consolidated groups.

(3) Definitions.

(b) Computation of the group credit.

(1) In general.

(2) Start-up companies.

(c) Allocation of the group credit.

(d) Special rules for consolidated groups.

(1) In general.

(2) Start-up company status.

(3) Special rule for allocation of group credit among consolidated group members.

(e) Examples.

(f) For taxable years beginning before January 1, 1990.

(g) Tax accounting periods used.

(1) In general.

(2) Special rule when timing of research is manipulated.

(h) Membership during taxable year in more than one group.

(i) Intra-group transactions.

(1) In general.

(2) In-house research expenses.

(3) Contract research expenses.

(4) Lease payments.

(5) Payment for supplies.

(j) Effective/applicability dates.

(1) In general.

(2) Consolidated group rule.

(3) Taxable years ending after June 9, 2011.

(4) Taxable years beginning after December 31, 2011.

(5) Taxable years ending before January 1, 2012.

§ 1.41-7 Special rules.

(a) Allocations.

(1) Corporation making an election under subchapter S.

(i) Pass-through, for taxable years beginning after December 31, 1982, in the case of an S corporation.

(ii) Pass-through, for taxable years beginning before January 1, 1983, in the case of a subchapter S corporation.

(2) Pass-through in the case of an estate or trust.

(3) Pass-through in the case of a partnership.

(i) In general.

(ii) Certain expenditures by joint ventures.

(4) Year in which taken into account.

(5) Credit allowed subject to limitation.

(b) Adjustments for certain acquisitions and dispositions—Meaning of terms.

(c) Special rule for pass-through of credit.

(d) Carryback and carryover of unused credits.

§ 1.41-8 Alternative incremental credit applicable for taxable years beginning on or before December 31, 2008.

(a) Determination of credit.

(b) Election.

(1) In general.

(2) Time and manner of election.

(3) Revocation.

(4) Special rules for controlled groups.

(i) In general.

(ii) Designated member.

(5) Effective/applicability dates.

§ 1.41-9 Alternative simplified credit.

(a) Determination of credit.

(b) Election.

(1) In general.

(2) Time and manner of election.

(3) Revocation.

(4) Special rules for controlled groups.

(i) In general.

(ii) Designated member.

(c) Special rules.

(1) Qualified research expenditures (QREs) required in all years.

(2) Section 41(c)(6) applicability.

(3) Short taxable years.

(i) General rule.

(ii) Limited exception.

(4) Controlled groups.

(d) Effective/applicability dates.

[T.D. 8930, 65 FR 287, Jan. 3, 2001, as amended by T.D. 9104, 69 FR 26, Jan. 2, 2004; T.D. 9205, 70 FR 29601, May 24, 2005; T.D. 9296, 71 FR 65725, Nov. 9, 2006; T.D. 9401, 73 FR 34187, June 17, 2008; T.D. 9528, 76 FR 33995, June 10, 2011; 80 FR 18098, Apr. 3, 2015; T.D. 9786, 81 FR 68306, Oct. 4, 2016]

§ 1.41-1 Credit for increasing research activities.

(a) ***Amount of credit.*** The amount of a taxpayer's credit is determined under section 41(a). For taxable years beginning after June 30, 1996, and at the election of the taxpayer, the portion of the credit determined under section 41(a)(1) may be calculated using the alternative incremental credit set forth in section 41(c)(4). For taxable years ending after December 31, 2006, and at the election of the taxpayer, the portion of the credit determined under section 41(a)(1) may be calculated using either the alternative incremental credit set forth in section 41(c)(4), or the alternative simplified credit set forth in section 41(c)(5).

(b) ***Introduction to regulations under section 41.***

(1) Sections 1.41-2 through 1.41-8 and 1.41-3A through 1.41-5A address only certain provisions of section 41. The following table identifies the provisions of section 41 that are addressed, and lists each provision with the section of the regulations in which it is covered.

Section of the regulation	Section of the Internal Revenue Code
§ 1.41-2	41(b).
§ 1.41-3	41(c).
§ 1.41-4	41(d).
§ 1.41-5	41(e).
§ 1.41-6	41(f).
§ 1.41-7	41(f). 41(g).
§ 1.41-8	41(c).
§ 1.41-3A	41(c) (taxable years beginning before January 1, 1990).
§ 1.41-4A	41(d) (taxable years beginning before January 1, 1986).
§ 1.41-5A	41(e) (taxable years beginning before January 1, 1987).

(2) Section 1.41-3A also addresses the special rule in section 221(d)(2) of the Economic Recovery Tax Act of 1981 relating to taxable years overlapping the effective dates of section 41. Section 41 was formerly designated as sections 30 and 44F. Sections 1.41-0 through 1.41-8 and 1.41-0A through

1.41-5A refer to these sections as section 41 for conformity purposes. Whether section 41, former section 30, or former section 44F applies to a particular expenditure depends upon when the expenditure was paid or incurred.

[T.D. 8930, 65 FR 288, Jan. 3, 2001, as amended by T.D. 9401, 73 FR 34187, June 17, 2008]

§ 1.41-2 Qualified research expenses.

(a) ***Trade or business requirement*** —

(1) ***In general.*** An in-house research expense of the taxpayer or a contract research expense of the taxpayer is a qualified research expense only if the expense is paid or incurred by the taxpayer in carrying on a trade or business of the taxpayer. The phrase “in carrying on a trade or business” has the same meaning for purposes of section 41(b)(1) as it has for purposes of section 162; thus, expenses paid or incurred in connection with a trade or business within the meaning of section 174(a) (relating to the deduction for research and experimental expenses) are not necessarily paid or incurred in carrying on a trade or business for purposes of section 41. A research expense must relate to a particular trade or business being carried on by the taxpayer at the time the expense is paid or incurred in order to be a qualified research expense. For purposes of section 41, a contract research expense of the taxpayer is not a qualified research expense if the product or result of the research is intended to be transferred to another in return for license or royalty payments and the taxpayer does not use the product of the research in the taxpayer's trade or business.

(2) ***New business.*** Expenses paid or incurred prior to commencing a new business (as distinguished from expanding an existing business) may be paid or incurred in connection with a trade or business but are not paid or incurred in carrying on a trade or business. Thus, research expenses paid or incurred by a taxpayer in developing a product the sale of which would constitute a new trade or business for the taxpayer are not paid or incurred in carrying on a trade or business.

(3) ***Research performed for others*** —

(i) ***Taxpayer not entitled to results.*** If the taxpayer performs research on behalf of another person and retains no substantial rights in the research, that research shall not be taken into account by the taxpayer for purposes of section 41. See § 1.41-4A(d)(2).

(ii) ***Taxpayer entitled to results.*** If the taxpayer in carrying on a trade or business performs research on behalf of other persons but retains substantial rights in the research, the taxpayer shall take otherwise qualified expenses for that research into account for purposes of section 41 to the extent provided in § 1.41-4A(d)(3).

(4) ***Partnerships*** —

(i) ***In general.*** An in-house research expense or a contract research expense paid or incurred by a partnership is a qualified research expense of the partnership if the expense is paid or incurred by the partnership in carrying on a trade or business of the partnership, determined at the partnership level without regard to the trade or business of any partner.

(ii) ***Special rule for certain partnerships and joint ventures.***

(A) If a partnership or a joint venture (taxable as a partnership) is not carrying on the trade or business to which the research relates, then the general rule in paragraph (a)(4)(i) of this section would not allow any of such expenditures to qualify as qualified research expenses.

(B) Notwithstanding paragraph (a)(4)(ii)(A) of this section, if all the partners or venturers are entitled to make independent use of the results of the research, this paragraph (a)(4)(ii) may allow a portion of such expenditures to be treated as qualified research expenditures by certain partners or venturers.

(C) First, in order to determine the amount of credit that may be claimed by certain partners or venturers, the amount of qualified research expenditures of the partnership or joint venture is determined (assuming for this purpose that the partnership or joint venture is carrying on the trade or business to which the research relates).

(D) Second, this amount is reduced by the proportionate share of such expenses allocable to those partners or venturers who would not be able to claim such expenses as qualified research expenditures if they had paid or incurred such expenses directly. For this purpose such partners' or venturers' proportionate share of such expenses shall be determined on the basis of such partners' or venturers' share of partnership items of income or gain (excluding gain allocated under section 704(c)) which results in the largest proportionate share. Where a partner's or venturer's share of partnership items of income or gain (excluding gain allocated under section 704(c)) may vary during the period such partner or venturer is a partner or venturer in such partnership or joint venture, such share shall be the highest share such partner or venturer may receive.

(E) Third, the remaining amount of qualified research expenses is allocated among those partners or venturers who would have been entitled to claim a credit for such expenses if they had paid or incurred the research expenses in their own trade or business, in the relative proportions that such partners or venturers share deductions for expenses under section 174 for the taxable year that such expenses are paid or incurred.

(F) For purposes of section 41, research expenditures to which this paragraph (a)(4)(ii) applies shall be treated as paid or incurred directly by such partners or venturers. See § 1.41-7(a)(3)(ii) for special rules regarding these expenses.

(iii) The following examples illustrate the application of the principles contained in paragraph (a)(4)(ii) of this section.

Example 1. A joint venture (taxable as a partnership) is formed by corporations A, B, and C to develop and market a supercomputer. A and B are in the business of developing computers, and each has a 30 percent distributive share of each item of income, gain, loss, deduction, credit and basis of the joint venture. C, which is an investment banking firm, has a 40 percent distributive share of each item of income, gain, loss, deduction, credit and basis of the joint venture. The joint venture agreement provides that A's, B's and C's distributive shares will not vary during the life of the joint venture, liquidation proceeds are to be distributed in accordance with the partners' capital account balances, and any partner with a deficit in its capital account following the distribution of liquidation proceeds is required to restore the amount of such deficit to the joint venture. Assume in Year 1 that the joint venture incurs $100x of “qualified research expenses.” Assume further that the joint venture cannot claim the research credit for such expenses because it is not carrying on the trade or business to which the research relates. In addition A, B, and C are all entitled to make independent use of the

results of the research. First, the amount of qualified research expenses of the joint venture is $l00x. Second, this amount is reduced by the proportionate share of such expenses allocable to C, the venturer which would not have been able to claim such expenses as qualified research expenditures if it had paid or incurred them directly, C's proportionate share of such expenses is $40x (40% of $100x). The reduced amount is $60x. Third, the remaining $60x of qualified research expenses is allocated between A and B in the relative proportions that A and B share deductions for expenses under section 174. A is entitled to treat $30x ((30%/(30% + 30%)) $60x) as a qualified research expense. B is also entitled to treat $30x ((30%/(30% + 30%)) $60x) as a qualified research expense.

Example 2. Assume the same facts as in example (1) except that the joint venture agreement provides that during the first 2 years of the joint venture, A and B are each allocated 10 percent of each item of income, gain, loss, deduction, credit and basis, and C is allocated 80 percent of each item of income, gain, loss, deduction, credit and basis. Thereafter the allocations are the same as in example (1). Assume for purposes of this example that such allocations have substantial economic effect for purposes of section 704 (b). C's highest share of such items during the life of the joint venture is 80 percent. Therefore C's proportionate share of the joint venture's qualified research expenses is $80x (80% of $100x). The reduced amount of qualified research expenses is $20x ($100x−$80x). A is entitled to treat $10x ((10%/(10% + 10%)) $20x) as a qualified research expense in Year 1. B is also entitled to treat $10x ((10%/(10% + 10%)) $20x) as a qualified research expense in Year 1.

(b) ***Supplies and personal property used in the conduct of qualified research*** —

(1) ***In general.*** Supplies and personal property (except to the extent provided in paragraph (b)(4) of this section) are used in the conduct of qualified research if they are used in the performance of qualified services (as defined in section 41(b)(2)(B), but without regard to the last sentence thereof) by an employee of the taxpayer (or by a person acting in a capacity similar to that of an employee of the taxpayer; see example (6) of § 1.41-2(e)(5)). Expenditures for supplies or for the use of personal property that are indirect research expenditures or general and administrative expenses do not qualify as inhouse research expenses.

(2) ***Certain utility charges*** —

(i) ***In general.*** In general, amounts paid or incurred for utilities such as water, electricity, and natural gas used in the building in which qualified research is performed are treated as expenditures for general and administrative expenses.

(ii) ***Extraordinary expenditures.*** To the extent the taxpayer can establish that the special character of the qualified research required additional extraordinary expenditures for utilities, the additional expenditures shall be treated as amounts paid or incurred for supplies used in the conduct of qualified research. For example, amounts paid for electricity used for general laboratory lighting are treated as general and administrative expenses, but amounts paid for electricity used in operating high energy equipment for qualified research (such as laser or nuclear research) may be treated as expenditures for supplies used in the conduct of qualified research to the extent the taxpayer can establish that the special character of the research required an extraordinary additional expenditure for electricity.

(3) ***Right to use personal property.*** The determination of whether an amount is paid to or incurred for another person for the right to use personal property in the conduct of qualified research shall be made without regard to the characterization of the transaction as a lease under section 168(f)(8) (as that section read before it was repealed by the Tax Reform Act of 1986). See § 5c.168(f)(8)-1(b).

(4) ***Use of personal property in taxable years beginning after December 31, 1985.*** For taxable years beginning after December 31, 1985, amounts paid or incurred for the use of personal property are not qualified research expenses, except for any amount paid or incurred to another person for the right to use (time-sharing) computers in the conduct of qualified research. The computer must be owned and operated by someone other than the taxpayer, located off the taxpayer's premises, and the taxpayer must not be the primary user of the computer.

(c) ***Qualified services*** —

(1) ***Engaging in qualified research.*** The term “engaging in qualified research” as used in section 41(b)(2)(B) means the actual conduct of qualified research (as in the case of a scientist conducting laboratory experiments).

(2) ***Direct supervision.*** The term “direct supervision” as used in section 41(b)(2)(B) means the immediate supervision (first-line management) of qualified research (as in the case of a research scientist who directly supervises laboratory experiments, but who may not actually perform experiments). “Direct supervision” does not include supervision by a higher-level manager to whom first-line managers report, even if that manager is a qualified research scientist.

(3) ***Direct support.*** The term “direct support” as used in section 41(b)(2)(B) means services in the direct support of either—

(i) Persons engaging in actual conduct of qualified research, or

(ii) Persons who are directly supervising persons engaging in the actual conduct of qualified research. For example, direct support of research includes the services of a secretary for typing reports describing laboratory results derived from qualified research, of a laboratory worker for cleaning equipment used in qualified research, of a clerk for compiling research data, and of a machinist for machining a part of an experimental model used in qualified research. Direct support of research activities does not include general administrative services, or other services only indirectly of benefit to research activities. For example, services of payroll personnel in preparing salary checks of laboratory scientists, of an accountant for accounting for research expenses, of a janitor for general cleaning of a research laboratory, or of officers engaged in supervising financial or personnel matters do not qualify as direct support of research. This is true whether general administrative personnel are part of the research department or in a separate department. Direct support does not include supervision. Supervisory services constitute “qualified services” only to the extent provided in paragraph (c)(2) of this section.

(d) ***Wages paid for qualified services*** —

(1) ***In general.*** Wages paid to or incurred for an employee constitute in-house research expenses only to the extent the wages were paid or incurred for qualified services performed by the employee. If an employee has performed both qualified services and nonqualified services, only the amount of wages allocated to the performance of qualified services constitutes an in-house research expense. In the absence of another method of allocation that the taxpayer can demonstrate to be more appropriate, the amount of in-house research expense shall be determined by multiplying the total amount of wages paid to or incurred for the employee during the taxable year by the ratio of the total time actually spent by the employee in the performance of qualified services for the taxpayer to the total time spent by the employee in the performance of all services for the taxpayer during the taxable year.

(2) "*Substantially all.*" Notwithstanding paragraph (d)(1) of this section, if substantially all of the services performed by an employee for the taxpayer during the taxable year consist of services meeting the requirements of section 41(b)(2)(B) (i) or (ii), then the term "qualified services" means all of the services performed by the employee for the taxpayer during the taxable year. Services meeting the requirements of section 41(b)(2)(B) (i) or (ii) constitute substantially all of the services performed by the employee during a taxable year only if the wages allocated (on the basis used for purposes of paragraph (d)(1) of this section) to services meeting the requirements of section 41(b)(2)(B) (i) or (ii) constitute at least 80 percent of the wages paid to or incurred by the taxpayer for the employee during the taxable year.

(e) *Contract research expenses* —

(1) *In general.* A contract research expense is 65 percent of any expense paid or incurred in carrying on a trade or business to any person other than an employee of the taxpayer for the performance on behalf of the taxpayer of—

(i) Qualified research as defined in § 1.41-4 or 1.41-4A, whichever is applicable, or

(ii) Services which, if performed by employees of the taxpayer, would constitute qualified services within the meaning of section 41(b)(2)(B).

Where the contract calls for services other than services described in this paragraph (e)(1), only 65 percent of the portion of the amount paid or incurred that is attributable to the services described in this paragraph (e)(1) is a contract research expense.

(2) *Performance of qualified research.* An expense is paid or incurred for the performance of qualified research only to the extent that it is paid or incurred pursuant to an agreement that—

(i) Is entered into prior to the performance of the qualified research,

(ii) Provides that research be performed on behalf of the taxpayer, and

(iii) Requires the taxpayer to bear the expense even if the research is not successful.

If an expense is paid or incurred pursuant to an agreement under which payment is contingent on the success of the research, then the expense is considered paid for the product or result rather than the performance of the research, and the payment is not a contract research expense. The previous sentence applies only to that portion of a payment which is contingent on the success of the research.

(3) "*On behalf of.*" Qualified research is performed on behalf of the taxpayer if the taxpayer has a right to the research results. Qualified research can be performed on behalf of the taxpayer notwithstanding the fact that the taxpayer does not have exclusive rights to the results.

(4) *Prepaid amounts.* Notwithstanding paragraph (e)(1) of this section, if any contract research expense paid or incurred during any taxable year is attributable to qualified research to be conducted after the close of such taxable year, the expense so attributable shall be treated for purposes of section 41(b)(1)(B) as paid or incurred during the period during which the qualified research is conducted.

(5) *Examples.* The following examples illustrate provisions contained in paragraphs (e) (1) through (4) of this section.

Example 1. A, a cash-method taxpayer using the calendar year as the taxable year, enters into a contract with B Corporation under which B is to perform qualified research on behalf of A. The contract requires A to pay B $300x, regardless of the success of the research. In 1982, B performs all of the research, and A makes full payment of $300x under the contract. Accordingly, during the taxable year 1982, $195x (65 percent of the payment of $300x) constitutes a contract research expense of A.

Example 2. The facts are the same as in example (1), except that B performs 50 percent of the research in 1983. Of the $195x of contract research expense paid in 1982, paragraph (e)(4) of this section provides that $97.5x (50 percent of $195x) is a contract research expense for 1982 and the remaining $97.5x is contract research expense for 1983.

Example 3. The facts are the same as in example (1), except that instead of calling for a flat payment of $300x, the contract requires A to reimburse B for all expenses plus pay B $l00x. B incurs expenses attributable to the research as follows:

Labor	$90x
Supplies	20x
Depreciation on equipment	50x
Overhead	40x
Total	200x

Under this agreement A pays B $300x during 1982. Accordingly, during taxable year 1982, $195x (65 percent of $300x) of the payment constitutes a contract research expense of A.

Example 4. The facts are the same as in example (3), except that A agrees to reimburse B for all expenses and agrees to pay B an additional amount of $100x, but the additional $100x is payable only if the research is successful. The research is successful and A pays B $300x during 1982. Paragraph (e)(2) of this section provides that the contingent portion of the payment is not an expense incurred for the performance of qualified research. Thus, for taxable year 1982, $130x (65 percent of the payment of $200x) constitutes a contract research expense of A.

Example 5. C conducts in-house qualified research in carrying on a trade or business. In addition, C pays D Corporation, a provider of computer services, $100x to develop software to be used in analyzing the results C derives from its research. Because the software services, if performed by an employee of C, would constitute qualified services, $65x of the $100x constitutes a contract research expense of C.

Example 6. C conducts in-house qualified research in carrying on C's trade or business. In addition, C contracts with E Corporation, a provider of temporary secretarial services, for the services of a secretary for a week. The secretary spends the entire week typing reports describing laboratory results derived from C's qualified research. C pays E $400 for the secretarial service, none of

which constitutes wages within the meaning of section 41(b)(2)(D). These services, if performed by employees of C, would constitute qualified services within the meaning of section 41(b)(2)(B). Thus, pursuant to paragraph (e)(1) of this section, $260 (65 percent of $400) constitutes a contract research expense of C.

Example 7. C conducts in-house qualified research in carrying on C's trade or business. In addition, C pays F, an outside accountant, $100x to keep C's books and records pertaining to the research project. The activity carried on by the accountant does not constitute qualified research as defined in section 41(d). The services performed by the accountant, if performed by an employee of C, would not constitute qualified services (as defined in section 41(b)(2)(B)). Thus, under paragraph (e)(1) of this section, no portion of the $100x constitutes a contract research expense.

[T.D. 8251, 54 FR 21204, May 17, 1989, as amended by T.D. 8930, 65 FR 287, Jan. 3, 2001]

§ 1.41-3 Base amount for taxable years beginning on or after January 3, 2001.

(a) ***New taxpayers.*** If, with respect to any credit year, the taxpayer has not been in existence for any previous taxable year, the average annual gross receipts of the taxpayer for the four taxable years preceding the credit year shall be zero. If, with respect to any credit year, the taxpayer has been in existence for at least one previous taxable year, but has not been in existence for four taxable years preceding the taxable year, then the average annual gross receipts of the taxpayer for the four taxable years preceding the credit year shall be the average annual gross receipts for the number of taxable years preceding the credit year for which the taxpayer has been in existence.

(b) ***Special rules for short taxable years*** —

(1) ***Short credit year.*** If a credit year is a short taxable year, then the base amount determined under section 41(c)(1) (but not section 41(c)(2)) shall be modified by multiplying that amount by the number of months in the short taxable year and dividing the result by 12.

(2) ***Short taxable year preceding credit year.*** If one or more of the four taxable years preceding the credit year is a short taxable year, then the gross receipts for such year are deemed to be equal to the gross receipts actually derived in that year multiplied by 12 and divided by the number of months in that year.

(3) ***Short taxable year in determining fixed-base percentage.*** No adjustment shall be made on account of a short taxable year to the computation of a taxpayer's fixed-base percentage.

(c) ***Definition of gross receipts*** —

(1) ***In general.*** For purposes of section 41, gross receipts means the total amount, as determined under the taxpayer's method of accounting, derived by the taxpayer from all its activities and from all sources (e.g., revenues derived from the sale of inventory before reduction for cost of goods sold).

(2) ***Amounts excluded.*** For purposes of this paragraph (c), gross receipts do not include amounts representing—

(i) Returns or allowances;

(ii) Receipts from the sale or exchange of capital assets, as defined in section 1221;

(iii) Repayments of loans or similar instruments (e.g., a repayment of the principal amount of a loan held by a commercial lender);

(iv) Receipts from a sale or exchange not in the ordinary course of business, such as the sale of an entire trade or business or the sale of property used in a trade or business as defined under section 1221(2);

(v) Amounts received with respect to sales tax or other similar state and local taxes if, under the applicable state or local law, the tax is legally imposed on the purchaser of the good or service, and the taxpayer merely collects and remits the tax to the taxing authority; and

(vi) Amounts received by a taxpayer in a taxable year that precedes the first taxable year in which the taxpayer derives more than $25,000 in gross receipts other than investment income. For purposes of this paragraph (c)(2)(vi), investment income is interest or distributions with respect to stock (other than the stock of a 20-percent owned corporation as defined in section 243(c)(2).

(3) ***Foreign corporations.*** For purposes of section 41, in the case of a foreign corporation, gross receipts include only gross receipts that are effectively connected with the conduct of a trade or business within the United States, the Commonwealth of Puerto Rico, or other possessions of the United States. See section 864(c) and applicable regulations thereunder for the definition of effectively connected income.

(d) ***Consistency requirement*** —

(1) ***In general.*** In computing the credit for increasing research activities for taxable years beginning after December 31, 1989, qualified research expenses and gross receipts taken into account in computing a taxpayer's fixed-base percentage and a taxpayer's base amount must be determined on a basis consistent with the definition of qualified research expenses and gross receipts for the credit year, without regard to the law in effect for the taxable years taken into account in computing the fixed-base percentage or the base amount. This consistency requirement applies even if the period for filing a claim for credit or refund has expired for any taxable year taken into account in computing the fixed-base percentage or the base amount.

(2) ***Illustrations.*** The following examples illustrate the application of the consistency rule of paragraph (d)(1) of this section:

> *Example 1.* (i) X, an accrual method taxpayer using the calendar year as its taxable year, incurs qualified research expenses in 2001. X wants to compute its research credit under section 41 for the tax year ending December 31, 2001. As part of the computation, X must determine its fixed-base percentage, which depends in part on X's qualified research expenses incurred during the fixed-base period, the taxable years beginning after December 31, 1983, and before January 1, 1989.

(ii) During the fixed-base period, X reported the following amounts as qualified research expenses on its Form 6765:

1984	$100x
1985	120x
1986	150x
1987	180x
1988	170x
Total	720x

(iii) For the taxable years ending December 31, 1984, and December 31, 1985, X based the amounts reported as qualified research expenses on the definition of qualified research in effect for those taxable years. The definition of qualified research changed for taxable years beginning after December 31, 1985. If X used the definition of qualified research applicable to its taxable year ending December 31, 2001, the credit year, its qualified research expenses for the taxable years ending December 31, 1984, and December 31, 1985, would be reduced to $ 80x and $ 100x, respectively. Under the consistency rule in section 41(c)(5) and paragraph (d)(1) of this section, to compute the research credit for the tax year ending December 31, 2001, X must reduce its qualified research expenses for 1984 and 1985 to reflect the change in the definition of qualified research for taxable years beginning after December 31, 1985. Thus, X's total qualified research expenses for the fixed-base period (1984-1988) to be used in computing the fixed-base percentage is $80 + 100 + 150 + 180 + 170 = $680x.

Example 2. The facts are the same as in *Example 1,* except that, in computing its qualified research expenses for the taxable year ending December 31, 2001, X claimed that a certain type of expenditure incurred in 2001 was a qualified research expense. X's claim reflected a change in X's position, because X had not previously claimed that similar expenditures were qualified research expenses. The consistency rule requires X to adjust its qualified research expenses in computing the fixed-base percentage to include any similar expenditures not treated as qualified research expenses during the fixed-base period, regardless of whether the period for filing a claim for credit or refund has expired for any year taken into account in computing the fixed-base percentage.

(e) ***Effective date.*** The rules in paragraphs (c) and (d) of this section are applicable for taxable years beginning on or after the date final regulations are published in the FEDERAL REGISTER.

[T.D. 8930, 66 FR 289, Jan. 3, 2001]

§ 1.41-4 Qualified research for expenditures paid or incurred in taxable years ending on or after December 31, 2003.

(a) ***Qualified research*** —

(1) ***General rule.*** Research activities related to the development or improvement of a business component constitute qualified research only if the research activities meet all of the requirements of section 41(d)(1) and this section, and are not otherwise excluded under section 41(d)(3)(B) or (d)(4), or this section.

(2) ***Requirements of section 41(d)(1).*** Research constitutes qualified research only if it is research—

(i) With respect to which expenditures may be treated as expenses under section 174, see § 1.174-2;

(ii) That is undertaken for the purpose of discovering information that is technological in nature, and the application of which is intended to be useful in the development of a new or improved business component of the taxpayer; and

(iii) Substantially all of the activities of which constitute elements of a process of experimentation that relates to a qualified purpose.

(3) ***Undertaken for the purpose of discovering information*** —

(i) ***In general.*** For purposes of section 41(d) and this section, research must be undertaken for the purpose of discovering information that is technological in nature. Research is undertaken for the purpose of discovering information if it is intended to eliminate uncertainty concerning the development or improvement of a business component. Uncertainty exists if the information available to the taxpayer does not establish the capability or method for developing or improving the business component, or the appropriate design of the business component.

(ii) ***Application of the discovering information requirement.*** A determination that research is undertaken for the purpose of discovering information that is technological in nature does not require the taxpayer be seeking to obtain information that exceeds, expands or refines the common knowledge of skilled professionals in the particular field of science or engineering in which the taxpayer is performing the research. In addition, a determination that research is undertaken for the purpose of discovering information that is technological in nature does not require that the taxpayer succeed in developing a new or improved business component.

(iii) ***Patent safe harbor.*** For purposes of section 41(d) and paragraph (a)(3)(i) of this section, the issuance of a patent by the Patent and Trademark Office under the provisions of 35 U.S.C. 151 (other than a patent for design issued under the provisions of 35 U.S.C. 171) is conclusive evidence that a taxpayer has discovered information that is technological in nature that is intended to eliminate uncertainty concerning the development or improvement of a business component. However, the issuance of such a patent is not a precondition for credit availability.

(4) ***Technological in nature.*** For purposes of section 41(d) and this section, information is technological in nature if the process of experimentation used to discover such information fundamentally relies on principles of the physical or biological sciences, engineering, or computer science. A taxpayer may employ existing technologies and may rely on existing principles of the physical or biological sciences, engineering, or computer science to satisfy this requirement.

(5) ***Process of experimentation*** —

(i) ***In general.*** For purposes of section 41(d) and this section, a process of experimentation is a process designed to evaluate one or more alternatives to achieve a result where the capability or the method of achieving that result, or the appropriate design of that result, is uncertain as of the beginning of the taxpayer's research activities. A process of experimentation must

fundamentally rely on the principles of the physical or biological sciences, engineering, or computer science and involves the identification of uncertainty concerning the development or improvement of a business component, the identification of one or more alternatives intended to eliminate that uncertainty, and the identification and the conduct of a process of evaluating the alternatives (through, for example, modeling, simulation, or a systematic trial and error methodology). A process of experimentation must be an evaluative process and generally should be capable of evaluating more than one alternative. A taxpayer may undertake a process of experimentation if there is no uncertainty concerning the taxpayer's capability or method of achieving the desired result so long as the appropriate design of the desired result is uncertain as of the beginning of the taxpayer's research activities. Uncertainty concerning the development or improvement of the business component (e.g., its appropriate design) does not establish that all activities undertaken to achieve that new or improved business component constitute a process of experimentation.

(ii) ***Qualified purpose.*** For purposes of section 41(d) and this section, a process of experimentation is undertaken for a qualified purpose if it relates to a new or improved function, performance, reliability or quality of the business component. Research will not be treated as conducted for a qualified purpose if it relates to style, taste, cosmetic, or seasonal design factors.

(6) ***Substantially all requirement.*** In order for activities to constitute qualified research under section 41(d)(1), substantially all of the activities must constitute elements of a process of experimentation that relates to a qualified purpose. The substantially all requirement of section 41(d)(1)(C) and paragraph (a)(2)(iii) of this section is satisfied only if 80 percent or more of a taxpayer's research activities, measured on a cost or other consistently applied reasonable basis (and without regard to section 1.41-2(d)(2)), constitute elements of a process of experimentation for a purpose described in section 41(d)(3). Accordingly, if 80 percent (or more) of a taxpayer's research activities with respect to a business component constitute elements of a process of experimentation for a purpose described in section 41(d)(3), the substantially all requirement is satisfied even if the remaining 20 percent (or less) of a taxpayer's research activities with respect to the business component do not constitute elements of a process of experimentation for a purpose described in section 41(d)(3), so long as these remaining research activities satisfy the requirements of section 41(d)(1)(A) and are not otherwise excluded under section 41(d)(4). The substantially all requirement is applied separately to each business component.

(7) ***Use of computers and information technology.*** The employment of computers or information technology, or the reliance on principles of computer science or information technology to store, collect, manipulate, translate, disseminate, produce, distribute, or process data or information, and similar uses of computers and information technology does not itself establish that qualified research has been undertaken.

(8) ***Illustrations.*** The following examples illustrate the application of paragraph (a)(5) of this section:

> *Example 1.* (i) *Facts.* X is engaged in the business of developing and manufacturing widgets. X wants to change the color of its blue widget to green. X obtains from various suppliers several different shades of green paint. X paints several sample widgets, and surveys X's customers to determine which shade of green X's customers prefer.

(ii) *Conclusion.* X's activities to change the color of its blue widget to green are not qualified research under section 41(d)(1) and paragraph (a)(5) of this section because substantially all of X's activities are not undertaken for a qualified purpose. All of X's research activities are related to style, taste, cosmetic, or seasonal design factors.

Example 2. (i) *Facts.* The facts are the same as in *Example 1,* except that X chooses one of the green paints. X obtains samples of the green paint from a supplier and determines that X must modify its painting process to accommodate the green paint because the green paint has different characteristics from other paints X has used. X obtains detailed data on the green paint from X's paint supplier. X also consults with the manufacturer of X's paint spraying machines. The manufacturer informs X that X must acquire a new nozzle that operates with the green paint X wants to use. X tests the nozzles to ensure that they work as specified by the manufacturer of the paint spraying machines.
(ii) *Conclusion.* X's activities to modify its painting process are a separate business component under section 41(d)(2)(A). X's activities to modify its painting process to change the color of its blue widget to green are not qualified research under section 41(d)(1) and paragraph (a)(5) of this section. X did not conduct a process of evaluating alternatives in order to eliminate uncertainty regarding the modification of its painting process. Rather, the manufacturer of the paint machines eliminated X's uncertainty regarding the modification of its painting process. X's activities to test the nozzles to determine if the nozzles work as specified by the manufacturer of the paint spraying machines are in the nature of routine or ordinary testing or inspection for quality control.

Example 3. (i) *Facts.* X is engaged in the business of manufacturing food products and currently manufactures a large-shred version of a product. X seeks to modify its current production line to permit it to manufacture both a large-shred version and a fine-shred version of one of its food products. A smaller, thinner shredding blade capable of producing a fine-shred version of the food product, however, is not commercially available. Thus, X must develop a new shredding blade that can be fitted onto its current production line. X is uncertain concerning the design of the new shredding blade, because the material used in its existing blade breaks when machined into smaller, thinner blades. X engages in a systematic trial and error process of analyzing various blade designs and materials to determine whether the new shredding blade must be constructed of a different material from that of its existing shredding blade and, if so, what material will best meet X's functional requirements.
(ii) *Conclusion.* X's activities to modify its current production line by developing the new shredding blade meet the requirements of qualified research as set forth in paragraph (a)(2) of this section. Substantially all of X's activities constitute elements of a process of experimentation because X evaluated alternatives to achieve a result where the method of achieving that result, and the appropriate design of that result, were uncertain as of the beginning of the taxpayer's research activities. X identified uncertainties related to the

development of a business component, and identified alternatives intended to eliminate these uncertainties. Furthermore, X's process of evaluating identified alternatives was technological in nature, and was undertaken to eliminate the uncertainties.

Example 4. (i) *Facts.* X is in the business of designing, developing and manufacturing automobiles. In response to government-mandated fuel economy requirements, X seeks to update its current model vehicle and undertakes to improve aerodynamics by lowering the hood of its current model vehicle. X determines, however, that lowering the hood changes the air flow under the hood, which changes the rate at which air enters the engine through the air intake system, and which reduces the functionality of the cooling system. X's engineers are uncertain how to design a lower hood to obtain the increased fuel economy, while maintaining the necessary air flow under the hood. X designs, models, simulates, tests, refines, and re-tests several alternative designs for the hood and associated proposed modifications to both the air intake system and cooling system. This process enables X to eliminate the uncertainties related to the integrated design of the hood, air intake system, and cooling system, and such activities constitute eighty-five percent of X's total activities to update its current model vehicle. X then engages in additional activities that do not involve a process of evaluating alternatives in order to eliminate uncertainties. The additional activities constitute only fifteen percent of X's total activities to update its current model vehicle.
(ii) *Conclusion.* In general, if eighty percent or more of a taxpayer's research activities measured on a cost or other consistently applied reasonable basis constitute elements of a process of experimentation for a qualified purpose under section 41(d)(3)(A) and paragraph (a)(5)(ii) of this section, then the substantially all requirement of section 41(d)(1)(C) and paragraph (a)(2)(iii) of this section is satisfied. Substantially all of X's activities constitute elements of a process of experimentation because X evaluated alternatives to achieve a result where the method of achieving that result, and the appropriate design of that result, were uncertain as of the beginning of X's research activities. X identified uncertainties related to the improvement of a business component and identified alternatives intended to eliminate these uncertainties. Furthermore, X's process of evaluating the identified alternatives was technological in nature and was undertaken to eliminate the uncertainties. Because substantially all (in this example, eighty-five percent) of X's activities to update its current model vehicle constitute elements of a process of experimentation for a qualified purpose described in section 41(d)(3)(A), all of X's activities to update its current model vehicle meet the requirements of qualified research as set forth in paragraph (a)(2) of this section, provided that X's remaining activities (in this example, fifteen percent of X's total activities) satisfy the requirements of section 41(d)(1)(A) and are not otherwise excluded under section 41(d)(4).

Example 5. (i) *Facts.* X, a retail and distribution company, wants to upgrade its warehouse management software. X evaluates several of the alternative warehouse management

software products available from vendors in the marketplace to determine which product will best serve X's technical requirements. X selects vendor V's software.
(ii) *Conclusion.* X's activities to select the software are not qualified research under section 41(d)(1) and paragraph (a)(5) of this section. X did not conduct a process of evaluating alternatives in order to eliminate uncertainty regarding the development of a business component. X's evaluation of products available from vendors is not a process of experimentation.

Example 6. (i) *Facts.* X wants to develop a new web application to allow customers to purchase its products online. X, after reviewing commercial software offered by various vendors, purchases a commercial software package of object-oriented functions from vendor Z that X can use in its web application (for example, a shopping cart). X evaluates the various object-oriented functions included in vendor Z's software package to determine which functions it can use. X then incorporates the selected software functions in its new web application software.
(ii) *Conclusion.* X's activities related to selecting the commercial software vendor with the object-oriented functions it wanted, and then selecting which functions to use, are not qualified research under section 41(d)(1) and paragraph (a)(5) of this section. In addition, incorporating the selected object-oriented functions into the new web application software being developed by X did not involve conducting a process of evaluating alternatives in order to eliminate uncertainty regarding the development of software. X's evaluation of products available from vendors and selection of software functions are not a process of experimentation.

Example 7. (i) *Facts.* In order to be more responsive to user online requests, X wants to develop software to balance the incoming processing requests across multiple web servers that run the same set of software applications. Without evaluating or testing any alternatives, X decides that a separate server will be used to distribute the workload across each of the web servers and that a round robin workload distribution algorithm is appropriate for its needs.
(ii) *Conclusion.* X's activities to develop the software are activities relating to the development of a separate business component under section 41(d)(2)(A). X's activities to develop the load distribution function are not qualified research under section 41(d)(1) and paragraph (a)(5) of this section. X did not conduct a process of evaluating different load distribution alternatives in order to eliminate uncertainty regarding the development of software. X's selection of a separate server and a round robin distribution algorithm is not a process of experimentation.

Example 8. (i) *Facts.* X must develop load balancing software across a server cluster supporting multiple web applications. X's web applications have high concurrency demands

because of a dynamic, highly volatile environment. X is uncertain of the appropriate design of the load balancing algorithm, given that the existing evolutionary algorithms did not meet the demands of their highly volatile web environment. Therefore, X designs and systematically tests and evaluates several different algorithms that perform the load distribution functions.
(ii) *Conclusion.* X's activities to develop software are activities to develop a separate business component under section 41(d)(2)(A). X's activities involving the design, evaluation, and systematic testing of several new load balancing algorithms meet the requirements as set forth in paragraph (a)(5) of this section. X's activities constitute elements of a process of experimentation because X identified uncertainties related to the development of a business component, identified alternatives intended to eliminate those uncertainties, and evaluated one or more alternatives to achieve a result where the appropriate design was uncertain at the beginning of X's research activities.

Example 9. (i) *Facts.* X, a multinational manufacturer, wants to install an enterprise resource planning (ERP) system that runs off a single database so that X can track orders more easily, and coordinate manufacturing, inventory, and shipping among many different locations at the same time. In order to successfully install and implement ERP software, X evaluates its business needs and the technical requirements of the software, such as processing power, memory, storage, and network resources. X devotes the majority of its resources in implementing the ERP system to evaluating the available templates, reports, and other standard programs and choosing among these alternatives in configuring the system to match its business process and reengineering its business process to match the available alternatives in the ERP system. X also performs some data transfer from its old system, involving routine programming and one-to-one mapping of data to be exchanged between each system.
(ii) *Conclusion.* X's activities related to the ERP software including the data transfer are not qualified research under section 41(d)(1) and paragraph (a)(5) of this section. X did not conduct a process of evaluating alternatives in order to eliminate uncertainty regarding the development of software. X's activities in choosing between available templates, reports, and other standard programs and conducting data transfer are not elements of a process of experimentation.

Example 10. (i) *Facts.* Same facts as *Example 9* except that X determines that it must interface part of its legacy software with the new ERP software because the ERP software does not provide a particular function that X requires for its business. As a result, X must develop an interface between its legacy software and the ERP software, and X evaluates several data exchange software applications and chooses one of the available alternatives. X is uncertain as to how to keep the data synchronized between the legacy and ERP systems. Thus, X engages in systematic trial and error testing of several newly designed data caching algorithms to eliminate synchronization problems.

(ii) *Conclusion.* Substantially all of X's activities with respect to this ERP project do not satisfy the requirements for a process of experimentation. However, when the shrinking-back rule is applied, a subset of X's activities do satisfy the requirements for a process of experimentation. X's activities to develop the data caching software and keeping the data on the legacy and ERP systems synchronized meet the requirements of qualified research as set forth in paragraph (a)(2) of this section. Substantially all of X's activities to develop the specialized data caching and synchronization software constitute elements of a process of experimentation because X identified uncertainties related to the development of a business component, identified alternatives intended to eliminate those uncertainties, and evaluated alternatives to achieve a result where the appropriate design of that result was uncertain as of the beginning of the taxpayer's research activities.

(b) ***Application of requirements for qualified research*** —

(1) ***In general.*** The requirements for qualified research in section 41(d)(1) and paragraph (a) of this section, must be applied separately to each business component, as defined in section 41(d)(2)(B). In cases involving development of both a product and a manufacturing or other commercial production process for the product, research activities relating to development of the process are not qualified research unless the requirements of section 41(d) and this section are met for the research activities relating to the process without taking into account the research activities relating to development of the product. Similarly, research activities relating to development of the product are not qualified research unless the requirements of section 41(d) and this section are met for the research activities relating to the product without taking into account the research activities relating to development of the manufacturing or other commercial production process.

(2) ***Shrinking-back rule.*** The requirements of section 41(d) and paragraph (a) of this section are to be applied first at the level of the discrete business component, that is, the product, process, computer software, technique, formula, or invention to be held for sale, lease, or license, or used by the taxpayer in a trade or business of the taxpayer. If these requirements are not met at that level, then they apply at the most significant subset of elements of the product, process, computer software, technique, formula, or invention to be held for sale, lease, or license. This shrinking back of the product is to continue until either a subset of elements of the product that satisfies the requirements is reached, or the most basic element of the product is reached and such element fails to satisfy the test. This shrinking-back rule is applied only if a taxpayer does not satisfy the requirements of section 41(d)(1) and paragraph (a)(2) of this section with respect to the overall business component. The shrinking-back rule is not itself applied as a reason to exclude research activities from credit eligibility.

(3) ***Illustration.*** The following example illustrates the application of this paragraph (b):

Example. X, a motorcycle engine builder, develops a new carburetor for use in a motorcycle engine. X also modifies an existing engine design for use with the new carburetor. Under the shrinking-back rule, the requirements of section 41(d)(1) and paragraph (a) of this section are applied first to the engine. If the modifications to the engine when viewed as a whole, including the development of the new carburetor, do not satisfy the requirements of section 41(d)(1) and paragraph (a) of this section, those requirements are applied to the next most significant subset of elements of the business component. Assuming that the next most significant subset of elements of the engine is the carburetor, the research activities in developing the new carburetor may constitute qualified research within the meaning of section 41(d)(1) and paragraph (a) of this section.

(c) *Excluded activities* —

(1) ***In general.*** Qualified research does not include any activity described in section 41(d)(4) and paragraph (c) of this section.

(2) ***Research after commercial production*** —

(i) ***In general.*** Activities conducted after the beginning of commercial production of a business component are not qualified research. Activities are conducted after the beginning of commercial production of a business component if such activities are conducted after the component is developed to the point where it is ready for commercial sale or use, or meets the basic functional and economic requirements of the taxpayer for the component's sale or use.

(ii) ***Certain additional activities related to the business component.*** The following activities are deemed to occur after the beginning of commercial production of a business component—

(A) Preproduction planning for a finished business component;

(B) Tooling-up for production;

(C) Trial production runs;

(D) Trouble shooting involving detecting faults in production equipment or processes;

(E) Accumulating data relating to production processes; and

(F) Debugging flaws in a business component.

(iii) ***Activities related to production process or technique.*** In cases involving development of both a product and a manufacturing or other commercial production process for the product, the exclusion described in section 41(d)(4)(A) and paragraphs (c)(2)(i) and (ii) of this section applies separately for the activities relating to the development of the product and the activities relating to the development of the process. For example, even after a product meets the taxpayer's basic functional and economic requirements, activities relating to the development of the manufacturing process still may constitute qualified research, provided that the development of the process itself separately satisfies the requirements of section 41(d) and this section, and the activities are conducted before the process meets the taxpayer's basic functional and economic requirements or is ready for commercial use.

(iv) ***Clinical testing.*** Clinical testing of a pharmaceutical product prior to its commercial production in the United States is not treated as occurring after the beginning of commercial production even if the product is commercially available in other countries. Additional clinical testing of a pharmaceutical product after a product has been approved for a specific therapeutic use by the Food and Drug Administration and is ready for commercial production and sale is not treated as occurring after the beginning of commercial production if such clinical testing is undertaken to establish new functional uses, characteristics, indications, combinations, dosages, or delivery forms for the product. A functional use, characteristic, indication, combination, dosage, or delivery form shall be considered new only if such functional use, characteristic, indication, combination, dosage, or delivery form must be approved by the Food and Drug Administration.

(3) ***Adaptation of existing business components.*** Activities relating to adapting an existing business component to a particular customer's requirement or need are not qualified research. This exclusion does not apply merely because a business component is intended for a specific customer.

(4) ***Duplication of existing business component.*** Activities relating to reproducing an existing business component (in whole or in part) from a physical examination of the business component itself or from plans, blueprints, detailed specifications, or publicly available information about the business component are not qualified research. This exclusion does not apply merely because the taxpayer examines an existing business component in the course of developing its own business component.

(5) ***Surveys, studies, research relating to management functions, etc.*** Qualified research does not include activities relating to—

(i) Efficiency surveys;

(ii) Management functions or techniques, including such items as preparation of financial data and analysis, development of employee training programs and management organization plans, and management-based changes in production processes (such as rearranging work stations on an assembly line);

(iii) Market research, testing, or development (including advertising or promotions);

(iv) Routine data collections; or

(v) Routine or ordinary testing or inspections for quality control.

(6) ***Internal use software*** —

(i) ***General rule.*** Research with respect to software that is developed by (or for the benefit of) the taxpayer primarily for the taxpayer's internal use is eligible for the research credit only if—

(A) The research with respect to the software satisfies the requirements of section 41(d)(1);

(B) The research with respect to the software is not otherwise excluded under section 41(d)(4) (other than section 41(d)(4)(E)); and

(C) The software satisfies the high threshold of innovation test of paragraph (c)(6)(vii) of this section.

(ii) ***Inapplicability of the high threshold of innovation test.*** This paragraph (c)(6) does not apply to the following:

(A) Software developed by (or for the benefit of) the taxpayer primarily for internal use by the taxpayer for use in an activity that constitutes qualified research (other than the development of the internal use software itself);

(B) Software developed by (or for the benefit of) the taxpayer primarily for internal use by the taxpayer for use in a production process to which the requirements of section 41(d)(1) are met; and

(C) A new or improved package of software and hardware developed together by the taxpayer as a single product (or to the costs to modify an acquired software and hardware package), of which the software is an integral part, that is used directly by the taxpayer in providing services in its trade or business. In these cases, eligibility for the research credit is to be determined by examining the combined hardware-software product as a single product.

(iii) ***Software developed primarily for internal use*** —

(A) ***In general.*** Except as otherwise provided in paragraph (c)(6)(vi) of this section, software is developed by (or for the benefit of) the taxpayer primarily for the taxpayer's internal use if the software is developed for use in general and administrative functions that facilitate or support the conduct of the taxpayer's trade or business. Software that the taxpayer develops primarily for a related party's internal use will be considered internal use software. A related party is any corporation, trade or business, or other person that is treated as a single taxpayer with the taxpayer pursuant to section 41(f).

(B) ***General and administrative functions.*** General and administrative functions are:

(*1*) ***Financial management.*** Financial management functions are functions that involve the financial management of the taxpayer and the supporting recordkeeping. Financial management functions include, but are not limited to, functions such as accounts payable, accounts receivable, inventory management, budgeting, cash management, cost accounting, disbursements, economic analysis and forecasting, financial reporting, finance, fixed asset accounting, general ledger bookkeeping, internal audit, management accounting, risk management, strategic business planning, and tax.

(*2*) ***Human resources management.*** Human resources management functions are functions that manage the taxpayer's workforce. Human resources management functions include, but are not limited to, functions such as recruiting, hiring, training, assigning personnel, and maintaining personnel records, payroll, and benefits.

(*3*) ***Support services.*** Support services are other functions that support the day- to-day operations of the taxpayer. Support services include, but are not limited to, functions such as data processing, facility services (for example, grounds keeping, housekeeping, janitorial, and logistics), graphic services, marketing, legal services, government compliance services, printing and publication services, and security services (for example, video surveillance and physical asset protection from fire and theft).

(iv) ***Software not developed primarily for internal use.*** Software is not developed primarily for the taxpayer's internal use if it is not developed for use in general and administrative functions that facilitate or support the conduct of the taxpayer's trade or business, such as—

(A) Software developed to be commercially sold, leased, licensed, or otherwise marketed to third parties; or

(B) Software developed to enable a taxpayer to interact with third parties or to allow third parties to initiate functions or review data on the taxpayer's system.

(v) ***Time and manner of determination.*** For purposes of paragraphs (c)(6)(iii) and (iv) of this section, whether software is developed primarily for internal use or not developed primarily for internal use depends on the intent of the taxpayer and the facts and circumstances at the beginning of the software development. For example, software will not be considered internal use software solely because it is used internally for purposes of testing prior to commercial sale, lease, or license. If a taxpayer originally develops software primarily for internal use, but later makes improvements to the software with the intent to hold the improved software to be sold, leased, licensed, or otherwise marketed to third parties, or to interact with third parties or to allow third parties to initiate functions or review data on the taxpayer's system using the improved software, the improvements will be considered separate from the existing software and will not

be considered developed primarily for internal use. Alternatively, if a taxpayer originally develops software to be sold, leased, licensed, or otherwise marketed to third parties, or to interact with third parties or to allow third parties to initiate functions or review data on the taxpayer's system, but later makes improvements to the software with the intent to use the software in general and administrative functions, the improvements will be considered separate from the existing software and will be considered developed primarily for internal use.

(vi) ***Software developed for both internal use and to enable interaction with third parties (dual function software)*** —

(A) ***Presumption of development primarily for internal use.*** Unless paragraph (c)(6)(vi)(B) or (C) of this section applies, software developed by (or for the benefit of) the taxpayer both for use in general and administrative functions that facilitate or support the conduct of the taxpayer's trade or business and to enable a taxpayer to interact with third parties or to allow third parties to initiate functions or review data on the taxpayer's system (dual function software) is presumed to be developed primarily for a taxpayer's internal use.

(B) ***Identification of a subset of elements of software that only enables interaction with third parties.*** To the extent that a taxpayer can identify a subset of elements of dual function software that only enables a taxpayer to interact with third parties or allows third parties to initiate functions or review data (third party subset), the presumption under paragraph (c)(6)(vi)(A) of this section does not apply to such third party subset, and such third party subset is not developed primarily for internal use as described under paragraph (c)(6)(iv)(B) of this section.

(C) ***Safe harbor for expenditures related to software developed for both internal use and to enable interaction with third parties.*** If, after the application of paragraph (c)(6)(vi)(B) of this section, there remains dual function software or a subset of elements of dual function software (dual function subset), a taxpayer may include 25 percent of the qualified research expenditures of such dual function software or dual function subset in computing the amount of the taxpayer's credit. This paragraph (c)(6)(vi)(C) applies only if the taxpayer's research activities related to the development or improvement of the dual function software or dual function subset constitute qualified research under section 41(d), without regard to section 41(d)(4)(E), and the dual function software or dual function subset's use by third parties or by the taxpayer to interact with third parties is reasonably anticipated to constitute at least 10 percent of the dual function software or the dual function subset's use. An objective, reasonable method within the taxpayer's industry must be used to estimate the dual function software or dual function subset's use by third parties or by the taxpayer to interact with third parties. An objective, reasonable method may include, but is not limited to, processing time, amount of data transfer, and number of software user interface screens.

(D) ***Time and manner of determination.*** A taxpayer must apply this paragraph (c)(6)(vi) based on the intent of the taxpayer and the facts and circumstances at the beginning of the software development.

(E) ***Third party.*** For purposes of paragraphs (c)(6)(iv), (v), and (vi) of this section, the term *third party* means any corporation, trade or business, or other person that is not treated as a single taxpayer with the taxpayer pursuant to section 41(f). Additionally, for purposes of paragraph (c)(6)(iv)(B) of this section, third parties do not include any persons that use the software to support the general and administrative functions of the taxpayer.

(vii) ***High threshold of innovation test*** —

(A) ***In general.*** Software satisfies this paragraph (c)(6)(vii) only if the taxpayer can establish that—

(*1*) The software is innovative;

(*2*) The software development involves significant economic risk; and

(*3*) The software is not commercially available for use by the taxpayer in that the software cannot be purchased, leased, or licensed and used for the intended purpose without modifications that would satisfy the requirements of paragraphs (c)(6)(vii)(A)(*1*) and (*2*) of this section.

(B) ***Innovative.*** Software is innovative if the software would result in a reduction in cost or improvement in speed or other measurable improvement, that is substantial and economically significant, if the development is or would have been successful. This is a measurable objective standard, not a determination of the unique or novel nature of the software or the software development process.

(C) ***Significant economic risk.*** The software development involves significant economic risk if the taxpayer commits substantial resources to the development and if there is substantial uncertainty, because of technical risk, that such resources would be recovered within a reasonable period. The term "substantial uncertainty" requires a higher level of uncertainty and technical risk than that required for business components that are not internal use software. This standard does not require technical uncertainty regarding whether the final result can ever be achieved, but rather whether the final result can be achieved within a timeframe that will allow the substantial resources committed to the development to be recovered within a reasonable period. Technical risk arises from uncertainty that is technological in nature, as defined in paragraph (a)(4) of this section, and substantial uncertainty must exist at the beginning of the taxpayer's activities.

(D) ***Application of high threshold of innovation test.*** The high threshold of innovation test of paragraph (c)(6)(vii) of this section takes into account only the results anticipated to be attributable to the development of new or improved software at the beginning of the software development independent of the effect of any modifications to related hardware or other software. The implementation of existing technology by itself is not evidence of innovation, but the use of existing technology in new ways could be evidence of a high threshold of innovation if it resolves substantial uncertainty as defined in paragraph (c)(6)(vii)(C) of this section.

(viii) ***Illustrations.*** The following examples illustrate provisions contained in this paragraph (c)(6). No inference should be drawn from these examples concerning the application of section 41(d)(1) and paragraph (a) of this section to these facts.

> *Example 1.* *Computer hardware and software developed as a single product*—(i) *Facts.* X is a telecommunications company that developed high technology telephone switching hardware. In addition, X developed software that interfaces directly with the hardware to initiate and terminate a call, along with other functions. X designed and developed the hardware and software together.

(ii) *Conclusion.* The telecommunications software that interfaces directly with the hardware is part of a package of software and hardware developed together by the taxpayer that is used by the taxpayer in providing services in its trade or business. Accordingly, this paragraph (c)(6) does not apply to the software that interfaces directly with the hardware as described in paragraph (c)(6)(ii)(C) of this section, and eligibility for the research credit is determined by examining the combined software-hardware product as a single product.

Example 2. *Internal use software; financial management*—(i) *Facts.* X, a manufacturer, self-insures its liabilities for employee health benefits. X develops its own software to administer its self-insurance reserves related to employee health benefits. At the beginning of the development, X does not intend to develop the software for commercial sale, lease, license, or to be otherwise marketed to third parties or to enable X to interact with third parties or to allow third parties to initiate functions or review data on X's system.
(ii) *Conclusion.* The software is developed for use in a general and administrative function because reserve valuation is a financial management function under paragraph (c)(6)(iii)(B)(*1*) of this section. Accordingly, the software is internal use software because it is developed for use in a general and administrative function.

Example 3. *Internal use software; human resources management*—(i) *Facts.* X, a manufacturer, develops a software module that interacts with X's existing payroll software to allow X's employees to print pay stubs and make certain changes related to payroll deductions over the internet. At the beginning of the development, X does not intend to develop the software module for commercial sale, lease, license, or to be otherwise marketed to third parties or to enable X to interact with third parties or to allow third parties to initiate functions or review data on X's system.
(ii) *Conclusion.* The employee access software module is developed for use in a general and administrative function because employee access software is a human resources management function under paragraph (c)(6)(iii)(B)(*2*) of this section. Accordingly, the software module is internal use software because it is developed for use in a general and administrative function.

Example 4. *Internal use software; support services*—(i) *Facts.* X, a restaurant, develops software for a Web site that provides information, such as items served, price, location, phone number, and hours of operation for purposes of advertising. At the beginning of the development, X does not intend to develop the Web site software for commercial sale, lease, license, or to be otherwise marketed to third parties or to enable X to interact with third parties or to allow third parties to initiate functions or review data on X's system. X intends to use the software for marketing by allowing third parties to review

general information on X's Web site.
(ii) *Conclusion.* The software is developed for use in a general and administrative function because the software was developed to be used by X for marketing which is a support services function under paragraph (c)(6)(iii)(B)(*3*) of this section. Accordingly, the software is internal use software because it is developed for use in a general and administrative function.

Example 5. *Internal use software*—(i) *Facts.* X, a multinational manufacturer with different business and financial systems in each of its divisions, undertakes a software development project aimed at integrating the majority of the functional areas of its major software systems (Existing Software) into a single enterprise resource management system supporting centralized financial systems, human resources, inventory, and sales. X purchases software (New Software) upon which to base its enterprise-wide system. X has to develop software (Developed Software) that transfers data from X's legacy financial, human resources, inventory, and sales systems to the New Software. At the beginning of the development, X does not intend to develop the software for commercial sale, lease, license, or to be otherwise marketed to third parties or to enable X to interact with third parties or to allow third parties to initiate functions or review data on X's system.
(ii) *Conclusion.* The financial systems, human resource systems, inventory and sales systems are general and administrative functions under paragraph (c)(6)(iii)(B) of this section. Accordingly, the Developed Software is internal use software because it is developed for use in general and administrative functions.

Example 6. *Internal use software; definition of third party*—(i) *Facts.* X develops software to interact electronically with its vendors to improve X's inventory management. X develops the software to enable X to interact with vendors and to allow vendors to initiate functions or review data on the taxpayer's system. X defines the electronic messages that will be exchanged between X and the vendors. X's software allows a vendor to request X's current inventory of the vendor's product, and allows a vendor to send a message to X which informs X that the vendor has just made a new shipment of the vendor's product to replenish X's inventory. At the beginning of development, X does not intend to develop the software for commercial sale, lease, license, or to be otherwise marketed to third parties.
(ii) *Conclusion.* Under paragraph (c)(6)(vi)(E) of this section, X's vendors are not third parties for purposes of paragraph (c)(6)(iv) of this section. While X's software was developed to allow vendors to initiate functions or review data on the taxpayer's system, the software is not excluded from internal use software as set forth in paragraph

(c)(6)(iv)(B) of this section because the software was developed to allow vendors to use the software to support X's inventory management, which is a general and administrative function of X.

Example 7. *Not internal use software; third party interaction*—(i) *Facts.* X, a manufacturer of various products, develops software for a Web site with the intent to allow third parties to access data on X's database, to order X's products and track the status of their orders online. At the beginning of the development, X does not intend to develop the Web site software for commercial sale, lease, license, or to be otherwise marketed to third parties.
(ii) *Conclusion.* The software is not developed primarily for internal use because it is not developed for use in a general and administrative function. X developed the software to allow third parties to initiate functions or review data on the taxpayer's system as provided under paragraph (c)(6)(iv)(B) of this section.

Example 8. *Not internal use software; third party interaction*—(i) *Facts.* X developed software that allows its users to upload and modify photographs at no charge. X earns revenue by selling advertisements that are displayed while users enjoy the software that X offers for free. X also developed software that has interfaces through which advertisers can bid for the best position in placing their ads, set prices for the ads, or develop advertisement campaign budgets. At the beginning of the development, X intended to develop the software to enable X to interact with third parties or to allow third parties to initiate functions on X's system.
(ii) *Conclusion.* The software for uploading and modifying photographs is not developed primarily for internal use because it is not developed for use in X's general and administrative functions under paragraph (c)(6)(iii)(A) of this section. The users and the advertisers are third parties for purposes of paragraph (c)(6)(iv) of this section. Furthermore, both the software for uploading and modifying photographs and the advertising software are not internal use software under paragraph (c)(6)(iv)(B) of this section because at the beginning of the development X developed the software with the intention of enabling X to interact with third parties or to allow third parties to initiate functions on X's system.

Example 9. *Not internal use software; commercially sold, leased, licensed, or otherwise marketed*—(i) *Facts.* X is a provider of cloud-based software. X develops enterprise application software (including customer relationship management, sales automation, and accounting software) to be accessed online and used by X's customers. At the beginning of development, X intended to develop the software for commercial sale, lease, license, or to be otherwise marketed to third parties.

(ii) *Conclusion.* The software is not developed primarily for internal use because it is not developed for use in a general and administrative function. X developed the software to be commercially sold, leased, licensed, or otherwise marketed to third parties under paragraph (c)(6)(iv)(A) of this section.

Example 10. Improvements to existing internal use software—(i) *Facts.* X has branches throughout the country and develops its own facilities services software to coordinate moves and to track maintenance requests for all locations. At the beginning of the development, X does not intend to develop the software for commercial sale, lease, license, or to be otherwise marketed to third parties or to enable X to interact with third parties or to allow third parties to initiate functions or review data on X's system. Several years after completing the development and using the software, X consults its business development department, which assesses the market for the software. X determines that the software could be sold at a profit if certain technical and functional enhancements are made. X develops the improvements to the software, and sells the improved software to third parties.
(ii) *Conclusion.* Support services, which include facility services, are general and administrative functions under paragraph (c)(6)(iii)(B) of this section. Accordingly, the original software is developed for use in general and administrative functions and is, therefore, developed primarily for internal use. However, the improvements to the software are not developed primarily for internal use because the improved software was not developed for use in a general and administrative function. X developed the improved software to be commercially sold, leased, licensed, or otherwise marketed to third parties under paragraphs (c)(6)(iv)(A) and (c)(6)(v) of this section.

Example 11. Dual function software; identification of a third party subset—(i) *Facts.* X develops software for use in general and administrative functions that facilitate or support the conduct of X's trade or business and to allow third parties to initiate functions. X is able to identify a third party subset. X incurs $50,000 of research expenditures for the software, 50% of which is allocable to the third party subset.
(ii) *Conclusion.* The software developed by X is dual function software. Because X is able to identify a third party subset, the third party subset is not presumed to be internal use software under paragraph (c)(6)(vi)(A) of this section. If X's research activities related to the third party subset constitute qualified research under section 41(d), and the allocable expenditures are qualified research expenditures under section 41(b), $25,000 of the software research expenditures allocable to the third party subset may be included in computing the amount of X's credit, pursuant to paragraph (c)(6)(vi)(B) of this section. If, after the application of paragraph (c)(6)(vi)(B) of this section, there remains a dual function subset, X may determine whether paragraph (c)(6)(vi)(C) of this section applies.

Example 12. Dual function software; application of the safe harbor—(i) *Facts.* The facts are the same as in *Example 11,* except that X is unable to identify a third party subset. X uses an objective, reasonable method at the beginning of the software development to determine that the dual function software's use by third parties to initiate functions is reasonably anticipated to constitute 15% of the dual function software's use.

(ii) *Conclusion.* The software developed by X is dual function software. The software is presumed to be developed primarily for internal use under paragraph (c)(6)(vi)(A) of this section. Although X is unable to identify a third party subset, X reasonably anticipates that the dual function software's use by third parties will be at least 10% of the dual function software's use. If X's research activities related to the development or improvement of the dual function software constitute qualified research under section 41(d), without regard to section 41(d)(4)(E), and the allocable expenditures are qualified research expenditures under section 41(b), X may include $12,500 (25% of $50,000) of the software research expenditures of the dual function software in computing the amount of X's credit pursuant to paragraph (c)(6)(vi)(C) of this section.

Example 13. Dual function software; safe harbor inapplicable—(i) *Facts.* The facts are the same as in *Example 11,* except X is unable to identify a third party subset. X uses an objective, reasonable method at the beginning of the software development to determine that the dual function software's use by third parties to initiate functions is reasonably anticipated to constitute 5% of the dual function software's use.
(ii) *Conclusion.* The software developed by X is dual function software. The software is presumed to be developed primarily for X's internal use under paragraph (c)(6)(vi)(A) of this section. X is unable to identify a third party subset, and X reasonably anticipates that the dual function software's use by third parties will be less than 10% of the dual function software's use. X may only include the software research expenditures of the dual function software in computing the amount of X's credit if the software satisfies the high threshold of innovation test of paragraph (c)(6)(vii) of this section and X's research activities related to the development or improvement of the dual function software constitute qualified research under section 41(d), without regard to section 41(d)(4)(E), and the allocable expenditures are qualified research expenditures under section 41(b).

Example 14. Dual function software; identification of a third party subset and the safe harbor—(i) *Facts.* X develops software for use in general and administrative functions that facilitate or support the conduct of X's trade or business and to allow third parties to initiate functions and review data. X is able to identify a third party subset (Subset A). The remaining dual function subset of the software (Subset B) allows third parties to review data and provides X with data used in its general and administrative functions. X is unable to identify a third party subset of Subset B. X incurs $50,000 of research expenditures for the software, 50% of which is allocable to Subset A and 50% of which is allocable to Subset B. X determines, at the beginning of the software development, that the processing time of the third party use of Subset B is reasonably anticipated to account for 15% of the total processing time of Subset B.
(ii) *Conclusion.* The software developed by X is dual function software. Because X is able to identify a third party subset, such third party subset (Subset A) is not presumed to be internal use software under paragraph (c)(6)(vi)(A) of this section. If X's research activities related to the development or improvement of Subset A constitute qualified research under section 41(d), and the allocable expenditures are qualified research expenditures under section 41(b), the $25,000 of the software research expenditures allocable to Subset A may be included in computing the amount of X's credit pursuant to paragraph (c)(6)(vi)(B) of this section. Although X is unable to identify a third party subset of Subset B, 15% of Subset B's use is reasonably anticipated to be attributable to the use of Subset B by third parties. If X's research activities related to the development or improvement of Subset B constitute qualified research under section 41(d),

without regard to section 41(d)(4)(E), and the allocable expenditures are qualified research expenditures under section 41(b), X may include $6,250 (25% × $25,000) of the software research expenditures of Subset B in computing the amount of X's credit, pursuant to paragraph (c)(6)(vi)(C) of this section.

Example 15. *Internal use software; application of the high threshold of innovation test*—(i) *Facts.* X maintained separate software applications for tracking a variety of human resource (HR) functions, including employee reviews, salary information, location within the hierarchy and physical location of employees, 401(k) plans, and insurance coverage information. X determined that improved HR efficiency could be achieved by redesigning its disparate software applications into one employee-centric system, and worked to develop that system. X also determined that commercially available database management systems did not meet all of the requirements of the proposed system. Rather than waiting several years for vendor offerings to mature and become viable for its purpose, X embarked upon the project utilizing older technology that was severely challenged with respect to data modeling capabilities. The improvements, if successful, would provide a reduction in cost and improvement in speed that is substantial and economically significant. For example, having one employee-centric system would remove the duplicative time and cost of manually entering basic employee information separately in each application because the information would only have to be entered once to be available across all applications. The limitations of the technology X was attempting to utilize required that X attempt to develop a new database architecture. X committed substantial resources to the project, but could not predict, because of technical risk, whether it could develop the database software in the timeframe necessary so that X could recover its resources in a reasonable period. Specifically, X was uncertain regarding the capability of developing, within a reasonable period, a new database architecture using the old technology that would resolve its technological issues regarding the data modeling capabilities and the integration of the disparate systems into one system. At the beginning of the development, X did not intend to develop the software for commercial sale, lease, license, or to be otherwise marketed to third parties or to enable X to interact with third parties or to allow third parties to initiate functions or review data on X's system.
(ii) *Conclusion.* The software is internal use software because it is developed for use in a general and administrative function. However, the software satisfies the high threshold of innovation test set forth in paragraph (c)(6)(vii) of this section. The software was intended to be innovative in that it would provide a reduction in cost or improvement in speed that is substantial and economically significant. In addition, X's development activities involved significant economic risk in that X committed substantial resources to the development and there was substantial uncertainty, because of technical risk, that the resources would be recovered within a reasonable period. Finally, at the time X undertook the development of the system, software meeting X's requirements was not commercially available for use by X.

Example 16. *Internal use software; application of the high threshold of innovation test*—(i) *Facts.* X undertook a software project to rewrite a legacy mainframe application using an object-oriented programming language, and to move the new application off the mainframe to a client/server environment. Both the object-oriented language and client/server technologies were new to X. This project was undertaken to develop a more maintainable application, which X expected would significantly reduce the

cost of maintenance, and implement new features more quickly, which X expected would provide both significant improvements in speed and reduction in cost. Thus, the improvements, if successful, would provide a reduction in cost and improvement in speed that is substantial and economically significant. X also determined that commercially available systems did not meet the requirements of the proposed system. X was certain that it would be able to overcome any technological uncertainties and implement the improvements within a reasonable period. However, X was unsure of the appropriate methodology to achieve the improvements. At the beginning of the development, X does not intend to develop the software for commercial sale, lease, license, or to be otherwise marketed to third parties or to enable X to interact with third parties or to allow third parties to initiate functions or review data on X's system.
(ii) *Conclusion.* The software is internal use software because it is developed for use in a general and administrative function. X's activities do not satisfy the high threshold of innovation test of paragraph (c)(6)(vii) of this section. Although the software meets the requirements of paragraphs (c)(6)(vii)(A)(*1*) and (*3*) of this section, X's development activities did not involve significant economic risk under paragraph (c)(6)(vii)(A)(*2*) of this section. X did not have substantial uncertainty, because of technical risk, that the resources committed to the project would be recovered within a reasonable period.

Example 17. *Internal use software; application of the high threshold of innovation test*—(i) *Facts.* X wants to expand its internal computing power, and is aware that its PCs and workstations are idle at night, on the weekends, and for a significant part of any business day. Because the general and administrative computations that X needs to make could be done on workstations as well as PCs, X develops a screen-saver-like application that runs on employee computers. When employees' computers have been idle for an amount of time set by each employee, X's application goes back to a central server to get a new job to execute. This job will execute on the idle employee's computer until it has either finished, or the employee resumes working on his computer. The ability to use the idle employees' computers would save X significant costs because X would not have to buy new hardware to expand the computing power. The improvements, if successful, would provide a reduction in cost that is substantial and economically significant. At the time X undertook the software development project, there was no commercial application available with such a capability. In addition, at the time X undertook the software development project, X was uncertain regarding the capability of developing a server application that could schedule and distribute the jobs across thousands of PCs and workstations, as well as handle all the error conditions that occur on a user's machine. X commits substantial resources to the project. X undertakes a process of experimentation to attempt to eliminate its uncertainty. At the beginning of the development, X does not intend to develop the software for commercial sale, lease, license, or to be otherwise marketed to third parties or to enable X to interact with third parties or to allow third parties to initiate functions or review data on X's system.
(ii) *Conclusion.* The software is internal use software because it is developed for use in a general and administrative function. However, the software satisfies the high threshold of innovation test as set forth in paragraph (c)(6)(vii) of this section. The software was intended to be innovative because it would provide a reduction in cost or improvement in speed that is substantial and economically significant. In addition, X's development activities involved significant economic risk in that X committed substantial resources to the

development and there was substantial uncertainty that because of technical risk, such resources would be recovered within a reasonable period. Finally, at the time X undertook the development of the system, software meeting X's requirements was not commercially available for use by X.

Example 18. *Internal use software; application of the high threshold of innovation test*—(i) *Facts.* X, a multinational manufacturer, wants to install an enterprise resource planning (ERP) system that runs off a single database. However, to implement the ERP system, X determines that it must integrate part of its old system with the new because the ERP system does not have a particular function that X requires for its business. The two systems are general and administrative software systems. The systems have mutual incompatibilities. The integration, if successful, would provide a reduction in cost and improvement in speed that is substantial and economically significant. At the time X undertook this project, there was no commercial application available with such a capability. X is uncertain regarding the appropriate design of the interface software. However, X knows that given a reasonable period of time to experiment with various designs, X would be able to determine the appropriate design necessary to meet X's technical requirements and would recover the substantial resources that X commits to the development of the system within a reasonable period. At the beginning of the development, X does not intend to develop the software for commercial sale, lease, license, or to be otherwise marketed to third parties or to enable X to interact with third parties or to allow third parties to initiate functions or review data on X's system.
(ii) *Conclusion.* The software is internal use software because it is developed for use in a general and administrative function. X's activities do not satisfy the high threshold of innovation test of paragraph (c)(6)(vii) of this section. Although the software meets the requirements of paragraphs (c)(6)(vii)(A)(*1*) and (*3*) of this section, X's development activities did not involve significant economic risk under paragraph (c)(6)(vii)(A)(*2*) of this section. X did not have substantial uncertainty, because of technical risk, that the resources committed to the project would be recovered within a reasonable period.

(7) ***Activities outside the United States, Puerto Rico, and other possessions*** —

(i) ***In general.*** Research conducted outside the United States, as defined in section 7701(a)(9), the Commonwealth of Puerto Rico and other possessions of the United States does not constitute qualified research.

(ii) ***Apportionment of in-house research expenses.*** In-house research expenses paid or incurred for qualified services performed both in the United States, the Commonwealth of Puerto Rico and other possessions of the United States and outside the United States, the Commonwealth of Puerto Rico and other possessions of the United States must be apportioned between the services performed in the United States, the Commonwealth of Puerto Rico and other possessions of the United States and the services performed outside the United States, the Commonwealth of Puerto Rico and other possessions of the United States. Only those in-house research expenses apportioned to the services performed within the United States, the Commonwealth of Puerto Rico and other possessions of the United States are eligible to be treated as qualified research expenses, unless the in-house research expenses are wages and the 80 percent rule of § 1.41-2(d)(2) applies.

(iii) ***Apportionment of contract research expenses.*** If contract research is performed partly in the United States, the Commonwealth of Puerto Rico and other possessions of the United States and partly outside the United States, the Commonwealth of Puerto Rico and other possessions of the United States, only 65 percent (or 75 percent in the case of amounts paid to qualified research consortia) of the portion of the contract amount that is attributable to the research activity performed in the United States, the Commonwealth of Puerto Rico and other possessions of the United States may qualify as a contract research expense (even if 80 percent or more of the contract amount is for research performed in the United States, the Commonwealth of Puerto Rico and other possessions of the United States).

(8) ***Research in the social sciences, etc.*** Qualified research does not include research in the social sciences (including economics, business management, and behavioral sciences), arts, or humanities.

(9) ***Research funded by any grant, contract, or otherwise.*** Qualified research does not include any research to the extent funded by any grant, contract, or otherwise by another person (or governmental entity). To determine the extent to which research is so funded, § 1.41-4A(d) applies.

(10) ***Illustrations.*** The following examples illustrate provisions contained in paragraphs (c)(1) through (9) (excepting paragraphs (c)(6) of this section) of this section. No inference should be drawn from these examples concerning the application of section 41(d)(1) and paragraph (a) of this section to these facts. The examples are as follows:

> *Example 1.* (i) *Facts.* X, a tire manufacturer, develops a new material to use in its tires. X conducts research to determine the changes that will be necessary for X to modify its existing manufacturing processes to manufacture the new tire. X determines that the new tire material retains heat for a longer period of time than the materials X currently uses for tires, and, as a result, the new tire material adheres to the manufacturing equipment during tread cooling. X evaluates several alternatives for processing the treads at cooler temperatures to address this problem, including a new type of belt for its manufacturing equipment to be used in tread cooling. Such a belt is not commercially available. Because X is uncertain of the belt design, X develops and conducts sophisticated engineering tests on several alternative designs for a new type of belt to be used in tread cooling until X successfully achieves a design that meets X's requirements. X then manufactures a set of belts for its production equipment, installs the belts, and tests the belts to make sure they were manufactured correctly.
> (ii) *Conclusion.* X's research with respect to the design of the new belts to be used in its manufacturing of the new tire may be qualified research under section 41(d)(1) and paragraph (a) of this section. However, X's expenses to implement the new belts, including the costs to manufacture, install, and test the belts were incurred after the belts met the taxpayer's functional and economic requirements and are excluded as research after commercial production under section 41(d)(4)(A) and paragraph (c)(2) of this section.

> *Example 2.* (i) *Facts.* For several years, X has manufactured and sold a particular kind of widget. X initiates a new research project to develop a new or improved widget.

(ii) *Conclusion.* X's activities to develop a new or improved widget are not excluded from the definition of qualified research under section 41(d)(4)(A) and paragraph (c)(2) of this section. X's activities relating to the development of a new or improved widget constitute a new research project to develop a new business component. X's research activities relating to the development of the new or improved widget, a new business component, are not considered to be activities conducted after the beginning of commercial production under section 41(d)(4)(A) and paragraph (c)(2) of this section.

Example 3. (i) *Facts.* X, a computer software development firm, owns all substantial rights in a general ledger accounting software core program that X markets and licenses to customers. X incurs expenditures in adapting the core software program to the requirements of C, one of X's customers.
(ii) *Conclusion.* Because X's activities represent activities to adapt an existing software program to a particular customer's requirement or need, X's activities are excluded from the definition of qualified research under section 41(d)(4)(B) and paragraph (c)(3) of this section.

Example 4. (i) *Facts.* The facts are the same as in *Example 3,* except that C pays X to adapt the core software program to C's requirements.
(ii) *Conclusion.* Because X's activities are excluded from the definition of qualified research under section 41(d)(4)(B) and paragraph (c)(3) of this section, C's payments to X are not for qualified research and are not considered to be contract research expenses under section 41(b)(3)(A).

Example 5. (i) *Facts.* The facts are the same as in *Example 3,* except that C's own employees adapt the core software program to C's requirements.
(ii) *Conclusion.* Because C's employees' activities to adapt the core software program to C's requirements are excluded from the definition of qualified research under section 41(d)(4)(B) and paragraph (c)(3) of this section, the wages C paid to its employees do not constitute in-house research expenses under section 41(b)(2)(A).

Example 6. (i) *Facts.* X manufacturers and sells rail cars. Because rail cars have numerous specifications related to performance, reliability and quality, rail car designs are subject to extensive, complex testing in the scientific or laboratory sense. B orders passenger rail cars from X. B's rail car requirements differ from those of X's other existing customers only in that B wants fewer seats in its passenger cars and a higher quality seating material and carpet that are commercially available. X manufactures rail cars meeting B's requirements.
(ii) *Conclusion.* X's activities to manufacture rail cars for B are excluded from the definition of qualified research. The rail car sold to B was not a new business component, but merely an adaptation of an existing business component that did not require a process of experimentation. Thus, X's activities to manufacture rail cars for B are excluded from the

definition of qualified research under section 41(d)(4)(B) and paragraph (c)(3) of this section because X's activities represent activities to adapt an existing business component to a particular customer's requirement or need.

Example 7. (i) *Facts.* X, a manufacturer, undertakes to create a manufacturing process for a new valve design. X determines that it requires a specialized type of robotic equipment to use in the manufacturing process for its new valves. Such robotic equipment is not commercially available, and X, therefore, purchases the existing robotic equipment for the purpose of modifying it to meet its needs. X's engineers identify uncertainty that is technological in nature concerning how to modify the existing robotic equipment to meet its needs. X's engineers develop several alternative designs, and conduct experiments using modeling and simulation in modifying the robotic equipment and conduct extensive scientific and laboratory testing of design alternatives. As a result of this process, X's engineers develop a design for the robotic equipment that meets X's needs. X constructs and installs the modified robotic equipment on its manufacturing process.
(ii) *Conclusion.* X's research activities to determine how to modify X's robotic equipment for its manufacturing process are not excluded from the definition of qualified research under section 41(d)(4)(B) and paragraph (c)(3) of this section, provided that X's research activities satisfy the requirements of section 41(d)(1).

Example 8. (i) *Facts.* An existing gasoline additive is manufactured by Y using three ingredients, A, B, and C. X seeks to develop and manufacture its own gasoline additive that appears and functions in a manner similar to Y's additive. To develop its own additive, X first inspects the composition of Y's additive, and uses knowledge gained from the inspection to reproduce A and B in the laboratory. Any differences between ingredients A and B that are used in Y's additive and those reproduced by X are insignificant and are not material to the viability, effectiveness, or cost of A and B. X desires to use with A and B an ingredient that has a materially lower cost than ingredient C. Accordingly, X engages in a process of experimentation to develop, analyze and test potential alternative formulations of the additive.
(ii) *Conclusion.* X's activities in analyzing and reproducing ingredients A and B involve duplication of existing business components and are excluded from the definition of qualified research under section 41(d)(4)(C) and paragraph (c)(4) of this section. X's experimentation activities to develop potential alternative formulations of the additive do not involve duplication of an existing business component and are not excluded from the definition of qualified research under section 41(d)(4)(C) and paragraph (c)(4) of this section.

Example 9. (i) *Facts.* X, a manufacturing corporation, undertakes to restructure its manufacturing organization. X organizes a team to design an organizational structure that will improve X's business operations. The team includes X's employees as well as outside

management consultants. The team studies current operations, interviews X's employees, and studies the structure of other manufacturing facilities to determine appropriate modifications to X's current business operations. The team develops a recommendation of proposed modifications which it presents to X's management. X's management approves the team's recommendation and begins to implement the proposed modifications.
(ii) *Conclusion.* X's activities in developing and implementing the new management structure are excluded from the definition of qualified research under section 41(d)(4)(D) and paragraph (c)(5) of this section. Qualified research does not include activities relating to management functions or techniques including management organization plans and management-based changes in production processes.

Example 10. (i) *Facts.* X, an insurance company, develops a new life insurance product. In the course of developing the product, X engages in research with respect to the effect of pricing and tax consequences on demand for the product, the expected volatility of interest rates, and the expected mortality rates (based on published data and prior insurance claims).
(ii) *Conclusion.* X's activities related to the new product represent research in the social sciences (including economics and business management) and are thus excluded from the definition of qualified research under section 41(d)(4)(G) and paragraph (c)(8) of this section.

(d) ***Recordkeeping for the research credit.*** A taxpayer claiming a credit under section 41 must retain records in sufficiently usable form and detail to substantiate that the expenditures claimed are eligible for the credit. For the rules governing record retention, see § 1.6001-1. To facilitate compliance and administration, the IRS and taxpayers may agree to guidelines for the keeping of specific records for purposes of substantiating research credits.

(e) ***Effective/applicability dates.*** Other than paragraph (c)(6) of this section, this section is applicable for taxable years ending on or after December 31, 2003. Paragraph (c)(6) of this section is applicable for taxable years beginning on or after October 4, 2016. For any taxable year that both ends on or after January 20, 2015 and begins before October 4, 2016, the IRS will not challenge return positions consistent with all of paragraph (c)(6) of this section or all of paragraph (c)(6) of this section as contained in the Internal Revenue Bulletin (IRB) 2015-5 (see *www.irs.gov/pub/irs-irbs/irb15-05.pdf*). For taxable years ending before January 20, 2015, taxpayers may choose to follow either all of § 1.41-4(c)(6) as contained in 26 CFR part 1 (revised as of April 1, 2003) and IRB 2001-5 (see *www.irs.gov/pub/irs-irbs/irb01-05.pdf*) or all of § 1.41-4(c)(6) as contained in IRB 2002-4 (see *www.irs.gov/pub/irs-irbs/irb02-04.pdf*).

[T.D. 8930, 66 FR 290, Jan. 3, 2001, as amended by T.D. 9104, 69 FR 26, Jan. 2, 2004; T.D. 9786, 81 FR 68307, Oct. 4, 2016; 81 FR 76496, Nov. 3, 2016]

§ 1.41-4A Qualified research for taxable years beginning before January 1, 1986.

(a) ***General rule.*** Except as otherwise provided in section 30(d) (as that section read before amendment by the Tax Reform Act of 1986) and in this section, the term “qualified research” means research, expenditures for which would be research and experimental expenditures within the meaning of section 174.

Expenditures that are ineligible for the section 174 deduction elections are not expenditures for qualified research. For example, expenditures for the acquisition of land or depreciable property used in research, and mineral exploration costs described in section 174(d), are not expenditures for qualified research.

(b) ***Activities outside the United States*** —

(1) ***In-house research.*** In-house research conducted outside the United States (as defined in section 7701(a)(9)) cannot constitute qualified research. Thus, wages paid to an employee scientist for services performed in a laboratory in the United States and in a test station in Antarctica must be apportioned between the services performed within the United States and the services performed outside the United States, and only the wages apportioned to the services conducted within the United States are qualified research expenses unless the 80 percent rule of § 1.41-2(d)(2) applies.

(2) ***Contract research.*** If contract research is performed partly within the United States and partly without, only 65 percent of the portion of the contract amount that is attributable to the research performed within the United States can qualify as contract research expense (even if 80 percent or more of the contract amount was for research performed in the United States).

(c) ***Social sciences or humanities.*** Qualified research does not include research in the social sciences or humanities. For purposes of section 30(d)(2) (as that section read before amendment by the Tax Reform Act of 1986) and of this section, the phrase “research in the social sciences or humanities” encompasses all areas of research other than research in a field of laboratory science (such as physics or biochemistry), engineering or technology. Examples of research in the social sciences or humanities include the development of a new life insurance contract, a new economic model or theory, a new accounting procedure or a new cookbook.

(d) ***Research funded by any grant, contract, or otherwise*** —

(1) ***In general.*** Research does not constitute qualified research to the extent it is funded by any grant, contract, or otherwise by another person (including any governmental entity). All agreements (not only research contracts) entered into between the taxpayer performing the research and other persons shall be considered in determining the extent to which the research is funded. Amounts payable under any agreement that are contingent on the success of the research and thus considered to be paid for the product or result of the research (see § 1.41-2(e)(2)) are not treated as funding. For special rules regarding funding between commonly controlled businesses, see § 1.41-6(e).

(2) ***Research in which taxpayer retains no rights.*** If a taxpayer performing research for another person retains no substantial rights in research under the agreement providing for the research, the research is treated as fully funded for purposes of section 41(d)(4)(H), and no expenses paid or incurred by the taxpayer in performing the research are qualified research expenses. For example, if the taxpayer performs research under an agreement that confers on another person the exclusive right to exploit the results of the research, the taxpayer is not performing qualified research because the research is treated as fully funded under this paragraph (d)(2). Incidental benefits to the taxpayer from performance of the research (for example, increased experience in a field of research) do not constitute substantial rights in the research. If a taxpayer performing research for another person retains no substantial rights in the research and if the payments to the researcher are contingent upon the success of the research, neither the performer nor the person paying for the research is entitled to treat any portion of the expenditures as qualified research expenditures.

(3) ***Research in which the taxpayer retains substantial rights*** —

(i) ***In general.*** If a taxpayer performing research for another person retains substantial rights in the research under the agreement providing for the research, the research is funded to the extent of the payments (and fair market value of any property) to which the taxpayer becomes entitled by performing the research. A taxpayer does not retain substantial rights in the research if the taxpayer must pay for the right to use the results of the research. Except as otherwise provided in paragraph (d)(3)(ii) of this section, the taxpayer shall reduce the amount paid or incurred by the taxpayer for the research that would, but for section 41(d)(4)(H), constitute qualified research expenses of the taxpayer by the amount of funding determined under the preceding sentence.

(ii) ***Pro rata allocation.*** If the taxpayer can establish to the satisfaction of the district director—

(A) The total amount of research expenses,

(B) That the total amount of research expenses exceed the funding, and

(C) That the otherwise qualified research expenses (that is, the expenses which would be qualified research expenses if there were no funding) exceed 65 percent of the funding, then the taxpayer may allocate the funding pro rata to nonqualified and otherwise qualified research expenses, rather than allocating it 100 percent to otherwise qualified research expenses (as provided in paragraph (d)(3)(i) of this section). In no event, however, shall less than 65 percent of the funding be applied against the otherwise qualified research expenses.

(iii) ***Project-by-project determination.*** The provisions of this paragraph (d)(3) shall be applied separately to each research project undertaken by the taxpayer.

(4) ***Independent research and development under the Federal Acquisition Regulations System and similar provisions.*** The Federal Acquisition Regulations System and similar rules and regulations relating to contracts (fixed price, cost plus, etc.) with government entities provide for allocation of certain "independent research and development costs" and "bid and proposal costs" of a contractor to contracts entered into with that contractor. In general, any "independent research and development costs" and "bid and proposal costs" paid to a taxpayer by reason of such a contract shall not be treated as funding the underlying research activities except to the extent the "independent research and development costs" and "bid and proposal costs" are properly severable from the contract. See § 1.451-3(e); see also section 804(d)(2) of the Tax Reform Act of 1986.

(5) ***Funding determinable only in subsequent taxable year.*** If at the time the taxpayer files its return for a taxable year, it is impossible to determine to what extent particular research performed by the taxpayer during that year may be funded, then the taxpayer shall treat the research as completely funded for purposes of completing that return. When the amount of funding is finally determined, the taxpayer should amend the return and any interim returns to reflect the proper amount of funding.

(6) ***Examples.*** The following examples illustrate the application of the principles contained in this paragraph.

> *Example 1.* A enters into a contract with B Corporation, a cash-method taxpayer using the calendar year as its taxable year, under which B is to perform research that would, but for section 41(d)(3)(H), be qualified research of B. The agreement calls for A to pay B $120x, regardless of the outcome of the research. In 1982, A makes full payment of $120x under the

contract, B performs all the research, and B pays all the expenses connected with the research, as follows:

In-house research expenses	$100x
Outside research:	
(Amount B paid to third parties for research, 65 percent of which ($26x) is treated as a contract research expense of B)	40x
Overhead and other expenses	10x
Total	150x

If B has no rights to the research, B is fully funded. Alternatively, assume that B retains the right to use the results of the research in carrying on B's business. Of B's otherwise qualified research expenses of $126x + $26x), $120x is treated as funded by A. Thus $6x ($126x − $120x) is treated as a qualified research expense of B. However, if B establishes the facts required under paragraph (d)(3) of this section, B can allocate the funding pro rata to nonqualified and otherwise qualified research expenses. Thus $100.8x ($120x ($126x/$150x)) would be allocated to otherwise qualified research expenses. B's qualified research expenses would be $25.2x ($126x − $100.8x). For purposes of the following examples (2), (3) and (4) assume that B retains substantial rights to use the results of the research in carrying on B's business.

Example 2. The facts are the same as in example (1) (assuming that B retains the right to use the results of the research in carrying on B's business) except that, although A makes full payment of $120x during 1982, B does not perform the research or pay the associated expenses until 1983. The computations are unchanged. However, B's qualified research expenses determined in example (1) are qualified research expenses during 1983.

Example 3. The facts are the same as in example (1) (assuming that B retains the right to use the results of the research in carrying on B's business) except that, although B performs the research and pays the associated expenses during 1982, A does not pay the $120x until 1983. The computations are unchanged and the amount determined in example (1) is a qualified research expense of B during 1982.

Example 4. The facts are the same as in example (1) (assuming that B retains the right to use the results of the research in carrying on B's business) except that, instead of agreeing to pay B $120x, A agrees to pay $100x regardless of the outcome and an additional $20x only if B's research produces a useful product. B's research produces a useful product and A pays B $120x during 1982. The $20x payment that is conditional on the success of the research is not treated as funding. Assuming that B establishes to the satisfaction of the district director the actual research expenses, B can allocate the funding to nonqualified and otherwise qualified research expenses. Thus $84x ($100x ($126x/$150x)) would be allocated to otherwise qualified research expenses. B's qualified research expenses would be $42x ($126x − $84x).

Example 5. C enters into a contract with D, a cash-method taxpayer using the calendar year as its taxable year, under which D is to perform research in which both C and D will have substantial rights. C agrees to reimburse D for 80 percent of D's expenses for the research. D performs part of the research in 1982 and the rest in 1983. At the time that D files its return for 1982, D is unable to determine the extent to which the research is funded under the provisions of this paragraph. Under these circumstances, D may not treat any of the expenses paid by D for this research during 1982 as qualified research expenses on its 1982 return. When the project is complete and D can determine the extent of funding, D should file an amended return for 1982 to take into account any qualified research expense for 1982.

[T.D. 8251, 54 FR 21204, May 17, 1989. Redesignated and amended by T.D. 8930, 66 FR 295, Jan. 3, 2001]

§ 1.41-5 Basic research for taxable years beginning after December 31, 1986. [Reserved]

§ 1.41-5A Basic research for taxable years beginning before January 1, 1987.

(a) ***In general.*** The amount expended for basic research within the meaning of section 30(e) (before amended by the Tax Reform Act of 1986) equals the sum of money plus the taxpayer's basis in tangible property (other than land) transferred for use in the performance of basic research.

(b) ***Trade or business requirement.*** Any amount treated as a contract research expense under section 30(e) (before amendment by the Tax Reform Act of 1986) shall be deemed to have been paid or incurred in carrying on a trade or business, if the corporation that paid or incurred the expenses is actually engaged in carrying on some trade or business.

(c) ***Prepaid amounts*** —

(1) ***In general.*** If any basic research expense paid or incurred during any taxable year is attributable to research to be conducted after the close of such taxable year, the expense so attributable shall be treated for purposes of section 30(b)(1)(B) (before amendment by the Tax Reform Act of 1986) as paid or incurred during the period in which the basic research is conducted.

(2) ***Transfers of property.*** In the case of transfers of property to be used in the performance of basic research, the research in which that property is to be used shall be considered to be conducted ratably over a period beginning on the day the property is first so used and continuing for the number of years provided with respect to property of that class under section 168(c)(2) (before amendment by the Tax Reform Act of 1986). For example, if an item of property which is 3-year property under section 168(c) is transferred to a university for basic research on January 12, 1983, and is first so used by the university on March 1, 1983, then the research in which that property is used is considered to be conducted ratably from March 1, 1983, through February 28, 1986.

(d) ***Written research agreement*** —

(1) ***In general.*** A written research agreement must be entered into prior to the performance of the basic research.

(2) ***Agreement between a corporation and a qualified organization after June 30, 1983*** —

(i) ***In general.*** A written research agreement between a corporation and a qualified organization (including a qualified fund) entered into after June 30, 1983, shall provide that the organization shall inform the corporation within 60 days after the close of each taxable year of the corporation what amount of funds provided by the corporation pursuant to the agreement was

expended on basic research during the taxable year of the corporation. In determining amounts expended on basic research, the qualified organization shall take into account the exclusions specified in section 30(e)(3) (before amendment by the Tax Reform Act of 1986) and in paragraph (e) of this section.

(ii) ***Transfers of property.*** In the case of transfers of property to be used in basic research, the agreement shall provide that substantially all use of the property is to be for basic research, as defined in section 30(e)(3) (before amendment by the Tax Reform Act of 1986).

(3) ***Agreement between a qualified fund and a qualified educational organization after June 30, 1983.*** A written research agreement between a qualified fund and a qualified educational organization (see section 30(e)(4)(B)(iii) (before amendment by the Tax Reform Act of 1986)) entered into after June 30, 1983, shall provide that the qualified educational organization shall furnish sufficient information to the qualified fund to enable the qualified fund to comply with the written research agreements it has entered into with grantor corporations, including the requirement set forth in paragraph (d)(2) of this section.

(e) ***Exclusions*** —

(1) ***Research conducted outside the United States.*** If a taxpayer pays or incurs an amount for basic research to be performed partly within the United States and partly without, only 65 percent of the portion of the amount attributable to research performed within the United States can be treated as a contract research expense (even if 80 percent or more of the contract amount was for basic research performed in the United States).

(2) ***Research in the social sciences or humanities.*** Basic research does not include research in the social sciences or humanities, within the meaning of § 1.41-4A(c).

(f) ***Procedure for making an election to be treated as a qualified fund.*** In order to make an election to be treated as a qualified fund within the meaning of section 30(e)(4)(B)(iii) (before amendment by the Tax Reform Act of 1986) or as an organization described in section 41(e)(6)(D), the organization shall file with the Internal Revenue Service center with which it files its annual return a statement that—

(1) Sets out the name, address, and taxpayer identification number of the electing organization (the “taxpayer”) and of the organization that established and maintains the electing organization (the “controlling organization”),

(2) Identifies the election as an election under section 41(e)(6)(D) of the Code,

(3) Affirms that the controlling organization and the taxpayer are section 501(c)(3) organizations,

(4) Provides that the taxpayer elects to be treated as a private foundation for all Code purposes other than section 4940,

(5) Affirms that the taxpayer satisfies the requirement of section 41(e)(6)(D)(iii), and

(6) Specifies the date on which the election is to become effective.

If an election to be treated as a qualified fund is filed before February 1, 1982, the election may be made effective as of any date after June 30, 1981, and before January 1, 1986. If an election is filed on or after February 1, 1982, the election may be made effective as of any date on or after the date on which the election is filed.

[T.D. 8251, 54 FR 21204, May 17, 1989. Redesignated and amended by T.D. 8930, 66 FR 295, Jan. 3, 2001]

§ 1.41-6 Aggregation of expenditures.

(a) *Controlled group of corporations; trades or businesses under common control* —

(1) ***In general.*** To determine the amount of research credit (if any) allowable to a trade or business that at the end of its taxable year is a member of a controlled group, a taxpayer must—

(i) Compute the group credit in the manner described in paragraph (b) of this section; and

(ii) Allocate the group credit among the members of the group in the manner described in paragraph (c) of this section.

(2) ***Consolidated groups.*** For special rules relating to consolidated groups, see paragraph (d) of this section.

(3) ***Definitions.*** For purposes of this section—

(i) ***Consolidated group*** has the meaning set forth in § 1.1502-1(h).

(ii) ***Controlled group*** and *group* mean a controlled group of corporations, as defined in section 41(f)(5), or a group of trades or businesses under common control. For rules for determining whether trades or businesses are under common control, see § 1.52-1 (b) through (g).

(iii) ***Credit year*** means the taxable year for which the member is computing the credit.

(iv) ***Group credit*** means the research credit (if any) allowable to a controlled group.

(v) ***Trade or business*** means a sole proprietorship, a partnership, a trust, an estate, or a corporation that is carrying on a trade or business (within the meaning of section 162). Any corporation that is a member of a commonly controlled group shall be deemed to be carrying on a trade or business if any other member of that group is carrying on any trade or business.

(b) *Computation of the group credit* —

(1) ***In general.*** All members of a controlled group are treated as a single taxpayer for purposes of computing the research credit. The group credit is compute2d by applying all of the section 41 computational rules on an aggregate basis. All members of a controlled group must use the same method of computation: The method described in section 41(a)(1), the alternative incremental credit (AIRC) method described in section 41(c)(4) (available for years beginning on or before December 31, 2008), or the alternative simplified credit (ASC) method described in section 41(c)(5), in computing the group credit for a credit year.

(2) *Start-up companies* —

(i) ***In general.*** For purposes of computing the group credit, a controlled group is treated as a start-up company for purposes of section 41(c)(3)(B)(i) if—

(A) There was no taxable year beginning before January 1, 1984, in which a member of the group had gross receipts and either the same member or another member also had qualified research expenditures (QREs); or

(B) There were fewer than three taxable years beginning after December 31, 1983, and before January 1, 1989, in which a member of the group had gross receipts and either the same member or another member also had QREs.

(ii) ***Example.*** The following example illustrates the principles of paragraph (b)(2)(i) of this section:

Example. A, B, and C, all of which are calendar year taxpayers, are members of a controlled group. During the 1983 taxable year, A had QREs, but no gross receipts; B had gross receipts, but no QREs; and C had no QREs or gross receipts. The 1984 taxable year was the first taxable year for which each of A, B, and C had both QREs and gross receipts. A, B, and C had both QREs and gross receipts in 1985, 1986, 1987, and 1988. Because the first taxable year for which each of A, B, and C had both QREs and gross receipts began after December 31, 1983, each of A, B, and C is a start-up company under section 41(c)(3)(B)(i) and each is a start-up company for purposes of computing the stand-alone entity credit. During the 1983 taxable year, at least one member of the group, A, had QREs and at least one member of the group, B, had gross receipts, thus, the group had both QREs and gross receipts in 1983. Therefore, the controlled group is not a start-up company because the first taxable year for which the group had both QREs and gross receipts did not begin after December 31, 1983, and there were not fewer than three taxable years beginning after December 31, 1983, and before January 1, 1989, in which a member of the group had gross receipts and QREs.

(iii) ***First taxable year after December 31, 1993, for which the controlled group had QREs.*** In the case of a controlled group that is treated as a start-up company under section 41(c)(3)(B)(i) and paragraph (b)(2)(i) of this section, for purposes of determining the group's fixed-base percentage under section 41(c)(3)(B)(ii), the first taxable year after December 31, 1993, for which the group has QREs is the first taxable year in which at least one member of the group has QREs.

(iv) ***Example.*** The following example illustrates the principles of paragraph (b)(2)(iii) of this section:

Example. D, E, and F, all of which are calendar year taxpayers, are members of a controlled group. The group is treated as a start-up company under section 41(c)(3)(B)(i) and paragraph (b)(2)(i) of this section. The first taxable year after December 31, 1993, for which D had QREs was 1994. The first taxable year after December 31, 1993, for which E had QREs was 1995. The first taxable year after December 31, 1993, for which F had QREs was 1996. Because the 1994 taxable year was the first taxable year after December 31, 1993, for which at least one member of the group, D, had QREs, for purposes of determining the group's fixed-based percentage under section 41(c)(3)(B)(ii), the 1994 taxable year was the first taxable year after December 31, 1993, for which the group had QREs.

(c) ***Allocation of the group credit.*** The group credit is allocated to each member of the controlled group on a proportionate basis to its share of the aggregate of the qualified research expenses, basic research payments, and amounts paid or incurred to energy research consortiums taken into account for the taxable year by such controlled group for purposes of the credit. For purposes of paragraphs (c), (d), and (e) of this section, qualified research expenses, basic research payments, and amounts paid or incurred to energy research consortiums are collectively referred to as QREs.

(d) ***Special rules for consolidated groups*** —

(1) ***In general.*** For purposes of applying paragraph (c) of this section, members of a consolidated group who are members of a controlled group are treated as a single member of the controlled group.

(2) ***Start-up company status.*** A consolidated group's status as a start-up company and the first taxable year after December 31, 1993, for which a consolidated group has QREs are determined in accordance with the principles of paragraph (b)(2) of this section.

(3) ***Special rule for allocation of group credit among consolidated group members.*** The portion of the group credit that is allocated to a consolidated group is allocated to each member of the consolidated group on a proportionate basis to its share of the aggregate of the QREs taken into account for the taxable year by such consolidated group for purposes of the credit.

(e) ***Examples.*** The following examples illustrate the provisions of paragraphs (c) and (d) of this section.

Example 1. Controlled group. A, B, and C are a controlled group. A had $100x, B $300x, and C $500x of qualified research expenses for the year, totaling $900x for the group. A, in the course of its trade or business, also made a payment of $100x to an energy research consortium for energy research. The group's QREs total 1,000x and the group calculated its total research credit to be $60x for the year. Based on each member's proportionate share of the controlled group's aggregate QREs, A is allocated $12x, B $18x, and C $30x of the credit.

Example 2. Consolidated group is a member of controlled group. The controlled group's members are D, E, F, G, and H. F, G, and H file a consolidated return and are treated as a single member (FGH) of the controlled group. D had $240x, E $360x, and FGH $600x of qualified research expenses for the year ($1,200x aggregate). The group calculated its research credit to be $100x for the year. Based on the proportion of each member's share of QREs to the controlled group's aggregate QREs for the taxable year D is allocated $20x, E $30x, and FGH $50x of the credit. The $50x of credit allocated to FGH is then allocated to the consolidated group members based on the proportion of each consolidated group member's share of QREs to the consolidated group's aggregate QREs. F had $120x, G $240x, and H $240x of QREs for the year. Therefore, F is allocated $10x, G is allocated $20x, and H is allocated $20x.

(f) ***For taxable years beginning before January 1, 1990.*** For taxable years beginning before January 1, 1990, see § 1.41-6 as contained in 26 CFR part 1, revised April 1, 2005.

(g) ***Tax accounting periods used*** —

(1) ***In general.*** The credit allowable to a member of a controlled group is that member's share of the group credit computed as of the end of that member's taxable year. In computing the group credit for a group whose members have different taxable years, a member generally should treat the taxable year of another member that ends with or within the credit year of the computing member as the credit year of that other member. For example, Q, R, and S are members of a controlled group of corporations. Both Q and R are calendar year taxpayers. S files a return using a fiscal year ending June 30. For purposes of computing the group credit at the end of Q's and R's taxable year on December 31, S's fiscal year ending June 30, which ends within Q's and R's taxable year, is treated as S's credit year.

(2) ***Special rule when timing of research is manipulated.*** If the timing of research by members using different tax accounting periods is manipulated to generate a credit in excess of the amount that would be allowable if all members of the group used the same tax accounting period, then the appropriate Internal Revenue Service official in the operating division that has examination jurisdiction of the return may require each member of the group to calculate the credit in the current taxable year and all future years as if all members of the group had the same taxable year and base period as the computing member.

(h) ***Membership during taxable year in more than one group.*** A trade or business may be a member of only one group for a taxable year. If, without application of this paragraph, a business would be a member of more than one group at the end of its taxable year, the business shall be treated as a member of the group in which it was included for its preceding taxable year. If the business was not included for its preceding

taxable year in any group in which it could be included as of the end of its taxable year, the business shall designate in its timely filed (including extensions) return the group in which it is being included. If the return for a taxable year is due before July 1, 1983, the business may designate its group membership through an amended return for that year filed on or before June 30, 1983. If the business does not so designate, then the appropriate Internal Revenue Service official in the operating division that has examination jurisdiction of the return will determine the group in which the business is to be included.

(i) *Intra-group transactions* —

(1) ***In general.*** Because all members of a group under common control are treated as a single taxpayer for purposes of determining the research credit, transfers between members of the group are generally disregarded.

(2) ***In-house research expenses.*** If one member of a group performs qualified research on behalf of another member, the member performing the research shall include in its QREs any in-house research expenses for that work and shall not treat any amount received or accrued as funding the research. Conversely, the member for whom the research is performed shall not treat any part of any amount paid or incurred as a contract research expense. For purposes of determining whether the in-house research for that work is qualified research, the member performing the research shall be treated as carrying on any trade or business carried on by the member on whose behalf the research is performed.

(3) ***Contract research expenses.*** If a member of a group pays or incurs contract research expenses to a person outside the group in carrying on the member's trade or business, that member shall include those expenses as QREs. However, if the expenses are not paid or incurred in carrying on any trade or business of that member, those expenses may be taken into account as contract research expenses by another member of the group provided that the other member—

(i) Reimburses the member paying or incurring the expenses; and

(ii) Carries on a trade or business to which the research relates.

(4) ***Lease payments.*** The amount paid or incurred to another member of the group for the lease of personal property owned by a member of the group is not taken into account for purposes of section 41. Amounts paid or incurred to another member of the group for the lease of personal property owned by a person outside the group shall be taken into account as in-house research expenses for purposes of section 41 only to the extent of the lesser of—

(i) The amount paid or incurred to the other member; or

(ii) The amount of the lease expenses paid to the person outside the group.

(5) ***Payment for supplies.*** Amounts paid or incurred to another member of the group for supplies shall be taken into account as in-house research expenses for purposes of section 41 only to the extent of the lesser of—

(i) The amount paid or incurred to the other member; or

(ii) The amount of the other member's basis in the supplies.

(j) *Effective/applicability dates* —

(1) ***In general.*** Except for paragraph (d) of this section, these regulations are applicable for taxable years ending on or after May 24, 2005. Generally, a taxpayer may use any reasonable method of computing and allocating the credit (including use of the consolidated group rule contained in paragraph (d) of this section) for taxable years ending before May 24, 2005. However, paragraph (b) of this section, relating to the computation of the group credit, and paragraph (c) of this section, relating to the allocation of the group credit, (applied without regard to paragraph (d) of this section) will apply to taxable years ending on or after December 29, 1999, if the members of a controlled group, as a whole, claimed more than 100 percent of the amount that would be allowable under paragraph (b) of this section. In the case of a controlled group whose members have different taxable years and whose members use inconsistent methods of allocation, the members of the controlled group shall be deemed to have, as a whole, claimed more than 100 percent of the amount that would be allowable under paragraph (b) of this section.

(2) ***Consolidated group rule.*** Paragraph (d) of this section is applicable for taxable years ending on or after November 9, 2006. For taxable years ending on or after May 24, 2005, and before November 9, 2006, see § 1.41-6T(d) as contained in 26 CFR part 1, revised April 1, 2006.

(3) ***Taxable years ending after June 9, 2011.*** Paragraphs (b)(1), (c)(2), and (e) of this section are applicable for taxable years ending after June 9, 2011. For taxable years ending on or before June 9, 2011, see §§ 1.41-6T and 1.41-6 as contained in 26 CFR part 1, revised April 1, 2011.

(4) ***Taxable years beginning after December 31, 2011.*** Paragraphs (c), (d)(1) and (3), (e), and (j)(4) and (5) of this section apply to taxable years beginning on or after April 2, 2018. For taxable years ending before April 2, 2018, see § 1.41-6T as contained in 26 CFR part 1, as revised April 1, 2017.

(5) ***Taxable years beginning before January 1, 2012.*** See § 1.41-6 as contained in 26 CFR part 1, revised April 1, 2014.

[T.D. 9296, 71 FR 65725, Nov. 9, 2006; 71 FR 70875, Dec. 7, 2006; 71 FR 75614, Dec. 15, 2006; T.D. 9401, 73 FR 34188, June 17, 2008; T.D. 9528, 76 FR 33995, June 10, 2011; T.D. 9717, 80 FR 18098, Apr. 3, 2015; T.D. 9832, 83 FR 13184, Mar. 28, 2018]

§ 1.41-7 Special rules.

(a) ***Allocations —***

(1) ***Corporation making an election under subchapter S —***

(i) ***Pass-through, for taxable years beginning after December 31, 1982, in the case of an S corporation.*** In the case of an S corporation (as defined in section 1361) the amount of research credit computed for the corporation shall be allocated to the shareholders according to the provisions of section 1366 and section 1377.

(ii) ***Pass-through, for taxable years beginning before January 1, 1983, in the case of a subchapter S corporation.*** In the case of an electing small business corporation (as defined in section 1371 as that section read before the amendments made by the subchapter S Revision Act of 1982), the amount of the research credit computed for the corporation for any taxable year shall be apportioned pro rata among the persons who are shareholders of the corporation on the last day of the corporation's taxable year.

(2) ***Pass-through in the case of an estate or trust.*** In the case of an estate or trust, the amount of the research credit computed for the estate or trust for any taxable year shall be apportioned among the estate or trust and the beneficiaries on the basis of the income of the estate or trust allocable to each.

(3) ***Pass-through in the case of a partnership*** —

(i) ***In general.*** In the case of a partnership, the research credit computed for the partnership for any taxable year shall be apportioned among the persons who are partners during the taxable year in accordance with section 704 and the regulations thereunder. See, for example, § 1.704-1(b)(4)(ii). Because the research credit is an expenditure-based credit, the credit is to be allocated among the partners in the same proportion as section 174 expenditures are allocated for the year.

(ii) ***Certain expenditures by joint ventures.*** Research expenses to which § 1.41-2(a)(4)(ii) applies shall be apportioned among the persons who are partners during the taxable year in accordance with the provisions of that section. For purposes of section 41, these expenses shall be treated as paid or incurred directly by the partners rather than by the partnership. Thus, the partnership shall disregard these expenses in computing the credit to be apportioned under paragraph (a)(3)(i) of this section, and in making the computations under section 41 each partner shall aggregate its distributive share of these expenses with other research expenses of the partner. The limitation on the amount of the credit set out in section 41(g) and in paragraph (c) of this section shall not apply because the credit is computed by the partner, not the partnership.

(4) ***Year in which taken into account.*** An amount apportioned to a person under this paragraph shall be taken into account by the person in the taxable year of such person which or within which the taxable year of the corporation, estate, trust, or partnership (as the case may be) ends.

(5) ***Credit allowed subject to limitation.*** The credit allowable to any person to whom any amount has been apportioned under paragraph (a)(1), (2) or (3)(i) of this section is subject to section 41(g) and sections 38 and 39 of the Code, if applicable.

(b) ***Adjustments for certain acquisitions and dispositions—Meaning of terms.*** For the meaning of “acquisition,” “separate unit,” and “major portion,” see paragraph (b) of § 1.52-2. An “acquisition” includes an incorporation or a liquidation.

(c) ***Special rule for pass-through of credit.*** The special rule contained in section 41(g) for the pass-through of the credit in the case of an individual who owns an interest in an unincorporated trade or business, is a partner in a partnership, is a beneficiary of an estate or trust, or is a shareholder in an S corporation shall be applied in accordance with the principles set forth in § 1.53-3.

(d) ***Carryback and carryover of unused credits.*** The taxpayer to whom the credit is passed through under paragraph (c) of this section shall not be prevented from applying the unused portion in a carryback or carryover year merely because the entity that earned the credit changes its form of conducting business.

[T.D. 8251, 54 FR 21204, May 17, 1989. Redesignated by T.D. 8930, 66 FR 295, Jan. 3, 2001]

§ 1.41-8 Alternative incremental credit applicable for taxable years beginning on or before December 31, 2008.

(a) ***Determination of credit.*** At the election of the taxpayer, the credit determined under section 41(a)(1) equals the amount determined under section 41(c)(4).

(b) ***Election*** —

(1) ***In general.*** A taxpayer may elect to apply the provisions of the alternative incremental research credit (AIRC) in section 41(c)(4) for any taxable year of the taxpayer beginning after June 30, 1996. If a taxpayer makes an election under section 41(c)(4), the election applies to the taxable year for which made and all subsequent taxable years unless revoked in the manner prescribed in paragraph (b)(3) of this section.

(2) ***Time and manner of election.*** An election under section 41(c)(4) is made by completing the portion of Form 6765, "Credit for Increasing Research Activities," (or successor form) relating to the election of the AIRC, and attaching the completed form to the taxpayer's timely filed (including extensions) original return for the taxable year to which the election applies. An election under section 41(c)(4) may not be made on an amended return. An extension of time to make an election under section 41(c)(4) will not be granted under § 301.9100-3 of this chapter.

(3) ***Revocation.*** An election under this section may not be revoked except with the consent of the Commissioner. A taxpayer is deemed to have requested, and to have been granted, the consent of the Commissioner to revoke an election under section 41(c)(4) if the taxpayer completes the portion of Form 6765, "Credit For Increasing Research Activities," (or successor form) relating to the amount determined under section 41(a)(1) (the regular credit) or the alternative simplified credit (ASC) and attaches the completed form to the taxpayer's timely filed (including extensions) original return for the year to which the revocation applies. An election under section 41(c)(4) may not be revoked on an amended return. An extension of time to revoke an election under section 41(c)(4) will not be granted under § 301.9100-3 of this chapter.

(4) ***Special rules for controlled groups*** —

(i) ***In general.*** In the case of a controlled group of corporations, all the members of which are not included on a single consolidated return, an election (or revocation) must be made by the designated member by satisfying the requirements of paragraph (b)(2) or (b)(3) of this section (whichever applies), and such election (or revocation) by the designated member shall be binding on all the members of the group for the credit year to which the election (or revocation) relates. If the designated member fails to timely make (or revoke) an election, each member of the group must compute the group credit using the method used to compute the group credit for the immediately preceding credit year.

(ii) ***Designated member.*** For purposes of this paragraph (b)(4), for any credit year, the term *designated member* means that member of the group that is allocated the greatest amount of the group credit under § 1.41-6(c) based on the amount of credit reported on the taxpayer's timely filed (including extensions) original Federal income tax return (even if that member subsequently is determined not to be the designated member). If the members of a group compute the group credit using different methods (the method described in section 41(a)(1), the AIRC method of section 41(c)(4) (available for years beginning on or before December 31, 2008), or the ASC method of section 41(c)(5)) and at least two members of the group qualify as the designated member, then the term *designated member* means that member that computes

the group credit using the method that yields the greatest group credit. For example, A, B, C, and D are members of a controlled group but are not members of a consolidated group. For the 2008 taxable year (the credit year), the group credit using the method described in section 41(a)(1) is $10x. Under this method, A would be allocated $5x of the group credit, which would be the largest share of the group credit under this method. For the credit year, the group credit using the AIRC method is $15x. Under the AIRC method, B would be allocated $5x of the group credit, which is the largest share of the group credit computed using the AIRC method. For the credit year, the group credit using the ASC method is $10x. Under the ASC method, C would be allocated $5x of the group credit, which is the largest share of the group credit computed using the ASC method. Because the group credit is greatest using the AIRC method and B is allocated the greatest amount of credit under that method, B is the designated member. Therefore, if B makes a section 41(c)(4) election on its original timely filed return for the credit year, that election is binding on all members of the group for the credit year.

(5) ***Effective/applicability dates.*** This section is applicable for taxable years ending after *June 9, 2011*. For taxable years ending on or before *June 9, 2011*, see §§ 1.41-8 and 1.41-8T, as contained in 26 CFR part 1, revised April 1, 2011.

[T.D. 9296, 71 FR 65732, Nov. 9, 2006; 71 FR 70875, Dec. 7, 2006, as amended by T.D. 9401, 73 FR 34189, June 17, 2008; T.D. 9528, 76 FR 33996, June 10, 2011]

§ 1.41-9 Alternative simplified credit.

(a) ***Determination of credit.*** At the election of the taxpayer, the credit determined under section 41(a)(1) equals the amount determined under section 41(c)(5).

(b) ***Election*** —

(1) ***In general.*** A taxpayer may elect to apply the provisions of the alternative simplified credit (ASC) in section 41(c)(5) for any taxable year of the taxpayer ending after December 31, 2006. If a taxpayer makes an election under section 41(c)(5), the election applies to the taxable year for which made and all subsequent taxable years unless revoked in the manner prescribed in paragraph (b)(3) of this section.

(2) ***Time and manner of election.*** A taxpayer makes an election under section 41(c)(5) by completing the portion of Form 6765, “Credit for Increasing Research Activities,” (or successor form) relating to the election of the ASC, and attaching the completed form to the taxpayer's timely filed (including extensions) original return for the taxable year to which the election applies. A taxpayer may make an election under section 41(c)(5) for a tax year on an amended return, but only if the taxpayer has not previously claimed a section 41(a)(1) credit on its original return or an amended return for that tax year, and only if that tax year is not closed by the period of limitations on assessment under section 6501(a). An extension of time to make an election under section 41(c)(5) will not be granted under § 301.9100-3 of this chapter. A taxpayer that is a member of a controlled group in a tax year may not make an election under section 41(c)(5) for that tax year on an amended return if any member of the controlled group for that tax year previously claimed the research credit under section 41(a)(1) using a method other than the ASC on an original or amended return for that tax year. See paragraph (b)(4) of this section for additional rules concerning controlled groups. See also § 1.41-6(b)(1) requiring that all members of the controlled group use the same method of computation.

(3) ***Revocation.*** An election under this section may not be revoked except with the consent of the Commissioner. A taxpayer is deemed to have requested, and to have been granted, the consent of the Commissioner to revoke an election under section 41(c)(5) if the taxpayer completes the portion of Form 6765 (or successor form) relating to the credit determined under section 41(a)(1) (the regular credit) or the alternative incremental credit (AIRC) and attaches the completed form to the taxpayer's timely filed (including extensions) original return for the year to which the revocation applies. An election under section 41(c)(5) may not be revoked on an amended return. An extension of time to revoke an election under section 41(c)(5) will not be granted under § 301.9100-3 of this chapter.

(4) ***Special rules for controlled groups*** —

(i) ***In general.*** In the case of a controlled group of corporations, all the members of which are not included on a single consolidated return, an election (or revocation) must be made by the designated member by satisfying the requirements of paragraphs (b)(2) or (b)(3) of this section (whichever applies), and such election (or revocation) by the designated member shall be binding on all the members of the group for the credit year to which the election (or revocation) relates. If the designated member fails to timely make (or revoke) an election, each member of the group must compute the group credit using the method used to compute the group credit for the immediately preceding credit year.

(ii) ***Designated member.*** For purposes of this paragraph (b)(4), for any credit year, the term *designated member* means that member of the group that is allocated the greatest amount of the group credit under § 1.41-6(c) based on the amount of credit reported on the taxpayer's timely filed (including extensions) original Federal income tax return (even if that member subsequently is determined not to be the designated member). If the members of a group compute the group credit using different methods (the method described in section 41(a)(1), the AIRC method of section 41(c)(4), or the ASC method of section 41(c)(5)) and at least two members of the group qualify as the designated member, then the term *designated member* means that member that computes the group credit using the method that yields the greatest group credit. For example, A, B, C, and D are members of a controlled group but are not members of a consolidated group. For the 2011 taxable year (the credit year), the group credit using the method described in section 41(a)(1) is $10x. Under this method, A would be allocated $5x of the group credit, which would be the largest share of the group credit under this method. For the credit year, the group credit using the ASC method is $15x. Under the ASC method, C would be allocated $5x of the group credit, which is the largest share of the group credit computed using the ASC method. Because the group credit is greatest using the ASC method and C is allocated the greatest amount of credit under that method, C is the designated member. Therefore, if C makes a section 41(c)(5) election on its timely filed (including extensions) original return for the credit year, that election is binding on all members of the group for the credit year.

(c) ***Special rules*** —

(1) ***Qualified research expenses (QREs) required in all years.*** Unless a taxpayer has QREs in each of the three taxable years preceding the taxable year for which the credit is being determined, the credit equals that percentage of the QREs for the taxable year provided by section 41(c)(5)(B)(ii).

(2) ***Section 41(c)(6) applicability.*** QREs for the three taxable years preceding the credit year must be determined on a basis consistent with the definition of QREs for the credit year, without regard to the law in effect for the three taxable years preceding the credit year. This consistency requirement applies even if the period for filing a claim for credit or refund has expired for any of the three taxable years preceding the credit year.

(3) ***Short taxable years*** —

(i) ***General rule.*** If one or more of the three taxable years preceding the credit year is a short taxable year, then the QREs for such year are deemed to be equal to the QREs actually paid or incurred in that year multiplied by 365 and divided by the number of days in that year. If a credit year is a short taxable year, then the average QREs for the three taxable years preceding the credit year are modified by multiplying that amount by the number of days in the short taxable year and dividing the result by 365.

(ii) ***Limited exception.*** Returns filed for taxable years ending after December 31, 2006, and before June 9, 2011, and for which the period of limitations has not expired, may be amended to apply the daily calculation for short taxable years provided in paragraph (3)(i) of this section in lieu of the monthly calculation for short taxable years provided in § 1.41-9T(c)(4).

(4) ***Controlled groups.*** For purposes of computing the group credit under § 1.41-6, a controlled group must apply the rules of this paragraph (c) on an aggregate basis. For example, if the controlled group has QREs in each of the three taxable years preceding the taxable year for which the credit is being determined, the controlled group applies the credit computation provided by section 41(c)(5)(A) rather than section 41(c)(5)(B)(ii).

(d) ***Effective/applicability dates.*** This section is applicable for taxable years ending after June 9, 2011. For taxable years ending on or before June 9, 2011, see § 1.41-9T as contained in 26 CFR part 1, revised April 1, 2011. Paragraph (b)(2) of this section applies to elections with respect to taxable years ending on or after February 27, 2015. For taxable years ending before *February 27, 2015,* see § 1.41-9T as contained in 26 CFR part 1, revised April 1, 2015.

[T.D. 9528, 76 FR 33996, June 10, 2011, as amended by T.D. 9666, 79 FR 31864, June 3, 2014; T.D. 9712, 80 FR 10589, Feb. 27, 2015]

§ 1.42-0 Table of contents.

This section lists the paragraphs contained in §§ 1.42-1 through 1.42-19 and § 1.42-1T.

§ 1.42-1 Limitation on low-income housing credit allowed with respect to qualified low-income buildings receiving housing credit allocations from a State or local housing credit agency.

(a) through (g) [Reserved]

(h) Filing of forms.

(i) [Reserved]

(j) Effective dates.

§ 1.42-1T Limitation on low-income housing credit allowed with respect to qualified low income buildings receiving housing credit allocations from a State or local housing credit agency (temporary).

(a) In general.

(1) Determination of amount of low-income housing credit.

(2) Limitation on low-income housing credit allowed.

(b) The State housing credit ceiling.

(c) Apportionment of State housing credit ceiling among State and local housing credit agencies.

(1) In general.

(2) Primary apportionment.

(3) States with 1 or more constitutional home rule cities.

(i) In general.

(ii) Amount of apportionment to a constitutional home rule city.

(iii) Effect of apportionment to constitutional home rule cities on apportionment to other housing credit agencies.

(iv) Treatment of governmental authority within constitutional home rule city.

(4) Apportionment to local housing credit agencies.

(i) In general.

(ii) Change in apportionment during a calendar year.

(iii) Exchanges of apportionments.

(iv) Written records of apportionments.

(5) Set-aside apportionments for projects involving a qualified nonprofit organization.

(i) In general.

(ii) Projects involving a qualified nonprofit organization.

(6) Expiration of unused apportionments.

(d) Housing credit allocation made by State and local housing credit agencies.

(1) In general.

(2) Amount of a housing credit allocation.

(3) Counting housing credit allocations against an agency's aggregate housing credit dollar amount.

(4) Rules for when applications for housing credit allocations exceed an agency's aggregate housing credit dollar amount.

(5) Reduced or additional housing credit allocations.

(i) In general.

(ii) Examples.

(6) No carryover of unused aggregate housing credit dollar amount.

(7) Effect of housing credit allocations in excess of an agency's aggregate housing credit dollar amount.

(8) Time and manner for making housing credit allocations.

(i) Time.

(ii) Manner.

(iii) Certification.

(iv) Fee.

(v) No continuing agency responsibility.

(e) Housing credit allocation taken into account by owner of a qualified low-income building.

(1) Time and manner for taking housing credit allocation into account.

(2) First-year convention limitation on housing credit allocation taken into account.

(3) Use of excess housing credit allocation for increases in qualified basis.

(i) In general.

(ii) Example.

(4) Separate housing credit allocations for new buildings and increases in qualified basis.

(5) Acquisition of building for which a prior housing credit allocation has been made.

(6) Multiple housing credit allocations.

(f) Exception to housing credit allocation requirement.

(1) Tax-exempt bond financing.

(i) In general.

(ii) Determining use of bond proceeds.

(iii) Example.

(g) Termination of authority to make housing credit allocation.

(1) In general.

(2) Carryover of unused 1989 apportionment.

(3) Expiration of exception for tax-exempt bond financed projects.

(h) [Reserved]

(i) Transitional rules.

§ 1.42-2 Waiver of requirement that an existing building eligible for the low-income housing credit was last placed in service more than 10 years prior to acquisition by the taxpayer.

(a) Low-income housing credit for existing building

(b) Waiver of 10-year holding period requirement

(c) Waiver requirements

(1) Federally-assisted building

(2) Federal mortgage funds at risk

(3) Statement by the Department of Housing and Urban Development or the Farmers' Home Administration

(4) No prior credit allowed

(d) Application for waiver

(1) Time and manner

(2) Information required

(3) Other rules

(4) Effective date of waiver

(5) Attachment to return

(e) Effective date of regulations

§ 1.42-3 Treatment of buildings financed with proceeds from a loan under an Affordable Housing Program established pursuant to section 721 of the Financial Institutions Reform, Recovery, and Enforcement Act of 1989 (FIRREA).

(a) Treatment under sections 42(i) and 42(b).

(b) Effective date.

§ 1.42-4 Application of not-for-profit rules of section 183 to low-income housing credit activities.

(a) Inapplicability to section 42.

(b) Limitation.

(c) Effective date.

§ 1.42-5 Monitoring compliance with low-income housing credit requirements.

(a) Compliance monitoring requirement.

(1) In general.

(2) Requirements for a monitoring procedure.

(i) In general.

(ii) Order and form.

(iii) [Reserved]

(b) Recordkeeping and record retention provisions.

(1) Recordkeeping provision.

(2) Record retention provision.

(3) Inspection record retention provision.

(c) Certification and review provisions.

(1) Certification.

(2) Review.

(ii)-(iii) [Reserved]

(3) [Reserved]

(4) Exception for certain buildings.

(i) In general.

(ii) Agreement and review.

(iii) Example.

(5) Agency reports of compliance monitoring activities.

(d) Inspection provision.

(1) In general.

(2) Inspection standard.

(3) Exception from inspection provision.

(4) Delegation.

(e) Notification-of-noncompliance provisions.

(1) In general.

(2) Notice to owner.

(3) Notice to Internal Revenue Service.

(i) In general.

(ii) Agency retention of records.

(4) Correction period.

(f) Delegation of authority.

(1) Agencies permitted to delegate compliance monitoring functions.

(i) In general.

(ii) Limitations.

(2) Agencies permitted to delegate compliance monitoring functions to another Agency.

(g) Liability.

(h) Effective/applicability dates.

(1) In general.

(2) [Reserved]

§ 1.42-6 Buildings qualifying for carryover allocations.

(a) Carryover allocations.

(1) In general.

(2) 10 percent basis requirement.

(i) Allocation made before July 1.

(ii) Allocation made after June 30.

(b) Carryover-allocation basis.

(1) In general.

(2) Limitations.

(i) Taxpayer must have basis in land or depreciable property related to the project.

(ii) High cost areas.

(iii) Amounts not treated as paid or incurred.

(iv) Fees.

(3) Reasonably expected basis.

(4) Examples.

(c) Verification of basis by Agency.

(1) Verification requirement.

(2) Manner of verification.

(3) Time of verification.

(i) Allocations made before July 1.

(ii) Allocations made after June 30.

(d) Requirements for making carryover allocations.

(1) In general.

(2) Requirements for allocation.

(3) Special rules for project-based allocations.

(i) In general.

(ii) Requirement of section 42(h)(1)(F)(1)(III).

(4) Recordkeeping requirements.

(i) Taxpayer.

(ii) Agency.

(5) Separate procedure for election of appropriate percentage month.

(e) Special rules.

(1) Treatment of partnerships and other flow-through entities.

(2) Transferees.

§ 1.42-7 Substantially bond-financed buildings. [Reserved]

§ 1.42-8 Election of appropriate percentage month.

(a) Election under section 42(b)(2)(A)(ii)(I) to use the appropriate percentage for the month of a binding agreement.

(1) In general.

(2) Effect on state housing credit ceiling.

(3) Time and manner of making election.

(4) Multiple agreements.

(i) Rescinded agreements.

(ii) Increases in credit.

(5) Amount allocated.

(6) Procedures.

(i) Taxpayer.

(ii) Agency.

(7) Examples.

(b) Election under section 42(b)(2)(A)(ii)(II) to use the appropriate percentage for the month tax-exempt bonds are issued.

(1) Time and manner of making election.

(2) Bonds issued in more than one month.

(3) Limitations on appropriate percentage.

(4) Procedures.

(i) Taxpayer.

(ii) Agency.

§ 1.42-9 For use by the general public.

(a) General rule.

(b) Limitations.

(c) Treatment of units not for use by the general public.

§ 1.42-10 Utility allowances.

(a) Inclusion of utility allowances in gross rent.

(b) Applicable utility allowances.

(1) Buildings assisted by the Rural Housing Service.

(2) Buildings with Rural Housing Service assisted tenants.

(3) Buildings regulated by the Department of Housing and Urban Development.

(4) Other buildings.

(i) Tenants receiving HUD rental assistance.

(ii) Other tenants.

(A) General rule.

(B) Utility company estimate.

(C) Agency estimate.

(D) HUD Utility Schedule Model.

(E) Energy consumption model.

(c) Changes in applicable utility allowance.

(1) In general.

(2) Annual review.

(d) Record retention.

(e) Actual consumption submetering arrangements.

(1) Definition.

(2) Administrative fees.

§ 1.42-11 Provision of services.

(a) General rule.

(b) Services that are optional.

(1) General rule.

(2) Continual or frequent services.

(3) Required services.

(i) General rule.

(ii) Exceptions.

(A) Supportive services.

(B) Specific project exception.

§ 1.42-12 Effective dates and transitional rules.

(a) Effective dates.

(1) In general.

(2) Community Renewal Tax Relief Act of 2000.

(i) In general.

(3) Electronic filing simplification changes.

(4) Utility allowances.

(5) Additional effective dates affecting utility allowances.

(b) Prior periods.

(c) Carryover allocations.

§ 1.42-13 Rules necessary and appropriate; housing credit agencies' correction of administrative errors and omissions.

(a) Publication of guidance.

(b) Correcting administrative errors and omissions.

(1) In general.

(2) Administrative errors and omissions described.

(3) Procedures for correcting administrative errors or omissions.

(i) In general.

(ii) Specific procedures.

(iii) Secretary's prior approval required.

(iv) Requesting the Secretary's approval.

(v) Agreement to conditions.

(vi) Secretary's automatic approval.

(vii) How Agency corrects errors or omissions subject to automatic approval.

(viii) Other approval procedures.

(c) Examples.

(d) Effective date.

§ 1.42-14 Allocation rules for post-2000 State housing credit ceiling amount.

(a) State housing credit ceiling.

(1) In general.

(2) Cost-of-living adjustment.

(i) General rule.

(ii) Rounding.

(b) The unused carryforward component.

(c) The population component.

(d) The returned credit component.

(1) In general.

(2) Limitations and special rules.

(i) General limitations.

(ii) Credit period limitation.

(iii) Three-month rule for returned credit.

(iv) Returns of credit.

(A) Building not qualified within required time period.

(B) Noncompliance with terms of the allocation.

(C) Mutual consent.

(D) Amount not necessary for financial feasibility.

(3) Manner of returning credit.

(i) Taxpayer notification.

(ii) Internal Revenue Service notification.

(e) The national pool component.

(f) When the State housing credit ceiling is determined.

(g) Stacking order.

(h) Nonprofit set-aside.

(1) Determination of set-aside.

(2) Allocation rules.

(i) National Pool.

(1) In general.

(2) Unused housing credit carryover.

(3) Qualified State.

(i) In general.

(ii) Exceptions.

(A) De minimis amount.

(B) Other circumstances.

(iii) Time and manner for making request.

(4) Formula for determining the National Pool.

(j) Coordination between Agencies.

(k) Example.

(l) Effective dates.

(1) In general.

(2) Community Renewal Tax Relief Act of 2000 changes.

§ 1.42-15 Available unit rule.

(a) Definitions.

(b) General section 42(g)(2)(D)(i) rule.

(c) Exceptions.

(1) In general.

(2) Rental of next available unit in case of the average income test.

(i) Basic rule.

(ii) No requirement to comply with the next available unit rule in a specific order.

(iii) Deep rent skewed projects.

(iv) Limitation.

(d) Effect of current resident moving within building.

(e) Available unit rule applies separately to each building in a project.

(f) Result of noncompliance with available unit rule.

(g) Relationship to tax-exempt bond provisions.

(h) Examples.

(i) Applicability dates.

(1) In general.

(2) Applicability dates under the average income test.

§ 1.42-16 Eligible basis reduced by federal grants.

(a) In general.

(b) Grants do not include certain rental assistance payments.

(c) Qualifying rental assistance program.

(d) Effective date.

§ 1.42-17 Qualified allocation plan.

(a) Requirements.

(1) In general [Reserved].

(2) Selection criteria [Reserved].

(3) Agency evaluation.

(4) Timing of Agency evaluation.

(i) In general.

(ii) Time limit for placed-in-service evaluation.

(5) Special rule for final determinations and certifications.

(6) Bond-financed projects.

(b) Effective date.

§ 1.42-18 Qualified Contracts.

(a) Extended low-income housing commitment.

(1) In general.

(i) Extended use period.

(ii) Termination of extended use period.

(iii) Other non-acceptance.

(iv) Eviction, gross rent increase concerning existing low-income tenants not permitted.

(2) Exception.

(b) Definitions.

(c) Qualified contract purchase price formula.

(1) In general.

(i) Initial determination.

(ii) Mandatory adjustment by the buyer and owner.

(iii) Optional adjustment by the Agency and owner.

(2) Low-income portion amount.

(3) Outstanding indebtedness.

(4) Adjusted investor equity.

(i) Application of cost-of-living factor.

(ii) Unadjusted investor equity.

(iii) Qualified-contract cost-of-living adjustment.

(iv) General rule.

(v) Provision by the Commissioner of the qualified-contract cost-of-living adjustment.

(vi) Methodology.

(vii) Example.

(5) Other capital contributions.

(6) Cash distributions.

(i) In general.

(ii) Excess proceeds.

(iii) Anti-abuse rule.

(d) Administrative discretion and responsibilities of the Agency.

(1) In general.

(2) Actual offer.

(3) Debarment of certain appraisers.

(e) Effective/applicability date.

§ 1.42-19 Average income test.

(a) Average income set-aside.

(b) Definition of low-income unit and qualified group of units.

(1) Definition of low-income unit.

(2) Definition of qualified group of units.

(3) Identification of qualified groups of units.

(i) Average income set-aside test.

(ii) Applicable fraction determinations.

(iii) Identification of units.

(c) Procedures.

(1) Identification of low-income units for use in the average income set-aside test or the applicable fraction determination.

(i) In general.

(ii) Recording and communicating.

(2) Notifications to the Agency with jurisdiction over a project.

(i) Agency flexibility.

(ii) Examples.

(3) Designation of imputed income limitations.

(i) Timing of designation.

(ii) 10-percent increments.

(iii) Continuity.

(iv) Recording, retention, and annual communications related to designations.

(4) Correcting failures to comply with procedural requirements.

(i) In general.

(ii) Discovery by taxpayer.

(iii) Discovery by Agency.

(iv) Waiver by Agency.

(d) Changing a unit's designated imputed income limitation.

(1) Permitted changes.

(i) Federally permitted changes.

(ii) ***Housing credit agency*** (Agency)-permitted changes.

(iii) Certain laws.

(iv) Tenant movement.

(v) Restoring compliance with average income requirements.

(2) Process for changing a unit's designated imputed income limitation.

(e) Examples.

(f) Applicability dates.

(1) General rule.

(2) Designations of occupied units.

(3) Applicability of this section to taxable years beginning before January 1, 2023.

(4) Taxable years beginning on or after September 30, 2025.

[T.D. 8302, 55 FR 21189, May 23, 1990, as amended by T.D. 9755, 81 FR 11107, Mar. 3, 2016; T.D. 9967, 87 FR 61501, Oct. 12, 2022; T.D. 10036, 90 FR 46761, Sept. 30, 2025]

§ 1.42-0T Table of contents.

This section lists the paragraphs contained in §§ 1.42-5T and 1.42-10T.

[T.D. 9755, 81 FR 11109, Mar. 3, 2016, as amended by T.D. 9848, 84 FR 6079, Feb. 26, 2019; T.D. 9850, 84 FR 7284, Mar. 4, 2019]

§ 1.42-1 Limitation on low-income housing credit allowed with respect to qualified low-income buildings receiving housing credit allocations from a State or local housing credit agency.

(a)-(g) [Reserved]. For further guidance, *see* § 1.42-1T(a) through (g).

(h) ***Filing of forms.*** Unless otherwise provided in forms or instructions, a completed Form 8586, "Low-Income Housing Credit," (or any successor form) must be filed with the owner's Federal income tax return for each taxable year the owner of a qualified low-income building is claiming the low-income housing credit under section 42(a). Unless otherwise provided in forms or instructions, a completed Form 8609, "Low-Income

Housing Credit Allocation and Certification," (or any successor form) must be filed by the building owner with the IRS. The requirements for completing and filing Forms 8586 and 8609 are addressed in the instructions to the forms.

(i) [Reserved]. For further guidance, *see* § 1.42-1T(i).

(j) ***Effective dates.*** Section 1.42-1(h) applies to forms filed on or after November 7, 2005. The rules that apply for forms filed before November 7, 2005 are contained in § 1.42-1T(h) and § 1.42-1(h) (see 26 CFR part 1 revised as of April 1, 2003, and April 1, 2005).

[T.D. 9112, 69 FR 3827, Jan. 27, 2004, as amended by T.D. 9228, 70 FR 67356, Nov. 7, 2005]

§ 1.42-1T Limitation on low-income housing credit allowed with respect to qualified low-income buildings receiving housing credit allocations from a State or local housing credit agency (temporary).

(a) ***In general*** —

(1) ***Determination of amount of low-income housing credit.*** Section 42 provides that, for purposes of section 38, a low-income housing credit is determined for a building in an amount equal to the applicable percentage of the qualified basis of the qualified low-income building. In general, the credit may be claimed annually for a 10-year credit period, beginning with the taxable year in which the building is placed in service or, at the election of the taxpayer, the succeeding taxable year. If, after the first year of the credit period, the qualified basis of a building is increased in excess of the qualified basis upon which the credit was initially determined, the allowable credit with respect to such additional qualified basis is determined using a credit percentage equal to two-thirds of the applicable percentage for the initial qualified basis. The credit for additions to qualified basis is generally allowable for the remaining years in the 15-year compliance period which begins with the first taxable year of the credit period for the building. In general, the low-income housing credit is available with respect to buildings placed in service after December 31, 1986, in taxable years ending after that date. *See* section 42 for the definitions of "qualified low-income building", "applicable percentage", "qualified basis", "credit period", "compliance period", and for other rules relating to determination of the amount of the low-income housing credit.

(2) ***Limitation on low-income housing credit allowed.*** Generally, the low-income housing credit determined under section 42 is allowed and may be claimed for any taxable year if, and to the extent that, the owner of a qualified low-income building receives a housing credit allocation from a State or local housing credit agency. The aggregate amount of housing credit allocations that may be made in any calendar year by all housing credit agencies within a State is limited by a State housing credit ceiling, or volume cap, described in paragraph (b) of this section. The authority to make housing credit allocations within the State housing credit ceiling may be apportioned among the State and local housing credit agencies, under the rules prescribed in paragraph (c) of this section. Upon apportionment of the State housing credit volume cap, each State or local housing credit agency receives an aggregate housing credit dollar amount that may be used to make housing credit allocations among qualified low-income buildings located within an agency's geographic jurisdiction. The rules governing the making of housing credit allocations by any state or local housing credit agency are provided in paragraph (d) of this section. Housing credit allocations are required to be taken into account by owners of qualified low-income buildings under the rules prescribed in paragraph (e) of this section. Exceptions to the requirement that a qualified low-income building receive a housing credit allocation from a State or local housing credit agency are provided in

paragraph (f) of this section. Rules regarding termination of the authority of State and local housing credit agencies to make housing credit allocations after December 31, 1989, are specified in paragraph (g) of this section. Rules concerning information reporting by State and local housing credit agencies and owners of qualified low-income buildings are provided in paragraph (h) of this section. Special statutory transitional rules are incorporated into this section of the regulations as described in paragraph (i) of this section.

(b) ***The State housing credit ceiling.*** The aggregate amount of housing credit allocations that may be made in any calendar year by all State and local housing credit agencies within a State may not exceed the State's housing credit ceiling for such calendar year. The State housing credit ceiling for each State for any calendar year is equal to $1.25 multiplied by the State's population. A State's population for any calendar year is determined by reference to the most recent census estimate (whether final or provisional) of the resident population of the State released by the Bureau of the Census before the beginning of the calendar year for which the State's housing credit ceiling is set. Unless otherwise prescribed by applicable revenue procedure, determinations of population are based on the most recent estimates of population contained in the Bureau of the Census publication, “Current Population Reports, Series P-25: Population Estimates and Projections, Estimates of the Population of States”. For purposes of this section, the District of Columbia and United States possessions are treated as States.

(c) ***Apportionment of State housing credit ceiling among State and local housing credit agencies*** —

(1) ***In general.*** A State's housing credit ceiling for any calendar year is apportioned among the State and local housing credit agencies within such State under the rules prescribed in this paragraph. A “State housing credit agency” is any State agency specifically authorized by gubernatorial act or State statute to make housing credit allocations on behalf of the State and to carry out the provisions of section 42(h). A “local housing credit agency” is any agency of a political subdivision of the State that is specifically authorized by a State enabling act to make housing credit allocations on behalf of the State or political subdivision and to carry out the provisions of section 42(h). A “State enabling act” is any gubernatorial act, State statute, or State housing credit agency regulation (if authorized by gubernatorial act or State statute). A State enabling act enacted on or before October 22, 1986, the date of enactment of the Tax Reform Act of 1986, shall be given effect for purposes of this paragraph if such State enabling act expressly carries out the provisions of section 42(h).

(2) ***Primary apportionment.*** Except as otherwise provided in paragraphs (c) (3) and (4) of this section, a State's housing credit ceiling is apportioned in its entirety to the State housing credit agency. Such an apportionment is the “primary apportionment” of a State's housing credit ceiling. There shall be no primary apportionment of the State housing credit ceiling and no grants of housing credit allocations in such State until a State housing credit agency is authorized by gubernatorial act or State statute. If a State has more than one State housing credit agency, such agencies shall be treated as a single agency for purposes of the primary apportionment. In such a case, the State housing credit ceiling may be divided among the multiple State housing credit agencies pursuant to gubernatorial act or State statute.

(3) ***States with 1 or more constitutional home rule cities*** —

(i) ***In general.*** Notwithstanding paragraph (c)(2) of this section, in any State with 1 or more constitutional home rule cities, a portion of the State housing credit ceiling is apportioned to each constitutional home rule city. In such a State, except as provided in paragraph (c)(4) of this section, the remainder of the State housing credit ceiling is apportioned to the State housing credit agency under paragraph (c)(2) of this section. *See* paragraph (c)(3)(iii) of this

section. The term "constitutional home rule city" means, with respect to any calendar year, any political subdivision of a State that, under a State constitution that was adopted in 1970 and effective on July 1, 1971, had home rule powers on the first day of the calendar year.

(ii) ***Amount of apportionment to a constitutional home rule city.*** The amount of the State housing credit ceiling apportioned to a constitutional home rule city for any calendar year is an amount that bears the same ratio to the State housing credit ceiling for that year as the population of the constitutional home rule city bears to the population of the entire State. The population of any constitutional home rule city for any calendar year is determined by reference to the most recent census estimate (whether final or provisional) of the resident population of the constitutional home rule city released by the Bureau of the Census before the beginning of the calendar year for which the State housing credit ceiling is apportioned. However, determinations of the population of a constitutional home rule city may not be based on Bureau of the Census estimates that do not contain estimates for all of the constitutional home rule cities within the State. If no Bureau of the Census estimate is available for all such constitutional home rule cities, the most recent decennial census of population shall be relied on. Unless otherwise prescribed by applicable revenue procedure, determinations of population for constitutional home rule cities are based on estimates of population contained in the Bureau of the Census publication, "Current Population Reports, Series P-26: Local Population Estimates".

(iii) ***Effect of apportionments to constitutional home rule cities on apportionments to other housing credit agencies.*** The aggregate amounts of the State housing credit ceiling apportioned to constitutional home rule cities under this paragraph (c)(3) reduce the State housing credit ceiling available for apportionment under paragraph (c) (2) or (4) of this section. Unless otherwise provided in a State constitutional amendment or by law changing the home rule provisions adopted in a manner provided by the State constitution, the power of the governor or State legislature to apportion the State housing credit ceiling among local housing credit agencies under paragraph (c)(4) of this section shall not be construed as allowing any reduction of the portion of the State housing credit ceiling apportioned to a constitutional home rule city under this paragraph (c)(3). However, any constitutional home rule city may agree to a reduction in its apportionment of the State housing credit ceiling under this paragraph (c)(3), in which case the amount of the State housing credit ceiling not apportioned to the constitutional home rule city shall be available for apportionment under paragraph (c) (2) or (4) of this section.

(iv) ***Treatment of governmental authority within constitutional home rule city.*** For purposes of determining which agency within a constitutional home rule city receives the apportionment of the State housing credit ceiling under this paragraph (c)(3), the rules of this paragraph (c) shall be applied by treating the constitutional home rule city as a "State", the chief executive officer of a constitutional home rule city as a "governor", and a city council as a "State legislature". A constitutional home rule city is also treated as a "State" for purposes of the set-aside requirement for housing credit allocations to projects involving a qualified nonprofit organization. *See* paragraph (c)(5) of this section for rules governing set-aside requirements. In this connection, a constitutional home rule city may agree with the State housing credit agency to exchange an apportionment set aside for projects involving a qualified nonprofit organization for an apportionment that is not so restricted. In such a case, the authorizing gubernatorial act,

State statute, or State housing credit agency regulation (if authorized by gubernatorial act or State statute) must ensure that the set-aside apportionment transferred to the State housing credit agency be used for the purposes described in paragraph (c)(5) of this section.

(4) *Apportionment to local housing credit agencies* —

(i) ***In general.*** In lieu of the primary apportionment under paragraph (c)(2) of this section, all or a portion of the State housing credit ceiling may be apportioned among housing credit agencies of governmental subdivisions. Apportionments of the State housing credit ceiling to local housing credit agencies must be made pursuant to a State enabling act as defined in paragraph (c)(1) of this section. Apportionments of the State housing credit ceiling may be made to housing credit agencies of constitutional home rule cities under this paragraph (c)(4), in addition to apportionments made under paragraph (c)(3) of this section. Apportionments of the State housing credit ceiling under this paragraph (c)(4) need not be based on the population of political subdivisions and may, but are not required to, give balanced consideration to the low-income housing needs of the entire State.

(ii) ***Change in apportionments during a calendar year.*** The apportionment of the State housing credit ceiling among State and local housing credit agencies under this paragraph (c)(4) may be changed after the beginning of a calendar year, pursuant to a State enabling act. No change in apportionments shall retroactively reduce the housing credit allocations made by any agency during such year. Any change in the apportionment of the State housing credit ceiling under this paragraph (c)(4) that occurs during a calendar year is effective only to the extent housing credit agencies have not previously made housing credit allocations during such year from their original apportionments of the State housing credit ceiling for such year. To the extent apportionments of the State housing credit ceiling to local housing credit agencies made pursuant to this paragraph (c)(4) for any calendar year are not used by such local agencies before a certain date (e.g., November 1) to make housing credit allocations in such year, the amount of unused apportionments may revert back to the State housing credit agency for reapportionment. Such reversion must be specifically authorized by the State enabling act.

(iii) ***Exchanges of apportionments.*** Any State or local housing credit agency that receives an apportionment of the State housing credit ceiling for any calendar year under this paragraph (c)(4) may exchange part or all of such apportionment with another State or local housing credit agency to the extent no housing credit allocations have been made in such year from the exchanged portions. Such exchanges must be made with another housing credit agency in the same State and must be consistent with the State enabling act. If an apportionment set aside for projects involving a qualified nonprofit organization is transferred or exchanged, the transferee housing credit agency shall be required to use the set-aside apportionment for the purposes described in paragraph (c)(5) of this section.

(iv) ***Written records of apportionments.*** All apportionments, exchanges of apportionments, and reapportionments of the State housing credit ceiling which are authorized by this paragraph (c)(4) must be evidenced in the written records maintained by each State and local housing credit agency.

(5) *Set-aside apportionments for projects involving a qualified nonprofit organization* —

(i) ***In general.*** Ten percent of the State housing credit ceiling for a calendar year must be set aside exclusively for projects involving a qualified nonprofit organization (as defined in paragraph (c)(5)(ii) of this section). Thus, at least 10 percent of apportionments of the State housing

credit ceiling under paragraphs (c) (2) and (3) of this section must be used only to make housing credit allocations to buildings that are part of projects involving a qualified nonprofit organization. In the case of apportionments of the State housing credit ceiling under paragraph (c)(4) of this section, the State enabling act must ensure that the apportionment of at least 10 percent of the State housing credit ceiling be used exclusively to make housing credit allocations to buildings that are part of projects involving a qualified nonprofit organization. The State enabling act shall prescribe which housing credit agencies in the State receive apportionments that must be set aside for making housing credit allocations to buildings that are part of projects involving a qualified nonprofit organization. These set-aside apportionments may be distributed disproportionately among the State or local housing credit agencies receiving apportionments under paragraph (c)(4) of this section. The 10-percent set-aside requirement of this paragraph (c)(4) is a minimum requirement, and the State enabling act may set aside more than 10 percent of the State housing credit ceiling for apportionment to housing credit agencies for exclusive use in making housing credit allocations to buildings that are part of projects involving a qualified nonprofit organization.

(ii) ***Projects involving a qualified nonprofit organization.*** The term "projects involving a qualified nonprofit organization" means projects with respect to which a qualified nonprofit organization is to materially participate (within the meaning of section 469(h)) in the development and continuing operation of the project throughout the 15-year compliance period. The term "qualified nonprofit organization" means any organization that is described in section 501(c) (3) or (4), is exempt from tax under section 501(a), and includes as one of its exempt purposes the fostering of low-income housing.

(6) ***Expiration of unused apportionments.*** Apportionments of the State housing credit ceiling under this paragraph (c) for any calendar year may be used by housing credit agencies to make housing credit allocations only in such calendar year. Any part of an apportionment of the State housing credit ceiling for any calendar year that is not used for housing credit allocations in such year expires as of the end of such year and does not carry over to any other year. However, any part of an apportionment for 1989 that is not used to make a housing credit allocation in 1989 may be carried over to 1990 and used to make a housing credit allocation to a qualified low-income building described in section 42(n)(2)(B). *See* paragraph (g)(2) of this section.

(d) ***Housing credit allocations made by State and local housing credit agencies*** —

(1) ***In general.*** This paragraph governs State and local housing credit agencies in making housing credit allocations to qualified low-income buildings. The amount of the apportionment of the State housing credit ceiling for any calendar year received by any State or local housing credit agency under paragraph (c) of this section constitutes the agency's aggregate housing credit dollar amount for such year. The aggregate amount of housing credit allocations made in any calendar year by a State or local housing credit agency may not exceed such agency's aggregate housing credit dollar amount for such year. A State or local housing credit agency may make housing credit allocations only to qualified low-income buildings located within the agency's geographic jurisdiction.

(2) ***Amount of a housing credit allocation.*** In making a housing credit allocation, a State or local housing credit agency must specify a credit percentage, not to exceed the building's applicable percentage determined under section 42(b), and a qualified basis amount. The amount of the housing credit allocation for any building is the product of the specified credit percentage and the specified qualified basis amount. In specifying the credit percentage and qualified basis amount, the State or local housing credit agency shall not take account of the first-year conventions described in section

42(f) (2)(A) and (3)(B). A State or local housing credit agency may adopt rules or regulations governing conditions for specification of less than the maximum credit percentage and qualified basis amount allowable under section 42 (b) and (c), respectively. For example, an agency may specify a credit percentage and a qualified basis amount of less than the maximum credit percentage and qualified basis amount allowable under section 42 (b) and (c), respectively, when the financing and rental assistance from all sources for the project of which the building is a part is sufficient to provide the continuing operation of the building without the maximum credit amount allowable under section 42.

(3) ***Counting housing credit allocations against an agency's aggregate housing credit dollar amount.*** The aggregate amount of housing credit allocations made in any calendar year by a State or local housing credit agency may not exceed such agency's aggregate housing credit dollar amount (*i.e.,* the agency's apportionment of the State housing credit ceiling for such year). This limitation on the aggregate dollar amount of housing credit allocations shall be computed separately for set-aside apportionments received pursuant to paragraph (c)(5) of this section. Housing credit allocations count against an agency's aggregate housing credit dollar amount without regard to the amount of credit allowable to or claimed by an owner of a building in the taxable year in which the allocation is made or in any subsequent year. Thus, housing credit allocations (which are computed without regard to the first-year conventions as provided in paragraph (d)(2) of this section) count in full against an agency's aggregate housing credit dollar amount, even though the first-year conventions described in section 42(f) (2)(A) and (3)(B) may reduce the amount of credit claimed by a taxpayer in the first year in which a credit is allowable. *See also* paragraph (e)(2) of this section. Housing credit allocations count against an agency's aggregate housing credit dollar amount only in the calendar year in which made and not in subsequent taxable years in the credit period or compliance period during which a taxpayer may claim a credit based on the original housing credit allocation. Since the aggregate amount of housing credit allocations made in any calendar year by a State or local housing credit agency may not exceed such agency's aggregate housing credit dollar amount, an agency shall at all times during a calendar year maintain a record of its cumulative allocations made during such year and its remaining unused aggregate housing credit dollar amount.

(4) ***Rules for when applications for housing credit allocations exceed an agency's aggregate housing credit dollar amount.*** A State or local housing credit agency may adopt rules or regulations governing the awarding of housing credit allocations when an agency expects that applicants during a calendar year will seek aggregate allocations in excess of the agency's aggregate housing credit dollar amount. The State enabling act may provide uniform standards for the awarding of housing credit allocations when there is actual or anticipated excess demand from applicants in any calendar year.

(5) ***Reduced or additional housing credit allocations*** —

(i) ***In general.*** A State or local housing credit agency may not reduce or rescind a housing credit allocation made to a qualified low-income building in the manner prescribed in paragraph (d)(8) of this section. Thus, a housing credit agency may not reduce or rescind a housing credit allocation made to a qualified low-income building which is acquired by a new owner who is entitled to a carryover of the allowable credit for such building under section 42(d)(7). A housing credit agency may make additional housing credit allocations to a building in any year in the building's compliance period, whether or not there are additions to qualified basis for which an increased credit is allowable under section 42(f)(3). Each additional housing credit allocation made to a building is treated as a separate allocation and is subject to the rules and requirements of this section. However, in the case of an additional housing credit allocation made with respect to additions to qualified basis for which an increased credit is allowable

under section 42(f)(3), the amount of the allocation that counts against the agency's aggregate housing credit dollar amount shall be computed as if the specified credit percentage were unreduced in the manner prescribed in section 42(f)(3)(A) and the specified qualified basis amount were unreduced by the first-year convention prescribed in section 42(f)(3)(B).

(ii) ***Examples.*** The rules of paragraph (d)(5)(i) of this section may be illustrated by the following examples:

Example 1. For 1987, the County L Housing Credit Agency has an aggregate housing credit dollar amount of $2 million. D, an individual, places in service on July 1, 1987, a new qualified low-income building. As of the close of each month in 1987 in which the building is in service, the building consists of 100 residential rental units, of which 20 units are both rent-restricted and occupied by individuals whose income is 50 percent or less of area median gross income. The total floor space of the residential rental units is 120,000 square feet, and the total floor space of the low-income units is 20,000 square feet. The building is not Federally subsidized within the meaning of section 42(i)(2). As of the end of 1987, the building has eligible basis under section 42(d) of $1 million. Thus, the qualified basis of the building determined without regard to the first-year convention provided in section 42(f) is $166,666.67 (*i.e.,* $1 million eligible basis times $^{1}/_{6}$, the floor space fraction which is required to be used instead of the larger unit fraction). However, the amount of the low-income housing credit determined for 1987 under section 42 reflects the first-year convention provided in section 42(f)(2). Since the building has the same floor space and unit fractions as of the close of each of the six months in 1987 during which it is in service, upon applying the first-year convention in section 42(f)(2), the qualified basis of the building in 1987 is $83,333.33 (*i.e.,* $1 million eligible basis times $^{1}/_{12}$, the fraction determined under section 42(f)(2)(A)). Under paragraph (d)(2) of this section, the County L Housing Credit Agency may make a housing credit allocation by specifying a credit percentage, not to exceed 9 percent, and a qualified basis amount, which may be greater or less than the qualified basis of the building in 1987 as determined under section 42(c), without regard to the first-year convention provided in section 42(f)(2). If the County L Housing Credit Agency specifies a credit percentage of 8 percent and a qualified basis amount of $100,000, the amount of the housing credit allocation is $8,000. Under paragraph (d)(3) of this section, the County L Housing Credit Agency's aggregate housing credit dollar amount for 1987 is reduced by $8,000, notwithstanding that D is entitled to claim less than $8,000 of the credit in 1987 under the rules in paragraph (e) of this section. Under paragraph (e)(2) of this section, in 1987 D is entitled to claim only $4,000 of the credit, determined by applying the first-year convention of $^{6}/_{12}$ to the specified qualified basis amount contained in the housing credit allocation (*i.e.,* .08 × $100,000 × ($^{6}/_{12}$)).

Example 2. The facts are the same as in *Example 1* except that on July 1, 1988, the number of occupied low-income units increases to 50 units and the floor space of the occupied low-income units increases to 48,000 square feet. These occupancy fractions remain unchanged as of the close of each month remaining in 1988. Under section 42(c), the qualified basis of the building in 1988, without regard to the first-year convention in section 42(f)(3)(B), is $400,000 (*i.e.,* $1 million eligible basis times .4, the floor space fraction which is required to be used instead of the larger unit fraction). D's 1987 housing credit allocation from the County L Housing Credit Agency remains effective in 1988 and entitles D to a credit of $8,000 (*i.e.,* .08, the specified credit percentage, times $100,000, the specified qualified basis amount). With respect to the additional $300,000 of qualified

basis which the 1987 housing credit allocation does not cover, D must apply to the County L Housing Credit Agency for an additional housing credit allocation. Assume that the County L Housing Credit Agency has a sufficient aggregate housing credit dollar amount for 1988 to make a housing credit allocation to D in 1988 by specifying a credit percentage of 9 percent and a qualified basis amount of $300,000. The amount of the housing credit allocation that counts against the County L Housing Credit Agency's aggregate housing credit dollar amount is $27,000 (*i.e.,* the amount counted (.09 times $300,000) is unreduced in the manner prescribed in section 42(f)(3) (A) and (B)). Since D's qualified basis in 1987 was $166,666.67, D is entitled to claim a credit in 1988 with respect to such basis of $14,000 (*i.e.,* .08 × $100,000, the 1987 credit allocation, + .09 × $66,666.67, the 1988 credit allocation). In addition, D is entitled to claim a credit in 1988 and subsequent years in the 15-year compliance period with respect to the additional $233,333.33 of qualified basis covered by the 1988 housing credit allocation. However, the allowable credit for 1988 with respect to this amount of additional qualified basis is subject to reductions prescribed in section 42(f)(3) (A) and (B). Thus, D is entitled in 1988 to a credit at a 6-percent rate applied to $116,666.67 of additional qualified basis, which is reduced to reflect the first-year convention. D's total allowable low-income housing credit in 1988 is $21,000 (*i.e.,* $14,000 with respect to original qualified basis + $7,000 with respect to 1988 additions to qualified basis). If the County L Housing Credit Agency had specified an 8-percent credit percentage in 1988 with respect to the qualified basis not covered by the 1987 housing credit allocation to D, D's allowable credit with respect to the $233,333.33 of additions to qualified basis would not exceed, in 1988 and subsequent years, an amount determined by applying a specified credit percentage of 5.33 percent (*i.e.,* two-thirds of 8 percent). In 1988, D's specified qualified basis amount would be adjusted for the first-year convention.

(6) ***No carryover of unused aggregate housing credit dollar amount.*** Any portion of a State or local housing credit agency's aggregate housing credit dollar amount for any calendar year that is not used to make a housing credit allocation in such year may not be carried over to any other year, except as provided in paragraph (g) of this section. An agency may not permit owners of qualified low-income buildings to transfer housing credit allocations to other buildings. However, an agency may provide a procedure whereby owners may return to the agency, prior to the end of the calendar year in which housing credit allocations are made, unusable portions of such allocations. In such a case, an owner's housing credit allocation is deemed reduced by the amount of the allocation returned to the agency, and the agency may reallocate such amount to other qualified low-income buildings prior to the end of the year.

(7) ***Effect of housing credit allocations in excess of an agency's aggregate housing credit dollar amount.*** In the event that a State or local housing credit agency makes housing credit allocations in excess of its aggregate housing credit dollar amount for any calendar year, the allocations shall be deemed reduced (to the extent of such excess) for buildings in the reverse order in which such allocations were made during such year.

(8) ***Time and manner for making housing credit allocations*** —

(i) ***Time.*** Housing credit allocations are effective for the calendar year in which made in the manner prescribed in paragraph (d)(8)(ii) of this section. A State or local housing credit agency may not make a housing credit allocation to a qualified low-income building prior to the calendar year in which such building is placed in service. An agency may adopt its own procedures for receiving applications for housing credit allocations from owners of qualified

low-income buildings. An agency may provide a procedure for making, in advance of a building's being placed in service, a binding commitment (e.g., by contract, inducement, resolution, or other means) to make a housing credit allocation in the calendar year in which a qualified low-income building is placed in service or in a subsequent calendar year. Any advance commitment shall not constitute a housing credit allocation for purposes of this section.

(ii) ***Manner.*** Housing credit allocations are deemed made when part I of IRS Form 8609, Low-Income Housing Credit Allocation Certification, is completed and signed by an authorized official of the housing credit agency and mailed to the owner of the qualified low-income building. A copy of all completed (as to part I) Form 8609 allocations along with a single completed Form 8610, Annual Low-Income Housing Credit Agencies Report, must also be mailed to the Internal Revenue Service not later than the 28th day of the second calendar month after the close of the calendar year in which the housing credit was allocated to the qualified low-income building. Housing credit allocations to a qualified low-income building must be made on Form 8609 and must include—

(A) The address of the building;

(B) The name, address, and taxpayer identification number of the housing credit agency making the housing credit allocation;

(C) The name, address, and taxpayer identification number of the owner of the qualified low-income building;

(D) The date of the allocation of housing credit;

(E) The housing credit dollar amount allocated to the building on such date;

(F) The specified maximum applicable credit percentage allocated to the building on such date;

(G) The specified maximum qualified basis amount;

(H) The percentage of the aggregate basis financed by tax-exempt bonds taken into account for purposes of the volume cap under section 146;

(I) A certification under penalties of perjury by an authorized State or local housing credit agency official that the allocation is made in compliance with the requirements of section 42(h); and

(J) Any additional information that may be required by Form 8609 or by an applicable revenue procedure.

See paragraph (h) of this section for additional rules concerning filing of forms.

(iii) ***Certification.*** The certifying official for the State or local housing credit agency need not perform an independent investigation of the qualified low-income building in order to certify on part I of Form 8609 that the housing credit allocation meets the requirements of section 42(h). For example, the certifying official may rely on information contained in an application for a low-income housing credit allocation submitted by the building owner which sets forth facts necessary to determine that the building is eligible for the low-income housing credit under section 42.

(iv) ***Fee.*** A State or local housing credit agency may charge building owners applying for housing credit allocations a reasonable fee to cover the agency's administrative expenses for processing applications.

(v) ***No continuing agency responsibility.*** The State or local housing credit agency need not monitor or investigate the continued compliance of a qualified low-income building with the requirements of section 42 throughout the applicable compliance period.

(e) ***Housing credit allocation taken into account by owner of a qualified low-income building*** —

(1) ***Time and manner for taking housing credit allocation into account.*** An owner of a qualified low-income building may not claim a low-income housing credit determined under section 42 in any year in excess of an effective housing credit allocation received from a State or local housing credit agency. A housing credit allocation made to a qualified low-income building is effective with respect to any owner of the building beginning with the owner's taxable year in which the housing credit allocation is received. A housing credit allocation is deemed received in a taxable year, except as modified in the succeeding sentence, if that allocation is made (in the manner described in paragraph (d)(8) of this section) not later than the earlier of

(i) the 60th day after the close of the taxable year, or

(ii) the close of the calendar year in which such taxable year ends. A housing credit allocation is deemed received in a taxable year ending in 1987, if such allocation is made (in the manner described in paragraph (d)(8) of this section) on or before December 31, 1987. A housing credit allocation is not effective for any taxable year if received in a calendar year which ends prior to when the qualified low-income building is placed in service. A housing credit allocation made to a qualified low-income building remains effective for all taxable years in the compliance period.

(2) ***First-year convention limitation on housing credit allocation taken into account.*** For purposes of the limitation that the allowable low-income housing credit may not exceed the effective housing credit allocation received from a State or local housing credit agency, as provided in paragraph (e)(1) of this section, the amount of the effective housing credit allocation shall be adjusted by applying the first-year convention provided in section 42(f)(2)(A) and (3)(B) and the percentage credit reduction provided in section 42(f)(3)(A). Under paragraphs (d) (2) and (5) of this section, the State or local housing credit agency must specify the credit percentage and qualified basis amount, the product of which is the amount of the housing credit allocation, without taking account of the first-year convention described in section 42(f)(2)(A) and (3)(B) or the percentage credit reduction prescribed in section 42(f)(3)(A). However, for purposes of the limitation on the amount of the allowable low-income housing credit, as provided in paragraph (e)(1) of this section, in a taxable year in which the first-year convention applies to the amount of credit determined under section 42(a), the specified qualified basis amount shall be adjusted by the first-year convention fraction which is equal to the number of full months (during the first taxable year) in which the building was in service divided by 12. In addition, for purposes of the limitation on the amount of the allowable low-income housing credit, as provided in paragraph (e)(1) of this section, in a taxable year in which the reduction in credit percentage applies to additions to qualified basis, as prescribed in section 42(f)(3), the specified credit percentage shall be reduced by one-third. *See* examples in paragraphs (d)(5)(ii) and (e)(3)(ii) of this section.

(3) ***Use of excess housing credit allocation for increases in qualified basis*** —

(i) ***In general.*** If the housing credit allocation made to a qualified low-income building exceeds the amount of credit allowable with respect to such building in any taxable year (without regard to the first-year conventions under section 42(f)), such excess is not transferable to another qualified low-income building. However, if in a subsequent year there are increases in the qualified basis for which an increased credit is allowable under section 42(f)(3) at a reduced credit percentage, the original housing credit allocation (including the specified credit percentage and qualified basis amount) would be effective with respect to such increased credit.

(ii) ***Example.*** The provisions of this paragraph (e)(3) may be illustrated by the following example:

Example. In 1987, a newly-constructed qualified low-income building receives a housing credit allocation of $90,000 based on a specified credit percentage of 9 percent and a specified qualified basis amount of $1,000,000. The building is placed in service in 1987, but the qualified basis in such year is only $800,000, resulting in an allowable credit in 1987 (determined without regard to the first-year conventions) of $72,000. In 1988, the qualified basis is increased to $1,100,000, resulting in an additional credit allowable under section 42(f)(3) (without regard to the first-year conventions) of $18,000 (*i.e.,* $300,000 × .06, or $^{2}/_{3}$ of .09). The unused portion of the 1987 housing credit allocation ($18,000) is effective in 1988 and in each subsequent year in the compliance period only with respect to the specified qualified basis for the 1987 housing credit allocation ($1,000,000). Thus, the owner is allowed to claim a credit in 1988 and in each subsequent year (without regard to the first-year conventions), based on the effective housing credit allocation from 1987, of $84,000 (*i.e.,* $72,000 + ($200,000 × .06)). The owner of the qualified low-income building must obtain a new housing credit allocation in 1988 with respect to the additional $100,000 of qualified basis in order to claim a credit on such basis in 1988 and in each subsequent year. If the applicable first-year convention under section 42(f)(3)(B) entitled the owner in 1988 to only $^{1}/_{2}$ of the otherwise applicable credit for the additions to qualified basis, under paragraph (e)(2) of this section the owner is allowed to claim a credit in 1988, based on the effective housing credit allocation from 1987, of $78,000 (*i.e.,* $72,000 + ($200,000 × .06 × .5)).

(4) ***Separate housing credit allocations for new buildings and increases in qualified basis.*** Separate housing credit allocations must be received for each building with respect to which a housing credit may be claimed. Rehabilitation expenditures with respect to a qualified low-income building are treated as a separate new building under section 42(e) and must receive a separate housing credit allocation. Increases in qualified basis in a qualified low-income building are not generally treated as a new building for purposes of section 42. To the extent that a prior housing credit allocation received with respect to a qualified low-income building does not allow an increased credit with respect to an increase in the qualified basis of such building, an additional housing credit allocation must be received in order to claim a credit with respect to that portion of increase in qualified basis. *See* paragraph (e)(3) of this section. The amount of credit allowable with respect to an increase in qualified basis is subject to the credit percentage limitation of section 42(f)(3)(A) and the first-year convention of section 42(f)(3)(B). *See* paragraph (d)(5) of this section for a rule requiring that the State or local housing credit agency count a housing credit allocation made with respect to an increase in qualified basis as if the specified credit percentage were unreduced in the manner prescribed in section 42(f)(3) and the specified basis amount were unreduced by the first-year convention prescribed in section 42(f)(3)(B).

(5) ***Acquisition of building for which a prior housing credit allocation has been made.*** If a carryover credit would be allowable to an acquirer of a qualified low-income building under section 42(d)(7), such acquirer need not obtain a new housing credit allocation with respect to such building. Under section 42(d)(7), the acquirer would be entitled to claim only such credits as would have been allowable to the prior owner of the building.

(6) ***Multiple housing credit allocations.*** A qualified low-income building may receive multiple housing credit allocations from different housing credit agencies having overlapping jurisdictions. A qualified low-income building that receives a housing credit allocation set aside exclusively for projects involving a qualified nonprofit organization may also receive a housing credit allocation from a housing credit agency's aggregate housing credit dollar amount that is not so set aside.

(f) ***Exception to housing credit allocation requirement*** —(1) *Tax-exempt bond financing*—

(i) ***In general.*** No housing credit allocation is required in order to claim a credit under section 42 with respect to that portion of the eligible basis (as defined in section 42(d)) of a qualified low-income building that is financed with the proceeds of an obligation described in section 103(a) ("tax-exempt bond") which is taken into account for purposes of the volume cap under section 146. In addition, no housing credit allocation is required in order to claim a credit under section 42 with respect to the entire qualified basis (as defined in section 42(c)) of a qualified low-income building if 70 percent or more of the aggregate basis of the building and the land on which the building is located is financed with the proceeds of tax-exempt bonds which are taken into account for purposes of the volume cap under section 146. For purposes of this paragraph, "land on which the building is located" includes only land that is functionally related and subordinate to the qualified low-income building. *See* § 1.103-8(b)(4)(iii) for the meaning of the term "functionally related and subordinate". For purposes of this paragraph, the basis of the land shall be determined using principles that are consistent with the rules contained in section 42(d).

(ii) ***Determining use of bond proceeds.*** For purposes of determining the portion of proceeds of an issue of tax-exempt bonds used to finance

(A) the eligible basis of a qualified low-income building, and

(B) the aggregate basis of the building and the land on which the building is located, the proceeds of the issue must be allocated in the bond indenture or a related document (as defined in § 1.103-13(b)(8)) in a manner consistent with the method used to allocate the net proceeds of the issue for purposes of determining whether 95 percent or more of the net proceeds of the issue are to be used for the exempt purpose of the issue. If the issuer is not consistent in making this allocation throughout the bond indenture and related documents, or if neither the bond indenture nor a related document provides an allocation, the proceeds of the issue will be allocated on a pro rata basis to all of the property financed by the issue, based on the relative cost of the property.

(iii) ***Example.*** The provisions of this paragraph may be illustrated by the following example:

Example. In 1987, County K assigns $500,000 of its volume cap for private activity bonds under section 146 to a $500,000 issue of exempt facility bonds to provide a qualified residential rental project to be owned by A, an individual. The aggregate basis of the building and the land on which the building is located is $700,000. Under the terms of the bond indenture, the net proceeds of the issue are to be used to finance $490,000 of the eligible basis of the building. More than 70 percent of the aggregate basis of the qualified low-income building and the land on which the building is located is financed with the proceeds of tax-exempt bonds to which a

portion of the volume cap under section 146 was allocated. Accordingly, A may claim a credit under section 42 without regard to whether any housing credit dollar amount was allocated to that building. If, instead, the aggregate basis of the building and land were $800,000, A would be able to claim the credit under section 42 without receiving a housing credit allocation for the building only to the extent that the credit was attributable to eligible basis of the building financed with tax-exempt bonds.

(g) ***Termination of authority to make housing credit allocation*** —

(1) ***In general.*** No State or local housing credit agency shall receive an apportionment of a State housing credit ceiling for calendar years after 1989. Consequently, no housing credit allocations may be made after 1989, except as provided in paragraph (g)(2) of this section. Housing credit allocations made prior to January 1, 1990, remain effective after such date.

(2) ***Carryover of unused 1989 apportionment.*** Any State or local housing credit agency that has an unused portion of its apportionment of the State housing credit ceiling for 1989 from which housing credit allocations have not been made in 1989 may carry over such unused portion into 1990. Such carryover portion of the 1989 apportionment shall be treated as the agency's apportionment for 1990. From this 1990 apportionment, the State or local housing credit agency may make housing credit allocations only to a qualified low-income building meeting the following requirements:

(i) The building must be constructed, reconstructed, or rehabilitated by the taxpayer seeking the allocation;

(ii) More than 10 percent of the reasonably anticipated cost of such construction, reconstruction, or rehabilitation must have been incurred as of January 1, 1989; and

(iii) The building must be placed in service before January 1, 1991.

(3) ***Expiration of exception for tax-exempt bond financed projects.*** The exception to the requirement that a housing credit allocation be received with respect to any portion of the eligible basis of a qualified low-income building, as provided in paragraph (f) of this section, shall not apply to any building placed in service after 1989, unless such building is described in paragraphs (g)(2) (i), (ii), and (iii) of this section.

(h) ***Filing of forms.*** For further guidance, *see* § 1.42-1(h).

(i) ***Transitional rules.*** The transitional rules contained in section 252(f)(1) of the Tax Reform Act of 1986 are incorporated into this section of the regulations for purposes of determining whether a qualified low-income building is entitled to receive a housing credit allocation or is excepted from the requirement that a housing credit allocation be received. Housing credit allocations made to qualified low-income buildings described in section 252(f)(1) shall not count against the State or local housing credit agency's aggregate housing credit dollar amount. The transitional rules contained in section 252(f)(2) of the Tax Reform Act of 1986 are incorporated into this section of the regulations for purposes of determining amounts available to certain State or local housing credit agencies for the making of housing credit allocations to certain qualified low-income housing projects. Amounts available to housing credit agencies under section 252(f)(2) shall be treated as special apportionments unavailable for housing credit allocations to qualified low-income buildings not described in section 252(f)(2). Housing credit allocations made from the special apportionments shall not count against the State or local credit agency's aggregate housing credit dollar amount. The set-aside requirements shall not apply to these special apportionments. The transitional rules contained in section 252(f)(3) of the Tax Reform Act 1986 are incorporated in this

section of the regulations for purposes of determining the amount of housing credit allocations received by certain qualified low-income buildings. Housing credit allocations deemed received under section 252(f)(3) shall not count against the State or local housing credit agency's aggregate housing credit dollar amount.

[T.D. 8144, 52 FR 23433, June 22, 1987; 52 FR 24583, July 1, 1987, as amended by T.D. 9112, 69 FR 3827, Jan. 27, 2004]

§ 1.42-2 [Reserved]

§ 1.42-3 Treatment of buildings financed with proceeds from a loan under an Affordable Housing Program established pursuant to section 721 of the Financial Institutions Reform, Recovery, and Enforcement Act of 1989 (FIRREA).

(a) ***Treatment under sections 42(i) and 42(b).*** A below market loan funded in whole or in part with funds from an Affordable Housing Program established under section 721 of FIRREA is not, solely by reason of the Affordable Housing Program funds, a below market Federal loan as defined in section 42(i)(2)(D). Thus, any building with respect to which the proceeds of the loan are used during the tax year is not, solely by reason of the Affordable Housing Program funds, treated as a federally subsidized building for that tax year and subsequent tax years for purposes of determining the applicable percentage for the building under section 42(b).

(b) ***Effective date.*** The rules set forth in paragraph (a) of this section are effective for loans made after August 8, 1989.

[56 FR 48734, Sept. 26, 1991]

§ 1.42-4 Application of not-for-profit rules of section 183 to low-income housing credit activities.

(a) ***Inapplicability to section 42.*** In the case of a qualified low-income building with respect to which the low-income housing credit under section 42 is allowable, section 183 does not apply to disallow losses, deductions, or credits attributable to the ownership and operation of the building.

(b) ***Limitation.*** Notwithstanding paragraph (a) of this section, losses, deductions, or credits attributable to the ownership and operation of a qualified low-income building with respect to which the low-income housing credit under section 42 is allowable may be limited or disallowed under other provisions of the Code or principles of tax law. See, e.g., sections 38(c), 163(d), 465, 469; *Knetsch* v. *United States,* 364 U.S. 361 (1960), 1961-1 C.B. 34 (“sham” or “economic substance” analysis); and *Frank Lyon Co.* v. *Commissioner,* 435 U.S. 561 (1978), 1978-1 C.B. 46 (“ownership” analysis).

(c) ***Effective date.*** The rules set forth in paragraphs (a) and (b) of this section are effective with respect to buildings placed in service after December 31, 1986.

[T.D. 8420, 57 FR 24729, June 11, 1992]

§ 1.42-5 Monitoring compliance with low-income housing credit requirements.

(a) ***Compliance monitoring requirement*** —

(1) ***In general.*** Under section 42(m)(1)(B)(iii), an allocation plan is not qualified unless it contains a procedure that the State or local housing credit agency ("Agency") (or an agent of, or other private contractor hired by, the Agency) will follow in monitoring for noncompliance with the provisions of section 42 and in notifying the Internal Revenue Service of any noncompliance of which the Agency becomes aware. These regulations only address compliance monitoring procedures required of Agencies. The regulations do not address forms and other records that may be required by the Service on examination or audit. For example, if a building is sold or otherwise transferred by the owner, the transferee should obtain from the transferor information related to the first year of the credit period so that the transferee can substantiate credits claimed.

(2) ***Requirements for a monitoring procedure*** —

(i) ***In general.*** A procedure for monitoring for noncompliance under section 42(m)(1)(B)(iii) must include—

(A) The recordkeeping and record retention provisions of paragraph (b) of this section;

(B) The certification and review provisions of paragraph (c) of this section;

(C) The inspection provision of paragraph (d) of this section; and

(D) The notification-of-noncompliance provisions of paragraph (e) of this section.

(ii) ***Order and form.*** A monitoring procedure will meet the requirements of section 42 (m)(1)(B)(iii) if it contains the substance of these provisions. The particular order and form of the provisions in the allocation plan is not material. A monitoring procedure may contain additional provisions or requirements.

(b) ***Recordkeeping and record retention provisions*** —

(1) ***Recordkeeping provision.*** Under the recordkeeping provision, the owner of a low-income housing project must be required to keep records for each qualified low-income building in the project that show for each year in the compliance period—

(i) The total number of residential rental units in the building (including the number of bedrooms and the size in square feet of each residential rental unit);

(ii) The percentage of residential rental units in the building that are low-income units;

(iii) The rent charged on each residential rental unit in the building (including any utility allowances);

(iv) The number of occupants in each low-income unit, but only if rent is determined by the number of occupants in each unit under section 42(g)(2) (as in effect before the amendments made by the Omnibus Budget Reconciliation Act of 1989);

(v) The low-income unit vacancies in the building and information that shows when, and to whom, the next available units were rented;

(vi) The annual income certification of each low-income tenant per unit. For an exception to this requirement, see section 42(g)(8)(B) (which provides a special rule for a 100 percent low-income building);

(vii) Documentation to support each low-income tenant's income certification (for example, a copy of the tenant's federal income tax return, Forms W-2, or verifications of income from third parties such as employers or state agencies paying unemployment compensation). For an

exception to this requirement, see section 42(g)(8)(B) (which provides a special rule for a 100 percent low-income building). Tenant income is calculated in a manner consistent with the determination of annual income under section 8 of the United States Housing Act of 1937 ("Section 8"), not in accordance with the determination of gross income for federal income tax liability. In the case of a tenant receiving housing assistance payments under Section 8, the documentation requirement of this paragraph (b)(1)(vii) is satisfied if the public housing authority provides a statement to the building owner declaring that the tenant's income does not exceed the applicable income limit under section 42 (g);

(viii) The eligible basis and qualified basis of the building at the end of the first year of the credit period; and

(ix) The character and use of the nonresidential portion of the building included in the building's eligible basis under section 42 (d) (e.g., tenant facilities that are available on a comparable basis to all tenants and for which no separate fee is charged for use of the facilities, or facilities reasonably required by the project).

(2) ***Record retention provision.*** Under the record retention provision, the owner of a low-income housing project must be required to retain the records described in paragraph (b)(1) of this section for at least 6 years after the due date (with extensions) for filing the federal income tax return for that year. The records for the first year of the credit period, however, must be retained for at least 6 years beyond the due date (with extensions) for filing the federal income tax return for the last year of the compliance period of the building.

(3) ***Inspection record retention provision.*** Under the inspection record retention provision, the owner of a low-income housing project must be required to retain the original local health, safety, or building code violation reports or notices that were issued by the State or local government unit (as described in paragraph (c)(1)(vi) of this section) for the Agency's inspection under paragraph (d) of this section. Retention of the original violation reports or notices is not required once the Agency reviews the violation reports or notices and completes its inspection, unless the violation remains uncorrected.

(c) ***Certification and review provisions*** —

(1) ***Certification.*** Under the certification provision, the owner of a low-income housing project must be required to certify at least annually to the Agency that, for the preceding 12-month period—

(i) The project met the requirements of:

(A) The 20-50 test under section 42 (g)(1)(A), the 40-60 test under section 42 (g)(1)(B), or the 25-60 test under sections 42 (g)(4) and 142 (d)(6) for New York City, whichever minimum set-aside test was applicable to the project; and

(B) If applicable to the project, the 15-40 test under sections 42(g)(4) and 142 (d)(4)(B) for "deep rent skewed" projects;

(ii) There was no change in the applicable fraction (as defined in section 42(c)(1)(B)) of any building in the project, or that there was a change, and a description of the change;

(iii) The owner has received an annual income certification from each low-income tenant, and documentation to support that certification; or, in the case of a tenant receiving Section 8 housing assistance payments, the statement from a public housing authority described in paragraph (b)(1)(vii) of this section. For an exception to this requirement, see section 42(g)(8)(B) (which provides a special rule for a 100 percent low-income building);

(iv) Each low-income unit in the project was rent-restricted under section 42(g)(2);

(v) All units in the project were for use by the general public (as defined in § 1.42-9), including the requirement that no finding of discrimination under the Fair Housing Act, 42 U.S.C. 3601-3619, occurred for the project. A finding of discrimination includes an adverse final decision by the Secretary of the Department of Housing and Urban Development (HUD), 24 CFR 180.680, an adverse final decision by a substantially equivalent state or local fair housing agency, 42 U.S.C. 3616a(a)(1), or an adverse judgment from a federal court;

(vi) The buildings and low-income units in the project were suitable for occupancy, taking into account local health, safety, and building codes (or other habitability standards), and the State or local government unit responsible for making local health, safety, or building code inspections did not issue a violation report for any building or low-income unit in the project. If a violation report or notice was issued by the governmental unit, the owner must attach a statement summarizing the violation report or notice or a copy of the violation report or notice to the annual certification submitted to the Agency under paragraph (c)(1) of this section. In addition, the owner must state whether the violation has been corrected;

(vii) There was no change in the eligible basis (as defined in section 42(d)) of any building in the project, or if there was a change, the nature of the change (e.g., a common area has become commercial space, or a fee is now charged for a tenant facility formerly provided without charge);

(viii) All tenant facilities included in the eligible basis under section 42(d) of any building in the project, such as swimming pools, other recreational facilities, and parking areas, were provided on a comparable basis without charge to all tenants in the building;

(ix) If a low-income unit in the project became vacant during the year, that reasonable attempts were or are being made to rent that unit or the next available unit of comparable or smaller size to tenants having a qualifying income before any units in the project were or will be rented to tenants not having a qualifying income;

(x) If the income of tenants of a low-income unit in the building increased above the limit allowed in section 42(g)(2)(D)(ii), the next available unit of comparable or smaller size in the building was or will be rented to tenants having a qualifying income;

(xi) An extended low-income housing commitment as described in section 42(h)(6) was in effect (for buildings subject to section 7108(c)(1) of the Omnibus Budget Reconciliation Act of 1989, 103 Stat. 2106, 2308-2311), including the requirement under section 42(h)(6)(B)(iv) that an owner cannot refuse to lease a unit in the project to an applicant because the applicant holds a voucher or certificate of eligibility under section 8 of the United States Housing Act of 1937, 42 U.S.C. 1437f (for buildings subject to section 13142(b)(4) of the Omnibus Budget Reconciliation Act of 1993, 107 Stat. 312, 438-439); and

(xii) All low-income units in the project were used on a nontransient basis (except for transitional housing for the homeless provided under section 42(i)(3)(B)(iii) or single-room-occupancy units rented on a month-by-month basis under section 42(i)(3)(B)(iv)).

(2) ***Review.*** The review provision must—

(i) Require that the Agency review the certifications submitted under paragraph (c)(1) of this section for compliance with the requirements of section 42;

(ii) Require that, with respect to each low-income housing project, the Agency conduct on-site inspections and review low-income certifications (including in that term the documentation supporting the low-income certifications and the rent records for tenants).

(iii) Require that the on-site inspections that the Agency must conduct satisfy both the requirements of § 1.42-5(d) and the requirements in paragraph (c)(2)(iii)(A) through (D) of this section, and require that the low-income certification review that the Agency must perform satisfies the requirements in paragraphs (c)(2)(iii)(A) through (D) of this section. Paragraph (c)(2)(iii)(A) through (D) of this section provides rules determining how these on-site inspection requirements and how these low-income certification review requirements may be satisfied by an inspection or review, as the case may be, that includes only a sample of the low-income units.

(A) ***Timing.*** The Agency must conduct on-site inspections of all buildings in the low-income housing project and must review low-income certifications of the low-income housing project—

(*1*) By the end of the second calendar year following the year the last building in the low-income housing project is placed in service; and

(*2*) At least once every 3 years thereafter.

(B) ***Number of low-income units.*** The Agency must conduct on-site inspections and low-income certification review of not fewer than the minimum number of low-income units for the corresponding number of low-income units in the low-income housing project set forth in the table to paragraph (c)(2)(iii).

TABLE TO PARAGRAPH (c)(2)(iii)

Number of low-income units in the low-income housing project	Number of low-income units selected for inspection or for low-income certification review (minimum unit sample size)
1	1
2	2
3	3
4	4

Number of low-income units in the low-income housing project	Number of low-income units selected for inspection or for low-income certification review (minimum unit sample size)
5-6	5
7	6
8-9	7
10-11	8
12-13	9
14-16	10
17-18	11
19-21	12
22-25	13
26-29	14
30-34	15
35-40	16
41-47	17
48-56	18
57-67	19
68-81	20
82-101	21
102-130	22
131-175	23
176-257	24
258-449	25
450-1,461	26
1,462-9,999	27

(C) *Selection of low-income units for inspection and low-income certifications for review* —

(1) ***Random selection.*** The Agency must select in a random manner the low-income units to be inspected and the units whose low-income certifications are to be reviewed. Agencies generally may not select the same low-income units of a low-income housing project for on-site inspections and low-income certification review, because doing so would usually give prohibited advance notice. See paragraph (c)(2)(iii)(C)(2) of this section. An Agency may choose a different number of units for on-site inspections and for low-income certification review, provided the Agency chooses at least the minimum number of low-income units in each case. The Agency must select the units for inspections or low-income certification review separately and in a random manner.

(2) ***Advance notification limited to reasonable notice.*** The Agency must select the low-income units to inspect and low-income certifications to review in a manner that does not give advance notice that a particular low-income unit (or low-income certifications for a particular low-income unit) will or will not be inspected (or reviewed) for a particular year. The Agency may notify the owner of the low-income units for on-site inspection only on the day of inspection. However, the Agency may give an owner reasonable notice that an inspection of the project and of not-yet-identified low-income units or review of low-income certifications will occur. The notice serves to enable the owner to assemble needed documentation for low-income certifications for review and to notify tenants of the possibility of physical inspection of their units.

(3) ***Meaning of reasonable notice.*** For purposes of paragraph (c)(2)(iii)(C)(2) of this section, reasonable notice is generally no more than 15 days. The notice period begins on the date the Agency informs the owner that an on-site inspection of a project and low-income units or low-income certification review will occur. Notice of more than 15 days, however, may be reasonable in extraordinary circumstances that are beyond an Agency's control and that prevent an Agency from carrying out within 15 days an on-site inspection or low-income certification review. Extraordinary circumstances include, but are not limited to, natural disasters and severe weather conditions. In the event of extraordinary circumstances that result in a reasonable-notice period longer than 15 days, an Agency must select the relevant units and conduct the same-day on-site inspection or low-income certification review as soon as practicable.

(4) ***Alternative means of conducting on-site inspections—Use of the REAC protocol.*** An Agency may satisfy the requirements of paragraphs (c)(2)(ii) and (iii) of this section if the inspection is performed under the Department of Housing and Urban Development (HUD) Real Estate Assessment Center (REAC) protocol and the inspection satisfies the following requirements:

(*i*) Both vacant and occupied low-income units in a low-income housing project are included in the population of units from which units are selected for inspection;

(*ii*) The inspection complies with the procedural and substantive requirements of the REAC protocol, including the requirements of the most recent REAC Uniform Physical Condition Standards (UPCS) inspection software, or software accepted by HUD;

(*iii*) The inspection is performed by HUD or HUD-Certified REAC inspectors;

(*iv*) The inspection results are sent to HUD, the results are reviewed and scored within HUD's secure system without any involvement of the inspector who conducted the inspection, and HUD makes its inspection report available.

(5) ***HUD Inspections that comply with the requirements of the REAC Protocol.*** If, consistent with the requirements of paragraph (c)(2)(iii)(4) of this section, an Agency conducts on-site inspections under the REAC protocol, then—

(*i*) Paragraph (c)(2)(iii)(A) of this section is applied as if it did not contain the word “all”;

(*ii*) The number of low-income units required to be inspected under the REAC protocol satisfies the requirements of paragraph (c)(2)(iii)(B) of this section concerning the number of low-income units an Agency must inspect; and

(*iii*) The manner in which the low-income units are selected for inspection under the REAC protocol satisfies the requirements of paragraph (c)(2)(iii)(C) of this section.

(*6*) ***Income Certification Requirements for HUD Inspections that comply with the requirements of the REAC Protocol.*** An agency that conducts on-site inspections under the REAC protocol is not excused from reviewing low-income certifications in accordance with paragraphs (c)(2)(ii) and (iii) of this section.

(*7*) ***Applicability of reasonable notice limitation when the same units are chosen for inspection and file review.*** If the Agency chooses to select the same units for on-site inspections and low-income certification review, the Agency must complete both the inspections and review before the end of the day on which the units are selected. See paragraph (c)(2)(iii)(C)(*1*) and (*2*) of this section.

(D) ***Method of low-income certification review.*** The Agency may review the low-income certifications wherever the owner maintains or stores the records (either on-site or off-site).

(3) ***Frequency and form of certification.*** A monitoring procedure must require that the certifications and reviews of § 1.42-5(c)(1) and (c)(2)(i) be made at least annually covering each year of the 15-year compliance period under section 42(i)(1). The certifications must be made under penalties of perjury. A monitoring procedure may require certifications and reviews more frequently than every 12 months, provided that all months within each 12-month period are subject to certification.

(4) ***Exception for certain buildings*** —

(i) ***In general.*** The review requirements under paragraph (c)(2)(ii) of this section may provide that owners are not required to submit, and the Agency is not required to review, the tenant income certifications, supporting documentation, and rent records for buildings financed by the Rural Housing Service (RHS), formerly known as Farmers Home Administration, under the section 515 program, or buildings of which 50 percent or more of the aggregate basis (taking into account the building and the land) is financed with the proceeds of obligations the interest on which is exempt from tax under section 103 (tax-exempt bonds). In order for a monitoring procedure to except these buildings, the Agency must meet the requirements of paragraph (c)(4)(ii) of this section.

(ii) ***Agreement and review.*** The Agency must enter into an agreement with the RHS or tax-exempt bond issuer. Under the agreement, the RHS or tax-exempt bond issuer must agree to provide information concerning the income and rent of the tenants in the building to the Agency. The Agency may assume the accuracy of the information provided by RHS or the tax-exempt bond issuer without verification. The Agency must review the information and determine that the income limitation and rent restriction of section 42 (g)(1) and (2) are met. However, if the information provided by the RHS or tax-exempt bond issuer is not sufficient for the Agency to make this determination, the Agency must request the necessary additional income or rent information from the owner of the buildings. For example, because RHS determines tenant

eligibility based on its definition of "adjusted annual income," rather than "annual income" as defined under Section 8, the Agency may have to calculate the tenant's income for section 42 purposes and may need to request additional income information from the owner.

(iii) ***Example.*** The exception permitted under paragraph (c)(4)(i) and (ii) of this section is illustrated by the following example.

Example. An Agency selects for review buildings financed by the RHS. The Agency has entered into an agreement described in paragraph (c)(4)(ii) of this section with the RHS with respect to those buildings. In reviewing the RHS-financed buildings, the Agency obtains the tenant income and rent information from the RHS for 20 percent of the low-income units in each of those buildings. The Agency calculates the tenant income and rent to determine whether the tenants meet the income and rent limitation of section 42 (g)(1) and (2). In order to make this determination, the Agency may need to request additional income or rent information from the owners of the RHS buildings if the information provided by the RHS is not sufficient.

(5) ***Agency reports of compliance monitoring activities.*** The Agency must report its compliance monitoring activities annually on Form 8610, "Annual Low-Income Housing Credit Agencies Report."

(d) ***Inspection provision*** —

(1) ***In general.*** Under the inspection provision, the Agency must have the right to perform an on-site inspection of any low-income housing project at least through the end of the compliance period of the buildings in the project. The inspection provision of this paragraph (d) is a separate requirement from any tenant file review under paragraph (c)(2)(ii) of this section.

(2) ***Inspection standard.*** For the on-site inspections of buildings and low-income units required by paragraph (c)(2)(ii) of this section, the Agency must review any local health, safety, or building code violations reports or notices retained by the owner under paragraph (b)(3) of this section and must determine—

(i) Whether the buildings and units are suitable for occupancy, taking into account local health, safety, and building codes (or other habitability standards); or

(ii) Whether the buildings and units satisfy, as determined by the Agency, the uniform physical condition standards for public housing established by HUD (24 CFR 5.703). The HUD physical condition standards do not supersede or preempt local health, safety, and building codes. A low-income housing project under section 42 must continue to satisfy these codes and, if the Agency becomes aware of any violation of these codes, the Agency must report the violation to the Service. However, provided the Agency determines by inspection that the HUD standards are met, the Agency is not required under this paragraph (d)(2)(ii) to determine by inspection whether the project meets local health, safety, and building codes.

(3) ***Exception from inspection provision.*** An Agency is not required to inspect a building under this paragraph (d) if the building is financed by the RHS under the section 515 program, the RHS inspects the building (under 7 CFR part 1930), and the RHS and Agency enter into a memorandum of understanding, or other similar arrangement, under which the RHS agrees to notify the Agency of the inspection results.

(4) ***Delegation.*** An Agency may delegate inspection under this paragraph (d) to an Authorized Delegate retained under paragraph (f) of this section. Such Authorized Delegate, which may include HUD or a HUD-approved inspector, must notify the Agency of the inspection results.

(e) ***Notification-of-noncompliance provision*** —

(1) ***In general.*** Under the notification-of-noncompliance provisions, the Agency must be required to give the notice described in paragraph (e)(2) of this section to the owner of a low-income housing project and the notice described in paragraph (e)(3) of this section to the Service.

(2) ***Notice to owner.*** The Agency must be required to provide prompt written notice to the owner of a low-income housing project if the Agency does not receive the certification described in paragraph (c)(1) of this section, or does not receive or is not permitted to inspect the tenant income certifications, supporting documentation, and rent records described in paragraph (c)(2)(ii) of this section, or discovers by inspection, review, or in some other manner, that the project is not in compliance with the provisions of section 42.

(3) ***Notice to Internal Revenue Service*** —

(i) ***In general.*** The Agency must be required to file Form 8823, "Low-Income Housing Credit Agencies Report of Noncompliance," with the Service no later than 45 days after the end of the correction period (as described in paragraph (e)(4) of this section, including extensions permitted under that paragraph) and no earlier than the end of the correction period, whether or not the noncompliance or failure to certify is corrected. The Agency must explain on Form 8823 the nature of the noncompliance or failure to certify and indicate whether the owner has corrected the noncompliance or failure to certify. Any change in either the applicable fraction or eligible basis under paragraph (c)(1)(ii) and (vii) of this section, respectively, that results in a decrease in the qualified basis of the project under section 42 (c)(1)(A) is noncompliance that must be reported to the Service under this paragraph (e)(3). If an Agency reports on Form 8823 that a building is entirely out of compliance and will not be in compliance at any time in the future, the Agency need not file Form 8823 in subsequent years to report that building's noncompliance. If the noncompliance or failure to certify is corrected within 3 years after the end of the correction period, the Agency is required to file Form 8823 with the Service reporting the correction of the noncompliance or failure to certify.

(ii) ***Agency retention of records.*** An Agency must retain records of noncompliance or failure to certify for 6 years beyond the Agency's filing of the respective Form 8823. In all other cases, the Agency must retain the certifications and records described in paragraph (c) of this section for 3 years from the end of the calendar year the Agency receives the certifications and records.

(4) ***Correction period.*** The correction period shall be that period specified in the monitoring procedure during which an owner must supply any missing certifications and bring the project into compliance with the provisions of section 42. The correction period is not to exceed 90 days from the date of the notice to the owner described in paragraph (e)(2) of this section. An Agency may extend the correction period for up to 6 months, but only if the Agency determines there is good cause for granting the extension.

(f) ***Delegation of Authority*** —

(1) ***Agencies permitted to delegate compliance monitoring functions*** —

(i) ***In general.*** An Agency may retain an agent or other private contractor ("Authorized Delegate") to perform compliance monitoring. The Authorized Delegate must be unrelated to the owner of any building that the Authorized Delegate monitors. The Authorized Delegate may be delegated all of the functions of the Agency, except for the responsibility of notifying the Service under paragraphs (c)(5) and (e)(3) of this section. For example, the Authorized Delegate may be delegated the responsibility of reviewing tenant certifications and documentation under paragraph (c) (1) and (2) of this section, the right to inspect buildings and records as described in paragraph (d) of this section, and the responsibility of notifying building owners of lack of certification or noncompliance under paragraph (e)(2) of this section. The Authorized Delegate must notify the Agency of any noncompliance or failure to certify.

(ii) ***Limitations.*** An Agency that delegates compliance monitoring to an Authorized Delegate under paragraph (f)(1)(i) of this section must use reasonable diligence to ensure that the Authorized Delegate properly performs the delegated monitoring functions. Delegation by an Agency of compliance monitoring functions to an Authorized Delegate does not relieve the Agency of its obligation to notify the Service of any noncompliance of which the Agency becomes aware.

(2) ***Agencies permitted to delegate compliance monitoring functions to another Agency.*** An Agency may delegate all or some of its compliance monitoring responsibilities for a building to another Agency within the State. This delegation may include the responsibility of notifying the Service under paragraph (e)(3) of this section.

(g) ***Liability.*** Compliance with the requirements of section 42 is the responsibility of the owner of the building for which the credit is allowable. The Agency's obligation to monitor for compliance with the requirements of section 42 does not make the Agency liable for an owner's noncompliance.

(h) ***Effective/applicability dates*** —

(1) ***In general.*** Allocation plans must comply with these regulations by June 30, 1993. The requirement of section 42 (m)(1)(B)(iii) that allocation plans contain a procedure for monitoring for noncompliance becomes effective on January 1, 1992, and applies to buildings for which a low-income housing credit is, or has been, allowable at any time. Thus, allocation plans must comply with section 42(m)(1)(B)(iii) prior to June 30, 1993, the effective date of these regulations. An allocation plan that complies with these regulations, with the notice of proposed rulemaking published in the FEDERAL REGISTER on December 27, 1991, or with a reasonable interpretation of section 42(m)(1)(B)(iii) will satisfy the requirements of section 42(m)(1)(B)(iii) for periods before June 30, 1993. Section 42(m)(1)(B)(iii) and these regulations do not require monitoring for whether a building or project is in compliance with the requirements of section 42 prior to January 1, 1992. However, if an Agency becomes aware of noncompliance that occurred prior to January 1, 1992, the Agency is required to notify the Service of that noncompliance. In addition, the requirements in paragraphs (b)(3) and (c)(1)(v), (vi), and (xi) of this section (involving recordkeeping and annual owner certifications) and paragraphs (c)(2)(ii)(B), (c)(2)(iii), and (d) of this section (involving tenant file reviews and physical inspections of existing projects, and the physical inspection standard) are applicable January 1, 2001. The requirement in paragraph (c)(2)(ii)(A) of this section (involving tenant file reviews and physical inspections of new projects) is applicable for buildings placed in service on or after January 1, 2001. The requirements in paragraph (c)(5) of this section (involving Agency reporting of compliance monitoring activities to the Service) and paragraph (e)(3)(i) of this section (involving Agency reporting of corrected noncompliance or failure to certify within 3 years after the end of the correction period) are applicable January 14, 2000.

(2) ***Applicability dates.*** The requirements in paragraphs (c)(2)(ii) and (iii) and (c)(3) of this section apply beginning on February 26, 2019. A state housing credit agency is allowed a reasonable period of time to amend its qualified allocation plan, but must amend its qualified allocation plan no later than December 31, 2020.

[T.D. 8430, 57 FR 40121, Sept. 2, 1992; 57 FR 57280, Dec. 3, 1992; 58 FR 7748, Feb. 9, 1993; T.D. 8563, 59 FR 50163, Oct. 3, 1994; T.D. 8859, 65 FR 2326, Jan. 14, 2000; 65 FR 16317, Mar. 28, 2000; T.D. 9753, 81 FR 9336, Feb. 25, 2016; T.D. 9848, 84 FR 6079, Feb. 26, 2019]

§ 1.42-6 Buildings qualifying for carryover allocations.

(a) ***Carryover allocations*** —

(1) ***In general.*** A carryover allocation is an allocation that meets the requirements of section 42(h)(1)(E) or (F). If the requirements of section § 42(h)(1)(E) or (F) that are required to be satisfied by the close of a calendar year are not satisfied, the allocation is not valid and is treated as if it had not been made for that calendar year. For example, if a carryover allocation fails to satisfy a requirement in § 1.42-6(d) for making an allocation, such as failing to be signed or dated by an authorized official of an allocating agency by the close of a calendar year, the allocation is not valid and is treated as if it had not been made for that calendar year.

(2) ***10 percent basis requirement.*** A carryover allocation may only be made with respect to a qualified building. A qualified building is any building which is part of a project if, by the date specified under paragraph (a)(2)(i) or (ii) of this section, a taxpayer's basis in the project is more than 10 percent of the taxpayer's reasonably expected basis in the project as of the close of the second calendar year following the calendar year the allocation is made. For purposes of meeting the 10 percent basis requirement, the determination of whether a building is part of a single-building project or multi-building project is based on whether the carryover allocation is made under section 42(h)(1)(E) (building-based allocation) or section 42(h)(1)(F) (project-based allocation). In the case of a multi-building project that receives an allocation under section 42(h)(1)(F), the 10 percent basis requirement is satisfied by reference to the entire project.

(i) ***Allocation made before July 1.*** If a carryover allocation is made before July 1 of a calendar year, a taxpayer must meet the 10 percent basis requirement by the close of that calendar year. If a taxpayer does not meet the 10 percent basis requirement by the close of the calendar year, the carryover allocation is not valid and is treated as if it had not been made.

(ii) ***Allocation made after June 30.*** If a carryover allocation is made after June 30 of a calendar year, a taxpayer must meet the 10 percent basis requirement by the close of the date that is 6 months after the date the allocation was made. If a taxpayer does not meet the 10 percent basis requirement by the close of the required date, the carryover allocation must be returned to the Agency. Unlike a carryover allocation made before July 1, if a taxpayer does not meet the 10 percent basis requirement by the close of the required date, the carryover allocation is treated as a valid allocation for the calendar year of allocation, but is included in the “returned credit component” for purposes of determining the State housing credit ceiling under section 42(h)(3)(C) for the calendar year following the calendar year of the allocation. See § 1.42-14(d)(1).

(b) ***Carryover-allocation basis*** —

(1) ***In general.*** Subject to the limitations of paragraph (b)(2) of this section, a taxpayer's basis in a project for purposes of section 42(h)(1) (E)(ii) or (F) (carryover-allocation basis) is the taxpayer's adjusted basis in land or depreciable property that is reasonably expected to be part of the project, whether or not these amounts are includible in eligible basis under section 42(d). Thus, for example, if the project is to include property that is not residential rental property, such as commercial space, the basis attributable to the commercial space, although not includible in eligible basis, is includible in carryover-allocation basis. The adjusted basis of land and depreciable property is determined under sections 1012 and 1016, and generally includes the direct and indirect costs of acquiring, constructing, and rehabilitating the property. Costs otherwise includible in carryover-allocation basis are not excluded by reason of having been incurred prior to the calendar year in which the carryover allocation is made.

(2) ***Limitations*** —For purposes of determining carryover-allocation basis under paragraph (b)(1) of this section, the following limitations apply.

(i) ***Taxpayer must have basis in land or depreciable property related to the project.*** A taxpayer has carryover-allocation basis to the extent that it has basis in land or depreciable property and the land or depreciable property is reasonably expected to be part of the project for which the carryover allocation is made. This basis includes all items that are properly capitalizable with respect to the land or depreciable property. For example, a nonrefundable downpayment for, or an amount paid to acquire an option to purchase, land or depreciable property may be included in carryover-allocation basis if properly capitalizable into the basis of land or depreciable property that is reasonably expected to be part of a project.

(ii) ***High cost areas.*** Any increase in eligible basis that may result under section 42(d)(5)(C) from a building's location in a qualified census tract or difficult development area is not taken into account in determining carryover-allocation basis or reasonably expected basis.

(iii) ***Amounts not treated as paid or incurred.*** An amount is not includible in carryover-allocation basis unless it is treated as paid or incurred under the method of accounting used by the taxpayer. For example, a cash method taxpayer cannot include construction costs in carryover-allocation basis unless the costs have been paid, and an accrual method taxpayer cannot include construction costs in carryover- allocation basis unless they have been properly accrued. See paragraph (b)(2)(iv) of this section for a special rule for fees.

(iv) ***Fees.*** A fee is includible in carryover-allocation basis only to the extent the requirements of paragraph (b)(2)(iii) of this section are met and—

(A) The fee is reasonable;

(B) The taxpayer is legally obligated to pay the fee;

(C) The fee is capitalizable as part of the taxpayer's basis in land or depreciable property that is reasonably expected to be part of the project;

(D) The fee is not paid (or to be paid) by the taxpayer to itself; and

(E) If the fee is paid (or to be paid) by the taxpayer to a related person, and the taxpayer uses the cash method of accounting, the taxpayer could properly accrue the fee under the accrual method of accounting (considering, for example, the rules of section 461(h)). A person is a related person if the person bears a relationship to the taxpayer specified in

sections 267(b) or 707(b)(1), or if the person and the taxpayer are engaged in trades or businesses under common control (within the meaning of subsections (a) and (b) of section 52).

(3) ***Reasonably expected basis.*** Rules similar to the rules of paragraphs (a) and (b) of this section apply in determining the taxpayer's reasonably expected basis in a project (land and depreciable basis) as of the close of the second calendar year following the calendar year of the allocation.

(4) ***Examples.*** The following examples illustrate the rules of paragraphs (a) and (b) of this section.

> *Example 1.* (i) *Facts.* C, an accrual-method taxpayer, receives a carryover allocation from Agency, the state housing credit agency, in May of 2003. As of that date, C has not begun construction of the low-income housing building C plans to build. However, C has owned the land on which C plans to build the building since 1985. C's basis in the land is $100,000. C reasonably expects that by the end of 2005, C's basis in the project of which the building is to be a part will be $2,000,000. C also expects that because the project is located in a qualified census tract, C will be able to increase its basis in the project to $2,600,000. Before the close of 2003, C incurs $150,000 of costs for architects' fees and site preparation. C properly accrues these costs under its method of accounting and capitalizes the costs.
> (ii) *Determination of carryover-allocation basis.* C's $100,000 basis in the land is includible in carryover-allocation basis even though C has owned the land since 1985. The $150,000 of costs C has incurred for architects' fees and site preparation are also includible in carryover-allocation basis. The expected increase in basis due to the project's location in a qualified census tract is not taken into account in determining C's carryover-allocation basis. Accordingly, C's carryover-allocation basis in the project of which the building is a part is $250,000.
>
> (iii) *Determination of whether building is qualified.* C's reasonably expected basis in the project at the close of the second calendar year following the calendar year of allocation is $2,000,000. The expected increase in eligible basis due to the project's location in a qualified census tract is not taken into account in determining this amount. Because C's carryover-allocation basis is more than 10 percent of C's reasonably expected basis in the project of which the building is a part, the building for which C received the carryover allocation is a qualified building for purposes of section 42(h)(1)(E)(ii) and paragraph (a) of this section.

> *Example 2.* (i) *Facts.* D, an accrual-method taxpayer, received a carryover allocation from Agency, the state housing credit agency of State X, on September 12, 2003. As of that date, D has not begun construction of the low-income housing building D plans to build and D does not have basis in the land on which D plans to build the building. From September 12, 2003, to the close of March 12, 2004, D incurs some costs related to the planned building, including architects' fees. As of the close of March 12, 2004, these costs do not exceed 10 percent of D's reasonably expected basis in the single-building project as of the close of 2005.

(ii) *Determination of whether building is qualified.* Because D's carryover-allocation basis as of the close of March 12, 2004, is not more than 10 percent of D's reasonably expected basis in the single-building project, the building is not a qualified building for purposes of section 42(h)(1)(E)(ii) and paragraph (a) of this section. Accordingly, the carryover allocation to D must be returned to the Agency. The allocation is valid for purposes of determining the amount of credit allocated by Agency from State X's 2003 State housing credit ceiling, but is included in the returned credit component of State X's 2004 housing credit ceiling.

(c) ***Verification of basis by Agency*** —

(1) ***Verification requirement.*** An Agency that makes a carryover allocation to a taxpayer must verify that the taxpayer has met the 10 percent basis requirement of paragraph (a)(2) of this section.

(2) ***Manner of verification.*** An Agency may verify that a taxpayer has incurred more than 10 percent of its reasonably expected basis in a project by obtaining a certification from the taxpayer, in writing and under penalty of perjury, that the taxpayer has incurred by the close of the calendar year of the allocation (for allocations made before July 1) or by the close of the date that is 6 months after the date the allocation is made (for allocations made after June 30) more than 10 percent of the reasonably expected basis in the project. The certification must be accompanied by supporting documentation that the Agency must review. Supporting documentation may include, for example, copies of checks or other records of payments. Alternatively, an Agency may verify that the taxpayer has incurred adequate basis by requiring that the taxpayer obtain from an attorney or certified public accountant a written certification to the Agency, that the attorney or accountant has examined all eligible costs incurred with respect to the project and that, based upon this examination, it is the attorney's or accountant's belief that the taxpayer has incurred more than 10 percent of its reasonably expected basis in the project by the close of the calendar year of the allocation (for allocations made before July 1) or by the close of the date that is 6 months after the date the allocation is made (for allocations made after June 30).

(3) ***Time of verification*** —

(i) ***Allocations made before July 1.*** For a carryover allocation made before July 1, an Agency may require that the basis certification be submitted to or received by the Agency prior to the close of the calendar year of allocation or within a reasonable time following the close of the calendar year of allocation. The Agency will need to verify basis as provided in paragraph (c)(2) of this section to accurately complete the Form 8610, “Annual Low-Income Housing Credit Agencies Report,” and the Schedule A (Form 8610), “Carryover Allocation of Low-Income Housing Credit,” for the calendar year of the allocation. If the basis certification is not timely made, or supporting documentation is lacking, inadequate, or does not actually support the certification, the Agency should notify the taxpayer and try to get adequate documentation. If the Agency cannot verify before the Form 8610 is filed that the taxpayer has satisfied the 10 percent basis requirement for a carryover allocation made before July 1, the allocation is not valid and is treated as if it had not been made and the carryover allocation should not be reported on the Schedule A (Form 8610).

(ii) ***Allocations made after June 30.*** An Agency may require that the basis certification be submitted to or received by the Agency prior to the close of the date that is 6 months after the date the allocation was made or within a reasonable period of time following the close of the date that is 6 months after the date the allocation was made. The Agency will need to verify basis as

provided in paragraph (c)(2) of this section. If the basis certification is not timely made, or supporting documentation is lacking, inadequate, or does not actually support the certification, the Agency should notify the taxpayer and try to get adequate documentation. If the Agency cannot verify that the taxpayer has satisfied the 10 percent basis requirement for a carryover allocation made after June 30, the allocation must be returned to the Agency. The carryover allocation is a valid allocation for the calendar year of the allocation, but is included in the returned credit component of the State housing credit ceiling for the calendar year following the calendar year of the allocation.

(d) ***Requirements for making carryover allocations*** —

(1) ***In general.*** Generally, an allocation is made when an Agency issues the Form 8609, 'Low-Income Housing Credit Allocation Certification,' for a building. See § 1.42-1T(d)(8)(ii). An Agency does not issue the Form 8609 for a building until the building is placed in service. However, in cases where allocations of credit are made pursuant to section 42(h)(1)(E) (relating to carryover allocations for buildings) or section 42(h)(1)(F) (relating to carryover allocations for multiple-building projects), Form 8609 is not used as the allocating document because the buildings are not yet in service. When an allocation is made pursuant to section 42(h)(1) (E) or (F), the allocating document is the document meeting the requirements of paragraph (d)(2) of this section. In addition, when an allocation is made pursuant to section 42(h)(1)(F), the requirements of paragraph (d)(3) of this section must be met for the allocation to be valid. An allocation pursuant to section 42(h)(1) (E) or (F) reduces the state housing credit ceiling for the year in which the allocation is made, whether or not the Form 8609 is also issued in that year.

(2) ***Requirements for allocation.*** An allocation pursuant to section 42(h)(1) (E) or (F) is made when an allocation document containing the following information is completed, signed, and dated by an authorized official of the Agency—

(i) The address of each building in the project, or if none exists, a specific description of the location of each building;

(ii) The name, address, and taxpayer identification number of the taxpayer receiving the allocation;

(iii) The name and address of the Agency;

(iv) The taxpayer identification number of the Agency;

(v) The date of the allocation;

(vi) The housing credit dollar amount allocated to the building or project, as applicable;

(vii) The taxpayer's reasonably expected basis in the project (land and depreciable basis) as of the close of the second calendar year following the calendar year in which the allocation is made;

(viii) For carryover allocations made before July 1, the taxpayer's basis in the project (land and depreciable basis) as of the close of the calendar year of the allocation and the percentage that basis bears to the reasonably expected basis in the project (land and depreciable basis) as of the close of the second calendar year following the calendar year of allocation;

(ix) The date that each building in the project is expected to be placed in service; and

(x) The Building Identification Number (B.I.N.) to be assigned to each building in the project. The B.I.N. must reflect the year an allocation is first made to the building, regardless of the year that the building is placed in service. This B.I.N. must be used for all allocations of credit for the

building. For example, rehabilitation expenditures treated as a separate new building under section 42(e) should not have a separate B.I.N. if the building to which the rehabilitation expenditures are made has a B.I.N. In this case, the B.I.N. used for the rehabilitation expenditures shall be the B.I.N. previously assigned to the building, although the rehabilitation expenditures must have a separate Form 8609 for the allocation. Similarly, a newly constructed building that receives an allocation of credit in different calendar years must have a separate Form 8609 for each allocation. The B.I.N. assigned to the building for the first allocation must be used for the subsequent allocation.

(3) ***Special rules for project-based allocations*** —

(i) ***In general.*** An allocation pursuant to section 42(h)(1)(F) (a project-based allocation) must meet the requirements of this section as well as the requirements of section 42(h)(1)(F), including the minimum basis requirement of section 42(h)(1)(E)(ii).

(ii) ***Requirement of section 42(h)(1)(F)(i)(III).*** An allocation satisfies the requirement of section 42(h)(1)(F)(i)(III) if the Form 8609 that is issued for each building that is placed in service in the project states the portion of the project-based allocation that is applied to that building.

(4) ***Recordkeeping requirements*** —

(i) ***Taxpayer.*** When an allocation is made pursuant to section 42(h)(1)(E) or (F), the taxpayer must retain a copy of the allocation document. The Form 8609 that reflects the allocation must be filed for the first taxable year that the credit is claimed and for each taxable year thereafter throughout the compliance period, whether or not a credit is claimed for the taxable year.

(ii) ***Agency.*** The Agency must retain the original carryover allocation document made under paragraph (d)(2) of this section and file Schedule A (Form 8610) with the Agency's Form 8610 for the year the allocation is made. The Agency must also retain a copy of the Form 8609 that is issued to the taxpayer and file the original with the Agency's Form 8610 that reflects the year the form is issued.

(5) ***Separate procedure for election of appropriate percentage month.*** If a taxpayer receives an allocation under section 42(h)(1) (E) or (F) and wishes to elect under section 42(b)(2)(A)(ii) to use the appropriate percentage for a month other than the month in which a building is placed in service, the requirements specified in § 1.42-8 must be met for the election to be effective.

(e) ***Special rules.*** The following rules apply for purposes of this section.

(1) ***Treatment of partnerships and other flow-through entities.*** With respect to taxpayers that own projects through partnerships or other flow-through entities (e.g., S corporations, estates, or trusts), carryover-allocation basis is determined at the entity level using the rules provided by this section. In addition, the entity is responsible for providing to the Agency the certification and documentation required under the basis verification requirement in paragraph (c) of this section.

(2) ***Transferees.*** If land or depreciable property that is expected to be part of a project is transferred after a carryover allocation has been made for a building that is reasonably expected to be part of the project, but before the close of the calendar year of the allocation (for allocations made before July 1) or by the close of the date that is 6 months after the date the allocation is made (for allocations made after June 30), the transferee's carryover-allocation basis is determined under the principles of this section and section 42(d)(7). See also Rev. Rul. 91-38, 1991-2 C.B. 3 (see § 601.601(d)(2)(ii)(*b*)

of this chapter). In addition, the transferee is treated as the taxpayer for purposes of the basis verification requirement of this section, and therefore, is responsible for providing to the Agency the required certifications and documentation.

[T.D. 8520, 59 FR 10069, Mar. 3, 1994, as amended by T.D. 8859, 65 FR 2328, Jan. 14, 2000; 65 FR 16317, Mar. 28, 2000; T.D. 9110, 69 FR 502, Jan. 6, 2004]

§ 1.42-7 Substantially bond-financed buildings. [Reserved]

§ 1.42-8 Election of appropriate percentage month.

(a) ***Election under section 42(b)(2)(A)(ii)(I) to use the appropriate percentage for the month of a binding agreement*** —

(1) ***In general.*** For purposes of section 42(b)(2)(A)(ii)(I), an agreement between a taxpayer and an Agency as to the housing credit dollar amount to be allocated to a building is considered binding if it—

(i) Is in writing;

(ii) Is binding under state law on the Agency, the taxpayer, and all successors in interest;

(iii) Specifies the type(s) of building(s) to which the housing credit dollar amount applies (*i.e.*, a newly constructed or existing building, or substantial rehabilitation treated as a separate new building under section 42(e));

(iv) Specifies the housing credit dollar amount to be allocated to the building(s); and

(v) Is dated and signed by the taxpayer and the Agency during the month in which the requirements of paragraphs (a)(1) (i) through (iv) of this section are met.

(2) ***Effect on state housing credit ceiling.*** Generally, a binding agreement described in paragraph (a)(1) of this section is an agreement by the Agency to allocate credit to the taxpayer at a future date. The binding agreement may include a reservation of credit or a binding commitment (under section 42(h)(1)(C)) to allocate credit in a future taxable year. A reservation or a binding commitment to allocate credit in a future year has no effect on the state housing credit ceiling until the year the Agency actually makes an allocation. However, if the binding agreement is also a carryover allocation under section 42(h)(1) (E) or (F), the state housing credit ceiling is reduced by the amount allocated by the Agency to the taxpayer in the year the carryover allocation is made. For a binding agreement to be a valid carryover allocation, the requirements of paragraph (a)(1) of this section and § 1.42-6 must be met.

(3) ***Time and manner of making election.*** An election under section 42(b)(2)(A)(ii)(I) may be made either as part of the binding agreement under paragraph (a)(1) of this section to allocate a specific housing credit dollar amount or in a separate document that references the binding agreement. In either case, the election must—

(i) Be in writing;

(ii) Reference section 42(b)(2)(A)(ii)(I);

(iii) Be signed by the taxpayer;

(iv) If it is in a separate document, reference the binding agreement that meets the requirements of paragraph (a)(1) of this section; and

(v) Be notarized by the 5th day following the end of the month in which the binding agreement was made.

(4) *Multiple agreements* —

(i) ***Rescinded agreements.*** A taxpayer may not make an election under section 42(b)(2)(A)(ii)(I) for a building if an election has previously been made for the building for a different month. For example, assume a taxpayer entered into a binding agreement for allocation of a specific housing credit dollar amount to a building and made the election under section 42(b)(2)(A)(ii)(I) to apply the appropriate percentage for the month of the binding agreement. If the binding agreement subsequently is rescinded under state law, and the taxpayer enters into a new binding agreement for allocation of a specific housing credit dollar amount to the building, the taxpayer must apply to the building the appropriate percentage for the elected month of the rescinded binding agreement. However, if no prior election was made with respect to the rescinded binding agreement, the taxpayer may elect the appropriate percentage for the month of the new binding agreement.

(ii) ***Increases in credit.*** The election under section 42(b)(2)(A)(ii)(I), once made, applies to any increase in the credit amount allocated for a building, whether the increase occurs in the same or in a subsequent year. However, in the case of a binding agreement (or carryover allocation that is treated as a binding agreement) to allocate a credit amount under section 42(e)(1) for substantial rehabilitation treated as a separate new building, a taxpayer may make the election under section 42(b)(2)(A)(ii)(I) notwithstanding that a prior election under section 42(b)(2)(A)(ii)(I) is in effect for a prior allocation of credit for a substantial rehabilitation that was previously placed in service under section 42(e).

(5) ***Amount allocated.*** The housing credit dollar amount eventually allocated to a building may be more or less than the amount specified in the binding agreement. Depending on the Agency's determination pursuant to section 42(m)(2) as to the financial feasibility of the building (or project), the Agency may allocate a greater housing credit dollar amount to the building (provided that the Agency has additional housing credit dollar amounts available to allocate for the calendar year of the allocation) or the Agency may allocate a lesser housing credit dollar amount. Under section 42(h)(7)(D), in allocating a housing credit dollar amount, the Agency must specify the applicable percentage and maximum qualified basis of the building. The applicable percentage may be less, but not greater than, the appropriate percentage for the month the building is placed in service, or the month elected by the taxpayer under section 42(b)(2)(A)(ii)(I). Whether the appropriate percentage is the appropriate percentage for the 70-percent present value credit or the 30-percent present value credit is determined under section 42(i)(2) when the building is placed in service.

(6) *Procedures* —

(i) ***Taxpayer.*** The taxpayer must give the original notarized election statement to the Agency before the close of the 5th calendar day following the end of the month in which the binding agreement is made. The taxpayer must retain a copy of the binding agreement and the election statement.

(ii) ***Agency.*** The Agency must retain the original of the binding agreement and election statement and, to the extent required by Schedule A (Form 8610), “Carryover Allocation of Low-Income Housing Credit,” account for the binding agreement and election statement on that schedule.

(7) ***Examples.*** The following examples illustrate the provisions of this section. In each example, X is the taxpayer, Agency is the state housing credit agency, and the carryover allocations meet the requirements of § 1.42-6 and are otherwise valid.

Example 1. (i) In August 2003, X and Agency enter into an agreement that Agency will allocate $100,000 of housing credit dollar amount for the low-income housing building X is constructing. The agreement is binding and meets all the requirements of paragraph (a)(1) of this section. The agreement is a reservation of credit, not an allocation, and therefore, has no effect on the state housing credit ceiling. On or before September 5, 2003, X signs and has notarized a written election statement that meets the requirements of paragraph (a)(3) of this section. The applicable percentage for the building is the appropriate percentage for the month of August 2003.
(ii) Agency makes a carryover allocation of $100,000 of housing credit dollar amount for the building on October 2, 2003. The carryover allocation reduces Agency's state housing credit ceiling for 2003. Due to unexpectedly high construction costs, when X places the building in service in July 2004, the product of the building's qualified basis and the applicable percentage for the building (the appropriate percentage for the month of August 2003) is $150,000, rather than $100,000. Notwithstanding that only $100,000 of credit was allocated for the building in 2003, Agency may allocate an additional $50,000 of housing credit dollar amount for the building from its state housing credit ceiling for 2004. The appropriate percentage for the month of August 2003 is the applicable percentage for the building for the entire $150,000 of credit allocated for the building, even though separate allocations were made in 2003 and 2004. Because allocations were made for the building in two separate calendar years, Agency must issue two Forms 8609, “Low-Income Housing Credit Allocation Certification,” to X. One Form 8609 must reflect the $100,000 allocation made in 2003, and the other Form 8609 must reflect the $50,000 allocation made in 2004.

(iii) X gives the original notarized statement to Agency on or before September 5, 2003, and retains a copy of the binding agreement, election statement, and carryover allocation document.

(iv) Agency retains the original of the binding agreement, election statement, and 2003 carryover allocation document. Agency accounts for the binding agreement, election statement, and 2003 carryover allocation on the Schedule A (Form 8610) that it files for the 2003 calendar year. After the building is placed in service in 2004, and assuming other necessary requirements for issuing a Form 8609 are met (for example, taxpayer has certified all sources and uses of funds and development costs for the building under § 1.42-17), Agency issues to X a copy of the Form 8609 reflecting the 2003 carryover allocation of $100,000. Agency files the original of this Form 8609 with the Form 8610, “Annual Low-Income Housing Credit Agencies Report,” that it files for the 2004 calendar year. Agency also

issues to X a copy of the Form 8609 reflecting the 2004 allocation of $50,000 and files the original of this Form 8609 with the Form 8610 that it files for the 2004 calendar year. Agency retains copies of the Forms 8609 that are issued to X.

Example 2. (i) In September 2003, X and Agency enter into an agreement that Agency will allocate $70,000 of housing credit dollar amount for rehabilitation expenditures that X is incurring and that X will treat as a new low-income housing building under section 42(e)(1). The agreement is binding and meets all the requirements of paragraph (a)(1) of this section. The agreement is a reservation of credit, not an allocation, and therefore, has no effect on Agency's state housing credit ceiling. On or before October 5, 2003, X signs and has notarized a written election statement that meets the requirements of paragraph (a)(3) of this section. The applicable percentage for the building is the appropriate percentage for the month of September 2003. Agency makes a carryover allocation of $70,000 of housing credit dollar amount for the building on November 15, 2003. The carryover allocation reduces by $70,000 Agency's state housing credit ceiling for 2003.
(ii) In October 2004, X and Agency enter into another binding agreement meeting the requirements of paragraph (a)(1) of this section. Under the agreement, Agency will allocate $50,000 of housing credit dollar amount for additional rehabilitation expenditures by X that qualify as a second separate new building under section 42(e)(1). On or before November 5, 2004, X signs and has notarized a written election statement meeting the requirements of paragraph (a)(3) of this section. On December 1, 2004, X receives a carryover allocation under section 42(h)(1)(E) for $50,000. The carryover allocation reduces by $50,000 Agency's state housing credit ceiling for 2004. The applicable percentage for the rehabilitation expenditures treated as the second separate new building is the appropriate percentage for the month of October 2004, not September 2003. The appropriate percentage for the month of September 2003 still applies to the allocation of $70,000 for the rehabilitation expenditures treated as the first separate new building. Because allocations were made for the building in two separate calendar years, Agency must issue two Forms 8609 to X. One Form 8609 must reflect the $70,000 allocation made in 2003, and the other Form 8609 must reflect the $50,000 allocation made in 2004.

(iii) X gives the first original notarized statement to Agency on or before October 5, 2003, and retains a copy of the first binding agreement, election statement, and carryover allocation document issued in 2003. X gives the second original notarized statement to Agency on or before November 5, 2004, and retains a copy of the second binding agreement, election statement, and carryover allocation document issued in 2004.

(iv) Agency retains the original of the binding agreements, election statements, and carryover allocation documents. Agency accounts for the binding agreement, election statement, and 2003 carryover allocation on the Schedule A (Form 8610) that it files for the 2003 calendar year. Agency also accounts for the binding agreement, election statement, and 2004

> carryover allocation on the Schedule A (Form 8610) that it files for the 2004 calendar year. After each separate new building is placed in service, and assuming other necessary requirements for issuing a Form 8609 are met (for example, taxpayer has certified all sources and uses of funds and development costs for the building under § 1.42-17), the Agency will issue to X a copy of the Form 8609 reflecting the 2003 carryover allocation of $70,000 and a copy of the Form 8609 reflecting the 2004 carryover allocation of $50,000, respectively. Agency files the original of each Form 8609 with the Form 8610 that reflects the calendar year each Form 8609 is issued. Agency retains copies of the Forms 8609 that are issued to X.

(b) ***Election under section 42(b)(2)(A)(ii)(II) to use the appropriate percentage for the month tax-exempt bonds are issued*** —

(1) ***Time and manner of making election.*** In the case of any building to which section 42(h)(4)(B) applies, an election under section 42(b)(2)(A)(ii)(II) to use the appropriate percentage for the month tax-exempt bonds are issued must—

(i) Be in writing;

(ii) Reference section 42(b)(2)(A)(ii)(II);

(iii) Specify the percentage of the aggregate basis of the building and the land on which the building is located that is financed with the proceeds of obligations described in section 42(h)(4)(A) (tax-exempt bonds);

(iv) State the month in which the tax-exempt bonds are issued;

(v) State that the month in which the tax-exempt bonds are issued is the month elected for the appropriate percentage to be used for the building;

(vi) Be signed by the taxpayer; and

(vii) Be notarized by the 5th day following the end of the month in which the bonds are issued.

(2) ***Bonds issued in more than one month.*** If a building described in section 42(h)(4)(B) (substantially bond-financed building) is financed with tax-exempt bonds issued in more than one month, the taxpayer may elect the appropriate percentage for any month in which the bonds are issued. Once the election is made, the appropriate percentage elected applies for the building even if all bonds are not issued in that month. The requirements of this paragraph (b), including the time limitation contained in paragraph (b)(1)(vii) of this section, must also be met.

(3) ***Limitations on appropriate percentage.*** Under section 42(m)(2)(D), the credit allowable for a substantially bond- financed building is limited to the amount necessary to assure the project's feasibility. Accordingly, in making the determination under section 42(m)(2), an Agency may use an applicable percentage that is less, but not greater than, the appropriate percentage for the month the building is placed in service, or the month elected by the taxpayer under section 42(b)(2)(A)(ii)(II).

(4) ***Procedures*** —

(i) ***Taxpayer.*** The taxpayer must provide the original notarized election statement to the Agency before the close of the 5th calendar day following the end of the month in which the bonds are issued. If an authority other than the Agency issues the tax-exempt bonds, the taxpayer must

also give the Agency a signed statement from the issuing authority that certifies the information described in paragraphs (b)(1)(iii) and (iv) of this section. The taxpayer must also retain a copy of the election statement.

(ii) ***Agency.*** The Agency must retain the original of the election statement and a copy of the Form 8609 that reflects the election statement. The Agency must file an additional copy of the Form 8609 with the Agency's Form 8610 that reflects the calendar year the Form 8609 is issued.

[T.D. 8520, 59 FR 10071, Mar. 3, 1994, as amended by T.D. 9110, 69 FR 504, Jan. 6, 2004]

§ 1.42-9 For use by the general public.

(a) ***General rule.*** If a residential rental unit in a building is not for use by the general public, the unit is not eligible for a section 42 credit. A residential rental unit is for use by the general public if the unit is rented in a manner consistent with housing policy governing non-discrimination, as evidenced by rules or regulations of the Department of Housing and Urban Development (HUD) (24 CFR subtitle A and chapters I through XX). See HUD Handbook 4350.3 (or its successor). A copy of HUD Handbook 4350.3 may be requested by writing to: HUD, Directives Distribution Section, room B-100, 451 7th Street, SW., Washington, DC 20410.

(b) ***Limitations.*** Notwithstanding paragraph (a) of this section, if a residential rental unit is provided only for a member of a social organization or provided by an employer for its employees, the unit is not for use by the general public and is not eligible for credit under section 42. In addition, any residential rental unit that is part of a hospital, nursing home, sanitarium, lifecare facility, trailer park, or intermediate care facility for the mentally and physically handicapped is not for use by the general public and is not eligible for credit under section 42.

(c) ***Treatment of units not for use by the general public.*** The costs attributable to a residential rental unit that is not for use by the general public are not excludable from eligible basis by reason of the unit's ineligibility for the credit under this section. However, in calculating the applicable fraction, the unit is treated as a residential rental unit that is not a low-income unit.

[T.D. 8520, 59 FR 10073, Mar. 3, 1994]

§ 1.42-10 Utility allowances.

(a) ***Inclusion of utility allowances in gross rent.*** If the cost of any utility (other than telephone, cable television, or Internet) for a residential rental unit is paid directly by the tenant(s), and not by or through the owner of the building, the gross rent for that unit includes the applicable utility allowance determined under this section. For purposes of the preceding sentence, if the cost of a particular utility for a residential unit is paid pursuant to an actual-consumption submetering arrangement within the meaning of paragraph (e)(1) of this section, then that cost is treated as being paid directly by the tenant(s) and not by or through the owner of the building. This section only applies for purposes of determining gross rent under section 42(g)(2)(B)(ii) as to rent-restricted units.

(b) ***Applicable utility allowances*** —

(1) ***Buildings assisted by the Rural Housing Service.*** If a building receives assistance from the Rural Housing Service (RHS-assisted building), the applicable utility allowance for all rent-restricted units in the building is the utility allowance determined under the method prescribed by the Rural Housing Service (RHS) for the building (whether or not the building or its tenants also receive other state or federal assistance).

(2) ***Buildings with Rural Housing Service assisted tenants.*** If any tenant in a building receives RHS rental assistance payments (RHS tenant assistance), the applicable utility allowance for all rent-restricted units in the building (including any units occupied by tenants receiving rental assistance payments from the Department of Housing and Urban Development (HUD)) is the applicable RHS utility allowance.

(3) ***Buildings regulated by the Department of Housing and Urban Development.*** If neither a building nor any tenant in the building receives RHS housing assistance, and the rents and utility allowances of the building are regulated by HUD (HUD-regulated buildings), the applicable utility allowance for all rent-restricted units in the building is the applicable HUD utility allowance.

(4) ***Other buildings.*** If a building is neither an RHS-assisted nor a HUD-regulated building, and no tenant in the building receives RHS tenant assistance, the applicable utility allowance for rent-restricted units in the building is determined under the following methods.

(i) ***Tenants receiving HUD rental assistance.*** The applicable utility allowance for any rent-restricted units occupied by tenants receiving HUD rental assistance payments (HUD tenant assistance) is the applicable Public Housing Authority (PHA) utility allowance established for the Section 8 Existing Housing Program.

(ii) ***Other tenants*** —

(A) ***General rule.*** If none of the rules of paragraphs (b)(1), (2), (3), and (4)(i) of this section apply to determine the appropriate utility allowance for a rent-restricted unit, then the appropriate utility allowance for the unit is the applicable PHA utility allowance. However, if a local utility company estimate is obtained for any unit in the building in accordance with paragraph (b)(4)(ii)(B) of this section, that estimate becomes the appropriate utility allowance for all rent-restricted units of similar size and construction in the building. This local utility company estimate procedure is not available for and does not apply to units to which the rules of paragraphs (b) (1), (2), (3), or (4)(i) of this section apply. However, if a local utility company estimate is obtained for any unit in the building under paragraph (b)(4)(ii)(B) of this section, a State or local housing credit agency (Agency) provides a building owner with an estimate for any unit in a building under paragraph (b)(4)(ii)(C) of this section, a cost estimate is calculated using the HUD Utility Schedule Model under paragraph (b)(4)(ii)(D) of this section, or a cost estimate is calculated by an energy consumption model under paragraph (b)(4)(ii)(E) of this section, then the estimate under paragraph (b)(4)(ii)(B), (C), (D), or (E) becomes the applicable utility allowance for all rent-restricted units of similar size and construction in the building. Paragraphs (b)(4)(ii)(B), (C), (D), and (E) of this section do not apply to units to which the rules of paragraphs (b)(1), (2), (3), or (4)(i) of this section apply.

(B) ***Utility company estimate.*** Any interested party (including a low-income tenant, a building owner, or an Agency) may obtain a local utility company estimate for a unit. The estimate is obtained when the interested party receives, in writing, information from a local utility company providing the estimated cost of that utility for a unit of similar size and

construction for the geographic area in which the building containing the unit is located. In the case of deregulated utility services, the interested party is required to obtain an estimate only from one utility company even if multiple companies can provide the same utility service to a unit. However, the utility company must offer utility services to the building in order for that utility company's rates to be used in calculating utility allowances. The estimate should include all component deregulated charges for providing the utility service. The local utility company estimate may be obtained by an interested party at any time during the building's extended use period (see section 42(h)(6)(D)) or, if the building does not have an extended use period, during the building's compliance period (see section 42(i)(1)). Unless the parties agree otherwise, costs incurred in obtaining the estimate are borne by the initiating party. The interested party that obtains the local utility company estimate (the initiating party) must retain the original of the utility company estimate and must furnish a copy of the local utility company estimate to the owner of the building (where the initiating party is not the owner), and the Agency that allocated credit to the building (where the initiating party is not the Agency). The owner of the building must make available copies of the utility company estimate to the tenants in the building.

(C) ***Agency estimate.*** A building owner may obtain a utility estimate for each unit in the building from the Agency that has jurisdiction over the building provided the Agency agrees to provide the estimate. The estimate is obtained when the building owner receives, in writing, information from the Agency providing the estimated per-unit cost of the utilities for units of similar size and construction for the geographic area in which the building containing the units is located. The Agency estimate may be obtained by a building owner at any time during the building's extended use period (see section 42(h)(6)(D)). Costs incurred in obtaining the estimate are borne by the building owner. In establishing an accurate utility allowance estimate for a particular building, an Agency (or an agent or other private contractor of the Agency that is a qualified professional within the meaning of paragraph (b)(4)(ii)(E) of this section) must take into account, among other things, local utility rates, property type, climate and degree-day variables by region in the State, taxes and fees on utility charges, building materials, and mechanical systems. If the Agency uses an agent or other private contractor to calculate the utility estimates, the agent or contractor and the owner must not be related within the meaning of section 267(b) or 707(b). An Agency may also use actual utility company usage data and rates for the building. However, use of the Agency estimate is limited to the building's consumption data for the twelve-month period ending no earlier than 60 days prior to the beginning of the 90-day period under paragraph (c)(1) of this section and utility rates used for the Agency estimate must be no older than the rates in place 60 days prior to the beginning of the 90-day period under paragraph (c)(1) of this section. In the case of newly constructed or renovated buildings with less than 12 months of consumption data, the Agency (or an agent or other private contractor of the Agency that is a qualified professional within the meaning of paragraph (b)(4)(ii)(E) of this section) may use consumption data for the 12-month period of units of similar size and construction in the geographic area in which the building containing the units is located.

(D) ***HUD Utility Schedule Model.*** A building owner may calculate a utility estimate using the "HUD Utility Schedule Model" that can be found on the Low-Income Housing Tax Credits page at *http://www.huduser.org/datasets/lihtc.html* (or successor URL). Utility rates used for the HUD Utility Schedule Model must be no older than the rates in place 60 days prior to the beginning of the 90-day period under paragraph (c)(1) of this section.

(E) ***Energy consumption model.*** A building owner may calculate utility estimates using an energy and water and sewage consumption and analysis model (energy consumption model). The energy consumption model must, at a minimum, take into account specific factors including, but not limited to, unit size, building orientation, design and materials, mechanical systems, appliances, characteristics of the building location, and available historical data. The utility consumption estimates must be calculated by a properly licensed engineer or other qualified professional. The qualified professional and the building owner must not be related within the meaning of section 267(b) or 707(b). If a qualified professional is not a properly licensed engineer and if the building owner wants to utilize that qualified professional to calculate utility consumption estimates, then the owner must obtain approval from the Agency that has jurisdiction over the building. Further, regardless of the type of qualified professional, the Agency may approve or disapprove of the energy consumption model or require information before permitting its use. In addition, utility rates used for the energy consumption model must be no older than the rates in place 60 days prior to the beginning of the 90-day period under paragraph (c)(1) of this section.

(c) ***Changes in applicable utility allowance*** —

(1) ***In general.*** If, at any time during the building's extended use period (as defined in section 42(h)(6)(D)), the applicable utility allowance for units changes, the new utility allowance must be used to compute gross rents of the units due 90 days after the change (the 90-day period). For example, if rent must be lowered because a local utility company estimate is obtained that shows a higher utility cost than the otherwise applicable PHA utility allowance, the lower rent must be in effect for rent due at the end of the 90-day period. A building owner using a utility company estimate under paragraph (b)(4)(ii)(B) of this section, the HUD Utility Schedule Model under paragraph (b)(4)(ii)(D) of this section, or an energy consumption model under paragraph (b)(4)(ii)(E) of this section must submit copies of the utility estimates to the Agency that has jurisdiction over the building and make the estimates available to all tenants in the building at the beginning of the 90-day period before the utility allowances can be used in determining the gross rent of rent-restricted units. An Agency may require additional information from the owner during the 90-day period. Any utility estimates obtained under the Agency estimate under paragraph (b)(4)(ii)(C) of this section must also be made available to all tenants in the building at the beginning of the 90-day period. The building owner must pay for all costs incurred in obtaining the estimates under paragraphs (b)(4)(ii)(B), (C), (D), and (E) of this section and providing the estimates to the Agency and the tenants. The building owner is not required to review the utility allowances, or implement new utility allowances, until the building has achieved 90 percent occupancy for a period of 90 consecutive days or the end of the first year of the credit period, whichever is earlier.

(2) ***Annual review.*** A building owner must review at least once during each calendar year the basis on which utility allowances have been established and must update the applicable utility allowance in accordance with paragraph (c)(1) of this section. The review must take into account any changes to the building such as any energy conservation measures that affect energy consumption and changes in utility rates.

(d) ***Record retention.*** The building owner must retain any utility consumption estimates and supporting data as part of the taxpayer's records for purposes of § 1.6001-1(a).

(e) ***Actual-consumption submetering arrangements*** —

(1) ***Definition.*** For purposes of this section, an actual-consumption submetering arrangement for a utility in a residential unit possesses all of the following attributes:

(i) The utility consumed in the unit is described in paragraph (e)(1)(i)(A) or (e)(1)(i)(B) of this section;

(A) The utility is purchased from or through a local utility company by the building owner (or its agent or other party acting on behalf of the building owner).

(B) The utility is not purchased from or through a local utility company and is produced from a renewable source (within the meaning of paragraph (e)(1)(i)(C) of this section).

(C) For purposes of paragraph (e)(1)(i)(B) of this section, a utility is produced from a renewable source if—

(*1*) It is energy that is produced from energy property described in section 48;

(*2*) It is energy that is produced from a facility described in section 45(d)(1), (2), (3), (4), (6), (9), or (11); or

(*3*) It is a utility that is described in guidance published for this purpose in the Internal Revenue Bulletin (see § 601.601(d)(2)(ii) of this chapter).

(D) Determinations under paragraphs (e)(1)(i)(C)(*1*) and (*2*) of this section take into account only the manner in which the energy is produced and not who owns the energy property or the facility or whether the applicability of relevant portions of sections 45 and 48 has expired.

(ii) The tenants in the unit are billed for, and pay the building owner (or its agent or other party acting on behalf of the building owner) for, the unit's consumption of the utility;

(iii) The billed amount reflects the unit's actual consumption of the utility. In the case of sewerage charges, however, if the unit's sewerage charges are combined on the bill with water charges and the sewerage charges are determined based on the actual water consumption of the unit, then the bill is treated as reflecting the actual sewerage consumption of the unit; and

(iv) The rate at which the building owner bills for the utility satisfies the following requirements:

(A) To the extent that the utility consumed is described in paragraph (e)(1)(i)(A) of this section, the utility rate charged to the tenants of the unit does not exceed the rate incurred by the building owner for that utility; and

(B) To the extent that the utility consumed is described in paragraph (e)(1)(i)(B) of this section, the utility rate charged to the tenants of the unit does not exceed the highest rate that the tenants would have paid if they had obtained the utility from a local utility company. In determining whether a rate satisfies the preceding sentence, a building owner may rely on the rates published by local utility companies.

(2) ***Administrative fees.*** If the owner charges a unit's tenants a fee for administering an actual-consumption submetering arrangement, the fee is not considered gross rent for purposes of section 42(g)(2). The preceding sentence, however, does not apply unless the fee is computed in the same manner for every unit receiving the same submetered utility service, nor does it apply to any amount by which the aggregate monthly fee or fees for all of the unit's utilities under one or more actual-consumption submetering arrangements exceed the greater of—

(i) Five dollars per month;

(ii) An amount (if any) designated by publication in the Internal Revenue Bulletin (see § 601.601(d)(2)(ii) of this chapter); or

(iii) The lesser of—

(A) The dollar amount (if any) specifically prescribed under a State or local law; or

(B) A maximum amount (if any) designated by publication in the Internal Revenue Bulletin (see § 601.601(d)(2)(ii) of this chapter).

[T.D. 8520, 59 FR 10073, Mar. 3, 1994, as amended by T.D. 9420, 73 FR 43867, July 29, 2008; T.D. 9755, 81 FR 11109, Mar. 3, 2016; T.D. 9850, 84 FR 7284, Mar. 4, 2019]

§ 1.42-11 Provision of services.

(a) ***General rule.*** The furnishing to tenants of services other than housing (whether or not the services are significant) does not prevent the units occupied by the tenants from qualifying as residential rental property eligible for credit under section 42. However, any charges to low-income tenants for services that are not optional generally must be included in gross rent for purposes of section 42(g).

(b) ***Services that are optional*** —

(1) ***General rule.*** A service is optional if payment for the service is not required as a condition of occupancy. For example, for a qualified low-income building with a common dining facility, the cost of meals is not included in gross rent for purposes of section 42(g)(2)(A) if payment for the meals in the facility is not required as a condition of occupancy and a practical alternative exists for tenants to obtain meals other than from the dining facility.

(2) ***Continual or frequent services.*** If continual or frequent nursing, medical, or psychiatric services are provided, it is presumed that the services are not optional and the building is ineligible for the credit, as is the case with a hospital, nursing home, sanitarium, lifecare facility, or intermediate care facility for the mentally and physically handicapped. See also § 1.42-9(b).

(3) ***Required services*** —

(i) ***General rule.*** The cost of services that are required as a condition of occupancy must be included in gross rent even if federal or state law requires that the services be offered to tenants by building owners.

(ii) ***Exceptions*** —

(A) ***Supportive services.*** Section 42(g)(2)(B)(iii) provides an exception for certain fees paid for supportive services. For purposes of section 42(g)(2)(B)(iii), a supportive service is any service provided under a planned program of services designed to enable residents of a residential rental property to remain independent and avoid placement in a hospital,

nursing home, or intermediate care facility for the mentally or physically handicapped. For a building described in section 42(i)(3)(B)(iii) (relating to transitional housing for the homeless) or section 42(i)(3)(B)(iv) (relating to single-room occupancy), a supportive service includes any service provided to assist tenants in locating and retaining permanent housing.

(B) ***Specific project exception.*** Gross rent does not include the cost of mandatory meals in any federally-assisted project for the elderly and handicapped (in existence on or before January 9, 1989) that is authorized by 24 CFR 278 to provide a mandatory meals program.

[T.D. 8520, 59 FR 10074, Mar. 3, 1994, as amended by T.D. 8859, 65 FR 2328, Jan. 14, 2000]

§ 1.42-12 Effective dates and transitional rules.

(a) ***Effective dates*** —

(1) ***In general.*** Except as provided in paragraphs (a)(2) and (a)(3) of this section, the rules set forth in §§ 1.42-6 and 1.42-8 through 1.42-12 are applicable on May 2, 1994. However, binding agreements, election statements, and carryover allocation documents entered into before May 2, 1994, that follow the guidance set forth in Notice 89-1, 1989-1 C.B. 620 (*see* § 601.601(d)(2)(ii)(b) of this chapter) need not be changed to conform to the rules set forth in §§ 1.42-6 and 1.42-8 through 1.42-12.

(2) ***Community Renewal Tax Relief Act of 2000*** —(i) *In general.* Section 1.42-6 (a), (b)(4)(iii) *Example 1* and *Example 2,* (c), (d)(2)(viii), and (e)(2) are applicable for housing credit dollar amounts allocated after January 6, 2004. However, the rules in § 1.42-6 (a), (b)(4)(iii) *Example 1* and *Example 2,* (c), (d)(2)(viii), and (e)(2) may be applied by Agencies and taxpayers for housing credit dollar amounts allocated after December 31, 2000, and on or before January 6, 2004. Otherwise, subject to the applicable effective dates of the corresponding statutory provisions, the rules that apply for housing credit dollar amounts allocated on or before January 6, 2004, are contained in § 1.42-6 in effect on and before January 6, 2004 (see 26 CFR part 1 revised as of April 1, 2003).

(3) ***Electronic filing simplification changes.*** Sections 1.42-6(d)(4) and 1.42-8(a)(6)(i), (a)(6)(ii), (a)(7) Example 1 and Example 2, (b)(4)(i), and (b)(4)(ii) are applicable for forms filed after January 6, 2004. The rules that apply for forms filed on or before January 6, 2004, are contained in § 1.42-6 and § 1.42-8 in effect on and before January 6, 2004 (see 26 CFR part 1 revised as of April 1, 2003).

(4) ***Utility allowances.*** The first sentence in § 1.42-10(a), § 1.42-10(b)(1), (2), (3), and (4), the last two sentences in § 1.42-10(b)(4)(ii)(A), the third, fourth, and fifth sentences in § 1.42-10(b)(4)(ii)(B), § 1.42-10(b)(4)(ii)(C), (D), and (E), and § 1.42-10(c) and (d) are applicable to a building owner's taxable years beginning on or after July 29, 2008. Taxpayers may rely on these provisions before the beginning of the building owner's taxable year beginning on or after July 29, 2008 provided that any utility allowances calculated under these provisions are effective no earlier than the first day of the building owner's taxable year beginning on or after July 29, 2008. The utility allowances provisions that apply to taxable years beginning before July 29, 2008 are contained in § 1.42-10 (see 26 CFR part 1 revised as of April 1, 2008).

(5) ***Additional effective dates affecting utility allowances.***

(i) The following provisions apply to a building owner's taxable years beginning on or after March 3, 2016—

(A) The second sentence in § 1.42-10(a);

(B) Section 1.42-10(b)(3);

(C) The first sentence in § 1.42-10(b)(4)(ii)(A);

(D) Section 1.42-10(b)(4)(ii)(E); and

(E) Section 1.42-10(e), except as provided in paragraph (a)(5)(iii) of this section.

(ii) Except as provided in paragraph (a)(5)(iii) of this section, a building owner may apply the provisions described in paragraphs (a)(5)(i)(A) through (E) of this section to the building owner's taxable years beginning before March 3, 2016. Otherwise, the utility allowance provisions that apply to those taxable years are contained in § 1.42-10, as contained in 26 CFR part 1, revised as of April 1, 2015.

(iii) The provisions in § 1.42-10(e)(1)(i) introductory text, (e)(1)(i)(B) through (D), and (e)(1)(iv)(B) apply to a building owner's taxable years beginning on or after March 4, 2019. A building owner, however, may apply these provisions to earlier taxable years. Otherwise, the submetering provisions that apply to taxable years beginning after March 3, 2016, and before March 4, 2019, are contained in § 1.42-10 and § 1.42-10T as contained in 26 CFR part 1 revised as of April 1, 2016. In addition, a building owner may apply those submetering provisions to taxable years beginning before March 3, 2016.

(b) ***Prior periods.*** Notice 89-1, 1989-1 C.B. 620 and Notice 89-6, 1989-1 C.B. 625 (see § 601.601(d)(2)(ii)(*b*) of this chapter) may be applied for periods prior to May 2, 1994.

(c) ***Carryover allocations.*** The rule set forth in § 1.42-6(d)(4)(ii) relating to the requirement that state and local housing agencies file Schedule A (Form 8610), "Carryover Allocation of the Low-Income Housing Credit," is applicable for carryover allocations made after December 31, 1999.

[T.D. 8520, 59 FR 10074, Mar. 3, 1994; 59 FR 15501, Apr. 1, 1994, as amended by T.D. 8859, 65 FR 2328, Jan. 14, 2000; T.D. 9110, 69 FR 504, Jan. 6, 2004; T.D. 9420, 73 FR 43868, July 29, 2008; T.D. 9755, 81 FR 11110, Mar. 3, 2016; T.D. 9850, 84 FR 7285, Mar. 4, 2019]

§ 1.42-13 Rules necessary and appropriate; housing credit agencies' correction of administrative errors and omissions.

(a) ***Publication of guidance.*** Under section 42(n), the Secretary has authority to prescribe regulations as may be necessary or appropriate to carry out the purposes of section 42. The Secretary may also provide guidance through various publications in the Internal Revenue Bulletin. (See § 601.601(d)(2)(ii)(*b*) of this chapter.)

(b) ***Correcting administrative errors and omissions*** —

(1) ***In general.*** An Agency may correct an administrative error or omission with respect to allocations and recordkeeping, as described in paragraph (b)(2) of this section, within a reasonable period after the Agency discovers the administrative error or omission. Whether a correction is made within a reasonable period depends on the facts and circumstances of each situation. Except as provided in paragraph (b)(3)(iii) of this section, an Agency need not obtain the prior approval of the Secretary to correct an administrative error or omission, if the correction is made in accordance with paragraph (b)(3)(i) of this section. The administrative errors and omissions to which this paragraph (b) applies are strictly limited to those described in paragraph (b)(2) of this section, and, thus, do not include, for

example, any misinterpretation of the applicable rules and regulations under section 42. Accordingly, an Agency's allocation of a particular calendar year's low-income housing credit dollar amount made after the close of that calendar year, or the use of an incorrect population amount in calculating a State's housing credit ceiling for a calendar year are not administrative errors that can be corrected under this paragraph (b).

(2) ***Administrative errors and omissions described.*** An administrative error or omission is a mistake that results in a document that inaccurately reflects the intent of the Agency at the time the document is originally completed or, if the mistake affects a taxpayer, a document that inaccurately reflects the intent of the Agency and the affected taxpayer at the time the document is originally completed. Administrative errors and omissions described in this paragraph (b)(2) include the following—

(i) A mathematical error;

(ii) An entry on a document that is inconsistent with another entry on the same or another document regarding the same property, or taxpayer;

(iii) A failure in tracking the housing credit dollar amount an Agency has allocated (or that remains to be allocated) in the current calendar year (e.g., a failure to include in its State housing credit ceiling a previously allocated credit dollar amount that has been returned by a taxpayer);

(iv) An omission of information that is required on a document; and

(v) Any other type of error or omission identified by guidance published in the Internal Revenue Bulletin (see § 601.601(d)(2)(ii)(*b*) of this chapter) as an administrative error or omission covered by this paragraph (b).

(3) ***Procedures for correcting administrative errors or omissions*** —

(i) ***In general.*** An Agency's correction of an administrative error or omission, as described in paragraph (b)(2) of this section, must amend the document so that the corrected document reflects the original intent of the Agency, or the Agency and the affected taxpayer, and complies with applicable rules and regulations under section 42.

(ii) ***Specific procedures.*** If a document corrects a document containing an administrative error or omission that has not yet been filed with the Internal Revenue Service, the Agency, or the Agency and the affected taxpayer, should complete and file the corrected document as the original. When a document containing an administrative error or omission has already been filed with the Service, the Agency, or the Agency and the affected taxpayer, should refile a copy of the document containing the administrative error or omission, and prominently and clearly note the correction thereon or on an attached new document. The Agency should indicate at the top of the document(s) that the correction is being made under § 1.42-13 of the Income Tax Regulations.

(iii) ***Secretary's prior approval required.*** Except as provided in paragraph (b)(3)(vi) of this section, an Agency must obtain the Secretary's prior approval to correct an administrative error or omission, as described in paragraph (b)(2) of this section, if the correction is not made before the close of the calendar year of the error or omission and the correction—

(A) Is a numerical change to the housing credit dollar amount allocated for the building or project;

(B) Affects the determination of any component of the State's housing credit ceiling under section 42(h)(3)(C); or

(C) Affects the State's unused housing credit carryover that is assigned to the Secretary under section 42(h)(3)(D).

(iv) ***Requesting the Secretary's approval.*** To obtain the Secretary's approval under paragraph (b)(3)(iii) of this section, an Agency must submit a request for the Secretary's approval within a reasonable period after discovering the administrative error or omission, and must agree to any conditions that may be required by the Secretary under paragraph (b)(3)(v) of this section. When requesting the Secretary's approval, the Agency, or the Agency and the affected taxpayer, must file an application that complies with the requirements of this paragraph (b)(3)(iv). For further information on the application procedure see Rev. Proc. 93-1, 1993-1 I.R.B. 10 (or any subsequent applicable revenue procedure). (See § 601.601(d)(2)(ii)(*b*) of this chapter.) The application requesting the Secretary's approval must contain the following information—

(A) The name, address, and identification number of each affected taxpayer;

(B) The Building Identification Number (B.I.N.) and address of each building or project affected by the administrative error or omission;

(C) A statement explaining the administrative error or omission and the intent of the Agency, or of the Agency and the affected taxpayer, when the document was originally completed;

(D) Copies of any supporting documentation;

(E) A statement explaining the effect, if any, that a correction of the administrative error or omission would have on the housing credit dollar amount allocated for any building or project; and

(F) A statement explaining the effect, if any, that a correction of the administrative error or omission would have on the determination of the components of the State's housing credit ceiling under section 42(h)(3)(C) or on the State's unused housing credit carryover that is assigned to the Secretary under section 42(h)(3)(D).

(v) ***Agreement to conditions.*** To obtain the Secretary's approval under paragraph (b)(3)(iii) of this section, an Agency, or the Agency and the affected taxpayer, must agree to the conditions the Secretary considers appropriate.

(vi) ***Secretary's automatic approval.*** The Secretary grants automatic approval to correct an administrative error or omission described in paragraph (b)(2) of this section if—

(A) The correction is not made before the close of the calendar year of the error or omission and the correction is a numerical change to the housing credit dollar amount allocated for the building or multiple-building project;

(B) The administrative error or omission resulted in an allocation document (the Form 8609, “Low-Income Housing Credit Allocation Certification,” or the allocation document under the requirements of section 42(h)(1)(E) or (F), and § 1.42-6(d)(2)) that either did not accurately reflect the number of buildings in a project (for example, an allocation document for a 10-building project only references 8 buildings instead of 10 buildings), or the correct information (other than the amount of credit allocated on the allocation document);

(C) The administrative error or omission does not affect the Agency's ranking of the building(s) or project and the total amount of credit the Agency allocated to the building(s) or project; and

(D) The Agency corrects the administrative error or omission by following the procedures described in paragraph (b)(3)(vii) of this section.

(vii) ***How Agency corrects errors or omissions subject to automatic approval.*** An Agency corrects an administrative error or omission described in paragraph (b)(3)(vi) of this section by—

(A) Amending the allocation document described in paragraph (b)(3)(vi)(B) of this section to correct the administrative error or omission. The Agency will indicate on the amended allocation document that it is making the "correction under § 1.42-13(b)(3)(vii)." If correcting the allocation document requires including any additional B.I.N.(s) in the document, the document must include any B.I.N.(s) already existing for buildings in the project. If possible, the additional B.I.N.(s) should be sequentially numbered from the existing B.I.N.(s);

(B) Amending, if applicable, the Schedule A (Form 8610), "Carryover Allocation of the Low-Income Housing Credit," and attaching a copy of this schedule to Form 8610, "Annual Low-Income Housing Credit Agencies Report," for the year the correction is made. The Agency will indicate on the schedule that it is making the "correction under § 1.42-13(b)(3)(vii)." For a carryover allocation made before January 1, 2000, the Agency must complete Schedule A (Form 8610), and indicate on the schedule that it is making the "correction under § 1.42-13(b)(3)(vii)";

(C) Amending, if applicable, the Form 8609 and attaching the original of this amended form to Form 8610 for the year the correction is made. The Agency will indicate on the Form 8609 that it is making the "correction under § 1.42-13(b)(3)(vii)"; and

(D) Mailing or otherwise delivering a copy of any amended allocation document and any amended Form 8609 to the affected taxpayer.

(viii) ***Other approval procedures.*** The Secretary may grant automatic approval to correct other administrative errors or omissions as designated in one or more documents published either in the FEDERAL REGISTER or in the Internal Revenue Bulletin (see § 601.601(d)(2) of this chapter).

(c) ***Examples.*** The following examples illustrate the scope of this section:

Example 1. Individual B applied to Agency X for a reservation of a low-income housing credit dollar amount for a building that is part of a low-income housing project. When applying for the low-income housing credit dollar amount, B informed Agency X that B intended to form Partnership Y to finance the project. After receiving the reservation letter and prior to receiving an allocation, B formed Partnership Y and sold partnership interests to a number of limited partners. B contributed the low-income housing project to Partnership Y in exchange for a partnership interest. B and Partnership Y informed Agency X of the ownership change. When actually allocating the housing credit dollar amount, Agency X sent Partnership Y a document listing B, rather than Partnership Y, as the building's owner. Partnership Y promptly notified Agency X of the error. After reviewing related documents, Agency X determined that it had incorrectly listed B as the building's owner on the allocation document. Since the parties originally intended that Partnership Y would receive the allocation as the owner of the building, Agency X may correct the error without obtaining the Secretary's approval, and insert Partnership Y as the building's owner on the allocation document.

Example 2. Agency Y allocated a lower low-income housing credit dollar amount for a low-income housing building than Agency Y originally intended. After the close of the calendar year of the allocation, B, the building's owner, discovered the error and promptly notified Agency Y. Agency Y reviewed relevant documents and agreed that an error had occurred. Agency Y and B must apply, as provided in paragraph (b)(3)(iv) of this section, for the Secretary's approval before Agency Y may correct the error.

(d) ***Effective date.*** This section is effective February 24, 1994. However, an Agency may elect to apply these regulations to administrative errors or omissions that occurred before the publication of these regulations. Any reasonable method used by a State or local housing credit agency to correct an administrative error or omission prior to February 24, 1994, will be considered proper, provided that the method is consistent with the rules of section 42. Paragraphs (b)(3)(vi), (vii), and (viii) of this section are effective January 14, 2000.

[T.D. 8521, 59 FR 8861, Feb. 24, 1994, as amended by T.D. 8859, 65 FR 2328, Jan. 14, 2000]

§ 1.42-14 Allocation rules for post-2000 State housing credit ceiling amount.

(a) ***State housing credit ceiling*** —

(1) ***In general.*** The State housing credit ceiling for a State for any calendar year after 2000 is comprised of four components. The four components are—

(i) The unused State housing credit ceiling, if any, of the State for the preceding calendar year (the unused carryforward component);

(ii) The greater of—

(A) $1.75 ($1.50 for calendar year 2001) multiplied by the State population; or

(B) $2,000,000 (the population component);

(iii) The amount of State housing credit ceiling returned in the calendar year (the returned credit component); plus

(iv) The amount, if any, allocated to the State by the Secretary under section 42(h)(3)(D) from a national pool of unused credit (the national pool component).

(2) ***Cost-of-living adjustment*** —

(i) ***General rule.*** For any calendar year after 2002, the $2,000,000 and $1.75 amounts in paragraph (a)(1)(ii) of this section are each increased by an amount equal to—

(A) The dollar amount; multiplied by

(B) The cost-of-living adjustment determined under section 1(f)(3) for the calendar year by substituting "calendar year 2001" for "calendar year 1992" in section 1(f)(3)(B).

(ii) ***Rounding.*** Any increase resulting from the application of paragraph (a)(2)(i) of this section which, in the case of the $2,000,000 amount, is not a multiple of $5,000, is rounded to the next lowest multiple of $5,000, and which, in the case of the $1.75 amount, is not a multiple of 5 cents, is rounded to the next lowest multiple of 5 cents.

(b) ***The unused carryforward component.*** The unused carryforward component of the State housing credit ceiling for any calendar year is the unused State housing credit ceiling, if any, of the State for the preceding calendar year. The unused State housing credit ceiling for any calendar year is the excess, if any, of—

(1) The sum of the population, returned credit, and national pool components for the calendar year; over

(2) The aggregate housing credit dollar amount allocated for the calendar year reduced by the housing credit dollar amounts allocated from the unused carryforward component for the calendar year.

(c) ***The population component.*** The population component of the State housing credit ceiling of a State for any calendar year is determined pursuant to section 146(j). Thus, a State's population for any calendar year is determined by reference to the most recent census estimate, whether final or provisional, of the resident population of the State released by the Bureau of the Census before the beginning of the calendar year for which the State's housing credit ceiling is set. Unless otherwise prescribed by applicable revenue procedure, determinations of population are based on the most recent estimates of population contained in the Bureau of the Census publication, *Current Population Report, Series P-25; Population Estimates and Projections, Estimates of the Population of States.* For convenience, the Internal Revenue Service publishes the population estimates annually in the Internal Revenue Bulletin. (See § 601.601(d)(2)(ii)(*b*)).

(d) ***The returned credit component*** —

(1) ***In general.*** The returned credit component of the State housing credit ceiling of a State for any calendar year equals the housing credit dollar amount returned during the calendar year that was validly allocated within the State in a prior calendar year to any project that does not become a qualified low-income housing project within the period required by section 42, or as required by the terms of the allocation. The returned credit component also includes credit allocated in a prior calendar year that is returned as a result of the cancellation of an allocation by mutual consent or by an Agency's determination that the amount allocated is not necessary for the financial feasibility of the project. For purposes of this section, credit is allocated within a State if it is allocated from the State's housing credit ceiling by an Agency of the State or of a constitutional home rule city in the State.

(2) ***Limitations and special rules.*** The following limitations and special rules apply for purposes of this paragraph (d).

(i) ***General limitations.*** Notwithstanding any other provision of this paragraph (d), returned credit does not include any credit that was—

(A) Allocated prior to calendar year 1990;

(B) Allowable under section 42(h)(4) (relating to the portion of credit attributable to eligible basis financed by certain tax-exempt bonds under section 103); or

(C) Allocated during the same calendar year that it is received back by the Agency.

(ii) ***Credit period limitation.*** Notwithstanding any other provision of this paragraph (d), an allocation of credit may not be returned any later than 180 days following the close of the first taxable year of the credit period for the building that received the allocation. After this date, credit that might otherwise be returned expires, and cannot be returned to or reallocated by any Agency.

(iii) ***Three-month rule for returned credit.*** An Agency may, in its discretion, treat any portion of credit that is returned from a project after September 30 of a calendar year and that is not reallocated by the close of the calendar year as returned on January 1 of the succeeding calendar year. In this case, the returned credit becomes part of the returned credit component of the State housing credit ceiling for the succeeding calendar year. Any portion of credit that is returned from a project after September 30 of a calendar year that is reallocated by the close of the calendar year is treated as part of the returned credit component of the State housing credit ceiling for the calendar year that the credit was returned.

(iv) ***Returns of credit.*** Subject to the limitations of paragraphs (d)(2) (i) and (ii) of this section, credit is returned to the Agency in the following instances in the manner described in paragraph (d)(3) of this section.

(A) ***Building not qualified within required time period.*** If a building is not a qualified building within the time period required by section 42, it loses its credit allocation and the credit is returned. For example, a building is not qualified within the required time period if it is not placed in service within the period required by section 42 or if the project of which the building is a part fails to meet the minimum set-aside requirements of section 42(g)(1) by the close of the first year of the credit period. Also, a building that has received a post-June 30 carryover allocation is not qualified within the required time period if the taxpayer does not meet the 10 percent basis requirement by the date that is 6 months after the date the allocation was made (as described in § 1.42-6(a)(2)(ii)).

(B) ***Noncompliance with terms of the allocation.*** If a building does not comply with the terms of its allocation, it loses the credit allocation and the credit is returned. The terms of an allocation are the written conditions agreed to by the Agency and the allocation recipient in the allocation document.

(C) ***Mutual consent.*** If the Agency and the allocation recipient cancel an allocation of an amount of credit by mutual consent, that amount of credit is returned.

(D) ***Amount not necessary for financial feasibility.*** If an Agency determines under section 42(m)(2) that an amount of credit allocated to a project is not necessary for the financial feasibility of the project and its viability as a qualified low-income housing project throughout the credit period, that amount of credit is returned.

(3) ***Manner of returning credit—***

(i) ***Taxpayer notification.*** After an Agency determines that a building or project no longer qualifies under paragraph (d)(2)(iv)(A), (B), or (D) of this section for all or part of the allocation it received, the Agency must provide written notification to the allocation recipient, or its successor in interest, that all or part of the allocation is no longer valid. The notification must also state the amount of the allocation that is no longer valid. The date of the notification is the date the credit is returned to the Agency. If an allocation is cancelled by mutual consent under paragraph (d)(2)(iv)(C) of this section, there must be a written agreement signed by the Agency, and the allocation recipient, or its successor in interest, indicating the amount of the allocation that is returned to the Agency. The effective date of the agreement is the date the credit is returned to the Agency.

(ii) ***Internal Revenue Service notification.*** If a credit is returned within 180 days following the close of the first taxable year of a building's credit period as provided in paragraph (d)(2)(ii) of this section, and a Form 8609, *Low-Income Housing Credit Allocation Certification,* has been issued

for the building, the Agency must notify the Internal Revenue Service that the credit has been returned. If only part of the credit has been returned, this notification requirement is satisfied when the Agency attaches to an amended Form 8610, *Annual Low- Income Housing Credit Agencies Report,* the original of an amended Form 8609 reflecting the correct amount of credit attributed to the building together with an explanation for the filing of the amended Forms. The Agency must send a copy of the amended Form 8609 to the taxpayer that owns the building. If the building is not issued an amended Form 8609 because all of the credit allocated to the building is returned, notification to the Internal Revenue Service is satisfied by following the requirements prescribed in § 1.42-5(e)(3) for filing a Form 8823, *Low-Income Housing Credit Agencies Report of Noncompliance.*

(e) ***The national pool component.*** The national pool component of the State housing credit ceiling of a State for any calendar year is the portion of the National Pool allocated to the State by the Secretary for the calendar year. The national pool component for any calendar year is zero unless a State is a *qualified State.* (See paragraph (i) of this section for rules regarding the National Pool and the description of a qualified State.) A national pool component credit that is allocated during a calendar year and returned after the close of the calendar year may qualify as part of the returned credit component of the State housing credit ceiling for the calendar year that the credit is returned.

(f) ***When the State housing credit ceiling is determined.*** For purposes of accounting for the State housing credit ceiling on Form 8610 and for purposes of determining the set-aside apportionment for projects involving qualified nonprofit organizations described in section 42(h)(5) and § 1.42-1T(c)(5), the State housing credit ceiling for any calendar year is determined at the close of the calendar year.

(g) ***Stacking order.*** Credit is treated as allocated from the various components of the State housing credit ceiling in the following order. The first credit allocated for any calendar year is treated as credit from the unused carryforward component of the State housing credit ceiling for the calendar year. After all of the credit in the unused carryforward component has been allocated, any credit allocated is treated as allocated from the sum of the population, returned credit, and national pool components of the State housing credit ceiling.

(h) ***Nonprofit set-aside*** —

(1) ***Determination of set-aside.*** Under section 42(h)(5) and § 1.42-1T(c)(5), at least 10 percent of a State housing credit ceiling in any calendar year must be set aside exclusively for projects involving qualified nonprofit organizations (the nonprofit set-aside). However, credit allocated from the nonprofit set-aside in a calendar year and returned in a subsequent calendar year does not retain its nonprofit set-aside character. The credit becomes part of the returned credit component of the State housing credit ceiling for the calendar year that the credit is returned and must be included in determining the nonprofit set-aside of the State housing credit ceiling for that calendar year. Similarly, credit amounts that are not allocated from the nonprofit set-aside in a calendar year and are returned in a subsequent calendar year become part of the returned credit component of the State housing credit ceiling for that year and are also included in determining the set-aside for that year.

(2) ***Allocation rules.*** An Agency may allocate credit from any component of the State housing credit ceiling as part of the nonprofit set-aside and need not reserve 10 percent of each component for the nonprofit set-aside. Thus, an Agency may satisfy the nonprofit set-aside requirement of section 42(h)(5) and § 1.42-1T(c)(5) in any calendar year by setting aside for allocation an amount equal to at least 10 percent of the total State housing credit ceiling for the calendar year.

(i) *National Pool* —

(1) ***In general.*** The unused housing credit carryover of a State for any calendar year is assigned to the Secretary for inclusion in a national pool of unused housing credit carryovers (National Pool) that is reallocated among qualified States the succeeding calendar year. The assignment to the Secretary is made on Form 8610.

(2) ***Unused housing credit carryover.*** The unused housing credit carryover of a State for any calendar year is the excess, if any, of—

(i) The unused carryforward component of the State housing credit ceiling for the calendar year; over

(ii) The total housing credit dollar amount allocated for the calendar year.

(3) *Qualified State* —

(i) ***In general.*** The term *qualified State* means, with respect to any calendar year, any State that has allocated its entire State housing credit ceiling for the preceding calendar year and for which a request is made by the State, not later than May 1 of the calendar year, to receive an allocation of credit from the National Pool for that calendar year. Except as provided in paragraph (i)(3)(ii) of this section, a State is not a qualified State in a calendar year if there remains any unallocated credit in its State housing credit ceiling at the close of the preceding calendar year that was apportioned to any Agency within the State for the calendar year.

(ii) *Exceptions* —

(A) ***De minimis amount.*** If the amount remaining unallocated at the close of a calendar year is only a de minimis amount of credit, the State is a qualified State eligible to participate in the National Pool. For that purpose, a credit amount is de minimis if it does not exceed 1 percent of the aggregate State housing credit ceiling of the State for the calendar year.

(B) ***Other circumstances.*** Pursuant to the authority under section 42(n), the Internal Revenue Service may determine that a State is a qualified State eligible to participate in the National Pool even though the State's unallocated credit is in excess of the 1 percent safe harbor set forth in paragraph (A) of this section. The Internal Revenue Service will make this determination based on all the facts and circumstances, weighing heavily the interests of the States who would otherwise qualify for the National Pool. The Internal Revenue Service will generally grant relief under this paragraph only where a State's unallocated credit is not substantial.

(iii) ***Time and manner for making request.*** For further guidance as to the time and manner for making a request of housing credit dollar amounts from the National Pool by a qualified State, see Rev. Proc. 92-31, 1992-1 C.B. 775. (See 601.601(d)(2)(ii)(*b*)).

(4) ***Formula for determining the National Pool.*** The amount allocated to a qualified State in any calendar year is an amount that bears the same ratio to the aggregate unused housing credit carryovers of all States for the preceding calendar year as that State's population for the calendar year bears to the population of all qualified States for the calendar year.

(j) ***Coordination between Agencies.*** The Agency responsible for filing Form 8610 on behalf of all Agencies within a State and making any request on behalf of the State for credit from the National Pool (the Filing Agency) must coordinate with each Agency within the State to ensure that the various requirements of

this section are complied with. For example, the Filing Agency of a State must ensure that all Agencies within the State that were apportioned a credit amount for the calendar year have allocated all of their respective credit amounts for the calendar year before the Filing Agency can make a request on behalf of the State for a distribution of credit from the National Pool.

(k) *Example.*

(1) The operation of the rules of this section is illustrated by the following examples. Unless otherwise stated in an example, Agency A is the sole Agency authorized to make allocations of housing credit dollar amounts in State M, all of Agency A's allocations are valid, and for calendar year 2003, Agency A has available for allocation a State housing credit ceiling consisting of the following housing credit dollar amounts:

A. Unused carryforward component	$50
B. Population component	110
C. Returned credit component	10
D. National pool component	0
Total	170

(2) In addition, the $10 of returned credit component was returned before October 1, 2003.

Example 1: (i) *Additional facts.* By the close of 2003, Agency A had allocated $80 of the State M housing credit ceiling. Of the $80 allocated, $17 was allocated to projects involving qualified nonprofit organizations.
(ii) *Application of stacking rules.* The $80 of allocated credit is first treated as allocated from the unused carryforward component of the State housing credit ceiling. The $80 of allocated credit exceeds the $50 attributable to the unused carryforward component by $30. Because the unused carryforward component is fully utilized no credit will be forfeited by State M to the 2004 National Pool. The remaining $30 of allocated credit will next be treated as allocated from the $120 in credit determined by aggregating the population, returned credit, and national pool components ($110 + 10 + 0 = $120). The $90 of unallocated credit remaining in State M's 2003 State housing credit ceiling ($120 − 30 = $90) represents the unused carryforward component of State M's 2004 State housing credit ceiling. Under paragraph (i)(3) of this section, State M does not qualify for credit from the 2004 National Pool.

(iii) *Nonprofit set-aside.* Agency A allocated exactly the amount of credit to projects involving qualified nonprofit organizations as necessary to meet the nonprofit set-aside requirement ($17, 10% of the $170 ceiling).

Example 2: (i) *Additional facts.* By the close of 2003, Agency A had allocated $40 of the

State M housing credit ceiling. Of the $40 allocated, $20 was allocated to projects involving qualified nonprofit organizations.
(ii) *Application of stacking rules.* The $40 of allocated credit is first treated as allocated from the unused carryforward component of the State housing credit ceiling. Because the $40 of allocated credit does not exceed the $50 attributable to the unused carryforward component, the remaining components of the State housing credit ceiling are unaffected. The $10 remaining in the unused carryforward component is assigned to the Secretary for inclusion in the 2004 National Pool. The $120 in credit determined by aggregating the population, returned credit, and national pool components becomes the unused carryforward component of State M's 2004 State housing credit ceiling. Under paragraph (i)(3) of this section, State M does not qualify for credit from the 2004 National Pool.

(iii) *Nonprofit set-aside.* Agency A allocated $3 more credit to projects involving qualified nonprofit organizations than necessary to meet the nonprofit set-aside requirement. This does not reduce the application of the 10% nonprofit set-aside requirement to the State M housing credit ceiling for calendar year 2004.

Example 3: (i) *Additional fact.* None of the applications for credit that Agency A received for 2003 are for projects involving qualified nonprofit organizations.
(ii) *Nonprofit set-aside.* Because at least 10% of the State housing credit ceiling must be set aside for projects involving a qualified nonprofit organization, Agency A can allocate only $153 of the $170 State housing credit ceiling for calendar year 2003 ($170 −17 = $153). If Agency A allocates $153 of credit, the credit is treated as allocated $50 from the unused carryforward component and $103 from the sum of the population, returned credit, and national pool components. The $17 of unallocated credit that is set aside for projects involving qualified nonprofit organizations becomes the unused carryforward component of State M's 2004 State housing credit ceiling. Under paragraph (i)(3) of this section, State M does not qualify for credit from the 2004 National Pool.

Example 4: (i) *Additional facts.* The $10 of returned credit component was returned prior to October 1, 2003. However, a $40 credit that had been allocated in calendar year 2002 to a project involving a qualified nonprofit organization was returned to the Agency by a mutual consent agreement dated November 15, 2003. By the close of 2003, Agency A had allocated $170 of the State M's housing credit ceiling, including $17 of credit to projects involving qualified nonprofit organizations.
(ii) *Effect of three-month rule.* Under the three-month rule of paragraph (d)(2)(iii) of this section, Agency A may treat all or part of the $40 of previously allocated credit as returned on January 1, 2004. If Agency A treats all of the $40 amount as having been returned in calendar year 2004, the State M housing credit ceiling for 2003 is $170. This entire amount, including the $17 nonprofit set-aside, has been allocated in 2003. Under paragraph (i)(3) of this section, State M qualifies for the 2004 National Pool.

(iii) *If three-month rule not used.* If Agency A treats all of the $40 of previously allocated credit as returned in calendar year 2003, the State housing credit ceiling for the 2003 calendar year will be $210 of which $50 will be attributable to the returned credit component ($10 + $40 = $50). Because credit amounts allocated to a qualified nonprofit organization in a prior calendar year that are returned in a subsequent calendar year do not retain their nonprofit character, the nonprofit set-aside for calendar year 2003 is $21 (10% of the $210 State housing credit ceiling). The $170 that Agency A allocated during 2003 is first treated as allocated from the unused carryforward component of the State housing credit ceiling. The $170 of allocated credit exceeds the $50 attributable to the unused carryforward component by $120. Because the unused carryforward component is fully utilized no credit will be forfeited by State M to the 2004 National Pool. The remaining $120 of allocated credit will next be treated as allocated from the $160 in credit determined by aggregating the population, returned credit, and national pool components ($110 + 50 + 0 = $160). The $40 of unallocated credit (which includes $4 of unallocated credit from the $21 nonprofit set-aside) remaining in State M's 2003 housing credit ceiling ($160−120 = $40) represents the unused carryforward component of State M's 2004 housing credit ceiling. Under paragraph (i)(3) of this section, State M does not qualify for credit from the 2004 National Pool.

(l) ***Effective dates*** —

(1) ***In general.*** Except as provided in paragraph (l)(2) of this section, the rules set forth in § 1.42-14 are applicable on January 1, 1994.

(2) ***Community Renewal Tax Relief Act of 2000 changes.*** Paragraphs (a), (b), (c), (e), (i)(2) and (k) of this section are applicable for housing credit dollar amounts allocated after January 6, 2004. However, paragraphs (a), (b), (c), (e), (i)(2) and (k) of this section may be applied by Agencies and taxpayers for housing credit dollar amounts allocated after December 31, 2000, and on or before January 6, 2004. Otherwise, subject to the applicable effective dates of the corresponding statutory provisions, the rules that apply for housing credit dollar amounts allocated on or before January 6, 2004, are contained in this section in effect on and before January 6, 2004 (*see* 26 CFR part 1 revised as of April 1, 2003).

[T.D. 8563, 59 FR 50163, Oct. 3, 1994; 60 FR 3345, Jan. 17, 1995, as amended by T.D. 9110, 69 FR 504, Jan. 6, 2004; 69 FR 8331, Feb. 24, 2004]

§ 1.42-15 Available unit rule.

(a) ***Definitions.*** The following definitions apply to this section:

Applicable income limitation means the limitation applicable under section 42(g)(1) or, for deep rent skewed projects described in section 142(d)(4)(B), 40 percent of area median gross income.

Available unit rule means the rule in section 42(g)(2)(D)(ii).

Comparable unit means a residential unit in a low-income building that is comparably sized or smaller than an over-income unit or, for deep rent skewed projects described in section 142(d)(4)(B), any low-income unit. For purposes of determining whether a residential unit is comparably sized, a comparable unit must be measured by the same method used to determine qualified basis for the credit year in which the comparable unit became available.

Current resident means a person who is living in the low-income building.

Low-income unit is defined by section 42(i)(3)(A).

Nonqualified resident means a new occupant or occupants whose aggregate income exceeds the applicable income limitation.

Over-income unit means, in the case of a project with respect to which the taxpayer elects the requirements of section 42(g)(1)(A) or (B) (that is, the 20-50 or 40-60 tests), a low-income unit in which the aggregate income of the occupants of the unit increases above 140 percent of the applicable income limitation under section 42(g)(1)(A) and (B), or above 170 percent of the applicable income limitation for deep rent skewed projects described in section 142(d)(4)(B). In the case of a project with respect to which the taxpayer elects the requirements of section 42(g)(1)(C) (that is, the average income test), *over-income unit* means a residential unit described in § 1.42-19(b)(1)(i) through (iii) in which the aggregate income of the occupants of the unit increases above 140 percent (170 percent in case of deep rent skewed projects described in section 142(d)(4)(B)) of the greater of 60 percent of area median gross income or the imputed income limitation designated with respect to the unit under § 1.42-19(b).

Qualified resident means an occupant either whose aggregate income (combined with the income of all other occupants of the unit) does not exceed the applicable income limitation and who is otherwise a low-income resident under section 42, or who is a current resident.

(b) ***General section 42(g)(2)(D)(i) rule.*** Except as provided in paragraph (c) of this section, notwithstanding an increase in the income of the occupants of a low-income unit above the applicable income limitation, if the income of the occupants initially met the applicable income limitation, and the unit continues to be rent-restricted—

(1) The unit continues to be treated as a low-income unit; and

(2) The unit continues to be included in the numerator and the denominator of the ratio used to determine whether a project satisfies the applicable minimum set-aside requirement of section 42(g)(1).

(c) ***Exceptions*** —

(1) ***In general.*** A unit ceases to be treated as a low-income unit if it becomes an over-income unit and a nonqualified resident occupies any comparable unit that is available or that subsequently becomes available in the same low-income building. In other words, the owner of a low-income building must rent to qualified residents all comparable units that are available or that subsequently become available in the same building to continue treating the over-income unit as a low-income unit. Once the percentage of low-income units in a building (excluding the over-income units) equals the percentage of low-income units on which the credit is based, failure to maintain the over-income units as low-income units has no immediate significance. The failure to maintain the over-income units as low-income units, however, may affect the decision of whether or not to rent a particular available unit at market rate at a later time. A unit is not available for purposes of the available unit

rule when the unit is no longer available for rent due to contractual arrangements that are binding under local law (for example, a unit is not available if it is subject to a preliminary reservation that is binding on the owner under local law prior to the date a lease is signed or the unit is occupied).

(2) ***Rental of next available unit in case of the average income test*** —

(i) ***Basic rule.*** In the case of a project with respect to which the taxpayer elects the average income test, if a unit becomes an over-income unit within the meaning of paragraph (a) of this section, that unit ceases to be described in § 1.42-19(b)(1)(ii) if—

(A) Any residential rental unit (of a size comparable to, or smaller than, the over-income unit) is available, or subsequently becomes available, in the same low-income building; and

(B) That available unit is occupied by a new resident whose income exceeds the limitation described in paragraph (c)(2)(iv) of this section.

(ii) ***No requirement to comply with the next available unit rule in a specific order.*** Where multiple units in a building are over-income units at the same time—

(A) The order in which available units are occupied makes no difference for purposes of complying with the rules in this section (next available unit rule); and

(B) In making imputed income limitation designations, the taxpayer must take into account the limitations described in paragraphs (c)(2)(iii) and (iv) of this section.

(iii) ***Deep rent skewed projects.*** In the case of a project described in section 142(d)(4)(B) with respect to which the taxpayer elects the average income test, if a unit becomes an over-income unit within the meaning of paragraph (a) of this section, that unit ceases to be a unit described in § 1.42-19(b)(1)(ii) if—

(A) Any residential unit described in § 1.42-19(b)(1)(i) through (iii) is available, or subsequently becomes available, in the same low-income building; and

(B) That unit is occupied by a new resident whose income exceeds the lesser of 40 percent of area median gross income or the imputed income limitation designated with respect to that unit.

(iv) ***Limitation.*** The limitation described in this paragraph (c)(2)(iv) is—

(A) In the case of a unit that was described in § 1.42-19(b)(1)(i) through (iii) prior to becoming vacant, the imputed income limitation designated with respect to the available unit for the average income test under § 1.42-19(b); and

(B) In the case of any other unit, the highest imputed income limitation that could be designated (consistent with section 42(g)(1)(C)(ii)(III)) for that available unit under § 1.42-19(c) such that the average of all imputed income designations of residential units in the project does not exceed 60 percent of area median gross income (AMGI).

(v) ***Example.*** The operation of paragraph (c)(2) of this section (that is, the next available unit rule for the average income test) is illustrated by the following example.

(A) ***Facts.***

(*1*) A single-building housing project received an allocation of housing credit dollar amount for 10 low-income units. The taxpayer who owns the project constructs the building with 10 identically sized units and elects the average income test. In the first year, the taxpayer intended to have 8 units that will qualify as low-income units (within the meaning of § 1.42-19(b)(1)), and 2 units that are market-rate units. The taxpayer properly and timely designates the imputed income limitations for the 8 units as follows: 4 units at 80 percent of AMGI; and 4 units at 40 percent of AMGI.

TABLE 1 TO PARAGRAPH (c)(2)(v)(A)(*1*)

Unit No.	Imputed income limitation of the unit
1	80 percent of AMGI.
2	80 percent of AMGI.
3	80 percent of AMGI.
4	80 percent of AMGI.
5	Market Rate.
6	40 percent of AMGI.
7	40 percent of AMGI.
8	40 percent of AMGI.
9	40 percent of AMGI.
10	Market Rate.

(*2*) In the first taxable year of the credit period (Year 1), the project is fully leased and occupied by income-qualified residents in Units ##1-4 and 6-9. In Year 2, Unit #1 and Unit #6 become over-income. The tenant residing in Unit #5 vacated that unit. Taxpayer then designated an imputed income limitation of 40 percent of AMGI for Unit #5. Later in Year 2, the tenant residing in Unit #10 vacated that unit. Taxpayer designated an imputed income limitation of 80 percent of AMGI for Unit #10. After those designations, Unit #10 was occupied by a new income-qualified tenant, and then later, Unit #5 was occupied by a new income-qualified resident.

(B) ***Analysis.*** Taxpayer sought to maintain the status of the over-income units (Unit #1 and Unit #6) as units described in § 1.42-19(b)(1)(ii). As the then-market rate units (Units ##5 and 10) became available to rent, Taxpayer designated imputed income limitations for them at 40 percent and 80 percent of AMGI, respectively. Immediately after each designation, the average of the designations in the project does not exceed 60 percent AMGI. Pursuant to the rule in paragraph (c)(2)(ii) of this section, when there are multiple over-income units, Taxpayer is not required to rent the next-available units in a specific order, even though they may have different imputed income limitations. Thus, Taxpayer complied with the rules of the next available unit rule, and Unit #1 and Unit #6 maintain status as units described in § 1.42-19(b)(1)(ii).

(d) ***Effect of current resident moving within building.*** When a current resident moves to a different unit within the building, the newly occupied unit adopts the status of the vacated unit. Thus, if a current resident, whose income exceeds the applicable income limitation, moves from an over-income unit to a vacant unit in the same building, the newly occupied unit is treated as an over-income unit. The vacated unit assumes the status the newly occupied unit had immediately before it was occupied by the current resident.

(e) ***Available unit rule applies separately to each building in a project.*** In a project containing more than one low-income building, the available unit rule applies separately to each building.

(f) ***Result of noncompliance with available unit rule.*** If any comparable unit that is available or that subsequently becomes available is rented to a nonqualified resident, all over-income units for which the available unit was a comparable unit within the same building lose their status as low-income units; thus, comparably sized or larger over-income units would lose their status as low-income units.

(g) ***Relationship to tax-exempt bond provisions.*** Financing arrangements that purport to be exempt-facility bonds under section 142 must meet the requirements of sections 103 and 141 through 150 for interest on the obligations to be excluded from gross income under section 103(a). This section is not intended as an interpretation under section 142.

(h) ***Examples.*** The following examples illustrate this section:

Example 1. This example illustrates noncompliance with the available unit rule in a low-income building containing three over-income units. On January 1, 1998, a qualified low-income housing project, consisting of one building containing ten identically sized residential units, received a housing credit dollar amount allocation from a state housing credit agency for five low-income units. By the close of 1998, the first year of the credit period, the project satisfied the minimum set-aside requirement of section 42(g)(1)(B). Units 1, 2, 3, 4, and 5 were occupied by individuals whose incomes did not exceed the income limitation applicable under section 42(g)(1) and were otherwise low-income residents under section 42. Units 6, 7, 8, and 9 were occupied by market-rate tenants. Unit 10 was vacant. To avoid recapture of credit, the project owner must maintain five of the units as low-income units. On November 1, 1999, the certificates of annual income state that annual incomes of the individuals in Units 1, 2, and 3 increased above 140 percent of the income limitation applicable under section 42(g)(1), causing those units to become over-income units. On November 30, 1999, Units 8 and 9 became vacant. On December 1, 1999, the project owner rented Units 8 and 9 to qualified residents who were not current residents at rates meeting the rent restriction requirements of section 42(g)(2). On December 31, 1999, the project owner rented Unit 10 to a market-rate tenant. Because Unit 10, an available comparable unit, was leased to a market-rate tenant, Units 1, 2, and 3 ceased to be treated as low-income units. On that date, Units 4, 5, 8, and 9 were the only remaining low-income units. Because the project owner did not maintain five of the residential units as low-income units, the qualified basis in the building is reduced, and credit must be recaptured. If the project owner had rented Unit 10 to a qualified resident who was not a current resident, eight of the units would be low-income units. At that time, Units 1, 2, and 3, the over-income units, could be rented to market-rate tenants because the building would still contain five low-income units.

Example 2. This example illustrates the provisions of paragraph (d) of this section. A low-income project consists of one six-floor building. The residential units in the building are identically sized. The building contains two over-income units on the sixth floor and two vacant units on the first floor. The project owner, desiring to maintain the over-income units as low-income units, wants to rent the available units to qualified residents. J, a resident of one of the over-income units, wishes to occupy a unit on the first floor. J's income has recently increased above the applicable income limitation. The project owner permits J to move into one of the units on the first floor. Despite J's income

exceeding the applicable income limitation, J is a qualified resident under the available unit rule because J is a current resident of the building. The unit newly occupied by J becomes an over-income unit under the available unit rule. The unit vacated by J assumes the status the newly occupied unit had immediately before J occupied the unit. The over-income units in the building continue to be treated as low-income units.

(i) ***Applicability dates*** —

(1) ***In general.*** Except for paragraph (c)(2) of this section, this section applies to leases entered into or renewed on and after September 26, 1997.

(2) ***Applicability dates under the average income test.*** The requirements of the second sentence of the definition of *over-income unit* in paragraph (a) of this section and paragraph (c)(2) of this section apply to taxable years beginning after December 31, 2022. A taxpayer may choose to apply this section to a taxable year beginning after October 12, 2022, and before January 1, 2023, provided that the taxpayer chooses to apply § 1.42-19 to the same taxable year.

[T.D. 8732, 62 FR 50505, Sept. 26, 1997, as amended by T.D. 9967, 87 FR 61501, Oct. 12, 2022]

§ 1.42-16 Eligible basis reduced by federal grants.

(a) ***In general.*** If, during any taxable year of the compliance period (described in section 42(i)(1)), a grant is made with respect to any building or the operation thereof and any portion of the grant is funded with federal funds (whether or not includible in gross income), the eligible basis of the building for the taxable year and all succeeding taxable years is reduced by the portion of the grant that is so funded.

(b) ***Grants do not include certain rental assistance payments.*** A federal rental assistance payment made to a building owner on behalf or in respect of a tenant is not a grant made with respect to a building or its operation if the payment is made pursuant to—

(1) Section 8 of the United States Housing Act of 1937 (42 U.S.C. 1437f)

(2) A qualifying program of rental assistance administered under section 9 of the United States Housing Act of 1937 (42 U.S.C. 1437g); or

(3) A program or method of rental assistance as the Secretary may designate by publication in the FEDERAL REGISTER or in the Internal Revenue Bulletin (see § 601.601(d)(2) of this chapter).

(c) ***Qualifying rental assistance program.*** For purposes of paragraph (b)(2) of this section, payments are made pursuant to a qualifying rental assistance program administered under section 9 of the United States Housing Act of 1937 to the extent that the payments—

(1) Are made to a building owner pursuant to a contract with a public housing authority with respect to units the owner has agreed to maintain as public housing units (PH-units) in the building;

(2) Are made with respect to units occupied by public housing tenants, provided that, for this purpose, units may be considered occupied during periods of short term vacancy (not to exceed 60 days); and

(3) Do not exceed the difference between the rents received from a building's PH-unit tenants and a pro rata portion of the building's actual operating costs that are reasonably allocable to the PH-units (based on square footage, number of bedrooms, or similar objective criteria), and provided that, for this purpose, operating costs do not include any development costs of a building (including developer's fees) or the principal or interest of any debt incurred with respect to any part of the building.

(d) ***Effective date.*** This section is effective September 26, 1997.

[T.D. 8731, 62 FR 50503, Sept. 26, 1997]

§ 1.42-17 Qualified allocation plan.

(a) ***Requirements*** —

(1) ***In general.*** [Reserved]

(2) ***Selection criteria.*** [Reserved]

(3) ***Agency evaluation.*** Section 42(m)(2)(A) requires that the housing credit dollar amount allocated to a project is not to exceed the amount the Agency determines is necessary for the financial feasibility of the project and its viability as a qualified low-income housing project throughout the credit period. In making this determination, the Agency must consider—

(i) The sources and uses of funds and the total financing planned for the project. The taxpayer must certify to the Agency the full extent of all federal, state, and local subsidies that apply (or which the taxpayer expects to apply) to the project. The taxpayer must also certify to the Agency all other sources of funds and all development costs for the project. The taxpayer's certification should be sufficiently detailed to enable the Agency to ascertain the nature of the costs that will make up the total financing package, including subsidies and the anticipated syndication or placement proceeds to be raised. Development cost information, whether or not includible in eligible basis under section 42(d), that should be provided to the Agency includes, but is not limited to, site acquisition costs, construction contingency, general contractor's overhead and profit, architect's and engineer's fees, permit and survey fees, insurance premiums, real estate taxes during construction, title and recording fees, construction period interest, financing fees, organizational costs, rent-up and marketing costs, accounting and auditing costs, working capital and operating deficit reserves, syndication and legal fees, and developer fees;

(ii) Any proceeds or receipts expected to be generated by reason of tax benefits;

(iii) The percentage of the housing credit dollar amount used for project costs other than the costs of intermediaries. This requirement should not be applied so as to impede the development of projects in hard-to-develop areas under section 42(d)(5)(C); and

(iv) The reasonableness of the developmental and operational costs of the project.

(4) ***Timing of Agency evaluation*** —

(i) ***In general.*** The financial determinations and certifications required under paragraph (a)(3) of this section must be made as of the following times—

(A) The time of the application for the housing credit dollar amount;

(B) The time of the allocation of the housing credit dollar amount; and

(C) The date the building is placed in service.

(ii) ***Time limit for placed-in-service evaluation.*** For purposes of paragraph (a)(4)(i)(C) of this section, the evaluation for when a building is placed in service must be made not later than the date the Agency issues the Form 8609, "Low-Income Housing Credit Allocation Certification." The Agency must evaluate all sources and uses of funds under paragraph (a)(3)(i) of this section paid, incurred, or committed by the taxpayer for the project up until date the Agency issues the Form 8609.

(5) ***Special rule for final determinations and certifications.*** For the Agency's evaluation under paragraph (a)(4)(i)(C) of this section, the taxpayer must submit a schedule of project costs. Such schedule is to be prepared on the method of accounting used by the taxpayer for federal income tax purposes, and must detail the project's total costs as well as those costs that may qualify for inclusion in eligible basis under section 42(d). For projects with more than 10 units, the schedule of project costs must be accompanied by a Certified Public Accountant's audit report on the schedule (an Agency may require an audited schedule of project costs for projects with fewer than 11 units). The CPA's audit must be conducted in accordance with generally accepted auditing standards. The auditor's report must be unqualified.

(6) ***Bond-financed projects.*** A project qualifying under section 42(h)(4) is not entitled to any credit unless the governmental unit that issued the bonds (or on behalf of which the bonds were issued), or the Agency responsible for issuing the Form(s) 8609 to the project, makes determinations under rules similar to the rules in paragraphs (a) (3), (4), and (5) of this section.

(b) ***Effective date.*** This section is effective on January 1, 2001.

[T.D. 8859, 65 FR 2329, Jan. 14, 2000]

§ 1.42-18 Qualified contracts.

(a) ***Extended low-income housing commitment*** —

(1) ***In general.*** No credit under section 42(a) is allowed by reason of section 42 with respect to any building for the taxable year unless an extended low-income housing commitment (commitment) (as defined in section 42(h)(6)(B)) is in effect as of the end of such taxable year. A commitment must be in effect for the extended use period (as defined in paragraph (a)(1)(i) of this section).

(i) ***Extended use period.*** The term *extended use period* means the period beginning on the first day in the compliance period (as defined in section 42(i)(1)) on which the building is part of a qualified low-income housing project (as defined in section 42(g)(1)) and ending on the later of—

(A) The date specified by the low-income housing credit agency (Agency) in the commitment; or

(B) The date that is 15 years after the close of the compliance period.

(ii) ***Termination of extended use period.*** The extended use period for any building will terminate—

(A) On the date the building is acquired by foreclosure (or instrument in lieu of foreclosure) unless the Commissioner determines that such acquisition is part of an arrangement with the taxpayer ("the owner") a purpose of which is to terminate such period; or

(B) On the last day of the one-year period beginning on the date (after the 14th year of the compliance period) on which the owner submits a written request to the Agency to find a person to acquire the owner's interest in the low-income portion of the building if the Agency is unable to present during such period a qualified contract for the acquisition of the low-income portion of the building by any person who will continue to operate such portion as a qualified low-income building (as defined in section 42(c)(2)).

(iii) ***Owner non-acceptance.*** If the Agency provides a qualified contract within the one-year period and the owner rejects or fails to act upon the contract, the building remains subject to the existing commitment.

(iv) ***Eviction, gross rent increase concerning existing low-income tenants not permitted.*** Prior to the close of the three year period following the termination of a commitment, no owner shall be permitted to evict or terminate the tenancy (other than for good cause) of an existing tenant of any low-income unit, or increase the gross rent for such unit in a manner or amount not otherwise permitted by section 42.

(2) ***Exception.*** Paragraph (a)(1)(ii)(B) of this section shall not apply to the extent more stringent requirements are provided in the commitment or under State law.

(b) ***Definitions.*** For purposes of this section, the following terms are defined:

(1) As provided by section 42(h)(6)(G)(iii), *base calendar year* means the calendar year with or within which the first taxable year of the credit period ends.

(2) The *low-income portion* of a building is the portion of the building equal to the applicable fraction (as defined in section 42(c)(1)(B)) specified in the commitment for the building.

(3) The *fair market value of the non-low-income portion* of the building is determined at the time of the Agency's offer of sale of the building to the general public. The fair market value of the non-low-income portion also includes the fair market value of the land underlying the entire building (both the non-low-income portion and the low-income portion). This valuation must take into account the existing and continuing requirements contained in the commitment for the building. The fair market value of the non-low-income portion also includes the fair market value of items of personal property not included in eligible basis under section 42(d) that convey under the contract with the building.

(4) ***Qualifying building costs include*** —

(i) Costs that are included in eligible basis of a low-income housing building under section 42(d) and that are included in the adjusted basis of depreciable property that is subject to section 168 and that is residential rental property for purposes of section 142(d) and § 1.103-8(b);

(ii) Costs that are included in eligible basis of a low-income housing building under section 42(d) and that are included in the adjusted basis of depreciable property that is subject to section 168 and that is used in a common area or is provided as a comparable amenity to all residential rental units in the building; and

(iii) Costs of the type described in paragraph (b)(4)(i) and (ii) of this section incurred after the first year of the low-income housing building's credit period under section 42(f).

(5) The *qualified contract amount* is the sum of the fair market value of the non-low-income portion of the building (within the meaning of section 42(h)(6)(F) and paragraph (b)(3) of this section) and the price for the low-income portion of the building (within the meaning of section 42(h)(6)(F) and paragraph (b)(2) of this section) as calculated in paragraph (c)(2) of this section. If this sum is not a multiple of $1,000, then when the Agency offers the building for sale to the general public, the Agency may round up the offering price to the next highest multiple of $1,000.

(c) ***Qualified contract purchase price formula*** —

(1) ***In general.*** For purposes of this section, *qualified contract* means a bona fide contract to acquire the building (within a reasonable period after the contract is entered into) for the qualified contract amount.

(i) ***Initial determination.*** The qualified contract amount is determined at the time of the Agency's offer of sale of the building to the general public.

(ii) ***Mandatory adjustment by the buyer and owner.*** The buyer and owner under a qualified contract must adjust the amount of the low-income portion of the qualified contract formula to reflect changes in the components of the qualified contract formula such as mortgage payments that reduce outstanding indebtedness between the time of the Agency's offer of sale to the general public and the building's actual sale closing date.

(iii) ***Optional adjustment by the Agency and owner.*** The Agency and owner may agree to adjust the fair market value of the non low-income portion of the building after the Agency's offer of sale of the building to the general public and before the close of the one-year period described in paragraph (a)(1)(ii)(B) of this section. If no agreement between the Agency and owner is reached, the fair market value of the non-low-income portion of the building determined at the time of the Agency's offer of sale of the building to the general public remains unchanged.

(2) ***Low-income portion amount.*** The low-income portion amount is an amount not less than the applicable fraction specified in the commitment, as defined in section 42(h)(6)(B)(i), multiplied by the total of—

(i) The outstanding indebtedness for the building (as defined in paragraph (c)(3) of this section); plus

(ii) The adjusted investor equity in the building for the calendar year (as defined in paragraph (c)(4) of this section); plus

(iii) Other capital contributions (as defined in paragraph (c)(5) of this section), not including any amounts described in paragraphs (c)(2)(i) and (ii) of this section; minus

(iv) Cash distributions from (or available for distribution from) the building (as defined in paragraph (c)(6) of this section).

(3) ***Outstanding indebtedness.*** For purposes of paragraph (c)(2)(i) of this section, *outstanding indebtedness* means the remaining stated principal balance (which is initially determined at the time of the Agency's offer of sale of the building to the general public) of any indebtedness secured by, or with respect to, the building that does not exceed the amount of qualifying building costs described in paragraph (b)(4) of this section. Thus, any refinancing indebtedness or additional mortgages in excess of such qualifying building costs are not outstanding indebtedness for purposes of section 42(h)(6)(F) and this section. Examples of outstanding indebtedness include certain mortgages and developer fee notes (excluding developer service costs not included in eligible basis). Outstanding

indebtedness does not include debt used to finance nondepreciable land costs, syndication costs, legal and accounting costs, and operating deficit payments. Outstanding indebtedness includes only obligations that are indebtedness under general principles of Federal income tax law and that are actually paid to the lender upon the sale of the building or are assumed by the buyer as part of the sale of the building.

(4) ***Adjusted investor equity*** —

(i) ***Application of cost-of-living factor.*** For purposes of paragraph (c)(2)(ii) of this section, the *adjusted investor equity* for any calendar year equals the unadjusted investor equity, as described in paragraph (c)(4)(ii) of this section, multiplied by the qualified-contract cost-of-living adjustment for that year, as defined in paragraph (c)(4)(iii) of this section.

(ii) ***Unadjusted investor equity.*** For purposes of this paragraph (c)(4), *unadjusted investor equity* means the aggregate amount of cash invested by owners for qualifying building costs described in paragraph (b)(4)(i) and (ii) of this section. Thus, equity paid for land, credit adjuster payments, Agency low-income housing credit application and allocation fees, operating deficit contributions, and legal, syndication, and accounting costs all are examples of cost payments that do not qualify as unadjusted investor equity. Unadjusted investor equity takes an amount into account only to the extent that, as of the beginning of the low-income building's credit period (as defined in section 42(f)(1)), there existed an obligation to invest the amount. Unadjusted investor equity does not include amounts included in the calculation of outstanding indebtedness as defined in paragraph (c)(3) of this section.

(iii) ***Qualified-contract cost-of-living adjustment.*** For purposes of this paragraph (c)(4), the *qualified-contract cost-of-living adjustment for a calendar year* is the number that is computed under the general rule in paragraph (c)(4)(iv) of this section or a number that may be provided by the Commissioner as described in paragraph (c)(4)(v) of this section.

(iv) ***General rule.*** Except as provided in paragraph (c)(4)(v) of this section, the *qualified-contract cost-of-living adjustment* is the quotient of—

(A) The sum of the 12 monthly Consumer Price Index (CPI) values whose average is the CPI for the calendar year that precedes the calendar year in which the Agency offers the building for sale to the general public (The term “CPI for a calendar year” has the meaning given to it by section 1(f)(4) for purposes of computing annual inflation adjustments to the rate brackets.); divided by

(B) The sum of the 12 monthly CPI values whose average is the CPI for the base calendar year (within the meaning of section 1(f)(4)), unless that sum has been increased under paragraph (c)(4)(iii)(D) of this section.

(v) ***Provision by the Commissioner of the qualified-contract cost-of-living adjustment.*** The Commissioner may publish in the Internal Revenue Bulletin (see § 601.601(d)(2) of this chapter) a process pursuant to which the Internal Revenue Service will compute the qualified-contract cost-of-living adjustment for a calendar year and make available the results of that computation.

(vi) ***Methodology.*** The calculations in paragraph (c)(4)(iv) of this section are to be made in the following manner:

(A) The CPI data to be used for purposes of this paragraph (c)(4) are the not seasonally adjusted values of the CPI for all urban consumers. (The U.S. Department of Labor's Bureau of Labor Statistics (BLS) sometimes refers to these values as “CPI-U.”) The BLS publishes the CPI data on-line (including a History Table that contains monthly CPI-U values for all years back to 1913). See *www.BLS.gov/data*.

(B) The quotient is to be carried out to 10 decimal places.

(C) The Agency may round adjusted investor equity to the nearest dollar.

(D) If the CPI for any calendar year (within the meaning of section 1(f)(4)) during the extended use period after the base calendar year exceeds by more than 5 percent the CPI for the preceding calendar year (within the meaning of section 1(f)(4)), then the sum described in paragraph (c)(4)(i)(B) is to be increased so that the excess is never taken into account under this paragraph (c)(4).

(vii) ***Example.*** The following example illustrates the calculations described in this paragraph (c)(4):

> *Example.* (i) *Facts.* Owner contributed $20,000,000 in equity to a building in 1997, which was the first year of the credit period for the building. In 2011, Owner requested Agency to find a buyer to purchase the building, and Agency offered the building for sale to the general public during 2011. The CPI for 1997 (within the meaning of section 1(f)(4)) is the average of the Consumer Price Index as of the close of the 12-month period ending on August 31, 1997. The sum of the CPI values for the twelve months from September 1996 through August 1997 is 1913.9. The CPI for 2010 (within the meaning of section 1(f)(4)) is the average of the Consumer Price Index as of the close of the 12-month period ending August 31, 2010. The sum of the CPI values for the twelve months from September 2009 through August 2010 is 2605.959. At no time during this period (after the base calendar year) did the CPI for any calendar year exceed the CPI for the preceding calendar year by more than 5 percent.
> (ii) *Determination of adjusted investor equity.* The qualified-contract cost-of-living adjustment is 1.3615962171 (the quotient of 2605.959, divided by 1913.9). Owner's adjusted investor equity, therefore, is $27,231,924, which is $20,000,000, multiplied by 1.3615962171, rounded to the nearest dollar.

(5) ***Other capital contributions.*** For purposes of paragraph (c)(2)(iii) of this section, other capital contributions to a low-income building are qualifying building costs described in paragraph (b)(4)(ii) of this section paid or incurred by the owner of the low-income building other than amounts included in the calculation of outstanding indebtedness or adjusted investor equity as defined in this section. For example, other capital contributions may include amounts incurred to replace a furnace after the first year of a low-income housing credit building's credit period under section 42(f), provided any loan used to finance the replacement of the furnace is not secured by the furnace or the building. Other capital contributions do not include expenditures for land costs, operating deficit payments, credit adjuster payments, and payments for legal, syndication, and accounting costs.

(6) ***Cash distributions*** —

(i) ***In general.*** For purposes of paragraph (c)(2)(iv) of this section, the term *cash distributions from (or available for distribution from)* the building include—

(A) All distributions from the building to the owners or to persons whose relationship to the owner is described in section 267(b) or section 707(b)(1)), including distributions under section 301 (relating to distributions by a corporation), section 731 (relating to distributions by a partnership), or section 1368 (relating to distributions by an S corporation); and

(B) All cash and cash equivalents available for distribution at, or before, the time of sale, including, for example, reserve funds whether operating or replacement reserves, unless the reserve funds are legally required by mortgage restrictions, regulatory agreements, or third party contractual agreements to remain with the building following the sale.

(ii) ***Excess proceeds.*** For purposes of paragraph (c)(6)(i) of this section, proceeds from the refinancing of indebtedness or additional mortgages that are in excess of qualifying building costs are not considered cash available for distribution.

(iii) ***Anti-abuse rule.*** The Commissioner will interpret and apply the rules in this paragraph (c)(6) as necessary and appropriate to prevent manipulation of the qualified contract amount. For example, cash distributions include payments to owners or persons whose relation to owners is described in section 267(b) or section 707(b) for any operating expenses in excess of amounts reasonable under the circumstances.

(d) ***Administrative discretion and responsibilities of the Agency*** —

(1) ***In general.*** An Agency may exercise administrative discretion in evaluating and acting upon an owner's request to find a buyer to acquire the building. An Agency may establish reasonable requirements for written requests and may determine whether failure to follow one or more applicable requirements automatically prevents a purported written request from beginning the one-year period described in section 42(h)(6)(I). If the one-year-period has already begun, the Agency may determine whether failure to follow one or more requirements suspends the running of that period. Examples of Agency administrative discretion include, but are not limited to, the following:

(i) Concluding that the owner's request lacks essential information and denying the request until such information is provided.

(ii) Refusing to consider an owner's representations without substantiating documentation verified with the Agency's records.

(iii) Determining how many, if any, subsequent requests to find a buyer may be submitted if the owner has previously submitted a request for a qualified contract and then rejected or failed to act upon a qualified contract presented by the Agency.

(iv) Assessing and charging the owner certain administrative fees for the performance of services in obtaining a qualified contract (for example, real estate appraiser costs).

(v) Requiring all appraisers involved in the qualified contract process to be State certified general appraisers that are acceptable to the Agency.

(vi) Specifying other conditions applicable to the qualified contract consistent with section 42 and this section.

(2) ***Actual offer.*** Upon receipt of a written request from the owner to find a person to acquire the building, the Agency must offer the building for sale to the general public, based on reasonable efforts, at the determined qualified contract amount in order for the qualified contract to satisfy the requirements of this section unless the Agency has already identified a willing buyer who submitted a qualified contract to purchase the project.

(3) ***Debarment of certain appraisers.*** Agencies shall not utilize any individual or organization as an appraiser if that individual or organization is currently on any list for active suspension or revocation for performing appraisals in any State or is listed on the Excluded Parties Lists System (EPLS) maintained by the General Services Administration for the United States Government found at *www.epls.gov*.

(e) ***Effective date/applicability date.*** These regulations are applicable to owner requests to housing credit agencies on or after May 3, 2012 to obtain a qualified contract for the acquisition of a low-income housing credit building.

[T.D. 9587, 77 FR 26178, May 3, 2012]

§ 1.42-19 Average income test.

(a) ***Average income set-aside.*** A project for residential rental property satisfies the average income test in section 42(g)(1)(C) for a taxable year if the project contains a qualified group of units (within the meaning of paragraph (b)(2) of this section) that constitutes 40 percent or more of the residential units in the project. (In the case of a project described in section 142(d)(6), "40 percent" in the preceding sentence is replaced with "25 percent.")

(b) ***Definition of low-income unit and qualified group of units*** —

(1) ***Definition of low-income unit.*** For purposes of this section, a residential unit is a low-income unit if and only if -

(i) Such unit is rent-restricted (as defined in section 42(g)(2));

(ii) The individuals occupying such unit satisfy the imputed income limitation of that unit designated by the taxpayer in accordance with paragraphs (c)(3) and (d) of this section and with § 1.42-19T(c) and (d), or the unit meets the requirements under section 42(g)(2)(D);

(iii) No provision in section 42 (including section 42(i)(3)(B)-(E)) or in the regulations under section 42 denies low-income status to that unit; and

(iv) The unit is part of a qualified group of units under paragraph (b)(2) of this section.

(2) ***Definition of qualified group of units.*** A group of residential units is a qualified group of units for a taxable year if and only if—

(i) Each unit in the group satisfies the requirements of paragraphs (b)(1)(i) through (iii) of this section; and

(ii) The average of the imputed income limitations of all of the units in the group does not exceed 60 percent of area median gross income (AMGI).

(3) ***Identification of qualified groups of units*** —

(i) ***Average income set-aside test.*** For each taxable year in the extended use period, the taxpayer must identify a qualified group of units that constitute 40 percent or more of the residential units in the project. The requirements in paragraph (b)(3)(iii) of this section apply to these identifications.

(ii) ***Applicable fraction determinations.*** For each taxable year in the extended use period, the taxpayer must identify a qualified group of units to be used in determining the applicable fractions for the buildings in the project.

(A) ***Identification of the units in the qualified group of units used for determining applicable fractions.*** The residential units that are identified for purposes of this paragraph (b)(3)(ii) include the units that, under paragraph (b)(3)(i) of this section, are included in the qualified group of units identified for purposes of the set-aside qualification of the project. The taxpayer may identify additional units for inclusion in the group of units used in determining the applicable fractions for buildings in the project provided that the resulting group is a qualified group of units within the meaning of paragraph (b)(2) of this section.

(B) ***Computing applicable fractions of buildings.*** For a taxable year, the applicable fraction of a building in a project is computed using the units that are in the particular building and that are also in the qualified group of units for the project identified for purposes of this paragraph (b)(3)(ii). The units included in the applicable fraction of a building do not have to be a qualified group of units on their own. *See Example 4* of paragraph (e) of this section.

(iii) ***Identification of units.*** The recordkeeping and reporting requirements in § 1.42-19T(c)(1) apply both to the identification of units that is required by paragraph (b)(3)(i) of this section and the identification of units that is described in paragraph (b)(3)(ii) of this section.

(c) ***Procedures*** —

(1) ***Identification of low-income units for use in the average income set-aside test or the applicable fraction determination*** —

(i) ***In general.*** For a taxable year, a taxpayer must follow the procedures described in paragraph (c)(1)(ii) of this section to identify—

(A) A qualified group of units that satisfy the average income set-aside test; and

(B) A qualified group of units to be used to determine the applicable fraction.

(ii) ***Recording and communicating.*** A taxpayer must—

(A) Record the identification in its books and records, where the identification must be retained for a period not shorter than the record-retention requirement under § 1.42-5(b)(2); and

(B) Communicate the annual identifications to the applicable housing credit agency (Agency) as provided in paragraph (c)(2) of this section.

(2) ***Notifications to the Agency with jurisdiction over a project*** —

(i) ***Agency flexibility.*** An Agency may establish the time and manner in which information is annually provided to it.

(ii) ***Examples.*** The following fact patterns illustrate some of the approaches that paragraph (c)(2)(i) of this section allows an Agency to use to establish the time and manner in which a taxpayer annually provides information to the Agency.

(A) ***Example 1.*** Agency A requires taxpayers annually to submit a single list reporting all low-income units in a qualified group to be used by the taxpayer in determining the applicable fraction(s) for all building(s) in the project. The identification of each unit on the list must include the unit's imputed income designation. Consequently, Agency A can identify within the list a group or groups of units that constitute a qualified group that satisfies the average income set-aside test and taxpayers are considered to have identified a qualified group of units that satisfy the average income test.

(B) ***Example 2.*** Agency B has the same requirements for taxpayers as Agency A in paragraph (c)(2)(ii)(A) of this section (*Example 1*) for the initial annual report, but thereafter Agency B permits taxpayers, in lieu of a full list, to submit a statement describing the differences from the previous year's information (or, when applicable, by reporting that there are no such differences).

(C) ***Example 3.*** Agency C requires taxpayers to annually provide two separate lists of low-income units: one list identifying the qualified group of units for use in the average income set-aside; and a second list identifying the qualified group of units for use in the applicable fraction determination. The identification of each unit on the lists must include the unit's imputed income designation.

(3) ***Designation of imputed income limitations*** —

(i) ***Timing of designation.***

(A) Before a unit is first occupied as a low-income unit, or, except as provided in paragraph (c)(3)(i)(B) of this section, is first occupied under a changed income limit, the taxpayer must designate the unit's imputed income limitation or changed imputed income limitation.

(B) For an occupied unit that is subject to a change in imputed income limitation pursuant to paragraph (d) of this section, the taxpayer must designate the unit's changed imputed income limitation not later than the end of the taxable year in which the change occurs.

(ii) ***10-percent increments.*** Under section 42(g)(1)(C)(ii)(III), a designation is valid only if it is one of the following: 20 percent, 30 percent, 40 percent, 50 percent, 60 percent, 70 percent, or 80 percent of AMGI.

(iii) ***Continuity.*** Except as provided in paragraph (d) of this section, the imputed income limitation of a residential unit does not change.

(iv) ***Recording, retention, and annual communications related to designations.*** A taxpayer designates a unit's imputed income limitation by recording the limitation in its books and records, where it must be retained for a period not shorter than the record retention requirement under § 1.42-5(b)(2). The preceding sentence applies both to units whose first occupancy is as a low-income unit and to previously market-rate units that are converted to low-income status. The designation must also be communicated annually to the applicable Agency as provided in paragraph (c)(2) of this section.

(4) ***Correcting failures to comply with procedural requirements*** —

(i) ***In general.*** If there is a failure to comply with the requirements of paragraph (c)(1) or (2) or (c)(3)(iv) of this section and any of the procedures described in paragraph (c)(4)(ii), (iii), or (iv) of this section are followed, then the failure is treated as corrected and the relevant requirements are treated as having been satisfied. In such case, the tax consequences under this section correspond to that deemed satisfaction.

(ii) ***Discovery by taxpayer.*** If a taxpayer discovers a failure to comply, the taxpayer must submit a correction to the Agency. Such a correction may be in the form of a revised qualified group of units. This submission must occur not more than 180 days after discovery of the failure.

(iii) ***Discovery by Agency.*** If an Agency discovers a failure to comply, the Agency must provide prompt notification to the taxpayer in a manner similar to the one described in § 1.42-5(e)(2), and the taxpayer must submit a correction to the Agency within a time period no longer than the period described in § 1.42-5(e)(4).

(iv) ***Waiver by Agency.*** In all cases, if a correction is required due to a failure to comply with the requirements of paragraph (c)(1) or (2) or (c)(3)(iv) of this section, then the Agency has the discretion to waive that failure in writing. For the waiver to be effective, this writing must be provided to the taxpayer within the time limit described in paragraph (c)(4)(ii) or (iii) of this section, as applicable.

(d) ***Changing a unit's designated imputed income limitation*** —

(1) ***Permitted changes.*** Notwithstanding paragraph (c)(3)(iii) of this section, the taxpayer may change the imputed income limitation of a unit in the following circumstances subject to the timing of designation requirement in paragraph (c)(3)(i)(B) of this section.

(i) ***Federally permitted changes.*** Permission for the change is contained in IRS forms, instructions, or guidance published in the Internal Revenue Bulletin pursuant to § 601.601(d)(2)(ii)(*b*) of this chapter.

(ii) ***Housing credit agency (Agency)-permitted changes.*** The Agency with jurisdiction of the project has issued public written guidance that provides conditions for a permitted change and that applies to all average income test projects under the jurisdiction of the Agency.

(iii) ***Certain laws.*** The change in designation is required or appropriate to enhance protections contained in the following, as amended—

(A) The Americans with Disabilities Act of 1990 (ADA), Pub. L. 101-336, 104 Stat. 328, 42 U.S.C. 12101, *et seq.;*

(B) The Fair Housing Amendments Act of 1988, Pub. L. 100-430, 102 Stat.1619, 42 U.S.C. 3601, et. seq.;

(C) The Violence Against Women Act of 1994, Pub. L. 103-322, 108 Stat. 1902, 34 U.S.C. 12291, et. seq.;

(D) The Rehabilitation Act of 1973, Pub. L. 93-112, 87 Stat. 394, 29 U.S.C. 701, *et seq.;* or

(E) Any other State, Federal, or local law or program that protects tenants and that is identified pursuant to paragraph (d)(1)(i) or (ii) of this section.

(iv) ***Tenant movement.*** If a current income-qualified tenant moves to a different unit in the project—

(A) The unit to which the tenant moves has its imputed income designation, if any, changed to the limitation of the unit from which the tenant is moving; and

(B) The vacated unit takes on the prior limitation, if any, of the tenant's new unit.

(v) ***Restoring compliance with average income requirements.*** If one or more units lose low-income status or if there is a change in the imputed income limitation of some unit and if either event would cause a previously qualifying group of units to cease to be described in paragraph (b)(2)(ii) of this section, then the taxpayer may designate an imputed income limitation for a market-rate unit or may reduce the existing imputed income limitations of one or more other units in the project in order to restore compliance with the average income requirement. The rule in this paragraph (d)(1)(v) may be applied to market-rate, vacant, or low-income units, but, in the case of occupied units, the current tenants must qualify under the new, lower imputed income limitation.

(2) ***Process for changing a unit's designated imputed income limitation.*** The taxpayer effects a change in a unit's imputed income limitation by recording the new designation in its books and records, where it must be retained for a period not shorter than the record retention requirement under § 1.42-5(b)(2). The new designation must also be communicated to the applicable Agency as provided in paragraph (c)(2) of this section and must become part of the annual report to the Agency of income designations. The prior designation must be retained in the books and records for the period specified in paragraph (c)(3)(iv) of this section. A designation under this paragraph (d)(2) satisfies paragraph (c)(3) of this section.

(e) ***Examples.*** The operation of this section is illustrated by the following examples.

(1) ***Example 1*** —

(i) ***Facts.***

(A) A single-building housing project received an allocation of housing credit dollar amount. The taxpayer who owns the project elects the average income test, intending for the 10-unit building to have 100 percent low-income occupancy. The taxpayer properly and timely designates the imputed income limitations for the 10 units as follows: 5 units at 80 percent of AMGI; and 5 units at 40 percent of AMGI. Also, for the first credit year, the taxpayer follows proper procedure in identifying 4 units as the qualified group of units that are to be used for qualifying under the average income set-aside (Units ##1, 2, 6, and 7). Additionally, for the first credit year, the taxpayer follows proper procedure in identifying all 10 units as the qualified group of units that are to be used for the applicable fraction determination. All of the units in the project are described in paragraphs (b)(1)(i) through (iii) of this section.

TABLE 1 TO PARAGRAPH (e)(1)(i)(A)

Unit No.	Imputed income limitation of the unit
1	80 percent of AMGI.

Unit No.	Imputed income limitation of the unit
2	80 percent of AMGI.
3	80 percent of AMGI.
4	80 percent of AMGI.
5	80 percent of AMGI.
6	40 percent of AMGI.
7	40 percent of AMGI.
8	40 percent of AMGI.
9	40 percent of AMGI.
10	40 percent of AMGI.

(B) In the first taxable year of the credit period (Year 1), the project is fully leased and occupied.

(ii) ***Analysis.*** The identified groups are qualified groups under paragraph (b)(2) of this section. All units in both of the groups are described in paragraphs (b)(1)(i) through (iii) of this section, and the averages of the imputed income limitations of both the 4-unit group (Units ##1, 2, 6, and 7) and the 10-unit group do not exceed 60 percent of AMGI.

(A) ***Average income set-aside.*** The project qualifies under the average income set-aside because the identified group of 4 units (Units ##1, 2, 6, and 7) is a qualified group of units that comprise at least 40% of the residential units in the project.

(B) ***Qualified basis.*** All 10 units in the identified qualified group of units are used in the applicable fraction determination when calculating qualified basis for purposes of determining the annual credit amount under section 42(a).

(2) ***Example 2*** —

(i) ***Facts.*** Assume the same facts as *Example 1* of paragraph (e)(1) of this section. In Year 2, Unit #6 (which has a designated imputed income limitation of 40 percent of AMGI) becomes uninhabitable. Repair work on Unit #6 is completed in Year 3. For Year 2, Taxpayer identifies the following as a qualified group of units that are to be used for both the set-aside requirement and the applicable fraction determination: Units ##1-4 and 7-10. For Year 3, Taxpayer identifies all 10 units as the qualified group of units that are to be used for the set-aside requirement and the applicable fraction determination.

(ii) ***Analysis.*** For Year 2, the identified group is a qualified group under paragraph (b)(2) of this section. All 8 units in the group are described in paragraphs (b)(1)(i) through (iii) of this section, and the average of the imputed income limitations of the 8 units in the group of units does not exceed 60 percent of AMGI.

(A) ***Average income set-aside.*** For Year 2, the project qualifies for the average income set-aside because the project contains a qualified group of units that comprises at least 40% of the residential units in the project.

(B) ***Qualified basis.*** To determine qualified basis in Year 2, the 8 units in the identified qualified group of units are used in the applicable fraction determination when calculating qualified basis for purposes of determining the annual credit amount under section 42(a). Unit #6 could not have been identified in the qualified group of units for use in the applicable fraction determination because its lack of habitability prevents it from being a low-income unit. Further, Taxpayer could not have identified all 9 of the habitable units to be used in the qualified group of units for the applicable fraction determination because the average of imputed income limitations of those 9 exceeds 60 percent of AMGI. Taxpayer had a choice of which of Units ##1-5 it was going to not identify for use in the applicable fraction determination. Omitting any one of them reduces the average limitation of the remaining group of 8 units to an amount that does not exceed 60 percent of AMGI. Given taxpayer's decision to leave out Unit #5, Units ##1, 2, 3, 4, 7, 8, 9, and 10 are taken into account in the applicable fraction.

(C) ***Recapture.*** At the close of Year 2, Unit #6's unsuitability for occupancy precludes it from being described in paragraph (b)(1)(iii) of this section. Unit #6's resulting failure to be a low-income unit prevents it from being in a qualified group for purposes of computing the applicable fraction. The decline in the applicable fraction yields a decline in qualified basis, which results in credit recapture under section 42(j) for Year 2. Additionally, Unit #5 is not a low-income unit because the taxpayer did not include it in the qualified group of units identified for determining the building's applicable fraction. The exclusion of Unit #5 from the qualified group of units further reduces the applicable fraction for Year 2 and so reduces qualified basis for that year as well. Thus, this exclusion increases the credit recapture amount under section 42(j).

(D) ***Restoration of habitability and of qualified basis.*** As described in the facts in paragraph (e)(2)(i) of this section, in Year 3, after repair work is complete, the formerly uninhabitable Unit #6 is again occupied by a qualified tenant at the same imputed income limitation, and the Taxpayer identifies all 10 units as the qualified group of units that are to be used for the set-aside requirement and the applicable fraction determination. The identified group is a qualified group under paragraph (b)(2) of this section. All 10 units in the group are described in paragraphs (b)(1)(i) through (iii) of this section, and the average of the imputed income limitations of the 10 units in the group of units does not exceed 60 percent of AMGI. For Year 3, all 10 units are included in the qualified group of units for purposes of the average income set-aside test and are a qualified group of units for the applicable fraction determination.

(3) ***Example 3*** —

(i) ***Facts.*** Assume the same facts as *Example 2* of paragraph (e)(2) of this section, except that the income for the tenant residing in Unit #5 has declined so that tenant's income does not exceed 60 percent of AMGI. For Year 2, taxpayer timely redesignates Unit #5 pursuant to the rule in paragraph (d)(1)(v) of this section so that the imputed income limitation is 60 percent of AMGI instead of 80 percent of AMGI. Taxpayer also makes revisions so that Unit #5 is rent-restricted under the redesignated imputed income limitation. Taxpayer identifies 9 units (Units ##1-5 and 7-10) as the qualified group of units that are to be used for the set-aside requirement and the applicable fraction determination.

Table 2 to Paragraph (e)(3)(i)

Unit Number	Imputed Income Limitation of the Unit
1	80 percent of AMGI
2	80 percent of AMGI
3	80 percent of AMGI
4	80 percent of AMGI
5	60 percent of AMGI
6	40 percent of AMGI
7	40 percent of AMGI
8	40 percent of AMGI
9	40 percent of AMGI
10	40 percent of AMGI

(ii) ***Analysis.*** For Year 2, the identified group is a qualified group under paragraph (b)(2) of this section. All 9 units in the group are described in paragraphs (b)(1)(i) through (iii) of this section, and the average of the imputed income limitations of the 9 units in the group of units does not exceed 60 percent of AMGI.

(A) ***Average income set-aside.*** For Year 2, project contains a qualified group of units that comprises at least 40% of the residential units in the project.

(B) ***Qualified basis.*** To determine qualified basis, all 9 units in the identified qualified group of units are used in the applicable fraction determination when calculating qualified basis for purposes of determining the annual credit amount under section 42(a). Unit #6 could not have been identified in the qualified group of units for use in the applicable fraction determination because its lack of habitability prevents it from being a low-income unit. Thus, Units ##1, 2, 3, 4, 5, 7, 8, 9, and 10 are taken into account in the applicable fraction determination.

(C) ***Recapture.*** At the close of Year 2, the amount of the qualified basis is less than the amount of the qualified basis at the close of Year 1, because Unit #6's unsuitability for occupancy prohibits it from being a low-income unit. Unit #6's failure to be a low-income unit results in a credit recapture amount under section 42(j) for Year 2 related to Unit #6. Because Units ##1-5 and 7-10 are all included in the qualified group of units for use in the applicable fraction determination, Units ##1-5 and 7-10 are included in qualified basis for Year 2 when determining the recapture amount.

(4) ***Example 4*** —

(i) ***Facts.***

(A) A multiple-building housing project consisting of two buildings received an allocation of housing credit dollar amount, and the taxpayer who owns the project elects the average income test. The taxpayer intends for the buildings (each containing 5 units) to have 100 percent low-income occupancy. The taxpayer properly and timely designates the imputed income limitations for the 10 units in Buildings 1 and 2 as follows: Building A contains 2 units at 80 percent of AMGI and 3 units at 40 percent of AMGI; and Building B contains 2 units at 40 percent of AMGI and 3 units at 80 percent of AMGI.

TABLE 3 TO PARAGRAPH (e)(4)(i)(A)

Building A, Unit No.	Imputed income limitation of the unit
A1	80 percent of AMGI.
A2	80 percent of AMGI.
A3	40 percent of AMGI.
A4	40 percent of AMGI.
A5	40 percent of AMGI.
Building B, Unit No.	
B1	40 percent of AMGI.
B2	40 percent of AMGI.
B3	80 percent of AMGI.
B4	80 percent of AMGI.

Building A, Unit No.	Imputed income limitation of the unit
B5	80 percent of AMGI.

(B) In the first taxable year of the credit period (Year 1), the project is fully leased and occupied. Also, for the first credit year, the taxpayer follows proper procedure in identifying all 10 units as a qualified group of units for the minimum set-aside and the applicable fraction determination.

(ii) ***Analysis.*** For Year 1, the identified group is a qualified group under paragraph (b)(2) of this section. All 10 units in the group are described in paragraphs (b)(1)(i) through (iii) of this section, and the average of the imputed income limitations of the 10 units in the group of units does not exceed 60 percent of AMGI.

(A) ***Average income test.*** The multiple-building project meets the average income test as the project contains a qualified group of units that comprises at least 40% of the residential units in the project. The fact that the average of the income limitations of the units in Building B exceeds 60 percent of AMGI does not impact this result.

(B) ***Qualified basis.*** To determine qualified basis, all 10 units in the identified qualified group of units across Building A and Building B are used in the applicable fraction determination when calculating qualified basis of each building for purposes of determining the annual credit amount under section 42(a). The fact that the average of the units in Building B exceeds 60 percent of AMGI does not impact the applicable fraction of Building B because the average of the identified group of units across both buildings does not exceed 60 percent of AMGI.

(5) ***Example 5*** —

(i) ***Facts.*** A single-building housing project received an allocation of housing credit dollar amount, and the taxpayer who owns the project elects the average income test. During Year 2 of the credit period, the tenant residing in a unit with a designated imputed income limitation of 40 percent of AMGI moves to a market-rate unit within the same project. The tenant's income continues to be at or below 40 percent of AMGI.

(ii) ***Analysis.*** Under the rule in paragraph (d)(1)(iv) of this section, when the current income-qualified tenant moves to a different unit in the project, the unit to which the tenant moves is eligible for the taxpayer to designate as a unit with a designated imputed income limitation of 40 percent of AMGI. If the taxpayer makes those designations, the unit vacated by the tenant takes on the prior limitation, if any, of the tenant's new unit. In this situation, the vacated unit formerly occupied by the tenant is now a market-rate unit.

(6) ***Example 6*** —

(i) ***Facts.*** A single-building housing project received an allocation of housing credit dollar amount, and the taxpayer who owns the project elects the average income test. During Year 2 of the credit period, the disability status under the ADA of a tenant changes, and therefore under the provisions of the ADA, the tenant now needs to reside in a different unit with different

accommodations. The tenant currently resides in a unit with a designated imputed income limitation of 40 percent of AMGI. A unit that would meet the tenant's needs is available on the first-floor of the building, but it was previously a low-income unit with a designated imputed income limitation of 70 percent of AMGI and thus a higher maximum gross rent than the tenant's current unit. The tenant moves to the first-floor unit.

(ii) ***Analysis.*** The tenant's move was required under the ADA. Accordingly, the taxpayer is permitted to change the designation of the imputed income limitation of the first-floor unit so that the unit's designation is 40 percent of AMGI. Under paragraph (d)(1)(iv) of this section, the vacated unit takes on the prior limitation of 70 percent of AMGI of the tenant's new unit.

(f) ***Applicability dates*** —

(1) ***In general.*** Except as provided in paragraphs (f)(3) and (4) of this section, this section applies to taxable years beginning after December 31, 2022.

(2) ***Designations of occupied units.***

(i) If a residential unit is occupied at the end of the most recent taxable year ending before the first taxable year to which this section applies and if the unit is to be taken into account as a low-income unit under this section as of the beginning of the first taxable year to which this section applies, then not later than the first day of such first taxable year, the taxpayer must designate an imputed income limitation for the unit. The first taxable year to which this section applies means the first taxable year beginning after December 31, 2022, if paragraph (f)(1) of this section applies, or the taxable year described in paragraph (f)(3) of this section if the taxpayer chooses to apply paragraph (f)(3) of this section.

(ii) The designation required by paragraph (f)(2)(i) of this section must comply with paragraphs (c)(3)(ii) and (iv) of this section, without taking into account paragraph (c)(4) of this section. Paragraph (c)(2) of this section applies to these designations, except that the Agency may allow the notification to be made along with any other notifications for the first taxable year beginning after December 31, 2022.

(3) ***Applicability of this section to taxable years beginning before January 1, 2023.*** A taxpayer may choose to apply this section to a taxable year beginning after October 12, 2022, and before January 1, 2023, provided that the taxpayer chooses to apply§ 1.42-15 to the same taxable year.

(4) ***Taxable years beginning on or after September 30, 2025.*** Paragraphs (c)(1) and (2), (c)(3)(iv), (c)(4), (d)(2), and (f)(2)(ii) of this section apply to taxable years beginning on or after September 30, 2025. For taxable years beginning before September 30, 2025, see § 1.42-19T as contained in 26 CFR part 1, as revised April 1, 2025. For taxable years beginning before September 30, 2025, taxpayers, however, may choose to apply the rules of paragraphs (c)(1) and (2), (c)(3)(iv), (c)(4), (d)(2), and (f)(2)(ii) of this section, provided the taxpayers apply the rules in their entirety and in a consistent manner.

[T.D. 9967, 87 FR 61501, Oct. 12, 2022, as amended at 87 FR 68048, Nov. 14, 2022; T.D. 9967, 87 FR 73458, Nov. 30, 2022; T.D. 10036, 90 FR 46761, Sept. 30, 2025]

§ 1.42A-1 General tax credit for taxable years ending after December 31, 1975, and before January 1, 1979.

(a)

(1) ***Allowance of credit for taxable years ending after December 31, 1975, and beginning before January 1, 1977.*** Subject to the special rules of paragraphs (b)(1), (c) and (d) and the limitation of paragraph (e)(1) of this section, an individual is allowed as a credit against the tax imposed by chapter 1 for the taxable year in the case of taxable years ending after December 31, 1975, and beginning before January 1, 1977, an amount equal to the greater of—

(i) 2 percent of so much of the individual's taxable income as does not exceed $9,000, or

(ii) $35 multiplied by the total number of deductions for personal exemptions to which the individual is entitled for the taxable year under section 151 (b) and (e) and the regulations thereunder (relating to allowance of deductions for personal exemptions with respect to the individual, the individual's spouse, and dependents).

For purposes of applying subdivision (ii) of this paragraph (a)(1), the total number of deductions for personal exemptions shall not include any additional exemptions to which the individual or his spouse may be entitled based upon age of 65 or more or blindness under section 151 (c) or (d) and the regulations thereunder.y

(2) ***Allowance of credit for taxable years beginning after December 31, 1976, and ending before January 1, 1979.*** Subject to the special rules of paragraphs (b)(2), (c) and (d) and the limitation of paragraph (e)(2) of this section, an individual is allowed as a credit against the tax imposed by section 1, or against the tax imposed in lieu of the tax imposed by section 1, for the taxable year in the case of taxable years beginning after December 31, 1976, and ending before January 1, 1979, an amount equal to the greater of—

(i) 2 percent of so much of the individual's taxable income for the taxable year, reduced by the zero bracket amount determined under section 63 (d), as does not exceed $9,000, or

(ii) $35 multiplied by the total number of deductions for personal exemptions to which the individual is entitled for the taxable year under section 151 and the regulations thereunder (relating to allowance of deductions for personal exemptions).

(b) ***Married individuals filing separate returns*** —

(1) ***For taxable years ending after December 31, 1975, and beginning before January 1, 1977.*** In the case of taxable years ending after December 31, 1975, and beginning before January 1, 1977, a married individual who files a separate return for the taxable year is allowed as a credit for the taxable year an amount equal to either—

(i) 2 percent of so much of the individual's taxable income as does not exceed $4,500, or

(ii) $35 multiplied by the total number of deductions for personal exemptions to which the individual is entitled for the taxable year under section 151 (b) and (e) and the regulations thereunder, but only if both the individual and the individual's spouse elect to have the credit determined in the manner described in this subdivision (ii) for their corresponding taxable years. The elections shall be made by both married individuals separately calculating and claiming the credit in the manner and amount described in this subdivision (ii) on their separate returns for their corresponding taxable years. The rules of section 142 (a) and the regulations thereunder (relating to individuals not eligible for the standard deduction) in effect for taxable years beginning before January 1, 1977, apply to determine whether the taxable years of the individual and the individual's spouse correspond to each other. For purposes of applying this

subdivision (ii), the total number of deductions for personal exemptions shall not include any additional exemptions to which the individual may be entitled based upon age of 65 or more or blindness under section 151 (c) or (d) and the regulations thereunder.

(2) ***For taxable years beginning after December 31, 1976, and ending before January 1, 1979.*** In the case of taxable years beginning after December 31, 1976, and ending before January 1, 1979, a married individual who files a separate return for the taxable year shall determine the amount of the credit for the taxable year under section 42(a)(2) and § 1.42A-1(a)(2)(ii).

(3) ***Determination of marital status.*** For purposes of this paragraph, the determination of marital status shall be made as provided by section 143 and the regulations thereunder (relating to the determination of marital status).

(c) ***Return for short period on change of annual accounting period.*** In computing the credit provided by section 42 and this section for a period of less than 12 months (hereinafter referred to as a "short period"), where income is to be annualized under section 443(b)(1) in order to determine the tax—

(1) The credit allowed by paragraphs (a) (1)(i) and (2)(i) of this section shall be computed based upon the amount of the taxable income annualized under the rules of section 443(b)(1) and § 1.443-1(b)(1), or

(2)

(i) The credit allowed by paragraph (a)(1)(ii) of this section shall be computed based upon the total number of deductions for personal exemptions to which the individual is entitled for the short period under section 151 (b) and (e) and the regulations thereunder (relating to allowance of deductions for personal exemptions with respect to the individual, the individual's spouse, and dependents), and

(ii) The credit allowed by paragraph (a)(2)(ii) of this section shall be computed based upon the total number of deductions for personal exemptions to which the individual is entitled for the short period under section 151 and the regulations thereunder (relating to allowance of deductions for personal exemptions).

As so computed, the credit allowed by section 42 and this section shall be allowed against the tax computed on the basis of the annualized taxable income. See § 1.443-1(b)(1)(vi).

(d) ***Certain persons not eligible*** —

(1) ***Estates and trusts.*** The credit provided by section 42 and this section shall not be allowed in the case of any estate or trust. Thus, the credit shall not be allowed to an estate of an individual in bankruptcy or to an estate of a deceased individual. However, in the case of a deceased individual, the credit shall be allowed on the decedent's final return filed by his executor or other representative. Also, the credit provided by section 42 and this section shall be allowed in the case of a return filed by an estate of an infant, incompetent, or an individual under a disability.

(2) ***Nonresident alien individuals.*** The credit provided by section 42 and this section shall not be allowed in the case of any nonresident alien individual. As used in this subparagraph, the term "nonresident alien individual" has the meaning provided by § 1.871-2. See, however, section 6013(g) for election to treat nonresident alien individual as resident of the United States. The credit shall be allowed to an alien individual who is a resident of the United States for part of the taxable year. See § 1.871-2(b) for rules relating to the determination of residence of an alien individual. For purposes of paragraphs (a) (1)(i) and (2)(i) of this section, the credit allowed shall be computed by taking into account only

that portion of the individual's taxable income which is attributable to the period of his residence in the United States. For purposes of paragraph (a)(1)(ii) of this section, the credit allowed shall be computed by taking into account only the total number of deductions for personal exemptions to which the individual is entitled under section 151 (b) and (e) for the period of his residence in the United States. For purposes of paragraph (a)(2)(ii) of this section, the credit allowed shall be computed by taking into account only the total number of deductions for personal exemptions to which the individual is entitled under section 151 for the period of his residence in the United States. See § 1.871-13 for rules relating to changes of residence status during a taxable year.

(e) ***Limitation*** —

(1) ***For taxable years ending after December 31, 1975, and beginning before January 1, 1977.*** For taxable years ending after December 31, 1975, and beginning before January 1, 1977, the credit allowed by section 42 and this section shall not exceed the amount of tax imposed by chapter 1 for the taxable year. In the case of an alien individual who is a resident of the United States for a part of the taxable year, the credit allowed by section 42 and this section shall not exceed the amount of tax imposed by chapter 1 for that portion of the taxable year during which the alien individual was a resident of the United States. See § 1.871-13.

(2) ***For taxable years beginning after December 31, 1976, and ending before January 1, 1979.*** For taxable years beginning after December 31, 1976, and ending before January 1, 1979, the credit allowed by section 42 and this section shall not exceed the amount of tax imposed by section 1, or the amount of tax imposed in lieu of the tax imposed by section 1, for the taxable year. In the case of an alien individual who is a resident of the United States for a part of the taxable year, the credit allowed by section 42 and this section shall not exceed the amount of tax imposed by section 1, or the amount of tax imposed in lieu of the tax imposed by section 1, for that portion of the taxable year during which the alien individual was a resident of the United States. See § 1.871-13.

(f) ***Application with other credits.*** In determining the credits allowed under—

(1) Section 33 (relating to foreign tax credit),

(2) Section 37 (relating to credit for the elderly),

(3) Section 38 (relating to investment in certain depreciable property),

(4) Section 40 (relating to expenses of work incentive programs), and

(5) Section 41 (relating to contributions to candidates for public office),

the tax imposed for the taxable year shall first be reduced (before any other reduction) by the credit allowed by section 42 and this section for the taxable year.

(g) ***Income tax tables to reflect credit.*** The tables prescribed under section 3 shall reflect the credit allowed by section 42 and this section.

(h) ***Effective dates.*** The credit allowed by section 42 and this section applies only for taxable years ending after December 31, 1975, and before January 1, 1979.

[T.D. 7547, 43 FR 19653, May 8, 1978]

§ 1.43-0 Table of contents.

This section lists the captions contained in §§ 1.43-0 through 1.43-7.

§ 1.43-1 The enhanced oil recovery credit—general rules.

(a) Claiming the credit.

(1) In general.

(2) Examples.

(b) Amount of the credit.

(c) Phase-out of the credit as crude oil prices increase.

(1) In general.

(2) Inflation adjustment.

(3) Examples.

(d) Reduction of associated deductions.

(1) In general.

(2) Certain deductions by an integrated oil company.

(e) Basis adjustment.

(f) Passthrough entity basis adjustment.

(1) Partners' interests in a partnership.

(2) Shareholders' stock in an S corporation.

(g) Examples.

§ 1.43-2 Qualified enhanced oil recovery project.

(a) Qualified enhanced oil recovery project.

(b) More than insignificant increase.

(c) First injection of liquids, gases, or other matter.

(1) In general.

(2) Example.

(d) Significant expansion exception.

(1) In general.

(2) Substantially unaffected reservoir volume.

(3) Terminated projects.

(4) Change in tertiary recovery method.

(5) Examples.

(e) Qualified tertiary recovery methods.

(1) In general.

(2) Tertiary recovery methods that qualify.

(3) Recovery methods that do not qualify.

(4) Examples.

§ 1.43-3 Certification.

(a) Petroleum engineer's certification of a project.

(1) In general.

(2) Timing of certification.

(3) Content of certification.

(b) Operator's continued certification of a project.

(1) In general.

(2) Timing of certification.

(3) Content of certification.

(c) Notice of project termination.

(1) In general.

(2) Timing of notice.

(3) Content of notice.

(d) Failure to submit certification.

(e) Effective date.

§ 1.43-4 Qualified enhanced oil recovery costs.

(a) Qualifying costs.

(1) In general.

(2) Costs paid or incurred for an asset which is used to implement more than one qualified enhanced oil recovery project or for other activities.

(b) Costs defined.

(1) Qualified tertiary injectant expenses.

(2) Intangible drilling and development costs.

(3) Tangible property costs.

(4) Examples.

(c) Primary purpose.

(1) In general.

(2) Tertiary injectant costs.

(3) Intangible drilling and development costs.

(4) Tangible property costs.

(5) Offshore drilling platforms.

(6) Examples.

(d) Costs paid or incurred prior to first injection.

(1) In general.

(2) First injection after filing of return for taxable year costs are allowable.

(3) First injection more than 36 months after close of taxable year costs are paid or incurred.

(4) Injections in volumes less than the volumes specified in the project plan.

(5) Examples.

(e) Other rules.

(1) Anti-abuse rule.

(2) Costs paid or incurred to acquire a project.

(3) Examples.

§ 1.43-5 At-risk limitation.

§ 1.43-6 Election out of section 43.

(a) Election to have the credit not apply.

(1) In general.

(2) Time for making the election.

(3) Manner of making the election.

(b) Election by partnerships and S corporations.

§ 1.43-7 Effective date of regulations.

[T.D. 8448, 57 FR 54923, Nov. 23, 1992]

§ 1.43-1 The enhanced oil recovery credit—general rules.

(a) ***Claiming the credit*** —

(1) ***In general.*** The enhanced oil recovery credit (the "credit") is a component of the section 38 general business credit. A taxpayer that owns an operating mineral interest (as defined in § 1.614-2(b)) in a property may claim the credit for qualified enhanced oil recovery costs (as described in § 1.43-4) paid or incurred by the taxpayer in connection with a qualified enhanced oil recovery project (as described in § 1.43-2) undertaken with respect to the property. A taxpayer that does not own an operating mineral interest in a property may not claim the credit. To the extent a credit included in the current year business credit under section 38(b) is unused under section 38, the credit is carried back or forward under the section 39 business credit carryback and carryforward rules.

(2) ***Examples.*** The following examples illustrate the principles of this paragraph (a).

Example 1. Credit for operating mineral interest owner. In 1992, A, the owner of an operating mineral interest in a property, begins a qualified enhanced oil recovery project using cyclic steam. B, who owns no interest in the property, purchases and places in service a steam generator. B sells A steam, which A uses as a tertiary injectant described in section 193. Because A owns an operating mineral interest in the property with respect to which the project is undertaken, A may

claim a credit for the cost of the steam. Although B owns the steam generator used to produce steam for the project, B may not claim a credit for B's costs because B does not own an operating mineral interest in the property.

Example 2. Credit for operating mineral interest owner. C and D are partners in CD, a partnership that owns an operating mineral interest in a property. In 1992, CD begins a qualified enhanced oil recovery project using cyclic steam. D purchases a steam generator and sells steam to CD. Because CD owns an operating mineral interest in the property with respect to which the project is undertaken, CD may claim a credit for the cost of the steam. Although D owns the steam generator used to produce steam for the project, D may not claim a credit for the costs of the steam generator because D paid these costs in a capacity other than that of an operating mineral interest owner.

(b) ***Amount of the credit.*** A taxpayer's credit is an amount equal to 15 percent of the taxpayer's qualified enhanced oil recovery costs for the taxable year, reduced by the phase-out amount, if any, determined under paragraph (c) of this section.

(c) ***Phase-out of the credit as crude oil prices increase*** —

(1) ***In general.*** The amount of the credit (determined without regard to this paragraph (c)) for any taxable year is reduced by an amount which bears the same ratio to the amount of the credit (determined without regard to this paragraph (c)) as—

(i) The amount by which the reference price determined under section 29(d)(2)(C) for the calendar year immediately preceding the calendar year in which the taxable year begins exceeds $28 (as adjusted under paragraph (c)(2) of this section); bears to

(ii) $6.

(2) ***Inflation adjustment*** —

(i) ***In general.*** For any taxable year beginning in a calendar year after 1991, an amount equal to $28 multiplied by the inflation adjustment factor is substituted for the $28 amount under paragraph (c)(1)(i) of this section.

(ii) ***Inflation adjustment factor.*** For purposes of this paragraph (c), the inflation adjustment factor for any calendar year is a fraction, the numerator of which is the GNP implicit price deflator for the preceding calendar year and the denominator of which is the GNP implicit price deflator for 1990. The "GNP implicit price deflator" is the first revision of the implicit price deflator for the gross national product as computed and published by the Secretary of Commerce. As early as practicable, the inflation adjustment factor for each calendar year will be published by the Internal Revenue Service in the Internal Revenue Bulletin.

(3) ***Examples.*** The following examples illustrate the principles of this paragraph (c).

Example 1. Reference price exceeds $28. In 1992, E, the owner of an operating mineral interest in a property, incurs $100 of qualified enhanced oil recovery costs. The reference price for 1991 determined under section 29(d)(2)(C) is $30 and the inflation adjustment factor for 1992 is 1. E's credit for 1992 determined without regard to the phase-out for crude oil price increases is $15 ($100 × 15%). In determining E's credit, the credit is reduced by $5 ($15 × ($30 − ($28 × 1))/6). Accordingly, E's credit for 1992 is $10 ($15 − $5).

Example 2. Inflation adjustment. In 1993, F, the owner of an operating mineral interest in a property, incurs $100 of qualified enhanced oil recovery costs. The 1992 reference price is $34, and the 1993 inflation adjustment factor is 1.10. F's credit for 1993 determined without regard to the phase-out for crude oil price increases is $15 ($100 × 15%). In determining F's credit, $30.80 (1.10 × $28) is substituted for $28, and the credit is reduced by $8 ($15 × ($34 − $30.80)/6). Accordingly, F's credit for 1993 is $7 ($15 − $8).

(d) ***Reduction of associated deductions*** —

(1) ***In general.*** Any deduction allowable under chapter 1 for an expenditure taken into account in computing the amount of the credit determined under paragraph (b) of this section is reduced by the amount of the credit attributable to the expenditure.

(2) ***Certain deductions by an integrated oil company.*** For purposes of determining the intangible drilling and development costs that an integrated oil company must capitalize under section 291(b), the amount allowable as a deduction under section 263(c) is the deduction allowable after paragraph (d)(1) of this section is applied. See § 1.43-4(b)(2) (extent to which integrated oil company intangible drilling and development costs are qualified enhanced oil recovery costs).

(e) ***Basis adjustment.*** For purposes of subtitle A, the increase in the basis of property which would (but for this paragraph (e)) result from an expenditure with respect to the property is reduced by the amount of the credit determined under paragraph (b) of this section attributable to the expenditure.

(f) ***Passthrough entity basis adjustment*** —

(1) ***Partners' interests in a partnership.*** To the extent a partnership expenditure is not deductible under paragraph (d)(1) of this section or does not increase the basis of property under paragraph (e) of this section, the expenditure is treated as an expenditure described in section 705(a)(2)(B) (concerning decreases to basis of partnership interests). Thus, the adjusted bases of the partners' interests in the partnership are decreased (but not below zero).

(2) ***Shareholders' stock in an S corporation.*** To the extent an S corporation expenditure is not deductible under paragraph (d)(1) of this section or does not increase the basis of property under paragraph (e) of this section, the expenditure is treated as an expenditure described in section 1367(a)(2)(D) (concerning decreases to basis of S corporation stock). Thus, the bases of the shareholders' S corporation stock are decreased (but not below zero).

(g) ***Examples.*** The following examples illustrate the principles of paragraphs (d) through (f) of this section.

Example 1. Deductions reduced for credit amount. In 1992, G, the owner of an operating mineral interest in a property, incurs $100 of intangible drilling and development costs in connection with a qualified enhanced oil recovery project undertaken with respect to the property. G elects under section 263(c) to deduct these intangible drilling and development costs. The amount of the credit determined under paragraph (b) of this section attributable to the $100 of intangible drilling and development costs is $15 ($100 × 15%). Therefore, G's otherwise allowable deduction of $100 for the intangible drilling and development costs is reduced by $15. Accordingly, in 1992, G may deduct under section 263(c) only $85 ($100 − $15) for these costs.

Example 2. Integrated oil company deduction reduced. The facts are the same as in *Example 1*, except that G is an integrated oil company. As in *Example 1*, the amount of the credit determined under paragraph (b) of this section attributable to the $100 of intangible drilling and development costs is

$15, and G's allowable deduction under section 263(c) is $85. Because G is an integrated oil company, G must capitalize 25.50 ($85 × 30%) under section 291(b). Therefore, in 1992, G may deduct under section 263(c) only $59.50 ($85 − $25.50) for these intangible drilling and development costs.

Example 3. Basis of property reduced. In 1992, H, the owner of an operating mineral interest in a property, pays $100 to purchase tangible property that is an integral part of a qualified enhanced oil recovery project undertaken with respect to the property. The amount of the credit determined under paragraph (b) of this section attributable to the $100 is $15 ($100 × 15%). Therefore, for purposes of subtitle A, H's basis in the tangible property is $85 ($100 − $15).

Example 4. Basis of interest in passthrough entity reduced. In 1992, I is a $50% partner in IJ, a partnership that owns an operating mineral interest in a property. IJ pays $200 to purchase tangible property that is an integral part of a qualified enhanced oil recovery project undertaken with respect to the property. The amount of the credit determined under paragraph (b) of this section attributable to the $200 is $30 ($200 × 15%). Therefore, for purposes of subtitle A, IJ's basis in the tangible property is $170 ($200 − $30). Under paragraph (f) of this section, the amount of the purchase price that does not increase the basis of the property ($30) is treated as an expenditure described in section 705(a)(2)(B). Therefore, I's basis in the partnership interest is reduced by $15 (I's allocable share of the section 705(a)(2)(B) expenditure ($30 × 50%)).

[T.D. 8448, 57 FR 54923, Nov. 23, 1992; 58 FR 7987, Feb. 11, 1993]

§ 1.43-2 Qualified enhanced oil recovery project.

(a) ***Qualified enhanced oil recovery project.*** A "qualified enhanced oil recovery project" is any project that meets all of the following requirements—

(1) The project involves the application (in accordance with sound engineering principles) of one or more qualified tertiary recovery methods (as described in paragraph (e) of this section) that is reasonably expected to result in more than an insignificant increase in the amount of crude oil that ultimately will be recovered;

(2) The project is located within the United States (within the meaning of section 638(1));

(3) The first injection of liquids, gases, or other matter for the project (as described in paragraph (c) of this section) occurs after December 31, 1990; and

(4) The project is certified under § 1.43-3.

(b) ***More than insignificant increase.*** For purposes of paragraph (a)(1) of this section, all the facts and circumstances determine whether the application of a tertiary recovery method can reasonably be expected to result in more than an insignificant increase in the amount of crude oil that ultimately will be recovered. Certain information submitted as part of a project certification is relevant to this determination. See § 1.43-3(a)(3)(i)(D). In no event is the application of a recovery method that merely accelerates the recovery of crude oil considered an application of one or more qualified tertiary recovery methods that can reasonably be expected to result in more than an insignificant increase in the amount of crude oil that ultimately will be recovered.

(c) ***First injection of liquids, gases, or other matter*** —

(1) ***In general.*** The "first injection of liquids, gases, or other matter" generally occurs on the date a tertiary injectant is first injected into the reservoir. The "first injection of liquids, gases, or other matter" does not include—

(i) The injection into the reservoir of any liquids, gases, or other matter for the purpose of pretreating or preflushing the reservoir to enhance the efficiency of the tertiary recovery method; or

(ii) Test or experimental injections.

(2) ***Example.*** The following example illustrates the principles of this paragraph (c).

Example. Injections to pretreat the reservoir. In 1989, A, the owner of an operating mineral interest in a property, began injecting water into the reservoir for the purpose of elevating reservoir pressure to obtain miscibility pressure to prepare for the injection of miscible gas in connection with an enhanced oil recovery project. In 1992, A obtains miscibility pressure in the reservoir and begins injecting miscible gas into the reservoir. The injection of miscible gas, rather than the injection of water, is the first injection of liquids, gases, or other matter into the reservoir for purposes of determining whether the first injection of liquids, gases, or other matter occurs after December 31, 1990.

(d) ***Significant expansion exception*** —

(1) ***In general.*** If a project for which the first injection of liquids, gases, or other matter (within the meaning of paragraph (c)(1) of this section) occurred before January 1, 1991, is significantly expanded after December 31, 1990, the expansion is treated as a separate project for which the first injection of liquids, gases, or other matter occurs after December 31, 1990.

(2) ***Substantially unaffected reservoir volume.*** A project is considered significantly expanded if the injection of liquids, gases, or other matter after December 31, 1990, is reasonably expected to result in more than an insignificant increase in the amount of crude oil that ultimately will be recovered from reservoir volume that was substantially unaffected by the injection of liquids, gases, or other matter before January 1, 1991.

(3) ***Terminated projects.*** Except as otherwise provided in this paragraph (d)(3), a project is considered significantly expanded if each qualified tertiary recovery method implemented in the project prior to January 1, 1991, terminated more than 36 months before implementing an enhanced oil recovery project that commences after December 31, 1990. Notwithstanding the provisions of the preceding sentence, if a project implemented prior to January 1, 1991, is terminated for less than 36 months before implementing an enhanced oil recovery project that commences after December 31, 1990, a taxpayer may request permission to treat the project that commences after December 31, 1990, as a significant expansion. Permission will not be granted if the Internal Revenue Service determines that a project was terminated to make an otherwise nonqualifying project eligible for the credit. For purposes of section 43, a qualified tertiary recovery method terminates at the point in time when the method no longer results in more than an insignificant increase in the amount of crude oil that ultimately will be recovered. All the facts and circumstances determine whether a tertiary recovery method has terminated. Among the factors considered is the project plan, the unit plan of development, or other similar plan. A tertiary recovery method is not necessarily terminated merely because the injection of the tertiary injectant has ceased. For purposes of this paragraph (d)(1), a project is implemented when costs that will be taken into account in determining the credit with respect to the project are paid or incurred.

(4) ***Change in tertiary recovery method.*** If the application of a tertiary recovery method or methods with respect to an enhanced oil recovery project for which the first injection of liquids, gases, or other matter occurred before January 1, 1991, has not been terminated for more than 36 months, a taxpayer may request a private letter ruling from the Internal Revenue Service whether the application of a different tertiary recovery method or methods after December 31, 1990, that does not affect reservoir volume substantially unaffected by the previous tertiary recovery method or methods, is treated as a significant expansion. All the facts and circumstances determine whether a change in tertiary recovery method is treated as a significant expansion. Among the factors considered are whether the change in tertiary recovery method is in accordance with sound engineering principles and whether the change in method will result in more than an insignificant increase in the amount of crude oil that would be recovered using the previous method. A more intensive application of a tertiary recovery method after December 31, 1990, is not treated as a significant expansion.

(5) ***Examples.*** The following examples illustrate the principles of this paragraph (d).

Example 1. Substantially unaffected reservoir volume. In January 1988, B, the owner of an operating mineral interest in a property, began injecting steam into the reservoir in connection with a cyclic steam enhanced oil recovery project. The project affected only a portion of the reservoir volume. In 1992, B begins cyclic steam injections with respect to reservoir volume that was substantially unaffected by the previous cyclic steam project. Because the injection of steam into the reservoir in 1992 affects reservoir volume that was substantially unaffected by the previous cyclic steam injection, the cyclic steam injection in 1992 is treated as a separate project for which the first injection of liquids, gases, or other matter occurs after December 31, 1990.

Example 2. Tertiary recovery method terminated more than 36 months. In 1982, C, the owner of an operating mineral interest in a property, implemented a tertiary recovery project using cyclic steam injection as a method for the recovery of crude oil. The project was certified as a tertiary recovery project for purposes of the windfall profit tax. In May 1988, the application of the cyclic steam tertiary recovery method terminated. In July 1992, C begins drilling injection wells as part of a project to apply the steam drive tertiary recovery method with respect to the same project area affected by the cyclic steam method. C begins steam injections in September 1992. Because C commences an enhanced oil recovery project more than 36 months after the previous tertiary recovery method was terminated, the project is treated as a separate project for which the first injection of liquids, gases, or other matter occurs after December 31, 1990.

Example 3. Change in tertiary recovery method affecting substantially unaffected reservoir volume. In 1984, D, the owner of an operating mineral interest in a property, implemented a tertiary recovery project using cyclic steam as a method for the recovery of crude oil. The project was certified as a tertiary recovery project for purposes of the windfall profit tax. D continued the cyclic steam injection until 1992, when the tertiary recovery method was changed from cyclic steam injection to steam drive. The steam drive affects reservoir volume that was substantially unaffected by the cyclic steam injection. Because the steam drive affects reservoir volume that was substantially unaffected by the cyclic steam injection, the steam drive is treated as a separate project for which the first injection of liquids, gases, or other matter occurs after December 31, 1990.

Example 4. Change in tertiary recovery method not affecting substantially unaffected reservoir volume. In 1988, E, the owner of an operating mineral interest in a property, undertook an immiscible nitrogen enhanced oil recovery project that resulted in more than an insignificant increase in the ultimate recovery of crude oil from the property. E continued the immiscible nitrogen project until 1992, when the project was converted from immiscible nitrogen displacement to miscible nitrogen displacement by increasing the injection of nitrogen to increase reservoir pressure. The miscible nitrogen displacement affects the same reservoir volume that was affected by the immiscible nitrogen displacement. Because the miscible nitrogen displacement does not affect reservoir volume that was substantially unaffected by the immiscible nitrogen displacement nor was the immiscible nitrogen displacement project terminated for more than 36 months before the miscible nitrogen displacement project was implemented, E must obtain a ruling whether the change from immiscible nitrogen displacement to miscible nitrogen displacement is treated as a separate project for which the first injection of liquids, gases, or other matter occurs after December 31, 1990. If E does not receive a ruling, the miscible nitrogen displacement project is not a qualified project.

Example 5. More intensive application of a tertiary recovery method. In 1989, F, the owner of an operating mineral interest in a property, undertook an immiscible carbon dioxide displacement enhanced oil recovery project. F began injecting carbon dioxide into the reservoir under immiscible conditions. The injection of carbon dioxide under immiscible conditions resulted in more than an insignificant increase in the ultimate recovery of crude oil from the property. F continues to inject the same amount of carbon dioxide into the reservoir until 1992, when new engineering studies indicate that an increase in the amount of carbon dioxide injected is reasonably expected to result in a more than insignificant increase in the amount of crude oil that would be recovered from the property as a result of the previous injection of carbon dioxide. The increase in the amount of carbon dioxide injected affects the same reservoir volume that was affected by the previous injection of carbon dioxide. Because the additional carbon dioxide injected in 1992 does not affect reservoir volume that was substantially unaffected by the previous injection of carbon dioxide and the previous immiscible carbon dioxide displacement method was not terminated for more than 36 months before additional carbon dioxide was injected, the increase in the amount of carbon dioxide injected into the reservoir is not a significant expansion. Therefore, it is not a separate project for which the first injection of liquids, gases, or other matter occurs after December 31, 1990.

(e) ***Qualified tertiary recovery methods*** —

(1) ***In general.*** For purposes of paragraph (a)(1) of this section, a "qualified tertiary recovery method" is any one or any combination of the tertiary recovery methods described in paragraph (e)(2) of this section. To account for advances in enhanced oil recovery technology, the Internal Revenue Service may by revenue ruling prescribe that a method not described in paragraph (e)(2) of this section is a "qualified tertiary recovery method." In addition, a taxpayer may request a private letter ruling that a method not described in paragraph (e)(2) of this section or in a revenue ruling is a qualified tertiary recovery method. Generally, the methods identified in revenue rulings or private letter rulings will be limited to those methods that involve the displacement of oil from the reservoir rock by means of modifying the properties of the fluids in the reservoir or providing the energy and drive mechanism to force the oil to flow to a production well. The recovery methods described in paragraph (e)(3) of this section are not "qualified tertiary recovery methods."

(2) ***Tertiary recovery methods that qualify*** —

(i) *Thermal recovery methods* —

(A) ***Steam drive injection.*** The continuous injection of steam into one set of wells (injection wells) or other injection source to effect oil displacement toward and production from a second set of wells (production wells);

(B) ***Cyclic steam injection*** —The alternating injection of steam and production of oil with condensed steam from the same well or wells; and

(C) ***In situ combustion.*** The combustion of oil or fuel in the reservoir sustained by injection of air, oxygen-enriched air, oxygen, or supplemental fuel supplied from the surface to displace unburned oil toward producing wells. This process may include the concurrent, alternating, or subsequent injection of water.

(ii) *Gas Flood recovery methods* —

(A) ***Miscible fluid displacement.*** The injection of gas (e.g., natural gas, enriched natural gas, a liquified petroleum slug driven by natural gas, carbon dioxide, nitrogen, or flue gas) or alcohol into the reservoir at pressure levels such that the gas or alcohol and reservoir oil are miscible;

(B) ***Carbon dioxide augmented waterflooding.*** The injection of carbonated water, or water and carbon dioxide, to increase waterflood efficiency;

(C) ***Immiscible carbon dioxide displacement.*** The injection of carbon dioxide into an oil reservoir to effect oil displacement under conditions in which miscibility with reservoir oil is not obtained. This process may include the concurrent, alternating, or subsequent injection of water; and

(D) ***Immiscible nonhydrocarbon gas displacement.*** The injection of nonhydrocarbon gas (e.g., nitrogen) into an oil reservoir, under conditions in which miscibility with reservoir oil is not obtained, to obtain a chemical or physical reaction (other than pressure) between the oil and the injected gas or between the oil and other reservoir fluids. This process may include the concurrent, alternating, or subsequent injection of water.

(iii) *Chemical flood recovery methods* —

(A) ***Microemulsion flooding.*** The injection of a surfactant system (e.g., a surfactant, hydrocarbon, cosurfactant, electrolyte, and water) to enhance the displacement of oil toward producing wells; and

(B) ***Caustic flooding.*** The injection of water that has been made chemically basic by the addition of alkali metal hydroxides, silicates, or other chemicals.

(iv) ***Mobility control recovery method—Polymer augmented waterflooding.*** The injection of polymeric additives with water to improve the areal and vertical sweep efficiency of the reservoir by increasing the viscosity and decreasing the mobility of the water injected. Polymer augmented waterflooding does not include the injection of polymers for the purpose of modifying the injection profile of the wellbore or the relative permeability of various layers of the reservoir, rather than modifying the water-oil mobility ratio.

(3) ***Recovery methods that do not qualify.*** The term “qualified tertiary recovery method” does not include—

(i) Waterflooding—The injection of water into an oil reservoir to displace oil from the reservoir rock and into the bore of the producing well;

(ii) Cyclic gas injection—The increase or maintenance of pressure by injection of hydrocarbon gas into the reservoir from which it was originally produced;

(iii) Horizontal drilling—The drilling of horizontal, rather than vertical, wells to penetrate hydrocarbon bearing formations;

(iv) Gravity drainage—The production of oil by gravity flow from drainholes that are drilled from a shaft or tunnel dug within or below the oil bearing zones; and

(v) Other methods—Any recovery method not specifically designated as a qualified tertiary recovery method in either paragraph (e)(2) of this section or in a revenue ruling or private letter ruling described in paragraph (e)(1) of this section.

(4) ***Examples.*** The following examples illustrate the principles of this paragraph (e).

Example 1. Polymer augmented waterflooding. In 1992 G, the owner of an operating mineral interest in a property, begins a waterflood project with respect to the property. To reduce the relative permeability in certain areas of the reservoir and minimize water coning, G injects polymers to plug thief zones and improve the areal and vertical sweep efficiency of the reservoir. The injection of polymers into the reservoir does not modify the water-oil mobility ratio. Accordingly, the injection of polymers into the reservoir in connection with the waterflood project does not constitute polymer augmented waterflooding and the project is not a qualified enhanced oil recovery project.

Example 2. Polymer augmented waterflooding. In 1993 H, the owner of an operating mineral interest in a property, begins a caustic flooding project with respect to the property. Engineering studies indicate that the relative permeability of various layers of the reservoir may result in the loss of the injectant to thief zones, thereby reducing the areal and vertical sweep efficiency of the reservoir. As part of the caustic flooding project, H injects polymers to plug the thief zones and improve the areal and vertical sweep efficiency of the reservoir. Because the polymers are injected into the reservoir to improve the effectiveness of the caustic flooding project, the project is a qualified enhanced oil recovery project.

[T.D. 8448, 57 FR 54925, Nov. 23, 1992; 58 FR 6678, Feb. 1, 1993]

§ 1.43-3 Certification

(a) ***Petroleum engineer's certification of a project*** —

(1) ***In general.*** A petroleum engineer must certify, under penalties of perjury, that an enhanced oil recovery project meets the requirements of section 43(c)(2)(A). A petroleum engineer's certification must be submitted for each project. The petroleum engineer certifying a project must be duly registered or certified in any State.

(2) ***Timing of certification.*** The operator of an enhanced oil recovery project or any other operating mineral interest owner designated by the operator ("designated owner") must submit a petroleum engineer's certification to the Internal Revenue Service Center, Austin, Texas, or such other place as may be designated by revenue procedure or other published guidance, not later than the last date prescribed by law (including extensions) for filing the operator's or designated owner's federal

income tax return for the first taxable year for which the enhanced oil recovery credit (the "credit") is allowable. The operator may designate any other operating mineral interest owner (the "designated owner") to file the petroleum engineer's certification.

(3) ***Content of certification*** —

(i) ***In general.*** A petroleum engineer's certification must contain the following information—

(A) The name and taxpayer identification number of the operator or the designated owner submitting the certification;

(B) A statement identifying the project, including its geographic location;

(C) A statement that the project involves a tertiary recovery method (as defined in section 43(c)(2)(A)(i)) and a description of the process used, including—

(*1*) A description of the implementation and operation of the project sufficient to establish that it is implemented and operated in accordance with sound engineering practices;

(*2*) If the project involves the application of a tertiary recovery method approved in a private letter ruling described in paragraph (e)(1) of § 1.43-2, a copy of the private letter ruling, and

(*3*) The date on which the first injection of liquids, gases, or other matter occurred or is expected to occur.

(D) A statement that the application of a qualified tertiary recovery method or methods is expected to result in more than an insignificant increase in the amount of crude oil that ultimately will be recovered, including—

(*1*) Data on crude oil reserve estimates covering the project area with and without the enhanced oil recovery process,

(*2*) Production history prior to implementation of the project and estimates of production after implementation of the project, and

(*3*) An adequate delineation of the reservoir, or portion of the reservoir, from which the ultimate recovery of crude oil is expected to be increased as a result of the implementation and operation of the project; and

(E) A statement that the petroleum engineer believes that the project is a qualified enhanced oil recovery project within the meaning of section 43(c)(2)(A).

(ii) ***Additional information for significantly expanded projects.*** The petroleum engineer's certification for a project that is significantly expanded must in addition contain—

(A) If the expansion affects reservoir volume that was substantially unaffected by a previously implemented project, an adequate delineation of the reservoir volume affected by the previously implemented project;

(B) If the expansion involves the implementation of an enhanced oil recovery project more than 36 months after the termination of a qualified tertiary recovery method that was applied before January 1, 1991, the date on which the previous tertiary recovery method terminated and an explanation of the data or assumptions relied upon to determine the termination date;

(C) If the expansion involves the implementation of an enhanced oil recovery project less than 36 months after the termination of a qualified tertiary recovery method that was applied before January 1, 1991, a copy of a private letter ruling from the Internal Revenue Service that the project implemented after December 31, 1990 is treated as a significant expansion; or

(D) If the expansion involves the application after December 31, 1990, of a tertiary recovery method or methods that do not affect reservoir volume that was substantially unaffected by the application of a different tertiary recovery method or methods before January 1, 1991, a copy of a private letter ruling from the Internal Revenue Service that the change in tertiary recovery method is treated as a significant expansion.

(b) *Operator's continued certification of a project* —

(1) *In general.* For each taxable year following the taxable year for which the petroleum engineer's certification is submitted, the operator or designated owner must certify, under penalties of perjury, that an enhanced oil recovery project continues to be implemented substantially in accordance with the petroleum engineer's certification submitted for the project. An operator's certification must be submitted for each project.

(2) *Timing of certification.* The operator or designated owner of an enhanced oil recovery project must submit an operator's certification to the Internal Revenue Service Center, Austin, Texas, or such other place as may be designated by revenue procedure or other published guidance, not later than the last date prescribed by law (including extensions) for filing the operator's or designated owner's federal income tax return for any taxable year after the taxable year for which the petroleum engineer's certification is filed.

(3) *Content of certification.* An operator's certification must contain the following information—

(i) The name and taxpayer identification number of the operator or the designated owner submitting the certification;

(ii) A statement identifying the project including its geographic location and the date on which the petroleum engineer's certification was filed;

(iii) A statement that the project continues to be implemented substantially in accordance with the petroleum engineer's certification (as described in paragraph (a) of this section) submitted for the project; and

(iv) A description of any significant change or anticipated change in the information submitted under paragraph (a)(3) of this section, including a change in the date on which the first injection of liquids, gases, or other matter occurred or is expected to occur.

(c) *Notice of project termination* —

(1) *In general.* If the application of a tertiary recovery method is terminated, the operator or designated owner must submit a notice of project termination to the Internal Revenue Service.

(2) ***Timing of notice.*** The operator or designated owner of an enhanced oil recovery project must submit the notice of project termination to the Internal Revenue Service Center, Austin, Texas, or such other place as may be designated by revenue procedure or other published guidance, not later than the last date prescribed by law (including extensions) for filing the operator's or designated owner's federal income tax return for the taxable year in which the project terminates.

(3) ***Content of notice.*** A notice of project termination must contain the following information—

(i) The name and taxpayer identification number of the operator or the designated owner submitting the notice;

(ii) A statement identifying the project including its geographic location and the date on which the petroleum engineer's certification was filed; and

(iii) The date on which the application of the tertiary recovery method was terminated.

(d) ***Failure to submit certification.*** If a petroleum engineer's certification (as described in paragraph (a) of this section) or an operator's certification (as described in paragraph (b) of this section) is not submitted in the time or manner prescribed by this section, the credit will be allowed only after the appropriate certifications are submitted.

[T.D. 8384, 56 FR 67177, Dec. 30, 1991; 57 FR 6074, Feb. 20, 1992; 57 FR 6353, Feb. 24, 1992. Redesignated and amended by T.D. 8448, 57 FR 54927, Nov. 23, 1992]

§ 1.43-4 Qualified enhanced oil recovery costs.

(a) ***Qualifying costs*** —

(1) ***In general.*** Except as provided in paragraph (e) of this section, amounts paid or incurred in any taxable year beginning after December 31, 1990, that are qualified tertiary injectant expenses (as described in paragraph (b)(1) of this section), intangible drilling and development costs (as described in paragraph (b)(2) of this section), and tangible property costs (as described in paragraph (b)(3) of this section) are "qualified enhanced oil recovery costs" if the amounts are paid or incurred with respect to an asset which is used for the primary purpose (as described in paragraph (c) of this section) of implementing an enhanced oil recovery project. Any amount paid or incurred in any taxable year beginning before January 1, 1991, in connection with an enhanced oil recovery project is not a qualified enhanced oil recovery cost.

(2) ***Costs paid or incurred for an asset which is used to implement more than one qualified enhanced oil recovery project or for other activities.*** Any cost paid or incurred during the taxable year for an asset which is used to implement more than one qualified enhanced oil recovery project is allocated among the projects in determining the qualified enhanced oil recovery costs for each qualified project for the taxable year. Similarly, any cost paid or incurred during the taxable year for an asset which is used to implement a qualified enhanced oil recovery project and which is also used for other activities (for example, an enhanced oil recovery project that is not a qualified enhanced oil recovery project) is allocated among the qualified enhanced oil recovery project and the other activities to determine the qualified enhanced oil recovery costs for the taxable year. See § 1.613-5(a). Any cost paid or incurred for an asset which is used to implement a qualified enhanced oil recovery project and which is also used for other activities is not required to be allocated under this paragraph (a)(2) if the use of the property for nonqualifying activities is *de minimis* (e.g., not greater than 10%). Costs are allocated under this paragraph (a)(2) only if the asset with respect to

which the costs are paid or incurred is used for the primary purpose of implementing an enhanced oil recovery project. *See* paragraph (c) of this section. Any reasonable allocation method may be used. A method that allocates costs based on the anticipated use in a project or activity is a reasonable method.

(b) ***Costs defined*** —

(1) ***Qualified tertiary injectant expenses.*** For purposes of this section, "qualified tertiary injectant expenses" means any costs that are paid or incurred in connection with a qualified enhanced oil recovery project and that are deductible under section 193 for the taxable year. *See* section 193 and § 1.193-1. Qualified tertiary injectant expenses are taken into account in determining the credit with respect to the taxable year in which the tertiary injectant expenses are deductible under section 193.

(2) ***Intangible drilling and development costs.*** For purposes of this section, "intangible drilling and development costs" means any intangible drilling and development costs that are paid or incurred in connection with a qualified enhanced oil recovery project and for which the taxpayer may make an election under section 263(c) for the taxable year. Intangible drilling and development costs are taken into account in determining the credit with respect to the taxable year in which the taxpayer may deduct the intangible drilling and development costs under section 263(c). For purposes of this paragraph (b)(2), the amount of the intangible drilling and development costs for which an integrated oil company may make an election under section 263(c) is determined without regard to section 291(b).

(3) ***Tangible property costs*** —

(i) ***In general.*** For purposes of this section, "tangible property costs" means an amount paid or incurred during a taxable year for tangible property that is an integral part of a qualified enhanced oil recovery project and that is depreciable or amortizable under chapter 1. An amount paid or incurred for tangible property is taken into account in determining the credit with respect to the taxable year in which the cost is paid or incurred.

(ii) ***Integral part.*** For purposes of this paragraph (b), tangible property is an integral part of a qualified enhanced oil recovery project if the property is used directly in the project and is essential to the completeness of the project. All the facts and circumstances determine whether tangible property is used directly in a qualified enhanced oil recovery project and is essential to the completeness of the project. Generally, property used to acquire or produce the tertiary injectant or property used to transport the tertiary injectant to a project site is property that is an integral part of the project.

(4) ***Examples.*** The following examples illustrate the principles of this paragraph (b). Assume for each of these examples that the qualified enhanced oil recovery costs are paid or incurred with respect to an asset which is used for the primary purpose of implementing an enhanced oil recovery project.

> *Example 1.* Qualified costs—in general. (i) In 1992, X, a corporation, acquires an operating mineral interest in a property and undertakes a cyclic steam enhanced oil recovery project with respect to the property. X pays a fee to acquire a permit to drill and hires a contractor to drill six wells. As part of the project implementation, X constructs a building to serve as an office on the property and purchases equipment, including downhole equipment (e.g., casing, tubing, packers, and sucker rods), pumping units, a steam generator, and equipment to remove gas and water from the oil after it is produced. X constructs roads to transport the

equipment to the wellsites and incurs costs for clearing and draining the ground in preparation for the drilling of the wells. X purchases cars and trucks to provide transportation for monitoring the wellsites. In addition, X contracts with Y for the delivery of water to produce steam to be injected in connection with the cyclic steam project, and purchases storage tanks to store the water.

(ii) The leasehold acquisition costs are not qualified enhanced oil recovery costs. However, the costs of the permit to drill are intangible drilling and development costs that are qualified costs. The costs associated with hiring the contractor to drill, constructing roads, and clearing and draining the ground are intangible drilling and development costs that are qualified enhanced oil recovery costs. The downhole equipment, the pumping units, the steam generator, and the equipment to remove the gas and water from the oil after it is produced are used directly in the project and are essential to the completeness of the project. Therefore, this equipment is an integral part of the project and the costs of the equipment are qualified enhanced oil recovery costs. Although the building that X constructs as an office and the cars and trucks X purchases to provide transportation for monitoring the wellsites are used directly in the project, they are not essential to the completeness of the project. Therefore, the building and the cars and trucks are not an integral part of the project and their costs are not qualified enhanced oil recovery costs. The cost of the water X purchases from Y is a tertiary injectant expense that is a qualified enhanced oil recovery cost. The storage tanks X acquires to store the water are required to provide a proximate source of water for the production of steam. Therefore, the water storage tank are an integral part of the project and the costs of the water storage tanks are qualified enhanced oil recovery costs.

Example 2. Diluent storage tanks. In 1992, A, the owner of an operating mineral interest, undertakes a qualified enhanced oil recovery project with respect to the property. A acquires diluent to be used in connection with the project. A stores the diluent in a storage tank that A acquires for that purpose. The storage tank provides a proximate source of diluent to be used in the tertiary recovery method. Therefore, the storage tank is used directly in the project and is essential to the completeness of the project. Accordingly, the storage tanks is an integral part of the project and the cost of the storage tank is a qualified enhanced oil recovery cost.

Example 3. Oil storage tanks. In 1992, Z, a corporation and the owner of an operating mineral interest in a property, undertakes a qualified enhanced oil recovery project with respect to the property. Z acquires storage tanks that Z will use solely to store the crude oil that is produced from the enhanced oil recovery project. The storage tanks are not used directly in the project and are not essential to the completeness of the project. Therefore, the storage tanks are not an integral part of the enhanced oil recovery project and the costs of the storage tanks are not qualified enhanced oil recovery costs.

Example 4. Oil refinery. B, the owner of an operating mineral interest in a property, undertakes a qualified enhanced oil recovery project with respect to the property. Located on B's property is an oil refinery where B will refine the crude oil produced from the project. The refinery is not used directly in the project and is not essential to the completeness of the project. Therefore, the refinery is not an integral part of the enhanced oil recovery project.

Example 5. Gas processing plant. C, the owner of an operating mineral interest in a property, undertakes a qualified enhanced oil recovery project with respect to the property. A gas processing plant where C will process gas produced in the project is located on C's property. The gas processing plant is not used directly in the project and is not essential to the completeness of the project. Therefore, the gas processing plant is not an integral part of the enhanced oil recovery project.

Example 6. Gas processing equipment. The facts are the same as in *Example 5* except that C uses a portion of the gas processing plant to separate and recycle the tertiary injectant. The gas processing equipment used to separate and recycle the tertiary injectant is used directly in the project and is essential to the completeness of the project. Therefore, the gas processing equipment used to separate and recycle the tertiary injectant is an integral part of the enhanced oil recovery project and the costs of this equipment are qualified enhanced oil recovery costs.

Example 7. Steam generator costs allocated. In 1988, D, the owner of an operating mineral interest in a property, undertook a steam drive project with respect to the property. In 1992, D decides to undertake a steam drive project with respect to reservoir volume that was substantially unaffected by the 1988 project. The 1992 project is a significant expansion that is a qualified enhanced oil recovery project. D purchases a new steam generator with sufficient capacity to provide steam for both the 1988 project and the 1992 project. The steam generator is used directly in the 1992 project and is essential to the completeness of the 1992 project. Accordingly, the steam generator is an integral part of the 1992 project. Because the steam generator is also used to provide steam for the 1988 project, D must allocate the cost of the steam generator to the 1988 project and the 1992 project. Only the portion of the cost of the steam generator that is allocable to the 1992 project is a qualified enhanced oil recovery cost.

Example 8. Carbon dioxide pipeline. In 1992, E, the owner of an operating mineral interest in a property, undertakes an immiscible carbon dioxide displacement project with respect to the property. E constructs a pipeline to convey carbon dioxide to the project site. E contracts with F, a producer of carbon dioxide, to purchase carbon dioxide to be injected into injection wells in E's enhanced oil recovery project. The cost of the carbon dioxide is a tertiary injectant expense that is a qualified enhanced oil recovery cost. The pipeline is used by E to transport the tertiary injectant, that is, the carbon dioxide to the project site. Therefore, the pipeline is an integral part of the project. Accordingly, the cost of the pipeline is a qualified enhanced oil recovery cost.

Example 9. Water source wells. In 1992, G the owner of an operating mineral interest in a property, undertakes a polymer augmented waterflood project with respect to the property. G drills water wells to provide water for injection in connection with the project. The costs of drilling the water wells are intangible drilling and development costs that are paid or incurred in connection with the project. Therefore, the costs of drilling the water wells are qualified enhanced oil recovery costs.

Example 10. Leased equipment. In 1992, H, the owner of an operating mineral interest in a property undertakes a steam drive project with respect to the property. H contracts with I, a driller, to drill injection wells in connection with the project. H also leases a steam generator to provide steam for injection in connection with the project. The drilling costs are intangible drilling and development costs that are paid in connection with the project and are qualified enhanced oil recovery costs. The steam generator is used to produce the tertiary injectant. The steam

generator is used directly in the project and is essential to the completeness of the project; therefore, it is an integral part of the project. The costs of leasing the steam generator are tangible property costs that are qualified enhanced oil recovery costs.

(c) ***Primary purpose*** —

(1) ***In general.*** For purposes of this section, a cost is a qualified enhanced oil recovery cost only if the cost is paid or incurred with respect to an asset which is used for the primary purpose of implementing one or more enhanced oil recovery projects, at least one of which is a qualified enhanced oil recovery project. All the facts and circumstances determine whether an asset is used for the primary purpose of implementing an enhanced oil recovery project. For purposes of this paragraph (c), an enhanced oil recovery project is a project that satisfies the requirements of paragraphs (a) (1) and (2) of section 1.43-2.

(2) ***Tertiary injectant costs.*** Tertiary injectant costs generally satisfy the primary purpose test of this paragraph (c).

(3) ***Intangible drilling and development costs.*** Intangible drilling and development costs paid or incurred with respect to a well that is used in connection with the recovery of oil by primary or secondary methods are not qualified enhanced oil recovery costs. Except as provided in this paragraph (c)(3), a well used for primary or secondary recovery is not used for the primary purpose of implementing an enhanced oil recovery project. A well drilled for the primary purpose of implementing an enhanced oil recovery project is not considered to be used for primary or secondary recovery, notwithstanding that some primary or secondary production may result when the well is drilled, provided that such primary or secondary production is consistent with the unit plan of development or other similar plan. All the facts and circumstances determine whether primary or secondary recovery is consistent with the unit plan of development or other similar plan.

(4) ***Tangible property costs.*** Tangible property costs must be paid or incurred with respect to property which is used for the primary purpose of implementing an enhanced oil recovery project.

If tangible property is used partly in a qualified enhanced oil recovery project and partly in another activity, the property must be primarily used to implement the qualified enhanced oil recovery project.

(5) ***Offshore drilling platforms.*** Amounts paid or incurred in connection with the acquisition, construction, transportation, erection, or installation of an offshore drilling platform (regardless of whether the amounts are intangible drilling and development costs) that is used in connection with the recovery of oil by primary or secondary methods are not qualified enhanced oil recovery costs. An offshore drilling platform used for primary or secondary recovery is not used for the primary purpose of implementing an enhanced oil recovery project.

(6) ***Examples.*** The following examples illustrate the principles of this paragraph (c).

Example 1. Intangible drilling and development costs. In 1992, J incurs intangible drilling and development costs in drilling a well. J intends to use the well as an injection well in connection with an enhanced oil recovery project in 1994, but in the meantime will use the well in connection with a secondary recovery project. J may not take the intangible drilling and development costs into account in determining the credit because the primary purpose of a well used for secondary recovery is not to implement a qualified enhanced oil recovery project.

Example 2. Offshore drilling platform. K, the owner of an operating mineral interest in an offshore oil field located within the United States, constructs an offshore drilling platform that is designed to accommodate the primary, secondary, and tertiary development of the field. Subsequent to primary and secondary development of the field, K commences an enhanced oil recovery project that involves the application of a qualified tertiary recovery method. As part of the enhanced oil recovery project, K drills injection wells from the offshore drilling platform K used in the primary and secondary development of the field and installs an additional separator on the platform. Because the offshore drilling platform was used in the primary and secondary development of the field and was not used for the primary purpose of implementing tertiary development of the field, costs incurred by K in connection with the acquisition, construction, transportation, erection, or installation of the offshore drilling platform are not qualified enhanced oil recovery costs. However, the costs K incurs for the additional separator are qualified enhanced oil recovery costs because the separator is used for the primary purpose of implementing tertiary development of the field. In addition, the intangible drilling and development costs K incurs in connection with drilling the injection wells are qualified enhanced oil recovery costs with respect to which K may claim the enhanced oil recovery credit.

(d) ***Costs paid or incurred prior to first injection*** —

(1) ***In general.*** Qualified enhanced oil recovery costs may be paid or incurred prior to the date of the first injection of liquids, gases, or other matter (within the meaning of § 1.43-2(c)). If the first injection of liquids, gases, or other matter occurs on or before the date the taxpayer files the taxpayer's federal income tax return for the taxable year with respect to which the costs are allowable, the costs may be taken into account on that return. If the first injection of liquids, gases, or other matter is expected to occur after the date the taxpayer files that return, costs may be taken into account on that return if the Internal Revenue Service issues a private letter ruling to the taxpayer that so permits.

(2) ***First injection after filing of return for taxable year costs are allowable.*** Except as provided in paragraph (d)(3) of this section, if the first injection of liquids, gases, or other matter occurs or is expected to occur after the date the taxpayer files the taxpayer's federal income tax return for the taxable year with respect to which the costs are allowable, the costs may be taken into account on an amended return (or in the case of a Coordinated Examination Program taxpayer, on a written statement treated as a qualified return) after the earlier of—

(i) The date the first injection of liquids, gases, or other matter occurs; or

(ii) The date the Internal Revenue Service issues a private letter ruling that provides that the taxpayer may take costs into account prior to the first injection of liquids, gases, or other matter.

(3) ***First injection more than 36 months after close of taxable year costs are paid or incurred.*** If the first injection of liquids, gases, or other matter occurs more than 36 months after the close of the taxable year in which costs are paid or incurred, the taxpayer may take the costs into account in determining the credit only if the Internal Revenue Service issues a private letter ruling to the taxpayer that so provides.

(4) ***Injections in volumes less than the volumes specified in the project plan.*** For purposes of this paragraph (d), injections in volumes significantly less than the volumes specified in the project plan, the unit plan of development, or another similar plan do not constitute the first injection of liquids, gases, or other matter.

(5) ***Examples.*** The following examples illustrate the provisions of paragraph (d) of this section.

Example 1. First injection before return filed. In 1992, L, a calendar year taxpayer, undertakes a qualified enhanced oil recovery project on a property in which L owns an operating mineral interest. L incurs $1,000 of intangible drilling and development costs, which L may elect to deduct under section 263(c) for 1992. The first injection of liquids, gases, or other matter (within the meaning of § 1.43-2(c)) occurs in March 1993. L files a 1992 federal income tax return in April 1993. Because the first injection occurs before the filing of L's 1992 federal income tax return, L may take the $1,000 of intangible drilling and development costs into account in determining the credit for 1992 on that return.

Example 2. First injection after return filed. In 1993, M, a calendar year taxpayer, undertakes a qualified enhanced oil recovery project on a property in which M owns an operating mineral interest. M incurs $2,000 of intangible drilling and development costs, which M elects to deduct under section 263(c) for 1993. The first injection of liquids, gases, or other matter is expected to occur in 1995. M files a 1993 federal income tax return in April 1994. Because the first injection of liquids, gases, or other matter occurs after the date on which M's 1993 federal income tax return is filed in April 1994, M may take the $2,000 of intangible drilling and development costs into account on an amended return for 1993 after the earlier of the date the first injection of liquids, gases, or other matter occurs, or the date the Internal Revenue Service issues a private letter ruling that provides that M may take the $2,000 into account prior to first injection.

Example 3. First injection more than 36 months after taxable year. N, a calendar year taxpayer, owns an operating mineral interest in a property on which N undertakes an immiscible carbon dioxide displacement project. In 1994, N incurs $5,000 in connection with the construction of a pipeline to transport carbon dioxide to the project site. The first injection of liquids, gases, or other matter is expected to occur after the pipeline is completed in 1998. Because the first injection of liquids, gases, or other matter occurs more than 36 months after the close of the taxable year in which the $5,000 is incurred, N may take the $5,000 into account in determining the credit only if N receives a private letter ruling from the Internal Revenue Service that provides that N may take the $5,000 into account prior to first injection.

(e) ***Other rules —***

(1) ***Anti-abuse rule.*** Costs paid or incurred with respect to an asset that is acquired, used, or transferred in a manner designed to duplicate or otherwise unreasonably increase the amount of the credit are not qualified enhanced oil recovery costs, regardless of whether the costs would otherwise be creditable for a single taxpayer or more than one taxpayer.

(2) ***Costs paid or incurred to acquire a project.*** A purchaser of an existing qualified enhanced oil recovery project may claim the credit for any section 43 costs in excess of the acquisition cost. However, costs paid or incurred to acquire an existing qualified enhanced oil recovery project (or an interest in an existing qualified enhanced oil recovery project) are not eligible for the credit.

(3) ***Examples.*** The following examples illustrate the principles of paragraph (e) of this section.

Example 1. Duplicating or unreasonably increasing the credit. O owns an operating mineral interest in a property with respect to which a qualified enhanced oil recovery project is implemented. O acquires pumping units, rods, casing, and separators for use in connection with the project from an unrelated equipment dealer in an arm's length transaction. The equipment is used for the primary purpose of implementing the project. Some of the equipment acquired by O is used

equipment. The costs paid by O for the used equipment are qualified enhanced oil recovery costs. O does not need to determine whether the equipment has been previously used in an enhanced oil recovery project.

Example 2. Duplicating or unreasonably increasing the credit. P and Q are co-owners of an oil property with respect to which a qualified enhanced oil recovery project is implemented. In 1992, P and Q jointly purchase a nitrogen plant to supply the tertiary injectant used in the project. P and Q claim the credit for their respective costs for the plant. In 1994, X, a corporation unrelated to P or Q, purchases the nitrogen plant and enters into an agreement to sell nitrogen to P and Q. Because this transaction duplicates or otherwise unreasonably increases the credit, the credit is not allowable for the amounts incurred by P and Q for the nitrogen purchased from X.

Example 3. Duplicating or unreasonably increasing the credit. The facts are the same as in *Example 2*. In addition, in 1995, P and Q reacquire the nitrogen plant from X. This constitutes the acquisition of property in a manner designed to duplicate or otherwise unreasonably increase the amount of the credit. Therefore, the credit is not allowable for amounts incurred by P and Q for the nitrogen plant purchased from X.

Example 4. Duplicating or unreasonably increasing the credit. R owns an operating mineral interest in a property with respect to which a qualified enhanced oil recovery project is implemented. R acquires a pump that is installed at the site of the project. After the pump has been placed in service for 6 months, R transfers the pump to a secondary recovery project and acquires a replacement pump for the tertiary project. The original pump is suited to the needs of the secondary recovery project and could have been installed there initially. The pumps have been acquired in a manner designed to duplicate or otherwise unreasonably increase the amount of the credit. Depending on the facts, the cost of one pump or the other may be a qualified enhanced oil recovery cost; however, R may not claim the credit with respect to the cost of both pumps.

Example 5. Acquiring a project. In 1993, S purchases all of T's interest in a qualified enhanced oil recovery project, including all of T's interest in tangible property that is an integral part of the project and all of T's operating mineral interest. In 1994, S incurs costs for additional tangible property that is an integral part of the project and which is used for the primary purpose of implementing the project. S also incurs costs for tertiary injectants that are injected in connection with the project. In determining the credit for 1994, S may take into account costs S incurred for tangible property and tertiary injectants. However, S may not take into account any amount that S paid for T's interest in the project in determining S's credit for any taxable year.

[T.D. 8448, 57 FR 54927, Nov. 23, 1992; 58 FR 7987, Feb. 11, 1993]

§ 1.43-5 At-risk limitation. [Reserved]

§ 1.43-6 Election out of section 43.

(a) ***Election to have the credit not apply*** —

(1) ***In general.*** A taxpayer may elect to have section 43 not apply for any taxable year. The taxpayer may revoke an election to have section 43 not apply for any taxable year. An election to have section 43 not apply (or a revocation of an election to have section 43 not apply) for any taxable year is effective only for the taxable year to which the election relates.

(2) ***Time for making the election.*** A taxpayer may make an election under paragraph (a) of this section to have section 43 not apply (or revoke an election to have section 43 not apply) for any taxable year at any time before the expiration of the 3-year period beginning on the last date prescribed by law (determined without regard to extensions) for filing the return for the taxable year. The time for making the election (or revoking the election) is prescribed by section 43(e)(2) and may not be extended under § 1.9100-1.

(3) ***Manner of making the election.*** An election (or revocation) under paragraph (a)(1) of this section is made by attaching a statement to the taxpayer's federal income tax return or an amended return (or, in the case of a Coordinated Examination Program taxpayer, on a written statement treated as a qualified amended return) for the taxable year for which the election (or revocation) applies. The taxpayer must indicate whether the taxpayer is electing to not have section 43 apply or is revoking such an election and designate the project or projects to which the election (or revocation) applies. For any taxable year, the last election (or revocation) made by a taxpayer within the period prescribed in paragraph (a)(2) of this section determines whether section 43 applies for that taxable year.

(b) ***Election by partnerships and S corporations.*** For partnerships and S corporations, an election to have section 43 not apply (or a revocation of an election to have section 43 not apply) for any taxable year is made, in accordance with the requirements of paragraph (a) of this section, by the partnership or S corporation with respect to the qualified enhanced oil recovery costs paid or incurred by the partnership or S corporation for the taxable year to which the election relates.

[T.D. 8448, 57 FR 54930, Nov. 23, 1992]

§ 1.43-7 Effective date of regulations.

The provisions of §§ 1.43-1, 1.43-2 and 1.43-4 through 1.43-7 are effective with respect to costs paid or incurred after December 31, 1991, in connection with a qualified enhanced oil recovery project. The provisions of § 1.43-3 are effective for taxable years beginning after December 31, 1990. For costs paid or incurred after December 31, 1990, and before January 1, 1992, in connection with a qualified enhanced oil recovery project, taxpayers must take reasonable return positions taking into consideration the statute and its legislative history.

[T.D. 8448, 57 FR 54931, Nov. 23, 1992]

§ 1.44-1 Allowance of credit for purchase of new principal residence after March 12, 1975, and before January 1, 1977.

(a) ***General rule.*** Section 44 provides a credit against the tax imposed by chapter 1 of the Internal Revenue Code of 1954 in the case of an individual who purchases a new principal residence (as defined in paragraph (a) of § 1.44-5) which is property to which section 44 applies (as provided in § 1.44-2). Subject to the limitations set forth in paragraph (b) of this section, the credit is in an amount equal to 5 percent of the purchase price (as defined in paragraph (b) of § 1.44-5).

(b) ***Limitations*** —

(1) ***Maximum credit.*** The credit allowed under section 44 and this section may not exceed $2,000.

(2) ***Limitation to one residence.*** Such credit shall be allowed with respect to only one residence of the taxpayer; the combined purchase prices of more than one new principal residence cannot be aggregated to increase the credit allowed.

(3) *Married individuals.* In the case of a husband and wife who file a joint return under section 6013, the maximum credit allowed on the joint return is $2,000. In the case of married individuals filing separate returns the maximum credit allowable to each spouse is $1,000. Where a husband and wife do not make equal contributions with respect to the purchase price of the new principal residence, allocation of the credit is to be made in proportion to their respective ownership interests in such residence. For this purpose, tenants by the entirety or joint tenants with right of survivorship are treated as equal owners.

(4) *Certain other taxpayers.* **Where a new principal residence is purchased by two or more taxpayers (other than a husband and wife), the amount of the credit allowed will be allocated among the taxpayers in proportion to their respective ownership interests in such residence, with the limitation that the sum of the credits allowed to all such taxpayers shall not exceed $2,000. For this purpose, joint tenants with right of survivorship are treated as equal owners. For an example of the operation of this provision see *Example (2)*** of § 1.44-5(b)(2)(ii).

(5) *Application with other credits.* The credit allowed by this section shall not exceed the amount of the tax imposed by chapter 1 of the Code for the taxable year, reduced by the sum of the credits allowable under—

(i) Section 33 (relating to taxes of foreign countries and possessions of the United States),

(ii) Section 37 (relating to retirement income),

(iii) Section 38 (relating to investment in certain depreciable property),

(iv) Section 40 (relating to expenses of work incentive program),

(v) Section 41 (relating to contributions to candidates for public office), and

(vi) Section 42 (relating to personal exemptions).

[T.D. 7391, 40 FR 55851, Dec. 2, 1975]

§ 1.44-2 Property to which credit for purchase of new principal residence applies.

The provisions of section 44 and the regulations thereunder apply to a new principal residence which satisfies the following conditions:

(a) *Construction.* The construction of the residence must have begun before March 26, 1975. For this purpose construction is considered to have commenced in the following circumstances:

(1)

(i) Except as provided in subparagraph (2) of this paragraph, construction is considered to commence when actual physical work of a significant amount has occurred on the building site of the residence. A significant amount of construction requires more than drilling to determine soil conditions, preparation of an architect's sketches, securing of a building permit, or grading of the land. Land preparation and improvements such as the clearing and grading (excavation or filling), construction of roads and sidewalks, and installation of sewers and utilities are not considered commencement of construction of the residence even though they might involve a significant expenditure. However, driving pilings for the foundation, digging of the footings, excavation of the building foundation, pouring of floor slabs, or construction of compacted earthen pads when specifically prepared and designed for a particular residential structure and

not merely as a part of the overall land preparation, constitute a significant amount of construction of the residence. In the case of a housing or condominium development construction of recreational facilities no matter how extensive does not by itself constitute commencement of construction of any residential unit. However, where residential units are part of a building structure, as in the case of certain condominium and cooperative housing units, then digging of the footings or excavation of the building foundation constitutes commencement of construction for all units in that building.

(ii) The rules in subdivision (i) of this subparagraph are illustrated by the following examples:

Example 1. A location chosen for a housing development has extremely hilly terrain. In order to make the location suitable for development, the builder moves large amounts of earth and places it elsewhere on the location. In addition, the earth material which has been moved must be compacted according to government specifications in order to provide a stable base. Such activities constitute land preparation and, therefore, do not constitute the commencement of construction.

Example 2. A location chosen for a housing development has swampy and marshy terrain. In order to make the location suitable for development the builder utilizes large quantities of fill. This activity constitutes land preparation and does not constitute commencement of construction.

Example 3. Assume the same facts as in either *Example 1* or *Example 2* except that the builder also constructs an earthen pad of compacted fill specifically prepared for a particular residential structure and not merely as a part of the overall land preparation. Construction of the compacted earthen pad is considered in the same light as excavation of the building foundation and accordingly constitutes commencement of construction.

(2) Construction of a factory-made home (as defined in paragraph (e) of § 1.44-5) is considered to have commenced when construction of important parts of the factory-made home has commenced. For this purpose, commencement of construction of important parts means the cutting and shaping or welding of structural components for a specific identifiable factory-made home, whether the work was done by the manufacturer of the home or by a subcontractor thereof.

(b) ***Acquisition and occupancy.*** The residence must be acquired and occupied by the taxpayer after March 12, 1975, and before January 1, 1977. For this purpose a taxpayer “acquires” a residence when legal title to it is conveyed to him at settlement, or he has possession of it pursuant to a binding purchase contract under which he makes periodic payments until he becomes entitled under the contract to demand conveyance of title. A taxpayer “occupies” a residence when he or his spouse physically occupies it. Thus, for example, moving of furniture or other household effects into the residence or physical occupancy by a dependent child of the taxpayer is not “occupancy” for purposes of this paragraph. The credit may be claimed when both the acquisition and occupancy tests have been satisfied. Thus, where a taxpayer meets the acquisition and occupancy tests set forth above after March 12, 1975, and before January 1, 1976, the credit is allowable for 1975. Where a taxpayer occupied a residence prior to March 13, 1975, without having acquired it (as where his occupancy was pursuant to a leasing arrangement pending settlement under a binding contract to purchase or pursuant to a leasing arrangement where a written option to purchase was contained in the original lease agreement) he will nonetheless satisfy the acquisition and occupancy tests set forth above if he acquires the residence and continues to occupy it after March 12, 1975, and before January 1, 1977.

(c) ***Binding contract.*** Except in the case of self-construction, the new principal residence must be acquired by the taxpayer (within the meaning of paragraph (b) of this section) under a binding contract entered into by the taxpayer before January 1, 1976. An otherwise binding contract for the purchase of a residence which is conditioned upon the purchaser's obtaining a loan for the purchase of the residence (including conditions as to the amount or interest rate of such loan) is considered binding notwithstanding that condition.

(d) ***Self-constructed residence.*** A self-constructed residence (as defined in paragraph (d) of § 1.44-5) must be occupied by the taxpayer before January 1, 1977. Where self-construction of a principal residence was begun before March 13, 1975, only that portion of the basis of the property allocable to construction after March 12, 1975, and before January 1, 1977, shall be taken into consideration in determining the amount of the credit allowable. For this purpose, the portion of the basis attributable to the pre-March 13 period includes the total cost of land acquired (as defined in paragraph (b) of this section) prior to March 13, 1975, on which the new principal residence is constructed and the cost of expenditures with respect to construction work performed prior to March 13, 1975. The costs incurred in stockpiling materials for later stages of construction, however, are not allocated to the pre-March 13 period. Thus, for example, if prior to March 13, 1975, a taxpayer who qualifies for the credit has constructed a portion of a residence at a cost of $10,000 (including the cost of the land purchased prior to March 13, 1975) and the total cost of the residence is $40,000 and the taxpayer's basis after the application of section 1034(e) (relating to the reduction of basis of new principal residence where gain is not recognized upon the sale of the old residence) is $36,000, the amount subject to the credit will be $27,000:

($30,000 ÷ $40,000) × $36,000.

[T.D. 7391, 40 FR 55852, Dec. 2, 1975; 40 FR 58138, Dec. 15, 1975]

§ 1.44-3 Certificate by seller.

(a) ***Requirement of certification by seller.*** Taxpayers claiming the credit should attach Form 5405, Credit for Purchase or Construction of New Principal Residence, to their tax returns on which the credit is claimed. Except in the case of self-construction (as defined in § 1.44-5(d)), taxpayers must attach a certification by the seller that construction of the residence began before March 26, 1975, and that the purchase price is the lowest price at which the residence was offered for sale after February 28, 1975. For purposes of section 44(e)(4) and this section, the term “price” generally does not include costs of acquisition other than the amount of the consideration from the purchaser to the seller. However, for rules relating to adjustments in price due to changes in financing terms and closing costs see paragraph (d)(2) of this section.

(b) ***Form of certification.*** The following form of the certification statement is suggested:

> I certify that the construction of the residence at (specify address) was begun before March 26, 1975, and that this residence has not been offered for sale after February 28, 1975 in a listing, a written private offer, or an offer by means of advertisement at a lower purchase price than (state price), the price at which I sold the residence to (state name, present address, and social security number of purchaser) by contract dated (give date).
>
> (Date, seller's signature and taxpayer identification number.)

However, any written certification filed by the taxpayer will be accepted provided that such certification is signed by the seller and states that construction of the residence began before March 26, 1975, and that the purchase price of the residence is the lowest price at which the residence was offered for sale after February 28, 1975. With regard to factory-made homes the seller, in the absence of his own knowledge as to the commencement of construction, may attach to his own certification a certification from the manufacturer that construction began before March 26, 1975, and may certify based on the manufacturer's certification. It is suggested that both certifications include the serial number, if any, of the residence.

(c) ***Offer to sell.***

(1) For purposes of section 44(e)(4) and this section, an offer to sell is limited to an offer to sell a specified residence at a specified purchase price.

(2) An “offer” includes any written offer, whether made to a particular purchaser or to the public, and any offer by means of advertising. Advertising includes an offer to sell published by billboards, flyers, brochures, price lists (unless the lists are exclusively for the internal use of the seller and are not made available to the public), mailings, newspapers, periodicals, radio, or television. The listing of a property with a real estate agency, the filing of a prospectus and the registration of construction plans and price lists with the appropriate authorities (in the case of condominiums or cooperative housing developments) are to be considered offers made to the public.

(3) An offer to sell a specified residence includes:

(i) Both an offer to sell an existing residence and an offer to build and sell a residence of substantially the same design or model as that purchased by the taxpayer on the same lot as that on which the taxpayer's new principal residence was constructed. It does not include an offer to sell the same model residence on a different lot. Where a residence of a particular design or model is offered at a specific base price, additions of property to the residence, no matter how extensive, will not result in the residence being treated as a different residence for the purpose of determining the lowest offer (as defined in paragraph (f) of § 1.44-5).

(ii) In the case of a condominium or cooperative housing development where units are offered for sale on the basis of models (e.g., all Model C two-bedroom apartments sell at a specified base price), an offer to sell a specified residence includes an offer to sell a specific type of unit (with appropriate adjustments to be made for the location of such unit and as provided in paragraph (d) of this section).

(iii) In the case of a factory-made home, an offer to sell a specified residence includes an offer to sell the same model home as that purchased by the taxpayer, provided that the offer is made after the seller has the right to sell the home purchased by the taxpayer (*i.e.,* has that specific home in his inventory). However, it does not include an offer to sell such home with land which is not included in the taxpayer's purchase nor an offer to sell such home without land which is included in the taxpayer's purchase. Appropriate adjustments to a prior offer shall be made as provided in paragraph (d) of this section, including adjustments for any delivery and installation charges as provided in paragraph (d)(3).

(iv) The rules of this subparagraph may be illustrated by the following examples:

Example 1. In March 1975 A advertised colonial-style homes on section I of subdivision C at a base price of $40,000. At the time none of the homes had been completed but construction of all homes on section I was commenced before March 26, 1975. After one-half of the homes were

sold, A offers to sell the remaining homes in May 1975 at a base price of $45,000. Under the facts above the base price of $45,000 is not the lowest offer since the seller had offered to sell the same model home on the same lot at a lower purchase price after February 28, 1975.

Example 2. In June 1975 A offers houses, otherwise qualifying, on section II for the first time for a base price of $50,000. They are colonial homes and substantially the same as the homes he previously offered on section I. Under the facts stated above the base price of $50,000 is the lowest offer since the same model home on the same lot was not previously offered for sale.

Example 3. In March 1975 B, a condominium developer, offers to sell any two-bedroom unit in a particular high rise condominium for $45,000 with an added $5,000 for units with a lakefront view and an additional $2,000 for units on higher floors. With regard to all two-bedroom units in the condominium an offer to sell a specified residence at a specified purchase price has been made. This is true even though at the time of the offer construction had not reached the floor on which the particular unit will be located.

(4) A specified purchase price means a stated definite price for a particular residence or a specific base price for a residence of a particular model or design. An offer to sell for an indefinite price (e.g., an advertisement that all houses sell in the $40,000's) is not considered an offer to sell at a specified purchase price.

(5) An offer to sell includes an offer to sell subject to special conditions imposed by the seller. Thus, if the lowest price at which a house was advertised was "at $40,000 for March only", the $40,000 price would be the lowest offer. However, certain conditions may necessitate adjustments in determining the lowest offer. See paragraph (d) of this section.

(6) An offer to sell two or more residences together as for example, in a bulk sale shall be disregarded, even though each residence is assigned a specific purchase price for the purpose of such a sale. With regard to factory-made homes an offer to sell does not include an offer made by the manufacturer to a dealer in such homes.

(7)

(i) Where new residences are purchased at a foreclosure sale (including a conveyance by the owner in lieu of foreclosure) and prior to the foreclosure sale such residences had been offered for sale by the foreclosure seller at specified prices, the foreclosure purchaser is bound by such prices in determining the lowest offer. He is not bound by the prices paid to the foreclosure seller since such prices do not constitute voluntary offers.

(ii) For this purpose, if the foreclosure seller and foreclosure purchaser are not related parties (as defined in subdivision (iii) of this subparagraph), and if the foreclosure purchaser does not have knowledge of the date of commencement of construction and the lowest offer made by such seller with respect to each of the foreclosed residences, the foreclosure purchaser must request and try to obtain from the foreclosure seller a certificate specifying such facts. Upon a subsequent sale of a particular residence by the foreclosure purchaser, he must certify whether the price is the lowest offer for that particular residence based on the certification of the foreclosure seller, a copy of which must be attached to the certification of the foreclosure purchaser. If the foreclosure seller refuses to so certify, the foreclosure purchaser must make a reasonable effort to determine the date construction commenced and the lowest offer made by the foreclosure seller. For this purpose, reasonable effort includes the effort to locate and examine advertising and listings published or used by the foreclosure seller. If the foreclosure seller and foreclosure purchaser are related parties (as defined in subdivision (iii) of this

subparagraph), the foreclosure purchaser will be considered as having knowledge of the date of the commencement of construction and the lowest offer made by such seller with respect to each of the foreclosed residences, and, upon a subsequent sale of a particular residence by the foreclosure purchaser, he must comply with the certification requirements prescribed by paragraphs (a) and (b) of this section.

(iii) For purposes of this subparagraph related parties shall include the relationships described in subparagraph (2) of § 1.44-5(c), and the constructive ownership rules of section 318 shall apply, but family members for this purpose shall include spouses, ancestors, and lineal descendants.

(d) ***Adjustments in determining lowest price.***

(1)

(i) In determining whether a residence was sold at the lowest offer appropriate adjustment shall be made for differences in the property offered and in the terms of the sale. Where the sale to the taxpayer includes property which was not the subject of the prior offer or excludes property which was included in the prior offer, the amount of the prior offer shall be adjusted to reflect the fair market value of such property, provided that, in the case of property included in the sale which was not a part of the residence at the time of execution of the contract of purchase, the taxpayer had the option to require inclusion or exclusion of such property. The fair market value of any excluded property is to be determined at the time of the prior offer, while all additions are to be valued at their fair market value on the date of execution of the contract of sale. If a seller increases his present offer to include financing or other costs of the seller in connection with his ownership of the residence, the present offer does not qualify as being the lowest offer.

(ii) The rules in subdivision (i) of this subparagraph are illustrated by the following examples:

Example 1. A offered to sell a new home without a garage for $35,000. Having found no buyers A added a garage and sold the home for $40,000. At the time the contract of sale was executed the fair market value of the garage was $5,000. The offer to sell for $40,000 qualifies since it equals the seller's lowest offer plus the fair market value of the garage.

Example 2. B, unable to sell colonial-style homes presently under construction and previously offered for sale for $40,000, makes extensive changes in decor and identifies the homes as his new Williamsburg model. The Williamsburg models are not different residences for purposes of this section. To the extent that the additions have not yet been added at the time of execution of a contract of sale, in order to qualify for the credit the taxpayer must have the option as to whether to include these additions, and if these additions are included B must charge no more than the fair market value of the additions on that date of execution of the contract of sale.

(2) Appropriate adjustment to a prior offer to sell shall be made for differences in financing terms and closing costs which increase the seller's actual net proceeds and the purchaser's actual costs. A seller may pass on to the purchaser without affecting the purchase price only those additional amounts he is required to expend in connection with such differences. The seller may not by changing the financing terms or closing costs indirectly increase the purchase price. For these purposes closing costs include all charges paid at settlement for obtaining the mortgage loan and transferring real estate title. Thus, for example, where a seller previously offered a residence for sale for $40,000 and agreed to pay financing “points” required by the mortgagee, and now offers the same residence also for $40,000 but requires the purchaser to pay the points, the present offer does not constitute the lowest offer. On the other hand, a prior offer to sell based upon a large down

payment by the prospective purchaser may be adjusted to reflect the additional costs to the seller of accepting a small down payment from the taxpayer. For purposes of determining the seller's net proceeds, proceeds received by all related parties within the meaning of section 318 must be taken into account. For purposes of determining the lowest offer, where an offer provided for a rebate (e.g., of cash or of a contribution toward mortgage payments) or included, without additional charge or at less than fair market value, property not normally included in the sale of a residence (e.g., an automobile), such offer must be reduced by the amount of such rebate or by the amount by which the fair market value of such property at the time of the offer exceeds the amount paid for it by the purchaser. Thus, where a residence was advertised for sale at $40,000, but the seller agreed to pay $200 a month on the purchaser's mortgage for 10 months, such residence is considered to have been offered for sale at $38,000.

(3) In the case of a factory-made home, where delivery and installation costs are included in the specified base price of such home an appropriate adjustment is to be made in such specified base price for differences in the fair market value of the delivery and installation in determining the lowest offer.

(e) ***Civil and criminal penalties.*** If a person certifies that the price for which the residence was sold does not exceed the lowest offer and if it is found that the price for which the residence was sold exceeded the lowest offer, then such person is liable (under section 208(b) of the Tax Reduction Act of 1975) to the purchaser for damages in an amount equal to three times the excess of the certified price over the lowest offer plus reasonable attorney's fees. No income tax deduction shall be allowed for two-thirds of any amount paid or incurred pursuant to a judgment entered against any person in a suit based on such liability. However, attorney's fees, court costs, and other such amounts paid or incurred with respect to such suit which meet the requirements of section 162 are deductible under that section. In addition, an individual who falsely certifies may be subject to criminal penalties. For example, section 1001 of title 18 of the United States Code provides as follows:

> **§ 1001 Statements or entries generally.**
>
> Whoever, in any matter within the jurisdiction of any department or agency of the United States knowingly and willfully falsifies, conceals or covers up by any trick, scheme, or device a material fact, or makes any false, fictitious or fraudulent statements or representations, or makes or uses any false writing or document knowing the same to contain any false, fictitious or fraudulent statement or entry, shall be fined not more than $10,000 or imprisoned not more than five years, or both.

The treble damages and criminal sanctions provided under this paragraph apply only with regard to false certification as to the lowest offer, not to false certification as to commencement of construction. However, with regard to false certification as to commencement of construction there may exist contractual or tort remedies under State law.

(f) ***Denial of credit.*** In the absence of the taxpayer's participation in, or knowledge of, a false certification by the seller, the credit is not denied to a taxpayer who otherwise qualifies for the credit solely because the seller has falsely certified that the new principal residence was sold at the lowest offer. However, if certification as to the commencement of construction is false, no credit is allowed since such residence does not qualify as a new principal residence construction of which began before March 26, 1975.

[T.D. 7391, 40 FR 55852, Dec. 2, 1975]

§ 1.44-4 Recapture for certain dispositions.

(a) *In general.*

(1) Under section 44(d) except as provided in paragraphs (b) and (c) of this section, if the taxpayer disposes of property, with respect to the purchase of which a credit was allowed under section 44(a), at any time within 36 months after the date on which he acquired it (or, in the case of construction by the taxpayer, the date on which he first occupied it as his principal residence), then the tax imposed under chapter 1 of the Code for the taxable year in which the replacement period (as provided under subparagraph (2) of this paragraph) terminates is increased by an amount equal to the amount allowed as a credit for the purchase of such property.

(2) The replacement period is the period provided for purchase of a new principal residence under section 1034 of the Code without recognition of gain on the sale of the old residence. In the case of residences sold or exchanged after December 31, 1974, it is generally 18 months in the case of acquisition by purchase and 2 years in the case of construction by the taxpayer provided, however, that such construction has commenced within the 18-month period. Thus, a calendar-year taxpayer who disposes of his old principal residence in December 1975 and does not qualify under paragraph (b) or (c) of this section will include the amount previously allowed as additional tax on his 1977 tax return.

(3) Except as provided in paragraphs (b) and (c) of this section, section 44(d) applies to all dispositions of property, including sales (including foreclosure sales), exchanges (including tax-free exchanges such as those under sections 351, 721, and 1031), and gifts.

(4) In the case of a husband and wife who were allowed a credit under section 44(a) claimed on a joint return, for the purpose of section 44(d) and this section the credit shall be allocated between the spouses in accordance with the provisions of paragraph (b)(3) of § 1.44-1.

(b) *Acquisition of a new residence.*

(1) Section 44(d)(1) and paragraph (a) of this section shall not apply to a disposition of property with respect to the purchase of which a credit was allowed under section 44(a) in the case of a taxpayer who purchases or constructs a new principal residence (within the meaning of § 1.44-5(a)) within the applicable replacement period provided in section 1034. In determining whether a new principal residence qualifies for purposes of this section the rules relating to construction, acquisition, and occupancy under § 1.44-2 do not apply. Where a disposition has occurred and the taxpayer's purchase (or construction) costs of a new principal residence are less than the adjusted sales price (as defined in section 1034(b)) of the old residence, the tax imposed by chapter 1 of the Code for the taxable year following the taxable year during which disposition occurs is increased by an amount which bears the same ratio to the amount allowed as a credit for the purchase of the old residence as

(i) the adjusted sales price of the old residence (within the meaning of section 1034), reduced (but not below zero) by the taxpayer's cost of purchasing (or constructing) the new residence (within the meaning of such section) bears to

(ii) the adjusted sales price of the old residence.

(2) The rules of subparagraph (1) of this paragraph may be illustrated by the following example:

Example. On July 15, 1975, A purchases a new principal residence for a total purchase price of $40,000. The property meets the tests of § 1.44-2, and A is allowed a credit of $2,000 on his 1975 tax return. On January 15, 1977 (within 36 months after acquisition) A sells his residence for an adjusted sales price of $50,000 and on March 15, 1977, purchases a new principal residence at a cost of $40,000. Since the new principal residence was purchased within the 18-month replacement period (provided in section 1034), the amount recaptured is limited to $400, determined by multiplying the amount of the credit allowed ($2,000) by a fraction, the numerator of which is $10,000 (determined by reducing the adjusted sales price of the old residence ($50,000) by A's cost of purchasing the new principal residence ($40,000)) and the denominator of which is $50,000 (the adjusted sales price). Therefore, A's tax liability for 1978, the year following the taxable year in which the disposition occurred, is increased by $400.

(c) ***Certain involuntary dispositions.*** Section 44(d)(1) and paragraph (a) of this section shall not apply to the following:

(1) A disposition of a residence made on account of the death of any individual having a legal or equitable interest therein occurring during the 36-month period described in paragraph (a) of this section,

(2) A disposition of the residence if it is substantially or completely destroyed by a casualty described in section 165(c)(3),

(3) A disposition of the residence if it is compulsorily and involuntarily converted within the meaning of section 1033(a), or

(4) A disposition of the residence pursuant to a settlement in a divorce or legal separation proceeding where the other spouse retains the residence as principal residence (as defined in § 1.44-5(a)).

[T.D. 7391, 40 FR 55854, Dec. 2, 1975; 40 FR 58138, Dec. 15, 1975]

§ 1.44-5 Definitions.

For purposes of section 44 and the regulations thereunder—

(a) ***New principal residence.*** The term "new principal residence" means a principal residence, the original use of which commences with the taxpayer. The term "principal residence" has the same meaning as under section 1034 of the Code. For this purpose, the term "residence" includes, without being limited to, a single family structure, a residential unit in a condominium or cooperative housing project, a townhouse, and a factory-made home. In the case of a tenant-stockholder in a cooperative housing corporation references to property used by the taxpayer as his principal residence and references to the residence of a taxpayer shall include stock held by the tenant-stockholder in a cooperative housing project provided, however, that the taxpayer used as his principal residence the house or apartment which he was entitled as such stockholder to occupy. "Original use" of the new principal residence by the taxpayer means that such residence has never been used as a residence prior to its use as such by the taxpayer. For this purpose, a residence will qualify if the first occupancy was by the taxpayer pursuant to a lease arrangement pending settlement under a binding contract to purchase or pursuant to a lease arrangement where a written option to purchase the then existing residence was contained in the original lease agreement.

A renovated building does not qualify as new, regardless of the extent of the renovation nor does a condominium conversion qualify.

(b) *Purchase price* —

(1) ***General rule.*** For purposes of section 44(a) and § 1.44-1, the term "purchase price" means the adjusted basis of the new principal residence on the date of acquisition and includes all amounts attributable to the acquisition or construction, but only to the extent that such amounts constitute capital expenditures and are not allowable as deductions in computing taxable income. Such capital expenditures include but are not limited to the cost of acquisition or construction, title insurance, attorney's fees, transfer taxes, and other costs of transfer. For these purposes the adjusted basis of a factory-made home includes the cost of moving the home and setting it up as the taxpayer's principal residence only where such cost is included in the base price of the residence; it also includes the purchase price of the land on which the home is located, but only if such land was purchased by the taxpayer after March 12, 1975 and only if the taxpayer acquired the land prior to or in conjunction with the acquisition of such factory-made home. However, the adjusted basis does not include any expenditures involved in connection with the leasing of land on which the factory-made home is located. In the case of factory-made homes the adjusted basis includes furniture only where it is included in the base price of the unit.

(2) ***Sale of old principal residence.***

(i) The adjusted basis is reduced by any gain from the sale or involuntary conversion of an old principal residence, which is not recognized due to the application of section 1033 or section 1034. However, no reduction will be made for any gain excluded from tax by reason of the special treatment provided under the tax laws in the case of a sale by a taxpayer who has attained age 65 (section 121 of the code).

(ii) The rules in subdivision (i) of this subparagraph are illustrated by the following examples:

Example 1. A sells an old principal residence for $30,000 which has an adjusted basis of $20,000. A reinvests the proceeds by purchasing a new principal residence for $40,000 (including settlement costs which are capital in nature), and this purchase satisfies the statutory criteria under section 1034 for nonrecognition of gain. The credit under section 44 applies with respect to $30,000 ($40,000 costs minus $10,000 unrecognized gain) of the cost of the new principal residence.

Example 2. B and C, two sisters, purchase a new principal residence as joint tenants with the right of survivorship for a total purchase price of $40,000. B has previously sold her old principal residence for $25,000 and a $10,000 gain on the sale has qualified for nonrecognition under section 1034. B contributes $25,000 and C contributes $15,000. The adjusted basis of the new principal residence is $30,000 representing the total purchase price of $40,000 less $10,000 representing unrecognized gain under section 1034. The total credit allowable, therefore, is $1,500. Since joint tenants are treated as equal owners and since allocation of the credit is made in proportion to the taxpayer's respective ownership interests in such residence B and C each will receive a credit of $750.

Example 3. Taxpayer D is 65 years old and sells his old principal residence for $20,000 excluding all gain under section 121. He then purchases a new principal residence for $30,000. D's adjusted basis in his new principal residence is $30,000, and he is allowed a credit of $1,500.

(3) ***Tie-in sales.*** In the case of a purchase of a new principal residence which is tied in to the transfer of other property by the seller to the purchaser, whether purportedly by sale or gift, the adjusted basis of the residence is reduced by the amount of the excess of the fair market value of such other property received over the amount, if any, purportedly paid for it by the purchaser of the residence.

For example, if a taxpayer receives a new car with a fair market value of $2,500 upon the purchase of a condominium apartment for a total purchase price of $40,000 (including settlement costs which are capital in nature) his adjusted basis in the residence for computation of the credit is $37,500.

(4) ***Basis of new principal residence.*** The taxpayer's basis in his new principal residence is not in any way affected by the allowance of the credit.

(c) ***Purchase*** —

(1) ***General rule.*** Except as provided in subparagraph (2) of this paragraph, the term “purchase” means any acquisition of property.

(2) ***Exceptions.***

(i) An acquisition does not qualify as a purchase for the purpose of this paragraph if the property is acquired from a person whose relationship to the person acquiring it would result in the disallowance of losses under section 267 or 707(b). Such persons include—

(A) The purchaser's spouse, ancestors and lineal descendants,

(B) Related corporations as provided under section 267(b)(2),

(C) Related trusts as provided under section 267(b), (4), (5), (6), and (7),

(D) Related charitable organizations as provided under section 267(b)(9), and

(E) Related partnerships as provided under section 707(b)(1).

For purposes of this subdivision the constructive ownership rules of section 267(c) shall apply except that paragraph (4) of section 267(c) shall be treated as providing that the family of an individual shall include only his spouse, ancestors, and lineal descendants.

(ii) An acquisition does not qualify as a purchase for the purpose of this paragraph if the basis of the property in the hands of the person acquiring such property is determined—

(A) In whole or in part by reference to the adjusted basis of such property in the hands of the person from whom acquired (e.g., a gift under section 1015), or

(B) Under section 1014(a) (relating to property acquired from a decedent).

(d) ***Self-construction.*** The term “self-construction” means the construction of a residence (other than a factory-made home) to the taxpayer's specifications on land already owned or leased by the taxpayer at the time of commencement of construction. Thus, where a taxpayer purchases land and either builds a residence himself or hires an architect and a contractor to build a residence on that land, the taxpayer has “self-constructed” the residence.

(e) ***Factory-made home.*** The term “factory-made homes” includes mobile homes, houseboats and prefabricated and modular homes.

(f) ***Lowest offer.*** The term “lowest offer” means the lowest price at which the residence was offered for sale after February 28, 1975.

[T.D. 7391, 40 FR 55855, Dec. 2, 1975]

§ 1.44B-1 Credit for employment of certain new employees.

(a) *In general* —

(1) ***Targeted jobs credit.*** Under section 44B a taxpayer may elect to claim a credit for wages (as defined in section 51(c) paid or incurred to members of a targeted group (as defined in section 51(d)). Generally, to qualify for the credit, the wages must be paid or incurred to members of a targeted group first hired after September 26, 1978. However, wages paid of incurred to a vocational rehabilitation referral (as defined in section 51(d)(2)) hired before September 27, 1978, may qualify for the credit if a credit under section 44B (as in effect prior to enactment of the Revenue Act of 1978) was claimed for the individual by the taxpayer for a taxable year beginning before January 1, 1979. The amount of the credit shall be determined under section 51. Section 280C(b) (relating to the requirement that the deduction for wages be reduced by the amount of the credit) and the regulations thereunder will not apply to taxpayers who do not elect to claim the credit.

(2) ***New jobs credit.*** Under section 44B (as in effect prior to enactment of the Revenue Act of 1978) a taxpayer may elect to claim as a credit the amount determined under sections 51, 52, and 53 (as in effect prior to enactment of the Revenue Act of 1978). Section 280C(b) (relating to the requirement that the deduction for wages be reduced by the amount of the credit) and the regulations thereunder will not apply to taxpayers who do not elect to claim the credit.

(b) ***Time and manner of making election.*** The election to claim the targeted jobs credit and the new jobs credit is made by claiming the credit on an original return, or on an amended return, at any time before the expiration of the 3-year period beginning on the last date prescribed by law for filing the return for the taxable year (determined without regard to extensions). The election may be revoked within the above-described 3-year period by filing an amended return on which the credit is not claimed.

(c) ***Election by partnership, electing small business corporation, and members of a controlled group.*** In the case of a partnership, the election shall be made by the partnership. In the case of an electing small business corporation (as defined in section 1371(a)), the election shall be made by the corporation. In the case of a controlled group of corporations (within the meaning of section 52(a) and the regulations issued thereunder) not filing a consolidlated return under section 1501, the election shall be made by each member of the group. In the case of an affiliated group filing a consolidated return under section 1501, the election shall be made by the group.

(Secs. 44B, 381, and 7805 of the Internal Revenue Code of 1954 (92 Stat. 2834, 26 U.S.C. 44B; 91 Stat. 148, 26 U.S.C. 381(c)(26); 68A Stat. 917, 26 U.S.C. 7805)

[T.D. 7921, 48 FR 52904, Nov. 23, 1983]

RESEARCH CREDIT—FOR TAXABLE YEARS BEGINNING BEFORE JANUARY 1, 1990

§ 1.41-0A Table of contents.

This section lists the paragraphs contained in §§ 1.41-0A, 1.41-3A, 1.41-4A and 1.41-5A.

§ 1.41-0A Table of contents.

§ 1.41-3A Base period research expense.

(a) Number of years in base period.

(b) New taxpayers.

(c) Definition of base period research expenses.

(d) Special rules for short taxable years.

(1) Short determination year.

(2) Short base period year.

(3) Years overlapping the effective dates of section 41 (section 44F).

(i) Determination years.

(ii) Base period years.

(4) Number of months in a short taxable year.

(e) Examples.

§ 1.41-4A Qualified research for taxable years beginning before January 1, 1986.

(a) General rule.

(b) Activities outside the United States.

(1) In-house research.

(2) Contract research.

(c) Social sciences or humanities.

(d) Research funded by any grant, contract, or otherwise.

(1) In general.

(2) Research in which taxpayer retains no rights.

(3) Research in which the taxpayer retains substantial rights.

(i) In general.

(ii) Pro rata allocation.

(iii) Project-by-project determination.

(4) Independent research and development under the Federal Acquisition Regulations System and similar provisions.

(5) Funding determinable only in subsequent taxable year.

(6) Examples.

§ 1.41-5A Basic research for taxable years beginning before January 1, 1987.

(a) In general.

(b) Trade or business requirement.

(c) Prepaid amounts.

(1) In general.

(2) Transfers of property.

(d) Written research agreement.

(1) In general.

(2) Agreement between a corporation and a qualified organization after June 30, 1983.

(i) In general.

(ii) Transfers of property.

(3) Agreement between a qualified fund and a qualified educational organization after June 30, 1983.

(e) Exclusions.

(1) Research conducted outside the United States.

(2) Research in the social sciences or humanities.

(f) Procedure for making an election to be treated as a qualified fund.

[T.D. 8930, 66 FR 295, Jan. 3, 2001]

§ 1.41-3A Base period research expense.

(a) ***Number of years in base period.*** The term "base period" generally means the 3 taxable years immediately preceding the year for which a credit is being determined ("determination year"). However, if the first taxable year of the taxpayer ending after June 30, 1981, ends in 1981 or 1982, then with respect to that taxable year the term "base period" means the immediately preceding taxable year. If the second taxable year of the taxpayer ending after June 30, 1981, ends in 1982 or 1983, then with respect to that taxable year the term "base period" means the 2 immediately preceding taxable years.

(b) ***New taxpayers.*** If, with respect to any determination year, the taxpayer has not been in existence for the number of preceding taxable years that are included under paragraph (a) of this section in the base period for that year, then for purposes of paragraph (c)(1) of this section (relating to the determination of average qualified research expenses during the base period), the taxpayer shall be treated as—

(1) Having been in existence for that number of additional 12-month taxable years that is necessary to complete the base period specified in paragraph (a) of this section, and

(2) Having had qualified research expenses of zero in each of those additional years.

(c) ***Definition of base period research expenses.*** For any determination year, the term "base period research expenses" means the greater of—

(1) The average qualified research expenses for taxable years during the base period, or

(2) Fifty percent of the qualified research expenses for the determination year.

(d) ***Special rules for short taxable years*** —

(1) ***Short determination year.*** If the determination year for which a research credit is being taken is a short taxable year, the amount taken into account under paragraph (c)(1) of this section shall be modified by multiplying that amount by the number of months in the short taxable year and dividing the result by 12.

(2) ***Short base period year.*** For purposes of paragraph (c)(1) of this section, if a year in the base period is a short taxable year, the qualified research expenses paid or incurred in the short taxable year are deemed to be equal to the qualified research expenses actually paid or incurred in that year multiplied by 12 and divided by the number of months in that year.

(3) ***Years overlapping the effective dates of section 41 (section 44F)*** —

(i) ***Determination years.*** If a determination year includes months before July 1981, the determination year is deemed to be a short taxable year including only the months after June 1981. Accordingly, paragraph (d)(1) of this section is applied for purposes of determining the base period expenses for such year. See section 221(d)(2) of the Economic Recovery Tax Act of 1981.

(ii) ***Base period years.*** No adjustment is required in the case of a base period year merely because it overlaps June 30, 1981.

(4) ***Number of months in a short taxable year.*** The number of months in a short taxable year is equal to the number of whole calendar months contained in the year plus fractions for any partially included months. The fraction for a partially included month is equal to the number of days in the month that are included in the short taxable year divided by the total number of days in that month. Thus, if a short taxable year begins on January 1, 1982, and ends on June 9, 1982, it consists of 5 and 9/30 months.

(e) ***Examples.*** The following examples illustrate the application of this section.

Example 1. X Corp., an accrual-method taxpayer using the calendar year as its taxable year, is organized and begins carrying on a trade or business during 1979 and subsequently incurs qualified research expenses as follows:

1979	$10x
1980	150x
1/1/81-6/30/81	90x
7/1/81-12/31/81	110x
1982	250x
1983	450x

(i) *Determination year 1981.* For determination year 1981, the base period consists of the immediately preceding taxable year, calendar year 1980. Because the determination year includes months before July 1981, paragraph (d)(3)(i) of this section requires that the determination year be treated as a short taxable year. Thus, for purposes of paragraph (c)(1) of this section, as modified by paragraph (d)(1) of this section, the average qualified research expenses for taxable years during the base period are $75x ($150x, the average qualified research expenses for the base period, multiplied by 6, the number of months in the determination year after June 30, 1981, and divided by 12). Because this amount is greater than the amount determined under paragraph (c)(2) of this section (50 percent of the determination year's qualified research expense of $110x, or $55x), the amount of base period research expenses is $75x. The credit for determination year 1981 is equal to 25 percent of the excess of $110x (the qualified research expenditures incurred during the determination year including only expenditures accrued on or after July 1, 1981, through the end of the determination year) over $75x (the base period research expenses).
(ii) *Determination year 1982.* For determination year 1982, the base period consists of the 2 immediately preceding taxable years, 1980 and 1981. The amount determined under paragraph (c)(1) of this section (the average qualified research expenses for taxable years during the base period) is $175x (($150x + $90x + $110x)/2). This amount is greater than the amount determined under paragraph (c)(2) of this section, (50 percent of $250x, or $125x). Accordingly, the amount of base period research expenses is $175x. The credit for determination year 1982 is equal to 25 percent of the excess of $250x (the qualified research expenses incurred during the determination year) over $175x (the base period research expenses).

(iii) *Determination year 1983.* For determination year 1983, the base period consists of the 3 immediately preceding taxable years 1980, 1981 and 1982. The amount determined under paragraph (c)(1) of this section (the average qualified research expenses for taxable years during the base period) is $200x (($150x + $200x + $250x)/3). The amount determined under paragraph (c)(2) of this section is $225x (50 percent of the $450x of qualified research expenses in 1983). Accordingly, the amount of base period research expenses is $225x. The credit for determination year 1983 is equal to 25 percent of the excess of $450x (the qualified research expenses incurred during the determination year) over $225x (the base period research expenses).

Example 2. Y, an accrual-basis corporation using the calendar year as its taxable year comes into existence and begins carrying on a trade or business on July 1, 1983. Y incurs qualified research expenses as follows:

7/1/83—12/31/83	$80x
1984	200x
1985	200x

(i) *Determination year 1983.* For determination year 1983, the base period consists of the 3 immediately preceding taxable years: 1980, 1981 and 1982. Although Y was not in existence during 1980, 1981 and 1982, Y is treated under paragraph (b) of this section as having been in existence during those years with qualified research expenses of zero. Thus, the amount determined under paragraph (c)(1) of this section (the average qualified research expenses for taxable years during the base period) is $0x (($0x + $0x + $0x)/3). The amount determined under paragraph (c)(2) of this section is $40x (50 percent of $80x). Accordingly, the amount of base period research expenses is $40x. The credit for determination year 1983 is equal to 25 percent of the excess of $80x (the qualified research expenses incurred during the determination year) over $40x (the base period research expenses).
(ii) *Determination year 1984.* For determination year 1984, the base period consists of the 3 immediately preceding taxable years: 1981, 1982, and 1983. Under paragraph (b) of this section, Y is treated as having been in existence during years 1981 and 1982 with qualified research expenses of zero. Because July 1 through December 31, 1983 is a short taxable year, paragraph (d)(2) of this section requires that the qualified research expenses for that year be adjusted to $160x for purposes of determining the average qualified research expenses during the base period. The $160x results from the actual qualified research expenses for that year ($80x) multiplied by 12 and divided by 6 (the number of months in the short taxable year). Accordingly, the amount determined under paragraph (c)(1) of this section (the average qualified research expenses for taxable years during the base period) is 53^{1}/_{3}$x (($0x + $0x + $160x)/3). The amount determined under paragraph (c)(2) of this section is $100x (50 percent of $200x). The amount of

base period research expenses is $100x. The credit for determination year 1984 is equal to 25 percent of the excess of $200x (the qualified research expenses incurred during the determination year) over $100x (the base period research expenses).

(iii) *Determination year 1985.* For determination year 1985, the base period consists of the 3 immediately preceding taxable years: 1982, 1983, and 1984. Pursuant to paragraph (b) of this section, Y is treated as having been in existence during 1982 with qualified research expenses of zero. Because July 1 through December 31, 1982, is a short taxable year, paragraph (d)(2) of this section requires that the qualified research expense for that year be adjusted to $160x for purposes of determining the average qualified research expenses for taxable years during the base period. This $160x is the actual qualified research expense for that year ($80x) multiplied by 12 and divided by 6 (the number of months in the short taxable year). Accordingly, the amount determined under paragraph (c)(1) of this section (the average qualified research expenses for taxable years during the base period) is $120x (($0x + $160x + $200x)/3). The amount determined under paragraph (c)(2) of this section is $100x (50 percent of $200x). The amount of base period research expenses is $120x. The credit for determination year 1985 is equal to 25 percent of the excess of $200x (the qualified research expenses incurred during the determination year) over $120x (the base period research expenses).

[T.D. 8251, 54 FR 21204, May 17, 1989. Redesignated by T.D. 8930, 66 FR 289, Jan. 3, 2001]

RULES FOR COMPUTING CREDIT FOR INVESTMENT IN CERTAIN DEPRECIABLE PROPERTY

§ 1.45-0 Table of contents.

This section lists the table of contents for §§ 1.45-1 through 1.45-12.

§§ 1.45-1—1.45-5 [Reserved]

§ 1.45-6 Increased credit amount.

(a) In general.

(b) Qualified facility requirements.

(c) Definition of nameplate capacity for purposes of determining maximum net output under section 45(b)(6)(B)(i).

(d) Applicability date.

§ 1.45-7 Prevailing wage requirements.

(a) Prevailing wage requirements.

(b) Wage determinations.

(c) Curing a failure to satisfy the prevailing wage requirements.

(d) Definitions.

(e) Applicability date.

§ 1.45-8 Apprenticeship requirements.

(a) Apprenticeship requirements.

(b) Labor hours requirement.

(c) Ratio requirement.

(d) Participation requirement.

(e) Examples.

(f) Exceptions to the apprenticeship requirements.

(g) Definitions.

(h) Applicability date.

§§ 1.45-9—1.45-11 [Reserved]

§ 1.45-12 Recordkeeping and reporting.

(a) In general.

(b) Recordkeeping for the prevailing wage and apprenticeship requirements.

(c) Recordkeeping for the prevailing wage requirements.

(d) Recordkeeping for the apprenticeship requirements.

(e) Satisfaction of the recordkeeping requirements.

(f) Applicability date.

§§ 1.45-1-1.45-5 [Reserved]

§ 1.45-6 Increased credit amount.

(a) ***In general.*** If a qualified facility (as defined in section 45) satisfies the requirements in paragraph (b) of this section, the amount of the renewable electricity production credit determined under section 45(a) (after the application of section 45(b)(1) through (5)) is equal to the credit determined under section 45(a) multiplied by five.

(b) ***Qualified facility requirements.*** A qualified facility satisfies the requirements of this paragraph (b) if it is one of the following—

(1) A facility with a maximum net output (as determined under paragraph (c) of this section) of less than one megawatt (as measured in alternating current);

(2) A facility the construction of which began prior to January 29, 2023; or

(3) A facility that meets the prevailing wage requirements of section 45(b)(7) and § 1.45-7, the apprenticeship requirements of section 45(b)(8) and § 1.45-8, and the recordkeeping and reporting requirements of § 1.45-12.

(c) ***Definition of nameplate capacity for purposes of determining maximum net output under section 45(b)(6)(B)(i).*** For purposes of determining whether a facility has a maximum net output of less than one megawatt (as measured in alternating current) for purposes of section 45(b)(6)(B)(i), nameplate capacity is determinative. *Nameplate capacity* for an electrical generating unit means the maximum electrical generating output in megawatts that the unit is capable of producing on a steady state basis and during continuous operation under standard conditions, as measured by the manufacturer and consistent with the definition provided in 40 CFR 96.202. If applicable, the International Standard Organization (ISO) conditions are used to measure the maximum electrical generating output or usable energy capacity.

(d) ***Applicability date.*** This section applies to qualified facilities placed in service in taxable years ending after June 25, 2024, and the construction of which begins after June 25, 2024. Taxpayers may apply this section to qualified facilities placed in service in taxable years ending on or before June 25, 2024, and qualified facilities placed in service in taxable years ending after June 25, 2024, the construction of which begins before June 25, 2024, provided that taxpayers follow this section in its entirety and in a consistent manner.

§ 1.45-7 Prevailing wage requirements.

(a) ***Prevailing wage requirements*** —

(1) ***In general.*** Except as provided in paragraphs (a)(2), (3), and (c) of this section, a taxpayer claiming or transferring (under section 6418) the increased credit amount under section 45(b)(6)(B)(iii) with respect to any qualified facility must satisfy the requirements of section 45(b)(7) and this section by ensuring that all laborers and mechanics employed by the taxpayer or any contractor or subcontractor in the construction of such facility, and with respect to any taxable year, for any portion of such taxable year that is within the 10-year period beginning on the date the qualified facility was placed in service, the alteration or repair of such facility, are paid wages at rates not less than the prevailing rates for construction, alteration, or repair of a similar character in the locality in which such facility is located (Prevailing Wage Requirements). If alteration or repair of a qualified facility occurs during any portion of such taxable year(s) within the 10-year period after the qualified facility was placed in service, the Prevailing Wage Requirements apply with respect to such taxable year(s) in which that alteration or repair occurs. If no alteration or repair work occurs during the taxable year(s) with respect to the qualified facility after the facility is placed in service, the taxpayer

is deemed to satisfy the Prevailing Wage Requirements with respect to such taxable year. Prevailing rates are those rates most recently determined by the Secretary of Labor in accordance with 40 U.S.C. chapter 31, subchapter IV (Davis-Bacon Act), and as set forth in paragraph (b) of this section. See paragraph (d) of this section for definitions of terms used in this section.

(2) ***Transition relief.*** Taxpayers are excepted from the Prevailing Wage Requirements with respect to any activities that would be considered construction, alteration, or repair of the qualified facility and that occurred prior to January 29, 2023.

(3) ***Relief for Indian Tribal governments.*** An Indian Tribal government, as defined in section 30D(g)(9), and including any subdivision, agency, or instrumentality of the Indian Tribal government, is excepted from the Prevailing Wage Requirements with respect to laborers and mechanics that are employees, within the meaning of section 3121(d)(2), of the Indian Tribal government. This paragraph (a)(3) also applies to a qualified facility that is subject to joint ownership arrangements that involve an Indian Tribal government, including any subdivision, agency, or instrumentality of the Indian Tribal government. However, any activity that would be considered construction, alteration, or repair of the qualified facility that is not performed by Indian Tribal government employees (within the meaning of section 3121(d)(2)), but that is instead performed by or through a contractor or subcontractor, is subject to the Prevailing Wage Requirements described in this paragraph (a).

(b) ***Wage determinations*** —

(1) ***In general.*** A taxpayer satisfies the Prevailing Wage Requirements with respect to a qualified facility, if the taxpayer ensures that laborers and mechanics employed by the taxpayer or any contractor or subcontractor in the construction, alteration, or repair of the facility are paid wages at rates not less than those set forth in the applicable wage determination issued by the Secretary of Labor pursuant to 40 U.S.C. 3142, 29 CFR part 1, and other implementing guidance for the specified type of construction in the geographic area where that facility is located. If the construction, alteration, or repair of a facility occurs in more than one geographic area, the taxpayer, contractor, or subcontractor must use the applicable wage determination for the work performed in each geographic area. Subject to the requirements of this section, the applicable wage determination is a general wage determination described in paragraph (b)(2) of this section (including any additional classifications and wage rates described in paragraph (b)(3) of this section), or a supplemental wage determination described in paragraph (b)(3) of this section.

(2) ***General wage determinations*** —

(i) ***In general.*** Except as provided in paragraph (b)(3) of this section, to satisfy the Prevailing Wage Requirements described in paragraph (a) of this section with respect to a qualified facility, taxpayers must ensure that laborers and mechanics employed by the taxpayer or any contractor or subcontractor in the construction, alteration, or repair of the facility are paid wages at rates not less than those set forth in the applicable general wage determination(s) published by the U.S. Department of Labor on the approved website. The applicable general wage determination is the general wage determination in effect for the specified type of construction in the geographic area at the time a contract for the construction, alteration, or repair of the facility is executed by the taxpayer (or the taxpayer's designee, assignee, or agent) and any contractor. The applicable general wage determination will continue in effect for any additional contracts executed by such contractor with any subcontractors with respect to the construction, alteration, or repair of the facility. In the absence of a contract (or if the date of

execution of the contract cannot be reasonably determined), the applicable general wage determination is the general wage determination in effect for the specified type of construction in the geographic area when the construction, alteration, or repair of the facility starts.

(ii) ***Wage determinations applicable to Indian Tribal governments.*** If the taxpayer is an Indian Tribal government, as defined in section 30D(g)(9), including any subdivision, agency, or instrumentality of the Indian Tribal government, and the construction, alteration, or repair of a qualified facility occurs on Indian land, as defined in 25 U.S.C. 3501(2), that encompasses or overlaps with more than one geographic area with respect to which the U.S. Department of Labor has issued a general wage determination, the Indian Tribal government may choose the general wage determination applicable for any one of those geographic areas and apply that general wage determination for work performed on any qualified facility that is located on the Indian land. This paragraph (b)(2)(ii) also applies to a qualified facility that is subject to joint ownership arrangements that involve an Indian Tribal government, including any subdivision, agency, or instrumentality of the Indian Tribal government. If the Indian Tribal government chooses to use a single general wage determination under this paragraph (b)(2)(ii), it must maintain and preserve records sufficient to document the applicable prevailing wage rates for each laborer and mechanic employed by the Indian Tribal government or any contractor or subcontractor with respect to each qualified facility on Indian land.

(3) ***Supplemental wage determinations and additional classifications and rates*** —

(i) ***Use of supplemental wage determinations and additional classifications and rates.*** In the event the Secretary of Labor has not issued a general wage determination for the relevant geographic area and type of construction for the facility, or the Secretary of Labor has issued a general wage determination for the relevant geographic area and type of construction, but one or more labor classifications for the construction, alteration, or repair work that will be done on the facility by laborers or mechanics is not listed, the taxpayer must ensure that laborers and mechanics employed by the taxpayer or any contractor or subcontractor in the construction, alteration, or repair of a facility are paid wages at rates not less than those set forth in a supplemental wage determination or in an additional classification and wage rate issued to the taxpayer by the U.S. Department of Labor upon request by the taxpayer, contractor, or subcontractor in accordance with paragraph (b)(3)(ii) of this section. A taxpayer, contractor, or subcontractor may also request a supplemental wage determination if the location of the facility involves work by covered laborers and mechanics that spans more than one contiguous geographic area.

(ii) ***Request for supplemental wage determinations and additional classifications and rates*** —

(A) ***Manner of making request.*** A taxpayer, contractor, or subcontractor requesting a supplemental wage determination or additional classification and wage rate under paragraph (b)(3)(i) of this section must submit the request to the U.S. Department of Labor at, U.S. Department of Labor, Wage and Hour Division, Branch of Construction Wage Determinations, Washington, DC 20210, by email at *IRAprevailingwage@dol.gov,* or such other address as may be prescribed in guidance and instructions issued by the Administrator of the Wage and Hour Division of the U.S. Department of Labor (Wage and Hour Division).

(B) ***Timing of supplemental wage determination requests.*** A taxpayer, contractor, or subcontractor should make requests for a supplemental wage determination no more than 90 days before the taxpayer (or the taxpayer's designee, assignee, or agent) expects

to execute the contract for the construction, alteration, or repair of the facility with a contractor. In the absence of a contract, the taxpayer, contractor, or subcontractor should make such requests no more than 90 days before construction, alteration, or repair of the facility starts.

(C) ***Timing of requests for prevailing wage rates for additional classifications.*** A request for prevailing wage rates for additional classifications can be made any time after a contract for the construction, alteration, or repair of a facility has been executed between the taxpayer (or the taxpayer's designee, assignee, or agent) and a contractor. In the absence of a contract, the taxpayer, contractor, or subcontractor should make such requests no more than 90 days before construction, alteration, or repair of the facility starts. If the taxpayer, contractor, or subcontractor cannot reasonably determine prior to execution of the contract between the taxpayer (or the taxpayer's designee, assignee, or agent) and the contractor or prior to the start of the construction, alteration, or repair work that an additional classification and wage rate is necessary, the taxpayer, contractor, or subcontractor should make such request as soon as practicable after determining that an additional classification and wage rate is necessary.

(D) ***Required information.*** The request for a supplemental wage determination or additional classification and wage rate must include the following information:

(*1*) The name of the taxpayer, contractor, or subcontractor requesting the supplemental wage determination or wage rate;

(*2*) The general wage determination(s), if any, applicable to construction, alteration, or repair of the facility;

(*3*) A description of the work to be performed, including the type(s) of construction involved and, if the project involves multiple types of construction, information indicating the expected cost breakdown by type of construction;

(*4*) The geographic area in which the facility is being constructed, altered, or repaired, including the name and address of the facility (if known);

(*5*) The date the taxpayer (or the taxpayer's designee, assignee, or agent) expects to enter into a contract with a contractor for which a supplemental wage determination is needed or the date of execution of the contract with a contractor for which a prevailing wage rate for an additional classification is needed;

(*6*) The start date of construction, alteration, or repair at the facility;

(*7*) The labor classification(s) needed for performance of the work on the facility (excluding those for which wage rates are available on an applicable general wage determination);

(*8*) The duties to be performed by each such labor classification on the facility;

(*9*) The proposed wage rate, including any bona fide fringe benefits, for each such labor classification;

(*10*) Any pertinent wage payment information that may be available;

(*11*) Any additional relevant information otherwise required by forms and instructions published by the U.S. Department of Labor; and

(12) Any additional information the taxpayer, contractor, or subcontractor wants the U.S. Department of Labor to consider.

(iii) ***Issuance of supplemental wage determinations and additional classifications and wage rates.*** After review, the Wage and Hour Division will notify the taxpayer, contractor, or subcontractor as to the supplemental wage determination or the labor classifications and wage rates to be used for the type of work in question in the geographic area in which the facility is located. Supplemental wage determinations issued by the Wage and Hour Division are effective for 180 calendar days from the date such determinations are issued. If a supplemental wage determination is not incorporated into the contract (or, in the absence of a contract, if construction has not started) during the 180-day period, the determination is no longer effective, and a new supplemental wage determination will need to be requested. The Wage and Hour Division will resolve requests for a prevailing wage rate for an additional classification within 30 days of receipt of the request or will advise the requester within the 30-day period that additional time is necessary.

(iv) ***Special rule for qualified facilities located offshore.*** If a general wage determination is not available, in lieu of requesting a supplemental wage determination for a qualified facility located in an offshore area within the outer continental shelf of the United States, a taxpayer, contractor, or subcontractor may rely on the general wage determination for the relevant category of construction that is applicable in the geographic area closest to the area in which the qualified facility will be located.

(4) ***Reconsideration and review.*** A taxpayer, contractor, or subcontractor may seek reconsideration and review by the Administrator of the Wage and Hour Division of a general wage determination, or a determination issued with respect to a request for a supplemental wage determination or additional classification and wage rate in accordance with the procedures set forth in 29 CFR 1.8 and 5.13 and any subsequent guidance issued by the U.S. Department of Labor. A taxpayer, contractor, or subcontractor may appeal the decision of the Administrator of the Wage and Hour Division to the U.S. Department of Labor's Administrative Review Board in accordance with the procedures set forth in 29 CFR part 7 and any subsequent guidance issued by the U.S. Department of Labor. Questions regarding wage determinations and rates may be referred to the Administrator of the Wage and Hour Division.

(5) ***Timing of wage determination.*** The applicable prevailing wage rates on a general wage determination are those in effect at the time a contract for the construction, alteration, or repair of the qualified facility is executed by the taxpayer (or the taxpayer's designee, assignee, or agent) and a contractor. After the qualified facility is placed in service, the applicable prevailing wage rates on a general wage determination for the alteration or repair of a qualified facility are those in effect at the time the contract for the alteration or repair work is executed by the taxpayer (or the taxpayer's designee, assignee, or agent) and a contractor. The applicable prevailing wage rates on a general wage determination at the time such contract is executed apply to all subcontractors of that contractor. If a taxpayer (or the taxpayer's designee, assignee, or agent) executes separate contracts with more than one contractor with respect to the construction, alteration, or repair of the qualified facility, then, for each such contract, the applicable prevailing wage rates with respect to any work performed by the contractor (and all subcontractors of the contractor) are determined at the time the contract is executed by the taxpayer (or the taxpayer's designee, assignee, or agent). If no contract exists with respect to the construction, alteration, or repair of the qualified facility (or if the date of execution of the relevant contract cannot be reasonably determined), the applicable prevailing wage rates on a general wage determination are those in effect at the time the construction, alteration, or repair work

starts. The applicable prevailing wage rates of a general wage determination generally remain valid for the duration of the work performed with respect to the construction, alteration, or repair of the qualified facility by the taxpayer, contractor, or subcontractor. A new general wage determination is required to be used if the contract between the taxpayer (or the taxpayer's designee, assignee, or agent) and the contractor for work on a facility is modified to include additional substantial construction, alteration, or repair work not within the scope of work of the original contract, or to require work to be performed for an additional time period not originally obligated, including if an option to extend the term of a contract for the construction, alteration, or repair is exercised. A new general wage determination is not required if the contractor is simply given additional time to complete its original commitment or if the additional construction, alteration, and/or repair work in the modification of the contract is merely incidental. In circumstances in which a new general wage determination is required, the applicable prevailing wage rates on a general wage determination are those in effect at the time the additional substantial work is agreed to or at the time when an option to extend the term of the contract is executed. If a taxpayer enters into a contract for alteration or repair work over an indefinite period of time that is not tied to the completion of any specific work, the applicable prevailing wage rates must be updated on an annual basis on the anniversary date of such contract. General wage determinations published on the U.S. Department of Labor approved website contain no expiration date and remain valid until revised, superseded, or canceled. Any supplemental wage determination issued under paragraph (b)(3) of this section applies without expiration from the time the taxpayer incorporates the supplemental wage determination into the contract provided that the supplemental wage determination is incorporated into the contract within 180 days of issuance of the supplemental wage determination. If there is no contract, any supplemental wage determination issued under paragraph (b)(3) of this section applies without expiration from the time construction, alteration, or repair starts provided the construction, alteration, or repair starts within 180 days of issuance of the supplemental determination. Any additional classification and wage rate issued under paragraph (b)(3) of this section applies without expiration from the earlier of the date of issuance or the first day in which work in the additional classification was performed. If a supplemental wage determination or additional classification and wage rate is issued after construction, alteration, or repair of the facility has started, the applicable prevailing rates apply retroactively to the date construction started.

(6) ***Payment of wages.*** All laborers and mechanics working on a qualified facility must be paid in the time and manner consistent with the regular payroll practices of the taxpayer, contractor, or subcontractor, as applicable. The payment of wages must be made without subsequent deduction or rebate on any account (except such payroll deductions as are required by the law or permitted by regulations issued by the Secretary of Labor), and must consist of the full amount of wages (including bona fide fringe benefits or cash equivalents thereof) due at the time of payment computed at rates not less than those contained in the applicable wage determination of the Secretary of Labor. A taxpayer may discharge its wage obligations for the payment of wages by paying the full amount in cash, by making payments to a bona fide fringe benefit provider or incurring costs for bona fide fringe benefits, or by a combination thereof. The taxpayer is solely responsible for ensuring that laborers and mechanics are paid wages not less than the prevailing rate whether employed directly by the taxpayer, a contractor, or a subcontractor in the construction, alteration, or repair of the qualified facility for purposes of claiming the increased credit amount under section 45(b)(6)(B)(iii). The rules set forth in 29 CFR 5.25 through 5.33, and any subsequent guidance issued by the U.S. Department of Labor apply with respect to costs for bona fide fringe benefits that may be credited for purposes of the payment of wages.

(7) ***Apprentices —***

(i) ***Rate of pay.*** Apprentices who perform work with respect to the construction, alteration, or repair of a qualified facility consistent with the requirements of section 45(b)(8) and § 1.45-8 may be paid wages at rates that are less than the rates that would otherwise apply under paragraph (a) of this section. Every apprentice must be paid wages at rates not less than the rates specified by the registered apprenticeship program for the apprentice's level of progress, expressed as a percentage of the journeyworker hourly rate specified for the apprentice's classification in the applicable wage determination. If the apprentice is working in a classification that is not part of the occupation of the registered apprenticeship program, the apprentice must be paid not less than the applicable wage rate on the wage determination for laborers or mechanics working in that classification. Any individual listed on payroll at an apprenticeship wage, who is not participating in a registered apprenticeship program, must be paid not less than the applicable wage rate on the wage determination for the classification of work actually performed to satisfy the Prevailing Wage Requirements. In the event the U.S. Department of Labor's Office of Apprenticeship or a State apprenticeship agency recognized by the U.S. Department of Labor's Office of Apprenticeship withdraws approval of an apprenticeship program, the taxpayer, contractor, or subcontractor will no longer satisfy the Prevailing Wage Requirements by paying apprentices less than the applicable predetermined rate for the work performed until an acceptable program is approved.

(ii) ***Bona fide fringe benefits.*** To satisfy the Prevailing Wage Requirements, apprentices must be paid bona fide fringe benefits in accordance with the provisions of the registered apprenticeship program. If the apprenticeship program does not specify the payment of bona fide fringe benefits, apprentices must be paid the full amount of bona fide fringe benefits listed on the wage determination for the applicable classification in cash or in kind.

(iii) ***Apprenticeship ratio.*** The allowance for payment of wages to apprentices at rates less than the applicable prevailing wage rates determined by the U.S. Department of Labor is subject to any applicable ratio of apprentices to journeyworkers required under the registered apprenticeship program and consistent with section 45(b)(8)(B) and § 1.45-8. Any apprentice performing construction, alteration, or repair work on the job site in excess of the ratio permitted under the registered program or the ratio applicable to the geographic area of the facility pursuant to 29 CFR 5.5(a)(4)(i) must be paid not less than the applicable wage rate on the wage determination for the work actually performed to satisfy the Prevailing Wage Requirements. Taxpayers, contractors, or subcontractors have the discretion to determine which apprentice(s) must receive the full prevailing wage rate for hours worked if the applicable ratio of apprentices to journeyworkers has not been met.

(iv) ***Reciprocity of ratios and wage rates.*** If a taxpayer, contractor, or subcontractor is performing construction, alteration, or repair work on a facility in a geographic area other than the geographic area in which an apprenticeship program is registered, the taxpayer, contractor, or subcontractor must comply with the apprentice-to-journeyworker ratios applicable within the geographic area in which the construction, alteration, or repair work is being performed. If there is no applicable ratio for the geographic area of the facility, the ratio specified in the registered apprenticeship program standard must be observed. The wage rates (expressed in percentages of the journeyworker's hourly rate) applicable within the geographic area in which the construction, alteration, or repair work is being performed must be observed.

(c) ***Curing a failure to satisfy the prevailing wage requirements*** —

(1) ***In general.*** If a taxpayer fails to ensure that all laborers and mechanics employed by the taxpayer or any contractor or subcontractor in the construction, alteration, or repair of a qualified facility are paid wages at rates not less than those set forth in the applicable wage determination(s), such taxpayer will be deemed to have satisfied the Prevailing Wage Requirements with respect to such facility for any year if the taxpayer makes the correction and penalty payments provided in paragraphs (c)(1)(i) and (ii) of this section.

(i) ***Correction payment.*** The taxpayer must pay any laborer or mechanic who was paid wages at a rate below the rate described in paragraph (b) of this section for any pay period during such year an amount equal to the sum of:

(A) The difference between the amount of wages paid to such laborer or mechanic for all hours worked during such period and the amount of wages required to be paid to such laborer or mechanic pursuant to paragraph (a) of this section for all hours worked during such period; and

(B) Interest on the amount determined under paragraph (c)(1)(i)(A) of this section at the Federal short-term rate as determined under section 6621 but substituting “6 percentage points” for “3 percentage points” in section 6621(a)(2).

(ii) ***Penalty payment.*** The taxpayer must pay a penalty equal to $5,000 multiplied by the total number of laborers and mechanics who were paid wages at a rate below the rate described in paragraph (b) of this section for any period during such year.

(iii) ***Correction and penalty payments not required if taxpayer ineligible for increased credit amount under section 45(b)(6)(B)(iii).*** If the taxpayer claims the increased credit amount under section 45(b)(6)(B)(iii) and does not satisfy the Prevailing Wage Requirements for the claimed increased credit amount, then the obligation to make correction and penalty payments under paragraphs (c)(1)(i) and (ii) of this section applies in order for the taxpayer to retain the credit. If the IRS determines that a taxpayer claiming the increased credit amount under section 45(b)(6)(B)(iii) failed to meet the Prevailing Wage Requirements and the taxpayer does not make the correction and penalty payments provided in paragraphs (c)(1)(i) and (ii) of this section, then no penalty is assessed under paragraph (c)(1)(ii) of this section, and the taxpayer is not eligible for the increased credit amount under section 45(b)(6)(B)(iii). Taxpayers that are not eligible to claim the increased credit amount may still be eligible to claim the base amount of the renewable electricity production credit under section 45(a) if they meet the requirements to claim the credit.

(iv) ***Correction and penalty payments in the event of a transfer pursuant to section 6418.*** To the extent an eligible taxpayer, as defined in section 6418(f)(2), has determined an increased credit amount under section 45(b)(6) and transferred such increased credit amount as part of a specified credit portion, the obligation to make correction and penalty payments under paragraphs (c)(1)(i) and (ii) of this section remains with the eligible taxpayer. The obligation for an eligible taxpayer to satisfy the Prevailing Wage Requirements becomes binding upon the earlier of the filing of the eligible taxpayer's return for the taxable year for which the specified credit portion is determined with respect to the eligible taxpayer, or the filing of the return of the transferee taxpayer for the year in which the specified credit portion is taken into account. If the IRS determines that the eligible taxpayer failed to meet the Prevailing Wage Requirements and the eligible taxpayer does not then make the correction and penalty payments provided in paragraphs (c)(1)(i) and (ii) of this section, then no penalty is assessed under paragraph (c)(1)(ii) of this section, and the eligible taxpayer is not eligible for the increased credit amount

determined under section 45(b)(6)(B)(iii). Section 6418 and the regulations under section 6418 control for determining the impact of an eligible taxpayer's failure to cure on any transferee taxpayer. The eligible taxpayer that is not eligible to claim the increased credit amount may still be eligible to claim the base amount of the renewable electricity production credit under section 45(a) if they meet the requirements to claim the credit.

(v) ***Special rule for laborers and mechanics who cannot be located.*** A taxpayer will be deemed to have paid a correction payment, under this paragraph (c)(1), to a laborer or mechanic who cannot be located if the taxpayer can establish that correction payments have been made. A taxpayer may establish that correction payments have been made by demonstrating compliance with the applicable State unclaimed property law and all Federal and State withholding and information reporting requirements with respect to the payments.

(vi) ***Examples.*** The provisions of this paragraph (c)(1) are illustrated by the following examples, which do not take into account any possible application of the enhanced correction and penalty payment requirements in the case of intentional disregard under paragraph (c)(3) of this section, the exception for wages paid before a determination by the U.S. Department of Labor under paragraph (c)(5) of this section, or the penalty waiver under paragraph (c)(6) of this section. In each example, assume that the taxpayer uses the calendar year as the taxpayer's taxable year.

(A) ***Example 1.*** Taxpayer A starts construction of a qualified facility on February 3, 2023. The facility is placed in service on October 10, 2023, and Taxpayer A claims the increased credit amount under section 45(b)(6)(B)(iii) on its 2023 tax return. Laborer X was employed in the construction, alteration, or repair of the facility in calendar year 2023 for 20 weeks and was paid on a weekly basis. Laborer X was paid wages below the prevailing wage rate for all pay periods in calendar year 2023. All other laborers and mechanics were paid wages at the prevailing wage rate. The aggregate difference between the amount of wages Laborer X was paid and the amount required to be paid under paragraph (a) of this section is $400 (that is, Laborer X worked 20 weeks during the year and was underpaid by $20 in each of those weeks). The amount of the correction payment Taxpayer A must make to Laborer X is equal to $400 plus interest from the date of each underpayment at the rate as determined under section 6621 but substituting “6 percentage points” for “3 percentage points” in section 6621(a)(2). The total number of laborers underpaid for any period in 2023 was one, so the total amount of the penalty payment that Taxpayer A must pay to the IRS to retain the increased credit amount is $5,000.

(B) ***Example 2.*** Taxpayer B starts construction of a qualified facility on January 30, 2023. The facility is placed in service on February 2, 2024. Taxpayer B claims the increased credit amount under section 45(b)(6)(B)(iii) on its 2024 tax return. Taxpayer B paid workers on a biweekly basis. Five laborers employed in the construction of the facility were paid wages at rates below the prevailing wage rates in 2023, with the difference between the amount they were paid and the amount of wages required to be paid under paragraph (a) of this section being $500 per laborer. One of those laborers remained employed in the construction of the facility in 2024 and was paid wages below the prevailing wage rate in 2024, with the difference between the amount the laborer was paid and the amount of wages required to be paid under paragraph (a) of this section being $100. All other laborers and mechanics involved in the construction, alteration, or repair of the facility were paid wages at the prevailing wage rates. Taxpayer B must make correction payments of $500 plus interest from the date of each underpayment at the rate as determined under

section 6621 but substituting “6 percentage points” for “3 percentage points” in section 6621(a)(2) to each of the five laborers that were underpaid in 2023, and a correction payment of $100 plus interest from the date of each underpayment at the rate as determined under section 6621 but substituting “6 percentage points” for “3 percentage points” in section 6621(a)(2) to the laborer that was underpaid in 2024. The total amount of the penalty payment that Taxpayer B must pay to the IRS to retain the increased credit amount is $30,000, which includes $5,000 for each laborer underpaid in 2023 and $5,000 for the laborer underpaid in 2024.

(C) ***Example 3.*** Taxpayer C starts construction of a qualified facility on January 30, 2023. The facility is placed in service on February 2, 2024. Taxpayer C claims the increased credit amount under section 45(b)(6)(B)(iii) on its 2024 tax return. Taxpayer C paid workers on a biweekly basis. Laborer Y was employed in the construction of the facility for 22 weeks in 2023 and was paid wages at rates below the prevailing wage rates for the first 20 weeks of her employment in the amount of $500 (that is, Laborer Y was underpaid $50 in each of the 10 biweekly periods). For the last biweekly pay period, Taxpayer C paid Laborer Y the correct prevailing rate for the work performed during the period, plus $500 for the amounts that were underpaid in the first 10 periods. All other laborers and mechanics involved in the construction, alteration, or repair of the facility were paid at the prevailing wage rates. Taxpayer C is required to make a correction payment to Laborer Y in the amount of the interest from the date of each underpayment at the rate as determined under section 6221 but substituting “6 percentage points” for “3 percentage points” in section 6221(a)(2) to the laborer that was underpaid in 2023. To retain the increased credit amount, Taxpayer C must make a penalty payment of $5,000 to the IRS with respect to Laborer Y.

(2) ***Deficiency procedures not to apply.*** The penalty payment required by paragraph (c)(1)(ii) of this section may be assessed and collected without regard to the deficiency procedures provided by subchapter B of chapter 63 of the Code. Any determination by the IRS disallowing a claim for the increased credit amount under section 45(b)(6) will be subject to the deficiency procedures of subchapter B of chapter 63.

(3) ***Intentional disregard*** —

(i) ***Application of section 45 (b)(7)(B)(iii).*** If the IRS determines that any failure to satisfy the Prevailing Wage Requirements in paragraph (a) of this section is due to intentional disregard of the requirements—

(A) The correction payment under paragraph (c)(1)(i) of this section is increased to three times the sum determined in paragraph (c)(1)(i) of this section; and

(B) The penalty payment under paragraph (c)(1)(ii) of this section is increased to $10,000 multiplied by the total number of laborers and mechanics who were paid wages at a rate below the rate described in paragraph (b) of this section for any period during such year.

(ii) ***Meaning of intentional disregard.*** A failure to ensure that any laborer or mechanic employed in the construction, alteration, or repair of a qualified facility is paid wages at the prevailing wage rate is due to intentional disregard if it is knowing or willful.

(iii) ***Facts and circumstances considered.*** The facts and circumstances that are considered in determining whether a failure to satisfy the Prevailing Wage Requirements is due to intentional disregard include, but are not limited to—

(A) Whether the failure was part of a pattern of conduct that includes repeated or systemic failures to ensure that the laborers and mechanics were paid wages at rates not less than the applicable prevailing wage rate, including failures to pay prevailing wages as required under other applicable laws;

(B) Whether the taxpayer took steps to determine or review the applicable classifications of laborers and mechanics, such as through a quarterly, or more frequent, review of the applicable classifications of laborers and mechanics according to the actual duties performed by those laborers and mechanics;

(C) Whether the taxpayer took steps to determine or review the applicable prevailing wage rate(s) for laborers and mechanics to ensure usage of correct rates by all contractors and subcontractors, such as through a quarterly, or more frequent, review of the prevailing wage rates;

(D) Whether the taxpayer promptly cured any failures to ensure that laborers and mechanics were paid wages at rates not less than the applicable prevailing rates;

(E) Whether the taxpayer has been required to make a penalty payment under paragraph (c)(1)(ii) of this section in previous years;

(F) Whether the taxpayer undertook (or engaged an independent third party to aid in conducting) a quarterly, or more frequent, review of wages paid to mechanics and laborers to ensure that wages at rates not less than the applicable prevailing wage rates were paid (including by reviewing payroll information of contractors and subcontractors or by requiring contractors and subcontractors to regularly provide payroll information to the taxpayer or a third party acting on behalf of the taxpayer);

(G) Whether the taxpayer included provisions in any contracts entered into with contractors that required the contractors and any subcontractors retained by the contractors to pay laborers and mechanics wages at rates not less than the prevailing wage rates and maintain records to ensure the taxpayer's compliance with recordkeeping requirements set forth in § 1.45-12;

(H) Whether the taxpayer posted in a prominent place at the qualified facility or otherwise provided written notice to laborers and mechanics during the construction, alteration, or repair of the qualified facility, the applicable wage rate(s) as determined by the U.S. Department of Labor for all classifications of work to be performed for the construction, alteration, or repair of the facility, that in order to be eligible to claim certain tax benefits, employers must ensure that laborers and mechanics are paid wages at rates not less than such wage rates, and instructions on how laborers and mechanics may contact the taxpayers' personnel departments or taxpayers' managers to report suspected failures to pay prevailing wages and/or suspected failures to classify workers in accordance with applicable wage determinations, employment tax violations, or violations of workplace standard laws without retaliation or adverse action;

(I) Whether laborers and mechanics were given the opportunity to acknowledge notice provided by the taxpayer, contractor, or subcontractor that in order to be eligible to claim certain tax benefits, taxpayers must ensure that laborers and mechanics employed by the taxpayer, contractor, or subcontractor in the construction of a qualified facility are paid wages at rates not less than prevailing wage rates;

(J) Whether the taxpayer had in place procedures whereby laborers and mechanics could report suspected failures to pay prevailing wages and/or suspected failures to classify workers in accordance with the wage determination of workers, employment tax violations, or violations of workplace standard laws to appropriate personnel departments or managers without retaliation or adverse action, and whether the taxpayer investigated such reports by laborers and mechanics and had internal controls to prevent failures to pay prevailing wages and classify workers in accordance with the wage determination of workers, employment tax violations, and violations of workplace standard laws;

(K) Whether all laborers and mechanics were provided with a written notice of the rights conferred by the whistleblower provisions of the Taxpayer First Act in section 7623(d);

(L) Whether all laborers and mechanics were provided with paystubs (or access to individual payroll records) reflecting the amount they were paid per pay period (including the specific hourly rate and all deductions from wages);

(M) Whether the taxpayer investigated any complaints of retaliation or adverse action resulting from, reports of suspected failures to pay prevailing wages and/or classify workers in accordance with applicable wage determinations, employment tax violations, or violations of workplace standard laws and took appropriate actions to remedy any retaliation or adverse action and prevent it from reoccurring;

(N) Whether the taxpayer, contractor, or subcontractor contracted with contractors who, at the time the work was performed, was known by the taxpayer, contractor, or subcontractor to be debarred by a municipality, State, or the U.S. Department of Labor for violations related to the underpayment of local, State, or Federal prevailing wages; and

(O) Whether the taxpayer failed to maintain and preserve records in accordance with § 1.45-12 sufficient to establish compliance with the prevailing wage requirements for relevant tax years.

(iv) ***Examples.*** The provisions of this paragraph (c)(3) are illustrated by the following examples, which take into account certain facts and circumstances described in paragraph (c)(3)(iii) of this section, that are considered in applying the enhanced correction and penalty payment requirements in the case of intentional disregard. These examples do not take into account any possible application of the exception for wages paid before a determination by the U.S. Department of Labor under paragraph (c)(5) of this section, or the penalty waiver under paragraph (c)(6) of this section. In each example, assume that the taxpayer uses the calendar year as the taxpayer's taxable year.

(A) ***Example 1.*** Taxpayer D failed to satisfy the Prevailing Wage Requirements with respect to the construction of a qualified facility. Taxpayer D did not include contract language that requires the payment of prevailing wages in the contract executed with the contractor nor did it require similar contract provisions in any subcontracts. Taxpayer D did not post in a prominent place at the qualified facility or otherwise notify any laborers or mechanics that in order to claim certain tax benefits (the increased credit amount described in section 45(b)(6)(B)(iii)) taxpayers must ensure that laborers and mechanics are paid wages at rates not less than prevailing wage rates for construction of the qualified facility. Taxpayer D did not have a process for laborers and mechanics to report suspected failures to pay prevailing wages and/or suspected failures to classify workers in accordance with applicable wage determinations. Additionally, Taxpayer D did not have a procedure for the

review of wages paid to laborers and mechanics to ensure that wages at rates not less than the applicable prevailing wage rate were paid, nor did Taxpayer D undertake any actual review of the wages paid to any laborers and mechanics employed in the construction of the qualified facility. Taxpayer D failed to maintain any records documenting wages paid to laborers and mechanics in connection with the construction of the facility. Considering all of the facts and circumstances, Taxpayer D's failure to satisfy the Prevailing Wage Requirements would be considered due to intentional disregard for purposes of this paragraph (c)(3) and Taxpayer D would be subject to the enhanced correction and penalty payments described in paragraph (c)(3)(i) of this section.

(B) ***Example 2.*** Taxpayer E failed to satisfy the Prevailing Wage Requirements with respect to the construction of a qualified facility. Taxpayer E included contract language that requires the payment of prevailing wages in the contract executed with the contractor and required similar language be included in all subcontracts. Taxpayer E posted in a prominent place at the qualified facility that in order to claim tax benefits (that is, the increased credit amount described in section 45(b)(6)(B)(iii)) employers must ensure that laborers and mechanics are paid wages at rates not less than prevailing wage rates for the construction of the qualified facility. Additionally, Taxpayer E created procedures for a quarterly review of the applicable classifications of laborers and mechanics according to the actual duties performed by those laborers and mechanics and the actual wages paid to laborers and mechanics. In cases in which reviews found any instance that a laborer or mechanic was paid wages at rates less than the applicable prevailing wage rates, Taxpayer E promptly cured the failure. Considering all of the facts and circumstances, Taxpayer E's failure to satisfy the Prevailing Wage Requirements would not be considered due to intentional disregard for purposes of this paragraph (c)(3) and Taxpayer E would not be subject to the enhanced correction and penalty payments described in paragraph (c)(3)(i) of this section. Taxpayer E would be subject to the normal correction and penalty payments described in paragraph (c)(1)(i) of this section.

(v) ***Rebuttable presumption of no intentional disregard.*** If a taxpayer makes the correction and penalty payments required by paragraphs (c)(1)(i) and (ii) of this section before receiving notice of an examination from the IRS with respect to a claim for the increased credit amount under section 45(b)(6), the taxpayer will be presumed not to have intentionally disregarded the Prevailing Wage Requirements in paragraph (a) of this section. The IRS may rebut this presumption based on the relevant facts and circumstances.

(4) ***Limitation on the availability of cure*** —

(i) ***180-day limit.*** In the case of a final determination by the IRS with respect to any failure by the taxpayer to satisfy the Prevailing Wage Requirements in paragraph (a) of this section, the cure provision in paragraph (c)(1) of this section does not apply unless the correction and penalty payments described in paragraphs (c)(1)(i) and (ii) of this section are made by the taxpayer on or before the date that is 180 days after the date of such determination.

(ii) ***Final determination.*** For purposes of paragraph (c)(4)(i) of this section, a final determination occurs on the date the IRS sends to the taxpayer a notice stating that the taxpayer has failed to satisfy the Prevailing Wage Requirements under paragraph (a) of this section.

(5) ***Exception for wages paid before a supplemental wage determination or additional classification and wage rate is issued by the U.S. Department of Labor Wage and Hour Division.*** If a taxpayer has requested a supplemental wage determination or an additional classification and wage rate from the Wage and Hour Division in accordance with paragraph (b)(3)(ii) of this section and the Wage and Hour Division makes a wage determination or issues an additional classification and wage rate determination after the construction, alteration, or repair of a qualified facility has started, the taxpayer will not be considered to have failed to meet the Prevailing Wage Requirements under paragraph (a) of this section with respect to wages paid to any mechanic or laborer whose wage rate was subject to the request and who was paid below the prevailing wage rate before the determination by the Wage and Hour Division if the taxpayer makes a payment within 30 days of the determination to each laborer or mechanic equal to the difference between the amount of wages paid to such laborer or mechanic before the determination and the amount of wages required to be paid to such laborer or mechanic pursuant to paragraph (a) of this section during such period.

(6) ***Waiver of the penalty*** —

(i) ***Availability of waiver.*** The penalty payment required by paragraph (c)(1)(ii) of this section to cure a failure to satisfy the Prevailing Wage Requirements in paragraph (a) of this section is waived with respect to a laborer or mechanic employed in the construction, alteration, or repair of a qualified facility during a calendar year if the taxpayer makes the correction payment required by paragraph (c)(1)(i) of this section by the last day of the first month that follows the end of the calendar quarter in which the failure occurred, and:

(A) The laborer or mechanic is paid wages at rates less than the amount required to be paid under paragraph (b) of this section for not more than 10 percent of all pay periods of the calendar year (or part thereof) during which the laborer or mechanic was employed in the construction, alteration, or repair of the qualified facility; or

(B) The difference between the amount the laborer or mechanic was paid during the calendar year (or part thereof) and the amount required to be paid under paragraph (b) of this section is not greater than 5 percent of the amount required to be paid under paragraph (b) of this section.

(ii) ***Project labor agreements.*** The penalty payments required by paragraphs (c)(1)(ii) and (c)(3)(i)(B) of this section to cure a failure to satisfy the Prevailing Wage Requirements in paragraph (a) of this section do not apply with respect to a laborer or mechanic employed in the construction, alteration, or repair work of a qualified facility if the work is done pursuant to a pre-hire collective bargaining agreement with one or more labor organizations that establishes the terms and conditions of employment for a specific construction project (Qualifying Project Labor Agreement) and any correction payment owed to any laborer or mechanic is paid on or before the date on which the increased credit amount is claimed under section 45(b)(6). In order to be considered a Qualifying Project Labor Agreement, such agreement must at a minimum:

(A) Bind all contractors and subcontractors on the construction project through the inclusion of appropriate specifications in all relevant solicitation provisions and contract documents;

(B) Contain guarantees against strikes, lockouts, and similar job disruptions;

(C) Set forth effective, prompt, and mutually binding procedures for resolving labor disputes arising during the term of the project labor agreement;

(D) Contain provisions to pay wages at rates not less than the prevailing rates in accordance with subchapter IV of chapter 31 of title 40 of the United States Code;

(E) Contain provisions for referring and using qualified apprentices consistent with section 45(b)(8)(A) through (C) and guidance issued thereunder; and

(F) Be a collective bargaining agreement with one or more labor organizations (as defined in 29 U.S.C. 152(5)) of which building and construction employees are members, as described in 29 U.S.C. 158(f).

(iii) ***Transition Waiver.*** The penalty payment required by paragraph (c)(1)(ii) of this section to cure a failure to satisfy the Prevailing Wage Requirements in paragraph (a) of this section is waived with respect to a laborer or mechanic who performed work in the construction, alteration, or repair of a qualified facility on or after January 29, 2023, and prior to June 25, 2024, if the taxpayer relied upon Notice 2022-61, 2022-52 I.R.B. 560, or the Proposed Regulations (REG-100908-23) (88 FR 60018), corrected in 88 FR 73807 (Oct. 27, 2023), corrected in 89 FR 25550 (April 11, 2024), to determine when the activities of any laborer or mechanic became subject to the Prevailing Wage Requirements, and the taxpayer makes the correction payments required by paragraph (c)(1)(i) of this section with respect to such laborer and mechanics within 180 days of June 25, 2024.

(iv) ***Examples.*** The provisions of this paragraph (c)(6) are illustrated by the following examples, which do not take into account any possible application of the enhanced correction and penalty payment requirements in the case of intentional disregard under paragraph (c)(3) of this section or the exception for wages paid before a determination by the U.S. Department of Labor under paragraph (c)(5) of this section. In each example, assume that the taxpayer uses the calendar year as the taxpayer's taxable year.

(A) ***Example 1.*** Taxpayer F starts construction of a qualified facility on February 1, 2023. The facility is placed in service on October 10, 2023, and Taxpayer F claims the increased credit amount under section 45(b)(6)(B)(iii) on its 2023 tax return filed on April 15, 2024. Taxpayer F employs Laborer Z in the construction of the facility for a total of 36 weekly pay periods. Taxpayer F pays Laborer Z wages at the prevailing wage rate for all pay periods except for the pay periods ending on April 8, April 22, and May 20. Under the applicable prevailing wage rate, Laborer Z should have been paid a total of $35,000 in 2023, but was instead paid only $30,000. Taxpayer F ensures that all other laborers and mechanics employed in the construction, alteration, or repair of the facility are paid wages at the prevailing wage rate. Taxpayer F becomes aware of the failure on June 1, 2023. On June 19, 2023, Taxpayer F pays Laborer Z the correction payment required by paragraph (c)(1)(i) of this section. The penalty waiver applies to Taxpayer F. Although the difference between the amount Laborer Z was paid in 2023 and the amount required to be paid under the applicable prevailing wage rate was greater than five percent ($5,000/$35,000 = 14.29%), Laborer Z was paid below the prevailing wage rate for only three out of 36 pay periods, or 8.3% of the applicable pay periods. Furthermore, Taxpayer F made the correction payment before the last day of the first month that follows the end of the calendar quarter in which the failure occurred.

(B) ***Example 2.*** Taxpayer G starts construction of a qualified facility on February 1, 2024. The facility is placed in service on October 10, 2024, and Taxpayer G claims the increased credit under section 45(b)(6)(B)(iii) on its 2024 tax return filed on April 15, 2025. Taxpayer G hires Contractor M to assist in the construction, and Contractor M employs Laborer Y in

the construction of the facility for a total of 36 pay periods. Contractor M pays Laborer Y wages at the prevailing wage rate for all pay periods except for the pay periods ending on February 24 and March 2 of 2024. Under the applicable prevailing wage rate, Laborer Y should have been paid a total of $50,000 in 2024, but was instead paid only $49,000. All other laborers and mechanics employed in the construction, alteration, or repair of the facility are paid wages at the prevailing wage rate. Taxpayer G learns on January 1, 2025, that Laborer Y was paid wages at rates that were less than the prevailing wage rates, and on January 19, 2025, Taxpayer G pays Laborer Y the correction payment required by paragraph (c)(1)(i) of this section. The penalty waiver does not apply to Taxpayer G. Laborer Y was paid wages at rates below the prevailing wage rate for two out of 36 pay periods, or 5.5% of the applicable pay periods, and the difference between the amount Laborer Y was paid in 2024 and the amount required to be paid under the applicable prevailing wage rate was $1,000, which is only 2% of the amount required to be paid under the applicable prevailing wage rate. However, because Taxpayer G did not make the correction payments until January 19, 2025, which was later than the last day of the first month that followed the end of the calendar quarter in which the failure occurred, Taxpayer G does not qualify for the penalty waiver. Taxpayer G must pay a penalty of $5,000 with respect to the failure.

(C) ***Example 3.*** Taxpayer H starts the construction of a qualified facility on April 8, 2024. The facility is placed in service on December 1, 2024, and Taxpayer H claims the increased credit amount under section 45(b)(6)(B)(iii) on its 2024 tax return filed on April 15, 2025. Taxpayer H employs Laborer X in the construction of the facility for a total of 34 pay periods. Due to a failure to classify workers in accordance with the wage determination, Taxpayer H pays Laborer X wages at rates below the prevailing wage rates for the first 12 pay periods. Under the applicable prevailing wage rate, Laborer X should have been paid $20,000 during those 12 pay periods, but was instead paid only $17,000. All other laborers and mechanics employed in the construction, alteration, or repair of the facility were paid wages at the prevailing wage rates. Taxpayer H becomes aware of the failure on July 15, 2024, and on July 30, 2024, Taxpayer H pays Laborer X the correction payments required by paragraph (c)(1)(i) of this section. For the 22 pay periods from July 1, 2024, through December 1, 2024, Taxpayer H pays Laborer X the correct prevailing wage rate in amounts that total $41,000. The penalty waiver applies to Taxpayer H. Taxpayer H made the correction payment on July 30, 2024, which was before the last day of the first month that followed the end of the quarter in which the failures occurred. Although Laborer X was paid wages at a rate below the prevailing wage rate for 35% (12 pay periods with underpayments/34 total pay periods) of the applicable pay periods, the difference between the total amount Laborer X was paid in 2024 and the amount required to be paid under the applicable prevailing wage rate was $3,000, which is only 4.9% of the total amount required to be paid to Laborer X under the applicable prevailing wage rate ($3,000/$61,000).

(D) ***Example 4.*** Taxpayer I begins construction of a qualified facility on August 29, 2024. The facility is placed in service on June 30, 2025, and Taxpayer I claims the increased credit amount under section 45(b)(6)(B)(iii) on its 2025 tax return. Taxpayer I employs Laborer W in the construction of the facility for a total of 25 weekly pay periods in 2025. Taxpayer I pays Laborer W wages at or above the prevailing wage rate for all pay periods except for the pay periods ending on April 12, May 10, and June 14. Under the applicable prevailing wage rate, Laborer W should have been paid $25,000 in 2025, but was instead paid only

$20,000. Taxpayer I ensures that all other laborers and mechanics employed in the construction, alteration, or repair of the facility are paid at the prevailing wage rate. Taxpayer I has in place a pre-hire collective bargaining agreement, but the agreement does not contain a provision for referring and using qualified apprentices. Taxpayer I becomes aware of the failure to pay Laborer W at the prevailing wage rate on June 30, 2025, and on July 4, 2025, Taxpayer I pays Laborer W the correction payment required by paragraph (c)(1)(i) of this section. The penalty waiver does not apply to Taxpayer I. The difference between the amount Laborer W was paid in 2025 and the amount required to be paid under the applicable prevailing wage rate was $5,000, which is 20% of the amount required to be paid under the applicable prevailing wage rate. Laborer W was paid below the prevailing wage rate for three out of 25 pay periods, or 12% of the applicable pay periods. Taxpayer I does not have in place a Qualifying Project Labor Agreement because the pre-hire collective bargaining agreement does not contain a provision for referring and using qualified apprentices as required by paragraph (c)(6)(ii)(E) of this section.

(E) ***Example 5.*** Taxpayer J intends to construct a qualified facility and claim the increased credit amount under section 45(b)(6)(B)(iii). Taxpayer J executes a contract for the construction of the facility and engages in construction activities as defined in paragraph (d)(3) of this section starting August 1, 2023. Taxpayer J began construction as of September 1, 2023, pursuant to the Physical Work Test in Notice 2022-61. During the period of August 1 to September 1 of 2023, Taxpayer J paid all laborers and mechanics wages at rates below the applicable prevailing wage rates in reliance on Notice 2022-61 regarding when construction began for purposes of satisfying the requirements of section 45(b)(7). After September 1, 2023, Taxpayer J paid all laborers and mechanics wages at the prevailing wage rate for the appropriate classification for work performed on the facility. Within 180 days of June 25, 2024, Taxpayer J makes correction payments to all affected laborers and mechanics for the period of August 1, 2023, to September 1, 2023, equal to the amount described in paragraph (c)(1)(i) of this section. Pursuant to paragraph (c)(6)(iii) of this section, the penalty under paragraph (c)(1)(ii) of this section is waived.

(d) ***Definitions.*** Solely for purposes of this section, the following definitions apply:

(1) ***Apprentice.*** The term *apprentice* has the same meaning as *qualified apprentice* in § 1.45-8(g)(8).

(2) ***Bona fide fringe benefits.*** The term *bona fide fringe benefits* means fringe benefits described in 29 CFR part 5. Bona fide fringe benefits include medical or hospital care, pensions on retirement or death, compensation for injuries or illness resulting from occupational activity, or insurance to provide any of the foregoing; unemployment benefits; life insurance, disability insurance, sickness insurance, or accident insurance; vacation or holiday pay; defraying costs of apprenticeship or other similar programs; or other bona fide fringe benefits (each as described in 29 CFR part 5 and other U.S. Department of Labor guidance). Consistent with 29 CFR 5.29, bona fide fringe benefits do not include benefits required by other Federal, State, or local law.

(3) ***Construction, alteration, or repair.*** The term *construction, alteration, or repair* generally means those activities, described in 29 CFR 5.2 as being construction, prosecution, completion, or repair that are performed with respect to a qualified facility as defined under section 45. Construction, alteration, or repair does not include any activities that are excluded from the requirement to pay prevailing wages under the definitions described in 29 CFR 5.2. Repair work normally includes an activity that improves the facility, either by fixing something that is not functioning properly or by improving upon the facility's existing condition; involves the correction of individual problems or defects as separate

and segregable incidents and is not continuous or recurring; or improves the facility's structural strength, stability, safety, capacity, efficiency, or usefulness. Construction, alteration, or repair does not include work that is ordinary and regular in nature that is designed to maintain and preserve existing functionalities of a facility after it is placed in service. Work designed to maintain and preserve functionality of a facility after it is placed in service includes basic maintenance such as regular inspections of the facility, regular cleaning and janitorial work, regular replacement of materials with limited lifespans such as filters and light bulbs, and the regular calibration of equipment. However, such work that occurs before the facility is placed in service may constitute construction for which prevailing wages must be paid in order to claim the increased credit amount. Maintenance generally includes work that is needed to keep the facility in its current condition so that it may continue to be used and work that does not improve the current condition or function of a facility. Maintenance is routinely scheduled and continuous or recurring. Ultimately, the determination of whether an activity can be categorized as construction, alteration, or repair is dependent on the facts and circumstances. This definition has no bearing on any other sections of the Code, including any determination of construction, alteration, repair, or maintenance under sections 162 or 263 of the Code, unless specified otherwise in the Code or in this chapter.

(4) ***Contractor.*** The term *contractor* means any person that enters into a contract directly with the taxpayer (or the taxpayer's designee, assignee, or agent) for the construction, alteration, or repair of a qualified facility.

(5) ***Employed.*** The term *employed* means performing the duties of a laborer or mechanic for the taxpayer, contractor, or subcontractor (as applicable), regardless of whether the individual would be characterized as an employee or an independent contractor for other Federal tax purposes.

(6) ***General wage determination.*** The term *general wage determination* means a wage determination issued by the U.S. Department of Labor and published on the approved website. A general wage determination provides the minimum hourly wage rates (both the basic hourly rate of pay and bona fide fringe benefit rates) that the U.S. Department of Labor has determined are prevailing for laborers and mechanics in specified types of construction in a given geographic area.

(7) ***Geographic area and locality.*** The terms *geographic area* and *locality* mean the county, independent city, or other civil subdivision of the State in which a qualified facility is located. The terms geographic area and locality also include areas located offshore of the United States and within the outer continental shelf of the United States and the U.S. territories. If construction, alteration, or repair work is performed in multiple counties, independent cities, or other civil subdivisions, the geographic area may include all counties, independent cities, or other civil subdivisions in which the work will be performed. The locality in which a facility is located is defined as the physical place or places where the facility will be placed in service and remain. The locality of the facility also includes secondary locations where a significant portion of the facility is constructed, altered, or repaired provided that such construction is for specific use at that facility and does not simply reflect the manufacture or construction of a product made available to the general public, and provided further that the site is either established specifically for, or dedicated exclusively for a specific period of time to, the construction, alteration, or repair of the facility. A significant portion means one or more entire portion(s) or module(s) of the facility, such as a completed room or structure, with minimal construction work remaining other than the installation and/or final assembly of the portions or modules at the place where the facility will be placed in service and remain. A significant portion does not include materials or prefabricated component parts delivered to the location of a facility. A specific period of time means a period of weeks, months, or more, and does not include circumstances in which a site at which multiple facilities are in progress is shifted exclusively to a

single facility for a few hours or days in order to meet a deadline. The locality of the facility also includes any adjacent or virtually adjacent dedicated support sites, including job headquarters, tool yards, batch plants, borrow pits, and similar facilities of a taxpayer, contractor, or subcontractor that are established specifically for or dedicated exclusively to the construction, alteration, or repair of the facility, and adjacent or virtually adjacent to either a primary construction site or a secondary construction site.

(8) ***Laborer and mechanic*** —

(i) ***In general.*** The terms *laborer* and *mechanic* mean those individuals whose duties are manual or physical in nature (including those individuals who use tools or who are performing the work of a trade). The terms laborer and mechanic include apprentices and helpers. The terms do not apply to individuals whose duties are primarily administrative, executive, or clerical, rather than manual. Persons employed in a bona fide executive, administrative, or professional capacity as defined in 29 CFR part 541 are not deemed to be laborers or mechanics. Working forepersons who devote more than 20 percent of their time during a workweek to laborer or mechanic duties, and who do not meet the criteria for exemption of 29 CFR part 541, are considered laborers and mechanics for the time spent conducting laborer and mechanic duties.

(ii) ***Examples*** —

(A) ***Individual working in professional capacity.*** Taxpayer hires an architect (Architect) to design a qualified facility and general layout of the site including access roads and ancillary buildings to support the facility. Taxpayer engages a general contractor (Contractor) to construct the qualified facility based on the drafting plans of Architect. Contractor hires an electrical engineer (Engineer) to assist Architect and Contractor with design and placement of the electrical systems necessary to support the qualified facility. Engineer oversees and inspects construction of the electrical systems to ensure the systems conform to the facility's specifications and Architect's drafting plans. Architect and Engineer do not perform any actual duties of a laborer or mechanic during their employment with Taxpayer and Contractor. Architect and Engineer are working in a professional capacity as defined under 29 CFR part 541 and are exempt employees under the DBA. Architect and Engineer are not considered laborers and mechanics for the duration of their employment for purposes of this section and Taxpayer does not need to ensure they are paid wages at rates not less than the prevailing wage rates for purposes of claiming the increased credit amount under section 45(b)(6)(B)(iii).

(B) ***Working foreperson.*** A supervisory employee who is a working foreperson (Foreperson) spends 60% of the time during the workweek (24 hours of a 40 hour workweek) performing administrative functions such as preparing timecards, supervising work on the qualified facility and arranging for deliveries. Foreperson spends the remaining 40% (16 hours) of the time performing the duties of an electrician with respect to construction of a qualified facility. Because Foreperson devoted more than 20% of their time during the workweek to laborer or mechanic duties, Foreperson must be paid wages at rates not less than the electrician's applicable prevailing wage rate for the 16 hours spent doing the duties of an electrician for purposes of the Prevailing Wage Requirements.

(9) ***Subcontractor.*** The term *subcontractor* means any person that enters into a contract with a contractor for the construction, alteration, or repair of a qualified facility. The term *subcontractor* also includes any person that agrees to perform or be responsible for the performance of any part of a

contract entered into between the taxpayer (or the taxpayer's designee, assignee, or agent) and a contractor (or between a contractor and another subcontractor) with respect to the construction, alteration, or repair of a qualified facility.

(10) ***Taxpayer.*** The term *taxpayer* means any taxpayer as defined in section 7701(a)(14), including applicable entities described in section 6417(d)(1)(A). In the case of a credit transferred under section 6418, the term *taxpayer* means the eligible taxpayer that determines the eligible credit to be transferred and makes a transfer election under section 6418 to transfer any specified credit portion (including 100 percent) of an eligible credit determined with respect to any eligible credit property of such eligible taxpayer for any taxable year.

(11) ***Type of construction.*** The *type of construction* is the general category of construction as established by the U.S. Department of Labor for the publication of general wage determinations as defined in 29 CFR 1.2.

(12) ***Wages.*** The term *wages* generally means wages as defined in 29 CFR 5.2. In general, wages means the basic hourly rate of pay; any contribution irrevocably made by a taxpayer, contractor, or subcontractor to a trustee or to a third person pursuant to a bona fide fringe benefit fund, plan, or program; and the rate of costs to the taxpayer, contractor, or subcontractor that may be reasonably anticipated in providing bona fide fringe benefits to laborers and mechanics pursuant to an enforceable commitment to carry out a financially responsible plan or program, provided the commitment was communicated in writing to the laborers and mechanics affected. Whether amounts are wages for prevailing wage purposes is not relevant in determining whether amounts are wages or compensation for other Federal tax purposes.

(e) ***Applicability date.*** This section applies to qualified facilities placed in service in taxable years ending after June 25, 2024, and the construction of which begins after June 25, 2024. Taxpayers may apply this section to qualified facilities placed in service in taxable years ending on or before June 25, 2024, and qualified facilities placed in service in taxable years ending after June 25, 2024, the construction of which begins before June 25, 2024, provided that taxpayers follow this section in its entirety and in a consistent manner.

[89 FR 53252, June 25, 2024; 89 FR 66561, Aug. 16, 2024]

§ 1.45-8 Apprenticeship requirements.

(a) ***Apprenticeship requirements*** —

(1) ***In general.*** Except as provided in paragraphs (a)(2) and (f) of this section, a taxpayer claiming or transferring (under section 6418) the increased credit amount under section 45(b)(6)(B)(iii) with respect to any qualified facility must satisfy the requirements of section 45(b)(8) and this section with respect to the construction of such facility (Apprenticeship Requirements). The taxpayer is solely responsible for ensuring that the Apprenticeship Requirements are satisfied. See paragraph (g) of this section for definitions of terms used in this section.

(2) ***Transition relief.*** Taxpayers are excepted from the Apprenticeship Requirements with respect to any activities that would be considered construction, alteration, or repair of the qualified facility and that occurred prior to January 29, 2023.

(b) ***Labor hours requirement*** —

(1) ***Percentage of total labor hours.*** A taxpayer claiming or transferring (under section 6418) the increased credit amount under section 45(b)(6) must ensure that qualified apprentices (hired by the taxpayer, contractor, or subcontractor) perform not less than the applicable percentage of the total labor hours of the construction, alteration, or repair work (including work performed by any contractor or subcontractor) with respect to any qualified facility prior to the facility being placed in service, subject to the apprentice-to-journeyworker ratio described in paragraph (c) of this section. The percentage of total labor hours is calculated on a per qualified facility basis, aggregating all hours worked by all laborers and mechanics (including the hours of qualified apprentices) during construction of the facility and dividing the total hours worked by all laborers and mechanics by the hours of the qualified apprentices.

(2) ***Applicable percentage.*** For purposes of paragraph (b)(1) of this section, and subject to paragraph (b)(3) of this section, the applicable percentage is—

(i) 10 percent in the case of a qualified facility, the construction of which begins before January 1, 2023;

(ii) 12.5 percent in the case of a qualified facility, the construction of which begins after December 31, 2022, and before January 1, 2024; and

(iii) 15 percent in the case of a qualified facility, the construction of which begins after December 31, 2023.

(3) ***Transition rule.*** Taxpayers may apply the rules set forth in Notice 2022-61, 2022-52 I.R.B. 560, or these regulations for determining when construction began for purposes of the applicable percentage of labor hours performed by qualified apprentices required under section 45(b)(8)(A) and paragraph (b)(2) of this section.

(c) ***Ratio requirement*** —

(1) ***In general.*** The labor hours requirement under paragraph (b) of this section is subject to any applicable requirements for apprentice-to-journeyworker ratios of the U.S. Department of Labor or the applicable State apprenticeship agency.

(2) ***Ratio.*** The allowable ratio of apprentices to journeyworkers on the job site in any occupation and its corresponding classification on any day must comply with the applicable apprentice-to-journeyworker ratio of the registered apprenticeship program in accordance with 29 CFR part 29. If a taxpayer, contractor, or subcontractor is performing construction, alteration, or repair work on a qualified facility in a geographic area other than the geographic area in which an apprenticeship program is registered, the taxpayer, contractor, or subcontractor must comply with the apprentice-to-journeyworker ratios applicable within the geographic area in which the construction, alteration, or repair work is being performed. If there is no applicable ratio for the geographic area of the qualified facility, the ratio specified in the registered apprenticeship program standard must be observed.

(3) ***Failure to meet ratio requirements.*** For purposes of section 45(b)(8)(B) and paragraph (b) of this section, if on any day the ratio of apprentices to journeyworkers exceeds the ratio established in accordance with paragraph (c)(2) of this section, subject to the requirements of the registered apprenticeship program, the labor hours performed by any qualified apprentice in excess of the ratio may not be counted as hours performed by qualified apprentices for purposes of the labor hours requirement. The hours devoted to the performance of construction, alteration, or repair work by any

qualified apprentice in excess of the ratio will be counted towards the total labor hours, but will not be counted as hours performed by qualified apprentices for purposes of the labor hours requirement under paragraph (b) of this section.

(d) ***Participation requirement.*** Each taxpayer, contractor, or subcontractor who employs four or more individuals to perform construction, alteration, or repair work with respect to the construction of a qualified facility must employ one or more qualified apprentices to perform work with respect to the construction, alteration, or repair of the qualified facility prior to the facility being placed in service. The participation requirement applies if a taxpayer, contractor, or subcontractor employs four or more individuals in the construction of the qualified facility over the entire course of the construction, regardless of whether they are employed at the same location or at the same time.

(e) ***Examples.*** The provisions of paragraphs (b) through (d) of this section are illustrated by the following examples. For purposes of the following examples, assume that each taxpayer has a calendar year taxable year.

(i) *Example 1.* Taxpayer A starts construction of a qualified facility on April 1, 2023. Accordingly, Taxpayer A must ensure that at least 12.5% of the total labor hours are performed by qualified apprentices. The facility is placed in service on April 1, 2025, and Taxpayer A claims the increased credit amount under section 45(b)(6)(B)(iii) on its 2025 tax return. A total of eight individuals performed construction, alteration, or repair work during the construction of the facility, all of whom were employed directly by Taxpayer A. Taxpayer A employed four journeyworkers and no qualified apprentices from April 1, 2023 through October 31, 2024. Taxpayer A hired four qualified apprentices and retained three journeyworkers to perform construction on the facility for the period of November 1, 2024 through March 31, 2025. The registered apprenticeship program from which Taxpayer A requested the apprentices required a ratio of one journeyworker for every apprentice. In the first year of construction, a total of 10,000 labor hours were performed on construction, alteration, or repair work of the facility, with each journeyworker working 2,500 hours. In the second year of construction, 7,000 labor hours were performed on construction, alteration, or repair work of the facility, with each qualified apprentice and journeyworker working 1,000 hours during this time. On each day of work during the second year of construction, the three journeyworkers oversaw the work of the four qualified apprentices. A total of 17,000 labor hours were spent on the construction, alteration, or repair work of the facility, requiring that 2,125 labor hours be performed by qualified apprentices. Only 3,000 labor hours performed by qualified apprentices count towards the labor hours requirement because the ratio requirement was only satisfied with respect to the work of three qualified apprentices. Taxpayer A satisfied the labor hours requirement under paragraph (b)(2) of this section because more than 12.5% (3,000 qualified apprentice hours/17,000 total labor hours = 17.6%) of the total labor hours were performed by qualified apprentices. Taxpayer A was also subject to the participation requirement because four or more individuals employed by Taxpayer A performed construction work on the facility. Taxpayer A satisfied the participation requirement because Taxpayer A hired at least one qualified apprentice to perform construction, alteration, or repair with respect to the facility.

(ii) *Example 2.* Taxpayer B intends to construct a qualified facility to claim the increased credit amount under section 45(b)(6)(B)(iii) and executes a contract for the construction of the facility. On December 31, 2023, Taxpayer B expends sufficient funds to meet the 5 Percent Safe Harbor for beginning of construction in reliance on Notice 2022-61. Construction activities as defined in paragraph (d)(3) of this section start on January 1, 2024. In reliance on Notice 2022-61, Taxpayer B employs qualified apprentices for 12.5% of the total construction hours to complete the qualified facility. Because Taxpayer B applies the 12.5% applicable percentage in reliance on Notice 2022-61 for construction beginning before January 1, 2024, but after December 31, 2022, Taxpayer B has satisfied the Labor Hours Requirement, assuming all other provisions of the Labor Hours Requirement are also satisfied.

(iii) *Example 3.* Taxpayer C starts construction of a qualified facility on April 1, 2023, and complies with the Labor Hours Requirement, the Ratio Requirement, and the Participation Requirement with respect to the construction of the facility before it is placed in service on April 1, 2025. Taxpayer C claims the increased credit amount under section 45(b)(6)(B)(iii) on its 2025 tax return. The qualified facility was repaired from September 1, 2025, through October 31, 2025. No qualified apprentices were employed for the repairs. Taxpayer C did not fail the Apprenticeship Requirements because the Apprenticeship Requirements do not apply after the qualified facility is placed in service.

(iv) *Example 4.* Taxpayer D starts construction of a qualified facility on April 1, 2023. Accordingly, Taxpayer D must ensure that at least 12.5% of the total labor hours are performed by qualified apprentices. The facility is placed in service on April 1, 2025, and Taxpayer D claims the increased credit amount under section 45(b)(6)(B)(iii) on its 2025 tax return. Taxpayer D employed 12 individuals to perform the construction, alteration, and repair work on the qualified facility. Taxpayer D is subject to the participation requirement. For the first year of construction, a total of 25,000 labor hours were performed on the construction, alteration, or repair of the facility, 3,000 of which were performed by qualified apprentices. For the second year of construction, an additional 25,000 labor hours were performed on the construction, alteration, or repair of the facility, 3,250 of which were performed by qualified apprentices. The ratio requirement was satisfied for all labor hours performed by qualified apprentices. Taxpayer D has satisfied the labor hours requirement because 12.5% (6,250 labor hours divided by 50,000 labor hours) of the total labor hours were performed by qualified apprentices.

(v) *Example 5.* Taxpayer E starts construction of a qualified facility on January 1, 2024. Accordingly, Taxpayer E must ensure that at least 15% of the total labor hours are performed by qualified apprentices. The facility is placed in service on June 1, 2026. Taxpayer E claims the increased credit amount under section 45(b)(6)(B)(iii) on its 2026 tax return. All individuals who performed the construction, alteration, or repair work were employed directly by Taxpayer E. A total of 50,000 labor hours were spent on the construction, alteration, or repair work of the facility, 7,000 of which were performed by qualified apprentices and the ratio requirement was met for all 7,000 labor hours. Qualified apprentices also spent 500 hours in classroom training at a location other than the location of the qualified facility in preparation for the performance of construction, alteration, or repair work at the qualified facility. Taxpayer E did not satisfy the labor hours requirement under paragraph (b)(2) of this section because less than 15% of the total labor hours were performed by qualified apprentices. The hours spent on classroom training at a location other than the location of the qualified facility in preparation for the construction, alteration, or repair of the facility are not considered labor hours performed by qualified apprentices.

(f) ***Exceptions to the apprenticeship requirements.*** If a taxpayer fails to satisfy the Apprenticeship Requirements in paragraph (a) of this section with respect to the construction, alteration, or repair of any qualified facility prior to the facility being placed in service, the taxpayer will nonetheless be deemed to have satisfied the Apprenticeship Requirements if the taxpayer has made a good faith effort to meet the Apprenticeship Requirements as described in paragraph (f)(1) of this section (Good Faith Effort Exception) or made the penalty payment provided in paragraph (f)(2) of this section (Apprenticeship Cure Provision) for any failures to which the Good Faith Effort Exception does not apply.

(1) ***Good faith effort exception*** —

(i) ***In general.*** A taxpayer is deemed to have satisfied the Apprenticeship Requirements of this section with respect to a request for qualified apprentices if the taxpayer meets the following requirements:

(A) ***Request for qualified apprentices.*** The taxpayer, contractor, or subcontractor must submit a written request for qualified apprentices to at least one registered apprenticeship program that has a geographic area of operation that includes the location of the qualified facility; trains qualified apprentices in the occupation(s) needed to perform construction, alteration, or repair with respect to the facility; and has a usual and customary business practice of entering into agreements with employers for the placement of qualified apprentices in the occupation for which they are training, consistent with the standards and requirements set forth in 29 CFR parts 29 and 30, and any subsequent guidance issued by the Department of Labor. Such request must be in writing and sent electronically or by registered mail. The initial request to a registered apprenticeship program for qualified apprentices must be made no later than 45 days before the qualified apprentices are requested to start work. Any subsequent requests for qualified apprentices made to the same registered apprenticeship program after the initial request must be made no later than 14 days before the qualified apprentices are requested to start work. If there is no registered apprenticeship program that has a geographic area of operation that includes the location of the qualified facility; trains qualified apprentices in the occupation(s) needed to perform construction, alteration, or repair with respect to the facility; and has a usual and customary business practice of entering into agreements with employers for the placement of qualified apprentices in the occupation for which they are training, consistent with the standards and requirements set forth in 29 CFR parts 29 and 30, and any subsequent guidance issued by the Department of Labor, the taxpayer will be deemed to satisfy the Good Faith Effort Exception with respect to the qualified apprentices that the taxpayer, contractor, or subcontractor would have requested.

(*1*) ***Content of valid request.*** The request of the taxpayer, contractor, or subcontractor must include the proposed dates of employment, occupation of qualified apprentices needed, location of the work to be performed, number of qualified apprentices needed, the number of labor hours expected to be performed by the qualified apprentices, and the name and contact information of the taxpayer, contractor, or subcontractor requesting employment of qualified apprentices from the registered apprenticeship program. Reasonable estimates of the foregoing information are permissible. The request must also state that the request for qualified apprentices is made with an intent to employ qualified apprentices in the occupation for which they are being trained and in accordance with the requirements and standards of the registered apprenticeship program and to employ qualified apprentices consistent with the expected number of hours and dates of employment specified in the request. If the employer of the requested qualified apprentices is not the same as the taxpayer, contractor, or subcontractor submitting the request for qualified apprentices, then the request must include the name of the employer.

(*2*) ***Duration of request.*** If the taxpayer, contractor, or subcontractor submits a request in accordance with paragraph (f)(1)(i)(A) of this section and the request is denied or not responded to, the taxpayer will be deemed to have exercised a Good Faith Effort with respect to the request for the period described in the request but not exceeding 365 days (366 days in case of a leap year). For requests that are denied or not responded to and include a period of employment for qualified apprentices that exceeds 365 days (366 days in case of a leap year), the taxpayer, contractor, or subcontractor must submit one or more additional requests with respect to the period of such request in excess of 365 days (366 days in case of a leap year). The

taxpayer will not be deemed to have exercised a Good Faith Effort beyond 365 days (366 days in case of a leap year) of a previously denied request unless the taxpayer submits an additional request. There is no limit on the number of requests a taxpayer, contractor, or subcontractor may submit to one or more registered apprenticeship programs for purposes of the Good Faith Effort Exception and the taxpayer, contractor, or subcontractor is not required to make subsequent requests to the same registered apprenticeship program in order to qualify for the Good Faith Effort Exception. The 365 day (366 days in case of a leap year) duration of requests for qualified apprentices also applies in circumstances in which there is no registered apprenticeship program with a geographic area of operation that includes the location of the facility at the time a taxpayer, contractor, or subcontractor attempts to requests qualified apprentices from a registered apprenticeship program.

(B) ***Denial of request.*** If a taxpayer, contractor, or subcontractor submits a request in accordance with paragraph (f)(1)(i)(A) of this section and the request is denied (including after an initial acceptance and before the scheduled qualified apprentice work starts), the taxpayer will be deemed to satisfy the requirements of section 45(b)(8)(A) through (C), and paragraphs (b) through (d) of this section, provided that such denial is not the result of a refusal by the taxpayer or any contractors or subcontractors engaged in the performance of construction, alteration, or repair work with respect to such qualified facility to comply with the established standards and requirements of the registered apprenticeship program. The denial of a request is only valid for purposes of establishing a Good Faith Effort with respect to the portion(s) of the request that were denied. In the case of a partial denial, a taxpayer, contractor, or subcontractor must accept the qualified apprentices offered in response to the request to satisfy the Good Faith Effort with respect to the portion of the request that was denied. If a request is partially denied, the qualified apprentice labor hours specified in the request that were denied that qualify for the Good Faith Effort Exception are considered to be labor hours performed by qualified apprentices. Subject to the requirements of paragraph (f)(1)(i)(A)(2) of this section, the taxpayer, contractor, or subcontractor does not need to follow up with the registered apprenticeship program after the initial request or after the receipt of a non-substantive response. The date on which a registered apprenticeship program received a request for qualified apprentices is determined by the date the electronic request is sent to the registered apprenticeship program or the date of delivery shown on a receipt from the registered mail delivery.

(C) ***Response to a valid request.*** A response to a valid request for qualified apprentices is a substantive written reply to the request that agrees, in whole or in part, to the specific requirements in the taxpayer's, contractor's, or subcontractor's request. If the registered apprenticeship program fails to provide a response to a request submitted in accordance with paragraph (f)(1)(i)(A) of this section within five business days after the date on which such registered apprenticeship program received the taxpayer's (or its contractor or subcontractor) request, then such request is deemed to be denied.

(D) ***Employer sponsored apprenticeship programs.*** A taxpayer, contractor, or subcontractor that sponsors one or more internal registered apprenticeship programs and that is unable to employ a sufficient number of qualified apprentices through such programs to meet the

Apprenticeship Requirements must submit a request for qualified apprentices to at least one registered apprenticeship program that it does not sponsor in order to satisfy the Good Faith Effort Exception.

(ii) ***Examples.*** The provisions of this paragraph (f)(1) are illustrated by the following examples.

(A) ***Example 1.*** Taxpayer F submits a request to a registered apprenticeship program by email. The registered apprenticeship program responds three days later indicating that it has qualified apprentices ready to start work, but the reply email from the registered apprenticeship program is automatically forwarded to Taxpayer F's spam or junk mail folder, and Taxpayer F does not see the email response. Taxpayer F would not qualify for the Good Faith Effort Exception with respect to this request because the registered apprenticeship program provided a substantive reply to the request that agreed to the specific requirements in Taxpayer F's request within five business days.

(B) ***Example 2.*** Contractor G submits a request for qualified apprentices from a registered apprenticeship program with an area of operation outside of the geographic area of the qualified facility. Contractor G's request is denied because the registered apprenticeship program does not operate in the geographic area where the qualified facility is located. Contractor G's request would not qualify for the Good Faith Effort Exception because the registered apprenticeship program does not have a geographic area of operation that includes the location of the qualified facility.

(C) ***Example 3.*** Contractor H submits a request for qualified apprentices to a registered apprenticeship program. Under its established standards and requirements, the registered apprenticeship program requires contractors to enter into an agreement to partner with that registered apprenticeship program. Contactor H refuses to enter into the agreement, and as a result, the registered apprenticeship program denies Contractor H's request for qualified apprentices. The requirement to enter into the agreement to partner with the registered apprenticeship program applies to all employers who request apprentices from the registered apprenticeship program. Neither the Department of Labor nor a recognized State apprenticeship agency has found the requirement to enter into such an agreement to be contrary to Department of Labor guidance regarding the administration of registered apprenticeship programs. Contractor H's request would not qualify for the Good Faith Effort Exception because Contractor H refused to comply with the established standards and requirements of the registered apprenticeship program.

(D) ***Example 4.*** Contractor I submits a request for qualified apprentices from a registered apprenticeship program on November 15, 2024. Contractor I's request states that it seeks to employ four qualified apprentices for the period starting on January 2, 2025, and ending June 30, 2025, for a total of 4,160 hours (1,040 hours × four qualified apprentices). On November 18, 2024, the registered apprenticeship program informs Contractor I that it can supply four qualified apprentices for the requested time period. On December 29, 2024, the registered apprenticeship program informs Contractor I that it is only able to supply two of the four qualified apprentices. Contractor I does not submit any additional requests for qualified apprentices from a registered apprenticeship program. Contractor I's request would qualify for the Good Faith Effort Exception for 2,080 hours (1,040 hours for each of the two requested qualified apprentices that were denied after the request was initially accepted), provided Contractor I accepted the two qualified apprentices that were offered for the requested period.

(E) ***Example 5.*** Contractor J submits a written request for qualified apprentices from a registered apprenticeship program on June 1, 2025. Contractor J's request states that it seeks to employ three qualified apprentices for a period starting September 1, 2025, and ending December 31, 2026. The registered apprenticeship program denies the request on June 2, 2025. Contractor J's request satisfies the Good Faith Effort Exception with respect to the three qualified apprentices that were denied for the period beginning September 1, 2025, and ending August 31, 2026. Contractor J's request does not satisfy the Good Faith Effort Exception with respect to the period beginning September 1, 2026, and ending December 31, 2026, because that is the portion of the denied request that exceeded 365 days (366 days in case of a leap year) and Contractor J did not submit an additional valid request for that period.

(2) ***Apprenticeship cure provision*** —

(i) ***In general.*** A taxpayer that fails to satisfy the Apprenticeship Requirements in paragraph (a) of this section with respect to the construction, alteration, or repair of any qualified facility prior to the facility being placed in service, will be deemed to satisfy the Apprenticeship Requirements if the taxpayer pays the IRS a penalty equal to $50 multiplied by the total labor hours for which the requirements described in paragraph (b) or (d) of this section were not satisfied with respect to the construction, alteration, or repair work on such qualified facility.

(A) ***Total labor hours for which the labor hours requirement is not met.*** For failures to meet the percentage of the total labor hours requirement in paragraph (b)(1) of this section, the total labor hours for which the requirement was not satisfied is calculated as the difference between the total labor hours performed by qualified apprentices that would be required to meet the applicable percentage under paragraph (b)(2) of this section and the sum of the labor hours actually worked by all qualified apprentices consistent with the applicable ratio of apprentices to journeyworkers and the hours qualifying for the Good Faith Effort Exception.

(B) ***Total labor hours for which the participation requirement is not met.*** For failures to meet the participation requirement in paragraph (d) of this section, the total labor hours for which the requirement was not satisfied is calculated as the total labor hours of construction, alteration, or repair work with respect to the facility performed by all laborers or mechanics employed by the taxpayer, contractor, or subcontractor that failed to meet the participation requirement of the qualified facility divided by the number of laborers or mechanics employed by such taxpayer, contractor, or subcontractor that performed construction, alteration, or repair work on the facility.

(C) ***Penalty payment not required if taxpayer ineligible for increased credit amount under section 45*** (*b*)(*6*)(*B*)(*iii*). If the taxpayer claims the increased credit amount under section 45(b)(6)(B)(iii) and does not satisfy the Apprenticeship Requirements for the claimed increased credit amount, then the obligation to make the penalty payment under paragraph (f)(2)(i) of this section applies. If the IRS determines that a taxpayer claiming the increased credit amount under section 45(b)(6)(B)(iii) failed to meet the Apprenticeship Requirements and the taxpayer does not make the penalty payment required under paragraph (f)(2)(i) of this section, then no penalty is assessed under paragraph (f)(2)(i) of this section, and the taxpayer is not eligible for the increased credit amount under section 45(b)(6)(B)(iii). Taxpayers that are not eligible to claim the

increased credit amount may still be eligible to claim the base amount of the renewable electricity production credit under section 45(a) if they meet the requirements to claim the credit.

(D) ***Examples.*** The provisions of paragraph (f)(2)(i) of this section are illustrated by the following examples, which do not take into account any possible application of the exception for Good Faith Effort Exception under paragraph (f)(1) of this section, the enhanced penalty payment requirement in the case of intentional disregard under paragraph (f)(2)(ii) of this section, or the inapplicability of the penalty in the case of a Qualifying Project Labor Agreement under paragraph (f)(2)(v) of this section. In each example, assume that the taxpayer uses the calendar year as the taxpayer's taxable year.

(*1*) ***Example 1.*** Taxpayer K starts construction of a qualified facility on April 1, 2023. Accordingly, Taxpayer K must ensure that at least 12.5% of the total labor hours are performed by qualified apprentices. The facility is placed in service on April 1, 2025, and Taxpayer K claims the increased credit amount under section 45(b)(6)(B)(iii) on its 2025 tax return. All individuals who performed the construction, alteration, or repair work were employed directly by Taxpayer K, including two qualified apprentices. Taxpayer K employed enough journeyworkers to satisfy the Ratio Requirement. A total of 50,000 labor hours were spent on the construction, alteration, or repair work of the facility, 6,000 of which were performed by qualified apprentices. Taxpayer K has satisfied the participation requirement because Taxpayer K has employed at least one qualified apprentice. Taxpayer K failed to satisfy the labor hours requirement under paragraph (b)(2) of this section because less than 12.5% of the total labor hours were performed by qualified apprentices. Qualified apprentices must have performed at least 6,250 labor hours (50,000 × 12.5%), so the total labor hours by which the labor hours requirement was not satisfied is 250 (6,250−6,000). To cure Taxpayer K's failure to meet the labor hours requirement, Taxpayer K must pay a penalty of $12,500 (250 × $50).

(*2*) ***Example 2.*** Taxpayer L starts construction of a qualified facility on February 10, 2023. Accordingly, Taxpayer L must ensure that at least 12.5% of the total labor hours are performed by qualified apprentices. The facility is placed in service on February 10, 2026, and Taxpayer L claims the increased credit amount under section 45(b)(6)(B)(iii) on its 2026 tax return. Taxpayer L employs 10 individuals to perform construction, alteration, or repair work of the facility, two of whom are qualified apprentices. Taxpayer L employed enough journeyworkers to satisfy the Ratio Requirement. Taxpayer L also hires Contractor M, who employs five individuals to perform construction, alteration, or repair work of the facility, none of whom are qualified apprentices. A total of 50,000 labor hours were spent on the construction, alteration, or repair work of the facility, 6,500 of which were performed by qualified apprentices. Of the total 50,000 labor hours, 33,000 labor hours were performed by individuals employed by Taxpayer L and 17,000 labor hours were performed by individuals employed by Contractor M. Taxpayer L has satisfied the labor hours requirement under paragraph (b)(2) of this section because more than 12.5% of the total labor hours were performed by qualified apprentices. However, Taxpayer L failed to satisfy the participation requirement under paragraph (d) of this section because Contractor M employed five individuals but no qualified apprentices. The total labor hours for which the participation requirement was not satisfied is equal to the total

labor hours performed by individuals employed by Contractor M (17,000) divided by the number of individuals employed by Contractor M (5) on the construction of the qualified facility, which is 3,400 hours (17,000/5). To cure the failure to meet the Apprenticeship Requirements, Taxpayer L must pay a penalty of $170,000 (3,400 × $50).

(3) ***Example 3.*** Taxpayer N starts construction of a qualified facility on January 1, 2024. Accordingly, Taxpayer N must ensure that at least 15% of the total labor hours are performed by qualified apprentices. The facility is placed in service on January 1, 2025, and Taxpayer N claims the increased credit amount under section 45(b)(6)(B)(iii) on its 2025 tax return. Taxpayer N employs 15 individuals to perform construction, alteration, or repair work of the facility, none of whom is a qualified apprentice. Taxpayer N also hires Contractor O, who employs five individuals to perform construction, alteration, or repair work of the facility, one of whom is a qualified apprentice. At the time Taxpayer N claims the increased credit amount, a total of 20,000 labor hours were spent on the construction, alteration, or repair work of the facility, 1,000 of which were performed by the qualified apprentice. Of the 20,000 total labor hours, 15,000 labor hours were performed by individuals employed by Taxpayer N and 5,000 labor hours were performed by individuals employed by Contractor O. Taxpayer N failed to satisfy the labor hours requirement under paragraph (b)(2) of this section because less than 15% of the total labor hours were performed by qualified apprentices. Qualified apprentices must have performed at least 3,000 labor hours, so the total labor hours by which the labor hours requirement was not satisfied is 2,000. Taxpayer N also failed to satisfy the participation requirement under paragraph (d) of this section because Taxpayer N employed 15 individuals but no qualified apprentices. The total labor hours for which the participation requirement was not satisfied is 1,000, which is equal to the total labor hours performed by individuals employed by Taxpayer N (15,000) divided by the number of individuals employed by Taxpayer N (15), which is 1,000 (15,000/15). The total labor hours by which Taxpayer N failed to meet the labor hours and participation requirements is 3,000 (2,000 + 1,000). To cure Taxpayer N's failure to meet the Apprenticeship Requirements, Taxpayer N must pay a penalty of $150,000 (3,000 × $50).

(4) ***Example 4.*** Taxpayer P starts construction of a qualified facility on April 1, 2023. Accordingly, Taxpayer P must ensure that at least 12.5% of the total labor hours are performed by qualified apprentices. The facility is placed in service on January 5, 2024, and Taxpayer P claims the increased credit amount under section 45(b)(6)(B)(iii) on its 2024 tax return. Taxpayer P hires Contractors Q, R, and S to perform the construction, alteration, and repair of the qualified facility. Contractor Q employs 10 journeyworkers who work 10,000 hours and one qualified apprentice who works 400 hours. Contractor R employs four journeyworkers who work 4,000 hours and five qualified apprentices who work 2,000 hours. Contractor S employs three journeyworkers who work 3,000 hours and one qualified apprentice who works 400 hours. The registered apprenticeship program for all of the qualified apprentices has prescribed a 1:1 apprentice-to-journeyworker ratio. For each day, all journeyworkers and qualified apprentices employed by the contractors are on the job site. The contractors have satisfied the participation requirement under paragraph (d) of this section because they each employed one or more qualified apprentices. The total

labor hours are 19,800 hours, and the total hours worked by qualified apprentices are 2,800. However, Contractor R employed one qualified apprentice in excess of the apprentice-to-journeyworker ratio (five qualified apprentices: four journeyworkers) that was prescribed by the apprenticeship program. Because Contractor R employed one qualified apprentice in excess of the apprentice-to-journeyworker ratio on each day that Contractor R performed work on the facility, 400 of the qualified apprentice hours worked by Contractor R do not count towards the labor hour requirement. Thus, Taxpayer P has failed to meet the labor hours requirement under paragraph (b)(2) of this section because only 2,400 hours worked by qualified apprentices are counted for purposes of the labor hours requirement. The total labor hours by which Taxpayer P failed to meet the labor hours requirement is 75 (2,475 required hours (19,800 × 12.5%)−2,400 qualified apprentice hours worked). To cure Taxpayer P's failure to meet the Apprenticeship Requirements, Taxpayer P must pay a penalty of $3,750 (75 × $50).

(ii) ***Intentional disregard*** —

(A) ***Application of section 45*** (*b*)(*8*)(*D*)(*iii*). If the IRS determines that any failure to satisfy the Apprenticeship Requirements in paragraph (b) or (d) of this section is due to intentional disregard of those requirements, the amount of the penalty payment under paragraph (f)(2) of this section is increased to $500 multiplied by the total labor hours for which the requirements described in paragraph (b) or (d) of this section were not satisfied with respect to the construction, alteration, or repair work on such qualified facility.

(B) ***Meaning of intentional disregard.*** A failure to satisfy the Apprenticeship Requirements of paragraph (b) or (d) of this section is due to intentional disregard if it is knowing or willful.

(C) ***Facts and circumstances considered.*** The facts and circumstances that are considered in determining whether a failure to satisfy the Apprenticeship Requirements is due to intentional disregard include, but are not limited to—

(*1*) Whether the failure was part of a pattern of conduct that includes repeated or systemic failures to ensure compliance with the Apprenticeship Requirements;

(*2*) Whether the taxpayer took steps to determine or review the applicable percentage of labor hours required to be performed by qualified apprentices;

(*3*) Whether the taxpayer sought to promptly cure any failures;

(*4*) Whether the taxpayer has been required to make a penalty payment under paragraph (f)(2) of this section in previous years;

(*5*) Whether the taxpayer included provisions in any contracts entered into with contractors that required the employment of qualified apprentices by the contractor and any subcontractors consistent with the labor hour requirement of section 45(b)(8)(A) and the participation requirement of section 45(b)(8)(C) and whether taxpayers regularly reviewed contractors' and subcontractors' use of qualified apprentices;

(*6*) Whether the taxpayer required contractors and subcontractors to forward to the taxpayer requests to registered apprenticeship programs within five business days of when requests were made;

(7) Whether the taxpayer made no attempt to comply with the Apprenticeship Requirements;

(8) Whether the taxpayer developed and used a plan to utilize qualified apprentices in the construction, alteration, or repair of the qualified facility;

(9) Whether the taxpayer, contractor, or subcontractor regularly followed up with registered apprenticeship programs regarding requests for qualified apprentices;

(10) Whether the taxpayer, contractor, or subcontractor contacted the Department of Labor's Office of Apprenticeship or relevant State apprenticeship agency for assistance in locating a registered apprenticeship program;

(11) Whether the taxpayer had in place procedures whereby individuals could report suspected failures to comply with the Apprenticeship Requirements, without retaliation or adverse action, whether taxpayer investigated such reports by individuals, and whether the taxpayer had internal controls to prevent the failures to comply with the Apprenticeship Requirements;

(12) Whether the taxpayer investigated complaints of retaliation or adverse action resulting from reports of suspected failures to comply with the Apprenticeship Requirements, and took appropriate actions to remedy any retaliation or adverse action and prevent it from reoccurring; and

(13) Whether taxpayer failed to maintain and preserve records sufficient to establish compliance with the Apprenticeship Requirements for relevant tax years.

(D) ***Examples.*** The provisions of paragraph (f)(2)(ii) of this section are illustrated by the following examples, which take into account certain facts and circumstances described in paragraph (f)(2)(ii)(C) of this section, that are considered in applying the enhanced penalty payment requirement in the case of intentional disregard. These examples do not take into account any possible application of the exception for Good Faith Effort Exception under paragraph (f)(1) of this section or the inapplicability of the penalty in the case of a Qualifying Project Labor Agreement under paragraph (f)(2)(v) of this section. In each example, assume that the taxpayer uses the calendar year as the taxpayer's taxable year.

(1) ***Example 1.*** Taxpayer T failed to satisfy the labor hours requirement of section 45(b)(8)(A), the participation requirement of section 45(b)(8)(C), and the requirements described in paragraphs (b) and (d) of this section. Taxpayer T did not create a plan to utilize qualified apprentices in the construction, alteration, or repair of the qualified facility. Taxpayer T did not include contract provisions that require the hiring of qualified apprentices and the compliance with the labor hours requirement described in section 45(b)(8)(A) and the participation requirement described in section 45(b)(8)(C), nor did Taxpayer T require those contract provisions in any subcontracts. Neither Taxpayer T nor any contractors or subcontractors made any requests to a registered apprenticeship program for qualified apprentices. Taxpayer T also did not have procedures in place to audit whether contractors or subcontractors made a request to a registered apprenticeship program. Taxpayer T's failures to satisfy the labor hours requirement of section 45(b)(8)(A), the participation requirement of section 45(b)(8)(C), and the requirements described in paragraphs (b) and (d) of this section would be considered due to intentional

disregard for purposes of paragraph (f)(2)(ii) of this section. After considering all of the facts and circumstances, Taxpayer T would be subject to the enhanced penalty payment described in paragraph (f)(2)(ii)(A) of this section.

(2) ***Example 2.*** Taxpayer U failed to satisfy the labor hours requirement of section 45(b)(8)(A), the participation requirement of section 45(b)(8)(C), and the requirements described in paragraphs (b) and (d) of this section. Taxpayer U created a plan to utilize qualified apprentices in the construction, alteration, or repair of a qualified facility. Taxpayer U included contract provisions that required the hiring of qualified apprentices and the compliance with the labor hours requirement described in section 45(b)(8)(A) and the participation requirement described in section 45(b)(8)(C) and required those contract provisions in any subcontracts. Taxpayer U and all contractors and subcontractors of Taxpayer U requested relevant qualified apprentices from registered apprenticeship programs. Taxpayer U also created procedures to audit whether contractors or subcontractors made a request to a registered apprenticeship program and ensured that the registered apprenticeship programs were contacted in writing. In cases in which a registered apprenticeship program replied to a proper request described in paragraph (f)(1)(i)(A)(*1*) of this section with a non-substantive response, Taxpayer U encouraged follow-ups to the registered apprenticeship program. Additionally, Taxpayer U contacted and encouraged contractors and subcontractors to contact the Department of Labor's Office of Apprenticeship and the State apprenticeship agency in cases in which Taxpayer U, or any contractors or subcontractors, experienced difficulty in locating a registered apprenticeship program. After considering all of the facts and circumstances, Taxpayer U's failure to satisfy the labor hours requirement of section 45(b)(8)(A), the participation requirement of section 45(b)(8)(C), and the requirements described in paragraphs (b) and (d) of this section would not be considered due to intentional disregard for purposes of paragraph (f)(2)(ii) of this section.

(E) ***Rebuttable presumption of no intentional disregard.*** If a taxpayer makes the penalty payment required by this paragraph (f)(2) before receiving notice of an examination from the IRS with respect to a claim for the increased credit amount under section 45(b)(6), the taxpayer will be presumed not to have intentionally disregarded the Apprenticeship Requirements in paragraphs (b) and (d) of this section. The IRS may rebut this presumption based on the relevant facts and circumstances.

(iii) ***Deficiency procedures to apply.*** The penalty payment required by this paragraph (f)(2) is subject to deficiency procedures of subchapter B of chapter 63 of the Code.

(iv) ***Penalty payments in the event of a transfer pursuant to section 6418.*** To the extent an eligible taxpayer, as defined in section 6418(f)(2), has determined an increased credit amount under section 45(b)(6) and transferred such increased credit amount as part of a specified credit portion, the obligation to make a penalty payment under paragraph (f)(2)(i) of this section remains with the eligible taxpayer. The obligation for an eligible taxpayer to satisfy the Apprenticeship Requirements becomes binding upon the earlier of the filing of the eligible taxpayer's return for the taxable year for which the specified credit portion is determined with respect to the eligible taxpayer, or the filing of the return of the transferee taxpayer for the year in which the specified credit portion is taken into account. If the IRS determines that the eligible taxpayer failed to meet the Apprenticeship Requirements and the eligible taxpayer does not

then make the penalty payments provided in paragraph (f)(2)(i) of this section, then no penalty is assessed under paragraph (f)(2)(i) of this section, and the eligible taxpayer is not eligible for the increased credit amount determined under section 45(b)(6)(B)(iii). Section 6418 and the regulations under section 6418 control for determining the impact of an eligible taxpayer's failure to cure on any transferee taxpayer.

(v) ***Project labor agreements.*** The penalty payment required by this paragraph (f)(2) to cure a failure to satisfy the Apprenticeship Requirements in paragraphs (b) and (d) of this section does not apply with respect to the construction, alteration, or repair work of a qualified facility if the work is done pursuant to a Qualifying Project Labor Agreement as defined in § 1.45-7(c)(6)(ii).

(g) ***Definitions.*** Solely for purposes of this section, the following definitions apply:

(1) ***Construction, alteration, or repair.*** The term *construction, alteration, or repair* has the same meaning as in § 1.45-7(d)(3).

(2) ***Contractor.*** The term *contractor* has the same meaning as in § 1.45-7(d)(4).

(3) ***Employed.*** The term *employed* has the same meaning as in § 1.45-7(d)(5).

(4) ***Established standards and requirements.*** The term *established standards and requirements* means those standards of apprenticeship required by 29 CFR parts 29 and 30 for registered apprenticeship programs, as well as any additional requirements established by the registered apprenticeship program for the placement of apprentices and applicable to all employers participating in the registered apprenticeship program. Such requirements must not be found by the U.S. Department of Labor's Office of Apprenticeship or a recognized State apprenticeship agency to be contrary to Department of Labor guidance regarding the administration of registered apprenticeship programs.

(5) ***Geographic area.*** The term *geographic area* for purposes of determining the geographic area of operation of a registered apprenticeship program has the same meaning as the term *geographic area* and *locality* defined in § 1.45-7(d)(7).

(6) ***Journeyworker.*** The term *journeyworker* means an individual who has attained a level of skill, abilities, and competencies recognized within an industry as having mastered the skills and competencies required for the occupation. Use of the term may also refer to a mentor, technician, specialist, or other skilled individual who has documented sufficient skills and knowledge of an occupation, either through formal apprenticeship or through practical on-the-job experience and formal training.

(7) ***Labor hours.*** The term *labor hours* means the total number of hours devoted to the performance of construction, alteration, or repair work by any individual employed by the taxpayer or by any contractor or subcontractor. Labor hours do not include hours worked by foremen, superintendents, owners, or persons employed in bona fide executive, administrative, or professional capacities (as defined in 29 CFR part 541).

(8) ***Qualified apprentice.*** The term *qualified apprentice* means an individual who is employed by the taxpayer or by any contractor or subcontractor and who is participating in a registered apprenticeship program. An individual is participating in a registered apprenticeship program if, the individual has entered into a written agreement with a registered apprenticeship program containing the terms and conditions of the employment and training of the apprentice and has been registered as an apprentice with the U.S. Department of Labor's Office of Apprenticeship or a recognized State apprenticeship agency during the time period in which work is performed by the apprentice for the taxpayer, contractor, or subcontractor, or the individual is in the first 90 days of probationary

employment as an apprentice in a registered apprenticeship program and the individual has been certified by the U.S. Department of Labor's Office of Apprenticeship or a recognized State apprenticeship agency as eligible for probationary employment as an apprentice.

(9) ***Registered apprenticeship program.*** A *registered apprenticeship program* means a program that has been registered by the U.S. Department of Labor's Office of Apprenticeship or a recognized State apprenticeship agency, pursuant to the National Apprenticeship Act and its implementing regulations for registered apprenticeship at 29 CFR parts 29 and 30, as meeting the basic standards and requirements of the Department of Labor for approval of such program for Federal purposes. Registration of a program is evidenced by a Certificate of Registration or other written indicia. Registered apprenticeship programs include those that taxpayers, contractors, or subcontractors sponsor, create, or partner with and include joint and non-joint programs (as those terms are used in 29 CFR part 29).

(10) ***State apprenticeship agency.*** The term *State apprenticeship agency* means an agency of a State government that has responsibility and accountability for apprenticeship within the State and that has been recognized and authorized by the U.S. Department of Labor's Office of Apprenticeship to register and oversee apprenticeship programs and agreements for Federal purposes.

(11) ***Subcontractor.*** The term *subcontractor* has the same meaning as in § 1.45-7(d)(10).

(12) ***Taxpayer.*** The term *taxpayer* has the same meaning as in § 1.45-7(d)(11).

(h) ***Applicability date.*** This section applies to qualified facilities placed in service in taxable years ending after June 25, 2024, and the construction of which begins after June 25, 2024. Taxpayers may apply this section to qualified facilities placed in service in taxable years ending on or before June 25, 2024, and qualified facilities placed in service in taxable years ending after June 25, 2024, the construction of which begins before June 25, 2024, provided that taxpayers follow this section in its entirety and in a consistent manner.

[89 FR 53252, June 25, 2024; 89 FR 66562, Aug. 16, 2024]

§§ 1.45-9-1.45.11 [Reserved]

§ 1.45-12 Recordkeeping and reporting.

(a) ***In general.*** The increased credit amount determined under section 45(b)(6) must be claimed in such form and manner as may be prescribed in IRS forms, instructions, publications, or guidance published in the Internal Revenue Bulletin. *See* § 601.601 of this chapter. Consistent with sections 45 and 6001 and § 1.6001-1(e), a taxpayer claiming or transferring (under section 6418) an increased credit amount under section 45(b)(6)(A) must maintain and preserve records sufficient to establish compliance with the requirements of sections 45(b)(6)(B), (b)(7), and (8), as applicable. In the case of any credit transferred under section 6418 reflecting an increased credit amount, the requirement to maintain and preserve sufficient records demonstrating compliance with the applicable prevailing wage and apprenticeship requirements remains with the eligible taxpayer that determined and transferred the credit. For definitions of terms used in this section, *see* § 1.45-7(d) with respect to the prevailing wage requirements, and § 1.45-8(g) with respect to the apprenticeship requirements.

(b) ***Recordkeeping for the prevailing wage and apprenticeship requirements.*** With respect to each qualified facility for which a taxpayer is claiming or transferring (under section 6418) a credit reflecting an increased credit amount under section 45(b)(6)(A)(iii), the taxpayer must maintain and preserve records

sufficient to demonstrate compliance with the applicable prevailing wage and apprenticeship requirements in sections 45(b)(7) and (8) and §§ 1.45-7 and 1.45-8, respectively. At a minimum, those records include payroll records for each laborer and mechanic (including each qualified apprentice) employed by the taxpayer, contractor, or subcontractor in the construction, alteration, or repair of the qualified facility. If work is done pursuant to a Qualifying Project Labor Agreement as defined in § 1.45-7(c)(6)(ii), the taxpayer should also maintain and preserve records related to that Qualifying Project Labor Agreement.

(c) ***Recordkeeping for the prevailing wage requirements.*** In addition to payroll records otherwise maintained by the taxpayer, records sufficient to demonstrate compliance with the applicable prevailing wage requirements in section 45(b)(7) and § 1.45-7 may include Forms WH-347 completed fully and correctly with information for each laborer and mechanic (including each qualified apprentice) employed by the taxpayer, a contractor, or subcontractor with respect to each qualified facility. Records sufficient to demonstrate compliance with the applicable prevailing wage requirements in section 45(b)(7) and § 1.45-7 may also include the following other documents and records with respect to each qualified facility:

(1) Identifying information for each laborer and mechanic who worked on the construction, alteration, or repair of the qualified facility, including the name, the last four digits of a social security or tax identification number, address, telephone number, and email address;

(2) The location and type of construction of the qualified facility;

(3) The labor classification(s) the taxpayer applied to each laborer and mechanic for determining the prevailing wage rate and documentation supporting the applicable classification, including the applicable wage determination and copies of executed contracts for construction, alteration, or repair of the qualified facility with any contractor or subcontractor;

(4) The hourly rate(s) of wages paid (including rates of contributions or costs for bona fide fringe benefits or cash equivalents thereof) for each applicable labor classification described in paragraph (c)(3) of this section;

(5) Records to support any contribution irrevocably made on behalf of each laborer or mechanic to a trustee or other third person pursuant to a bona fide fringe benefit program, and the rate of costs that were reasonably anticipated in providing bona fide fringe benefits to laborers and mechanics pursuant to an enforceable commitment to carry out a plan or program described in 40 U.S.C. 3141(2)(B), including records demonstrating that the enforceable commitment was provided in writing to the laborers and mechanics affected;

(6) The total number of hours worked by each laborer and mechanic per pay period;

(7) The total wages paid to each laborer and mechanic for each pay period (including identifying any deductions from wages);

(8) Records to support wages paid to any qualified apprentices at less than the applicable prevailing wage rates, including records reflecting an individual's participation in a registered apprenticeship program and the applicable wage rates and apprentice- to-journeyworker ratios prescribed by the registered apprenticeship program;

(9) The amount and timing of any correction and penalty payments and documentation reflecting the calculation of the correction and penalty payments, including records to demonstrate eligibility for the penalty waiver in § 1.45-7(c)(6);

(10) Records to document any failures to pay prevailing wages and the actions taken to prevent, mitigate, or remedy the failure (for example, records demonstrating that the taxpayer (or an independent third party engaged by the taxpayer) regularly reviewed payroll practices, included requirements to pay prevailing wages in contracts with contractors, and posted prevailing wage rates in a prominent place on the job site); and

(11) Records related to any complaints received by the taxpayer, contractor, or subcontractor that the taxpayer, contractor, or subcontractor was paying wages less than the applicable prevailing wage rate for work performed by laborers and mechanics with respect to the qualified facility.

(d) ***Recordkeeping for the apprenticeship requirements.*** Records sufficient to demonstrate compliance with the applicable apprenticeship requirements in section 45(b)(8) and § 1.45-8 may include the following information with respect to each qualified facility:

(1) Any written requests for the employment of qualified apprentices from registered apprenticeship programs, including any contacts with the U.S. Department of Labor's Office of Apprenticeship or a State apprenticeship agency regarding requests for qualified apprentices from registered apprenticeship programs;

(2) Any agreements entered into with registered apprenticeship programs with respect to the construction, alteration, or repair of the facility;

(3) Documents reflecting the standards and requirements of all registered apprenticeship programs from which taxpayers, contractors, or subcontractors employed qualified apprentices with respect to the construction, alteration, or repair of the facility (including the applicable ratio requirement prescribed by each registered apprenticeship program);

(4) The total number of labor hours worked with respect to the construction, alteration, or repair of the qualified facility, including and identifying hours worked by each qualified apprentice;

(5) Records reflecting the daily ratio of apprentices to journeyworkers;

(6) Records demonstrating compliance with the Good Faith Effort Exception in § 1.45-8(f)(1) (including requests for qualified apprentices, correspondence with registered apprenticeship programs, and denials of requests);

(7) The amount and timing of any penalty payments and documentation reflecting the calculation of the penalty payments;

(8) Records to document any failures to satisfy the apprenticeship requirements under section 45(b)(8) and § 1.45-8 and the actions taken to prevent, mitigate, or remedy the failure; and

(9) Records related to any complaints received by the taxpayer, contractor, or subcontractor that the taxpayer, contractor, or subcontractor was not satisfying the apprenticeship requirements under section 45(b)(8) and § 1.45-8.

(e) ***Satisfaction of the recordkeeping requirements.*** Taxpayers may satisfy the recordkeeping requirements in this section as follows:

(1) Taxpayers may collect and physically retain relevant records from every contractor and subcontractor. The records may have personally identifiable information (PII) redacted to comply with applicable privacy laws. Unredacted information must be made available to the IRS upon request;

(2) Taxpayers, contractors, and subcontractors may provide relevant records to a third party vendor to physically retain on behalf of the taxpayer. The records may have PII redacted to comply with applicable privacy laws. Unredacted records must be made available to the IRS upon request; or

(3) Taxpayers, contractors, and subcontractors may each physically retain the relevant unredacted records for their own employees. Unredacted records must be made available to the IRS upon request.

(f) ***Applicability date.*** This section applies to qualified facilities placed in service in taxable years ending after June 25, 2024, and the construction of which begins after June 25, 2024. Taxpayers may apply this section to qualified facilities placed in service in taxable years ending on or before June 25, 2024, and qualified facilities placed in service in taxable years ending after June 25, 2024, the construction of which begins before June 25, 2024, provided that taxpayers follow this section in its entirety and in a consistent manner.

[T.D. 9998, 89 FR 53252, June 25, 2024]

§ 1.45D-0 Table of contents.

This section lists the paragraphs contained in § 1.45D-1.

(a) Current year credit.

(b) Allowance of credit.

(1) In general.

(2) Credit allowance date.

(3) Applicable percentage.

(4) Amount paid at original issue.

(c) Qualified equity investment.

(1) In general.

(2) Equity investment.

(3) Equity investments made prior to allocation.

(i) In general.

(ii) Exceptions.

(A) Allocation applications submitted by August 29, 2002.

(B) Other allocation applications.

(iii) Failure to receive allocation.

(iv) Initial investment date.

(4) Limitations.

(i) In general.

(ii) Allocation limitation.

(5) Substantially all.

(i) In general.

(ii) Direct-tracing calculation.

(iii) Safe harbor calculation.

(iv) Time limit for making investments.

(v) Reduced substantially-all percentage.

(vi) Examples.

(6) Aggregation of equity investments.

(7) Subsequent purchasers.

(8) Non-real estate qualified equity investment.

(d) Qualified low-income community investments.

(1) In general.

(i) Investment in a qualified active low-income community business or a non-real estate qualified active low-income community business.

(ii) Purchase of certain loans from CDEs.

(A) In general.

(B) Certain loans made before CDE certification.

(C) Intermediary CDEs.

(D) Examples.

(iii) Financial counseling and other services.

(iv) Investments in other CDEs.

(A) In general.

(B) Examples.

(2) Payments of, or for, capital, equity or principal.

(i) In general.

(ii) Subsequent reinvestments.

(iii) Special rule for loans.

(iv) Example.

(3) Special rule for reserves.

(4) Qualified active low-income community business.

(i) In general.

(A) Gross-income requirement.

(B) Use of tangible property.

(*1*) In general.

(*2*) Example.

(C) Services performed.

(D) Collectibles.

(E) Nonqualified financial property.

(*1*) In general.

(*2*) Construction of real property.

(ii) Proprietorships.

(iii) Portions of business.

(A) In general.

(B) Examples.

(iv) Active conduct of a trade or business.

(A) Special rule.

(B) Example.

(5) Qualified business.

(i) In general.

(ii) Rental of real property.

(iii) Exclusions.

(A) Trades or businesses involving intangibles.

(B) Certain other trades or businesses.

(C) Farming.

(6) Qualifications.

(i) In general.

(ii) Control.

(A) In general.

(B) Definition of control.

(C) Disregard of control.

(7) Financial counseling and other services.

(8) Special rule for certain loans.

(i) In general.

(ii) Example.

(9) Targeted populations.

(i) Low-income persons.

(A) Definition.

(*1*) In general.

(*2*) Area median family income.

(*3*) Individual's family income.

(B) Qualified active low-income community business requirements for low-income targeted populations.

(*1*) In general.

(*2*) Employee.

(*3*) Owner.

(*4*) Derived from.

(*5*) Fair market value of sales, rentals, services, or other transactions.

(C) 120-percent-income restriction.

(*1*) In general.

(*2*) Population census tract location.

(D) Rental of real property for low-income targeted populations.

(*1*) In general.

(*2*) Special rule for entities whose sole business is the rental to others of real property.

(ii) Individuals who otherwise lack adequate access to loans or equity investments.

(A) In general.

(B) GO Zone Targeted Population.

(C) Qualified active low-income community business requirements for the GO Zone Targeted Population.

(*1*) In general.

(*2*) Location.

(*i*) In general.

(*ii*) Determination.

(D) 200-percent-income restriction.

(*1*) In general.

(*2*) Population census tract location.

(E) Rental of real property for the GO Zone Targeted Population.

(10) Non-real estate qualified active low-income community business.

(i) Definition.

(ii) Payments of, or for, capital, equity or principal with respect to a non-real estate qualified active low-income community business.

(A) In general.

(B) Seventh year of the 7-year credit period.

(C) Amounts received from a qualifying entity.

(D) Definition of qualifying entity.

(e) Recapture.

(1) In general.

(2) Recapture event.

(3) Redemption.

(i) Equity investment in a C corporation.

(ii) Equity investment in an S corporation.

(iii) Capital interest in a partnership.

(4) Bankruptcy.

(5) Waiver of requirement or extension of time.

(i) In general.

(ii) Manner for requesting a waiver or extension.

(iii) Terms and conditions.

(6) Cure period.

(7) Example.

(f) Basis reduction.

(1) In general.

(2) Adjustment in basis of interest in partnership or S corporation.

(g) Other rules.

(1) Anti-abuse.

(2) Reporting requirements.

(i) Notification by CDE to taxpayer.

(A) Allowance of new markets tax credit.

(B) Recapture event.

(ii) CDE reporting requirements to Secretary.

(iii) Manner of claiming new markets tax credit.

(iv) Reporting recapture tax.

(3) Other Federal tax benefits.

(i) In general.

(ii) Low-income housing credit.

(4) Bankruptcy of CDE.

(h) Effective/applicability dates.

(1) In general.

(2) Exception for certain provisions.

(3) Targeted populations.

(4) Investments in non-real estate businesses.

[T.D. 9560, 76 FR 75777, Dec. 5, 2011, as amended by T.D. 9600, 77 FR 59546, Sept. 28, 2012]

§ 1.45D-1 New markets tax credit.

(a) ***Current year credit.*** The current year general business credit under section 38(b)(13) includes the new markets tax credit under section 45D(a).

(b) ***Allowance of credit*** —

(1) ***In general.*** A taxpayer holding a qualified equity investment on a credit allowance date which occurs during the taxable year may claim the new markets tax credit determined under section 45D(a) and this section for such taxable year in an amount equal to the applicable percentage of the amount paid to a qualified community development entity (CDE) for such investment at its original issue. *Qualified equity investment* is defined in paragraph (c) of this section. *Credit allowance date* is defined in paragraph (b)(2) of this section. *Applicable percentage* is defined in paragraph (b)(3) of this section. A *CDE* is a qualified community development entity as defined in section 45D(c). The amount paid at original issue is determined under paragraph (b)(4) of this section.

(2) ***Credit allowance date.*** The term *credit allowance date* means, with respect to any qualified equity investment—

(i) The date on which the investment is initially made; and

(ii) Each of the 6 anniversary dates of such date thereafter.

(3) ***Applicable percentage.*** The *applicable percentage* is 5 percent for the first 3 credit allowance dates and 6 percent for the other 4 credit allowance dates.

(4) ***Amount paid at original issue.*** The amount paid to the CDE for a qualified equity investment at its original issue consists of all amounts paid by the taxpayer to, or on behalf of, the CDE (including any underwriter's fees) to purchase the investment at its original issue.

(c) ***Qualified equity investment*** —

(1) ***In general.*** The term *qualified equity investment* means any equity investment (as defined in paragraph (c)(2) of this section) in a CDE if—

(i) The investment is acquired by the taxpayer at its original issue (directly or through an underwriter) solely in exchange for cash;

(ii) Substantially all (as defined in paragraph (c)(5) of this section) of such cash is used by the CDE to make qualified low-income community investments (as defined in paragraph (d)(1) of this section); and

(iii) The investment is designated for purposes of section 45D and this section as a qualified equity investment or a non-real estate qualified equity investment (as defined in paragraph (c)(8) of this section) by the CDE on its books and records using any reasonable method.

(2) ***Equity investment.*** The term *equity investment* means any stock (other than nonqualified preferred stock as defined in section 351(g)(2)) in an entity that is a corporation for Federal tax purposes and any capital interest in an entity that is a partnership for Federal tax purposes. See §§ 301.7701-1 through 301.7701-3 of this chapter for rules governing when a business entity, such as a business trust or limited liability company, is classified as a corporation or a partnership for Federal tax purposes.

(3) ***Equity investments made prior to allocation*** —

(i) ***In general.*** Except as provided in paragraph (c)(3)(ii) of this section, an equity investment in an entity is not eligible to be designated as a qualified equity investment if it is made before the entity enters into an allocation agreement with the Secretary. An *allocation agreement* is an agreement between the Secretary and a CDE relating to a new markets tax credit allocation under section 45D(f)(2).

(ii) ***Exceptions.*** Notwithstanding paragraph (c)(3)(i) of this section, an equity investment in an entity is eligible to be designated as a qualified equity investment or a non-real estate qualified equity investment under paragraph (c)(1)(iii) of this section if—

(A) ***Allocation applications submitted by August 29, 2002.***

(*1*) The equity investment is made on or after April 20, 2001;

(*2*) The designation of the equity investment as a qualified equity investment is made for a credit allocation received pursuant to an allocation application submitted to the Secretary no later than August 29, 2002; and

(*3*) The equity investment otherwise satisfies the requirements of section 45D and this section; or

(B) ***Other allocation applications.***

(*1*) The equity investment is made on or after the date the Secretary publishes a Notice of Allocation Availability (NOAA) in the FEDERAL REGISTER;

(*2*) The designation of the equity investment as a qualified equity investment is made for a credit allocation received pursuant to an allocation application submitted to the Secretary under that NOAA; and

(*3*) The equity investment otherwise satisfies the requirements of section 45D and this section.

(iii) ***Failure to receive allocation.*** For purposes of paragraph (c)(3)(ii)(A) of this section, if the entity in which the equity investment is made does not receive an allocation pursuant to an allocation application submitted no later than August 29, 2002, the equity investment will not be eligible to be designated as a qualified equity investment. For purposes of paragraph (c)(3)(ii)(B) of this section, if the entity in which the equity investment is made does not receive an allocation under the NOAA described in paragraph (c)(3)(ii)(B)(*1*) of this section, the equity investment will not be eligible to be designated as a qualified equity investment.

(iv) ***Initial investment date.*** If an equity investment is designated as a qualified equity investment in accordance with paragraph (c)(3)(ii) of this section, the investment is treated as initially made on the effective date of the allocation agreement between the CDE and the Secretary.

(4) *Limitations* —

(i) ***In general.*** The term *qualified equity investment* does not include—

(A) Any equity investment issued by a CDE more than 5 years after the date the CDE enters into an allocation agreement (as defined in paragraph (c)(3)(i) of this section) with the Secretary; and

(B) Any equity investment by a CDE in another CDE, if the CDE making the investment has received an allocation under section 45D(f)(2).

(ii) ***Allocation limitation.*** The maximum amount of equity investments issued by a CDE that may be designated under paragraph (c)(1)(iii) of this section by the CDE may not exceed the portion of the limitation amount allocated to the CDE by the Secretary under section 45D(f)(2).

(5) *Substantially all* —

(i) ***In general.*** Except as provided in paragraph (c)(5)(v) of this section, the term *substantially all* means at least 85 percent. The substantially-all requirement must be satisfied for each annual period in the 7-year credit period using either the direct-tracing calculation under paragraph (c)(5)(ii) of this section, or the safe harbor calculation under paragraph (c)(5)(iii) of this section. For the first annual period, the substantially-all requirement is treated as satisfied if either the direct-tracing calculation under paragraph (c)(5)(ii) of this section, or the safe-harbor calculation under paragraph (c)(5)(iii) of this section, is performed on a single testing date and the result of the calculation is at least 85 percent. For each annual period other than the first annual period, the substantially-all requirement is treated as satisfied if either the direct-tracing calculation under paragraph (c)(5)(ii) of this section, or the safe harbor calculation under paragraph (c)(5)(iii) of this section, is performed every six months and the average of the two calculations for the annual period is at least 85 percent. For example, the CDE may choose the same two testing dates for all qualified equity investments regardless of the date each qualified equity investment was initially made under paragraph (b)(2)(i) of this section, provided the testing dates are six months apart. The use of the direct-tracing calculation under paragraph (c)(5)(ii) of this section (or the safe harbor calculation under paragraph (c)(5)(iii) of this section) for an annual period does not preclude the use of the safe harbor calculation under paragraph (c)(5)(iii) of this section (or the direct-tracing calculation under paragraph (c)(5)(ii) of this section) for another annual period, provided that a CDE that switches to a direct-tracing calculation must substantiate that the taxpayer's investment is directly traceable to qualified low-income community investments from the time of the CDE's initial investment in a qualified low-income community investment. For purposes of this paragraph (c)(5)(i), the *7-year credit period* means the period of 7 years beginning on the date the qualified equity investment is initially made. See paragraph (c)(6) of this section for circumstances in which a CDE may treat more than one equity investment as a single qualified equity investment.

(ii) ***Direct-tracing calculation.*** The substantially-all requirement is satisfied if at least 85 percent of the taxpayer's investment is directly traceable to qualified low-income community investments as defined in paragraph (d)(1) of this section. The direct-tracing calculation is a fraction the numerator of which is the CDE's aggregate cost basis determined under section 1012 in all of the qualified low-income community investments that are directly traceable to the taxpayer's cash investment, and the denominator of which is the amount of the taxpayer's cash investment under paragraph (b)(4) of this section. For purposes of this paragraph (c)(5)(ii), cost basis includes the cost basis of any qualified low-income community investment that becomes

worthless. *See* paragraph (d)(2) of this section for the treatment of amounts received by a CDE in payment of, or for, capital, equity or principal with respect to a qualified low-income community investment.

(iii) ***Safe harbor calculation.*** The substantially-all requirement is satisfied if at least 85 percent of the aggregate gross assets of the CDE are invested in qualified low-income community investments as defined in paragraph (d)(1) of this section. The safe harbor calculation is a fraction the numerator of which is the CDE's aggregate cost basis determined under section 1012 in all of its qualified low-income community investments, and the denominator of which is the CDE's aggregate cost basis determined under section 1012 in all of its assets. For purposes of this paragraph (c)(5)(iii), cost basis includes the cost basis of any qualified low-income community investment that becomes worthless. *See* paragraph (d)(2) of this section for the treatment of amounts received by a CDE in payment of, or for, capital, equity or principal with respect to a qualified low-income community investment.

(iv) ***Time limit for making investments.*** The taxpayer's cash investment received by a CDE is treated as invested in a qualified low-income community investment as defined in paragraph (d)(1) of this section only to the extent that the cash is so invested within the 12-month period beginning on the date the cash is paid by the taxpayer (directly or through an underwriter) to the CDE.

(v) ***Reduced substantially-all percentage.*** For purposes of the substantially-all requirement (including the direct-tracing calculation under paragraph (c)(5)(ii) of this section and the safe harbor calculation under paragraph (c)(5)(iii) of this section), 85 percent is reduced to 75 percent for the seventh year of the 7-year credit period (as defined in paragraph (c)(5)(i) of this section).

(vi) ***Examples.*** The following examples illustrate an application of this paragraph (c)(5):

Example 1. X is a partnership and a CDE that has received a $1 million new markets tax credit allocation from the Secretary. On September 1, 2004, X uses a line of credit from a bank to fund a $1 million loan to Y. The loan is a qualified low-income community investment under paragraph (d)(1) of this section. On September 5, 2004, A pays $1 million to acquire a capital interest in X. X uses the proceeds of A's equity investment to pay off the $1 million line of credit that was used to fund the loan to Y. X's aggregate gross assets consist of the $1 million loan to Y and $100,000 in other assets. A's equity investment in X does not satisfy the substantially-all requirement under paragraph (c)(5)(i) of this section using the direct-tracing calculation under paragraph (c)(5)(ii) of this section because the cash from A's equity investment is not used to make X's loan to Y. However, A's equity investment in X satisfies the substantially-all requirement using the safe harbor calculation under paragraph (c)(5)(iii) of this section because at least 85 percent of X's aggregate gross assets are invested in qualified low-income community investments.

Example 2. X is a partnership and a CDE that has received a new markets tax credit allocation from the Secretary. On August 1, 2004, A pays $100,000 for a capital interest in X. On August 5, 2004, X uses the proceeds of A's equity investment to make an equity investment in Y. X controls Y within the meaning of paragraph (d)(6)(ii)(B) of this section. For the annual period ending July 31, 2005, Y is a qualified active low-income community business (as defined in paragraph (d)(4) of this section). Thus, for that period, A's equity investment satisfies the substantially-all requirement under paragraph (c)(5)(i) of this section using the direct-tracing calculation under paragraph (c)(5)(ii) of this section. For the annual period ending July 31, 2006, Y no longer is a qualified active low-income

community business. Thus, for that period, A's equity investment does not satisfy the substantially-all requirement using the direct-tracing calculation. However, during the entire annual period ending July 31, 2006, X's remaining assets are invested in qualified low-income community investments with an aggregate cost basis of $900,000. Consequently, for the annual period ending July 31, 2006, at least 85 percent of X's aggregate gross assets are invested in qualified low-income community investments. Thus, for the annual period ending July 31, 2006, A's equity investment satisfies the substantially-all requirement using the safe harbor calculation under paragraph (c)(5)(iii) of this section.

Example 3. X is a partnership and a CDE that has received a new markets tax credit allocation from the Secretary. On August 1, 2004, A and B each pay $100,000 for a capital interest in X. X does not treat A's and B's equity investments as one qualified equity investment under paragraph (c)(6) of this section. On September 1, 2004, X uses the proceeds of A's equity investment to make an equity investment in Y and X uses the proceeds of B's equity investment to make an equity investment in Z. X has no assets other than its investments in Y and Z. X controls Y and Z within the meaning of paragraph (d)(6)(ii)(B) of this section. For the annual period ending July 31, 2005, Y and Z are qualified active low-income community businesses (as defined in paragraph (d)(4) of this section). Thus, for the annual period ending July 31, 2005, A's and B's equity investments satisfy the substantially-all requirement under paragraph (c)(5)(i) of this section using either the direct-tracing calculation under paragraph (c)(5)(ii) of this section or the safe harbor calculation under paragraph (c)(5)(iii) of this section. For the annual period ending July 31, 2006, Y, but not Z, is a qualified active low-income community business. Thus, for the annual period ending July 31, 2006—

(1) X does not satisfy the substantially-all requirement using the safe harbor calculation under paragraph (c)(5)(iii) of this section;

(2) A's equity investment satisfies the substantially-all requirement using the direct-tracing calculation because A's equity investment is directly traceable to Y; and

(3) B's equity investment does not satisfy the substantially-all requirement because B's equity investment is traceable to Z.

Example 4. X is a partnership and a CDE that has received a new markets tax credit allocation from the Secretary. On November 1, 2004, A pays $100,000 for a capital interest in X. On December 1, 2004, B pays $100,000 for a capital interest in X. On December 31, 2004, X uses $85,000 from A's equity investment and $85,000 from B's equity investment to make a $170,000 equity investment in Y, a qualified active low-income community business (as defined in paragraph (d)(4) of this section). X has no assets other than its investment in Y. X determines whether A's and B's equity investments satisfy the substantially-all requirement under paragraph (c)(5)(i) of this section on December 31, 2004. The

calculation for A's and B's equity investments is 85 percent using either the direct-tracing calculation under paragraph (c)(5)(ii) of this section or the safe harbor calculation under paragraph (c)(5)(iii) of this section. Therefore, for the annual periods ending October 31, 2005, and November 30, 2005, A's and B's equity investments, respectively, satisfy the substantially-all requirement under paragraph (c)(5)(i) of this section. For the subsequent annual period, X performs its calculations on December 31, 2005, and June 30, 2006. The average of the two calculations on December 31, 2005, and June 30, 2006, is 85 percent using either the direct-tracing calculation under paragraph (c)(5)(ii) of this section or the safe harbor calculation under paragraph (c)(5)(iii) of this section. Therefore, for the annual periods ending October 31, 2006, and November 30, 2006, A's and B's equity investments, respectively, satisfy the substantially-all requirement under paragraph (c)(5)(i) of this section.

(6) ***Aggregation of equity investments.*** A CDE may treat any qualified equity investments issued on the same day as one qualified equity investment. If a CDE aggregates equity investments under this paragraph (c)(6), the rules in this section shall be construed in a manner consistent with that treatment.

(7) ***Subsequent purchasers.*** A qualified equity investment includes any equity investment that would (but for paragraph (c)(1)(i) of this section) be a qualified equity investment in the hands of the taxpayer if the investment was a qualified equity investment in the hands of a prior holder.

(8) ***Non-real estate qualified equity investment.*** If a qualified equity investment is designated as a non-real estate qualified equity investment under paragraph (c)(1)(iii) of this section, then the qualified equity investment may only satisfy the *substantially-all* requirement under paragraph (c)(5) of this section if the CDE makes qualified low-income community investments that are directly traceable (including investments made through one or more CDEs) to non-real estate qualified active low-income community businesses (as defined in paragraph (d)(10) of this section). The proceeds of a non-real estate qualified equity investment cannot be used for transactions involving a qualified active low-income community business that is not a non-real estate qualified active low-income community business.

(d) ***Qualified low-income community investments*** —

(1) ***In general.*** The term *qualified low-income community investment* means any of the following:

(i) ***Investment in a qualified active low-income community business or a non-real estate qualified active low-income community business.*** Any capital or equity investment in, or loan to, any qualified active low-income community business (as defined in paragraph (d)(4) of this section) or any non-real estate qualified active low-income community business (as defined in paragraph (d)(10) of this section).

(ii) ***Purchase of certain loans from CDEs*** —

(A) ***In general.*** The purchase by a CDE (the ultimate CDE) from another CDE (whether or not that CDE has received an allocation from the Secretary under section 45D(f)(2)) of any loan made by such entity that is a qualified low-income community investment. A loan purchased by the ultimate CDE from another CDE is a qualified low-income community investment if it qualifies as a qualified low-income community investment either—

(*1*) At the time the loan was made; or

(*2*) At the time the ultimate CDE purchases the loan.

(B) ***Certain loans made before CDE certification.*** For purposes of paragraph (d)(1)(ii)(A) of this section, a loan by an entity is treated as made by a CDE, notwithstanding that the entity was not a CDE at the time it made the loan, if the entity is a CDE at the time it sells the loan.

(C) ***Intermediary CDEs.*** For purposes of paragraph (d)(1)(ii)(A) of this section, the purchase of a loan by the ultimate CDE from a CDE that did not make the loan (the second CDE) is treated as a purchase of the loan by the ultimate CDE from the CDE that made the loan (the originating CDE) if—

(*1*) The second CDE purchased the loan from the originating CDE (or from another CDE); and

(*2*) Each entity that sold the loan was a CDE at the time it sold the loan.

(D) ***Examples.*** The following examples illustrate an application of this paragraph (d)(1)(ii):

Example 1. X is a partnership and a CDE that has received a new markets tax credit allocation from the Secretary. Y, a corporation, made a $500,000 loan to Z in 1999. In January of 2004, Y is certified as a CDE. On September 1, 2004, X purchases the loan from Y. At the time X purchases the loan, Z is a qualified active low-income community business under paragraph (d)(4)(i) of this section. Accordingly, the loan purchased by X from Y is a qualified low-income community investment under paragraphs (d)(1)(ii)(A) and (B) of this section.

Example 2. The facts are the same as in *Example 1* except that on February 1, 2004, Y sells the loan to W and on September 1, 2004, W sells the loan to X. W is a CDE. Under paragraph (d)(1)(ii)(C) of this section, X's purchase of the loan from W is treated as the purchase of the loan from Y. Accordingly, the loan purchased by X from W is a qualified low-income community investment under paragraphs (d)(1)(ii)(A) and (C) of this section.

Example 3. The facts are the same as in *Example 2* except that W is not a CDE. Because W was not a CDE at the time it sold the loan to X, the purchase of the loan by X from W is not a qualified low-income community investment under paragraphs (d)(1)(ii)(A) and (C) of this section.

(iii) ***Financial counseling and other services.*** Financial counseling and other services (as defined in paragraph (d)(7) of this section) provided to any qualified active low-income community business, or to any residents of a low-income community (as defined in section 45D(e)).

(iv) ***Investments in other CDEs*** —

(A) ***In general.*** Any equity investment in, or loan to, any CDE (the second CDE) by a CDE (the primary CDE), but only to the extent that the second CDE uses the proceeds of the investment or loan—

(*1*) In a manner—

(*i*) That is described in paragraph (d)(1)(i) or (iii) of this section; and

(*ii*) That would constitute a qualified low-income community investment if it were made directly by the primary CDE;

(*2*) To make an equity investment in, or loan to, a third CDE that uses such proceeds in a manner described in paragraph (d)(1)(iv)(A)(*1*) of this section; or

(*3*) To make an equity investment in, or loan to, a third CDE that uses such proceeds to make an equity investment in, or loan to, a fourth CDE that uses such proceeds in a manner described in paragraph (d)(1)(iv)(A)(*1*) of this section.

(B) *Examples.* The following examples illustrate an application of paragraph (d)(1)(iv)(A) of this section:

Example 1. X is a partnership and a CDE that has received a new markets tax credit allocation from the Secretary. On September 1, 2004, X uses $975,000 to make an equity investment in Y. Y is a corporation and a CDE. On October 1, 2004, Y uses $950,000 from X's equity investment to make a loan to Z. Z is a qualified active low-income community business under paragraph (d)(4)(i) of this section. Of X's equity investment in Y, $950,000 is a qualified low-income community investment under paragraph (d)(1)(iv)(A)(*1*) of this section.

Example 2. W is a partnership and a CDE that has received a new markets tax credit allocation from the Secretary. On September 1, 2004, W uses $975,000 to make an equity investment in X. On October 1, 2004, X uses $950,000 from W's equity investment to make an equity investment in Y. X and Y are corporations and CDEs. On October 5, 2004, Y uses $925,000 from X's equity investment to make a loan to Z. Z is a qualified active low-income community business under paragraph (d)(4)(i) of this section. Of W's equity investment in X, $925,000 is a qualified low-income community investment under paragraph (d)(1)(iv)(A)(*2*) of this section because X uses proceeds of W's equity investment to make an equity investment in Y, which uses $925,000 of the proceeds in a manner described in paragraph (d)(1)(iv)(A)(*1*) of this section.

Example 3. U is a partnership and a CDE that has received a new markets tax credit allocation from the Secretary. On September 1, 2004, U uses $975,000 to make an equity investment in V. On October 1, 2004, V uses $950,000 from U's equity investment to make an equity investment in W. On October 5, 2004, W uses $925,000 from V's equity investment to make an equity investment in X. On November 1, 2004, X uses $900,000 from W's equity investment to make an equity investment in Y. V, W, X, and Y are corporations and CDEs. On November 5, 2004, Y uses $875,000 from X's equity investment to make a loan to Z. Z is a qualified active low-income community business under paragraph (d)(4)(i) of this section. U's equity investment in V is not a qualified low-income community investment because X does not use proceeds of W's equity investment in a manner described in paragraph (d)(1)(iv)(A)(*1*) of this section.

(2) *Payments of, or for, capital, equity or principal*—(i) *In general.* Except as otherwise provided in this paragraph (d)(2), amounts received by a CDE in payment of, or for, capital, equity or principal with respect to a qualified low-income community investment must be reinvested by the CDE in a qualified low-income community investment no later than 12 months from the date of receipt to be treated as continuously invested in a qualified low-income community investment. If the amounts received by the CDE are equal to or greater than the cost basis of the original qualified low-income community investment (or applicable portion thereof), and the CDE reinvests, in accordance with this paragraph (d)(2)(i), an amount at least equal to such original cost basis, then an amount equal to such original cost basis will be treated as continuously invested in a qualified low-income community investment. In addition, if the amounts received by the CDE are equal to or greater than the cost basis of the original qualified low-income community investment (or applicable portion thereof), and the CDE reinvests, in accordance with this

paragraph (d)(2)(i), an amount less than such original cost basis, then only the amount so reinvested will be treated as continuously invested in a qualified low-income community investment. If the amounts received by the CDE are less than the cost basis of the original qualified low-income community investment (or applicable portion thereof), and the CDE reinvests an amount in accordance with this paragraph (d)(2)(i), then the amount treated as continuously invested in a qualified low-income community investment will equal the excess (if any) of such original cost basis over the amounts received by the CDE that are not so reinvested. Amounts received by a CDE in payment of, or for, capital, equity or principal with respect to a qualified low-income community investment during the seventh year of the 7-year credit period (as defined in paragraph (c)(5)(i) of this section) do not have to be reinvested by the CDE in a qualified low-income community investment in order to be treated as continuously invested in a qualified low-income community investment.

(ii) *Subsequent reinvestments.* In applying paragraph (d)(2)(i) of this section to subsequent reinvestments, the original cost basis is reduced by the amount (if any) by which the original cost basis exceeds the amount determined to be continuously invested in a qualified low-income community investment.

(iii) *Special rule for loans.* Periodic amounts received during a calendar year as repayment of principal on a loan that is a qualified low-income community investment are treated as continuously invested in a qualified low-income community investment if the amounts are reinvested in another qualified low-income community investment by the end of the following calendar year.

(iv) *Example.* The application of paragraphs (d)(2)(i) and (ii) of this section is illustrated by the following example:

Example. On April 1, 2003, A, B, and C each pay $100,000 to acquire a capital interest in X, a partnership. X is a CDE that has received a new markets tax credit allocation from the Secretary. X treats the 3 partnership interests as one qualified equity investment under paragraph (c)(6) of this section. In August 2003, X uses the $300,000 to make a qualified low-income community investment under paragraph (d)(1) of this section. In August 2005, the qualified low-income community investment is redeemed for $250,000. In February 2006, X reinvests $230,000 of the $250,000 in a second qualified low-income community investment and uses the remaining $20,000 for operating expenses. Under paragraph (d)(2)(i) of this section, $280,000 of the proceeds of the qualified equity investment is treated as continuously invested in a qualified low-income community investment. In December 2008, X sells the second qualified low-income community investment and receives $400,000. In March 2009, X reinvests $320,000 of the $400,000 in a third qualified low-income community investment. Under paragraphs (d)(2)(i) and (ii) of this section, $280,000 of the proceeds of the qualified equity investment is treated as continuously invested in a qualified low-income community investment ($40,000 is treated as invested in another qualified low-income community investment in March 2009).

(3) ***Special rule for reserves.*** Reserves (not in excess of 5 percent of the taxpayer's cash investment under paragraph (b)(4) of this section) maintained by the CDE for loan losses or for additional investments in existing qualified low-income community investments are treated as invested in a qualified low-income community investment under paragraph (d)(1) of this section. Reserves include fees paid to third parties to protect against loss of all or a portion of the principal of, or interest on, a loan that is a qualified low-income community investment.

(4) ***Qualified active low-income community business*** —

(i) ***In general.*** The term *qualified active low-income community business* means, with respect to any taxable year, a corporation (including a nonprofit corporation) or a partnership engaged in the active conduct of a qualified business (as defined in paragraph (d)(5) of this section), if the requirements of paragraphs (d)(4)(i)(A), (B), (C), (D), and (E) of this section are met (or in the case of an entity serving targeted populations, if the requirements of paragraphs (d)(4)(i)(D), (E), and (d)(9)(i) or (ii) of this section are met). Solely for purposes of this section, a nonprofit corporation will be deemed to be engaged in the active conduct of a trade or business if it is engaged in an activity that furthers its purpose as a nonprofit corporation.

(A) ***Gross-income requirement.*** At least 50 percent of the total gross income of such entity is derived from the active conduct of a qualified business (as defined in paragraph (d)(5) of this section) within any low-income community (as defined in section 45D(e)). An entity is deemed to satisfy this paragraph (d)(4)(i)(A) if the entity meets the requirements of either paragraph (d)(4)(i)(B) or (C) of this section, if "50 percent" is applied instead of *40 percent*. In addition, an entity may satisfy this paragraph (d)(4)(i)(A) based on all the facts and circumstances. See paragraph (d)(4)(iv) of this section for certain circumstances in which an entity will be treated as engaged in the active conduct of a trade or business. See paragraph (d)(9) of this section for rules relating to targeted populations.

(B) ***Use of tangible property*** —(*1*) *In general.* At least 40 percent of the use of the tangible property of such entity (whether owned or leased) is within any low-income community. This percentage is determined based on a fraction the numerator of which is the average value of the tangible property owned or leased by the entity and used by the entity during the taxable year in a low-income community and the denominator of which is the average value of the tangible property owned or leased by the entity and used by the entity during the taxable year. Property owned by the entity is valued at its cost basis as determined under section 1012. Property leased by the entity is valued at a reasonable amount established by the entity. See paragraph (d)(9) of this section for rules relating to targeted populations.

(*2*) *Example.* The application of paragraph (d)(4)(i)(B)(*1*) of this section is illustrated by the following example:

Example. X is a corporation engaged in the business of moving and hauling scrap metal. X operates its business from a building and an adjoining parking lot that X owns. The building and the parking lot are located in a low-income community (as defined in section 45D(e)). X's cost basis under section 1012 for the building and parking lot is $200,000. During the taxable year, X operates its business 10 hours a day, 6 days a week. X owns and uses 40 trucks in its business, which, on average, are used 6 hours a day outside a low-income community and 4 hours a day inside a low-income community (including time in the parking lot). The cost basis under section 1012 of each truck is $25,000. During non-business hours, the trucks are parked in the lot. Only X's 10-hour business days are used in calculating the use of tangible property percentage under paragraph (d)(4)(i)(B)(*1*) of this section. Thus, the numerator of the tangible property calculation is $600,000 ($^{4}/_{10}$ of $1,000,000 (the $25,000 cost basis of each truck times 40 trucks) plus $200,000 (the cost basis of the building and parking lot)) and the denominator is $1,200,000 (the total cost basis of the trucks, building, and parking lot), resulting in 50 percent of the use of X's tangible property being within a low-income community. Consequently, X satisfies the 40 percent use of tangible property test under paragraph (d)(4)(i)(B)(*1*) of this section.

(C) ***Services performed.*** At least 40 percent of the services performed for such entity by its employees are performed in a low-income community. This percentage is determined based on a fraction the numerator of which is the total amount paid by the entity for employee services performed in a low-income community during the taxable year and the denominator of which is the total amount paid by the entity for employee services during the taxable year. If the entity has no employees, the entity is deemed to satisfy this paragraph (d)(4)(i)(C), and paragraph (d)(4)(i)(A) of this section, if the entity meets the requirement of paragraph (d)(4)(i)(B) of this section if "85 percent" is applied instead of *40 percent.* See paragraph (d)(9) of this section for rules relating to targeted populations.

(D) ***Collectibles.*** Less than 5 percent of the average of the aggregate unadjusted bases of the property of such entity is attributable to collectibles (as defined in section 408(m)(2)) other than collectibles that are held primarily for sale to customers in the ordinary course of business.

(E) ***Nonqualified financial property*** —(*1*) *In general.* Less than 5 percent of the average of the aggregate unadjusted bases of the property of such entity is attributable to *nonqualified financial property.* For purposes of the preceding sentence, the term *nonqualified financial property* means debt, stock, partnership interests, options, futures contracts, forward contracts, warrants, notional principal contracts, annuities, and other similar property except that such term does not include—

(*i*) Reasonable amounts of working capital held in cash, cash equivalents, or debt instruments with a term of 18 months or less (because the definition of *nonqualified financial property* includes debt instruments with a term in excess of 18 months, banks, credit unions, and other financial institutions are generally excluded from the definition of a *qualified active low-income community business*); or

(*ii*) Debt instruments described in section 1221(a)(4).

(*2*) *Construction of real property.* For purposes of paragraph (d)(4)(i)(E)(*1*)(*i*) of this section, the proceeds of a capital or equity investment or loan by a CDE that will be expended for construction of real property within 12 months after the date the investment or loan is made are treated as a reasonable amount of working capital.

(ii) ***Proprietorships.*** Any business carried on by an individual as a proprietor is a qualified active low-income community business if the business would meet the requirements of paragraph (d)(4)(i) of this section if the business were incorporated.

(iii) ***Portions of business*** —

(A) ***In general.*** A CDE may treat any trade or business (or portion thereof) as a qualified active low-income community business if the trade or business (or portion thereof) would meet the requirements of paragraph (d)(4)(i) of this section if the trade or business (or portion thereof) were separately incorporated and a complete and separate set of books and records is maintained for that trade or business (or portion thereof). However, the CDE's capital or equity investment or loan is not a qualified low-income community investment under paragraph (d)(1)(i) of this section to the extent the proceeds of the investment or loan are not used for the trade or business (or portion thereof) that is treated as a qualified active low-income community business under this paragraph (d)(4)(iii)(A).

(B) ***Examples.*** The following examples illustrate an application of paragraph (d)(4)(iii) of this section:

Example 1. X is a partnership and a CDE that receives a new markets tax credit allocation from the Secretary. A pays $1 million for a capital interest in X. Z is a corporation that operates a supermarket that is not in a low-income community (as defined in section 45D(e)). X uses the proceeds of A's equity investment to make a loan to Z that Z will use to construct a new supermarket in a low-income community. Z will maintain a complete and separate set of books and records for the new supermarket. The proceeds of X's loan to Z will be used exclusively for the new supermarket. Assume that Z's new supermarket in the low-income community would meet the requirements to be a qualified active low-income community business under paragraph (d)(4)(i) of this section if it were separately incorporated. Pursuant to paragraph (d)(4)(iii)(A) of this section, X treats Z's new supermarket as the qualified active low-income community business. Accordingly, X's loan to Z is a qualified low-income community investment under paragraph (d)(1)(i) of this section.

Example 2. X is a partnership and a CDE that receives a new markets tax credit allocation from the Secretary. A pays $1 million for a capital interest in X. Z is a corporation that operates a liquor store in a low-income community (as defined in section 45D(e)). A liquor store is not a qualified business under paragraph (d)(5)(iii)(B) of this section. X uses the proceeds of A's equity investment to make a loan to Z that Z will use to construct a restaurant next to the liquor store. Z will maintain a complete and separate set of books and records for the new restaurant. The proceeds of X's loan to Z will be used exclusively for the new restaurant. Assume that Z's restaurant would meet the requirements to be a qualified active low-income community business under paragraph (d)(4)(i) of this section if it were separately incorporated. Pursuant to paragraph (d)(4)(iii) of this section, X treats Z's restaurant as the qualified active low-income community business. Accordingly, X's loan to Z is a qualified low-income community investment under paragraph (d)(1)(i) of this section.

Example 3. X is a partnership and a CDE that receives a new markets tax credit allocation from the Secretary. A pays $1 million for a capital interest in X. Z is a corporation that operates an insurance company in a low-income community (as defined in section 45D(e)). Five percent or more of the average of the aggregate unadjusted bases of Z's property is attributable to nonqualified financial property under paragraph (d)(4)(i)(E) of this section. Z's insurance operations include different operating units including a claims processing unit. X uses the proceeds of A's equity investment to make a loan to Z for use in Z's claims processing operations. Z will maintain a complete and separate set of books and records for the claims processing unit. The proceeds of X's loan to Z will be used exclusively for the claims processing unit. Assume that Z's claims processing unit would meet the requirements to be a qualified active low-income community business under paragraph (d)(4)(i) of this section if it were separately incorporated. Pursuant to paragraph (d)(4)(iii) of this section, X treats Z's claims processing unit as the qualified active low-income community business. Accordingly, X's loan to Z is a qualified low-income community investment under paragraph (d)(1)(i) of this section.

(iv) ***Active conduct of a trade or business —***

(A) ***Special rule.*** For purposes of paragraph (d)(4)(i) of this section, an entity will be treated as engaged in the active conduct of a trade or business if, at the time the CDE makes a capital or equity investment in, or loan to, the entity, the CDE reasonably expects that the entity will generate revenues (or, in the case of a nonprofit corporation, engage in an activity that furthers its purpose as a nonprofit corporation) within 3 years after the date the investment or loan is made. This paragraph (d)(4)(iv) applies only for purposes of determining whether an entity is engaged in the active conduct of a trade or business and does not apply for purposes of determining whether the gross-income requirement under paragraph (d)(4)(i)(A), (d)(9)(i)(B)(*1*)(*i*), or (d)(9)(ii)(C)(*1*)(*i*) of this section is satisfied.

(B) ***Example.*** The application of paragraph (d)(4)(iv)(A) of this section is illustrated by the following example:

Example. X is a partnership and a CDE that receives a new markets tax credit allocation from the Secretary on July 1, 2004. X makes a ten-year loan to Y. Y is a newly formed entity that will own and operate a shopping center to be constructed in a low-income community. Y has no revenues but X reasonably expects that Y will generate revenues beginning in December 2005. Under paragraph (d)(4)(iv)(A) of this section, Y is treated as engaged in the active conduct of a trade or business for purposes of paragraph (d)(4)(i) of this section.

(5) ***Qualified business*** —

(i) ***In general.*** Except as otherwise provided in this paragraph (d)(5), the term *qualified business* means any trade or business. There is no requirement that employees of a qualified business be residents of a low-income community.

(ii) ***Rental of real property.*** The rental to others of real property located in any low-income community (as defined in section 45D(e)) is a qualified business if and only if the property is not residential rental property (as defined in section 168(e)(2)(A)) and there are substantial improvements located on the real property. However, a CDE's investment in or loan to a business engaged in the rental of real property is not a qualified low-income community investment under paragraph (d)(1)(i) of this section to the extent a lessee of the real property is described in paragraph (d)(5)(iii)(B) of this section.

(iii) ***Exclusions*** —

(A) ***Trades or businesses involving intangibles.*** The term *qualified business* does not include any trade or business consisting predominantly of the development or holding of intangibles for sale or license.

(B) ***Certain other trades or businesses.*** The term *qualified business* does not include any trade or business consisting of the operation of any private or commercial golf course, country club, massage parlor, hot tub facility, suntan facility, racetrack or other facility used for gambling, or any store the principal business of which is the sale of alcoholic beverages for consumption off premises.

(C) ***Farming.*** The term *qualified business* does not include any trade or business the principal activity of which is farming (within the meaning of section 2032A(e)(5)(A) or (B)) if, as of the close of the taxable year of the taxpayer conducting such trade or business, the sum of the aggregate unadjusted bases (or, if greater, the fair market value) of the assets owned by the taxpayer that are used in such a trade or business, and the aggregate value

of the assets leased by the taxpayer that are used in such a trade or business, exceeds $500,000. For purposes of this paragraph (d)(5)(iii)(C), two or more trades or businesses will be treated as a single trade or business under rules similar to the rules of section 52(a) and (b).

(6) ***Qualifications*** —

(i) ***In general.*** Except as provided in paragraph (d)(6)(ii) of this section, an entity is treated as a qualified active low-income community business for the duration of the CDE's investment in the entity if the CDE reasonably expects, at the time the CDE makes the capital or equity investment in, or loan to, the entity, that the entity will satisfy the requirements to be a qualified active low-income community business under paragraph (d)(4)(i) of this section throughout the entire period of the investment or loan.

(ii) ***Control*** —

(A) ***In general.*** If a CDE controls or obtains control of an entity at any time during the 7-year credit period (as defined in paragraph (c)(5)(i) of this section), the entity will be treated as a qualified active low-income community business only if the entity satisfies the requirements of paragraph (d)(4)(i) of this section throughout the entire period the CDE controls the entity.

(B) ***Definition of control.*** Control means, with respect to an entity, direct or indirect ownership (based on value) or control (based on voting or management rights) of more than 50 percent of the entity. For purposes of the preceding sentence, the term *management rights* means the power to influence the management policies or investment decisions of the entity.

(C) ***Disregard of control.*** For purposes of paragraph (d)(6)(ii)(A) of this section, the acquisition of control of an entity by a CDE is disregarded during the 12-month period following such acquisition of control (the 12-month period) if—

(*1*) The CDE's capital or equity investment in, or loan to, the entity met the requirements of paragraph (d)(6)(i) of this section when initially made;

(*2*) The CDE's acquisition of control of the entity is due to financial difficulties of the entity that were unforeseen at the time the investment or loan described in paragraph (d)(6)(ii)(C)(*1*) of this section was made; and

(*3*) If the acquisition of control occurs before the seventh year of the 7-year credit period (as defined in paragraph (c)(5)(i) of this section), either—

(*i*) The entity satisfies the requirements of paragraph (d)(4) of this section by the end of the 12-month period; or

(*ii*) The CDE sells or causes to be redeemed the entire amount of the investment or loan described in paragraph (d)(6)(ii)(C)(*1*) of this section and, by the end of the 12-month period, reinvests the amount received in respect of the sale or redemption in a qualified low-income community investment under paragraph (d)(1) of this section. For this purpose, the amount treated as continuously invested in a qualified low-income community investment is determined under paragraphs (d)(2)(i) and (ii) of this section.

(7) ***Financial counseling and other services.*** The term *financial counseling and other services* means advice provided by the CDE relating to the organization or operation of a trade or business.

(8) ***Special rule for certain loans*** —

(i) ***In general.*** For purposes of paragraphs (d)(1)(i), (ii), and (iv) of this section, a loan is treated as made by a CDE to the extent the CDE purchases the loan from the originator (whether or not the originator is a CDE) within 30 days after the date the originator makes the loan if, at the time the loan is made, there is a legally enforceable written agreement between the originator and the CDE which—

(A) Requires the CDE to approve the making of the loan either directly or by imposing specific written loan underwriting criteria; and

(B) Requires the CDE to purchase the loan within 30 days after the date the loan is made.

(ii) ***Example.*** The application of paragraph (d)(8)(i) of this section is illustrated by the following example:

> *Example.* (i) X is a partnership and a CDE that has received a new markets tax credit allocation from the Secretary. On October 1, 2004, Y enters into a legally enforceable written agreement with W. Y and W are corporations but only Y is a CDE. The agreement between Y and W provides that Y will purchase loans (or portions thereof) from W within 30 days after the date the loan is made by W, and that Y will approve the making of the loans.
> (ii) On November 1, 2004, W makes an $825,000 loan to Z pursuant to the agreement between Y and W. Z is a qualified active low-income community business under paragraph (d)(4) of this section. On November 15, 2004, Y purchases the loan from W for $840,000. On December 31, 2004, X purchases the loan from Y for $850,000.

(iii) Under paragraph (d)(8)(i) of this section, the loan to Z is treated as made by Y. Y's loan to Z is a qualified low-income community investment under paragraph (d)(1)(i) of this section. Accordingly, under paragraph (d)(1)(ii)(A) of this section, X's purchase of the loan from Y is a qualified low-income community investment in the amount of $850,000.

(9) ***Targeted populations.*** For purposes of section 45D(e)(2), targeted populations that will be treated as a low-income community are individuals, or an identifiable group of individuals, including an Indian tribe, who are low-income persons as defined in paragraph (d)(9)(i) of this section or who are individuals who otherwise lack adequate access to loans or equity investments as defined in paragraph (d)(9)(ii) of this section.

(i) ***Low-income persons*** —

(A) ***Definition*** —(*1*) *In general.* For purposes of section 45D(e)(2) and this paragraph (d)(9), an individual shall be considered to be low-income if the individual's family income, adjusted for family size, is not more than—

(*i*) For metropolitan areas, 80 percent of the area median family income; and

(*ii*) For non-metropolitan areas, the greater of 80 percent of the area median family income, or 80 percent of the statewide non-metropolitan area median family income.

(*2*) *Area median family income.* For purposes of paragraph (d)(9)(i)(A)(*1*) of this section, *area median family income* is determined in a manner consistent with the determinations of median family income under section 8 of the Housing Act of 1937, as amended. Taxpayers must use the annual estimates of median family income released by the Department of Housing and Urban Development (HUD) and may rely on those figures until 45 days after HUD releases a new list of income limits, or until HUD's effective date for the new list, whichever is later.

(*3*) *Individual's family income.* For purposes of paragraph (d)(9)(i)(A)(*1*) of this section, an individual's family income is determined using any one of the following three methods for measuring family income:

(*i*) Household income as measured by the U.S. Census Bureau,

(*ii*) Adjusted gross income under section 62 as reported on Internal Revenue Service Form 1040. Adjusted gross income must include the adjusted gross income of any member of the individual's family (as defined in section 267(c)(4)) if the family member resides with the individual regardless of whether the family member files a separate return,

(*iii*) Household income determined under section 8 of the Housing Act of 1937, as amended.

(B) ***Qualified active low-income community business requirements for low-income targeted populations*** —(*1*) *In general.* An entity will not be treated as a qualified active low-income community business for low-income targeted populations unless—

(*i*) Except as provided in paragraph (d)(9)(i)(D)(*2*) of this section, at least 50 percent of the entity's total gross income for any taxable year is derived from sales, rentals, services, or other transactions with individuals who are low-income persons for purposes of section 45D(e)(2) and this paragraph (d)(9);

(*ii*) At least 40 percent of the entity's employees are individuals who are low-income persons for purposes of section 45D(e)(2) and this paragraph (d)(9); or

(*iii*) At least 50 percent of the entity is owned by individuals who are low-income persons for purposes of section 45D(e)(2) and this paragraph (d)(9).

(*2*) *Employee.* The determination of whether an employee is a low-income person must be made at the time the employee is hired. If the employee is a low-income person at the time of hire, that employee is considered a low-income person for purposes of section 45D(e)(2) and this paragraph (d)(9) throughout the time of employment, without regard to any increase in the employee's income after the time of hire.

(*3*) *Owner.* The determination of whether an owner is a low-income person must be made at the time the qualified low-income community investment is made, or at the time the ownership interest is acquired by the owner, whichever is later. If an owner is a low-income person at the time the qualified low-income community investment is made or at the time the ownership interest is acquired by the owner, whichever is later, that owner is considered a low-income person for purposes of section 45D(e)(2) and this paragraph (d)(9) throughout the time the ownership interest is held by that owner.

(*4*) *Derived from.* For purposes of paragraph (d)(9)(i)(B)(*1*)(*i*) of this section, the term *derived from* includes gross income derived from:

(*i*) Payments made directly by low-income persons to the entity; and

(*ii*) Money and the fair market value of property or services provided to the entity primarily for the benefit of low-income persons, but only if the persons providing the money, property, or services do not receive a direct benefit from the entity (for this purpose, a contribution that benefits the general public is not a direct benefit).

(*5*) *Fair market value of sales, rentals, services, or other transactions.* For purposes of paragraph (d)(9)(i)(B)(*1*)(*i*) of this section, an entity with gross income that is derived from sales, rentals, services, or other transactions with both non low-income persons and low-income persons may treat the gross income derived from the sales, rentals, services, or other transactions with low-income persons as including the full fair market value even if the low-income persons do not pay fair market value.

(C) ***120-percent-income restriction*** —(*1*) *In general*—(*i*) In no case will an entity be treated as a qualified active low-income community business under paragraph (d)(9)(i) of this section if the entity is located in a population census tract for which the median family income exceeds 120 percent of, in the case of a tract not located within a metropolitan area, the statewide median family income, or in the case of a tract located within a metropolitan area, the greater of statewide median family income or metropolitan area median family income (120-percent-income restriction).

(*ii*) The 120-percent-income restriction shall not apply to an entity located within a population census tract with a population of less than 2,000 if such tract is not located in a metropolitan area.

(*iii*) The 120-percent-income restriction shall not apply to an entity located within a population census tract with a population of less than 2,000 if such tract is located in a metropolitan area and more than 75 percent of the tract is zoned for commercial or industrial use. For this purpose, the 75 percent calculation should be made using the area of the population census tract. For purposes of this paragraph (d)(9)(i)(C)(*1*)(*iii*), property for which commercial or industrial use is a permissible zoning use will be treated as zoned for commercial or industrial use.

(*2*) *Population census tract location*—(*i*) For purposes of the 120-percent-income restriction, an entity will be considered to be located in a population census tract for which the median family income exceeds 120 percent of the applicable median family income under paragraph (d)(9)(i)(C)(*1*)(*i*) of this section (non-qualifying population census tract) if at least 50 percent of the total gross income of the entity is derived from the active conduct of a qualified business (as defined in paragraph (d)(5) of this section) within one or more non-qualifying population census tracts (non-qualifying gross income amount); at least 40 percent of the use of the tangible property of the entity (whether owned or leased) is within one or more non-qualifying population census tracts (non-qualifying tangible property usage); and at least 40 percent of the services performed for the entity by its employees are performed in one or more non-qualifying population census tracts (non-qualifying services performance).

(*ii*) The entity is considered to have the non-qualifying gross income amount if the entity has non-qualifying tangible property usage or non-qualifying services performance of at least 50 percent instead of 40 percent.

(*iii*) If the entity has no employees, the entity is considered to have the non-qualifying gross income amount and non-qualifying services performance if at least 85 percent of the use of the tangible property of the entity (whether owned or leased) is within one or more non-qualifying population census tracts.

(D) ***Rental of real property for low-income targeted populations*** —(*1*) *In general.* An entity that rents to others real property for low-income targeted populations and that otherwise satisfies the requirements to be a qualified business under paragraph (d)(5) of this section will be treated as located in a low-income community for purposes of paragraph (d)(5)(ii) of this section if at least 50 percent of the entity's total gross income is derived from rentals to individuals who are low-income persons for purposes of section 45D(e)(2) and this paragraph (d)(9) or rentals to a qualified active low-income community business that meets the requirements for low-income targeted populations under paragraphs (d)(9)(i)(B)(*1*)(*i*) or (*ii*) and (d)(9)(i)(B)(*2*) of this section.

(*2*) *Special rule for entities whose sole business is the rental to others of real property.* If an entity's sole business is the rental to others of real property under paragraph (d)(9)(i)(D)(*1*) of this section, then the gross income requirement in paragraph (d)(9)(i)(B)(*1*)(*i*) of this section will be considered satisfied if the entity is treated as being located in a low-income community under paragraph (d)(9)(i)(D)(*1*) of this section.

(ii) *Individuals who otherwise lack adequate access to loans or equity investments*—(A) *In general.* Paragraph (d)(9)(ii) of this section may be applied only with regard to qualified low-income community investments made under the increase in the new markets tax credit limitation pursuant to section 1400N(m)(2). Therefore, only CDEs with a significant mission of recovery and redevelopment of the Gulf Opportunity Zone (GO Zone) that receive an allocation from the increase described in section 1400N(m)(2) may make qualified low-income community investments from that allocation pursuant to the rules in paragraph (d)(9)(ii) of this section.

(B) *GO Zone Targeted Population.* For purposes of the targeted populations rules under section 45D(e)(2), an individual otherwise lacks adequate access to loans or equity investments only if the individual was displaced from his or her principal residence as a result of Hurricane Katrina or the individual lost his or her principal source of employment as a result of Hurricane Katrina (GO Zone Targeted Population). In order to meet this definition, the individual's principal residence or principal source of employment, as applicable, must have been located in a population census tract within the GO Zone that contains one or more areas designated by the Federal Emergency Management Agency (FEMA) as flooded, having sustained extensive damage, or having sustained catastrophic damage as a result of Hurricane Katrina.

(C) *Qualified active low-income community business requirements for the GO Zone Targeted Population*—(*1*) *In general.* An entity will not be treated as a qualified active low-income community business for the GO Zone Targeted Population unless—

(*i*) At least 50 percent of the entity's total gross income for any taxable year is derived from sales, rentals, services, or other transactions with the GO Zone Targeted Population, low-income persons as defined in paragraph (d)(9)(i) of this section, or some combination thereof;

(*ii*) At least 40 percent of the entity's employees consist of the GO Zone Targeted Population, low-income persons as defined in paragraph (d)(9)(i) of this section, or some combination thereof; or

(*iii*) At least 50 percent of the entity is owned by the GO Zone Targeted Population, low-income persons as defined in paragraph (d)(9)(i) of this section, or some combination thereof.

(*2*) *Location*—(*i*) *In general.* In order to be a qualified active low-income community business under paragraph (d)(9)(ii)(C) of this section, the entity must be located in a population census tract within the GO Zone that contains one or more areas designated by FEMA as flooded, having sustained extensive damage, or having sustained catastrophic damage as a result of Hurricane Katrina (qualifying population census tract).

(*ii*) *Determination.* For purposes of the preceding paragraph, an entity will be considered to be located in a qualifying population census tract if at least 50 percent of the total gross income of the entity is derived from the active conduct of a qualified business (as defined in paragraph (d)(5) of this section) within one or more qualifying population census tracts (gross income requirement); at least 40 percent of the use of the tangible property of the entity (whether owned or leased) is within one or more qualifying population census tracts (use of tangible property requirement); and at least 40 percent of the services performed for the entity by its employees are performed in one or more qualifying population census tracts (services performed requirement). The entity is deemed to satisfy the gross income requirement if the entity satisfies the use of tangible property requirement or the services performed requirement on the basis of at least 50 percent instead of 40 percent. If the entity has no employees, the entity is deemed to satisfy the services performed requirement and the gross income requirement if at least 85 percent of the use of the tangible property of the entity (whether owned or leased) is within one or more qualifying population census tracts.

(D) ***200-percent-income restriction*** —(*1*) *In general*—

(*i*) In no case will an entity be treated as a qualified active low-income community business under paragraph (d)(9)(ii) of this section if the entity is located in a population census tract for which the median family income exceeds 200 percent of, in the case of a tract not located within a metropolitan area, the statewide median family income, or, in the case of a tract located within a metropolitan area, the greater of statewide median family income or metropolitan area median family income (200-percent-income restriction).

(*ii*) The 200-percent-income restriction shall not apply to an entity located within a population census tract with a population of less than 2,000 if such tract is not located in a metropolitan area.

(*iii*) The 200-percent-income restriction shall not apply to an entity located within a population census tract with a population of less than 2,000 if such tract is located in a metropolitan area and more than 75 percent of the tract is zoned for commercial or industrial use. For this purpose, the 75 percent calculation should be made using the area of the population census tract. For purposes of this paragraph (d)(9)(ii)(D)(*1*)(*iii*), property for which commercial or industrial use is a permissible zoning use will be treated as zoned for commercial or industrial use.

(*2*) *Population census tract location*—(*i*) For purposes of the 200-percent-income restriction, an entity will be considered to be located in a population census tract for which the median family income exceeds 200 percent of the applicable median family income under paragraph (d)(9)(ii)(D)(*1*)(*i*) of this section (non-qualifying population census tract) if—at least 50 percent of the total gross income of the entity is derived from the active conduct of a qualified business (as defined in paragraph (d)(5) of this section) within one or more non-qualifying population census tracts (non-qualifying gross income amount); at least 40 percent of the use of the tangible property of the entity (whether owned or leased) is within one or more non-qualifying population census tracts (non-qualifying tangible property usage); and at least 40 percent of the services performed for the entity by its employees are performed in one or more non-qualifying population census tracts (non-qualifying services performance).

(*ii*) The entity is considered to have the non-qualifying gross income amount if the entity has non-qualifying tangible property usage or non-qualifying services performance of at least 50 percent instead of 40 percent.

(*iii*) If the entity has no employees, the entity is considered to have the non-qualifying gross income amount and non-qualifying services performance if at least 85 percent of the use of the tangible property of the entity (whether owned or leased) is within one or more non-qualifying population census tracts.

(E) ***Rental of real property for the GO Zone Targeted Population.*** The rental to others of real property for the GO Zone Targeted Population that otherwise satisfies the requirements to be a qualified business under paragraph (d)(5) of this section will be treated as located in a low-income community for purposes of paragraph (d)(5)(ii) of this section if at least 50 percent of the entity's total gross income is derived from rentals to the GO Zone Targeted Population, rentals to low-income persons as defined in paragraph (d)(9)(i) of this section, or rentals to a qualified active low-income community business that meets the requirements for the GO Zone Targeted Population under paragraph (d)(9)(ii)(C)(*1*)(*i*) or (*ii*) of this section.

(10) ***Non-real estate qualified active low-income community business*** —

(i) ***Definition.*** The term *non-real estate qualified active low-income community business* means any qualified active low-income community business (as defined in paragraph (d)(4) of this section) whose predominant business activity does not include the development (including construction of new facilities and rehabilitation/enhancement of existing facilities), management, or leasing of real estate. For purposes of the preceding sentence, predominant business activity means a business activity that generates more than 50 percent of the business' gross income. The purpose of the capital or equity investment in, or loan to, the non-real estate qualified active

low-income community business must not be connected to the development (including construction of new facilities and rehabilitation/enhancement of existing facilities), management, or leasing of real estate.

(ii) ***Payments of, or for, capital, equity or principal with respect to a non-real estate qualified active low-income community business*** —

(A) ***In general.*** For purposes of paragraph (d)(2)(i) of this section, a portion of the amounts received by a CDE in payment of, or for, capital, equity, or principal with respect to a non-real estate qualified active low-income community business after year one of the 7-year credit period (as defined by paragraph (c)(5)(i) of this section) may be reinvested by the CDE in a qualifying entity (as defined in paragraph (d)(10)(ii)(D)). Any portion that the CDE chooses to reinvest in a qualifying entity must be reinvested by the CDE no later than 30 days from the date of receipt to be treated as continuously invested in a qualified low-income community investment for purposes of paragraph (d)(2)(i) of this section. If the amount reinvested in a qualifying entity exceeds the maximum aggregate portion of the non-real estate qualified equity investment, then the excess will not be treated as invested in a qualified low-income community investment. The maximum aggregate portion of the non-real estate qualified equity investment that may be reinvested into a qualifying entity, which will be treated as continuously invested in a qualified low-income community investment, may not exceed the following percentages of the non-real estate qualified equity investment in the following years:

(*1*) 15 percent in Year 2 of the 7-year credit period.

(*2*) 30 percent in Year 3 of the 7-year credit period.

(*3*) 50 percent in Year 4 of the 7-year credit period.

(*4*) 85 percent in Year 5 and Year 6 of the 7-year credit period.

(B) ***Seventh year of the 7-year credit period.*** Amounts received by a CDE in payment of, or for, capital, equity, or principal with respect to a non-real estate qualified active low-income community business (as defined in paragraph (d)(10)(i) of this section) during the seventh year of the 7-year credit period do not have to be reinvested by the CDE in a qualified low-income community investment to be treated as continuously invested in a qualified low-income community investment.

(C) ***Amounts received from qualifying entity.*** Except for the seventh year of the 7-year credit period under paragraph (d)(10)(ii)(B) of this section, amounts received from a qualifying entity must be reinvested by the CDE no later than 30 days from the date of receipt to be treated as continuously invested in a qualified low-income community investment.

(D) ***Definition of qualifying entity.*** For purposes of paragraphs (d)(10)(ii) and (d)(10)(iii) of this section, a *qualifying entity* is—

(*1*) A certified community development financial institution (certified CDFI) that is a CDE under section 45D(c)(2)(B) (as defined by 12 CFR 1805.201), which is unrelated to the CDE making the investment in the certified CDFI within the meaning of section 267(b) or section 707(b)(1); or

(*2*) An entity designated by the Secretary by publication in the Internal Revenue Bulletin (see § 601.601(d)(2)(ii)(*b*) of this chapter).

(e) *Recapture* —

(1) ***In general.*** If, at any time during the 7-year period beginning on the date of the original issue of a qualified equity investment in a CDE, there is a recapture event under paragraph (e)(2) of this section with respect to such investment, then the tax imposed by Chapter 1 of the Internal Revenue Code for the taxable year in which the recapture event occurs is increased by the credit recapture amount under section 45D(g)(2). A recapture event under paragraph (e)(2) of this section requires recapture of credits allowed to the taxpayer who purchased the equity investment from the CDE at its original issue and to all subsequent holders of that investment.

(2) ***Recapture event.*** There is a recapture event with respect to an equity investment in a CDE if—

(i) The entity ceases to be a CDE;

(ii) The proceeds of the investment cease to be used in a manner that satisfies the substantially-all requirement of paragraph (c)(1)(ii) of this section; or

(iii) The investment is redeemed or otherwise cashed out by the CDE.

(3) *Redemption* —

(i) ***Equity investment in a C corporation.*** For purposes of paragraph (e)(2)(iii) of this section, an equity investment in a CDE that is treated as a C corporation for Federal tax purposes is redeemed when section 302(a) applies to amounts received by the equity holder. An equity investment is treated as cashed out when section 301(c)(2) or section 301(c)(3) applies to amounts received by the equity holder. An equity investment is not treated as cashed out when only section 301(c)(1) applies to amounts received by the equity holder.

(ii) ***Equity investment in an S corporation.*** For purposes of paragraph (e)(2)(iii) of this section, an equity investment in a CDE that is an S corporation is redeemed when section 302(a) applies to amounts received by the equity holder. An equity investment in an S corporation is treated as cashed out when a distribution to a shareholder described in section 1368(a) exceeds the accumulated adjustments account determined under § 1.1368-2 and any accumulated earnings and profits of the S corporation.

(iii) ***Capital interest in a partnership.*** In the case of an equity investment that is a capital interest in a CDE that is a partnership for Federal tax purposes, a pro rata cash distribution by the CDE to its partners based on each partner's capital interest in the CDE during the taxable year will not be treated as a redemption for purposes of paragraph (e)(2)(iii) of this section if the distribution does not exceed the CDE's *operating income* for the taxable year. In addition, a non-pro rata *de minimis* cash distribution by a CDE to a partner or partners during the taxable year will not be treated as a redemption. A non-pro rata *de minimis* cash distribution may not exceed the lesser of 5 percent of the CDE's *operating income* for that taxable year or 10 percent of the partner's capital interest in the CDE. For purposes of this paragraph (e)(3)(iii), with respect to any taxable year, *operating income* is the sum of:

(A) The CDE's taxable income as determined under section 703, except that—

(*1*) The items described in section 703(a)(1) shall be aggregated with the non-separately stated tax items of the partnership; and

(*2*) Any gain resulting from the sale of a capital asset under section 1221(a) or section 1231 property shall not be included in taxable income;

(B) Deductions under section 165, but only to the extent the losses were realized from qualified low-income community investments under paragraph (d)(1) of this section;

(C) Deductions under sections 167 and 168, including the additional first-year depreciation under section 168(k);

(D) Start-up expenditures amortized under section 195; and

(E) Organizational expenses amortized under section 709.

(4) ***Bankruptcy.*** Bankruptcy of a CDE is not a recapture event.

(5) ***Waiver of requirement or extension of time*** —

(i) ***In general.*** The Commissioner may waive a requirement or extend a deadline if such waiver or extension does not materially frustrate the purposes of section 45D and this section.

(ii) ***Manner for requesting a waiver or extension.*** A CDE that believes it has good cause for a waiver or an extension may request relief from the Commissioner in a ruling request. The request should set forth all the relevant facts and include a detailed explanation describing the event or events relating to the request for a waiver or an extension. For further information on the application procedure for a ruling, see Rev. Proc. 2005-1 (2005-1 I.R.B. 1) or its successor revenue procedure (see § 601.601(d)(2) of this chapter).

(iii) ***Terms and conditions.*** The granting of a waiver or an extension to a CDE under this section may require adjustments of the CDE's requirements under section 45D and this section as may be appropriate.

(6) ***Cure period.*** If a qualified equity investment fails the substantially-all requirement under paragraph (c)(5)(i) of this section, the failure is not a recapture event under paragraph (e)(2)(ii) of this section if the CDE corrects the failure within 6 months after the date the CDE becomes aware (or reasonably should have become aware) of the failure. Only one correction is permitted for each qualified equity investment during the 7-year credit period under this paragraph (e)(6).

(7) ***Example.*** The application of this paragraph (e) is illustrated by the following example:

Example. In 2003, A and B acquire separate qualified equity investments in X, a partnership. X is a CDE that has received a new markets tax credit allocation from the Secretary. X uses the proceeds of A's qualified equity investment to make a qualified low-income community investment in Y, and X uses the proceeds of B's qualified equity investment to make a qualified low-income community investment in Z. Y and Z are not CDEs. X controls both Y and Z within the meaning of paragraph (d)(6)(ii)(B) of this section. In 2003, Y and Z are qualified active low-income community businesses. In 2007, Y, but not Z, is a qualified active low-income community business and X does not satisfy the substantially-all requirement using the safe harbor calculation under paragraph (c)(5)(iii) of this section. A's equity investment satisfies the substantially-all requirement of paragraph (c)(1)(ii) of this section using the direct-tracing calculation of paragraph (c)(5)(ii) of this section because A's equity investment is traceable to Y. However, B's equity investment fails the substantially-all requirement using the direct-tracing calculation because B's equity investment is traceable to Z. Therefore, under paragraph (e)(2)(ii) of this section, there is a recapture event for B's equity investment (but not A's equity investment).

(f) ***Basis reduction*** —

(1) ***In general.*** A taxpayer's basis in a qualified equity investment is reduced by the amount of any new markets tax credit determined under paragraph (b)(1) of this section with respect to the investment. A basis reduction occurs on each credit allowance date under paragraph (b)(2) of this section. This paragraph (f) does not apply for purposes of sections 1202, 1400B, and 1400F.

(2) ***Adjustment in basis of interest in partnership or S corporation.*** The adjusted basis of either a partner's interest in a partnership, or stock in an S corporation, must be appropriately adjusted to take into account adjustments made under paragraph (f)(1) of this section in the basis of a qualified equity investment held by the partnership or S corporation (as the case may be).

(g) ***Other rules*** —

(1) ***Anti-abuse.*** If a principal purpose of a transaction or a series of transactions is to achieve a result that is inconsistent with the purposes of section 45D and this section, the Commissioner may treat the transaction or series of transactions as causing a recapture event under paragraph (e)(2) of this section.

(2) ***Reporting requirements*** —

(i) ***Notification by CDE to taxpayer*** —

(A) ***Allowance of new markets tax credit.*** A CDE must provide notice to any taxpayer who acquires a qualified equity investment in the CDE at its original issue that the equity investment is a qualified equity investment entitling the taxpayer to claim the new markets tax credit. The notice must be provided by the CDE to the taxpayer no later than 60 days after the date the taxpayer makes the investment in the CDE. The notice must contain the amount paid to the CDE for the qualified equity investment at its original issue and the taxpayer identification number of the CDE.

(B) ***Recapture event.*** If, at any time during the 7-year period beginning on the date of the original issue of a qualified equity investment in a CDE, there is a recapture event under paragraph (e)(2) of this section with respect to such investment, the CDE must provide notice to each holder, including all prior holders, of the investment that a recapture event has occurred. The notice must be provided by the CDE no later than 60 days after the date the CDE becomes aware of the recapture event.

(ii) ***CDE reporting requirements to Secretary.*** Each CDE must comply with such reporting requirements to the Secretary as the Secretary may prescribe.

(iii) ***Manner of claiming new markets tax credit.*** A taxpayer may claim the new markets tax credit for each applicable taxable year by completing Form 8874, “New Markets Credit,” and by filing Form 8874 with the taxpayer's Federal income tax return.

(iv) ***Reporting recapture tax.*** If there is a recapture event with respect to a taxpayer's equity investment in a CDE, the taxpayer must include the credit recapture amount under section 45D(g)(2) on the line for recapture taxes on the taxpayer's Federal income tax return for the taxable year in which the recapture event under paragraph (e)(2) of this section occurs (or on the line for total tax, if there is no such line for recapture taxes) and write *NMCR* (new markets credit recapture) next to the entry space.

(3) ***Other Federal tax benefits*** —

(i) ***In general.*** Except as provided in paragraph (g)(3)(ii) of this section, the availability of Federal tax benefits does not limit the availability of the new markets tax credit. Federal tax benefits that do not limit the availability of the new markets tax credit include, for example:

(A) The rehabilitation credit under section 47;

(B) All deductions under sections 167 and 168, including the additional first-year depreciation under section 168(k), and the expense deduction for certain depreciable property under section 179; and

(C) All tax benefits relating to certain designated areas such as empowerment zones and enterprise communities under sections 1391 through 1397D, the District of Columbia Enterprise Zone under sections 1400 through 1400B, renewal communities under sections 1400E through 1400J, and the New York Liberty Zone under section 1400L.

(ii) ***Low-income housing credit.*** If a CDE makes a capital or equity investment or a loan with respect to a qualified low-income building under section 42, the investment or loan is not a qualified low-income community investment under paragraph (d)(1) of this section to the extent the building's eligible basis under section 42(d) is financed by the proceeds of the investment or loan.

(4) ***Bankruptcy of CDE.*** The bankruptcy of a CDE does not preclude a taxpayer from continuing to claim the new markets tax credit on the remaining credit allowance dates under paragraph (b)(2) of this section.

(h) ***Effective/applicability dates*** —

(1) ***In general.*** Except as provided in paragraphs (h)(2), (h)(3), and (h)(4) of this section, this section applies on or after December 22, 2004, and may be applied by taxpayers before December 22, 2004. The provisions that apply before December 22, 2004, are contained in § 1.45D-1T (see 26 CFR part 1 revised as of April 1, 2003, and April 1, 2004).

(2) ***Exception.*** Paragraph (d)(5)(ii) of this section as it relates to the restriction on lessees described in paragraph (d)(5)(iii)(B) of this section applies to qualified low-income community investments made on or after June 22, 2005.

(3) ***Targeted populations.*** The rules in paragraph (d)(9) of this section and the last sentence in paragraph (d)(4)(iv)(A) of this section apply to taxable years ending on or after December 5, 2011. A taxpayer may apply the rules in paragraph (d)(9) of this section to taxable years ending before December 5, 2011 for designations made by the Secretary after October 22, 2004.

(4) ***Investments in non-real estate businesses.*** Paragraphs (c)(8) and (d)(10) of this section apply to equity investments in CDEs made on or after September 28, 2012.

[T.D. 9171, 69 FR 77627, Dec. 28, 2004; 70 FR 4012, Jan. 28, 2005, as amended by T.D. 9560, 76 FR 75778, Dec. 5, 2011; T.D. 9600, 77 FR 59546, Sept. 28, 2012]

§ 1.45G-0 Table of contents for the railroad track maintenance credit rules.

This section lists the table of contents for § 1.45G-1.

§ 1.45G-1 Railroad track maintenance credit.

(a) In general.

(b) Definitions.

(1) Class II railroad and Class III railroad.

(2) Eligible railroad track.

(3) Eligible taxpayer.

(4) Qualifying railroad structure.

(5) Qualified railroad track maintenance expenditures.

(6) Rail facilities.

(7) Railroad-related property.

(8) Railroad-related services.

(9) Railroad track.

(10) Form 8900.

(11) Examples.

(c) Determination of amount of railroad track maintenance credit for the taxable year.

(1) General amount.

(2) Limitation on the credit.

(i) Eligible taxpayer is a Class II railroad or Class III railroad.

(ii) Eligible taxpayer is not a Class II railroad or Class III railroad.

(iii) No carryover of amount that exceeds limitation.

(3) Determination of amount of QRTME paid or incurred.

(i) In general.

(ii) Effect of reimbursements received from persons other than a Class II or Class III railroad.

(4) Examples.

(d) Assignment of track miles.

(1) In general.

(2) Assignment eligibility.

(3) Effective date of assignment.

(4) Assignment information statement.

(i) In general.

(ii) Assignor.

(iii) Assignee.

(iv) Special rule for returns filed prior to November 9, 2007.

(5) Special rules.

(i) Effect of subsequent dispositions of eligible railroad track during the assignment year.

(ii) Effect of multiple assignments of eligible railroad track miles during the same taxable year.

(6) Examples.

(e) Adjustments to basis.

(1) In general.

(2) Basis adjustment made to railroad track.

(3) Examples.

(f) Controlled groups.

(1) In general.

(2) Definitions.

(i) Trade or business.

(ii) Group and controlled group.

(iii) Group credit.

(iv) Consolidated group.

(v) Credit year.

(3) Computation of the group credit.

(4) Allocation of the group credit.

(5) Special rules for consolidated groups.

(i) In general.

(ii) Special rule for allocation of group credit among consolidated group members.

(6) Tax accounting periods used.

(i) In general.

(ii) Special rule when timing of QRTME is manipulated.

(7) Membership during taxable year in more than one group.

(8) Intra-group transactions.

(i) In general.

(ii) Payment for QRTME.

(g) Effective/applicability date.

(1) In general.

(2) Taxable years ending before September 7, 2006.

(3) Special rules for returns filed prior to November 9, 2007.

(4) Taxable years beginning after December 31, 2011.

(5) Taxable years beginning before January 1, 2012.

[T.D. 9365, 72 FR 63815, Nov. 13, 2007, as amended by T.D. 9717, 80 FR 18098, Apr. 3, 2015]

§ 1.45G-1 Railroad track maintenance credit.

(a) ***In general.*** For purposes of section 38, the railroad track maintenance credit (RTMC) for qualified railroad track maintenance expenditures (QRTME) paid or incurred by an eligible taxpayer during the taxable year is determined under this section. A taxpayer claiming the RTMC must do so by filing Form 8900, “Qualified

Railroad Track Maintenance Credit," with its timely filed (including extensions) Federal income tax return for the taxable year the RTMC is claimed. Paragraph (b) of this section provides definitions of terms. Paragraph (c) of this section provides rules for computing the RTMC, including rules regarding limitations on the amount of the credit. Paragraph (d) of this section provides rules for assigning miles of railroad track. Paragraph (e) of this section contains rules for adjusting basis for the amount of the RTMC claimed by an eligible taxpayer. Paragraph (f) of this section contains rules for computing the amount of the RTMC in the case of a controlled group, and for the allocation of the group credit among members of the controlled group.

(b) ***Definitions.*** For purposes of section 45G and this section, the following definitions apply:

(1) ***Class II railroad and Class III railroad*** have the respective meanings given to these terms by the Surface Transportation Board (STB) without regard to the controlled group rules under section 45G(e)(2).

(2) ***Eligible railroad track*** is railroad track (as defined in paragraph (b)(9) of this section) located within the United States that is owned or leased by a Class II railroad or Class III railroad at the close of its taxable year. For purposes of section 45G and this section, a Class II railroad or Class III railroad owns railroad track if the railroad track is subject to the allowance for depreciation under section 167 by the Class II railroad or Class III railroad.

(3) ***Eligible taxpayer*** is—

(i) A Class II railroad or Class III railroad during the taxable year;

(ii) Any person that transports property using the rail facilities (as defined in paragraph (b)(6) of this section) of a Class II railroad or Class III railroad during the taxable year, but only is an eligible taxpayer with respect to the miles of eligible railroad track assigned to the person for that taxable year by that Class II railroad or Class III railroad under paragraph (d) of this section; or

(iii) Any person that furnishes railroad-related property (as defined in paragraph (b)(7) of this section) or railroad-related services (as defined in paragraph (b)(8) of this section), to a Class II railroad or Class III railroad during the taxable year, but only is an eligible taxpayer with respect to the miles of eligible railroad track assigned to the person for that taxable year by that Class II railroad or Class III railroad under paragraph (d) of this section.

(4) ***Qualifying railroad structure*** is property located within the United States that is described in the following STB property accounts in 49 CFR Part 1201, Subpart A:

(i) Property Account 3, Grading.

(ii) Property Account 4, Other right-of-way expenditures.

(iii) Property Account 5, Tunnels and subways.

(iv) Property Account 6, Bridges, trestles, and culverts.

(v) Property Account 7, Elevated structures.

(vi) Property Account 8, Ties.

(vii) Property Account 9, Rails and other track material.

(viii) Property Account 11, Ballast.

(ix) Property Account 13, Fences, snowsheds, and signs.

(x) Property Account 27, Signals and interlockers.

(xi) Property Account 39, Public improvements; construction.

(5) ***Qualified railroad track maintenance expenditures (QRTME)*** are expenditures for maintaining, repairing, and improving qualifying railroad structure (as defined in paragraph (b)(4) of this section) that is owned or leased as of January 1, 2005, by a Class II railroad or Class III railroad. These expenditures may or may not be chargeable to a capital account.

(6) ***Rail facilities*** of a Class II railroad or Class III railroad are railroad yards, tracks, bridges, tunnels, wharves, docks, stations, and other related assets that are used in the transport of freight by a railroad and that are owned or leased by the Class II railroad or Class III railroad.

(7) ***Railroad-related property*** is property that is provided directly to, and is unique to, a railroad and that, in the hands of a Class II railroad or Class III railroad, is described in—

(i) The following STB property accounts in 49 CFR Part 1201, Subpart A:

(A) Property Account 3, Grading;

(B) Property Account 5, Tunnels and subways;

(C) Property Account 22, Storage warehouses; and

(ii) Asset classes 40.1 through 40.54 in the guidance issued by the Internal Revenue Service under section 168(i)(1) (for further guidance, for example, see Rev. Proc. 87-56 (1987-2 CB 674), and § 601.601(d)(2)(ii)(*b*) of this chapter), except that any office building, any passenger train car, and any miscellaneous structure if such structure is not provided directly to, and is not unique to, a railroad are excluded from the definition of railroad-related property.

(8) ***Railroad-related services*** are services that are provided directly to, and are unique to, a railroad and that relate to railroad shipping, loading and unloading of railroad freight, or repairs of rail facilities (as defined in paragraph (b)(6) of this section) or railroad-related property (as defined in paragraph (b)(7) of this section). Examples of railroad-related services are the transport of freight by rail; the loading and unloading of freight transported by rail; railroad bridge services; railroad track construction; providing railroad track material or equipment; locomotive leasing or rental; maintenance of railroad's right-of-way (including vegetation control); piggyback trailer ramping; rail deramping services; and freight train cars repair services. Examples of services that are not railroad-related services are general business services, such as, accounting and bookkeeping, marketing, legal services; janitorial services; office building rental; banking services (including financing of railroad-related property); and purchasing of, or services performed on, property not described in paragraph (b)(7) of this section.

(9) Except as provided in paragraph (e)(2) of this section, *railroad track* is property described in STB property accounts 8 (ties), 9 (rails and other track material), and 11 (ballast) in 49 CFR part 1201, Subpart A. *Double track* is treated as multiple lines of railroad track, rather than as a single line of railroad track. Thus, one mile of single track is one mile, but one mile of double track is two miles.

(10) ***Form 8900.*** If Form 8900 is revised or renumbered, any reference in this section to that form shall be treated as a reference to the revised or renumbered form.

(11) ***Examples.*** The application of this paragraph (b) is illustrated by the following examples. In all examples, the taxpayers use a calendar taxable year, and are not members of a controlled group.

Example 1. A is a manufacturer that in 2006, transports its products by rail using the railroad tracks owned by B, a Class II railroad that owns 500 miles of railroad track within the United States on December 31, 2006. B properly assigns for purposes of section 45G 100 miles of eligible railroad track to A in 2006. A is an eligible taxpayer for 2006 with respect to the 100 miles of eligible railroad track.

Example 2. C is a bank that loans money to several Class III railroads. In 2006, C loans money to D, a Class III railroad, who in turn uses the loan proceeds to purchase track material. Because providing loans is not a service that is unique to a railroad, C is not providing railroad-related services and, thus, C is not an eligible taxpayer, even if D assigns miles of eligible railroad track to C for purposes of section 45G.

Example 3. E leases locomotives directly to Class I, Class II, and Class III railroads. In 2006, E leases locomotives to F, a Class II railroad that owns 200 miles of railroad track within the United States on December 31, 2006. F properly assigns for purposes of section 45G 200 miles of eligible railroad track to E. Because locomotives are property that is unique to a railroad, and E leases these locomotives directly to F in 2006, E is an eligible taxpayer for 2006 with respect to the 200 miles of eligible railroad track assigned to E by F.

Example 4. The facts are the same as in Example 3, except that E leases passenger trains, not locomotives, to F. Because passenger trains are not railroad-related property for purposes of section 45G, E is not an eligible taxpayer even if F assigns miles of eligible railroad track to E for purposes of section 45G.

(c) ***Determination of amount of railroad track maintenance credit for the taxable year*** —

(1) ***General amount.*** Except as provided in paragraph (c)(2) of this section, for purposes of section 38, the RTMC determined under section 45G(a) for the taxable year is equal to 50 percent of the QRTME paid or incurred (as determined under paragraph (c)(3) of this section) by an eligible taxpayer during the taxable year.

(2) ***Limitation on the credit*** —

(i) ***Eligible taxpayer is a Class II railroad or Class III railroad.*** If an eligible taxpayer is a Class II railroad or Class III railroad, the RTMC determined under paragraph (c)(1) of this section for the Class II railroad or Class III railroad for any taxable year must not exceed $3,500 multiplied by the sum of—

(A) The number of miles of eligible railroad track owned or leased by the Class II railroad or Class III railroad, reduced by the number of miles of eligible railroad track assigned under paragraph (d) of this section by the Class II railroad or Class III railroad to another eligible taxpayer for that taxable year; and

(B) The number of miles of eligible railroad track owned or leased by another Class II railroad or Class III railroad that are assigned under paragraph (d) of this section to the Class II railroad or Class III railroad for the taxable year.

(ii) ***Eligible taxpayer is not a Class II railroad or Class III railroad.*** If an eligible taxpayer is not a Class II railroad or Class III railroad, the RTMC determined under paragraph (c)(1) of this section for the eligible taxpayer for any taxable year must not exceed $3,500 multiplied by the number of miles of eligible railroad track assigned under paragraph (d) of this section by a Class II railroad or Class III railroad to the eligible taxpayer for the taxable year.

(iii) ***No carryover of amount that exceeds limitation.*** Amounts that exceed the limitation under paragraph (c)(2)(i) of this section or paragraph (c)(2)(ii) of this section, may never be carried over to another taxable year.

(3) ***Determination of amount of QRTME paid or incurred*** —

(i) ***In general.*** The term *paid or incurred* means, in the case of a taxpayer using an accrual method of accounting, a liability incurred (within the meaning of § 1.446-1(c)(1)(ii)). A liability may not be taken into account under section 45G and this section prior to the taxable year during which the liability is incurred. Any amount that an eligible taxpayer (assignee) pays a Class II railroad or Class III railroad (assignor) in exchange for an assignment of one or more miles of eligible railroad track under paragraph (d) of this section, is treated, for purposes of this section, as QRTME paid or incurred by the assignee, and not by the assignor, at the time and to the extent the assignor pays or incurs QRTME.

(ii) ***Effect of reimbursements received from persons other than a Class II or Class III railroad.*** The amount of QRTME treated as paid or incurred during the taxable year by an eligible taxpayer under paragraphs (b)(3)(ii) and (iii) of this section shall be reduced by any amount to which the eligible taxpayer is entitled to be reimbursed, directly or indirectly, from persons other than a Class II or Class III railroad.

(4) ***Examples.*** The application of this paragraph (c) is illustrated by the following examples. In all examples, the taxpayers use an accrual method of accounting and a calendar taxable year, and are not members of a controlled group.

> *Example 1. Computation of RTMC; section 45G credit limitation is not exceeded.* (i) G is a Class II railroad that owns or has leased to it 1,000 miles of railroad track within the United States on December 31, 2006. H is a manufacturer that in 2006, transports its products by rail using the rail facilities of G. In 2006, for purposes of section 45G, G assigns 100 miles of eligible railroad track to H and does not make any other assignments of railroad track miles. H did not receive any other assignments of railroad track miles in 2006. During 2006, G incurred QRTME in the amount of $2.5 million and H incurred QRTME in the amount of $200,000.
> (ii) For 2006, G determines the tentative amount of RTMC under paragraph (c)(1) of this section to be $1,250,000 (50% multiplied by $2,500,000 QRTME incurred by G during 2006). G further determines G's credit limitation under paragraph (c)(2)(i) of this section for 2006 to be $3,150,000 ($3,500 multiplied by 900 miles of eligible railroad track (1,000 miles owned by, or leased to, G on December 31, 2006, less 100 miles assigned by G to H in 2006)). Because G's tentative amount of RTMC does not exceed G's credit limitation amount for 2006, G may claim a RTMC for 2006 in the amount of $1,250,000.

(iii) For 2006, H determines the tentative amount of RTMC under paragraph (c)(1) of this section to be $100,000 (50% multiplied by $200,000 QRTME incurred by H during 2006). H further determines H's credit limitation under paragraph (c)(2)(ii) of this section for 2006 to be $350,000 ($3,500 multiplied by 100 miles of eligible railroad track assigned by G to H in 2006). Because H's tentative amount of RTMC does not exceed H's credit limitation amount for 2006, H may claim a RTMC in the amount of $100,000.

Example 2. Computation of RTMC; section 45G credit limitation is exceeded. (i) The facts are the same as in *Example 1*, except that G assigned for purposes of section 45G only 50 miles of railroad track to H in 2006 and, during 2006, H incurred QRTME in the amount of $400,000.
(ii) For 2006, G determines the tentative amount of RTMC under paragraph (c)(1) of this section to be $1,250,000 (50% multiplied by $2,500,000 QRTME incurred by G during 2006). G further determines G's credit limitation under paragraph (c)(2)(i) of this section for 2006 to be $3,325,000 ($3,500 multiplied by 950 miles of eligible railroad track (1,000 miles owned by, or leased to, G on December 31, 2006, less 50 miles assigned by G to H in 2006)). Because G's tentative amount of RTMC does not exceed G's credit limitation amount for 2006, G may claim a RTMC in the amount of $1,250,000.

(iii) For 2006, H determines the tentative amount of RTMC under paragraph (c)(1) of this section to be $200,000 (50% multiplied by $400,000 QRTME incurred by H during 2006). H further determines H's credit limitation under paragraph (c)(2)(ii) of this section for 2006 to be $175,000 ($3,500 multiplied by 50 miles of eligible railroad track assigned by G to H in 2006). Because H's tentative amount of RTMC exceeds H's credit limitation amount for 2006, H may claim a RTMC in the amount of $175,000 (the credit limitation amount). Under paragraph (c)(2)(iii) of this section, there is no carryover of the $25,000 (the tentative amount of $200,000 less the credit limitation amount of $175,000) that exceeds the limitation.

Example 3. Railroad track miles assigned for payment. (i) J is a Class II railroad that owns or has leased to it 1,000 miles of railroad track within the United States on December 31, 2006. K is a corporation that sells ties, ballast, and other track material to Class I, Class II, and Class III railroads. During 2006, K sold these items to J and J incurred QRTME in the amount of $1 million. Also, on December 6, 2006, J assigned for purposes of section 45G 150 miles of eligible railroad track to K and K paid J $800,000 for that assignment. K did not pay or incur any other QRTME during 2006.
(ii) For 2006, in accordance with paragraph (c)(3)(ii) of this section, J is treated as having incurred QRTME in the amount of $200,000 ($1 million QRTME actually incurred by J less the $800,000 paid by K to J for the assignment of the railroad track miles in 2006). For 2006, J determines the tentative amount of RTMC under paragraph (c)(1) of this section to be $100,000 (50% multiplied by $200,000 QRTME treated as incurred by J during 2006). J further determines J's credit limitation amount under paragraph (c)(2)(i) of this section for 2006 to

be $2,975,000 ($3,500 multiplied by 850 miles of eligible railroad track (1,000 miles owned by, or leased to, J on December 31, 2006, less 150 miles assigned by J to K in 2006)). Because J's tentative amount of RTMC does not exceed J's credit limitation amount for 2006, J may claim a RTMC in the amount of $100,000.

(iii) For 2006, K is an eligible taxpayer because, during 2006, K provided railroad-related property to J and received an assignment of eligible railroad track miles from J. Under paragraph (c)(3)(ii) of this section, K is treated as having incurred QRTME in the amount of $800,000 (the amount paid by K to J for the assignment of the railroad track miles in 2006). For 2006, K determines the tentative amount of RTMC under paragraph (c)(1) of this section to be $400,000 (50% multiplied by $800,000 QRTME treated as incurred by K during 2006). K further determines K's credit limitation amount under paragraph (c)(2)(ii) of this section for 2006 to be $525,000 ($3,500 multiplied by 150 miles of eligible railroad track assigned by J in 2006). Because K's tentative amount of RTMC does not exceed K's credit limitation amount for 2006, K may claim a RTMC in the amount of $400,000.

(iv) The results in this *Example 3* would be the same if K sold the ties, ballast, and other track material with a fair market value of $1 million to J for $200,000 in exchange for the assignment by J of 150 miles of eligible railroad track to K.

Example 4. Reimbursement of QRTME. (i) L is a Class III railroad that owns or has leased to it 500 miles of railroad track within the United States on December 31, 2006. M is a manufacturer that in 2006 transports its products by rail using the rail facilities of L. During 2006, L did not incur any QRTME. Also, in 2006, L assigned for purposes of section 45G 200 miles of eligible railroad track to M and agreed to reduce L's freight shipping rates to M by $250,000 in exchange for M upgrading these railroad track miles. Consequently, during 2006, M incurred QRTME of $500,000 to upgrade these 200 miles of railroad track and L reduced L's freight shipping rates for M by $250,000.
(ii) For 2006, M is an eligible taxpayer because, during 2006, M transported property using the rail facilities of L and received an assignment of eligible railroad track miles from L. The amount of QRTME paid or incurred by M during 2006 is $500,000 and is not reduced by the reimbursement of $250,000 by L to M because, under paragraph (c)(3)(ii) of this section, QRTME is not reduced by reimbursements from Class II or Class III railroads. For 2006, M determines the tentative amount of RTMC under paragraph (c)(1) of this section to be $250,000 (50% multiplied by $500,000 QRTME incurred by M during 2006). M further determines M's credit limitation amount under paragraph (c)(2)(ii) of this section for 2006 to be $700,000 ($3,500 multiplied by 200 miles of eligible railroad track assigned by L to M in 2006). Because M's tentative amount of RTMC does not exceed M's credit limitation amount for 2006, M may claim a RTMC in the amount of $250,000.

(d) ***Assignment of track miles*** —

(1) ***In general.*** An assignment of any mile of eligible railroad track under this paragraph (d) is a designation by a Class II railroad or Class III railroad that is made solely for purposes of section 45G and this section of a specific number of miles of eligible railroad track as being assigned to another eligible taxpayer for a taxable year. A designation must be in writing and must include the name and taxpayer identification number of the assignee, and the information required under the rules of paragraph (d)(4)(iii)(B) of this section. A designation requires no transfer of legal title or other indicia of ownership of the eligible railroad track, and need not specify the location of any assigned mile of eligible railroad track. Further, an assigned mile of eligible railroad track need not correspond to any specific mile of eligible railroad track with respect to which the eligible taxpayer actually pays or incurs the QRTME.

(2) ***Assignment eligibility.*** Only a Class II railroad or Class III railroad may assign a mile of eligible railroad track. If a Class II railroad or Class III railroad assigns a mile of eligible railroad track to an eligible taxpayer, the assignee is not permitted to reassign any mile of eligible railroad track to another eligible taxpayer. The maximum number of miles of eligible railroad track that may be assigned by a Class II railroad or Class III railroad for any taxable year is its total miles of eligible railroad track less the miles of eligible railroad track that the Class II railroad or Class III railroad retains for itself in determining its RTMC for the taxable year.

(3) ***Effective date of assignment.*** If a Class II railroad or Class III railroad assigns a mile of eligible railroad track, the assignment is treated as being made by the Class II railroad or Class III railroad at the close of its taxable year in which the assignment was made. With respect to the assignee, the assignment of a mile of eligible railroad track is taken into account for the taxable year of the assignee that includes the date the assignment is treated as being made by the assignor Class II railroad or Class III railroad under this paragraph (d)(3).

(4) ***Assignment information statement*** —

(i) ***In general.*** A taxpayer must file Form 8900, “Qualified Railroad Track Maintenance Credit,” with its timely filed (including extensions) Federal income tax return for the taxable year for which the taxpayer assigns any mile of eligible railroad track, even if the taxpayer is not itself claiming the RTMC for that taxable year.

(ii) ***Assignor.*** Except as provided in paragraph (d)(4)(iv) of this section, a Class II railroad or Class III railroad (assignor) that assigns one or more miles of eligible railroad track during a taxable year to one or more eligible taxpayers must attach to the assignor's Form 8900 for that taxable year an information statement providing—

(A) The name and taxpayer identification number of each assignee;

(B) The total number of miles of the assignor's eligible railroad track;

(C) The number of miles of eligible railroad track assigned by the assignor to each assignee for the taxable year; and

(D) The total number of miles of eligible railroad track assigned by the assignor to all assignees for the taxable year.

(iii) ***Assignee.*** Except as provided in paragraph (d)(4)(iv) of this section, an eligible taxpayer (assignee) that has received an assignment of miles of eligible railroad track during its taxable year from a Class II railroad or Class III railroad, and that claims the RTMC for that taxable year, must attach to the assignee's Form 8900 for that taxable year a statement—

(A) Providing the total number of miles of eligible railroad track assigned to the assignee for the assignee's taxable year; and

(B) Attesting that the assignee has in writing, and has retained as part of the assignee's records for purposes of § 1.6001-1(a), the following information from each assignor:

(*1*) The name and taxpayer identification number of each assignor.

(*2*) The date of each assignment made by each assignor (as determined under paragraph (d)(3) of this section) to the assignee;

(*3*) The number of miles of eligible railroad track assigned by each assignor to the assignee for the assignee's taxable year.

(iv) ***Special rules for returns filed prior to November 9, 2007.*** If an eligible taxpayer's Federal income tax return for a taxable year beginning after December 31, 2004, and ending before November 9, 2007, was filed before December 13, 2007, and the eligible taxpayer is not filing an amended Federal income tax return for that taxable year pursuant to paragraph (g)(2) of this section before the eligible taxpayer's next filed original Federal income tax return, and the eligible taxpayer wants to apply paragraph (g)(2) of this section but did not include with that return the information specified in paragraph (d)(4)(ii) or (iii) of this section, as applicable, the eligible taxpayer must attach a statement containing the information specified in paragraph (d)(4)(ii) or (iii) of this section, as applicable, to either—

(A) The eligible taxpayer's next filed original Federal income tax return; or

(B) The eligible taxpayer's amended Federal income tax return that is filed pursuant to paragraph (g)(2) of this section, provided that amended Federal income tax return is filed by the eligible taxpayer before its next filed original Federal income tax return.

(5) ***Special rules*** —

(i) ***Effect of subsequent dispositions of eligible railroad track during the assignment year.*** If a Class II railroad or Class III railroad assigns one or more miles of eligible railroad track that it owned or leased as of the actual date of the assignment, but does not own or lease any eligible railroad track at the close of the taxable year in which the assignment is made by the Class II railroad or Class III railroad, the assignment is not valid for that taxable year for purposes of section 45G and this section.

(ii) ***Effect of multiple assignments of eligible railroad track miles during the same taxable year.*** If a Class II railroad or Class III railroad assigns more miles of eligible railroad track than it owned or leased as of the close of the taxable year in which the assignment is made by the Class II railroad or Class III railroad, the assignment is valid for purposes of section 45G and this section only with respect to the name of the assignee and the number of miles listed by the assignor Class II railroad or Class III railroad on the statement required under paragraph (d)(4)(ii) of this section and only to the extent of the maximum miles of eligible railroad track that may be assigned by the assignor Class II railroad or Class III railroad as determined under paragraph (d)(2) of this section. If the total number of miles on this statement exceeds the maximum miles of eligible railroad track that may be assigned by the assignor Class II railroad or Class III railroad (as determined under paragraph (d)(2) of this section), the total number of

miles on the statement shall be reduced by the excess amount of miles. This reduction is allocated among each assignee listed on the statement in proportion to the total number of miles listed on the statement for that assignee.

(6) ***Examples.*** The application of this paragraph (d) is illustrated by the following examples. In none of the examples are the taxpayers members of a controlled group:

> *Example 1. Assignor and assignee have the same taxable year.* (i) N, a calendar year taxpayer, is a Class II railroad that owns 500 miles of railroad track within the United States on December 31, 2006. O, a calendar year taxpayer, is not a railroad, but is a taxpayer that provides railroad-related property to N during 2006. On November 7, 2006, N assigns for purposes of section 45G 300 miles of eligible railroad track to O. O receives no other assignment of eligible railroad track in 2006. O pays or incurs QRTME in the amount of $100,000 in November 2006, and $50,000 in February 2007. N and O each file Form 8900 with their timely filed Federal income tax returns for 2006 and attach the statement required by paragraph (d)(4)(ii) and (iii), respectively, of this section reporting the assignment of the 300 miles of eligible railroad track to O.
> (ii) The assignment of the 300 miles of eligible railroad track made by N to O on November 7, 2006, is treated as made on December 31, 2006 (at the close of the N's taxable year). Consequently, the assignment is taken into account by O for O's taxable year ending on December 31, 2006. For 2006, O is an eligible taxpayer because, during 2006, O provides railroad-related property to N and receives an assignment of 300 eligible railroad track miles from N. For 2006, O determines the tentative amount of RTMC under paragraph (c)(1) of this section to be $50,000 (50% multiplied by $100,000 QRTME paid or incurred by O during 2006). O further determines the credit limitation amount under paragraph (c)(2)(i) of this section for 2006 to be $1,050,000 ($3,500 multiplied by 300 miles of eligible railroad track assigned by N to O on December 31, 2006). Because O's tentative amount of RTMC does not exceed O's credit limitation amount for 2006, O may claim a RMTC for 2006 in the amount of $50,000.

> *Example 2. Assignor and assignee have different taxable years.* (i) The facts are the same as in *Example 1,* except that O's taxable year ends on March 31.
> (ii) The assignment of the 300 miles of eligible railroad track made by N to O on November 7, 2006, is treated as made on December 31, 2006. As a result, the assignment is taken into account by O for O's taxable year ending on March 31, 2007. Thus, for the taxable year ending on March 31, 2007, O determines the tentative amount of RMTC under paragraph (c)(1) of this section to be $75,000 (50% multiplied by $150,000 QRTME incurred by O during its taxable year ending March 31, 2007). Because O's tentative amount of RTMC does not exceed O's credit limitation amount for the taxable year ending March 31, 2007, O may claim a RMTC for the taxable year ending March 31, 2007, in the amount of $75,000.

> *Example 3. Assignment location differs from QRTME location.* (i) P, a calendar-year taxpayer, is a Class III railroad that owns or has leased to it 200 miles of railroad track within

the United States on December 31, 2006. P owns 50 miles of this railroad track and leases 150 miles of this railroad track from Q, a Class I railroad. On February 8, 2006, P assigns for purposes of section 45G 50 miles of eligible railroad track to R. R is not a railroad, but is a taxpayer that ships products using the 50 miles of eligible railroad track owned by P, and R paid $100,000 in 2006 to P to enable P to upgrade these 50 miles of eligible railroad track. In March 2006, P also assigns for purposes of section 45G 150 miles of eligible railroad track to S. S is not a railroad, but is a taxpayer that provides railroad-related property to P, and S paid $400,000 to P to enable P to upgrade P's 200 miles of eligible railroad track. For 2006, P pays or incurs QRTME in the amount of $500,000 to upgrade the 150 miles of eligible railroad track that it leases from Q and pays or incurs no QRTME on the 50 miles of eligible railroad track that it owns. For 2006, P receives no other assignment of eligible railroad track miles and did not retain any eligible railroad track miles for itself. Also, R and S do not pay or incur any other amounts that would qualify as QRTME during 2006. P, R, and S each file Form 8900 with their timely filed Federal income tax returns for 2006 and attach the statement required by paragraph (d)(4) (ii) or (iii) of this section, whichever applies, reporting the assignment of eligible railroad track by P to R or S in 2006.
(ii) For 2006, in accordance with paragraph (c)(3)(ii) of this section, P is treated as having incurred QRTME in the amount of $0 ($500,000 QRTME actually incurred by P less the $100,000 paid by R to P for the assignment of the 50 miles of eligible railroad track and the $400,000 paid by S to P for the assignment of the 150 miles of eligible railroad track). Further, P assigned all of its eligible railroad track miles to R and S for 2006. Accordingly, for 2006, P may not claim any RTMC.

(iii) For 2006, R is an eligible taxpayer because, during 2006, R ships property using the rail facilities of P and receives an assignment of 50 eligible railroad track miles from P. In accordance with paragraph (c)(3)(ii) of this section, R is treated as having incurred QRTME in the amount of $100,000 (the amount paid by R to P for the assignment of the eligible railroad track miles in 2006) even though no work was performed on the 50 miles of eligible railroad track that was assigned by P to R. For 2006, R determines the tentative amount of RTMC under paragraph (c)(1) of this section to be $50,000 (50% multiplied by $100,000 QRTME treated as incurred by R during 2006). R further determines the credit limitation amount under paragraph (c)(2)(ii) of this section to be $175,000 ($3,500 multiplied by 50 miles of eligible railroad track assigned by P to R in 2006). Because R's tentative amount of RTMC does not exceed R's credit limitation amount for 2006, R may claim a RTMC for 2006 in the amount of $50,000.

(iv) For 2006, S is an eligible taxpayer because, during 2006, S provides railroad-related property to P and receives an assignment of 150 eligible railroad track miles from P. In accordance with paragraph (c)(3)(ii) of this section, S is treated as having incurred QRTME in the amount of $400,000 (amount paid by S to P for the assignment of the eligible railroad

track miles in 2006). For 2006, S determines the tentative amount of RTMC under paragraph (c)(1) of this section to be $200,000 (50% multiplied by $400,000 QRTME treated as incurred by S during 2006). S further determines the credit limitation amount under paragraph (c)(2)(ii) of this section to be $525,000 ($3,500 multiplied by 150 miles of eligible railroad track assigned by P to S in 2006). Because S's tentative amount of RTMC does not exceed S's credit limitation amount for 2006, S may claim a RTMC for 2006 in the amount of $200,000.

Example 4. Multiple assignments of track miles. (i) T, a calendar-year taxpayer, is a Class III railroad that owns or has leased to it 200 miles of railroad track within the United States on December 31, 2006. T owns 75 miles of this railroad track and leases 125 miles of this railroad track from U, a Class I railroad. V and W are not railroads, but are both taxpayers that provide railroad-related services to T during 2006. On January 15, 2006, T assigns for purposes of section 45G 200 miles of eligible railroad track to V. V agrees to incur, in 2006, $1.4 million of QRTME to upgrade a portion of/segment of these 200 miles of eligible railroad track. Due to unexpected financial difficulties, V only incurs $250,000 of QRTME during 2006 and on May 15, 2006, T learns that V is unable to incur the remainder of the QRTME. On June 15, 2006, T assigns for purposes of section 45G the 200 miles of railroad track to W. In 2006, W incurs $1,100,000 of QRTME to upgrade a portion of/segment of the railroad track. For 2006, T receives no other assignment of eligible railroad track miles and did not retain any eligible railroad track miles for itself. V and W do not receive any other assignments of miles of eligible railroad track miles from a Class II railroad or Class III railroad during 2006. T and W each file Form 8900 with their timely filed Federal income tax returns for 2006, and attach the statement required by paragraph (d)(4) (ii) and (iii), respectively, of this section, reporting the assignment of 200 miles of eligible railroad track to W.
(ii) Because T did not retain any miles of eligible railroad track for itself for 2006, the maximum miles of eligible railroad track that may be assigned by T for 2006 is 200 miles pursuant to paragraph (d)(2) of this section. On the statement required by paragraph (d)(4)(ii) of this section, T assigned a total of 200 miles of eligible railroad track to W. Consequently, because T did not list V as an assignee on T's statement required by paragraph (d)(4)(ii) of this section, V did not receive an assignment of eligible railroad track miles from T during 2006 and V is not an eligible taxpayer for 2006. Thus, for 2006, V may not claim any RTMC even though V incurred QRTME in the amount of $250,000.

(iii) For 2006, W is an eligible taxpayer because, during 2006, W provides railroad-related services to T and receives an assignment of 200 eligible railroad track miles from T. W determines the tentative amount of RTMC under paragraph (c)(1) of this section to be $550,000 (50% multiplied by $1,100,000 QRTME incurred by W during 2006). W further determines the credit limitation amount under paragraph (c)(2)(ii) of this section to be

$700,000 ($3,500 multiplied by the 200 miles of eligible railroad track assigned by T to W in 2006). Because W's tentative amount of RTMC does not exceed W's credit limitation amount for 2006, W may claim a RTMC for 2006 in the amount of $550,000.

Example 5. Multiple assignments of track miles. (i) Same facts as in *Example 4,* except T, to its Form 8900 for 2006, attaches the statement required by paragraph (d)(4)(ii) of this section assigning 200 miles of eligible railroad track to W and 200 miles of eligible railroad track to V. (ii) Because T did not retain any miles of eligible railroad track for itself for 2006, the maximum miles of eligible railroad track that may be assigned by T for 2006 is 200 miles pursuant to paragraph (d)(2) of this section. However, on the statement required by paragraph (d)(4)(ii) of this section, T assigned a total of 400 miles of eligible railroad track (200 miles to W and 200 miles to V). Consequently, the 400 miles of eligible railroad track on this statement must be reduced to the 200 maximum miles of eligible railroad track available for assignment for 2006. Because the statement reports 200 miles of eligible railroad track assigned to each W and V, the reduction of 200 miles (400 total miles of eligible railroad track on the statement less 200 maximum miles of eligible railroad track available for assignment) is allocated pro-rata between W and V and, therefore, 100 miles each to W and V. Thus, pursuant to paragraph (d)(5)(ii) of this section, the number of miles of eligible railroad track assigned by T to W and V for 2006 is 100 miles each.

(iii) For 2006, V is an eligible taxpayer because, during 2006, V provides railroad-related services to T and receives an assignment of 100 eligible railroad track miles from T. V determines the tentative amount of RTMC under paragraph (c)(1) of this section to be $125,000 (50% multiplied by $250,000 QRTME incurred by V during 2006). V further determines the credit limitation amount under paragraph (c)(2)(ii) of this section to be $350,000 ($3,500 multiplied by the 100 miles of eligible railroad track assigned by T to V in 2006). Because V's tentative amount of RTMC does not exceed W's credit limitation amount for 2006, V may claim a RTMC for 2006 in the amount of $125,000.

(iv) For 2006, W is an eligible taxpayer because, during 2006, W provides railroad-related services to T and receives an assignment of 100 eligible railroad track miles from T. W determines the tentative amount of RTMC under paragraph (c)(1) of this section to be $550,000 (50% multiplied by $1,100,000 QRTME incurred by W during 2006). W further determines the credit limitation amount under paragraph (c)(2)(ii) of this section to be $350,000 ($3,500 multiplied by the 100 miles of eligible railroad track assigned by T to W in 2006). Because W's tentative amount of RTMC exceeds W's credit limitation amount for 2006, W may claim a RTMC for 2006 in the amount of $350,000 (the credit limitation). There is no carryover of the amount of $200,000 (the tentative amount of $550,000 less the credit limitation amount of $350,000).

(e) ***Adjustments to basis —***

(1) ***In general.*** All or some of the QRTME paid or incurred by an eligible taxpayer during the taxable year may be required to be capitalized under section 263(a) as a tangible asset or as an intangible asset. See, for example, § 1.263(a)-4(d)(8), which requires capitalization of amounts paid or incurred by a taxpayer to produce or improve real property owned by another (except to the extent the taxpayer is selling services at fair market value to produce or improve the real property) if the real property can reasonably be expected to produce significant economic benefits for the taxpayer. The basis of the tangible asset or intangible asset includes the capitalized amount of the QRTME.

(2) ***Basis adjustment made to railroad track.*** An eligible taxpayer must reduce the adjusted basis of any railroad track with respect to which the eligible taxpayer claims the RTMC. For purposes of section 45G(e)(3) and this paragraph (e)(2), the adjusted basis of any railroad track with respect to which the eligible taxpayer claims the RTMC is limited to the amount of QRTME, if any, that is required to be capitalized into the qualifying railroad structure or an intangible asset. The adjusted basis of the railroad track is reduced by the amount of the RTMC allowable (as determined under paragraph (c) of this section) by the eligible taxpayer for the taxable year, but not below zero. This reduction is taken into account at the time the QRTME is paid or incurred by an eligible taxpayer and before the depreciation deduction with respect to such railroad track is determined for the taxable year for which the RTMC is allowable. If all or some of the QRTME paid or incurred by an eligible taxpayer during the taxable year is capitalized under section 263(a) to more than one asset, whether tangible or intangible (for example, railroad track and bridges), the reduction to the basis of these assets under this paragraph (e)(2) is allocated among each of the assets subject to the reduction in proportion to the unadjusted basis of each asset at the time the QRTME is paid or incurred during that taxable year.

(3) ***Examples.*** The application of this paragraph (e) is illustrated by the following examples. In each example, all taxpayers use a calendar taxable year, and no taxpayers are members of a controlled group.

> *Example 1.* (i) X is a Class II railroad that owns 500 miles of railroad track within the United States on December 31, 2006. During 2006, X incurs $1 million of QRTME for maintaining this railroad track. X uses the track maintenance allowance method for track structure expenditures (for further guidance, see Rev. Proc. 2002-65 (2002-2 CB 700) and § 601.601(d)(2)(ii)(*b*) of this chapter). Assume all of the $1 million QRTME is track structure expenditures and none of it was expended for new track structure.
> (ii) For 2006, X determines the tentative amount of RTMC under paragraph (c)(1) of this section to be $500,000 (50% multiplied by $1 million QRTME incurred by X during 2006). X further determines the credit limitation amount under paragraph (c)(2)(i) of this section for 2006 to be $1,750,000 ($3,500 multiplied by 500 miles of eligible railroad track). Because X's tentative amount of RTMC does not exceed X's credit limitation amount for 2006, X may claim a RTMC for 2006 in the amount of $500,000.
>
> (iii) Of the $1 million QRTME incurred by X during 2006, X determines under the track maintenance allowance method that $750,000 is the track maintenance allowance under section 162 and $250,000 is the capitalized amount for the track structure. In accordance with paragraph (e)(2) of this section, X reduces the capitalized amount of $250,000 by the

RTMC of $500,000 claimed by X for 2006, but not below zero. Thus, the capitalized amount of $250,000 is reduced to zero. X also deducts under section 162 a track maintenance allowance of $750,000 on its 2006 Federal income tax return.

Example 2. (i) Y is a Class II railroad that owns or has leased to it 500 miles of eligible railroad track within the United States on December 31, 2006. Z is not a railroad, but is a taxpayer that, in 2006, transports its products using the rail facilities of Y. In 2006, Y assigns for purposes of section 45G 300 miles of eligible railroad track to Z. Z does not receive any other assignments of eligible railroad track miles in 2006. During 2006, Z incurs QRTME in the amount of $1 million, and Y does not incur any QRTME. Y and Z each file Form 8900 with their timely filed Federal income tax returns for 2006 and attach the statement required by paragraph (d)(4)(ii) and (iii), respectively, of this section reporting the assignment of the 300 miles of eligible railroad track to Z.
(ii) For 2006, Z determines the tentative amount of RTMC under paragraph (c)(1) of this section to be $500,000 (50% multiplied by $1 million QRTME incurred by Z during 2006). Z further determines the credit limitation amount under paragraph (c)(2)(ii) of this section for 2006 to be $1,050,000 ($3,500 multiplied by 300 miles of eligible railroad track assigned by Y to Z in 2006). Because Z's tentative amount of RTMC does not exceed Z's credit limitation amount for 2006, Z may claim a RTMC for 2006 in the amount of $500,000.

(iii) For 2006, Z also must determine the portion of the $1 million QRTME that Z incurs that is required to be capitalized under section 263(a), and the portion that is a section 162 expense. Because Z is not a Class II railroad or Class III railroad, Z cannot use the track maintenance allowance method. Assume that all of the QRTME constitutes an intangible asset under § 1.263(a)-4(d)(8) and, therefore, is required to be capitalized by Z under section 263(a) as an intangible asset. In accordance with paragraph (e)(2) of this section, Z reduces the capitalized amount of $1 million by the RTMC of $500,000 claimed by Z for 2006. Thus, the capitalized amount of $1 million for the intangible asset is reduced to $500,000. Further, pursuant to § 1.167(a)-3(b)(1)(iv), Z may treat this intangible asset with an adjusted basis of $500,000 as having a useful life of 25 years for purposes of the depreciation allowance under section 167(a).

(f) ***Controlled groups*** —

(1) ***In general.*** Pursuant to section 45G(e)(2), if an eligible taxpayer is a member of a controlled group of corporations, rules similar to the rules in § 1.41-6T apply for determining the amount of the RTMC under section 45G(a) and this section. To determine the amount of RTMC (if any) allowable to a trade or business that at the end of its taxable year is a member of a controlled group, a taxpayer must—

(i) Compute the group credit in the manner described in paragraph (f)(3) of this section; and

(ii) Allocate the group credit among the members of the group in the manner described in paragraph (f)(4) of this section.

(2) ***Definitions.*** For purposes of section 45G(e)(2) and paragraph (f) of this section—

(i) A *trade or business* is a sole proprietorship, a partnership, a trust, an estate, or a corporation that is carrying on a trade or business (within the meaning of section 162). Any corporation that is a member of a commonly controlled group shall be deemed to be carrying on a trade or business if any other member of that group is carrying on any trade or business;

(ii) ***Group*** and *controlled group* means a controlled group of corporations, as defined in section 41(f)(5), or a group of trades or businesses under common control. For rules for determining whether trades or businesses are under common control, see § 1.52-1(b) through (g);

(iii) ***Group credit*** means the RTMC (if any) allowable to a controlled group;

(iv) ***Consolidated group*** has the meaning set forth in § 1.1502-1(h); and

(v) ***Credit year*** means the taxable year for which the member is computing the RTMC.

(3) ***Computation of the group credit.*** All members of a controlled group are treated as a single taxpayer for purposes of computing the RTMC. The group credit is computed by applying all of the section 45G computational rules (including the rules set forth in this section) on an aggregate basis.

(4) ***Allocation of the group credit.*** The group credit is allocated to each member of the controlled group on a proportionate basis to its share of the aggregate of the QRTMEs taken into account for the taxable year by such controlled group for purposes of the credit.

(5) ***Special rules for consolidated groups*** —

(i) ***In general.*** For purposes of applying paragraph (f)(4) of this section, members of a consolidated group who are members of a controlled group are treated as a single member of the controlled group.

(ii) ***Special rule for allocation of group credit among consolidated group members.*** The portion of the group credit that is allocated to a consolidated group is allocated to each member of the consolidated group on a proportionate basis to its share of the aggregate of the QRTMEs taken into account for the taxable year by such consolidated group for purposes of the credit.

(6) ***Tax accounting periods used*** —

(i) ***In general.*** The credit allowable to a member of a controlled group is that member's share of the group credit computed as of the end of that member's taxable year. In computing the group credit for a group whose members have different taxable years, a member generally should treat the taxable year of another member that ends with or within the credit year of the computing member as the credit year of that other member. For example, Q, R, and S are members of a controlled group of corporations. Both Q and R are calendar year taxpayers. S files a return using a fiscal year ending June 30. For purposes of computing the group credit at the end of Q's and R's taxable year on December 31, S's fiscal year ending June 30, which ends within Q's and R's taxable year, is treated as S's credit year.

(ii) ***Special rule when timing of QRTME is manipulated.*** If the timing of QRTME by members using different tax accounting periods is manipulated to generate a credit in excess of the amount that would be allowable if all members of the group used the same tax accounting period, then the appropriate Internal Revenue Service official in the operating division that has examination

jurisdiction of the return may require each member of the group to calculate the credit in the current taxable year and all future years as if all members of the group had the same taxable year and base period as the computing member.

(7) ***Membership during taxable year in more than one group.*** A trade or business may be a member of only one group for a taxable year. If, without application of this paragraph (f)(7), a business would be a member of more than one group at the end of its taxable year, the business shall be treated as a member of the group in which it was included for its preceding taxable year. If the business was not included for its preceding taxable year in any group in which it could be included as of the end of its taxable year, the business shall designate in its timely filed (including extensions) federal income tax return for the taxable year the group in which it is being included. If the business does not so designate, then the appropriate Internal Revenue Service official in the operating division that has examination jurisdiction of the return will determine the group in which the business is to be included. If the Federal income tax return for a taxable year beginning after December 31, 2004, and ending before November 9, 2007, was filed before December 13, 2007, and the business wants to apply paragraph (g)(2) of this section but did not designate its group membership in that return, the business must designate its group membership for that year either—

(i) In its next filed original Federal income tax return; or

(ii) In its amended Federal income tax return that is filed pursuant to paragraph (g)(2) of this section, provided that amended Federal income tax return is filed by the business before its next filed original Federal income tax return.

(8) ***Intra-group transactions*** —

(i) ***In general.*** Because all members of a group under common control are treated as a single taxpayer for purposes of determining the RTMC, transfers between members of the group are generally disregarded.

(ii) ***Payment for QRTME.*** Amounts paid or incurred by the owner (or lessor) of eligible railroad track to another member of the group for QRTME shall be taken into account as QRTME by the owner (or lessor) of the eligible railroad track for purposes of section 45G only to the extent of the lesser of—

(A) The amount paid or incurred to the other member; or

(B) The amount that would have been considered paid or incurred by the other member for the QRTME, if the QRTME was not reimbursed by the owner (or lessor) of the eligible railroad track.

(g) ***Effective/applicability date*** —

(1) ***In general.*** Except as provided in paragraphs (g)(2) and (g)(3) of this section, this section applies to taxable years ending on or after September 7, 2006.

(2) ***Taxable years ending before September 7, 2006.*** A taxpayer may apply this section to taxable years beginning after December 31, 2004, and ending before September 7, 2006, provided that the taxpayer applies all provisions in this section to the taxable year.

(3) ***Special rules for returns filed prior to November 9, 2007.*** If a taxpayer's Federal income tax return for a taxable year beginning after December 31, 2004, and ending before November 9, 2007, was filed before December 13, 2007, and the taxpayer is not filing an amended Federal income tax return for

that taxable year pursuant to paragraph (g)(2) of this section before the taxpayer's next filed original Federal income tax return, see paragraphs (d)(4)(iv) and (f)(7) of this section for the statements that must be attached to the taxpayer's next filed original Federal income tax return.

(4) ***Taxable years beginning after December 31, 2011.*** Paragraphs (f)(4) and (5) and (g)(4) and (5) of this section apply to taxable years beginning on or after April 2, 2018. For taxable years ending before April 2, 2018, see § 1.45G-1T as contained in 26 CFR part 1, as revised April 1, 2017.

(5) ***Taxable years beginning before January 1, 2012.*** See § 1.45-1 as contained in 26 CFR part 1, revised April 1, 2014.

[T.D. 9365, 72 FR 63816, Nov. 13, 2007, as amended by T.D. 9717, 80 FR 18098, Apr. 3, 2015; 80 FR 23238, Apr. 27, 2015; T.D. 9832, 83 FR 13185, Mar. 28, 2018]

§§ 1.45L-1-1.45L-2 [Reserved]

§ 1.45L-3 Rules relating to the increased credit amount for prevailing wage.

(a) ***In general.*** With respect to a qualified residence described in section 45L(a)(2)(B), the credit determined under section 45L(a)(2)(B)(i) is $2,500 and the credit determined under section 45L(a)(2)(B)(ii) is $5,000 if the qualified residence described in section 45L(a)(2)(B)—

(1) Meets the requirements under section 45L(c)(1)(A) or 45L(c)(1)(B), as applicable;

(2) Is constructed by an eligible contractor;

(3) Is acquired by a person for use as a residence during the taxable year; and

(4) Satisfies the prevailing wage requirements of section 45(b)(7) and § 1.45-7, and the recordkeeping and reporting requirements of § 1.45-12, with respect to the construction of the qualified residence before such residence is acquired by a person for use as a residence.

(b) ***Definitions*** —

(1) ***Qualified residence.*** For purposes of this section, a *qualified residence* means a qualified new energy efficient home as defined in section 45L(b)(2).

(2) ***Eligible contractor.*** For purposes of this section, an *eligible contractor* means an eligible contractor as defined in section 45L(b)(1).

(c) ***Applicability date.*** This section applies to any qualified new energy efficient home acquired for use as a residence in taxable years ending after June 25, 2024, and the construction of which begins after June 25, 2024. Taxpayers may apply this section to any qualified new energy efficient home acquired for use as a residence in taxable years ending on or before June 25, 2024, and any qualified new energy efficient home acquired for use as a residence in taxable years ending after June 25, 2024, the construction of which begins before June 25, 2024, provided that taxpayers follow this section in its entirety and in a consistent manner.

[T.D. 9998, 89 FR 53270, June 25, 2024]

§ 1.45Q-0 Table of Contents

This section lists the captions contained in §§ 1.45Q-1 through 1.45Q-5.

§ 1.45Q-1 Credit for Carbon Oxide Sequestration.

(a) In general.

(b) Credit amount for carbon capture equipment originally placed in service before February 9, 2018.

(1) In general.

(2) Inflation adjustment.

(c) Credit amount for carbon capture equipment originally placed in service on or after February 9, 2018.

(d) Applicable dollar amount.

(1) Applicable dollar amount for any taxable year beginning in a calendar year after 2016 and before 2027 for qualified carbon oxide not used as a tertiary injectant or utilized.

(2) Applicable dollar amount for any taxable year beginning in a calendar year after 2026 for qualified carbon oxide not used as a tertiary injectant or utilized.

(3) Applicable dollar amount for any taxable year beginning in a calendar year after 2016 and before 2027 for qualified carbon oxide used as a tertiary injectant or utilized.

(4) Applicable dollar amount for any taxable year beginning in a calendar year after 2026 for qualified carbon oxide used as a tertiary injectant or utilized.

(e) Election to apply the $10 and $20 credit amounts in lieu of the applicable dollar amounts.

(f) Application of section 45Q for certain carbon capture equipment placed in service before February 9, 2018.

(g) Installation of additional carbon capture equipment.

(1) Allocation of section 45Q credits for facilities installing additional carbon capture equipment.

(2) Additional carbon capture equipment.

(3) New carbon capture equipment.

(4) Examples.

(i) Example 1.

(ii) Example 2.

(iii) Example 3.

(h) Eligibility for the section 45Q credit.

(1) Person to whom the section 45Q credit is attributable.

(i) Equipment placed in service before February 9, 2018.

(ii) Equipment placed in service on or after February 9, 2018.

(iii) Reporting.

(2) Contractually ensuring capture and disposal, injection, or utilization of qualified carbon oxide.

(i) Binding written contract.

(ii) Multiple binding written contracts permitted.

(iii) Contract provisions.

(iv) Pre-existing contracts.

(v) Reporting of contract information.

(vi) Relationship with election to allow section 45Q credit.

(3) Election to allow the section 45Q credit to another taxpayer.

(i) Example.

(ii) Time and manner of making election.

(iii) Annual election.

(iv) Required information.

(v) Requirements for section 45Q credit claimant.

(vi) Failure to satisfy reporting requirements.

(*i*) Applicability date.

§ 1.45Q-2 Definitions for Purposes of §§ 1.45Q-1 through 1.45Q-5.

(a) Qualified carbon oxide.

(b) Recycled carbon oxide.

(c) Carbon capture equipment.

(1) Use of carbon capture equipment.

(2) Carbon capture equipment components.

(3) Single process train.

(d) Industrial facility.

(1) Exclusion.

(2) Industrial source.

(3) Manufacturing process.

(4) Examples.

(i) Example 1.

(ii) Example 2.

(e) Electricity generating facility.

(f) Direct air capture facility.

(g) Qualified facility.

(1) Emissions and capture requirements.

(2) Examples.

(i) Example 1.

(ii) Example 2.

(iii) Example 3.

(iv) Example 4.

(v) Example 5.

(3) Annualization of first-year and last-year qualified carbon oxide emission and/or capture amounts.

(i) In general.

(ii) Calculation.

(iii) Consequences.

(4) Election for applicable facilities.

(i) Applicable facility.

(ii) Time and manner of making election.

(iii) Retroactive credit revocations.

(5) Retrofitted qualified facility or carbon capture equipment (80/20 Rule).

(h) Qualified enhanced oil or natural gas recovery project.

(1) Application of §§ 1.43-2 and 1.43-3.

(2) Required certification.

(3) Natural gas.

(4) Timely filing of petroleum engineer's certification.

(5) Carbon oxide injected in oil reservoir.

(6) Tertiary injectant.

(i) Section 45Q credit.

(j) *Form 8933.*

(k) Applicability date.

§ 1.45Q-3 Secure Geological Storage.

(a) In general.

(b) Requirements for secure geological storage.

(c) Documentation.

(d) Certification.

(e) Failure to submit complete documentation or certification.

(f) Applicability date.

§ 1.45Q-4 Utilization of Qualified Carbon Oxide.

(a) In general.

(b) Amount utilized.

(1) In general.

(2) Limitation.

(c) Lifecycle greenhouse gas emissions and lifecycle analysis (LCA).

(1) In general.

(2) LCA verification.

(3) Standards of adequate lifecycle analysis.

(4) Third-party independent review of LCA.

(5) Submission of the LCA.

(6) LCA review.

(d) Commercial market.

(e) Applicability date.

§ 1.45Q-5 Recapture of Credit.

(a) Recapture event.

(b) Ceases to be disposed of in secure geological storage or used as a tertiary injectant.

(c) Leaked amount of qualified carbon oxide.

(d) Qualified carbon oxide subject to recapture.

(e) Recapture amount.

(f) Recapture period.

(g) Application of recapture.

(1) In general.

(2) Calculation.

(3) Multiple units.

(4) Multiple taxpayers.

(i) In general.

(ii) Partnerships.

(A) General rule.

(B) Terminated partnerships.

(5) Reporting.

(6) Examples.

(i) Example 1.

(ii) Example 2.

(iii) Example 3.

(iv) Example 4.

(v) Example 5.

(vi) Example 6.

(h) Recapture in the event of deliberate removal from storage.

(1) In general.

(2) Recycled qualified carbon oxide.

(i) Limited exceptions.

(j) Applicability date.

[T.D. 9944, 86 FR 4760, Jan. 15, 2021]

§ 1.45Q-1 Credit for Carbon Oxide Sequestration.

(a) ***In general.*** For purposes of section 38 of the Internal Revenue Code (Code), the carbon oxide sequestration credit is determined under section 45Q of the Code and this section (section 45Q credit). Generally, the amount of the section 45Q credit and the party that is eligible to claim the credit depend on

whether the taxpayer captures qualified carbon oxide using carbon capture equipment originally placed in service at a qualified facility before February 9, 2018, or on or after February 9, 2018, and whether the taxpayer disposes of the qualified carbon oxide in secure geological storage without using it as a tertiary injectant in a qualified enhanced oil or natural gas recovery project (disposal), uses it as a tertiary injectant in a qualified enhanced oil or natural gas recovery project and disposes of it in secure geological storage (injection), or utilizes it in a manner described in section 45Q(f)(5) and § 1.45Q-4 (utilization). The section 45Q credit applies only with respect to qualified carbon oxide the capture and disposal, injection, or utilization of which is within the United States (within the meaning of section 638(1) of the Code) or a possession of the United States (within the meaning of section 638(2)).

(b) ***Credit amount for carbon capture equipment originally placed in service before February 9, 2018—***

(1) ***In general.*** For carbon capture equipment originally placed in service at a qualified facility before February 9, 2018, the amount of credit determined under section 45Q(a) and this section is the sum of—

(i) $20 per metric ton of qualified carbon oxide that is—

(A) Captured by the taxpayer at the qualified facility and disposed of by the taxpayer in secure geological storage, and

(B) Not used by the taxpayer as a tertiary injectant in a qualified enhanced oil or natural gas recovery project or utilized by the taxpayer in a manner described in section 45Q(f)(5) and § 1.45Q-4, and

(ii) $10 per metric ton of qualified carbon oxide that is—

(A) Captured by the taxpayer at the qualified facility and used by the taxpayer as a tertiary injectant in a qualified enhanced oil or natural gas recovery project, and disposed of by the taxpayer in secure geological storage, or

(B) Captured by the taxpayer at the qualified facility and utilized by the taxpayer in a manner described in section 45Q(f)(5) and § 1.45Q-4.

(2) ***Inflation adjustment.*** In the case of any taxable year beginning in a calendar year after 2009, there is substituted for each dollar amount contained in paragraphs (b)(1)(i) and (ii) of this section an amount equal to the product of—

(i) Such dollar amount, multiplied by

(ii) The inflation adjustment factor for such calendar year determined under section 43(b)(3)(B) for such calendar year, determined by substituting “2008” for “1990.”

(c) ***Credit amount for carbon capture equipment originally placed in service on or after February 9, 2018.*** For carbon capture equipment originally placed in service at a qualified facility on or after February 9, 2018, the amount of credit determined under section 45Q(a)(3) and (4) and this section is the sum of—

(1) The applicable dollar amount (as determined under paragraph (d)(1) and (2) of this section) per metric ton of qualified carbon oxide that is captured during the 12-year period beginning on the date the equipment was originally placed in service, and is—

(i) Disposed of by the taxpayer in secure geological storage, and

(ii) Not used by the taxpayer as a tertiary injectant in a qualified enhanced oil or natural gas recovery project or utilized by the taxpayer in a manner described in section 45Q(f)(5) and § 1.45Q-4; and

(2) The applicable dollar amount (as determined under paragraph (d)(3) and (4) of this section) per metric ton of qualified carbon oxide that is captured during the 12-year period beginning on the date the equipment was originally placed in service and is—

(i) Used by the taxpayer as a tertiary injectant in a qualified enhanced oil or natural gas recovery project and disposed of by the taxpayer in secure geological storage, or

(ii) Utilized by the taxpayer in a manner described in section 45Q(f)(5) and § 1.45Q-4.

(d) ***Applicable dollar amount.*** In general, the applicable dollar amount depends on whether section 45Q(a)(3) and paragraph (c)(1) of this section applies or section 45Q(a)(4) and paragraph (c)(2) of this section applies, and the calendar year in which the taxable year begins.

(1) ***Applicable dollar amount for any taxable year beginning in a calendar year after 2016 and before 2027 for qualified carbon oxide not used as a tertiary injectant or utilized.*** For purposes of section 45Q(a)(3) and paragraph (c)(1) of this section, the applicable dollar amount for each taxable year beginning in a calendar year after 2016 and before 2027 is:

TABLE 1 TO PARAGRAPH (d)(1)

Year	Applicable dollar amount
2017	$22.66
2018	25.70
2019	28.74
2020	31.77
2021	34.81
2022	37.85
2023	40.89
2024	43.92
2025	46.96
2026	50.00

(2) ***Applicable dollar amount for any taxable year beginning in a calendar year after 2026 for qualified carbon oxide not used as a tertiary injectant or utilized.*** For purposes of section 45Q(a)(3) and paragraph (c)(1) of this section, the applicable dollar amount for any taxable year beginning in any calendar year after 2026 is an amount equal to the product of $50 and the inflation adjustment factor for the calendar year determined under section 43(b)(3)(B) for the calendar year, determined by substituting “2025” for “1990.”

(3) ***Applicable dollar amount for any taxable year beginning in a calendar year after 2016 and before 2027 for qualified carbon oxide used as a tertiary injectant or utilized.*** For purposes of section 45Q(a)(4) and paragraph (c)(2) of this section, the applicable dollar amount for each taxable year beginning in a calendar year after 2016 and before 2027 is:

TABLE 2 TO PARAGRAPH (d)(3)

Year	Applicable dollar amount
2017	$12.83
2018	15.29
2019	17.76
2020	20.22
2021	22.68
2022	25.15
2023	27.61
2024	30.07
2025	32.54
2026	35.00

(4) ***Applicable dollar amount for any taxable year beginning in a calendar year after 2026 for qualified carbon oxide used as a tertiary injectant or utilized.*** For purposes of section 45Q(a)(4) and paragraph (c)(2) of this section, the applicable dollar amount for any taxable year beginning in any calendar year after 2026, is an amount equal to the product of $35 and the inflation adjustment factor for such calendar year determined under section 43(b)(3)(B) for such calendar year, determined by substituting “2025” for “1990.”

(e) ***Election to apply the $10 and $20 credit amounts in lieu of the applicable dollar amounts.*** For purposes of determining the carbon oxide sequestration credit under this section, a taxpayer may elect to have the dollar amounts applicable under section 45Q(a)(1) or (2) and paragraph (b) of this section apply in lieu of the dollar amounts applicable under section 45Q(a)(3) or (4) and paragraph (d) of this section for each metric ton of qualified carbon oxide which is captured by the taxpayer using carbon capture equipment which is originally placed in service at a qualified facility on or after February 9, 2018. The election must be made on a *Form 8933* (as defined in § 1.45Q-2(j)), and applies to all metric tons of qualified carbon oxide captured by the taxpayer using carbon capture equipment which is originally placed in service at the qualified facility throughout the full 12-year credit period.

(f) ***Application of section 45Q for certain carbon capture equipment placed in service before February 9, 2018.*** In the case of any carbon capture equipment placed in service before February 9, 2018, the credits under section 45Q(a)(1) and (2) and paragraph (b)(1)(i) and (ii) of this section apply with respect to qualified carbon oxide captured using such equipment before the end of the calendar year in which the Secretary of the Treasury or his delegate, in consultation with the Administrator of the Environmental Protection Agency (EPA), certifies that, during the period beginning after October 3, 2008, a total of 75,000,000

metric tons of qualified carbon oxide have been taken into account in accordance with section 45Q(a), as in effect on February 8, 2018, and section 45Q(a)(1) and (2). In general, a taxpayer may not claim credits under section 45Q(a)(1) and (2) in taxable years after the year in which the 75,000,000 metric ton limit is certified with respect to carbon capture equipment placed in service before February 9, 2018. However, see § 1.45Q-2(g)(4) regarding the election for applicable facilities to treat certain carbon capture equipment as having been placed in service on February 9, 2018 (section 45Q(f)(6) election).

(g) ***Installation of additional carbon capture equipment.*** In general, the credit amounts for property placed in service before February 9, 2018, apply to a qualified facility at which carbon capture equipment was placed in service before February 9, 2018, subject to the limitations under paragraph (f) of this section. The same qualified facility may place additional carbon capture equipment in service on or after February 9, 2018. The additional carbon capture equipment is eligible to qualify for the section 45Q credit amounts for equipment placed in service on or after February 9, 2018.

(1) ***Allocation of section 45Q credits for facilities installing additional carbon capture equipment.*** In the case of a qualified facility placed in service before February 9, 2018, for which additional carbon capture equipment is placed in service on or after February 9, 2018, the amount of qualified carbon oxide which is captured by the taxpayer is equal to—

(i) For purposes of section 45Q(a)(1)(A) and (2)(A), and paragraphs (b)(1)(i) and (ii) of this section, the lesser of the total amount of qualified carbon oxide captured at such facility for the taxable year, or the total amount of the carbon dioxide capture capacity of the carbon capture equipment in service at such facility on February 8, 2018, and

(ii) For purposes of section 45Q(a)(3)(A) and (4)(A), and paragraphs (c)(1) and (2) of this section, an amount (not less than zero) equal to the excess of the total amount of qualified carbon oxide captured at such facility for the taxable year, over the total amount of the carbon dioxide capture capacity of the carbon capture equipment in service at such facility on February 8, 2018.

(2) ***Additional carbon capture equipment.*** A physical modification or equipment addition that results in an increase in the carbon dioxide capture capacity of existing carbon capture equipment constitutes the installation of additional carbon capture equipment. Increasing the amount of carbon dioxide captured without physically modifying existing carbon capture equipment or adding new equipment, for example, by merely operating the existing carbon capture equipment above the carbon dioxide capture capacity, does not constitute the installation of additional carbon capture equipment. For purposes of this section, the term *carbon dioxide capture capacity* means capture design capacity. Section 45Q credits attributable to qualified carbon oxide captured by additional carbon capture equipment that is placed in service on or after February 9, 2018, are not subject to the 75,000,000 metric ton limitation described in section 45Q(g) and paragraph (f) of this section.

(3) ***New carbon capture equipment.*** A physical modification or equipment addition with a cost that satisfies the 80/20 Rule provided in § 1.45Q-2(g)(5) constitutes the installation of new carbon capture equipment rather than the installation of additional carbon capture equipment.

(4) ***Examples.*** The following examples illustrate the rules of this paragraph (g):

(i) ***Example 1.*** Taxpayer X owns qualified facility QF. In 2017, X placed in service three units of carbon capture equipment—CC1, CC2, and CC3—to capture carbon dioxide emitted by QF. Each of CC1, CC2, and CC3 are capable of capturing 50,000 metric tons of carbon dioxide. In 2017, X entered into a binding written contract with Y to provide 80,000 metric tons of carbon dioxide annually for Y to dispose of in secure geological storage. X operates CC1 and CC2 to capture

carbon dioxide pursuant to the binding written contract with Y, leaving CC3 idle. In 2020, X enters into a binding written contract with Z to provide 40,000 metric tons of carbon dioxide annually for Z to dispose of in secure geological storage. X operates CC3 to capture carbon dioxide pursuant to the binding written contract with Z. CC3 is not additional carbon capture equipment under paragraph (g)(2) of this section simply because it began operating CC3 in 2020. X merely increased the amount of carbon dioxide captured by existing carbon capture equipment. As a result, any section 45Q credits attributable to the carbon dioxide captured by CC3 and disposed of by Z are calculated under section 45Q(a)(1) and paragraph (b)(1)(i) of this section, and are subject to the 75,000,000 metric ton limitation described in section 45Q(g) and paragraph (f) of this section.

(ii) ***Example 2.*** Assume the same facts as in Example 1, except that in 2019, X physically modified CC3 to enable CC3 to capture 100,000 metric tons of carbon dioxide. The physical modification to upgrade CC3 does not satisfy the 80/20 Rule in § 1.45Q-2(g)(5). In 2020 X enters into a binding written contract with Z to provide 80,000 metric tons of carbon dioxide annually for Z to dispose of in secure geological storage. X operates CC3 to capture carbon dioxide pursuant to the binding written contract with Z. Because the physical modification to upgrade CC3 does not satisfy the 80/20 Rule, the physical modification to upgrade CC3 is considered the installation of additional carbon capture equipment under paragraph (g)(2) of this section, rather than new carbon capture equipment under paragraph (g)(3) of this section. As a result, any section 45Q credits attributable to the first 50,000 metric tons of carbon dioxide captured by CC3 and disposed of by Z are calculated under section 45Q(a)(1) and paragraph (b)(1)(i) of this section, and are subject to the 75,000,000 metric ton limitation described in section 45Q(g) and paragraph (f) of this section. Any section 45Q credits attributable to additional carbon dioxide captured by CC3 and disposed of by Z in excess of those first 50,000 metric tons are calculated under section 45Q(a)(4) and paragraph (c)(2) of this section, and are not subject to the 75,000,000 metric ton limitation described in section 45Q(g) and paragraph (f) of this section.

(iii) ***Example 3.*** Assume the same facts as in Example 2, except that the physical modification to CC3 satisfies the 80/20 Rule in § 1.45Q-2(g)(5). The physical modification to CC3 is considered the installation of new carbon capture equipment under paragraph (g)(3) of this section. As a result, any section 45Q credits attributable to carbon dioxide captured by CC3 and disposed of by Z are calculated under section 45Q(a)(4) and paragraph (c)(2) of this section, and are not subject to the 75,000,000 metric ton limitation described in section 45Q(g) and paragraph (f) of this section.

(h) ***Eligibility for the section 45Q credit.*** The following rules determine who may claim the section 45Q credit.

(1) ***Person to whom the section 45Q credit is attributable.*** In general, the person to whom the credit is attributable is the person who may claim the credit. Except as provided in paragraph (h)(3) of this section, the section 45Q credit is attributable to the following persons—

(i) ***Equipment placed in service before February 9, 2018.*** In the case of qualified carbon oxide captured using carbon capture equipment that is originally placed in service at a qualified facility before February 9, 2018, the section 45Q credit is attributable to the person that captures and physically or contractually ensures the disposal, injection, or utilization of such qualified carbon oxide.

(ii) ***Equipment placed in service on or after February 9, 2018.*** In the case of qualified carbon oxide captured using carbon capture equipment that is originally placed in service at a qualified facility on or after February 9, 2018, the section 45Q credit is attributable to the person that

owns the carbon capture equipment and physically or contractually ensures the capture and disposal, injection, or utilization of such qualified carbon oxide. For each single process train of carbon capture equipment (as described in § 1.45Q-2(c)(3)), only one taxpayer will be considered the person to whom the credit is attributable under this paragraph (h)(1)(ii). That person will be the taxpayer who either physically ensures the capture and disposal, injection, or utilization of such qualified carbon oxide or contracts with others to capture and dispose, inject, or utilize such qualified carbon oxide.

(iii) ***Reporting.*** The taxpayer described in this paragraph (h)(1) as eligible to claim the section 45Q credit must claim the credit on a *Form 8933,* "Carbon Dioxide Sequestration Credit," with the taxpayer's Federal income tax return or *Form 1065,* "U.S. Return of Partnership Income," for each taxable year for which the taxpayer is eligible. The taxpayer must provide the name and location of the qualified facilities at which the qualified carbon oxide was captured. If the taxpayer is claiming the section 45Q credit on an amended Federal income tax return, an amended *Form 1065,* or an administrative adjustment request under section 6227 (AAR), as applicable, the taxpayer must state AMENDED RETURN FOR SECTION 45Q CREDIT at the top of the amended Federal income tax return, the amended *Form 1065,* or the AAR, as applicable. The amended Federal income tax return or the amended *Form 1065* must be filed, in any event, not later than the applicable period of limitations on filing an amended Federal income tax return or *Form 1065* is being filed. A BBA partnership may make a late election by filing an AAR on or before October 15, 2021, but in any event, not later than the period of limitations on filing an AAR under section 6227(c).

(2) ***Contractually ensuring capture and disposal, injection, or utilization of qualified carbon oxide.*** In the case of qualified carbon oxide captured using carbon capture equipment which is originally placed in service at a qualified facility on or after February 9, 2018, a taxpayer is not required to physically carry out the capture and disposal, injection, or utilization of qualified carbon oxide to claim the section 45Q credit if the taxpayer contractually ensures in a binding written contract that the party that physically carries out the capture, disposal, injection, or utilization of the qualified carbon oxide does so in the manner required under section 45Q, this section and §§ 1.45Q-2, 1.45Q-3, 1.45Q-4, and 1.45Q-5. A taxpayer may enter into a binding written contract with a general contractor that hires subcontractors to physically carry out the capture, disposal, injection, or utilization of the qualified carbon oxide, but the contract must bind the subcontractors to the requirements of this paragraph (h)(2). In the case of qualified carbon oxide captured using carbon capture equipment which is originally placed in service at a qualified facility before February 9, 2018, a taxpayer that contractually ensures the capture of the qualified carbon oxide is not eligible for the section 45Q credit. However, the taxpayer is not required to physically carry out the disposal, injection, or utilization of qualified carbon oxide to claim the section 45Q credit if the taxpayer contractually ensures in a binding written contract that the party that physically carries out the disposal, injection, or utilization of the qualified carbon oxide does so in the manner required under section 45Q, this section, and §§ 1.45Q-2, 1.45Q-3, 1.45Q-4, and 1.45Q-5.

(i) ***Binding written contract.*** A written contract is binding only if it is enforceable under State law against both the taxpayer and the party that physically carries out the capture, disposal, injection, or utilization of the qualified carbon oxide, or a predecessor or successor of either, and does not limit damages to a specified amount (for example, by use of a liquidated damages provision). For this purpose, a contractual provision that limits damages to an

amount equal to at least five percent of the total contract price will not be treated as limiting damages to a specified amount. For additional guidance regarding the definition of a binding written contract, see § 1.168(k)-1(b)(4)(ii)(A)-(D).

(ii) ***Multiple binding written contracts permitted.*** A taxpayer may enter into multiple binding written contracts with multiple parties for the capture, disposal, injection, or utilization of qualified carbon oxide. A party that physically carries out the capture, disposal, injection, or utilization of qualified carbon oxide may enter into multiple binding written contracts with multiple parties that own carbon capture equipment or capture or contractually ensure the capture of qualified carbon oxide.

(iii) ***Contract provisions.*** Contracts ensuring the capture, disposal, injection, or utilization of qualified carbon oxide—

(A) Must include commercially reasonable terms and provide for enforcement of the party's obligation to perform the capture, disposal, injection, or utilization of the qualified carbon oxide;

(B) May, but are not required to, include long-term liability provisions, indemnity provisions, penalties for breach of contract, or liquidated damages provisions;

(C) May, but are not required to, include information including how many metric tons of qualified carbon oxide the parties agree to dispose of, inject, or utilize;

(D) May, but are not required to, include minimum quantities that the parties agree to dispose of, inject, or utilize;

(E) Must, in the case of qualified carbon oxide that is intended to be disposed of in secure geological storage and not used as a tertiary injectant in a qualified enhanced oil or natural gas recovery project, obligate the disposing party to comply with §§ 1.45Q-3(b)(1) and (c), and, in the case of a recapture event, promptly inform the capturing party of all information that is pertinent to the recapture (*e.g.,* location of leak, leaked amount of qualified carbon oxide, dollar value of section 45Q credit attributable to leaked qualified carbon oxide);

(F) Must, for qualified carbon oxide that is intended to be used as a tertiary injectant in a qualified enhanced oil or natural gas recovery, obligate the disposing party to comply with § 1.45Q-3(b)(2) and (c), and in the case of a recapture event, promptly inform the capturing party of all information that is pertinent to recapture of the section 45Q credit as listed in § 1.45Q-5; and

(G) Must, for qualified carbon oxide that is intended to be utilized in a manner specified in § 1.45Q-4, obligate the utilizing party to comply with § 1.45Q-4.

(iv) ***Pre-existing contracts.*** If a taxpayer entered into a contract for the capture, disposal, injection, or utilization of qualified carbon oxide prior to January 13, 2021, and that contract does not satisfy all of the requirements of this paragraph (h)(2), the taxpayer must amend its existing contract or execute a new contract that satisfies all of the requirements of this paragraph (h)(2) by July 12, 2021.

(v) ***Reporting of contract information.*** The existence of each contract and the parties involved must be reported to the IRS annually. Each party to a contract must complete a signed *Form 8933* (as defined in § 1.45-2(j)) and provide information required by the instructions to *Form 8933.* The

party that contracts with the taxpayer claiming the credit must also provide that taxpayer with a signed *Form 8933* in accordance with the instructions to *Form 8933.* The taxpayer claiming the credit must attach and file all other signed *Forms 8933* received by each other party to the contract to its own signed *Form 8933.* Failure of the taxpayer claiming the credit to satisfy this reporting requirement in a taxable year will result in the inability of that taxpayer to claim the credit with respect to any qualified carbon oxide that is disposed of, injected, or utilized in that taxable year pursuant to that particular contract. In addition to any information stated as required on *Form 8933,* the report must include the following information—

(A) The name and taxpayer identification number of the taxpayer to whom the credit is attributable;

(B) The name and taxpayer identification number of each party with whom the taxpayer has entered into a contract to ensure the disposal, injection, or utilization of qualified carbon oxide;

(C) The date each contract to ensure the disposal, injection, or utilization of qualified carbon oxide was entered into;

(D) The number of metric tons of qualified carbon oxide each contracting party disposes of, injects, or utilizes on behalf of the contracting taxpayer each taxable year for reporting to the IRS; and

(E) For contracts for the disposal of qualified carbon oxide in secure geological storage or the use of qualified carbon oxide as a tertiary injectant in enhanced oil or natural gas recovery, the name of the operator, the field, unit, and reservoir, location by county and state, and identification number assigned to the facility by the EPA's electronic Greenhouse Gas Reporting Tool (e-GGRT ID number) for submission of the facility's 40 CFR part 98 annual reports.

(vi) ***Relationship with election to allow section 45Q credit.*** A taxpayer does not elect to allow all or a portion of the credit to any of the contracting parties merely by contracting with that party to ensure the disposal, injection, or utilization of qualified carbon oxide. Any election to allow all or a portion of the credit to be claimed by another party must be made separately pursuant to paragraph (h)(3) of this section.

(3) ***Election to allow the section 45Q credit to another taxpayer.*** The taxpayer described in paragraph (h)(1) of this section as the person to whom the section 45Q credit is attributable (electing taxpayer) may elect to allow the person that enters into a contract with the electing taxpayer to dispose of the qualified carbon oxide (disposer), utilize the qualified carbon oxide (utilizer), or use the qualified carbon oxide as a tertiary injectant (injector) to claim the credit (credit claimant) (section 45Q(f)(3)(B) election). However, the electing taxpayer may not elect or otherwise allow the section 45Q credit to a contractor or subcontractor that physically captures carbon oxide on behalf of the taxpayer. For purposes of this paragraph (h)(3), the disposer or injector that is eligible to be a credit claimant is the party that obtains the permit to dispose of the qualified carbon oxide in secure geological storage. In the case of an injector that is itself a joint venture (not a federal tax partnership), only those taxpayers that hold a working interest in the joint venture may be credit claimants. A credit claimant may not allow the section 45Q credit to a subcontractor that performs the disposal, utilization, or injection for the credit claimant. The electing taxpayer may not claim any section 45Q credits that are allowable to a credit claimant. An electing taxpayer may elect to allow a credit claimant to claim the full amount or a partial amount of section 45Q credits arising during the

taxable year. An electing taxpayer may elect to allow a single credit claimant or multiple credit claimants to claim section 45Q credits in the same taxable year. If an electing taxpayer elects to allow multiple credit claimants to claim section 45Q credits, the maximum amount of section 45Q credits allowable to each credit claimant is proportional to the amount of qualified carbon oxide disposed of, utilized, or used as a tertiary injectant by the credit claimant. A credit claimant may receive allowances of section 45Q credits from multiple electing taxpayers in the same taxable year. In the case of an electing taxpayer with multiple qualified facilities, the electing taxpayer must make a separate election for each qualified facility.

(i) ***Example.*** Electing Taxpayer, E, captures 1,000,000 metric tons of qualified carbon oxide with carbon capture equipment that was placed in service in 2020. In 2021, E contracts with two companies, A and B, for the disposal of the qualified carbon oxide. E is eligible for a section 45Q credit at a rate of $22.68 per metric ton, for a total section 45Q credit of $22,680,000. E contractually ensures that A will dispose of 300,000 metric tons of qualified carbon oxide and that B will dispose of 700,000 metric tons of qualified carbon oxide. E may make a section 45Q(f)(3)(B) election to allow up to $6,804,000 of section 45Q credit to A and up to $15,876,000 of section 45Q credit to B, equal to the value of the number of metric tons each party has contracted to ensure disposal, multiplied by the credit value of the metric tons disposed of.

(ii) ***Time and manner of making election.*** The electing taxpayer makes a section 45Q(f)(3)(B) election by filing a statement of election containing the information described in paragraph (h)(3)(iv) of this section with the taxpayer's Federal income tax return or *Form 1065* for each taxable year in which the credit arises. The section 45Q(f)(3)(B) election must be made in accordance with *Form 8933* no later than the time prescribed by law (including extensions) for filing the Federal income tax return or *Form 1065* for the year in which the credit arises. The election may not be filed with an amended Federal income tax return, an amended *Form 1065,* or an AAR, as applicable, after the prescribed date (including extensions) for filing the original Federal income tax return or *Form 1065* for the year, with the exception of amended Federal income tax returns, amended *Forms 1065,* or AARs, as applicable, for any taxable year ending after February 9, 2018, and beginning on or before January 13, 2021. The amended Federal income tax return or the amended *Form 1065* must be filed, in any event, not later than the applicable period of limitations on assessment for the taxable year for which the amended Federal income tax return or *Form 1065* is being filed. A BBA partnership may make a late election by filing an AAR on or before October 15, 2021, but in any event, not later than the period of limitations on filing an AAR under section 6227(c).

(iii) ***Annual election.*** A section 45(Q)(f)(3)(B) election is only effective for the taxable year for which it is made. A new section 45Q(f)(3)(B) election must be made for each taxable year for which an electing taxpayer wishes to allow section 45Q credits to a credit claimant.

(iv) ***Required information.*** For the section 45Q(f)(3)(B) election to be valid under paragraph (h)(3)(ii) of this section, the election statement of the electing taxpayer must be made on *Form 8933* and must indicate that an election is being made under section 45Q(f)(3)(B). The electing taxpayer must provide each credit claimant with a copy of the electing taxpayer's *Form 8933.* The electing taxpayer must, in addition to any information required on *Form 8933* set forth the following information—

(A) The electing taxpayer's name, address, taxpayer identification number, location, and e-GGRT ID number(s) (if available) of each qualified facility where qualified carbon oxide was captured;

(B) The full amount of credit attributable to the taxpayer prior to the election and the corresponding metric tons of qualified carbon oxide;

(C) The name, address, and taxpayer identification number of each credit claimant, and the name and location and e-GGRT ID number(s) (if available) of:

(*i*) Each secure geological storage site where the qualified carbon oxide is disposed of or injected, or

(*ii*) Each site where the qualified carbon oxide is utilized;

(D) The dollar amount of section 45Q credits the taxpayer is allowing each credit claimant to claim and the corresponding metric tons of qualified carbon oxide; and

(E) The dollar amount of section 45Q credits retained by the electing taxpayer and the corresponding metric tons of qualified carbon oxide.

(v) ***Requirements for section 45Q credit claimant.*** For a section 45Q(f)(3)(B) election to be valid, the section 45Q credit claimant must include the following information on *Form 8933*—

(A) The name, address, taxpayer identification number of the credit claimant;

(B) The name, address, and taxpayer identification number of each taxpayer making an election under section 45Q(f)(3)(B) to allow the credit to the credit claimant;

(C) The name and location and e-GGRT ID number(s) (if available) of each qualified facility where qualified carbon oxide was captured;

(D) The name and location and e-GGRT ID number(s) (if available) of:

(*i*) Each secure geological storage site where the qualified carbon oxide is disposed of or injected, or

(*ii*) Each site where the qualified carbon oxide is utilized.

(E) The full dollar amount of section 45Q credits attributable to each electing taxpayer prior to the election and the corresponding metric tons of qualified carbon oxide;

(F) The dollar amount of section 45Q credits that each electing taxpayer is allowing the credit claimant to claim and the corresponding metric tons of qualified carbon oxide; and

(G) A copy of the electing taxpayer's *Form 8933.* The credit claimant must include this *Form 8933* with its timely filed Federal income tax return or *Form 106*5 (including extensions). The election may not be filed with an amended Federal income tax return, an amended *Form 1065,* or an AAR, as applicable, after the prescribed date (including extensions) for filing the original Federal income tax return or *Form 1065* for the year, with the exception of amended Federal income tax returns, amended *Forms 1065,* or AARs, as applicable, for any taxable year ending after February 9, 2018, and beginning on or before January 13, 2021. The amended Federal income tax return or the amended *Form 1065* must be filed, in any event, not later than the applicable period of limitations on filing an amended Federal income tax return or *Form 1065.* In the case of a BBA partnership, the BBA partnership may make a late election by filing an AAR on or before October 15, 2021, but in any event, not later than the period of limitations on filing an AAR under section 6227(c).

(vi) ***Failure to satisfy reporting requirements.*** With respect to any section 45Q(f)(3)(B) election, the failure of an electing taxpayer or a credit claimant to satisfy the requirements in paragraph (h)(3)(iv) or (v) in a taxable year will result in the inability to claim the credit with respect to any qualified carbon oxide that is disposed of, injected, or utilized in that taxable year pursuant to that particular election.

(i) ***Applicability date.*** This section applies to taxable years beginning on or after January 13, 2021. Taxpayers may choose to apply this section for taxable years beginning on or after January 1, 2018, provided the taxpayer applies this section and §§ 1.45Q-2, 1.45Q-3, 1.45Q-4, and 1.45Q-5 in their entirety and in a consistent manner.

[T.D. 9944, 86 FR 4760, Jan. 15, 2021]

§ 1.45Q-2 Definitions for Purposes of §§ 1.45Q-1 through 1.45Q-5.

(a) ***Qualified carbon oxide.*** The term *qualified carbon oxide* means—

(1) Any carbon dioxide which—

(i) Is captured from an industrial source by carbon capture equipment which is originally placed in service before February 9, 2018,

(ii) Would otherwise be released into the atmosphere as industrial emission of greenhouse gas or lead to such release, and

(iii) Is measured at the source of capture and verified at the point of disposal, injection, or utilization; or

(2) Any carbon dioxide or other carbon oxide which—

(i) Is captured from an industrial source by carbon capture equipment which is originally placed in service on or after February 9, 2018,

(ii) Would otherwise be released into the atmosphere as industrial emission of greenhouse gas or lead to such release, and

(iii) Is measured at the source of capture and verified at the point of disposal, injection, or utilization; or

(3) In the case of a direct air capture facility, any carbon dioxide that is captured directly from the ambient air and is measured at the source of capture and verified at the point of disposal, injection, or utilization.

(b) ***Recycled carbon oxide.*** The term qualified carbon oxide includes the initial deposit of captured carbon oxide used as a tertiary injectant. Qualified carbon oxide does not include carbon oxide that is recaptured, recycled, and re-injected as part of the enhanced oil or natural gas recovery process.

(c) ***Carbon capture equipment.*** In general, *carbon capture equipment* includes all components of property that are used to capture or process carbon oxide until the carbon oxide is transported for disposal, injection, or utilization. Except as described in paragraph (c)(2) of this section, carbon capture equipment generally does not include components of property used for transporting qualified carbon oxide for disposal, injection, or utilization. Carbon capture equipment that is originally placed in service at a qualified facility on or after February 9, 2018, may be owned by a taxpayer other than the taxpayer that owns the industrial facility at which the carbon capture equipment is placed in service.

(1) ***Use of carbon capture equipment.*** Carbon capture equipment is equipment used for the purpose of—

(i) Separating, purifying, drying, and/or capturing carbon oxide that would otherwise be released into the atmosphere from an industrial facility;

(ii) Removing carbon oxide from the atmosphere via direct air capture; or

(iii) Compressing or otherwise increasing the pressure of carbon oxide.

(2) ***Carbon capture equipment components.*** Carbon capture equipment generally includes components of property necessary to compress, treat, process, liquefy, pump or perform some other physical action to capture qualified carbon oxide. For purposes of this paragraph (c), carbon capture equipment includes a system of gathering and distribution lines that collect carbon oxide captured from a qualified facility or multiple qualified facilities that constitute a single project (as described in section 8.01 of Notice 2020-12, 2020-11 I.R.B. 495 (see § 601.601(d)(1) and (2)(ii) of this chapter)) for the purpose of transporting that carbon oxide away from the qualified facility or single project to a pipeline used to transport carbon oxide to or from one or more taxpayers and projects.

(3) ***Single process train.*** All components that make up an independently functioning process train capable of capturing, processing, and preparing carbon oxide for transport will be treated as a single unit of carbon capture equipment.

(d) ***Industrial facility.*** An *industrial facility* is a facility, including an electricity generating facility, that produces a carbon oxide stream from a fuel combustion source or fuel cell, a manufacturing process, or a fugitive carbon oxide emission source that, absent capture and disposal, injection, or utilization, would otherwise be released into the atmosphere as industrial emission of greenhouse gas or lead to such release.

(1) ***Exclusion.*** An industrial facility does not include a facility that produces carbon dioxide from carbon dioxide production wells at natural carbon dioxide-bearing formations or a naturally occurring subsurface spring. For purposes of section 45Q, a carbon dioxide production well at natural carbon dioxide-bearing formations or a naturally occurring subsurface spring means a well that contains 90 percent or greater carbon dioxide by volume (90 percent test).

(2) ***Exception for wells at natural carbon dioxide-bearing formations or a naturally occurring subsurface spring that contain a product other than carbon dioxide.*** A well meeting the 90 percent test will not be treated as a carbon dioxide production well at natural carbon dioxide-bearing formations or a naturally occurring subsurface spring if:

(i) The deposit contains a product, other than carbon oxide, that is commercially viable to extract and sell without taking into account the availability of a commercial market for the carbon oxide that is extracted or any section 45Q tax credit that might be available;

(ii) The taxpayer provides an attestation to paragraph (d)(2)(i) of this section from an independent registered engineer with experience in feasibility studies for extraction of gases from the subsurface;

(iii) A direct air capture facility (defined in section 45Q(e)(1)(A)) is not used to capture carbon oxide from the gas stream; and

(iv) Any carbon oxide extracted from the deposit is used as tertiary injectant in an enhanced oil or natural gas recovery project or as feedstock of a utilization project.

(2) ***Industrial source.*** An *industrial source* is an emission of carbon oxide from an industrial facility.

(3) ***Manufacturing process.*** A *manufacturing process* is a process involving the manufacture of one or more products, other than carbon oxide, that are intended to be sold at a profit, or are used for a commercial purpose (other than producing carbon oxide). All facts and circumstances with respect to the process and products are to be taken into account.

(4) ***Examples.*** The following examples illustrate the rules of paragraph (d) of this section:

(i) ***Example 1.*** A natural underground reservoir contains a gas that is comprised of 50 percent carbon dioxide and 50 percent methane by volume. The raw gas is not usable without the application of a separation process to create two gases that are primarily carbon dioxide and methane. Taxpayer B constructs processing equipment that separates the raw gas into carbon oxide and methane. The carbon dioxide is sold to a third party for use in a qualified enhanced oil recovery project. Some of the methane is used as fuel to power the processing equipment. The remainder of the methane is injected into the reservoir. The injection will increase the ultimate recovery of carbon dioxide. The injected methane can be produced later from the reservoir. At the end of the taxable year Taxpayer B has not secured a contract to sell methane and does not have any plans to use the methane for a commercial purpose other than producing carbon oxide. Because carbon dioxide is the only product manufactured that is intended to be sold at a profit or used for a commercial purpose, the separation process applied to the gases is not a manufacturing process within the meaning of paragraph (d)(3) of this section. The carbon dioxide captured by the process is not qualified carbon oxide.

(ii) ***Example 2.***

(A) A natural underground reservoir contains a gas that is comprised of 95 percent carbon dioxide and 5 percent helium by volume. The raw gas is not usable without the application of a separation process to create two gases that are primarily carbon dioxide and helium. Taxpayer C determines that the extraction of helium is economically viable even if there were no commercial market for carbon dioxide or any section 45Q credit. An independent registered engineer attests to Taxpayer C's determination. Taxpayer C constructs processing equipment that separates the raw gas into carbon dioxide and helium. The helium is sold to various customers for use in commercial and industrial applications. The carbon dioxide is sold to a third party for use in a qualified enhanced oil recovery project. Any carbon dioxide which the third party cannot accept is returned to the reservoir or vented in accordance with applicable permits.

(B) Because the extraction of helium is economically viable even if there were no commercial market for carbon dioxide or any section 45Q credit, the reservoir will not be considered a natural carbon dioxide-bearing formation or a naturally occurring subsurface spring within the meaning of paragraph (d)(1) and the separation process applied to the gases is a manufacturing process within the meaning of paragraph (d)(3). Taxpayer C may claim the section 45Q credit with respect to the carbon dioxide sold to the third party and which the third party uses in ad oil recovery project during the taxable year. Taxpayer C may not claim the section 45Q credit with respect to the carbon dioxide that is returned to the reservoir or vented.

(e) ***Electricity generating facility.*** An *electricity generating facility* is a facility described in section 45Q(d)(2)(A) or (B) of the Internal Revenue Code (Code) that is subject to depreciation under MACRS Asset Class 49.11 (Electric Utility Hydraulic Production Plant), 49.12 (Electric Utility Nuclear Production Plant), 49.13 (Electric Utility Steam Production Plant), or 49.15 (Electric Utility Combustion Turbine Production Plant).

(f) ***Direct air capture facility.*** A *direct air capture facility* means any facility that uses carbon capture equipment to capture carbon oxide directly from the ambient air. It does not include any facility that captures carbon dioxide

(1) that is deliberately released from naturally occurring subsurface springs or

(2) using natural photosynthesis.

(g) ***Qualified facility.*** A *qualified facility* means any industrial facility or direct air capture facility, the construction of which begins before January 1, 2026, and either at which construction of carbon capture equipment begins before that date, or the original planning and design for which includes installation of carbon capture equipment, and at which carbon capture equipment is placed in service that captures the requisite annual thresholds of carbon oxide described in paragraph (g)(1) of this section. See Notice 2020-12 (see § 601.601(d)(1) and (2)(ii) of this chapter), for guidance on the determination of when construction has begun on a qualified facility or on carbon capture equipment. For purposes of whether a facility satisfies the requisite annual carbon oxide capture thresholds described in paragraph (g)(1) of this section, a taxpayer may apply the rules of section 8.01 of Notice 2020-12 (see § 601.601(d)(1) and (2)(ii) of this chapter) to treat multiple facilities as a single facility.

(1) ***Emissions and capture requirements.*** The carbon capture equipment placed in service at the qualified facility must capture—

(i) In the case of a facility, other than a direct air capture facility, which emits not more than 500,000 metric tons of carbon oxide i the atmosphere during the taxable year, at least 25,000 metric tons of qualified carbon oxide during the taxable year which is utilized in a manner consistent with section 45Q(f)(5) and § 1.45Q-4 (section 45Q(d)(2)(A) facility);

(ii) In the case of an electricity generating facility which is not a section 45Q(d)(2)(A) facility (section 45Q(d)(2)(B) facility), not less than 500,000 metric tons of qualified carbon oxide during the taxable year; and

(iii) In the case of a direct air capture facility or other facility that is not a section 45Q(d)(2)(A) facility or a section 45Q(d)(2)(B) facility, at least 100,000 metric tons of qualified carbon oxide during the taxable year.

(2) ***Examples.*** The following examples illustrate the rules of paragraph (g) of this section:

(i) ***Example 1.*** During the taxable year, an ethanol plant emits 200,000 metric tons of carbon dioxide. Carbon capture equipment located at the facility captures 35,000 metric tons of carbon dioxide, all of which are utilized in a manner consistent with section 45Q(f)(5) and § 1.45Q-4. The ethanol plant is a qualified facility under section 45Q(d)(2)(C) and § 1.45Q-2(g)(1)(i) during the taxable year because it met the requirement to capture at least 25,000 metric tons of qualified carbon oxide during the taxable year which were utilized in a manner consistent with section 45Q(f)(5) and § 1.45Q-4.

(ii) ***Example 2.*** During the taxable year, an electricity generating facility emits 600,000 metric tons of carbon dioxide. Carbon capture equipment located at the facility captures a total of 450,000 metric tons of carbon dioxide. 50,000 metric tons of the captured carbon dioxide are utilized in a manner consistent with section 45Q(f)(5) and § 1.45Q-4, and 400,000 metric tons of the carbon dioxide are disposed of in secure geological storage. The electricity generating facility is not a qualified facility under section 45Q(d)(2)(B) during the taxable year because it did not capture at least 500,000 metric tons of qualified carbon oxide during the taxable year. Further,

because the electricity generating facility emitted greater than 500,000 metric tons of carbon dioxide during the taxable year, but only captured 450,000 metric tons, it is not a qualified facility under section 45Q(d)(2)(A) and § 1.45Q-2(g)(1)(ii).

(iii) *Example 3.* During the taxable year, a cement manufacturing plant emits 110,000 metric tons of carbon dioxide. Carbon capture equipment located at the plant captures 100,000 metric tons of carbon dioxide. 10,000 metric tons of the amount captured are utilized in a manner consistent with section 45Q(f)(5) and § 1.45Q-4, and 90,000 metric tons of carbon dioxide, are disposed of in secure geological storage. The cement manufacturing plant is a qualified facility during the taxable year because the carbon capture equipment located at the plant met the requirement under section 45Q(d)(2)(C) and § 1.45Q-2(g)(1)(i) to capture at least 100,000 metric tons of qualified carbon oxide during the taxable year.

(iv) *Example 4.* Taxpayer X owns and operates three natural gas processing facilities (A, B, and C) that separate carbon dioxide from natural gas. A, B, and C are all located within several miles of each other. X installed carbon capture equipment by A, B, and C. Carbon dioxide captured by A, B, and C is collected via a single system of gathering and distribution lines for delivery to a transportation pipeline. X contracts with third-party Z for the use of carbon dioxide captured by A, B, and C as a tertiary injectant pursuant to a single contract. During the taxable year, equipment at A captures 30,000 metric tons of carbon dioxide, equipment at B captures 40,000 metric tons of carbon dioxide, and equipment at C captures 50,000 tons of carbon dioxide. All other factors listed in the single project rule in section 8.01 of Notice 2020-12 support the conclusion that A, B and C are a single facility. X may treat A, B, and C as a single facility under the rules of section 8.01 of Notice 2020-12 for purposes of determining whether the requirement under section 45Q(d)(2)(C) and § 1.45Q-2(g)(1)(i), to capture at least 100,000 metric tons of qualified carbon oxide during the taxable year is satisfied. If X treats A, B, and C as a single facility, the minimum capture requirement will be satisfied for the taxable year.

(3) *Annualization of first-year and last-year qualified carbon oxide emission and/or capture amounts* —

(i) *In general.* For both the taxable year in which carbon capture equipment is placed in service at a qualified facility and the taxable year in which the 12-year period described in sections 45Q(a)(3)(A) and (4)(A) and § 1.45Q-1(c)(1) and (2) ends, annualization of the amount of qualified carbon oxide emitted and captured (or captured directly from the ambient air in the case of a direct air capture facility) is permitted to determine if the threshold requirements under paragraph (g)(1) of this section are satisfied. Such annualization may result in a facility being deemed to satisfy the threshold requirements under paragraph (g)(1) of this section for the year and may permit a taxpayer to claim section 45Q credits even though the amount of qualified carbon oxide emitted or captured in the first year or last year of the 12-year period is less than the threshold requirements under paragraph (g)(1) of this section.

(ii) *Calculation.* Annualization is only available for the taxable year in which the carbon capture equipment is placed in service at the qualified facility and the taxable year in which the 12-year period described in sections 45Q(a)(3)(A) and (4)(A) and § 1.45Q-1(c)(1) and (2) ends. Annualized amounts must be calculated by—

(A) Determining the amount of qualified carbon oxide emitted and captured (or captured directly from the ambient air in the case of a direct air capture facility) during the taxable year in which the carbon capture equipment was placed in service at the qualified facility or the taxable year in which the 12-year period described in sections 45Q(a)(3)(A) and (4)(A) and § 1.45Q-1(c)(1) and (2) ends,

(B) Dividing the amount of qualified carbon determined under paragraph (g)(3)(ii)(A) of this section by the number of days in the period either (I) beginning with the date on which the carbon capture equipment was placed in service at the qualified facility and ending with the last day of the taxable year containing that date, or (II) beginning with the first day of the taxable year in which the 12-year period described in sections 45Q(a)(3)(A) and (4)(A) and § 1.45Q-1(c)(1) and (2) ends and ending with the last day of that 12-year period; and

(C) Multiplying by 365.

(iii) ***Consequences.*** If the annualized amounts of qualified carbon oxide emitted and captured (or captured directly from the ambient air in the case of a direct air capture facility) as calculated under this formula meet the threshold requirements under paragraph (g)(1) of this section, the threshold requirements under paragraph (g)(1) of this section are deemed satisfied for the taxable year in which the carbon capture equipment was placed in service at the qualified facility or the taxable year in which the 12-year period described in sections 45Q(a)(3)(A) and (4)(A) and § 1.45Q-1(c)(1) and (2) ends. The taxpayer may be eligible for a section 45Q credit for that taxable year but must calculate the credit based on actual amounts of qualified carbon oxide captured and disposed of, injected, or utilized during the taxable year.

(4) ***Election for applicable facilities.*** In the case of an applicable facility, for any taxable year during which such facility captures not less than 500,000 metric tons of qualified carbon oxide, the taxpayer described in section 45Q(f)(3)(A)(ii) and § 1.45Q-1(h)(1)(ii) (that is, the person that owns the carbon capture equipment and physically or contractually ensures the capture and disposal, injection or utilization of such qualified carbon oxide), may elect to have such facility, and any carbon capture equipment placed in service at such facility, deemed as having been placed in service on February 9, 2018 (section 45Q(f)(6) election). For purposes of whether a facility satisfies the 500,000 metric ton qualified carbon oxide capture threshold, a taxpayer may apply the rules of section 8.01 of Notice 2020-12 to treat multiple facilities as a single facility.

(i) ***Applicable facility.*** An applicable facility means a qualified facility described in section 45Q(f)(6)(B) and § 1.45Q-2(g) that was placed in service before February 9, 2018, for which no taxpayer claimed a section 45Q credit for qualified carbon oxide captured at the facility for any taxable year ending before February 9, 2018.

(ii) ***Time and manner of making election.*** The taxpayer described § 1.45Q-1(h)(1) makes a section 45Q(f)(6) election by filing a statement of election with the taxpayer's income tax return for each taxable year in which the credit arises. The section 45Q(f)(6) election must be made in accordance with *Form 8933* filed with the taxpayer's Federal income tax return for each taxable year in which the taxpayer makes the section 45Q(f)(6) election. The statement of election must, in addition to any information required on *Form 8933,* set forth the electing taxpayer's name, address, taxpayer identification number, location, and e-GGRT ID number(s) (if available) of the applicable facility.

(iii) ***Retroactive credit revocations.*** A taxpayer may not file an amended Federal income tax return, an amended *Form 1065,* or an AAR, as applicable, for any taxable year ending before February 9, 2018, to revoke a prior claim of section 45Q credits.

(5) ***Retrofitted qualified facility or carbon capture equipment (80/20 Rule).*** A qualified facility or carbon capture equipment may qualify as originally placed in service even if it contains some used components of property, provided the fair market value of the used components of property is not more than 20 percent of the qualified facility or carbon capture equipment's total value (that is, the

cost of the new components of property plus the value of the used components of property) (80/20 Rule). In determining the value of the used components of property as compared to the new components, the general principles of Revenue Ruling 94-31 (see § 601.601(d)(2)(i)(a) and (ii) of this chapter), will apply. The relevant unit of retrofitted carbon capture equipment for purposes of the 80/20 Rule is an independently functioning process train. For purposes of the 80/20 Rule, the cost of a new qualified facility or carbon capture equipment includes all properly capitalized costs of the new qualified facility or carbon capture equipment. Solely for purposes of the 80/20 Rule, properly capitalized costs of a new qualified facility or carbon capture equipment may, at the option of the taxpayer, include the cost of new equipment for a pipeline (the cost of equipment for a new pipeline, not equipment used to repair an existing pipeline) owned and used exclusively by that taxpayer to transport carbon oxides captured by that taxpayer's qualified facility or carbon capture equipment that would otherwise be emitted into the atmosphere.

(h) ***Qualified enhanced oil or natural gas recovery project.*** The term *qualified enhanced oil or natural gas recovery project* has the same meaning as a qualified enhanced oil recovery project under section 43(c)(2) of the Code and § 1.43-2, by substituting crude oil or natural gas for crude oil in section 43(c)(2)(A)(i) and §§ 1.43-2 and 1.43-3.

(1) ***Application of §§ 1.43-2 and 1.43-3.*** For purposes of applying §§ 1.43-2 and 1.43-3 with respect to a qualified enhanced oil or natural gas recovery project, the term enhanced oil or natural gas recovery is substituted for enhanced oil recovery, and the term oil or natural gas is substituted for oil.

(2) ***Required certification.*** The qualified enhanced oil or natural gas recovery project must be certified under § 1.43-3, even if no credit related to enhanced oil or natural gas recovery is claimed for the taxable year. For purposes of a natural gas project—

(i) The petroleum engineer's certification under § 1.43-3(a)(3) and the operator's continued certification of a project under § 1.43-3(b)(3) must include an additional statement that the certification is for purposes of the section 45Q carbon oxide sequestration tax credit;

(ii) The petroleum engineer's certification must be attached to a *Form 8933* and filed not later than the last date prescribed by law (including extensions) for filing the operator's or designated owner's Federal income tax return or *Form 1065* for the first taxable year in which qualified carbon oxide is injected into the reservoir; and

(iii) The operator's continued certification of a project must be attached to a *Form 8933* and filed not later than the last date prescribed by law (including extensions) for filing the operator's or designated owner's Federal income tax return or *Form 1065* for taxable years after the taxable year for which the petroleum engineer's certification is filed but not after the taxable year in which injection activity ceases and all injection wells are plugged and abandoned.

(3) ***Natural gas.*** Natural gas has the same meaning as under section 613A(e)(2) of the Code.

(4) ***Timely filing of petroleum engineer's certification.*** For purposes of this paragraph (h), if a section 45Q credit is claimed on an amended Federal income tax return, an amended *Form 1065,* or an AAR, as applicable, the petroleum engineer's certification for a natural gas project will be treated as filed timely if it is attached to a *Form 8933* that is submitted with such amended Federal income tax return, amended *Form 1065,* or AAR. With respect to a section 45Q credit that is claimed on a timely filed Federal income tax return or *Form 1065* for a taxable year ending after December 31, 2017, and beginning on or before January 13, 2021, for which the petroleum engineer's certification for a natural gas project was not submitted, the petroleum engineer's certification for a natural gas project will be treated as filed timely if it is attached to an amended *Form 8933* for such taxable year.

(5) ***Carbon oxide injected in oil reservoir.*** Carbon oxide that is injected into an oil reservoir that is not a qualified enhanced oil recovery project under section 43(c)(2) due to circumstances such as the first injection of a tertiary injectant occurring before 1991, or because a petroleum engineer's certification was not timely filed, cannot be treated as qualified carbon oxide, disposed of in secure geological storage, or utilized in a manner described in section 45Q(f)(5). This rule will not apply to an oil reservoir if—

(i) The reservoir has permanently ceased oil production;

(ii) The operator has obtained an Underground Injection Control Class VI permit; and

(iii) The operator complies with 40 CFR part 98 subpart RR.

(6) ***Tertiary Injectant.*** For purposes of section 45Q, a tertiary injectant is qualified carbon oxide that is injected into and stored in a qualified enhanced oil or natural gas recovery project and contributes to the extraction of crude oil or natural gas. The term *tertiary injectant* has the same meaning as used in section 193(b)(1) of the Code.

(i) ***Section 45Q credit.*** The term *section 45Q credit* means the carbon oxide sequestration credit determined under section 45Q of the Internal Revenue Code and § 1.45Q-1.

(j) ***Form 8933.*** The term *Form 8933* means Form 8933, Carbon Oxide Sequestration Credit, any successor form(s), pursuant to instructions to any of the foregoing (see § 601.602 of this chapter), or other guidance. This definition of Form 8933 applies to this section and to §§ 1.45Q-1, 1.45Q-3, 1.45Q-4, and 1.45Q-5.

(k) ***Applicability date.*** This section applies to taxable years beginning on or after January 13, 2021. Taxpayers may choose to apply this section for taxable years beginning on or after January 1, 2018, provided the taxpayer applies this section and §§ 1.45Q-1, 1.45Q-3, 1.45Q-4, and 1.45Q-5 in their entirety and in a consistent manner.

[T.D. 9944, 86 FR 4760, Jan. 15, 2021]

§ 1.45Q-3 Secure Geological Storage.

(a) ***In general.*** To qualify for the section 45Q credit, a taxpayer must either physically or contractually dispose of captured qualified carbon oxide in secure geological storage in the manner provided in paragraph (b) of this section, or utilize qualified carbon oxide in a manner conforming with section 45Q(f)(5) of the Internal Revenue Code and § 1.45Q-4. Secure geological storage includes, but is not limited to, storage at deep saline formations, oil and gas reservoirs, and unminable coal seams.

(b) ***Requirements for secure geological storage.*** For purposes of the section 45Q credit, qualified carbon oxide is considered disposed of by the taxpayer in secure geological storage such that the qualified carbon oxide does not escape into the atmosphere if the qualified carbon oxide is—

(1) Injected into a well that

(i) Complies with applicable Underground Injection Control or other regulations, located onshore or offshore under submerged lands within the territorial jurisdiction of States or federal waters, and

(ii) Is not used as a tertiary injectant in a qualified enhanced oil or natural gas recovery project, in compliance with applicable requirements under 40 CFR part 98 subpart RR; or

(2) Injected into a well that

(i) Complies with applicable Underground Injection Control or other regulations, is located onshore or offshore under submerged lands within the territorial jurisdiction of States or federal waters, and

(ii) Is used as a tertiary injectant in a qualified enhanced oil or natural gas recovery project and stored in compliance with applicable requirements under 40 CFR part 98 subpart RR, or the International Organization for Standardization (ISO) standards endorsed by the American National Standards Institute (ANSI) under CSA/ANSI ISO 27916:2019, Carbon dioxide capture, transportation and geological storage—Carbon dioxide storage using enhanced oil recovery (CO_2-EOR) (CSA/ANSI ISO 27916:2019).

(c) ***Documentation.*** Documentation must be filed in accordance with *Form 8933.*

(d) ***Certification.*** For qualified enhanced oil or natural gas recovery projects in which the taxpayer reported volumes of carbon oxide to the Environmental Protection Agency pursuant to 40 CFR part 98 subpart RR, the taxpayer may self-certify the volume of qualified carbon oxide claimed for purposes of section 45Q. For qualified enhanced oil or natural gas recovery projects in which the taxpayer determined volumes pursuant to CSA/ANSI ISO 27916:2019, a taxpayer may prepare documentation as outlined in CSA/ANSI ISO 27916:2019 internally, but all such documentation must be provided to a qualified independent engineer or geologist, who then must certify that the documentation provided, including the mass balance calculations as well as information regarding monitoring and containment assurance, is accurate and complete. The qualified independent engineer or geologist certifying a project must be duly registered or certified in any State. The certification must contain an affidavit from the certifying engineer or geologist stating that he or she is independent from the taxpayer (and if a section 45Q(f)(3)(B) election has been made, the affidavit must state that he or she is independent from both the electing taxpayer and the credit claimant). Certifications must be made annually and under penalties of perjury. For any leaked amount of qualified carbon oxide (as defined in § 1.45Q-5(c)) that is determined pursuant to CSA/ANSI ISO 27916:2019, the certification must also include a statement that the quantity was determined in accordance with sound engineering principles. Taxpayers that capture qualified carbon oxide giving rise to the section 45Q credit must file *Form 8933* with a timely filed Federal income tax return or *Form 1065,* including extensions or for the purpose of this rule, amendments to Federal income tax returns, *Forms 1065,* or on AARs, as applicable. Taxpayers that dispose of, inject, or utilize qualified carbon oxide must also file *Form 8933* with a timely filed Federal income tax return or *Form 1065,* including extensions or for the purpose of this rule, amendments to Federal income tax returns, *Forms 1065,* or on AARs, as applicable. If the volume of carbon oxide certified and reported is a negative amount, see § 1.45Q-5 for rules regarding recapture.

(e) ***Failure to submit complete documentation or certification.*** No section 45Q credit is allowed for any taxable year for which the taxpayer (including credit claimants) has failed to timely submit complete documentation and certification that is required by this regulation or *Form 8933.* The credit will be allowed only for a taxable year for which complete documentation and certification has been timely submitted. Certifications for each taxable year must be submitted by the due date of the federal income tax return or *Form 1065* on which the section 45Q credit is claimed, including extensions. However, if a section 45Q credit is claimed on an amended Federal income tax return, an amended *Form 1065,* or an AAR, as applicable, certifications may also be submitted with such amended Federal income tax return, amended *Form 1065,* or AAR. Further, if a section 45Q credit was claimed on a timely filed Federal income tax return or *Form 1065* for a taxable year ending on or after January 1, 2018, and beginning on or before January

13, 2021, for which certifications were not submitted, such certifications may be submitted with a timely filed amended Federal income tax return, an amended *Form 1065,* or an AAR, as applicable, for such taxable year.

(f) ***Applicability date.*** This section applies to taxable years beginning on or after January 13, 2021. Taxpayers may choose to apply this section for taxable years beginning on or after January 1, 2018, provided the taxpayer applies this section and §§ 1.45Q-1, 1.45Q-2, 1.45Q-4, and 1.45Q-5 in their entirety and in a consistent manner.

[T.D. 9944, 86 FR 4760, Jan. 15, 2021]

§ 1.45Q-4 Utilization of Qualified Carbon Oxide.

(a) ***In general.*** For purposes of this section, *utilization of qualified carbon oxide* means—

(1) The fixation of such qualified carbon oxide through photosynthesis or chemosynthesis, such as through the growing of algae or bacteria,

(2) The chemical conversion of such qualified carbon oxide to a material or chemical compound in which such qualified carbon oxide is securely stored, or

(3) The use of such qualified carbon oxide for any other purpose for which a commercial market exists (with the exception of use as a tertiary injectant in a qualified enhanced oil or natural gas recovery project), as described in paragraph (d) of this section.

(b) ***Amount utilized*** —

(1) ***In general.*** For purposes of § 1.45Q-1(b) (ii) and (c)(2)(ii), the amount of qualified carbon oxide utilized by the taxpayer is equal to the metric tons of qualified carbon oxide which the taxpayer demonstrates, based upon an analysis of lifecycle greenhouse gas emissions (LCA), were—

(i) Captured and permanently isolated from the atmosphere through use of a process described in paragraph (a) of this section, or

(ii) Displaced from being emitted into the atmosphere through use of a process described in paragraph (a) of this section.

(2) ***Limitation.*** The amount determined under paragraph (b)(1) of this section cannot exceed the amount of qualified carbon oxide measured at the source of capture.

(c) ***Lifecycle greenhouse gas emissions and lifecycle analysis (LCA)*** —

(1) ***In general.*** For purposes of paragraph (b) of this section, the term lifecycle greenhouse gas emissions means the aggregate quantity of greenhouse gas emissions (including direct emissions and significant indirect emissions such as significant emissions from land use changes) related to the full product lifecycle, including all stages of product and feedstock production and distribution, from feedstock generation or extraction through the distribution and delivery and use of the finished product to the ultimate consumer, where the mass values for all greenhouse gases are adjusted to account for their relative global warming potential according to Table A-1 of 40 CFR part 98 subpart A. Such emissions are expressed in carbon dioxide equivalent (CO_2-e).

(2) ***LCA verification.*** The taxpayer verifies the amount of qualified carbon oxide utilized through an LCA. The LCA must demonstrate that the proposed process results in a net reduction of carbon dioxide equivalents when compared to a comparison system. The results of the LCA must be documented in a written LCA report.

(3) ***Standards of adequate lifecycle analysis.*** The LCA report must be prepared in conformity with and contain documentation that conforms with International Organization for Standardization (ISO) 14040:2006, *Environmental management—Life cycle assessment—Principles and framework and ISO 14044:2006, Environmental management—Life cycle assessment—Requirements and guidelines.* The LCA may consist of direct and indirect data in conformity with ISO 14040:2006 and 14044:2006.

(4) ***Third-party independent review of LCA.*** The LCA report must be performed or verified by an independent third party. The LCA report must provide a statement documenting the qualifications of the independent third party, including proof of appropriate U.S. or foreign professional license, an affidavit from the third party stating that it is independent from the taxpayer (if a section 45Q(f)(3)(B) election has been made, the affidavit must state that the third party is independent from both the electing taxpayer and the credit claimant), and the statement must be made under penalties of perjury. If an independent third-party review is conducted, then it must include an assessment of the model and supporting data.

(5) ***Submission of the LCA.*** The taxpayer must submit the LCA report and third-party independent statement required by paragraph (c) of this section to the IRS and the Department of Energy. The taxpayer must also submit the model if the LCA is not verified by an independent third-party review.

(6) ***LCA review.*** The LCA report will be subject to a technical review by the DOE. The IRS will determine whether to approve the LCA and will notify the taxpayer. The taxpayer must receive approval of its LCA prior to claiming the section 45Q credits for such taxable year on any federal income tax return. In addition to receiving approval of its LCA, the taxpayer must satisfy all other requirements of section 45Q and §§ 1.45Q-1, 1.45Q-2, and this section in order to be eligible to claim section 45Q credits.

(d) ***Commercial market.*** A commercial market means a market in which a product, process, or service that utilizes carbon oxide is sold or transacted on commercial terms. A taxpayer must submit a statement attached to its *Form 8933* substantiating that a commercial market exists for its particular product, process, or service.

(e) ***Applicability date.*** This section applies to taxable years beginning on or after January 13, 2021. Taxpayers may choose to apply this section for taxable years beginning on or after January 1, 2018, provided the taxpayer applies this section and §§ 1.45Q-1, 1.45Q-2, 1.45Q-3, and 1.45Q-5 in their entirety and in a consistent manner.

[T.D. 9944, 86 FR 4760, Jan. 15, 2021]

§ 1.45Q-5 Recapture of Credit.

(a) ***Recapture event.*** A recapture event occurs when qualified carbon oxide for which a section 45Q credit has been previously claimed ceases to be disposed of in secure geological storage (as described in § 1.45Q-3(b)), or used as a tertiary injectant during the recapture period. Recapture events are determined separately for each project involving the disposal or use of qualified carbon oxide as a tertiary injectant. A recapture event does not occur if some portion of qualified carbon oxide disposed of in the current year

does not remain in secure storage at the end of the year. The amount of such carbon oxide that is securely stored in the current year is determined according to the applicable requirements of 40 CFR part 98 subpart RR or CSA/ANSI ISO 27916:2019.

(b) ***Ceases to be disposed of in secure geological storage or used as a tertiary injectant.*** Qualified carbon oxide for which a section 45Q credit has been previously claimed ceases to be disposed of in secure geological storage (as described in § 1.45Q-3(b)), or used as a tertiary injectant, if the leaked amount of qualified carbon oxide in the taxable year exceeds the amount of qualified carbon oxide securely stored in that same taxable year.

(c) ***Leaked amount of qualified carbon oxide.*** When a taxpayer that claimed a section 45Q credit with respect to qualified carbon oxide stored at a secure storage site, operator of the secure storage site, or regulatory agency with jurisdiction over the site determines that the qualified carbon oxide that was disposed of in secure geological storage has leaked to the atmosphere, the taxpayer or the party with whom the taxpayer contracted to ensure the secure geological storage of the qualified carbon oxide must quantify the metric tons of qualified carbon oxide that has leaked to the atmosphere pursuant to the requirements of 40 CFR part 98 subpart RR or CSA/ANSI ISO 27916:2019. The quantity determined pursuant to CSA/ANSI ISO 27916:2019 must be certified by a qualified independent engineer or geologist, including a statement that the quantity was determined in accordance with sound engineering principles in the same manner as required in § 1.45Q-3. The IRS will consider all available facts and circumstances, and may consult with the relevant regulatory agency with jurisdiction over such site, in verifying the amount of qualified carbon oxide that has leaked to the atmosphere. The verified amount is the leaked amount of qualified carbon oxide.

(d) ***Qualified carbon oxide subject to recapture.*** The quantity of recaptured qualified carbon oxide (in metric tons) subject to recapture is the amount by which the leaked amount of qualified carbon oxide exceeds the amount of qualified carbon oxide securely stored in the taxable year. The leaked amount of qualified carbon oxide shall be subtracted from the amount of qualified carbon oxide that is securely stored in the taxable year. If the leaked amount does not exceed the amount of qualified carbon oxide that is securely stored in the taxable year, then the taxpayer is entitled to a credit equal to the amount of qualified carbon oxide securely stored less the leaked amount in the taxable year, multiplied by the appropriate statutory credit rate.

(e) ***Recapture amount.*** The recapture amount is equal to the product of the quantity of recaptured qualified carbon oxide (in metric tons) subject to recapture and the appropriate statutory credit rate.

(f) ***Recapture period.*** The recapture period begins on the date of first injection of qualified carbon oxide for disposal in secure geological storage or use as a tertiary injectant for which a section 45Q credit was claimed. The recapture period ends on the earlier of three years after the last taxable year in which the taxpayer claimed a section 45Q credit or was eligible to claim a credit that it elected to carry forward or the date monitoring ends under the requirements of the standards described in § 1.45Q-3(b)(1) or (2).

(g) ***Application of recapture*** —

(1) ***In general.*** Any recapture amount must be taken into account in the taxable year in which it is identified and reported. If the leaked amount of qualified carbon oxide does not exceed the amount of qualified carbon oxide securely stored in the taxable year reported, there is no recapture amount and no further adjustments to prior taxable years are needed. If the leaked amount of qualified carbon oxide does exceed the amount of qualified carbon oxide securely stored in the taxable year reported, then the taxpayer must add the recapture amount to the amount of tax due in the taxable year in which the recapture event occurs.

(2) ***Calculation.*** Recapture amounts are calculated on a last-in-first-out basis (LIFO), such that the leaked amount of qualified carbon oxide that exceeds the amount of qualified carbon oxide securely stored in the current taxable year will be deemed attributable first to the prior taxable year, then to taxable year before that, and then up to a maximum of the third preceding year.

(3) ***Multiple units.*** In the event of a recapture event in which the leaked amount of qualified carbon oxide had been captured from multiple units of carbon capture equipment that were not under common ownership, the recapture amount must be allocated on a pro rata basis among the multiple units of carbon capture equipment. All taxpayers that claimed a section 45Q credit with respect to one or more of such units of carbon capture equipment are responsible for adding the recapture amount to their amount of tax due in the taxable year in which the recapture event occurs.

(4) ***Multiple taxpayers*** —

(i) ***In general.*** In the event of a recapture event involving a leaked amount of qualified carbon oxide that is deemed attributable to qualified carbon oxide for which multiple taxpayers claimed section 45Q credits (for example, if ownership of the carbon capture equipment was transferred, or if a taxpayer made an election under section 45Q(f)(3)(B) to allow one or more credit claimants to claim a portion of the section 45Q credit), the recapture amount must be allocated on a pro rata basis among the taxpayers that claimed the section 45Q credits.

(ii) ***Partnerships*** —

(A) ***General rule.*** For purposes of paragraph (g)(4)(i) of this section, if a partnership is one of the multiple taxpayers that claimed section 45Q credit amounts, the partnership and not its partners will be the taxpayer to which the pro rata recapture amount must be allocated. The partnership must allocate its pro rata recapture amount among its partners under § 1.704-1(b)(4)(ii).

(B) ***Terminated partnerships.*** If a partnership described in paragraph (g)(4)(ii)(A) of this section terminates under section 708(b)(1) prior to a recapture event, the partners of that terminated partnership at the time the section 45Q credit was claimed will be the taxpayers to which the pro rata recapture amount must be allocated.

(5) ***Reporting.*** If a recapture event occurs during a project's recapture period, any taxpayer that claimed a section 45Q credit for that project must report the following information on a *Form 8933* filed with that taxpayer's Federal income tax return or *Form 1065* for the taxable year for which the recapture event occurred—

(A) The recapture amount (as defined in § 1.45Q-5(e));

(B) The leaked amount of qualified carbon oxide (in metric tons) (as defined in § 1.45Q-5(c));

(C) The statutory credit rate(s) at which the section 45Q credits were previously calculated; and

(D) A statement that describes how the taxpayer became aware of the recapture event, how the leaked amount was determined, and the identity and involvement of any regulatory agencies.

(6) ***Examples.*** The following examples illustrate the principles of this paragraph (g):

(i) ***Example 1.***

(A) A owns direct air capture Facility X. No other taxpayer has owned Facility X, and A has never allowed another taxpayer to claim any section 45Q credits with respect to qualified carbon oxide captured by Facility X. Facility X captured 100,000 metric tons of carbon dioxide in each of 2021, 2022, and 2023. All captured carbon dioxide was sold to B for use a tertiary injectant in a qualified enhanced oil recovery project. B provided contractual assurance that the carbon dioxide would be disposed of in secure geological storage. A claimed section 45Q credit amounts of $2,268,000 in 2021, $2,515,000 in 2022, and $2,761,000 in 2023 using the statutory rates in § 1.45Q-1(d)(3). In 2024, A captured and sold another 100,000 metric tons of carbon dioxide to B, which B used as a tertiary injectant in a qualified enhanced oil recovery project. In late 2024, B determined that 10,000 metric tons of qualified carbon dioxide injected during 2021 had leaked from the containment area of the reservoir and were released into the atmosphere.

(B) Because the leakage determined in 2024 (10,000 metric tons) did not exceed the presumed amount stored in 2024 (100,000 metric tons), a recapture event did not occur in 2024. B's actual storage in 2024 is 90,000 metric tons of qualified carbon oxide. A's section 45Q credit for 2024 is $2,706,300 (net 90,000 metric tons of qualified carbon oxide captured, disposed of in secure geological storage, and used as a tertiary injectant multiplied by the statutory credit rate for 2024 of $30.07).

(ii) *Example 2.*

(A) Assume same facts as in Example 1. Additionally, in 2025, B determines that 190,000 metric tons of qualified carbon dioxide injected in 2021 and 2022 had leaked and were released into the atmosphere. No injection of carbon dioxide takes place in 2025.

(B) Because the leakage determined in 2025 (190,000 metric tons) exceeds the amount stored in 2025 (0 metric tons), a recapture event occurred in 2025. A's credit for 2025 is $0 because the net amount of carbon dioxide captured, disposed of in secure geological storage, and used as a tertiary injectant in 2025 was 0 metric tons. The 2025 recapture amount is calculated by multiplying the 190,000 metric tons of recaptured qualified carbon oxide by the appropriate statutory credit rate using the LIFO method. The first 90,000 metric tons of recaptured qualified carbon oxide is deemed attributable to 2024, and is recaptured at the 2024 statutory rate of $30.07 per metric ton. The remaining 100,000 metric tons of recaptured qualified carbon oxide are deemed attributable to 2023. The credits attributable to 2023 are recaptured at the 2023 statutory rate of $27.61 per metric ton. Thus, the total recapture amount is $5,467,300, and is added to A's tax due for 2025.

(iii) *Example 3.*

(A) Assume the same facts as in Example 2, except that A sells Facility X to C on January 1, 2024. C sells 100,000 metric tons of carbon dioxide captured by Facility X to B for use as a tertiary injectant in a qualified enhanced oil recovery project. C claims a section 45Q credit in 2024 of $2,706,300 (net 90,000 metric tons of qualified carbon oxide captured, disposed of in secure geological storage, and used as a tertiary injectant multiplied by the statutory credit rate for 2024 of $30.07).

(B) The total recapture amount in 2025 is the same $5,467,300 as in Example 2, but is allocated between A and C. The first 90,000 metric tons of recaptured qualified carbon oxide are deemed attributable to 2024. The credits that are attributable to 2024 are

recaptured at the 2024 statutory rate of $30.07 per ton (for a recapture amount of $2,706,300). Because C claimed that amount of section 45Q credit in 2024, a recapture amount of $2,706,300 is added to C's tax due for 2025. The remaining 100,000 metric tons of recaptured qualified carbon oxide are deemed attributable to 2023. The credits that are attributable to 2023 are recaptured at the 2023 statutory rate of $27.61 per ton (for a recapture amount of $2,761,000). Because A claimed that amount of section 45Q credit in 2023, a recapture amount of $2,761,000 is added to A's tax due for 2025.

(iv) *Example 4.*

(A) Assume the same facts as in Example 2, except that in 2023, A made a section 45Q(f)(3)(B) election to allow B to claim one-half of the section 45Q credit for 2023. A and B each claimed $1,380,500 of section 45Q credit in 2023 (50,000 metric tons each multiplied by the 2023 statutory rate of $27.61).

(B) The total recapture amount in 2025 is the same $5,467,300 as in Example 2, but is allocated among A and B. The first 90,000 metric tons of recaptured qualified carbon oxide is deemed attributable to 2024. The section 45Q credit amounts attributable to 2024 are recaptured at the 2024 statutory rate of $30.07 per ton (for a recapture amount of $2,706,300). Because A claimed that amount of section 45Q credit in 2024, $2,706,300 is added to A's tax due for 2025. The remaining 100,000 metric tons of recaptured qualified carbon oxide is deemed attributable to 2023. The section 45Q credit amounts attributable to 2023 are recaptured at the 2023 statutory rate of $27.61 per ton (for a recapture amount of $2,761,000). Because A and B each claimed half of that amount ($1,380,500) of section 45Q credit in 2023, $1,380,500 is added to both A's and B's tax due for 2025. Thus, a recapture amount of $4,086,800 is added to A's tax due for 2025, and a recapture amount of $1,380,500 is added to B's tax due for 2025.

(v) *Example 5.*

(A) Assume the same facts as in Example 2, except that the 100,000 metric tons of carbon dioxide sold to B in 2021, 2022, 2023, and 2024 for use as a tertiary injectant in a qualified enhanced oil recovery project were captured equally (50,000 metric tons per year) from qualified facilities owned by J and K. Neither J nor K made a section 45Q(f)(3)(B) election to allow B to claim the credit.

(B) Because the leakage determined in 2024 (10,000 metric tons) did not exceed the presumed amount stored in 2024 (100,000 metric tons) a recapture event did not occur in 2024. The total amount of section 45Q credit for 2024 is $2,706,300 (net 90,000 metric tons of qualified carbon oxide captured, disposed of in secure geological storage, and used as a tertiary injectant multiplied by the statutory credit rate for 2024 of $30.07). J and K may each claim half of this amount of section 45Q credit ($1,353,150) in 2024.

(C) The total recapture amount in 2025 is the same $5,467,300 as in Example 2, but is allocated between J and K. The section 45Q credit amounts relating to the first 90,000 metric tons of recaptured qualified carbon oxide are deemed attributable to 2024 and are recaptured at the 2024 statutory rate of $30.07 per ton (for a recapture amount of $2,706,300). Because J and K each claimed half of that amount ($1,353,150) of section 45Q credit in 2024, $1,353,150 is added to both J's and K's tax due for 2025. The section 45Q credit amounts relating to the remaining 100,000 metric tons of recaptured qualified carbon oxide are deemed attributable to 2023 and are recaptured at the 2023 statutory

rate of $27.61 per ton (for a recapture amount of $2,761,000). Because J and K each claimed half of that amount ($1,380,500) of section 45Q credit in 2023, an additional $1,380,500 is added to both J's and Ks tax due for 2025. Thus, a total recapture amount of $2,733,650 is added to both J's and K's tax due for 2025.

(vi) *Example 6.*

(A) M owns Industrial Facility Z. No other taxpayer has ever owned Z, and M has never allowed another taxpayer to claim any section 45Q credits with respect to qualified carbon oxide captured from Z. M captured 1,000,000 metric tons of carbon dioxide annually in each of 2017, 2018, 2019, 2020, 2021, 2022, 2023, 2024, and 2025. All captured carbon dioxide was sold to N for use a tertiary injectant in a qualified enhanced oil recovery project. N provided contractual assurance that the carbon dioxide would be sequestered in secure geological storage. M claimed section 45Q credit amounts of $12,830,000 in 2017, $15,209,000 in 2018, $17,760,000 in 2019, $20,220,000 in 2020, $22,680,000 in 2021, $25,150,000 in 2022, $27,610,000 in 2023, $30,070,000 in 2024, and $32,540,000 in 2025 using the statutory rates in § 1.45Q-1(d)(3). No injection of carbon oxides takes place in 2026. In 2026, N determined that 6,200,000 metric tons of qualified carbon dioxide previously injected had leaked from the containment area of the reservoir and were released into the atmosphere.

(B) Because the leakage determined in 2025 (6,200,000 metric tons) exceed the amount stored in 2026 (0 metric tons) a recapture event occurred in 2026. A's credit for 2026 is $0 because the net amount of carbon dioxide captured and used as a tertiary injectant in 2026 was 0 metric tons. The 2026 recapture amount is calculated by multiplying the 6,200,000 metric tons of recaptured qualified carbon oxide by the appropriate statutory credit rate using the LIFO method. The first 1,000,000 metric tons of recaptured qualified carbon oxide is deemed attributable to 2025, and is recaptured at the 2025 statutory rate of $32.54 per metric ton. The next 1,000,000 metric tons of recaptured qualified carbon oxide is deemed attributable to 2024, and is recaptured at the 2024 statutory rate of $30.07 per metric ton. The next 1,000,000 metric tons of recaptured qualified carbon oxide is deemed attributable to 2023, and is recaptured at the 2023 statutory rate of $27.16 per metric ton. The remaining 3,200,000 metric tons are not subject to recapture because of the three-year lookback limit in § 1.45Q-1(g)(2). Thus, the total recapture amount is $89,770,000, and is added to A's tax due for 2026.

(h) *Recapture in the event of deliberate removal from storage* —

(1) ***In general.*** If qualified carbon oxide for which a credit has been claimed is deliberately removed from a secure geological storage site, then a recapture event would occur in the year in which the qualified carbon oxide is removed from the storage site pursuant to § 1.45Q-5(a).

(2) ***Recycled qualified carbon oxide.*** If qualified carbon oxide for which a credit has been claimed is recaptured, recycled, and reinjected as part of the enhanced oil and natural gas recovery project, that qualified carbon oxide will be considered recycled carbon oxide under section 45Q(c)(2). If recycled carbon oxide is reinjected into the same qualified enhanced oil or natural gas recovery project it was originally injected into, it will not be considered deliberately removed from a secure geological storage site for purposes of paragraph (h)(1) of this section. If recycled carbon oxide is reinjected

into a different qualified enhanced oil or natural gas recovery project from the one it was initially injected into, or used for any other purpose, that qualified carbon oxide will be considered deliberately removed from a secure geological storage site for purposes of paragraph (h)(1) of this section.

(i) ***Limited exceptions.*** A recapture event is not triggered in the event of a loss of containment of qualified carbon oxide resulting from actions not related to the selection, operation, or maintenance of the storage facility, such as volcanic activity or terrorist attack.

(j) ***Applicability date.*** This section applies to taxable years beginning on or after January 13, 2021. Taxpayers may choose to apply this section for taxable years beginning on or after January 1, 2018, provided the taxpayer applies this section and §§ 1.45Q-1, 1.45Q-2, 1.45Q-3, and 1.45Q-4 in their entirety and in a consistent manner.

[T.D. 9944, 86 FR 4760, Jan. 15, 2021]

§ 1.45Q-6 Rules relating to the increased credit amount for prevailing wage and apprenticeship.

(a) ***In general.*** If the requirements in paragraph (b) of this section are satisfied with respect to any qualified facility or any carbon capture equipment placed in service at that facility, then the credit determined under section 45Q(a) is multiplied by five.

(b) ***Qualified facility and carbon capture equipment requirements.*** The requirements of this paragraph (b) are satisfied if any of the following requirements are met—

(1) With respect to a qualified facility within the meaning of section 45Q the construction of which begins on or after January 29, 2023, and any carbon capture equipment within the meaning of section 45Q placed in service at such facility, the taxpayer meets the prevailing wage requirements of section 45(b)(7) and § 1.45-7 with respect to the construction of such facility and equipment and with respect to the alteration or repair of such facility and equipment for any taxable year, for any portion of such taxable year that is within the period described in section 45Q(3)(A) or (4)(A) after the facility or equipment was originally placed in service, the apprenticeship requirements of section 45(b)(8) and § 1.45-8, and the recordkeeping and reporting requirements of § 1.45-12;

(2) With respect to any carbon capture equipment within the meaning of section 45Q the construction of which begins on or after January 29, 2023, and that is installed at a qualified facility the construction of which began prior to January 29, 2023, the taxpayer meets the prevailing wage requirements of section 45(b)(7) and § 1.45-7 with respect to the construction of such equipment and with respect to the alteration or repair of such equipment for any taxable year, for any portion of such taxable year that is within the period described in section 45Q(3)(A) or (4)(A) after the equipment was originally placed in service, the apprenticeship requirements of section 45(b)(8) and § 1.45-8, and the recordkeeping and reporting requirements of § 1.45-12; or

(3) Carbon capture equipment within the meaning of section 45Q the construction of which began prior to January 29, 2023, and such equipment is installed at a qualified facility the construction of which began prior to January 29, 2023.

(c) ***Applicability date.*** This section applies to qualified facilities and carbon capture equipment placed in service in taxable years ending after June 25, 2024, and the construction of which begins after June 25, 2024. Taxpayers may apply this section to qualified facilities and carbon capture equipment placed in service in taxable years ending on or before June 25, 2024, and qualified facilities and carbon capture

equipment placed in service in taxable years ending after June 25, 2024, the construction of which begins before June 25, 2024, provided that taxpayers follow this section in its entirety and in a consistent manner.

[T.D. 9998, 89 FR 53271, June 25, 2024]

§ 1.45R-0 Table of contents.

This section lists the table of contents for §§ 1.45R-1 through 1.45R-5.

§ 1.45R-1 Definitions.

(a) Definitions.

(1) Average premium.

(2) Composite billing.

(3) Credit period.

(4) Eligible small employer.

(5) Employee.

(6) Employer-computed composite rate.

(7) Exchange.

(8) Family member.

(9) Full-time equivalent employee (FTE).

(10) List billing.

(11) Net premium payments.

(12) Nonelective contribution.

(13) Payroll taxes.

(14) Qualified health plan QHP.

(15) Qualifying arrangement.

(16) Seasonal worker.

(17) SHOP dependent coverage.

(18) Small Business Health Options Program (SHOP).

(19) State.

(20) Tax-exempt eligible small employer.

(21) Tier.

(22) Tobacco surcharge.

(23) United States.

(24) Wages.

(25) Wellness program.

(b) Effective/applicability date.

§ 1.45R-2 Eligibility for the credit.

(a) Eligible small employer.

(b) Application of section 414 employer aggregation rules.

(c) Employees taken into account.

(d) Determining the hours of service performed by employees.

(1) In general.

(2) Permissible methods.

(3) Examples.

(e) FTE calculation.

(1) In general.

(2) Example.

(f) Determining the employer's average annual wages.

(1) In general.

(2) Example.

(g) Effective/applicability date.

§ 1.45R-3 Calculating the credit.

(a) In general.

(b) Average premium limitation.

(1) In general.

(2) Examples.

(c) Credit phaseout.

(1) In general.

(2) $25,000 dollar amount adjusted for inflation.

(3) Examples

(d) State credits and subsidies for health insurance.

(1) Payments to employer.

(2) Payments to issuer.

(3) Credits may not exceed net premium payment.

(4) Examples.

(e) Payroll tax limitation for tax-exempt eligible small employers.

(1) In general.

(2) Example.

(f) Two-consecutive-taxable year credit period limitation.

(g) Premium payments by the employer for a taxable year.

(1) In general.

(2) Excluded amounts.

(h) Rules applicable to trusts, estates, regulated investment companies, real estate investment trusts and cooperative organizations.

(i) Transition rule for 2014.

(1) In general.

(2) Example.

(j) Effective/applicability date.

§ 1.45R-4 Uniform percentage of premium paid.

(a) In general.

(b) Employers offering one QHP.

(1) Employers offering one QHP, self-only coverage, composite billing.

(2) Employers offering one QHP, other tiers of coverage, composite billing.

(3) Employers offering one QHP, self-only coverage, list billing.

(4) Employers offering one QHP, other tiers of coverage, list billing.

(5) Employers offering SHOP dependent coverage.

(c) Employers offering more than one QHP.

(1) QHP-by-QHP method.

(2) Reference QHP method.

(d) Tobacco surcharges and wellness program discounts.

(i) Tobacco surcharges.

(ii) Wellness programs.

(e) Special rules regarding employer compliance with applicable State and local law.

(f) Examples.

(g) Effective/applicability date.

§ 1.45R-5 Claiming the credit.

(a) Claiming the credit.

(b) Estimated tax payments and alternative minimum tax (AMT) liability.

(c) Reduction of section 162 deduction.

(d) Effective/applicability date.

[T.D. 9672, 79 FR 36646, June 30, 2014]

§ 1.45R-1 Definitions.

(a) ***Definitions.*** The definitions in this section apply to this section and §§ 1.45R-2, 1.45R-3, 1.45R-4, and 1.45R-5.

(1) ***Average premium.*** The term *average premium* means an average premium for the small group market in the rating area in which the employee enrolls for coverage. The average premium for the small group market in a rating area is determined by the Secretary of Health and Human Services.

(2) ***Composite billing.*** The term *composite billing* means a system of billing under which a health insurer charges a uniform premium for each of the employer's employees or charges a single aggregate premium for the group of covered employees that the employer then divides by the number of covered employees to determine the uniform premium.

(3) ***Credit period*** —

(i) ***In general.*** The term *credit period* means, with respect to any eligible small employer (or any predecessor employer), the two-consecutive-taxable-year period beginning with the first taxable year beginning after 2013, for which the eligible small employer files an income tax return with an attached Form 8941, "Credit for Small Employer Health Insurance Premiums" (or files a Form 990-T, "Exempt Organization Business Income Tax Return," with an attached Form 8941 in the case of a tax-exempt eligible employer). For a transition rule for 2014, see § 1.45R-3(i).

(ii) ***Examples.*** The following examples illustrate the provisions of paragraph (a)(3)(i) of this section:

> *Example 1.* (i) *Facts.* In 2014, an eligible small employer (Employer) that uses a calendar year as its taxable year begins to offer insurance through a SHOP Exchange. Employer has 4 employees and otherwise qualifies for the credit, but none of the employees enroll in the coverage offered by Employer through the SHOP Exchange. In mid-2015, the 4 employees enroll for coverage through the SHOP Exchange but Employer does not file Form 8941 or claim the credit. In 2016, Employer has 20 employees and all are enrolled in coverage offered through the SHOP Exchange. Employer files Form 8941 with Employer's 2016 tax return to claim the credit.
> (ii) *Conclusion.* Employer's taxable year 2016 is the first year of the credit period. Accordingly, Employer's two-year credit period is 2016 and 2017.

> *Example 2.* (i) *Facts.* Same facts as *Example 1,* but Employer files Form 8941 with Employer's 2015 tax return.
> (ii) *Conclusion.* Employer's taxable year 2015 is the first year of the credit period. Accordingly, Employer's two-year credit period is 2015 and 2016 (and does not include 2017). Employer is entitled to a credit based on a partial year of SHOP Exchange coverage for Employer's taxable year 2015.

(4) ***Eligible small employer.***

(i) The term *eligible small employer* means an employer that meets the requirements set forth in § 1.45R-2.

(ii) For the definition of tax-exempt eligible small employer, see paragraph (a)(19) of this section.

(iii) A farmers' cooperative described under section 521 that is subject to tax pursuant to section 1381, and otherwise meets the requirements of this paragraph (a)(4) and § 1.45R-2, is an eligible small employer.

(5) ***Employee*** —

(i) ***In general.*** Except as otherwise specifically provided in this paragraph (a)(5), the term *employee* means an individual who is an employee of the eligible small employer under the common law standard. See § 31.3121(d)-1(c).

(ii) ***Leased employees.*** For purposes of this paragraph (a)(5), the term *employee* also includes a leased employee (as defined in section 414(n)).

(iii) ***Certain individuals excluded.*** The term *employee* does not include independent contractors (including sole proprietors), partners in a partnership, shareholders owning more than two percent of an S corporation, and any owners of more than five percent of other businesses. The term *employee* also does not include family members of these owners and partners, including the employee-spouse of a shareholder owning more than two percent of the stock of an S corporation, the employee-spouse of an owner of more than five percent of a business, the employee-spouse of a partner owning more than a five percent interest in a partnership, and the employee-spouse of a sole proprietor, or any other member of the household of these owners and partners who qualifies as a dependent under section 152(d)(2)(H).

(iv) ***Seasonal workers.*** The term *employee* does not include seasonal workers unless the seasonal worker provides services to the employer on more than 120 days during the taxable year.

(v) ***Ministers.*** Whether a minister is an employee is determined under the common law standard for determining worker status. If, under the common law standard, a minister is not an employee, the minister is not an employee for purposes of this paragraph (a)(5) and is not taken into account in determining an employer's FTEs, and premiums paid for the minister's health insurance coverage are not taken into account in computing the credit. If, under the common law standard, a minister is an employee, the minister is an employee for purposes of this paragraph (a)(5), and is taken into account in determining an employer's FTEs, and premiums paid by the employer for the minister's health insurance coverage can be taken into account in computing the credit. Because the performance of services by a minister in the exercise of his or her ministry is not treated as employment for purposes of the Federal Insurance Contributions Act (FICA), compensation paid to the minister is not wages as defined under section 3121(a), and is not counted as wages for purposes of computing an employer's average annual wages.

(vi) ***Former employees.*** Premiums paid on behalf of a former employee with no hours of service may be treated as paid on behalf of an employee for purposes of calculating the credit (see § 1.45R-3) provided that, if so treated, the former employee is also treated as an employee for purposes of the uniform percentage requirement (see § 1.45R-4). For the treatment of terminated employees for purposes of determining employer eligibility for the credit, see § 1.45R-2(c).

(6) ***Employer-computed composite rate.*** The term *employer-computed composite rate* refers to a rate for a tier of coverage (such as employee-only, dependent or family) of a QHP that is the average rate determined by adding the premiums for that tier of coverage for all employees eligible to participate in the QHP (whether or not they actually receive coverage under the plan or under that tier of coverage) and dividing by the total number of such eligible employees. The employer-computed composite rate may be used in list billing to convert individual premiums for a tier of coverage into an employer-computed composite rate for that tier of coverage. See § 1.45R-4(b)(3).

(7) ***Exchange.*** The term *Exchange* means an exchange as defined in 45 CFR 155.20.

(8) ***Family member.*** The term *family member* is defined with respect to a taxpayer as a child (or descendant of a child); a sibling or step-sibling; a parent (or ancestor of a parent); a step-parent; a niece or nephew; an aunt or uncle; or a son-in-law, daughter-in-law, father-in-law, mother-in-law, brother-in-law or sister-in-law. A spouse of any of these family members is also considered a family member.

(9) ***Full-time equivalent employee (FTE).*** The number of *full-time equivalent employees (FTEs)* is determined by dividing the total number of hours of service for which wages were paid by the employer to employees during the taxable year by 2,080. See § 1.45R-2(d) and (e) for permissible methods of calculating hours of service and the method for calculating the number of an employer's FTEs.

(10) ***List billing.*** The term *list billing* refers to a system of billing under which a health insurer lists a separate premium for each employee based on the age of the employee or other factors.

(11) ***Net premium payments.*** The term *net premium payments* means, in the case of an employer receiving a State tax credit or State subsidy for providing health insurance to its employees, the excess of the employer's actual premium payments over the State tax credit or State subsidy received by the employer. In the case of a State payment directly to an insurance company (or another entity licensed under State law to engage in the business of insurance), the employer's net premium payments are the employer's actual premium payments. If a State-administered program (such as Medicaid or another program that makes payments directly to a health care provider or insurance company on behalf of individuals and their families who meet certain eligibility guidelines) makes payments that are not contingent on the maintenance of an employer-provided group health plan, those payments are not taken into account in determining the employer's net premium payments.

(12) ***Nonelective contribution.*** The term *nonelective contribution* means an employer contribution other than a contribution pursuant to a salary reduction arrangement under section 125.

(13) ***Payroll taxes.*** For purposes of section 45R, the term *payroll taxes* means amounts required to be withheld as tax from the employees of a tax-exempt eligible small employer under section 3402, amounts required to be withheld from such employees under section 3101(b), and amounts of tax imposed on the tax-exempt eligible small employer under section 3111(b).

(14) ***Qualified health plan or QHP.*** The term *qualified health plan* or the term *QHP* means a qualified health plan as defined in Affordable Care Act section 1301(a) (see 42 U.S.C. 18021(a)), but does not include a catastrophic plan described in Affordable Care Act section 1302(e) (see 42 U.S.C. 18022(e)).

(15) ***Qualifying arrangement.*** The term *qualifying arrangement* means an arrangement that requires an eligible small employer to make a nonelective contribution on behalf of each employee who enrolls in a QHP offered to employees by the employer through a SHOP Exchange in an amount equal to a uniform percentage (not less than 50 percent) of the premium cost of the QHP.

(16) ***Seasonal worker.*** The term *seasonal worker* means a worker who performs labor or services on a seasonal basis as defined by the Secretary of Labor, including (but not limited to) workers covered by 29 CFR 500.20(s)(1), and retail workers employed exclusively during holiday seasons. Employers may apply a reasonable, good faith interpretation of the term seasonal worker and a reasonable good faith interpretation of 29 CFR 500.20(s)(1) (including as applied by analogy to workers and employment positions not otherwise covered under 29 CFR 500.20(s)(1)).

(17) ***SHOP dependent coverage.*** The term *SHOP dependent coverage* refers to coverage offered through SHOP separately to any individual who is or may become eligible for coverage under the terms of a group health plan offered through SHOP because of a relationship to a participant-employee, whether or not a dependent of the participant-employee under section 152 of the Internal Revenue Code. The term *SHOP dependent coverage* does not include coverage such as family coverage, which includes coverage of the participant-employee.

(18) ***Small Business Health Options Program (SHOP).*** The term *Small Business Health Options Program (SHOP)* means an Exchange established pursuant to section 1311 of the Affordable Care Act and defined in 45 CFR 155.20.

(19) ***State.*** The term *State* means a State as defined in section 7701(a)(10), including the District of Columbia.

(20) ***Tax-exempt eligible small employer.*** The term *tax-exempt eligible small employer* means an eligible small employer that is exempt from federal income tax under section 501(a) as an organization described in section 501(c).

(21) ***Tier.*** The term *tier* refers to a category of coverage under a benefits package that varies only by the number of individuals covered. For example, employee-only coverage, dependent coverage, and family coverage would constitute three separate tiers of coverage.

(22) ***Tobacco surcharge.*** The term *tobacco surcharge* means any allowable differential that is charged for insurance in the SHOP Exchange that is attributable to tobacco use as the term tobacco use is defined in 45 CFR 147.102(a)(1)(iv).

(23) ***United States.*** The term *United States* means United States as defined in section 7701(a)(9).

(24) ***Wages.*** The term *wages* for purposes of section 45R means wages as defined under section 3121(a) for purposes of the Federal Insurance Contributions Act (FICA), determined without regard to the social security wage base limitation under section 3121(a)(1).

(25) ***Wellness program.*** The term *wellness program* for purposes of section 45R means a program of health promotion or disease prevention subject to the requirements of § 54.9802-1(f).

(b) ***Effective/applicability date.*** This section is applicable for periods after 2013. For rules relating to certain plan years beginning in 2014, see § 1.45R-3(i).

[T.D. 9672, 79 FR 36646, June 30, 2014]

§ 1.45R-2 Eligibility for the credit.

(a) ***Eligible small employer.*** To be eligible for the credit under section 45R, an employer must be an eligible small employer. In order to be an eligible small employer, with respect to any taxable year, an employer must have no more than 25 full-time equivalent employees (FTEs), must have in effect a qualifying arrangement, and the average annual wages of the employer's FTEs must not exceed an amount equal to twice the dollar amount in effect under § 1.45R-3(c)(2). For purposes of eligibility for the credit for taxable years beginning in or after 2014, a qualifying arrangement is an arrangement that requires an employer to make a nonelective contribution on behalf of each employee who enrolls in a qualified health plan (QHP) offered to employees through a small business health options program (SHOP) Exchange in an amount equal to a uniform percentage (not less than 50 percent) of the premium cost of the QHP. Notwithstanding the foregoing, an employer that is an agency or instrumentality of the federal government, or of a State, local or Indian tribal government, is not an eligible small employer if it is not an organization described in section 501(c) that is exempt from tax under section 501(a). An employer does not fail to be an eligible small employer merely because its employees are not performing services in a trade or business of the employer. An employer located outside the United States (including an employer located in a U.S. territory) must have income effectively connected with the conduct of a trade or business in the United States, and otherwise meet the requirements of this section, to be an eligible small employer. For eligibility standards for SHOP related to foreign employers, see 45 CFR 155.710. Paragraphs (b) through (f) of this section provide the rules for determining whether the requirements to be an eligible small employer are met, including rules related to identifying and counting the number of the employer's FTEs, counting the employees' hours of service, and determining the employer's average annual FTE wages for the taxable year. For rules on determining whether the uniform percentage requirement is met, see § 1.45R-4.

(b) ***Application of section 414 employer aggregation rules.*** All employers treated as a single employer under section 414(b), (c), (m) or (o) are treated as a single employer for purposes of this section. Thus, all employees of a controlled group under section 414(b), (c) or (o), or an affiliated service group under section 414(m), are taken into account in determining whether any member of the controlled group or affiliated service group is an eligible small employer. Similarly, all wages paid to, and premiums paid for, employees by the members of the controlled group or affiliated service group are taken into account when determining the amount of the credit for a group treated as a single employer under these rules.

(c) ***Employees taken into account.*** To be eligible for the credit, an employer must have employees as defined in § 1.45R-1(a)(5) during the taxable year. All such employees of the eligible small employer are taken into account for purposes of determining the employer's FTEs and average annual FTE wages. Employees include employees who terminate employment during the year for which the credit is being claimed, employees covered under a collective bargaining agreement, and employees who do not enroll in a QHP offered by the employer through a SHOP Exchange.

(d) ***Determining the hours of service performed by employees —***

(1) ***In general.*** An employee's hours of service for a year include each hour for which an employee is paid, or entitled to payment, for the performance of duties for the employer during the employer's taxable year. It also includes each hour for which an employee is paid, or entitled to payment, by the employer on account of a period of time during which no duties are performed due to vacation, holiday, illness, incapacity (including disability), layoff, jury duty, military duty or leave of absence (except that no more than 160 hours of service are required to be counted for an employee on account of any single continuous period during which the employee performs no duties).

(2) ***Permissible methods.*** In calculating the total number of hours of service that must be taken into account for an employee during the taxable year, eligible small employers need not use the same method for all employees, and may apply different methods for different classifications of employees if the classifications are reasonable and consistently applied. Eligible small employers may change the method for calculating employees' hours of service for each taxable year. An eligible small employer may use any of the following three methods.

(i) ***Actual hours worked.*** An employer may use the actual hours of service provided by employees including hours worked and any other hours for which payment is made or due (as described in paragraph (d)(1) of this section).

(ii) ***Days-worked equivalency.*** An employer may use a days-worked equivalency whereby the employee is credited with 8 hours of service for each day for which the employee would be required to be credited with at least one hour of service under paragraph (d)(1) of this section.

(iii) ***Weeks-worked equivalency.*** An employer may use a weeks-worked equivalency whereby the employee is credited with 40 hours of service for each week for which the employee would be required to be credited with at least one hour of service under paragraph (d)(1) of this section.

(3) ***Examples.*** The following examples illustrate the rules of paragraph (d) of this section:

> *Example 1. Counting hours of service by hours actually worked or for which payment is made or due.* (i) *Facts.* An eligible small employer (Employer) has payroll records that indicate that Employee A worked 2,000 hours and that Employer paid Employee A for an additional 80 hours on account of vacation, holiday and illness. Employer uses the actual hours worked method described in paragraph (d)(2)(i) of this section.
> (ii) *Conclusion.* Under this method of counting hours, Employee A must be credited with 2,080 hours of service (2,000 hours worked and 80 hours for which payment was made or due).

> *Example 2. Counting hours of service under days-worked equivalency.* (i) *Facts.* Employee B worked from 8:00 am to 12:00 pm every day for 200 days. Employer uses the days-worked equivalency method described in paragraph (d)(2)(ii) of this section.
> (ii) *Conclusion.* Under this method of counting hours, Employee B must be credited with 1,600 hours of service (8 hours for each day Employee B would otherwise be credited with at least 1 hour of service × 200 days).

Example 3. Counting hours of service under weeks-worked equivalency. (i) *Facts.* Employee C worked 49 weeks, took 2 weeks of vacation with pay, and took 1 week of leave without pay. Employer uses the weeks-worked equivalency method described in paragraph (d)(2)(iii) of this section.
(ii) *Conclusion.* Under this method of counting hours, Employee C must be credited with 2,040 hours of service (40 hours for each week during which Employee C would otherwise be credited with at least 1 hour of service × 51 weeks).

Example 4. Excluded employees. (i) *Facts.* Employee D worked 3 consecutive weeks at 32 hours per week during the holiday season. Employee D did not work during the remainder of the year. Employee E worked limited hours after school from time to time through the year for a total of 350 hours. Employee E does not work through the summer. Employer uses the actual hours worked method described in paragraph (d)(2)(i) of this section.
(ii) *Conclusion.* Employee D is a seasonal employee who worked for 120 days or less for Employer during the year. Employee D's hours are not counted when determining the hours of service of Employer's employees. Employee E works throughout most of the year and is not a seasonal employee. Employer counts Employee E's 350 hours of service during the year.

(e) ***FTE Calculation*** —

(1) ***In general.*** The number of an employer's FTEs is determined by dividing the total hours of service, determined in accordance with paragraph (d) of this section, credited during the year to employees taken into account under paragraph (c) of this section (but not more than 2,080 hours for any employee) by 2,080. The result, if not a whole number, is then rounded to the next lowest whole number. If, however, after dividing the total hours of service by 2,080, the resulting number is less than one, the employer rounds up to one FTE.

(2) ***Example.*** The following example illustrates the provisions of paragraph (e) of this section:

Example. Determining the number of FTEs. (i) *Facts.* A sole proprietor pays 5 employees wages for 2,080 hours each, pays 3 employees wages for 1,040 hours each, and pays 1 employee wages for 2,300 hours. One of the employees working 2,080 hours is the sole proprietor's nephew. The sole proprietor's FTEs would be calculated as follows: 8,320 hours of service for the 4 employees paid for 2,080 hours each (4 × 2,080); the sole proprietor's nephew is excluded from the FTE calculation; 3,120 hours of service for the 3 employees paid for 1,040 hours each (3 × 1,040); and 2,080 hours of service for the 1 employee paid for 2,300 hours (lesser of 2,300 and 2,080). The sum of the included hours of service equals 13,520 hours of service.
(ii) *Conclusion.* The sole proprietor's FTEs equal 6 (13,520 divided by 2,080 = 6.5, rounded to the next lowest whole number).

(f) ***Determining the employer's average annual FTE wages*** —

(1) ***In general.*** All wages paid to employees (including overtime pay) are taken into account in computing an eligible small employer's average annual FTE wages. The average annual wages paid by an employer for a taxable year is determined by dividing the total wages paid by the eligible small employer during the employer's taxable year to employees taken into account under paragraph (c) of this section by the number of the employer's FTEs for the year. The result is then rounded down to the nearest $1,000 (if not otherwise a multiple of $1,000). For purposes of determining the employer's average annual wages for the taxable year, only wages that are paid for hours of service determined under paragraph (d) of this section are taken into account.

(2) ***Example.*** The following example illustrates the provision of paragraphs (e) and (f) of this section:

> *Example.* (i) *Facts.* An employer has 26 FTEs with average annual wages of $23,000. Only 22 of the employer's employees enroll for coverage offered by the employer through a SHOP Exchange.
> (ii) *Conclusion.* The hours of service and wages of all employees are taken into consideration in determining whether the employer is an eligible small employer for purposes of the credit. Because the employer does not have fewer than 25 FTEs for the taxable year, the employer is not an eligible small employer for purposes of this section, even if fewer than 25 employees (or FTEs) enroll for coverage through the SHOP Exchange.

(g) ***Effective/applicability date.*** This section is applicable for periods after 2013. For transition rules relating to certain plan years beginning in 2014, see § 1.45R-3(i).

[T.D. 9672, 79 FR 36646, June 30, 2014]

§ 1.45R-3 Calculating the credit.

(a) ***In general.*** The tax credit available to an eligible small employer equals 50 percent of the eligible small employer's premium payments made on behalf of its employees under a qualifying arrangement, or in the case of a tax-exempt eligible small employer, 35 percent of the employer's premium payments made on behalf of its employees under a qualifying arrangement. The employer's tax credit is subject to the following adjustments and limitations:

(1) The average premium limitation for the small group market in the rating area in which the employee enrolls for coverage, described in paragraph (b) of this section;

(2) The credit phaseout described in paragraph (c) of this section;

(3) The net premium payment limitation in the case of State credits or subsidies described in paragraph (d) of this section;

(4) The payroll tax limitation for a tax-exempt eligible small employer described in paragraph (e) of this section;

(5) The two-consecutive-taxable year-credit period limitation, described in paragraph (f) of this section;

(6) The rules with respect to the premium payments taken into account, described in paragraph (g) of this section;

(7) The rules with respect to credits applicable to trusts, estates, regulated investment companies, real estate investment trusts and cooperatives described in paragraph (h) of this section; and

(8) The transition relief for 2014 described in paragraph (i) of this section.

(b) ***Average premium limitation*** —

(1) ***In general.*** The amount of an eligible small employer's premium payments that is taken into account in calculating the credit is limited to the premium payments the employer would have made under the same arrangement if the average premium for the small group market in the rating area in which the employee enrolls for coverage were substituted for the actual premium.

(2) ***Examples.*** The following examples illustrate the provisions of paragraph (b)(1) of this section:

> *Example 1. Comparing premium payments to average premium for small group market.* (i) *Facts.* An eligible small employer (Employer) offers a health insurance plan with employee-only and SHOP dependent coverage through a small business options program (SHOP) Exchange. Employer has 9 full-time equivalent employees (FTEs) with average annual wages of $23,000 per FTE. All 9 employees are employees as defined under § 1.45R-1(a)(5). Six employees are enrolled in employee-only coverage and 5 of these 6 employees have also enrolled either one child or one spouse in SHOP dependent coverage. Employer pays 50% of the premiums for all employees enrolled in employee-only coverage and 50% of the premiums for all employees who enrolled family members in SHOP dependent coverage (and the employee is responsible for the remainder in each case). The premiums are $4,000 a year for employee-only coverage and $3,000 a year for each individual enrolled in SHOP dependent coverage. The average premium for the small group market in Employer's rating area is $5,000 for employee-only coverage and $4,000 for each individual enrolled in SHOP dependent coverage. Employer's premium payments for each FTE ($2,000 for employee-only coverage and $1,500 for SHOP dependent coverage) do not exceed 50 percent of the average premium for the small group market in Employer's rating area ($2,500 for employee-only coverage and $2,000 for each individual enrolled in SHOP dependent coverage).
> (ii) *Conclusion.* The amount of premiums paid by Employer for purposes of computing the credit equals $19,500 ((6 × $2,000) plus (5 × $1,500)).

> *Example 2. Premium payments exceeding average premium for small group market.* (i) *Facts.* Same facts as *Example* 1, except that the premiums are $6,000 for employee-only coverage and $5,000 for each dependent enrolled in coverage. Employer's premium payments for each employee ($3,000 for employee-only coverage and $2,500 for SHOP dependent coverage) exceed 50% of the average premium for the small group market in Employer's rating area ($2,500 for self-only coverage and $2,000 for family coverage).

(ii) *Conclusion.* The amount of premiums paid by Employer for purposes of computing the credit equals $25,000 ((6 × $2,500) plus (5 × $2,000)).

(c) ***Credit phaseout*** —

(1) ***In general.*** The tax credit is subject to a reduction (but not reduced below zero) if the employer's FTEs exceed 10 or average annual FTE wages exceed $25,000. If the number of FTEs exceeds 10, the reduction is determined by multiplying the otherwise applicable credit amount by a fraction, the numerator of which is the number of FTEs in excess of 10 and the denominator of which is 15. If average annual FTE wages exceed $25,000, the reduction is determined by multiplying the otherwise applicable credit amount by a fraction, the numerator of which is the amount by which average annual FTE wages exceed $25,000 and the denominator of which is $25,000. In both cases, the result of the calculation is subtracted from the otherwise applicable credit to determine the credit to which the employer is entitled. For an employer with both more than 10 FTEs and average annual FTE wages exceeding $25,000, the total reduction is the sum of the two reductions.

(2) ***$25,000 dollar amount adjusted for inflation.*** For taxable years beginning in a calendar year after 2013, each reference to "$25,000" in paragraph (c)(1) of this section is replaced with a dollar amount equal to $25,000 multiplied by the cost-of-living adjustment under section 1(f)(3) for the calendar year, determined by substituting "calendar year 2012" for "calendar year 1992" in section 1(f)(3)(B).

(3) ***Examples.*** The following examples illustrate the provisions of paragraph (c) this section. For purposes of these examples, no employer is a tax-exempt organization and no other adjustments or limitations on the credit apply other than those adjustments and limitations explicitly set forth in the example.

Example 1. Calculating the maximum credit for an eligible small employer without an applicable credit phaseout. (i) *Facts.* An eligible small employer (Employer) has 9 FTEs with average annual wages of $23,000. Employer pays $72,000 in health insurance premiums for those employees (which does not exceed the total average premium for the small group market in the rating area), and otherwise meets the requirements for the credit.
(ii) *Conclusion.* Employer's credit equals $36,000 (50% × $72,000).

Example 2. Calculating the credit phaseout if the number of FTEs exceeds 10 or average annual wages exceed $25,000, as adjusted for inflation. (i) *Facts.* An eligible small employer (Employer) has 12 FTEs and average annual FTE wages of $30,000 in a year when the amount in paragraph (c)(1) of this section, as adjusted for inflation, is $25,000. Employer pays $96,000 in health insurance premiums for its employees (which does not exceed the average premium for the small group market in the rating area) and otherwise meets the requirements for the credit.
(ii) *Conclusion.* The initial amount of the credit is determined before any reduction (50% × $96,000) = $48,000. The credit reduction for FTEs in excess of 10 is $6,400 ($48,000 × 2/15). The credit reduction for average annual FTE wages in excess of $25,000 is $9,600 ($48,000 × $5,000/$25,000), resulting in a total credit reduction of $16,000 ($6,400 + $9,600). Employer's total tax credit equals $32,000 ($48,000−$16,000).

(d) *State credits and subsidies for health insurance* —

(1) ***Payments to employer.*** If the employer is entitled to a State tax credit or a premium subsidy that is paid directly to the employer, the premium payment made by the employer is not reduced by the credit or subsidy for purposes of determining whether the employer has satisfied the requirement to pay an amount equal to a uniform percentage (not less than 50 percent) of the premium cost. Also, except as described in paragraph (d)(3) of this section, the maximum amount of the credit is not reduced by reason of a State tax credit or subsidy or by reason of payments by a State directly to an employer.

(2) ***Payments to issuer.*** If a State makes payments directly to an insurance company (or another entity licensed under State law to engage in the business of insurance) to pay a portion of the premium for coverage of an employee enrolled for coverage through a SHOP Exchange, the State is treated as making these payments on behalf of the employer for purposes of determining whether the employer has satisfied the requirement to pay an amount equal to a uniform percentage (not less than 50 percent) of the premium cost of coverage. Also, except as described below in paragraph (d)(3) of this section, these premium payments by the State are treated as an employer contribution under this section for purposes of calculating the credit.

(3) ***Credits may not exceed net premium payment.*** Regardless of the application of paragraphs (d)(1) and (2) of this section, in no event may the amount of the credit exceed the amount of the employer's net premium payments as defined in § 1.45R-1(a)(11).

(4) ***Examples.*** The following examples illustrate the provisions of paragraphs (d)(1) through (3) of this section. For purposes of these examples, each employer is an eligible small employer that is not a tax-exempt organization and the eligible small employer's taxable year and plan year begin during or after 2014. No other adjustments or limitations on the credit apply other than those adjustments and limitations explicitly set forth in the example.

> *Example 1.* *State premium subsidy paid directly to employer.* (i) *Facts.* The State in which an eligible small employer (Employer) operates provides a health insurance premium subsidy of up to 40% of the health insurance premiums for each eligible employee. The State pays the subsidy directly to Employer. Employer has one employee, Employee D. Employee D's health insurance premiums are $100 per month and are paid as follows: $80 by Employer and $20 by Employee D through salary reductions to a cafeteria plan. The State pays Employer $40 per month as a subsidy for Employer's payment of insurance premiums on behalf of Employee D. Employer is otherwise an eligible small employer that meets the requirements for the credit. (ii) *Conclusion.* For purposes of calculating the credit, the amount of premiums paid by the employer is $80 per month (the premium payment by the Employer without regard to the subsidy from the State). The maximum credit is $40 ($80 × 50%).

> *Example 2.* *State premium subsidy paid directly to insurance company.* (i) *Facts.* The State in which Employer operates provides a health insurance premium subsidy of up to 30% for each eligible employee. Employer has one employee, Employee E. Employee E is enrolled in employee-only coverage through a qualified health plan (QHP) offered by Employer through a SHOP Exchange. Employee E's health insurance premiums are $100 per month and are paid

as follows: $50 by Employer; $30 by the State and $20 by the employee. The State pays the $30 per month directly to the insurance company and the insurance company bills Employer for the employer and employee's share, which equal $70 per month. Employer is otherwise an eligible small employer that meets the requirements for the credit.
(ii) *Conclusion.* For purposes of calculating the amount of the credit, the amount of premiums paid by Employer is $80 per month (the sum of Employer's payment and the State's payment). The maximum credit is $40 ($80 × 50%).

Example 3. *Credit limited by employer's net premium payment.* (i) *Facts.* The State in which Employer operates provides a health insurance premium subsidy of up to 50% for each eligible employee. Employer has one employee, Employee F. Employee F is enrolled in employee-only coverage under the QHP offered to Employee F by Employer through a SHOP Exchange. Employee F's health insurance premiums are $100 per month and are paid as follows: $20 by Employer; $50 by the State and $30 by Employee F. The State pays the $50 per month directly to the insurance company and the insurance company bills Employer for the employer's and employee's shares, which total $50 per month. The amount of premiums paid by Employer (the sum of Employer's payment and the State's payment) is $70 per month, which is more than 50% of the $100 monthly premium payment. The amount of the premium for calculating the credit is also $70 per month.
(ii) *Conclusion.* The maximum credit without adjustments or limitations is $35 ($70 × 50%). Employer's net premium payment is $20 (the amount actually paid by Employer excluding the State subsidy). Because the credit may not exceed Employer's net premium payment, the credit is $20 (the lesser of $35 or $20).

(e) ***Payroll tax limitation for tax-exempt eligible small employers*** —

(1) ***In general.*** For a tax-exempt eligible employer, the amount of the credit claimed cannot exceed the total amount of payroll taxes (as defined in § 1.45R-1(a)(13)) of the employer during the calendar year in which the taxable year begins.

(2) ***Example.*** The following example illustrates the provisions of paragraph (e)(1) of this section. For purposes of this example, the eligible small employer's taxable year and plan year begin during or after 2014. No other adjustments or limitations on the credit apply other than those adjustments and limitations explicitly set forth in the example.

Example. *Calculating the maximum credit for a tax-exempt eligible small employer.* (i) *Facts.* Employer is a tax-exempt eligible small employer that has 10 FTEs with average annual wages of $21,000. Employer pays $80,000 in health insurance premiums for its employees (which does not exceed the average premium for the small group market in the rating area) and otherwise meets the requirements for the credit. The total amount of Employer's payroll taxes equals $30,000.

(ii) *Conclusion.* The initial amount of the credit is determined before any reduction: (35% × $80,000) = $28,000, and Employer's payroll taxes are $30,000. The total tax credit equals $28,000 (the lesser of $28,000 and $30,000).

(f) ***Two-consecutive-taxable-year credit period limitation.*** The credit is available to an eligible small employer, including a tax-exempt eligible small employer, only during that employer's credit period. For a transition rule for 2014, see paragraph (i) of this section. To prevent the avoidance of the two-year limit on the credit period through the use of successor entities, a successor entity and a predecessor entity are treated as the same employer. For this purpose, the rules for identifying successor entities under § 31.3121(a)(1)-1(b) apply. Accordingly, for example, if an eligible small employer claims the credit for the 2014 and 2015 taxable years, that eligible small employer's credit period will have expired so that any successor employer to that eligible small employer will not be able to claim the credit for any subsequent taxable years.

(g) ***Premium payments by the employer for a taxable year —***

(1) ***In general.*** Only premiums paid by an eligible small employer or tax-exempt eligible small employer on behalf of each employee enrolled in a QHP or payments paid to the issuer in accordance with paragraph (d)(2) of this section are counted in calculating the credit. If an eligible small employer pays only a portion of the premiums for the coverage provided to employees (with employees paying the rest), only the portion paid by the employer is taken into account. Premiums paid on behalf of seasonal workers may be counted in determining the amount of the credit (even though seasonal worker wages and hours of service are not included in the FTE calculation and average annual FTE wage calculation unless the seasonal worker works for the employer on more than 120 days during the taxable year). Subject to the average premium limitation, premiums paid on behalf of an employee with respect to any individuals who are or may become eligible for coverage under the terms of the plan because of a relationship to the employee (including through family coverage or SHOP dependent coverage) may also be taken into account in determining the amount of the credit. (However, premiums paid for SHOP dependent coverage are not taken into account in determining whether the uniform percentage requirement is met, see § 1.45R-4(b)(5).)

(2) ***Excluded amounts —***

(i) ***Salary reduction amounts.*** Any premium paid pursuant to a salary reduction arrangement under a section 125 cafeteria plan is not treated as paid by the employer for purposes of section 45R and these regulations. For this purpose, premiums paid with employer-provided flex credits that employees may elect to receive as cash or other taxable benefits are treated as paid pursuant to a salary reduction arrangement under a section 125 cafeteria plan.

(ii) ***HSAs, HRAs, and FSAs.*** Employer contributions to, or amounts made available under, health savings accounts, reimbursement arrangements, and health flexible spending arrangements are not taken into account in determining the premium payments by the employer for a taxable year.

(h) ***Rules applicable to trusts, estates, regulated investment companies, real estate investment trusts and cooperative organizations.*** Rules similar to the rules of section 52(d) and (e) and the regulations thereunder apply in calculating and apportioning the credit with respect to a trust, estate, a regulated investment company or real estate investment trusts or cooperative organization.

(i) ***Transition rule for 2014 —***

(1) ***In general.*** This paragraph (i) applies if as of August 26, 2013, an eligible small employer offers coverage for a health plan year that begins on a date other than the first day of its taxable year. In such a case, if the eligible small employer has a health plan year beginning after January 1, 2014 but before January 1, 2015 (2014 health plan year) that begins after the start of its first taxable year beginning on or after January 1, 2014 (2014 taxable year), and the employer offers one or more QHPs to its employees through a SHOP Exchange as of the first day of its 2014 health plan year, then the eligible small employer is treated as offering coverage through a SHOP Exchange for its entire 2014 taxable year for purposes of section 45R if the health care coverage provided from the first day of the 2014 taxable year through the day immediately preceding the first day of the 2014 health plan year would have qualified for a credit under section 45R using the rules applicable to taxable years beginning before January 1, 2014. If the eligible small employer claims the section 45R credit in the 2014 taxable year, the 2014 taxable year begins the first year of the credit period.

(2) ***Example.*** The following example illustrates the rule of this paragraph (i) of this section. For purposes of this example, it is assumed that the eligible small employer is not a tax-exempt organization and that no other adjustments or limitations on the credit apply other than those adjustments and limitations explicitly set forth in the example.

> *Example.* (i) *Facts.* An eligible small employer (Employer) has a 2014 taxable year that begins January 1, 2014 and ends on December 31, 2014. As of August 26, 2013, Employer had a 2014 health plan year that begins July 1, 2014 and ends June 30, 2015. Employer offers a QHP through a SHOP Exchange the coverage under which begins July 1, 2014. Employer also provides other coverage from January 1, 2014 through June 30, 2014 that would have qualified for a credit under section 45R based on the rules applicable to taxable years beginning before 2014.
> (ii) *Conclusion.* Employer may claim the credit at the 50% rate under section 45R for the entire 2014 taxable year using the rules under this paragraph (i) of this section. Accordingly, in calculating the credit, Employer may count premiums paid for the coverage from January 1, 2014 through June 30, 2014, as well as premiums paid for the coverage from July 1, 2014 through December 31, 2014. If Employer claims the credit for the 2014 taxable year, that taxable year is the first year of the credit period.

(j) ***Effective/applicability date.*** This section is applicable for periods after 2013. For transition rules relating to certain plan years beginning in 2014, see paragraph (i) of this section.

[T.D. 9672, 79 FR 36646, June 30, 2014]

§ 1.45R-4 Uniform percentage of premium paid.

(a) ***In general.*** An eligible small employer must pay a uniform percentage (not less than 50 percent) of the premium for each employee enrolled in a qualified health plan (QHP) offered to employees by the employer through a small business health options program (SHOP) Exchange.

(b) ***Employers offering one QHP.*** An employer that offers a single QHP through a SHOP Exchange must satisfy the requirements of this paragraph (b).

(1) ***Employers offering one QHP, employee-only coverage, composite billing.*** For an eligible small employer offering employee-only coverage and using composite billing, the employer satisfies the requirements of this paragraph if it pays the same amount toward the premium for each employee receiving employee-only coverage under the QHP, and that amount is equal to at least 50 percent of the premium for employee-only coverage.

(2) ***Employers offering one QHP, other tiers of coverage, composite billing.*** For an eligible small employer offering one QHP providing at least one tier of coverage with a higher premium than employee-only coverage and using composite billing, the employer satisfies the requirements of this paragraph (b)(2) if it either—

(i) Pays an amount for each employee enrolled in that more expensive tier of coverage that is the same for all employees and that is no less than the amount that the employer would have contributed toward employee-only coverage for that employee, or

(ii) Meets the requirements of paragraph (b)(1) of this section for each tier of coverage that if offers.

(3) ***Employers offering one QHP, employee-only coverage, list billing.*** For an eligible small employer offering one QHP providing only employee-only coverage and using list billing, the employer satisfies the requirements of this paragraph (b)(3) if either—

(i) The employer pays toward the premium an amount equal to a uniform percentage (not less than 50 percent) of the premium charged for each employee, or

(ii) The employer converts the individual premiums for employee-only coverage into an employer-computed composite rate for self-only coverage, and, if an employee contribution is required, each employee who receives coverage under the QHP pays a uniform amount toward the employee-only premium that is no more than 50 percent of the employer-computed composite rate for employee-only coverage.

(4) ***Employers offering one QHP, other tiers of coverage, list billing.*** For an eligible small employer offering one QHP providing at least one tier of coverage with a higher premium than employee-only coverage and using list billing, the employer satisfies the requirements of this paragraph (b)(4) if it either—

(i) Pays toward the premium for each employee covered under each tier of coverage an amount equal to or exceeding the amount that the employer would have contributed with respect to that employee for employee-only coverage, calculated either based upon the actual premium that would have been charged by the insurer for that employee for employee-only coverage or based upon the employer-computed composite rate for employee-only coverage, or

(ii) Meets the requirements of paragraph (b)(3) of this section for each tier of coverage that it offers substituting the employer-computed composite rate for each tier of coverage for the employer-computed composite rate for employee-only coverage.

(5) ***Employers offering SHOP dependent coverage.*** If SHOP dependent coverage is offered through the SHOP Exchange, the employer does not fail to satisfy the uniform percentage requirement by contributing a different amount toward that SHOP dependent coverage, even if that contribution is zero. For treatment of premiums paid on behalf of an employee's dependents, see § 1.45R-3(g)(1).

(c) ***Employers offering more than one QHP.*** If an eligible small employer offers more than one QHP, the employer must satisfy the requirements of this paragraph (c). The employer may satisfy the requirements of this paragraph (c) in either of the following two ways:

(1) ***QHP-by-QHP method.*** The employer makes payments toward the premium with respect to each QHP for which the employer is claiming the credit that satisfy the uniform percentage requirement under paragraph (b) of this section on a QHP-by-QHP basis (so that the amounts or percentages of premium paid by the employer for each QHP need not be identical, but the payments with respect to each QHP must satisfy paragraph (b) of this section); or

(2) ***Reference QHP method.*** The employer designates a reference QHP and makes employer contributions in accordance with the following requirements—

(i) The employer determines a level of employer contributions for each employee such that, if all eligible employees enrolled in the reference QHP, the contributions would satisfy the uniform percentage requirement under paragraph (b) of this section, and

(ii) The employer allows each employee to apply an amount of employer contribution determined necessary to meet the uniform percentage requirement under paragraph (b) of this section either toward the reference QHP or toward the cost of coverage under any of the other available QHPs.

(d) ***Tobacco surcharges and wellness program discounts or rebates*** —

(i) ***Tobacco surcharges.*** The tobacco surcharge and amounts paid by the employer to cover the surcharge are not included in premiums for purposes of calculating the uniform percentage requirement, nor are payments of the surcharge treated as premium payments for purposes of calculating the credit. The uniform percentage requirement is also applied without regard to employee payment of the tobacco surcharges in cases in which all or part of the employee tobacco surcharges are not paid by the employer.

(ii) ***Wellness programs.*** If a plan of an employer provides a wellness program, for purposes of meeting the uniform percentage requirement any additional amount of the employer contribution attributable to an employee's participation in the wellness program over the employer contribution with respect to an employee that does not participate in the wellness program is not taken into account in calculating the uniform percentage requirement, whether the difference is due to a discount for participation or a surcharge for nonparticipation. The employer contribution for employees that do not participate in the wellness program must be at least 50 percent of the premium (including any premium surcharge for nonparticipation). However, for purposes of computing the credit, the employer contributions are taken into account, including those contributions attributable to an employee's participation in a wellness program.

(e) ***Special rules regarding employer compliance with applicable State or local law.*** An employer will be treated as satisfying the uniform percentage requirement if the failure to otherwise satisfy the uniform percentage requirement is attributable solely to additional employer contributions made to certain employees to comply with an applicable State or local law.

(f) ***Examples.*** The following examples illustrate the provisions of paragraphs (a) through (e) of this section:

> *Example 1.* (i) *Facts.* An eligible small employer (Employer) offers a QHP on a SHOP Exchange, Plan A, which uses composite billing. The premiums for Plan A are $5,000 per year for employee-only coverage, and $10,000 for family coverage. Employees can elect employee-only or family coverage under Plan A. Employer pays $3,000 (60% of the premium) toward employee-only coverage under Plan A and $6,000 (60% of the premium) toward family coverage under Plan A.

(ii) *Conclusion.* Employer's contributions of 60% of the premium for each tier of coverage satisfy the uniform percentage requirement.

Example 2. (i) *Facts.* Same facts as *Example 1,* except that Employer pays $3,000 (60% of the premium) for each employee electing employee-only coverage under Plan A and pays $3,000 (30% of the premium) for each employee electing family coverage under Plan A.
(ii) *Conclusion.* Employer's contributions of 60% of the premium toward employee-only coverage and the same dollar amount toward the premium for family coverage satisfy the uniform percentage requirement, even though the percentage is not the same.

Example 3. (i) *Facts.* Employer offers two QHPs, Plan A and Plan B, both of which use composite billing. The premiums for Plan A are $5,000 per year for employee-only coverage and $10,000 for family coverage. The premiums for Plan B are $7,000 per year for employee-only coverage and $13,000 for family coverage. Employees can elect employee-only or family coverage under either Plan A or Plan B. Employer pays $3,000 (60% of the premium) for each employee electing employee-only coverage under Plan A, $3,000 (30% of the premium) for each employee electing family coverage under Plan A, $3,500 (50% of the premium) for each employee electing employee-only coverage under Plan B, and $3,500 (27% of the premium) for each employee electing family coverage under Plan B.
(ii) *Conclusion.* Employer's contributions of 60% (or $3,000) of the premiums for employee-only coverage and the same dollar amounts toward the premium for family coverage under Plan A, and of 50% (or $3,500) of the premium for employee-only of coverage and the same dollar amount toward the premium for family coverage under Plan B, satisfy the uniform percentage requirement on a QHP-by-QHP basis; therefore the employer's contributions to both plans satisfy the uniform percentage requirement.

Example 4. (i) *Facts.* Same facts as *Example 3,* except that Employer designates Plan A as the reference QHP. Employer pays $2,500 (50% of the premium) for each employee electing employee-only coverage under Plan A and pays $2,500 of the premium for each employee electing family coverage under Plan A or either employee-only or family coverage under Plan B.
(ii) *Conclusion.* Employer's contribution of 50% (or $2,500) toward the premium of each employee enrolled under Plan A or Plan B satisfies the uniform percentage requirement.

Example 5. (i) *Facts.* Employer receives a list billing premium quote with respect to Plan X, a QHP offered by Employer on a SHOP Exchange for health insurance coverage for each of Employer's four employees. For Employee L, age 20, the employee-only premium is $3,000 per year, and the family premium is $8,000. For Employees M, N and O, each age 40, the employee-only premium is $5,000 per year and the family premium is $10,000. The total employee-only premium for the four employees is $18,000 ($3,000 + (3 × 5,000)). Employer calculates an employer-computed composite employee-only rate of $4,500 ($18,000/4). Employer offers to make contributions such

that each employee would need to pay $2,000 of the premium for employee-only coverage. Under this arrangement, Employer would contribute $1,000 toward employee-only coverage for L and $3,000 toward employee-only coverage for M, N, and O. In the event an employee elects family coverage, Employer would make the same contribution ($1,000 for L or $3,000 for M, N, or O) toward the family premium.
(ii) *Conclusion.* Employer satisfies the uniform percentage requirement because it offers and makes contributions based on an employer-calculated composite employee-only rate such that, to receive employee-only coverage, each employee must pay a uniform amount which is not more than 50% of the composite rate, and it allows employees to use the same employer contributions toward family coverage.

Example 6. (i) *Facts.* Same facts as *Example 5,* except that Employer calculates an employer-computed composite family rate of $9,500 (($8,000 + 3 × 10,000)/4) and requires each employee to pay $4,000 of the premium for family coverage.
(ii) *Conclusion.* Employer satisfies the uniform percentage requirement because it offers and makes contributions based on a calculated employee-only and family rate such that, to receive either employee-only or family coverage, each employee must pay a uniform amount which is not more than 50% of the composite rate for coverage of that tier.

Example 7. (i) *Facts.* Same facts as *Example 5,* except that Employer also receives a list billing premium quote from Plan Y with respect to a second QHP offered by Employer on a SHOP Exchange for each of Employer's 4 employees. Plan Y's quote for Employee L, age 20, is $4,000 per year for employee-only coverage or $12,000 per year for family coverage. For Employees M, N and O, each age 40, the premium is $7,000 per year for employee-only coverage or $15,000 per year for family coverage. The total employee-only premium under Plan Y is $25,000 ($4,000 + (3 × 7,000)). The employer-computed composite employee-only rate is $6,250 ($25,000/4). Employer designates Plan X as the reference plan. Employer offers to make contributions based on the employer-calculated composite premium for the reference QHP (Plan X) such that each employee has to contribute $2,000 to receive employee-only coverage through Plan X. Under this arrangement, Employer would contribute $1,000 toward employee-only coverage for L and $3,000 toward employee-only coverage for M, N, and O. In the event an employee elects family coverage through Plan X or either employee-only or family coverage through Plan Y, Employer would make the same contributions ($1,000 for L or $3,000 for M, N, or O) toward that coverage.
(ii) *Conclusion.* Employer satisfies the uniform percentage requirement because it offers and makes contributions based on the employer-calculated composite employee-only premium for the Plan X reference QHP such that, in order to receive employee-only coverage, each employee must pay a uniform amount which is not more than 50% of the employee-only composite premium of the reference QHP; it allows employees to use the same employer contributions toward family coverage in the reference QHP or coverage through another QHPs.

Example 8. (i) *Facts.* Employer offers employee-only and SHOP dependent coverage through a QHP to its three employees using list billing. All three employees enroll in the employee-only coverage, and one employee elects to enroll two dependents in SHOP dependent coverage. Employer contributes 100% of the employee-only premium costs, but only contributes 25% of the premium costs toward SHOP dependent coverage.
(ii) *Conclusion.* Employer's contribution of 100% toward the premium costs of employee-only coverage satisfies the uniform percentage requirement, even though Employer is only contributing 25% toward SHOP dependent coverage.

Example 9. (i) *Facts.* Employer has five employees. Employer is located in a State that requires employers to pay 50% of employees' premium costs, but also requires that an employee's contribution not exceed a certain percentage of the employee's monthly gross earnings from that employer. Employer offers to pay 50% of the premium costs for all its employees, and to comply with the State law, Employer contributes more than 50% of the premium costs for two of its employees.
(ii) *Conclusion.* Employer satisfies the uniform percentage requirement because its failure to otherwise satisfy the uniform percentage requirement is attributable solely to compliance with the applicable State or local law.

Example 10. (i) *Facts.* Employer has three employees who all enroll in employee-only coverage. Employer is located in a State that has a tobacco surcharge on the premiums of employees who use tobacco. One of Employer's employees smokes. Employer contributes 50% of the employee-only premium costs, but does not cover any of the tobacco surcharge for the employee who smokes.
(ii) *Conclusion.* Employer's contribution of 50% toward the premium costs of employee-only coverage satisfies the uniform percentage requirement. Tobacco surcharges are not factored into premiums when calculating the uniform percentage requirement.

Example 11. (i) *Facts.* Employer has five employees who all enroll in employee-only coverage. Employer offers a wellness program that reduces the employee share of the premium for employees who participate in the wellness program. Employer contributes 50% of the premium costs of employee-only coverage for employees who do not participate in the wellness program and 55% of the premium costs of employee-only coverage for employees who participate in the wellness program. Three of the five employees participate in the wellness program.
(ii) *Conclusion.* Employer's contribution of 50% toward the premium costs of employee-only coverage for the two employees who do not participate in the wellness program and 55% toward the premium costs of employee-only coverage for three employees who participate in the wellness program satisfies the uniform percentage requirement because the additional 5% contribution due to the employees' participation in the wellness program is not taken into account. However, the additional 5% contributions are taken into account for purposes of calculating the credit.

(g) ***Effective/applicability date.*** This section is applicable for periods after 2013. For transition rules relating to certain plan years starting in 2014, see § 1.45R-3(i).

[T.D. 9672, 79 FR 36646, June 30, 2014]

§ 1.45R-5 Claiming the credit.

(a) ***Claiming the credit.*** The credit is a general business credit. It is claimed on an eligible small employer's annual income tax return and offsets an employer's actual tax liability for the year. The credit is claimed by attaching Form 8941, "Credit for Small Employer Health Insurance Premiums," to the eligible small employer's income tax return or, in the case of a tax-exempt eligible small employer, by attaching Form 8941 to the employer's Form 990-T, "Exempt Organization Business Income Tax Return." To claim the credit, a tax-exempt eligible small employer must file a form 990-T with an attached Form 8941, even if a Form 990-T would not otherwise be required to be filed.

(b) ***Estimated tax payments and alternative minimum tax (AMT) liability.*** An eligible small employer may reflect the credit in determining estimated tax payments for the year in which the credit applies in accordance with the estimated tax rules as set forth in sections 6654 and 6655 and the applicable regulations. An eligible small employer may also use the credit to offset the employer's alternative minimum tax (AMT) liability for the year, if any, subject to certain limitations based on the amount of the employer's regular tax liability, AMT liability and other allowable credits. See section 38(c)(1), as modified by section 38(c)(4)(B)(vi). However, an eligible small employer, including a tax-exempt eligible small employer, may not reduce its deposits and payments of employment tax (that is, income tax required to be withheld under section 3402, social security and Medicare tax under sections 3101 and 3111, and federal unemployment tax under section 3301) during the year in anticipation of the credit.

(c) ***Reduction of section 162 deduction.*** No deduction under section 162 is allowed for the eligible small employer for that portion of the health insurance premiums that is equal to the amount of the credit under § 1.45R-2.

(d) ***Effective/applicability date.*** This section is applicable for periods after 2013. For rules relating to certain plan years beginning in 2014, see § 1.45R-3(i).

[T.D. 9672, 79 FR 36646, June 30, 2014]

§§ 1.45U-1-1.45U-2 [Reserved]

§ 1.45U-3 Rules relating to the increased credit amount for prevailing wage.

(a) ***In general.*** If a qualified nuclear power facility satisfies the prevailing wage requirements of section 45(b)(7) and § 1.45-7 for any alteration or repair with respect to such qualified nuclear power facility within the meaning of section 45U(b)(1), and the recordkeeping and reporting requirements of § 1.45-12, then the amount of the zero-emission nuclear power production credit for the taxable year is equal to the credit amount determined under section 45U(a) multiplied by five.

(b) ***Qualifying Project Labor Agreement for a qualified nuclear power facility.*** For the purposes of section 45U and § 1.45-7(c)(6)(ii), in order to be a Qualifying Project Labor Agreement, such agreement must, at a minimum:

(1) Be a collective bargaining agreement with one or more labor organizations (as defined in 29 U.S.C. 152(5)) of which employees of the qualified nuclear power facility are members and such agreement establishes the terms and conditions of employment at the qualified nuclear power facility;

(2) Contain guarantees against strikes, lockouts, and similar job disruptions;

(3) Set forth effective, prompt, and mutually binding procedures for resolving labor disputes arising during the term of the collective bargaining agreement; and

(4) Contain provisions to pay wages at rates not less than the prevailing rates in accordance with subchapter IV of chapter 31 of title 40 of the United States Code.

(c) ***Applicability date.*** This section applies to alterations and repairs of qualified nuclear power facilities that are performed after June 25, 2024, for taxable years beginning after June 25, 2024. Taxpayers may apply this section to alterations and repairs of qualified nuclear power facilities that are performed prior to June 25, 2024 provided that taxpayers follow this section in its entirety and in a consistent manner.

[T.D. 9998, 89 FR 53271, June 25, 2024; T.D. 9998, 89 FR 66562, Aug. 16, 2024]

§ 1.45V-0 Table of contents.

This section lists the captions contained in §§ 1.45V-1, 1.45V-2, and 1.45V-4 through 1.45V-6.

§ 1.45V-1 Credit for production of clean hydrogen.

(a) Overview.

(b) Amount of credit.

(c) Determination of credit.

(d) Applicability date.

§ 1.45V-2 Special rules.

(a) Coordination with credit for carbon oxide sequestration.

(b) Anti-abuse rule.

(c) Recordkeeping.

(d) Applicability date.

§ 1.45V-4 Procedures for determining lifecycle greenhouse gas emissions rates for qualified clean hydrogen.

(a) Overview.

(b) Use of the 45VH2-GREET Model.

(c) Provisional emissions rate (PER).

(d) Use of energy attribute certificates (EACs).

(e) Carbon capture and sequestration.

(f) Use of methane from certain sources to produce hydrogen.

(g) Applicability date.

§ 1.45V-5 Procedures for verification of qualified clean hydrogen production and sale or use.

(a) In general.

(b) Requirements for verification reports.

(c) Requirements for the production attestation.

(d) Requirements for the sale or use attestation.

(e) Requirements for the conflict attestation.

(f) Requirements for the qualified verifier statement.

(g) General information on the taxpayer's hydrogen production facility.

(h) Qualified verifier.

(i) Unrelated party.

(j) Requirements for taxpayers claiming both the section 45V credit and the section 45 credit or the section 45U credit.

(k) Timely verification report.

(l) Applicability date.

§ 1.45V-6 Rules for determining the placed-in-service date for an existing facility that is modified or retrofitted to produce qualified clean hydrogen.

(a) Modification of an existing facility.

(b) Retrofit of an existing facility (80/20 Rule).

(c) Examples.

(d) Applicability date.

[T.D. 10023; 90 FR 2309, Jan. 10, 2025]

§ 1.45V-1 Credit for production of clean hydrogen.

(a) Overview—

(1) ***In general.*** For purposes of section 38 of the Internal Revenue Code (Code), the clean hydrogen production credit is determined under section 45V of the Code, so much of sections 6417 and 6418 of the Code that relate to section 45V, and the section 45V regulations (as defined in paragraph (a)(17) of this section). Paragraphs (a)(2) through (17) of this section provide generally applicable definitions of terms that, unless otherwise provided, apply for purposes of section 45V, the section 45V regulations, and any provision of the Code or this chapter that expressly refers to any provision of section 45V or the section 45V regulations. Paragraph (b) of this section provides rules for determining the amount of the section 45V credit for any taxable year, which generally depends on the kilograms of qualified clean hydrogen produced during the taxable year and the emissions intensity of the process used to produce such hydrogen, as well as whether certain requirements, including the requirements under § 1.45V-3, are satisfied. Paragraph (c) of this section provides rules regarding the taxable year for which a section 45V credit is determined. *See* § 1.45V-2 for special rules, including rules to coordinate the section 45V credit with the credit for carbon oxide sequestration determined under section 45Q of the Code, an anti-abuse rule, and recordkeeping requirements. *See* § 1.45V-3 for rules relating to the increased credit amount for satisfying the prevailing wage and apprenticeship requirements. *See* § 1.45V-4 for procedures to determine lifecycle greenhouse gas (GHG) emissions rates for qualified clean hydrogen and § 1.45V-5 for procedures for verification of qualified clean hydrogen production and sale or use. *See* § 1.45V-6 for rules to determine the placed in service date for an existing facility that is modified or retrofitted to produce qualified clean hydrogen. *See also* § 1.48-15 for procedures to elect to treat any qualified property that is part of a specified clean hydrogen production facility as energy property for purposes of section 48 of the Code.

(2) ***Applicable amount*** —

(i) ***In general.*** The term *applicable amount* means the amount equal to the applicable percentage of $0.60, provided that if any such amount is not a multiple of 0.1 cent, such amount is rounded to the nearest multiple of 0.1 cent.

(ii) ***Inflation adjustment.*** The $0.60 amount specified in section 45V(b)(1) and paragraph (a)(2)(i) of this section is adjusted annually by multiplying such amount by the inflation adjustment factor (as determined under section 45(e)(2) of the Code, determined by substituting “2022” for “1992” in section 45(e)(2)(B)) for the calendar year in which the qualified clean hydrogen is produced, provided that if any such amount as adjusted is not a multiple of 0.1 cent, such amount is rounded to the nearest multiple of 0.1 cent.

(3) ***Applicable percentage.*** The term *applicable percentage* means the percentage set forth in paragraphs (a)(3)(i) through (iv) of this section, which is determined according to the lifecycle GHG emissions rate of the process by which the qualified clean hydrogen is produced:

(i) In the case of any qualified clean hydrogen that is produced through a process that results in a lifecycle GHG emissions rate of not greater than 4 kilograms of carbon dioxide equivalent (CO2e) per kilogram of hydrogen, and not less than 2.5 kilograms of CO2e per kilogram of hydrogen, the applicable percentage is 20 percent.

(ii) In the case of any qualified clean hydrogen that is produced through a process that results in a lifecycle GHG emissions rate of less than 2.5 kilograms of CO2e per kilogram of hydrogen, and not less than 1.5 kilograms of CO2e per kilogram of hydrogen, the applicable percentage is 25 percent.

(iii) In the case of any qualified clean hydrogen that is produced through a process that results in a lifecycle GHG emissions rate of less than 1.5 kilograms of CO2e per kilogram of hydrogen, and not less than 0.45 kilograms of CO2e per kilogram of hydrogen, the applicable percentage is 33.4 percent.

(iv) In the case of any qualified clean hydrogen that is produced through a process that results in a lifecycle GHG emissions rate of less than 0.45 kilograms of CO2e per kilogram of hydrogen, the applicable percentage is 100 percent.

(4) ***Claim.*** With respect to the section 45V credit determined for qualified clean hydrogen produced by the taxpayer at a qualified clean hydrogen production facility, the term *claim* means the filing of a completed Form 7210, *Clean Hydrogen Production Credit,* or any successor form(s), with the taxpayer's Federal income tax return or annual information return for the taxable year in which the credit is determined, and includes the making of an election under section 6417 or 6418 and the regulations in this chapter under section 6417 or 6418, as applicable, with respect to such section 45V credit on the applicable entity's or eligible taxpayer's timely filed (including extensions) Federal income tax return or annual information return.

(5) ***Code.*** The term *Code* means the Internal Revenue Code.

(6) ***DOE.*** The term *DOE* means the U.S. Department of Energy.

(7) ***Facility*** —

(i) ***In general.*** For purposes of the definition of *qualified clean hydrogen production facility* provided at section 45V(c)(3) and paragraph (a)(14) of this section, unless otherwise specified, the term *facility* means a single production line that is used to produce qualified clean hydrogen. For this purpose, a single production line includes all components of property that function interdependently to produce qualified clean hydrogen through a process that results in the lifecycle GHG emissions rate used to determine the credit. Components of property function interdependently to produce qualified clean hydrogen if the placing in service of each component is dependent upon the placing in service of each of the other components to produce qualified clean hydrogen. A facility includes carbon capture equipment if such carbon capture equipment contributes to the lifecycle GHG emissions rate of the process by which the qualified clean hydrogen for which the credit is determined is produced.

(ii) ***Treatment of certain indirect production and post-production equipment.*** The term *facility* does not include—

(A) Equipment that is used to condition or transport hydrogen beyond the point of production; or

(B) Notwithstanding paragraph (a)(7)(iii) of this section, feedstock-related equipment, including production, purification, recovery, transportation, or transmission equipment; or electricity production equipment used to power the hydrogen production process, including any carbon capture equipment associated with the electricity production process.

(iii) ***Multipurpose components.*** Components that have a purpose in addition to the production of qualified clean hydrogen may be part of a facility if such components function interdependently with other components to produce qualified clean hydrogen.

(iv) ***Example.*** The following example illustrates the definition of facility provided in this paragraph (a)(7).

(A) ***Facts.*** Taxpayer owns a hydrogen production facility that is equipped with carbon capture equipment (as defined in § 1.45Q-2(c)), as distinguished from the carbon capture equipment described in paragraph (a)(7)(ii)(B) of this section. One purpose of this equipment is the capture of carbon oxides. The facility produces hydrogen through a process that results in a lifecycle GHG emissions rate of less than 0.45 kilograms of CO2e per kilogram of hydrogen. Without the carbon capture equipment, the facility could not produce hydrogen through a process that results in a lifecycle GHG emissions rate of less than 0.45 kilograms of CO2e per kilogram of hydrogen. Taxpayer determines the section 45V credit using a lifecycle GHG emissions rate of less than 0.45 kilograms of CO2e per kilogram of hydrogen.

(B) ***Analysis.*** Because the carbon capture equipment is functionally interdependent with other components of property to produce qualified clean hydrogen through a process that results in the lifecycle GHG emissions rate that Taxpayer uses to determine the credit, the carbon capture equipment is part of the facility for purposes of section 45V(c)(3) and the section 45V regulations, along with all other components of property that function interdependently with the carbon capture equipment to produce such hydrogen.

(8) ***Hydrogen gas stream.*** The term *hydrogen gas stream* means a flow of gases that includes hydrogen, either alone or with one or more other gases.

(9) ***Lifecycle GHG emissions*** —

(i) ***In general.*** Subject to section 45V(c)(1)(B) and paragraphs (a)(9)(ii) through(iv) of this section, and unless otherwise specified in the section 45V regulations, the term *lifecycle GHG emissions* has the meaning given the term *lifecycle greenhouse gas emissions* by 42 U.S.C. 7545(o)(1)(H), as in effect on August 16, 2022. For purposes of section 45V, lifecycle GHG emissions include emissions only through the point of production (well-to-gate), as determined under the 45VH2-GREET Model.

(ii) ***45VH2-GREET Model.*** Unless otherwise specified in the section 45V regulations, for purposes of the section 45V credit, the term 45VH2-GREET Model means the latest publicly available version of 45VH2-GREET developed by Argonne National Laboratory and published by the DOE, as provided in the instructions to the latest version of Form 7210, *Clean Hydrogen Production Credit,* or any successor form(s), on the first day of the taxable year during which the qualified clean hydrogen for which the taxpayer is claiming the section 45V credit was produced. If a version of 45VH2-GREET becomes publicly available after the first day of the taxable year of production (but still within such taxable year), then the taxpayer may, in its discretion, treat such later version of 45VH2-GREET as the 45VH2-GREET Model.

(iii) ***Emissions through the point of production (well-to-gate).*** The term *emissions through the point of production (well-to-gate)* means the aggregate lifecycle GHG emissions related to hydrogen produced at a hydrogen production facility during the taxable year through the point of production. It includes emissions associated with growth, gathering, extraction, processing, and delivery of feedstocks to a hydrogen production facility. It also includes the emissions associated with the hydrogen production process, inclusive of the production of a mixed gas or impurity, and the electricity used by the hydrogen production facility and any capture and sequestration of carbon dioxide generated by the hydrogen production facility. Examples of emissions outside of the well-to-gate boundary generally include, but are not limited to, emissions from the liquefaction, storage, or transport of hydrogen.

(iv) ***Certain emissions related to purification treated as through point of production.*** If the taxpayer knows or has reason to know the purification of a hydrogen gas stream (that is, removal of a mixed gas or impurity) is necessary for a hydrogen gas stream to be productively used, or to be sold for productive use, any lifecycle GHG emissions relating to such purification (for example, emissions from electricity used in purification, or carbon dioxide that is separated from a hydrogen gas stream and then vented as part of purification) are treated as emissions through the point of production (well-to-gate). Additionally, if the taxpayer knows or has reason to know that a hydrogen gas stream contains less than 99 percent hydrogen and will be combusted without purification, any lifecycle GHG emissions relating to the purification needed to purify the hydrogen gas stream to contain 99 percent hydrogen are treated as emissions through the point of production (well-to-gate).

(v) ***Example.*** The following example illustrates the rule of paragraph (a)(9)(iv) of this section.

(A) ***Facts.*** Taxpayer is a C corporation that has a calendar year taxable year. In 2025, Taxpayer places Facility in service in the United States. Facility's hydrogen production process produces a hydrogen gas stream containing mixed gases or impurities, and the stream is subsequently sold to Customer without removing the mixed gases or impurities. Taxpayer knows or has reason to know that the purity of the hydrogen gas stream is materially different from what the Customer requires for productive use, and Customer will need to remove the mixed gases or impurities in order for the hydrogen gas stream to be productively used. Because Taxpayer refrains from removing the mixed gases or impurities at the hydrogen production facility, 45VH2-GREET reflects a lower lifecycle GHG emissions rate for the hydrogen production process than it would have reflected had the mixed gases or impurities been removed at Facility.

(B) ***Analysis.*** The Taxpayer has not accurately reflected well-to-gate emissions in 45VH2-GREET because the emissions associated with purification that was necessary for productive use have not been reflected. All lifecycle GHG emissions relating to the purification of the hydrogen gas stream to be productively used are emissions through the point of production (well-to-gate) and therefore must be taken into account as part of the emissions within the well-to-gate boundary.

(10) ***Mixed gas or impurity.*** The term *mixed gas or impurity* means a non-hydrogen gas that is part of a hydrogen gas stream.

(11) ***Process.*** The term *process* means the operations conducted by a facility to produce hydrogen (for example, electrolysis or steam methane reforming) during a taxable year using a primary feedstock. The term *primary feedstock* means a hydrogen-containing chemical that is transformed to produce

hydrogen at a hydrogen production facility and has uniform or similar attributes distinguished by the source from which it is derived, if such source materially affects the lifecycle GHG emissions associated with use of the chemical to produce hydrogen.

(12) ***Productive use.*** The term *productive use* means, with respect to a hydrogen gas stream, a consumption of the hydrogen gas stream in a manner that generates positive economic value, which is determined without regard to the availability of the section 45V credit. The term *productive use* means, with respect to qualified clean hydrogen, a consumption of the qualified clean hydrogen in a manner that generates positive economic value, which is determined without regard to the availability of the section 45V credit.

(13) ***Qualified clean hydrogen*** —

(i) ***In general.*** The term *qualified clean hydrogen* means hydrogen that is produced through a process that results in a lifecycle GHG emissions rate of not greater than 4 kilograms of CO2e per kilogram of hydrogen. Such term does not include any hydrogen unless the production and sale or use of such hydrogen is verified by an unrelated party in accordance with, and satisfying the requirements of, § 1.45V-5, and such hydrogen is produced—

(A) In the United States (as defined in section 638(1) of the Code) or a U.S. territory, which, for purposes of section 45V and the section 45V regulations, has the meaning of the term *possession* provided in section 638(2) of the Code;

(B) In the ordinary course of a trade or business of the taxpayer; and

(C) For sale or use.

(ii) ***For sale or use.*** The term *for sale or use* means for the primary purpose of making ready and available for sale or use. Storage of hydrogen following production does not disqualify such hydrogen from being considered produced for sale or use.

(14) ***Qualified clean hydrogen production facility.*** The term *qualified clean hydrogen production facility* means a facility—

(i) Owned by the taxpayer;

(ii) That produces qualified clean hydrogen; and

(iii) The construction of which begins before January 1, 2033.

(15) ***Secretary.*** The term *Secretary* means the Secretary of the Treasury or her delegate.

(16) ***Section 45V credit.*** The term *section 45V credit* means the credit for production of clean hydrogen determined under section 45V of the Code, so much of sections 6417 and 6418 of the Code that relate to section 45V, and the section 45V regulations.

(17) ***Section 45V regulations.*** The term *section 45V regulations* means this section, §§ 1.45V-2 through 1.45V-6, and the regulations in this chapter under sections 6417 and 6418 of the Code that relate to the section 45V credit.

(b) ***Amount of credit*** —

(1) ***In general.*** The amount of the section 45V credit determined under section 45V(a) and the section 45V regulations for any taxable year is the product of the kilograms of qualified clean hydrogen produced by the taxpayer during such taxable year at a qualified clean hydrogen production facility during the 10-year period beginning on the date such facility was originally placed in service, multiplied by the applicable amount with respect to each process used to produce such hydrogen.

(2) ***Producer of qualified clean hydrogen.*** For purposes of section 45V(a)(1) and paragraph (b)(1) of this section, the term *taxpayer* means the taxpayer that owns the qualified clean hydrogen production facility at the time of the facility's production of hydrogen for which the section 45V credit is claimed, regardless of whether such taxpayer is treated as a producer under section 263A of the Code or under any other provision of law with respect to such hydrogen.

(3) ***Increased credit amount for qualified clean hydrogen production facilities.*** Pursuant to section 45V(e)(1), § 1.45V-3 provides rules that permit the amount of the section 45V credit determined under section 45V(a) and paragraph (b)(1) of this section to be multiplied by five if certain prevailing wages and apprenticeship requirements are met. *See* § 1.45V-3(a).

(c) ***Determination of credit.*** Subject to any applicable sections of the Code that may limit the section 45V credit amount, the section 45V credit for any taxable year of a taxpayer who produces qualified clean hydrogen and claims such credit is determined with respect to the qualified clean hydrogen produced by the taxpayer during that taxable year, regardless of whether the verification of the production and sale or use of that hydrogen occurs in a later taxable year. Although the section 45V credit is determined with respect to the taxable year in which the qualified clean hydrogen is produced, a taxpayer is not eligible to claim the section 45V credit with respect to the production of that hydrogen until all relevant verification requirements, and the verification itself, have been completed for both the production of the hydrogen and the sale or use of that hydrogen. Accordingly, although the sale or use of the hydrogen and the verification thereof may occur in a taxable year after the taxable year of production, the section 45V credit is properly claimed with respect to the taxable year of production and is subject to the general period of limitations for filing a claim for credit or refund under section 6511(a) and other applicable provisions of the Code.

(d) ***Applicability date.*** This section applies to taxable years beginning after December 26, 2023.

[T.D. 10023; 90 FR 2309, Jan. 10, 2025]

§ 1.45V-2 Special rules.

(a) ***Coordination with credit for carbon oxide sequestration.*** In the case of any qualified clean hydrogen produced at a qualified clean hydrogen production facility that includes carbon capture equipment for which a credit is allowed to any taxpayer under section 45Q of the Code (section 45Q credit) for the taxable year or any prior taxable year, no section 45V credit is allowed under section 45V of the Code. However, if the 80/20 Rule provided in § 1.45Q-2(g)(5) is satisfied with respect to such carbon capture equipment, and no new section 45Q credit has been allowed to any taxpayer for such carbon capture equipment, then the unit of carbon capture equipment (as defined in § 1.45Q-2(c)(3)) for which the 80/20 Rule is satisfied will not be treated as carbon capture equipment for which a section 45Q credit was allowed to any taxpayer for any prior taxable year for purposes of section 45V(d)(2) and this paragraph (a).

(b) ***Anti-abuse rule*** —

(1) ***In general.*** The rules of section 45V of the Code (and so much of sections 6417 and 6418 of the Code related to the section 45V credit) and the section 45V regulations (as defined in § 1.45V-1(a)(17)) must be applied in a manner consistent with the purposes of section 45V and the section 45V regulations. A purpose of section 45V is to provide taxpayers an incentive to produce qualified clean hydrogen for a productive use. Accordingly, the section 45V credit is not allowable if the primary purpose of the sale or use of qualified clean hydrogen is to obtain the benefit of the section 45V credit in a manner that is wasteful, such as when a taxpayer claims the section 45V credit for qualified clean hydrogen that the taxpayer knows or has reason to know will, in excess of standard commercial practices, be vented, flared, used to produce heat or power that is then directly used to produce hydrogen, or otherwise used to produce hydrogen. For example, venting or flaring for safety or maintenance reasons in the ordinary course of business is a non-abusive commercial industry practice. While not abusive, such venting or flaring is also not a verifiable use under § 1.45V-5(d)(2)(ii), and therefore any such hydrogen that is vented or flared for safety reasons is not eligible for the section 45V credit. A determination of whether the sale or use of qualified clean hydrogen is inconsistent with the purposes of section 45V is based on all relevant facts and circumstances.

(2) ***Example.*** The following example illustrates the application of paragraph (b)(1).

(i) ***Example 1*** —

(A) ***Facts.*** Taxpayer is a C corporation that has a calendar year taxable year. In 2031, Taxpayer places Facility in service in the United States. Facility produces qualified clean hydrogen that qualifies for the highest applicable amount of the section 45V credit at a production cost of $2 per kilogram of hydrogen (assuming Taxpayer also claims the increased credit under section 45V(e), excluding any future inflation adjustment, the amount of the section 45V credit would be $3 per kilogram of qualified clean hydrogen). The cost of producing each kilogram of qualified clean hydrogen is less than the amount of the section 45V credit that would be available if Taxpayer qualified for the section 45V credit. In 2031, Taxpayer sells all the qualified clean hydrogen produced at Facility that year to Customer at a price that is well below the current market price. Taxpayer knows or reasonably expects that Customer will vent or flare the qualified clean hydrogen it purchased from Taxpayer, in excess of standard commercial practices. In addition, Taxpayer intends to obtain the benefit of the section 45V credit by claiming such credit itself or monetizing such credit through an election under section 6417 or 6418 of the Code.

(B) ***Analysis.*** Based on all the facts and circumstances, the primary purpose of Taxpayer's sale of qualified clean hydrogen is to obtain the benefit of the section 45V credit in a manner that is wasteful. Taxpayer is not eligible for the section 45V credit with respect to the qualified clean hydrogen that Taxpayer produced and sold in 2031 to Customer that is subsequently vented or flared by Customer.

(c) ***Recordkeeping.*** Consistent with section 6001 of the Code, a taxpayer claiming the section 45V credit for qualified clean hydrogen produced at a qualified clean hydrogen production facility must maintain and preserve records sufficient to establish the amount of the section 45V credit claimed by the taxpayer. At a minimum, those records must include records to substantiate the information required to be included in the verification report under § 1.45V-5, records establishing that the facility meets the definition of a qualified clean hydrogen production facility under section 45V(c)(3) and § 1.45V-1(a)(14), records of past credit claims under section 45Q by any taxpayer with respect to carbon capture equipment included at the facility, and records establishing the date the qualified clean hydrogen production facility was placed in

service. If the requirements under section 45V(e) and § 1.45V-3(b) for the increased credit amount were satisfied, then the taxpayer must also maintain records in accordance with § 1.45-12. Taxpayers must also retain all raw data used for submission of a request for an emissions value to the DOE for at least six years after the due date (including extensions) for filing the Federal income tax return or information return to which the provisional emissions rate (PER) (as defined in § 1.45V-4(c)(1)) petition is ultimately attached.

(d) ***Applicability date.*** This section applies to taxable years beginning after December 26, 2023.

[T.D. 10023; 90 FR 2309, Jan. 10, 2025]

§ 1.45V-3 Rules relating to the increased credit amount for prevailing wage and apprenticeship.

(a) ***In general.*** If any qualified clean hydrogen production facility (as defined in section 45V(c)(3)) satisfies the requirements in paragraph (b) of this section, then the amount of the credit for producing qualified clean hydrogen determined under section 45V(a) with respect to qualified clean hydrogen described in section 45V(b)(2) is equal to the credit amount determined under section 45V(a) multiplied by five.

(b) ***Qualified clean hydrogen production facility requirements.*** A qualified clean hydrogen production facility satisfies the requirements ofthis paragraph (b) if it is one of thefollowing—

(1) A facility the construction of which began prior to January 29, 2023, and that meets the prevailing wage requirements of section 45(b)(7) and § 1.45-7 with respect to alterations or repairs of a qualified facility within the meaning of section 45V that occur after January 29, 2023 (to the extent applicable), and that meets the recordkeeping and reporting requirements of § 1.45-12; or

(2) A facility that meets the prevailing wage requirements of section 45(b)(7) and § 1.45-7, the apprenticeship requirements of section 45(b)(8) and § 1.45-8, and the recordkeeping and reporting requirements of § 1.45-12 with respect to the construction, alteration, or repair of a qualified facility within the meaning of section 45V.

(c) ***Applicability date.*** This section applies to qualified clean hydrogen production facilities placed in service in taxable years ending after June 25, 2024, and the construction of which begins after June 25, 2024. Taxpayers may apply this section to qualified clean hydrogen production facilities placed in service in taxable years ending on or before June 25, 2024, and qualified clean hydrogen production facilities placed in service in taxable years ending after June 25, 2024, the construction of which begins before June 25, 2024, provided that taxpayers follow this section in its entirety and in a consistent manner.

[T.D. 9998, 89 FR 53271, June 25, 2024]

Editorial Note: By T.D. 10023, 90 FR 2309, Jan. 10, 2025, § 1.45V-3 was added. However, the amendment could not be incorporated because the section already exists.

§ 1.45V-4 Procedures for determining lifecycle greenhouse gas emissions rates for qualified clean hydrogen.

(a) ***Overview*** —

(1) ***In general.*** Except as provided in paragraph (a)(2) of this section, the amount of the section 45V credit is determined under section 45V(a) of the Code and § 1.45V-1(b) according to the lifecycle GHG emissions rate of each hydrogen production process conducted at a hydrogen production

facility during the taxable year. The lifecycle GHG emissions rate of each process is determined under the 45VH2-GREET Model. In the case of any hydrogen production pathway, as described in paragraph (c)(2)(i) of this section, for which a lifecycle GHG emissions rate has not been determined under the 45VH2-GREET Model for purposes of section 45V, a taxpayer producing hydrogen via such a pathway may file a petition for a provisional emissions rate (PER) with the IRS for the Secretary's determination of the lifecycle GHG emissions rate with respect to such hydrogen.

(2) ***Lifecycle GHG emissions rate of hourly electricity consumption.*** In the case of a facility's use of electricity generated on or after January 1, 2030, for which the taxpayer acquires and retires a qualifying EAC (as defined in paragraph (d)(2)(vii) of this section) that represents electricity that is generated in the same hour (Coordinated Universal Time (UTC)) that the taxpayer's process uses electricity to produce hydrogen, the taxpayer may determine the lifecycle GHG emissions associated with the use of such electricity by the taxpayer's process during such hour using the attributes of such qualifying EAC rather than using an annual average of the lifecycle GHG emissions associated with the use of electricity in the taxpayer's process. If a taxpayer determines the lifecycle GHG emissions associated with the use of electricity on an hourly basis in the manner provided in this paragraph (a)(2), such taxpayer must determine the lifecycle GHG emissions associated with the use of electricity on an hourly basis for the entire taxable year. In the case of hydrogen produced at a facility using electricity for which the taxpayer does not acquire and retire qualifying EACs that represent electricity that is generated in the same hour that the taxpayer's hydrogen production facility uses electricity to produce hydrogen on or after January 1, 2030, the lifecycle GHG emissions rate of such hydrogen is determined using the regional annual average emissions rate of such electricity usage as reflected in 45VH2-GREET. The taxpayer may determine the lifecycle GHG emissions associated with the use of electricity on an hourly basis only if the annual average lifecycle GHG emissions rate of the hydrogen production process during the taxable year is not greater than 4 kilograms of carbon dioxide equivalent (CO2e) per kilogram of hydrogen for all hydrogen produced pursuant to that process during the taxable year.

(3) ***Examples.*** The following examples illustrate the application of paragraphs (a)(1) and (2) of this section.

(i) ***Example 1: Annual emissions accounting*** —

(A) ***Facts.*** Taxpayer, which files its Federal income tax return based on the calendar year, owns a hydrogen production facility, Facility, that constantly produces hydrogen through electrolysis during all 24 hours of each day of taxable year 2031. Facility's only inputs are water and electricity. For the first 23 of the 24 hours of each day of 2031, Facility acquires and retires qualifying EACs that represent electricity that is generated in the same hour that the taxpayer's hydrogen production facility uses electricity to produce hydrogen. The qualifying EACs reflect electricity from wind power, a uniform source of zero-emission electricity depicted in 45VH2-GREET. During the last hour of each day in 2031, Facility sources electricity from a regional grid. During taxable year 2031, Taxpayer produces 2,402,145.12 kilograms of a hydrogen gas stream (an annual total of 2,302,055.74 kilograms produced during the first 23 hours of each day, and 100,089.38 kilograms produced during the remaining one hour of each day). To produce such a stream, Facility consumes 132,000 MWh of electricity. Of the 132,000 MWh of electricity consumed, 126,500 MWh of the electricity is from wind power, and 5,500 MWh of the electricity is from the regional electricity grid. On average, of the 2,402,145.12 kilograms produced, 99.99 percent by mol is pure hydrogen and 0.01 percent is water vapor (this translates to 99.9107 percent pure hydrogen and 0.0893 percent water vapor by mass). Thus, Facility

produced an annual total of 2,400,000 kilograms of pure hydrogen by mass. In 2031, the Facility produces 10,000,000 kilograms of oxygen co-product. The pressure at which Facility produces the hydrogen gas stream is 300 psi.

(B) ***Analysis.*** To determine the annual average lifecycle GHG emissions rate of the process by which the 2,400,000 kilograms of pure hydrogen were produced in 2031, Taxpayer must account for the total amount of electricity consumed by Facility in taxable year 2031 (132,000 MWh), the annual average share of electricity that is from each source depicted in 45VH2-GREET (95.8333 percent wind power, 4.1667 percent regional electricity grid), the total amount of hydrogen gas stream produced in that year (2,402,145.12 kilograms), the average share of mixed gases in the hydrogen gas stream over the year (99.99 percent hydrogen by mol, 0.01 percent water by mol), the total amount of oxygen co-product produced in that year (10,000,000 kilograms); and the pressure at which the hydrogen gas stream is produced (300 psi). Assuming that, using these inputs, 45VH2-GREET reflects that the average annual lifecycle GHG emissions rate of the process by which the 2,400,000 kilograms of hydrogen were produced in 2031 not greater than 4 kilograms of CO2e per kilogram of hydrogen, then the hydrogen produced by Facility in 2031 is qualified clean hydrogen. Further, assuming that, using these inputs, 45VH2-GREET reflects that Facility produces hydrogen through a process that results in an annual lifecycle GHG emissions rate of less than 2.5 but not less 1.5 kilograms of CO2e per kilogram of hydrogen, the applicable percentage under section 45V(b)(2) is 25 percent. Accordingly, assuming all other requirements to claim the section 45V credit are met, and assuming prevailing wage and apprenticeship requirements under section 45V(e) are met, Taxpayer may claim the section 45V credit for the 2,400,000 kilograms of qualified clean hydrogen in the amount of $1,800,000 (2,400,000 kilograms of qualified clean hydrogen produced by Taxpayer at Facility during taxable year 2031 multiplied by $0.75 with respect to such hydrogen) (unadjusted for inflation).

(ii) ***Example 2: Hourly emissions accounting*** —

(A) ***Facts.*** The facts are the same as in paragraph (a)(3)(i)(A) of this section (*Example 1*), except that Taxpayer opts to determine the lifecycle GHG emissions rate of electricity used to produce hydrogen on an hourly basis pursuant to paragraph (a)(2) of this section.

(B) ***Analysis.*** To determine whether Taxpayer is eligible to use hourly accounting, Taxpayer must first complete an analysis on an annual basis, as described in *Example 1*. Assuming that the lifecycle GHG emissions rate associated with pure hydrogen production at Facility during the taxable year is not greater than 4 kilograms of CO2e per kilogram of hydrogen, Taxpayer is eligible to use hourly accounting. To determine the hourly lifecycle GHG emissions rate, Taxpayer must first determine the average share of mixed gases in the hydrogen gas stream over taxable year 2031 (99.99 percent hydrogen by mol, 0.01 percent water vapor by mol) and the average amount of oxygen co-product produced for every kilogram of hydrogen gas stream produced in taxable year 2031 (10,000,000 kilograms of oxygen divided by 2,402,145.12 kilograms of hydrogen gas stream equals 4.163 kilograms of oxygen per kilogram of hydrogen gas stream). Then, for each hour, Taxpayer must account for the following inputs in 45VH2-GREET: the total kilograms of hydrogen gas stream produced in that hour, the product of the annual average oxygen co-product rate (4.163 kilograms of oxygen co-product per kilogram of hydrogen gas stream) and the total kilograms of hydrogen gas stream produced in that hour, the average impurity content of the hydrogen gas stream produced in that hour, the total amount of electricity consumed

in that hour, and the source of the electricity used in that hour, as depicted in 45VH2-GREET (for example, wind power, regional electricity grid). Assuming that, using these inputs, 45VH2-GREET reflects that the lifecycle GHG emissions rate of the process by which the hydrogen was produced in each hour of the first 23 hours of each day in taxable year 2031 is less than 0.45 kilograms of CO2e per kilogram of hydrogen, then for purposes of section 45V(b)(2), the applicable percentage for such hydrogen produced in each hour of the first 23 hours of each day of taxable year 2031 is 100 percent. For the hydrogen produced during the last hour of each day of taxable year 2031, assuming that 45VH2-GREET reflects that the lifecycle GHG emissions rate of the process exceeded 4 kilograms of CO2e per kilogram of hydrogen, the applicable percentage for such hydrogen is zero percent (that is, the hydrogen produced is not qualified clean hydrogen). Assuming all other requirements of section 45V are met, including the prevailing wage and apprenticeship requirements of section 45V(e), Taxpayer is entitled to a section 45V credit equal to $3 (not adjusted for inflation) per kilogram of qualified clean hydrogen produced in the first 23 hours of each day of taxable year 2031 and no credit for the hydrogen produced in the last hour of each day of taxable year 2031. As described in *Example 1,* in taxable year 2031, Taxpayer produced 2,400,000 kilograms of pure hydrogen by mass at a constant rate. Accordingly, during the first 23 hours of each day of taxable year 2031, Taxpayer produced 2,300,000 kilograms of pure hydrogen. Taxpayer may therefore claim a section 45V credit of $6,900,000 (2,300,000 kilograms of qualified clean hydrogen produced by Taxpayer during the first 23 hours of each day of taxable year 2031 at Facility multiplied by $3 with respect to such hydrogen).

(b) ***Use of the 45VH2-GREET Model*** —

(1) ***In general.*** For each taxable year during the period described in section 45V(a)(1), a taxpayer claiming the section 45V credit determines the lifecycle GHG emissions rate of each hydrogen production process conducted at a hydrogen production facility under the 45VH2-GREET Model separately for each process. This determination is made following the close of each such taxable year and, subject to paragraph (a)(2) of this section, must include all of a process's hydrogen production during the taxable year. In using the 45VH2-GREET Model to calculate the lifecycle GHG emissions rate for purposes of determining the amount of the section 45V credit under section 45V(a) and § 1.45V-1(b), the taxpayer must accurately enter all information about its facility requested within the interface of 45VH2-GREET (as described in § 1.45V-1(a)(9)(ii)). Information regarding where taxpayers may access 45VH2-GREET and accompanying documentation will be included in the instructions to the Form 7210, *Clean Hydrogen Production Credit,* or any successor form(s).

(2) ***Beginning of construction safe harbor*** —

(i) ***In general.*** A taxpayer may, in its discretion, make an irrevocable election effective for the remaining taxable years within the period described in section 45V(a)(1), to treat the latest version of 45VH2-GREET that was publicly available on the date when construction of the qualified clean hydrogen facility began as the 45VH2-GREET Model. In the case of a facility owned by the taxpayer that began construction prior to December 26, 2023, such taxpayer may, in its discretion, make an irrevocable election effective for the remaining taxable years within the period described in section 45V(a)(1), to treat the first publicly-available version of 45VH2-GREET (that is, the version of 45VH2-GREET released in December 2023) as the 45VH2-GREET Model. For purposes of this paragraph (b)(2), in the case of a facility that is modified to produce qualified clean hydrogen under section 45V(d)(4) and § 1.45V-6(a), or a

facility that is retrofitted in a manner that entitles the facility to a new placed in service date under § 1.45V-6(b), the date when construction of the facility began is the date when construction of such modification or retrofit began. An election under this paragraph (b)(2)(i) relates to the version of 45VH2-GREET and does not alter any other rules provided in this section and in §§ 1.45V-1, -2, -3, -5, and -6.

(ii) ***Time and manner of making election.*** The taxpayer makes the election described in paragraph (b)(2)(i) of this section with respect to a qualified clean hydrogen production facility's hydrogen production process on Form 7210 or any successor form(s). The taxpayer must make the election by no later than the due date for filing its Federal income tax return or information return (including extensions) for a taxable period ending no later than December 31, 2025, or the due date for filing its Federal income tax return or information return (including extensions) for the taxable period in which such facility is placed in service, whichever due date is later.

(c) ***Provisional emissions rate (PER)*** —

(1) ***In general.*** For purposes of section 45V(c)(2)(C) and paragraph (a) of this section, the term *provisional emissions rate* or *PER* means the lifecycle GHG emissions rate of the hydrogen produced through a process at a hydrogen production facility as determined by the Secretary under this paragraph (c).

(2) ***Rate not determined*** —

(i) ***In general.*** For purposes of section 45V(c)(2)(C), a taxpayer may not file a petition for a PER unless a lifecycle GHG emissions rate has not been determined under the 45VH2-GREET Model with respect to hydrogen produced through a process by the taxpayer at a hydrogen production facility. A lifecycle GHG emissions rate has not been determined under the 45VH2-GREET Model with respect to hydrogen produced through a process by the taxpayer at a hydrogen production facility if either the feedstock used in such process or the facility's hydrogen production technology, together referred to as the facility's "hydrogen production pathway," is not included in the 45VH2-GREET Model. If a taxpayer's request for an emissions value pursuant to paragraph (c)(5) of this section with respect to the hydrogen produced through a process by the taxpayer at a hydrogen production facility is pending at the time such facility's hydrogen production pathway becomes included in an updated version of 45VH2-GREET, the taxpayer's request for an emissions value will be automatically denied. In such case, the taxpayer must determine the lifecycle GHG emissions rate with respect to such hydrogen under paragraph (c)(2)(ii) of this section.

(ii) ***Subsequent inclusion in 45VH2-GREET.*** Notwithstanding the definition of the 45VH2-GREET Model provided at § 1.45V-1(a)(9)(ii), for the taxable year in which the hydrogen production facility's hydrogen production pathway is first included in an updated version of 45VH2-GREET, the updated version of 45VH2-GREET will be considered the 45VH2-GREET Model with respect to the hydrogen produced through a process by the taxpayer at the hydrogen production facility during such taxable year, and for purposes of section 45V(c)(2)(C), a lifecycle GHG emissions rate for such hydrogen will be considered to have been determined.

(3) ***Process for filing a PER petition.*** To file a PER petition with the Secretary, a taxpayer must submit a PER petition attached to the taxpayer's Federal income tax return (or information return) for the first taxable year of hydrogen production ending within the 10-year period described in section 45V(a)(1) for which the taxpayer claims the section 45V credit for hydrogen to which the PER petition relates and for which a lifecycle GHG emissions rate has not been determined, as defined under paragraph

(c)(2)(i) of this section. A PER petition must contain the letter received from the DOE stating the emissions value the DOE determined with respect to the facility's hydrogen production pathway, and the control number the DOE assigned to the emissions value request application. If the taxpayer obtained more than one emissions value from the DOE, the PER petition must contain the emissions value setting forth the lifecycle GHG emissions rate of the hydrogen for which the section 45V credit is claimed on the Form 7210, *Clean Hydrogen Production Credit,* or any successor form(s), to which the PER petition is attached.

(4) ***PER determination.*** Upon the taxpayer's filing of its Federal income tax return (or information return) containing a PER petition in a manner consistent with paragraph (c)(3) of this section, the emissions value of the hydrogen determined by the DOE will be deemed accepted. The taxpayer may rely upon an emissions value provided by the DOE for purposes of calculating and claiming a section 45V credit, provided that any information, representations, or other data provided to the DOE in support of the request for an emissions value are accurate. The IRS's deemed acceptance of such emissions value is the Secretary's determination of the PER. However, the production, including the data the taxpayer submitted in the PER petition and the data provided to the DOE in support of the taxpayer's request for an emissions value, and sale or use of such hydrogen must be verified by an unrelated party under section 45V(c)(2)(B)(ii) and § 1.45V-5. Such verification and any information, representations, or other data provided to the DOE in support of the request for an emissions value are subject to later examination by the IRS.

(5) ***Department of Energy (DOE) emissions value request process (EVRP).*** An applicant that submits a request for an emissions value must follow the procedures specified by the DOE to request and obtain such emissions value. Emissions values will be evaluated using the same well-to-gate system boundary that is employed in 45VH2-GREET. Additionally, background data parameters in 45VH2-GREET will also be treated as background data (fixed values that an applicant cannot change) in the emissions value request process. Treatment of qualifying EACs and other sources of emissions addressed in the section 45V regulations will be consistently applied in the EVRP. An applicant may request an emissions value from the DOE only after a Class 3 front-end engineering and design (FEED) study or similar indication of project maturity, as determined by the DOE, such as project specification and cost estimation sufficient to inform a final investment decision, has been completed for the hydrogen production facility. The DOE may decline to review applications that are not responsive, including those applications that use a hydrogen production technology and feedstock already in 45VH2-GREET or applications that are incomplete. Applicants seeking a new emissions value for a given hydrogen production facility after the DOE has completed its analysis may reapply only if they wish to resubmit their application with new or revised technical information or clarifications related to the information previously submitted. Guidance and procedures for applicants to request and obtain an emissions value from the DOE will be published by the DOE.

(6) ***Effect of PER*** —

(i) ***In general.*** A taxpayer may use a PER determined by the Secretary to calculate the amount of the section 45V credit under section 45V(a) and § 1.45V-1(b) with respect to qualified clean hydrogen produced at a qualified clean hydrogen production facility, provided—

(A) The lifecycle GHG emissions rate of such hydrogen has not been determined (for purposes of section 45V(c)(2)(C)) under the 45VH2-GREET Model;

(B) There are no material changes to the information about the taxpayer's hydrogen production process from the information provided to the DOE to obtain an emissions value pursuant to paragraph (c)(5) of this section; and

(C) All other requirements of section 45V are met.

(ii) ***Material change.*** For purposes of paragraph (c)(6)(i)(B) of this section, a *material change* means any change that would cause a qualified verifier (as defined in § 1.45V-5(h)) to be unable to complete a production attestation under section 45V(c)(2)(B)(ii) of the Code and § 1.45V-5(c).

(iii) ***Subsequent inclusion safe harbor*** —

(A) ***In general.*** The taxpayer may, in its discretion, make an irrevocable election, effective for the remaining taxable years within the period described in section 45V(a)(1), to treat the first version of 45VH2-GREET that includes the taxpayer's qualified clean hydrogen production facility's hydrogen production pathway as the 45VH2-GREET Model.

(B) ***Time and manner of making election.*** The taxpayer makes the election described in paragraph (c)(6)(iii)(A) of this section with respect to a qualified clean hydrogen production facility on Form 7210 or any successor form(s). The taxpayer must make the election by no later than the due date for filing its Federal income tax return or information return (including extensions) for a taxable period ending no later than December 31, 2025, or the due date for filing its Federal income tax return or information return (including extensions) for the taxable period in which the taxpayer's qualified clean hydrogen production facility's hydrogen production pathway is first included in 45VH2-GREET, whichever due date is later.

(iv) ***Special rule for facilities that receive an emissions value prior to the beginning of construction.*** Notwithstanding the requirement of paragraph (c)(6)(i)(A) of this section, a taxpayer who received an emissions value from the DOE with respect to a qualified clean hydrogen production facility (pursuant to paragraph (c)(5) of this section) before the date when construction of the facility began, may, in its discretion, use the PER determined by the Secretary and the associated emissions value to calculate the amount of section 45V credit with respect to qualified clean hydrogen produced at the qualified clean hydrogen production facility for the entirety of the period described in section 45V(a)(1), provided that the taxpayer continues to satisfy the requirements of paragraphs (c)(6)(i)(B) and (C) of this section.

(v) ***Not an examination of books and records.*** The Secretary's PER determination is not an examination or inspection of books of account for purposes of section 7605(b) of the Code and does not preclude or impede the IRS (under section 7605(b) or any administrative provisions adopted by the IRS) from later examining a return or inspecting books or records with respect to any taxable year for which the section 45V credit is claimed. For example, the verification report submitted under section 45V(c)(2)(B)(ii) and § 1.45V-5 and any information, representations, or other data provided to the DOE in support of the request for an emissions value are still subject to examination. Further, a PER determination does not signify that the IRS has determined that the requirements of section 45V have been satisfied for any taxable year.

(d) ***Use of energy attribute certificates (EACs)*** —

(1) ***In general.*** For purposes of the section 45V credit, if a taxpayer determines a lifecycle GHG emissions rate for hydrogen produced at a hydrogen production facility using the 45VH2-GREET Model or the Secretary determines a PER for hydrogen produced at a hydrogen production facility subject to a PER petition, then the taxpayer may treat such hydrogen production facility's use of electricity as being from a specific electricity generating facility rather than as electricity with the annual average lifecycle GHG emissions of the regional electricity grid (as represented in 45VH2-GREET) only if the taxpayer acquires and retires qualifying EACs (as defined in paragraph

(d)(2)(vii) of this section) for each unit of electricity that the taxpayer claims from such source. For example, one megawatt-hour of electricity used to produce hydrogen would need to be matched with one megawatt-hour of qualifying EACs. Further, to satisfy this requirement, a taxpayer's acquisition and retirement of qualifying EACs must also be recorded in a qualified EAC registry or accounting system (as defined in paragraph (d)(2)(viii) of this section) so that the acquisition and retirement of such EACs may be verified by a qualified verifier (as defined in § 1.45V-5(h)). The requirements of this paragraph (d)(1) apply regardless of whether the electricity generating facility is grid connected, directly connected, or co-located with the hydrogen production facility.

(2) ***Definitions.*** For purposes of this section—

(i) ***Commercial operations date.*** The term *commercial operations date* or *COD* means the date on which a facility that generates electricity begins commercial operations.

(ii) ***Energy attribute certificate.*** The term *energy attribute certificate* (EAC) means a tradeable contractual instrument, issued through a qualified EAC registry or accounting system (as defined in paragraph (d)(2)(viii) of this section), that represents the energy attributes of a specific unit of energy produced. An EAC may be traded with or separately from the underlying energy it represents. An EAC can be retired by or on behalf of its owner, which is the party that has the right to claim the underlying attributes represented by an EAC. Renewable energy certificates (RECs) and other similar energy certificates issued through a registry or accounting system are forms of EACs.

(iii) ***Eligible EAC.*** The term *eligible EAC* means an EAC that represents electricity that is produced by an electricity generating facility that is registered on only one qualified EAC registry or accounting system and that, with respect to the electricity to which the EAC relates, provides, at a minimum, the information described in paragraphs (d)(2)(iii)(A) through (H) of this section—

(A) A description of the facility, including the technology and feedstock used to generate the electricity;

(B) The amount and units of electricity;

(C) The COD of the facility that generated the electricity;

(D) For electricity that is generated before January 1, 2030, the calendar year in which such electricity was generated;

(E) For electricity that is generated after December 31, 2029, the date and hour (including time zone, or in UTC) in which such electricity was generated;

(F) Other attributes required by 45VH2-GREET or in the determination of a PER to accurately determine the emissions associated with such electricity;

(G) For electricity generating sources that use carbon capture equipment, the placed in service date of such equipment; and

(H) The project identification number or assigned identifier.

(iv) ***Qualifying electricity decarbonization standard.*** A *qualifying electricity decarbonization standard* is a standard that—

(A) Contains a target that 100 percent of the State's retail sales of electricity from obligated entities be supplied by renewable, non-emitting, zero-emitting, or minimal-emitting sources, where obligated entities and eligible sources are defined by State policy, or a target for GHG emissions from the State's electricity sector that reflects an equivalent of such a retail sales target, by 2050 or earlier;

(B) Applies to the large majority of eligible electricity supplied to the state, as determined by the State; and

(C) Includes policies that would achieve the target, a requirement that the state develop a plan to achieve the standard, or a requirement that entities subject to the standard are required to develop such a plan.

(v) ***Qualifying GHG cap program.*** A *qualifying GHG cap program* is a legally binding program that meets the following minimum criteria—

(A) Creates a limitation (cap) on the quantity of GHG emissions from the electricity sector (either alone or along with other sectors) in a State through issuance of a limited number of allowances or other compliance instruments to covered entities for each compliance period;

(B) Includes annual obligations (even if part of multi-year compliance periods) under which an entity subject to the cap must provide information about such entity's GHG emissions and for which an entity must submit at least some compliance instruments to the State's regulatory authority;

(C) Includes a cap on GHG emissions from covered entities that generally declines over time from the cap on GHG emissions in effect in calendar year 2025 (or the first calendar year in which the cap is in effect, if later), with adjustments as appropriate for expansions in the scope of the cap;

(D) Applies to the large majority of in-state electricity sources of emissions that emit greater than 25,000 metric tons of CO2e in a calendar year;

(E) Applies to the large majority of out-of-state electricity supplied to the State and to emissions associated with those imports, including emissions that arise from entities that emit greater than 25,000 metric tons of CO2e in a calendar year;

(F) Generally ensures that the prices of allowances sold in a state-run auction cannot fall below $25 per metric ton of CO2e, adjusted for inflation from 2025 dollars using at a minimum the most recently available twelve-month value of the Consumer Price Index for All Urban Consumers (CPI-U), as published by the United States Bureau of Labor Statistics (BLS); and

(G) Generally ensures that the cap on greenhouse gas emissions cannot be exceeded for less than $90 per metric ton of CO2e, adjusted for inflation from 2025 dollars using at a minimum the most recently available twelve-month value of the CPI-U, as published by the BLS.

(vi) ***Merchant nuclear reactor.*** The term *merchant nuclear reactor* means a nuclear reactor that competes in a competitive electricity market through the sale of energy and, in some cases, other services and for which over 50 percent of the reactor and its electricity production does not receive cost recovery through rate regulation or public ownership with related retail rate recovery.

(vii) ***Qualifying EAC.*** The term *qualifying EAC* means an eligible EAC that meets the requirements of paragraph (d)(3) of this section and for which the satisfaction of those requirements has been verified by a qualified verifier (as defined in § 1.45V-5(h)).

(viii) ***Qualified EAC registry or accounting system.*** The term *qualified EAC registry or accounting system* means a tracking system that—

(A) Assigns a unique identification number to each EAC tracked by such system;

(B) Enables verification that only one EAC is associated with each unit of electricity;

(C) Verifies that each EAC is claimed and retired only once;

(D) Identifies the owner of each EAC; and

(E) Provides a publicly accessible view (for example, through an application programming interface) of all currently registered generators in the tracking system to prevent the duplicative registration of generators.

(ix) ***Region.*** The term *region* means a Region that corresponds to a Balancing Authority, as identified in the following table. Alaska, Hawaii, and each U.S. territory will be treated as separate regions. Future versions of this table may be provided as a safe harbor in guidance published in the *Internal Revenue Bulletin.*

TABLE 1 TO PARAGRAPH (d)(2)(ix)

Balancing Authority	Region
Balancing Authority of Northern California	California.
California Independent System Operator (Balancing Authority)	California.
Imperial Irrigation District	California.
Los Angeles Dept of Water & Power	California.
Turlock Irrigation District	California.
Midcontinent ISO (Balancing Authority): South	Delta.
Duke Energy Florida Inc	Florida.
Florida Municipal Power Pool	Florida.
Florida Power & Light	Florida.
Gainesville Regional Utilities	Florida.
Homestead (City of)	Florida.
JEA	Florida.
New Smyrna Beach Utilities Commission	Florida.

Balancing Authority	Region
Reedy Creek Improvement District	Florida.
Seminole Electric Coop Inc	Florida.
Tallahassee FL (City of)	Florida.
Tampa Electric Co	Florida.
East Kentucky Power Coop Inc	Mid-Atlantic.
LG&E & KU Services Co	Mid-Atlantic.
Ohio Valley Electric Corp	Mid-Atlantic.
PJM Interconnection	Mid-Atlantic.
Associated Electric Coop Inc	Midwest.
Electric Energy Inc	Midwest.
Gridliance Heartland	Midwest.
Midcontinent ISO (Balancing Authority): North and Central	Midwest.
NaturEner Power Watch LLC (GWA)	Mountain.
NaturEner Wind Watch LLC	Mountain.
Nevada Power Co	Mountain.
Northwestern Energy	Mountain.
PacifiCorp East	Mountain.
Public Service Co of Colorado	Mountain.
WAPA Rocky Mountain Region	Mountain.
WAPA Upper Great Plains West	Mountain.
New England ISO (Balancing Authority)	New England.
Northern Maine	New England.
New York ISO (Balancing Authority)	New York.
Avangrid Renewables LCC	Northwest.
Avista Corp	Northwest.
Bonneville Power Administration	Northwest.
Gridforce Energy Management LLC	Northwest.
Idaho Power Co	Northwest.
PacifiCorp West	Northwest.
Portland General Electric	Northwest.
PUD No 1 of Chelan County	Northwest.
PUD No 1 of Douglas County	Northwest.
PUD No 2 of Grant County	Northwest.
Puget Sound Energy Inc	Northwest.
Seattle City Light	Northwest.
Tacoma Power	Northwest.
Southwest Power Pool (Balancing Authority)	Plains.
Southwestern Power Administration	Plains.
Alcoa Power Generating Inc Yadkin Division	Southeast.

Balancing Authority	Region
Duke Energy Carolinas LLC	Southeast.
Duke Energy Progress East	Southeast.
Duke Energy Progress West	Southeast.
PowerSouth Energy Coop	Southeast.
South Carolina Electric & Gas Co	Southeast.
South Carolina Public Service Authority	Southeast.
Southeastern Power Administration (Southern)	Southeast.
Southern Co Services Inc	Southeast.
Tennessee Valley Authority	Southeast.
Arizona Public Service Co	Southwest.
Arlington Valley LLC	Southwest.
El Paso Electric	Southwest.
Gila River Power LLC	Southwest.
Griffith Energy LLC	Southwest.
New Harquahala Generating Co LLC	Southwest.
Public Service Co of New Mexico	Southwest.
Salt River Project	Southwest.
Tucson Electric Power Co	Southwest.
WAPA Desert Southwest Region	Southwest.
ERCOT ISO (Balancing Authority)	Texas.

(x) ***Qualifying nuclear reactor.*** The term *qualifying nuclear reactor* means, with respect to an EAC, a nuclear reactor—

(A) That is a merchant nuclear reactor, as defined in paragraph (d)(2)(vi) of this section, or is a nuclear reactor that is not co-located with any other operating nuclear reactor,

(B) For which the average annual gross receipts within the meaning of section 45U(b)(2)(A)(ii)(I) of the reactor are less than 4.375 cents per kilowatt hour, for any two of the calendar years 2017 through 2021, as determined with respect to any one owner of the reactor, and

(C) That either

(*1*) Has a physical electrical connection with the hydrogen production facility which acquires and retires the EAC, which is on the reactor's side of a utility service meter before the reactor or the hydrogen production facility connect to a distribution or transmission system, or

(*2*) Is the subject of a written binding contract, as defined in paragraph (d)(2)(xi) of this section, for a fixed term of at least 10 years beginning on the first date on which qualified EACs are acquired, under which the owner of the hydrogen production facility agrees to acquire and retire EACs from the nuclear reactor, and which manages the qualifying nuclear reactor's revenue risk.

(xi) ***Written binding contract.*** For purposes of this paragraph (d)(2)(xi), a contract is a *written binding contract* if it is enforceable under state law against the taxpayer or a predecessor and does not limit damages to a specified amount (for example, by use of a liquidated damages provision). For this purpose, a contractual provision that limits damages to an amount equal to at least five percent of the total contract price will not be treated as limiting damages to a specified amount. For additional guidance regarding the definition of a written binding contract, see § 1.168(k)-2(b)(5)(iii).

(xii) ***Qualifying State.*** The term *qualifying State* means a state which, as determined by the Secretary, has under its state law or regulations a qualifying electricity decarbonization standard as defined in paragraph (d)(2)(iv) of this section and a qualifying GHG cap program as defined in paragraph (d)(2)(v) of this section. For purposes of this rule, the District of Columbia, Commonwealth of Puerto Rico, Guam, the U.S. Virgin Islands, American Samoa, and the Commonwealth of the Northern Mariana Islands are treated as states.

(3) ***Qualifying EAC requirements.*** An eligible EAC meets the requirements of this paragraph (d)(3) if it meets the requirements of paragraphs (d)(3)(i) through (iii) of this section.

(i) ***Incrementality.*** An EAC meets the requirements of this paragraph (d)(3)(i) if it meets the requirements of paragraph (d)(3)(i)(A), (B), (C), or (D) of this section. Paragraph (d)(3)(i)(B)(*4*) of this section provides an example that illustrates the application of paragraph (d)(3)(i)(B) of this section.

(A) ***In general.*** An EAC meets the requirements of this paragraph (d)(3)(i)(A) if the electricity generating facility that produced the unit of electricity to which the EAC relates has a COD that is no more than 36 months before the hydrogen production facility for which the EAC is retired was placed in service, or, if the electricity represented by the EAC is produced by an electricity generating facility that uses carbon capture and sequestration (CCS) technology, such technology has a placed in service date that is no more than 36 months before the hydrogen production facility for which the EAC is retired was placed in service.

(B) ***Uprates*** —

(*1*) ***In general.*** An EAC meets the requirements of this paragraph (d)(3)(i)(B) if the electricity represented by the EAC is produced by an electricity generating facility that had an uprate no more than 36 months before the hydrogen production facility with respect to which the EAC is retired was placed in service and such electricity is part of such electricity generating facility's uprated production. The term *uprate* means an increase in an electricity generating facility's rated nameplate capacity (in nameplate megawatts) or capacity measured by a standard other than nameplate capacity (specified capacity) meeting the requirements of the measurement standard described in paragraph (d)(3)(i)(B)(*3*) of this section. The term *pre-uprate capacity* means the nameplate capacity or specified capacity of an electricity generating facility before an uprate. The term *post-uprate capacity* means the nameplate capacity or specified capacity of an electricity generating facility after an uprate. The term *incremental generation capacity* means the increase in an electricity generating facility's rated nameplate capacity or specified capacity from the pre-uprate capacity to the post-uprate capacity. The term *uprated production rate* means the incremental generation capacity (in nameplate megawatts) divided by the post-uprate capacity (in nameplate megawatts). The term *uprated production* means the uprated production rate of an electricity generating facility multiplied by its total generation

output (in megawatt hours). An electricity generating facility's uprated production must be prorated to each hour of such facility's generation by multiplying the production for each hour or each year, consistent with the requirements in paragraph (d)(3)(ii) of this section, by the uprated production rate to determine the electricity to which the uprate relates.

(*2*) ***Special rule for restarted facilities.*** For purposes of this paragraph (d)(3)(i)(B), a facility that is decommissioned or in the process of decommissioning and restarts can be considered to have increased nameplate or specified capacity from a base of zero if the following conditions are met:

(*i*) The existing facility must have ceased operations;

(*ii*) The existing facility must have a shutdown period of at least one calendar year during which it was not authorized to operate by its respective Federal regulatory authority (that is, the Federal Energy Regulatory Commission (FERC) or the Nuclear Regulatory Commission (NRC));

(*iii*) The increased capacity of the restarted facility must be eligible to restart based on an operating license issued by either FERC or NRC; and

(*iv*) The existing facility must not have ceased operations for the purpose of qualifying for the special rule for restarted facilities.

(*3*) ***Measurement standard.*** For purposes of paragraph (d)(3)(i)(B)(*1*) of this section, taxpayers must use one of the following measurement standards described in paragraph (d)(3)(i)(B)(*3*)(*i*), (*ii*), or (*iii*) of this section to measure the capacity and change in capacity of a facility, except a taxpayer cannot use the measurement standard described in paragraph (d)(3)(i)(B)(*3*)(*ii*) of this section if the taxpayer is able to use the measurement standard described in paragraph (d)(3)(i)(B)(*3*)(*i*) of this section:

(*i*) Modified or amended facility operating licenses from FERC or NRC, or related reports prepared by FERC or NRC as part of the licensing process;

(*ii*) The International Standard Organization (ISO) conditions to measure the nameplate capacity of the facility consistent with the definition of nameplate capacity provided in 40 CFR 96.202; or

(*iii*) A measurement standard prescribed by the Secretary in guidance published in the Internal Revenue Bulletin (see § 601.601 of this chapter).

(*4*) Example. The following example illustrates the application of paragraph (d)(3)(i)(B) of this section.

(*i*) ***Facts.*** Power Plant undergoes an uprate that expands its rated nameplate capacity from a pre-uprate capacity of 10 megawatts (MW) to a post-uprate capacity of 12 MW. After the uprate, its generation output increases to a total of 40,000 megawatt hours (MWh) for the year.

(*ii*) ***Analysis.*** Power Plant's incremental generation capacity is 2 MW, its uprated production rate is 0.167 (2 MW divided by 12 MW), and its total uprated production for the year is 6,667 MWh (2 MW divided by 12 MW multiplied by 40,000 MWh). Two-twelfths (0.167) of each hour of Power Plant's production may be considered uprated production.

(C) ***Electricity produced in qualifying States.*** An EAC meets the requirements of this paragraph (d)(3)(i)(C) if the electricity represented by the EAC is produced by an electricity generating facility that is located in a qualifying State, as defined in paragraph (d)(2)(xii) of this section, and the hydrogen production facility acquiring and retiring such EAC is also located in a qualifying State.

(D) ***Electricity produced by certain nuclear facilities*** —

(*1*) ***In general.*** An EAC meets the requirements of this paragraph (d)(3)(i)(D) if the electricity represented by the EAC is produced by an electricity generating facility that is a qualifying nuclear reactor, as defined in paragraph (d)(2)(x).

(*2*) For purposes of paragraph (d)(3)(i) of this section, only 200 megawatt hours of electricity per operating hour per qualifying nuclear reactor may be considered incremental, except that, if a qualifying nuclear reactor has integrated operations with one or more other qualifying nuclear reactors, the amount of electricity from those integrated reactors deemed incremental shall instead be subject to an aggregate limit of 200 megawatt hours per operating hour multiplied by the number of integrated nuclear reactors that have not permanently ceased operations.

(*3*) A qualifying nuclear reactor is treated as having *integrated operations* with any other qualifying nuclear reactor if the reactors—

(*i*) Are owned by the same or related taxpayers; and

(*ii*) Transmit electricity generated by the reactors through the same point of interconnection or, if the reactors are not grid-connected, or are delivering electricity directly to an end user behind a utility meter, are able to support the same end user, or, if the reactors have multiple points of interconnection, are co-located with each another.

(*4*) For purposes of paragraph (d)(3)(i)(D)(*3*)(*i*) of this section, the term *related taxpayers* means members of a group of trades or businesses that are under common control (as defined in § 1.52-1(b)). Related taxpayers are treated as one taxpayer in determining whether a qualifying nuclear reactor has integrated operations.

(*5*) In the case of a nuclear reactor that satisfies the definition of a qualifying nuclear reactor because it is the subject of a written binding contract as provided in paragraph (d)(2)(x)(C)(*2*) of this section, the megawatt hours of electricity per hour per qualifying nuclear reactor that may be considered incremental are further limited to those megawatt hours of electricity for which the taxpayer acquires EACs from the nuclear reactor pursuant to the written binding contract.

(ii) ***Temporal matching*** —

(A) ***In general.*** An EAC meets the requirements of this paragraph (d)(3)(ii) if the electricity represented by the EAC is generated in the same hour that the taxpayer's hydrogen production facility uses electricity to produce hydrogen.

(B) ***Transition rule.*** For EACs that represent electricity generated before January 1, 2030, the EAC will be considered generated in the same hour that the taxpayer's hydrogen production facility uses electricity to produce hydrogen as required in paragraph (d)(3)(ii)(A) of this section if the electricity represented by the EAC is generated in the same calendar year that the taxpayer's hydrogen production facility uses electricity to produce hydrogen.

(C) ***Use of energy storage.*** For purposes of meeting the requirements of paragraph (d)(3)(ii)(A) of this section, an EAC meets such requirements if the electricity represented by the EAC is discharged from a storage system in the same hour that the taxpayer's hydrogen production facility uses electricity to produce hydrogen. The storage system must be located in the same region as both the hydrogen production facility and the facility generating the stored electricity. To use the rule described in this paragraph (d)(3)(ii)(C), the volume of electricity use substantiated by each EAC representing stored electricity must account for storage-related efficiency losses. In addition, to use the rule described in this paragraph (d)(3)(ii)(C), EACs representing stored electricity must comprehensively address the storage of electricity by reflecting the energy attributes of the electricity generating facility that provided electricity to the storage facility, reflecting the temporal attributes regarding when the electricity is discharged from energy storage, and ensuring that paragraph (d)(2)(viii)(C) of this section relating to verification that each EAC is claimed and retired only once applies to EACs representing stored electricity.

(iii) ***Deliverability*** —

(A) ***In general.*** An EAC meets the requirements of this paragraph (d)(3)(iii) if the electricity represented by the EAC is generated by a facility that is in the same region (as defined in paragraph (d)(2)(ix) of this section) as the hydrogen production facility. Whether the electricity generating source and the hydrogen production facility are located in the same region is determined by the balancing authority to which each is electrically interconnected, not the geographic location.

(B) ***Interregional delivery.*** For purposes of meeting the requirements of paragraph (d)(3)(iii)(A) of this section, an EAC meets such requirements if the electricity generation represented by the EAC has transmission rights from the generator location to the region in which the hydrogen production facility is located and that generation is delivered to (*i.e.,* scheduled and dispatched or settled in) such facility's region. Such delivery must be demonstrated on at least an hour-to-hour basis, with no direct counterbalancing reverse transactions, and must be verified with NERC E-tags or the equivalent. In addition, to use the rule described in this paragraph (d)(3)(iii)(B), the qualified EAC registry or accounting system for each eligible EAC representing delivered electricity must track such delivery. Finally, to use the rule described in this paragraph (d)(3)(iii)(B), in the case of electricity imported from Canada or Mexico, the electricity generator must provide an attestation to the hydrogen production facility for purposes of the verification process described in § 1.45V-5 that the use or attributes of the electricity represented by each EAC are not being claimed for any other purpose.

(e) ***Carbon capture and sequestration.*** For purposes of the section 45V credit, if a taxpayer determines a lifecycle GHG emissions rate for hydrogen produced at a hydrogen production facility using the 45VH2-GREET Model or the Secretary determines a PER for hydrogen produced at a hydrogen production facility subject to a PER petition, then carbon capture and sequestration may be taken into account only if the carbon capture occurs in the production of qualified clean hydrogen (for subsequent sequestration) or occurs in the production of electricity, fuel, or feedstock that is used by such facility to produce hydrogen and is captured and disposed of in secure geological storage, pursuant to section 45Q(f)(2) and any regulations established thereunder, or utilized in a manner described in section 45Q(f)(5) and any regulations established thereunder. Such carbon capture and sequestration that occurs in the production of qualified clean hydrogen (rather than in the production of electricity, fuel, or feedstock) may only be taken into account if the carbon capture equipment is part of the qualified clean hydrogen production facility.

(f) ***Use of methane from certain sources to produce hydrogen*** —

(1) ***In general.*** The requirements provided by this paragraph (f) apply to a process (as defined in § 1.45V-1(a)(11)) that uses methane derived from biogas, renewable natural gas (RNG) derived from biogas, or fugitive sources of methane.

(2) ***Definitions.*** The following definitions apply for purposes of this paragraph (f):

(i) ***Alternative fate.*** The term *alternative fate* means a set of informed assumptions (for example, production processes, material outcomes, and market-mediated effects) used to estimate the emissions from the use or disposal of each feedstock were it not for the feedstock's new use due to the implementation of policy (that is, to produce hydrogen).

(ii) ***Biogas.*** The term *biogas* means gas containing methane that results from the decomposition of organic matter under anaerobic conditions.

(iii) ***Coal mine methane.*** The term *coal mine methane* means methane that is stored within coal seams and is liberated as a result of current or past mining activities. Liberated coal mine methane can be released intentionally by the mine for safety purposes, such as through mine degasification boreholes or underground mine ventilation systems, or it may leak out of the mine through vents, fissures, or boreholes. The term coal mine methane does not include methane removed from virgin coal seams (for example, coal bed methane).

(iv) ***Fugitive methane.*** The term *fugitive methane* means methane released from equipment leaks or venting during the extraction, processing, transformation, or delivery of fossil fuels and other gaseous fuels to the point of final use.

(v) ***Renewable natural gas.*** The term *renewable natural gas* (RNG) means biogas that has been upgraded to remove water, CO2, and other impurities such that it is interchangeable with fossil natural gas.

(vi) ***Gas energy attribute certificate.*** The term *gas energy attribute certificate* (gas EAC) means a tradeable contractual instrument, issued through and retired within a qualified gas EAC registry or accounting system (as defined in paragraph (f)(2)(ix) of this section), that represents the attributes of a specific unit of RNG or coal mine methane. A gas EAC may be traded with or separately from the underlying gas it represents. A gas EAC can be retired by or on behalf of its owner, which is the party that has the right to claim the underlying attributes represented by a gas EAC.

(vii) ***Eligible gas EAC.*** The term *eligible gas EAC* means a gas EAC that represents the quantity of RNG or coal mine methane that is produced by a producing facility that is registered on only one qualified gas EAC registry or accounting system (as defined in paragraph (f)(2)(ix) of this section) and that, with respect to the RNG or coal mine methane to which the gas EAC relates, provides, at a minimum, the following information:

(A) A description of the production facility, including the technology or practice and feedstock used to produce RNG or coal mine methane;

(B) The amount (and units) of RNG or coal mine methane;

(C) The month and year in which the RNG or coal mine methane is produced;

(D) The location at which the RNG or coal mine methane is injected into a natural gas pipeline (or the location of the production facility if directly used without injection into a natural gas pipeline);

(E) The source or sources of the gas that comprises the RNG or coal mine methane associated with each certificate as well as other attributes required by 45VH2-GREET, or in the determination of a PER, to determine the emissions associated with such RNG or coal mine methane; and

(F) A project identification number or assigned identifier.

(viii) ***Qualifying gas EAC.*** The term *qualifying gas EAC* means an eligible gas EAC that meets the requirements of paragraph (f)(4)(iii) of this section and for which the satisfaction of those requirements has been verified by a qualified verifier (as defined in § 1.45V-5(h)).

(ix) ***Qualified gas EAC registry or accounting system.*** The term *qualified gas EAC registry or accounting system* means an electronic tracking system that—

(A) Assigns a unique identification number to each certificate associated with RNG and coal mine methane tracked by such system;

(B) Requires independent verification of the source or sources of the gas that comprises the RNG or coal mine methane and any other factual considerations relevant to the lifecycle GHG emissions assessment for purposes of section 45V for tracking and verification purposes (self-reported data without independent verification are not allowed);

(C) Requires use of a revenue grade meter, with production volumes reported to the registry via an application programming interface (API) or with independent reporting to ensure accurate accounting for production volumes (self-reported data are not allowed);

(D) Enables verification that only one certificate is associated with each unit of RNG or coal mine methane;

(E) Verifies that each certificate is claimed and retired only once;

(F) Identifies the owner of each certificate and provides for documentation of the chain-of-custody of any transfers of certificates;

(G) Requires an attestation that a producer has not registered the RNG or coal mine methane with other registries;

(H) Provides a publicly accessible view (for example, through an application programming interface) of all currently registered RNG or coal mine methane production facilities in the tracking system to prevent the duplicative registration of such production facilities; and

(I) Requires verification of pipeline interconnection, if applicable.

(3) ***Considerations regarding the lifecycle greenhouse gas emissions associated with the production of hydrogen using methane from certain sources*** —

(i) ***In general.*** For purposes of determining the lifecycle GHG emissions rate of a process (as defined § 1.45V-1(a)(11)) that uses methane derived from biogas, RNG, or fugitive methane to produce hydrogen, estimates of lifecycle GHG emissions must consider all the direct and significant indirect emissions from the hydrogen production process. Such determinations must consider the alternative fates of that methane, including avoided emissions and alternative productive uses of that methane; the risk that the availability of tax credits creates incentives resulting in the production of additional methane or otherwise induces additional emissions; and observable trends and anticipated changes in waste management and disposal practices over time as they are applicable to methane generation and uses.

(ii) ***Methane from landfill sources.*** For purposes of determining the lifecycle GHG emissions rate of a process (as defined § 1.45V-1(a)(11)) that uses methane derived from landfill sources, the alternative fate of such gas must be flaring using an efficiency determined by 45VH2-GREET.

(iii) ***Methane from wastewater sources.*** For purposes of determining the lifecycle GHG emissions rate of a process (as defined § 1.45V-1(a)(11)) that uses methane derived from wastewater sources, the alternative fate of such gas must assume flaring and use the flaring efficiency and other factors as determined by 45VH2-GREET, including accounting for the proportion of the gas typically used to heat the anaerobic digester.

(iv) ***Coal mine methane.*** For purposes of determining the lifecycle GHG emissions rate of a process (as defined § 1.45V-1(a)(11)) that uses coal mine methane, flaring of such gas must be used as the alternative fate.

(v) ***Methane from animal waste.*** For purposes of determining the lifecycle GHG emissions rate of a process (as defined § 1.45V-1(a)(11)) that uses methane derived from biogas sourced from animal waste, the emissions associated with producing and transporting such biogas to the point where it is fed into an upgrader must use an alternative fate derived from the national average of all animal waste management practices, which results in a carbon intensity score of -51 grams of CO2e per megajoule (MJ), where the MJ basis refers to the lower heating value of the methane contained in the biogas prior to upgrading.

(vi) ***Fugitive methane other than coal mine methane.*** For purposes of determining the lifecycle GHG emissions rate of a process (as defined § 1.45V-1(a)(11)) that uses fugitive methane other than coal mine methane, such as fugitive methane from oil and gas operations, productive use of such gas must be used as the alternative fate, which would result in emissions equivalent to the carbon intensity of using fossil natural gas.

(4) ***Use of gas EACs*** —

(i) ***In general.*** Subject to paragraph (f)(4)(ii) of this section, for purposes of the section 45V credit, if a taxpayer determines a lifecycle GHG emissions rate for hydrogen produced at a hydrogen production facility using the 45VH2-GREET model or the Secretary determines a PER for

hydrogen produced at a hydrogen production facility subject to a PER petition, then the taxpayer may treat such hydrogen production facility's use of RNG (as defined in paragraph (f)(2)(v) of this section) or coal mine methane (as defined in paragraph (f)(2)(iii) of this section) as being from a specific source of such gas rather than fossil natural gas only if the taxpayer acquires and retires qualifying gas EACs (as defined in paragraph (f)(2)(viii) of this section) for each unit of such gas that the taxpayer claims from such source. To satisfy this requirement, a taxpayer's acquisition and retirement of qualifying gas EACs must also be recorded in a qualified gas EAC registry or accounting system (as defined in paragraph (f)(2)(ix) of this section) so that the acquisition and retirement of such gas EACs may be verified by a qualified verifier (as defined in § 1.45V-5(h)). The requirements of this paragraph (f)(4) apply regardless of whether the source of the RNG or coal mine methane is connected to a pipeline network, directly connected to a hydrogen production facility, or co-located with the hydrogen production facility.

(ii) ***System readiness.*** Paragraph (f)(4)(i) of this section applies only if the Secretary determines that one or more electronic tracking systems meet the definition of a qualified gas EAC registry or accounting system (as defined in paragraph (f)(2)(ix) of this section). The Secretary may make this determination no earlier than January 1, 2027. Prior to the Secretary making a determination described in this paragraph (f)(4)(ii), a taxpayer using RNG or coal mine methane in a hydrogen production process must substantiate the use of such gas by maintaining a direct pipeline connection to a supplier of such gas or documentation of other physical methods of exclusive delivery of such gas. Prior to the Secretary making a determination described in this paragraph (f)(4)(ii), a taxpayer must ensure that attributes of the RNG or coal mine methane used in a hydrogen production process are not double counted by obtaining attestations from the RNG or coal mine methane producers that there has been and will be no double counting of such attributes. The taxpayer must provide such attestations to the taxpayer's qualified verifier (as defined in § 1.45V-5(h)).

(iii) ***Qualifying gas EAC requirements.*** An eligible gas EAC meets the requirements of this paragraph (f)(4)(iii) if it meets the requirements of paragraphs (f)(4)(iii)(A) and (B) of this section.

(A) ***Temporal matching.*** An eligible gas EAC meets the requirements of this paragraph (f)(4)(iii)(A) if the RNG or coal mine methane represented by the eligible gas EAC was injected into a pipeline described in paragraph (f)(4)(iii)(B) of this section in the same calendar month that the hydrogen production facility uses the RNG or coal mine methane in the production of hydrogen or, if the RNG or coal mine methane represented by the eligible gas EAC was delivered to the hydrogen production facility from the RNG or coal mine methane producer, through a direct pipeline connection or other physical method of exclusive delivery.

(B) ***Deliverability.*** An eligible gas EAC meets the requirements of this paragraph (f)(4)(iii)(B) if the RNG or coal mine methane represented by the eligible gas EAC is injected into a natural gas pipeline in the contiguous United States and the hydrogen production facility is also located in and connected to a natural gas pipeline in the contiguous United States. Alaska, Hawaii, and each U.S. territory are separate regions, such that an eligible gas EAC meets the requirements of this paragraph (f)(4)(iii)(B) if the RNG or coal mine methane represented by the eligible gas EAC is injected into a natural gas pipeline in one of these regions and the hydrogen production facility is located in and connected to a natural gas pipeline in the same region. An eligible gas EAC also meets the requirements of this paragraph (f)(4)(iii)(B) if the RNG or coal mine methane represented by the eligible gas

EAC was delivered to the hydrogen production facility from the RNG or coal mine methane producer through a direct pipeline connection or other physical method of exclusive delivery.

(g) ***Applicability date.*** This section applies to taxable years beginning after December 26, 2023.

[T.D. 10023; 90 FR 2309, Jan. 10, 2025]

§ 1.45V-5 Procedures for verification of qualified clean hydrogen production and sale or use.

(a) ***In general.*** A verification report must be attached to a taxpayer's Form 7210, *Clean Hydrogen Production Credit,* or any successor form(s), with the taxpayer's Federal income tax return or information return for each qualified clean hydrogen production facility and for each taxable year in which the taxpayer claims the section 45V credit.

(b) ***Requirements for verification reports.*** A verification report specified in paragraph (a) of this section must be prepared by a qualified verifier under penalties of perjury and must contain—

(1) An attestation from the qualified verifier regarding the taxpayer's production of qualified clean hydrogen for sale or use, including an attestation that the inputs used to determine the lifecycle GHG emissions rate of the hydrogen production process are accurate (production attestation);

(2) An attestation from the qualified verifier regarding the amount of qualified clean hydrogen sold or used (sale or use attestation);

(3) An attestation from the qualified verifier regarding conflicts of interest (conflict attestation);

(4) Information regarding the qualified verifier, including documentation of the qualified verifier's qualifications (qualified verifier statement);

(5) Certain general information about the taxpayer's hydrogen production facility where the hydrogen production undergoing verification occurred;

(6) Any documentation necessary to substantiate the verification process given the standards and best practices prescribed by the qualified verifier's accrediting body and the circumstances of the taxpayer and the taxpayer's hydrogen production facility; and

(7) Any other information required by IRS forms or instructions.

(c) ***Requirements for the production attestation.*** The following requirements apply to the production attestation:

(1) The production attestation must be an attestation, made under penalties of perjury, that the qualified verifier performed a verification sufficient to determine that the operation, during the applicable taxable year, of the hydrogen production facility that produced the hydrogen for which the section 45V credit is claimed, any lifecycle GHG emissions data inputs, and any energy attribute certificates (EACs) applied pursuant to § 1.45V-4(d) for the purpose of accounting for such facility's emissions, are accurately reflected with reasonable assurance in—

(i) The amount of qualified clean hydrogen produced by the taxpayer that is claimed on the Form 7210, *Clean Hydrogen Production Credit,* or any successor form(s), to which the verification report is attached; and

(ii) Either—

(A) The data the taxpayer entered into the 45VH2-GREET Model to determine the lifecycle GHG emissions rate that is claimed on the Form 7210, *Clean Hydrogen Production Credit,* or any successor form(s), to which the verification report is attached; or

(B) The data the taxpayer submitted in the PER petition relating to the hydrogen for which the section 45V credit is claimed, and the data provided to the DOE in support of the taxpayer's request for the emissions value provided in the PER petition.

(2) If the production attestation attests that qualifying EACs were acquired and retired pursuant to § 1.45V-4(d), then the production attestation must confirm that the electricity generator or generators associated with such EACs were not registered on multiple qualifying EAC registries, or, in the event such generators are registered on multiple qualifying EAC registries, that each EAC undergoing verification from each such generator registered on multiple qualifying EAC registries is being issued by only one qualifying EAC registry.

(3) If the production attestation attests to the information specified in paragraph (c)(1)(ii)(B) of this section, then the production attestation must also specify the emissions value received from the DOE that was calculated using such data, expressed in kilograms of carbon dioxide equivalent (CO2e) per kilogram of hydrogen.

(4) The production attestation must specify the lifecycle GHG emissions rate(s) (expressed in kilograms of CO2e per kilogram of hydrogen) and the amount of qualified clean hydrogen produced by the taxpayer (expressed in kilograms), that are claimed on the Form 7210, *Clean Hydrogen Production Credit,* or any successor form(s), to which the verification report is attached.

(d) ***Requirements for the sale or use attestation*** —

(1) ***In general.*** The sale or use attestation must be an attestation, made under penalties of perjury, that the qualified verifier performed a verification sufficient to determine that the amount of qualified clean hydrogen that is specified in the production attestation pursuant to paragraph (c)(1)(i) of this section, and that is claimed on the Form 7210, *Clean Hydrogen Production Credit,* or any successor form(s), to which the verification report is attached, has been sold, or has been used by a person who makes a verifiable use of such hydrogen.

(2) ***Verifiable use.*** For purposes of section 45V(c)(2)(B)(ii) of the Code and the section 45V regulations (as defined in § 1.45V-1(a)(17)), a person's *verifiable use* of the hydrogen specified in paragraph (d)(1) of this section can occur within or outside the United States. A verifiable use can be made by the taxpayer or a person other than the taxpayer. For example, a verifiable use includes a tolling arrangement pursuant to which a service recipient provides raw materials or inputs, such as water or electricity, to a toller (that is, a third-party service provider that owns a hydrogen production facility), and the toller produces hydrogen for the service recipient using the service recipient's raw materials or inputs in exchange for a fee. In such a case, use of the hydrogen by the service recipient would be a verifiable use. However, a verifiable use does not include—

(i) Use of hydrogen to generate heat or power that is then directly used in the production of more hydrogen (except when such heat or power is derived from a byproduct of hydrogen use); or

(ii) Venting or flaring of hydrogen.

(3) The following example illustrates the application of paragraph (d)(2) of this section.

(i) ***Example*** —

(A) ***Facts.*** In 2025, Taxpayer A produces 100 kilograms of hydrogen through a process that results in an emissions rate of not greater than four kilograms of CO2e per kilogram of hydrogen produced. However, throughout the year, Taxpayer A feeds two kilograms of the hydrogen back into its facility's process train to replace what would otherwise be externally sourced energy inputs directly supplying the hydrogen production process. Taxpayer A also flares two kilograms of the hydrogen for testing and maintenance purposes. Taxpayer A puts 96 kilograms of the hydrogen to use in a separate facility that produces fertilizer. Additionally, Taxpayer A recovers waste heat from the fertilizer production process to generate electricity used to power both facilities.

(B) ***Analysis.*** Taxpayer A has made a verifiable use of 96 kilograms of qualified clean hydrogen and may claim the section 45V credit for that amount, assuming all other requirements for claiming the section 45V credit are met. The two kilograms of hydrogen that are flared have not been verifiably used, and therefore Taxpayer A may not determine the section 45V credit with respect to such two kilograms of hydrogen. The two kilograms of hydrogen that are directly supplied back into the hydrogen process have also not been verifiably used because the hydrogen is being consumed to produce heat or power that will then directly be used to produce more hydrogen. Consumption of hydrogen in this manner (to generate heat or power that is then directly used to produce hydrogen) is not a verifiable use under paragraph (d)(2) of this section.

(e) ***Requirements for the conflict attestation.*** The conflict attestation must include attestations, made under penalties of perjury, that—

(1) The qualified verifier has not received a fee based to any extent on the value of any section 45V credit that has been or is expected to be claimed by any taxpayer and no arrangement has been made for such fee to be paid at some time in the future;

(2) The qualified verifier has not been a party to any transaction in which the taxpayer sold qualified clean hydrogen it had produced or in which the taxpayer purchased inputs for the production of such hydrogen;

(3) The qualified verifier is not related, within the meaning of section 267(b) or 707(b)(1) of the Code, to, or an employee of, the taxpayer;

(4) The qualified verifier is not married to an individual described in paragraph (e)(3) of this section; and

(5) If the qualified verifier is acting in his or her capacity as a partner in a partnership, an employee of any person, whether an individual, corporation, or partnership, or an independent contractor engaged by a person other than the taxpayer, the attestations under paragraphs (e)(1) through (4) of this section must also be made with respect to the partnership or the person who employs or engages the qualified verifier.

(f) ***Requirements for the qualified verifier statement.*** The qualified verifier statement must include the following—

(1) The qualified verifier's name, address, and taxpayer identification number;

(2) The qualified verifier's qualifications to conduct the verification, including a description of the qualified verifier's education and experience and a photocopy of the qualified verifier's certificate received from their accrediting body;

(3) If the qualified verifier is acting in his or her capacity as a partner in a partnership, an employee of any person, whether an individual, corporation, or partnership, or an independent contractor engaged by a person other than the taxpayer, the name, address, and taxpayer identification number of the partnership or the person who employs or engages the qualified verifier;

(4) The signature of the qualified verifier and the date signed by the qualified verifier; and

(5) A statement that the verification was conducted for Federal income tax purposes.

(g) ***General information on the taxpayer's hydrogen production facility.*** The verification report must include the following information for the taxpayer's hydrogen production facility where the hydrogen production undergoing verification occurred:

(1) The location of the hydrogen production facility;

(2) A description of the hydrogen production facility, including its method of producing hydrogen;

(3) The type(s) of feedstock(s) used by the hydrogen production facility during the taxable year of production;

(4) The amount(s) of feedstock(s) used by the hydrogen production facility during the taxable year of production; and

(5) A list of the metering devices used to record any data used by the qualified verifier to support the production attestation under paragraph (c) of this section along with a statement that the qualified verifier is reasonably assured that the device(s) underwent industry-appropriate quality assurance and quality control, and the accuracy and calibration of the device has been tested in the last year.

(h) ***Qualified verifier.*** The term *qualified verifier* means any individual or organization with active accreditation—

(1) From the American National Standards Institute National Accreditation Board to conduct validation and verification in accordance with the requirements of ISO 14065:2020 and ISO 14064-3:2019; or

(2) As a verifier, lead verifier, or verification body under the California Air Resources Board Low Carbon Fuel Standard program.

(i) ***Unrelated party.*** For purposes of section 45V(c)(2)(B)(ii), the term *unrelated party* means a qualified verifier who meets the requirements of paragraph (e) of this section.

(j) ***Requirements for taxpayers claiming both the section 45V credit and the section 45 credit or the section 45U credit.*** In the case of a taxpayer who produces electricity for which either the section 45 or section 45U credit is claimed and the taxpayer or a related person uses such electricity to produce hydrogen for which the section 45V credit is claimed, the verification report must also contain attestations that the qualified verifier performed a verification sufficient to determine that—

(1) The electricity used to produce such hydrogen was produced at the relevant facility for which a section 45 or section 45U credit is claimed;

(2) The given amount of electricity (in kilowatt hours) used to produce such hydrogen at the relevant hydrogen production facility is reasonably assured of being accurate; and

(3) The electricity for which a section 45 or section 45U credit was claimed is represented by EACs that are acquired and retired in connection with the production of such hydrogen.

(k) ***Timely verification report.*** A verification report must be signed and dated by the qualified verifier no later than—

(1) The due date, including extensions, of the Federal income tax return or information return for the taxable year during which the hydrogen undergoing verification is produced; or

(2) In the case of a credit first claimed for the taxable year on an amended return or administrative adjustment request, the date on which the amended return or administrative adjustment request is filed.

(l) ***Applicability date.*** This section applies to taxable years beginning after December 26, 2023.

[T.D. 10023, 90 FR 2309, Jan. 10, 2025]

§ 1.45V-6 Rules for determining the placed in service date for an existing facility that is modified or retrofitted to produce qualified clean hydrogen.

(a) ***Modification of an existing facility*** —

(1) ***In general.*** Under section 45V(d)(4) of the Code, in the case of an existing facility that—

(i) Was originally placed in service before January 1, 2023, and, prior to the modification described in this paragraph (a), did not produce qualified clean hydrogen, and after the date such facility was originally placed in service—

(A) Is modified to produce qualified clean hydrogen; and

(B) Amounts paid or incurred with respect to such modification are properly chargeable to the taxpayer's capital account for the facility,

(ii) Such facility will be deemed to have been originally placed in service as of the date the property required to complete the modification described in this paragraph (a) is placed in service.

(2) ***Modification requirements.*** For purposes of section 45V(d)(4) and paragraph (a)(1) of this section, an existing facility will not be deemed to have been originally placed in service as of the date the property required to complete the modification is placed in service unless the modification is made for the purpose of enabling the facility to produce qualified clean hydrogen and amounts paid or incurred with respect to the modification are properly chargeable to the taxpayer's capital account. A modification is made for the purpose of enabling the facility to produce qualified clean hydrogen if the facility could not produce hydrogen with a lifecycle GHG emissions rate that is less than or equal to 4 kilograms of carbon dioxide equivalent (CO2e) per kilogram of hydrogen but for the modification. For example, if a taxpayer solely pays or incurs capital expenses to modify existing components of a hydrogen production facility that are not necessary for the production of hydrogen with a lifecycle GHG emissions rate that is less than or equal to 4 kilograms of CO2e per kilogram of hydrogen, such modification does not entitle the facility to a new placed in service date. A modification does not include changing fuel inputs to the hydrogen production facility. For example, changing from using conventional natural gas to using renewable natural gas as a feedstock, is not a modification under this paragraph.

(3) ***Interaction with 80/20 Rule.*** An existing facility that satisfies the requirements of section 45V(d)(4) and paragraphs (a)(1) and (2) of this section is deemed to be originally placed in service as of the date that the property required to complete the modification described in section 45V(d)(4)(B) is placed in service regardless of whether such facility satisfies the requirements of paragraph (b) of this section.

(b) ***Retrofit of an existing facility (80/20 Rule).*** For purposes of section 45V(a)(1), a retrofitted hydrogen production facility may establish a new date on which it is considered originally placed in service, even though the facility contains some used components of property of a single production line, provided the fair market value of the used property is not more than 20 percent of the facility's total value, calculated by adding the cost of the new property to the value of the used property (80/20 Rule). For purposes of the 80/20 Rule, the cost of new property includes all properly capitalized costs of the new property included within the facility. If a facility satisfies the requirements of the 80/20 Rule, then the date on which such facility is considered originally placed in service for purposes of section 45V(a)(1) is the date on which the new property added to the facility is placed in service.

(c) ***Examples.*** The following examples illustrate the application of paragraphs (a) and (b) of this section:

(1) ***Example 1: Modification of an existing facility*** —

(i) ***Facts.*** Facility X, a hydrogen production facility that was originally placed in service on January 1, 2018, could not produce qualified clean hydrogen as described in section 45V(c)(2). After January 1, 2023, Facility X was modified to produce qualified clean hydrogen, and all amounts paid or incurred with respect to such modifications were properly chargeable to the taxpayer's capital account for Facility X. The property required to complete the modification was placed in service on June 1, 2023.

(ii) ***Analysis.*** Under section 45V(d)(4) and paragraph (a) of this section, because Facility X was originally placed in service before January 1, 2023, and before the modification could not produce qualified clean hydrogen, it is deemed to be originally placed in service as of the date the property required to complete the modification is placed in service. Accordingly, for purposes of section 45V(a)(1) and (d)(4), Facility X is deemed to have been originally placed in service on June 1, 2023.

(2) ***Example 2: Modification of an existing facility; coordination with the section 45Q credit previously allowed*** —

(i) ***Facts.*** The facts are the same as in paragraph (c)(1) of this section (*Example 1*), except that taxpayer was allowed a section 45Q credit with respect to carbon capture equipment (CCE) included at Facility X before June 1, 2023.

(ii) ***Analysis.*** Under paragraph (a) of this section and § 1.45V-2(a), although Facility X is deemed to have been originally placed in service on June 1, 2023, because taxpayer had previously been allowed a section 45Q credit with respect to the CCE included at Facility X, no section 45V credit is allowable for qualified clean hydrogen produced at Facility X, despite the modification. The result would be the same if the section 45Q credit with respect to the CCE included at Facility X were allowed to a person other than the taxpayer.

(3) ***Example 3: Modification of an existing facility and coordination with section 45Q credit not previously allowed*** —

(i) ***Facts.*** Facility Y, a hydrogen production facility that was originally placed in service on February 1, 2020, could not previously produce qualified clean hydrogen as described in section 45V(c)(2). On February 1, 2026, Facility Y was modified to produce qualified clean hydrogen by adding new CCE to allow Facility Y to capture, process, and prepare carbon dioxide for transport for disposal, injection, or utilization. All amounts paid or incurred with respect to such modifications were properly chargeable to the taxpayer's capital account for Facility Y. The property required to complete the modification of Facility Y was placed in service on February 1, 2026, and as a result, Facility Y, including the new CCE, is deemed to be originally placed in service on February 1, 2026, for purposes of sections 45V and 45Q. No section 45Q credit has been allowed to any taxpayer with respect to the new CCE located at Facility Y.

(ii) ***Analysis.*** Under paragraph (a) of this section and § 1.45V-2(a), because no section 45Q credit has been allowed to any taxpayer with respect to the new CCE located at Facility Y, a section 45V credit is allowable for the qualified clean hydrogen produced at Facility Y, assuming all other requirements of section 45V are met.

(4) ***Example 4: Retrofit of an existing facility (80/20 Rule)*** —

(i) ***Facts.*** Facility Z, a hydrogen production facility that was originally placed in service on February 1, 2023, does not produce qualified clean hydrogen as described in section 45V(c)(2). On January 1, 2026, Facility Z was retrofitted to produce qualified clean hydrogen. After the retrofit, the cost of the new property included in Facility Z is greater than 80 percent of Facility Z's total value.

(ii) ***Analysis.*** Even though Facility Z does not satisfy the requirements of section 45V(d)(4) because Facility Z was not originally placed in service before January 1, 2023, under paragraph (b) of this section, Facility Z is deemed to be originally placed in service on January 1, 2026, because Facility Z meets the 80/20 Rule. Thus, a section 45V credit is allowable for qualified clean hydrogen produced at Facility Z during the 10-year period beginning on January 1, 2026, assuming all other requirements of section 45V are met.

(5) ***Example 5: Retrofit of an Existing Facility (80/20 Rule) and coordination with section 45Q credit previously allowed*** —

(i) ***Facts.*** The facts are the same as in paragraph (c)(4) of this section (*Example 4*), except that before the retrofit, Facility Z included CCE for which a section 45Q credit was allowed to a taxpayer.

(ii) ***Analysis.*** Under paragraph (b) of this section and § 1.45V-2(a), Facility Z is deemed to be originally placed in service on January 1, 2026, because Facility Z meets the 80/20 Rule. However, a section 45V credit is not allowable for qualified clean hydrogen produced at Facility Z during the 10-year period beginning on January 1, 2026, because a section 45Q credit has been allowed to a taxpayer with regard to the CCE included in Facility Z.

(d) ***Applicability date.*** This section applies to taxable years beginning after December 26, 2023.

[T.D 10023, 90 FR 2309, Jan. 10, 2025]

§ 1.45X-0 Table of contents.

This section lists the major captions contained in §§ 1.45X-1 through 1.45X-4.

§ 1.45X-1 General rules applicable to the advanced manufacturing production credit.

(a) Overview.

(b) Credit amount.

(c) Definition of produced by the taxpayer.

(d) Produced in the United States.

(e) Production and sale in a trade or business.

(f) Sale of integrated components.

(g) Interaction between sections 45X and 48C.

(h) [Reserved]

(i) Anti-abuse rule.

(j) Applicability date.

§ 1.45X-2 Sale to unrelated person.

(a) In general.

(b) Definitions.

(c) Special rule for sale to related person.

(d) Related person election.

(e) Sales of integrated components to related person.

(f) Applicability date.

§ 1.45X-3 Eligible components.

(a) In general.

(b) Solar energy components.

(c) Wind energy components.

(d) Inverters.

(e) Qualifying battery component.

(f) Phase out rule.

(g) Applicability date.

§ 1.45X-4 Applicable critical minerals.

(a) In general.

(b) Definitions.

(c) Credit amount.

(d) Applicability date.

[T.D. 10010, 89 FR 85831, Oct. 28, 2024]

§ 1.45X-1 General rules applicable to the advanced manufacturing production credit.

(a) ***Overview*** —

(1) ***In general.*** This section provides general rules regarding the advanced manufacturing production credit determined under section 45X of the Code (section 45X credit). Paragraph (a)(2) of this section provides definitions of certain terms that apply for purposes of section 45X and the section 45X regulations (as defined in paragraph (a)(2)(xv) of this section). Paragraphs (b) through (j) of this section provide the basic rules regarding the section 45X credit, including the definition of the term *produced by the taxpayer,* and rules to determine the taxpayer that produces an eligible component and whether such taxpayer is entitled to claim a section 45X credit in contract manufacturing arrangements; where the production of eligible components must occur; the treatment of integrated, incorporated or assembled eligible components; and the interaction between sections 45X and 48C of the Code. *See* § 1.45X-2 for rules regarding sales to unrelated persons, sales to related persons, and the related person election (Related Person Election), including rules regarding the time, place, and manner of making the Related Person Election. *See* § 1.45X-3 for the definitions of all eligible components (except applicable critical minerals) and the credit amounts available for each of these eligible components, including certain phase-out percentages. *See* § 1.45X-4 for the definitions of applicable critical minerals and the rules regarding the determination of the credit amount for applicable critical minerals.

(2) ***Generally applicable definitions.*** This paragraph (a)(2) provides definitions of terms that apply for purposes of section 45X and the section 45X regulations.

(i) ***Applicable critical mineral.*** The term *applicable critical mineral* means any of the minerals that are listed in section 45X(c)(6) and defined in § 1.45X-4(b).

(ii) ***Code.*** The term *Code* means the Internal Revenue Code.

(iii) ***Contract manufacturing arrangement.*** The term *contract manufacturing arrangement* is defined in paragraph (c)(3)(ii)(B) of this section.

(iv) ***Electrode active materials.*** The term *electrode active materials* is defined in section 45X(c)(5)(B)(i) and described in § 1.45X-3(e)(2).

(v) ***Eligible component.*** The term *eligible component* is defined in section 45X(c)(1)(A) and described in §§ 1.45X-3 and 1.45X-4.

(vi) ***Eligible taxpayer.*** The term *eligible taxpayer* is defined in paragraph (c)(3) of this section.

(vii) ***Extraction.*** The term *extraction* is defined in § 1.45X-3(e)(2)(iv)(B).

(viii) ***Guidance.*** The term *guidance* means guidance published in the FEDERAL REGISTER or Internal Revenue Bulletin, as well as administrative guidance such as forms, instructions, publications, or other guidance on the IRS.gov website. *See* §§ 601.601 and 601.602 of this chapter.

(ix) ***IRA.*** The term *IRA* means Public Law 117-169, commonly known as the Inflation Reduction Act of 2022.

(x) ***IRS.*** The term *IRS* means the Internal Revenue Service.

(xi) ***Produced by the taxpayer.*** The term *produced by the taxpayer* is defined in paragraph (c) of this section.

(xii) ***Related person.*** The term *related person* is defined in § 1.45X-2(b)(2).

(xiii) ***Related Person Election.*** The term *Related Person Election* is defined in § 1.45X-2(d)(1).

(xiv) ***Secretary.*** The term *Secretary* means the Secretary of the Treasury or her delegate.

(xv) ***Section 45X regulations.*** The term *section 45X regulations* means the provisions of this section, §§ 1.45X-2 through 1.45X-4, and the regulations in this chapter under sections 6417 and 6418 of the Code that relate to the section 45X credit.

(xvi) ***Unrelated person.*** The term *unrelated person* is defined in section 45X(a)(3) and described in § 1.45X-2(b)(3).

(b) ***Credit amount.*** Except as otherwise provided in section 45X(b)(3) and § 1.45X-3(f), for purposes of section 38 of the Code, the amount of the section 45X credit for any taxable year is equal to the sum of the credit amounts provided under section 45X(b) and described in §§ 1.45X-3 and 1.45X-4 with respect to each eligible component that is produced by the taxpayer and, within the taxable year, sold by the taxpayer to an unrelated person. *See* § 1.45X-2 for rules regarding sales of eligible components to related persons that may be treated as if sold to unrelated persons for purposes of section 45X(a).

(c) ***Definition of produced by the taxpayer*** —

(1) ***In general.*** The term *produced by the taxpayer* means a process conducted by the taxpayer that substantially transforms constituent elements, materials, or subcomponents into a complete and distinct eligible component that is functionally different from that which would result from minor assembly or superficial modification of the elements, materials, or subcomponents, and includes both primary and secondary production. Primary production involves producing an eligible component using non-recycled materials while secondary production involves producing an eligible component using recycled materials.

(i) ***Partial transformation.*** The term *produced by the taxpayer* does not include partial transformation that does not result in substantial transformation of constituent elements, materials, or subcomponents into a complete and distinct eligible component as described in this paragraph (c)(1).

(ii) ***Minor assembly or superficial modification.*** The term *produced by the taxpayer* does not include minor assembly of two or more constituent elements, materials, or subcomponents, or superficial modification of the final eligible component, if the taxpayer does not also engage in the process resulting in a substantial transformation described in paragraph (c)(1) or (2) of this section.

(iii) ***Examples.*** The following examples illustrate the application of this paragraph (c)(1).

(A) ***Example 1.*** Taxpayers X, Y, and Z each produce one of three sections of a wind tower that together make up the wind tower. No taxpayer has produced an eligible component within the meaning of section 45X(a)(1)(A) because no taxpayer has produced all sections of the wind tower.

(B) ***Example 2.*** Same facts as paragraph (c)(1)(iii)(A) of this section (*Example 1*), but taxpayers X, Y, and Z instead form Partnership XYZ. Partnership XYZ produces all three sections of the wind tower. Partnership XYZ has produced an eligible component within the meaning of section 45X(a)(1)(A).

(C) ***Example 3.*** Taxpayer V puts the external casing on a battery module (within the meaning of § 1.45X-3(e)(4)(i)(A)) that already had cells, battery management systems, and other components integrated into it. Taxpayer V has engaged in minor assembly and has not produced an eligible component within the meaning of section 45X(a)(1)(A).

(D) ***Example 4.*** Taxpayer U purchases two finished halves of a wind turbine nacelle and combines them into a single nacelle. Taxpayer U has engaged in minor assembly and has not produced an eligible component within the meaning of section 45X(a)(1)(A).

(E) ***Example 5.*** Taxpayer T purchases a dry cell battery and fills the electrolyte of the battery. Taxpayer T has engaged in minor assembly and has not produced an eligible component within the meaning of section 45X(a)(1)(A).

(F) ***Example 6.*** Taxpayer W purchases a prefabricated wind turbine blade and applies paint and finishes. Taxpayer W has engaged in superficial modification of the blade and has not produced an eligible component within the meaning of section 45X(a)(1)(A).

(2) ***Special rule for certain eligible components*** —

(i) ***In general.*** For solar grade polysilicon, electrode active materials, and applicable critical minerals, the term *produced by the taxpayer* means processing, converting, refining, or purifying source materials, such as brines, ores, or waste streams, to substantially transform the source materials to derive a distinct eligible component, and includes both primary and secondary production. For the production process for electrode active materials and applicable critical minerals, the term *conversion* is defined in § 1.45X-3(e)(2)(iii)(A) or § 1.45X-4(c)(2)(i), respectively, and the term *purification* is defined in § 1.45X-3(e)(2)(iii)(B) or § 1.45X-4(c)(2)(ii), respectively.

(ii) ***Example.*** Taxpayers X, Y and Z are unrelated C corporations that have calendar year taxable years. In 2024, X extracts raw lithium from natural mineral deposits and purifies the extracted material to 90% lithium by mass. X subsequently hires Y to further purify the lithium material furnished by X to a purity of no less than 99.9% lithium by mass as required by section 45X(c)(6)(P)(ii) and § 1.45X-4(b)(16)(ii). In 2025, Y purifies the material to 99.9% lithium by mass (qualifying lithium). X subsequently sells the qualifying lithium to Z in 2026. X may not claim a section 45X credit for the qualifying lithium sold to Z because the qualifying lithium was not produced by X within the meaning of this paragraph (c)(2) of this section, given that X did not transform the lithium material to derive a distinct eligible component (*i.e.,* lithium which satisfies the minimum purity of 99.9% lithium by mass prescribed by section 45X(c)(6)(P)(ii).

(3) ***Eligible taxpayer*** —

(i) ***In general.*** Except as otherwise provided in paragraph (c)(3)(iii) of this section, a taxpayer claiming a section 45X credit with respect to an eligible component must be the taxpayer that directly performs the production activities that bring about a substantial transformation resulting in the eligible component and must sell such eligible component to an unrelated person.

(ii) ***Contract manufacturing arrangement*** —

(A) ***In general.*** If the production of an eligible component is performed in whole or in part pursuant to a contract that is a contract manufacturing arrangement, then, provided the other requirements of section 45X are met, the party to such contract that may claim the section 45X credit with respect to such eligible component is the party that performs the actual production activities that bring about a substantial transformation resulting in the eligible component.

(B) ***Contract manufacturing arrangement defined.*** The term *contract manufacturing arrangement* means any agreement (or agreements) providing for the production of an eligible component if the agreement is entered into before the production of the eligible component to be delivered under the contract is completed. A routine purchase order for off-the-shelf property is not treated as a contract manufacturing arrangement for purposes of this paragraph (c)(3). An agreement will be treated as a routine purchase order for off-the-shelf property if the contractor is required to make no more than de minimis modifications to the property to tailor it to the customer's specific needs, or if at the time the agreement is entered into, the contractor knows or has reason to know that the contractor can satisfy the agreement out of existing stocks or normal production of finished goods.

(iii) ***Special rule for contract manufacturing arrangements.*** If an eligible component is produced by a taxpayer pursuant to a contract manufacturing arrangement, the parties to such agreement may determine by agreement the party that may claim the section 45X credit. If a taxpayer enters into contract manufacturing arrangements with multiple fabricators to produce an eligible component, the parties to such agreements may determine by agreement the party that may claim the section 45X credit. The IRS will not challenge the agreement of the parties provided all the parties submit signed certification statements in the manner required in Form 7207, *Advanced Manufacturing Production Credit,* or its instructions (as described in paragraph (c)(3)(iv) of this section) indicating that all parties agree as to the party that may claim the section 45X credit.

(iv) ***Certification statement requirements.*** A certification statement indicating that all parties to a contract manufacturing arrangement agree as to the party that will claim the section 45X credit must include—

(A) All required information set forth in guidance; and

(B) A properly signed penalty of perjury statement that includes the following: under penalties of perjury, I declare that I have examined this statement, including accompanying documents, and to the best of my knowledge and belief, the facts presented in support of this statement are true, correct, and complete.

(v) ***Examples.*** The following examples illustrate the application of this paragraph (c)(3).

(A) ***Example 1: Contract manufacturing with sale.*** Taxpayers X, Y and Z are unrelated C corporations that have calendar year taxable years. In 2024, pursuant to a contract manufacturing arrangement as described in paragraph (c)(3)(ii)(B) of this section, X hires Y to produce a solar module. The contract is a tolling arrangement and provides that Y will produce the solar module according to X's designs and specifications and using the materials and subcomponents that X provides. X and Y enter an agreement providing that X is the sole party that may claim a section 45X credit for the production and sale of the solar module, and X and Y each sign a certification statement as described in paragraph (c)(3)(iv) of this section reflecting this agreement. In 2025, Y produces and delivers the solar module to X, and in 2026, X sells the solar module to Z. X may claim a section 45X credit in taxable year 2026 for the solar module it sold to Z provided all other requirements of section 45X are met and the certification statements signed by X and Y meet the requirements described in paragraph (c)(3)(iv) of this section and are properly submitted by X. Y could claim a section 45X credit if the agreement between X and Y had designated Y as the sole party that could claim a section 45X credit for the production and sale of the solar module provided all other requirements of section 45X are met and the certification statements signed by X and Y meet the requirements described in paragraph (c)(3)(iv) of this section and are properly submitted by Y.

(B) ***Example 2: Contract manufacturing with no sale.*** Assume the facts are the same as in paragraph (c)(3)(v)(A) of this section (*Example 1*), except that X does not sell the solar module and instead X uses it to generate electricity for use in X's trade or business. Because there has been no sale, neither X nor Y may claim a section 45X credit for the solar module regardless of whether X and Y submit signed certification statements described in paragraph (c)(3)(iv) of this section.

(C) ***Example 3: Multiple contract manufacturing arrangements.*** Taxpayers V, W, X, Y, and Z are unrelated C corporations that have calendar year taxable years. In 2024, pursuant to three separate contract manufacturing arrangements as described in paragraph (c)(3)(ii)(B) of this section, V hires W, X, and Y to produce the bottom, middle and top segments, respectively, of a single wind tower that V designed. W, X, Y, and V enter into an agreement providing that V is the sole party that may claim a section 45X credit for the production and sale of the wind tower, and W, X, Y, and V each sign a certification statement as described in paragraph (c)(3)(iv) of this section reflecting this agreement. In 2024, W and X both produce and deliver their respective wind tower segments to the installation site, and in 2025, Y produces and delivers its wind tower segment to the installation site. In 2026, V sells the completed wind tower to Z. V may claim a section 45X credit in taxable year 2026 for the wind tower it sold to Z provided all other requirements of section 45X are

met and the certification statements signed by V, W, X, and Y meet the requirements described in paragraph (c)(3)(iv) of this section and are properly submitted by V. W or X or Y could be the party that could claim a section 45X credit if the agreement between V, W, X and Y had designated W or X or Y as the sole party that could claim a section 45X credit for the production and sale of the wind tower provided all other requirements of section 45X are met and the certification statements signed by V, W, X, and Y meet the requirements described in paragraph (c)(3)(iv) of this section and are properly submitted by the party designated as the sole party that could claim a section 45X credit.

(D) ***Example 4: Applicable Critical Mineral Processing with Certification.*** Taxpayers X, Y, and Z are unrelated C corporations that have calendar year taxable years. In 2024, X extracts raw lithium from natural mineral deposits and purifies the extracted material to 90% lithium by mass. X subsequently hires Y to further process the lithium material pursuant to a contract manufacturing arrangement as described in paragraph (c)(3)(ii)(B) of this section. Specifically, the contract is a tolling arrangement and provides that X remains the owner for Federal income tax purposes throughout the purification process and that Y will further purify the lithium material furnished by X to a purity of no less than 99.9% lithium by mass as required by section 45X(c)(6)(P) and § 1.45X-4(b)(16)(ii). X and Y enter an agreement providing that X is the sole party that may claim a section 45X credit for the production and sale of the applicable critical mineral, and X and Y each sign a certification statement as described in paragraph (c)(3)(iv) of this section reflecting this agreement. In 2025, Y purifies the material to 99.9% lithium by mass (qualifying lithium) and delivers it to X. X subsequently sells the qualifying lithium to Z in 2026. X may claim a section 45X credit in taxable year 2026 for the qualifying lithium sold to Z, provided that all other requirements of section 45X are met, and the certification statements signed by X and Y meet the requirements described in paragraph (c)(3)(iv) of this section and are properly submitted by X. Y could claim a section 45X credit if the agreement between X and Y had designated Y as the sole party that could claim a section 45X credit for the qualifying lithium, provided that all other requirements of section 45X are met, and the certification statements signed by X and Y meet the requirements described in paragraph (c)(3)(iv) of this section and are properly submitted by Y. Neither X nor Y could claim a section 45X credit in the absence of a designating agreement and certification statement (described in paragraphs (c)(3)(iii) and (iv) of this section, respectively) for the reasons stated in paragraph (c)(3)(i) of this section.

(4) ***Timing of production and sale*** —

(i) ***In general.*** Production of eligible components for which a taxpayer is claiming a section 45X credit may begin before December 31, 2022. Production of eligible components must be completed, and sales of eligible components must occur, after December 31, 2022.

(ii) ***Example.*** Taxpayer X has a calendar year taxable year. Taxpayer X begins production of a related offshore wind vessel (as defined in section 45X(c)(4)(B)(iv) and described in § 1.45X-3(c)(4)) in January 2022. Production is completed in December 2024 and the sale to an unrelated person occurs in 2025. Taxpayer X is eligible to claim the section 45X credit in 2025, assuming that all other requirements of section 45X are met.

(d) ***Produced in the United States*** —

(1) ***In general.*** Sales are taken into account for purposes of the section 45X credit only for eligible components that are produced within the United States, as defined in section 638(1) of the Code, or a United States territory, which for purposes of section 45X and the section 45X regulations has the meaning of the term *possession* provided in section 638(2).

(2) ***Subcomponents.*** Constituent elements, materials, and subcomponents used in the production of eligible components are not subject to the domestic production requirement provided in paragraph (d)(1) of this section.

(e) ***Production and sale in a trade or business.*** An eligible component produced and sold by the taxpayer is taken into account for purposes of the section 45X credit only if the production and sale are in a trade or business (within the meaning of section 162 of the Code) of the taxpayer.

(f) ***Sale of integrated components*** —

(1) ***In general.*** For purposes of the section 45X credit, section 45X(d)(4) provides that a taxpayer that produces an eligible component is treated as having sold such eligible component to an unrelated person if such component is integrated, incorporated, or assembled into another eligible component that is then sold to an unrelated person.

(i) ***Integrated, incorporated, or assembled.*** The term *integrated, incorporated,* or *assembled* means the production activities by which an eligible component that is a constituent element, material, or subcomponent is substantially transformed into another complete and distinct eligible component that is not solar grade polysilicon, an electrode active material, or an applicable critical mineral. The term *integrated, incorporated,* or *assembled* does not mean the minor assembly or superficial modification of an eligible component used as an element, material, or subcomponent and other elements, materials, or subcomponents that results in a distinct product.

(ii) ***Special rule for eligible components resulting in solar grade polysilicon, electrode active materials, or applicable critical minerals.*** For solar grade polysilicon, electrode active materials, and applicable critical minerals, the term *integrated, incorporated,* or *assembled* means the production activities in which an eligible component is processed, converted, refined, or purified to derive a distinct eligible component that is solar grade polysilicon, an electrode active material, or an applicable critical mineral. The term *integrated, incorporated,* or *assembled* does not mean minor assembly or superficial modification of an eligible component used as an element, material, or subcomponent and other elements, materials, or subcomponents that results in a distinct product.

(2) ***Application*** —

(i) ***In general.*** A taxpayer may claim a section 45X credit for each eligible component the taxpayer produces and sells to an unrelated person, including any eligible component the taxpayer produces that was used as a constituent element, material, or subcomponent and integrated, incorporated, or assembled into another complete and distinct eligible component or another complete and distinct product (that is not itself an eligible component) that the taxpayer also produces and sells to an unrelated person.

(ii) ***Example: Sale of product with incorporated eligible components to unrelated person.*** In 2022, X, a domestic corporation that has a calendar year taxable year, begins production of electrode active materials (EAMs) that are completed in 2023 and incorporated into battery cells that X also produces. In 2024, X incorporates those battery cells into battery modules (within the

meaning of § 1.45X-3(e)(4)(i)(A)) and integrates the battery modules into electric vehicles. X sells the electric vehicles to Z, an unrelated person, in 2024. X may claim a section 45X credit for the EAMs, the battery cells, and the battery modules in 2024.

(g) ***Interaction between sections 45X and 48C*** —

(1) ***In general.*** For purposes of the section 45X credit, consistent with section 45X(c)(1)(B), property that would otherwise qualify as an eligible component (otherwise qualified property) is only an eligible component if the property is produced at a section 45X facility (as defined in paragraph (g)(2) of this section) and no part of that section 45X facility is also a section 48C facility (as defined in paragraph (g)(3) of this section).

(2) ***Section 45X facility*** —

(i) ***In general.*** A section 45X facility comprises the independently functioning tangible property used by the taxpayer that is necessary to be considered the producer of the otherwise qualified property within the meaning of paragraph (c)(1) or (2) of this section, as applicable. The tangible property that comprises a section 45X facility may be in more than one location.

(ii) ***Special rule for contract manufacturing arrangement.*** In the case of a contract manufacturing arrangement where the parties have agreed to who can claim a section 45X credit under paragraph (c)(3)(iii) of this section, the section 45X facility under paragraph (g)(2)(i) of this section is determined by taking into account the tangible property used to produce the otherwise qualified property, regardless of which party to the arrangement claims the credit.

(3) ***Section 48C facility*** —

(i) ***In general.*** A *section 48C facility* includes all eligible property included in a qualifying advanced energy project for which a taxpayer receives an allocation of section 48C credits under the allocation program established under section 48C(e) and claims such credits after August 16, 2022.

(ii) ***Eligible property. Eligible property*** is property that—

(A) Is necessary for the production or recycling of property described in section 48C(c)(1)(A)(i), re-equipping an industrial or manufacturing facility described in section 48C(c)(1)(A)(ii), or re-equipping, expanding, or establishing an industrial facility described in section 48C(c)(1)(A)(iii);

(B) Is tangible personal property, or other tangible property (not including a building or its structural components), but only if such property is used as an integral part of the qualified investment credit facility; and

(C) With respect to which depreciation (or amortization in lieu of depreciation) is allowable.

(4) ***Examples.*** The following examples illustrate the application of this paragraph (g), and assume any other requirements of section 45X that are not described have been met:

(i) ***Example 1: Two independent section 45X facilities*** —

(A) ***Facts.*** Taxpayer owns and operates a manufacturing site that contains tangible property made up of Equipment A and Equipment B, each set of which functions independently and which is arranged in serial fashion. Equipment A is used by the taxpayer to produce otherwise qualified property 1. Equipment B is used to produce otherwise qualified

property 2, a different type of product than otherwise qualified property 1. Taxpayer was allocated a section 48C credit under the section 48C(e) program for a section 48C facility that includes Equipment A and subsequently placed the section 48C facility and Equipment A in service in taxable year 2026. Taxpayer claimed a section 48C credit related to Equipment A for taxable year 2026.

(B) ***Analysis.*** The section 45X facility with respect to otherwise qualified property 1 is the tangible property made up of Equipment A, which is the independently functioning tangible property used by the taxpayer that is necessary to be considered the producer of the otherwise qualified property within the meaning of paragraph (c)(1) or (2) of this section. However, Equipment A is also eligible property that is considered part of a section 48C facility as defined in paragraph (g)(3) of this section. Therefore, otherwise qualified property 1 is not an eligible component under paragraph (g)(1) of this section because part (all in this case) of the section 45X facility where otherwise qualified property 1 was produced is also considered a section 48C facility. There is a separate section 45X facility with respect to otherwise qualified property 2. That section 45X facility is the tangible property made up of Equipment B. Equipment A is not included in the section 45X facility as it is not used to produce otherwise qualified property 2. None of the tangible property comprising the section 45X facility with respect to otherwise qualified property 2 is considered part of a section 48C facility. Thus, otherwise qualified property 2 is an eligible component under paragraph (g)(1) of this section.

(ii) ***Example 2: Single section 45X facility at different locations*** —

(A) ***Facts.*** Taxpayer owns and operates two manufacturing sites at different locations. The tangible property at manufacturing site 1 is Equipment A, which is used to continue and finish the first part of the production process for otherwise qualified property. The tangible property at manufacturing site 2 is Equipment B, which is used to complete the production process of the same otherwise qualified property. Taxpayer was allocated a section 48C credit under the section 48C(e) program for Equipment A.

(B) ***Analysis.*** Equipment A and B comprise a single section 45X facility regardless of location under paragraph (g)(2)(i) of this section because both Equipment A and B were used to produce the otherwise qualified property and the use of Equipment A and B are necessary to consider the taxpayer the producer, consistent with the meaning of produced by the taxpayer in paragraph (c)(1) or (2) of this section. However, part of the property comprising the section 45X facility is also a section 48C facility under paragraph (g)(3) of this section because Equipment A is eligible property that is part of a section 48C facility. As a result, the otherwise qualified property is not considered an eligible component, and the sale of the otherwise qualified property will not generate a section 45X credit.

(iii) ***Example 3: Independent tangible property and production of component*** —

(A) ***Facts.*** Taxpayer owns and operates two manufacturing sites. Manufacturing Site 1 contains tangible property that is Equipment A, which is used to produce photovoltaic cells. Manufacturing Site 2 contains tangible property that is Equipment B and tangible property that is Equipment C, which are arranged in serial fashion. Equipment B is used to produce photovoltaic cells. Equipment C is used to produce solar modules, in part, by combining the photovoltaic cells produced by Equipment A and Equipment B. Taxpayer was allocated a section 48C credit under the section 48C(e) program for a section 48C

facility that includes Equipment B. Subsequently, Taxpayer places the section 48C facility and Equipment B in service in taxable year 2026. Taxpayer claimed a section 48C credit for Equipment B in taxable year 2026.

(B) ***Analysis.*** Equipment A and Equipment B each comprise a section 45X facility since each independently functions to produce otherwise qualified property, photovoltaic cells. No part of the section 45X facility comprised of Equipment A is eligible property that is included in a section 48C facility. Thus, the photovoltaic cells produced in the section 45X facility comprised of Equipment A are eligible components. The photovoltaic cells that are produced in the section 45X facility comprised of Equipment B are otherwise qualified property that cannot qualify as eligible components because part (all in this case) of the section 45X facility comprised of Equipment B where the photovoltaic cells are produced is also considered a section 48C facility. Solar modules, a different otherwise qualified property, are produced in using Equipment C, which is itself a separate section 45X facility. Equipment C does not have to include any of the tangible property included in Equipment A or B under paragraph (g)(2)(i) of this section because it is not necessary for the Taxpayer to use that equipment to be considered the producer of the solar modules for purposes of section 45X. As a result, no part of section 45X facility comprised of Equipment C where the solar modules are produced is considered a section 48C facility, and the solar modules are considered an eligible component for purposes of section 45X.

(iv) ***Example 4: Manufacturing under a contract manufacturing arrangement*** —

(A) ***Facts.*** X is hired by Y to manufacture photovoltaic cells, but X and Y agree under paragraph (c)(3)(iii) of this section that Y will be the party to claim any section 45X credit resulting from the sale of the photovoltaic cells. X owns and operates a manufacturing site that contains equipment that is tangible property used to produce the photovoltaic cells. X was allocated a section 48C credit under the section 48C(e) program for a section 48C facility that includes the equipment used to produce the photovoltaic cells. The equipment is eligible property that is part of the section 48C facility that was placed in service in taxable year 2026. X claimed a section 48C credit for the equipment in taxable year 2026.

(B) ***Analysis.*** Under paragraph (g)(2)(ii) of this section, in determining the section 45X facility related to the photovoltaic cells (the otherwise qualified property), Y must consider the equipment that X used in producing the photovoltaic cells. In this case, that means that part of the section 45X facility is also considered a section 48C facility, as the equipment used to produce the photovoltaic cells is also eligible property that is part of a section 48C facility. Therefore, the photovoltaic cells are not eligible components for purposes of section 45X to X or Y, and there is no section 45X credit generated if the photovoltaic cells are sold.

(v) ***Example 5: Multiple tangible property used to produce separate eligible components*** —

(A) ***Facts.*** Assume the facts are the same as in paragraph (g)(4)(iv) of this section (*Example 4*), except that Y and X also agreed for X to produce photovoltaic wafers using other equipment that is tangible property that is different than the equipment X uses to produce the photovoltaic cells.

(B) ***Analysis.*** While Y must consider the equipment that X uses to produce the photovoltaic wafers (the otherwise qualified property) under paragraph (g)(2)(ii) of this section to determine the section 45X facility associated with the photovoltaic wafer production, Y is

not required to include any of the equipment used by X to produce the photovoltaic cells because it was not necessary to use that equipment to be considered the producer of the photovoltaic wafers. As a result, no part of the section 45X facility related to photovoltaic wafers is part of a section 48C facility. Therefore, the photovoltaic wafers are eligible components for purposes of section 45X and Y will be entitled to claim a section 45X credit upon the sale.

(h) [Reserved]

(i) ***Anti-abuse rule*** —

(1) ***In general.*** The rules of section 45X and the section 45X regulations must be applied in a manner consistent with the purposes of section 45X and the section 45X regulations (and the regulations in this chapter under sections 6417 and 6418 related to the section 45X credit). A purpose of section 45X and the section 45X regulations (and the regulations in this chapter under sections 6417 and 6418 related to the section 45X credit) is to provide taxpayers an incentive to produce eligible components in a manner that contributes to the development of secure and resilient supply chains. Accordingly, the section 45X credit is not allowable if the primary purpose of the production and sale of an eligible component is to obtain the benefit of the section 45X credit in a manner that is wasteful, such as discarding, disposing of, or destroying the eligible component without putting it to a productive use. A determination of whether the production and sale of an eligible component is inconsistent with the purposes of section 45X and the section 45X regulations (and the regulations in this chapter under sections 6417 and 6418 related to the section 45X credit) is based on all facts and circumstances.

(2) ***Example*** —

(i) ***Facts.*** Taxpayer is engaged in the activity of producing and selling multiple units of Eligible Component 1 (EC1). Taxpayer engages in no other activities. The cost of producing each unit of EC1 is less than the amount of the section 45X credit that would be available if each EC1 qualified for the section 45X credit. Taxpayer sells some of its units of EC1 to related persons and makes a Related Person Election pursuant to section 45X(a)(3)(B)(i). Taxpayer also sells some of its units of EC1 to unrelated persons. Taxpayer sells all units of EC1 at an amount equal to cost plus a markup to reflect an anticipated accommodation fee and establishes corresponding accounts receivable at the time of the respective sales. In addition, Taxpayer knows or reasonably expects that after acquiring the units of EC1, the related and unrelated transferees will not resell the units of EC1 or use them in their trades or businesses. Taxpayer intends to obtain the benefit from the section 45X credit by claiming such credits itself or monetizing such credits through an election under section 6417 or section 6418. Taxpayer eliminates the aforementioned accounts receivable at the time it claims the section 45X credit or receives related payments attributable to the section 45X credit, and further makes payments to the related and unrelated transferees as accommodation fees computed as a percentage of such benefits.

(ii) ***Analysis.*** Based on all of the facts and circumstances in paragraph (i)(2)(i) of this section, the primary purpose of Taxpayer's production and sale of EC1 is to obtain the benefit of the section 45X credit in a manner that is wasteful and will not be treated as the production and sale of eligible components in a trade or business of Taxpayer for purposes of section 45X(a)(1) and (2). Taxpayer is not eligible for the section 45X credit with respect to units of EC1 that it produced and sold. See sections 6417(d)(6) (excessive payments) and 6418(g)(2) (excessive credit transfer).

(j) ***Applicability date.*** This section applies to eligible components for which production is completed and sales occur after December 31, 2022, and during a taxable year ending on or after October 28, 2024.

[T.D. 10010, 89 FR 85831, Oct. 28, 2024; 89 FR 93171, Nov. 26, 2024]

§ 1.45X-2 Sale to unrelated person.

(a) ***In general.*** The amount of the section 45X credit for any taxable year is equal to the sum of the credit amounts determined under section 45X(b) (and described in §§ 1.45X-3 and 1.45X-4) with respect to each eligible component that is produced by the taxpayer and, during the taxable year, sold by the taxpayer to an unrelated person. Applicable Federal income tax principles apply to determine whether a transaction is in substance a sale (or the provision of a service, or some other disposition). *See* § 1.45X-1(d) and (e) for additional requirements relating to sales.

(b) ***Definitions.*** This paragraph (b) provides definitions of terms that apply for purposes of this section.

(1) ***Person.*** The term *person* means an individual, a trust, estate, partnership, association, company, or corporation, as provided in section 7701(a)(1) of the Code. For purposes of this section, an entity disregarded as separate from a person (for example, under § 301.7701-3 of this chapter) is not a person.

(2) ***Related person.*** The term *related person* means a person who is related to another person if such persons would be treated as a single employer under the regulations in this chapter under section 52(b) of the Code.

(3) ***Unrelated person.*** The term *unrelated person* means a person who is not a related person as defined in paragraph (b)(2) of this section.

(c) ***Special rule for sale to related person*** —

(1) ***In general.*** For purposes of section 45X(a), a taxpayer is treated as selling an eligible component to an unrelated person if such component is sold to such person by a person who is a related person with respect to the taxpayer.

(2) ***Example.*** X and Y are members of a group of trades or businesses under common control under section 52(b), and thus are related persons under section 45X(d)(1). Each of X and Y has a calendar year taxable year. Z is an unrelated person. X is in the trade or business of producing and selling solar modules. X produces and sells solar modules to Y in 2023. Y sells the solar modules to Z in 2024. X may claim a section 45X credit for the sale of the solar modules in 2024, the taxable year of X in which Y sells the solar modules to Z.

(d) ***Related person election*** —

(1) ***Availability of election*** —

(i) ***In general.*** In such form and manner as the Secretary may prescribe, a taxpayer may make an election under section 45X(a)(3)(B) (Related Person Election), to treat a sale of eligible components by such taxpayer to a related person as if made to an unrelated person. As a condition of, and prior to, a taxpayer making a Related Person Election (as described in paragraph (d)(2) of this section), the Secretary may require such information or registration as the Secretary deems necessary for purposes of preventing duplication, fraud, or any improper or excessive credit amount determined under section 45X(a)(1).

(ii) ***Members of a consolidated group.*** A Related Person Election is made by a member of a consolidated group (as defined in § 1.1502-1(h)) in the manner described in paragraph (d)(3)(ii) of this section. A member of a consolidated group that sells eligible components in an intercompany transaction (as defined in § 1.1502-13(b)(1)) may make the Related Person Election to claim the section 45X credit in the year of the intercompany sale. For the treatment of the selling member's gain or loss from that sale, *see* § 1.1502-13.

(2) ***Time and manner of making election*** —

(i) ***In general.*** A taxpayer must make an affirmative Related Person Election annually on the taxpayer's timely filed original Federal income tax return, including extensions in such form and in such manner as may be prescribed in guidance. The Related Person Election will be applicable to all sales of eligible components to related persons by the taxpayer for each trade or business that the taxpayer engages in during the taxable year that resulted in a credit claim and for which the taxpayer has made the Related Person Election.

(ii) ***Required information.*** For all sales of eligible components to related persons, the taxpayer must provide all required information set forth in guidance. Such information may include, for example, the taxpayer's name, employer identification number (EIN), a description of the taxpayer's trade or business (including principal business activity code); the name(s) and EINs of all related persons; a listing of the eligible components that are sold; and the intended purpose of any sales of eligible components to or from related persons.

(3) ***Scope and effect of election*** —

(i) ***In general.*** A separate Related Person Election must be made with respect to related person sales made by a taxpayer for each eligible trade or business of the taxpayer. The election applies only to such trade or business for which the Related Person Election is made. An election under this section applies to all sales to related persons (including between members of the same consolidated group) of eligible components produced by the taxpayer during the taxable year with respect to each trade or business for which the Related Person Election is made and is irrevocable for the taxable year for which the election is made. An election under paragraph (d)(2)(i) of this section applies solely for purposes of the section 45X credit and the section 45X regulations (and the regulations in this chapter under sections 6417 and 6418 related to the section 45X credit).

(ii) ***Application to consolidated groups.*** For a trade or business of a consolidated group, a Related Person Election must be made by the agent for the group on behalf of the members claiming the section 45X credit and filed with the group's timely filed original Federal income tax return, including extensions, with respect to each trade or business that the consolidated group conducts. *See* § 1.1502-77 (providing rules regarding the status of the common parent as agent for its members). A separate election must be filed on behalf of each member claiming the section 45X credit, and each election must include the name and EIN of the agent for the group and the member on whose behalf the election is being made.

(iii) ***Application to partnerships.*** The Related Person Election for a partnership must be made on the partnership's timely filed original Federal income tax return, including extensions, with respect to each trade or business that the partnership conducts. The election applies only to such trade or business for which the Related Person Election is made. An election by a partnership does not apply to any trade or business conducted by a partner outside the partnership.

(4) ***Anti-abuse rule*** —

(i) ***In general.*** A Related Person Election may not be made if, with respect to the eligible components relevant to such election, the taxpayer fails to provide the information described in paragraph (d)(2) of this section, provides information described in paragraph (d)(2) of this section that shows that such components are described in paragraph (d)(4)(ii) or (iii) of this section, or such components are described in paragraph (d)(4)(ii) or (iii) of this section.

(ii) ***Improper use.*** For purposes of this paragraph (d)(4) the term *improper use* means a use that is wasteful, such as discarding, disposing of, or destroying the eligible component without putting it to a productive use by the related person to which the eligible component is sold.

(iii) ***Defective components.*** The term *defective component* means a component that does not meet the requirements of section 45X and the section 45X regulations.

(e) ***Sales of integrated components to related person*** —

(1) ***In general.*** For purposes of section 45X and the section 45X regulations (and the regulations in this chapter under sections 6417 and 6418 related to the section 45X credit), a taxpayer that produces and then sells an eligible component to a related person, who then integrates, incorporates, or assembles the taxpayer's eligible component into another complete and distinct eligible component that is subsequently sold to an unrelated person, may claim a section 45X credit (or make an election under section 6417 or section 6418) with respect to the taxable year in which the related person's sale to the unrelated person occurs.

(2) ***Examples.*** The following examples illustrate the rules provided in paragraph (e)(1) of this section.

(i) ***Example 1: Sales of multiple incorporated eligible components to related persons.*** X and Y are C corporations that are members of a group of trades or businesses under common control under section 52(b), and thus are related persons under section 45X(d)(1) and paragraph (b)(2) of this section. Each of X and Y has a calendar year taxable year. Z is an unrelated person. X and Y are in the trade or business of producing and selling photovoltaic wafers and cells. X produces and sells photovoltaic wafers to Y in 2023. Y incorporates the photovoltaic wafers into photovoltaic cells and sells the photovoltaic cells to Z in 2024. X may claim a section 45X credit for the sale of the photovoltaic wafers in 2024, the taxable year of X in which Y sells the photovoltaic cells to Z.

(ii) ***Example 2: Sales of multiple incorporated eligible components to related and unrelated persons.*** W, X, and Y are domestic C corporations that are members of a group of trades or businesses under common control under section 52(b), and thus are related persons under section 45X(d)(1) and paragraph (b)(2) of this section. Each of W, X, and Y has a calendar year taxable year. W produces electrode active materials (EAMs) and sells the EAMs to X in 2023. In 2024, X incorporates the EAMs into battery cells that it produces and sells the battery cells to Y. In 2025, Y incorporates the battery cells into battery modules (within the meaning of § 1.45X-3(e)(4)(i)(A)) that it produces and sells the battery modules to Z, an unrelated person. W may claim a section 45X credit for EAMs sold to X, X may claim a section 45X credit for the battery cells sold to Y, and Y may claim a section 45X credit for the battery modules sold to Z in 2025, the taxable year of each of W, X, and Y in which the battery modules are sold to Z.

(3) ***Special rules applicable to related person election*** —

(i) ***In general.*** If a taxpayer makes a valid Related Person Election under section 45X(a)(3)(B)(i) and paragraph (d)(1) of this section, and the taxpayer produces and then sells an eligible component to a related person, who then integrates, incorporates, or assembles the taxpayer's

eligible component into another complete and distinct eligible component that is subsequently sold to an unrelated person, the taxpayer's sale of the eligible component to the related person is treated (solely for purposes of the section 45X credit and the section 45X regulations, and the regulations in this chapter under sections 6417 and 6418 related to the section 45X credit) as if made to an unrelated person in the taxable year in which the sale to the related person occurs.

(ii) ***Example: Sales of multiple integrated eligible components to related and unrelated persons with a related person election.*** W, X, and Y are domestic C corporations that are members of a group of trades or businesses under common control and thus are related persons under section 45X(d)(1) and paragraph (b)(2) of this section. Each of W, X, and Y has a calendar year taxable year. W produces electrode active materials (EAMs) and sells the EAMs to X in 2023. W makes a valid Related Person Election under paragraph (d)(1) of this section in 2023 with regard to the sale. In 2024, X incorporates the EAMs into battery cells that it produces and sells the battery cells to Y. X makes a valid Related Person Election under paragraph (d)(1) of this section in 2024 with regard to the sale. In 2025, Y incorporates the battery cells into battery modules that it produces and sells the battery modules to Z, an unrelated person. W may claim a section 45X credit for the sale of the EAMs in 2023 because the sale to X is treated as if made to an unrelated person solely for purposes of section 45X(a). X may claim a section 45X credit for the sale of the battery cells in 2024 because the sale to Y is treated as if made to an unrelated person solely for purposes of section 45X(a). Y may claim a section 45X credit for the sale of battery modules in 2025 because Z is an unrelated person.

(f) ***Applicability date.*** This section applies to eligible components for which production is completed and sales occur after December 31, 2022, and during a taxable year ending on or after October 28, 2024.

[T.D. 10010, 89 FR 85831, Oct. 28, 2024]

§ 1.45X-3 Eligible components.

(a) ***In general.*** For purposes of the section 45X credit, *eligible component* means any solar energy component (as defined in paragraph (b) of this section), any wind energy component (as defined in paragraph (c) of this section), any inverter (as defined in paragraph (d) of this section), any qualifying battery component (as defined in paragraph (e) of this section), and any applicable critical mineral (as defined in § 1.45X-4(b)). See paragraph (f) of this section for certain phase-out rules applicable to eligible components other than applicable critical minerals.

(b) ***Solar energy components. Solar energy component*** means a solar module, photovoltaic cell, photovoltaic wafer, solar grade polysilicon, torque tube, structural fastener, or polymeric backsheet, each as defined in this paragraph (b).

(1) ***Photovoltaic cell*** —

(i) ***Definition. Photovoltaic cell*** means the smallest semiconductor element of a solar module that performs the immediate conversion of light into electricity that is either a thin film photovoltaic cell or a crystalline photovoltaic cell.

(ii) ***Credit amount.*** For a photovoltaic cell, the credit amount is equal to the product of 4 cents multiplied by the capacity of such photovoltaic cell. The capacity of each photovoltaic cell is expressed on a direct current watt basis. Capacity is the nameplate capacity in direct current watts using Standard Test Conditions (STC), as defined by the International Electrotechnical

Commission (IEC). In the case of a tandem technology produced in serial fashion, such as a monolithic multijunction cell composed of two or more sub-cells, capacity must be measured at the point of sale at the end of the single cell production unit. In the case of a four-terminal tandem technology produced by mechanically stacking two distinct cells or interconnected layers, capacity must be measured for each cell at each point of sale. If a cell is sold to a customer who will use it as the bottom cell in a tandem module, its capacity should be measured with the customer's intended top cell placed between the bottom cell and the one-sun light source.

(iii) ***Substantiation.*** The taxpayer must document the capacity of a photovoltaic cell in a bill of sale or design documentation, such as an IEC certification (for example, IEC 61215 or IEC 60904).

(2) ***Photovoltaic wafer*** —

(i) ***Definition. Photovoltaic wafer*** means a thin slice, sheet, or layer of semiconductor material of at least 240 square centimeters that comprises the substrate or absorber layer of one or more photovoltaic cells. A photovoltaic wafer must be produced by a single manufacturer by forming an ingot from molten polysilicon (for example, Czochralski method) and then subsequently slicing it into wafers, forming molten or evaporated polysilicon into a sheet or layer, or depositing a thin-film semiconductor photon absorber into a sheet or layer (that is, thin-film deposition).

(ii) ***Credit amount.*** For a photovoltaic wafer, the credit amount is $12 per square meter.

(3) ***Polymeric backsheet*** —

(i) ***Definition. Polymeric backsheet*** means a sheet on the back of a solar module, composed, at least in part, of a polymer, that acts as an electric insulator and protects the inner components of such module from the surrounding environment.

(ii) ***Credit amount.*** For a polymeric backsheet, the credit amount is 40 cents per square meter.

(4) ***Solar grade polysilicon*** —

(i) ***Definition. Solar grade polysilicon*** means silicon that is suitable for use in photovoltaic manufacturing and purified to a minimum purity of 99.999999 percent silicon by mass. Satisfaction of the minimum purity requirement will be determined in accordance with the standards provided in SEMI Specification PV17-1012, Category 1.

(ii) ***Credit amount.*** For solar grade polysilicon, the credit amount is $3 per kilogram.

(5) ***Solar module*** —

(i) ***Definition. Solar module*** means the connection and lamination of photovoltaic cells into an environmentally protected final assembly that is—

(A) Suitable to generate electricity when exposed to sunlight; and

(B) Ready for installation without an additional manufacturing process.

(ii) ***Credit amount.*** For a solar module, the credit amount is equal to the product of 7 cents multiplied by the capacity of such module. The capacity of each solar module is expressed on a direct current watt basis. Capacity is the nameplate capacity in direct current watts using STC, as defined by the IEC.

(iii) ***Substantiation.*** The taxpayer must document the capacity of a solar module in a bill of sale or design documentation, such as an IEC certification (for example, IEC 61215 or IEC 61646).

(6) ***Solar tracker. Solar tracker*** means a mechanical system that moves solar modules according to the position of the sun and to increase energy output. A torque tube (as defined in paragraph (b)(7) of this section) or structural fastener (as defined in paragraph (b)(8) of this section) are solar tracker components that are eligible components for purposes of the section 45X credit.

(7) ***Torque tube*** —

(i) ***Definition. Torque tube*** means a structural steel support element (including longitudinal purlins) that—

(A) Is part of a solar tracker;

(B) Is of any cross-sectional shape;

(C) May be assembled from individually manufactured segments;

(D) Spans longitudinally between foundation posts;

(E) Supports solar panels and is connected to a mounting attachment for solar panels (with or without separate module interface rails); and

(F) Is rotated by means of a drive system.

(ii) ***Credit amount.*** For a torque tube, the credit amount is 87 cents per kilogram.

(iii) ***Substantiation.*** The taxpayer must document that a torque tube is part of a solar tracker with a specification sheet, bill of sale, or other similar documentation that explicitly describes its application as part of a solar tracker.

(8) ***Structural fastener*** —

(i) ***Definition. Structural fastener*** means a component that is used—

(A) To connect the mechanical and drive system components of a solar tracker to the foundation of such solar tracker;

(B) To connect torque tubes to drive assemblies; or

(C) To connect segments of torque tubes to one another.

(ii) ***Credit amount.*** For a structural fastener, the credit amount is $2.28 per kilogram.

(iii) ***Substantiation.*** The taxpayer must document that a structural fastener is used in a manner described in paragraph (b)(8)(i)(A), (B), or (C) of this section with a bill of sale or other similar documentation that explicitly describes such use.

(c) ***Wind energy components. Wind energy component*** means a blade, nacelle, tower, offshore wind foundation, or related offshore wind vessel, each as defined in this paragraph (c).

(1) ***Blade*** —

(i) ***Definition. Blade*** means an airfoil-shaped blade that is responsible for converting wind energy to low-speed rotational energy.

(ii) ***Credit amount.*** For a blade, the credit amount is equal to the product of 2 cents multiplied by the total rated capacity of the completed wind turbine for which the blade is designed.

(2) ***Offshore wind foundation*** —

(i) ***Definition. Offshore wind foundation*** means the component (including transition piece) that secures an offshore wind tower and any above-water turbine components to the seafloor using—

(A) Fixed platforms, such as offshore wind monopiles, jackets, or gravity-based foundations; or

(B) Floating platforms and associated mooring systems.

(ii) ***Credit amount.*** For a fixed offshore wind foundation platform, the credit amount is equal to the product of 2 cents multiplied by the total rated capacity of the completed wind turbine for which the fixed offshore wind foundation platform is designed. For a floating offshore wind foundation platform, the credit amount is equal to the product of 4 cents multiplied by the total rated capacity of the completed wind turbine for which the floating offshore wind foundation platform is designed.

(3) ***Nacelle*** —

(i) ***Definition. Nacelle*** means the assembly of the drivetrain and other tower-top components of a wind turbine (with the exception of the blades and the hub) within their cover housing.

(ii) ***Credit amount.*** For a nacelle, the credit amount is equal to the product of 5 cents multiplied by the total rated capacity of the completed wind turbine for which the nacelle is designed.

(4) ***Related offshore wind vessel*** —

(i) ***Definition. Related offshore wind vessel*** means any vessel that is purpose-built or retrofitted for purposes of the development, transport, installation, operation, or maintenance of offshore wind energy components. A vessel is purpose-built for development, transport, installation, operation, or maintenance of offshore wind energy components if it is built to be capable of performing such functions and it is of a type that is commonly used in the offshore wind industry. A vessel is retrofitted for development, transport, installation, operation, or maintenance of offshore wind energy components if such vessel was incapable of performing such functions prior to being retrofitted, the retrofit causes the vessel to be capable of performing such functions, and the retrofitted vessel is of a type that is commonly used in the offshore wind industry.

(ii) ***Credit amount.*** For a related offshore wind vessel, the credit amount is equal to 10 percent of the sales price of the vessel. The sales price of the vessel, determined under Federal income tax principles, does not include the price of maintenance, services, or other similar items that may be sold with the vessel. For a related offshore wind vessel with respect to which an election under section 45X(a)(3)(B)(i) has been made, such election will not cause the sale price of such vessel to be treated as having been determined with respect to a transaction between uncontrolled taxpayers for purposes of section 482 of the Code and the regulations in this chapter.

(5) ***Tower*** —

(i) ***Definition. Tower*** means a tubular or lattice structure that supports the nacelle and rotor of a wind turbine.

(ii) ***Credit amount.*** For a tower, the credit amount is equal to the product of 3 cents multiplied by the total rated capacity of the completed wind turbine for which the tower is designed.

(6) ***Total rated capacity of the completed wind turbine.*** For purposes of this section, *total rated capacity of the completed wind turbine* means, for the completed wind turbine for which a blade, nacelle, offshore wind foundation, or tower was manufactured and sold, the nameplate capacity at the time of sale as certified to the relevant national or international standards, such as IEC 61400, or ANSI/ACP 101-1-2021, the Small Wind Turbine Standard (Standard). Certification of the turbine to such Standards must be documented by a certificate issued by an accredited certification body. The total rated capacity of a wind turbine must be expressed in watts.

(7) ***Substantiation.*** Taxpayers must maintain specific documentation regarding wind energy components for which a section 45X credit is claimed. For blades, nacelles, offshore wind foundations, or towers, a taxpayer must document the turbine model for which such component is designed and the total rated capacity of the completed wind turbine in technical documentation associated with the sale of such component. For related offshore wind vessel, such documentation could include the contract to construct or retrofit (along with retrofit plans), sales contract, U.S. Coast Guard bill of sale, U.S. Coast Guard Certificate of Documentation (COD), and U.S. Coast Guard Certificate of Inspection (COI).

(d) ***Inverters*** —

(1) ***In general. Inverter*** means an end product that is suitable to convert direct current (DC) electricity from one or more solar modules or certified distributed wind energy systems into alternating current electricity. An end product is suitable to convert DC electricity from one or more solar modules or certified distributed wind energy systems into alternating current electricity if, in the form sold by the manufacturer, it is able to connect with such modules or systems and convert DC electricity to alternating current electricity from such connected source. The term inverter includes a central inverter, commercial inverter, distributed wind inverter, microinverter, or residential inverter. Only an inverter that meets at least one of the requirements in paragraphs (d)(2) through (7) of this section is an eligible component for purposes of the section 45X credit.

(2) ***Central inverter*** —

(i) ***Definition. Central inverter*** means an inverter that is suitable for large utility-scale systems and has a capacity that is greater than 1,000 kilowatts. The capacity of a central inverter is expressed on an alternating current watt basis. An inverter is suitable for large utility-scale systems if, in the form sold by the manufacturer, it is capable of serving as a component in a large utility-scale system and meets the core engineering specifications for such application.

(ii) ***Credit amount.*** For a central inverter the total rated capacity of which is expressed on an alternating current watt basis, the credit amount is equal to the product of 0.25 cents multiplied by the total rated capacity of the central inverter.

(iii) ***Substantiation.*** The taxpayer must document that a central inverter meets the core engineering specifications for use in a large utility-scale system and has a capacity that is greater than 1,000 kilowatts with a specification sheet, bill of sale, or other similar documentation that explicitly describes such specifications and capacity.

(3) *Commercial inverter* —

(i) ***Definition. Commercial inverter*** means an inverter that—

(A) Is suitable for commercial or utility-scale applications;

(B) Has a rated output of 208, 480, 600, or 800 volt three-phase power; and

(C) Has a capacity expressed on an alternating current watt basis that is not less than 20 kilowatts and not greater than 125 kilowatts.

(ii) ***Suitable for commercial or utility-scale applications.*** An inverter is suitable for commercial or utility-scale applications if, in the form sold by the manufacturer, it is capable of serving as a component in commercial or utility-scale systems and meets the core engineering specifications for such application.

(iii) ***Credit amount.*** For a commercial inverter the total rated capacity of which is expressed on an alternating current watt basis, the credit amount is equal to the product of 2 cents multiplied by the total rated capacity of the commercial inverter.

(iv) ***Substantiation.*** The taxpayer must document that a commercial inverter meets the core engineering specifications for use in commercial or utility-scale applications, the inverter's rated output, and the inverter's capacity in a specification sheet, bill of sale, or other similar documentation.

(4) *Distributed wind inverter* —

(i) ***In general. Distributed wind inverter*** means an inverter that is used in a residential or non-residential system that utilizes one or more certified distributed wind energy systems and has a total rated output, expressed on an alternating current watt basis, of not greater than 150 kilowatts.

(ii) ***Certified distributed wind energy system. Certified distributed wind energy system*** means a wind energy system that is certified by an accredited certification agency to meet Standard 9.1-2009 of the American Wind Energy Association; IEC 61400-1, 61400-2, 61400-11, 61400-12; or ANSI/ACP 101-1-2021, the Standard, including any subsequent revisions to or modifications of such Standard that have been approved by ANSI.

(iii) ***Credit amount.*** For a distributed wind inverter the total rated capacity of which is expressed on an alternating current watt basis, the credit amount is equal to the product of 11 cents multiplied by the total rated capacity of the distributed wind inverter.

(iv) ***Substantiation.*** The taxpayer must document that a distributed wind inverter is used in a residential or non-residential system that utilizes one or more certified distributed wind energy systems with a specification sheet, bill of sale, or other similar documentation that explicitly describes such use and the total rated output of the inverter on an alternating current watt basis.

(5) *Microinverter* —

(i) ***Definition. Microinverter*** means an inverter that—

(A) Is suitable to connect with one solar module;

(B) Has a rated output described in paragraph (d)(5)(ii) of this section; and

(C) Has a capacity, expressed on an alternating current watt basis, that is not greater than 650 watts.

(ii) ***Rated output.*** For purposes of paragraph (d)(5)(i)(B) of this section, for an inverter to be a microinverter, the inverter must have a rated output of—

(A) 120 or 240 volt single-phase power; or

(B) 208 or 480 volt three-phase power.

(iii) ***Suitable to connect to one solar module*** —

(A) ***In general.*** An inverter is suitable to connect to one solar module if, in the form sold by the manufacturer, it is capable of connecting to one or more solar modules and regulating the DC electricity from each module independently before that electricity is converted into alternating current electricity.

(B) ***Application to direct current (DC) optimized inverter systems.*** A *DC optimized inverter system* means an inverter that is comprised of an inverter connected to multiple DC optimizers that are each designed to connect to one solar module. A DC optimized inverter system is suitable to connect with one solar module if, in the form sold by the manufacturer, it is capable of connecting to one or more solar modules and regulating the DC electricity from each module independently before that electricity is converted into alternating current electricity.

(C) ***Application to multi-module inverters.*** A *multi-module inverter* means an inverter that is comprised of an inverter with independent connections and DC optimizing components for two or more modules. A multi-module microinverter is suitable to connect with one solar module if it is capable of connecting to one or more solar modules and regulating the DC electricity from each module independently before that electricity is converted into alternating current electricity.

(iv) ***Credit amount*** —

(A) ***In general.*** For a microinverter the total rated capacity of which is expressed on an alternating current watt basis, the credit amount is equal to the product of 11 cents multiplied by the total rated capacity of the microinverter.

(B) ***DC optimized inverter systems.*** A DC optimized inverter system qualifies as a microinverter if it meets the requirements of paragraph (d)(5)(i) of this section. For purposes of paragraph (d)(5)(i)(C) of this section, a DC optimized inverter system's capacity is determined separately for each DC optimizer paired with the inverter in a DC optimized inverter system. If each DC optimizer paired with the inverter in a DC optimized inverter system meets the requirements of paragraph (d)(5)(i) of this section, then the DC optimized inverter system qualifies as a microinverter. The credit amount for a DC optimized inverter system that qualifies as a microinverter is equal to the product of 11 cents multiplied by the lesser of the sum of the alternating current capacity of each DC optimizer when paired with the inverter in the DC optimized inverter system or the alternating current capacity of the inverter in the DC optimized inverter system. For purposes of this paragraph (d)(5)(iv)(B), capacity must be measured in watts of alternating current converted from DC electricity by the inverter in a DC optimized inverter

system. For a DC optimized inverter system to qualify as a microinverter, a taxpayer must produce and sell the inverter and the DC optimizers in the DC optimized inverter system together as a combined end product.

(C) ***Multi-module inverters.*** A multi-module inverter qualifies as a microinverter if it meets the requirements of paragraph (d)(5)(i) of this section. For purposes of paragraph (d)(5)(i)(C) of this section, a multi-module inverter's capacity is determined separately for each internal DC optimizer paired with the inverter. The credit amount for a multi-module inverter is equal to the product of 11 cents multiplied by the total alternating current capacity of the DC optimizers in the multi-module inverter when paired with the inverter in the system. For purposes of this paragraph (d)(5)(iv)(C), capacity must be measured in watts of alternating current converted from DC electricity by the inverter in a multi-module microinverter.

(v) ***Substantiation.*** The taxpayer must document that a microinverter meets the core engineering specifications to be suitable to connect with one solar module, the inverter's rated output, and the inverter's capacity in a specification sheet, bill of sale, or other similar documentation. In the case of a DC optimized inverter system, the taxpayer must also document that the DC optimizers and the inverter in such system were sold as a combined end product.

(6) ***Residential inverter*** —

(i) ***Definition. Residential inverter*** means an inverter that—

(A) Is suitable for a residence;

(B) Has a rated output of 120 or 240 volt single-phase power; and

(C) Has a capacity expressed on an alternating current watt basis that is not greater than 20 kilowatts.

(ii) ***Suitable for a residence.*** An inverter is suitable for a residence if, in the form sold by the manufacturer, it is capable of serving as a component in a residential system and meets the core engineering specifications for such application.

(iii) ***Credit amount.*** For a residential inverter the total rated capacity of which is expressed on an alternating current watt basis, the credit amount is equal to the product of 6.5 cents multiplied by the total rated capacity of the residential inverter.

(iv) ***Substantiation.*** The taxpayer must document that a residential inverter meets the core engineering specifications for use in a residence, the inverter's rated output, and the inverter's capacity in a specification sheet, bill of sale, or other similar documentation.

(7) ***Utility inverter*** —

(i) ***Definition. Utility inverter*** means an inverter that—

(A) Is suitable for commercial or utility-scale systems;

(B) Has a rated output of not less than 600 volt three-phase power; and

(C) Has a capacity expressed on an alternating current watt basis that is greater than 125 kilowatts and not greater than 1000 kilowatts.

(ii) ***Suitable for commercial or utility-scale systems.*** An inverter is suitable for commercial or utility-scale systems if, in the form sold by the manufacturer, it is capable of serving as a component in such systems and meets the core engineering specifications for such application.

(iii) ***Credit amount.*** For a utility inverter the total rated capacity of which is expressed on an alternating current watt basis, the credit amount is equal to the product of 1.5 cents multiplied by the total rated capacity of the utility inverter.

(iv) ***Substantiation.*** The taxpayer must document that a utility inverter meets the core engineering specifications for use in commercial or utility-scale systems, the inverter's rated output, and the inverter's capacity in a specification sheet, bill of sale, or other similar documentation.

(e) ***Qualifying battery component*** —

(1) ***In general. Qualifying battery component*** means electrode active materials, battery cells, or battery modules, each as defined in this paragraph (e).

(2) ***Electrode active materials*** —

(i) ***Definitions*** —

(A) ***Electrode active materials. Electrode active materials*** means cathode electrode materials, anode electrode materials, and electrochemically active materials that contribute to the electrochemical processes necessary for energy storage. Electrode active materials do not include battery management systems, terminal assemblies, cell containments, gas release valves, module containments, module connectors, compression plates, straps, pack terminals, bus bars, thermal management systems, and pack jackets.

(B) ***Cathode electrode materials. Cathode electrode materials*** means the materials that comprise the cathode of a commercial battery technology, such as binders, and current collectors (for example, cathode foils).

(C) ***Anode electrode materials. Anode electrode materials*** means the materials that comprise the anode of a commercial battery technology, including anode foils.

(D) ***Electrochemically active materials. Electrochemically active materials*** that contribute to the electrochemical processes necessary for energy storage means battery-grade materials that enable the electrochemical storage within a commercial battery technology. In addition to solvents, additives, and electrolyte salts, electrochemically active materials that contribute to the electrochemical processes necessary for energy storage may include electrolytes, catholytes, anolytes, separators, and metal salts and oxides.

(E) ***Example.*** A commercial battery technology contains Cathode Active Material (CAM), which is a powder used in the battery that is made by processing and combining Battery-Grade Materials A and B. Battery-Grade Material A is a derivative of Material C, which has been refined to the necessary level to enable electrochemical storage. The production costs for CAM and its direct inputs (Battery-Grade Material A and Battery-Grade Material B) are eligible for the section 45X credit for electrode active materials, but the unrefined Material C is not.

(F) ***Battery-grade materials.*** Battery-grade materials means the processed materials found in a final battery cell or an analogous unit, or the direct battery-grade precursors to those processed materials.

(ii) ***Credit amount.*** For an electrode active material, the credit amount is equal to 10 percent of the costs incurred by the taxpayer with respect to production of such materials.

(iii) ***Production processes for electrode active materials*** —

(A) ***Conversion.*** For purposes of section 45X, the term *conversion* means a chemical transformation from one species to another.

(B) ***Purification.*** For purposes of section 45X, the term *purification* means increasing the mass fraction of a certain element.

(iv) ***Production costs incurred*** —

(A) ***In general*** —

(*1*) ***Definition of production costs incurred.*** Costs incurred by the taxpayer with respect to production of an electrode active material includes all costs as defined in § 1.263A-1(e) that are paid or incurred within the meaning of section 461 of the Code by the taxpayer for the production of such electrode active material only, including direct materials costs as defined in § 1.263A-1(e)(2)(i)(A), or indirect materials costs as defined in § 1.263A-1(e)(3)(ii)(E), but does not include direct or indirect materials costs that relate to the purchase of materials that are an eligible component at the time of acquisition (for example, an electrode active material as defined in paragraph (e)(2)(i) of this section or applicable critical mineral as defined in § 1.45X-4(b)). This definition of production costs incurred also includes any costs incurred by the taxpayer related to the extraction, as defined in paragraph (e)(2)(iv)(B) of this section, of raw materials in the United States or a United States territory, but only if those costs are paid or incurred by the taxpayer that claims the section 45X credit with respect to the relevant electrode active material. Section 263A of the Code and the regulations in this chapter under section 263A apply solely to identify the types of costs that are includible in production costs incurred for purposes of computing the amount of the section 45X credit, but do not apply for any other purpose, such as to determine whether a taxpayer is engaged in production activities.

(2) ***Production costs for production of incorporated eligible components.*** The production costs that a taxpayer pays or incurs in the production of an eligible component (whether produced domestically or not) that the taxpayer then incorporates into a further distinct electrode active material within the meaning of § 1.45X-1(f)(1) are not included in the costs incurred by the taxpayer in producing the further distinct electrode active material. A taxpayer may not include the same production costs in the calculation of the credit amount for more than one eligible component. For example, if the taxpayer pays or incurs production costs of $50X for eligible component 1 and an additional $100X of production costs for eligible component 2 that included integrating eligible component 1 within the meaning of § 1.45X-1(f)(1), then the production costs for eligible component 1 equal $50X and the production costs for eligible component 2 equal $100X.

(3) ***Examples.*** The following examples illustrate the rules of this section:

(*i*) ***Example 1.*** Taxpayers X, Y and Z are unrelated C corporations that have calendar year taxable years. In 2024, X extracts raw nickel from natural mineral deposits located in the United States and purifies the extracted material to 99% nickel by

mass (qualifying nickel) as required by section 45X(c)(6)(S) and § 1.45X-4(b)(19)(ii). Y subsequently purchases the qualifying nickel and uses the material to produce battery-grade nickel salts which qualify as electrode active materials within the meaning of paragraph (e)(2) of this section. Y sells the battery-grade nickel salts to Z in tax year 2026. Y may claim a section 45X credit for the battery-grade nickel salts in tax year 2026 because Y produced, within the meaning of § 1.45X-1(c)(2), an eligible component. In calculating its production costs with respect to such credit, Y may not include the purchase price it paid to X for the qualifying nickel because the qualifying nickel met the minimum purity requirement prescribed by section 45X(c)(6)(S) such that the material constituted an applicable critical mineral (and, accordingly, an eligible component) at the time at which Y acquired the qualifying nickel.

(*ii*) ***Example 2.*** Assume the facts are the same as in paragraph (e)(2)(iv)(A)(*3*)(*i*) of this section (*Example 1*), except that X purifies the extracted raw nickel material to a purity of 90% nickel by mass, rather than 99% nickel by mass as required by section 45X(c)(6)(S) and § 1.45X-4(b)(19)(ii). Y may claim a section 45X credit for the battery-grade nickel salts in tax year 2026 because Y produced, within the meaning of § 1.45X-1(c)(2), an eligible component. In calculating its production costs with respect to such credit, Y may include the purchase price of the 90% nickel material among its production costs, provided that Y satisfies the substantiation requirements described in paragraph (e)(2)(iv)(C) of this section, because, at the time at which Y acquired such material, the material did not meet the minimum purity as required by section 45X(c)(6)(S) to constitute an applicable critical mineral.

(B) ***Definition of extraction.*** The term *extraction* means the activities performed to harvest minerals or natural resources from the ground or from a body of water. Extraction includes, but is not limited to, operating equipment to harvest minerals or natural resources from mines and wells and the physical processes involved in refining. Extraction also includes operating equipment to extract minerals or natural resources from the waste or residue of prior extraction, including crude oil extraction to the extent that processes applied to that crude oil yield an applicable critical mineral or an electrode active material as a byproduct. Extraction concludes when activities are performed to convert raw mined or harvested products or raw well effluent to substances that can be readily transported or stored for direct use in critical mineral or electrode active material processing. Extraction does not include activities that begin with a recyclable commodity (as such activities are recycling). Extraction does not include the chemical and thermal processes involved in refining.

(C) ***Substantiation.*** In order to include direct or indirect materials costs as defined in § 1.263A-1(e)(2)(i)(A) and (e)(3)(ii)(E) as production costs when calculating a section 45X credit for the production and sale of an electrode active material, a taxpayer, as part of filing an annual tax return (or a return for a short year within the meaning of section 443 of the Code), must include the information in paragraph (e)(2)(iv)(C)(*1*) of this section as an attachment to that return, prepare the information required in paragraphs (e)(2)(iv)(C)(*2*) through (*4*) of this section and maintain that information in the taxpayer's books and records under section 6001, and comply with directions for the information required in paragraph (e)(2)(iv)(C)(*5*) of this section as specified in guidance:

(1) Certifications from any supplier, including the supplier's employer identification number and that is signed under penalties of perjury, from which the taxpayer purchased any constituent elements, materials, or subcomponents of the taxpayer's electrode active material, stating that the supplier is not claiming the section 45X credit with respect to any of the material acquired by the taxpayer, nor is the supplier aware that any prior supplier in the chain of production of that material claimed a section 45X credit for the material.

(2) A document that provides an analysis of any constituent elements, materials, or subcomponents that concludes the material did not meet the definition of an eligible component (for example, did not meet the definition of applicable critical mineral or electrode active material) at the time of acquisition by the taxpayer. The document may be prepared by the taxpayer or ideally by an independent third-party.

(3) A list of all direct and indirect material costs and the amount of such costs that were included within the taxpayer's total production cost for each electrode active material.

(4) A document related to the taxpayer's production activities with respect to the direct and indirect material costs that establishes the materials were used in the production of the electrode active material. The document may be prepared by the taxpayer or ideally by an independent third-party.

(5) Any other information related to the direct or indirect materials specified in guidance.

(D) Failure to provide the documentation described in paragraph (e)(2)(iv)(C) of this section with the return filing, or providing an available upon request statement, will constitute a failure to substantiate the claim.

(v) ***Materials that are both electrode active materials and applicable critical minerals*** —

(A) ***In general.*** A material that qualifies as an electrode active material and an applicable critical material is eligible for the section 45X credit. A taxpayer may claim the section 45X credit with respect to such material either as an electrode active material or an applicable critical material, but not both.

(B) ***Example.*** Lithium carbonate is an electrode active material because it is a direct battery-grade precursor to electrolyte salts, which are processed materials found in a final battery cell. Lithium carbonate is also eligible for the 45X critical minerals credit. A taxpayer who produces and sells lithium carbonate may claim either the electrode active material credit or the critical mineral credit for its production and sale of lithium carbonate but may not take both credits.

(3) ***Battery cells*** —

(i) ***Definition. Battery cell*** means an electrochemical cell—

(A) Comprised of one or more positive electrodes and one or more negative electrodes;

(B) With a volumetric energy density of not less than 100 watt-hours per liter; and

(C) Capable of storing at least 12 watt-hours of energy.

(ii) ***Capacity measurement.*** Taxpayers must measure the capacity of a battery cell in accordance with a national or international standard, such as IEC 60086-1 (Primary Batteries), or an equivalent standard. Taxpayers can reference the United States Advanced Battery Consortium (USABC) Battery Test Manual for additional guidance.

(iii) ***Credit amount.*** For a battery cell, the credit amount is equal to the product of $35 multiplied by the capacity of such battery cell, subject to the limitation provided in paragraph (e)(5) of this section. The capacity of a battery cell is expressed on a kilowatt-hour basis.

(4) ***Battery module definitions and applicable rules*** —

(i) ***Battery module defined.*** The term *battery module* means a module described in paragraph (e)(4)(i)(A) or (B) of this section with an aggregate capacity of not less than 7 kilowatt-hours (or, in the case of a module for a hydrogen fuel cell vehicle, not less than 1 kilowatt-hour).

(A) ***Modules using battery cells.*** A module using battery cells, is a module with two or more battery cells that are configured electrically, in series or parallel, to create voltage or current, as appropriate, to a specified end use, meaning an end-use configuration of battery technologies. An end-use configuration is the product that combines cells into a module such that any subsequent manufacturing is done to the module rather than to the cells. Where multiple points in a supply chain may be eligible under this section, the first module produced and sold that meets the requirements of this section and the kilowatt-hour requirement in paragraph (e)(4)(i) of this section will be the only module eligible.

(B) ***Modules with no battery cells.*** A *module with no battery cells* means a product with a standardized manufacturing process and form that is capable of storing and dispatching useful energy, that contains an energy storage medium that remains in the module (for example, it is not consumed through combustion), and that is not a custom-built electricity generation or storage facility. For example, neither standalone fuel storage tanks nor fuel tanks connected to engines or generation systems qualify as modules with no battery cells.

(ii) ***Capacity measurement*** —

(A) ***Modules using battery cells.*** Taxpayers must measure the capacity of a module using battery cells with a testing procedure that complies with a national or international standard published by a recognized standard setting organization. The capacity of a battery module may not exceed the total nameplate capacity of the battery cells in the module. Taxpayers must measure the capacity of a battery cell in accordance with a national or international standard, such as IEC 60086-1 (Primary Batteries), or an equivalent standard. Taxpayers can reference the USABC Battery Test Manual for additional guidance.

(B) ***Modules with no battery cells.*** Taxpayers must measure the capacity of a module with no battery cells with a testing procedure that complies with a national or international standard published by a recognized standard setting organization. Taxpayers producing thermal and thermochemical battery modules described in paragraph (e)(4)(i)(B) of this section must convert the energy storage to a kilowatt-hour basis and provide both methodology and testing regarding this conversion. Such conversion of the kilowatt-hour basis cannot exceed the total direct conversion of the total nameplate capacity of the thermal battery module to kilowatt-hours.

(C) ***Substantiation of capacity measurement.*** Taxpayers must maintain the testing standard and methodology with respect to the capacity measurement described in paragraphs (e)(4)(ii)(A) and (B) of this section as part of books and records under section 6001 and § 1.6001-1. The testing procedure and methodology must consistently be used, subject to any updated standard of the same methodology and testing, for battery modules (with or without cells) sold in the taxpayer's trade or business.

(iii) ***Credit amount*** —

(A) ***Modules using battery cells.*** For a battery module with cells, the credit amount is equal to the product of $10 multiplied by the capacity of such battery module, subject to the limitation provided in paragraph (e)(5) of this section. The capacity of each battery module is expressed on a kilowatt-hour basis.

(B) ***Modules with no battery cells.*** For a battery module without cells, the credit amount is equal to the product of $45 multiplied by the capacity of such battery module, subject to the limitation provided in paragraph (e)(5) of this section. The capacity of each battery module is expressed on a kilowatt-hour basis.

(5) ***Limitation on capacity of battery cells and battery modules*** —

(i) ***In general.*** For purposes of paragraphs (e)(3)(iii) and (e)(4)(iii) of this section, the capacity determined with respect to a battery cell or battery module must not exceed a capacity-to-power ratio of 100:1.

(ii) ***Capacity to power ratio.*** For purposes of paragraph (e)(5)(i) of this section, *capacity-to-power ratio* means, with respect to a battery cell or battery module, the ratio of the capacity of such cell or module to the maximum discharge amount of such cell or module.

(f) ***Phase out rule*** —

(1) ***In general.*** Except as provided in paragraph (f)(3) of this section, in the case of any eligible component sold after December 31, 2029, the amount of the section 45X credit determined with respect to such eligible component must be equal to the product of—

(i) The amount determined under this section with respect to such eligible component, multiplied by

(ii) The phase out percentage under paragraph (f)(2) of this section.

(2) ***Phase out percentages.*** The phase out percentage is equal to—

(i) 75 percent for eligible components sold during calendar year 2030;

(ii) 50 percent for eligible components sold during calendar year 2031;

(iii) 25 percent for eligible components sold during calendar year 2032, and

(iv) Zero percent for eligible components sold after calendar year 2032.

(3) ***Exception for applicable critical minerals.*** The phase out rules described in paragraphs (f)(1) and (2) of this section apply to all eligible components except applicable critical minerals.

(g) ***Applicability date.*** This section applies to eligible components for which production is completed and sales occur after December 31, 2022, and during a taxable year ending on or after October 28, 2024.

[T.D. 10010, 89 FR 85831, Oct. 28, 2024; 89 FR 93171, Nov. 26, 2024]

§ 1.45X-4 Applicable critical minerals.

(a) ***In general.*** The term *applicable critical mineral* means any of the minerals that are listed in section 45X(c)(6) and defined in paragraph (b) of this section.

(b) ***Definitions.*** The following definitions apply for the purpose of this section—

(1) [Reserved]

(2) ***Antimony.*** The term *antimony* means antimony that is—

(i) Converted to antimony trisulfide concentrate with a minimum purity of 90 percent antimony trisulfide by mass; or

(ii) Purified to a minimum purity of 99.65 percent antimony by mass.

(3) ***Barite.*** The term *barite* means barite that is barium sulfate purified to a minimum purity of 80 percent barite by mass.

(4) ***Beryllium.*** The term *beryllium* means beryllium that is—

(i) Converted to copper-beryllium master alloy; or

(ii) Purified to a minimum purity of 99 percent beryllium by mass.

(5) ***Cerium.*** The term *cerium* means cerium that is—

(i) Converted to cerium oxide that is purified to a minimum purity of 99.9 percent cerium oxide by mass; or

(ii) Purified to a minimum purity of 99 percent cerium by mass.

(6) ***Cesium.*** The term *cesium* means cesium that is—

(i) Converted to cesium formate or cesium carbonate; or

(ii) Purified to a minimum purity of 99 percent cesium by mass.

(7) ***Chromium.*** The term *chromium* means chromium that is—

(i) Converted to ferrochromium consisting of not less than 60 percent chromium by mass; or

(ii) Purified to a minimum purity of 99 percent chromium by mass.

(8) ***Cobalt.*** The term *cobalt* means cobalt that is—

(i) Converted to cobalt sulfate; or

(ii) Purified to a minimum purity of 99.6 percent cobalt by mass.

(9) ***Dysprosium.*** The term *dysprosium* means dysprosium that is—

(i) Converted to not less than 99 percent pure dysprosium iron alloy by mass; or

(ii) Purified to a minimum purity of 99 percent dysprosium by mass.

(10) ***Europium.*** The term *europium* means europium that is—

(i) Converted to europium oxide that is purified to a minimum purity of 99.9 percent europium oxide by mass; or

(ii) Purified to a minimum purity of 99 percent of europium by mass.

(11) ***Fluorspar.*** The term *fluorspar* means fluorspar that is—

(i) Converted to fluorspar that is purified to a minimum purity of 97 percent calcium fluoride by mass; or

(ii) Purified to a minimum purity of 99 percent fluorspar by mass.

(12) ***Gadolinium.*** The term *gadolinium* means gadolinium that is—

(i) Converted to gadolinium oxide that is purified to a minimum purity of 99.9 percent gadolinium oxide by mass; or

(ii) Purified to a minimum purity of 99 percent gadolinium by mass.

(13) ***Germanium.*** The term *germanium* means germanium that is—

(i) Converted to germanium tetrachloride; or

(ii) Purified to a minimum purity of 99.99 percent germanium by mass.

(14) ***Graphite.*** The term *graphite* means natural or synthetic graphite that is purified to a minimum purity of 99.9 percent graphitic carbon by mass. The term *99.9 percent graphitic carbon by mass* means graphite that is 99.9 percent carbon by mass.

(15) ***Indium.*** The term *indium* means indium that is—

(i) Converted to—

(A) Indium tin oxide; or

(B) Indium oxide that is purified to a minimum purity of 99.9 percent indium oxide by mass; or

(ii) Purified to a minimum purity of 99 percent indium by mass.

(16) ***Lithium.*** The term *lithium* means lithium that is—

(i) Converted to lithium carbonate or lithium hydroxide; or

(ii) Purified to a minimum purity of 99.9 percent lithium by mass.

(17) ***Manganese.*** The term *manganese* means manganese that is—

(i) Converted to manganese sulphate; or

(ii) Purified to a minimum purity of 99.7 percent manganese by mass.

(18) ***Neodymium.*** The term *neodymium* means neodymium that is—

(i) Converted to neodymium-praseodymium oxide that is purified to a minimum purity of 99 percent neodymium-praseodymium oxide by mass;

(ii) Converted to neodymium oxide that is purified to a minimum purity of 99.5 percent neodymium oxide by mass; or

(iii) Purified to a minimum purity of 99.9 percent neodymium by mass.

(19) ***Nickel.*** The term *nickel* means nickel that is—

(i) Converted to nickel sulphate; or

(ii) Purified to a minimum purity of 99 percent nickel by mass.

(20) ***Niobium.*** The term *niobium* means niobium that is—

(i) Converted to ferronibium; or

(ii) Purified to a minimum purity of 99 percent niobium by mass.

(21) ***Tellurium.*** The term *tellurium* means tellurium that is—

(i) Converted to cadmium telluride; or

(ii) Purified to a minimum purity of 99 percent tellurium by mass.

(22) ***Tin.*** The term *tin* means tin that purified to low alpha emitting tin that—

(i) Has a purity of greater than 99.99 percent by mass; and

(ii) Possesses an alpha emission rate of not greater than 0.01 counts per hour per centimeter square.

(23) ***Tungsten.*** The term *tungsten* means tungsten that is converted to ammonium paratungstate or ferrotungsten.

(24) ***Vanadium.*** The term *vanadium* means vanadium that is converted to ferrovanadium or vanadium pentoxide.

(25) ***Yttrium.*** The term *yttrium* means yttrium that is—

(i) Converted to yttrium oxide that is purified to a minimum purity of 99.999 percent yttrium oxide by mass; or

(ii) Purified to a minimum purity of 99.9 percent yttrium by mass.

(26) ***Other minerals.*** The following minerals are also applicable critical minerals provided that such mineral is purified to a minimum purity of 99 percent by mass:

(i) Arsenic.

(ii) Bismuth.

(iii) Erbium.

(iv) Gallium.

(v) Hafnium.

(vi) Holmium.

(vii) Iridium.

(viii) Lanthanum.

(ix) Lutetium.

(x) Magnesium.

(xi) Palladium.

(xii) Platinum.

(xiii) Praseodymium.

(xiv) Rhodium.

(xv) Rubidium.

(xvi) Ruthemium.

(xvii) Samarium.

(xviii) Scandium.

(xix) Tantalum.

(xx) Terbium.

(xxi) Thulium.

(xxii) Titanium.

(xxiii) Ytterbium.

(xxiv) Zinc.

(xxv) Zirconium.

(c) ***Credit amount*** —

(1) ***In general.*** For any applicable critical mineral, the credit amount is equal to 10 percent of the costs incurred by the taxpayer with respect to production of such mineral.

(2) ***Production processes for applicable critical minerals*** —

(i) ***Conversion.*** For purposes of section 45X, the term *conversion* means a chemical transformation from one species to another.

(ii) ***Purification.*** For purposes of section 45X, the term *purification* means increasing the mass fraction of a certain element.

(3) ***Production costs incurred*** —

(i) ***In general.*** Costs incurred by the taxpayer with respect to the production of applicable critical minerals includes all costs as defined in § 1.263A-1(e) that are paid or incurred within the meaning of section 461 of the Code by the taxpayer for the production of an applicable critical mineral only, including direct or indirect materials costs as defined in § 1.263A-1(e)(2)(i)(A) and (e)(3)(ii)(E), respectively, but only if those direct or indirect material costs do not relate to the purchase of materials that are an eligible component at the time of acquisition (for example, an electrode active material as defined in § 1.45X-3(e)(2)(i) or applicable critical mineral as defined in paragraph (b) of this section). This definition of production costs incurred would include any costs incurred by the taxpayer related to the extraction of raw materials in the United States or a United States territory, but only if those costs are paid or incurred by the taxpayer that claims the section 45X credit with respect to the relevant applicable critical mineral. Section 263A of the Code and the regulations in this chapter under section 263A apply

solely to identify the types of costs that are includible in production costs incurred for purposes of computing the amount of the section 45X credit, but do not apply for any other purpose, such as to determine whether a taxpayer is engaged in production activities.

(ii) ***Production costs for production of incorporated eligible components.*** The production costs that a taxpayer pays or incurs in the production of an eligible component (whether produced domestically or not) that the taxpayer then incorporates into a further distinct applicable critical mineral within the meaning of § 1.45X-1(f)(1) are not included in the costs incurred by the taxpayer in producing the further distinct applicable critical mineral. A taxpayer may not include the same production costs in the calculation of the credit amount for more than one eligible component. For example, if the taxpayer pays or incurs production costs of $50X for eligible component 1 and an additional $100X of production costs for eligible component 2 that included integrating eligible component 1 within the meaning of § 1.45X-1(f)(1), then the production costs for eligible component 1 equal $50X and the production costs for eligible component 2 equal $100X.

(4) ***Substantiation.*** In order to include direct or indirect materials costs as defined in § 1.263A-1(e)(2)(i)(A) and (e)(3)(ii)(E) as production costs when calculating a section 45X credit for the production and sale of an applicable critical mineral, a taxpayer, as part of filing an annual tax return (or a return for a short year within the meaning of section 443 of the Code), must include the information in paragraph (c)(4)(i) of this section as an attachment to that return, prepare the information required in paragraph (c)(4)(ii) through (iv) of this section and maintain that information in the taxpayer's books and records under section 6001, and comply with directions for the information required in paragraph (c)(4)(v) of this section as specified in guidance:

(i) Certification from any supplier, including the supplier's employer identification number and that is signed under penalties of perjury, from which the taxpayer purchased any constituent elements, materials, or subcomponents of the taxpayer's applicable critical mineral, stating that the supplier is not claiming the section 45X credit with respect to any of the material acquired by the taxpayer, nor is the supplier aware that any prior supplier in the chain of production of that material claimed a section 45X credit for the material.

(ii) A document that provides an analysis of any constituent elements, materials, or subcomponents that concludes the material did not meet the definition of an eligible component (for example, an applicable critical mineral or electrode active material) at the time of acquisition by the taxpayer. The document may be prepared by the taxpayer or ideally by an independent third-party.

(iii) A list of all direct and indirect material costs and the amount of such costs that were included within the taxpayer's total production cost for each applicable critical mineral.

(iv) A document related to the taxpayer's production activities with respect to the direct and indirect material costs that establishes the materials were used in the production of the applicable critical mineral. The document may be prepared by the taxpayer or ideally by an independent third-party.

(v) Any other information related to the direct or indirect materials specified in guidance.

(5) Failure to provide the documentation described in paragraph (c)(4) of this section with the return filing, or providing an available upon request statement, will constitute a failure to substantiate the claim.

(d) ***Applicability date.*** This section applies to eligible components for which production is completed and sales occur after December 31, 2022, and during a taxable year ending on or after October 28, 2024.

[T.D. 10010, 89 FR 85831, Oct. 28, 2024; 89 FR 93171, Nov. 26, 2024]

§ 1.45Y-0 Table of contents.

This section lists the captions contained in §§ 1.45Y-1 through 1.45Y-5.

§ 1.45Y-1 Clean electricity production credit.

(a) Overview.

(1) In general.

(2) CHP property.

(i) In general.

(ii) Components excluded.

(3) Code.

(4) kWh.

(5) Metering device.

(i) In general.

(ii) Standards for maintaining and operating a metering device.

(iii) Network equipment.

(iv) Examples.

(6) Qualified facility.

(7) Related person.

(i) In general.

(ii) Member of a consolidated group.

(8) Secretary.

(9) Section 45Y credit.

(10) Section 45Y regulations.

(11) Unrelated person.

(12) Waste energy recovery property (WERP).

(b) Credit amount.

(1) In general.

(2) Applicable amount.

(i) In general.

(ii) Base amount.

(iii) Alternative amount.

(3) Inflation adjustment.

(i) In general.

(ii) Annual computation.

(iii) Inflation adjustment factor.

(iv) GDP implicit price deflator.

(4) Energy communities increase in credit.

(5) Domestic content bonus credit amount.

(c) Credit phase-out.

(1) In general.

(2) Phase-out percentage.

(3) Applicable year.

(4) Phase-out data.

(5) Determination of phase-out.

(d) Requirements for CHP property.

(1) In general.

(2) Energy efficiency percentage.

(3) Special rule for calculating electricity produced by CHP property.

(i) In general.

(ii) Conversion from Btu to kWh.

(e) Applicability date.

§ 1.45Y-2 Qualified facility for purposes of section 45Y.

(a) Qualified facility.

(b) Property included in qualified facility.

(1) In general.

(2) Unit of qualified facility.

(i) In general.

(ii) Functionally interdependent.

(3) Integral part.

(i) In general.

(ii) Power conditioning and transfer equipment.

(iii) Roads.

(iv) Fences.

(v) Buildings.

(vi) Shared integral property.

(vii) Examples.

(c) Coordination with other credits.

(1) In general.

(2) Allowed.

(3) Examples.

(d) Applicability date.

§ 1.45Y-3 Rules relating to the increased credit amount for prevailing wage and apprenticeship.

(a) In general.

(b) Qualified facility requirements.

(c) Nameplate capacity for purposes of the One Megawatt Exception.

(1) In general.

(2) Nameplate capacity for qualified facilities that generate in direct current for purposes of the One Megawatt Exception.

(3) Integrated operations.

(4) Related taxpayers.

(i) Definition.

(ii) Related taxpayer rule.

(d) Applicability date.

§ 1.45Y-4 Rules of general application.

(a) Only production in the United States taken into account for purposes of section 45Y.

(b) Production attributable to the taxpayer.

(1) In general.

(2) Example of gross sales.

(3) Section 761(a) election.

(c) Expansion of facility; Incremental production (Incremental Production Rule).

(1) In general.

(2) Measurement standard.

(3) Special rule for restarted facilities.

(4) Computation of increased amount of electricity produced.

(5) Examples.

(d) Retrofit of an existing facility (80/20 Rule).

(1) In general.

(2) Cost of new components of property.

(3) Examples.

(e) Applicability date.

§ 1.45Y-5 Greenhouse gas emissions rates for qualified facilities under section 45Y.

(a) In general.

(b) Definitions.

(1) CO_2e per kWh.

(2) Combustion.

(3) Gasification.

(4) Facility that produces electricity through combustion or gasification (C&G Facility).

(5) Greenhouse gas emissions rate.

(6) Greenhouse gases emitted into the atmosphere by a facility in the production of electricity.

(7) Non-C&G Facility.

(8) Fuel.

(9) Feedstock.

(10) Market-mediated effects.

(c) Non-C&G Facilities.

(1) Determining a greenhouse gas emissions rate for Non-C&G Facilities.

(i) Excluded emissions.

(ii) Emissions assessment process.

(iii) Example of greenhouse gas emissions rate determination for a Non-C&G Facility.

(2) Non-C&G Facilities with a greenhouse gas emissions rate that is not greater than zero.

(d) C&G Facilities.

(1) Determining a greenhouse gas emissions rate for C&G Facilities.

(2) LCA requirements.

(i) Starting boundary.

(ii) Ending boundary.

(iii) Baseline.

(iv) Offsets and offsetting activities.

(v) Principles for included emissions.

(vi) Principles for excluded emissions.

(vii) Alternative fates and avoided emissions.

(viii) Temporal scales.

(ix) Spatial scales.

(x) Categorization of products.

(e) Use of methane from certain sources to produce electricity.

(1) In general.

(2) Definitions.

(i) Biogas.

(ii) Coal mine methane.

(iii) Fugitive methane.

(iv) Renewable natural gas.

(3) Considerations regarding the lifecycle greenhouse gas emissions associated with the production of electricity using methane from certain sources.

(i) In general.

(ii) Methane from landfill sources.

(iii) Methane from wastewater sources.

(iv) Coal mine methane.

(v) Methane from animal waste.

(vi) Fugitive methane other than coal mine methane.

(4) Book and claim.

(f) Carbon capture and sequestration.

(1) In general.

(2) Substantiation.

(g) Annual publication of emissions rates.

(1) In general.

(2) Publication of analysis required for changes to the Annual Table.

(h) Provisional emissions rates.

(1) In general.

(2) Rate not established.

(3) Process for filing a PER petition.

(4) PER determination.

(5) Emissions value request process.

(6) LCA model for determining an emissions value for C&G Facilities.

(7) Effect of PER.

(i) Reliance on Annual Table or Provisional Emissions Rate.

(j) Substantiation.

(1) In general.

(2) Sufficient substantiation.

(k) Applicability date.

[T.D. 10024, 90 FR 4096, Jan. 15, 2025]

§ 1.45Y-1 Clean electricity production credit.

(a) ***Overview*** —

(1) ***In general.*** For purposes of section 38 of the Internal Revenue Code (Code), the section 45Y credit (defined in paragraph (a)(9) of this section) is determined under section 45Y of the Code and the section 45Y regulations (defined in paragraph (a)(10) of this section). This paragraph (a) provides definitions of terms that, unless otherwise specified, apply for purposes of section 45Y, the section 45Y regulations, and any provision of the Code or this chapter that expressly refers to any provision of section 45Y or the section 45Y regulations. Paragraph (b) of this section provides rules for determining the amount of the section 45Y credit for any taxable year. Paragraph (c) of this section provides rules regarding the phase-out of the section 45Y credit. Paragraph (d) of this section provides rules regarding combined heat and power system (CHP) property. *See* § 1.45Y-2 for rules relating to qualified facilities for purposes of the section 45Y credit. *See* § 1.45Y-4 for rules of general application for the section 45Y credit. *See* § 1.45Y-5 for rules to determine greenhouse gas emissions rates for qualified facilities.

(2) ***CHP property*** —

(i) ***In general.*** For purposes of section 45Y(g)(2)(B) and paragraph (d) of this section, the term *CHP property* means property comprising a system that uses the same energy source for the simultaneous or sequential generation of electrical power, mechanical shaft power, or both, in combination with the generation of steam or other forms of useful thermal energy (including for heating and cooling applications).

(ii) ***Components excluded.*** CHP property does not include property used to transport the energy source to the generating facility or to distribute energy produced by the facility.

(3) ***Code.*** The term *Code* means the Internal Revenue Code.

(4) ***kWh.*** The term *kWh* means kilowatt hours.

(5) ***Metering device*** —

(i) ***In general.*** For purposes of section 45Y(a)(1)(A)(ii)(II), the term *metering device* means equipment that is owned and operated by an unrelated person (as defined in paragraph (a)(11) of this section) for energy revenue metering to measure and register the continuous summation of an electricity quantity with respect to time.

(ii) ***Standards for maintaining and operating a metering device.*** For purposes of section 45Y(a)(1)(A)(ii)(II) and this section, a metering device must—

(A) Be maintained in proper working order in accordance with the instructions of its manufacturer;

(B) Be certified as meeting generally accepted industry performance standards, such as the American National Standards Institute C12.1-2022 standard, or subsequent revisions;

(C) Be revenue grade with a ±0.5 percent accuracy; and

(D) Be properly calibrated.

(iii) ***Network equipment.*** For purposes of operating the metering device, the unrelated person may share network equipment, such as spare fiber optic cable owned by the taxpayer that produces the electricity, and may co-locate network equipment in the taxpayer's facilities.

(iv) ***Examples.*** This paragraph (a)(5)(iv) provides examples illustrating the application of paragraph (a)(5) of this section.

(A) ***Example 1. Qualified facility equipped with a metering device owned and operated by an unrelated person.*** X owns a qualified facility equipped with a metering device that is owned and operated by Y, an unrelated person. The metering device meets the requirements of paragraphs (a)(5)(i) through (iii) of this section. X sells electricity produced at the qualified facility to Z, a related person during the taxable year. Because the qualified facility is equipped with a metering device that is owned and operated by an unrelated person and meets the requirements of paragraphs (a)(5)(i) through (iii), X may claim a section 45Y credit based on the electricity produced by X and sold to Z during the taxable year.

(B) ***Example 2. Electricity produced by the taxpayer at a qualified facility sold, consumed, or stored by the taxpayer during the taxable year.*** X owns a qualified facility equipped with a metering device that is owned and operated by an unrelated person, Y. The metering device meets the requirements of paragraphs (a)(5)(i) through (iii) of this section. Because the qualified facility is equipped with a metering device that is owned and operated by an unrelated person and the metering device meets the requirements of paragraphs (a)(5)(i) through (iii), X may sell electricity produced at the qualified facility during the taxable year to a related or unrelated person. X may also consume the electricity produced at the qualified facility during the taxable year onsite. Additionally, X may store the electricity produced at the qualified facility during the taxable year in energy storage technology owned by X. In any of these three situations, X may claim a section 45Y credit for the taxable year for the kWh of electricity produced at the qualified facility measured by the metering device and sold, consumed, or stored by X during the taxable year.

(6) ***Qualified facility.*** The term *qualified facility* for purposes of the section 45Y credit has the meaning provided in § 1.45Y-2(a).

(7) ***Related person*** —

(i) ***In general.*** The term *related person* means a person that is related to another person if such persons would be treated as a single employer under the regulations in this chapter under section 52(b) of the Code.

(ii) ***Member of a consolidated group.*** In the case of a corporation that is a member of a consolidated group (as defined in § 1.1502-1(h)), such member will be treated as selling electricity to an unrelated person if such electricity is sold to an unrelated person by another member of such group.

(8) ***Secretary.*** The term *Secretary* means the Secretary of the Treasury or their delegate.

(9) ***Section 45Y credit.*** The term *section 45Y credit* means the clean electricity production credit determined under section 45Y of the Code and the section 45Y regulations.

(10) ***Section 45Y regulations.*** The term *section 45Y regulations* means this section and §§ 1.45Y-2 through 1.45Y-5.

(11) ***Unrelated person.*** For purposes of section 45Y(a), the term *unrelated person* means a person who is not a related person as defined in section 45Y(g)(4) and paragraph (a)(7) of this section. In the case of sales of electricity to an individual consumer, such sales will be treated as sales to an unrelated party for purposes of the section 45Y credit. For example, assume Taxpayer X produces electricity at a qualified facility and sells it to Consumer Y. Consumer Y is an individual consumer and is not subject to aggregation under the regulations at 26 CFR 1.52-1 prescribed under section 52(b). Therefore, Consumer Y is not treated as a single employer with Taxpayer X under section 52(b), and a sale to Consumer Y is treated as a sale to an unrelated person. The result is the same if Consumer Y is an individual consumer who is a member of a cooperative or Indian tribe that owns or controls, directly or indirectly, Taxpayer X. The result is also the same if Consumer Y is an individual consumer who is a resident of a State or municipality that owns or controls, directly or indirectly, Taxpayer X.

(12) ***Waste energy recovery property (WERP).*** WERP is property that generates electricity solely from heat from buildings or equipment if the primary purpose of such building or equipment is not the generation of electricity. Examples of buildings or equipment the primary purpose of which is not the generation of electricity include, but are not limited to, manufacturing plants, medical care facilities, facilities on school campuses, and associated equipment.

(b) ***Credit amount*** —

(1) ***In general.*** The section 45Y credit for any taxable year is an amount equal to the product of the kWh of electricity that is produced at a qualified facility and sold by the taxpayer to an unrelated person during the taxable year, multiplied by the applicable amount with respect to such qualified facility. In the case of a qualified facility equipped with a metering device (as defined in paragraph (a)(5) of this section) that is owned and operated by an unrelated person, the section 45Y credit for any taxable year is an amount equal to the product of the kWh of electricity that is produced, as measured by the metering device, at such qualified facility and sold, consumed, or stored by the taxpayer during the taxable year, multiplied by the applicable amount with respect to such qualified facility. Only one section 45Y credit can be claimed for each kWh of electricity produced by the taxpayer at a qualified facility. The credit amount may also be increased as provided in section 45Y(g)(11) and paragraph (b)(5) of this section in the case of a qualified facility that satisfies the domestic content requirements of section 45Y(g)(11)(B).

(2) ***Applicable amount*** —

(i) ***In general.*** The term *applicable amount* means the base amount described in paragraph (b)(2)(ii) of this section or the alternative amount described in paragraph (b)(2)(iii) of this section. The applicable amount is subject to the inflation adjustment as provided in section 45Y(c)(1) and

paragraph (b)(3) of this section. The applicable amount may also be increased as provided in section 45Y(g)(7) and paragraph (b)(4) of this section in the case of a qualified facility that is located in an energy community.

(ii) ***Base amount.*** Under section 45Y(a)(2)(A), in the case of any qualified facility that does not satisfy the requirements provided in section 45Y(a)(2)(B), the applicable amount is the *base amount,* which is 0.3 cents.

(iii) ***Alternative amount.*** Under section 45Y(a)(2)(B), in the case of any qualified facility that satisfies the prevailing wage and apprenticeship requirements provided in section 45Y(a)(2)(B), the applicable amount is the *alternative amount,* which is 1.5 cents.

(3) ***Inflation adjustment*** —

(i) ***In general.*** Pursuant to section 45Y(c)(1), in the case of a calendar year beginning after 2024, the base amount and the alternative amount will each be adjusted by multiplying such amount by the inflation adjustment factor for the calendar year in which the sale, consumption, or storage of the electricity occurs. If the base amount as adjusted under this paragraph (b)(3)(i) is not a multiple of 0.05 cent, such amount will be rounded to the nearest multiple of 0.05 cent. If the alternative amount as adjusted under this paragraph (b)(3)(i) is not a multiple of 0.1 cent, such amount will be rounded to the nearest multiple of 0.1 cent.

(ii) ***Annual computation.*** Pursuant to section 45Y(c)(2), the inflation adjustment factor for each calendar year will be published in the FEDERAL REGISTER not later than April 1 of that calendar year. The base amount and the alternative amount, as adjusted under paragraph (b)(3)(i) of this section, will also be published in the FEDERAL REGISTER not later than April 1 of each calendar year.

(iii) ***Inflation adjustment factor.*** Under section 45Y(c)(3), the term *inflation adjustment factor* means, with respect to a calendar year, a fraction—

(A) The numerator of which is the GDP implicit price deflator for the preceding calendar year; and

(B) The denominator of which is the GDP implicit price deflator for the calendar year 1992.

(iv) ***GDP implicit price deflator.*** Under section 45Y(c)(3), the term *GDP implicit price deflator* means the most recent revision of the implicit price deflator for the gross domestic product as computed and published by the Department of Commerce before March 15 of the calendar year.

(4) ***Energy communities increase in credit.*** In the case of any qualified facility that is located in an energy community (as defined in section 45(b)(11)(B)), for purposes of determining the amount of the section 45Y credit with respect to any electricity produced by the taxpayer at such facility during the taxable year, the applicable amount will be increased by an amount equal to 10 percent of the applicable amount that would otherwise be in effect before application of this paragraph (b)(4). The 10 percent increase under this paragraph (b)(4) applies after the inflation adjustment under paragraph (b)(3) of this section.

(5) ***Domestic content bonus credit amount.*** In the case of any qualified facility that satisfies the requirements of section 45Y(g)(11)(B)(i) (domestic content requirement), for purposes of determining the amount of the section 45Y credit with respect to any electricity produced by the

taxpayer at such facility during the taxable year, the amount of the credit otherwise determined under this paragraph (b), without application of paragraph (b)(4) of this section (related to energy communities), is increased by 10 percent.

(c) ***Credit phase-out*** —

(1) ***In general.*** The amount of the section 45Y credit for any qualified facility, the construction of which begins during a calendar year provided in section 45Y(d)(2) and described in paragraph (c)(2) of this section, is equal to the product of—

(i) The amount of the credit determined under section 45Y(a) and described in paragraph (b) of this section, without regard to section 45Y(d) and this paragraph (c); multiplied by

(ii) The phase-out percentage provided under section 45Y(d)(2) and described in paragraph (c)(2) of this section.

(2) ***Phase-out percentage.*** The phase-out percentage described in this paragraph (c)(2) is equal to—

(i) For a facility the construction of which begins during the first calendar year following the applicable year, 100 percent;

(ii) For a facility the construction of which begins during the second calendar year following the applicable year, 75 percent;

(iii) For a facility the construction of which begins during the third calendar year following the applicable year, 50 percent; and

(iv) For a facility the construction of which begins during any calendar year subsequent to the calendar year described in paragraph (c)(2)(iii) of this section, 0 percent.

(3) ***Applicable year.*** For purposes of this paragraph (c), the term *applicable year* means the later of—

(i) The calendar year in which the Secretary makes the determination that the annual greenhouse gas emissions from the production of electricity in the United States are equal to or less than 25 percent of the annual greenhouse gas emissions from the production of electricity in the United States for calendar year 2022; or

(ii) 2032.

(4) ***Phase-out data.*** For purposes of paragraph (c)(3)(i) of this section, the annual greenhouse gas emissions from the production of electricity in the United States for any calendar year must be assessed separately using both of the data sources described in paragraphs (c)(4)(i) and (ii) of this section:

(i) The U.S. Energy Information Administration's Electric Power Annual, summing the annual carbon dioxide emissions data from conventional power plants and combined heat and power plants and the Monthly Energy Review annual carbon dioxide emissions from the combustion of biomass to produce electricity in the Electric Power Sector; and

(ii) The U.S. Environmental Protection Agency (EPA) Inventory of U.S. Greenhouse Gas Emissions and Sinks (GHGI) annual electric power-related carbon dioxide, methane, and nitrous oxide emissions data including carbon dioxide emissions from the combustion of biomass to produce electricity.

(5) ***Determination of phase-out.*** For purposes of paragraph (c)(3)(i) of this section, the Secretary will determine that the annual greenhouse gas emissions from the production of electricity in the United States are equal to or less than 25 percent of the annual greenhouse gas emissions from the production of electricity in the United States for calendar year 2022 only if the annual greenhouse gas emissions from the production of electricity in the United States, as determined separately under both of the data sources described in paragraph (c)(4) of this section, are each equal to or less than 25 percent of the annual greenhouse gas emissions from the production of electricity in the United States for calendar year 2022. If a data source described in paragraph (c)(4) of this section becomes unavailable (for example, it is no longer published or does not provide the specified data), the Secretary must designate a similar data source to replace the unavailable data source.

(d) ***Requirements for CHP property*** —

(1) ***In general.*** To be eligible for the section 45Y credit, a CHP property must produce at least 20 percent of its total useful energy in the form of useful thermal energy that is not used to produce electrical or mechanical power (or combination thereof), and at least 20 percent of its total useful energy in the form of electrical or mechanical power (or combination thereof). The energy efficiency percentage of CHP property must exceed 60 percent. These percentages are determined on a British thermal unit (Btu) basis.

(2) ***Energy efficiency percentage.*** The energy efficiency percentage of a CHP property is the fraction the numerator of which is the total useful electrical, thermal, and mechanical power produced by the system at normal operating rates, and expected to be consumed in its normal application, and the denominator of which is the lower heating value of the fuel sources for the system. In the case of a qualified facility using nuclear energy, which does not involve combustion, the denominator is the reactor's maximum power level in megawatts thermal listed on the Nuclear Regulatory Commission (NRC) operating license, converted to Btus using 3,412,140 Btus per hour per megawatt. For other qualified facilities not using combustion, additional methodologies may be prescribed by the Secretary in guidance published in the Internal Revenue Bulletin (see § 601.601 of this chapter).

(3) ***Special rule for calculating electricity produced by CHP property*** —

(i) ***In general.*** For purposes of section 45Y(a) and paragraph (b) of this section, the kWh of electricity produced by a taxpayer at a qualified facility includes any production in the form of useful thermal energy by any CHP property within such facility, and the amount of greenhouse gases emitted into the atmosphere by such facility in the production of such useful thermal energy is included for purposes of determining the greenhouse gas emissions rate for such facility.

(ii) ***Conversion from Btu to kWh*** —

(A) ***In general.*** For purposes of section 45Y(g)(2)(A)(i) and this paragraph (d)(3), the amount of kWh of electricity produced in the form of useful thermal energy is equal to the quotient of the total useful thermal energy produced by the CHP property within the qualified facility, divided by the heat rate for such facility.

(B) ***Heat rate.*** For purposes of this paragraph (d)(3), the term *heat rate* means the amount of energy used by the qualified facility to generate 1 kWh of electricity, expressed as Btus per net kWh generated. In calculating the heat rate of a qualified facility that includes CHP property that uses combustion, a taxpayer must use the annual average heat rate, defined as the total annual fuel consumption of the CHP property (in Btus, using the lower heating value of the fuel) during the taxable year for which the section 45Y credit is claimed,

divided by the annual net electricity generation (in kWh) of the CHP property during such taxable year. In the case of a qualified facility using nuclear energy, which does not involve combustion, the facility's reactor's total annual thermal output (in Btus, using a conversion rate of 3,412,140 Btus per megawatt hour thermal) shall be used in place of the total annual fuel consumption of the CHP property. For other qualified facilities not using combustion, additional methodologies may be prescribed by the Secretary in guidance published in the Internal Revenue Bulletin (see § 601.601 of this chapter).

(e) ***Applicability date.*** This section applies to qualified facilities placed in service after December 31, 2024, and during a taxable year ending on or after January 15, 2025.

[T.D. 10024, 90 FR 4096, Jan. 15, 2025]

§ 1.45Y-2 Qualified facility for purposes of section 45Y.

(a) ***Qualified facility.*** For purposes of the section 45Y credit (defined in § 1.45Y-1(a)(9)), the term *qualified facility* means a facility owned by the taxpayer that meets the requirements of paragraphs (a)(1) through (3) of this section:

(1) The facility is used for the generation of electricity, meaning that it is a net generator of electricity taking into account any electricity consumed by the facility;

(2) The facility is placed in service after December 31, 2024; and

(3) The facility has a greenhouse gas emissions rate of not greater than zero (as determined under rules provided in § 1.45Y-5).

(b) ***Property included in qualified facility*** —

(1) ***In general.*** A qualified facility includes a unit of qualified facility (as defined in paragraph (b)(2) of this section) that meets the requirements of paragraph (b)(2). A qualified facility also includes property owned by the taxpayer that is an integral part (as defined in paragraph (b)(3) of this section) of the qualified facility. Any component of property that meets the requirements of this paragraph (b) is part of a qualified facility regardless of where such component of property is located. A qualified facility generally does not include equipment that is an addition or modification to an existing qualified facility. However, see § 1.45Y-4(c) for rules regarding the Incremental Production Rule and § 1.45Y-4(d) for rules regarding a retrofitted qualified facility (80/20 Rule).

(2) ***Unit of qualified facility*** —

(i) ***In general.*** For purposes of the section 45Y credit, the unit of qualified facility includes all functionally interdependent components of property (as defined in paragraph (b)(2)(ii) of this section) owned by the taxpayer that are operated together and that can operate apart from other property to produce electricity, or, in the case of CHP property, useful thermal energy and electricity. No provision of this section, § 1.45Y-1, or §§ 1.45Y-3 through 1.45Y-5 uses the term *unit* in respect of a qualified facility with any meaning other than that provided in this paragraph (b)(2)(i).

(ii) ***Functionally interdependent.*** Components of property are functionally interdependent if the placing in service of each of the components is dependent upon the placing in service of each of the other components to produce electricity.

(3) ***Integral part*** —

(i) ***In general.*** For purposes of thesection 45Ycredit, a component of property owned by a taxpayer is an integral part of a qualified facility if it is used directly in the intended function of the qualified facility and is essential to the completeness of such function. Property that is an integral part of a qualified facility is part of the qualified facility.

(ii) ***Power conditioning and transfer equipment.*** Power conditioning equipment and transfer equipment are integral parts of a qualified facility. Power conditioning equipment includes, but is not limited to, transformers, inverters, and converters, which modify the characteristics of electricity or thermal energy into a form suitable for use, transmission, or distribution. Parts related to the functioning or protection of power conditioning equipment are also treated as power conditioning equipment and include, but are not limited to, switches, circuit breakers, arrestors, and hardware used to monitor, operate, and protect power conditioning equipment. Transfer equipment includes components of property that allow for the aggregation of electricity generated by a qualified facility and components of property that alter voltage to permit electricity to be transferred to a transmission or distribution line. Transfer equipment does not include transmission or distribution lines. Examples of transfer equipment include, but are not limited to, wires, cables, and combiner boxes that conduct electricity. Parts related to the functioning or protection of transfer equipment are also treated as transfer equipment and may include items such as current transformers used for metering, electrical interrupters (such as circuit breakers, fuses, and other switches), and hardware used to monitor, operate, and protect transfer equipment.

(iii) ***Roads.*** Roads that are integral to the intended function of the qualified facility such as onsite roads that are used to operate and maintain the qualified facility are integral parts of a qualified facility. Roads used primarily for access to the site, or roads used primarily for employee or visitor vehicles, are not integral to the intended function of the qualified facility and thus are not an integral part of a qualified facility.

(iv) ***Fences.*** Fencing is not an integral part of a qualified facility because it is not integral to the intended function of the qualified facility.

(v) ***Buildings.*** Generally, buildings are not integral parts of a qualified facility because they are not integral to the intended function of the qualified facility. However, the structures described in paragraphs (b)(3)(v)(A) and (B) of this section are not treated as buildings for this purpose and are an integral part of a qualified facility:

(A) A structure that is essentially an item of machinery or equipment; and

(B) A structure that houses components of property that are integral to the intended function of a qualified facility if the use of the structure is so closely related to the use of the components of property housed therein that the structure clearly can be expected to be replaced if the components of property it initially houses are replaced.

(vi) ***Shared integral property.*** Multiple qualified facilities (whether owned by one or more taxpayers), including qualified facilities with respect to which a taxpayer has claimed a credit under section 48E or another Federal income tax credit, may include shared property that may be considered an integral part of each qualified facility. In addition, a component of property that is shared by a qualified facility as defined in section 45Y(b) (45Y Qualified Facility) and a qualified facility as defined by section 48E(b)(3) (48E Qualified Facility) that is an integral part of both qualified facilities will not affect the eligibility of the 45Y Qualified Facility for the section 45Y credit or the 48E Qualified Facility for the section 48E credit (defined in § 1.48E-1(a)(10)).

(vii) ***Examples.*** This paragraph (b)(3)(vii) provides examples illustrating the rules of paragraphs (b)(3)(i) through (vi) of this section.

(A) ***Example 1. Co-located qualified facilities owned by the same taxpayer that share integral property.*** X constructs and owns a solar facility (Solar Facility) and nearby also constructs and owns a wind facility (Wind Facility) that are each a qualified facility. The Solar Facility and Wind Facility each connect to a shared transformer that steps up the electricity produced by each qualified facility to electrical grid voltage before it is transmitted to the electrical grid through an intertie. The fact that the Solar Facility and Wind Facility share property that is integral to both does not impact the ability of X to claim a section 45Y credit for both qualified facilities.

(B) ***Example 2. Co-located qualified facilities owned by different taxpayers that share integral property.*** X constructs and owns a solar facility (Solar Facility), and nearby Y constructs and owns a wind facility (Wind Facility) that are each a qualified facility. X's Solar Facility and Y's Wind Facility each connect to a shared transformer that steps up the electricity produced by both qualified facilities to electrical grid voltage before it is transmitted to the electrical grid through an intertie. The fact that the Solar Facility and Wind Facility share property that is integral to both does not impact the ability of X or Y to claim a section 45Y credit for the electricity produced by their respective qualified facilities.

(C) ***Example 3. Co-located qualified facility and Energy Storage Technology (EST) owned by the same taxpayer that share integral property.*** X constructs and owns a wind facility that is a qualified facility (Wind Facility) that is co-located with an EST (as defined in § 1.48E-2(g)) that X also constructed and owns. The Wind Facility and EST share transfer equipment that is integral to both. The fact that the Wind Facility and EST share property that is integral to both does not impact the ability of X to claim a section 45Y credit for the electricity produced by the Wind Facility or to claim a section 48E credit for the EST.

(D) ***Example 4. Co-located wind qualified facility and Energy Storage Technology owned by different taxpayers that share integral property.*** X constructs and owns a solar facility that is a qualified facility (Solar Facility) that is co-located with an EST (as defined in § 1.48E-2(g)) constructed and owned by Y. The Wind Facility and EST share transfer equipment that is integral to both. The fact that the Wind Facility and EST share property that is integral to both does not impact the ability of X to claim a section 45Y credit for the electricity produced by the Wind Facility or the ability of Y to claim a section 48E credit for the EST.

(E) ***Example 5. Qualified facility with integral property owned by a different taxpayer.*** X constructs and owns a hydropower production facility that is a qualified facility (Hydropower Facility). The Hydropower Facility connects to a dam owned by Y, a government entity, that is an integral part of the Hydropower Facility. The fact that X does not own the dam does not impact the ability of X to claim a section 45Y credit for the production of electricity by the Hydropower Facility.

(c) ***Coordination with other credits*** —

(1) ***In general.*** The term *qualified facility* (as defined in section 45Y(b) and paragraph (a) of this section) does not include any facility for which a credit determined under section 45, 45J, 45Q, 45U, 48, 48A, or 48E is allowed under section 38 of the Code for the taxable year or any prior taxable year. A taxpayer that directly owns a qualified facility (as defined in section 45Y(b)) that is eligible for both a

section 45Y credit and a credit determined under one of section 45, 45J, 45Q, 45U, 48, 48A, or 48E is eligible for the section 45Y credit only if such other Federal income tax credit was not allowed with respect to the qualified facility. Nothing in this paragraph (c) precludes a taxpayer from claiming a section 45Y credit with respect to a qualified facility (as defined in section 45Y(b)) that is co-located with another facility for which a credit determined under section 45, 45J, 45Q, 45U, 48, 48A, or 48E is allowed under section 38 for the taxable year or any prior taxable year.

(2) ***Allowed.*** For purposes of paragraph (c)(1) of this section, the term *allowed* only includes credits that a taxpayer has claimed on a Federal income tax return or Federal return, as appropriate, and that the Internal Revenue Service (IRS) has not challenged in terms of the taxpayer's eligibility.

(3) ***Examples.*** This paragraph (c)(3) provides examples illustrating the rules of paragraph (c) of this section.

(i) ***Example 1. Taxpayer claims a section 45Y credit on a solar farm and section 48E credit on co-located EST.*** X owns a solar farm that is a qualifying facility (Solar Qualified Facility), and X owns a co-located EST (as defined in § 1.48E-2(g)) (Energy Storage). The Energy Storage is not part of the Solar Qualified Facility, and, therefore, X may claim the section 45Y credit based on the kWh of electricity produced by the Solar Qualified Facility, and X may also claim the section 48E credit based on its qualified investment in the Energy Storage.

(ii) ***Example 2. Different taxpayers claim a section 45Y credit for a solar farm*** and *a section 48E credit for co-located Energy Storage Technology.* X owns a solar farm that is a qualifying facility (Solar Qualified Facility), and Y owns a co-located EST (as defined in § 1.48E-2(g)) (Energy Storage). The Energy Storage is not part of the Solar Qualified Facility, and therefore, X may claim the section 45Y credit based on the kWh of electricity produced by the Solar Qualified Facility, and Y may claim the section 48E credit based on its qualified investment in the Energy Storage.

(iii) ***Example 3. Taxpayer claiming another credit is not allowed a section 45Y credit.*** X owns a wind facility that satisfies the requirements of a qualified facility as well as the requirements of a qualified facility as defined in § 1.48E-2(a). X claims a section 48E credit with respect to the wind facility. While a credit may be available with regard to the wind facility under section 45Y, because X has already claimed a section 48E credit with respect to the wind facility, a section 45Y credit is not allowed.

(iv) ***Example 4. Interaction of section 45Y and section 45Q credits for single qualified facility.*** X owns a qualified facility (Facility A) that includes carbon capture equipment, which is needed for the facility to meet the zero greenhouse gas requirement, so it is functionally interdependent to the production of electricity by Facility A. X used the carbon capture equipment to capture and utilize (as described in section 45Q(f)(5)) qualified carbon dioxide and claimed a section 45Q credit in a prior taxable year. As a result, X cannot claim a credit for its Facility A because a qualified facility does not include a facility for which a credit determined under section 45Q is allowed.

(v) ***Example 5. Interaction of section 45Y and section 45Q credits for co-located qualified facilities.*** Assume the same facts as in paragraph (c)(3)(iv) of this section (*Example 4*), except that X owns a co-located qualified facility (Facility B) that also includes carbon capture equipment, which is needed for the facility to meet the zero greenhouse gas requirement, so it is functionally interdependent to the production of electricity by Facility B. X used the carbon capture equipment to capture and utilize (as described in section 45Q(f)(5)) qualified carbon

dioxide, but has not claimed a section 45Q credit with respect to Facility B. While X claimed a section 45Q credit in a prior taxable year for Facility A (*see* paragraph (c)(3)(iv) of this section (*Example 4*)), Facility B is not part of Facility A, and, therefore, X may claim the section 45Y credit for Facility B.

(d) ***Applicability date.*** This section applies to qualified facilities placed in service after December 31, 2024, and during a taxable year ending on or after January 15, 2025.

[T.D. 10024, 90 FR 4096, Jan. 15, 2025]

§ 1.45Y-3 Rules relating to the increased credit amount for prevailing wage and apprenticeship.

(a) ***In general.*** If any qualified facility satisfies the requirements in paragraph (b) of this section, the applicable amount used for calculating the amount of the credit for producing clean electricity determined under section 45Y(a) of the Internal Revenue Code is the alternative applicable amount described in section 45Y(a)(2)(B), subject to adjustment provided by section 45Y(c).

(b) ***Qualified facility requirements.*** A qualified facility satisfies the requirements of this paragraph (b), if it is described in paragraph (b)(1), (2), or (3) of this section:

(1) A qualified facility with a maximum net output of less than one megawatt (as measured in alternating current) determined based on the nameplate capacity as provided in paragraph (c) of this section (One Megawatt Exception);

(2) A qualified facility the construction of which began prior to January 29, 2023; or

(3) A qualified facility that meets the prevailing wage requirements of section 45(b)(7) and § 1.45-7, the apprenticeship requirements of section 45(b)(8) and § 1.45-8, and the recordkeeping and reporting requirements of § 1.45-12 with respect to the construction, alteration, or repair of a qualified facility within the meaning of section 45Y.

(c) ***Nameplate capacity for purposes of the One Megawatt Exception*** —

(1) ***In general.*** For purposes of paragraph (b)(1) of this section, the determination of whether a qualified facility has a maximum net output of less than 1 megawatt (MW) of electrical energy (as measured in alternating current) is determined based on the nameplate capacity of the qualified facility. If a qualified facility has *integrated operations* with one or more other qualified facilities, then the aggregate nameplate capacity of the qualified facilities is used for the purposes of determining if the qualified facility meets the requirements of paragraph (b)(1) of this section. The nameplate capacity for purposes of the One Megawatt Exception is the maximum electrical generating output in megawatts that a qualified facility is capable of producing on a steady state basis and during continuous operation under standard conditions, as measured by the manufacturer and consistent with the definition of nameplate capacity provided in 40 CFR 96.202. If applicable, the International Standard Organization conditions should be used to measure the maximum electrical generating output.

(2) ***Nameplate capacity for qualified facilities that generate in direct current for purposes of the One Megawatt Exception.*** For qualified facilities that generate electricity in direct current, the taxpayer determines the maximum net output (in alternating current) of each qualified facility by using the lesser of:

(i) The sum of the nameplate generating capacities within the unit of qualified facility in direct current, which is deemed the nameplate generating capacity of the unit of qualified facility in alternating current; or

(ii) The nameplate capacity of the first component of property that inverts the direct current electricity into alternating current.

(3) ***Integrated operations.*** Solely for the purposes of the One Megawatt Exception, a qualified facility is treated as having *integrated operations* with any other qualified facility of the same technology type if the facilities are owned by the same or related taxpayers, placed in service in the same taxable year; and transmit electricity generated by the facilities through the same point of interconnection or, if the facilities are not grid-connected or are delivering electricity directly to an end user behind a utility meter, are able to support the same end user.

(4) ***Related taxpayers*** —

(i) ***Definition.*** For purposes of this section, the term *related taxpayers* means members of a group of trades or businesses that are under common control (as defined in § 1.52-1(b)).

(ii) ***Related taxpayer rule.*** For purposes of this section, related taxpayers are treated as one taxpayer in determining whether a qualified facility has integrated operations.

(d) ***Applicability date*** —

(1) ***In general.*** Except as provided in paragraph (d)(2) of this section, this section applies to qualified facilities placed in service in taxable years ending after January 15, 2025, and the construction of which begins after January 15, 2025. Taxpayers may apply this section to qualified facilities placed in service in taxable years ending on or before January 15, 2025, and qualified facilities placed in service in taxable years ending after January 15, 2025, the construction of which begins before January 15, 2025, provided that taxpayers follow this section in its entirety and in a consistent manner.

(2) ***Paragraph (b)(1) of this section.*** Paragraph (b)(1) of this section applies to qualified facilities placed in service in taxable years ending after January 15, 2025, and the construction of which begins after March 17, 2025. Taxpayers may apply this section to qualified facilities placed in service in taxable years ending on or before January 15, 2025, the construction of which begins before January 15, 2025, provided that taxpayers follow this section in its entirety and in a consistent manner.

[T.D. 10024 90 FR 4101, Jan. 15, 2025]

§ 1.45Y-4 Rules of general application.

(a) ***Only production in the United States is taken into account for purposes of section 45Y.*** Consumption, sales, or storage are taken into account for purposes of the section 45Y credit (defined in § 1.45Y-2(a)) only with respect to electricity the production of which is within the United States (within the meaning of section 638(1) of the Internal Revenue Code (Code)), or a United States territory, which for purposes of section 45Y and the section 45Y regulations (defined in § 1.45Y-2(a)) has the meaning of the term a possession of the United States (within the meaning of section 638(2)).

(b) ***Production attributable to the taxpayer*** —

(1) ***In general.*** In the case of a qualified facility in which more than one person has an ownership share (and the arrangement is not treated as a partnership for Federal tax purposes) production from the qualified facility is allocated among such persons in proportion to their respective ownership shares in the gross sales from such qualified facility. The respective owners each determine their respective section 45Y credit under section 45Y(a) and based on their respective ownership shares in the gross sales from such qualified facility during the taxable year.

(2) ***Example of gross sales.*** A, B and C, all calendar year taxpayers, each own an interest in a solar facility which is a qualified facility (as defined in § 1.45Y-2(a)) (Solar Facility). A owns 45 percent, B owns 35 percent, and C owns 20 percent, and each are allocated gross sales from the Solar Facility in proportion to their ownership interest. The Solar Facility produced 1000 kWh of electricity during the taxable year. A, B, and C will each determine their respective section 45Y credit under section 45Y(a) and § 1.45Y-1(b) based on their allocable share of the gross sales from the 1000 kWh of electricity produced at the Solar Facility during the taxable year.

(3) ***Section 761(a) election.*** If a qualified facility is owned through an unincorporated organization that has made a valid election under section 761(a) of the Code, each member's undivided ownership share in the qualified facility will be treated as a separate qualified facility owned by such member.

(c) ***Expansion of facility; Incremental production (Incremental Production Rule)*** —

(1) ***In general.*** Solely for purposes of this paragraph (c), the term *qualified facility* includes either a new unit or an addition of capacity placed in service after December 31, 2024, in connection with a facility described in section 45Y(b)(1)(A) (without regard to section 45Y(b)(1)(A)(ii)) that was placed in service before January 1, 2025, but only to the extent of the increased amount of electricity produced at the facility by reason of such new unit or addition of capacity. This rule is only applicable to an addition of capacity or new unit that would not otherwise qualify as a separate qualified facility as defined in section 45Y(b)(1)(A). A new unit or an addition of capacity that meets the requirements of this paragraph (c) will be treated as a separate qualified facility. For purposes of this paragraph (c), a new unit or an addition of capacity requires the addition or replacement of components of property, including any new or replacement integral property, added to a facility necessary to increase capacity. For purposes of assessing the One Megawatt Exception provided in section 45Y(a)(2)(B)(i), the maximum net output for a new unit or an addition of capacity is the sum of the capacity of the added qualified facility and the capacity of the facility to which the qualified facility was added, as determined under § 1.45Y-3(c) and paragraph (c)(2) of this section.

(2) ***Measurement standard.*** For purposes of this paragraph (c), taxpayers must use one of the measurement standards described in paragraph (c)(2)(i), (ii), or (iii) of this section to measure the capacity and change in capacity of a facility, except a taxpayer cannot use the measurement standard described in paragraph (c)(2)(ii) of this section if they are able to use the measurement standard described in paragraph (c)(2)(i) of this section:

(i) Modified or amended facility operating licenses from the Federal Energy Regulatory Commission (FERC) or the Nuclear Regulatory Commission (NRC), or related reports prepared by FERC or NRC as part of the licensing process;

(ii) Nameplate capacity certified consistent with generally accepted industry standards, such as the International Standard Organization (ISO) conditions to measure the nameplate capacity of the facility consistent with the definition of nameplate capacity provided in 40 CFR 96.202; or

(iii) A measurement standard prescribed by the Secretary in guidance published in the Internal Revenue Bulletin (see § 601.601 of this chapter).

(3) ***Special rule for restarted facilities.*** Solely for purposes of this paragraph (c), a facility that is decommissioned or in the process of decommissioning and restarts can be considered to have increased capacity from a base of zero if the conditions described in each of paragraphs (c)(3)(i) through (iv) of this section are met:

(i) The existing facility must have ceased operations;

(ii) The existing facility must have a shutdown period of at least one calendar year during which it was not authorized to operate by its respective Federal regulatory authority (that is, FERC or NRC);

(iii) The restarted facility must be eligible to restart based on an operating license issued by either FERC or NRC; and

(iv) The existing facility may not have ceased operations for the purpose of qualifying for the special rule for restarted facilities in this paragraph (c)(3).

(4) ***Computation of increased amount of electricity produced.*** To determine the increased amount of electricity produced by a facility in a taxable year by reason of a new unit or an addition of capacity, a taxpayer must multiply the amount of electricity that the facility produces during that taxable year after the new unit or addition of capacity is placed in service by a fraction, the numerator of which is the added capacity that results from the new unit or addition of capacity, and the denominator of which is the total capacity of the facility with the new unit or addition of capacity added, provided the added capacity and resulting total capacity are measured using a measurement standard identified in paragraph (c)(2) of this section.

(5) ***Examples.*** This paragraph (c)(5) provides examples illustrating the rules of paragraph (c) of this section.

(i) ***Example 1. New Unit.*** X owns a hydropower facility (Facility H) that was originally placed in service in 2020, with a FERC license authorizing an installed capacity of 60 megawatts. During taxable years 2020 through 2024, X claimed a section 45 credit for the electricity produced by Facility H. On July 1, 2025, as allowed by a FERC license amendment, X places in service components of property comprising a new unit that results in Facility H having an increased authorized installed capacity of 90 megawatts in 2025. For purposes of paragraph (c) of this section, this new unit will be treated as a separate facility (Facility J). X may claim a section 45Y credit during the 10-year credit period starting on July 1, 2025, based on the increased amount of electricity generated as a result of the new unit, which is determined by multiplying the electricity that Facility H produces with Facility J by one-third (equal to the 30-megawatt increase in capacity that results from the addition of Facility J divided by the 90 megawatt capacity of Facility H with Facility J). Even though X claimed a section 45 credit for the existing capacity of Facility H in taxable years 2020 through 2024, X can claim a section 45Y credit for the production of electricity associated with Facility J. X may also continue to claim the section 45 credit through taxable year 2030 for electricity generated by Facility H (excluding the incremental electricity generation related to Facility J).

(ii) ***Example 2. Addition of Capacity.*** Y owns a nuclear facility (Facility N) that was originally placed in service on January 1, 2000. Y claimed a section 45U credit in taxable years 2024 and 2025 for the electricity generated by Facility N. On January 15, 2026, Y completed and placed in service an investment associated with a power uprate approved by an NRC license amendment that involved the removal and replacement of components of property and placing in service additional components of property. NRC reports associated with the license amendment

describe the uprate as increasing the nuclear facility's electrical capacity by 100 MW to 900 MW. For purposes of this paragraph (c), Facility N's addition of capacity is treated as a new separate qualified facility placed in service on January 15, 2026 (Facility P). Y may claim a section 45Y credit during the 10-year credit period starting on January 15, 2026, based on the increased amount of electricity produced at Facility N that is attributable to the addition of capacity (Facility P), which is determined by multiplying the electricity that Facility N produces with Facility P by $^{1}/_{9}$ (equal to the 100-megawatt increase in capacity divided by Facility N's new total capacity of 900 megawatts with Facility P, as described in NRC reports associated with the license amendment). Even though Y claimed a section 45U credit in taxable years 2024 and 2025 for the existing capacity of Facility N, Y can claim a section 45Y credit for the production of electricity associated with Facility P. Y may also continue to claim the section 45U credit for electricity generated by Facility N (excluding the incremental electricity generation related to Facility P).

(iii) ***Example 3. Geothermal Turbine and Generator Additions of Capacity.*** X owns a geothermal power plant (Facility G) with a 24 MW nameplate capacity, which is placed in service in 2007. Over the subsequent years, the plant's generating capability declines because of physical degradation of the turbine and generator. On March 1, 2027, X places in service components of property at Facility G that increase its capacity. The turbine rotor is removed, and the eroded blades are replaced with new blades. The generator is refurbished by removing old subcomponents of the generator and replacing those with new subcomponents, as well as replacing the old copper windings with new windings in concert with new insulation. After the upgrade, the plant increases its nameplate capacity to 26 MW, an increase of 2 MW over the previous nameplate capacity. For purposes of this paragraph (c), the addition of capacity to Facility G is treated as a new separate qualified facility placed in service on March 1, 2027 (Facility N). X may claim a section 45Y credit during the 10-year credit period starting on March 1, 2027, based on the amount of electricity produced by Facility N, which is determined by multiplying the aggregate amount of electricity that Facility G produces with Facility N by 1/13 (that is, the fraction equal to the 2-megawatt increase in nameplate capacity attributable to Facility N divided by the new total aggregate 26 megawatt nameplate capacity of Facility G with Facility N).

(iv) ***Example 4. Hydropower Addition of Capacity.*** X owns a hydropower plant (Facility H) that was placed in service in 1960. Facility H has become less efficient since it was placed in service with attendant reductions in its generating capacity. As approved by a FERC license amendment, X increases Facility H's capacity by installing new headcovers, new turbines with integrated dissolved oxygen injection, and a new high pressure digital governor system. The new turbines are more efficient and are capable of more power output than the original design. Improvements to the generators involve removing the old asphalt coated copper windings and purchasing and then installing new epoxy coated double wound windings. X adds digital controls to effectively utilize new digital governors while simultaneously investing in cybersecurity protection. As set forth in the FERC order amending its license, these investments, which are placed in service on April 15, 2026, increase Facility H's authorized installed capacity from 180 MW to 190 MW, an increase of 10 MW. For purposes of this paragraph (c), Facility H's addition of capacity is treated as a new separate qualified facility placed in service on April 16, 2026 (Facility A). X may claim a section 45Y credit during the 10-year credit period starting on April 16, 2026, based on the amount of electricity produced by

Facility A, which is determined by multiplying the aggregate amount of electricity that Facility H produces with Facility A by 1/19 (equal to the 10-megawatt increase in capacity attributable to Facility A divided by the new total aggregate 190 MW capacity of Facility H with Facility A).

(v) ***Example 5. Nonoperational Nuclear Facility that Satisfies Restart Rule.*** T owns a nuclear facility (Facility N) that was originally placed in service in 1982. In 2020, Facility N ceased operations, began decommissioning, and the NRC no longer authorized the operation of Facility N. T did not cease operations at Facility N for the purpose of qualifying for the special rule for restarted facilities under section 45Y. In 2028, the NRC authorized Facility N to restart and, on October 1, 2028, Facility N placed in service components of property and restarted and resumed operations, with an electrical capacity of 800 MW, as indicated in NRC documents related to the authorization to restart. For purposes of this paragraph (c), the restart of Facility N is considered to have increased capacity from a base of zero, and Facility N is treated as having an addition of capacity equal to 800 MW. For purposes of this paragraph (c), Facility N's 800 MW addition of capacity is treated as a new qualified facility placed in service on October 1, 2028 (Facility P). T may claim a section 45Y credit during the 10-year period starting on October 1, 2028, based on the increased amount of electricity produced at Facility N that is attributable to that addition of capacity (Facility P).

(d) ***Retrofit of an existing facility (80/20 Rule)*** —

(1) ***In general.*** For purposes of section 45Y(b)(1)(B), a facility may qualify as originally placed in service even if it contains some used components of property within the unit of qualified facility, provided the fair market value of the used components of the unit of qualified facility is not more than 20 percent of the total value of the unit of qualified facility (that is, the cost of the new components of property plus the fair market value of the used components of property within the unit of qualified facility) (80/20 Rule). If a facility satisfies the requirements of the 80/20 Rule, then the date on which such qualified facility is considered originally placed in service for purposes of section 45Y(b)(1)(B) is the date on which the new components of property of the unit of qualified facility are placed in service. A qualified facility that meets the 80/20 Rule may claim the section 45Y credit without regard to any addition of capacity to the qualified facility.

(2) ***Cost of new components of property.*** For purposes of the 80/20 Rule, the cost of new components of the unit of qualified facility includes all costs properly included in the depreciable basis of the new components of property of the unit of qualified facility.

(3) ***Examples.*** The following examples illustrate the rules of this paragraph (d).

(i) ***Example 1. Retrofitted facility that meets the 80/20 Rule.*** A owns an existing wind facility. On February 1, 2026, A replaces used components of the unit of qualified facility of a wind facility with new components at a cost of $2 million. The fair market value of the remaining original components of the unit of qualified facility is $400,000, which is not more than 20 percent of the retrofitted unit of qualified facility's total fair market value of $2.4 million (the cost of the new components ($2 million) + the fair market value of the remaining original components of the unit of qualified facility ($400,000)). Thus, the retrofitted wind facility will be considered newly placed in service for purposes of section 45Y, and the section 45Y credit is allowable for electricity produced by A at the wind qualified facility and sold, consumed, or stored, during the 10-year period beginning on February 1, 2026, assuming all the other requirements of section 45Y are met.

(ii) ***Example 2. Retrofit of an existing facility that meets the 80/20 Rule.*** Facility Z, a facility that was originally placed in service on January 1, 2026, was not a qualified facility (as described in § 1.45Y-2(a)) when it was placed in service because it did not meet the greenhouse gas emissions rate requirements (as determined under rules provided in § 1.45Y-5). On January 1, 2027, Facility Z was retrofitted and now meets the requirements to be a qualified facility under § 1.45Y-2(a). After the retrofit, the cost of the new property included in the unit of qualified facility of Facility Z is greater than 80 percent of the unit of qualified facility of Facility Z's total fair market value. Because Facility Z meets the 80/20 Rule, Facility Z is deemed to be originally placed in service on January 1, 2027. Therefore, a section 45Y credit is allowable for electricity produced by Facility Z and sold, consumed, or stored during the 10-year period beginning on January 1, 2027, assuming all the other requirements of section 45Y are met.

(iii) ***Example 3. Retrofitted nuclear facility that satisfied the 80/20 Rule.*** T owns a nuclear facility (Facility N) that was originally placed in service on March 1, 1982. T replaces used components of property of unit of qualified facility of Facility N with new components at a cost of $200 million, placing in service the components of property on July 15, 2026. The fair market value of the remaining original components of the unit of qualified facility of Facility N, prior to the retrofit, is $30 million, which is less than 20 percent of the unit of qualified facility of Facility N's total fair market value of $230 million (the cost of the new components ($200 million) + the fair market value of the remaining original components of the unit of qualified facility ($30 million)) ($30 million/$230 million = 13%). Thus, Facility N will be considered newly placed in service on July 15, 2026, for purposes of section 45Y, and T will be able to claim a section 45Y credit based on the electricity generated at Facility N, assuming all the other requirements of section 45Y are met.

(iv) ***Example 4. Capital improvements to an existing qualified facility that do not satisfy the 80/20 Rule.*** X owns an existing facility, Facility C, that was originally placed in service on January 1, 2023. X makes capital improvements to Facility C that are placed in service on June 1, 2026. The cost of the capital improvements to the unit of qualified facility of Facility C is $500,000 and the fair market value of the unit of qualified facility of Facility C after the improvements is $2 million. The value of the old components of property of the unit of qualified facility is $1,500,000 out of $2.0 million, or 75 percent ($500,000/$2,000,000) of the total fair market value of the unit of qualified facility after the improvements. Because the fair market value of the new property included in the unit of qualified facility is less than 80 percent of the total fair market value of the unit of qualified facility, Facility C does not meet the 80/20 Rule. Facility C will not be considered a qualified facility (as defined in § 1.45Y-2(a)) eligible for the section 45Y credit. If the capital improvements to Facility C increase its nameplate capacity, the determination that it does not meet the 80/20 Rule does not prevent X from claiming a section 45Y credit if the requirements under paragraph (c)(1) of this section are met.

(v) ***Example 5. Upgrades to a hydropower qualified facility that satisfies the 80/20 Rule:*** Y owns a hydropower qualified facility (hydropower facility) and no taxpayer, including Y, has ever claimed a section 45 credit for the hydropower facility. The hydropower facility consists of a unit of qualified facility including water intake, water isolation mechanisms, turbine, pump, motor, and generator. The associated impoundment (dam) and power conditioning equipment are integral parts of the unit of qualified facility. Y makes upgrades to the unit of qualified facility by replacing the turbine, pump, motor, and generator with new components at a cost of $1.5 million. Y does not make any upgrades to the property that is an integral part of the unit of qualified facility. The remaining original components of the unit of qualified facility have a fair

market value of $100,000, which is not more than 20 percent of the retrofitted hydropower facility's total value of $1.6 million (that is, the cost of the new components ($1.5 million) + the value of the remaining original components ($100,000)). Thus, the retrofitted hydropower facility will be considered newly placed in service for purposes of section 45Y, and Y will be able to claim a section 45Y credit based on the cost of the new components ($1.5 million).

(e) ***Applicability date.*** This section applies to qualified facilities placed in service after December 31, 2024, and during a taxable year ending on or after January 15, 2025.

[T.D. 10024, 90 FR 4102, Jan. 15, 2025]

§ 1.45Y-5 Greenhouse gas emissions rates for qualified facilities under section 45Y.

(a) ***In general.*** This section provides rules and definitions for determining emissions rates for purposes of section 45Y of the Internal Revenue Code (Code). Paragraph (b)(4) of this section provides a definition for a facility that produces electricity through combustion or gasification and paragraph (b)(7) of this section defines a facility that does not produce electricity through combustion or gasification. Paragraphs (c) through (e) provide rules for determining the greenhouse gas emissions rates for facilities for purposes of section 45Y. Paragraph (f) of this section provides rules for the annual publication of emissions rates. Paragraph (g) of this section provides rules related to provisional emissions rates. Paragraph (h) of this section provides rules regarding reliance on the annual publication of emissions rates and provisional emissions rates. Finally, paragraph (i) of this section provides rules regarding substantiation requirements.

(b) ***Definitions.*** The definitions in this paragraph (b) apply for purposes of this section.

(1) ***CO_2e per kWh.*** The term *CO_2e per kWh* means with respect to any greenhouse gas, the equivalent carbon dioxide (as determined based on global warming potential) per kWh of electricity produced. The 100-year time horizon global warming potentials (GWP-100) from the Intergovernmental Panel on Climate Change's Fifth Assessment Report (AR5) must be used to convert emissions to equivalent carbon dioxide emissions. For purposes of this paragraph (b)(1), the GWP-100 from AR5 (as shown in table 1 to this paragraph (b)(1)) excludes climate-carbon feedbacks. Table 1 to this paragraph (b)(1) provides GWP-100 amounts for certain greenhouse gases applicable to this section.

Table 1 to Paragraph (b)(1)—100 Year Global Warming Potentials for Greenhouse Gases

Greenhouse gas	GWP
CO_2	1.
CH_4	28.
N_2O	265.
SF_6	23,500.
Hydrofluorocarbons	Varies by gas.

Greenhouse gas	GWP
Perfluorocarbons	Varies by gas.

(2) ***Combustion.*** The term *combustion* means a rapid exothermic chemical reaction, specifically the oxidation of a fuel, which liberates energy including heat and light.

(3) ***Gasification.*** The term *gasification* means a thermochemical process that converts carbon-containing materials into syngas, a gaseous mixture that is composed primarily of carbon monoxide, carbon dioxide, and hydrogen.

(4) ***Facility that produces electricity through combustion or gasification (C&G Facility).*** Consistent with section 45Y(b)(2)(B), the term *facility that produces electricity through combustion or gasification* (C&G Facility) means a facility that produces electricity through combustion or uses an input energy source to produce electricity, if the input energy source was produced through a fundamental transformation of one energy source into another using combustion or gasification.

(5) ***Greenhouse gas emissions rate.*** Consistent with section 45Y(b)(2)(A), the term *greenhouse gas emissions rate* means the amount of greenhouse gases emitted into the atmosphere by a facility in the production of electricity, expressed as grams of CO_2e per kWh.

(6) ***Greenhouse gases emitted into the atmosphere by a facility in the production of electricity.*** For purposes of section 45Y(b)(2)(A), for both C&G and Non-C&G Facilities, the term *greenhouse gases emitted into the atmosphere by a facility in the production of electricity* means emissions from a facility that directly occur from the processes that transform the input energy source into electricity but excludes emissions described in paragraphs (b)(6)(i) through (vi) of this section.

(i) Emissions from electricity production by back-up or auxiliary generators that are primarily used in maintaining critical systems in case of a power system outage or for supporting restart of a generator after an outage.

(ii) Emissions from routine operational and maintenance activities that are integral to the production of electricity, including, but not limited to, emissions from internal combustion vehicles used to access and perform maintenance on remote electricity generating facilities or emissions occurring from heating and cooling control rooms or dispatch centers.

(iii) Emissions from a step-up transformer that conditions the electricity into a form suitable for productive use or sale.

(iv) Emissions that occur before commercial operations commence or after commercial operations terminate, including, but not limited to, on-site emissions occurring from construction or manufacturing of the facility itself, emissions from the off-site manufacturing of facility components, or emissions occurring due to siting or decommissioning.

(v) Emissions from infrastructure associated with the facility, including, but not limited to, emissions from road construction for feedstock production.

(vi) Emissions from the distribution of electricity to consumers.

(7) ***Non-C&G Facility.*** The term *Non-C&G Facility* means a facility that produces electricity and is not described in paragraph (b)(4) of this section.

(8) ***Fuel.*** The term *fuel* means material directly used to produce electricity or energy inputs that are used to produce electricity.

(9) ***Feedstock.*** The term *feedstock* means any raw material used in a process for electricity generation or to produce an intermediate product or finished fuel used for electricity generation.

(10) ***Market-mediated effects.*** The term *market-mediated effects* means effects resulting from policy interventions and other factors (for example, technological advances) that alter the availability of and demand for marketed goods and activities and their related greenhouse gas (GHG) emissions profiles. These effects are driven by and result in changes in absolute and relative prices which can occur at local, national, and global boundaries. Examples of market-mediated effects include direct and significant indirect emissions, such as land use changes or land use management changes that result from the production of fuels derived from biomass and shifts in total market demand and supply for input fuels, feedstocks and related commodities, and other materials, as a result of changes associated with the policy intervention.

(c) ***Non-C&G Facilities*** —

(1) ***Determining a greenhouse gas emissions rate for Non-C&G Facilities.*** Greenhouse gas emissions rates for Non-C&G Facilities must be determined under paragraphs (c) and (e) of this section.

(i) ***Excluded emissions.*** With respect to Non-C&G Facilities only, greenhouse gases emitted into the atmosphere by a facility in the production of electricity excludes emissions of greenhouse gases that are not directly produced by the fundamental transformation of the input energy source into electricity, including, but not limited to:

(A) Emissions from hydropower reservoirs due to anoxic conditions;

(B) Ebullitive, diffuse, and degassing emissions from hydropower operations;

(C) Emissions of non-condensable gases from underground reservoirs during geothermal operations; and

(D) Emissions occurring due to activities and operations occurring off-site, including but not limited to, the production and transportation of fuels used by the facility, or land use change from siting or changes in demand.

(ii) ***Emissions assessment process.*** Subject to paragraphs (b)(6) and (c)(1) of this section, a greenhouse gas emissions rate for a Non-C&G Facility must be determined through a technical and engineering assessment of the fundamental energy transformation into electricity. This assessment must consider all input and output energy carriers and chemical reactions or mechanical processes taking place at the facility in the production of electricity.

(iii) ***Example of greenhouse gas emissions rate determination for a Non-C&G Facility*** —

(A) ***Facts.*** A facility uses solar photovoltaic technologies to convert light directly into electricity through use of the photovoltaic effect. This is a physical phenomenon in which certain semiconducting materials upon exposure to light, absorb the light and transform the energy contained in the light directly into an electric current. There are many materials that may be used to generate electricity through this method, including crystalline silicon, amorphous silicon, cadmium telluride, copper indium gallium diselenide, perovskites,

quantum dots, and carbon-based materials known as organic photovoltaics. The smallest unit of photovoltaic materials is a cell. Multiple cells are typically assembled into a panel or module and electrically connected. Multiple modules or panels are generally connected to comprise a solar system or installation. Solar photovoltaic technologies produce direct current electricity that can be used as is or, more typically, can be fed into inverters to transform it into alternating current. Solar panels can be ground mounted at a fixed angle or can be mounted with tracking systems that move the panels to track the location of the sun over the course of the day and season in order to maximize electricity production. Solar panels may also be mounted on buildings (for example, on roofs), or solar photovoltaic materials can be integrated into other building components such as roofing tiles.

(B) ***Analysis.*** For solar photovoltaic technologies, the fundamental transformation of input energy (solar electromagnetic radiation) into electricity using the photovoltaic effect involves no mechanical energy or chemical reactions. Academic studies on the lifecycle greenhouse gas emissions from solar photovoltaic power indicate that there is a small but non-zero amount of emissions associated with the operational phase of these technologies. However, these emissions exclusively occur due to ongoing maintenance (for example, the washing of solar panels), preventative maintenance (for example, the periodic replacement of electrical equipment such as inverters), and a minimal amount of project management (for example, inverter standby mode at night). These emissions do not occur directly due to the production of electricity. Therefore, consistent with paragraph (c)(1)(ii) of this section, the greenhouse gas emissions rate for facilities that produce electricity by solar photovoltaic properties is not greater than zero.

(2) ***Non-C&G Facilities with a greenhouse gas emissions rate that is not greater than zero.*** The types or categories of facilities described in paragraphs (c)(2)(i) through (viii) of this section are Non-C&G Facilities with a greenhouse gas emissions rate that is not greater than zero and may be treated as listed in the Annual Table (see paragraph (g) of this section) with an emissions rate that is not greater than zero:

(i) Wind (including small wind properties);

(ii) Hydropower (including retrofits that add electricity production to non-powered dams, conduit hydropower, hydropower using new impoundments, and hydropower using diversions such as a penstock or channel);

(iii) Marine and hydrokinetic;

(iv) Solar (including photovoltaic and concentrated solar power);

(v) Geothermal (including flash and binary plants);

(vi) Nuclear fission;

(vii) Fusion energy; and

(viii) Waste energy recovery property that derives energy from a source described in paragraphs (c)(2)(i) through (vii) of this section.

(d) ***C&G Facilities*** —

(1) ***Determining a greenhouse gas emissions rate for C&G Facilities.*** The greenhouse gas emissions rate for a C&G Facility—

(i) Must be determined by a lifecycle analysis (LCA) that complies with the requirements of paragraphs (d) and (e) of this section; and

(ii) Equals the net rate of greenhouse gases emitted into the atmosphere by such facility (taking into account lifecycle greenhouse gas emissions, as described in 42 U.S.C. 7545(o)(1)(H)) in the production of electricity, expressed as grams of CO_2e per kWh.

(2) ***LCA requirements.*** For purposes of this paragraph (d), an LCA must comply with the requirements of paragraphs (d)(2)(i) through (x) of this section:

(i) ***Starting boundary.*** The starting boundary of the LCA for an LCA involving generation-derived feedstocks (such as biogenic feedstocks) is feedstock generation. The starting boundary of the LCA for an LCA involving extraction-derived feedstocks (such as fossil fuel feedstocks) is feedstock extraction. The starting boundaries include the processes and inputs necessary to produce and collect or extract the raw materials used to produce electricity from combustion or gasification technologies, including those used as energy inputs to electricity production. This includes, but is not limited to, the emissions effects, including associated direct and indirect greenhouse gas emissions, of relevant land management activities or changes related to or associated with the extraction or production of raw feedstock materials or fuel.

(ii) ***Ending boundary.*** The ending boundary of the LCA for electricity that is transmitted to the grid or electricity that is used on-site is the meter at the point of production of the C&G Facility. The use of such electricity generated by the C&G Facility (and what other types of energy sources it displaces), including emissions from transmission and distribution, are outside of the LCA boundary.

(iii) ***Baseline.*** The LCA must be based on a future anticipated baseline, which projects future status quo in the absence of the availability of the section 45Y and 48E credits (taking into account anticipated changes in technology, policies, practices, and environmental and other socioeconomic conditions). The future anticipated baseline must be updated as necessary to capture material regulatory, economic, supply chain, or environmental changes. The baseline must be updated at least every ten years, but not more often than every five years.

(iv) ***Offsets and offsetting activities.*** Offsets and offsetting activities may not be taken into account in the LCA.

(v) ***Principles for included emissions.*** The LCA must take into account direct emissions and significant indirect emissions. Sources of direct emissions include those associated with feedstock production or extraction, including emissions at all stages of fuel and feedstock production, and distribution, and emissions associated with distribution, delivery, and use of feedstocks to and by a C&G Facility. Sources of significant indirect emissions include emissions in the United States and other countries associated with market-mediated changes in related commodity markets, such as emission from indirect land use change and emissions consequences of commodity production. These included emissions are within the system boundary of the LCA.

(A) ***Direct emissions.*** For purposes of this paragraph (d)(2)(v), direct emissions include, but are not limited to:

(1) Emissions from feedstock generation, production, and extraction (including emissions from feedstock and fuel harvesting and extraction and direct land use change and management, including emissions from fertilizers, and changes in carbon stocks);

(2) Emissions from feedstock and fuel transport (including emissions from transporting the raw or processed feedstock to the fuel processing facility);

(3) Emissions from transporting and distributing fuels to electricity production facility;

(4) Emissions from handling, processing, upgrading, and/or storing feedstocks, fuels and intermediate products (including emissions from on/offsite storage and preparation/pre-treatment for use (for example, torrefaction or pelletization) and emissions from process additives); and

(5) Emissions from combustion and gasification at the electricity generating facility (including emissions from the combustion and/or gasification process and emission from gasification or combustion additives).

(B) ***Significant indirect emissions.*** For purposes of this paragraph (d)(2)(v), examples of significant indirect emissions include, but are not limited to, emissions from indirect land use and land use change, and induced emissions associated with the increased use of the feedstock for energy production.

(vi) ***Principles for excluded emissions.*** The LCA must not take into account the types of emissions described in paragraphs (d)(2)(vi)(A) through (D) of this section:

(A) Emissions from facility construction, siting or decommissioning (including on-site emissions occurring from construction or manufacturing of the facility itself);

(B) Emissions from facility maintenance (including emissions from the on and offsite construction or maintenance of the facility; emissions from vehicles used to access and perform maintenance on electricity generating facilities; emissions from back-up generators that do not provide additional firm power and are used in maintaining critical systems in case of a power system outage or for supporting restart of a generator after an outage; and emissions occurring from heating and cooling control rooms or dispatch centers);

(C) Emissions from infrastructure associated with the facility (including emissions from road construction for feedstock production and emissions from onsite backup or emergency generators used in an emergency or unplanned outage); and

(D) Emissions from the distribution of electricity to consumers.

(vii) ***Alternative fates and avoided emissions.*** The LCA may consider alternative fates and account for avoided emissions, including for the fuels and feedstocks consumed in the fuel and feedstock supply chain and at the electricity generating facility. The term *alternative fate* means a set of informed assumptions (for example, production processes, material outcomes, and market-mediated effects) used to estimate the emissions from the use or disposal of each feedstock were it not for the feedstock's new use due to the implementation of policy (that is, to produce electricity). The term *avoided emissions* means the estimated emissions associated

with the feedstock, including the feedstock's production and use or disposal, that would have occurred in the alternative fate (if such feedstock had not been diverted for electricity production) but are instead avoided with the feedstock's use for electricity production.

(viii) ***Temporal scales.*** The LCA should evaluate the emissions over a time horizon of 30 years from the year in which a qualified facility first qualifies for the credit (or, for purposes of the section 48E credit, the year in which a qualified facility was placed in service).

(ix) ***Spatial scales.*** To determine the initial spatial scope of the LCA, the initial qualitative assessment should analyze whether the feedstock has been or is anticipated: to be used or sold on the market in the absence of the section 45Y and 48E credits; to be used directly in or as an input to an activity or good in local markets; to be transported for use in domestic markets elsewhere; to be traded for use in international markets; and to be used in a manner that has significant ramifications on other markets. If this assessment concludes that the feedstock does not meet one or more of the criteria in this paragraph (d)(2)(ix), then the market-mediated effects analysis would not be necessary beyond the relevant spatial scale(s) (for example, if the feedstock is not traded or not anticipated to be traded for use in international markets and increased use in the United States is not anticipated to have significant market ramifications abroad, international market-mediated effects analysis would not be necessary). Based on the results of the assessment, the LCA should evaluate the emissions on a sub-regional, regional, national, or international scale as appropriate. The evaluation of emissions should include the market and emissions implications of sourcing new or additional material for electricity generation across the applicable market and spatial scales.

(x) ***Categorization of products.*** As appropriate, the LCA should distinguish between primary products, co-products, byproducts, and waste products.

(A) Products should be categorized based on the definitions in paragraphs (d)(2)(x)(A)(*1*) through (*4*) of this section.

(*1*) A *primary product* is an input or an output with marketability and is the main driver of the process from which it is produced.

(*2*) A *co-product* is an input or an output with marketability that is produced together with another product, both of which are economic drivers of the process from which they are produced.

(*3*) A *byproduct* is an input or an output that is produced together with another product, and which has a market recognized economic value of zero or greater, but the output is not an economic driver of the process from which it is produced.

(*4*) A *waste product* is an input or an output with negative economic value, demonstrated by—

(*i*) The absence of a market in which the product is purchased and sold; and

(*ii*) The existence of a market in which producers pay for the collection and removal or disposal of the input or output material or the existence of a predominant operational practice in which producers themselves collect and remove, give away, or dispose of the input or output material as part of operational processes.

(B) The LCA should adopt the principles in paragraphs (d)(2)(x)(B)(*1*) through (*6*) of this section for categorizing and assessing the emissions outcomes for different types of products if such categorization is relevant to the LCA model or models used.

(*1*) All classification of materials and LCAs should take into account relevant geospatial variations in supply and demand (that is, differences across local, sub-regional, and larger regions), as well as variations across specific product types and characteristics, and producer types as relevant.

(*2*) The LCA should assess whether there are market-mediated effects and, if so, take these into account as part of the GHG analysis.

(*3*) Regardless of how a material is categorized, the LCA should consider whether the availability of the section 45Y and 48E credits is expected to result in additional production of that material or in material changes in the supply chain, and, if so, should take into account the direct and indirect emissions impact of the additional production or changes in the supply chain.

(*4*) Policy and other interventions (for example, technological advances) can alter the availability and demand for marketed goods and services, which can alter the treatment of materials once disposed of. Therefore, reevaluation of material categorization should occur at least every ten years, but not more often than every five years.

(*5*) All determinations of marketability, market-mediated effects, and behavioral changes must be supported by an analytical assessment performed by one or more National Laboratories, in consultation with other Federal agency experts as appropriate.

(*6*) A material should be considered to have a market recognized economic value and an established market if one existed within the last five years as of the date of the analysis.

(e) ***Use of methane from certain sources to produce electricity*** —

(1) ***In general.*** The requirements provided by this paragraph (e) apply to C&G Facilities (as defined in paragraph (b)(4) of this section) that produce electricity through combustion or gasification using methane derived from biogas, renewable natural gas (RNG) derived from biogas, or fugitive sources of methane (or any hydrogen derived from methane from these sources) as a fuel or feedstock.

(2) ***Definitions.*** The following definitions apply for purposes of paragraph (e) of this section:

(i) ***Biogas.*** The term *biogas* means gas containing methane that results from the decomposition of organic matter under anaerobic conditions.

(ii) ***Coal mine methane.*** The term *coal mine methane* means methane that is stored within coal seams and is liberated as a result of current or past mining activities. Liberated coal mine methane can be released intentionally by the mine for safety purposes, such as through mine degasification boreholes or underground mine ventilation systems, or it may leak out of the mine through vents, fissures, or boreholes. The term coal mine methane does not include methane removed from virgin coal seams (for example, coal bed methane).

(iii) ***Fugitive methane.*** The term *fugitive methane* means methane released from equipment leaks or venting during the extraction, processing, transformation, or delivery of fossil fuels and other gaseous fuels to the point of final use.

(iv) ***Renewable natural gas.*** The term *renewable natural gas* (RNG) means biogas that has been upgraded to remove water, CO_2, and other impurities such that it is interchangeable with fossil natural gas.

(3) ***Considerations regarding the lifecycle greenhouse gas emissions associated with the production of electricity using methane from certain sources*** —

(i) ***In general.*** For purposes of determining the GHG emissions rate of a C&G Facility (as provided in paragraph (d)(1) of this section) that produces electricity through combustion or gasification using methane derived from biogas, RNG derived from biogas, or fugitive sources of methane (or any hydrogen derived from methane from these sources) as a fuel or feedstock, measurements of lifecycle GHG emissions must consider all the direct and significant indirect emissions associated with a C&G Facility's production of electricity. For purposes of determining the alternative fates and avoided emissions under paragraph (d)(2)(vii) of this section, such determinations must consider the alternative fates of that methane, including avoided emissions and alternative productive uses of that methane; the risk that the availability of tax credits creates incentives resulting in the production of additional methane or otherwise induces additional emissions; and observable trends and anticipated changes in waste management and disposal practices over time as they are applicable to methane generation and uses.

(ii) ***Methane from landfill sources.*** For purposes of determining the GHG emissions rate of a C&G Facility (as provided in paragraph (d)(1) of this section) that produces electricity through combustion or gasification using methane derived from landfill sources as a fuel or feedstock, the alternative fate of such gas must be flaring.

(iii) ***Methane from wastewater sources.*** For purposes of determining the GHG emissions rate of a C&G Facility (as provided in paragraph (d)(1) of this section) that produces electricity through combustion or gasification using methane derived from wastewater sources as a fuel or feedstock, the alternative fate of such gas must be flaring of gas not used to heat the anaerobic digester.

(iv) ***Coal mine methane.*** For purposes of determining the GHG emissions rate of a C&G Facility (as provided in paragraph (d)(1) of this section) that produces electricity through combustion or gasification using coal mine methane that is drainage gas as a fuel or feedstock, the alternative fate of such gas must be flaring.

(v) ***Methane from animal waste.*** For purposes of determining the GHG emissions rate of a C&G Facility (as provided in paragraph (d)(1) of this section) that produces electricity through combustion or gasification using methane derived from animal waste as a fuel or feedstock, the emissions associated with producing and transporting such biogas must use an alternative fate derived from the national average of all animal waste management practices, which results in a carbon intensity score of -51 gCO_2e/megajoule (MJ), where the MJ basis refers to the lower heating value of the methane contained in the biogas prior to upgrading.

(vi) ***Fugitive methane other than coal mine methane.*** For purposes of determining the GHG emissions rate of a C&G Facility (as provided in paragraph (d)(1) of this section) that produces electricity through combustion or gasification using fugitive methane other than coal mine

methane as a fuel or feedstock, such as fugitive methane from oil and gas operations, the alternative fate of such gas must be productive use, resulting in emissions equivalent to the carbon intensity of using fossil natural gas.

(4) ***Book-and-claim.*** For purposes of determining a GHG emissions rate of a facility under section 45Y or 48E, a book-and-claim accounting system may not be used to establish or claim the energy attributes of biogas, RNG, coal mine methane, or any other methane described in this paragraph (e), or any other input or feedstock.

(f) ***Carbon capture and sequestration*** —

(1) ***In general.*** For purposes of determining a greenhouse gas emissions rate for a Non-C&G Facility or C&G Facility, the greenhouse gas emissions rate must not include any qualified carbon dioxide (as defined in section 45Y(c)(3)) that is produced in such facility's production of electricity, that is captured by the taxpayer, and pursuant section 45Q(f)(2) and 26 CFR 1.45Q-3, disposed of by the taxpayer in secure geological storage, or utilized by the taxpayer in a manner described in section 45Q(f)(5) and 26 CFR 1. 45Q-4.

(2) ***Substantiation.*** The requirements for substantiation and verification of carbon capture and sequestration provided by regulations and guidance published in the Internal Revenue Bulletin (*see* § 601.601 of this chapter) under section 45Q (section 45Q requirements) must be satisfied for qualified carbon dioxide to be taken into account under paragraph (e)(1) of this section. A taxpayer that uses carbon capture and sequestration at a qualified facility for which a section 45Y credit is claimed must comply with applicable requirements of the U.S. Environmental Protection Agency's Greenhouse Gas Reporting Program (GHGRP) under 40 CFR part 98, subpart PP (for carbon capture), subpart RR (for geological storage), and subpart RR or VV (for storage through enhanced oil recovery). In addition to the section 45Q requirements, taxpayers using the ISO 27916 standard for enhanced oil recovery must report information to GHGRP under 40 CFR part 98, subpart VV. Furthermore, the taxpayer must also include their applicable GHGRP ID number(s) on the IRS Form used to claim the section 45Y or section 48E credit, with the exception of taxpayers claiming the credits by performing carbon capture and utilization. The GHGRP does not provide a reporting mechanism for utilization.

(g) ***Annual publication of emissions rates*** —

(1) ***In general.*** As required by section 45Y(b)(2)(C)(i), the Secretary will annually publish a table that sets forth the greenhouse gas emissions rates for types or categories of facilities (Annual Table), which a taxpayer must use for purposes of section 45Y. Except as provided in paragraph (h) of this section, a taxpayer that owns a facility that is described in the Annual Table on the first day of the taxpayer's taxable year in which the section 45Y credit or section 48E credit is determined with respect to such facility must use the Annual Table as of such date to determine an emissions rate for such facility for such taxable year.

(2) ***Publication of analysis required for changes to the Annual Table.*** In connection with the publication of the Annual Table, the Secretary must publish an accompanying expert analysis that addresses any types or categories of facilities added or removed from the Annual Table, as well as any changes to emissions determinations for any types or categories of facilities in the Annual Table, since its last publication. Types or categories of facilities will be added or removed from the Annual Table consistent with, for Non-C&G Facilities, a technical assessment of the fundamental energy transformation into electricity as provided in paragraph (c)(1)(ii) of this section, and, for C&G Facilities, an LCA that complies with paragraphs (d) and (f) of this section. Such expert analysis

must be prepared by one or more of the National Laboratories, in consultation with other Federal agency experts as appropriate, and must address whether the addition or removal of types or categories of facilities from the Annual Table complies with section 45Y(b)(2)(A) and (B) of the Internal Revenue Code and this section.

(h) ***Provisional emissions rates*** —

(1) ***In general.*** In the case of any facility that is of a type or category for which an emissions rate has not been established by the Secretary under paragraph (g) of this section, a taxpayer that owns such facility may file a petition with the Secretary for the determination of the emissions rate with respect to such facility (Provisional Emissions Rate or PER). A PER must be determined and obtained under the rules of this section.

(2) ***Rate not established.*** An emissions rate has not been established by the Secretary for a facility for purposes of section 45Y(b)(2)(C)(ii) if such facility is not described in the Annual Table. If a taxpayer's request for an emissions value pursuant to paragraph (h)(5) of this section is pending at the time such facility is or becomes described in the Annual Table, the taxpayer's request for an emissions value will be automatically denied.

(3) ***Process for filing a PER petition.*** To file a PER petition with the Secretary, a taxpayer must submit a PER petition by attaching it to the taxpayer's Federal income tax return or Federal return, as appropriate, for the first taxable year in which the taxpayer claims the section 45Y credit with respect to the facility to which the PER petition applies. The PER petition must contain an emissions value, and, if applicable, the associated letter from the Department of Energy (DOE). An emissions value may be obtained from DOE or by using the designated LCA model in accordance with paragraph (h)(6) of this section. An emission value obtained from DOE will be based on an analytical assessment of the emissions rate associated with the facility, performed by one or more National Laboratories, in consultation with other Federal agency experts as appropriate, consistent with this section. A taxpayer must retain in its books and records a copy of the application and correspondence to and from DOE including a copy of the taxpayer's request to DOE for an emissions value and any information provided by the taxpayer to DOE pursuant to the emissions value request process provided in paragraph (h)(5) of this section. Alternatively, an emissions value can be determined by the taxpayer for a facility using the most recent version of an LCA model, as of the time the PER petition is filed, that has been designated by the Secretary for such use under paragraph (h)(6) of this section. If an emissions value is determined using the most recent version of the model or models, the taxpayer is required to provide to the IRS information to support its determination in the form and manner prescribed in IRS forms or instructions or in publications or guidance published in the Internal Revenue Bulletin. *See* § 601.601 of this chapter. A taxpayer may not request an emissions value from DOE for a facility for which an emissions value can be determined by using the most recent version of an LCA model or models that have been designated by the Secretary for such use under paragraph (h)(6) of this section.

(4) ***PER determination.*** Upon the IRS's acceptance of the taxpayer's Federal income tax return or Federal return, as appropriate, containing a PER petition, the emissions value of the facility specified on such petition will be deemed accepted. A taxpayer may rely upon an emissions value provided by DOE for purposes of claiming a section 45Y credit, provided that any information, representations, or other data provided to DOE in support of the request for an emissions value are accurate. If applicable, a taxpayer may rely upon an emissions value determined for a facility using the most recent version of the specific LCA model or models that, as of the time the PER petition is filed, have been designated by the Secretary for such use under paragraph (h)(6) of this section, provided that any information,

representations, or other data used to obtain such emissions value are accurate. The IRS's deemed acceptance of an emissions value is the Secretary's determination of the PER. However, the taxpayer must still comply with all applicable requirements for the section 45Y credit and any information, representations, or other data supporting an emissions value are subject to later examination by the IRS.

(5) ***Emissions value request process.*** An applicant that submits a request for an emissions value must follow the procedures specified by DOE to request and obtain such emissions value. Emissions values will be determined consistent with the rules provided in this section. An applicant may request an emissions value from DOE only after a front-end engineering and design (FEED) study or similar indication of project maturity, as determined by DOE, such as completion of a project specification and cost estimation sufficient to inform a final investment decision for the facility. DOE may decline to review applications that are not responsive, including those applications that relate to a facility described in the Annual Table (consistent with paragraph (h)(2) of this section) or a facility for which an emissions value can be determined by an LCA model designated under paragraph (h)(6) of this section (consistent with paragraph (h)(3) of this section), or applications that are incomplete. DOE will publish guidance and procedures that applicants must follow to request and obtain an emissions value from DOE. DOE's guidance and procedures will include a process for, under limited circumstances, requesting a revision to DOE's initial assessment of an emissions value based on revised technical information or facility design and operation.

(6) ***LCA model for determining an emissions value for C&G Facilities.*** The Secretary may designate one or more LCA models for determining an emissions value for C&G Facilities that are not described in the Annual Table. The Secretary may only designate a model under this paragraph (h)(6) if the model complies with section 45Y(b)(2)(B) and paragraphs (d) and (f) of this section. The Secretary may revoke the designation of an LCA model or models. In connection with the designation or revocation of a designation of an LCA model or models, the Secretary is required to publish an accompanying expert analysis of the model that is prepared by one or more of the National Laboratories, in consultation with other Federal agency experts as appropriate, and such analysis must address the model's compliance with section 45Y(b)(2)(B) of the Internal Revenue Code and paragraphs (d) and (f) of this section.

(7) ***Effect of PER.*** A taxpayer may use a PER determined by the Secretary to determine eligibility for the section 45Y credit for the facility to which the PER applies, provided all other requirements of section 45Y are met. The Secretary's PER determination is not an examination or inspection of books of account for purposes of section 7605(b) of the Code and does not preclude or impede the IRS (under section 7605(b) or any administrative provisions adopted by the IRS) from later examining a return or inspecting books or records with respect to any taxable year for which the section 45Y credit is claimed. Further, a PER determination does not signify that the IRS has determined that the requirements of section 45Y have been satisfied for any taxable year.

(i) ***Reliance on Annual Table or provisional emissions rate.*** Taxpayers may rely on the Annual Table in effect as of the date a facility began construction or the provisional emissions rate determined by the Secretary for the taxpayer's facility under paragraph (h)(4) of this section to determine the facility's greenhouse gas emissions rate for any taxable year that is within the 10-year period described in section 45Y(b)(1)(B), provided that the facility continues to operate as a type of facility that is described in the Annual Table or the facility's emissions value request, as applicable, for the entire taxable year.

(j) ***Substantiation —***

(1) ***In general.*** A taxpayer must maintain in its books and records documentation regarding the design, operation, and, if applicable, feedstock or fuel source used by the facility that establishes that such facility had a greenhouse gas emissions rate, as determined under this section, that is not greater than zero for the taxable year.

(2) ***Sufficient substantiation.*** Documentation sufficient to substantiate that a facility had a greenhouse gas emissions rate, as determined under this section, that is not greater than zero for the taxable year includes documentation or a report prepared by an unrelated party that verifies that a facility had such an emissions rate. For a facility described in paragraph (c)(2) of this section, the taxpayer can maintain sufficient documentation to demonstrate a greenhouse gas emissions rate that is not greater than zero for the taxable year by showing that it is the type of facility described in paragraph (c)(2). For qualified facilities not described in paragraph (c)(2), the taxpayer must demonstrate that the qualified facility meets the specific criteria that the analytical assessment prepared by the National Laboratories, in consultation with other Federal agency experts as appropriate, has found are necessary for a facility to meet the statutory requirement of a greenhouse gas emissions rate not greater than zero. For C&G Facilities that utilize biomass feedstocks, the taxpayer must substantiate that the source of such fuels or feedstocks used are consistent with the taxpayer's claims. The Secretary may determine that qualified facilities not described in paragraph (c)(2) can sufficiently substantiate a greenhouse gas emissions rate, as determined under this section, that is not greater than zero with certain documentation and will describe such facilities and documentation in IRS forms or instructions or in publications or guidance published in the Internal Revenue Bulletin. *See* § 601.601 of this chapter. For facilities that utilize unmarketable feedstocks that are indistinguishable from marketable feedstocks (for instance, after processing), the taxpayer will be required to maintain documentation substantiating the origin and original form of the feedstock.

(k) ***Applicability date.*** This section applies to qualified facilities placed in service after December 31, 2024, and during a taxable year ending on or after January 15, 2025.

[T.D. 10024, 90 FR 4102, Jan. 15, 2025]

§§ 1.45Z-1-1.45Z-2 [Reserved]

§ 1.45Z-3 Rules relating to the increased credit amount for prevailing wage and apprenticeship.

(a) ***In general.*** If any qualified facility (as defined in section 45Z(d)(4)) satisfies the requirements in paragraph (b) of this section, the applicable amount used to calculate the clean fuel production credit determined under section 45Z(a) is the alternative amount described in section 45Z(a)(2)(B) or 45Z(a)(3)(A)(ii), as applicable, subject to the inflation adjustment provided by section 45Z(c).

(b) ***Qualified facility for clean fuel production requirements.*** A qualified facility (as defined in section 45Z(d)(4)) satisfies the requirements of this paragraph (b) if it is one of the following—

(1) A qualified facility that is placed in service after December 31, 2024, that meets the prevailing wage requirements of section 45(b)(7) and § 1.45-7, the apprenticeship requirements of section 45(b)(8) and § 1.45-8, and the recordkeeping and reporting requirements of § 1.45-12 with respect to the construction, alteration, or repair of such qualified facility; or

(2) A qualified facility that is placed in service before January 1, 2025, that meets the prevailing wage requirements of section 45(b)(7) and § 1.45-7 with respect to any alteration or repair of such qualified facility that is performed in taxable years beginning after December 31, 2024, the apprenticeship requirements of section 45(b)(8) and § 1.45-8 with respect to the construction of such qualified facility, and the recordkeeping and reporting requirements of § 1.45-12.

(3) ***Special transition rule for facilities placed in service before January 1, 2025.*** Solely for purposes of the apprenticeship requirements of section 45(b)(8) and § 1.45-8, taxpayers that place a qualified facility in service before January 1, 2025, must satisfy the apprenticeship requirements with respect to construction of the facility that occurs 90 days after June 25, 2024.

(c) ***Applicability date.*** This section applies to qualified facilities for clean fuel production placed in service in taxable years ending after June 25, 2024, and the construction of which begins after June 25, 2024. Taxpayers may apply this section to qualified facilities for clean fuel production placed in service in taxable years ending on or before June 25, 2024, and qualified facilities for clean fuel production placed in service in taxable years ending after June 25, 2024, the construction of which begins before June 25, 2024, provided that taxpayers follow this section in its entirety and in a consistent manner.

[T.D. 9998, 89 FR 53272, June 25, 2024]

§ 1.46-1 Determination of amount.

(a) ***Effective dates*** —

(1) ***In general.*** This section is effective for taxable years beginning after December 31, 1975. However, transitional rules under paragraph (g) of this section are effective for certain earlier taxable years.

(2) ***Acts covered.*** This section reflects changes made by the following Acts of Congress:

Act and Section
Tax Reduction Act of 1975, section 301.
Tax Reform Act of 1976, sections 802, 1701, 1703.
Revenue Act of 1978, sections 311, 312, 315.
Energy Tax Act of 1978, section 301.
Economic Recovery Tax Act of 1981, section 212.
Technical Corrections Act of 1982, section 102(f).
Tax Reform Act of 1986, section 251.

(3) ***Prior regulations.*** For taxable years beginning before January 1, 1976, see 26 CFR 1.46-1 (Rev. as of April 1, 1979). Those regulations do not reflect changes made by Pub. L. 89-384, Pub. L. 89-389, and Pub. L. 91-172.

(b) ***General rule.*** The amount of investment credit (credit) allowed by section 38 for the taxable year is the portion of credit available under section 46(a)(1) that does not exceed the limitation based on tax under section 46(a)(3).

(c) ***Credit available.*** The credit available for the taxable year is the sum of—

(1) Unused credit carried over from prior taxable years under section 46(b) (carryovers).

(2) Amount of credit determined under section 46(a)(2) for the taxable year (credit earned), and

(3) Unused credit carried back from succeeding taxable years under section 46(b) (carrybacks).

(d) ***Credit earned.*** The credit earned for the taxable year is the sum of the following percentages of qualified investment (as determined under section 46 (c) and (d))—

(1) The regular percentage (as determined under section 46),

(2) For energy property, the energy percentage (as determined under section 46), and

(3) For the portion of the basis of a qualified rehabilitated building (as defined in § 1.48-12(b)) that is attributable to qualified rehabilitation expenditures (as defined in § 1.48-12(c)), the rehabilitation percentage (as determined under section 46(b)(4)).

(e) ***Designation of credits.*** The credit available for the taxable year is designated as follows:

(1) The credit attributable to the regular percentage is the “regular credit”.

(2) The credit attributable to the ESOP percentage is the “ESOP credit”.

(3) The credit attributable to the energy percentage for energy property other than solar or wind is the “nonrefundable energy credit”.

(4) The credit attributable to the energy percentage for solar or wind energy property is the “refundable energy credit”.

(5) The credit attributable to the rehabilitation percentage for qualified rehabilitation expenditures is the rehabilitation investment credit.

(f) ***Special rules for certain energy property.*** Energy property is defined in section 48(l). Under section 46(a)(2)(D), energy property that is section 38 property solely by reason of section 48(l)(1) qualifies only for the energy credit. Other energy property qualifies for both the regular credit (and, if applicable, the ESOP credit) and the energy credit. For limitation on the energy percentage for property financed by industrial development bonds, see section 48(l)(11).

(g) ***Transitional rule for regular and ESOP credit*** —

(1) ***In general.*** Although section 46(a)(2) was amended by section 301(a)(1) of the Energy Tax Act of 1977 to eliminate the transitional rules under section 46(a)(2)(D), those rules still apply in certain instances. Section 46(a)(2)(D) was added by section 301(a) of the Tax Reduction Act of 1975 and amended by section 802(a) of the Tax Reform Act of 1976.

(2) ***Regular credit.*** Under section 46(a)(2)(D), the regular credit is 10 percent and applies for the following property:

(i) Property to which section 46 (d) does not apply, the construction, reconstruction, or erection of which is completed by the taxpayer after January 21, 1975, but only to the extent of basis attributable to construction, reconstruction, or erection after that date.

(ii) Property to which section 46(d) does not apply, acquired by the taxpayer after January 21, 1975.

(iii) Qualified progress expenditures (as defined in section 46(d)) made after January 21, 1975.

(3) ***ESOP credit.*** See section 48(m) for transitional rules limiting the period for which the ESOP percentage under section 46(a)(2)(E) applies. For prior statutes, see section 46(a)(2) (B) and (D), as added by section 301 of the Tax Reduction Act of 1975 and amended by section 802 of the Tax Reform Act of 1976.

(4) ***Cross reference.***

(i) The principles of § 1.48-2 (b) and (c) apply in determining the portion of basis attributable to construction, reconstruction, or erection after January 21, 1975, and in determining the time when property is acquired.

(ii) Section 311 of the Revenue Act of 1978 made the 10 percent regular credit permanent.

(5) ***Seven percent credit.*** To the extent that, under paragraph (g)(1) of this section, the 10 percent does not apply, the regular credit, in general, is 7 percent. For a special limitation on qualified investment for public utility property (other than energy property), see section 46(c)(3)(A).

(6) ***Qualified progress expenditures.*** For progress expenditure property that is constructed, reconstructed, or erected by the taxpayer within the meaning of § 1.48-2(b), the ten-percent credit applies in the year the property is placed in service to the portion of the qualified investment that remains after reduction for qualified progress expenditures under section 46(c)(4), but only to the extent that the remaining qualified investment is attributable to construction, reconstruction, or erection after January 21, 1975. For progress expenditure property that is acquired by the taxpayer (within the meaning of § 1.48-2(b)) after January 21, 1975, and placed in service after that date, the ten-percent credit applies in the year the property is placed in service to the entire portion of qualified investment that remains after reduction for qualified progress expenditures.

(h) ***Tax liability limitation*** —

(1) ***In general.*** Section 46(a)(3) provides a tax liability limitation on the amount of credit allowed by section 38 (other than the refundable energy credit) for any taxable year. See section 46(a)(10)(C)(i). Tax liability is defined in paragraph (j) of this section. The excess of available credit over the applicable tax liability limitation for the year is an unused credit which may be carried forward or carried back under section 46(b).

(2) ***Regular and ESOP tax liability limitation.*** In general, the tax liability limitation for the regular and ESOP credits is the portion of tax liability that does not exceed $25,000 plus a percentage of the excess, as determined under section 46(a)(3)(B).

(3) ***Nonrefundable energy credit tax liability limitation.***

(i) For nonrefundable energy credit carrybacks to a taxable year ending before October 1, 1978, the tax liability limitation is the portion of tax liability that does not exceed $25,000 plus a percentage of the excess, as determined under section 46(a)(3)(B).

(ii) For a taxable year ending after September 30, 1978, the tax liability limitation for available nonrefundable energy credit is 100 percent of the year's tax liability.

(4) ***Alternative limitations.*** Alternative limitations apply for certain utilities, railroads, and airlines in determining the regular tax liability limitation and, for nonrefundable energy credit carrybacks to taxable years ending before October 1, 1978, the nonrefundable energy credit tax liability limitation. These alternative limitations do not apply in determining the energy tax liability limitation for a taxable year ending after October 1, 1978. The provisions listed below set forth the alternative limitations:

Code section	Type	Years applicable
46(a)(6) [1]	Utilities	Taxable years ending in 1975-1978
46(a)(7) [2]	Utilities	Taxable year ending in 1979
46(a)(8)	Railroads and Airlines	Taxable year ending in 1979 or 1980
46(a)(8) [3]	Railroads	Taxable years ending in 1977 or 1978
46(a)(9) [3]	Airlines	Taxable years ending in 1977 or 1978

[1] Section 46(a)(6) was added by section 301(b)(2) of the Tax Reduction Act of 1975 and redesignated as section 46(a)(7) by section 302(a)(1) of the Tax Reform Act of 1976.

[2] Section 46(a)(7) was amended by section 312(b)(1) of the Revenue Act of 1978.

[3] These provisions were repealed by section 312(b)(2) of the Revenue Act of 1978.

(i) [Reserved]

(j) ***Tax liability*** —

(1) ***In general.*** "Tax liability" for purposes of the regular and ESOP credit and carrybacks of nonrefundable energy credit to a taxable year ending before October 1, 1978, means the liability for tax as defined in section 46(a)(4). For ordering of regular, ESOP, and nonrefundable energy credits, see paragraph (m) of this section. In addition to taxes excluded under section 46(a)(4), tax liability does not include tax resulting from recapture of credit under section 47 and the alternative minimum tax imposed by section 55. See sections 47(c) and 55(c)(1).

(2) ***Certain nonrefundable energy credit.*** For a taxable year ending after September 30, 1978, "tax liability" for purposes of the nonrefundable energy credit is liability for tax, as defined in section 46(a)(4) and paragraph (j)(1) of this section, reduced by the regular and ESOP credit allowed for the taxable year. Thus, carrybacks of regular or ESOP credit to a taxable year may displace nonrefundable energy carryovers or credit earned taken into account in that year. However, carrybacks of regular, ESOP, or nonrefundable energy credit do not affect refundable energy credit which is treated as an overpayment of tax under section 6401(b). See paragraph (k) of this section.

(k) ***Special rule for refundable energy credit.*** The amount of the refundable energy credit is determined under the rules of section 46 (other than section 46(a)(3)). However, to permit the refund, the refundable energy credit for purposes of the Internal Revenue Code (other than section 38, part IVB, and chapter 63 of the Code) is treated as allowed by section 39 and not by section 38. The refundable credit is not applied against tax liability for purposes of determining the tax liability limitation for other investment credits. Rather, it is treated as an overpayment of tax under section 6401(b).

(l) ***FIFO rule.*** If the credit available for a taxable year is not allowed in full because of the tax liability limitation, special rules determine the order in which credits are applied. Under the first-in-first-out rule of section 46(a)(1) (FIFO), carryovers are applied against the tax liability limitation first. To the extent the tax liability limitation exceeds carryovers, credit earned, and carrybacks are then applied.

(m) ***Special ordering rule*** —

(1) ***In general.*** Under section 46(a)(10)(A), the FIFO rule applies separately—

(i) First, with respect to regular and ESOP credits, and

(ii) Second, with respect to nonrefundable energy credit.

(2) ***Regular and ESOP credit.*** Under § 1.46-8(c)(9)(ii), regular and ESOP credits available are applied in the following order:

(i) Regular carryovers;

(ii) ESOP carryovers;

(iii) Regular credit earned;

(iv) ESOP credit earned;

(v) Regular carrybacks; and

(vi) ESOP carrybacks.

(3) ***Example.*** For an example of the order of application of regular and ESOP credits, see § 1.46-8(c)(9)(iii).

(n) ***Examples.*** The following examples illustrate paragraphs (a) through (m) of this section.

Example 1. (a) Corporation M's regular credit available for its taxable year ending December 31, 1979 is as follows:

Regular carryovers	$5,000
Regular credit earned	10,000
Regular carrybacks	15,000
Credit available	30,000

(b) M's “tax liability” for 1979 is $30,000. M's tax liability limitation for 1979 for the regular credit is $28,000, consisting of $25,000 plus 60 percent of the $5,000 of “tax liability” in excess of $25,000.

(c) The regular carryovers and credit earned are allowed in full. However, only $13,000 of the regular carryback is allowed for 1979. The remaining $2,000 must be carried to the next year to which it may be carried under section 46(b).

Example 2. (a) For its taxable year ending December 31, 1980, corporation N has $30,000 regular credit earned and $9,000 nonrefundable energy credit earned. N has no carryovers to 1980 and no "tax liability" for pre-1980 years.
(b) N's "tax liability" for 1980 for the regular credit is $35,000. N's tax liability limitation for 1980 for the regular credit is $32,000, consisting of $25,000 plus 70 percent of the $10,000 of "tax liability" in excess of $25,000.

(c) The entire regular credit is allowed in 1980.

(d) N's "tax liability" for 1980 for the nonrefundable energy credit is $5,000, consisting of $35,000 less $30,000 regular credit allowed for 1980. N's tax liability limitation for 1980 for the nonrefundable energy credit is 100 percent of $5,000.

(e) $5,000 of the nonrefundable energy credit is allowed for 1980. The remaining $4,000 energy credit is an unused nonrefundable energy credit which must be carried to the next year to which it may be carried under section 46(b).

Example 3. (a) Assume the same facts as in *Example 2* except that in its taxable year ending December 31, 1981, N earns a regular credit of which it may carry back $2,000 to 1980.
(b) The $30,000 regular credit earned and $2,000 of the regular carryback is allowed for 1980. N's "tax liability" for 1980 for the nonrefundable energy credit is reduced to $3,000, consisting of $35,000 less $32,000 regular credit allowed for 1980. The nonrefundable energy credit allowed for 1980 is reduced to $3,000. The remaining $6,000 is an unused nonrefundable energy credit which must be carried to the next year to which it may be carried under section 46(b).

Example 4. (a) For its taxable year ending December 31, 1980, corporation P's regular credit earned is $20,000. P also has a $9,000 refundable energy credit for 1980. There are no carryovers or carrybacks to 1980.
(b) P's "tax liability" for 1980 for the regular credit is $25,000 which is also the tax liability limitation for the regular credit.

(c) The entire $20,000 regular credit is allowed for 1980. The entire $9,000 refundable energy credit is treated as an overpayment of tax under section 6401(b), even though "tax liability" remains.

Example 5. Assume the same facts as in *Example 4,* except that in the following year P earns a regular credit, $5,000 of which it may carry back to 1980. The $5,000 carryback is allowed in full in 1980.

Example 6. (i) Corporation X, a calendar year taxpayer, constructs a ship on which it begins construction on January 1, 1973, and which, when placed in service on December 31, 1980, has a basis of $450,000. Of that amount, $100,000 is attributable to construction before

January 22, 1975. X makes an election under section 46(d) (qualified progress expenditures) for taxable years after 1975.
(ii) For 1976, 1977, 1978, and 1979, qualified progress expenditures total $200,000. The ten-percent credit applies to those expenditures.

(iii) For 1980, qualified investment for the ship is $450,000. Under section 46(c)(4), X must reduce this amount by $200,000, the amount of qualified progress expenditures taken into account. The ten-percent credit applies to the portion of the remaining qualified investment attributable to construction after January 21, 1975 ($150,000). The seven-percent credit applies to the portion of qualified investment attributable to construction before January 22, 1975 ($100,000).

Example 7. (i) Corporation Y agrees to build a ship for Corporation X, which uses the calendar year. In 1973, Y begins construction of the ship which X acquires and places in service on December 31, 1980. X makes an election under section 46(d) for taxable years after 1974. The contract price is $400,000.
(ii) For 1975, 1976, 1977, 1978, and 1979, qualified progress expenditures total $250,000. The ten-percent credit applies to those expenditures.

(iii) For 1980, qualified investment for the ship is $400,000, which is the contract price. X must reduce qualified investment by $250,000, the amount of qualified progress expenditures. The ten-percent credit applies to the $150,000 of qualified investment that remains after reduction for qualified progress expenditures.

(o) ***Married individuals.*** If a separate return is filed by a husband or wife, the tax liability limitation is computed by substituting a $12,500 amount for the $25,000 amount that applies under section 46(a)(3). However, this reduction of the $25,000 amount to $12,500 applies only if the taxpayer's spouse is entitled to a credit under section 38 for the taxable year of such spouse which ends with, or within, the taxpayer's taxable year. The taxpayer's spouse is entitled to a credit under section 38 either because of investment made in qualified property for such taxable year of the spouse (whether directly made by such spouse or whether apportioned to such spouse, for example, from an electing small business corporation, as defined in section 1371(b)), or because of an investment credit carryback or carryover to such taxable year. The determination of whether an individual is married shall be made under the principles of section 143 and the regulations thereunder.

(p) ***Apportionment of $25,000 amount among component members of a controlled group*** —

(1) ***In general.*** In determining the tax liability limitation under section 46(a)(3) for corporations that are component members of a controlled group on December 31, only one $25,000 amount is available to those component members for their taxable years that include that December 31. See subparagraph (2) of this paragraph for apportionment of such amount among such component members. See subparagraph (3) of this paragraph for definition of “component member”.

(2) ***Manner of apportionment.***

(i) In the case of corporations which are component members of a controlled group on a particular December 31, the $25,000 amount may be apportioned among such members for their taxable years that include such December 31 in any manner the component members may select, provided that each such member less than 100 percent of whose stock is owned, in the aggregate, by the other component members of the group on such December 31 consents to an apportionment plan. The consent of a component member to an apportionment plan with respect to a particular December 31 shall be made by means of a statement, signed by a person duly authorized to act on behalf of the consenting member, stating that such member consents to the apportionment plan with respect to such December 31. The statement shall set forth the name, address, employer identification number, and taxable year of each component member of the group on such December 31, the amount apportioned to each such member under the plan, and the location of the Service Center where the statement is to be filed. The consent of more than one component member may be incorporated in a single statement. The statement shall be timely filed with the Service Center where the component member having the taxable year first ending on or after such December 31 files its return for such taxable year and shall be irrevocable after such filing. If two or more component members have the same such taxable year, a statement of consent may be filed by any one of such members. However, if the due date (including any extensions of time) of the return of such member is on or before December 15, 1971, the required statement shall be considered as timely filed if filed on or before March 15, 1972. Each component member of the group on such December 31 shall keep as a part of its records a copy of the statement containing all the required consents.

(ii) An apportionment plan adopted by a controlled group with respect to a particular December 31 shall be valid only for the taxable year of each member of the group which includes such December 31. Thus, a controlled group must file a separate consent to an apportionment plan with respect to each taxable year which includes a December 31 as to which an apportionment plan is desired.

(iii) If the apportionment plan is not timely filed, the $25,000 amount specified in section 46(a)(3) shall be reduced for each component member of the controlled group, for its taxable year which includes a December 31, to an amount equal to $25,000 divided by the number of component members of such group on such December 31.

(iv) If a component member of the controlled group makes its income tax return on the basis of a 52-53-week taxable year, the principles of section 441(f)(2)(A)(ii) and § 1.441-2 apply in determining the last day of such taxable year.

(3) ***Definitions of controlled group of corporations and component member of controlled group.*** For the purpose of this paragraph, the terms “controlled group of corporations” and “component member” of a controlled group of corporations shall have the same meaning assigned to those terms in section 1563 (a) and (b). For purposes of applying § 1.1563-1(b)(2)(ii)(c), an electing small business corporation shall be treated as an excluded member whether or not it is subject to the tax imposed by section 1378.

(4) ***Members of a controlled group filing a consolidated return.*** If some component members of a controlled group join in filing a consolidated return pursuant to § 1.1502-3(a)(3), and other component members do not join, then, unless a consent is timely filed apportioning the $25,000 amount among the group filing the consolidated return and the other component members of the controlled group, each component member of the controlled group (including each component member which joins in filing the consolidated return) shall be treated as a separate corporation for

purposes of equally apportioning the $25,000 amount under subparagraph (2)(iii) of this paragraph. In that case, the tax liability limitation for the group filing the consolidated return is computed by substituting for the $25,000 amount under section 46(a)(3) the total amount apportioned to each component member that joins in filing the consolidated return. If the affiliated group filing the consolidated return and the other component members of the controlled group adopt an apportionment plan, the affiliated group shall be treated as a single member for the purpose of applying subparagraph (2)(i) of this paragraph. Thus, for example, only one consent executed by the common parent to the apportionment plan is required for the group filing the consolidated return. If any component member of the controlled group which joins in the filing of the consolidated return is an organization to which section 593 applies or a cooperative organization described in section 1381(a), see paragraph (a)(3)(ii) of § 1.1502-3.

(5) ***Examples.*** The provisions of this paragraph may be illustrated by the following examples:

Example 1. At all times during 1976 Smith, an individual, owns all the stock of corporations X, Y, and Z. Corporation X files an income tax return on a calendar year basis. Corporation Y files an income tax return on the basis of a fiscal year ending June 30. Corporation Z files an income tax return on the basis of a fiscal year ending September 30. On December 31, 1976, X, Y, and Z are component members of the same controlled group. X, Y, and Z all consent to an apportionment plan in which the $25,000 amount is apportioned entirely to Y for its taxable year ending June 30, 1977 (Y's taxable year which includes December 31, 1976). Such consent is timely filed. For purposes of computing the credit under section 38, Y's tax liability limitation for its taxable year ending June 30, 1977, is so much of Y's tax liability as does not exceed $25,000, plus 50 percent of Y's tax liability in excess of $25,000. X's and Z's limitations for their taxable years ending December 31, 1976, and September 30, 1977, respectively, are equal to 50 percent of X's tax liability for 50 percent of Z's tax liability. On the other hand, if an apportionment plan is not timely filed, X's limitation would be so much of X's tax liability as does not exceed $8,333.33, plus 50 percent of X's liability in excess of $8,333.33, and Y's and Z's limitations would be computed similarly.

Example 2. At all times during 1976, Jones, an individual, owns all the outstanding stock of corporations P, Q, and R. Corporations Q and R both file returns for taxable years ending December 31, 1976. P files a consolidated return as a common parent for its fiscal year ending June 30, 1977, with its two wholly-owned subsidiaries N and O. On December 31, 1976, N, O, P. Q, and R are component members of the same controlled group. No consent to an apportionment plan is filed. Therefore, each member is apportioned $5,000 of the $25,000 amount ($25,000 divided equally among the five members). The tax liability limitation for the group filing the consolidated return (P, N, and O) for the year ending June 30, 1977 (the consolidated taxable year within which December 31, 1976, falls) is computed by using $15,000 instead of the $25,000 amount. The $15,000 is arrived at by adding together the $5,000 amounts apportioned to P, N, and O.

(q) ***Rehabilitation percentage*** —

(1) ***General rule*** —

(i) ***In general.*** Due to amendments made by the Tax Reform Act of 1986, different rules apply depending on when the property attributable to the qualified rehabilitated expenditures (as defined in § 1.48-12(c)) is placed in service. Paragraph (q)(1)(ii) of this section contains the general rule relating to property placed in service after December 31, 1986. Paragraph (q)(1)(iii)

of this section contains rules relating to property placed in service before January 1, 1987. Paragraph (q)(1)(iv) of this section contains rules relating to property placed in service after December 31, 1986, that qualifies for a transition rule.

(ii) ***Property placed in service after December 31, 1986.*** Except as otherwise provided in paragraph (q)(1)(iv) of this section, in the case of section 38 property described in section 48(a)(1)(E) placed in service after December 31, 1986, the term "rehabilitation percentage" means—

(A) 10 percent in the case of qualified rehabilitation expenditures with respect to a qualified rehabilitated building other than a certified historic structure, and

(B) 20 percent in the case of qualified rehabilitation expenditures with respect to a certified historic structure.

(iii) ***Property placed in service before January 1, 1987.*** For qualified rehabilitation expenditures (as defined in § 1.48-12(c)) with respect to property placed in service before January 1, 1987, section 46(b)(4)(A) as in effect prior to the enactment of the Tax Reform Act of 1986 provided for a three-tier rehabilitation percentage. The applicable rehabilitation percentage for such expenditures depends on whether the qualified rehabilitated building is a "30-year building," a "40-year building," or a certified historic structure (as defined in section 48(g)(3) and § 1.48-12(d)(1)). The rehabilitation percentage for such qualified rehabilitation expenditures incurred with respect to a qualified rehabilitated building is 15 percent to the extent that the building is a 30-year building (*i.e.,* at least 30 years, but less than 40 years, has elapsed between the date the physical work on the rehabilitation began and the date the building was first placed in service), 20 percent to the extent that the building is a 40-year building (*i.e.,* at least 40 years has so elapsed), and 25 percent for certified historic structures, regardless of age. See paragraph (q)(2)(ii) of this section for rules concerning buildings to which additions have been added.

(iv) ***Property placed in service after December 31, 1986, that qualifies under the transition rules.*** In the case of section 38 property described in section 48(a)(1)(E) placed in service after December 31, 1986, and to which the amendments made by section 251 of the Tax Reform Act of 1986 do not apply because the transition rules in section 251(d) of that Act and § 1.48-12(a)(2)(iv)(B) or (C) apply, the rehabilitation percentage for a "30-year building" (within the meaning of paragraph (q)(1)(iii) of this section) shall be 10 percent, the rehabilitation percentage for a "40-year building" (within the meaning of paragraph (q)(1)(iii) of this section) shall be 13 percent, and the rehabilitation percentage for a certified historic structure shall be 25 percent.

(2) ***Special rules*** —

(i) ***Moved buildings.*** With respect to paragraph (q)(1)(ii) of this section, § 1.48-12(b)(5) provides that a building (other than a certified historic structure) is not a qualified rehabilitated building unless it has been at the location where it is being rehabilitated since January 1, 1936. In addition, for purposes of paragraph (q)(1) (iii) and (iv) of this section, a building is not a "30-year building" unless it has been at the location where it is being rehabilitated for the thirty-year period immediately preceding the beginning of the rehabilitation process, and is not a "40-year building" unless it has been at the location where it is being rehabilitated for the forty-year period immediately preceding the beginning of the rehabilitation process.

(ii) ***Building to which additions have been added*** —

(A) ***Property placed in service after December 31, 1986.*** For purposes of paragraph (q)(1)(ii) of this section, if part of a building meets the definition of a qualified rehabilitated building, and part of the building does not meet the definition of a qualified rehabilitated building because such part is an addition that was placed in service after December 31, 1935, the qualified rehabilitation expenditures made to the building must be allocated to the pre-1936 portion of the building and the post-1935 portion of the building using the principles in § 1.48-12(c)(10)(ii). Qualified rehabilitation expenditures attributable to the post-1935 addition shall not qualify for the 10 percent rehabilitation percentage.

(B) ***Property placed in service before January 1, 1987, and property qualifying for a transitional rule.*** For purposes of paragraphs (q)(1) (iii) and (iv) of this section, if part of a building meets the definition of a "40-year building" and part of the building is an addition that was placed in service less than forty years before physical work on the rehabilitation began but more than thirty years before such date, then the qualified rehabilitation expenditures made to the building shall be allocated between the forty year old portion of the building and the thirty year old portion of the building, and a 20 percent rehabilitation percentage shall be applied to the forty year old portion of the building and a 15 percent rehabilitation percentage shall be applied to the thirty year old portion. This allocation shall be made using the principles in § 1.48-12(c)(10)(ii). If an allocation cannot be made between the expenditures to the forty year old portion of the building and the thirty year old portion of the building, then the building will be considered to be a 30-year building. Furthermore, for purposes of this paragraph (q), a building (other than a certified historic structure) is not a qualified rehabilitated building to the extent of that portion of the building that is less than 30 years old. If rehabilitation expenditures are incurred with respect to an addition to a qualified rehabilitated building, but the addition is not considered to be part of the qualified rehabilitated building because the addition does not meet the age requirement in section 48(g)(1)(B) (as in effect prior to its amendment by the Tax Reform Act of 1986) and § 1.48-12(b)(4)(i)(B), then no rehabilitation percentage will be applied to the expenditures attributable to the rehabilitation of the addition. Thus, for purposes of paragraphs (q)(1) (iii) and (iv) of this section, it may be necessary to allocate rehabilitation expenditures incurred with respect to a building between the original portion of the building and the addition.

(iii) ***Mixed-use buildings.*** If qualified rehabilitation expenditures are incurred for property that is excluded from section 38 property described in section 48(a)(1)(E) (because, for example, they are made with respect to a portion of the building used for lodging within the meaning of section 48(a)(3) and § 1.48-1(h)), an allocation of the expenditures must be made between the expenditures that result in an addition to basis that is section 38 property and the expenditures that result in an addition to basis that is excluded from the definition of section 38 property since the rehabilitation percentage is applicable only to section 38 property. These allocations should be made using the principles contained in § 1.48-12(c)(10)(ii).

(3) ***Regular and energy percentages not to apply.*** The regular percentage and the energy percentage shall not apply to that portion of the basis of any building that is attributable to qualified rehabilitation expenditures (as defined in § 1.48-12(c)).

(4) ***Effective date.*** The rehabilitation percentage is applicable only to qualified rehabilitation expenditures (as defined in § 1.48-12(c)). For rules relating to applicability of the regular percentage to qualified rehabilitation expenditures (as defined in § 1.48-11(c)), see § 1.48-11.

[T.D. 6731, 29 FR 6064, May 8, 1964]

Editorial Note: For FEDERAL REGISTER citations affecting § 1.46-1, see the List of CFR Sections Affected, which appears in the Finding Aids section of the printed volume and at *www.govinfo.gov*.

§ 1.46-2 Carryback and carryover of unused credit.

(a) ***Effective date.*** This section is effective for taxable years beginning after December 31, 1975. For taxable years beginning before January 1, 1976, see 26 CFR 1.46-2 (Rev. as of April 1, 1979).

(b) ***In general.*** Under section 46(b)(1), unused credit may be carried back and carried over. Carrybacks and carryovers of unused credit are taken into account in determining the amount of credit available and the credit allowed for the taxable years to which they may be carried. In general, the application of the rules of this section to regular and ESOP credits are separate from their application to nonrefundable energy credits. For example, the limitations on carrybacks and carryovers of unused nonrefundable energy credit under section 46(b) (2) and (3), respectively, differ in amount from the limitations on the regular and ESOP credits because the tax liability limitations for those credits differ. See § 1.46-1(h). For a further example, see the special ordering rule in § 1.46-1(m). Section 46(b) does not apply to the refundable energy credit.

(c) ***Unused credit.*** If carryovers and credit earned (as defined in § 1.46-1(c)(1)) exceed the applicable tax liability limitation, the excess attributable to credit earned is an unused credit. The taxable year in which an unused credit arises is referred to as the “unused credit year”.

(d) ***Taxable years to which unused credit may be carried.*** An unused credit is a carryback to each of the 3 taxable years preceding the unused credit year and a carryover to each of the 7 taxable years succeeding the unused credit year. An unused credit must be carried first to the earliest of those 10 taxable years. An unused credit then must be carried to each of the other 9 taxable years (in order of time) to the extent that the unused credit was not absorbed during a prior taxable year because of the limitations under section 46(b) (2) and (3).

(e) ***Special rule for pre-1971 years*** —

(1) ***In general.*** For unused credit years ending before January 1, 1971, unused credit is allowed a 10-year carryover rather than the 7-year carryover. The principles of paragraph (d) of this section apply to this 10-year carryover.

(2) ***Cross reference.*** For limitations on the taxable years to which unused credit from pre-1971 credit years may be carried, see paragraph (g) of this section.

(f) ***Limitations on carrybacks.*** Under the FIFO rule to section 46(a)(1), carryovers and credit earned are applied against the tax liability limitation before carrybacks. Thus, carrybacks to a taxable year may not exceed the amount by which the applicable tax liability limitation for that year exceeds the sum of carryovers to and credit earned for that year. Carrybacks from an unused credit year are applied against tax liability before carrybacks from a later unused credit year. To the extent an unused credit cannot be carried back to a particular preceding taxable year, the unused credit must be carried to the next succeeding taxable year to which it may be carried.

(g) ***Limitations on carryovers*** —

(1) ***General rule.*** Carryovers to a taxable year may not exceed the applicable tax liability limitation for that year. Carryovers from an unused credit year are applied before carryovers from a later unused credit year.

(2) ***Exception.*** A 10-year carryover from a pre-1971 unused credit year may, under certain circumstances, be postponed to prevent a later-earned 7-year carryover from expiring. This exception does not extend the 10-year carryover period for pre-1971 unused credit. See section 46(b)(1)(D).

(h) ***Examples.*** The following examples illustrate paragraphs (a) through (g) of this section.

> *Example 1.* (a) Corporation M is organized on January 1, 1977 and files its income tax return on a calendar year basis. Assume the facts set forth in columns (1) and (2) of the following table. The determination of the regular credit allowed for each of the taxable years indicated is set forth in the remaining portions of the table.

	(1)	(2)	(3)	(4)	(5)	(6)	(7)
	Credit available	Tax liability	Percent	Tax liability limitation (remaining from col. (6) on preceding line)	Credit allowed (lower of (1) or (4))	Remaining tax liability limitation ((4)-(5))	Unused credit ((1)-(5)) or (amount absorbed)
1977:							
A. Credit earned	$20,000	$45,000	50	$35,000	$20,000	$15,000	0
B. Carryback from 1978	*15,000			[15,000]	15,000		
1978:							
A. Credit earned	80,000	55,000	50	40,000	40,000	0	$20,000
Carryback to 1977							(*15,000)
Carryover to 1979							(*5,000)
1979:							
A. Carryover from 1978	*5,000	50,000	60	40,000	6,000	35,000	
B. Credit earned	50,000			[35,000]	35,000	0	15,000
Carryover to 1980							(*15,000)
1980:							
A. Carryover from 1979	*15,000	55,000	70	46,000	15,000	31,000	
B. Credit earned	25,000			[31,000]	25,000	6,000	0

**For line "A" each year: Lesser of (1) tax liability or (2) $25,000 + (percentage in col. (3) × [col. (2) − $25,000]). See, § 1.46-1(h). For other lines: Amount in col. (6) on preceding line.*

> *Example 2.* (a) Assume the same facts as in *Example 1* except for 1979 M earns a $35,000 nonrefundable energy credit. The following table shows the determinations for each year.

	(1)	(2)		(3)	(4)	(5)	(6)	(7)
	Credit available	Tax liability		Percent	Tax liability limitation* (remaining from col. (6) on preceding line)	Credit allowed (lower of (1) or (4))	Remaining tax liability limitation ((4)-(5))	Unused credit ((1)-(5)) or (amount absorbed)
		(a) Regular	(b) Energy ((2)(a)-(5)(R))					
1977:								
Regular:								
A. Credit earned	$20,000	$45,000		50	$35,000	$20,000R	$15,000	0
B. Carryback from 1978	*15,000				[15,000]	15,000R	0	
1978:								
Regular:								
A. Credit earned	60,000	55,000		50	40,000	40,000R	0	$20,000
Carryback to 1977								(*15,000)
Carryover to 1979								(*5,000)
Energy:								
A. Carryback from 1979	*15,000		$15,000	100	15,000	15,000E	0	
1979:								
Regular:								
A. Carryover from 1978	*5,000	50,000		60	40,000	5,000R	35,000	
B. Credit earned	50,000				[35,000]	35,000R	0	15,000
Carryover to 1980								(*15,000)
Energy:								
A. Credit earned	35,000		10,000	100	10,000	10,000E	0	25,000
Carryback to 1978								(*15,000)
Carryover to								(*10,000)

**See footnote to the chart in Example 1.*

	(1)	(2)		(3)	(4)	(5)	(6)	(7)
	Credit available	Tax liability		Percent	Tax liability limitation* (remaining from col. (6) on preceding line)	Credit allowed (lower of (1) or (4))	Remaining tax liability limitation ((4)-(5))	Unused credit ((1)-(5)) or (amount absorbed)
		(a) Regular	(b) Energy ((2)(a)-(5)(R))					
1980								
1980:								
Regular:								
A. Carryover from 1979	*15,000	55,000		70	46,000	15,000R	31,000	
B. Credit earned	25,000				[31,000]	25,000R	6,000	0
Energy:								
A. Carryover from 1979	*10,000		15,000	100	15,000	10,000E	5,000	

**See footnote to the chart in Example 1.*

(b) Although, in general, a nonrefundable energy credit may be carried back to taxable years ending before October 1, 1978, in this example the unused nonrefundable energy credit from 1979 may not be absorbed in 1977. The 1977 tax liability limitation for the nonrefundable energy credit is the same as it is for the regular credit, reduced by regular credit previously allowed for 1977. See §§ 1.46-1(h)(3) and 1.46-1(m).

Example 3. (a) Assume the same facts as in *Example 2* except M has regular credit of $37,000 for 1981 and M's tax liability for 1981 is $32,500. The determinations for 1980 and 1981 are set forth in the following table.

	(1)	(2)		(3)	(4)	(5)	(6)	(7)
	Credit available	Tax liability		Percent	Tax liability limitation* (remaining from col. (6) on preceding line)	Credit allowed (lower of (1) or (4))	Remaining tax liability limitation ((4)-(5))	Unused credit ((1)-(5)) or (amount absorbed)
		(a) Regular	(b) Energy ((2)-(5)(R))					
1979 (restated):								
Energy:								
To be carried over								$10,000
Carryover to 1980								(*9,000)
Carryover to 1981								(*1,000)
1980 (restated):								
Regular:								
A. Carryover from 1979	$15,000	$55,000		70	$46,000	$15,000R	$31,000	
B. Credit earned	*25,000				[31,000]	25,000R	6,000	0
C. Carryback from 1981	*6,000				[6,000]	6,000R	0	
Energy:								
A. Carryover from 1979	*9,000		$9,000	100	9,000	9,000E		
1981:								
Regular:								
A. Credit earned	37,000	32,500		80	31,000	31,000R	0	6,000
Carryback to 1980								(*6,000)
Energy:								
A. Carryover from 1979	*1,000		1,500	100	1,500	1,000E	500	0

**See footnote to chart under Example 1.*

(b) Allowance of the regular carryback in 1980 from 1981 requires that the computations for 1980 be restated. The energy tax liability limitation for 1980 is reduced from $15,000 (as determined in *Example 2*) to $9,000. Thus, $1,000 of the $10,000 energy credit allowed for 1980 is displaced by the regular carryback. That amount may not be carried back because there is no remaining energy tax liability limitation for the prior 3 years (see table in *Example 2*). It may be carried over to 1981 and allowed in full in that year.

(i) [Reserved]

(j) ***Electing small business corporation.*** A shareholder of an electing small business corporation (as defined in section 1371(b)) may not take into account unused credit of the corporation attributable to unused credit years for which the corporation was not an electing small business corporation. However, a taxable year for which the corporation is an electing small business corporation is counted as a taxable year for determining the taxable years to which that unused credit may be carried.

(k) ***Periods of less than 12 months.*** A fractional part of a year that is considered a taxable year under sections 441(b) and 7701(a)(23) is treated as a preceding or succeeding taxable year for determining under section 46(b) the taxable years to which an unused credit may be carried.

(l) ***Corporate acquisitions.*** For carryover of unused credits in the case of certain corporate acquisitions, see section 381(c)(23).

(Secs. 7805 (68A Stat. 917, 26 U.S.C. 7805) and 38(b) (76 Stat. 962, 26 U.S.C. 38))

[T.D. 7751, 46 FR 1679, Jan. 7, 1981]

§ 1.46-3 Qualified investment.

(a) ***In general.***

(1) With respect to any taxable year, the qualified investment of the taxpayer is the aggregate (expressed in dollars) of

(i) the applicable percentage of the basis of each new section 38 property placed in service by the taxpayer during such taxable year, plus

(ii) the applicable percentage of the cost of each used section 38 property placed in service by the taxpayer during such taxable year. With respect to any section 38 property, qualified investment means the applicable percentage of the basis (or cost) of such property. Section 38 property placed in service by the taxpayer during the taxable year includes the taxpayer's share of the basis (or cost) of section 38 property placed in service by a partnership in the taxable year of such partnership ending with or within the taxpayer's taxable year. In the case of a shareholder of an electing small business corporation (as defined in section 1371(b)), or a beneficiary of an estate or trust, see §§ 1.48-5 and 1.48-6, respectively, for apportionment of the basis (or cost) of section 38 property placed in service by such corporation, estate, or trust. For the definitions of new section 38 property and used section 38 property, see §§ 1.48-2 and 1.48-3, respectively. *See* § 1.46-5 for special rules for progress expenditure property.

(2) The basis (or cost) of section 38 property placed in service during a taxable year shall not be taken into account in determining qualified investment for such year if such property is disposed of or otherwise ceases to be section 38 property during such year, except where § 1.47-3 applies. Thus, if individual A places in service during a taxable year section 38 property and later in the same year sells such property, the basis (or cost) of such property shall not be taken into account in determining A's qualified investment. On the other hand, if A places in service section 38 property during a taxable year and dies later in the same year, the basis (or cost) of such property would be taken into account in computing qualified investment. Similarly, if section 38 property is destroyed by fire in the same year in which it is placed in service and paragraph (h) of this section applies to reduce the basis (or cost) of replacement property, the basis (or cost) of the destroyed property would be taken into account in computing qualified investment. In order to determine whether section 38 property is disposed of or otherwise ceases to be section 38 property see § 1.47-2.

(3) Qualified investment is reduced in the case of property which is “public utility property” (see paragraph (h) of this section), and in the case of property of organizations to which section 593 applies, regulated investment companies or real estate investment trusts subject to taxation under subchapter M, chapter 1 of the Code, and cooperative organizations described in section 1381(a) (see § 1.46-4).

(b) ***Applicable percentage.*** The applicable percentage to be applied to the basis (or cost) of property is $33^1/_3$ percent if the estimated useful life of the property is 3 years or more but less than 5 years; $66^2/_3$ percent if the estimated useful life is 5 years or more but less than 7 years; or 100 percent if the estimated useful life is 7 years or more. In the case of property which is not described in section 50, the preceding sentence shall be applied by substituting “4 years” for “3 years”, “6 years” for “5 years”, and “8 years” for “7 years”. The provisions of this paragraph may be illustrated by the following example:

Example. Corporation Y acquires and places in service during 1972 the following new and used section 38 properties:

Property	Estimated useful life (years)	Basis (or cost)
A (new)	4	$60,000
B (new)	10	90,000
C (new)	6	150,000
D (used)	3	30,000

Corporation Y's qualified investment for 1972 is $220,000 determined in the following manner:

Property	Basis (or cost)	Applicable percentage	Qualified investment
A	$60,000	$33^1/_3$	$20,000
B	90,000	100	90,000

Property	Basis (or cost)	Applicable percentage	Qualified investment
C	150,000	$66^2/_3$	100,000
D	30,000	$33^1/_3$	10,000
Total			220,000

(c) ***Basis or cost.***

(1) The basis of any new section 38 property shall be determined in accordance with the general rules for determining the basis of property. Thus, the basis of property would generally be its cost (see section 1012), unreduced by the adjustment to basis provided by section 48(g)(1) with respect to property placed in service before January 1, 1964, and any other adjustment to basis, such as that for depreciation, and would include all items properly included by the taxpayer in the depreciable basis of the property, such as installation and freight costs. However, for purposes of determining qualified investment, the basis of new section 38 property constructed, reconstructed, or erected by the taxpayer shall not include any depreciation sustained with respect to any other property used in the construction, reconstruction, or erection of such new section 38 property. (See paragraph (b)(4) of § 1.48-1.) If new section 38 property is acquired in exchange for cash and other property in a transaction described in section 1031 in which no gain or loss is recognized, the basis of the newly acquired property for purposes of determining qualified investment would be equal to the adjusted basis of the other property plus the cash paid. See § 1.48-4 for the basis of property to a lessee where the lessor has elected to treat such lessee as a purchaser.

(2) The cost of any used section 38 property shall be determined in accordance with paragraph (b) of § 1.48-3. However, the aggregate cost of used section 38 property which may be taken into account in any taxable year in computing qualified investment cannot exceed $50,000 (see paragraph (c) of § 1.48-3).

(3) For reduction in the basis (or cost) of certain property which replaces other property which was destroyed or damaged by fire, storm, shipwreck, or other casualty, or which was stolen, see paragraph (h) of this section.

(d) ***Placed in service.***

(1) For purposes of the credit allowed by section 38, property shall be considered placed in service in the earlier of the following taxable years:

(i) The taxable year in which, under the taxpayer's depreciation practice, the period for depreciation with respect to such property begins; or

(ii) The taxable year in which the property is placed in a condition or state of readiness and availability for a specifically assigned function, whether in a trade or business, in the production of income, in a tax-exempt activity, or in a personal activity.

Thus, if property meets the conditions of subdivision (ii) of this subparagraph in a taxable year, it shall be considered placed in service in such year notwithstanding that the period for depreciation with respect to such property begins in a succeeding taxable year because, for example, under the taxpayer's depreciation practice such property is accounted for in a multiple asset account and

depreciation is computed under an "averaging convention" (see § 1.167(a)-10), or depreciation with respect to such property is computed under the completed contract method, the unit of production method, or the retirement method.

(2) In the case of property acquired by a taxpayer for use in his trade or business (or in the production of income), the following are examples of cases where property shall be considered in a condition or state of readiness and availability for a specifically assigned function:

(i) Parts are acquired and set aside during the taxable year for use as replacements for a particular machine (or machines) in order to avoid operational time loss.

(ii) Operational farm equipment is acquired during the taxable year and it is not practicable to use such equipment for its specifically assigned function in the taxpayer's business of farming until the following year.

(iii) Equipment is acquired for a specifically assigned function and is operational but is undergoing testing to eliminate any defects.

(iv) Reforestation expenditures (as defined in § 1.194-3(c)) are incurred during the taxable year in connection with qualified timber property (as defined in § 1.194-3(a)).

However, fruit-bearing trees and vines shall not be considered in a condition or state of readiness and availability for a specifically assigned function until they have reached an income-producing stage. Moreover, materials and parts acquired to be used in the construction of an item of equipment shall not be considered in a condition or state of readiness and availability for a specifically assigned function.

(3) Notwithstanding subparagraph (1) of this paragraph, property with respect to which an election is made under § 1.48-4 to treat the lessee as having purchased such property shall be considered placed in service by the lessor in the taxable year in which possession is transferred to such lessee.

(4)

(i) The credit allowed by section 38 with respect to any property shall be allowed only for the first taxable year in which such property is placed in service by the taxpayer. The determination of whether property is section 38 property in the hands of the taxpayer shall be made with respect to such first taxable year. Thus, if a taxpayer places property in service in a taxable year and such property does not qualify as section 38 property (or only a portion of such property qualifies as section 38 property) in such year, no credit (or a credit only as to the portion which qualifies in such year) shall be allowed to the taxpayer with respect to such property notwithstanding that such property (or a greater portion of such property) qualifies as section 38 property in a subsequent taxable year. For example, if a taxpayer places property in service in 1963 and uses the property entirely for personal purposes in such year, but in 1964 begins using the property in a trade or business, no credit is allowable to the taxpayer under section 38 with respect to such property. See § 1.48-1 for the definition of section 38 property.

(ii) Notwithstanding subdivision (i) of this subparagraph, if, for the first taxable year in which property is placed in service by the taxpayer, the property qualifies as section 38 property but the basis of the property does not reflect its full cost for the reason that the total amount to be paid or incurred by the taxpayer for the property is indeterminate, a credit shall be allowed to the taxpayer for such first taxable year with respect to so much of the cost as is reflected in the basis of the property as of the close of such year, and an additional credit shall be allowed to

the taxpayer for any subsequent taxable year with respect to the additional cost paid or incurred during such year and reflected in the basis of the property as of the close of such year. The estimated useful life used in computing each additional credit with respect to the property shall be the same as the estimated useful life used in computing the credit for the first taxable year in which the property was placed in service by the taxpayer. Assume, for example, that in 1964 X Corporation, a utility company which makes its return on the basis of a calendar year, enters into an agreement with Y Corporation, a builder, to construct certain utility facilities for a housing development built by Y. Assume further that part of the funds for the construction of the utility facilities is advanced by Y under a contract providing that X will repay the advances over a 10-year period in accordance with an agreed formula, after which no further amounts will be repayable by X even though the full amount advanced by Y has not been repaid. Assuming that the utility facilities are placed in service in 1964 and qualify as section 38 property, X is allowed a credit for 1964 with respect to its basis in the utility facilities at the close of 1964. For each succeeding taxable year X is allowed an additional credit with respect to the increase in the basis of the utility facilities resulting from the repayments to Y during such year.

(e) ***Estimated useful life*** —

(1)

(i) ***In general.*** With respect to assets placed in service by the taxpayer during any taxable year, for the purpose of computing qualified investment the estimated useful lives assigned to all assets which fall within a particular guideline class (within the meaning of Revenue Procedure 62-21) may be determined, at the taxpayer's option, under either subparagraph (2) or (3) of this paragraph. Thus, the taxpayer may assign estimated useful lives to all the assets falling in one guideline class in accordance with subparagraph (2) of this paragraph, and may assign estimated useful lives to all the assets falling within another guideline class in accordance with subparagraph (3) of this paragraph. See subparagraphs (4) and (5) of this paragraph for determination of estimated useful lives of assets not subject to subparagraph (2) or (3) of this paragraph.

(ii) Except as provided in subparagraph (7), this paragraph shall not apply to property described in section 50.

(2) ***Class life system.*** The taxpayer may assign to each asset falling within a guideline class, which is placed in service during the taxable year, the class life of the taxpayer for the guideline class for such year as determined under section 4, part II of Revenue Procedure 62-21. The preceding sentence may be applied to the assets falling within a guideline class irrespective of whether the taxpayer uses single asset accounts or multiple asset accounts in computing depreciation with respect to such assets and irrespective of whether the taxpayer chooses to have his depreciation allowance with respect to such assets examined under the rules provided in Revenue Procedure 62-21.

(3) ***Individual useful life system.***

(i) The taxpayer may assign an individual estimated useful life to each asset falling within a guideline class which is placed in service during the taxable year. With respect to the assets falling within the guideline class which are placed in single asset accounts for purposes of computing depreciation, the estimated useful life used for each asset for that purpose shall be used in determining qualified investment. With respect to the assets falling within the guideline class which are placed in multiple asset accounts (including a guideline class account described in Revenue Procedure 62-21) for which a group, classified, or composite rate is used

in computing depreciation (or in single asset accounts for which an average life rate is used), the determination of estimated useful life for each asset in the account shall be made individually on the best estimate obtainable on the basis of all the facts and circumstances. The individual estimated useful lives used for all the assets placed in a multiple asset account, when viewed together, must be consistent with the group, classified, or composite life used for the account for purposes of computing depreciation.

(ii) In determining the individual estimated useful lives of assets similar in kind contained in a multiple asset account (or in single asset accounts for which an average life rate is used), the taxpayer may

(*a*) assign to each of such assets the average useful life of such assets used for purposes of computing depreciation, or

(*b*) assign separate lives to such assets based on the estimated range of years taken into consideration in establishing the average useful life. Thus, for example, if a taxpayer places nine similar trucks with an average estimated useful life of 7 years, based on an estimated range of 6 to 8 years (two trucks with a useful life of 6 years, five trucks with a useful life of 7 years, and two trucks with a useful life of 8 years), in a multiple asset account for which a group rate is used in computing depreciation, he may either assign a useful life of 6 years to two of the trucks, 7 years to five of the trucks, and 8 years to two of the trucks, or he may assign the average useful life of the trucks (7 years) to each of the nine trucks. Likewise, if a taxpayer places 100 similar telephone poles with an average useful life of 28 years, based on an estimated range of 3 to 40 years (two with a useful life of less than 4 years, three with a useful life of 4 to 6 years, four with a useful life of 6 to 8 years, and 91 with a useful life of more than 8 years), in a multiple asset account for which a group rate is used in computing depreciation, he may either assign useful lives corresponding to the estimated range of years of the poles (*i.e.*, a useful life of less than 4 years to two of the poles, etc.), or he may assign the average useful life of the poles (28 years) to each of the poles.

(iii) [Reserved]

(iv) For purposes of subdivision (ii) of this subparagraph, assets (other than “mass assets”) shall not be considered as “similar in kind” in respect of other assets unless all such assets are substantially of the same value, nor shall used section 38 property be considered as “similar in kind” to new section 38 property.

(4) ***Useful life of property subject to amortization*** —

(i) ***In general.*** In the case of property with respect to which amortization in lieu of depreciation is allowable, the term over which amortization deductions are taken shall be considered as the estimated useful life of such property.

(ii) ***Qualified timber property.*** In the case of qualified timber property (within the meaning of section 194(c)(1)), the normal growing period of such property shall be considered its estimated useful life.

(5) ***Useful life of property subject to certain methods of depreciation.*** If a taxpayer is using a method of depreciation, such as the unit of production or retirement method, which does not measure the useful life of the property in terms of years, he must estimate such useful life in years in order to compute his qualified investment.

(6) ***Record requirements.*** The taxpayer shall maintain sufficient records to determine whether section 47 (relating to certain dispositions, etc., of section 38 property) applies with respect to any asset.

(7) ***Section 50 property.***

(i) The provisions of this subparagraph and subparagraphs (4) and (6) of this paragraph shall apply to property which is described in section 50.

(ii) The estimated useful life of property for purposes of computing qualified investment shall be the useful life used or to be used by the taxpayer in computing the allowance for depreciation with respect to such property under section 167 for the taxable year in which the property is placed in service. Thus, if property is placed in service by a taxpayer in a taxable year but the period for depreciation with respect to such property does not begin until a succeeding taxable year (see paragraph (d)(1) of this section), the estimated useful life for purposes of computing qualified investment must be the estimated useful life that the taxpayer uses in computing the allowance for depreciation. See subdivision (iv) of this subparagraph for rules for determining the estimated useful life of property with respect to which the allowance for depreciation under section 167 is computed under the unit of production method, the income-forecast method, or any other method which does not measure the useful life of the property in terms of years.

(iii)

(*a*) The estimated useful life of any section 38 property to which an election under section 167(m) applies shall be the asset depreciation period selected for such property under § 1.167(a)-11(b)(4), whether or not such property constitutes mass assets (as defined in § 1.47-1(e)(4)).

(*b*) The estimated useful life of any section 38 property to which an election under section 167(m) does not apply and which is placed in a multiple asset account for which a group, classified, or composite rate is used in computing depreciation (or in single asset accounts for which an average life rate is used) shall be determined individually for each asset on the best estimate obtainable on the basis of all the facts and circumstances. The individual estimated useful life for each asset placed in a multiple asset account (including a mass asset account) must be the same as the useful life of such asset used in determining the group, classified, or composite life for the account for purposes of computing depreciation. The individual estimated useful lives of assets similar in kind may be determined in accordance with subdivisions (ii) and (iv) of subparagraph (3) of this paragraph. In the case of mass assets, subdivision (iii) of subparagraph (3) of this paragraph shall apply.

(f) ***Partnerships*** —

(1) ***In general.*** In the case of a partnership, each partner shall take into account separately, for his taxable year with or within which the partnership taxable year ends, his share of the basis of partnership new section 38 property and his share of the cost of partnership used section 38 property placed in service by the partnership during such partnership taxable year. Each partner shall be treated as the taxpayer with respect to his share of the basis of partnership new section 38 property and his share of the cost of partnership used section 38 property. The estimated useful life to each partner of such property shall be deemed to be the estimated useful life of the property in the hands of the partnership. Partnership section 38 property shall not, by reason of each partner

taking his share of the basis or cost into account, lose its character as either new section 38 property or used section 38 property, as the case may be. For computation of each partner's qualified investment for the energy credit for a qualified intercity bus, see § 1.48-9(q)(9)(iv).

(2) ***Determination of partner's share.***

(i) Each partner's share of the basis (or cost) of any section 38 property shall be determined in accordance with the ratio in which the partners divide the general profits of the partnership (that is, the taxable income of the partnership as described in section 702(a)(9)) regardless of whether the partnership has a profit or a loss for its taxable year during which the section 38 property is placed in service. However, if the ratio in which the partners divide the general profits of the partnership changes during the taxable year of the partnership, the ratio effective for the date on which the property is placed in service shall apply.

(ii) Notwithstanding subdivision (i) of this subparagraph, if all related items of income, gain, loss, and deduction with respect to any item of partnership section 38 property are specially allocated in the same manner and if such special allocation is recognized under section 704 (a) and (b) and paragraph (b) of § 1.704-1, then each partner's share of the basis of such item of new section 38 property or the cost of such item of used section 38 property shall be determined by reference to such special allocation effective for the date on which the property is placed in service.

(iii) Notwithstanding subdivisions (i) and (ii) of this subparagraph, if with respect to a partnership's taxable year the conditions set forth in (*a*) through (*c*) of this subdivision are satisfied with respect to a partner, then such partner shall not take into account the basis (or cost) of any section 38 property placed in service by the partnership during such taxable year. The conditions referred to in the preceding sentence are:

(*a*) Such partner's interest in the general profits of the partnership during the taxable year is 5 percent or less;

(*b*) Under the partnership agreement, such partner will retire from the partnership during the taxable year or within 7 years after the end of such year; and

(*c*) The partnership agreement provides that the basis (or cost) of section 38 property placed in service by the partnership during the taxable year shall not be taken into account by a partner described in (*a*) and (*b*) of this subdivision.

Any basis (or cost) of section 38 property which is not taken into account by a partner because of the provisions of this subdivision shall be taken into account by the other partners in accordance with subdivision (i) of this subparagraph.

(3) ***Examples.*** This paragraph may be illustrated by the following examples:

Example 1. Partnership ABCD acquires and places in service on January 1, 1962, an item of new section 38 property, and acquires and places in service on September 1, 1962, another item of new section 38 property. The ABCD partnership and each of its partners reports income on the basis of the calendar year. Partners A, B, C, and D share partnership profits equally. Each partner's share of the basis of each new partnership section 38 property is 25 percent.

Example 2. Assume the same facts as in *Example 1* and the following additional facts: A dies on June 30, 1962, and B purchases A's interest as of such date. Each partner's share of the profits from January 1 to June 30 is 25 percent. From July 1 to December 31, B's share of the profits is 50

percent, and C and D's share of the profits is 25 percent each. For A's last taxable year (January 1 to June 30, 1962), A shall take into account 25 percent of the basis of the section 38 property placed in service on January 1. B shall take into account 25 percent of the basis of the section 38 property placed in service on January 1 and 50 percent of the basis of the section 38 property placed in service on September 1, C and D shall each take into account 25 percent of the basis of each new section 38 property placed in service by the partnership in 1962.

Example 3. Partnership MR is engaged in the business of renting soda fountain equipment and icemakers to restaurants. The partnership makes no elections under § 1.48-4 to treat its lessees as having purchased such property. Under the terms of the partnership agreement, the income, gain or loss on disposition, depreciation, and other deductions attributable to the icemakers are specially allocated 70 percent to partner M and 30 percent to partner R. In all other respects M and R share profits and losses equally. If the special allocation with respect to the icemakers is recognized under section 704 (a) and (b) and paragraph (b) of § 1.704-1, the basis (or cost) of the icemakers which qualify as partnership section 38 property shall be taken into account 70 percent by M and 30 percent by R. The basis (or cost) of partnership section 38 property not subject to the special allocation shall be taken into account equally by M and R.

Example 4. Assume the same facts as in *Example 3* and the following additional facts: During November 1962, the partnership, which reports its income on the basis of a fiscal year ending May 31, acquires and places in service two items which qualify as new section 38 property, an icemaker and a soda fountain. The icemaker has an estimated useful life of 8 years to the partnership and a basis of $1,000. The soda fountain has an estimated useful life of 6 years to the partnership and a basis of $600. Partner M also owns and operates a business as a sole proprietorship and reports income on the calendar year basis. During 1963, M acquires and places in service in his sole proprietorship a machine which qualifies as new section 38 property. This machine has an estimated useful life of 4 years and a basis of $300. M owns no interest in any other partnerships, electing small business corporations, estates, or trusts. M's total qualified investment for 1963 is $1,000, computed as follows:

Property	Estimated useful life	Basis	M's share of basis	Applicable percentage	Qualified investment
Partnership MR					
Icemaker	8	$1,000	$700	100	$700
Soda fountain	6	600	300	$66^2/_3$	200
Sole proprietorship					
Machine	4	300		$33^1/_3$	100

Property	Estimated useful life	Basis	M's share of basis	Applicable percentage	Qualified investment
Total					1,000

(g) *Public utility property* —

(1) *In general* —

(i) ***Scope of paragraph.*** This paragraph only applies to property described in section 50. For rules relating to public utility property not described in section 50, see 26 CFR part 1, § 1.46-3(g) (as revised April 1, 1977). This paragraph does not reflect amendments to section 46(c) made after enactment of the Revenue Act of 1971.

(ii) ***Amount of qualified investment.*** A taxpayer's qualified investment in section 38 property that is public utility property is $^{4}/_{7}$ of the amount otherwise determined under this section.

(2) ***Meaning and uses of certain terms.*** For purposes of this paragraph—

(i) ***Public utility property.*** "Public utility property" is property used by a taxpayer predominantly in a trade or business that is a public utility activity and property that is nonregulated communication property.

(ii) ***Public utility activity.*** A "public utility activity" is any activity in which the goods or services described in section 46(c)(3)(B) (i), (ii), or (iii) are furnished or sold at regulated rates. If property is used by a taxpayer both in a public utility activity and in another activity, the characterization of such property is based on the predominant use of such property during the taxable year in which it is placed in service.

(iii) ***Regulated rates.*** A taxpayer's rates are "regulated" if they are established or approved on a rate-of-return basis. Rates regulated on a rate-of-return basis are an authorization to collect revenues that cover the taxpayer's cost of providing goods or services, including a fair return on the taxpayer's investment in providing such goods or services, where the taxpayer's costs and investment are determined by use of a uniform system of accounts prescribed by the regulatory body. A taxpayer's rates are not "regulated" if they are established or approved on the basis of maintaining competition within an industry, insuring adequate service to customers of an industry, or charging "reasonable" rates within an industry since the taxpayer is not authorized to collect revenues based on the taxpayer's cost of providing goods or services. Rates are considered to have been "established or approved" if a schedule of rates is filed with a regulatory body that has the power to approve such rates, even though the regulatory body takes no action on the filed schedule or generally leaves undisturbed rates filed by the taxpayer.

(iv) ***Nonregulated communication property.*** "Nonregulated communication property" is property that is clearly the same type of property (and is used by the taxpayer predominantly for the same type of communication purposes) as communication property, but it is used by the taxpayer predominantly in a trade or business that is not a public utility activity. For purposes of this paragraph (g)(2)(iv), of this section, communication property is property ordinarily used for communication purposes by persons who provide regulated telephone or microwave communication services described in section 46(c)(3)(B)(iii). The determination of whether

property is clearly of this same type and is used predominantly for these same communication purposes as communication property is made on the basis of the facts and circumstances of each particular case, including the current state of technology in the communications industry and the range and type of services permitted or required to be provided by the regulated telephone and microwave communication industry. As of 1978, wires or cables used predominantly to distribute to subscribers the signals of one or more television broadcast stations or cablecast stations (such as in a CATV system) are not used for the same type of communication purposes as communication property. Communication property includes microwave transmission equipment, private communication equipment (other than land mobile radio equipment for which the operator must obtain a license from the Federal Communications Commission), private switchboard (PBX) equipment, communications terminal equipment connected to telephone networks, data transmission equipment, and communications satellites. Communication property does not include (as of 1978) computer terminals or facsimile reproduction equipment that is connected to telephone lines to transmit data. It also does not include office furniture stands for communication property, tools, repair vehicles, and similar property, even if such property is exclusively used in providing regulated telephone or microwave communication services.

(3) ***Leased property.*** Public utility property includes property which is leased to others by a taxpayer where the leasing of such property is part of the lessor's public utility activity. Thus, such leased property is public utility property even though the lessee uses such property in an activity which is not a public utility activity, and whether or not the lessor of such property makes a valid election under § 1.48-4 to treat the lessee as having purchased such property for purposes of the credit allowed by section 38. Property leased by a lessor, where the leasing is not part of a public utility activity, to a lessee who uses such property predominantly in a public utility activity is public utility property for purposes of computing the lessor's or lessee's qualified investment with respect to such property.

(4) ***Property used in both the production or transmission of gas and the local distribution of gas.***

(i) With respect to properties of a taxpayer engaged in both the production or transmission of gas and the local distribution of gas, section 38 property shall be considered as used predominantly in the trade or business of the furnishing or sale of gas through a local distribution system if expenditures for such property are chargeable to any of the following accounts under either the uniform system of accounts prescribed for natural gas companies (class A and class B) by the Federal Power Commission, effective January 1, 1961, or the uniform system of accounts for class A and B gas utilities adopted in 1958 by the National Association of Railroad and Utility Commissioners (or would be chargeable to any of the following accounts if the taxpayer used either of such systems):

(*a*) Accounts 360 through 363, inclusive (Local Storage Plant), or

(*b*) Accounts 374 through 387, inclusive (Distribution Plant).

(ii) If expenditures for section 38 property are chargeable (or would be chargeable) to any of the following accounts under either of the systems named in subdivision (i) of this subparagraph, the determination of whether or not such property is used predominantly in the trade or business of the furnishing or sale of gas through a local distribution system shall be made under all the facts and circumstances relating to the actual use of such property in the year such property is placed in service:

(*a*) Accounts 304 through 320, inclusive (Manufactured Gas Production Plant), or

(*b*) Accounts 389 through 399, inclusive (General Plant).

For example, if an office machine is used 55 percent of the time for billing customers of the taxpayer's local distribution system in the year in which it is placed in service, such office machine shall be considered as used predominantly in the trade or business of the furnishing or sale of gas through a local distribution system.

(5) ***Certain submarine cable property.*** In the case of any interest in a submarine cable circuit which is property described in section 50 used to furnish telegraph service between the United States and a point outside the United States of a taxpayer engaged in furnishing international telegraph service (if the rates for such furnishing have been established or approved by a governmental unit, agency, instrumentality, commission, or similar body described in subparagraph (2) of this paragraph), the qualified investment shall not exceed the qualified investment attributable to so much of the interest of the taxpayer in the circuit as does not exceed 50 percent of all interests in the circuit.

(h) ***Certain replacement property.***

(1)

(i) If section 38 property is placed in service by the taxpayer to replace property (whether or not section 38 property) similar or related in service or use, which was destroyed or damaged before August 16, 1971, by fire, storm, shipwreck, or other casualty, or was stolen before such date, then for purposes of paragraph (a) of this section the basis (or cost) of the replacement section 38 property otherwise determined under paragraph (c) of this section shall be reduced by an amount equal to the lesser of—

(*a*) The amount of money, or the fair market value of other property, received as compensation, by insurance or otherwise, for the property which was destroyed, damaged, or stolen, or

(*b*) The adjusted basis of such destroyed, damaged, or stolen property (immediately before such destruction, damage, or theft).

(ii) For purposes of subdivision (i) of this subparagraph—

(*a*) Section 38 property placed in service after the due date (including extensions of time thereof) for filing the taxpayer's income tax return for the taxable year in which the other property was destroyed, damaged, or stolen shall not be considered as replacement section 38 property, and

(*b*) If the property which is destroyed, damaged, or stolen, is leased property, no other leased property shall be considered as replacement property with respect to the property destroyed, damaged, or stolen, in any case in which the lessor makes or made an election under section 48(d) (relating to election with respect to certain leased property) with respect to either the property destroyed, damaged, or stolen, the other leased property, or both.

(2) Subparagraph (1) of this paragraph shall not apply to replacement property if the reduction, under such subparagraph (1), in the basis (or cost) of such replacement property is less than the excess of—

(i) The qualified investment with respect to the destroyed, damaged, or stolen property, over

(ii) The recomputed qualified investment with respect to such property (determined under the principles of paragraph (a) of § 1.47-1).

(3) This paragraph may be illustrated by the following examples:

> *Example 1.* (i) A acquired and placed in service on January 1, 1962, machine No. 1, which qualified as section 38 property, with a basis of $30,000 and an estimated useful life of 6 years. The amount of qualified investment with respect to such machine was $20,000. On January 2, 1963, machine No. 1 is completely destroyed by fire. On January 1, 1963, the adjusted basis of such machine in A's hands is $24,500. On November 1, 1963, A receives $23,000 in insurance proceeds as compensation for the destroyed machine, and on December 15, 1963, A acquires and places in service machine No. 2, which qualifies as section 38 property, with a basis of $41,000 and an estimated useful life of 6 years to replace machine No. 1.
> (ii) Under subparagraph (1) of this paragraph, the $41,000 basis of machine No. 2 is reduced, for purposes of paragraph (a) of this section, by $23,000 (that is, the $23,000 insurance proceeds since such amount is less than the $24,500 adjusted basis of machine No. 1 immediately before it was destroyed) to $18,000 since such reduction (that is, $23,000) is greater than the $20,000 reduction in qualified investment which would be made if paragraph (a) of § 1.47-1 were to apply to machine No. 1 ($20,000 qualified investment less zero recomputed qualified investment).

> *Example 2.* (i) The facts are the same as in *Example 1* except that on November 1, 1963, A receives only $19,000 in insurance proceeds as compensation for the destroyed machine.
> (ii) The $41,000 basis of machine No. 2 is not reduced, for purposes of paragraph (a) of this section, under this paragraph since the $19,000 reduction which would have been made under this paragraph had it applied (that is, the $19,000 insurance proceeds since such amount is less than the $24,500 adjusted basis of machine No. 1 immediately before it was destroyed) is less than the $20,000 reduction in qualified investment which is made since paragraph (a) of § 1.47-1 applies to machine No. 1 ($20,000 qualified investment less zero recomputed qualified investment).

(Secs. 194 (94 Stat. 1989; 26 U.S.C. 194) and 7805 (68A Stat. 917, 26 U.S.C. 7805) of the Internal Revenue Code of 1954; secs. 38(b) (76 Stat. 963, 26 U.S.C. 38(b)), 48(l)(16) (94 Stat. 264, 26 U.S.C. 48(l)(16)), and 7805 (68A Stat. 917, 26 U.S.C. 7805)

[T.D. 6731, 29 FR 6068, May 8, 1964, as amended by T.D. 6931, 32 FR 14026, Oct. 10, 1967; T.D. 7203, 37 FR 17125, Aug. 25, 1972; T.D. 7602, 44 FR 17667, Mar. 23, 1979; T.D. 7927, 48 FR 55849, Dec. 16, 1983; T.D. 7982, 49 FR 39541, Oct. 9, 1984; T.D. 8183, 53 FR 6618, Mar. 2, 1988; T.D. 8474, 58 FR 25557, Apr. 27, 1993]

§ 1.46-4 Limitations with respect to certain persons.

(a) ***Mutual savings institutions.*** In the case of an organization to which section 593 applies (that is, a mutual savings bank, a cooperative bank, or a domestic building and loan association)—

(1) The qualified investment with respect to each section 38 property shall be 50 percent of the amount otherwise determined under § 1.46-3, and

(2) The $25,000 amount specified in section 46(a)(2), relating to limitation based on amount of tax, shall be reduced by 50 percent of such amount.

For example, if a domestic building and loan association places in service on January 1, 1963, new section 38 property with a basis of $30,000 and an estimated useful life of 6 years, its qualified investment for 1963 with respect to such property computed under § 1.46-3 is $20,000 ($66^2/_3$ percent of $30,000). However, under this paragraph such amount is reduced to $10,000 (50 percent of $20,000). If an organization to which section 593 applies is a member of an affiliated group (as defined in section 46(a)(5)), the $25,000 amount specified in section 46(a)(2) shall be reduced in accordance with the provisions of paragraph (f) of § 1.46-1 before such amount is further reduced under this paragraph.

(b) ***Regulated investment companies and real estate investment trusts.***

(1) In the case of a regulated investment company or a real estate investment trust subject to taxation under subchapter M, chapter 1 of the Code—

(i) The qualified investment with respect to each section 38 property otherwise determined under § 1.46-3, and

(ii) The $25,000 amount specified in section 46(a)(2), relating to limitation based on amount of tax,

shall be reduced to such person's ratable share of each such amount. If a regulated investment company or a real estate investment trust is a member of an affiliated group (as defined in section 46(a)(5)), the $25,000 amount specified in section 46(a)(2) shall be reduced in accordance with the provisions of paragraph (f) of § 1.46-1 before such amount is further reduced under this paragraph.

(2) A person's ratable share of the amount described in subparagraph (1)(i) and the amount described in subparagraph (1)(ii) of this paragraph shall be the ratio which—

(i) Taxable income for the taxable year, bears to

(ii) Taxable income for the taxable year plus the amount of the deduction for dividends paid taken into account under section 852(b)(2)(D) in computing investment company taxable income, or under section 857(b)(2)(B) (section 857(b)(2)(C), as then in effect, for taxable years ending before October 5, 1976) in computing real estate investment trust taxable income, as the case may be.

For purposes of the preceding sentence, taxable income means, in the case of a regulated investment company its investment company taxable income (within the meaning of section 852(b)(2)), and in the case of a real estate investment trust its real estate investment trust taxable income (within the meaning of section 857(b)(2)). In the case of a taxable year ending after October 4, 1976, real estate investment trust taxable income, for purposes of section 46(e) and this paragraph, is determined by excluding any net capital gain, and by computing the deduction for dividends paid without regard to capital gains dividends (as defined in section 857(b)(3)(C)). The amount of the deduction for dividends paid includes the amount of deficiency dividends (other than capital gains deficiency dividends) taken into account in computing investment company taxable income or real estate investment trust taxable income for the taxable year. See section 860(f) for the definition of deficiency dividends. For purposes of this paragraph only, in computing taxable income for a taxable year beginning before January 1, 1964, a regulated investment company or a real estate investment trust may compute depreciation deductions with respect to section 38 property placed in service before January 1, 1964, without regard to the reduction in basis of such property required under § 1.48-7.

(3) This paragraph may be illustrated by the following example:

> *Example.* (i) Corporation X, a regulated investment company subject to taxation under section 852 of the Code which makes its return on the basis of the calendar year, places in service on January 1, 1964, section 38 property with a basis of $30,000 and an estimated useful life of 6 years. Corporation X's investment company taxable income under section 852(b)(2) is $10,000 after taking into account a deduction for dividends paid of $90,000.
> (ii) Under this paragraph, corporation X's qualified investment for the taxable year 1964 with respect to such property is $2,000, computed as follows: (*a*) $20,000 (qualified investment under § 1.46-3), multiplied by (*b*) $10,000 (taxable income), divided by (*c*) $100,000 (taxable income plus the deduction for dividends paid). For 1964, the $25,000 amount specified in section 46(a)(2) is reduced to $2,500.

(c) ***Cooperatives.***

(1) In the case of a cooperative organization described in section 1381(a)—

(i) The qualified investment with respect to each section 38 property otherwise determined under § 1.46-3, and

(ii) The $25,000 amount specified in section 46(a)(2), relating to limitation based on amount of tax,

shall be reduced to such cooperative's ratable share of each such amount. If a cooperative organization described in section 1381(a) is a member of an affiliated group (as defined in section 46(a)(5)), the $25,000 amount specified in section 46(a)(2) shall be reduced in accordance with the provisions of paragraph (f) of § 1.46-1 before such amount is further reduced under this paragraph.

(2) A cooperative's ratable share of the amount described in subparagraph (1)(i) and the amount described in subparagraph (1)(ii) of this paragraph shall be the ratio which—

(i) Taxable income for the taxable year, bears to

(ii) Taxable income for the taxable year plus the sum of (*a*) the amount of the deductions allowed under section 1382(b), (*b*) the amount of the deductions allowed under section 1382(c), and (*c*) amounts similar to the amounts described in (*a*) and (*b*) of this subdivision the tax treatment of which is determined without regard to subchapter T, chapter 1 of the Code and the regulations thereunder.

Amounts similar to deductions allowed under section 1382 (b) or (c) are, for example, in the case of a taxable year of a cooperative organization beginning before January 1, 1963, the amount of patronage dividends which are excluded or deducted and any nonpatronage distributions which are deducted under section 522(b)(1). In the case of a taxable year of a cooperative organization beginning after December 31, 1962, such amounts are the amount of patronage dividends and nonpatronage distributions which are excluded or deducted without regard to section 1382 (b) or (c) because they are paid with respect to patronage occurring before 1963. For purposes of this paragraph only, in computing taxable income for a taxable year beginning before January 1, 1964, a cooperative may compute depreciation deductions with respect to section 38 property placed in service before January 1, 1964, without regard to the reduction in basis of such property required under § 1.48-7.

(3) This paragraph may be illustrated by the following example:

> *Example.* (i) Cooperative X, an organization described in section 1381(a) which makes its return on the basis of the calendar year, places in service on January 1, 1964, section 38 property with a basis of $30,000 and an estimated useful life of 6 years. Cooperative X's taxable income is $10,000 after taking into account deductions of $20,000 allowed under section 1382(b), deductions of $60,000 allowed under section 1382(c), and deductions of $10,000 allowed under section 522(b)(1)(B).
> (ii) Under this paragraph, cooperative X's qualified investment for the taxable year 1964 with respect to such property is $2,000, computed as follows: (*a*) $20,000 (qualified investment under § 1.46-3), multiplied by (*b*) $10,000 (taxable income), divided by (*c*) $100,000 (taxable income plus the sum of the deductions allowed under sections 1382(b), 1382(c), and 522(b)(1)(B)). For 1964, the $25,000 amount specified in section 46(a)(2) is reduced to $2,500.

(d) ***Noncorporate lessors.***

(1) In the case of a lease entered into after September 22, 1971, a credit is allowed under section 38 to a noncorporate lessor of property with respect to the leased property only if—

(i) Such property has been manufactured or produced by the lessor in the ordinary course of his business, or

(ii) The term of the lease (taking into account any options to renew) is less than 50 percent of the estimated useful life of the property (determined under § 1.46-3(e)), and for the period consisting of the first 12 months after the date on which the property is transferred to the lessee the sum of the deductions with respect to such property which are allowable to the lessor solely by reason of section 162 (other than rents and reimbursed amounts with respect to such property) exceeds 15 percent of the rental income produced by such property.

In the case of property of which a partnership is the lessor, the credit otherwise allowable under section 38 with respect to such property to any partner which is a corporation shall be allowed notwithstanding the first sentence of this subparagraph. For purposes of this subparagraph, an electing small business corporation (as defined in section 1371) shall be treated as a person which is not a corporation. This paragraph shall not apply to property used by the taxpayer in his trade or business (other than the leasing of property) for a period of at least 24 months preceding the day on which any lease of such property is entered into.

(2) For purposes of subparagraph (1)(ii) of this paragraph, if at the time the lessor files his income tax return for the taxable year in which the property is placed in service, the lessor is unable to show that the more-than-15-percent test has been satisfied, then no credit may be claimed by the lessor on such return with respect to such property unless

(i) taking into account the lessor's obligations under the lease it is reasonable to believe that the more-than-15-percent test will be satisfied, and

(ii) the lessor files a statement with his return from which it may be determined that he expects to satisfy the more-than-15-percent test. If the more-than-15-percent test is not satisfied with respect to the property, the taxpayer must file an amended return for the year in which the property is placed in service.

(3)

(i) The more-than-15-percent test described in subparagraph (1)(ii) of this paragraph is based on the relationship of the expenses of the lessor relating to or attributable to the property to the gross income from rents of the taxpayer produced by the property. The test is applied with respect to such expenses and gross income as are properly attributable to the period consisting of the first 12 months after the date on which the property is transferred to the lessee. When more than one property is subject to a single lease and, pursuant to subparagraph (4) of this paragraph, the arrangement is considered to be a separate lease of each property, the test is applied separately to each such lease by making an apportionment of the payments received and expenses incurred with respect to each such property, considering all relevant factors. Such apportionment is made in accordance with any reasonable method selected and consistently applied by the taxpayer. For example, under subparagraph (4) of this paragraph, where a taxpayer leases an airplane which he owns to an airline along with a baggage truck, he is treated as having made two separate leases, one covering the airplane and one covering the baggage truck. Thus, the test will be applied by apportioning the related income and expenses between the two leases. Similarly, where a taxpayer leases a factory building erected by him containing section 38 property (machinery and equipment), the test will be applied to the taxpayer as though he had leased (to the lessee) the building and the section 38 property separately. Thus, the rental income and expenses are apportioned between the building and the section 38 property.

(ii) Only those deductions allowable solely by reason of section 162 are taken into account in applying the more-than-15-percent test. Hence, depreciation allowable by reason of section 167 (including amortization allowable in lieu of depreciation); interest allowable by reason of section 163; taxes allowable by reason of section 164; and depletion allowable by reason of section 611 are examples of deductions which are not taken into account in applying the test. Moreover, rents and reimbursed amounts paid or payable by the lessor are not taken into account notwithstanding that a deduction in respect of such rents or reimbursed amounts is allowable solely by reason of section 162. For purposes of this paragraph, a reimbursed amount is any expense for which the lessee or some other party is obligated to reimburse the lessor. Section 162 expenses paid or payable by any person other than the lessor are not taken into account unless the lessor is obligated to reimburse the person paying the expense. Further, if the lessee is obligated to pay to the lessor a charge for services which is separately stated or determinable, the expenses incurred by the lessor with respect to those services are not taken into account.

(iii) For purposes of the more-than-15-percent test, the gross income from rents of the lessor produced by the property is the total amount which is payable to the lessor by reason of the lease agreement other than reimbursements of section 162 expenses and charges for services which are separately stated or determinable. The fact that such amount depends, in whole or in part, on the sales or profits of the lessee or the performance of significant services by the lessor shall not affect the characterization of such amounts as gross income from rents for purposes of this paragraph. Gross income from rents also includes any taxes imposed on the lessor by local law but which are paid directly by the lessee on behalf of the lessor.

(4) For purposes of determining under this paragraph whether property is subject to a lease, the provisions of § 1.57-3(d)(1) (relating to definition of a lease) shall apply. If a noncorporate lessor enters into two or more successive leases with respect to the same or substantially similar items of section 38 property, the terms of such leases shall be aggregated and such leases shall be considered one lease for the purpose of determining whether the term of such leases is less than 50 percent of the estimated useful life of the property subject to such leases. Thus, for example, if an individual owns an airplane with an estimated useful life of 7 years and enters into three successive 3-year leases of such airplane, such leases will be considered to be one lease for a term of nine years for the purpose of determining whether the term of the lease is less than $3^1/_2$ years (50 percent of the 7-year estimated useful life).

(5) The requirements of this paragraph shall not apply with respect to any property which is treated as section 38 property by reason of section 48(a)(1)(E).

(Sec. 860(e) (92 Stat. 2849, 26 U.S.C. 860(e)); sec. 860(g) (92 Stat. 2850, 26 U.S.C. 860(g)); and sec. 7805 (68A Stat. 917, 26 U.S.C. 7805))

[T.D. 6731, 29 FR 6071, May 8, 1964, as amended by T.D. 6958, 33 FR 9170, June 21, 1968; T.D. 7203, 37 FR 17126, Aug. 25, 1972; T.D. 7767, 46 FR 11262, Feb. 6, 1981; T.D. 7936, 49 FR 2105, Jan. 18, 1984; T.D. 8031, 50 FR 26697, June 28, 1985]

§ 1.46-5 Qualified progress expenditures.

(a) ***Effective date.*** This section applies to taxable years ending after December 31, 1974. This section reflects amendments to the Internal Revenue Code made only by the Tax Reduction Act of 1975, the Tax Reform Act of 1976, and the Revenue Act of 1978.

(b) ***General rule.*** Under section 46(d), a taxpayer may elect to take the investment credit for qualified progress expenditures (as defined in paragraph (g) of this section). In general, qualified progress expenditures are amounts paid (paid or incurred in the case of self-constructed property) for construction of progress expenditure property. The taxpayer must reasonably estimate that the property will take at least 2 years to construct and that the useful life of the property will be 7 years or more. Qualified progress expenditures may not be taken into account if made before the later of January 22, 1975, or the first taxable year to which an election under section 46(d) applies. In general, qualified progress expenditures are not allowed for the year property is placed in service, nor for the first year or any subsequent year recapture is required under section 47(a)(3). There is a percentage limitation on qualified progress expenditures for taxable years beginning before January 1, 1980. For a special rule relating to transfers of progress expenditure property, see paragraph (r) of this section.

(c) ***Reduction of qualified investment.*** Under section 46(c)(4), a taxpayer must reduce qualified investment for the year property is placed in service by qualified progress expenditures taken into account by that person or a predecessor. A “predecessor” of a taxpayer is a person whose election under section 46(d) carries over to the taxpayer under paragraph (o)(3) of this section.

(d) ***Progress expenditure property.*** Progress expenditure property is property constructed by or for the taxpayer, with a normal construction period of 2 years or more. The taxpayer must reasonably believe that the property will be new section 38 property with a useful life of 7 years or more when placed in service. Whether property is progress expenditure property is determined on the basis of facts know at the close of the taxable year of the taxpayer in which construction begins (or, if later, at the close of the first taxable year to which an election under section 46(d) applies). For purposes of this paragraph (d), property is

constructed by or for the taxpayer only if it is built or manufactured from materials and component parts. Accordingly, progress expenditure property does not include property such as orchards, vineyards, livestock, or motion picture films or videotapes.

(e) ***Normal construction period*** —

(1) ***In general.***

(i) The normal construction period is the period the taxpayer reasonably expects will be required to construct the property. The period begins on the date physical work on construction of the property commences and ends on the date the property is available to be placed in service. The normal construction period does not include, however, construction before January 22, 1975, nor construction before the first day of the first taxable year for which an election under section 46(d) is in effect. Physical work on construction of property does not include preliminary activities such as planning, designing, preparing blueprints, exploring, or securing financing.

(ii) The determination of the time when physical work on construction commences is based on the facts and circumstances of each case. Physical work on construction of property may include the physical work done by a subcontractor on a component specifically designated as part of the property. Also, the commencement of physical work on construction may occur at a site different from the main site of construction of the property. For example, if a shipyard orders a turbine before it begins work on building a ship, the normal construction period of the ship is measured from the time the subcontractor commences physical work on construction of the turbine (if it is normal for such work to precede the work of the main contractor).

(iii) Generally, physical work on construction does not include physical activity that is not necessary to complete construction of the property, nor does it include physical work on construction of a building or other property that will not be new section 38 property when placed in service. Physical work on construction also does not include research and development activities in a laboratory or experimental setting.

(iv) The normal construction period of property ends on the date it is expected the property will be available to be placed in service. Property is considered available to be placed in service when construction is completed and the property is available for delivery to the site of its assigned function. It is not necessary that property be in a state of readiness for a specifically assigned function. Nor is it necessary that it actually be delivered to the site of its assigned function.

(2) ***Estimates.*** Taxpayers should refer to normal industry practice in estimating the normal construction period of particular items. A different period may be used if special circumstances exist making it impractical to make the estimate on the basis of normal industry practice. The estimate must be based on information available at the close of the taxable year in which physical work on construction of the property begins, or, if later, at the close of the first taxable year for which an election under section 46(d) is in effect for the taxpayer. If the estimate is reasonable when made, the actual time it takes to complete the work is, in general, irrelevant in determining whether property is progress expenditure property. However, if there is a significant error in estimating the normal construction period, it may be evidence that the estimate was unreasonable when made. For taxable years ending after April 1, 1988, a taxpayer not relying or normal industry practice to estimate the normal construction period of particular property must attach to the tax return for the taxable year in which physical work on construction of the property begins (or, if later, the first taxable year for which an election under section 46(d) is in effect) a statement of the basis relied upon in estimating the normal construction period of the property.

(3) ***Integrated unit.***

(i) In determining whether property has a normal construction period of 2 years or more, property that will be placed in service separately is to be considered separately. For example, if two ships are contracted for at the same time, each ship is considered separately under this paragraph. However, for property that will be placed in service as an integrated unit, the taxpayer must determine the normal construction period of the integrated unit. If the normal construction period of the integrated unit is 2 years or more, the normal construction period of each item of new section 38 property that is a part of the integrated unit is considered to be 2 years or more. Thus, the normal construction period of an integrated unit may be 2 years or more even if no part of the unit has a normal construction period of 2 years or more.

(ii) Property is part of an integrated unit only if the operation of that item is essential to the performance of the function to which the unit is assigned. Property essential to the performance of the function to which the unit is assigned includes property the use of which is significantly connected to that function and which effects the safe, proper, or efficient performance of the unit. Generally, property must be placed in service at the same time to be considered part of the same integrated unit. Properties are not an integrated unit, however, solely because they are to be placed in service at the same time.

(iii) The normal construction period for an integrated unit begins on the date the normal construction period of the first item of new section 38 property that is part of the unit begins. It is not necessary that physical work commence at the main construction site of the integrated unit.

The period ends on the date the last item of new section 38 property that is part of that unit is available to be placed in service. Property that is not new section 38 property, such as a building, is not considered part of an integrated unit for purposes of determining the normal construction period of that unit. For example, if a manufacturing plant has a normal construction period of two years or more but the equipment (*i.e.,* new section 38 property) to be installed in the plant has a normal construction period of less than two years, the plant and the equipment do not constitute an integrated unit with a construction period of two years or more and the equipment is not progress expenditure property.

(4) ***Examples.*** The following examples illustrate this paragraph (e).

Example 1. On July 1, 1974, corporation X begins physical work on construction of a machine with an estimated useful life when placed in service of more than 7 years. For its taxable year ending June 30, 1975, X makes an election under section 46(d). For purposes of determining on June 30, 1975, whether the machine is “progress expenditure property”, the normal construction period is treated as having begun on January 22, 1975. Thus, the machine will be considered to be progress expenditure property on June 30, 1975, only if the estimated time required to complete construction after June 30 is at least 18 months and 22 days (*i.e.,* 2 years less the period January 22, 1975, through June 30, 1975).

> *Example 2.* (i) Corporation X constructs a pipeline in two sections and simultaneously begins physical work on construction of each section on January 1, 1976. One section extends from city M to city N. The other extends from city N to city O. Oil will be transferred to storage tanks at both city N and city O. Corporation X also begins

construction on January 1, 1976, of a pumping station necessary to the operation of the pipeline from city M to city N. Construction of a pumping station necessary to the operation of the pipeline from city N to city O begins on June 30, 1977. For 1976, corporation X makes an election under section 46(d).
(ii) The section of pipeline from city M to city N and the associated pumping station will be available to be placed in service on January 1, 1977. Construction of the section of the pipeline from city N to city O will be completed on June 30, 1977. However, that section of the pipeline will not be available to be placed in service until completion of the associated pumping station on January 1, 1978.

(iii) The section of pipeline from city M to city N and the section from city N to city O must be considered separately in determining the normal construction period of the property. Each section will be placed in service separately. However, each section of the pipeline and the associated pumping station may be considered an integrated unit. The pumping stations are essential to the operation of each section of pipeline. Each section of pipeline and the associated pumping station are placed in service at the same time.

(iv) The section of pipeline from city M to city N and the associated pumping station are not progress expenditure property, because the normal construction period of that unit is only 1 year (January 1, 1976 to January 1, 1977).

(v) The section of pipeline from city N to city O and the associated pumping station are progress expenditure property, because the normal construction of that integrated unit is 2 years (January 1, 1976 to January 1, 1978). It is immaterial that neither the construction period of that section of pipeline (January 1, 1976 to June 30, 1977) nor the construction period of the associated pumping station (June 30, 1977 to January 1, 1978) is 2 years.

(vi) Assume the pumping station associated with the pipeline from city N to city O includes backup pumping equipment that will be used only if the primary pumping equipment fails. The backup equipment is part of the integrated unit because it serves to effect the safe or efficient performance of the unit.

(f) ***New section 38 property with a 7-year useful life*** —

(1) ***In general.*** The taxpayer must determine if property will be new section 38 property with a useful life of 7 years or more when placed in service. The determination must be made at the close of the taxable year in which construction begins or, if later, at the close of the first taxable year to which an election under section 46(d) applies for the taxpayer.

(2) ***Determination based on reasonably expected use.*** The determination of whether property will be "new section 38 property" (within the meaning of §§ 1.48-1 and 1.48-2 when placed in service must be based on the reasonably expected use of the property by the taxpayer. There is a presumption that property will be new section 38 property if it would be new section 38 property if placed in service by

the taxpayer when the determination is made. For example, in determining if property is an integral part of manufacturing under section 48(a)(1)(B)(i), it will be presumed that property will be new section 38 property if the taxpayer is engaged in manufacturing when the determination is made. Also, significant steps taken to establish a trade or business will be evidence the taxpayer will be engaged in that trade or business when the property is placed in service.

(3) ***Estimated useful life.*** The determination of whether property will have an estimated useful life of 7 years or more when placed in service must be made by applying the principles of § 1.46-3(e). If the estimated useful life is less than 7 years when the property is actually placed in service, the credit previously allowed under section 46(d) must be recomputed under section 47(a)(3)(B).

(g) ***Definition of qualified progress expenditures*** —

(1) ***In general.*** A taxpayer's qualified progress expenditures are the sum of qualified progress expenditures for self-constructed property (determined under paragraph (h) of this section), plus qualified progress expenditures for non-self-constructed property (determined under paragraph (j) of this section). Only amounts includible under § 1.46-3(c) in the basis of new section 38 property may be considered as qualified progress expenditures.

(2) ***Excluded amounts.*** Qualified progress expenditures do not include:

(i) In the case of non-self-constructed property, amounts incurred (whether or not paid)—

(A) Before the normal construction period begins, or

(B) Before the later of January 22, 1975, or the first day of the first taxable year for which an election under section 46(d) applies for the taxpayer;

(ii) In the case of self-constructed property, amounts chargeable to capital account—

(A) Before the normal construction period begins, or

(B) Before the later of January 22, 1975, or the first day of the first taxable year for which an election under section 46(d) applies for the taxpayer,

(See, however, section 46(d)(4)(A) and paragraph (h)(3)(i) of this section, relating to the time when amounts for component parts and materials are properly chargeable to capital account);

(iii) Expenditures with respect to particular property in the earlier of—

(A) The taxable year in which the property is placed in service, or

(B) The taxable year in which the taxpayer must recapture investment credit under section 47(a)(3) for the property or any subsequent year;

(iv) Expenditures for construction, reconstruction, or erection of property that is not section 38 property; or

(v) Amounts treated as an expense and deducted in the year paid or accrued.

(h) ***Qualified progress expenditures for self-constructed property*** —

(1) ***In general.*** Qualified progress expenditures for self-constructed property (as defined in paragraph (k) of this section) are amounts properly chargeable to capital account in connection with that property. In general, amounts paid or incurred are chargeable to capital account if under the taxpayer's method of accounting they are properly includible in computing basis under § 1.46-3. Qualified

progress expenditures for self-constructed property include both direct costs (e.g., labor, material, parts) and indirect costs (e.g., overhead, insurance) associated with construction of property to the extent those costs are properly chargeable to capital account.

(2) ***Property partially non-self constructed.*** If an item of property is self-constructed because more than half of the construction expenditures are made directly by the taxpayer, then any expenditures (whether or not made directly by the taxpayer) for construction of that item of property are not subject to the limitations of section 46(d)(3)(B) and paragraph (j) of this section (relating to actual payment and progress in construction).

(3) ***Time when amounts paid or incurred are properly chargeable to capital account.***

(i) In general, expenditures for component parts and materials to be used in construction of self-constructed property are not properly chargeable to capital account until consumed or physically attached in the construction process. Component parts and materials that have been neither consumed nor physically attached in the construction process, but which have been irrevocably allocated to construction of that property are properly chargeable to capital account. Component parts and materials designed specifically for the self-constructed property may be considered irrevocably allocated to construction of that property at the time of manufacture of the component parts and materials. Component parts and materials not designed specifically for the property may be considered irrevocably allocated to construction at the time of delivery to the construction site if they would be economically impractical to remove. For example, pumps delivered to sites of construction of a tundra pipeline may be treated as irrevocably allocated to that pipeline on the date of delivery, even if they would be usable, but for their location on the tundra, in connection with other property. Component parts and materials are not to be considered irrevocably allocated to use in self-constructed property until physical work on construction of that property has begun (as determined under paragraph (e)(1)(ii) of this section). Mere bookkeeping notations are not sufficient evidence that the necessary allocation has been made.

(ii) A taxpayer's procedure for determining the time when an expenditure is properly chargeable to capital account for self-constructed property is a method of accounting. Under section 446(e), the method of accounting, once adopted, may not be changed without consent of the Secretary.

(4) ***Records requirement.*** The taxpayer shall maintain detailed records which permit specific identification of the amounts properly chargeable by the taxpayer during each taxable year to capital account for each item of self-constructed property.

(i) [Reserved]

(j) ***Qualified progress expenditures for non-self-constructed property*** —

(1) ***In general.*** Qualified progress expenditures for non-self-constructed property (as defined in paragraph (l) of this section) are amounts actually paid by the taxpayer to another person for construction of the property, but only to the extent progress is made in construction. For example, such expenditures may include payments to the manufacturer of an item of progress expenditure property, payments to a contractor building progress expenditure property, or payments for engineering designs or blueprints that are drawn up during the normal construction period.

(2) ***Property partially self-constructed.*** If an item of property is non-self-constructed, but a taxpayer uses its own employees to construct a portion of the property, expenditures for construction of that portion are made directly by the taxpayer (see § 1.46-5(h)(1)). Subject to the limitations of paragraph

(g) of this section, those expenditures are qualified progress expenditures for non-self-constructed property if they satisfy the requirements of paragraphs (j) (4), (5), and (6) of this section. Wages actually paid to the taxpayer's employees are presumed to correspond to progress in construction. Other amounts, including expenditures for materials, parts, and overhead, must be actually paid, not borrowed from the payee, and attributable to progress made in construction by the taxpayer.

(3) ***Property constructed by more than one person.*** The percentage of completion limitation (as prescribed in paragraph (j)(6) of this section), including the presumption of ratable progress in construction, applies to an item of progress expenditure property as a whole. However, if several manufacturers or contractors do work in connection with the same property, the progress that each person makes toward completion of construction of the property must be determined separately. Section 46(d)(3)(B) is then applied separately to amounts paid to each manufacturer or contractor based on each person's progress in construction. For example, assume the taxpayer contracts with three persons to build an item of equipment. The taxpayer contracts with A to build the frame, B to build the motor, and C to assemble the frame and motor. Assume each contract represents $33^{1}/_{3}$ percent of the construction costs of the property. If, within the taxable year in which construction begins, A and B each complete 50 percent of the construction of the frame and motor, respectively, amounts paid to A during that taxable year not in excess of $16^{2}/_{3}$ percent of the overall cost of the property, and amounts paid to B during that taxable year not in excess of $16^{2}/_{3}$ percent of the overall cost of the property, are qualified progress expenditures. Section 46(d)(3)(B) does not apply, however, to persons, such as lower-tier subcontractors, that do not have a direct contractual relationship with the taxpayer. If, in the above example, A engages a subcontractor to construct part of the frame, section 46(d)(3)(B) is applied only to amounts paid by the taxpayer to A, B, and C, but the portion of construction completed by A during a taxable year includes the portion completed by A's subcontractor.

(4) ***Requirement of actual payment.*** Qualified progress expenditures for non-self-constructed property must be actually paid and not merely incurred. Amounts paid during the taxable year to another person for construction of non-self-constructed property may be in the form of money or property (e.g., materials). However, property given as payment may be considered only to the extent it will be includible under § 1.46-3(c) in the basis of the non-self-constructed property when it is placed in service.

(5) ***Certain borrowing disregarded.*** Qualified progress expenditures for non-self-constructed property do not include any amount paid to another person (the “payee”) for construction if the amount is paid out of funds borrowed directly or indirectly from the payee. Amounts borrowed directly or indirectly from the payee by any person that is related to the taxpayer (within the meaning of section 267) or that is a member of the same controlled group of corporations (as defined in section 1563(a)) will be considered borrowed indirectly from the payee. Similarly, amounts borrowed under any financing arrangement that has the effect of making the payee a surety will be considered amounts borrowed indirectly by the taxpayer from the payee.

(6) ***Percentage of completion limitation.***

(i) Under section 46(d)(3)(B)(ii), payments made in any taxable year may be considered qualified progress expenditures for non-self-constructed property only to the extent they are attributable to progress made in construction (percentage of completion limitation). Progress will generally be measured in terms of the manufacturer's incurred cost, as a fraction of the anticipated cost (as adjusted from year to year). Architectural or engineering estimates will be evidence of progress made in construction. Cost accounting records also will be evidence of progress.

Progress will be presumed to occur not more rapidly than ratably over the normal construction period. However, the taxpayer may rebut the presumption by clear and convincing evidence of a greater percentage of completion.

(ii) If, after the first year of construction, there is a change in either the total cost to the taxpayer or the total cost of construction by another person, the taxpayer must recompute the percentage of completion limitation on the basis of revised cost. However, the recomputation will affect only amounts allowed as qualified progress expenditures in the taxable year in which the change occurs and in subsequent taxable years. The recomputation remains subject to the presumption of pro rata completion.

(iii) If, for any taxable year, the amount paid to another person for construction of an item of property under section 46(d)(3)(B)(i) exceeds the percentage of completion limitation in section 46(d)(3)(B)(ii), the excess is treated as an amount paid to the other person for construction for the succeeding taxable year. If for any taxable year the percentage of completion limitation for an item of property exceeds the amount paid to another during the taxable year for construction, the excess is added to the percentage of completion limitation for that property for the succeeding taxable year.

(iv) The taxpayer must maintain detailed records which permit specific identification of the amounts paid to each person for construction of each item of property and the percentage of construction completed by each person for each taxable year.

(7) ***Example.*** The following example illustrates paragraph (j)(6) of this section.

Example. (i) Corporation X agrees to build an airplane for corporation Y, a calendar year taxpayer. The airplane is non-self-constructed progress expenditure property. Physical work on construction begins on January 1, 1980. The normal construction period for the airplane is five years and the airplane is delivered and placed in service on December 31, 1984.
(ii) The cost of construction to corporation X is $500,000. The contract price is $550,000. Corporation Y makes a $110,000 payment in each of the years 1980 and 1981, an $85,000 payment in 1982, a $135,000 payment in 1983, and a $110,000 payment in 1984.

(iii) For 1980, corporation Y makes an election under section 46(d). Progress is presumed to occur ratably over the 5-year construction period, which is 20 percent in each year. Twenty percent of the contract price is $110,000. The percentage of completion limitation for each year, thus, is $110,000.

(iv) For each of the years 1980 and 1981, the $110,000 payments may be treated as qualified progress expenditures. The payments equal the percentage of completion limitation.

(v) For 1982, the $85,000 payment may be treated as a qualified progress expenditure, because it is less than the percentage of completion limitation. The excess of the percentage of completion limitation ($110,000) over the 1982 payment ($85,000) is added to the

percentage of completion limitation for 1983. One hundred and ten thousand dollars minus $85,000 equals $25,000. Twenty-five thousand dollars plus $110,000 equals $135,000, which is the percentage of completion limitation for 1983.

(vi) For 1983, the entire $135,000 payment may be treated as a qualified progress expenditure. The payment equals the percentage of completion limitation for 1983.

(vii) For 1984, no qualified progress expenditures may be taken into account, because the airplane is placed in service in that year.

(viii) See example 2 of paragraph (r)(4) of this section for the result if Y sells its contract rights to the property on December 31, 1982.

(k) ***Definition of self-constructed property*** —

(1) ***In general.*** Property is self-constructed property if it is reasonable to believe that more than half of the construction expenditures for the property will be made directly by the taxpayer. Construction expenditures made directly by the taxpayer include direct costs such as wages and materials and indirect costs such as overhead attributable to construction of the property. Expenditures for direct and indirect costs of construction will be treated as construction expenditures made directly by the taxpayer only to the extent that the expenditures directly benefit the construction of the property by employees of the taxpayer. Thus, wages paid to taxpayers's employees and expenditures for basic construction materials, such as sheet metal, lumber, glass, and nails, which are used by employees of the taxpayer to construct progress expenditure property, will be considered made directly by the taxpayer. Construction expenditures made by the taxpayer to a contractor or manufacturer, in general, will not be considered made directly by the taxpayer. Thus, the cost of component parts, such as boilers and turbines, which are purchased and merely installed or assembled by the taxpayer, will not be considered expenditures made directly by the taxpayer for construction. (*See* paragraph (h)(3) of this section to determine when such cost is properly chargeable to capital account.)

(2) ***Time when determination made.*** The determination of whether property is self-constructed is to be made at the close of the taxable year in which physical work on construction of the property begins, or, if later, the close of the first taxable year to which an election under this section applies. Once it is reasonably estimated that more than half of construction expenditures will be made directly by the taxpayer, the fact the taxpayer actually makes half, or less than half, of the expenditures directly will not affect classification of the property as self-constructed property. Similarly, once a determination has been made, classification of property as self-constructed property is not affected by a change in circumstances in a later taxable year. However, a significant error unrelated to a change in circumstances may be evidence that the estimate was unreasonable when made.

(3) ***Determination based on certain expenditures.*** For purposes of determining whether more than half of the expenditures for construction of an item of property will be made directly by the taxpayer, the taxpayer may take into account only expenditures properly includable by the taxpayer in the basis of the property under the provisions of § 1.46-3(c). Thus, property is self-constructed property only if more than half of the estimated basis of the property to be used for purposes of determining the credit allowed by section 38 is attributable to expenditures made directly by the taxpayer.

(l) ***Definition of non-self-constructed property.*** Non-self-constructed property is property that is not self-constructed property. Thus, property is non-self-constructed property if it is reasonable to believe that only half, or less than half, of the expenditures for construction will be made directly by the taxpayer.

(m) ***Alternative limitations for public utility, railroad, or airline property.*** The alternative limitations on qualified investment under section 46(a) (7) and (8) for public utility, railroad, or airline property (whichever applies) apply in determining the credit for qualified progress expenditures. The determination of whether progress expenditure property will be public utility, railroad, or airline property (whichever applies) when placed in service must be made at the close of the taxable year in which physical work on construction begins or, if later, at the close of the first taxable year for which an election under section 46(d) is in effect. If, at that time, the taxpayer is in a trade or business as a public utility, railroad, or airline (as described in section 46(c)(3)(B) and 46(a)(8) (D) and (E), respectively), it is evidence the property will be public utility, railroad, or airline property when placed in service.

(n) ***Leased property.*** A lessor of progress expenditure property may not elect under section 48(d) to treat a lessee (or a person who will be a lessee) as having made qualified progress expenditures.

(o) ***Election*** —

(1) In *general.* The election under section 46(d)(6) to increase qualified investment by qualified progress expenditures may be made for any taxable year ending after December 31, 1974. Except as provided in paragraph (o)(2) of this section, the election is effective for the first taxable year for which it is made and for all taxable years thereafter unless it is revoked with the consent of the Commissioner. Except as provided in paragraphs (o) (2) and (3) of this section, the election applies to all qualified progress expenditures made by the taypayer during the taxable year for construction of any progress expenditure property. Thus, the taxpayer may not make the election for one item of progress expenditure property and not for other items. If progress expenditure property is being constructed by or for a partnership, S corporation (as defined in section 1361(a)), trust, or estate, an election under section 46(d)(6) must be made separately by each partner or shareholder, or each beneficiary if the beneficiary, in determining his tax liability, would be allowed investment credit under section 38 for property subject to the election. The election may not be made by a partnership or S corporation, and may be made by a trust or estate only if the trust or estate, in determining its tax liability, would be allowed investment credit under section 38 for property subject to the election. The election of any partner, shareholder, beneficiary, trust, or estate will be effective for that person, even if a related partner, shareholder, beneficiary, trust, or estate does not make the election. An election made by a partner, shareholder, beneficiary, trust, or estate applies to all progress expenditure property of that person. For example, an election made by corporation X, which is a partner in the XYZ partnership, applies to progress expenditure property the corporation holds in its own capacity and also to its interest in progress expenditure property of the partnership.

(2) ***Time and manner of making election.*** An election under section 46(d)(6) must be made on Form 3468 and filed with the original income tax return for the first taxable year ending after December 31, 1974 to which the election will apply. An election made before March 2, 1988, by filing a written statement (whether or not attached to the income tax return) will be considered valid. The election may not be made on an amended return filed after the time prescribed for filing the original return (including extensions) for that taxable year. However, an election under this section may be made or revoked by filing a statement with an amended return filed on or before May 31, 1988, if the due date for filing a return for the first taxable year to which the election applies is before May 31, 1988.

(3) ***Carryover of election in certain transactions.*** In general, and election under section 46(d)(6) does not carry over to the transferee of progress expenditure property (or an interest therein). However, if under section 47(b) the property does not cease to be progress expenditure property because of the transfer, the election will carry over to the transferee. If so, the election will apply only to the property transferred. For rules relating to the determination of qualified progress expenditures of the transferee, see paragraph (r) of this section.

(p) ***Partnerships, S corporations, trusts, or estates*** —

(1) ***In general.*** Each partner, shareholder, trust, estate, or beneficiary of a trust or estate that makes an election under section 46(d) shall take into account its share of qualified progress expenditures (determined under paragraph (p)(2) of this section) made by the partnership, S corporation, trust, or estate. In determining qualified investment for the year in which the property is placed in service, the basis of the property is apportioned as provided in §§ 1.46-3(f), 1.48-6, or 1.48-5 (whichever applies). Each partner, shareholder, trust, estate, or beneficiary that made the election must reduce qualified investment under section 46(c)(4) for the year the property is placed in service by qualified progress expenditures taken into account by that person.

(2) ***Determination of share of qualified progress expenditures.*** The share of qualified progress expenditures of each partner, shareholder, trust, estate, or beneficiary that makes an election under section 46(d) must be determined in accordance with the same ratio used under §§ 1.46-3(f)(2), 1.48-5(a)(1), or 1.48-6(a)(1) (whichever applies) to determine its share of basis (or cost). The last sentence of § 1.46-3(f)(2)(i) must be applied by referring to the date on which qualified progress expenditures are paid or chargeable to capital amount (whichever is applicable).

(3) ***Examples.*** The following examples illustrate this paragraph (p).

> *Example 1.* (i) Corporation X contracts to build a ship for partnership AB that qualifies as progress expenditure property. The contract price is $100,000. Physical work on construction of the ship begins on January 1, 1980. The ship is placed in service on December 31, 1983.
> (ii) The AB partnership reports income on the calendar year basis. Partners A and B share profits equally. For A's taxable year ending December 31, 1980, A makes an election under section 46(d) B does not make the election.
>
> (iii) For each of the years 1980, 1981, 1982, and 1983, the AB partnership makes $25,000 payments to corporation X. The payments made in 1980, 1981, and 1982 are qualified progress expenditures. The 1983 payment is not a qualified progress expenditure, because the ship is placed in service in that year.
>
> (iv) For each of the years 1980, 1981, and 1982, A may take into account qualified progress expenditures of $12,500 because A had a 50 percent partnership interest in each of those years.

(v) For 1983, qualified investment for the ship is $100,000. A and B's share are $50,000 each, because each had a 50 percent partnership interest in 1983. However, A must reduce its $50,000 share for 1983 by $37,500, the amount of qualified progress expenditures taken into account by A. B's share is not reduced, because B did not take into account qualified progess expenditures.

Example 2. (i) The facts are the same as in example 1 except that on June 30, 1983, the partnership agreement is amended to admit a new partner, C. The partners agree to share profits equally. There is no special allocation in effect under section 704 with respect to the ship.
(ii) For each of the years 1980, 1981, and 1982, A may take into account qualified progress expenditures of $12,500 because A has a 50 percent partnership interest in those years.

(iii) For 1983, A, B, and C's share of qualified investment is $33,333 each, because each had a $33\frac{1}{3}$ percent partnership interest in that year. A must reduce its share to zero, because it took $37,500 into account as qualified progress expenditures. In addition, the excess of the $37,500 over the $33,333 applied as a reduction is subject to recapture under section 47(a)(3)(B). B and C's shares are not reduced, because neither taxpayer took into account qualified progress expenditures.

(q) ***Limitation on qualified progress expenditures for taxable years beginning before 1980*** —

(1) ***In general.***

(i) Under section 46(d)(7), qualified progress expenditures for any taxable year beginning before January 1, 1980, are limited. The taxpayer must apply the limitation under section 46(d)(7) on an item by item basis. In general, the taxpayer may take into account the applicable percentage (as determined under the table in section 46(d)(7)(A)) of qualified progress expenditures for each of those years. In addition, the taxpayer may take into account for each of those years 20 percent of qualified investment for each of the preceding taxable years determined without applying the limitations of section 46(d)(7).

(ii) The applicable percentage under section 46(d)(7)(A) may be applied only for one taxable year that ends within a calendar year in determining qualified investment for an item of progress expenditure property. For example, calendar year partners of a calendar year partnership may increase qualified investment for 1976 by 20 percent of qualified progress expenditures made in 1975 for an item of property. If the partnership incorporates in 1976 and the taxable year of the corporation begins on July 1, 1976, and ends on June 30, 1977, qualified investment of the corporation for its taxable year beginning on July 1, 1976, cannot be increased by 20 percent of the 1975 expenditure.

(2) ***Example.*** The following example illustrates this paragraph (q).

Example. (i) Corporation X contracts with A on January 1, 1976, to build an electric generator that qualifies as non-self-constructed progress expenditure property. A will build

the generator at a cost of $125,000. Corporation X agrees to pay A $150,000. Corporation X reports income on the calendar year basis. Corporation X makes an election under section 46(d) for 1976. Physical work on construction begins on January 1, 1976. Corporation X makes payments of $30,000 to A for construction of the generator in each of the years 1976, 1977, 1978, 1979, and 1980. A incurs a cost of $25,000 in each of those years for construction of the property. The property is placed in service in 1980.
(ii) For 1976, X may increase qualified investment by $12,000, 40 percent of the payment made in 1976.

(iii) For 1977, corporation X may increase qualified investment by $24,000. Eighteen thousand dollars of that amount is 60 percent of the 1977 payment. The remaining $6,000 is 20 percent of the $30,000 payment made in 1976.

(iv) For 1978, corporation X may increase qualified investment by $36,000. Twenty-four thousand dollars of that amount is 80 percent of the 1978 payment. The remaining $12,000 is 20 percent of the $30,000 payment made in 1976, plus 20 percent of the $30,000 payment made in 1977.

(v) For 1979, corporation X may increase qualified investment by $48,000. Thirty thousand dollars of that amount is 100 percent of the 1979 payment. The remaining $18,000 of that amount is 20 percent of the $30,000 payments made in each of the years 1976, 1977, and 1978.

(vi) Qualified investment for corporation X for 1980 is $30,000. The $30,000 is the basis (or cost) of the generator ($150,000), reduced by qualified progress expenditures allowed with respect to that property ($120,000).

(r) ***Special rules for transferred property*** —

(1) ***In general.*** A transferee of progress expenditure property (or an interest therein) may take into account qualified progress expenditures for the property only if—

(i) The property is progress expenditure property in the hands of the transferee, and

(ii) The transferee makes an election under section 46(d) or the election made by the transferor (or its predecessor) carries over to the transferee under paragraph (o)(3) of this section.

(2) ***Status as progress expenditure property.***

(i) If the transfer requires recapture under section 47(a)(3) and § 1.47-1(g) (or would require recapture if the transferor had made an election under section 46(d)), then—

(A) For purposes of determining if the property is progress expenditure property in the hands of the transferee, the normal construction period for the property begins on the date of the transfer, or, if later, on the first day of the first taxable year for which the transferee makes an election under section 46(d), and

(B) For purposes of determining whether the property is self-constructed or non-self-constructed in the hands of the transferee, the amount paid or incurred for the transfer of the property will not be considered a construction expenditure made directly by the transferee.

(ii) If the transfer does not require recapture under section 47(a)(3) and § 1.47-1(g), and the election carries over to the taxpayer under paragraph (o)(3) of this section, the property does not lose its status as progress expenditure property because of the transfer.

(3) ***Amount of qualified progress expenditures for transferee.***

(i) If the transfer does not require recapture under section 47(a)(3) and § 147-1(g), and the election carries over to the taxpayer under paragraph (o)(3) of this section, the transferee must determine its qualified progress expenditures—

(A) By using the same normal construction period used by the transferor,

(B) By treating the property as having the same status as self-constructed or non-self-constructed as the property had in the hands of the transferor, and

(C) In the case of non-self-constructed property, by taking into account any excess described in section 46(d)(4)(C)(i) (relating to the excess of payments over the percentage-of-completion limitation) or section 46(d)(4)(C)(ii) (relating to the excess of the percentage-of-completion limitation over the amount of payments) that the transferor would have taken into account with respect to that property.

(ii) If the transfer requires recapture under section 47(a)(3) and § 1.47-1(g) (or would require recapture if the transferor had made an election under section 46(d)), the amount paid or incurred for the transfer will be considered a payment for construction of that property to the extent that—

(A) It is properly includible in the basis of the property under § 1.46-3(c),

(B) The taxpayer can show the amount is attributable to construction costs paid or chargeable to capital account by the transferor or other person after physical work on construction of the property began, and

(C) It does not exceed the amount by which the transferor has increased qualified investment for qualified progress expenditures incurred with respect to the property (or would have increased qualified investment but for the “lesser of” limitation of section 46(d)(3)(B) or the absence of an election under section 46(d)), plus any amount that would have been treated as a qualified progress expenditure by the transferor had the property not been transferred.

Once the status of the property as self-constructed or non-self-constructed property in the hands of the transferee has been determined, all rules under this section for determining the amount of qualified progress expenditures for that type of property apply. For example, if the property is non-self-constructed in the hands of the transferee, amounts merely incurred (but not paid) for the transfer are not taken into account as qualified progress expenditures. Actual payment is necessary (see paragraph (j)(3) of this section). In applying section 46(d)(3)(B)(ii), the amount paid or incurred for the transfer (to the extent that it qualifies as a payment for construction under the first sentence of this paragraph (r)(3)(ii)) is considered to be part of the overall cost to the transferee of construction by another person, and the portion of construction

which is completed during the taxable year is determined by taking into account construction that was completed before the constructed property was acquired by the transferee. If the transferee makes an election under section 46(d) and this section for the taxable year in which the transfer occurs, then for purposes of applying the presumption in section 46(d)(4)(D) that construction is deemed to occur not more rapidly than ratably over the normal construction period, the transferee's normal construction period is considered to have begun on the date on which physical work on construction of the acquired property began.

(4) ***Examples.*** The following examples illustrate this paragraph (r).

Example 1. Corporation X begins physical work on construction of progress expenditure property for corporation Y on January 1, 1976. Y accurately estimates a 3-year normal construction period and elects under section 46(d) on its return for its taxable year ending December 31, 1976. On January 1, 1978, Y sells the contract rights for construction of the property to corporation Z, which uses a fiscal year ending June 30. Qualified progress expenditures allowed to Y in 1976 and 1977 are subject to recapture under section 47(a)(3). Because Z's normal construction period for the property is less than 2 years (January 1, 1978 to January 1, 1979), the property is not progress expenditure property in Z's hands. Z may not elect progress expenditure treatment for the property.

Example 2. (i) Assume the same facts as in the example in paragraph (j)(7) of this section, except, on December 31, 1982, Y sells its contract rights to the property for $340,000 to corporation Z, which also uses the calendar year. Z pays Y the full $340,000 on that date. The property is still to be placed in service on December 31, 1984, and will not be available for placing in service at an earlier date. Z makes payments to X of $135,000 on December 31, 1983, and $110,000 on December 31, 1984.
(ii) The investment credit allowed Y in 1980 and 1981 for qualified progress expenditures is subject to recapture under section 47(a)(3) and Y may not treat its $85,000 payment in 1982 as a qualified progress expenditure.

(iii) For purposes of determining if the airplane is qualified progress expenditure property with respect to Z, the normal construction period for the property for Z begins on December 31, 1982, the date of transfer. Since the remaining construction period is two years, the property is progress expenditure property if it otherwise qualifies in Z's hands.

(iv) Only $305,000 of the $340,000 payment to Y can qualify as a qualified progress expenditure, because only that amount is attributable to construction costs paid by Y and does not exceed the sum of the amount by which Y increased qualified investment in 1980 and 1981 for qualified progress expenditures ($220,000) and the amount that Y would have treated as a qualified progress expenditure in 1982 ($85,000).

(v) Assume that Z cannot establish that progress in construction has been completed more rapidly than ratably. If Z makes an election under section 46(d) for 1982, then for purposes of applying the percentage of completion limitation, Z's normal construction period is considered to begin on January 1, 1980. Progress is presumed to occur ratably over the 5-year construction period, which is 20 percent in each year.

(vi) For 1982, Z may treat the full $305,000 as a qualified progress expenditure because it is less than the percentage of completion limitation, $330,000 ($110,000 a year for 1980, 1981, and 1982).

(vii) For 1983, Z may treat the entire $135,000 payment as a qualified progress expenditure, since it does not exceed the percentage of completion limitation for that year, $135,000 ($110,000 plus the $25,000 excess from 1982).

(viii) For Z's taxable year ending December 31, 1984, no qualified progress expenditures may be taken into account because the property is placed in service during that year.

[T.D. 8183, 53 FR 6618, Mar. 2, 1988; 53 FR 11162, Apr. 5, 1988]

§ 1.46-6 Limitation in case of certain regulated companies.

(a) ***In general*** —

(1) ***Scope of section.*** This section does not reflect amendments made to section 46 after enactment of the Revenue Act of 1971, other than the redesignation of section 46(e) as section 46(f) by the Tax Reduction Act of 1975.

(2) ***Disallowance of credit.*** Under section 46(f), a credit otherwise allowable under section 38 ("credit") will be disallowed in certain cases with respect to "section 46(f) property" as defined in paragraph (b)(1) of this section. Paragraph (f) of this section describes circumstances under which a determination put into effect by a regulatory body will result in the disallowance of the credit. Such a determination will result in a disallowance only if section 46(f) (1) or (2) applies to such property and such determination affects the taxpayer's cost of service or rate base in a manner inconsistent with section 46(f) (1) or (2) (whichever is applicable).

(3) ***General rules.*** The provisions of section 46(f) (1) and (2) are limitations on the treatment of the credit for ratemaking purposes and for purposes of the taxpayer's regulated books of account only. Under the provisions of section 46(f)(1), the credit may not be flowed through to income (*i.e.*, used to reduce taxpayer's cost of service) but in certain circumstances may be used to reduce rate base (provided that such reduction is restored not less rapidly than ratably). If an election is made under section 46(f)(2), the credit may be flowed through to income (but not more rapidly than ratably) and there may not be any reduction in rate base. If an election is made under section 46(f)(3), none of the limitations of section 46(f) (1) or (2) apply to certain section 46(f) property of the taxpayer. Thus, under the provisions of section 46(f)(3), no credit is disallowed if the credit is treated in any manner for ratemaking purposes, including any manner of treatment permitted under the limitations of section 46(f) (1) or (2).

(4) ***Elections.*** For rules relating to the manner of making, on or before March 9, 1972, the three elections listed in section 46(f) (1), (2), and (3), see 26 CFR 12.3. For rules relating to the application of such elections, see paragraph (h) of this section.

(5) ***Cross references.*** For rules with respect to the treatment of corporate reorganizations, asset acquisitions, and taxpayers subject to the jurisdiction of more than one regulatory body, etc., see paragraph (j) of this section.

(6) ***Nonapplication of prior law.*** Under section 105 (e) of the Revenue Act of 1971, section 203 (e) of the Revenue Act of 1964, 78 Stat. 35, does not apply to section 46(f) property.

(b) ***Definitions.*** For purposes of this section, the following definitions apply:

(1) ***Section 46(f) property.*** "Section 46(f) property" is property described in section 50 that is—

(i) Public utility property within the meaning of section 46(c)(3)(B) (other than nonregulated communication property described in § 1.46-3(g)(2)(iv)) or

(ii) Property used predominantly in the trade or business of the furnishing or sale of steam through a local distribution system or of the transportation of gas or steam by pipeline, if the rates for the trade or business are regulated within the meaning of § 1.46-3(g)(2)(iii).

For purposes of determining whether property is used predominantly in the trade or business of transportation of gas by pipeline (or of transportation of gas by pipeline and of furnishing or sale of gas through a local distribution system), the rules prescribed in § 1.46-3(g)(4) apply except that accounts 365 through 371 inclusive (Transmission Plant) are added to the accounts listed in § 1.46-3(g)(4)(i).

(2) ***Cost of service.***

(i)

(A) For purposes of this section, "cost of service" is the amount required by a taxpayer to provide regulated goods or services. Cost of service includes operating expenses (including salaries, cost of materials, etc.) maintenance expenses, depreciation expenses, tax expenses, and interest expenses. For purposes of this section, any effect on a taxpayer's permitted return on investment that results from a reduction in the taxpayer's rate base does not constitute a reduction in cost of service, even though, as a technical ratemaking term, "cost of service" ordinarily includes a permitted return on investment. In addition, taking into account a deduction for the additional interest that the taxpayer would pay or accrue if the credit were unavailable in determining Federal income tax expense ("synchronization of interest") does not constitute a reduction in cost of service for purposes of section 46(f)(2). This adjustment to Federal income tax expense may be taken into account in determining cost of service for the regulated accounting period or periods that include the taxable year to which the adjustment relates or for any subsequent regulated accounting period.

(B) See paragraph (b)(3)(ii)(B) of this section for rules relating to the amount of additional interest that the taxpayer would pay or accrue if the credit were unavailable.

(ii) In determining whether, or to what extent, a credit has been used to reduce cost of service, reference shall be made to any accounting treatment that affects cost of service. Examples of such treatment include reducing by all or a portion of the credit the amount of Federal income tax expense taken into account for ratemaking purposes and reducing the depreciable bases of property by all or a portion of the credit for ratemaking purposes.

(3) ***Rate base.***

(i) For purposes of this section, "rate base" is the monetary amount that is multiplied by a rate of return to determine the permitted return on investment.

(ii)

(A) In determining whether, or to what extent, a credit has been used to reduce rate base, reference shall be made to any accounting treatment that affects rate base. In addition, in those cases in which the rate of return is based on the taxpayer's cost of capital, reference shall be made to any accounting treatment that reduces the permitted return on investment by treating the credit less favorably than the capital that would have been provided if the credit were unavailable. Thus, the credit may not be assigned a “cost of capital” rate that is less than the overall cost of capital rate, determined on the basis of a weighted average, for the capital that would have been provided if the credit were unavailable.

(B) For purposes of determining the cost of capital rate assigned to the credit and the amount of additional interest that the taxpayer would pay or accrue, the composition of the capital that would have been provided if the credit were unavailable may be determined—

(*1*) On the basis of all the relevant facts and circumstances; or

(*2*) By assuming for both such purposes that such capital would be provided solely by common shareholders, preferred shareholders, and long-term creditors in the same proportions and at the same rates of return as the capital actually provided to the taxpayer by such shareholders and creditors.

For purposes of this section, capital provided by long-term creditors does not include deferred taxes as described in section 167(e)(3)(G) or 168(e)(3)(B)(ii).

(C) If a taxpayer's overall rate of return is based on a deemed or hypothetical capital structure, paragraph (b)(3)(ii)(B) of this section shall be applied by treating the deemed or hypothetical capital as if it were the capital actually provided to the taxpayer and determining the composition of the capital that would have been provided if the credit were unavailable in a manner consistent with such treatment.

(iii) Whether, or to what extent, a credit has been used to reduce rate base for any period to which pre-June 23, 1986 rates apply will be determined under 26 CFR 1.46-6(b) (3) and (4) (revised as of April 1, 1985) if such a determination avoids disallowance of a credit that would be disallowed under paragraph (b)(3)(ii) or (4)(ii) of this section. For this purpose, a period of which pre-June 23, 1986 rates apply is any period for which the effect of the credit on rate base for ratemaking purposes is established under a determination put into effect (within the meaning of paragraph (f) of this section) before June 23, 1986.

(4) ***Indirect reductions to cost of service or rate base.***

(i) Cost of service or rate base is also considered to have been reduced by reason of all or a portion of a credit if such reduction is made in an indirect manner.

(ii) One type of such indirect reduction is any ratemaking decision in which the credit is treated as operating income (subject to ratemaking regulation) or is treated less favorably than the capital that would have been provided if the credit were unavailable. For example, if the credit is accounted for as nonoperating income on a company's regulated books of account but a ratemaking decision has the effect of treating the credit as operating income in determining rate of return to common shareholders, then cost of service has been indirectly reduced by reason of the credit.

(iii) A second type of indirect reduction is any ratemaking decision intended to achieve an effect similar to a direct reduction to cost of service or rate base. In determining whether a ratemaking decision is intended to achieve this effect, consideration is given to all the relevant facts and circumstances of each case, including, but not limited to—

(A) The record of the proceeding,

(B) The regulatory body's orders or opinions (including any dissenting views), and

(C) The anticipated effect of the ratemaking decision on the company's revenues in comparison to a direct reduction to cost of service or rate base by reason of the investment tax credits available to the regulated company.

(iv) This paragraph (b)(4)(iv) describes a situation that is not an indirect reduction to cost of service or rate base by reason of all or a portion of a credit. The ratemaking treatment of credits may affect the financial condition of a company, including the company's ability to attract new capital, the cost of that capital, the company's future financial requirements, the market price of the company's securities, and the degree of risk attributable to investment in those securities. The financial condition may be reflected in certain customary financial indicators such as the comparative capital structure of the company, coverage ratios, price/earnings ratios, and price/book ratios. Under the facts and circumstances test of paragraph (b)(4)(iii) of this section, the consideration of a company's financial condition by a regulatory body is not an indirect reduction to cost of service or rate base, even though such condition, as affected by the ratemaking treatment of the company's investment tax credits, is considered in the development of a reasonable rate of return on common shareholders' investment.

(c) ***General rule*** —

(1) ***In general.*** Section 46(f)(1) applies to all of the taxpayer's section 46(f) property except property to which an election under section 46(f) (2) or (3) applies. Under section 46(f)(1), the credit for the taxpayer's section 46(f) property will be disallowed if—

(i) The taxpayer's cost of service for ratemaking purposes is reduced by reason of any portion of such credit, or

(ii) The taxpayer's rate base is reduced by reason of any portion of the credit and such reduction in rate base is not restored or is restored less rapidly than ratably within the meaning of paragraph (g) of this section.

(2) ***Insufficient natural domestic supply.*** The provisions of paragraph (c)(1)(ii) of this section shall not apply to permit any reduction in taxpayer's rate base with respect to its “short supply property” if it made an election under the last sentence of section 46(f)(1) on or before March 9, 1972.

(3) ***Short supply property.*** For purposes of this section, section 46(f) property is “short supply property” if—

(i) The property is described in paragraph (b)(1)(ii) of this section,

(ii) The regulatory body described in section 46(c)(3)(B) that has jurisdiction for ratemaking purposes with respect to such trade or business is an agency or instrumentality of the United States, and

(iii) This regulatory body makes a short supply determination and the determination is in effect on the date such property is placed in service.

(4) ***Short supply determination.*** A short supply determination is made or revoked on the date of its publication in the FEDERAL REGISTER. It is a determination that the natural domestic supply of gas or steam is insufficient to meet the present and future requirements of the domestic economy.

(5) ***Dates short supply determination in effect.***

(i) A short supply determination is considered to be in effect with respect to section 46(f) property placed in service at any time before the determination is revoked. However, a short supply determination made after June 20, 1979 is not considered to be in effect with respect to section 46(f) property placed in service before such determination was made.

(d) ***Special rule for ratable flow-through.*** If an election was made under section 46(f)(2) on or before March 9, 1972, section 46(f)(2) applies to all of the taxpayer's section 46(f) property except property to which an election under section 46(f)(3) applies. Under section 46(f)(2), the credit for the taxpayer's section 46(f) property will be disallowed if—

(1) The taxpayer's cost of service, for ratemaking purposes or in its regulated books of account, is reduced by more than a ratable portion of such credit within the meaning of paragraph (g) of this section or

(2) The taxpayer's rate base is reduced by reason of any portion of such credit.

(e) ***Flow-through property.*** If a taxpayer made an election under section 46(f)(3) on or before March 9, 1972, section 46(f) (1) and (2) do not apply to the taxpayer's section 46(f) property to which section 167(l)(2)(C) applies. In the case of an election under section 46(f)(3), a credit will not be disallowed, notwithstanding a determination by a regulatory body having jurisdiction over such taxpayer that reduces the taxpayer's cost of service or rate base by reason of such credit. In general, section 167(l)(2)(C) applies to property with respect to which a taxpayer may use a flow-through method of accounting (within the meaning of section 167(l)(3)(H)) to take into account the allowance for depreciation under section 167(a). Section 167(l)(2)(C) applies to property even though the taxpayer does not use a flow-through method of accounting with respect to the property. Section 167(l)(2)(C) does not apply to property if the taxpayer can not use a flow-through method of accounting with respect to the property. For example, section 167(l)(2)(C) does not apply to property with respect to which an election under section 167(l)(4)(A) applies. Thus, such property does not qualify for an election under section 46(f)(3).

(f) ***Limitations*** —

(1) ***In general.*** This paragraph provides rules relating to limitations on the disallowance of credits under section 46(f)(4). Key terms are defined in paragraphs (f) (7), (8), and (9) of this section.

(2) ***Disallowance postponed.*** There is no disallowance of a credit before the first final inconsistent determination is put into effect for the taxpayer's section 46(f) property.

(3) ***Time of disallowance.*** A credit is disallowed—

(i) When the first final inconsistent determination is put into effect and

(ii) When any inconsistent determination (whether or not final) is put into effect after the first final inconsistent determination is put into effect.

(4) ***Credits disallowed.*** A credit is disallowed for section 46(f) property placed in service (within the meaning of § 1.46-3(d)) by the taxpayer—

(i) Before the date any inconsistent determination described in paragraph (f)(2) of this section is put into effect and

(ii) On or after such date and before the date a subsequent consistent determination (whether or not final) is put into effect.

(5) ***Barred years.*** No amount of credit for a taxable year is disallowed under paragraph (f)(3) of this section if, for such year, assessment of a deficiency is barred by any law or rule of law.

(6) ***Notification and other requirements.*** The taxpayer shall notify the district director of a disallowance of a credit under paragraph (f)(3) of this section within 30 days of the date that the applicable determination is put into effect. In the case of such a disallowance, the taxpayer shall recompute its tax liability for any affected taxable year, and such recomputation shall be made in the form of an amended return where necessary.

(7) ***Determinations.*** For purposes of this paragraph, the term "determination" refers to a determination made with respect to section 46(f) property (other than property to which an election under section 46(f)(3) applies) by a regulatory body described in section 46(c)(3)(B) that determines the effect of the credit—

(i) For purposes of section 46(f)(1), on the taxpayer's cost of service or rate base for ratemaking purposes or

(ii) In the case of a taxpayer that made an election under section 46(f)(2), on the taxpayer's cost of service, for ratemaking purposes or in its regulated books of account, or on the taxpayer's rate base for ratemaking purposes.

A regulatory body does not have to take affirmative action to make a determination. Thus, a regulatory body's failure to take action on a rate schedule filed by a taxpayer is a determination if the rates can be put into effect without further action by the regulatory body.

(8) ***Types of determinations.*** For purposes of this paragraph—

(i) The term "inconsistent" refers to a determination that is inconsistent with section 46(f) (1) or (2) (as the case may be). Thus, for example, a determination to reduce the taxpayer's cost of service by more than a ratable portion of the credit would be a determination that is inconsistent with section 46(f)(2). As a further example, such a determination would also be inconsistent if section 46(f)(1) applied because no reduction in cost of service is permitted under section 46(f)(1).

(ii) The term "consistent" refers to a determination that is consistent with section 46(f) (1) or (2) (as the case may be).

(iii) The term "final determination" means a determination with respect to which all rights to appeal or to request a review, a rehearing, or a redetermination have been exhausted or have lapsed.

(iv) The term "first final inconsistent determination" means the first final determination put into effect after December 10, 1971, that is inconsistent with section 46(f) (1) or (2) (as the case may be).

(9) ***Put into effect.*** A determination is put into effect on the latter of—

(i) The date it is issued (or, if a first final inconsistent determination, the date it becomes final) or

(ii) The date it becomes operative.

(10) ***Examples.*** The provisions of this paragraph may be illustrated by the following examples:

Example 1. Corporation X, a calendar-year taxpayer engaged in a public utility activity is subject to the jurisdiction of regulatory body A. On September 15, 1971, X purchases section 46(f) property and places it in service on that date. For 1971, X takes the credit allowable by section 38 with respect to such property. X does not make any election permitted by section 46(f). On October 9, 1972, A makes a determination that X must account for the credit allowable under section 38 in a manner inconsistent with section 46(f)(1). The determination, which was the first determination by A after December 10, 1971, becomes final on January 1, 1973, and holds that X must retroactively adjust the manner in which it accounted for the credit allowable under section 38 starting with the taxable year that began on January 1, 1972. Since, under the provisions of paragraph (f)(8) of this section, the determination by A is put into effect on January 1, 1973 (the date it becomes final), the credit is retroactively disallowed with respect to any of X's section 46(f) property placed in service before January 1, 1973, on any date which occurs during a taxable year with respect to which an assessment of a deficiency has not been barred by any law or rule of law. In addition, the credit is disallowed with respect to X's section 46(f) property placed in service on or after January 1, 1973, and before the date that a subsequent determination by A, which as to X is consistent with section 46(f)(1), is put into effect. Thus, X must amend its income tax return for 1971 to reflect the retroactive disallowance of the credit otherwise allowable under section 38 with respect to the section 46(f) property placed in service on September 15, 1971.

Example 2. The facts are the same as in example 1, except that the first inconsistent determination by A becomes final on April 5, 1972, and requires X to account for the credit for all taxable years beginning on or after January 1, 1973, in a manner inconsistent with section 46(f)(1). Under the provisions of paragraph (f)(8) of this section, the determination was put into effect on January 1, 1973 (the date it became operative). The result is the same as in example 1.

Example 3. The facts are the same as in example 1, except that on June 1, 1975, A issues a determination that X shall retroactively account for the credit allowable by section 38 in a manner consistent with the provisions of section 46(f)(1) for taxable years beginning on or after January 1, 1971. The determination becomes final on January 5, 1976, in the same form as originally issued. The result is the same as in example 1 with respect to property X places in service before June 1, 1975. The credit is allowed with respect to property X places in service on or after June 1, 1975 (the date that the consistent determination is put into effect).

(g) ***Ratable methods*** —

(1) ***In general.*** Under this paragraph (g), rules are prescribed for purposes of determining whether or not, under section 46(f)(1), a reduction in the taxpayer's rate base with respect to the credit is restored less rapidly than ratably and whether or not under section 46(f)(2) the taxpayer's cost of service for ratemaking purposes is reduced by more than a ratable portion of such credit.

(2) ***Regulated depreciation expense.*** What is “ratable” is determined by considering the period of time actually used in computing the taxpayer's regulated depreciation expense for the property for which a credit is allowed. “Regulated depreciation expense” is the depreciation expense for the property used by a regulatory body for purposes of establishing the taxpayer's cost of service for ratemaking purposes. Such period of time shall be expressed in units of years (or shorter periods), units of production, or machine hours and shall be determined in accordance with the individual useful life system or composite (or other group asset) account system actually used in computing the taxpayer's regulated depreciation expense. A method of restoring, or reducing, is ratable if the

amount to be restored to rate base, or to reduce cost of service (as the case may be), is allocated ratably in proportion to the number of such units. Thus, for example, assume that the regulated depreciation expense is computed under the straight line method by applying a composite annual percentage rate to "original cost" (as defined for purposes of computing regulated depreciation expense). If, with respect to an item of section 46(f) property, the amount to be restored annually to rate base is computed by applying a composite annual percentage rate to the amount by which the rate base was reduced, then the restoration is ratable. Similarly, if cost of service is reduced annually by an amount computed by applying a composite annual percentage rate to the amount of the credit, cost of service is reduced by a ratable portion. If such composite annual percenage rate were revised for purposes of computing regulated depreciation expense beginning with a particular accounting period, the computation of ratable restoration or ratable portion (as the case may be) must also be revised beginning with such period. A composite annual percentage rate is determined solely by reference to the period of time actually used by the taxpayer in computing its regulated depreciation expense without reduction for salvage or other items such as over and under accruals. A composite annual percentage rate determined by taking into account salvage value or other items shall be considered to be ratable in the case of a determination (whether or not final) issued before March 22, 1979, and any rate order (whether or not final) that is entered into before June 20, 1979, in response to a rate case filed before April 23, 1979. For this purpose, the term "rate order" does not include an order by a regulatory body that perfunctorily adopts rates as filed if such rates are suspended or subject to rebate.

(h) *Elections* —

(1) *Applicability of elections.*

(i) Any election under section 46(f) applies to all of the taxpayer's property eligible for the election, whether or not the taxpayer is regulated by more than one regulatory body.

(ii) Section 46(f)(1) applies to all of the taxpayer's section 46(f) property in the absence of an election under either section 46(f) (2) or (3). If an election is made under section 46(f)(2), section 46(f)(1) does not apply to any of the taxpayer's section 46(f) property.

(iii) An election made under the last sentence of section 46(f)(1) applies to that portion of the taxpayer's section 46(f) property to which section 46(f)(1) applies and which is short supply property within the meaning of paragraph (c)(2) of this section.

(iv) If a taxpayer makes an election under section 46(f)(2) and makes no election under section 46(f)(3), the election under section 46(f)(2) applies to all of the taxpayer's section 46(f) property.

(v) If a taxpayer makes an election under section 46(f)(3), such election applies to all of the taxpayer's section 46(f) property to which section 167(l)(2)(C) applies. Section 46(f) (1) or (2) (as the case may be) applies to that portion of the taxpayer's section 46(f) property that is not property to which section 167(f)(2)(C) applies. Thus, for example, if a taxpayer makes an election under section 46(f)(2) and also makes an election under section 46(f)(3), section 46(f)(3) applies to all of the taxpayer's section 46(f) property to which section 167(l)(2)(C) applies, and section 46(f)(2) applies to the remainder of the taxpayer's section 46(f) property.

(2) *Method of making elections.* See 26 CFR 12.3 for rules relating to the method of making the elections described in section 46(f) (1), (2), or

(3) .

(i) [Reserved]

(j) *Reorganizations, asset acquisitions, multiple regulation, etc.* —

(1) *Taxpayers not entirely subject to jurisdiction of one regulatory body.*

(i) If a taxpayer is required by a regulatory body having jurisdiction over less than all of its property to account for the credit under a determination that is inconsistent with section 46(f) (1) or (2) (as the case may be), such credit shall be disallowed only with respect to property subject to the jurisdiction of such regulatory body.

(ii) For purposes of this paragraph (j), a regulatory body is considered to have jurisdiction over property of a taxpayer if the property is included in the rate base for which the regulatory body determines an allowable rate of return for ratemaking purposes or if expenses with respect to the property are included in cost of service as determined by the regulatory body for ratemaking purposes. For example, if regulatory body A, having jurisdiction over 60 percent of an item of corporation X's section 46(f) property, makes a determination which is inconsistent with section 46(f), and if regulatory body B, having jurisdiction over the remaining 40 percent of such item of property, makes a consistent determination (or if the remaining 40 percent is not subject to the jurisdiction of any regulatory body), then 60 percent of the credit for such item will be disallowed. For a further example, if regulatory body A, having jurisdiction over 60 percent of X's section 46(f) property, has jurisdiction over 100 percent of a particular generator, 100 percent of the credit for such generator will be disallowed.

(iii) For rules which provide that the 3 elections under section 46(f) may not be made with respect to less than all of the taxpayer's property eligible for the election, see paragraph (h)(1)(i) of this section.

(2) [Reserved]

(k) *Treatment of accumulated deferred investment tax credits upon the deregulation of public utility property* —

(1) *Scope* —

(i) *In general.* This paragraph (k) provides rules for the application of former sections 46(f)(1) and 46(f)(2) of the Internal Revenue Code to a taxpayer with respect to public utility property that ceases, whether by disposition, deregulation, or otherwise, to be public utility property with respect to the taxpayer and that is not described in paragraph (k)(1)(ii) of this section (deregulated public utility property).

(ii) *Exception.* This paragraph (k) does not apply to property that ceases to be public utility property with respect to the taxpayer on account of an ordinary retirement within the meaning of § 1.167(a)-11(d)(3)(ii).

(2) *Ratable amount* —

(i) *Restoration of rate base reduction.* A reduction in the taxpayer's rate base on account of the credit with respect to public utility property that becomes deregulated public utility property is restored ratably during the period after the property becomes deregulated public utility property if the amount of the reduction remaining to be restored does not, at any time during the period, exceed the restoration percentage of the recoverable stranded cost of the property at such time. For this purpose—

(A) The stranded cost of the property is the cost of the property reduced by the amount of such cost that the taxpayer has recovered through regulated depreciation expense during the period before the property becomes deregulated public utility property;

(B) The recoverable stranded cost of the property at any time is the stranded cost of the property that the taxpayer will be permitted to recover through rates after such time; and

(C) The restoration percentage for the property is determined by dividing the reduction in rate base remaining to be restored with respect to the property immediately before the property becomes deregulated public utility property by the stranded cost of the property.

(ii) ***Cost of service reduction.*** Reductions in the taxpayer's cost of service on account of the credit with respect to public utility property that becomes deregulated public utility property are ratable during the period after the property becomes deregulated public utility property if the cumulative amount of the reduction during such period does not, at any time during the period, exceed the flowthrough percentage of the cumulative stranded cost recovery for the property at such time. For this purpose—

(A) The stranded cost of the property is the cost of the property reduced by the amount of such cost that the taxpayer has recovered through regulated depreciation expense during the period before the property becomes deregulated public utility property;

(B) The cumulative stranded cost recovery for the property at any time is the stranded cost of the property that the taxpayer has been permitted to recover through rates on or before such time; and

(C) The flowthrough percentage for the property is determined by dividing the amount of credit with respect to the property remaining to be used to reduce cost of service immediately before the property becomes deregulated public utility property by the stranded cost of the property.

(3) ***Cross reference.*** See § 1.168(i)-(3) for rules relating to the treatment of balances of excess deferred income taxes when public utility property becomes deregulated public utility property.

(4) ***Effective/applicability dates*** —

(i) ***In general.*** Except as provided in paragraph (k)(4)(ii) of this section, this paragraph (k) applies to public utility property that becomes deregulated public utility property with respect to a taxpayer after December 21, 2005.

(ii) ***Property that becomes public utility property of the transferee.*** This paragraph (k) does not apply to property that becomes deregulated public utility property with respect to a taxpayer an account of a transfer on or before March 20, 2008 if after the transfer the property is public utility property of the transferee.

(iii) ***Application of regulation project (REG-104385-01).*** A reduction in the taxpayer's cost of service will be treated as ratable if it is consistent with the proposed rules in regulation project (REG-104385-01) (68 FR 10190) March 4, 2003, and occurs during the period beginning on March 5, 2003, and ending on the earlier of—

(A) The last date on which the utility's rates are determined under the rate order in effect on December 21, 2005; or

(B) December 21, 2007.

[T.D. 7602, 44 FR 17668, Mar. 23, 1979, as amended by T.D. 8089, 51 FR 18777, May 22, 1986; T.D. 9387, 73 FR 14936, Mar. 20, 2008; 73 FR 18708, Apr. 7, 2008]

§ 1.46-7 Statutory provisions; plan requirements for taxpayers electing additional investment credit, etc.

As amended by sections 802(b)(7), and 803 (c), (d), and (e) of the Tax Reform Act of 1976 (90 Stat. 1520), section 301 (d), (e), and (f) of the Tax Reduction Act of 1975 (89 Stat. 38) provides as follows:

> Sec. 301. Increase in investment credit * * *
>
> (d) *Plan requirements for taxpayers electing additional credit.* In order to meet the requirements of this subsection—
>
> (1) Except as expressly provided in subsections (e) and (f), a corporation (hereinafter in this subsection referred to as the "employer") must establish an employee stock ownership plan (described in paragraph (2)) which is funded by transfers of employer securities in accordance with the provisions of paragraph (6) and which meets all other requirements of this subsection.
>
> (2) The plan referred to in paragraph (1) must be a defined contribution plan established in writing which—
>
> (A) Is a stock bonus plan, a stock bonus and a money purchase pension plan, or a profit-sharing plan,
>
> (B) Is designed to invest primarily in employer securities, and
>
> (C) Meets such other requirements (similar to requirements applicable to employee stock ownership plans as defined in section 4975(e)(7) of the Internal Revenue Code of 1954) as the Secretary of the Treasury or his delegate may prescribe.
>
> (3) The plan must provide for the allocation of all employer securities transferred to it or purchased by it (because of the requirements of section 46(a)(2)(B) of the Internal Revenue Code of 1954) to the account of each participant (who was a participant at any time during the plan year, whether or not he is a participant at the close of the plan year) as of the close of each year in an amount which bears substantially the same proportion to the amount of all such securities allocated to all participants in the plan for that plan year as the amount of compensation paid to such participant (disregarding any compensation in excess of the first $100,000 per year) bears to the compensation paid to all such participants during that year (disregarding any compensation in excess of the first $100,000 with respect to any participant). Notwithstanding the first sentence of this paragraph, the allocation to participants' accounts may be extended over whatever period may be necessary to comply with the requirements of section 415 of the Internal Revenue Code of 1954. For purposes of this paragraph, the amount of compensation paid to a participant for a year is the amount of such participant's compensation within the meaning of section 415(c)(3) of such Code for such year.
>
> (4) The plan must provide that each participant has a nonforfeitable right to any stock allocated to his account under paragraph (3), and that no stock allocated to a participant's account may be distributed from that account before the end of the eighty-fourth month beginning after the month in which the stock is allocated to the account except in the case of separation from the service, death, or disability.

(5) The plan must provide that each participant is entitled to direct the plan as to the manner in which any employer securities allocated to the account of the participant are to be voted.

(6) On making a claim for credit, adjustment, or refund under section 38 of the Internal Revenue Code of 1954, the employer states in such claim that it agrees, as a condition of receiving any such credit, adjustment, or refund—

(A) In the case of a taxable year beginning before January 1, 1977, to transfer employer securities forthwith to the plan having an aggregate value at the time of the claim of 1 percent of the amount of the qualified investment (as determined under section 46 (c) and (d) of such Code) of the taxpayer for the taxable year, and

(B) In the case of a taxable year beginning after December 31, 1976—

(i) To transfer employer securities to the plan having an aggregate value at the time of the claim of 1 percent of the amount of the qualified investment (as determined under section 46 (c) and (d) of such Code) of the employer for the taxable year,

(ii) Except as provided in clause (iii), to effect the transfer not later than 30 days after the time (including extensions) for filing its income tax return for a taxable year, and

(iii) In the case of an employer whose credit (as determined under section 46(a)(2)(B) of such Code) for a taxable year beginning after December 31, 1976, exceeds the limitations of paragraph (3) of section 46(a) of such Code—

(I) To effect that portion of the transfer allocable to investment credit carrybacks of such excess credit at the time required under clause (ii) for the unused credit year (within the meaning of section 46(b) of such Code), and

(II) To effect that portion of the transfer allocable to investment credit carryovers of such excess credit at the time required under clause (ii) for the taxable year to which such portion is carried over.

For purposes of meeting the requirements of this paragraph, a transfer of cash shall be treated as a transfer of employer securities if the cash is, under the plan, used to purchase employer securities.

(7) Notwithstanding any other provision of law to the contrary, if the plan does not meet the requirements of section 401 of the Internal Revenue Code of 1954—

(A) Stock transferred under paragraph (6) or subsection (e)(3) and allocated to the account of any participant under paragraph (3) and dividends thereon shall not be considered income of the participant or his beneficiary under the Internal Revenue Code of 1954 until actually distributed or made available to the participant or his beneficiary and, at such time, shall be taxable under section 72 of such Code (treating the participant or his beneficiary as having a basis of zero in the contract),

(B) No amount shall be allocated to any participant in excess of the amount which might be allocated if the plan met the requirements of section 401 of such Code, and

(C) The plan must meet the requirements of sections 410 and 415 of such Code.

(8)(A) Except as provided in subparagraph (B)(iii), if the amount of the credit determined under section 46(a)(2)(B) of the Internal Revenue Code of 1954 is recaptured or redetermined in accordance with the provisions of such Code, the amounts transferred to the plan under this subsection and subsection (e) and allocated under the plan shall remain in the plan or in participant accounts, as the case may be, and continue to be allocated in accordance with the plan.

(B) If the amount of the credit determined under section 46(a)(2)(B) of the Internal Revenue Code of 1954 is recaptured in accordance with the provisions of such Code—

(i) The employer may reduce the amount required to be transferred to the plan under paragraph (6) of this subsection, or under paragraph (3) of subsection (e), for the current taxable year or any succeeding taxable years by the portion of the amount so recaptured which is attributable to the contribution to such plan,

(ii) Notwithstanding the provisions of paragraph (12), the employer may deduct such portion, subject to the limitations of section 404 of such Code (relating to deductions for contributions to an employees' trust or plan), or

(iii) If the requirements of subsection (f)(1) are met, the employer may withdraw from the plan an amount not in excess of such portion.

(C) If the amount of the credit claimed by an employer for a prior taxable year under section 38 of the Internal Revenue Code of 1954 is reduced because of a redetermination which becomes final during the taxable year, and the employer transferred amounts to a plan which were taken into account for purposes of this subsection for that prior taxable year, then—

(i) The employer may reduce the amount it is required to transfer to the plan under paragraph (6) of this subsection, or under paragraph (3) of subsection, (e), for the taxable year or any succeeding taxable year by the portion of the amount of such reduction in the credit or increase in tax which is attributable to the contribution to such plan, or

(ii) Notwithstanding the provisions of paragraph (12), the employer may deduct such portion subject to the limitations of section 404 of such Code.

(9) For purposes of this subsection, the term—

(A) “Employer securities” means common stock issued by the employer or a corporation which is a member of a controlled group of corporations which includes the employer (within the meaning of section 1563 (a) of the Internal Revenue Code of 1954, determined without regard to section 1563 (a)(4) and (e)(3)(C) of such Code) with voting power and dividend rights no less favorable than the voting power and dividend rights of other common stock issued by the employer or such controlling corporation, or securities issued by the employer or such controlling corporation, convertible into such stock, and

(B) “Value” means the average of closing prices of the employer's securities, as reported by a national exchange on which securities are listed, for the 20 consecutive trading days immediately preceding the date of transfer or allocation of such securities or, in the case of securities not listed on a national exchange, the fair market value as determined in good faith and in accordance with regulations issued by the Secretary of the Treasury or his delegate.

(10) The Secretary of the Treasury or his delegate shall prescribe such regulations and require such reports as may be necessary to carry out the provisions of this subsection and subsections (e) and (f).

(11) If the employer fails to meet any requirement imposed under this subsection or subsection (e) or (f) or under any obligation undertaken to comply with the requirement of this subsection or subsection (e) or (f), he is liable to the United States for a civil penalty of an amount equal to the amount involved in such failure. The preceding sentence shall not apply if the taxpayer corrects such failure (as determined by the Secretary of the Treasury or his delegate) within 90 days after notice thereof. For purposes of this paragraph, the term “amount involved” means an amount determined by the Secretary or his delegate, but not in excess of 1 percent of the qualified investment of the taxpayer for the taxable year under section 46(a)(2)(B) and not less than the product of one-half of one percent of such amount multiplied by the number of months (or parts thereof) during which such failure continues. The amount of such penalty may be collected by the Secretary of the Treasury in the same manner in which a deficiency in the payment of Federal income tax may be collected.

(12) Notwithstanding any provision of the Internal Revenue Code of 1954 to the contrary, no deductions shall be allowed under section 162, 212, or 404 of such Code for amounts transferred to an employee stock ownership plan and taken into account under this subsection.

(13)(A) As reimbursement for the expense of establishing the plan, the employer may withhold from amounts due the plan for the taxable year for which the plan is established, or the plan may pay, so much of the amounts paid or incurred in connection with the establishment of the plan as does not exceed the sum of 10 percent of the first $100,000 that the employer is required to transfer to the plan for that taxable year under paragraph (6) (including any amounts transferred under subsection (e)(3)) and 5 percent of any amount in excess of the first $100,000 of such amount.

(B) As reimbursement for the expense of administering the plan, the employer may withhold from amounts due the plan, or the plan may pay, so much of the amounts paid or incurred during the taxable year as expenses of administering the plan as does not exceed the smaller of—

(i) The sum of 10 percent of the first $100,000 and 5 percent of any amount in excess of $100,000 of the income from dividends paid to the plan with respect to stock of the employer during the plan year ending with or within the employer's taxable year, or

(ii) $100,000.

(14) The return of a contribution made by an employer to an employee stock ownership plan designed to satisfy the requirements of this subsection or subsection (e) (or a provision for such a return) does not fail to satisfy the requirements of this subsection, subsection (e), section 401(a) of the Internal Revenue Code of 1954, or section 403(c)(1) of the Employee Retirement Income Security Act of 1974 if—

(A) The contribution is conditioned under the plan upon determination by the Secretary of the Treasury that such plan meets the applicable requirements of this subsection, subsection (e), or section 401(a) of such Code.

(B) The application for such a determination is filed with the Secretary not later than 90 days after the date on which the credit under section 38 is allowed, and

(C) The contribution is returned within one year after the date on which the Secretary issues notice to the employer that such plan does not satisfy the requirements of this subsection, subsection (e), or section 401(a) of such Code.

(e) *Plan requirements for taxpayers electing additional one-half percent credit*—(1) *General rule.* For purposes of clause (ii) of section 46(a)(2)(B) of the Internal Revenue Code of 1954, the amount determined under this subsection for a taxable year is an amount equal to the sum of the matching employee contributions for the taxable year which meet the requirements of this subsection.

(2) *Election; basic plan requirements.* No amount shall be determined under this subsection for the taxable year unless the corporation elects to have this subsection apply for that year. A corporation may not elect to have the provisions of this subsection apply for a taxable year unless the corporation meets the requirements of subsection (d) and the requirements of this subsection.

(3) *Employer contribution.* On making a claim for credit, adjustment, or refund under section 38 of the Internal Revenue Code of 1954, the employer shall state in such claim that the employer agrees, as a condition of receiving any such credit, adjustment, or refund attributable to the provisions of section 46(a)(2)(B)(ii) of such Code, to transfer at the time described in subsection (d)(6)(B) employer securities (as defined in subsection (d)(9)(A)) to the plan having an aggregate value at the time of the transfer of not more than one-half of one percent of the amount of the qualified investment (as determined under subsections (c) and (d) of section 46 of such Code) of the taxpayer for the taxable year. For purposes of meeting the requirements of this paragraph, a transfer of cash shall be treated as a transfer of employer securities if the cash is, under the plan, used to purchase employer securities.

(4) *Requirements relating to matching employee contributions.* (A) An amount contributed by an employee under a plan described in subsection (d) for the taxable year may not be treated as a matching employee contribution for that taxable year under this subsection unless—

(i) Each employee who participates in the plan described in subsection (d) is entitled to make such a contribution,

(ii) The contribution is designated by the employee as a contribution intended to be used for matching employer amounts transferred under paragraph (3) to a plan which meets the requirements of this subsection, and

(iii) The contribution is in the form of an amount paid in cash to the employer or plan administrator not later than 24 months after the close of the taxable year in which the portion of the credit allowed by section 38 of such Code (and determined under clause (ii) of section 46 (a)(2)(B) of such Code which the contribution is to match) is allowed, and is invested forthwith in employer securities (as defined in subsection (d)(9)(A)).

(B) The sum of the amounts of matching employee contributions taken into account for purposes of this subsection for any taxable year may not exceed the value (at the time of transfer) of the employer securities transferred to the plan in accordance with the requirements of paragraph (3) for the year for which the employee contributions are designated as matching contributions.

(C) The employer may not make participation in the plan a condition of employment and the plan may not require matching employee contributions as a condition of participation in the plan.

(D) Employee contributions under the plan must meet the requirements of section 401(a)(4) of such Code (relating to contributions).

(5) A plan must provide for allocation of all employer securities transferred to it or purchased by it under this subsection to the account of each participant (who was a participant at any time during the plan year, whether or not he is a participant at the close of the plan year) as of the close of the plan year in an amount equal to his matching employee contributions for the year. Matching employee contributions and amounts so allocated shall be deemed to be allocated under subsection (d)(3).

(f) *Recapture*—(1) *General rule.* Amounts transferred to a plan under subsection (d)(6) or (e)(3) may be withdrawn from the plan by the employer if the plan provides that while subject to recapture—

(A) Amounts so transferred with respect to a taxable year are segregated from other plan assets, and

(B) Separate accounts are maintained for participants on whose behalf amounts so transferred have been allocated for a taxable year.

(2) *Coordination with other law.* Notwithstanding any other law or rule of law, an amount withdrawn by the employer will neither fail to be considered to be nonforfeitable nor fail to be for the exclusive benefit of participants or their beneficiaries merely because of the withdrawal from the plan of—

(A) Amounts described in paragraph (1), or

(B) Employer amounts transferred under subsection (e)(3) to the plan which are not matched by matching employee contributions or which are in excess of the limitations of section 415 of such Code,

nor will the withdrawal of any such amount be considered to violate the provisions of section 403(c)(1) of the Employee Retirement Income Security Act of 1974.

[Sec. 301(d) of the Tax Reduction Act of 1975 (89 Stat. 38) as amended by sec. 802(b)(7) and sec. 803 (c) and (e) of the Tax Reform Act of 1976 (90 Stat. 1520); sec. 301 (e) and (f) of the Tax Reduction Act of 1975 as added by sec. 803(d) of the Tax Reform Act of 1976]

(Sec. 301(d)(2)(C) of the Tax Reduction Act of 1975; sec. 7805 of the Internal Revenue Code of 1954 (89 Stat. 38, 68A Stat. 917; 26 U.S.C. 7805)

[T.D. 7857, 47 FR 54793, Dec. 6, 1982]

§ 1.46-8 Requirements for taxpayers electing additional one-percent investment credit (TRASOP's).

(a) ***Introduction*** —

(1) ***In general.*** A corporation may elect under section 46(a)(2)(B) of the Code to obtain an additional investment credit for property described in section 46(a)(2)(D). This section provides rules for electing to have the provisions of section 46(a)(2)(B) apply and for implementing an employee stock ownership plan under section 301(d) of the Tax Reduction Act of 1975 ("1975 TRA"). The plan must meet the formal requirements of paragraph (d), and the operational requirements of paragraph (e), of

this section. An additional credit may be obtained for the periods described in section 46(a)(2)(D). Unless otherwise indicated, statutory references in this section are to the Internal Revenue Code of 1954 as in effect prior to the amendments made by the Revenue Act of 1978.

(2) ***Reports.*** The returns required by section 6058(a) must be filed on behalf of a plan established under paragraph (c)(7) of this section, whether or not the plan is qualified under section 401(a).

(3) ***Cross-references.*** The following table indicates where in this section provisions appear relating to each provision of section 301 (d) and (f) of the 1975 TRA.

Section 301	Section 1.46-8	Subject
(d)(1)	(c)(7)(i), (c)(8)(i)	Establishing a TRASOP, in general; funding a TRASOP, in general.
(2)(A)	(c)(7)(ii)	Type of plan.
(B)	(d)(3), (e)(10)	Investment design.
(C)	(d)(1)	Plan requirements, in general.
(3)	(d)(6)	Allocation.
	(b)(8)	Compensation, definition.
(4)	(d)(7)	Nonforfeitability.
	(d)(9)	Distributions.
(5)	(d)(8)	Voting rights.
(6)	(c)	Procedures for additional credit.
(7)(A)	(c)(7)(ii)	Taxability, non-401(a) TRASOP.
(B)	(e)(3)	Allocations under 401(a).
(C)	(e)(3)	Section 410 and section 415 requirements.
(8)	(e)(9)	Reductions of investment credit.
(9)(A)	(b)(4)	Employer securities, definition.
	(e)(10), (f)	Employer securities, requirements.
(B)	(b)(7)	Value, definition.
(10)	(a)(2)	Reporting requirements.
(11)	(h)	Failure to comply.
(12)	(c)(10)	Deductibility.
(13)	(e) (6) and (7)	Reimbursement for expenses.
(14)	(c)(8)(v) and (d)(7)(i)	Contingent contributions.
(f)	(d)(7), (e)(8)(vii), (f)	Withdrawals of TRASOP securities.

(b) ***Definitions.*** When used in this section, the terms listed below have the indicated meanings:

(1) ***TRASOP.*** A "TRASOP" is an employee stock ownership plan that meets the requirements of section 301(d) of the 1975 TRA. See § 1.46-7. It is a type of plan described in paragraph (d)(1) of this section and may, but need not, be an ESOP under § 54.4975-11 of this chapter (Pension Excise Tax Regulations). See § 1.46-8(d)(5) concerning use of TRASOP assets as collateral for debts and expenses of the plan.

(2) ***Additional credit.*** An "additional credit" is the additional one-percent investment credit under section 46(a)(2)(B)(i).

(3) ***Employer.*** An "employer" is a corporation that establishes a TRASOP.

(4) ***Employer securities*** —

(i) ***In general.*** "Employer securities" are common stock, and securities convertible into common stock, of the employer or of a corporation that is a member of a controlled group of corporations including the employer. Employer securities must meet the requirements of paragraph (g) of this section. Membership in a controlled group for purposes of this section is determined under section 414(b) of the Code.

(ii) ***Pre-1977 employer securities.*** In addition, employer securities acquired by a TRASOP before January 1, 1977, include common stock, and securities convertible into common stock, of a corporation in control of the employer within the meaning of section 368(c).

(iii) ***Caution.*** An employer security under this section is not necessarily a qualifying employer security as defined in section 407(d)(5) of the Employee Retirement Income Security Act of 1974 (ERISA) or section 4975(e)(8). Moreover, sections 406, 407, and 408 of ERISA in certain cases limit the acquisition and disposition of qualifying employer securities as defined in section 407(d)(5) of ERISA.

(5) ***TRASOP securities.*** "TRASOP securities" are employer securities that—

(i) Are transferred to a TRASOP, or acquired with cash transferred to a TRASOP, to obtain an additional credit, and

(ii) Except as provided under paragraphs (g) (4) and (5) of this section, or as required by applicable law, are subject to no other put, call, or other option, or buy-sell or similar arrangement while held by the plan.

(6) ***Publicly traded.*** The term "publicly traded" has the meaning specified in § 54.4975-7(b)(1)(iv) of this chapter.

(7) ***Value*** —

(i) ***In general.*** With respect to the transfer of TRASOP securities by a corporation to a TRASOP or the acquisition of TRASOP securities with cash transferred by a corporation to a TRASOP, "value" means fair market value determined in good faith and based on all relevant factors as of the date of transfer or acquisition of the TRASOP securities. If the plan acquires TRASOP securities from other than a disqualified person within the meaning of section 4975(e)(2), a good faith determination of value includes a determination of fair market value based on an appraisal independently arrived at by a person who customarily makes such appraisals and who is independent of any person from whom the TRASOP securities are acquired.

(ii) ***Twenty-day average rule.*** A special 20-day average valuation rule applies to certain publicly traded securities transferred by a corporation to a TRASOP. It does not apply to securities acquired with cash transferreed by a corporation to a TRASOP. Under the special rule, the term "value" refers to an average of daily closing prices for a security, as reported on any national securities exchange or as quoted on any system sponsored by a national securities association, over the 20 consecutive trading days immediately preceding the applicable last day described in paragraph (c)(8)(i) of this section. The average is based on the closing prices for each day when the security is in fact traded during the 20-day period. However, the special rule does not apply unless the security is in fact traded for at least 10 of the 20 days.

(iii) ***20-day average transitional exception.*** If a TRASOP security is transferred before March 20, 1979, the plan may value the security on the basis of the 20 consecutive trading days preceding the date on which the security is transferred or the date as of which the security is allocated to a participant's account.

(8) ***Compensation.*** "Compensation" means "participant's compensation" under section 415(c)(3) and § 1.415-2(d). However, except for purposes of applying section 415, compensation must be determined for a plan year, not a limitation year.

(c) ***Procedures for additional credit*** —

(1) ***Applicable year*** —

(i) ***General rule.*** With respect to a qualified investment, the "applicable year" of a corporation is generally the taxable year in which the investment is made. For purposes of this section, an investment is made either in a year when section 38 property is placed in service or in a year when qualified progress expenditures are incurred.

(ii) ***Carryover option.*** A corporation may determine the applicable years for qualified investments made in any taxable year beginning after December 31, 1976, under the following method: The first applicable year with respect to the additional credit for a given year's qualified investment is the year the qualified investment is made or, if later, the first taxable year for which any additional credit is allowable if claimed for that qualified investment. If there is an investment credit carryover from the first applicable year, each taxable year to which any part of the additional credit for that qualified investment is carried over is also an applicable year. If the carryover treatment is elected for the additional credit attributable to a year's qualified investment, all applicable years for the additional credit attributable to that investment must be determined under the carryover option.

(iii) ***Increased credit.*** A taxable year in which a corporation's additional credit is increased because of a redetermination is also an applicable year. See paragraph (c)(9)(iv) of this section.

(iv) ***Illustration.*** To illustrate the application of paragraphs (c)(1) (i) and (ii) of this section, assume that a calendar-year corporation makes a qualified investment in 1977 and that 1977 is an unused credit year described in section 46(b)(1). If the general rule is applied, 1977 is an applicable year. However, because 1977 is an unused credit year (at least with respect to the additional credit), if the corporation does not elect to treat 1977 as an applicable year but carries over its entire additional credit for 1977 to 1978 and uses it in 1978, then 1978 is an applicable year. If part of the additional credit is carried over further to 1979, the year 1979 is also an applicable year.

(v) ***Change in method.*** The choice between the general rule and carryover option methods of determining the additional credit attributable to applicable years is made with respect to each year's qualified investment, and does not bind the corporation with respect to selection of methods for the additional credit attributable to other years' qualified investment. A failure to comply does not occur merely because a corporation elects to apply either method for the additional credit attributable to separate years' qualified investment.

(2) ***Time and manner of electing.*** A corporation with a qualified investment must elect to be eligible for an additional credit by attaching a statement of election—

(i) To its income tax return, filed on or before the due date including extensions of time, for a taxable year not later than its first applicable year with respect to a qualified investment, or

(ii) In the case of a return filed before December 31, 1975, to an amended return filed on or before December 31, 1975.

(3) ***Statement of election.*** The statement of election must contain the name and taxpayer identification number of the corporation. Also, it must declare in the following words, or in words having substantially the same meaning, that:

(i) The corporation elects to have section 46(a)(2)(B)(i) of the Internal Revenue Code of 1954 apply; and

(ii) The corporation agrees to implement (or continue to implement, as appropriate) a TRASOP and to claim the additional credit as required by § 1.46-8 of the Income Tax Regulations.

(4) ***Separate election.*** A separate election must be made for each taxable year's qualified investment to obtain an additional credit for that qualified investment. If a corporation does not make a timely election to obtain an additional credit for a taxable year, it may not subsequently make the election on an amended return or otherwise.

(5) ***No partial election.*** An election to obtain an additional credit applies to a corporation's entire qualified investment for a taxable year. Thus, a corporation may not elect to obtain a partial additional credit for any year's qualified investment. However, the partial disallowance of an additional credit will not result in an election being treated as a partial election. Also, an election by a member of a controlled group of corporations that applies only to the electing member's qualified investment is not a partial election. See § 1.46-8(h)(9) with respect to transitional rules for elections made before January 19, 1979.

(6) ***No revocation of election.*** After the time for electing the additional credit has expired for a taxable year, a corporation may not revoke its election for that year.

(7) ***Establishing a TRASOP*** —

(i) ***In general.*** A corporation electing to obtain an additional credit must establish a TRASOP with accompanying trust on or before the last day for making the election regardless of when in fact the election is made. A TRASOP is considered to be in existence on a particular date if it meets the requirements of § 1.410(a)-2(c)(1). A new plan need not be established if an existing plan qualifies as a TRASOP, or is amended to meet the requirements of this section, on or before the last day for making the election. The requirements of this section are not satisfied merely by establishing and crediting a separate “TRASOP” account on the corporation's books.

(ii) ***Type of plan.*** A TRASOP need not meet the requirements of section 401(a). However, it must be a stock bonus plan, a combination stock bonus plan and money purchase pension plan, or a profit-sharing plan under § 1.401-1(b)(1) of this chapter. See section 301(d)(7)(A) of the 1975 TRA for the tax consequences relating to a TRASOP that does not meet the requirements of section 401(a). See also title I of ERISA for additional provisions applicable to a TRASOP as an employee pension benefit plan under section 3(2) of ERISA.

(8) ***Funding a TRASOP*** —

(i) ***In general.*** A corporation electing to obtain an additional credit must fund its TRASOP by transferring TRASOP securities or cash to it no later than 30 days after the applicable last day. That day is the last day for electing the additional credit, irrespective of when the election is actually made. However, in the case of an investment credit that was carried over and claimed in a subsequent applicable year by reason of paragraph (c)(1)(ii) of this section, that day is the last day (including extensions) for filing its income tax return for the subsequent applicable year. TRASOP securities may be transferred to a plan at any time during the applicable year, but not before the first day of an applicable year. If TRASOP securities are transferred to the plan within the permissible time period after the close of the applicable year, they are treated as transferred during that applicable year first until all TRASOP securities required by this paragraph (c) for that applicable year are transferred to, and taken into account under, the TRASOP. Thus, for example, assume that on a return filed on September 17, 1979 (with extensions, the last day for filing a return for 1978), a calendar-year corporation claims an additional credit of $5,000 for 1978, an applicable year under the TRASOP. No contributions were made in 1978 on account of the 1978 credit, but TRASOP securities with a value of $6,000 were contributed in 1979. The corporation also expects to be able to claim an additional credit of $10,000 for 1979. TRASOP securities transferred between January 1, 1979, and October 17, 1979, must be taken into account under the plan for 1978 before they are taken into account for 1979. Accordingly, securities having a value of $5,000 are applied against the obligation for 1978, and $1,000 of the contribution is retained to be applied to the eventual obligation for 1979.

(ii) ***Cash transfers.*** A corporation may transfer cash to the TRASOP instead of TRASOP securities only if the TRASOP uses the cash to acquire TRASOP securities no later than 30 days after the time for funding the TRASOP.

(iii) ***Valuation.*** The value of the TRASOP securities for an applicable year must equal one percent of the corporation's qualified investment for that year. However, if paragraph (c)(1)(ii) of this section is followed by a corporation, the value of TRASOP securities for an applicable year must equal the amount of additional credit claimed for that year.

(iv) ***Cash reserve.*** The value of TRASOP securities acquired with cash transferred by a corporation may be reduced by two items. The first item is an amount not more than the value of fractional shares allocable to participants entitled to receive an immediate distribution at the time of the transfer. The second item is start-up expenses and administrative expenses to the extent permitted under section 301(d)(13) of the 1975 TRA and paragraphs (e) (6) and (7) of this section.

(v) ***Conditional funding.*** The funding of a TRASOP may be conditional if the TRASOP satisfies the provisions of section 301(d)(14) of the 1975 TRA. For purposes of section 301(d)(14), an investment credit is considered to be allowed on the date the election for the applicable year is made under paragraph (c)(2) of this section.

(vi) ***Certain benefit offset mechanisms.*** A TRASOP will be deemed to be not funded to the extent that TRASOP securities are used to offset benefits under a defined benefit plan.

(9) ***Claiming additional credit*** —

(i) ***In general.*** Section 46(a)(3) subjects the amount of investment credit earned with respect to a taxpayer's qualified investment for a taxable year to a limitation based on the corporation's tax liability.

(ii) ***Unused credit year.*** Section 46(a)(1) provides a first-in-first-out rule for the investment credit in a taxable year. Section 46(b)(1) provides for the carryback and carryover of unused credits. If less than all of a taxpayer's credit earned for a taxable year is allowable, the 10-percent credit determined under section 46(a)(2)(A) earned for a particular year is allowed first. Any portion of the additional credit for a taxable year that is not allowable may be carried back or carried over to the extent permitted by section 46(b)(1). However, an additional credit which is allowed for a taxable year is not reduced by a carryback to that year of an unused credit from a succeeding taxable year.

(iii) ***Example.*** Paragraph (c)(9)(ii) of this section is illustrated by the following example:

Example. A calendar-year corporation begins operation and establishes a TRASOP in 1975. The facts and treatment relating to the corporation's qualified investments and investment tax credits for 1975 and 1976 are as follows:

	1975	1976
Facts:		
1. Qualified investment	$500,000	$500,000
2. Credits earned:		
a. 10% credit	50,000	50,000
b. Additional credit	5,000	5,000
c. Carryover of additional credit from prior year, line 5		3,000
3. Sec. 46(a)(3) limitation	52,000	47,000
Treatment of credits:		
4. Credits allowed:		
a. Carryover of additional credit		3,000
b. Current 10% credit	50,000	44,000
c. Current additional credit	2,000	0
5. Unused credits:		
a. 10% credit	0	6,000

	1975	1976
b. Additional credit	3,000	5,000

Thus, in 1975 the section 46(a)(3) limitation ($52,000) is applied first to allow all of the 10-percent investment credit ($50,000). Accordingly only $2,000 of the additional credit earned is allowed in 1975 and $3,000 of the additional credit is carried forward to 1976. In 1976, section 46(a)(1) requires that this $3,000 of additional credit is allowed first, and then only $44,000 of the 10-percent credit earned in 1976 is allowed since the section 46(a)(3) limitation for that year is $47,000. The unused credits from 1976 cannot be carried back since 1975, the only prior year, is an unused credit year.

(iv) ***Redeterminations increasing credit.*** If a corporation's allowable additional credit is increased because of a redetermination, the increase is treated as if it were an unused credit carryover for purposes of paragraphs (c)(1)(ii) and (c)(8)(i) of this section. For purposes of this subdivision (iv), the date of the increase is determined under paragraph (e)(9)(iii) of this section as if it were the date of a reduction. Thus, for example, assume that a calendar-year corporation claims an additional credit of $100,000 in 1978 because of a qualified investment in that year. In 1980, the additional credit attributable to 1978 qualified investment is redetermined to be $110,000. With respect to the 1978 qualified investment, 1980 is also an applicable year to the extent of $10,000. The increased credit is reflected on the employer's return for 1980. The corporation must fund the TRASOP with this $10,000 under paragraph (c)(8) of this section.

(v) ***Redeterminations increasing tax liability.*** If a corporation's tax liability for a year is increased such that an additional credit carried forward and claimed in a later year is allowable in the earlier year, the claim of the additional credit will be considered timely if it was otherwise timely under this section. Thus, for example, assume that a calendar-year corporation makes qualified investment of $5,000,000 in 1978 but, based on its income tax liability, is unable to use any of the credit until 1979, when the entire $50,000 additional credit can be used. The corporation adopts the TRASOP, elects the full $50,000 credit and funds in a timely manner for tax year 1979. However, as a result of a 1981 redetermination of the 1978 tax liability, the corporation is able to use $30,000 of the additional credit in 1978 and the remaining $20,000 in 1979. The allowable credit for 1978 is increased by $30,000 and the increase is treated as an unused credit carryover, for which the year of redetermination, 1981, is the applicable year. Assuming that no other credits are available, the 1979 credit is reduced from $50,000 to $20,000, and this reduction is taken into account in the redetermination year by offsetting the reduction against amounts due the plan or by deducting the amount of the reduction. The adoption of the TRASOP for 1979, rather than 1978, is considered timely.

(10) ***Deductions at expiration of carryover period.*** Under paragraph (c)(1)(i) of this section, a corporation that uses no additional credit in the year of a qualifed investment may nonetheless treat the year in which the qualified investment is made as the first applicable year. If the carryover period under section 46(b)(1)(B) expires before the corporation uses the entire additional credit with respect to the qualified investment, contributions attributable to the unused credit are deductible, subject to the

limitations of section 404(a), as if made in the taxable year when the carryover period expires. The amount deductible is the dollar amount of the unused credit irrespective of the current value of the securities contributed with respect to the credit.

(d) *Formal plan requirements* —

(1) ***In general.*** To be a TRASOP, a plan must meet the formal requirements of this paragraph (d).

(2) ***Plan year.*** To be a TRASOP, a plan must specify a plan year that begins with or within the corporation's taxable year.

(3) ***Designed to invest primarily in employer securities.*** To be a TRASOP, a plan must state that it is designed to invest primarily in employer securities. A TRASOP intended to qualify as an ESOP under § 54.4975-11 must state that it is designed to invest primarily in employer securities. See paragraph (e)(10) of this section concerning the requirement that a plan invest in employer securities on an ongoing basis.

(4) ***Separate accounting.*** To be a TRASOP, a plan must state that TRASOP securities are to be accounted for separately from any other contributions to the plan.

(5) ***Debts and expenses of the TRASOP.*** To be a TRASOP, a plan must state that TRASOP securities cannot be used to satisfy a loan made to the TRASOP or be used as collateral for a loan made to a TRASOP. However, if the plan so provides, to the extent permitted under section 301(d)(13) of the 1975 TRA and paragraphs (e) (6) and (7) of this section, certain amounts may be used for the TRASOP's start-up expenses and administrative expenses.

(6) *Allocation of TRASOP securities* —

(i) ***General rules.*** To be a TRASOP, a plan must provide for the allocation of TRASOP securities under section 301(d)(3) of the 1975 TRA and this subparagraph (6).

(ii) ***Timing.*** TRASOP securities are allocated as of the last day of the plan year beginning with or within the appropriate applicable year.

(iii) ***Participants.*** Each employee who is a participant at any time during the plan year for which allocation is made must receive an allocation as of the end of that year even though not then employed by the employer. However, to receive allocations, employees must satisfy the minimum participation requirements of the plan (for example, 1,000 hours of service).

(iv) ***Compensation considered.*** Under section 301(d)(3) of the 1975 TRA, allocations must be based on the proportion that each participant's compensation bears to all participants' compensation. Compensation in excess of $100,000 must be disregarded in making these allocations. A plan may have a lower stated ceiling on compensation (from $0 to $100,000) and if the plan has such a lower ceiling, compensation in excess of this ceiling must likewise be disregarded. Also, allocations must be based on a participant's compensation while actually employed, not just while actually participating, in the plan year.

(v) ***Section 415 priority rule; transitional rule.*** For purposes of section 415, this subdivision (v) applies only to limitation years beginning after November 30, 1982. If a TRASOP security is not allocated to a participant's account for a plan year because of section 415 and section 301(d)(3) of the 1975 TRA, no other amount may be allocated for that participant under any defined contribution plan of the same employer after the actual allocation date for that TRASOP plan year, until all unallocated TRASOP securities have been allocated as provided in

paragraphs (d)(6) (vi) and (vii) of this section. This subdivision (v) applies to a TRASOP when, under section 415(f)(1)(B), the TRASOP is treated along with an employer's other defined contribution plans as one plan for purposes of section 415.

(vi) ***Unallocated amounts.*** Under section 301(d)(3) of the 1975 TRA, TRASOP securities unallocated for a plan year to participants' accounts because of section 415 must be allocated proportionately to the accounts of other participants until the addition to the account of each participant reaches the limits of section 415.

(vii) ***Suspense account.*** If, after these allocations, TRASOP securities remain unallocated, they must be held in an unallocated suspense account under the TRASOP. Any income produced by these securities must also be held in the account. A plan with such an account will not fail to qualify under section 401(a) merely because of the account. In each successive TRASOP plan year (whether or not an applicable year), the unallocated assets are released from this account for allocation on a first-in-first-out basis. They are then allocated to the participants' accounts proportionately under paragraph (d)(6) (i) through (vi) of this section for each later year until no TRASOP securities remain unallocated. Value for this allocation is determined under paragraph (b)(7) of this section as of the date of transfer from the suspense account or, if the special 20-day average rule applies, the value is determined on the basis of the 20 consecutive trading days immediately preceding the date of transfer from the suspense account.

(viii) ***Escrow account.*** A TRASOP may provide for the establishment of an escrow account instead of a suspense account. The escrow account must satisfy paragraph (d)(6)(vii) of this section. The beneficiary of the escrow account is to be the TRASOP. The corporation may establish the escrow account and contribute stock or cash to it. In such a case, the escrow agent must transfer assets to the plan each year equal to the amount to be allocated proportionately under paragraph (d)(6)(i)-(vi) of this section. Assets held in an escrow account are plan assets.

(ix) ***Treatment of certain plan terminations.*** To be a TRASOP, a plan must provide that, if a plan terminates because the corporation ceases to exist, unallocated amounts described in paragraph (d)(6)(vi) of this section must be allocated to the extent possible under section 415 for the year of termination. The remaining unallocated amounts must then be withdrawn. These unallocated amounts are treated as recaptured under all the rules of paragraph (e)(9)(vii) of this section except its last sentence. See paragraph (d)(9)(i) of this section concerning distributions of allocated TRASOP securities.

(x) ***No integration.*** No TRASOP may be integrated, directly or indirectly, with contributions or benefits under title II of the Social Security Act or any other state or federal law.

(xi) ***Fractional securities.*** Participants' accounts are to be allocated fractional securities or fractional rights to securities.

(xii) ***Accounting for amounts withheld by employer or paid by plan as start-up or administrative expenses.*** An employer may withhold certain start-up and administrative expenses from TRASOP securities due the plan. Also, a plan may reduce amounts to be allocated to the extent that certain plan assets are used to reimburse the employer, for example for salaries of employees providing services to the plan, or to pay fees directly to independent contractors for expenses. These expenses do not reduce the amount of additional credit claimed and are not allowable as expenses in computing taxable income. Additional rules concerning these expenses are in paragraphs (e) (6) and (7) of this section.

(7) ***Nonforfeitability.*** To be a TRASOP, a plan must state that each participant has a nonforfeitable right to allocated TRASOP securities. For purposes of this section, forfeitures described in section 411(a)(3) are not permitted. However, amounts shall not fail to be considered to be nonforfeitable if the plan provides for their return to the corporation—

(i) In the case of conditional contributions, under section 301(d)(14) of the 1975 TRA and paragraph (c)(8)(v) of this section, and

(ii) In the case of investment credit recapture or an event deemed to be a recapture, under section 301(f) of the 1975 TRA and paragraph (f) of this section.

(8) ***Voting rights*** —

(i) ***Provision for passthrough.*** To be a TRASOP, a plan must state that each participant is entitled to direct a designated fiduciary how to exercise any voting rights on TRASOP securities allocated to the account of the participant. The plan need not permit participants to direct the voting of unallocated TRASOP or other securities held by the trust. It may authorize the designated fiduciary to exercise voting rights for unallocated securities.

(ii) ***Notification by the employer.*** To be a TRASOP, the plan must obligate the corporation to furnish the designated fiduciary and participants with notices and information statements when voting rights are to be exercised. The time and manner for furnishing participants with a notice or information statement must comply with both applicable law and the corporation's charter and bylaws as generally applicable to security holders. In general, the content of the statement must be the same for plan participants as for other security holders.

(iii) ***Fractional securities.*** To be a TRASOP, the plan must allow the participants to vote any allocated fractional securities or fractional rights to securities. This requirement is met if the designated fiduciary votes the combined fractional securities or rights to the extent possible to reflect the direction of the voting participants.

(iv) ***Unexercised voting rights.*** To be a TRASOP, the plan may not permit the designated fiduciary to exercise voting rights which a participant fails to exercise. However, the plan may permit the solicitation and exercise of participants' voting rights by management and others under a proxy provision applicable to all security holders.

(9) ***Distributions*** —

(i) ***In general.*** To be a TRASOP, a plan must permit the distribution of allocated TRASOP securities only as provided under section 301(d)(4) of the 1975 TRA. Also, under § 1.401-1(b)(1)(i) of this chapter, to the extent that a TRASOP is a money purchase pension plan, it can only provide for a distribution in the case of separation from service, death, or disability. No TRASOP may provide for the distribution of TRASOP securities upon plan termination within the 84-month holding period. For purposes of section 301(d)(4) of the 1975 TRA, the 84-month holding period begins on the date as of which TRASOP securities are allocated.

(ii) ***Certain fractional securities.*** A stock bonus TRASOP may distribute cash instead of fractional securities.

(e) ***Operational plan requirements*** —

(1) ***General rule.*** To be a TRASOP, a plan in operation must meet the requirements of this paragraph (e). However, the provisions under paragraph (e)(8) of this section apply only to TRASOPs qualified under section 401(a).

(2) ***Compliance with plan provisions.*** To be a TRASOP, a plan must operate in compliance with its provisions. Failure to operate in compliance with plan provisions constitutes an operational failure to comply. See paragraph (h)(5)(iii) of this section.

(3) ***Compliance with certain Code provisions.*** To be a TRASOP, a plan must meet the requirements of section 301(d)(7) of the 1975 TRA. Thus, whether or not it is qualified under section 401(a), a TRASOP must meet the requirements of section 401(a) with respect to allocations, section 410 with respect to participation, and section 415 with respect to limitations on contributions and benefits. However, these requirements are modified by paragraph (d)(6) of this section, relating to allocations and section 415.

(4) ***Employee contributions.*** Under a TRASOP, the participants' receipt of benefits attributable to TRASOP securities contributed for the additional credit (but not the extra additional credit) must not depend on contributions by participants. If a corporation has a plan in existence which requires employee contributions, a portion of the plan may be a TRASOP if employee contributions are not required with respect to that portion of the plan.

(5) ***Controlled group of corporations, etc.*** Whether or not a TRASOP is qualified under section 401(a), all employees who by reason of section 414 (b) and (c) are treated as employees of an electing corporation are treated as employed by the corporation in determining whether the plan satisfies the requirements of sections 301(d)(7) (B) and (C) of the 1975 TRA. A member of a controlled group under paragraph (b)(4)(i) of this section with a qualified investment but with no actual employees may obtain an additional credit even though the only participants in the corporation's TRASOP are actually employed by another member of the controlled group.

(6) ***Start-up expenses*** —

(i) ***In general.*** For purposes of this section, the term “start-up expense” means any ordinary and necessary amount of a nonrecurring nature paid or incurred by the corporation or by the plan in connection with the establishment of a TRASOP under paragraph (c)(7) of this section. Thus, for example, start-up expenses may include expenses relating to: the drafting or amending of plan documents to establish a TRASOP under section 301(d) or (e) of the 1975 TRA, the seeking of agency approval for these documents and related transactions, the obtaining of shareholder approval for establishing a TRASOP, and the registering of securities for initial funding of a TRASOP.

(ii) ***Treatment of start-up expenses.*** Start-up expenses may be withheld by the employer from amounts that would otherwise be due the plan under paragraph (c)(8) of this section, to the extent that these amounts are known by the employer when funding first occurs for an applicable year. To the extent that these amounts are not withheld by the employer, the plan may pay remaining amounts from plan assets within a reasonable time after the amounts are known by the plan.

(iii) ***Ceiling on start-up expenses.*** Reimbursement for start-up expenses is limited to a ceiling. This ceiling is the sum of 10 percent of the first $100,000 that an employer is first required to transfer under paragraph (c)(8) of this section for an applicable year and 5 percent of that amount in excess of $100,000. If this first year is an unused credit year from which there is a carryover, amounts required to be transferred in subsequent years for claiming carryovers from

this first year are considered in determining this ceiling. Thus, for example, assume that a calendar-year corporation first earns an additional credit in 1977 of $9,000 and that $3,000 of this amount is claimed on the income tax return for 1977, for 1978 and for 1979. The corporation's ceiling on start-up expenses is $300 when its 1977 return is filed. The total ceiling increases to $600 when its 1978 return is filed and to $900 when its 1979 return is filed, with the claiming of an additional $3,000 credit for each of the three years.

(iv) ***Special rule for taxable years ending before January 1, 1977.*** Special treatment is available for expenses paid or incurred before January 1, 1977, that were not taken into account in the manner provided by section 301(d)(13) of the 1975 TRA. These expenses may be withdrawn under paragraph (e)(9)(vii) of this section in the same manner as reductions in the corporation's additional credit caused by a recapture. This withdrawal may only be made during the first taxable year ending after March 20, 1979. It is subject to the ceiling of section 301(d)(13) of the 1975 TRA. Expenses previously deducted by a corporation must be reduced on a timely-filed amended return by the amount of this withdrawal.

(7) ***Administrative expenses*** —

(i) ***In general.*** For purposes of this section, the term “administrative expense” means any amount, other than a start-up expense, paid or incurred by the corporation or by the plan that is ordinary and necessary in maintaining the TRASOP. Thus, for example, administrative expenses may include expenses relating to: compensating plan fiduciaries and administrators, leasing office space and equipment, reproducing and mailing information to participants and beneficiaries, and filing reports, returns, and amendments relating to a TRASOP. Paragraph (e)(6) (ii) and (iv), relating to treatment of start-up expenses and to a special rule for taxable years ending before January 1, 1977, also applies to administrative expenses.

(ii) ***Ceiling on administrative expenses.*** Reimbursement for administrative expenses under paragraph (e)(6)(ii) of this section is limited to the smaller of two amounts for each plan year. The first amount is $100,000. The second amount is the sum of 10 percent of the first $100,000 of dividend income paid with respect to TRASOP securities held by the plan during the plan year ending with or within the corporation's taxable year and 5 percent of any such dividend income in excess of $100,000.

(8) ***TRASOP qualification under section 401(a)*** —

(i) ***Permanence.*** A TRASOP is not required to be a qualified plan under section 401(a). However, to meet the requirements of section 401(a), a TRASOP must be a permanent plan, as described in § 1.401-1(b)(2) of this chapter. Under section 401(a)(21), a plan will not fail to be considered permanent merely because the amount of employer contributions under the plan is determined solely by reference to the amount of additional credit allowable under this section. Thus, for example, it will not fail to be considered permanent merely because employer contributions are not made for a year for which an additional credit is not available by reason of no qualified investment for which an additional credit can be obtained. Section 401(a)(21) applies only to the extent the TRASOP is funded with TRASOP securities and cash in lieu of TRASOP securities.

(ii) ***Partial discontinuance of contributions.*** A plan that meets the requirements of section 401(a) may receive contributions of TRASOP securities as well as other contributions. If the other contributions continue on a permanent basis, the plan's qualification under section 401(a) will

not be adversely affected merely because TRASOP securities cease to be contributed to it. The discontinuance of TRASOP contributions does not alter the requirement that past TRASOP contributions remain invested in employer securities. See paragraph (e)(10) of this section.

(iii) ***Income distribution.*** Income paid with respect to employer securities acquired by a TRASOP may be distributed at any time after receipt by the plan to participants on whose behalf such securities have been allocated without adversely affecting the qualified status of the plan under section 401(a). (See the last sentence of section 803(h), Tax Reform Act of 1976.) However, under a TRASOP that is a stock bonus or profit-sharing plan, income held by the plan for a 2-year period or longer must be distributed under rules generally applicable to stock bonus and profit-sharing plans qualified under section 401(a). Income distributed by a TRASOP is not subject to the partial exclusion of dividends provided in section 116, whether or not the income is held by the plan for two or more years.

(9) ***Reductions in investment credit*** —

(i) ***General rule.*** Certain reductions in a corporation's investment credit result from either a recapture under section 47 of the corporation's investment credit or a redetermination of the allowable credit. If these reductions are taken into account under a TRASOP, the plan may only use one or more of the methods described in paragraphs (e)(9), (v), (vi), and (vii) of this section for taking into account these reductions. Thus, for example, more than one method is permitted upon a recapture with respect to a qualified investment made in a particular year. However, the method described in paragraphs (e)(9)(vii) of this section applies only to a recapture and not to a redetermination.

(ii) ***Ratable reduction.*** A reduction is allocated ratably between the 10-percent credit and the additional credit. Thus, for example, if a calendar-year corporation claims a $33,000 investment credit for 1976, including $3,000 additional credit, and $11,000 of the total credit is recaptured in 1978, the $3,000 additional credit is reduced by $1,000. This subdivision (ii) does not apply to a reduction solely of the additional credit as could occur, for example, in the case of a redetermination caused by a mathematical error in computing the additional credit or in the case of a recapture caused by a bad faith failure to comply under paragraph (h) of this section.

(iii) ***Date of reduction.*** A reduction in investment credit occurs under this paragraph (e)(9) on the earliest of these dates:

(A) The date an income tax return (or an amended return) is filed reflecting the reduction;

(B) the date a judicial determination affecting the amount of the reduction becomes final; and

(C) the date specified in a closing agreement made under section 7121 that is approved by the Commissioner. For purposes of this subdivision (iii), a judicial determination becomes final at the time prescribed in § 1.547-2(b)(1) (ii) or (iii), relating to personal holding company tax.

(iv) ***Year for taking reduction into account.*** A reduction in investment credit must be taken into account in the earliest year or years possible under the applicable method beginning no later than the year in which the date of the reduction falls.

(v) ***Decrease future contributions.*** The reduction may be taken into account as a decrease in the value of TRASOP securities to be transferred to the plan. The amount of the decrease is equal to the dollar amount of the reduction.

(vi) ***Deduct under section 404.*** On the date of the reduction, the amount of the reduction may be treated as an amount paid to the TRASOP for purposes of, and as a deduction to the extent allowed under, section 404.

(vii) ***Withdraw TRASOP securities.*** If an additional credit allowed for a taxable year is recaptured, the corporation may withdraw from the plan TRASOP securities transferred to, or acquired by, the plan for claiming that year's credit. The withdrawal must only be from assets segregated under paragraph (f)(2) of this section and must be first from assets accounted for in an unallocated suspense account for the particular year. The amount of assets actually withdrawn bears the same proportion to the amount of assets subject to withdrawal as the amount of additional credit recaptured bears to the amount of additional credit claimed. Thus, for example, if the assets subject to withdrawal consist of 300 shares of one class of employer stock and one-third of the additional credit is recaptured, 100 shares of the stock are withdrawn. However, if the current value of the assets subject to withdrawal exceeds the dollar amount of the additional credit claimed, assets may be withdrawn only to the extent that their current value does not exceed the dollar amount of the recaptured portion of the additional credit. Thus, for example, if the 300 segregated shares in the prior example have a current value of $9,000 and the dollar value of the additional credit claimed is $4,500, when one-third of the additional credit is recaptured, only 50 shares, not 100 shares, are withdrawn. Current value is determined under paragraph (b)(7) of this section as of the withdrawal date or, if the special 20-day average rule is applied, it is based on the 20 consecutive trading days immediately preceding the withdrawal date. Withdrawals from an individual's account for the year with respect to which recapture occurs must bear the same ratio to the total amount withdrawn for that year as the individual's TRASOP account balance for that year bears to the total TRASOP account balances for that year. In the case of a TRASOP security acquired after March 20, 1979, the corporation may not withdraw it unless the plan meets the requirements of paragraph (d)(7)(ii) of this section when the plan acquires the TRASOP security.

(viii) ***Prior distribution rule.*** If a TRASOP distributes an amount allocated with respect to an investment credit for a taxable year and the credit for that year is later recaptured, withdrawals may not reduce participants' accounts below the level to which they would have been reduced had the prior distribution not occurred. Recaptured amounts above this level may only be deducted under paragraph (e)(9)(vi) of this section. They may not be used to decrease future contributions under paragraph (e)(9)(v).

(ix) ***Illustration.*** The operation of paragraph (e)(9)(viii) of this section is illustrated as follows:

Example. For 1977, a calendar-year corporation claims an additional credit of $10,000. The corporation's TRASOP meets the requirements of section 301(f) of the 1975 TRA. Each of 10 participants under the plan for that year receives an equal allocation of 10 shares valued at $1,000. In 1978, one participant terminates employment and receives a distribution of 10 shares. In 1979, a recapture reduces the 1977 additional credit by $2,000. The value of employer securities has not changed from the allocation date. If the 10 shares had not been distributed, 20 shares would be available for withdrawal, 2 shares from each participant's account. Since 9 participants remain from 1977, only 18 shares are available for withdrawal (2 shares × 9 remaining participants). If these 18 shares are withdrawn, the corporation may take into account 2 shares by deducting their value to the extent permitted under paragraph (e)(9)(vi) of this section.

(10) ***Continued investment in employer securities.*** The requirement that a plan be designed to invest primarily in employer securities is a continuing obligation. Therefore, a transaction changing the status of a corporation as an employer may require the conversion of certain plan assets into other securities. See paragraphs (d)(9) and (g)(6) of this section. In general, cash or other assets derived from the disposition of employer securities must be reinvested in employer securities not later than the 90th day following the date of disposition. However, the Commissioner may grant an extension of the period for reinvestment in employer securities depending on the facts and circumstances of each case.

(f) ***Section 301(f) withdrawals*** —

(1) ***In general.*** No assets may be withdrawn by a corporation under section 301(f) of the 1975 TRA unless the assets are either TRASOP securities or plan assets into which TRASOP securities have been converted ("withdrawal assets"). See paragraph (e)(10) concerning restrictions on investment of TRASOP assets in assets other than employer securities. Withdrawal assets must meet the segregated accounting requirements of this paragraph. The physical segregation of assets is not required.

(2) ***Segregated accounting.*** The segregated accounting requirements are that—

(i) Withdrawal assets must be segregated from other plan assets on a taxable-year-by-taxable-year basis; and

(ii) Separate accounts must be maintained on a taxable-year-by-taxable-year basis for each participant on whose behalf withdrawal assets are allocated.

(3) ***Aggregate plan year accounting.*** Withdrawal assets for taxable years beginning before October 4, 1976, also meet the segregated accounting requirements if they are aggregated and accounted for in one separate account apart from withdrawal assets in separate accounts for later taxable years.

(g) ***Requirements for employer securities*** —

(1) ***General rules.*** The term "employer security" does not include stock rights, warrants and options. An employer security that is not common stock must at all times be immediately convertible into common stock that is an employer security at a conversion price which is no greater than the fair market value of that common stock at the time the plan acquires the security.

(2) ***Common stock*** —

(i) ***In general.*** To be an employer security, common stock must meet certain voting power and dividend right requirements. For purposes of this paragraph (g), stock held by the TRASOP is not treated as outstanding.

(ii) ***Dividend right limitations.*** If dividend rights are subject to a limitation, then stock representing at least 50 percent of the fair market value of the employer's outstanding common stock at the time the common stock is transferred to or purchased by the TRASOP must be subject to the same limitation. However, common stock that satisfies paragraph (g)(3)(ii) of this section is not subject to this subdivision (ii).

(3) ***Voting power and dividend rights.*** To be an employer security, common stock must have voting power and dividend rights which, when taken together, are "no less favorable" than the voting power and dividend rights of any other common stock issued by the employer. Common stock which meets one of the following tests is "no less favorable".

(i) ***Ten-percent shareholder test.*** The stock is part of, or identical to, a class of outstanding stock of which at least 50 percent is not owned by 10-percent shareholders. For this purpose, a 10-percent shareholder is one who owns at least 10 percent of the outstanding shares in a class, including shares constructively owned under section 318.

(ii) ***Substantial proportionality test.*** More than one class of common stock is outstanding and an identical percentage of shares from each class is transferred to the TRASOP.

(iii) ***Voting power test.*** The stock is part of, or identical to, the existing class of stock having the greatest number of votes per unit of fair market value. For example, assume there are only two classes of common stock, Class A and Class B. Their fair market values per share are $1 and $.50, respectively, and the owner of each share of each class is entitled to one vote per share. Thus, Class B has two votes per $1 and Class A has one vote per $1. Accordingly, the Class B stock has the greatest number of votes per unit of fair market value.

(4) ***Right of first refusal.*** TRASOP securities may, but need not, be subject to a right of first refusal. However, whether or not the plan is an ESOP, any such right must meet the requirements of § 54.4975-7(b)(9) of this chapter.

(5) ***Put option.*** A TRASOP security that is transferred to a TRASOP after September 30, 1976, must be subject to a put option if it is not publicly traded when distributed or if it is subject to a trading limitation when distributed. The provisions of § 54.4975-7(b)(10)-(12) and § 54.4975-11(a)(3) of this chapter apply to such securities whether or not the plan is an ESOP.

(6) ***Change of employer security status.*** In general, a transaction changing the status of a corporation as an employer, or as a member of a controlled group of corporations including the employer, adversely affects the status as employer securities of common stock and securities held by a plan ("old employer securities"). However, to the extent that the transaction causing the change in status of the old employer securities does not result in a recapture under section 47 of any investment credit underlying the transfer to, or acquisition by, the plan of the old employer securities, common stock and securities ("new employer securities") substituted for old employer securities are treated as if they were the old employer securities if—

(i) The plan is not terminated,

(ii) The old employer securities and the new employer securities are of equal value at the time of the transaction changing the status of the old employer securities, and

(iii) The new employer securities otherwise meet the requirements of this section.

(h) ***Failure to comply*** —

(1) ***General rule*** —

(i) ***Effect of failure.*** If a corporation elects under paragraphs (c)(2) through (5) of this section to obtain an additional credit and fails to comply with respect to that credit at any time, it is liable to the United States for a civil penalty equal to the amount involved in the failure to comply. If the corporation fails to comply with respect to an additional credit during the 84-month period described in section 301(d)(4) of the 1975 TRA, the credit is also recaptured. A separate failure to comply occurs for each taxable year in which a failure continues to exist.

(ii) ***Illustration of continuing failure's effect.*** Assume that in 1975 an additional credit is allowed and a failure to comply occurs in 1975 with respect to that credit. Assume also that in 1976 the 1975 failure continues uncorrected, another additional credit is allowed, and a failure to comply occurs with respect to the 1976 credit. Under these circumstances, on the last day of 1976 three separate failures to comply exist:

(A) The 1975 failure with respect to the 1975 credit,

(B) the 1976 failure with respect to the 1975 credit, and

(C) the 1976 failure with respect to the 1976 credit.

(2) ***Assessment and collection.*** The civil penalty must be assessed and collected in the same manner in which a deficiency in the payment of federal income tax is assessed and collected.

(3) ***Exception.*** If a failure to comply is corrected within the correction period described in paragraph (h)(5) of this section—

(i) The corporation is not liable for a civil penalty; and

(ii) If the corporation establishes that at the time of the failure a good faith effort to comply was made, its additional credit is not disallowed.

(4) ***Failure to comply (penalty classifications)*** —

(i) ***In general.*** An electing corporation fails to comply if a defect described in paragraphs (h)(4) (ii) through (iv) of this section occurs with respect to an additional credit allowed for a particular taxable year. The characterization of the defect in this subparagraph (4) determines the amount involved under paragraph (h)(8) of this section for the purpose of assessing the civil penalty.

(ii) ***Funding defect.*** A funding defect occurs if a corporation or its TRASOP fails to satisfy the requirements of paragraph (c) (8) or (9) of this section, relating to funding a TRASOP and claiming an additional credit.

(iii) ***Special operational defect.*** A special operational defect occurs if a TRASOP fails in operation to satisfy the requirements described in paragraphs (d) (5) through (9) of this section, relating to debts and expenses of a TRASOP, allocation of TRASOP securities, nonforfeitability, voting rights, and distributions, or paragraph (e)(3) of this section, relating to compliance with certain Code provisions.

(iv) ***De minimis defect.*** A de minimis defect occurs if a corporation or its TRASOP fails to satisfy any requirement of this section other than those enumerated either in paragraph (h)(4) (ii) and (iii) of this section or in paragraphs (a)(2) and (c) (2) through (5) of this section. A failure to comply under this subdivision (iv) may be formal or operational in nature.

(5) ***Failure to comply (correction rules classifications)*** —

(i) ***In general.*** If for an electing corporation a defect described in paragraph (h)(4) of this section occurs, the procedure for correcting the failure to comply depends upon whether the failure is classified as a “formal” failure or an “operational” failure under this subparagraph (5).

(ii) ***Formal failure to comply.*** Formal failures are corrected by retroactive amendment. If a formal plan requirement is not met, the plan must be retroactively amended by no later than the expiration of the correction period under paragraph (h)(6) of this section. A plan fails to meet a formal plan requirement of paragraph (d) of this section if, for example, it does not state, as required by paragraph (d)(3) of this section, that it is designed to invest primarily in employer securities.

(iii) ***Operational failure to comply.*** Operational failures are corrected by undoing the defective transaction and by making the plan and the participants whole. If the value of TRASOP securities transferred to the TRASOP is less than the amount of the additional credit, the corporation must make up any resulting funding deficiency within the correction period. This is done, for example, by contributing additional TRASOP securities plus an amount equal to the dividends or interest that would have been paid between the time that the TRASOP securities should have been transferred and the actual time for the transfer. The contribution of additional TRASOP securities is based on their value under paragraph (b)(7) of this section as of the date by which they were required to be transferred to the plan. An electing corporation fails to meet an obligation undertaken under this section if, for example, it fails to comply with paragraph (c)(8) of this section.

(6) ***Correction period*** —

(i) ***In general.*** For purposes of this paragraph (h), the "correction period" begins when the failure to comply occurs and ends 90 days after receipt by the corporation of a notice of deficiency under section 6212 with respect to the civil penalty and the investment credit.

(ii) ***Extensions of correction period.*** Extensions of the correction period are determined under § 53.4941(e)-1(d)(2) (i), (ii), and (iv) of this chapter (Foundation Excise Tax Regulations). For this purpose, a failure to comply is treated as an act of self-dealing, the corporation is treated as a foundation, and a civil penalty is treated as a tax under section 4941(a)(1).

(7) ***Good faith.*** The corporation has the burden of establishing under paragraph (h)(3)(ii) of this section that it made a good faith effort to comply. For example, if a corporation shows that it has made a good faith effort to establish the fair market value of the employer securities transferred to the TRASOP, it may be entitled to the additional credit even if, on later examination of the return, it is determined that more securities should have been transferred. For purposes of this paragraph (h)(7), reasonable reliance on Technical Information Release 1413 (1975-50 I.R.B. 16), questions and answers relating to ESOP's, is a good faith effort to comply.

(8) ***Amount involved*** —

(i) ***In general.*** The amount involved in a failure to comply is an amount described in this subparagraph (8). A maximum amount and a minimum amount are determined with respect to an additional credit allowed for a particular taxable year.

(ii) ***Maximum amount involved.*** Notwithstanding any other rule in this paragraph (h), all amounts involved with respect to an additional credit allowed for a particular taxable year may not exceed the amount of that credit.

(iii) ***Minimum amount involved.*** The minimum amount is $^{1}/_{2}$ of one percent of the additional credit times the number of full months, or parts of full months, during which the failure to comply exists. "Full month" has the meaning assigned in § 1.1250-1(d)(4) (realty depreciation recapture).

(iv) ***Funding amount involved.*** The amount involved for a funding defect is the greater of the minimum amount involved or the amount required to place the plan in the position it would have been in if no funding defect had occurred.

(v) ***Special operational amount involved.*** The amount involved for a special operational defect is the maximum amount involved.

(vi) ***De minimis amount involved.*** The amount involved for a de minimis defect is the minimum amount involved.

(9) ***Certain permissible actions*** —

(i) ***Elections prior to January 19, 1979.*** A corporation does not fail to comply (within the meaning of this paragraph (h)) merely because it revokes an election made prior to January 19, 1979, under the general rule described in paragraph (c)(1)(i) of this section and with respect to which no additional credit was claimed in the taxable year for which the election was made. Such a revocation is permitted irrespective of whether the carryover option described in paragraph (c)(1)(ii) is elected with respect to qualified investment made in a year for which a general rule election is revoked.

(ii) ***Pro rata use of credit.*** A corporation does not fail to comply merely because, for an applicable year ending prior to January 19, 1979, it provides for pro rata use of the regular 10-percent credit and the 1-percent additional credit to the extent that less than all of a taxpayer's credit earned for a taxable year is allowable.

(iii) ***Transitional rule.*** The Commissioner, based on the particular facts and circumstances of individual cases, may determine that a good faith failure to comply before January 19, 1979, with a final or temporary rule adopted under this section on or after that date does not require retroactive correction under paragraph (h)(5)(ii) of this section.

(Sec. 301(d)(2)(C) of the Tax Reduction Act of 1975; sec. 7805 of the Internal Revenue Code of 1954 (89 Stat. 38, 68A Stat. 917; 26 U.S.C. 7805))

[T.D. 7857, 47 FR 54795, Dec. 6, 1982]

§ 1.46-9 Requirements for taxpayers electing an extra one-half percent additional investment credit.

(a) ***Introduction*** —

(1) ***In general.*** A corporation that qualifies for an additional credit under § 1.46-8 may elect under section 46(a)(2)(B)(ii) of the Code to obtain an extra one-half percent additional investment credit for property described in section 46(a)(2)(D). Paragraph (c) of this section provides additional procedures for electing this extra credit. This section also provides rules for implementing an employee stock ownership plan that meets the requirements of sections 301 (d) and (e) of the Tax Reduction Act of 1975 (“1975 TRA”). The plan must meet the additional formal requirements of paragraph (d), and the additional operational requirements of paragraph (e) of this section. Unless otherwise indicated, statutory references in this section are to the Internal Revenue Code of 1954, as applicable for the year in which a qualified investment is made.

(2) ***Applicability of one-percent TRASOP provisions.*** Subject to the exceptions and additional rules of this section, the provisions of § 1.46-8 apply to an election made, and to a plan implemented, under this section. However, this section does not change the requirements of § 1.46-8 for purposes of obtaining an additional one-percent credit.

(3) ***Effective date.*** This section applies only to taxable years beginning after December 31, 1976. See section 803(j)(2)(A) of the Tax Reform Act of 1976.

(b) ***Definitions*** —

(1) ***One-percent terms.*** When used in this section, the terms listed below have the same meanings as in § 1.46-8(b):

(i) TRASOP. See § 1.46-8(b)(1).

(ii) Employer. See § 1.46-8(b)(3).

(iii) Employer securities. See § 1.46-8(b)(4).

(iv) TRASOP securities. See § 1.46-8(b)(5).

(v) Publicly traded. See § 1.46-8(b)(6).

(vi) Value. See § 1.46-8(b)(7).

(vii) Compensation. See § 1.46-8(b)(8).

(2) ***Additional credit.*** An “additional credit” or “extra additional credit” is the extra one-half percent additional investment credit under section 46(a)(2)(B)(ii)—

(i) For purposes of applying this section, and

(ii) When the context requires, for purposes of applying § 1.46-8 to this extra credit.

(3) ***Matching employee contribution.*** A “matching employee contribution” is a contribution that meets the requirements of paragraph (f) of this section.

(4) ***Basic amount.*** A “basic amount” is a matching employee contribution which is equal to the maximum credit multiplied by a fraction. The numerator of this fraction is a participant's compensation for the plan year. (See § 1.46-9(f)(3)(ii), concerning disregarded compensation.) The denominator is the aggregate of all participants' compensation for the plan year. The “maximum credit” is the estimated value of all employer contributions under paragraph (c)(4)(i) of this section for the applicable year, determined as if the maximum possible matching employee contributions were made.

(5) ***Supplemental contribution.*** A “supplemental contribution” is a matching employee contribution made in addition to a basic amount.

(c) ***Special procedures for extra additional credit*** —

(1) ***Statement of election.*** A corporation's statement of election described in § 1.46-8(c)(3) must contain the name and taxpayer identification number of the corporation. Also, it must declare in the following words, or in words having substantially the same meaning, that:

(i) The corporation elects to have section 46(a)(2)(B) (i) and (ii) of the Internal Revenue Code of 1954 apply; and

(ii) The corporation agrees to implement (or continue to implement, as appropriate) a TRASOP and to claim the additional credit as required by § 1.46-8 and § 1.46-9 of the Income Tax Regulations.

(2) ***Separate election.*** A separate election must be made for each year's qualified investment to obtain the extra additional credit for the qualified investment. If a corporation does not make a timely election to obtain an extra additional credit for a taxable year, it may not subsequently make the election on an amended return or otherwise.

(3) ***No partial election.*** To reduce administrative costs, a plan may establish a ceiling on matching employee contributions. Thus, for example, it may provide for the contribution of only a basic amount without supplemental contributions under paragraph (f)(2)(iv) of this section. Such a ceiling that in effect limits the additional credit to less than one-half percent of the qualified investment is not a partial election prohibited by § 1.46-8(c)(5).

(4) ***Funding a TRASOP*** —

(i) ***Employer contributions.*** The carryover option under § 1.46-8(c)(1)(ii) is available for both the one-percent and one-half percent additional credits or for the one-half percent additional credit alone. In applying § 1.46-8(c)(8)(iii), the value of TRASOP securities, other than those acquired with matching employee contributions, for an applicable year must equal one-half percent of the corporation's qualified investment for that year or, if less, the amount of matching employee contributions received (including pledges, where permitted by the plan) by the time the election for that year is made. However, if a corporation exercises the carryover option in § 1.46-8(c)(1)(ii), the value of these TRASOP securities for an applicable year must equal the amount of additional credit claimed for that year determined after being reduced, if necessary, to equal contributions received (including pledges, if permitted) by the time the credit is claimed for that year. The value of these TRASOP securities, but not the amount of credit claimed, is further reduced to the extent that the employer withholds TRASOP securities to take into account start-up and administrative expenses under paragraph (e)(1) of this section or an investment tax credit reduction under paragraph (e)(2) of this section.

(ii) ***Employee contributions.*** Paragraph (f)(4) of this section, but not § 1.46-8(c)(8) (i) through (iii), applies to TRASOP securities acquired with matching employee contributions.

(5) ***Claiming additional credit.*** In applying § 1.46-8(c)(9)(ii), if less than all of a corporation's credit earned for a taxable year is allowed, the extra additional credit under this section for that year is allowed last.

(d) ***Additional formal plan requirements*** —

(1) ***Contributions by employees*** —

(i) ***In general.*** The plan must contain statements relating to matching employee contributions as required under paragraph (f) of this section.

(ii) ***Aggregate floor.*** A plan may provide for the return of all matching employee contributions for a year if the aggregate amount of such contributions is not at least equal to an amount stated in the plan. See also § 1.46-9(f)(3)(iv).

(2) ***Separate accounting.*** The plan must state that employer contributions and matching employee contributions respectively described in paragraph (c)(4)(i) and (ii) of this section are accounted for separately from each other as well as from other contributions, including those described in § 1.46-8(c)(8).

(3) ***Allocation of TRASOP securities contributed by employer.*** The plan must provide for the allocation under section 301(e)(5) of the 1975 TRA and this subparagraph (3) of TRASOP securities contributed by the employer. These allocations reflect a ratable reduction for TRASOP securities withheld by the employer under paragraph (c)(4)(i) of this section. TRASOP securities so allocated are deemed to be allocated under section 301(d) of the 1975 TRA. In applying § 1.46-8(d)(6) to this section, only subdivisions (ii), (iv), (ix), (x), (xi) and (xii) thereof apply to allocations under this section.

(4) ***Effect of section 415.*** In applying the limitations of section 415 to limitation years beginning after January 19, 1979, allocations of TRASOP securities are considered in the following order: first, allocations under § 1.46-8; second, allocations under this section. See § 1.46-8(d)(6)(v) concerning the allocation of amounts under any other defined contribution plan. No suspense or escrow account may be maintained to hold contributions under this section that are unallocated because of section 415. Thus, section 415 in effect limits the availability of an extra additional credit in a particular year. However, if the plan so provides, a potential extra additional credit is treated as an investment credit carryover under the carryover option described in § 1.46-8(c)(1)(ii) to the extent that it is not used in a particular year because of section 415.

(5) ***Nonforfeitability.*** Employer contributions are also not considered to be forfeitable under § 1.46-8(d)(7) merely because the plan provides for their return to the corporation in an amount equal to the excess of employer contributions under this section over matching employee contributions or in the case of discriminatory operation under paragraph (f)(3) of this section. See paragraph (f)(3)(iv).

(6) ***Distributions.*** Notwithstanding § 1.46-8(d)(9)(i), a plan may not distribute from a participant's employer contribution account cash or employer securities attributable to unpaid pledges of the participant.

(e) ***Additional operational plan requirements*** —

(1) ***Start-up and administrative expenses*** —

(i) ***In general.*** The expense of establishing plan features relating to the extra additional credit is a start-up expense. The expense of collecting matching employee contributions is an administrative expense.

(ii) ***Payment.*** Under § 1.46-8(e) (6) and (7), an employee may withhold or a plan may use, to the extent not withheld, TRASOP securities for start-up and administrative expense payments. However, withdrawals must be either limited to employer contributions under § 1.46-8(c)(8) or reasonably apportioned between these employer contributions and contributions under paragraph (c)(4)(i) of this section. An example of reasonable apportionment is earmarking expenses attributable to each of the additional credits and allocating any remaining non-earmarked expenses on either a 2:1 or 1:1 ratio between the additional credits. Another example is simply apportioning expenses between the additional credits on a 2:1 or 1:1 ratio basis without earmarking. However, if one-percent and one-half percent start-up expenses are attributable to different qualified investments, withdrawals for one-half percent expenses are limited to employer contributions under paragraph (c)(4)(i) of this section.

(iii) ***Ceiling.*** In determining the ceiling on start-up expenses under § 1.46-8(e)(6)(iii), only employer contributions under § 1.46-8(c)(8) and paragraph (c)(4)(i) of this section are considered. In determining the ceiling on administrative expenses under § 1.46-8(e)(7)(ii), dividends on all TRASOP securities, including those acquired with matching employee contributions, are considered.

(2) ***Redeterminations and recaptures.*** A reduction in investment credit because of a redetermination or recapture is allocated ratably under the principles of § 1.46-8(e)(9)(ii) among the 10-percent credit, the one-percent credit, and the one-half percent credit for a particular year. However, as illustrated in § 1.46-8(e)(9)(ii), this subparagraph (3) does not apply to a redetermination solely of one or both of the additional credits.

(3) ***Withdrawal asset segregation.*** The segregated accounting provisions of § 1.46-8(f) apply independently to withdrawal assets attributable to TRASOP securities under § 1.46-8 and to TRASOP securities under this section.

(f) ***Matching employee contributions*** —

(1) ***Designation by employee.*** The plan must state that each employee on whose behalf an allocation is made under § 1.46-8(d)(6) for an applicable year is eligible to designate and contribute an amount to the TRASOP for that year as a matching employee contribution.

(2) ***Form and timing of contribution*** —

(i) ***Cash.*** A participant may contribute in a manner provide under the plan a designated amount in cash directly to the plan or indirectly by the employer's withholding from amounts otherwise due the participant. The full amount, or pledge in lieu of an amount, for an applicable year must be contributed by the applicable last day described in § 1.46-8(c)(8)(i).

(ii) ***Optional pledges in lieu of cash.*** The plan need not permit a pledge. However, when permitted by the plan, an irrevocable written pledge made in good faith by a participant is treated as a matching employee contribution of cash, whether or not the pledge is in fact contractually binding. The pledge must be to contribute, by no later than a time specified in the TRASOP, a designated amount in cash directly to the plan or indirectly by authorizing the employer to withhold from compensation otherwise due a participant. The specified time may not be later than 24 months after the close of the applicable year for which the amount is treated as a matching employee contribution.

(iii) ***Transitional rule.*** A plan may provide for the receipt of employee pledges at any time before the later of the applicable last day or January 15, 1980. If the last day for receipt of pledges for an applicable year is January 15, 1980, the one-half percent TRASOP credit for the applicable year may be elected on an amended return filed not later than that date, and employer contributions for the applicable year must be made by that date. A plan may provide that pledges which otherwise would have been payable on or before December 31, 1979 may be paid on or before January 15, 1980.

(iv) ***Basic and supplemental contributions.*** A plan formula may limit a matching employee contribution to a basic amount. It may also permit matching employee contributions of supplemental amounts to the extent that total basic amount contributions do not equal the amount of the additional credit claimed under this section. Employees may make supplemental contributions covering unpaid pledges only after the employer has disclosed the value of securities and income attributable to the unpaid pledge.

(3) *Prohibited discrimination* —

(i) ***General rule.*** Matching employee contributions must be based on a formula stated in the plan that does not result in prohibited discrimination under section 401(a)(4) either in form or in operation. Thus, for example, a flat dollar amount required as a matching employee contribution to qualify for employer-provided benefits under this section may not be too high for lower paid employees to contribute under the plan. Further, lower paid employees must participate to such an extent that allocations under this section do not result in prohibited discrimination

(ii) ***Compensation disregarded.*** Compensation disregarded in allocations under § 1.46-8(d)(6)(iv) is disregarded under this paragraph and for purposes of determining basic amounts as defined in paragraph (b)(4) of this section.

(iii) ***Former employees.*** A TRASOP must give all participants a reasonable opportunity to make matching employee contributions. However, neither a former employee who is a participant at the end of the plan year by reason of § 1.46-8(d)(6)(iii), nor the estate of a deceased employee, need have the same options as are available to other participants. Thus, for example, a former employee may be limited to cash contributions even though other participants are permitted to make pledges. Also, if former employees of estates of deceased employees fail to make matching employee contributions, they are not considered in determining whether or not a TRASOP is discriminatory.

(iv) ***Return of contributions.*** A plan may provide for the return of employee and employer contributions for a year to the extent that plan operation would otherwise result in prohibited discrimination.

(4) *Investment in employer securities* —

(i) ***General rule.*** Matching employee contributions must be invested in TRASOP securities no later than 30 days after the time for funding a TRASOP under § 1.46-8(c)(8)(ii) or, if later, the time specified under the special rule for pledges.

(ii) ***Special rule for pledges.*** Cash contributed to pay a pledge permitted by paragraph (f)(2)(ii) of this section must be invested in employer securities so that the cash is not held more than 3 months. The 3-month period includes the period, if any, that the cash is held by the employer.

(5) *Reduction of matching employee contribution* —

(i) ***In general.*** Matching employee contributions must be reduced in three cases. First, they are reduced to the extent that there are no corresponding employer contributions described in paragraph (c)(4)(i) of this section. This occurs, for example, when the aggregate of the basic amounts of matching employee contributions exceeds the allowable credit. Second, they are reduced to the extent that corresponding employer contributions matching them under paragraph (c)(4)(i) of this section are withdrawn under section 301(f) of the 1975 TRA. Third, they are reduced by the amount of any pledge unpaid at the time specified in paragraph (f)(2)(ii) of this section.

(ii) ***Apportioning reductions.*** Generally, the account of each contributor under this section for an applicable year is reduced by a percentage of the account. This percentage equals the total reduction of all matching employee contributions for that year divided by the total, before the reduction, of all matching employee contributions. However, if a reduction is directly

attributable to a particular contributor, only that contributor's account is reduced. A reduction is directly attributable to a particular contributor when, for example, the limits of section 415 prohibit a full allocation of employer contributions equal to the contributor's matching employee contribution for an applicable year or when a contributor fails to pay a pledge. A reduction may not yield a negative balance in a participant's account.

(iii) ***Disposing of reductions.*** If a participant's matching employee contribution is reduced, the amount of the reduction must either be treated as a voluntary contribution or returned to the participant by the later of two dates. The first date is 30 days after the time for investing in TRASOP securities under paragraph (f)(4) of this section. The second date is the 30th day after the date on which the withdrawal of employer contributions occurs that causes the reduction. It may be treated as a voluntary contribution only if, as stated in the plan, the participant so indicates in writing when making the matching employee contribution.

(iv) ***Supplemental contributions covering unpaid pledges.*** Notwithstanding the timing requirements of paragraph (f)(2) of this section, supplemental contributions covering unpaid pledges must be made no later than 60 days after accounting for the corresponding reduction under paragraph (f)(5)(ii) of this section.

(v) ***Effect of reduction on credit.*** For the purpose of applying section 415 to an additional allocation to the account of a participant attributable to a supplemental contribution covering an unpaid pledge, the contribution is treated as an annual addition to the supplemental contributor's account in the applicable year for which the reduction occurred. An amount in excess of the contribution may be allocated in equal amounts for each year from the applicable year to the year of the reduction. The employer's credit is reduced only to the extent that a proportionate transfer of assets is not made from the account of the participant to whom the reduction is attributable to the accounts of supplemental contributors.

(vi) ***Example.*** The rules contained in paragraphs (f) (2) and (5) of this section are illustrated by the following example:

Example. Assume that A is an employee of corporation M, a calendar year taxpayer that maintains a TRASOP. A has pledged $100 as a matching employee contribution for 1977, the first applicable year of M's TRASOP. M has transferred employer securities valued at $100 that have been allocated to A's account under the Plan. The TRASOP provides that pledges must be paid no later then 24 months after the end of the applicable year. Thus, A's $100 pledge must be paid by December 31, 1979. As of December 31, 1979, the employer securities attributable to A's pledge have a value of $90 and have produced undistributed dividend income of $13. Thus, the value of the portion of A's account attributable to the unpaid pledge is $103. After December 31, 1979, the value of this portion of A's account is disclosed to participants, and employee B chooses to pay off A's unpaid pledge, as provided in the plan, by making a $100 supplemental contribution. The full amount of the securities and dividend income attributable to the unpaid pledge are transferred from A's account to that of B as of December 31, 1979. M's credit for 1977 is not reduced. The $100 supplemental contribution is an annual addition to B's account for purposes of applying section 415 in 1979. Income attributable to the pledge in excess of the supplemental contribution, $3 ($103-$100), may be allocated and treated as an annual addition by spreading this excess amount over the years from the applicable year to the year of the reduction (1977, 1978, 1979).

(g) ***Failure to comply —***

(1) ***General rule.*** If a corporation elects under § 1.46-8(c) (2) through (5) and paragraph (c)(1) of this section to obtain an additional credit, § 1.46-8(h) (1), (2), (3), (5), (6), and (7) as modified by this paragraph (g) apply.

(2) ***Failure to comply (penalty classifications)*** —

(i) ***In general.*** A corporation fails to comply with an extra additional credit election if a defect described in paragraph (g)(2) (ii)-(iv) of this section occurs in a taxable year.

(ii) ***Funding defect.*** A funding defect occurs under this section if a corporation or its TRASOP fails to satisfy the requirements of § 1.46-8(c) (8) or (9) or paragraph (c)(4) of this section, as they apply directly to the extra additional credit.

(iii) ***Special operational defect.*** A special operational defect occurs if a TRASOP fails in operation to satisfy the requirements decribed in § 1.46-8(d) (5) through (9) (except (6) (i), (iii), and (v) through (viii)) or (e)(3), or paragraphs (d) (5), (6), and (e)(3) of this section, as they apply directly to the extra additional credit.

(iv) ***De minimis defect.*** A *de minimis* defect occurs if a corporation or its TRASOP fails to satisfy the requirements, other than those enumerated in paragraphs (c) (1) and (2) and (g)(2) (ii) and (iii), of this section or of § 1.46-8 other than those excluded under § 1.46-8(h)(4)(iv).

(3) ***Amount involved.*** The amount involved in a failure to comply under this section is based upon the extra additional credit within the meaning of section 46(a)(2)(B)(ii).

(4) ***Coordination of civil penalties.*** The civil penalties under § 1.46-8 and this section are determined separately. In no case may the amount involved with respect to a particular failure to comply in one year exceed under both sections the full additional credit within the meaning of section 46(a)(2)(B) (i) and (ii).

[T.D. 7856, 47 FR 54805, Dec. 6, 1982]

§ 1.46-10 [Reserved]

§ 1.47-1 Recomputation of credit allowed by section 38.

(a) ***General rule*** —

(1) ***In general.***

(i) If during the taxable year any section 38 property the basis (or cost) of which was taken into account, under paragraph (a) of § 1.46-3, in computing the taxpayer's qualified investment is disposed of, or otherwise ceases to be section 38 property or becomes public utility property (as defined in paragraph (g) of § 1.46-3) or is a qualifying commuter highway vehicle (as defined in paragraph (a) of § 1.46-11) which undergoes a change in use (as defined in paragraph (m)(2) of this section) with respect to the taxpayer, before the close of the estimated useful life (as determined under subparagraph (2)(i) of this paragraph) which was taken into account in computing such qualified investment, then the credit earned for the credit year (as defined in subdivision (ii)(*a*) of this subparagraph) shall be recomputed under the principles of paragraph (a) of § 1.46-1 and paragraph (a) of § 1.46-3 substituting, in lieu of the estimated useful life of the property that was taken into account originally in computing qualified investment, the actual useful life of the property as determined under subparagraph (2)(ii) of this paragraph. There shall also be recomputed under the principles of §§ 1.46-1 and 1.46-2 the

credit allowed for the credit year and for any other taxable year affected by reason of the reduction in credit earned for the credit year, giving effect to such reduction in the computation of carryovers or carrybacks of unused credit. If the recomputation described in the preceding sentence results in the aggregate in a decrease (taking into account any recomputations under this paragraph in respect of prior recapture years, as defined in subdivision (ii)(*b*) of this subparagraph) in the credits allowed for the credit year and for any other taxable year affected by the reduction in credit earned for the credit year, then the income tax for the recapture year shall be increased by the amount of such decrease in credits allowed. For treatment of such increase in tax, see paragraph (b) of this section. For rules relating to "disposition" and "cessation", see § 1.47-2. For rules relating to certain exceptions to the application of this section, see § 1.47-3. For special rules in the case of an electing small business corporation (as defined in section 1371(b)), an estate or trust, or a partnership, see respectively, §§ 1.47-4, 1.47-5, or 1.47-6. For rules applicable to energy property, see paragraph (h) of this section. For special rules relating to recomputation of credit allowed by section 38 if progress expenditure property (as defined in § 1.46-5(d)) ceases to be progress expenditure property with respect to the taxpayer, see paragraph (g) of this section.

(ii) For purposes of this section and §§ 1.47-2 through 1.47-6—

(*a*) The term "credit year" means the taxable year in which section 38 property was taken into account in computing a taxpayer's qualified investment.

(*b*) The term "recapture year" means the taxable year in which section 38 property the basis (or cost) of which was taken into account in computing a taxpayer's qualified investment is disposed of, or otherwise ceases to be section 38 property or becomes public utility property with respect to the taxpayer, before the close of the estimated useful life which was taken into account in computing such qualified investment.

(*c*) The term "recapture determination" means a recomputation made under this paragraph.

(2) ***Rules for applying subparagraph (1).*** For purposes of subparagraph (1) of this paragraph—

(i) In determining whether section 38 property is disposed of, or otherwise ceases to be section 38 property with respect to the taxpayer, before the close of the estimated useful life which was taken into account in computing the taxpayer's qualified investment, the term "estimated useful life" means the shortest life of the useful life category within which falls the estimated useful life which was assigned to such property under paragraph (e) of § 1.46-3. Thus, section 38 property which is assigned, under paragraph (e) of § 1.46-3, an estimated useful life of 6 years shall not be treated, for purposes of subparagraph (1) of this paragraph, as having been disposed of before the close of its estimated useful life if such property is sold 5 years (that is, the shortest life of the 5 years or more but less than 7 years useful life category) after the date on which it was placed in service. Likewise, section 38 property with an estimated useful life of 15 years which is placed in service on January 1, 1972, shall not be treated as having been disposed of before the close of its estimated useful life if such property is sold at any time after January 1, 1979 (that is, 7 years or more after the date on which it was placed in service).

(ii) In determining the recomputed qualified investment with respect to property which is disposed of or otherwise ceases to be section 38 property the term "actual useful life" means, except as otherwise provided in this section and §§ 1.47-2 through 1.47-6, the period beginning with the date on which the property was placed in service by the taxpayer and ending with the date of such disposition or cessation. See paragraph (c) of this section.

(iii) In determining the recomputed qualified investment with respect to property which ceases to be section 38 property with respect to the taxpayer after August 15, 1971, or which becomes public utility property after such date, such property shall be treated as if it were property described in section 50 at the time it was placed in service (whether or not it was property described in section 50 at such time). Thus, if property was placed in service on October 15, 1968, and was assigned an estimated useful life of 4 years, there would be no increase in tax under section 47 if the property were disposed of at any time after October 14, 1971, that is, 3 years or more after the property was placed in service.

(b) ***Increase in income tax and reduction of investment credit carryover*** —

(1) ***Increase in tax.*** Except as provided in subparagraph (2) of this paragraph, any increase in income tax under this section shall be treated as income tax imposed on the taxpayer by chapter 1 of the Code for the recapture year notwithstanding that without regard to such increase the taxpayer has no income tax liability, has a net operating loss for such taxable year, or no income tax return was otherwise required for such taxable year.

(2) ***Special rule.*** Any increase in income tax under this section shall not be treated as income tax imposed on the taxpayer by chapter 1 of the Code for purposes of determining the amount of the credits allowable to such taxpayer under—

(i) Section 33 (relating to taxes of foreign countries and possessions of United States),

(ii) Section 34 (relating to dividends received by individuals before January 1, 1965),

(iii) Section 35 (relating to partially tax-exempt interest received by individuals),

(iv) Section 37 (relating to retirement income), and

(v) Section 38 (relating to investment in certain depreciable property).

(3) ***Reduction in credit allowed as a result of a net operating loss carryback.***

(i) If a net operating loss carryback from the recapture year or from any taxable year subsequent to the recapture year reduces the amount allowed as a credit under section 38 for any taxable year up to and including the recapture year, then there shall be a new recapture determination under paragraph (a) of this section for each recapture year affected, taking into account the reduced amount of credit allowed after application of the net operating loss carryback.

(ii) Subdivision (i) of this subparagraph may be illustrated by the following examples:

> *Example 1.* (*a*) X Corporation, which makes its return on the basis of a calendar year, acquired and placed in service on January 1, 1962, an item of section 38 property with a basis of $10,000 and an estimated useful life of 8 years. The amount of qualified investment with respect to such asset was $10,000. For the taxable year 1962, X Corporation's credit earned of $700 (7 percent of $10,000) was allowed under section 38 as a credit against its liability for tax of $700. In 1963 and 1964 X Corporation had no liability for tax and placed in service no section 38 property. On January 3, 1963, such item of section 38 property was sold to Y Corporation. Since the actual useful life of such item was only 1 year, there was a recapture determination under paragraph (a) of this section. The income tax imposed by chapter 1 of the Code on X Corporation for the

taxable year 1963 was increased by the $700 decrease in its credit earned for the taxable year 1962 (that is, the $700 original credit earned minus zero recomputed credit earned).
(*b*) For the taxable year 1965, X Corporation has a net operating loss which is carried back to the taxable year 1962 and reduces its liability for tax, as defined in paragraph (c) of § 1.46-1, for such taxable year to $200. As a result of such net operating loss carryback, X Corporation's credit allowed under section 38 for the taxable year 1962 is limited to $200 and the excess of $500 ($700 credit earned minus $200 limitation based on amount of tax) is an investment credit carryover to the taxable year 1963.

(*c*) For 1965, there is a recapture determination under subdivision (i) of this subparagraph for the 1963 recapture year. The $700 increase in the income tax imposed on X Corporation for the taxable year 1963 is redetermined to be $200 (that is, the $200 credit allowed after taking into account the 1965 net operating loss minus zero credit which would have been allowed taking into account the 1963 recapture determination). In addition, X Corporation's $500 investment credit carryover to the taxable year 1963 is reduced by $500 ($700 minus $200) to zero and X Corporation is entitled to a $500 refund of the tax paid as a result of the 1963 determination.

Example 2. (*a*) X Corporation, which makes its returns on the basis of a calendar year, acquired and placed in service on January 1, 1962, an item of section 38 property with a basis of $10,000 and an estimated useful life of 8 years. The amount of qualified investment with respect to such asset was $10,000. For the taxable year 1962, X Corporation's credit earned of $700 (7 percent of $10,000) was allowed under section 38 as a credit against its liability for tax of $700. In 1963 and in 1964 X Corporation had no liability for tax and placed in service no section 38 property. On January 3, 1965, such item of section 38 property is sold to Y Corporation. For the taxable year 1965, X Corporation has a net operating loss which is carried back to the taxable year 1962 and reduces its liability for tax, as defined in paragraph (c) of § 1.46-1, for such taxable year to $100.
(*b*) As a result of such net operating loss carryback, X Corporation's credit allowed under section 38 for the taxable year 1962 is limited to $100 and the excess of $600 ($700 credit earned minus $100 limitation based on amount of tax) is an investment credit carryover to the taxable year 1963.

(*c*) Since the actual useful life of the item of section 38 property sold to Y Corporation was only 3 years, there is a recapture determination under paragraph (a) of this section. X Corporation's $600 investment credit carryover to 1963 is reduced by $600 to zero. The income tax imposed by chapter 1 of the Code on X Corporation for the taxable year 1965 is increased by the $100 reduction in credit allowed by section 38 for 1962.

(4) ***Statement of recomputation.*** The taxpayer shall attach to his income tax return for the recapture year a separate statement showing in detail the computation of the increase in income tax imposed on such taxpayer by chapter 1 of the Code and the reduction in any investment credit carryovers.

(c) ***Date placed in service and date of disposition or cessation*** —

(1) ***General rule.*** For purposes of this section and §§ 1.47-2 through 1.47-6, in determining the actual useful life of section 38 property—

(i) Such property shall be treated as placed in service on the first day of the month in which such property is placed in service. The month in which property is placed in service shall be determined under the principles of paragraph (d) of § 1.46-3.

(ii) If during the taxable year such property ceases to be section 38 property with respect to the taxpayer—

(*a*) As a result of the occurrence of an event on a specific date (for example, a sale, transfer, retirement or other disposition), such cessation shall be treated as having occurred on the actual date of such event.

(*b*) For any reason other than the occurrence of an event on a specific date (for example, because such property is used predominantly in connection with the furnishing of lodging during such taxable year), such cessation shall be treated as having occurred on the first day of such taxable year.

(2) ***Special rule.*** Notwithstanding subparagraph (1) of this paragraph, if a taxpayer uses an averaging convention (see § 1.167(a)(10)) in computing depreciation with respect to section 38 property, then, for purposes of this section and §§ 1.47-2 through 1.47-6, he may use the assumed dates of additions and retirements in determining the actual useful life of such property provided such assumed dates are used consistently for purposes of subpart B of part IV of subchapter A of chapter 1 of the Code with respect to all section 38 property for which such convention is used for purposes of depreciation. This subparagraph shall not apply in any case where from all the facts and circumstances it appears that the use of such assumed dates results in a substantial distortion of the investment credit allowed by section 38. Thus, for example, if the taxpayer computes depreciation under a convention under which the average of the beginning and ending balances of the asset account for the taxable year are taken into account, he may use July 1 as the assumed date of all additions and retirements to such account. Similarly, if the taxpayer computes depreciation under a convention under which the average of the beginning and ending balances of the asset account for each month is taken into account, he may use the date determined by reference to the weighted average of the monthly averages as the assumed date of all additions and retirements to such account.

(3) ***Example.*** This paragraph may be illustrated by the following example:

Example. Assume that section 38 property is placed in service (within the meaning of paragraph (d) of § 1.46-3) on December 1, 1965 (thus, the credit is treated as being earned in 1965) but under the taxpayer's depreciation practice the period for depreciation with respect to such property begins on January 1, 1966, and that the property is actually retired on December 2, 1970. Under the general rule of subparagraph (1) of this paragraph, the property is treated as placed in service on December 1, 1965, and as ceasing to be section 38 property with respect to the taxpayer on December 2, 1970, even though under the taxpayer's depreciation practice the period for depreciation with respect to such property begins on January 1, 1966, and

terminates on January 1, 1971. However, under the special rule of subparagraph (2) of this paragraph the taxpayer may determine the actual useful life of the property by reference to the assumed dates of January 1, 1966, and January 1, 1971.

(d) ***Examples.*** Paragraphs (a) through (c) of this section may be illustrated by the following examples:

Example 1. (i) X Corporation, which makes its returns on the basis of the calendar year, acquired and placed in service on January 1, 1962, three items of section 38 property each with a basis of $12,000 and an estimated useful life of 15 years. The amount of qualified investment with respect to each such asset was $12,000. For the taxable year 1962, X Corporation's credit earned of $2,520 was allowed under section 38 as a credit against its liability for tax of $4,000. On December 2, 1965, one of the items of section 38 property is sold to Y Corporation.
(ii) The actual useful life of the item of property which is sold on December 2, 1965, is three years and eleven months. The recomputed qualified investment with respect to such item of property is zero ($12,000 basis multiplied by zero applicable percentage) and X Corporation's recomputed credit earned for the taxable year 1962 is $1,680 (7 percent of $24,000). The income tax imposed by chapter 1 of the Code on X Corporation for the taxable year 1965 is increased by the $840 decrease in its credit earned for the taxable year 1962 (that is, $2,520 original credit earned minus $1,680 recomputed credit earned).

Example 2. (i) The facts are the same as in example 1 and in addition on December 2, 1966, a second item of section 38 property placed in service in the taxable year 1962 is sold to Y Corporation.
(ii) The actual useful life of the item of property which is sold on December 2, 1966, is four years and eleven months. The recomputed qualified investment with respect to such item of property is $4,000 ($12,000 basis multiplied by $33^1/_3$ percent applicable percentage) and X Corporation's recomputed credit earned for the taxable year 1962 is $1,120 (7 percent of $16,000). The income tax imposed by chapter 1 of the Code on X Corporation for the taxable year 1966 is increased by $560 (that is, $1,400 ($2,520 original credit earned minus $1,120 recomputed credit earned) reduced by the $840 increase in tax for 1965).

Example 3. (i) The facts are the same as in example 1 except that for the taxable year 1962 X Corporation's liability for tax under section 46(a)(3) is only $1,520. Therefore, for such taxable year X Corporation's credit allowed under section 38 is limited to $1,520 and the excess of $1,000 ($2,520 credit earned minus $1,520 limitation based on amount of tax) is an unused credit. Of such $1,000 unused credit, $100 is allowed as a credit under section 38 for the taxable year 1963, $100 is allowed for 1964, and $800 is carried to the taxable year 1965.
(ii) The actual useful life of the item of property which is sold on December 2, 1965, is three years and eleven months. The recomputed qualified investment with respect to such item of property is zero ($12,000 basis multiplied by zero applicable percentage) and X Corporation's recomputed credit earned for the taxable year 1962 is $1,680 (7 percent of $24,000). If such $1,680

recomputed credit earned had been taken into account in place of the $2,520 original credit earned, X's credit allowed for 1962 would have been $1,520, and of the $160 unused credit from 1962 $100 would have been allowed as a credit under section 38 for 1963, and $60 would have been allowed for 1964. X Corporation's $800 investment credit carryover to the taxable year 1965 is reduced by $800 to zero. The income tax imposed by chapter 1 of the Code on X Corporation for the taxable year 1965 is increased by $40 (that is, the aggregate reduction in the credits allowed by section 38 for 1962, 1963, and 1964).

Example 4. (i) X Corporation, which makes its returns on the basis of the calendar year, acquired and placed in service on November 1, 1962, an item of section 38 property with a basis of $12,000 and an estimated useful life of 10 years. The amount of qualified investment with respect to such property was $12,000. For the taxable year 1962, X Corporation's credit earned of $840 was allowed under section 38 as a credit against its liability for tax of $840. For each of the taxable years 1963 and 1964 X Corporation's liability for tax was zero and its credit earned was $400; therefore, for each of such years its unused credit was $400. For the taxable year 1965 its liability for tax was $200 and its credit earned was zero; therefore, $200 of the $400 unused credit from 1963 was allowed as credit for 1965 and $600 ($200 from 1963 and $400 from 1964) is an investment credit carryover to 1966. On February 2, 1966, such item of section 38 property is sold to Y Corporation.
(ii) The actual useful life of such item of property is three years and three months. The recomputed qualified investment with respect to such property is zero ($12,000 basis multipled by zero) and X Corporation's recomputed credit earned for the taxable year 1962 is zero. If such zero recomputed credit earned had been taken into account in place of the $840 original credit earned, the entire $400 unused credit from 1963 (including the $200 portion which was originally allowed as a credit for 1965) and the $400 unused credit from 1964 would have been allowed as investment credit carrybacks against X Corporation's liability for tax of $840 for 1962. (See § 1.46-2 for rules relating to the carryback of unused credits.)

(iii) Therefore, the $600 carryover from 1963 and 1964 to 1966 is eliminated and the income tax imposed by chapter 1 of the Code on X Corporation for the taxable year 1966 is increased by the $240 aggregate reduction in the credits allowed by section 38 for the taxable years 1962 and 1965 (that is, $1,040 credit allowed minus $800 which would have been allowed).

Example 5. (i) X Corporation, which makes its returns on the basis of the calendar year, acquired and placed in service on November 1, 1962, an item of section 38 property with a basis of $10,000 and an estimated useful life of 8 years. The amount of qualified investment with respect to such asset was $10,000. For the taxable year 1962, X Corporation's credit earned of $700 was allowed as a credit against its liability for tax. For each of the taxable years 1963, 1964, and 1965 X had no taxable income. On July 3, 1966, the item of section 38 property is sold to Y Corporation. For the taxable year 1966 X Corporation has a net operating loss of $3,000.

(ii) The actual useful life of the item of property is three years and eight months. The recomputed qualified investment with respect to such item of property is zero and X Corporation's recomputed credit earned for the taxable year 1962 is zero. Notwithstanding the $3,000 net operating loss for the taxable year 1966, the income tax imposed by chapter 1 of the Code on X Corporation for such year is $700 (that is, the decrease in its credit earned for the taxable year 1962).

(e) ***Identification of property*** —

(1) ***General rule*** —

(i) ***Record requirements.*** In general, the taxpayer must maintain records from which he can establish, with respect to each item of section 38 property, the following facts:

(*a*) The date the property is disposed of or otherwise ceases to be section 38 property,

(*b*) The estimated useful life which was assigned to the property under paragraph (e) of § 1.46-3,

(*c*) The month and the taxable year in which the property was placed in service, and

(*d*) The basis (or cost), actually or reasonably determined, of the property.

(ii) ***Recapture determination.*** For purposes of determining whether section 38 property is disposed of, or otherwise ceases to be section 38 property with respect to the taxpayer, before the close of its estimated useful life, and for purposes of determining recomputed qualified investment, the taxpayer must establish from his records the facts required by subdivision (i) of this subparagraph.

(iii) ***Examples.*** If the taxpayer fails to maintain records from which he can establish the facts required by subdivision (i) of this subparagraph, then this section shall be applied to the taxpayer in the manner indicated in the following examples:

Example 1. Corporation X, organized on January 1, 1964, files its income tax return on the basis of a calendar year. During the years 1964 and 1965, X places in service several items of machinery to which it assigns estimated useful lives of 8 years. X places the items of machinery in a composite account for purposes of computing depreciation. When X's 1966 return is being audited, X is unable to establish whether the items placed in service in 1964 and 1965 were still on hand at the end of 1966. Therefore, for purposes of paragraph (a) of this section, X is treated as having disposed of, in 1966, all of the items of machinery placed in service in 1964 and 1965.

Example 2. Corporation Y, organized on January 1, 1960, files its income tax return on the basis of a calendar year. During each of the years 1960 through 1965, Y places in service four items of machinery to each of which it assigns an estimated useful life of 8 years for depreciation purposes (and for purposes of computing qualified investment for relevant years). Y places the items of machinery in a composite account for purposes of computing depreciation (and for purposes of computing qualified investment for relevant years). When Y's 1965 return is being audited, Y can establish that it retired during 1965 only six items of this machinery. However, Y cannot establish the date on which these six items were placed in service, nor can Y establish that the items placed in service in 1963 or 1964 are still on hand as of the end of 1965. No previous recapture has taken place with respect to any of the items placed in service in 1963 or 1964. Assuming that

paragraph (e) (2) and (3) of this section is not applicable, Y is treated, for purposes of paragraph (a) of this section, as having disposed of, in 1965, the four items placed in service in 1964, the most recent year before 1965 in which such property was placed in service, and two items from 1963, the next most recent year.

Example 3. The facts are the same as in example 2 except that when Y's 1966 return is being audited, Y can establish from its records that all four items placed in service in 1965 are still on hand and that only three items were retired in 1966. For purposes of paragraph (a) of this section, Y is treated as having disposed of, in 1966, the two remaining items of machinery placed in service in 1963, and one of the items placed in service in 1962.

(2) ***Treatment of "mass assets".***

(i) If, in the case of mass assets (as defined in subparagraph (4) of this paragraph), it is impracticable for the taxpayer to maintain records from which he can establish with respect to each item of section 38 property the facts required by subparagraph (1) of this paragraph, and if he adopts other reasonable recordkeeping practices, consonant with good accounting and engineering practices, and consistent with his prior recordkeeping practices, then he may substitute data from an appropriate mortality dispersion table. An appropriate mortality dispersion table must be based on an acceptable sampling of the taxpayer's actual experience or other acceptable statistical or engineering techniques. In lieu of such mortality dispersion table, the taxpayer may use a standard mortality dispersion table prescribed by the Commissioner. If the taxpayer uses such standard mortality dispersion table for any taxable year, it must be used for all subsequent taxable years unless the taxpayer obtains the consent of the Commissioner to change. If mass assets are placed in a multiple asset account and if the depreciation rate for such account is based on the maximum expected life of the longest lived asset in such account, in applying a mortality dispersion table (including a standard mortality dispersion table) the average expected useful life of the mass assets in such account must be used.

(ii) Subdivision (i) of this subparagraph shall not apply with respect to assets placed in service in a taxable year ending on or after June 30, 1967, and beginning before January 1, 1971, or with respect to assets placed in service for a taxable year beginning after December 31, 1970, for which the taxpayer has not made the election provided by section 167(m), unless the estimated useful lives which were assigned to such assets for purposes of determining qualified investment—

(*a*) Were separate lives based on the estimated range of years taken into account in establishing the average useful life of assets similar in kind under paragraph (e)(3)(ii)(*b*) of § 1.46-3, and

(*b*) Were determined by use of a mortality dispersion table (including a standard mortality dispersion table).

(iii) Any standard mortality dispersion table prescribed by the Commissioner shall be based on average useful life categories and with respect to each category shall contain five columns, the first four of which shall state the percentage of property assumed to have a useful life of—

Column (1): Less than 4 years,

Column (2): 4 years or more but less than 6 years,

Column (3): 6 years or more but less than 8 years, and

Column (4): 8 years or more.

The fifth column shall show the total qualified investment as a percentage and shall be used in connection with the determination to be made under § 1.46-3(e)(3)(iii). In the case of a table which is to apply to property which is described in section 50 or to property which is treated as property described in section 50 under paragraph (a)(2)(iii) of this section, this subdivision shall be applied by substituting “3 years” for “4 years”, “5 years” for “6 years”, and “7 years” for “8 years”.

(iv) Whenever the standard mortality dispersion table is used for a taxable year under subdivision (i) of this subparagraph (whether or not such table was used in determining qualified investment), the percentage of property shown in column (1) of the table shall (for purposes of section 47, this section, and §§ 1.47-2 through 1.47-6) be deemed to have been disposed of on the day before the expiration of the 4-year period beginning on the date on which it was considered as placed in service under § 1.47-1(c); the percentage of property shown in column (2) of the table shall be deemed to have been disposed of on the day before the expiration of the 6-year period beginning on the date on which it was so considered as placed in service; and the percentage of property shown in column (3) shall be deemed to have been disposed of on the day before the expiration of the 8-year period beginning on the date on which it was so considered as placed in service. In applying this subdivision for purposes of recomputing qualified investment, the proper average useful life category shall be used whether or not such category was used in determining qualified investment. In the case of property which is described in section 50 or property which is treated as property described in section 50 under paragraph (a)(2)(iii) of this section (other than property the qualified investment with respect to which was determined by use of the standard or an appropriate mortality dispersion table), this subdivision shall be applied by substituting “3-year period” for “4-year period”, “5-year period” for “6-year period”, and “7-year period” for “8-year period”.

(v) In lieu of using subdivision (iv) of this subparagraph for purposes of recomputing qualified investment, a taxpayer may, for the first recapture year (as defined in paragraph (a)(1)(ii)(*b*) of this section) to which such subdivision (iv) would otherwise apply with respect to any mass asset account, recompute qualified investment on the basis of the difference between

(*a*) the proper total qualified investment based on the percentage shown in column (5) of the table, and

(*b*) the total qualified investment actually claimed by the taxpayer for the year in which the property was placed in service.

Example. Assume that the taxpayer places in service during 1963 mass assets costing him $100,000, that he places these assets in a multiple asset account for which he properly claims a useful life of 6 years and a qualified investment of $66,667 ($^{2}/_{3}$ × $100,000), and that he is allowed an investment credit of $4,667.67. When the taxpayer's 1967 return is being audited he is unable to establish that any of the mass assets placed in service in 1963 were still on hand at the end of 1967.

The taxpayer elects to use the standard mortality dispersion table prescribed by the Commissioner to determine the amount of recapture with respect to these mass assets. Assume that the table prescribed by the Commissioner shows with respect to mass assets with an average useful life of 6 years the following:

Percent of property assumed to have a useful life of—				Total qualified investment (percent) (5)
Less than 4 years (1)	4 years or more, but less than 6 years (2)	6 years or more, but less than 8 years (3)	8 years or more (4)	
15.87	34.13	34.13	15.87	50.00

(*a*) Under these circumstances 15.87 percent of the mass assets placed in service in 1963 are deemed to have been disposed of during 1967. With respect to these assets, the amount of qualified investment for 1963 was $10,580 ($15,870 × $^{2}/_{3}$) and the amount of credit earned was $740.60 (7 percent of $10,580), whereas the recomputed qualified investment is zero and the recomputed credit earned is zero. Thus, the tax imposed by chapter 1 of the Code for 1967 is increased by $740.60.
(*b*) No recapture determination is required for 1968 since no assets are deemed to have been disposed of in that year. During 1969, 34.13 percent of the mass assets placed in service in 1963 are deemed to have been disposed of. With respect to these assets, the amount of qualified investment for 1963 was $22,753.34 ($34,130 × $^{2}/_{3}$) and the amount of credit earned was $1,592.73 (7 percent of $22,753.34), whereas the recomputed qualified investment is $11,376.67 ($34,130 × $^{1}/_{3}$) and the recomputed credit earned is $796.37 (7 percent of $11,376.67). Thus, the tax imposed by chapter 1 of the Code for 1969 is increased by $796.36 ($1,592.73 minus $796.37).

(*c*) If the taxpayer chooses to recompute qualified investment by using the method provided in subdivision (v) of this subparagraph, the increase in tax for 1967 (the first recapture year) would be $1,167.67, *i.e.*, the original credit earned, $4,667.67, minus the recomputed credit earned, $3,500 (50 percent, the percentage shown in column (5), of $100,000 multiplied by 7 percent). As long as the same average useful life category reflects the taxpayer's experience for subsequent years, no recapture determination will be required for any future year, except as provided by subparagraph (3)(iv) of this paragraph.

(vi) Subdivision (i) of this subparagraph shall not apply with respect to section 38 property to which an election under section 167(m) applies unless the taxpayer assigns actual retirements of such section 38 property for all taxable years to the same vintage account for purposes of section 47 and for purposes of computing the allowance for depreciation under section 167. The assignment of actual retirements of section 38 property for a taxable year to particular vintage accounts may be made on the basis of an appropriate mortality dispersion table (based on an acceptable sampling of the taxpayer's actual experience or other statistical or engineering techniques) or on the basis of a standard mortality dispersion table prescribed by the Commissioner. If the taxpayer assigns actual retirements for any taxable year to particular vintage accounts on the basis of such standard mortality dispersion table, actual retirements for all subsequent taxable years must be assigned to particular vintage accounts on the basis of such table. Actual retirements of section 38 property for a taxable year shall be assigned to particular vintage accounts by—

(*a*) Determining the expected retirements for such taxable year from each vintage account containing such section 38 property, and

(*b*) Ratably allocating such actual retirements to each vintage account containing such section 38 property.

However, the unadjusted basis of retired assets assigned to any particular vintage account shall not exceed the unadjusted basis of the property contained in such account.

(3) *Special rules.*

(i) Taxpayers who properly determine estimated useful lives under § 1.46-3(e)(3) (ii)(*b*) or (iii) may treat such assets as having been disposed of or having ceased to be section 38 assets in the order of the estimated useful lives that were assigned to such assets. Thus, the asset that is first disposed of or first ceases to be section 38 property may be treated as the asset to which there was assigned the shortest estimated useful life; the next asset disposed of or ceasing to be section 38 property may be treated as the asset to which there was assigned the second shortest life, etc.

(ii) In the case of taxpayers who use the rule of subdivision (i) of this subparagraph with respect to mass assets for which the estimated useful life was determined under § 1.46-3(e)(3)(iii), if the dispersion shown by the mortality dispersion table effective for a taxable year subsequent to the credit year is the same as the dispersion shown by the mortality table that was effective for the credit year (for example, if the same average useful life on the standard mortality dispersion table reflects the taxpayer's experience for both such years), no recapture determination is required for such subsequent taxable year.

(iii) Notwithstanding subdivision (i) of this subparagraph, taxpayers who, for purposes of determining qualified investment, do not use a mortality dispersion table with respect to certain section 38 assets similar in kind but who consistently assign under paragraph (e)(3)(ii)(*b*) of § 1.46-3 to such assets separate lives based on the estimated range of years taken into consideration in establishing the average useful life of such assets, may select the order in which such assets shall be considered as having been disposed of, regardless of the taxable years in which such assets were placed in service. If a taxpayer uses the method provided in this subdivision to determine that any asset is considered as having been disposed of, then, in addition to complying with the record requirements of subparagraph (1)(i) of this paragraph, such taxpayer must maintain records from which he can establish to the satisfaction of the

district director that such asset has not previously been considered as having been disposed of. In addition, if, for any taxable year, a taxpayer uses the method provided in this subdivision for any asset, he must use for such year and for each subsequent taxable year (unless he obtains the district director's consent to change) with respect to all assets similar in kind to such asset—

(*a*) The method of determining estimated useful lives described in paragraph (e)(3)(ii)(*b*) of § 1.46-3, and

(*b*) The method he has selected under this subdivision for determining the order in which such assets are considered as having been disposed of.

A request by a taxpayer to obtain the district director's consent to change a system or method described in this subdivision with respect to assets similar in kind must be submitted to the district director on or before the last day of the taxable year with respect to which the change is sought.

(iv) Notwithstanding subdivisions (i), (ii), and (iii) of this subparagraph, there shall be taken into account separately any abnormal retirement of section 38 property of substantial value for which the estimated useful life was determined under § 1.46-3(e)(3) (ii)(*b*) or (iii). For definition of abnormal retirement, see paragraph (b) of § 1.167(a)-8.

(4) [Reserved]

(5) ***Example.*** This paragraph may be illustrated by the following example:

Example. (i) Taxpayer A uses numerous small returnable containers in his business. It is impracticable for A to keep individual detailed records with respect to such containers which are mass assets. In 1965, A places in service 10 million containers purchased for $1 million, and reasonably determines that each of such containers has a basis of 10 cents. A places such containers in a multiple asset account to which is assigned a 5-year average useful life for purposes of computing depreciation. A has conducted an appropriate mortality study which shows that the containers have the following estimated useful lives:

Percent of assets	Useful life (years)
10	3
20	6
40	5
20	6

Percent of assets	Useful life (years)
10	7

A assigns separate lives to such assets based on the estimated range of years taken into account in establishing the average useful life of such containers. The qualified investment with respect to such containers is $400,000 computed as follows:

Useful life	Basis	Applicable percentage	Qualified investment
4	$200,000	$33^1/_3$	$66,666
5	400,000	$33^1/_3$	133,334
6	200,000	$66^2/_3$	133,334
7	100,000	$66^2/_3$	66,666
			400,000

A's credit earned for 1965 of $28,000 (7 percent times $400,000) is allowed as a credit under section 38 against A's liability for tax of $2 million. (For purposes of this example the computations of investment credit and recapture with respect to containers placed in service in years other than 1965 are omitted.) The mortality studies effective for 1966 and 1967 show that none of the containers placed in service in 1965 was retired.

(ii) A's mortality study effective with respect to 1968 shows that the containers are being retired as follows:

Percent of assets	Useful life (years)
30	3
20	4
30	5
10	6
10	7

Thus, the 1968 study shows that 30 percent of the 10 million containers placed in service in 1965 were retired in 1968. Under the rule of subparagraph (3)(i) of this paragraph, the 3 million containers are treated as consisting of the 1 million containers to which was assigned

a 3-year useful life and the 2 million containers to which was assigned a 4-year useful life. Taking into account only the fact that 30 percent of the containers placed in service in 1965 had an actual life of less than 4 years, A's recomputed qualified investment for 1965 is $333,333 and his recomputed credit earned is $23,333. A's income tax for 1968 is increased by $4,667 ($28,000 original credit earned minus $23,333 recomputed credit earned).

(iii) The mortality study effective for 1969 shows the same results as the mortality study effective for 1968. Thus, it shows that 2 million containers were retired in 1969 (an actual life of 4 years). Under the rule of subparagraph (3)(i) of this paragraph such 2 million containers are treated as having been among 4 million containers to which were assigned a 5-year useful life. Therefore, no recapture determination is required for 1969.
(iv) The mortality study effective for 1970 shows the same results as the mortality study effective for 1968. Thus, it shows that 3 million containers were retired in 1970 (an actual life of 5 years). Under the rule of subparagraph (3)(i) of this paragraph, the 3 million are treated as having been assigned useful lives as follows: 2 million as having been assigned a useful life of 5 years, and 1 million as having been assigned a useful life of 6 years. Taking into account only the fact that 10 percent of the containers placed in service in 1965 had an actual life of 5 years rather than the 6 years estimated useful life assigned to them, A's recomputed qualified investment is $300,000 and A's credit earned for 1965 is $21,000. Thus, taking into account the 1968 recapture determination A's income tax for 1970 is increased by $2,333.

(f) ***Public utility property*** —

(1) ***Recomputed qualified investment.*** In recomputing qualified investment with respect to section 38 property which becomes public utility property (as defined in paragraph (g) of § 1.46-3)—

(i) If such property becomes public utility property less than 3 years from the date on which it was placed in service, then such property shall be treated as public utility property for its entire useful life.

(ii) If such property becomes public utility property 3 years or more but less than 5 years from the date on which it was placed in service, then such property shall be treated as section 38 property which is not public utility property for the first 3 years of its estimated useful life and as public utility property for the remaining period of its estimated useful life.

(iii) If such property becomes public utility property 5 years or more but less than 7 years from the date on which it was placed in service, then such property shall be treated as section 38 property which is not public utility property for the first 5 years of its estimated useful life and as public utility property for the remaining period of its estimated useful life.

If property becomes public utility property before August 16, 1971, this subparagraph shall be applied by substituting “4 years” for “3 years”, “6 years” for “5 years”, and “8 years” for “7 years”.

(2) ***Examples.*** Subparagraph (1) of this paragraph may be illustrated by the following examples:

Example 1. (i) X Corporation, which makes its returns on the basis of the calendar year,

acquired and placed in service on January 1, 1969, an item of section 38 property with a basis of $12,000 and an estimated useful life of 8 years. The amount of qualified investment with respect to such property was $12,000. For the taxable year 1969, X Corporation's credit earned was $840 (7 percent of $12,000) and for such taxable year X Corporation was allowed under section 38 a credit of $840 against its liability for tax. During the taxable year 1972 such property becomes public utility property (as defined in paragraph (g) of § 1.46-3) with respect to X Corporation.

(ii) Such item of section 38 property is treated as section 38 property which is not public utility property for the first 3 years of its 8-year estimated useful life and is treated as public utility property for the remaining 5 years. The recomputed qualified investment with respect to such item of section 38 property is $7,428, computed as follows:

$12,000 basis × $33^1/_3$ percent applicable percentage	$4,000
$12,000 basis × $^3/_7$ × 66 $^2/_3$ percent applicable percentage	3,428
Total recomputed qualified investment	7,428

X Corporation's recomputed credit earned for the taxable year 1969 is $520 (7 percent of $7,428). The income tax imposed by chapter 1 of the Code on X Corporation for the taxable year 1972 is increased by the $320 decrease in its credit earned for the taxable year 1969 (that is, $840 original credit earned minus $520 recomputed credit earned).

Example 2. (i) The facts are the same as in example 1 and in addition the item of section 38 property which became public utility property in 1972 is sold to Y Corporation on January 2, 1975.

(ii) The actual useful life of such item of property is 6 years. For the first 3 years of its 8-year estimated useful life such item is treated as section 38 property which is not public utility property and for the remaining 3 years is treated as public utility property. The recomputed qualified investment with respect to such item of property is $5,714, computed as follows:

$12,000 basis × $33^1/_3$ percent applicable percentage	$4,000
$12,000 basis × $^3/_7$ × 33 $^1/_3$ percent applicable percentage	1,714

Total recomputed qualified investment	5,714

X Corporation's recomputed credit earned for the taxable year 1969 is $400 (7 percent of $5,714). The income tax imposed by chapter 1 of the Code on X Corporation for the taxable year 1975 is increased by $120 (that is, $440 ($840 original credit earned minus $400 recomputed credit earned) minus $320 increase in tax for 1969).

(g) ***Special rules for progress expenditure property.*** Under section 47(a)(3), a recapture determination is required if property ceases to be progress expenditure property (as defined in § 1.46-5(d)). Property ceases to be progress expenditure property if it is sold or otherwise disposed of before it is placed in service. For example, cancellation of the contract for progress expenditure property or abandonment of the project by the taxpayer will be considered a "disposition" within the meaning of § 1.47-2. A cessation occurs if progress expenditure property ceases to be property that will be section 38 property with a useful life of 7 years or more when placed in service. In general, a sale and leaseback is treated as a cessation. However, see paragraph (g)(2) of § 1.47-3 for special rules for certain sale and leaseback transactions. Recapture determinations for progress expenditure property are to be made in a way similar to that provided under §§ 1.47-1 through 1.47-6. Reduction of qualified investment must begin with the most recent credit year (*i.e.,* the most recent taxable year the property is taken into account in computing qualified investment under § 1.46-3 or 1.46-5).

(h) ***Special rules for energy property*** —

(1) ***In general.*** A recapture determination is required for the investment credit attributable to the energy percentage (energy credit) if property is (i) disposed of or (ii) otherwise ceases to be energy property (as defined in section 48(l)) with regard to the taxpayer before the close of the estimated useful life (as determined under paragraph (a)(2)(i) of this section) which was taken into account in computing qualified investment.

(2) ***Dispositions.*** The term "disposition" is described in § 1.47-2(a)(1). A transfer of energy property that is a "disposition" requiring a recapture determination for the investment credit attributable to the regular percentage (regular credit) and the ESOP percentage (ESOP credit) will also be a "disposition" requiring a recapture determination for the energy credit.

(3) ***Cessation.***

(i) The term "cessation" is described in § 1.47-2(a)(2). For energy property, a cessation occurs during a taxable year if, by reason of a change in use or otherwise, the property would not have qualified for an energy credit if placed in service during that year. A change in use will not require a recapture determination for the regular or ESOP credit unless, by reason of the change, the property would not have qualified for the regular or ESOP credit if placed in service during that year.

(ii) A qualified intercity bus described in § 1.48-9(q) must meet the predominant use test (of § 1.48-9(q)(7)) for the remainder of the taxable year from the date it is placed in service and for each taxable year thereafter. A cessation occurs in any taxable year in which the bus is no longer a qualifying bus under § 1.48-9(q)(6). A qualified intercity bus does not cease to be

energy property for a taxable year subsequent to the one in which it was placed in service by reason of a decrease in operating capacity (see § 1.48-9(q)(9)) for that year compared to any prior taxable year.

(4) ***Recordkeeping requirement.*** For recordkeeping requirements with respect to dispositions or cessations, the rules of paragraph (e)(1) of this section apply. For example, the taxpayer must maintain records for each recycling facility indicating the percentage of virgin materials used each year. See, § 1.48-9(g)(5)(ii).

(5) ***Examples.*** The following examples illustrate this paragraph (h).

> *Example 1.* (a) In 1980, corporation X, a calendar year taxpayer, acquires and places in service a computer that will perform solely energy conserving functions in connection with an existing industrial process. Assume the computer has a 10 year useful life and qualifies for both the regular and energy credits. In 1981, a change is made in the industrial process (within the meaning of § 1.48-9(l)(2)). However, for 1981 the computer continues to perform solely energy conserving functions. In 1982, the computer ceases to perform energy conserving functions and begins to perform a production related function.
> (b) For 1981, a recapture determination is not required. For 1982, the entire energy credit must be recaptured, although none of the regular credit is recaptured. If in 1989 the computer first ceased to perform an energy conserving function, no part of the energy credit would be recaptured.

Example 2. Assume the same facts and conclusion as in example 1. Assume further that X sells the computer in 1985. A recapture determination is required for the regular credit.

Example 3. In 1981, corporation Y, a calendar year taxpayer, acquires and places in service recycling equipment. Assume the equipment has a 7-year useful life and qualifies for both the regular credit and energy credit. During the course of 1982, more than 10 percent of the material recycled is virgin material. The energy credit is recaptured in its entirety, although none of the regular credit is recaptured. See § 1.48-9(g)(5)(B)(ii).

Example 4. In 1980, corporation Z, a calendar year taxpayer, acquires and places in service a boiler the primary fuel for which is an alternate substance. The boiler has a 7-year useful life. Assume the boiler is a structural component of a building within the meaning of § 1.48-1(e)(2). Assume further that the boiler is not a part of a qualified rehabilitated building (as defined in section 48(g)(1)) or a single purpose agricultural or horticultural structure (as defined in section 48(p)). Z is allowed only an energy credit since the boiler is a structural component of a building. In 1984, Z modifies the boiler to use oil as the primary fuel. A recapture determination is required for the energy credit. See § 1.48-9(c)(3).

(i)-(l) [Reserved]

(m) ***Commuter highway vehicles*** —

(1) ***Recomputed qualified investment.***

(i) If a qualifying commuter highway vehicle (as defined in § 1.46-11(a) undergoes a change in use but does not cease to be section 38 property, qualified investment for that vehicle is recomputed as if the vehicle was section 38 property which is not a qualifying commuter highway vehicle for its entire useful life.

(ii) The following example illustrates this paragraph (m)(1).

Example. X Corporation, a calendar year taxpayer, acquired and placed in service on January 1, 1982, a qualifying commuter highway vehicle with a basis of $10,000 and which qualified as three year recovery property under section 168(c)(2)(A)(i). The amount of qualified investment for the vehicle under section 46(c) (1) and (6) is $10,000. For the taxable year 1982, X Corporation's credit earned was $1,000 (10 percent of $10,000) and X Corporation was allowed under section 38 a $1,000 credit against its 1982 tax liability. During the taxable year 1984, the vehicle undergoes a change in use but does not cease to be section 38 property. The vehicle is treated as section 38 property which is not a qualifying commuter highway vehicle for its entire useful life. The recomputed qualified investment for the vehicle is $6,000 (60 percent of $10,000) and X Corporation's recomputed credit earned is $600 (10 percent of $6,000). The income tax imposed by chapter 1 of the Code on X Corporation for 1984 is increased by the $400 decrease in its credit earned for 1982 ($1,000−$600).

(2) ***Change in use*** —

(i) A qualifying commuter highway vehicle undergoes a change in use if the vehicle does not meet the commuter use requirement (as defined in § 1.46-11(d)) for each computation period.

(ii) Each of the following is a computation period:

(A) The period beginning on the date the vehicle was placed in service and ending on the last day of the taxpayer's taxable year in which the vehicle was placed in service;

(B) Each of the taxpayer's taxable years beginning after the date the vehicle was placed in service and ending before the end of the first 36 months after the vehicle was placed in service; and

(C) The period ending at the end of the first 36 months after the vehicle was placed in service and beginning on the first day of the taxpayer's taxable year in which the end of those first 36 months falls.

(iii) The following example illustrates this paragraph (m)(2).

Example. (*a*) Z Corporation, a calendar year taxpayer, acquired and placed in service a qualifying commuter highway vehicle on January 15, 1979. Z Corporation used the vehicle as set forth in the following table:

Taxable year ending	Total miles	Commuter miles	Ratio
1979	10,000	9,000	.90
1980	10,000	8,000	.80
1981	10,000	8,000	.80

Taxable year ending	Total miles	Commuter miles	Ratio
1982 (1-14)	1,000	100	.10

(*b*) The first computation period begins on the date the vehicle is placed in service, in this example 1-15-79, and ends 12-31-79. In that computation period, the ratio of commuter miles to total miles is .90 (9,000 miles ÷ 10,000 miles). Therefore, the vehicle meets the commuter use requirement for that period and has not undergone a change in use. Similar calculations for the computation periods 1-1-80 to 12-31-80 and 1-1-81 to 12-31-81 produce the same result.
(*c*) As of the computation period beginning 1-1-82 and ending 1-14-82, the ratio of commuter use to total mileage is .10 (100 miles ÷ 1,000 miles). Since that ratio is less than .80, the vehicle does not meet the commuter use requirement for the period and the vehicle has undergone a change in use.

(Secs. 38(b) (76 Stat. 963, 26 U.S.C. 38(b)), 48(l)(16) (94 Stat. 264, 26 U.S.C. 48(l)(16)), and 7805 (68A Stat. 917, 26 U.S.C. 7805))

[T.D. 6931, 32 FR 14027, Oct. 10, 1967, as amended by T.D. 7203, 37 FR 17127, Aug. 25, 1972; T.D. 7765, 46 FR 7291, Jan. 23, 1981; T.D. 7982, 49 FR 39541, Oct. 9, 1984; T.D. 8035, 50 FR 29370, July 19, 1985; T.D. 8183, 53 FR 6625, Mar. 2, 1988; T.D. 8474, 58 FR 25557, Apr. 27, 1993]

§ 1.47-2 "Disposition" and "cessation".

(a) ***General rule*** —

(1) ***"Disposition".*** For purposes of this section and § 1.47-1 and §§ 1.47-3 through 1.47-6, the term "disposition" includes a sale in a sale-and-leaseback transaction, a transfer upon the foreclosure of a security interest and a gift, but such term does not include a mere transfer of title to a creditor upon creation of a security interest. See paragraph (g) of § 1.47-3 for treatment of certain sale-and-leaseback transactions.

(2) ***"Cessation".***

(i) A determination of whether section 38 property ceases to be section 38 property with respect to the taxpayer must be made for each taxable year subsequent to the credit year. Thus, in each such taxable year the taxpayer must determine, as if such property were placed in service in such taxable year, whether such property would qualify as section 38 property (within the meaning of § 1.48-1) in the hands of the taxpayer for such taxable year.

(ii) Section 38 property does not cease to be section 38 property with respect to the taxpayer in any taxable year subsequent to the credit year merely because under the taxpayer's depreciation practice no deduction for depreciation with respect to such property is allowable to the taxpayer for the taxable year, provided that the property continues to be used in the taxpayer's trade or business (or in the production of income) and otherwise qualifies as section 38 property with respect to the taxpayer.

(iii) This subparagraph may be illustrated by the following examples:

Example 1. A, an individual who makes his returns on the basis of the calendar year, on January 1, 1962, acquired and placed in service in his trade or business an item of section 38 property with an estimated useful life of eight years. On January 1, 1965, A removes the item of section 38 property from use in his trade or business by converting such item to personal use. Therefore no deduction for depreciation with respect to such item of property is allowable to A for the taxable year 1965. On January 1, 1965, such item of property ceases to be section 38 property with respect to A.

Example 2. On January 1, 1965, A placed in service an item of section 38 property with a basis of $10,000 and an estimated useful life of 4 years. A depreciates such item, which has a salvage value of $2,000 (after taking into account section 167(f)), on the declining balance method at a rate of 50 percent (that is, twice the straight line rate of 25 percent). With respect to such item, A is allowed deductions for depreciation of $5,000 for 1965, $2,500 for 1966, and $500 for 1967. A is not allowed a deduction for depreciation for 1968 although he continues to use such item in his trade or business. Such item does not cease to be section 38 property with respect to A in 1968.

(b) ***Leased property*** —

(1) ***In general.*** For purposes of paragraph (a) of § 1.47-1, generally the mere leasing of section 38 property by a lessor who took the basis of such property into account in computing his qualified investment for the credit year shall not be considered to be a disposition. However, in a case where a lease is treated as a sale for income tax purposes such transaction is considered to be a disposition. Leased section 38 property ceases to be section 38 property with respect to the lessor if, in any taxable year subsequent to the credit year, such property would not qualify as section 38 property (as defined in § 1.48-1) in the hands of the lessor, the lessee, or any sublessee. Thus, if, in a taxable year subsequent to the credit year, a lessee uses the property predominantly outside the United States, such property shall be considered to have ceased to be section 38 property with respect to the lessor.

(2) ***Where lessor elects to treat lessee as purchaser.*** For purposes of paragraph (a) of § 1.47-1, if, under § 1.48-4, the lessor of new section 38 property made a valid election to treat the lessee as having purchased such property for purposes of the credit allowed by section 38, the following rules apply in determining whether such property is disposed of, or otherwise ceases to be section 38 property with respect to the lessee:

(i) Generally, a mere disposition by the lessor of property subject to a lease shall not be considered to be a disposition by the lessee.

(ii) If the lessor makes a disposition of property subject to a lease to a person who may not, under § 1.48-4, make a valid election to treat the lessee as having purchased such property for purposes of the credit allowed by section 38 (such as a person described in paragraph (a)(5) of § 1.48-4), such property shall be considered to have ceased to be section 38 property with respect to the lessee on the date of such disposition.

(iii) If a lease is terminated and the property is transferred by the lessee to the lessor or to any other person, such transfer shall be considered to be a disposition by the lessee.

(iv) If the lessee actually purchases such property in the credit year or in a taxable year subsequent to the credit year, such purchase shall not be considered to be a disposition.

(v) The property ceases to be section 38 property with respect to the lessee if in any taxable year subsequent to the credit year such property would not qualify as section 38 property (as defined in § 1.48-1) in the hands of the lessor, the lessee, or any sublessee. Thus, for example,

if, in a taxable year subsequent to the credit year, a sublessee uses the property predominantly outside the United States, the property ceases to be section 38 property with respect to the lessee.

(c) ***Reduction in basis of section 38 property*** —

(1) ***General rule.*** If, in the credit year or in any taxable year subsequent to the credit year, the basis (or cost) of section 38 property is reduced, for example, as a result of a refund of part of the cost of the property, then such section 38 property shall be treated as having ceased to be section 38 property with respect to the taxpayer to the extent of the amount of such reduction in basis (or cost) on the date the refund which results in such reduction in basis (or cost) is received or accrued, except that for purposes of § 1.47-1(a) the actual useful life of the property treated as having ceased to be section 38 property shall be considered to be less than 3 years.

(2) ***Example.*** Subparagraph (1) of this paragraph may be illustrated by the following example:

> *Example.* (i) On January 1, 1962, A, a cash basis taxpayer, acquired from X Cooperative an item of section 38 property with a basis of $100 and an estimated useful life of 10 years which he placed in service on such date. The amount of qualified investment with respect to such asset was $100. For the taxable year 1962 A was allowed under section 38 a credit of $7 against his liability for tax. On June 1, 1963, A receives a $10 patronage dividend from X Cooperative with respect to such asset. Under paragraph (c)(2)(i) of § 1.1385-1, the basis of the asset in A's hands is reduced by $10.
> (ii) Under subparagraph (1) of this paragraph, on June 1, 1963, the item of section 38 property ceases to be section 38 property with respect to A to the extent of $10 of the original $100 basis.

(d) ***Retirements.*** A retirement of section 38 property, including a normal retirement (as defined in paragraph (b) of § 1.167(a)-8, relating to definition of normal and abnormal retirements), whether from a single asset account or a multiple asset account, and an abandonment, are dispositions for purposes of paragraph (a) of § 1.47-1.

(e) ***Conversion of section 38 property to personal use.***

(1) If, for any taxable year subsequent to the credit year—

(i) A deduction for depreciation is allowable to the taxpayer with respect to only a part of section 38 property because such property is partially devoted to personal use, and

(ii) The part of the property (expressed as a percentage of its total basis (or cost)) with respect to which a deduction for depreciation is allowable for such taxable year is less than the part of the property with respect to which a deduction for depreciation was allowable in the credit year,

then such property shall be considered as having ceased to be section 38 property with respect to the taxpayer to such extent. Further, property ceases to be section 38 property with respect to the taxpayer to the extent that a deduction for depreciation thereon is disallowed under section 274 (relating to disallowance of certain entertainment, etc., expenses).

(2) ***Examples.*** Subparagraph (1) of this paragraph may be illustrated by the following examples:

> *Example 1.* (i) A, a calendar-year taxpayer, acquired and placed in service on January 1, 1962, an automobile with a basis of $2,400 and an estimated useful life of four years. In the taxable year 1962 the automobile was used by A 80 percent of the time in his trade or business and was used 20 percent of the time for personal purposes. Thus, for the taxable year 1962 only 80 percent of the basis of the automobile qualified as section 38 property since a deduction for depreciation was allowable to A only with respect to 80 percent of the basis of the automobile. In the taxable year 1963 the automobile is used by A only 60 percent of the time in his trade or business. Thus, for the taxable year 1963 a deduction for depreciation is allowable to A only with respect to 60 percent of the basis of the automobile.
> (ii) Under subparagraph (1) of this paragraph, on January 1, 1963, the automobile ceases to be section 38 property with respect to A to the extent of 20 percent (80 percent minus 60 percent) of the $2,400 basis of the automobile.

> *Example 2.* (i) The facts are the same as in example 1 and in addition for the taxable year 1964 a deduction for depreciation is allowable to A only with respect to 40 percent of the basis of the property.
> (ii) Under subparagraph (1) of this paragraph, on January 1, 1964, the automobile ceases to be section 38 property with respect to A to the extent of 20 percent (60 percent minus 40 percent) of the $2,400 basis of the automobile.

[T.D. 6931, 32 FR 14032, Oct. 10, 1967, as amended by T.D. 7203, 37 FR 17128, Aug. 25, 1972]

§ 1.47-3 Exceptions to the application of § 1.47-1.

(a) ***In general.*** Notwithstanding the provisions of § 1.47-2, relating to "disposition" and "cessation," paragraph (a) of § 1.47-1 shall not apply if paragraph (b) of this section (relating to transfers by reason of death), paragraph (c) of this section (relating to property destroyed by casualty), paragraph (d) of this section (relating to reselection of used section 38 property), paragraph (e) of this section (relating to transactions to which section 381(a) applies), paragraph (f) of this section (relating to mere change in form of conducting a trade or business), paragraph (g) of this section (relating to sale-and-leaseback transactions), or paragraph (h) of this section (relating to certain property replaced after Apr. 18, 1969) applies with respect to such disposition or cessation.

(b) ***Transfers by reason of death*** —

(1) ***General rule.*** Notwithstanding the provisions of § 1.47-2, relating to "disposition" and "cessation", paragraph (a) of § 1.47-1 shall not apply to a transfer of section 38 property by reason of the death of the taxpayer. Thus, for example, with respect to section 38 property held in joint tenancy, paragraph (a) of § 1.47-1 shall not apply to the transfer of the deceased taxpayer's interest to the surviving joint tenant. If, under § 1.48-4, the lessor of new section 38 property made a valid election to treat the lessee as having purchased such property for purposes of the credit allowed by section 38, paragraph (a) of § 1.47-1 does not apply if, by reason of the death of the lessee, there is a termination of the lease and transfer of the leased property to the lessor, or there is an assignment of the lease and transfer of the leased property to another person. Moreover, paragraph (a) of § 1.47-1 does not apply to the transfer of a partner's interest in a partnership, a beneficiary's interest in an estate or trust, or shares of stock of a shareholder of an electing small business corporation (as defined in section 1371(b)) by reason of the death of such partner, beneficiary, or shareholder. Paragraph (a) of § 1.47-1 shall not apply to property prior to his death even if the value of such gift is

included in his gross estate for estate tax purposes (such as, a gift in contemplation of death under section 2035). The effect of this subparagraph is that any section 38 property held by a taxpayer at the time of his death is deemed to have been held by him for its entire estimated useful life.

(2) ***Examples.*** Subparagraph (1) of this paragraph may be illustrated by the following examples:

> *Example 1.* (i) A, an individual, acquired and placed in service on January 1, 1962, an item of section 38 property with a basis of $10,000 and an estimated useful life of eight years. On April 28, 1963, A dies and, as a result of A's death, his interest in such item of section 38 property is transferred to a testamentary trust pursuant to A's will, and on February 1, 1967, the trust is terminated and the item of section 38 property is transferred to the beneficiaries of the trust.
> (ii) Under subparagraph (1) of this paragraph, paragraph (a) of § 1.47-1 does not apply to the transfer, as a result of A's death, of his interest in such item of section 38 property to the testamentary trust. Moreover, paragraph (a) of § 1.47-1 does not apply to the February 1, 1967, transfer of such item of section 38 property by the trust to its beneficiaries.

> *Example 2.* (i) X Corporation, an electing small business corporation (as defined in section 1371(b)) which makes its returns on the basis of a calendar year, acquired and placed in service during 1962 an item of section 38 property. On December 31, 1962, X Corporation had 10 shares of stock outstanding which were owned as follows: A owned eight shares and B owned two shares. On December 31, 1962, 80 percent of the basis of the item of section 38 property was apportioned to A and 20 percent to B. On June 1, 1964, A dies and, as a result of A's death, his eight shares of stock in X Corporation are transferred to his wife. On July 10, 1965, X Corporation sells the item of section 38 property to Y Corporation.
> (ii) Under subparagraph (1) of this paragraph, paragraph (a) of § 1.47-1 does not apply to the transfer, as a result of A's death, of his eight shares of stock in X Corporation to his wife. Moreover, with respect to the July 10, 1965, sale paragraph (a) of § 1.47-1 applies only to the 20 percent of the basis of the item of section 38 property which was apportioned to B.

(c) ***Property destroyed by casualty*** —

(1) ***Dispositions after April 18, 1969.*** Notwithstanding the provisions of § 1.47-2, relating to “disposition” and “cessation”, paragraph (a) of § 1.47-1 shall not apply to property which, after April 18, 1969, and before August 16, 1971, is disposed of or otherwise ceases to be section 38 property with respect to the taxpayer on account of its destruction or damage by fire, storm, shipwreck, or other casualty, or by reason of its theft.

(2) ***Dispositions before April 19, 1969.***

(i) In the case of property which, before April 19, 1969, is disposed of or otherwise ceases to be section 38 property with respect to the taxpayer on account of its destruction or damage by fire, storm, shipwreck or other casualty, or by reason of its theft, paragraph (a) of § 1.47-1 shall apply except to the extent provided in subdivisions (ii) and (iii) of this subparagraph.

(ii) Paragraph (a) of § 1.47-1 shall not apply if—

(*a*) Section 38 property is placed in service by the taxpayer to replace (within the meaning of paragraph (h) of § 1.46-3) the destroyed, damaged, or stolen property, and

(*b*) The basis (or cost) of the section 38 property which is placed in service by the taxpayer to replace the destroyed, damaged, or stolen property is reduced under paragraph (h) of § 1.46-3.

(iii) If property which would be section 38 property but for section 49 is placed in service by the taxpayer to replace the destroyed, damaged, or stolen property, then the provisions of paragraph (h) of this section (other than the requirement that the replacement take place within 6 months after the disposition) shall apply.

(3) ***Examples.*** The provisions of subparagraph (2)(ii) of this paragraph may be illustrated by the following examples:

> *Example 1.* (i) A acquired and placed in service on January 1, 1962, machine No. 1 which qualified as section 38 property with a basis of $30,000 and an estimated useful life of 6 years. The amount of qualified investment with respect to such machine was $20,000. For the taxable year 1962 A's credit earned of $1,400 was allowed under section 38 as a credit against its liability for tax. On January 1, 1963, machine No. 1 is completely destroyed by fire. On January 1, 1963, the adjusted basis of machine No. 1 in A's hands is $24,500. A receives $23,000 in insurance proceeds as compensation for the destroyed machine, and on February 15, 1964, A acquires and places in service machine No. 2, which qualifies as section 38 property, with a basis of $41,000 and an estimated useful life of 6 years to replace machine No. 1.
> (ii) Under subparagraph (1) of this paragraph, paragraph (a) of § 1.47-1 does not apply with respect to machine No. 1 since machine No. 2 is placed in service to replace machine No. 1 and the $41,000 basis of machine No. 2 is reduced, under paragraph (h) of § 1.46-3, by $23,000. (See example 1 of paragraph (h)(3) of § 1.46-3.)

> *Example 2.* (i) The facts are the same as in example 1 except that A receives only $19,000 in insurance proceeds as compensation for the destroyed machine.
> (ii) Although machine No. 2 is placed in service to replace machine No. 1, subparagraph (1) of this paragraph does not apply with respect to machine No. 1 since the basis of machine No. 2 is not reduced under paragraph (h) of § 1.46-3. Paragraph (a) of § 1.47-1 applies with respect to the January 1, 1963, destruction of machine No. 1. The actual useful life of machine No. 1 is 1 year. The recomputed qualified investment with respect to such machine is zero ($30,000 basis multiplied by zero applicable percentage) and A's recomputed credit earned for the taxable year 1962 is zero. The income tax imposed by chapter 1 of the Code on A for the taxable year 1963 is increased by $1,400.

(d) ***Reselection of used section 38 property*** —

(1) ***Reselection.*** If—

(i) Used section 38 property (as defined in § 1.48-3) the cost of which was taken into account in computing the taxpayer's qualified investment is disposed of, or otherwise ceases to be section 38 property with respect to the taxpayer, before the close of the estimated useful life which was taken into account in computing such qualified investment, and

(ii) For the taxable year in which the property described in subdivision (i) of this subparagraph was placed in service, the sum of

(*a*) the cost of used section 38 property placed in service by the taxpayer, and

(*b*) the cost of used section 38 property apportioned to such taxpayer exceeded $50,000,

then such taxpayer may treat the cost of any used section 38 property (regardless of its estimated useful life) which was not originally selected, under paragraph (c)(4) of § 1.48-3, to be taken into account in computing qualified investment for such taxable year (or previously reselected under this subparagraph) as having been selected (in accordance with the principles of paragraph (c)(4)(ii) of § 1.48-3) in place of the cost of the used section 38 property described in subdivision (i) of this subparagraph. Hereinafter such reselected property is referred to as "newly selected used section 38 property". For purposes of this subparagraph, the cost of used section 38 property apportioned to a taxpayer means the sum of the cost of used section 38 property apportioned to him by a trust, estate, or electing small business corporation (as defined in section 1371(b)), and his share of the cost of partnership used section 38 property, with respect to the taxable year of such trust, estate, corporation or partnership ending with or within such taxpayer's taxable year. In the case of a taxpayer to whom paragraph (c)(2) of § 1.48-3 applied for the taxable year in which the property described in subdivision (i) of this subparagraph was placed in service, a $25,000 amount shall be substituted for the $50,000 amount referred to in subdivision (ii)(*b*) of this subparagraph, and in the case of a member of an affiliated group (as defined in subparagraph (6) of § 1.48-3(e)) the amount apportioned to such member under paragraph (e) of § 1.48-3 shall be substituted for such $50,000 amount.

(2) ***Application of paragraph (a) of § 1.47-1.***

(i) If a taxpayer treats, under subparagraph (1) of this paragraph, the cost of any used section 38 property which was not originally selected as having been selected in place of the cost of used section 38 property described in subparagraph (1)(i) of this paragraph, then, not withstanding the provisions of § 1.47-2 (relating to "disposition" and "cessation"), paragraph (a) of § 1.47-1 shall not apply to the property described in subparagraph (1)(i) of this paragraph to the extent of the cost of the newly selected used section 38 property.

(ii) If the cost of the used section 38 property described in subparagraph (1)(i) of this paragraph exceeds the cost of the newly selected used section 38 property, then the property described in subparagraph (1)(i) of this paragraph shall cease to be section 38 property with respect to the taxpayer to the extent of such excess.

(iii) If the newly selected used section 38 property is disposed of, or otherwise ceases to be section 38 property with respect to the taxpayer, before the close of the estimated useful life of the property described in subparagraph (1)(i) of this paragraph, then, unless he reselects other used section 38 property, paragraph (a) of § 1.47-1 shall apply with respect to such newly selected used section 38 property. For purposes of recomputing qualified investment with respect to such newly selected used section 38 property the actual useful life shall be deemed to be the period beginning with the date on which the property described in subparagraph (1)(i)

of this paragraph was placed in service by the taxpayer and ending with the date of the disposition or cessation with respect to such newly selected used section 38 property. See paragraph (c) of § 1.47-1, relating to date placed in service and date of disposition or cessation.

(3) ***Information requirement.***

(i) If in any taxable year this paragraph applies to a taxpayer, such taxpayer shall attach to his income tax return for such taxable year a statement containing the information required by subdivision (ii) of this subparagraph.

(ii) The statement referred to in subdivision (i) of this subparagraph shall contain the following information:

(*a*) The taxpayer's name, address and taxpayer account number; and

(*b*) With respect to the originally selected used section 38 property and the newly selected used section 38 property, the month and year placed in service, cost, and estimated useful life.

(4) ***Examples.*** This paragraph may be illustrated by the following examples:

> *Example 1.* (i) X Corporation purchased and placed in service on January 1, 1962, machines No. 1 and No. 2, which qualified as used section 38 property, each with a cost of $50,000 and an estimated useful life of eight years. The aggregate cost of used section 38 property taken into account by X Corporation in computing its qualified investment for the taxable year 1962 could not exceed $50,000; therefore, under paragraph (c)(4) of § 1.48-3, X selected the $50,000 cost of machine No. 1 to be taken into account in computing its qualified investment for the taxable year 1962. The qualified investment with respect to machine No. 1 was $50,000. For the taxable year 1962 X's credit earned of $3,500 was allowed under section 38 as a credit against its liability for tax. On January 2, 1965, X Corporation sells machine No. 1 to Y Corporation.
> (ii) Under subparagraph (1) of this paragraph, X Corporation treats the $50,000 cost of machine No. 2 as having been selected to be taken into account in computing its qualified investment for the taxable year 1962 in place of the $50,000 cost of machine No. 1. Therefore, under subparagraph (2)(i) of this paragraph, paragraph (a) of § 1.47-1 does not apply to the January 2, 1965, disposition of machine No. 1.

> *Example 2.* (i) The facts are the same as in example 1 and in addition X Corporation, on December 2, 1966, sells machine No. 2 to Z Corporation.
> (ii) Under subparagraph (2)(iii) of this paragraph, paragraph (a) of § 1.47-1 applies with respect to the December 2, 1966, disposition of machine No. 2. The actual useful life of machine No. 2 is four years and eleven months (that is, the period beginning on January 1, 1962, and ending on December 2, 1966). The recomputed qualified investment with respect to machine No. 2 is $16,667 ($50,000 cost multiplied by $33^{1}/_{3}$ percent applicable percentage) and X Corporation's recomputed credit earned for the taxable year 1962 is $1,167. The

income tax imposed by chapter 1 of the Code on X Corporation for the taxable year 1966 is increased by the $2,333 decrease in its credit earned for the taxable year 1962 (that is, $3,500 original credit earned minus $1,167 recomputed credit earned).

Example 3. (i) The facts are the same as in example 1 except that machine No. 2 had a cost of $30,000.
(ii) Under subparagraph (1) of this paragraph, X Corporation treats the $30,000 cost of machine No. 2 as having been selected to be taken into account in computing its qualified investment for the taxable year 1962 in place of the $50,000 cost of machine No. 1. Therefore, under subparagraph (2)(i) of this paragraph, paragraph (a) of § 1.47-1 does not apply to the January 2, 1965, disposition of machine No. 1 to the extent of $30,000 of the $50,000 cost of machine No. 1. However, under subparagraph (2)(ii) of this paragraph, paragraph (a) of § 1.47-1 applies to the January 2, 1965, disposition of machine No. 1 to the extent of $20,000 (that is, $50,000 cost of machine No. 1 minus $30,000 cost of machine No. 2). The actual useful life of such $20,000 portion of machine No. 1 is three years (that is, the period beginning on January 1, 1962, and ending on January 2, 1965). The recomputed qualified investment with respect to the $20,000 portion of the cost of machine No. 1 is zero ($20,000 portion of the cost multiplied by zero applicable percentage) and X Corporation's recomputed credit earned for the taxable year 1962 is $2,100 (7 percent of $30,000). The income tax imposed by chapter 1 of the Code on X Corporation for the taxable year 1965 is increased by the $1,400 decrease in its credit earned for the taxable year 1962 (that is, $3,500 original credit earned minus $2,100 recomputed credit earned).

(e) ***Transactions to which section 381(a) applies*** —

(1) ***General rule.*** Notwithstanding the provisions of § 1.47-2, relating to “disposition” and “cessation”, paragraph (a) of § 1.47-1 shall not apply to a disposition of section 38 property in a transaction to which section 381(a) (relating to carryovers in certain corporate acquisitions) applies. If the section 38 property described in the preceding sentence is disposed of, or otherwise ceases to be section 38 property with respect to the acquiring corporation, before the close of the estimated useful life which was taken into account in computing the transferor corporation's qualified investment, then paragraph (a) of § 1.47-1 shall apply to the acquiring corporation with respect to such section 38 property. For purposes of recomputing qualified investment with respect to such property its actual useful life shall be the period beginning with the date on which it was placed in service by the transferor corporation and ending with the date of the disposition by, or cessation with respect to, the acquiring corporation.

(2) ***Examples.*** This paragraph may be illustrated by the following examples:

Example 1. (i) X Corporation, a wholly owned subsidiary of Y Corporation, acquired and placed in service on January 1, 1962, an item of section 38 property with a basis of $12,000 and an estimated useful life of eight years. Both X and Y make their returns on the basis of a calendar year. The qualified investment with respect to such item was $12,000. For the taxable year 1962 X Corporation's credit earned of $840 was allowed under section 38 as a

credit against its liability for tax. On January 15, 1967, X Corporation is liquidated under section 332 and all of its properties, including the item of section 38 property, are transferred to Y Corporation. The bases of the properties in the hands of Y Corporation are determined under section 334(b)(1).
(ii) Under subparagraph (1) of this paragraph, paragraph (a) of § 1.47-1 does not apply to the January 15, 1967, transfer to Y Corporation.

Example 2. (i) The facts are the same as in example 1 and in addition on February 2, 1968, Y Corporation sells the item of section 38 property to Z Corporation.
(ii) Under subparagraph (1) of this paragraph, paragraph (a) of § 1.47-1 does not apply to the January 15, 1967, transfer to Y Corporation. However, paragraph (a) of § 1.47 applies to the February 2, 1968, sale of the property by Y Corporation. The actual useful life of the property is six years and one month (that is, the period beginning on January 1, 1962, and ending on February 2, 1968).

(f) ***Mere change in form of conducting a trade or business*** —

(1) ***General rule.***

(i) Notwithstanding the provisions of § 1.47-2, relating to “disposition” and “cessation”, paragraph (a) of § 1.47-1 shall not apply to section 38 property which is disposed of, or otherwise ceases to be section 38 property with respect to the taxpayer, before the close of the estimated useful life which was taken into account in computing the taxpayer's qualified investment by reason of a mere change in the form of conducting the trade or business in which such section 38 property is used provided that the conditions set forth in subdivision (ii) of this subparagraph are satisfied.

(ii) The conditions referred to in subdivision (i) of this subparagraph are as follows:

(*a*) The section 38 property described in subdivision (i) of this subparagraph is retained as section 38 property in the same trade or business,

(*b*) The transferor (or in a case where the transferor is a partnership, estate, trust, or electing small business corporation, the partner, beneficiary, or shareholder) of such section 38 property retains a substantial interest in such trade or business,

(*c*) Substantially all the assets (whether or not section 38 property) necessary to operate such trade or business are transferred to the transferee to whom such section 38 property is transferred, and

(*d*) The basis of such section 38 property in the hands of the transferee is determined in whole or in part by reference to the basis of such section 38 property in the hands of the transferor. This subparagraph shall not apply to the transfer of section 38 property if paragraph (e) of this section, relating to transactions to which section 381 applies, applies with respect to such transfer.

(2) ***Substantial interest.*** For purposes of this paragraph, a transferor (or in a case where the transferor is a partnership, estate, trust, or electing small business corporation, the partner, beneficiary, or shareholder) shall be considered as having retained a substantial interest in the trade or business only if, after the change in form, his interest in such trade or business—

(i) Is substantial in relation to the total interest of all persons, or

(ii) Is equal to or greater than his interest prior to the change in form.

Thus, where a taxpayer owns a 5-percent interest in a partnership, and, after the incorporation of that partnership, the taxpayer retains at least a 5-percent interest in the corporation, the taxpayer will be considered as having retained a substantial interest in the trade or business as of the date of the change in form.

(3) ***Property held for the production of income.*** Subparagraph (1)(i) of this paragraph applies to section 38 property held for the production of income (within the meaning of section 167(a)(2)) as well as to section 38 property used in a trade or business.

(4) ***Leased property.*** In a case where a lessor of new section 38 property made a valid election, under § 1.48-4, to treat the lessee as having purchased such property for purposes of the credit allowed by section 38, in determining whether subparagraph (1)(i) of this paragraph applies to an assignment of the lease and transfer of possession of such property, the condition contained in subparagraph (1)(ii)(*d*) of this paragraph is not applicable.

(5) ***Disposition or cessation.***

(i) If section 38 property described in subparagraph (1)(i) of this paragraph is disposed of by the transferee, or otherwise ceases to be section 38 property with respect to the transferee, before the close of the estimated useful life which was taken into account in computing the qualified investment of the transferor (or in a case where the transferor is a partnership, estate, trust, or electing small business corporation, the qualified investment of the partners, beneficiaries, or shareholders) then under paragraph (a) of § 1.47-1 such property ceases to be section 38 property with respect to the transferor (or such partners, beneficiaries, or shareholders), and a recapture determination shall be made with respect to such property. For purposes of recomputing qualified investment with respect to such property, the actual useful life shall be the period beginning with the date on which it was placed in service by the transferor and ending with the date of the disposition by, or cessation with respect to, the transferee.

(ii) If in any taxable year the transferor (or in a case where the transferor is a partnership, estate, trust, or electing small business corporation, the partner, beneficiary, or shareholder) of the section 38 property described in subparagraph (1)(i) of this paragraph does not retain a substantial interest in the trade or business directly or indirectly (through ownership in other entities provided that such other entities' bases in such interest are determined in whole or in part by reference to the basis of such interest in the hands of the transferor) then, under paragraph (a) of § 1.47-1, such property ceases to be section 38 property with respect to the transferor and he (or the partner, beneficiary, or shareholder) shall make a recapture determination. For purposes of recomputing qualified investment with respect to property described in this subdivision, its actual useful life shall be the period beginning with the date on which it was placed in service by the transferor and ending with the first date on which the transferor (or the partner, beneficiary, or shareholder) does not retain a substantial interest in

the trade or business. Any taxpayer who seeks to establish his interest in a trade or business under the rule of this subdivision shall maintain adequate records to demonstrate his indirect interest in such trade or business after any such transfer or transfers.

(iii) In making a recapture determination under this subparagraph there shall be taken into account any prior recapture determinations with respect to the transferor in connection with the same property.

(iv) Notwithstanding subparagraph (1) of this paragraph and subdivision (ii) of this subparagraph in the case of a mere change in the form of a trade or business, if the interest of a taxpayer in the trade or business is reduced but such taxpayer has retained a substantial interest in such trade or business, paragraph (a)(2) of § 1.47-4 (relating to electing small business corporations), paragraph (a)(2) of § 1.47-5 (relating to estates or trusts) or paragraph (a)(2) of § 1.47-6 (relating to partnerships) shall apply, as the case may be.

(6) ***Examples.*** This paragraph may be illustrated by the following examples in each of which it is assumed that the transfer satisfies the conditions of subparagraphs (1)(ii) (*a*), (*c*), and (*d*) of this paragraph.

> *Example 1.* (i) On January 1, 1962, A, an individual, acquired and placed in service in his sole proprietorship an item of section 38 property with a basis of $12,000 and an estimated useful life of eight years. The qualified investment with respect to such item was $12,000. For the taxable year 1962 A's credit earned of $840 was allowed under section 38 as a credit against his liability for tax. On March 15, 1963, A transfers all of the assets used in his sole proprietorship to X Corporation, a newly formed corporation, in exchange for 45 percent of the stock of X Corporation.
> (ii) Under subparagraph (1)(i) of this paragraph, paragraph (a) of § 1.47-1 does not apply to the March 15, 1963, transfer to X Corporation.

> *Example 2.* (i) The facts are the same as in example 1 and in addition on February 2, 1964, X Corporation sells the item of section 38 property to Y Corporation.
> (ii) Under subparagraph (1)(i) of this paragraph, paragraph (a) of § 1.47-1 does not apply to the March 15, 1963, transfer to X Corporation. However, under subparagraph (5)(i) of this paragraph, paragraph (a) of § 1.47-1 applies to the February 2, 1964, sale of the item of section 38 property by X Corporation to Y Corporation. The actual useful life of the property is two years and one month (that is, the period beginning on January 1, 1962, and ending on February 2, 1964). The recomputed qualified investment with respect to such property is zero ($12,000 basis multiplied by zero applicable percentage) and A's recomputed credit earned for the taxable year 1962 is zero. The income tax imposed by chapter 1 of the Code on A for 1964 is increased by the $840 decrease in his credit earned for the taxable year 1962 (that is, $840 credit earned minus zero recomputed credit earned).

> *Example 3.* (i) On January 1, 1962, partnership ABC, which makes its returns on the basis of a calendar year, acquired and placed in service on item of section 38 property with a basis of

$20,000 and an estimated useful life of eight years. Partnership ABC has 10 partners who make their returns on the basis of a calendar year and share partnership profits equally. Each partner's share of the basis of such item of section 38 property is 10 percent, that is, $2,000. On March 15, 1963, partnership ABC transfers all of the assets used in its trade or business to the X Corporation, a newly formed corporation, in exchange for all of the stock of X Corporation and immediately thereafter transfers 10 percent of such stock to each of the 10 partners.
(ii) Under subparagraph (1)(i) of this paragraph, paragraph (a) of § 1.47-1 does not apply to the March 15, 1963 transfer by the ABC Partnership to X Corporation.

Example 4. (i) The facts are the same as in example 3 except that partnership ABC transfers 10 percent of the stock in X Corporation to each of 8 partners, 20 percent to partner A, and cash to partner B.
(ii) Under subparagraph (1)(i) of this paragraph, with respect to all of the partners (including partner A) except partner B, paragraph (a) of § 1.47-1 does not apply to the March 15, 1963, transfer by the ABC Partnership to X Corporation. Paragraph (a) of § 1.47-1 applies with respect to partner B's $2,000 share of the item of section 38 property. See paragraph (a)(1) of § 1.47-6.

Example 5. (i) X Corporation operates a manufacturing business and a separate personal service business. On January 1, 1962, X acquired and placed in service a truck, which qualified as section 38 property, in its manufacturing business. The truck had a basis of $10,000 and an estimated useful life of 8 years. On February 10, 1965, X transfers all the assets used in its manufacturing business to Partnership XY in exchange for a 50-percent interest in such partnership.
(ii) Under subparagraph (1)(i) of this paragraph, paragraph (a) of § 1.47-1 does not apply to the February 10, 1965, transfer to Partnership XY.

(g) ***Sale-and-leaseback transactions*** —

(1) ***In general.*** Notwithstanding the provisions of § 1.47-2, relating to “disposition” and “cessation”, paragraph (a) of § 1.47-1 shall not apply where section 38 property is disposed of and as part of the same transaction is leased back to the vendor even though gain or loss is recognized to the vendor-lessee and the property ceases to be subject to depreciation in his hands. If paragraph (a) of § 1.47-1 applies with respect to such property subsequent to the transaction, the actual useful life shall begin with the date on which such property was first placed in service by the vendor-lessee as owner.

(2) ***Special rule for progress expenditure property.*** The sale and leaseback (or agreement or contract to leaseback) of progress expenditure property (including any contract rights to the property), in general, will be treated as a cessation described in section 47(a)(3)(A) with respect to the seller-lessee. However, a sale and leaseback (or agreement or contract to leaseback) will not be treated as a cessation to the extent qualified investment passed through to the lessee under section 48(d) in the year the property is placed in service equals or exceeds qualified progress expenditures for the

property taken into account by the lessee. If a sale-leaseback transaction is treated as a cessation, qualified investment must be reduced and the credit recomputed, beginning with the most recent credit year (*i.e.,* the most recent year property is taken into account in computing qualified investment under § 1.46-3 or 1.46-5). The amount of the reduction is the amount, if any, by which qualified progress expenditures taken into account by the lessee in all prior years exceeds qualified investment passed through to the lessee under section 48(d). This paragraph (g)(2) does not apply to any progress expenditure property that has been placed in service by a vendor-lessee (as described in paragraph (g)(1) of this section) prior to a sale-leaseback of that property in a transaction described in paragraph (g)(1) of this section.

(h) ***Certain property replaced after April 18, 1969*** —

(1) ***In general.***

(i) If section 38 property is disposed of and property which is, for purposes of section 1033 and the regulations thereunder, similar or related in service or use to the property disposed of and which would be section 38 property but for the application of section 49 is placed in service to replace the property disposed of, the increase in income tax and adjustment of investment credit carryovers and carrybacks resulting from the recomputation under paragraph (a) of § 1.47-1 shall be reduced (but not below zero) by the credit that would be allowed for the qualified investment of the replacement property (determined as if such property were section 38 property). The preceding sentence shall not apply unless the replacement takes place within 6 months after the disposition. If property otherwise qualifies as replacement property, it is immaterial that it is placed in service (for example, to undergo testing) before the replaced property is disposed of. The assignment by the taxpayer in his return of an estimated useful life to the replacement property in computing its qualified investment will be considered a representation by the taxpayer that he expects to retain the replacement property for its entire estimated useful life. If such property is disposed of before the end of such life, then the circumstances surrounding the replacement will be examined to determine whether the taxpayer's representation was in good faith and, if appropriate, the qualified investment of the replacement property will be recomputed for the year of replacement using the actual useful life of such property.

(ii) The provisions of subdivision (i) of this subparagraph may be illustrated by the following example:

Example. On January 1, 1967, A, a calendar year taxpayer, acquired and placed in service a new machine with a basis of $100 and an estimated useful life of 8 years. A's qualified investment was $100 and his credit earned was $7, which was allowed as a credit against tax for 1967. On January 15, 1971. A disposed of the machine and replaced it with a similar new machine costing $75 and having an estimated useful life of 8 years. The new machine would be section 38 property but for section 49. Since the actual useful life of the original machine was at least 4 but less than 6 years, the recomputed qualified investment of the machine is $33.33 ($33\frac{1}{3}$ percent of $100) and under paragraph (a) of § 1.47-1 the amount of recapture tax would be $4.67 ($7, the original credit earned, minus $2.33, the recomputed credit earned). However, under the provisions of this paragraph, the recapture tax is reduced (but not below zero) by the credit that would be allowed for the replacement property (determined as if such property were section 38 property). Under these facts the recapture tax is zero ($4.67, the recapture tax with respect to the original machine, minus $5.25, the credit that would be allowed on the new machine).

(2) ***Leased property.*** Property disposed of may be replaced with property leased from another, provided (i) an election with respect to the newly leased property could be made under section 48(d) but for section 49, and (ii) the lessee obtains the lessor's written statement that he will not claim such property as replacement property under this paragraph. The statement of the lessor shall contain the information specified in subdivisions (i) through (vii) of § 1.48-4(f)(1) and the statement (or a copy thereof) shall be retained in the records of the lessor and the lessee for a period of at least 3 years after the property is transferred to the lessee.

[T.D. 6931, 32 FR 14033, Oct. 10, 1967, as amended by T.D. 7126, 36 FR 11192, June 10, 1971; T.D. 7203; 37 FR 17128, Aug. 25, 1972; T.D. 8183, 53 FR 6625, Mar. 2, 1988]

§ 1.47-4 Electing small business corporation.

(a) ***In general*** —

(1) ***Disposition or cessation in hands of corporation.*** If an electing small business corporation (as defined in section 1371(b)) or a former electing small business corporation disposes of any section 38 property (or if any section 38 property otherwise ceases to be section 38 property in the hands of the corporation) before the close of the estimated useful life which was taken into account in computing qualified investment with respect to such property, a recapture determination shall be made with respect to each shareholder who is treated, under § 1.48-5, as a taxpayer with respect to such property. Each such recapture determination shall be made with respect to the pro rata share of the basis (or cost) of such property taken into account by such shareholder in computing his qualified investment. For purposes of each such recapture determination the actual useful life of such property shall be the period beginning with the date on which it was placed in service by the electing small business corporation and ending with the date of the disposition or cessation. In making a recapture determination under this subparagraph there shall be taken into account any prior recapture determinations made with respect to the shareholder in connection with the same property. For definition of “recapture determination” see paragraph (a)(1) of § 1.47-1.

(2) ***Disposition of shareholder's interest.***

(i) If—

(*a*) The basis (or cost) of section 38 property is apportioned, under § 1.48-5, to a shareholder of an electing small business corporation who takes such basis (or cost) into account in computing his qualified investment, and

(*b*) After the end of the shareholder's taxable year in which such apportionment was taken into account and before the close of the estimated useful life of the property, such shareholder's proportionate stock interest in such corporation is reduced (for example, by a sale or redemption, or by the issuance of additional shares) below the percentage specified in subdivision (ii) of this subparagraph,

then, on the date of such reduction such section 38 property ceases to be section 38 property with respect to such shareholder to the extent of the actual reduction in such shareholder's proportionate stock interest. (For example, if $100 of the basis of section 38 property was apportioned to a shareholder and if his proportionate stock interest is reduced from 60 percent to 30 percent (that is, 50 percent of his original interest), then such property shall be treated as having ceased to be section 38 property to the extent of $50.) Accordingly, a recapture determination shall be made with respect to such shareholder. For purposes of such recapture

determination the actual useful life of such property shall be the period beginning with the date on which it was placed in service by the electing small business corporation and ending with the date on which it is treated as having ceased to be section 38 property with respect to the shareholder. In making a recapture determination under this subparagraph there shall be taken into account any prior recapture determination made with respect to the shareholder in connection with the same property.

(ii) The percentage referred to in subdivision (i)(*b*) of this subparagraph is $66^{2}/_{3}$ percent of the shareholder's proportionate stock interest in the corporation on the date of the apportionment under § 1.48-5. However, once property has been treated under this subparagraph as having ceased to be section 38 property to any extent the percentage referred to shall be $33^{1}/_{3}$ percent of the shareholder's proportionate stock interest in the corporation on the date of the apportionment under § 1.48-5.

(iii) In determining a shareholder's proportionate stock interest in a former electing small business corporation for purposes of this subparagraph, the shareholder shall be considered to own stock in such corporation which he owns directly or indirectly (through ownership in other entities provided such other entities' bases in such stock are determined in whole or in part by reference to the basis of such stock in the hands of the transferor). For example, if A, who owns all of the 100 shares of the outstanding stock of corporation X, a corporation which was formerly an electing small business corporation, transfers on November 1, 1966, 70 shares of X stock to corporation Y in exchange for 90 percent of the stock of Y in a transaction to which section 351 applies, then, for purposes of subdivision (i) of this subparagraph, A shall be considered to own 93 percent of the stock of X, 30 percent directly and 63 percent indirectly (*i.e.*, 90 percent of 70). Any taxpayer who seeks to establish his interest in the stock of a former electing small business corporation under the rule of this subdivision shall maintain adequate records to demonstrate his indirect interest in the corporation after any such transfer or transfers.

(b) ***Election of a small business corporation under section 1372*** —

(1) ***General rule.*** If a corporation makes a valid election under section 1372 to be an electing small business corporation (as defined in section 1371(b)), then on the last day of the taxable year immediately preceding the first taxable year for which such election is effective, any section 38 property the basis (or cost) of which was taken into account in computing the corporation's qualified investment in taxable years prior to the first taxable year for which the election is effective (and which has not been disposed of or otherwise ceased to be section 38 property with respect to the corporation prior to such last day) shall be considered as having ceased to be section 38 property with respect to such corporation and § 1.47-1 shall apply. However, if the corporation and each of the persons who are shareholders of the corporation on the first day of the first taxable year for which the election under section 1372 is to be effective, or on the date of such election, whichever is later, execute the agreement specified in subparagraph (2) of this paragraph, § 1.47-1 shall not apply to any such section 38 property by reason of the election by the corporation under section 1372.

(2) ***Agreement of shareholders and corporation.***

(i) The agreement referred to in subparagraph (1) of this paragraph shall be signed by the shareholders and the corporation, and shall recite that, in the event the section 38 property described in subparagraph (1) of this paragraph is later disposed of by, or ceases to be section 38 property with respect to, the corporation during a taxable year of the corporation for which the election under section 1372 is effective, each such signer agrees

(*a*) to notify the district director of such disposition or cessation, and

(*b*) to be jointly and severally liable to pay to the district director an amount equal to the increase in tax provided by section 47. The amount of such increase shall be determined as if such property had ceased to be section 38 property as of the last day of the taxable year immediately preceding the first taxable year for which the election under section 1372 is effective, except that the actual useful life (within the meaning of paragraph (a) of § 1.47-1) of the property shall be considered to have ended on the date of the actual disposition by, or cessation in the hands of, the electing small business corporation.

(ii) The agreement shall set forth the name, address, and taxpayer account number of each party and the internal revenue district in which each such party files his or its income tax return for the taxable year which includes the last day of the corporation's taxable year immediately preceding the first taxable year for which the election under section 1372 is effective. The agreement may be signed on behalf of the corporation by any person who is duly authorized. The agreement shall be filed with the district director with whom the corporation files its income tax return for its taxable year immediately preceding the first taxable year for which the election under section 1372 is effective and shall be filed on or before the due date (including extensions of time) of such return. However, if the due date (including extensions of time) of such income tax return is on or before September 1, 1967, the agreement may be filed on or before December 31, 1967. For purposes of the two preceding sentences, the district director may, if good cause is shown, permit the agreement to be filed on a later date.

(c) ***Examples.*** This section may be illustrated by the following examples in each of which it is assumed that X Corporation, an electing small business corporation which makes its returns on the basis of the calendar year, acquired and placed in service on June 1, 1962, three items of section 38 property. The basis and estimated useful life of each item of section 38 property are as follows:

Asset No.	Basis	Estimated useful life (Years)
1	$30,000	4
2	30,000	6
3	30,000	8

On December 31, 1962, X Corporation had 20 shares of stock outstanding which were owned equally by A and B who make their returns on the basis of a calendar year. Under § 1.48-5, the total bases of section 38 properties was apportioned to the shareholders of X Corporation as follows:

	Useful life category		
	4 to 6 years	6 to 8 years	8 years or more
Total bases	$30,000	$30,000	$30,000
Shareholder A (10/20)	15,000	15,000	15,000

	Useful life category		
	4 to 6 years	6 to 8 years	8 years or more
Shareholder B (10/20)	15,000	15,000	15,000

Assuming that during 1962 shareholders A and B did not place in service any section 38 property and that they did not own any interests in other electing small business corporations, partnerships, estates, or trusts, the qualified investment of each shareholder is $30,000, computed as follows:

Basis	Applicable percentage	Qualified investment
$15,000	$33^1/_3$	$5,000
$15,000	$66^2/_3$	10,000
$15,000	100	15,000
		30,000

For the taxable year 1962, each shareholder's credit earned of $2,100 (7 percent of $30,000) was allowed under section 38 as a credit against his liability for tax.

Example 1. (i) On December 2, 1965, X Corporation sells asset No. 3 to Y Corporation.
(ii) The actual useful life of asset No. 3 is three years and six months. The recomputed qualified investment with respect to each shareholder's share of the basis of asset No. 3 is zero ($15,000 share of basis multiplied by zero applicable percentage) and for the taxable year 1962 each shareholder's recomputed credit earned is $1,050 (7 percent of $15,000). The income tax imposed by chapter 1 of the Code on each of the shareholders for the taxable year 1965 is increased by the $1,050 decrease in his credit earned for the taxable year 1962 (that is, $2,100 original credit earned minus $1,050 recomputed credit earned).

Example 2. (i) On December 3, 1964, shareholder A sells 5 of his 10 shares of stock in X Corporation to C, and on December 3, 1965, A sells his remaining 5 shares of stock to D. In addition, on January 2, 1966, X Corporation sells asset No. 3 to Y Corporation.
(ii) Under paragraph (a)(2) of this section, on December 3, 1964, 50 percent of the share of the basis of each of the three items of section 38 property ceases to be section 38 property with respect to shareholder A since immediately after the December 3, 1964, sale A's proportionate stock interest in X Corporation is reduced to 50 percent of the proportionate stock interest in X Corporation which he held on December 31, 1962. The actual useful life of the share of the bases of the section 38 properties which

cease to be section 38 property with respect to A is two years and six months (that is, the period beginning with June 1, 1962, and ending with December 3, 1964). A's recomputed qualified investment with respect to such properties is $15,000, computed as follows:

Basis	Applicable percentage	Recomputed qualified investment
$7,500	$33^1/_3$	$2,500
$7,500	$66^2/_3$	5,000
$7,500	100	7,500
		15,000

For the taxable year 1962 shareholder A's recomputed credit earned is $1,050 (7 percent of $15,000). The income tax imposed by chapter 1 of the Code on shareholder A for the taxable year 1964 is increased by the $1,050 decrease in his credit earned for the taxable year 1962 (that is, $2,100 original credit earned minus $1,050 recomputed credit earned).

(iii) Under paragraph (a)(2) of this section, on December 3, 1965, the remaining 50 percent of the share of the basis of each of the three items of section 38 property ceases to be section 38 property with respect to shareholder A since immediately after the December 3, 1965, sale A's proportionate stock interest in X Corporation is reduced to zero. The actual useful life of the share of the bases of the section 38 properties which cease to be section 38 property with respect to A is three years and six months (that is, the period beginning with June 1, 1962, and ending with December 3, 1965). A's recomputed qualified investment with respect to such properties is zero. For the taxable year 1962 shareholder A's recomputed credit earned is zero. The income tax imposed by chapter 1 of the Code on shareholder A for the taxable year 1965 is increased by $1,050 (that is, $2,100 ($2,100 original credit earned minus zero recomputed credit earned) reduced by the $1,050 increase in tax for 1964).
(iv) The actual useful life of asset No. 3 which was sold on January 2, 1966, is three years and seven months. The recomputed qualified investment with respect to B's share of the basis of asset No. 3 is zero ($15,000 share of basis multiplied by zero applicable percentage) and for the taxable year 1962, B's recomputed credit earned is $1,050 (7 percent of $15,000). The income tax imposed by chapter 1 of the Code on shareholder B for the taxable year 1966 is increased by the $1,050 decrease in his credit earned for the taxable year 1962 ($2,100 original credit earned minus $1,050 recomputed credit earned). The sale of asset No. 3 on January 2, 1966, by X Corporation has no effect on A.

(d) ***Termination or revocation of an election under section 1372.*** Section 38 property shall not be considered to be disposed of or to have ceased to be section 38 property solely by reason of a termination or revocation of a corporation's election under section 1372.

[T.D. 6931, 32 FR 14035, Oct. 10, 1967]

§ 1.47-5 Estates and trusts.

(a) *In general* —

(1) ***Disposition or cessation in hands of estate or trust.*** If an estate or trust disposes of any section 38 property (or if any section 38 property otherwise ceases to be section 38 property in the hands of the estate or trust) before the close of the estimated useful life which was taken into account in computing qualified investment with respect to such property, a recapture determination shall be made with respect to the estate or trust, and each beneficiary who is treated, under § 1.48-6, as a taxpayer with respect to such property. Each such recapture determination shall be made with respect to the share of the basis (or cost) of such property taken into account by such estate or trust and such beneficiary in computing its or his each such recapture determination the actual useful life of such property shall be the period beginning with the date on which it was placed in service by the estate or trust and ending with the date of the disposition or cessation. In making a recapture determination under this subparagraph with respect to a taxpayer there shall be taken into account any prior recapture determinations made with respect to such taxpayer in connection with the same property. For definition of "recapture determination" see paragraph (a)(1) of § 1.47-1.

(2) ***Disposition of interest.***

(i) If—

(*a*) The basis (or cost) of section 38 property is apportioned, under § 1.48-6, to an estate or trust which, or to a beneficiary of an estate or trust who, takes such basis (or cost) into account in computing his qualified investment, and

(*b*) After the date on which such section 38 property was placed in service by the estate or trust and before the close of the estimated useful life of the property, such estate's, trust's, or such beneficiary's proportionate interest in the income of the estate or trust is reduced (for example, by a sale, or by the terms of the estate or trust instrument) below the percentage specified in subdivision (ii) of this subparagraph, then, on the date of such reduction, such section 38 property ceases to be section 38 property with respect to such estate, trust, or beneficiary to the extent of the actual reduction in such estate's, trust's, or beneficiary's proportionate interest in the income of the estate or trust. (For example, if $100 of the basis of section 38 property was apportioned to a beneficiary and if his proportionate interest in the income of the estate or trust is reduced from 60 percent to 30 percent (that is, 50 percent of his original interest), then such property shall be treated as having ceased to be section 38 property to the extent of $50). Accordingly, a recapture determination shall be made with respect to such estate, trust, or beneficiary. For purposes of such recapture determination the actual useful life of such property shall be the period beginning with the date on which it was placed in service by the estate or trust and ending with the date on which it is treated as having ceased to be section 38 property with respect to the estate, trust, or beneficiary. In making a recapture determination under this subparagraph there shall be taken into account any prior recapture determination made with respect to the estate, trust, or beneficiary in connection with the same property.

(ii) The percentage referred to in subdivision (i)(*b*) of this subparagraph is $66^{2}/_{3}$ percent of the estate's, trust's, or beneficiary's proportionate interest in the income of the estate or trust for the taxable year of the apportionment under § 1.48-6. However, once property has been treated under this subparagraph as having ceased to be section 38 property to any extent the

percentage referred to shall be $33^1/_3$ percent of the estate's, trust's, or beneficiary's proportionate interest in the income of the estate or trust for the taxable year of the apportionment under § 1.48-6.

(iii) In determining a beneficiary's proportionate interest in the income of an estate or trust for purposes of this subparagraph, the beneficiary shall be considered to own any interest in such an estate or trust which he owns directly or indirectly (through ownership in other entities provided such other entities' bases in such interest are determined in whole or in part by reference to the basis of such interest in the hands of the beneficiary). For example, if A, whose proportionate interest in the income of trust X is 30 percent, transfers all of such interest to corporation Y in exchange for all of the stock of Y in a transaction to which section 351 applies, then, for purposes of subdivision (i) of this subparagraph, A shall be considered to own a 30-percent interest in trust X. Any taxpayer who seeks to establish his interest in an estate or trust under the rule of this subdivision shall maintain adequate records to demonstrate his indirect interest in the estate or trust after any such transfer or transfers.

(b) ***Examples.*** Paragraph (a) of this section may be illustrated by the following examples in each of which it is assumed that XYZ Trust, which makes its returns on the basis of the calendar year, acquired and placed in service on June 1, 1962, three items of section 38 property. The basis and estimated useful life of each item of section 38 property are as follows:

Asset No.	Basis	Estimated useful life (Years)
1	$30,000	4
2	30,000	6
3	30,000	8

For the taxable year 1962 the income of XYZ Trust is $20,000, which is allocable equally to XYZ Trust and beneficiary A. Beneficiary A makes his returns on the basis of a calendar year. Under § 1.48-6, the total bases of the section 38 properties was apportioned to XYZ Trust and beneficiary A as follows:

		Useful life category		
		4 to 6 years	6 to 8 years	8 years or more
Total bases		$30,000	$30,000	$30,000
	($10,000)	15,000	15,000	15,000
XYZ Trust	($20,000)			
Beneficiary A	($10,000)	15,000	15,000	15,000

		Useful life category		
		4 to 6 years	6 to 8 years	8 years or more
	($20,000)			

Assuming that during 1962 beneficiary A did not place in service any section 38 property and that he did not own any interests in other estates, trusts, electing small business corporations, or partnerships, the qualified investment of XYZ Trust and of beneficiary A is $30,000 each, computed as follows:

Basis	Applicable percentage	Qualified investment
$15,000	$33^1/_3$	$5,000
$15,000	$66^2/_3$	10,000
$15,000	100	15,000
		30,000

For the taxable year 1962, XYZ Trust and beneficiary A each had a credit earned of $2,100 (7 percent of $30,000). Each such credit earned was allowed under section 38 as a credit against the liability for tax.

Example 1. (i) On December 2, 1965, XYZ Trust sells asset No. 3 to X Corporation.
(ii) The actual useful life of asset No. 3 is three years and six months. The recomputed qualified investment with respect to XYZ Trust's and beneficiary A's share of the basis of asset No. 3 is zero ($15,000 share of basis multiplied by zero applicable percentage) and for the taxable year 1962, XYZ Trust's and beneficiary A's recomputed credit earned is $1,050 (7 percent of $15,000). The income tax imposed by chapter 1 of the Code on XYZ Trust and on beneficiary A for the taxable year 1965 is increased by the $1,050 decrease in his credit earned for the taxable year 1962 (that is, $2,100 original credit earned minus $1,050 recomputed credit earned).

Example 2. (i) On December 3, 1964, beneficiary A sells 50 percent of his interest in the income of XYZ Trust to B, and on December 3, 1965, A sells his remaining 50 percent interest to C. In addition, on January 2, 1966, XYZ Trust sells asset No. 3 to Y Corporation.
(ii) Under paragraph (a)(2) of this section, on December 3, 1964, 50 percent of the basis of each of the three items of section 38 property ceases to be section 38 property with respect to beneficiary A since immediately after the December 3, 1964, sale A's proportionate interest in the income of XYZ Trust is reduced to 50 percent of his proportionate interest in the income of XYZ Trust for the taxable year 1962. The actual useful life of the share of the bases of the section 38 properties which cease to be section 38

property with respect to A is two years and six months (that is, the period beginning with June 1, 1962, and ending with December 3, 1964). Beneficiary A's recomputed qualified investment with respect to such properties is $15,000, computed as follows:

Basis	Applicable percentage	Qualified investment
$7,500	$33^1/_3$	$2,500
$7,500	$66^2/_3$	5,000
$7,500	100	7,500
		15,000

For the taxable year 1962 beneficiary A's recomputed credit earned is $1,050 (7 percent of $15,000). The income tax imposed by chapter 1 of the Code on beneficiary A for the taxable year 1964 is increased by the $1,050 decrease in his credit earned for the taxable year 1962 (that is, $2,100 original credit earned minus $1,050 recomputed credit earned).

(iii) Under paragraph (a)(2) of this section, on December 3, 1965, the remaining 50 percent of the share of the basis of each of the three items of section 38 property ceases to be section 38 property with respect to beneficiary A since immediately after the December 3, 1965, sale A's proportionate interest in the income of XYZ Trust is reduced to zero. The actual useful life of the share of the basis of the section 38 properties which cease to be section 38 property with respect to A is three years and six months (that is, the period beginning with June 1, 1962, and ending with December 3, 1965). A's recomputed qualified investment with respect to such properties is zero. For the taxable year 1962 beneficiary A's recomputed credit earned is zero. The income tax imposed by chapter 1 of the Code on beneficiary A for the taxable year 1965 is increased by $1,050 (that is, $2,100 ($2,100 original credit earned minus zero recomputed credit earned) reduced by the $1,050 increase in tax for 1964).
(iv) The actual useful life of asset No. 3 which was sold on January 2, 1966, is three years and seven months. The recomputed qualified investment with respect to XYZ Trust's share of the basis of asset No. 3 is zero ($15,000 share of basis multiplied by zero applicable percentage) and for the taxable year 1962, XYZ Trust's recomputed credit earned is $1,050 (7 percent of $15,000). The income tax imposed by chapter 1 of the Code on XYZ Trust for the taxable year 1966 is increased by the $1,050 decrease in its credit earned for the taxable year 1962 ($2,100 original credit earned minus $1,050 recomputed credit earned). The sale of asset No. 3 on January 2, 1966, has no effect on A.

[T.D. 6931, 32 FR 14037, Oct. 10, 1967]

§ 1.47-6 Partnerships.

(a) *In general* —

(1) ***Disposition or cessation in hands of partnership.*** If a partnership disposes of any partnership section 38 property (or if any partnership section 38 property otherwise ceases to be section 38 property in the hands of the partnership) before the close of the estimated useful life which was taken into account in computing qualified investment with respect to such property, a recapture determination shall be made with respect to each partner who is treated, under paragraph (f) of § 1.46-3, as a taxpayer with respect to such property. Each such recapture determination shall be made with respect to the share of the basis (or cost) of such property taken into account by such partner in computing his qualified investment. For purposes of each such recapture determination the actual useful life of such property shall be the period beginning with the date on which it was placed in service by the partnership and ending with the date of the disposition or cessation. In making a recapture determination under this subparagraph there shall be taken into account any prior recapture determinations made with respect to the partner in connection with the same property. For definition of "recapture determination" see paragraph (a)(1) of § 1.47-1.

(2) ***Disposition of partner's interest.***

(i) If—

(*a*) The basis (or cost) of partnership section 38 property is taken into account by a partner in computing his qualified investment, and

(*b*) After the date on which such partnership section 38 property was placed in service by the partnership and before the close of the estimated useful life of the property, such partner's proportionate interest in the general profits of the partnership (or in the particular item of property) is reduced (for example, by a sale, by a change in the partnership agreement, or by the admission of a new partner) below the percentage specified in subdivision (ii) of this subparagraph, then, on the date of such reduction such partnership section 38 property ceases to be section 38 property with respect to such partner to the extent of the actual reduction in such partner's proportionate interest in the general profits of the partnership (or in the particular item of property). (For example, if $100 of the basis of section 38 property was taken into account by a partner and if his proportionate interest in the general profits of the partnership is reduced from 60 percent to 30 percent (that is, 50 percent of his original interest), then such property shall be treated as having ceased to be section 38 property to the extent of $50.) Accordingly, a recapture determination shall be made with respect to such partner. For purposes of such recapture determination the actual useful life of such property shall be the period beginning with the date on which it was placed in service by the partnership and ending with the date on which it is treated as having ceased to be section 38 property with respect to the partner. In making a recapture determination under this subparagraph there shall be taken into account any prior recapture determination made with respect to the partner in connection with the same property.

(ii) The percentage referred to in subdivision (i)(*b*) of this subparagraph is $66^{2}/_{3}$ percent of the partner's proportionate interest in the general profits of the partnership (or in the particular item of property) for the year in which such property was placed in service. However, once property has been treated under this subparagraph as having ceased to be section 38 property to any extent the percentage referred to shall be $33^{1}/_{3}$ percent of the partner's proportionate interest in the general profits of the partnership (or in the particular item of property) for the year in which such property was placed in service.

(iii) In determining a partner's proportionate interest in the general profits of a partnership for purposes of this subparagraph, the partner shall be considered to own any interest in such a partnership which he owns directly or indirectly (through ownership in other entities provided the other entities' bases in such interest are determined in whole or in part by reference to the basis of such interest in the hands of the partner). For example, if A, whose proportionate interest in the general profits of partnership X is 20 percent, transfers all of such interest to corporation Y in exchange for all of the stock of Y in a transaction to which section 351 applies, then, for purposes of subdivision (i) of this subparagraph, A shall be considered to own a 20-percent interest in partnership X. Any taxpayer who seeks to establish his interest in a partnership under the rule of this subdivision shall maintain adequate records to demonstrate his indirect interest in the partnership after any such transfer or transfers.

(b) ***Examples.*** Paragraph (a) of this section may be illustrated by the following examples in each of which it is assumed that ABC Partnership, which makes its returns on the basis of the calendar year, acquired and placed in service on June 1, 1962, three items of section 38 property. The basis and estimated useful life of each item of section 38 property are as follows:

Asset No.	Basis	Estimated useful life Years
1	$30,000	4
2	30,000	6
3	30,000	8

Partners A and B, who make their returns on the basis of a calendar year, share the profits and losses of ABC Partnership equally. Under paragraph (f)(2) of § 1.46-3, each partner's share of the basis of the partnership section 38 property is as follows:

Asset No.	Estimated useful life (years)	Basis	Partners share of basis	
			A 50 percent	B 50 percent
1	4	$30,000	$15,000	$15,000
2	6	30,000	15,000	15,000

Asset No.	Estimated useful life (years)	Basis	Partners share of basis	
			A 50 percent	B 50 percent
3	8	30,000	15,000	15,000

Assuming that during 1962 partners A and B did not place in service any section 38 property and that they did not own any interests in other partnerships, electing small business corporations, estates, or trusts, the qualified investment of each partner is $30,000, computed as follows:

Partnership asset No.	Share of basis	Applicable percentage	Qualified investment
1	$15,000	$33^1/_3$	$5,000
2	15,000	$66^2/_3$	10,000
3	15,000	100	15,000
			30,000

For the taxable year 1962, each partner's credit earned of $2,100 (7 percent of $30,000) was allowed under section 38 as a credit against his liability for tax.

Example 1. (i) On December 2, 1965, ABC Partnership sells asset No. 3 to X Corporation.
(ii) The actual useful life of asset No. 3 is three years and six months. The recomputed qualified investment with respect to each partner's share of the basis of asset No. 3 is zero ($15,000 shares of basis multiplied by zero applicable percentage) and for the taxable year 1962, each partner's recomputed credit earned is $1,050 (7 percent of $15,000). The income tax imposed by chapter 1 of the Code on each of the partners for the taxable year 1965 is increased by the $1,050 decrease in his credit earned for the taxable year 1962 (that is, $2,100 original credit earned minus $1,050 recomputed credit earned).

Example 2. (i) On December 3, 1964, partner A sells one-half of his 50 percent interest in ABC Partnership to C, and on December 3, 1965, A sells the remaining one- half of his interest to D. In addition, on January 2, 1966, ABC Partnership sells asset No. 3 to X Corporation.
(ii) Under paragraph (a)(2) of this section, on December 3, 1964, 50 percent of the basis of each of the three items of section 38 property ceases to be section 38 property with respect to partner A since immediately after the December 3, 1964, sale A's proportionate interest in the general profits of ABC Partnership is reduced to 50 percent of his proportionate interest in the general profits of ABC Partnership for 1962. The actual useful life of the share of the basis of each of the section 38 properties which cease

to be section 38 property with respect to A is two years and six months (that is, the period beginning with June 1, 1962, and ending with December 3, 1964). Partner A's recomputed qualified investment with respect to such properties is $15,000, computed as follows:

Partnership asset No.	Share of basis	Applicable percentage	Qualified investment
1	$7,500	$33^1/_3$	$2,500
2	7,500	$66^2/_3$	5,000
3	7,500	100	7,500
			15,000

For the taxable year 1962 partner A's recomputed credit earned is $1,050 (7 percent of $15,000). The income tax imposed by chapter 1 of the Code on partner A for the taxable year 1964 is increased by the $1,050 decrease in his credit earned for the taxable year 1962 (that is, $2,100 original credit earned minus $1,050 recomputed credit earned).

(iii) Under paragraph (a)(2) of this section, on December 3, 1965, the remaining 50 percent of the share of the basis of each of the three items of section 38 property ceases to be section 38 property with respect to partner A since immediately after the December 3, 1965, sale A's proportionate interest in the general profits of ABC Partnership is reduced to zero. The actual useful life of the share of the bases of the section 38 properties which cease to be section 38 property with respect to A is three years and six months (that is, the period beginning with June 1, 1962, and ending with December 3, 1965). A's recomputed qualified investment with respect to such properties is zero. For the taxable year 1962 partner A's recomputed credit earned is zero. The income tax imposed by chapter 1 of the Code on partner A for the taxable year 1965 is increased by $1,050 (that is, $2,100 ($2,100 original credit earned minus zero recomputed credit earned) reduced by the $1,050 increase in tax for 1964).
(iv) The actual useful life of asset No. 3 which was sold on January 2, 1966, is three years and seven months. The recomputed qualified investment with respect to partner B's share of the basis of asset No. 3 is zero ($15,000 share of basis multiplied by zero applicable percentage) and for the taxable year 1962, partner B's recomputed credit earned is $1,050 (7 percent of $15,000). The income tax imposed by chapter 1 of the Code on partner B for the taxable year 1966 is increased by the $1,050 decrease in his credit earned for the taxable year 1962 ($2,100 original credit earned minus $1,050 recomputed credit earned). The sale of asset No. 3 on January 2, 1966, has no effect on A.

[T.D. 6931, 32 FR 14039, Oct. 10, 1967]

§ 1.47-7 Rehabilitation credit allocated over a 5-year period.

(a) ***In general.*** For purposes of section 46, for any taxable year during the 5-year period beginning in the taxable year in which a qualified rehabilitated building, as defined in section 47(c)(1) and § 1.48-12(b), is placed in service, the rehabilitation credit for the taxable year is an amount equal to the ratable share for

the taxable year, provided the requirements of section 47 are satisfied. Except as provided by section 13402(c)(2) of Public Law 115-97, 131 Stat. 2054 (2017), this section applies with respect to qualified rehabilitation expenditures, as defined in section 47(c)(2) and § 1.48-12(c), paid or incurred after December 31, 2017.

(b) ***Ratable share.*** For purposes of paragraph (a) of this section, the term *ratable share* means, for any taxable year during the 5-year period described in such paragraph, the amount equal to 20 percent of the rehabilitation credit determined with respect to the qualified rehabilitated building, allocated ratably to each year during such period.

(c) ***Rehabilitation credit determined.*** The term *rehabilitation credit determined* means the amount equal to 20 percent of the qualified rehabilitation expenditures, as defined in section 47(c)(2) and § 1.48-12(c), taken into account under section 47(b)(1) for the taxable year in which the qualified rehabilitated building is placed in service. However, if the taxpayer claims the additional first year depreciation for the qualified rehabilitation expenditures pursuant to § 1.168(k)-2(g)(9), the term *rehabilitation credit determined* means the amount equal to 20 percent of the remaining rehabilitated basis, as defined in § 1.168(k)-2(g)(9)(i)(B), of the qualified rehabilitated building for the taxable year in which such building is placed in service.

(d) ***Coordination with section 50.*** For purposes of section 50 and § 1.50-1, the amount of the rehabilitation credit determined is the amount defined in paragraph (c) of this section.

(e) ***Examples.*** The provisions of paragraphs (a) through (d) of this section are illustrated by the following examples. Assume that the additional first year depreciation deduction provided by section 168(k) is not allowed or allowable for the qualified rehabilitation expenditures.

(1) ***Example 1: Rehabilitation Credit Determined and Ratable Share.*** Between February 1, 2021 and October 1, 2021, X, a calendar year C corporation, incurred qualified rehabilitation expenditures of $200,000 with respect to a qualified rehabilitated building. X placed the building in service on October 15, 2021. X's rehabilitation credit determined in 2021 under paragraph (c) of this section is $40,000 ($200,000 × 0.20). For purposes of section 46, for each taxable year during the 5-year period beginning in 2021, the ratable share allocated under paragraph (b) of this section for the year is $8,000 ($40,000 × 0.20).

(2) ***Example 2: Coordination with section 50(c).*** The facts are the same as in paragraph (e)(1) of this section (Example 1). For purposes of determining the amount of X's basis adjustment in 2021 under section 50(c), the amount of the rehabilitation credit determined under paragraph (c) of this section is $40,000.

(3) ***Example 3: Coordination with section 50(a).*** The facts are the same as in paragraph (e)(1) of this section (Example 1). In 2021 and 2022, X claimed the full amount of the ratable share allowed under section 46, or $8,000 per taxable year. X's total allowable ratable share for 2023 through 2025 is $24,000 ($8,000 allowable per taxable year). On November 1, 2023, X disposes of the qualified rehabilitated building. Under section 50(a)(1)(B)(iii), because the period of time between when the qualified rehabilitated building was placed in service is more than two, but less than 3 full years, the applicable recapture percentage is 60%. Based on these facts, X has an increase in tax of $9,600 under section 50(a) ($16,000 of credit claimed in 2021 and 2022 × 0.60) and has $3,200 of credits remaining in each of 2023 through 2025, after forgoing $4,800 in credits in each of the years 2023 through 2025 ($8,000 × 0.60).

(4) ***Example 4: Coordination with section 50(d)(5) and § 1.50-1; C corporation lessee.*** X, a calendar year C corporation, leases nonresidential real property from Y. The property is a qualified rehabilitated building that is placed in service on October 15, 2021. Under paragraph (c) of this section, the

amount of the rehabilitation credit determined is $100,000. Y elects under § 1.48-4 to treat X as having acquired the property. The shortest recovery period that could be available to the property under section 168 is 39 years. Because Y has elected to treat X as having acquired the property, Y does not reduce its basis in the property under section 50(c). Instead, pursuant to section 50(d)(5) and § 1.50-1, X, the lessee of the property, must include ratably in gross income over 39 years an amount equal to the rehabilitation credit determined with respect to such property.

(5) ***Example 5: Coordination with section 50(d)(5) and § 1.50-1; partnership lessee.*** A and B, calendar year taxpayers, form a partnership, the AB partnership, that leases nonresidential real property from Y. The property is a qualified rehabilitated building that is placed in service on October 15, 2021. Under paragraph (c) of this section, the amount of the rehabilitation credit determined is $200,000. Y elects under § 1.48-4 to treat the AB partnership as having acquired the property. The shortest recovery period that could be available to the property under section 168 is 39 years. Because Y has elected to treat the AB partnership as having acquired the property, Y does not reduce its basis in the building under section 50(c). Instead, A and B, the ultimate credit claimants, as defined in § 1.50-1(b)(3)(ii), must include the amount of the rehabilitation credit determined under paragraph (c) of this section with respect to A and B ratably in gross income over 39 years, the shortest recovery period available with respect to such property.

(f) ***Applicability date.*** This section applies to taxable years beginning on or after September 18, 2020. Taxpayers may choose to apply this section for taxable years beginning before September 18, 2020, provided the taxpayer applies this section in its entirety and in a consistent manner.

[T.D. 9915, 85 FR 58267, Sept. 18, 2020]

§ 1.48-1 Definition of section 38 property.

(a) ***In general.*** Property which qualifies for the credit allowed by section 38 is known as “section 38 property”. Except as otherwise provided in this section, the term “section 38 property” means property

(1) with respect to which depreciation (or amortization in lieu of depreciation) is allowable to the taxpayer,

(2) which has an estimated useful life of 3 years or more (determined as of the time such property is placed in service), and

(3) which is

(i) tangible personal property,

(ii) other tangible property (not including a building and its structural components) but only if such other property is used as an integral part of manufacturing, production, or extraction, or an integral part of furnishing transportation, communications, electrical energy, gas, water, or sewage disposal services by a person engaged in a trade or business of furnishing any such service, or is a research or storage facility used in connection with any of the foregoing activities,

(iii) an elevator or escalator which satisfies the conditions of section 48(a)(1)(C), or

(iv) in the case of a qualified rehabilitated building, that portion of the basis which is attributable to qualified rehabilitation expenditures. The determination of whether property qualifies as section 38 property in the hands of the taxpayer for purposes of the credit allowed by section 38 must

be made with respect to the first taxable year in which such property is placed in service by the taxpayer. See paragraph (d) of § 1.46-3. For the meaning of "estimated useful life", see paragraph (e) of § 1.46-3. In the case of property which is not described in section 50, this paragraph shall be applied by substituting "4 years" for "3 years".

(b) ***Depreciation allowable.***

(1) Property (with the exception of property described in section 48(a)(1)(F) and paragraph (p) of this section) is not section 38 property unless a deduction for depreciation (or amortization in lieu of depreciation) with respect to such property is allowable to the taxpayer for the taxable year. A deduction for depreciation is allowable if the property is of a character subject to the allowance for depreciation under section 167 and the basis (or cost) of the property is recovered through a method of depreciation, including, for example, the unit of production method and the retirement method as well as methods of depreciation which measure the life of the property in terms of years. If property is placed in service (within the meaning of paragraph (d) of § 1.46-3) in a trade or business (or in the production of income), but under the taxpayer's depreciation practice the period for depreciation with respect to such property begins in a taxable year subsequent to the taxable year in which such property is placed in service, then a deduction for depreciation shall be treated as allowable with respect to such property in the earlier taxable year (or years). Thus, for example, if a machine is placed in service in a trade or business in 1963, but the period for depreciation with respect to such machine begins in 1964, because the taxpayer uses an averaging convention (see § 1.167(a)-10) in computing depreciation, then, for purposes of determining whether the machine qualifies as section 38 property, a deduction for depreciation shall be treated as allowable in 1963.

(2) If, for the taxable year in which property is placed in service, a deduction for depreciation is allowable to the taxpayer only with respect to a part of such property, then only the proportionate part of the property with respect to which such deduction is allowable qualifies as section 38 property for the purpose of determining the amount of credit allowable under section 38. Thus, for example, if property is used 80 percent of the time in a trade or business and is used 20 percent of the time for personal purposes, only 80 percent of the basis (or cost) of such property qualifies as section 38 property. Further, property does not qualify to the extent that a deduction for depreciation thereon is disallowed under section 274 (relating to disallowance of certain entertainment, etc., expenses).

(3) If the cost of property is not recovered through a method of depreciation but through a deduction of the full cost in one taxable year, for purposes of subparagraph (1) of this paragraph a deduction for depreciation with respect to such property is not allowable to the taxpayer. However, if an adjustment with respect to the income tax return for such taxable year requires the cost of such property to be recovered through a method of depreciation, a deduction for depreciation will be considered as allowable to the taxpayer.

(4) If depreciation sustained on property is not an allowable deduction for the taxable year but is added to the basis of property being constructed, reconstructed, or erected by the taxpayer, for purposes of subparagraph (1) of this paragraph a deduction for depreciation shall be treated as allowable for the taxable year with respect to the property on which depreciation is sustained. Thus, if $1,000 of depreciation sustained with respect to property No. 1, which is placed in service in 1964 by taxpayer A, is not allowable to A as a deduction for 1964 but is added to the basis of property being constructed by A (property no. 2), for purposes of subparagraph (1) of this paragraph a deduction for depreciation shall be treated as allowable to A for 1964 with respect to property no. 1. However, the $1,000 amount is not included in the basis of property no. 2 for purposes of determining A's qualified investment with respect to property no. 2. See paragraph (c)(1) of § 1.46-3.

(c) ***Definition of tangible personal property.*** If property is tangible personal property it may qualify as section 38 property irrespective of whether it is used as an integral part of an activity (or constitutes a research or storage facility used in connection with such activity) specified in paragraph (a) of this section. Local law shall not be controlling for purposes of determining whether property is or is not "tangible" or "personal". Thus, the fact that under local law property is held to be personal property or tangible property shall not be controlling. Conversely, property may be personal property for purposes of the investment credit even though under local law the property is considered to be a fixture and therefore real property. For purposes of this section, the term "tangible personal property" means any tangible property except land and improvements thereto, such as buildings or other inherently permanent structures (including items which are structural components of such buildings or structures). Thus, buildings, swimming pools, paved parking areas, wharves and docks, bridges, and fences are not tangible personal property. Tangible personal property includes all property (other than structural components) which is contained in or attached to a building. Thus, such property as production machinery, printing presses, transportation and office equipment, refrigerators, grocery counters, testing equipment, display racks and shelves, and neon and other signs, which is contained in or attached to a building constitutes tangible personal property for purposes of the credit allowed by section 38. Further, all property which is in the nature of machinery (other than structural components of a building or other inherently permanent structure) shall be considered tangible personal property even though located outside a building. Thus, for example, a gasoline pump, hydraulic car lift, or automatic vending machine, although annexed to the ground, shall be considered tangible personal property.

(d) ***Other tangible property*** —

(1) ***In general.*** In addition to tangible personal property, any other tangible property (but not including a building and its structural components) used as an integral part of manufacturing, production, or extraction, or as an integral part of furnishing transportation, communications, electrical energy, gas, water, or sewage disposal services by a person engaged in a trade or business of furnishing any such service, or which constitutes a research or storage facility used in connection with any of the foregoing activities, may qualify as section 38 property.

(2) ***Manufacturing, production, and extraction.*** For purposes of the credit allowed by section 38, the terms "manufacturing", "production", and "extraction" include the construction, reconstruction, or making of property out of scrap, salvage, or junk material, as well as from new or raw material, by processing, manipulating, refining, or changing the form of an article, or by combining or assembling two or more articles, and include the cultivation of the soil, the raising of livestock, and the mining of minerals. Thus, section 38 property would include, for example, property used as an integral part of the extracting, processing, or refining of metallic and nonmetallic minerals, including oil, gas, rock, marble, or slate; the construction of roads, bridges, or housing; the processing of meat, fish or other foodstuffs; the cultivation of orchards, gardens, or nurseries; the operation of sawmills, the production of lumber, lumber products or other building materials; the fabrication or treatment of textiles, paper, leather goods, or glass; and the rebuilding, as distinguished from the mere repairing, of machinery.

(3) ***Transportation and communications businesses.*** Examples of transportation businesses include railroads, airlines, bus companies, shipping or trucking companies, and oil pipeline companies. Examples of communications businesses include telephone or telegraph companies and radio or television broadcasting companies.

(4) ***Integral part.*** In order to qualify for the credit, property (other than tangible personal property and research or storage facilities used in connection with any of the activities specified in subparagraph (1) of this paragraph) must be used as an integral part of one or more of the activities specified in subparagraph (1) of this paragraph. Property such as pavements, parking areas, inherently permanent advertising displays or inherently permanent outdoor lighting facilities, or swimming pools, although used in the operation of a business, ordinarily is not used as an integral part of any of such specified activities. Property is used as an integral part of one of the specified activities if it is used directly in the activity and is essential to the completeness of the activity. Thus, for example, in determining whether property is used as an integral part of manufacturing, all properties used by the taxpayer in acquiring or transporting raw materials or supplies to the point where the actual processing commences (such as docks, railroad tracks and bridges), or in processing raw materials into the taxpayer's final product, would be considered as property used as an integral part of manufacturing. Specific examples of property which normally would be used as an integral part of one of the specified activities are blast furnaces, oil and gas pipelines, railroad tracks and signals, telephone poles, broadcasting towers, oil derricks, and fences used to confine livestock. Property shall be considered used as an integral part of one of the specified activities if so used either by the owner of the property or by the lessee of the property.

(5) ***Research or storage facilities.***

(i) If property (other than a building and its structural components) constitutes a research or storage facility and if it is used in connection with an activity specified in subparagraph (1) of this paragraph, such property may qualify as section 38 property even though it is not used as an integral part of such activity. Examples of research facilities include wind tunnels and test stands. Examples of storage facilities include oil and gas storage tanks and grain storage bins. Although a research or storage facility must be used in connection with, for example, a manufacturing process, the taxpayer-owner of such facility need not be engaged in the manufacturing process.

(ii) In the case of property described in section 50, property will constitute a storage facility only if the facility is used principally for the bulk storage of fungible commodities. Bulk storage means the storage of a commodity in a large mass prior to its consumption or utilization. Thus, if a facility is used to store oranges that have been sorted and boxed, it is not used for bulk storage.

(e) ***Definition of building and structural components.***

(1) Generally, buildings and structural components thereof do not qualify as section 38 property. See, however, section 48(a)(1)(E) and (g), and § 1.48-11 (relating to investment credit for qualified rehabilitated building). The term “building” generally means any structure or edifice enclosing a space within its walls, and usually covered by a roof, the purpose of which is, for example, to provide shelter or housing, or to provide working, office, parking, display, or sales space. The term includes, for example, structures such as apartment houses, factory and office buildings, warehouses, barns, garages, railway or bus stations, and stores. Such term includes any such structure constructed by, or for, a lessee even if such structure must be removed, or ownership of such structure reverts to the lessor, at the termination of the lease. Such term does not include

(i) a structure which is essentially an item of machinery or equipment, or

(ii) a structure which houses property used as an integral part of an activity specified in section 48(a)(1)(B)(i) if the use of the structure is so closely related to the use of such property that the structure clearly can be expected to be replaced when the property it initially houses is

replaced. Factors which indicate that a structure is closely related to the use of the property it houses include the fact that the structure is specifically designed to provide for the stress and other demands of such property and the fact that the structure could not be economically used for other purposes. Thus, the term "building" does not include such structures as oil and gas storage tanks, grain storage bins, silos, fractionating towers, blast furnaces, basic oxygen furnaces, coke ovens, brick kilns, and coal tipples.

(2) The term "structural components" includes such parts of a building as walls, partitions, floors, and ceilings, as well as any permanent coverings therefor such as paneling or tiling; windows and doors; all components (whether in, on, or adjacent to the building) of a central air conditioning or heating system, including motors, compressors, pipes and ducts; plumbing and plumbing fixtures, such as sinks and bathtubs; electric wiring and lighting fixtures; chimneys; stairs, escalators, and elevators, including all components thereof; sprinkler systems; fire escapes; and other components relating to the operation or maintenance of a building. However, the term "structural components" does not include machinery the sole justification for the installation of which is the fact that such machinery is required to meet temperature or humidity requirements which are essential for the operation of other machinery or the processing of materials or foodstuffs. Machinery may meet the "sole justification" test provided by the preceding sentence even though it incidentally provides for the comfort of employees, or serves, to an insubstantial degree, areas where such temperature or humidity requirements are not essential. For example, an air conditioning and humidification system installed in a textile plant in order to maintain the temperature or humidity within a narrow optimum range which is critical in processing particular types of yarn or cloth is not included within the term "structural components". For special rules with respect to an elevator or escalator, the construction, reconstruction, or erection of which is completed by the taxpayer after June 30, 1963, or which is acquired after June 30, 1963, and the original use of which commences with the taxpayer and commences after such date, see section 48(a)(1)(C) and paragraph (m) of this section.

(f) ***Intangible property.*** Intangible property, such as patents, copyrights, and subscription lists, does not qualify as section 38 property. The cost of intangible property, in the case of a patent or copyright, includes all costs of purchasing or producing the item patented or copyrighted. Thus, in the case of a motion picture or television film or tape, the cost of the intangible property includes manuscript and screenplay costs, the cost of wardrobe and set design, the salaries of cameramen, actors, directors, etc., and all other costs properly includible in the basis of such film or tape. In the case of a book, the cost of the intangible property includes all costs of producing the original copyrighted manuscript, including the cost of illustration, research, and clerical and stenographic help. However, if tangible depreciable property is used in the production of such intangible property, see paragraph (b)(4) of this section.

(g) ***Property used outside the United States*** —

(1) ***General rule.***

(i) Except as provided in subparagraph (2) of this paragraph, the term "section 38 property" does not include property which is used predominantly outside the United States (as defined in section 7701(a)(9)) during the taxable year. The determination of whether property is used predominantly outside the United States during the taxable year shall be made by comparing the period of time in such year during which the property is physically located outside the United States with the period of time in such year during which the property is physically located within the United States. If the property is physically located outside the United States during more than 50 percent of the taxable year, such property shall be considered used predominantly outside the United States during that year. If property is placed in service after

the first day of the taxable year, the determination of whether such property is physically located outside the United States during more than 50 percent of the taxable year shall be made with respect to the period beginning on the date on which the property is placed in service and ending on the last day of such taxable year.

(ii) Since the determination of whether a credit is allowable to the taxpayer with respect to any property may be made only with respect to the taxable year in which the property is placed in service by the taxpayer, property used predominantly outside the United States during the taxable year in which it is placed in service cannot qualify as section 38 property with respect to such taxpayer, regardless of the fact that the property is permanently returned to the United States in a later year. Furthermore, if property is used predominantly in the United States in the year in which it is placed in service by the taxpayer, and a credit under section 38 is allowed with respect to such property, but such property is thereafter in any one year used predominantly outside the United States, such property ceases to be section 38 property with respect to the taxpayer and is subject to the application of section 47.

(iii) This subparagraph applies whether property is used predominantly outside the United States by the owner of the property, or by the lessee of the property. If property is leased and if the lessor makes a valid election under § 1.48-4 to treat the lessee as having purchased such property for purposes of the credit allowed by section 38, the determination of whether such property is physically located outside the United States during more than 50 percent of the taxable year shall be made with respect to the taxable year of the lessee; however, if the lessor does not make such an election, such determination shall be made with respect to the taxable year of the lessor.

(2) ***Exceptions.*** The provisions of subparagraph (1) of this paragraph do not apply to—

(i) Any aircraft which is registered by the Administrator of the Federal Aviation Agency, and which (*a*) is operated, whether on a scheduled or nonscheduled basis, to and from the United States, or (*b*) is placed in service by the taxpayer during a taxable year ending after March 9, 1967, and is operated under contract with the United States: *Provided,* That use of the aircraft under the contract constitutes its principal use outside the United States during the taxable year. The term “to and from the United States” is not intended to exclude an aircraft which makes flights from one point in a foreign country to another such point, as long as such aircraft returns to the United States with some degree of frequency;

(ii) Rolling stock, of a domestic railroad corporation subject to part I of the Interstate Commerce Act, which is used within and without the United States. For purposes of this subparagraph, the term “rolling stock” means locomotives, freight and passenger train cars, floating equipment, and miscellaneous transportation equipment on wheels, the expenditures for which are chargeable (or, in the case of leased property, would be chargeable) to the equipment investment accounts in the uniform system of accounts for railroad companies prescribed by the Interstate Commerce Commission;

(iii) Any vessel documented under the laws of the United States which is operated in the foreign or domestic commerce of the United States. A vessel is documented under the laws of the United States if it is registered, enrolled, or licensed under the laws of the United States by the Commandant, U.S. Coast Guard. Vessels operated in the foreign or domestic commerce of the United States include those documented for use in foreign trade, coastwise trade, or fisheries;

(iv) Any motor vehicle of a United States person (as defined in section 7701(a)(30)) which is operated to and from the United States with some degree of frequency;

(v) Any container of a United States person which is used in the transportation of property to and from the United States;

(vi) Any property (other than a vessel or an aircraft) of a U.S. person which is used for the purpose of exploring for, developing, removing, or transporting resources from the outer Continental Shelf (within the meaning of section 2 of the Outer Continental Shelf Lands Act, as amended and supplemented; 43 U.S.C. 1331). Thus for example, offshore drilling equipment may be section 38 property;

(vii) Any property placed in service after December 31, 1965 which (*a*) is owned by a domestic corporation (other than a corporation entitled to the benefits of section 931 or 934(b)) or by a United States citizen (other than a citizen entitled to the benefits of section 931, 932, 933, or 934(c)), and (*b*) is used predominantly in a possession of the United States during the taxable year by such a corporation or such a citizen, or by a corporation created or organized in, or under the law of, a possession of the United States. Thus, property placed in service after December 31, 1965, which is owned by a domestic corporation not entitled to the benefits of section 931 or 934(b), which is leased to a corporation organized under the laws of a U.S. possession, and which is used by such lessee predominantly in a possession of the United States may qualify as section 38 property. However, property which is owned by a corporation not entitled to the benefits of section 931 or 934(b) but which is leased to a domestic corporation entitled to such benefits would not qualify as section 38 property. The determination of whether property is used predominantly in a possession of the United States during the taxable year shall be made under principles similar to those described in subparagraph (1) of this paragraph. For example, if a machine is placed in service in a possession of the United States on July 1, 1966, by a calendar year taxpayer and if it is physically located in such a possession during more than 50 percent of the period beginning on July 1, 1966 and ending on December 31, 1966, then such machine shall be considered used predominantly in a possession of the United States during the taxable year 1966;

(viii) Any communications satellite (as defined in section 103(3) of the Communications Satellite Act of 1962, 47 U.S.C., sec. 702(3)), or any interest therein, of a U.S. person;

(ix) Any cable which is property described in section 50, or any interest therein, of a domestic corporation engaged in furnishing telephone service to which section 46(c)(3)(B)(iii) applies (or of a wholly owned domestic subsidiary of such corporation), if such cable is part of a submarine cable system which constitutes part of a communications link exclusively between the United States and one or more foreign countries; and

(x) Any property described in section 50 (other than a vessel or an aircraft) of a U.S. person which is used in international or territorial waters for the purpose of exploring for, developing, removing, or transporting resources from ocean waters or deposits under such waters.

(h) ***Property used for lodging*** —

(1) ***In general.***

(i) Except as provided in subparagraph (2) of this paragraph, the term “section 38 property” does not include property which is used predominantly to furnish lodging or is used predominantly in connection with the furnishing of lodging during the taxable year. Property used in the living

quarters of a lodging facility, including beds and other furniture, refrigerators, ranges, and other equipment, shall be considered as used predominantly to furnish lodging. The term "lodging facility" includes an apartment house, hotel, motel, dormitory, or any other facility (or part of a facility) where sleeping accommodations are provided and let, except that such term does not include a facility used primarily as a means of transportation (such as an aircraft, vessel, or a railroad car) or used primarily to provide medical or convalescent services, even though sleeping accommodations are provided.

(ii) Property which is used predominantly in the operation of a lodging facility or in serving tenants shall be considered used in connection with the furnishing of lodging, whether furnished by the owner of the lodging facility or another person. Thus, for example, lobby furniture, office equipment, and laundry and swimming pool facilities used in the operation of an apartment house or in serving tenants would be considered used predominantly in connection with the furnishing of lodging. However, property which is used in furnishing, to the management of a lodging facility or its tenants, electrical energy, water, sewage disposal services, gas, telephone service, or other similar services shall not be treated as property used in connection with the furnishing of lodging. Thus, such items as gas and electric meters, telephone poles and lines, telephone station and switchboard equipment, and water and gas mains, furnished by a public utility would not be considered as property used in connection with the furnishing of lodging.

(iii) Notwithstanding any other provision of this paragraph (h), in the case of a qualified rehabilitated building (within the meaning of section 48(g)(1) and § 1.48-12(b)), expenditures for property resulting in basis described in section 48(a)(1)(E) shall not be treated as section 38 property to the extent that such property is attributable to a portion of the building that is used for lodging or in connection with lodging. For example, if expenditures are incurred to rehabilitate a five story qualified rehabilitated building, three floors of which are used for apartments and two floors of which are used as commercial office space, the portion of the basis of the building attributable to qualified rehabilitated expenditures attributable to the commercial part of the building shall not be considered to be expenditures for property, or in connection with property, used predominantly for lodging. Allocation of expenditures between the two portions of the building are to be made using the principles contained in § 1.48-12(C)(10)(ii).

(2) *Exceptions* —

(i) ***Nonlodging commercial facility.*** A nonlodging commercial facility which is available to persons not using the lodging facility on the same basis as it is available to the tenants of the lodging facility shall not be treated as property which is used predominantly to furnish lodging or predominantly in connection with the furnishing of lodging. Examples of non-lodging commercial facilities include restaurants, drug stores, grocery stores, and vending machines located in a lodging facility.

(ii) ***Property used by a hotel or motel.*** Property used by a hotel, motel, inn, or other similar establishment, in connection with the trade or business of furnishing lodging shall not be considered as property which is used predominantly to furnish lodging or predominantly in connection with the furnishing of lodging, provided that the predominant portion of the living accommodations in the hotel, motel, etc., is used by transients during the taxable year. For purposes of the preceding sentence, the term "predominant portion" means "more than one-half". Thus, if more than one-half of the living quarters of a hotel, motel, inn, or other similar establishment is used during the taxable year to accommodate tenants on a transient basis, none of the property used by such hotel, motel, etc., in the trade or business of furnishing

lodging shall be considered as property which is used predominantly to furnish lodging or predominantly in connection with the furnishing of lodging. Accommodations shall be considered used on a transient basis if the rental period is normally less than 30 days.

(iii) ***Coin-operated machines.*** In the case of property which is described in section 50, coin-operated vending machines and coin-operated washing machines and dryers shall not be considered as property which is used predominantly to furnish lodging or predominantly in connection with the furnishing of lodging.

(iv) ***Certified historic structures.*** For purposes of this paragraph (h), regardless of the actual use of a certified historic structure, that portion of the basis of such certified historic structure which is attributable to qualified rehabilitation expenditures (as defined in § 1.48-12(c)) shall not be considered as property which is either used predominantly to furnish lodging or predominantly in connection with the furnishing of lodging. Accordingly, such portion of the basis may qualify as section 38 property. (For the definition of "certified historic structure," see section 48(g)(3) and § 1.48-12(d).)

(i) [Reserved]

(j) ***Property used by certain tax-exempt organizations.*** The term "section 38 property" does not include property used by an organization (other than a cooperative described in section 521) which is exempt from the tax imposed by chapter 1 of the Code unless such property is used predominantly in an unrelated trade or business the income of which is subject to tax under section 511. If such property is debt-financed property as defined in section 514(b), the basis or cost of such property for purposes of computing qualified investment under section 46(c) shall include only that percentage of the basis or cost which is the same percentage as is used under section 514(a), for the year the property is placed in service, in computing the amount of gross income to be taken into account during such taxable year with respect to such property. The term "property used by an organization" means

(1) property owned by the organization (whether or not leased to another person), and

(2) property leased to the organization. Thus, for example, a data processing or copying machine which is leased to an organization exempt from tax would be considered as property used by such organization. Property (unless used predominantly in an unrelated trade or business) leased by another person to an organization exempt from tax or leased by such an organization to another person is not section 38 property to either the lessor or the lessee, and in either case the lessor may not elect under § 1.48-4 to treat the lessee of such property as having purchased such property for purposes of the credit allowed by section 38. This paragraph shall not apply to property leased on a casual or short-term basis to an organization exempt from tax.

(k) ***Property used by governmental units.*** The term "section 38 property" does not include property used by the United States, any State (including the District of Columbia) or political subdivision thereof, any international organization (as defined in section 7701(a)(18)) other than the International Telecommunications Satellite Consortium or any successor organization, or any agency or instrumentality of the United States, of any State or political subdivision thereof, or of any such international organization. The term "property used by the United States, etc." means

(1) property owned by any such governmental unit (whether or not leased to another person), and

(2) property leased to any such governmental unit. Thus, for example, a data processing or copying machine which is leased to any such governmental unit would be considered as property used by such governmental unit. Property leased by another person to any such governmental unit or leased

by such governmental unit to another person is not section 38 property to either the lessor or the lessee, and in either case the lessor may not elect under § 1.48-4 to treat the lessee of such property as having purchased such property for purposes of the credit allowed by section 38. This paragraph shall not apply to property leased on a casual or short-term basis to any such governmental unit.

(l) [Reserved]

(m) *Elevators and escalators* —

(1) ***In general.*** Under section 48(a)(1)(C), an elevator or escalator qualifies as section 38 property if—

(i) The construction, reconstruction, or erection of the elevator or escalator is completed by the taxpayer after June 30, 1963, or

(ii) The elevator or escalator is acquired after June 30, 1963, and the original use of such elevator or escalator commences with the taxpayer and commences after such date.

In the case of construction, reconstruction, or erection of an elevator or escalator commenced before January 1, 1962, and completed after June 30, 1963, there shall be taken into account in determining the qualified investment under section 46(c) only that portion of the basis which is properly attributable to construction, reconstruction, or erection after December 31, 1961. Further, if the construction, reconstruction, or erection of such property is commenced after December 31, 1961, and is completed after June 30, 1963, the entire basis of the elevator or escalator shall be taken into account in determining qualified investment under section 46(c). Also, if an elevator or escalator is reconstructed by the taxpayer after June 30, 1963, the basis attributable to such reconstruction may be taken into account in determining the qualified investment under section 46(c), irrespective of the fact that the original construction or erection of such elevator or escalator may have occurred before January 1, 1962. Paragraph (b) of § 1.48-2 shall be applied in determining the date of acquisition, original use, and basis attributable to construction, reconstruction, or erection.

(2) ***Definition of elevators and escalators.*** For purposes of this section the term “elevator” means a cage or platform and its hoisting machinery for conveying persons or freight to or from different levels and functionally related equipment which is essential to its operation. The term includes, for example, guide rails and cables, motors and controllers, control panels and landing buttons, and elevator gates and doors, which are essential to the operation of the elevator. The term “elevator” does not, however, include a structure which is considered a building for purposes of the investment credit. The term “escalator” means a moving staircase and functionally related equipment which is essential to its operation. For purposes of determining qualified investment under section 46(c) and § 1.46-3, the basis of an elevator or escalator does not include the cost of any structural alterations to the building, such as the cost of constructing a shaft or of making alterations to the floor, walls, or ceiling, even though such alterations may be necessary in order to install or modernize the elevator or escalator.

(3) ***Examples.*** The provisions of this paragraph may be illustrated by the following examples:

Example 1. If an elevator with a total basis of $100,000 is completed after June 30, 1963, and the portion attributable to construction by the taxpayer after December 31, 1961, is determined by engineering estimates or by cost accounting records to be $30,000, only the $30,000 portion may be taken into account as an investment in new section 38 property in computing qualified investment.

Example 2. If construction of an elevator with a total basis of $90,000 is commenced by the taxpayer after December 31, 1961, and is completed after June 30, 1963, the entire basis of $90,000 may be taken into account as an investment in new section 38 property.

Example 3. The facts are the same as in example 2 except that construction of the elevator was completed before June 30, 1963. The elevator is not considered to be section 38 property.

Example 4. In 1964, a taxpayer reconditions an elevator, which had been constructed and placed in service in 1962 and which had an adjusted basis in 1964 of $75,000. The cost of reconditioning amounts to an additional $50,000. The basis of the elevator which may be taken into account in computing qualified investment in section 38 property is $50,000, irrespective of whether the taxpayer contracts to have it reconditioned or reconditions it himself, and irrespective of whether the materials used in the process are new in use.

(n) ***Amortized property.*** Any property with respect to which an election under 167(k), 169, 184, 187, or 188 applies shall not be treated as section 38 property. In the case of any property to which section 169 applies, the preceding sentence shall apply only to so much of the adjusted basis of the property as (after the application of section 169(f)) constitutes the amortizable basis for purposes of section 169. This paragraph shall not apply to property with respect to which an election under section 167(k), 184, 187, or 188 applies unless such property is described in section 50.

(o) [Reserved]

(p) ***Qualified timber property.***

(1) Qualified timber property (within the meaning of section 194(c)(1)) shall be treated as section 38 property to the extent of the portion of the basis of such property which is the amortizable basis (as defined in § 1.194-3(b)) acquired during the taxable year and taken into account under section 194 (after applying the limitation of section 194(b)(1)). Such amortizable basis shall qualify as section 38 property whether or not an election is made under section 194. However, any portion of such amortizable basis which is attributable to property which otherwise qualifies as section 38 property shall not be treated as section 38 property under section 48(a)(1)(F) and this paragraph. For example, amortizable basis attributable to depreciation on equipment would not qualify as section 38 property under this paragraph if such equipment qualifies as section 38 property under sections 48(a)(1) (A) or (B). In determining the portion of amortizable basis which qualifies as section 38 property under this paragraph, the reduction in amortizable basis to account for depreciation sustained with respect to property used in the reforestation process (which otherwise qualifies as section 38 property) shall be applied before the $10,000 limitation on eligible costs under section 194(b)(1). For example, if in a taxable year a taxpayer incurs qualifying reforestation costs resulting in $12,000 of amortizable basis with respect to property for which an election is in effect, and $2,000 of these costs are attributable to depreciation of the taxpayer's equipment, such $12,000 would first be reduced by the $2,000 of depreciation, and the $10,000 limitation under section 194(b)(1) would be applied following such reduction.

(2) If a taxpayer makes an election to amortize reforestation expenditures under section 194, and allocates the $10,000 limitation among more than one property under § 1.194-2(b)(2), then such allocation shall apply for purposes of determining the amortizable basis that qualifies as section 38 property under paragraph (p)(1) of this section. If no election is made under section 194, the taxpayer may select the manner in which the $10,000 limitation is to be allocated among the qualified timber properties.

(Sec. 38(b), 76 Stat. 963; 26 U.S.C. 38; secs. 194 (94 Stat. 1989; 26 U.S.C. 194) and 7805 (68A Stat. 917, 26 U.S.C. 7805) of the Internal Revenue Code of 1954)

[T.D. 6731, 29 FR 6073, May 8, 1964]

Editorial Note: For FEDERAL REGISTER citations affecting § 1.48-1, see the List of CFR Sections Affected, which appears in the Finding Aids section of the printed volume and at *www.govinfo.gov*.

§ 1.48-2 New section 38 property.

(a) ***In general.*** Section 48(b) defines "new section 38 property" as section 38 property—

(1) The construction, reconstruction, or erection of which is completed by the taxpayer after December 31, 1961, or

(2) Which is acquired by the taxpayer after December 31, 1961, provided that the original use of such property commences with the taxpayer and commences after such date.

In the case of construction, reconstruction, or erection of such property commenced before January 1, 1962, and completed after December 31, 1961, there shall be taken into account as the basis of new section 38 property in determining qualified investment only that portion of the basis which is properly attributable to contruction, reconstruction, or erection after December 31, 1961. See § 1.48-1 for the definition of section 38 property.

(b) ***Special rules for determining date of acquisition, original use, and basis attributable to construction, reconstruction, or erection.*** For purposes of paragraph (a) of this section, the principles set forth in paragraphs (a) (1) and (2) of § 1.167(c)-1 shall be applied. Thus, for example, the following rules are applicable:

(1) Property is considered as constructed, reconstructed, or erected by the taxpayer if the work is done for him in accordance with his specifications.

(2) The portion of the basis of property attributable to construction, reconstruction, or erection after December 31, 1961, consists of all costs of construction, reconstruction, or erection allocable to the period after December 31, 1961, including the cost or other basis of materials entering into such work (but not including, in the case of reconstruction of property, the adjusted basis of the reconstructed property as of the time such reconstruction is commenced).

(3) It is not necessary that materials entering into construction, reconstruction, or erection be acquired after December 31, 1961, or that they be new in use.

(4) If construction or erection by the taxpayer began after December 31, 1961, the entire cost or other basis of such construction or erection may be taken into account as the basis of new section 38 property.

(5) Construction, reconstruction, or erection by the taxpayer begins when physical work is started on such construction, reconstruction, or erection.

(6) Property shall be deemed to be acquired when reduced to physical possession, or control.

(7) The term "original use" means the first use to which the property is put, whether or not such use corresponds to the use of such property by the taxpayer. For example, a reconditioned or rebuilt machine acquired by the taxpayer will not be treated as being put to original use by the taxpayer. The question of whether property is reconditioned or rebuilt property is a question of fact. Property will not be treated as reconditioned or rebuilt merely because it contains some used parts.

If the cost of reconstruction may properly either be capitalized and recovered through depreciation or charged against the depreciation reserve, such cost may be taken into account as the basis of new section 38 property even though it is charged against the depreciation reserve.

(c) ***Examples.*** This section may be illustrated by the following examples:

Example 1. If a machine with a total cost of $100,000 is completed after December 31, 1961, and the portion attributable to construction by the taxpayer after December 31, 1961, is determined by engineering estimates or by cost accounting records to be $30,000, the $30,000 amount shall be taken into account by the taxpayer in computing qualified investment in new section 38 property.

Example 2. In 1965, a taxpayer reconditions a machine, which he constructed and placed in service in 1962 and which has an adjusted basis in 1965 of $10,000. The cost of reconditioning amounts to an additional $20,000. The basis of the machine which shall be taken into account in computing qualified investment in new section 38 property for 1965 is $20,000, whether he contracts to have it reconditioned or reconditions it himself, and irrespective of whether the materials used for reconditioning are new in use.

Example 3. In 1961, a taxpayer pays the entire purchase price of $10,000 for section 38 property to be delivered in 1962. In 1962 he takes possession of the property and commences the original use of the asset in that year. The $10,000 amount shall be taken into account in computing qualified investment in new section 38 property for 1962.

Example 4. A taxpayer, instead of reconditioning his old machine, buys a "factory reconditioned" or "rebuilt" machine in 1962 to replace it. The reconditioned or rebuilt machine is not new section 38 property since such taxpayer is not the first user of the machine. See, however, § 1.48-3 (relating to used section 38 property).

Example 5. In 1962, a taxpayer buys from X for $20,000 an item of section 38 property which has been previously used by X. The taxpayer in 1962 makes an expenditure on the property of $5,000 of the type that must be capitalized. Regardless of whether the $5,000 is added to the basis of such property or is capitalized in a separate account, such amount shall be taken into account by the taxpayer in computing qualified investment in new section 38 property for 1962. No part of the $20,000 purchase price may be taken into account for such purpose. See, however, § 1.48-3 (relating to used section 38 property).

(d) ***Special rule for qualified rehabilitated buildings.*** Notwithstanding the rules in paragraphs (a) through (c) of this section, that portion of the basis of a qualified rehabilitated building attributable to qualified rehabilitation expenditures is treated as new section 38 property. See section 48(a)(1)(E) and (g), and § 1.48-11.

[T.D. 6731, 29 FR 6076, May 8, 1964, as amended by T.D. 8031, 50 FR 26698, June 28, 1985]

§ 1.48-3 Used section 38 property.

(a) ***In general.***

(1) Section 48(c) provides that "used section 38 property" means section 38 property acquired by purchase after December 31, 1961, which is not "new section 38 property." See §§ 1.48-1 and 1.48-2, respectively, for definitions of section 38 property and new section 38 property. In determining whether property is acquired by purchase, the provisions of paragraph (c)(1) of § 1.179-3 shall apply, except that

(i) "1961" shall be substituted for "1957", and

(ii) the definition of "component member" of a controlled group of corporations in paragraph (d)(4) of this section shall be substituted for the definition of such term in paragraph (e) of § 1.179-3.

(2)

(i) Property shall not qualify as used section 38 property if, after its acquisition by the taxpayer, it is used by (*a*) a person who used such property before such acquisition, or (*b*) a person who bears a relationship described in section 179(d)(2) (A) or (B) to a person who used such property before such acquisition. Thus, for example, if property is used by a person and is later sold by him under a sale and lease-back arrangement, such property in the hands of the purchaser-lessor is not used section 38 property because the property, after its acquisition, is being used by the same person who used it before its acquisition. Similarly, where a lessee has been leasing property and subsequently purchases it (whether or not the lease contains an option to purchase), such property is not used section 38 property with respect to the purchaser because the property is being used by the same person who used it before its acquisition. In addition, if property owned by a lessor is sold subject to the lease, or is sold upon the termination of the lease, the property will not qualify as used section 38 property with respect to the purchaser if, after the purchase, the property is used by a person who used the property as a lessee before the purchase.

(ii) For purposes of applying subdivision (i) of this subparagraph, property shall not be considered as used by a person before its acquisition if such property was used only on a casual basis by such person.

(iii) In determining whether a person bears a relationship described in section 179(d)(2) (A) or (B) to a person who used property before its acquisition by the taxpayer, the provisions of paragraphs (c)(1) (i) and (ii) of § 1.179-3 shall apply, except that the definition of "component member" of a controlled group of corporations in paragraph (d)(4) of this section shall be substituted for the definition of such term in paragraph (e) of § 1.179-3.

(3) The provisions of this paragraph may be illustrated by the following examples:

Example 1. Corporation P acquires properties 1 and 2 in 1960 and uses them in its trade or business until 1962. In 1962, corporation P sells such properties to corporation Y, which leases back property 1 to corporation P and leases property 2 to corporation S, a wholly owned subsidiary of corporation P. Property 1 is not used section 38 property in the hands of corporation Y because, after its acquisition by corporation Y, it is used by a person (corporation P) who used it prior to such acquisition. Property 2 is not used section 38 property because, after its acquisition by corporation Y, it is used by a person (corporation S) who is related, within the meaning of section 179(d)(2)(B), to a person (corporation P) who used it before such acquisition.

Example 2. In 1962, corporation L leases property from corporation M. In 1964, corporation L acquires the property that it previously had been leasing. The property acquired by corporation L is not used section 38 property because such property is used after such acquisition by the same person (corporation L) who used the property before its acquisition (corporation L).

Example 3. Corporation X buys property in 1962 and leases such property to corporation Y. Corporation X in 1965 sells the property to A subject to the lease. The property acquired by A is not used section 38 property if such property continues to be used by corporation Y, because corporation Y used the property before its acquisition by A.

Example 4. A owns a bulldozer which he rents out to a number of different users, including B. In 1962, B used the bulldozer from February 16 to March 12 and again on October 15 and 16. B purchases the bulldozer from A on December 1, 1962. The prior use of the property by B does not disqualify such property as used section 38 property to B, because he used such property only on a casual basis prior to its purchase.

(b) ***Cost.***

(1) The cost of used section 38 property is equal to the basis of such property, but does not include so much of such basis as is determined by reference to the adjusted basis of other property (whether or not section 38 property) held at any time by the taxpayer acquiring such used section 38 property.

(2) If property (whether or not section 38 property) is disposed of by the taxpayer (other than by reason of its destruction or damage by fire, storm, shipwreck, or other casualty, or its theft) and used section 38 property similar or related in service or use is acquired as a replacement therefor in a transaction in which the basis of the replacement property is not determined by reference to the adjusted basis of the property replaced, then the cost of the used section 38 property so acquired shall be its basis reduced by the adjusted basis of the property replaced. The preceding sentence shall apply only if the taxpayer acquires (or enters into a contract to acquire) the replacement property within a period of 60 days before or after the date of the disposition.

(3) Notwithstanding subparagraphs (1) and (2) of this paragraph, the cost of used section 38 property shall not be reduced with respect to the adjusted basis of any property disposed of if, by reason of section 47, such disposition resulted in an increase of tax or a reduction of investment credit carrybacks or carryovers described in section 46(b).

(4) The provisions of this paragraph may be illustrated by the following examples:

Example 1. In 1972, A acquires machine 2 (an item of used section 38 property which has a sales price of $5,600) by trading in machine 1 (an item of section 38 property acquired in 1962), and by paying an additional $4,000 cash. The adjusted basis of machine 1 is $1,600. Under the provisions of sections 1012 and 1031(d), the basis of machine 2 is $5,600 ($1,600 adjusted basis of machine 1 plus cash expended of $4,000). The cost of machine 2 which may be taken into account in computing qualified investment for 1972 is $4,000 (basis of $5,600 less $1,600 adjusted basis of machine 1).

Example 2. The facts are the same as in example 1 except that machine 2 has a sales price of $6,000. The trade-in allowance on machine 1 is $2,000. The result is the same as in example 1, that is, the basis of machine 2 is $5,600 ($1,600 plus $4,000); therefore, the cost of machine 2 which may be taken into account in computing qualified investment for 1972 is $4,000 (basis of $5,600 less $1,600 adjusted basis of machine 1).

Example 3. On September 18, 1962, B sells truck 1, which he acquired in 1961 and which has an adjusted basis in his hands of $1,200. On October 15, 1962, he purchases for $2,000 truck 2 (an item of used section 38 property) as a replacement therefor. The cost of truck 2 which may be taken into account in computing qualified investment is $800 ($2,000 less $1,200).

Example 4. In 1962, C acquires property 1, an item of new section 38 property with a basis of $12,000 and a useful life of eight years or more. He is allowed a credit under section 38 of $840 (7 percent of $12,000) with respect to such property. In 1968, C acquires property 2 (an item of used section 38 property) by trading in property 1 and by paying an additional amount in cash. Section 47(a) applies to the disposition of property 1 and C's tax liability for 1968 is increased by $280. Since the application of section 47(a) results in an increase in tax, for purposes of computing qualified investment the cost of property 2 is not reduced by any part of the adjusted basis of the property traded in.

(c) ***Dollar limitation*** —

(1) ***In general.*** Section 48(c)(2) provides that the aggregate cost of used section 38 property which may be taken into account for any taxable year in computing qualified investment under section 46(c)(1)(B) shall not exceed $50,000. If the total cost of used section 38 property exceeds $50,000, there must be selected, in the manner provided in subparagraph (4) of this paragraph, the particular items of used section 38 property the cost of which is to be taken into account in computing qualified investment. The cost of used section 38 property that may be taken into account by a person in applying the $50,000 limitation for any taxable year includes not only the cost of used section 38 property placed in service by such person during such taxable year, but also the cost of used section 38 property apportioned to such person. For purposes of this section, the cost of used section 38 property apportioned to any person means the cost of such property apportioned to him by a trust, estate, or electing small business corporation (as defined in section 1371(b)), and his share of the cost of partnership used section 38 property, with respect to the taxable year of such trust, estate, corporation or partnership ending with or within such person's taxable year. Thus, if an individual places in service during his taxable year used section 38 property with a cost of $25,000, if the cost of used section 38 property apportioned to him by an electing small business corporation for such year is $30,000, and if his share for such year of the cost of used section 38 property placed in service by a partnership is $20,000, he may select from the used section 38 property with a total cost of $75,000 the particular used section 38 property the cost of which he wishes to take into account. No part of the excess of $25,000 ($75,000 cost minus $50,000 annual limitation) may be taken into account in any other taxable year. For determining the amount of the cost to be apportioned by an electing small business corporation, see paragraph (a)(2) of § 1.48-5; in the case of estates and trusts, see paragraph (a)(2) of § 1.48-6. See paragraph (e) of this section for application of $50,000 limitation in the case of affiliated groups.

(2) ***Married individuals filing separate returns.*** In the case of a husband or wife who files a separate return, the aggregate cost of used section 38 property which may be taken into account for the taxable year to which such return relates cannot exceed $25,000. The preceding sentence shall not apply, however, unless the taxpayer's spouse places in service (or is apportioned the cost of) used section 38 property for the taxable year of such spouse which ends with or within the taxpayer's taxable year. Thus, if a husband and wife who file separate returns on a calendar year basis both place in service used section 38 property during the taxable year, the maximum cost of used section 38 property which may be taken into account by each is $25,000. However, in such case, if only one spouse places in service (or is apportioned the cost of) used section 38 property during the taxable

year, such spouse may take into account a maximum of $50,000 for such year. The determination of whether an individual is married shall be made under the principles of section 143 and the regulations thereunder.

(3) ***Partnerships.*** In the case of a partnership, the aggregate cost of used section 38 property placed in service by the partnership (or apportioned to the partnership) which may be taken into account by the partners with respect to any taxable year of the partnership may not exceed $50,000. If such aggregate cost exceeds $50,000, the partnership must make a selection in the manner provided in subparagraph (4) of this paragraph. The $50,000 limitation applies to each partner, as well as to the partnership.

(4) ***Selection of $50,000 cost.***

(i) If the sum of (*a*) the cost of used section 38 property placed in service during the taxable year by any person, (*b*) such person's share of the cost of partnership used section 38 property placed in service during the taxable year of a partnership ending with or within such person's taxable year, and (*c*) the cost of used section 38 property apportioned to such person for such taxable year by an electing small business corporation, estate, or trust, exceeds $50,000, such person must make a selection for such taxable year in the manner provided in subdivision (ii) of this subparagraph.

(ii) For purposes of computing qualified investment (or, in the case of a partnership, electing small business corporation, estate, or trust, for purposes of selecting used section 38 property the cost of which may be taken into account by the partners, shareholders, or estate or trust and its beneficiaries) any person to whom subdivision (i) of this subparagraph applies must select a total cost of $50,000 from (*a*) the cost of specific used section 38 property placed in service by such person, (*b*) such person's share of the cost of specific used section 38 property placed in service by a partnership and (*c*) the cost of used section 38 property apportioned to such person by an electing small business corporation, estate, or trust. When a particular property is selected, the entire cost (or entire share of cost of a particular property in the case of partnership property) of such property must be taken into account unless, as a result of the selection of such particular property, the $50,000 limitation is exceeded. Likewise, in the case of an apportionment from an electing small business corporation, estate, or trust, when the cost in a particular useful life category is selected, the entire cost in such category must be taken into account unless, as a result of the selection of such cost, the $50,000 limitation is exceeded. Thus, if a person places in service during the taxable year three items of used section 38 property, each with a cost of $20,000, he must select the entire cost of two of the items and only $10,000 of the cost of the third item; he may not select a portion of the cost of each of the three items. The selection by any person shall be made by taking the cost of used section 38 property into account in computing qualified investment (or in selecting the used section 38 property the cost of which may be taken into account by the partners, etc.), and if such property was placed in service by such person, he must maintain records which permit specific identification of any item of used section 38 property selected.

(5) ***Examples.*** The provisions of this paragraph may be illustrated by the following examples:

Example 1. H, who operates a sole proprietorship, purchases and places in service in 1963 used section 38 property with a cost of $60,000. His spouse, W, is a shareholder in an electing small business corporation which purchases and places in service during its fiscal year ending June 30, 1963, used section 38 property with a cost of $50,000. Both spouses file separate returns on a calendar year basis. W, as a 60 percent shareholder on the last day of the taxable year of

the corporation, is apportioned $30,000 (60 percent of $50,000) of the cost of the used section 38 property placed in service by the corporation. The cost of used section 38 property that may be taken into account by H on his separate return is $25,000. The cost of used section 38 property that may be taken into account by W on her separate return is $25,000. On the other hand, if the corporation had made no investment in used section 38 property, H could take $50,000 of the $60,000 cost into account.

Example 2. Partners X, Y, and Z share the profits and losses of partnership XYZ in the ratio of 50 percent, 30 percent, and 20 percent, respectively. The partnership and each partner make returns on the basis of the calendar year. Each partner also operates a sole proprietorship. In 1963, the partnership and the partners purchase and place in service the following used section 38 property:

Property	Estimated useful life (years)	Cost
Partnership XYZ		
Property No. 1	9	$10,000
Property No. 2	7	50,000
Property No. 3	7	50,000
Property No. 4	5	30,000
Partner X		
Property No. 5	6	30,000
Partner Y		
Property No. 6	10	60,000
Partner Z		
Property No. 7	4	36,000

(i) *Selection by partnership.* In accordance with subparagraph (4)(ii) of this paragraph, the partnership selects property No. 1 and $40,000 of the cost of property No. 2 to be taken into account. Therefore, each partner's share of cost of the property selected by the partnership is as follows:

Property No.	Estimated useful life (years)	Selected cost	Partner's share of cost		
			X (50%)	Y (30%)	Z (20%)
1	9	$10,000	$5,000	$3,000	$2,000
2	7	40,000	20,000	12,000	8,000

Property No.	Estimated useful life (years)	Selected cost	Partner's share of cost		
			X (50%)	Y (30%)	Z (20%)
Total		50,000	25,000	15,000	10,000

(ii) *Selection by partners.* In accordance with subparagraph (4)(ii) of this paragraph, the partners make the following selections: Partner X selects property No. 5 ($30,000), his share of the cost of property No. 1 ($5,000), and $15,000 of his share of the cost of property No. 2. Partner Y selects $50,000 of the cost of property No. 6, and no part of his share of the cost of partnership property. Partner Z, having an aggregate cost of used section 38 property of only $46,000 (partnership property of $10,000 and individually owned property of $36,000), takes into account the entire $46,000.
(iii) *Qualified investment of partner X.* X's total qualified investment in used section 38 property for 1963 is $35,000, computed as follows:

Property No.	Estimated useful life (years)	Selected cost	Applicable percentage	Qualified investment
1	9	$5,000	100	$5,000
2	7	15,000	$66^2/_3$	10,000
5	6	30,000	$66^2/_3$	20,000
Total		50,000		35,000

(iv) *Qualified investment of partner Y.* Y's total qualified investment in used section 38 property for 1963 is $50,000 (100 percent of $50,000) since he selected $50,000 of the cost of property No. 6 which has a useful life of 8 years or more.
(v) *Qualified investment of partner Z.* Z's total qualified investment in used section 38 property for 1963 is $19,333, computed as follows:

Property No.	Estimated useful life (years)	Selected cost	Applicable percentage	Qualified investment
1	9	$2,000	100	$2,000
2	7	8,000	$66^2/_3$	5,333
7	4	36,000	$33^1/_3$	12,000

Property No.	Estimated useful life (years)	Selected cost	Applicable percentage	Qualified investment
Total		46,000		19,333

(d) *Dollar limitation for component members of a controlled group —*

(1) *In general.*

(i) Section 48(c)(2)(C) provides that the $50,000 limitation on the cost of used section 38 property which may be taken into account for any taxable year shall, in the case of component members of a controlled group (as defined in subparagraph (4) of this paragraph) on a particular December 31, be reduced for each such member by apportioning the $50,000 amount among such component members for their taxable years that include such December 31 in accordance with their respective amounts of used section 38 property which may be taken into account, that is, in accordance with the total cost of used section 38 property placed in service by each such member during its taxable year (without regard to the $50,000 limitation or the applicable percentages to be applied in computing qualified investment).

(ii) Except as otherwise provided in this paragraph, the $50,000 amount shall be apportioned among those corporations which are component members of the controlled group on a December 31. For the taxable year of each such member which includes such December 31, the cost of used section 38 property taken into account in computing qualified investment under section 46(c)(1)(B) shall not exceed the amount which bears the same ratio to $50,000 as the cost of used section 38 property placed in service by such member for such taxable year bears to the total cost of used section 38 property placed in service by all component members of the controlled group for their taxable years which include such December 31.

(iii) If a component member of the group makes its income tax return on the basis of a 52-53-week taxable year, the principles of section 441(f)(2)(A)(ii) and § 1.441-2 apply in determining the last day of such a taxable year.

(2) *Statement by the "filing member".* For purposes of this paragraph, the term "filing member" with respect to a particular December 31 means the member (or members) of a controlled group which has, among those members of the group which are apportioned part of the $50,000 amount for their taxable years which include such December 31, the taxable year including such December 31 which ends on the earliest date. The filing member of the group shall attach to its income tax return a statement containing the name, address, and employer identification number of each component member of the controlled group on such December 31 and a schedule showing the computation of the apportionment of the $50,000 amount among the component members of the group. Each such other member shall retain as part of its records a copy of the statement containing the apportionment schedule. Except as otherwise provided in subparagraph (3)(ii) of this paragraph, each member which is apportioned part of the $50,000 amount shall take such apportioned amount into account in filing its return for its taxable year which includes such December 31.

(3) *Estimate of used section 38 property to be placed in service.*

(i) For purposes of subparagraphs (1) and (2) of this paragraph, if on the date (including extensions of time) for filing the income tax return of the filing member of the group with respect to a particular December 31, the total cost of used section 38 property actually placed in service by any component member of the group during such member's taxable year that includes such December 31 is not known, then such member shall estimate such cost. The estimate shall be made on the basis of the facts and circumstances known as of the time of the estimate. Any such estimate shall also be used in determining the total cost of used section 38 property placed in service by all component members for their taxable years including such December 31.

(ii) If an estimate is used by any component member of a controlled group pursuant to subdivision (i) of this subparagraph, each member may later file an original or amended return in which the apportionment of the $50,000 amount is based upon the cost of used section 38 property actually placed in service by all component members of the group during their taxable year which include such December 31. Such amended apportionment shall be made only if each component member of the group whose limitation would be changed files an original or amended return which reflects the amended apportionment based upon the cost of the used section 38 property actually placed in service by component members of the group. In such case, the new statement reflecting the amended apportionment shall be attached to the amended return of the filing member of the group, and a copy of such statement shall be retained by each such member pursuant to the requirements of subparagraph (2) of this paragraph.

(4) ***Definitions of controlled group of corporations and component member of controlled group.*** For purposes of this section, the terms “controlled group of corporations” and “component member” of a controlled group of corporations shall have the same meaning assigned to those terms in section 1563 (a) and (b), except that the phrase “more than 50 percent” shall be substituted for the phrase “at least 80 percent” each place it appears in section 1563(a)(1). For purposes of applying § 1.1563-1(b)(2)(ii)(*c*), an electing small business corporation shall be treated as an excluded member whether or not it is subject to the tax imposed by section 1378.

(5) ***Members of controlled group filing a consolidated return.*** For the purpose of apportioning the $50,000 amount in the case of component members of a controlled group which join in filing a consolidated return, all such members shall be treated as though they were a single component member of the controlled group. Thus, in determining the limitation on the cost of used section 38 property which may be taken into account by the group filing the consolidated return, the apportionment provided in subparagraph (1)(ii) of this paragraph shall be made by using the aggregate cost of such property placed in service by all members of the group filing the consolidated return. If all component members of the controlled group join in filing a consolidated return, the group may select the items to be taken into account to the extent of an aggregate cost of $50,000; if some component members of the controlled group do not join in filing the consolidated return, then the members of the group which join in filing the consolidated return may select the items to be taken into account to the extent of the amount apportioned to such members under subparagraph (1)(ii) of this paragraph.

(6) ***Examples.*** This paragraph may be illustrated by the following examples:

Example 1. (i) On December 31, 1970, corporations M, N, and O are component members of the same controlled group. The taxable years of M, N, and O end, respectively, on January 31, March 31, and April 30. During the respective taxable years of each corporation which include December 31, 1970, M places in

service no used section 38 property, and N and O place in service used section 38 property with respective costs of $100,000 and $150,000. N is the "filing member" of the group since N, among the members (N and O) which are apportioned part of the $50,000 amount for their taxable years which include such December 31, has the taxable year ending on the earliest date.
(ii) The cost of used section 38 property taken into account by N for its taxable year ending March 31, 1971, may not exceed $20,000, that is, an amount which bears the same ratio to $50,000 as the cost of used section 38 property placed in service by N for its taxable year ($100,000) bears to the total cost of used section 38 property placed in service by all component members of the controlled group (M, N, and O) for their taxable years which include December 31, 1970 ($250,000). Similarly, the cost of used section 38 property taken into account by O for its taxable year ending April 30, 1971, may not exceed $30,000.

Example 2. (i) On December 31, 1971, corporations S and T are component members of the same controlled group. The taxable years of corporations S and T end, respectively, on January 31 and June 30. On April 15, 1972, S files an income tax return for its taxable year ending January 31, 1972, during which year it places in service used section 38 property costing $100,000. T estimates that it will place in service used section 38 property costing $150,000 during its taxable year ending June 30, 1972.
(ii) S, the "filing member" of the group, must file an apportionment schedule under which it may take into account as the cost of used section 38 property an amount not in excess of $20,000 ($100,000/$250,000 × $50,000). If T actually places in service during its taxable year used section 38 property costing more or less than $150,000, its income tax return for its taxable year ending June 30, 1972, may reflect the amended apportionment of the $50,000 limitation based upon the cost of used section 38 property actually placed in service by the group, provided that S attaches a new apportionment schedule to an amended return to reflect the amended apportionment. For example, if T places in service used section 38 property costing $200,000, the cost of used section 38 property taken into account by S and T for their respective taxable years could not exceed $16,667 ($100,000/$300,000 × $50,000) and $33,333 ($200,000/$300,000 × $50,000), respectively, under an amended apportionment.

(Secs. 38(b) and 7805 of the Internal Revenue Code of 1954 (76 Stat. 962, U.S.C. 38(b); 68A Stat. 917; 26 U.S.C. 7805)

[T.D. 6731, 29 FR 6076, May 8, 1964, as amended by T.D. 7181, 37 FR 8064, Apr. 25, 1972; T.D. 7820, 47 FR 25139, June 10, 1982; T.D. 8996, 67 FR 35012, May 17, 2002]

§ 1.48-4 Election of lessor of new section 38 property to treat lessee as purchaser.

(a) ***In general*** —

(1) ***Lessee treated as purchaser.*** Under section 48(d), a lessor of property may elect to treat the lessee of such property as having purchased such property (or, in the case of short-term lease property described in subparagraph (2) of this paragraph, a portion of such property) for purposes of the credit allowed by section 38 if the following conditions are satisfied:

(i) The property must be "section 38 property" in the hands of the lessor; that is, it must be property with respect to which depreciation (or amortization in lieu of depreciation) is allowable to the lessor, it must have a useful life of 3 years (4 years in the case of property which is not described in section 50) or more in his hands, and in every other respect it must meet the requirements of § 1.48-1. Thus, for example, property leased by a municipality to a taxpayer for use in what is commonly known as an "industrial park" is not eligible for the election since, under paragraph (k) of § 1.48-1, property used by a governmental unit is not section 38 property. In addition, property used by the lessee predominantly outside the United States is not eligible for the election since, under paragraph (g) of § 1.48-1, such property is not section 38 property. For purposes of this subdivision, if the lessor is an estate or trust, depreciation (or amortization in lieu of depreciation) will be considered allowable to the estate or trust even if it is apportioned to the beneficiaries or other persons.

(ii) The property must be "new section 38 property" (within the meaning of § 1.48-2) in the hands of the lessor, and the original use of such property must commence with the lessor. See paragraph (b) of this section for the application of the rules relating to "original use" in the case of leased property.

(iii) The property would constitute "new section 38 property" to the lessee if such lessee had actually purchased the property. Thus, the election is not available if the lessee is not the original user of the property. See paragraph (b) of this section for the application of the rules relating to "original use" in the case of leased property. See paragraph (d) of this section for the determination of the estimated useful life of leased property in the hands of the lessee.

(iv) A statement of election to treat the lessee as a purchaser has been filed in the manner and within the time provided in paragraph (f) or (g) of this section.

(v) The lessor is not a person referred to in section 46(d)(1), that is, a mutual savings bank, cooperative bank, or domestic building and loan association to which section 593 applies; a regulated investment company or real estate investment trust subject to taxation under subchapter M, chapter 1 of the Code; or a cooperative organization described in section 1381(a).

The election may be made on a property-by-property basis or a general election may be made with respect to each taxable year of a particular lessee. If the conditions of this subparagraph have been met, the lessee shall be treated as though he were the actual owner of all or a portion of the property for purposes of the credit allowed by section 38. Thus, the lessee shall be entitled to a credit allowed by section 38 with respect to such property for the taxable year in which he places such property in service, and the lessor shall not be entitled to a credit allowed by section 38 with respect to such property unless the property is short-term lease property (as defined in subparagraph (2) of this paragraph). Moreover, if the leased property is disposed of, or if it otherwise ceases to be section 38 property, the property will be subject to the provisions of section 47 (relating to early dispositions, etc.).

(2) ***Short-term lease property.*** For purposes of this section, the term "short-term lease property" means property which—

(i) Is new section 38 property;

(ii) Has a class life (determined under section 167(m)) in excess of 14 years;

(iii) Is leased under a lease entered into after November 8, 1971, for a period which is less than 80 percent of the class life of such property; and

(iv) Is not leased subject to a net lease within the meaning of section 57(c)(1)(B) and the regulations thereunder.

The class life of property shall be determined under section 167(m) and the regulations prescribed in connection with that section, except that such class life shall be determined without regard to any variance from the class life permitted under such section. If a class life has not been prescribed for property under section 167(m) on the date such property is leased, the class life of the property shall be the estimated useful life used to compute the allowance for depreciation with respect to such property under section 167. For purposes of subdivision (iii) of this subparagraph, the period for which a lease is entered into shall be determined without regard to any option on the part of the lessee to extend or renew such lease, and without regard to any option on the part of the lessee to cancel the lease after a specified period if under the terms of such lease, such a cancellation would result in the imposition of a substantial penalty upon the lessee. Generally, a penalty equal to 25 percent of the total remaining rental payments due under the lease will be regarded as substantial.

(b) ***Original use.*** For purposes of this section only, the lessor and the lessee may both be considered as the original users of an item of leased property. The determination of whether the lessor qualifies as the original user of leased property shall be made under paragraph (b)(7) of § 1.48-2. The determination of whether the lessee qualifies as the original user of leased property shall be made, under paragraph (b)(7) of § 1.48-2, as if the lessee actually purchased the property. Thus, the lessee would not be considered the original user of the property if it has been previously used by the lessor or another person, or if it is reconstructed, rebuilt, or reconditioned property. However, the lessee would be considered the original user if he is the first person to use the property for its intended function. Thus, the fact that the lessor may have, for example, tested, stored, or attempted to lease the property to other persons will not preclude the lessee from being considered the original user.

(c) ***Qualified investment*** —

(1) ***In general.*** If a valid election is made under this section, the amount of qualified investment under section 46(c) with respect to the leased property shall be determined under this paragraph and paragraphs (d) and (e) of this section.

(2) ***Nonshort-term lease property.*** In the case of property which is not short-term lease property, the lessee is treated as having acquired the entire property for an amount equal to—

(i) The fair market value of such property on the date possession is transferred to the lessee, or

(ii) If the property is leased by a component member of a controlled group to another component member of the same controlled group (within the meaning of paragraph (f)(4) of § 1.46-1) on the date possession of the property is transferred to the lessee, the basis of the property in the hands of the lessor.

(3) ***Short-term lease property.***

(i) In the case of short-term lease property, the lessee is treated as having acquired a portion of such property. The amount for which the lessee is treated as having acquired such portion is an amount equal to a fraction, the numerator of which is the term of the lease and the

denominator of which is the class life of the property leased, of the amount for which the lessee would be treated as having acquired the property under subparagraph (2) of this paragraph if the property were not short-term lease property.

(ii) In the case of short-term lease property, the qualified investment of the lessor is an amount equal to his qualified investment in such property determined under section 46(c) multiplied by a fraction, the numerator of which is the class life of the property leased minus the term of the lease and the denominator of which is the class life of such property.

(4) ***Example.*** The provisions of this paragraph may be illustrated by the following example:

> *Example.* (a) On December 1, 1971, X corporation completed construction of an item of new section 38 property with a basis of $10,000. Under section 167(m), the property has a class life of 16 years. On December 1, 1971, X leases the property to individual A for 4 years and A immediately places the property in service. The lease is not a net lease within the meaning of section 57(c)(1)(B). On the date of the lease, the fair market value of the property is $12,000. The property would qualify as new section 38 property in A's hands if it had been purchased by A. Under this section, the property is short-term lease property. X makes the election under this section to treat A as having acquired a portion of the property.
> (b) A is treated as having acquired from X a portion of the property for $3,000 (the fair market value of the property, $12,000, multiplied by a fraction, $^{4}/_{16}$, the numerator of which is the term of the lease and the denominator of which is the class life of the leased property). Since under paragraph (d) of this section the useful life of such property in the hands of A is the same as the useful life of such property in the hands of X, and such useful life is at least 7 years, A's qualified investment with respect to the property is $3,000.
>
> (c) The qualified investment of X is $7,500 (the qualified investment of X under section 46(c), $10,000, multiplied by a fraction, $^{12}/_{16}$, the numerator of which is the class life of the leased property, 16, minus the term of the lease, 4, and the denominator of which is the class life of the property).

(d) ***Estimated useful life of leased property.*** The estimated useful life to the lessee of property subject to the election shall be deemed to be the estimated useful life in the hands of the lessor for purposes of computing depreciation, regardless of the term of the lease. The lessor shall determine the estimated useful life of each leased property on an individual basis even though multiple asset accounts are used. However, in the case of assets similar in kind contained in a multiple asset account, the lessor shall assign to each of such assets the average useful life of such assets used in computing depreciation. Thus, for example, if during a taxable year a lessor leases 10 similar trucks with an average estimated useful life for depreciation purposes of 6 years, based on an estimated range of 5 to 7 years, he must assign a useful life of 6 years to each of the 10 trucks.

(e) ***Lessor itself a lessee —***

(1) ***In general.*** If the lessee of property is treated, under this section, as having purchased all or a portion of such property and if such lessee leases such property to a sublessee, the qualified investment with respect to such property in the hands of the sublessee shall be determined under paragraphs (c) and (d) of this section as if the original lessor had leased the property directly to the sublessee for the term of the sublessee's lease on the date possession of the property is transferred to the sublessee. For this purpose, property which is short-term lease property in the hands of the lessee shall be treated as short-term lease property in the hands of the sublessee regardless of whether such property is leased to the sublessee subject to a net lease (within the meaning of section 57(c)(1)(B)). In the case of property which is short-term lease property in the hands of the sublessee, the amount for which the lessee is treated as having acquired such property under paragraph (c) of this section shall be reduced by an amount equal to such amount multiplied by a fraction, the numerator of which is the term of the lease of the sublessee and the denominator of which is the term of the lease of the lessee.

(2) ***Example.*** The provisions of this paragraph may be illustrated by the following example:

> *Example.* (a) On December 1, 1971, corporation X completes construction of a machine at a cost of $10,000. The machine has a class life under section 167(m) of 20 years. On December 1, 1971, X leases the machine to corporation Y for 12 years, and Y immediately subleases the machine to individual A for 8 years. X and Y are component members of the same controlled group. The lease between X and Y is not a net lease within the meaning of section 57(c)(1)(B). The fair market value of the property on December 1, 1971, is $16,000. Both X and Y make valid elections under this section.
> (b) The property is short-term lease property and this paragraph applies.
>
> (c) The qualified investment of A is $6,400. Such amount is determined by multiplying $16,000, the amount for which A would be treated under paragraph (c)(2) of this section as having acquired the property if it were not short-term lease property, by $^{8}/_{20}$.
>
> (d) The qualified investment of Y is $2,000. Such amount is determined by multiplying $10,000, the amount for which Y would be treated under paragraph (c)(2) of this section as having acquired the property if it were not short-term lease property, by $^{12}/_{20}$, and by reducing the amount so determined ($6,000) by $^{8}/_{12}$ of such amount ($4,000) to $2,000.
>
> (e) The qualified investment of X is $4,000. Such amount is determined by multiplying the amount of X's qualified investment determined under section 46(c) without regard to this section ($10,000) by $^{8}/_{20}$.

(f) ***Property-by-property election*** —

(1) ***Manner of making election.*** The election of a lessor with respect to a particular property (or properties) shall be made by filing a statement with the lessee, signed by the lessor and including the written consent of the lessee, containing the following information:

(i) The name, address, and taxpayer account number of the lessor and the lessee;

(ii) The district director's office with which the income tax returns of the lessor and the lessee are filed;

(iii) A description of each property with respect to which the election is being made;

(iv) The date on which possession of the property (or properties) is transferred to the lessee;

(v) The estimated useful life category of the property (or properties) in the hands of the lessor, that is, 3 years or more but less than 5 years, 5 years or more but less than 7 years, or 7 years or more;

(vi) The amount for which the lessee (or sublessee) is treated as having acquired the leased property under paragraph (c)(2) or (3) of this section; and

(vii) If the lessor is itself a lessee, the name, address, and taxpayer account number of the original lessor, and the district director's office with which the income tax return of such original lessor is filed.

(2) ***Time for making election.*** The statement referred to in subparagraph (1) of this paragraph shall be filed with the lessee on or before the due date (including any extensions of time) of the lessee's return for the lessee's taxable year during which possession of the property is transferred to the lessee, except that if such taxable year ends after March 31, 1971, and before December 11, 1971, the statement shall be filed with the lessee on or before the due date (including any extensions of time) of the lessee's return for such taxable year, or on or before October 24, 1972, whichever is later.

(3) ***Election is irrevocable.*** An election under this paragraph shall be irrevocable as of the time the statement referred to in subparagraph (1) of this paragraph is filed with the lessee.

(g) ***General election*** —

(1) ***In general.*** In lieu of making elections on a property-by-property basis in the manner and time prescribed in paragraph (f) of this section, a lessor may, with respect to a particular taxable year of a particular lessee, make a general election to treat such lessee as having purchased all properties possession of which is transferred under lease by the lessor to the lessee during such taxable year of the lessee.

(2) ***Manner and time for making general election.*** The general election of a lessor with respect to a taxable year of a lessee shall be made by filing a statement with the lessee, signed by the lessor and including the written consent of the lessee, on or before the due date (including any extensions of time) of the lessee's return for such taxable year, except that if such taxable year ends after March 31, 1971, and before December 11, 1971, the statement shall be filed with the lessee on or before the due date (including any extensions of time) of the lessee's return for such taxable year, or on or before October 24, 1972, whichever is later. Such statement of general election shall contain:

(i) The name, address, and taxpayer account number of the lessor and the lessee;

(ii) The taxable year of the lessee with respect to which such general election is made;

(iii) The district director's office with which the income tax returns of the lessor and the lessee are filed;

(iv) If the lessor is itself a lessee, the name, address, and taxpayer account number of the original lessor, and the district director's office with which the income tax return of such original lessor is filed.

(3) ***Election is irrevocable.*** A general election under this paragraph shall be irrevocable as of the time the statement referred to in subparagraph (2) of this paragraph is filed with the lessee and shall be binding on the lessor and the lessee for the entire taxable year of the lessee with respect to which such general election is made.

(4) ***Information requirement.*** If a lessor, with respect to a taxable year of the lessee, makes a general election under this paragraph, such lessor shall provide such lessee, on or before the date required for filing the statement under subparagraph (2) of this paragraph, with a statement (or statements) containing the information required by paragraphs (f)(1) (iii), (iv), (v), and (vi) of this section with respect to all properties possession of which is transferred under lease by the lessor to the lessee during such taxable year.

(h) ***Signature.*** The statement referred to in paragraph (f)(1) or (g)(2) of this section shall not be valid unless signed by both the lessor and the lessee. The signature of the lessee shall constitute the consent of the lessee to the election. The statement shall be signed by the taxpayer or a duly authorized agent of the taxpayer. For purposes of this section, a facsimile signature may be used in lieu of a signature manually executed and, if used, shall be as binding as a signature manually executed.

(i) [Reserved]

(j) ***Record requirements.*** The lessor and the lessee shall keep as a part of their records the statement referred to in paragraph (f)(1), or the statements referred to in paragraphs (g)(2) and (g)(4), of this section. The lessor shall attach to his income tax return a summary statement of all property leased during his taxable year with respect to which an election is made. In the case of a taxable year ending after March 31, 1971, and before December 11, 1971, a summary statement may be filed on or before the due date (including any extensions of time) of the return or on or before October 24, 1972, whichever is later, with the Internal Revenue Service Center with which the return has been filed. Such summary statement shall contain the following information:

(1) The name, address, and taxpayer account number of the lessor; and

(2) in numerical account number order, each lessee's account number, name, and address, the estimated useful life category of the property (or, if applicable, the estimated useful life expressed in years), and the basis or fair market value of the property, whichever is applicable.

(k) ***Adjustment of rental deductions*** —

(1) ***In general.*** The rules of this paragraph apply only to section 38 property placed in service before January 1, 1964, and with respect to any such property only for taxable years of a lessee beginning before January 1, 1964. If a lessor makes a valid election under this section with respect to property placed in service by the lessee before January 1, 1964, section 48(g) and § 1.48-7 (relating to adjustments to basis of property) shall not apply to the lessor with respect to such property. Thus, the lessor is not required to reduce under section 48(g)(1) the basis of such property. However, if such an election is made, the deductions otherwise allowable under section 162 to the lessee for amounts paid or accrued to the lessor under the lease shall be adjusted in the manner provided in this paragraph. For special adjustment for taxable years beginning after December 31, 1963, see paragraph (m) of this section.

(2) *Decrease in rental deduction.*

(i) The deductions otherwise allowable under section 162 to the lessee for amounts paid or accrued to the lessor under the lease with respect to leased property placed in service before January 1, 1964, shall be decreased under subdivision (ii) or (iii) of this subparagraph, whichever is applicable, by an amount determined by reference to the credit earned on the leased property. The "credit earned" on the leased property is determined by multiplying the qualified investment (as defined in section 46(c)) with respect to such property by 7 percent. Thus, the credit earned (and the decrease in deductions) is determined without regard to the limitation based on tax which, under section 46(a)(2), may limit the amount of the credit the lessee may take into account in any one year.

(ii) If, in the case of property placed in service before January 1, 1964, the lessor, under paragraph (f)(1)(v) of this section, supplies the lessee with the useful life of such property expressed in years, then for each taxable year beginning before January 1, 1964, any part of which falls within a period beginning with the month in which the leased property is placed in service by the lessee and ending with the close of the estimated useful life of such property (as determined under paragraph (d) of this section), the lessee shall decrease the deduction otherwise allowable under section 162 for each such taxable year with respect to such property. The decrease for each such taxable year shall be equal to (*a*) the credit earned, divided by (*b*) the estimated useful life of the property (expressed in months), multiplied by (*c*) the number of calendar months in which the leased property was held by the lessee during such taxable year. Thus, if leased property with a basis of $27,000 in the hands of a calendar-year lessee, and with an estimated useful life of 10 years, is placed in service by the lessee on July 15, 1963, the lessee must decrease his section 162 deduction with respect to the leased property for the taxable year 1963 by $94.50 ($1,890 credit earned, divided by 120, multiplied by 6).

(iii) If, in the case of property placed in service before January 1, 1964, the lessor, under paragraph (f)(1)(v) of this section, supplies the lessee with the useful life category of such property, then for each taxable year beginning before January 1, 1964, during a period equal to the shortest life of the useful life category used by the lessee in computing qualified investment under section 46(c) with respect to the leased property, the lessee shall decrease the deduction otherwise allowable under section 162 for such taxable year with respect to such property. The decrease for each such taxable year shall be equal to the credit earned divided by such shortest life, that is, 4, 6, or 8. Such decreases shall begin with the taxable year during which the lessee places the property in service. Thus, if leased property with a basis of $30,000 to the lessee, and an estimated useful life falling within the 4 years or more but less than 6 years useful life category, is placed in service by the lessee within the lessee's taxable year ending December 31, 1962, the lessee must decrease his section 162 deduction with respect to the leased property for each of the taxable years 1962 and 1963 by $175 ($700 credit earned divided by 4).

(iv) To the extent that a required decrease, under subdivision (ii) or (iii) of this subparagraph, is not taken into account for any taxable year beginning before January 1, 1964, because the deduction otherwise allowable under section 162 for such taxable year with respect to the leased property is less than the required decrease for such taxable year, then the balance of the required decrease not taken into account for such taxable year shall decrease the amount otherwise allowable as a deduction under section 162 with respect to such property for the next succeeding taxable year (or years) beginning before January 1, 1964, if any, for which a

deduction is allowable with respect to such property. Thus, if the required decrease with respect to leased property is $200 for 1962 but the lessee's deduction otherwise allowable under section 162 for such taxable year with respect to such property is only $50, the balance of $150 must be applied in 1963 to decrease the deduction otherwise allowable to the lessee with respect to the leased property for such taxable year.

(v) See paragraph (b) of § 1.48-7 for reduction of basis in the case of an actual purchase of leased property by a lessee (in a taxable year of such lessee beginning before January 1, 1964) who has been treated as a purchaser of such property under this section.

(3) ***Increase in rental deductions on account of early disposition, etc.***

(i) If, as a result of an early disposition, etc., in a taxable year beginning before January 1, 1964, with respect to leased property placed in service before such date, the lessee's tax is increased under section 47(a) (1) or (2), or an adjustment in a carryback or carryover is made under section 47(a)(3) by reduction of an unused credit, the rental deductions (if any) otherwise allowable under section 162 to such lessee for amounts paid or accrued to the lessor under the lease with respect to such property shall be increased in an amount equal to the total decreases previously made in the lessee's rental deductions under subparagraph (2) of this paragraph.

(ii) Except as provided in subdivision (iii) of this subparagraph, the increase in rental deductions described in subdivision (i) of this subparagraph shall be taken into account as an increase in rental deductions otherwise allowable under section 162 for the taxable year in which the early disposition, etc., occurred.

(iii) If, after the event which caused section 47(a) (1), (2), or (3) to apply the lessee continues the use of the property in a trade or business or in the production of income, the increase in rental deductions described in subdivision (i) of this subparagraph shall be taken into account ratably over the remaining portion of the useful life of the property which was used in making the decreases in rental deductions with respect to the property under subparagraph (2) of this paragraph.

(iv) If subdivision (iii) of this subparagraph applies, and if, prior to the expiration of the useful life of the property used in making the decreases in rental deductions, the lease is terminated other than by actual purchase of the property by the lessee, any increase in rental deductions not previously taken into account shall be taken into account as an increase in rental deductions for the taxable year in which the lease is terminated. In the case of an actual purchase of the property by the lessee, see paragraph (e) of § 1.48-7.

(l) ***Examples.*** The provisions of this section may be illustrated by the following examples:

Example 1. X Corporation is engaged in the business of manufacturing and leasing new and reconstructed equipment which in its hands has an estimated useful life of 12 years. After December 31, 1961, X Corporation constructs machine no. 1 at a cost of $20,000 and reconstructs machine no. 2 at a cost of $5,000. On February 15, 1962, Y Corporation, a calendar-year taxpayer, leases both machines from X Corporation and places them in service. The fair market value of machine no. 1 on the date on which possession is transferred to Y is $25,200. Machine no. 1 would qualify as new section 38 property in Y's hands if it had been purchased by Y. If X elects to treat Y as the purchaser of machine no. 1, under paragraph (c)(2)(ii) of this section such machine will have a basis of $25,200 in Y's hands. Under paragraph (f)(1)(v) of this section, X supplies Y with an estimated useful life of 12 years (expressed in years rather than useful life category) with respect to machine no. 1 for

purposes of determining Y's qualified investment. Y's credit earned with respect to the property is $1,764 (7 percent of $25,200). Under paragraph (k)(2)(ii) of this section, Y's deduction attributable to the leased property for 1962 will be decreased by $134.75 (credit earned of $1,764, divided by 144, multiplied by 11), and for 1963 such deduction will be decreased by $147 ($1,764, divided by 144, multiplied by 12). The election is not available with respect to machine no. 2 since a reconstructed machine would not constitute new section 38 property if Y had purchased it. In such case, while X cannot make the election to treat Y as a purchaser, X would be entitled to a credit under section 38 based on its expenditure of $5,000 as an investment in new section 38 property, since such amount represents cost of reconstruction after December 31, 1961.

Example 2. Assume the same facts as in example 1 except that under paragraph (f)(1)(v) of this section, X supplies Y with an estimated useful life category of 8 years or more (rather than an estimated useful life expressed in years) with respect to machine no. 1 for purposes of determining Y's qualified investment. Under paragraph (k)(2)(iii) of this section, Y's deduction attributable to the leased property will be decreased by $220.50 (credit earned of $1,764, divided by 8) for each of its taxable years 1962 and 1963.

Example 3. Assume the same facts as in example 1 except that the lessee disposes of his interest in the lease on January 1, 1963, and that there is an increase in Y's tax for 1963 under section 47(a)(1) in the amount of $1,764. Under paragraph (k)(2) of this section, Y's deductions attributable to the leased property are decreased only in 1962, and the amount of such decrease is $134.75. In 1963 there shall be an increase of $134.75 in the deductions otherwise allowable under section 162 for such taxable year with respect to the leased property.

Example 4. Assume the same facts as in example 1 except that during the year 1963 the property was used by Y predominantly outside the United States within the meaning of paragraph (g) of § 1.48-1, and thereafter was used in Y's trade or business. Under paragraph (k)(3) of this section, the increase of $134.75 described in example 3 is taken into account ratably as an increase in rental deductions otherwise allowable under section 162 in the amount of $12.25 ($134.75 divided by 11 years) for 1963 and each of the 10 succeeding years.

(m) ***Increase in rental deductions on account of section 203(a)(2)(B) of the Revenue Act of 1964*** —

(1) ***In general.***

(i) Under section 203(a)(2)(B) of the Revenue Act of 1964, if, for any taxable year of a lessee beginning before January 1, 1964, the rental deductions otherwise allowable under section 162 to such lessee for amounts paid or accrued to the lessor under the lease with respect to leased property placed in service before January 1, 1964, were decreased under paragraph (k)(2) of this section, such rental deductions shall be increased.

(ii) The increase in rental deductions described in subdivision (i) of this subparagraph shall be in an amount equal to the total decreases in the lessee's rental deductions previously made under paragraph (k)(2) of this section less any increases in rental deductions made under paragraph (k)(3) of this section.

(iii) Except as provided in subdivision (iv) of this subparagraph, the increase in rental deductions described in subdivision (i) of this subparagraph shall be taken into account ratably over the remaining portion of the useful life of the property commencing with the first day of the first taxable year beginning after December 31, 1963. For this purpose, the useful life of the property shall be the useful life used in making the decreases in rental deductions with respect to the property under paragraph (k)(2) of this section.

(iv) If the lease is terminated other than by the lessee's actual purchase of the property during a taxable year beginning after December 31, 1963, and before the end of the remaining useful life of the property used in making the decreases in rental deductions, the amount of the increase in rental deductions described in subdivision (i) of this subparagraph and not previously taken into account shall be allowed as a deduction for the taxable year in which such termination occurs.

(v) The rental deductions with respect to any section 38 property are not to be increased under this paragraph if the lessee dies in a taxable year beginning before January 1, 1964.

(vi) The increase in rental deductions described in subdivision (i) of this subparagraph shall ordinarily be taken into account by the lessee treated as the purchaser, that is, the lessee entitled to the credit. However, if the property under the lease is transferred by the lessee to a successor lessee in a transaction described in section 47(b) (other than a transfer by reason of death) under which the successor lessee assumes the lessee's obligations under the lease, such increase in rental deductions shall be taken into account by the successor lessee in the manner prescribed in this paragraph.

(2) ***Examples.*** The operation of this paragraph may be illustrated by the following examples:

Example 1. (a) X Corporation acquired on January 1, 1962, an item of new section 38 property with a basis of $24,000 and with a useful life to the lessor of 10 years. Y Corporation, which makes its returns on the basis of a calendar year, leased such property from X Corporation and placed it in service on January 2, 1962. Under this section, X Corporation made a valid election to treat Y Corporation as having purchased such property for purposes of the credit allowed by section 38 and supplied the lessee with information that the property had a useful life of 10 years. The amount of the credit earned with respect to such property was $1,680 (7 percent of $24,000). For each of the taxable years 1962 and 1963, Y Corporation decreased, under paragraph (k)(2) of this section, its deductions otherwise allowable under section 162 with respect to such property by $168 ($1,680 multiplied by $^{12}/_{120}$).
(b) For each of the taxable years 1964 through 1971, Y Corporation increases its deductions otherwise allowable under section 162 for amounts paid to X Corporation under the lease by $42 ($336 (that is, $168 multiplied by 2) divided by the remaining useful life of 8 years).

Example 2. (a) The facts are the same as in example 1 except that the lease is terminated on January 3, 1965.
(b) For the taxable year 1964, Y Corporation increases its deductions otherwise allowable under section 162 by $42.

(c) For the taxable year 1965, Y Corporation increases its deductions otherwise allowable under section 162 for the portion of the increase which had not been taken into account as of the time of the termination of the lease. Thus, the amount of such increase for the taxable year 1965 is $294 ($336 minus $42).

(Sec. 38, 76 Stat. 963; 26 U.S.C. 38)

[T.D. 6731, 29 FR 6080, May 8, 1964; 29 FR 7671, June 16, 1964, as amended by T.D. 6838, 30 FR 9060, July 20, 1965; T.D. 7203, 37 FR 17131, 17132, Aug. 25, 1972]

§ 1.48-5 Electing small business corporations.

(a) ***In general.***

(1) In the case of an electing small business corporation (as defined in section 1371(b)), the basis of "new section 38 property" and the cost of "used section 38 property" placed in service during the taxable year shall be apportioned pro rata among the persons who are shareholders of such corporation on the last day of such corporation's taxable year. Section 38 property shall not (by reason of such apportionment) lose its character as new section 38 property or used section 38 property, as the case may be. The estimated useful life of such property in the hands of a shareholder shall be deemed to be the estimated useful life of such property in the hands of the electing small business corporation. The bases of all new section 38 properties which have a useful life falling within a particular useful life category shall be aggregated; likewise, the cost of all used section 38 properties which have a useful life falling within a particular useful life category shall be aggregated. The total bases of new section 38 properties within each useful life category and the total cost of used section 38 properties within each useful life category shall be apportioned separately. The useful life categories are:

(i) 3 years or more but less than 5 years; (ii) 5 years or more but less than 7 years; and (iii) 7 years or more. There shall be apportioned to each person who is a shareholder of the electing small business corporation on the last day of the taxable year of such corporation, for his taxable year in which or with which the taxable year of such corporation ends, his pro rata share of the total bases of new section 38 properties within each useful life category, and his pro rata share of the total cost of used section 38 properties within each useful life category. In determining who are shareholders of an electing small business corporation on the last day of its taxable year, the rules of paragraph (d)(1) of § 1.1371-1 and of paragraph (a)(2) of § 1.1373-1 shall apply.

(2) The total cost of used section 38 property that may be apportioned by an electing small business corporation to its shareholders for any taxable year of such corporation shall not exceed $50,000. If the total cost of used section 38 property placed in service during the taxable year by the electing small business corporation exceeds $50,000 such corporation must select, under paragraph (c)(4) of § 1.48-3, the used section 38 property the cost of which is to be apportioned to its shareholders.

(3) A shareholder to whom the basis (or cost) of section 38 property is apportioned shall, for purposes of the credit allowed by section 38, be treated as the taxpayer with respect to such property. Thus, the total cost of used section 38 property apportioned to him by the electing small business corporation must be taken into account as cost of used section 38 property in determining whether the $50,000 limitation on the cost of used section 38 property which may be taken into account by the shareholder in computing qualified investment for any taxable year is exceeded. If a shareholder takes into account in determining his qualified investment any portion of the basis (or cost) of section 38 property placed in service by an electing small business corporation and if such property subsequently is disposed of or otherwise ceases to be section 38 property in the hands of the corporation, such shareholder shall be subject to the provisions of section 47. See § 1.47-4.

(b) ***Summary statement.*** An electing small business corporation shall attach to its return a statement showing the apportionment to each shareholder of the total bases of new, and the total cost of used, section 38 properties within each useful life category.

(c) ***Example.*** This section may be illustrated by the following example:

Example. 1 X Corporation, an electing small business corporation which makes its return on the basis of the calendar year, acquires and places in service on June 1, 1962, three new assets which qualify as new section 38 property and three used assets which qualify as used section 38 property. The basis of each new, and the cost of each used, section 38 property and the estimated useful life of each property are as follows:

Asset No.	Basis (or cost)	Estimated useful life
1 (new)	$30,000	4 years.
2 (new)	30,000	4 years.
3 (new)	30,000	8 years.
4 (used)	12,000	6 years.
5 (used)	12,000	6 years.
6 (used)	12,000	8 years.

On December 31, 1962, X Corporation has 10 shares of stock outstanding which are owned as follows: A owns 3 shares, B owns 2 shares, and C owns 5 shares.

(2) Under this section, the total bases of the new, and the total cost of the used, section 38 properties are apportioned to the shareholders of X Corporation as follows:

Useful life category	New—4 to 6 years	New—8 years or more	Used—6 to 8 years	Used—8 years or more
Total bases or total cost	$60,000	$30,000	$24,000	$12,000
Shareholder A ($^{3}/_{10}$)	18,000	9,000	7,200	3,600
Shareholder B ($^{2}/_{10}$)	12,000	6,000	4,800	2,400
Shareholder C	30,000	15,000	12,000	6,000

Useful life category	New—4 to 6 years	New—8 years or more	Used—6 to 8 years	Used—8 years or more
($^5/_{10}$)				

Assume that shareholders A, B and C did not place in service during their taxable years in which falls December 31, 1962 (the last day of X Corporation's taxable year) any section 38 property and that such shareholders did not own any interests in other electing small business corporations, partnerships, estates, or trusts. Under section 46(c), the qualified investment of shareholder A is $23,400, of shareholder B is $15,600, and of shareholder C is $39,000, computed as follows:

Basis (or cost)	Applicable percentage	Qualified investment
	Shareholder A	
$18,000 (new)	$33^1/_3$	$6,000
$9,000 (new)	100	9,000
$7,200 (used)	$66^2/_3$	4,800
$3,600 (used)	100	3,600
Total		23,400
	Shareholder B	
$12,000 (new)	$33^1/_3$	$4,000
$6,000 (new)	100	6,000
$4,800 (used)	$66^2/_3$	3,200
$2,400 (used)	100	2,400
Total		15,600
	Shareholder C	
$30,000 (new)	$33^1/_3$	$10,000
$15,000 (new)	100	15,000
$12,000 (used)	$66^2/_3$	8,000
$6,000 (used)	100	6,000
Total		39,000

[T.D. 6731, 29 FR 6082, May 8, 1964, as amended by T.D. 6931, 32 FR 14040, Oct. 10, 1967; T.D. 7203, 37 FR 17133, Aug. 25, 1972]

§ 1.48-6 Estates and trusts.

(a) *In general.*

(1) In the case of an estate or trust, the basis of "new section 38 property" and the cost of "used section 38 property" placed in service during the taxable year shall be apportioned among the estate or trust and its beneficiaries on the basis of the income of such estate or trust allocable to each. Section 38 property shall not (by reason of such apportionment) lose its character as new section 38 property or used section 38 property, as the case may be. The estimated useful life of such property in the hands of a beneficiary shall be deemed to be the estimated useful life of such property in the hands of the estate or trust. The bases of all new section 38 properties which have a useful life falling within a particular useful life category shall be aggregated; likewise, the cost of all used section 38 properties which have a useful life falling within a particular useful life category shall be aggregated. The total bases of new section 38 properties within each useful life category and the total cost of used section 38 properties within each useful life category shall be apportioned separately. The useful life categories are:

(i) 3 years or more but less than 5 years; (ii) 5 years or more but less than 7 years; and (iii) 7 years or more. There shall be apportioned to the estate or trust for its taxable year, and to each beneficiary of such estate or trust for his taxable year in which or with which the taxable year of such estate or trust ends, his share (as determined under paragraph (b) of this section) of the total bases of new section 38 properties within each useful life category, and his share of the total cost of used section 38 properties within each useful life category.

(2) The total cost of used section 38 property that may be apportioned among an estate or trust and its beneficiaries for any taxable year of such estate or trust shall not exceed $50,000. If the total cost of used section 38 property placed in service during the taxable year by the estate or trust exceeds $50,000, such estate or trust must select, under paragraph (c)(4) of § 1.48-3, the used section 38 property the cost of which is to be apportioned among such estate or trust and its beneficiaries.

(3) A beneficiary to whom the basis (or cost) of section 38 property is apportioned shall, for purposes of the credit allowed by section 38, be treated as the taxpayer with respect to such property. Thus, the total cost of used section 38 property apportioned to him by the estate or trust must be taken into account as cost of used section 38 property in determining whether the $50,000 limitation on the cost of used property which may be taken into account by the beneficiary in computing qualified investment for any taxable year is exceeded. If a beneficiary takes into account in determining his qualified investment any portion of the basis (or cost) of section 38 property placed in service by an estate or trust and if such property subsequently is disposed of or otherwise ceases to be section 38 property in the hands of estate or trust, such beneficiary shall be subject to the provisions of section 47. See § 1.47-5.

(4) For purposes of this section, the term "beneficiary" includes heir, legatee, and devisee.

(5) If during the taxable year of an estate or trust a beneficiary's interest in the income of such estate or trust terminates, the basis (or cost) of section 38 property placed in service by such estate or trust after such termination shall not be apportioned to such beneficiary.

(b) ***Share.*** A trust's, estate's, or beneficiary's share of the total bases of new section 38 properties, and the total cost of used section 38 properties, within a useful life category shall be—

(1) The total bases of new (or the total cost of used) section 38 properties which have a useful life falling within such useful life category placed in service in the taxable year of the estate or trust, multiplied by

(2) The amount of income allocable to such estate or trust or to such beneficiary for such taxable year, divided by

(3) The sum of the amounts of income allocable to such estate or trust and all its beneficiaries taken into account under subparagraph (2) of this paragraph.

(c) ***Limitation based on amount of tax.*** In the case of an estate or trust, the $25,000 amount specified in section 46(a)(2), relating to limitation based on amount of tax, shall be reduced for the taxable year to—

(1) $25,000, multiplied by

(2) The qualified investment with respect to the total bases of new section 38 properties plus the qualified investment with respect to the total cost of used section 38 properties, apportioned to such estate or trust under paragraph (a) of this section, divided by

(3) The qualified investment with respect to the total bases of all new section 38 properties plus the qualified investment with respect to the total cost of all used section 38 properties, apportioned among such estate or trust and its beneficiaries.

For purposes of subparagraph (3) of this paragraph, cost of used section 38 property shall not be considered as apportioned to any beneficiary to the extent that such cost is not taken into account by such beneficiary in computing qualified investment in used section 38 property.

(d) ***Summary statement.*** An estate or trust shall attach to its return a statement showing the apportionment to such estate or trust and to each beneficiary of the total bases of new, and the total cost of used, section 38 properties within each useful life category.

(e) ***Example.*** This section may be illustrated by the following example:

Example. 1 XYZ Trust, which makes its return on the basis of the calendar year, acquires and places in service on June 1, 1962, three new assets which qualify as new section 38 property and three used assets which qualify as used section 38 property. The basis of the new, and the cost of the used, section 38 property and the estimated useful life of each property are as follows:

Asset No.	Basis (or cost)	Estimated useful life
1 (new)	$30,000	4 years.
2 (new)	30,000	4 years.
3 (new)	30,000	8 years.
4 (used)	12,000	6 years.
5 (used)	12,000	6 years.
6 (used)	12,000	8 years.

For the taxable year 1962 the income of XYZ Trust is $20,000 which is allocable as follows: $10,000 to XYZ Trust, $6,000 to beneficiary A, and $4,000 to beneficiary B. Beneficiaries A and B make their returns on the basis of a calendar year.

(2) Under this section, the total bases of the new, and the total cost of the used, section 38 properties are

apportioned to XYZ Trust and its beneficiaries as follows:

Useful life category	New—4 to 6 years	New—8 years or more	Used—6 to 8 years	Used—8 years or more
Total bases or total cost	$60,000	$30,000	$24,000	$12,000
XYZ Trust ($10,000 ÷ 20,000)	30,000	15,000	12,000	6,000
Beneficiary A ($6,000 ÷ 20,000)	18,000	9,000	7,200	3,600
Beneficiary B ($4,000 ÷ 20,000)	12,000	6,000	4,800	2,400

Assume that beneficiary A placed in service during his taxable year 1962 new section 38 property with a basis of $10,000 and an estimated useful life of 8 years. Also, assume that beneficiary B did not place in service during his taxable year 1962 any section 38 property and that beneficiaries A and B did not own any interests in other trusts, estates, partnerships, or electing small business corporations. Under section 46(c), the qualified investment of XYZ Trust is $39,000, of beneficiary A is $33,400, and of beneficiary B is $15,600, computed as follows:

Basis (or cost)	Applicable percentage	Qualified investment
	XYZ Trust	
$30,000 (new)	$33^1/_3$	$10,000
$15,000 (new)	100	15,000
$12,000 (used)	$66^2/_3$	8,000
$6,000 (used)	100	6,000
Total		39,000
	Beneficiary A	
$18,000 (new)	$33^1/_3$	$6,000
$9,000 (new)	100	9,000
$7,200 (used)	$66^2/_3$	4,800
$3,600 (used)	100	3,600
		23,400
$10,000 (new)	100	10,000
Total		33,400
	Beneficiary B	
$12,000 (new)	$33^1/_3$	$4,000
$6,000 (new)	100	6,000

Basis (or cost)	Applicable percentage	Qualified investment
$4,800 (used)	$66^2/_3$	3,200
$2,400 (used)	100	2,400
Total		15,600

(3) In the case of XYZ Trust, the $25,000 amount specified in section 46(a)(2) is reduced to $12,500, computed as follows: (i) $25,000, multiplied by (ii) $39,000 (qualified investment apportioned to the trust), divided by (iii) $78,000 (total qualified investment apportioned among such trust ($39,000), beneficiary A ($23,400), and beneficiary B ($15,600)).

[T.D. 6731, 29 FR 6083, May 8, 1964, as amended by T.D. 6931, 32 FR 14040, Oct. 10, 1967; T.D. 6958, 33 FR 9171, June 21, 1968; T.D. 7203, 37 FR 17133, Aug. 25, 1972]

§ 1.48-9 Definition of energy property.

(a) ***In general.*** For purposes of the credit determined under section 48 of the Internal Revenue Code (Code), the term *energy property* means property that, taking into account the definition of the term *unit of energy property* (defined in paragraph (f)(2)(i) of this section) and of other terms defined in paragraph (b) and other provisions of this section, meets the requirements of paragraph (c) of this section and is of a type of energy property set forth in paragraph (e) of this section. If a property is described more than once in the types of energy property set forth in paragraph (e), only a single section 48 credit is allowed. Paragraph (d) of this section provides rules for property excluded from energy property. Paragraph (f) of this section provides rules for components included in an energy property. Paragraph (g) of this section provides the applicability date for this section.

(b) ***Definitions related to requirements for energy property.*** For purposes of section 48, this section, §§ 1.48-13 and 1.48-14, and any provision of the Code or this chapter that expressly refers to any of the foregoing, the definitions in this paragraph (b) apply:

(1) ***Construction, reconstruction, or erection of energy property.*** The term *construction, reconstruction, or erection of energy property* means work performed to construct, reconstruct, or erect energy property either by the taxpayer or for the taxpayer in accordance with the taxpayer's specifications.

(2) ***Acquisition of energy property.*** The term *acquisition of energy property* means a transaction by which a taxpayer acquires the rights and obligations to establish tax ownership of an energy property for Federal income tax purposes.

(3) ***Original use of energy property*** —

(i) ***In general.*** The term *original use of energy property* means the first use to which a unit of energy property is put, whether or not such use is by the taxpayer.

(ii) ***Retrofitted units of energy property.*** A retrofitted unit of energy property acquired by the taxpayer will be treated as not being put to original use by the taxpayer unless the rules in § 1.48-14(a) regarding retrofitted energy property (80/20 Rule) or paragraph (e)(10)(v) of this section

regarding modifications of certain energy storage technology apply. The question of whether a unit of energy property meets the 80/20 Rule or is modified (as described in paragraph (e)(10)(v) of this section) is a facts and circumstances determination.

(4) ***Allowable*** —

(i) ***In general.*** For purposes of applying paragraph (c)(1)(ii) of this section, depreciation or amortization in lieu of depreciation (collectively, *depreciation*) is *allowable* with respect to energy property if such property is of a character subject to the allowance for depreciation under section 167 of the Code and the basis or cost of such property is recovered using a method of depreciation (for example, the straight line method), which includes any additional first year depreciation deduction method of depreciation (for example, under section 168(k) of the Code). Further, if an Internal Revenue Service adjustment with respect to the Federal income tax or information return for such taxable year requires the basis or cost of such energy property to be recovered using a method of depreciation, depreciation is allowable to the taxpayer with respect to energy property.

(ii) ***Exclusions from allowable.*** For purposes of paragraph (b)(4)(i) of this section, depreciation is not allowable with respect to energy property if the basis or cost of such property is not recovered through a method of depreciation but, instead, such basis or cost is recovered through a deduction of the full basis or cost of the energy property in one taxable year (for example, under section 179 of the Code).

(5) ***Placed in service*** —

(i) ***In general.*** Energy property is considered placed in service in the earlier of:

(A) The taxable year in which, under the taxpayer's depreciation practice, the period for depreciation with respect to such energy property begins; or

(B) The taxable year in which the energy property is placed in a condition or state of readiness and availability for a specifically assigned function, whether in a trade or business or in the production of income. Energy property in a condition or state of readiness and availability for a specifically assigned function includes, but is not limited to, components that are acquired and set aside during the taxable year for use as replacements for a particular energy property (or energy properties) to avoid operational time loss and equipment that is acquired for a specifically assigned function and is operational but is undergoing testing to eliminate any defects. However, components acquired to be used in the construction of an energy property will not be considered in a condition or state of readiness and availability for a specifically assigned function.

(ii) ***Energy property subject to § 1.48-4 election to treat lessee as purchaser.*** Notwithstanding paragraph (b)(5)(i) of this section, energy property with respect to which an election is made under § 1.48-4 to treat the lessee as having purchased such energy property is considered placed in service by the lessor in the taxable year in which possession is transferred to such lessee.

(6) ***Unit of energy property.*** The term *unit of energy property* is defined in paragraph (f)(2)(i) of this section. No provision of this section or § 1.48-13 or § 1.48-14 uses the term *unit* in respect of energy property with any meaning other than that provided in paragraph (f)(2)(i) of this section.

(7) ***Claim.*** With respect to a section 48 credit determined with respect to energy property of a taxpayer, the term *claim* means filing a completing Form 3468, *Investment Credit,* or any successor form(s) with the taxpayer's timely filed (including extensions) Federal income tax return for the taxable year in which the energy property is placed in service, and includes the making of an election under section 6417 or 6418 of the Code and corresponding regulations with respect to such section 48 credit and made on the taxpayer's Federal income tax return or annual information return.

(c) ***Requirements for energy property*** —

(1) ***In general.*** Energy property must satisfy each of the requirements of paragraphs (c)(1)(i) through (v) of this section:

(i) The taxpayer constructs, reconstructs, or erects the property, or, if the original use of the property commences with the taxpayer, acquires the property;

(ii) Depreciation (or amortization in lieu of depreciation) is allowable with respect to the property;

(iii) The property meets the performance and quality standards as provided in paragraph (c)(2) of this section;

(iv) The construction of the property begins before the date provided in section 48 (if any such date is provided); and

(v) The property is placed in service by the taxpayer by the date provided in section 48 (if any such date is provided).

(2) ***Performance and quality standards*** —

(i) ***In general.*** Energy property must meet performance and quality standards, if any, that have been prescribed by the Secretary of the Treasury or her delegate (after consultation with the Secretary of Energy) and are in effect at the time of acquisition of the energy property.

(ii) ***Special rules for performance and quality standards*** —

(A) ***Small wind energy property*** —

(*1*) Small wind energy property must meet one of the following performance and quality standards in effect at the time of acquisition of the small wind turbine:

(*i*) American Wind Energy Association Small Wind Turbine Performance and Safety Standard 9.1 (AWEA standards);

(*ii*) International Electrotechnical Commission standards 61400-1, 61400-2, 61400-11, 61400-12 (IEC standards); or

(*iii*) ANSI/ACP Small Wind Turbine Standard 101-1 (ACP standards).

(*2*) Taxpayers may rely on a certification that the performance and quality standards set forth in this paragraph (c)(2)(ii)(A)(*1*) are met. Guidance published in the Internal Revenue Bulletin sets forth the requirements to certify that the performance and quality standards provided in this paragraph (c)(2)(ii)(A)(*1*) are met. *See* § 601.601 of this chapter.

(B) ***Electrochromic glass property.*** To be eligible for the section 48 credit, electrochromic windows must be rated in accordance with the National Fenestration Rating Council (NFRC) and secondary glazing systems must be rated in accordance with the

Attachments Energy Rating Council (AERC) Rating and Certification Process, or subsequent revisions. *See* paragraph (e)(2)(ii) of this section for the definition of electrochromic glass property.

(iii) ***Time of acquisition.*** For purposes of applying performance and quality standards, the time of acquisition is the date the taxpayer enters into a binding contract (defined in paragraph (c)(2)(iv) of this section) to acquire the property, or, in the case of property constructed, reconstructed, or erected by the taxpayer, the earlier of the date that—

(A) The taxpayer begins construction, reconstruction, or erection of the property, or

(B) The taxpayer and another person enter into a binding contract (as defined in paragraph (c)(2)(iv) of this section) requiring the other person to construct, reconstruct, or erect property and to place the property in service for an agreed upon use.

(iv) ***Binding contract.*** For purposes of this paragraph (c)(2), whether a contract is binding is determined based on the rules described in § 1.168(k)-2(b)(5)(iii)(A).

(d) ***Property that is not energy property*** —

(1) ***Interaction with section 45.*** Energy property does not include any property that is part of a qualified facility the production from which is allowed as a credit determined under section 45 of the Code (section 45 credit) for the taxable year or any prior taxable year. However, see paragraph (f)(3) of this section for rules regarding property that is an integral part of an energy property that is also used by a qualified facility. See § 1.48-14(f)(1) for rules regarding making an election under section 48(a)(5) to treat a qualified facility as an energy property.

(2) ***Other property.*** Energy property also does not include power purchase agreements, goodwill, going concern value, or renewable energy certificates.

(e) ***Types of energy property.*** The types of energy property eligible for a section 48 credit are:

(1) ***Solar energy property*** —

(i) ***In general. Solar energy property*** is equipment that uses solar energy to generate electricity, to heat or cool (or provide hot water for use in) a structure, or to provide solar process heat, excepting property used to generate energy for the purposes of heating a swimming pool. Solar energy property includes solar electric generation equipment (as defined in paragraph (e)(1)(ii) of this section), solar process heat equipment (as defined in paragraph (e)(1)(iii) of this section), and equipment that uses solar energy to heat or cool a structure or provide hot water for use in a structure, and parts related to the functioning of all such equipment.

(ii) ***Solar electric generation equipment. Solar electric generation equipment*** is equipment that converts sunlight into electricity through the use of devices such as solar cells or other collectors.

(iii) ***Solar process heat equipment. Solar process heat equipment*** is equipment that uses solar energy to generate steam at high temperatures for use in industrial or commercial processes.

(2) ***Fiber-optic solar energy property and electrochromic glass property*** —

(i) ***Fiber-optic solar energy property. Fiber-optic solar energy property*** is equipment that uses solar energy to illuminate the inside of a structure using fiber-optic distributed sunlight.

(ii) ***Electrochromic glass property. Electrochromic glass energy property*** uses electricity to change its light transmittance properties (both visible and near infrared light) in order to heat or cool a structure. For purposes of section 48, windows, including secondary windows (also referred to as secondary glazings), that incorporate electrochromic glass are treated as electrochromic glass property.

(3) ***Geothermal energy property*** —

(i) ***In general. Geothermal energy property*** is equipment used to produce, distribute, or use energy derived from a geothermal deposit (within the meaning of section 613(e)(2) of the Code), but only, in the case of electricity generated by geothermal power, up to (but not including) the electrical transmission stage. Geothermal equipment includes production equipment (as defined in paragraph (e)(3)(ii) of this section) and distribution equipment (as defined in paragraph (e)(3)(iii) of this section).

(ii) ***Production equipment.*** For purposes of paragraph (e)(3)(i) of this section, *production equipment* is equipment necessary to bring geothermal energy from the subterranean deposit to the surface, including well-head and downhole equipment (such as screening or slotting liners, tubing, downhole pumps, and associated equipment). Production, injection, and monitoring wells required for production of the geothermal deposit qualify as production equipment. If geothermal energy is used to generate electricity, production equipment also includes the property necessary to produce electricity. Production equipment does not include equipment used for exploration and development of geothermal deposits, such as drilling wells.

(iii) ***Distribution equipment.*** For purposes of paragraph (e)(3)(i) of this section, *distribution equipment* is equipment that transports geothermal energy from a geothermal deposit to the site of ultimate use. If geothermal energy is used to generate electricity, distribution equipment includes equipment that transports geothermal fluids between the geothermal deposit and the power plant. Distribution equipment also includes components of a building's heating and/or cooling system, such as pipes and ductwork that distribute within a building the energy derived from the geothermal deposit.

(4) ***Qualified fuel cell property. Qualified fuel cell property*** is a fuel cell power plant that has a nameplate capacity of at least 0.5 kilowatts (kW) (1 kW in the case of a fuel cell power plant with a linear generator assembly) of electricity using an electrochemical or electromechanical process, and an electricity-only generation efficiency greater than 30 percent. For this purpose, electricity-only generation efficiency may be calculated by dividing the heat rate of the fuel cell (for example, kilowatt-hours (kWh) electricity produced per kilogram (kg) of fuel consumed) by the higher heating value of the fuel (for example, kWh per kg). A fuel cell power plant is an integrated system comprised of a fuel cell stack assembly, or linear generator assembly, and associated balance of plant components that converts a fuel into electricity using electrochemical or electromechanical means. A linear generator assembly does not include any assembly that contains rotating parts.

(5) ***Qualified microturbine property. Qualified microturbine property*** is a stationary microturbine power plant that has a nameplate capacity of less than 2,000 kW and an electricity-only generation efficiency of not less than 26 percent at International Standard Organization conditions. A stationary microturbine power plant is an integrated system comprised of a gas turbine engine, a combustor, a recuperator or regenerator, a generator or alternator, and associated balance of plant components that converts a fuel into electricity and thermal energy. A stationary microturbine power plant also

includes all secondary components located between the existing infrastructure for fuel delivery and the existing infrastructure for power distribution, including equipment and controls for meeting relevant power standards, such as voltage, frequency, and power factors.

(6) ***Combined heat and power system (CHP) property*** —

(i) ***In general. CHP property*** is property comprising a system that uses the same energy source for the simultaneous or sequential generation of electrical power, mechanical shaft power, or both, in combination with the generation of steam or other forms of useful thermal energy (including heating and cooling applications). CHP property must produce at least 20 percent of its total useful energy in the form of thermal energy that is not used to produce electrical or mechanical power (or combination thereof), and at least 20 percent of its total useful energy in the form of electrical or mechanical power (or combination thereof). The energy efficiency percentage of CHP property must exceed 60 percent (except in the case of CHP systems that use biomass within the meaning of section 45). CHP property does not include any property comprising a system if such system has a capacity in excess of 50 MW or a mechanical energy capacity in excess of 67,000 horsepower or an equivalent combination of electrical and mechanical energy capacities.

(ii) ***Components excluded.*** CHP property does not include property used to transport the energy source to the generating facility or to distribute energy produced by the facility.

(7) ***Qualified small wind energy property. Qualified small wind energy property*** is property that uses a qualifying small wind turbine to generate electricity. A qualifying small wind turbine means a wind turbine that has a nameplate capacity of not more than 100 kW.

(8) ***Geothermal heat pump (GHP) property. GHP property*** is equipment that uses the ground, ground water, or other underground fluids as a thermal energy source to heat a structure or as a thermal energy sink to cool a structure.

(9) ***Waste energy recovery property (WERP)*** —

(i) ***In general. WERP*** is property that generates electricity solely from heat from buildings or equipment if the primary purpose of such building or equipment is not the generation of electricity. Examples of buildings or equipment the primary purpose of which is not the generation of electricity include, but are not limited to, manufacturing plants, medical care facilities, facilities on college campuses, pipeline compressor stations, and associated equipment. WERP does not include any property that has a capacity in excess of 50 MW.

(ii) ***Coordination with CHP property.*** Any WERP that is part of a system that is a CHP property is not treated as WERP for purposes of section 48 unless the taxpayer elects to not treat such system as a CHP property for purposes of section 48.

(10) ***Energy storage technology*** —

(i) ***In general. Energy storage technology*** includes electrical energy storage property described in paragraph (e)(10)(ii) of this section, thermal energy storage property described in paragraph (e)(10)(iii) of this section, and hydrogen energy storage property described in paragraph (e)(10)(iv) of this section.

(ii) ***Electrical energy storage property. Electrical energy storage property*** is property (other than property primarily used in the transportation of goods or individuals and not for the production of electricity) that receives, stores, and delivers energy for conversion to electricity, and has a

nameplate capacity of not less than 5 kWh. For example, subject to the exclusion for property primarily used in the transportation of goods or individuals, electrical energy storage property includes, but is not limited to, rechargeable electrochemical batteries of all types (such as lithium ion, vanadium flow, sodium sulfur, and lead-acid), ultracapacitors, physical storage such as pumped storage hydropower, compressed air storage, flywheels, and reversible fuel cells.

(iii) *Thermal energy storage property* —

(A) *In general. Thermal energy storage property* is property comprising a system that is directly connected to a heating, ventilation, or air conditioning (HVAC) system; removes heat from, or adds heat to, a storage medium for subsequent use; and provides energy for the heating or cooling of the interior of a residential or commercial building. Thermal energy storage property includes equipment and materials, and parts related to the functioning of such equipment, to store thermal energy for later use to heat or cool, or to provide hot water for use in heating, a residential or commercial building. It does not include property that transforms other forms of energy into heat in the first instance. Property that *removes heat from, or adds heat to, a storage medium for subsequent use* is property that is designed with the particular purpose of substantially altering the time profile of when heat added to or removed from the thermal storage medium can be used for heating or cooling of the interior of a residential or commercial building. Paragraph (e)(10)(iii)(B) of this section provides a safe harbor for determining whether a thermal energy storage property has such a purpose. Thermal energy storage property does not include a swimming pool, CHP property, or a building or its structural components. For example, thermal energy storage property includes, but is not limited to, a system that adds heat to bricks heated to high temperatures that later use this stored energy to heat a building through the HVAC system; thermal ice storage systems that use electricity to run a refrigeration cycle to produce ice that is later connected to the HVAC system as an exchange medium for air conditioning the building; heat pump systems that store thermal energy in an underground tank, an artificial pit, an aqueous solution, a borehole field, or a solid-liquid phase change material to be extracted for later use for heating and/or cooling; and air-to-water heat pump systems with a water storage tank. However, consistent with § 1.48-14(d), if thermal energy storage property, such as a heat pump system, includes equipment, such as a heat pump, that also serves a purpose in an HVAC system that is installed in connection with the thermal energy storage property, the taxpayer's basis in the thermal energy storage property includes the total cost of the thermal energy storage property and HVAC system less the cost of an HVAC system without thermal storage capacity that would meet the same functional heating or cooling needs as the heat pump system with a storage medium, other than time shifting of heating or cooling.

(B) *Safe harbor.* A thermal energy storage property will be deemed to have the purpose of substantially altering the time profile of when heat added to or removed from the thermal storage medium can be used to heat or cool the interior of a residential or commercial building if that thermal energy storage property is capable of storing energy that is sufficient to provide heating or cooling of the interior of a residential or commercial building for a minimum of one hour.

(iv) *Hydrogen energy storage property. Hydrogen energy storage property* is property (other than property primarily used in the transportation of goods or individuals and not for the production of electricity) that stores hydrogen and has a nameplate capacity of not less than 5 kWh, equivalent to 0.127 kg of hydrogen or 52.7 standard cubic feet (scf) of hydrogen. Hydrogen

energy storage property includes, but is not limited to, above ground storage tanks, underground storage facilities, and associated compressors. Property that is an integral part of hydrogen energy storage property includes, but is not limited to, hydrogen liquefaction equipment and gathering and distribution lines within a hydrogen energy storage property.

(v) ***Modifications of energy storage energy property.*** With respect to electrical energy storage property and hydrogen energy storage property placed in service after December 31, 2022, energy storage technology that is modified as set forth in this paragraph (e)(10)(v) is treated as electrical energy storage property described in paragraph (e)(10)(ii) of this section or hydrogen energy storage property described in paragraph (e)(10)(iv) of this section, except that the basis of any existing property prior to such modification is not taken into account for purposes of this section and section 48. This paragraph (e)(10)(v) applies to any electrical energy storage property and hydrogen energy storage property that either:

(A) Was placed in service before August 16, 2022, and would be described in section 48(c)(6)(A)(i), except that such property had a nameplate capacity of less than 5 kWh and is modified in a manner that such property (after such modification) has a nameplate capacity (after such modification) of not less than 5 kWh; or

(B) Is described in section 48(c)(6)(A)(i) and is modified in a manner that such property (after such modification) has an increase in nameplate capacity of not less than 5 kWh.

(11) ***Qualified biogas property*** —

(i) ***In general. Qualified biogas property*** is property comprising a system that converts biomass (as defined in section 45K(c)(3), as in effect on August 16, 2022) into a gas that consists of not less than 52 percent methane by volume (tested at the point described in paragraph (e)(11)(ii) of this section), or is concentrated by such system into a gas that consists of not less than 52 percent methane (tested at the point described in paragraph (e)(11)(ii) of this section), and captures such gas for sale or productive use and not for disposal via combustion. Qualified biogas property also includes any property that is part of such system that cleans or conditions such gas, including gas upgrading equipment, to make the gas suitable for sale or productive use. For example, qualified biogas property includes, but is not limited to, an anaerobic digester. Property that is an integral part of qualified biogas property includes, but is not limited to, a waste feedstock collection system, a landfill gas collection system and mixing or pumping equipment.

(ii) ***Methane content requirement.*** The methane content requirement described in section 48(c)(7)(A)(i) and paragraph (e)(11)(i) of this section is measured at the point at which the biogas exits the qualified biogas property.

(iii) ***Flaring Allowance.*** While a qualified biogas property generally may not capture biogas for disposal via combustion, combustion in the form of flaring will not disqualify a qualified biogas property provided the primary purpose of the qualified biogas property is sale or productive use of biogas and any flaring is in compliance with all relevant Federal, State, regional, Tribal, and local laws and regulations.

(12) ***Microgrid controllers*** —

(i) ***In general.*** A microgrid controller is equipment that is part of a qualified microgrid and is designed and used to monitor and control the energy resources and loads on such microgrid. A qualified microgrid is an electrical system that includes equipment that is capable of generating

not less than 4 kW and not greater than 20 MW of electricity; is capable of operating in connection with the electrical grid and as a single controllable entity with respect to such electrical grid, and independently (and disconnected) from such electrical grid; and is not part of a bulk-power system (as defined in section 215 of the Federal Power Act (16 U.S.C. 824o)).

(ii) ***Capable of operating in connection with the electrical grid.*** For purposes of this paragraph, a qualified microgrid includes an electrical system that is capable of operating in connection with the larger electrical grid, regardless of whether a connection to the larger electrical grid exists.

(13) ***Other property included in section 48.*** Any other property specified by section 48 as energy property is energy property for purposes of this section and §§ 1.48-13 and 1.48-14.

(f) ***Property included in energy property*** —

(1) ***In general.*** An energy property includes a unit of energy property (defined in paragraph (f)(2)(i) of this section) that meets the requirements of paragraph (c) of this section, that is not excluded from energy property as provided in paragraph (d) of this section, and that is of a type of energy property included in paragraph (e) of this section. Property owned by the taxpayer that is an integral part of an energy property (as defined in paragraph (f)(3) of this section) is treated as part of that energy property. Energy property does not include any electrical transmission equipment, such as transmission lines and towers, or any equipment beyond the electrical transmission stage. Energy property also generally does not include equipment that is an addition or modification to an existing energy property. However, see § 1.48-14(a) for rules regarding retrofitted energy property (80/20 Rule) and paragraph (e)(10)(v) of this section for rules regarding modifications of certain types of energy storage technology.

(2) ***Unit of energy property*** —

(i) ***Definition.*** The term *unit of energy property* means all functionally interdependent components of property (as defined in paragraph (f)(2)(ii) of this section) owned by the taxpayer that are operated together and that can operate apart from other energy properties within a larger energy project (as defined in § 1.48-13(d)). For rooftop solar energy property, all components of energy property that are installed on a single rooftop are treated as a single unit of energy property. *See* § 1.48-13(d) for rules regarding the treatment of multiple energy properties as an energy project for certain purposes.

(ii) ***Functionally interdependent*** —

(A) ***In general.*** Except as provided in paragraph (f)(3)(ii)(B) of this section, with respect to components of a unit of energy property, the term *functionally interdependent* means that the placing in service of each component is dependent upon the placing in service of each of the other components in order to generate or store electricity, thermal energy, or hydrogen as provided by section 48(a)(3) and (c) and as described in paragraph (e) of this section.

(B) ***Components of certain energy property.*** In the case of solar process heat equipment, fiber-optic solar energy property, electrochromic glass property, GHP property, qualified biogas property, and microgrid controllers, with respect to components of such property, the term *functionally interdependent* means that the placing in service of each component is dependent upon the placing in service of each of the other components in order to perform the intended function of the energy property as provided by section 48(a)(3) and (c) and as described in paragraph (e) of this section.

(3) *Integral part* —

(i) ***In general.*** For purposes of the section 48 credit, property owned by a taxpayer is an integral part of an energy property owned by the same taxpayer if it is used directly in the intended function of the energy property as provided by section 48(a)(3) and (c) and as described in paragraph (e) of this section and is essential to the completeness of the intended function. Property that is an integral part of an energy property is treated as part of that energy property. A taxpayer may not claim the section 48 credit for any property not owned by the taxpayer that is an integral part of energy property owned by the taxpayer. Multiple energy properties (whether owned by one or more taxpayers) may include shared property that may be considered an integral part of each energy property so long as the cost basis for the shared property is properly allocated to each energy property. The total cost basis of such shared property divided among the energy properties may not exceed 100 percent of the cost of such shared property. In addition, the exclusion in paragraph (d)(1) of this section does not apply to property that is shared by a qualified facility (as defined in section 45(d)) and an energy property if it is an integral part of that energy property. The basis of any such property must be properly allocated across the energy property and qualified facility that share such property.

(ii) ***Power conditioning and transfer equipment.*** Property that is an integral part of energy property includes power conditioning equipment and transfer equipment used to perform the intended function of the energy property as provided by section 48(a)(3) and (c) and as described in paragraph (e) of this section. Power conditioning equipment includes, but is not limited to, transformers, inverters, and converters, which modify the characteristics of electricity or thermal energy into a form suitable for use or transmission or distribution. Parts related to the functioning or protection of power conditioning equipment are also treated as power conditioning equipment and include, but are not limited to, switches, circuit breakers, arrestors, and hardware and software used to monitor, operate, and protect power conditioning equipment. Transfer equipment includes equipment that permits the aggregation of energy generated by components of energy properties and equipment that alters voltage to permit transfer to a transmission or distribution line. Transfer equipment does not include transmission or distribution lines. Examples of transfer equipment include, but are not limited to, wires, cables, and combiner boxes that conduct electricity. Parts related to the functioning or protection of transfer equipment are also treated as transfer equipment and may include items such as current transformers used for metering, electrical interrupters (such as circuit breakers, fuses, and other switches), and hardware and software used to monitor, operate, and protect transfer equipment. Power conditioning equipment and transfer equipment that are integral to an energy property may be integral to another energy property or used by a qualified facility (as defined in section 45(d)), so long as the total cost basis of the integral property is properly allocated across the energy property and qualified facility that share such property.

(iii) ***Roads.*** Roads that are an integral part of an energy property are integral to the activity performed by the energy property such as onsite roads that are used for equipment to operate and maintain the energy property. Roads primarily for access to the site, or roads used primarily for employee or visitor vehicles, are not integral to the activity performed by an energy property.

(iv) ***Fences.*** Fencing is not an integral part of an energy property because it is not integral to the activity performed by the energy property.

(v) ***Buildings.*** Generally, buildings are not integral parts of an energy property because they are not integral to the activity of the energy property. However, the structures described in paragraphs (f)(3)(vi) and (vii) of this section are not treated as buildings for this purpose.

(vi) ***Structures essentially items of machinery or equipment.*** A structure that is essentially an item of machinery or equipment is not treated as a building for purposes of paragraph (f)(3)(v) of this section.

(vii) ***Structures that house certain property.*** A structure that houses property that is integral to the activity of an energy property is not treated as a building for purposes of paragraph (f)(3)(v) of this section if the use of the structure is so closely related to the use of the housed energy property that the structure clearly can be expected to be replaced if the energy property it initially houses is replaced.

(4) ***Location of energy property.*** Any property that meets the requirements of paragraphs (f)(2) and (3) of this section is part of an energy property regardless of where such property is located.

(5) ***Examples.*** This paragraph provides examples illustrating property included in energy property.

(i) ***Example 1. Solar energy property.*** X constructs a solar energy property (Solar Property) comprised of 500 separate solar panels. The solar panels are connected by wires, cables, and combiner boxes. Generated electricity is conditioned for subsequent use through one inverter and eventually carried to a substation that houses a transformer where the electricity is stepped up to electrical grid voltage before being transmitted to the electrical grid through an intertie. All components of the Solar Property up to the inverter are functionally interdependent components of the Solar Property. The inverter and up to and including the transformer are integral parts of the Solar Property. Therefore, the Solar Property is an energy property for purposes of the section 48 credit. When X places the Solar Property in service, the cost of the components up to and including the transformer is included in the basis of the Solar Property for purposes of computing the section 48 credit.

(ii) ***Example 2. Co-located energy properties.*** Assume the same facts as in paragraph (f)(5)(i) of this section (*Example 1*), except that Y constructs a wind energy property (Wind Property) near X's solar energy property (Solar Property). X's Solar Property and Y's Wind Property each connect to a substation that houses a transformer where the electricity is stepped up to electrical grid voltage before being transmitted to the electrical grid through an intertie. X and Y each pay 50% of the cost of, and own a 50% undivided interest in, the transformer and related power conditioning equipment housed in the substation. X's Solar Property and Y's Wind Property are separate energy properties. When X and Y place their respective energy properties in service, the cost of the components up to and including 50% of the cost of the transformer and related power conditioning equipment is included in X's and Y's basis in their respective energy properties for purposes of computing the section 48 credit.

(iii) ***Example 3. Qualified offshore wind energy project.*** Z constructs an offshore wind farm (Offshore Wind Energy Project) comprised of 150 turbines (energy properties) for which Z makes a valid election under section 48(a)(5) to claim the section 48 credit in lieu of the section 45 credit. The alternating current electricity generated by the individual wind turbines will be carried by inter-array cables to an offshore substation where a transformer will step up the voltage of the electricity and a converter will convert it to direct current so it may be transported by subsea export cables to an onshore substation adjacent to the point of interconnection with the electrical grid. When the electricity reaches the onshore substation, it will flow into another

converter where it will be converted back to alternating current, and then through a transformer and associated switchgear where it will be converted to electrical grid voltage and where the Offshore Wind Energy Project can be electrically isolated from the grid. The electricity will then pass through an intertie that will take the electricity from the substation to the point of interconnection with the electrical grid. All components of the Offshore Wind Energy Project, up to and including the transformer and switchgear housed in the onshore substation, are either functionally interdependent components or integral parts of the energy properties that comprise the Offshore Wind Energy Project. Therefore, when Z places the Offshore Wind Energy Project in service, the cost of the components up to and including the transformer and switchgear housed in the onshore substation are included in the aggregate basis of the energy properties that comprise the Offshore Wind Energy Project for purposes of computing the section 48 credit.

(iv) ***Example 4. Co-located energy property and qualified facility.*** X constructs a wind facility (Wind Facility) that is co-located with an energy storage technology (Energy Storage). The Wind Facility and Energy Storage share power conditioning and transfer equipment. The power conditioning and transfer equipment are integral parts of the Energy Storage, and are therefore considered energy property. Therefore, X will include a properly allocated share of the shared power conditioning and transfer equipment costs to determine the section 48 credit for the Energy Storage. If the Wind Facility otherwise satisfies the requirements of the section 45 credit, X may claim the section 45 credit with respect to the Wind Facility.

(g) ***Applicability date.*** This section applies with respect to property placed in service after December 31, 2022, and during a taxable year beginning after December 12, 2024.

[T.D. 10015, 89 FR 100651, Dec. 12, 2024]

§ 1.48-10 Single purpose agricultural or horticultural structures.

(a) ***In general*** —

(1) ***Scope.*** Under section 48(a)(1)(D), "section 38 property" includes single purpose agricultural and horticultural structures, as defined in section 48 (p) and paragraphs (b) and (c) of this section. These structures are subject to a special rule for recapture of the credit. See paragraph (g) of this section. For the relation of this section to section 48(a)(1)(B) (other tangible property) and to sections 1245 and 1250 (depreciation recapture), see paragraph (h) of this section.

(2) ***Effective date.*** The provisions of section 48(a)(1)(D) and this section apply to open taxable years ending after August 15, 1971.

(b) ***Definition of single purpose agricultural structure*** —

(1) ***In general.*** Under section 48(p)(2), a single purpose agricultural structure is any structure or enclosure that meets all of the following requirements:

(i) It is specifically designed and constructed for permissible purposes (as defined in paragraph (b)(2) of this section). See paragraph (d) of this section for the rule regarding "specifically designed and constructed".

(ii) It is specifically used exclusively for those permissible purposes. See paragraph (e) of this section for the rules regarding "specifically used".

(iii) It houses equipment necessary to house, raise, and feed livestock and their produce. See paragraphs (b)(3) and (4) of this section.

(2) ***Permissible purposes.*** The following are the only permissible purposes for a single purpose agricultural structure:

(i) Housing, raising, and feeding a particular type of livestock and, at the taxpayer's option, its produce. The term “housing, raising, and feeding” includes the full range of livestock breeding and raising activities, including ancillary post-production activities (as defined in paragraph (f) of this section). Thus, for example, use of a structure for breeding livestock, or for producing eggs or livestock, is permitted. The structure may also be used for storing feed or machinery, but more than strictly incidental use for these purposes will disqualify the structure. See paragraph (e)(1) of this section. For the special rule concerning the permissible purposes for a milking parlor, see paragraph (b)(2)(iii) of this section.

(ii) Housing required equipment (including any replacements) as defined in paragraph (b)(4) of this section.

(iii) If the structure is a dairy facility, it will qualify if it is used for:

(A) activities consisting of the production of milk or of the production of milk and the housing, raising, or feeding dairy cattle, and

(B) housing equipment (including any replacements) necessary for these activities. The term “housing, raising, or feeding” includes the full range of dairy cattle breeding and raising activities including ancillary post-production activities (as defined in paragraph (f) of this section). The structure may also be used for storing feed or machinery, but, more than incidental use for these purposes will disqualify the structure. See paragraph (e)(1) of this section.

(3) ***Livestock; particular type of livestock*** —

(i) ***Livestock.*** Livestock qualifying as “section 38 property” under § 1.48-1(l) constitutes livestock for purposes of this section. Thus, for example, horses are not livestock for purposes of this section since they do not qualify as “section 38 property” under § 1.48-1(l). Under section 48(p)(6) poultry constitutes livestock for purposes of section 48(a)(1)(D). The term “livestock” includes the offspring of livestock. “Livestock” is distinguished from the produce of livestock, such as milk and eggs held for sale. For purposes of this section, eggs held for hatching and newborn livestock are considered livestock. A structure used solely to house produce of livestock or equipment necessary to house produce of livestock will not qualify as a single purpose agricultural structure. Thus, for example, a dairy facility used solely for storing milk will not qualify.

(ii) ***Particular type of livestock.*** A structure qualifies as a single purpose agricultural structure only if it is specifically designed, constructed, and used exclusively for permissible purposes with respect to one particular type of livestock. For purposes of this section, each species is a different type except that all species of poultry are considered to be of a single type. Thus, for example, a structure specifically designed and constructed as a single purpose hog-raising facility will not qualify if it is used to raise dairy cows, but a structure specifically designed, constructed, and used to raise poultry may house, raise, and feed both chickens and turkeys.

(4) ***Required equipment rule.***

(i) A single purpose agricultural structure must also house equipment necessary to house, raise, and feed the livestock ("required equipment"). Required equipment must be an integral part of the structure, and includes, but is not limited to, equipment necessary to contain the livestock, to provide them with water or feed, and to control the temperature, lighting, and humidity of the interior of the structure. For purposes of this section, equipment is an integral part of the structure if it is physically attached to or a part of the structure. The useful life of the structure, however, need not be contemporaneous with the life of the equipment it houses. A structure without required equipment is not a single purpose agricultural structure.

(ii) A single purpose agricultural structure may, but is not required to, house equipment (for example, loading chutes) necessary to the conduct of ancillary post-production activities as defined in paragraph (f) of this section.

(5) ***Livestock structure.*** In section 48(p)(2), the terms "single purpose livestock structure" and "single purpose agricultural structure" are interchangeable.

(c) ***Definition of single purpose horticultural structure*** —

(1) ***In general.*** Under section 48(p)(3), a single purpose horticultural structure is any structure that meets both of the following requirements:

(i) It is a greenhouse or other structure specifically designed and constructed for permissible purposes (as defined in paragraph (c)(2) of this section). See paragraph (d) of this section for the rule regarding "specifically designed and constructed."

(ii) It is specifically used exclusively for those permissible purposes. See paragraph (e) of this section for the rules regarding "specifically used."

(2) ***Permissible purposes.*** The following are the only permissible purposes for a single purpose horticultural structure:

(i) The commercial production of plants (including plant products such as flowers, vegetables, or fruit) in a greenhouse.

(ii) The commercial production of mushrooms.

(iii) A single purpose horticultural structure also may, but is not required to, house equipment necessary to carry out these permissible purposes listed in paragraphs (c)(2) (i) and (ii) of this section.

(3) ***Ancillary post-production activities.*** The terms "commercial production of plants" and "commercial production of mushrooms" include ancillary post-production activities (as defined in paragraph (f) of this section).

(d) ***Specifically designed and constructed.*** A structure is specifically designed and constructed if it is not economic to design and construct the structure for the intended qualifying purpose and then use the structure for a different purpose. For example, if a hog raising structure is designed and constructed in accordance with a standard set of plans for such a structure provided by the Department of Agriculture, it would not be economic to use the structure for purposes other than hog raising.

(e) ***Specifically used.*** There are two aspects of the specific use requirement—exclusive use and actual use.

(1) ***Exclusive use.***

(i) A structure qualifies as a single purpose agricultural or horticultural structure only if it is used exclusively for the permitted purposes by reason of which it qualified for the credit. Thus—

(A) The structure may not be used for any nonpermissible purposes (for example, processing, marketing, or more than incidental use for storing feed or equipment) and

(B) It may not be put to any use other than the specific use by reason of which it qualifies for the credit.

(ii) For purposes of this section, the term "incidental use" means a use which is both related and subordinate to the qualifying purpose. Thus, for example, if feed is stored in an agricultural structure which will be used for raising hogs, the feed must be used only for the hogs in order to be related to the qualifying purpose. In determining whether use of the structure for feed storage is subordinate to the qualifying purpose, all of the facts and circumstances must be considered, including, with respect to feed storage, the following:

(A) Type of animal involved;

(B) Number of, and consumption rate for, each animal;

(C) Climate of area;

(D) Total volume of storage area; and

(E) Percentage of structure's total volume devoted to storage.

(iii) It will be presumed that the storage function is not subordinate to the qualifying purpose of the structure if more than one-third of the structure's total usable volume is devoted to storage. This presumption may be rebutted with clear and convincing evidence.

(iv) A structure may fail the exclusive use test if either of the requirements of paragraph (e)(1)(i) of this section is not met. Thus, for example, a horticultural structure that contains an area for processing plants or plant products will fail the exclusive use test because there is a nonpermissible use. An agricultural structure that is used to house more than one particular type of livestock fails the exclusive use test for the same reason. A change in the use of an agricultural structure from one species of livestock to another will cause the structure to fail the exclusive use test when the change occurs. Thus, for example, a hog-raising facility which qualified for the credit when it was placed in service cannot later be modified and used for producing broiler chickens even if the structure would have qualified for the credit if it had been originally designed, constructed, and used exclusively for producing broiler chickens.

(2) ***Actual use.***

(i) A single purpose agricultural or horticultural structure also must actually be used for the permissible purpose by reason of which it qualifies for the credit. "Actual use" means "placed in service" (as defined in § 1.46-3(d)). Mere vacancy, on a temporary basis, will not disqualify the structure. Thus, for example, a structure that is designed and constructed as a hog-raising structure will not qualify if it is never placed in service for raising hogs. However, a turkey-raising facility will not be disqualified if the turkeys are all sent to a packing plant in November and the structure remains vacant until the next spring when newly hatched turkeys are placed in the structure to be raised.

(ii) For purposes of this section, "vacancy on a temporary basis" includes temporary vacancy caused by market fluctuations or other economic considerations and vacancy on a seasonal basis.

(f) ***Work space; ancillary post-production activities*** —

(1) ***Permissible work space.*** Under section 48(p)(4), a single purpose agricultural or horticultural structure may contain work space only if it is used for—

(i) Stocking, caring for, or collecting livestock, plants, or mushrooms,

(ii) Maintenance of the structure, or

(iii) Maintenance or replacement of the equipment or stock enclosed by or contained in the structure. Thus, for example, an eligible structure may not contain space devoted to processing or marketing or other nonpermissible purposes.

(2) ***Ancillary post-production activities.*** The term "stocking, caring for, or collecting" the livestock, plants, or mushrooms includes ancillary post-production activities. These activities, therefore, constitute permissible purposes when carried on in conjunction with other permissible purposes, and a qualifying structure may contain work space devoted to such activities. Ancillary post-production activities include gathering, sorting, and loading livestock, plants, and mushrooms and packing unprocessed plants, mushrooms, and the live offspring and unprocessed produce of the livestock. Ancillary post-production activities do not include processing activities, such as slaughtering or packing meat, nor do they include marketing activities.

(g) ***Special rule for recapture under section 47.*** Under section 48(p)(5), if a structure which qualifies for the credit under this section becomes ineligible because it ceases to be held for the specific use by reason of which it qualified (or it is used for other than that qualifying use) before the end of the applicable estimated useful life or period specified in section 47(a), then the investment credit previously allowed with respect to the structure may be partially or entirely recaptured under section 47. Unlike other property to which section 47 applies, single purpose structures may not be converted from one permissible use to another without recapture. See subparagraph (e)(2) of this section.

(h) ***Relationship to other sections*** —

(1) ***Relation to section 48(a)(1)(B).*** All structures satisfying the requirements of section 48(a)(1)(B) and (a)(1)(D) will be considered to qualify under either provision.

(2) ***Relationship to sections 1245 and 1250.*** For purposes of depreciation recapture, property to which section 48(a)(1)(D) applies is section 1245 property, except that property placed in service prior to January 1, 1981, may, at the option of the taxpayer, be treated as section 1250 property if depreciation deductions allowed were not under one of the methods authorized only for section 1245 property.

(i) [Reserved]

(j) ***Examples.*** The provisions of this section may be illustrated by the following examples:

Example 1. A constructs a rectangular structure for use as an egg-producing facility. The structure has no windows. The walls and roof are made of corrugated steel and there is a door which is 4 feet wide and 8 feet tall at each end of the structure. At the end of each wall are louvered openings approximately 4 feet high and 8 feet long. These openings house thermostatically controlled fans. In the center of the walls are manually operated fresh-air openings. Corrugated steel "curtains" hang

from the top of the openings so that the openings can be completely closed in cold weather, but the curtains can be propped open to admit fresh air. The building is well insulated. A has reinforced the roof with extra trusses and rafters and reinforced the building with extra wall studs. Two rows of cages are suspended from the rafters by thin steel girders and wires. The floor of the structure is a sloping concrete slab pierced with long troughs which run the length of the structure beneath the cages. The troughs are used for collection and disposal of chicken wastes. When this structure is placed in service it will qualify for an investment credit under this section.

Example 2. B constructs a greenhouse for the commercial production of plants. The greenhouse is a rectangular structure with translucent fiberglass walls and roof. The structure is equipped with an automatic temperature and humidity control system. Pipes were installed to carry water and liquid fertilizer to the plants and to release minute amounts of carbon dioxide into the air. When the structure was originally placed in service B used the entire structure for growing flowers commercially. In September 1978, B began to use the structure for growing tomatoes. Because of the success of the venture, in January 1979, B began to use the entire structure for growing tomatoes. In February 1980, B set up a small counter with a cash register at one end of the structure so that workers could sell tomatoes to customers at the greenhouse. Until February 1980, the structure would qualify for the credit under this section. The change in use from growing flowers to growing tomatoes will not affect the eligibility of the structure. Once the cash register is installed, however, the structure fails to meet both the exclusive use test of paragraph (e)(1) of this section and the work space rule of paragraph (f) of this section since a single purpose structure may not be used for marketing activities.

Example 3. C purchases a prefabricated structure and makes modifications so that the structure will meet C's requirements. C adds gates and constructs a partition which divides the structure into two parts. One part of the structure constitutes less than one-third of the total usable volume of the structure and is used to house feeder cattle while they are fed with hay. This part of the structure has a sloping concrete floor. The other part of the structure constitutes more than two-thirds of the total usable volume of the structure and is used to store the hay used to feed the cattle. This structure will not qualify for the credit since it fails the required equipment test. The structure does not contain equipment which is an integral part of the structure. This structure also fails the "specifically designed and constructed" test of paragraph (d) of this section since it would be economic to use the structure for purposes other than housing, raising, and feeding cattle (such as a general purpose barn, for example). Finally, the structure fails the incidental use test of paragraph (e) of this section because the storage function is presumptively not subordinate to the qualifying purpose since more than two-thirds of the structure's total usable volume is devoted to storage and none of the facts will serve to rebut the presumption.

(Secs. 7805 (68A Stat. 917, 26 U.S.C. 7805) and 38 (b) (76 Stat. 926, 26 U.S.C. 38))

[T.D. 7900, 48 FR 32768, July 19, 1983; 48 FR 36448, Aug. 11, 1983]

§ 1.48-11 Qualified rehabilitated building; expenditures incurred before January 1, 1982.

(a) ***In general.*** Under section 48(a)(1)(E), that portion of the basis of a qualified rehabilitated building which is attributable to qualified rehabilitation expenditures qualifies as section 38 property. In general, property which is treated as section 38 property by reason of section 48(a)(1)(E) is treated as new section 38 property and therefore is not subject to the used property limitation. See § 1.48-2(d). Section 48(g)(1) and

paragraph (b) of this section define the term "qualified rehabilitated building". Section 48(g)(2) and paragraph (c) of this section define the term "qualified rehabilitation expenditure". Paragraph (d) of this section provides guidance for coordination of these provisions with other sections of the Code.

(b) ***Definition of qualified rehabilitated building*** —

(1) ***In general.*** The term "qualified rehabilitated building" means any building and its structural components—

(i) Which has been rehabilitated (within the meaning of paragraph (b)(3) of this section),

(ii) Which was placed in service (within the meaning of § 1.46-3(d)) by any person at any time before the beginning of the rehabilitation,

(iii) 75 percent or more of the existing external walls of which are retained in place as external walls (within the meaning of paragraph (b)(4) of this section) in the rehabilitation process, and

(iv) Which meets the twenty-year requirement in paragraph (b)(2) of this section.

In addition, a major portion of a building may be treated as a separate building for purposes of this paragraph if the requirements of paragraph (b)(5) of this section are met.

(2) ***Twenty-year requirement*** —

(i) ***In general.*** A building is considered a qualified rehabilitated building only if a period of at least 20 years has elapsed between the date physical work on the rehabilitation of the building began, and the later of—

(A) The date the building was first placed in service (see § 1.46-3(d)) by any person as a building, or

(B) The date the building was placed in service by any taxpayer in connection with a prior rehabilitation with respect to which a credit was allowed by reason of section 48(a)(1)(E).

(ii) ***Vacant periods.*** The 20-year period includes periods during which a building was vacant or devoted to a personal use and is computed without regard to the number of owners or the identity of owners during the period.

(iii) ***Physical work on a rehabilitation.*** For purposes of this section, "physical work on a rehabilitation" begins when actual construction begins. The term "physical work on a rehabilitation" does not include preliminary activities such as planning, designing, securing financing, exploring, researching, developing plans and specifications, or stabilizing a building to prevent deterioration (e.g., placing boards over broken windows).

(iv) ***Special rule.*** If a part of a building meets the twenty-years requirement in subdivision (i) of this subparagraph and a part (for example, an addition) does not, a rehabilitation of that part that meets the requirement may qualify for a credit only if that part constitutes a major portion (as defined in paragraph (b)(5) of this section) of the building.

(3) ***Rehabilitation*** —

(i) ***In general.*** For purposes of this paragraph, rehabilitation includes renovation, restoration, or reconstruction. However, the term "rehabilitation" does not include enlargement (within the meaning of paragraph (c)(7)(ii) of this section), new construction, or the completion of new

construction after a building has been placed in service. For purposes of this paragraph (b)(3), whether expenditures are attributable to the rehabilitation of an existing building, or to new construction, is determined upon all the facts and circumstances.

(ii) ***Substantial rehabilitation.*** For a building to be considered rehabilitated, the rehabilitation must be substantial. Whether a rehabilitation is substantial is determined upon the basis of all the facts and circumstances. In general, to be substantial, the rehabilitation must do one of the following:

(A) Materially extend the useful life of the building;

(B) Significantly upgrade its usefulness (for either the same or a new use); or

(C) Preserve it in a way that significantly improves its condition or enhances its historic value.

A substantial rehabilitation may vary in degree from gutting and extensive reconstruction of a building's major structural components to the cure of a substantial accumulation of major disrepairs. It may also include renovation, alteration, or remodelling for the conversion of a structurally sound building to a design and condition required for a new use. Cosmetic improvements alone, however, do not qualify as a substantial rehabilitation.

(iii) ***Aggregation of rehabilitation.*** In the case where qualified rehabilitation expenditures are incurred with respect to a rehabilitation of a building by more than one person (e.g., a lessor and a lessee, several lessees, or several condominium owners), the substantial rehabilitation requirement in this paragraph (b)(3) shall be applied by aggregating all the rehabilitation work done by such persons.

(iv) ***Special rule by qualified rehabilitation expenditures treated as incurred by the taxpayer.*** In the case where qualified rehabilitation expenditures are treated as having been incurred by a taxpayer because of the application of paragraph (c)(3)(ii) of this section, the substantial rehabilitation test in paragraph (b)(3)(ii) of this section will be applied by aggregating the rehabilitation work done by the transferor and the transferee.

(v) ***Examples.*** The provisions of this subparagraph (3) may be illustrated by the following examples:

Example 1. Taxpayer A is the owner of a 30-year old building. The building is air conditioned by means of window air conditioning units. A replaces the window units with a central air conditioning system and no other rehabilitation is performed by A. The expenditures incurred by A did not materially extend the building's useful life, significantly upgrade its usefulness, or preserve it in a manner that significantly improves its condition or enhances its historic value. Although expenditures for replacement of window units with a central air conditioning system may constitute qualified expenditures as part of an overall rehabilitation, alone they do not qualify as a substantial rehabilitation and the building is not considered rehabilitated within the meaning of this subparagraph.

Example 2. Taxpayer B is the owner of a 10 story office building that is 35 years old. The building is in substantial disrepair and in order to modernize it as an office building B installs new plumbing, electrical wiring, and heating and air conditioning systems. In addition, the layout of each floor is changed by means of tearing down many existing interior walls and partitions and building new walls, partitions, and doors. Old plaster is removed from many walls and replaced by new wall covering. New windows and new flooring are installed

throughout the building. The improvements made by B materially extend the useful life of the building and significantly upgrade its usefulness. The building is considered rehabilitated within the meaning of the facts and circumstances test in this subparagraph.

Example 3. Taxpayer C is the owner of a 100-year old building that has substantial historic character, although the building is not a certified historic structure (as defined in section 191(d)(1) and the regulations thereunder). C uncovers and restores the original woodwork, wall coverings and moldings throughout the building. The windows and doors are replaced with replicas of the original. The improvements made by C significantly preserve the building and significantly enhance its historic value. Thus, the building is considered rehabilitated within the meaning of this subparagraph.

(4) ***Retention of 75 percent of external walls*** —

(i) ***In general.*** A building meets the requirements set forth in paragraph (b)(1)(iii) only if 75 percent or more of the existing external walls (as measured by the total area of the existing external walls) are retained in place as external walls in the rehabilitation process. For this purpose, the area of existing external walls includes the area of windows and doors.

(ii) ***External wall.*** For purposes of this paragraph (b)(4), a wall includes both the supporting elements of the wall and the nonsupporting elements (e.g., a curtain) of the wall. Except as otherwise provided in this paragraph (b)(4), the term "external wall" includes any wall that has one face exposed to the weather, earth, or an abutting wall erected on an adjacent property. An external wall also includes a shared wall (*i.e.,* a single wall shared with an adjacent building), generally referred to as a "party wall".

(iii) ***Alternative rule.*** Notwithstanding the definition of external wall contained in paragraph (b)(4)(ii) of this section, in any case in which the building being rehabilitated would fail to meet the requirements of a qualified rehabilitation building if the definition of external wall in paragraph (b)(4)(ii) of this section were used, then the term "external wall" shall be defined as a wall, including its supporting elements, with one face exposed to the weather or earth, and a common wall shall not be treated as an external wall.

(iv) ***Retained in place.*** An existing external wall is retained in place if the supporting elements of the wall are retained in place. An existing external wall is not retained in place if the supporting elements of the wall are replaced by new supporting elements. An external wall is retained in place, however, if the supporting elements are reinforced in the rehabilitation, provided that such supporting elements of the external wall are retained in place. An external wall is retained in place even though it is covered (e.g., with new siding). Moreover, the existing curtain may be replaced with a new curtain provided that the structural framework that provides for the support of the existing curtain is retained in place. An external wall is retained in place notwithstanding that the existing doors and windows in the wall are modified, eliminated, or replaced. A wall may be disassembled and reassembled so long as the same supporting elements are used when the wall is reassembled. Thus, for example, in the case of the brick wall, the wall is considered retained in place even though the original bricks are removed (for cleaning, etc.) and put back to form the wall.

(v) ***Retention as an external wall.*** For purposes of meeting the 75 percent requirement of this subparagraph (4), an existing external wall must be retained in place as an external wall. If an addition is made that results in an existing external wall being converted into an internal wall, the wall is not retained in place as an external wall.

(vi) ***Special rule.*** Solely for the purpose of meeting the 75 percent requirement of this subparagraph (4), the walls of an uncovered internal shaft designed solely to bring light or air into the center of a building which are completely surrounded by external walls of the building and which enclose space not designated for occupancy or other use by people (other than for maintenance or emergency) are not considered external walls. Thus, a wall of a light well in the center of an office building is not an external wall. However, walls surrounding an uncovered courtyard which is usable by the building's occupants, (e.g., at lunch time) are external walls.

(vii) ***Examples.*** The provisions of this subparagraph (4) may be illustrated by the following examples:

Example 1. Taxpayer A rehabilitated a building all of the walls of which consisted of wood siding attached to gypsum board sheets (which covered the studs). A covered the existing wood siding with aluminum siding in a part of a rehabilitation that otherwise qualified under this subparagraph. A satisfied the requirement that 75 percent of the existing external walls must be retained in place as external walls.

Example 2. Taxpayer B rehabilitated a building the external walls of which had a masonry curtain. The masonry on the wall face was replaced with a glass curtain. The steel beam and girders supporting the existing curtain were retained in place. B satisfied the requirement that 75 percent of the existing external walls must be retained in place as external walls.

Example 3. Taxpayer C rehabilitated a building which has two external walls measuring 75' × 20' and two other external walls measuring 100' × 20'. C tore down one of the larger walls, including its supporting elements, which accounted for more than 25% of the building's external walls and constructed a new wall. C has not satisfied the requirement that 75 percent of the existing external walls must be retained in place as external walls.

Example 4. The facts are the same as in example 3, except C does not tear down any walls, but makes an addition that results in one of the smaller walls becoming an internal wall. In addition, C enlarged 8 of the existing windows on the larger walls, increasing them from a size of 3' × 4' to 6' × 8'. Since the smaller wall accounts for less than 25 percent of the total wall area, C has satisfied the requirement that 75 percent of the existing external walls must be retained in place as external walls in the rehabilitation process. The enlargement of the existing windows on the larger wall does not change the result.

(5) ***Major portion treated as separate building*** —

(i) ***In general.*** Where there is a separate rehabilitation of a major portion of a building, such major portion shall be treated as a separate building. Thus, such major portion may qualify as a qualified rehabilitated building if the requirements of this paragraph are met with respect to such major portion. Expenditures for property that services both a major portion of a building and another portion must be specifically allocated to each portion to the extent possible. If it is not possible to make such an allocation, the expenditures must be allocated to each portion on some reasonable basis. What constitutes a reasonable basis for an allocation depends on factors such as the type of improvement and how the improvement relates functionally to the building. For example, in the case of expenditures for an air conditioning system or a roof, a reasonable basis for allocating the expenditures would be the volume of the major portion served by the improvement relative to the volume of the other portion of the building served by the improvement.

(ii) ***Major portion defined.*** Whether a part of a building constitutes a major portion of the building is determined upon the basis of all the facts and circumstances. A major portion must generally consist of clearly identifiable parts of a building (e.g., a wing of a building or the first 5 stories of a 7 story building). The following factors shall be taken into account:

(A) Whether the portion comprises an entire leasehold interest or an entire ownership (e.g., condominium) interest;

(B) Whether the portion (as measured by volume) is sufficiently large that it would be reasonable to treat it as a separate building; and

(C) Whether the portion is functionally different from other parts of the building.

(6) ***Special rule for rehabilitation done in phases.*** If rehabilitation which is not continuous is determined under this subparagraph to be a single rehabilitation done in phases, the requirements of this paragraph (b) are to be applied with respect to the overall rehabilitation and not merely to a phase of the rehabilitation. In such case, a phase of a single overall rehabilitation will not be considered as "prior rehabilitation" for purposes of subparagraph (2)(i)(B) of this paragraph (b). Whether rehabilitation which is not continuous is a single rehabilitation that is done in phases is determined on the basis of all the facts and circumstances. Generally, however, to constitute a single rehabilitation that is done in phases, there must exist, prior to the time any rehabilitation work is commenced, a set of written plans describing generally all phases of the rehabilitation of the building and a reasonable expectation that all phases of the rehabilitation will be completed. Such written plans are not required to contain detailed working drawings or detailed specifications of the material to be used. In addition, the period between the time that physical work on the first phase of the overall rehabilitation begins and physical work on the last phase of the overall rehabilitation begins must be reasonable. In determining whether the rehabilitation is completed within a reasonable time, the fact that a building is occupied during the rehabilitation, the necessity of acquiring a lease (of additional portions of the building), and unforeseen delays shall be taken into account. Other factors that are relevant in determining whether rehabilitation is a single rehabilitation include the length of time between each phase of rehabilitation activities and the extent of rehabilitation activity in each phase.

(7) ***Special rule for adjoining buildings that are combined.*** For purposes of this paragraph (b), if as part of a rehabilitation process two or more adjoining buildings are combined and placed in service as a single building after the rehabilitation process, then all of the requirements of a qualified rehabilitated building in section 48(g)(1) and this section may be applied to the constituent adjoining buildings in the aggregate. Any party walls or abutting walls between the constitutent buildings that would otherwise be treated as external walls (within the meaning of paragraph (b)(4)(ii) of this section) would not be treated as external walls of the building; the substantial rehabilitation test in paragraph (b)(3)(ii) of this section would be applied to the aggregate rehabilitation work with respect to all of the constitutent buildings.

(c) ***Definition of qualified rehabilitation expenditures*** —

(1) ***In general.*** Except as provided in subparagraph (2) of this paragraph, the term "qualified rehabilitation expenditure" means any amount—

(i) Properly chargeable to capital account (as described in subparagraph (2) of this paragraph),

(ii) Incurred after October 31, 1978, for depreciable or amortizable property (or additions or improvements to property) with a useful life of five years or more, and

(iii) Made in connection with the rehabilitation of a qualified rehabilitated building.

(2) ***Chargeable to capital account.*** For purposes of paragraph (c)(1)(i) of this section, amounts paid or incurred are chargeable to capital account if under the taxpayer's method of accounting they are property includible in computing basis under § 1.46-3. Amounts treated as an expense and deducted in the year they are paid or incurred are not chargeable to capital account.

(3) ***Incurred by the taxpayer*** —

(i) ***In general.*** Generally, to qualify for a credit under section 48 (a)(1)(E), qualified rehabilitation expenditures must be incurred by the taxpayer after October 31, 1978. An expenditure is incurred for purposes of this paragraph on the date such expenditure would be considered incurred under the accrual method of accounting, regardless of the method of accounting used by the taxpayer with respect to other items of income and expense. If qualified rehabilitation expenditures are treated as having been incurred by a taxpayer under paragraph (c)(3)(ii)) of this section, the taxpayer shall be treated as having incurred the expenditures on the date such expenditures were incurred by the transferor.

(ii) ***Qualified rehabilitation expenditures treated as incurred by the taxpayer.***

(A) Where rehabilitation expenditures are incurred with respect to a building by a person (or persons) other than the taxpayer and the taxpayer acquires the building, or a portion of the building to which the expenditures are allocable, the taxpayer acquiring such property will be treated as having incurred the rehabilitation expenditures actually incurred by the transferor (or treated as incurred by the transferor under this paragraph (c)(3)(ii)) with respect to the acquired property, provided that—

(*1*) The building, or the portion of the building, acquired by the taxpayer was not used after the rehabilitation expenditures were incurred and prior to the date of acquisition by the taxpayer, and

(*2*) No credit with respect to such qualified rehabilitation expenditures is claimed by anyone other than the taxpayer acquiring the property.

For purposes of this paragraph (c)(3)(ii), use shall mean actual use, whether personal or business.

(B) The amount of qualified rehabilitation expenditures treated as incurred by the taxpayer under this paragraph is the lesser of—

(*1*) The qualified rehabilitation expenditures incurred before the date on which the taxpayer acquired the building (or portion thereof), to which the expenditures are attributable, or

(*2*) That portion of the taxpayer's cost or other basis for the property which is attributable to the qualified rehabilitation expenditures described in paragraph (c)(3)(B)(*1*) of this section incurred before such date.

For purposes of paragraph (c)(6)(ii) of this section, the amount of rehabilitation expenditures treated as incurred by the taxpayer under this paragraph (c)(3)(ii) shall not be considered to be part of the cost of acquiring a building or any interest in the building.

The portion of the cost of acquiring a building (or an interest therein) which is not treated under this paragraph as qualified rehabilitation expenditures incurred by the taxpayer is not eligible for a rehabilitation investment credit. See paragraph (c)(6)(ii) of this section.

(C) See paragraph (b)(2)(iv) of this section for rules concerning the application of the substantial rehabilitation test to expenditures treated as incurred by the taxpayer.

(iii) ***Examples.*** The provisions of this subparagraph may be illustrated by the following examples:

Example 1. In 1978, taxpayer A, a cash basis taxpayer, commenced the rehabilitation of a 30-year old building. In June 1978, A signed contract with a plumbing contractor for replacement of the plumbing in the building. A agreed to pay the contractor as soon as the work was completed. The work was completed in September 1978, but A did not pay the amount due until November 1, 1978. The expenditures for the plumbing are not qualified rehabilitation expenditures because they were not incurred after October 31, 1978.

Example 2. B incurred qualified rehabilitation expenditures of $300,000 with respect to an existing building between January 1, 1980, and May 15, 1980, and then sold the building to C on June 1, 1980. If the property attributable to the expenditures was not placed in service by A during the period from January 1, 1980, to June 1, 1980, C will be treated as having incurred the expenditures.

(4) ***Incurred for 5-year property.*** An expenditure is incurred for depreciable or amortizable property if the amount of the expenditure is added to the basis of property which is depreciable or amortizable under section 167. The determination of whether property has a useful life of five years or more is made by applying the principles of § 1.46-3(e). In the case of expenditures for property made by a lessee, see sections 167 and 178 and the regulations thereunder for rules relating to whether improvements made to leased property are depreciable or amortizable.

(5) ***Made in connection with the rehabilitation of a qualified rehabilitated building.*** Expenditures attributable to work done to facilities related to a building (e.g., sidewalk, parking lot, landscaping) are not considered made in connection with a rehabilitation of a qualified rehabilitated building.

(6) ***Certain expenditures excluded from qualified rehabilitation expenditures.*** The term “qualified rehabilitation expenditures” does not include the following expenditures:

(i) An expenditure for property which is “section 38 property” (determined without regard to section 48(a)(1) (E) and (I)).

(ii) The cost of acquiring a building or any interest in a building (including a leasehold interest) except as provided in paragraph (c)(3)(ii) of this section.

(iii) An expenditure attributable to enlargement of a building (as defined in paragraph (c)(7) of this section).

(iv) An expenditure attributable to rehabilitation of a certified historic structure (as defined in section 191(d)(1) and the regulations thereunder), unless the rehabilitation is a certified rehabilitation (as defined in paragraph (c)(8) of this section).

(7) ***Expenditures for enlargement distinguished*** —

(i) ***In general.*** Expenditures attributable to an enlargement of an existing building do not qualify as qualified rehabilitated expenditures. A building is enlarged to the extent that the total volume of the building is increased. An increase in floor space resulting from interior remodeling is not

considred an enlargement. Generally, the total volume of a building is equal to the product of the floor area of the base of the building and the height from the underside of the lowest floor (including the basement) to the average height of the finished roof (as it exists or existed). For this purpose, floor area is measured from the exterior faces of external walls (other than shared walls that are external walls) and from the centerline of shared walls that are external walls. In addition, a building is enlarged to the extent of any construction outside the exterior faces of the existing external wall of the building.

(ii) ***Rehabilitation which includes enlargement.*** If expenditures for property only partially qualify as qualified rehabilitation expenditures because some of the expenditures are also attributable to the enlargement of the building, the expenditures must be apportioned between the original portion of the building and the enlargement. This allocation should be made using the principles contained in paragraph (b)(5)(i) of this section.

(8) ***Certified rehabilitation*** —

(i) ***In general.*** For the purpose of this paragraph (c) of this section, the term "certified rehabilitation" means any rehabilitation of a certified historic building in a registered historic district which the Secretary of the Interior has certified to the Secretary as being consistent with the historic character of such building or the district in which such building is located.

(ii) ***Revoked or invalidated certifications.*** If the Department of Interior revokes or otherwise invalidates a certification after it has been provided to a taxpayer, the decertified property will cease to be section 38 property described in section 48(a)(1)(e). Such cessation shall be effective as of the date the activity giving rise to the revocation or invalidation occurred. See section 47 for the rules applicable to property that ceases to be section 38 property.

(d) ***Coordination with other provisions of the Code*** —

(1) ***Credit by lessees*** —

(i) ***Rehabilitation performed by lessor.*** A lessee may take the credit for rehabilitation performed by the lessor if the requirements of this section and section 48(d) are satisfied. For purposes of applying section 48(d), the fair market value of section 38 property described in section 48(a)(1)(E) shall be equal to that portion of the lessor's basis in a qualified rehabilitated building that is attributable to qualified rehabilitation expenditures.

(ii) ***Rehabilitation performed by lessee.*** A lessee may take the credit for rehabilitation performed by the lessee, provided that the property (or improvements or additions to property) for which the rehabilitation expenditures are made is depreciable (or amortizable) by the lessee (see sections 167 and 178, and the regulations thereunder) and the requirements of this section are satisfied.

(2) ***When credit may be claimed.*** The investment credit for qualified rehabilitation expenditures is allowed generally in the taxable year in which the property to which the rehabilitation expenditures is attributable is placed in service, provided the building is a qualified rehabilitated building for the taxable year. See § 1.46-3(d). Under certain circumstances, however, the credit may be available prior to the date the property is placed in service. See section 46(d) and § 1.46-5 (relating to qualified progress expenditures).

(3) ***Recapture.*** If property described in section 48(a)(1)(E) is disposed of by the taxpayer, or otherwise ceases to be "section 38 property," recapture may result under section 47. Property will cease to be section 38 property, and therefore recapture may occur under section 47, in any case where the

Department of Interior revokes or otherwise invalidates a certification of rehabilitation (see section 48(g)(2)(C)) after the property is placed in service because, for example, the taxpayer made modifications to the building inconsistent with Department of Interior standards.

(e) *Effective date* —

(1) ***General rule.*** Except as provided in paragraph (e)(2) of this section, this § 1.48-11 shall not apply to expenditures incurred after December 31, 1981.

(2) ***Transitional rule.*** This § 1.48-11 shall continue to apply to expenditures incurred after December 31, 1981, for the rehabilitation of a building if—

(i) The physical work on the rehabilitation began before January 1, 1982, and

(ii) The building does not meet the requirements of section 48(g)(1) of the Code as amended by the Economic Recovery Tax Act of 1981.

[T.D. 8031, 50 FR 26698, June 28, 1985]

§ 1.48-12 Qualified rehabilitated building; expenditures incurred after December 31, 1981.

(a) *General rule* —

(1) ***In general.*** Under section 48(a)(1)(E), the portion of the basis of a qualified rehabilitated building that is attributable to qualified rehabilitation expenditures (within the meaning of section 48(g) and this section) is section 38 property. Property that is section 38 property by reason of section 48(a)(1)(E) is treated as new section 38 property and, therefore, is not subject to the used property limitation in section 48(c). Section 48(g)(1) and paragraph (b) of this section define the term “qualified rehabilitated building.” Section 48(g)(2) and paragraph (c) of this section define the term “qualified rehabilitation expenditure.” Section 48(g) (2)(B)(iv) and (3) and paragraph (d) of this section describe the rules applicable to “certified historic structures.” Section 48(q) and paragraph (e) of this section provide rules concerning an adjustment to the basis of the rehabilitated building. Paragraph (f) of this section provides guidance for coordination of these provisions with other sections of the Code, including rules for determining when the rehabilitation credit may be claimed.

(2) *Effective dates and transition rules* —

(i) ***In general.*** Except as otherwise provided in this paragraph (a)(2)(i), this section applies to expenditures incurred after December 31, 1981, in connection with the rehabilitation of a qualified rehabilitated building. (See paragraph (c)(3)(i) of this section for rules concerning the determination of when an expenditure is incurred.) If, however, physical work on the rehabilitation began before January 1, 1982, and the building does not meet the requirements of paragraph (b) of this section, the rules in § 1.48-11 shall apply to the expenditures incurred after December 31, 1981, in connection with such rehabilitation. (See paragraph (b)(6)(i) of this section for rules determining when physical work on a rehabilitation begins.) The next to last sentence of paragraph (c)(8)(i) of this section applies to qualified rehabilitation expenditures that are qualified property under section 168(k)(2) or qualified New York Liberty Zone property under section 1400L(b) acquired by a taxpayer after September 10, 2001, and to qualified rehabilitation expenditures that are 50 percent bonus depreciation property under section 168(k)(4) acquired by a taxpayer after May 5, 2003. The last sentence of paragraph (c)(8)(i) of this section applies to qualified rehabilitation expenditures that are qualified property under section 168(k)(2) and placed in service by a taxpayer during or after the taxpayer's taxable year

that includes September 24, 2019. However, a taxpayer may choose to apply the last sentence in paragraph (c)(8)(i) of this section for qualified rehabilitation expenditures that are qualified property under section 168(k)(2) and acquired and placed in service after September 27, 2017, by the taxpayer during taxable years ending on or after September 28, 2017. A taxpayer may rely on the last sentence in paragraph (c)(8)(i) of this section in regulation project REG-104397-18 (2018-41 I.R.B. 558) (see § 601.601(d)(2)(ii)(b) of this chapter) for qualified rehabilitation expenditures that are qualified property under section 168(k)(2) and acquired and placed in service after September 27, 2017, by the taxpayer during taxable years ending on or after September 28, 2017, and ending before the taxpayer's taxable year that includes September 24, 2019.

(ii) ***Transition rules concerning ACRS lives.***

(A) For property placed in service before March 16, 1984, and any property subject to the exception set forth in section 111(g)(2) of Pub. L. 98-369 (Deficit Reduction Act of 1984), the references to “19 years” in paragraph (c)(4)(ii) and (7)(v) shall be replaced with “15 years” and the reference to “19-year real property” in paragraph (c)(4)(ii) shall be replaced with “15-year real property.”

(B) Except as otherwise provided in paragraph (a)(2)(ii)(A) of this section, for property placed in service before May 9, 1985, and any property subject to the exception set forth in section 105(b) (2) and (5) of Pub. L. 99-121 (99 Stat. 501, 511), the reference to “19 years” in paragraph (c)(4)(ii) and (7)(v) shall be replaced with “18 years” and the references to “19-years real property” in paragraph (c)(4)(ii) shall be replaced with “18-year real property.”

(iii) ***Transition rule concerning external wall definition.*** Notwithstanding the definition of external wall contained in paragraph (b)(3)(ii) of this section, in any case in which the written plans and specifications for a rehabilitation were substantially completed on or before June 28, 1985, and the building being rehabilitated would fail to meet the requirement of paragraph (b)(1)(iii) of this section if the definition of external wall in paragraph (b)(3)(ii) of this section were used, the term “external wall” shall be defined as a wall, including its supporting elements, with one face exposed to the weather or earth, and a common wall shall not be treated as an external wall. See paragraph (b)(2)(v) of this section for the definition of written plans and specifications.

(iv) ***Transition rules concerning amendments made by the Tax Reform Act of 1986*** —

(A) ***In general.*** Except as otherwise provided in section 251(d) of the Tax Reform Act of 1986 and this paragraph (a)(2)(iv), the amendments made by section 251 of the Tax Reform Act of 1986 shall apply to property placed in service after December 31, 1986, in taxable years ending after that date, regardless of when the rehabilitation expenditures attributable to such property were incurred. If property attributable to qualified rehabilitation expenditures is incurred with respect to a rehabilitation to a building placed in service in segments or phases and some segments are placed in service before January 1, 1987, and the remaining segments are placed in service after December 31, 1986, the amendments under the Tax Reform Act would not apply to the property placed in service before January 1, 1987, but would apply to the segments placed in service after December 31, 1986, unless one of the transition rules in paragraph (a)(2)(iv) (B) or (C) of this section applies.

(B) ***General transition rule.*** The amendments made by sections 251 and 201 of the Tax Reform Act of 1986 shall not apply to property that qualifies under section 251(d) (2), (3), or (4) of the Tax Reform Act of 1986. Property qualifies for the general transition rule in section 251(d)(2) of the Act if such property is placed in service before January 1, 1994, and if such property is placed in service as part of—

(*1*) A rehabilitation that was completed pursuant to a written contract that was binding on March 1, 1986, or

(*2*) A rehabilitation incurred in connection with property (including any leasehold interest) acquired before March 2, 1986, or acquired on or after such date pursuant to a written contract that was binding on March 1, 1986, if—

(*i*) Parts 1 and 2 of the Historic Preservation Certificate Application were filed with the Department of the Interior (or its designee) before March 2, 1986, or

(*ii*) The lesser of $1,000,000 or 5 percent of the cost of the rehabilitation is incurred before March 2, 1986, or is required to be incurred pursuant to a written contract which was binding on March 1, 1986.

(C) ***Specific rehabilitations.*** See section 251(d) (3) and (4) of the Tax Reform Act of 1986 for additional rehabilitations that are exempted from the amendments made by sections 251 and 201 of the Tax Reform Act of 1986.

(b) ***Definition of qualified rehabilitated building*** —

(1) ***In general.*** The term "qualified rehabilitated building" means any building and its structural components—

(i) That has been substantially rehabilitated (within the meaning of paragraph (b)(2) of this section) for the taxable year,

(ii) That was placed in service (within the meaning of § 1.46-3(d)) as a building by any person before the beginning of the rehabilitation, and

(iii) That meets the applicable existing external wall retention test or the existing external wall and internal structural framework retention test in accordance with paragraph (b)(3) of this section.

The requirement in paragraph (b)(1)(iii) of this section does not apply to a certified historic structure. See paragraphs (b) (4) and (5) of this section for additional requirements related to the definition of a qualified rehabilitated building.

(2) ***Substantially rehabilitated building*** —

(i) ***Substantial rehabilitation test.*** A building shall be treated as having been substantially rehabilitated for a taxable year only if the qualified rehabilitation expenditures (as defined in paragraph (c) of this section) incurred during any 24-month period selected by the taxpayer ending with or within the taxable year exceed the greater of—

(A) The adjusted basis of the building (and its structural components), or

(B) $5,000.

(ii) ***Date to determine adjusted basis of the building*** —

(A) ***In general.*** The adjusted basis of the building (and its structural components) shall be determined as of the beginning of the first day of the 24-month period selected by the taxpayer or the first day of the taxpayer's holding period of the building (within the meaning of section 1250(e)), whichever is later. For purposes of determining the holding period under section 1250(e), any reconstruction that is part of the rehabilitation shall be disregarded.

(B) ***Special rules.*** In the event that a building is not owned by the taxpayer, the adjusted basis of the building shall be determined as of the date that would have been used if the owner had been the taxpayer. The adjusted basis of a building that is being rehabilitated by a taxpayer other than the owner shall thus be determined as of the beginning of the first day of the 24-month period selected by the taxpayer or the first day of the owner's holding period, whichever is later. Therefore, if a building that is being rehabilitated by a lessee is sold subject to the lease prior to the date that the lessee has substantially rehabilitated the building, the lessee's adjusted basis is determined as of the beginning of the first day of the new lessor's holding period or the beginning of the first day of the 24-month period selected by the lessee (the taxpayer), whichever is later. If, therefore, the first day of the new lessor's holding period were later than the first day of the 24-month period selected by the lessee (the taxpayer), the lessee's adjusted basis for purposes of the substantial rehabilitation test would be the same as the adjusted basis of the new lessor as determined under paragraph (b)(2)(vii) of this section. If a building is sold after the date that a lessee has substantially rehabilitated the building with respect to the original lessor's adjusted basis, however, the lessee's basis may be determined as of the first day of the 24-month period selected by the lessee or the first day of the original lessor's holding period, whichever is later, and the transfer of the building will not affect the adjusted basis for purposes of the substantial rehabilitation test. The preceding sentence shall not apply, however, if the building is sold to the lessee or a related party within the meaning of section 267(b) or section 707(b)(1).

(iii) ***Adjusted basis of the building*** —

(A) ***In general.*** The term “adjusted basis of the building” means the aggregate adjusted basis (within the meaning of section 1011(a)) in the building (and its structural components) of all the parties who have an interest in the building.

(B) ***Special rules.*** In the case of a building that is leased to one or more tenants in whole or inpart, the adjusted basis of the building is determined by adding the adjusted basis of the owner (lessor) in the building to the adjusted basis of the lessee (or lessees) in the leasehold and any leasehold improvements that are structural components of the building. Similarly, in the case of a building that is divided into condominium units, the adjusted basis of the building means the aggregate adjusted basis of all of the respective condominium owners (including the basis of any lessee in the leasehold and leasehold improvements) in the building (and its structural components). If the adjusted basis of a building would be determined in whole or in part by reference to the adjusted basis of a person or persons other than the taxpayer (e.g., a rehabilitation by a lessee) and the taxpayer is unable to obtain the required information, the taxpayer must establish by clear and convincing evidence that the adjusted basis of such person or persons in the building on the date specified in paragraph (b)(2)(ii) of this section is an amount that is less than the amount of qualified rehabilitation expenditures incurred by the taxpayer. If no such amount can be so established, the adjusted basis of the building will be deemed to be the

fair market value of the building on the relevant date. For purposes of determining the adjusted basis of a building, the portion of the adjusted basis of a building that is allocable to an addition (within the meaning of paragraph (b)(4)(ii) of this section) to the building that does not meet the age requirement in paragraph (b)(4)(i) of this section shall be disregarded. (See paragraph (b)(2)(vii) of this section for the rule applicable to the determination of the adjusted basis of a building when qualified rehabilitation expenditures are treated as incurred by the taxpayer.)

(iv) ***Rehabilitation.*** Rehabilitation includes renovation, restoration, or reconstruction of a building, but does not include an enlargement (within the meaning of paragraph (c)(10) of this section) of new construction. The determination of whether expenditures are attributable to the rehabilitation of an existing building or to new construction shall be based upon all the facts and circumstances.

(v) ***Special rule for phased rehabilitation.*** In the case of any rehabilitation that may reasonably be expected to be completed in phases set forth in written architectural plans and specifications completed before the physical work on the rehabilitation begins, paragraphs (b)(2) (i), (ii), and (vii) of this section shall be applied by substituting “60-month period” for “24-month period.” A rehabilitation may reasonably be expected to be completed in phases if it consists of two or more distinct stages of development. The determination of whether a rehabilitation consists of distinct stages and therefore may reasonably be expected to be completed in phases shall be made on the basis of all the relevant facts and circumstances in existence before physical work on the rehabilitation begins. For purposes of this paragraph and paragraph (a)(2)(iii) of this section, written plans that describe generally all phases of the rehabilitation process shall be treated as written architectural plans and specifications. Such written plans are not required to contain detailed working drawings or detailed specifications of the materials to be used. In addition, the taxpayer may include a description of work to be done by lessees in the written plans. For example, where the owner of a vacant four story building plans to rehabilitate two floors of the building and plans to require, as a condition of any lease, that tenants of the other two floors must rehabilitate those floors, the requirements of this paragrpah (b)(2)(v) shall be met if the owner provides written plans for the rehabilitation work to be done by the owner and a description of the rehabilitation work that the tenants will be required to complete. The work required of the tenants may be described in the written plans in terms of minimum specifications (e.g., as to lighting, wiring, materials, appearance) that must be met by such tenants. See paragraph (b)(6)(i) of this section for the definition of physical work on a rehabilitation.

(vi) ***Treatment of expenses incurred by persons who have an interest in the building.*** For purposes of the substantial rehabilitation test in paragraph (b)(2)(i) of this section, the taxpayer may take into account qualified rehabilitation expenditures incurred during the same rehabilitation process by any other person who has an interest in the building. Thus, for example, to determine whether a building has been substantially rehabilitated, a lessee may include the expenditures of the lessor and of other lessees; a condominium owner may include the expenditures incurred by other condominium owners; and an owner may include the expenditures of the lessees.

(vii) ***Special rules when qualified rehabilitation expenditures are treated as incurred by the taxpayer.*** In the case where qualified rehabilitation expenditures are treated as having been incurred by a taxpayer under paragraph (c)(3)(ii) of this section, the transferee shall be treated as having incurred the expenditures incurred by the transferor on the date that the transferor incurred the

expenditures within the meaning of paragraph (c)(3)(i) of this section. For purposes of the substantial rehabilitation test in paragrpah (b)(2)(i) of this section, the transferee's adjusted basis in the building shall be determined as of the beginning of the first day of a 24-month period, or the first day of the transferee's holding period, whichever is later, as provided in paragraph (b)(2)(ii) of this section. The transferee's basis as of the first day of the transferee's holding period for purposes of the substantial rehabilitation test in paragraph (b)(2)(i) of this section, however, shall be considered to be equal to the transferee's basis in the building on such date less—

(A) The amount of any qualified rehabilitation expenditures incurred (or treated as having been incurred) by the transferor during the 24-month period that are treated as having been incurred by the transferee under paragraph (c)(3)(ii) of this section, and

(B) The amount of qualified rehabilitation expenditures incurred before the transfer and during the 24-month period by any other person who has an interest in the building (e.g., a lessee of the transferor). The preceding sentence shall not apply, however, unless the transferee's basis in the building is determined with reference to

(*1*) the transferee's cost of the building (including the rehabilitation expenditures),

(*2*) the transferor's basis in the building (where such basis includes the amount of the expenditures), or

(*3*) any other amount that includes the cost of the rehabilitation expenditures. In the event that the transferee's basis is determined with reference to an amount not described above (e.g., transferee's basis in one building is determined with reference to the transferee's basis in another building under section 1031(d)), the amount of the expenditures incurred by the transferor and treated as having been incurred by the transferee are not deducted from the transferee's basis for purposes of the substantial rehabilitation test. If a transferee's basis is determined under section 1014 or section 1022, any expenditures incurred by the decedent within the measuring period that are treated as having been incurred by the transferee under paragraph (c)(3)(ii) of this section shall decrease the transferee's basis for purposes of the substantial rehabilitation test.

(viii) ***Statement of adjusted basis, measuring period, and qualified rehabilitation expenditures.*** In the case of any tax return filed after August 27, 1985, on which an investment tax credit for property, described in section 48(a)(1)(E) is claimed, the taxpayer shall indicate by way of a marginal notation on, or a supplemental statement attached to, Form 3468—

(A) The beginning and ending dates for the measuring period selected by the taxpayer under section 48(g)(1)(C)(i) and paragraph (b)(2) of this section,

(B) The adjusted basis of the building (within the meaning of paragraph (b)(2) (iii) or (vii) of this section) as of the beginning of such measuring period, and

(C) The amount of qualified rehabilitation expenditures incurred, and treated as incurred, respectively, during such measuring period.

Furthermore, for returns filed after August 27, 1985, if the adjusted basis of the building for purposes of the substantial rehabilitation test is determined in whole or in part by reference to the adjusted basis of a person, or persons, other than the taxpayer (e.g., a rehabilitation by a

lessee), the taxpayer must attach to the Form 3468 filed with the tax return on which the credit is claimed a statement addressed to the District Director, signed by such third party, that states the first day of the third party's holding period and the amount of the adjusted basis of such third party in the building at the beginning of the measuring period or the first day of the holding period, whichever is later. If the taxpayer is unable to obtain the required information, that fact should be indicated and the taxpayer should state the manner in which the adjusted basis was determined and, if different, the fair market value of the building on the relevant date.

(ix) ***Partnerships and S corporations.*** If a building is owned by a partnership (*i.e.,* the building is partnership property) or an S corporation, the substantial rehabilitation test shall be determined at the entity level. Thus, the entity shall compare the amount of qualified rehabilitation expenditures incurred during the measuring period against its basis in the building at the beginning of its holding period or the beginning of its measuring period, whichever is later. (See section 1223(2) for rules concerning the determination of a partnership's holding period in the case of a contribution of property to the partnership meeting the requirements of section 721.) The adjusted basis of the building to a partnership shall be determined by taking into account any adjustments to the basis of the building made under section 743 and section 734. Any adjustments to the building's basis that are made under section 743 or section 734 after the beginning of the partnership's holding period, but before the end of the measuring period, shall be deemed for purposes of the substantial rehabilitation test to have been made on the first day of the partnership's holding period. However, in such case, the partnership's basis in the building shall be reduced by the amount of qualified rehabilitation expenditures incurred by the partnership. In the case of any tax return filed after January 9, 1989 on which a credit is claimed by a partner or a shareholder of an S corporation for rehabilitation expenditures incurred by a partnership or an S corporation, the partner or shareholder shall indicate on the Form 3468 on which the credit is claimed the name, address, and identification number of the partnership or S corporation that incurred the rehabilitation expenditures, and the partnership or S corporation shall, by way of a marginal notation on or a supplemental statement attached to the entity's return, provide the information required by paragraph (b)(2)(viii) of this section.

(x) ***Examples.*** The following examples illustrate the application of the substantial rehabilitation test in this paragraph (b)(2):

Example 1. Assume that A, a calendar year taxpayer, purchases a building for $140,000 on January 1, 1982, incurs qualified rehabilitation expenditures in the amount of $48,000 (at the rate of $4,000 per month) in 1982, $100,000 in 1983, and $20,000 (at the rate of $2,000 per month) in the first ten months of 1984, and places the rehabilitated building in service on October 31, 1984. Assume that A did not have written architectural plans and specifications describing a phased rehabilitation within the meaning of paragraph (b)(2)(v) of this section in existence prior to the beginning of physical work on the rehabilitation. For purposes of the substantial rehabilitation test in paragraph (b)(2) of this section, A may select any 24-consecutive-month measuring period that ends in 1984, the taxable year in which the rehabilitated building was placed in service. Assume that on A's 1984 return, A selects a measuring period beginning on February 1, 1982, and ending on January 31, 1984, and specifies that A's basis in the building (within the meaning of section 1011(a)) was $144,000 on February 1, 1982 ($140,000 + $4,000). (The $4,000 of rehabilitation expenditures incurred during January 1982 are included in A's basis under section 1011 even though such property has not been placed in service.) The amount of qualified rehabilitation expenditures incurred during the measuring period was $146,000

($44,000 from February 1 to December 31, 1982, plus $100,000 in 1983, plus $2,000 in January 1984). The building shall be treated as "substantially rehabilitated" within the meaning of this paragraph (b)(2) for A's 1984 taxable year because the $146,000 of expenditures incurred by A during the measuring period exceeded A's adjusted basis of $144,000 at the beginning of the period. If the other requirements of section 48(g)(1) and this paragraph are met, the building is treated as a qualified rehabilitated building, and A can treat as qualified rehabilitation expenditures the amount of $168,000 (*i.e.,* $146,000 of expenditures incurred during the measuring period, $4,000 of expenditures incurred prior to the beginning of the measuring period as part of the rehabilitation process, and $18,000 of expenditures incurred after the measuring period during the taxable year within which the measuring period ends (See paragraph (c)(6) of this section.)). The result would generally be the same if the property attributable to the rehabilitation expenditures was placed in service as the expenditures were incurred, but A would have $148,000 of qualified rehabilitation expenditures for 1983 and $20,000 of qualified rehabilitation expenditures for 1984. (See paragraph (f)(2) of this section).

Example 2. Assume the same facts as in example 1, except that additional rehabilitation expenditures are incurred after the portion of the basis of the building attributable to qualified rehabilitation expenditures was placed in service on October 31, 1984. Such expenditures are incurred through the end of 1984 and in 1985 when the portion of the basis attributable to the additional expenditures is placed in service. The fact that the building qualified as a substantially rehabilitated building for A's 1984 taxable year has no effect on whether the building is a qualified rehabilitated building for property placed in service in A's 1985 taxable year. In order to determine whether the building is a qualified rehabilitated building for A's 1985 taxable year, A must select a measuring period that ends in 1985 and compare the expenditures incurred within that period with the adjusted basis as of the beginning of the period. Solely for the purpose of determining whether the building was substantially rehabilitated for A's 1985 taxable year, expenditures incurred during 1983 and 1984, even though considered in determining whether the building was substantially rehabilitated in 1984, may also be used to determine whether the building was substantially rehabilitated for A's 1985 taxable year, provided the expenditures were incurred during any 24-month measuring period selected by A that ends in 1985.

Example 3. (i) Assume the B purchases a building for $100,000 on January 1, 1982, and leases the building to C who rehabilitates the building. Assume that C, a calendar year taxpayer, places the property with respect to which rehabilitation expenditures were made in service in 1982 and selects December 31, 1982, as the end of the measuring period for purposes of the substantial rehabilitation test. The beginning of the measuring period is January 2, 1982, the beginning of B's holding period under section 1250(e), and the adjusted basis of the building is $100,000. Accordingly, if C incurred more than $100,000 of qualified rehabilitation expenditures during 1982, the building would be substantially rehabilitated within the meaning of paragraph (b)(2)(i) of this section.
(ii) Assume the facts of example 3(i), except that after C begins physical work on the rehabilitation, but before C incurs $100,000 of expenditures, D acquires the building, subject to C's lease, from B for $200,000. D's holding period under section

1250(e) begins on the day after D acquired the building, and C's adjusted basis for purposes of the substantial rehabilitation test is $200,000, less the amount of expenditures incurred by C before the transfer. (See paragraphs (b)(2) (ii) and (vii) of this section.) Accordingly, if C incurred more than $200,000 (less the amount of expenditures incurred prior to the transfer) of qualified rehabilitation expenditures during 1982, the building would be substantially rehabilitated within the meaning of paragraph (b)(2) of this section. Under paragraph (b)(2)(ii)(B) of this section, however, C's adjusted basis for purposes of the substantial rehabilitation test would be $100,000 if C had substantially rehabilitated the building (*i.e.,* incurred more than $100,000 in rehabilitation expenditures) prior to B's sale to D.

Example 4. E owns a building with a basis of $10,000 and E incurs $5,000 of rehabilitation expenditures. Before completing the rehabilitation project, E sells the building to F for $30,000. Assume that F is treated under paragraph (c)(3)(ii) of this section as having incurred the $5,000 of rehabilitation expenditures actually incurred by E. Because F's basis in the building is determined under section 1011 with reference to F's $30,000 cost of the building (which includes the property attributable to E's rehabilitation expenditures), F's basis for purposes of the substantial rehabilitation test is $25,000 ($30,000 cost basis less $5,000 rehabilitation expenditures treated as if incurred by F). (See paragraph (b)(2)(vii) of this section.) F would thus be required to incur more than $20,000 of rehabilitation expenditures (in addition to the $5,000 incurred by E and treated as having been incurred by F) during a measuring period selected by F to satisfy the substantial rehabilitation test.

Example 5. G owns Building I with a basis of $10,000 and a fair market value of $20,000. H owns Building II with a basis of $5,000 and a fair market value of $20,000, with respect to which H has incurred $1,000 of rehabilitation expenditures. G and H exchange their buildings in a transaction that qualifies for nonrecognition treatment under section 1031. Assume that G is treated under paragraph (c)(3)(ii) of this section as having incurred $1,000 of rehabilitation expenditures. G's basis in Building II, computed under section 1031(d), is $10,000. G's basis in Building II is not determined with reference to

(A) the cost of Building II,

(B) H's basis in Building II (including the cost of the rehabilitation expenditures) or

(C) any other amount that includes the cost of expenditures, but is instead determined with reference to G's basis in other property (Building I). Therefore, G's basis in Building II for purposes of the substantial rehabilitation test is not reduced by the $1,000 of rehabilitation expenditures treated as if incurred by G. (See paragraph (b)(2)(vii) of this section.) Accordingly, G's basis in Building II for purposes of the substantial rehabilitation test is $10,000, and G must incur additional rehabilitation expenditures in excess of $9,000 within a measuring period selected by G to satisfy the test.

(3) ***Retention of existing external walls and internal structural framework*** —

(i) ***In general*** —

(A) ***Property placed in service after December 31, 1986.*** Except in the case of property that qualifies for the transition rules in paragraphs (a)(2)(iv) (B) and (C) of this section, in the case of property that is placed in service after December 31, 1986, a building (other than a certified historic structure) meets the requirement in paragraph (b)(1)(iii) of this section only if in the rehabilitation process—

(*1*) 50 percent or more of the existing external walls of such building are retained in place as external walls;

(*2*) 75 percent or more of the existing external walls of such building are retained in place as internal or external walls; and

(*3*) 75 percent or more of the internal structural framework of such building (as defined in paragraph (b)(3)(iii) of this section) is retained in place.

(B) ***Expenditures incurred before January 1, 1984, for property placed in service before January 1, 1987.*** With respect to rehabilitation expenditures incurred before January 1, 1984, for property that is either placed in service before January 1, 1987, or that qualifies for the transition rules in paragraph (a)(2)(iv) (B) or (C) of this section, a building meets the requirement in paragraph (b)(1)(iii) of this section only if 75 percent or more of the existing external walls of the building are retained in place as external walls in the rehabilitation process. If an addition to a building is not treated as part of a qualified rehabilitated building because it does not meet the 30-year requirement in paragraph (b)(4)(i)(B) of this section, then the external walls of such addition shall not be considered to be existing external walls of the building for purposes of section 48(g)(1)(A)(iii) (as in effect prior to enactment of the Tax Reform Act of 1986), and this section.

(C) ***Expenditures incurred after December 31, 1983, for property placed in service before January 1, 1987.*** With respect to expenditures incurred after December 31, 1983, for property that is either placed in service before January 1, 1987, or that qualifies for the transition rules in paragraph (a)(2)(iv) (B) or (C) of this section, the requirement of paragraph (b)(1)(iii) of this section is satisfied only if in the rehabilitation process either the existing external wall retention requirement in paragraph (b)(3)(i) (B) of this section is satisfied, or:

(*1*) 50 percent or more of the existing external walls of the building are retained in place as external walls,

(*2*) 75 percent or more of the existing external walls are retained in place as internal or external walls, and

(*3*) 75 percent or more of the existing internal structural framework of such building is retained in place.

(D) ***Area of external walls and internal structural framework.*** The determinations required by paragraphs (b)(3)(i) (A), (B), and (C) of this section shall be based upon the area of the external walls or internal structural framework that is retained in place compared to the total area of each prior to the rehabilitation. The area of the existing external walls and internal structural framework of a building shall be determined prior to any destruction, modification, or construction of external walls or internal structural framework that is undertaken by any party in anticipation of the rehabilitation.

(ii) ***Definition of external wall.*** For purposes of this paragraph (b), a wall includes both the supporting elements of the wall and the nonsupporting elements, (e.g., a curtain, windows or doors) of the wall. Except as otherwise provided in this paragraph (b)(3), the term "external wall" includes any wall that has one face exposed to the weather, earth, or an abutting wall of an adjacent building. The term "external wall" also includes a shared wall (*i.e.,* a single wall shared with an adjacent building), generally referred to as a "party wall," provided that the shared wall has no windows or doors in any portion of the wall that does not have one face exposed to the weather, earth, or an abutting wall. In general, the term "external wall" includes only those external walls that form part of the outline or perimeter of the building or that surround an uncovered courtyard. Therefore, the walls of an uncovered internal shaft, designed solely to bring light or air into the center of a building, which are completely surrounded by external walls of the building and which enclose space not designated for occupancy or other use by people (other than for maintenance or emergency), are not considered external walls. Thus, for example, a wall of a light well in the center of a building is not an external wall. However, walls surrounding an outdoor space which is usable by people, such as a courtyard, are external walls.

(iii) ***Definition of internal structural framework.*** For purposes of this section, the term "internal structural framework" includes all load-bearing internal walls and any other internal structural supports, including the columns, girders, beams, trusses, spandrels, and all other members that are essential to the stability of the building.

(iv) ***Retained in place.*** An existing external wall is retained in place if the supporting elements of the wall are retained in place. An existing external wall is not retained in place if the supporting elements of the wall are replaced by new supporting elements. An external wall is retained in place, however, if the supporting elements are reinforced in the rehabilitation, provided that such supporting elements of the external wall are retained in place. An external wall also is retained in place if it is covered (e.g., with new siding). Moreover, an external wall is retained in place if the existing curtain is replaced with a new curtain, provided that the structural framework that provides for the support of the existing curtain is retained in place. An external wall is retained in place notwithstanding that the existing doors and windows in the wall are modified, eliminated, or replaced. An external wall is retained in place if the wall is disassembled and reassembled, provided the same supporting elements are used when the wall is reassembled and the configuration of the external walls of the building after the rehabilitation is the same as it was before the rehabilitation process commenced. Thus, for example, a brick wall is considered retained in place even though the original bricks are removed (for cleaning, etc.) and replaced to form the wall. The principles of this paragraph (b)(3)(iv) shall also apply to determine whether internal structural framework of the building is retained in place.

(v) ***Effect of additions.*** If an existing external wall is converted into an internal wall (*i.e.,* a wall that is not an external wall), the wall is not retained in place as an external wall for purposes of this section.

(vi) ***Examples.*** The provisions of this paragraph (b)(3) may be illustrated by the following examples:

Example 1. Taxpayer A rehabilitated a building all of the walls of which consisted of wood siding attached to gypsum board sheets (which covered the supporting elements of the wall, *i.e.,* studs). A covered the existing wood siding with aluminum siding as part of a rehabilitation

that otherwise qualified under this subparagraph. The addition of the aluminum siding does not affect the status of the existing external walls as external walls and they would be considered to have been retained in place.

Example 2. Taxpayer B rehabilitated a building, the external walls of which had a masonry curtain. The masonry on the wall face was replaced with a glass curtain. The steel beam and girders supporting the existing masonry curtain were retained in place. The walls of the building are considered to be retained in place as external walls, notwithstanding the replacement of the curtain.

Example 3. Taxpayer C rehabilitated a building that has two external walls measuring 75' × 20' and two other external walls measuring 100' × 20'. C demolished one of the larger walls, including its supporting elements and constructed a new wall. Because one of the larger walls represents more than 25 percent of the area of the building's external walls, C has not satisfied the requirements that 75 percent of the existing external walls must be retained in place as either internal or external walls. If however, C had not demolished the wall, but had converted it into an internal wall (e.g., by building a new external wall), the building would satisfy the external wall requirements.

Example 4. The facts are the same as in example 3, except that C does not tear down any walls, but builds an addition that results in one of the smaller walls becoming an internal wall. In addition, C enlarged 8 of the existing windows on one of the larger walls, increasing them from a size of 3' × 4' to 6' × 8'. Since the smaller wall accounts for less than 25 percent of the total wall area, C has satisfied the requirement that 75 percent of the existing external walls must be retained in place as external walls in the rehabilitation process. The enlargement of the existing windows on the larger wall does not affect its status as an external wall.

Example 5. Taxpayer D rehabilitated a building that was in the center of a row of three buildings. The building being rehabilitated by D shares its side walls with the buildings on either side. The shared walls measure 100' × 20' and the rear and front walls measure 75' × 20'. As part of a rehabilitation, D tears down and replaces the front wall. Because the shared walls as well as the front and back walls are considered external walls and the front wall accounts for less than 25 percent of the total external wall area (including the shared walls), D has satisfied the requirement that 75 percent of the existing external walls must be retained in place as external walls in the rehabilitation process.

(4) ***Age requirement*** —

(i) ***In general*** —

(A) ***Property placed in service after December 31, 1986.*** Except in the case of property that qualifies for the transition rules in paragraph (a)(2)(iv) (B) or (C) of this section, a building other than a certified historic structure shall not be considered a qualified rehabilitated building unless the building was first placed in service (within the meaning of § 1.46-3(d)) before January 1, 1936.

(B) ***Property placed in service before January 1, 1987, and property qualifying under a transition rule.*** In the case of property placed in service before January 1, 1987, and property that qualifies under the transition rules in paragraph (a)(2)(iv) (B) or (C) of this section, a building other than a certified historic structure is considered a qualified rehabilitated

building only if a period of at least 30 years has elasped between the date physical work on the rehabilitation of the building began and the date the building was first placed in service (within the meaning of § 1.46-3(d)) as a building by any person.

(ii) ***Additions.*** A building that was first placed in service before 1936 in the case described in paragraph (b)(4)(i)(A) of this section, or at least 30 years before physical work on the rehabilitation began in the case described in paragraph (b)(4)(i)(B) of this section, will not be disqualified because additions to such building have been added since 1936 in the case described in paragraph (b)(4)(i)(A) of this section, or are less than 30 years old in the case described in paragraph (b)(4)(i)(B) of this section. Such additions, however, shall not be treated as part of the qualified rehabilitated building. The term "addition" means any construction that resulted in any portion of an external wall becoming an internal wall, that resulted in an increase in the height of the building, or that increased the volume of the building.

(iii) ***Vacant periods.*** The determinations required by paragraph (b)(4)(i) of this section include periods during which a building was vacant or devoted to a personal use and is computed without regard to the number of owners or the identify of owners during the period.

(5) ***Location at which the rehabilitation occurs.*** A building, other than a certified historic structure is not a qualified rehabilitated building unless it has been located where it is rehabilitated since before 1936 in the case described in paragraph (b)(4)(i)(A) of this section. Similarly, in the case described in paragraph (b)(4)(i)(B) of this section, a building, other than a certified historic structure, is not a qualified rehabilitation building unless it has been located where it is rehabilitated for the thirty-year period immediately preceding the date physical work on the rehabilitation began in the case of a "30-year building" or the forty-year period immediately preceding the date physical work on the rehabilitation began in the case of a "40-year building." (See § 1.46-1(q)(1)(iii) for the definitions of "30-year building" and "40-year building.")

(6) ***Definition and special rule*** —

(i) ***Physical work on a rehabilitation.*** For purposes of this section, "physical work on a rehabilitation" begins when actual construction, or destruction in preparation for construction, begins. The term "physical work on a rehabilitation," however, does not include preliminary activities such as planning, designing, securing financing, exploring, researching, developing plans and specifications, or stabilizing a building to prevent deterioration (e.g., placing boards over broken windows).

(ii) ***Special rule for adjoining buildings that are combined.*** For purposes of this paragraph (b), if as part of a rehabilitation process two or more adjoining buildings are combined and placed in service as a single building after the rehabilitation process, then, at the election of the taxpayer, all of the requirements for a qualified rehabilitated building in section 48(g)(1) and this section may be applied to the constituent adjoining buildings in the aggregate. For example, if such requirements are applied in the aggregate, any shared walls or abutting walls between the constituent buildings that would otherwise be treated as external walls (within the meaning of paragraph (b)(3) of this section) would not be treated as external walls of the building, and the substantial rehabilitation test in paragraph (b)(2) of this section would be applied to the aggregate expenditures with respect to all of the constituent buildings and to the aggregate adjusted basis of all of the constituent buildings. A taxpayer shall elect the special rule of this paragraph (b)(6)(ii) for adjoining buildings by indicating by way of a marginal notation on, or a supplemental statement attached to, the Form 3468 on which a credit is first claimed for

qualified rehabilitation expenditures with respect to such buildings that such buildings are a single qualified rehabilitated building because of the application of the special rule in this paragraph (b)(6)(ii).

(c) ***Definition of qualified rehabilitation expenditures*** —

(1) ***In general.*** Except as otherwise provided in paragraph (c)(7) of this section, the term "qualified rehabilitation expenditure" means any amount that is—

(i) Properly chargeable to capital account (as described in paragraph (c)(2) of this section),

(ii) Incurred by the taxpayer after December 31, 1981 (as described in paragraph (c)(3) of this section),

(iii) For property for which depreciation is allowable under section 168 and which is real property described in paragraph (c)(4) of this section, and

(iv) Made in connection with the rehabilitation of a qualified rehabilitated building (as described in paragraph (c)(5) of this section).

(2) ***Chargeable to capital account.*** For purposes of paragraph (c)(1) of this section, amounts are chargeable to capital account if they are properly includible in computing basis of real property under § 1.46-3(c). Amounts treated as an expense and deducted in the year they are paid or incurred or amounts that are otherwise not added to the basis of real property described in paragraph (c)(4) of this section do not qualify. For purposes of this paragraph (c), amounts incurred for architectural and engineering fees, site survey fees, legal expenses, insurance premiums, development fees, and other construction related costs, satisfy the requirement of this paragraph (c)(2) if they are added to the basis of real property that is described in paragraph (c)(4) of this section. Construction period interest and taxes that are amortized under section 189 (as in effect prior to its repeal by the Tax Reform Act of 1986) do not satisfy the requirement of this paragraph (c)(2). If, however, such interest and taxes are treated by the taxpayer as chargeable to capital account with respect to property described in paragraph (c)(4) of this section, they shall be treated in the same manner as other costs described in this paragraph (c)(2). Any construction period interest or taxes or other fees or costs incurred in connection with the acquisition of a building, any interest in a building, or land, are subject to paragraph (c)(7)(ii) of this section. See paragraph (c)(9) of this section for additional rules concerning interest.

(3) ***Incurred by the taxpayer*** —

(i) ***In general.*** Qualified rehabilitation expenditures are incurred by the taxpayer for purposes of this section on the date such expenditures would be considered incurred under an accrual method of accounting, regardless of the method of accounting used by the taxpayer with respect to other items of income and expense. If qualified rehabilitation expenditures are treated as having been incurred by a taxpayer under paragraph (c)(3)(ii) of this section, the taxpayer shall be treated as having incurred the expenditures on the date such expenditures were incurred by the transferor.

(ii) ***Qualified rehabilitation expenditures treated as incurred by the taxpayer*** —

(A) Where rehabilitation expenditures are incurred with respect to a building by a person (or persons) other than the taxpayer and the taxpayer subsequently acquires the building, or a portion of the building to which some or all of the expenditures are allocable (e.g., a condominium unit to which rehabilitation expenditures have been allocated), the taxpayer

acquiring such property shall be treated as having incurred the rehabilitation expenditures actually incurred by the transferor (or treated as incurred by the transferor under this paragraph (c)(3)(ii)) allocable to the acquired property, provided that—

(*1*) The building, or the portion of the building, acquired by the taxpayer was not used (or, if later, was not placed in service (as defined in paragraph (f)(2) of this section)) after the rehabilitation expenditures were incurred and prior to the date of acquisition, and

(*2*) No credit with respect to such qualified rehabilitation expenditures is claimed by anyone other than the taxpayer acquiring the property. For purposes of this paragraph (c)(3)(ii), use shall mean actual use, whether personal or business. In the case of a building that is divided into condominium units, expenditures attributable to the common elements shall be allocable to the individual condominium units in accordance with the principles of paragraph (c)(10)(ii) of this section. Furthermore, for purpose of this paragraph (c)(3)(ii), a condominium unit's share of the common elements shall not be considered to have been used (or placed in service) prior to the time that the particular condominium unit is used.

(B) The amount of rehabilitation expenditures described in paragraph (c)(3)(ii)(A) of this section treated as incurred by the taxpayer under this paragraph shall be the lesser of—

(*1*) The amount of rehabilitation expenditures incurred before the date on which the taxpayer acquired the building (or portion thereof) to which the rehabilitation expenditures are attributable, or

(*2*) The portion of the taxpayer's cost or other basis for the property that is properly allocable to the property resulting from the rehabilitation expenditures described in paragraph (c)(3)(ii)(B)(*1*) of this section.

(C) For purposes of this paragraph (c)(3)(ii), the amount of rehabilitation expenditures treated as incurred by the taxpayer under this paragraph (c) shall not be treated as costs for the acquisition of a building. The portion of the cost of acquiring a building (or an interest therein) that is not treated under this paragraph as qualified rehabilitation expenditures incurred by the taxpayer is not treated as section 38 property in the hands of the acquiring taxpayer. (See paragraph (c)(7)(ii) of this section.) (See paragraph (b)(2)(vii) for rules concerning the application of the substantial rehabilitation test when expenditures are treated as incurred by the taxpayer.)

(iii) ***Examples.*** The provisions of this paragraph (c) may be illustrated by the following examples:

Example 1. In 1981, A, a taxpayer using the cash receipts and disbursements method of accounting, commenced the rehabilitation of a 30-year old building. In June 1981, A signed a contract with a plumbing contractor for replacement of the plumbing in the building. A agreed to pay the contractor as soon as the work was completed. The work was completed in December 1981, but A did not pay the amount due until January 15, 1982. The expenditures for the plumbing are not qualified rehabilitation expenditures (within the meaning of this paragraph (c)) because they were not incurred under an accrual method of accounting after December 31, 1981.

Example 2. B incurred qualified rehabilitation expenditures of $300,000 with respect to an existing building between January 1, 1982, and May 15, 1982, and then sold the building to C on June 1, 1982. The portion of the building to which the expenditures were allocable

was not used by B or any other person during the period from January 1, 1982, to June 1, 1982, and neither B nor any other person claimed the credit. Consequently, C will be treated as having incurred the expenditures on the dates that B incurred the expenditures.

Example 3. D, a taxpayer using the cash receipts and disbursements method of accounting, begins the rehabilitation of a building on January 11, 1982. Prior to May 1, 1982, D makes rehabilitation expenditures of $16,000. On May 3, 1982, D sells the building, the land, and the property attributable to the rehabilitation expenditures to E for $35,000. The purchase price is properly allocable as follows:

Land	$5,000
Existing building	11,000
Property attributable to rehabilitation expenditures	19,000
Total purchase price	35,000

The property attributable to the rehabilitation expenditures is placed in service by E on September 5, 1982. E may treat a portion of the $35,000 purchase price as rehabilitation expenditures paid or incurred by him. Since the rehabilitation expenditures paid by D ($16,000) are less than the portion of the purchase price properly allocable to property attributable to these expenditures ($19,000), E may treat only $16,000 as rehabilitation expenditures paid or incurred by him. The excess of the purchase price allocable to rehabilitation expenditures ($19,000) over the rehabilitation expenditures paid by D ($16,000), or $3,000, is treated as the cost of acquiring an interest in the building and is not a qualified rehabilitation expenditure treated as incurred by E.

Example 4. The facts are the same as in example 3, except that the purchase price properly allocable to the property attributable to rehabilitation expenditures is $15,000. Under these circumstances, E may treat only $15,000 of D's $16,000 expenditures as rehabilitation expenditures paid by D. The excess of the rehabilitation expenditures paid by D ($16,000) over the purchase price allocable to rehabilitation expenditures ($15,000), or $1,000, is treated as the cost of acquiring an interest in the building and is not a qualified rehabilitation expenditure treated as incurred by E.

(4) ***Incurred for depreciable real property*** —

(i) ***Property placed in service after December 31, 1986.*** Except as otherwise provided in paragraph (c)(4)(ii) of this section (relating to certain property that qualifies under a transition rule), in the case of property placed in service after December 31, 1986, an expenditure is incurred for depreciable real property for purposes of paragraph (c)(1)(iii) of this section, only if it is added to the depreciable basis of depreciable property which is—

(A) Nonresidential real property,

(B) Residential rental property,

(C) Real property which has a class life of more than 12.5 years, or

(D) An addition or improvement to property described in paragraph (c)(4)(i) (A), (B), or (C) of this section.

For purposes of this paragraph (c)(4)(i), the terms “nonresidential real property”, “residential rental property”, and “class life” have the respective meanings given to such terms by section 168 and the regulations thereunder.

(ii) ***Property placed in service before January 1, 1987, and property that qualifies under a transition rule.*** In the case of property placed in service before January 1, 1987, and property placed in service after December 31, 1986, that qualifies for the transition rules in paragraph (a)(2)(iv) (B) or (C) of this section, an expenditure attributable to such property shall be a qualified rehabilitation expenditure only if such expenditure is incurred for property that is real property (or additions or improvements to real property) with a recovery period (within the meaning of section 168 as in effect prior to its amendment by the Tax Reform Act of 1986) of 19 years (15 years for low-income housing) and if the other requirements of this paragraph (c) are met. For purposes of this section, an expenditure is incurred for recovery property having a recovery period of 19 years only if the amount of the expenditure is added to the basis of property which is 19-year real property or 15-year real property in the case of low-income housing. For purposes of this section, the term “low-income housing” has the meaning given such term by section 168(c)(2)(F) (as in effect prior to the amendments made by the Tax Reform Act of 1986).

(5) ***Made in connection with the rehabilitation of a qualified rehabilitated building.*** In order for an expenditure to be a qualified rehabilitation expenditure, such expenditure must be incurred in connection with a rehabilitation (as defined in paragraph (b)(2)(iv) of this section) of a qualified rehabilitated building. Expenditures attributable to work done to facilities related to a building (e.g., sidewalk, parking lot, landscaping) are not considered made in connection with the rehabilitation of a qualified rehabilitated building.

(6) ***When expenditures may be incurred.*** An expenditure is a qualified rehabilitation expenditure only if the building with respect to which the expenditures are incurred is substantially rehabilitated (within the meaning of paragraph (b)(2) of this section) for the taxable year in which the property attributable to the expenditures is placed in service (*i.e.,* the building is substantially rehabilitated during a measuring period ending with or within the taxable year in which a credit is claimed). (See paragraph (f)(2) of this section for rules relating to when property is placed in service.) Once the substantial rehabilitation test is met for a taxable year, the amount of qualified rehabilitation expenditures upon which a credit can be claimed for the taxable year is limited to expenditures incurred:

(i) Before the beginning of a measuring period during which the building was substantially rehabilitated that ends with or within the taxable year, provided that the expenditures were incurred in connection with the rehabilitation process that resulted in the substantial rehabilitation of the building;

(ii) Within a measuring period during which the building was substantially rehabilitated that ends with or within the taxable year, and

(iii) After the end of a measuring period during which the building was substantially rehabilitated but prior to the end of the taxable year with or within which the measuring period ends.

(7) ***Certain expenditures excluded from qualified rehabilitation expenditures.*** The term "qualified rehabilitation expenditures" does not include the following expenditures:

(i) Except as otherwise provided in paragraph (c)(8) of this section, any expenditure with respect to which the taxpayer does not use the straight line method over a recovery period determined under section 168 (c) and (g).

(ii) The cost of acquiring a building, any interest in a building (including a leasehold interest), or land, except as provided in paragraph (c)(3)(ii) of this section.

(iii) Any expenditure attributable to an enlargement of a building (within the meaning of paragraph (c)(10) of this section).

(iv) Any expenditure attributable to the rehabilitation of a certified historic structure or a building located in a registered historic district, unless the rehabilitation is a certified rehabilitation. (See paragraph (d) of this section which contains definitions and special rules applicable to rehabilitations of certified historic structures and buildings located in registered historic districts.)

(v) Any expenditure of a lessee of a building or a portion of a building, if, on the date the rehabilitation is completed with respect to property placed in service by such lessee, the remaining term of the lease (determined without regard to any renewal period) is less than the recovery period determined under section 168(c) (or 19 years in the case of property placed in service before January 1, 1987, and property placed in service that qualifies under the transition rules in paragraph (a)(2)(iv)(B) or (C) of this section).

(vi) Any expenditure allocable to that portion of a building which is (or may reasonably be expected to be) tax-exempt use property (within the meaning of section 168 and the regulations thereunder), except that the exclusion in this paragraph (c)(7)(vi) shall not apply for purposes of determining whether the building is a substantially rehabilitated building under paragraph (b)(2) of this section.

(8) ***Requirement to use straight line depreciation*** —

(i) ***Property placed in service after December 31, 1986.*** The requirement in section 48(g)(2)(B)(i) and paragraph (c)(7)(i) of this section to use straight line cost recovery does not apply to any expenditure to the extent that the alternative depreciation system of section 168(g) applies to such expenditure by reason of section 168(g)(1) (B) or (C). In addition, the requirement in section 48(g)(2)(B)(i) and paragraph (c)(7)(i) of this section applies only to the depreciation of the portion of the basis of a qualified rehabilitated building that is attributable to qualified rehabilitation expenditures. However, see § 1.168(k)-1(f)(10) if the qualified rehabilitation expenditures are qualified property or 50-percent bonus depreciation property under section 168(k) and see § 1.1400L(b)-1(f)(9) if the qualified rehabilitation expenditures are qualified New York Liberty Zone property under section 1400L(b). Further, see § 1.168(k)-2(g)(9) if the qualified rehabilitation expenditures are qualified property under section 168(k), as amended by the Tax Cuts and Jobs Act, Public Law 115-97 (131 Stat. 2054 (December 22, 2017)).

(ii) ***Property placed in service before January 1, 1987, and property placed in service after December 31, 1986, that qualifies for a transition rule.*** In the case of expenditures attributable to property placed in service before January 1, 1987, and property that qualifies for the transition rules in paragraph (a)(2)(iv) (B) or (C) of this section, the term "qualified rehabilitation expenditure" does not include an expenditure with respect to which an election was not made under section 168(b)(3) as in effect prior to its amendment by the Tax Reform Act of 1986, to use the straight line method of depreciation. In such case, the requirement that an election be made to use straight line cost recovery applies only to the cost recovery of the portion of the basis of a qualified rehabilitated building that is attributable to qualified rehabilitation expenditures. See section 168(f)(1), as in effect prior to its amendment by the Tax Reform Act of 1986, for rules relating to the use of different methods of cost recovery for different components of a building. In addition, such requirement shall not apply to any expenditure to the extent that section 168(f)(12) or (j), as in effect prior to the amendments made by the Tax Reform Act of 1986, applied to such expenditure.

(9) ***Cost of acquisition.*** For purposes of paragraph (c)(7)(ii) of this section, cost of acquisition includes any interest incurred on indebtedness the proceeds of which are attributable to the acquisition of a building, an interest in a building, or land open which a building exists. Interest incurred on a construction loan the proceeds of which are used for qualified rehabilitation expenditures, however, is not treated as a cost of acquisition.

(10) ***Enlargement defined*** —

(i) ***In general.*** A building is enlarged to the extent that the total volume of the building is increased. An increase in floor space resulting from interior remodeling is not considered an enlargement. The total volume of a building is generally equal to the product of the floor area of the base of the building and the height from the underside of the lowest floor (including the basement) to the average height of the finished roof (as it exists or existed). For this purpose, floor area is measured from the exterior faces of external walls (other than shared walls that are external walls) and from the centerline of shared walls that are external walls.

(ii) ***Rehabilitation that includes enlargement.*** If expenditures for property only partially qualify as qualified rehabilitation expenditures because some of the expenditures are attributable to the enlargement of the building, the expenditures must be apportioned between the original portion of the building and the enlargement. The expenditures must be specifically allocated between the original portion of the building and the enlargement to the extent possible. If it is not possible to make a specific allocation of the expenditures, the expenditures must be allocated to each portion on some reasonable basis. The determination of a reasonable basis for an allocation depends on factors such as the type of improvement and how the improvement relates functionally to the building. For example, in the case of expenditures for an air-conditioning system or a roof, a reasonable basis for allocating the expenditures among the two portions generally would be the volume of the building, excluding the enlargement, served by the air-conditioning system or the roof relative to the volume of the enlargement served by the improvement.

(d) ***Rules applicable to rehabilitations of certified historic structures*** —

(1) ***Definition of certified historic structure.*** The term "certified historic structure" means any building (and its structural components) that is—

(i) Listed in the National Register of Historic Places ("National Register"); or

(ii) Located in a registered historic district and certified by the Secretary of the Interior to the Internal Revenue Service as being of historic significance to the district.

For purposes of this section, a building shall be considered to be a certified historic structure at the time it is placed in service if the taxpayer reasonably believes on that date the building will be determined to be a certified historic structure and has requested on or before that date a determination from the Department of Interior that such building is a certified historic structure within the meaning of this paragraph (d)(1)(i) or (ii) and the Department of Interior later determines that the building is a certified historic structure.

(2) ***Definition of registered historic district.*** The term "registered historic district" means any district that is—

(i) Listed in the National Register, or

(ii)

(A) Designated under a statute of the appropriate State or local government that has been certified by the Secretary of the Interior to the Internal Revenue Service as containing criteria that will substantially achieve the purpose of preserving and rehabilitating buildings of historic significance to the district, and

(B) certified by the Secretary of the Interior as meeting substantially all of the requirements for the listing of districts in the National Register.

(3) ***Definition of certified rehabilitation.*** The term "certified rehabilitation" means any rehabilitation of a certified historic structure that the Secretary of the Interior has certified to the Internal Revenue Service as being consistent with the historic character of the building and, where applicable, the district in which such building is located. The determination of the scope of a rehabilitation shall be made on the basis of all the facts and circumstances surrounding the rehabilitation and shall not be made solely on the basis of ownership. The Secretary of the Interior shall take all of the rehabilitation work performed as part of a single rehabilitation, including any post-certification work, into account in determining whether the rehabilitation complies with the Department of Interior standards for rehabilitation and whether the certification should be granted, revoked, or otherwise invalidated.

(4) ***Revoked or invalidated certification.*** If the Department of Interior revokes or otherwise invalidates a certification after it has been issued to a taxpayer, the basis attributable to rehabilitation of the decertified property shall cease to be section 38 property described in section 48(a)(1)(E). Such cessation shall be effective as of the date the activity giving rise to the revocation or invalidation commenced. See section 47 for the rules applicable to property that ceases to be section 38 property.

(5) ***Special rule for certain buildings located in registered historic districts.*** The exclusion in paragraph (c)(7)(iv) of this section does not apply to a building in a registered historic district if—

(i) Such building was not a certified historic structure during the rehabilitation process; and

(ii) The Secretary of the Interior certified to the Internal Revenue Service that such building was not of historic significance to the district.

In general, the certification referred to in paragraph (d)(5)(ii) of this section must be requested by the taxpayer prior to the time that physical work on the rehabilitation began. If, however, the certification referred to in paragraph (d)(5)(ii) of this section is requested by the taxpayer after physical work on

the rehabilitation of the building has begun, the taxpayer must certify to the Internal Revenue Service that, prior to the date that physical work on the rehabilitation began, the taxpayer in good faith was not aware of the requirement of paragraph (d)(5)(ii) of this section. The certification referred to in the previous sentence must be attached to the Form 3468 filed with the tax return for the year in which the credit is claimed.

(6) ***Special rule for certain rehabilitations begun before an area is designated as a registered historic district.*** In general, the exclusion from the definition of qualified rehabilitation expenditure in paragraph (c)(7)(iv) of this section applies to any rehabilitation expenditures that are incurred after a building becomes a certified historic structure within the meaning of section 48 (g)(3)A) and paragraph (d)(1) of this section or the area in which a building is located becomes a registered historic district within the meaning of section 48 (g)(3)(B) and paragraph (d)(2) of this section. Rehabilitation expenditures incurred prior to such date, however, are not disqualified. In addition, rehabilitation expenditures made after the date the area in which a building is located becomes a registered historic district shall not be disqualified under paragraph (c)(7)(iv) of this section in any case in which physical work on the rehabilitation of a building begins prior to the date the taxpayer knows or has reason to know of an intention to nominate the area in which such building is located as a registered historic district. For purposes of this paragraph (d)(6), the taxpayer knows or has reason to know of such an intention if there is (A) a communication (written or oral) to the owner of any building within the district from the Department of the Interior, or any agency or instrumentality of the appropriate state or local government (or a designee of such agency or instrumentality) that the district in which the building is located is being considered for designation as a registered historic district, (B) a legal notice of such consideration published in a newspaper, or (C) a public meeting held to discuss such consideration. In order to take advantage of the special rule of this paragraph (d)(6), the taxpayer must attach to the Form 3468 filed for the taxable year in which the credit is claimed a statement that the taxpayer in good faith did not know, or have reason to know, of an intention to nominate the area in which the building is located as a registered historic district.

(7) ***Notice of certification*** —

(i) ***In general.*** Except as otherwise provided in paragraph (d)(7)(ii) of this section, a taxpayer claiming the credit for rehabilitation of a certified historic structure (within the meaning of section 48(g)(3) and paragraph (d)(1) of this section) must attach to the Form 3468 filed with the tax return for the taxable year in which the credit is claimed a copy of the final certification of completed work by the Secretary of the Interior, and for returns filed after January 9, 1989, evidence that the building is a certified historic structure.

(ii) ***Late certification.*** If the final certification of completed work has not been issued by the Secretary of the Interior at the time the tax return is filed for a year in which the credit is claimed, a copy of the first page of the Historic Preservation Certification Application—Part 2—Description of Rehabilitation (NPS Form 10-168a), with an indication that it has been received by the Department of the Interior or its designate, together with proof that the building is a certified historic structure (or that such status has been requested), must be attached to the Form 3468 filed with the return. A notice from the Department of the Interior or the State Historic Preservation Officer, stating that the nomination or application has been received, or a date-stamped nomination or application shall be sufficient indication that the nomination or application has been received. The building need not be either listed in the National Register or be determined to be of historic significance to a registered historic district at the time the return is filed for the year in which the credit is claimed. (See paragraph (d)(1) of this section.) The taxpayer must submit a copy of the final certification as an attachment to Form 3468 with the

first income tax return filed after the receipt by the taxpayer of the certification. If the final certification is denied by the Department of Interior, the credit will be disallowed for any taxable year in which it was claimed. If the taxpayer fails to receive final certification of completed work prior to the date that is 30 months after the date that the taxpayer filed the tax return on which the credit was claimed, the taxpayer must submit a written statement to the District Director stating such fact prior to the last day of the 30th month, and the taxpayer shall be requested to consent to an agreement under section 6501(c)(4) extending the period of assessment for any tax relating to the time for which the credit was claimed. The procedure permitted by the preceding sentence shall be used whenever the entire rehabilitation project is not fully completed by the date that is 30 months after the taxpayer filed the tax return upon which the credit was claimed (e.g., a phased rehabilitation) and the Secretary of the Interior has thus not yet certified the rehabilitation.

(iii) ***Effective dates.*** Paragraph (d)(7)(i) of this section applies to returns for taxable years beginning before January 1, 2002. The requirement in the fourth sentence of paragraph (d)(7)(ii) of this section applies only if the first income tax return filed after receipt by the taxpayer of the certification is for a taxable year beginning before January 1, 2002. For rules applicable to returns for taxable years beginning after December 31, 2001, see paragraph (d)(7)(iv) of this section.

(iv) ***Returns for taxable years beginning after December 31, 2001*** —

(A) ***In general.*** Except as otherwise provided in paragraph (d)(7)(ii) of this section and this paragraph (d)(7)(iv), a taxpayer claiming the credit for rehabilitation of a certified historic structure (within the meaning of section 47(c)(3) and paragraph (d)(1) of this section) for a taxable year beginning after December 31, 2001, must provide with the return for the taxable year in which the credit is claimed, the NPS project number assigned by, and the date of the final certification of completed work received from, the Secretary of the Interior. If a credit (including a credit for a taxable year beginning before January 1, 2002) is claimed under the late certification procedures of paragraph (d)(7)(ii) of this section and the first income tax return filed by the taxpayer after receipt of the certification is for a taxable year beginning after December 31, 2001, the taxpayer must provide the NPS project number assigned by, and the date of the final certification of completed work received from, the Secretary of the Interior with that return.

(B) ***Reporting and recordkeeping requirements.*** The information required under paragraph (d)(7)(iv)(A) of this section must be provided on Form 3468 (or its successor) filed with the taxpayer's return. In addition, the taxpayer must retain a copy of the final certification of completed work for as long as its contents may become material in the administration of any internal revenue law.

(C) ***Passthrough entities.*** In the case of a credit for qualified rehabilitation expenditures of a partnership, S corporation, estate, or trust, the requirements of this paragraph (d)(7)(iv) apply only to the entity. Each partner, shareholder or beneficiary claiming a credit for such qualified rehabilitation expenditures from a passthrough entity must, however, provide the employer identification number of the entity on Form 3468 (or its successor).

(e) ***Adjustment to basis*** —

(1) ***General rule.*** Except as otherwise provided by this paragraph (e), if a credit is allowed with respect to property attributable to qualified rehabilitation expenditures incurred in connection with the rehabilitation of a qualified rehabilitated building, the increase in the basis of the rehabilitated property that would otherwise result from the qualified rehabilitation expenditures must be reduced by the amount of the credit allowed. See section 48(q) and the regulations there under for other rules concerning adjustments to basis in the case of section 38 property.

(2) ***Special rule for certain property relating to certified historic structures.*** If a rehabilitation investment credit is allowed with respect to property that is placed in service before January 1, 1987, or property that qualifies for the transition rules in paragraph (a)(2)(iv) (B) or (C) of this section, and such property is attributable to qualified rehabilitation expenditures incurred in connection with the rehabilitation of a certified historic structure, the increase in the basis of the rehabilitated property that would otherwise result from the qualified rehabilitation expenditures must be reduced by one-half of the amount of the credit allowed.

(3) ***Recapture of rehabilitation investment credit.*** If during any taxable year there is a recapture amount determined with respect to any credit that resulted in a basis adjustment under paragraph (e) (1) or (2) of this section, the basis of such building (immediately before the event resulting in such recapture) shall be increased by an amount equal to such recapture amount. For purposes of the preceding sentence, the term “recapture amount” means any increase in tax (or adjustment in carrybacks or carryovers) determined under section 47(a)(5).

(f) ***Coordination with other provisions of the Code*** —

(1) ***Credit claimed by lessee for rehabilitation performed by lessor.*** A lessee may take the credit for rehabilitation performed by the lessor if the requirements of this section and section 48(d) are satisfied. For purposes of applying section 48(d), the fair market value of section 38 property described in section 48(a)(1)(E) shall be limited to that portion of the lessor's basis in the qualified rehabilitated building that is attributable to qualified rehabilitation expenditures. In the case of a portion of a building that is divided into more than one leasehold interest, the qualified rehabilitation expenditures attributable to the common elements shall be allocated to the individual leasehold interests in accordance with the principles of paragraph (c)(10)(ii) of this section. Furthermore, a leasehold interest's share of the common elements shall not be considered to have been placed in service prior to the time that the particular leasehold interest is placed in service.

(2) ***When the credit may be claimed*** —

(i) ***In general.*** The investment credit for qualified rehabilitation expenditures is generally allowed in the taxable year in which the property attributable to the expenditure is placed in service, provided the building is a qualified rehabilitated building for the taxable year. See paragraph (b) of this section and section 46(c) and § 1.46-3(d). Under certain circumstances, however, the credit may be available prior to the date the property is placed in service. See section 46(d) and § 1.46-5 (relating to qualified progress expenditures). Solely for purposes of section 46(c), property attributable to qualified rehabilitation expenditures will not be treated as placed in service until the building with respect to which the expenditures are made meets the definition of a qualified rehabilitated building (as defined in section 48(g)(1) and paragraph (b) of this section) for the taxable year. Accordingly, in the first taxable year for which the building becomes a qualified rehabilitated building, the property described in section 48(a)(1)(E) attributable to expenditures described in paragraph (c) of this section, shall be considered to be placed in service, if such property was considered placed in service under section 46(c) and the regulations thereunder without regard to this paragraph (f)(2)(i) in that taxable year or a prior

taxable year. For purposes of the preceding sentence, the requirement of section 48(g)(1)(A)(iii) and paragraph (b)(3) of this section, relating to the definition of a qualified rehabilitated building shall be deemed to be met if the taxpayer reasonably expects that no rehabilitation work undertaken during the remainder of the rehabilitation process will result in a failure to satisfy the requirements of paragraph (b)(3) of this section. If the requirements of paragraph (b)(3) of this section, are not satisfied, however, the credit shall be disallowed for the taxable year in which it was claimed. If a taxpayer fails to complete physical work on the rehabilitation prior to the date that is 30 months after the date that the taxpayer filed a tax return on which the credit is claimed, the taxpayer must submit a written statement to the District Director stating such fact prior to the last day of the 30th month, and shall be requested to consent to an agreement under section 6501(c)(4) extending the period of assessment for any tax relating to the item for which the credit was claimed.

(ii) ***Section 38 property described in section 48(a)(1)(E).*** In the case of section 38 property described in section 48(a)(1)(E), the section 38 property is not the building. Instead, the section 38 property is the portion of the basis of the building that is attributable to qualified rehabilitation expenditures. Therefore, for example, for purposes of the determination of when such section 38 property is placed in service, a determination must be made regarding when property attributable to the portion of the basis of the building attributable to qualified rehabilitation expenditures is placed in service. The issue of when the building is placed in service is thus not relevant. In fact, under this test, the building itself may never have been taken out of service during the rehabilitation process. If the building is rehabilitated over several years in stages (e.g., by floors), section 38 property attributable to qualified rehabilitation expenditures to a qualified rehabilitated building placed in service in each taxable year shall, generally, be treated as a separate item of section 38 property.

(iii) ***Example.*** The application of this paragraph (f)(2) may be illustrated by the following example:

Example. Assume that A, a calendar year taxpayer, purchases a four-story building on January 1, 1983, for $100,000, and incurs $10,000 of qualified rehabilitation expenditures in 1983 to rehabilitate floor one, $50,000 of qualified rehabilitation expenditures in 1984 to rehabilitate floor two, $70,000 of qualified rehabilitation expenditures in 1985 to rehabilitate floor three, and $60,000 of qualified rehabilitation expenditures in 1986 to rehabilitate floor four. Assume further that A places the property attributable to these expenditures in service on the last day of the year in which the respective expenditures were incurred and that the building is never taken out of service since as each floor is rehabilitated, the other three floors are occupied by tenants. Under the rule in this paragraph (f)(2), the portion of the basis of the building that is attributable to qualified rehabilitation expenditures incurred with respect to floor one and two are deemed to be placed in service in 1985, because that is the first year that the substantial rehabilitation test described in paragraph (b) of this section is met ($120,000 of expenditures incurred by A during a measuring period ending on December 31, 1985 is greater than the $110,000 basis at the beginning of the period). Assume that as of December 31, 1985, at least 75 percent of the external walls of the building have been retained during the rehabilitation process and that A has a reasonable expectation that no work during the remainder of the rehabilitation process will result in less than 75 percent of the external walls being retained. A may claim a credit for A's 1985 taxable year on $130,000 of qualified rehabilitation expenditures ($10,000 in 1983, $50,000 in 1984, and $70,000 in 1985). (See paragraph (c)(6) of this section for rules applicable to when qualified expenditures may be

incurred. In addition, see section 46 (d) and § 1.46-5 for rules relating to qualified progress expenditures.) The fact that the building was a qualified rehabilitated building for A's 1985 taxable year, however, has no effect on whether the building is a qualified rehabilitated building for A's 1986 taxable year. In order to determine whether A is entitled to claim a credit on A's 1986 return for the $60,000 of qualified rehabilitation expenditures incurred in 1986, A must select a measuring period ending in 1986 and must determine whether the building is a qualified rehabilitated building for that year. Solely for purposes of determining whether the building was substantially rehabilitated, expenditures incurred in 1984 and 1985, even though considered in determining whether the building was substantially rehabilitated for A's 1985 taxable year, may be used in addition to the expenditures incurred in 1986 to determine whether the building was substantially rehabilitated for A's 1986 taxable year, provided the expenditures were incurred during any measuring period selected by A that ends in 1986.

(3) ***Coordination with section 47.*** If property described in section 48(a)(1)(E) is disposed of by the taxpayer, or otherwise ceases to be "section 38 property," section 47 may apply. Property will cease to be section 38 property, and therefore section 47 may apply, in any case in which the Department of Interior revokes or otherwise invalidates a certification of rehabilitation after the property is placed in service or a building (other than a certified historic structure) is moved from the place where it is rehabilitated after the property is placed in service. If, for example, the taxpayer made modifications to the building inconsistent with Department of Interior standards, the Secretary of the Interior might revoke the certification. In addition, if all or a portion of a substantially rehabilitated building becomes tax-exempt use property (see paragraph (c)(7)(vi) of this section) for the first time within five years after the credit is claimed, the credit will be recaptured under section 47 at that time as if the building or portion of the building which becomes tax-exempt use property had then been sold.

(g) ***Effective/applicability date.*** This section applies on and after January 19, 2017. For rules before January 19, 2017, see § 1.48-12 as contained in 26 CFR part 1 revised as of April 1, 2016.

[T.D. 8233, 53 FR 39592, Oct. 11, 1988; 53 FR 43866, Oct. 31, 1988, as amended by T.D. 8989, 67 FR 20030, Apr. 24, 2002; T.D. 9040, 68 FR 4920, Jan. 31, 2003; T.D. 9283, 71 FR 51737, Aug. 31, 2006; T.D. 9811, 82 FR 6236, Jan. 19, 2017; T.D. 9874, 84 FR 50125, Sept. 24, 2019]

§ 1.48-13 Rules relating to the increased credit amount for prevailing wage and apprenticeship.

(a) ***In general.*** If a qualified energy project satisfies the requirements in paragraph (b) of this section, the amount of the credit determined under section 48(a) of the Internal Revenue Code (Code), after the application of section 48(a)(1) through (8), and (15), is equal to the credit determined under section 48(a) (section 48 credit) multiplied by five.

(b) ***Requirements.*** A qualified energy project satisfies the requirements of this paragraph (b) if it is one of the following—

(1) A project with a maximum net output of less than one megawatt (MW) of electrical (as measured in alternating current) or thermal energy determined based on the nameplate capacity as provided in paragraph (e) of this section (One Megawatt Exception);

(2) A project the construction of which began prior to January 29, 2023; or

(3) A project that meets the prevailing wage requirements of section 48(a)(10)(A), § 1.45-7(a)(2) and (3) and (b) through (d), and paragraph (c) of this section, the apprenticeship requirements of section 45(b)(8) and § 1.45-8, and the recordkeeping and reporting requirements of § 1.45-12.

(c) *Special rule applicable to general prevailing wage requirements* —

(1) ***In general.*** In addition to satisfying the prevailing wage requirements under § 1.45-7(a)(2) and (3) and (b) through (d), a taxpayer must ensure that any laborers and mechanics employed (within the meaning of § 1.45-7) by the taxpayer or any contractor or subcontractor in the construction of such energy project, and for the five-year period beginning on the date such project is placed in service, the alteration or repair of such project, are paid wages at rates not less than the prevailing rates for construction, alteration, or repair of a similar character in the locality in which such project is located as most recently determined by the Secretary of Labor, in accordance with 40 U.S.C. chapter 31, subchapter IV. Subject to section 48(a)(10)(C) and this paragraph (c), for purposes of determining the increased credit amount under section 48(a)(9)(B)(iii), the taxpayer is deemed to satisfy the prevailing wage requirements of section 48(a)(10)(A)(ii) at the time such project is placed in service.

(2) ***Transition waiver of penalty for prevailing wage requirements.*** For purposes of the transition waiver described in § 1.45-7(c)(6)(iii), the penalty payment required by § 1.45-7(c)(1)(ii) to cure a failure to satisfy the Prevailing Wage Requirements in paragraph (b)(3) of this section is waived with respect to a laborer or mechanic who performed work in the construction, alteration, or repair of an energy project on or after January 29, 2023, and prior to December 12, 2024, if the taxpayer relied upon Notice 2022-61, 2022-52 I.R.B. 560, or the Proposed Regulations (REG-132569-17) (88 FR 82188), corrected in 89 FR 13293 (Feb. 22, 2024), to determine when the activities of any laborer or mechanic became subject to the prevailing wage requirements, and the taxpayer makes the correction payments required by § 1.45-7(c)(1)(i) with respect to such laborer and mechanics within 180 days of December 12, 2024.

(3) ***Exception.*** For purposes of satisfying the prevailing wage requirements of paragraph (b)(3) of this section, § 1.45-7(a)(1) does not apply.

(4) *Recapture* —

(i) ***In general.*** In the case of an energy project that receives the increased credit amount under paragraph (a) of this section by reason of satisfying the requirements of paragraph (b)(3) of this section, the increased credit amount is subject to recapture for any project that does not satisfy the prevailing wage requirements in § 1.45-7(b) through (d) and paragraph (c)(1) of this section for any period with respect to an alteration or repair of such project during the five-year period beginning on the date such project is originally placed in service (five-year recapture period) (but that does not cease to be investment credit property within the meaning of section 50(a) of the Code).

(ii) *Recapture event* —

(A) ***In general.*** Any failure to satisfy the prevailing wage requirements in § 1.45-7(b) through (d) and paragraph (c)(1) of this section for any period with respect to the alteration or repair of any project during the five-year recapture period is a recapture event. Any failure to satisfy the prevailing wage requirements in § 1.45-7(b) through (d) and paragraph (c)(1) of this section with respect to the alteration or repair of any project during the five-year recapture period described in paragraph (c)(6) of this section remains subject to the correction and penalty provisions in § 1.45-7(c), including the waiver provisions in § 1.45-7(c)(6). Subject to § 1.45-7(c)(5) and (6), if the correction and penalty payments

described in § 1.45-7(c) are not made by the taxpayer on or before the date that is 180 days after the date of a final determination by the IRS (as defined in § 1.45-7(c)(4)(ii)), the cure provision described in § 1.45-7(c) does not apply and the increased credit amount is subject to recapture.

(B) ***Yearly determination.*** A determination of whether a recapture event has occurred under paragraph (c)(3)(ii) of this section must be made for each taxable year (or portion thereof) occurring within the five-year recapture period, beginning with the taxable year ending after the date the energy project is placed in service. Thus, for each taxable year beginning or ending within the five-year recapture period, the taxpayer must determine whether the prevailing wage requirements of section 48(a)(10)(A), § 1.45-7(b) through (d), and paragraph (c)(1) of this section are satisfied for the recapture year(s) occurring during each taxable year. If no alteration or repair work occurs during the five-year recapture period, the taxpayer is deemed to satisfy the Prevailing Wage Requirements described in paragraph (b)(3) of this section with respect to such taxable year.

(C) ***Carrybacks and carryforward adjusted.*** In the case of any recapture event described in paragraph (c)(3)(ii)(A) of this section, the carrybacks and carryforwards under section 39 of the Code must be adjusted by reason of such recapture event.

(iii) ***Correction and penalty payments not required if taxpayer is subject to recapture under section 48(a)(10)(C).*** If the IRS determines that a taxpayer that claimed the increased credit amount under section 48(a)(9)(B)(iii) or transferred a specified credit portion under section 6418 of the Code that includes the increased credit amount under section 48(a)(9)(B)(iii) failed to satisfy the prevailing wage requirements in § 1.45-7(b) through (d) and paragraph (c)(1) of this section for any period with respect to the alteration or repair of any project during the five-year recapture period and the taxpayer does not make the correction and penalty payments provided in § 1.45-7(c), then no penalty is assessed under § 1.45-7, and the increased credit amount is subject to recapture. Taxpayers whose increased credit amount is subject to recapture under this section may retain the amount of the section 48(a) credit (base credit) determined under section 48(a) of this section provided all requirements were met in the year of determination.

(5) ***Recapture amount*** —

(i) ***In general.*** If a recapture event has occurred as described in paragraph (c)(3)(ii) of this section, the tax under chapter 1 of the Code for the taxable year in which the recapture event occurs is increased by the applicable recapture percentage multiplied by the increased credit amount allowed to the taxpayer pursuant to paragraphs (a) and (b)(3) of this section.

(ii) ***Applicable recapture percentage.*** If the recapture event occurs:

(A) Within one full year after the property is placed in service, the recapture percentage is 100;

(B) Within one full year after the close of the period described in paragraph (c)(4)(ii)(A) of this section, the recapture percentage is 80;

(C) Within one full year after the close of the period described in paragraph (c)(4)(ii)(B) of this section, the recapture percentage is 60;

(D) Within one full year after the close of the period described in paragraph (c)(4)(ii)(C) of this section, the recapture percentage is 40; or

(E) Within one full year after the close of the period described in paragraph (c)(4)(ii)(D) of this section, the recapture percentage is 20.

(6) ***Recapture period.*** The five-year recapture period begins on the date the project is placed in service and ends on the date that is five full years after the placed-in-service date. Each 365-day period (366-day period in case of a leap year) within the five-year recapture period is a separate recapture year for recapture purposes.

(7) ***Increase in tax for recapture.*** The increase in tax under chapter 1 of the Code for the recapture of an increased credit amount claimed under paragraph (a) of this section occurs in the year of the recapture event.

(8) ***Annual prevailing wage compliance report.*** In addition to the general reporting requirements in § 1.45-12, a taxpayer that has claimed an increased credit amount under paragraph (a) of this section or transferred a specified credit portion under section 6418 that includes an increased credit amount under paragraph (a) of this section is required to provide to the IRS, information on the payment of prevailing wages with respect to any alteration or repair of the project during the recapture period at the time and in the form and manner prescribed in IRS forms or instructions or in publications or guidance published in the Internal Revenue Bulletin. *See* § 601.601 of this chapter.

(9) ***Transferred specified credit portions.*** In the case of a transferred specified credit portion under section 6418, to which recapture of an increased credit amount under this paragraph (c) applies, the eligible taxpayer is required to notify the transferee taxpayer of the recapture event in accordance with the provisions of § 1.6418-5(f)(2) and the transferee taxpayer is responsible for any amount of increase in tax under section 48(a)(10)(C) and this paragraph (c) in accordance with the provisions of § 1.6418-5(f)(3).

(d) ***Energy project defined*** —

(1) ***In general.*** For purposes of the increased credit amount provided by section 48(a)(9) and paragraphs (b) and (c) of this section, the domestic content bonus credit amount provided by section 48(a)(12), and the increase in credit rate for energy communities provided in section 48(a)(14), the term *energy project* means one or more energy properties (multiple energy properties) that are operated as part of a single energy project. Multiple energy properties will be treated as one energy project if they are owned by a taxpayer (subject to the related taxpayer rule provided in paragraph (d)(2) of this section) and any four or more of the following factors are present:

(i) The energy properties are constructed on contiguous pieces of land;

(ii) The energy properties are described in a common power purchase, thermal energy, or other off-take agreement or agreements;

(iii) The energy properties have a common intertie;

(iv) The energy properties share a common substation, or thermal energy off-take point;

(v) The energy properties are described in one or more common environmental or other regulatory permits;

(vi) The energy properties are constructed pursuant to a single master construction contract; or

(vii) The construction of the energy properties is financed pursuant to the same loan agreement.

(2) ***Time of determination*** —

(i) ***Energy project.*** A taxpayer may make the determination that multiple energy properties are an energy project either—

(A) At any point during the construction of the multiple energy properties, or

(B) During the taxable year in which the last such energy property is placed in service.

(ii) ***Placed in Service.*** An energy project (as defined in § 1.48-13(d)) is considered placed in service *on the date* the last of the energy properties within the energy project is placed in service.

(3) ***Related taxpayers*** —

(i) ***Definition.*** For purposes of this section, the term *related taxpayers* means members of a group of trades or businesses that are under common control (as defined in § 1.52-1(b)).

(ii) ***Related taxpayer rule.*** For purposes of this section, related taxpayers are treated as one taxpayer in determining whether multiple energy properties are treated as an energy project with respect to which a section 48 credit may be determined.

(4) ***Separate reporting for energy properties within an energy project*** —(i) *In general.* While multiple energy properties may be treated as a single energy project for specified purposes, this information must be separately reported for each energy property within an energy project on Form 3468, *Investment Credit,* or any successor form(s), and such form must be filed with the taxpayer's timely filed (including extensions) Federal income tax return for the taxable year in which the energy property is placed in service.

(e) ***Nameplate capacity for purposes of the One Megawatt Exception*** —

(1) ***In general.*** For purposes of paragraph (b)(1) of this section, whether an energy project has a maximum net output of less than 1 megawatt (MW) of electrical (as measured in alternating current) or thermal energy is determined based on the nameplate capacity. If an energy project is comprised of more than one energy property, the energy project's maximum net output is calculated as the sum of the nameplate capacity of each energy property. If applicable, taxpayers should use the International Standard Organization (ISO) conditions to measure the maximum electrical generating output or usable energy capacity of an energy project. Paragraphs (e)(2) through (7) of this section provide rules for measuring output for different types of energy properties to determine whether the One Megawatt Exception (as provided in paragraph (b)(1) of this section) applies. Because electrochromic glass property (as defined in § 1.48-9(e)(2)(ii)), fiber-optic solar energy property (as defined in § 1.48-9(e)(2)(i)), and microgrid controllers (as defined in § 1.48-9(e)(12)) do not generate electricity or thermal energy, these energy properties are not eligible for the One Megawatt Exception.

(2) ***Nameplate capacity for energy properties that generate in direct current for purposes of the One Megawatt Exception.*** Only for energy properties that generate electricity in direct current, the taxpayer may choose to determine the maximum net output (in alternating current) of each energy property that is part of the energy project by using the lesser of:

(i) The sum of the nameplate generating capacities within the unit of energy property in direct current, which is deemed the nameplate generating capacity of the unit of energy property in alternating current; or

(ii) The nameplate capacity of the first component of property that inverts the direct current electricity into alternating current.

(3) ***Electrical generating energy property.*** In the case of an electrical generating energy property, the One Megawatt Exception is determined by using maximum electrical generating output in megawatts that the unit of energy property is capable of producing on a steady state basis and during continuous operation under standard conditions, as measured by the manufacturer and consistent with the definition of nameplate capacity provided in 40 CFR 96.202.

(4) ***Electrical energy storage property.*** In the case of electrical energy storage property (as defined in § 1.48-9(e)(10)(ii)), the One Megawatt Exception is determined by using the storage device's maximum net output. If the output of electrical energy storage property is in direct current, apply the rules of paragraph (2) of this section.

(5) ***Thermal energy storage property and other property generating or distributing thermal energy.*** In the case of thermal energy storage property (as defined in § 1.48-9(e)(10)(iii)) and other energy property that generates or distributes thermal energy for productive use (for example, geothermal energy property, GHP property, solar process heat property), the One Megawatt Exception is determined by using the property's maximum net output. The maximum net output in MW is calculated by using a conversion whereby one MW is equal to 3.4 million British Thermal Units per hour (mmBtu/hour) for heating and 284 tons for cooling (Btu per hour/3,412,140 = MW). The maximum net output is the maximum instantaneous rate of discharge and is determined based on the nameplate capacity of the equipment that generates or distributes thermal energy for productive use (including distributing the thermal energy from the storage medium). For purposes of determining the maximum net output of thermal energy storage property, if the nameplate capacity of the thermal energy storage is not available, the nameplate capacity of the equipment delivering thermal energy to the thermal energy storage may be used. For thermal energy storage property and other energy property distributing thermal energy to a building or buildings, the nameplate capacity can be assessed as either the aggregate maximum thermal output of all individual heating or cooling elements within the building or buildings, or as the maximum thermal output that the entire project is capable of delivering to a building or buildings at any given moment. The maximum thermal output an entire project is capable of delivering at any given moment does not take into account the capacity of redundant equipment if such equipment is not operated when the system is at maximum output during normal operation. For thermal energy storage property and other energy property that generates or distributes thermal energy for a productive use, the maximum thermal output that the entire system is capable of delivering is considered to be the greater of the rate of cooling or the rate of heating of the aggregate of the nameplate capacity of the equipment distributing energy for productive use, including distributing the thermal energy from the thermal energy storage medium to the building or buildings. If such nameplate capacity is unavailable, in the case of thermal energy storage property only, the maximum thermal output may instead be considered to be the greater of the rate of cooling or the rate of heating of the aggregate of the nameplate capacity of all the equipment delivering energy to the thermal energy storage property in the project.

(6) ***Hydrogen energy storage property and specified clean hydrogen production facilities.*** In the case of a hydrogen energy storage property (as defined in § 1.48-9(e)(10)(iv)) or a specified clean hydrogen production facility (as defined in section 48(a)(15)(C)), the One Megawatt Exception is determined by using the property's or facility's maximum net output. The maximum net output in MW is calculated by using a conversion whereby one MW is equal to 3.4 mmBtu/hour of hydrogen or equivalently 10,500 standard cubic feet (scf) per hour of hydrogen.

(7) ***Qualified biogas property.*** In the case of qualified biogas property, the One Megawatt Exception is determined by the property's maximum net output. The maximum net output in MW is calculated by using a conversion whereby one MW is equal to 3.4 mmBtu/hour. Taxpayers may convert the

maximum net output of 3.4 mmBtu/hour into an equivalent maximum net volume flow in scf per hour using the appropriate high heat value conversion factors found in the Environmental Protection Agency (EPA) Greenhouse Gas Reporting Rule (GHGRR) at table C-1 to subpart C of part 98 (40 CFR part 98). Otherwise, taxpayers may calculate their own equivalent volumetric flow if the heat content of the gas is known.

(f) ***Applicability date.*** This section applies to energy projects placed in service in taxable years ending on or after December 12, 2024, and the construction of which begins after December 12, 2024.

[T.D. 10015, 89 FR 100651, Dec. 12, 2024]

§ 1.48-14 Rules applicable to energy property.

(a) ***Retrofitted energy property —***

(1) ***In general.*** For purposes of section 48(a)(3)(B)(ii), (5)(D)(iv), and (8)(B)(iii) of the Internal Revenue Code (Code), a retrofitted energy property may be originally placed in service even though it contains some used components of the unit of energy property only if the fair market value of the used components of the unit of energy property is not more than 20 percent of the total value of the unit of energy property taking into account the cost of the new components of property plus the value of the used components of the unit of energy property (80/20 Rule). Only the cost of new components of the unit of energy property is taken into account for purposes of computing the credit determined under section 48 (section 48 credit) with respect to the unit of energy property. The cost of new components of the unit of energy property includes all costs properly included in the depreciable basis of the new components. If the taxpayer satisfies the 80/20 Rule with regard to the unit of energy property and the taxpayer pays or incurs new costs for property that is an integral part of the energy property (as defined in § 1.48-9(f)(3)(i)), then the taxpayer may include the new costs paid or incurred for property that is an integral part of the energy property (as defined in § 1.48-9(f)(3)(i)) in the basis of the energy property for purpose of the section 48 credit. In the case of an energy project (as defined in § 1.48-13(d)), the 80/20 Rule is applied to each unit of energy property comprising an energy project.

(2) ***Excluded costs.*** Costs incurred for new components of property added to used components of a unit of energy property may not be taken into account for purposes of the section 48 credit unless the taxpayer satisfies the 80/20 Rule (as provided in paragraph (a)(1) of this section) by placing into service a unit of energy property for which the fair market value of the used components of property is not more than 20 percent of the total value of the unit of energy property taking into account the cost of the new components of property plus the value of the used components of property.

(3) ***Examples.*** This paragraph (a)(3) provides examples illustrating the provisions of this paragraph (a):

(i) ***Example 1. Retrofitted solar energy property that satisfies the 80/20 Rule.*** Z owns an existing solar energy property for which the section 48 credit has been claimed and the recapture period for the section 48 credit has elapsed. Z replaces used components of the solar energy property with new components of property at a cost of $1.4 million. The retrofitted solar energy property constitutes a unit of energy property. The fair market value of the remaining original components of the retrofitted solar energy property is $100,000, which is not more than 20 percent of the retrofitted solar energy property's total value of $1.5 million (that is, the cost of the new components ($1.4 million) + the value of the remaining original components ($100,000)). The value of the old components of the retrofitted solar energy property is 7

percent of the value of total value of the retrofitted solar energy property ($100,000/$1.5 million), thus the retrofitted solar energy property will be considered newly placed in service for purposes of section 48, and Z will be able to claim a section 48 credit based on the cost of the new components ($1.4 million).

(ii) ***Example 2. Capital improvements to an existing energy property that do not satisfy the 80/20 Rule.*** X owns an existing unit of energy property for which the section 48 credit has been claimed and the recapture period for the section 48 credit has elapsed. The fair market value of the unit of energy property is $1 million. During the tax year, X makes capital improvements to the unit of energy property. The expenditures for such capital improvements total $300,000. X may not claim a section 48 credit for the $300,000 spent on capital improvements during the tax year because the capital improvements did not satisfy the 80/20 Rule.

(iii) Example 3. *Upgrades to a qualified hydropower production facility that satisfies the 80/20 Rule:* Y owns a qualified hydropower production facility (hydropower facility) as defined under section 45 and no taxpayer, including Y, has ever claimed a section 45 credit for the hydropower facility. The hydropower facility consists of a unit of energy property including water intake, water isolation mechanisms, turbine, pump, motor, and generator. The associated impoundment (dam) and power conditioning equipment are integral parts of the unit of energy property. Y makes upgrades to the unit of energy property by replacing the turbine, pump, motor, and generator with new components at a cost of $1.5 million. Y does not make any upgrades to the property that is an integral part of the unit of energy property. The remaining original components of the unit of energy property have a fair market value of $100,000, which is not more than 20 percent of the retrofitted hydropower facility's total value of $1.6 million (that is, the cost of the new components ($1.5 million) + the value of the remaining original components ($100,000)). Thus, the retrofitted hydropower facility will be considered newly placed in service for purposes of section 48, and Y will be able to make a valid section 48(a)(5) election and claim a section 48 credit based on the cost of the new components ($1.5 million).

(b) ***Dual use property*** —

(1) ***Definition.*** For purposes of section 48, the term *dual use property* means property that uses energy derived from both a qualifying source (that is, from an energy property defined in § 1.48-9(a) (including a qualified facility for which an election has been made as provided by paragraph (f)(2) of this section)) and from a non-qualifying source (that is, sources other than an energy property defined in § 1.48-9(a) (including a qualified facility for which an election has been made as provided by paragraph (f)(2) of this section)).

(2) ***Qualification as energy property*** —

(i) ***In general.*** Dual use property qualifies as energy property if its use of energy from non-qualifying sources does not exceed 50 percent of its total energy input (as determined under the rules of paragraph (b)(2)(ii) of this section) during an annual measuring period (as defined in paragraph (b)(2)(iii) of this section). If the energy used from qualifying sources is between 50 percent and 100 percent, only a proportionate amount of the basis of the energy property will be taken into account in computing the amount of the section 48 credit (for example, if 80 percent of the energy used by a dual use property is from qualifying sources, 80 percent of the basis of the dual use property will be taken into account in computing the amount of the section 48 credit).

(ii) ***Aggregation of energy inputs.*** The measurement of energy use required for purposes of paragraph (b)(2)(i) of this section may be made by comparing, on the basis of British thermal units (Btus), energy input to dual use property from all qualifying sources with energy input from all non-qualifying sources. To convert the energy inputs for CHP into Btus, the lower heating value of the fuel is used for CHP property and the higher heating value of the hydrogen is used for fuel cells. The Commissioner may also accept any other method that accurately establishes the relative annual use of energy derived from all qualifying sources and of energy input from all non-qualifying sources by dual use property.

(iii) ***Annual measuring period.*** For purposes of paragraph (b)(2)(i) of this section, the term *annual measuring period* means with respect to an item of dual use property the 365-day period (366-day period in case of a leap year) beginning with the day the dual use property is placed in service (initial annual measuring period) or a 365-day period (366-day period in case of a leap year) beginning the day after the last day of the immediately preceding annual measuring period (subsequent annual measuring period).

(iv) ***Recapture.*** If, for any subsequent annual measuring period (within the recapture period specified in section 50(a) of the Code, the equipment's use of energy from all qualifying sources is reduced below 50 percent of its total energy input (as determined under the rules of paragraph (b)(2)(i) of this section), then recapture of the section 48 credit is required under section 50(a).

(v) ***Example.*** On October 1, 2021, X, a calendar year taxpayer, places in service a unit of energy property that includes a system that heats its office building by circulating hot water heated by energy derived from a geothermal deposit through the building. The water heated by energy derived from a geothermal deposit is not hot enough to provide sufficient heat for the building. The circulation system includes an electric boiler in which the water is further heated before being circulated in the heating system. Energy from the electric boiler is not from a qualifying source and therefore the system is dual use property. On a Btu basis, sixty percent of the total energy input to the circulating system during the initial annual measuring period (the 365-day period beginning on October 1, 2021) is energy derived from a geothermal deposit. Accordingly, the circulation system, including the pumps and pipes that circulate the hot water through the building, are part of the unit of energy property and eligible for a section 48 credit. Sixty percent of the basis of the circulation system is taken into account in determining the section 48 credit for X's unit of energy property. During the 365-day period beginning on October 1, 2023, forty-five percent of the total energy input to the circulating system (on a Btu basis) is energy derived from a geothermal deposit. X's section 48 credit is therefore subject to recapture under section 50.

(c) ***Energy property eligible for multiple Federal income tax credits*** —

(1) ***In general.*** The basis of energy property may be eligible for calculating both the section 48 credit and another Federal income tax credit, subject to the limitation provided in paragraph (c)(2) of this section.

(2) ***Limitation.*** Except as provided in paragraph (g) of this section, a taxpayer may not claim both a section 48 credit and another Federal income tax credit with respect to the same basis in an energy property. See paragraph (e) of this section for special rules regarding ownership of energy property.

(d) ***Incremental cost*** —

(1) ***In general.*** For purposes of section 48, if a component of energy property is also used for a purpose other than the intended function of the energy property, only the incremental cost of a component of energy property is included in the basis of the energy property. The term *incremental cost* means the excess of the total cost of a component over the amount that would have been expended for the component if that component were used for a non-qualifying purpose.

(2) ***Example.*** A installs solar energy property above the surface of an existing roof of a building that A owns. The solar energy property uses bifacial panels that convert to energy the light that strikes both the front and back of the panels. Therefore, along with installing the bifacial panels, A is reroofing their building with a reflective roof that has a highly reflective surface. Because the reflective roof enables the panels' generation of significant amounts of electricity from reflected sunlight, when installed in connection with the solar energy property, it constitutes part of that energy property to the extent that the cost of the reflective roof exceeds the cost of reroofing A's building with a non-reflective roof. The cost of reroofing with the reflective roof is $15,000 whereas the cost of a reroofing with a standard roof for the building would be $10,000. The incremental cost of the reflective roof is $5,000, and that amount is included in A's basis in the solar energy property for purposes of the section 48 credit.

(e) ***Special rules concerning ownership*** —

(1) ***Basis.*** For purposes of section 48, a taxpayer that owns an energy property is eligible for the section 48 credit only to the extent of the taxpayer's basis in the energy property. In the case of multiple taxpayers holding direct ownership in an energy property, each taxpayer determines its basis based on its fractional ownership interest in the energy property.

(2) ***Multiple owners.*** A taxpayer must directly own at least a fractional interest in the entire unit of energy property for a section 48 credit to be determined with respect to such taxpayer's interest. No section 48 credit may be determined with respect to a taxpayer's ownership of one or more separate components of an energy property if the components do not constitute a unit of energy property. However, the use of property owned by one taxpayer that is an integral part of an energy property owned by a second taxpayer will not prevent a section 48 credit from being determined with respect to the second taxpayer's energy property (though neither taxpayer would be eligible for a section 48 credit with respect to the first taxpayer's property).

(3) ***Related taxpayers*** —

(i) ***Definition.*** For purposes of this section, the term *related taxpayers* means members of a group of trades or businesses that are under common control (as defined in § 1.52-1(b)).

(ii) ***Related taxpayer rule.*** For purposes of this section, related taxpayers are treated as one taxpayer in determining whether a taxpayer has made an investment in an energy property with respect to which a section 48 credit may be determined.

(4) ***Examples.*** The following examples illustrate the rules in this paragraph (e). In each example, X and Y are unrelated taxpayers.

(i) ***Example 1. Fractional ownership required to satisfy section 48.*** X and Y own fractional ownership interests in a GHP property that is a unit of energy property. Because X and Y each own a fractional ownership interest in a unit of energy property, a section 48 credit may be determined with respect to X's and Y's fractional ownership interests in the unit of energy property.

(ii) ***Example 2. Separate ownership of GHP property.*** A GHP property is comprised of coils in the ground and several individual heat pumps used in conjunction with those coils. X owns both the coils in the ground and one of the individual heat pumps used in conjunction with the coils. Y owns one or more of the individual heat pump(s) used in conjunction with the coils. No section 48 credit may be determined with respect to Y because Y owns merely a component of energy property rather than a unit of energy property as defined in § 1.48-9(f)(2). However, while X does not own all of the individual heat pumps used in conjunction with the coils, X does own both the coils in the ground and one heat pump used in conjunction with the coils and thus owns an entire unit of energy property. Accordingly, X may compute a section 48 credit with respect to this unit of energy property.

(iii) ***Example 3. Shared ownership of property that is an integral part of separate energy properties.*** X owns a wind energy property that is a unit of energy property and Y owns a solar energy property that is a unit of energy property that are co-located. Both X's wind energy property and Y's solar energy property connect to a substation that houses a step-up transformer where the electricity is stepped up to electrical grid voltage before being transmitted to the electrical grid through an intertie. X and Y each own a 50 percent fractional ownership interest in the step-up transformer. The step-up transformer is an integral part of both the wind energy property and the solar energy property (as defined in § 1.48-9(f)(3)(i)). As a result, X and Y may both compute a section 48 credit for their respective energy properties by including their respective bases in the step-up transformer.

(iv) ***Example 4. Separate ownership of property that is an integral part of separate energy property.*** X owns a wind energy property that is a unit of energy property and property that is an integral part of the wind energy property, specifically a transformer where the electricity is stepped up to electrical grid voltage before being transmitted to the electrical grid through an intertie. Y owns a solar energy property that is a unit of energy property that connects to X's transformer. X and Y are not related persons within the meaning of paragraph (e)(3)(i) of this section. Because Y does not hold an ownership interest in the transformer, Y may compute its section 48 credit for its solar energy property, but it cannot include any basis relating to the transformer.

(v) ***Example 5.*** X owns a wind energy property that is a unit of energy property and a solar energy property that is a unit of energy property. Both the wind energy property and the solar energy property are connected to a transformer where the electricity is stepped up to electrical grid voltage before being transmitted to the electrical grid through an intertie. The transformer is an integral part of both the wind energy property and the solar energy property (within the meaning of § 1.48-9(f)(3)(i)) and is owned by Y. X and Y are related persons within the meaning of paragraph (e)(3)(i) of this section. X and Y are treated as one taxpayer under paragraph (e)(3)(ii) of this section. X may include the basis of the transformer in computing its section 48 credit with respect to the wind energy and the solar energy property (but may not include more than 100% of that basis in the aggregate).

(f) ***Election to treat qualified facilities as energy property*** —

(1) ***In general.*** If a taxpayer makes an election under section 48(a)(5)(C) (pursuant to paragraph (f)(5) of this section) to treat qualified property that is part of a qualified investment credit facility as energy property with respect to which a section 48 credit may be determined, such property will be treated

as energy property for purposes of section 48. No section 45 credit may be determined with respect to any qualified investment credit facility and the requirements of section 45 are not imposed on a qualified investment credit facility.

(2) ***Qualified investment credit facility.*** The term qualified investment credit facility means any facility—

(i) That is a qualified facility (within the meaning of section 45) described in section 45(d)(1) through (4), (6), (7), (9) or (11);

(ii) That meets the placed in service and beginning of construction requirements (if any) provided in section 48;

(iii) With respect to which no credit has been allowed under section 45; and

(iv) For which the taxpayer makes an irrevocable election under section 48(a)(5) and paragraph (f)(5) of this section.

(3) ***Qualified property.*** The term *qualified property* means property that meets each of the requirements of paragraphs (f)(3)(i) through (iv) of this section. Regardless of where qualified property is located, any qualified property that meets the requirements of this paragraph (f)(3) is part of a qualified investment credit facility with respect to which a section 48 credit may be determined.

(i) The property is tangible personal property or other tangible property (not including a building or its structural components), but only if such other tangible property is an integral part of the qualified investment credit facility.

(ii) Depreciation (or amortization in lieu of depreciation) is allowable (as defined in § 1.48-9(b)(4)) with respect to the property.

(iii) The taxpayer constructs, reconstructs, or erects the property (as defined in § 1.48-9(b)(1)) or acquires the property (as defined in § 1.48-9(b)(2)) if the original use of the property (as defined in § 1.48-9(b)(3)) commences with the taxpayer.

(iv) The property is not intangible property.

(4) ***Definitions related to requirements for qualified property*** —

(i) ***Tangible personal property.*** The term *tangible personal property* means any tangible property except land and improvements thereto, such as buildings or other inherently permanent structures (including items that are structural components of such buildings or structures). Tangible personal property includes all property (other than structural components) that is contained in or attached to a building. Further, all property that is in the nature of machinery (other than structural components of a building or other inherently permanent structure) is considered tangible personal property even though located outside a building. Local law is not controlling for purposes of determining whether property is or is not tangible property or tangible personal property. Thus, tangible property may be personal property for purposes of the section 48 credit even though under local law the property is considered to be a fixture and therefore real property.

(ii) ***Other tangible property.*** The term *other tangible property* means tangible property other than tangible personal property (not including a building and its structural components), that is used as an integral part of furnishing electrical energy by a person engaged in a trade or business of furnishing any such service.

(iii) *Integral part* —

(A) ***In general.*** Property owned by a taxpayer is an integral part of a qualified investment credit facility owned by the same taxpayer if it is used directly in the intended function of the qualified investment credit facility and is essential to the completeness of the intended function of the qualified investment credit facility. A taxpayer may not claim the section 48 credit for any property that is not owned by the taxpayer, regardless of whether that property is otherwise an integral part of the taxpayer's qualified investment credit facility.

(B) ***Power conditioning and transfer equipment.*** Property that is an integral part of a qualified investment credit facility includes power conditioning equipment and transfer equipment used to perform the intended function of the qualified investment credit facility. Power conditioning equipment includes, but is not limited to, transformers, inverters, and converters, which modify the characteristics of electricity or thermal energy into a form suitable for use or transmission or distribution. Parts related to the functioning or protection of power conditioning equipment are also treated as power conditioning equipment and include, but are not limited to, switches, circuit breakers, arrestors, and hardware used to monitor, operate, and protect power conditioning equipment. Transfer equipment includes equipment that permits the aggregation of energy generated by components of energy properties and equipment that alters voltage in order to permit transfer to a transmission or distribution line. Transfer equipment does not include transmission or distribution lines. Examples of transfer equipment include, but are not limited to, wires, cables, and combiner boxes that conduct electricity. Parts related to the functioning or protection of transfer equipment are also treated as transfer equipment and may include items such as current transformers used for metering, electrical interrupters (such as circuit breakers, fuses, and other switches), and hardware used to monitor, operate, and protect transfer equipment.

(C) ***Roads.*** Roads that are an integral part of a qualified investment credit facility are integral to the activity performed by the qualified investment credit facility; these include onsite roads that are used for equipment to operate and maintain the qualified investment credit facility. Roads primarily for access to the site, or roads used primarily for employee or visitor vehicles, are not integral to the activity performed by a qualified investment credit facility.

(D) ***Fences.*** Fencing is not an integral part of a qualified investment credit facility because it is not integral to the activity performed by the energy property.

(E) ***Buildings.*** Generally, buildings are not integral parts of a qualified investment credit facility because they are not integral to the activity of the qualified investment credit facility. However, the structures described in paragraphs (f)(4)(iii)(F) and (G) of this section are not treated as buildings for this purpose.

(F) ***Structures essentially items of machinery or equipment.*** A structure that is essentially an item of machinery or equipment is not treated as a building for purposes of paragraph (f)(4)(iii)(E) of this section.

(G) ***Structures that house certain property.*** A structure that houses property that is integral to the activity of a qualified investment credit facility is not treated as a building for purposes of paragraph (f)(4)(iii)(E) of this section if the use of the structure is so closely related to

the use of the housed qualified investment credit facility that the structure clearly can be expected to be replaced if the qualified investment credit facility it initially houses is replaced.

(5) *Time and manner of making election* —

(i) ***In general.*** To make an election under section 48(a)(5) and paragraph (f) of this section to treat a qualified facility as a qualified investment credit facility, a taxpayer must claim the section 48 credit with respect to such qualified investment credit facility on a completed Form 3468, *Investment Credit,* or any successor form(s), and file such form with the taxpayer's timely filed (including extensions) Federal income tax return for the taxable year in which the qualified investment credit facility is placed in service. The taxpayer must also attach a statement to its Form 3468, or any successor form(s), filed with its timely filed Federal income tax return (including extensions) that includes all of the information required by the instructions to Form 3468, or any successor form(s) for each qualified investment credit facility subject to an election under section 48(a)(5) and paragraph (f) of this section. A separate election must be made for each qualified facility that meets the requirements provided in paragraph (f)(5)(v) of this section to be treated as a qualified investment credit facility. If any taxpayer owning an interest in a qualified facility makes an election with respect to such qualified facility, that election is binding on all taxpayers that directly or indirectly own an interest in the qualified facility.

(ii) ***Special rule for partnerships and S corporations.*** In the case of a qualified facility owned by a partnership or an S corporation, the election under paragraph (f) of this section is made by the partnership or S corporation and is binding on all ultimate credit claimants (as defined in § 1.50-1(b)(3)(ii)) of a section 48 credit. The partnership or S corporation must file a Form 3468, *Investment Credit,* or any successor form(s), with its timely filed partnership or S corporation return (including extensions) with respect to Federal income tax for the taxable year in which the qualified investment credit facility is placed in service to indicate that it is making the election and attach a statement that includes all of the information required by the instructions to Form 3468, or any successor form(s) for each qualified facility subject to the election. The ultimate credit claimants must claim the section 48 credit on a completed Form 3468, or any successor form(s), and file such form with a timely filed (including extensions) Federal income tax return for the taxable year in which the ultimate credit claimant's distributive share or pro rata share of the section 48 credit is taken into account under section 706(a) of the Code or section 1366(a) of the Code, respectively. The partnership or S corporation making the election must provide the ultimate credit claimants with the necessary information to complete Form 3468, or any successor form(s), to claim the section 48 credit.

(6) ***Election irrevocable.*** The election under section 48(a)(5) and paragraph (f) of this section to treat a qualified facility as an energy property is irrevocable.

(g) ***Coordination rule for sections 42 and 48 credits.*** As provided under section 50(c)(3)(C), in determining eligible basis for purposes of calculating a section 42 credit, a taxpayer is not required to reduce its basis in an energy property by the amount of the section 48 credit determined with respect to the property. The basis of an energy property may be used to determine a section 48 credit and may also be included in eligible basis to determine a section 42 credit. See paragraph (e) of this section for special rules regarding ownership of energy property.

(h) *Qualified interconnection costs included in certain lower-output energy properties* —

(1) ***In general.*** For purposes of determining the section 48 credit, energy property includes amounts paid or incurred by the taxpayer for qualified interconnection property (as defined in paragraph (h)(2) of this section), in connection with the installation of energy property (as defined in § 1.48-9(a)) that has a maximum net output of not greater than five megawatts (MW) (as measured in alternating current) (as described in paragraph (h)(3) of this section). The qualified interconnection property must provide for the transmission or distribution of the electricity produced or stored by such energy property and must be properly chargeable to the capital account of the taxpayer as reduced by paragraph (h)(6) of this section. If the costs borne by the taxpayer are reduced by utility or non-utility payments, Federal income tax principles may require the taxpayer to reduce the amounts of costs treated as paid or incurred for qualified interconnection property to determine a section 48 credit.

(2) ***Qualified interconnection property.*** The term *qualified interconnection property* means, with respect to an energy project that is not a microgrid controller, any tangible property that is part of an addition, modification, or upgrade to a transmission or distribution system that is required at or beyond the point at which the energy project interconnects to such transmission or distribution system in order to accommodate such interconnection; is either constructed, reconstructed, or erected by the taxpayer, (as defined in § 1.48-9(b)(1)), or for which the cost with respect to the construction, reconstruction, or erection of such property is paid or incurred by such taxpayer; and the original use (as defined in § 1.48-9(b)(3)), of which, pursuant to an interconnection agreement (as defined in paragraph (h)(4) of this section), commences with a utility (as defined in paragraph (h)(5) of this section). For purposes of determining the original use of interconnection property in the context of a sale-leaseback or lease transaction, the principles of section 50(d)(4) must be taken into account, as applicable, with such original use determined on the date of the sale-leaseback or lease. Qualified interconnection property is not part of an energy property. As a result, qualified interconnection property is not taken into account in determining whether an energy project satisfies the prevailing wage and apprenticeship requirements in section 48(a)(10)(A) and (11), the requirements for the domestic content bonus credit amount referenced in section 48(a)(12), or the increase in credit rate for energy communities provided in section 48(a)(14).

(3) ***Five-Megawatt Limitation*** —

(i) ***In general.*** The Five-Megawatt Limitation is measured at the level of the energy property in accordance with section 48(a)(8)(A). The maximum net output of an energy property is measured only by nameplate generating capacity (in alternating current) of the unit of energy property, which does not include the nameplate capacity of any integral property, at the time the energy property is placed in service. The nameplate generating capacity of the unit of energy property is measured independently from any other energy properties that share the same integral property.

(ii) ***Nameplate capacity for purposes of the Five-Megawatt Limitation.*** For purposes of paragraph (h)(1) of this section, the determination of whether an energy property has a maximum net output of not greater than five MW (as measured in alternating current) is based on the nameplate capacity for purposes of paragraph (h)(1) of this section. If applicable, taxpayers should use the International Standard Organization (ISO) conditions to measure the maximum electrical generating output or usable energy capacity of an energy property. Paragraphs (h)(3)(iv) and (v) of this section provide rules for applying the Five-Megawatt Limitation (as provided in paragraph (h)(1) of this section) to electrical generating energy property and electrical energy storage property, respectively.

(iii) ***Nameplate capacity for energy properties that generate in direct current for purposes of the Five-Megawatt Limitation.*** For energy properties that generate electricity in direct current, the taxpayer may choose to determine whether an energy property has a maximum net output of not greater than five MW (in alternating current) by using the lesser of:

(A) The sum of the nameplate generating capacities within the unit of energy property in direct current, which is deemed the nameplate generating capacity of the unit of energy property in alternating current; or

(B) The nameplate capacity of the first component of property that inverts the direct current electricity into alternating current.

(iv) ***Electrical generating energy property.*** In the case of an electrical generating energy property, the Five-Megawatt Limitation is determined by using the maximum electrical generating output in megawatts that the unit of energy property is capable of producing on a steady state basis and during continuous operation under standard conditions, as measured by the manufacturer and consistent with the definition of nameplate capacity provided in 40 CFR 96.202. If applicable, taxpayers should use the International Standard Organization (ISO) conditions to measure the maximum electrical generating output of a unit of energy property.

(v) ***Electrical energy storage property.*** In the case of electrical energy storage property (as defined in § 1.48-9(e)(10)(ii)), the Five-Megawatt Limitation is determined by using the energy storage property's maximum net output as its nameplate capacity.

(4) ***Interconnection agreement.*** The term *interconnection agreement* means an agreement with a utility for the purposes of interconnecting the energy property owned by such taxpayer to the transmission or distribution system of the utility. In the case of the election provided under section 50(d)(5) (relating to certain leased property), the term includes an agreement regarding energy property leased by such taxpayer.

(5) ***Utility.*** For purposes of section 48(a)(8) and this paragraph (h), the term *utility* means the owner or operator of an electrical transmission or distribution system that is subject to the regulatory authority of a State or political subdivision thereof, any agency or instrumentality of the United States, a public service or public utility commission or other similar body of any State or political subdivision thereof, or the governing or ratemaking body of an electric cooperative.

(6) ***Reduction to amounts chargeable to capital account*** —(i) *In general.* In the case of costs paid or incurred for qualified interconnection property as defined in paragraph (h)(2) of this section, amounts otherwise chargeable to capital account with respect to such costs must be reduced under rules similar to the rules of section 50(c) (including section 50(c)(3)).

(7) ***Examples.*** This subparagraph provides examples illustrating the application of the general rules provided in paragraph (h)(1) of this section and Five-Megawatt Limitation provided in this paragraph (h).

(i) ***Example 1. Application of Five-Megawatt Limitation to an interconnection agreement for energy properties owned by taxpayer.*** X places in service two solar energy properties (Solar Properties) each with a maximum net output of 4 MW (as measured in alternating current by using the nameplate capacity of an inverter, which is the first component of property attached to each of the Solar Properties that inverts the direct current electricity into alternating current). Each inverter is integral property to each Solar Property but is not shared by the Solar Properties. The Solar Properties share a step-up transformer, which is integral property to both Solar

Properties. As part of the development of the Solar Properties, payment of qualified interconnection costs is required by the utility to modify and upgrade the utility's transmission system at or beyond the point of interconnection to accommodate such interconnection. X has an interconnection agreement with the utility that allows for a maximum output of 10 MW (as measured in alternating current). The interconnection agreement provides the total cost to X of the qualified interconnection property. X may include the costs X paid or incurred for qualified interconnection property subject to the terms of the interconnection agreement, to calculate X's section 48 credits for each of the Solar Properties because each has a maximum net output of not greater than five MW (alternating current). X cannot include more than the total costs X paid or incurred for the qualified interconnection property in calculating the aggregate section 48 credit amount for both Solar Properties.

(ii) ***Example 2. Application of Five-Megawatt Limitation to an interconnection agreement for energy properties owned by separate taxpayers.*** X places in service a solar energy property (Solar Property) with a maximum net output of 3 MW (as measured in alternating current by using the nameplate capacity of the first component of property attached to the Solar Property that inverts the direct current electricity into alternating current). Y places in service a wind facility (Wind Facility), for which Y has made a valid election under section 48(a)(5), with a maximum net output of 4 MW (as measured in alternating current). The Solar Property and the Wind Facility share a step-up transformer, which is integral to both facilities. As part of the development of the Solar Property and the Wind Facility, payment of qualified interconnection costs is required by the utility to modify and upgrade the transmission system at or beyond the point of interconnection to accommodate that interconnection. X and Y are party to the same interconnection agreement with the utility that allows for a maximum output of 10 MW (as measured in alternating current). The interconnection agreement provides the total cost of the qualified interconnection property to X and Y. X and Y may include the costs paid or incurred by X and Y, respectively, for qualified interconnection property subject to the terms of the interconnection agreement, to calculate their respective section 48 credits for the Solar Property and the Wind Facility because each has a maximum net output of not greater than five MW (in alternating current).

(iii) ***Example 3. Application of Five-Megawatt Limitation to an interconnection agreement for a single energy property.*** X develops three solar properties (Solar Properties) located in close proximity. The Solar Properties are not considered an energy project pursuant to the definition in § 1.48-13(d). Each of the Solar Properties is a unit of energy property that has a maximum net output of 4 MW. The nameplate capacity of each Solar Property is determined by using the sum of the nameplate generating capacities within the unit of each Solar Property in direct current, which is deemed the nameplate generating capacity of each Solar Property in alternating current. Electricity from the three Solar Properties feeds into a single gen-tie line and a common point of interconnection with the transmission system. X is party to a separate interconnection agreement with the utility for each of the Solar Properties and each interconnection agreement allows for a maximum output of 10 MW (as measured in alternating current). X may include the costs it paid or incurred for qualified interconnection property for each of the Solar Properties to calculate its section 48 credit for each of the Solar Properties, subject to the terms of each interconnection agreement, because each of the Solar Properties has a maximum net output of not greater than five MW (in alternating current). X cannot include more than the total costs X paid or incurred for the qualified interconnection property in calculating the aggregate section 48 credit amount for both Solar Properties.

(iv) ***Example 4. Application of Five-Megawatt Limitation to a single interconnection agreement for multiple energy properties.*** The facts are the same as in paragraph (h)(7)(iii) of this section (*Example 3*), except that X is party to one interconnection agreement with the utility with respect to the three solar energy properties (Solar Properties) and the interconnection agreement allows for a maximum output of 12 MW (as measured in alternating current). With respect to each of the three Solar Properties, X may include the costs it paid or incurred for qualified interconnection property for each Solar Property to calculate its section 48 credit for each Solar Property, subject to the terms of the interconnection agreement, because each Solar Property has a maximum net output of not greater than five MW (in alternating current).

(v) ***Example 5. Application of Five-Megawatt Limitation to an Energy Project.*** The facts are the same as in paragraph (h)(7)(iv) of this section (*Example 4*), except that the three solar energy properties (Solar Properties) are also subject to a common power purchase agreement and as a result, are considered an energy project (as defined in § 1.48-13(d)). With respect to each of the three Solar Properties, X may include the costs it paid or incurred for qualified interconnection property to calculate its section 48 credit for each of the three Solar Properties, subject to the terms of the interconnection agreement, because each of the Solar Properties has a maximum net output of not greater than five MW (in alternating current).

(vi) ***Example 6. Utility payment reducing costs borne by taxpayer.*** In year 1, X places in service a solar energy property (Solar Property) with a maximum net output of 3 MW (as measured in alternating current by using the nameplate capacity of the inverter attached to the solar energy property, which is the first component of property attached to each of the Solar Properties that inverts the direct current electricity into alternating current). X is party to an interconnection agreement with a utility for the purpose of connecting the Solar Property to the transmission or distribution system of the utility. Pursuant to the interconnection agreement, X pays $1 million to the utility, and the utility places in service qualified interconnection property. In year 1, X had no reasonable expectation of any payment from the utility or other parties with respect to the qualified interconnection property. The $1 million is properly chargeable to the capital account of X, subject to paragraph (h)(6) of this section. X properly includes the $1 million paid to the utility in determining its credit under section 48 for Year 1. In Year 4, taxpayer Y enters into an agreement with the utility under which Y pays the utility $100,000 for the use of qualified interconnection property placed in service by the utility pursuant to the interconnection agreement between X and the utility. The utility pays $100,000 to X. Under these circumstances, the payment from the utility in year 4 would not require X to reduce the amount treated as paid or incurred for the qualified interconnection property for the purpose of determining the section 48 credit in year 1.

(vii) ***Example 7. Non-utility payment reducing costs borne by taxpayer.*** The facts in year 1 are the same as in paragraph (h)(7)(vi) of this section (*Example 6*). In Year 4, taxpayer Y enters into an agreement with the utility under which Y pays X $100,000 for the use of qualified interconnection property placed in service by the utility pursuant to the interconnection agreement between X and the utility. Y pays $100,000 to X. In year 1, X had no reasonable expectation of any payment from Y for subsequent agreements with Y or other parties with respect to the qualified interconnection property. Under these circumstances, the payment from Y in year 4 would not require X to reduce the amount treated as paid or incurred for the qualified interconnection property for the purpose of determining the section 48 credit in year 1.

(i) ***Cross references.***

(1) For rules regarding the coordination of the section 42 credit and section 48 credit, see section 50(c)(3).

(2) For rules regarding the denial of double benefit for qualified biogas property, see section 45(e).

(3) For applicable recapture rules, see section 50(a).

(4) For rules regarding the credit eligibility of property used outside the United States, see section 50(b)(1).

(5) For rules regarding the credit eligibility of property used by certain tax-exempt organizations, see section 50(b)(3). See section 6417(d)(2) of the Code for an exception to this rule in the case of an applicable entity making an elective payment election.

(6) For application of the normalization rules to determine the section 48 credit taken by certain regulated companies, including rules regarding the election not to apply the normalization rules to energy storage technology (as defined in section 48(c)(6)), see section 50(d)(2).

(j) ***Applicability date.*** This section applies with respect to property placed in service after December 31, 2022, and during a taxable year beginning after December 12, 2024.

[T.D. 10015, 89 FR 100651, Dec. 12, 2024]

§ 1.48-15 Election to treat clean hydrogen production facility as energy property.

(a) ***In general.*** Under section 48(a)(15) of the Internal Revenue Code (Code), a taxpayer that owns and places in service a specified clean hydrogen production facility (as defined in section 48(a)(15)(C) and paragraph (b) of this section) can make an irrevocable election under section 48(a)(15)(C)(ii)(II) to treat any qualified property (as defined in section 48(a)(5)(D)) that is part of the facility as energy property for purposes of section 48.

(b) ***Specified clean hydrogen production facility.*** The term *specified clean hydrogen production facility* means any qualified clean hydrogen production facility—

(1) That is placed in service after December 31, 2022;

(2) With respect to which no credit has been allowed under section 45V or 45Q of the Code, and for which the taxpayer makes an irrevocable election to have section 48(a)(15) apply; and

(3) For which an unrelated party has verified in the manner specified in paragraph (e) of this section that such facility produces hydrogen through a process or processes that results in lifecycle GHG emissions that are consistent with the hydrogen that such facility was designed and expected to produce under section 48(a)(15)(A)(ii) and paragraph (c) of this section.

(c) ***Energy percentage*** —

(1) ***In general.*** In the case of a specified clean hydrogen production facility that is designed and reasonably expected to produce qualified clean hydrogen through a process or processes that results in a lifecycle GHG emissions rate of:

(i) Not greater than 4 kilograms of carbon dioxide equivalent (CO2e) per kilogram of hydrogen, and not less than 2.5 kilograms of CO2e per kilogram of hydrogen, the energy percentage is 1.2 percent;

(ii) Less than 2.5 kilograms of CO2e per kilogram of hydrogen, and not less than 1.5 kilograms of CO2e per kilogram of hydrogen, the energy percentage is 1.5 percent;

(iii) Less than 1.5 kilograms of CO2e per kilogram of hydrogen, and not less than 0.45 kilograms of CO2e per kilogram of hydrogen, the energy percentage is 2 percent; and

(iv) Less than 0.45 kilograms of CO2e per kilogram of hydrogen, the energy percentage is 6 percent.

(2) ***Designed and reasonably expected to produce.*** Hydrogen that a facility is *designed and reasonably expected to produce* means hydrogen produced through a process or processes that result in the lifecycle GHG emissions rate specified in the annual verification report described in paragraph (e)(2) of this section for the taxable year in which the election is made. In the case of a facility that is designed and reasonably expected to produce hydrogen through multiple processes, the lifecycle GHG emissions rate must be determined using the weighted average of the lifecycle GHG emissions rates of all hydrogen production processes.

(d) ***Time and manner of making the election*** —

(1) ***In general.*** To make an election under section 48(a)(15)(C)(ii)(II), a taxpayer must claim the section 48 credit with respect to a specified clean hydrogen production facility on a completed Form 3468, *Investment Credit,* or any successor form(s), and file the form with the taxpayer's Federal income tax return or information return for the taxable year in which the specified clean hydrogen production facility is placed in service. The taxpayer must also attach a statement to its Form 3468, or any successor form(s), filed with its Federal income tax return or information return that includes the information required by the instructions to Form 3468, or any successor form(s), for each specified clean hydrogen production facility subject to an election. A separate election must be made for each specified clean hydrogen production facility that meets the requirements provided in section 48(a)(15) to treat the qualified property that is part of the facility as energy property. If any taxpayer owning an interest in a specified clean hydrogen production facility makes an election under section 48(a)(15)(C)(ii)(II) with respect to the specified clean hydrogen production facility, then that election is binding on all taxpayers that directly or indirectly own an interest in the specified clean hydrogen production facility.

(2) ***Special rule for partnerships and S corporations.*** In the case of a specified clean hydrogen production facility owned by a partnership or an S corporation, the election under section 48(a)(15)(C)(ii)(II) is made by the partnership or S corporation and is binding on all ultimate credit claimants (as defined in § 1.50-1(b)(3)(ii)). The partnership or S corporation must file a Form 3468, or any successor form(s), with its partnership or S corporation return for the taxable year in which the specified clean hydrogen production facility is placed in service to indicate that it is making the election, and attach a statement that includes all the information required by the instructions to Form 3468, or any successor form(s), for each specified clean hydrogen production facility subject to the election. The ultimate credit claimant must claim the section 48 credit on a completed Form 3468, or any successor form(s), and file such form on a timely filed (including extensions) Federal income tax return for the taxable year in which the ultimate credit claimant's distributive share or pro rata share of the section 48 credit is taken into account under section 706(a) of the Code or section 1366(a) of the Code, respectively. The partnership or S corporation making the election must provide the ultimate credit claimants with the necessary information to complete Form 3468, or any successor form(s), to claim the section 48 credit.

(3) ***Election irrevocable.*** The election to treat qualified property that is part of a specified clean hydrogen production facility as energy property is irrevocable.

(4) ***Election availability date.*** The election to treat qualified property that is part of a specified clean hydrogen production facility as energy property is available for property placed in service after December 31, 2022. In the case of any property placed in service after December 31, 2022, for which construction began before January 1, 2023, the election under section 48(a)(15)(C)(ii)(II) applies only to the extent of the basis of such property that is attributable to construction, reconstruction, or erection occurring after December 31, 2022.

(5) ***Beginning of construction safe harbor*** —

(i) ***In general.*** A taxpayer may, in its discretion, make an irrevocable election effective for the remaining taxable years within the period described in paragraph (f)(3) of this section, to treat the latest version of 45VH2-GREET that was publicly available on the date when construction of the specified clean hydrogen facility began as the 45VH2-GREET Model. In the case of a facility owned by a taxpayer that began construction prior to December 26, 2023, such taxpayer may, in its discretion, make an irrevocable election effective for the remaining taxable years within the period described in paragraph (f)(3) of this section, to treat the first publicly-available version of 45VH2-GREET (that is, the version of 45VH2-GREET that was released in December 2023) as the 45VH2-GREET Model. For purposes of this paragraph (d)(5), in the case of a facility that is modified to produce qualified clean hydrogen under section 45V(d)(4) or a facility that is retrofitted in a manner that entitles the facility to a new placed in service date under § 1.45V-6(b), the date when construction of the facility began is the date when construction of such modification or retrofit began. An election under this paragraph (d)(5)(i) relates to the version of 45VH2-GREET and does not alter any other rules provided in this section.

(ii) ***Time and manner of making election*** —

(A) ***In general.*** The taxpayer makes the election described in paragraph (d)(5)(i) of this section with respect to a specified clean hydrogen production facility by attaching a statement to the Form 3468 or any successor form(s). The taxpayer must make the election by no later than the due date for filing its Federal income tax return or information return (including extensions) for the taxable period in which such facility is placed in service.

(B) ***Special rule for facilities placed in service prior to January 1, 2024.*** In the case of a taxpayer that places in service a specified clean hydrogen production facility prior to January 1, 2024, the taxpayer must make the election described in paragraph (d)(5)(i) of this section by no later than the period of limitation on filing a claim for credit or refund under section 6511(a) for the taxable period in which such facility is placed in service.

(6) ***Provisional emissions rate*** —

(i) ***In general.*** A taxpayer files a petition with the Secretary for a provisional emissions rate (PER) by following the procedures stated in § 1.45V-4(c)(3) through (5), except, in lieu of attaching the PER petition to the Form 7210 in the first taxable year of production as specified in § 1.45V-4(c)(3), the taxpayer must attach the PER petition to the Form 3468, or a successor form(s), attached to the taxpayer's Federal income tax return for the taxable year in which the specified clean hydrogen production facility is originally placed in service. A taxpayer may use such PER to calculate the amount of the section 48 credit with respect to a specified clean hydrogen production facility, provided—

(A) The lifecycle GHG emissions rate of the hydrogen produced at the specified clean hydrogen production facility has not been determined (for purposes of section 45V(c)(2)(C)) under the 45VH2-GREET Model;

(B) There are no material changes to the information about the taxpayer's hydrogen production process from the information provided to the DOE to obtain an emissions value pursuant to § 1.45V-4(c)(5); and

(C) All other requirements of section 48(a)(15) are met.

(ii) ***Material change.*** For purposes of paragraph (d)(6)(i)(B), a *material change* means any change that would cause a qualified verifier (as defined in § 1.45V-5(h)) to be unable to complete a verification under paragraph (e) of this section.

(iii) ***Subsequent inclusion safe harbor*** —

(A) ***In general.*** The taxpayer may, in its discretion, make an irrevocable election, effective for the remaining taxable years within the period described in paragraph (f)(3) of this section, to treat the first version of 45VH2-GREET that includes the taxpayer's specified clean hydrogen production facility's hydrogen production pathway, as described in § 1.45V-4(c)(2)(i), as the 45VH2-GREET Model.

(B) ***Time and manner of making election.*** The taxpayer makes the election described in paragraph (d)(6)(iii) of this section with respect to a specified clean hydrogen production facility by attaching a statement to the Form 3468 or any successor form(s). The taxpayer must make the election by no later than the due date for filing its Federal income tax return or information return (including extensions) for the taxable period in which such facility is placed in service.

(C) ***Special rule for facilities placed in service prior to January 1, 2024.*** In the case of a taxpayer that places in service a specified clean hydrogen production facility prior to January 1, 2024, the taxpayer must make the election described in paragraph (d)(6)(iii)(A) of this section by no later than the close of the period of limitation for filing a claim for credit or refund under section 6511(a) for the taxable period in which such facility is placed in service.

(iv) ***Special rule for facilities that receive an emissions value prior to the beginning of construction.*** Notwithstanding the requirement of paragraph (d)(6)(i)(A) of this section, a taxpayer who received an emissions value from the DOE with respect to a specified clean hydrogen production facility (pursuant to § 1.45V-4(c)(5)) before the date when construction of the facility began, may, in its discretion, continue to use the PER determined by the Secretary and the associated emissions value to calculate the lifecycle GHG emissions rate of the hydrogen produced at the specified clean hydrogen production facility for the remainder of the period described in paragraph (f)(3) of this section, provided that the taxpayer continues to satisfy the requirements of paragraphs (d)(6)(i)(B) and (C) of this section.

(v) ***Not an examination of books and records.*** The Secretary's PER determination is not an examination or inspection of books of account for purposes of section 7605(b) of the Code and does not preclude or impede the IRS (under section 7605(b) or any administrative provisions adopted by the IRS) from later examining a return or inspecting books or records with respect to any taxable year for which the section 48 credit is claimed. For example, the annual verification report submitted under section 48(a)(15)(C)(iii) and paragraph (e)(2) of this section and any information, representations, or other data provided to the DOE in support of the request for an emissions value are still subject to examination. Further, a PER determination does not signify that the IRS has determined that the requirements of section 48(a)(15), including the cross-references to section 45V, have been satisfied for any taxable year.

(e) *Third-party verification* —

(1) ***In general.*** In the case of a taxpayer that makes an election under section 48(a)(15)(C)(ii)(II) to treat any qualified property that is part of a specified clean hydrogen production facility as energy property for purposes of the section 48 credit, the taxpayer must obtain an annual verification report for the taxable year in which the election under section 48(a)(15)(C)(ii)(II) is made for the facility and for each taxable year thereafter during the recapture period specified in paragraph (f)(3) of this section. The taxpayer must also submit the annual verification report as an attachment to the Form 3468, or any successor form(s), for the taxable year in which the election under section 48(a)(15)(C)(ii)(II) is made for the facility.

(2) *Annual verification report* —

(i) ***In general.*** For purposes of paragraph (e)(1) of this section, the annual verification report must be signed under penalties of perjury by a qualified verifier (as defined in § 1.45V-5(h)) and contain an attestation providing all of the following—

(A) The information specified in § 1.45V-5(b) and (d) through (h);

(B) A statement attesting to the lifecycle GHG emissions rate of the hydrogen produced through a process (determined under section 45V(c) and § 1.45V-4), or the weighted average of the lifecycle GHG emissions rate of the hydrogen produced through processes, by which all hydrogen was produced at the specified clean hydrogen production facility for the taxable year to which the annual verification report relates and that the operation, during such taxable year, of the specified clean hydrogen production facility, and any qualifying energy attribute certificates applied pursuant to § 1.45V-4(d) for the purpose of accounting for such facility's emissions, are accurately reflected in the data that the taxpayer entered into the 45VH2-GREET Model (as defined in § 1.45V-1(a)(9)(ii)) (or that the taxpayer provided to the Department of Energy (DOE) in support of the taxpayer's request for an emissions value), to determine the lifecycle GHG emissions rate of the hydrogen undergoing verification; and

(C) A statement attesting that the facility produced hydrogen through a process or processes that results in a lifecycle GHG emissions rate that is consistent with, or lower than, the lifecycle GHG emissions rate of the hydrogen that such facility was designed and expected to produce.

(ii) ***Inconsistent lifecycle GHG emissions.*** In the event the facility produces hydrogen through a process (or processes) that results in a lifecycle GHG emissions rate that is greater than the lifecycle GHG emissions rate that such facility was designed and expected to produce (and thus the qualified verifier cannot provide the attestation specified in paragraph (e)(2)(i)(C) of this section), resulting in a reduced energy percentage under section 48(a)(15)(A)(ii) with respect to such facility, an emissions tier recapture event under paragraph (f)(2) of this section will occur.

(iii) ***Designed and expected to produce.*** Hydrogen that the facility was *designed and expected to produce* means hydrogen specified in paragraph (c)(2) of this section.

(iv) ***Timely annual verification report.*** The annual verification report must be signed and dated by the qualified verifier no later than the due date, including extensions, of the Federal income tax return for the taxable year in which the hydrogen undergoing verification was produced.

(v) ***Records retention.*** In addition to the recordkeeping requirements set forth in paragraph (g) of this section, the taxpayer must retain the annual verification report for at least six years after the due date, with extensions, for filing the Federal income tax return for the taxable year in which the hydrogen undergoing verification was produced.

(f) ***Recapture*** —

(1) ***In general.*** Pursuant to of section 48(a)(15)(E), in any taxable year of the recapture period specified in paragraph (f)(3) of this section in which an emissions tier recapture event (as defined in paragraph (f)(2) of this section) occurs, the tax imposed on the taxpayer under chapter 1 of the Code for the taxable year of the emissions tier recapture event is increased by the recapture amount specified in paragraph (f)(4) of this section.

(2) ***Emissions tier recapture event.*** For purposes of paragraph (f)(1) of this section, an *emissions tier recapture event* is any of the following occurrences—

(i) The taxpayer fails to obtain an annual verification report by the deadline for filing its Federal income tax return or information return (including extensions) for any taxable year in which an annual verification report is required under paragraph (e)(1) of this section;

(ii) The specified clean hydrogen production facility actually produced hydrogen through a process (or processes) that results in a lifecycle GHG emissions rate that can only support a lower energy percentage than the energy percentage used to calculate the amount of the section 48 credit for the facility for the taxable year in which the facility is placed in service; or

(iii) The specified clean hydrogen production facility actually produced hydrogen through a process (or processes) that results in a lifecycle GHG emissions rate of greater than 4 kilograms of CO2e per kilogram of hydrogen.

(3) ***Recapture period.*** For purposes of paragraph (f) of this section, the recapture period begins on the first day of the taxable year after the taxable year in which the facility was placed in service and ends on the close of the fifth taxable year following the close of the taxable year in which the facility was placed in service.

(4) ***Recapture amount*** —

(i) ***In general.*** In the case of an emissions tier recapture event under paragraph (f)(2) of this section, the *recapture amount* for the taxable year in which the emissions tier recapture event occurred is equal to 20 percent of the excess of the section 48 credit allowed to the taxpayer for the specified clean hydrogen production facility for the taxable year in which the facility was placed in service, over the section 48 credit that would have been allowed to the taxpayer for the facility if the taxpayer had used the energy percentage supported by the actual production to calculate the amount of the section 48 credit.

(ii) ***Carrybacks and carryovers.*** In the case of any emissions tier recapture event described in paragraph (f)(2) of this section, the carrybacks and carryovers under section 39 must be adjusted by reason of the emissions tier recapture event.

(iii) ***Recapture amount in case of recapture events under paragraph (f)(2)(i) or (iii) of this section.*** For purposes of paragraph (f)(4)(i) of this section, in the case of an emissions tier recapture event under paragraph (f)(2)(i) or (iii) of this section, the amount of the section 48 credit that would have been allowed to the taxpayer for the specified clean hydrogen production facility if the taxpayer had used the energy percentage supported by the actual production is zero.

Accordingly, the recapture amount in the taxable year of an emissions tier recapture event under paragraph (f)(2)(i) or (iii) of this section, is 20 percent of the section 48 credit allowed to the taxpayer for such specified clean hydrogen production facility.

(5) ***Example.*** The following example illustrates the application of paragraphs (f)(1) through (4) of this section.

(i) ***Facts.*** On June 1, 2024, Taxpayer, a calendar-year taxpayer, originally places in service Facility X, a specified clean hydrogen production facility. At such time, Taxpayer's basis in qualified property that is part of Facility X is $100,000,000. In the taxable year in which Facility X was originally placed in service (taxable year 2024), Facility X produces qualified clean hydrogen through a process that results in a lifecycle GHG emissions rate of 0.44kg of CO2e per kilogram of hydrogen. Taxpayer submits with its 2024 Federal income tax return an annual verification report attesting that, for the taxable year 2024, Facility X produced hydrogen through a process that resulted in a lifecycle GHG emissions rate of 0.44kg of CO2e per kilogram of hydrogen, which is consistent with the lifecycle GHG emissions rate of the hydrogen that the facility was designed and expected to produce. Taxpayer makes a valid election under section 48(a)(15)(C)(ii)(II) with respect to Facility X on its Federal income tax return for the taxable year 2024. In the first year of the recapture period (taxable year 2025), Taxpayer fails to obtain an annual verification report by the deadline (including extensions) for filing its 2025 Federal income tax return. In the second year of the recapture period (taxable year 2026), Facility X produces qualified clean hydrogen through a process that results in a lifecycle GHG emissions rate of 1.4kg of CO2e per kilogram of hydrogen and obtains an annual verification report attesting to such lifecycle GHG emissions rate. In the third, fourth, and fifth years of the recapture period (taxable years 2027, 2028, and 2029), Facility X produces qualified clean hydrogen through a process that results in a lifecycle GHG emissions rate of 0.44kg of CO2e per kilogram of hydrogen and obtains an annual verification report attesting to such lifecycle GHG emissions rate, and attesting that such lifecycle GHG emissions rate is consistent with the lifecycle GHG emissions rate of the hydrogen that the facility was designed and expected to produce, by the deadline (including extensions) for filing its 2027, 2028, and 2029 Federal income tax returns, respectively.

(ii) ***Analysis.*** Facility X is designed and reasonably expected to produce hydrogen through a process that results in a lifecycle GHG emissions rate of 0.44kg of CO2e per kilogram of hydrogen, which is the rate specified in Taxpayer's annual verification report submitted with Taxpayer's Federal income tax return for the taxable year in which the election under section 48(a)(15)(C)(ii)(II) with respect to Facility X was made. Under paragraph (c)(1)(iv) of this section, Facility X's energy percentage is therefore 6 percent. For the taxable year 2024, the year in which Taxpayer places in service Facility X, Taxpayer claims a section 48 credit for its basis in qualified property that is part of Facility X in the amount of $6,000,000 (6 percent of $100,000,000). In taxable year 2025 there is an emissions tier recapture event under paragraph (f)(2)(i) of this section because Taxpayer failed to obtain an annual verification report. Under paragraph (f)(4)(i) of this section, the amount of the section 48 credit recaptured in 2025 is $1,200,000. This reflects 20 percent of the section 48 credit allowed ($6,000,000) for Facility X. In taxable year 2026, there is an emissions tier recapture event under paragraph (f)(2)(ii) of this section because Facility X produced hydrogen through a process that resulted in a lifecycle GHG emissions rate that could only support an energy percentage of 2 percent, which is lower than the energy percentage used to calculate the amount of the section 48 credit for Facility X. Under paragraph (f)(4)(i) of this section, the amount of the section 48 credit recaptured in 2026

is $800,000. This reflects 20 percent of the difference between the amount of the section 48 credit allowed ($6,000,000) and the amount of the section 48 credit that would have been allowed for Facility X if Taxpayer had used the energy percentage supported by the actual production ($2,000,000). There is no emissions tier recapture event in taxable years 2027, 2028, or 2029 because, in those years, Facility X produced hydrogen through a process that resulted in a lifecycle GHG emissions rate that was consistent with the lifecycle GHG emissions rate of the hydrogen that Facility X was designed and expected to produce, and Taxpayer obtained an annual verification report attesting to such by the deadline (with extensions) for filing its Federal income tax return for each of those taxable years.

(6) ***Coordination with sections 50(a) and 48(a)(10)(C) of the Code*** —

(i) ***In general.*** In each taxable year of the recapture period specified in paragraph (f)(3) of this section for any credit allowed under section 48 with respect to a specified clean hydrogen production facility, the recapture rules, if applicable, apply in the following order:

(A) Section 50(a);

(B) Section 48(a)(10)(C), as provided in § 1.48-13; and

(C) Section 48(a)(15)(E).

(ii) The following examples illustrate the application of paragraph (f)(6) of this section.

(A) ***Example 1*** —

(*1*) ***Facts.*** The facts are the same as in paragraph (f)(5)(i) of this section (*Example*), except that, in addition to failing to obtain an annual verification report by the deadline (including extensions) for filing its 2025 Federal income tax return, on August 1, 2025, Taxpayer disposes of Facility X. Taxpayer has not been allowed any other credits under section 38.

(*2*) ***Analysis.*** For taxable year 2025, under section 50(a)(1)(B)(ii), because the period of time between when Facility X was placed in service is more than 1, but less than 2 full years, the applicable recapture percentage is 80 percent. Taxpayer has an increase in tax for taxable year 2025 under section 50(a) of $4,800,000 ($6,000,000 aggregate decrease in credit allowed multiplied by 0.80). Under paragraph (f)(6) of this section, because the credit was recaptured under section 50(a), no further amounts would be recaptured under either section 48(a)(10)(C) (had Taxpayer claimed the increased credit amount under section 48(a)(9)) or section 48(a)(15)(E) (on account of Taxpayer's failure to obtain an annual verification report).

(B) ***Example 2*** —

(*1*) ***Facts.*** The facts are the same as in paragraph (f)(5)(i) of this section (*Example*), except that, in taxable year 2025, Facility X produces qualified clean hydrogen through a process that results in a lifecycle GHG emissions rate of 1.4 kilograms of CO2e per kilogram of hydrogen and obtains an annual verification report attesting to such lifecycle GHG emissions rate. On August 1, 2026, Taxpayer disposes of Facility X. Taxpayer has not been allowed any other credits under section 38.

(2) ***Analysis.*** In taxable year 2025, there is an emissions tier recapture event under paragraph (f)(2)(ii) of this section because Facility X produced hydrogen through a process that resulted in a lifecycle GHG emissions rate that could only support an energy percentage of 2 percent, which is lower than the energy percentage used to calculate the amount of the section 48 credit for Facility X. Under paragraph (f)(4)(i) of this section, the amount of the section 48 credit recaptured in 2025 is $800,000. In taxable year 2026, under section 50(a)(1)(B)(iii), because the period of time between when Facility X was placed in service is more than 2, but less than 3 full years, the applicable recapture percentage is 60 percent. Taxpayer has an increase in tax under section 50(a) of $3,120,000 ($5,200,000 aggregate decrease in credit allowed ($6,000,000 credit allowed minus $800,000 amount recaptured under paragraph (f)(2)(ii) of this section in taxable year 2025) multiplied by 0.60).

(g) ***Recordkeeping.*** Consistent with section 6001 of the Code, a taxpayer making the election under section 48(a)(15)(C)(ii)(II) with respect to a specified clean hydrogen production facility must maintain and preserve records sufficient to establish the amount of the section 48 credit claimed by the taxpayer. At a minimum, those records include the annual verification report required under paragraph (e)(2) of this section, records to substantiate the information required to be included in the annual verification report, records establishing that the facility meets the definition of a specified clean hydrogen production facility under section 48(a)(15)(C) and paragraph (b) of this section, records of past credit claims under section 45Q by any taxpayer with respect to carbon capture equipment included at the facility, and records establishing the date the specified clean hydrogen production facility was placed in service. If the increased section 48 credit amount was allowed under section 48(a)(9), then the taxpayer must also maintain records in accordance with § 1.45-12. Taxpayers must also retain all raw data used for submission of a request for an emissions value to the DOE for at least six years after the due date (including extensions) for filing the Federal income tax return or information return to which the provisional emissions rate (PER) (as defined in § 1.45V-4(c)(1)) petition is ultimately attached.

(h) ***Applicability date.*** This section applies to taxable years beginning after December 26, 2023.

[T.D. 10023, 90 FR 2325, Jan. 10, 2025]

§§ 1.48C-1-1.48C-2 [Reserved]

§ 1.48C-3 Rules relating to the increased credit amount for prevailing wage and apprenticeship.

(a) ***In general.*** If any qualifying advanced energy project (as defined in section 48C(c)(1)(A)) satisfies the prevailing wage requirements of section 45(b)(7) and § 1.45-7, the apprenticeship requirements of section 45(b)(8) and § 1.45-8, and the recordkeeping and reporting requirements of § 1.45-12, with respect to the re-equipping, expansion, or establishment of a qualifying advanced energy project within the meaning of section 48C, the qualifying advanced energy project credit determined under section 48C(a) for any taxable year with respect to credits allocated pursuant to section 48C(e) is an amount equal to 30 percent of the qualified investment for the taxable year. For purposes of this section, the term re-equipping, expansion, or establishment means those activities described in §§ 1.45-7(d)(3) and 1.45-8(g)(1) that are performed with respect to a qualifying advanced energy project within the meaning of section 48C before such project is placed in service.

(b) ***Applicability date.*** This section applies to qualifying advanced energy projects placed in service in taxable years ending after June 25, 2024, and the re-equipping, expansion, or establishment of which begins after June 25, 2024. Taxpayers may apply this section to qualifying advanced energy projects placed in service

in taxable years ending on or before June 25, 2024, and qualifying advanced energy projects placed in service in taxable years ending after June 25, 2024, the re-equipping, expansion, or establishment of which begins before June 25, 2024, provided that taxpayers follow this section in its entirety and in a consistent manner.

[T.D. 9998, 89 FR 53272, June 25, 2024]

§ 1.48D-0 Table of contents.

This section lists the table of contents for §§ 1.48D-1 through 1.48D-6.

§ 1.48D-1 Advanced manufacturing investment credit determined.

(a) Overview.

(b) Determination of credit.

(c) Coordination with section 47.

(1) In general.

(2) Example.

(d) Applicability date.

§ 1.48D-2 Definitions.

(a) In general.

(b) Applicable transaction.

(c) Basis.

(1) In general.

(2) Transition rule.

(d) Beginning of construction.

(e) Eligible taxpayer.

(f) Foreign entities.

(1) Foreign entity.

(2) Foreign entity of concern.

(g) Manufacturing of semiconductors.

(h) Manufacturing of semiconductor manufacturing equipment.

(i) Placed in service.

(j) Qualified investment.

(1) In general.

(2) Special rules for certain passthrough entities.

(i) Partnership.

(ii) S corporation.

(iii) Estate or trust.

(3) Qualified progress expenditures election.

(i) In general.

(ii) Special rules for certain passthrough entities.

(4) Examples.

(i) Example 1.

(ii) Example 2.

(k) Section 48D credit.

(l) Section 48D regulations.

(m) Semiconductor.

(n) Semiconductor manufacturing.

(1) Semiconductor wafer production.

(2) Semiconductor fabrication.

(3) Semiconductor packaging.

(4) Assembly.

(5) Testing.

(6) Advanced packaging.

(o) Semiconductor manufacturing equipment.

(p) Statutory references.

(1) Chapter 1.

(2) Code.

(3) Subtitle A.

(q) Applicability date.

§ 1.48D-3 Qualified property.

(a) In general.

(b) Qualified property.

(c) Tangible depreciable property.

(1) In general.

(2) Exception.

(3) Buildings or portions of a building not excluded by section 48D(b)(2)(B)(ii).

(d) Constructed, reconstructed, or erected by the taxpayer.

(e) Original use.

(1) In general.

(2) Treatment of inventory.

(f) Part of an advanced manufacturing facility.

(1) In general.

(2) Property that is not located or co-located at an advanced manufacturing facility or on a contiguous piece of land to the advanced manufacturing facility.

(g) Integral to the operation of an advanced manufacturing facility.

(1) In general.

(2) Vertically integrated manufacturers.

(3) Specific examples of integral property.

(4) Research or storage facilities.

(5) Examples.

(i) Example 1.

(ii) Example 2.

(h) Applicability date.

§ 1.48D-4 Advanced manufacturing facility of an eligible taxpayer.

(a) In general.

(b) Advanced manufacturing facility.

(c) Primary purpose.

(1) In general.

(2) No primary purpose.

(3) Examples.

(i) Example 1: Primary purpose; in general.

(ii) Example 2: Primary purpose; semiconductor wafer production.

(iii) Example 3: Primary purpose; vertically integrated manufacturer.

(iv) Example 4: No primary purpose; vertically integrated manufacturer.

(d) Applicability date.

§ 1.48D-5 Beginning of construction.

(a) Termination of credit.

(1) In general.

(2) Property.

(3) Single advanced manufacturing facility project.

(i) In general.

(ii) Related taxpayers.

(A) Definition.

(B) Related taxpayer rule.

(iii) Example.

(iv) Timing of single advanced manufacturing facility project determination.

(v) Disaggregation.

(vi) Example.

(b) Beginning of construction.

(1) In general.

(2) Continuity requirement.

(c) Physical work test.

(1) In general.

(2) Physical work of significant nature.

(i) In general.

(ii) Exceptions.

(d) Five percent safe harbor.

(1) In general.

(2) Costs.

(3) Cost overruns.

(i) Single advanced manufacturing facility project.

(ii) Example.

(iii) Single property.

(iv) Example.

(e) Continuity requirement.

(1) In general.

(2) Continuous construction.

(3) Continuous efforts.

(4) Excusable disruptions to continuous construction and continuous efforts tests.

(i) In general.

(ii) Effect of excusable disruptions on continuity safe harbor.

(iii) Non-exclusive list of construction disruptions.

(5) Timing of excusable disruption determination.

(6) Continuity safe harbor.

(i) In general.

(ii) Example.

(f) Applicability date.

§ 1.48D-6 Elective payment election.

(a) Elective payment election.

(1) In general.

(2) Partnerships and S corporations.

(3) Irrevocable.

(b) Pre-filing registration required.

(1) In general.

(2) Manner of registration.

(3) Members of a consolidated group.

(4) Timing of pre-filing registration.

(5) Each qualified investment in an advanced manufacturing facility must have its own registration number.

(6) Information required to complete the pre-filing registration process.

(7) Registration number.

(i) In general.

(ii) Registration number is only valid for one year.

(iii) Renewing registration numbers.

(iv) Amendment of previously submitted registration information if a change occurs before the registration number is used.

(v) Registration number is required to be reported on the return for the taxable year of the elective payment election.

(c) Time and manner of election.

(1) In general.

(2) Limitations.

(d) Special rules for partnerships and S corporations.

(1) In general.

(2) Election.

(i) Time and manner of election.

(ii) Effect of election.

(iii) Coordination with sections 705 and 1366.

(iv) Partner's distributive share.

(A) In general.

(B) Interim rule.

(C) Partnership requirements.

(v) S corporation shareholder's pro-rata share.

(vi) Timing of tax exempt income.

(3) Disregarded entity ownership.

(4) Electing partnerships in tiered structures.

(i) In general.

(ii) Electing partnerships in tiered structures; interim rule.

(5) Character of tax exempt income.

(6) Determination of amount of the section 48D credit.

(i) In general.

(ii) Application of section 49 at-risk rules to determination of section 48D credit for partnerships and S corporations.

(iii) Changes in at-risk amounts under section 49 at partner or shareholder level.

(7) Partnerships subject to subchapter C of chapter 63 of the Code.

(8) Example.

(e) Denial of double benefit.

(1) In general.

(2) Application of the denial of double benefit rule.

(3) Use of the section 48D credit for other purposes.

(4) Examples.

(i) Example 1.

(ii) Example 2.

(iii) Example 3.

(iv) Example 4.

(f) Excessive payment.

(1) In general.

(2) Reasonable cause.

(3) Excessive payment defined.

(4) Example.

(g) Basis reduction and recapture.

(1) In general.

(2) Basis adjustment.

(i) In general.

(ii) Basis adjustment by partnership or S corporation.

(iii) Basis adjustment of partners and S corporation shareholders.

(3) Recapture reporting.

(h) Applicability dates.

(1) In general.

(2) Prior taxable years.

[T.D. 10009, 89 FR 84751, Oct. 23, 2024, as amended by T.D. 10009, 89 FR 92793, Nov. 25, 2024]

§ 1.48D-1 Advanced manufacturing investment credit determined.

(a) ***Overview.*** For purposes of section 46 of the Code, the amount of the advanced manufacturing investment credit under section 48D of the Code determined for any taxable year is the amount determined under section 48D and this section and §§ 1.48D-2 through 1.48D-6 and 1.50-2 (the section 48D regulations) (subject to any applicable provisions of the Code that may limit the amount determined under section 48D), for such taxable year with respect to any advanced manufacturing facility of an eligible taxpayer. Paragraph (b) of this section provides the general rules for determining the amount of a taxpayer's section 48D credit for a taxable year. Paragraph (c) of this section provides rules coordinating the section 48D credit with the rules of section 47 of the Code (relating to the rehabilitation credit). Section 1.48D-2 provides definitions that apply for purposes of section 48D and the section 48D regulations. Section 1.48D-3 provides rules relating to the definition of qualified property for purposes of the section 48D credit. Section 1.48D-4 provides rules relating to the definition of an advanced manufacturing facility of an eligible taxpayer for purposes of the section 48D credit. Section 1.48D-5 provides rules regarding the beginning of construction of property for purposes of the section 48D credit. Section 1.48D-6 provides

rules related to the elective payment election of the section 48D credit. *See* § 1.50-2 for additional rules under section 50(a)(3) and (6) of the Code relating to applicable transactions that result in the recapture of section 48D credits.

(b) ***Determination of credit.*** Subject to any applicable sections of the Code that may limit the credit determined under section 48D, the section 48D credit for any taxable year of an eligible taxpayer with respect to any advanced manufacturing facility is an amount equal to 25 percent of the taxpayer's qualified investment for the taxable year with respect to that advanced manufacturing facility. A section 48D credit is available only with respect to qualified property that a taxpayer places in service after December 31, 2022, and, for any qualified property the construction of which began prior to January 1, 2023, only to the extent of the basis of that property attributable to the construction, reconstruction, or erection of that property occurring after August 9, 2022. Under section 48D(e), no section 48D credit is allowed to a taxpayer for placing qualified property in service in any taxable year if the beginning of construction of that qualified property as determined under § 1.48D-5 begins after December 31, 2026 (the date specified in section 48D(e)).

(c) ***Coordination with section 47*** —

(1) ***In general.*** The qualified investment with respect to any advanced manufacturing facility of an eligible taxpayer for any taxable year does not include that portion of the basis of any property that is attributable to qualified rehabilitation expenditures, as defined in section 47(c)(2) and § 1.48-12(c), with respect to a qualified rehabilitated building, as defined in section 47(c)(1) and § 1.48-12(b).

(2) ***Example: Coordination with section 47.*** X Corp, a calendar-year C corporation, owns Building A, a certified historic structure. X Corp's adjusted basis in Building A is $100,000. Between August 1, 2024, and October 31, 2024, X Corp incurs $1 million to reconstruct, within the meaning of section 48D(b)(2)(A)(iii)(I) and § 1.48-12(b)(2)(iv), Building A. X Corp places the reconstructed Building A, a qualified rehabilitated building, in service on November 15, 2024. Of the $1 million of capitalized expenditures incurred to reconstruct Building A (all of which would meet the definition of qualified investment), $250,000 also meets the definition of qualified rehabilitation expenditures (QREs). As such, X Corp's qualified investment in Building A is $750,000 ($1 million−$250,000). X Corp's qualified investment in Building A remains $750,000 even if X Corp does not determine a rehabilitation credit with respect to the $250,000 of QREs.

(d) ***Applicability date.*** This section applies to property that is placed in service after December 31, 2022, and during a taxable year ending on or after October 23, 2024.

[T.D. 10009, 89 FR 84752, Oct. 23, 2024]

§ 1.48D-2 Definitions.

(a) ***In general.*** The definitions in paragraphs (b) through (p) of this section apply for purposes of sections 48D and 50 of the Code and § 1.48D-1, this section and §§ 1.48D-3 through 1.48D-6 and 1.50-2 (the section 48D regulations).

(b) ***Applicable transaction.*** The term *applicable transaction* has the meaning provided in section 50(a)(6) and § 1.50-2.

(c) ***Basis*** —

(1) ***In general.*** With respect to any qualified property, the term *basis* has the same meaning as provided in § 1.46-3(c). Thus, the basis of the qualified property generally is determined in accordance with the general rules of subtitle A for determining the basis of property (see subtitle A, subchapter O, part II of the Code). As such, the basis of qualified property would generally be the cost of that qualified property (*see* section 1012 of the Code) unreduced by any adjustments to basis and would include all items properly included by the taxpayer in the depreciable basis of the qualified property.

(2) ***Transition rule.*** For property the construction of which began prior to January 1, 2023, and is placed in service after December 31, 2022, the portion of the basis of such property attributable to construction, reconstruction, or erection after August 9, 2022, must be allocated using any reasonable method, including by applying the principles of section 461 of the Code. Rules similar to the rules in §§ 1.48-2(b)(2), 1.48-11(b)(5)(i), and 1.48-12(c)(1) are applicable.

(d) ***Beginning of construction.*** The term *beginning of construction* has the meaning provided in § 1.48D-5.

(e) ***Eligible taxpayer.*** The term *eligible taxpayer* means any taxpayer that—

(1) Is not a foreign entity of concern; and

(2) Has not made an applicable transaction during the taxable year.

(f) ***Foreign entities*** —

(1) ***Foreign entity.*** The term *foreign entity* has the same meaning as provided in 15 CFR 231.103.

(2) ***Foreign entity of concern.*** The term *foreign entity of concern* has the same meaning as provided in 15 CFR 231.104.

(g) ***Manufacturing of semiconductors.*** The term *manufacturing of semiconductors* and the term *semiconductor manufacturing* are synonymous.

(h) ***Manufacturing of semiconductor manufacturing equipment.*** The term *manufacturing of semiconductor manufacturing equipment* means the physical production (in a manufacturing facility) of semiconductor manufacturing equipment, which is used by an advanced manufacturing facility engaged in the manufacturing of semiconductors as defined in paragraph (g) of this section.

(i) ***Placed in service.*** The term *placed in service* has the same meaning as provided in § 1.46-3(d).

(j) ***Qualified investment*** —

(1) ***In general.*** Except as provided in paragraph (j)(2) and (3) of this section, the term *qualified investment* with respect to an advanced manufacturing facility means, for any taxable year, the basis of any qualified property that is part of an advanced manufacturing facility and placed in service by the taxpayer during the taxable year.

(2) ***Special rules for certain passthrough entities.*** In the case of any qualified property that is part of an advanced manufacturing facility of an eligible taxpayer and placed in service by an entity described in paragraphs (j)(2)(i) through (iii) of this section during a taxable year, the rules of this paragraph (j)(2) apply to determine the qualified investment for the taxable year with respect to the advanced manufacturing facility.

(i) ***Partnership.*** In the case of a partnership that places in service qualified property that is part of an advanced manufacturing facility of an eligible taxpayer, each partner in the partnership must take into account separately the partner's share of the basis of the qualified property placed in service by the partnership during the taxable year as provided in § 1.46-3(f).

(ii) ***S corporation.*** The basis of qualified property that is part of an advanced manufacturing facility of an eligible taxpayer and placed in service during the taxable year by an S corporation (as defined in section 1361(a) of the Code) must be apportioned pro rata among the S corporation's shareholders on the last day of the S corporation's taxable year as provided in section 1366.

(iii) ***Estate or trust.*** The basis of qualified property that is part of an advanced manufacturing facility of an eligible taxpayer and placed in service during the taxable year by an estate or trust must be apportioned among the estate or trust and its beneficiaries on the basis of the income of the estate or trust allocable to each for that taxable year.

(3) ***Qualified progress expenditures election*** —

(i) ***In general.*** A taxpayer may elect, as provided in § 1.46-5, to increase the qualified investment with respect to any advanced manufacturing facility of an eligible taxpayer for the taxable year, by any qualified progress expenditures made after August 9, 2022.

(ii) ***Special rules for certain passthrough entities.*** Notwithstanding the provisions of § 1.46-5, relating to elections of progress expenditure property being constructed by or for a partnership or S corporation, the rules of § 1.46-5(o)(1) and (p) do not apply to prohibit a partnership or S corporation from making a progress expenditure election under § 1.46-5 with respect to qualified property if the partnership or S corporation intends to make an elective payment election under section 48D(d) and § 1.48D-6 with respect to a section 48D credit determined with respect to such qualified property.

(4) ***Examples.*** The provisions of this paragraph (j) are illustrated by the following examples.

(i) *Example 1: Advanced manufacturing investment credit: qualified investment in general.* On November 1, 2024, X, a calendar-year C corporation, places in service qualified property with a basis of $200,000, and on December 1, 2024, X places in service qualified property with a basis of $300,000. X's qualified investment for the taxable year is $500,000 ($200,000 + $300,000).

(ii) *Example 2: Advanced manufacturing investment credit: qualified investment for partnerships.* A, B, C, and D, all calendar-year C corporations, are partners in the ABCD partnership. Partners A, B, C, and D share partnership profits equally. On November 1, 2024, the ABCD partnership placed in service qualified property with a basis of $1 million. Each partner's share of the basis of the qualified property, as determined in § 1.46-3(f)(2), is $250,000 ($1m × 0.25) and each partner's qualified investment is $250,000.

(k) ***Section 48D credit.*** The term *section 48D credit* means the advanced manufacturing investment credit determined under section 48D and the section 48D regulations.

(l) ***Section 48D regulations.*** The term *section 48D regulations* means §§ 1.48D-1 through 1.48D-6 and 1.50-2.

(m) ***Semiconductor.*** The term *semiconductor* means, consistent with 15 CFR 231.115, an integrated electronic device or system most commonly manufactured using materials such as, but not limited to, silicon, silicon carbide, or III-V compounds, and processes such as, but not limited to, lithography, deposition, and etching. Such devices and systems include, but are not limited to, analog and digital electronics, power electronics, and photonics, for memory, processing, sensing, actuation, and communications applications.

(n) ***Semiconductor manufacturing.*** The term *semiconductor manufacturing* and the term *manufacturing of semiconductors* are synonymous and mean, consistent with 15 CFR 231.116, semiconductor wafer production, semiconductor fabrication, or semiconductor packaging. The following terms have the following meanings in connection with semiconductor wafer production, semiconductor fabrication, and semiconductor packaging for purposes of section 48D and the section 48D regulations:

(1) ***Semiconductor wafer production*** includes the processes of growing single-crystal ingots and boules, wafer slicing, etching and polishing, bonding, cleaning, epitaxial deposition, and metrology.

(2) ***Semiconductor fabrication*** includes the process of forming devices such as transistors, poly capacitors, non-metal resistors, and diodes, as well as interconnects between such devices, on a wafer of semiconductor material.

(3) ***Semiconductor packaging*** means the process of enclosing a semiconductor in a protective container (package) and providing external power and signal connectivity for the assembled integrated circuit and includes the process of assembly and testing of semiconductors and advanced packaging of semiconductors.

(4) ***Assembly*** includes, but is not limited to, wafer-dicing, die-bonding, wire bonding, solder bumping, and encapsulation.

(5) ***Testing*** includes, but is not limited to, probing, screening, and burn-in work.

(6) ***Advanced packaging*** means a subset of packaging technologies that uses novel techniques and materials to increase the performance, power, modularity, and/or durability of an integrated circuit. Advanced packaging technologies include flip-chip, 2D, 2.5D, and 3D stacking, fan-out and fan-in, and embedded die/system-in-package (SiP).

(o) ***Semiconductor manufacturing equipment.*** The term *semiconductor manufacturing equipment* means the highly engineered and specialized equipment used in the manufacturing of semiconductors as defined in paragraph (g) of this section and the subsystems that enable or are incorporated into the manufacturing equipment. Specific examples of semiconductor manufacturing equipment and subsystems that enable semiconductor manufacturing equipment include but are not limited to:

(1) Deposition equipment, including, Chemical Vapor Deposition (CVD), Physical Vapor Deposition (PVD), Electrodeposition, and Atomic Layer Deposition (ALD);

(2) Etching equipment (wet etch, dry etch);

(3) Equipment for epitaxial growth of transistor features;

(4) Chemical-mechanical polishing equipment to planarize layers through the semiconductor fabrication process;

(5) Lithography equipment (steppers and scanners of various light wavelengths, such as deep UV, extreme ultraviolet (EUV), photoresist coating, and developer tracks);

(6) Equipment for producing ingots and boules, wafer growth equipment, wafer slicing equipment, wafer dicing equipment, and wire bonders;

(7) Inspection and measuring equipment, including scanning electron microscopes, atomic force microscopes, optical inspection systems, wafer probes and optical scatterometer, EDS (Energy Dispersive Spectroscopy);

(8) Certain metrology and inspection systems to measure critical dimensions of the integrated circuit features throughout the fabrication process, detection and measurement of defects on the wafers during the fabrication process;

(9) Ion implantation and diffusion/oxidation furnaces;

(10) Specialty glass components including EUV mirrors and optical pathways, lenses and mirrors used in inspection equipment and other fabrication processes, and lens assemblies for wafer defect inspection;

(11) Electrostatic chucks;

(12) High performance pumps;

(13) High purity quartz devices;

(14) Ultra-high vacuum chamber components; and

(15) Photomasks and light sources used in photolithography.

(p) ***Statutory references*** —

(1) ***Chapter 1.*** The term *chapter 1* means chapter 1 of the Code.

(2) ***Code.*** The term *Code* means the Internal Revenue Code.

(3) ***Subtitle A.*** The term *subtitle A* means subtitle A of the Code.

(q) ***Applicability date.*** This section applies to property that is placed in service after December 31, 2022, and during a taxable year ending on or after October 23, 2024.

[T.D. 10009, 89 FR 84752, Oct. 23, 2024, as amended by T.D. 10009, 89 FR 92793, Nov. 25, 2024]

§ 1.48D-3 Qualified property.

(a) ***In general.*** This section provides definitions and rules relating to qualified property for purposes of section 48D of the Code and the section 48D regulations.

(b) ***Qualified property.*** The term *qualified property* means tangible depreciable property that is part of, and integral to, the operation of an advanced manufacturing facility and that is either—

(1) Constructed, reconstructed, or erected by the taxpayer; or

(2) Acquired by the taxpayer if the original use of such property commences with the taxpayer.

(c) ***Tangible depreciable property*** —

(1) ***In general.*** The term *tangible depreciable property* means tangible personal property (as defined in § 1.48-1(c)), other tangible property (as defined in § 1.48-1(d)), and building and structural components (as defined in § 1.48-1(e), except as provided in paragraphs (c)(2) and (3) of this section) with respect to which depreciation (or amortization in lieu of depreciation) is allowable. The law of a State or local jurisdiction is not controlling for purposes of determining whether property is tangible property for purposes of section 48D or the section 48D regulations.

(2) ***Exception.*** Pursuant to section 48D(b)(2)(B)(ii), except as provided in paragraph (c)(3) of this section, the term *tangible depreciable property* does not include a building and its structural components, or a portion thereof, used for—

(i) Offices;

(ii) Administrative services such as human resources or personnel services, payroll services, legal and accounting services, and procurement services;

(iii) Sales or distribution functions;

(iv) Security services (not including cybersecurity operations); or

(v) Any other functions unrelated to manufacturing of semiconductors or semiconductor manufacturing equipment.

(3) ***Buildings or portions of a building not excluded by section 48D(b)(2)(B)(ii).*** Buildings or portions of a building not treated as offices and that are considered related to manufacturing of semiconductors or semiconductor manufacturing equipment include buildings or portions of a building used for:

(i) Gowning to enter to and from a cleanroom environment;

(ii) Monitoring operations and remote access of equipment;

(iii) Functions performed by unit process engineers including developing, monitoring, updating and overseeing individual process recipes running on every tool in the facility to manufacture, measure and test wafers including access to relevant data, data analysis, modifications and updates to the process recipes on the tools;

(iv) Functions performed by equipment engineers including overseeing tools to ensure proper operation by accessing data about the tool health and performance remotely adjusting the tool at workstations, and issuing work orders to the equipment and maintenance technicians from the workstations;

(v) Functions performed by test engineers including monitoring the electrical test data being collected from the wafers at certain points in their processing;

(vi) Functions performed by yield and defect engineers including reviewing inspection data collected from wafers;

(vii) Functions performed by metrology engineers including reviewing physical measurement data collected from the wafers;

(viii) Functions performed by integration engineers that are responsible for the technology node and the end-to-end wafer process;

(ix) Functions performed by facilities engineers including monitoring and controlling facilities systems; and

(x) Functions related to central utilities buildings, material handling and ultrapure water generation facilities, and computing (data center).

(d) ***Constructed, reconstructed, or erected by the taxpayer.*** Property is considered constructed, reconstructed, or erected by the taxpayer if the work is done for the benefit of the taxpayer in accordance with the taxpayer's specifications.

(e) ***Original use*** —

(1) ***In general.*** Except as provided in paragraph (e)(2) of this section, the term *original use* means with respect to any property the first use to which the property is put by any taxpayer in connection with a trade or business or for the production of income. Additional capital expenditures paid or incurred by a taxpayer to recondition or rebuild property acquired or owned by the taxpayer satisfy the original use requirement to the extent of the expenditures paid or incurred by a taxpayer. However, a taxpayer's cost to acquire property reconditioned or rebuilt by another taxpayer does not satisfy the original use requirement. Whether property is reconditioned or rebuilt property will be determined based on the facts and circumstances.

(2) ***Treatment of inventory.*** For purposes of paragraph (e)(1) of this section, if a taxpayer initially acquires new property and holds the property primarily for sale to customers in the ordinary course of the taxpayer's trade or business and subsequently withdraws the property from inventory and uses the property primarily in the taxpayer's trade or business or primarily for the taxpayer's production of income, the taxpayer is considered the original user of the property. If a person initially acquires new property and holds the property primarily for sale to customers in the ordinary course of the person's business and a taxpayer subsequently acquires the property from the person for use primarily in the taxpayer's trade or business or primarily for the taxpayer's production of income, the taxpayer is considered the original user of the property. For purposes of this paragraph (e), the original use of the property by the taxpayer commences on the date on which the taxpayer first uses the property primarily in the taxpayer's trade or business or primarily for the taxpayer's production of income.

(f) ***Part of an advanced manufacturing facility*** —

(1) ***In general.*** To qualify for the section 48D credit, property must be part of the advanced manufacturing facility, as provided in this paragraph (f). Property is part of an advanced manufacturing facility if the property is physically located or co-located either at the advanced manufacturing facility, or on a contiguous piece of land to the advanced manufacturing facility. Parcels or tracts of land will be considered contiguous if they possess common boundaries, and would be contiguous but for the interposition of a road, street, railroad, public utility, stream or similar property.

(2) ***Property that is not located or co-located at an advanced manufacturing facility or on a contiguous piece of land to the advanced manufacturing facility.*** Property that is not located or co-located at an advanced manufacturing facility or on a contiguous piece of land to the advanced manufacturing facility may be considered part of the advanced manufacturing facility if the property is owned by the same taxpayer as the entire advanced manufacturing facility, connected to the advanced manufacturing facility (*e.g.,* via pipeline) and the sole purpose, function, and output of the property is dedicated to the operation of the advanced manufacturing facility.

(g) ***Integral to the operation of an advanced manufacturing facility*** —

(1) ***In general.*** To qualify for the section 48D credit, property must be integral to the operation of manufacturing of semiconductors or manufacturing of semiconductor manufacturing equipment, both as provided in § 1.48D-2. Property is integral to the operation of manufacturing of semiconductors or manufacturing of semiconductor manufacturing equipment if such property is used directly in the manufacturing operation, is essential to the completeness of the manufacturing operation, and is not transformed in any material way as a result of the manufacturing operation. Materials, supplies, and other inventoriable items of property that are transformed during the manufacturing of semiconductors or into a unit of semiconductor manufacturing equipment are not considered property integral to the operation of an advanced manufacturing facility. For this purpose, the term *transform* does not include the normal degradation of components of

semiconductor manufacturing equipment. In addition, property such as pavements, parking areas, inherently permanent advertising displays, or inherently permanent outdoor lighting facilities, although used in the operation of a business, ordinarily are not integral to the operation of an advanced manufacturing facility. Thus, for example, all property used by the taxpayer to acquire or transport materials or supplies to the point where the actual manufacturing activity commences (such as docks, railroad tracks, and bridges), or all property (other than materials or supplies) used by the taxpayer during the manufacturing of semiconductors or during the manufacturing of semiconductor manufacturing equipment within the meaning of § 1.48D-2, would be considered property integral to the operation of an advanced manufacturing facility of an eligible taxpayer. Property is considered integral to the operation of an advanced manufacturing facility of an eligible taxpayer if so used either by the owner of the property or by a lessee of the property.

(2) ***Vertically integrated manufacturers.*** If an advanced manufacturing facility that is engaged in the manufacturing of semiconductors within the meaning of § 1.48D-2 also conducts vertically integrated activities (for example, producing raw materials and manufacturing, ingots, wafers, and semiconductors), then property integral to the operation of such an advanced manufacturing facility includes only the property used in the manufacturing of semiconductors within the meaning of § 1.48D-2.

(3) ***Specific examples of integral property.*** Specific examples of property that normally would be integral to the operation of the advanced manufacturing facility of an eligible taxpayer are:

(i) Equipment and tools used in the processes of Chemical Vapor Deposition (CVD), and Physical Vapor Deposition (PVD), Atomic Layer deposition (ALD), oxidation, annealing, and epitaxy. Such equipment includes Deposition and thin-film growth equipment, etching equipment, and lithography equipment (including Extreme Ultraviolet Lithography (EUV));

(ii) Wet process tools, analytical tools, E-Beam operation tools (to repair masks), mask manufacturing equipment, chemical mechanical polishing equipment, reticle handlers, and stockers;

(iii) Inspection and metrology equipment, including scanning electron microscopes, atomic force microscopes, ion milling tools, optical inspection systems, wafer probes and optical scatterometer;

(iv) Clean room facilities, including locker and gowning rooms, specialized lighting systems, automated material systems for wafer handling, specialized recirculating air handlers, to maintain the cleanroom free from particles, control temperature and humidity levels, and specialized ceilings comprised of HEPA filters;

(v) Cleanroom equipment (including jogs, hand tools, calibration equipment, and temperature pollution monitoring tools) and specialty cleaning equipment;

(vi) Electrical power facilities, cooling facilities, chemical supply systems, and wastewater and wastewater treatment systems, including water management, water conservation, and water treatment equipment, materials and technologies;

(vii) Electricity distribution equipment including connectors, capacitors, meters and sockets, switchgear, surge arresters and transformers;

(viii) Sub-fab levels containing pumps, transformers, abatement systems, ultrapure water systems, uninterruptible power supply, and boilers, pipes, storage systems, wafer routing systems and databases, backup systems, quality assurance equipment, and computer data centers;

(ix) Utility level equipment including chillers, systems to handle nitrogen, argon, and other gases, compressor systems, and pipes;

(x) Industrial automation and control equipment (including, but not limited to, programmable logic controllers, process controllers, distributed control systems, human machine interface and motor controls and accessories);

(xi) Industrial automation communications devices, networks, and software for industrial automation control products and systems including automated material handling systems (AMHS) and advance wafer routing software systems and databases;

(xii) Tooling equipment;

(xiii) Back-end manufacturing equipment related to assembly, testing, and packaging;

(xiv) Photolithography tools;

(xv) Photomasks, reticles, pellicle, steppers, scanners, and photoresist related equipment;

(xvi) Emulation tools;

(xvii) Rapid thermal processing tools (annealing tubs and vacuum ovens), melting laser annealing (MLA) equipment, wafer bonding equipment, physical removal processing tools (flycutter DieSaw and backgrind), and edge seal dispense;

(xviii) Site infrastructure including but limited to energy, water, natural gas, backup power generators, transformers, stormwater management and fire protection;

(xix) Equipment and installation (wipe-film evaporators);

(xx) Chemical and gas delivery systems (piping, storage, and waste systems including hazardous waste);

(xxi) Bulk chemical purification systems (Liquid N2, Ar, H2, etc.);

(xxii) HVAC air conditioning and air handling systems, critical cooling water systems and heating systems;

(xxiii) Wafer stockers with temperature and air quality control;

(xxiv) Temperature control systems;

(xxv) Security and monitoring system and devices;

(xxvi) Failure analysis labs and equipment;

(xxvii) Quality assurance equipment including incoming goods, in-process inspection, and finished-good inspection;

(xxviii) Transportation, trolleys and carts that are used to transport wafers or overhead conveyer systems to move the carts;

(xxxix) Lighting products;

(xxx) Industrial gas generation and/or handling systems, such as air separation units, including any associated backup and storage equipment;

(xxxi) Input shaping tooling;

(xxxii) Crystal formation and coating equipment;

(xxxiii) Mechanical equipment; and

(xxxiv) Polishing equipment.

(4) ***Research or storage facilities.*** If property, including a building and its structural components, constitutes a research or storage facility and is used in connection with the manufacturing of semiconductors or manufacturing of semiconductor manufacturing equipment, the property may qualify as integral to the operation of the advanced manufacturing facility under section 48D(b)(2)(A)(iv). Specific examples of research facilities include research facilities that manufacture semiconductors in connection with research, such as pre-pilot production lines and prototypes, including semiconductor packaging. Specific examples of storage facilities are mineral or chemical storage equipment, gas storage tanks, including high pressure cylinders or specially designed tanks and drums, wastewater storage, and inventory and finished goods warehouses. A research facility that does not manufacture any type of semiconductor, as provided in § 1.48D-2(m), or semiconductor manufacturing equipment, as provided in § 1.48D-2(o), does not qualify.

(5) ***Examples.*** The following examples illustrate the rules of this paragraph (g):

(i) *Example 1.* X Corp, a calendar-year C corporation, is a manufacturer of air separation units that are designed to supply on demand nitrogen to an advanced manufacturing facility. In January 2025, X Corp places in service an air separation unit that is co-located at an advanced manufacturing facility on a contiguous piece of land to the advanced manufacturing facility. The air separation unit produces nitrogen on demand, and the nitrogen is used directly in the manufacturing of semiconductors. The air separation unit is part of the advanced manufacturing facility within the meaning of paragraph (f) of this section because the air separation unit is located on a contiguous piece of land to the advanced manufacturing facility. The air separation unit is property integral to the operation of an advanced manufacturing facility under this paragraph (g) because it is used directly in, and is essential to, the completeness of the semiconductor manufacturing operation, and is not transformed in any material way as a result of the semiconductor manufacturing operation.

(ii) *Example 2.* Y Corp, a calendar-year C corporation, is a manufacturer of specialty chemicals that are used in the manufacturing of semiconductors. In 2025, Y Corp places in service equipment at its facility that manufactures the specialty chemicals. The equipment is located five miles from the advanced manufacturing facility, but is not part of the advanced manufacturing facility within the meaning of paragraph (f) of this section because it is not located or co-located at the advanced manufacturing facility, or on a contiguous piece of land to the advanced manufacturing facility, and it is not connected to the advanced manufacturing facility. Also in 2025, Y Corp places in service chemical storage tanks that are part of the advanced manufacturing facility within the meaning of paragraph (f) of this section because the property is located on a contiguous piece of land to the advanced manufacturing facility. The chemical storage tanks are property integral to the operation of the advanced manufacturing facility pursuant to paragraph (g) of this section.

(h) ***Applicability date.*** This section applies to property that is placed in service after December 31, 2022, and during a taxable year ending on or after October 23, 2024.

[T.D. 10009, 89 FR 84752, Oct. 23, 2024]

§ 1.48D-4 Advanced manufacturing facility of an eligible taxpayer.

(a) ***In general.*** This section provides definitions and rules relating to advanced manufacturing facilities of eligible taxpayers for purposes of section 48D of the Code and the section 48D regulations.

(b) ***Advanced manufacturing facility.*** For purposes of section 48D(b)(3) and this section, the term *advanced manufacturing facility* means a facility of an eligible taxpayer for which the primary purpose, as determined under paragraph (c)(1) of this section, is the manufacturing of semiconductors or the manufacturing of semiconductor manufacturing equipment within the meaning of § 1.48D-2.

(c) ***Primary purpose*** —

(1) ***In general.*** The determination of the *primary purpose* of a facility will be made based on all the facts and circumstances surrounding the construction, reconstruction, or erection of the advanced manufacturing facility of an eligible taxpayer. Facts that may indicate a facility has a primary purpose of manufacturing of semiconductors or manufacturing of semiconductor manufacturing equipment include plans or other documents for the facility that demonstrate that the facility is designed for the manufacturing of semiconductors or manufacturing of semiconductor manufacturing equipment within the meaning of § 1.48D-2. Facts may also include the possession of permits or licenses needed for the manufacturing of semiconductors or manufacturing of semiconductor manufacturing equipment; and executed contracts to a customer to supply such semiconductors or executed contracts to an advanced manufacturing facility as defined in paragraph (b) of this section to supply such semiconductor manufacturing equipment in place either before or within 6 months after the facility is placed in service. A facility has the primary purpose of manufacturing of semiconductors or manufacturing of semiconductor manufacturing equipment if more than 50 percent of its potential output, as measured by cost to produce, revenue received in an arm's length transaction, or units produced, constitutes manufacturing of semiconductors or manufacturing of semiconductor manufacturing equipment within the meaning of § 1.48D-2. However, property placed in service in a taxable year must still meet the definition of qualified property under section 48D(b)(2) and § 1.48D-3 for its basis to be included as part of the qualified investment in the advanced manufacturing facility eligible for the section 48D credit. For example, property that is not integral to the operation of an advanced manufacturing facility as provided in § 1.48D-3(g) may not be included as a qualified investment in an advanced manufacturing facility.

(2) ***No primary purpose.*** A facility for which the primary purpose is the manufacturing, producing, growing, or extracting of materials or chemicals that are supplied to an advanced manufacturing facility is not a facility for which the primary purpose is the manufacturing of semiconductors or manufacturing of semiconductor manufacturing equipment. Thus, for example, facilities that exclusively produce semiconductor-grade polysilicon, or produce gases, or that manufacture components or parts, to supply to an advanced manufacturing facility engaged in the manufacturing of semiconductors or manufacturing of semiconductor manufacturing equipment are not facilities for which the primary purpose is the manufacturing of semiconductors or the manufacturing of semiconductor manufacturing equipment.

(3) ***Examples.*** The following examples illustrate the rules of this paragraph (c):

(i) *Example 1: Primary purpose; in general.* In January 2025, X Corp, a calendar-year C corporation, begins construction of a facility that will manufacture semiconductor manufacturing equipment that could be used in a facility that will engage in semiconductor fabrication (semiconductor fabrication facility). A

portion of the equipment produced, however, could be used for manufacturing operations of a facility that is not engaged in semiconductor manufacturing. X Corp enters into a contract with Y Corp, which is building a semiconductor fabrication facility to be placed in service in July 2026, to supply Y Corp with equipment that is integral to semiconductor fabrication. Such equipment represents more than 50 percent of the potential output of X Corp's facility (by cost to produce such equipment) of X Corp's facility for the first year of operations. X Corp's facility will be considered as having a primary purpose of manufacturing of semiconductor manufacturing equipment for the first year of its operations.

(ii) *Example 2: Primary purpose; semiconductor wafer production.* X Corp, a calendar-year C corporation, is engaged in the production of solar wafers (that is, X Corp is engaged in semiconductor wafer production). In January 2025, X Corp receives the necessary permits to begin construction of a facility designed for semiconductor wafer production within the meaning of § 1.48D-2. X Corp enters into a contract to supply such wafers to an unrelated person. Such contract represents more than 50 percent of X Corp's potential output (by revenue received) for the tax year that the facility is placed in service. Because the contract to sell wafers represents more than 50 percent of X Corp's potential output (by revenue received), X Corp's facility will be considered as having a primary purpose of semiconductor wafer production within the meaning of paragraph (c)(1) of this section.

(iii) *Example 3: Primary purpose; vertically integrated manufacturer.* Z Corp, a C corporation, is a vertically integrated manufacturer. In January 2025, Z Corp begins construction of a facility that will produce raw materials and other consumables for use in the manufacturing of semiconductors and such facility will also engage in semiconductor wafer production and semiconductor fabrication. Z Corp enters into separate sales contracts to sell units produced from the semiconductor fabrication with a variety of unrelated companies that are engaged in semiconductor packaging. Z Corp also enters into a sales contract with A Corp to sell raw materials that it produces at the facility to A Corp. Z Corp's production of units from its semiconductor fabrication sold to companies engaged in semiconductor packaging represents more than 50 percent of the potential output (by cost) of Z Corp's facility for the first year of operations; therefore, Z Corp's facility will be considered as having a primary purpose of manufacturing of semiconductors.

(iv) *Example 4: No primary purpose; vertically integrated manufacturer.* Assume the same facts as in paragraph (c)(3)(iii) of this section (*Example 3*), except that Z Corp's production of such raw materials represents more than 50 percent of the potential output of Z Corp's facility for the first year of operations. Z Corp's facility will not be considered as having a primary purpose of manufacturing of semiconductors.

(d) ***Applicability date.*** This section applies to property that is placed in service after December 31, 2022, and during a taxable year ending on or October 23, 2024.

[T.D. 10009, 89 FR 84752, Oct. 23, 2024]

§ 1.48D-5 Beginning of construction.

(a) ***Termination of credit*** —

(1) ***In general.*** The credit allowed under section 48D of the Code and the section 48D regulations does not apply to property that is part of an advanced manufacturing facility of an eligible taxpayer if the beginning of construction of the property, as defined in paragraph (a)(2) of this section, begins after December 31, 2026 (the date specified in section 48D(e)).

(2) ***Property.*** For purposes of determining beginning of construction of property under this section, the unit of property is—

(i) A single advanced manufacturing facility project as described in paragraph (a)(3) of this section; or

(ii) An item of qualified property (as defined in § 1.48D-3(b)).

(3) ***Single advanced manufacturing facility project*** —

(i) ***In general.*** Solely for purposes of determining whether construction of a qualified property has begun for purposes of section 48D and the section 48D regulations, multiple items of qualified property or advanced manufacturing facilities that are operated as part of a single advanced manufacturing facility project (along with any items of property, such as clean rooms, chemical delivery systems, chemical storage facilities, temperature control systems, robotic handling systems, semiconductor manufacturing equipment, and tooling equipment (such as for deposition and etching) that are integral to the operation of the single advanced manufacturing facility project) will be treated as a single item of qualified property. Multiple qualified properties or advanced manufacturing facilities will be treated as operated as part of a single advanced manufacturing facility project, if at any point during construction of the multiple qualified properties or advanced manufacturing facilities, they are owned by a single taxpayer (subject to the related taxpayer rule provided in paragraph (a)(3)(ii) of this section) and any two or more of the following factors are present—

(A) The properties or facilities are owned by a single legal entity;

(B) The properties or facilities are constructed on contiguous pieces of land;

(C) The properties or facilities are described in a common supply contract or other type of relevant contract;

(D) The properties or facilities share a common electricity and/or water supply;

(E) The properties or facilities are described in one or more common environmental or other regulatory permits;

(F) The properties or facilities were constructed pursuant to a single master construction contract; or

(G) The construction of the properties or facilities was financed pursuant to the same loan agreement or other financing arrangement.

(ii) ***Related taxpayers*** —

(A) ***Definition.*** For purposes of this section, the term *related taxpayers* means members of a group of trades or businesses that are under common control (as defined in § 1.52-1(b)).

(B) ***Related taxpayer rule.*** For purposes of this section, related taxpayers are treated as one taxpayer in determining whether multiple qualified properties or advanced manufacturing facilities will be treated as operated as part of a single advanced manufacturing facility project.

(iii) ***Example.*** A single taxpayer is developing Project C, a project that will consist of 3 advanced manufacturing facilities constructed on the same campus. Project C will share a common electricity supply, and semiconductors manufactured by Project C will be sold to Buyer through

a single supply contract. In 2023, for 1 of the 3 advanced manufacturing facilities, the taxpayer installs deposition equipment. Thereafter, the taxpayer completes the construction of all 3 advanced manufacturing facilities pursuant to a continuous program of construction. For purposes of the section 48D credit, Project C is a single advanced manufacturing facility project that will be treated as a single property, and the taxpayer performed physical work of a significant nature that constitutes the beginning of construction of Project C in 2023.

(iv) ***Timing of single advanced manufacturing facility project determination.*** Whether multiple properties or advanced manufacturing facilities are operated as part of a single advanced manufacturing facility project and are treated as a single item of property for purposes of the beginning of construction requirement of section 48D and the section 48D regulations is determined in the taxable year during which the last of the multiple properties or facilities is placed in service.

(v) ***Disaggregation.*** Multiple properties or advanced manufacturing facilities that are operated as part of a single advanced manufacturing facility project and treated as a single item of qualified property under this paragraph (a)(3) for purposes of determining whether construction of a qualified property or advanced manufacturing facility has begun may be disaggregated and treated as separate items of qualified property for purposes of determining whether a separate advanced manufacturing facility or item of qualified property satisfies the continuity safe harbor (as defined in paragraph (e) of this section). Those disaggregated separate advanced manufacturing facilities or items of qualified property that are placed in service prior to the continuity safe harbor deadline will be eligible for the continuity safe harbor. The remaining disaggregated separate items of property or facilities may satisfy the continuity requirement under a facts and circumstances determination.

(vi) ***Example.*** A single taxpayer is developing Project D, a project that will consist of 4 separate properties. Project D will use the same water supply and each property within Project D will be constructed pursuant to a single master construction contract. Under the single project rule provided in this paragraph (a)(3), Project D is a single project that will be treated as a single property. In 2024, for 3 of the 4 separate properties, the taxpayer installs property integral to the operation of the advanced manufacturing facility. Accordingly, the taxpayer has performed physical work of a significant nature that constitutes the beginning of construction of Project D for purposes of section 48D(e). Thereafter, on the last day of the 10-year continuity safe harbor period, the taxpayer places in service only 3 of the 4 separate properties within Project D. The taxpayer disaggregates Project D under paragraph (a)(3)(v) of this section and accordingly, only 3 of the 4 separate properties satisfy the continuity safe harbor. For the remaining 1 separate property, the taxpayer may demonstrate that it satisfies the continuity requirement provided in paragraph (e) of this section based on the facts and circumstances, to enable the taxpayer to claim the section 48D credit.

(b) ***Beginning of construction*** —

(1) ***In general.*** For purposes of section 48D, the section 48D regulations, and section 107(f)(1) of the CHIPS Act of 2022, Public Law 117-167, div. A, 136 Stat. 1366, 1399 (August 9, 2022), a taxpayer may establish that construction of an item of property (as defined in paragraph (a)(2) of this section) of the taxpayer begins under either:

(i) The physical work test of paragraph (c) of this section; or

(ii) The five percent safe harbor of paragraph (d) of this section.

(2) ***Continuity requirement. See*** paragraph (e) of this section for the continuity requirement applicable for purposes of the physical work test and the five percent safe harbor, which must be demonstrated either by maintaining continuous construction (as defined in paragraph (e)(2) of this section) or continuous efforts (as defined in paragraph (e)(3) of this section).

(c) ***Physical work test*** —

(1) ***In general.*** Under the physical work test, construction of an item of property begins when physical work of a significant nature begins, provided thereafter that the taxpayer maintains continuous construction or continuous efforts. This test focuses on the nature of the work performed, not the amount of the costs. Assuming the work performed is of a significant nature, there is no fixed minimum amount of work, monetary or percentage threshold required to satisfy the physical work test.

(2) ***Physical work of significant nature*** —

(i) ***In general.*** Work performed by the taxpayer and work performed for the taxpayer by other persons under a binding written contract that is entered into prior to the manufacture, construction, or production of the property for use by the taxpayer in the taxpayer's trade or business of manufacturing semiconductors or semiconductor manufacturing equipment is taken into account in determining whether physical work of a significant nature has begun. Both on-site and off-site work (performed either by the taxpayer or by another person under a binding written contract) may be taken into account for purposes of demonstrating that physical work of a significant nature has begun. A written contract is binding only if it is enforceable under local law against the taxpayer or a predecessor and does not limit damages to a specified amount (for example, by use of a liquidated damages provision). For this purpose, a contractual provision that limits damages to an amount equal to at least five percent of the total contract price will not be treated as limiting damages to a specified amount. For additional guidance regarding the definition of a binding written contract, *see* § 1.168(k)-1(b)(4)(ii)(A) through (D). Specific examples of on-site physical work of a significant nature include the excavation for the foundation and the pouring of the concrete pads of the foundation. Specific examples of off-site physical work of a significant nature include the manufacture of semiconductor manufacturing equipment but only if the manufacturer's work is done pursuant to a binding written contract and the semiconductor manufacturing equipment is not held in the manufacturer's inventory.

(ii) ***Exceptions.*** Physical work of significant nature does not include preliminary activities, including but not limited to planning or designing, securing financing, exploring, researching, obtaining permits, licensing, conducting surveys, environmental and engineering studies, or clearing a site, even if the cost of those preliminary activities is properly included in the depreciable basis of the property. Physical work of a significant nature also does not include work (performed either by the taxpayer or by another person under a binding written contract) to produce property that is either in existing inventory or is normally held in inventory by a vendor.

(d) ***Five percent safe harbor*** —

(1) ***In general.*** Construction of a property will be considered as having begun if:

(i) A taxpayer pays or incurs (within the meaning of § 1.461-1(a)(1) and (2)) five percent or more of the total cost of the property; and

(ii) Thereafter, the taxpayer maintains continuous construction or continuous efforts.

(2) ***Costs.*** All costs properly included in the basis of the property are taken into account to determine whether the five percent safe harbor has been met. For property that is manufactured, constructed, or produced for the taxpayer by another person under a binding written contract with the taxpayer, costs incurred with respect to the property by the other person before the property is provided to the taxpayer are deemed incurred by the taxpayer when the costs are incurred by the other person under the principles of section 461 of the Code.

(3) ***Cost overruns*** —

(i) ***Single advanced manufacturing facility project.*** If the total cost of a property that is a single advanced manufacturing facility project comprised of multiple properties (as described in paragraph (a)(3) of this section) exceeds its anticipated total cost such that the amount the taxpayer actually paid or incurred with respect to the single advanced manufacturing facility project to establish the beginning of its construction under paragraph (b)(1)(ii) of this section is less than five percent of the total cost at the time it is placed in service, the five percent safe harbor is not fully satisfied. However, the five percent safe harbor will be satisfied with respect to some, but not all, of the separate properties or facilities (as described in paragraph (a)(3) of this section) comprising the single advanced manufacturing facility project, as long as the total aggregate cost of those properties is not more than twenty times greater than the amount the taxpayer paid or incurred.

(ii) ***Example.*** In 2023, taxpayer incurs $300,000 in costs to construct Project A, comprised of six advanced manufacturing facilities that will be operated as a single project. Taxpayer anticipates that each advanced manufacturing facility will cost $1,000,000 for a total cost for Project A of $6,000,000. Thereafter, the taxpayer makes continuous efforts to advance towards completion of Project A. The taxpayer timely places Project A in service in 2025. In 2025, the actual total cost of Project A amounts to $7,500,000, with each advanced manufacturing facility costing $1,250,000. Although the taxpayer did not pay or incur five percent of the actual total cost of Project A in 2023, the taxpayer will be treated as satisfying the Five Percent Safe Harbor in 2023 with respect to four of the advanced manufacturing facilities, as their actual total cost of $5,000,000 is not more than twenty times greater than the $300,000 in costs incurred by the taxpayer. The taxpayer will not be treated as satisfying the five percent safe harbor in 2023 with respect to two of the properties. Thus, the taxpayer may claim the section 48D credit based on $5,000,000, the cost of four of the properties.

(iii) ***Single property.*** If the total cost of a single property, which is not part of a single advanced manufacturing facility project comprised of multiple properties or facilities (as described in paragraph (a)(3) of this section) and cannot be separated into multiple properties or facilities, exceeds its anticipated total cost so that the amount a taxpayer actually paid or incurred with respect to the single property as of an earlier year is less than five percent of the total cost of the single property at the time it is placed in service, then the taxpayer will not satisfy the five percent safe harbor with respect to any portion of the single property in such earlier year.

(iv) ***Example.*** In 2023, a taxpayer incurs $250,000 in costs to construct Project B, a single property. The taxpayer anticipates that the total cost of Project B will be $5,000,000. Thereafter, the taxpayer makes continuous efforts to advance towards completion of Project B. The taxpayer places Project B in service in a later year. At that time, its actual total cost amounts to $6,000,000. Because Project B is a single property that is not a single project comprised of multiple properties, the taxpayer will not satisfy the five percent safe harbor as of 2023.

However, if the construction of Project B satisfies the requirements of the physical work test by also beginning physical work of a significant nature in 2024, the taxpayer may be able to demonstrate that construction began in 2024.

(e) ***Continuity requirement*** —

(1) ***In general.*** For purposes of the physical work test and five percent safe harbor, taxpayers must satisfy the *continuity requirement* by demonstrating either continuous construction or continuous efforts regardless of whether the physical work test or the five percent safe harbor was used to establish the beginning of construction. Whether a taxpayer meets the continuity requirement under either test is determined by the relevant facts and circumstances. The Commissioner will closely scrutinize a property and may determine that the beginning of construction is not satisfied with respect to a property if a taxpayer does not meet the continuity requirement.

(2) ***Continuous construction.*** The term *continuous construction* means a continuous program of construction that involves continuing physical work of a significant nature. Whether a taxpayer maintains a continuous program of construction to satisfy the continuity requirement will be determined based on all the relevant facts and circumstances.

(3) ***Continuous efforts.*** The term *continuous efforts* means continuous efforts to advance towards completion of a property to satisfy the continuity requirement. Whether a taxpayer makes continuous efforts to advance towards completion of a property will be determined by the relevant facts and circumstances. Facts and circumstances indicating continuous efforts to advance towards completion of a property may include:

(i) Paying or incurring additional amounts included in the total cost of the property. A taxpayer is considered to meet this factor for a taxable year in which it pays or incurs (within the meaning of § 1.461-1(a)(1) and (2)) five percent or more of the total cost of the property each calendar year after the calendar year during which construction of the property began for purposes of section 48D and the section 48D regulations;

(ii) Entering into binding written contracts for the manufacture, construction, or production of the property or for future work to construct the property;

(iii) Obtaining necessary permits; and

(iv) Performing physical work of a significant nature.

(4) ***Excusable disruptions to continuous construction and continuous efforts tests*** —

(i) ***In general.*** Certain disruptions in a taxpayer's continuous construction or continuous efforts to advance towards completion of a property that are beyond the taxpayer's control will not be considered as indicating that a taxpayer has failed to satisfy the continuity requirement.

(ii) ***Effect of excusable disruptions on continuity safe harbor.*** The excusable disruptions provided in this paragraph (e)(4) will not extend the continuity safe harbor deadline that is provided in paragraph (e)(6) of this section.

(iii) ***Non-exclusive list of construction disruptions.*** This paragraph (e)(4)(iii) provides a non-exclusive list of construction disruptions that will not be considered as indicating that a taxpayer has failed to satisfy the continuity requirement:

(A) Delays due to severe weather conditions.

(B) Delays due to natural disasters.

(C) Delays in obtaining permits or licenses from Federal, Indian Tribal, State, territorial, or local governments. Such delays include delays in obtaining air emissions, water discharge, or hazardous waste management permits or chemical handling licenses from the Environmental Protection Agency (EPA) or another environmental protection authority. Such delays also include delays as a result of the review process under State, Tribal, local, or Federal environmental laws, for example, a review under the National Environmental Policy Act, as well as delays in obtaining construction permits.

(D) Delays at the written request of a Federal, State, local, or Indian Tribal government regarding matters of public health, public safety, security, or similar concerns, including hazardous chemical transport.

(E) Delays related to electrical or water supply, such as those relating to the completion of construction on a distribution line or water supply line that may be associated with a project's electrical and water needs, whether constructed by the eligible taxpayer that is the owner of the advanced manufacturing facility, a governmental entity, or another person.

(F) Delays in the manufacture of custom components or equipment.

(G) Delays due to the inability to obtain specialized equipment of limited availability.

(H) Delays due to supply shortages.

(I) Delays due to the presence of endangered species.

(J) Financing delays.

(K) Delays due to specialized labor shortages or labor stoppages.

(5) ***Timing of excusable disruption determination.*** In the case of a single advanced manufacturing facility project comprised of a single property, whether an excusable disruption has occurred for purposes of the beginning of construction requirement of section 48D and the section 48D regulations must be determined in the taxable year during which the property is placed in service. In the case of a single advanced manufacturing facility project comprised of multiple properties or facilities, whether an excusable disruption has occurred for purposes of the beginning of construction requirement of section 48D and the section 48D regulations must be determined in the taxable year during which the last of multiple properties or facilities is placed in service.

(6) ***Continuity safe harbor*** —

(i) ***In general.*** A taxpayer will be deemed to satisfy the continuity requirement provided the property is placed in service no more than 10 calendar years after the calendar year during which construction of the property began for purposes of section 48D and the section 48D regulations.

(ii) ***Example.*** If construction begins on a property on January 15, 2023, and the property is placed in service by December 31, 2033, the property will be considered to satisfy the continuity safe harbor. If the property is not placed in service before January 1, 2034, whether the continuity requirement was satisfied will be determined based on all the relevant facts and circumstances.

(f) ***Applicability date.*** This section applies to property that is placed in service after December 31, 2022, and during a taxable year ending on or after October 23, 2024.

[T.D. 10009, 89 FR 84752, Oct. 23, 2024, as amended by T.D. 10009, 89 FR 92793, Nov. 25, 2024]

§ 1.48D-6 Elective payment election.

(a) ***Elective payment election*** —

(1) ***In general.*** A taxpayer, after successfully completing the pre-filing registration requirements under paragraph (b) of this section, may make an elective payment election with respect to any section 48D credit determined with respect to such taxpayer in accordance with section 48D(d)(1) of the Internal Revenue Code (Code) and this section. A taxpayer, other than a partnership or S corporation, that makes an elective payment election in the manner provided in paragraph (c) of this section will be treated as making a payment against the Federal income taxes imposed by subtitle A of the Code (subtitle A) for the taxable year with respect to which a section 48D credit is determined equal to the amount of the section 48D credit with respect to any qualified property otherwise allowable to the taxpayer (determined without regard to section 38(c) of the Code). The payment described in section 48D(d)(1), and this paragraph (a)(1) will be treated as made on the later of the due date (determined without regard to extensions) of the return of tax imposed by subtitle A for the taxable year or the date on which such return is filed.

(2) ***Partnerships and S corporations.*** See paragraph (d) of this section for special rules regarding elective payment elections under section 48D(d) applicable to partnerships and S corporations.

(3) ***Irrevocable.*** Any election under section 48D(d)(1) and this section, once made, will be irrevocable and, except as otherwise provided, will apply with respect to any amount of section 48D credit for the taxable year for which the election is made.

(b) ***Pre-filing registration required*** —

(1) ***In general.*** Pre-filing registration by any taxpayer (including a partnership or an S corporation) in accordance with this paragraph (b) is a condition that must be successfully completed prior to making an elective payment election under section 48D(d)(1) and this section with respect to qualified property placed in service by the taxpayer as part of an advanced manufacturing facility of an eligible taxpayer. An elective payment election will not be effective with respect to the section 48D credit determined with respect to any such qualified property placed in service by any taxpayer unless the taxpayer received a valid registration number for the taxpayer's qualified investment in the advanced manufacturing facility of an eligible taxpayer in accordance with this paragraph (b) and provided the registration number for each qualified investment in each advanced manufacturing facility on its Form 3800, *General Business Credit* (or its successor), and on any required completed source form(s) with respect to the qualified investment, attached to the tax return in accordance with guidance. For purposes of this section, the term *guidance* means guidance published in the FEDERAL REGISTER or Internal Revenue Bulletin, as well as administrative guidance such as forms, instructions, publications, or other guidance on the *IRS.gov* website. *See* §§ 601.601 and 601.602 of this chapter. However, completion of the pre-filing registration requirements and receipt of a registration number does not, by itself, mean the taxpayer is eligible to receive a payment with respect to any section 48D credit determined with respect to the qualified property.

(2) ***Manner of registration.*** Unless otherwise provided in guidance, a taxpayer must complete the pre-filing registration process electronically through the IRS electronic portal and in accordance with the instructions provided therein.

(3) ***Members of a consolidated group.*** A member of a consolidated group is required to complete pre-filing registration as a condition of, and prior to, making an elective payment election. *See* § 1.1502-77 (providing rules regarding the status of the common parent as agent for its members).

(4) ***Timing of pre-filing registration.*** A taxpayer must satisfy the pre-filing registration requirements of this paragraph (b) and receive a registration number under paragraph (b)(7) of this section prior to making any elective payment election under this section on the taxpayer's tax return for the taxable year at issue.

(5) ***Each qualified investment in an advanced manufacturing facility must have its own registration number.*** A taxpayer must obtain a registration number for each qualified investment in an advanced manufacturing facility of an eligible taxpayer with respect to which an elective payment election is made.

(6) ***Information required to complete the pre-filing registration process.*** Unless modified in future guidance, a taxpayer must provide the following information to the IRS to complete the pre-filing registration process:

(i) The taxpayer's general information, including its name, address, taxpayer identification number, and type of legal entity;

(ii) Any additional information required by the IRS electronic portal;

(iii) The taxpayer's taxable year, as determined under section 441 of the Code;

(iv) The type of annual return(s) normally filed by the taxpayer with the IRS;

(v) A list of each qualified investment in an advanced manufacturing facility that the taxpayer intends to use to determine a section 48D credit for which the taxpayer intends to make an elective payment election;

(vi) For each qualified investment in an advanced manufacturing facility listed in paragraph (b)(6)(v) of this section, any further information required by the IRS electronic portal, such as:

(A) The type of qualified investment in the advanced manufacturing facility;

(B) Physical location (that is, address and coordinates (longitude and latitude) of the advanced manufacturing facility);

(C) Supporting documentation relating to the construction, reconstruction or acquisition of the advanced manufacturing facility (such as, State and local government permits to operate the advanced manufacturing facility, certifications, and evidence of ownership that ties to the land deed, lease, or other documented right to use and access any land upon which the advanced manufacturing facility is constructed or housed);

(D) The beginning of construction date and the placed in service date of any qualified property that is part of the advanced manufacturing facility, or the date of the last progress expenditure made during the taxable year;

(E) The source of funds the taxpayer used to acquire the qualified property with respect to which the qualified investment was made; and

(F) Any other information that the taxpayer or entity believes will help the IRS evaluate the registration request;

(vii) The name of a contact person for the taxpayer. The contact person is the person whom the IRS may contact if there is an issue with the registration. The contact person must either:

(A) Possess legal authority to bind the taxpayer; or

(B) Must provide a properly executed power of attorney on Form 2848, *Power of Attorney and Declaration of Representative;*

(viii) A penalties of perjury statement, effective for all information submitted as a complete application, and signed by a person with personal knowledge of the relevant facts that is authorized to bind the registrant; and

(ix) Any other information the IRS deems necessary for purposes of preventing duplication, fraud, improper payments, or excessive payments under this section that is provided in guidance.

(7) ***Registration number*** —

(i) ***In general.*** The IRS will review the information provided and will issue a separate registration number for each qualified investment in an advanced manufacturing facility of an eligible taxpayer for which the taxpayer making the registration provided sufficient verifiable information.

(ii) ***Registration number is only valid for one year.*** A registration number is valid only with respect to the taxpayer that obtained the registration number under this section and only for the taxable year for which it is obtained.

(iii) ***Renewing registration numbers.*** If an elective payment election will be made with respect to any section 48D credit determined with respect to a qualified investment in an advanced manufacturing facility for a taxable year after a registration number under this section has been obtained, the taxpayer must renew the registration for that subsequent year in accordance with applicable guidance, including attesting that all the facts previously provided are still correct or updating any facts.

(iv) ***Amendment of previously submitted registration information if a change occurs before the registration number is used.*** As provided in instructions to the pre-filing registration portal, if specified changes occur with respect to a qualified investment in an advanced manufacturing facility for which a registration number has been previously obtained, a taxpayer must amend the registration (or may need to submit a new registration) to reflect these new facts. For example, if an eligible taxpayer that is the owner of an advanced manufacturing facility previously registered qualified investments in the advanced manufacturing facility or the advanced manufacturing facility, and the advanced manufacturing facility undergoes a change of ownership (incident to a corporate reorganization or an asset sale) such that the new owner has a different employer identification number (EIN) than the owner who obtained the original registration, the original owner of the advanced manufacturing facility must amend the original registration to disassociate its EIN from the advanced manufacturing facility and the new owner must submit separately an original registration (or if the new owner previously registered other qualified investments or advanced manufacturing facilities, must amend its original registration) to associate the new owner's EIN with the previously registered advanced manufacturing facility.

(v) ***Registration number is required to be reported on the return for the taxable year of the elective payment election.*** The taxpayer must include the registration number of the qualified investment in the advanced manufacturing facility on the taxpayer's return as provided in this paragraph (b) for the taxable year. The IRS will treat an elective payment election as ineffective with respect to a section 48D credit determined with respect to a qualified investment in an advanced manufacturing facility for which the taxpayer does not include a valid registration number that was assigned to that particular taxpayer during the pre-registration process on the annual return.

(c) ***Time and manner of election*** —

(1) ***In general.*** Any elective payment election under section 48D(d)(1) and this section with respect to any section 48D credit determined with respect to a taxpayer's qualified investment must—

(i) Be made on the taxpayer's original return of tax (including a superseding return) filed not later than the due date (including extensions of time) for the taxable year for which the section 48D credit is determined and the election is made in the manner prescribed by the IRS in guidance;

(ii) Include any required completed source credit form(s), a completed Form 3800, and any additional information required in instructions, including supporting calculations;

(iii) Provide on the completed Form 3800 and on any required source credit form(s) a valid registration number for the qualified investment that is placed in service as part of an advanced manufacturing facility of an eligible taxpayer;

(iv) Include a statement attesting under the penalties of perjury that—

(A) The taxpayer claiming to be an eligible taxpayer is not a foreign entity of concern within the meaning of regulations under section 48D and has not made an applicable transaction as defined under regulations under section 50 during the taxable year that the qualified property is placed in service; andThe taxpayer claiming to be an eligible taxpayer is not a foreign entity of concern within the meaning of regulations under section 48D and has not made an applicable transaction as defined under regulations under section 50 during the taxable year that the qualified property is placed in service; and

(B) The taxpayer will not claim a double benefit (within the meaning of section 48D(d)(3) and paragraphs (d)(2)(ii)(B) and (C) and (e) of this section) with respect to any elective payment election made by the taxpayer; and

(v) Be made not later than the due date (including extensions of time) for the taxable year for which the election is made, but in no event earlier than May 8, 2023.

(2) ***Limitations.*** No elective payment election may be made for the first time on an amended return, withdrawn on an amended return, or made or withdrawn by filing an administrative adjustment request under section 6227 of the Code, although a numerical error with respect to a properly claimed elective payment election may be corrected on an amended return or by filing an administrative adjustment request under section 6227 if necessary. There is no relief available under § 301.9100-1 or § 301.9100-3 of this chapter for an elective payment election that is not timely filed; however, relief under § 301.9100-2(b) may apply.

(d) ***Special rules for partnerships and S corporations*** —

(1) ***In general.*** If a partnership or S corporation directly holds any property for which an advanced manufacturing investment credit is determined, any election under this section must be made by the partnership or S corporation. No election under section 48D(d) and this section by any partner or shareholder is allowed.

(2) ***Election*** —

(i) ***Time and manner of election.*** An elective payment election by a partnership or S corporation is made at the same time and in the same manner, and subject to the pre-filing registration and other requirements for the election to be effective, as provided in paragraphs (b) and (c) of this section.

(ii) ***Effect of election.*** If a partnership or S corporation makes an elective payment election with respect to a section 48D credit, the following rules will apply:

(A) The Internal Revenue Service will make a payment to such partnership or S corporation equal to the amount of such credit, determined in accordance with paragraph (d)(6) of this section (unless the partnership or S corporation owes a Federal tax liability, in which case the payment may be reduced by such tax liability);

(B) Before determining any partner's distributive share, or S corporation shareholder's pro rata share, of such credit, such credit is reduced to zero and is, for any other purposes under the Code, deemed to have been allowed solely to such entity (and not allocated or otherwise allowed to its partners or shareholders) for such taxable year; and

(C) Any partner's or S corporation shareholder's share of any qualified investment in an advanced manufacturing facility for which an elective payment election has been made for the taxable year, is reduced to zero for such taxable year.

(iii) ***Coordination with sections 705 and 1366.*** Any amount with respect to which the election is made is treated as tax exempt income for purposes of sections 705 and 1366 of the Code.

(iv) ***Partner's distributive share*** —

(A) ***In general.*** Except as provided in paragraphs (d)(2)(iv)(B) and (C) of this section, a partner's distributive share of such tax exempt income is equal to such partner's distributive share of its otherwise allocable basis in qualified property under regulations under section 48D that apply for purposes of allocating a partner's share of its basis in qualified property placed in service by the partnership for such taxable year.

(B) ***Interim rule.*** If a partnership meets the requirements of paragraph (d)(2)(iv)(C) of this section, a partner's distributive share of the tax exempt income resulting from a section 48D(d) elective payment election made by the partnership with respect to property held directly by the partnership, may be determined in accordance with the basic principles for partnership income allocations as described in § 1.704-1(b)(1)(i) instead of in accordance with the partner's distributive share of the otherwise applicable section 48D credits as determined under §§ 1.704-1(b)(4)(ii) and 1.46-3(f).

(C) ***Partnership requirements.*** A partnership meets the requirements of this paragraph (d)(2)(iv)(C) if its partnership agreement is a written binding contract that was entered into after December 31, 2021, and before June 22, 2023, and it was formed for the purpose of owning and operating an advanced manufacturing facility or qualified property.

(v) ***S corporation shareholder's pro-rata share.*** An S corporation shareholder's pro rata share (as determined under section 1377(a) of the Code) of such tax exempt income is taken into account by the S corporation shareholder in the taxable year (as determined under sections 444 and 1378(b) of the Code) in which the section 48D credit is determined and is based on the shareholder's otherwise apportioned basis in qualified property under regulations under section 48D that apply for purposes of allocating an S corporation shareholder's pro-rata share of basis in qualified property placed in service by the S corporation for the taxable year.

(vi) ***Timing of tax exempt income.*** Such tax exempt income resulting from such election is treated as received or accrued, including for purposes of sections 705 and 1366 of the Code, as of the date the qualified property is placed in service with respect to the partnership or S corporation.

(3) ***Disregarded entity ownership.*** In the case of a qualified property held directly by an entity disregarded as separate from a partnership or S corporation for Federal income tax purposes, such qualified property will be treated as held directly by the partnership or S corporation for purposes of making an elective payment election.

(4) ***Electing partnerships in tiered structures*** —

(i) ***In general.*** If a partnership (upper-tier partnership) is a direct or indirect partner of a partnership that makes an elective payment election (lower-tier partnership) and directly or indirectly receives an allocation of tax exempt income resulting from the elective payment election made by the lower-tier partnership, the upper-tier partnership must determine its partners' distributive shares of such tax exempt income in proportion to each partner's distributive share of its otherwise allocable basis in qualified property under regulations under section 48D that apply for purposes of allocating a partner's share of its basis in qualified property placed in service by a partnership for such taxable year.

(ii) ***Electing partnerships in tiered structures; interim rule.*** If a lower-tier partnership determined its partners' distributive shares of the tax exempt income described in paragraph (d)(2)(iii) of this section using the interim rule described in paragraph (d)(2)(iv)(B) of this section, an upper-tier partnership that is a direct or indirect partner in such lower-tier partnership may determine its partners' distributive shares of the tax exempt income in accordance with the basic principles for partnership income allocations as described in § 1.704-1(b)(1)(i).

(5) ***Character of tax exempt income.*** Tax exempt income resulting from an elective payment election by an S corporation or a partnership is treated as arising from an investment activity and not from the conduct of a trade or business within the meaning of section 469(c)(1)(A). As such, the tax exempt income is not treated as passive income to any partners or shareholders who do not materially participate within the meaning of section 469(c)(1)(B).

(6) ***Determination of amount of the section 48D credit*** —

(i) ***In general.*** In determining the amount of the section 48D credit that will result in a payment under paragraph (d)(2)(ii)(A) of this section, the partnership or S corporation must compute the amount of the credit allowable (without regard to section 38(c)) as if an elective payment election were not made. Because a partnership or S corporation is not subject to sections 38(b) and (c) and 469 (that is, those sections apply at the partner or shareholder level), the amount of the credit determined by a partnership or S corporation is not subject to limitation by those sections. Because the section 48D credit is an investment credit under section 46, sections 49 and 50 apply to limit the amount of the credit.

(ii) ***Application of section 49 at-risk rules to determination of section 48D credit for partnerships and S corporations.*** Any amount of section 48D credit determined with respect to qualified property held directly by a partnership or S corporation must be determined by the partnership or S corporation taking into account the section 49 at-risk rules at the partner or shareholder level as of the close of the taxable year in which the qualified property is placed in service. Thus, if the credit base of a qualified property is limited to a partner or S corporation shareholder by section 49, then the amount of the section 48D credit determined by the partnership or S corporation is also limited. A partnership or S corporation that directly holds qualified property must request from each of its partners or shareholders, respectively, that is subject to section 49, the amount of such partner's or shareholder's nonqualified nonrecourse financing with respect to the qualified property as of the close of the taxable year in which the property is placed in service. Additionally, the partnership or S corporation must attach to its tax return for the taxable year in which the qualified property is placed in service, the amount of each partner's or shareholder's section 49 limitation with respect to any qualified property. Changes to at-risk amounts under section 49 for partners or S corporation shareholders after the close of the taxable year in which the qualified property is placed in service do not impact the section 48D credit determined by the partnership or S corporation, but do impact the partner(s) or S corporation shareholder(s) as provided in paragraph (d)(6)(iii) of this section.

(iii) ***Changes in at-risk amounts under section 49 at partner or shareholder level.*** A partner or shareholder in a partnership or S corporation, respectively, must apply the rules under section 49 at the partner or shareholder level if there is a change in nonqualified nonrecourse financing with respect to the partner or shareholder after the close of the taxable year in which the qualified property is placed in service and the section 48D credit is determined. If there is an increase in nonqualified nonrecourse financing to a partner, any adjustment under the rules of section 49(b) is calculated based on the partner's share of the basis (or cost) of the qualified property to which the section 48D credit was determined in accordance with regulations under section 48D that apply for purposes of allocating a partner's share of its basis in qualified property placed in service by the partnership. If there is an increase in nonqualified nonrecourse financing to a shareholder, any adjustment under the rules of section 49(b) is calculated based on the shareholder's pro rata share of the basis (or cost) of the qualified property to which the section 48D credit was determined in accordance with regulations under section 48D that apply for purposes of allocating an S corporation shareholder's pro-rata share of basis in qualified property placed in service by the S corporation. If there is a decrease in nonqualified nonrecourse financing, any increase in the credit base is taken into account by the partner or shareholder as provided under section 49, and any resulting credit is not eligible for an elective payment election under section 48D(d).

(7) ***Partnerships subject to subchapter C of chapter 63 of the Code.*** See § 301.6241-7(j) of this chapter for rules applicable to payments made to partnerships subject to subchapter C of chapter 63 of the Code for a partnership taxable year.

(8) ***Example.*** P is a calendar-year partnership consisting of partners A and B, each 50 percent owners. P constructs Facility A, an advanced manufacturing facility, at V. P completes the pre-filing registration with respect to Facility A at V for 2024 in accordance with paragraph (b) of this section. In 2024, P places in service qualified property that is part of Facility A at V. P timely files its 2024 Form 1065 and properly makes the elective payment election in accordance with paragraph (c) of this section. On its Form 1065, P properly determines that the amount of section 48D credit with respect to the qualified property placed in service at Facility A for 2024 is $100,000. The IRS processes P's return

and makes a $100,000 payment to P. Before determining A's and B's distributive shares, P reduces the section 48D credit to zero. However, for other purposes of the Code, the $100,000 section 48D credit is deemed to have been allowed to P for 2024. P does not qualify for the interim rule described in paragraph (d)(2)(iv)(B) of this section. The $100,000 is treated as tax exempt income for purposes of section 705, and A's and B's distributive shares of such tax exempt income is based on each partner's otherwise allocable basis in qualified property under regulations under section 48D that apply for purposes of allocating a partner's share of its basis in qualified property placed in service by the partnership for the 2024 taxable year ($50,000 each). A's and B's basis in their partnership interests and capital accounts will be appropriately adjusted to take into account basis adjustments made to the qualified property under section 50(c)(5) and § 1.704-1(b)(2)(iv)(*j*). See paragraph (g)(2) of this section. The tax exempt income received or accrued by P as a result of the elective payment election is treated as received or accrued, including for purposes of section 705, as of date P placed in service the qualified property in 2024.

(e) ***Denial of double benefit*** —

(1) ***In general.*** In the case of a taxpayer making an election under section 48D(d) and this section with respect to any section 48D credit determined under section 48D(a) and regulations under section 48D that apply for purposes of determining the section 48D credit, such credit is reduced to zero and is, for any other purposes under the Code, deemed to have been allowed to the taxpayer for such taxable year. Paragraphs (e)(2) and (3) of this section explain the application of the section 48D(d)(3) denial of a double benefit rule to a taxpayer (other than a partnership or S corporation). The application of section 48D(d)(3) to a partnership or S corporation is provided in paragraphs (d)(2)(ii)(B) and (C) of this section.

(2) ***Application of the denial of double benefit rule.*** A taxpayer (other than a partnership or S corporation) making an elective payment election applies section 48D(d)(3) by taking the following steps:

(i) Compute the amount of the Federal income tax liability (if any) for the taxable year, without regard to the general business credit under section 38 of the Code (GBC), that is payable on the due date of the tax return (without regard to extensions), and the amount of the Federal income tax liability that may be offset by GBCs pursuant to the limitation based on the amount of tax under section 38.

(ii) Compute the allowed amount of the GBC carryforwards carried to the taxable year under section 38(a)(1) plus the amount of the current year GBCs (including the current section 48D credit) for the taxable year under section 38(a)(2) and (b). Because the election is made on an original return for the taxable year for which the section 48D credit is determined, any business credit carrybacks are not considered when determining the elective payment amount for the taxable year.

(iii) Calculate the net elective payment amount for the section 48D credit, which equals the lesser of the section 48D credit for which an elective payment election is made or the excess (if any, otherwise the excess is zero) of the total GBC credits described in paragraph (e)(2)(ii) of this section over the amount of the Federal income tax liability that may be offset by GBCs pursuant to the limitation based on amount of tax under section 38 computed in paragraph (e)(2)(i) of this section. Treat the net elective payment amount of the section 48D credit for which an elective payment election is made as a payment against the tax imposed by subtitle A for the taxable year with respect to which such credit is determined.

(iv) Excluding the net elective payment amount determined under paragraph (e)(2)(iii) of this section, but including any portion of the section 48D credit that is not part of the net elective payment amount, compute the allowed amount of GBC carryforwards carried to the taxable year plus the amount of current year GBCs allowed for the taxable year under section 38 (including, for clarity purposes, the ordering rules in section 38(d)). Apply these GBCs against the tax liability computed in paragraph (e)(2)(i) of this section.

(v) Reduce the section 48D credit for which an elective payment election is made by the net elective payment amount, as provided in paragraph (e)(2)(iii) of this section, and by the amount (if any) allowed as a GBC under section 38 for the taxable year, as provided in paragraph (e)(2)(iv) of this section, which results in the section 48D credit being reduced to zero.

(3) ***Use of the section 48D credit for other purposes.*** The full amount of the section 48D credit for which an elective payment election is made is deemed to have been allowed for all other purposes of the Code, including, but not limited to, the basis reduction and recapture rules imposed by section 50 and the calculation of tax, calculation of the amount of any underpayment of estimated tax under sections 6654 and 6655 of the Code, and the addition to tax for the failure to pay under section 6651(a)(2) of the Code (if any).

(4) ***Examples.*** The following examples illustrate the rules of this paragraph (e).

(i) ***Example 1.*** Z Corp is a calendar-year C corporation. Z Corp places in service qualified property that is part of an advanced manufacturing facility in June of 2024. Z Corp completes the pre-filing registration in accordance with this section and receives a registration number for the qualified property. Z Corp timely files (with extension) its 2024 Form 1120 on October 15, 2025, properly making the elective payment election with respect to the section 48D credit earned with respect to the qualified property in accordance with this section. On its return, Z Corp properly determines that it has $500,000 of tax imposed by subtitle A of the Code (see paragraph (e)(2)(i) of this section). For simplicity, assume the maximum amount of GBCs that can be claimed for the taxable year is $375,000. Z Corp properly determines that the amount of the section 48D credit determined with respect to the qualified property (its GBC for the taxable year) is $100,000 (see paragraph (e)(2)(ii) of this section). Under paragraph (e)(2)(iii) of this section, the net elective payment amount is $0, so the section 48D credit is considered a credit that reduces Z Corp's tax liability to $400,000 under paragraph (e)(2)(iv) of this section. Z Corp pays its $400,000 tax liability on October 15, 2025. Under paragraph (e)(2)(v) of this section, the $100,000 of section 48D credit is reduced by the $100,000 of section 48D credit claimed as GBCs for the taxable year, which results in the section 48D credit being reduced to zero. However, the $100,000 of the current year section 48D credit is deemed to have been allowed to Z Corp for 2024 for all other purposes of the Code (paragraph (e)(3) of this section). Because Z Corp paid its tax liability after the original due date for the filing of its Form 1120, Z Corp will owe a failure to pay penalty under section 6651(a)(2) and interest. Z Corp may also owe a penalty for failure to pay estimated income tax under section 6655.

(ii) ***Example 2.*** Assume the same facts as in paragraph (e)(4)(i) of this section (*Example 1*), except that Z Corp has $80,000 of tax imposed by subtitle A (paragraph (e)(2)(i) of this section) and calculates its limitation of GBC under section 38(c) (simplified) is $60,000 (paragraph (e)(2)(i) of this section), and Z Corp timely files its Form 1120 on April 15 instead of October 15. Under paragraph (e)(2)(iii) of this section, the net elective payment amount is $40,000 (lesser of $100,000 section 48D credit or $100,000 of total GBC credits described in paragraph (e)(2)(ii) of this section minus $60,000 of section 38(c) limitation). Under paragraph (e)(2)(iv) of this

section, Z Corp uses $60,000 of its $100,000 of section 48D credit against its tax liability. Z Corp reduces the section 48D credit by the $40,000 net elective payment amount determined in paragraph (e)(2)(iii) of this section and by the $60,000 section 48D credit claimed against tax in paragraph (e)(2)(iv) of this section, resulting in the credit being reduced to zero (paragraph (e)(2)(v) of this section). When the IRS processes Z Corp's 2024 Form 1120, the net elective payment amount results in a $20,000 refund to Z Corp (after applying $20,000 of the $40,000 net elective payment amount to cover Z Corp's tax shown on the return). However, for other purposes of the Code, the $100,000 section 48D credit is deemed to have been allowed to Z Corp for 2024 (paragraph (e)(3) of this section). Even though Z Corp did not owe tax after applying the net elective payment amount against its net tax liability, Z Corp may be subject to the section 6655 penalty for failure to pay estimated income tax. The net elective payment is not an estimated tax installment, rather, it is treated as a payment made at the filing of the return.

(iii) *Example 3.* X Corp is a calendar-year C corporation. X Corp places in service qualified property that is part of an advanced manufacturing facility in June of 2025. X Corp completes the pre-filing registration in accordance with this section and receives a registration number for the qualified property. In 2026, X Corp timely files its 2025 return (without extension), calculating its federal income tax before GBCs of $125,000 and that its limitation of GBC under section 38(c) (simplified) is $100,000 (paragraph (e)(2)(i) of this section). X Corp attaches Form 3468 to claim a current section 48D credit of $50,000. X Corp also attaches Form 5884 to claim a current work opportunity tax credit (WOTC) of $50,000. X Corp also has business credit carryforwards of $25,000, which together with the 48D credit and WOTC results in a total of $125,000 of GBC for the taxable year (paragraph (e)(2)(ii) of this section). Under paragraph (e)(2)(iii) of this section, the net elective payment amount is $25,000. Under paragraph (e)(2)(iv) of this section, including using the ordering rules in section 38(d), X Corp is allowed $25,000 of the carryforwards, $25,000 of section 48D credit (as its section 46 investment credit) plus $50,000 of WOTC against net income tax, as defined under section 38(c)(1)(B). The $25,000 of unused section 48D credit is the net elective payment amount that results in a $25,000 payment against tax by X Corp (paragraph (e)(2)(iii) of this section). On its return, X Corp shows net tax liability of $25,000 ($125,000−$100,000 allowed GBC) and the net elective payment of $25,000 which X Corp applied to net tax liability, resulting in zero tax owed on the return. Under paragraph (e)(2)(v) of this section, X Corp's section 48D credit is reduced by the $25,000 of the net elective payment amount, as well as by the $25,000 of section 48D credit claimed as a GBC for the taxable year, resulting in the $50,000 of section 48D credit being reduced to zero. However, for all other purposes of the Code, the $50,000 of section 48D credit is deemed to have been allowed to X Corp for 2025 (paragraph (e)(3) of this section). Even though X Corp did not owe tax after applying the net elective payment amount against its net tax liability, X Corp may be subject to the section 6655 penalty for failure to pay estimated income tax. The net elective payment is not an estimated tax installment, rather, it is treated as a payment made at the filing of the return.

(iv) *Example 4.* Assume the same facts as in paragraph (e)(4)(iii) of this section (*Example 3*), except X Corp filed the return on a timely filed extension after the due date of the return (without extensions). Even though X Corp did not owe tax after applying the net elective payment amount against its net tax liability, X Corp may be subject to the section 6651(a)(2) penalty for failure to pay tax.

(f) *Excessive payment* —

(1) ***In general.*** Except as provided in paragraph (f)(2) of this section, in the case of any amount treated as a payment which is made by the taxpayer under section 48D(d)(1) and paragraph (a) of this section, or any payment made pursuant to section 48D(d)(2)(A)(i)(I) and paragraph (d) of this section, with respect to any property, which amount the Commissioner determines constitutes an excessive payment as defined in paragraph (f)(3) of this section, the tax imposed on such taxpayer by chapter 1 of the Code for the taxable year in which such determination is made is increased by an amount equal to the sum of—

(i) The amount of such excessive payment; plus

(ii) An amount equal to 20 percent of such excessive payment.

(2) ***Reasonable cause.*** Paragraph (f)(1)(ii) of this section will not apply if the taxpayer demonstrates to the satisfaction of the Commissioner that the excessive payment resulted from reasonable cause.

(3) ***Excessive payment defined.*** For purposes of section 48D(d) and this paragraph (f), the term *excessive payment* means, with respect to any property for which an election is made under section 48D(d) and this section for any taxable year, an amount equal to the excess of—

(i) The amount treated as a payment which is made by the taxpayer pursuant to section 48D(d)(2)(A)(i)(I) and paragraph (d) of this section, or any payment made by the Commissioner pursuant to section 48D(d)(2)(A)(i)(I) and paragraph (d) of this section, with respect to such property for such taxable year; over

(ii) The amount of the section 48D credit which, without application of section 48D(d) and this section, would be otherwise allowable (determined without regard to section 38(c)) under section 48D(a) and the section 48D regulations with respect to such property for such taxable year.

(4) ***Example.*** A Corp is a calendar-year C corporation. A Corp places in service qualified property that is part of Facility A, an advanced manufacturing facility in 2023. A Corp properly completes the pre-filing registration in accordance with paragraph (b) of this section and receives a registration number for the advanced manufacturing facility. A Corp timely files its 2023 Form 1120, properly providing the registration number for Facility A on Form 3800 and the relevant source credit form and otherwise complying with paragraph (c) of this section. On its return, A Corp calculates that the amount of the section 48D credit with respect to the qualified property is $100,000 and that the net elective payment amount is $100,000. A Corp receives a refund in the amount of $100,000. In 2025, the IRS determines that the amount of the section 48D credit properly allowable to A Corp in 2023 with respect to Facility A (as determined under regulations under section 48D that apply for purposes of determining the amount of the section 48D credit and without regard to the limitation based on tax in section 38(c)) was $60,000. A Corp is not able to show reasonable cause for the difference. The excessive payment amount is $40,000 ($100,000 treated as a payment−$60,000 allowable amount). In 2025, the tax imposed under chapter 1 on A Corp is increased in the amount of $48,000 ($40,000 + (20% * $40,000 = $8,000)).

(g) ***Basis reduction and recapture*** —

(1) ***In general.*** The rules in section 50(a) and (c) of the Code apply with respect to elective payments under paragraphs (a) and (d) of this section.

(2) ***Basis adjustment*** —

(i) ***In general.*** If a section 48D credit is determined with respect to property for which a taxpayer makes an election under section 48D(d)(1), then the adjusted basis of the property must be reduced by the amount of the section 48D credit determined for which the taxpayer made an election under section 48D(d)(1).

(ii) ***Basis adjustment by partnership or S corporation.*** If an advanced manufacturing investment credit is determined with respect to property for which a partnership or S corporation makes an election under section 48D(d)(1), then the adjusted basis of the property must be reduced by the amount of the advanced manufacturing investment credit determined with respect to the property held by the partnership or S corporation, for which the IRS made a payment to the partnership or S corporation pursuant to section 48D(d)(2)(A)(i)(I).

(iii) ***Basis adjustment of partners and S corporation shareholders.*** The adjusted basis of a partner's interest in a partnership, and stock in an S corporation, must be appropriately adjusted pursuant to section 50(c)(5) to take into account adjustments made under paragraph (g)(2)(ii) of this section in the basis of property held by the partnership or S corporation, as the case may be.

(3) ***Recapture reporting.*** Any reporting of recapture is made on the taxpayer's annual return in the manner prescribed by the IRS in any guidance.

(h) ***Applicability dates*** —

(1) ***In general.*** Except as provided in paragraph (h)(2) of this section, this section applies to taxable years ending on or after March 11, 2024.

(2) ***Prior taxable years.*** For taxable years ending before March 11, 2024 taxpayers may choose to apply the rules of this section to property that is placed in service after December 31, 2022, provided the taxpayers apply the rules in their entirety and in a consistent manner.

[T.D. 9989, 89 FR 17606, Mar. 11, 2024; 89 FR 29257, Apr. 22, 2024]

§ 1.48(e)-0 Table of contents.

This section lists the captions contained in § 1.48(e)-1.

§ 1.48(e)-1 Low-Income Communities Bonus Credit Program.

(a) In general.

(b) Qualified solar or wind facility defined.

(1) In general.

(2) Facility categories.

(i) Category 1 Facility.

(ii) Category 2 Facility.

(iii) Category 3 Facility.

(iv) Category 4 Facility.

(3) Single project treated as single facility.

(c) Eligible property.

(1) In general.

(2) Energy storage technology installed in connection with qualified solar or wind facility.

(3) Safe harbor for requirement of paragraph (c)(2)(ii) of this section.

(d) Location.

(1) In general.

(2) Nameplate Capacity Test.

(i) Nameplate capacity for purpose of Nameplate Capacity Test.

(ii) Exclusion of energy storage technology.

(e) Financial benefits for a Category 3 Facility.

(1) In general.

(2) Threshold requirement.

(3) Financial value of the energy produced by the facility.

(4) Gross financial value.

(5) Net financial value defined.

(i) Common ownership.

(ii) Third-party ownership.

(iii) Equitable allocation of financial benefits.

(A) If financial value distributed via utility bill savings.

(B) If financial value is not distributed via utility bill savings.

(6) Benefits Sharing Statement.

(i) In general.

(ii) Notification requirement.

(f) Financial benefits for a Category 4 Facility.

(1) In general.

(2) Bill credit discount rate.

(i) In general.

(ii) No or nominal cost of participation.

(iii) Calculation on annual basis.

(iv) Examples.

(A) Example 1.

(B) Example 2.

(3) Low-income verification.

(i) In general.

(ii) Methods of verification.

(A) Categorical eligibility.

(B) Other income verification methods.

(C) Impermissible verification method.

(g) Annual Capacity Limitation.

(h) Reservations of Capacity Limitation allocation for facilities that meet certain additional selection criteria.

(1) In general.

(2) Ownership criteria.

(i) In general.

(ii) Indirect ownership.

(A) Disregarded entities.

(B) Partnership.

(iii) Tribal enterprise.

(iv) Alaska native corporation.

(v) Renewable energy cooperative.

(vi) Qualified renewable energy company.

(vii) Qualified tax-exempt entity.

(3) Geographic criteria.

(i) In general.

(A) Persistent Poverty County.

(B) Certain census tracts.

(ii) Applicable terms for certain census tracts.

(A) Energy burden or cost.

(B) Exposure.

(C) Energy cost.

(D) $PM_{2.5}$.

(E) Low-income.

(i) Sub-reservations of allocation for Category 1 facilities.

(1) In general.

(2) Definitions.

(i) Behind the meter (BTM) facility.

(ii) Eligible residential BTM facility.

(iii) Eligible FTM facility.

(j) Process of application evaluation.

(1) In general.

(2) Information required as part of application.

(3) No administrative appeal of capacity limitation allocation decisions.

(k) Placed in service.

(1) Requirement to report date placed in service.

(2) Requirement to submit final eligibility information at placed in service time.

(3) DOE confirmation.

(4) Definition of placed in service.

(l) Facilities placed in service prior to an allocation award.

(1) In general.

(2) Rejection or rescission.

(m) Disqualification.

(n) Recapture of section 48(e) increase to the section 48(a) credit.

(1) In general.

(2) Exception to application of recapture.

(3) Recapture events.

(4) Section 50(a) Recapture.

(o) Applicability date.

[T.D. 9979, 88 FR 55540, Aug. 15, 2023; 88 FR 59446, Aug. 29, 2023]

§ 1.48(e)-1 Low-Income Communities Bonus Credit Program.

(a) ***In general.*** For purposes of section 48 of the Internal Revenue Code (Code), the energy percentage used to calculate the amount of the energy investment credit determined under section 48(a) (section 48 credit) is increased under section 48(e)(1) in the case of eligible property (as defined in paragraph (c) of this section) that is part of any qualified solar or wind facility (as defined in paragraph (b) of this section) placed in service in connection with low-income communities with respect to which an allocation of the

environmental justice solar and wind capacity limitation (Capacity Limitation) is made under the Low-Income Communities Bonus Credit Program (Program) established under section 48(e)(4) of the Code on February 13, 2023. *See* Notice 2023-17, 2023-10 I.R.B. 505. In this section, the terms *applicant* and *taxpayer* are used interchangeably as the context may require.

(b) ***Qualified solar or wind facility defined*** —

(1) ***In general.*** A qualified solar or wind facility means any facility that—

(i) Generates electricity solely from a wind facility (described in section 45(d)(1) of the Code) for which an election to treat the facility as energy property was made under section 48(a)(5) (wind facility), solar energy property (described in section 48(a)(3)(A)(i)) (solar energy property), or small wind energy property (described in section 48(a)(3)(A)(vi)) (small wind energy property);

(ii) Has a maximum net output of less than 5 megawatts (MW) (as measured in alternating current (AC)); and

(iii) Is described in at least one of the four categories described in section 48(e)(2)(A)(iii) and paragraph (b)(2) of this section.

(2) ***Facility categories*** —

(i) ***Category 1 Facility.*** A facility is a *Category 1 Facility* if it is located in a low-income community. The term *low-income community* is generally defined under section 45D(e)(1) of the Code as any population census tract if the poverty rate for such tract is at least 20 percent based on the 2011-2015 American Community Survey (ACS) low-income community data currently used for the New Markets Tax Credit (NMTC) under section 45D, or, in the case of a tract not located within a metropolitan area, the median family income for such tract does not exceed 80 percent of statewide median family income, or, in the case of a tract located within a metropolitan area, the median family income for such tract does not exceed 80 percent of the greater of statewide median family income or the metropolitan area median family income. The term low-income community also includes the modifications in section 45D(e)(4) and (5) for tracts with low population and modification of the income requirement for census tracts with high migration rural counties. Low-income community information for NMTC can be found at *https://www.cdfifund.gov/cims3*. For purposes of this paragraph (b)(2)(i), if updated ACS low-income community data is released for the NMTC program, a taxpayer can choose to base the poverty rate for any population census tract on either the 2011-2015 ACS low-income community data for the NMTC program or the updated ACS low-income community data for the NMTC program for a period of 1 year following the date of the release of the updated data. After the 1-year transition period, the updated ACS low-income community data for the NMTC program must be used to determine the poverty rate for any population census tract. Populations census tracts that satisfy the definition of low-income community at the time of application are considered to continue to meet the definition of low-income community for the duration of the recapture period described in paragraph (n)(1) of this section unless the location of the facility changes.

(ii) ***Category 2 Facility.*** A facility is a *Category 2 Facility* if it is located on Indian land. The term *Indian land* is defined in section 2601(2) of the Energy Policy Act of 1992 (25 U.S.C. 3501(2)).

(iii) ***Category 3 Facility.*** A facility is a *Category 3 Facility* if it is part of a qualified low-income residential building project. A facility will be treated as part of a *qualified low-income residential building project* if such facility is installed on a residential rental building that participates in a

covered housing program or other affordable housing program described in section 48(e)(2)(B)(i) (Qualified Residential Property) and the financial benefits of the electricity produced by such facility are allocated equitably among the occupants of the dwelling units of such building as provided in paragraph (e) of this section. A facility is considered installed on a Qualified Residential Property even if not on the building if the facility is installed on the same or an adjacent parcel of land as the Qualified Residential Property, and the other requirements to be a Category 3 Facility are satisfied.

(iv) ***Category 4 Facility.*** A facility is a *Category 4 Facility* if it is part of a qualified low-income economic benefit project. A facility will be treated as part of a *qualified low-income economic benefit project* if, as provided in paragraph (f) of this section, at least 50 percent of the financial benefits of the electricity produced by such facility are provided to households with income of less than—

(A) Two-hundred percent of the poverty line (as defined in section 36B(d)(3)(A) of the Code) applicable to a family of the size involved, or

(B) Eighty percent of area median gross income (as determined under section 142(d)(2)(B) of the Code).

(3) ***Single project treated as single facility.*** Multiple solar or wind facilities or energy properties that are operated as part of a single project are aggregated and treated as a single facility or energy property for purposes of determining if it is a qualified solar or wind facility under paragraph (b)(1) of this section. Any facility or energy property treated as part of a single facility under this paragraph (b)(3) will also be treated as a single facility for all other purposes under this section and all other guidance applicable to section 48(e) published in the Internal Revenue Bulletin. *See* § 601.601 of this chapter. Whether multiple facilities or energy properties are operated as part of a single project will depend on the relevant facts and circumstances and a single factor may not be dispositive. Factors indicating that multiple facilities or energy properties are operated as part of a single project may include—

(i) The facilities or energy properties are owned by a single legal entity;

(ii) The facilities or energy properties are constructed on contiguous pieces of land;

(iii) The facilities or energy properties are described in a common power purchase agreement (PPA) or more than one common power purchase agreements (PPAs);

(iv) The facilities or energy properties have a common interconnection;

(v) The facilities or energy properties share a common substation;

(vi) The facilities or energy properties are described in one or more common environmental or other regulatory permits;

(vii) The facilities or energy properties were constructed pursuant to a single master construction contract; or

(viii) The facilities or construction of the energy properties was financed pursuant to the same loan agreement.

(c) ***Eligible property*** —

(1) ***In general. Eligible property*** is energy property that is part of a qualified solar or wind facility described in paragraph (b) of this section. Eligible property also includes energy storage technology (as described in section 48(a)(3)(A)(ix)) installed in connection with such qualifying energy property.

(2) ***Energy storage technology installed in connection with qualified solar or wind facility.*** Energy storage technology is installed in connection with other eligible property if the requirements of both paragraph (c)(2)(i) of this section and paragraph (c)(2)(ii) of this section (including by reason of paragraph (c)(3) of this section) are satisfied.

(i) The requirements of this paragraph (c)(2)(i) are satisfied if the energy storage technology and other eligible property are considered part of a single qualified solar or wind facility based on the energy storage technology and other eligible property being:

(A) Owned by a single legal entity,

(B) Located on the same or contiguous pieces of land,

(C) Having a common interconnection point, and

(D) Described in one or more common environmental or other regulatory permits.

(ii) The requirement of this paragraph (c)(2)(ii) is satisfied if the energy storage technology is charged no less than an annual average of 50 percent by the other eligible property.

(3) ***Safe harbor for requirement of paragraph (c)(2)(ii) of this section.*** For purposes of paragraph (c)(2)(ii) of this section, energy storage technology is deemed to be charged at least 50 percent by the facility if the power rating of the energy storage technology (in kW) is less than 2 times the capacity rating of the connected wind facility (in kW AC) or solar facility (in kW direct current (DC)).

(d) ***Location*** —

(1) ***In general.*** A qualified solar or wind facility is treated as *located in a low-income community* or *located on Indian land* under section 48(e)(2)(A)(iii)(I) if the qualified solar or wind facility satisfies the Nameplate Capacity Test of paragraph (d)(2) of this section. Similarly, a qualified solar or wind facility is treated as located in a geographic area under the additional selection criteria described in paragraph (h) of this section if it satisfies the Nameplate Capacity Test.

(2) ***Nameplate Capacity Test.*** A qualified solar or wind facility is considered located in or on the relevant geographic area described in paragraph (d)(1) of this section if 50 percent or more of the facility's nameplate capacity is in a qualifying area. The percentage of a facility's nameplate capacity (as defined in paragraph (d)(2)(i) of this section) that is in a qualifying area is determined by dividing the nameplate capacity of the facility's energy-generating units that are located in the qualifying area by the total nameplate capacity of all the energy-generating units of the facility.

(i) ***Nameplate capacity for purpose of Nameplate Capacity Test. Nameplate capacity*** for an electricity generating unit means the maximum electricity generating output that the unit is capable of producing on a steady state basis and during continuous operation under standard conditions, as measured by the manufacturer and consistent with the definition provided in 40 CFR 96.202. Where applicable, the International Standard Organization conditions are used to measure the maximum electricity generating output or usable energy capacity. For purposes of assessing the Nameplate Capacity Test, qualified solar facilities use the nameplate capacity in DC and qualified wind facilities use the nameplate capacity in AC.

(ii) ***Exclusion of energy storage technology.*** The nameplate capacity of any energy storage technology installed in connection with the qualified solar or wind facility is disregarded in applying the Nameplate Capacity Test.

(e) ***Financial benefits for a Category 3 Facility*** —

(1) ***In general.*** To satisfy the requirements of a Category 3 Facility as provided in paragraph (b)(2)(iii) of this section, the financial benefits of the electricity produced by the facility must be allocated equitably among the occupants of the dwelling units of the Qualified Residential Property. A Qualified Residential Property could either be a multifamily rental property or single-family rental property. The same rules for financial benefits for Category 3 Facilities apply to both types of Qualified Residential Property.

(2) ***Threshold requirement.*** At least 50 percent of the financial value of the energy produced by the facility (as defined in paragraph (e)(3) of this section) must be equitably allocated to the Qualified Residential Property's occupants that are designated as low-income occupants under the covered housing program or other affordable housing program.

(3) ***Financial value of the energy produced by the facility.*** For purposes of this paragraph (e), the *financial value of the energy produced by the facility* is defined as the greater of:

(i) Twenty-five percent of the gross financial value (as defined in paragraph (e)(4) of this section) of the annual energy produced by the energy property, or

(ii) The net financial value (as defined in paragraph (e)(5) of this section) of the annual energy produced by the energy property.

(4) ***Gross financial value.*** For purposes of this paragraph (e), *gross financial value* of the annual energy produced by the facility is calculated as the sum of:

(i) The total self-consumed kilowatt-hours produced by the qualified solar or wind facility multiplied by the applicable building's metered volumetric price of electricity,

(ii) The total exported kilowatt-hours produced by the qualified solar or wind facility multiplied by the applicable building's volumetric export compensation rate for solar or wind kilowatt-hours, and

(iii) The sale of any attributes associated with the facility's production (including, for example, any Federal, State, or Tribal renewable energy tax credits or incentives), if separate from the metered price of electricity or export compensation rate.

(5) ***Net financial value defined*** —

(i) ***Common ownership.*** For purposes of this paragraph (e), if the facility and Qualified Residential Property are commonly owned, *net financial value* is defined as the gross financial value of the annual energy produced minus the annual average (or levelized) cost of the qualified solar or wind facility over the useful life of the facility (including debt service, maintenance, replacement reserve, capital expenditures, and any other costs associated with constructing, maintaining, and operating the facility).

(ii) ***Third-party ownership.*** For purposes of this paragraph (e), if the facility and the Qualified Residential Property are not commonly owned and the facility owner enters into a PPA or other contract for energy services with the Qualified Residential Property owner and/or building

occupants, *net financial value* is defined as the gross financial value of the annual energy produced minus any payments made by the building owner and/or building occupants to the facility owner for energy services associated with the facility in a given year.

(iii) ***Equitable allocation of financial benefits.*** There are different rules to ensure an equitable allocation of financial benefits depending on whether or not financial value is distributed to building occupants via utility bill savings or through different means.

(A) ***If financial value distributed via utility bill savings.*** If financial value is distributed via utility bill savings, financial benefits will be considered to be equitably allocated if at least 50 percent of the financial value of the energy produced by the facility is distributed as utility bill savings in equal shares to each building dwelling unit among the Qualified Residential Property's occupants that are designated as low-income under the covered housing program or other affordable housing program (described in section 48(e)(2)(B)(i)) or alternatively distributed in proportional shares based on each low-income dwelling unit's square footage, or each low-income dwelling unit's number of occupants. For any occupant(s) who choose to not receive utility bill savings (for example, exercise their right to not participate in or to opt out of a community solar subscription in applicable jurisdictions), the portion of the financial value that would otherwise be distributed to non-participating occupants must be instead distributed to all participating occupants. No less than 50 percent of the Qualified Residential Property's occupants that are designated as low-income must participate and receive utility bill savings for the facility to utilize this method of benefit distribution. In the case of a solar facility, applicants must follow the Department of Housing and Urban Development (HUD) guidance on the Treatment of Community Solar Credits on Tenant Utility Bills (July 2022), located at *https://www.hud.gov/sites/dfiles/Housing/documents/MF_Memo_Community_Solar_Credits_signed.pdf*, Community Solar Credits in PIH Programs (August 2022), located at *https://www.hud.gov/sites/dfiles/documents/Solar%20Credits_PH_HCV.pdf*, or future HUD guidance, or other guidance or notices from the Federal agency that oversees the applicable housing program identified in section 48(e)(2)(B) to ensure that tenants' utility allowances and annual income for rent calculations are not negatively impacted. Applicants should apply similar principles in the case of a wind facility.

(B) ***If financial value is not distributed via utility bill savings.*** If financial value is not distributed via utility bill savings, financial benefits will be considered to be equitably allocated if at least 50 percent of the financial value of the energy produced by the facility is distributed to occupants using one of the methods described in HUD guidance on the Treatment of Solar Benefits in Master-metered Building (May 2023) located at *https://www.hud.gov/sites/dfiles/Housing/documents/MF_Memo_re_Community_Solar_Credits_in_MM_Buildings.pdf*, or future HUD guidance, or other guidance or notices from the Federal agency that oversees the applicable housing program identified in section 48(e)(2)(B). In the case of a solar facility, applicants must comply with HUD guidance, or future HUD guidance, for how residents of master-metered HUD-assisted housing can benefit from owners' sharing of financial benefits accrued from an investment in solar energy generation to ensure that tenants' utility allowances and annual income for rent calculations are not negatively impacted. Applicants should apply similar principles in the case of a wind facility.

(6) ***Benefits Sharing Statement*** —

(i) ***In general.*** The facility owner must prepare a *Benefits Sharing Statement,* which must include:

(A) A calculation of the facility's gross financial value using the method described paragraph (e)(4) of this section,

(B) A calculation of the facility's net financial value using the method described in paragraph (e)(5) of this section,

(C) A calculation of the financial value required to be distributed to building occupants using the method described in paragraph (e)(3) of this section,

(D) A description of the means through which the required financial value will be distributed to building occupants, and

(E) If the facility and Qualified Residential Property are separately owned, indication of which entity will be responsible for the distribution of benefits to the occupants.

(ii) ***Notification requirement.*** The Qualified Residential Property owner must formally notify the occupants of units in the Qualified Residential Property of the development of the facility and planned distribution of benefits.

(f) ***Financial benefits for a Category 4 Facility*** —

(1) ***In general.*** To satisfy the requirements of a Category 4 Facility as provided in paragraph (b)(2)(iv) of this section:

(i) The facility must serve multiple qualifying low-income households under section 48(e)(2)(C)(i) or (ii) (Qualifying Household),

(ii) At least 50 percent of the facility's total output in kW must be assigned to Qualifying Households, and

(iii) Each Qualifying Household must be provided a bill credit discount rate (as defined in paragraph (f)(2) of this section) of at least 20 percent.

(2) ***Bill credit discount rate*** —

(i) ***In general.*** A *bill credit discount rate* is the difference between the financial benefit provided to a Qualifying Household (including utility bill credits, reductions in a Qualifying Household's electricity rate, or other monetary benefits accrued by the Qualifying Household on their utility bill) and the cost of participating in the community program (including subscription payments for renewable energy and any other fees or charges), expressed as a percentage of the financial benefit distributed to the Qualifying Household. The bill credit discount rate can be calculated by starting with the financial benefit provided to the Qualifying Household, subtracting all payments made by the Qualifying Household to the facility owner and any related third parties as a condition of receiving that financial benefit, then dividing that difference by the financial benefit distributed to the Qualifying Household.

(ii) ***No or nominal cost of participation.*** In cases where the Qualifying Household has no or only a nominal cost of participation, the bill credit discount rate should be calculated as the financial benefit provided to a Qualifying Household (including utility bill credits, reductions in a Qualifying Household's electricity rate, or other monetary benefits accrued by a Qualifying Household on their utility bill) divided by the total value of the electricity produced by the facility and assigned to the Qualifying Household (including any electricity services, products, and

credits provided in conjunction with the electricity produced by such facility), as measured by the utility, independent system operator (ISO), or other off-taker procuring electricity (and related services, products, and credits) from the facility.

(iii) ***Calculation on annual basis.*** In all instances, the bill credit discount rate is calculated on an annual basis.

(iv) ***Examples.*** The provisions of this paragraph (f)(2) may be illustrated by the following examples:

(A) ***Example 1.*** A Qualifying Household signs a community solar subscription agreement with the facility owner that (1) requires the facility owner to cause a portion of the electricity generated (or its value) to be assigned to the utility bill of the Qualifying Household on a monthly basis, and (2) requires the Qualifying Household to pay the facility owner the equivalent of 80 percent of the monetary value of the assigned generation (that is, 80 percent of the value of bill credits provided to the Qualifying Household's utility bill) on a monthly basis. In this example, over the course of the first year the facility owner or their agent cause $200 in utility bill credits to be placed on the Qualifying Household's bill, and the Qualifying Household pays $160, inclusive of any upfront fees. The subsequent year, due to variation in solar generation and/or the compensation paid by the utility for solar generation, the facility owner, in accordance with the community solar subscription agreement, cause $220 in bill credits to be provided to the Qualifying Household's bill and the household pays $176. In each year of facility operation described within this example, a bill credit discount rate of 20 percent is maintained.

(B) ***Example 2.*** Due to the regulatory structure of the applicable jurisdiction or program, the terms of the community solar subscription, the use of a “net-crediting” mechanism, or other reason, the Qualifying Household does not make a direct payment to the facility owner. Assume that the total value of the electricity produced by the facility and assigned to the household, as measured by the utility, ISO, or other off-taker procuring the electricity, is $500 in the first year and $600 in the second year. Assume further that the Qualifying Household receives a “net” bill credit of $100 in the first year and $120 in the second year. In this case, the bill credit discount rate is 20 percent in each year ($500 × .2 = $100) and ($600 × .2 = $120), respectively.

(3) ***Low-income verification*** —

(i) ***In general.*** To establish that financial benefits are provided to Qualifying Households as provided in paragraph (f)(1) of this section, applicants must, in accordance with guidance published in the Internal Revenue Bulletin (*see* § 601.601 of this chapter), submit documentation upon placing the qualified solar or wind facility in service that identifies each Qualifying Household, the output from the facility allocated to each Qualifying Household in kW, and the method of income verification utilized for each Qualifying Household. A Qualifying Household's low-income status is determined at the time the household enrolls in the subscription program and does not need to be re-verified.

(ii) ***Methods of verification.*** Applicants may use categorical eligibility or other income verification methods to establish that a household is a Qualifying Household.

(A) ***Categorical eligibility. Categorical eligibility*** consists of obtaining proof of the household's participation in a needs-based Federal, State, Tribal, or utility program with income limits at or below the qualifying income level required to be a Qualifying Household. Federal programs may include, but are not limited to: Medicaid, Low-Income Home Energy

Assistance Program (LIHEAP) administered by the Department of Health and Human Services, Weatherization Assistance Program (WAP) administered by the Department of Energy (DOE), Supplemental Nutrition Assistance Program (SNAP) administered by the Department of Agriculture (USDA), Section 8 Project-Based Rental Assistance, the Housing Choice Voucher Program administered by HUD, the Federal Communication Commission's Lifeline Support for Affordable Communications, the National School Lunch Program administered by the USDA, the Supplemental Security Income Program administered by the Social Security Administration, and any verified government or non-profit program serving Asset Limited Income Constrained Employed (ALICE) persons or households. With respect to the Federal programs listed previously an individual in the household must currently be approved for assistance from or participation in the program with an award letter or other written documentation within the last 12 months for enrollment in that program to establish categorical eligibility of the household. State agencies can also provide verification that a household is a Qualifying Household if the household participates in a State's solar or other program and income limits for such program are at or below the qualifying income level required to be a Qualifying Household. The qualifying income level for a Qualifying Household is based on where such household is located.

(B) ***Other income verification methods.*** Paystubs, Federal or State tax returns, or income verification through crediting agencies and commercial data sources can be used to establish that a household is a Qualifying Household.

(C) ***Impermissible verification method.*** A self-attestation from a household is not a permissible method to establish a household is a Qualifying Household. This prohibition on direct self-attestation from a household does not extend to categorical eligibility for needs-based Federal, State, Tribal, or utility programs with income limits that rely on self-attestation for verification of income.

(g) ***Annual Capacity Limitation.*** Under section 48(e)(4)(C), the total annual capacity limitation is 1.8 gigawatts of DC capacity for the calendar year 2023 and 2024 Program. The annual Capacity Limitation for each Program year is divided across the four facility categories described in section 48(e)(2)(A)(iii) and paragraph (b)(2) of this section as provided in guidance published in the Internal Revenue Bulletin. *See* § 601.601 of this chapter. The Capacity Limitation for each Program year is divided across the four facility categories based on factors such as the anticipated number of applications that are expected for each category and the amount of Capacity Limitation that needs to be reserved for each category to encourage market participation in each category consistent with statutory intent and the goals of the Program. After the Capacity Limitation for each facility category is established in guidance published in the Internal Revenue Bulletin, it may later be re-allocated across facility categories and sub-reservation in the event one category or sub-reservation is oversubscribed and another has excess capacity. A facility category or sub-reservation is oversubscribed if it receives applications in excess of Capacity Limitation reserved for the facility category or sub-reservation.

(h) ***Reservations of Capacity Limitation allocation for facilities that meet certain additional selection criteria*** —

(1) ***In general.*** At least 50 percent of the total Capacity Limitation in each facility category described in paragraph (b)(2) of this section will be reserved for qualified facilities meeting the additional selection criteria described in paragraph (h)(2) of this section (relating to ownership criteria) and paragraph (h)(3) of this section (relating to geographic criteria) as provided in guidance published in the Internal Revenue Bulletin. *See* § 601.601 of this chapter. Revenue Procedure 2023-27, 2023-35

I.R.B. provides the specific amounts reserved for 2023 and future guidance published in the Internal Revenue Bulletin will provide the amounts reserved for future years. The procedure for utilizing these additional selection criteria is provided in guidance published in the Internal Revenue Bulletin. After the reservation of Capacity Limitation for qualified facilities meeting the additional selection criteria described in paragraphs (h)(2) and (3) of this section is established in guidance published in the Internal Revenue Bulletin, it may later be re-allocated across facility categories and sub-reservations in the event one category or sub-reservation within a category is oversubscribed and another has excess capacity.

(2) ***Ownership criteria*** —

(i) ***In general.*** The ownership criteria is based on characteristics of the applicant that owns the qualified solar or wind facility. A qualified solar or wind facility will meet the ownership criteria if it is owned by one of the following:

(A) A Tribal enterprise (as defined in paragraph (h)(2)(iii) of this section),

(B) An Alaska native corporation (as defined in paragraph (h)(2)(iv) of this section),

(C) A renewable energy cooperative (as defined in paragraph (h)(2)(v) of this section),

(D) A qualified renewable energy company meeting certain characteristics (as defined in paragraph (h)(2)(vi) of this section), or

(E) A qualified tax-exempt entity (as defined in paragraph (h)(2)(vii) of this section).

(ii) ***Indirect ownership*** —

(A) ***Disregarded entities.*** If an applicant wholly owns an entity that is the owner of a qualified solar or wind facility, and the entity is disregarded as separate from its owner for Federal income tax purposes (disregarded entity), the applicant, and not the disregarded entity, is treated as the owner of the qualified solar or wind facility for purposes of the ownership criteria.

(B) ***Partnership.*** If an applicant is an entity treated as a partnership for Federal income tax purposes, and an entity described in paragraphs (h)(2)(i)(A) through (E) of this section owns at least a one percent interest (either directly or indirectly) in each material item of partnership income, gain, loss, deduction, and credit and is a managing member or general partner (or similar title) under State law of the partnership (or directly owns 100 percent of the equity interests in the managing member or general partner) at all times during the existence of the partnership, the qualified solar or wind facility will be deemed to meet the ownership criteria. If the partnership becomes the owner of the facility after an allocation is made to an entity described in paragraphs (h)(2)(i)(A) through (E) of this section, the transfer of the facility to the partnership is not a disqualification event for purposes of paragraph (m)(5) of this section, so long as the requirements of paragraph (m)(5) of this section are satisfied. The original applicant and the successor partnership should refer to guidance published in the Internal Revenue Bulletin for the procedures to request a transfer of the Capacity Limitation allocation to the successor partnership.

(iii) ***Tribal enterprise.*** A *Tribal enterprise* for purposes of the ownership criteria is an entity that is:

(A) Owned at least 51 percent directly by an Indian Tribal government (as defined in section 30D(g)(9) of the Internal Revenue Code (Code)), or owned at least 51 percent indirectly through a corporation that is wholly owned by the Indian Tribal government and is created under either the Tribal laws of the Indian Tribal government or through a corporation incorporated under the authority of either section 17 of the Indian Reorganization Act of 1934, 25 U.S.C. 5124 or section 3 of the Oklahoma Indian Welfare Act, 25 U.S.C. 5203), and

(B) Subject to Tribal government rules, regulations, and/or codes that regulate the operations of the entity.

(iv) ***Alaska native corporation.*** An *Alaska Native corporation* for purposes of the ownership criteria is defined in section 3 of the Alaska Native Claims Settlement Act, 43 U.S.C. 1602(m).

(v) ***Renewable energy cooperative.*** A *renewable energy cooperative* for purposes of the ownership criteria is an entity that develops qualified solar and/or wind facilities and is either:

(A) A consumer or purchasing cooperative controlled by its members with each member having an equal voting right and with each member having rights to profit distributions based on patronage as defined by proportion of volume of energy or energy credits purchased (kWh), volume of financial benefits delivered ($), or volume of financial payments made ($); and in which at least 50 percent of the patronage in the qualified facility is by cooperative members who are low-income households (as defined in section 48(e)(2)(C)), or

(B) A worker cooperative controlled by its worker-members with each member having an equal voting right.

(vi) ***Qualified renewable energy company.*** A *qualified renewable energy company* for purposes of the ownership criteria is an entity that serves low-income communities and provides pathways for the adoption of clean energy by low-income households. In addition to its general business purpose, a qualified renewable energy company must satisfy the ownership requirements described in one of paragraphs (h)(2)(vi)(A) through (F) of this section and each of the requirements in paragraphs (h)(2)(vi)(G), (H), and (I) of this section.

(A) At least 51 percent of the entity's equity interests are owned and controlled by one or more individuals.

(B) At least 51 percent of the entity's equity interests are owned and controlled by a Community Development Corporation (as defined in 13 CFR 124.3).

(C) At least 51 percent of the entity's equity interests are owned and controlled by an agricultural or horticultural cooperative (as defined in section 199A(g)(4)(A)).

(D) At least 51 percent of the entity's equity interests are owned and controlled by an Indian Tribal government (as defined in section 30D(g)(9)).

(E) At least 51 percent of the entity's equity interests are owned and controlled by an Alaska Native corporation (as defined in section 3 of the Alaska Native Claims Settlement Act, 43 U.S.C. 1602(m)).

(F) At least 51 percent of the entity's equity interests are owned and controlled by a Native Hawaiian organization (as defined in 13 CFR 124.3).

(G) Has less than 10 full-time equivalent employees (as determined under section 4980H(c)(2)(E) and (c)(4)) and less than $20 million in annual gross receipts in the previous calendar year; this must include the employees or receipts of all affiliates when determining the size of a business. Affiliation with another business is based on the power to control, whether exercised or not. The power to control exists when an external party has 50 percent or more ownership. It may also exist with considerably less than 50 percent ownership by contractual arrangement, or when one or more parties own a large share compared to other parties.

(H) First installed and/or operated a qualified solar or wind facility as defined in section 48(e)(2)(A) two or more years prior to the date of application; or

(I) Has provided solar services as a contractor or subcontractor to qualified solar or wind facilities as defined in section 48(e)(2)(A) with at least 100 kW of cumulative nameplate capacity located in one or more low-income communities as defined in section 48(e)(2)(A)(iii)(I).

(vii) ***Qualified tax-exempt entity.*** A *qualified tax-exempt entity* for purposes of the ownership criteria is:

(A) An organization exempt from the tax imposed by subtitle A by reason of being described in section 501(c)(3) or section 501(d);

(B) Any State, the District of Columbia, or political subdivision thereof, or any agency or instrumentality of any of the foregoing;

(C) An Indian Tribal government (as defined in section 30D(g)(9)), a political subdivision thereof, or any agency or instrumentality of any of the foregoing; or

(D) Any corporation described in section 501(c)(12) operating on a cooperative basis that is engaged in furnishing electric energy to persons in rural areas.

(3) ***Geographic criteria*** —

(i) ***In general.*** Geographic criteria does not apply to Category 2 Facilities. To meet the geographic criteria, a facility must be located in a county or census tract that is described in paragraph (h)(3)(i)(A) or (B) of this section. Applicants who meet the geographic criteria at the time of application are considered to continue to meet the geographic criteria for the duration of the recapture period, unless the location of the facility changes.

(A) ***Persistent Poverty County.*** A Persistent Poverty County (PPC for which information can be found at *https://www.ers.usda.gov/data-products/poverty-area-measures/*), which is generally defined as any county where 20 percent or more of residents have experienced high rates of poverty over the past 30 years. For the purposes of the Program, the PPC measure is that adopted by the USDA to make this determination. The most recent measure, which would apply for the 2023 Program year, incorporates poverty estimates from the 1980, 1990, and 2000 censuses, and 2007-11 ACS 5-year average. If updated data is released by USDA, a taxpayer will have a 1-year period following the date of the release of the updated data to be eligible under the previous data. After the 1-year transition period, the updated data must be used to determine eligibility. Applicants who

satisfy the definition of PPC community at the time of application are considered to continue to meet the definition of PPC for the duration of the recapture period described in paragraph (n)(1) of this section, unless the location of the facility changes.

(B) ***Certain census tracts.*** A census tract that is designated in the Climate and Economic Justice Screening Tool (CEJST), which can be found at *https://screeningtool.geoplatform.gov/en/#3/33.47/-97.5*, as disadvantaged based on whether the tract is described in paragraph (h)(3)(ii)(A) or (B) of this section. The CEJST website provides further detail on the terms described in paragraphs (h)(3)(ii)(C) through (E) of this section, which are used in identifying census tracts described in paragraphs (h)(3)(ii)(A) and (B) of this section. See CEJST, Methodology & data, *https://screeningtool.geoplatform.gov/en/methodology*.

(ii) ***Applicable terms for certain census tracts.*** The following terms are applicable to this paragraph (h)(3):

(A) ***Energy burden or cost.*** The census tract is greater than or equal to the 90th percentile for energy burden (or energy cost) and is greater than or equal to the 65th percentile for low income.

(B) ***Exposure.*** The census tract is greater than or equal to the 90th percentile for $PM_{2.5}$ exposure and is greater than or equal to the 65th percentile for low income.

(C) ***Energy cost. Energy cost*** is defined as average household annual energy cost in dollars divided by the average household income.

(D) ***$PM_{2.5}$. $PM_{2.5}$*** is defined as fine inhalable particles with 2.5 or smaller micrometer diameters. The percentile is the weight of the particles per cubic meter.

(E) ***Low-income. Low income*** is defined as the percent of a census tract's population in households where household income is at or below 200 percent of the Federal poverty level, not including students enrolled in higher education.

(i) ***Sub-reservations of allocation for Category 1 Facilities*** —

(1) ***In general.*** Capacity Limitation reserved for Category 1 Facilities will be subdivided each Program year for facilities seeking a Category 1 allocation with Capacity Limitation reserved specifically for eligible residential behind the meter (BTM) facilities, including rooftop solar. The remaining Capacity Limitation is available for applicants with front of the meter (FTM) facilities as well as non-residential BTM facilities. The specific sub-reservation for eligible residential BTM facilities in Category 1 is provided in guidance published in the Internal Revenue Bulletin and is established based on factors such as promoting efficient allocation of Capacity Limitation and allowing like-projects to compete for an allocation. After the sub-reservation is established in guidance published in the Internal Revenue Bulletin, it may later be re-allocated in the event it has excess capacity.

(2) ***Definitions*** —

(i) ***Behind the meter (BTM) facility.*** For purposes of the Program, a qualified wind or solar facility is BTM if:

(A) It is connected with an electrical connection between the facility and the panelboard or sub-panelboard of the site where the facility is located,

(B) It is to be connected on the customer side of a utility service meter before it connects to a distribution or transmission system (that is, before it connects to the electricity grid), and

(C) Its primary purpose is to provide electricity to the utility customer of the site where the facility is located. This also includes systems not connected to a grid and that may not have a utility service meter, and whose primary purpose is to serve the electricity demand of the owner of the site where the system is located.

(ii) ***Eligible residential BTM facility.*** For purposes of paragraph (i)(1) of this section, an eligible residential BTM facility is defined as a single-family or multi-family residential qualified solar or wind facility that does not meet the requirements for a Category 3 Facility and is BTM. A qualified solar or wind facility is residential if it is uses solar or wind energy to generate electricity for use in a dwelling unit that is used as a residence.

(iii) ***Eligible FTM facility.*** For purposes of the Program, a qualified solar or wind facility is FTM if it is directly connected to a grid and its primary purpose is to provide electricity to one or more offsite locations via such grid or utility meters with which it does not have an electrical connection; alternatively, FTM is defined as a facility that is not BTM. For the purposes of Category 4 Facilities, a qualified solar or wind facility is also FTM if 50 percent or more of its electricity generation on an annual basis is physically exported to the broader electricity grid.

(j) ***Process of application evaluation*** —

(1) ***In general.*** Applications for a Capacity Limitation allocation will be evaluated according to the procedures specified in guidance published in the Internal Revenue Bulletin. *See* § 601.601 of this chapter. If a facility category is oversubscribed, a lottery system may be used to allocate Capacity Limitation to similarly situated applicants.

(2) ***Information required as part of application.*** Applicants are required to submit with each application for a Capacity Limitation allocation information, documentation, and attestations to demonstrate eligibility for an allocation and project viability as specified in guidance published in the Internal Revenue Bulletin. *See* § 601.601 of this chapter.

(3) ***No administrative appeal of capacity limitation allocation decisions.*** An applicant may not administratively appeal decisions regarding Capacity Limitation allocations.

(k) ***Placed in service*** —

(1) ***Requirement to report date placed in service.*** For any facility that received an allocation of Capacity Limitation the owner of the facility must report to DOE the date the eligible property was placed in service. This report is done through the same portal by which the original application for allocation was submitted.

(2) ***Requirement to submit final eligibility information at placed in service time.*** At the time that the owner reports that eligible property has been placed in service the owner also must confirm information about the facility and submit additional documentation to prove the facility is still eligible to maintain the allocation and the increased energy percentage under section 48(e)(1) as specified in guidance published in the Internal Revenue Bulletin. *See* § 601.601 of this chapter.

(3) ***DOE confirmation.*** DOE will review the placed in service documentation and attestations to determine if the facility meets the eligibility criteria for the owner to claim an increased energy percentage. DOE then provides a recommendation to the IRS regarding whether the facility continues to meet the eligibility requirements for the facility to retain its allocation or if the facility should be disqualified

(as provided in paragraph (m) of this section). Based on DOE's recommendation, the IRS will decide whether the facility should retain its allocation or if the facility should be disqualified and will notify DOE of its decision. Each applicant must receive confirmation from the IRS that DOE has reviewed the placed in service submissions, and that eligibility is confirmed, prior to the owner (or a partner or shareholder in the case of a partnership or S corporation) claiming the increased credit amount on Form 3468, *Investment Credit* (or Form 3800, *General Business Credit*), or successor form, if eligible, making a transfer election under section 6418 of the Code, or, if eligible, making an elective payment election under section 6417 of the Code.

(4) ***Definition of placed in service.*** For purposes of this section, eligible property is considered placed in service in the earlier of the following taxable years:

(i) The taxable year in which, under the taxpayer's depreciation practice, the period for depreciation with respect to such eligible property begins; or

(ii) The taxable year in which the eligible property is placed in a condition or state of readiness and availability for a specifically assigned function, whether in a trade or business or in the production of income.

(l) ***Facilities placed in service prior to an allocation award*** —

(1) ***In general.*** Qualified solar or wind facilities must be placed in service after being awarded an allocation of Capacity Limitation.

(2) ***Rejection or rescission.*** An application for a qualified solar or wind facility that is placed in service prior to submission of the application will be rejected. If a facility is placed in service after the application is submitted, but prior to the allocation of Capacity Limitation, and the facility is awarded an allocation, the allocation will be rescinded.

(m) ***Disqualification.*** A facility will be disqualified and lose its allocation if prior to or upon the facility being placed in service an occurrence described in one of paragraphs (m)(1) through (5) of this section takes place.

(1) The location where the facility will be placed in service changes.

(2) The net output of the facility increases such that it exceeds the less than 5 MW AC output limitation provided in section 48(e)(2)(A)(ii) or the nameplate capacity decreases by the greater of 2 kW or 25 percent of the Capacity Limitation awarded in the allocation (AC for a wind facility; DC for a solar facility).

(3) The facility cannot satisfy the financial benefits requirements under section 48(e)(2)(B)(ii) and paragraph (e) of this section as planned, if applicable, or cannot satisfy the financial benefits requirements under section 48(e)(2)(C) or paragraph (f) of this section as planned, if applicable.

(4) The eligible property that is part of the facility that received the Capacity Limitation allocation is not placed in service within four years after the date the applicant was notified of the allocation of Capacity Limitation to the facility.

(5) The facility received a Capacity Limitation allocation based, in part, on meeting the ownership criteria and ownership of the facility changes prior to the facility being placed in service, unless the original applicant transfers the facility to an entity treated as a partnership for Federal income tax purposes and retains at least a one percent interest (either directly or indirectly) in each material item of partnership income, gain, loss, deduction, and credit of such partnership and is a managing member

or general partner (or similar title) under State law of the partnership (or directly owns 100 percent of the equity interests in the managing member or general partner) at all times during the existence of the partnership.

(n) *Recapture of section 48(e) Increase to the section 48(a) credit* —

(1) ***In general.*** Section 48(e)(5) provides for recapturing the benefit of any increase in the credit allowed under section 48(a) by reason of section 48(e) with respect to any property that ceases to be property eligible for such increase (but that does not cease to be investment credit property within the meaning of section 50(a)). Section 48(e) provides that the period and percentage of such recapture must be determined under rules similar to the rules of section 50(a). Therefore, if, at any time during the five year recapture period beginning on the date that a qualified solar or wind facility property under section 48(e) is placed in service, there is a recapture event under paragraph (n)(3) of this section with respect to such property, then the Federal income tax imposed on the taxpayer by chapter 1 of the Code for the taxable year in which the recapture event occurs is increased by the recapture percentage of the benefit of the increase in the section 48 credit. The recapture percentage is determined according to the table provided in section 50(a)(1)(B).

(2) ***Exception to application of recapture.*** Such recapture may not apply with respect to any property if, within 12 months after the date the applicant becomes aware (or reasonably should have become aware) of such property ceasing to be property eligible for such increase in the credit allowed under section 48(a), the eligibility of such property for such increase pursuant to section 48(e) is restored. Such restoration of an increase pursuant to section 48(e) is not available more than once with respect to any facility.

(3) ***Recapture events.*** Any of the following circumstances result in a recapture event if the property ceases to be eligible for the increased credit under section 48(e):

(i) Property described in section 48(e)(2)(A)(iii)(II) fails to provide financial benefits.

(ii) Property described under section 48(e)(2)(B) ceases to allocate the financial benefits equitably among the occupants of the dwelling units, such as not allocating to residents the required net energy savings of the electricity, as required by paragraph (e) of this section.

(iii) Property described under section 48(e)(2)(C) ceases to provide at least 50 percent of the financial benefits of the electricity produced to qualifying households as described under section 48(e)(2)(C)(i) or (ii), or fails to provide those households the required minimum 20 percent bill credit discount rate, as required by paragraph (f) of this section.

(iv) For property described under section 48(e)(2)(B), the residential rental building the facility is a part of ceases to participate in a covered housing program or any other affordable housing program described in section 48(e)(2)(B)(i), as applicable.

(v) A facility increases its output such that the facility's output is 5 MW AC or greater, unless the applicant can prove that the output increase is not attributable to the original facility but rather is output associated with a new facility under the 80/20 Rule (the cost of the new property plus the value of the used property).

(4) ***Section 50(a) Recapture.*** Any event that results in recapture under section 50(a) will also result in recapture of the benefit of the increase in the section 48 credit by reason of section 48(e). The exception to the application of recapture provided in paragraph (n)(2) of this section does not apply in the case of a recapture event under section 50(a).

(o) ***Applicability date.*** The rules of this section will apply to taxable years ending on or after October 16, 2023.

[T.D. 9979, 88 FR 55540, Aug. 15, 2023; 88 FR 59446, Aug. 29, 2023, as amended at 88 FR 87903, Dec. 20, 2023]

§ 1.48E-0 Table of contents.

This section lists the captions contained in §§ 1.48E-1 through 1.48E-5.

§ 1.48E-1 Clean electricity investment credit.

(a) Overview.

(1) In general.

(2) Claim.

(3) Code.

(4) EST.

(5) kWh.

(6) Qualified facility.

(7) Qualified investment with respect to a qualified facility.

(8) Qualified investment with respect to EST.

(9) Secretary.

(10) Section 48E credit.

(11) Section 48E regulations.

(12) Waste energy recovery property (WERP).

(b) Credit amount.

(1) In general.

(2) Applicable percentage.

(3) Base rate.

(4) Alternative rate.

(5) Energy communities increase in credit rate.

(i) In general.

(ii) Applicable credit rate increase.

(6) Domestic content increase in credit rate.

(i) In general.

(ii) Applicable credit rate increase.

(c) Credit phase-out.

(1) In general.

(2) Phase-out percentage.

(3) Applicable year.

(d) Related taxpayers.

(1) Definition.

(2) Related taxpayer rule.

(e) Applicability date.

§ 1.48E-2 Qualified investments in qualified facilities and EST for purposes of section 48E.

(a) Qualified investment with respect to a qualified facility.

(1) In general.

(2) Total basis amount.

(b) Qualified facility.

(1) In general.

(2) Placed in service.

(i) In general.

(ii) Qualified facility subject to § 1.48-4 election to treat lessee as purchaser.

(c) Qualified property.

(1) In general.

(2) Location of property.

(d) Property included in qualified facility.

(1) In general.

(2) Unit of a qualified facility.

(i) In general.

(ii) Functionally interdependent.

(3) Integral part.

(i) In general.

(ii) Power conditioning and transfer equipment.

(iii) Roads.

(iv) Fences.

(v) Buildings.

(vi) Shared integral property.

(vii) Examples.

(e) Definitions related to requirements for qualified property.

(1) Tangible personal property.

(2) Other tangible property.

(3) Depreciation allowable.

(i) In general.

(ii) Exclusions from allowable.

(4) Construction, reconstruction, or erection of the property.

(5) Acquisition of qualified property.

(6) Original use of the property.

(7) Retrofitted qualified facility.

(f) Coordination with other credits.

(1) In general.

(2) Allowed.

(3) Examples.

(g) EST.

(1) Property included in EST.

(2) Unit of EST.

(i) In general.

(ii) Functionally interdependent.

(3) Integral part.

(4) Qualified investment with respect to EST.

(5) Placed in service.

(i) In general.

(ii) EST subject to § 1.48-4 election to treat lessee as purchaser.

(6) Types of EST.

(i) Electrical energy storage property.

(ii) Thermal energy storage property.

(iii) Hydrogen energy storage property.

(7) Modification of EST.

(h) Applicability date.

§ 1.48E-3 Rules relating to the increased credit for prevailing wage and apprenticeship.

(a) In general.

(b) Qualified facility or EST requirements.

(c) Nameplate capacity for purposes of the One Megawatt Exception.

(1) Qualified facilities.

(2) Nameplate capacity for qualified facilities that generate in direct current for purposes of the One Megawatt Exception.

(3) EST.

(i) In general.

(ii) Electrical energy storage property.

(iii) Thermal energy storage property.

(iv) Hydrogen energy storage property.

(4) Integrated operations.

(i) One Megawatt Exception.

(ii) EST One Megawatt Exception.

(d) Transition waiver of penalty for prevailing wage requirements.

(e) No alteration or repair during recapture period described in § 1.48-13(c)(3).

(f) Applicability date.

§ 1.48E-4 Rules of general application.

(a) Qualified interconnection costs included in certain lower-output qualified facilities.

(1) In general.

(2) Qualified interconnection property.

(3) Five-Megawatt Limitation.

(i) In general.

(ii) Nameplate capacity for purposes of the Five-Megawatt Limitation.

(iii) Nameplate capacity for qualified facilities that generate in direct current for purposes of the Five-Megawatt Limitation.

(4) Interconnection agreement.

(5) Utility.

(6) Reduction to amounts chargeable to capital account.

(7) Examples.

(b) Expansion of facility; Incremental production (Incremental Production Rule).

(1) In general.

(2) Measurement standard.

(3) Special rule for restarted facilities.

(4) Computation of qualified investment for a new unit or an addition of capacity.

(i) New unit.

(ii) Addition of capacity.

(5) Examples.

(c) Retrofit of an existing facility (80/20 Rule).

(1) In general.

(2) Expenditures taken into account.

(3) Cost of new components.

(4) New costs.

(5) Excluded costs.

(6) Examples.

(d) Special rules regarding ownership.

(1) Qualified investment with respect to a qualified facility or EST.

(2) Multiple owners.

(3) Section 761(a) election.

(4) Examples.

(e) Coordination rule for section 42 credits and section 48E credits.

(f) Recapture.

(1) In general.

(2) Recapture event.

(i) In general.

(ii) Changes to the Annual Table.

(iii) Yearly determination.

(iv) Carryback and carryforward adjustments.

(3) Recapture amount.

(i) In general.

(ii) Applicable recapture percentage.

(4) Recapture period.

(5) Increase in tax for recapture.

(g) Qualified progress expenditure election.

(h) Incremental cost.

(i) Cross references.

(j) Applicability date.

§ 1.48E-5 Greenhouse gas emissions rates for qualified facilities under section 48E.

(a) In general.

(b) Definitions.

(c) Non-C&G Facilities.

(d) C&G Facilities.

(e) Use of methane from certain sources to produce electricity.

(f) Carbon capture and sequestration.

(g) Annual publication of emissions rates.

(h) Provisional emissions rates.

(1) In general.

(2) Rate not established.

(3) Process for filing a PER petition.

(4) PER determination.

(5) Emissions value request process.

(6) LCA model for determining an emissions value for C&G Facilities.

(7) Effect of PER.

(i) Determining anticipated greenhouse gas emissions rate.

(1) In general.

(2) Examples of objective indicia.

(j) Reliance on Annual Table or Provisional Emissions Rate.

(k) Substantiation.

(1) In general.

(2) Sufficient substantiation.

(l) Applicability date.

[T.D. 10024, 90 FR 4110, Jan. 15, 2025]

§ 1.48E-1 Clean electricity investment credit.

(a) ***Overview*** —

(1) ***In general.*** For purposes of section 46 of the Internal Revenue Code (Code), the section 48E credit (defined in paragraph (a)(10) of this section) is determined under section 48E of the Code and the section 48E regulations (defined in paragraph (a)(11) of this section). This paragraph (a) provides definitions of terms that, unless otherwise specified, apply for purposes of section 48E, the section 48E regulations, and any provision of the Code or this chapter that expressly refers to any provision of section 48E or the section 48E regulations. Paragraph (b) of this section provides rules for determining the amount of the section 48E credit for any taxable year. Paragraph (c) of this section provides rules regarding the phase-out of the section 48E credit. *See* § 1.48E-2 for rules relating to qualified investments in qualified facilities and energy storage technology (EST) for purposes of the section 48E credit. *See* § 1.48E-4 for rules of general application for the section 48E credit. *See* § 1.48E-5 for rules to determine greenhouse gas emissions rates for qualified facilities under section 48E.

(2) ***Claim.*** For purposes of determining a taxpayer's section 48E credit with respect to a qualified facility or EST or a credit described in section 48E(b)(3)(C), the term *claim* means filing a completed Form 3468, Investment Credit, or any successor form(s), or other relevant form as it relates to the credits described in section 48E(b)(3)(C), with the taxpayer's timely filed (including extensions) Federal income tax return or Federal return, as appropriate, for the taxable year in which the qualified facility or EST is placed in service, and for the taxable year in which the facility for which the credit described in section 48E(b)(3)(C) is placed in service. It includes making an election under section 6417 or 6418 of the Code and 26 CFR 1.6417-1 and 1.6418-1, respectfully, with respect to such section 48E credit on the taxpayer's filed return.

(3) ***Code.*** The term *Code* means the Internal Revenue Code.

(4) ***EST.*** The term *EST* for purposes of the section 48E credit means energy storage technology as defined in § 1.48E-2(g).

(5) ***kWh.*** The term *kWh* means kilowatt hours.

(6) ***Qualified facility.*** The term *qualified facility* for purposes of the section 48E credit has the meaning provided in § 1.48E-2(b).

(7) ***Qualified investment with respect to a qualified facility.*** The term *qualified investment with respect to a qualified facility* for purposes of the section 48E credit has the meaning provided in § 1.48E-2(a).

(8) ***Qualified investment with respect to EST.*** The term *qualified investment with respect to EST* for purposes of the section 48E credit has the meaning provided in § 1.48E-2(g)(4).

(9) ***Secretary.*** The term *Secretary* means the Secretary of the Treasury or their delegate.

(10) ***Section 48E credit.*** The term *section 48E credit* means the clean electricity investment credit determined under section 48E of the Code and the section 48E regulations.

(11) ***Section 48E regulations.*** The term *section 48E regulations* means this section and §§ 1.48E-2 through 1.48E-5.

(12) ***Waste energy recovery property (WERP).*** WERP is property that generates electricity solely from heat from buildings or equipment if the primary purpose of such building or equipment is not the generation of electricity. Examples of buildings or equipment the primary purpose of which is not the generation of electricity include, but are not limited to, manufacturing plants, medical care facilities, facilities on school campuses, and associated equipment.

(b) *Credit amount* —

(1) ***In general.*** For purposes of section 46 of the Code, the section 48E credit for any taxable year is an amount equal to the applicable percentage of the qualified investment for such taxable year with respect to any qualified facility and any EST.

(2) ***Applicable percentage.*** The term *applicable percentage* means the base rate described in paragraph (b)(3) of this section or the alternative rate described in paragraph (b)(4) of this section. The applicable percentage may be increased as provided in section 48E(a)(3)(A) and paragraph (b)(5) of this section in the case of a qualified facility that is located in an energy community. Similarly, the applicable percentage may be increased as provided in section 48E(a)(3)(B) and paragraph (b)(6) of this section in the case of a qualified facility that satisfies the domestic content requirements.

(3) ***Base rate.*** Under section 48E(a)(2)(A)(i) and (B)(i), in the case of any qualified facility or EST that does not satisfy the requirements provided in section 48E(a)(2)(A)(ii) or (B)(ii), the applicable percentage is the *base rate,* which is 6 percent.

(4) ***Alternative rate.*** In the case of any qualified facility or EST that satisfies the prevailing wage and apprenticeship requirements provided in section 48E(a)(2)(A)(ii) or (B)(ii), the applicable percentage is the *alternative rate,* which is 30 percent.

(5) *Energy communities increase in credit rate* —

(i) ***In general.*** In the case of any qualified facility or EST that is placed in service within an energy community (as defined in section 45(b)(11)(B)), the applicable percentage under section 48E(a)(2) and paragraph (b)(2) of this section will be increased by the applicable credit rate increase described in section 48E(a)(3)(A)(ii) and paragraph (b)(5)(ii) of this section.

(ii) ***Applicable credit rate increase.*** In the case of any qualified investment with respect to a qualified facility or EST to which the base rate is applicable, the applicable credit rate increase is 2 percentage points, and with respect to any qualified investment with respect to a qualified facility or EST to which the alternative rate is applicable, the applicable credit rate increase is 10 percentage points.

(6) *Domestic content increase in credit rate* —

(i) ***In general.*** In the case of any qualified facility or EST that satisfies the requirements of section 45(b)(9)(B) (domestic content requirement), the applicable percentage under section 48E(a)(2) and paragraph (b)(2) of this section will be increased by the applicable credit rate increase described in paragraph (b)(6)(ii) of this section.

(ii) ***Applicable credit rate increase.*** In the case of any qualified investment with respect to a qualified facility or EST to which the base rate is applicable, 2 percentage points, and with respect to any qualified investment with respect to a qualified facility or EST to which the alternative rate is applicable, 10 percentage points.

(c) *Credit phase-out* —

(1) ***In general.*** The amount of the credit as determined under section 48E(a) and paragraph (b) of this section for any qualified facility or EST, the construction of which begins during a calendar year described in section 48E(e)(2) and paragraph (c)(2) of this section is equal to the product of—

(i) The amount of the credit determined under section 48E(a) and paragraph (b) of this section without regard to section 48E(e) and paragraph (c) of this section; multiplied by

(ii) The phase-out percentage under section 48E(e)(2) and paragraph (c)(2) of this section.

(2) ***Phase-out percentage.*** The phase-out percentage under this paragraph (c)(2) is equal to—

(i) For any qualified investment with respect to any qualified facility or EST the construction of which begins during the first calendar year following the applicable year, 100 percent;

(ii) For any qualified investment with respect to any qualified facility or EST the construction of which begins during the second calendar year following the applicable year, 75 percent;

(iii) For any qualified investment with respect to any qualified facility or EST the construction of which begins during the third calendar year following the applicable year, 50 percent; and

(iv) For any qualified investment with respect to any qualified facility or EST the construction of which begins during any calendar year subsequent to the calendar year described in paragraph (c)(2)(iii) of this section, 0 percent.

(3) ***Applicable year.*** For purposes of this paragraph (c), the term *applicable year* has the same meaning provided under § 1.45Y-1(c)(3).

(d) ***Related taxpayers*** —

(1) ***Definition.*** For purposes of the section 48E credit, the term *related taxpayers* means members of a group of trades or businesses that are under common control (as defined in § 1.52-1(b)).

(2) ***Related taxpayer rule.*** For purposes of the section 48E credit, related taxpayers are treated as one taxpayer in determining whether a taxpayer has made an investment in a qualified facility or EST with respect to which a section 48E credit may be determined.

(e) ***Applicability date.*** This section applies to qualified facilities and ESTs placed in service after December 31, 2024, and during a taxable year ending on or after January 15, 2025.

[T.D. 10024, 90 FR 4110, Jan. 15, 2025]

§ 1.48E-2 Qualified investments in qualified facilities and EST for purposes of section 48E.

(a) ***Qualified investment with respect to a qualified facility*** —

(1) ***In general.*** A *qualified investment* of a taxpayer for a taxable year with respect to a qualified facility is the total basis amount for the taxable year with respect to the qualified facility.

(2) ***Total basis amount.*** The *total basis amount* is the sum of:

(i) The basis of any qualified property that is a part of the qualified facility and that is placed in service by the taxpayer during the taxable year; plus

(ii) The amount of any expenditures paid or incurred by the taxpayer for qualified interconnection property (as defined in section § 1.48E-4(a)(2)) in connection with a qualified facility which has a maximum net output of not greater than five megawatts (as measured in alternating current), that was placed in service during the taxable year of the taxpayer, and that are properly chargeable to the capital account.

(b) ***Qualified facility*** —

(1) ***In general.*** A qualified facility is a facility that:

(i) Is used for the generation of electricity, meaning that it is a net generator of electricity taking into account any electricity consumed by the facility;

(ii) Is placed in service by the taxpayer after December 31, 2024; and

(iii) Has an anticipated greenhouse gas emissions rate of not greater than zero (as determined under the rules provided in § 1.48E-5).

(2) ***Placed in service*** —

(i) ***In general.*** A qualified facility is considered placed in service in the earlier of:

(A) The taxable year in which, under the taxpayer's depreciation practice, the period for depreciation with respect to such qualified facility begins; or

(B) The taxable year in which the qualified facility is placed in a condition or state of readiness and availability to produce electricity, whether in a trade or business or in the production of income. A qualified facility in a condition or state of readiness and availability to produce electricity includes, but is not limited to, components of property that are acquired and set aside during the taxable year for use as replacements for a particular qualified facility (or facilities) in order to avoid operational time loss and equipment that is acquired for a specifically assigned function and is operational but is undergoing testing to eliminate any defects. However, components of property acquired to be used in the construction of a qualified facility are not considered in a condition or state of readiness and availability for a specifically assigned function.

(ii) ***Qualified facility subject to § 1.48-4 election to treat lessee as purchaser.*** Notwithstanding paragraph (b)(2)(i) of this section, a qualified facility with respect to which an election is made under section 50(d)(5) of the Code and § 1.48-4 to treat the lessee as having purchased such qualified facility is considered placed in service by the lessor in the taxable year in which possession is transferred to such lessee.

(c) ***Qualified property*** —

(1) ***In general.*** For purposes of this paragraph (c), the term *qualified property* means all property owned by the taxpayer that meets all of the requirements of paragraphs (c)(1)(i) through (iii) of this section:

(i) The property is tangible personal property (as defined in paragraph (e)(1) of this section) or other tangible property (as defined in paragraph (e)(2) of this section) but only if such other tangible property is used as an integral part of the qualified facility;

(ii) Depreciation (or amortization in lieu of depreciation) is allowable (as defined in paragraph (e)(3) of this section) with respect to the property; and

(iii) Either—

(A) The construction, reconstruction, or erection of the property is completed by the taxpayer (as defined in paragraph (e)(4) of this section) with respect to the property; or

(B) The taxpayer acquires the property (as defined in paragraph (e)(5) of this section) and the original use of the property (as defined in paragraph (e)(6) of this section) commences with the taxpayer.

(2) ***Location of property.*** Any component of qualified property that otherwise satisfies the requirements of this paragraph (c) is part of a qualified facility regardless of where such component is located.

(d) ***Property included in qualified facility*** —

(1) ***In general.*** A qualified facility includes a unit of a qualified facility (as defined in paragraph (d)(2) of this section) owned by the taxpayer. A qualified facility also includes components of qualified property owned by the taxpayer that are an integral part (as defined in paragraph (d)(3) of this section) of the qualified facility. Any component of qualified property that meets the requirements of this paragraph (d) is part of a qualified facility regardless of where such component of qualified property is located. A qualified facility does not include any electrical transmission equipment, such as electrical transmission lines and towers, or any equipment beyond the electrical transmission stage. *See* § 1.48E-4(b) regarding the Incremental Production Rule and § 1.48E-4(c) for rules regarding a retrofitted qualified facility (80/20 rule).

(2) ***Unit of a qualified facility*** —

(i) ***In general.*** For purposes of the section 48E credit, a unit of a qualified facility includes all functionally interdependent components of property (as defined in paragraph (d)(2)(ii) of this section) owned by the taxpayer that are operated together and that can operate apart from other property to produce electricity. No provision of this section, § 1.48E-1, or §§ 1.48E-3 through 1.48E-5 uses the term *unit* in respect of a qualified facility with any meaning other than that provided in this paragraph (d)(2)(i).

(ii) ***Functionally interdependent.*** Components of property are functionally interdependent if the placing in service of each of the components is dependent upon the placing in service of the other components to generate electricity.

(3) ***Integral part*** —

(i) ***In general.*** For purposes of the section 48E credit, a component of property owned by a taxpayer is an integral part of a qualified facility if it is used directly in the intended function of the qualified facility and is essential to the completeness of such function. Property that is an integral part of a qualified facility is part of the qualified facility. A taxpayer may not claim the section 48E credit for any property not owned by the taxpayer that is an integral part of the qualified facility owned by the taxpayer.

(ii) ***Power conditioning and transfer equipment.*** Power conditioning equipment and transfer equipment are integral parts of a qualified facility. Power conditioning equipment includes, but is not limited to, transformers, inverters and converters, which modify the characteristics of electricity into a form suitable for use, transmission, or distribution. Parts related to the functioning or protection of power conditioning equipment are also treated as power conditioning equipment and include, but are not limited to, switches, circuit breakers, arrestors, and hardware used to monitor, operate, and protect power conditioning equipment. Transfer equipment includes components of property that allow for the aggregation of electricity generated by a qualified facility and components of property that alter voltage to permit electricity to be transferred to a transmission or distribution line. Transfer equipment does not include transmission or distribution lines. Examples of transfer equipment include, but are not limited to, wires, cables, and combiner boxes that conduct electricity. Parts related to the functioning or protection of transfer equipment are also treated as transfer equipment and may include items such as current transformers used for metering, electrical interrupters (such as circuit breakers fuses, and other switches) and hardware used to monitor, operate, and protect transfer equipment.

(iii) ***Roads.*** Roads that are integral to the intended function of the qualified facility such as onsite roads that are used to operate and maintain the qualified facility are an integral part of a qualified facility. Roads used primarily to access the site, or roads used primarily for employee or visitor vehicles, are not integral to the intended function of the qualified facility, and thus are not an integral part of a qualified facility.

(iv) ***Fences.*** Fencing is not an integral part of a qualified facility because it is not integral to the intended function of the qualified facility.

(v) ***Buildings.*** Generally, buildings are not integral parts of a qualified facility because they are not integral to the intended function of the qualified facility. For purposes of section 48E, a structure that is essentially an item of machinery or equipment is not considered a building. In addition, a structure is not a building if it houses components of property that are integral to the intended function of the qualified facility and if the use of the structure is so closely related to the use of the housed components of property therein that the structure clearly can be expected to be replaced if the components of property it initially houses are replaced.

(vi) ***Shared integral property.*** Multiple qualified facilities (whether owned by one or more taxpayers), including qualified facilities with respect to which a taxpayer has claimed a credit under section 48E or another Federal income tax credit, may include shared property that may be considered an integral part of each qualified facility so long as the cost basis for the shared property is properly allocated to each qualified facility and the taxpayer only claims a section 48E credit with respect to the portion of the cost basis properly allocable to a qualified facility for which the taxpayer is claiming a section 48E credit. The total cost basis of such shared property divided among the qualified facilities may not exceed 100 percent of the cost of such shared property. In addition, a component of property that is shared by a qualified facility as defined by section 48E(b)(3) (48E Qualified Facility) and a qualified facility as defined in section 45Y(b) (45Y Qualified Facility) that is an integral part of both qualified facilities will not affect the eligibility of the 48E Qualified Facility for the section 48E credit or the 45Y Qualified Facility for the section 45Y credit.

(vii) ***Examples.*** This paragraph (d)(3)(vii) provides examples illustrating the rules of this paragraph (d).

(A) ***Example 1. Co-located qualified facilities owned by the same taxpayer that share integral property.*** X constructs and owns a solar facility (Solar Facility) and nearby also constructs and owns a wind facility (Wind Facility) that are each a qualified facility. The Solar Facility and Wind Facility each connect to a shared transformer that steps up the electricity produced by each qualified facilities to electrical grid voltage before it is transmitted to the electrical grid through an intertie. X assigns 50% of the cost of the shared transformer to the Solar Facility and the Wind Facility, respectively. The fact that the Solar Facility and Wind Facility share property that is integral to both does not impact the ability of X to claim a section 48E credit for both qualified facilities. When X places the qualified facilities in service, 50% of the cost of the transformer is included in X's basis in each of the qualified facilities for purposes of computing the section 48E credit.

(B) ***Example 2. Co-located qualified facilities owned by different taxpayers that share integral property.*** X constructs and owns a solar facility (Solar Facility), and nearby Y constructs and owns a wind facility (Wind Facility) that are each a qualified facility. The Solar Facility and the Wind Facility both connect to a shared transformer that steps up the electricity produced by both qualified facilities to electrical grid voltage before it is transmitted to the

electrical grid through an intertie. X and Y each pay 50% of the cost of the shared transformer. The fact that the Solar Facility and Wind Facility share property that is integral to both does not impact the ability of X or Y to claim a section 48E credit for their respective qualified facilities. When X and Y place their respective qualified facilities in service, 50% of the cost of the transformer is included in X's and Y's basis in their respective qualified facilities for purposes of computing the section 48E credit.

(C) ***Example 3. Co-located qualified facility and Energy Storage Technology (EST) owned by the same taxpayer.*** X constructs and owns a wind facility (Wind Facility) that is co-located with an EST that X also constructs and owns. The Wind Facility and EST share transfer equipment that is integral to both. X assigns 50% of the cost of the shared transfer equipment to the Wind Facility and 50% of the cost to the EST. The fact that the Wind Facility and EST share property that is integral to both does not impact the ability of X to claim a section 48E credit for the Wind Facility and the EST. X may include 50% of the cost of the transfer equipment in its basis to determine a section 48E credit for the Wind Facility and the EST.

(D) ***Example 4. Co-located qualified facility and Energy Storage Technology owned by different taxpayers.*** X constructs and owns a solar facility that is a qualified facility (Solar Facility) and is co-located with an EST constructed and owned by Y. The Solar Facility and EST share transfer equipment that is integral to both. X and Y each incur 50% of the cost of the transfer equipment. The fact that the Solar Facility and EST share property that is integral to both does not impact the ability of X to claim a section 48E credit for the Solar Facility or Y to claim a section 48E credit for the EST. When X and Y place in service the Solar Facility and EST, for purposes of computing the section 48E credit, 50% of the cost of the transfer equipment is included in X's basis in the Solar Facility and 50% of the cost is included in Y's basis in the EST.

(E) ***Example 5. Qualified facility with integral property owned by a different taxpayer.*** X constructs and owns a hydropower production facility that is a qualified facility (Hydropower Facility). The Hydropower Facility connects to a dam owned by Y, a government entity, that is an integral part of the Hydropower Facility. X pays for upkeep of the dam. The fact that X does not own the dam does not impact the ability of X to claim a section 48E credit for the Hydropower Facility. When X places in service the Hydropower Facility, for purposes of computing the section 48E credit, the cost incurred by X related to the dam would not be included in X's basis in the Qualified Facility because X does not own the dam.

(e) ***Definitions related to requirements for qualified property*** —

(1) ***Tangible personal property.*** The term *tangible personal property* means any tangible property except land or improvements thereto, such as buildings or other inherently permanent structures (including items that are structural components of such buildings or structures. Tangible personal property includes all property (other than structural components) that is contained in or attached to a building. Further, all property that is in the nature of machinery (other than structural components of a building or other inherently permanent structure) is considered tangible personal property even though located outside a building. Machinery located outside of a building is qualified property if it is used for the generation of electricity and the components of machinery are functionally interdependent. Local law does not control whether property is tangible property or is tangible

personal property for purposes of the section 48E credit. Thus, tangible property may be tangible personal property for purposes of the section 48E credit even though under local law the property is considered a fixture and therefore is real property under local law.

(2) ***Other tangible property.*** The term *other tangible property* means tangible property other than tangible personal property (not including a building and its structural components) that is used as an integral part of furnishing electricity by a person engaged in a trade or business of furnishing any such service. Other tangible property may be tangible property for purposes of the section 48E credit even though under local law the property is considered a fixture and is therefore real property under local law.

(3) ***Depreciation allowable*** —

(i) ***In general.*** For purposes of applying paragraph (c) of this section, depreciation (or amortization in lieu of depreciation) (collectively, *depreciation*) is allowable with respect to the property if such property is of a character subject to the allowance for depreciation under section 167 of the Code and the basis or cost of such property is recovered using a method of depreciation (for example, the straight line method), which includes any additional first year depreciation deduction method of depreciation (for example, under section 168(k) of the Code). Further, if an adjustment with respect to the Federal income tax or Federal return, as appropriate, for such taxable year requires the basis or cost of such qualified property to be recovered using a method of depreciation, depreciation is allowable to the taxpayer with respect to the qualified property.

(ii) ***Exclusions from allowable.*** For purposes of paragraph (c) of this section, depreciation is not allowable with respect to a qualified facility if the basis or cost of such qualified facility is not recovered through a method of depreciation but, instead, such basis or cost is recovered through a deduction of the full basis or cost of the qualified facility in one taxable year (for example, under section 179 of the Code).

(4) ***Construction, reconstruction, or erection of the property.*** The term *construction, reconstruction, or erection of the property* means work performed to construct, reconstruct, or erect property either by the taxpayer or for the taxpayer in accordance with the taxpayer's specifications.

(5) ***Acquisition of qualified property.*** The term *acquisition of qualified property* means a transaction by which a taxpayer acquires the rights and obligations to establish tax ownership of the property for Federal tax purposes.

(6) ***Original use of the property.*** The term *original use of the property* means the first use to which the unit of property is put, whether or not such use is by the taxpayer.

(7) ***Retrofitted qualified facility.*** A retrofitted qualified facility acquired by the taxpayer will not be treated as being put to original use by the taxpayer unless the rules in § 1.48E-4(c) regarding retrofitted qualified facilities (80/20 Rule) apply. The question of whether a qualified facility meets the 80/20 Rule is a facts and circumstances determination.

(f) ***Coordination with other credits*** —

(1) ***In general.*** The term *qualified facility* (as defined in section 48E(b)(3)) and paragraph (b) of this section does not include any facility for which a credit determined under section 45, 45J, 45Q, 45U, 45Y, 48, or 48A is allowed under section 38 of the Code for the taxable year or any prior taxable year. A taxpayer that directly owns a qualified facility (as defined in section 48E(b)(3)) for which the

taxpayer is eligible for both a section 48E credit and another Federal income tax credit is eligible for the section 48E credit only if the other Federal income tax credit was not allowed to the taxpayer with respect to the qualified facility. Nothing in this paragraph (f) precludes a taxpayer from claiming a section 48E credit with respect to a qualified facility (as defined in section 48E(b)(3)) that is co-located with another facility for which a credit determined under section 45, 45J, 45Q, 45U, 45Y, 48, or 48A is allowed under section 38 of the Code for the taxable year or any prior taxable year.

(2) ***Allowed.*** For purposes of this paragraph (f), the term *allowed* only includes credits that taxpayers have claimed on a Federal income tax return or Federal return, as appropriate, and that the Internal Revenue Service (IRS) has not challenged in terms of the taxpayer's eligibility.

(3) ***Examples.*** This paragraph (f)(3) provides examples illustrating the rules provided in this paragraph (f).

(i) ***Example 1. Taxpayer claims a section 45Y credit on a solar farm and section 48E credit on co-located Energy Storage Technology.*** X owns a solar farm that is a qualifying facility (as defined in § 1.45Y-2(a)) (Solar Qualified Facility), and a co-located EST (Energy Storage). The Energy Storage is not part of the Solar Qualified Facility, and therefore X may claim the section 45Y credit based on the kWh of electricity produced by the Solar Qualified Facility, and X may also claim the section 48E credit based on its qualified investment in the Energy Storage.

(ii) ***Example 2. Different taxpayers claim a section 45Y credit for a solar farm and a co-located Energy Storage Technology.*** X owns a solar farm that is a qualifying facility (as defined in § 1.45Y-2(a)) (Solar Qualified Facility), and Y owns a co-located EST (Energy Storage). The Energy Storage is not part of the Solar Qualified Facility, and therefore, X may claim the section 45Y credit based on the kWh of electricity produced by the Solar Qualified Facility, and Y may claim the section 48E credit based on its qualified investment in the Energy Storage.

(iii) ***Example 3. Taxpayer claiming a section 48E credit; another credit is not allowed.*** X owns a wind facility that satisfies the requirements of a qualified facility under section 48E as well as the requirements of a qualified facility as defined in § 1.45Y-2(a) under section 45Y. X claims a section 45Y credit with respect to the wind facility. While a credit may be available with regard to the wind facility under section 48E, because X has already claimed a section 45Y credit with respect to the wind facility, a section 48E credit is not allowed. Local law is not controlling for purposes of determining whether property is or is not tangible property or tangible personal property. Thus, tangible property may be personal property for purposes of the energy credit even though under local law the property is considered a fixture and therefore real property.

(iv) ***Example 4. Interaction of section 48E and section 45Q credits for single qualified facility.*** X owns a qualified facility (Facility A) that includes carbon capture equipment, which is needed for the facility to meet the zero greenhouse gas requirement, so it is functionally interdependent to the production of electricity by the Facility A. X uses the carbon capture equipment to capture and utilize (as described in section 45Q(f)(5)) qualified carbon dioxide and claimed a section 45Q credit in the current taxable year. As a result, X cannot claim a section 48E credit for its 48E Facility A because a qualified facility does not include a facility for which a credit determined under section 45Q is allowed.

(v) ***Example 5. Interaction of section 48E and section 45Q credits for co-located qualified facilities.*** Assume the same facts as in paragraph (f)(3)(iv) of this section (Example 4), except that X owns a co-located qualified facility (Facility B) that also includes carbon capture equipment, which is needed for the facility to meet the zero greenhouse gas requirement, so it is

functionally interdependent to the production of electricity by the Facility B. X uses the carbon capture equipment to capture and utilize (as described in section 45Q(f)(5)) qualified carbon dioxide, but does not claim a section 45Q credit with respect to the Facility B. While X claimed a section 45Q credit in the current taxable year for the Facility A (see Example 4), the Facility B is not part of the Facility A, and, therefore, X may claim the section 48E credit for its Facility B.

(g) *EST* —

(1) ***Property included in EST.*** An EST includes a unit of energy storage technology (unit of EST) (as defined in paragraph (g)(2) of this section) that meets the requirements of paragraph (g)(2)(ii) of this section. An EST also includes property owned by the taxpayer that is an integral part (as defined in paragraph (g)(3) of this section) of the EST. An EST does not include equipment that is an addition or modification to an existing EST. For purposes of the section 48E credit, EST includes electrical energy storage property (as described in paragraph (g)(6)(i) of this section), thermal energy storage property (as described in paragraph (g)(6)(ii) of this section), and hydrogen energy storage property (as described in paragraph (g)(6)(iii) of this section).

(2) *Unit of EST* —

(i) ***In general.*** For purposes of the section 48E credit, a unit of EST includes all functionally interdependent components of property (as defined in paragraph (g)(2)(ii) of this section) owned by the taxpayer that are operated together and that can operate apart from other property to perform the intended function of the EST. No provision of this section, § 1.48E-1, or §§ 1.48E-3 through 1.48E-5 uses the term *unit* in respect of an EST with any meaning other than that provided in this paragraph (g)(2)(i).

(ii) ***Functionally interdependent.*** Components of property are functionally interdependent if the placing in service of each of the components is dependent upon the placing in service of each of the other components to perform the intended function of the EST.

(3) ***Integral part.*** For purposes of the section 48*E* credit, property owned by a taxpayer is an integral part of an EST owned by the same taxpayer if it is used directly in the intended function of the EST and is essential to the completeness of such function. Property that is an integral part of an EST is part of that EST. A taxpayer may not claim the section 48E credit for any property not owned by the taxpayer that is an integral part of EST owned by the taxpayer.

(4) ***Qualified investment with respect to EST.*** The qualified investment with respect to any EST for any taxable year is the basis of any EST placed in service by the taxpayer during such taxable year.

(5) *Placed in service* —

(i) ***In general.*** An EST is considered placed in service in the earlier of:

(A) The taxable year in which, under the taxpayer's depreciation practice, the period for depreciation with respect to such EST begins; or

(B) The taxable year in which the EST is placed in a condition or state of readiness and availability for the intended function of the EST, whether in a trade or business or in the production of income. An EST in a condition or state of readiness and availability for its intended function includes, but is not limited to, components of property that are acquired and set aside during the taxable year for use as replacements for a particular EST (or ESTs) in order to avoid operational time loss and equipment that is acquired for a specifically assigned function and is operational but is undergoing testing to eliminate any

defects. However, components of property acquired to be used in the construction of an EST are not considered in a condition or state of readiness and availability for a specifically assigned function.

(ii) ***EST subject to § 1.48-4 election to treat lessee as purchaser.*** Notwithstanding paragraph (g)(5)(i) of this section, EST with respect to which an election is made under section 50(d)(5) of the Code and § 1.48-4 to treat the lessee as having purchased such EST is considered placed in service by the lessor in the taxable year in which possession is transferred to such lessee.

(6) ***Types of EST —***

(i) ***Electrical energy storage property.*** Electrical energy storage property is property (other than property primarily used in the transportation of goods or individuals and not for the production of electricity) that receives, stores, and delivers energy for conversion to electricity, and has a nameplate capacity of not less than 5 kWh. For example, subject to the exclusion for property primarily used in the transportation of goods or individuals, electrical energy storage property includes but is not limited to rechargeable electrochemical batteries of all types (such as lithium-ion, vanadium redox flow, sodium sulfur, and lead-acid); ultracapacitors; physical storage such as pumped storage hydropower, compressed air storage, flywheels; and reversible fuel cells.

(ii) ***Thermal energy storage property —***

(A) ***In general.*** Thermal energy storage property is property comprising a system that is directly connected to a heating, ventilation, or air conditioning (HVAC) system; removes heat from, or adds heat to, a storage medium for subsequent use; and provides energy for the heating or cooling of the interior of a residential or commercial building. Thermal energy storage property includes equipment and materials, and parts related to the functioning of such equipment, to store thermal energy for later use to heat or cool, or to provide hot water for use in heating a residential or commercial building. It does not include property that transforms other forms of energy into heat in the first instance. Property that "removes heat from, or adds heat to, a storage medium for subsequent use" is property that is designed with the particular purpose of substantially altering the time profile of when heat added to or removed from the thermal storage medium can be used for heating or cooling of the interior of a residential or commercial building. Paragraph (g)(6)(ii)(B) of this section provides a safe harbor for determining whether a thermal energy storage property has such a purpose. Thermal energy storage property does not include a swimming pool, combined heat and power system property (as defined in section 45Y(g)(2)), or a building or its structural components. For example, thermal energy storage property includes, but is not limited to, a system that adds heat to bricks heated to high temperatures that later use this stored energy to heat a building through the HVAC system; thermal ice storage systems that use electricity to run a refrigeration cycle to produce ice that is later connected to the HVAC system as an exchange medium for air conditioning a building, heat pump systems that store thermal energy in an underground tank, an artificial pit, an aqueous solution, a borehole field, or a solid-liquid phase change material to be extracted for later use for heating and/or cooling; and air-to-water heat pump systems with a water storage tank. However, consistent with § 1.48-14(d), if thermal energy storage property, such as a heat pump system, includes equipment, such as a heat pump, that also serves a purpose in an HVAC system that is installed in connection with the thermal energy storage property, the taxpayer's qualified investment with respect to

the thermal energy storage property includes the total cost of the thermal energy storage property and HVAC system less the cost of an HVAC system without thermal storage capacity that would meet the same functional heating or cooling needs as the heat pump system with a storage medium, other than time shifting of heating or cooling. *See* § 1.48-14(h) for application of the Incremental Cost Rule.

(B) ***Safe harbor.*** A thermal energy storage property will be deemed to have the purpose of substantially altering the time profile of when heat added to or removed from the thermal storage medium can be used to heat or cool the interior of a residential or commercial building if that thermal energy storage property is capable of storing energy that is sufficient to provide heating or cooling of the interior of a residential or commercial building for a minimum of one hour.

(iii) ***Hydrogen energy storage property.*** Hydrogen energy storage property is property (other than property primarily used in the transportation of goods or individuals and not for the production of electricity) that stores hydrogen and has a nameplate capacity of not less than 5 kWh, equivalent to 0.127 kg of hydrogen or 52.7 standard cubic feet (scf) of hydrogen. Hydrogen energy storage property includes, but is not limited to, above ground storage tanks, underground storage facilities, and associated compressors. Property that is an integral part of hydrogen energy storage property includes, but is not limited to, hydrogen liquefaction equipment and gathering and distribution lines within a hydrogen energy storage property.

(7) ***Modification of EST.*** With respect to an electrical energy storage property or a hydrogen energy storage property, modified as set forth in this paragraph (g)(7), such property will be treated as an electrical energy storage property (as described in paragraph (g)(6)(i) of this section) or a hydrogen energy storage property (as described in paragraph (g)(6)(iii) of this section), except that the basis of any existing electrical energy storage property or hydrogen energy storage property prior to such modification is not taken into account for purposes of this paragraph (g)(7) and section 48E. This paragraph (g)(7) applies to any electrical energy storage property and hydrogen energy storage property that either:

(i) Was placed in service before August 16, 2022, and would be described in section 48(c)(6)(A)(i), except that such property had a nameplate capacity of less than 5 kWh and is modified in a manner that such property (after such modification) has a nameplate capacity of not less than 5 kWh; or

(ii) Is described in section 48(c)(6)(A)(i) and is modified in a manner that such property (after such modification) has an increase in nameplate capacity of not less than 5 kWh. The increase in nameplate capacity is equal to the difference between nameplate capacity immediately after the modification and nameplate capacity immediately prior to the modification.

(h) ***Applicability date.*** This section applies to qualified facilities and EST placed in service after December 31, 2024, and during a taxable year ending on or after January 15, 2025.

[T.D. 10024, 90 FR 4110, Jan. 15, 2025]

§ 1.48E-3 Rules relating to the increased credit for prevailing wage and apprenticeship.

(a) ***In general.*** If any qualified facility or EST satisfies the requirements in paragraph (b) of this section, the applicable percentage used for calculating the amount of the credit for a qualified investment determined under section 48E(a) for the taxable year equals 30 percent.

(b) ***Qualified facility or EST requirements.*** A qualified facility or EST satisfies the requirements of this paragraph (b) if it is a facility described in one of paragraphs (b)(1) through (6) of this section:

(1) A qualified facility with a maximum net output of less than one megawatt of electrical energy (as measured in alternating current) based on the nameplate capacity as provided in paragraph (c) of this section (One Megawatt Exception);

(2) A qualified facility the construction of which began prior to January 29, 2023;

(3) A qualified facility that meets the prevailing wage requirements of section 48E(d)(3) and §§ 1.45-7(a)(2) and (3) and (b) through (d) and 1.48-13(c), the apprenticeship requirements of section 45(b)(8) and § 1.45-8, and the recordkeeping and reporting requirements of § 1.45-12;

(4) An EST with a capacity of less than one megawatt based on the nameplate capacity as provided in paragraph (c) of this section (EST One Megawatt Exception);

(5) An EST the construction of which began prior to January 29, 2023; or

(6) An EST that satisfies the prevailing wage requirements of section 48E(d)(3) and §§ 1.45-7(a)(2) and (3) and (b) through (d) and 1.48-13(c), the apprenticeship requirements of section 45(b)(8) and § 1.45-8, and the recordkeeping and reporting requirements of § 1.45-12.

(c) ***Nameplate capacity for purposes of the One Megawatt Exception*** —

(1) ***Qualified facilities.*** For purposes of paragraph (b)(1) of this section, whether a qualified facility has a maximum net output of less than 1 megawatt (MW) of electrical energy (as measured in alternating current) is determined based on the nameplate capacity of the facility. If a qualified facility has integrated operations (as defined in paragraph (c)(4)(i) of this section) with one or more other qualified facilities, then the aggregate nameplate capacity of the qualified facilities is used for the purposes of determining if the qualified facilities satisfy the One Megawatt Exception. If applicable, taxpayers should use the International Standard Organization (ISO) conditions to measure the maximum electrical generating output of a facility.

(2) ***Nameplate capacity for qualified facilities that generate in direct current for purposes of the One Megawatt Exception.*** For qualified facilities that generate electricity in direct current, the taxpayer determines the maximum net output (in alternating current) of each unit of qualified facility by using the lesser of:

(i) The sum of the nameplate generating capacities within the unit of qualified facility in direct current, which is deemed the nameplate generating capacity of the unit of qualified facility in alternating current; or

(ii) The nameplate capacity of the first component of property that inverts the direct current electricity into alternating current.

(3) ***EST*** —

(i) ***In general.*** Paragraphs (c)(3)(ii) through (iv) of this section provide rules for applying the EST One Megawatt Exception described in paragraph (b)(4) of this section to different types of energy storage properties. If the EST has integrated operations (as defined in paragraph (c)(4)(ii) of this section) with one or more other ESTs, then the aggregate nameplate capacity of the ESTs is used for the purposes of the EST One Megawatt Exception. If applicable, taxpayers should use the ISO conditions to measure the maximum net output of an EST.

(ii) ***Electrical energy storage property.*** In the case of electrical energy storage property (as defined in § 1.48E-2(g)(6)(i)), the EST One Megawatt Exception is determined by using the storage device's maximum net output. If the output of electrical energy storage property is in direct current, taxpayer should apply the rules of paragraph (c)(2) of this section.

(iii) ***Thermal energy storage property.*** In the case of thermal energy storage property (as defined in § 1.48E-2(g)(6)(ii)), the EST One Megawatt Exception is determined by using the property's maximum net output. The maximum net output in MW is calculated by using a conversion whereby one MW is equal to 3.4 million British Thermal Units per hour (mmBtu/hour) for heating and 284 tons for cooling (Btu per hour/3,412,140 = MW). The maximum net output is the maximum instantaneous rate of discharge and is determined based on the nameplate capacity of the equipment that generates or distributes thermal energy for productive use (including distributing the thermal energy from the storage medium). For purposes of determining the maximum net output of thermal energy storage property, if the nameplate capacity of the thermal energy storage is not available, the nameplate capacity of the equipment delivering thermal energy to the thermal energy storage may be used. For thermal energy storage property distributing thermal energy to a building or buildings, the nameplate capacity can be assessed as either the aggregate maximum thermal capacity of all individual heating or cooling elements within the building or buildings, or as the maximum thermal output that the thermal energy storage property is capable of delivering to a building or buildings at any given moment. The maximum thermal capacity of an entire thermal energy storage property is capable of delivering at any given moment does not take into account the capacity of redundant equipment if such equipment is not operated when the system is at maximum output during normal operation. For thermal energy storage property and other energy property that generates or distributes thermal energy for a productive use, the maximum thermal capacity that the entire system is capable of delivering is considered to be the greater of the rate of cooling or the rate of heating of the aggregate of the nameplate capacity of the equipment distributing energy for productive use, including distributing the thermal energy from the thermal energy storage medium to the building or buildings. If such nameplate capacity is unavailable, in the case of thermal energy storage property only, the maximum thermal capacity may instead be considered to be the greater of the rate of cooling or the rate of heating of the aggregate of the nameplate capacity of all the equipment delivering energy to the thermal energy storage property in the project.

(iv) ***Hydrogen energy storage property.*** In the case of a hydrogen energy storage property (as defined in § 1.48E-2(g)(6)(iii)), the EST One Megawatt Exception is determined by using the property's maximum net output. The maximum net output in MW is calculated by using a conversion whereby one MW is equal to 3.4 mmBtu/hour of hydrogen or equivalently 10,500 standard cubic feet (scf) per hour of hydrogen.

(4) ***Integrated operations*** —

(i) ***One Megawatt Exception.*** Solely for the purposes of the One Megawatt Exception described in paragraph (b)(1) of this section, a qualified facility is treated as having *integrated operations* with any other qualified facility of the same technology type if the facilities are:

(A) Owned by the same or related taxpayers;

(B) Placed in service in the same taxable year; and

(C) Transmit electricity generated by the facilities through the same point of interconnection or, if the facilities are not grid-connected or are delivering electricity directly to an end user behind a utility meter, are able to support the same end user.

(ii) ***EST One Megawatt Exception.*** Solely for the purposes of the EST One Megawatt Exception described in paragraph (b)(4) of this section, an EST is treated as having *integrated operations* with any other EST of the same technology type if the ESTs are:

(A) Owned by the same or related taxpayers;

(B) Placed in service in the same taxable year; and

(C) Transmit energy through the same point of interconnection or, if the ESTs are not grid-connected or are providing storage directly to an end user behind a utility meter, are able to support the same end user. In the case of EST described in paragraphs (c)(3)(iii) and (iv) of this section, which use the same piping and distribution systems for the respective type of EST.

(d) ***Transition waiver of penalty for prevailing wage requirements.*** For purposes of the transition waiver described in § 1.48-13(c)(2) (by reference to § 1.45-7(c)(6)(iii)), the penalty payment required by § 1.45-7(c)(1)(ii) to cure a failure to satisfy the prevailing wage requirements in paragraph (b)(3) or (6) of this section is waived with respect to a laborer or mechanic who performed work in the construction, alteration, or repair of an energy project on or after January 29, 2023, and prior to January 15, 2025, if the taxpayer relied upon Notice 2022-61, 2022-52 I.R.B. 560, or the PWA proposed regulations (REG-100908-23) (88 FR 60018), corrected in 88 FR 73807 (Oct. 27, 2023), corrected in 89 FR 25550 (April 11, 2024), to determine when the activities of any laborer or mechanic became subject to the prevailing wage requirements, and the taxpayer makes the correction payments required by § 1.45-7(c)(1)(i) with respect to such laborer and mechanics within 180 days of January 15, 2025.

(e) ***No alteration or repair during recapture period described in § 1.48-13(c)(3).*** If no alteration or repair work occurs during the five-year recapture period, the taxpayer is deemed to satisfy the prevailing wage requirements described in paragraph (b)(3) or (6) of this section with respect to such taxable year.

(f) ***Applicability date.*** This section applies to qualified facilities and qualified ESTs placed in service in taxable years ending after January 15, 2025, and the construction of which begins after March 17, 2025. Taxpayers may apply this section to qualified facilities and qualified ESTs placed in service in taxable years ending on or after January 15, 2025, the construction of which begins before January 15, 2025, provided that taxpayers follow this section in its entirety and in a consistent manner.

[T.D. 10024, 90 FR 4110, Jan. 15, 2025]

§ 1.48E-4 Rules of general application.

(a) ***Qualified interconnection costs included in certain lower-output qualified facilities*** —

(1) ***In general.*** For purposes of determining the section 48E credit (as defined in § 1.48E-1(a)), the qualified investment with respect to a qualified facility (as defined in § 1.48E-2(a)) includes amounts paid or incurred by the taxpayer for qualified interconnection property (as defined in paragraph (a)(2) of this section), in connection with a qualified facility (as defined in § 1.48E-2(a)) that has a maximum net output of not greater than 5 MW (as measured in alternating current) as described in paragraph (a)(3) of this section (Five-Megawatt Limitation). The qualified interconnection property must provide for the transmission or distribution of the electricity produced by a qualified facility and

must be properly chargeable to the capital account of the taxpayer as reduced by paragraph (a)(6) of this section. If the costs borne by the taxpayer are reduced by utility or non-utility payments, Federal income tax principles may require the taxpayer to reduce the amounts of costs treated as paid or incurred for qualified interconnection property to determine a section 48E credit.

(2) ***Qualified interconnection property.*** For purposes of this paragraph (a), the term *qualified interconnection property* means, with respect to a qualified facility, any tangible property that is part of an addition, modification, or upgrade to a transmission or distribution system that is required at or beyond the point at which the qualified facility interconnects to such transmission or distribution system in order to accommodate such interconnection; is either constructed, reconstructed, or erected by the taxpayer (as defined in § 1.48E-2(e)(4)), or for which the cost with respect to the construction, reconstruction, or erection of such property is paid or incurred by such taxpayer; and the original use (as defined in § 1.48E-2(e)(6)) of which, pursuant to an interconnection agreement (as defined in paragraph (a)(4) of this section), commences with a utility (as defined in paragraph (a)(5) of this section). For purposes of determining the original use of interconnection property in the context of a sale-leaseback or lease transaction, the principles of section 50(d)(4) of the Internal Revenue Code (Code) must be taken into account, as applicable, with such original use determined on the date of the sale-leaseback or lease. Qualified interconnection property is not part of a qualified facility. As a result, qualified interconnection property is not taken into account in determining whether a qualified facility satisfies the requirements for the increase in credit rate for energy communities provided in section 48E(a)(3)(A) of the Code, the increase in credit rate for domestic content referenced in section 48E(a)(3)(B) (by reference to the rules of section 48(a)(12)) or the increase in credit rate for prevailing wage requirements referenced in section 48E(d)(3) and apprenticeship requirements referenced in section 48E(d)(4).

(3) ***Five-Megawatt Limitation*** —

(i) ***In general.*** For purposes of this paragraph (a), the Five-Megawatt Limitation is measured at the level of the qualified facility in accordance with section 48E(b)(1)(B). The maximum net output of a qualified facility is measured only by nameplate generating capacity (in alternating current) of the unit of qualified facility, which does not include the nameplate capacity of any integral property, at the time the qualified facility is placed in service. The nameplate generating capacity of the unit of qualified facility is measured independently from any other qualified facilities that share the same integral property.

(ii) ***Nameplate capacity for purposes of the Five-Megawatt Limitation.*** For purposes of paragraph (a)(1) of this section, the determination of whether a qualified facility has a maximum net output of not greater than 5 MW (as measured in alternating current) is based on the nameplate capacity. The nameplate capacity for purposes of the Five-Megawatt Limitation is the maximum electrical generating output in megawatts that the unit of qualified facility is capable of producing on a steady state basis and during continuous operation under standard conditions, as measured by the manufacturer and consistent with the definition of nameplate capacity provided in 40 CFR 96.202. If applicable, taxpayers should use the International Standard Organization (ISO) conditions to measure the maximum electrical generating output of a unit of qualified facility.

(iii) ***Nameplate capacity for qualified facilities that generate in direct current for purposes of the Five-Megawatt Limitation.*** For qualified facilities that generate electricity in direct current, a taxpayer determines whether a qualified facility has a maximum net output of not greater than five MW (in alternating current) by using the lesser of:

(A) The sum of the nameplate generating capacities within the unit of qualified facility property in direct current, which is deemed the nameplate generating capacity of the unit of qualified facility property in alternating current; or

(B) The nameplate capacity of the first component of the qualified facility that inverts the direct current electricity into alternating current.

(4) ***Interconnection agreement.*** For purposes of this paragraph (a), the term *interconnection agreement* means an agreement with a utility for the purposes of interconnecting the qualified facility owned by such taxpayer to the transmission or distribution system of the utility. In the case of the election provided under section 50(d)(5) (relating to certain leased property), the term includes an agreement regarding a qualified facility leased by such taxpayer.

(5) ***Utility.*** For purposes of this paragraph (a), the term *utility* means the owner or operator of an electrical transmission or distribution system that is subject to the regulatory authority of a State or political subdivision thereof, any agency or instrumentality of the United States, a public service or public utility commission or other similar body of any State or political subdivision thereof, or the governing or ratemaking body of an electric cooperative.

(6) ***Reduction to amounts chargeable to capital account.*** In the case of costs paid or incurred for qualified interconnection property as defined in paragraph (a)(2) of this section, amounts otherwise chargeable to capital account with respect to such costs must be reduced under rules of section 50(c) (including section 50(c)(3)).

(7) ***Examples.*** This paragraph (a)(7) provides examples illustrating the application of the general rules provided in paragraph (a)(1) of this section and Five-Megawatt Limitation provided in this paragraph (a).

(i) ***Example 1. Application of Five-Megawatt Limitation to an interconnection agreement for qualified facilities owned by taxpayer.*** X places in service two solar qualified facilities (48E Facilities) each with a maximum net output of 5 MW (as measured in alternating current by using the nameplate capacity of an inverter, which is the first component of property attached to each of the 48E Facilities that inverts the direct current electricity into alternating current). The two 48E Facilities each have their own inverter, which is integral property to each facility, and share a step-up transformer, which is integral property to both facilities. As part of the development of the 48E Facilities, interconnection costs are required by the utility to modify and upgrade the transmission system at or beyond the common intertie to the utility's transmission system to accommodate the interconnection. X has an interconnection agreement with the utility that allows for a maximum output of 10 MW (as measured in alternating current). The interconnection agreement provides the total cost to X of the qualified interconnection property. X may include the costs paid or incurred by X, respectively, for qualified interconnection property subject to the terms of the interconnection agreement, to calculate X's section 48E credit for each of the 48E Facilities because each qualified facility has a maximum net output of not greater than 5 MW (alternating current).

(ii) ***Example 2. Application of Five-Megawatt Limitation to an interconnection agreement for qualified facilities owned by separate taxpayers.*** X places in service a solar farm that is a qualified facility (as defined in § 1.48E-2(a)) (Solar Qualified Facility) with a maximum net output of 5 MW (as measured in alternating current by using the nameplate capacity of the first component of property attached to the Solar Qualified Facility that inverts the direct current electricity into alternating current). The Solar Qualified Facility includes an inverter, which is integral property.

Y places in service a wind facility (as defined in § 1.48E-2(a)) (Wind Qualified Facility), with a maximum net output of 5 MW (as measured in alternating current by using the nameplate capacity of the first component of property attached to the Wind Qualified Facility that inverts the direct current electricity into alternating current). The Solar Qualified Facility and the Wind Qualified Facility share a step-up transformer, which is integral to both facilities. As part of the development of the Solar Qualified Facility and Wind Qualified Facility, interconnection costs are required by the utility to modify and upgrade the transmission system at or beyond the common intertie to the utility's transmission system to accommodate the interconnection. X and Y are party to the same interconnection agreement with the utility that allows for a maximum output of 10 MW (as measured in alternating current). The interconnection agreement provides the total cost of the qualified interconnection property to X and Y. X and Y may include the costs paid or incurred by X and Y, respectively, for qualified interconnection property subject to the terms of the interconnection agreement, to calculate their respective section 48E credits for the Solar Qualified Facility and the Wind Qualified Facility because each has a maximum net output of not greater than 5 MW (alternating current).

(iii) ***Example 3. Application of Five-Megawatt Limitation to an interconnection agreement for a single qualified facility.*** X develops three solar farms (Solar Qualified Facilities) located in close proximity. Each of the Solar Qualified Facilities is a unit of qualified facility that has a maximum net output of 4 MW. The nameplate capacity of each Solar Qualified Facility is determined by using the sum of the nameplate generating capacities within the unit of each Solar Qualified Facility in direct current, which is deemed the nameplate generating capacity of each Solar Qualified Facility in alternating current. Electricity from the three Solar Qualified Facilities feeds into a single gen-tie line and a common point of interconnection with the transmission system. X is party to a separate interconnection agreement with the utility for each of the Solar Qualified Facilities and each interconnection agreement allows for a maximum output of 10 MW (as measured in alternating current). X may include the costs it paid or incurred for qualified interconnection property for each of the Solar Qualified Facilities to calculate its section 48E credit for each of the Solar Qualified Facilities, subject to the terms of each interconnection agreement, because each of the Solar Qualified Facilities has a maximum net output of not greater than 5 MW (in alternating current). X cannot include more than the total costs X paid or incurred for the qualified interconnection property in calculating the aggregate section 48E credit amount for the Solar Qualified Facilities.

(iv) ***Example 4. Utility payment reducing costs borne by taxpayer.*** In year 1, X places in service a solar facility (Solar Qualified Facility) with a maximum net output of 3 MW (as measured in alternating current) by using the nameplate capacity of the inverter attached to the solar facility, which is the first component of the qualified facility that inverts the direct current electricity into alternating current. X is party to an interconnection agreement with a utility for the purpose of connecting the Solar Qualified Facility to the transmission or distribution system of the utility. Pursuant to the interconnection agreement, X pays $1 million to the utility, and the utility places in service qualified interconnection property. In year 1, X had no reasonable expectation of any payment from the utility or other parties with respect to the qualified interconnection property. The $1 million is properly chargeable to the capital account of X, subject to paragraph (a)(6) of this section. X properly includes the $1 million paid to the utility in determining its credit under section 48E for Year 1. In Year 4, taxpayer Y enters into an agreement with the utility under which Y pays the utility $100,000 for the use of qualified interconnection property placed in service by the utility pursuant to the interconnection agreement between X and the utility. The utility pays $100,000 to X. Under these circumstances, the payment from the utility in year 4

would not require X to reduce the amount treated as paid or incurred for the qualified interconnection property for the purpose of determining the section 48E credit in year 1; instead X would treat the payment as income.

(v) ***Example 5. Non-utility payment reducing costs borne by taxpayer.*** The facts in year 1 are the same as in paragraph (a)(7)(iii) of this section (*Example 3*). In Year 4, taxpayer Y enters into an agreement with the utility under which Y pays X $100,000 for the use of qualified interconnection property placed in service by the utility pursuant to the interconnection agreement between X and the utility. Y pays $100,000 to X. In year 1, X had no reasonable expectation of any payment from Y for subsequent agreements with Y or other parties with respect to the qualified interconnection property. Under these circumstances, the payment from Y in year 4 would not require X to reduce the amount treated as paid or incurred for the qualified interconnection property for the purpose of determining the section 48E credit in year 1; instead X would treat the payment as income.

(b) ***Expansion of facility; Incremental production (Incremental Production Rule)*** —

(1) ***In general.*** Solely for purposes of this paragraph (b), the term *qualified facility* includes either a new unit or an addition of capacity placed in service after December 31, 2024, in connection with a facility described in section 48E(b)(3)(A) (without regard to section 48E(b)(3)(A)(ii)), which was placed in service before January 1, 2025, but only to the extent of the increased amount of electricity produced at the facility by reason of such new unit or addition of capacity. This paragraph (b) is only applicable to an addition of capacity or new unit that would not otherwise qualify as a separate qualified facility as defined in section 48E(b)(3). A new unit or an addition of capacity that meets the requirements of this paragraph (b) will be treated as a separate qualified facility. For purposes of this paragraph (b), a new unit or an addition of capacity requires the addition or replacement of qualified property (as defined in § 1.48E-2(e)), including any new or replacement integral property, added to a facility necessary to increase capacity. For purposes of assessing the One Megawatt Exception provided in section 48E(a)(2)(A)(ii)(I), the maximum net output for a new unit or an addition of capacity is the sum of the capacity of the added qualified facility and the capacity of the facility to which the qualified facility was added, as determined under § 1.48E-3(c) and paragraph (b)(2) of this section.

(2) ***Measurement standard.*** For purposes of this paragraph (b), taxpayers must use one of the measurement standards described in paragraph (b)(2)(i), (ii), or (iii) of this section to measure the capacity and change in capacity of a facility, except a taxpayer cannot use the measurement standard described in paragraph (b)(2)(ii) of this section if the taxpayer is able to use the measurement standard described in paragraph (b)(2)(i) of this section:

(i) Modified or amended facility operating licenses from the Federal Energy Regulatory Commission (FERC) or the Nuclear Regulatory Commission (NRC), or related reports prepared by FERC or NRC as part of the licensing process;

(ii) Nameplate capacity certified consistent with generally accepted industry standards, such as the International Standard Organization (ISO) conditions to measure the nameplate capacity of the facility consistent with the definition of nameplate capacity provided in 40 CFR 96.202; or

(iii) A measurement standard prescribed by the Secretary in guidance published in the Internal Revenue Bulletin (see § 601.601 of this chapter).

(3) ***Special rule for restarted facilities.*** Solely for purposes of this paragraph (b), a facility that is decommissioned or in the process of decommissioning and restarts can be considered to have increased capacity from a base of zero if the conditions described in each of paragraphs (b)(3)(i) through (iv) of this section are met:

(i) The existing facility must have ceased operations;

(ii) The existing facility must have a shutdown period of at least one calendar year during which it was not authorized to operate by its respective Federal regulatory authority (that is, FERC or NRC);

(iii) The restarted facility must be eligible to restart based on an operating license issued by either FERC or NRC; and

(iv) The existing facility may not have ceased operations for the purpose of qualifying for the special rule for restarted facilities.

(4) ***Computation of qualified investment for a new unit or an addition of capacity.*** For purposes of this paragraph (b), a new unit or an addition of capacity requires the addition or replacement of components of qualified property, including any new or replacement integral property, added to a facility necessary to increase capacity. The taxpayer's qualified investment during the taxable year that resulted in an increased capacity of a facility by reason of a new unit or addition of capacity is its total qualified investment associated with the components of property that result in the new unit or addition of capacity.

(5) ***Examples.*** This paragraph (b)(5) provides examples illustrating the rules of this paragraph (b).

(i) ***Example 1. New Unit.*** X owns a hydropower facility (Facility H) that was originally placed in service in 2020, with a FERC license authorizing an installed capacity of 60 megawatts. During taxable years 2020 through 2024, X claimed a section 45 credit for the electricity produced by Facility H. On July 1, 2025, as allowed by a FERC license amendment, X places in service components of property comprising a new unit that results in Facility H having an increased authorized installed capacity of 90 megawatts in 2025. These components of property meet the requirements of qualified property (as defined in § 1.48E-2(e)). For purposes of this paragraph (b), this new unit will be treated as a separate facility (Facility J). X determines the amount of its section 48E credit based on the amount of its qualified investment in Facility J. Even though X claimed a section 45 credit for electricity produced by Facility H in taxable years 2020 through 2024, X can claim a section 48E credit for its qualified investment in Facility J. X may also continue to claim the section 45 credit through taxable year 2030 for electricity generated by Facility H (excluding the incremental electricity generation related to Facility J).

(ii) ***Example 2. Addition of Capacity.*** Y owns a nuclear facility (Facility N) that was originally placed in service on January 1, 2000. Y claimed a section 45U credit in taxable years 2024 and 2025 for the electricity generated by Facility N. On January 15, 2026, Y completed and placed in service an investment associated with a power uprate approved by an NRC license amendment that involved the removal and replacement of components of property and placing in service additional components of property. Both of these replacement and additional components of property meet the requirements of qualified property (as defined in § 1.48E-2(c)). NRC reports associated with the license amendment describe the uprate as increasing the nuclear facility's electrical capacity by 100 MW to 900 MW. For purposes of this paragraph (b), Facility N's addition of capacity equal to 100 MW is treated as a new separate qualified facility placed in service on January 15, 2026 (Facility P). Y determines the amount of its section 48E credit

based on the entire amount of its qualified investment on January 15, 2026. Even though Y claimed a section 45U credit in taxable years 2024 and 2025 for the existing capacity of Facility N, Y can claim a section 48E credit for its investment in components of property needed to support the increase in capacity. Y may also continue to claim the section 45U credit for electricity generated by Facility N (excluding the incremental electricity generation related to Facility P).

(iii) ***Example 3. Geothermal Turbine and Generator Additions of Capacity.*** X owns a geothermal power plant (Facility G) with a 24 MW nameplate capacity, which is placed in service in 2007. Over the subsequent years, the plant's generating capability declines because of physical degradation of the turbine and generator. On March 1, 2027, X places in service components of property at Facility G that increase its capacity. The turbine rotor is removed, and the eroded blades are replaced with new blades, with associated capital expenditures. The generator is refurbished by removing old subcomponents of the generator and replacing those with new subcomponents, as well as replacing the old copper windings with new windings in concert with new insulation. These components of property meet the requirements of qualified property (as defined in § 1.48E-2(c)). After the upgrade, the plant increases its nameplate capacity to 26 MW, an increase of 2 MW over the previous nameplate capacity. For purposes of this paragraph (b), the addition of capacity to Facility G is treated as a new separate qualified facility placed in service on March 1, 2027 (Facility N). X determines the amount of its section 48E credit based on the amount of its qualified investment in qualified property needed to increase the capacity of the facility.

(iv) ***Example 4. Hydropower Addition of Capacity.*** X owns a hydropower plant (Facility H) placed in service in 1960. Facility H has become less efficient since it was placed in service with attendant reductions in its generating capacity. As approved by a FERC license amendment, X increases Facility H's capacity by installing new headcovers, new turbines with integrated dissolved oxygen injection, and a new high pressure digital governor system. All of the existing turbine systems are replaced with new turbine and governor systems. The new turbines are more efficient, and are capable of more power output, than the original design installed in 1960. Improvements to the generators involve removing the old asphalt coated copper windings and purchasing and then installing new epoxy coated double wound windings. X adds digital controls to effectively utilize new digital governors. These components of property meet the requirements of qualified property (as defined in § 1.48E-2(c)). X simultaneously invests in cybersecurity protection. As set forth in the FERC order amending its license, these investments, which are placed in service on April 15, 2026, increase Facility H's authorized installed nameplate capacity from 180 MW to 190 MW, an increase of 10 MW over the previous nameplate capacity. For purposes of this paragraph (b), Facility H's addition of capacity is treated as a new separate qualified facility placed in service on April 16, 2026 (Facility A). X determines the amount of its section 48E credit based on the amount of its qualified investment in qualified property needed in Facility A to result in the final 190 MW capacity, which would not include any investments in intangible property, such as those that might be associated with cybersecurity protection.

(v) ***Example 5. Nonoperational Nuclear Facility that Satisfies Restart Rule.*** T owns a nuclear facility (Facility N) that was originally placed in service in 1982. In 2020, Facility N ceased operations, began decommissioning, and the NRC no longer authorized the operation of Facility N. T did not cease operations at Facility N for the purpose of qualifying for the special rule for restarted facilities under section 48E. In 2028, the NRC authorized Facility N to restart, and, on October 1,

2028, Facility N placed in service qualified property that enabled Facility N to restart and resume operations, with an electrical capacity of 800 MW, as indicated in NRC documents related to the authorization to restart. For purposes of this paragraph (b), the restart of Facility N is considered to have increased capacity from a base of zero, and Facility N is treated as having an addition of capacity equal to 800 MW. For purposes of this paragraph (b), Facility N's 800 MW addition of capacity is treated as a new qualified facility placed in service on October 1, 2028 (Facility P). T determines the amount of its section 48E credit based on the amount of its qualified investment in qualified property needed to restart the facility.

(c) ***Retrofit of an existing facility (80/20 Rule)*** —

(1) ***In general.*** For purposes of section 48E(b)(3)(A)(ii), a retrofitted qualified facility or an energy storage technology (EST) may qualify as originally placed in service even if it contains some used components of property within the unit of qualified facility or unit of EST, provided that the fair market value of the used components of the unit of qualified facility or unit of EST is not more than 20 percent of the total value of the unit of qualified facility or unit of EST (that is, the cost of the new components of property plus the value of the used components of property within the unit of qualified facility or unit of EST) (80/20 Rule). A qualified facility or EST that meets the 80/20 Rule may claim the section 48E credit without regard to any addition of capacity to the qualified facility or EST.

(2) ***Expenditures taken into account.*** Notwithstanding the rule provided in paragraph (c)(1) of this section, only the cost of new components of the unit of qualified facility or unit of EST are taken into account for purposes of computing the credit determined under section 48E with respect to the qualified facility or EST.

(3) ***Cost of new components.*** For purposes of this 80/20 Rule, the cost of new components of the unit of qualified facility or unit of EST includes all costs properly included in the depreciable basis of the new components of the unit of qualified facility.

(4) ***New costs.*** If the taxpayer satisfies the 80/20 Rule with regard to the unit of qualified facility or unit of EST and the taxpayer pays or incurs new costs for property that is an integral part of the qualified facility (as defined in § 1.48E-2(a)) or the EST (as defined in § 1.48E-2(g)), the taxpayer may include these new costs paid or incurred for property that is an integral part of the qualified facility or EST in the basis of the qualified facility or EST for purposes of the section 48E credit.

(5) ***Excluded costs.*** Costs incurred for new components of property added to used components of a unit of qualified facility or unit of EST may not be taken into account for purposes of the section 48E credit unless the taxpayer satisfies the 80/20 Rule by placing in service a unit of qualified facility or unit of EST for which the fair market value of the used components of property is not more than 20 percent of the total value of the unit of qualified facility or unit of EST taking into account the cost of the new components of property plus the value of the used components of property.

(6) ***Examples.*** This paragraph (c)(6) provides examples illustrating the rules of this paragraph (c).

(i) ***Example 1. Retrofitted facility that satisfies the 80/20 Rule.*** A owns an existing wind facility. On February 1, 2026, A replaces used components of unit of qualified facility of the wind facility with new components at a cost of $2 million. The fair market value of the remaining original components of the unit of qualified facility is $400,000, which is not more than 20 percent of the retrofitted unit of qualified facility's total fair market value of $2.4 million (the cost of the new components ($2 million) + the fair market value of the remaining original components of the unit of qualified facility ($400,000)). Thus, the retrofitted wind facility will be considered

newly placed in service for purposes of section 48E, assuming all the other requirements of section 48E are met, and A will be able to claim a section 48E credit based on its investment in 2026 ($2 million).

(ii) ***Example 2. Retrofit of an existing facility that meets the 80/20 Rule.*** Facility Z, a facility that was originally placed in service on January 1, 2026, was not a qualified facility (as defined in § 1.48E-2(a)) when it was placed in service because it did not meet the greenhouse gas emissions rate requirements (as determined under rules provided in § 1.48E-5). On January 1, 2027, Facility Z was retrofitted and now meets the requirements to be a qualified facility (as defined in § 1.48E-2(a)). After the retrofit, the cost of the new property included in the unit of qualified facility of Facility Z is greater than 80 percent of unit of qualified facility's total fair market value. Because Facility Z meets the 80/20 Rule, Facility Z is deemed to be originally placed in service on January 1, 2027. Assuming all the other requirements of section 48E are met, Z may claim a section 48E credit based on its investment in the new components used to retrofit the existing facility in 2027.

(iii) ***Example 3. Retrofitted nuclear facility that satisfied the 80/20 Rule.*** T owns a nuclear facility (Facility N) that was originally placed in service on March 1, 1982. T replaces used components of property of the unit of qualified facility of Facility N with new components at a cost of $200 million, and then places in Facility N in service on July 15, 2026. The fair market value of the remaining original components of the unit of qualified facility, prior to the retrofit, is $30 million, which is not more than 20 percent of the unit of qualified facility's total fair market value of $230 million (the cost of the new components ($200 million) + the fair market value of the remaining original components of the unit of qualified facility ($30 million)) ($30 million/$230 million = 13%). Thus, assuming all the other requirements of section 48E are met, Facility N will be considered newly placed in service on July 15, 2026, for purposes of section 48E, and T will be able to claim a section 48E credit based on its investment in the new components ($200 million).

(iv) ***Example 4. Capital improvements to an existing qualified facility that do not satisfy the 80/20 Rule.*** X owns an existing facility, Facility C, that was originally placed in service on January 1, 2023. X makes capital improvements to Facility C that are placed in service on June 6, 2026. The cost of the capital improvements to the unit of qualified facility of Facility C total $500,000 and the fair market value of the unit of qualified facility after the improvements is $2 million. The fair market value of the old components of the unit of qualified facility is $1,500,000 or 75 percent of the total fair market value of the Facility C after the improvements. Because the fair market value of the new property included in the unit of qualified facility is less than 80 percent of the unit of qualified facility's total fair market value, Facility C does not meet the 80/20 Rule.

(v) ***Example 5. Upgrades to a hydropower qualified facility that satisfies the 80/20 Rule:*** Y owns a hydropower qualified facility (hydropower facility) and no taxpayer, including Y, has ever claimed a section 45 credit for the hydropower facility. The hydropower facility consists of a unit of qualified facility including water intake, water isolation mechanisms, turbine, pump, motor, and generator. The associated impoundment (dam) and power conditioning equipment are integral parts of the unit of qualified facility. Y makes upgrades to the unit of qualified facility by replacing the turbine, pump, motor, and generator with new components at a cost of $1.5 million. Y does not make any upgrades to the property that is an integral part of the unit of qualified facility. The remaining original components of the unit of qualified facility have a fair market value of $100,000, which is not more than 20 percent of the retrofitted hydropower facility's total value of $1.6 million (that is, the cost of the new components ($1.5 million) + the

value of the remaining original components ($100,000)). Thus, the retrofitted hydropower facility will be considered newly placed in service for purposes of section 48E, and Y will be able to claim a section 48E credit based on the cost of the new components ($1.5 million).

(d) *Special rules regarding ownership* —

(1) ***Qualified investment with respect to a qualified facility or EST.*** For purposes of this paragraph (d), a taxpayer that owns a qualified investment with respect to a qualified facility or EST is eligible for the section 48E credit only to the extent of the taxpayer's basis in the qualified facility or EST. In the case of multiple taxpayers holding direct ownership through their qualified investments in a single qualified facility or EST (and such arrangement is not treated as a partnership for Federal income tax purposes), each taxpayer determines its basis based on its fractional ownership interest in the qualified facility or EST.

(2) ***Multiple owners.*** A taxpayer must directly own at least a fractional interest in the entire unit of qualified facility (as defined in § 1.48E-2(b)(2)) or unit of EST (as defined in § 1.48E-2(g)(2)) for a section 48E credit to be determined with respect to such taxpayer's interest. No section 48E credit may be determined with respect to a taxpayer's ownership of one or more separate components of a qualified facility or an EST if the components do not constitute a unit of qualified facility (as defined in § 1.48E-2(b)(2)) or unit of EST (as defined in § 1.48E-2(g)(2)). However, the use of property owned by one taxpayer that is an integral part of a qualified facility or EST owned by another taxpayer will not prevent a section 48E credit from being determined with respect to the second taxpayer's qualified investment in a qualified facility or EST (though neither taxpayer would be eligible for a section 48E credit with respect to the first taxpayer's property). See § 1.48E-2(b)(3)(vi) for rules regarding shared integral property.

(3) ***Section 761(a) election.*** If a qualified facility or EST is owned through an unincorporated organization that has made a valid election under section 761(a) of the Code, each member's undivided ownership share in the qualified facility or EST will be treated as a separate qualified facility or EST owned by such member.

(4) ***Examples.*** The following examples illustrate the rules in this paragraph (d). In each example, X and Y are unrelated taxpayers.

(i) ***Example 1. Fractional ownership required to satisfy section 48E.*** X and Y each own a direct fractional ownership interest in an entire qualified facility (as defined in § 1.48E-2(b)) and as a result, a section 48E credit may be determined with respect to X's and Y's qualified investment in their fractional ownership interests in the qualified facility.

(ii) ***Example 2. Ownership of separate components of property that are part of a qualified facility.*** X and Y each own separate components of a qualified facility, which taken together would constitute a unit of qualified facility but taken separately would not constitute a unit of qualified facility. X owns component A and Y owns component B. No section 48E credit may be determined with respect to either component A or component B because X and Y each owns a separate component of a qualified facility that does not constitute a unit of qualified facility (as defined in § 1.48E-2(b)(2)).

(iii) ***Example 3. Separate ownership of property that is an integral part of separate qualified facilities.*** X owns a solar farm that is a qualified facility (as defined in § 1.48E-2(b)) (Solar Qualified Facility), which includes property that is an integral part of the Solar Qualified Facility, specifically a transformer in which the electricity is stepped up to electrical grid voltage before being transmitted to the electrical grid through an intertie. Y owns a wind facility that is a

qualified facility (as defined in § 1.48E-2(b)) (Wind Qualified Facility) that connects to X's transformer. X and Y are not related persons within the meaning of paragraph (d)(4)(i) of this section. Because Y does not hold an ownership interest in the transformer, Y may compute its section 48E credit for the Wind Qualified Facility, but it may not include any costs relating to the transformer in its section 48E credit base.

(iv) ***Example 4. Related taxpayers and property that is an integral part.*** X owns a wind facility that is a unit of qualified facility and a solar facility that is a unit of qualified facility. Both the wind facility and the solar facility are connected to a transformer where the electricity is stepped up to electrical grid voltage before being transmitted to the electrical grid through an intertie. The transformer is an integral part of both the wind facility and the solar facility (within the meaning of § 1.48E-2(d)(3)(i)) and is owned by Y. X and Y are related persons within the meaning of paragraph (d)(4)(i) of this section. X and Y are treated as one taxpayer under paragraph (d)(4)(ii) of this section. X may include the basis of the transformer in computing its section 48E credit with respect to the wind facility and the solar facility (but may not include more than 100% of that basis in the aggregate).

(e) ***Coordination rule for section 42 credits and section 48E credits.*** As provided under section 50(c)(3)(C) of the Code, in determining eligible basis for purposes of calculating a credit under section 42 of the Code (section 42 credit), a taxpayer is not required to reduce its basis in a qualified facility or EST by the amount of the section 48E credit determined with respect to the taxpayer's qualified investment with respect to such qualified facility or EST. The qualified investment with respect to a qualified facility or EST property may be used to determine a section 48E credit and may also be included in eligible basis to determine a section 42 credit. See paragraph (d) of this section for special rules regarding ownership.

(f) ***Recapture*** —

(1) ***In general.*** The credit calculated under section 48E(a) and § 1.48E-1(b) is subject to general recapture rules under section 50(a). Additionally, section 48E(g) provides for recapture for any qualified facility for which a taxpayer claimed a section 48E credit that has a greenhouse gas emissions rate (as determined under rules provided in § 1.45Y-5) of greater than 10 grams of CO_2e per kWh during the five-year period beginning on the date such qualified facility is originally placed in service (five-year recapture period).

(2) ***Recapture event*** —

(i) ***In general.*** Any event that results in a qualified facility having a greenhouse gas emissions rate (as determined under rules provided in § 1.45Y-5) of greater than 10 grams of CO_2e per kWh during the five-year period is a recapture event. If a qualified facility's greenhouse gas emissions rate exceeds 10 grams of CO_2e per kWh, the section 48E credit is subject to recapture.

(ii) ***Changes to the Annual Table.*** A change to the greenhouse gas emissions rate for a type or category of facility that is published in the Annual Table (as defined in § 1.48E-5(f)) after a facility is placed in service does not result in a recapture event.

(iii) ***Yearly determination*** —

(A) ***In general.*** A determination of whether a recapture event occurred under this paragraph (f)(2) must be made for each taxable year (or portion thereof) occurring within the five-year recapture period, beginning with the taxable year ending after the date the qualified facility is placed in service. Thus, for each taxable year that begins or ends within the five-

year recapture period, the taxpayer must determine, for any qualified facility for which it has claimed the section 48E credit, whether such facility has maintained a greenhouse gas emissions rate of not greater than 10 grams of CO_2e per kWh.

(B) ***Annual reporting requirement.*** A taxpayer that has claimed the section 48E credit amount under § 1.48E-1(b), including a taxpayer that has transferred a specified credit portion under section 6418 of the Code, is required to provide to the IRS information on the greenhouse gas emissions rate of the qualified facility during the recapture period at the time and in the form and manner prescribed in IRS forms or instructions or in publications or guidance published in the Internal Revenue Bulletin. *See* § 601.601 of this chapter.

(iv) ***Carryback and carryforward adjustments.*** In the case of any recapture event described in this paragraph (f)(2), the carrybacks and carryforwards under section 39 of the Code must be adjusted by reason of such recapture event.

(3) ***Recapture amount*** —

(i) ***In general.*** If a recapture event occurred as described in paragraph (f)(2) of this section, the tax under chapter 1 of the Code for the taxable year in which the recapture event occurs is increased by an amount equal to the applicable recapture percentage multiplied by the credit amount that was claimed by the taxpayer under § 1.48E-1(b).

(ii) ***Applicable recapture percentage.*** If the recapture event occurs:

(A) Within one full year after the property is placed in service, the recapture percentage is 100;

(B) Within one full year after the close of the period described in paragraph (f)(3)(ii)(A) of this section, the recapture percentage is 80;

(C) Within one full year after the close of the period described in paragraph (f)(3)(ii)(B) of this section, the recapture percentage is 60;

(D) Within one full year after the close of the period described in paragraph (f)(3)(ii)(C) of this section, the recapture percentage is 40; and

(E) Within one full year after the close of the period described in paragraph (f)(3)(ii)(D) of this section, the recapture percentage is 20.

(4) ***Recapture period.*** The five-year recapture period begins on the date the qualified facility is placed in service and ends on the date that is five full years after the placed in service date. Each 365-day period (366-day period in case of a leap year) within the five-year recapture period is a separate recapture year for recapture purposes.

(5) ***Increase in tax for recapture.*** The increase in tax under chapter 1 of the Code for the recapture of the credit amount claimed under section 48E(a) and § 1.48E-1(b) occurs in the year of the recapture event.

(g) ***Qualified progress expenditure election.*** A taxpayer may elect, as provided in § 1.46-5, to increase the qualified investment with respect to any qualified facility or EST of an eligible taxpayer for the taxable year, by any qualified progress expenditures made after August 16, 2022.

(h) ***Incremental cost*** —

(1) ***In general.*** For purposes of section 48E, if a component of qualified property of a qualified facility or component of property of an EST is also used for a purpose other than the intended function of the qualified facility or EST, only the incremental cost of such component is included in the basis of the qualified facility or EST. The term *incremental cost* means the excess of the total cost of a component over the amount that would have been expended for the component if that component were used for a non-qualifying purpose.

(2) ***Example.*** A installs a solar qualified facility above the surface of an existing roof of a building that A owns. The solar qualified facility uses bifacial panels that convert to energy the light that strikes both the front and back of the panels. Therefore, along with installing the bifacial panels, A is reroofing their building with a reflective roof that has a highly reflective surface. Because the reflective roof enables the panels' generation of significant amounts of electricity from reflected sunlight, when installed in connection with the solar qualified facility, it constitutes part of that solar qualified facility to the extent that the cost of the reflective roof exceeds the cost of reroofing A's building with a non-reflective roof. The cost of reroofing with the reflective roof is $15,000 whereas the cost of a reroofing with a standard roof for the building would be $10,000. The incremental cost of the reflective roof is $5,000, and that amount is included in A's basis in the solar qualified facility for purposes of the section 48E credit.

(i) ***Cross references.***

(1) To determine applicable recapture rules, see section 50(a) of the Code.

(2) For rules regarding the credit eligibility of property used outside the United States, see section 50(b)(1) of the Code.

(3) For rules regarding the credit eligibility of property used by certain tax-exempt organizations, see section 50(b)(3) of the Code. See section 6417(d)(2) of the Code for an exception to the rule in section 50(b)(3) in the case of an applicable entity making an elective payment election.

(4) For application of the normalization rules to the section 48E credit in the case of certain regulated companies, including rules regarding the election not to apply the normalization rules to EST (as defined in section 48(c)(6) of the Code without regard to section 48(c)(6)(D) of the Code), see section 50(d)(2) of the Code.

(5) For rules relating to certain leased property, see section 50(d)(5) of the Code.

(j) ***Applicability date.*** This section applies to qualified facilities and ESTs placed in service after December 31, 2024, and during a taxable year ending on or after January 15, 2025.

[T.D. 10024, 90 FR 4110, Jan. 15, 2025]

§ 1.48E-5 Greenhouse gas emissions rates for qualified facilities under section 48E.

(a) ***In general.*** Section 48E(b)(3)(B)(ii) provides that rules similar to the rules of section 45Y(b)(2) regarding greenhouse emissions rates apply for purposes of section 48E. Paragraphs (b) through (f) of this section thus provide that the definitions and rules regarding greenhouse gas emissions rate requirements (as determined under rules provided in § 1.45Y-5) apply for purposes of section 48E and this section. Paragraph (g) of this section provides rules related to provisional emissions rates for purposes of section 48E and this section. Paragraph (h) of this section provides rules for determining an anticipated

greenhouse gas emissions rate. Paragraph (i) of this section provides rules regarding reliance on the annual publication of emissions rates and provisional emissions rates. Finally, paragraph (j) of this section provides rules regarding substantiation requirements.

(b) ***Definitions.*** The definitions provided in § 1.45Y-5(b) apply for purposes of section 48E and this section.

(c) ***Non-C&G Facilities.*** The rules provided in § 1.45Y-5(c) apply for purposes of determining greenhouse gas emissions rates for Non-C&G Facilities for purposes of section 48E and this section.

(d) ***C&G Facilities.*** The rules provided in § 1.45Y-5(d) apply for purposes of determining greenhouse gas emissions rates for C&G Facilities for purposes of section 48E and this section.

(e) ***Use of methane from certain sources to produce electricity.*** The rules provided in § 1.45Y-5(e) regarding the use of methane from certain sources to produce electricity apply for purposes of section 48E and this section.

(f) ***Carbon capture and sequestration.*** The rules provided in § 1.45Y-5(f) regarding carbon capture and sequestration apply for purposes of section 48E and this section.

(g) ***Annual publication of emissions rates.*** The rules provided in § 1.45Y-5(g) regarding the annual publication of a table (Annual Table) that sets forth the greenhouse gas emissions rates for types or categories of facilities apply for purposes of section 48E and this section.

(h) ***Provisional emissions rates*** —

(1) ***In general.*** In the case of any facility for which an emissions rate has not been established by the Secretary, a taxpayer that owns such facility may file a petition with the Secretary for determination of the emissions rate with respect to such facility (Provisional Emissions Rate or PER). A PER must be determined and obtained under the rules of this section.

(2) ***Rate not established.*** An emissions rate has not been established by the Secretary for a facility for purposes of sections 45Y(b)(2)(C)(ii) and 48E(b)(3)(B)(ii) if such facility is not described in the Annual Table. If a taxpayer's request for an emissions value pursuant to paragraph (h)(5) of this section is pending at the time such facility is or becomes described in the Annual Table, the taxpayer's request for an emissions value will be automatically denied.

(3) ***Process for filing a PER petition.*** To file a PER petition with the Secretary, a taxpayer must submit a PER petition by attaching it to the taxpayer's Federal income tax return or Federal return, as appropriate, for the taxable year in which the taxpayer claims the section 48E credit with respect to the facility to which the PER petition relates. The PER petition must contain an emissions value and, if applicable, the associated letter from DOE. An emissions value may be obtained from DOE or by using the designated LCA model in accordance with paragraph (h)(6) of this section. An emission value obtained from DOE will be based on an analytical assessment of the emissions rate associated with the facility performed by one or more of the National Laboratories, in consultation with other Federal agency experts as appropriate, consistent with this section. A taxpayer must retain in its books and records the application and correspondence to and from DOE including a copy of the taxpayer's request to DOE for an emissions value and any information provided by the taxpayer to DOE pursuant to the emissions value request process provided in paragraph (h)(5) of this section. Alternatively, an emissions value can be determined by the taxpayer for a facility using the most the recent version of an LCA model, as of the time the PER petition is filed, that has been designated by the Secretary for such use under paragraph (h)(6) of this section. If an emissions value is determined using the designated LCA model under paragraph (h)(6) of this section, a

taxpayer is required to provide to the IRS information to support its determination in the form and manner prescribed in IRS forms or instructions or in publications or guidance published in the Internal Revenue Bulletin. *See* § 601.601 of this chapter. A taxpayer may not request an emissions value from DOE for a facility for which an emissions value can be determined using the most recent version of an LCA model or models designated for such use under paragraph (h)(6) of this section.

(4) ***PER determination.*** Upon the IRS's acceptance of the taxpayer's return to which a PER petition is attached, the emissions value of the facility specified on such petition is deemed accepted. A taxpayer can rely upon an emissions value provided by DOE for purposes of claiming a section 48E credit, provided that any information, representations, or other data provided to DOE in support of the request for an emissions value are accurate. If applicable, a taxpayer may rely upon an emissions value determined for a facility using the LCA model designated under paragraph (h)(6) of this section, provided that any information, representations, or other data used to obtain such emissions value are accurate. The IRS's deemed acceptance of an emissions value is the Secretary's determination of the PER. However, the taxpayer must also comply with all applicable requirements for the section 48E credit and any information, representations, or other data supporting an emissions value are subject to later examination by the IRS.

(5) ***Emissions value request process.*** An applicant that submits a request for an emissions value must follow the procedures specified by DOE to request and obtain such emissions value. Emissions values will be determined consistent with the rules provided in this section. An applicant can request an emissions value from DOE only after a front-end engineering and design (FEED) study or similar indication of project maturity, as determined by DOE, such as the completion of a project specification and cost estimation sufficient to inform a final investment decision for the facility. DOE may decline to review applications that are not responsive, including those applications that relate to a facility described in the Annual Table (consistent with paragraph (h)(2) of this section) or a facility for which an emissions value can be determined by an LCA model under paragraph (h)(6) of this section (consistent with paragraph (h)(3) of this section), or applications that are incomplete. Applicants must follow DOE's guidance and procedures for requesting and obtaining an emissions value from DOE. DOE will publish this guidance and procedures, including a process for, under limited circumstances, a revision to DOE's initial assessment of an emissions value on the basis of revised technical information or facility design and operation.

(6) ***LCA model for determining an emissions value for C&G Facilities.*** The rules provided in § 1.45Y-5(h)(6) regarding the designation of an LCA model or models for determining an emissions value for C&G Facilities apply for purposes of section 48E and this section.

(7) ***Effect of PER.*** A taxpayer who files for a PER must use a PER determined by the Secretary to determine eligibility for the section 48E credit, provided all other requirements of section 48E are met. The Secretary's PER determination is not an examination or inspection of books of account for purposes of section 7605(b) of the Code and does not preclude or impede the IRS (under section 7605(b) or any administrative provisions adopted by the IRS) from later examining a return or inspecting books or records with respect to any taxable year for which the section 48E credit is claimed. Further, a PER determination does not signify that the IRS has determined that the requirements of section 48E have been satisfied for any taxable year.

(i) ***Determining anticipated greenhouse gas emissions rate*** —

(1) ***In general.*** A facility's anticipated greenhouse gas emissions rate must be objectively determined based on an examination of all the facts and circumstances. Certain Non-C&G Facilities, such as the facilities described in § 1.45Y-5(c)(2), may have an anticipated greenhouse gas emissions rate that

is not greater than zero based on the technology and practices they rely upon to generate electricity. For facilities that require the use of certain fuel sources, which may vary, or carbon capture and sequestration, to generate electricity with a greenhouse gas emissions rate that is not greater than zero, objective indicia that such facilities will use such fuel sources or operate such carbon capture equipment, as applicable, in a manner that results in a greenhouse gas emissions rate that is not greater than zero for at least 10 years beginning from the date the facility is placed in service are required to establish a reasonable expectation that the combination of fuel, type of facility, and practice will result in a greenhouse gas emissions rate that is not greater than zero. Taxpayers must attest under penalty of perjury that the anticipated greenhouse gas emissions rate as determined under the statute and these final regulations is not greater than zero. A facility subject to legally binding Federal or State permit conditions requiring that the facility operate in a manner that would be incompatible with a greenhouse gas emissions rate of not greater than zero is not a facility for which the anticipated greenhouse gas emissions rate is not greater than zero.

(2) ***Examples of objective indicia.*** Examples of objective indicia that may establish an anticipated greenhouse gas emissions rate that is not greater than zero for specific elements of the type of facility, fuel source, or practice include, but are not limited to:

(i) Co-location of the facility with a fuel source (for example, an anaerobic digester) for which the combination of fuel, type of facility, and practice is reasonably expected to result in a greenhouse gas emissions rate that is not greater than zero;

(ii) A 10-year binding written contract to purchase fuels for which the combination of fuel, type of facility, and practice is reasonably expected to result in a greenhouse gas emissions rate that is not greater than zero;

(iii) A facility type that only accommodates one type of fuel or a small range of fuels for which the combination of fuel, type of facility, and practice is reasonably expected to result in a greenhouse gas emissions rate that is not greater than zero;

(iv) A 10-year binding written contract for the permanent geological storage (including after injection into an enhanced oil and gas recovery (EOR) project) or utilization of qualified carbon dioxide from the facility for which the combination of fuel, type of facility, and capture and practice is reasonably expected to result in a greenhouse gas emissions rate that is not greater than zero; or

(v) A legally binding Federal or State air permit which requires, as a condition of the permit, that the facility operates in a manner for which the combination of fuel, type of facility, and practice is reasonably expected to result in a greenhouse gas emissions rate that is not greater than zero and that any captured carbon dioxide is permanently geologically stored and subjects the holder to civil or criminal penalties in the event the relevant permit requirements are breached.

(j) ***Reliance on Annual Table or provisional emissions rate.*** Taxpayers may rely on the Annual Table in effect as of the date a facility began construction or the provisional emissions rate determined by the Secretary for the taxpayer's facility under paragraph (h)(4) of this section to determine the facility's greenhouse gas emissions rate, provided that the facility continues to operate as a type of facility that is described in the Annual Table or the facility's emissions value request, as applicable, for the entire taxable year.

(k) ***Substantiation*** —

(1) ***In general.*** A taxpayer must maintain in its books and records documentation regarding the design and operation of a facility that establishes that such facility had an anticipated greenhouse gas emissions rate that is not greater than zero in the year in which the section 48E credit is determined and operated with a greenhouse gas emissions rate that is not greater than 10 grams of CO_2e per kWh during each year of the recapture period that applies for purposes of section 48E(g).

(2) ***Sufficient substantiation.*** Documentation sufficient to substantiate that a facility had a greenhouse gas emissions rate, as determined under this section, not greater than 10 grams of CO_2e per kWh during each year of the recapture period that applies for purposes of section 48E(g) includes documentation or a report prepared by an unrelated party that verifies the facility's actual emissions rate. A facility described in § 1.45Y-5(c)(2) can maintain sufficient documentation to demonstrate a greenhouse gas emissions rate that is not greater than 10 grams of CO_2e per kWh during each year of the recapture period that applies for purposes of section 48E(g) by showing that it is the type of facility described in § 1.45Y-5(c)(2). The Secretary may determine that other types of facilities can sufficiently substantiate a greenhouse gas emissions rate, as determined under this section, that is not greater than 10 grams of CO_2e per kWh during each year of the recapture period that applies for purposes of section 48E(g) with certain documentation and will describe such facilities and documentation in IRS forms or instructions or in publications or guidance published in the Internal Revenue Bulletin. *See* § 601.601 of this chapter. For such other types of facilities that utilize biomass feedstocks, the taxpayer must substantiate that the source of such fuels or feedstocks used are consistent with the taxpayer's claims. For all facilities that utilize unmarketable feedstocks that are indistinguishable from marketable feedstocks (for instance, after processing), the taxpayer will be required to maintain documentation substantiating the origin and original form of the feedstock.

(l) ***Applicability date.*** This section applies to qualified facilities placed in service after December 31, 2024, and during a taxable year ending on or after January 15, 2025.

[T.D. 10024, 90 FR 4110, Jan. 15, 2025]

§ 1.48E(h)-0 Table of contents.

This section lists the captions contained in § 1.48E(h)-1.

§ 1.48E(h)-1 Clean Electricity Low-Income Communities Bonus Credit Amount Program.

(a) Overview.

(1) General rule.

(2) Certain terms used in this section.

(i) Applicant.

(ii) Disregarded entity.

(iii) Internal Revenue Bulletin.

(b) Applicable facility defined.

(1) In general.

(2) Facility categories.

(i) Category 1 facility.

(ii) Category 2 facility.

(iii) Category 3 facility.

(iv) Category 4 facility.

(3) Less than five megawatts requirement.

(i) In general.

(ii) Nameplate capacity for purposes of the less than five megawatts requirement.

(iii) Nameplate capacity for an applicable facility that generates in direct current for purposes of the less than five megawatts requirement.

(iv) Integrated operations.

(4) Related taxpayers.

(c) Eligible property.

(d) Location.

(1) In general.

(2) Nameplate Capacity Test for Location.

(3) Nameplate capacity for purpose of Nameplate Capacity Test for Location.

(e) Financial benefits for a Category 3 facility.

(1) In general.

(2) Threshold requirement.

(3) Financial value of the electricity produced by the facility.

(4) Gross financial value defined.

(5) Net financial value defined.

(i) Common ownership.

(ii) Third-party ownership.

(iii) Equitable allocation of financial benefits.

(A) If financial value distributed via utility bill savings.

(B) If financial value is not distributed via utility bill savings.

(6) Benefits sharing statement.

(i) In general.

(ii) Notification requirement.

(f) Financial benefits for a Category 4 facility.

(1) In general.

(2) Bill credit discount rate.

(i) With cost to participate.

(ii) No or nominal cost of participation.

(iii) Calculation on annual basis.

(iv) Examples.

(A) Example 1.

(B) Example 2.

(C) Example 3.

(3) Demonstration of financial benefits statement.

(4) Low-income verification and recordkeeping.

(i) In general.

(ii) Methods of verification.

(A) Categorical eligibility.

(B) Direct income verification methods.

(C) Impermissible verification method.

(g) Annual Capacity Limitation.

(1) In general.

(2) Sub-reservations.

(3) Redistribution within Program year.

(4) Carryover of unallocated Annual Capacity Limitation.

(5) Allocations to applicable facilities with nameplate capacity in alternating current.

(h) Reservations of Capacity Limitation allocation for facilities that meet certain Additional Selection Criteria.

(1) In general.

(2) Ownership criteria.

(i) In general.

(ii) Indirect ownership.

(A) Disregarded entities.

(B) Partner qualifying partnership under ownership criteria.

(C) Partner qualifying partnership involving low-income housing credit under ownership criteria.

(iii) Tribal enterprise.

(iv) Alaska Native Corporation.

(v) Native Hawaiian Organization.

(vi) Renewable energy cooperative.

(vii) Qualified tax-exempt entity.

(viii) Qualified renewable energy company.

(3) Geographic criteria.

(i) In general.

(ii) Persistent Poverty County.

(iii) Certain census tracts under Climate and Economic Justice Screening Tool.

(A) Energy burden.

(B) PM2.5.

(C) Low-income.

(i) Sub-reservations of allocation for Category 1 facilities.

(1) In general.

(2) Definitions.

(i) Behind the meter (BTM) facility.

(ii) Eligible residential BTM facility.

(iii) FTM facility.

(j) Process of application evaluation.

(1) In general.

(2) Information required as part of application.

(3) No administrative appeal of Capacity Limitation allocation decisions.

(4) Application period.

(i) Opening and closing dates.

(ii) Initial 30-day period.

(iii) Applications submitted after the initial 30-day period.

(A) In general.

(B) Additional Selection Criteria Applications submitted after the initial 30-day period.

(k) Placed in service.

(1) Requirement to report date placed in service.

(2) Requirement to submit final eligibility information at placed in service time.

(3) Confirmation.

(4) Definition of placed in service.

(l) Facilities placed in service prior to an allocation award.

(1) In general.

(2) Rejection or rescission.

(m) Disqualification.

(n) Recapture of section 48E(h) Increase to the section 48E(a) credit.

(1) In general.

(2) Exception to application of recapture.

(3) Recapture events.

(4) Section 50(a) recapture.

(o) Record retention.

(p) Applicability date.

[T.D. 10025, 90 FR 2861, Jan. 13, 2025]

§ 1.48E(h)-1 Clean Electricity Low-Income Communities Bonus Credit Amount Program.

(a) ***Overview*** —

(1) ***General rule.*** For purposes of section 46 of the Internal Revenue Code (Code), if an allocation of the capacity limitation (Capacity Limitation) is made with respect to eligible property (as defined in paragraph (c) of this section) that is part of any applicable facility (as defined in paragraph (b) of this section) placed in service in connection with low-income communities under the Clean Electricity Low-Income Communities Bonus Credit Amount Program (Program) established under section 48E(h)(4), the applicable percentage used to calculate the amount of the clean electricity investment credit determined under section 48E(a) (section 48E credit) is increased under section 48E(h)(1).

(2) ***Certain terms used in this section.*** In this section:

(i) ***Applicant.*** The terms *applicant* and *taxpayer* are used interchangeably as the context may require. An applicant is the taxpayer that owns the applicable facility and that intends to claim the section 48E credit and will be applying for an allocation of Capacity Limitation for purposes of the section 48E(h) Increase. A disregarded entity is not eligible to be an applicant. The regarded taxpayer that owns the disregarded entity is the owner of the applicable facility and, therefore, the applicant, for purposes of the Program and this section.

(ii) ***Disregarded entity.*** The term *disregarded entity* means an entity that is disregarded as separate from its owner for Federal income tax purposes.

(iii) ***Internal Revenue Bulletin.*** The term *Internal Revenue Bulletin* has the meaning provided in § 601.601 of this chapter.

(b) ***Applicable facility defined*** —

(1) ***In general.*** An *applicable facility* means any qualified facility (as defined in section 48E(b)(3)) that—

(i) Is a non-combustion and gasification facility for which the Secretary of the Treasury or her delegate has determined has a greenhouse gas (GHG) emissions rate of not greater than zero and announced in guidance published either in the FEDERAL REGISTER or in the Internal Revenue Bulletin as of the opening date for a Program year;

(ii) Has a maximum net output of less than five megawatts (MW) (as measured in alternating current (AC)); and

(iii) Is described in at least one of the four categories described in section 48E(h)(2)(A)(iii) and paragraph (b)(2) of this section.

(2) ***Facility categories*** —

(i) ***Category 1 facility.*** A facility is a *Category 1 facility* if it is located in a low-income community. The term *low-income community* is defined under section 45D(e)(1) of the Code as any population census tract for which the poverty rate is at least 20 percent based on the most recently released American Community Survey (ACS) low-income community data currently used for the New Markets Tax Credit (NMTC) under section 45D, or, in the case of a tract not located within a metropolitan area, the median family income for such tract does not exceed 80 percent of statewide median family income, or, in the case of a tract located within a metropolitan area, the median family income for such tract does not exceed 80 percent of the greater of statewide median family income or the metropolitan area median family income. The term low-income community also includes the modifications in section 45D(e)(4) and (5) for tracts with low population and modification of the income requirement for census tracts with high migration rural counties. Low-income community information for NMTC can be found at *https://www.cdfifund.gov/cims3*. For purposes of this paragraph (b)(2)(i), if updated ACS low-income community data is released for the NMTC, a taxpayer can choose to base the poverty rate for any population census tract on either the prior version of the ACS low-income community data for the NMTC program or the updated ACS low-income community data for the NMTC program for a period of 1 year following the date of the release of the updated data. After the 1-year transition period, the updated ACS low-income community data for the NMTC program must be used to determine the poverty rate for any population census tract. Population census tracts that satisfy the definition of low-income community at the time of

application are considered to continue to meet the definition of low-income community for the duration of the recapture period described in paragraph (n)(1) of this section unless the location of the facility changes.

(ii) ***Category 2 facility.*** A facility is a *Category 2 facility* if it is located on Indian land. The term Indian land is defined in section 2601(2) of the Energy Policy Act of 1992 (25 U.S.C. 3501(2)).

(iii) ***Category 3 facility.*** A facility is a *Category 3 facility* if it is part of a qualified low-income residential building project. A facility will be treated as part of a qualified low-income residential building project if such facility is installed on a residential rental building that participates in a covered housing program or other affordable housing program as described in section 48E(h)(2)(B)(i) (*Qualified Residential Property*) and the financial benefits of the electricity produced by such facility are allocated equitably among the occupants of the dwelling units of such building as provided in paragraph (e) of this section. A Qualified Residential Property could either be a multifamily rental property or single-family rental property. However, the building, and not merely the tenants, must participate in a covered housing program or other affordable housing program described in section 48E(h)(2)(B)(i). A facility does not need to be installed directly on the building to be considered installed on a Qualified Residential Property if the facility is installed on the same or an adjacent parcel of land as the Qualified Residential Property, and the other requirements to be a Category 3 facility are satisfied.

(iv) ***Category 4 facility.*** A facility is a *Category 4 facility* if it is part of a qualified low-income economic benefit project. A facility will be treated as part of a qualified low-income economic benefit project if, as provided in paragraph (f) of this section, at least 50 percent of the financial benefits of the electricity produced by such facility are provided to households with income of less than—

(A) Two-hundred percent of the poverty line (as defined in section 36B(d)(3)(A) of the Code) applicable to a family of the size involved; or

(B) Eighty percent of area median gross income (as determined under section 142(d)(2)(B) of the Code).

(3) ***Less than five megawatts requirement*** —

(i) ***In general.*** For purposes of this paragraph (b), the less than five megawatts requirement in paragraph (b)(1)(ii) of this section is measured at the level of the applicable facility in accordance with section 48E(h)(2)(A)(ii). The maximum net output of an applicable facility is measured only by nameplate generating capacity of the applicable facility, which includes only functionally interdependent components of the applicable facility, at the time the applicable facility is placed in service. Components of property are functionally interdependent if the placing in service of each component is dependent upon placing in service other components to produce electricity.

(ii) ***Nameplate capacity for purposes of the less than five megawatts requirement.*** The determination of whether an applicable facility has a maximum net output of less than 5 MW (as measured in AC) is based on the nameplate capacity of the applicable facility. If an applicable facility has *integrated operations* with one or more other qualified facilities of the same technology type, then the aggregate nameplate capacity of the applicable facility and each other qualified facility is used to determine whether the less than five megawatts requirement in paragraph (b)(1)(ii) of this section is met. If an applicable facility has a maximum net output equal to or more than 5MW (as measured in AC), it is not eligible for the Program. The nameplate capacity for

purposes of the less than five megawatts requirement in paragraph (b)(1)(ii) of this section is the maximum electrical generating output in MW that the applicable facility is capable of producing on a steady state basis and during continuous operation under standard conditions, as measured by the manufacturer and consistent with the definition of nameplate capacity provided in 40 CFR 96.202. If applicable, the International Standard Organization conditions should be used to measure the maximum electrical generating output of an applicable facility.

(iii) ***Nameplate capacity for an applicable facility that generates in direct current for purposes of the less than five megawatts requirement.*** Only for applicable facilities that generate electricity in direct current, the taxpayer may choose to determine the maximum net output (in alternating current) of the applicable facility by using the lesser of:

(A) The nameplate generating capacity of the applicable facility in direct current, which is deemed the nameplate generating capacity of the applicable facility in alternating current; or

(B) The nameplate capacity of the first component of property that inverts the direct current electricity into alternating current.

(iv) ***Integrated operations.*** For the purposes of the less than five megawatts requirement in paragraph (b)(1)(ii) of this section, an applicable facility is treated as having *integrated operations* with one or more other qualified facilities of the same technology type if the facilities are:

(A) Owned by the same or related taxpayers;

(B) Placed in service in the same taxable year; and

(C) Transmit electricity generated by the facilities through the same point of interconnection or, if the facilities are not grid-connected or are delivering electricity directly to an end user behind a utility meter, are able to support the same end user.

(4) ***Related taxpayers*** —

(i) ***Definition.*** For purposes of this paragraph (b), the term *related taxpayers* means members of a group of trades or businesses that are under common control (as defined in § 1.52-1(b)).

(ii) ***Related taxpayer rule.*** For purposes of this paragraph (b), related taxpayers are treated as one taxpayer in determining whether an applicable facility has integrated operations.

(c) ***Eligible property. Eligible property*** means a qualified investment (as defined in section 48E(b)) with respect to any applicable facility.

(d) ***Location*** —

(1) ***In general.*** An applicable facility is treated as located in a low-income community or located on Indian land under section 48E(h)(2)(A)(iii)(I) if the applicable facility satisfies the requirements of the *Nameplate Capacity Test for Location* of paragraph (d)(2) of this section. Similarly, an applicable facility is treated as located in a geographic area under the Additional Selection Criteria described in paragraph (h) of this section if it satisfies the Nameplate Capacity Test for Location.

(2) ***Nameplate Capacity Test for Location.*** An applicable facility satisfies the requirements of the *Nameplate Capacity Test for Location* of this paragraph (d)(2) and is considered located in or on the relevant geographic area described in paragraph (d)(1) of this section if 50 percent or more of the

applicable facility's nameplate capacity is in a qualifying area. The percentage of an applicable facility's nameplate capacity (as defined in paragraph (d)(3) of this section) that is in a qualifying area is determined by dividing the nameplate capacity of the applicable facility's electricity-generating units that are located in the qualifying area by the total nameplate capacity of all the electricity-generating units of the applicable facility.

(3) ***Nameplate capacity for purpose of Nameplate Capacity Test for Location. Nameplate capacity*** for an electricity generating unit means the maximum electrical output that the applicable facility is capable of producing on a steady state basis and during continuous operation under standard conditions, as measured by the manufacturer and consistent with the definition of nameplate capacity provided in 40 CFR 96.202. If applicable, the International Standard Organization conditions should be used to measure the maximum electrical generating output. For purposes of assessing the Nameplate Capacity Test, electricity-generating units that generate direct current (DC) power before converting to AC (for example, solar photovoltaic), should use nameplate capacity in DC, otherwise the nameplate capacity in AC should be used.

(e) ***Financial benefits for a Category 3 facility*** —

(1) ***In general.*** To satisfy the requirements of a Category 3 facility as provided in paragraph (b)(2)(iii) of this section, the financial benefits of the electricity produced by the facility must be allocated equitably among the occupants of the dwelling units of the Qualified Residential Property. The same rules for financial benefits for Category 3 facilities apply to both multi-family property and single-family Qualified Residential Property.

(2) ***Threshold requirement.*** At least 50 percent of the financial benefits of the electricity produced by the applicable facility (as defined in paragraph (e)(3) of this section) must be allocated equitably to the Qualified Residential Property's occupants that are designated as low-income occupants under the covered housing program or other affordable housing program.

(3) ***Financial value of the electricity produced by the facility.*** Financial benefits are calculated as the financial value of the electricity produced by the applicable facility. For purposes of this paragraph (e), *financial value of the electricity produced by the facility* means the greater of:

(i) 25 percent of the gross financial value (as defined in paragraph (e)(4) of this section) of the annual electricity produced by the applicable facility; or

(ii) The net financial value (as defined in paragraph (e)(5) of this section) of the annual electricity produced by the applicable facility.

(4) ***Gross financial value defined.*** For purposes of this paragraph (e), *gross financial value* of the annual electricity produced by the applicable facility means the sum of:

(i) The total self-consumed kilowatt-hours produced by the applicable facility multiplied by the Qualified Residential Property's metered volumetric price of electricity;

(ii) The total exported kilowatt-hours produced by the applicable facility multiplied by the Qualified Residential Property's volumetric export compensation rate for the type of electricity produced by the applicable facility per kilowatt-hour; and

(iii) The sale of any attributes associated with the applicable facility's production (including, for example, any Federal, State, Tribal, or utility incentives or renewable energy certificates), if separate from the metered price of electricity or export compensation rate.

(5) ***Net financial value defined*** —

(i) ***Common ownership.*** For purposes of this paragraph (e), if the facility and Qualified Residential Property are commonly owned, *net financial value* means:

(A) The gross financial value of the annual electricity produced; minus

(B) The annual average (or levelized) cost of the applicable facility over the useful life of the facility (including debt service, maintenance, replacement reserve, capital expenditures, and any other costs associated with constructing, maintaining, and operating the facility).

(ii) ***Third-party ownership.*** For purposes of this paragraph (e), if the facility and the Qualified Residential Property are not commonly owned and the facility owner enters into a power purchase agreement or other contract for electricity services with the Qualified Residential Property owner and/or building occupants, *net financial value* means:

(A) The gross financial value of the annual electricity produced; minus

(B) Any payments made by the building owner and/or building occupants to the facility owner for electricity services associated with the facility in a given year.

(iii) ***Equitable allocation of financial benefits.*** Paragraphs (e)(5)(iii)(A) and (B) of this section provide rules regarding an equitable allocation of financial benefits in circumstances where financial value is distributed to building occupants via utility bill savings or via different means, respectively. Distributed financial benefits or investments previously made to the Qualified Residential Property are not considered eligible financial benefits for this purpose.

(A) ***If financial value distributed via utility bill savings.*** If financial value is distributed via utility bill savings, financial benefits will be considered to be allocated equitably if at least 50 percent of the financial value of the electricity produced by the facility is distributed as utility bill savings in equal shares to each building dwelling unit among the Qualified Residential Property's occupants that are designated as low-income under the covered housing program or other affordable housing program (described in section 48E(h)(2)(B)(i)) or alternatively distributed in proportional shares based on each low-income dwelling unit's square footage, or each low-income dwelling unit's number of occupants. For any occupant(s) who choose to not receive utility bill savings (for example, who exercise their right to not participate in or to opt out of a community solar subscription in their applicable jurisdictions), the portion of the financial value that would otherwise be distributed to non-participating occupants must be distributed instead to all participating occupants. No less than 50 percent of the Qualified Residential Property's occupants that are designated as low-income must participate and receive utility bill savings for the facility to use this method of benefit distribution. In the case of a solar facility, applicants must follow guidance published by the Department of Housing and Urban Development (HUD) regarding benefits sharing, such as Treatment of Financial Benefits to HUD-Assisted Tenants Resulting from Participation in Solar Programs Notice (Housing Notice 2023-09), located at *https://www.hud.gov/sites/dfiles/OCHCO/documents/2023-09hsgn.pdf*, or other applicable HUD guidance, or other guidance or notices from the Federal agency that oversees the applicable housing program identified in section 48E(h)(2)(B) to ensure that tenants' annual income for rent calculations or other requirements impacting total tenant payment are not negatively impacted by the distribution of financial value. In the case of any other applicable facility, applicants must follow applicable HUD guidance on benefits sharing, or other guidance from the Federal

agency that oversees the applicable housing program. In the absence of applicable guidance from a Federal agency, applicants should apply principles similar to those articulated in HUD guidance in the case of any other applicable facility.

(B) ***If financial value is not distributed via utility bill savings.*** If financial value is not distributed via utility bill savings, financial benefits will be considered to be allocated equitably if at least 50 percent of the financial value of the electricity produced by the facility is distributed to occupants using one or more methods described in HUD guidance regarding benefits sharing for master-metered HUD-assisted housing, such as the Treatment of Financial Benefits to HUD-Assisted Tenants Resulting from Participation in Solar Programs Notice (Housing Notice 2023-09) located at *https://www.hud.gov/sites/dfiles/OCHCO/documents/2023-09hsgn.pdf,* or other applicable HUD guidance, or other guidance or notices from the Federal agency that oversees the applicable housing program identified in section 48E(h)(2)(B). In the case of a solar facility, applicants must comply with applicable HUD guidance for how residents of master-metered HUD-assisted housing can benefit from owners' sharing of financial benefits accrued from an investment in solar electricity generation to ensure that HUD-assisted tenants' calculations for utility allowances and annual income for rent are not negatively impacted. In the absence of applicable guidance from a Federal agency, applicants should apply principles similar to those articulated in HUD guidance in the case of any other applicable facility.

(6) ***Benefits sharing statement*** —

(i) ***In general.*** The facility owner must prepare a *Benefits sharing statement* to submit at placed in service reporting, which must include:

(A) A calculation of the facility's gross financial value using the method described paragraph (e)(4) of this section;

(B) A calculation of the facility's net financial value using the method described in paragraph (e)(5) of this section;

(C) A calculation of the financial value required to be distributed to building occupants using the method described in paragraph (e)(3) of this section;

(D) A description of the means through which the required financial value will be distributed to building occupants; and

(E) If the facility and Qualified Residential Property are separately owned, specify which entity will be responsible for the distribution of benefits to the occupants.

(ii) ***Notification requirement.*** The Qualified Residential Property owner must formally notify the occupants of units in the Qualified Residential Property of the development of the facility and planned distribution of benefits.

(f) ***Financial benefits for a Category 4 facility*** —

(1) ***In general.*** The requirements of each of paragraph (f)(1)(i) through (iii) of this section must be met to satisfy the requirements of a Category 4 facility as provided in paragraph (b)(2)(iv) of this section.

(i) The facility must serve multiple qualifying low-income households under section 48E(h)(2)(C)(i) or (ii) (*Qualifying Household*).

(ii) At least 50 percent of the total financial benefits of the electricity produced by the applicable facility must be assigned to Qualifying Households. Total financial benefits is calculated as the sum of all value from electricity production as measured by the utility, independent system operator, or other off-taker procuring electricity, and any additional value (including, for example, any electricity services, products, and credits or certificates such as RECs provided in connection with the electricity produced by such facility, but excluding any Federal tax credits), from the facility.

(iii) Each Qualifying Household must be provided a bill credit discount rate (as defined in paragraph (f)(2) of this section) of at least 20 percent.

(2) ***Bill credit discount rate*** —

(i) ***With cost to participate.*** A *bill credit discount rate* is the difference between the amount of the total financial benefits provided to a Qualifying Household (including utility bill credits, reductions in a Qualifying Household's electricity rate, or other monetary benefits accrued by the Qualifying Household on their utility bill) and the cost by a Qualifying Household for participating in the program (including, but not limited to subscription payments for zero carbon and any other fees or charges, such as consolidated billing fees), expressed as a percentage of the amount of the total financial benefits provided to a Qualifying Household. The bill credit discount rate must be calculated by starting with the amount of the total financial benefits provided to a Qualifying Household, subtracting all payments made by a Qualifying Household (or payments remitted on behalf of the Qualifying Household through net crediting, consolidated billing, or similar arrangements) to the facility owner and any related third parties as a condition of receiving that financial benefit to determine the net financial benefit (cost savings) to a Qualified Household, then dividing that difference by the amount of the total financial benefit provided to the Qualifying Household.

(ii) ***No or nominal cost of participation.*** In cases in which the Qualifying Household has no or only a nominal cost of participation, and financial benefits are delivered through a utility or government body, the bill credit discount rate must be calculated as the net financial benefits (cost savings) provided to a Qualifying Household (including utility bill credits, reductions in a Qualifying Household's electricity rate, or other monetary benefits accrued by a Qualifying Household on their utility bill) divided by the amount of the total financial benefit assigned to a Qualifying Household.

(iii) ***Calculation on annual basis.*** In all instances, the bill credit discount rate is calculated on an annual basis.

(iv) ***Examples.*** The provisions of this paragraph (f)(2) may be illustrated by the following examples:

(A) ***Example 1.*** A Qualifying Household signs a community solar subscription agreement with the facility owner. Each month, the facility owner will assign a portion of the electricity generated (or its value) by the facility to the household's utility bill, and the household will pay the facility owner. The amount the household pays the facility owner cannot exceed 80 percent of the monetary value of the assigned generation. The remaining 20 percent is a cost savings to the household on electricity. In this example, over the course of the first year the facility owner or their agent cause $180 in utility bill credits to be placed on the Qualifying Household's bill, and the Qualifying Household pays $144, inclusive of any upfront fees. The subsequent year, due to variation in solar generation and/or the compensation paid by the utility for solar generation, the facility owner, in accordance with

the community solar subscription agreement, causes $240 in bill credits to be provided to the Qualifying Household's bill and the household pays $192. In each year of facility operation described within this example, a bill credit discount rate of 20 percent is maintained (($180-$144)/$180 = 20%) and (($240-$192)/$240 = 20%), respectively.

(B) ***Example 2.*** Due to the regulatory structure of the applicable jurisdiction or program, the terms of the community solar subscription, the use of a *net-crediting* mechanism, or other reason, the Qualifying Household does not make a direct payment to the facility owner, but rather payment is remitted on their behalf by the utility. In this example, over the course of the first year the facility owner or their agent cause $200 in utility bill credits to be placed on the Qualifying Household's bill, and the Qualifying Household's utility remits $160 to the facility owner, inclusive of any upfront fees. The subsequent year, due to variation in solar generation and/or the compensation paid by the utility for solar generation, the facility owner, in accordance with the community solar subscription agreement, causes $240 in bill credits to be provided to the Qualifying Household's bill and the utility remits $192 to the facility owner. In each year of facility operation described within this example, a bill credit discount rate of 20 percent is maintained (($200-$160)/$200 = 20%) and (($240-$192)/$240 = 20%), respectively.

(C) ***Example 3.*** Assume the facility is part of a program by which the financial benefits are delivered to 100 Qualifying Households through a utility or government body, and each Qualifying Household pays no cost to participate. Assume that the financial value of the electricity produced by the facility's total output is $120,000 in the first year and $160,000 in the second year. Assume that 50% of the facility's financial value of the electricity is assigned to Qualifying Households and is therefore calculated as $60,000 in the first year ($120,000 × 50% = $60,000) and $80,000 in the second year ($160,000 × 50% = $80,000). Assume further that each Qualifying Household is assigned the same total financial benefit ($600 in the first year and $800 in the second year). If the bill credit discount rate for each Qualifying Household is 20 percent in each year, the net financial benefits (or cost savings) provided to each Qualifying Household is $120 in the first year ($120/$600 = 20%) and $160 in the second year ($160/$800 = 20%).

(3) ***Demonstration of financial benefits statement.*** The facility owner must prepare a *Demonstration of Financial Benefits Statement,* which must include:

(i) A calculation of the total financial benefits of annual electricity production, as described in paragraph (f)(1)(ii) of this section;

(ii) The percent of the total financial benefits provided and/or assigned to Qualifying Households;

(iii) The bill credit discount rate method used (with cost to participate or no or nominal cost of participation);

(iv) A calculation of the bill credit discount rate;

(v) A description of the means of distributing the required benefits to Qualifying Households; and

(vi) Documentation that the facility is enrolled in the applicable utility tariff, program, or other arrangement used to distribute financial benefits to Qualifying Households.

(4) ***Low-income verification and recordkeeping*** —

(i) ***In general.*** Taxpayers must verify that a household meets the income limits under section 48E(h)(2)(C)(i) or (ii), whichever is applicable to the household based on the household's location, for the household to be a Qualifying Household under paragraph (f)(1)(i) of this section. A household's low-income status is determined at the time the household enrolls in the subscription program and does not need to be re-verified. The qualifying income level for a Qualifying Household is based on where such household is located. Taxpayers must additionally maintain records of the verification for each household that prove the taxpayer has provided requisite percentage of financial benefits to Qualifying Households.

(ii) ***Methods of verification.*** Applicants may use categorical eligibility verification or direct income verification methods, but not an impermissible verification method described in paragraph (f)(4)(ii)(C) of this section, to establish that a household is a Qualifying Household.

(A) ***Categorical eligibility.*** Categorical eligibility consists of obtaining proof of the household's participation in a needs-based Federal, State, Tribal, or utility program with income limits at or below the qualifying income level required to be a Qualifying Household. An individual in the household must currently be approved for assistance from or participation in a program with an award letter or other written documentation within the last 12 months for enrollment in that program to establish categorical eligibility of the household.

(B) ***Direct income verification methods.*** Documentation like paystubs, Federal or State tax returns, or income verification through crediting agencies and commercial data sources can be used to establish that a household is a Qualifying Household.

(C) ***Impermissible verification method.*** A self-attestation from a member or members of a household is not a permissible method to establish a household is a Qualifying Household. This prohibition on direct self-attestation from a household, for purposes of this Program, does not extend to categorical eligibility verification where the eligible needs-based Federal, State, Tribal, or utility programs with income limits rely on self-attestation for verification of income, and the taxpayer has obtained proof of a member or members of a household's participation in such a program.

(g) ***Annual Capacity Limitation*** —

(1) ***In general.*** Under section 48E(h)(4)(C), the total annual Capacity Limitation is 1.8 gigawatts of DC capacity (Annual Capacity Limitation) for each calendar year of the Program. The Annual Capacity Limitation for each Program year is divided across the four facility categories described in section 48E(h)(2)(A)(iii) and paragraph (b)(2) of this section based on factors such as the anticipated

number of applications that are expected for each category and the amount of Capacity Limitation that needs to be reserved for each category to encourage market participation in each category. The initial distribution of the Annual Capacity Limitation for each Program year is:

TABLE 1 TO PARAGRAPH (g)(1) OF THIS SECTION

Category	Capacity limitation (DC)
1: Located in a Low-Income Community	600 MW.
2: Located on Indian Land	200 MW.
3: Qualified Low-Income Residential Building Project	200 MW.
4: Qualified Low-Income Economic Benefit Project	800 MW.

(2) ***Sub-reservations.*** The reservation of Capacity Limitation for Category 1 is further divided into Category 1 sub-reservations, which are described in paragraph (i) of this section. The category 1 sub-reservation distribution of Capacity Limitation is:

TABLE 2 TO PARAGRAPH (g)(2) OF THIS SECTION

Eligible Residential BTM facilities	400 MW.
Eligible FTM facilities and non-residential BTM facilities	200 MW.

(3) ***Redistribution within Program year.*** At the close of the application period for a Program year, if some categories or sub-reservations are undersubscribed, while others are oversubscribed, capacity will be redistributed within the Program year for allocation to applicants in another Category or sub-reservation. A category or sub-reservation is undersubscribed if the amount of capacity applied for in all eligible applications within a reservation is less than the amount of the Capacity Limitation portion distributed to that reservation. A category or sub-reservation is oversubscribed if the amount of capacity applied for in all eligible applications within a particular reservation is in excess of the Capacity Limitation portion distributed to that reservation. Capacity Limitation will be redistributed within a Program year in the following manner:

(i) Capacity will first be redistributed within a category from the undersubscribed reservation to the oversubscribed reservation. For example, if the Additional Selection Criteria reservation is undersubscribed while the non-Additional Selection Criteria reservation is oversubscribed, the remaining capacity reservation for the Additional Selection Criteria will be redistributed to and increase the non-Additional Selection Criteria reservation or sub-reservation in the same category.

(ii) If there is remaining capacity in a category after redistribution under paragraph (g)(3)(i) of this section, or, in general, if a category is, as a whole, undersubscribed such that paragraph (g)(3)(i) of this section does not apply to that category, then, any remaining capacity in any category will be redistributed to and increase the reservation for Category 1 residential BTM facilities, but only if Category 1 residential BTM is oversubscribed. If both the Additional Selection Criteria and non-Additional Section Criteria reservations are oversubscribed for Category 1 residential BTM, then consistent with paragraph (h)(1) of this section, the redistributed capacity limitation will first increase the reservation for Additional Selection Criteria applications, and then if any capacity is remaining it will be added to the reservation for non-Additional Selection Criteria applications.

(iii) If there is remaining capacity after redistribution under paragraphs (g)(3)(i) and (ii) of this section, or if redistribution under paragraph (g)(3)(ii) of this section is inapplicable due to undersubscription in Category 1 residential BTM, then the remaining capacity will be redistributed to and increase the reservation for Category 4. If both the Additional Selection Criteria and the non-Additional Selection Criteria reservations under Category 4 are oversubscribed, then consistent with paragraph (j)(4)(ii) of this section, the redistributed capacity limitation will first increase the reservation for Additional Selection Criteria applications, and then if any capacity is remaining it will be added to the reservation for non-Additional Selection Criteria applications.

(iv) If there is remaining capacity after redistribution under paragraphs (g)(3)(i) through (iii) of this section, or if redistribution under paragraph (g)(3)(iii) of this section is inapplicable due to undersubscription in Category 1 residential BTM and Category 4, then the remaining capacity will be redistributed to and increase the reservation for Category 3. If both the Additional Selection Criteria and the non-Additional Selection Criteria reservations under Category 3 are oversubscribed, then consistent with paragraph (j)(4)(ii) of this section, the redistributed capacity limitation will first increase the reservation for Additional Selection Criteria applications, and then if any capacity is remaining it will be added to the reservation for non-Additional Selection Criteria applications.

(v) If there is remaining capacity after redistribution under paragraphs (g)(3)(i) through (iv) of this section, or if redistribution under paragraph (g)(3)(iv) of this section is inapplicable due to undersubscription in Category 1 residential BTM, Category 4, and Category 3 then the remaining capacity will be redistributed to and increase the reservation for Category 2. If both the Additional Selection Criteria and the non-Additional Selection Criteria reservations under Category 2 are oversubscribed, then consistent with paragraph (j)(4)(ii) of this section, the redistributed capacity limitation will first increase the reservation for Additional Selection Criteria applications, and then if any capacity is remaining it will be added to the reservation for non-Additional Selection Criteria applications.

(vi) If there is remaining capacity after redistribution under paragraphs (g)(3)(i) through (v) of this section, or if redistribution under paragraph (g)(3)(iv) of this section is inapplicable due to undersubscription in Category 1 residential BTM, Category 4, Category 3, and Category 2, then the remaining capacity will be redistributed to and increase the reservation for Category 1 Eligible FTM facilities and non-residential BTM facilities. If both the Additional Selection Criteria and the non-Additional Selection Criteria reservations under Category 1 Eligible FTM facilities and non-residential BTM facilities are oversubscribed, then consistent with paragraph (j)(4)(ii)

of this section, the redistributed capacity limitation will first increase the reservation for Additional Selection Criteria applications, and then if any capacity is remaining it will be added to the reservation for non-Additional Selection Criteria applications.

(vii) If after redistribution under paragraphs (g)(3)(i) through (vi) of this section, there is remaining Capacity Limitation at the close of a Program year, the unallocated amount of Capacity Limitation will be carried forward to the succeeding year as described in paragraph (g)(4) of this section.

(4) ***Carryover of unallocated Annual Capacity Limitation.*** If the Annual Capacity Limitation, as described in paragraph (g)(1) of this section, for any calendar year exceeds the aggregate amount of Annual Capacity Limitation allocated for a given calendar year, the Annual Capacity Limitation for the succeeding calendar year will be increased by the amount of such excess or remainder from previous Program Year. No amount of Capacity Limitation may be carried to any calendar year after the third calendar year following the applicable year (as defined in section 45Y(d)(3) of the Code). Any unallocated Capacity Limitation carried over from the preceding year will be equally distributed across Category 1, 2, 3, and 4. Within Category 1, the portion distributed from the carried over Capacity Limitation will be equally distributed across Category 1 sub-reservations and further across the reservation for Additional Selection Criteria within those sub-reservations. The portion of the carried over Capacity Limitation distributed to each of Category 2, 3, and 4 will be equally distributed within each category to the Additional Selection Criteria reservation and the non-Additional Selection Criteria reservation.

(5) ***Allocations to*** *applicable facilities with nameplate capacity in alternating current.* For applicable facilities which have a nameplate capacity in AC, and which are awarded an allocation, such an applicable facility will be awarded an amount of Capacity Limitation in direct current that is equal to the applicable facility's reported nameplate capacity in alternating current.

(h) ***Reservations of Capacity Limitation allocation for facilities that meet certain Additional Selection Criteria*** —

(1) ***In general.*** 50 percent of the total Capacity Limitation in each facility category described in paragraph (b) of this section and Category 1 sub-reservation (described in paragraph (i) of this section) will be reserved at the beginning of an application period for applicable facilities meeting the Additional Selection Criteria described in paragraph (h)(2) of this section (relating to ownership criteria) and paragraph (h)(3) of this section (relating to geographic criteria). The reservation of Capacity Limitation for applicable facilities meeting the Additional Selection Criteria may be redistributed across facility categories and sub-reservations as described in paragraph (g)(3) of this section. If after the initial 30-day period an Additional Selection Criteria reservation for a category or Category 1 sub-reservation is undersubscribed, such Additional Selection Criteria reservation of 50 percent is maintained. The procedures for applying under these Additional Selection Criteria are provided in guidance published in the Internal Revenue Bulletin.

(2) ***Ownership criteria*** —

(i) ***In general.*** The ownership criteria are based on characteristics of the applicant that owns the applicable facility. An applicable facility will meet the ownership criteria if it is owned by one of the following:

(A) A Tribal enterprise (as defined in paragraph (h)(2)(iii) of this section);

(B) An Alaska Native Corporation (as defined in paragraph (h)(2)(iv) of this section);

(C) A Native Hawaiian Organization (as defined in paragraph (h)(2)(v) of this section);

(D) A renewable energy cooperative (as defined in paragraph (h)(2)(vi) of this section); or

(E) A qualified tax-exempt entity (as defined in paragraph (h)(2)(vii) of this section).

(F) A qualified renewable energy company (as defined in paragraph (h)(2)(viii) of this section).

(ii) ***Indirect ownership*** —

(A) ***Disregarded entities.*** If an applicant wholly owns a disregarded entity that is the owner of an applicable facility, then the applicant, and not the disregarded entity, is treated as the owner of the applicable facility for purposes of the ownership criteria. For entities wholly owned and chartered under Tribal law and corporations incorporated under the authority of either section 17 of the Indian Reorganization Act of 1934, 25 U.S.C. 5124, or section 3 of the Oklahoma Indian Welfare Act, 25 U.S.C. 5203, an application may be made as a Tribal Enterprise. Disregarded entities are not eligible for an award and may not submit an application.

(B) ***Partner qualifying partnership under ownership criteria.*** Except as described in paragraph (h)(2)(ii)(C) of this section, if an applicant is an entity classified as a partnership for Federal income tax purposes, and an entity described in paragraphs (h)(2)(i)(A) through (E) of this section owns at least a one percent interest (either directly or indirectly) in each material item of partnership income, gain, loss, deduction, and credit of the partnership and is also a managing member or general partner (or similar title) under State or Tribal law of the partnership (or directly owns 100 percent of the equity interests in the managing member or general partner) at all times during the existence of the partnership, the applicable facility will be deemed to meet the ownership criteria. If the partnership described in the preceding sentence becomes the owner of the facility after an allocation is made to an entity described in paragraphs (h)(2)(i)(A) through (E) of this section, then the transfer of the facility to the partnership is not a disqualification event for purposes of paragraph (m)(5) of this section, so long as the requirements of paragraph (m)(5) of this section are satisfied. Nothing in this paragraph (h)(2)(ii)(B) applies to an applicant described in paragraph (h)(2)(i)(F) of this section.

(C) ***Partner qualifying partnership involving low-income housing credit under ownership criteria.*** If an applicant is an entity classified as a partnership for Federal income tax purposes and is the owner of an applicable facility connected to a residential building to which credits under section 42 of the Code are reasonably anticipated or have been determined and has a partner for Federal income tax purposes that is an entity described in paragraphs (h)(2)(i)(A) through (E) of this section, the applicable facility will be deemed to meet the ownership criteria. If the partnership becomes the owner of the facility after an allocation is made to an entity described in paragraph (h)(2)(i)(E) of this section, and complete ownership is transferred to a partnership that owns a qualified low-income building within the meaning of section 42(c)(2) (including, through a disregarded entity owned by the partnership), then the transfer of the facility to the partnership is not a disqualification event for purposes of paragraph (m)(5) of this section or subject to recapture for purposes of paragraph (n) of this section, so long as the requirements of paragraph (m)(5) of this section are satisfied.

(iii) ***Tribal enterprise.*** A *Tribal enterprise* for purposes of the ownership criteria is an entity that is:

(A) Owned at least 51 percent directly by an Indian Tribal government (as defined in section 30D(g)(9) of the Code), or owned at least 51 percent indirectly through an entity that is wholly owned by the Indian Tribal government and is created under either the Tribal laws of the Indian Tribal government or through a corporation incorporated under the authority of either section 17 of the Indian Reorganization Act of 1934, 25 U.S.C. 5124, or section 3 of the Oklahoma Indian Welfare Act, 25 U.S.C. 5203; and

(B) Subject to Tribal government rules, regulations, and/or codes that regulate the operations of the entity.

(iv) ***Alaska Native Corporation.*** An *Alaska Native Corporation* for purposes of the ownership criteria is defined in section 3 of the Alaska Native Claims Settlement Act, 43 U.S.C. 1602(m).

(v) ***Native Hawaiian Organization.*** A *Native Hawaiian Organization* for purposes of the ownership criteria is defined in 13 CFR 124.3.

(vi) ***Renewable energy cooperative.*** A renewable energy cooperative for purposes of the ownership criteria is an entity that develops applicable facilities and is either:

(A) A consumer or purchasing cooperative controlled by its members with each member having an equal voting right and with each member having rights to profit distributions based on patronage as defined by proportion of volume of electricity or energy credits purchased (kWh), volume of financial benefits delivered (in United States dollars), or volume of financial payments made (in United States dollars); and in which at least 50 percent of the patronage in the qualified facility is by cooperative members who are low-income households (as defined in section 48E(h)(2)(C)); or

(B) A worker cooperative controlled by its worker-members with each member having an equal voting right.

(vii) ***Qualified tax-exempt entity.*** A qualified tax-exempt entity for purposes of the ownership criteria is:

(A) An organization exempt from the tax imposed by subtitle A of the Code by reason of being described in section 501(c)(3) or (d) of the Code;

(B) Any State, the District of Columbia, or political subdivision thereof, or any agency or instrumentality of any of the foregoing;

(C) An Indian Tribal government (as defined in section 30D(g)(9)), a political subdivision thereof, or any agency or instrumentality of any of the foregoing; or

(D) Any corporation described in section 501(c)(12) operating on a cooperative basis that is engaged in furnishing electric energy to persons in rural areas.

(viii) ***Qualified renewable energy company.*** A qualified renewable energy company (QREC) for purposes of the ownership criteria is an entity that serves low-income communities and provides pathways for the adoption of clean energy by low-income households. To be a QREC, an entity must meet all of the requirements in paragraphs (h)(2)(vii)(A) through (D) of this section.

(A) The entity's business purpose must be to serve low-income households or low-income communities, and this purpose must be stated in governing documents and dated at least two years prior to application submission;

(B) At least 51 percent of the entity's equity interests must be owned and controlled by one or more individuals;

(C) The entity must have first installed, operated, or provided services as a contractor or subcontractor to an applicable facility two or more years prior to the date of application; and

(D) The entity must have at least one but less than 10 full-time equivalent employees (as determined under section 4980H(c)(2)(E) and (c)(4) of the Code) and less than $20 million in annual gross receipts in the previous two calendar years. The number of full-time equivalent employees and amount in annual gross receipts must include the full-time equivalent employees and annual gross receipts of all affiliated entities. An entity is considered to be an affiliated entity if—

(1) 25 percent or more of an entity's board seats, voting rights, or equity interests, are cumulatively held by another entity and related entities (as described in described in section 267(b) or section 707(b)(1) of the Code); or

(2) One or more of an entities' officers, directors, managing members or partners with authority over the board of directors or management and operations also have authority over the board of directors or management and operations of another entity.

(3) ***Geographic criteria*** —

(i) ***In general.*** Geographic criteria do not apply to Category 2 facilities. To meet the geographic criteria, a facility must be located in a county or census tract that is described in paragraph (h)(3)(ii) or (iii) of this section. Applicants who meet the geographic criteria at the time of application are considered to continue to meet the geographic criteria for the duration of the recapture period unless the location of the facility changes.

(ii) ***Persistent Poverty County.*** A *Persistent Poverty County* (PPC), which is, generally, described as any county where 20 percent or more of residents have experienced high rates of poverty over the past 30 years. For purposes of the Program and this section, the PPC measure adopted by the USDA is used to make this determination. If updated data is released by USDA, a taxpayer will have a 1-year period following the date of the release of the updated data to be eligible under the previous data. After the 1-year transition period, the updated data must be used to determine eligibility.

(iii) ***Certain census tracts under Climate and Economic Justice Screening Tool.*** A census tract that is described in the latest official Climate and Economic Justice Screening Tool (CEJST), as greater than or equal to the 90th percentile for energy burden and greater than or equal to the 65th percentile for low income, or as greater than or equal to the 90th percentile for $PM_{2.5}$ exposure and greater than or equal to the 65th percentile for low income.

(A) ***Energy burden. Energy burden*** is defined as average household annual energy cost in dollars divided by the average household income.

(B) ***$PM_{2.5}$. PM*** $_{2.5}$ is defined as fine inhalable particles with 2.5 or smaller micrometer diameters. The percentile is the weight of the particles per cubic meter.

(C) ***Low-income. Low income,*** for purposes of this section, is defined as the percent of a census tract's population in households for which household income is at or below 200 percent of the Federal poverty level, not including students enrolled in higher education.

(i) ***Sub-reservations of allocation for Category 1 facilities*** —

(1) ***In general.*** Capacity Limitation reserved for Category 1 facilities will be subdivided each Program year for facilities seeking a Category 1 allocation with Capacity Limitation reserved specifically for eligible residential behind the meter (BTM) facilities, including rooftop solar. The remaining Capacity Limitation is available for applicants with front of the meter (FTM) facilities as well as non-residential BTM facilities. The specific sub-reservation for eligible residential BTM facilities in Category 1 is provided in guidance published in the Internal Revenue Bulletin and is established based on factors such as promoting efficient allocation of Capacity Limitation and allowing like-projects to compete for an allocation. After the sub-reservation is established in guidance published in the Internal Revenue Bulletin, the sub-reservation may be reallocated later in the event it has excess capacity.

(2) ***Definitions*** —

(i) ***Behind the meter (BTM) facility.*** For purposes of the Program and this section, an applicable facility is *BTM* if:

(A) It is connected with an electrical connection between the facility and the panelboard or sub-panelboard of the site where the facility is located;

(B) It is to be connected on the customer side of a utility service meter before it connects to a distribution or transmission system (that is, before it connects to the electricity grid); and

(C) Its primary purpose is to provide electricity to the utility customer of the site where the facility is located. This also includes systems not connected to a grid and that may not have a utility service meter, and whose primary purpose is to serve the electricity demand of the owner of the site where the system is located.

(ii) ***Eligible residential BTM facility.*** For purposes of paragraph (i)(1) of this section, an *eligible residential BTM facility* is defined as a single-family or multi-family residential applicable facility that does not meet the requirements for a Category 3 facility and is BTM. An applicable facility is residential if it uses energy to generate electricity for use in a dwelling unit that is used as a residence.

(iii) ***FTM facility.*** For purposes of the Program and this section, an applicable facility is *FTM* if it is directly connected to a grid and its primary purpose is to provide electricity to one or more offsite locations via such grid or utility meters with which it does not have an electrical connection; alternatively, a FTM facility is defined as a facility that is not a BTM facility. For the purpose of Category 4 facilities, an applicable facility is also FTM if 50 percent or more of its electricity generation on an annual basis is exported physically to the broader electricity grid.

(j) ***Process of application evaluation*** —

(1) ***In general.*** Applications for a Capacity Limitation allocation will be evaluated according to the procedures specified in guidance published in the Internal Revenue Bulletin.

(2) ***Information required as part of application.*** With each application for a Capacity Limitation allocation, applicants are required to submit information, documentation, and attestations to demonstrate eligibility for an allocation and project viability as specified in guidance published in the Internal Revenue Bulletin.

(3) ***No administrative appeal of Capacity Limitation allocation decisions.*** An applicant may not administratively appeal decisions regarding Capacity Limitation allocations.

(4) ***Application period*** —

(i) ***Opening and closing dates.*** For calendar year 2026 and each succeeding calendar year of the Program, the application period will open the first Monday of February at 9 a.m. EST and close the first Friday of August at 11:59 p.m. EST. The application period for calendar year 2025 will be announced in guidance published in the Internal Revenue Bulletin.

(ii) ***Initial 30-day period.*** For each year, there will be an initial 30-day period during which all applications submitted will be considered to be submitted at the same time and date. The initial 30-day period will begin on the opening day of the application period described in paragraph (j)(4)(i) of this section, and end at 11:59 p.m. EST on the 30th calendar day after the opening day of the application period. The opening day is included in calculating the 30-day period. All applications submitted within the 30-day period will be ordered for review and consideration of an allocation of Capacity Limitation within the same category based on a process described in procedural guidance published in the Internal Revenue Bulletin. If during the initial 30-day period, an Additional Selection Criteria reservation for a category or Category 1 sub-reservation is oversubscribed with Additional Selection Criteria applications, Capacity Limitation from the applicable category or sub-reservation may be reallocated to prioritize review and consideration of Additional Selection Criteria applications. Additional Selection Criteria applications received during the initial 30-day period receive priority over other applications received during the initial 30-day period.

(iii) ***Applications submitted after the initial 30-day period*** —

(A) ***In general.*** Applications submitted after the close of the initial 30-day period will be held for review and consideration of an allocation of Capacity Limitation after the applications in the same category or Category 1 sub-reservation which were submitted during the initial 30-day period. Review of such applications will occur only if sufficient Capacity Limitation remains to be allocated in a given category or Category 1 sub-reservation, and in conjunction with the redistribution provisions described under paragraph (g)(2) of this section. Provided sufficient Capacity Limitation remains in a given category or Category 1 sub-reservation, these applications submitted after the initial 30-day period will be reviewed and considered for an allocation in the order in which they are received.

(B) ***Additional Selection Criteria Applications submitted after the initial 30-day period.*** If the Additional Selection Criteria reservation for a category or Category 1 sub-reservation is undersubscribed after the initial 30-day period ends, then the Additional Selection Criteria reservation of 50 percent is maintained. Additional Selection Criteria applications submitted after the initial 30-day period will be prioritized for review and consideration of an allocation of Capacity Limitation from the Additional Selection Criteria reservation in the applicable category or Category 1 sub-reservation until such Additional Selection Criteria reservation is allocated or is reallocated.

(k) ***Placed in service*** —

(1) ***Requirement to report date placed in service.*** For any facility that receives an allocation of Capacity Limitation, the owner of the facility must report the date the eligible property was placed in service.

(2) ***Requirement to submit final eligibility information at placed in service time.*** At the time that the owner reports that eligible property has been placed in service, the owner also must confirm information about the facility and submit additional documentation to demonstrate the facility is still eligible to maintain the allocation and claim the increased applicable percentage under section 48E(h)(1) as specified in guidance published in the Internal Revenue Bulletin.

(3) ***Confirmation.*** The placed in service documentation and attestations demonstrating that the facility meets the eligibility criteria for the owner to claim an increased applicable percentage will be reviewed. A recommendation will then be considered by the IRS regarding whether the facility continues to meet the eligibility requirements for the facility to retain its allocation or if the facility should be disqualified (as provided in paragraph (m) of this section). Based on this recommendation and underlying facts and circumstances analysis, the IRS will decide whether the facility should retain its allocation or if the facility should be disqualified. Eligibility is determined, prior to the owner (or a partner or shareholder in the case of a partnership or S corporation) claiming the increased credit amount on Form 3468, *Investment Credit* (or Form 3800, *General Business Credit*), or successor form, or, if eligible, making a transfer election under section 6418 of the Code, or an elective payment election under section 6417 of the Code.

(4) ***Definition of placed in service.*** For purposes of this section, eligible property is considered *placed in service* in the earlier of the following taxable years:

(i) The taxable year in which, under the taxpayer's depreciation practice, the period for depreciation with respect to such eligible property begins; or

(ii) The taxable year in which the eligible property is placed in a condition or state of readiness and availability for a specifically assigned function, whether in a trade or business or in the production of income.

(l) ***Facilities placed in service prior to an allocation award*** —

(1) ***In general.*** Applicable facilities must be placed in service after being awarded an allocation of Capacity Limitation.

(2) ***Rejection or rescission.*** An application for an applicable facility that is placed in service prior to submission of the application will be rejected. If a facility is placed in service after the application is submitted, but prior to the allocation of Capacity Limitation, and the facility is awarded an allocation, the allocation will be rescinded.

(m) ***Disqualification.*** A facility will be disqualified and lose its allocation if prior to or upon the facility being placed in service an occurrence described in one of paragraphs (m)(1) through (5) of this section takes place.

(1) The location where the facility will be placed in service materially changes or is in a different census tract.

(2) The maximum net output of the facility increases such that it exceeds the less than five megawatts AC requirement provided in section 48E(h)(2)(A)(ii) or the nameplate capacity decreases by the greater of 2 kW or 25 percent of the Capacity Limitation awarded in the allocation. However, the amount of bonus credit capacity allocated will not be exceeded from the original allocation amount.

(3) The facility either cannot or did not satisfy the financial benefits requirements under section 48E(h)(2)(B)(ii) and paragraph (e) of this section as planned, if applicable, or cannot satisfy the financial benefits requirements under section 48E(h)(2)(C) or paragraph (f) of this section as planned, if applicable.

(4) The eligible property that is part of the facility that received the Capacity Limitation allocation is not placed in service within four years after the date the applicant was notified of the allocation of Capacity Limitation to the facility.

(5) The facility received a Capacity Limitation allocation based, in part, on meeting the ownership criteria and ownership of the facility changes prior to the facility being placed in service, unless the original applicant transfers the facility to an entity classified as a partnership for Federal income tax purposes and retains at least a one percent interest (either directly or indirectly) in each material item of partnership income, gain, loss, deduction, and credit of such partnership and is a managing member or general partner (or similar title) under State or Tribal law of the partnership (or directly owns 100 percent of the equity interests in the managing member or general partner) at all times during the existence of the partnership.

(n) ***Recapture of section 48E(h) Increase to the section 48E(a) credit*** —

(1) ***In general.*** Section 48E(h)(5) provides for recapturing the benefit of any increase in the credit allowed under section 48E(a) by reason of section 48E(h) with respect to any property that ceases to be property eligible for such increase (but that does not cease to be investment credit property within the meaning of section 50(a) of the Code). Section 48E(h) provides that the period and percentage of such recapture must be determined under rules similar to the rules of section 50(a). Therefore, if, at any time during the five year recapture period beginning on the date that an applicable facility under section 48E(h) is placed in service, there is a recapture event under paragraph (n)(3) of this section with respect to such property, then the Federal income tax imposed on the taxpayer by chapter 1 of the Code for the taxable year in which the recapture event occurs is increased by the recapture percentage of the benefit of the increase in the section 48E credit. The recapture percentage is determined according to the table provided in section 50(a)(1)(B).

(2) ***Exception to application of recapture.*** Such recapture may not apply with respect to any property if, within 12 months after the date the applicant becomes aware (or reasonably should have become aware) of such property ceasing to be property eligible for such increase in the credit allowed under section 48E(a), the eligibility of such property for such increase pursuant to section 48E(h) is restored. Such restoration of an increase pursuant to section 48E(h) is not available more than once with respect to any facility.

(3) ***Recapture events.*** Any of the following circumstances result in a recapture event if the property ceases to be eligible for the increased credit under section 48E(h):

(i) Property described in section 48E(h)(2)(A)(iii)(II) fails to provide financial benefits;

(ii) Property described under section 48E(h)(2)(B) ceases to allocate the financial benefits equitably among the occupants of the dwelling units as described under section 48E(h)(2)(B)(ii), such as not allocating to residents the required net electricity savings of the electricity, as required by paragraph (e) of this section;

(iii) Property described under section 48E(h)(2)(C) ceases to provide at least 50 percent of the financial benefits of the electricity produced to Qualifying Households as described under section 48E(h)(2)(C)(i) or (ii), or fails to provide those households the required minimum 20 percent bill credit discount rate, as required by paragraph (f) of this section;

(iv) For property described under section 48E(h)(2)(B), the residential rental building the facility is a part of ceases to participate in a covered housing program or any other affordable housing program described in section 48E(h)(2)(B)(i), as applicable; or

(v) A facility increases its maximum net output or nameplate capacity such that the facility's maximum net output or nameplate capacity is 5 MW AC or greater.

(4) ***Section 50(a) recapture.*** Any event that results in recapture under section 50(a) also will result in recapture of the benefit of the increase in the section 48E credit by reason of section 48E(h). The exception to the application of recapture provided in paragraph (n)(2) of this section does not apply in the case of a recapture event under section 50(a).

(o) ***Record retention.*** The applicant is required to retain records and materials related to the application for the following periods:

(1) For at least 6 years after the due date (with extensions) for filing the Federal income tax return after the tax year that return is filed to claim the increase in the section 48E credit; and

(2) For at least 6 years after the due date (with extensions) for filing the Federal income tax return for the last year that the applicant could be subject to recapture as described in paragraph (n) of this section.

(p) ***Applicability date.*** This section applies to applicable facilities placed in service after December 31, 2024, and during taxable years ending on or after January 13, 2025.

[T.D. 10025, 90 FR 2861, Jan. 13, 2025]

§ 1.50-0 Table of contents.

This section lists the table of contents for §§ 1.50-1 and 1.50-2.

§ 1.50-1 Lessee's income inclusion following election of lessor of investment credit property to treat lessee as acquirer.

(a) In general.

(b) Coordination with basis adjustment rules.

(1) Basis adjustment.

(2) Amount of credit included ratably in gross income.

(i) In general.

(ii) Special rule for the energy credit.

(3) Special rule for partnerships and S corporations.

(i) In general.

(ii) Definition of ultimate credit claimant.

(c) Coordination with the recapture rules.

(1) In general.

(2) Income inclusion exceeds unrecaptured credit.

(3) Special rule for the energy credit.

(4) Timing of income inclusion or reduction following recapture.

(d) Election to accelerate income inclusion outside of the recapture period.

(1) In general.

(2) Exceptions.

(3) Manner and time for making election.

(e) Examples.

(1) Example 1.

(2) Example 2.

(3) Example 3.

(4) Example 4.

(5) Example 5.

(6) Example 6.

(f) Applicability date.

§ 1.50-2 Recapture of the advanced manufacturing investment credit in the case of certain expansions.

(a) Recapture in connection with certain expansions.

(1) In general.

(2) Exception.

(3) Carrybacks and carryover adjusted.

(b) Definitions.

(1) Applicable period.

(2) Applicable taxpayer.

(i) In general.

(ii) Special rules for partnerships and S corporations and their partners and shareholders.

(iii) Examples.

(A) Example 1: Applicable taxpayer: In general.

(B) Example 2: Applicable taxpayer: In general.

(C) Example 3: Applicable taxpayer: Special rules for partnerships and S corporations and their partners and shareholders.

(D) Example 4: Applicable taxpayer: Special rules for partnerships and S corporations and their partners and shareholders.

(E) Example 5: Applicable taxpayer: Special rules for partnerships and S corporations and their partners and shareholders.

(F) Example 6: Applicable taxpayer: Special rules for partnerships and S corporations and their partners and shareholders.

(iv) Affiliated groups.

(3) Applicable transaction.

(4) Applicable transaction recapture amount.

(5) Existing facility.

(6) Foreign country of concern.

(7) Material expansion.

(8) Semiconductor manufacturing capacity.

(9) Significant renovations.

(10) Significant transaction.

(i) In general.

(ii) Required agreement.

(11) Technology licensing.

(12) Technology or product that raises national security concerns.

(c) Exception from the definition of applicable transaction for the manufacturing of legacy semiconductors.

(1) In general.

(2) Legacy semiconductor.

(d) Example: Applicable transaction credit claimed.

(e) Applicability date.

[T.D. 10009, 89 FR 84760, Oct. 23, 2024]

§ 1.50-1 Lessee's income inclusion following election of lessor of investment credit property to treat lessee as acquirer.

(a) ***In general.*** Section 50(d)(5) provides that, for purposes of computing the investment credit, rules similar to the rules of former section 48(d) (relating to certain leased property) (as in effect on the day before the date of the enactment of the Revenue Reconciliation Act of 1990 (Pub. L. 101-508, 104 Stat. 1388 (November 5, 1990))) apply. This section provides rules similar to the rules of former section 48(d)(5) that the Secretary has determined shall apply for purposes of determining the inclusion in gross income required when a lessor elects to treat a lessee as having acquired investment credit property.

(b) ***Coordination with basis adjustment rules.*** In the case of any property with respect to which an election is made under § 1.48-4 by a lessor of investment credit property to treat the lessee as having acquired the property—

(1) ***Basis adjustment.*** Section 50(c) does not apply with respect to such property.

(2) ***Amount of credit included ratably in gross income*** —

(i) ***In general.*** A lessee of the property must include ratably in gross income, over the shortest recovery period which could be applicable under section 168 with respect to that property, an amount equal to the amount of the credit determined under section 46 with respect to that property. The ratable income inclusion under this paragraph begins on the date the investment credit property is placed in service and continues on each one year anniversary date thereafter until the end of the applicable recovery period. The lessee will include in gross income the amount of its credit determined under section 46 regardless of limitations on the amount of the credit allowed under section 38(c) based on the amount of the lessee's income tax.

(ii) ***Special rule for the energy credit.*** In the case of any energy credit determined under section 48(a), paragraph (b)(2)(i) of this section applies only to the extent of 50 percent of the amount of the credit determined under section 46.

(3) ***Special rule for partnerships and S corporations*** —

(i) ***In general.*** For purposes of paragraph (b)(2) of this section, if the lessee of the property is a partnership (other than an electing large partnership) or an S corporation, the gross income includible under such paragraph is not an item of partnership income to which the rules of subchapter K of Chapter 1, subtitle A of the Code apply or an item of S corporation income to which the rules of subchapter S of Chapter 1, subtitle A of the Code apply. Any partner or S corporation shareholder that is an ultimate credit claimant (as defined in paragraph (b)(3)(ii) of this section) is treated as a lessee that must include in gross income the amounts required under paragraph (b)(2) of this section in proportion to the credit determined under section 46 with respect to such partner or S corporation shareholder.

(ii) ***Definition of ultimate credit claimant.*** For purposes of this section, the term *ultimate credit claimant* means any partner or S corporation shareholder that files (or that would file) Form 3468, "Investment Credit," with such partner's or S corporation shareholder's income tax return to claim an investment credit determined under section 46 with respect to such partner or S corporation shareholder.

(c) ***Coordination with the recapture rules*** —

(1) ***In general.*** If section 50(a) requires an increase in the lessee's or the ultimate credit claimant's tax or a reduction in the carryback or carryover of an unused credit (or both) as a result of an early disposition (including a lease termination), etc., of leased property for which an election had been made under § 1.48-4, the lessee or the ultimate credit claimant is required to include in gross income an amount equal to the excess, if any, of the amount of the credit that is not recaptured over the total increases in gross income previously made under paragraph (b)(2) of this section with respect to the property. Such amount is in addition to the amounts the lessee or the ultimate credit claimant previously included in gross income under paragraph (b)(2) of this section.

(2) ***Income inclusion exceeds unrecaptured credit.*** If section 50(a) requires an increase in the lessee's or ultimate credit claimant's tax or a reduction in the carryback or carryover of an unused credit (or both) as a result of an early disposition (including a lease termination), etc., of leased property for which an election had been made under § 1.48-4, the lessee's or the ultimate credit claimant's gross income shall be reduced by an amount equal to the excess, if any, of the total increases in gross income previously included under paragraph (b)(2) of this section over the amount of the credit that is not recaptured.

(3) ***Special rule for the energy credit.*** In the case of any energy credit determined under section 48(a), paragraphs (c)(1) and (2) of this section apply by substituting the phrase "50 percent of the amount of the credit that is not recaptured" for the phrase "the amount of the credit that is not recaptured."

(4) ***Timing of income inclusion or reduction following recapture.*** Any adjustment required by paragraphs (c)(1) and (2) of this section is taken into account in the taxable year in which the property is disposed of or otherwise ceases to be investment credit property.

(d) ***Election to accelerate income inclusion outside of the recapture period*** —

(1) ***In general.*** If after the recapture period described in section 50(a), but prior to the expiration of the recovery period described in paragraph (b)(2) of this section, there is a lease termination, the lessee otherwise disposes of the lease, or a partner or S corporation shareholder that is an ultimate credit claimant disposes of its entire interest, either direct or indirect, in a lessee partnership (other than an electing large partnership) or S corporation, the lessee, or, in the case of a partnership or S corporation, the ultimate credit claimant may irrevocably elect to take into account the remaining amount required to be included in gross income under this section in the taxable year of the disposition or termination.

(2) ***Exceptions.*** The election provided under paragraph (d)(1) of this section is not available to—

(i) Lessees or ultimate credit claimants required by paragraph (c) of this section to account for the remaining amount required to be included in gross income after accounting for recapture in the taxable year in which the property was disposed of or otherwise ceased to be investment credit property under section 50(a); or

(ii) Former partners or S corporation shareholders that own no interest, either direct or indirect, in a lessee partnership or S corporation at the time of a lease termination or disposition.

(3) ***Manner and time for making election.*** The election under paragraph (d)(1) of this section is made by including the remaining amount required to be included under this section in gross income in the taxable year of the lease termination or disposition or the disposition of the ultimate credit claimant's entire interest, either direct or indirect, in a partnership or S corporation. The election must be made on or before the due date (including any extension of time) of the lessee's income tax return, or, in the case of a partnership or S corporation, the ultimate credit claimant's income tax return for the taxable year in which the lease termination or disposition or the disposition of the ultimate credit claimant's entire interest, either direct or indirect, in a partnership or S corporation occurs.

(e) ***Examples.*** The provisions of this section may be illustrated by the following examples:

(1) ***Example 1.*** X, a calendar year C corporation, leases nonresidential real property from Y. The property is placed in service on October 1, 2016. Y elects under § 1.48-4 to treat X as having acquired the property. X's investment credit determined under section 46 for 2016 with respect to such property is $9,750. The shortest recovery period that could be available to the property under section 168 is 39 years. Because Y has elected to treat X as having acquired the property, Y does not reduce its basis in the property under section 50(c). Instead, X, the lessee of the property, must include ratably in gross income over 39 years an amount equal to the credit determined under section 46 with respect to such property. Under paragraph (b)(2) of this section, X's increase in gross income for each of the 39 years beginning with 2016 is $250 ($9,750/39 year recovery period).

(2) ***Example 2.*** The facts are the same as in *Example 1* in paragraph (e)(1) of this section, except that instead of nonresidential real property, X leases from Y solar energy equipment for which an energy credit under section 48 is determined under section 46. X's investment credit determined under section 46 for 2016 with respect to the property is $9,750. The shortest recovery period that could be available to the property under section 168 is 5 years. X, the lessee of the property, must include ratably in gross income over 5 years an amount equal to 50% of the credit determined under section 46 with respect to such property. Under paragraph (b)(2) of this section, X's increase in gross income for each of the 5 years beginning with 2016 is $975 ($4,875/5 year recovery period).

(3) ***Example 3.*** A and B, calendar year taxpayers, form a partnership, the AB partnership, that leases nonresidential real property from Y. The property is placed in service on October 1, 2016. Y elects under § 1.48-4 to treat the AB partnership as having acquired the property. A's investment credit determined under section 46 for 2016 is $3,900 and B's investment credit determined under section 46 for 2016 is $7,800 with respect to the property. The shortest recovery period that could be available to the property under section 168 is 39 years. Because Y has elected to treat the AB partnership as having acquired the property, Y does not reduce its basis in the building under section 50(c). Instead, A and B, the ultimate credit claimants, must include the amount of the credit determined with respect to A and B under section 46 ratably in gross income over 39 years, the shortest recovery period available with respect to such property. Therefore, A and B must include ratably in gross income over 39 years under paragraph (b)(2) of this section an amount equal to $3,900 and $7,800, respectively. Under paragraph (b)(2) of this section, A's increase in gross income for each of the 39 years beginning with 2016 is $100 ($3,900/39 year recovery period) and B's is $200 ($7,800/39 year recovery period). Because the gross income A and B are required to include under paragraph (b)(2) of this section is not an item of partnership income, the rules under subchapter K applicable to items of partnership income do not apply with respect to such income. In particular, A and B are not entitled to an increase in the outside basis of their partnership interests under section 705(a) and are not entitled to an increase in their capital accounts under section 704(b).

(4) ***Example 4.*** The facts are the same as in *Example 3* in paragraph (e)(3) of this section, except that on January 1, 2019, the lease between AB partnership and Y terminates (Y retains ownership of the property), which is a recapture event under section 50(a). A's and B's income tax for 2019 is increased under section 50(a) by $2,340 and $4,680, respectively (60% of $3,900 and $7,800, respectively, assuming that the aggregate decrease in the credits allowed under section 38 was the full amount of the investment credits determined as to A and B under section 46). Therefore, the amount of the unrecaptured credit as to A and B is $1,560 and $3,120, respectively (40% of $3,900 and $7,800, respectively). The amounts that A and B previously included in gross income under paragraph (b)(2) of this section are $300 ($100 for each of 2016, 2017, and 2018) and $600 ($200 for each of 2016, 2017, and 2018), respectively. A and B are required under paragraph (c)(1) of this section to include in gross income an amount equal to the excess of the credit that is not recaptured ($1,560 and $3,120, respectively) over the total increases in gross income previously made under paragraph (b)(2) of this section with respect to the property ($300 and $600, respectively). Therefore, A and B must include in gross income $1,260 and $2,520, respectively, in the taxable year of the lease termination (2019) in addition to the recapture amounts described above.

(5) ***Example 5.***

(i) The facts are the same as in *Example 4* in paragraph (e)(4) of this section, except that instead of nonresidential real property, the AB partnership leases from Y solar energy equipment for which an energy credit under section 48 is determined under section 46. Because the shortest recovery period that could be available to the property under section 168 is 5 years, A and B are required under paragraph (b)(2)(ii) of this section to include ratably in gross income over 5 years an amount equal to 50% of the credit determined under section 46 with respect to such property (50% of $3,900/5, or $390, per year for A, and 50% of $7,800/5, or $780, per year for B).

(ii) The January 1, 2019 lease termination requires A's and B's income tax for 2019 to be increased under section 50(a) by $2,340 and $4,680, respectively (60% of $3,900 and $7,800, respectively). Therefore, the amount of the unrecaptured credit as to A and B is $1,560 and $3,120, respectively (40% of $3,900 and $7,800, respectively). Under paragraph (b)(2)(ii) of this

section, the amounts A and B previously included in gross income are $1,170 ($390 for each of 2016, 2017, and 2018) and $2,340 ($780 for each of 2016, 2017, and 2018), respectively. A and B are entitled to a reduction in gross income under paragraph (c)(2) of this section equal to the excess of the total increases in gross income made under paragraph (b)(2)(ii) of this section ($1,170 and $2,340, respectively) over 50% of the amount of the credit that is not recaptured ($780 and $1,560, respectively). Therefore, A and B are entitled to a reduction in gross income in the amount of $390 and $780, respectively, in the taxable year of the lease termination (2019).

(6) ***Example 6.***

(i) The facts are the same as in *Example 3* in paragraph (e)(3) of this section, except that on December 1, 2021, A sells its entire interest to C, and on January 1, 2022, the lease between AB partnership and Y terminates. At the time of the lease termination, B is still a partner in the AB partnership. There is no recapture event under section 50(a) because both the lease termination and the disposition of A's interest in the partnership occurred outside of the recapture period.

(ii) At the time that A sold its interest in the AB partnership to C, A had previously included $500 ($100 for each of 2016-2020) in gross income under paragraph (b)(2) of this section. Under paragraph (b)(2) of this section, A must continue to include the remaining $3,400 (including $100 in 2021) in gross income ratably over the remaining portion of the applicable recovery period of 39 years. Alternatively, under paragraph (d)(1) of this section, A may irrevocably elect to include the remaining $3,400 in gross income in the taxable year that A sold its entire interest in the AB partnership to C (2021). Pursuant to paragraph (d)(2) of this section, A cannot make this election in the taxable year of the lease termination (2022).

(iii) At the time of the lease termination, B had previously included $1,200 ($200 for each of 2016-2021) in gross income under paragraph (b)(2) of this section. Under paragraph (b)(2) of this section, B must continue to include the remaining $6,600 required in gross income ratably over the remaining portion of the applicable recovery period of 39 years. Alternatively, under paragraph (d)(1) of this section, B may irrevocably elect to include the remaining $6,600 in gross income in the taxable year of the lease termination (2022).

(f) ***Applicability date.*** This section applies to property placed in service on or after September 19, 2016.

[T.D. 9872, 84 FR 34780, July 19, 2019]

§ 1.50-2 Recapture of the advanced manufacturing investment credit in the case of certain expansions.

(a) ***Recapture in connection with certain expansions*** —

(1) ***In general.*** Except as provided in section 50(a)(3)(B) of the Code and paragraph (a)(2) of this section, if an applicable taxpayer engages in an applicable transaction before the close of the applicable period, then the tax under chapter 1 for the taxable year in which such transaction occurs is increased by 100 percent of the applicable transaction recapture amount. Any taxpayer, including an applicable taxpayer, that engages in an applicable transaction during a taxable year does not meet the definition of an eligible taxpayer under section 48D(c) and the section 48D regulations and is ineligible for the section 48D credit for that taxable year. See paragraph (b) of this section for definitions of terms used in section 50(a)(3) and this section.

(2) ***Exception.*** Section 50(a)(3)(A) and paragraph (a)(1) of this section do not apply if the applicable taxpayer demonstrates to the satisfaction of the Commissioner that the applicable transaction has been ceased or abandoned within 45 days of a determination and notice by the Commissioner. A taxpayer that ceases or abandons a particular applicable transaction for a taxable year may still be treated as engaging in a different applicable transaction for a taxable year. A taxpayer may not circumvent the application of section 50(a)(3) and this section by engaging in a series of applicable transactions, multiple applicable transactions, or other similar arrangements.

(3) ***Carrybacks and carryover adjusted.*** In the case of any cessation described in section 50(a)(1) or (2), or any applicable transaction to which section 50(a)(3) and paragraph (a)(1) of this section apply, any carryback or carryover under section 39 of the Code is appropriately adjusted by reason of such cessation or applicable transaction.

(b) ***Definitions.*** The following definitions apply for purposes of section 50(a)(3) and this section.

(1) ***Applicable period.*** The term *applicable period* means the 10-year period beginning on the date that an applicable taxpayer placed in service property that is eligible for the section 48D credit.

(2) ***Applicable taxpayer*** —

(i) ***In general.*** Except as provided in paragraph (b)(2)(ii) of this section, the term *applicable taxpayer* means any taxpayer who was allowed a section 48D credit or made an election under section 48D(d)(1) with respect to such credit, for any taxable year prior to the taxable year in which such taxpayer entered into an applicable transaction.

(ii) ***Special rules for partnerships and S corporations and their partners and shareholders.*** In the case of qualified property placed in service by a partnership or an S corporation for which a section 48D credit was determined, the term *applicable taxpayer* also means—

(A) The partnership and the partners of such partnership (directly or indirectly through one or more tiered partnerships) who were allowed a section 48D credit for such property, or S corporation and the shareholder(s) of such S corporation who were allowed a section 48D credit for such property, for any taxable year prior to the taxable year in which such partnership or S corporation entered into an applicable transaction;

(B) Any partner in a partnership (directly or indirectly through one or more tiered partnerships) or any shareholder in an S corporation with respect to the partner's or S corporation shareholder's share of any section 48D credit allowed for such property for any taxable year prior to when such partner or S corporation shareholder entered into an applicable transaction;

(C) Any partnership or S corporation that made an election under section 48D(d)(2) with respect to a credit determined under section 48D(a)(1) for any taxable year prior to the taxable year in which such partnership or S corporation entered into an applicable transaction; and

(D) Any partner in a partnership (directly or indirectly through one or more tiered partnerships) or shareholder in an S corporation with respect to the partner's or S corporation shareholder's share of any tax-exempt income from the partnership or S corporation that made an election under section 48D(d)(2) for any taxable year prior to when such partner or shareholder entered into an applicable transaction.

(iii) ***Examples.*** The following examples illustrate the rules of this paragraph (b)(2).

(A) *Example 1: Applicable taxpayer: In general.* On July 1, 2026, X Corp, a calendar-year C corporation, entered into an applicable transaction. In 2025, X Corp had placed in service qualified property that is part of an advanced manufacturing facility and was allowed a section 48D credit for its 2025 taxable year. X Corp is an applicable taxpayer when it entered into the applicable transaction.

(B) *Example 2: Applicable taxpayer: In general.* The facts are the same as in paragraph (b)(2)(iii)(A) of this section (*Example 1*), except that X timely filed its 2025 tax return properly making an election under section 48D(d)(1) with respect to the section 48D credit. X Corp is an applicable taxpayer when it entered into the applicable transaction.

(C) *Example 3: Applicable taxpayer: Special rules for partnerships and S corporations and their partners and shareholders.* A, B, C, and D, all calendar-year C corporations, are partners in the ABCD partnership. Partners A, B, C, and D share partnership profits equally. On May 1, 2027, the ABCD partnership engages in an applicable transaction. On November 1, 2025, the ABCD partnership had placed in service qualified property with a basis of $1 million. Each partner's share of the basis of the qualified property, as determined in § 1.46-3(f)(2), is $250,000 ($1m x 0.25) and each partner's qualified investment is $250,000. A, B, C, and D each filed its 2025 tax return claiming a section 48D credit. The ABCD partnership and A, B, C, and D each are an applicable taxpayer when ABCD partnership enters into the applicable transaction.

(D) *Example 4: Applicable taxpayer: Special rules for partnerships and S corporations and their partners and shareholders.* The facts are the same as in paragraph (b)(2)(iii)(C) of this section (*Example 3*), except that on May 1, 2027, A, and not ABCD partnership, engages in an applicable transaction. A is an applicable taxpayer with respect to A's share of the section 48D credit when A enters into the applicable transaction. Neither the ABCD partnership nor partners B, C, nor D are an applicable taxpayer with respect to the applicable transaction entered into by A.

(E) *Example 5: Applicable taxpayer: Special rules for partnerships and S corporations and their partners and shareholders.* The facts are the same as in paragraph (b)(2)(iii)(C) of this section (*Example 3*), except that A, B, C and D do not claim a section 48D credit on their timely filed 2025 tax returns. Instead, the ABCD partnership makes an election pursuant to section 48D(d)(2) with respect to the section 48D credit determined under section 48D(a)(1). The ABCD partnership is an applicable taxpayer with respect to the elective payment to the ABCD partnership pursuant to section 48D(d)(2)(A)(i)(I).

(F) *Example 6: Applicable taxpayer: Special rules for partnerships and S corporations and their partners and shareholders.* The facts are the same as in paragraph (b)(2)(iii)(E) of this section (*Example 5*), except that the ABCD partnership did not engage in an applicable transaction. On May 1, 2027, A engages in an applicable transaction. A is an applicable taxpayer with respect to its share of tax-exempt income allocated to A pursuant to section 48D(d)(2)(A)(i)(II) and (IV). Neither the ABCD partnership nor partners B, C, or D are an applicable taxpayer with respect to the applicable transaction entered into by A.

(iv) ***Affiliated groups.*** For purposes of this paragraph (b)(2), all members of an affiliated group under section 1504(a) of the Code, determined without regard to section 1504(b)(3), are treated as one taxpayer.

(3) ***Applicable transaction.*** Except as provided in section 50(a)(6)(D)(ii) and paragraph (c)(1) of this section, the term *applicable transaction* means, with respect to any applicable taxpayer, any significant transaction involving the material expansion of semiconductor manufacturing capacity of such applicable taxpayer in any foreign country of concern.

(4) ***Applicable transaction recapture amount.*** The term *applicable transaction recapture amount* means, with respect to an applicable taxpayer, the aggregate decrease in the credits allowed under section 38 of the Code for all prior taxable years that would have resulted solely from reducing to zero any credit determined under section 46 of the Code that is attributable to the advanced manufacturing investment credit under section 48D(a), with respect to property that has been placed in service during the applicable period.

(5) ***Existing facility.*** The term *existing facility* means any facility built, equipped, and operating prior to a taxpayer placing in service qualified property as defined in section 48D(b)(2) and § 1.48D-3. Existing facilities are defined by their semiconductor manufacturing capacity at the time the qualified property is placed in service; facilities that undergo significant renovations, as defined in paragraph (b)(9) of this section, will no longer qualify as existing facilities within the meaning of this paragraph (b)(5).

(6) ***Foreign country of concern.*** The term *foreign country of concern* has the same meaning as provided in 15 CFR 231.102.

(7) ***Material expansion.*** The term *material expansion* means—

(i) With respect to an existing facility, the increase of the semiconductor manufacturing capacity of that facility by more than five percent during the applicable period due to the addition of a cleanroom, production line or other physical space, or a series of such additions; or

(ii) Any construction of a new facility for semiconductor manufacturing.

(8) ***Semiconductor manufacturing capacity.*** The term *semiconductor manufacturing capacity* means, consistent with 15 CFR 231.117, the productive capacity of a semiconductor facility. In the case of a semiconductor wafer production facility that includes the processes of growing single-crystal ingots and boules, wafer slicing, wafer bonding, etching and polishing, cleaning, epitaxial deposition, and metrology, semiconductor manufacturing capacity is measured in wafer starts per month. In the case of a semiconductor fabrication facility, semiconductor manufacturing capacity is measured in wafer starts per year. In the case of a packaging facility, semiconductor manufacturing capacity is measured in packages per year.

(9) ***Significant renovations.*** The term *significant renovations* means building new cleanroom space or adding a production line or other physical space to an existing facility that, in the aggregate during the applicable period, increases semiconductor manufacturing capacity by 10 percent or more of the capacity.

(10) ***Significant transaction*** —

(i) ***In general.*** As determined in coordination with the Secretary of Commerce and the Secretary of Defense and except as provided in paragraph (b)(10)(ii) of this section, the term *significant transaction* means any of the following:

(A) An investment, whether proposed, pending, or completed, including any capital expenditure, loan, or gift;

(B) The formation of a subsidiary, whether classified as a corporation or partnership for Federal tax purposes;

(C) A merger, acquisition, or takeover, including—

(*1*) The acquisition of a new or additional ownership interest in an entity;

(*2*) The acquisition of a material portion of the assets of an entity; or

(*3*) A consolidation;

(D) The formation of a joint venture; or

(E) A long-term lease or concession arrangement under which a lessee (or equivalent) makes substantially all business decisions concerning the operation of a leased entity (or equivalent), as if it were the owner.

(F) A transaction that involves the expansion of manufacturing capacity for legacy semiconductors (other than with respect to an existing facility or equipment of an applicable taxpayer for manufacturing legacy semiconductors) if less than 85 percent of the output of the semiconductor manufacturing facility (for example, wafers, semiconductor devices, or packages) by value, is incorporated into final products (that is, not an intermediate product that is used as factory inputs for producing other goods) that are used or consumed in the market of a foreign country of concern; or

(G) A transaction during the applicable period in which an applicable taxpayer knowingly (within the meaning of 15 CFR 231.106) engages in any joint research, as defined in 15 CFR 231.105, or technology licensing effort with a foreign entity of concern that relates to a technology or product that raises national security concerns.

(ii) ***Required agreement.*** If a taxpayer enters into a required agreement with the Secretary of Commerce pursuant to 15 U.S.C. 4652(a)(6)(C) and 15 CFR 231.112, then the term *significant transaction* for purposes of section 48D and the section 48D regulations has the meaning provided in the required agreement. Defined terms in the required agreement control only for purposes of determining the meaning of the term *significant transaction.* Thus, the effect of a significant transaction is determined under section 50(a)(3) and (6) during the applicable term defined under paragraph (b)(1) of this section.

(11) ***Technology licensing.*** The term *technology licensing* has the same meaning as provided in 15 CFR 231.120.

(12) ***Technology or product that raises national security concerns.*** The term *technology or product that raises national security concerns* has the same meaning as provided in 15 CFR 231.121.

(c) ***Exception from the definition of applicable transaction for the manufacturing of legacy semiconductors*** —

(1) ***In general.*** The term *applicable transaction,* as defined in section 50(a)(6)(D) and paragraph (b)(3) of this section, does not include a transaction that primarily involves the expansion of manufacturing capacity for legacy semiconductors, but only to the extent not described in paragraph (b)(10)(i)(F) of this section.

(2) ***Legacy semiconductor.*** The term *legacy semiconductor* has the same meaning as provided in 15 CFR 231.107.

(d) ***Example: Applicable transaction credit claimed.*** On January 15, 2025, X Corp, a C corporation that is a calendar-year taxpayer, placed in service Property A, qualified property with a basis of $1 million. X Corp's qualified investment, as determined in § 1.46-3(c), for the taxable year is $1 million. X Corp's advanced manufacturing investment credit for the taxable year is $250,000 ($1 million × 0.25) and, assume that X Corp's income tax liability is $400,000. X Corp does not determine any other credits in 2025. X claims an advanced manufacturing investment credit of $250,000 for its 2025 taxable year. On December 15, 2026, X Corp engages in an applicable transaction, as defined in section 50(a)(6)(D) and paragraph (b)(3) of this section and did not cease or abandon the transaction within 45 days of a determination and notice by the Commissioner. X Corp has not determined or claimed any general business credits since its 2025 taxable year. The aggregate decrease in credits allowed under section 38 for all prior years resulting from reducing to zero any credit determined under section 46 that is attributable to the advanced manufacturing investment credit is $250,000 ($250,000 (credit allowed)−$0 (credit that would have been allowed)). X Corp's tax under chapter 1 is increased by $250,000 (1.0 × $250,000) for the 2026 taxable year. Pursuant to section 48D(c), for the 2026 taxable year, X Corp is not an eligible taxpayer and is ineligible to claim or carryforward the advanced manufacturing investment credit.

(e) ***Applicability date.*** This section applies to property that is placed in service after December 31, 2022, and during a taxable year ending on or after October 23, 2024.

[T.D. 10009, 89 FR 84761, Oct. 23, 2024]

RULES FOR COMPUTING CREDIT FOR EXPENSES OF WORK INCENTIVE PROGRAMS

§ 1.50A-1 Determination of amount.

(a) ***In general.*** Except as otherwise provided in this section and in § 1.50A-2, the amount of the work incentive program (WIN) credit allowed by section 40 for the taxable year is equal to 20 percent of the taxpayer's WIN expenses (as determined under paragraph (a) of § 1.50B-1). The amount equal to 20 percent of the WIN expenses shall be referred to in this section and §§ 1.50A-2 through 1.50B-5 as the “credit earned.”

(b) ***Limitation based on amount of tax.*** Notwithstanding the amount of the credit earned for the taxable year, under section 50A(a)(2) the credit allowed by section 40 for the taxable year is limited to—

(1) If the liability for tax (as defined in paragraph (c) of this section) is $25,000 or less, the liability for tax; or

(2) If the liability for tax is more than $25,000, then, the first $25,000 of the liability for tax plus 50 percent of the liability for tax in excess of $25,000. However, such $25,000 amount may be reduced in the case of certain married individuals filing separate returns (see paragraph (e) of this section); corporations which are members of a controlled group (see paragraph (f) of this section); estates and trusts (see paragraph (c) of § 1.50B-3); and organizations to which section 593 applies, regulated investment companies or real estate investment trusts subject to taxation under subchapter M, chapter 1 of the Code, and cooperative organizations described in section 1381(a) (see § 1.50B-5). The excess of the credit earned for the taxable year over the limitations described in this paragraph for such taxable year is an unused credit which may be carried back or forward to other taxable years in accordance with § 1.50A-2.

(c) ***Liability for tax.*** For the purpose of computing the limitation based on amount of tax, section 50A(a)(3) defines the liability for tax as the income tax imposed for the taxable year by chapter 1 of the Code, reduced by the sum of the credits allowable under—

(1) Section 33 (relating to taxes of foreign countries and possessions of the United States,

(2) Section 37 (relating to credit for the elderly),

(3) Section 38 (relating to investment in certain depreciable property), and

(4) Section 41 (relating to contributions to candidates for public office).

For purposes of this paragraph, the tax imposed for the taxable year by section 56 (relating to imposition of minimum tax for tax preferences), section 72(m)(5)(B) (relating to 10 percent tax on premature distributions to owner-employees), section 402(e) (relating to tax on lump sum distributions), section 408(f) (relating to additional tax on income from certain retirement accounts), section 531 (relating to imposition of accumulated earnings tax), section 541 (relating to imposition of personal holding company tax), or section 1378 (relating to tax on certain capital gains of subchapter S corporations), and any additional tax imposed for the taxable year by section 1351(d)(1) (relating to recoveries of foreign expropriation losses), shall not be considered tax imposed by chapter 1 of the Code for such year. Thus, the liability for tax for purposes of computing the limitation based on amount of tax for the taxable year is determined without regard to any tax imposed by sections 56, 72(m)(5)(B), 402(e), 408(f), 531, 541, 1351(d)(1) or 1378 of the Code. In addition, any increase in tax resulting from the application of section 50A (c) and (d) and § 1.50A-3 (relating to recomputation of credit allowed due to early termination of employment by employer, or failure to pay comparable wages) shall not be treated as tax imposed by chapter 1 of the Code for purposes of computing the liability for tax. See section 50A (c)(3) and (d)(2).

(d) ***Example.*** The application of paragraphs (a), (b), and (c) of this section may be illustrated by the following example:

Example. X Corporation's WIN expenses for its taxable year ending December 31, 1973, are $500,000. X's credit earned for its taxable year is $100,000 (20 percent of $500,000). X's income tax for such year, computed without regard to credits against tax and without regard to any tax imposed by section 56, 531, 541, 1351(d)(1) or 1378, is $190,000. That amount includes $5,000 resulting from the application of section 50A(c)(3) and § 1.50 A-3. X is allowed under section 33 a foreign tax credit of $50,000. X's liability for tax is computed as follows:

Income tax (including increase in tax under section 50A(c)(3), but before any credits and without regard to any tax imposed by section 56, 531, 541, 1351(d)(1) or 1378)		$190,000
Less:		
Increase in tax resulting from application of section 50A(c)(3)	$5,000	
Foreign tax credit	50,000	
		55,000

Liability for tax	135,000

Under section 50A(a)(2) and paragraph (b) of this section, X's limitation based on amount of tax for the taxable year is $80,000 ($25,000 plus 50 percent of $110,000). X Corporation's credit allowed by section 40 for the taxable year therefore is $80,000. X has an unused credit for the year of $20,000 ($100,000 less $80,000) which it may carry back or forward to other taxable years in accordance with § 1.50A-2.

(e) ***Married individuals.*** If a separate return is filed by a husband or wife, the limitation based on amount of tax under paragraph (b) of this section shall be computed by substituting a $12,500 amount for the $25,000 amount in applying such paragraph (b). However, this reduction of the $25,000 amount to $12,500 applies only if the taxpayer's spouse is entitled to a credit under section 40 for the taxable year of such spouse which ends with, or within, the taxpayer's taxable year. The taxpayer's spouse is entitled to a credit under section 40 either because of incurring WIN expenses for such taxable year of the spouse (whether directly incurred by such spouse or whether apportioned to such spouse, for example, from an electing small business corporation, as defined in section 1371(b)), or because of a credit carryback or carryover to such taxable year under § 1.50A-2. The determination of whether an individual is married shall be made under the principles of section 143 and the regulations thereunder.

(f) ***Apportionment of $25,000 amount among component members of a controlled group*** —

(1) ***In general.*** In determining the limitation based on amount of tax under section 50A(a)(2) in the case of corporations which are component members of a controlled group of corporations on a December 31, only one $25,000 amount is available to such component members for their taxable years that include such December 31. See subparagraph (2) of this paragraph for apportionment of such amount among such component members. See subparagraph (3) of this paragraph for the definition of "component member."

(2) ***Manner of apportionment.***

(i) In the case of corporations which are component members of a controlled group on a particular December 31, the $25,000 amount may be apportioned among such members for their taxable years that include such December 31 in any manner the component members may select, provided that each such member less than 100 percent of whose stock is owned, in the aggregate, by the other component members of the group on such December 31 consents to an apportionment plan. The consent of a component member to an apportionment plan with respect to a particular December 31 shall be made by means of a statement signed by a person duly authorized to act on behalf of the consenting member, stating that such member consents to the apportionment plan with respect to such December 31. The statement shall set forth the name, address, employer identification number, and taxable year of each component member of the group on such December 31, the amount apportioned to each such member under the plan, and the location of the Internal Revenue Service center where the statement is to be filed. The consent of more than one component member may be incorporated in a single statement. The statement shall be timely filed with the Internal Revenue Service center where the component member having the taxable year first ending on or after such December 31 files its

return for such taxable year and shall be irrevocable after such filing. If two or more component members have the same such taxable year, a statement of consent may be filed by any one of such members. Such statement shall be considered as timely filed if filed on or before the due date (including any extensions of time) of such member's income tax return which includes such December 31. However, if the due date (including any extensions of time) of the return of such member is on or before December 15, 1972, the required statement shall be considered as timely filed if filed on or before March 15, 1973. Each component member of the group on such December 31 shall keep as a part of its records a copy of the statement containing all the required consents.

(ii) An apportionment plan adopted by a controlled group with respect to a particular December 31 shall be valid only for the taxable year of each member of the group which includes such December 31. Thus, a controlled group must file a separate consent to an apportionment plan with respect to each taxable year which includes a December 31 as to which an apportionment plan is desired.

(iii) If an apportionment plan is not timely filed, the $25,000 amount specified in section 50A(a)(2) shall be reduced for each component member of the controlled group, for its taxable year which includes a December 31, to an amount equal to $25,000 divided by the number of component members of each group on such December 31.

(iv) If a component member of the controlled group makes its income tax return on the basis of a 52-53 week taxable year, the principles of section 441(f)(2)(A)(ii) and paragraph (b)(1) of § 1.441-2 apply in determining the last day of such taxable year.

(3) ***Definitions of controlled group of corporations and component member of controlled group.*** For the purpose of this paragraph, the terms “controlled group of corporations” and “component member” of a controlled group of corporations shall have the same meaning assigned to those terms in section 1563 (a) and (b) and the regulations thereunder. For purposes of applying § 1.1563-1(b)(2)(ii)(*c*), an electing small business corporation shall be treated as an excluded member whether or not it is subject to the tax imposed by section 1378.

(4) ***Members of a controlled group filing a consolidated return.*** If some component members of a controlled group join in filing a consolidated return pursuant to § 1.1502-3(a)(3), and other component members do not join, then, unless a consent is timely filed apportioning the $25,000 amount among the group filing the consolidated return and the other component members of the controlled group, each component member of the controlled group (including each component member which joins in filing the consolidated return) shall be treated as a separate corporation for purposes of equally apportioning the $25,000 amount under subparagraph (2)(iii) of this paragraph. In such case, the limitation based on the amount of tax for the group filing the consolidated return shall be computed by substituting for the $25,000 amount the total of the amount apportioned to each component member which joins in filing the consolidated return. If the affiliated group, filing the consolidated return and the other component members of the controlled group adopt an apportionment plan, the affiliated group shall be treated as a single member for the purpose of applying subparagraph (2)(i) of this paragraph. Thus, for example, only one consent executed by the common parent to the apportionment plan is required for the group filing the consolidated return. If any component member of the controlled group which joins in the filing of the consolidated return is an organization to which section 593 applies or a cooperative organization described in section 1381(a), rules similar to the rules contained in paragraph (a)(3)(ii) of § 1.1502-3 are applicable.

(5) ***Examples.*** The provisions of this paragraph may be illustrated by the following examples:

Example 1. At all times during 1972 Smith, an individual, owns all the stock of corporations X, Y, and Z. Corporation X files an income tax return on a calendar year basis. Corporation Y files an income tax return on the basis of a fiscal year ending June 30. Corporation Z files an income tax return on the basis of a fiscal year ending September 30. On December 31, 1972, X, Y, and Z are component members of the same controlled group. X, Y, and Z all consent to an apportionment plan in which the $25,000 amount is apportioned entirely to Y for its taxable year ending June 30, 1973 (Y's taxable year which includes December 31, 1972). Such consent is timely filed. For purposes of computing the credit under section 40, Y's limitation based on amount of tax for its taxable year ending June 30, 1973, is so much of Y's liability for tax as does not exceed $25,000, plus 50 percent of Y's liability for tax in excess of $25,000. X's and Z's limitations for their taxable years ending December 31, 1972, and September 30, 1973, respectively, are equal to 50 percent of X's liability for tax and 50 percent of Z's liability for tax. On the other hand, if an apportionment plan is not timely filed, X's limitation would be so much of X's liability for tax as does not exceed $8,333.33, plus 50 percent of X's liability in excess of $8,333.33, and Y's and Z's limitations would be computed similarly.

Example 2. At all times during 1972, Jones, an individual, owns all the outstanding stock of corporations P, Q, and R. Corporations Q and R both file returns for taxable year ending December 31, 1972. P files a consolidated return as a common parent for its fiscal year ending June 30, 1973, with its wholly owned subsidiaries N and O. On December 31, 1972, N, O, P, Q, and R are component members of the same controlled group. No consent to an apportionment plan is filed. Therefore, each member is apportioned $5,000 of the $25,000 amount ($25,000 divided equally among the five members). The limitation based on the amount of tax for the group filing the consolidated return (P, N, and O) for the year ending June 30, 1973 (the consolidated taxable year within which December 31, 1972, falls), is computed by using $15,000 instead of the $25,000 amount. The $15,000 is arrived at by adding together the $5,000 amounts apportioned to P, N, and O.

[38 FR 6152, Mar. 7, 1973, as amended by T.D. 7636, 44 FR 47049, Aug. 10, 1979]

§ 1.50A-2 Carryback and carryover of unused credit.

(a) ***Allowance of unused credit as carryback or carryover*** —

(1) ***In general.*** Section 50A(b)(1) provides for carrybacks and carryovers of any unused credit. An unused credit is the excess of the credit earned for the taxable year (as determined under paragraph (a) of § 1.50A-1) over the limitation based on amount of tax for such taxable year (as determined under paragraph (b) of § 1.50A-1). Subject to the limitation contained in paragraph (b) of this section, an unused credit shall be added to the amount allowable as a credit under section 40 for the years to which the unused credit can be carried. The year with respect to which an unused credit arises shall be referred to in this section as the "unused credit year."

(2) ***Taxable years to which unused credit may be carried.*** An unused credit shall be a work incentive program (WIN) credit carryback to each of the 3 taxable years preceding the unused credit year and a WIN credit carryover to each of the 7 taxable years succeeding the unused credit year, except that an unused credit shall be a carryback only to taxable years beginning after December 31, 1971. An unused credit must be carried first to the earliest of the taxable years to which it may be carried, and

then to each of the other taxable years (in order of time) to the extent that the unused credit may not be added (because of the limitation contained in paragraph (b) of this section) to the amount allowable as a credit under section 40 for a prior taxable year.

(b) ***Limitation on allowance of unused credit.*** The amount of the unused credit from any particular unused credit year which may be added to the amount allowable as a credit under section 40 for any of the preceding or succeeding taxable years to which such credit may be carried shall not exceed the amount by which the limitation based on amount of tax for such preceding or succeeding taxable year exceeds the sum of

(1) the credit earned for such preceding or succeeding year, and

(2) other unused credits carried to such preceding or succeeding year which are attributable to unused credit years prior to the particular unused credit year.

(c) ***Corporate acquisitions.*** For the carryover of unused credits in the case of certain corporate acquisitions, see section 381(c)(24) and the regulations thereunder. [§ 1.381(c)(24)-1]

(d) ***Periods of less than 12 months.*** A fractional part of a year which is considered as a taxable year under sections 441(b) and 7701(a)(23) shall be treated as a preceding or a succeeding taxable year for the purpose of determining under section 50A(b) and this section the taxable years to which an unused credit may be carried.

(e) ***Example.*** The provisions of paragraphs (a) through (d) of this section may be illustrated by the following example:

Example. Corporation X files its income tax return on the basis of the calendar year. X's credit earned and its limitation based on amount of tax for each of its taxable years 1972 through 1978 are as follows:

	Credit earned	Limitation based on amount of tax
1972	$175,000	$200,000
1973	250,000	160,000
1974	200,000	210,000
1975	210,000	230,000
1976	220,000	260,000
1977	260,000	220,000
1978	270,000	280,000

(i) Corporation X's credit earned for 1972, $175,000, is allowable in full as a credit under section 40 for 1972 since such amount is less than the limitation based on amount of tax for such year, $200,000. Since the limitation based on amount of tax for 1973 is $160,000, only $160,000 of the $250,000 credit earned for such year is allowable under section 40 as a credit for 1973. The unused credit for 1973 of $90,000 ($250,000 less $160,000) is a WIN credit carryback to 1972 and

a WIN credit carryover to 1974 and subsequent years up to and including 1980. The portion of the $90,000 unused credit which shall be added to the amount allowable as a credit under section 40 for 1972 and 1974 and subsequent years is computed as follows:

(*a*) *1972.* The portion of the unused credit for 1973 ($90,000) which is allowable as a credit for 1972 is $25,000. This amount shall be added to the amount allowable as a credit for 1972. The balance of the unused credit for 1973 to be carried to 1974 is $65,000. These amounts are computed as follows:

Carryback to 1972			$90,000
1972 limitation based on tax		$200,000	
Less: Credit earned for 1972	$175,000		
Unused credits attributable to years preceding 1973	0		
		175,000	
Limit on amount of 1973 unused credit which may be added as a credit for 1972			25,000
Balance of 1973 unused credit to be carried to 1974			65,000

(*b*) *1974.* The portion of the balance of the unused credit for 1973 ($65,000) allowable as a credit for 1974 is $10,000. This amount shall be added to the amount allowable as a credit for 1974. The balance of the unused credit for 1973 to be carried to 1975 is $55,000. These amounts are computed as follows:

Carryover to 1974			$65,000
1974 limitation based on tax		$210,000	
Less: Credit earned for 1974	$200,000		
Unused credits attributable to years preceding 1973	0		
		200,000	
Limit on amount of 1973 unused credit which may be added as a credit for 1974			10,000
Balance of 1973 unused credit to be carried to 1975			55,000

(*c*) *1975.* The portion of the balance of the unused credit for 1973 ($55,000) allowable as a credit for 1975 is $20,000. This amount shall be added to the amount allowable as a credit for 1975. The balance of the unused credit for 1973 to be carried to 1976 is $35,000. These amounts are

computed as follows:

Carryover to 1975			$55,000
1975 limitation based on tax		$230,000	
Less: Credit earned for 1975	$210,000		
Unused credits attributable to years preceding 1973	0		
		210,000	
Limit on amount of 1973 unused credit which may be added as a credit for 1975			$20,000
Balance of 1973 unused credit to be carried to 1976			35,000

(*d*) *1976.* The entire balance of the unused credit for 1973 ($35,000) is allowable as a credit for 1976, since the limitation based on amount of tax for 1976 exceeds the sum of the credit earned for 1976 and unused credits attributable to years prior to 1973 by an amount in excess of $35,000. Since the balance of the unused credit for 1973 has been fully allowed, no portion thereof remains to be carried to subsequent taxable years. This is illustrated as follows:

Carryover to 1976			$35,000
1976 limitation based on tax		$260,000	
Less: Credit earned for 1976	$220,000		
Unused credits attributable to years preceding 1973	0		
		220,000	
Limit on amount of 1973 unused credit which may be added as a credit for 1976			40,000
Balance of 1973 unused credit to be carried to 1977			0

(ii) Since the limitation based on amount of tax for 1977 is $220,000, only $220,000 of the $260,000 credit earned for such year is allowable as a credit for 1977. The unused credit for 1977 of $40,000 ($260,000 less $220,000) is a WIN credit carryback to 1974, 1975, and 1976 and a WIN credit carryover to 1978 and subsequent years. The portions of the $40,000 unused credit which shall be added to the amount allowable as a credit for such years are computed as follows:

(*a*) *1974.* The portion of the unused credit for 1977 ($40,000) allowable as a credit for 1974 is zero. The balance of the unused credit for 1977 to be carried to 1975 is $40,000. These amounts are computed as follows:

Carryback to 1974			$40,000
1974 limitation based on tax		$210,000	
Less: Credit earned for 1974	$200,000		
Unused credits attributable to years preceding 1977 (unused credit from 1973)	10,000		
		$210,000	
Limit on amount of 1977 unused credit which may be added as a credit for 1974			0
Balance of 1977 unused credit to be carried to 1975			40,000

(*b*) *1975.* The portion of the unused credit for 1977 ($40,000) allowable as a credit for 1975 is zero. The balance of the unused credit for 1977 to be carried to 1976 is $40,000. These amounts are computed as follows:

Carryback to 1975			$40,000
1975 limitation based on tax		$230,000	
Less: Credit earned for 1975	$210,000		
Unused credits attributable to years preceding 1977 (unused credit from 1973)	20,000		
		230,000	
Limit on amount of 1977 unused credit which may be added as a credit for 1975			0
Balance of 1977 unused credit to be carried to 1976			40,000

(*c*) *1976.* The portion of the unused credit for 1977 ($40,000) allowable as a credit for 1976 is $5,000. This amount shall be added to the amount allowable as a credit for 1976. The balance of the unused credit for 1977 to be carried to 1978 is $35,000. These amounts are computed as follows:

Carryback to 1976			$40,000
1976 limitation based on tax		$260,000	
Less: Credit earned for 1976	$220,000		

Unused credits attributable to years preceding 1977 (unused credit from 1973)	35,000		
		255,000	
Limit on amount of 1977 unused credit which may be added as a credit for 1976			5,000
Balance of 1977 unused credit to be carried to 1978			35,000

(*d*) *1978.* The portion of the balance of the unused credit for 1977 ($35,000) allowable as a credit for 1978 is $10,000. This amount shall be added to the amount allowable as a credit for 1978. The balance of the unused credit for 1977 to be carried to 1979 and subsequent years is $25,000. These amounts are computed as follows:

Carryover to 1978			$35,000
1978 limitation based on tax		$280,000	
Less: Credit earned for 1978	$270,000		
Unused credits attributable to years preceding 1977	0		
		$270,000	
Limit on amount of 1977 unused credit which may be added as a credit for 1978			$10,000
Balance of 1977 unused credit to be carried to 1979			25,000

(f) ***Electing small business corporation.*** An unused credit of a corporation which arises in an unused credit year for which the corporation is not an electing small business corporation (as defined in section 1371(b)) and which is a carryback or carryover to a taxable year for which the corporation is an electing small business corporation shall not be added to the amount allowable as a credit under section 40 to the shareholders of such corporation for any taxable year. However, a taxable year for which the corporation is an electing small business corporation shall be counted as a taxable year for purposes of determining the taxable years to which such unused credit may be carried.

[38 FR 6153, Mar. 7, 1973]

§ 1.50A-3 Recomputation of credit allowed by section 40.

(a) ***General rule*** —

(1) ***Early termination of employment by employer*** —

(i) ***In general.*** If the employment of any employee, with respect to whom work incentive program (WIN) expenses (as defined in paragraph (a) of § 1.50B-1) are taken into account under paragraph (a) of § 1.50A-1, is terminated by the taxpayer at any time during the first 12 months of such employment (whether or not consecutive) or before the close of the 12th calendar month after the calendar month in which such employee completes the first 12 months of

employment (whether or not consecutive) with the taxpayer, then subparagraph (3) of this paragraph shall apply. See paragraph (c) of this section for rules relating to the determination of the first 12 months of employment (whether or not consecutive). See § 1.50A-4 for rules relating to other circumstances under which a termination of employment will not be treated as a termination of employment to which the provisions of subparagraph (3) of this paragraph are applicable.

(ii) ***Rules for determining whether a termination of employment has occurred.*** For purposes of this section, the taxpayer is deemed to have terminated the employment of any WIN employee (as defined in paragraph (h) of § 1.50B-1) if the employment relationship (as determined under common law principles) has terminated. A layoff for any reason is considered a termination of employment for purposes of the preceding sentence. However, a temporary suspension of employment of any WIN employee necessitated by the installation of new equipment or by the retooling of existing equipment (such as for a model changeover in the automobile industry) shall not be deemed to be a termination of employment if such suspension is for a period of time no longer than 60 days. For purposes of this section, the death of the taxpayer is considered a termination of the employment relationship between the taxpayer and any WIN employee.

(2) ***Failure to pay comparable wages*** —

(i) ***In general.*** If, at any time during the period described in subparagraph (1)(i) of this paragraph, the taxpayer pays wages (as defined in section 50B(b) and paragraph (b) of § 1.50B-1) to an employee, with respect to whom WIN expenses are taken into account under paragraph (a) of § 1.50A-1, which are less than the wages paid to other employees of the taxpayer who perform comparable services, then subparagraph (3) of this paragraph shall apply.

(ii) ***Comparable services.***

(*a*) For purposes of subdivision (i) of this subparagraph, the term “comparable services” refers to services performed in work positions which require similar education, training, and skills. Comparable services are those associated with other work positions which require similar levels of judgment and responsibility, which make similar physical and mental demands of an employee, and which could easily be performed by the employee without substantial additional training or experience.

(*b*) If substantial training, skill, or experience are material to the performance of a particular job, a taxpayer may pay wages to a WIN employee which are less than those paid to other employees of the taxpayer who possess such training, skill, or experience. However, there must be a reasonable relationship between the lower wages or salary of such WIN employee and his relative lack of training, skill, or experience.

(3) ***Recomputation of credit earned.***

(i) If, by reason of subparagraph (1) or (2) of this paragraph, this subparagraph (3) is applicable, then the credit earned for all credit years (as defined in subdivision (ii)(*a*) of this subparagraph) shall be recomputed under the principles of paragraph (a) of § 1.50A-1 by not taking into account WIN expenses with respect to the employee (or employees) described in subparagraph (1) or (2) of this paragraph. There shall be recomputed under the principles of §§ 1.50A-1 and 1.50A-2 the credit allowed for all credit years and for any other taxable year affected by reason of the reduction in credit earned for such credit year or years, giving effect to such reduction in the computation of carrybacks or carryovers of unused credit from any taxable year. If the

recomputation described in the preceding sentence results, in the aggregate, in a decrease (taking into account any recomputation under this paragraph in respect of prior recapture years, as defined in subdivision (ii)(*b*) of this subparagraph) in the credits allowed for any credit year and for any other taxable year affected by the reduction in credit earned for any credit year, then the income tax for the recapture year shall be increased by the amount of such decrease in credits allowed. For treatment of such increase in tax, see paragraph (b) of this section. For special rules in the case of an electing small business corporation (as defined in section 1371(b)), an estate or trust, or a partnership, see respectively, § 1.50A-5, § 1.50A-6 or § 1.50A-7.

(ii) For purposes of this section and §§ 1.50A-4 through 1.50B-6—

(*a*) The term "credit year" means a taxable year in which WIN expenses with respect to the employee described in subparagraph (1) or (2) of this paragraph are taken into account under paragraph (a) of § 1.50A-1.

(*b*) The term "recapture year" means a taxable year in which a termination of employment (within the meaning of subparagraph (1) of this paragraph) or a failure to pay comparable wages (within the meaning of subparagraph (2) of this paragraph) occurs by reason of which the rule of subparagraph (3) of this paragraph becomes applicable.

(*c*) The term "recapture determination" means a recomputation made under this paragraph.

(b) ***Increase in income tax and reduction of WIN credit carryback and carryover*** —

(1) ***Increase in tax.*** Except as provided in subparagraph (2) of this paragraph, any increase in income tax under this section shall be treated as income tax imposed on the taxpayer by chapter 1 of the Code for the recapture year notwithstanding that without regard to such increase the taxpayer has no income tax liability, has a net operating loss for such taxable year, or no income tax return was otherwise required for such taxable year.

(2) ***Special rule.*** Any increase in income tax under this section shall not be treated as income tax imposed on the taxpayer by chapter 1 of the Code for purposes of determining the amount of the credits allowable to such taxpayer under—

(i) Section 33 (relating to taxes of foreign countries and possessions of the United States),

(ii) Section 35 (relating to partially tax-exempt interest received by individuals),

(iii) Section 37 (relating to retirement income),

(iv) Section 38 (relating to investment in certain depreciable property),

(v) Section 39 (relating to certain uses of gasoline, special fuels, and lubricating oil),

(vi) Section 40 (relating to expenses of work incentive programs), and

(vii) Section 41 (relating to contributions to candidates for public office).

(3) ***Reduction in credit allowed as a result of a net operating loss carryback.***

(i) If a net operating loss carryback from the recapture year or from any taxable year subsequent to the recapture year reduces the amount allowed as a credit under section 40 for any taxable year up to and including the recapture year, then there shall be a new recapture determination under paragraph (a) of this section for each recapture year affected, taking into account the reduced amount of credit allowed after application of the net operating loss carryback.

(ii) Subdivision (i) of this subparagraph may be illustrated by the following example:

> *Example.* (a) X Corporation, which makes its returns on the basis of a calendar year, hired WIN employees on March 1, 1972, and incurred $10,000 in WIN expenses with respect to these employees for the year. For the taxable year 1972, X Corporation's credit earned of $2,000 (20 percent of $10,000) was allowed under section 40 as a credit against its liability for tax of $2,000. In 1973 and 1974 X Corporation had no liability for tax and had no WIN expenses. In January 1974, X Corporation terminated the employees for whom the WIN expenses had been incurred. Since these terminations were not subject to the exceptions provided by § 1.50A-4, there was a recapture determination under paragraph (a) of this section. The income tax imposed by chapter 1 of the Code on X Corporation for the taxable year 1974 was increased by the $2,000 decrease in its credit earned for the taxable year 1972 (that is, the $2,000 original credit earned minus zero recomputed credit earned).
> (b) For the taxable year 1975, X Corporation has a net operating loss which is carried back to the taxable year 1972 and reduces its liability for tax, as defined in paragraph (c) of § 1.50A-1, for such taxable year to $800. As a result of such net operating loss carryback, X Corporation's credit allowed under section 40 for the taxable year 1972 is limited to $800 and the excess of $1,200 ($2,000 credit earned minus the $800 limitation based on amount of tax) is a WIN credit carryover to the taxable year 1973.
>
> (c) For 1975 there is a recapture determination under subdivision (i) of this subparagraph for the 1974 recapture year. The $2,000 increase in the income tax imposed on X Corporation for the taxable year 1974 is redetermined to be $800 (that is, the $800 credit allowed after taking into account the 1975 net operating loss minus zero credit which would have been allowed taking into account the 1974 recapture determination). In addition, X Corporation's $1,200 WIN credit carryover to the taxable year 1973 is reduced by $1,200 ($2,000 minus $800) to zero and X Corporation is entitled to a $1,200 refund of the $2,000 tax paid as a result of the 1974 recapture determination.

(4) ***Statement of recomputation.*** The taxpayer shall attach to his income tax return for the recapture year a separate statement showing in detail the computation of the increase in income tax imposed on such taxpayer by chapter 1 of the Code and the reduction in any WIN credit carryovers.

(c) ***Period of employment*** —

(1) ***Initial date of employment.*** For purposes of this section and §§ 1.50A-4 through 1.50B-6, the initial date of employment (for purposes of applying paragraph (a) (1) and (2) of this section and paragraphs (a)(1) and (f) of § 1.50B-1) is the date the WIN employee reports to the taxpayer (or in the case where the taxpayer is a partner of a partnership, a beneficiary of an estate or trust, or a shareholder of an electing small business corporation, to such partnership, estate, trust, or electing small business corporation) for work.

(2) ***Computation of the first 12 months of employment (whether or not consecutive).*** For purposes of computing the first 12 months of employment (whether or not consecutive), the first month of employment shall begin with the initial date of employment (as defined in subparagraph (1) of this paragraph) of the WIN employee, the second month of employment shall begin with the corresponding date in the following month, the third month of employment shall begin with the corresponding date in the next following month, and so forth. If the WIN employee performs any services during any such month (as determined under the preceding sentence), that month shall be counted in computing the WIN employee's "first 12 months of employment (whether or not consecutive)". If the WIN employee performs no services during any such month, that month shall not be counted in computing the WIN employee's "first 12 months of employment (whether or not consecutive)". Thus, if the initial date of employment of a WIN employee is June 15, the first month of employment of such employee shall be the period beginning June 15, and ending July 14. The second month of employment is the period beginning July 15 and ending August 14. If during such second month of employment the employee performs no services for the taxpayer, that month is not counted in determining the employee's first 12 months of employment (whether or not consecutive).

[38 FR 6154, Mar. 7, 1973]

§ 1.50A-4 Exceptions to the application of § 1.50A-3.

(a) ***In general.*** Notwithstanding the provisions of paragraph (a) of § 1.50A-3, a termination of employment shall not be deemed to occur if paragraph (b) (relating to voluntary termination of employment), paragraph (c) (relating to termination of employment due to disability), paragraph (d) (relating to termination of employment due to misconduct), paragraph (f) (relating to transactions to which section 381(a) applies), or paragraph (g) (relating to mere change in form of conducting a trade or business) applies.

(b) ***Voluntary termination of employment.*** A termination of employment shall not be deemed to occur for purposes of paragraph (a) of § 1.50A-3 if the employee voluntarily leaves the employment of the taxpayer. If the taxpayer makes the working conditions of the employee so untenable that the employee is, in effect, compelled by the taxpayer to quit, or if the employee is coerced into quitting, the employee will not be deemed to have voluntarily left the employment of the taxpayer. For purposes of the preceding sentence, a substantial reduction in the benefits of employment of an employee (such as a substantial decrease in the hours of the employee's working week) shall constitute untenable working conditions. An employee has voluntarily left the employment of the taxpayer if he leaves for any reason external to his employment, such as sickness or death in the employee's family which the employee feels necessitates his quitting work with the taxpayer to remain at home. Any employee who participates in an authorized strike (as finally determined by a court, labor relations administrative body, or arbiter) will not be deemed to have voluntarily left the employment of the taxpayer.

(c) ***Termination of employment due to death or disability.*** A termination of employment shall not be deemed to occur for purposes of paragraph (a) of § 1.50A-3 if, after the initial date of employment (as defined in paragraph (c)(1) of § 1.50A-3) and before the close of the period referred to in paragraph (a)(1) of § 1.50A-3, the employee becomes disabled, by reason of illness or injury (including a disability relating to the employment), to perform the services required by such employment, unless, before the close of such period:

(1) Such disability is removed,

(2) The employer knows of the removal of the disability, and

(3) The employer fails to offer reemployment to such employee.

The death of an employee shall not be deemed a termination of employment for purposes of paragraph (a) of § 1.50A-3.

(d) ***Termination of employment due to misconduct.*** A termination of employment shall not be deemed to occur for purposes of paragraph (a) of § 1.50A-3 if it is determined by the appropriate State administrative agency or State court that under the applicable State unemployment compensation law such termination was due to the misconduct of the WIN employee. If the WIN employee is not covered by the applicable State unemployment compensation law (or if the employee did not work for the minimum period required to qualify for unemployment compensation or if the employee did not apply for unemployment compensation), a termination of employment shall not be deemed to occur for purposes of paragraph (a) of § 1.50A-3 if the taxpayer demonstrates by convincing evidence that, were such employee covered by the applicable State unemployment compensation law (or if the employee had worked for such minimum period or if the employee had applied for unemployment compensation), he could reasonably have been found by such administrative agency or court to have been terminated for misconduct.

(e) ***Recordkeeping requirement.*** A taxpayer who is claiming that a termination of employment falls within the provisions of paragraph (b), (c), or (d) of this section shall maintain sufficient records to support his claim until the expiration of the pertinent period of limitations.

(f) ***Transactions to which section 381(a) applies*** —

(1) ***General rule.*** The employment relationship between the taxpayer and a WIN employee (as defined in paragraph (h) of § 1.50B-1) shall not be deemed terminated for purposes of paragraph (a) of § 1.50A-3 in the case of a transaction to which section 381(a) (relating to carryovers in certain corporate acquisitions) applies. If there is a termination of employment (within the meaning of paragraph (a) of § 1.50A-3 and this section) by the acquiring corporation with respect to the WIN employee described in the preceding sentence, or if the acquiring corporation fails to pay comparable wages to such employee (within the meaning of paragraph (a)(2) of § 1.50A-3), then paragraph (a)(3) of § 1.50A-3 shall apply to the acquiring corporation with respect to the credit allowed the acquired corporation as well as the credit allowed the acquiring corporation with respect to such employee. For purposes of the preceding sentence, the initial date of employment (as defined in paragraph (c)(1) of § 1.50A-3) of such employee with respect to the acquired corporation shall be deemed to be the initial date of employment of such employee with respect to the acquiring corporation and employment by the acquired corporation shall be deemed employment by the acquiring corporation.

(2) ***Examples.*** This paragraph may be illustrated by the following examples:

> *Example 1.* (i) X Corporation, a wholly owned subsidiary of Y Corporation, incurred WIN

expenses of $12,000 for its taxable year ending December 31, 1972, with respect to WIN employees hired on March 1, 1972. Both X and Y made their returns on the basis of a calendar year. For the taxable year 1972 X Corporation's credit earned of $2,400 (20 percent of $12,000) was allowed under section 40 as a credit against its liability for tax. On December 15, 1973, X Corporation is liquidated under section 332 and all of its assets and liabilities are transferred to Y Corporation in a transaction to which section 334(b)(2) is not applicable. In addition, Y Corporation continues the employment of the WIN employees which were employed by X Corporation and with respect to which X Corporation was allowed the credit for its taxable year 1972.
(ii) Under subparagraph (1) of this paragraph, a termination of employment of the WIN employees shall not be deemed to occur for purposes of paragraph (a)(1) of § 1.50A-3 due to the liquidation of X Corporation on December 15, 1973. Thus, no recapture determination under paragraph (a)(3) of § 1.50A-3 shall be made with respect to X Corporation.

Example 2. (i) The facts are the same as in Example 1 and, in addition, on February 2, 1974, Y Corporation terminates the employment of the employees with respect to whom X Corporation had incurred WIN expenses. The termination is a termination for purposes of paragraph (a)(1) of § 1.50A-3. For purposes of applying the period described in paragraph (a)(1) of § 1.50A-3, the date the employees reported for work at X Corporation is deemed to be the initial date of employment of the employees with respect to Y Corporation.
(ii) Under subparagraph (1) of this paragraph, a termination of employment of the WIN employees shall not be deemed to occur for purposes of paragraph (a)(1) of § 1.50A-3 due to the liquidation of X Corporation on December 15, 1973. However, a termination of employment of the WIN employees is deemed to occur for purposes of paragraph (a)(1) of § 1.50A-3 on February 2, 1974. Thus, Y Corporation shall make a recapture determination under paragraph (a) of § 1.50A-3 with respect to the credit allowed X Corporation with respect to the WIN employees.

(g) ***Mere change in form of conducting a trade or business*** —

(1) ***General rule.***

(i) The employment relationship between the taxpayer and a WIN employee (as defined in paragraph (h) of § 1.50B-1) shall not be deemed terminated for purposes of paragraph (a) of § 1.50A-3 in the case of a mere change in the form of conducting the trade or business in which such employment occurs, provided that the conditions set forth in subdivision (ii) of this subparagraph are satisfied.

(ii) The conditions referred to in subdivision (i) of this subparagraph are as follows:

(*a*) The WIN employee described in subdivision (i) of this subparagraph is retained in the same trade or business,

(*b*) The taxpayer retains a substantial ownership interest in such trade or business,

(*c*) Substantially all the assets necessary to operate such trade or business are transferred to the transferee who continues the employment of the WIN employee described in subdivision (i) of this subparagraph, and

(*d*) The basis of the assets described in (*c*) of this subdivision in the hands of the transferee is determined in whole or in part by reference to the basis of such assets in the hands of the transferor.

This subparagraph shall not apply if paragraph (e) of this section (relating to transactions to which section 381(a) applies) is applicable with respect to such transfer.

(2) ***Substantial interest.*** For purposes of this paragraph, the taxpayer shall be considered as having retained a substantial ownership interest in the trade or business only if, after the change in form, the ownership interest in such trade or business by such taxpayer—

(i) Is substantial in relation to the total ownership interests of all persons, or

(ii) Is equal to or greater than the ownership interest prior to the change in form.

Thus, where a taxpayer owns a 5-percent interest in a partnership, and, after the incorporation of that partnership, the taxpayer retains at least a 5-percent interest in the corporation, the taxpayer will be considered as having retained a substantial interest in the trade or business as of the date of the change in form because of the application of the rule contained in subdivision (ii) of this subparagraph.

(3) ***Termination of employment.***

(i) If employment of a WIN employee described in subparagraph (1)(i) of this paragraph is terminated by the transferee, the employment of such employee shall be deemed terminated by the taxpayer for purposes of paragraph (a) of § 1.50A-3. For purposes of determining the period described in paragraph (a)(1) of § 1.50A-3 with respect to such taxpayer employment by the transferee shall be deemed employment by the transferor.

(ii) If in any taxable year the taxpayer does not retain a substantial ownership interest in the trade or business directly or indirectly (through ownership in other entities provided that such other entities' bases in such interest are determined in whole or in part by reference to the basis of such interest in the hands of the taxpayer) then, for purposes of paragraph (a)(1) of § 1.50A-3, there shall be deemed to be a termination of employment of the WIN employees described in subparagraph (1)(i) of this paragraph on the first date on which such taxpayer does not retain a substantial interest in the trade or business. For purposes of determining the period described in paragraph (a)(1) of § 1.50A-3, employment by the transferee shall be deemed employment by the transferor. Any taxpayer who seeks to establish his interest in a trade or business under the rule of this subdivision shall maintain adequate records to demonstrate his indirect interest in such trade or business after any such transfer or transfers.

(iii) Notwithstanding subparagraph (1) of this paragraph and subdivision (ii) of this subparagraph in the case of a mere change in the form of a trade or business, if the interest of a taxpayer in the trade or business is reduced but such taxpayer has retained a substantial interest in such trade or business, paragraph (a)(2) of § 1.50A-5 (relating to electing small business corporations), paragraph (a)(2) of § 1.50A-6 (relating to estates or trusts), or paragraph (a)(2)(ii) of § 1.50A-7 (relating to partnerships) shall apply, as the case may be.

(4) ***Failure to pay comparable wages.*** If the transferee fails to pay comparable wages (within the meaning of paragraph (a)(2) of § 1.50A-3) to the WIN employee within the period described in paragraph (a)(1) of § 1.50A-3, then such failure shall be deemed to be a failure of the transferor (or in a case where the transferor is a partnership, estate, trust, or electing small business corporation, the partners, beneficiaries, or shareholders), and a recapture determination shall be made with respect to such WIN employee as provided in § 1.50A-3. For purposes of determining the period described in paragraph (a)(1) of § 1.50A-3 with respect to such transferor (or such partners, beneficiaries, or shareholders), employment by the transferee shall be deemed employment by such transferor. For special rules in the case of an electing small business corporation (as defined in section 1371(b)), an estate or trust, or a partnership, see respectively, § 1.50A-5, § 1.50A-6, or § 1.50A-7.

(5) ***Examples.*** This paragraph may be illustrated by the following examples in each of which it is assumed that the transfer satisfies the conditions of subparagraphs (1)(ii) (*a*), (*c*) and (*d*) of this paragraph.

Example 1. (i) On January 1, 1972, A, an individual, employed WIN employees in his sole proprietorship. A incurred WIN expenses with respect to these employees of $12,000 for the taxable year ending December 31, 1972. For the taxable year 1972 A's credit earned of $2,400 (20 percent of $12,000) was allowed under section 40 as a credit against his liability for tax. On March 15, 1973, A transferred all of the assets used in his sole proprietorship to X Corporation, a newly formed corporation, in exchange for 45 percent of the stock of X Corporation.
(i) Under subparagraph (1)(i) of this paragraph, paragraph (a) of § 1.50A-3 does not apply to the March 15, 1973, transfer to X Corporation.

Example 2. (i) The facts are the same as in Example 1 and in addition on June 1, 1973, X Corporation terminates the employment of WIN employees with respect to whom 50 percent of the WIN expenses were incurred during A's 1972 taxable year.
(ii) Under subparagraph (1)(i) of this paragraph, paragraph (a) of § 1.50A-3 does not apply to the March 15, 1973, transfer to X Corporation. However, under subparagraph (3)(i) of this paragraph, paragraph (a) of § 1.50A-3 applies to the June 1, 1973, termination of WIN employees by X Corporation. The actual period of employment of such WIN employees is 1 year and 5 months (that is, the period beginning on January 1, 1972, and ending on June 1, 1973). For taxable year 1972, A's recomputed credit earned is $1,200 (20 percent of $6,000). The income tax imposed by chapter 1 of the Code on A for the taxable year 1973 is increased by the $1,200 decrease in his credit earned for the taxable year 1972 (that is, $2,400 original credit earned minus $1,200 recomputed credit earned).

Example 3. (i) The facts are the same as in Example 1 and in addition on April 1, 1973, X Corporation begins paying wages to the employees referred to in Example 1 which are less than the wages paid to its other employees who perform comparable services.
(ii) Under subparagraph (1)(i) of this paragraph, paragraph (a)(1) of § 1.50A-3 does not apply to the March 15, 1973, transfer to X Corporation. However, under subparagraph (4) of this paragraph, paragraph (a) of § 1.50A-3 applies to the failure of X Corporation to pay wages to the WIN employees which are equal to the

wages paid to its other employees who perform comparable services. For taxable year 1972, A's recomputed credit earned is zero. The income tax imposed by chapter 1 of the Code on A for the taxable year 1973 is increased by the $2,400 decrease in his credit earned for the taxable year 1972.

Example 4. (i) On January 1, 1972, partnership ABC, which makes its returns on the basis of a calendar year, employed WIN employees. Partnership ABC incurred WIN expenses with respect to these employees of $20,000 for the taxable year. Partnership ABC has 10 partners who make their returns on the basis of a calendar year and share partnership profits equally. Each partner's share of the WIN expenses is 10 percent, that is, $2,000. On March 15, 1973, partnership ABC transfers all of the assets used in its trade or business to the X Corporation, a newly formed corporation, in exchange for its stock and immediately thereafter transfers 10 percent of the stock to each of the 10 partners.
(ii) Under subparagraph (1)(i) of this paragraph, paragraph (a)(1) of § 1.50A-1 does not apply to the March 15, 1973, transfer by the ABC Partnership to X Corporation.

Example 5. (i) The facts are the same as in Example 4 except that partnership ABC transfers 10 percent of the stock in X Corporation to each of eight partners, 20 percent to partner A, and cash to partner B.
(ii) Under subparagraph (1)(i) of this paragraph, with respect to all of the partners (including partner A) except partner B, paragraph (a)(1) of § 1.50A-3 does not apply to the March 15, 1973, transfer by the ABC Partnership. Paragraph (a)(1) of § 1.50A-3 applies with respect to partner B's $2,000 share of the WIN expenses. See paragraph (a)(2) of § 1.50A-7.

Example 6. (i) X Corporation operates a manufacturing business and a separate retail sales business. During the month of January 1972, X incurred WIN expenses in its manufacturing business. On February 10, 1973, X transfers all the assets used in its manufacturing business to Partnership XY in exchange for a 50 percent interest in such partnership.
(ii) Under subparagraph (1)(i) of this paragraph, paragraph (a)(1) of § 1.50A-3 does not apply to the February 10, 1973, transfer to Partnership XY.

[T.D. 7263, 38 FR 6156, Mar. 7, 1973; 38 FR 8656, Apr. 5, 1973]

§ 1.50A-5 Electing small business corporations.

(a) ***In general*** —

(1) ***Termination of employment by a corporation.*** If an electing small business corporation (as defined in section 1371(b)) or a former electing small business corporation terminates (in a termination subject to the provisions of paragraph (a) of § 1.50A-3) the employment of any WIN employee with respect to whom WIN expenses have been paid or incurred, a recapture determination shall be made under § 1.50A-3 with respect to each shareholder who is treated, under paragraph (a) of § 1.50B-2 as a taxpayer who paid or incurred such expenses. Each such recapture determination shall be made with respect to the pro rata share of the WIN expenses of such employee which were taken into account by such shareholder under paragraph (a) of § 1.50B-2. For purposes of each such recapture determination the period of employment of such employee or employees shall be the period beginning with the initial date of employment (as defined in paragraph (c)(1) of § 1.50A-3) with

respect to the electing small business corporation and ending with the date of such employee's termination (as defined in paragraph (a)(1)(ii) of § 1.50A-3). For the definition of the term "recapture determination" see paragraph (a)(3) of § 1.50A-3.

(2) ***Disposition of shareholder's interest.***

(i) If—

(*a*) WIN expenses are apportioned to a shareholder of an electing small business corporation who takes such expenses into account in computing his WIN expenses, and

(*b*) After the end of the shareholder's taxable year in which such apportionment was taken into account and before the close of the period to which paragraph (a)(1) of § 1.50A-3 applies with respect to the employee to which such WIN expenses relate, such shareholder's proportionate stock interest in such corporation is reduced (for example, by a sale or redemption, or by the issuance of additional shares) below the percentage specified in subdivision (ii) of this subparagraph,

then, on the date of such reduction the employment of such employee shall be deemed terminated with respect to such shareholder to the extent of the actual reduction in such shareholder's proportionate stock interest. (For example, if $100 of WIN expenses were apportioned to a shareholder and if his proportionate stock interest is reduced from 60 percent to 30 percent (that is, 50 percent of his original interest), then the employment of the employee to which such WIN expenses relate shall be deemed terminated as to that shareholder to the extent of $50.) Accordingly, a recapture determination shall be made with respect to such shareholder. For purposes of such recapture determination the period of employment of any employee or employees with respect to whom WIN expenses were paid or incurred shall be the period beginning with the initial date of employment (as defined in paragraph (c)(1) of § 1.50A-3) with respect to the electing small business corporation and ending with the date on which such reduction occurs.

(ii) The percentage referred to in subdivision (i)(*b*) of this subparagraph is $66^{2}/_{3}$ percent of the shareholder's proportionate stock interest in the corporation on the date of the apportionment under paragraph (a) of § 1.50B-2. However, once employment of an employee has been treated under this subparagraph as having terminated with respect to the shareholder to any extent, the percentage referred to shall be $33^{1}/_{3}$ percent of the shareholder's proportionate stock interest in the corporation on the date of apportionment under paragraph (a) of § 1.50B-2.

(iii) In determining a shareholder's proportionate stock interest in a former electing small business corporation for purposes of this subparagraph, the shareholder shall be considered to own stock in such corporation which he owns directly or indirectly (through ownership in other entities provided such other entities' bases in such stock are determined in whole or in part by reference to the basis of such stock in the hands of the shareholder). For example, if A, who owns all of the 100 shares of the outstanding stock of corporation X, a corporation which was formerly an electing small business corporation, transfers on November 1, 1973, 70 shares of X stock to corporation Y in exchange for 90 percent of the stock of Y in a transaction to which section 351 applies, then, for purposes of subdivision (i) of this subparagraph, A shall be considered to own 93 percent of the stock of X, 30 percent directly and 63 percent indirectly

(*i.e.*, 90 percent of 70). Any taxpayer who seeks to establish his interest in the stock of a former electing small business corporation under the rule of this subdivision shall maintain adequate records to demonstrate his indirect interest in the corporation after any such transfer or transfers.

(3) ***Computation of the first 12 months of employment.*** The period described in paragraph (a)(1) of § 1.50A-3 shall not be affected by a change in the shareholders in such corporation and shall not be affected by a reduction in any shareholder's proportionate stock interest in such corporation (for example, by a sale or redemption or by the issuance of additional shares). Thus, the first 12 months of employment (whether or not consecutive) of any WIN employee shall be the same with respect to any shareholder who is allowed a credit under section 40 for salaries and wages paid or incurred for services rendered by such employee. Also, such first 12 months of employment and the period described in section 50B(c)(4) with respect to any WIN employee shall not be deemed to begin again in the case of a corporation making a valid election under section 1372.

(b) ***Election of a small business corporation under section 1372*** —

(1) ***General rule.*** If a corporation makes a valid election under section 1372 to be an electing small business corporation (as defined in section 1371(b)), then on the last day of the first taxable year immediately preceding the taxable year for which such election is effective, the employment of any WIN employees whose initial date of employment (as defined in paragraph (c)(1) of § 1.50A-3) occurred in taxable years prior to the first taxable year for which the election is effective (and whose employment has not been terminated prior to such last day) shall be considered as having been terminated on such last day with respect to the WIN expenses paid or incurred by such corporation and § 1.50A-3 shall apply to such corporation. However, if the corporation and each of the persons who are shareholders of the corporation on the first day of the first taxable year for which the election under section 1372 is to be effective, or on the date of such election, whichever is later, execute the agreement specified in subparagraph (2) of this paragraph, § 1.50A-3 shall not apply with respect to any such WIN expenses by reason of the election by the corporation under section 1372.

(2) ***Agreement of shareholders and corporation.***

(i) The agreement referred to in subparagraph (1) of this paragraph shall be signed by the shareholders and by the corporation. The agreement shall recite that:

(*a*) In the event the employment of any WIN employee described in subparagraph (1) of this paragraph is later terminated (in a termination subject to the rules contained in paragraph (a) of § 1.50A-3) during a taxable year of the corporation for which the election under section 1372 is effective, each signer agrees to notify the district director or the director of the Internal Revenue service center of such termination, and agrees to be jointly and severally liable to pay to the district director or the director of the Internal Revenue service center an amount equal to the increase in tax which would have been imposed by § 1.50A-3 on the corporation but for the agreement under this paragraph.

(*b*) In the event any WIN employee described in subparagraph (1) of this paragraph is paid wages (as defined in section 50B(b) and paragraph (b) of § 1.50B-1) by such electing corporation, which are less than the wages paid to other employees of such electing corporation who perform comparable services (as defined in paragraph (a)(2)(ii) of § 1.50A-3), during a taxable year of the corporation for which the election under section 1372 is effective, each signer agrees to notify the district director or the director of the

Internal Revenue service center of such failure to pay equal wages for comparable services, and agrees to be jointly and severally liable to pay to the district director or the director of the Internal Revenue service center an amount equal to the increase in tax which would have been imposed by § 1.50A-3 on the corporation as a result of such failure but for the election under section 1372.

For purposes of computing the period described in paragraph (a)(1) of § 1.50A-3, the period of employment by the corporation before the election under section 1372 shall be added to the period of employment by the electing small business corporation after such election.

(ii) The agreement shall set forth the name, address, and taxpayer account number of each party and the internal revenue district or service center in which each such party files his or its income tax return for the taxable year which includes the last day of the corporation's taxable year immediately preceding the first taxable year for which the election under section 1372 is effective. The agreement may be signed on behalf of the corporation by any person who is duly authorized. The agreement shall be filed with the district director or the director of the Internal Revenue service center with whom the corporation files its income tax return for its taxable year immediately preceding the first taxable year for which the election under section 1372 is effective and shall be filed on or before the due date (including extensions of time) of such return. For purposes of the preceding sentence, the district director or the director of the Internal Revenue service center may, if good cause is shown, permit the agreement to be filed on a later date.

(c) ***Examples.*** This section may be illustrated by the following examples:

Example 1. (i) X Corporation, an electing small business corporation which makes its returns on the basis of the calendar year, hired employees under a WIN program on July 1, 1972, and incurred expenses for such employees during the following 12 months at an initial rate of $10,000 per month. For taxable year 1972, X Corporation had 20 shares of stock outstanding which were owned equally by A and B who make their returns on the basis of a calendar year. Under paragraph (a) of this section, the WIN expenses were apportioned to the shareholders of X Corporation as follows:

	Period ending Dec. 31, 1973
Total WIN expenses for the taxable year	$60,000
Shareholder A (10/20)	30,000
Shareholder B (10/20)	30,000

Assuming that during 1972 shareholders A and B did not directly incur any WIN expenses and that they did not own any interest in other electing small business corporations, partnerships, estates, or trusts incurring WIN expenses, the WIN expenses attributable to each shareholder is $30,000. For the taxable year 1972, each shareholder's credit earned of $6,000 (20 percent of $30,000) was allowed under section 40 as a credit against his liability for tax.

(ii) On January 1, 1973, X Corporation terminates the employment of the employees accounting for 50 percent of its WIN expenses incurred to that date, or $30,000 in salaries and wages. The actual period of employment for these WIN employees was 6 months. For taxable year 1972, each shareholder's recomputed credit is $3,000 (20 percent of $15,000). The income tax imposed by chapter 1 of the Code on each of the shareholders for the taxable year 1973 is increased by the $3,000 decrease in his credit earned for the taxable year 1972 (that is, $6,000 original credit earned minus $3,000 recomputed credit earned).

Example 2. (i) The facts are the same as in subdivision (i) of example 1, except that on January 1, 1973, shareholder A sells five of his 10 shares of stock in X Corporation to C. No other changes in stock ownership occurred during 1973. Under paragraph (a)(2) of this section, the WIN expenses of X Corporation were apportioned on December 31, 1973, to the shareholders of X Corporation as follows:

	Period ending Dec. 31, 1972
Total WIN expenses for the taxable year	$60,000
Shareholder A (5/20)	15,000
Shareholder B (10/20)	30,000
Shareholder C (5/20)	15,000

(ii) Under paragraph (a)(2) of this section, on January 1, 1973, the employment of these WIN employees shall be deemed terminated by shareholder A with respect to 50 percent of the WIN expenses allocated to him since immediately after the January 1, 1973, sale A's proportionate stock interest in X Corporation is reduced to 50 percent of the proportionate stock interest in X Corporation which he held for taxable year 1972. The actual period of employment of the WIN employees accounting for the 50 percent of the WIN expenses originally allocated to A is 6 months (that is, the period beginning with July 1, 1972, and ending with January 1, 1973). The income tax imposed by chapter 1 of the Code on shareholder A for the taxable year 1973 is increased by the $3,000 decrease in his credit earned for the taxable year 1972 (that is, $6,000 original credit earned minus $3,000 recomputed credit earned).

(d) ***Termination or revocation of an election under section 1372.*** The employment of employees with respect to whom WIN expenses were paid or incurred shall not be considered to have been terminated solely by reason of a termination or revocation of a corporation's election under section 1372.

[38 FR 6158, Mar. 7, 1973]

§ 1.50A-6 Estates and trusts.

(a) *In general* —

(1) ***Termination of employment by an estate or trust.*** If an estate or trust terminates (in a termination subject to the provisions of paragraph (a) of § 1.50A-3) the employment of any employee with respect to whom WIN expenses have been paid or incurred, a recapture determination shall be made under § 1.50A-3 with respect to the estate or trust, and each beneficiary who is treated, under paragraph (a) of § 1.50B-3 as a taxpayer who paid or incurred such expenses. For purposes of each such recapture determination the period of employment of such employees shall be the period beginning with the initial date of employment (as defined in paragraph (c)(1) of § 1.50A-3) with respect to the estate or trust and ending with the date of such employee or employees' termination (as defined in paragraph (a)(1)(ii) of § 1.50A-3). For definition of "recapture determination" see paragraph (a)(3) of § 1.50A-3.

(2) ***Disposition of interest.***

(i) If—

(*a*) WIN expenses are apportioned to an estate or trust, or to a beneficiary of an estate or trust who takes such expenses into account in computing his WIN expenses, and

(*b*) After the end of the estate's, trust's, or beneficiary's taxable year in which such apportionment was taken into account and before the close of the period to which paragraph (a)(1) of § 1.50A-3 applies with respect to the employees to which such WIN expenses relate, such estate's, trust's, or such beneficiary's proportionate interest in the income of the estate or trust is reduced (for example, by a sale, or by the terms of the estate or trust instrument) below the percentage specified in subdivision (ii) of this subparagraph,

then, on the date of such reduction, the employment of such employee shall be deemed terminated with respect to such estate, trust, or beneficiary to the extent of the actual reduction in such estate's, trust's, or beneficiary's proportionate interest in the income of the estate or trust. (For example, if $100 of WIN expenses were apportioned to a beneficiary and if his proportionate interest in the income of the estate or trust is reduced from 60 percent to 30 percent (that is, 50 percent of his original interest), then the employment of the employee to which such WIN expenses relates shall be deemed terminated as to that beneficiary to the extent of $50.) Accordingly, a recapture determination shall be made with respect to such estate, trust, or beneficiary. For purposes of such recapture determination the period of employment of any employee or employees with respect to whom WIN expenses were paid or incurred shall be the period beginning with the initial date of employment (as defined in paragraph (c)(1) of § 1.50A-3) with respect to the estate or trust and ending with the date on which such reduction occurs.

(ii) The percentage referred to in subdivision (i)(*b*) of this subparagraph is $66^{2}/_{3}$ percent of the estate's, trust's, or beneficiary's proportionate interest in the income of the estate or trust for the taxable year of the apportionment under paragraph (a) of § 1.50B-3. However, once employment of an employee has been treated under this subparagraph as having terminated with respect to the estate, trust, or beneficiary to any extent, the percentage referred to shall be $33^{1}/_{3}$ percent of the estate's, trust's, or beneficiary's proportionate interest in the income of the estate or trust for the taxable year of the apportionment under paragraph (a) of § 1.50B-3.

(iii) In determining a beneficiary's proportionate interest in the income of an estate or trust for purposes of this subparagraph, the beneficiary shall be considered to own any interest in such an estate or trust which he owns directly or indirectly (through ownership in other entities provided such other entities' bases in such interests are determined in whole or in part by reference to the basis of such interest in the hands of the beneficiary). For example, if A, whose proportionate interest in the income of trust X is 30 percent, transfers all of such interest to corporation Y in exchange for all of the stock of Y in a transaction to which section 351 applies, then, for purposes of subdivision (i) of this subparagraph, A shall be considered to own a 30-percent interest in trust X. Any taxpayer who seeks to establish his interest in an estate or trust under the rule of this subdivision shall maintain adequate records to demonstrate his indirect interest in the estate or trust after any such transfer or transfers.

(b) ***Computation of the first 12 months of employment.*** The period described in paragraph (a)(1) of § 1.50A-3 shall not be affected by a change in the beneficiaries of an estate or trust and shall not be affected by a reduction or a termination of a beneficiary's interest in the income of such estate or trust. Thus, the period described in paragraph (a)(1) of § 1.50A-3 for any WIN employee shall be the same with respect to a trust or estate and any beneficiary of such trust or estate which is allowed a credit under section 40 for salaries and wages paid or incurred for services rendered by such employee. Also, such period with respect to any WIN employee shall not be deemed to begin again as the result of the acquisition of the interest by another.

(c) ***Examples.*** Paragraph (a) of this section may be illustrated by the following examples:

Example 1. (i) XYZ Trust, which makes its returns on the basis of the calendar year, hired employees under the WIN program on July 1, 1972, and incurred expenses for such employees during the following 12 months at an initial rate of $10,000 per month. For the taxable year 1972 the income of XYZ Trust is $60,000, which is allocated equally to XYZ Trust and beneficiary A. Beneficiary A makes his returns on the basis of a calendar year. Under paragraph (a) of this section, the WIN expenses were apportioned to XYZ Trust and to beneficiary A as follows:

	Period ending Dec. 31, 1972
Total WIN expenses for the taxable year	$60,000
XYZ Trust ($30,000/$60,000)	30,000
Beneficiary A ($30,000/$60,000)	30,000

Assuming that during 1972 beneficiary A did not directly incur any WIN expenses and that he did not own any interest in other estates, trusts, electing small business corporations, or partnerships incurring WIN expenses, the WIN expenses incurred by XYZ Trust and by beneficiary A are $30,000 each. For the taxable year 1972, XYZ Trust and beneficiary A each had a credit earned of $6,000. Each credit earned was allowed under section 40 as a credit against the liability for tax.

(ii) On January 1, 1973, XYZ Trust terminates the employment of its employees accounting for 50 percent

of its WIN expenses incurred to that date, or $30,000 in salaries and wages. The actual period of employment for these WIN employees was 6 months. For the taxable year 1972, XYZ Trust's and beneficiary A's recomputed credit is $3,000 (20 percent of $15,000). The income tax imposed by chapter 1 of the Code on XYZ Trust and on beneficiary A for the taxable year 1973 is increased by the $3,000 decrease in his credit earned for the taxable year 1972 (that is, $6,000 original credit earned minus $3,000 recomputed credit earned).

Example 2. (i) The facts are the same as in subdivision (i) of example 1, except that on January 1, 1973, beneficiary A sells 50 percent of his interest in the income of XYZ Trust to B. No other changes in income interest occurred during 1973. Under paragraph (a)(2) of § 1.50B-4, each beneficiary's share and the trust's share of the WIN expenses are apportioned as follows:

	Period ending Dec. 31, 1972
Total WIN expenses for the taxable year	$60,000
XYZ Trust ($30,000/$60,000)	30,000
Beneficiary A ($15,000/$60,000)	15,000
Beneficiary B ($15,000/$60,000)	15,000

(ii) Under paragraph (a)(2) of this section, on January 1, 1973, the employment of these WIN employees shall be deemed terminated by beneficiary A with respect to 50 percent of the WIN expenses allocated to him since immediately after the January 1, 1973, sale A's proportionate interest in the income of XYZ Trust is reduced to 50 percent of his proportionate interest in the income of XYZ Trust for the taxable year 1972. The period of employment of the WIN employees accounting for the 50 percent of the WIN expense originally allocated to A is 6 months (that is, the period beginning with July 1, 1972, and ending with December 31, 1972). For the taxable year 1972 beneficiary A's recomputed credit earned is $3,000 (20 percent of $15,000). The income tax imposed by chapter 1 of the Code on beneficiary A for the taxable year 1973 is increased by the $3,000 decrease in his credit earned for the taxable year 1972 (that is, $6,000 original credit earned minus $3,000 recomputed credit earned).

[38 FR 6159, Mar. 7, 1973]

§ 1.50A-7 Partnerships.

(a) ***In general*** —

(1) ***Termination of employment by a partnership.*** If a partnership terminates (in a termination subject to the provisions of paragraph (a) of § 1.50A-3) the employment of any WIN employee with respect to whom WIN expenses have been paid or incurred, a recapture determination shall be made under § 1.50A-3 with respect to each partner who is treated, under paragraph (a) of § 1.50B-4, as a taxpayer with respect to such expenses. Each such recapture determination shall be made with respect to the

share of the WIN expenses with respect to such employee which were taken into account by such partner under paragraph (a) of § 1.50B-4. For purposes of each such recapture determination the period of employment of any such employee shall be the period beginning with the initial date of employment (as defined in paragraph (c)(1) of § 1.50A-3) with respect to the partnership and ending with the date of such employee's termination (as defined in paragraph (a)(1)(ii) of § 1.50A-3). For the definition of "recapture determination" see paragraph (a)(3) of § 1.50A-3.

(2) ***Disposition of partner's interest.***

(i) If—

(*a*) WIN expenses are allocated to a partner of a partnership who takes such expenses into account in computing his WIN expenses, and

(*b*) After the end of the partner's taxable year in which such allocation was taken into account and before the close of the period to which paragraph (a)(1) of § 1.50A-3 applies with respect to the employee to which such WIN expenses relate, such partner's proportionate interest in the general profits of the partnership (or in the particular expenses) is reduced (for example, by a sale, by a change in the partnership agreement, or by the admission of a new partner) below the percentage specified in subdivision (ii) of this subparagraph,

then, on the date of such reduction the employment of such employee shall be deemed terminated with respect to such partner to the extent of the actual reduction in such partner's proportionate interest in the general profits (or in the particular expenses) of the partnership. (For example, if $100 of WIN expenses were taken into account by a partner and if his proportionate interest in the general profits of the partnership is reduced from 60 percent to 30 percent (that is, 50 percent of his original interest), then the employment of the employee to which such WIN expenses relate shall be deemed terminated as to that partner to the extent of $50.) Accordingly, a recapture determination shall be made with respect to such partner. For purposes of such recapture determination the period of employment of any employee or employees with respect to whom WIN expenses were paid or incurred shall be the period beginning with the initial date of employment (as defined in paragraph (c)(1) of § 1.50A-3) with respect to the partnership and ending with the date on which such reduction occurs.

(ii) The percentage referred to in subdivision (i)(*b*) of this subparagraph is $66^{2}/_{3}$ percent of the partner's proportionate interest in the general profits (or in the WIN expenses) of the partnership for the year of the apportionment under § 1.50B-4(a). However, once employment of an employee has been treated under this subparagraph as having terminated with respect to the partner to any extent, the percentage referred to shall be $33^{1}/_{3}$ percent of the partner's proportionate interest in the general profits (or in the WIN expenses) of the partnership for the taxable year of the apportionment under paragraph (a) of § 1.50B-4.

(iii) In determining a partner's proportionate interest in the general profits (or in the WIN expenses) of a partnership for purposes of this subparagraph, the partner shall be considered to own any interest in such a partnership which he owns directly or indirectly (through ownership in other entities provided the other entities' bases in such interests are determined in whole or in part by reference to the basis of such interest in the hands of the partner). For example, if A, whose proportionate interest in the general profits of partnership X is 20 percent, transfers all of such interest to Corporation Y in exchange for all of the stock of Y in a transaction to which section 351 applies then, for purposes of subdivision (i) of this subparagraph, A shall be considered to

own a 20 percent interest in partnership X. Any taxpayer who seeks to establish his interest in a partnership under the rule of this subdivision shall maintain adequate records to demonstrate his indirect interest in the partnership after any such transfer or transfers.

(3) ***Computation of the first 12 months of employment.*** The period described in paragraph (a)(1) of § 1.50A-3 shall not be affected by a change in the partners of such partnership and shall not be affected by a change in the ratio in which the partners divide the general profits (or the WIN expenses) of the partnership. Thus, such period for any WIN employee shall be the same with respect to any partner claiming a credit under section 40 for salaries and wages paid or incurred for services rendered by such employee.

(b) ***Examples.*** Paragraph (a) of this section may be illustrated by the following examples:

Example 1. (i) AB partnership, which makes its returns on the basis of the calendar year, hired employees under the WIN program on July 1, 1972, and incurred expenses for such employees during the following 12 months at an initial rate of $10,000 per month. Partners A and B, who make their returns on the basis of a calendar year, share the profits and losses of AB partnership equally. Under paragraph (a)(2) of this section, each partner's share of the WIN expenses was approportioned as follows:

	Period ending Dec. 31, 1972
Total WIN expenses for the taxable year	$60,000
Partner A's share (50 percent)	30,000
Partner B's share (50 percent)	30,000

Assuming that during 1972 A and B did not directly incur any WIN expenses and that they did not own any interest in other partnerships, electing small business corporations, estates, or trusts incurring WIN expenses, each partner's share of the WIN expenses is $30,000. For the taxable year 1972, each partner's credit earned of $6,000 (20 percent of $30,000) was allowed under section 40 as a credit against his liability for tax.

(ii) On January 1, 1973, AB partnership terminates the employment of its employees accounting for 50 percent of its WIN expenses incurred to that date, or $30,000 in salaries and wages. The actual period of employment for these WIN employees was 6 months. For the taxable year 1972, each partner's recomputed credit earned is $3,000 (20 percent of $15,000). The income tax imposed by chapter 1 of the Code on each of the partners for the taxable year 1973 is increased by the $3,000 decrease in his credit earned for the taxable year 1972 (that is, $6,000 original credit earned minus $3,000 recomputed credit earned).

Example 2. (i) The facts are the same as in subdivision (i) of example 1, except that on January 1, 1973, partner A sells one-half of his 50 percent interest in AB partnership to C, to form the ABC partnership. No other changes in the partners' proportionate interest in the general profits of the partnership occurred

during 1973. Under paragraph (a)(2) of this section, each partner's share of the WIN expenses was apportioned on December 31, 1973, as follows:

	Period ending Dec. 31, 1973
Total WIN expenses for the taxable year	$60,000
Partner A's share (25 percent)	15,000
Partner B's share (50 percent)	30,000
Partner C's share (25 percent)	15,000

(ii) Under paragraph (a)(2) of this section, on January 1, 1973, the employment of these WIN employees shall be deemed terminated by partner A with respect to 50 percent of the WIN expenses allocated to him since immediately after the January 1, 1973, sale, A's proportionate interest in the general profits of ABC partnership is reduced to 50 percent of his proportionate interest in the general profits of AB partnership for 1972. The period of employment of the WIN employees accounting for the 50 percent of the WIN expenses originally allocated to A is 6 months (that is, the period beginning with July 1, 1972, and ending with December 31, 1972). For the taxable year 1972 partner A's recomputed credit earned is $3,000 (20 percent of $15,000). The income tax imposed by chapter 1 of the Code on partner A for the taxable year 1973 is increased by the $3,000 decrease in his credit earned for the taxable year 1972 (that is, $6,000 original credit earned minus $3,000 recomputed credit earned).

[38 FR 6160, Mar. 7, 1973]

§ 1.50B-1 Definitions of WIN expenses and WIN employees.

(a) ***WIN expenses*** —

(1) ***In general.*** Except as otherwise provided in paragraphs (b) through (g) of this section, for purposes of §§ 1.50A-1 through 1.50B-5, the term “work incentive program expenses” (referred to in §§ 1.50A-1 through 1.50B-5 as “WIN expenses”) means the salaries and wages paid or incurred by the taxpayer for services rendered during the first 12 months of employment (whether or not consecutive) by an employee who is certified by the Secretary of Labor as—

(i) Having been placed in employment by the taxpayer (or if the taxpayer is a partner of a partnership, beneficiary of an estate or trust, or a shareholder of an electing small business corporation, by such partnership, estate, trust, or electing small business corporation) under a work incentive (WIN) program established under section 432(b)(1) of the Social Security Act (42 U.S.C. 632(b)(1)), and

(ii) Not having displaced any individual from employment.

The term “WIN expenses” includes only salaries and wages paid or incurred in taxable years beginning after December 31, 1971. See paragraph (c) of § 1.50A-3 for rules relating to the determination of the first 12 months of employment (whether or not consecutive).

(2) ***Examples.*** The provisions of subparagraph (1) of this paragraph may be illustrated by the following examples:

Example 1. X Corporation, an accrual basis taxpayer which files its return on the basis of the calendar year, hired an employee on July 1, 1971, who was certified by the Secretary of Labor under this paragraph. The first 12 months of employment were continuous. X is entitled to the credit provided by section 40 with respect to the salaries or wages incurred during its taxable year beginning January 1, 1972, for services rendered by that employee during the period beginning July 1, 1971, and ending June 30, 1972.

Example 2. Y, a cash basis taxpayer who files his return on the basis of the calendar year, employed A, an employee certified by the Secretary of Labor under this paragraph, on July 1, 1971. A's first 12 months of employment were continuous. Y paid A on the basis of a semimonthly payroll period, but paid his payroll 2 days after the close of the payroll period during which the wages were earned. Thus, Y paid A on January 2, 1972, for services rendered between December 16, 1971, and December 31, 1971. Y is entitled to the credit provided by section 40 with respect to the wages paid for services rendered by A during the period beginning December 16, 1971, and ending June 30, 1972, because those wages were paid by Y in a taxable year beginning after December 31, 1971.

(b) ***Salaries and wages.*** For purposes of this section, the term “salaries and wages” means only cash remuneration including a check. Amounts deducted and withheld from the employee's pay (for example, taxes and contributions to health and retirement plans) shall be deemed to be cash remuneration even though not actually paid directly to the employee.

(c) ***Trade or business expenses.*** The term “WIN expenses” includes only salaries and wages which are paid or incurred in a trade or business of the taxpayer and which are deductible in computing taxable income. Thus, salaries and wages paid to domestic employees in a private home are not “WIN expenses”.

(d) ***Reimbursed expenses*** —

(1) ***In general.*** The term “WIN expenses” does not include salaries and wages to the extent that the taxpayer is reimbursed for such salaries or wages from any source.

(2) ***Example.*** Subparagraph (1) of this paragraph may be illustrated by the following example:

Example. X Company, which makes its return on the basis of the calendar year, hired WIN employees on January 1, 1972. X Company has a cost-plus construction contract with the Federal Government. The fact that X has a construction contract with the Federal Government or anyone else does not change its character from a normal business transaction in which there has been a sale of materials and services. Thus, the salaries or wages paid or incurred for services rendered by these WIN employees would not be reimbursed expenses, and X would be entitled to the credit provided by section 40.

(e) ***Geographical limitation*** —

(1) ***In general.*** The term “WIN expenses” does not include salaries and wages paid or incurred for services rendered outside the United States (as defined in sections 638 (relating to Continental Shelf areas) and 7701(a)(9). However, services rendered by any WIN employee outside the United States (as defined in sections 638 (relating to Continental Shelf areas) and 7701(a)(9)) shall contribute to such employee's first 12 months of employment (whether or not consecutive) for purposes of paragraph (a) of § 1.50A-3 and paragraph (a) of this section.

(2) ***Example.*** Subparagraph (1) of this paragraph may be illustrated by the following example:

Example. X Corporation, which files its return on the basis of the calendar year, hired A, a WIN employee, on January 1, 1972, and continuously employed him for the following 24-month period. During January and February of 1972, X paid A's wages while he received training conducted in Puerto Rico. For the remainder of the calendar year A performed services for X within the United States. For purposes of paragraph (a) of § 1.50A-3 and paragraph (a) of this section, A's first 12 months of employment are January 1, 1972, to December 31, 1972. Under subparagraph (1) of this paragraph no wages paid to A for services rendered during the months of January and February of 1972 may be taken into account by X under paragraph (a) of this section as WIN expenses because the services were rendered outside the United States. However, X may take into account wages he has incurred with respect to A for the period March 1, 1972, to December 31, 1972.

(f) ***Maximum period of training or instruction.*** The term "WIN expenses" does not include salaries and wages paid or incurred for services rendered by a WIN employee after the end of the 24-month period beginning with the date of initial employment (as defined in paragraph (c)(1) of § 1.50A-3) of the WIN employee.

(g) ***Ineligible individuals.*** The term "WIN expenses" does not include salaries and wages paid or incurred for services rendered by a WIN employee who—

(1) Bears any of the relationships described in paragraphs (1) through (8) of section 152(a) of the Code to the taxpayer, or, if the taxpayer is a corporation, to an individual who owns, directly or indirectly, more than 50 percent in value of the outstanding stock of the corporation (determined with the application of section 267(c) of the Code),

(2) If the taxpayer is an estate or trust, is a grantor, beneficiary, or fiduciary of the estate or trust, or is an individual who bears any of the relationships described in paragraphs (1) through (8) of section 152(a) of the Code to a grantor, beneficiary, or fiduciary of the estate or trust, or

(3) Is a dependent (described in section 152(a)(9) of the Code) of the taxpayer, or, if the taxpayer is a corporation, of an individual described in subparagraph (1), or, if the taxpayer is an estate or trust, of a grantor, beneficiary, or fiduciary of the estate or trust.

(h) ***WIN employee.*** For purposes of §§ 1.50A-1 through 1.50B-5 the term "WIN employee" means an employee who is certified by the Secretary of Labor as meeting the requirements of paragraphs (a)(1) (i) and (ii) of this section.

(i) [Reserved]

(j) ***Special rule applicable to transactions to which section 381(a) applies and transactions involving a mere change in form of conducting a trade or business.*** The first 12 months of employment (whether or not consecutive) and the period described in section 50B (c)(4) of any WIN employee, for purposes of determining the amount of WIN expenses (as defined in paragraph (a) of § 1.50B-1), shall not be affected by transactions to which the rule contained in paragraph (f) (relating to transaction to which section 381(a) (relating to certain corporate acquisitions) applies), or paragraph (g) (relating to a mere change in form of conducting a trade or business) of § 1.50A-4 applies.

[38 FR 6161, Mar. 7, 1973]

§ 1.50B-2 Electing small business corporations.

(a) *General rule* —

(1) ***In general.*** In the case of an electing small business corporation (as defined in section 1371 (b)), WIN expenses (as defined in paragraph (a) of § 1.50B-1) shall be apportioned pro rata among the persons who are shareholders of such corporation on the last day of such corporation's taxable year, and shall be taken into account for the taxable years of such shareholders within which or with which the taxable year of such corporation ends. The WIN expenses for each employee shall be apportioned separately. In determining who are shareholders of an electing small business corporation on the last day of its taxable year, the rules of paragraph (d)(1) of § 1.1371-1 and of paragraph (a)(2) of § 1.1373-1 shall apply.

(2) ***Shareholder as taxpayer.*** A shareholder to whom WIN expenses are apportioned shall, for purposes of the credit allowed by section 40, be treated as the taxpayer who paid or incurred the expenses allocated to him. If a shareholder takes into account in determining his WIN expenses any WIN expenses with respect to an employee of an electing small business corporation, and if the employment of such employee is terminated in a termination subject to the rules contained in paragraph (a) of § 1.50A-3, or if the electing small business corporation fails to pay comparable wages and such failure is subject to the rules contained in paragraphs (a) (2) and (3) of § 1.50A-3, then such shareholder shall make a recapture determination under the provisions of section 50A (c) and (d) of the Code and § 1.50A-3. See § 1.50A-5.

(3) ***Computation of the first 12 months of employment.*** The first 12 months of employment (whether or not consecutive) and the period described in section 50B(c)(4) of any WIN employee for purposes of determining the amount of WIN expenses (as defined in paragraph (a) of § 1.50B-1) shall not be affected by a change in the shareholders in such corporation and shall not be affected by a reduction in any shareholder's proportionate stock interest in such corporation (for example, by a sale or redemption or by the issuance of additional shares). Thus, the first 12 months of employment (whether or not consecutive) of any WIN employee shall be the same with respect to any shareholder claiming a credit under section 40 for salaries and wages paid or incurred for services rendered by such employee. Also, such first 12 months of employment and the period described in section 50B(c)(4), with respect to any WIN employee, shall not be deemed to begin again because of the making of a valid election under section 1372.

(b) ***Summary statement.*** An electing small business corporation shall attach to its return a statement showing the apportionment to each shareholder of its WIN expenses with respect to each WIN employee.

(c) ***Examples.*** Paragraph (a) of this section may be illustrated by the following examples:

> *Example 1.* (i) X Corporation, an electing small business corporation which files its returns on the basis of the calendar year, hired WIN employees on July 1, 1972, whose employment was continuous for the next 24 months. A, a shareholder, has a 10 percent interest in X Corporation. X Corporation incurred $24,000 in wages with respect to these WIN employees in calendar year 1972, and $48,000 in calendar year 1973. Assuming that during 1972 shareholder A did not directly incur any other WIN expenses and did not own any other interest in other electing small business corporations, partnerships, estates, or trusts that incurred WIN expenses, for taxable year 1972 shareholder A's credit earned of $480 (10 percent (A's ownership interest) multiplied by $24,000 of WIN expenses multiplied by 20 percent) was allowed under

section 40 as a credit against his liability for tax.
(ii) On March 1, 1973, shareholder A sold all of his interest to B, a new shareholder. Therefore, the employment of the WIN employees is deemed terminated for purposes of paragraph (a) of § 1.50A-3 with respect to shareholder A. For taxable year 1972, A's recomputed credit is zero because the termination occurred before the end of the period described in paragraph (a)(1) of § 1.50A-3. The income tax imposed by chapter 1 of the Code on A for the taxable year 1973 is increased by the $480 decrease in his credit earned for the taxable year 1972 (that is, $480 original credit earned minus zero recomputed credit earned). Under paragraph (a) of this section A has no credit earned for 1973.

(iii) Under paragraph (a)(1) of this section, assuming that during 1973 shareholder B did not directly incur any other WIN expenses and that he did not own any interest in other electing small business corporations, partnerships, estates, or trusts that incurred WIN expenses, shareholder B's credit earned is $480 (10 percent (B's ownership interest) multiplied by $24,000 of WIN expenses multiplied by 20 percent) and is allowable under section 40 as a credit against his liability for tax. Under paragraph (a)(3) for purposes of determining the period of employment that may be taken into account by B the initial date of employment of these WIN employees relates back to the date they were first employed, *i.e.,* July 1, 1972. Thus, the first 12 months of employment ends on June 30, 1973.

Example 2. (i) Y Corporation, an electing small business corporation which files its return on the basis of the calendar year, hires five WIN employees in 1972. The WIN expenses incurred with respect to each employee are as follows:

WIN employee No.	WIN expenses
1	$6,000
2	5,000
3	4,000
4	4,000
5	3,000
Total	22,000

On December 31, 1972, Y Corporation has 10 shares of stock outstanding which are owned as follows: A owns 3 shares, B owns 2 shares, and C owns 5 shares.

(ii) Under this section, the WIN expenses are apportioned to the shareholders of Y Corporation as follows:

WIN employees	1	2	3	4	5	Total
Total WIN expenses	$6,000	$5,000	$4,000	$4,000	$3,000	
Shareholder A (3/10)	1,800	1,500	1,200	1,200	900	6,600
Shareholder B (2/10)	1,200	1,000	800	800	600	4,400
Shareholder C (5/10)	3,000	2,500	2,000	2,000	1,500	11,000

Assume that shareholders A, B, and C did not directly incur any other WIN expenses during their taxable year in which falls December 31, 1972 (the last day of Y Corporation's taxable year), and that such shareholders did not own any interest in other electing small business corporations, partnerships, estates or trust that incurred WIN expenses. The total WIN expenses of shareholder A are $6,600, of shareholder B are $4,400, and of shareholder C are $11,000.

[38 FR 6162, Mar. 7, 1973]

§ 1.50B-3 Estates and trusts.

(a) ***General rule*** —

(1) ***In general.*** In the case of an estate or trust, WIN expenses (as defined in paragraph (a) of § 1.50B-1) shall be apportioned among the estate or trust and its beneficiaries on the basis of the income of such estate or trust allocable to each. There shall be apportioned to the estate or trust for its taxable year, and to each beneficiary of such estate or trust for his taxable year in which or with which the taxable year of such estate or trust ends, his share (as determined under paragraph (b) of this section) of the total WIN expenses. The WIN expenses for each employee shall be apportioned separately.

(2) ***Beneficiary as taxpayer.*** A beneficiary to whom WIN expenses are apportioned shall, for purposes of the credit allowed by section 40, be treated as the taxpayer who paid or incurred such WIN expenses allocated to him. If a beneficiary takes into account in determining his WIN expenses any portion of the WIN expenses paid or incurred by an estate or trust and if the employee with respect to which the WIN expenses were paid or incurred is terminated in a termination subject to the rules in paragraph (a) of § 1.50A-3, or if there is a failure (which is subject to the rules is paragraphs (a) (2) and (3) of § 1.50A-3) to pay such employee comparable wages then such beneficiary shall make a recapture determination under the provisions of section 50A (c) and (d) of the Code and § 1.50A-3. See § 1.50A-6.

(3) ***Beneficiary.*** For purposes of this section, the term “beneficiary” includes heir, legatee, and devisee.

(4) ***Special rule for termination of interest.*** If during the taxable year of an estate or trust a beneficiary's interest in the income of such estate or trust terminates, WIN expenses paid or incurred by such estate or trust after such termination shall not be apportioned to such beneficiary.

(b) ***Share.*** A trust's, estate's, or beneficiary's share of the WIN expenses with respect to each employee shall be:

(1) The total WIN expenses incurred in the taxable year of the estate or trust with respect to such employee, multiplied by

(2) The amount of income allocable to such estate or trust or to such beneficiary for such taxable year, divided by

(3) The sum of the amounts of income allocable to such estate or trust and all its beneficiaries taken into account under subparagraph (2) of this paragraph.

(c) ***Limitation based on amount of tax.*** In the case of an estate or trust, the $25,000 amount specified in section 50A(a)(2), relating to limitation based on amount of tax, shall be reduced for the taxable year to—

(1) $25,000, multiplied by

(2) The WIN expenses apportioned to such estate or trust under paragraph (a) of this section, divided by

(3) The WIN expenses apportioned among such estate or trust and its beneficiaries.

(d) ***Computation of the first 12 months of employment.*** The first 12 months of employment (whether or not consecutive) and the period described in section 50B(c)(4) of any WIN employee for purposes of determining the amount of WIN expenses (as defined in paragraph (a) of § 1.50B-1) shall not be affected by a change in the beneficiaries of an estate or trust and shall not be affected by a reduction or a termination of a beneficiary's interest in the income of such estate or trust. Thus, the first 12 months of employment (whether or not consecutive) of any WIN employee shall be the same with respect to trust or estate, and any beneficiary of such trust or estate claiming a credit under section 40 for salaries and wages paid or incurred for services rendered by such employee.

(e) ***Summary statement.*** An estate or trust shall attach to its return a statement showing the apportionment of WIN expenses with respect to each employee to such estate or trust and to each beneficiary.

(f) ***Examples.*** This section may be illustrated by the following examples:

Example 1. (1) XYZ trust, which makes its return on the basis of the calendar year, hires five WIN employees in 1972. The WIN expenses incurred with respect to each employee are as follows:

WIN employee No.	WIN expenses
1	$6,000
2	5,000
3	4,000
4	4,000
5	3,000

WIN employee No.	WIN expenses
Total	22,000

For the taxable year 1972 the income of XYZ trust is $10,000 which is allocable as follows: $5,000 to XYZ trust, $2,000 to beneficiary A, and $3,000 to beneficiary B. Beneficiaries A and B make their returns on the basis of a calendar year.

(2) Under this section, the WIN expenses are apportioned to XYZ trust and to its beneficiaries as follows:

WIN employees	1	2	3	4	5	Total
Total WIN expenses	$6,000	$5,000	$4,000	$4,000	$3,000	
XYZ Trust: $5,000/10,000	3,000	2,500	2,000	2,000	1,500	$11,000
Beneficiary A: $2,000/10,000	1,200	1,000	800	800	600	4,400
Beneficiary B: $3,000/10,000	1,800	1,500	1,200	1,200	900	6,600

Assume that beneficiary A hired a WIN employee during his taxable year 1972 and incurred $6,000 in wages. Also, assume that beneficiary B did not hire WIN employees during his taxable year 1972 and that beneficiaries A and B did not own any interests in other trusts, estates, partnerships, or electing small business corporations that hired WIN employees. The WIN expenses of XYZ trust are $11,000, of beneficiary A are $10,400, and of beneficiary B are $6,600.

(3) In the case of XYZ trust, the $25,000 amount specified in section 50A(a)(2) is reduced to $12,500, computed as follows: (i) $25,000 multiplied by (ii) $11,000 (WIN expense apportioned to the trust), divided by (iii) $22,000 (total WIN expenses apportioned among such trust ($11,000), beneficiary A ($4,400), and beneficiary B ($6,600)).

Example 2. The facts are the same as in example 1 except that beneficiary A's interest is reduced to zero. Under paragraph (a)(2) for purposes of determining the period of employment that may be taken into account by XYZ trust and by beneficiary B, the initial date of employment of the WIN employees relates back to the date they were first employed.

[38 FR 6163, Mar. 7, 1973]

§ 1.50B-4 Partnerships.

(a) ***General rule —***

(1) ***In general.*** In the case of a partnership, each partner shall take into account separately, for his taxable year with or within which the partnership taxable year ends, his share (as determined under subparagraph (3) of this paragraph) of the WIN expenses (as defined in paragraph (a) of § 1.50B-1) of employees employed by the partnership during such partnership's taxable year. The WIN expenses for each employee shall be allocated separately.

(2) ***Partner as taxpayer.*** Each partner shall be treated as the taxpayer who paid or incurred the share of the WIN expenses allocated to him. If a partner takes into account in determining his WIN expenses the WIN expenses of an employee of a partnership, and if the employment of such employee is terminated in a termination subject to the rules contained in paragraph (a) of § 1.50A-3, or if the partnership fails to pay comparable wages and such failure is subject to the rules contained in paragraphs (a) (2) and (3) of § 1.50A-3, then such partner shall make a recapture determination under the provisions of section 50A (c) and (d) of the Code and § 1.50A-3. See § 1.50A-7.

(3) ***Determination of partner's share.***

(i) Each partner's share of the WIN expenses shall be determined in accordance with the ratio in which the partners divide the general profits of the partnership (that is, the taxable income of the partnership as described in section 702 (a)(9)) regardless of whether the partnership has a profit or a loss for the taxable year during which the WIN expenses are paid or incurred. However, if the ratio in which the partners divide the general profits of the partnership changes during the taxable year of the partnership, the ratio effective for the date on which the WIN expenses are paid or incurred shall apply.

(ii) Notwithstanding subdivision (i) of this subparagraph, if the deduction with respect to any WIN expenses is specially allocated and if such special allocation is recognized under section 704 (a) and (b) and paragraph (b) of § 1.704-1, then each partner's share of the WIN expenses shall be determined by reference to such special allocation effective for the date on which the WIN expenses are paid or incurred.

(4) ***Computation of the first 12 months of employment.*** The first 12 months of employment (whether or not consecutive) and the period described in section 50B(c)(4) with respect to any WIN employee for purposes of determining the amount of WIN expenses (as defined in paragraph (a) of § 1.50B-1) shall not be affected by a change in the partners of such partnership and shall not be affected by a change in the ratio in which the partners divide the general profits of the partnership. Thus, the first 12 months of employment (whether or not consecutive) and the 24-month period described in section 50B(c)(4) of any WIN employee shall be the same with respect to any partner claiming a credit under section 40 for salaries and wages paid or incurred for services rendered by such employee.

(b) ***Summary statement.*** A partnership shall attach to its return a statement showing the allocation to each partner of its WIN expenses with respect to each WIN employee.

(c) ***Examples.*** Paragraph (a) of this section may be illustrated by the following examples:

Example 1. Partnership ABCD hires a WIN employee on January 1, 1972, and hires a second WIN employee on September 1, 1972. The ABCD partnership and each of its partners reports income on the basis of the calendar year. Partners A, B, C, and D share partnership profits equally. Each partner's share of the WIN expenses incurred with respect to these employees is 25 percent.

Example 2. Assume the same facts as in example 1 and the following additional facts: A dies on June 30, 1972, and B purchases A's interest as of such date. Each partner's share of the profits from January 1 to June 30 is 25 percent. From July 1 to December 31, B's share of the profits is 50 percent, and C and D's share of the profits is 25 percent each. B shall take into account 25 percent of the WIN expenses incurred during the period beginning January 1 and ending June 30 and 50 percent of the WIN expenses incurred during the remainder of the year with respect to the employee hired on January 1, 1972. Also, B shall take into account 50 percent of the WIN expenses incurred with respect to the employee hired on September 1, C and D shall each take into account 25 percent of the WIN expenses incurred with respect to the employees employed by the partnership in 1972. Under paragraph (a)(3), for purposes of determining the period of employment that may be taken into account by B, the initial date of employment of the WIN employee hired on January 1 relates back to the date he was first employed, *i.e.,* January 1, 1972.

Example 3. Partnership SH is engaged in manufacturing. Under the terms of the partnership agreements deductions attributable to the employment of WIN employees are specially allocated 70 percent to partner S and 30 percent to partner H. In all other respects S and H share profits and losses equally. If the special allocation with respect to the WIN expenses is recognized under section 704 (a) and (b) and paragraph (b) of § 1.704-1, the WIN expenses shall be taken into account, 70 percent by S and 30 percent by H.

Example 4. (i) LMN partnership, which files its return on the basis of the calendar year, hires five WIN employees in 1973. The WIN expenses incurred with respect to each employee are as follows:

WIN employee No.	WIN expenses
1	$6,000
2	5,000
3	4,000
4	4,000
5	3,000
Total	22,000

On December 31, 1973, the ratio in which the partners divide the general profits of the LMN partnership is as follows: L receives three-tenths of the general profits, M receives two-tenths of the general profits, and N receives five-tenths of the general profits.

(ii) Under this section the WIN expenses are apportioned to the partners of LMN partnership as follows:

WIN employees	1	2	3	4	5	Total
Total WIN expenses	$6,000	$5,000	$4,000	$4,000	$3,000	$22,000

WIN employees	1	2	3	4	5	Total
Partner L (3/10)	1,800	1,500	1,200	1,200	900	6,600
Partner M (2/10)	1,200	1,000	800	800	600	4,400
Partner N (5/10)	3,000	2,500	2,000	2,000	1,500	11,000

Assume that partners L, M, and N did not directly incur any other WIN expenses during their taxable year in which falls December 31, 1973 (the last day of LMN partnership's taxable year) and that such partners did not own any interest in other partnerships, electing small business corporations, estates, or trusts that incurred WIN expenses. The total WIN expenses of partner L are $6,600, of partner M are $4,400, and of partner N are $11,000.

[38 FR 6164, Mar. 7, 1973]

§ 1.50B-5 Limitations with respect to certain persons.

(a) ***Mutual savings institutions.*** In the case of an organization to which section 593 applies (that is, a mutual savings bank, a cooperative bank, or a domestic building and loan association)—

(1) WIN expenses shall be 50 percent of the amount otherwise determined under paragraph (a) of § 1.50B-1, and

(2) The $25,000 amount specified in section 50A(a)(2), relating to limitation based on amount of tax, shall be reduced by 50 percent of such amount.

For example, a domestic building and loan association incurs $30,000 in WIN expenses (as determined under paragraph (a) of § 1.50B-1) during its taxable year. However, under this paragraph such amount is reduced to $15,000 (50 percent of $30,000). If an organization to which section 593 applies is a member of a controlled group (as defined in section 50A(a)(5)), the $25,000 amount specified in section 50A(a)(2) shall be reduced in accordance with the provisions of paragraph (f) of § 1.50A-1 before such amount is further reduced under this paragraph.

(b) ***Regulated investment companies and real estate investment trusts.***

(1) In the case of a regulated investment company or a real estate investment trust subject to taxation under subchapter M, chapter 1 of the Code—

(i) The WIN expenses determined under paragraph (a) of § 1.50B-1, and

(ii) The $25,000 amount specified in section 50A(a)(2), relating to limitation based on amount of tax,

shall be reduced to such person's ratable share of each such amount. If a regulated investment company or a real estate investment trust is a member of a controlled group (as defined in section 50A (a)(5)), the $25,000 amount specified in section 50A(a)(2) shall be reduced in accordance with the provisions of paragraph (f) of § 1.50A-1 before such amount is further reduced under this paragraph.

(2) A person's ratable share of the amount described in subparagraph (1)(i) and the amount described in subparagraph (1)(ii) of this paragraph shall be the ratio which—

(i) Taxable income for the taxable year, bears to,

(ii) Taxable income for the taxable year plus the amount of the deduction for dividends paid taken into account under section 852(b)(2)(D) in computing investment company taxable income, or under section 857(b)(2)(B) (section 857(b)(2)(C), as then in effect, for taxable years ending before October 5, 1976) in computing real estate investment trust taxable income, as the case may be.

For purposes of the preceding sentence, the term “taxable income” means, in the case of a regulated investment company, its investment company taxable income (within the meaning of section 852(b)(2)) and, in the case of a real estate investment trust its real estate investment trust, taxable income (within the meaning of section 857(b)(2)). In the case of a taxable year ending after October 4, 1976, real estate investment trust taxable income, for purposes of this paragraph, is determined by excluding any net capital gain, and by computing the deduction for dividends paid without regard to capital gains dividends (as defined in section 857(b)(3)(C)). The amount of the deduction for dividends paid includes the amount of deficiency dividends (other than capital gains deficiency dividends) taken into account in computing investment company taxable income or real estate investment trust taxable income for the taxable year. See section 860(f) for the definition of deficiency dividends.

(3) This paragraph may be illustrated by the following example:

> *Example.* (i) Corporation X, a regulated investment company subject to taxation under section 852 of the Code, which makes its return on the basis of the calendar year, incurs WIN expenses of $30,000 during the year 1974. Corporation X's investment company taxable income under section 852 (b)(2) is $10,000 after taking into account a deduction for dividends paid of $90,000.
> (ii) Under this paragraph, Corporation X's WIN expenses for the taxable year 1974 is $3,000, computed as follows: (*a*) $30,000 (WIN expenses), multiplied by (*b*) $10,000 (taxable income), divided by (*c*) $100,000 (taxable income plus the deduction for dividends paid). For 1974, the $25,000 amount specified in section 50A(a)(2) is reduced to $2,500.

(c) ***Cooperatives.***

(1) In the case of a cooperative organization described in section 1381(a)—

(i) The WIN expenses determined under paragraph (a) of § 1.50B-1, and

(ii) The $25,000 amount specified in section 50A(a)(2), relating to limitation based on amount of tax,

shall be reduced to such cooperative's ratable share of each such amount (as determined under subparagraph (2) of this paragraph). If a cooperative organization described in section 1381(a) is a member of a controlled group (as defined in section 50A(a)(5)), the $25,000 amount specified in section 50A(a)(2) shall be reduced in accordance with the provisions of paragraph (f) of § 1.50A-1 before such amount is further reduced under this paragraph.

(2) A cooperative's ratable share of the amount described in subparagraph (1)(i) and the amount described in subparagraph (1)(ii) of this paragraph shall be the ratio which—

(i) Taxable income for the taxable year, bears to

(ii) Taxable income for the taxable year plus the sum of (*a*) the amount of the deductions allowed under section 1382(b), and (*b*) the amount of the deductions allowed under section 1382(c), and (*c*) amounts similar to the amounts described in (*a*) and (*b*) of this subdivision the tax treatment of which is determined without regard to subchapter T, chapter 1 of the Code and the regulations thereunder.

(3) This paragraph may be illustrated by the following example:

> *Example.* (i) Cooperative X, an organization described in section 1381(a) which makes its return on the basis of the calendar year, incurs WIN expenses of $30,000 for the taxable year 1972. Cooperative X's taxable income is $10,000 after taking into account deductions of $30,000 allowed under section 1382(b), and deductions of $60,000 allowed under section 1382(c).
> (ii) Under this paragraph, Cooperative X's WIN expenses for the taxable year 1972 are $3,000, computed as follows: (*a*) $30,000 (WIN expenses), multiplied by (*b*) $10,000 (taxable income), divided by (*c*) $100,000 (taxable income plus the sum of deductions allowed under sections 1382(b) and 1382(c)). For 1972, the $25,000 amount specified in section 50A(a)(2) is reduced to $2,500.

(Sec. 860(e) (92 Stat. 2849, 26 U.S.C. 860(e)); sec. 860(g) (92 Stat. 2850, 26 U.S.C. 860(g)); sec. 7805 (68A Stat. 917, 26 U.S.C. 7805))

[38 FR 6164, Mar. 7, 1973, as amended by T.D. 7767, 46 FR 11262, Feb. 6, 1981; T.D. 7936, 49 FR 2105, Jan. 18, 1984]

§ 1.51-1 Amount of credit.

(a) ***Determination of amount*** —

(1) ***General rule.*** Except as provided in paragraph (a)(2) of this section, the amount of the targeted jobs credit for purposes of section 38 (formerly designated section 44B) for the taxable year equals 50 percent of the qualified first-year wages (minus any qualified first-year wages paid to individuals while such individuals are qualified summer youth employees) plus 25 percent of the qualified second-year wages.

(2) ***Special rule for employment of qualified summer youth employees.*** In the case of an employer who pays or incurs qualified wages after April 30, 1983, to a qualified summer youth employee beginning work for the employer after such date, the amount of the targeted jobs credit for the taxable year is equal to the amount determined under paragraph (a)(1) of this section plus an amount equal to 85 percent of the first $3,000 of qualified wages paid to each qualified summer youth employee during the taxable year. Such wages must be attributable to services tendered by the qualified summer youth employee during any 90-day period beginning on or after May 1 and ending on or before September 15.

(3) ***Limitation.*** See section 38(c) for rules limiting the amount of the credit to a percentage of the amount of the taxpayer's net tax liability.

(b) ***Definitions*** —

(1) ***Qualified wages.*** The term "qualified wages" means wages (as defined in paragraph (b)(4)) paid or incurred by the employer during the taxable year to individuals who are members of a targeted group (within the meaning of section 51(d)).

(2) ***Qualified first-year wages*** —

(i) ***General rule.*** Except in the case of qualified summer youth employees, the term "qualified first-year wages" means the first $6,000 of wages (as defined in paragraph (b)(4) of this section) attributable to service rendered by a member of a targeted group during the 1-year period beginning with the day the individual first begins work for the employer. In the case of a vocational rehabilitation referral (as defined in section 51(d)(2)) who begins work for the employer before July 19, 1984, the one-year period begins with the day the individual begins work for the employer on or after the beginning of such individual's rehabilitation plan. However, with the exception of vocational rehabilitation referrals for whom the employer claimed a credit under section 44B (as in effect prior to enactment of the Revenue Act of 1978) for a taxable year beginning before January 1, 1979, members of a targeted group who are first hired after September 26, 1978, and before January 1, 1979, will be treated as if they first began work for the employer on January 1, 1979. The date on which the wages are paid is not determinative of whether the wages are first-year wages; rather, the wages must be attributed to the period during which the work was performed. See paragraph (f)(1) of this section for an additional limitation on the term "qualified first-year wages". (See examples 1, 2, 3, 4, 5, and 6 in paragraph (j) of this section for examples illustrating the application of the rules in this paragraph (b)(2)).

(ii) ***Special rule for qualified summer youth employees.*** In the case of a qualified summer youth employee, qualified first-year wages for purposes of the 85 percent credit referred to in paragraph (a)(2) of this section include only wages attributable to services rendered by a qualified summer youth employee during any 90-day period beginning on or after May 1 and ending on or before September 15. If the individual is retained by the employer after the 90-day period and recertified as a member of another targeted group, the term "qualified first-year wages" for purposes of the 50 percent credit described by section 51(a)(1) has the meaning assigned that term in paragraph (b)(2)(i) of this section except that the $6,000 limitation for qualified first-year wages shall be reduced by wages up to, but not more than, $3,000 attributable to services rendered during the 90-day period.

(3) ***Qualified second-year wages.*** The term "qualified second-year wages" means the first $6,000 of wages attributable to services rendered by a member of a targeted group, other than a qualified summer youth employee, during the 1-year period beginning on the day after the last day of the period for qualified first-year wages. The date on which the wages are paid is not determinative of whether the wages are second-year wages; rather, the wages must be attributed to the period during which the work was performed.

(4) ***Wages*** —

(i) ***General rule.*** Except as otherwise provided in paragraphs (b)(4) (ii) and (iii) of this section, the term "wages" shall only include amounts paid or incurred after December 31, 1978, for taxable years ending after December 31, 1978. For purposes of this section, the term "wages" has the meaning assigned such term by section 3306(b) (determined without regard to any dollar limitation contained in such subsection).

(ii) ***Special rules.*** In the case of agricultural labor or railway labor, the term "wages" means unemployment insurance wages within the meaning of subparagraph (A) or (B) of section 51(h)(1). The term "wages" shall not include any amounts paid or incurred by an employer for any pay period to any individual for whom the employer receives federally funded payments for on-the-job training for such individual for such pay period. (See example 7 in paragraph (j) of this section.) The amount of wages which would otherwise be qualified wages under this section with respect to an individual for a taxable year shall be reduced by an amount equal to the amount of payments made to the employer (however utilized by such employer) with respect to such individual for such taxable year under a program established under section 414 of the Social Security Act. In addition, the term "wages" shall not include any amount paid or incurred by the employer in a taxable year beginning before January 1, 1982, to an individual with respect to whom the employer claims a credit under section 40 (relating to expenses of work incentive programs). For youths participating in a qualified cooperative education program:

(A) Section 3306(c)(10)(C) (relating to the definition of employment for certain students) does not apply in determining wages under this section; and

(B) The term "wages" shall include only those amounts paid or incurred by the employer that are attributable to services rendered by the individual while he or she meets the conditions specified in section 51(d)(8)(A). For purposes of the preceding sentence, an employee who met the requirement in section 51(d)(8)(A)(iv), dealing with economically disadvantaged status, when hired, shall be deemed to continuously meet the requirement in section 51(d)(8)(A)(iv) during the time the employee is in the cooperative education program. See also paragraph (e) of this section for rules relating to the exclusion of wages paid to certain individuals.

(iii) ***Termination.*** The term "wages" shall not include any amount paid or incurred to an individual who begins work for the employer after December 31, 1985.

(5) ***Special rule for eligible work incentive employees.*** In the case of an eligible work incentive employee (as defined in § 1.51-1(c)(4)), this paragraph (b) shall be applied for taxable years beginning after December 31, 1981, as if such employee had been a member of a targeted group for taxable years beginning before January 1, 1982. (See example 8 in paragraph (j) of this section.)

(c) ***Members of targeted groups*** —

(1) ***In general.*** An individual is a member of a targeted group if the individual is certified as

(i) a vocational rehabilitation referral,

(ii) an economically disadvantaged youth,

(iii) an economically disadvantaged Vietnam-era veteran,

(iv) an SSI recipient,

(v) a general assistance recipient,

(vi) a youth participating in a cooperative education program,

(vii) an economically disadvantaged ex-convict,

(viii) an eligible work incentive employee,

(ix) a qualified summer youth employee, or

(x) an involuntarily terminated CETA employee. Except as provided below, see section 51(d) of this section for a definition of these groups. See paragraph (d) of this section for rules concerning the certification of individuals as members of one of these targeted groups.

(2) ***Youths participating in a qualified cooperative education Program*** —

(i) ***Student requirements.*** For an individual to qualify as a youth participating in a qualified cooperative education program, the individual must meet each of the following conditions (A) through (D)—

(A) The youth must have attained the age of 16 but not 20. (An individual reaching 19 will be treated as a youth participating in a qualified cooperative education program only for wages paid or incurred after November 26, 1979.)

(B) The youth must not have graduated from a high school or vocational school.

(C) The youth must be enrolled in and actively pursuing a qualified cooperative education program (as defined in paragraph (c)(2)(iii) of this section).

(D) With respect to wages paid or incurred after December 31, 1981, the youth must be a member of an economically disadvantaged family when initially hired.

(ii) ***Economically disadvantaged family.*** See section 51(d)(11) for the rules relating to the determination of whether an individual is a member of an economically disadvantaged family.

(iii) ***Qualified cooperative education program.*** The term “qualified cooperative education program” means a program of vocational education for individuals who (through written cooperative arrangements between a qualified school and one or more employers) receive instruction (including required academic instruction) by alternation of study in school with a job in any occupational field (but only if these two experiences are planned by the school and employer so that each contributes to the student's education and employability). See section 51(d)(8)(C) for the definition of a “qualified school.” For purposes of this paragraph, the term “program of vocational education” means an organized educational program which is directly related to the preparation of individuals for employment, or for additional preparation for a career requiring other than a baccalaureate or advanced degree. An “organized educational program” means only instruction related to the occupation or occupations for which the students are in training or instruction necessary for students to benefit from such training. The student's employment contributes to his or her education and employability only if it is related to the occupation, or a cluster of closely related occupations, for which the student is in training in school. However, the student's employment need not be directly related to or in the same technical field as the training the student receives in school. For example, a student studying carpentry does not have to work as a carpenter for the program to constitute a “qualified cooperative education program.” The program will qualify if, for example, the student works at a hardware store because the student's work would familiarize the student with the materials and tools used by carpenters. The program would not qualify, however, if the student works at a restaurant and generally performs tasks in such employment not related to carpentry.

(iv) ***Actively pursuing.*** For purposes of this paragraph (c)(2), a youth will not be considered to be “actively pursuing” a school's qualified cooperative education program (within the meaning of paragraph (c)(2)(iii) of this section) during summer vacation unless that school program

continues during the summer vacation. Whether the school program continues during the summer vacation will be determined by examining the written agreement between the school and the employer. Thus, if a written agreement specifically covers the summer vacation period and provides for a significant degree of involvement by school personnel to provide supervision for the students in the program during that period, the school program will be considered to continue during the summer, regardless of whether classes are held during the vacation period.

(3) ***General assistance recipients.*** In order for an individual to qualify as a general assistance recipient, the individual, or another member of the assistance unit (within the meaning of 45 CFR 205.40(a)(1)) that the individual is a member of, must receive assistance for a period of not less than 30 days ending within the preemployment period (as defined in section 51(d)(13)) from a qualified general assistance program. A qualified general assistance program is a program of a State or a political sudivision of a State that the Secretary (after consultation with the Secretary of Health and Human Services) has designated as providing general assistance (or similar assistance) which is based on need and consists of money payments or voucher or scrip. For purposes of the preceding sentences, a program qualifying as a general assistance program by reason of non-cash assistance (*i.e.,* voucher or scrip) shall be so treated only with respect to amounts paid or incurred after July 1, 1982, to individuals beginning work for the employer after such date. For purposes of this subparagraph, the term "money" means cash or an instrument convertible into cash (e.g., a check).

(4) ***Eligible work incentive employees.*** An eligible work incentive employee means an individual who has been certified by the designated local agency (as defined in paragraph (d)(10) of this section) as—

(i) Being eligible for financial assistance under part A of title IV of the Social Security Act and as having continuously received such financial assistance during the 90-day period which immediately precedes the date on which such individual is hired by the employer, or

(ii) Having been placed in employment under a work incentive program established under section 432(b)(1) or 445 of the Social Security Act.

The provisions of this paragraph (c)(4) are effective with respect to taxable years of the employer beginning after December 31, 1981. (See paragraph (b)(5) of this section for a special rule relating to eligible work incentive employees.)

(5) ***Involuntarily terminated CETA employees*** —

(i) ***In general.*** An involuntarily terminated CETA employee is an individual who first began work for an employer after August 13, 1981, in taxable years of the employer ending after August 13, 1981, and is certified by the designated local agency (as defined in paragraph (d)(10) of this section) as having been involuntarily terminated after December 31, 1980, from employment financed in whole, or in part, under a program under part D of title II or title VI of the Comprehensive Employment and Training Act.

(ii) ***Termination.*** Section 51(d)(10) and this paragraph (c)(5) shall not apply to any individual who begins work for the employer after December 31, 1982.

(d) ***Certification*** —

(1) ***General rule.*** Except as otherwise provided in this paragraph, an individual shall not be treated as a member of a targeted group unless, on or before the day on which such individual begins work for the employer, the employer has received, or has requested in writing, a certification that the individual is a member of a targeted group from the designated local agency (as defined in

paragraph (d)(10) of this section). In addition, the employer must receive a certification before the targeted jobs credit can be claimed. However, with respect to individuals who began work for the employer on or before May 11, 1982, the certification will be timely only if requested or received before the day the individual began work for the employer. In the case of a request in writing mailed via the United States Postal Service, the request shall be deemed to be made on the date of the postmark stamped on the cover in which such request was mailed to the designated local agency provided the request is mailed in accordance with the mailing requirements in § 301.7502-1(c) and delivered in accordance with the delivery requirements in § 301.7502-1(d). In the case of a deadline that but for this sentence would fall on a Saturday, Sunday, or a legal holiday, the deadline for making a timely request in writing for a certification or receiving a timely certification shall be the next succeeding day which is not a Saturday, Sunday, or legal holiday. (See section 7503 for the definition of "legal holiday.") See paragraph (d)(2) of this section for transitional rules applicable to certain employees who began work for the employer before September 26, 1981. See paragraph (d)(3) of this section for special rules applicable to cooperative education students and paragraph (d)(4) of this section for special rules applicable to eligible work incentive employees.

(2) ***Timeliness of certification in the case of an individual to whom a written preliminary eligibility determination has been issued.*** If on or before the day on which an individual begins work for the employer, such individual has received from a designated local agency (or other agency or organization designated pursuant to a written agreement with such designated local agency) a written preliminary determination that such individual is a member of a targeted group, then such individual may be treated as a member of a targeted group if on or before the fifth day after the day such individual begins work for the employer such employer receives, or requests in writing, from the designated local agency a certification that such individual is a member of a targeted group. This paragraph (d)(2) only applies to individuals who begin work for the employer after July 18, 1984.

(3) ***Transitional rules for certain employees who began work for the employer on or before September 26, 1981.*** In the case of an individual, other than a cooperative education student, who began work for the employer before June 29, 1981, the employer must either receive, or request in writing, a certification before July 23, 1981. In the case of an individual, other than a cooperative education student, who began work for the employer after June 28, 1981, and on or before September 26, 1981, the employer must either receive, or request in writing, a certification before September 26, 1981.

(4) ***Cooperative education students.*** In the case of cooperative education students, the school administering the cooperative education program must issue the certification. Form 6199 is provided for this purpose. If the student begins work for the employer after September 26, 1981, see the general rule in § 1.51-1(d)(1) for the date when this certification must be received or requested. If the student begins work for the employer on or before September 26, 1981, the employer must receive the certification or request it in writing before September 26, 1981. In order for an employer to claim a credit on wages paid or incurred to a cooperative education student after December 31, 1981, the employer must receive or request in writing a determination that the student is a member of an economically disadvantaged family. A request for economic eligibility determination for a cooperative education student must be made in writing by the employer to the participating school. If the student begins work for the employer on or before September 26, 1981, the employer must receive or request in writing such determination before September 26, 1981. However, a request in writing on or after August 13, 1981, to a participating school for certification will be deemed to include a request for an economic eligibility determination. In addition, any certification issued by a school after August 13, 1981, will be deemed to be issued in response to a request for certification which includes a request for an economic eligibility determination. The rule in the preceding

sentence does not eliminate the requirement that the employer receive a certification that includes an economic eligibility determination in order to claim a credit for wages paid or incurred after December 31, 1981. If a certification issued by a school after August 13, 1984, does not contain an economic eligibility determination and the employer wishes to claim a credit for wages paid or incurred after December 31, 1981, the employer must receive a completed certification before the date on which the credit is claimed.

(5) ***Eligible work incentive employees.*** In the case of eligible work incentive employees, the employer must either receive, or request in writing, a certification within the time requirements of paragraph (d) (1), (2), or (3) of this section, whichever is applicable. Before October 12, 1981 (the date the Economic Recovery Tax Act of 1981 codified the State employment security agency as the designated local agency for certifying targeted groups), a certificate may be received or requested in writing from either the designated local agency (as defined in paragraph (d)(10) of this section) or the office or agency that properly issued certifications under former section 50B(h)(1) (relating to the work incentive credit).

(6) ***Certifications that are not timely.*** Any certification that is not timely received or requested by the employer in accordance with the rules of this paragraph will be treated as invalid. Thus, the employer will not be allowed to claim a credit under section 51 with respect to any wages paid or incurred to an employee whose certification or request for certification is not timely. A timely request for certification does not eliminate the need for the employer to receive a certification before claiming the credit. In the case of a request for certification that was denied, resubmitted, and then approved, the timeliness of the request shall be determined by the timeliness of the first request.

(7) ***Incorrect certification*** —

(i) ***In general.*** Except as otherwise provided in paragraph (d)(7)(ii) of this section, if an individual has been certified as a member of a targeted group, and such certification is based on false information provided by such individual, the certification shall be revoked and wages paid by the employer after the date on which notice of revocation is received by the employer shall not be treated as qualified wages. For purposes of this paragraph, a certification will be revoked only if the individual would not have been certified had correct information been provided to the issuer of the certification. Thus, false information that is not material to an individual's eligibility as a member of a targeted group will not invalidate an otherwise valid certification.

(ii) ***Employer's knowledge that the certification was incorrect.*** In the case of an employer who knew, or had reason to know, at the time of certification that the information provided to the designated local agency was false, none of the wages paid by such employer to an individual to whom an incorrect certification has been issued will be qualified wages.

(8) ***Certifications issued to certain rehires.*** This paragraph (d)(8) applies in the case of an employee who first began work for the employer before August 13, 1981, and was dismissed and rehired by the employer. A certification received or requested by an employer with respect to such an employee will be considered timely only if there was a valid business reason, unrelated to the availability of the credit, for the dismissal and rehire and if the employer did not dismiss and then rehire the employee in order to meet the timing requirement with respect to certification. An individual who is dismissed and then rehired for the purpose described in the preceding sentence will be considered for purposes of section 51(d)(16) and this paragraph to have been continuously employed by the employer during the time between the dismissal and the rehire. Whether the employer was motivated by reason of the certification rules in section 51(d)(16) and this paragraph to dismiss and

then rehire an employee is a question of fact to be determined from all the circumstances surrounding the dismissal and rehire. (See paragraph (e)(2) of this section for a separate rule disallowing the credit in the case of nonqualifying rehires.)

(9) ***Individuals who continue to be employed by the same employer but as a member of another targeted group.*** This paragraph (d)(9) applies in the case of an employee who continues to be employed by the same employer but no longer qualifies as a member of the targeted group for which such employee was first certified (e.g., the employee was orginally certified as a qualified summer youth employee with respect to a ninety-day period between May 1 and September 15, but such ninety-day period has ended). In such case, the employer may request a certification that the employee is a member of another targeted group, and if any wages paid to such individual are qualified first-year wages or qualified second-year wages, the employer may be entitled to a targeted jobs credit with respect to such wages. The second certification will not be invalid merely because it was requested or received after the individual began work for the employer; only the first certification (for example, the certification with respect to an individual hired first as a qualified summer youth employee) must meet the requirement of section 51(d)(16) that a certification must be requested or received by an employer on or before the day on which the individual begins work for the employer. In the case of a former qualified summer youth employee or a youth participating in a qualified cooperative education program who is recertified as an economically disadvantaged youth, the term "hiring date" in section 51(d)(3)(B) does not mean the day the individual is hired by the employer but means the day the individual is certified as a member of the new targeted group. Accordingly, the age requirement of section 51(d)(3)(B) shall be applied as of the day the individual is certified as a member of the second targeted group. In addition, see section 51(d)(11) for rules concerning the viability of the original economic eligibility determination.

(10) ***Certification where a trade or business has been transferred to a new employer.*** In the case of a transfer of a trade or business in which an individual who is a member of a targeted group is retained as an employee in the trade or business, the certification obtained for such employee by the transferor-employer will apply with respect to the transferee-employer.

(11) ***Designated local agency*** —

(i) ***In general.*** For the period before October 12, 1981, the term "designated local agency" means the agency for any locality designated jointly by the Secretary and the Secretary of Labor to perform certifications of employees for employers in that locality. On or after October 12, 1981, the term "designated local agency" means a State employment security agency established in accordance with the Act of June 6, 1933, as amended (29 U.S.C. 49 through 49n).

(ii) ***Jurisdiction.*** The designated local agency is the agency that has, pursuant to its charter, jurisdiction over the individual that is sought to be certified. Thus, any certification that is issued with respect to an individual who is not within the jurisdiction of the designated local agency that issued the certification will be invalid. Notwithstanding any other provision of this section, a request in writing for certification to the appropriate designated local agency that is made before January 23, 1984, will be considered to be timely if it is made after an otherwise timely request in writing for certification was made to a designated local agency that does not have jurisdiction over the individual sought to be certified.

(e) ***Certain ineligible individuals*** —

(1) ***Related individuals.*** For purposes of section 51(a), "qualified wages" does not include any amounts paid or incurred by a taxpayer to any of the following individuals:

(i) An individual who is related (within the meaning of any of paragraphs (1) through (8) of section 152 (a)) to the taxpayer;

(ii) An individual who is a dependent (within the meaning of section 152(a)(9)) of the taxpayer;

(iii) An individual who is related (within the meaning of any of paragraphs (1) through (8) of section 152(a)) to a shareholder who owns (within the meaning of section 267(c)) more than 50 percent in value of the outstanding stock of the taypayer, if the taxpayer is a corporation;

(iv) An individual who is a dependent (within the meaning of section 152(a)(9)) of a shareholder described in paragraph (e)(1)(iii) of this section;

(v) An individual who is a grantor, beneficiary or fiduciary of the taxpayer, if the taxpayer is an estate or trust;

(vi) An individual who is a dependent (within the meaning of section 152(a)(9)) of an individual described in paragraph (e)(1)(v) of this section; or

(vii) An individual who is related (within the meaning of any of paragraphs (1) through (8) of section 152(a)) to an individual described in paragraph (e)(1)(v) of this section.

(2) ***Nonqualifying rehires.*** For purposes of section 51(a), "qualified wages" does not include wages paid to an employee who had been employed by the employer prior to the current hiring date of the employee if at any time during such prior employment the employee was not a member of a targeted group. The preceding sentence shall not apply to an employee who was previously timely certified as a member of a targeted group with respect to the same employer. An employee shall be treated as not having been a member of a targeted group if the certification requirements of section 51(d)(16) were not met. (See example 8 in paragraph (j) of this section.)

(3) ***Effective date.*** The provisions of this paragraph (e) are effective with respect to employees first beginning work for an employer after August 13, 1981.

(f) ***Limitations —***

(1) ***Limitation on qualified first-year wages.*** With respect to taxable years beginning before January 1, 1982, the amount of the qualified first-year wages which may be taken into account for purposes of the targeted jobs credit for any taxable year shall not exceed 30 percent of the aggregate unemployment insurance wages paid by the employer during the calendar year ending in such taxable year. In the case of a group of trades or businesses under common control (as defined in § 1.52-1(b)), the qualified first-year wages cannot exceed 30 percent of the aggregate unemployment insurance wages paid to all employees of that group of trades or businesses under common control during the calendar year ending in such taxable year. For this purpose, the term "unemployment insurance wages" has the same meaning given to the term "wages" as defined in § 1.51-1(b)(4). In this case of agricultural or railway labor, see section 51(h)(1) for the applicable definition of unemployment insurance wages. (See examples 13 and 14 in paragraph (j) of this section.)

(2) ***Remuneration must be for trade or business employment.*** Remuneration paid by an employer to an employee during any taxable year shall be taken into account only if more than one-half of the remuneration paid by the employer to an employee is for services in a trade or business of the employer. This determination shall be made by each employer without regard to section 52 (a) or (b). Accordingly, employees of corporations that are members of a controlled group or employees of partnerships, proprietorships, and other trades or businesses (whether or not incorporated) which

are under common control will be treated as being employed by each separate employer for this purpose. For this purpose, the term "year" means the taxable year of the employer. (See example 15 in paragraph (j) of this section.)

(g) ***Election not to claim the targeted jobs credit.*** The election under section 51(j) (as amended by section 474(p) of the Tax Reform Act of 1984) not to claim the targeted jobs credit is available for taxable years beginning after December 31, 1983, and shall be made for the taxable year in which such credit is available by not claiming such credit on an original return or amended return at any time before the expiration of the 3-year period beginning on the last date prescribed by law for filing the return for the taxable year (determined without regard to extensions). The election may be revoked within the 3-year period by filing an amended return on which the credit is claimed.

(h) ***Treatment of successor-employers.*** In the case of a successor-employer referred to in section 3306(b)(1), the determination of the amount of credit under this section with respect to wages paid by such successor-employer shall be made in the same manner as if such wages were paid by the predecessor-employer referred to in such section. Thus, the 1-year period referred to in § 1.51-1(b)(2)(i) will be considered to begin with the day the employee first began work for the transferor-employer, and the amount of qualified first-year wages and qualified second-year wages paid or incurred with respect to the employee must be reduced by the amount of any such wages paid or incurred by the transferor-employer. (See examples 10 and 11 in paragraph (j) of this section.) Also, see paragraph (d)(10) of this section for rules concerning the viability of the employee's certification.

(i) ***Treatment of employees performing services for other persons.*** No credit shall be determined under this section with respect to remuneration paid by an employer to an employee for services performed by such employee for another person unless the amount reasonably expected to be received by the employer for such services from such other person exceeds the remuneration paid by the employer to such employee for such services.

(j) ***Examples.*** The application of this section may be illustrated by the following examples which, except as otherwise stated, assume that the limitations imposed by §§ 1.51-1(f)(2) and 1.53-3 are inapplicable:

Example 1. Corporation M is a calendar year, cash receipts and disbursements method taxpayer. A, an economically disadvantaged youth, first began work for Corporation M on October 1, 1978. Qualified first-year wages with respect to A are wages attributable to the period beginning on January 1, 1979 (since A was first hired after September 26, 1978, he is treated as having begun work on January 1, 1979) and ending on December 31, 1979. In the 1979 taxable year, Corporation M pays A $5,000 of qualified first-year wages attributable to services performed in 1979. Corporation M's allowable credit is equal to $2,500 (50 percent of $5,000).

Example 2. Assume the same facts as in example 1, except that in 1980 Corporation M pays to A $100 of wages attributable to services rendered in 1979. These wages will still be considered as qualified first-year wages, but the credit may not be claimed until the 1980 taxable year.

Example 3. Corporation O is a calendar year, cash receipts and disbursements method taxpayer. C, a vocational rehabilitation referral, first began work for Corporation O on July 1, 1978. Corporation O claimed a credit under section 44B (as in effect prior to enactment of the Revenue Act of 1978) for $3,000 of wages paid to C in the 1978 taxable year. Corporation O paid C $6,000 for services performed from January 1, 1979 to June 30, 1979. The period during which qualified first-year wages are determined begins on July 1, 1978, and ends on June 30, 1979. Amounts paid before January 1, 1979, however, are not taken into consideration in determining the amount of qualified first-year

wages. Accordingly, only the wages attributable to services performed from January 1, 1979, through June 30, 1979, are considered as qualified first-year wages. Corporation O's allowable credit is equal to $3,000 (50 percent of $6,000).

Example 4. I first began work for Corporation Q, a cash receipts and disbursements method taxpayer, on January 1, 1981, and was not a member of a targeted group. On March 1, 1981, I was convicted of a felony and sentenced to prison. I quit working for Corporation Q, and served the prison sentence. On November 1, 1981, I again was hired by Corporation Q and began work on that date. On the November 1, 1981 hiring date, I was an economically disadvantaged ex-convict for whom Corporation Q received a certificate. Corporation Q paid I $500 of wages for services performed from November 1, 1981, to December 31, 1981, and $6,000 of wages for services performed during 1982. The $500 of wages paid for services performed from November 1, 1981, to December 31, 1981, would be qualified first-year wages because these qualified wages were paid for services performed during the 1-year period beginning on the date I first began work for Corporation Q (January 1, 1981). The $6,000 of wages paid for services performed during 1982 would be qualified second-year wages because these qualified wages were paid for services performed during the 1-year period beginning on the day after the first 1-year period. Accordingly, Corporation Q has an allowable credit of $250 attributable to qualified first-year wages and $1,500 attributable to qualified second-year wages.

Example 5. Assume the same facts as in example 4, except that all dates are 1 year later. Thus, I first began work for Corporation Q on January 1, 1982, was convicted on March 1, 1982, and was rehired on November 1, 1982. Under these facts, Q is not entitled to take a targeted jobs credit with respect to I's wages because I is a nonqualifying rehire.

Example 6. J, an economically disadvantaged youth, first began work for Corporation R, a calendar year cash receipts and disbursements method taxpayer, on December 1, 1979. On July 1, 1980, J was laid off by Corporation R and began work for Corporation S, which is unrelated to Corporation R, on July 2, 1980. On November 1, 1980, J again began work for Corporation R and continued working for Corporation R until January 1, 1982. At the time J first began work for Corporation S, J no longer met the qualifications of an economically disadvantaged youth. Corporation S may not claim a credit for wages paid to J because J was not a member of a targeted group at the time he began work for Corporation S. Corporation R, however, may claim a credit for wages paid to J because J was a member of a targeted group when he was hired by Corporation R. Corporation R's qualified first-year wages paid to J are the wages paid for services performed by J from December 1, 1979, to July 1, 1980, and from November 1, 1980, to November 30, 1980. Corporation R's qualified second-year wages paid to J are wages paid for services performed by J from December 1, 1980, to November 30, 1981. Corporation R may not claim a credit for wages paid for services performed by J after November 30, 1981.

Example 7. K, a member of a targeted group, first began work for Corporation T on January 1, 1979. For the pay periods from January 1, 1979, to March 31, 1979, Corporation T received federally funded payments for on-the-job training for K and paid wages of $2,000 to K. During the remainder of 1979 Corporation T paid wages of $7,000 to K. Corporation T may claim a credit on $6,000 of qualified first-year wages. Amounts paid to K by Corporation T during the pay periods for which Corporation T received federally funded payments for on-the-job training for K are not considered wages for purposes of the credit. However, Corporation T may consider $6,000 of the total $7,000 of wages paid after March 31, 1979, as qualified first-year wages.

Example 8. P first began work for Corporation X on January 1, 1981, as an individual who was certified to be an eligible employee for purposes of the WIN credit provided in section 40. Corporation X paid P $6,000 of wages during its taxable year beginning on January 1, 1981, and $6,000 of wages during its taxable year beginning on January 1, 1982. X can claim a targeted jobs credit for the wages paid in 1982 if the requirements of section 51 are met. For purposes of section 51 (a), P's qualified first-year wages are the wages paid from January 1, 1981, to December 31, 1981, and P's qualified second-year wages are the wages paid from January 1, 1982, to December 31, 1982. Thus, Corporation X is only entitled to claim a targeted job credit based on P's qualified second-year wages.

Example 9. (i) L, 15 years of age, first began work for Corporation U on August 1, 1979. On September 3, 1979, L began her junior year in high school and enrolled in a qualified cooperative education program that was to run for her junior and senior years. On October 1, 1979, when L turned 16, she met all the requirements of § 1.51-1(c)(2)(i) and qualified as a youth participating in a qualified cooperative education program. Corporation U is entitled to claim a credit on wages paid or incurred for services performed by L after September 30, 1979, so long as L meets the requisite requirements. L's summer vacation began on June 1, 1980. Assume that the cooperative education program L was enrolled in did not continue during the summer vacation (*i.e.,* the written agreement between the employer and the school did not cover the summer vacation). Thus, during her summer vacation, L did not meet the requirement of actively pursuing a qualified cooperative education program. Accordingly, Corporation U may not claim a credit on wages paid for services performed by L during L's summer vacation. On September 2, 1980, L began her senior year, and again met all the requirements of § 1.51-1(c)(2)(i). She continued to meet these requirements until June 5, 1981, when she graduated from high school. Accordingly, Corporation U may claim a credit on wages paid for services performed after September 1, 1980, and before June 5, 1981.
(ii) Assume the same facts as in (i), above, except that all dates are 3 years later. Under these facts, U is not entitled to claim a targeted jobs credit with respect to any of L's wages because L has not been timely certified under section 51(d)(16) and § 1.51-1(d)(3).

Example 10. D began work for a drugstore owned by E as a sole proprietor on January 1, 1979, and was certified as a member of a targeted group with respect to E. On June 1, 1979, E sold the drugstore where D worked to F, who continued to operate the drugstore with D as an employee. D's qualification as a member of a targeted group is not required to be redetermined in order for F to qualify for the targeted jobs credit. F will take into account the certification of D's eligibility that was provided to E. F will have qualified first-year wages consisting of the first $6,000 of wages paid or incurred to D by E and F from January 1, 1979 to December 31, 1979 (reduced by any qualified wages paid or incurred by E to D from January 1, 1979, to May 31, 1979). F's qualified second-year wages will consist of the first $6,000 of wages paid or incurred to D by F from January 1, 1980, to December 31, 1980.

Example 11. G began work in a machine shop owned by H as a sole proprietor on January 1, 1979, and was certified as a member of a targeted group with respect to H. On June 1, 1980, H transferred all the assets of the machine shop to newly formed Corporation P. Corporation P retained G as an employee

in the machine shop. G's qualification as a member of a targeted group is not required to be redetermined in order for P to qualify for the targeted jobs credit. H has qualified first-year wages in the amount of the first $6,000 of wages paid or incurred to G by H from January 1, 1979, to December 31, 1979. Corporation P has qualified second-year wages in the amount of the first $6,000 of wages paid or incurred to G by H and Corporation P from January 1, 1980, to December 31, 1980 (reduced by any qualified second-year wages paid by H to G).

Example 12. W operates a retail store as a sole proprietor. On June 1, 1982, W hires S after receiving a written determination from a local community organization that S meets the requirements of an economically disadvantaged youth. W does not request a certification from the State employment security agency as to S's eligibility. W is not entitled to claim a credit with respect to wages paid to S because W did not receive, or request in writing, a certification from the State employment security agency as to S's eligibility on or before the day on which S began work for W.

Example 13. Corporation V is a cash receipts and disbursements method taxpayer with a July 1 through June 30 taxable year. In the taxable year ending June 30, 1980, the aggregate unemployment insurance wages paid by V were $150,000. In calendar year 1979 the aggregate unemployment insurance wages paid by Corporation V were $110,000. Corporation V's qualified first-year wages are limited to 30 percent of the aggregate unemployment insurance wages paid by it in calendar year 1979 or $33,000 (30 percent of $110,000), even though the aggregate unemployment insurance wages paid by it in the taxable year ending June 30, 1980, were $150,000.

Example 14. Assume the same facts as in example 13, except that all dates are 3 years later. Since the limitation on qualified first-year wages does not apply to taxable years beginning after December 31, 1981, Corporation V's qualified first-year wages are $150,000.

Example 15. M operates a retail store as a sole proprietor. N and O, both members of a targeted group, first began work for M on January 1, 1979. M paid N total qualified first-year wages of $6,000 in 1979. Three thousand one hundred dollars of those wages were for services in M's retail store, and $2,900 of those wages were for services as M's maid. M paid O total qualified first-year wages of $6,000 in 1979. Three thousand dollars of those wages were for services in M's store and $3,000 of those wages were for services as M's chauffeur. M has an allowable credit of $3,000 in 1979 on all $6,000 of qualified first-year wages paid to N because more than one-half of the remuneration paid by M to N was for services in M's trade or business. M may not take into account the wages paid to O because not more than one-half of the remuneration paid by M to O was for services in M's trade or business. Acordingly, M may not claim a credit on wages paid to O.

[T.D. 8062, 50 FR 45998, Nov. 6, 1985]

TAX SURCHARGE

§ 1.52-1 Trades or businesses that are under common control.

(a) ***Apportionment of jobs credit among members of a group of trades or businesses that are under common control —***

(1) ***Targeted jobs credit.***

(i) In the case of a group of trades or businesses that are under common control (within the meaning of paragraph (b) of this section) at any time during the calendar year, the amount of the targeted jobs credit (computed under section 51 as if all the organizations that are under

common control are one trade or business) under section 4-1B must be apportioned among the members of the group on the basis of each member's proportionate share of the wages giving rise to such credit. If the group of trades or businesses that are under common control have different taxable years, the credit shall be computed as if all the organizations have the same taxable year as the organization for which a determination of the proportionate share of the credit is being made. For taxable years beginning before January 1, 1982, the amount of the qualified first-year wages cannot exceed 30 percent of the aggregate unemployment insurance wages paid by the group of trades or businesses under common control during the calendar year ending in the taxable year of the organization for which a determination of the proportionate share of the credit is being made. The limitations in section 53 and the regulations thereunder apply to each organization individually (although, in applying these limitations, an affiliated group of corporations electing to make a consolidated return shall be treated as one organization).

(ii) The application of the subparagraph may be illustrated by the following examples:

Example 1. (a) Corporation M and its three subsidiaries, Corporations N, O, and P, are a group of businesses that are under common control and each uses the cash receipts and disbursements method of accounting and has a calendar year taxable year. Corporations M, N, O, and P paid out the following amounts in unemployment insurance wages, qualified first-year wages and qualified second-year wages during 1980.

	Unemployment insurance wages	Qualified 1st-Year wages	Qualified 2d-year wages
Corporation:			
M	$600,000	$184,000	$75,000
N	300,000	85,000	90,000
O	360,000	120,000	115,000
P	24,000	24,000	0
Total	1,284,000	413,000	280,000

(b) Since Corporations M, N, O, and P are under common control, the amount of qualified first-year wages paid by the group is limited to 30 percent of the aggregate unemployment insurance wages paid by the group in the calendar year ending in the group's taxable year. Since the qualified first-year wages of $413,000 exceeds 30% of the aggregate unemployment insurance wages, the group is limited to qualified first-year wages of $385,200 (30% of $1,284,000). The amount of the targeted jobs credit attributable to qualified first-year wages is equal to $192,600 (50% of $385,200). The amount of the credit attributable to qualified second-year wages is equal to $70,000 (25% of $280,000).

(c) The credit is apportioned among Corporations M, N, O, and P on the basis of their proportionate share of the qualified first-year wages or qualified second-year wages giving rise to the credit. Each corporation's share of the credit attributable to qualified first-year wages would be computed as follows:

Corporation:	Amount of credit
M .... $\$192,600 \times \frac{\$184,000}{\$413,000}$	$= \$85,807.26$
N .... $\$192,600 \times \frac{\$85,000}{\$413,000}$	$= \$39,639.23$
O .... $\$192,600 \times \frac{\$120,000}{\$413,000}$	$= \$55,961.26$
P .... $\$192,600 \times \frac{\$24,000}{\$413,000}$	$= \$11,192.25$

Each corporation's share of the credit attributable to qualified second-year wages is computed as follows:

Corporation:	Amount of credit
M .... $\$70,000 \times \frac{\$75,000}{\$280,000}$	$= \$18,750$
N .... $\$70,000 \times \frac{\$90,000}{\$280,000}$	$= \$22,500$
O .... $\$70,000 \times \frac{\$115,000}{\$280,000}$	$= \$28,750$
P .... $\$70,000 \times \frac{0}{\$280,000}$	$= 0$

Example 2. Assume the facts in example 1 with these additional facts. A, a member of a targeted group, worked for more than one of the members of the controlled group in the taxable year. A first began work for Corporation M on January 1, 1980, and later worked for Corporations N and O during 1980. For services rendered by A during 1980,

the following wages were paid to A: Corporation M paid A $2,500 of qualified first-year wages: Corporation N paid A $1,500 of qualified first-year wages; Corporation O paid A $3,000 of qualified first-year wages. Corporations M, N, and O paid A a total of $7,000 of wages during 1980. Only $6,000 of qualified first-year wages per year per employee may be taken into account for purposes of the credit. See § 1.51-1(d)(1). Since Corporations M, N, and O are treated as a single employer under section 52(a), the maximum $6,000 of qualified first-year wages paid A by the group must be apportioned among Corporations M, N, and O as follows:

Corporation: Qualified 1st year wages

$$\text{M} \ldots. \$6{,}000 \times \frac{\$2{,}500}{\$7{,}000} = \$2{,}142.86$$

$$\text{N} \ldots. \$6{,}000 \times \frac{\$1{,}500}{\$7{,}000} = \$1{,}285.71$$

$$\text{O} \ldots. \$6{,}000 \times \frac{\$3{,}000}{\$7{,}000} = \$2{,}571.43$$

Example 3. (a) Corporation Q and its two subsidiaries, Corporations R and S, are a group of businesses that are under common control and each uses the cash receipts and disbursements method of accounting. Corporation Q has a calendar year taxable year. Corporation R has a July 1 through June 30 taxable year. Corporation S has an October 1 through September 30 taxable year. For purposes of determining Corporation R's proportionate share of the credit, the credit is computed as if Corporations Q and S have the same taxable year as Corporation R. Accordingly, Corporation R would compute its share of the credit for its 1979-1980 taxable year as set forth below.

	Unemployment insurance wages, 1979	Qualified wages paid from July 1, 1979, to June 30, 1980	
		1st year wages	2d year wages
Corporation:			
Q	$500,000	$150,000	$80,000
R	300,000	110,000	50,000
S	100,000	25,000	10,000

	Unemployment insurance wages, 1979	Qualified wages paid from July 1, 1979, to June 30, 1980	
		1st year wages	2d year wages
Total	900,000	285,000	140,000

(b) Since Corporations Q, R, and S are under common control, the amount of qualified first-year wages is limited to 30 percent of the aggregate unemployment insurance wages paid by the group during the calendar year ending in Corporation R's taxable year. Since the qualified first-year wages of $285,000 exceeds 30 percent of the aggregate unemployment insurance wages, the group is limited to qualified first-year wages of $270,000 (30% of $900,000). The amount of the targeted jobs credit attributable to qualified first-year wages paid by members of the group during the period of the taxpayer's taxable year is $135,000 (50% of $270,000). The amount of the credit attributable to qualified second-year wages paid or incurred by members of the group during the period of the taxpayer's taxable year is $35,000 (25% of $140,000).
(c) The credit is apportioned to Corporation R on the basis of its proportionate share of the qualified first-year wages and qualified second-year wages giving rise to the credit. Corporation R's share of the credit attributable to qualified first-year wages is $52,105.26

$$\$135{,}000 \times \frac{\$110{,}000}{\$285{,}000}$$

Corporation R's share of the credit attributable to qualified second-year wages is $12,500

$$\$35{,}000 \times \frac{\$50{,}000}{\$140{,}000}$$

Corporation R's share of the credit for its 1979-1980 taxable year is $64,605.26 ($52,105.26 + $12,500).

(2) ***New jobs credit.*** In the case of a group of trades or businesses that are under common control at any time during the calendar year, the amount of the new jobs credit (computed under section 51 as if all the organizations that are under common control are one trade or business) under section 44B (as in effect prior to enactment of the Revenue Act of 1978) must be apportioned among the members of the group on the basis of each member's proportionate contribution to the increase in unemployment insurance wages for the entire group. The limitations in section 53 (as in effect prior to enactment of the Revenue Act of 1978) and the regulations thereunder apply to each organization individually (although, in applying these limitations, an affiliated group of corporations electing to make a consolidated return shall be treated as one organization). The application of this subparagraph may be illustrated by the following example:

Example. (a) Corporation T and its three subsidiaries, U, V, and W, are a group of businesses that are under common control and each has a calendar year taxable year. Corporations T, U, V, and W have paid out the following amounts in unemployment insurance wages during 1976 and 1977:

	1976	1977	Increase in FUTA wages in 1977 over 1976
Corporation.			
T	$1,000,000	$1,015,000	+ $15,000
U	500,000	650,000	+ 150,000
V	600,000	580,000	−20,000
W	40,000	100,000	+ 60,000
Total	2,140,000	2,345,000	205,000

(b) Since all employees of trades or, businesses that are under common control are treated as employed by a single employer, the computations in section 51 are performed as if all the organizations which are under common control are one trade or business. Consequently, the amounts of the total unemployment insurance wages of the group in 1976 (*i.e.,* $2,140,000) and 1977 (*i.e.,* $2,345,000) are used to determine the increase in unemployment insurance wages in 1977 over the 1976 wage base. Since the amount equal to 102 percent of the 1976 unemployment insurance wages ($2,182,800) is greater than the amount equal to 50 percent of the 1977 unemployment insurance wages ($1,172,500), the increase in unemployment insurance wages in 1977 over the 1976 wage base is $162,200 ($2,345,000-$2,182,800). The limitations in section 51(c), (d), and (g) (as in effect prior to enactment of the Revenue Act of 1978) must also be computed as though all the organizations under common control are one trade or business. For purposes of this example, it is assumed that none of those limitations reduce the amount of increase in unemployment insurance wages. As a result, the amount of the new jobs credit allowed to the group of business is $81,100 (50% of $162,200).
(c) The credit is apportioned among Corporations T, U, and W on the basis of their proportionate contributions to the increase in unemployment insurance wages. No credit would be allowed to Corporation V because it did not contribute to the increase in the group's unemployment insurance wages. Corporation T's share of the credit would be $5,406.66 ($81,100 × ($15,000 ÷ $225,000 (*i.e.,* $15,000 + $150,000 + $60,000))), Corporation U's share would be $54,066.67 ($81,100 × ($150,000 ÷ 225,000)), and Corporation W's share would be $21,626.67 ($81,100 × ($60,000 ÷ $225,000)).

(b) ***Trades or businesses that are under common control.*** For purposes of this section, the term “trades or businesses that are under common control” means any group of trades or businesses that is either a “parent-subsidiary group under common control” as defined in paragraph (c) of this section, a “brother-

sister group under common control" as defined in paragraph (d) of this section, or a "combined group under common control" as defined in paragraph (e) of this section. For purposes of this section and §§ 1.52-2 and 1.52-3, the term "organization" means a sole proprietorship, a partnership, a trust, an estate, or a corporation. An organization may be a member of only one group of trades or businesses under common control. If, without the application of this paragraph, an organization would be a member of more than one such group, that organization shall indicate in its timely filed return the group in which it is being included. If the organization does not so indicate, then the district director with audit jurisdiction of the organization's return will determine the group in which the organization is to be included.

(c) ***Parent-subsidiary group under common control*** —

(1) ***In general.*** The term "parent-subsidiary group under common control" means one or more chains of organizations conducting trades or businesses that are connected through ownership of a controlling interest with a common parent organization if—

(i) A controlling interest in each of the organizations, except the common parent organization, is owned (directly and with the application of § 1.414(c)-4(b)(1), (2), and (3)) by one or more of the other organizations; and

(ii) The common parent organization owns (directly and with the application of § 1.414(c)-4(b)(1), (2), and (3)) a controlling interest in at least one of the other organizations, excluding, in computing the controlling interest, any direct ownership interest by the other organizations.

(2) ***Controlling interest defined.*** For purposes of this paragraph, the term "controlling interest" means:

(i) In the case of a corporation, ownership of stock possessing more than 50 percent of the total combined voting power of all classes of stock entitled to vote or more than 50 percent of the total value of the shares of all classes of stock of the corporation;

(ii) In the case of a trust or estate, ownership of an actuarial interest (determined under paragraph (f) of this section) of more than 50 percent of the trust or estate;

(iii) In the case of a partnership, ownership of more than 50 percent of the profit interest or capital interest of the partnership; and

(iv) In the case of a sole proprietorship, ownership of the sole proprietorship.

(d) ***Brother-sister group under common control*** —

(1) ***In general.*** The term "brother-sister group under common control" means two or more organizations conducting trades or businesses if—

(i) The same five or fewer persons who are individuals, estates, or trusts own (directly and with the application of § 1.414(c)-4), a controlling interest of each organization; and

(ii) Taking into account the ownership of each person only to the extent that person's ownership is identical with respect to each organization, such persons are in effective control of each organization.

The five or fewer persons whose ownership is considered for purposes of the controlling interest requirement for each organization must be the same persons whose ownership is considered for purposes of the effective control requirement.

(2) ***Controlling interest defined.*** For purposes of this paragraph, the term "controlling interest" means:

(i) In the case of a corporation, ownership of stock possessing at least 80 percent of the total combined voting power of all classes of stock entitled to vote or at least 80 percent of the total value of the shares of all classes of stock of the corporation;

(ii) In case of a trust or estate, ownership of an actuarial interest (determined under paragraph (f) of this section) of a least 80 percent of the trust or estate;

(iii) In the case of a partnership, ownership of at least 80 percent of the profit interest or capital interest of the partnership; and

(iv) In the case of a sole proprietorship, ownership of the sole proprietorship.

(3) ***Effective control defined.*** For purposes of this paragraph "effective control" means:

(i) In the case of a corporation, ownership of stock possessing more than 50 percent of the total combined voting power of all classes of stock entitled to vote or more than 50 percent of the total value of the shares of all classes of stock of the corporation;

(ii) In the case of a trust or estate, ownership of an actuarial interest (determined under paragraph (f) of this section) of more than 50 percent of the trust or estate;

(iii) In the case of a partnership, ownership of more than 50 percent of the profit interest or capital interest of the partnership; and

(iv) In the case of a sole proprietorship, ownership of the sole proprietorship.

(e) ***Combined group under common control.*** The term "combined group under common control" means a group of three or more organizations, in which

(1) each organization is a member of either a parent-subsidiary group under common control or brother-sister group under common control, and

(2) at least one organization is the common parent organization of a parent-subsidiary group under common control and also a member of a brother-sister group under common control.

(f) ***Actuarial interest.*** For purposes of this section, the actuarial interest of each beneficiary of a trust or estate shall be determined by assuming the maximum exercise of discretion by the fiduciary in favor of the beneficiary. The factors and method prescribed in § 20.2031-7 or, for certain prior periods, 20.2031-7A of this chapter (Estate Tax Regulations) for use in ascertaining the value of an interest in property for estate tax purposes will be used to determine a beneficiary's actuarial interest.

(g) ***Exclusion of certain interests and stock in determining control.*** In determining control under this paragraph, the term "interest" and the term "stock" do not include an interest that is treated as not outstanding under § 1.414(c)-3. In addition, the term "stock" does not include treasury stock or nonvoting stock that is limited and preferred regarding dividends.

(h) ***Transitional rule*** —

(1) ***In general.*** Paragraph (d) of this section, as amended by T.D. 8179, applies to all taxable years to which section 52(b) applies.

(2) ***Election.*** In the case of taxable years ending before March 2, 1988.

(i) If, pursuant to paragraph (b) of this section, an organization indicated in a timely filed return that it chose to be a member of a brother-sister group under common control, and it is not a member of such group because of the amendments to paragraph (d) of this section made by

T.D. 8179 such organization may make the choice described in paragraph (b) of this section by filing an amended return on or before September 2, 1988 if such organization would otherwise still be a member of more than one group of trades or businesses under common control, and

(ii) If an organization—

(A) Is a member of a brother-sister group of trades or businesses under common control under § 1.52-1(d)(1) as in effect before amendment by T.D. 8179 ("old group"), for such taxable year, and

(B) Is not such a member for such taxable year because of the amendments made by such Treasury decision,

such organization (whether or not a corporation) nevertheless will be treated as a member of such old group if all the organizations (whether or not corporations) that are members of the old group meet all the requirements of § 1.1563-1(d)(3) with respect to such taxable year.

(i) ***Applicability date.*** This section applies to taxable years beginning on or after January 1, 2025. *See* 26 CFR 1.52-1, as revised April 1, 2024, for taxable years beginning before January 1, 2025.

(Secs. 44B, 381, and 7805 of the Internal Revenue Code of 1954 (92 Stat. 2834, 26 U.S.C. 44B); 91 Stat. 148, 26 U.S.C. 381(c)(26); 68A Stat. 917, 26 U.S.C. 7805)

[T.D. 7553, 43 FR 31322, July 21, 1978, as amended by T.D. 7921, 48 FR 52904, Nov. 23, 1983; T.D. 7955, 49 FR 19975, May 11, 1984; T.D. 8179, 53 FR 6605, Mar. 2, 1988; 53 FR 8302, Mar. 14, 1988; 53 FR 16408, May 9, 1988; T.D. 8540, 59 FR 30102, June 10, 1994; T.D. 8179, 84 FR 33002, July 11, 2019; T.D. 10018, 89 FR 106851, Dec. 30, 2024]

§ 1.52-2 Adjustments for acquisitions and dispositions.

(a) ***General rule.*** The provisions in this section only apply to the computation of the new jobs credit. If, after December 31, 1975, an employer acquires the major portion of a trade or business or the major portion of a separate unit of a trade or business, then, for purposes of computing the new jobs credit for any calendar year ending after the acquisition, both the amount of unemployment insurance wages and the amount of total wages considered to have been paid by the acquiring employer, for both the year in which the acquisition occurred and the preceding year, must be increased, respectively, by the amount of unemployment insurance wages and the amount of total wages paid by the predecessor employer that are attributable to the acquired portion of the trade or business or separate unit. If the predecessor employer informs the acquiring employer in writing of the amount of unemployment insurance wages and the amount of total wages attributable to the acquired portion of the trade or business that have been paid during the periods preceding the acquisition, then, for purposes of computing the credit for any calendar year ending after the acquisition the amount of unemployment insurance wages and the amount of total wages considered paid by the predecessor employer shall be decreased by those amounts. Regardless of whether the predecessor employer so informs the acquiring employer, the predecessor employer shall not be allowed a credit for the amount of any increase in the employment insurance wages or the total wages in the calendar year of the acquisition attributable to the acquired portion of the trade or business over the amount of such wages in the calendar year preceding the acquisition.

(b) ***Meaning of terms*** —

(1) ***Acquisition.***

(i) For the purposes of this section, the term "acquisition" includes a lease agreement if the effect of the lease is to transfer the major portion of the trade or business or of a separate unit of the trade or business for the period of the lease. For instance, if one company leases a factory (including equipment) to another company for a 2-year period, the employees are retained by the second company, and the factory is used for the same general purposes as before, then for purposes of this section the lessee has acquired the lessor's trade or business for the period of the lease.

(ii) Neither the major portion of a trade or business nor the major portion of a separate unit of a trade or business is acquired merely by acquiring physical assets. The acquisition must transfer a viable trade or business.

(iii) Subdivision (ii) of this subparagraph may be illustrated by the following examples:

Example 1. R Co., a restaurant, sells its building and all its restaurant equipment to S Co. and moves into a larger, more modern building across the street. R Co. purchases new equipment, retains its name and continues to operate as a restaurant. S Co. opens a new restaurant in the old R Co. building. S Co. has merely acquired the old R Co. assets; it has not acquired any portion of R Co.'s business.

Example 2. The facts are the same as in *Example 1,* except that R Co. also sells its name and goodwill to S Co. and ceases to operate a restaurant business. S Co. operates its restaurant using the old R Co. name. In this situation, S Co. has acquired R Co.'s business.

(2) ***Separate unit.***

(i) A separate unit is a segment of a trade or business capable of operating as a self-sustaining enterprise with minor adjustments. The allocation of a portion of the goodwill of a trade or business to one of its segments is a strong indication that that segment is a separate unit.

(ii) The following examples are illustrations of the acquisition of a separate unit of a trade or business:

Example 1. The M Corp., which has been engaged in the sale and repair of boats, leases the repair shop building and all the property used in its boat repair operations to the N Co. for four years and gives the N Co. a covenant not to compete in the boat repair business for the period of the lease. The N Co. is considered to have acquired a separate unit of M Corp.'s business for the period of the lease.

> *Example 2.* (a) The P Co. is engaged in the operation of a chain of department stores. There are eight divisions, each division is located in a different metropolitan area of the country, and each division operates under a different name. Although certain buying and merchandising functions are centralized, each division's day-to-day operations are independent of the others. The Q Corp. acquires all of the physical and intangible assets of one of the divisions, including the division's name. Other than making those minor adjustments necessary to give the division buying and merchandising departments, the Q Corp. allows the division to continue doing business in the same manner as it had been operating prior to the acquisition. The Q Corp. has acquired a separate unit of the P Co.'s business.

> (b) The facts are the same as in paragraph (a) of example 2, except that Q Corporation buys the division merely to obtain its store locations. Before the Q Corporation takes over, the division liquidates its inventory in a going-out-of-business sale. The Q Corporation has merely acquired assets in this transaction, not a separate unit of P Company's business.

Example 3. The R Company processes and distributes meat products. Both the processing division and the distributorship are self-sustaining, profitable operations. The acquisition of either the meat processing division or the distributorship would be an acquisition of a separate unit of the R Company's business.

Example 4. The S Corporation is engaged in the manufacture and sale of steel and steel products. S Corporation also owns a coal mine, which it operates for the sole purpose of supplying its coal requirements for its steel manufacturing operations. The acquisition of the coal mine would be an acquisition of a separate unit of the S company's business.

Example 5. The T Company, which is engaged in the business of operating a chain of drug stores, sells its only downtown drug store to the V Company and agrees not to open another T Company store in the downtown area for five years. Included in the purchase price is an amount that is charged for the goodwill of the store location. The V Company has acquired a separate unit of the T Company's business.

Example 6. The W Company, which is engaged in the business of operating a chain of drug stores sells one of its stores to the X Company, but continues to operate another drug store three blocks away. The X Company opens the store doing business under its own name. The X Company has not acquired a separate unit of the W Company's business.

> *Example 7.* (a) The Y Corporation, which is engaged in the manufacture of mattresses, sells one of its three factories to the Z Company. At the time of the sale, the factory is capable of profitably manufacturing mattresses on its own. Z Company has acquired a separate unit of the Y Corporation.
> (b) The facts are the same as in (a) above, except that a profitable manufacturing operation cannot be conducted in the factory standing on its own. Z Company has not acquired a separate unit of the Y Corporation.

Example 8. The O Construction Company is owned by A, B, and C, who are unrelated individuals. It owns equipment valued at 1.5 million dollars and construction contracts valued at 6 million dollars. A, wishing to start his own company, exchanges his interest in O Company for 2 million dollars of contracts and a sufficient amount of equipment to enable him to begin business immediately. A has acquired a separate unit of the O Company's business.

(3) ***Major portion.*** All the facts and circumstances surrounding the transaction shall be taken into account in determining what constitutes a major portion of a trade or business (or separate unit). Factors to be considered include:

(i) The fair market value of the assets in the portion relative to the fair market value of the other assets of the trade or business (or separate unit);

(ii) The proportion of goodwill attributable to the portion of the trade or business (or separate unit);

(iii) The proportion of the number of employees of the trade or business (or separate unit) attributable to the portion in the periods immediately preceding the transaction; and

(iv) The proportion of the sales or gross receipts, net income, and budget of the trade or business (or separate unit) attributable to the portion.

(Secs. 44B, 381, and 7805 of the Internal Revenue Code of 1954 (92 Stat. 2834, 26 U.S.C. 44B); 91 Stat. 148, 26 U.S.C. 381(c)(26); 68A Stat. 917, 26 U.S.C. 7805)

[T.D. 7553, 43 FR 31323, July 21, 1978, as amended by T.D. 7921, 48 FR 52906, Nov. 23, 1983]

§ 1.52-3 Limitations with respect to certain persons.

(a) ***Mutual savings institutions.*** In the case of an organization to which section 593 applies (that is, a mutual savings bank, a cooperative bank or a domestic building and loan association), the amount of the targeted jobs credit (new jobs credit in the case of wages paid before 1979) allowable under section 44B shall be 50 percent of the amount otherwise determined under section 51, or, in the case of an organization under common control, under § 1.52-1 (a) and (b).

(b) ***Regulated investment companies and real estate investment trusts.*** In the case of a regulated investment company or a real estate investment trust subject to taxation under subchapter M, chapter 1 of the Code, the amount of the targeted jobs credit (new jobs credit in the case of wages paid before 1979) allowable under section 44B shall be reduced to the company's or trust's ratable share of the credit. The ratable share shall be determined in accordance with rules similar to the rules provided in section 46(e)(2)(B) and the regulations thereunder. For purposes of computing the ratable share, the reduction of the deduction for wage or salary expenses under § 1.280C-1 shall not be taken into account.

(c) ***Cooperatives*** —

(1) ***Taxable years ending after October 31, 1978.*** For taxable years ending after October 31, 1978, in the case of a cooperative organization described in section 1381(a), rules similar to rules provided in section 46(h) and the regulations thereunder shall apply in determining the distribution of the amount of the targeted jobs credit (new jobs credit in the case of wages paid before 1979) allowable to the cooperative organization and its patrons under section 44B.

(2) ***Taxable years ending before November 1, 1978.*** For taxable years ending before November 1, 1978, in the case of a cooperative organization described in section 1381(a), the amount of new jobs credit allowable under section 44B shall be reduced to the cooperative's ratable share of the credit. The ratable share shall be the ratio which the taxable income of the cooperative for the taxable year bears to its taxable income increased by the amount of the deductions allowed under section 1382 (b) and (c). For purposes of computing the ratable share, the reduction of the deduction for wage or salary expenses under § 1.280C-1 shall not be taken into account.

(Secs. 44B, 381, and 7805 of the Internal Revenue Code of 1954 (92 Stat. 2834, 26 U.S.C. 44B); 91 Stat. 148, 26 U.S.C. 381(c)(26); 68A Stat. 917, 26 U.S.C. 7805)

[T.D. 7921, 48 FR 52906, Nov. 23, 1983]

§ 1.53-1 Limitation based on amount of tax.

(a) *General rule* —

(1) ***Targeted jobs credit.*** For taxable years beginning after December 31, 1978, the amount of the targeted jobs credit allowed by section 44B (as amended by the Revenue Act of 1978) shall not exceed 90 percent of the tax imposed by chapter 1, reduced by the credits enumerated in section 53(a).

(2) ***New jobs credit.*** For taxable years beginning before January 1, 1979, the amount of the new jobs credit allowed by section 44B (as in effect prior to enactment of the Revenue Act of 1978) shall not exceed the tax imposed by chapter 1, reduced by the credits enumerated in section 53(a).

(b) ***Special rule for 1978-79 fiscal year.*** In the case of a taxable year beginning before January 1, 1979, and ending after that date, the sum of the targeted jobs credit (determined without regard to the tax liability limitation in paragraph (a)(1) of this section) and the new jobs credit (determined without regard to the tax liability limitation in (a)(2) of this section) shall not exceed the tax imposed by chapter 1, reduced by the credits enumerated in section 53(a).

(Secs. 44B, 381, and 7805 of the Internal Revenue Code of 1954 (92 Stat. 2834, 26 U.S.C. 44B); 91 Stat. 148, 26 U.S.C. 381(c)(26); 68A Stat. 917, 26 U.S.C. 7805)

[T.D. 7921, 48 FR 52906, Nov. 23, 1983]

§ 1.53-2 Carryback and carryover of unused credit.

(a) *Allowance of unused credit as a carryback or carryover* —

(1) ***In general.*** Section 53(b) (formerly designated as section 53(c) for taxable years beginning before 1979) provides for carrybacks and carryovers of unused targeted jobs credit (new jobs credit in the case of wages paid before 1979). An unused credit is the excess of the credit determined under section 51 for the taxable year over the limitation provided by § 1.53-1 for such taxable year. Subject to the limitations contained in paragraph (b) of this section and paragraph (f) of § 1.53-3, an unused credit shall be added to the amount allowable as a credit under section 44B for the years to which an unused credit can be carried. The year with respect to which an unused credit arises shall be referred to in this section as the “unused credit year.”

(2) ***Taxable years to which unused credit may be carried.*** An unused targeted jobs credit (new jobs credit in the case of wages paid before 1979) shall be a new employee credit carryback to each of the 3 taxable years preceding the unused credit year and a new employee credit carryover to each of the 15 taxable years succeeding the unused credit year. An unused credit must be carried first to the earliest of the taxable years to which it may be carried, and then to each of the other taxable years (in order of time) to the extent that the unused credit may not be added (because of the limitation contained in paragraph (b) of this section) to the amount allowable as a credit under section 44B for a prior taxable year.

(b) *Limitations on allowance of unused credit* —

(1) ***In general.*** The amount of the unused targeted jobs credit (new jobs credit in the case of wages paid before 1979) from any particular unused credit year which may be added under section 53(b)(1) (section 53(c)(1) in the case of a new jobs credit) to the amount allowable as a credit under section

44B for any of the preceding or succeeding taxable years to which such credit may be carried shall not exceed the amount by which the limitation in § 1.53-1 for such preceding or succeeding taxable year exceeds the sum of

(i) the credit allowable under section 44B for such preceding or succeeding taxable year, and

(ii) other unused credits carried to such preceding or succeeding taxable year which are attributable to unused credit years prior to the particular unused credit year. Thus, in determining the amount, if any, of an unused credit from a particular unused credit year which shall be added to the amount allowable as a credit for any preceding or succeeding taxable year, the credit earned for such preceding or succeeding taxable year, plus any unused credits originating in taxable years prior to the particular unused credit year, shall first be applied against the limitation based on amount of tax for such preceding or succeeding taxable year. To the extent the limitation based on amount of tax for the preceding or succeeding year exceeds the sum of the credit earned for such year and other unused credits attributable to years prior to the particular unused credit year, the unused credit from the particular unused credit year shall be added to the amount allowable as a credit under section 44B for such preceding or succeeding year. If any portion of the unused credit is a carryback to a taxable year beginning before January 1, 1977, section 44B shall be deemed to have been in effect for such taxable year for purposes of allowing such carryback as a credit under section 44B. To the extent that an unused credit cannot be added for a particular preceding or succeeding taxable year because of the limitation contained in this paragraph, such unused credit shall be available as a carryback or carryover to the next succeeding taxable year to which it may be carried.

(2) ***Special rules for an electing small business corporation.*** An unused targeted jobs credit (new jobs credit in the case of wages paid before 1979) under section 44B of a corporation which arises in an unused credit year for which the corporation is not an electing small business corporation (as defined in section 1371(b)) and which is a carryback or carryover to a taxable year for which the corporation is an electing small business corporation shall not be added to the amount allowable as a credit under section 44B to the shareholders of such corporation for any taxable year. However, a taxable year for which the corporation is an electing small business corporation shall be counted as a taxable year for purposes of determining the taxable years to which such unused credit may be carried.

(3) ***Corporate acquisitions.*** For the carryover of unused credits under section 44B in the case of certain corporate acquisitions, see section 381(c)(26) and § 1.381(c)(26)-1.

(4) ***Examples.*** This paragraph may be illustrated by the following examples.

Example 1. In 1978, A, a calendar year taxpayer, had an unused new jobs credit of $2,000. In 1979, A has a targeted jobs credit of $2,000 and a tax liability imposed by chapter 1 of the Code of $4,000 after all credits listed in section 53(a) have been taken into account. The amount of A's targeted jobs credit allowable under section 44B for 1979 is 90 percent of A's tax liability. The amount of the new jobs credit that may be carried to 1979 is limited to $1,600 ($3,600 [90% of $4,000]−$2,000).

Example 2. In 1979, B, a calendar year taxpayer, has a tax liability imposed by chapter 1 of the Code of $10,000 after all credits listed in section 53(a) have been taken. B's targeted jobs credit for that taxable year is limited to 90 percent of his income tax liability or $9,000. B had a $15,000 targeted jobs credit in 1979 resulting in an unused targeted jobs credit of $5,000 for that year. In 1976 and 1977 B had tax liabilities imposed by chapter 1 of the Code of $3,000 and $4,000

respectively after all credits listed in section 53(a) had been taken. For purposes of carrying back an unused targeted jobs credit to a taxable year beginning before January 1, 1977, section 44B as amended by the Revenue Act of 1978 is deemed to have been in effect for such taxable year. Accordingly, the applicable tax liability limitation for 1976 would be governed by section 53(a) (as amended by the Revenue Act of 1978) which limits the amount of targeted jobs credit allowed to 90 percent of the tax imposed by chapter 1 of the Code after all credits listed in section 53(a) have been taken. B may carry back $2,700 (90% of $3,000) of the 1979 unused targeted jobs credit to 1976. B may carry back $4,000 of the unused targeted jobs credit to 1977 because section 53(a) as it applied to the 1977 taxable year limited the amount of the credit to 100 percent of the taxpayer's tax liability imposed by chapter 1 of the Code after all credits listed in section 53(a) had been taken.

(Secs. 44B, 381, and 7805 of the Internal Revenue Code of 1954 (92 Stat. 2834, 26 U.S.C. 44B); 91 Stat. 148, 26 U.S.C. 381(c)(26); 68A Stat. 917, 26 U.S.C. 7805)

[T.D. 7921, 48 FR 52906, Nov. 23, 1983]

§ 1.53-3 Separate rule for pass-through of jobs credit.

(a) ***In general.*** Under section 53(b), in the case of a new jobs credit or targeted jobs credit earned under section 44B by a partnership, estate or trust, or subchapter S corporation, the amount of the credit that may be taken into account by a partner, beneficiary, or shareholder may not exceed a limitation under section 53(b) separately computed with respect to the partner's, beneficiary's, or shareholder's interest in the entity. A credit is subject to the limitation of section 53(b) with respect to a partner, beneficiary, or shareholder if it is earned by a partnership, estate or trust, or subchapter S corporation in a taxable year ending within, or ending before, a taxable year beginning before January 1, 1979 of the partner, beneficiary, or shareholder. See paragraph (f) of this section for rules on carryback or carryover of a credit subject to separate limitation. This section prescribes rules, under the authority of section 44B(b), relating to the computation of the separate limitation. For purposes of this section, references to section 53(a) and (b) are to that section as it existed before it was amended by the Revenue Act of 1978. This paragraph may be illustrated by the following examples:

Example 1. A, a calendar year taxpayer, is a partner in P, a calendar year partnership. A's pro rata portion of the credit earned by P in 1978 is $200. The $200 credit to be claimed on A's 1978 return is subject to the separate limitation in section 53(b) because the limitation applies to taxable years of the taxpayer beginning before January 1, 1979.

Example 2. B, a calendar year taxpayer, is a shareholder in Corporation M, a subchapter S corporation with a July to June fiscal year. B's pro rata portion of the credit earned by Corporation M in its taxable year beginning in 1978 is $100. The $100 credit to be claimed on B's 1979 return is not subject to the separate limitation requirement of section 53(b) because the limitation only applies to taxable years of the taxpayer beginning before 1979, notwithstanding the credit was earned by Corporation M before 1979.

(b) ***Application of credit earned.*** A credit earned under section 44B by a partnership, estate or trust, or subchapter S corporation shall be applied by a partner, beneficiary, or shareholder, to the extent allowed under section 53(b), before applying any other credit earned under section 44B. For example, if an individual has a new jobs credit from a proprietorship of $2,000 and from a partnership (after applying section 53(b)) of $1,800, but the credit must be limited under section 53(a) to $3,000, the entire $1,800 credit from the partnership would be applied before any part of the $2,000 amount is applied.

(c) ***Amount of separate limitation.*** The amount of the separate limitation is equal to the partner's, beneficiary's, or shareholder's limitation under section 53(a) for the taxable year multiplied by a fraction. The numerator of the fraction is the portion of the taxpayer's taxable income for the year attributable to the taxpayer's interest in the entity. The denominator of the fraction is the taxpayer's total taxable income for the year reduced by the zero bracket amount, if any.

(d) ***Portion of taxable income attributable to an interest in a partnership, estate or trust, or subchapter S corporation*** —

(1) ***General rule.*** The portion of a taxpayer's taxable income attributable to an interest in a partnership, estate or trust, or subchapter S corporation is the amount of income from that entity the taxpayer is required to include in gross income, reduced by—

(i) The amount of the deductions allowed to the taxpayer that are attributable to the taxpayer's interest in the entity; and

(ii) A proportionate share of the deductions allowed to the taxpayer not attributable to a specific activity (as defined in paragraph (e)).

If a deduction comprises both an item that is attributable to the taxpayer's interest in the entity and an item or items that are not attributable to the interest in the entity, and if the deduction is limited by a provision of the Code (such as section 170(b), relating to limitations on charitable contributions), the deduction must be prorated among the items taken into account in computing the deduction. For example, if an individual makes a charitable contribution of $5,000 and his distributive share of a partnership includes $2,000 in charitable contributions made by the partnership, and if the charitable contribution deduction is limited to $3,500 under section 170(b), then the portion of the deduction allowed to the taxpayer that is not attributable to a specific activity is $2,500 ($3,500 × ($5,000 ÷ $7,000)) and the portion of the deduction allowed to the taxpayer that is attributable to the interest in the partnership is $1,000 ($3,500 × ($2,000 ÷ $7,000)).

(2) ***Deductions attributable to an interest in an entity.*** Examples of deductions that are attributable to the taxpayer's interest in an entity include (but are not limited to) a deduction under section 1202 attributable to a net capital gain passed through the entity, and a deduction attributable to a deductible item (such as a charitable contribution) that has been passed through the entity.

(3) ***Computation of the proportionate share of deductions not attributable to a specific activity.*** The proportionate share of a deduction of the taxpayer not attributable to a specific activity is obtained by multiplying the amount of the deduction by a fraction. The numerator of the fraction is the income from the entity that the taxpayer is required to include in gross income, reduced by the amount of the deductions of the taxpayer that are attributable to the taxpayer's interest in the entity. The denominator is the taxpayer's gross income reduced by the amount of all the deductions attributable to specific activities.

(4) ***Examples.*** The method of determining the amount of taxable income attributable to an interest in a partnership, estate or trust, or subchapter S corporation is illustrated by the following examples:

> *Example 1.* (a) A, a single individual, is a shareholder in S Corporation, a subchapter S corporation. A is required to include the following amounts from S corporation is his gross

income:

Salary	$3,000
Undistributed taxable income:	
Ordinary income	8,000
Net capital gain	2,000
Total	10,000
Total	13,000

A has income from other activities:

Ordinary income	6,000
Net capital gain	4,000
Total	10,000

(b) In order to determine the taxable income attributable to A's interest in S Corporation, it is necessary to reduce the amount of income from S Corporation that A is required to include in gross income by the amount of A's deductions attributable to the interest in S Corporation and by a proportionate share of A's deductions not attributable to a specific activity. These computations are made in paragraph (c) of this example. However, before the computation reducing A's income by a proportionate share of the deductions not attributable to a specific activity can be made, the ratio described in subparagraph (3) of this paragraph (d) must be determined. The numerator of the ratio (the amount of income from S Corporation that A is required to include in gross income, reduced by the amount of the deductions attributable to A's interest in S Corporation) is obtained in paragraph (c) of this example in the process of computing A's taxable income attributable to the interest in S Corporation. The determination of the denominator (A's gross income reduced by the amount of all deductions attributable to specific activities), however, require a separate computation, which follows:

Gross income:	
Income from S Corporation	$13,000
Income from other sources	10,000
Total	23,000

Less: Deductions attributable to specific activities:	
Section 1202 deduction (50 percent. of $6,000)	3,000
A's gross income reduced by the amount of the deductions attributable to specific activities (denominator of the ratio for determining the proportionate share of deductions not attributable to a specific activity)	20,000

(c) Computation of the amount of A's taxable income attributable to the interest in S Corporation:

Income from S Corporation that A is required to include in gross income:	
Ordinary income	$11,000
Net capital gain	2,000
Total	13,000
Less: Deductions of the taxpayer attributable to the interest in S Corporation:	
Section 1202 deduction (50 pct. of $2,000)	1,000
(Numerator of the ratio for determining the proportionate share of deductions not attributable to a specific activity)	12,000
Less: Proportionate share of the deductions of the taxpayer not attributable to a specific activity:	
Personal exemption deduction ($750 × $12,000/$20,000)	450
Zero bracket amount ($2,200 × $12,000/$20,000)	1,320
Total	1,770
Portion of A's taxable income attributable to interest in S Corporation.	10,230

Example 2. (a) C, a married individual with two children, is a partner in the CD Company. C's distributive share of the CD Company consists of the following:

Ordinary income (other than guaranteed payment)	$38,420
Guaranteed payment	20,000
Net long-term capital gain	6,000
Net short-term capital loss	2,000
Dividends qualifying for exclusion	100

Charitable contributions	500

C also has items of income from other sources and deductions, as follows:

Ordinary income	$21,680
Short-term capital gain	2,000
Dividends qualifying for exclusion	400
Deductions:	
Deductible medical expenses	16,000
Charitable contributions	4,000
Alimony	18,000
Interest and taxes on home	8,000
Loss relating to another specific activity	4,000

(b) In order to determine C's taxable income attributable to the interest in the partnership, it is necessary to reduce the amount of income from the partnership that C is required to include in gross income by the amount of C's deductions attributable to the interest in the partnership and by a proportionate share of C's deductions not attributable to a specific activity. These computations are made in paragraph (c) of this example. However, before the computation reducing C's income by a proportionate share of the deductions not attributable to a specific activity can be made, the ratio described in paragraph (d)(3) of this section must be determined. The numerator of the ratio is determined in paragraph (c) of this example in the process of computing C's taxable income attributable to the interest in the partnership. The denominator, however, requires a separate computation, reducing C's gross income by the amount of all deductions attributable to specific activities. This computation is as follows:

Gross income: Income from the partnership:	
Ordinary income	$58,420
Net long-term capital gain	6,000
Dividends	100
Less: Proportionate share of dividend exclusion ($100 × $100/$500)	20
	80

	64,500
Income from other sources:	
Ordinary income	21,680
Net short/term capital gain	2,000
Dividends	400
Less: Proportionate share of dividend exclusion ($100 × $400/$500)	$80
	320
	24,000
	88,500
Less: Deductions attributable to specific activities:	
Net short-term capital loss passed through the partnership	2,000
Loss related to another specific activity	4,000
Section 1202 deduction attributable to the interest in the partnership	2,000
Charitable contribution deduction passed through the partnership	500
	8,500
C's gross income, reduced by the amount of the deductions attributable to specific activities (denominator of the ratio for determining the proportionate share of deductions not attributable to a specific activity)	80,000

(c) Computation of the amount of C's taxable income attributable to the interest in the partnership:

Distributive share of ordinary income (other than guaranteed payments)	$38,420
Guaranteed payment	20,000
Distributive share of dividends less share of exclusion	80
Distributive share of net long-term capital gain	6,000
	64,500
Section 1202 deduction (50 pct. of $4,000)	2,000
Charitable contribution passed through the partnership	500
Net short-term capital loss passed through the partnership	2,000
	4,500
(Numerator of the ratio for determining the proportionate share of deductions not attributable to a specific activity)	60,000
Section 1202 deduction ($1,000 × $60,000/$80,000)	750
Deductible medical expenses ($16,000 × $60,000/$80,000)	12,000
Charitable contributions ($4,000 × $60,000/$80,000)	3,000

Alimony ($18,000 × $60,000/$80,000)	13,500
Interest and taxes on home ($8,000 × $60,000/$80,000)	6,000
Personal exemption deduction ($3,000 × $60,000/$80,000)	2,250
Total	37,500
Portion of C's taxable income attributable to the interest in the partnership	22,500

C has a deduction under section 1202 of $3,000. Of that deduction, $2,000 is attributable directly to C's interest in the partnership (50 percent of the net capital gain that would result from offsetting the $6,000 net long-term capital gain and the $2,000 net short-term capital loss that are attributable to C's interest in the partnership). Since the remaining $1,000 deduction under section 1202 cannot be attributed directly to either C's income from the partnership or any other specific activity, it must be treated as a deduction not attributable to a specific activity.

(e) ***Deductions not attributable to a specific activity*** —

(1) ***Specific activity defined.*** A specific activity means a course of continuous conduct involving a particular line of endeavor, whether or not the activity is carried on for profit. Examples of a specific activity are:

(i) A trade or business carried on by the taxpayer;

(ii) A trade or business carried on by an entity in which the taxpayer has an interest;

(iii) An activity with respect to which the taxpayer is entitled to a deduction under section 212;

(iv) The operation of a farm as a hobby.

(2) ***Types of deductions not attributable to a specific activity.*** Examples of deductions not attributable to a specific activity include charitable contributions made by the partner, beneficiary, or shareholder; medical expenses; alimony; interest on personal debts of the partner, beneficiary, or shareholder; and real estate taxes on the personal residence of the partner, beneficiary, or shareholder. For purposes of this section, in cases in which deductions are not itemized, the zero bracket amount is considered to be a deduction not attributable to a specific activity.

(f) ***Carryback or carryover of credit subject to separate limitation.*** A credit subject to the separate limitation under section 53(b) that is carried back or carried over to a taxable year beginning before January 1, 1979, is also subject to the separate limitation in the carryback or carryover year. For purposes of the preceding sentence, a credit that is earned by a partnership, a trust, or estate, or a subchapter S corporation in a taxable year of such entity ending within, or after, the taxable year of a partner beneficiary or shareholder beginning after December 31, 1978, will not be subject to the separate limitation in section 53(b) with respect to such partner, beneficiary, or shareholder. The taxpayer to whom the credit has been passed through shall not be prevented from applying the unused portion in a carryback or carryover year merely because the entity that earned the credit changes its form of conducting business if the nature of its trade or business essentially remains the same. The computation of the separate limitation in such a case shall

reflect the income attributable to the taxpayer's interest in the entity in its revised form. Thus, a shareholder carrying over a credit from a subchapter S corporation may include dividends declared by that corporation after the subchapter S election had been terminated as income attributable to that person's interest in the entity. Similarly, if a partnership incorporates in a carryover year, any income attributable to an interest in the corporation will be regarded, for purposes of computing the separate limitation under section 53(b), as income attributable to an interest in the entity. This paragraph may be illustrated by the following examples:

Example 1. A, a calendar year taxpayer, is a shareholder in Corporation M, a subchapter S corporation. In 1977, A's pro rata share of the new jobs credit earned by Corporation M was $10,000. A could only use $2,000 of the credit in 1977 because of the separate limitation under section 53(b). In 1978, A carries the unused credit over from 1977. The carryover credit is subject to the separate limitation under section 53(b).

Example 2. Assume the same facts as in example 1 except that the unused credit is carried over to 1979. The carryover credit is not subject to the separate limitation under section 53(b) because that limitation does not apply to taxable years of a taxpayer beginning after December 31, 1978.

Example 3. B, a calendar year taxpayer, is a shareholder in Corporation W, a subchapter S corporation. In 1979, B's pro rata share of the targeted jobs credit covered by Corporation W was $5,000 but B could only use $3,000 of the credit in 1979. B carries back the unused credit to 1978. The carryback credit is not subject to the separate limitation under section 53(b).

(Secs. 44B, 381, and 7805 of the Internal Revenue Code of 1954 (92 Stat. 2834, 26 U.S.C. 44B); 91 Stat. 148, 26 U.S.C. 381(c)(26); 68A Stat. 917, 26 U.S.C. 7805)

[T.D. 7560, 43 FR 60445, Dec. 28, 1978. Redesignated and amended by T.D. 7921, 48 FR 52906, 52907, Nov. 23, 1983]

§ 1.55-1 Alternative minimum taxable income.

(a) ***General rule for computing alternative minimum taxable income.*** Except as otherwise provided by statute, regulations, or other published guidance issued by the Commissioner, all Internal Revenue Code provisions that apply in determining the regular taxable income of a taxpayer also apply in determining the alternative minimum taxable income of the taxpayer.

(b) ***Items based on adjusted gross income or modified adjusted gross income.*** In determining the alternative minimum taxable income of a taxpayer other than a corporation, all references to the taxpayer's adjusted gross income or modified adjusted gross income in determining the amount of items of income, exclusion, or deduction must be treated as references to the taxpayer's adjusted gross income or modified adjusted gross income as determined for regular tax purposes.

(c) ***Effective date.*** These regulations are effective for taxable years beginning after December 31, 1993.

[T.D. 8569, 59 FR 60557, Nov. 25, 1994]

§ 1.56-0 Table of contents to § 1.56-1, adjustment for book income of corporations.

(a) Computation of the book income adjustment.

(1) In general.

(2) Taxpayers subject to the book income adjustment.

(3) Consolidated returns.

(4) Examples.

(b) Adjusted net book income.

(1) In general.

(2) Net book income.

(i) In general.

(ii) Measures of net book income.

(iii) Tax-free transactions and tax-free income.

(iv) Treatment of dividends and other amounts.

(3) Additional rules for consolidated groups.

(i) consolidated adjusted net book income.

(ii) Consolidated net book income.

(iii) Consolidated pre-adjustment alternative minimum taxable income.

(iv) Cross references.

(4) Computation of adjusted net book income when taxable year and financial accounting year differ.

(i) In general.

(ii) Estimating adjusted net book income.

(iii) Election to compute adjusted net book income based on the financial statement for the year ending within the taxable year.

(A) In general.

(B) Time of making election.

(C) Eligibility to make and manner of making election.

(D) Election or revocation of election made on an amended return.

(iv) Quarterly statement filed with the Securities and Exchange Commission (SEC).

(5) Computation of net book income using current earnings and profits.

(i) In general.

(ii) Current earnings and profits of a consolidated group.

(6) Additional rules for computation of net book income of a foreign corporate taxpayer.

(i) Adjusted net book income of a foreign taxpayer.

(ii) Effectively connected net book income of a foreign taxpayer.

(A) In general.

(B) Certain exempt amounts.

(iii) Computation of net book income of a foreign taxpayer using current earnings and profits.

(7) Examples.

(c) Applicable financial statement.

(1) In general.

(i) Statement required to be filed with the Securities and Exchange Commission (SEC).

(ii) Certified audited financial statement.

(iii) Financial statement provided to a government regulator.

(iv) Other financial statements.

(v) Required use of current earnings and profits.

(2) Election to treat net book income as equal to current earnings and profits for the taxable year.

(i) In general.

(ii) Time of making election.

(iii) Eligibility to make and manner of making election.

(iv) Election by common parent of consolidated group.

(v) Election or revocation of election made on an amended return.

(3) Priority among statements.

(i) In general.

(ii) Special priority rules for use of certified audited financial statements and other financial statements.

(iii) Priority among financial statements provided to a government regulator.

(iv) Statements of equal priority.

(A) In general.

(B) Exceptions to the general rule in paragraph (c)(3)(iv)(A).

(4) Use of financial statement for a substantial non-tax purpose.

(5) Special rules.

(i) Applicable financial statement of related corporations.

(A) Applicable financial statement of a consolidated group.

(B) Special rule for statements of equal priority.

(C) Special rule for related corporations.

(D) Anti-abuse rule.

(ii) Applicable financial statement of foreign corporation with a United States trade or business.

(A) In general.

(B) Special rules for applicable financial statement of a trade or business of a foreign taxpayer.

(C) Special rule for statements of equal priority.

(D) Anti-abuse rule.

(iii) Supplement or amendment to an applicable financial statement.

(A) Excluding a restatement of net book income.

(B) Restatement of net book income.

(6) Examples.

(d) Adjustments to net book income.

(1) In general.

(2) Definitions.

(i) Historic practice.

(ii) Accounting literature.

(3) Adjustments for certain taxes.

(i) In general.

(ii) Exception for certain foreign taxes.

(iii) Certain valuation adjustments.

(iv) Examples.

(4) Adjustments to prevent omission or duplication.

(i) In general.

(ii) Special rule for depreciating an asset below is cost.

(iii) Consolidated group using current earnings and profits.

(iv) Restatement of a prior year's applicable financial statement.

(A) In general.

(B) Reconciliation of owner's equity in applicable financial statements.

(B) Use of different priority applicable financial statements in consecutive taxable years.

(D) First successor year defined.

(E) Exceptions.

(v) Adjustment for items previously taxed as subpart F income.

(vi) Adjustment for pooling of interests.

(vii) Adjustment for certain deferred foreign taxes.

(viii) Examples.

(5) Adjustments resulting from disclosure.

(i) Adjustment for footnote disclosure or other supplementary information.

(A) In general.

(B) Disclosures not specifically authorized in the accounting literature.

(ii) Equity adjustments.

(A) In general.

(B) Definition of equity adjustment.

(iii) Amount disclosed in an accountant's opinion.

(iv) Accounting method changes that result in cumulative adjustments to the current year's applicable financial statement.

(A) In general.

(B) Exception.

(v) Examples.

(6) Adjustments applicable to related corporations.

(i) Consolidated returns.

(A) In general.

(B) Corporations included in the consolidated Federal income tax return but excluded from the applicable financial statement.

(C) Corporations included in the applicable financial statement but excluded from the consolidated tax return.

(ii) Adjustment under the principles of section 482.

(iii) Adjustment for dividends received from section 936 corporations.

(A) In general.

(B) Treatment as foreign taxes.

(C) Treatment of taxes imposed on section 936 corporations.

(iv) Adjustment to net book income on sale of certain investments.

(v) Examples.

(7) Adjustments for foreign taxpayers with a United States trade or business.

(i) In general.

(ii) Example.

(8) Adjustment for corporations subject to subchapter F.

(e) Special rules.

(1) Cooperatives.

(2) Alaska Native Corporations.

(3) Insurance companies.

(4) Estimating the net book income adjustment for purposes of estimated tax liability.

(5) Effective/applicability date.

[T.D. 8307, 55 FR 33675, Aug. 17, 1990, as amended by T.D. 9347, 72 FR 44347, Aug. 7, 2007]

REGULATIONS APPLICABLE TO TAXABLE YEARS BEGINNING IN 1969 AND ENDING IN 1970

§ 1.56(g)-0 Table of Contents.

This section lists the paragraphs contained in § 1.56(g)-1.

§ 1.56(g)-1 Adjusted current earnings.

(a) Adjustment for adjusted current earnings.

(1) Positive adjustment.

(2) Negative adjustment.

(i) In general.

(ii) Limitation on negative adjustments.

(iii) Example.

(3) Negative amounts.

(4) Taxpayers subject to adjustment for adjusted current earnings.

(5) General rule for applying Internal Revenue Code provisions in determining adjusted current earnings.

(i) In general.

(ii) Example.

(6) Definitions.

(i) Pre-adjustment alternative minimum taxable income.

(ii) Adjusted current earnings.

(iii) Earnings and profits.

(7) Application to foreign corporations.

(b) Depreciation allowed.

(1) Property placed in service after 1989.

(2) Property subject to new ACRS.

(i) In general.

(ii) Rules for computing the depreciation deduction.

(iii) Example.

(3) Property subject to original ACRS.

(i) In general.

(ii) Rules for computing the depreciation deduction.

(iii) Example.

(4) Special rule for certain section 168(f) property.

(5) Certain property not subject to ACRS.

(c) Inclusion in adjusted current earnings of items included in earnings and profits.

(1) In general.

(2) Certain amounts not taken into account in determining whether an item is permanently excluded.

(3) Allowance of offsetting deductions.

(4) Special rules.

(i) Income from the discharge of indebtedness.

(ii) Federal income tax refunds.

(iii) Income earned on behalf of states and municipalities.

(5) Treatment of life insurance contracts.

(i) In general.

(ii) Inclusion of inside buildup.

(iii) Calculation of income on the contract.

(iv) Treatment of distributions under the life insurance contract.

(v) Treatment of death benefits.

(vi) Other rules.

(A) Term life insurance contracts without net surrender values.

(B) Life insurance contracts involving divided ownership.

(vii) Examples.

(6) Partial list of income items excluded from gross income but included in earnings and profits.

(7) Partial list of items excluded from both pre-adjustment alternative minimum taxable income and adjusted current earnings.

(d) Disallowance of items not deductible in computing earnings and profits.

(1) In general.

(2) Deductions for certain dividends received.

(i) Certain amounts deducted under sections 243 and 245.

(ii) Special rules.

(A) Dividends received from a foreign sales corporation.

(B) Dividends received from a section 936 corporation.

(iii) Special rule for certain dividends received by certain cooperatives.

(3) Partial list of items not deductible in computing earnings and profits.

(4) Partial list of items deductible for purposes of computing both pre-adjustment alternative minimum taxable income and adjusted current earnings.

(e) Treatment of income items included, and deduction items not allowed, in computing pre-adjustment alternative minimum taxable income.

(f) Certain other earnings and profits adjustments.

(1) Intangible drilling costs.

(2) Certain amortization provisions do not apply.

(3) LIFO recapture adjustment.

(i) In general.

(ii) Beginning LIFO and FIFO inventory.

(iii) Definitions.

(A) LIFO recapture amount.

(*1*) Definition.

(*2*) Assets included.

(B) FIFO method.

(C) LIFO method.

(D) Inventory amounts.

(iv) Exchanges under sections 351 and 721.

(v) Examples.

(vi) Effective date.

(4) Installment sales.

(i) In general.

(ii) Exception for prior dispositions.

(iii) Special rules for obligations to which section 453A applies.

(A) In general.

(B) Limitation on application of installment method.

(C) Treatment of the ineligible portion.

(D) Treatment of the eligible portion.

(E) Coordination with the pledge rule.

(F) Example.

(g) Disallowance of loss on exchange of debt pools. [Reserved]

(h) Policy acquisition expenses of life insurance companies.

(1) In general.

(2) Reasonably estimated life.

(3) Reasonable allowance for amortization.

(4) Safe harbor for public financial statements.

(i) [Reserved]

(j) Depletion.

(k) Treatment of certain ownership changes.

(1) In general.

(2) Definition of ownership change.

(3) Determination of net unrealized built-in loss immediately before an ownership change.

(4) Example.

(l) [Reserved]

(m) Adjusted current earnings of a foreign corporation.

(1) In general.

(2) Definitions.

(i) Effectively connected pre-adjustment alternative minimum taxable income.

(ii) Effectively connected adjusted current earnings.

(3) Rules to determine effectively connected pre-adjustment alternative minimum taxable income and effectively connected adjusted current earnings.

(4) Certain exempt amounts.

(n) Adjustment for adjusted current earnings of consolidated groups.

(1) Positive adjustments.

(2) Negative adjustments.

(i) In general.

(ii) Limitation on negative adjustments.

(3) Definitions.

(i) Consolidated pre-adjustment alternative minimum taxable income.

(ii) Consolidated adjusted current earnings.

(4) Example.

(o) [Reserved]

(p) Effective dates for corporate partners in partnerships.

(1) In general.

(2) Application of effective dates.

(3) Example.

(q) Treatment of distributions of property to shareholders.

(1) In general.

(2) Examples.

(r) Elections to use simplified inventory methods to compute alternative minimum tax.

(1) In general.

(2) Effect of election.

(i) Inventories.

(ii) Modifications required.

(A) In general.

(B) Negative modifications allowed.

(iii) LIFO recapture adjustment.

(3) Time and manner of making election.

(i) Prospective election.

(ii) Retroactive election.

(iii) Taxpayers under examination.

(A) In general.

(*1*) Year of change under examination.

(*2*) Other open years under examination.

(B) Statement required.

(C) Year of change.

(D) Treatment of additional tax liability.

(iv) Election as method of accounting.

(v) Untimely election to use simplified inventory method.

(4) Example.

(5) Election to use alternative minimum tax inventories to compute adjusted current earnings.

(s) Adjustment for alternative tax energy preference deduction.

(1) In general.

(2) Example.

[T.D. 8340, 56 FR 11083, Mar. 15, 1991, as amended by T.D. 8454, 57 FR 60476, Dec. 21, 1992]

§ 1.56(g)-1 Adjusted current earnings.

(a) ***Adjustment for adjusted current earnings*** —

(1) ***Positive adjustment.*** For taxable years beginning after December 31, 1989, the alternative minimum taxable income of any taxpayer described in paragraph (a)(4) of this section is increased by the adjustment for adjusted current earnings. The adjustment for adjusted current earnings is 75 percent of the excess, if any, of—

(i) The adjusted current earnings (as defined in paragraph (a)(6)(ii) of this section) of the taxpayer for the taxable year over.

(ii) The pre-adjustment alternative minimum taxable income (as defined in paragraph (a)(6)(i) of this section) of the taxpayer for the taxable year.

(2) ***Negative adjustment*** —

(i) ***In general.*** For taxable years beginning after December 31, 1989, the alternative minimum taxable income of any taxpayer is decreased, subject to the limitation of paragraph (a)(2)(ii) of this section, by 75 percent of the excess, if any, of pre-adjustment alternative minimum taxable income (as defined in paragraph (a)(6)(i) of this section), over adjusted current earnings (as defined in paragraph (a)(6)(ii) of this section).

(ii) ***Limitation on negative adjustments.*** The amount of the negative adjustment for any taxable year is limited to the excess, if any, of—

(A) The aggregate increases in alternative minimum taxable income in prior years under paragraph (a)(1) of this section over

(B) The aggregate decreases in alternative minimum taxable income in prior years under this paragraph (a)(2).

Any excess of pre-adjustment alternative minimum taxable income over adjusted current earnings that is not allowed as a negative adjustment for the taxable year because of the limitation in this paragraph (a)(2)(ii) is not applied to reduce any positive adjustment in any other taxable year.

(iii) ***Example.*** The following example illustrates the provisions of this paragraph (a)(2):

(A) Corporation P is a calendar-year taxpayer and has pre-adjustment alternative minimum taxable income and adjusted current earnings in the following amounts for 1990 through 1993:

Year	Pre-adjustment alternative minimum taxable income	Adjusted current earnings
1990	$800,000	$700,000
1991	600,000	900,000
1992	500,000	400,000
1993	500,000	100,000

(B) Under these facts, corporation P has the following positive and negative adjustments for adjusted current earnings:

Year	Negative adjustment	Positive adjustment
1990	0	0
1991	0	$225,000
1992	$75,000	0
1993	150,000	0

(C) In 1990, P has a potential negative adjustment (before the cumulative limitation) of $75,000 (75 percent of the $100,000 excess of pre-adjustment alternative minimum taxable income over adjusted current earnings). Nonetheless, P is not permitted a negative adjustment because P had no prior increases in its alternative minimum taxable income due to an adjustment for adjusted current earnings.

(D) In 1991, P has a positive adjustment of $225,000 (75 percent of the $300,000 excess of adjusted current earnings over pre-adjustment alternative minimum taxable income). P is not allowed to use the prior year's excess of pre-adjustment alternative minimum taxable income over adjusted current earnings to reduce its 1991 positive adjustment.

(E) In 1992, P is permitted a negative adjustment of $75,000, the full amount of 75 percent of the $100,000 excess of pre-adjustment alternative minimum taxable income over adjusted current earnings for the taxable year. This is because P's prior cumulative increases in alternative minimum taxable income due to the positive adjustments for adjusted current earnings exceed the negative adjustment for the year.

(F) In 1993, P has a potential negative adjustment (before the cumulative limitation) of $300,000 (75 percent of the $400,000 excess of pre-adjustment alternative minimum taxable income over adjusted current earnings). P's net cumulative increases in alternative minimum taxable income due to the adjustment for adjusted current earnings are $150,000 ($225,000 increase in 1991, less $75,000 decrease in 1992). Thus, P's negative adjustment in 1993 is limited to $150,000. P may not use the remaining portion ($150,000) of the negative adjustment for 1993 to reduce positive adjustments in other taxable years.

(3) ***Negative amounts.*** In determining whether an excess exists under paragraph (a)(1) or (a)(2) of this section, a positive amount exceeds a negative amount by the sum of the absolute numbers, and a smaller negative amount exceeds a larger negative amount by the difference between the absolute numbers. Thus, for example, a positive amount of adjusted current earnings of $30 exceeds a negative amount (or loss) of pre-adjustment AMTI of $10 by the sum of the absolute numbers, or $40 (30 + 10). Accordingly, the adjustment for adjusted current earnings would be 75 percent of $40, or $30. In contrast, a negative amount of adjusted current earnings of $10 exceeds a negative amount (or loss) of pre-adjustment alternative minimum taxable income of $30 by the difference between the absolute numbers, or $20 (30−10). Accordingly, the adjustment for adjusted current earnings would be 75 percent of $20, or $15.

(4) ***Taxpayers subject to adjustment for adjusted current earnings.*** The adjustment for adjusted current earnings applies to any corporation other than—

(i) An S corporation as defined in section 1361,

(ii) A regulated investment company as defined in section 851,

(iii) A real estate investment trust as defined in section 856, or

(iv) A real estate mortgage investment conduit as defined in section 860A.

(5) ***General rule for applying Internal Revenue Code provisions in determining adjusted current earnings*** —

(i) ***In general.*** Except as otherwise provided by regulations or other guidance issued by the Internal Revenue Service, all Internal Revenue Code provisions that apply in determining the regular taxable income of a taxpayer also apply in determining adjusted current earnings. For example, the rules of part V of subchapter P (relating to original issue discount and similar matters) of the Code apply in determining the amount (and the timing) of any interest income included in adjusted current earnings under this section. In applying Code provisions, however, the adjustments of section 56(g) and this section are also taken into account. For example, in applying the capitalization provisions of section 263A, the amount of depreciation to be capitalized is based on the amount of depreciation allowed in computing adjusted current earnings.

(ii) ***Example.*** The following example illustrates the provisions of this paragraph (a)(5):

(A) Corporation N is a calendar year manufacturer of golf clubs. N places new manufacturing equipment in service in 1990. The regular tax depreciation allowable for this equipment is $80,000; the pre-adjustment alternative minimum taxable income depreciation is $60,000; and the adjusted current earnings depreciation is $40,000. All of the golf clubs N produces in 1990 are unsold and are in ending inventory.

(B) Pursuant to section 263A and § 1.263A-1(e)(3)(ii)(I), N must capitalize the depreciation allowed for the year for the new manufacturing equipment in the ending inventory of golf clubs. Thus, when N sells the golf clubs (or is deemed to have sold them under its normal method of accounting), the cost of goods sold attributable to the capitalized depreciation will be $80,000 in computing regular taxable income; $60,000 in computing pre-adjustment alternative minimum taxable income; and $40,000 in computing adjusted current earnings.

(6) ***Definitions.*** The following terms have the following meanings for purpose of this section.

(i) ***Pre-adjustment alternative minimum taxable income.*** Pre-adjustment alternative minimum taxable income is the alternative minimum taxable income of the taxpayer for the taxable year, determined under section 55(b)(2), but without the adjustment for adjusted current earnings under section 56(g) and this section, without the alternative tax net operating loss deduction under section 56(a)(4), and without the alternative tax energy preference deduction under section 56(h).

(ii) ***Adjusted current earnings.*** Adjusted current earnings is the pre-adjustment alternative minimum taxable income of the taxpayer for the taxable year, adjusted as provided in section 56(g) and this section. To the extent an amount is included (or deducted) in computing pre-adjustment alternative minimum taxable income for the taxable year (whether because an adjustment is made under section 56 or 58, because of a tax preference item under section 57, or because the item is reflected in taxable income), that amount is not again included (or deducted) in computing adjusted current earnings for the taxable year.

(iii) ***Earnings and profits.*** Earnings and profits means current earnings and profits within the meaning of section 316(a)(2), that is, earnings and profits for the taxable year computed as of the close of the taxable year of the corporation without diminution by reason of any distributions made during the taxable year.

(7) ***Application to foreign corporations.*** See paragraph (m) of this section for rules relating to the application of this section to foreign corporations.

(b) ***Depreciation allowed.*** The depreciation deduction allowed in computing adjusted current earnings is determined under the rules of this paragraph (b). Generally, the rules for computing the adjusted current earnings depreciation deduction differ depending on the taxable year in which the property is placed in service and the method used in computing the depreciation deduction for taxable income purposes. See § 1.168(i)-1(k) for an election to use general asset accounts.

(1) ***Property placed in service after 1989.*** The depreciation deduction for property placed in service in a taxable year beginning after December 31, 1989, is the amount determined by using the alternative depreciation system of section 168(g). This paragraph (b)(1) does not apply to property to which paragraph (b)(4) of this section applies (relating to certain property described in sections 168 (f)(1) through (f)(4)).

(2) ***Property subject to new ACRS*** —

(i) ***In general.*** This paragraph (b)(2) provides the rules for computing the depreciation deduction for property to which the amendments made by section 201 of the Tax Reform Act of 1986 (new ACRS) apply (generally property placed in service after December 31, 1986), and that is placed in service in a taxable year beginning before January 1, 1990. This paragraph (b)(2) does not apply to property described in paragraph (b)(4) of this section (relating to certain property described in sections 168 (f)(1) through (f)(4)) or to property described in paragraph (b)(5)(i) of this section (relating to certain churning transactions described in section 168(f)(5)).

(ii) ***Rules for computing the depreciation deduction.*** The depreciation deduction for property described in this paragraph (b)(2) is the amount determined by using—

(A) The adjusted basis of the property as determined in computing alternative minimum taxable income as of the close of the last taxable year beginning before January 1, 1990,

(B) The straight-line method, and

(C) The recovery period that consists of the remainder of the recovery period applicable to the property under the alternative depreciation system of section 168(g).

Thus, the recovery period begins on the first day of the first taxable year beginning after December 31, 1989, and ends on the last day of the recovery period that would have applied had the recovery period for the property originally been determined under section 168(g). In determining the recovery period that would have applied, the property is deemed placed in service on the date it was considered placed in service under the depreciation convention that would have applied to the property under section 168(d).

(iii) ***Example.*** The following example illustrates the provisions of this paragraph (b)(2).

Example. Corporation X, a calendar-year taxpayer, purchases and places in service on August 1, 1987, computer-based telephone central office switching equipment. This is the only item of depreciable property X places in service during 1987. Thus, the applicable convention under section 168(d) is the half-year convention. As of December 31, 1989, the adjusted basis of the property used in computing alternative minimum taxable income is $42,000. The recovery period that would have applied to the property under section 168(g)(2) is 9.5 years (from July 1, 1987 to December 31, 1996). Thus, the recovery period for computing adjusted current earnings under section 56(g)(4)(A)(ii) and this paragraph (b)(2) begins on January 1, 1990, and ends on December 31, 1996. X's 1990 depreciation deduction for computing adjusted current earnings is $6,000, determined under the straight-line method by dividing $42,000 (adjusted basis) by 7 (recovery period).

(3) ***Property subject to original ACRS*** —

(i) ***In general.*** This paragraph (b)(3) provides the rules for computing the depreciation deduction for property to which section 168 as in effect on the day before the date of enactment of the Tax Reform Act of 1986 (original ACRS) applies and that is placed in service in a taxable year beginning before January 1, 1990 (generally property that was placed in service after December 31, 1980 and before January 1, 1987). In determining whether original ACRS applies to property, the fact that the unadjusted basis of the property is reduced or eliminated under section 168(d)(4)(A)(i) of original ACRS is not taken into account. This paragraph (b)(3) does not apply to property described in paragraph (b)(4) or (b)(5)(i) of this section (relating to certain section 168(f) property).

(ii) ***Rules for computing the depreciation deduction.*** The depreciation deduction for property described in this paragraph (b)(3) is the amount determined by using—

(A) The adjusted basis of the property as determined in computing taxable income as of the close of the last taxable year beginning before January 1, 1990,

(B) The straight-line method, and

(C) The recovery period that consists of the remainder of the recovery period applicable to the property under the alternative depreciation system of section 168(g). Thus, the recovery period begins on the first day of the first taxable year beginning after December 31, 1989, and ends on the last day of the recovery period that would have applied had the recovery period for the property originally been determined under section 168(g)(2). In determining the recovery period that would have applied, the property is deemed placed in service on the date it was considered placed in service under the depreciation convention that would have applied to the property under section 168(d) (without regard to section 168(d)(3)).

(iii) ***Example.*** The following example illustrates the provisions of this paragraph (b)(3).

Example. Corporation Y, a calendar-year taxpayer, purchases and places in service on December 1, 1986, computer-based telephone central office switching equipment. The depreciation convention that would have applied to this property under section 168(d) (without regard to section 168(d)(3)) is the half-year convention. As of December 31, 1989, the adjusted basis of the property used in computing taxable income is $21,000. The recovery period for the property under section 168(g)(2) is 9.5 years (from July 1, 1986 to December 31, 1995). Thus, the recovery period for computing adjusted current earnings under section 56(g)(4)(A)(iii) and this paragraph (b)(3) begins on January 1, 1990, and ends on December 31, 1995. Y's 1990 depreciation deduction for computing adjusted current earnings is $3,500, determined under the straight-line method by dividing $21,000 (adjusted basis) by 6 (recovery period).

(4) ***Special rule for certain section 168(f) property.*** The depreciation or amortization deduction for property described in section 168(f) (1) through (4) is determined in the same manner as used in computing taxable income, without regard to when the property is placed in service.

(5) ***Certain property not subject to ACRS.*** The depreciation or amortization deduction for property not described in paragraphs (b) (1) through (4) of this section is determined in the same manner as used in computing taxable income. Thus, this paragraph (b)(5) applies to—

(i) Property placed in service after December 31, 1980, in a taxable year beginning before January 1, 1990, and that is excluded from the application of original ACRS or new ACRS by section 168(e)(4) of original ACRS or section 168(f)(5)(A)(i) of new ACRS, and

(ii) Property placed in service before January 1, 1981.

(c) ***Inclusion in adjusted current earnings of items included in earnings and profits*** —

(1) ***In general.*** Except as otherwise provided in paragraph (c)(4) of this section, adjusted current earnings includes all income items that are permanently excluded from (*i.e.,* not taken into account in determining) pre-adjustment alternative minimum taxable income but that are taken into account in determining earnings and profits. An income item is considered taken into account in determining pre-adjustment alternative minimum taxable income without regard to the timing of its inclusion. Thus, this paragraph (c)(1) does not apply to any income item that is, has been, or will be included in pre-adjustment alternative minimum taxable income. For example, a taxpayer eligible to use the completed contract method of accounting for long-term construction contracts does not take income (or expenses) into account in determining pre-adjustment alternative minimum taxable income for taxable years before the taxable year the contract is completed. The taxpayer is required under section 312(n)(6) to include income (and expenses) in earnings and profits throughout the term of the contract under the percentage of completion method. This paragraph (c)(1) does not require the income on the contract to be included in adjusted current earnings, however, because the income will be taken into account in the taxable year the contract is completed and therefore is considered to be taken into account in determining pre-adjustment alternative minimum taxable income.

(2) ***Certain amounts not taken into account in determining whether an item is permanently excluded.*** The fact that proceeds from an income item may eventually be reflected in pre-adjustment alternative minimum taxable income of another taxpayer on the liquidation or disposal of a business, or similar circumstances, is not taken into account in determining whether the item is permanently excluded from pre-adjustment alternative minimum taxable income. Thus, for example, a corporation's

adjusted current earnings include interest excluded from pre-adjustment alternative minimum taxable income under section 103 even though the interest might eventually be reflected in the pre-adjustment alternative minimum taxable income of a corporate shareholder as gain on the liquidation of the corporation.

(3) ***Allowance of offsetting deductions.*** In determining adjusted current earnings under this paragraph (c), a deduction is allowed for all items that relate to income required to be included in adjusted current earnings under this paragraph (c) and that would be deductible in computing pre-adjustment alternative minimum taxable income if the income items to which the items of deduction relate were included in pre-adjustment alternative minimum taxable income for any taxable year. For example, deductions disallowed under section 265(a)(2) for the costs of carrying tax-exempt obligations, the interest on which is excluded from pre-adjustment alternative minimum taxable income under section 103 but is included in adjusted current earnings under this paragraph (c), are generally allowed as deductions in computing adjusted current earnings. Amounts deductible under this paragraph (c)(3) are taken into account using the taxpayer's method of accounting and are subject to any provisions or limitations of the Code that would have applied if the amounts had been deductible in determining pre-adjustment alternative minimum taxable income. For example, section 267(a)(2) may affect the timing of a deduction otherwise disallowed under section 265(a)(2).

(4) ***Special rules.*** Adjusted current earnings does not include the following amounts.

(i) ***Income from the discharge of indebtedness.*** Amounts that are excluded from gross income under section 108 of the Internal Revenue Code of 1986 or any corresponding provision of prior law (including the Bankruptcy Tax Act of 1980, case law, income tax regulations and administrative pronouncements).

(ii) ***Federal income tax refunds.*** Refunds of federal income taxes.

(iii) ***Income earned on behalf of states and municipalities.*** Amounts that are excluded from gross income under section 115.

(5) ***Treatment of life insurance contracts*** —

(i) ***In general.*** This paragraph (c)(5) addresses the treatment of life insurance contracts in determining adjusted current earnings. These rules apply to life insurance contracts as defined in section 7702. Generally, death benefits under a life insurance contract are included in adjusted current earnings, and all other distributions (including surrenders) are taxed in accordance with the principles of section 72(e), taking into account the taxpayer's basis in the contract for purposes of adjusted current earnings. If the adjusted basis in the contract for purposes of adjusted current earnings exceeds the amount of death benefits received or the amount received when the contract is surrendered (increased by the amount of any outstanding policy loan), the resulting loss is allowed as a deduction under paragraph (c)(3) of this section in computing adjusted current earnings for the taxable year. In addition, undistributed income on the contract is included in adjusted current earnings as provided in paragraph (c)(5)(ii) of this section. Paragraph (c)(5)(vi)(A) of this section provides special rules for term insurance that has no net surrender value.

(ii) ***Inclusion of inside buildup.*** Income on a life insurance contract with respect to a taxable year (or any shorter period either ending or beginning with the date of a distribution from the contract) is included in adjusted current earnings for the taxable year. Thus, income on the contract is calculated from the beginning of a taxable year to the date of any distribution, from immediately after any distribution to the date of the next distribution, and from the last

distribution during the taxable year through the end of the taxable year. Income on a life insurance contract is not included in adjusted current earnings for any taxable year in which the insured dies or the contract is completely surrendered for its entire net surrender value. Solely for purposes of computing adjusted current earnings, the taxpayer's adjusted basis in the contract (as determined under section 72(e)(6)) is increased to reflect any positive income on the contract included in adjusted current earnings under this paragraph (c)(5)(ii). The manner in which the income on the contract is determined for adjusted current earnings purposes is prescribed in paragraph (c)(5)(iii) of this section. If the income on the contract determined under paragraph (c)(5)(iii) of this section is a negative amount, income on the contract is not included in adjusted current earnings and no deduction from adjusted current earnings is allowed for the negative amount.

(iii) ***Calculation of income on the contract.*** For purposes of determining adjusted current earnings, the income on a life insurance contract for any period, including a taxable year, is the excess, if any, of—

(A) The sum of the contract's net surrender value (as defined in section 7702(f)(2)(B)) at the end of the period, and any distributions under the contract during the period that, in accordance with the principles of section 72(e), are not taxed because they represent recoveries of the taxpayer's basis in the contract for adjusted current earnings, over

(B) The sum of the contract's net surrender value at the end of the preceding period, and any premiums paid under the contract during the period.

(iv) ***Treatment of distributions under the life insurance contract.*** Any distribution under a life insurance contract (whether a partial withdrawal or an amount received on complete surrender of the contract) is included in adjusted current earnings in accordance with the principles of section 72(e), taking into account the taxpayer's basis in the contract for purposes of computing adjusted current earnings. The taxpayer's basis in the contract is equal to the basis at the end of the immediately preceding period plus any premiums paid before the distribution. The taxpayer's basis in the contract for purposes of adjusted current earnings is reduced, in accordance with the principles of section 72(e), to the extent that the distribution is not included in adjusted current earnings because it represents a recovery of that basis.

(v) ***Treatment of death benefits.*** The excess of the contractual death benefit of a life insurance contract over the taxpayer's adjusted basis in the contract for purposes of computing adjusted current earnings at the time of the insured's death is included in adjusted current earnings as provided by paragraph (c)(6)(i) of this section. The amount of the death benefit that is taken into account for adjusted current earnings includes the amount of any outstanding policy loan treated as forgiven or discharged by the insurance company upon the death of the insured.

(vi) ***Other rules*** —

(A) ***Term life insurance contract without net surrender values.*** Except as provided in this paragraph (c)(5)(vi), the requirements of paragraph (c)(5) of this section do not apply to term life insurance contracts that provide no net surrender value. Adjusted current earnings are reduced by any premiums paid under such a contract that are allocable to the taxable year. Any premiums paid that are not allocable to the taxable year must be included in the basis of the contract. The death benefit under such a term insurance contract is included in adjusted current earnings as provided by paragraph (c)(5)(v) of this section.

(B) ***Life insurance contracts involving divided ownership.*** If the ownership of a life insurance contract is divided between different persons (for example, a split-dollar arrangement), the requirements of paragraph (c)(5) of this section apply to the separate ownership interests as though each interest were a separate contract.

(vii) ***Examples.*** The following examples illustrate the provisions of this paragraph (c)(5).

Example 1. (i) On January 1, 1987, corporation X, a calendar year taxpayer, purchased a flexible premium life insurance contract with a death benefit of $100,000 and planned annual gross premiums of $2,200 payable on January 1 of each year. The net surrender value of the contract at the end of 1987 and subsequent years, together with the cumulative premiums for the contract at the end of each year, are set forth in the following table:

Year	Cumulative premiums paid	Year-end net surrender value
1987	$2,200	$2,420
1988	4,400	5,082
1989	6,600	8,010
1990	8,800	11,231
1991	11,000	14,774

(ii) Under paragraph (c)(5)(ii) of this section, X must include $1,021 in adjusted current earnings for 1990. The inclusion is computed by subtracting from the net surrender value of the contract at the end of the taxable year ($11,231) the sum of the net surrender value of the contract at the end of the preceding taxable year ($8,010) plus the premiums paid during the taxable year ($2,200). See paragraph (c)(5)(iii) of this section. For purposes of determining adjusted current earnings, X's adjusted basis in the contract would be increased at the end of 1990 from $8,800 to $9,821 to reflect the $1,021 inclusion. See paragraph (c)(5)(ii) of this section. The income under the contract attributable to taxable years prior to 1990 does not increase X's adjusted basis in the contract.

(iii) For 1991, the income on the contract included in adjusted current earnings is determined in the same manner as the preceding year, and there is a corresponding increase in X's adjusted basis in the contract. Thus, for 1991, the income on the contract is $1,343, which is determined by subtracting from the net surrender value of the contract at the end of the taxable year ($14,774) the sum of the net surrender value at the end of the preceding taxable year ($11,231) plus the premiums paid during the taxable year ($2,200). At the end of 1991, X's adjusted basis in the contract for adjusted current earnings is $13,364, which reflects the basis of the contract at the beginning of

1991, increased by the premium paid during the year ($2,200) and the income on the contract that has been included in adjusted current earnings for the taxable year ($1,343).

Example 2. The facts are the same as in example 1, except that, after the payment of the premium for 1991, the insured dies and X receives the $100,000 death benefit under the contract. Under paragraph (c)(5)(ii) of this section, no amount is included in adjusted current earnings for income on the contract for the taxable year in which the insured dies. Instead, under paragraph (c)(5)(v) of this section, X must include the adjusted current earnings for 1991 the excess of the death benefit ($100,000) over the adjusted basis in the contract for purposes of computing adjusted current earnings at the time of the insured's death ($12,021), which equals X's adjusted basis in the contract at the end of 1990 ($9,821), increased by X's premium payment for 1991 ($2,200).

Example 3. (i) The facts are the same as in example 1, except that in addition to making the $2,200 planned premium payment for 1992, X receives a $16,200 distribution under the contract on February 1, 1992, leaving a net surrender value of $915 immediately following the distribution. On March 1, 1992, X pays an additional premium of $5,000 under the contract. The net surrender value of the contract at the end of 1992 is $6,417.
(ii) Treatment of the distribution. Under paragraph (c)(5)(iv) of this section, the $16,200 distribution in 1992 is included in adjusted current earnings as an amount taxable in accordance with the principles of section 72(e) to the extent that the distribution ($16,200) exceeds X's adjusted basis for adjusted current earnings, as determined at the end of the immediately preceding period, and including premiums paid through the period ending on the date of the distribution ($15,564). Thus, X must include $636 in adjusted current earnings for 1992 as an amount taxable in accordance with the principles of section 72(e).

(iii) Determination of the income on the contract. Under paragraph (c)(5)(iii) of this section, for 1992, the income on the contract must be separately determined for the period beginning with the first day of the taxable year to the date of the distribution and for the period beginning immediately after the distribution to the end of the taxable year, using the contract's net surrender values at the beginning and end of each of these periods. The income on the contract for the period beginning on January 1, 1992 and ending on February 1, 1992 (the date of the distribution) is equal to the excess, if any, of (A) the sum of the net surrender value at the end of the period ($915) and the amount of the distribution that is allocable to X's basis in the contract for adjusted current earnings ($15,564), over (B) the sum of the net surrender value at the end of the preceding taxable year ($14,774) plus any premiums paid on the contract during the period ($2,200). Because the net result of

this computation is a negative amount (($915 + $15,564)−($14,774 + $2,200)=−495), no income on the contract for the period ending with the date of the distribution is included in adjusted current earnings for 1992.

(iv) Under paragraph (c)(5)(ii), X must also determine the income on the contract for the period beginning immediately after the distribution through the end of the taxable year. The income on the contract for this period is $502, which is equal to the excess of the net surrender value at the end of the taxable year ($6,417) over the sum of the net surrender value at the end of the preceding period ($915), plus any premiums paid during the period ($5,000). At the end of 1992, X's adjusted basis in the contract for adjusted current earnings is $5,502, determined by adding the income on the contract ($502) and the premiums paid during the period ($5,000) to the basis at the end of the preceding period ($0).

(v) Thus, X must include a total of $1,138 ($636 + 502) in adjusted current earnings for 1992. This inclusion reflects both the undistributed income on the contract for the taxable year plus the amount of income from distributions under the contract that is taxed in accordance with the principles of section 72(e) using X's adjusted basis in the contract for adjusted current earnings.

(6) ***Partial list of income items excluded from gross income but included in earnings and profits.*** The following is a partial list of items that are permanently excluded from pre-adjustment alternative minimum taxable income but that are included in earnings and profits, and are therefore included in adjusted current earnings under this paragraph (c).

(i) Proceeds of life insurance contracts that are excluded under section 101, to the extent provided in paragraph (c)(5)(v) or (c)(5)(vi) of this section.

(ii) Interest that is excluded under section 103.

(iii) Amounts received as compensation for injuries or sickness that are excluded under section 104.

(iv) Income taxes of a lessor of property that are paid by a lessee and are excluded under section 110.

(v) Income attributable to the recovery of an item deducted in computing earnings and profits in a prior year that is excluded under section 111.

(vi) Amounts received as proceeds from sports programs that are excluded under section 114.

(vii) Cost-sharing payments that are excluded under section 126, to the extent section 126(e) does not apply.

(viii) Interest on loans used to acquire employer securities that is excluded under section 133.

(ix) Financial assistance that is excluded under section 597.

(x) Amounts that are excluded from pre-adjustment alternative minimum taxable income as a result of an election under section 831(b) (allowing certain insurance companies to compute their pre-adjustment alternative minimum taxable income using only their investment income).

Items described in paragraph (c)(1) of this section must be included in earnings and profits (and therefore in adjusted current earnings) even if they are not identified in this paragraph (c)(6). The Commissioner may identify additional items described in paragraph (c)(1) in other published guidance.

(7) ***Partial list of items excluded from both pre-adjustment alternative minimum taxable income and adjusted current earnings.*** The following is a partial list of items that are excluded from both pre-adjustment alternative minimum taxable income and adjusted current earnings, and for which no adjustment is allowed under this section.

(i) The value of improvements made by a lessee to a lessor's property that is excluded from the lessor's income under section 109.

(ii) contributions to the capital of a corporation by a non-shareholder that are excluded from the corporation's income under section 118.

The Commissioner may identify additional items described in this paragraph (c)(7) in other published guidance.

(d) ***Disallowance of items not deductible in computing earnings and profits*** —

(1) ***In general.*** Except as otherwise provided in this paragraph (d), no deduction is allowed in computing adjusted current earnings for any items that are not taken into account in determining earnings and profits for any taxable year, even if the items are taken into account in determining pre-adjustment alternative minimum taxable income. These items therefore increase adjusted current earnings to the extent they are deducted in computing pre-adjustment alternative minimum taxable income. An item of deduction is considered taken into account without regard to the timing of its deductibility in computing earnings and profits. Thus, to the extent an item is, has been, or will be deducted for purposes of determining earnings and profits, it does not increase adjusted current earnings in the taxable year in which it is deducted for purposes of determining pre-adjustment alternative minimum taxable income. For example, a deduction allowed (in determining pre-adjustment alternative minimum taxable income) under section 196 for unused research credits allowable under section 41 is taken into account in computing earnings and profits because the costs that gave rise to the credit were deductible in computing earnings and profits when incurred. Therefore, the deduction does not increase adjusted current earnings. As a further example, payments by a United States parent corporation with respect to employees of certain foreign subsidiaries, which are deductible under section 176, are considered contributions to the capital of the foreign subsidiary for purposes of computing earnings and profits. Although the payments are not deductible in computing the earnings and profits of the United States parent corporation in the year incurred, the payments do increase the parent's basis in its stock in the foreign subsidiary. This basis increase will reduce any gain the parent may later realize for purposes of computing earnings and profits on the disposition of the stock of the foreign subsidiary. Therefore, the amount of the payment by the parent is considered taken into account in computing the earnings and profits of the parent and does not increase adjusted current earnings. Thus, only deduction items that are never taken into account in computing earnings and profits are disallowed in computing adjusted current earnings under this paragraph (d).

(2) ***Deductions for certain dividends received*** —

(i) ***Certain amounts deducted under sections 243 and 245.*** Paragraph (d)(1) of this section does not apply to, and adjusted current earnings therefore are not increased by, amounts deducted under sections 243 and 245 that qualify as 100-percent deductible dividends under sections 243(a), 245(b) or 245(c), or to any dividend received from a 20-percent owned corporation (as defined in section 243(c)(2)), to the extent that the dividend giving rise to the deductions is attributable to earnings of the paying corporation that are subject to federal income tax. Earnings are considered subject to federal income tax return (that is filed or, if not, that should be filed) of an entity subject to United States taxation, even if there is no resulting United States tax liability (e.g., because of net operating losses or tax credits, other than the credit provided for in section 936).

(ii) ***Special rules*** —

(A) [Reserved]

(B) ***Dividends received from a section 936 corporation.*** For example, assume that a section 936 corporation earns $100 of income in its current taxable year, $10 of which is not eligible for the credit under section 936. If the section 936 corporation makes a distribution of $50 during that year, $5 of that distribution ($10 of income not eligible for the section 936 credit divided by $100 of income, times $50 distributed) is deemed to be attributable to earnings of the paying corporation that are subject to federal income tax.

(iii) ***Special rule for certain dividends received by certain cooperatives.*** Paragraph (d)(1) of this section does not apply to, and adjusted current earnings do not include, any dividend received by any organization to which part I of subchapter T of the Code applies and that is engaged in the marketing of agricultural or horticultural products, if the dividend is paid by a FSC and is allowable as a deduction under section 245(c).

(3) ***Partial list of items not deductible in computing earnings and profits.*** The following is a partial list of items that are not taken into account in computing earnings and profits and thus are not deductible in computing adjusted current earnings.

(i) Unrecovered losses attributable to certain damages that are deductible under section 186, to the extent those damages were previously deducted in computing earnings and profits.

(ii) The deduction for small life insurance companies allowed under section 806.

(iii) Dividends deductible under the following sections of the Code:

(A) Dividends received by corporations that are deductible under section 243, to the extent paragraph (d)(2)(i) of this section does not apply.

(B) Dividends received on certain preferred stock that are deductible under section 244.

(C) Dividends received from certain foreign corporations that are deductible under section 245, to the extent neither paragraph (d)(2)(i) nor (d)(2)(iii) of this section applies.

(D) Dividends paid on certain preferred stock of public utilities that are deductible under section 247.

(E) Dividends paid to an employee stock ownership plan that are deductible under section 404(k).

(F) Non-patronage dividends that are paid and deductible under section 1382(c)(1).

Items described in paragraph (d)(1) of this section are not taken into account in computing earnings and profits (and thus are not deductible in computing adjusted current earnings) even if they are not identified in this paragraph (d)(3). The Commissioner may identify additional items described in paragraph (d)(1) of this section in other published guidance.

(4) ***Partial list of items deductible for purposes of computing both pre-adjustment alternative minimum taxable income and adjusted current earnings.*** The following is a partial list of items that are deductible for purposes of computing both pre-adjustment alternative minimum taxable income and adjusted current earnings, and for which no adjustment is allowed under this section.

(i) Payments by a United States corporation with respect to employees of certain foreign corporations that are deductible under section 176.

(ii) Dividends paid on deposits by thrift institutions that are deductible under section 591.

(iii) Life insurance policyholder dividends that are deductible under section 808.

(iv) Dividends paid by cooperatives that are deductible under sections 1382(b) or 1382(c)(2) and that are not paid with respect to stock.

The Commissioner may identify additional items described in this paragraph (d)(4) in other published guidance.

(e) ***Treatment of income items included, and deduction items not allowed, in computing pre-adjustment alternative minimum taxable income.*** Adjusted current earnings includes any income item that is included in pre-adjustment alternative minimum taxable income, even if that income item is not included in earnings and profits for the taxable year. Except as specifically provided in paragraph (c)(3) or (c)(5) of this section, no deduction is allowed for an item in computing adjusted current earnings if the item is not deductible in computing pre-adjustment alternative minimum taxable income for the taxable year, even if the item is deductible in computing earnings and profits for the year. Thus, for example, capital losses in excess of capital gains for the taxable year are not deductible in computing adjusted current earnings for the taxable year.

(f) ***Certain other earnings and profits adjustments*** —

(1) ***Intangible drilling costs.*** For purposes of computing adjusted current earnings, the amount allowable as a deduction for intangible drilling costs (as defined in section 263(c)) for amounts paid or incurred in taxable years beginning after December 31, 1989, is determined as provided in section 312(n)(2)(A). See section 56(h) for an additional adjustment to alternative minimum taxable income based on energy preferences for taxable years beginning after 1990.

(2) ***Certain amortization provisions do not apply.*** For purposes of computing adjusted current earnings, sections 173 (relating to circulation expenditures) and 248 (relating to organizational expenditures) do not apply to amounts paid or incurred in taxable years beginning after December 31, 1989. If an election is made under section 59(e) to amortize circulation expenditures described in section 173 over a three-year period, the expenditures to which the election applies are deducted ratably over the three-year period for purposes of computing taxable income, pre-adjustment alternative minimum taxable income, and adjusted current earnings.

(3) ***LIFO recapture adjustment*** —

(i) ***In general.*** Adjusted current earnings are generally increased or decreased by the increase or decrease in the taxpayer's LIFO recapture amount (as defined in paragraph (f)(3)(iii)(A) of this section) as of the close of each taxable year.

(ii) ***Beginning LIFO and FIFO inventory.*** For purposes of computing the increase or decrease in the LIFO recapture amount, the beginning LIFO and FIFO inventory amounts for the first taxable year beginning after December 31, 1989, are—

(A) The ending LIFO inventory amount used in computing pre-adjustment alternative minimum taxable income for the last year beginning before January 1, 1990; and

(B) The ending FIFO inventory amount for the last year beginning before January 1, 1990, computed with the adjustments described in section 56 (other than the adjustment described in section 56(g)) and section 58, the items of tax preference described in section 57 and using the methods used in computing pre-adjustment alternative minimum taxable income.

(iii) ***Definitions*** —

(A) ***LIFO recapture amount*** —

(*1*) ***Definition.*** The taxpayer's LIFO recapture amount is the excess, if any, of—

(*i*) the inventory amount of its assets under the FIFO method, computed using the rules of this section; over

(*ii*) the inventory amount of its assets under the LIFO method, computed using the rules of this section.

(*2*) ***Assets included.*** Only the assets for which the taxpayer uses the LIFO method to compute pre-adjustment alternative minimum taxable income are taken into account in determining the LIFO recapture amount.

(B) ***FIFO Method.*** For purposes of this paragraph, the LIFO method is the first in, first out method described in section 471, determined by using—

(*1*) The retail method if that is the method the taxpayer uses in computing pre-adjustment alternative minimum taxable income; or

(*2*) The lower of cost or market method for all other taxpayers.

(C) ***LIFO method.*** The LIFO method is the last in, first out method authorized by section 472.

(D) ***Inventory amounts.*** Except as otherwise provided, inventory amounts are computed using the methods used in computing pre-adjustment alternative minimum taxable income. To the extent inventory is treated as produced or acquired during taxable years beginning after December 31, 1989, the inventory amount is determined with the adjustments described in sections 56 and 58 and the items of tax preference described in section 57. Thus, for example, the amount of depreciation to be capitalized under section 263A with respect to inventory produced in taxable years beginning after December 31, 1989, is based on the depreciation allowed under the rules of paragraph (b) of this section. See paragraph (a)(5) of this section.

(iv) ***Exchanges under sections 351 and 721.*** For purposes of this section, any decrease in a transferor's LIFO recapture amount that occurs as a result of a transfer of inventories in an exchange to which section 351 or section 721 applies cannot be used to decrease the adjusted current earnings of the transferor. A decrease that is disallowed under the preceding sentence is instead carried over to reduce any LIFO recapture adjustment that the transferee (or its corporate partners, if section 721 applies) would otherwise make (in the absence of this paragraph (f)(3)(iv)) solely by reason of its carryover basis in inventories received in the section 351 or section 721 exchange. Nothing in this paragraph (f)(3)(iv), however, alters the computation of the LIFO recapture amount of the transferor or transferee as of the close of any taxable year.

(v) ***Examples.*** The following examples illustrate the provisions of this paragraph (f)(3).

Example 1. M Corporation, a calendar-year taxpayer, uses the LIFO method of accounting for its inventory for purposes of computing pre-adjustment alternative minimum taxable income. M's ending LIFO inventory for all of its pools for purposes of computing pre-adjustment alternative minimum taxable income on December 31, 1989, is $300. M computes a $500 FIFO inventory amount on that date, after applying the provisions of section 263A along with the adjustments and preferences required in computing pre-adjustment alternative minimum taxable income. M's FIFO and LIFO ending inventory amounts at the close of its taxable years, its LIFO reserves, and its adjustment under this paragraph (f)(3), are as follows:

	1989	1990	1991	1992
Ending inventory:				
A. FIFO	[1] $500	$360	$560	$600
B. LIFO	[2] 300	180	320	440
LIFO recapture amount:				
A−B	200	180	240	160
Change in LIFO recapture amount and adjustment under paragraph (f)(3)		(20)	60	(80)

[1] *Beginning FIFO inventory amount under paragraph (f)(3)(ii).*

[2] *Beginning LIFO inventory amount under paragraph (f)(3)(ii).*

Example 2. (A) X Corporation, a calendar-year taxpayer, uses the LIFO method for purposes of computing pre-adjustment alternative minimum taxable income. X's LIFO recapture amount is $300 as of December 31, 1992, and is $200 as of December 31, 1993. Immediately prior to calculating its LIFO recapture amount as of December 31, 1993, X transfers inventory with an adjusted current earnings (ACE) basis of $500 to Y

Corporation in an exchange to which section 351 applies. X determines that the $100 decrease in its LIFO recapture amount occurred as a result of its transfer of inventories to Y in the section 351 exchange. Thus, under paragraph (f)(3)(iv) of this section, X cannot decrease its adjusted current earnings by that amount. In computing its 1994 LIFO recapture adjustment, X will use $200 as its LIFO recapture amount as of December 31, 1993, even though it was not entitled to reduce adjusted current earnings by the $100 decrease in its LIFO recapture amount in 1993.
(B) For purposes of computing its ACE, Y takes a $500 carryover basis in the inventories received from X. If Y, a newly formed calendar-year taxpayer, engages in no other inventory transactions in 1993 and adopts the LIFO inventory method on its 1993 tax return, it will have a LIFO recapture amount of $0 as of December 31, 1993 (because its FIFO inventory amount and its LIFO inventory amount are both $500). Assume that at December 31, 1994, Y has a LIFO recapture amount of $200 ($1,000 FIFO inventory amount−$800 LIFO inventory amount). Under paragraph (f)(3)(i) of this section, Y computes a LIFO recapture adjustment for 1994 of $200 ($200−$0). If any portion of Y's $200 LIFO recapture adjustment occurs solely by reason of its carryover basis in the inventories it received from X, Y reduces its $200 LIFO recapture adjustment by that portion under paragraph (f)(3)(iv). In any event, however, Y will use its $200 LIFO recapture amount as of December 31, 1994, in computing its 1995 LIFO recapture adjustment.

(vi) ***Effective date.*** Paragraph (f)(3) is effective for taxable years beginning after December 18, 1992. A taxpayer may choose to apply this paragraph, however, to all taxable years beginning after December 31, 1989.

(4) ***Installment sales*** —

(i) ***In general.*** Adjusted current earnings are computed without regard to the installment method, except as provided in this paragraph (f)(4).

(ii) ***Exception for prior dispositions.*** Paragraph (f)(4)(i) of this section does not apply to any disposition in a taxable year beginning before January 1, 1990, that is taken into account under the installment method for purposes of computing pre-adjustment alternative minimum taxable income. Thus, for any disposition in a taxable year beginning before January 1, 1990, the installment method applies in computing adjusted current earnings for taxable years beginning after December 31, 1989, to the same extent it applies in determining pre-adjustment alternative minimum taxable income for the taxable year.

(iii) ***Special rules for obligations to which section 453A applies*** —

(A) ***In general.*** The following special rules apply to any installment sale occurring in a taxable year beginning after December 31, 1989, that results in an installment obligation to which section 453A(a)(1) applies and with respect to which preadjustment alternative minimum taxable income is determined under the installment method. As explained in paragraph (f)(4)(iii)(B) of this section, for purposes of computing adjusted current earnings, a portion

of the contract price is eligible for the installment method, and the remainder of the contract price is not eligible for the installment method. Payments under the obligation are allocated pro-rata between the two accounting methods.

(B) ***Limitation on application of installment method.*** Only a portion of the contract price of an installment sale described in paragraph (f)(4)(iii)(A) of this section is eligible to be accounted for under the installment method for purposes of computing adjusted current earnings. The portion eligible for the installment method is equal to the total contract price of the sale multiplied by the applicable percentage (as determined under section 453A(c)(4)) for the taxable year of the sale. The remainder of the contract price is not eligible to be accounted for under the installment method for purposes of computing adjusted current earnings. The gross profit ratio is determined without regard to this bifurcated treatment of the sale.

(C) ***Treatment of the ineligible portion.*** The gain on the sale that is taken into account in the taxable year of the sale for purposes of computing adjusted current earnings is equal to the gross profit ratio multiplied by the entire portion of the contract price that is ineligible for the installment method.

(D) ***Treatment of the eligible portion.*** For purposes of calculating adjusted current earnings, the amount of gain recognized in a taxable year on the portion of the contract price that is eligible for the installment method is equal to—

(*1*) The amount of payments received during the taxable year, multiplied by

(*2*) The applicable percentage for the taxable year of the sale, multiplied by

(*3*) The gross profit ratio.

(E) ***Coordination with the pledge rule.*** For purposes of determining the amount of payments received during the taxable year under paragraph (f)(4)(iii)(D), the rules of section 453A(d) (relating to the treatment of certain pledge proceeds as payments) apply. This includes the rules under section 453A(d)(3) that relate to treating later payments as receipts of amounts on which tax has already been paid.

(F) ***Example.*** The following example illustrates the provisions of this paragraph (f)(4)(iii):

(*1*) On January 1, 1990, corporation A, a calendar-year taxpayer, sells a building with an adjusted basis for purposes of computing adjusted current earnings of $10 million, for $5 million and an installment obligation bearing adequate stated interest with a principal amount of $20 million. The installment obligation calls for 4 annual payments of $5 million on January 1 of 1991, 1992, 1993, and 1994. A does not elect out of the installment method, and disposes of no other property under the installment method during 1990. No gain with respect to the sale is recaptured pursuant to section 1250.

(*2*) The gross profit percentage for purposes of computing adjusted current earnings on the sale is 60 percent, computed as follows: gross profit of $15 million ($25 million contract price less $10 million adjusted basis) divided by $25 million contract price. The applicable percentage on the sale is 75 percent, computed as follows: $15 million ($20 million of installment obligations arising during and outstanding at the end of 1990 less $5 million) divided by $20 million of installment obligations arising during and outstanding at the end of 1990. See section 453A(c)(4). The portion of the contract price eligible for accounting under the

installment method for purposes of computing adjusted current earnings is $18.75 million, or $25 million total contract price times applicable percentage of 75 percent. The portion of the contract price ineligible for the installment method is $6.25 million, or $25 million less $18.75 million.

(*3*) In computing adjusted current earnings for 1990, A must include $3.75 million of the gain on the sale. This amount is equal to the portion of the contract price that is ineligible for the installment method times the gross profit ratio, or $6.25 million times 60 percent. A must also include $2.25 million of gain from the $5 million payment received in 1990. This amount is computed as follows: the eligible portion of the payment, $3.75 million ($5 million payment times the applicable percentage of 75 percent), times the gross profit ratio of 60 percent. Thus, the total amount of gain from the sale that A must include in adjusted current earnings for 1990 is $6 million ($3.75 million of gain from the portion of the contract price that is not eligible for the installment method, plus $2.25 million of gain from the 1990 payment).

(*4*) A does not pledge or otherwise accelerate payments on the note in any other taxable year. In computing adjusted current earnings for 1991, 1992, 1993, and 1994, A therefore includes $2.25 million of gain on the installment sale, computed as follows: $5 million payment times the applicable percentage of 75 percent, times the gross profit ratio of 60 percent.

(g) ***Disallowance of loss on exchange of debt pools.*** [Reserved]

(h) ***Policy acquisition expenses of life insurance companies*** —

(1) ***In general.*** This paragraph (h) addresses the treatment of policy acquisition expenses of life insurance companies in determining adjusted current earnings. Policy acquisition expenses are those expenses that, under generally accepted accounting principles in effect at the time the expenses are incurred, are considered to vary with and to be primarily related to the acquisition of new and renewal insurance policies. Generally, these acquisition expenses must be capitalized and amortized for purposes of adjusted current earnings over the reasonably estimated life of the acquired policy, using a method that provides a reasonable allowance for amortization. This method of amortization is treated as if it applied to all taxable years in determining the amount of policy acquisition expenses deducted for adjusted current earnings. The rules in this paragraph (h) apply to any life insurance company, as defined in section 816(a).

(2) ***Reasonably estimated life.*** The reasonably estimated life of an acquired policy is determined based on the facts with respect to each policy (such as the age, sex, and health of the insured), and the company's experience (such as mortality, lapse rate and renewals) with similar policies. A company may treat as the reasonably estimated life of an acquired policy the period for amortizing expenses of the acquired policy that would be required by the Financial Accounting Standards Board (FASB) at the time the acquisition expenses are incurred. If the FASB has not established such a period, the period for amortizing acquisition expense of an acquired policy under guidelines issued by the American Institute of Certified Public Accountants in effect at the time the acquisition expenses are incurred may be treated as the reasonably estimated life of the acquired policy.

(3) ***Reasonable allowance for amortization.*** For purposes of determining a reasonable allowance for amortization, a company may use a method that amortizes acquisition expenses in the same proportion that gross premiums and gross investment income for the taxable year bear to total anticipated receipts of gross premiums (including anticipated renewal premiums) and gross investment income to be realized over the reasonably estimated life of the policy.

(4) ***Safe harbor for public financial statements.*** Any company that is required to file with the Securities and Exchange Commission (SEC) a financial statement with respect to the taxable year will be treated as having complied with paragraph (h)(1) of this section if it accounts for acquisition expenses for adjusted current earnings purposes in the same manner as it accounts for those expenses on its financial statements filed with the SEC.

(i) [Reserved]

(j) ***Depletion.*** For purposes of computing adjusted current earnings, the allowance for depletion with respect to any property placed in service in a taxable year beginning after December 31, 1989 is determined under the cost depletion method of section 611.

(k) ***Treatment of certain ownership changes*** —

(1) ***In general.*** In the case of any corporation that has an ownership change as defined in paragraph (k)(2) of this section in a taxable year beginning after December 31, 1989, and that also has a net unrealized built-in loss (as defined in paragraph (k)(3) of this section) immediately before the ownership change, the adjusted basis of each asset of the corporation for purposes of computing adjusted current earnings following the ownership change shall be its proportionate share (determined on the basis of the respective fair market values of each asset) of the fair market value of the assets of the corporation immediately before the ownership change. The rules of § 1.338-6(b), if otherwise applicable to the transaction, are applied in making this allocation of basis. If such rules apply, the limitations of §§ 1.338-6(c) (1) and (2) also apply in allocating basis under this paragraph (k)(1).

(2) ***Definition of ownership change.*** A corporation has an ownership change for purposes of section 56(g)(4)(G)(i) and this paragraph (k) if there is an ownership change under section 382(g) for purposes of computing the corporation's amount of taxable income that may be offset by pre-change losses or the regular tax liability that may be offset by pre-change credits. See § 1.382-2T for rules to determine whether a corporation has an ownership change. Accordingly, in order for an ownership change to occur for purposes of this paragraph (k), a corporation must be a loss corporation as defined in § 1.382-2(a)(1). In determining whether the corporation is a loss corporation, the determination of whether there is a net unrealized built-in loss is made by using the aggregate adjusted basis of the assets of the corporation used in computing taxable income. The aggregate adjusted basis of the corporation's assets for purposes of computing adjusted current earnings is not relevant in determining whether the corporation is a loss corporation. See part (iv) of the example in paragraph (k)(4) of this section.

(3) ***Determination of net unrealized built-in loss immediately before an ownership change.*** In order to determine whether it has a net unrealized built-in loss for purposes of section 56(g)(4)(G)(ii) and paragraph (k)(1) of this section, a corporation that has an ownership change as defined in paragraph (k)(2) of this section must use the aggregate adjusted basis of its assets that it uses in computing its adjusted current earnings. The rules of section 382 (including sections 382(h)(3)(B)(i) and 382(h)(8)) otherwise apply in determining whether the corporation has a net unrealized built-in loss.

(4) ***Example.*** The following example illustrates the provisions of this paragraph (k):

(i) Individual A has owned all the issued and outstanding stock of corporation L for the past 5 years. A sells all of his stock in L to unrelated individual B. On the date of the sale, L owns the following assets (all numbers are in millions):

Asset	Adjusted basis for computing taxable income	Adjusted basis for computing adjusted current earnings	Fair market value
x	$45	$50	$50
y	55	60	30
z	10	10	20
	$110	$120	$100

For purposes of computing taxable income, L has a $500 million net operating loss carryforward to the taxable year in which the sale occurs. Therefore, L is a loss corporation. As a result of the transfer of shares of L from A to B, L has had an ownership change.

(ii) L has no net unrealized built-in loss for purposes of computing taxable income because the amount by which the aggregate adjusted basis of its assets for that purpose exceeds their fair market value is $10 million, which is less than 15 percent of their fair market value and is not greater than $10 million. See section 381(h)(3)(B)(i). L, however, does have a net unrealized built-in loss for purposes of computing adjusted current earnings because the aggregate adjusted basis of its assets for the purpose exceeds their fair market value by $20 million, and that amount is greater than $10 million.

(iii) Under paragraph (k)(1) of this section, L must restate the adjusted basis of its assets for purposes of computing adjusted current earnings to their fair market values, as follows (all numbers are in millions):

Asset	New adjusted basis
x	$50
y	30
z	20

L must use these new adjusted bases for all purposes in determining adjusted current earnings, including computing depreciation and any gain or loss on disposition.

(iv) If L did not have the net operating loss carryforward, and had no other loss or credit carryovers or other attributes described in § 1.382-2(a)(1) for purposes of computing the amount of its taxable income that may be offset by pre-change losses or its regular tax liability that may be offset by pre-change credits, it would not have been a loss corporation on the date of the sale and therefore would not be treated as having had an ownership change for purposes of computing adjusted current earnings. This would be true even though L had a net unrealized built-in loss for purposes of computing adjusted current earnings. Therefore, this paragraph (k) would not have applied.

(l) [Reserved]

(m) ***Adjusted current earnings of a foreign corporation*** —

(1) ***In general.*** The alternative minimum taxable income of a foreign corporation is increased by 75 percent of the excess of—

(i) Its effectively connected adjusted current earnings for the taxable year; over

(ii) Its effectively connected pre-adjustment alternative minimum taxable income for the taxable year.

(2) ***Definitions*** —

(i) ***Effectively connected pre-adjustment alternative minimum taxable income.*** Effectively connected pre-adjustment alternative minimum taxable income is the effectively connected taxable income of the foreign corporation for the taxable year, determined with the adjustments under sections 56 and 58 (except for the adjustment for adjusted current earnings, the alternative tax net operating loss and the alternative tax energy preference deduction) and increased by the tax preference items of section 57, but taking into account only items of income of the foreign corporation that are effectively connected (or treated as effectively connected) with the conduct of a trade or business in the United States, and any expense, loss or deduction that is properly allocated and apportioned to that income.

(ii) ***Effectively connected adjusted current earnings.*** Effectively connected adjusted current earnings is the effectively connected pre-adjustment alternative minimum taxable income of the foreign corporation for the taxable year, adjusted under section 56(g) and this section, but taking into account only items of income of the foreign corporation that are effectively connected (or treated as effectively connected) with the conduct of a trade or business in the United States, and any expense, loss or deduction that is properly allocated and apportioned to that income.

(3) ***Rules to determine effectively connected pre-adjustment alternative minimum taxable income and effectively connected adjusted current earnings.*** The principles of section 864 (c) (and the regulations thereunder) and any other applicable provision of the Internal Revenue Code apply to determine whether items of income of the foreign corporation are effectively connected (or treated as effectively connected) with the conduct of a trade or business in the United States, and whether any expense, loss or deduction is properly allocated and apportioned to that income.

(4) ***Certain exempt amounts.*** Effectively connected adjusted current earnings and effectively connected pre-adjustment alternative minimum taxable income do not include any item of income, or any expense, loss or deduction that is properly allocated and apportioned to income that is exempt from United States taxation under section 883 or an applicable income tax treaty. See section 894.

(n) ***Adjustment for adjusted current earnings of consolidated groups*** —

(1) ***Positive adjustments.*** For taxable years beginning after December 31, 1989, the alternative minimum taxable income of a consolidated group (as defined in § 1.1502-1T) is increased by 75 percent of the excess, if any, of—

(i) The consolidated adjusted current earnings for the taxable year, over

(ii) The consolidated pre-adjustment alternative minimum taxable income for the taxable year.

(2) ***Negative adjustments*** —

(i) ***In general.*** The alternative minimum taxable income of a consolidated group is decreased, subject to the limitation of paragraph (n)(2)(ii) of this section, by 75 percent of the excess, if any, of the consolidated pre-adjustment alternative minimum taxable income over consolidated adjusted current earnings.

(ii) ***Limitation on negative adjustments.*** The amount of the negative adjustment for any taxable year shall be limited to the excess, if any, of—

(A) The aggregate increases in the alternative minimum taxable income of the group in prior years under this section, over

(B) The aggregate decreases in the alternative minimum taxable income of the group in prior years under this section.

(3) ***Definitions*** —

(i) ***Consolidated pre-adjustment alternative minimum taxable income.*** Consolidated pre-adjustment alternative minimum taxable income is the consolidated taxable income (as defined in § 1.1502-11) of a consolidated group for the taxable year, determined with the adjustments provided in sections 56 and 58 (except for the adjustment for adjusted current earnings and the alternative tax net operating loss determined under section 56(a)(4)) and increased by the preference items described in section 57.

(ii) ***Consolidated adjusted current earnings.*** The consolidated adjusted current earnings of a consolidated group is the consolidated pre-adjustment alternative minimum taxable income of the consolidated group for the taxable year, adjusted as provided in section 56(g) and this section.

(4) ***Example.*** The following example illustrates the provisions of this paragraph (n):

(i) P is the common parent of a consolidated group. In 1990, the group has consolidated pre-adjustment alternative minimum taxable income of $1,400,000 and consolidated adjusted current earnings of $1,600,000. Thus, the group has a consolidated adjustment for adjusted current earnings for 1990 of $150,000 (75 percent of the $200,000 excess of consolidated adjusted current earnings over consolidated pre-adjustment alternative minimum taxable income), and alternative minimum taxable income of $1,550,000 ($1,400,000 plus $150,000).

(ii) In 1991, the group has consolidated pre-adjustment alternative minimum taxable income of $1,500,000 and consolidated adjusted current earnings of $1,100,000. Thus, the group can reduce its alternative minimum taxable income by $150,000. The potential negative adjustment of $300,000 (75 percent of the $400,000 excess of consolidated pre-adjustment alternative minimum taxable income over consolidated adjusted current earnings) is limited to the $150,000 consolidated adjustment for adjusted current earnings taken into account in 1990.

(o) [Reserved]

(p) ***Effective dates for corporate partners in partnerships*** —

(1) ***In general.*** The provisions of this section apply to a corporate partner's distributive share of items of income and expense from a partnership for any taxable year of the partnership ending within or with any taxable year of the corporate partner beginning after December 31, 1989.

(2) ***Application of effective dates.*** Solely for purposes of the effective date provisions of this section, a partnership event (such as placing property in service, paying or incurring a cost, or closing an installment sale) is deemed to occur on the last day of the partnership's taxable year.

(3) ***Example.*** The following example illustrates the provisions of this paragraph (p):

(i) X is a calendar-year corporation that is a partner in P, an accrual-basis partnership with a taxable year ending March 31. During P's taxable year ending March 31, 1990, P earned ratably throughout the year interest income on tax-exempt obligations. In addition, P incurred intangible drilling costs in November 1989 and in February 1990.

(ii) X's adjusted current earnings for 1990 includes X's distributive share of the interest on the tax-exempt obligations earned by P for its taxable year ending March 31, 1990. This is true even though P earned a portion of the interest prior to January 1, 1990.

(iii) For purposes of computing X's adjusted current earnings for 1990, the adjustment provided in paragraph (f)(1) of this section applies to X's distributive share of P's November 1989 and February 1990 intangible drilling costs.

(q) ***Treatment of distributions of property to shareholders*** —

(1) ***In general.*** If a distribution of an item of property by a corporation with respect to its stock gives rise to more than one adjustment to earnings and profits under section 312, all of the adjustments with respect to that item of property (including the adjustment described in section 312(c) with respect to liabilities to which the item is subject or which are assumed in connection with the distribution) are combined for purposes of determining the corporation's adjusted current earnings for the taxable year. If the amount included in pre-adjustment alternative minimum taxable income with respect to a distribution of an item of property exceeds the net increase in earnings and profits caused by the distribution, pre-adjustment alternative minimum taxable income is not reduced in computing adjusted current earnings. If the net increase in earnings and profits caused by a distribution of an item of property exceeds the amount included in pre-adjustment alternative minimum taxable income with respect to the distribution, that excess is added to pre-adjustment alternative minimum taxable income in computing adjusted current earnings.

(2) ***Examples.*** The following examples illustrate the provisions of this paragraph (q).

(i) ***Example 1.*** K corporation distributes property with a fair market value of $150 and an adjusted basis of $100. The adjusted basis is the same for purposes of computing taxable income, pre-adjustment alternative minimum taxable income, adjusted current earnings, and earnings and profits. Under section 312(a)(3), as modified by section 312(b)(2), K decreases its earnings and profits by the fair market value of the property, or $150. Under section 312(b)(1), K increases its earnings and profits by the excess of the fair market value of the property over its adjusted basis, or $50. As a result of the distribution, there is a net decrease in K's earnings and profits of $100. K recognizes $50 of gain under section 311(b) as a result of the distribution as if K sold the property for $150. K thus has no amount permanently excluded from pre-adjustment alternative minimum taxable income that is taken into account in determining current earnings and profits, and thus has no adjustment under paragraph (c)(1) of this section.

(ii) *Example 2.* The facts are the same as in example 1, except that the distribution shareholder assumes a $190 liability in connection with the disribution. Under section 312(c)(1), K must adjust the adjustments to its earnings and profits under section 312 (a) and (b) to account for the liability the shareholder assumes. K adjusts the $100 net decrease in its earnings and profits to reflect the $190 liability, resulting in an increase in its earnings and profits of $90. Because section 311(b)(2) makes the rules of section 336(b) apply, the fair market value of the property is not less than the amount of the liability, or $190. K therefore is treated as if it sold the property for $190, recognizing $90 of gain. K thus has no amount permanently excluded from pre-adjustment alternative minimum taxable income that is taken into account in determining current earnings and profits, and thus has no adjustment under paragraph (c)(1) of this section.

(r) *Elections to use simplified inventory methods to compute alternative minimum tax* —

(1) *In general.* If a taxpayer makes an election under this paragraph (r) (and does not make the election in paragraph (r)(5) of this section), the rules of paragraph (r)(2) of this section apply in computing the taxpayer's pre-adjustment alternative minimum taxable income and adjusted current earnings.

(2) *Effect of election* —

(i) *Inventories.* The taxpayer's inventory amounts as determined for purposes of computing taxable income are used for purposes of computing pre-adjustment alternative minimum taxable income and adjusted current earnings. Subject to the further modification described in paragraph (r)(2)(ii) of this section, the taxpayer's cost of sales as determined for purposes of computing taxable income is also used for purposes of computing pre-adjustment alternative minimum taxable income and adjusted current earnings.

(ii) *Modifications required* —

(A) *In general.* If a taxpayer makes an election under this paragraph (r), pre-adjustment alternative minimum taxable income and adjusted current earnings are computed with the modifications described in this paragraph. The items of adjustment under sections 56 and 58 and the items of tax preference under section 57 are computed without regard to the portion of those adjustments and preferences which, but for the election described in this paragraph, would have been capitalized in ending inventory. For example, pre-adjustment alternative minimum taxable income is increased by the excess of the depreciation allowable for the taxable year under section 168 for purposes of computing taxable income (determined without regard to section 263A) over the depreciation allowable for the taxable year under section 56(a)(1) and section 57 for purposes of computing pre-adjustment alternative minimum taxable income (determined without regard to section 263A). Similarly, adjusted current earnings is further increased by the excess of the depreciation allowable for the taxable year under section 56(a)(1) and section 57 for purposes of computing pre-adjustment alternative minimum taxable income (determined without regard to section 263A) over the depreciation allowable for the taxable year under section 56(g)(4)(A) for purposes of computing adjusted current earnings (determined without regard to section 263A). Thus, the modifications described in the preceding sentence do not duplicate amounts that are taken into account in computing pre-adjustment alternative minimum taxable income. See paragraph (a)(6)(ii) of this section.

(B) ***Negative modifications allowed.*** An election under this paragraph (r) does not affect the taxpayer's ability to make negative adjustments. Thus, if an election is made under this paragraph (r) and the amount of any adjustment under section 56 or 58, determined after modification under paragraph (r)(2)(ii)(A) of this section, is a negative amount, then this amount reduces pre-adjustment alternative minimum taxable income or adjusted current earnings. However, no negative adjustment under this paragraph (r)(2)(ii)(B) is allowed for the items of tax preference under section 57.

(iii) ***LIFO recapture adjustment.*** If a taxpayer makes an election under this paragraph (r) and uses the LIFO method for some assets, for purposes of computing the LIFO recapture adjustment under paragraph (f)(3) of this section for taxable years beginning after December 31, 1989—

(A) The LIFO inventory amount as determined for purposes of computing taxable income is used in lieu of the LIFO inventory amount as determined under paragraph (f)(3)(iii) of this section;

(B) The FIFO inventory amount is computed without regard to the adjustments under sections 56 (including the adjustments of section 56(g)(4)) and 58 and the items of tax preference of section 57; and

(C) The beginning LIFO and FIFO inventory amounts under paragraph (f)(3)(ii) of this section are the ending LIFO inventory amount as determined for purposes of computing taxable income and the ending FIFO inventory amount computed without regard to the adjustments under sections 56 (including the adjustments of sections 56(g)(4)) and 58 and the items of tax preference of section 57 for the last taxable year beginning before January 1, 1990.

(3) ***Time and manner of making election*** —

(i) ***Prospective election.***

(A) A prospective election under this paragraph (r) may be made by any taxpayer—

(*1*) That has computed pre-adjustment alternative minimum taxable income and adjusted current earnings for all prior taxable years in accordance with the method described in this paragraph (r); or

(2) That has not computed pre-adjustment alternative minimum taxable income and adjusted current earnings for all prior tax years in accordance with the method described in this paragraph (r), but for which the use of the method described in this paragraph (r) for all prior taxable years would not have changed the taxpayer's tax liability (as shown on returns filed as of the date the election is made) for any prior taxable year for which the period of limitations under section 6501(a) has not expired (as of the date the election is made).

(B) A prospective election under this paragraph (r) may only be made by attaching a statement to the taxpayer's timely filed (including extensions) original Federal income tax return for any taxable year that is no later than its first taxable year to which this paragraph (r) applies and in which the taxpayer's tentative minimum tax (computed under the provisions of this paragraph (r)) exceeds its regular tax. However, in the case of a taxpayer described in paragraph (r)(3)(i)(A)(*1*) of this section that had tentative minimum tax in

excess of its regular tax for any prior taxable year, the election may only be made by attaching a statement to its timely filed (including extensions) original Federal income tax return for the first taxable year ending after December 18, 1992. The statement must—

(*1*) Give the name, address and employer identification number of the taxpayer; and

(*2*) Identify the election as made under this paragraph (r).

(C) The determination of whether a taxpayer is described in paragraph (r)(3)(i)(A)(*2*) of this section is to be made as of the time the taxpayer makes a prospective election in accordance with the procedures in paragraph (r)(3)(i)(B) of this section.

(D) Any taxpayer described in paragraph (r)(3)(i)(A)(*2*) of this section that makes a prospective election will be deemed to have used the method described in this paragraph (r) in computing pre-adjustment alternative minimum taxable income and adjusted current earnings for all prior taxable years.

(ii) ***Retroactive election*** —

(A) A retroactive election under this paragraph (r) may be made by any taxpayer not described in paragraph (r)(3)(i)(A) (*1*) or (*2*) of this section. Except as provided in paragraph (r)(3)(iii) of this section, a retroactive election may only be made by attaching a statement to the taxpayer's amended Federal income tax return for the earliest taxable year for which the period of limitations under section 6501(a) has not expired and which begins after December 31, 1986. The amended return to which the election under this paragraph (r)(3)(ii) is attached must be filed no later than June 21, 1993.

(B) The amended return must contain the statement described in paragraph (r)(3)(i)(B) of this section. In addition, the statement must contain a representation that the taxpayer will modify its pre-adjustment alternative minimum taxable income and adjusted current earnings for all open taxable years in accordance with paragraph (r)(2) of this section. Upon this change in method of accounting, the taxpayer must include the entire adjustment required under section 481(a), if any, in preadjustment alternative minimum taxable income and adjusted current earnings on the amended return for the year of the election. The taxpayer must also reflect the method of accounting described in paragraph (r)(2) of this section on amended returns filed for all taxable years after the year of the election for which returns were originally filed before making the election (and for which the period of limitations under section 6501(a) has not expired).

(C) Provided a taxpayer meets the requirements of this paragraph (r), any change in method of accounting arising as a result of making a retroactive election will be treated as made with the advance consent of the Commissioner.

(D) Any retroactive election under this paragraph (r) that is made without filing amended returns required under this paragraph (r)(3)(ii) shall constitute a change in method of accounting made without the consent of the Commissioner.

(iii) ***Taxpayers under examination*** —

(A) ***In general.*** A taxpayer that wishes to make a retroactive election under section (r)(3)(ii) of this section may use the procedures in paragraph (r)(3)(iii)(A) (*1*) or (*2*) in lieu of filing an amended return for any taxable year that is under examination by the Internal Revenue Service.

(*1*) ***Year of change under examination.*** If the year of the change is under examination at the time the taxpayer timely makes the election, the taxpayer may (in lieu of filing an amended return for the year of the change) furnish the written statement described in paragraph (r)(3)(iii)(B) of this section to the revenue agent responsible for examining the taxpayer's return no later than June 21, 1993. It is the taxpayer's responsibility to make a timely election either by furnishing the statement to the revenue agent or by filing amended returns by June 21, 1993.

(*2*) ***Other open years under examination.*** If any other year for which the taxpayer must modify its pre-adjustment alternative minimum taxable income and adjusted current earnings (see paragraph (r)(3)(ii)(B) of this section) is examined, the taxpayer may (in lieu of filing an amended return) furnish the amount of the conforming adjustment to the revenue agent responsible for examining the taxpayer's return. It is the taxpayer's responsibility to timely modify its pre-adjustment alternative minimum taxable income and adjusted current earnings for each year other than the year of change, either by furnishing the amount of the adjustment to the revenue agent or by filing amended returns.

(B) ***Statement required.*** The statement required under paragraph (r)(3)(iii)(A)(*1*) of this section must include all of the items required under paragraph (r)(3)(ii)(B) of this section, as well as—

(*1*) The caption "Election to use regular tax inventories for AMT purposes;"

(*2*) A description of the nature and amount of all items that would result in adjustments and that the taxpayer would have reported if the taxpayer had used the method described in this paragraph (r) for all prior taxable years for which the period of limitations under section 6501(a) has not expired and which begin after December 31, 1986; and

(*3*) The following declaration signed by the person authorized to sign the return for the taxpayer: "Under penalties of perjury, I declare that I have examined this written statement, and to the best of my knowledge and belief this written statement is true, correct, and complete."

(C) ***Year of change.*** The year of change is the earliest taxable year for which the period of limitations under section 6501(a) has not expired at the time the statement is submitted to the appropriate revenue agent and that begins after December 31, 1986. Thus, the adjustments required to be included on the statement must include any adjustment under section 481(a) determined as if the method described in this paragraph (r) had been used in all taxable years prior to the year of change that begin after December 31, 1986.

(D) ***Treatment of additional tax liability.*** Any additional tax liability that results from the adjustments identified in the written statement described in paragraph (r)(3)(iii)(B) of this section is treated as an additional amount of tax shown on an amended return.

(iv) ***Election as method of accounting.*** The elections provided in paragraphs (r)(3) (i) and (ii) of this section constitute either adoptions of, or changes in, methods of accounting. These elections, once made, may be revoked only with the consent of the Commissioner in accordance with the rules of section 446(e) and § 1.446-1(e).

(v) ***Untimely election to use simplified inventory method.*** If a taxpayer makes an election described in this paragraph (r) after the times set forth in paragraph (r)(3) (i) or (ii) of this section, the taxpayer must comply with the requirements of § 1.446-1(e)(3) in order to secure the consent of the Commissioner to change to the method of accounting prescribed in this paragraph (r). The taxpayer generally will be subject to terms and conditions designed to place the taxpayer in a position no more favorable than a taxpayer that timely complied with paragraph (r)(3) (i) and (ii) of this section, whichever is applicable.

(4) ***Example.*** The following example illustrates the provisions of this paragraph (r).

Example. (i) Corporation L is a calendar year manufacturer of baseball bats and uses the LIFO method of accounting for inventories. During 1987, 1988, and 1989, L's cost of goods sold in computing taxable income was as follows:

	1987	1988	1989
Beginning LIFO inventory	$3,000	$4,000	$5,000
Purchases and other costs	9,000	9,000	9,000
Ending LIFO inventory	(4,000)	(5,000)	(6,000)
Cost of goods sold	8,000	8,000	8,000

(ii) L has no preferences under section 57 during 1987, 1988, and 1989. L's sole adjustment in computing alternative minimum tax during 1987, 1988, and 1989 was the depreciation adjustment under section 56(a)(1). Depreciation determined for both production and non-production assets under section 168 and under section 56(a)(1) during 1987, 1988, and 1989 was as follows:

	1987	1988	1989
Section 168 depreciation	$1,800	$1,800	$1,800
Section 56(a)(1) depreciation	(900)	(900)	(900)
Depreciation difference	900	900	900
Portion of difference capitalized in the increase in inventory	(100)	(100)	(100)
Adjustment required under section 56(a)(1)	800	800	800

(iii) In computing taxable income, a portion of each year's section 168 depreciation attributable to production assets is deducted currently and a portion is capitalized into the increase in ending inventory. For 1987, 1988, and 1989, L computed alternative minimum tax by deducting the cost of goods sold which was reflected in taxable income ($8,000) in

accordance with paragraph (r)(2)(i) of this section. For 1987, 1988, and 1989, L also modified its adjustments under sections 56 and 58 and its preferences under section 57 to disregard the portion of any adjustment or preference that was capitalized in inventory. Thus, under section 56(a)(1), L increased alternative minimum taxable income during each year by $900. (iv) L is eligible to make the election under paragraph (r)(1) of this section in accordance with paragraph (r)(3)(i) of this section (a prospective election).

(v) L must compute its LIFO recapture adjustment for each year by reference to—

(A) The FIFO inventory amount after applying the provisions of section 263A but before applying the adjustments of sections 56 and 58 and the items of preference in section 57; and

(B) The LIFO inventory amount used in computing taxable income.

(5) ***Election to use alternative minimum tax inventories to compute adjusted current earnings.*** A taxpayer may elect under this paragraph (r)(5) to use the inventory amounts used to compute pre-adjustment alternative minimum taxable income in computing its adjusted current earnings. Rules similar to those of paragraphs (r)(2) and (r)(3) of this section apply for purposes of this election.

(s) ***Adjustment for alternative tax energy preference deduction*** —

(1) ***In general.*** For purposes of computing adjusted current earnings, any taxpayer claiming a deduction under section 56(h) must properly decrease basis by the portion of the deduction allowed under section 56(h) which is attributable to adjustments under section 56(g)(4). In taxable years following the taxable year in which the section 56(h) deduction is claimed, basis recovery (including amortization, depletion, and gain on sale) must properly take into account this basis reduction.

(2) ***Example.*** The following example illustrates the provisions of this paragraph (s):

Example. Corporation A, a calendar year taxpayer, incurs $100 of intangible drilling costs on January 1, 1994 and as a result of these intangible drilling costs A claims a deduction under section 56(h) of $40. Assume that $20 of A's deduction under section 56(h) is attributable to the adjustment under paragraph (f)(1) of this section. A must reduce by $20 the amount of intangible drilling costs to be amortized under paragraph (f)(1) of this section in 1995 through 1998 (the balance of the 60-month amortization period).

[T.D. 8340, 56 FR 11084, Mar. 15, 1991, as amended by T.D. 8352, 56 FR 29433, June 27, 1991; T.D. 8454, 57 FR 60477, Dec. 21, 1992; T.D. 8482, 58 FR 42207, Aug. 9, 1993; T.D. 8566, 59 FR 51371, Oct. 11, 1994; T.D. 8858, 65 FR 1237, Jan. 7, 2000; T.D. 8940, 66 FR 9929, Feb. 13, 2001; T.D. 9849, 84 FR 9232, Mar. 14, 2019]

TAX PREFERENCE REGULATIONS

§ 1.57-0 Scope.

For purposes of the minimum tax for tax preferences (subtitle A, chapter I, part VI), the items of tax preference are:

(a) Excess investment interest,

(b) The excess of accelerated depreciation on section 1250 property over straight line depreciation,

(c) The excess of accelerated depreciation on section 1245 property subject to a net lease over straight line depreciation,

(d) The excess of the amortization deduction for certified pollution control facilities over the depreciation otherwise allowable,

(e) The excess of the amortization deduction for railroad rolling stock over the depreciation otherwise allowable,

(f) The excess of the fair market value of a share of stock received pursuant to a qualified or restricted stock option over the exercise price,

(g) The excess of the addition to the reserve for losses on bad debts of financial institutions over the amount which have been allowable based on actual experience,

(h) The excess of the percentage depletion deduction over the adjusted basis of the property, and

(i) The capital gains deduction allowable under section 1202 or an equivalent amount in the case of corporations.

Accelerated depreciation on section 1245 property subject to a net lease and excess investment interest are not items of tax preference in the case of a corporation, other than a personal holding company (as defined in section 542) and an electing small business corporation (as defined in section 1371(b)). In addition, excess investment interest is an item of tax preference only for taxable years beginning before January 1, 1972. Rules for the determination of the items of tax preference are contained in §§ 1.57-1 through 1.57-5. Generally, in the case of a nonresident alien or foreign corporation, the application of §§ 1.57-1 through 1.57-5 will be limited to cases in which the taxpayer has income effectively connected with the conduct of a trade or business within the United States. Special rules for the treatment of items of tax preference in the case of certain entities and the treatment of items of tax preference relating to income from sources outside the United States are provided in section 58 and in §§ 1.58-1 through 1.58-8.

[T.D. 7564, 43 FR 40470, Sept. 12, 1978]

§ 1.57-1 Items of tax preference defined.

(a) [Reserved]

(b) ***Accelerated depreciation on section 1250 property*** —

(1) ***In general.*** Section 57(a)(2) provides that, with respect to each item of section 1250 property (as defined in section 1250(c)), there is to be included as an item of tax preference the amount by which the deduction allowable for the taxable year for depreciation or amortization exceeds the deduction which would have been allowable for the taxable year if the taxpayer had depreciated the property under the straight line method for each year of its useful life for which the taxpayer has held the property. The determination of the excess under section 57(a)(2) is made with respect to each separate item of section 1250 property. Accordingly, where the amount of depreciation which would have been allowable with respect to one item of section 1250 property if the taxpayer had originally used the straight line method exceeds the allowable depreciation or amortization with respect to such property, such excess may not be used to reduce the amount of the item of tax preference resulting from another item of section 1250 property.

(2) ***Separate items of section 1250 property.*** The determination of what constitutes a separate item of section 1250 property is to be made on the facts and circumstances of each individual case. In general, each building (or component thereof, if the taxpayer uses the component method of computing depreciation) is a separate item of section 1250 property. However, for purposes of this section, assets placed in a group, classified, or composite account are to be treated as a single item by a taxpayer, provided that such account contains only property placed in service during a single taxable year. In addition, two or more items may be treated as one item of section 1250 property for purposes of this paragraph where, with respect to each such item:

(i) The period for which depreciation is taken begins on the same date,

(ii) the same estimated useful life has continually been used for purposes of taking depreciation or amortization, and

(iii) the same method (and rate) of depreciation or amortization has continually been used. For example, assume a taxpayer constructed a 40-unit rental townhouse development and began taking declining balance depreciation on all 40 units as of January 1, 1970, at a uniform rate and has consistently taken depreciation on all 40 units on this same basis. Although each townhouse is a separate item of section 1250 property, all 40 townhouses may be treated as one item of section 1250 property for purposes of the minimum tax since the conditions of subdivisions (i), (ii), and (iii) of this subparagraph are met. This would be true even if the 40 townhouses comprised two 20-unit developments located apart from each other. However, if the taxpayer constructed an additional development or new section on the existing development for which he began taking depreciation on July 1, 1970, at a uniform rate for all the additional units, the additional units and the original units may not be treated as one item of section 1250 property since the condition of subdivision (i) of this subparagraph is not met. Where a portion of an item of section 1250 property has been depreciated or amortized under a method (or rate) which is different from the method (or rate) under which the other portion or portions of such item have been depreciated or amortized, such portion is considered a separate item of section 1250 property for purposes of this paragraph.

(3) ***Allowable depreciation or amortization.*** The phrase "deduction allowable for the taxable year for exhaustion, wear and tear, obsolescence, or amortization" and references in this paragraph to "allowable depreciation or amortization" include deductions allowable for the taxable year under sections 162, 167, 212, or 611 for the depreciation or amortization of section 1250 property. Such phrase does not include depreciation allowable in the year in which the section 1250 property is disposed of. For the determination of "allowable depreciation or amortization" for taxable years in which the taxpayer has taken no deduction, see § 1.1016-3(a)(2).

(4) ***Straight line depreciation.***

(i) For purposes of computing the depreciation which would have been allowable for the taxable year if the taxpayer had depreciated the property under the straight line method for each taxable year of its useful life, the taxpayer must use the same useful life and salvage value as was used for the first taxable year in which the taxpayer depreciated or amortized the property (subject to redeterminations made pursuant to § 1.167(a)-1 (b) and (c)). If, however, for any taxable year, no useful life was used under the method of depreciation or amortization used or an artificial period was used, such as, for example, by application of section 167(k), or salvage value was not taken into account in determining the annual allowances, such as, for example, under the declining balance method, then, for purposes of computing the depreciation which would have been allowable under the straight line method for the taxable year—

(*a*) There is to be used the useful life and salvage value which would have been proper if depreciation had actually been determined under the straight line method (without reference to an artificial life) throughout the period the property was held, and

(*b*) Such useful life and such salvage value is to be determined by taking into account for each taxable year the same facts and circumstances as would have been taken into account if the taxpayer had used such method throughout the period the property was held.

If an election under § 1.167(a)-11(f), § 1.167(a)-12(e), or § 1.167(a)-12(f) is applicable to the property, the salvage value of the property shall be determined in accordance with such election, and the asset depreciation period (or asset guideline period) applicable to the property pursuant to such election shall be considered to be the useful life of the property for the purposes of this section.

(ii) Where the taxpayer acquires property in a transaction to which section 381(a) applies or from another member of an affiliated group during a consolidated return year and an "accelerated" method of depreciation as described in section 167(b)(2), (3), or (4) or section 167(j)(1)(B) or (C) is permitted (*see* § 1.381(c)(6)-1), the depreciation which would have been allowable under the straight line method is determined as if the property had been depreciated under the straight line method since depreciation was first taken on the property by the transferor of such property. In such cases, references in this paragraph to the period for which the property is held or useful life of the property are treated as including the period beginning with the commencement of the original use of the property.

(iii) For purposes of section 57(a)(2), the straight line method includes the method of depreciation described in § 1.167(b)-1 or any other method which provides for a uniform proration of the cost or other basis (less salvage value) of the property over the estimated useful life of the property to the taxpayer (in terms of years, hours of use, or other similar time units) or estimated number of units to be produced over the life of the property to the taxpayer. If a method other than the method described in § 1.167(b)-1 is used, the estimated useful life or estimated units of production shall be determined in a manner consistent with subdivision (i) of this subparagraph.

(iv) In the case of property constructed by or improvements made by a lessee, the useful life is to be determined in accordance with § 1.167(a)-4.

(5) ***Application for partial period.*** If an item is section 1250 property for less than the entire taxable year, the allowable depreciation or amortization includes only the depreciation or amortization for that portion of the taxable year during which the item is section 1250 property and the amount of the depreciation which would have been allowable under the straight line method is determined only with regard to such portion of the taxable year.

(6) ***No section 1250 and basis adjustment.*** No adjustment is to be made as a result of the minimum tax either to the basis of section 1250 property or with respect to computations under section 1250.

(7) ***Example.*** The principles of this paragraph may be illustrated by the following example:

> *Example.* The taxpayer's only item of section 1250 property is an office building with respect to which operations were commenced on January 1, 1971. The taxpayer depreciates the component parts of the building on the declining balance method. The useful life and

costs of the component parts for depreciation purposes are as follows:

Asset	Useful life	Cost	Salvage value
Building shell	50	$400,000	$50,000
Partitions and walls	10	40,000	
Ceilings	10	20,000	
Electrical system	25	40,000	2,500
Heating and air-conditioning system	25	60,000	2,500

For purposes of computing the item of tax preference under this paragraph for the taxpayer, the partitions, walls, and ceilings may be grouped together and the electrical, heating, and air-conditioning systems may be grouped together since the period for which depreciation is taken began with respect to the assets within these two groups on the same date and the assets within each group have continually had the same useful life and have continually been depreciated under the same method (and rate).

(a) The taxpayer's 1971 item of tax preference under this paragraph would be determined as follows:

(1)	(2)	(3)	(4)
Item of 1250 property	**Declining balance depreciation**	**Straight line depreciation**	**Excess of (2) over (3)**
1. Shell	$12,000	$7,000	$5,000
2. Partitions, walls, ceilings	9,000	6,000	3,000
3. Electrical, heating and air-conditioning systems	6,000	3,800	2,200
1971 preference			10,200

(b) Assuming the above facts are the same for 1974, the taxpayer's 1974 item of tax

preference under this paragraph would be determined as follows:

(1)	(2)	(3)	(4)
Item of 1250 property	**Declining balance depreciation**	**Straight line depreciation**	**Excess of (2) over (3)**
1. Shell	$10,952	$7,000	$3,952
2. Partitions, walls, ceilings	5,529	6,000	None
3. Electrical, heating and air-conditioning systems	4,983	3,800	1,183
1974 preference			5,135

(c) *Accelerated depreciation on section 1245 property subject to a net lease* —

(1) ***In general.*** Section 57(a)(3) provides that, with respect to each item of section 1245 property (as defined in section 1245(a)(3)) which is the subject of a net lease for the taxable year, there is to be included as an item of tax preference the amount by which the deduction allowable for the taxable year for depreciation or amortization exceeds the deduction which would have been allowable for the taxable year if the taxpayer had depreciated the property under the straight line method for each year of its useful life for which the taxpayer has held the property. Except as provided in paragraph (b)(1)(ii) of this section, the determination of the excess under section 57(a)(3) is made with respect to each separate item of section 1245 property. Accordingly, where the amount of depreciation which would have been allowable with respect to one item of section 1245 property if the taxpayer had originally used the straight line method exceeds the allowable depreciation or amortization with respect to such property, such excess may not be used to reduce the amount of the item of tax preference resulting from another item of section 1245 property.

(2) ***Separate items of property.*** The determination of what constitutes a separate item of section 1245 property must be made on the facts and circumstances of each individual case. Such determination shall be made in a manner consistent with the principles expressed in paragraph (b)(2) of this section.

(3) ***Allowable depreciation or amortization.*** The phrase “deduction allowable for the taxable year for exhaustion, wear and tear, obsolescence, or amortization” and references in this paragraph to “allowable depreciation or amortization” include deductions allowable for the taxable year under sections 162, 167 (including depreciation allowable under section 167 by reason of section 179), 169, 184, 185, 212, or 611 for the depreciation or amortization of section 1245 property. Such phrase does not include depreciation allowable in the year in which the section 1245 property is disposed of. Amortization of certified pollution control facilities under section 169, and amortization of railroad rolling stock under section 184 are not to be treated as amortization for purposes of section 57(a)(3) to the extent such amounts are treated as an item of tax preference under section 57(a) (4) or (5) (see paragraphs (d) and (e) of this section). For the determination of “allowable depreciation or amortization” for taxable years in which the taxpayer has taken no deduction, see § 1.1016-3(a)(2).

(4) ***Straight line method of depreciation.*** The determination of the depreciation which would have been allowable under the straight line method shall be made in a manner consistent with paragraph (b)(4) of this section. Such amount shall include any amount allowable under section 167 by reason of section 179 (relating to additional first-year depreciation for small business).

(5) ***Application for partial period.*** If an item is section 1245 property for less than the entire taxable year or subject to a net lease for less than the entire taxable year the allowable depreciation or amortization includes only the depreciation or amortization for that portion of the taxable year during which the item was both section 1245 property and subject to a net lease and the amount of the depreciation which would have been allowable under the straight line method is to be determined only with regard to such portion of the taxable year.

(6) ***Net lease.*** Section 57(a)(3) applies only if the section 1245 property is the subject of a net lease for all or part of the taxable year. See § 1.57-3 for the determination of when an item is considered the subject of a net lease. p

(7) ***No section 1245 and basis adjustment.*** No adjustment is to be made as a result of the minimum tax either to the basis of section 1245 property or with respect to computations under section 1245.

(8) ***Nonapplicability to corporations.*** Section 57(a)(3) does not apply to a corporation other than an electing small business corporation (as defined in section 1371(b)) and a personal holding company (as defined in section 542).

(d) ***Amortization of certified pollution control facilities*** —

(1) ***In general.*** Section 57(a)(4) provides that, with respect to each certified pollution control facility for which an election is in effect under section 169, there is to be included as an item of tax preference the amount by which the deduction allowable for the taxable year under such section exceeds the depreciation deduction which would otherwise be allowable under section 167. The determination under section 57(a)(4) is made with respect to each separate certified pollution control facility. Accordingly, where the amount of the depreciation deduction which would otherwise be allowable under section 167 with respect to one facility exceeds the allowable amortization deduction under section 169 with respect to such facility, such excess may not be used to offset an item of tax preference resulting from another facility.

(2) ***Separate facilities.*** The determination of what constitutes a separate facility must be made on the facts and circumstances of each individual case. Generally, each facility with respect to which a separate election is in effect under section 169 shall be treated as a separate facility for purposes of this paragraph. However, if the depreciation or amortization which would have been allowable without regard to section 169 with respect to any part of a facility is based on a different useful life, date placed in service, or method of depreciation or amortization from the other part or parts of such facility, such part is considered a separate facility for purposes of this paragraph. For example, if a building constitutes a certified pollution control facility and various component parts of the building have different useful lives, each group of component parts with the same useful life would be treated as a separate facility for purposes of this paragraph. Two or more facilities may be treated as one facility for purposes of this paragraph where, with respect to each such facility:

(i) The initial amortization under section 169 commences on the same date,

(ii) the facility is placed in service on the same date,

(iii) the estimated useful life which would be the basis for depreciation or amortization other than under section 169 has continually been the same, and

(iv) the method of depreciation or amortization which could have been used without regard to section 169 could have continually been the same.

(3) ***Amount allowable under section 169.*** For purposes of the determination of the amount of the deduction allowable under section 169, see section 169 and the regulations thereunder. Such amount, however, does not include amortization allowable in the year in which the pollution control facility is disposed of.

(4) ***Otherwise allowable deduction.***

(i) The determination of the amount of the depreciation deduction otherwise allowable under section 167 is made as if the taxpayer had depreciated the property under section 167 for each year of its useful life for which the property has been held. This amount may be determined under § 1.167(a)-(11)(c) if the property is eligible property (as defined in § 1.167(a)-11(b)(2)) and, during the taxable year in which the property was first placed in service, the taxpayer—

(*a*) Has made an election under § 1.167(a)-11(f) with respect to eligible property first placed in service in such taxable year, or

(*b*) Has placed no eligible property in service other than property described in § 1.167(a)-11(b)(5) (iii), (iv), or (v).

The amount determined pursuant to the preceding sentence shall be determined as if the taxpayer had depreciated the property in accordance with § 1.167(a)-11 for all years to which such section applies and during which the taxpayer held the property. This amount may be determined under § 1.167(a)-12(a)(5) if the property is qualified property (as defined in § 1.167(a)-12(a)(3)) and the taxpayer has made an election with respect to such property under § 1.167(a)-12(e). If the taxpayer has made an election under § 1.167(a)-12(f)(1) for a taxable year ending before January 1, 1971, this amount shall be determined for such year in accordance with such election. For purposes of this determination, any method selected by the taxpayer which would have been permissible under section 167 for such taxable year, including accelerated methods, may be used. Any additional amount which would have been allowable by reason of section 179 (relating to additional first-year depreciation for small business) may be included provided such amount is reflected in the determination made under this paragraph in subsequent years.

(ii) If a deduction for depreciation has not been taken by the taxpayer in any taxable year under section 167 with respect to the facility—

(*a*) There is to be used the useful life and salvage value which would have been proper under section 167.

(*b*) Such useful life and salvage value is determined by taking into account for each taxable year the same facts and circumstances as would have been taken into account if the taxpayer had used such method throughout the period the property has been held, and

(*c*) The date the property is placed in service is, for purposes of this section, deemed to be the first day of the first month for which the amortization deduction is taken with respect to the facility under section 169.

If, prior to the date amortization begins under section 169, a deduction for depreciation has been taken by the taxpayer in any taxable year under section 167 with respect to the facility, the useful life, salvage value, etc., used for that purpose is deemed to be the appropriate useful life, salvage value, etc., for purposes of this paragraph, with such adjustments as are appropriate in light of the facts and circumstances which would have been taken into account since the time the last such depreciation deduction was taken, unless it is established by clear and convincing evidence that some other useful life, salvage value, or date the property is placed in service is more appropriate.

(iii) For purposes of section 57(a)(4) and this paragraph, if the deduction for amortization or depreciation which would have been allowable had no election been made under section 169 would have been—

(*a*) An amortization deduction based on the term of a leasehold or

(*b*) A depreciation deduction determined by reference to section 611,

such deduction is to be deemed to be a deduction allowable under section 167.

(iv) If a facility is subject to amortization under section 169 for less than the entire taxable year, the otherwise allowable depreciation deduction under section 167 shall be determined only with regard to that portion of the taxable year during which the election under section 169 is in effect.

(v) If less than the entire adjusted basis of a facility is subject to amortization under section 169, the otherwise allowable depreciation deduction under section 167 shall be determined only with regard to that portion of the adjusted basis subject to amortization under section 169.

(5) ***No section 1245 and basis adjustment.*** No adjustment is to be made as a result of the minimum tax either to the basis of a certified pollution control facility or with respect to computations under sections 1245.

(6) ***Relationship to section 57(a)(3).*** See paragraph (c)(3) with respect to an adjustment in the amount treated as amortization under that provision where both paragraphs (3) and (4) of section 57(a) are applicable to the same item of property.

(7) ***Example.*** The principles of this paragraph may be illustrated by the following example:

> *Example.* A calendar year taxpayer has a certified pollution control facility on which an election is in effect under section 169 commencing with January 1, 1971. No part of the facility is section 1250 property. The original basis of the facility is $100,000 of which $75,000 constitutes amortizable basis. The useful life of the facility is 20 years. The taxpayer depreciates the $25,000 portion of the facility which is not amortizable basis under the double declining method and began taking depreciation on January 1, 1971.

(a) The taxpayer's 1971 item of tax preference under this paragraph would be determined as follows:

1. Amortization deduction	$15,000
2. Depreciation deduction on amortizable basis (double declining method)	7,500
1971 preference (excess of 1 over 2)	7,500

(b) If the taxpayer terminated his election under section 169 in 1972 effective as of July 1, 1972, the taxpayer's 1972 item of tax preference would be determined as follows:

1. Amortization deduction	$7,500
2. Depreciation deduction on amortizable basis:	
Full year ($75,000 (original basis) less $7,500 ("depreciation" to 1-1-72) equals adjusted basis of $67,500; multiplied by 0.10 (double declining rate))	6,750
Portion of full year's depreciation attributable to amortization period (one-half)	3,375
1972 preference (excess of 1 over 2)	4,125

(e) *Amortization of railroad rolling stock* —

(1) ***In general.*** Section 57(a)(5) provides that, with respect to each unit of railroad rolling stock for which an election is in effect under section 184, there is to be included as an item of tax preference the amount by which the deduction allowable for the taxable year under such section exceeds the depreciation deduction which would otherwise be allowable under section 167. The determination under section 57(a)(5) is made with respect to each separate unit of rolling stock. Accordingly, where the amount of the depreciation deduction which would otherwise be allowable under section 167 with respect to one unit exceeds the allowable amortization deduction under section 184 with respect to such unit, such excess may not be used to offset an item of tax preference resulting from another unit.

(2) ***Separate units of rolling stock.*** The determination of what constitutes a separate unit of rolling stock must be made on the facts and circumstances of each individual case. Such determination shall be made in a manner consistent with the manner in which the comparable determination is made with respect to separate certified pollution control facilities under paragraph (d) (2) of this section.

(3) ***Amount allowable under section 184.*** For purposes of the determination of the amount of the deduction allowable under section 184, see section 184. Such amount, however, does not include amortization allowable in the year in which the rolling stock is disposed of.

(4) ***Otherwise allowable deduction.*** The determination of the amount of the depreciation deduction otherwise allowable under section 167 is to be made in a manner consistent with the manner in which the comparable deduction with respect to certified pollution control facilities is determined under paragraph (d)(4) of this section.

(5) ***No section 1245 or basis adjustment.*** No adjustment is to be made as a result of the minimum tax either to the basis of a unit of railroad rolling stock or with respect to computations under section 1245.

(6) ***Relationship to section 57(a***)(3). See paragraph (c)(3) of this section with respect to an adjustment in the amount treated as amortization under that provision where both paragraphs (3) and (5) of section 57(a) are applicable to the same item.

(f) ***Stock options*** —

(1) ***In general.*** Section 57(a)(6) provides that with respect to each transfer of a share of stock pursuant to the exercise of a qualified stock option or a restricted stock option, there shall be included by the transferee as an item of tax preference the amount by which the fair market value of the share at the time of exercise exceeds the option price. The stock option item of tax preference is subject to tax under section 56(a) in the taxable year of the transferee in which the transfer is made.

(2) ***Definitions.*** See generally § 1.421-7 (e), (f), and (g) for the definitions of “option price,” “exercise,” and “transfer,” respectively; however, in the case of a transfer of a share of stock pursuant to the exercise of a qualified stock option or a restricted stock option after the death of an employee by the estate of the decedent (or by a person who acquired the right to exercise such option by bequest or inheritance or by reason of the death of the decedent), the term “option price” shall, for purposes of this paragraph, include both the consideration paid by the estate (or such person) for such share of stock and so much of the basis of the option as is attributable to such share of stock. For the definition of a qualified stock option see section 422(b) and § 1.422-2. For the definition of a restricted stock option see section 424(b) and § 1.424-2. The definitions and special rules contained in section 425 and the regulations thereunder are applicable to this paragraph.

(3) ***Fair market value.*** In accordance with the principles of section 83(a)(1), the fair market value of a share of stock received pursuant to the exercise of a qualified or restricted stock option is to be determined without regard to restrictions (other than nonlapse restrictions within the meaning of § 1.83-3(h)). Notwithstanding any valuation date given in section 83(a)(1), for purposes of this section, fair market value is determined as of the date the option is exercised.

(4) ***Foreign source options.*** In the case of an option attributable to sources within any foreign country or possession, see section 58(g) and § 1.58-8.

(5) ***Inapplicability in certain cases.***

(i) Section 57(a)(6) is inapplicable if during the same taxable year in which stock is transferred pursuant to the exercise of an option, the transferee makes a disposition (within the meaning of section 425(c)) of such stock. In the case of a nonresident alien, section 57(a)(6) is inapplicable to the extent the stock option is attributable (in accordance with the principles of sections 861 through 863 and the regulations thereunder) to sources without the United States.

(ii) Section 57(a)(6) is inapplicable if section 421(a) does not apply to the transfer because of employment requirements of section 422(a)(2) or 424(a)(2).

(6) ***Proportionate applicability.*** Where, by reason of section 422 (b)(7) and (c)(3) (relating to percentage ownership limitations), only a portion of a transfer qualifies for application of section 421, the fair market value and option price shall be determined only with regard to that portion of the transfer which so qualifies.

(7) ***No basis adjustment.*** No adjustment shall be made to the basis of the stock received pursuant to the exercise of a qualified or restricted stock option as a result of the minimum tax.

(g) ***Reserves for losses on bad debts of financial institutions*** —

(1) ***In general.*** Section 57(a)(7) provides that, in the case of a financial institution to which section 585 or 593 (both relating to reserves for losses on loans) applies, there shall be included as an item of tax preference the amount by which the deduction allowable for the taxable year for a reasonable addition to a reserve for bad debts exceeds the amount that would have been allowable had the institution maintained its bad debt reserve for all taxable years on the basis of the institution's actual experience.

(2) ***Taxpayers covered.*** Section 57(a)(7) applies only to an institution (or organization) to which section 585 or 593 applies. See sections 585(a) and 593(a) and the regulations thereunder for a description of those institutions.

(3) ***Allowable deduction.*** For purposes of this paragraph, the amount of the deduction allowable for the taxable year for a reasonable addition to a reserve for bad debts is the amount of the deduction allowed under section 166(c) by reference to section 585 or 593.

(4) ***Actual experience.***

(i) For purposes of this paragraph, the determination of the amount which would have been allowable had the institution maintained its reserve for bad debts on the basis of actual experience is the amount determined under section 585(b)(3)(A) and the regulations thereunder. For this purpose, the beginning balance for the first taxable year ending in 1970 is the amount which bears the same ratio to loans outstanding at the beginning of the taxable year as

(*a*) the total bad debts sustained during the 5 preceding taxable years, adjusted for recoveries of bad debts during such period, bears to

(*b*) the sum of the loans outstanding at the close of such 5 taxable years. The taxpayer may, however, select a more appropriate balance based on its actual experience during a shorter period subject to the approval of the district director upon examination of the return provided there are unusual circumstances which indicate that such period is more indicative of the taxpayer's actual loss experience. Any such selection and approval shall be made in a manner consistent with the selection and approval of a bad debt reserve method under § 1.166-1(b). In the case of an institution which has been in existence for less than 5 taxable years as of the beginning of the first taxable year ending in 1970, the above formula for determining the beginning balance is applied by substituting the number of taxable years for which the institution has been in existence as of the beginning of the taxable year for “5” each time it appears. If any taxable year utilized in the above formula for determining the beginning balance is a short taxable year the amount of the bad debts, adjusted for recoveries, for such taxable year is modified by dividing such amount by the number of days in the taxable year and multiplying the resulting amount by 365. The beginning balance for any subsequent taxable year is the amount of the

beginning balance of the preceding taxable year, decreased by bad debt losses during such year, increased by recoveries of bad debts during such year and increased by the lower of the maximum amount determined under section 585(b)(3)(A) for such year or the amount of the deduction allowed for such year. The application of this subdivision (i) may be illustrated by the following example:

Example. The Y Bank, a calendar year taxpayer, uses the reserve method of acounting for bad debts. On December 31, 1969, Y determines the balance of its reserve for bad debts to be $70,000 under the percentage method. On the same date Y's 5-year moving average is $52,000. Y incurs net bad debt losses (bad debt losses less recoveries of bad debts) of $3,000 for each of the years 1970, 1971, and 1972, which it charges to its reserve for bad debts. Y's 6-year moving averages computed under section 585(b)(3)(A) at the close of 1970, 1971, and 1972 are $50,000, $49,000, and $51,000, respectively. Y's preference items are computed as follows based upon additional facts assumed:

	1970	1971	1972
1. Bad debt reserve—percentage method:			
(a) Balance beginning of year (closing balance prior year)	$70,000	$70,000	$68,000
(b) Net bad debts charged to reserve	3,000	3,000	3,000
(c) Subtotal	67,000	67,000	65,000
(d) Deduction allowed	3,000	1,000	4,000
(e) Balance end of year	70,000	68,000	69,000
2. Bad debt reserve—"actual experience":			
(a) Beginning balance (for 1970, 5-year moving average; for other years, closing balance prior year)	52,000	50,000	48,000
(b) Net bad debts charged to reserve	3,000	3,000	3,000
(c) Subtotal	49,000	47,000	45,000
(d) Maximum amount under section 585 (b)(3)(A) (6-year moving average minus (c))	1,000	2,000	6,000
(e) Deduction allowed (line 1(d))	3,000	1,000	4,000
(f) Lower of (d) or (e)	1,000	1,000	4,000
(g) Closing balance (line (c) + (f))	50,000	48,000	49,000
3. Preference item under section 57(a)(7):			
(a) Deduction allowed	3,000	1,000	4,000
(b) Maximum amount under section 585(b)(3)(A)	1,000	2,000	6,000

	1970	1971	1972
(c) Preference item (excess of (a) over (b))	2,000	0	0

(ii) In the case of a new institution whose first taxable year ends after 1969, its beginning balance for its reserve for bad debts, for purposes of this paragraph, is zero and its reasonable addition to the reserve for such taxable year is determined on the basis of the actual experience of similar institutions located in the area served by the taxpayer.

(h) *Depletion* —

(1) ***In general.*** Section 57(a)(8) provides that with respect to each property (as defined in section 614), there is to be included as an item of tax preference the amount by which the deduction allowable for the taxable year under section 611 for depletion for the property exceeds the adjusted basis of the property at the end of the taxable year (determined without regard to the depletion deduction for that taxable year). The determination under section 57(a)(8) is made with respect to each separate property. Thus, for example, if one mineral property has an adjusted basis remaining at the end of the taxable year, such basis may not be used to reduce the amount of an item of tax preference resulting from another mineral property.

(2) ***Allowable depletion.*** For the determination of the amount of the deduction for depletion allowable for the taxable year see section 611 and the regulations thereunder.

(3) ***Adjusted basis.*** For the determination of the adjusted basis of the property at the end of the taxable year see section 1016 and the regulations thereunder.

(4) ***No basis adjustment.*** No adjustment is to be made to the basis of property subject to depletion as a result ot the minimum tax.

(i) *Capital gains* —

(1) ***Taxpayers other than corporations.*** Section 57(a)(9)(A) provides that, in the case of a taxpayer other than a corporation, there is to be included as an item of tax preference one-half of the amount by which the taxpayer's net long-term capital gain for the taxable year exceeds the taxpayer's net short-term capital loss for the taxable year. For this purpose, for taxable years beginning after December 31, 1971, the taxpayer's net long-term capital gain does not include an amount equal to the deduction allowable under section 163 (relating to interest expense) by reason of subsection (d)(1)(C) of that section, and the excess described in the preceding sentence is reduced by an amount equal to the reduction of disallowed interest expense by reason of section 163(d)(2)(B). Furthermore, the net long-term capital gain of an estate or trust does not include capital gains described in section 642(c)(4). Included in the computation of the taxpayer's capital gains item of tax preference are amounts reportable by the taxpayer as distributive shares of gain or loss from partnerships, estates or trusts, electing small business corporations, common trust funds, etc. See section 58 and the regulations thereunder with respect to the above entities.

Example. For 1971, A, a calendar year individual taxpayer, recognized $50,000 from the sale of securities held for more than 6 months. In addition, A received a $15,000 dividend from X Fund, a regulated investment company, $12,000 of which was designated as a capital gain

dividend by the company pursuant to section 852(b)(3)(C). The AB partnership recognized a gain of $20,000 from the sale of section 1231 property held by the partnership. The AB partnership agreement provides that A is entitled to 50 percent of the income and gains of the partnership. A had net short-term capital loss for the year of $10,000. A's 1971 capital gains item of tax preference is computed as follows:

Capital gain recognized from securities	$50,000
Capital gain dividend from regulated investment company	12,000
Distributive share of partnership capital gain	10,000
Total net long-term capital gain	72,000
Less: net short-term capital loss	(10,000)
Excess of net long-term capital gain over net short-term capital loss	62,000
One-half of above excess	31,000

(2) *Corporations.*

(i) Section 57(a)(9)(B) provides that in the case of corporations there is to be included as an item of tax preference with respect to a corporation's net section 1201 gain an amount equal to the product obtained by multiplying the excess of the net long-term capital gain over the net short-term capital loss by a fraction. The numerator of this fraction is the sum of the normal tax rate and the surtax rate under section 11 minus the alternative tax rate under section 1201(a) for the taxable year, and the denominator of the fraction is the sum of the normal tax rate and the surtax rate under section 11 for the taxable year. Included in the above computation are amounts reportable by the taxpayer as distributive shares of gain or loss from partnerships, estates or trusts, common trust funds, etc. In certain cases the amount of the net section 1201 gain which results in preferential treatment will be less than the amount determined by application of the statutory formula. Therefore, in lieu of the statutory formula, the capital gains item of tax preference for corporations may in all cases be determined by dividing—

(*a*) The amount of tax which would have been imposed under section 11 if section 1201(a) did not apply minus—

(*b*) The amount of the taxes actually imposed

by the sum of the normal tax rate plus the surtax rate under section 11. In case of foreign source capital gains and losses which are not taken into account pursuant to sections 58(g)(2)(B) and 1.58-8, the amount determined in the preceding sentence shall be multiplied by a fraction the numerator of which is the corporation's net section 1201 gain without regard to such gains and losses which are not taken into account and the denominator of which is the corporation's net section 1201 gain. The computation of the corporate capital gains item of tax preference may be illustrated by the following examples:

Example 1. For 1971, A, a calendar year corporate taxpayer, has ordinary income of $10,000 and net section 1201 gain of $50,000, none of which is subsection (d)

gain (as defined in sec. 1201(d)) and none of which is attributable to foreign sources. A's 1971 capital gain item of tax preference may be computed as follows:

1. Tax under section 11:		
Normal tax (0.22 × $60,000)		$13,200
Surtax (0.26 × $35,000)		9,100
		22,300
2. Tax under section 1201:		
(a) Normal tax on ordinary income (0.22 × $10,000)		$2,200
Tax on net section 1201 gain (0.30 × $50,000)	$15,000	$17,200
3. Excess		5,100
4. Normal tax rate plus surtax rate		.48
5. Capital gains preference (line 3 divided by line 4)		10,625

Example 2. For 1971, A, a calendar year corporate taxpayer, has a loss from operations of $30,000 and net section 1201 gain of $150,000, none of which is subsection (d) gain (as defined in section 1201(d)) and none of which is attributable to foreign sources. A's 1971 capital gain item of tax preference may be computed as follows:

1. Tax under section 11:		
Normal tax (0.22 × $120,000)		$26,400
Surtax (0.26 × $95,000)		24,700
		51,100
2. Tax under section 1201(a):		
Normal tax on ordinary income	None	
Tax on net section 1201 gain (0.30 × $150,000)	45,000	45,000
3. Excess		6,100
4. Normal tax rate plus surtax rate		.48
5. Capital gain preference (line 3 divided by line 4)		12,708

(ii) In the case of organizations subject to the tax imposed by section 511(a), mutual savings banks conducting a life insurance business (see section 594), life insurance companies (as defined in section 801), mutual insurance companies to which part II of subchapter L applies, insurance companies to which part III of subchapter L applies, regulated investment companies subject to tax under part I of subchapter M, real estate investment trusts subject to tax under part II of subchapter M, or any other corporation not subject to the taxes imposed by sections

11 and 1201(a), the capital gains item of tax preference may be computed in accordance with subdivision (i) of this subparagraph except that, in lieu of references to section 11, there is to be substituted the section which imposes the tax comparable to the tax imposed by section 11 and, in lieu of references to section 1201(a), there is to be substituted the section which imposes the alternative or special tax applicable to the capital gains of such corporation.

(iii) For purposes of this paragraph, where the net section 1201 gain is not in any event subject to the tax comparable to the normal tax and the surtax under section 11, such as in the case of regulated investment companies subject to tax under subchapter M, such comparable tax shall be computed as if it were applicable to net section 1201 gain to the extent such gain is subject to the tax comparable to the alternative tax under section 1201(a). Thus, in the case of a regulated investment company subject to tax under subchapter M, the tax comparable to the normal tax and the surtax would be the tax computed under section 852(b)(1) determined as if the amount subject to tax under section 852(b)(3) were included in investment company taxable income. The principles of this subdivision (iii) may be illustrated by the following example:

Example. M, a calendar year regulated investment company, in 1971, has investment company taxable income (subject to tax under sec. 852(b)(1)) of $125,000 and net long-term capital gain of $800,000. M company has no net short-term capital loss but has a deduction for dividends paid (determined with reference to capital gains only) of $700,000, M's 1971 capital gains item of tax preference is computed as follows:

1. Section 852(b)(1) tax computed as if it were applicable to all income including capital gains:			
Amount subject to section 852(b)(1)		$125,000	
Net section 1201 gain	$800,000		
Less: Dividends paid deduction	700,000		
Net section 1201 gain subject to tax at the company level		100,000	
		225,000	
Normal tax (0.22 × $225,000)			$49,500
Surtax (0.26 × 200,000)			52,000
			101,500
2. Tax comparable to section 1201(a) tax section 852(b)(1) tax:			
Normal tax (0.22 × 125,000)	$27,500		
Surtax (0.26 × 100,000)	26,000	$53,500	
Section 852(b)(3) tax (0.30 × 100,000)		30,000	
			$83,500
3. Excess			18,000
4. Normal tax rate plus surtax rate			.48

5. Capital gains preference (line 3 divided by line 4)	37,500

(iv) For the computation of the capital gains item of tax preference in the case of an electing small business corporation (as defined in section 1371(b)), see § 1.58-4(c).

(3) ***Nonresident aliens, foreign corporations.*** In the case of a nonresident alien individual or foreign corporation, there shall be included in computing the capital gains item of tax preference under section 57(a)(9) only those capital gains and losses included in the computation of income effectively connected with the conduct of a trade or business within the United States as provided in section 871(b) or 882.

[T.D. 7564, 43 FR 40470, Sept. 12, 1978, as amended by T.D. 10018, 89 FR 106851, Dec. 30, 2024]

§§ 1.57-2-1.57-3 [Reserved]

§ 1.57-4 Limitation on amounts treated as items of tax preference for taxable years beginning before January 1, 1976.

(a) ***In general.*** If in any taxable year beginning before January 1, 1976, a taxpayer has deductions in excess of gross income and all or a part of any item of tax preference described in § 1.57-1 results in no tax benefit due to modifications required under section 172(c) or section 172(b)(2) in computing the amount of the net operating loss or the net operating loss to be carried to a succeeding taxable year, then, for purposes of section 56(a)(1), the sum of the items of tax preference determined under section 57(a) (and § 1.57-1) is to be limited as provided in paragraph (b) of this section.

(b) ***Limitation.*** The sum of the items of tax preference, for purposes of section 56(a)(1) and § 1.56A-1(a), is limited to an amount determined under subparagraphs (1) and (2) of this paragraph.

(1) ***Loss year.*** If the taxpayer has no taxable income for the taxable year without regard to the net operating loss deduction, the amount of the limitation is equal to—

(i) In cases where the taxpayer does not have a net operating loss for the taxable year, the amount of the recomputed income (as defined in paragraph (c) of this section) or

(ii) In cases where the taxpayer has a net operating loss for the taxable year, the amount of the net operating loss (expressed as a positive amount) increased by the recomputed income or decreased by the recomputed loss for the taxable year (as defined in paragraph (c) of this section,

plus the amount of the taxpayer's stock option item of tax preference (as described in § 1.57-1(f)).

(2) ***Loss carryover and carryback years.*** Except in cases to which subparagraph (1)(ii) of this paragraph applies, if, in any taxable year to which a net operating loss is carried, a capital gains deduction is disallowed under section 172(b)(2) in computing the amount of such net operating loss which may be carried to succeeding taxable years, the amount of the limitation is equal to the amount, if any, by which the sum of the items of tax preference (computed with regard to subparagraph (1)(i) of this paragraph) exceeds the lesser of—

(i) The amount by which such loss is reduced because of a disallowance of the capital gains deduction in such taxable year, or

(ii) The capital gains deduction.

The amount determined pursuant to the preceding sentence shall be increased by the amount, if any, that such reduction is attributable to that portion of such a net operating loss described in section 56(b)(1)(B) and § 1.56A-2(a)(2) (relating to excess tax preferences).

(c) ***Recomputed income or loss.*** For purposes of this section, the phrase "recomputed income or loss" means the taxable income or net operating loss for the taxable year computed without regard to the amounts described in § 1.57-1 except paragraph (i)(2) of that section (relating to corporate capital gains) and without regard to the net operating loss deduction. For this purpose, the reference to the amounts described in § 1.57-1 is a reference to that portion of the deduction allowable in computing taxable income under the appropriate section equal to the amount which is determined in each paragraph of § 1.57-1. For example, the amount described in § 1.57-1(h) (relating to excess of percentage depletion over basis) is that portion of the deduction allowable for depletion under section 611 which is equal to the amount determined under § 1.57-1(h). For purposes of this paragraph, the amount described in § 1.57-1(i)(1) (relating to capital gains) is to be considered as the amount of the deduction allowable for the taxable year under section 1202.

(d) ***Determination of preferences reduced.*** When, pursuant to paragraph (b)(1) of this section, the sum of the items of tax preference (determined without regard to this section) are reduced, such reduction is first considered to be from the capital gains item of tax preference (described in § 1.57-1(i)(1)) and each item of tax preference relating to a deduction disallowed in computing the net operating loss pursuant to section 172(d), pro rata. The balance of the reduction, if any, is considered to be from the remaining items of tax preference, pro rata. For purposes of this subparagraph, deductions not attributable to the taxpayer's trade or business which do not relate to items of tax preference are considered as being applied in reducing gross income not derived from such trade or business before such deductions which do relate to items of tax preferences.

(e) ***Examples.*** The principles of this section may be illustrated by the following examples in each of which the deduction for the personal exemption is disregarded and the taxpayer is an individual who is a calendar year taxpayer.

Example 1. The taxpayer has the following items of income and deduction for 1970:

Gross income (all business income)	$120,000
Deductions:	
Nonbusiness deductions	30,000
Items of tax preference (excess accelerated depreciation on real property held in taxpayer's business)	80,000

Other business deductions			50,000

Based on the above figures, the taxpayer has a net operating loss of $10,000 (business deductions of $130,000 less business income of $120,000, the nonbusiness deductions having been disallowed by reason of section 172(d)(4)). The limitation on the amount treated as items of tax preference is computed as follows:

Tax preferences			$80,000
Net operating loss		$10,000	
Recomputed income or loss:			
Gross income	$120,000		
Deductions other than tax preference items	80,000		
Recomputed income		40,000	
Sum of net operating loss and recomputed income		50,000	
Stock options preference		0	
Limitation		50,000	

Thus, the minimum tax computed under section 56(a) would be 10 percent of $20,000 (items of tax preference of $50,000 less the minimum tax exemption of $30,000), $1,000 of which would be deferred tax liability pursuant to section 56(b).

Example 2. Assume the same facts as in example 1 except that the other business deductions are $130,000, resulting in a net operating loss of $90,000. The limitation on the amount treated as items of tax preference is computed as follows:

Tax preferences			$80,000
Net operating loss		$90,000	
Recomputed income or loss:			
Gross income	$120,000		
Deductions other than tax preference items	160,000		
	(40,000)		
Disallowance of nonbusiness deductions under sec. 172(d)	30,000		
Recomputed loss		10,000	
Net operating loss less recomputed loss		80,000	

Stock options preference		0	
Limitation			80,000

Thus, the minimum tax computed under section 56(a) would be 10 percent of $50,000 (items of tax preference of $80,000 less the minimum tax exemption of $30,000), all of which will be deferred tax liability pursuant to section 56(b).

Example 3. The taxpayer has the following items of income and deduction for 1970:

Gross income (all from business):			
Ordinary			$50,000
Net section 1201 gains			120,000
Deductions:			
Items of tax preference:			
Excess amortization of certified pollution control facilities		$45,000	
Capital gains deduction		60,000	105,000
Other business deductions			75,000

In addition, the taxpayer has a $55,000 item of tax preference resulting from qualified stock options. Based on the above figures, the taxpayer has no taxable income and no net operating loss as the capital gains deduction is disallowed in determining the net operating loss pursuant to section 172(d). The limitation on the amount treated as items of tax preference is computed as follows:

Tax preferences			$160,000
Net operating loss		0	
Recomputed income or loss:			
Gross income	$170,000		
Deductions other than tax preference items	75,000		
Recomputed income		$95,000	
Plus: Stock options preference		55,000	
Limitation			150,000

Thus, the minimum tax computed under section 56 would be 10 percent of $120,000 (items of tax preference of $150,000 less the minimum tax exemption of $30,000).

Example 4. Assume the same facts as in example (3) except that the taxpayer has a net operating loss carryover from 1969 of $80,000. The taxpayer has $160,000 of tax preferences which are limited to $150,000 pursuant to § 1.57-4(b)(1). In order to determine the amount of the 1969 net operating loss which remains as a carryover to 1971, the 1970 taxable income is redetermined in accordance with section 172(b)(2) and the regulations thereunder, as follows:

Gross income—1970	$170,000	
Deductions:		
Capital gains deduction disallowed business deductions	$120,000	120,000
Taxable income for section 172(b)(2)		50,000

Thus, the 1969 net operating loss which remains as a carryover to 1971 is $30,000. Pursuant to paragraph (b)(2) of this section, the limitation on the amount treated as items of tax preference is computed as follows:

Items of tax preference computed with regard to § 1.57-4(b)(1) (per example (3))	$150,000
Less: Lesser of capital gains deduction ($60,000) or amount of reduction in carryover due to its disallowance ($50,000)	50,000
Limitation	100,000

Thus, the minimum tax computed under section 56 would be 10 percent of $70,000 (items of tax preference of $100,000 less the minimum tax exemption of $30,000).

Example 5. The taxpayer has the following items of income and deduction for the taxable year 1970 without regard to any net operating loss deduction:

Gross income (all from business):		
Ordinary	$50,000	
Net section 1201 gain	40,000	
		$90,000
Deductions:		
Capital gains deduction	20,000	
Medical expenses ($4,100 actually paid but allowable only to the extent in excess of 3 percent of adjusted gross income of $70,000)	2,000	

Other itemized deductions	40,000	
		62,000
Taxable income (before net operating loss deduction)		28,000

In addition, the taxpayer has an item of tax preference of $35,000 resulting from qualified stock options. In 1973, the taxpayer has a net operating loss of $60,000 (no portion of which is attributable to excess tax preferences pursuant to § 1.56A-2) which is carried back to 1970 resulting in no taxable income in 1970. In order to determine the amount of the 1973 net operating loss which remains as a carryover to 1971, the 1970 taxable income is redetermined, in accordance with section 172(b)(2) and the regulations thereunder, as follows:

Gross income		$90,000
Deductions:		
Capital gains deduction disallowed		
Medical expenses ($4,100 actually paid but allowable only to the extent in excess of 3 percent of adjusted gross income of $90,000)	$1,400	
Other itemized deductions	40,000	
		$41,400
Taxable income for section 172(b)(2)		48,600

The limitation on the amount treated as items of tax preference is computed as follows:

Items of tax preference:	
Capital gains	$20,000
Stock options	35,000
	55,000
Less:	
Lesser of capital gains deduction ($20,000) or amount of reduction in carryover due to its disallowance ($20,600)	(20,000)
Limitation	35,000

Thus, the minimum tax for 1970 under section 56 would be 10 percent of $5,000 (items of tax preference of $35,000 less the minimum tax exemption of $30,000).

Example 6. Assume the same facts as in example (5) except that the 1973 net operating loss was $45,000. In this case, the $20,600 increase in the 1970 taxable income as redetermined, results in a decrease of $17,000 (*i.e.*, the remaining 1973 net operating loss after an initial decrease of $28,000 resulting from the 1970 taxable income before redetermination). The limitation on the amount treated as items of tax preference is computed as follows:

Items of tax preference computed without regard to this section	$55,000
Less: Lesser of capital gains deduction ($20,000) or amount of reduction in carryover due to its disallowance ($17,000)	(17,000)
Limitation	38,000

Thus, the minimum tax for 1970 under section 56 would be 10 percent of $8,000 (items of tax preference of $38,000 less the minimum tax exemption of $30,000).

Example 7. The taxpayer has the following items of income and deduction for 1973 without regard to any net operating loss deduction:

Gross income (all from business):		
Ordinary	$100,000	
Net section 1201 gains	120,000	
		$220,000
Deductions:		
Items of tax preference:		
Excess amortization of certified pollution control facilities	45,000	
Capital gains deduction	60,000	
	105,000	
Other business deductions	75,000	
		$180,000

Taxable income (before net operating loss deduction)	40,000

In 1972, the taxpayer had a net operating loss of $70,000 which is carried forward to 1973; $20,000 of this net operating loss is attributable to excess tax preferences. In order to determine the amount of the 1972 net operating loss which remains as a carryover to 1974, the 1973 taxable income is redetermined, in accordance with section 172(b)(2) and the regulations thereunder, as follows:

Gross income	$220,000
Deductions:	
Capital gains deduction	Disallowed
Business deductions	120,000
Taxable income per section 172(b)(2)	100,000

In this case, the $60,000 increase in the 1972 taxable income as redetermined and the $30,000 decrease in the amount of the 1973 net operating loss remaining as a carryover to 1974 (*i.e.*, the remaining 1972 net operating loss after an initial decrease of $40,000 resulting from the 1973 taxable income before redetermination) is entirely attributable to the disallowance of the capital gains deduction. The limitation on the amount treated as items of tax preference is computed as follows:

Items of tax preference computed without regard to this section:	
Capital gains	$60,000
Excess amortization of certified pollution control facilities	45,000
	105,000
Less: Lesser of capital gains deduction (60,000) or amount of reduction in carryover due to its disallowance ($30,000)	(30,000)
	75,000
Plus: Amount of reduction of carryover (due to disallowance of capital gains deduction) attributable to excess tax preferences	20,000
Limitation	95,000

[T.D. 7564, 43 FR 40476, Sept. 12, 1978, as amended by T.D. 8138, 52 FR 15309, Apr. 28, 1987]

§ 1.57-5 Records to be kept.

(a) ***In general.*** The taxpayer shall have available permanent records of all the facts necessary to determine with reasonable accuracy the amounts described in § 1.57-1. Such records shall include:

(1) In the case of amounts described in paragraph (a) of § 1.57-1: the amount and nature of indebtedness outstanding for the taxable year and the date or dates on which each such indebtedness was incurred or renewed in any form; the amount expended for property held for investment during any taxable year during which such indebtedness was incurred or renewed; and the manner in which it was determined that property was or was not held for investment.

(2) In the case of amounts described in paragraphs (b), (c), (d), (e), and (h) of § 1.57-1:

(i) The dates, and manner in which, the property was acquired and placed in service,

(ii) The taxpayer's basis on the date the property was acquired and the manner in which the basis was determined,

(iii) An estimate of the useful life (in terms of months, hours of use, etc., whichever is appropriate) of the property on the date placed in service or an estimate of the number of units to be produced by the property on the date the property is placed in service, whichever is appropriate, and the manner in which such estimate was determined,

(iv) The amount and date of all adjustments by the taxpayer to the basis of the property and an explanation of the nature of such adjustments, and

(v) In the case of property which has an adjusted basis reflecting adjustments taken by another taxpayer with respect to the property or taken by the taxpayer with respect to other property, the information described in paragraph (a)(2)(i) through (iv) of this section, with respect to such other property or other taxpayer.

(3) In the case of amounts described in paragraph (f) of § 1.57-1, the fair market value of the shares of stock at the date of exercise of the option and the option price and the manner in which each was determined.

(4) In the case of amounts described in paragraph (g) of § 1.57-1, the amount of debts written off and the amount of the loans outstanding for the taxable year and the 5 preceding taxable years or such shorter or longer period as is appropriate.

(b) ***Net operating losses.*** The taxpayer shall have available permanent records for the first taxable year in which a portion of a net operating loss was attributable to items of tax preference (within the meaning of § 1.56A-2 (b)) and each succeeding taxable year in which there is a net operating loss or a net operating loss carryover a portion of which is so attributable. Such records shall include all the facts necessary to determine with reasonable accuracy the amount of deferred tax liability under section 56, including the amount of the net operating loss in each taxable year in which there are items of tax preference in excess of the minimum tax exemption (as determined under § 1.58-1), the amount of the items of tax preference for each such taxable year, the amount by which each such net operating loss reduces taxable income in any taxable year, and the amount by which each such net operating loss is reduced in any taxable year.

[T.D. 7564, 43 FR 40479, Sept. 12, 1978, as amended by T.D. 8138, 52 FR 15309, Apr. 28, 1987]

§ 1.58-1 [Reserved]

§ 1.58-2 General rules for conduit entities; partnerships and partners.

(a) ***General rules for conduit entities.*** Sections 1.58-3 through 1.58-6 provide rules under which items of tax preference of an estate, trust, electing small business corporation, common trust fund, regulated investment company, or real estate investment trust (referred to in this paragraph as the "conduit entity") are treated as items of tax preference of the beneficiaries, shareholders, participants, etc. (referred to in this paragraph as the "distributees"). Where an item of tax preference of a conduit entity is so apportioned to a distributee, the item of tax preference retains its character in the hands of the distributee and is adjusted to reflect:

(1) The separate items of income and deduction of the distributee and

(2) the tax status of the distributee as an individual, corporation, etc. For example, if a trust has $100,000 of capital gains for the taxable year, all of which are distributed to A, an individual, the item of tax preference apportioned to A under section 57(a)(9) (and § 1.57-1(i)(1)) is $50,000. If, however, A had a net capital loss for the taxable year of $60,000 without regard to the distribution from the trust, the trust tax preference would be adjusted in the hands of A to reflect the separate items of income and deduction passed through to the distributee, or, in this case, to reflect the net section 1201 gain to A of $40,000. Thus, A's capital gains items of tax preference would be $20,000. By application of this rule, A, in effect, treats capital gains distributed to him from the trust the same as his other capital gains in computing his capital gains item of tax preference. If A had been a corporation, the trust tax preference would be adjusted both to reflect the capital loss and to reflect A's tax status by recomputing the capital gains item of tax preference (after adjustment for the capital loss) under section 57(a)(9)(B) and § 1.57-1(i)(2). Similarly, if depreciation on section 1245 property subject to a net lease (as defined in section 57(a)(3) and § 1.57-1(c)) is apportioned from a conduit entity to a corporation (other than a personal holding company or electing small business corporation), the amount so apportioned to the corporation is not treated as an item of tax preference to such corporation since such item is not an item of tax preference in the case of a corporation (other than a personal holding company or an electing small business corporation).

(b) ***Partnerships and partners.***

(1) Section 701 provides that a partnership as such is not subject to the income tax imposed by chapter 1. Thus, a partnership as such is not subject to the minimum tax for tax preferences. Section 702 provides that, in determining his income tax, each partner is to take into account separately his distributive share of certain items of income, deductions, etc. of the partnership and other items of income, gain, loss, deduction, or credit of the partnership to the extent provided by regulations prescribed by the Secretary or his delegate. Accordingly, each partner, in computing his items of tax preference, must take into account separately those items of income and deduction of the partnership which enter into the computation of the items of tax preference in accordance with subparagraph (2) of this paragraph.

(2) Pursuant to section 702, each partner must, solely for purposes of the minimum tax for tax preferences (to the extent not otherwise required to be taken into account separately under section 702 and the regulations thereunder), take into account separately in the manner provided in subchapter K and the regulations thereunder those items of income and deduction of the partnership which enter into the computation of the items of tax preference specified in section 57 and the regulations thereunder. A partner must, for this purpose, take into account separately his distributive share of:

(i) Investment interest expense (as defined in section 57(b)(2)(D) determined at the partnership level;

(ii) Investment income (as defined in section 57(b)(2)(B) determined at the partnership level;

(iii) Investment expenses (as defined in section 57(b)(2)(C)) determined at the partnership level;

(iv) With respect to each section 1250 property (as defined in section 1250(c)), the amount of the deduction allowable for the taxable year for exhaustion, wear and tear, obsolescence, or amortization and the deduction which would have been allowable for the taxable year had the property been depreciated under the straight line method each taxable year of its useful life (determined without regard to section 167(k)) for which the partnership has held the property;

(v) With respect to each item of section 1245 property (as defined in section 1245(a)(3)) which is subject to a net lease, the amount of the deduction allowable for exhaustion, wear and tear, obsolescence, or amortization and the deduction which would have been allowable for the taxable year had the property been depreciated under the straight line method for each taxable year of its useful life for which the partnership has held the property;

(vi) With respect to each certified pollution control facility for which an election is in effect under section 169, the amount of the deduction allowable for the taxable year under such section and the deduction which would have been allowable under section 167 had no election been in effect under section 169;

(vii) With respect to each unit of railroad rolling stock for which an election is in effect under section 184, the amount of the deduction allowable for the taxable year under such section and the deduction which would have been allowable under section 167 had no election been in effect under section 184;

(viii) In the case of a partnership which is a financial institution to which section 585 or 593 applies, the amount of the deduction allowable for the taxable year for a reasonable addition to a reserve for bad debts and the amount of the deduction that would have been allowable for the taxable year had the institution maintained its bad debt reserve for all taxable years on the basis of actual experience; and

(ix) With respect to each mineral property, the deduction for depletion allowable under section 611 for the taxable year and the adjusted basis of the property at the end of the taxable year (determined without regard to the depreciation deduction for the taxable year).

If, pursuant to section 743 (relating to optional adjustment to basis), the basis of partnership property is adjusted with respect to a transferee partner due to an election being in effect under section 754 (relating to manner of electing optional adjustment), items representing amortization, depreciation, depletion, gain or loss, and the adjusted basis of property subject to depletion, described above, shall be adjusted to reflect the basis adjustment under section 743.

(3) The minimum tax is effective for taxable years ending after December 31, 1969. Thus, subparagraph (2) of this paragraph is inapplicable in the case of items of income or deduction paid or accrued in a partnership's taxable year ending on or before December 31, 1969.

[T.D. 7564, 43 FR 40481, Sept. 12, 1978]

§ 1.58-3 Estates and trusts.

(a) *In general.*

(1) Section 58(c)(1) provides that the sum of the items of tax preference of an estate or trust shall be apportioned between the estate or trust and the beneficiary on the basis of the income of the estate or trust allocable to each. Income for this purpose is the income received or accrued by the trust or estate which is not subject to current taxation either in the hands of the trust or estate or the beneficiary by reason of an item of tax preference. The character of the amounts distributed is determined under section 652(b) or 662(b) and the regulations thereunder.

(2) Additional computations required by reason of excess distributions are to be made in accordance with the principles of sections 665 through 669 and the regulations thereunder.

(3) In the case of a charitable remainder annuity trust (as defined in section 664(d)(1) and § 1.664-2) or a charitable remainder unitrust (as defined in section 664(d)(2) and § 1.664-3), the determination of the income not subject to current taxation by reason of an item of tax preference is to be made as if such trust were generally subject to taxation. Where income of such a trust is not subject to current taxation in accordance with this section and is distributed to a beneficiary in a taxable year subsequent to the taxable year in which the trust received or accrued such income, the items of tax preference relating to such income are apportioned to the beneficiary in such subsequent year (without credit for minimum tax paid by the trust with respect to items of tax preference which are subject to the minimum tax by reason of section 664(c)).

(4) Items of tax preference apportioned to a beneficiary pursuant to this section are to be taken into account by the beneficiary in his taxable year within or with which ends the taxable year of the estate or trust during which it has such items of tax preference.

(5) Where a trust or estate has items of income or deduction which enter into the computation of the excess investment interest item of tax preference, but such items do not result in an item of tax preference at the trust or estate level, each beneficiary must take into account, in computing his excess investment interest, the portion of such items distributed to him. The determination of the portion of such items distributed to each beneficiary is made in accordance with the character rules of section 652(b) or 662(b) and the regulations thereunder.

(6) Where, pursuant to subpart E of part 1 of subchapter J (sections 671 through 678), the grantor of a trust or another person is treated as the owner of any portion of the trust, there shall be included in computing the items of tax preference of such person those items of income, deductions, and credits against tax of the trust which are attributable to that portion of the trust to the extent such items are taken into account under section 671 and the regulations thereunder. Any remaining portion of the trust is subject to the provisions of this section.

(b) ***Examples.*** The principles of this section may be illustrated by the following examples in each of which it is assumed that none of the distributions are accumulation distributions (see sections 665 through 669 and the regulations thereunder):

> *Example 1.* Trust A, with one income beneficiary, has the following items of income and

deduction without regard to the deduction for distributions:

Income:	
Business income	$200,000
Investment income	20,000
	220,000
Deductions:	
Business deductions (nonpreference)	100,000
Investment interest expense	80,000
	180,000

Based on the above figures, the trust has $100,000 of taxable income without regard to items which enter into the computation of excess investment interest and the deduction for distributions. The trust also has $60,000 of excess investment interests, resulting in $40,000 of distributable net income. Thus, $60,000 of the $100,000 of noninvestment income is not subject to current taxation by reason of the excess investment interest.

(*a*) If $40,000 is distributed to the beneficiary, the beneficiary will normally be subject to tax on the full amount received and the "sheltered" portion of the income will remain at the trust level. Thus, none of the excess investment interest item of tax preference is apportioned to the beneficiary.
(*b*) If the beneficiary receives $65,000 from the trust, the beneficiary is still subject to tax on only $40,000 (the amount of the distributable net income) and thus, is considered to have received $25,000 of business income "sheltered" by excess investment interest. Thus, $25,000 of the $60,000 of excess investment interest of the trust is apportioned to the beneficiary.

Example 2. Trust B has $150,000 of net section 1201 gain.
(*a*) If none of the gain is distributed to the beneficiaries, none of the capital gains item of tax preference is apportioned to the beneficiaries.

(*b*) If all or a part of the gain is distributed to the beneficiaries, a proportionate part of the capital gains item of tax preference is apportioned to the beneficiaries. If any of the beneficiaries are corporations the capital gains item of tax preference is adjusted in the hands of the corporations as provided in § 1.58-2(a).

Example 3. Trust C has taxable income of $200,000 computed without regard to depreciation on section 1250 property and the deduction for distributions. The depreciation on section 1250 property held by the trust is $160,000. The trust instrument provides for income to be retained by the trust in an amount equal to the depreciation on the property determined under the straight line method (which method has been used for this purpose for the entire period the trust has held the property) which, in this case is equal to $100,000. The $60,000 excess of the accelerated depreciation of $160,000 over

the straight line amount which would have resulted had the property been depreciated under that method for the entire period for which the trust has held the property is an item of tax preference pursuant to section 57(a)(2). Of the remaining $100,000 of net income of the trust (after the reserve for depreciation), 80 percent is distributed to the beneficiaries. Pursuant to sections 167(h) and 642(e), 80 percent of the remaining $60,000 of depreciation deduction (or $48,000) is taken as a deduction directly by the beneficiaries and "shelters" the income received by the beneficiaries. Thus, the full $48,000 deduction taken by the beneficiaries is "excess accelerated depreciation" on section 1250 property and is an item of tax preference in the hands of the beneficiaries. None of the remaining $12,000 of "excess accelerated depreciation" is apportioned to the beneficiaries since this amount "shelters" income retained at the trust level.

Example 4. G creates a trust the ordinary income of which is payable to his adult son. Ten years from the date of the transfer, corpus is to revert to G. G retains no other right or power which would cause him to be treated as an owner under subpart E of part 1 of subchapter J (section 671 and following). Under the terms of the trust instrument and applicable local law capital gains must be applied to corpus. During the taxable year 1970 the trust has $200,000 income from dividends and interest and a net long-term capital gain of $100,000. Since the capital gain is held or accumulated for future distribution to G, he is treated under section 677(a)(2) as an owner of a portion of the trust to which the gain is attributable. Therefore, he must include the capital gain in the computation of his taxable income in 1970 and the capital gain item of tax preference is treated as being directly received by G. Accordingly, no adjustment is made to the trust's minimum tax exemption by reason of the capital gain.

Example 5. For its taxable year 1971 the trust referred to in example (4) has taxable income of $200,000 computed without regard to depreciation on section 1250 property and the deduction for distributions. The depreciation on section 1250 property held by the trust is $160,000. The trust instrument provides for income to be retained by the trust in an amount equal to the depreciation on the property determined for purposes of the Federal income tax. If the property had been depreciated under the straight line method for the entire period for which the trust held the property the resulting depreciation deduction would have been $100,000. The $60,000 excess is, therefore, an item of tax preference pursuant to section 57(a)(2) and § 1.57-1(d). Since this amount of "income" is held or accumulated for future distributions to G, he is treated under section 677(a)(2) as an owner of a portion of the trust to which such income is attributable. Therefore, section 671 requires that in computing the tax liability of the grantor the income, deductions, and credits against tax of the trust which are attributable to such portion shall be taken into account. Thus, the grantor has received $160,000 of income and is entitled to a depreciation deduction in the same amount. The $60,000 item of tax preference resulting from the excess depreciation is treated as being directly received by G as he has directly received the income sheltered by that preference. Accordingly, no adjustment is made to the trust's minimum tax exemption by reason of such depreciation.

[T.D. 7564, 43 FR 40482, Sept. 12, 1978]

§ 1.58-3T Treatment of non-alternative tax itemized deductions by trusts and estates and their beneficiaries in taxable years beginning after December 31, 1982 (temporary).

For purposes of section 58(c), in taxable years beginning after December 31, 1982, itemized deductions of a trust or estate which are not alternative tax itemized deductions (as defined in section 55(e)(1)), shall be treated as items of tax preference and apportioned between trusts and their beneficiaries, and estates and their beneficiaries.

[T.D. 8083, 51 FR 15320, Apr. 23, 1986]

§ 1.58-4 Electing small business corporations.

(a) ***In general.*** Section 58(d)(1) provides rules for the apportionment of the items of tax preference of an electing small business corporation among the shareholders of such corporation. Section 58(d)(2) provides rules for the imposition of the minimum tax on an electing small business corporation with respect to certain capital gains. For purposes of section 58(d) and this section, the items of tax preference are computed at the corporate level as if section 57 generally applied to the corporation. However, the items of tax preference so computed are treated as items of tax preference of the shareholders of such corporation and not as items of tax preference of such corporation (except as provided in paragraph (c) of this section). The items of tax preference specified in section 57(a)(1) and § 1.57-1(a) (excess investment interest) and section 57(a)(3) and § 1.57-1(c) (accelerated depreciation on section 1245 property subject to a net lease), while generally inapplicable to corporations, are included as items of tax preference in the case of an electing small business corporation.

(b) ***Apportionment to shareholders.***

(1) The items of tax preference of an electing small business corporation, other than the capital gains item of tax preference described in paragraph (c) of this section, are apportioned pro rata among the shareholders of such corporation in a manner consistent with section 1374(c)(1). Thus, with respect to the items of tax preference of the electing small business corporation, there is to be treated as items of tax preference of each shareholder a pro rata share of such items computed as follows:

(i) Divide the total amount of such items of tax preference of the corporation by the number of days in the taxable year of the corporation, thus determining the daily amount of such items of tax preference.

(ii) Determine for each day the shareholder's portion of the daily amount of each such item of tax preference by applying to such amount the ratio which the stock owned by the shareholder on that day bears to the total stock outstanding on that day.

(iii) Total the shareholder's daily portions of each such item of tax preference of the corporation for it taxable year.

Amounts taken into account by shareholders in accordance with this paragraph are considered to consist of a pro rata share of each item of tax preference of the corporation. Thus, for example, if the corporation has $50,000 of excess investment interest and $150,000 of excess accelerated depreciation on section 1250 property and a shareholder, in accordance with this paragraph, takes into account $60,000 of the total $200,000 of tax preference items of the corporation, one-fourth ($50,000 ÷ $200,000) of the $60,000, or $15,000, taken into account by the shareholder is considered excess investment interest and three-fourths of the $60,000, or $45,000, is considered excess accelerated depreciation on section 1250 property.

(2) Items of tax preference apportioned to a shareholder pursuant to subparagraph (1) of this paragraph are taken into account by the shareholder for the shareholder's taxable year in which or with which the taxable year of the corporation ends, except that, in the case of the death of a shareholder during any taxable year of the corporation (during which the corporation is an electing small business corporation), the items of tax preference of the corporation for such taxable year are taken into account for the final taxable year of the shareholder.

(c) ***Capital gains.*** (1) Capital gains of an electing small business corporation, other than those capital gains subject to tax under section 1378, do not result in an item of tax preference at the corporate level since, in applying the formula specified in sections 57(a)(9)(B) and § 1.57-1(i)(2), the rate of tax on capital gains (and the resulting tax) at the corporate level is zero. Under section 1375 (a) shareholders of an electing small business corporation take into account the capital gains of the corporation (including capital gains subject to tax under section 1378). Therefore, the computation of the capital gains item of tax preference at the shareholder level, with respect to such capital gains, is taken into account automatically by operation of section 57(a)(9) and § 1.57-1(i). To avoid double inclusion of the capital gains item of tax preference by a shareholder with respect to capital gains subject to tax under section 1378, the capital gains item of tax preference which results at the corporate level by reason of section 58 (d)(2) is not treated under section 58

(d)

(1) as an item of tax preference of the shareholders of the corporation.

(2) The capital gains item of tax preference of an electing small business corporation subject to the tax imposed by section 1378 is the excess of the amount of tax computed under section 1378(b)(2) over the sum of—

(i) The amount of tax that would be computed under section 1378(b)(2) if the following amount were excluded:

(*a*) That portion of the net section 1201 gain of the corporation described in section 1378(b)(1), or

(*b*) If section 1378(c)(3) applies, that portion of the net section 1201 gain attributable to the property described in section 1378(c)(3), and

(ii) The amount of tax imposed under section 1378 divided by the sum of the normal tax rate and the surtax rate under section 11 for the taxable year.

(3) The principles of this paragraph may be illustrated by the following example.

Example. Corporation X is a calendar year taxpayer and an electing small business corporation. For its taxable year 1971 the corporation has net section 1201 gain of $650,000 and taxable income of $800,000 (including the net section 1201 gain). Although X's election under section 1372(a) has been in effect for its three immediately preceding taxable years, X is subject to the tax imposed by section 1378 for 1971 since it has net section 1201 gain (in the amount of $200,000) attributable to property with a substituted basis. The tax computed under section 1378(b)(1) is $187,500 (30 percent of ($650,000 minus $25,000)) and under section 1378(b)(2) is $377,500 (22 percent of $800,000 plus 26 percent of $775,000). By reason of the limitation imposed by section 1378(c) the tax actually imposed by section 1378 is $60,000 (30 percent of $200,000, the net section 1201 gain). The tax computed under section 1378(b)(2) with the modification required under subparagraph (2)(i) of this paragraph is $281,500 (22 percent of $600,000 plus 26 percent

of $575,000). Thus, the 1971 capital gains item of tax preference X is $75,000 computed as follows:

1. Tax computed under 1378(b) (2)	$377,500
2. Tax computed under 1378(b) (2) with modification	281,500
3. Excess	96,000
4. Tax actually imposed under 1378	60,000
5. Difference	36,000
6. Normal tax rate plus surtax rate	.48
7. Tax preference (line 5 divided by line 6)	$75,000

In addition each shareholder of X will take into account his distributive share of the $650,000 of net section 1201 gain of X less the taxes paid by X under sections 56 and 1378 on the gain

[T.D. 7564, 43 FR 40483, Sept. 12, 1978]

§ 1.58-5 Common trust funds.

Section 58(e) provides that each participant in a common trust fund (as defined in section 584 and the regulations thereunder) is to treat as items of tax preference his proportionate share of the items of tax preference of the fund computed as if the fund were an individual subject to the minimum tax. The participant's proportionate share of the items of tax preference of the fund is determined as if the participant had realized, or incurred, his pro rata share of items of income, gain, loss, or deduction of the fund directly from the source from which realized or incurred by the fund. The participant's pro rata share of such items is determined in a manner consistent with section 1.584-2(c). Items of tax preference apportioned to a participant pursuant to this paragraph are taken into account by the participant for the participant's taxable year in which or with which the taxable year of the trust ends.

[T.D. 7564, 43 FR 40484, Sept. 12, 1978]

§ 1.58-6 Regulated investment companies; real estate investment trusts.

(a) ***In general.*** Section 58(f) provides rules with respect to the determination of the items of tax preference of regulated investment companies (as defined in section 851) and their shareholders and real estate investment trusts (as defined in section 856) and their shareholders, or holders of beneficial interest. In general, the items of tax preference of such companies and such trusts are determined at the company or trust level and the items of tax preference so determined (other than the capital gains item of tax preference (sections 57(a)(9) and § 1.57-1(i)) and, in the case of a real estate investment trust, accelerated depreciation on section 1250 property (sections 57(a)(2) and § 1.57-1(b)) are treated as items of tax preference of the shareholders, or holders of beneficial interest, in the same proportion that the dividends (other than capital gains dividends) paid to each such shareholder, or holder of beneficial interest, bear to the taxable income of such company or such trust determined without regard to the deduction for dividends paid. In no case, however, is such proportion to be considered in excess of 100 percent. For example, if a regulated investment company has items of tax preference of $500,000 for the taxable year, none of which resulted from capital gains, and distributes dividends in an amount equal to

90 percent of its taxable income, each shareholder treats his share of 90 percent of the company's items of tax preference, or (a proportionate share of) $450,000, as items of tax preference of the shareholder. The remaining $50,000 constitutes items of tax preference of the company. Amounts treated under this paragraph as items of tax preference of the shareholders, or holders of beneficial interest, are deemed to be derived proportionately from each item of tax preference of the company or trust, other than the capital gains item of tax preference and, in the case of a real estate investment trust, accelerated depreciation on section 1250 property. Such amounts are taken into account by the shareholders, or holders of beneficial interest, in the same taxable year in which the dividends on which the apportionment is based are includible in income. The minimum tax exemption of the trust or company shall not be reduced because a portion of the trust's or company's items of tax preference are allocated to the shareholders or holders of beneficial interests.

(b) ***Capital gains.*** Section 58(g)(1) provides that a regulated investment company or real estate investment trust does not treat as an item of tax preference the capital gains item of tax preference under section 57(a)(9) (and § 1.57-1(i)) to the extent that such item is attributable to amounts taken into income by the shareholders of such company under section 852(b)(3) or by the shareholders or holders of beneficial interest of such trust under section 857(b)(3). Thus, such a company or trust computes its capital gains item of tax preference on the basis of its net section 1201 gain less the sum of (1) the capital gains dividend (as defined in section 852(b)(3)(C) or 857(b)(3)(C)) for the taxable year of the company or trust plus (2), in the case of a regulated investment company, that portion of the undistributed capital gains designated, pursuant to section 852(b)(3)(D) and the regulations thereunder, by the company to be includible in the shareholder's return as long-term capital gains for the shareholders's taxable year in which the last day of the company's taxable years falls. Amounts treated under section 852(b)(3) or 857(b)(3) as long-term capital gains of shareholders, or holders of beneficial interest, are automatically included, pursuant to sections 57(a)(9) and 1.57-1(i), in the computation of the capital gains item of tax preference of the shareholders, or holders of beneficial interest.

(c) ***Accelerated depreciation on section 1250 property.*** In the case of a real estate investment trust, all of the items of tax preference resulting from accelerated depreciation on section 1250 property held by the trust (section 57(a)(2) and § 1.57-1(b)) are treated as items of tax preference of the trust, and, thus, none are treated as items of tax preference of the shareholder, or holder of beneficial interest.

[T.D. 7564, 43 FR 40484, Sept. 12, 1978]

§ 1.58-7 Tax preferences attributable to foreign sources; preferences other than capital gains and stock options.

(a) ***In general.*** Section 58(g)(1) provides that except in the case of the stock options item of tax preference (section 57(a)(6) and § 1.57-1(f)) and the capital gains item of tax preference (section 57(a)(9) and § 1.57-1(i)), items of tax preference which are attributable to sources within any foreign country or possession of the United States shall, for purposes of section 56, be taken into account only to the extent that such items reduce the tax imposed by chapter 1 (other than the minimum tax under section 56) on income derived from sources within the United States. Items of tax preference from sources within any foreign country or possession of the United States reduce the chapter 1 tax on income from sources within the United States to the extent the deduction relating to such preferences, in combination with other foreign deductions, exceed the income from such sources and, in effect, offset income from sources within the United States. Items of tax preference, for this purpose, are determined after application of § 1.57-4 (relating to limitation on amounts treated as items of tax preference). In the case

of a taxpayer who deducted foreign taxes under section 164 for a taxable year, the provisions of this section shall be applied (without regard to section 275(a)(4)) as if he had elected the overall foreign tax credit limitation under section 904(a) (2) for such year.

(b) ***Preferences attributable to foreign sources*** —

(1) ***Preferences other than excess investment interest.*** Except in the case of excess investment interest (see subparagraph (2) of this paragraph), an item of tax preference to which this section applies is attributable to sources within a foreign country or possession of the United States to the extent such item is attributable to a deduction properly allocable or apportionable to an item or class of gross income from sources within a foreign country or possession of the United States under the principles of section 862(b), or section 863, and the regulations thereunder. Where, in the case of income partly from sources within the United States and partly from sources within a foreign country or possession of the United States, taxable income is computed before apportionment to domestic and foreign sources, and is then apportioned by processes or formulas of general apportionment (pursuant to section 863(b) and the regulations thereunder), deductions attributable to such taxable income are considered to be proportionately from sources within the United States and within the foreign country or possession of the United States on the same basis as taxable income.

(2) ***Excess investment interest*** —

(*i*) ***Per-country limitation*** —

(*a*) In the case of a taxpayer on the per-country foreign tax credit limitation under section 904(a) for the taxable year, excess investment interest (as defined in section 57(b)(1)), and the resulting item of tax preference, is attributable to sources within a foreign country or a possession of the United States to the extent that investment interest expense attributable to income from sources within such foreign country or possession of the United States exceeds the net investment income from sources within such foreign country or such possession. For this purpose, net investment income from within a foreign country or possession of the United States is the excess (if any) of the investment income from sources within such country or possession over the investment expenses attributable to income from sources within such country or such possession. For the definition of investment interest expense see section 57(b)(2)(D); for the definition of investment income see section 57(b)(2)(B); for the definition of investment expense see section 57(b)(2)(C).

(*b*) If the taxpayer's excess investment interest computed on a worldwide basis is less than the taxpayer's total separately determined excess investment interest (as defined in this subdivision (*b*)), the amount of the taxpayer's excess investment interest from each foreign country or possession is the amount which bears the same relationship to the taxpayer's excess investment interest from each such country or possession, determined without regard to this subdivision (*b*), as the taxpayer's worldwide excess investment interest bears to the taxpayer's total separately determined excess investment interest. For purposes of this subdivision (*b*), the taxpayer's total separately determined excess investment interest is the sum of the total excess investment interest determined without regard to this subdivision (*b*) plus the taxpayer's excess investment interest from sources within the United States determined in a manner consistent with (*a*) of this subdivision (i).

(ii) ***Overall limitation.*** In the case of a taxpayer who has elected the overall foreign tax credit limitation under section 904(a)(2) for the taxable year, excess investment interest (as defined in section 57(b)(1)), and the resulting item of tax preference, is attributable to sources within any foreign country or possession of the United States to the extent that investment interest expense attributable to income from such sources exceeds the sum of

(*a*) the net investment income from such sources plus

(*b*) the excess, if any, of net investment income from sources within the United States over investment interest expense attributable to sources within the United States. For this purpose, net investment income from sources within any foreign country or possession of the United States is the excess (if any) of the investment income from all such sources over the investment expenses attributable to income from such sources. For the definition of investment interest expense see section 57(b)(2)(D) for the definition of investment income see section 57(b)(2)(B); for the definition of investment expense see section 57(b)(2)(C).

(iii) ***Allocation of expenses.*** The determination of the investment interest expense and investment expenses attributable to a foreign country or possession of the United States is made in a manner consistent with subparagraph (1) of this paragraph.

(iv) ***Attribution of certain interest deductions to foreign sources.*** Where net investment income from sources within any foreign country or possession has the effect of offsetting investment interest expense attributable to income from sources within the United States, the deductions for the investment interest expense so offset are, for purposes of § 1.58-7(c) (relating to reduction in taxes on United States source income), treated as deductions attributable to income from sources within the foreign country or possession from which such net investment income is derived. Such an offset will occur where there is an excess of investment interest expense attributable to income from sources within the United States over net investment income from such sources and

(*a*) in the case of a taxpayer on the per-country foreign tax credit limitation, an excess of net investment income from sources within a foreign country or possession of the United States over investment interest expense from within such foreign country or possession, or

(*b*) in the case of a taxpayer who has elected the overall foreign tax credit limitation, there is an excess of net investment income from sources within foreign countries or possessions of the United States over investment interest expense attributable to income from within such sources.

(v) ***Separate limitation on interest income.*** Where a taxpayer has income described in section 904(f)(2) (relating to interest income subject to the separate foreign tax credit limitation) or expenses attributable to such income, the determination of the excess investment interest resulting therefrom must be determined separately with respect to such income and the expenses properly allocable or apportionable thereto in the same manner as such determination is made in the case of a taxpayer on the per-country foreign tax credit limitation for the taxable year (see subdivision (i) of this subparagraph).

(vi) ***Examples.*** The principles of this subparagraph may be illustrated by the following examples in each of which the taxpayer is an individual and a citizen of the United States:

Example 1. The taxpayer's only items of income and deduction relating to excess investment interest are as follows:

	United States	France	Germany	Total
Investment income from sources within	$150,000	$120,000	$180,000	$450,000
Investment expenses relating to income from sources within	(100,000)	(90,000)	(120,000)	(310,000)
Net investment income	50,000	30,000	60,000	140,000
Investment interest expense relating to income from sources within	(110,000)	(70,000)	(50,000)	(230,000)
(Excess) of investment interest expense over net investment income	(60,000)	(40,000)	*10,000	(90,000)

**Excess of net investment income over investment interest expense.*

(a) If the taxpayer has elected the overall foreign tax credit limitation, his excess investment interest from sources within any foreign countries or possessions of the United States determined under subdivision (ii) of this subparagraph is computed as follows:

Investment interest:			
French	($70,000)		
German	(50,000)		($120,000)
Net investment income:			
Investment income:			
French	120,000		
German	180,000	$300,000	
Less:			
Investment expenses:			
French	(90,000)		
German	(120,000)	(210,000)	90,000
Excess of U.S. net income over investment interest expenses:			
Total foreign excess investment interest			(30,000)

(b) If the taxpayer is on the per-country foreign tax credit limitation, his excess

investment interest from France and Germany determined under subdivision (i)(*a*) of this subparagraph is $40,000 and zero, respectively. Since the taxpayer's worldwide excess investment interest ($90,000) is less than his total separately determined excess investment interest ($60,000 (United States) plus $40,000 (French) plus zero (German), or $100,000), the limitation in subdivision (i) (*b*) of this subparagraph applies and the excess investment interest attributable to France is limited as follows:
Total worldwide excess ($90,000) / Total separately determined excess ($100,000) × French excess ($40,000) = $36,000

The taxpayer's total excess investment interest attributable to sources within any foreign country or possession of the United States is, thus, $36,000 ($36,000 (French) plus zero (German)). The taxpayer's excess investment interest attributable to sources within the United States is $54,000

($90,000 / $100,000 × $60,000).

Since, in making the latter determination, $6,000 of the $60,000 of U.S. investment interest expense in excess of U.S. net investment income is, in effect, offset by German net investment income, for purposes of § 1.58-7(c), $6,000 of interest deductions attributable to income from sources within the United States are, pursuant to subdivision (iv) of this subparagraph, treated as deductions attributable to income from sources within Germany.

Example 2. Assume the same facts as in example (1) except that the items of income and deduction in Germany and the United States are reversed. The worldwide excess investment interest, thus, remains $90,000 and the items of income and deduction relating to excess investment interest are as follows:

	United States	France	Germany	Total
Investment income from sources within	$180,000	$120,000	$150,000	$450,000
Investment expenses relating to income from sources within	(120,000)	(90,000)	(100,000)	(310,000)
Net investment income	60,000	30,000	50,000	140,000
Investment interest expense relating to income from sources within	(50,000)	(70,000)	(110,000)	(230,000)
(Excess) of investment interest	10,000	(40,000)	(60,000)	(90,000)

	United States	France	Germany	Total
expense over net investment income				

(a) If the taxpayer has elected the overall limitation, his excess investment interest from sources within any foreign countries or possessions of the United States determined under subdivision (ii) of this subparagraph is determined as follows:

Foreign investment interest:			
French	($70,000)		
German	(110,000)		($180,000)
Foreign net investment income:			
French	120,000		
German	150,000	$270,000	
Less:			
Investment expenses:			
French	(90,000)		
German	(100,000)	(190,000)	80,000
Excess of U.S. net investment income over U.S. investment interest expense			10,000
Excess investment interest attributable to foreign sources			(90,000)

(b) If the taxpayer has not elected the overall foreign tax credit limitation, his excess investment interest from France and Germany determined under subdivision (i) of this subparagraph (without regard to the limitation to worldwide excess investment interest) is $40,000 and $60,000 respectively, and his total separately determined excess investment interest is, thus, $10,000. Since the total separately determined excess would exceed the worldwide excess, the limitation to the worldwide excess in subdivision (i) applies and the excess investment interest is determined as follows:
France:

$90,000 / $100,000 × $40,000 = $36,000

Germany:

$90,000 / $100,000 × $60,000 = $54,000

Total excess investment interest attributable to sources within any foreign countries and possessions—$90,000.

Example 3. Assume the same facts as in example (1) except that the taxpayer, in addition has investment income, investment expenses, and investment interest subject to the separate limitation under section 904(f).
(a) If the taxpayer has elected the overall foreign tax credit limitation, his excess investment interest from sources within any foreign countries or possessions of the United States determined under subdivision (ii) of this subparagraph is the same as in (a) of example (1) of this subdivision (vi). He then treats such amount as separately determined excess investment interest attributable to a single foreign country as determined under subdivision (i) of this subparagraph and proceeds as in (b) of example (1) of this subdivision (vi) treating items of income and deduction subject to section 904(f) and from each separate foreign country or possession separately in making the additional determinations under subdivisions (i) and (iv) of this subparagraph.

(b) If the taxpayer has not elected the overall foreign tax credit limitation, his excess investment interest from sources within any foreign country or possession of the United States would be determined in the same manner as in (b) of example (1) treating items of income and deduction which are subject to section 904(f) and from each separate foreign country or possession separately in making the determinations under subdivisions (i) and (iv) of this subparagraph.

(c) ***Reduction in taxes on United States source income*** —

(1) ***Overall limitation*** —

(i) ***In general.*** If a taxpayer is on the overall foreign tax credit limitation under section 904(a)(2), the items of tax preference determined to be attributable to foreign sources under paragraph (b) of this section reduce the tax imposed by chapter 1 (other than the minimum tax imposed under section 56) on income from sources within the United States for the taxable year to the extent of the smallest of the following three amounts:

(*a*) Items of tax preference (other than stock options and capital gains) attributable to sources within a foreign country or possession of the United States,

(*b*) The excess (if any) of the total deductions properly allocable or apportionable to items or classes of gross income from sources within foreign countries and possessions of the United States over the gross income from such sources, or

(*c*) Taxable income from sources within the United States.

See § 1.58-7(b)(2)(iv) with respect to the attribution of certain interest deductions to foreign sources in cases involving the excess investment interest item of tax preference.

(ii) ***Net operating loss.*** Where there is an overall net operating loss for the taxable year, to the extent that the lesser of the amounts determined under (*a*) or (*b*) of subdivision (i) of this subparagraph exceeds the taxpayer's taxable income from sources within the United States (and, therefore do not offset taxable income from sources within the United States for the taxable year) the amount of such excess is treated as "suspense preferences." Suspense preferences are converted to actual items of tax preference, arising in the loss year and subject to the provisions of section 56, as the net operating loss is used in other taxable years, in the form of a net operating loss deduction under section 172, to offset taxable income from sources within the United States. Suspense preferences which, in other taxable years, reduce taxable income from sources within any foreign country or possession of the United States lose their character as suspense preferences and, thus, are never converted into actual items of tax preference. The amount of the suspense preferences which are converted into actual items of tax preference is equal to that portion of the net operating loss attributable to the suspense preferences which offset taxable income from sources within the United States in taxable years other than the loss year. The determination of the component parts of the net operating loss and the determination of the amount by which the portion of the net operating loss attributable to suspense preferences offsets taxable income from sources within the United States is made on a year-by-year basis in the same order as the net operating loss is used in accordance with section 172(b). Such determination is made by applying deductions attributable to U.S. source income first against such income and deductions attributable to foreign source income first against such foreign source income and in accordance with the following principles:

(*a*) Deductions attributable to items or classes of gross income from sources within the United States offset taxable income from sources within the United States before any remaining portion of the net operating loss;

(*b*) Deductions attributable to items or classes of gross income from sources within foreign countries or possessions of the United States offset taxable income from such sources before any remaining portion of the net operating loss;

(*c*) Deductions described in (*b*) of the subdivision (ii) which are not suspense preferences (referred to in this subparagraph as "other foreign deductions") offset taxable income from sources within foreign countries and possessions of the United States before suspense preferences; and

(*d*) Suspense preferences offset taxable income from sources within the United States before other foreign deductions.

For purposes of the above computations, taxable income is computed with the modifications specified in section 172(b)(2) or section 172(c), whichever is applicable. However, the amount of suspense preferences which are converted into actual items of tax preference in accordance with the above principles is reduced to the extent suspense preferences offset increases in taxable income from sources within the United States due to the modifications specified in section 172(b)(2) or section 172(c). For this purpose, suspense preferences are considered to offset an increase in taxable income due to the section 172(b)(2) modifications only after reducing taxable income computed before the section 172(b)(2) or section 172(c) modifications.

(iii) ***Examples.*** The principles of this subparagraph may be illustrated by the following examples. In each example the taxpayer is an individual citizen of the United States and has elected the overall foreign tax credit limitation. Personal deductions and exemptions are disregarded for purposes of these examples.

Example 1. In 1974, the taxpayer has the following items of income and deduction:

United States taxable income:			
Gross income		$750,000	
Deductions		(250,000)	$500,000
Foreign source loss:			
Gross income		200,000	
Deductions:			
Preference items (excess of percentage depletion over basis)	$550,000		
Other	50,000	(600,000)	(400,000)
Overall taxable income			100,000

Pursuant to subdivision (i) of this subparagraph the smallest of (a) the items of tax preference attributable to the foreign sources ($550,000), (b) the foreign source loss ($400,000), or (c) the taxable income from sources within the United States ($500,000) reduces the tax imposed by chapter 1 (other than the minimum tax) on income from sources within the United States. Thus, $400,000 of the $550,000 of excess depletion is treated as an item of tax preference in 1974 subject to the minimum tax.

Example 2. Assume the same facts as in example (1) except that the gross income from sources within the United States is $350,000 resulting in U.S. taxable income of $100,000 and an overall net operating loss of $300,000. Pursuant to subdivision (i) of this subparagraph, $100,000 of the $550,000 excess depletion would be treated as an item of tax preference in 1974 subject to the minimum tax. In addition, pursuant to subdivision (ii) of this subparagraph, the excess of the items of tax preference from foreign sources ($550,000) or the foreign source loss ($400,000), whichever is less, over the U.S. taxable income ($100,000), or, in this example, $300,000, is treated as suspense preferences.

(a) If, in 1971, the taxpayer's total items of income and deduction result in $350,000 of taxable income all of which is from sources within the United States, the entire $300,000 net operating loss, all of which is attributable to suspense preferences, is used to offset

U.S. taxable income. Accordingly, the full $300,000 of suspense preferences are converted into actual items of tax preference arising in 1974 and are subject to tax under section 56.

(b) If the $350,000 in 1971 is modified taxable income resulting from the denial of a section 1202 capital gains deduction of $175,000 by reason of section 172(b)(2), the $300,000, otherwise treated as actual items of tax preference, is reduced by $125,000, *i.e.*, the extent to which the suspense preferences offset U.S. taxable income attributable to the increase in taxable income resulting from the denial of the section 1202 deduction.

Example 3. In 1974, the taxpayer has the following items of income and deduction:

United States loss:			
Gross income		$75,000	
Deductions		(225,000)	
			($150,000)
Foreign loss:			
Gross income		400,000	
Deductions:			
Preference items (excess of accelerated depreciation on sec. 1250 property over straight-line amount)	$200,000		
Other	550,000	(750,000)	(350,000)
Overall net operating loss			(500,000)

Since the nonpreference deductions reduce the foreign source income before the preference portion, the $350,000 foreign source loss consists of $200,000 of suspense preferences and $150,000 of other deductions. In 1971, 1972, and 1973 the taxpayer had taxable income from sources within the United States of $100,000, $200,000, and $300,000, respectively and taxable income from sources within foreign countries of

$80,000 each year. Of the $200,000 of suspense preferences, $150,000 are converted into actual items of tax preference, subject to the minimum tax in 1974, determined as follows:

[IN THOUSANDS OF DOLLARS]

Year—Explanation	Taxable income		U.S. deductions	Foreign deductions	
	U.S. source	Foreign source		Suspense preferences	Other
1971 End of year balance before section 58(g) computations	100	80	150	200	150
1. U.S. deductions against U.S. income	(100)		(100)		
2. Other foreign deductions against foreign income		(80)			(80)
1972 End of year balance before section 58(g) computations	200	80	50	200	70
1. U.S. deductions against U.S. income	(50)		(50)		
2. Other foreign deductions against foreign income		(70)			(70)
3. Suspense preferences against foreign income		(10)		(10)	
4. Suspense preferences against U.S. income	*(150)			*(150)	
1973 End of year balance before section 58(g) computations	300	80		40	
1. U.S. deductions against U.S. income			Not applicable		
2. Other foreign deductions against foreign income			Not applicable		
3. Suspense preference against foreign income		(40)		(40)	
4. Suspense preferences against U.S. income			Not applicable		

**Suspense preferences converted to actual items of tax preference.*

Year—Explanation	Taxable income		U.S. deductions	Foreign deductions	
	U.S. source	Foreign source		Suspense preferences	Other
Balances	300	40			

**Suspense preferences converted to actual items of tax preference.*

Example 4. In 1970, the taxpayer's total items of income and deduction, all of which are attributable to foreign sources, are as follows:

Foreign loss:		
Gross income		$400,000
Deductions:		
Preferences (excess of accelerated depreciation on section 1250 property over straight-line)	$200,000	
Net operating loss		350,000

Pursuant to subdivision (i) of this subparagraph, none of the preferences attributable to foreign sources reduce the tax imposed by chapter 1 (other than the minimum tax) on taxable income from sources within the United States. Pursuant to subdivision (ii) of this subparagraph, the $200,000 portion of the net operating loss resulting from the excess accelerated depreciation constitutes suspense preferences. No part of the net operating loss that is carried back to previous years is reduced in such previous years. In 1971 and 1972, the taxpayer's income (before the net operating loss deduction) consists of the following:

1971 taxable income:	
United States	$160,000
Foreign	70,000
Total	230,000
1972 taxable income:	
United States	25,000
Foreign	105,000

Total	130,000

(a) In 1971, the conversion of suspense preferences into actual items of tax preference under section 58(g) (and this paragraph) and the imposition of the minimum tax on 1970 items of tax preference under section 56(b) and (§ 1.56A-2) are determined as follows: Conversion of suspense preferences:

1970 Net Operating Loss
[In thousands of dollars]

	U.S. taxable income	Foreign taxable income	U.S. deductions	Suspense preferences	Other foreign deductions
	$160	$70		$200	$150
1. U.S. deductions against U.S. income			Not applicable		
2. Other foreign deductions against foreign income		70			(70)
3. Suspense preference against foreign income			Not applicable		
4. Suspense preference against U.S. income	*(160)			(160)	

**Suspense preferences converted into actual items of tax preference.*

	U.S. taxable income	Foreign taxable income	U.S. deductions	Suspense preferences	Other foreign deductions
Balance to 1972				40	80

**Suspense preferences converted into actual items of tax preference.*

Imposition of minimum tax on 1970 items of tax preference:

1970 Net Operating Loss
[In thousands of dollars]

	1971 taxable income	Nonpreference portion	Preference portion	Suspense portion
	$230	$150		$200
1. 1971 conversion of suspense preferences pursuant to sec. 58(g)		[1] 30	$130	(160)
Adjusted NOL		180	130	40
2. Nonpreference portion against taxable income	(180)	(180)		
3. Preference portion against taxable income	[2] (50)		(50)	
Balance to 1972			80	40

[1] Represents the 1970 minimum tax exemption.

[2] Imposition of 1970 minimum tax (10 pct × $50,000 = $5,000).

(b) In 1972, the conversion of suspense preferences into actual items of tax preferences under section 58(g) (and this paragraph) and the imposition of the minimum tax on 1970 items of tax preference under section 56(b) (and § 1.56A-2) are determined as follows:

Conversion of suspense preferences:

1970 Net Operating Loss
[In thousands of dollars]

	U.S. taxable income	Foreign taxable income	U.S. deductions	Suspense preferences	Other foreign deductions
	$25	$105		$40	$80
1. U.S. deduction against U.S. income			Not applicable		
2. Other foreign deductions against foreign income		(80)			(80)
3. Suspense preferences against foreign income		(25)		(25)	
4. Suspense preference against U.S. income	[1] (15)			(15)	
Balance	10				

[1] *Suspense preferences converted into actual items of tax preference.*

Imposition of minimum tax on 1970 items of tax preference:

1970 Net Operating Loss
[In thousands of dollars]

	1972 taxable income	Nonpreference portion	Preference portion	Suspense portion
	$130		$80	$40
1. 1972 conversion of suspense preferences pursuant to sec. 58(g)		$25	15	(40)
Adjusted NOL		25	95	

[1] *Imposition of 1970 minimum tax (10 pct × $95,000 = $9,500).*

	1972 taxable income	Nonpreference portion	Preference portion	Suspense portion
2. Nonpreference portion against taxable income	(25)	(25)		
3. Preference portion against taxable income	[1] (95)		(95)	
Balance	10			

[1] *Imposition of 1970 minimum tax (10 pct × $95,000 = $9,500).*

(2) ***Per-country limitation*** —

(i) ***In general.*** If a taxpayer is on the per-country foreign tax credit limitation for the taxable year, the amount by which the items of tax preference to which this section applies reduce the tax imposed by chapter 1 (other than the minimum tax under section 56) on income from sources within the United States is determined separately with respect to each foreign country or possession of the United States. Such determination is made in a manner consistent with subparagraph (1) of this paragraph as modified in subdivision (ii) of this subparagraph. In applying subparagraph (1)(i) of this paragraph to a taxpayer on the per-country limitation, if the total potential preference amounts (as defined in this subdivision (i)) exceed the taxpayer's taxable income from sources within the United States, then, for purposes of subparagraph (1)(i)(*c*) of this paragraph (relating to the U.S. taxable income limitation on the amount treated as a reduction of U.S. taxable income), the taxable income from sources within the United States which is reduced by potential preference amounts with respect to each foreign country or possession is an amount which bears the same relationship to such income as the potential preference amount with respect to such foreign country or possession bears to the total of the potential preference amounts with respect to all foreign countries and possessions. For purposes of this subparagraph, the potential preference amount with respect to a foreign country or possession is the lesser of the amount of foreign source preference (described in subparagraph (1)(i)(*a*) of this paragraph) attributable to such country or possession or the amount of foreign source loss (described in subparagraph (1)(i)(*b*) of this paragraph) attributable to such country or possession.

(ii) ***Net operating loss.*** Where there is an overall net operating loss for the taxable year and the total of the potential preference amounts with respect to all foreign countries and possessions exceeds the taxpayer's taxable income from sources within the United States, the amount of such excess is treated as “suspense preferences”. The suspense preferences are converted into actual items of tax preference, arising in the loss year and subject to the provisions of section 56, as the net operating loss is used in other taxable years, in the form of a net operating loss deduction under section 172, to offset taxable income from sources within the United States. Suspense preferences attributable to a foreign country or possession which, in other taxable years, reduce taxable income from sources within such country or possession or offset taxable income from sources within any other foreign country or possession lose their character as suspense preferences and, thus, are never converted into actual items of tax preference. The amount of the suspense preferences which are converted into actual items of

tax preference is equal to that portion of the net operating loss attributable to the suspense preferences which offsets taxable income from sources within the United States in taxable years other than the loss year. The determination of the component parts of the net operating loss and the determination of the amount by which the portion of the net operating loss attributable to the suspense preferences offsets taxable income from sources within the United States is made on a year-by-year basis in the same order as the net operating loss is used in accordance with section 172(b). Such determination is made by applying deductions attributable to United States source income first against such income and applying deductions attributable to income from sources within a foreign country or possession of the United States first against income from sources within such country or possession and in accordance with the following principles:

(*a*) Deductions attributable to items or classes of gross income from sources within the United States offset taxable income from sources within the United States before any remaining deductions;

(*b*) Deductions attributable to items or classes of gross income from sources within any foreign country or possession of the United States which are not suspense preferences (referred to in this paragraph as “other foreign deductions”) offset taxable income from sources within such country or possession before any remaining deductions;

(*c*) Suspense preferences attributable to items or classes of gross income from sources within a foreign country or possession offset any remaining taxable income from sources within such foreign country or possession after application of (*b*) of this subdivision (ii) before any remaining deductions;

(*d*) Suspense preferences from each foreign country and possession (remaining after application of (*c*) of this subdivision (ii)) offset taxable income from sources within the Unted States (remaining after application of (*a*) of this subdivision (ii)) before other foreign deductions pro rata on the basis of the total of such suspense preferences;

(*e*) Other foreign deductions from each foreign country and possession (remaining after application of (*b*) of this subdivision (ii)) offset taxable income from sources within the United States (remaining after application (*a*) and (*b*) of this subdivision (ii)) pro rata on the basis of the total of such other foreign deductions;

(*f*) Deductions attributable to income from sources within the United States (remaining after application of (*a*) of this subdivision (ii)) offset taxable income from sources within any foreign country or possession before any foreign deductions;

(*g*) Other foreign deductions from each foreign country and possession (remaining after application of (*b*) and (*e*) of this subdivision (ii)) offset taxable income from sources within any other foreign countries or possessions (remaining after application of (*f*) of this subdivision (ii)) pro rata on the basis of the total of such other foreign deductions; and

(*h*) Suspense preferences (remaining after the application of (*c*) and (*d*) of this subdivision (ii)) offset taxable income from sources within any foreign country or possession (remaining after the application of paragraphs (*f*) and (*g*) of this subdivision (ii)) pro rata on the basis of the total of such suspense preferences.

For purposes of the above computations, taxable income is computed with the modifications specifed in section 172(b)(2) or section 172(c), whichever is applicable. However, the amount of suspense preferences which are converted into actual items of tax preference in accordance with the above principles is reduced to the extent the suspense preferences offset increases in taxable income from sources within the United States due to the modifications specified in section 172(b)(2) or section 172(c). For this purpose, suspense preferences are considered to offset an increase in taxable income due to section 172(b)(2) or section 172(c) modifications only after reducing taxable income computed before such modifications.

(iii) ***Examples.*** The principles of this subparagraph may be illustrated by the following examples in each of which the per-country foreign tax credit limitation is applicable. For purposes of these examples, personal deductions and exemptions are disregarded.

Example (1). The taxpayer has the following items of income and deduction for the taxable year 1971:

	United States	France	Germany	United Kingdom
Gross income	$180,000	$165,000	$50,000	$75,000
Deductions:				
Preference				(45,000)
Other	(120,000)	(125,000)	(80,000)	(100,000)
Taxable income (or loss)	60,000	40,000	(30,000)	(70,000)

(a) Pursuant to subdivision (i) of this subparagraph, the potential preference amount in the case of the United Kingdom is the lesser of the preferences attributable to the United Kingdom ($45,000) or the excess of deductions over gross income from sources within the United Kingdom ($70,000) and the potential preference amounts in the case of France and Germany are zero in both cases since the preferences attributable to both countries are zero. Since the total potential preference amounts ($45,000) is less than the taxable income from sources within the United States ($60,000), no modification of U.S. taxable income is required. Thus, the amount by which the U.K. preferences reduce the tax on taxable income from sources within the United States, determined in a manner consistent with subparagraph (1)(i) of this paragraph, is the smallest of (1) the items of tax preference attributable to the United Kingdom ($45,000), (2) the excess of deductions over gross income attributable to the United Kingdom ($70,000), or (3) taxable income from sources within the United States ($60,000). The full $45,000 of U.K. preference items are, therefore, taken into account as items of tax preference in 1971 and subject to the minimum tax. Since there is no net operating loss, subdivision (ii) of this subparagraph does not apply.

(b) If the French taxable income is $15,000 instead of $40,000, a $25,000 net operating loss (on a worldwide basis) results. The determination of the foreign preference items taken into account pursuant to subdivision (i) of this subparagraph is the same as in (a) of this example. Subdivision (ii) of this subparagraph again does not apply since the total potential preference amounts ($45,000) is less than the U.S. taxable income ($60,000).

Example 2. For the taxable year 1972, the taxpayer has a net operating loss of $35,000 consisting of the following items of income and deduction:

	United States	France	Germany	United Kingdom	Belgium
Gross income	$250,000	$50,000	$60,000	$5,000	$45,000
Deductions:					
Preferences		(35,000)	(70,000)	(95,000)	
Other	(100,000)	(75,000)	(30,000)		(40,000)
Taxable income (or loss)	150,000	(60,000)	(40,000)	(90,000)	5,000

(a) Pursuant to subdivision (i) of this subparagraph the potential preference amount with respect to each country is the lesser of the amount shown as preferences with respect to such country or the amount of the loss from such country. Thus, the potential preference amounts in this case are:

France	$35,000
Germany	40,000
United Kingdom	90,000
Belgium	0

Total	165,000

Since the total of the potential preference amounts exceeds the U.S. taxable income, in applying the principles of subparagraph (1)(i) of this paragraph, U.S. taxable income which is reduced by potential preference amounts with respect to each country is a pro-rata amount based on the total potential preference amounts as follows:

France	(35,000 / 165,000 × $150,000)—$31,818
Germany	(40,000 / 165,000 × $150,000)—$36,364
United Kingdom	(90,000 / 165,000 × $150,000)—$81,818
Belgium	(0 / 165,000 × $150,000)—$0
Total	$150,000

The amount by which the foreign preference items offset U.S. taxable income pursuant to subdivision (i) of this subparagraph is then determined as follows:

	(a)	(b)	(c)	(d)
	Preferences	**Loss**	**U.S. taxable income**	**Smallest of (a), (b), or (c)**
France	$35,000	$60,000	$81,818	$31,818
Germany	70,000	40,000	36,364	36,364
United Kingdom	95,000	90,000	81,818	81,818
Belgium				
Total				150,000

Thus, $150,000 of the total foreign preference items will be taken into account pursuant to subdivision (i) of this subparagraph as items of tax preference in 1972 and subject to the provisions of section 56.

(b) Pursuant to subdivision (ii) of this subparagraph, the 1972 net operating loss of $35,000 will consist of suspense preferences of $15,000 and other foreign deductions of $20,000 attributable to each foreign country as shown below and determined as follows:

Explanation	Deductions						
	United States	France		Germany		United Kingdom preferences	Belgium other
		Preferences	Other	Preferences	Other		
	$100,000	$35,000	$75,000	$70,000	$30,000	$95,000	$40,000
1. U.S. deductions against U.S. income ($250,000)	(100,000)						
2. Other foreign deductions against foreign income (per-country) [1]			(50,000)		(30,000)		(40,000)
3. Suspense preferences against remaining foreign income (per-country)				(30,000)		(5,000)	
4. Suspense preferences against remaining U.S. income:							
France (35,000 / 165,000 × $150,000)		(31,818)					
Germany (40,000 / 165,000 × $150,000)				(36,364)			
U.K. (90,000 / 165,000 × $150,000)						(81,818)	
5. Other foreign deductions against remaining U.S. income (0)	([2])	([2])	([2])	([2])	([2])	([2])	([2])
6. U.S. deductions against other foreign income	([2])	([2])	([2])	([2])	([2])	([2])	([2])
7. Other foreign deductions against remaining foreign income ($5,000)			(5,000)				
8. Suspense preferences against remaining foreign income (0):	([2])	([2])	([2])	([2])	([2])	([2])	([2])
Balance (components of NOL)		3,182	20,000	3,636		8,182	

[1] *Foreign income amounts before step 2 are: France—$50,000; Germany—$60,000; United Kingdom—$5,000; Belgium—$45,000.*

[2] *Not applicable.*

Example 3. In 1973, the taxpayer has taxable income (computed without regard to the net operating loss deduction) from the following sources and in the following amounts:

United States	France	Germany	United Kingdom
$100,000	$60,000	$20,000	$30,000

In addition, the taxpayer has a net operating loss deduction of $235,000 resulting from a 1972 net operating loss consisting of the following amounts:

Deductions attributable to income from sources within the United States	$25,000
Suspense preferences attributable to income from sources within France	$75,000
Deductions other than suspense preferences attributable to income from sources within France	$85,000
Deductions other than suspense preferences attributable to sources within the Netherlands	$50,000

(*a*) Pursuant to subdivision (ii) of this subparagraph, the converted suspense preferences and the remaining portions of the 1972 net operating loss carried over to 1974 are computed as follows:

[IN THOUSANDS OF DOLLARS]

	1973 income				1972 net operating loss			
	United States	France	Germany	United Kingdom	United States	French suspense preferences	French other deductions	Dutch other deductions
	100	60	20	30	25	75	85	50
U.S. deductions against U.S. income	(25)				(25)			
Other foreign deductions against foreign income (per-country)		(60)					(60)	
Suspense preferences against remaining foreign income (per-country)	([2])	([2])	([2])	([2])	([2])	([2])	([2])	([2])
Suspense preferences against remaining U.S. income	([1] 75)					(75)		
Other foreign deductions against remaining U.S. income	([2])	([2])	([2])	([2])	([2])	([2])	([2])	([2])
U.S. deductions against remaining foreign income	([2])	([2])	([2])	([2])	([2])	([2])	([2])	([2])
Other foreign deductions against remaining foreign income:								
French (25,000/75,000 × $50,000)			(16.7)				(16.7)	
Dutch (50,000/75,000 × $50,000)			(33.3)					(33.3)
Suspense preferences against remaining foreign income	([2])	([2])	([2])	([2])	([2])	([2])	([2])	([2])
Balance (1972 carryover to 1974)							8.3	16.7

[1] *Suspense preferences converted to actual items of tax preference.*

[2] *Not applicable.*

> (*b*) If, in 1972, there had been no items of tax preference without regard to the suspense preferences, the conversion of the suspense preferences in 1973 would result in a 1972 minimum tax liability under section 56(a) of $4,500 (10 percent × ($75,000−$30,000)), all of which would have been deferred by reason of section 56(b). Further, by application of section 56(b) and § 1.56A-2, $20,000 of the $45,000 preference portion of the 1972 net operating loss would be treated as having reduced taxable income in 1973 resulting in the imposition in 1973 of $2,000 of the deferred 1972 minimum tax liability.

(3) ***Separate limitation under section 904(f).*** In the case of a taxpayer subject to the separate limitation on interest income under section 904(f), the provisions of this paragraph shall be applied in the same manner as in subparagraph (2) of this paragraph. If the taxpayer has elected the overall foreign tax credit limitation, subparagraph (2) of this paragraph shall be applied as if all income from sources within any foreign countries or possessions of the United States and deductions relating to income from such sources other than income or deductions subject to the separate limitation under section 904(f) were from a single foreign country.

(4) ***Carryover of excess taxes.*** For rules relating to carryover of excess taxes described in paragraph (1) of section 56(c) when suspense preferences are converted to actual items of tax preference, see § 1.56A-5(f).

(5) ***Character of amounts.*** Where the amounts from sources within a foreign country or possession of the United States (or all such countries or possessions in the case of a taxpayer who has elected the overall foreign tax credit limitation) which are treated as reducing chapter 1 tax on income from sources within the United States or as suspense preferences are less than the total items of tax preference described in subparagraph (1)(i)(*a*) of this paragraph attributable to such sources, the amounts so treated are considered derived proportionately from each such item of tax preference.

[T.D. 7564, 43 FR 40484, Sept. 12, 1978, as amended by T.D. 8138, 52 FR 15309, Apr. 28, 1987]

§ 1.58-8 Capital gains and stock options.

(a) ***In general.*** Section 58(g)(2) provides that the items of tax preference specified in section 57(a)(6), and § 1.57-1(b) (stock options), and section 57(a)(9), and § 1.57-1(i) (capital gains), which are attributable to sources within any foreign country or possession of the United States shall not be taken into account as items of tax preference if, under the tax laws of such country or possession, preferential treatment is not accorded:

(1) In the case of stock options, to the gain, profit, or other income realized from the transfer of shares of stock pursuant to the exercise of an option which is under United States tax law a qualified or restricted stock option (under section 422 or section 424); and

(2) In the case of capital gains, to gain from the sale or exchange of capital assets (or property treated as capital assets under United States tax law).

Where capital gains are not accorded preferential treatment within a foreign country, capital losses as well as capital gains from such country are not taken into account for purposes of the minimum tax.

(b) ***Source of capital gains and stock options.*** Generally, in determining whether the capital gain or stock option item of tax preference is attributable to sources within any foreign country or possession of the United States, the principles of sections 861-863 and the regulations thereunder are applied. Thus, the stock option item of tax preference, representing compensation for personal services, is attributable, in accordance with § 1.861-4, to sources within the country in which the personal services were performed. Where the capital gain item of tax preference represents gain from the purchase and sale of personal property, such gain is attributable, in accordance with § 1.861-7, entirely to sources within the country in which the property is sold. In accordance with paragraph (c) of § 1.861-7, in any case in which the sales transaction is arranged in a particular manner for the primary purpose of tax avoidance, all factors of the transaction, such as negotiations, the execution of the agreement, the location of the property, and the place of payment, will be considered, and the sale will be treated as having been consummated at the place where the substance of the sale occurred.

(c) ***Preferential treatment.*** For purposes of this section, gain, profit, or other income is accorded preferential treatment by a foreign country or possession of the United States if

(1) recognition of the income, for foreign tax purposes, is deferred beyond the taxpayer's taxable year or comparable period for foreign tax purposes which coincides with the taxpayer's U.S. taxable year in cases where other items of profit, gain, or other income may not be deferred;

(2) it is subject to tax at a lower effective rate (including no rate of tax) than other items of profit, gain, or other income, by means of a special rate of tax, artifical deductions, exemptions, exclusions, or similar reductions in the amount subject to tax;

(3) it is subject to no significant amount of tax; or

(4) the laws of the foreign country or possession by any other method provide tax treatment for such profit, gain, or other income more beneficial than the tax treatment otherwise accorded income by such country or possession. For the purpose of the preceding sentence, gain, profit, or other income is subject to no significant amount of tax if the amount of taxes imposed by the foreign country or possession of the United States is equal to less than 2.5 percent of the gross amount of such income.

(d) ***Examples.*** The principles of this section may be illustrated by the following examples:

Example 1. The Bahamas imposes no income tax on individuals or corporations, whether resident or nonresident. Since capital gains are subject to no tax in the Bahamas, capital gains are considered to be accorded preferential treatment and will be taken into account for purposes of the minimum tax.

Example 2. In France, except in certain cases involving the sale of large blocks of stock, a nonresident individual is not subject to tax on isolated capital gains transactions. Since such capital gains are not subject to tax in France, they are considered to be accorded preferential treatment irrespective of the treatment accorded other capital gains in France and such gains will be taken into account for purposes of the minimum tax.

Example 3. In Germany, in the case of the sale within 1 taxable year of 1 percent or more of the shares of a corporation in which an individual taxpayer is regarded as holding a substantial interest, the gains on the sale of the large block of stock will be taxed as extraordinary income at one-half the ordinary income tax rate. Since these gains are taxed as a reduced rate of tax in comparison to other income, they are considered to be accorded preferential treatment and will be taken into account for purposes of the minimum tax.

Example 4. In Belgium, gains derived by an individual in the course of regular speculative transactions are taxed as ordinary income, but with an upper limit of 30 percent. Rates of tax on individuals in Belgium range from approximately 30 percent to approximately 60 percent. Since the gains on speculative transactions are taxed at a maximum rate which is more beneficial then the rates accorded to other income, such gains are considered to be accorded preferential treatment and will be taken into account for purposes of the minimum tax.

Example 5. In France, gains derived by a company on the sale of fixed assets held for less than 2 years are treated as short-term gains. The excess of short-term gains in any fiscal year is taxed at the full company tax rate of 50 percent. However, this tax may be paid in equal portions over the 5 years immediately following the realization of such short-term gains. Since recognition of the short-term gains for tax purposes is subject to deferral over a 5-year period, such gains are considered to be accorded preferential treatment and will be taken into account for purposes of the minimum tax.

Example 6. Also in France, in the case of the sale or exchange by a company of depreciable assets and nondepreciable asset owned for at least 2 years, the excess of long-term capital gains over long-term capital losses in a fiscal year is subject to an immediate tax at the reduced rate of 10 percent. Such excess, reduced by the 10-percent tax, is carried in a special reserve account on the taxpayer's books. If the excess is reinvested in other fixed asset within a stated period, no further tax is due. If the amounts in the special reserve are distributed, they will be treated as ordinary income for the fiscal year in which the distribution is made. Since such gains (other than those distributed in the same fiscal year they are realized) are subject to deferral or a reduced rate of tax, they are (except to the extent distributed in the year of realization) considered to be accorded preferential treatment and are taken into account for purposes of the minimum tax.

Example 7. In Sweden, in the case of gains derived by an individual on the sale of shares or bonds held for 5 years or less, 25 percent of the gains are taxed if the holding period is 4 to 5 years, 50 percent of the gain is taxed if the holding period is 3 to 4 years, and 75 percent of the gain is taxed if the holding period is 2 to 3 years. The gain is fully taxable at ordinary income rates if held for less than 2 years. Thus, gains on shares or bonds held for 2 years or more are considered accorded preferential treatment in Sweden since they are either subject to exemption or treatment comparable to the U.S. capital gains deduction and are taxed at a reduced rate. Thus, such gains are taken into account for purposes of the minimum tax.

Example 8. Pursuant to Article XIV of the United States-United Kingdom Income Tax Convention, a resident of the United States is exempt from United Kingdom tax on most capital gains. Since such capital gains are exempt from United Kingdom taxation, they are considered to be accorded preferential treatment and are taken into account for purposes of the minimum tax.

Example 9. An individual resident of the United States, is desirous of selling his stock in a corporation listed on the New York Stock Exchange. He requests the stock certificates from his broker in the United States, travels to a foreign country, delivers the certificates to a broker in that country, and has the foreign broker execute the sale which takes place on the New York Stock Exchange. Since the sale was consummated in the United States, pursuant to paragraph (b) of this section and § 1.861-7, the resulting capital gain item of tax preference is attributable to sources within the United States.

Example 10. Two individuals, both residing in the United States, negotiate and reach agreement in New York City for the sale of stock of a closed corporation. Prior to the transfer of the stock, in order to avoid imposition of the minimum tax, both individuals travel to a foreign country which does not accord preferential treatment to capital gains, but imposes a 5-percent rate of income tax which would be fully creditable against U.S. tax under sections 901 and 904 if the capital gains were

sourced in that country. The stock is actually transferred and consideration paid in the foreign country. Since the primary purpose of consummating the sale in the foreign country was the avoidance of tax, pursuant to paragraph (b) of this section, and § 1.861-7(c), the resulting capital gain item of tax preference will be considered attributable to sources within the country in which the substance of sale took place or, in this case, the United States.

[T.D. 7564, 43 FR 40492, Sept. 12, 1978]

§ 1.59-1 Optional 10-year writeoff of certain tax preferences.

(a) ***In general.*** Section 59(e) allows any qualified expenditure to which an election under section 59(e) applies to be deducted ratably over the 10-year period (3-year period in the case of circulation expenditures described in section 173) beginning with the taxable year in which the expenditure was made (or, in the case of intangible drilling and development costs deductible under section 263(c), over the 60-month period beginning with the month in which the expenditure was paid or incurred).

(b) ***Election*** —

(1) ***Time and manner of election.*** An election under section 59(e) shall only be made by attaching a statement to the taxpayer's income tax return (or amended return) for the taxable year in which the amortization of the qualified expenditures subject to the section 59(e) election begins. The statement must be filed no later than the date prescribed by law for filing the taxpayer's original income tax return (including any extensions of time) for the taxable year in which the amortization of the qualified expenditures subject to the section 59(e) election begins. Additionally, the statement must include the following information—

(i) The taxpayer's name, address, and taxpayer identification number; and

(ii) The type and amount of qualified expenditures identified in section 59(e)(2) that the taxpayer elects to deduct ratably over the applicable period described in section 59(e)(1).

(2) ***Elected amount.*** A taxpayer may make an election under section 59(e) with respect to any portion of any qualified expenditure paid or incurred by the taxpayer in the taxable year to which the election applies. An election under section 59(e) must be for a specific dollar amount and the amount subject to an election under section 59(e) may not be made by reference to a formula. The amount elected under section 59(e) is properly chargeable to a capital account under section 1016(a)(20), relating to adjustments to basis of property.

(c) ***Revocation*** —

(1) ***In general.*** An election under section 59(e) may be revoked only with the consent of the Commissioner. Such consent will only be granted in rare and unusual circumstances. The revocation, if granted, will be effective in the first taxable year in which the section 59(e) election was applicable. However, if the period of limitations for the first taxable year the section 59(e) election was applicable has expired, the revocation, if granted, will be effective in the earliest taxable year for which the period of limitations has not expired.

(2) ***Time and manner for requesting consent.*** A taxpayer requesting the Commissioner's consent to revoke a section 59(e) election must submit the request prior to the end of the taxable year the applicable amortization period described in section 59(e)(1) ends. The application for consent to revoke the election must be submitted to the Internal Revenue Service in the form of a letter ruling request.

(3) ***Information to be provided.*** A request to revoke a section 59(e) election must contain all of the information necessary to demonstrate the rare and unusual circumstances that would justify granting revocation.

(4) ***Treatment of unamortized costs.*** The unamortized balance of the qualified expenditures subject to the revoked section 59(e) election as of the first day of the taxable year the revocation is effective is deductible in the year the revocation is effective (subject to the requirements of any other provision under the Code, regulations, or any other published guidance) and the taxpayer will be required to amend any federal income tax returns affected by the revocation.

(d) ***Effective date.*** These regulations apply to a section 59(e) election made for a taxable year ending, or a request to revoke a section 59(e) election submitted, on or after December 22, 2004.

[T.D. 9168, 69 FR 76616, Dec. 22, 2004]

§ 1.59A-0 Table of contents.

This section contains a listing of the headings for §§ 1.59A-1, 1.59A-2, 1.59A-3, 1.59A-4, 1.59A-5, 1.59A-6, 1.59A-7, 1.59A-8, 1.59A-9, and 1.59A-10.

§ 1.59A-1 Base erosion and anti-abuse tax.

(a) Purpose.

(b) Definitions.

(1) Aggregate group.

(2) Applicable section 38 credits.

(3) Applicable taxpayer.

(4) Bank.

(5) Base erosion and anti-abuse tax rate.

(6) Business interest expense.

(7) Deduction.

(8) Disallowed business interest expense carryforward.

(9) Domestic related business interest expense.

(10) Foreign person.

(11) Foreign related business interest expense.

(12) Foreign related party.

(13) Gross receipts.

(14) Member of an aggregate group.

(15) Registered securities dealer.

(16) Regular tax liability.

(17) Related party.

(i) In general.

(ii) 25-percent owner.

(iii) Application of section 318.

(18) TLAC long-term debt required amount.

(19) TLAC securities amount.

(20) TLAC security.

(21) Unrelated business interest expense.

§ 1.59A-2 Applicable taxpayer.

(a) Scope.

(b) Applicable taxpayer.

(c) Aggregation rules.

(1) In general.

(2) Aggregate group determined with respect to each taxpayer.

(i) In general.

(ii) Change in the composition of an aggregate group.

(3) Taxable year of members of an aggregate group.

(4) Periods before and after a corporation is a member of an aggregate group.

(i) In general.

(ii) Deemed taxable year-end.

(iii) Items allocable to deemed taxable years before and after deemed taxable year-end.

(5) Short taxable year.

(i) Short period of the taxpayer.

(A) In general.

(B) Determining the gross receipts and base erosion percentage of the aggregate group of a taxpayer for a short period.

(ii) Short period of a member of the taxpayer's aggregate group.

(A) Multiple taxable years of a member of the taxpayer's aggregate group comprised of more than 12 months.

(B) Short period or periods of a member of the taxpayer's aggregate group comprised of fewer than 12 months from change in taxable year.

(iii) Anti-abuse rule.

(6) Treatment of predecessors.

(i) In general.

(ii) No duplication.

(7) Partnerships.

(8) Transition rule for aggregate group members with different taxable years.

(9) Consolidated groups.

(d) Gross receipts test.

(1) Amount of gross receipts.

(2) Taxpayer not in existence for entire three-year period.

(3) Gross receipts of foreign corporations.

(4) Gross receipts of an insurance company.

(5) Reductions in gross receipts.

(e) Base erosion percentage test.

(1) In general.

(2) Base erosion percentage test for banks and registered securities dealers.

(i) In general.

(ii) Aggregate groups.

(iii) De minimis exception for banking and registered securities dealer activities.

(3) Computation of base erosion percentage.

(i) In general.

(ii) Certain items not taken into account in denominator.

(iii) Effect of treaties on base erosion percentage determination.

(iv) Amounts paid or accrued between members of a consolidated group.

(v) Deductions and base erosion tax benefits from partnerships.

(vi) Mark-to-market positions.

(vii) Reinsurance losses incurred and claims payments.

(viii) Certain payments that qualify for the effectively connected income exception and another base erosion payment exception.

(f) Examples.

(1) Example 1: Mark-to-market.

(i) Facts.

(ii) Analysis.

(2) Example 2: Member leaving an aggregate group.

(i) Facts.

(ii) Analysis.

§ 1.59A-3 Base erosion payments and base erosion tax benefits.

(a) Scope.

(b) Base erosion payments.

(1) In general.

(2) Operating rules.

(i) In general.

(ii) Amounts paid or accrued in cash and other consideration.

(iii) Transactions providing for net payments.

(iv) Amounts paid or accrued with respect to mark-to-market position.

(v) Coordination among categories of base erosion payments.

(vi) Certain domestic passthrough entities.

(A) In general.

(B) Amount of base erosion payment.

(C) Specified domestic passthrough.

(D) Specified foreign related party.

(vii) Transfers of property to related taxpayers.

(viii) Reductions to determine gross income.

(ix) Losses recognized on the sale or transfer of property.

(3) Exceptions to base erosion payment.

(i) Certain services cost method amounts.

(A) In general.

(B) Eligibility for the services cost method exception.

(C) Adequate books and records.

(D) Total services cost.

(ii) Qualified derivative payments.

(iii) Effectively connected income.

(A) In general.

(B) Application to certain treaty residents.

(C) Application to partnerships.

(iv) Exchange loss on a section 988 transaction.

(v) Amounts paid or accrued with respect to TLAC securities and foreign TLAC securities.

(A) In general.

(B) Limitation on exclusion for TLAC securities.

(C) Scaling ratio.

(D) Average domestic TLAC securities amount.

(E) Average TLAC long-term debt required amount.

(F) Limitation on exclusion for foreign TLAC securities.

(*1*) In general.

(*2*) Foreign TLAC long-term debt required amount.

(*3*) No specified minimum provided by local law.

(*4*) Foreign TLAC security.

(vi) Amounts paid or accrued in taxable years beginning before January 1, 2018.

(vii) Business interest carried forward from taxable years beginning before January 1, 2018.

(viii) Specified nonrecognition transactions.

(A) In general.

(B) Other property transferred to a foreign related party in a specified nonrecognition transaction.

(C) Other property received from a foreign related party in certain specified nonrecognition transactions.

(D) Definition of other property.

(E) Allocation of other property.

(ix) Reinsurance losses incurred and claims payments.

(A) In general.

(B) Regulated foreign insurance company.

(4) Rules for determining the amount of certain base erosion payments.

(i) Interest expense allocable to a foreign corporation's effectively connected income.

(A) Methods described in § 1.882-5.

(B) U.S.-booked liabilities determination.

(C) U.S.-booked liabilities in excess of U.S.-connected liabilities.

(D) Election to use financial statements.

(E) Coordination with certain tax treaties.

(*1*) In general.

(*2*) Hypothetical § 1.882-5 interest expense defined.

(*3*) Consistency requirement.

(F) Coordination with exception for foreign TLAC securities.

(ii) Other deductions allowed with respect to effectively connected income.

(iii) Depreciable property.

(iv) Coordination with ECI exception.

(v) Coordination with certain tax treaties.

(A) Allocable expenses.

(B) Internal dealings under certain income tax treaties.

(vi) Business interest expense arising in taxable years beginning after December 31, 2017.

(c) Base erosion tax benefit.

(1) In general.

(2) Exception to base erosion tax benefit.

(i) In general.

(ii) Branch-level interest tax.

(3) Effect of treaty on base erosion tax benefit.

(4) Application of section 163(j) to base erosion payments.

(i) Classification of payments or accruals of business interest expense based on the payee.

(A) Classification of payments or accruals of business interest expense of a corporation.

(B) Classification of payments or accruals of business interest expense by a partnership.

(C) Classification of payments or accruals of business interest expense paid or accrued to a foreign related party that is subject to an exception.

(*1*) ECI exception.

(*2*) TLAC interest and interest subject to withholding tax.

(ii) Ordering rules for business interest expense that is limited under section 163(j)(1) to determine which classifications of business interest expense are deducted and which classifications of business interest expense are carried forward.

(A) In general.

(B) Ordering rules for treating business interest expense deduction and disallowed business interest expense carryforwards as foreign related business interest expense, domestic related business interest expense, and unrelated business interest expense.

(*1*) General ordering rule for allocating business interest expense deduction between classifications.

(*2*) Ordering of business interest expense incurred by a corporation.

(*3*) Ordering of business interest expense incurred by a partnership and allocated to a corporate partner.

(5) Allowed deduction.

(6) Election to waive allowed deductions.

(i) In general.

(ii) Time and manner for election to waive deduction.

(A) In general.

(B) Information required to make the election to waive allowed deductions.

(iii) Effect of election to waive deduction.

(A) In general.

(*1*) Consistent treatment.

(*2*) No allocation and apportionment of waived deductions.

(*3*) Effect of waiver of deductions described in §§ 1.861-10 and 1.861-10T.

(*4*) Effect of the election to waive deductions on the stock basis of a consolidated group member.

(B) Effect of the election to waive deductions disregarded for certain purposes.

(C) Not a method of accounting.

(D) Effect of the election in determining section 481(a) adjustments.

(iv) Rules applicable to partners and partnerships.

(A) In general.

(B) Rule for determining the adjusted basis of a partner's interest in a partnership.

(C) Rule for applying section 163(j).

(D) Limited application of election to waive deductions with respect to adjustments made pursuant to audit procedures under sections 6221 through 6241.

(v) Rule applicable to premium and other consideration paid or accrued by the taxpayer for any reinsurance payments that are taken into account under section 803(a)(1)(B) or 832(b)(4)(A).

(d) Examples.

(1) Example 1: Determining a base erosion payment.

(i) Facts.

(ii) Analysis.

(2) Example 2: Interest allocable under § 1.882-5.

(i) Facts.

(ii) Analysis.

(3) Example 3: Interaction with section 163(j).

(i) Facts.

(ii) Analysis.

(A) Classification of business interest.

(B) Ordering rules for disallowed business interest expense carryforward.

(4) Example 4: Interaction with section 163(j); carryforward.

(i) Facts.

(ii) Analysis.

(A) Classification of business interest.

(B) Ordering rules for disallowed business interest expense carryforward.

(5) Example 5: Interaction with section 163(j); carryforward.

(i) Facts.

(ii) Analysis.

(6) Example 6: Interaction with section 163(j); partnership.

(i) Facts.

(ii) Partnership level analysis.

(iii) Partner level allocations analysis.

(iv) Partner level allocations for determining base erosion tax benefits.

(v) Computation of modified taxable income.

(7) Example 7: Transfers of property to related taxpayers.

(i) Facts.

(ii) Analysis.

(A) Year 1.

(B) Year 2.

(8) Example 8: Effect of election to waive deduction on method of accounting.

(i) Facts.

(ii) Analysis.

(9) Example 9: Change of accounting method when taxpayer has waived a deduction.

(i) Facts.

(ii) Analysis.

(A) Computation of the section 481(a) adjustment.

(B) Computation of basis adjustments.

§ 1.59A-4 Modified taxable income.

(a) Scope.

(b) Computation of modified taxable income.

(1) In general.

(2) Modifications to taxable income.

(i) Base erosion tax benefits.

(ii) Certain net operating loss deductions.

(3) Rule for holders of a residual interest in a REMIC.

(c) Examples.

(1) Example 1: Current year loss.

(i) Facts.

(ii) Analysis.

(2) Example 2: Net operating loss deduction.

(i) Facts.

(ii) Analysis.

§ 1.59A-5 Base erosion minimum tax amount.

(a) Scope.

(b) Base erosion minimum tax amount.

(1) In general.

(2) Calculation of base erosion minimum tax amount.

(3) Credits that do not reduce regular tax liability.

(i) Taxable years beginning on or before December 31, 2025.

(ii) Taxable years beginning after December 31, 2025.

(c) Base erosion and anti-abuse tax rate.

(1) In general.

(i) Calendar year 2018.

(ii) Calendar years 2019 through 2025.

(iii) Calendar years after 2025.

(2) Increased rate for banks and registered securities dealers.

(i) In general.

(ii) De minimis exception to increased rate for banks and registered securities dealers.

(3) Application of section 15 to tax rates in section 59A.

(i) New tax.

(ii) Change in tax rate pursuant to section 59A(b)(1)(A).

(iii) Change in rate pursuant to section 59A(b)(2).

§ 1.59A-6 Qualified derivative payment.

(a) Scope.

(b) Qualified derivative payment.

(1) In general.

(2) Reporting requirements.

(i) In general.

(ii) Failure to satisfy the reporting requirement.

(iii) Reporting of aggregate amount of qualified derivative payments.

(iv) Transition period for qualified derivative payment reporting.

(3) Amount of any qualified derivative payment.

(i) In general.

(ii) Net qualified derivative payment that includes a payment that is a base erosion payment.

(c) Exceptions for payments otherwise treated as base erosion payments.

(d) Derivative defined.

(1) In general.

(2) Exceptions.

(i) Direct interest.

(ii) Insurance contracts.

(iii) Securities lending and sale-repurchase transactions.

(A) Multi-step transactions treated as financing.

(B) Special rule for payments associated with the cash collateral provided in a securities lending transaction or substantially similar transaction.

(C) Anti-abuse exception for certain transactions that are the economic equivalent of substantially unsecured cash borrowing.

(3) American depository receipts.

(e) Examples.

(1) Example 1: Notional principal contract as QDP.

(i) Facts.

(ii) Analysis.

(2) Example 2: Securities lending anti-abuse rule.

(i) Facts.

(ii) Analysis.

§ 1.59A-7 Application of base erosion and anti-abuse tax to partnerships.

(a) Scope.

(b) Application of section 59A to partnerships.

(c) Base erosion payment.

(1) Payments made by or to a partnership.

(2) Transfers of certain property.

(3) Transfers of a partnership interest.

(i) In general.

(ii) Transfers of a partnership interest by a partner.

(iii) Certain issuances of a partnership interest by a partnership.

(iv) Partnership interest transfers defined.

(4) Increased basis from a distribution.

(5) Operating rules applicable to base erosion payments.

(i) Single payment characterized as separate transactions.

(ii) Ordering rule with respect to transfers of a partnership interest.

(iii) Consideration for base erosion payment or property resulting in base erosion tax benefits.

(iv) Non-cash consideration.

(v) Allocations of income in lieu of deductions.

(d) Base erosion tax benefit for partners.

(1) In general.

(2) Exception for base erosion tax benefits of certain small partners.

(i) In general.

(ii) Attribution.

(e) Other rules for applying section 59A to partnerships.

(1) Partner's distributive share.

(2) Gross receipts.

(i) In general.

(ii) Foreign corporation.

(3) Registered securities dealers.

(4) Application of sections 163(j) and 59A(c)(3) to partners.

(5) Tiered partnerships.

(f) Foreign related party.

(g) Examples.

(1) Facts.

(2) Examples.

(i) Example 1: Contributions to a partnership on partnership formation.

(A) Facts.

(B) Analysis.

(ii) Example 2: Section 704(c) and remedial allocations.

(A) Facts.

(B) Analysis.

(iii) Example 3: Sale of a partnership interest without a section 754 election.

(A) Facts.

(B) Analysis.

(iv) Example 4: Sale of a partnership interest with section 754 election.

(A) Facts.

(B) Analysis.

(v) Example 5: Purchase of depreciable property from a partnership.

(A) Facts.

(B) Analysis.

(vi) Example 6: Sale of a partnership interest to a second partnership.

(A) Facts.

(B) Analysis.

(vii) Example 7: Distribution of cash by a partnership to a foreign related party.

(A) Facts.

(B) Analysis.

(viii) Example 8: Distribution of property by a partnership to a taxpayer.

(A) Facts.

(B) Analysis.

(ix) Example 9: Distribution of property by a partnership in liquidation of a foreign related party's interest.

(A) Facts.

(B) Analysis.

(x) Example 10: Section 704(c) and curative allocations.

(A) Facts.

(B) Analysis.

§ 1.59A-8 [Reserved].

§ 1.59A-9 Anti-abuse and recharacterization rules.

(a) Scope.

(b) Anti-abuse rules.

(1) Transactions involving unrelated persons, conduits, or intermediaries.

(2) Transactions to increase the amount of deductions taken into account in the denominator of the base erosion percentage computation.

(3) Transactions to avoid the application of rules applicable to banks and registered securities dealers.

(4) Nonrecognition transactions.

(5) Transactions involving derivatives on a partnership interest.

(6) Allocations to eliminate or reduce a base erosion payment.

(c) Examples.

(1) Facts.

(2) Example 1: Substitution of payments that are not base erosion payments for payments that otherwise would be base erosion payments through a conduit or intermediary.

(i) Facts.

(ii) Analysis.

(3) Example 2: Alternative transaction to base erosion payment.

(i) Facts.

(ii) Analysis.

(4) Example 3: Alternative financing source.

(i) Facts.

(ii) Analysis.

(5) Example 4: Alternative financing source that is a conduit.

(i) Facts.

(ii) Analysis.

(6) Example 5: Intermediary acquisition.

(i) Facts.

(ii) Analysis.

(7) Example 6: Offsetting transactions to increase the amount of deductions taken into account in the denominator of the base erosion percentage computation.

(i) Facts.

(ii) Analysis.

(8) Example 7: Ordinary course transactions that increase the amount of deductions taken into account in the denominator of the base erosion percentage computation.

(i) Facts.

(ii) Analysis.

(9) Example 8: Transactions to avoid the application of rules applicable to banks and registered securities dealers.

(i) Facts.

(ii) Analysis.

(10) Example 9: Transactions that do not avoid the application of rules applicable to banks and registered securities dealers.

(i) Facts.

(ii) Analysis.

(11) Example 10: Acquisition of depreciable property in a nonrecognition transaction.

(i) Facts.

(ii) Analysis.

(12) Example 11: Transactions between related parties with a principal purpose of increasing the adjusted basis of property.

(i) Facts.

(ii) Analysis.

§ 1.59A-10 Applicability date.

(a) General applicability date.

(b) Exception.

This section contains a listing of the headings for §§ 1.59A-1, 1.59A-2, 1.59A-3, 1.59A-4, 1.59A-5, 1.59A-6, 1.59A-7, 1.59A-8, 1.59A-9, and 1.59A-10.

§ 1.59A-1 Base erosion and anti-abuse tax.

(a) Purpose.

(b) Definitions.

(1) Aggregate group.

(2) Applicable section 38 credits.

(3) Applicable taxpayer.

(4) Bank.

(5) Base erosion and anti-abuse tax rate.

(6) Business interest expense.

(7) Deduction.

(8) Disallowed business interest expense carryforward.

(9) Domestic related business interest expense.

(10) Foreign person.

(11) Foreign related business interest expense.

(12) Foreign related party.

(13) Gross receipts.

(14) Member of an aggregate group.

(15) Registered securities dealer.

(16) Regular tax liability.

(17) Related party.

(i) In general.

(ii) 25-percent owner.

(iii) Application of section 318.

(18) TLAC long-term debt required amount.

(19) TLAC securities amount.

(20) TLAC security.

(21) Unrelated business interest expense.

§ 1.59A-2 Applicable taxpayer.

(a) Scope.

(b) Applicable taxpayer.

(c) Aggregation rules.

(1) In general.

(2) Aggregate group determined with respect to each taxpayer.

(i) In general.

(ii) Change in the composition of an aggregate group.

(3) Taxable year of members of an aggregate group.

(4) Periods before and after a corporation is a member of an aggregate group.

(i) In general.

(ii) Deemed taxable year-end.

(iii) Items allocable to deemed taxable years before and after deemed taxable year-end.

(5) Short taxable year.

(i) Short period of the taxpayer.

(A) In general.

(B) Determining the gross receipts and base erosion percentage of the aggregate group of a taxpayer for a short period.

(ii) Short period of a member of the taxpayer's aggregate group.

(A) Multiple taxable years of a member of the taxpayer's aggregate group comprised of more than 12 months.

(B) Short period or periods of a member of the taxpayer's aggregate group comprised of fewer than 12 months from change in taxable year.

(iii) Anti-abuse rule.

(6) Treatment of predecessors.

(i) In general.

(ii) No duplication.

(7) Partnerships.

(8) Transition rule for aggregate group members with different taxable years.

(9) Consolidated groups.

(d) Gross receipts test.

(1) Amount of gross receipts.

(2) Taxpayer not in existence for entire three-year period.

(3) Gross receipts of foreign corporations.

(4) Gross receipts of an insurance company.

(5) Reductions in gross receipts.

(e) Base erosion percentage test.

(1) In general.

(2) Base erosion percentage test for banks and registered securities dealers.

(i) In general.

(ii) Aggregate groups.

(iii) De minimis exception for banking and registered securities dealer activities.

(3) Computation of base erosion percentage.

(i) In general.

(ii) Certain items not taken into account in denominator.

(iii) Effect of treaties on base erosion percentage determination.

(iv) Amounts paid or accrued between members of a consolidated group.

(v) Deductions and base erosion tax benefits from partnerships.

(vi) Mark-to-market positions.

(vii) Reinsurance losses incurred and claims payments.

(viii) Certain payments that qualify for the effectively connected income exception and another base erosion payment exception.

(f) Examples.

(1) Example 1: Mark-to-market.

(i) Facts.

(ii) Analysis.

(2) Example 2: Member leaving an aggregate group.

(i) Facts.

(ii) Analysis.

§ 1.59A-3 Base erosion payments and base erosion tax benefits.

(a) Scope.

(b) Base erosion payments.

(1) In general.

(2) Operating rules.

(i) In general.

(ii) Amounts paid or accrued in cash and other consideration.

(iii) Transactions providing for net payments.

(iv) Amounts paid or accrued with respect to mark-to-market position.

(v) Coordination among categories of base erosion payments.

(vi) Certain domestic passthrough entities.

(A) In general.

(B) Amount of base erosion payment.

(C) Specified domestic passthrough.

(D) Specified foreign related party.

(vii) Transfers of property to related taxpayers.

(viii) Reductions to determine gross income.

(ix) Losses recognized on the sale or transfer of property.

(3) Exceptions to base erosion payment.

(i) Certain services cost method amounts.

(A) In general.

(B) Eligibility for the services cost method exception.

(C) Adequate books and records.

(D) Total services cost.

(ii) Qualified derivative payments.

(iii) Effectively connected income.

(A) In general.

(B) Application to certain treaty residents.

(C) Application to partnerships.

(iv) Exchange loss on a section 988 transaction.

(v) Amounts paid or accrued with respect to TLAC securities and foreign TLAC securities.

(A) In general.

(B) Limitation on exclusion for TLAC securities.

(C) Scaling ratio.

(D) Average domestic TLAC securities amount.

(E) Average TLAC long-term debt required amount.

(F) Limitation on exclusion for foreign TLAC securities.

(*1*) In general.

(*2*) Foreign TLAC long-term debt required amount.

(*3*) No specified minimum provided by local law.

(*4*) Foreign TLAC security.

(vi) Amounts paid or accrued in taxable years beginning before January 1, 2018.

(vii) Business interest carried forward from taxable years beginning before January 1, 2018.

(viii) Specified nonrecognition transactions.

(A) In general.

(B) Other property transferred to a foreign related party in a specified nonrecognition transaction.

(C) Other property received from a foreign related party in certain specified nonrecognition transactions.

(D) Definition of other property.

(E) Allocation of other property.

(ix) Reinsurance losses incurred and claims payments.

(A) In general.

(B) Regulated foreign insurance company.

(4) Rules for determining the amount of certain base erosion payments.

(i) Interest expense allocable to a foreign corporation's effectively connected income.

(A) Methods described in § 1.882-5.

(B) U.S.-booked liabilities determination.

(C) U.S.-booked liabilities in excess of U.S.-connected liabilities.

(D) Election to use financial statements.

(E) Coordination with certain tax treaties.

(*1*) In general.

(*2*) Hypothetical § 1.882-5 interest expense defined.

(*3*) Consistency requirement.

(F) Coordination with exception for foreign TLAC securities.

(ii) Other deductions allowed with respect to effectively connected income.

(iii) Depreciable property.

(iv) Coordination with ECI exception.

(v) Coordination with certain tax treaties.

(A) Allocable expenses.

(B) Internal dealings under certain income tax treaties.

(vi) Business interest expense arising in taxable years beginning after December 31, 2017.

(c) Base erosion tax benefit.

(1) In general.

(2) Exception to base erosion tax benefit.

(i) In general.

(ii) Branch-level interest tax.

(3) Effect of treaty on base erosion tax benefit.

(4) Application of section 163(j) to base erosion payments.

(i) Classification of payments or accruals of business interest expense based on the payee.

(A) Classification of payments or accruals of business interest expense of a corporation.

(B) Classification of payments or accruals of business interest expense by a partnership.

(C) Classification of payments or accruals of business interest expense paid or accrued to a foreign related party that is subject to an exception.

(*1*) ECI exception.

(*2*) TLAC interest and interest subject to withholding tax.

(ii) Ordering rules for business interest expense that is limited under section 163(j)(1) to determine which classifications of business interest expense are deducted and which classifications of business interest expense are carried forward.

(A) In general.

(B) Ordering rules for treating business interest expense deduction and disallowed business interest expense carryforwards as foreign related business interest expense, domestic related business interest expense, and unrelated business interest expense.

(*1*) General ordering rule for allocating business interest expense deduction between classifications.

(*2*) Ordering of business interest expense incurred by a corporation.

(*3*) Ordering of business interest expense incurred by a partnership and allocated to a corporate partner.

(5) Allowed deduction.

(6) Election to waive allowed deductions.

(i) In general.

(ii) Time and manner for election to waive deduction.

(A) In general.

(B) Information required to make the election to waive allowed deductions.

(iii) Effect of election to waive deduction.

(A) In general.

(*1*) Consistent treatment.

(*2*) No allocation and apportionment of waived deductions.

(*3*) Effect of waiver of deductions described in §§ 1.861-10 and 1.861-10T.

(*4*) Effect of the election to waive deductions on the stock basis of a consolidated group member.

(B) Effect of the election to waive deductions disregarded for certain purposes.

(C) Not a method of accounting.

(D) Effect of the election in determining section 481(a) adjustments.

(iv) Rules applicable to partners and partnerships.

(A) In general.

(B) Rule for determining the adjusted basis of a partner's interest in a partnership.

(C) Rule for applying section 163(j).

(D) Limited application of election to waive deductions with respect to adjustments made pursuant to audit procedures under sections 6221 through 6241.

(v) Rule applicable to premium and other consideration paid or accrued by the taxpayer for any reinsurance payments that are taken into account under section 803(a)(1)(B) or 832(b)(4)(A).

(d) Examples.

(1) Example 1: Determining a base erosion payment.

(i) Facts.

(ii) Analysis.

(2) Example 2: Interest allocable under § 1.882-5.

(i) Facts.

(ii) Analysis.

(3) Example 3: Interaction with section 163(j).

(i) Facts.

(ii) Analysis.

(A) Classification of business interest.

(B) Ordering rules for disallowed business interest expense carryforward.

(4) Example 4: Interaction with section 163(j); carryforward.

(i) Facts.

(ii) Analysis.

(A) Classification of business interest.

(B) Ordering rules for disallowed business interest expense carryforward.

(5) Example 5: Interaction with section 163(j); carryforward.

(i) Facts.

(ii) Analysis.

(6) Example 6: Interaction with section 163(j); partnership.

(i) Facts.

(ii) Partnership level analysis.

(iii) Partner level allocations analysis.

(iv) Partner level allocations for determining base erosion tax benefits.

(v) Computation of modified taxable income.

(7) Example 7: Transfers of property to related taxpayers.

(i) Facts.

(ii) Analysis.

(A) Year 1.

(B) Year 2.

(8) Example 8: Effect of election to waive deduction on method of accounting.

(i) Facts.

(ii) Analysis.

(9) Example 9: Change of accounting method when taxpayer has waived a deduction.

(i) Facts.

(ii) Analysis.

(A) Computation of the section 481(a) adjustment.

(B) Computation of basis adjustments.

§ 1.59A-4 Modified taxable income.

(a) Scope.

(b) Computation of modified taxable income.

(1) In general.

(2) Modifications to taxable income.

(i) Base erosion tax benefits.

(ii) Certain net operating loss deductions.

(3) Rule for holders of a residual interest in a REMIC.

(c) Examples.

(1) Example 1: Current year loss.

(i) Facts.

(ii) Analysis.

(2) Example 2: Net operating loss deduction.

(i) Facts.

(ii) Analysis.

§ 1.59A-5 Base erosion minimum tax amount.

(a) Scope.

(b) Base erosion minimum tax amount.

(1) In general.

(2) Calculation of base erosion minimum tax amount.

(3) Credits that do not reduce regular tax liability.

(i) Taxable years beginning on or before December 31, 2025.

(ii) Taxable years beginning after December 31, 2025.

(c) Base erosion and anti-abuse tax rate.

(1) In general.

(i) Calendar year 2018.

(ii) Calendar years 2019 through 2025.

(iii) Calendar years after 2025.

(2) Increased rate for banks and registered securities dealers.

(i) In general.

(ii) De minimis exception to increased rate for banks and registered securities dealers.

(3) Application of section 15 to tax rates in section 59A.

(i) New tax.

(ii) Change in tax rate pursuant to section 59A(b)(1)(A).

(iii) Change in rate pursuant to section 59A(b)(2).

§ 1.59A-6 Qualified derivative payment.

(a) Scope.

(b) Qualified derivative payment.

(1) In general.

(2) Reporting requirements.

(i) In general.

(ii) Failure to satisfy the reporting requirement.

(iii) Reporting of aggregate amount of qualified derivative payments.

(iv) Transition period for qualified derivative payment reporting.

(3) Amount of any qualified derivative payment.

(i) In general.

(ii) Net qualified derivative payment that includes a payment that is a base erosion payment.

(c) Exceptions for payments otherwise treated as base erosion payments.

(d) Derivative defined.

(1) In general.

(2) Exceptions.

(i) Direct interest.

(ii) Insurance contracts.

(iii) Securities lending and sale-repurchase transactions.

(A) Multi-step transactions treated as financing.

(B) Special rule for payments associated with the cash collateral provided in a securities lending transaction or substantially similar transaction.

(C) Anti-abuse exception for certain transactions that are the economic equivalent of substantially unsecured cash borrowing.

(3) American depository receipts.

(e) Examples.

(1) Example 1: Notional principal contract as QDP.

(i) Facts.

(ii) Analysis.

(2) Example 2: Securities lending anti-abuse rule.

(i) Facts.

(ii) Analysis.

§ 1.59A-7 Application of base erosion and anti-abuse tax to partnerships.

(a) Scope.

(b) Application of section 59A to partnerships.

(c) Base erosion payment.

(1) Payments made by or to a partnership.

(2) Transfers of certain property.

(3) Transfers of a partnership interest.

(i) In general.

(ii) Transfers of a partnership interest by a partner.

(iii) Certain issuances of a partnership interest by a partnership.

(iv) Partnership interest transfers defined.

(4) Increased basis from a distribution.

(5) Operating rules applicable to base erosion payments.

(i) Single payment characterized as separate transactions.

(ii) Ordering rule with respect to transfers of a partnership interest.

(iii) Consideration for base erosion payment or property resulting in base erosion tax benefits.

(iv) Non-cash consideration.

(v) Allocations of income in lieu of deductions.

(d) Base erosion tax benefit for partners.

(1) In general.

(2) Exception for base erosion tax benefits of certain small partners.

(i) In general.

(ii) Attribution.

(e) Other rules for applying section 59A to partnerships.

(1) Partner's distributive share.

(2) Gross receipts.

(i) In general.

(ii) Foreign corporation.

(3) Registered securities dealers.

(4) Application of sections 163(j) and 59A(c)(3) to partners.

(5) Tiered partnerships.

(f) Foreign related party.

(g) Examples.

(1) Facts.

(2) Examples.

(i) Example 1: Contributions to a partnership on partnership formation.

(A) Facts.

(B) Analysis.

(ii) Example 2: Section 704(c) and remedial allocations.

(A) Facts.

(B) Analysis.

(iii) Example 3: Sale of a partnership interest without a section 754 election.

(A) Facts.

(B) Analysis.

(iv) Example 4: Sale of a partnership interest with section 754 election.

(A) Facts.

(B) Analysis.

(v) Example 5: Purchase of depreciable property from a partnership.

(A) Facts.

(B) Analysis.

(vi) Example 6: Sale of a partnership interest to a second partnership.

(A) Facts.

(B) Analysis.

(vii) Example 7: Distribution of cash by a partnership to a foreign related party.

(A) Facts.

(B) Analysis.

(viii) Example 8: Distribution of property by a partnership to a taxpayer.

(A) Facts.

(B) Analysis.

(ix) Example 9: Distribution of property by a partnership in liquidation of a foreign related party's interest.

(A) Facts.

(B) Analysis.

(x) Example 10: Section 704(c) and curative allocations.

(A) Facts.

(B) Analysis.

§ 1.59A-8 [Reserved].

§ 1.59A-9 Anti-abuse and recharacterization rules.

(a) Scope.

(b) Anti-abuse rules.

(1) Transactions involving unrelated persons, conduits, or intermediaries.

(2) Transactions to increase the amount of deductions taken into account in the denominator of the base erosion percentage computation.

(3) Transactions to avoid the application of rules applicable to banks and registered securities dealers.

(4) Nonrecognition transactions.

(5) Transactions involving derivatives on a partnership interest.

(6) Allocations to eliminate or reduce a base erosion payment.

(c) Examples.

(1) Facts.

(2) Example 1: Substitution of payments that are not base erosion payments for payments that otherwise would be base erosion payments through a conduit or intermediary.

(i) Facts.

(ii) Analysis.

(3) Example 2: Alternative transaction to base erosion payment.

(i) Facts.

(ii) Analysis.

(4) Example 3: Alternative financing source.

(i) Facts.

(ii) Analysis.

(5) Example 4: Alternative financing source that is a conduit.

(i) Facts.

(ii) Analysis.

(6) Example 5: Intermediary acquisition.

(i) Facts.

(ii) Analysis.

(7) Example 6: Offsetting transactions to increase the amount of deductions taken into account in the denominator of the base erosion percentage computation.

(i) Facts.

(ii) Analysis.

(8) Example 7: Ordinary course transactions that increase the amount of deductions taken into account in the denominator of the base erosion percentage computation.

(i) Facts.

(ii) Analysis.

(9) Example 8: Transactions to avoid the application of rules applicable to banks and registered securities dealers.

(i) Facts.

(ii) Analysis.

(10) Example 9: Transactions that do not avoid the application of rules applicable to banks and registered securities dealers.

(i) Facts.

(ii) Analysis.

(11) Example 10: Acquisition of depreciable property in a nonrecognition transaction.

(i) Facts.

(ii) Analysis.

(12) Example 11: Transactions between related parties with a principal purpose of increasing the adjusted basis of property.

(i) Facts.

(ii) Analysis.

§ 1.59A-10 Applicability date.

(a) General applicability date.

(b) Exception.

[T.D. 9910, 85 FR 64340, Oct. 9, 2020]

§ 1.59A-1 Base erosion and anti-abuse tax.

(a) ***Purpose.*** This section and §§ 1.59A-2 through 1.59A-10 (collectively, the "section 59A regulations") provide rules under section 59A to determine the amount of the base erosion and anti-abuse tax. Paragraph (b) of this section provides definitions applicable to the section 59A regulations. Section 1.59A-2 provides rules regarding how to determine whether a taxpayer is an applicable taxpayer. Section 1.59A-3 provides rules regarding base erosion payments and base erosion tax benefits. Section 1.59A-4 provides rules for calculating modified taxable income. Section 1.59A-5 provides rules for calculating the base erosion minimum tax amount. Section 1.59A-6 provides rules relating to qualified derivative payments. Section 1.59A-7 provides rules regarding the application of section 59A to partnerships. Section 1.59A-8 is reserved for rules regarding the application of section 59A to certain expatriated entities. Section 1.59A-9 provides anti-abuse rules to prevent avoidance of section 59A. Finally, § 1.59A-10 provides the applicability date for the section 59A regulations.

(b) ***Definitions.*** For purposes of this section and §§ 1.59A-2 through 1.59A-10, the following terms have the meanings provided in this paragraph (b).

(1) Aggregate group. The term *aggregate group* means the group of corporations determined by—

(i) Identifying a controlled group of corporations as defined in section 1563(a), except that the phrase "more than 50 percent" is substituted for "at least 80 percent" each place it appears in section 1563(a)(1) and the determination is made without regard to sections 1563(a)(4) and (e)(3)(C), and

(ii) Once the controlled group of corporations is determined, excluding foreign corporations except with regard to income that is, or is treated as, effectively connected with the conduct of a trade or business in the United States under an applicable provision of the Internal Revenue Code or regulations published under 26 CFR chapter I. Notwithstanding the foregoing, if a foreign corporation is subject to tax on a net basis pursuant to an applicable income tax treaty of the United States, it is excluded from the controlled group of corporations except with regard to income taken into account in determining its net taxable income.

(2) Applicable section 38 credits. The term *applicable section 38 credits* means the credits allowed under section 38 for the taxable year that are properly allocable to—

(i) The low-income housing credit determined under section 42(a),

(ii) The renewable electricity production credit determined under section 45(a), and

(iii) The investment credit determined under section 46, but only to the extent properly allocable to the energy credit determined under section 48.

(3) ***Applicable taxpayer.*** The term *applicable taxpayer* means a taxpayer that meets the requirements set forth in § 1.59A-2(b).

(4) ***Bank.*** The term *bank* has the meaning provided in section 581.

(5) ***Base erosion and anti-abuse tax rate.*** The term *base erosion and anti-abuse tax rate* means the percentage that the taxpayer applies to its modified taxable income for the taxable year to calculate its base erosion minimum tax amount. See § 1.59A-5(c) for the base erosion and anti-abuse tax rate applicable for the relevant taxable year.

(6) ***Business interest expense.*** The term *business interest expense,* with respect to a taxpayer and a taxable year, has the meaning provided in § 1.163(j)-1(b)(3).

(7) ***Deduction.*** The term *deduction* means any deduction allowable under chapter 1 of subtitle A of the Internal Revenue Code.

(8) ***Disallowed business interest expense carryforward.*** The term *disallowed business interest expense carryforward* has the meaning provided in § 1.163(j)-1(b)(11).

(9) ***Domestic related business interest expense.*** The term *domestic related business interest expense* for any taxable year is the taxpayer's business interest expense paid or accrued to a related party that is not a foreign related party.

(10) ***Foreign person.*** The term *foreign person* means any person who is not a United States person. For purposes of the preceding sentence, a United States person has the meaning provided in section 7701(a)(30), except that any individual who is a citizen of any possession of the United States (but not otherwise a citizen of the United States) and who is not a resident of the United States is not a United States person. See § 1.59A-7(b) for rules applicable to partnerships.

(11) ***Foreign related business interest expense.*** The term *foreign related business interest expense* for any taxable year is the taxpayer's business interest expense paid or accrued to a foreign related party.

(12) ***Foreign related party.*** The term *foreign related party* means a foreign person, as defined in paragraph (b)(10) of this section, that is a related party, as defined in paragraph (b)(17) of this section, with respect to the taxpayer. In addition, for purposes of § 1.59A-3(b)(4)(v)(B) (relating to internal dealings under certain income tax treaties), a foreign related party also includes the foreign corporation's home office or a foreign branch of the foreign corporation. See § 1.59A-7(b), (c), and (f) for rules applicable to partnerships.

(13) ***Gross receipts.*** The term *gross receipts* has the meaning provided in § 1.448-1T(f)(2)(iv).

(14) ***Member of an aggregate group.*** The term *member of an aggregate group* means a corporation that is included in an aggregate group, as defined in paragraph (b)(1) of this section.

(15) ***Registered securities dealer.*** The term *registered securities dealer* means any dealer as defined in section 3(a)(5) of the Securities Exchange Act of 1934 that is registered, or required to be registered, under section 15 of the Securities Exchange Act of 1934.

(16) ***Regular tax liability.*** The term *regular tax liability* has the meaning provided in section 26(b).

(17) ***Related party*** —

(i) ***In general.*** A *related party,* with respect to an applicable taxpayer, is—

(A) Any 25-percent owner of the taxpayer;

(B) Any person who is related (within the meaning of section 267(b) or 707(b)(1)) to the taxpayer or any 25-percent owner of the taxpayer; or

(C) A controlled taxpayer within the meaning of § 1.482-1(i)(5) together with, or with respect to, the taxpayer.

(ii) ***25-percent owner.*** With respect to any corporation, a *25-percent owner* means any person who owns at least 25 percent of—

(A) The total voting power of all classes of stock of the corporation entitled to vote; or

(B) The total value of all classes of stock of the corporation.

(iii) ***Application of section 318.*** Section 318 applies for purposes of paragraphs (b)(17)(i) and (ii) of this section, except that—

(A) “10 percent” is substituted for “50 percent” in section 318(a)(2)(C); and

(B) Section 318(a)(3)(A) through (C) are not applied so as to consider a United States person as owning stock that is owned by a person who is not a United States person.

(18) ***TLAC long-term debt required amount.*** The term *TLAC long-term debt required amount* means the specified minimum amount of debt that is required pursuant to 12 CFR 252.162(a).

(19) ***TLAC securities amount.*** The term *TLAC securities amount* is the sum of the adjusted issue prices (as determined for purposes of § 1.1275-1(b)) of all TLAC securities issued and outstanding by the taxpayer, without regard to whether interest thereunder would be a base erosion payment absent § 1.59A-3(b)(3)(v).

(20) ***TLAC security.*** The term *TLAC security* means an eligible internal debt security, as defined in 12 CFR 252.161.

(21) ***Unrelated business interest expense.*** The term *unrelated business interest expense* for any taxable year is the taxpayer's business interest expense paid or accrued to a party that is not a related party.

[T.D. 9885, 84 FR 67017, Dec. 6, 2019, as amended by T.D. 9910, 85 FR 64363, Oct. 9, 2020]

§ 1.59A-2 Applicable taxpayer.

(a) ***Scope.*** This section provides rules for determining whether a taxpayer is an applicable taxpayer. Paragraph (b) of this section defines an applicable taxpayer. Paragraph (c) of this section provides rules for determining whether a taxpayer is an applicable taxpayer by reference to the aggregate group of which the taxpayer is a member. Paragraph (d) of this section provides rules regarding the gross receipts test. Paragraph (e) of this section provides rules regarding the base erosion percentage test. Paragraph (f) of this section provides examples illustrating the rules of this section.

(b) ***Applicable taxpayer.*** For purposes of section 59A, a taxpayer is an applicable taxpayer with respect to any taxable year if the taxpayer—

(1) Is a corporation, but not a regulated investment company, a real estate investment trust, or an S corporation;

(2) Satisfies the gross receipts test of paragraph (d) of this section; and

(3) Satisfies the base erosion percentage test of paragraph (e) of this section.

(c) ***Aggregation rules*** —

(1) ***In general.*** Solely for purposes of this section and § 1.59A-4, a taxpayer that is a member of an aggregate group determines its gross receipts and its base erosion percentage on the basis of the aggregate group. For these purposes, transactions that occur between members of the taxpayer's aggregate group that were members of the aggregate group as of the time of the transaction are not taken into account. In the case of a foreign corporation that is a member of an aggregate group, only transactions that occur between members of the aggregate group and that relate to income effectively connected with, or treated as effectively connected with, the conduct of a trade or business in the United States are not taken into account for this purpose. In the case of a foreign corporation that is a member of an aggregate group and that is subject to tax on a net basis pursuant to an applicable income tax treaty of the United States, only transactions that occur between members of the aggregate group and that relate to income that is taken into account in determining its net taxable income are not taken into account for this purpose. For purposes of this paragraph (c)(1), each payment or accrual is treated as a separate transaction.

(2) ***Aggregate group determined with respect to each taxpayer*** —

(i) ***In general.*** Solely for purposes of this section, an aggregate group is determined with respect to each taxpayer. As a result, the aggregate group of one taxpayer may be different than the aggregate group of another member of the taxpayer's aggregate group.

(ii) ***Change in the composition of an aggregate group.*** A change in ownership of the taxpayer (for example, a sale of the taxpayer to a third party) does not cause the taxpayer to leave its own aggregate group. Instead, any members of the taxpayer's aggregate group before the change in ownership that are no longer members following the change in ownership are treated as having

left the taxpayer's aggregate group, and any new members that become members of the taxpayer's aggregate group following the change in ownership are treated as having joined the taxpayer's aggregate group. A change in ownership of another member of the aggregate group of the taxpayer (for example, a sale of the member to a third party) may result in the member joining or leaving the aggregate group of the taxpayer. See paragraph (c)(4) of this section for the treatment of members joining or leaving the aggregate group of a taxpayer.

(3) ***Taxable year of members of an aggregate group.*** Solely for purposes of this section, a taxpayer that is a member of an aggregate group measures the gross receipts and base erosion percentage of the aggregate group for a taxable year by reference to the taxpayer's gross receipts, base erosion tax benefits, and deductions for the taxable year and the gross receipts, base erosion tax benefits, and deductions of each member of the aggregate group for the taxable year of the member that ends with or within the taxpayer's taxable year.

(4) ***Periods before and after a corporation is a member of an aggregate group*** —

(i) ***In general.*** Solely for purposes of this section, to determine the gross receipts and the base erosion percentage of the aggregate group of a taxpayer, the taxpayer takes into account only the portion of another corporation's taxable year during which the corporation is a member of the aggregate group of the taxpayer. The gross receipts, base erosion tax benefits, and deductions of a corporation that are properly included in the gross receipts and base erosion percentage of the aggregate group of a taxpayer are not reduced as a result of the member leaving the aggregate group of the taxpayer.

(ii) ***Deemed taxable year-end.*** Solely for purposes of this paragraph (c), if a corporation leaves or joins the aggregate group of a taxpayer, the corporation is treated as ceasing to be a member of the aggregate group at the time of its taxable year-end, or becoming a member of the aggregate group immediately after the time of its taxable year-end, resulting from the transaction. For purposes of this paragraph (c), if a corporation joins or leaves an aggregate group in a transaction that does not result in the corporation having a taxable year-end, the corporation is treated as having a taxable year-end ("deemed taxable year-end") at the end of the day on which the transaction occurs.

(iii) ***Items allocable to deemed taxable years before and after deemed taxable year-end.*** Solely for purposes of this paragraph (c), a corporation that has a deemed taxable year-end determines gross receipts, base erosion tax benefits, and deductions attributable to the deemed taxable year ending upon, or beginning immediately after, the deemed taxable year-end by either treating the corporation's books as closing ("deemed closing of the books") at the deemed taxable year-end or, in the case of items other than extraordinary items, allocating those items on a pro-rata basis without a closing of the books. Extraordinary items are allocated to the deemed taxable year ending upon, or beginning immediately after, the deemed taxable year-end based on the day that they are taken into account. For purposes of applying this paragraph (c)(4)(iii), extraordinary items that are attributable to a transaction that occurs during the portion of the corporation's day after the event resulting in the corporation joining or leaving the aggregate group are treated as taken into account at the beginning of the following day. Additionally, for purposes of applying this paragraph (c)(4)(iii), "extraordinary items" include the items enumerated in § 1.1502-76(b)(2)(ii)(C) as well as any other payment not made in the ordinary course of business that would be treated as a base erosion payment.

(5) ***Short taxable year*** —

(i) *Short period of the taxpayer* —

(A) ***In general.*** Solely for purposes of this section, if a taxpayer has a taxable year of fewer than 12 months (a short period), the gross receipts, base erosion tax benefits, and deductions of the taxpayer are annualized by multiplying the total amount for the short period by 365 and dividing the result by the number of days in the short period.

(B) ***Determining the gross receipts and base erosion percentage of the aggregate group of a taxpayer for a short period.*** When a taxpayer has a taxable year that is a short period and a member of the taxpayer's aggregate group does not have a taxable year that ends with or within the taxpayer's taxable year as a result of the taxpayer's short period, the taxpayer must use a reasonable approach to determine the gross receipts and base erosion percentage of its aggregate group for the short period. A reasonable approach should neither over-count nor under-count the gross receipts, base erosion tax benefits, and deductions of the aggregate group of the taxpayer. A reasonable approach does not include an approach that does not take into account the gross receipts, base erosion tax benefits, or deductions of the member. The taxpayer must consistently apply the reasonable approach. Examples of a reasonable approach may include an approach that takes into account 12 months of gross receipts, base erosion tax benefits, and deductions of the member by reference to—

(*1*) The 12-month period ending on the last day of the short period;

(*2*) The member's taxable year that ends nearest to the last day of the short period or that begins nearest to the first day of the short period; or

(*3*) An average of the two taxable years of the member ending before and after the short period.

(ii) *Short period of a member of the taxpayer's aggregate group* —

(A) ***Multiple taxable years of a member of the taxpayer's aggregate group comprised of more than 12 months.*** If a member of a taxpayer's aggregate group has more than one taxable year ending with or within the taxpayer's taxable year, and the member's taxable years ending with or within the taxpayer's taxable year are comprised of more than 12 months in total, then the aggregate group member's gross receipts, base erosion tax benefits, and deductions are annualized for purposes of determining the gross receipts and base erosion percentage of the taxpayer's aggregate group. The aggregate group member's gross receipts, base erosion tax benefits, and deductions are annualized by multiplying the total amount for the member's taxable years by 365 and dividing the result by the total number of days in the multiple taxable years.

(B) ***Short period or periods of a member of the taxpayer's aggregate group comprised of fewer than 12 months from change in taxable year.*** If, as a result of a member of a taxpayer's aggregate group changing its taxable year-end (other than as a result of the application of § 1.1502-76(a)), the member's taxable year or years ending with or within the taxpayer's taxable year are comprised of fewer than 12 months in total, then the aggregate group member's gross receipts, base erosion tax benefits, and deductions are annualized for purposes of determining the gross receipts and base erosion percentage of the taxpayer's aggregate group. The aggregate group member's gross receipts, base erosion tax

benefits, and deductions are annualized by multiplying the total amount for the member's taxable year or years by 365 and dividing the result by the total number of days in the taxable year or years.

(iii) ***Anti-abuse rule.*** If a taxpayer or a member of a taxpayer's aggregate group enters into a transaction (or series of transactions), plan, or arrangement with another corporation that is a member of the aggregate group or a foreign related party that has a principal purpose of changing the period taken into account under the gross receipts test or the base erosion percentage test to avoid applicable taxpayer status under paragraph (b) of this section, then the gross receipts test or base erosion percentage test, respectively, applies as if that transaction (or series of transactions), plan, or arrangement had not occurred.

(6) ***Treatment of predecessors*** —

(i) ***In general.*** Solely for purposes of this section, in determining gross receipts under paragraph (d) of this section, any reference to a taxpayer includes a reference to any predecessor of the taxpayer. For this purpose, a predecessor is the distributor or transferor corporation in a transaction described in section 381(a) in which the taxpayer is the acquiring corporation. For purposes of determining the gross receipts of a predecessor that are taken into account by a taxpayer, the operating rules set forth in this paragraph (c) and in paragraph (d) of this section are applied to the same extent they were applied to the predecessor.

(ii) ***No duplication.*** If the taxpayer or any member of its aggregate group is also a predecessor of the taxpayer or any member of its aggregate group, the gross receipts of each member are taken into account only once.

(7) ***Partnerships.*** For the treatment of partnerships for purposes of determining gross receipts and base erosion tax benefits, see § 1.59A-7(e)(2) and (d), respectively.

(8) ***Transition rule for aggregate group members with different taxable years.*** If the taxpayer has a different taxable year than another member of the taxpayer's aggregate group (other member), and the other member is eligible for the exception in § 1.59A-3(b)(3)(vi) (amounts paid or accrued in taxable years beginning before January 1, 2018) with respect to a taxable year ending with or within the taxpayer's taxable year ("excepted taxable year"), the excepted taxable year of the other member is not taken into account for purposes of paragraph (e) of this section. This rule applies solely for purposes of determining whether a taxpayer is an applicable taxpayer under this section.

(9) ***Consolidated groups.*** For the treatment of consolidated groups for purposes of determining gross receipts and base erosion tax benefits, see § 1.1502-59A(b).

(d) ***Gross receipts test*** —

(1) ***Amount of gross receipts.*** A taxpayer, or the aggregate group of which the taxpayer is a member, satisfies the gross receipts test of this section if it has average annual gross receipts of at least $500,000,000 for the three-taxable-year period ending with the preceding taxable year.

(2) ***Taxpayer not in existence for entire three-year period.*** If a taxpayer was not in existence for the entire three-year period referred to in paragraph (d)(1) of this section, the taxpayer determines a gross receipts average for the period that it was in existence (which includes gross receipts in the current year).

(3) ***Gross receipts of foreign corporations.*** With respect to any foreign corporation, only gross receipts that are taken into account in determining income that is, or is treated as, effectively connected with the conduct of a trade or business within the United States are taken into account for purposes of paragraph (d)(1) of this section. In the case of a foreign corporation that is a member of an aggregate group and that is subject to tax on a net basis pursuant to an applicable income tax treaty of the United States, the foreign corporation includes only gross receipts that are attributable to transactions taken into account in determining its net taxable income.

(4) ***Gross receipts of an insurance company.*** Solely for purposes of this section, for any corporation that is subject to tax under subchapter L or any corporation that would be subject to tax under subchapter L if that corporation were a domestic corporation, gross receipts are reduced by return premiums (within the meaning of section 803(a)(1)(B) and section 832(b)(4)(A)), but are not reduced by any reinsurance premiums paid or accrued.

(5) ***Reductions in gross receipts.*** For purposes of this section, gross receipts for any taxable year are reduced by returns and allowances made during that taxable year.

(6) ***Gross receipts of consolidated groups.*** For purposes of this section, the gross receipts of a consolidated group are determined by aggregating the gross receipts of all of the members of the consolidated group. See § 1.1502-59A(b).

(e) ***Base erosion percentage test*** —

(1) ***In general.*** A taxpayer, or the aggregate group of which the taxpayer is a member, satisfies the base erosion percentage test if its base erosion percentage is three percent or higher.

(2) ***Base erosion percentage test for banks and registered securities dealers*** —

(i) ***In general.*** A taxpayer that is a member of an affiliated group (as defined in section 1504(a)(1)) that includes a bank (as defined in § 1.59A-1(b)(4)) or a registered securities dealer (as defined in section § 1.59A-1(b)(15)) satisfies the base erosion percentage test if its base erosion percentage is two percent or higher.

(ii) ***Aggregate groups.*** An aggregate group of which a taxpayer is a member and that includes a bank or a registered securities dealer that is a member of an affiliated group (as defined in section 1504(a)(1)) is subject to the base erosion percentage threshold described in paragraph (e)(2)(i) of this section.

(iii) ***De minimis exception for banking and registered securities dealer activities.*** An aggregate group that includes a bank or a registered securities dealer that is a member of an affiliated group (as defined in section 1504(a)(1)) is not treated as including a bank or registered securities dealer for purposes of paragraph (e)(2)(i) of this section for a taxable year, if, for that taxable year, the total gross receipts of the aggregate group attributable to the bank or the registered securities dealer (or attributable to all of the banks and registered securities dealers in the group, if more than one) represent less than two percent of the total gross receipts of the aggregate group, as determined under paragraph (d) of this section. When there is no aggregate group, a consolidated group that includes a bank or a registered securities dealer is not treated as including a bank or registered securities dealer for purposes of paragraph (e)(2)(i) of this section for a taxable year, if, for that taxable year, the total gross receipts of the consolidated group attributable to the bank or the registered securities dealer (or attributable to all of the

banks or registered securities dealers in the group, if more than one) represent less than two percent of the total gross receipts of the consolidated group, as determined under paragraph (d) of this section.

(3) ***Computation of base erosion percentage*** —

(i) ***In general.*** The taxpayer's base erosion percentage for any taxable year is determined by dividing—

(A) The aggregate amount of the taxpayer's (or in the case of a taxpayer that is a member of an aggregate group, the aggregate group's) base erosion tax benefits (as defined in § 1.59A-3(c)(1)) for the taxable year, by

(B) The sum of—

(*1*) The aggregate amount of the deductions (including deductions for base erosion tax benefits described in § 1.59A-3(c)(1)(i) and base erosion tax benefits described in § 1.59A-3(c)(1)(ii)) allowable to the taxpayer (or in the case of a taxpayer that is a member of an aggregate group, any member of the aggregate group) under chapter 1 of Subtitle A for the taxable year;

(*2*) The base erosion tax benefits described in § 1.59A-3(c)(1)(iii) with respect to any premiums or other consideration paid or accrued by the taxpayer (or in the case of a taxpayer that is a member of an aggregate group, any member of the aggregate group) to a foreign related party for any reinsurance payment taken into account under sections 803(a)(1)(B) or 832(b)(4)(A) for the taxable year; and

(*3*) Any amount paid or accrued by the taxpayer (or in the case of a taxpayer that is a member of an aggregate group, any member of the aggregate group) resulting in a reduction of gross receipts described in § 1.59A-3(c)(1)(iv) for the taxable year.

(ii) ***Certain items not taken into account in denominator.*** Except as provided in paragraph (e)(3)(viii) of this section, the amount under paragraph (e)(3)(i)(B) of this section is determined by not taking into account—

(A) Any deduction allowed under section 172, 245A, or 250 for the taxable year;

(B) Any deduction for amounts paid or accrued for services to which the exception described in § 1.59A-3(b)(3)(i) applies;

(C) Any deduction for qualified derivative payments that are not treated as base erosion payments by reason of § 1.59A-3(b)(3)(ii);

(D) Any exchange loss within the meaning of § 1.988-2 from a section 988 transaction as described in § 1.988-1(a)(1) that is not treated as a base erosion payment by reason of § 1.59A-3(b)(3)(iv);

(E) Any deduction for amounts paid or accrued to foreign related parties with respect to TLAC securities and foreign TLAC securities that are not treated as base erosion payments by reason of § 1.59A-3(b)(3)(v);

(F) Any reinsurance losses incurred and claims payments described in § 1.59A-3(b)(3)(ix); and

(G) Any deduction not allowed in determining taxable income for the taxable year.

(iii) ***Effect of treaties on base erosion percentage determination.*** See § 1.59A-3(c)(2) and (3).

(iv) ***Amounts paid or accrued between members of a consolidated group.*** See § 1.1502-59A(b).

(v) ***Deductions and base erosion tax benefits from partnerships.*** See § 1.59A-7(b), (d), and (e).

(vi) ***Mark-to-market positions.*** For any position with respect to which the taxpayer (or in the case of a taxpayer that is a member of an aggregate group, a member of the aggregate group) applies a mark-to-market method of accounting for U.S. federal income tax purposes, the taxpayer must determine its gain or loss with respect to that position for any taxable year by combining all items of income, gain, loss, or deduction arising with respect to the position during the taxable year, regardless of how each item arises (including from a payment, accrual, or mark) for purposes of paragraph (e)(3) of this section. See paragraph (f)(1) of this section (*Example 1*) for an illustration of this rule. For purposes of section 59A, a taxpayer computes its losses resulting from positions subject to a mark-to-market regime under the Internal Revenue Code based on a single mark for the taxable year on the earlier of the last business day of the taxpayer's taxable year and the disposition (whether by sale, offset, exercise, termination, expiration, maturity, or other means) of the position, regardless of how frequently a taxpayer marks to market for other purposes. See 1.59A-3(b)(2)(iv) for the application of this rule for purposes of determining the amount of base erosion payments.

(vii) ***Reinsurance losses incurred and claims payments.*** Except as provided in paragraph (e)(3)(ii)(F) of this section, amounts paid for losses incurred (as defined in section 832(b)(5)) and claims and benefits under section 805(a)(1) are taken into account for purposes of paragraph (e)(3)(i)(B)(*1*) of this section.

(viii) ***Certain payments that qualify for the effectively connected income exception and another base erosion payment exception.*** Subject to paragraph (c) of this section (transactions that occur between members of the taxpayer's aggregate group), a payment that qualifies for the effectively connected income exception described in § 1.59A-3(b)(3)(iii) and either the service cost method exception described in § 1.59A-3(b)(3)(i), the qualified derivative payment exception described in § 1.59A-3(b)(3)(ii), or the TLAC exception described in § 1.59A-3(b)(3)(v) is not subject to paragraph (e)(3)(ii)(B), (C), or (E) of this section and those amounts are included in the denominator of the base erosion percentage if the foreign related party who received the payment is not a member of the aggregate group.

(f) ***Examples.*** The following examples illustrate the rules of this section.

(1) ***Example 1: Mark-to-market*** —

(i) ***Facts.***

(A) Foreign Parent (FP) is a foreign corporation that owns all of the stock of domestic corporation (DC). FP is a foreign related party of DC under § 1.59A-1(b)(12). DC is a registered securities dealer that does not hold any securities for investment. On January 1 of year 1, DC enters into two interest rate swaps for a term of two years, one with unrelated Customer A as the counterparty (position A) and one with unrelated Customer B as the counterparty (position B). Each of the swaps provides for semiannual periodic payments to be made or received on June 30 and December 31. No party makes any payment to any other party upon initiation of either of the swaps (that is, they are entered into at-the-money). DC is required to mark-to-market positions A and B for U.S. federal income tax purposes. DC is a calendar year taxpayer.

(B) For position A in year 1, DC makes a payment of $150x on June 30, and receives a payment of $50x on December 31. There are no other payments in year 1. On December 31, position A has a value to DC of $110x (that is, position A is in-the-money by $110x).

(C) For position B in year 1, DC receives a payment of $120x on June 30, and makes a payment of $30x on December 31. There are no other payments in year 1. On December 31, position B has a value to DC of ($130x) (that is, position B is out-of-the-money by $130x).

(ii) ***Analysis.***

(A) With respect to position A, based on the total amount of payments made and received in year 1, DC has a net deduction of $100x. In addition, DC has a mark-to-market gain of $110x. As described in paragraph (e)(3)(vi) of this section, the mark-to-market gain of $110x is combined with the net deduction of $100x resulting from the payments. Therefore, with respect to position A, DC has a gain of $10x, and thus has no deduction in year 1 for purposes of section 59A.

(B) With respect to position B, based on the total amount of payments made and received in year 1, DC has net income of $90x. In addition, DC has a mark-to-market loss of $130x. As described in paragraph (e)(3)(vi) of this section, the mark-to-market loss of $130x is combined with the net income of $90x resulting from the payments. Therefore, with respect to position B, DC has a loss of $40x, and thus has a $40x deduction in year 1 for purposes of section 59A.

(2) ***Example 2: Member leaving an aggregate group*** —

(i) ***Facts.*** Parent Corporation wholly owns Corporation 1 and Corporation 2. Each corporation is a domestic corporation and a calendar-year taxpayer that does not file a consolidated return. The aggregate group of Corporation 1 includes Parent Corporation and Corporation 2. At noon on June 30, Year 1, Parent Corporation sells the stock of Corporation 2 to Corporation 3, an unrelated domestic corporation, in exchange for cash consideration. Before the acquisition, Corporation 3 was not a member of an aggregate group. Corporation 2 and Corporation 3 do not file a consolidated return.

(ii) ***Analysis.***

(A) For purposes of section 59A, to determine the gross receipts and base erosion percentage of the aggregate group of Corporation 1 for calendar Year 1, Corporation 2 is treated as having a taxable year-end at the end of the day on June 30, Year 1, as a result of the sale. Corporation 2 leaves the aggregate group of Corporation 1 and Parent Corporation at the end of the day on June 30, Year 1. The aggregate group of Corporation 1 takes into account only the gross receipts, base erosion tax benefits, and deductions of Corporation 2 allocable to the period from January 1 to the end of the day on June 30, Year 1, in accordance with paragraph (c)(4)(ii) and (iii) of this section. The same results apply to the aggregate group of Parent Corporation for calendar Year 1. See paragraph (d)(1) and (2) of this section for the periods taken into account in determining whether the taxpayer or its aggregate group satisfies the gross receipts test.

(B) For purposes of section 59A, to determine the gross receipts and base erosion percentage of the aggregate group of Corporation 2 for calendar Year 1, each of Parent Corporation, Corporation 1, and Corporation 3 are treated as having a taxable year-end at the end of the

day on June 30, Year 1. Because Corporation 2 does not have a short taxable year, paragraph (c)(5)(i) of this section does not apply. The aggregate group of Corporation 2 takes into account the gross receipts, base erosion tax benefits, and deductions of Parent Corporation and Corporation 1 allocable to the period from January 1 to the end of the day on June 30, Year 1, and the gross receipts, base erosion tax benefits, and deductions of Corporation 3 allocable to the period from July 1 to December 31, Year 1 in accordance with paragraph (c)(4)(ii) and (iii) of this section. See paragraph (d)(1) and (2) of this section for the periods taken into account in determining whether the taxpayer or its aggregate group satisfies the gross receipts test.

(2) *Example 2: Member leaving an aggregate group* —

(i) ***Facts.*** Parent Corporation wholly owns Corporation 1 and Corporation 2. Each corporation is a domestic corporation and a calendar-year taxpayer that does not file a consolidated return. The aggregate group of Corporation 1 includes Parent Corporation and Corporation 2. At noon on June 30, Year 1, Parent Corporation sells the stock of Corporation 2 to Corporation 3, an unrelated domestic corporation, in exchange for cash consideration. Before the acquisition, Corporation 3 was not a member of an aggregate group. Corporation 2 and Corporation 3 do not file a consolidated return.

(ii) ***Analysis.***

(A) For purposes of section 59A, to determine the gross receipts and base erosion percentage of the aggregate group of Corporation 1 for calendar Year 1, Corporation 2 is treated as having a taxable year-end at the end of the day on June 30, Year 1, as a result of the sale. Corporation 2 leaves the aggregate group of Corporation 1 and Parent Corporation at the end of the day on June 30, Year 1. The aggregate group of Corporation 1 takes into account only the gross receipts, base erosion tax benefits, and deductions of Corporation 2 allocable to the period from January 1 to the end of the day on June 30, Year 1, in accordance with paragraph (c)(4)(ii) and (iii) of this section. The same results apply to the aggregate group of Parent Corporation for calendar Year 1. See paragraph (d)(1) and (2) of this section for the periods taken into account in determining whether the taxpayer or its aggregate group satisfies the gross receipts test.

(B) For purposes of section 59A, to determine the gross receipts and base erosion percentage of the aggregate group of Corporation 2 for calendar Year 1, each of Parent Corporation, Corporation 1, and Corporation 3 are treated as having a taxable year-end at the end of the day on June 30, Year 1. Because Corporation 2 does not have a short taxable year, paragraph (c)(5)(i) of this section does not apply. The aggregate group of Corporation 2 takes into account the gross receipts, base erosion tax benefits, and deductions of Parent Corporation and Corporation 1 allocable to the period from January 1 to the end of the day on June 30, Year 1, and the gross receipts, base erosion tax benefits, and deductions of Corporation 3 allocable to the period from July 1 to December 31, Year 1 in accordance with paragraph (c)(4)(ii) and (iii) of this section. See paragraph (d)(1) and (2) of this section for the periods taken into account in determining whether the taxpayer or its aggregate group satisfies the gross receipts test.

[T.D. 9885, 84 FR 67017, Dec. 6, 2019, as amended by T.D. 9910, 85 FR 64343, Oct. 9, 2020; T.D. 10041, 90 FR 59049, Dec. 18, 2025]

§ 1.59A-3 Base erosion payments and base erosion tax benefits.

(a) ***Scope.*** This section provides definitions and related rules regarding base erosion payments and base erosion tax benefits. Paragraph (b) of this section provides definitions and rules regarding base erosion payments. Paragraph (c) of this section provides rules for determining the amount of base erosion tax benefits. Paragraph (d) of this section provides examples illustrating the rules described in this section.

(b) ***Base erosion payments*** —

(1) ***In general.*** Except as provided in paragraph (b)(3) of this section, a *base erosion payment* means—

(i) Any amount paid or accrued by the taxpayer to a foreign related party of the taxpayer and with respect to which a deduction is allowable under chapter 1 of subtitle A of the Internal Revenue Code;

(ii) Any amount paid or accrued by the taxpayer to a foreign related party of the taxpayer in connection with the acquisition of property by the taxpayer from the foreign related party if the character of the property is subject to the allowance for depreciation (or amortization in lieu of depreciation);

(iii) Any premium or other consideration paid or accrued by the taxpayer to a foreign related party of the taxpayer for any reinsurance payments that are taken into account under section 803(a)(1)(B) or 832(b)(4)(A); or

(iv) Any amount paid or accrued by the taxpayer that results in a reduction of the gross receipts of the taxpayer if the amount paid or accrued is with respect to—

(A) A surrogate foreign corporation, as defined in section 59A(d)(4)(C)(i), that is a related party of the taxpayer (but only if the corporation first became a surrogate foreign corporation after November 9, 2017); or

(B) A foreign person that is a member of the same expanded affiliated group, as defined in section 59A(d)(4)(C)(ii), as the surrogate foreign corporation.

(2) ***Operating rules*** —

(i) ***In general.*** The determination of the amount paid or accrued, and the identity of the payor and recipient of any amount paid or accrued, is made under general U.S. federal income tax law.

(ii) ***Amounts paid or accrued in cash and other consideration.*** For purposes of paragraph (b)(1) of this section, an amount paid or accrued includes an amount paid or accrued using any form of consideration, including cash, property, stock, a partnership interest, or the assumption of a liability, including any exchange transaction. A distribution of property that is not part of an exchange (such as a distribution under section 301, without regard to whether section 301(c)(1), (c)(2), or (c)(3) applies), is not received with respect to an amount paid or accrued and does not give rise to a base erosion payment. In contrast, a redemption of stock by a corporation within the meaning of section 317(b) (such as a redemption described in section 302(a) or (d) or section 306(a)(2)), or a transaction in which there is an exchange for stock (such as a section 304 or section 331 transaction), is an amount paid or accrued by the shareholder to the corporation (or by the acquiring corporation to the transferor in a section 304 transaction), without regard to the treatment of such transaction for U.S. federal income tax purposes. See paragraph (b)(3)(viii) of this section for an exception for specified nonrecognition transactions (as defined in paragraph (b)(3)(viii)(A) of this section).

(iii) ***Transactions providing for net payments.*** Except as otherwise provided in paragraph (b)(2)(iv) of this section or as permitted by the Internal Revenue Code or the regulations, the amount of any base erosion payment is determined on a gross basis, regardless of any contractual or legal right to make or receive payments on a net basis. For this purpose, a right to make or receive payments on a net basis permits the parties to a transaction or series of transactions to settle obligations by offsetting any amounts to be paid by one party against amounts owed by that party to the other party. For example, any premium or other consideration paid or accrued by a taxpayer to a foreign related party for any reinsurance payments is not reduced by or netted against other amounts owed to the taxpayer from the foreign related party or by reserve adjustments or other returns.

(iv) ***Amounts paid or accrued with respect to mark-to-market positions*** —

(A) ***In general.*** For any transaction with respect to which the taxpayer applies the mark-to-market method of accounting for U.S. Federal income tax purposes, the rules set forth in § 1.59A-2(e)(3)(vi) apply to determine the amount of the base erosion payment.

(B) ***Application of the base erosion and anti-abuse tax ("BEAT") netting rule to securities lending transactions.*** Notwithstanding paragraph (b)(2)(iv)(A) of this section, mark-to-market gains and losses from the securities leg of a securities lending transaction as defined in §§ 1.861-2(a)(7) and 1.861-3(a)(6) are not taken into account when applying § 1.59A-2(e)(3)(vi) for purposes of determining the amount of a taxpayer's base erosion payment. Mark-to market gains and losses from the securities leg of a securities lending transaction are the ordinary gains and losses that a taxpayer recognizes with respect to the transaction by treating the taxpayer's position in the transaction as having been sold for its fair market value on the last business day of the taxable year (and any additional times as required by the Internal Revenue Code or the taxpayer's method of accounting). *See* § 1.59A-6(b)(1)(i). When determining the amount of the taxpayer's base erosion payment, items of income, gain, loss, or deduction that relate to the securities leg of a securities lending transaction, such as substitute payments defined in §§ 1.861-2(a)(7) and 1.861-3(a)(6) and borrow fees, must be taken into account on a consistent basis that does not result in the duplication or omission of these amounts. For purposes of the immediately preceding sentence, the term *items of income, gain, loss, or deduction that relate to the securities leg of a securities lending transaction* does not include delivery of the securities to, or receipt of securities from, the lender. This paragraph (b)(2)(iv)(B) applies to a taxpayer that is either the borrower or lender with respect to the securities lending transaction.

(v) ***Coordination among categories of base erosion payments.*** A payment that does not satisfy the criteria of one category of base erosion payment may be a base erosion payment described in one of the other categories.

(vi) ***Certain domestic passthrough entities*** —

(A) ***In general.*** If a taxpayer pays or accrues an amount that would be a base erosion payment except for the fact that the payment is made to a specified domestic passthrough, then the taxpayer will be treated as making a base erosion payment to each specified foreign related party for purposes of section 59A and §§ 1.59A-2 through 1.59A-10. This rule has no effect on the taxation of the specified domestic passthrough under subchapter J or subchapter M of the Code (as applicable).

(B) ***Amount of base erosion payment.*** The amount of the base erosion payment is equal to the lesser of the amount paid or accrued by the taxpayer to or for the benefit of the specified domestic passthrough and the amount of the deduction allowed under section 561, 651, or 661 to the specified domestic passthrough with respect to amounts paid, credited, distributed, deemed distributed, or required to be distributed to a specified foreign related party.

(C) ***Specified domestic passthrough.*** For purposes of this paragraph (b)(2)(vi), specified domestic passthrough means:

(*1*) A domestic trust that is not a grantor trust under subpart E of subchapter J of chapter 1 of the Code ("domestic trust") and which domestic trust is allowed a deduction under section 651 or section 661 with respect to amounts paid, credited, or required to be distributed to a specified foreign related party;

(*2*) A real estate investment trust (as defined in § 1.856-1(a)) that pays, or is deemed to pay, a dividend to a specified foreign related party for which a deduction is allowed under section 561; or

(*3*) A regulated investment company (as defined in § 1.851-1(a)) that pays, or is deemed to pay, a dividend to a specified foreign related party for which a deduction is allowed under section 561.

(D) ***Specified foreign related party.*** For purposes of this paragraph (b)(2)(vi), specified foreign related party means, with respect to a specified domestic passthrough, any foreign related party of a taxpayer that is a direct or indirect beneficiary or shareholder of the specified domestic passthrough.

(vii) ***Transfers of property to related taxpayers.*** If a taxpayer owns property of a character subject to the allowance for depreciation (or amortization in lieu of depreciation) with respect to which paragraph (c)(1)(ii) of this section applies, and the taxpayer sells, exchanges, or otherwise transfers the property to another taxpayer that is a member of an aggregate group that includes the taxpayer (taking into account § 1.59A-7), any deduction for depreciation (or amortization in lieu of depreciation) by the transferee taxpayer remains subject to paragraph (c)(1)(ii) of this section to the same extent the amounts would have been so subject in the hands of the transferor. See paragraph (d)(7) of this section (*Example 7*) for an illustration of this rule.

(viii) ***Reductions to determine gross income.*** For purposes of paragraphs (b)(1)(i) and (ii) of this section, any amount resulting in a reduction to determine gross income under section 61, including an amount properly treated as cost of goods sold under the Code, is not a base erosion payment.

(ix) ***Losses recognized on the sale or transfer of property.*** If a taxpayer recognizes a loss on a sale or transfer of property to a foreign related party, the loss recognized with respect to the sale or transfer is not a deduction that would cause the payment to be treated as a base erosion payment under paragraph (b)(1)(i) of this section. However, if a taxpayer uses property to make a payment to a foreign related party and the payment otherwise meets the requirements of paragraph (b)(1) of this section, the amount of the payment that is treated as a base erosion payment equals the fair market value of the property at the time of the transfer.

(3) ***Exceptions to base erosion payment.*** Paragraph (b)(1) of this section does not apply to the types of payments or accruals described in paragraphs (b)(3)(i) through (ix) of this section.

(i) *Certain services cost method amounts* —

(A) ***In general.*** Amounts paid or accrued by a taxpayer to a foreign related party for services that meet the requirements in paragraph (b)(3)(i)(B) of this section, but only to the extent of the total services cost of those services. Thus, any amount paid or accrued to a foreign related party in excess of the total services cost of services eligible for the services cost method exception (the mark-up component) remains a base erosion payment. For this purpose, services are an activity as defined in § 1.482-9(l)(2) performed by a foreign related party (the renderer) that provides a benefit as defined in § 1.482-9(l)(3) to the taxpayer (the recipient).

(B) ***Eligibility for the services cost method exception.*** To be eligible for the services cost method exception, all of the requirements of § 1.482-9(b) must be satisfied, except that:

(*1*) The requirements of § 1.482-9(b)(5) do not apply for purposes of determining eligibility for the service cost method exception in this section; and

(*2*) Adequate books and records must be maintained as described in paragraph (b)(3)(i)(C) of this section, instead of as described in § 1.482-9(b)(6).

(C) ***Adequate books and records.*** Permanent books of account and records must be maintained for as long as the costs with respect to the services are incurred by the renderer. The books and records must be adequate to permit verification by the Commissioner of the amount charged for the services and the total services costs incurred by the renderer, including a description of the services in question, identification of the renderer and the recipient of the services, calculation of the amount of profit mark-up (if any) paid for the services, and sufficient documentation to allow verification of the methods used to allocate and apportion the costs to the services in question in accordance with § 1.482-9(k). For example, where a renderer incurs costs that are attributable to performing a service for the taxpayer that includes services eligible for the services cost method exception under this section (regardless of whether the taxpayer determined its payments for those services based on the services cost method) and another service that is not eligible for the services cost method exception, books and records must be maintained that show, among other things: the total amount of costs that are attributable to each of those services, the method chosen under § 1.482-9(k) to apportion the costs between the service eligible for the services cost method under this section and the other service, and the application of that method in calculating the amount eligible for the services cost method exception. This paragraph (b)(3)(i)(C) does not affect the recordkeeping requirements imposed by any other provision, including § 1.6001-1.

(D) ***Total services cost.*** For purposes of this section, total services cost has the same meaning as total services costs in § 1.482-9(j).

(ii) ***Qualified derivative payments.*** Any qualified derivative payment as described in § 1.59A-6.

(iii) *Effectively connected income* —

(A) ***In general.*** Except as provided in paragraph (b)(3)(iii)(B) of this section, amounts paid or accrued to a foreign related party that are subject to U.S. federal income taxation as income that is, or is treated as, effectively connected with the conduct of a trade or business in the United States under an applicable provision of the Internal Revenue Code

or regulations. Paragraph (b)(3)(iii) of this section applies only if the taxpayer receives a withholding certificate on which the foreign related party claims an exemption from withholding under section 1441 or 1442 because the amounts are effectively connected income.

(B) ***Application to certain treaty residents.*** If a foreign related party determines its taxable income pursuant to the business profits provisions of an applicable income tax treaty, amounts paid or accrued to the foreign related party that are taken into account in determining its taxable income.

(C) ***Application to partnerships.*** To the extent that paragraph (b)(3)(iii)(A) or (B) of this section would apply to a payment or accrual made directly by a taxpayer to a foreign related party, paragraph (b)(3)(iii)(A) or (B) of this section apply to an amount treated as paid or accrued by a taxpayer to a foreign related party under § 1.59A-7(b) or (c) (generally applying aggregate principles to treat partnership transactions as partner-level transactions for purposes of section 59A). The certification requirement in paragraph (b)(3)(iii)(A) of this section is met if the taxpayer receives a written statement from the foreign related party that is comparable to the certification provided in paragraph (b)(3)(iii)(A) of this section but based on the deemed transaction under § 1.59A-7(b) or (c) and the extent to which paragraph (b)(3)(iii)(A) or (B) of this section would have applied to that deemed transaction. The taxpayer may rely on the written statement unless it has reason to know or actual knowledge that the statement is incorrect.

(iv) ***Exchange loss on a section 988 transaction.*** Any exchange loss within the meaning of § 1.988-2 from a section 988 transaction described in § 1.988-1(a)(1) that is an allowable deduction and that results from a payment or accrual by the taxpayer to a foreign related party.

(v) ***Amounts paid or accrued with respect to TLAC securities and foreign TLAC securities*** —

(A) ***In general.*** Except as provided in paragraph (b)(3)(v)(B) and (F) of this section, amounts paid or accrued to foreign related parties with respect to TLAC securities and foreign TLAC securities.

(B) ***Limitation on exclusion for TLAC securities.*** The amount excluded under paragraph (b)(3)(v)(A) of this section is no greater than the product of the scaling ratio and amounts paid or accrued to foreign related parties with respect to TLAC securities for which a deduction is allowed.

(C) ***Scaling ratio.*** For purposes of this paragraph (b)(3)(v), the scaling ratio for a taxable year of a taxpayer is a fraction the numerator of which is 115 percent of the average TLAC long-term debt required amount and the denominator of which is the average TLAC securities amount. The scaling ratio may in no event be greater than one.

(D) ***Average TLAC securities amount.*** The average TLAC securities amount for a taxable year is the average of the TLAC securities amounts for the year, computed at regular time intervals in accordance with this paragraph. The TLAC securities amount used in calculating the average TLAC securities amount is computed on a monthly basis.

(E) ***Average TLAC long-term debt required amount.*** The average TLAC long-term debt required amount for a taxable year is the average of the TLAC long-term debt required amounts, computed on a monthly basis.

(F) ***Limitation on exclusion for foreign TLAC securities*** —

(*1*) ***In general.*** The amount excluded under paragraph (b)(3)(v)(A) of this section for foreign TLAC securities is limited to the extent that interest deducted by a U.S. trade or business or permanent establishment with respect to foreign TLAC securities exceeds the interest expense associated with the foreign TLAC long-term debt required amount, applying the scaling ratio principles set forth under paragraphs (b)(3)(v)(B) through (E) of this section.

(*2*) ***Foreign TLAC long-term debt required amount.*** For purposes of paragraph (b)(3)(v) of this section, the term *foreign TLAC long-term debt required amount* means in the case of a trade or business or a permanent establishment in the United States, the lesser of—

(*i*) The specified minimum amount of debt, if any, required pursuant to a bank regulatory requirement imposed under the laws or regulations of a foreign country that are comparable to 12 CFR 252.160-167; or

(*ii*) The specified minimum amount of debt, if any, that would be required pursuant to 12 CFR 252.162(a) if the trade or business or permanent establishment were a U.S. person (as determined under Federal Reserve regulations).

(*3*) ***No specified minimum provided by local law.*** For purposes of paragraph (b)(3)(v)(F)(*2*)(*ii*) of this section, if the bank regulatory requirements imposed under the laws or regulations of a foreign country do not specify a minimum amount, the limitation for purposes of paragraph (b)(3)(v)(F)(*2*) of this section is determined by reference solely to paragraph (b)(3)(v)(F)(*2*)(*ii*) of this section.

(*4*) ***Foreign TLAC security.*** For purposes of paragraph (b)(3)(v) of this section, the term *foreign TLAC security* means an internal debt security issued under a bank regulatory requirement imposed under the laws or regulations of a foreign country that is comparable to 12 CFR 252.160-167. The laws or regulations of a foreign country are comparable to 12 CFR 252.160-167 if the requirement is imposed by a Financial Stability Board member state and those laws or regulations are substantially consistent with TLAC standards of the Financial Stability Board.

(vi) ***Amounts paid or accrued in taxable years beginning before January 1, 2018.*** Any amount paid or accrued in taxable years beginning before January 1, 2018.

(vii) ***Business interest carried forward from taxable years beginning before January 1, 2018.*** Any disallowed business interest described in section 163(j)(2) that is carried forward from a taxable year beginning before January 1, 2018.

(viii) ***Specified nonrecognition transactions*** —

(A) ***In general.*** Subject to paragraph (b)(3)(viii)(B) and (C) of this section, any amount transferred to, or exchanged with, a foreign related party pursuant to a transaction to which sections 332, 351, 355, or 368 apply ("specified nonrecognition transaction"). See § 1.59A-9(b)(4) for anti-abuse rules.

(B) ***Other property transferred to a foreign related party in a specified nonrecognition transaction.*** If a taxpayer transfers other property (as defined in paragraph (b)(3)(viii)(D) of this section) to a foreign related party pursuant to a specified nonrecognition transaction, the other property is treated as an amount paid or accrued to which paragraph (b)(3) of this section does not apply, regardless of whether gain is recognized on the transaction.

(C) ***Other property received from a foreign related party in certain specified nonrecognition transactions.*** If, in a transaction described in section 351, 355, or 368, the taxpayer transfers property and receives other property (as defined in paragraph (b)(3)(viii)(D) of this section) from a foreign related party, the property transferred by the taxpayer is treated as an amount paid or accrued to which paragraph (b)(3) of this section does not apply, regardless of whether gain is recognized on the transaction.

(D) ***Definition of other property.*** Solely for purposes of this paragraph (b)(3)(viii), the term *other property* has the meaning of the phrase "other property or money" as used in section 351(b), with respect to a transaction to which section 351 applies, and as used in sections 356(a)(1)(B) and 361(b), with respect to a transaction to which sections 355 or 368 apply, as applicable, including liabilities treated as money under section 357(b). However, the term *other property* does not include the sum of any money and the fair market value of any other property to which section 361(b)(3) applies. The term *other property* also includes liabilities that are assumed by the taxpayer in the specified nonrecognition transaction, but only to the extent of the amount of gain recognized under section 357(c).

(E) ***Allocation of other property.*** Other property is treated as exchanged for property in a specified nonrecognition transaction in a manner consistent with U.S. federal income tax law. For purposes making the allocation under this paragraph (b)(3)(viii)(E), liabilities described in paragraph (b)(3)(viii)(D) of this section are treated as money received.

(ix) ***Reinsurance losses incurred and claims payments*** —

(A) ***In general.*** Any amounts paid by a taxpayer subject to tax under subchapter L to a foreign related party that is a regulated insurance company under a reinsurance contract between the taxpayer and the regulated foreign insurance company for losses incurred (as defined in section 832(b)(5)) and claims and benefits under section 805(a)(1), to the extent that the amounts paid or accrued are properly allocable to amounts required to be paid by the regulated foreign insurance company (or indirectly through another regulated foreign insurance company), pursuant to an insurance, annuity, or reinsurance contract, to a person other than a related party. For purposes of this paragraph (b)(3)(ix), the determination of whether a contract is an insurance contract or an annuity contract is made without regard to sections 72(s), 101(f), 817(h), and 7702, provided that the contract is regulated as a life insurance or annuity contract in its jurisdiction of issuance and no policyholder, insured, annuitant or beneficiary with respect to the contract is a United States person.

(B) ***Regulated foreign insurance company.*** The term regulated foreign insurance company means any foreign corporation which—

(1) Is subject to regulation as an insurance (or reinsurance) company by the country in which the corporation is created, organized, or maintains its registered office, and is licensed, authorized, or regulated by the applicable insurance regulatory body for that country to sell insurance, annuity, or reinsurance contracts to persons other than related parties in that country, and

(2) Would be subject to tax under subchapter L if it were a domestic corporation.

(4) ***Rules for determining the amount of certain base erosion payments.*** The following rules apply in determining the amount that is a base erosion payment.

(i) ***Interest expense allocable to a foreign corporation's effectively connected income*** —

(A) ***Methods described in § 1.882-5.*** A foreign corporation that has interest expense allocable under section 882(c) to income that is, or is treated as, effectively connected with the conduct of a trade or business within the United States applying the method described in § 1.882-5(b) through (d) or the method described in § 1.882-5(e) has base erosion payments under paragraph (b)(1)(i) of this section for the taxable year equal to the sum of—

(1) The interest expense on a liability described in § 1.882-5(a)(1)(ii)(A) or (B) (direct allocations) that is paid or accrued by the foreign corporation to a foreign related party;

(2) The interest expense on U.S.-booked liabilities, as described in § 1.882-5(d)(2), determined by taking into account paragraph (b)(4)(i)(B) of this section, that is paid or accrued by the foreign corporation to a foreign related party; and

(3) The interest expense on U.S.-connected liabilities, as described in § 1.882-5(d) or 1.882-5(e), in excess of interest expense on U.S.-booked liabilities as described in § 1.882-5(d)(2), if any (hereafter, excess U.S.-connected liabilities), multiplied by a fraction, the numerator of which is the foreign corporation's average worldwide interest expense due to a foreign related party, and the denominator of which is the foreign corporation's average total worldwide interest expense. The numerator and denominator of this fraction are determined by translating interest expense into the functional currency of the foreign corporation using any reasonable method, consistently applied. Any interest expense that is interest expense on a U.S.-booked liability or is subject to a direct allocation is excluded from both the numerator and the denominator of the fraction.

(B) ***U.S.-booked liabilities determination.*** For purposes of paragraph (b)(4)(i)(A) of this section, the determination of the interest expense on U.S.-booked liabilities, as described in § 1.882-5(d)(2), is made without regard to whether the foreign corporation applies the method described in § 1.882-5(b) through (d) or the method described in § 1.882-5(e) for purposes of determining interest expense.

(C) ***U.S.-booked liabilities in excess of U.S.-connected liabilities.*** For purposes of paragraph (b)(4)(i)(A)(2) of this section, if a foreign corporation has U.S.-booked liabilities, as described in § 1.882-5(d)(2), in excess of U.S.-connected liabilities, as described in § 1.882-5(d) or § 1.882-5(e), the foreign corporation applies the scaling ratio pro-rata to all interest expense on U.S.-booked liabilities consistent with § 1.882-5(d)(4) for purposes of determining the amount of allocable interest expense on U.S.-booked liabilities that is a

base erosion payment. This paragraph (b)(4)(i)(C) applies without regard to whether the foreign corporation applies the method described in § 1.882-5(b) through (d) or the method described in § 1.882-5(e) for purposes of determining its interest expense.

(D) ***Election to use financial statements.*** A foreign corporation may elect to calculate the fraction described in paragraph (b)(4)(i)(A)(*3*) of this section on the basis of its applicable financial statement rather than U.S. tax principles. For purposes of this section, an applicable financial statement has the meaning provided in section 451(b)(3). The applicable financial statement must be the applicable financial statement of the foreign corporation, not a consolidated applicable financial statement. A foreign corporation makes this election in accordance with the requirements of Form 8991 (or successor).

(E) ***Coordination with certain tax treaties*** —

(*1*) ***In general.*** If a foreign corporation elects to determine its taxable income pursuant to business profits provisions of an income tax treaty rather than provisions of the Internal Revenue Code, or the regulations published under 26 CFR chapter I, for determining effectively connected income, and the foreign corporation does not apply § 1.882-5 to allocate interest expense to a permanent establishment, then paragraph (b)(4)(i)(A) through (D) of this section applies to determine the amount of hypothetical § 1.882-5 interest expense that is a base erosion payment under paragraph (b)(1) of this section. Interest expense allowed to the permanent establishment in excess of the hypothetical § 1.882-5 interest expense, if any, is treated as an amount paid or accrued by the permanent establishment to the foreign corporation's home office or to another branch of the foreign corporation and is a base erosion payment to the extent that the payment or accrual is described under paragraph (b)(1) of this section.

(*2*) ***Hypothetical § 1.882-5 interest expense defined.*** The hypothetical § 1.882-5 interest expense is equal to the amount of interest expense that would have been allocable under section 882(c) to income that is, or is treated as, effectively connected with the conduct of a trade or business within the United States if the foreign corporation determined interest expense in accordance with section § 1.882-5. However, the hypothetical § 1.882-5 interest expense shall not exceed the amount of interest expense allowed to the permanent establishment.

(*3*) ***Consistency requirement.*** For purposes of determining the amount described in paragraph (b)(4)(i)(E)(*2*) of this section and applying paragraph (b)(4)(i)(A) through (D) of this section, the elections of § 1.882-5 must be applied consistently and are subject to the rules and limitations of § 1.882-5, including limitations on the time period in which an election may be made or revoked. If a foreign corporation otherwise meets the requirements for making or revoking an election under § 1.882-5, then solely for purposes of this section, the foreign corporation is treated as making or revoking the election in accordance with the requirements of Form 8991 (or successor) and its instructions.

(F) ***Coordination with exception for foreign TLAC securities.*** For purposes of paragraph (b)(4)(i)(A) of this section, amounts paid or accrued to a foreign related party with respect to securities that are eligible for the foreign TLAC exception in paragraph (b)(3)(v) of this section are not treated as paid to a foreign related party.

(ii) ***Other deductions allowed with respect to effectively connected income.*** A deduction allowed under § 1.882-4 for an amount paid or accrued by a foreign corporation to a foreign related party (including a deduction for an amount apportioned in part to effectively connected income and in part to income that is not effectively connected income) is a base erosion payment under paragraph (b)(1) of this section.

(iii) ***Depreciable property.*** Any amount paid or accrued by a foreign corporation to a foreign related party of the taxpayer in connection with the acquisition of property by the foreign corporation from the foreign related party if the character of the property is subject to the allowance for depreciation (or amortization in lieu of depreciation) is a base erosion payment to the extent the property so acquired is used, or held for use, in the conduct of a trade or business within the United States.

(iv) ***Coordination with ECI exception.*** For purposes of paragraph (b)(4) of this section, amounts paid or accrued to a foreign related party treated as effectively connected income (or, in the case of a foreign related party that determines taxable income pursuant to the business profits provisions of an applicable income tax treaty, such amounts that are taken into account in determining taxable income) are not treated as paid to a foreign related party.

(v) ***Coordination with certain tax treaties*** —

(A) ***Allocable expenses.*** Except as provided in paragraph (b)(4)(i)(E) of this section with respect to interest, if a foreign corporation determines its taxable income on a net basis pursuant to an applicable income tax treaty rather than provisions of the Internal Revenue Code, or the regulations published under 26 CFR chapter I, for determining effectively connected income, then the foreign corporation must determine whether each allowable deduction is a base erosion payment under paragraph (b)(1) of this section.

(B) ***Internal dealings under certain income tax treaties.*** Except as provided in paragraph (b)(4)(i)(E) of this section with respect to interest, if, pursuant to the terms of an applicable income tax treaty, a foreign corporation determines the profits attributable to a permanent establishment based on the assets used, risks assumed, and functions performed by the permanent establishment, then any deduction attributable to any amount paid or accrued (or treated as paid or accrued) by the permanent establishment to the foreign corporation's home office or to another branch of the foreign corporation (an “internal dealing”) is a base erosion payment to the extent that the payment or accrual is described under paragraph (b)(1) of this section.

(vi) ***Business interest expense arising in taxable years beginning after December 31, 2017.*** Any disallowed business interest expense described in section 163(j)(2) that resulted from a payment or accrual to a foreign related party that first arose in a taxable year beginning after December 31, 2017, is treated as a base erosion payment under paragraph (b)(1)(i) of this section in the year that the business interest expense initially arose. See paragraph (c)(4) of this section for rules that apply when business interest expense is limited under section 163(j)(1) in order to determine whether the disallowed business interest is attributed to business interest expense paid to a person that is not a related party, a foreign related party, or a domestic related party.

(c) ***Base erosion tax benefit*** —

(1) ***In general.*** Except as provided in paragraph (c)(2) of this section, a base erosion tax benefit means:

(i) In the case of a base erosion payment described in paragraph (b)(1)(i) of this section, any deduction that is allowed under chapter 1 of subtitle A of the Internal Revenue Code for the taxable year with respect to that base erosion payment;

(ii) In the case of a base erosion payment described in paragraph (b)(1)(ii) of this section, any deduction allowed under chapter 1 of subtitle A of the Internal Revenue Code for the taxable year for depreciation (or amortization in lieu of depreciation) with respect to the property acquired with that payment;

(iii) In the case of a base erosion payment described in paragraph (b)(1)(iii) of this section, any reduction under section 803(a)(1)(B) in the gross amount of premiums and other consideration on insurance and annuity contracts for premiums and other consideration arising out of indemnity reinsurance, or any deduction under section 832(b)(4)(A) from the amount of gross premiums written on insurance contracts during the taxable year for premiums paid for reinsurance; or

(iv) In the case of a base erosion payment described in paragraph (b)(1)(iv) of this section, any reduction in gross receipts with respect to the payment in computing gross income of the taxpayer for the taxable year for purposes of chapter 1 of subtitle A of the Internal Revenue Code.

(2) ***Exception to base erosion tax benefit*** —

(i) ***In general.*** Except as provided in paragraph (c)(3) of this section, any base erosion tax benefit attributable to any base erosion payment is not taken into account as a base erosion tax benefit if tax is imposed on that payment under section 871 or 881, and the tax has been deducted and withheld under section 1441 or 1442. If a payment is taken into account for purposes of the fraction described in paragraph (b)(4)(i)(A)(*3*) of this section, and tax is imposed on the payment under section 871 or 881, and the tax has been deducted and withheld under section 1441 or 1442, the payment is treated as not paid or accrued to a foreign related party.

(ii) ***Branch-level interest tax.*** Except as provided in paragraph (c)(3) of this section, any base erosion tax benefit of a foreign corporation attributable to any base erosion payment determined under paragraph (b)(4)(i)(A)(*3*) of this section or attributable to interest expense in excess of the hypothetical section 1.882-5 interest expense determined under paragraph (b)(4)(i)(E)(*1*) of this section is not taken into account as a base erosion tax benefit to the extent of the amount of excess interest, as defined in § 1.884-4(a)(2), if any, on which tax is imposed on the foreign corporation under section 884(f) and § 1.884-4, if the tax is properly reported on the foreign corporation's income tax return and paid in accordance with § 1.884-4(a)(2)(iv).

(3) ***Effect of treaty on base erosion tax benefit.*** If any treaty between the United States and any foreign country reduces the rate of tax imposed by section 871 or 881, the amount of base erosion tax benefit that is not taken into account under paragraph (c)(2) of this section is equal to the amount of the base erosion tax benefit before the application of paragraph (c)(2) of this section multiplied by a fraction of—

(i) The rate of tax imposed under the treaty; over

(ii) The rate of tax imposed without regard to the treaty.

(4) ***Application of section 163(j) to base erosion payments*** —

(i) ***Classification of payments or accruals of business interest expense based on the payee.*** The following rules apply for corporations and partnerships:

(A) ***Classification of payments or accruals of business interest expense of a corporation.*** For purposes of this section, in the year that business interest expense of a corporation is paid or accrued the business interest expense is classified as foreign related business interest expense, domestic related business interest expense, or unrelated business interest expense.

(B) ***Classification of payments or accruals of business interest expense by a partnership.*** For purposes of this section, in the year that business interest expense of a partnership is paid or accrued, the business interest expense that is allocated to a partner is classified separately with respect to each partner in the partnership as foreign related business interest expense, domestic related business interest expense, or unrelated business interest expense.

(C) ***Classification of payments or accruals of business interest expense paid or accrued to a foreign related party that is subject to an exception*** —

(*1*) ***ECI exception.*** For purposes of paragraph (c)(4)(i)(A) and (B) of this section, business interest expense paid or accrued to a foreign related party to which the exception in paragraph (b)(3)(iii) of this section (effectively connected income) applies is classified as domestic related business interest expense.

(*2*) ***TLAC interest and interest subject to withholding tax.*** For purposes of paragraph (c)(4)(i)(A) and (B) of this section, if the exception in paragraph (b)(3)(v) of this section (TLAC securities) or paragraph (c)(2) or (3) of this section (withholding tax) applies to business interest expense paid or accrued to a foreign related party, that business interest expense remains classified as foreign related business interest expense, and retains its classification as eligible for those exceptions, on a pro-rata basis with other foreign related business interest expense.

(ii) ***Ordering rules for business interest expense that is limited under section 163(j)(1) to determine which classifications of business interest expense are deducted and which classifications of business interest expense are carried forward*** —

(A) ***In general.*** Section 163(j) and the regulations published under 26 CFR chapter I provide a limitation on the amount of business interest expense allowed as a deduction in a taxable year by a corporation or a partner in a partnership. In the case of a corporation with a disallowed business interest expense carryforward, the regulations under section 163(j) determine the ordering of the business interest expense deduction that is allowed on a year-by-year basis by reference first to business interest expense incurred in the current taxable year and then to disallowed business interest expense carryforwards from prior years. To determine the amount of base erosion tax benefit under paragraph (c)(1) of this section, this paragraph (c)(4)(ii) sets forth ordering rules that determine the amount of the deduction of business interest expense allowed under section 163(j) that is classified as paid or accrued to a foreign related party for purposes of paragraph (c)(1)(i) of this section. This paragraph (c)(4)(ii) also sets forth similar ordering rules that apply to disallowed business interest expense carryforwards for which a deduction is permitted under section 163(j) in a later year.

(B) ***Ordering rules for treating business interest expense deduction and disallowed business interest expense carryforwards as foreign related business interest expense, domestic related business interest expense, and unrelated business interest expense*** —

(*1*) ***General ordering rule for allocating business interest expense deduction between classifications.*** For purposes of paragraph (c)(1) of this section, if a deduction for business interest expense is not subject to the limitation under section 163(j)(1) in a taxable year, the deduction is treated first as foreign related business interest expense and domestic related business interest expense (on a pro-rata basis), and second as unrelated business interest expense. The same principle applies to business interest expense of a partnership that is deductible at the partner level under § 1.163(j)-6(f).

(*2*) ***Ordering of business interest expense incurred by a corporation.*** If a corporation's business interest expense deduction allowed for any taxable year is attributable to business interest expense paid or accrued in that taxable year and to disallowed business interest expense carryforwards from prior taxable years, the ordering of business interest expense deduction provided in paragraph (c)(4)(ii)(B)(*1*) of this section among the classifications described therein applies separately for the carryforward amount from each taxable year, following the ordering set forth in § 1.163(j)-5(b)(2). Corresponding adjustments to the classification of disallowed business interest expense carryforwards are made consistent with this year-by-year approach. For purposes of section 59A and this section, an acquiring corporation in a transaction described in section 381(a) will succeed to and take into account the classification of any disallowed business interest expense carryforward. See § 1.381(c)(20)-1.

(*3*) ***Ordering of business interest expense incurred by a partnership and allocated to a corporate partner.*** For a corporate partner in a partnership that is allocated a business interest expense deduction under § 1.163(j)-6(f), the ordering rule provided in paragraph (c)(4)(ii)(B)(*1*) of this section applies separately to the corporate partner's allocated business interest expense deduction from the partnership; that deduction is not comingled with the business interest expense deduction addressed in paragraph (c)(4)(ii)(B)(*1*) or (*2*) of this section or the corporate partner's items from any other partnership. Similarly, when a corporate partner in a partnership is allocated excess business interest expense from a partnership under the rules set forth in § 1.163(j)-6(f) and the excess interest expense becomes deductible to the corporate partner, that partner applies the ordering rule provided in paragraph (c)(4)(ii)(B)(*1*) of this section separately to that excess interest expense on a year-by-year basis. Corresponding adjustments to the classification of disallowed business interest expense carryforwards are made consistent with this year-by-year and partnership-by-partnership approach.

(5) ***Allowed deduction.*** Solely for purposes of paragraph (c)(1) of this section, all deductions (and any premium or other consideration paid or accrued by the taxpayer for any reinsurance payments that are taken into account under section 803(a)(1)(B) or 832(b)(4)(A)) that could be properly claimed by a taxpayer for the taxable year (determined after giving effect to the taxpayer's permissible method of accounting and to any election, such as the election under section 173 to capitalize circulation

expenditures or the election under section 168(g)(7) to use the alternative depreciation system of depreciation) are treated as allowed deductions under chapter 1 of subtitle A of the Internal Revenue Code.

(6) ***Election to waive allowed deductions*** —

(i) ***In general.*** If a taxpayer elects to waive certain deductions, in whole or in part, pursuant to this paragraph (c)(6)(i), the amount of allowed deductions as described in paragraph (c)(5) of this section is reduced by the amounts that are properly waived. In order to make the election or increase the amount of the deduction waived, the taxpayer must determine that it could satisfy the requirements of § 1.59A-2(b) absent the election to waive certain deductions. For rules applicable to partners and partnerships, see paragraph (c)(6)(iv) of this section. For rules addressing waiver of premium or other consideration paid or accrued by a taxpayer for any reinsurance payments that are taken into account under section 803(a)(1)(B) or 832(b)(4)(A), see paragraph (c)(6)(v) of this section.

(ii) ***Time and manner for election to waive deduction*** —

(A) ***In general.*** A taxpayer may make the election described in paragraph (c)(6)(i) of this section on its original filed Federal income tax return. In addition, a taxpayer may elect to waive deductions or increase the amount of deductions waived pursuant to the election described in paragraph (c)(6)(i) of this section on an amended Federal income tax return filed within the later of three years from the date the original return was filed, taking into account section 6501(b)(1), for the taxable year for which the election is made or the period described in section 6501(c)(4), or during the course of an examination of the taxpayer's income tax return for the relevant taxable year pursuant to procedures prescribed by the Commissioner. However, a taxpayer may not decrease the amount of deductions waived by the election, or otherwise revoke the election that is described in paragraph (c)(6)(i) of this section on any amended Federal income tax return or during the course of an examination. To make the election, a taxpayer must complete the appropriate part of Form 8991, *Tax on Base Erosion Payments of Taxpayers With Substantial Gross Receipts* (or successor), including the information described in paragraph (c)(6)(ii)(B) of this section and any other information required by the form or instructions. A taxpayer makes the election described in paragraph (c)(6)(i) of this section on an annual basis, and the taxpayer does not need the consent of the Commissioner if the taxpayer chooses not to make the election for a subsequent taxable year. The election described in paragraph (c)(6)(i) of this section may not be made in any other manner than as described in this paragraph (c)(6)(ii) (for example, by filing an application for a change in accounting method).

(B) ***Information required to make the election to waive allowed deductions.*** To make this election, a taxpayer must maintain contemporaneous documentation and provide information related to each deduction waived as required by applicable forms and instructions issued by the Commissioner, including—

(*1*) A description of the item or property to which the deduction relates, including sufficient information to identify that item or property on the taxpayer's books and records;

(*2*) The date on which, or period in which, the waived deduction was paid or accrued;

(3) The provision of the Internal Revenue Code (and regulations, as applicable) that allows the deduction for the item or property to which the election relates;

(4) The amount of the deduction that is claimed for the taxable year with respect to the item or property;

(5) The amount of the deduction being waived for the taxable year with respect to the item or property;

(6) A description of where the deduction is reflected (or would have been reflected) on the Federal income tax return (such as a line number); and

(7) The name, Taxpayer Identification Number (or, if the foreign person does not have a Taxpayer Identification Number, the foreign equivalent), and country of organization of the foreign related party that is or will be the recipient of the payment that generates the deduction.

(iii) ***Effect of election to waive deduction*** —

(A) ***In general*** —

(1) ***Consistent treatment.*** Except as otherwise provided in this paragraph (c)(6)(iii), any deduction waived under paragraph (c)(6)(i) of this section is treated as having been waived for all purposes of the Internal Revenue Code and regulations.

(2) ***No allocation and apportionment of waived deductions.*** The waiver of deductions described in paragraph (c)(6)(i) of this section is treated as occurring before the allocation and apportionment of deductions under §§ 1.861-8 through 1.861-14T and 1.861-17 (such as for purposes of section 904).

(3) ***Effect of waiver of deductions described in §§ 1.861-10 and 1.861-10T.*** To the extent that any waived deduction is interest expense that would have been directly allocated under the rules of § 1.861-10 or 1.861-10T and would have resulted in the reduction of value of any assets for purposes of allocating other interest expense under §§ 1.861-9 and 1.861-9T, the value of the assets is reduced to the same extent as if the taxpayer had not elected to waive the deduction.

(4) ***Effect of the election to waive deductions on the stock basis of a consolidated group member.*** For purposes of § 1.1502-32, any deduction waived under paragraph (c)(6)(i) of this section is a noncapital, nondeductible expense under § 1.1502-32(b)(2)(iii).

(B) ***Effect of the election to waive deductions disregarded for certain purposes.*** If a taxpayer makes the election to waive a deduction, in whole or in part, under paragraph (c)(6)(i) of this section, the election is disregarded for determining—

(1) The taxpayer's overall method of accounting, or the taxpayer's method of accounting for any item, under section 446;

(2) Whether a change in the taxpayer's overall plan of accounting or the taxpayer's treatment of a material item is a change in method of accounting under section 446(e) and § 1.446-1(e);

(*3*) The amount allowable under subtitle A of the Internal Revenue Code for depreciation or amortization for purposes of section 167(c) and section 1016(a)(2) or section 1016(a)(3) and any other adjustment to basis under section 1016(a);

(*4*) For purposes of applying the exclusive apportionment rule in § 1.861-17(b), the geographic source where the research and experimental activities which account for more than fifty percent of the amount of the deduction for research and experimentation was performed;

(*5*) The application of section 482;

(*6*) The amount of the taxpayer's earnings and profits; and

(*7*) Any other item as necessary to prevent a taxpayer from receiving the benefit of a waived deduction.

(C) ***Not a method of accounting.*** The election described in paragraph (c)(6)(i) of this section is not a method of accounting under section 446.

(D) ***Effect of the election in determining section 481(a) adjustments.*** A taxpayer making the election described in paragraph (c)(6)(i) of this section agrees that if the method of accounting for a waived deduction is changed, the amount of adjustment taken into account under section 481(a)(2) is determined without regard to the election described in paragraph (c)(6)(i) of this section. As a result, a waived deduction has no effect on the amount of a section 481(a) adjustment compared to what the adjustment would have been if the deduction had not been waived. See paragraph (d)(9) of this section (*Example 9*).

(iv) ***Rules applicable to partners and partnerships*** —

(A) ***In general.*** Except as provided in paragraph (c)(6)(iv)(D) of this section, deductions allocated to a corporate partner by a partnership may only be waived by the partner and not by the partnership, and then only to the extent the partner otherwise qualifies for the waiver under paragraph (c)(6) of this section. For purposes of complying with the documentation requirements in paragraph (c)(6)(ii)(B) of this section, the partner is not required to report the information in paragraphs (c)(6)(ii)(B)(*2*) and (*3*) of this section, and in lieu of reporting the information in paragraphs (c)(6)(ii)(B)(*1*) of this section, the partner is required to report the partnership from which the item is allocated.

(B) ***Rule for determining the adjusted basis of a partner's interest in a partnership.*** If a partner elects to waive a deduction or increases the amount of deduction waived with respect to deductions allocated to it by a partnership, the partner treats the waived amount as a nondeductible expenditure under section 705(a)(2)(B).

(C) ***Rule for applying section 163(j).*** If a partner waives a deduction pursuant to paragraph (c)(6)(iv)(A) of this section that was taken into account by the partnership in determining the partnership's adjusted taxable income for purposes of section 163(j), then the increase in the partner's income resulting from the waiver is treated by the partner (but not the partnership) as a partner basis item (as defined in § 1.163(j)-6(b)(2)) for purposes of section 163(j).

(D) ***Limited application of election to waive deductions with respect to adjustments made pursuant to audit procedures under sections 6221 through 6241.*** Except as provided in this paragraph (c)(6)(iv)(D), a partner is not permitted to waive any adjustment by the Secretary to any partnership-related items that is made pursuant to subchapter C of chapter 63. A partner in a partnership subject to subchapter C of chapter 63 may only make an election to waive any increase in a deduction due to an adjustment made under subchapter C of chapter 63 that the partner takes into account under section 6225(c)(2)(A), 6226, or 6227 in a manner consistent with paragraph (c)(6) of this section. If the partner makes an election under paragraph (c)(6)(i) of this section, the partner will compute its additional reporting year tax (as described in § 301.6226-3 of this chapter) or amount due under § 301.6225-2(d)(2)(ii)(A) of this chapter taking into account the rules in paragraph (c)(6) of this section with respect to the increase in the deduction that is waived.

(v) ***Rule applicable to premium and other consideration paid or accrued by the taxpayer for any reinsurance payments that are taken into account under section 803(a)(1)(B) or 832(b)(4)(A).*** For purposes of paragraph (c)(6)(i) of this section, a taxpayer may elect to waive (or increase the amount waived of) any premium or other consideration paid or accrued by the taxpayer for any reinsurance payments that are taken into account under section 803(a)(1)(B) or 832(b)(4)(A) that would be a base erosion tax benefit within the meaning of section 59A(c)(2)(A)(iii), in accordance with the rules and principles of this paragraph (c)(6).

(d) ***Examples.*** The following examples illustrate the application of this section. For purposes of all the examples, assume that the taxpayer is an applicable taxpayer and all payments apply to a taxable year beginning after December 31, 2017.

(1) ***Example 1: Determining a base erosion payment*** —

(i) ***Facts.*** FP is a foreign corporation that owns all of the stock of FC, a foreign corporation, and DC, a domestic corporation. FP has a trade or business in the United States with effectively connected income (USTB). DC owns FDE, a foreign disregarded entity. DC pays interest to FDE and FC. FDE pays interest to USTB. All interest paid by DC to FC and by FDE to USTB is deductible by DC in the current year for regular income tax purposes. FDE also acquires depreciable property from FP during the taxable year. FP's income from the sale of the depreciable property is not effectively connected with the conduct of FP's trade or business in the United States. DC and FP (based only on the activities of USTB) are applicable taxpayers under § 1.59A-2(b).

(ii) ***Analysis.*** The payment of interest by DC to FC is a base erosion payment under paragraph (b)(1)(i) of this section because the payment is made to a foreign related party and the interest payment is deductible. The payment of interest by DC to FDE is not a base erosion payment because the transaction is not a payment to a foreign person and the transaction is not a deductible payment. With respect to the payment of interest by FDE to USTB, if FP's USTB treats the payment of interest by FDE to USTB as income that is effectively connected with the conduct of a trade or business in the United States pursuant to section 864 or as profits attributable to a U.S. permanent establishment of a tax treaty resident, and if DC receives a withholding certificate from FP with respect to the payment, then the exception in paragraph (b)(3)(iii) of this section applies. Accordingly, the payment from DC, through FDE, to USTB is not a base erosion payment even though the payment is to the USTB of FP, a foreign related party. The acquisition of depreciable property by DC, through FDE, from FP is a base erosion payment

under paragraph (b)(1)(ii) of this section because there is a payment to a foreign related party in connection with the acquisition by the taxpayer of property of a character subject to the allowance for depreciation and the exception in paragraph (b)(3)(iii) of this section does not apply because FP's income from the sale of the depreciable property is not effectively connected with the conduct of FP's trade or business in the United States. See § 1.59A-2 for the application of the aggregation rule with respect to DC and FP's USTB.

(2) ***Example 2: Interest allocable under § 1.882-5*** —

(i) ***Facts.*** FC, a foreign corporation, has income that is effectively connected with the conduct of a trade or business within the United States. FC determines its interest expense under the three-step process described in § 1.882-5(b) through (d) with a total interest expense of $125x. The total interest expense is comprised of interest expense of $100x on U.S.- booked liabilities ($60x paid to a foreign related party and $40x paid to unrelated persons) and $25x of interest on excess U.S.-connected liabilities. FC has average worldwide interest expense (not including interest expense on U.S.-booked liabilities) of $500x, of which $100x is interest expense paid to a foreign related party. FC is an applicable taxpayer with respect to its effectively connected income. Assume all of the interest expense is deductible in the current taxable year and that none of the interest is subject to the effectively connected income exception in paragraph (b)(3)(iii) of this section.

(ii) ***Analysis.*** Under paragraph (b)(4)(i) of this section, the total amount of interest expense determined under § 1.882-5 that is a base erosion payment is $65x ($60x + 5x). FC has $60x of interest on U.S.-booked liabilities that is paid to a foreign related party and that is treated as a base erosion payment under paragraph (b)(4)(i)(A)(*2*) of this section. Additionally, $5x of the $25x of interest expense on excess U.S.-connected liabilities is treated as a base erosion payment under paragraph (b)(4)(i)(A)(*3*) of this section ($25x * ($100x/$500x)).

(3) ***Example 3: Interaction with section 163(j)*** —

(i) ***Facts.*** Foreign Parent (FP) is a foreign corporation that owns all of the stock of DC, a domestic corporation that is an applicable taxpayer. DC does not conduct a utility trade or business as described in section 163(j)(7)(A)(iv), an electing real property trade or business as described in section 163(j)(7)(B), or an electing farming business as described in section 163(j)(7)(C). In Year 1, DC has adjusted taxable income, as defined in section 163(j)(8), of $1000x and pays the following amounts of business interest expense: $420x that is paid to unrelated Bank, and $360x that is paid to FP. DC does not earn any business interest income or incur any floor plan financing interest expense in Year 1. None of the exceptions in paragraph (b)(3) of this section apply, and the interest is not subject to withholding.

(ii) ***Analysis*** —

(A) ***Classification of business interest.*** In Year 1, DC is permitted to deduct only $300x of business interest expense under section 163(j)(1) ($1000x × 30%). Paragraph (c)(4)(ii)(B) of this section provides that for purposes of paragraph (c)(1) of this section the deduction is treated first as foreign related business interest expense and domestic related business interest expense (here, only FP); and second as unrelated business interest expense (Bank). As a result, the $300x of business interest expense that is permitted under section 163(j)(1) is treated entirely as the business interest paid to the related foreign party, FP. All of DC's $300x deductible interest is treated as an add-back to modified taxable income in the Year 1 taxable year for purposes of § 1.59A-4(b)(2)(i).

(B) ***Ordering rules for disallowed business interest expense carryforward.*** Under section 163(j)(2), the $480x of disallowed business interest ($420x + $360x−$300x) is carried forward to the subsequent year. Under paragraph (c)(4)(ii)(B)(*1*) and (*2*) of this section, the disallowed business interest carryforward is correspondingly treated first as unrelated business interest expense, and second pro-rata as foreign related business interest expense and domestic related business interest expense. As a result, $420x of the $480x disallowed business interest expense carryforward is treated first as business interest expense paid to Bank and the remaining $60x of the $480x disallowed business interest expense carryforward is treated as interest paid to FP and as an add-back to modified taxable income.

(4) ***Example 4: Interaction with section 163(j); carryforward*** —

(i) ***Facts.*** The facts are the same as in paragraph (d)(3) of this section (the facts in *Example 3*), except that in addition, in Year 2, DC has adjusted taxable income of $250x, and pays the following amounts of business interest expense: $50x that is paid to unrelated Bank, and $45x that is paid to FP. DC does not earn any business interest income or incur any floor plan financing interest expense in Year 2. None of the exceptions in paragraph (b)(3) of this section apply.

(ii) ***Analysis*** —

(A) ***Classification of business interest.*** In Year 2, for purposes of section 163(j)(1), DC is treated as having paid or accrued total business interest expense of $575x, consisting of $95x business interest expense actually paid in Year 2 and $480x of business interest expense that is carried forward from Year 1. DC is permitted to deduct $75x of business interest expense in Year 2 under the limitation in section 163(j)(1) ($250x × 30%). Section 1.163(j)-5(b)(2) provides that, for purposes of section 163(j), the allowable business interest expense is first attributed to amounts paid or accrued in the current year, and then attributed to amounts carried over from earlier years on a first-in-first-out basis from the earliest year. Accordingly, the $75x of deductible business interest expense is deducted entirely from the $95x business interest expense incurred in Year 2 for section 163(j) purposes. Because DC's business interest expense deduction is limited under section 163(j)(1) and because DC's total business interest expense is attributable to more than one taxable year, paragraph (c)(4)(ii)(B)(*2*) of this section provides that the ordering rule in paragraph (c)(4)(ii)(B)(*1*) of this section is applied separately to each annual amount of section 163(j) disallowed business interest expense carryforward. With respect to the Year 2 layer, which is deducted first, paragraph (c)(4)(ii)(B) of this section provides that, for purposes of paragraph (c)(1) of this section, the Year 2 $75x deduction is treated first as foreign related business interest expense and domestic related business interest expense (here, only FP, $45x); and second as unrelated business interest expense (Bank, $30x). Consequentially, all of the $45x deduction of business interest expense that was paid to FP in Year 2 is treated as a base erosion tax benefit and an add-back to modified taxable income for the Year 2 taxable year for purposes of § 1.59A-4(b)(2)(i).

(B) ***Ordering rules for disallowed business interest expense carryforward.*** The disallowed business interest expense carryforward of $20x from Year 2 is correspondingly treated first as business interest expense paid to Bank under paragraph (c)(4)(i) of this section.

The disallowed business interest expense carryforward of $480x from the Year 1 layer that is also not allowed as a deduction in Year 2 remains treated as $420x paid to Bank and $60 paid to FP.

(5) ***Example 5: Interaction with section 163(j); carryforward*** —

(i) ***Facts.*** The facts are the same as in paragraph (d)(4) of this section (the facts in *Example 4*), except that in addition, in Year 3, DC has adjusted taxable income of $4000x and pays no business interest expense. DC does not earn any business interest income or incur any floor plan financing interest expense in Year 3.

(ii) ***Analysis.*** In Year 3, DC is treated as having paid or accrued total business interest expense of $500x, consisting of $480x of business interest expense that is carried forward from Year 1 and $20x of business interest expense that is carried forward from Year 2 for purposes of section 163(j)(1). DC is permitted to deduct $1200x of business interest expense in Year 3 under the limitation in section 163(j)(1) ($4000x × 30%). For purposes of section 163(j), DC is treated as first deducting the business interest expense from Year 1 then the business interest expense from Year 2. See § 1.163(j)-5(b)(2). Because none of DC's $500x business interest expense is limited under section 163(j), the stacking rule in paragraph (c)(4)(ii) of this section for allowed and disallowed business interest expense does not apply. For purposes of § 1.59A-4(b)(2)(i), DC's add-back to modified taxable income is $60x determined by the classifications in paragraph (c)(4)(i)(A) of this section ($60x treated as paid to FP from Year 1).

(6) ***Example 6: Interaction with section 163(j); partnership*** —

(i) ***Facts.*** The facts are the same as in paragraph (d)(4) of this section (the facts in *Example 4*), except that in addition, in Year 2, DC forms a domestic partnership (PRS) with Y, a domestic corporation that is not related to DC within the meaning of § 1.59A-1(b)(17). PRS does not conduct a utility trade or business as described in section 163(j)(7)(A)(iv), an electing real property trade or business as described in section 163(j)(7)(B) or an electing farming business as described in section 163(j)(7)(C) subject to section 163(j). PRS is not a small business described in section 163(j)(3). DC and Y are equal partners in partnership PRS. In Year 2, PRS has ATI of $100x and $48x of business interest expense. $12x of PRS's business interest expense is paid to Bank, and $36x of PRS's business interest expense is paid to FP. PRS allocates the items comprising its $100x of ATI $50x to DC and $50x to Y. PRS allocates its $48x of business interest expense $24x to DC and $24x to Y. DC classifies its $24x of business interest expense as $6x unrelated business interest expense (Bank) and $18x as foreign related business interest expense (FP) under paragraph (c)(4)(i)(B) of this section. Y classifies its $24x of business interest expense as entirely unrelated business interest expense of Y (Bank and FP) under paragraph (c)(4)(i)(B) of this section. None of the exceptions in paragraph (b)(3) of this section apply.

(ii) ***Partnership level analysis.*** In Year 2, PRS's section 163(j) limit is 30 percent of its ATI, or $30x ($100x × 30 percent). Thus, PRS has $30x of deductible business interest expense and $18x of excess business interest expense ($48x−$30x). The $30x of deductible business interest expense is includible in PRS's non-separately stated income or loss, and is not subject to further limitation under section 163(j) at the partners' level.

(iii) ***Partner level allocations analysis.*** Pursuant to § 1.163(j)-6(f)(2), DC and Y are each allocated $15x of deductible business interest expense and $9x of excess business interest expense. At the end of Year 2, DC and Y each have $9x of excess business interest expense from PRS,

which under § 1.163(j)-6 is not treated as paid or accrued by the partner until such partner is allocated excess taxable income or excess business interest income from PRS in a succeeding year. Pursuant to § 1.163(j)-6(e), DC and Y, in computing their limit under section 163(j), do not increase any of their section 163(j) items by any of PRS's section 163(j) items.

(iv) ***Partner level allocations for determining base erosion tax benefits.*** The $15x of deductible business interest expense allocated to DC is treated first as foreign related business interest expense (FP) under paragraph (c)(4)(ii)(B) of this section. DC's excess business interest expense from PRS of $9x is classified first as the unrelated business interest expense with respect to Bank ($6x) and then as the remaining portion of the business interest expense paid to FP ($3x, or $18x−$15x). Under paragraph (c)(4)(ii)(B)(*3*) of this section, these classifications of the PRS items apply irrespective of the classifications of DC's own interest expense as set forth in paragraph (d)(4) of this section (*Example 4*).

(v) ***Computation of modified taxable income.*** For Year 2, DC is treated as having incurred base erosion tax benefits of $60x, consisting of the $15x base erosion tax benefit with respect to its interest in PRS that is computed in paragraph (d)(6)(iii) of this section (*Example 6*) and $45x that is computed in paragraph (d)(4) of this section (*Example 4*).

(7) ***Example 7: Transfers of property to related taxpayers*** —

(i) ***Facts.*** FP is a foreign corporation that owns all of the stock of DC1 and DC2, both domestic corporations. DC1 and DC2 are both members of the same aggregate group but are not members of the same consolidated tax group under section 1502. In Year 1, FP sells depreciable property to DC1. On the first day of the Year 2 tax year, DC1 sells the depreciable property to DC2.

(ii) ***Analysis*** —

(A) ***Year 1.*** The acquisition of depreciable property by DC1 from FP is a base erosion payment under paragraph (b)(1)(ii) of this section because there is a payment to a foreign related party in connection with the acquisition by the taxpayer of property of a character subject to the allowance for depreciation.

(B) ***Year 2.*** The acquisition of the depreciable property in Year 2 by DC2 is not itself a base erosion payment because DC2 did not acquire the property from a foreign related party. However, under paragraph (b)(2)(viii) of this section any depreciation expense taken by DC2 on the property acquired from DC1 is a base erosion payment and a base erosion tax benefit under paragraph (c)(1)(ii) of this section because the acquisition of the depreciable property was a base erosion payment by DC1 and the property was sold to a member of the aggregate group; therefore, the depreciation expense continues as a base erosion tax benefit to DC2 as it would have been to DC1 if it continued to own the property.

(8) ***Example 8: Effect of election to waive deduction on method of accounting*** —

(i) ***Facts.*** DC, a domestic corporation, purchased and placed in service a depreciable asset (Asset A) from a foreign related party on the first day of its taxable year 1 for $100x. DC elects to use the alternative depreciation system under section 168(g) to depreciate all properties placed in service during taxable year 1. Asset A is not eligible for the additional first year depreciation deduction. Beginning in taxable year 1, DC depreciates Asset A under the alternative depreciation system using the straight-line depreciation method, a 5-year recovery period, and the half-year convention. This depreciation method, recovery period, and convention are

permissible for Asset A under section 168(g). On its timely filed original Federal income tax return for taxable year 1, DC does not elect to waive any deductions and DC claims a depreciation deduction of $10x for Asset A. On its timely filed original Federal income tax return for taxable year 2, DC does not elect to waive any deductions and DC claims a depreciation deduction of $20x for Asset A. During taxable year 3, DC files an amended return for taxable year 1 to elect to waive the depreciation deduction for Asset A and reports in accordance with paragraph (c)(6)(ii) of this section with its amended return for taxable year 1 that the amount of the waived depreciation deduction for Asset A is $10x and the amount of the claimed depreciation deduction is $0x.

(ii) ***Analysis.*** Pursuant to paragraph (c)(6)(iii)(B)(*1*) of this section, DC's election to waive the depreciation deduction for Asset A for taxable year 1 is disregarded for determining DC's method of accounting for Asset A. Accordingly, after DC's election to waive the depreciation deduction for Asset A for taxable year 1, DC's method of accounting for depreciation for Asset A continues to be the straight-line depreciation method, a 5-year recovery period, and the half-year convention. Pursuant to paragraph (c)(6)(iii)(C) of this section, the election made by DC in taxable year 3 on its amended return for taxable year 1 is not a method of accounting.

(9) ***Example 9: Change of accounting method when taxpayer has waived a deduction*** —

(i) ***Facts.*** DC, a domestic corporation, purchased and placed in service a depreciable asset (Asset B) from a foreign related party on the first day of its taxable year 1 for $100x. DC elects to use the alternative depreciation system under section 168(g) to depreciate all properties placed in service during taxable year 1. Asset B is not eligible for the additional first year depreciation deduction. Beginning in taxable year 1, DC depreciates Asset B under the alternative depreciation system using the straight-line depreciation method, a 10-year recovery period, and the half-year convention. Under this method of accounting, the depreciation deductions for Asset B are $5x for taxable year 1 and $10x for taxable year 2. However, for taxable years 1 and 2, DC elects to waive $3x and $6x, respectively, of the depreciation deductions for Asset B and reports the information required under paragraph (c)(6)(ii) of this section with its returns. In taxable year 3, DC realizes that the correct recovery period for Asset B is 5 years. If DC had used the correct recovery period for Asset B, the depreciation deductions for Asset B would have been $10x for taxable year 1 and $20x for taxable year 2. DC timely files a Form 3115 to change its method of accounting for Asset B from a 10-year recovery period to a 5-year recovery period, beginning with taxable year 3. DC was not under examination as of the date on which it timely filed this Form 3115.

(ii) ***Analysis*** —

(A) ***Computation of the section 481(a) adjustment.*** In determining the net negative section 481(a) adjustment for this method change, DC compares the depreciation deductions under its present method of accounting to the depreciation deductions under its proposed method of accounting. Pursuant to paragraph (c)(6)(iii)(D) of this section, DC agreed that, by making the election to waive depreciation deductions for Asset B, DC will not take into account the fact that depreciation deductions for Asset B were waived under paragraph (c)(6)(i) of this section. Accordingly, DC's net negative section 481(a) adjustment for this method change is $15x, which is calculated by determining the difference between the depreciation deductions for Asset B for taxable years 1 and 2 under DC's present method of accounting ($15x) and the depreciation deductions that would have been allowable for Asset B for taxable years 1 and 2 under DC's proposed method of accounting ($30x).

(B) ***Computation of basis adjustments.*** Pursuant to paragraph (c)(6)(iii)(B)(*3*) of this section, DC's elections to waive the depreciation deductions for Asset B for taxable years 1 and 2 are disregarded for determining the amount allowable for depreciation for purposes of section 1016(a)(2). The amount allowable for depreciation of Asset B is determined based on the proper method of computing depreciation for Asset B. Accordingly, Asset B's adjusted basis at the end of taxable year 1 is $90x ($100x−$10x) and at the end of taxable year 2 is $70x ($90x−$20x).

[T.D. 9885, 84 FR 67017, Dec. 6, 2019, as amended by T.D. 9910, 85 FR 64365, Oct. 9, 2020; T.D. 10041, 90 FR 59049, Dec. 18, 2025]

§ 1.59A-4 Modified taxable income.

(a) ***Scope.*** Paragraph (b)(1) of this section provides rules for computing modified taxable income. Paragraph (b)(2) of this section provides rules addressing how base erosion tax benefits and net operating losses affect modified taxable income. Paragraph (b)(3) of this section provides a rule for a holder of a residual interest in a REMIC. Paragraph (c) of this section provides examples illustrating the rules described in this section.

(b) ***Computation of modified taxable income*** —

(1) ***In general.*** The term *modified taxable income* means a taxpayer's taxable income, as defined in section 63(a), determined with the additions described in paragraph (b)(2) of this section. Notwithstanding the foregoing, the taxpayer's taxable income may not be reduced to an amount less than zero as a result of a net operating loss deduction allowed under section 172. See paragraphs (c)(1) and (2) of this section (*Examples 1* and *2*).

(2) ***Modifications to taxable income.*** The amounts described in this paragraph (b)(2) are added back to a taxpayer's taxable income to determine its modified taxable income.

(i) ***Base erosion tax benefits.*** The amount of any base erosion tax benefit as defined in § 1.59A-3(c)(1).

(ii) ***Certain net operating loss deductions.*** The base erosion percentage, as described in § 1.59A-2(e)(3), of any net operating loss deduction allowed to the taxpayer under section 172 for the taxable year. For purposes of determining modified taxable income, the net operating loss deduction allowed does not exceed taxable income before taking into account the net operating loss deduction. See paragraph (c)(1) and (2) of this section (*Examples 1* and *2*). The base erosion percentage for the taxable year that the net operating loss arose is used to determine the addition under this paragraph (b)(2)(ii). For a net operating loss that arose in a taxable year beginning before January 1, 2018, the base erosion percentage for the taxable year is zero.

(3) ***Rule for holders of a residual interest in a REMIC.*** For purposes of paragraph (b)(1) of this section, the limitation in section 860E(a)(1) is not taken into account in determining the taxable income amount that is used to compute modified taxable income for the taxable year.

(c) ***Examples.*** The following examples illustrate the rules of paragraph (b) of this section.

(1) ***Example 1: Current year loss*** —

(i) ***Facts.*** A domestic corporation (DC) is an applicable taxpayer that has a calendar taxable year. In 2020, DC has gross income of $100x, a deduction of $80x that is not a base erosion tax benefit, and a deduction of $70x that is a base erosion tax benefit. In addition, DC has a net operating loss carryforward to 2020 of $400x that arose in 2016.

(ii) ***Analysis.*** DC's starting point for computing modified taxable income is $(50x), computed as gross income of $100x, less a deduction of $80x (non-base erosion tax benefit) and a deduction of $70x (base erosion tax benefit). Under paragraph (b)(2)(ii) of this section, DC's starting point for computing modified taxable income does not take into account the $400x net operating loss carryforward because the allowable deductions for 2020, not counting the NOL deduction, exceed the gross income for 2020. DC's modified taxable income for 2020 is $20x, computed as $(50x) + $70x base erosion tax benefit.

(2) ***Example 2: Net operating loss deduction*** —

(i) ***Facts.*** The facts are the same as in paragraph (c)(1)(i) of this section (the facts in *Example 1*), except that DC's gross income in 2020 is $500x.

(ii) ***Analysis.*** DC's starting point for computing modified taxable income is $0x, computed as gross income of $500x, less: A deduction of $80x (non-base erosion tax benefit), a deduction of $70x (base erosion tax benefit), and a net operating loss deduction of $350x (which is the amount of taxable income before taking into account the net operating loss deduction, as provided in paragraph (b)(2)(ii) of this section ($500x−$150x)). DC's modified taxable income for 2020 is $70x, computed as $0x + $70x base erosion tax benefit. DC's modified taxable income is not increased as a result of the $350x net operating loss deduction in 2020 because the base erosion percentage of the net operating loss that arose in 2016 is zero under paragraph (b)(2)(ii) of this section.

[T.D. 9885, 84 FR 67017, Dec. 6, 2019]

§ 1.59A-5 Base erosion minimum tax amount.

(a) ***Scope.*** Paragraph (b) of this section provides rules regarding the calculation of the base erosion minimum tax amount. Paragraph (c) of this section describes the base erosion and anti-abuse tax rate applicable to the taxable year.

(b) ***Base erosion minimum tax amount*** —

(1) ***In general.*** For each taxable year, an applicable taxpayer must determine its base erosion minimum tax amount.

(2) ***Calculation of base erosion minimum tax amount.*** With respect to any applicable taxpayer, the base erosion minimum tax amount for any taxable year is, the excess (if any) of—

(i) An amount equal to the base erosion and anti-abuse tax rate multiplied by the modified taxable income of the taxpayer for the taxable year, over

(ii) An amount equal to the regular tax liability as defined in § 1.59A-1(b)(16) of the taxpayer for the taxable year, reduced (but not below zero) by the excess (if any) of—

(A) The credits allowed under chapter 1 of subtitle A of the Code against regular tax liability over

(B) The sum of the credits described in paragraph (b)(3) of this section.

(3) ***Credits that do not reduce regular tax liability.*** The sum of the following credits are used in paragraph (b)(2)(ii)(B) of this section to limit the amount by which the credits allowed under chapter 1 of subtitle A of the Internal Revenue Code reduce regular tax liability—

(i) ***Taxable years beginning on or before December 31, 2025.*** For any taxable year beginning on or before December 31, 2025—

(A) The credit allowed under section 38 for the taxable year that is properly allocable to the research credit determined under section 41(a);

(B) The portion of the applicable section 38 credits not in excess of 80 percent of the lesser of the amount of those applicable section 38 credits or the base erosion minimum tax amount (determined without regard to this paragraph (b)(3)(i)(B)); and

(C) Any credits allowed under sections 33, 37, and 53.

(ii) ***Taxable years beginning after December 31, 2025.*** For any taxable year beginning after December 31, 2025, any credits allowed under sections 33, 37, and 53.

(c) ***Base erosion and anti-abuse tax rate*** —

(1) ***In general.*** For purposes of calculating the base erosion minimum tax amount, the base erosion and anti-abuse tax rate is—

(i) ***Calendar year 2018.*** For taxable years beginning in calendar year 2018, five percent.

(ii) ***Calendar years 2019 through 2025.*** For taxable years beginning after December 31, 2018, through taxable years beginning before January 1, 2026, 10 percent.

(iii) ***Calendar years after 2025.*** For taxable years beginning after December 31, 2025, 12.5 percent.

(2) ***Increased rate for banks and registered securities dealers*** —

(i) ***In general.*** In the case of a taxpayer that is a member of an affiliated group (as defined in section 1504(a)(1)) that includes a bank or a registered securities dealer, the percentage otherwise in effect under paragraph (c)(1) of this section is increased by one percentage point.

(ii) ***De minimis exception to increased rate for banks and registered securities dealers.*** Paragraph (c)(2)(i) of this section does not apply to a taxpayer that is a member of an affiliated group (as defined in section 1504(a)(1)) that includes a bank or registered securities dealer if, in that taxable year, the total gross receipts of the affiliated group attributable to the bank or the registered securities dealer (or attributable to all of the banks and registered securities dealers in the group, if more than one) represent less than two percent of the total gross receipts of the affiliated group, as determined under § 1.59A-2(d).

(3) ***Application of section 15 to tax rates in section 59A*** —

(i) ***New tax.*** Section 15 does not apply to any taxable year that includes January 1, 2018.

(ii) ***Change in tax rate pursuant to section 59A(b)(1)(A).*** Section 15 does not apply to any taxable year that includes January 1, 2019.

(iii) ***Change in rate pursuant to section 59A(b)(2).*** Section 15 applies to the change in tax rate pursuant to section 59A(b)(2)(A).

[T.D. 9885, 84 FR 67017, Dec. 6, 2019]

§ 1.59A-6 Qualified derivative payment.

(a) ***Scope.*** This section provides additional guidance regarding qualified derivative payments. Paragraph (b) of this section defines the term qualified derivative payment. Paragraph (c) of this section provides guidance on certain payments that are not treated as qualified derivative payments. Paragraph (d) defines the term derivative for purposes of section 59A. Paragraph (e) of this section provides examples illustrating the rules of this section.

(b) ***Qualified derivative payment*** —

(1) ***In general.*** A *qualified derivative payment* means any payment made by a taxpayer to a foreign related party pursuant to a derivative with respect to which the taxpayer—

(i) Recognizes gain or loss as if the derivative were sold for its fair market value on the last business day of the taxable year (and any additional times as required by the Internal Revenue Code or the taxpayer's method of accounting);

(ii) Treats any gain or loss so recognized as ordinary; and

(iii) Treats the character of all items of income, deduction, gain, or loss with respect to a payment pursuant to the derivative as ordinary.

(2) ***Reporting requirements*** —

(i) ***In general.*** No payment is a qualified derivative payment under paragraph (b)(1) of this section for any taxable year unless the taxpayer (whether or not the taxpayer is a reporting corporation as defined in § 1.6038A-1(c)) reports the information required in § 1.6038A-2(b)(7)(ix) for the taxable year. To report its qualified derivative payments, a taxpayer must include the payment in the aggregate amount of qualified derivative payments on Form 8991 (or successor).

(ii) ***Failure to satisfy the reporting requirement.*** If a taxpayer fails to satisfy the reporting requirement described in paragraph (b)(2)(i) of this section with respect to any payments, those payments are not eligible for the qualified derivative payment exception described in § 1.59A-3(b)(3)(ii) and are base erosion payments unless an exception in § 1.59A-3(b)(3) otherwise applies. A taxpayer's failure to report a payment as a qualified derivative payment does not impact the eligibility of any other payment which the taxpayer properly reported under paragraph (b)(2)(i) of this section from being a qualified derivative payment.

(iii) ***Reporting of aggregate amount of qualified derivative payments.*** The aggregate amount of qualified derivative payments is the sum of the amount described in paragraph (b)(3) of this section for each derivative. To the extent that the taxpayer is treated as receiving a payment, as determined in § 1.59A-2(e)(3)(vi), for the taxable year with respect to a derivative, the payment is not included in the aggregate qualified derivative payments.

(iv) ***Transition period for qualified derivative payment reporting.*** Before paragraph (b)(2)(i) of this section is applicable, a taxpayer will be treated as satisfying the reporting requirement described section 59A(h)(2)(B) to the extent that the taxpayer reports the aggregate amount of qualified derivative payments on Form 8991 (or successor). *See* § 1.6038A-2(g) (applicability date for § 1.6038A-2(b)(7)(ix)). Until paragraph (b)(2)(i) of this section is applicable, paragraph (b)(2)(ii) of this section will not apply to a taxpayer who reports the aggregate amount of qualified derivative payments in good faith.

(3) *Amount of any qualified derivative payment* —

(i) ***In general.*** The amount of any qualified derivative payment excluded from the denominator of the base erosion percentage as provided in § 1.59A-2(e)(3)(ii)(C) is determined as provided in § 1.59A-2(e)(3)(vi).

(ii) ***Net qualified derivative payment that includes a payment that is a base erosion payment.*** Any net amount determined in paragraph (b)(3)(i) of this section must be reduced by any gross items that are treated as a base erosion payment pursuant to paragraph (c) of this section.

(iii) ***Special rule for mark-to-market gains and losses on the securities leg of a securities lending transaction*** —

(A) ***In general.*** The amount of any qualified derivative payment with respect to the securities leg of a securities lending transaction as defined in §§ 1.861-2(a)(7) and 1.861-3(a)(6) that is excluded from the denominator of the base erosion percentage is determined under § 1.59A-3(b)(2)(iv)(B). The securities leg of a securities lending transaction refers to the rights, obligations, and transfers of securities and payments under the transaction other than the obligation to provide or right to receive cash collateral and interest thereon. Pursuant to § 1.59A-3(b)(2)(iv)(B), mark-to-market gains and losses on a securities leg of a securities lending transaction are not included in determining the amount of the qualified derivative payment with respect to that security. Thus, the amount of the qualified derivative payment with respect to the securities leg of a securities lending transaction is determined by taking into account only other items of income, gain, loss, or deduction during the taxable year that relate to the securities leg, such as substitute payments defined in §§ 1.861-2(a)(7) and 1.861-3(a)(6) and borrow fees. This paragraph (b)(3)(iii)(A) applies to a taxpayer that is either the borrower or lender with respect to the securities lending transaction.

(B) ***Examples.*** The following examples illustrate the application of this paragraph (b)(3)(iii).

(*1*) *Example 1: Securities loan* —

(*i*) ***Facts.*** FP is a foreign corporation that owns all of the shares of DC, a domestic corporation. FP is a foreign related party of DC under § 1.59A-1(b)(12). DC is a registered securities dealer. On September 1 of year 1, DC enters into a securities lending transaction with FP in which it borrows stock from FP. DC provides cash collateral for the loan and receives a rebate on that collateral from FP. On September 1, year 1, the stock has a value of $100x. On November 1, year 1, a dividend of $1x is paid by the issuer on the stock. DC pays a substitute dividend of $1x to FP on November 1, year 1 under the terms of the securities loan. There are no other payments made or received in year 1. On December 31, year 1, the stock has a value of $106x. DC is required to mark-to-market the securities leg of the securities lending transaction for U.S. Federal income tax purposes. DC is a calendar year taxpayer.

(*ii*) ***Analysis.*** DC has a deduction of $1x as a result of the substitute dividend it pays to FP. Assuming that the securities lending transaction otherwise meets the requirements of this section (including reporting the information required by § 1.6038A-2(b)(7)(ix)), the amount of DC's qualified derivative payment with respect to the securities lending transaction is $1x. Payments with respect to the cash collateral are not treated as part of the securities lending transaction.

See paragraph (d)(2)(iii)(B) of this section. With respect to the securities leg of the securities lending transaction, DC has a mark-to-market loss of ($6x). Under paragraph (b)(3)(iii)(A) of this section, the amount of this mark-to-market loss is not included when determining the amount of the qualified derivative payment. Under § 1.59A-3(b)(2)(iv)(B), DC's ($6x) mark-to-market loss on the securities leg of the securities lending transaction also is not taken into account in determining the base erosion tax benefit amount for purposes of the numerator of the base erosion percentage. The ($6x) loss is taken into account in the denominator of the base erosion percentage, while the $1x substitute dividend payment is not taken into account for that purpose because it is a qualified derivative payment. *See* § 1.59A-2(e)(3)(ii)(C) and (e)(3)(vi). The amount of the qualified derivative payment would be the same if the lender paid a rebate on the cash collateral in year 1, without regard to whether the parties agree to pay and receive a net payment reflecting the difference between the amount of the rebate and the amount of the substitute payment.

(*2*) ***Example 2: Securities loan.*** The facts are the same as in paragraph (b)(3)(iii)(B)(*1*) of this section (*Example 1*) except that on December 31, year 1, the stock has a value of $94x. With respect to the securities leg of the securities lending transaction, DC has a mark-to-market gain of $6x. Under paragraph (b)(3)(iii)(A) of this section, the amount of this mark-to-market gain is not included when determining the amount of the qualified derivative payment. DC has a deduction of $1x as a result of the substitute dividend payment it makes to FP. Assuming that the securities lending transaction otherwise meets the requirements of this section (including reporting the information required by § 1.6038A-2(b)(7)(ix)), the amount of DC's qualified derivative payment with respect to the securities lending transaction is $1x. Neither the $6x gain nor the $1x substitute dividend payment, which is a qualified derivative payment, are taken into account in the denominator of the base erosion percentage.

(iv) ***Rule for determining the amount of a substitute payment or other payment paid with respect to a securities lending transaction to a foreign related party*** —

(A) ***In general.*** When a taxpayer makes a substitute payment as defined in § 1.861-2(a)(7) or § 1.861-3(a)(6) or other payment with respect to the securities leg of a securities lending transaction, the taxpayer must determine whether the substitute payment or other payment is paid to a foreign related party. The amount of the substitute payment or other payment paid by the taxpayer to a foreign related party is determined under either paragraph (b)(3)(iv)(B) or (C) of this section.

(B) ***Specific identification method.*** The taxpayer may determine the amount of the substitute payments or other payments with respect to the securities leg of a securities lending transaction that it has paid to foreign related parties by using the amount actually paid by the taxpayer to the foreign related parties if the taxpayer can specifically identify all recipients of the substitute payments or other payments paid by the taxpayer during the taxable year with respect to the securities leg of a securities lending transaction or the taxpayer can specifically identify the payor for all substitute payments or other payments received by foreign related parties during the taxable year with respect to the securities leg of a securities lending transaction.

(C) ***Alternative method.*** If the taxpayer has paid any substitute payment or other payment with respect to the securities leg of a securities lending transaction to which the taxpayer cannot apply paragraph (b)(3)(iv)(B) of this section, the taxpayer must use the methodology provided in this paragraph (b)(3)(iv)(C).

(*1*) ***Step 1: Determining the total amount of substitute payments and other payments received by foreign related parties.*** The taxpayer must determine the total amount of substitute payments and other payments with respect to the securities leg of a securities lending transaction received by all foreign related parties of the taxpayer during the taxable year.

(*2*) ***Step 2: Determining the total amount of substitute payments and other payments paid by taxpayer.*** The taxpayer must determine the total amount of substitute payments and other payments with respect to the securities leg of a securities lending transaction paid by the taxpayer during the taxable year.

(*3*) ***Step 3: Determining the amount of substitute payments and other payments paid by the taxpayer to foreign related parties.*** The amount of substitute payments and other payments with respect to the securities leg of a securities lending transaction paid by the taxpayer is treated as being paid first to foreign related parties of the taxpayer up to the total amount of substitute payments and other payments with respect to the securities leg of a securities lending transaction received by foreign related parties. Any amount of substitute payments and other payments with respect to the securities leg of a securities lending transaction paid by the taxpayer that exceeds the amount of substitute payments and other payments received by foreign related parties is treated as paid to unrelated parties for purposes of this paragraph (b)(3)(iv)(C)(*3*).

(D) ***Example —***

(*1*) ***Facts.*** FP is a foreign corporation that owns all of the shares of DC, a domestic corporation, and all of the shares of several foreign subsidiaries. FP and its foreign subsidiaries are foreign related parties of DC under § 1.59A-1(b)(12). DC is a registered securities dealer. DC enters into securities lending transactions pursuant to which it borrows securities both from foreign affiliates that are members of the FP controlled group and from unrelated customers. DC obtains the securities from a common pool of available securities that includes securities from DC's U.S. customer accounts as well as securities held by members of the FP controlled group for their own account and for the account of customers. DC is unable to determine from its records either the identities of the counterparties from which DC has borrowed securities or whether it has entered into a securities lending transaction with a foreign affiliate. In year 1, DC makes substitute payments of $500x in aggregate with respect to the securities lending transactions. DC's foreign affiliates receive substitute payments in year 1 totaling $100x. Because DC cannot determine whether it has entered into a securities lending transaction with a foreign affiliate, DC does not know what portion of the $100x received by DC's foreign affiliates was paid by DC.

(*2*) ***Analysis.*** Because DC is unable to determine the actual amount of substitute payments it has paid to DC's foreign affiliates, DC cannot use the specific identification method of paragraph (b)(3)(iv)(B) of this section to determine the

amount of substitute payments it has paid to foreign related parties for QDP reporting purposes. Instead, DC must use the alternative method set forth in paragraph (b)(3)(iv)(C) of this section to determine the amount of substitute payments treated as made to foreign related party recipients. Under Step 1, DC determines that its foreign affiliates have received substitute payments of $100x. Under Step 2, DC determines that it has paid substitute payments totaling $500x. Under Step 3, DC is treated as having paid substitute payments to its foreign affiliates of $100x, up to the total amount of substitute payments they received in year 1. The remaining $400x of substitute payments paid by DC is treated as having been paid to unrelated parties for purposes of paragraph (b)(3)(iv)(C)(*3*) of this section.

(c) ***Exceptions for payments otherwise treated as base erosion payments.*** A payment does not constitute a qualified derivative payment if—

(1) The payment would be treated as a base erosion payment if it were not made pursuant to a derivative, including any interest, royalty, or service payment; or

(2) In the case of a contract that has derivative and nonderivative components, the payment is properly allocable to the nonderivative component.

(d) ***Derivative defined*** —

(1) ***In general.*** For purposes of this section, the term *derivative* means any contract (including any option, forward contract, futures contract, short position, swap, or similar contract) the value of which, or any payment or other transfer with respect to which, is (directly or indirectly) determined by reference to one or more of the following:

(i) Any share of stock in a corporation;

(ii) Any evidence of indebtedness;

(iii) Any commodity that is actively traded;

(iv) Any currency; or

(v) Any rate, price, amount, index, formula, or algorithm.

(2) ***Exceptions.*** The following contracts are not treated as derivatives for purposes of section 59A.

(i) ***Direct interest.*** A derivative contract does not include a direct interest in any item described in paragraph (d)(1)(i) through (v) of this section.

(ii) ***Insurance contracts.*** A derivative contract does not include any insurance, annuity, or endowment contract issued by an insurance company to which subchapter L applies (or issued by any foreign corporation to which the subchapter would apply if the foreign corporation were a domestic corporation).

(iii) ***Securities lending and sale-repurchase transactions*** —

(A) ***Multi-step transactions treated as financing.*** For purposes of paragraph (d)(1) of this section, a derivative does not include any securities lending transaction, sale-repurchase transaction, or substantially similar transaction that is treated as a secured loan for federal tax purposes. Securities lending transaction and sale-repurchase transaction have the meanings provided in § 1.861-2(a)(7).

(B) ***Special rule for payments associated with the cash collateral provided in a securities lending transaction or substantially similar transaction.*** For purposes of paragraph (d)(1) of this section, a derivative does not include the cash collateral component of a securities lending transaction (or the cash payments pursuant to a sale-repurchase transaction, or similar payments pursuant to a substantially similar transaction).

(C) ***Anti-abuse exception for certain transactions that are the economic equivalent of substantially unsecured cash borrowing.*** For purposes of paragraph (d)(1) of this section, a derivative does not include any securities lending transaction or substantially similar transaction that is part of an arrangement that has been entered into with a principal purpose of avoiding the treatment of any payment with respect to that transaction as a base erosion payment and that provides the taxpayer with the economic equivalent of a substantially unsecured cash borrowing. The determination of whether the securities lending transaction or substantially similar transaction provides the taxpayer with the economic equivalent of a substantially unsecured cash borrowing takes into account arrangements that effectively serve as collateral due to the taxpayer's compliance with any U.S. regulatory requirements governing such transaction.

(3) ***American depository receipts.*** For purposes of section 59A, American depository receipts (or any similar instruments) with respect to shares of stock in a foreign corporation are treated as shares of stock in that foreign corporation.

(e) ***Examples.*** The following examples illustrate the rules of this section.

(1) ***Example 1: Notional principal contract as QDP*** —

(i) ***Facts.*** Domestic Corporation (DC) is a dealer in securities within the meaning of section 475. On February 1, 2019, DC enters into a contract (Interest Rate Swap) with Foreign Parent (FP), a foreign related party, for a term of five years. Under the Interest Rate Swap, DC is obligated to make a payment to FP each month, beginning March 1, 2019, in an amount equal to a variable rate determined by reference to the prime rate, as determined on the first business day of the immediately preceding month, multiplied by a notional principal amount of $50x. Under the Interest Rate Swap, FP is obligated to make a payment to DC each month, beginning March 1, 2019, in an amount equal to 5% multiplied by the same notional principal amount. The Interest Rate Swap satisfies the definition of a notional principal contract under § 1.446-3(c). DC recognizes gain or loss on the Interest Rate Swap pursuant to section 475. DC reports the information required to be reported for the taxable year under § 1.6038A-2(b)(7)(ix).

(ii) ***Analysis.*** The Interest Rate Swap is a derivative as described in paragraph (d) of this section because it is a contract that references the prime rate and a fixed rate for determining the amount of payments. The exceptions described in paragraph (c) of this section do not apply to the Interest Rate Swap. Because DC recognizes ordinary gain or loss on the Interest Rate Swap pursuant to section 475(d)(3), it satisfies the condition in paragraph (b)(1)(ii) of this section. Because DC satisfies the requirement relating to the information required to be reported under paragraph (b)(2) of this section, any payment to FP with respect to the Interest Rate Swap will be a qualified derivative payment. Therefore, under § 1.59A-3(b)(3)(ii), the payments to FP are not base erosion payments.

(2) ***Example 2: Securities lending anti-abuse rule*** —

(i) ***Facts.***

(A) Foreign Parent (FP) is a foreign corporation that owns all of the stock of domestic corporation (DC) and foreign corporation (FC). FP and FC are foreign related parties of DC under § 1.59A-1(b)(12) but not members of DC's aggregate group. On January 1 of year 1, with a principal purpose of providing financing to DC without DC making a base erosion payment to FC, FC lends 100x U.S. Treasury bills with a remaining maturity of 11 months (Securities A) to DC (Securities Lending Transaction 1) for a period of six months. Pursuant to the terms of Securities Lending Transaction 1, DC is obligated to make substitute payments to FC corresponding to the interest payments on Securities A. DC does not post cash collateral with respect to Securities Lending Transaction 1, and no other arrangements of FC or DC effectively serve as collateral under any U.S. regulatory requirements governing the transaction. Immediately thereafter, DC sells Securities A for cash.

(B) On June 30 of year 1, FC lends 100x U.S. Treasury bills with a remaining maturity of 11 months (Securities B) to DC (Securities Lending Transaction 2) for a period of six months. Pursuant to the terms of Securities Lending Transaction 2, DC is obligated to make substitute payments to FC corresponding to the interest payments on Securities B. Immediately thereafter, DC sells Securities B for cash and uses the cash to purchase U.S. Treasury bills with a remaining maturity equal to the Securities A bills that DC then transfers to FC in repayment of Securities Lending Transaction 1.

(ii) ***Analysis.*** Securities Lending Transaction 1 and Securities Lending Transaction 2 are not treated as derivatives for purposes of paragraph (d)(1) of this section because the transactions are part of an arrangement that has been entered into with a principal purpose of avoiding the treatment of any payment with respect to Securities Lending Transaction 1 and Securities Lending Transaction 2 as a base erosion payment and provides DC with the economic equivalent of a substantially unsecured cash borrowing by DC. As a result, pursuant to paragraph (d)(2)(iii)(C) of this section, the substitute payments made by DC to FC with respect to Securities A and Securities B are not eligible for the exception in § 1.59A-3(b)(3)(ii) (qualified derivative payment).

[T.D. 9885, 84 FR 67017, Dec. 6, 2019, as amended by T.D. 10041, 90 FR 59049, Dec. 18, 2025]

§ 1.59A-7 Application of base erosion and anti-abuse tax to partnerships.

(a) ***Scope.*** This section provides rules regarding how partnerships and their partners are treated for purposes of making certain determinations under section 59A, including whether there is a base erosion payment or base erosion tax benefit. All references to partnerships in this section include domestic and foreign partnerships. This section applies to payments to a partnership and payments from a partnership as well as transfers of partnership interests (as defined in paragraph (c)(3)(iv) of this section). The aggregate principle described in this section does not override the treatment of partnership items under any Code section other than section 59A. The aggregate principles provided in this section apply without regard to any tax avoidance purpose relating to a particular partnership. See § 1.701-2(e). Paragraph (b) of this section describes how the aggregate approach to partnerships applies for purposes of certain section 59A determinations. Paragraph (c) of this section provides rules for determining whether there is a base erosion payment with respect to a payment to or from a partnership. Paragraph (d) of this section provides rules for determining the base erosion tax benefits of a partner. Paragraph (e) of this section

provides additional rules relating to the application of section 59A to partnerships. Paragraph (f) of this section provides a rule for determining whether a person is a foreign related party. Paragraph (g) of this section provides examples that illustrate the application of the rules of this section.

(b) ***Application of section 59A to partnerships.*** The purpose of this section is to provide a set of operating rules for the application of section 59A to partnerships and partners in a manner consistent with the purposes of section 59A. Except for purposes of determining a partner's base erosion tax benefits under paragraph (d)(1) of this section and whether a taxpayer is a registered securities dealer under paragraph (e)(3) of this section, section 59A determinations are made at the partner level in the manner described in this section. The provisions of section 59A must be interpreted in a manner consistent with this approach. If a transaction is not specifically described in this section, whether the transaction gives rise to a base erosion payment or base erosion tax benefit is determined in accordance with the principles of this section and the purposes of section 59A.

(c) ***Base erosion payment.*** For purposes of determining whether a taxpayer has made a base erosion payment as described in § 1.59A-3(b), the taxpayer must treat a payment to or from a partnership as made to or from each partner and the assets and liabilities of the partnership as assets and liabilities of each partner. This paragraph (c) provides specific rules for determining whether a partner has made or received a payment, including as a result of a partnership interest transfer (as defined in paragraph (c)(3)(iv) of this section).

(1) ***Payments made by or to a partnership.*** For purposes of determining whether a payment or accrual by a partnership is a base erosion payment described in § 1.59A-3(b)(1)(i), any amount paid or accrued by the partnership (including any guaranteed payment described in section 707(c)) is treated as paid or accrued by each partner based on the partner's distributive share of the item of deduction with respect to that amount. For purposes of determining whether a payment or accrual to a partnership is a base erosion payment described in § 1.59A-3(b)(1)(i) or (iii), any amount paid or accrued to the partnership (including any guaranteed payment described in section 707(c)) is treated as paid or accrued to each partner based on the partner's distributive share of the item of income with respect to that amount. See paragraph (e)(1) of this section to determine the partner's distributive share.

(2) ***Transfers of certain property.*** When a partnership transfers property, each partner is treated as transferring its proportionate share of the property transferred for purposes of determining whether there is a base erosion payment described in § 1.59A-3(b)(1)(ii) or (iv). When a partnership acquires property, each partner is treated as acquiring its proportionate share of the property acquired for purposes of determining whether there is a base erosion payment described in § 1.59A-3(b)(1)(ii) or (iv). For purposes of this paragraph (c)(2), a transfer of property does not include a transfer of a partnership interest (as defined in paragraph (c)(3)(iv) of this section). See paragraph (c)(3) of this section for rules applicable to transfers of partnership interests. See paragraphs (g)(2)(v) and (vi) of this section (*Example 5* and *Example 6*) for examples illustrating the application of this paragraph (c)(2).

(3) ***Transfers of a partnership interest*** —

(i) ***In general.*** A transfer of a partnership interest (as defined in paragraph (c)(3)(iv) of this section) is generally treated as a transfer by each partner in the partnership of its proportionate share of the partnership's assets to the extent of any change in its proportionate share of any partnership asset, as well as any assumption of associated liabilities by the partner. Paragraphs (c)(3)(ii) and (iii) of this section provide rules for applying the general rule to

transfers of a partnership interest by a partner and issuances of a partnership interest by the partnership for contributed property, respectively. See paragraph (g)(2)(vii) of this section (*Example 7*) for an example illustrating the application of this paragraph (c)(3)(i).

(ii) ***Transfers of a partnership interest by a partner.*** A transfer of a partnership interest (as defined in paragraph (c)(3)(iv) of this section) by a partner is treated as a transfer by the transferor to the recipient of the transferor's proportionate share of each of the partnership assets and an assumption by the recipient of the transferor's proportionate share of the partnership liabilities. If the partner's entire partnership interest is not transferred, only the proportionate share of each of the partnership assets and liabilities associated with the transferred partnership interest is treated as transferred and assumed. See paragraphs (g)(2)(iii), (iv), and (vi) of this section (*Example 3, Example 4,* and *Example 6*) for examples illustrating the application of this paragraph (c)(3)(ii).

(iii) ***Certain issuances of a partnership interest by a partnership.*** If a partnership issues an interest in the partnership in exchange for a contribution of property to the partnership, the contributing partner is treated as exchanging a portion of the contributed property and assuming any liabilities associated with the transferred partnership interest for a portion of the partners' pre-contribution interests in the partnership's assets and the partners' assumption of any liabilities transferred to the partnership. For purposes of this paragraph (c)(3)(iii), a reference to the "partnership's assets" includes the assets contributed by the contributing partner and any other assets that are contributed to the partnership at the same time. Each partner whose proportionate share in a partnership asset (including the assets contributed to the partnership as part of the transaction) is reduced as a result of the transaction is treated as transferring the asset to the extent of the reduction, and each person who receives a proportionate share or an increased proportionate share in an asset as a result of the transaction is treated as receiving an asset to the extent of the increase, proportionately from the partners' reduced interests. For example, if a person contributes property to a partnership in which each of two existing partners has a 50 percent pro-rata interest in the partnership in exchange for a one-third pro-rata partnership interest, each of the pre-contribution partners is treated as transferring a one-third interest in their share of existing partnership assets to the contributing partner, and the contributing partner is treated as transferring a one-third interest in the contributed assets to each of the original partners. See paragraphs (g)(2)(i) and (ii) of this section (*Example 1* and *Example 2*) for additional examples illustrating the application of this paragraph (c)(3)(iii).

(iv) ***Partnership interest transfers defined.*** For purposes of paragraphs (c)(3) and (4) of this section, a transfer of a partnership interest includes any issuance of a partnership interest by a partnership; any sale of a partnership interest; any increase or decrease in a partner's proportionate share of any partnership asset as a result of a contribution of property or services to a partnership, a distribution, or a redemption; or any other transfer of a proportionate share of any partnership asset (other than a transfer of a partnership asset that is not a partnership interest by the partnership to a person not acting in a partner capacity), whether by a partner or the partnership (including as a result of a deemed or actual sale or a capital shift).

(4) ***Increased basis from a distribution.*** If a distribution of property from a partnership to a partner results in an increase in the tax basis of either the distributed property or other partnership property, such as under section 732(b) or 734(b), the increase in tax basis attributable to a foreign related party is treated as if it was newly purchased property acquired by the taxpayer (to the extent of its proportionate share) from the foreign related party that is placed in service when the distribution

occurs. See § 1.734-1(e). This increased basis treated as newly purchased property is treated as acquired with a base erosion payment, unless an exception in § 1.59A-3(b) applies. For this purpose, in the case of a distribution to a foreign related party, the increased basis in the remaining partnership property that is treated as newly purchased property is entirely attributable to the foreign related party. In the case of a distribution to a taxpayer, the increased basis in the distributed property that is treated as newly purchased property is attributable to each foreign related party in proportion to the foreign related party's proportionate share of the asset immediately before the distribution. If the distribution is to a person other than a taxpayer or a foreign related party, there is no base erosion payment caused by the distribution under this paragraph (c)(4). See paragraphs (g)(2)(vii), (viii), and (ix) of this section (*Example 7*, *Example 8,* and *Example 9*) for examples illustrating the application of this paragraph (c)(4).

(5) ***Operating rules applicable to base erosion payments*** —

(i) ***Single payment characterized as separate transactions.*** If a single transaction is partially characterized in one manner and partially characterized in another manner, each part of the transaction is separately analyzed. For example, if a contribution of property to a partnership is partially treated as a contribution and partially treated as a disguised sale, the contribution and sale are separately analyzed under paragraph (c) of this section.

(ii) ***Ordering rule with respect to transfers of a partnership interest.*** If a partnership interest is transferred (within the meaning of paragraph (c)(3)(iv) of this section), paragraph (c)(3) of this section first applies to determine the assets deemed transferred by the transferor(s) to the transferee(s) and liabilities deemed assumed by the parties. Then, to the extent applicable (such as where a partnership makes a contribution in exchange for an interest in another partnership or when a partnership receives an interest in another partnership as a contribution to it), paragraph (c)(2) of this section applies for purposes of determining the proportionate share of the property received by the partners in a partnership. See paragraph (g)(2)(vi) of this section (*Example 6*) for an illustration of this rule.

(iii) ***Consideration for base erosion payment or property resulting in base erosion tax benefits.*** When a partnership pays or receives property, services, or other consideration, each partner is deemed to pay or receive the property, services, or other consideration paid or received by the partnership for purposes of determining if there is a base erosion payment, except as otherwise provided in paragraph (c) of this section. See paragraphs (g)(2)(v) and (vi) of this section (*Example 5* and *Example 6*) for illustrations of this rule.

(iv) ***Non-cash consideration.*** When both parties to a transaction use non-cash consideration, each party must separately apply paragraph (c) of this section to determine its base erosion payment with respect to each property. For example, if two partnerships, each with a domestic corporation and a foreign corporation as partners, all of whom are related, exchange depreciable property, each transfer of property would be separately analyzed to determine whether it is a base erosion payment.

(v) ***Allocations of income in lieu of deductions.*** If a partnership adopts the curative method of making section 704(c) allocations under § 1.704-3(c), an allocation of income to the partner to whom any built-in gain or built-in loss would be allocable under section 704(c) (the 704(c) partner), in an amount necessary to offset the effect of the ceiling rule (as defined in § 1.704-3(b)(1)), in lieu of a deduction allocation to a partner other than the 704(c) partner (a

non-704(c) partner), is treated as a deduction to the non-704(c) partner for purposes of section 59A in an amount equal to the income allocation. See paragraph (g)(2)(x) of this section (*Example 10*) for an example illustrating the application of this paragraph (c)(5)(v).

(d) ***Base erosion tax benefit for partners*** —

(1) ***In general.*** A partner's distributive share of any deduction or reduction in gross receipts attributable to a base erosion payment (including as a result of sections 704(b) and (c), 707(a) and (c), 732(b) and (d), 734(b) and (d), 737, 743(b) and (d), and 751(b)) is the partner's base erosion tax benefit, subject to the exceptions in § 1.59A-3(c)(2). See paragraph (e)(1) of this section to determine the partner's distributive share for purposes of section 59A. A partner's base erosion tax benefit may be more than the partner's base erosion payment. For example, if a partnership makes a payment to a foreign related party of its domestic partner to acquire a depreciable asset, and the partnership specially allocates more depreciation deductions to a partner than its proportionate share of the asset, the partner's base erosion tax benefit includes the specially allocated depreciation deduction even if the total allocated deduction exceeds the partner's share of the base erosion payment made to acquire the asset. Base erosion tax benefits are determined separately for each asset, payment, or accrual, as applicable, and are not netted with other items. A taxpayer determines its base erosion tax benefits for non-partnership items pursuant to § 1.59A-3(c).

(2) ***Exception for base erosion tax benefits of certain small partners*** —

(i) ***In general.*** For purposes of determining a partner's amount of base erosion tax benefits attributable to a base erosion payment made by a partnership, a partner does not take into account its distributive share of any base erosion tax benefits from the partnership for the taxable year if—

(A) The partner's interest in the partnership represents less than ten percent of the capital and profits of the partnership at all times during the taxable year;

(B) The partner is allocated less than ten percent of each partnership item of income, gain, loss, deduction, and credit for the taxable year; and

(C) The partner's interest in the partnership has a fair market value of less than $25 million on the last day of the partner's taxable year, determined using a reasonable method.

(ii) ***Attribution.*** For purposes of paragraph (d)(2)(i) of this section, a partner's interest in a partnership or partnership item is determined by adding the interests of the partner and any related party of the partner (as determined under section 59A), taking into account any interest owned directly, indirectly, or through constructive ownership (applying the section 318 rules as modified by section 59A (except section 318(a)(3)(A) through (C) will also apply so as to consider a United States person as owning stock that is owned by a person who is not a United States person), but excluding any interest to the extent already taken into account).

(e) ***Other rules for applying section 59A to partnerships*** —

(1) ***Partner's distributive share.*** For purposes of section 59A, each partner's distributive share of an item of income or deduction of the partnership is determined under sections 704(b) and (c) and takes into account amounts determined under other provisions of the Code, including but not limited to sections 707(a) and (c), 732(b) and (d), 734(b) and (d), 737, 743(b) and (d), and 751(b). *See* § 1.704-1(b)(1)(iii) regarding the application of section 482. These amounts are calculated separately for each payment or accrual on a property-by-property basis, including for purposes of section

704(c), and are not netted. For purposes of section 59A, a partner's distributive share of a reduction to determine gross income is equal to a proportionate amount of the partnership's reduction to determine gross income corresponding to the partner's share of the partnership gross receipts (as determined under paragraph (e)(2)(i) of this section) related to that reduction.

(2) *Gross receipts* —

(i) ***In general.*** For purposes of section 59A, each partner in the partnership includes a share of partnership gross receipts in proportion to the partner's distributive share (as determined under sections 704(b) and (c)) of items of gross income that were taken into account by the partnership under section 703 or 704(c) (such as remedial or curative items under § 1.704-3(c) or (d)).

(ii) ***Foreign corporation.*** See § 1.59A-2(d)(3) for gross receipts of foreign corporations.

(3) ***Registered securities dealers.*** If a partnership, or a branch of the partnership, is a registered securities dealer, each partner is treated as a registered securities dealer unless the partner's interest in the registered securities dealer would satisfy the criteria for the exception in paragraph (d)(2) of this section. For purposes of applying the de minimis exception in § 1.59A-2(e)(2)(iii), a partner takes into account its distributive share of the relevant partnership items.

(4) ***Application of sections 163(j) and 59A(c)(3) to partners.*** See § 1.59A-3(c)(4).

(5) ***Tiered partnerships.*** In the case of one or more partnerships owning an interest in another partnership (or partnerships), the rules of this section apply successively to each partnership and its partners in the chain of ownership. Paragraphs (d)(2) and (f) of this section and the small partner exception in paragraph (e)(3) of this section apply only to a partner that is not itself a partnership.

(f) ***Foreign related party.*** With respect to any person that owns an interest in a partnership, the related party determination in section 59A(g) applies at the partner level.

(g) ***Examples.*** The following examples illustrate the application of this section.

(1) ***Facts.*** The following facts are assumed for purposes of the examples.

(i) DC is a domestic corporation that is an applicable taxpayer for purposes section 59A.

(ii) FC is a foreign corporation that is a foreign related party with respect to DC.

(iii) UC is a domestic corporation that is not related to DC and FC.

(iv) Neither FC nor any partnership in the examples is (or is treated as) engaged in a U.S. trade or business or has a permanent establishment in the United States.

(v) All payments apply to a taxable year beginning after December 31, 2017.

(vi) Unless otherwise stated, all allocations are pro-rata and satisfy the requirements of section 704(b) and all the partners have equal interests in the partnership.

(vii) Unless otherwise stated, depreciable property acquired and placed in service by the partnership has a remaining recovery period of five years and is depreciated under the alternative depreciation system of section 168(g) using the straight line method. Solely for purposes of simplifying the calculations in these examples, assume the applicable convention rules in section 168(d) do not apply.

(viii) No exception under § 1.59A-3(b) or (c) applies to any amount paid or accrued.

(2) *Examples* —

(i) *Example 1: Contributions to a partnership on partnership formation* —

(A) ***Facts.*** DC and FC form partnership PRS, with each contributing depreciable property that has a fair market value and tax basis of $100x, Property A and Property B, respectively. Therefore, the property contributed by FC, Property B, will generate $20x of annual section 704(b) and tax depreciation deductions for five years. The depreciation deductions will be allocated $10x to each of DC and FC each year. Before the transactions, for purposes of section 59A, DC is treated as owning a 100 percent interest in Property A and a zero percent interest in Property B, and FC is treated as owning a 100 percent interest in Property B and a zero percent interest in Property A. After the formation of PRS, for purposes of section 59A, DC and FC are each treated as owning a 50 percent proportionate share of each of Property A and Property B.

(B) ***Analysis.*** The treatment of contributions of property in exchange for an interest in a partnership is described in paragraph (c)(3)(iii) of this section. Under paragraph (c)(3)(iii) of this section, DC is treated as exchanging a 50 percent interest in Property A for a 50 percent proportionate share of Property B. Under § 1.59A-3(b)(1)(ii), the payment to acquire depreciable property, Property B, from FC is a base erosion payment. The base erosion tax benefit is the amount of depreciation allocated to DC with respect to Property B ($10x per year) and is not netted with any other partnership item pursuant to paragraph (d)(1) of this section.

(ii) *Example 2: Section 704(c) and remedial allocations* —

(A) ***Facts.*** The facts are the same as in paragraph (g)(2)(i)(A) of this section (the facts in *Example 1*), except that Property B has a tax basis of $40x and PRS adopts the remedial method under § 1.704-3(d).

(B) ***Analysis.*** The analysis and results are the same as in paragraph (g)(2)(i)(B) of this section (the analysis in *Example 1*), except that annual tax depreciation is $8x ($40x/5) and annual remedial tax deduction allocation to DC is $2x (with $2x of remedial income to FC) for five years. Both the tax depreciation and the remedial tax allocation to DC are base erosion tax benefits to DC under paragraph (d)(1) of this section.

(iii) *Example 3: Sale of a partnership interest without a section 754 election* —

(A) ***Facts.*** UC and FC are equal partners in partnership PRS, the only asset of which is Property A, a depreciable property with a fair market value of $200x and a tax basis of $120x. PRS does not have any section 704(c) assets. DC purchases 50 percent of FC's interest in PRS for $50x. Prior to the sale, for section 59A purposes, FC is treated as owning a 50 percent proportionate share of Property A and DC is treated as owning no interest in Property A. Following the sale, for section 59A purposes, DC is treated as owning a 25 percent proportionate share of Property A, all of which is treated as acquired from FC. The partnership does not have an election under section 754 in effect. Property A will generate $24x of annual tax and section 704(b) depreciation deductions for five years. The depreciation deductions will be allocated $12x to UC and $6x to both FC and DC each year.

(B) ***Analysis.*** The sale of a partnership interest by a partner is analyzed under paragraph (c)(3)(ii) of this section. Under section (c)(3)(ii) of this section, FC is treated as selling to DC 25 percent of Property A. Under § 1.59A-3(b)(1)(ii), the payment to acquire depreciable property is a base erosion payment. Under paragraph (d)(1) of this section, the base erosion tax benefit is the amount of depreciation allocated to DC with respect to the base erosion payment, which would be the depreciation deductions allocated to DC with respect to Property A. DC's annual $6x depreciation deduction is its base erosion tax benefit with respect to the base erosion payment.

(iv) ***Example 4: Sale of a partnership interest with section 754 election*** —

(A) ***Facts.*** The facts are the same as in paragraph (g)(2)(iii)(A) of this section (the facts in *Example 3*), except that the partnership has an election under section 754 in effect. As a result of the sale, there is a $20x positive adjustment to the tax basis in Property A with respect to DC under section 743(b) (DC's $50x basis in the PRS interest less DC's $30x share of PRS's tax basis in Property A). The section 743(b) step-up in tax basis is recovered over a depreciable recovery period of five years. Therefore, DC will be allocated a total of $10x in annual depreciation deductions for five years, comprised of $6x with respect to DC's proportionate share of PRS's common tax basis in Property A ($30x over 5 years) and $4x with respect to the section 743(b) adjustment ($20x over 5 years).

(B) ***Analysis.*** The analysis is the same as in paragraph (g)(2)(iii)(B) of this section (the analysis in *Example 3*); however, because section 743(b) increases the basis in Property A for DC by $20x, DC is allocated additional depreciation deductions of $4x per year as a result of the section 743(b) adjustment and has an annual base erosion tax benefit of $10x ($6x plus $4x) for five years under paragraph (d)(1) of this section.

(v) ***Example 5: Purchase of depreciable property from a partnership*** —

(A) ***Facts.*** The facts are the same as in paragraph (d)(2)(iii)(A) of this section (the facts in *Example 3*), except that instead of DC purchasing an interest in the partnership, DC purchases Property A from the partnership for $200x.

(B) ***Analysis.*** DC must analyze whether the purchase of the depreciable property from the partnership is a base erosion payment under paragraph (c)(2) of this section. Under paragraph (c)(2) of this section, DC is treated as acquiring FC's proportionate share of Property A from FC. Because DC paid the partnership for the partnership's interest in Property A, under paragraph (c)(5)(iii) of this section, DC is treated as paying FC for FC's proportionate share of Property A. Under § 1.59A-3(b)(1)(ii), the payment to FC to acquire depreciable property is a base erosion payment. DC's base erosion tax benefit is the amount of depreciation allocated to DC with respect to the base erosion payment, which in this case is the amount of depreciation deductions with respect to the property acquired with a base erosion payment, or the depreciation deductions from FC's (but not UC's) proportionate share of the asset. See § 1.59A-7(d)(1).

(vi) ***Example 6: Sale of a partnership interest to a second partnership*** —

(A) ***Facts.*** FC, UC1, and UC2 are equal partners in partnership PRS1. DC and UC3 are equal partners in partnership PRS2. UC1, UC2, and UC3 are not related to DC or FC. PRS1's sole asset is Property A, which is depreciable property with a fair market value and tax basis of $300x. FC sells its entire interest in PRS1 to PRS2 for $100. For section 59A purposes,

FC's proportionate share of Property A prior to the sale is one-third. Following the sale, for section 59A purposes, PRS2's proportionate share of Property A is one-third and DC's proportionate share of Property A (through PRS2) is one-sixth (50 percent of one-third).

(B) ***Analysis.*** Under paragraph (c)(5)(ii) of this section (the ordering rule), FC's transfer of its interest in PRS1 is first analyzed under paragraph (c)(3) of this section to determine how the transfer of the partnership interest is treated. Then, paragraph (c)(2) of this section applies to analyze how the acquisition of property by PRS2 is treated. Under paragraph (c)(3)(ii) of this section, FC is deemed to transfer its proportionate share of PRS1's assets, which is one-third of Property A. Then, under paragraph (c)(2) of this section, DC is treated as acquiring its proportionate share of PRS2's proportionate share of Property A from FC, which is one-sixth (50 percent of one-third). Under paragraph (c)(5)(iii) of this section, DC is treated as paying for the property it is treated as acquiring from FC. Therefore, DC's deemed payment to FC to acquire depreciable property is a base erosion payment under § 1.59A-3(b)(1)(ii). DC's base erosion tax benefit is equal to DC's distributive share of depreciation deductions that PRS2 allocates to DC attributable to Property A. See § 1.59A-7(d)(1).

(vii) ***Example 7: Distribution of cash by a partnership to a foreign related party*** —

(A) ***Facts.*** DC, FC, and UC are equal partners in a partnership, PRS, the assets of which consist of cash of $90x and a depreciable asset (Property A) with a fair market value of $180x and a tax basis of $60x. Each partner's interest in PRS has a fair market value of $90x ($270x/3) and a tax basis of $50x. Assume that all non-depreciable assets are capital assets, all depreciable assets are nonresidential real property under section 168, and that no depreciation has been claimed prior to the transaction below. PRS has an election under section 754 in effect. PRS distributes the $90x of cash to FC in complete liquidation of its interest, resulting in gain to FC of $40x ($90x minus its tax basis in PRS of $50x) under section 731(a)(1) and an increase to the tax basis of Property A under section 734(b) of $40x. Prior to the distribution, for section 59A purposes, each partner had a one-third proportionate share of Property A. After the distribution, for section 59A purposes, the remaining partners each have a 50 percent proportionate share of Property A. Each partner's pro-rata allocation of depreciation deductions with respect to Property A is in proportion to each partner's proportionate share of Property A both before and after the distribution. Half of the depreciation deductions attributable to the $40x section 734(b) step-up will be allocated to DC. In addition, DC's proportionate share of Property A increased from one-third to one-half and therefore DC will be allocated depreciation deductions with respect to half of the original basis of $60x (or $30x) instead of one-third of $60x (or $20x).

(B) ***Analysis.*** Distributions of property that cause an increase in the tax basis of property that continues to be held by the partnership are analyzed under paragraph (c)(4) of this section. The $40x increase in the tax basis of Property A as a result of the distribution of cash to FC is treated as newly purchased property acquired from FC under paragraph (c)(4) of this section and therefore acquired with a base erosion payment under § 1.59A-3(b)(1)(ii) to DC to the extent of DC's proportionate share. DC's base erosion tax benefit is the amount of DC's depreciation deductions attributable to that base erosion payment, which is DC's distributive share of the depreciation deductions with respect to the $40x increase in the tax basis of Property A. See § 1.59A-7(d)(1). In addition, FC transferred a partnership interest to DC (as defined in paragraph (c)(3)(iv) of this section),

which is analyzed under paragraph (c)(3)(i) of this section. Under paragraph (c)(3)(i) of this section, DC is deemed to acquire a one-sixth interest in Property A from FC (the increase in DC's proportionate share from one-third to one-half). DC's base erosion tax benefit from this additional one-sixth interest in Property A is the amount of DC's depreciation deductions attributable to this interest.

(viii) ***Example 8: Distribution of property by a partnership to a taxpayer*** —

(A) ***Facts.*** The facts are the same as paragraph (g)(2)(vii)(A) of this section (the facts of *Example 7*), except that PRS's depreciable property consists of two assets, Property A having a fair market value of $90x and a tax basis of $60x and Property B having a fair market value of $90x and a tax basis of zero. Instead of distributing cash to FC, PRS distributes Property B to DC in liquidation of its interest, resulting in an increase in the basis of the distributed Property B to DC of $50x (from zero to $50x) under section 732(b) because DC's tax basis in the PRS interest was $50x. For section 59A purposes, prior to the distribution, each partner had a one-third proportionate share of Property B and after the distribution, the property is wholly owned by DC.

(B) ***Analysis.*** Distributions of property that cause an increase in the tax basis of property that is distributed to a taxpayer are analyzed under paragraph (c)(4) of this section. Under paragraph (c)(4) of this section, the $50x increase in tax basis is treated as newly purchased property that was acquired with a base erosion payment to the extent that the increase in tax basis is attributable to FC. Under paragraph (c)(4) of this section, the portion of the increase that is attributable to FC is the proportionate share of the Property B immediately before the distribution that was treated as owned by FC. Immediately before the distribution, FC had a one-third proportionate share of Property B. Accordingly, one-third of the $50x increase in the tax basis of Property B is treated as if it was newly purchased property acquired by DC from FC with a base erosion payment under § 1.59A-3(b)(1)(ii). DC's base erosion tax benefit is the amount of DC's depreciation deductions with respect to the base erosion payment, which in this case is the depreciation deductions with respect to the one-third interest in the increased basis treated as newly purchased property deemed acquired from FC. See § 1.59A-3(c)(1). In addition, PRS transferred Property B to DC, which is analyzed under paragraph (c)(2) of this section. Prior to the distribution, DC, FC, and UC each owned one-third of Property B. After the distribution, DC entirely owned Property B. Therefore, under paragraph (c)(2) of this section, DC is treated as acquiring one-third of Property B from FC. DC's depreciation deductions with respect to the one-third of Property B acquired from FC (without regard to the basis increase) is also a base erosion tax benefit.

(ix) ***Example 9: Distribution of property by a partnership in liquidation of a foreign related party's interest*** —

(A) ***Facts.*** The facts are the same as paragraph (g)(2)(viii)(A) (the facts of *Example 8*), except that Property B is not distributed to DC and, instead, Property A is distributed to FC in liquidation of its interest, resulting in a tax basis in Property A of $50x in FC's hands under section 732(b) and a section 734(b) step-up in Property B of $10x (because Property A's tax basis was reduced from $60x to $50x), allocable to DC and UC. For section 59A purposes, prior to the distribution, each partner had a one-third proportionate share of Property B and after the distribution, DC and UC each have a one-half proportionate share of Property B.

(B) ***Analysis.*** Distributions of property that cause an increase in the tax basis of property that continues to be held by the partnership are analyzed under paragraph (c)(4) of this section. Under paragraph (c)(4) of this section, because the distribution of Property A to FC from PRS caused an increase in the tax basis of Property B, the entire $10x increase in tax basis is treated as newly purchased property that was acquired with a base erosion payment under § 1.59A-3(b)(1)(ii). DC's base erosion tax benefit is the amount of DC's depreciation deductions attributable to the base erosion payment, which is DC's distributive share of the depreciation deductions with respect to the $10x increase in the tax basis of Property B. See § 1.59A-7(d)(1). In addition, under paragraph (c)(3)(i) of this section, DC is deemed to acquire a one-sixth interest in Property B from FC (the increase in DC's proportionate share from one-third to one-half). While this increase is a base erosion payment under § 1.59A-3(b)(1)(ii), there is no base erosion tax benefit from this additional one-sixth interest in Property B because the tax basis in Property B (without regard to the basis) is zero and therefore the increase in DC's proportionate share does not result in any additional depreciation deductions.

(x) ***Example 10: Section 704(c) and curative allocations*** —

(A) ***Facts.*** The facts are the same as in paragraph (d)(2)(ii)(A) of this section (the facts in *Example 2*), except that DC's property is not depreciable, PRS uses the traditional method with curative allocations under § 1.704-3(c), and the curative allocations are to be made from operating income. Also assume that the partnership has $20x of gross operating income in each year and a curative allocation of the operating income satisfies the "substantially the same effect" requirement of § 1.704-3(c)(3)(iii)(A).

(B) ***Analysis.*** The analysis and results are the same as in paragraph (d)(2)(i)(B) of this section (the analysis in *Example 1*), except that actual depreciation is $8x ($40x/5) per year and the ceiling rule shortfall under § 1.704-3(b)(1) of $2x per year is corrected with a curative allocation of income from DC to FC of $2x per year. Solely for U.S. federal income tax purposes, each year FC is allocated $12x of total operating income and DC is allocated $8x of operating income. Both the actual depreciation deduction to DC and the curative allocation of income from DC are base erosion tax benefits to DC under paragraphs (c)(5)(v) and (d)(1) of this section.

[T.D. 9885, 84 FR 67017, Dec. 6, 2019, as amended by T.D. 9910, 85 FR 64367, Oct. 9, 2020]

§ 1.59A-8 [Reserved]

§ 1.59A-9 Anti-abuse and recharacterization rules.

(a) ***Scope.*** This section provides rules for recharacterizing certain transactions according to their substance for purposes of applying section 59A and the section 59A regulations. Paragraph (b) of this section provides specific anti-abuse rules. Paragraph (c) of this section provides examples illustrating the rules of paragraph (b) of this section.

(b) ***Anti-abuse rules*** —

(1) ***Transactions involving unrelated persons, conduits, or intermediaries.*** If a taxpayer pays or accrues an amount to one or more intermediaries (including an intermediary unrelated to the taxpayer) that would have been a base erosion payment if paid or accrued to a foreign related party, and one or more of the intermediaries makes (directly or indirectly) corresponding payments to or for the

benefit of a foreign related party as part of a transaction (or series of transactions), plan, or arrangement that has as a principal purpose of avoiding a base erosion payment (or reducing the amount of a base erosion payment), the role of the intermediary or intermediaries is disregarded as a conduit, or the amount paid or accrued to the intermediary is treated as a base erosion payment, as appropriate.

(2) ***Transactions to increase the amount of deductions taken into account in the denominator of the base erosion percentage computation.*** A transaction (or component of a transaction or series of transactions), plan, or arrangement that has a principal purpose of increasing the deductions taken into account for purposes of § 1.59A-2(e)(3)(i)(B) (the denominator of the base erosion percentage computation) is disregarded for purposes of § 1.59A-2(e)(3).

(3) ***Transactions to avoid the application of rules applicable to banks and registered securities dealers.*** A transaction (or series of transactions), plan, or arrangement that occurs among related parties that has a principal purpose of avoiding the rules applicable to certain banks and registered securities dealers in § 1.59A-2(e)(2) (base erosion percentage test for banks and registered securities dealers) or § 1.59A-5(c)(2) (increased base erosion and anti-abuse tax rate for banks and registered securities dealers) is not taken into account for purposes of § 1.59A-2(e)(2) or § 1.59A-5(c)(2).

(4) ***Nonrecognition transactions.*** If a transaction (or series of transactions), plan, or arrangement (the first transaction) increases the adjusted basis of property that the taxpayer acquires in a transaction (the second transaction) that qualifies for the specified nonrecognition transaction exception in § 1.59A-3(b)(3)(viii)(A) (or would qualify, but for this paragraph (b)(4)), and a principal purpose of the first transaction was to increase the taxpayer's depreciation or amortization deductions without increasing the taxpayer's base erosion tax benefits, then § 1.59A-3(b)(3)(viii)(A) does not apply to the property acquired in the second transaction to the extent of the increase in adjusted basis. For purposes of this paragraph (b)(4), if a transaction (or series of transactions), plan, or arrangement between related parties increases the adjusted basis of property within the six-month period before the taxpayer acquires the property, the transaction (or series of transactions), plan, or arrangement is deemed to have such a principal purpose.

(5) ***Transactions involving derivatives on a partnership interest.*** If a taxpayer acquires a derivative on a partnership interest (or partnership assets) as part of a transaction (or series of transactions), plan, or arrangement that has as a principal purpose of avoiding a base erosion payment (or reducing the amount of a base erosion payment) and the partnership interest (or partnership assets) would have resulted in a base erosion payment had the taxpayer acquired that interest (or partnership asset) directly, then the taxpayer is treated as having a direct interest instead of a derivative interest for purposes of applying section 59A. This paragraph (b)(5), however, does not apply to a derivative, as defined in section 59A(h)(4)(A)(v), on a partnership asset to the extent the payment pursuant to the derivative qualifies for the exception for qualified derivative payments in § 1.59A-3(b)(3)(ii) and § 1.59A-6. A derivative interest in a partnership includes any contract (including any financial instrument) the value of which, or any payment or other transfer with respect to which, is (directly or indirectly) determined in whole or in part by reference to the partnership, including the amount of partnership distributions, the value of partnership assets, or the results of partnership operations.

(6) ***Allocations to eliminate or reduce a base erosion payment.*** If a partnership receives (or accrues) an amount from a person not acting in a partner capacity (including a person who is not a partner) and allocates the income or loss with respect to that amount to its partners with a principal purpose of avoiding a base erosion payment (or reducing the amount of a base erosion payment), then the taxpayer transacting (directly or indirectly) with the partnership will determine its base erosion

payment as if the allocations had not been made and the items of income or loss had been allocated proportionately. The preceding sentence applies only when the allocations, in combination with any related allocations, do not change the economic arrangement of the partners to the partnership.

(c) ***Examples.*** The following examples illustrate the application of this section.

(1) ***Facts.*** The following facts are assumed for purposes of the examples.

(i) DC is a domestic corporation that is an applicable taxpayer for purposes section 59A.

(ii) FP is a foreign corporation that owns all the stock of DC.

(iii) None of the foreign corporations have income that is, or is treated as, effectively connected with the conduct of a trade or business in the United States under an applicable provision of the Internal Revenue Code or regulations thereunder.

(iv) All payments occur in a taxable year beginning after December 31, 2017.

(2) ***Example 1: Substitution of payments that are not base erosion payments for payments that otherwise would be base erosion payments through a conduit or intermediary*** —

(i) ***Facts.*** FP owns Property 1 with a fair market value of $95x, which FP intends to transfer to DC. A payment from DC to FP for Property 1 would be a base erosion payment. Corp A is a domestic corporation that is not a related party with respect to DC. As part of a plan with a principal purpose of avoiding a base erosion payment, FP enters into an arrangement with Corp A to transfer Property 1 to Corp A in exchange for $95x. Pursuant to the same plan, Corp A transfers Property 1 to DC in exchange for $100x. Property 1 is subject to the allowance for depreciation (or amortization in lieu of depreciation) in the hands of DC.

(ii) ***Analysis.*** The arrangement between FP, DC, and Corp A is deemed to result in a $95x base erosion payment under paragraph (b)(1) of this section because DC's payment to Corp A would have been a base erosion payment if paid to a foreign related party, and Corp A makes a corresponding payment to FP as part of the series of transactions that has as a principal purpose of avoiding a base erosion payment.

(3) ***Example 2: Alternative transaction to base erosion payment*** —

(i) ***Facts.*** The facts are the same as in paragraph (c)(2)(i) of this section (the facts in *Example 1*), except that DC does not purchase Property 1 from FP or Corp A. Instead, DC purchases Property 2 from Corp B, a domestic corporation that is not a related party with respect to DC and that originally produced or acquired Property 2 for Corp B's own account. Property 2 is substantially similar to Property 1, and DC uses Property 2 in substantially the same manner that DC would have used Property 1.

(ii) ***Analysis.*** Paragraph (b)(1) of this section does not apply to the transaction between DC and Corp B because Corp B does not make a corresponding payment to or for the benefit of FP as part of a transaction, plan, or arrangement.

(4) ***Example 3: Alternative financing source*** —

(i) ***Facts.*** On Date 1, FP loaned $200x to DC in exchange for Note A. DC pays or accrues interest annually on Note A, and the payment or accrual is a base erosion payment within the meaning of § 1.59A-3(b)(1)(i). On Date 2, DC borrows $200x from Bank, a corporation that is not a related party with respect to DC, in exchange for Note B. The terms of Note B are substantially similar to the terms of Note A. DC uses the proceeds from Note B to repay Note A.

(ii) ***Analysis.*** Paragraph (b)(1) of this section does not apply to the transaction between DC and Bank because Bank does not make a corresponding payment to or for the benefit of FP as part of the series of transactions.

(5) ***Example 4: Alternative financing source that is a conduit*** —

(i) ***Facts.*** The facts are the same as in paragraph (c)(4)(i) of this section (the facts in *Example 3*) except that in addition, as part of the same plan or arrangement as the Note B transaction and with a principal purpose of avoiding a base erosion payment, FP deposits $250x with Bank. The difference between the interest rate paid by Bank to FP on FP's deposit and the interest rate paid by DC to Bank is less than one percentage point. The interest rate charged by Bank to DC would have differed absent the deposit by FP.

(ii) ***Analysis.*** The transactions between FP, DC, and Bank are deemed to result in a base erosion payment under paragraph (b)(1) of this section because DC's payment to Bank would have been a base erosion payment if paid to a foreign related party, and Bank makes a corresponding payment to FP as part of the series of transactions that has as a principal purpose of avoiding a base erosion payment. See Rev. Rul. 87-89, 1987-2 C.B. 195, Situation 3.

(6) ***Example 5: Intermediary acquisition*** —

(i) ***Facts.*** FP owns all of the stock of DC1 and DC2, each domestic corporations. FP is a manufacturer of lawn equipment. DC1 is in the trade or business of renting equipment to unrelated third parties. DC2 is a dealer in property that capitalizes its purchases into inventory and recovers the amount through cost of goods sold. Before Date 1, in the ordinary course of DC1's business, DC1 acquired depreciable property from FP that DC1 in turn rented to unrelated third parties. DC1's purchases from FP were base erosion payments within the meaning of § 1.59A-3(b)(1)(ii). On Date 1, with a principal purpose of avoiding a base erosion payment, FP and DC2 reorganized their operations so that DC2 acquires the lawn equipment from FP and immediately thereafter, DC2 resells the lawn equipment to DC1.

(ii) ***Analysis.*** The transactions between FP, DC1, and DC2 are deemed to result in a base erosion payment under paragraph (b)(1) of this section because DC1's payment to DC2 would have been a base erosion payment if paid directly to FP, and DC2 makes a corresponding payment to FP as part of a series of transactions, plan, or arrangement that has a principal purpose of avoiding a base erosion payment from DC1 to FP.

(7) ***Example 6: Offsetting transactions to increase the amount of deductions taken into account in the denominator of the base erosion percentage computation*** —

(i) ***Facts.*** With a principal purpose of increasing the deductions taken into account by DC for purposes of § 1.59A-2(e)(3)(i)(B), DC enters into a long position with respect to Asset with Financial Institution 1 and simultaneously enters into a short position with respect to Asset with Financial Institution 2. Financial Institution 1 and Financial Institution 2 are not related to DC and are not related to each other.

(ii) ***Analysis.*** Paragraph (b)(2) of this section applies to the transactions between DC and Financial Institution 1 and DC and Financial Institution 2. These transactions are not taken into account for purposes of § 1.59A-2(e)(3)(i)(B) because the transactions have a principal purpose of increasing the deductions taken into account for purposes of § 1.59A-2(e)(3)(i)(B).

(8) ***Example 7: Ordinary course transactions that increase the amount of deductions taken into account in the denominator of the base erosion percentage computation*** —

(i) ***Facts.*** DC, a financial institution, enters into a long position with respect to stock in Corporation with Person 1 and later on the same day enters into a short position with respect to stock in Corporation with Person 2. Person 1 and Person 2 are not related to DC and are not related to each other. DC entered into the positions in the ordinary course of its business and did not have a principal purpose of increasing the deductions taken into account by DC for purposes of § 1.59A-2(e)(3)(i)(B).

(ii) ***Analysis.*** Paragraph (b)(2) of this section does not apply because the transactions between DC and Person 1 and Person 2 were not entered into with a principal purpose of increasing the deductions taken into account by DC for purposes of § 1.59A-2(e)(3)(i)(B).

(9) ***Example 8: Transactions to avoid the application of rules applicable to banks and registered securities dealers*** —

(i) ***Facts.*** DC owns all of the stock of DC1 and Bank (an entity defined in section 581). DC, DC1, and Bank are members of an affiliated group of corporations within the meaning of section 1504(a) that elect to file a consolidated U.S. federal income tax return. With a principal purpose of avoiding the rules of § 1.59A-2(e)(2) or § 1.59A-5(c)(2), DC and DC1 form a new partnership (PRS). DC contributes all of its stock of Bank, and DC1 contributes cash, to PRS. DC, DC1, and Bank do not materially change their business operations following the formation of PRS.

(ii) ***Analysis.*** Paragraph (b)(3) of this section applies to transactions with respect to Bank because the transactions with respect to PRS were entered into with a principal purpose of avoiding the rules of § 1.59A-2(e)(2) or § 1.59A-5(c)(2). The contribution of Bank to a PRS is not taken into account, and Bank will be deemed to be part of the affiliated group including DC and DC1 for purposes of § 1.59A-2(e)(2) and § 1.59A-5(c)(2).

(10) ***Example 9: Transactions that do not avoid the application of rules applicable to banks and registered securities dealers*** —

(i) ***Facts.*** The facts are the same as the facts of paragraph (c)(9)(i) of this section (the facts of Example 8), except that DC sells 90 percent of the stock of Bank to an unrelated party in exchange for cash.

(ii) ***Analysis.*** Paragraph (b)(3) of this section does not apply to DC's sale of the stock of Bank because the sale was not made with a principal purpose of avoiding the rules of § 1.59A-2(e)(2) or § 1.59A-5(c)(2). Bank will not be treated as part of the affiliated group including DC and DC1 for purposes of § 1.59A-2(e)(2) and § 1.59A-5(c)(2).

(11) ***Example 10: Acquisition of depreciable property in a nonrecognition transaction*** —

(i) ***Facts.*** U, which is not a related party with respect to FP or DC, owns Property 1 with an adjusted basis of $50x and a fair market value of $100x. On Date 1, FP purchases property, including Property 1, from U in exchange for cash, and then FP contributes Property 1 to DC in an exchange described in section 351. Following the exchange, DC's basis in Property 1 is $100x.

(ii) ***Analysis.*** Paragraph (b)(4) of this section does not apply to DC's acquisition of Property 1 because the purchase of Property 1 from U (first transaction) did not have a principal purpose of increasing DC's adjusted basis of Property 1 without increasing DC's base erosion tax benefits. The transaction is economically equivalent to an alternative transaction under which FP contributed $100x to DC and then DC purchased Property 1 from U. Further, the second sentence of paragraph (b)(4) of this section (providing that certain transactions are deemed to have a principal purpose of increasing the adjusted basis of property acquired in a second transaction) does not apply because FP purchased Property 1 from an unrelated party.

(12) ***Example 11: Transactions between related parties with a principal purpose of increasing the adjusted basis of property*** —

(i) ***Facts.*** The facts are the same as paragraph (c)(11)(i) of this section (the facts in *Example 10*), except that U is related to FP and DC.

(ii) ***Analysis.*** Paragraph (b)(4) of this section applies to DC's acquisition of Property 1 because the transaction that increased the adjusted basis of Property 1 (the purchase of Property 1 from U) was between related parties, and within six months DC acquired Property 1 from FP in a specified nonrecognition transaction. Accordingly, the purchase of property from U (first transaction) is deemed to have a principal purpose of increasing the adjusted basis of Property 1 that DC acquires in the second transaction—the contribution (a transaction that qualifies as a specified nonrecognition transaction in part and would wholly qualify but for the application of paragraph (b)(4) of this section). Accordingly, the exception in § 1.59A-3(b)(3)(viii)(A) for specified nonrecognition transactions does not apply to the contribution of Property 1 to DC to the extent of the increased adjusted basis from the first transaction ($50x), and DC's depreciation deductions with respect to Property 1 will be base erosion tax benefits to the extent of the $50x increase in adjusted basis in Property 1.

[T.D. 9885, 84 FR 67017, Dec. 6, 2019, as amended at 85 FR 9370, Feb. 19, 2020; T.D. 9910, 85 FR 64368, Oct. 9, 2020]

§ 1.59A-10 Applicability date.

(a) ***General applicability date.*** Sections 1.59A-1 through 1.59A-9, other than the provisions described in the first sentence of paragraph (b) of this section or in paragraph (c) of this section, apply to taxable years ending on or after December 17, 2018. However, taxpayers may apply the regulations in this paragraph (a) in their entirety for taxable years beginning after December 31, 2017, and ending before December 17, 2018. In lieu of applying the regulations referred to in the first sentence of this paragraph (a), taxpayers may apply the provisions matching §§ 1.59A-1 through 1.59A-9 from the Internal Revenue Bulletin (IRB) 2019-02 (*https:www.irs.gov/irb2019-02_IRB*) in their entirety for all taxable years beginning after December 31, 2017, and ending on or before December 6, 2019.

(b) ***Exception.*** Sections 1.59A-2(c)(2)(ii) and (c)(4) through (6), 1.59A-3(b)(3)(iii)(C), 1.59A-3(c)(5) and (6), and 1.59A-9(b)(4) apply to taxable years beginning on or after October 9, 2020, and §§ 1.59A-7(c)(5)(v) and 1.59A-9(b)(5) and (6) apply to taxable years ending on or after December 2, 2019. Taxpayers may apply those regulations in their entirety for taxable years beginning after December 31, 2017, and before their applicability date, provided that, once applied, taxpayers must continue to apply them in their entirety for all subsequent taxable years. Alternatively, taxpayers may apply only § 1.59A-3(c)(5) and (6) for taxable years beginning after December 31, 2017, and before their applicability date, provided that, once applied, taxpayers must continue to apply § 1.59A-3(c)(5) and (6) in their entirety for all subsequent taxable years.

(c) ***Additional applicability dates for certain rules relating to securities lending transactions.*** Sections 1.59A-3(b)(2)(iv) and 1.59A-6(b)(3)(iii) and (iv) apply to taxable years beginning on or after December 17, 2025.

[T.D. 9910, 85 FR 64368, Oct. 9, 2020, as amended by T.D. 10041, 90 FR 59051, Dec. 18, 2025]

§ 1.60 [Reserved]

COMPUTATION OF TAXABLE INCOME

DEFINITION OF GROSS INCOME, ADJUSTED GROSS INCOME, AND TAXABLE INCOME

§ 1.61-1 Gross income.

(a) ***General definition.*** Gross income means all income from whatever source derived, unless excluded by law. Gross income includes income realized in any form, whether in money, property, or services. Income may be realized, therefore, in the form of services, meals, accommodations, stock, or other property, as well as in cash. Section 61 lists the more common items of gross income for purposes of illustration. For purposes of further illustration, § 1.61-14 mentions several miscellaneous items of gross income not listed specifically in section 61. Gross income, however, is not limited to the items so enumerated.

(b) ***Cross references.*** Cross references to other provisions of the Code are to be found throughout the regulations under section 61. The purpose of these cross references is to direct attention to the more common items which are included in or excluded from gross income entirely, or treated in some special manner. To the extent that another section of the Code or of the regulations thereunder, provides specific treatment for any item of income, such other provision shall apply notwithstanding section 61 and the regulations thereunder. The cross references do not cover all possible items.

(1) For examples of items specifically included in gross income, see Part II (section 71 and following), Subchapter B, Chapter 1 of the Code.

(2) For examples of items specifically excluded from gross income, see part III (section 101 and following), Subchapter B, Chapter 1 of the Code.

(3) For general rules as to the taxable year for which an item is to be included in gross income, see section 451 and the regulations thereunder.

§ 1.61-2 Compensation for services, including fees, commissions, and similar items.

(a) ***In general.***

(1) Wages, salaries, commissions paid salesmen, compensation for services on the basis of a percentage of profits, commissions on insurance premiums, tips, bonuses (including Christmas bonuses), termination or severance pay, rewards, jury fees, marriage fees and other contributions received by a clergyman for services, pay of persons in the military or naval forces of the United States, retired pay of employees, pensions, and retirement allowances are income to the recipients unless excluded by law. Several special rules apply to members of the Armed Forces, National Oceanic and Atmospheric Administration, and Public Health Service of the United States; see paragraph (b) of this section.

(2) The Code provides special rules including the following items in gross income:

(i) Distributions from employees' trusts, see sections 72, 402, and 403, and the regulations thereunder;

(ii) Compensation for child's services (in child's gross income), see section 73 and the regulations thereunder;

(iii) Prizes and awards, see section 74 and the regulations thereunder.

(3) Similarly, the Code provides special rules excluding the following items from gross income in whole or in part:

(i) Gifts, see section 102 and the regulations thereunder;

(ii) Compensation for injuries or sickness, see section 104 and the regulations thereunder;

(iii) Amounts received under accident and health plans, see section 105 and the regulations thereunder;

(iv) Scholarship and fellowship grants, see section 117 and the regulations thereunder;

(v) Miscellaneous items, see section 122.

(b) ***Members of the Armed Forces, National Oceanic and Atmospheric Administration, and Public Health Service.***

(1) Subsistence and uniform allowances granted commissioned officers, chief warrant officers, warrant officers, and enlisted personnel of the Armed Forces, National Oceanic and Atmospheric Administration, and Public Health Service of the United States, and amounts received by them as commutation of quarters, are excluded from gross income. Similarly, the value of quarters or subsistence furnished to such persons is excluded from gross income.

(2) For purposes of this section, quarters or subsistence includes the following allowances for expenses incurred after December 31, 1993, by members of the Armed Forces, members of the commissioned corps of the National Oceanic and Atmospheric Administration, and members of the commissioned corps of the Public Health Service, to the extent that the allowances are not otherwise excluded from gross income under another provision of the Internal Revenue Code: a dislocation allowance, authorized by 37 U.S.C. 407; a temporary lodging allowance, authorized by 37 U.S.C. 405; a temporary lodging expense, authorized by 37 U.S.C. 404a; and a move-in housing allowance, authorized by 37 U.S.C. 405. No deduction is allowed under this chapter for any expenses reimbursed by such excluded allowances. For the exclusion from gross income of—

(i) Disability pensions, see section 104(a)(4) and the regulations thereunder;

(ii) Miscellaneous items, see section 122.

(3) The per diem or actual expense allowance, the monetary allowance in lieu of transportation, and the mileage allowance received by members of the Armed Forces, National Oceanic and Atmospheric Administration, and the Public Health Service, while in a travel status or on temporary duty away from their permanent stations, are included in their gross income except to the extent excluded under the accountable plan provisions of § 1.62-2.

(c) ***Payment to charitable, etc., organization on behalf of person rendering services.*** The value of services is not includible in gross income when such services are rendered directly and gratuitously to an organization described in section 170(c). Where, however, pursuant to an agreement or understanding,

services are rendered to a person for the benefit of an organization described in section 170(c) and an amount for such services is paid to such organization by the person to whom the services are rendered, the amount so paid constitutes income to the person performing the services.

(d) ***Compensation paid other than in cash*** —

(1) ***In general.*** Except as otherwise provided in paragraph (d)(6)(i) of this section (relating to certain property transferred after June 30, 1969), if services are paid for in property, the fair market value of the property taken in payment must be included in income as compensation. If services are paid for in exchange for other services, the fair market value of such other services taken in payment must be included in income as compensation. If the services are rendered at a stipulated price, such price will be presumed to be the fair market value of the compensation received in the absence of evidence to the contrary. For special rules relating to certain options received as compensation, see §§ 1.61-15, 1.83-7, and section 421 and the regulations thereunder. For special rules relating to premiums paid by an employer for an annuity contract which is not subject to section 403(a), see section 403(c) and the regulations thereunder and § 1.83-8(a). For special rules relating to contributions made to an employees' trust which is not exempt under section 501, see section 402(b) and the regulations thereunder and § 1.83-8(a).

(2) ***Property transferred to employee or independent contractor.***

(i) Except as otherwise provided in section 421 and the regulations thereunder and § 1.61-15 (relating to stock options), and paragraph (d)(6)(i) of this section, if property is transferred by an employer to an employee or if property is transferred to an independent contractor, as compensation for services, for an amount less than its fair market value, then regardless of whether the transfer is in the form of a sale or exchange, the difference between the amount paid for the property and the amount of its fair market value at the time of the transfer is compensation and shall be included in the gross income of the employee or independent contractor. In computing the gain or loss from the subsequent sale of such property, its basis shall be the amount paid for the property increased by the amount of such difference included in gross income

(ii)

(A) ***Cost of life insurance on the life of the employee.*** Generally, life insurance premiums paid by an employer on the life of his employee where the proceeds of such insurance are payable to the beneficiary of such employee are part of the gross income of the employee. However, the amount includible in the employee's gross income is determined with regard to the provisions of section 403 and the regulations thereunder in the case of an individual contract issued after December 31, 1962, or a group contract, which provides incidental life insurance protection and which satisfies the requirements of section 401(g) and § 1.401-9, relating to the nontransferability of annuity contracts. For example, if an employee or independent contractor is the owner (as defined in § 1.61-22(c)(1)) of a life insurance contract and the payments with regard to such contract are not split-dollar loans under § 1.7872-15(b)(1), the employee or independent contractor must include in income the amount of any such payments by the employer or service recipient with respect to such contract during any year to the extent that the employee's or independent contractor's rights to the life insurance contract are substantially vested (within the meaning of § 1.83-3(b)). This result is the same regardless of whether the employee or independent contractor has at all times been the owner of the life insurance contract or the contract previously has been owned by the employer or service recipient as part of a split-dollar life

insurance arrangement (as defined in § 1.61-22(b)(1) or (2)) and was transferred by the employer or service recipient to the employee or independent contractor under § 1.61-22(g). For the special rules relating to the includibility in an employee's gross income of an amount equal to the cost of certain group term life insurance on the employee's life which is carried directly or indirectly by his employer, see section 79 and the regulations thereunder. For special rules relating to the exclusion of contributions by an employer to accident and health plans for the employee, see section 106 and the regulations thereunder.

(B) ***Cost of group-term life insurance on the life of an individual other than an employee.*** The cost (determined under paragraph (d)(2) of § 1.79-3) of group-term life insurance on the life of an individual other than an employee (such as the spouse or dependent of the employee) provided in connection with the performance of services by the employee is includible in the gross income of the employee.

(3) ***Meals and living quarters.*** The value of living quarters or meals which an employee receives in addition to his salary constitutes gross income unless they are furnished for the convenience of the employer and meet the conditions specified in section 119 and the regulations thereunder. For the treatment of rental value of parsonages or rental allowance paid to ministers, see section 107 and the regulations thereunder; for the treatment of statutory subsistence allowances received by police, see section 120 and the regulations thereunder.

(4) ***Stock and notes transferred to employee or independent contractor.*** Except as otherwise provided by section 421 and the regulations thereunder and § 1.61-15 (relating to stock options), and paragraph (d)(6)(i) of this section, if a corporation transfers its own stock to an employee or independent contractor as compensation for services, the fair market value of the stock at the time of transfer shall be included in the gross income of the employee or independent contractor. Notes or other evidences of indebtedness received in payment for services constitute income in the amount of their fair market value at the time of the transfer. A taxpayer receiving as compensation a note regarded as good for its face value at maturity, but not bearing interest, shall treat as income as of the time of receipt its fair discounted value computed at the prevailing rate. As payments are received on such a note, there shall be included in income that portion of each payment which represents the proportionate part of the discount originally taken on the entire note.

(5) ***Property transferred on or before June 30, 1969, subject to restrictions.*** Notwithstanding paragraph (d) (1), (2), or (4) of this section, if any property is transferred after September 24, 1959, by an employer to an employee or independent contractor as compensation for services, and such property is subject to a restriction which has a significant effect on its value at the time of transfer, the rules of § 1.421-6(d)(2) shall apply in determining the time and the amount of compensation to be included in the gross income of the employee or independent contractor. This (5) is also applicable to transfers subject to a restriction which has a significant effect on its value at the time of transfer and to which § 1.83-8(b) (relating to transitional rules with respect to transfers of restricted property) applies. For special rules relating to options to purchase stock or other property which are issued as compensation for services, see § 1.61-15 and section 421 and the regulations thereunder.

(6) ***Certain property transferred, premiums paid, and contributions made in connection with the performance of services after June 30, 1969 —***

(i) ***Exception.*** Paragraph (d) (1), (2), (4), and (5) of this section and § 1.61-15 do not apply to the transfer of property (as defined in § 1.83-3(e)) after June 30, 1969, unless § 1.83-8 (relating to the applicability of section 83 and transitional rules) applies. If section 83 applies to a transfer of property, and the property is not subject to a restriction that has a significant effect on the fair market value of such property, then the rules contained in paragraph (d) (1), (2), and (4) of this section and § 1.61-15 shall also apply to such transfer to the extent such rules are not inconsistent with section 83.

(ii) ***Cross references.*** For rules relating to premiums paid by an employer for an annuity contract which is not subject to section 403(a), see section 403(c) and the regulations thereunder. For rules relating to contributions made to an employees' trust which is not exempt under section 501(a), see section 402(b) and the regulations thereunder.

[T.D. 6500, 25 FR 11402, Nov. 26, 1960, as amended by T.D. 6696, 28 FR 13450, Dec. 12, 1963; T.D. 6856, 30 FR 13316, Oct. 20, 1965; T.D. 7544, 43 FR 31913, July 24, 1978; T.D. 7623, 44 FR 28800, May 17, 1979; T.D. 8256, 54 FR 28582, July 6, 1989; T.D. 8607, 60 FR 40076, Aug. 7, 1995; T.D. 9092, 68 FR 54344, Sept. 17, 2003]

§ 1.61-3 Gross income derived from business.

(a) ***In general.*** In a manufacturing, merchandising, or mining business, “gross income” means the total sales, less the cost of goods sold, plus any income from investments and from incidental or outside operations or sources. Gross income is determined without subtraction of depletion allowances based on a percentage of income to the extent that it exceeds cost depletion which may be required to be included in the amount of inventoriable costs as provided in § 1.471-11 and without subtraction of selling expenses, losses or other items not ordinarily used in computing costs of goods sold or amounts which are of a type for which a deduction would be disallowed under section 162 (c), (f), or (g) in the case of a business expense. The cost of goods sold should be determined in accordance with the method of accounting consistently used by the taxpayer. Thus, for example, an amount cannot be taken into account in the computation of cost of goods sold any earlier than the taxable year in which economic performance occurs with respect to the amount (see § 1.446-1(c)(1)(ii)).

(b) ***State contracts.*** The profit from a contract with a State or political subdivision thereof must be included in gross income. If warrants are issued by a city, town, or other political subdivision of a State, and are accepted by the contractor in payment for public work done, the fair market value of such warrants should be returned as income. If, upon conversion of the warrants into cash, the contractor does not receive and cannot recover the full value of the warrants so returned, he may deduct any loss sustained from his gross income for the year in which the warrants are so converted. If, however, he realizes more than the value of the warrants so returned, he must include the excess in his gross income for the year in which realized.

[T.D. 6500, 25 FR 11402, Nov. 26, 1960; 25 FR 14021, Dec. 31, 1960, as amended by T.D. 7207, 37 FR 20767, Oct. 5, 1972; T.D. 7285, 38 FR 26184, Sept. 19, 1973; T.D. 8408, 57 FR 12419, Apr. 10, 1992]

§ 1.61-4 Gross income of farmers.

(a) ***Farmers using the cash method of accounting.*** A farmer using the cash receipts and disbursements method of accounting shall include in his gross income for the taxable year—

(1) The amount of cash and the value of merchandise or other property received during the taxable year from the sale of livestock and produce which he raised,

(2) The profits from the sale of any livestock or other items which were purchased,

(3) All amounts received from breeding fees, fees from rent of teams, machinery, or land, and other incidental farm income,

(4) All subsidy and conservation payments received which must be considered as income, and

(5) Gross income from all other sources.

The profit from the sale of livestock or other items which were purchased is to be ascertained by deducting the cost from the sales price in the year in which the sale occurs, except that in the case of the sale of purchased animals held for draft, breeding, or dairy purposes, the profits shall be the amount of any excess of the sales price over the amount representing the difference between the cost and the depreciation allowed or allowable (determined in accordance with the rules applicable under section 1016(a) and the regulations thereunder). However, see section 162 and the regulations thereunder with respect to the computation of taxable income on other than the crop method where the cost of seeds or young plants purchased for further development and cultivation prior to sale is involved. Crop shares (whether or not considered rent under State law) shall be included in gross income as of the year in which the crop shares are reduced to money or the equivalent of money. See section 263A for rules regarding costs that are required to be capitalized.

(b) ***Farmers using an accrual method of accounting.*** A farmer using an accrual method of accounting must use inventories to determine his gross income. His gross income on an accrual method is determined by adding the total of the items described in subparagraphs (1) through (5) of this paragraph and subtracting therefrom the total of the items described in subparagraphs (6) and (7) of this paragraph. These items are as follows:

(1) The sales price of all livestock and other products held for sale and sold during the year;

(2) The inventory value of livestock and products on hand and not sold at the end of the year;

(3) All miscellaneous items of income, such as breeding fees, fees from the rent of teams, machinery, or land, or other incidental farm income;

(4) Any subsidy or conservation payments which must be considered as income;

(5) Gross income from all other sources;

(6) The inventory value of the livestock and products on hand and not sold at the beginning of the year; and

(7) The cost of any livestock or products purchased during the year (except livestock held for draft, dairy, or breeding purposes, unless included in inventory).

All livestock raised or purchased for sale shall be added in the inventory at their proper valuation determined in accordance with the method authorized and adopted for the purpose. Livestock acquired for draft, breeding, or dairy purposes and not for sale may be included in the inventory (see subparagraphs (2), (6), and (7) of this paragraph) instead of being treated as capital assets subject to depreciation, provided such practice is followed consistently from year to year by the taxpayer. When any livestock included in an inventory are sold, their cost must not be taken as an additional deduction in computing taxable income, because such deduction is reflected in the inventory. See the regulations under section 471. See section 263A for rules regarding costs that are required to be capitalized. Crop shares (whether or not considered rent under State law) shall be included in gross income as of the year in which the crop shares are reduced to money or the equivalent of money.

(c) ***Special rules for certain receipts.*** In the case of the sale of machinery, farm equipment, or any other property (except stock in trade of the taxpayer, or property of a kind which would properly be included in the inventory of the taxpayer if on hand at the close of the taxable year, or property held by the taxpayer primarily for sale to customers in the ordinary course of his trade or business), any excess of the proceeds of the sale over the adjusted basis of such property shall be included in the taxpayer's gross income for the taxable year in which such sale is made. See, however, section 453 and the regulations thereunder for special rules relating to certain installment sales. If farm produce is exchanged for merchandise, groceries, or the like, the market value of the article received in exchange is to be included in gross income. Proceeds of insurance, such as hail or fire insurance on growing crops, should be included in gross income to the extent of the amount received in cash or its equivalent for the crop injured or destroyed. See section 451(d) for special rule relating to election to include crop insurance proceeds in income for taxable year following taxable year of destruction. For taxable years beginning after July 12, 1972, where a farmer is engaged in producing crops and the process of gathering and disposing of such crops is not completed within the taxable year in which such crops are planted, the income therefrom may, with the consent of the Commissioner (see section 446 and the regulations thereunder), be computed upon the crop method. For taxable years beginning on or before July 12, 1972, where a farmer is engaged in producing crops which take more than a year from the time of planting to the time of gathering and disposing, the income therefrom may, with the consent of the Commissioner (see section 446 and the regulations thereunder), be computed upon the crop method. In any case in which the crop method is used, the entire cost of producing the crop must be taken as a deduction for the year in which the gross income from the crop is realized, and not earlier.

(d) ***Definition of "farm".*** As used in this section, the term "farm" embraces the farm in the ordinarily accepted sense, and includes stock, dairy, poultry, fruit, and truck farms; also plantations, ranches, and all land used for farming operations. All individuals, partnerships, or corporations that cultivate, operate, or manage farms for gain or profit, either as owners or tenants, are designated as farmers. For more detailed rules with respect to the determination of whether or not an individual is engaged in farming, see § 1.175-3. For rules applicable to persons cultivating or operating a farm for recreation or pleasure, see sections 162 and 165, and the regulations thereunder.

(e) ***Cross references.***

(1) For election to include Commodity Credit Corporation loans as income, see section 77 and regulations thereunder.

(2) For definition of gross income derived from farming for purposes of limiting deductibility of soil and water conservation expenditures, see section 175 and regulations thereunder.

(3) For definition of gross income from farming in connection with declarations of estimated income tax, see section 6073 and regulations thereunder.

[T.D. 6500, 25 FR 11402, Nov. 26, 1960; 25 FR 14021, Dec. 31, 1960, as amended by T.D. 7198, 37 FR 13679, July 13, 1972; T.D. 8729, 62 FR 44546, Aug. 22, 1997]

§ 1.61-5 Allocations by cooperative associations; per-unit retain certificates—tax treatment as to cooperatives and patrons.

(a) ***In general.*** Amounts allocated on the basis of the business done with or for a patron by a cooperative association, whether or not entitled to tax treatment under section 522, in cash, merchandise, capital stock, revolving fund certificates, retain certificates, certificates of indebtedness, letters of advice or in

some other manner disclosing to the patron the dollar amount allocated, shall be included in the computation of the gross income of such patron for the taxable year in which received to the extent prescribed in paragraph (b) of this section, regardless of whether the allocation is deemed, for the purpose of section 522, to be made at the close of a preceding taxable year of the cooperative association. The determination of the extent of taxability of such amounts is in no way dependent upon the method of accounting employed by the patron or upon the method, cash, accrual, or otherwise, upon which the taxable income of such patron is computed.

(b) ***Extent of taxability.***

(1) Amounts allocated to a patron on a patronage basis by a cooperative association with respect to products marketed for such patron, or with respect to supplies, equipment, or services, the cost of which was deductible by the patron under section 162 or section 212, shall be included in the computation of the gross income of such patron, as ordinary income, to the following extent:

(i) If the allocation is in cash, the amount of cash received.

(ii) If the allocation is in merchandise, the amount of the fair market value of such merchandise at the time of receipt by the patron.

(iii) If the allocation is in the form of revolving fund certificates, retain certificates, certificates of indebtedness, letters of advice, or similar documents, the amount of the fair market value of such document at the time of its receipt by the patron. For purposes of this subdivision, any document containing an unconditional promise to pay a fixed sum of money on demand or at a fixed or determinable time shall be considered to have a fair market value at the time of its receipt by the patron, unless it is clearly established to the contrary. However, for purposes of this subdivision, any document which is payable only in the discretion of the cooperative association, or which is otherwise subject to conditions beyond the control of the patron, shall be considered not to have any fair market value at the time of its receipt by the patron, unless it is clearly established to the contrary.

(iv) If the allocation is in the form of capital stock, the amount of the fair market value, if any, of such capital stock at the time of its receipt by the patron.

(2) If any allocation to which subparagraph (1) of this paragraph applies is received in the form of a document of the type described in subparagraph (1) (iii) or (iv) of this paragraph and is redeemed in full or in part or is otherwise disposed of, there shall be included in the computation of the gross income of the patron, as ordinary income, in the year of redemption or other disposition, the excess of the amount realized on the redemption or other disposition over the amount previously included in the computation of gross income under such subparagraph.

(3)

(i) Amounts which are allocated on a patronage basis by a cooperative association with respect to supplies, equipment, or services, the cost of which was not deductible by the patron under section 162 or section 212, are not includible in the computation of the gross income of such patron. However, in the case of such amounts which are allocated with respect to capital assets (as defined in section 1221) or property used in the trade or business within the meaning of section 1231, such amounts shall, to the extent set forth in subparagraph (1) of this paragraph, be taken into account by such patron in determining the cost of the property to which the allocation relates. Notwithstanding the preceding sentence, to the extent that such

amounts are in excess of the unrecovered cost of such property, and to the extent that such amounts relate to such property which the patron no longer owns, they shall be included in the computation of the gross income of such patron.

(ii) If any patronage dividend is allocated to the patron in the form of a document of the type described in subparagraph (1) (iii) or (iv) of this paragraph, and if such allocation is with respect to capital assets (as defined in section 1221) or property used in the trade or business within the meaning of section 1231, any amount realized on the redemption or other disposition of such document which is in excess of the amount which was taken into account upon the receipt of the document by the patron shall be taken into account by such patron in the year of redemption or other disposition as an adjustment to basis or as an inclusion in the computation of gross income, as the case may be.

(iii) Any adjustment to basis in respect of an amount to which subdivision (i) or (ii) of this subparagraph applies shall be made as of the first day of the taxable year in which such amount is received.

(iv) The application of the provisions of this subparagraph may be illustrated by the following examples:

Example 1. On July 1, 1959, P, a patron of a cooperative association, purchases a tractor for use in his farming business from such association for $2,200. The tractor has an estimated useful life of five years and an estimated salvage value of $200. P files his income tax returns on a calendar year basis and claims depreciation on the tractor for the year 1959 of $200 pursuant to his use of the straight-line method at the rate of $400 per year. On July 1, 1960, the cooperative association allocates to P with respect to his purchase of the tractor a dividend of $300 in cash. P will reduce his depreciation allowance with respect to the tractor for 1960 (and subsequent taxable years) to $333.33, determined as follows:

Cost of tractor, July 1, 1959		$2,200
Less:		
Depreciation for 1959 (6 mos.)	$200	
Adjustment as of Jan. 1, 1960, for cash patronage dividend	300	
Salvage value	200	
	700	
Basis for depreciation for the remaining $4^1/_2$ years of estimated life		1,500
Basis for depreciation divided by the $4^1/_2$ years of remaining life		333.33

Example 2. Assume the same facts as in example (1), except that on July 1, 1960, the cooperative association allocates a dividend to P with respect to his purchase of the tractor in the form of a revolving fund certificate having a face amount of $300. The certificate is redeemable in cash at the discretion of the directors of the association and is subject to diminution by any future losses of the

association, and has no fair market value when received by P. Since the certificate had no fair market value when received by P, no amount with respect to such certificate was taken into account by him in the year 1960. In 1965, P receives $300 cash from the association in full redemption of the certificate. Prior to 1965, he had recovered through depreciation $2,000 of the cost of the tractor, leaving an unrecovered cost of $200 (the salvage value). For the year 1965, the redemption proceeds of $300 are applied against the unrecovered cost of $200, reducing the basis to zero, and the balance of the redemption proceeds, $100, is includible in the computation of P's gross income.

Example 3. Assume the same facts as in example (2), except that the certificate is redeemed in full on July 1, 1962. The full $300 received on redemption of the certificate will be applied against the unrecovered cost of the tractor as of January 1, 1962, computed as follows:

Cost of tractor, July 1, 1959		$2,200
Less:		
Depreciation for 1959 (6 mos.)	$200	
Depreciation for 1960	400	
Depreciation for 1961	400	
	1,000	
Unrecovered cost on Jan. 1, 1962		1,200
Adjustment as of Jan. 1, 1962, for proceeds of the redemption of the revolving fund certificate		300
Unrecovered cost on Jan. 1, 1962, after adjustment		900
Less: Salvage value		200
Basis for depreciation on Jan. 1, 1962		700
If P uses the tractor in his business until June 30, 1964, he would be entitled to the following depreciation allowances with respect to the tractor:		
For 1962	280	
For 1963	280	
For 1964 (6 mos.)	140	
	700	
Balance to be depreciated		0

Example 4. Assume the same facts as in example (3), except that P sells the tractor in 1961. The entire $300 received in 1962 in redemption of the revolving fund certificate is includible in the computation of P's gross income for the year 1962.

(c) ***Special rule.*** If, for any taxable year ending before December 3, 1959, a taxpayer treated any patronage dividend received in the form of a document described in paragraph (b) (1) (iii) or (iv) of this section in accordance with the regulations then applicable (whether such dividend is subject to paragraph (b) (1) or (3) of this section), such taxpayer is not required to change the treatment of such patronage dividends for

any such prior taxable year. On the other hand, the taxpayer may, if he so desires, amend his income tax returns to treat the receipt of such patronage dividend in accordance with the provisions of this section, but no provision in this paragraph shall be construed as extending the period of limitations within which a claim for credit or refund may be filed under section 6511.

(d) ***Per-unit retain certificates; tax treatment of cooperative associations; distribution and reinvestment alternative.***

(1)

(i) In the case of a taxable year to which this paragraph applies to a cooperative association, such association shall, in computing the amount paid or returned to a patron with respect to products marketed for such patron, take into account the stated dollar amount of any per-unit retain certificate (as defined in paragraph (g) of this section)—

(*a*) Which is issued during the payment period for such year (as defined in subparagraph (3) of this paragraph) with respect to such products,

(*b*) With respect to which the patron is a qualifying patron (as defined in subparagraph (2) of this paragraph), and

(*c*) Which clearly states the fact that the patron has agreed to treat the stated dollar amount thereof as representing a cash distribution to him which he has reinvested in the cooperative association.

(ii) No amount shall be taken into account by a cooperative association by reason of the issuance of a per-unit retain certificate to a patron who was not a qualifying patron with respect to such certificate. However, any amount paid in redemption of a per-unit retain certificate which was issued to a patron who was not a qualifying patron with respect to such certificate shall be taken into account by the cooperative in the year of redemption, as an amount paid or returned to such patron with respect to products marketed for him. This subdivision shall apply only to per-unit retain certificates issued with respect to taxable years of the cooperative association to which this paragraph applied to the association (that is, taxable years with respect to which per-unit retain certificates were issued to one or more patrons who are qualifying patrons).

(2)

(i) A patron shall be considered to be a “qualifying patron” with respect to a per-unit retain certificate if there is in effect an agreement between the cooperative association and such patron which clearly provides that such patron agrees to treat the stated dollar amounts of all per-unit retain certificates issued to him by the association as representing cash distributions which he has constructively received and which he has, of his own choice, reinvested in the cooperative association. Such an agreement may be included in a by-law of the cooperative which is adopted prior to the time the products to which the per-unit retain certificates relate are marketed. However, except where there is in effect a “written agreement” described in subdivision (ii) of this subparagraph, a patron shall not be considered to be a “qualifying patron” with respect to a per-unit retain certificate if it has been established by a determination of the Tax Court of the United States, or any other court of competent jurisdiction, which has become final, that the stated dollar amount of such certificate, or of a similar certificate issued under similar circumstances to such patron or any other patron by the cooperative association, is not required to be included (as ordinary income) in the gross income of such patron, or such other patron, for the taxable year of the patron in which received.

(ii) The "written agreement" referred to in subdivision (i) of this subparagraph is an agreement in writing, signed by the patron, on file with the cooperative association, and revocable as provided in this subdivision. Unless such an agreement specifically provides to the contrary, it shall be effective for per-unit retain certificates issued with respect to the taxable year of the cooperative association in which the agreement is received by the association, and unless revoked, for per-unit retain certificates issued with respect to all subsequent taxable years. A "written agreement" must be revocable by the patron at any time after the close of the taxable year in which it is made. To be effective, a revocation must be in writing, signed by the patron, and furnished to the cooperative association. A revocation shall be effective only for per-unit retain certificates issued with respect to taxable years of the cooperative association following the taxable year in which it is furnished to the association. Notwithstanding the preceding sentence, a revocation shall not be effective for per-unit retain certificates issued with respect to products marketed for the patron under a pooling arrangement in which such patron participated before such revocation. The following is an example of an agreement which would meet the requirements of this subparagraph:

> I agree that, for purposes of determining the amount I have received from this cooperative in payment for my goods, I shall treat the face amount of any per-unit retain certificates issued to me on and after _____ as representing a cash distribution which I have constructively received and which I have reinvested in the cooperative.
>
> (*Signed*)

(3) For purposes of this paragraph and paragraph (e) of this section, the payment period for any taxable year of the cooperative is the period beginning with the first day of such taxable year and ending with the 15th day of the 9th month following the close of such year.

(4) This paragraph shall apply to any taxable year of a cooperative association if, with respect to such taxable year, the association has issued per-unit retain certificates to one or more of its patrons who are qualifying patrons with respect to such certificates within the meaning of subparagraph (2) of this paragraph.

(e) ***Tax treatment of cooperative association; taxable years for which paragraph (d) does not apply.***

(1) In the case of a taxable year to which paragraph (d) of this section does not apply to a cooperative association, such association shall, in computing the amount paid or returned to a patron with respect to products marketed for such patron, take into account the fair market value (at the time of issue) of any per-unit retain certificates which are issued by the association with respect to such products during the payment period for such taxable year.

(2) An amount paid in redemption of a per-unit retain certificate issued with respect to a taxable year of the cooperative association for which paragraph (d) of this section did not apply to the association, shall, to the extent such amount exceeds the fair market value of the certificate at the time of its issue, be taken into account by the association in the year of redemption, as an amount paid or returned to a patron with respect to products marketed for such patron.

(3) For purposes of this paragraph and paragraph (f)(2) of this section, any per-unit retain certificate containing an unconditional promise to pay a fixed sum of money on demand or at a fixed or determinable time shall be considered to have a fair market value at the time of its issue, unless it is clearly established to the contrary. On the other hand, any per-unit retain certificate (other than

capital stock) which is redeemable only in the discretion of the cooperative association, or which is otherwise subject to conditions beyond the control of the patron, shall be considered not to have any fair market value at the time of its issue, unless it is clearly established to the contrary.

(f) ***Tax treatment of patron.***

(1) The following rules apply for purposes of computing the amount includible in gross income with respect to a per-unit retain certificate which was issued to a patron by a cooperative association with respect to a taxable year of such association for which paragraph (d) of this section applies.

(i) If the patron is a qualifying patron with respect to such certificate (within the meaning of paragraph (d) (2) of this section), he shall, in accordance with his agreement, include (as ordinary income) the stated dollar amount of the certificate in gross income for his taxable year in which the certificate is received by him.

(ii) If the patron is not a qualifying patron with respect to such certificate, no amount is includible in gross income on the receipt of the certificate; however, any gain on the redemption, sale, or other disposition of such certificate shall, to the extent of the stated dollar amount thereof, be considered as gain from the sale or exchange of property which is not a capital asset.

(2) The amount of the fair market value of a per-unit retain certificate which is issued to a patron by a cooperative association with respect to a taxable year of the association for which paragraph (d) of this section does not apply shall be included, as ordinary income, in the gross income of the patron for the taxable year in which the certificate is received. Any gain on the redemption, sale, or other disposition of such a per-unit retain certificate shall, to the extent its stated dollar amount exceeds its fair market value at the time of issue, be treated as gain on the redemption, sale, or other disposition of property which is not a capital asset.

(g) ***"Per-unit retain certificate" defined.*** For purposes of paragraphs (d), (e), and (f), of this section, the term "per-unit retain certificate" means any capital stock, revolving fund certificate, retain certificate, certificate of indebtedness, letter of advice, or other written notice—

(1) Which is issued to a patron with respect to products marketed for such patron;

(2) Which discloses to the patron the stated dollar amount allocated to him on the books of the cooperative association; and

(3) The stated dollar amount of which is fixed without reference to net earnings.

(h) ***Effective date.*** This section shall not apply to any amount the tax treatment of which is prescribed in section 1385 and § 1.1385-1. Paragraphs (d), (e), and (f) of this section shall apply to per-unit retain certificates as defined in paragraph (g) of this section issued by a cooperative association during taxable years of the association beginning after April 30, 1966, with respect to products marketed for patrons during such years.

[T.D. 6500, 25 FR 11402, Nov. 26, 1960, as amended by T.D. 6855, 30 FR 13134, Oct. 15, 1965]

§ 1.61-6 Gains derived from dealings in property.

(a) ***In general.*** Gain realized on the sale or exchange of property is included in gross income, unless excluded by law. For this purpose property includes tangible items, such as a building, and intangible items, such as goodwill. Generally, the gain is the excess of the amount realized over the unrecovered cost or other basis for the property sold or exchanged. The specific rules for computing the amount of gain or loss are

contained in section 1001 and the regulations thereunder. When a part of a larger property is sold, the cost or other basis of the entire property shall be equitably apportioned among the several parts, and the gain realized or loss sustained on the part of the entire property sold is the difference between the selling price and the cost or other basis allocated to such part. The sale of each part is treated as a separate transaction and gain or loss shall be computed separately on each part. Thus, gain or loss shall be determined at the time of sale of each part and not deferred until the entire property has been disposed of. This rule may be illustrated by the following examples:

Example 1. A, a dealer in real estate, acquires a 10-acre tract for $10,000, which he divides into 20 lots. The $10,000 cost must be equitably apportioned among the lots so that on the sale of each A can determine his taxable gain or deductible loss.

Example 2. B purchases for $25,000 property consisting of a used car lot and adjoining filling station. At the time, the fair market value of the filling station is $15,000 and the fair market value of the used car lot is $10,000. Five years later B sells the filling station for $20,000 at a time when $2,000 has been properly allowed as depreciation thereon. B's gain on this sale is $7,000, since $7,000 is the amount by which the selling price of the filling station exceeds the portion of the cost equitably allocable to the filling station at the time of purchase reduced by the depreciation properly allowed.

(b) ***Nontaxable exchanges.*** Certain realized gains or losses on the sale or exchange of property are not "recognized", that is, are not included in or deducted from gross income at the time the transaction occurs. Gain or loss from such sales or exchanges is generally recognized at some later time. Examples of such sales or exchanges are the following:

(1) Certain formations, reorganizations, and liquidations of corporations, see sections 331, 333, 337, 351, 354, 355, and 361;

(2) Certain formations and distributions of partnerships, see sections 721 and 731;

(3) Exchange of certain property held for productive use or investment for property of like kind, see section 1031;

(4) A corporation's exchange of its stock for property, see section 1032;

(5) Certain involuntary conversions of property if replaced, see section 1033;

(6) Sale or exchange of residence if replaced, see section 1034;

(7) Certain exchanges of insurance policies and annuity contracts, see section 1035; and

(8) Certain exchanges of stock for stock in the same corporation, see section 1036.

(c) ***Character of recognized gain.*** Under Subchapter P, Chapter 1 of the Code, relating to capital gains and losses, certain gains derived from dealings in property are treated specially, and under certain circumstances the maximum rate of tax on such gains is 25 percent, as provided in section 1201. Generally, the property subject to this treatment is a "capital asset", or treated as a "capital asset". For definition of such assets, see sections 1221 and 1231, and the regulations thereunder. For some of the rules either granting or denying this special treatment, see the following sections and the regulations thereunder:

(1) Transactions between partner and partnership, section 707;

(2) Sale or exchange of property used in the trade or business and involuntary conversions, section 1231;

(3) Payment of bonds and other evidences of indebtedness, section 1232;

(4) Gains and losses from short sales, section 1233;

(5) Options to buy or sell, section 1234;

(6) Sale or exchange of patents, section 1235;

(7) Securities sold by dealers in securities, section 1236;

(8) Real property subdivided for sale, section 1237;

(9) Amortization in excess of depreciation, section 1238;

(10) Gain from sale of certain property between spouses or between an individual and a controlled corporation, section 1239;

(11) Taxability to employee of termination payments, section 1240.

§ 1.61-7 Interest.

(a) ***In general.*** As a general rule, interest received by or credited to the taxpayer constitutes gross income and is fully taxable. Interest income includes interest on savings or other bank deposits; interest on coupon bonds; interest on an open account, a promissory note, a mortgage, or a corporate bond or debenture; the interest portion of a condemnation award; usurious interest (unless by State law it is automatically converted to a payment on the principal); interest on legacies; interest on life insurance proceeds held under an agreement to pay interest thereon; and interest on refunds of Federal taxes. For rules determining the taxable year in which interest, including interest accrued or constructively received, is included in gross income, see section 451 and the regulations thereunder. For the inclusion of interest in income for the purpose of the retirement income credit, see section 37 and the regulations thereunder. For credit of tax withheld at source on interest on tax-free covenant bonds, see section 32 and the regulations thereunder. For rules relating to interest on certain deferred payments, see section 483 and the regulations thereunder.

(b) ***Interest on Government obligations*** —

(1) ***Wholly tax-exempt interest.*** Interest upon the obligations of a State, Territory, or a possession of the United States, or any political subdivision of any of the foregoing, or of the District of Columbia, is wholly exempt from tax. Interest on certain United States obligations issued before March 1, 1941, is exempt from tax to the extent provided in the acts of Congress authorizing the various issues. See section 103 and the regulations thereunder.

(2) ***Partially tax-exempt interest.*** Interest earned on certain United States obligations is partly tax exempt and partly taxable. For example, the interest on United States Treasury bonds issued before March 1, 1941, to the extent that the principal of such bonds exceeds $5,000, is exempt from normal tax but is subject to surtax. See sections 35 and 103, and the regulations thereunder.

(3) ***Fully taxable interest.*** In general, interest on United States obligations issued on or after March 1, 1941, and obligations issued by any agency or instrumentality of the United States after that date, is fully taxable; but see section 103 and the regulations thereunder. A taxpayer using the cash receipts and disbursements method of accounting who owns United States savings bonds issued at a discount has an election as to when he will report the interest; see section 454 and the regulations thereunder.

(c) ***Obligations bought at a discount; bonds bought when interest defaulted or accrued.*** When notes, bonds, or other certificates of indebtedness are issued by a corporation or the Government at a discount and are later redeemed by the debtor at the face amount, the original discount is interest, except as otherwise provided by law. See also paragraph (b) of this section for the rules relating to Government bonds. If a taxpayer purchases bonds when interest has been defaulted or when the interest has accrued but has not been paid, any interest which is in arrears but has accrued at the time of purchase is not income and is not taxable as interest if subsequently paid. Such payments are returns of capital which reduce the remaining cost basis. Interest which accrues after the date of purchase, however, is taxable interest income for the year in which received or accrued (depending on the method of accounting used by the taxpayer).

(d) ***Bonds sold between interest dates; amounts received in excess of original issue discount; interest on life insurance.*** When bonds are sold between interest dates, part of the sales price represents interest accrued to the date of the sale and must be reported as interest income. Amounts received in excess of the original issue discount upon the retirement or sale of a bond or other evidence of indebtedness may under some circumstances constitute capital gain instead of ordinary income. See section 1232 and the regulations thereunder. Interest payments on amounts payable as employees' death benefits (whether or not section 101(b) applies thereto) and on the proceeds of life insurance policies payable by reason of the insured's death constitute gross income under some circumstances. See section 101 and the regulations thereunder for details. Where accrued interest on unwithdrawn insurance policy dividends is credited annually and is subject to withdrawal annually by the taxpayer, such interest credits constitute gross income to such taxpayer as of the year of credit. However, if under the terms of the insurance policy the interest on unwithdrawn policy dividends is subject to withdrawal only on the anniversary date of the policy (or some other date specified therein), then such interest shall constitute gross income to the taxpayer for the taxable year in which such anniversary date (or other specified date) falls.

[T.D. 6500, 25 FR 11402, Nov. 26, 1960, as amended by T.D. 6723, 29 FR 5342, Apr. 21, 1964; T.D. 6873, 31 FR 941, Jan. 25, 1966]

§ 1.61-8 Rents and royalties.

(a) ***In general.*** Gross income includes rentals received or accrued for the occupancy of real estate or the use of personal property. For the inclusion of rents in income for the purpose of the retirement income credit, see section 37 and the regulations thereunder. Gross income includes royalties. Royalties may be received from books, stories, plays, copyrights, trademarks, formulas, patents, and from the exploitation of natural resources, such as coal, gas, oil, copper, or timber. Payments received as a result of the transfer of patent rights may under some circumstances constitute capital gain instead of ordinary income. See section 1235 and the regulations thereunder. For special rules for certain income from natural resources, see Subchapter I (section 611 and following), Chapter 1 of the Code, and the regulations thereunder.

(b) ***Advance rentals; cancellation payments.*** Except as provided in section 467 and the regulations thereunder and except as otherwise provided by the Commissioner in published guidance (see § 601.601(d)(2) of this chapter), gross income includes advance rentals, which must be included in income for the year of receipt regardless of the period covered or the method of accounting employed by the taxpayer. An amount received by a lessor from a lessee for cancelling a lease constitutes gross income for the year in which it is received, since it is essentially a substitute for rental payments. As to amounts received by a lessee for the cancellation of a lease, see section 1241 and the regulations thereunder.

(c) ***Expenditures by lessee.*** As a general rule, if a lessee pays any of the expenses of his lessor such payments are additional rental income of the lessor. If a lessee places improvements on real estate which constitute, in whole or in part, a substitute for rent, such improvements constitute rental income to the lessor. Whether or not improvements made by a lessee result in rental income to the lessor in a particular case depends upon the intention of the parties, which may be indicated either by the terms of the lease or by the surrounding circumstances. For the exclusion from gross income of income (other than rent) derived by a lessor of real property on the termination of a lease, representing the value of such property attributable to buildings erected or other improvements made by a lessee, see section 109 and the regulations thereunder. For the exclusion from gross income of a lessor corporation of certain of its income taxes on rental income paid by a lessee corporation under a lease entered into before January 1, 1954, see section 110 and the regulations thereunder.

[T.D. 6500, 25 FR 11402, Nov. 26, 1960; 25 FR 14021, Dec. 31, 1960, as amended by T.D. 8820, 64 FR 26851, May 18, 1999; T.D. 9135, 69 FR 41192, July 8, 2004]

§ 1.61-9 Dividends.

(a) ***In general.*** Except as otherwise specifically provided, dividends are included in gross income under sections 61 and 301. For the principal rules with respect to dividends includible in gross income, see section 316 and the regulations thereunder. As to distributions made or deemed to be made by regulated investment companies, see sections 851 through 855, and the regulations thereunder. As to distributions made by real estate investment trusts, see sections 856 through 858, and the regulations thereunder. See section 116 for the exclusion from gross income of $100 ($50 for dividends received in taxable years beginning before January 1, 1964) of dividends received by an individual, except those from certain corporations. Furthermore, dividends may give rise to a credit against tax under section 34, relating to dividends received by individuals (for dividends received on or before December 31, 1964), and under section 37, relating to retirement income.

(b) ***Dividends in kind; stock dividends; stock redemptions.*** Gross income includes dividends in property other than cash, as well as cash dividends. For amounts to be included in gross income when distributions of property are made, see section 301 and the regulations thereunder. A distribution of stock, or rights to acquire stock, in the corporation making the distribution is not a dividend except under the circumstances described in section 305(b). However, the term “dividend” includes a distribution of stock, or rights to acquire stock, in a corporation other than the corporation making the distribution. For determining when distributions in complete liquidation shall be treated as dividends, see section 333 and the regulations thereunder. For rules determining when amounts received in exchanges under section 354 or exchanges and distributions under section 355 shall be treated as dividends, see section 356 and the regulations thereunder.

(c) ***Dividends on stock sold.*** When stock is sold, and a dividend is both declared and paid after the sale, such dividend is not gross income to the seller. When stock is sold after the declaration of a dividend and after the date as of which the seller becomes entitled to the dividend, the dividend ordinarily is income to the seller. When stock is sold between the time of declaration and the time of payment of the dividend, and the sale takes place at such time that the purchaser becomes entitled to the dividend, the dividend ordinarily is income to him. The fact that the purchaser may have included the amount of the dividend in his purchase price in contemplation of receiving the dividend does not exempt him from tax. Nor can the purchaser deduct the added amount he advanced to the seller in anticipation of the dividend. That added amount is merely part of the purchase price of the stock. In some cases, however, the purchaser may be considered to be the recipient of the dividend even though he has not received the legal title to the stock

itself and does not himself receive the dividend. For example, if the seller retains the legal title to the stock as trustee solely for the purpose of securing the payment of the purchase price, with the understanding that he is to apply the dividends received from time to time in reduction of the purchase price, the dividends are considered to be income to the purchaser.

[T.D. 6500, 25 FR 11402, Nov. 26, 1960, as amended by T.D. 6777, 29 FR 17807, Dec. 16, 1964]

§ 1.61-10 Alimony and separate maintenance payments; annuities; income from life insurance and endowment contracts.

(a) ***In general.*** Alimony and separate maintenance payments, annuities, and income from life insurance and endowment contracts in general constitute gross income, unless excluded by law. Annuities paid by religious, charitable, and educational corporations are generally taxable to the same extent as other annuities. An annuity charged upon devised land is taxable to the donee-annuitant to the extent that it becomes payable out of the rents or other income of the land, whether or not it is a charge upon the income of the land.

(b) ***Cross references.*** For the detailed rules relating to—

(1) Alimony and separate maintenance payments, see section 71 and the regulations thereunder;

(2) Annuities, certain proceeds of endowment and life insurance contracts, see section 72 and the regulations thereunder;

(3) Life insurance proceeds paid by reason of death of insured, employees' death benefits, see section 101 and the regulations thereunder;

(4) Annuities paid by employees' trusts, see section 402 and the regulations thereunder;

(5) Annuities purchased for employee by employer, see section 403 and the regulations thereunder.

§ 1.61-11 Pensions.

(a) ***In general.*** Pensions and retirement allowances paid either by the Government or by private persons constitute gross income unless excluded by law. Usually, where the taxpayer did not contribute to the cost of a pension and was not taxable on his employer's contributions, the full amount of the pension is to be included in his gross income. But see sections 72, 402, and 403, and the regulations thereunder. When amounts are received from other types of pensions, a portion of the payment may be excluded from gross income. Under some circumstances, amounts distributed from a pension plan in excess of the employee's contributions may constitute long-term capital gain, rather than ordinary income.

(b) ***Cross references.*** For the inclusion of pensions in income for the purpose of the retirement income credit, see section 37 and the regulations thereunder. Detailed rules concerning the extent to which pensions and retirement allowances are to be included in or excluded from gross income are contained in other sections of the Code and the regulations thereunder. Amounts received as pensions or annuities under the Social Security Act (42 U.S.C. ch. 7) or the Railroad Retirement Act (45 U.S.C. ch. 9) are excluded from gross income. For other partial and total exclusions from gross income, see the following:

(1) Annuities in general, section 72 and the regulations thereunder;

(2) Employees' annuities, sections 402 and 403 and the regulations thereunder;

(3) References to other acts of Congress exempting veterans' pensions and railroad retirement annuities and pensions, section 122.

[T.D. 6500, 25 FR 11402, Nov. 26, 1960, as amended by T.D. 6856, 30 FR 13316, Oct. 20, 1965]

§ 1.61-12 Income from discharge of indebtedness.

(a) ***In general.*** The discharge of indebtedness, in whole or in part, may result in the realization of income. If, for example, an individual performs services for a creditor, who in consideration thereof cancels the debt, the debtor realizes income in the amount of the debt as compensation for his services. A taxpayer may realize income by the payment or purchase of his obligations at less than their face value. In general, if a shareholder in a corporation which is indebted to him gratuitously forgives the debt, the transaction amounts to a contribution to the capital of the corporation to the extent of the principal of the debt.

(b) ***Proceedings under Bankruptcy Act.***

(1) Income is not realized by a taxpayer by virtue of the discharge, under section 14 of the Bankruptcy Act (11 U.S.C. 32), of his indebtedness as the result of an adjudication in bankruptcy, or by virtue of an agreement among his creditors not consummated under any provision of the Bankruptcy Act, if immediately thereafter the taxpayer's liabilities exceed the value of his assets. Furthermore, unless one of the principal purposes of seeking a confirmation under the Bankruptcy Act is the avoidance of income tax, income is not realized by a taxpayer in the case of a cancellation or reduction of his indebtedness under—

(i) A plan of corporate reorganization confirmed under Chapter X of the Bankruptcy Act (11 U.S.C., ch. 10);

(ii) An “arrangement” or a “real property arrangement” confirmed under Chapter XI or XII, respectively, of the Bankruptcy Act (11 U.S.C., ch. 11, 12); or

(iii) A “wage earner's plan” confirmed under Chapter XIII of the Bankruptcy Act (11 U.S.C., ch. 13).

(2) For adjustment of basis of certain property in the case of cancellation or reduction of indebtedness resulting from a proceeding under the Bankruptcy Act, see the regulations under section 1016.

(c) ***Issuance and repurchase of debt instruments*** —

(1) ***Issuance.*** An issuer does not realize gain or loss upon the issuance of a debt instrument. For rules relating to an issuer's interest deduction for a debt instrument issued with bond issuance premium, see § 1.163-13.

(2) ***Repurchase*** —

(i) ***In general.*** An issuer does not realize gain or loss upon the repurchase of a debt instrument. However, if a debt instrument provides for payments denominated in, or determined by reference to, a nonfunctional currency, an issuer may realize a currency gain or loss upon the repurchase of the instrument. See section 988 and the regulations thereunder. For purposes of this paragraph (c)(2), the term *repurchase* includes the retirement of a debt instrument, the conversion of a debt instrument into stock of the issuer, and the exchange (including an exchange under section 1001) of a newly issued debt instrument for an existing debt instrument.

(ii) ***Repurchase at a discount.*** An issuer realizes income from the discharge of indebtedness upon the repurchase of a debt instrument for an amount less than its adjusted issue price (within the meaning of § 1.1275-1(b)). The amount of discharge of indebtedness income is equal to the excess of the adjusted issue price over the repurchase price. See section 108 and the regulations thereunder for additional rules relating to income from discharge of indebtedness. For example, to determine the repurchase price of a debt instrument that is repurchased through the issuance of a new debt instrument, see section 108(e)(10).

(iii) ***Repurchase at a premium.*** An issuer may be entitled to a repurchase premium deduction upon the repurchase of a debt instrument for an amount greater than its adjusted issue price (within the meaning of § 1.1275-1(b)). See § 1.163-7(c) for the treatment of repurchase premium.

(iv) ***Effective date.*** This paragraph (c)(2) applies to debt instruments repurchased on or after March 2, 1998.

(d) ***Cross references.*** For exclusion from gross income of—

(1) Income from discharge of indebtedness in certain cases, see sections 108 and 1017, and regulations thereunder;

(2) Forgiveness of Government payments to encourage exploration, development, and mining for defense purposes, see section 621 and regulations thereunder.

(e) ***Cross reference.*** For rules relating to the treatment of liabilities on the sale or other disposition of encumbered property, see § 1.1001-2.

[T.D. 6500, 25 FR 11402, Nov. 26, 1960, as amended by T.D. 6984, 33 FR 19174, Dec. 24, 1968; T.D. 7741, 45 FR 81745, Dec. 12, 1980; T.D. 8746, 62 FR 68175, Dec. 31, 1997]

§ 1.61-13 Distributive share of partnership gross income; income in respect of a decedent; income from an interest in an estate or trust.

(a) ***In general.*** A partner's distributive share of partnership gross income (under section 702(c)) constitutes gross income to him. Income in respect of a decedent (under section 691) constitutes gross income to the recipient. Income from an interest in an estate or trust constitutes gross income under the detailed rules of Part I (section 641 and following), Subchapter J, Chapter 1 of the Code. In many cases, these sections also determine who is to include in his gross income the income from an estate or trust.

(b) ***Creation of sinking fund by corporation.*** If a corporation, for the sole purpose of securing the payment of its bonds or other indebtedness, places property in trust or sets aside certain amounts in a sinking fund under the control of a trustee who may be authorized to invest and reinvest such sums from time to time, the property or fund thus set aside by the corporation and held by the trustee is an asset of the corporation, and any gain arising therefrom is income of the corporation and shall be included as such in its gross income.

§ 1.61-14 Miscellaneous items of gross income.

(a) ***In general.*** In addition to the items enumerated in section 61(a), there are many other kinds of gross income. For example, punitive damages such as treble damages under the antitrust laws and exemplary damages for fraud are gross income. Another person's payment of the taxpayer's income taxes

constitutes gross income to the taxpayer unless excluded by law. Illegal gains constitute gross income. Treasure trove, to the extent of its value in United States currency, constitutes gross income for the taxable year in which it is reduced to undisputed possession.

(b) ***Cross references.***

(1) Prizes and awards, see section 74 and regulations thereunder;

(2) Damages for personal injury or sickness, see section 104 and the regulations thereunder;

(3) Income taxes paid by lessee corporation, see section 110 and regulations thereunder;

(4) Scholarships and fellowship grants, see section 117 and regulations thereunder;

(5) Miscellaneous exemptions under other acts of Congress, see section 122;

(6) Tax-free covenant bonds, see section 1451 and regulations thereunder.

(7) Notional principal contracts, see § 1.446-3.

[T.D. 6500, 25 FR 11402, Nov. 26, 1960, as amended by T.D. 6856, 30 FR 13316, Oct. 20, 1965; T.D. 8491, 58 FR 53127, Oct. 14, 1993]

§ 1.61-15 Options received as payment of income.

(a) ***In general.*** Except as otherwise provided in § 1.61-2(d)(6)(i) (relating to certain restricted property transferred after June 30, 1969), if any person receives an option in payment of an amount constituting compensation of such person (or any other person), such option is subject to the rules contained in § 1.421-6 for purposes of determining when income is realized in connection with such option and the amount of such income. In this regard, the rules of § 1.421-6 apply to an option received in payment of an amount constituting compensation regardless of the form of the transaction. Thus, the rules of § 1.421-6 apply to an option transferred for less than its fair market value in a transaction taking the form of a sale or exchange if the difference between the amount paid for the option and its fair market value at the time of transfer is the payment of an amount constituting compensation of the transferee or any other person. This section, for example, makes the rules of § 1.421-6 applicable to options granted in whole or partial payment for services of an independent contractor. If an amount of money or property is paid for an option to which this paragraph applies, then the amount paid shall be part of the basis of such option.

(b) ***Options to which paragraph (a) does not apply.***

(1) Paragraph (a) of this section does not apply to:

(i) An option which is subject to the rules contained in section 421; and

(ii) An option which is not granted as the payment of an amount constituting compensation, such as an option which is acquired solely as an investment (including an option which is part of an investment unit described in paragraph (b) of § 1.1232-3). For rules relating to the taxation of options described in this subdivision, see section 1234 and the regulations thereunder.

(2) If a person acquires an option which is not subject to the rules contained in section 421, and if such option has a readily ascertainable fair market value, such person may establish that such option was not acquired as payment of an amount constituting compensation by showing that the amount of money or its equivalent paid for the option equaled the readily ascertainable fair market value of the option. If a person acquires an option which is not subject to the rules contained in section 421, and

if such option does not have a readily ascertainable fair market value, then to establish that such option was not acquired as payment of an amount constituting compensation, such person must show that, from an examination of all the surrounding circumstances, there was no reason for the option to have been granted as the payment of an amount constituting compensation. For example, such person must show that he had neither rendered nor was obligated to render substantial services in consideration for the granting of the option. In determining whether an option, such as an option acquired in connection with an obligation as part of an investment unit, has been granted as compensation for services, the ordinary services performed by an investor in his own self-interest in connection with his investing activities will not be treated as the consideration for the grant of the option. For example, if a small business investment company takes an active part in the management of its debtor small business company, the rendering of such management services will not be treated as the consideration for the granting of the option, provided such services are rendered for an independent consideration, or are merely protective of the small business investment company's investment in the borrower. See paragraph (c) of § 1.421-6 for the meaning of the term “readily ascertainable fair market value.”

(c) ***Statement required in connection with certain options.***

(1) Any person acquiring any option to purchase securities (other than an option described in subparagraph (2) of this paragraph) shall attach a statement to his income tax return for the taxable year in which the option was acquired. For the definition of the term “securities”, see section 165(g)(2).

(2) The statement otherwise required by subparagraph (1) of this paragraph shall not be required with respect to the following options:

(i) Options subject to the rules contained in section 305(a) or section 421;

(ii) Options acquired as part of an investment unit consisting of an option and a debenture, note, or other similar obligation—

(*a*) If such unit is acquired as part of a public offering and the amount of money or its equivalent paid for such unit is not less than the public offering price, or

(*b*) If such unit is actively traded on an established market and the amount of money or its equivalent paid for such unit is not less than the price paid for such unit in contemporaneous purchases of such unit by persons independent of both the seller and the taxpayer;

(iii) Options acquired as part of a public offering, if the amount of money or its equivalent paid for such option is not less than the public offering price; and

(iv) Options which are actively traded on an established market and which are acquired for money or its equivalent at a price not less than the price paid for such options in contemporaneous purchases of such options by persons independent of both the seller and the taxpayer.

(3) The statement required by subparagraph (1) of this paragraph shall contain the following information:

(i) Name and address of the taxpayer;

(ii) Description of the securities subject to the option (including number of shares of stock);

(iii) Period during which the option is exercisable;

(iv) Whether the option had a readily ascertainable fair market value at date of grant; and

(v) Whether the option is subject to paragraph (a) of this section.

(4) If the statement required by subparagraph (1) of this paragraph indicates either that the option is not subject to paragraph (a) of this section, or that the option is subject to paragraph (a) of this section but that such option had a readily ascertainable fair market value at date of grant, then such statement shall contain the following additional information:

(i) Option price;

(ii) Value at date of grant of securities subject to the option;

(iii) Restrictions (if any) on exercise or transfer of option;

(iv) Restrictions (if any) on transfer of securities subject to the option;

(v) Value of the option (if readily ascertainable);

(vi) How value of option was determined;

(vii) Amount of money (or its equivalent) paid for the option;

(viii) Person from whom the option was acquired;

(ix) A concise description of the circumstances surrounding the acquisition of the option and any other factors relied upon by the taxpayer to establish that the option is not subject to paragraph (a) of this section, or, if the option is treated by the taxpayer as subject to paragraph (a) of this section, that the option had a readily ascertainable fair market value at date of grant.

(d) ***Effective date.*** This section shall apply to options granted after July 11, 1963, other than options required to be granted pursuant to the terms of a written contract entered into on or before such date.

[T.D. 6696, 28 FR 13450, Dec. 12, 1963, as amended by T.D. 6706, 29 FR 2911, Mar. 3, 1964; T.D. 6984, 33 FR 19175, Dec. 24, 1968; T.D. 7554, 43 FR 31913, July 24, 1978]

§ 1.61-21 Taxation of fringe benefits.

(a) ***Fringe benefits*** —

(1) ***In general.*** Section 61(a)(1) provides that, except as otherwise provided in subtitle A of the Internal Revenue Code of 1986, gross income includes compensation for services, including fees, commissions, fringe benefits, and similar items. For an outline of the regulations under this section relating to fringe benefits, see paragraph (a)(7) of this section. Examples of fringe benefits include: an employer-provided automobile, a flight on an employer-provided aircraft, an employer-provided free or discounted commercial airline flight, an employer-provided vacation, an employer-provided discount on property or services, an employer-provided membership in a country club or other social club, and an employer-provided ticket to an entertainment or sporting event.

(2) ***Fringe benefits excluded from income.*** To the extent that a particular fringe benefit is specifically excluded from gross income pursuant to another section of subtitle A of the Internal Revenue Code of 1986, that section shall govern the treatment of that fringe benefit. Thus, if the requirements of the governing section are satisfied, the fringe benefits may be excludable from gross income. Examples of excludable fringe benefits include qualified tuition reductions provided to an employee (section 117(d)); meals or lodging furnished to an employee for the convenience of the employer

(section 119); benefits provided under a dependent care assistance program (section 129); and no-additional-cost services, qualified employee discounts, working condition fringes, and de minimis fringes (section 132). Similarly, the value of the use by an employee of an employer-provided vehicle or a flight provided to an employee on an employer-provided aircraft may be excludable from income under section 105 (because, for example, the transportation is provided for medical reasons) if and to the extent that the requirements of that section are satisfied. Section 134 excludes from gross income "qualified military benefits." An example of a benefit that is not a qualified military benefit is the personal use of an employer-provided vehicle. The fact that another section of subtitle A of the Internal Revenue Code addresses the taxation of a particular fringe benefit will not preclude section 61 and the regulations thereunder from applying, to the extent that they are not inconsistent with such other section. For example, many fringe benefits specifically addressed in other sections of subtitle A of the Internal Revenue Code are excluded from gross income only to the extent that they do not exceed specific dollar or percentage limits, or only if certain other requirements are met. If the limits are exceeded or the requirements are not met, some or all of the fringe benefit may be includible in gross income pursuant to section 61. See paragraph (b)(3) of this section.

(3) ***Compensation for services.*** A fringe benefit provided in connection with the performance of services shall be considered to have been provided as compensation for such services. Refraining from the performance of services (such as pursuant to a covenant not to compete) is deemed to be the performance of services for purposes of this section.

(4) ***Person to whom fringe benefit is taxable*** —

(i) ***In general.*** A taxable fringe benefit is included in the income of the person performing the services in connection with which the fringe benefit is furnished. Thus, a fringe benefit may be taxable to a person even though that person did not actually receive the fringe benefit. If a fringe benefit is furnished to someone other than the service provider such benefit is considered in this section as furnished to the service provider, and use by the other person is considered use by the service provider. For example, the provision of an automobile by an employer to an employee's spouse in connection with the performance of services by the employee is taxable to the employee. The automobile is considered available to the employee and use by the employee's spouse is considered use by the employee.

(ii) ***All persons to whom benefits are taxable referred to as employees.*** The person to whom a fringe benefit is taxable need not be an employee of the provider of the fringe benefit, but may be, for example, a partner, director, or an independent contractor. For convenience, the term "employee" includes any person performing services in connection with which a fringe benefit is furnished, unless otherwise specifically provided in this section.

(5) ***Provider of a fringe benefit referred to as an employer.*** The "provider" of a fringe benefit is that person for whom the services are performed, regardless of whether that person actually provides the fringe benefit to the recipient. The provider of a fringe benefit need not be the employer of the recipient of the fringe benefit, but may be, for example, a client or customer of the employer or of an independent contractor. For convenience, the term "employer" includes any provider of a fringe benefit in connection with payment for the performance of services, unless otherwise specifically provided in this section.

(6) ***Effective date.*** Except as otherwise provided, this section is effective as of January 1, 1989 with respect to fringe benefits provided after December 31, 1988.

(7) ***Outline of this section.*** The following is an outline of the regulations in this section relating to fringe benefits:

§ 1.61-21 (a) Fringe benefits.

(1) In general.

(2) Fringe benefits excluded from income.

(3) Compensation for services.

(4) Person to whom fringe benefit is taxable.

(5) Provider of a fringe benefit referred to as an employer.

(6) Effective date.

(7) Outline of this section.

§ 1.61-21 (b) Valuation of fringe benefits

(1) In general.

(2) Fair market value.

(3) Exclusion from income based on cost.

(4) Fair market value of the availability of an employer-provided vehicle.

(5) Fair market value of chauffeur services.

(6) Fair market value of a flight on an employer-provided piloted aircraft.

(7) Fair market value of the use of an employer-provided aircraft for which the employer does not furnish a pilot.

§ 1.61-21 (c) Special valuation rules.

(1) In general.

(2) Use of the special valuation rules.

(3) Additional rules for using special valuation.

(4) Application of section 414 to employers.

(5) Valuation formulae contained in the special valuation rules.

(6) Modification of the special valuation rules.

(7) Special accounting rule.

§ 1.61-21 (d) Automobile lease valuation rule.

(1) In general.

(2) Calculation of Annual Lease Value.

(3) Services included in, or excluded from, the Annual Lease Value Table.

(4) Availability of an automobile for less than an entire calendar year.

(5) Fair market value.

(6) Special rules for continuous availability of certain automobiles.

(7) Consistency rules.

§ 1.61-21 (e)Vehicle cents-per-mile valuation rule.

(1) In general.

(2) Definition of vehicle.

(3) Services included in, or excluded from, the cents-per-mile rate.

(4) Valuation of personal use only.

(5) Consistency rules.

§ 1.61-21 (f) Commuting valuation rule.

(1) In general.

(2) Special rules.

(3) Commuting value.

(4) Definition of vehicle.

(5) Control employee defined—Non-government employer.

(6) Control employee defined—Government employer.

(7) “Compensation” defined.

§ 1.61-21 (g) Non-commercial flight valuation rule.

(1) In general.

(2) Eligible flights and eligible aircraft.

(3) Definition of a flight.

(4) Personal and non-personal flights.

(5) Aircraft valuation formula.

(6) Discretion to provide new formula.

(7) Aircraft multiples.

(8) Control employee defined—Non-government employer.

(9) Control employee defined—Government employer.

(10) “Compensation” defined.

(11) Treatment of former employees.

(12) Seating capacity rule.

(13) Erroneous use of the non-commercial flight valuation rule.

(14) Consistency rules.

§ 1.61-21 (h) Commercial flight valuation rule.

(1) In general.

(2) Space-available flight.

(3) Commercial aircraft.

(4) Timing of inclusion.

(5) Consistency rules.

§ 1.61-21 (i) [Reserved]

§ 1.61-21 (j) Valuation of meals provided at an employer-operated eating facility for employees.

(1) In general.

(2) Valuation formula.

§ 1.61-21 (k) Commuting valuation rule for certain employees.

(1) In general.

(2) Trip-by-trip basis.

(3) Commuting value.

(4) Definition of employer-provided transportation.

(5) Unsafe conditions.

(6) Qualified employee defined.

(7) Examples.

(8) Effective date.

(b) ***Valuation of fringe benefits*** —

(1) ***In general.*** An employee must include in gross income the amount by which the fair market value of the fringe benefit exceeds the sum of—

(i) The amount, if any, paid for the benefit by or on behalf of the recipient, and

(ii) The amount, if any, specifically excluded from gross income by some other section of subtitle A of the Internal Revenue Code of 1986.

Therefore, for example, if the employee pays fair market value for what is received, no amount is includible in the gross income of the employee. In general, the determination of the fair market value of a fringe benefit must be made before subtracting out the amount, if any, paid for the benefit and the amount, if any, specifically excluded from gross income by another section of subtitle A. See paragraphs (d)(2)(ii) and (e)(1)(iii) of this section.

(2) ***Fair market value.*** In general, fair market value is determined on the basis of all the facts and circumstances. Specifically, the fair market value of a fringe benefit is the amount that an individual would have to pay for the particular fringe benefit in an arm's-length transaction. Thus, for example, the effect of any special relationship that may exist between the employer and the employee must be disregarded. Similarly, an employee's subjective perception of the value of a fringe benefit is not relevant to the determination of the fringe benefit's fair market value nor is the cost incurred by the employer determinative of its fair market value. For special rules relating to the valuation of certain fringe benefits, see paragraph (c) of this section.

(3) ***Exclusion from income based on cost.*** If a statutory exclusion phrased in terms of cost applies to the provision of a fringe benefit, section 61 does not require the inclusion in the recipient's gross income of the difference between the fair market value and the excludable cost of that fringe benefit. For example, section 129 provides an exclusion from an employee's gross income for amounts contributed by an employer to a dependent care assistance program for employees. Even if the fair market value of the dependent care assistance exceeds the employer's cost, the excess is not subject to inclusion under section 61 and this section. However, if the statutory cost exclusion is a limited amount, the fair market value of the fringe benefit attributable to any excess cost is subject to inclusion. This would be the case, for example, where an employer pays or incurs a cost of more than $5,000 to provide dependent care assistance to an employee.

(4) ***Fair market value of the availability of an employer-provided vehicle*** —

(i) ***In general.*** If the vehicle special valuation rules of paragraph (d), (e), or (f) of this section do not apply with respect to an employer-provided vehicle, the value of the availability of that vehicle is determined under the general valuation principles set forth in this section. In general, that value equals the amount that an individual would have to pay in an arm's-length transaction to lease the same or comparable vehicle on the same or comparable conditions in the geographic area in which the vehicle is available for use. An example of a comparable condition is the amount of time that the vehicle is available to the employee for use, e.g., a one-year period. Unless the employee can substantiate that the same or comparable vehicle could have been leased on a cents-per-mile basis, the value of the availability of the vehicle cannot be computed by applying a cents-per-mile rate to the number of miles the vehicle is driven.

(ii) ***Certain equipment excluded.*** The fair market value of a vehicle does not include the fair market value of any specialized equipment not susceptible to personal use or any telephone that is added to or carried in the vehicle, provided that the presence of that equipment or telephone is necessitated by, and attributable to, the business needs of the employer. However, the value of specialized equipment must be included, if the employee to whom the vehicle is available uses the specialized equipment in a trade or business of the employee other than the employee's trade or business of being an employee of the employer.

(5) ***Fair market value of chauffeur services*** —

(i) ***Determination of value*** —

(A) ***In general.*** The fair market value of chauffeur services provided to the employee by the employer is the amount that an individual would have to pay in an arm's-length transaction to obtain the same or comparable chauffeur services in the geographic area for the period in which the services are provided. In determining the applicable fair market value, the amount of time, if any, the chauffeur remains on-call to perform chauffeur services must be included. For example, assume that A, an employee of corporation M, needs a chauffeur to be on-call to provide services to A during a twenty-four hour period. If during that twenty-four hour period, the chauffeur actually drives A for only six hours, the fair market value of the chauffeur services would have to be the value of having a chauffeur on-call for a twenty-four hour period. The cost of taxi fare or limousine service for the six hours the chauffeur actually drove A would not be an accurate measure of the fair market value of chauffeur services provided to A. Moreover, all other aspects of the chauffeur's services (including any special qualifications of the chauffeur (e.g., training in evasive driving skills) or the ability of the employee to choose the particular chauffeur) must be taken into consideration.

(B) ***Alternative valuation with reference to compensation paid.*** Alternatively, the fair market value of the chauffeur services may be determined by reference to the compensation (as defined in paragraph (b)(5)(ii) of this section) received by the chauffeur from the employer.

(C) ***Separate valuation for chauffeur services.*** The value of chauffeur services is determined separately from the value of the availability of an employer-provided vehicle.

(ii) ***Definition of compensation*** —

(A) ***In general.*** For purposes of this paragraph (b)(5)(ii), the term "compensation" means compensation as defined in section 414(q)(7) and the fair market value of nontaxable lodging (if any) provided by the employer to the chauffeur in the current year.

(B) ***Adjustments to compensation*** —For purposes of this paragraph (b)(5)(ii), a chauffeur's compensation is reduced proportionately to reflect the amount of time during which the chauffeur performs substantial services for the employer other than as a chauffeur and is not on-call as a chauffeur. For example, assume a chauffeur is paid $25,000 a year for working a ten-hour day, five days a week and also receives $5,000 in nontaxable lodging. Further assume that during four hours of each day, the chauffeur is not on-call to perform services as a chauffeur because that individual is performing secretarial functions for the employer. Then, for purposes of determining the fair market value of this chauffeur's services, the employer may reduce the chauffeur's compensation by $^{4}/_{10}$ or $12,000 (.4 × ($25,000 + $5,000) = $12,000). Therefore, in this example, the fair market value of the chauffeur's services is $18,000 ($30,000 −$12,000). However, for purposes of this paragraph (b)(5)(ii), a chauffeur's compensation is not to be reduced by any amounts paid to the chauffeur for time spent "on-call," even though the chauffeur actually performs other services for the employer during such time. For purposes of this paragraph (b)(5)(ii), a determination that a chauffeur is performing substantial services for the employer other than as a chauffeur is based upon the facts and circumstances of each situation. An employee will be deemed to be performing substantial services for the employer other than as a chauffeur if a certain portion of each working day is regularly spent performing other services for the employer.

(iii) ***Calculation of chauffeur services for personal purposes of the employee.*** The fair market value of chauffeur services provided to the employee for personal purposes may be determined by multiplying the fair market value of chauffeur services, as determined pursuant to paragraph (b)(5)(i) (A) or (B) of this section, by a fraction, the numerator of which is equal to the sum of the hours spent by the chauffeur actually providing personal driving services to the employee and the hours spent by the chauffeur in "personal on-call time," and the denominator of which is equal to all hours the chauffeur spends in driving services of any kind paid for by the employer, including all hours that are "on-call."

(iv) ***Definition of on-call time.*** For purposes of this paragraph, the term "on-call time" means the total amount of time that the chauffeur is not engaged in the actual performance of driving services, but during which time the chauffeur is available to perform such services. With respect to a round-trip, time spent by a chauffeur waiting for an employee to make a return trip is generally not treated as on-call time; rather such time is treated as part of the round-trip.

(v) ***Definition of personal on-call time.*** For purposes of this paragraph, the term "personal on-call time" means the amount of time outside the employee's normal working hours for the employer when the chauffeur is available to the employee to perform driving services.

(vi) ***Presumptions.***

(A) An employee's normal working hours will be presumed to consist of a ten hour period during which the employee usually conducts business activities for that employer.

(B) It will be presumed that if the chauffeur is on-call to provide driving services to an employee during the employee's normal working hours, then that on-call time will be performed for business purposes.

(C) Similarly, if the chauffeur is on-call to perform driving services to an employee after normal working hours, then that on-call time will be presumed to be "personal on-call time."

(D) The presumptions set out in paragraph (b)(5)(vi) (A), (B), and (C) of this section may be rebutted. For example, an employee may demonstrate by adequate substantiation that his or her normal working hours consist of more than ten hours. Furthermore, if the employee keeps adequate records and is able to substantiate that some portion of the driving services performed by the chauffeur after normal working hours is attributable to business purposes, then personal on-call time may be reduced by an amount equal to such personal on-call time multiplied by a fraction, the numerator of which is equal to the time spent by the chauffeur after normal working hours driving the employee for business purposes, and the denominator of which is equal to the total time spent by the chauffeur driving the employee after normal working hours for all purposes.

(vii) ***Examples.*** The rules of this paragraph (b)(5) may be illustrated by the following examples:

Example 1. An employer makes available to employee A an automobile and a full-time chauffeur B (who performs no other services for A's employer) for an entire calendar year. Assume that the automobile lease valuation rule of paragraph (d) of this section is used and that the Annual Lease Value of the automobile is $9,250. Assume further that B's compensation for the year is $12,000 (as defined in section 414(q)(7)) and that B is furnished lodging with a value of $3,000 that is excludable from B's gross income. The maximum amount subject to inclusion in A's gross income for use of the automobile and chauffeur is therefore $24,250 ($12,000 + $3,000 + $9,250). If 70 percent of the miles placed on the automobile during the year are for A's employer's business, then $6,475 is excludable from A's gross income with respect to the automobile as a working condition fringe ($9,250 × .70). Thus, $2,775 is includible in A's gross income with respect to the automobile ($9,250−$6,475). With respect to the chauffeur, if 20 percent of the chauffeur's time is spent actually driving A or being on-call to drive A for personal purposes; then $3,000 is includible in A's income (.20 × $15,000). Eighty percent of $15,000, or $12,000, is excluded from A's income as a working condition fringe.

Example 2. Assume the same facts as in example (1) except that in addition to providing chauffeur services, B is responsible for performing substantial non-chauffeur-related duties (such as clerical or secretarial functions) during which time B is not "on-call" as a chauffeur. If B spends only 75 percent of the time performing chauffeur services, then the maximum amount subject to inclusion in A's gross income for use of the automobile and chauffeur is $20,500 (($15,000 × .75) + $9,250). If B is actually driving A for personal purposes or is on-call to drive A for personal purposes for 20 percent of the time during which B is available to provide chauffeur services, then $2,250 is includible in A's gross income (.20 × $11,250). The income inclusion with respect to the automobile is the same as in example (1).

Example 3. Assume the same facts as in example (2) except that while B is performing non-chauffeur-related duties, B is on call as A's chauffeur. No part of B's compensation is excluded when determining the value of the benefit provided to A. Thus, as in example (1), $3,000 is includible in A's gross income with respect to the chauffeur.

(6) ***Fair market value of a flight on an employer-provided piloted aircraft*** —

(i) ***In general.*** If the non-commercial flight special valuation rule of paragraph (g) of this section does not apply, the value of a flight on an employer-provided piloted aircraft is determined under the general valuation principles set forth in this paragraph.

(ii) ***Value of flight.*** If an employee takes a flight on an employer-provided piloted aircraft and that employee's flight is primarily personal (see § 1.162-2(b)(2)), the value of the flight is equal to the amount that an individual would have to pay in an arm's-length transaction to charter the same or a comparable piloted aircraft for that period for the same or a comparable flight. A flight taken under these circumstances may not be valued by reference to the cost of commercial airfare for the same or a comparable flight. The cost to charter the aircraft must be allocated among all employees on board the aircraft based on all the facts and circumstances unless one or more of the employees controlled the use of the aircraft. Where one or more employees control the use of the aircraft, the value of the flight shall be allocated solely among such controlling employees, unless a written agreement among all the employees on the flight otherwise allocates the value of such flight. Notwithstanding the allocation required by the preceding sentence, no additional amount shall be included in the income of any employee whose flight is properly valued under the special valuation rule of paragraph (g) of this section. For purposes of this paragraph (b)(6), "control" means the ability of the employee to determine the route, departure time and destination of the flight. The rules provided in paragraph (g)(3) of this section will be used for purposes of this section in defining a flight. Notwithstanding the allocation required by the preceding sentence, no additional amount shall be included in the income of an employee for that portion of any such flight which is excludible from income pursuant to section 132(d) or § 1.132-5 as a working condition fringe.

(iii) ***Examples.*** The rules of paragraph (b)(6) of this section may be illustrated by the following examples:

Example 1. An employer makes available to employees A and B a piloted aircraft in New York, New York. A wants to go to Los Angeles, California for personal purposes. B needs to go to Chicago, Illinois for business purposes, and then wants to go to Los Angeles, California for personal purposes. Therefore, the aircraft first flies to Chicago, and B deplanes and then boards the plane again. The aircraft then flies to Los Angeles, California where A and B deplane. The value of the flight to employee A will be no more than the amount that an individual would have to pay in an arm's length transaction to charter the same or a comparable piloted aircraft for the same or comparable flight from New York City to Los Angeles. No amount will be imputed to employee A for the stop at Chicago. As to employee B, the value of the personal flight will be no more than the value or the flight from Chicago to Los Angeles. Pursuant to the rules set forth in § 1.132-5(k), the flight from New York to Chicago will not be included in employee B's income since that flight was taken solely for business purposes. The charter cost must be allocated between A and B, since both employees controlled portions of the flight. Assume that the employer allocates according to the relative value of each employee's flight. If the charter value of A's flight from New York City to Los Angeles is $1,000 and the value of B's flight from

Chicago to Los Angeles is $600 and the value of the actual flight from New York to Chicago to Los Angeles is $1,200, then the amount to be allocated to employee A is $750 ($1,000/($1,000 + $600) × $1,200) and the amount to be allocated to employee B is $450 ($600/($1000 + $600) × $1,200).

Example 2. Assume the same facts as in example (1), except that employee A also deplanes at Chicago, Illinois, but for personal purposes. The value of the flight to employee A then becomes the value of a flight from New York to Chicago to Los Angeles, *i.e.*, $1,200. Therefore, the amount to be allocated to employee A is $800 ($1,200/($1,200 + $600) × $1,200) and the amount to be allocated to employee B is $400 ($600/($1,200 + $600) × $1,200).

(7) ***Fair market value of the use of an employer-provided aircraft for which the employer does not furnish a pilot*** —

(i) ***In general.*** If the non-commercial flight special valuation rule of paragraph (g) of this section does not apply and if an employer provides an employee with the use of an aircraft without a pilot, the value of the use of the employer-provided aircraft is determined under the general valuation principles set forth in this paragraph (b)(7).

(ii) ***Value of flight.*** In general, if an employee takes a flight on an employer-provided aircraft for which the employer does not furnish a pilot, the value of that flight is equal to the amount that an individual would have to pay in an arm's-length transaction to lease the same or comparable aircraft on the same or comparable terms for the same period in the geographic area in which the aircraft is used. For example, if an employer makes its aircraft available to an employee who will pilot the aircraft for a two-hour flight, the value of the use of the aircraft is the amount that an individual would have to pay in an arm's-length transaction to rent a comparable aircraft for that period in the geographic area in which the aircraft is used. As another example, assume that an employee uses an employer-provided aircraft to commute between home and work. The value of the use of the aircraft is the amount that an individual would have to pay in an arm's-length transaction to rent a comparable aircraft for commuting in the geographic area in which the aircraft is used. If the availability of the flight is of benefit to more than one employee, then such value shall be allocated among such employees on the basis of the relevant facts and circumstances.

(c) ***Special valuation rules*** —

(1) ***In general.*** Paragraphs (d) through (k) of this section provide special valuation rules that may be used under certain circumstances for certain commonly provided fringe benefits. For general rules relating to the valuation of fringe benefits not eligible for valuation under the special valuation rules or fringe benefits with respect to which the special valuation rules are not used, see paragraph (b) of this section.

(2) ***Use of the special valuation rules*** —

(i) ***For benefits provided before January 1, 1993.*** The special valuation rules may be used for income tax, employment tax, and reporting purposes. The employer has the option to use any of the special valuation rules. However, an employee may only use a special valuation rule if the employer uses the rule. Moreover, an employee may only use the special rule that the employer uses to value the benefit provided; the employee may not use another special rule to value that benefit. The employee may always use general valuation rules based on facts and circumstances (see paragraph (b) of this section) even if the employer uses a special rule. If a

special rule is used, it must be used for all purposes. If an employer properly uses a special rule and the employee uses the special rule, the employee must include in gross income the amount determined by the employer under the special rule reduced by the sum of—

(A) Any amount reimbursed by the employee to the employer, and

(B) Any amount excludable from income under another section of subtitle A of the Internal Revenue Code of 1986. If an employer properly uses a special rule and properly determines the amount of an employee's working condition fringe under section 132 and § 1.132-5 (under the general rule or under a special rule), and the employee uses the special valuation rule, the employee must include in gross income the amount determined by the employer less any amount reimbursed by the employee to the employer. The employer and employee may use the special rules to determine the amount of the reimbursement due the employer by the employee. Thus, if an employee reimburses an employer for the value of a benefit as determined under a special valuation rule, no amount is includable in the employee's gross income with respect to the benefit. The provisions of this paragraph are effective for benefits provided before January 1, 1993.

(ii) ***For benefits provided after December 31, 1992.*** The special valuation rules may be used for income tax, employment tax, and reporting purposes. The employer has the option to use any of the special valuation rules. An employee may use a special valuation rule only if the employer uses that rule or the employer does not meet the condition of paragraph (c)(3)(ii)(A) of this section, but one of the other conditions of paragraph (c)(3)(ii) of this section is met. The employee may always use general valuation rules based on facts and circumstances (see paragraph (b) of this section) even if the employer uses a special rule. If a special rule is used, it must be used for all purposes. If an employer properly uses a special rule and the employee uses the special rule, the employee must include in gross income the amount determined by the employer under the special rule reduced by the sum of—

(A) Any amount reimbursed by the employee to the employer; and

(B) Any amount excludable from income under another section of subtitle A of the Internal Revenue Code of 1986. If an employer properly uses a special rule and properly determines the amount of an employee's working condition fringe under section 132 and § 1.132-5 (under the general rule or under a special rule), and the employee uses the special valuation rule, the employee must include in gross income the amount determined by the employer less any amount reimbursed by the employee to the employer. The employer and employee may use the special rules to determine the amount of the reimbursement due the employer by the employee. Thus, if an employee reimburses an employer for the value of a benefit as determined under a special valuation rule, no amount is includible in the employee's gross income with respect to the benefit. The provisions of this paragraph are effective for benefits provided after December 31, 1992.

(iii) ***Vehicle special valuation rules*** —

(A) ***Vehicle by vehicle basis.*** Except as provided in paragraphs (d)(7)(v) and (e)(5)(v) of this section, the vehicle special valuation rules of paragraphs (d), (e), and (f) of this section apply on a vehicle by vehicle basis. An employer need not use the same vehicle special valuation rule for all vehicles provided to all employees. For example, an employer may use the automobile lease valuation rule for automobiles provided to some employees, and the commuting and vehicle cents-per-mile valuation rules for automobiles provided to

other employees. For purposes of valuing the use or availability of a vehicle, the consistency rules provided in paragraphs (d)(7) and (e)(5) of this section (relating to the automobile lease valuation rule and the vehicle cents-per-mile valuation rule, respectively) apply.

(B) ***Shared vehicle usage.*** If an employer provides a vehicle to employees for use by more than one employee at the same time, such as with an employer-sponsored vehicle commuting pool, the employer may use any of the special valuation rules that may be applicable to value the use of the vehicle by the employees. The employer must use the same special valuation rule to value the use of the vehicle by each employee who shares such use. The employer must allocate the value of the use of the vehicle based on the relevant facts and circumstances among the employees who share use of the vehicle. For example, assume that an employer provides an automobile to four of its employees and that the employees use the automobile in an employer-sponsored vehicle commuting pool. Assume further that the employer uses the automobile lease valuation rule of paragraph (d) of this section and that the Annual Lease Value of the automobile is $5,000.

The employer must treat $5,000 as the value of the availability of the automobile to the employees, and must apportion the $5,000 value among the employees who share the use of the automobile based on the relevant facts and circumstances. Each employee's share of the value of the availability of the automobile is then to be reduced by the amount, if any, of each employee's working condition fringe exclusion and the amount reimbursed by the employee to the employer.

(iv) ***Commercial and noncommercial flight valuation rules.*** Except as otherwise provided, if either the commercial flight valuation rule or the non-commercial flight valuation rule is used, that rule must be used by an employer to value all eligible flights taken by all employees in a calendar year. See paragraph (g)(14) of this section for the applicable consistency rules.

(3) ***Additional rules for using special valuation*** —

(i) ***Election to use special valuation rules for benefits provided before January 1, 1993.*** A particular special valuation rule is deemed to have been elected by the employer (and, if applicable, by the employee), if the employer (and, if applicable, the employee) determines the value of the fringe benefit provided by applying the special valuation rule and treats that value as the fair market value of the fringe benefit for income, employment tax, and reporting purposes. Neither the employer nor the employee must notify the Internal Revenue Service of the election. The provisions of this paragraph are effective for benefits provided before January 1, 1993.

(ii) ***Conditions on the use of special valuation rules for benefits provided after December 31, 1992.*** Neither the employer nor the employee may use a special valuation rule to value a benefit provided after December 31, 1992, unless one of the following conditions is satisfied—

(A) The employer treats the value of the benefit as wages for reporting purposes within the time for filing the returns for the taxable year (including extensions) in which the benefit is provided;

(B) The employee includes the value of the benefit in income within the time for filing the returns for the taxable year (including extensions) in which the benefit is provided;

(C) The employee is not a control employee as defined in paragraphs (f)(5) and (f)(6) of this section; or

(D) The employer demonstrates a good faith effort to treat the benefit correctly for reporting purposes.

(4) ***Application of section 414 to employers.*** For purposes of paragraphs (c) through (k) of this section, except as otherwise provided therein, the term "employer" includes all entities required to be treated as a single employer under section 414 (b), (c), (m), or (o).

(5) ***Valuation formulae contained in the special valuation rules.*** The valuation formula contained in the special valuation rules are provided only for use in connection with those rules. Thus, when a special valuation rule is properly applied to a fringe benefit, the Commissioner will accept the value calculated pursuant to the rule as the fair market value of that fringe benefit. However, when a special valuation rule is not properly applied to a fringe benefit (see, for example, paragraph (g)(13) of this section), or when a special valuation rule is used to value a fringe benefit by a taxpayer not entitled to use the rule, the fair market value of that fringe benefit may not be determined by reference to any value calculated under any special valuation rule. Under the circumstances described in the preceding sentence, the fair market value of the fringe benefit must be determined pursuant to the general valuation rules of paragraph (b) of this section.

(6) ***Modification of the special valuation rules.*** The Commissioner may, to the extent necessary for tax administration, add, delete, or modify any special valuation rule, including the valuation formulae contained herein, on a prospective basis by regulation, revenue ruling or revenue procedure.

(7) ***Special accounting rule.*** If the employer is using the special accounting rule provided in Announcement 85-113 (1985-31 I.R.B. 31, August 5, 1985) (see § 601.601(d)(2)(ii)(*b*) of this chapter) (relating to the reporting of and withholding on the value of noncash fringe benefits), benefits which are deemed provided in a subsequent calendar year pursuant to that rule are considered as provided in that subsequent calendar year for purposes of the special valuation rules. Thus, if a particular special valuation rule is in effect for a calendar year, it applies to benefits deemed provided during that calendar year under the special accounting rule.

(d) ***Automobile lease valuation rule*** —

(1) ***In general*** —

(i) ***Annual Lease Value.*** Under the special valuation rule of this paragraph (d), if an employer provides an employee with an automobile that is available to the employee for an entire calendar year, the value of the benefit provided is the Annual Lease Value (determined under paragraph (d)(2) of this section) of that automobile. Except as otherwise provided, for an automobile that is available to an employee for less than an entire calendar year, the value of the benefit provided is either a pro-rated Annual Lease Value or the Daily Lease Value (both as defined in paragraph (d)(4) of this section), whichever is applicable. Absent any statutory exclusion relating to the employer-provided automobile (see, for example, section 132(a)(3) and § 1.132-5(b)), the amount of the Annual Lease Value (or a pro-rated Annual Lease Value or the Daily Lease Value, as applicable) is included in the gross income of the employee.

(ii) ***Definition of automobile.*** For purposes of this paragraph (d), the term "automobile" means any four-wheeled vehicle manufactured primarily for use on public streets, roads, and highways.

(2) ***Calculation of Annual Lease Value*** —

(i) ***In general.*** The Annual Lease Value of a particular automobile is calculated as follows:

(A) Determine the fair market value of the automobile as of the first date on which the automobile is made available to any employee of the employer for personal use. For an automobile first made available to any employee for personal use prior to January 1, 1985, determine the fair market value as of January l of the first year the special valuation rule of this paragraph (d) is used with respect to the automobile. For rules relating to determination of the fair market value of an automobile for purposes of this paragraph (d), see paragraph (d)(5) of this section.

(B) Select the dollar range in column 1 of the Annual Lease Value Table, set forth in paragraph (d)(2)(iii) of this section corresponding to the fair market value of the automobile. Except as otherwise provided in paragraphs (d)(2) (iv) and (v) of this section, the Annual Lease Value for each year of availability of the automobile is the corresponding amount in column 2 of the Table.

(ii) ***Calculation of Annual Lease Value of automobile owned or leased by both an employer and an employee*** —

(A) ***Purchased automobiles.*** Notwithstanding anything in this section to the contrary, if an employee contributes an amount toward the purchase price of an automobile in return for a percentage ownership interest in the automobile, the Annual Lease Value or the Daily Lease Value, whichever is applicable, is determined by reducing the fair market value of the employer-provided automobile by the lesser of—

(*1*) The amount contributed, or

(*2*) An amount equal to the employee's percentage ownership interest multiplied by the unreduced fair market value of the automobile.

If the automobile is subsequently revalued, the revalued amount (determined without regard to this paragraph (d)(2)(ii)(A)) is reduced by an amount which is equal to the employee's percentage ownership interest in the vehicle). If the employee does not receive an ownership interest in the employer-provided automobile, then the Annual Lease Value or the Daily Lease Value, whichever is applicable, is determined without regard to any amount contributed. For purposes of this paragraph (d)(2)(ii)(A), an employee's ownership interest in an automobile will not be recognized unless it is reflected in the title of the automobile. An ownership interest reflected in the title of an automobile will not be recognized if under the facts and circumstances the title does not reflect the benefits and burdens of ownership.

(B) ***Leased automobiles.*** Notwithstanding anything in this section to the contrary, if an employee contributes an amount toward the cost to lease an automobile in return for a percentage interest in the automobile lease, the Annual Lease Value or the Daily Lease Value, whichever is applicable, is determined by reducing the fair market value of the employer-provided automobile by the amount specified in the following sentence. The amount specified in this sentence is the unreduced fair market value of a vehicle multiplied by the lesser of—

(*1*) The employee's percentage interest in the lease, or

(*2*) A fraction, the numerator of which is the amount contributed and the denominator of which is the entire lease cost.

If the automobile is subsequently revalued, the revalued amount (determined without regard to this paragraph (d)(2)(ii)(B)) is reduced by an amount which is equal to the employee's percentage interest in the lease) multiplied by the revalued amount. If the employee does not receive an interest in the automobile lease, then the Annual Lease Value or the Daily Lease Value, whichever is applicable, is determined without regard to any amount contributed. For purposes of this paragraph (d)(2)(ii)(B), an employee's interest in an automobile lease will not be recognized unless the employee is a named co-lessee on the lease. An interest in a lease will not be recognized if under the facts and circumstances the lease does not reflect the true obligations of the lessees.

(C) ***Example.*** The rules of paragraph (d)(2)(ii) (A) and (B) of this section are illustrated by the following example:

Example. Assume that an employer pays $15,000 and an employee pays $5,000 toward the purchase of an automobile. Assume further that the employee receives a 25 percent interest in the automobile and is named as a co-owner on the title to the automobile. Under the rule of paragraph (d)(2)(ii)(A) of this section, the Annual Lease Value of the automobile is determined by reducing the fair market value of the automobile ($20,000) by the $5,000 employee contribution. Thus, the Annual Lease Value of the automobile under the table in paragraph (d)(2)(iii) of this section is $4,350. If the employee in this example does not receive an ownership interest in the automobile and is provided the use of the automobile for two years, the Annual Lease Value would be determined without regard to the $5,000 employee contribution. Thus, the Annual Lease Value would be $5,600. The $5,000 employee contribution would reduce the amount includible in the employee's income after taking into account the amount, if any, excluded from income under another provision of subtitle A of the Internal Revenue Code, such as the working condition fringe exclusion. Thus, if the employee places 50 percent of the mileage on the automobile for the employer's business each year, then the amount includible in the employee's income in the first year would be ($5,600-2,800-2,800), or $0, the amount includible in the employee's income in the second year would be ($5,600-2,800-2,200 ($5,000-2,800)) or $600 and the amount includible in the third year would be ($5,600-2,800) or $2,800 since the employee's contribution has been completely used in the first two years.

(iii) ***Annual Lease Value Table.***

Automobile fair market value	Annual lease value
(1)	(2)
$0 to 999	$600
1,000 to 1,999	850
2,000 to 2,999	1,100
3,000 to 3,999	1,350
4,000 to 4,999	1,600
5,000 to 5,999	1,850
6,000 to 6,999	2,100

Automobile fair market value	Annual lease value
(1)	(2)
7,000 to 7,999	2,350
8,000 to 8,999	2,600
9,000 to 9,999	2,850
10,000 to 10,999	3,100
11,000 to 11,999	3,350
12,000 to 12,999	3,600
13,000 to 13,999	3,850
14,000 to 14,999	4,100
15,000 to 15,999	4,350
16,000 to 16,999	4,600
17,000 to 17,999	4,850
18,000 to 18,999	5,100
19,000 to 19,999	5,350
20,000 to 20,999	5,600
21,000 to 21,999	5,850
22,000 to 22,999	6,100
23,000 to 23,999	6,350
24,000 to 24,999	6,600
25,000 to 25,999	6,850
26,000 to 27,999	7,250
28,000 to 29,999	7,750
30,000 to 31,999	8,250
32,000 to 33,999	8,750
34,000 to 35,999	9,250
36,000 to 37,999	9,750
38,000 to 39,999	10,250
40,000 to 41,999	10,750
42,000 to 43,999	11,250
44,000 to 45,999	11,750
46,000 to 47,999	12,250
48,000 to 49,999	12,750
50,000 to 51,999	13,250
52,000 to 53,999	13,750
54,000 to 55,999	14,250
56,000 to 57,999	14,750

Automobile fair market value	Annual lease value
(1)	(2)
58,000 to 59,999	15,250

For vehicles having a fair market value in excess of $59,999, the Annual Lease Value is equal to: (.25 × the fair market value of the automobile) + $500.

(iv) ***Recalculation of Annual Lease Value.*** The Annual Lease Values determined under the rules of this paragraph (d) are based on four-year lease terms. Therefore, except as otherwise provided in paragraph (d)(2)(v) of this section, the Annual Lease Value calculated by applying paragraph (d)(2) (i) or (ii) of this section shall remain in effect for the period that begins with the first date the special valuation rule of paragraph (d) of this section is applied by the employer to the automobile and ends on December 31 of the fourth full calendar year following that date. The Annual Lease Value for each subsequent four-year period is calculated by determining the fair market value of the automobile as of the first January 1 following the period described in the previous sentence and selecting the amount in column 2 of the Annual Lease Value Table corresponding to the appropriate dollar range in column 1 of the Table. If, however, the employer is using the special accounting rule provided in Announcement 85-113 (1985-31 I.R.B. 31, August 5, 1985) (relating to the reporting of and withholding on the value of noncash fringe benefits), the employer may calculate the Annual Lease Value for each subsequent four-year period as of the beginning of the special accounting period that begins immediately prior to the January 1 described in the previous sentence. For example, assume that pursuant to Announcement 85-113, an employer uses the special accounting rule. Assume further that beginning on November 1, 1988, the special accounting period is November 1 to October 31 and that the employer elects to use the special valuation rule of this paragraph (d) as of January 1, 1989. The employer may recalculate the Annual Lease Value as of November 1, 1992, rather than as of January 1, 1993.

(v) ***Transfer of the automobile to another employee.*** Unless the primary purpose of the transfer is to reduce Federal taxes, if an employer transfers the use of an automobile from one employee to another employee, the employer may recalculate the Annual Lease Value based on the fair market value of the automobile as of January 1 of the calendar year of transfer. If, however, the employer is using the special accounting rule provided in Announcement 85-113 (1985-31 I.R.B. 31, August 5, 1985) (relating to the reporting of and withholding on the value of noncash fringe benefits), the employer may recalculate the Annual Lease Value based on the fair market value of the automobile as of the beginning of the special accounting period in which the transfer occurs. If the employer does not recalculate the Annual Lease Value, and the employee to whom the automobile is transferred uses the special valuation rule, the employee may not recalculate the Annual Lease Value.

(3) ***Services included in, or excluded from, the Annual Lease Value Table*** —

(i) ***Maintenance and insurance included.*** The Annual Lease Values contained in the Annual Lease Value Table include the fair market value of maintenance of, and insurance for, the automobile. Neither an employer nor an employee may reduce the Annual Lease Value by the fair market value of any service included in the Annual Lease Value that is not provided by the employer,

such as reducing the Annual Lease Value by the fair market value of a maintenance service contract or insurance. An employer or employee who wishes to take into account only the services actually provided with respect to an automobile may value the availability of the automobile under the general valuation rules of paragraph (b) of this section.

(ii) *Fuel excluded* —

(A) ***In general.*** The Annual Lease Values do not include the fair market value of fuel provided by the employer, whether fuel is provided in kind or its cost is reimbursed by or charged to the employer. Thus, if an employer provides fuel, the fuel must be valued separately for inclusion in income.

(B) ***Valuation of fuel provided in kind.*** The provision of fuel in kind may be valued at fair market value based on all the facts and circumstances or, in the alternative, it may be valued at 5.5 cents per mile for all miles driven by the employee. However, the provision of fuel in kind may not be valued at 5.5 cents per mile for miles driven outside the United States, Canada or Mexico. For purposes of this section, the United States includes the United States, its possessions and its territories.

(C) ***Valuation of fuel where cost reimbursed by or charged to an employer.*** The fair market value of fuel, the cost of which is reimbursed by or charged to an employer, is generally the amount of the actual reimbursement or the amount charged, provided the purchase of the fuel is at arm's-length.

(D) ***Fleet-average cents-per-mile fuel cost.*** If an employer with a fleet of at least 20 automobiles that meets the requirements of paragraph (d)(5)(v)(D) of this section reimburses employees for the cost of fuel or allows employees to charge the employer for the cost of fuel, the fair market value of fuel provided to those automobiles may be determined by reference to the employer's fleet-average cents-per-mile fuel cost. The fleet-average cents-per-mile fuel cost is equal to the fleet-average per-gallon fuel cost divided by the fleet-average miles-per-gallon rate. The averages described in the preceding sentence must be determined by averaging the per-gallon fuel costs and miles-per-gallon rates of a representative sample of the automobiles in the fleet equal to the greater of ten percent of the automobiles in the fleet or 20 automobiles for a representative period, such as a two-month period. In lieu of determining the fleet-average cents-per-mile fuel cost, if an employer is using the fleet-average valuation rule of paragraph (d)(5)(v) of this section and if determining the amount of the actual reimbursement or the amount charged for the purchase of fuel would impose unreasonable administrative burdens on the employer, the provision of fuel may be valued under the rule provided in paragraph (d)(3)(ii)(B) of this section.

(iii) ***Treatment of other services.*** The fair market value of any service not specifically identified in paragraph (d)(3)(i) of this section that is provided by the employer with respect to an automobile (other than the services of a chauffeur) must be added to the Annual Lease Value of the automobile in determining the fair market value of the benefit provided. See paragraph (b) (5) of this section for rules relating to the valuation of chauffeur services.

(4) *Availability of an automobile for less than an entire calendar year* —

(i) *Pro-rated Annual Lease Value used for continuous availability of at least 30 days* —

(A) ***In general.*** Except as otherwise provided in paragraph (d)(4)(iv) of this section, for periods of continuous availability of at least 30 days, but less than an entire calendar year, the value of the availability of an automobile provided by an employer electing to use the automobile lease valuation rule of this paragraph (d) is the pro-rated Annual Lease Value. The pro-rated Annual Lease Value is calculated by multiplying the applicable Annual Lease Value by a fraction, the numerator of which is the number of days of availability and the denominator of which is 365.

(B) ***Special rule for continuous availability of at least 30 days that straddles two reporting years.*** If an employee is provided with the continuous availability of an automobile for at least 30 days, but the continuous period straddles two calendar years (or two special accounting periods if the special accounting rule of Announcement 85-113 (1985-31 I.R.B. 31, August 5, 1985) (relating to the reporting of and withholding on noncash fringe benefits) is used), the pro-rated Annual Lease Value, rather than the Daily Lease Value, may be applied with respect to such period of continuous availability.

(ii) ***Daily Lease Value used for continuous availability of less than 30 days.*** Except as otherwise provided in paragraph (d)(4)(iii) of this section, for periods of continuous availability of one or more but less than 30 days, the value of the availability of the employer-provided automobile is the Daily Lease Value. The Daily Lease Value is calculated by multiplying the applicable Annual Lease Value by a fraction, the numerator of which is four times the number of days of availability and the denominator of which is 365.

(iii) ***Election to treat all periods as periods of at least 30 days.*** The value of the availability of an employer-provided automobile for a period of continuous availability of less than 30 days may be determined by applying the pro-rated Annual Lease Value by treating the automobile as if it had been available for 30 days, if doing so would result in a lower valuation than applying the Daily Lease Value to the shorter period of actual availability.

(iv) ***Periods of unavailability*** —

(A) ***General rule.*** In general, a pro-rated Annual Lease Value (as provided in paragraph (d)(4)(i) of this section) is used to value the availability of an employer-provided automobile when the automobile is available to an employee for a continuous period of at least 30 days but less than the entire calendar year. Neither an employer nor an employee, however, may use a pro-rated Annual Lease Value when the reduction of Federal taxes is the primary reason the automobile is unavailable to an employee at certain times during the calendar year.

(B) ***Unavailability for personal reasons of the employee.*** If an automobile is unavailable to an employee because of personal reasons of the employee, such as while the employee is on vacation, a pro-rated Annual Lease Value, if used, must not take into account such periods of unavailability. For example, assume that an automobile is available to an employee during the first five months of the year and during the last five months of the year. Assume further that the period of unavailability occurs because the employee is on vacation. The Annual Lease Value, if it is applied, must be applied with respect to the entire 12-month period. The Annual Lease Value may not be pro-rated to take into account the two-month period of unavailability.

(5) ***Fair market value*** —

(i) ***In general.*** For purposes of determining the Annual Lease Value of an automobile under the Annual Lease Value Table, the fair market value of an automobile is the amount that an individual would have to pay in an arm's-length transaction to purchase the particular automobile in the jurisdiction in which the vehicle is purchased or leased. That amount includes all amounts attributable to the purchase of an automobile such as sales tax and title fees as well as the purchase price of the automobile. Any special relationship that may exist between the employee and the employer must be disregarded. Also, the employee's subjective perception of the value of the automobile is not relevant to the determination of the automobile's fair market value, and, except as provided in paragraph (d)(5)(ii) of this section, the cost incurred by the employer in connection with the purchase or lease of the automobile is not determinative of the fair market value of the automobile.

(ii) ***Safe-harbor valuation rule*** —

(A) ***General rule.*** For purposes of calculating the Annual Lease Value of an automobile under this paragraph (d), the safe-harbor value of the automobile may be used as the fair market value of the automobile.

(B) ***Automobiles owned by the employer.*** For an automobile owned by the employer, the safe-harbor value of the automobile is the employer's cost of purchasing the automobile (including sales tax, title, and other expenses attributable to such purchase), provided the purchase is made at arm's-length. Notwithstanding the preceding sentence, the safe-harbor value of this paragraph (d)(5)(ii)(B) is not available with respect to an automobile manufactured by the employer. Thus, for example, if one entity manufactures an automobile and sells it to an entity with which it is aggregated pursuant to paragraph (c)(4) of this section, this paragraph (d)(5)(ii)(B) does not apply to value the automobile by the aggregated employer. In this case, value must be determined under paragraph (d)(5)(i) of this section.

(C) ***Automobiles leased by the employer.*** For an automobile leased but not manufactured by the employer, the safe-harbor value of the automobile is either the manufacturer's suggested retail price of the automobile less eight percent (including sales tax, title, and other expenses attributable to such purchase), or the value determined under paragraph (d)(5)(iii) of this section.

(iii) ***Use of nationally recognized pricing sources.*** The fair market value of an automobile that is—

(A) Provided to an employee prior to January 1, 1985,

(B) Being revalued pursuant to paragraph (d)(2) (iv) or (v) of this section, or

(C) A leased automobile being valued pursuant to paragraph (d)(5)(ii) of this section, may be determined by reference to the retail value of such automobile as reported by a nationally recognized pricing source that regularly reports new or used automobile retail values, whichever is applicable. That retail value must be reasonable with respect to the automobile being valued. Pricing sources consist of publications and electronic data bases.

(iv) ***Fair market value of special equipment.*** When determining the fair market value of an automobile, the employer may exclude the fair market value of any specialized equipment or telephone that is added to or carried in the automobile provided that the presence of that equipment or telephone is necessitated by, and attributable to, the business needs of the

employer. The value of the specialized equipment must be included if the employee to whom the automobile is available uses the specialized equipment in a trade or business of the employee other than the employee's trade or business of being an employee of the employer.

(v) ***Fleet-average valuation rule*** —

(A) ***In general.*** An employer with a fleet of 20 or more automobiles meeting the requirements of this paragraph (d)(5)(v) (including the business-use and fair market value conditions of paragraph (d)(5)(v)(D) of this section) may use a fleet-average value for purposes of calculating the Annual Lease Values of the automobiles in the fleet. The fleet-average value is the average of the fair market values of all automobiles in the fleet. The fair market value of each automobile in the fleet shall be determined, pursuant to the rules of paragraphs (d)(5) (i) through (iv) of this section, as of the date described in paragraph (d)(2)(i)(A) of this section.

(B) ***Period for use of rule.*** The fleet-average valuation rule of this paragraph (d)(5)(v) may be used by an employer as of January 1 of any calendar year following the calendar year in which the employer acquires a sufficient number of automobiles to total a fleet of 20 or more automobiles. The Annual Lease Value calculated for the automobiles in the fleet, based on the fleet-average value, shall remain in effect for the period that begins with the first January 1 the fleet-average valuation ru1e of this paragraph (d)(5)(v) is applied by the employer to the automobiles in the fleet and ends on December 31 of the subsequent calendar year. The Annual Lease Value for each subsequent two-year period is calculated by determining the fleet-average value of the automobiles in the fleet as of the first January 1 of such period. An employer may cease using the fleet-average valuation rule as of any January 1. If, however, the employer is using the special accounting rule provided in Announcement 85-113 (1985-31 I.R.B. 31, August 5, 1985) (relating to the reporting of and withholding on noncash fringe benefits), the employer may apply the rules of this paragraph (d)(5)(v)(B) on the basis of the special accounting period rather than the calendar year. (This is accomplished by substituting (*1*) the beginning of the special accounting period that begins immediately prior to the January 1 described in this paragraph (d)(5)(v)(B) for January 1 wherever it appears in this paragraph (d)(5)(v) (B) and (*2*) the end of such accounting period for December 31.) If the number of qualifying automobiles in the employer's fleet declines to fewer than 20 for more than 50 percent of the days in a year, then the fleet-average valuation rule does not apply as of January 1 of such year. In this case, the Annual Lease Value must be determined separately for each remaining automobile. The revaluation rules of paragraphs (d)(2) (iv) and (v) of this section do not apply to automobiles valued under this paragraph (d)(5)(v).

(C) ***Automobiles included in the fleet.*** An employer may include in a fleet any automobile that meets the requirements of this paragraph (d)(5)(v) and is available to any employee of the employer for personal use. An employer may include in the fleet only automobiles the availability of which is valued under the automobile lease valuation rule of this paragraph (d). An employer need not include in the fleet all automobiles valued under the automobile lease valuation rule. An employer may have more than one fleet for purposes of the fleet-average rule of this paragraph (d)(5)(v). For example, an employer may group automobiles in a fleet according to their physical type or use.

(D) ***Limitations on use of fleet-average rule.*** The rule provided in this paragraph (d)(5)(v) may not be used for any automobile the fair market value of which (determined pursuant to paragraphs (d)(5)(i) through (iv) of this section as of the first date on which the automobile is made available to any employee of the employer for personal use) exceeds $50,000, as adjusted by section 280F(d)(7). The first such adjustment shall be for calendar year 2019. In addition, the rule provided in this paragraph (d)(5)(v) may only be used for automobiles that the employer reasonably expects will regularly be used in the employer's trade or business. For rules concerning when an automobile is regularly used in the employer's business, see paragraph (e)(1)(iv) of this section.

(E) ***Additional automobiles added to the fleet.*** The fleet-average value in effect at the time an automobile is added to a fleet is treated as the fair market value of the additional automobile for purposes of determining the Annual Lease Value of the automobile until the fleet-average value changes pursuant to paragraph (d)(5)(v)(B) of this section.

(F) ***Use of the fleet-average rule by employees.*** An employee may only use the fleet-average rule if it is used by the employer. If an employer uses the fleet-average rule, and the employee uses the special valuation rule of paragraph (d) of this section, the employee must use the fleet-average value determined by the employer.

(G) ***Transition rule for 2018 and 2019.*** Notwithstanding paragraph (d)(5)(v)(B) of this section, an employer that did not qualify to use the fleet-average valuation rule prior to January 1, 2018, with respect to any automobile (including a truck or van) because the fair market value of the vehicle exceeded the inflation-adjusted maximum value requirement of paragraph (d)(5)(v)(D) of this section, as published by the Service in a notice or revenue procedure applicable to the year the vehicle was first made available to any employee of the employer, may adopt the fleet-average valuation rule for 2018 or 2019 with respect to the vehicle, provided the fair market value of the vehicle does not exceed $50,000 on January 1, 2018, or $50,400 on January 1, 2019, respectively.

(H) ***Applicability date.*** Paragraphs (d)(5)(v)(D), and (G) of this section apply to taxable years beginning on or after February 5, 2020. Notwithstanding the first sentence of this paragraph (d)(5)(v)(H), any taxpayer may choose to apply paragraph (d)(5)(v)(G) of this section beginning on or after January 1, 2018.

(6) ***Special rules for continuous availability of certain automobiles*** —

(i) ***Fleet automobiles.*** If an employer is using the fleet-average valuation ru1e of paragraph (d)(5)(v) of this section and the employer provides an employee with the continuous availability of an automobile from the same fleet during a period (though not necessarily the same fleet automobile for the entire period), the employee is treated as having the use of a single fleet automobile for the entire period, e.g., an entire calendar year. Thus, when applying the automobile lease valuation rule of this paragraph (d), the employer may treat the fleet-average value as the fair market value of the automobile deemed available to the employee for the period for purposes of calculating the Annual Lease Value, (or pro-rated Annual Lease Value or Daily Lease Value whichever is applicable) of the automobile. If an employer provides an employee with the continuous availability of more than one fleet automobile during a period, the employer may treat the fleet-average value as the fair market value of each automobile provided to the employee provided that the rules of paragraph (d)(5)(v)(D) of this section are satisfied.

(ii) *Demonstration automobiles* —

(A) ***In general.*** If an automobile dealership provides an employee with the continuous availability of a demonstration automobile (as defined in § 1.132-5(o)(3)) during a period (though not necessarily the same demonstration automobile for the entire period), the employee is treated as having the use of a single demonstration automobile for the entire period, e.g., an entire calendar year. If an employer provides an employee with the continuous availability of more than one demonstration automobile during a period, the employer may treat the value determined under paragraph (d)(6)(ii)(B) of this section as the fair market value of each automobile provided to the employee. For rules relating to the treatment as a working condition fringe of the qualified automobile demonstration use of a demonstration automobile by a full-time automobile salesman, see § 1.132-5(o).

(B) ***Determining the fair market value of a demonstration automobile.*** When applying the automobile lease valuation rule of this paragraph (d), the employer may treat the average of the fair market values of the demonstration automobiles which are available to an employee and held in the dealership's inventory during the calendar year as the fair market value of the demonstration automobile deemed available to the employee for the period for purposes of calculating the Annual Lease Value of the automobile. If under the facts and circumstances it is inappropriate to take into account, with respect to an employee, certain models of demonstration automobiles, the value of the benefit is determined without reference to the fair market values of such models. For example, assume that an employee has the continuous availability for an entire calendar year of one demonstration automobile, although not the same one for the entire year. Assume further that the fair market values of the automobiles in the dealership inventory during the year range from $8,000 to $20,000. If there is not a substantial period (such as three months) during the year when the employee uses demonstration automobiles valued at less than $16,000, then those automobiles are not considered in determining the value of the benefit provided to the employee. In this case, the average of the fair market values of the demonstration automobiles in the dealership's inventory valued at $16,000 or more is treated as the fair market value of the automobile deemed available to the employee for the calendar year for purposes of calculating the Annual Lease Value of the automobile.

(7) *Consistency rules* —

(i) ***Use of the automobile lease valuation rule by an employer.*** Except as provided in paragraph (d)(5)(v)(B) of this section, an employer may adopt the automobile lease valuation rule of this paragraph (d) for an automobile only if the rule is adopted to take effect by the later of—

(A) January 1, 1989, or

(B) The first day on which the automobile is made available to an employee of the employer for personal use (or, if the commuting valuation rule of paragraph (f) of this section is used when the automobile is first made available to an employee of the employer for personal use, the first day on which the commuting valuation rule is not used).

(ii) ***An employer must use the automobile lease valuation rule for all subsequent years.*** Once the automobile lease valuation rule has been adopted for an automobile by an employer, the rule must be used by the employer for all subsequent years in which the employer makes the

automobile available to any employee except that the employer may, for any year during which (or for any employee for whom) use of the automobile qualifies for the commuting valuation rule of paragraph (f) of this section, use the commuting valuation rule with respect to the automobile.

(iii) ***Use of the automobile lease valuation rule by an employee.*** An employee may adopt the automobile lease valuation rule for an automobile only if the rule is adopted—

(A) By the employer, and

(B) Beginning with the first day on which the automobile for which the employer (consistent with paragraph (d)(7)(i) of this section) adopted the rule is made available to that employee for personal use (or, if the commuting valuation rule of paragraph (f) of this section is used when the automobile is first made available to that employee for personal use, the first day on which the commuting valuation rule is not used).

(iv) ***An employee must use the automobile lease valuation rule for all subsequent years.*** Once the automobile lease valuation rule has been adopted for an automobile by an employee, the rule must be used by the employee for all subsequent years in which the automobile for which the rule is used is available to the employee. However, the employee may, for any year during which use of the automobile qualifies for use of the commuting valuation rule of paragraph (f) of this section and for which the employer uses such rule, use the commuting valuation rule with respect to the automobile.

(v) ***Replacement automobiles.*** Notwithstanding anything in this paragraph (d)(7) to the contrary, if the automobile lease valuation rule is used by an employer, or by an employer and an employee, with respect to a particular automobile, and a replacement automobile is provided to the employee for the primary purpose of reducing Federal taxes, then the employer, or the employer and the employee, using the rule must continue to use the rule with respect to the replacement automobile.

(e) ***Vehicle cents-per-mile valuation rule*** —

(1) ***In general*** —

(i) ***General rule.*** Under the vehicle cents-per-mile valuation rule of this paragraph (e), if an employer provides an employee with the use of a vehicle that—

(A) The employer reasonably expects will be regularly used in the employer's trade or business throughout the calendar year (or such shorter period as the vehicle may be owned or leased by the employer), or

(B) Satisfies the requirements of paragraph (e)(1)(ii) of this section, the value of the benefit provided in the calendar year is the standard mileage rate provided in the applicable Revenue Ruling or Revenue Procedure (“cents-per-mile rate”) multiplied by the total number of miles the vehicle is driven by the employee for personal purposes. The cents-per-mile rate is to be applied prospectively from the first day of the taxable year following the date of publication of the applicable Revenue Ruling or Revenue Procedure. An employee who uses an employer-provided vehicle, in whole or in part, for a trade or business other than the employer's trade or business, may take a deduction for such business use based upon the vehicle cents-per-mile rule as long as such deduction is at the same standard mileage rate as that used in calculating the employee's income

inclusion. The standard mileage rate must be applied to personal miles independent of business miles. Thus, for example, if the standard mileage rate were 24 cents per mile for the first 15,000 miles and 11 cents per mile for all miles over 15,000 and an employee drives 20,000 personal miles and 45,000 business miles in a year, the value of the personal use of the vehicle is $4,150 ((15,000 × $.24) + (5,000 × $.11)). For purposes of this section, the use of a vehicle for personal purposes is any use of the vehicle other than use in the employee's trade or business of being an employee of the employer.

(ii) ***Mileage rule.*** A vehicle satisfies the requirements of this paragraph (e)(1)(ii) for a calendar year if—

(A) It is actually driven at least 10,000 miles in that year; and

(B) Use of the vehicle during the year is primarily by employees. For example, if a vehicle is used by only one employee during the calendar year and that employee drives the vehicle at least 10,000 miles during the year, the vehicle satisfies the requirements of this paragraph (e)(1)(ii) even if all miles driven by the employee are personal. A vehicle is considered used during the year primarily by employees in accordance with the requirement of paragraph (e)(1)(ii)(B) of this section if employees use the vehicle on a consistent basis for commuting. If the employer does not own or lease the vehicle during a portion of the year, the 10,000 mile threshold is to be reduced proportionately to reflect the periods when the employer did not own or lease the vehicle. For purposes of this paragraph (e)(1)(ii), use of the vehicle by an individual (other than the employee) whose use would be taxed to the employee is not considered use by the employee.

(iii) ***Limitation on use of the vehicle cents-per-mile valuation rule*** —

(A) ***In general.*** The value of the use of an automobile (as defined in paragraph (d)(1)(ii) of this section) may not be determined under the vehicle cents-per-mile valuation rule of this paragraph (e) for a calendar year if the fair market value of the automobile (determined pursuant to paragraphs (d)(5)(i) through (iv) of this section as of the first date on which the automobile is made available to any employee of the employer for personal use) exceeds $50,000, as adjusted by section 280F(d)(7). The first such adjustment shall be for calendar year 2019.

(B) ***Application of limitation with respect to a vehicle owned by both an employer and an employee.*** If an employee contributes an amount towards the purchase price of a vehicle in return for a percentage ownership interest in the vehicle, for purposes of determining whether the limitation of this paragraph (e)(1)(iii) applies, the fair market value of the vehicle is reduced by the lesser of—

(*1*) The amount contributed, or

(*2*) An amount equal to the employee's percentage ownership interest multiplied by the unreduced fair market value of the vehicle. If the employee does not receive an ownership interest in the employer-provided vehicle, then the fair market value of the vehicle is determined without regard to any amount contributed. For purposes of this paragraph (e)(1)(iii)(B), an employee's ownership interest in a vehicle will not be recognized unless it is reflected in the title of the vehicle. An ownership interest reflected in the title of a vehicle will not be recognized if under the facts and circumstances the title does not reflect the benefits and burdens of ownership.

(C) ***Application of limitation with respect to a vehicle leased by both an employer and employee.*** If an employee contributes an amount toward the cost to lease a vehicle in return for a percentage interest in the vehicle lease, for purposes of determining whether the limitation of this paragraph (e)(1)(iii) applies, the fair market value of the vehicle is reduced by the amount specified in the following sentence. The amount specified in this sentence is the unreduced fair market value of a vehicle multiplied by the lesser of—

(*1*) The employee's percentage interest in the lease, or

(*2*) A fraction, the numerator of which is the amount contributed and the denominator of which is the entire lease cost. If the employee does not receive an interest in the vehicle lease, then the fair market value is determined without regard to any amount contributed. For purposes of this paragraph (e)(1)(iii)(C), an employee's interest in a vehicle lease will not be recognized unless the employee is a named co-lessee on the lease. An interest in a lease will not be recognized if under the facts and circumstances, the lease does not reflect the true obligations of the lessees.

(iv) ***Regular use in an employer's trade or business.*** Whether a vehicle is regularly used in an employer's trade or business is determined on the basis of all facts and circumstances. A vehicle is considered regularly used in an employer's trade or business for purposes of paragraph (e)(1)(i)(A) of this section if one of the following safe harbor conditions is satisfied:

(A) At least 50 percent of the vehicle's total annual mileage is for the employer's business; or

(B) The vehicle is generally used each workday to transport at least three employees of the employer to and from work in an employer-sponsored commuting vehicle pool. Infrequent business use of the vehicle, such as for occasional trips to the airport or between the employer's multiple business premises, does not constitute regular use of the vehicle in the employer's trade or business.

(v) ***Application of rule to shared usage.*** If an employer regularly provides a vehicle to employees for use by more than one employee at the same time, such as with an employer-sponsored vehicle commuting pool, the employer may use the vehicle cents-per-mile valuation rule to value the use of the vehicle by each employee who shares such use. See § 1.61-21(c)(2)(ii)(B) for provisions relating to the allocation of the value of an automobile to more than one employee.

(2) ***Definition of vehicle.*** For purposes of this paragraph (e), the term “vehicle” means any motorized wheeled vehicle manufactured primarily for use on public streets, roads, and highways. The term “vehicle” includes an automobile as defined in paragraph (d)(1)(ii) of this section.

(3) ***Services included in, or excluded from, the cents-per-mile rate*** —

(i) ***Maintenance and insurance included.*** The cents-per-mile rate includes the fair market value of maintenance of, and insurance for, the vehicle. The cents-per-mile rate may not be reduced by the fair market value of any service included in the cents-per-mile rate but not provided by the employer. An employer or employee who wishes to take into account only the particular services provided with respect to a vehicle may value the availability of the vehicle under the general valuation rules of paragraph (b) of this section.

(ii) ***Fuel provided by the employer*** —

(A) ***Miles driven in the United States, Canada, or Mexico.*** With respect to miles driven in the United States, Canada, or Mexico, the cents-per-mile rate includes the fair market value of fuel provided by the employer. If fuel is not provided by the employer, the cents-per-mile rate may be reduced by no more than 5.5 cents or the amount specified in any applicable Revenue Ruling or Revenue Procedure. For purposes of this section, the United States includes the United States, its possessions and its territories.

(B) ***Miles driven outside the United States, Canada, or Mexico.*** With respect to miles driven outside the United States, Canada, or Mexico, the fair market value of fuel provided by the employer is not reflected in the cents-per-mile rate. Accordingly, the cents-per-mile rate may be reduced but by no more than 5.5 cents or the amount specified in any applicable Revenue Ruling or Revenue Procedure. If the employer provides the fuel in kind, it must be valued based on all the facts and circumstances. If the employer reimburses the employee for the cost of fuel or allows the employee to charge the employer for the cost of fuel, the fair market value of the fuel is generally the amount of the actual reimbursement or the amount charged, provided the purchase of fuel is at arm's length.

(iii) ***Treatment of other services.*** The fair market value of any service not specifically identified in paragraph (e)(3)(i) of this section that is provided by the employer with respect to a vehicle is not reflected in the cents-per-mile rate. See paragraph (b)(5) of this section for rules relating to valuation of chauffeur services.

(4) ***Valuation of personal use only.*** The vehicle cents-per-mile valuation rule of this paragraph (e) may only be used to value the miles driven for personal purposes. Thus, the employer must include an amount in an employee's income with respect to the use of a vehicle that is equal to the product of the number of personal miles driven by the employee and the appropriate cents-per-mile rate. The term “personal miles” means all miles for which the employee used the automobile except miles driven in the employee's trade or business of being an employee of the employer. Unless additional services are provided with respect to the vehicle (see paragraph (e)(3)(iii) of this section), the employer may not include in income a greater amount; for example, the employer may not include in income 100 percent (all business and personal miles) of the value of the use of the vehicle.

(5) ***Consistency rules —***

(i) ***Use of the vehicle cents-per-mile valuation rule by an employer.*** An employer must adopt the vehicle cents-per-mile valuation rule of this paragraph (e) for a vehicle to take effect by the first day on which the vehicle is used by an employee of the employer for personal use (or, if the commuting valuation rule of paragraph (f) of this section is used when the vehicle is first used by an employee of the employer for personal use, the first day on which the commuting valuation rule is not used).

(ii) ***An employer must use the vehicle cents-per-mile valuation rule for all subsequent years.*** Once the vehicle cents-per-mile valuation rule has been adopted for a vehicle by an employer, the rule must be used by the employer for all subsequent years in which the vehicle qualifies for use of the rule, except that the employer may, for any year during which use of the vehicle qualifies for the commuting valuation rule of paragraph (f) of this section, use the commuting valuation rule with respect to the vehicle. If the vehicle fails to qualify for use of the vehicle cents-per-mile valuation rule during a subsequent year, the employer may adopt for such subsequent year and thereafter any other special valuation rule for which the vehicle then qualifies. If the employer elects to use the automobile lease valuation rule of paragraph (d) of this section for a period in which the automobile does not qualify for use of the vehicle cents-per-mile valuation rule, then

the employer must comply with the requirements of paragraph (d)(7) of this section. For purposes of paragraph (d)(7) of this section, the first day on which the automobile with respect to which the vehicle cents-per-mile rule had been used fails to qualify for use of the vehicle cents-per-mile valuation rule may be deemed to be the first day on which the automobile is available to an employee of the employer for personal use.

(iii) ***Use of the vehicle cents-per-mile valuation rule by an employee.*** An employee may adopt the vehicle cents-per-mile valuation rule for a vehicle only if the rule is adopted—

(A) By the employer, and

(B) Beginning with respect to the first day on which the vehicle for which the employer (consistent with paragraph (e)(5)(i) of this section) adopted the rule is available to that employee for personal use (or, if the commuting valuation rule of paragraph (f) of this section is used when the vehicle is first used by an employee for personal use, the first day on which the commuting valuation rule is not used).

(iv) ***An employee must use the vehicle cents-per-mile valuation rule for all subsequent years.*** Once the vehicle cents-per-mile valuation rule has been adopted for a vehicle by an employee, the rule must be used by the employee for all subsequent years of personal use of the vehicle by the employee for which the rule is used by the employer. However, see paragraph (f) of this section for rules relating to the use of the commuting valuation rule for a subsequent year.

(v) ***Replacement vehicles.*** Notwithstanding anything in this paragraph (e)(5) to the contrary, if the vehicle cents-per-mile valuation rule is used by an employer, or by an employer and an employee, with respect to a particular vehicle. and a replacement vehicle is provided to the employee for the primary purpose of reducing Federal taxes, then the employer, or the employer and the employee, using the rule must continue to use the rule with respect to the replacement vehicle if the replacement vehicle qualifies for use of the rule.

(vi) ***Transition rule for 2018 and 2019.*** For a vehicle first made available to any employee of an employer for personal use before calendar year 2018, an employer that did not qualify under this paragraph (e)(5) to adopt the vehicle cents-per-mile valuation rule on the first day on which the vehicle is used by the employee for personal use because the fair market value of the vehicle exceeded the inflation-adjusted limitation of paragraph (e)(1)(iii) of this section, as published by the Service in a notice or revenue procedure applicable to the year the vehicle was first used by the employee for personal use, may first adopt the vehicle cents-per-mile valuation rule for the 2018 or 2019 taxable year, provided the fair market value of the vehicle does not exceed $50,000 on January 1, 2018, or $50,400 on January 1, 2019, respectively. Similarly, for a vehicle first made available to any employee of the employer for personal use before calendar year 2018, if the commuting valuation rule of paragraph (f) of this section was used when the vehicle was first used by the employee for personal use, and the employer did not qualify to switch to the vehicle cents-per-mile valuation rule of this paragraph (e) on the first day on which the commuting valuation rule of paragraph (f) of this section was not used because the vehicle had a fair market value in excess of the inflation-adjusted limitation of paragraph (e)(1)(iii) of this section, as published by the Service in a notice or revenue procedure applicable to the year the commuting valuation rule was first not used, the employer may adopt the vehicle cents-per-mile valuation rule for the 2018 or 2019 taxable year, provided the fair market value of the vehicle does not exceed $50,000 on January 1, 2018, or $50,400 on January 1, 2019, respectively. However, in accordance with paragraph (e)(5)(ii) of this section, an employer that adopts the vehicle cents-per-mile valuation rule pursuant to this paragraph (e)(5)(vi) must

continue to use the rule for all subsequent years in which the vehicle qualifies for use of the rule, except that the employer may, for any year during which use of the vehicle qualifies for the commuting valuation rule of paragraph (f) of this section, use the commuting valuation rule with regard to the vehicle.

(6) ***Applicability date.*** Paragraphs (e)(1)(iii)(A) and (e)(5)(i) and (vi) of this section apply to taxable years beginning on or after February 5, 2020. Notwithstanding the first sentence of this paragraph (e)(6), any taxpayer may choose to apply paragraph (e)(5)(vi) of this section beginning on or after January 1, 2018.

(f) ***Commuting valuation rule*** —

(1) ***In general.*** Under the commuting valuation rule of this paragraph (f), the value of the commuting use of an employer-provided vehicle may be determined pursuant to paragraph (f)(3) of this section if the following criteria are met by the employer and employees with respect to the vehicle:

(i) The vehicle is owned or leased by the employer and is provided to one or more employees for use in connection with the employer's trade or business and is used in the employer's trade or business;

(ii) For bona fide noncompensatory business reasons, the employer requires the employee to commute to and/or from work in the vehicle;

(iii) The employer has established a written policy under which neither the employee, nor any individual whose use would be taxable to the employee, may use the vehicle for personal purposes, other than for commuting or de minimis personal use (such as a stop for a personal errand on the way between a business delivery and the employee's home);

(iv) Except for de minimis personal use, the employee does not use the vehicle for any personal purpose other than commuting; and

(v) The employee required to use the vehicle for commuting is not a control employee of the employer (as defined in paragraphs (f) (5) and (6) of this section).

Personal use of a vehicle is all use of the vehicle by an employee that is not used in the employee's trade or business of being an employee of the employer. An employer-provided vehicle that is generally used each workday to transport at least three employees of the employer to and from work in an employer-sponsored commuting vehicle pool is deemed to meet the requirements of paragraphs (f)(1) (i) and (ii) of this section.

(2) ***Special rules.*** Notwithstanding anything in paragraph (f)(1) of this section to the contrary, the following special rules apply—

(i) ***Chauffeur-driven vehicles.*** If a vehicle is chauffeur-driven, the commuting valuation rule of this paragraph (f) may not be used to value the commuting use of any person (other than the chauffeur) who rides in the vehicle. (See paragraphs (d) and (e) of this section for other vehicle special valuation rules.) The special rule of this paragraph (f) may be used to value the commuting-only use of the vehicle by the chauffeur if the conditions of paragraph (f)(1) of this section are satisfied. For purposes of this paragraph (f)(2), an individual will not be considered a chauffeur if he or she performs non-driving services for the employer, is not available to perform driving services while performing such other services and whose only driving services consist of driving a vehicle used for commuting by other employees of the employer.

(ii) ***Control employee exception.*** If the vehicle in which the employee is required to commute is not an automobile as defined in paragraph (d)(1)(ii) of this section, the restriction of paragraph (f)(1)(v) of this section (relating to control employees) does not apply.

(3) ***Commuting value*** —

(i) ***$1.50 per one-way commute.*** If the requirements of this paragraph (f) are satisfied, the value of the commuting use of an employer-provided vehicle is $1.50 per one-way commute (e.g., from home to work or from work to home). The value provided in this paragraph (f)(3) includes the value of any goods or services directly related to the vehicle (e.g., fuel).

(ii) ***Value per employee.*** If there is more than one employee who commutes in the vehicle, such as in the case of an employer-sponsored commuting vehicle pool, the amount includible in the income of each employee is $1.50 per one-way commute. Thus, the amount includible for each round-trip commute is $3.00 per employee. See paragraphs (d)(7)(vi) and (e)(5)(vi) of this section for use of the automobile lease valuation and vehicle cents-per-mile valuation special rules for valuing the use or availability of the vehicle in the case of an employer-sponsored vehicle or automobile commuting pool.

(4) ***Definition of vehicle.*** For purposes of this paragraph (f), the term “vehicle” means any motorized wheeled vehicle manufactured primarily for use on public streets, roads, and highways. The term “vehicle” includes an automobile as defined in paragraph (d)(1)(ii) of this section.

(5) ***Control employee defined—Non-government employer.*** For purposes of this paragraph (f), a control employee of a non-government employer is any employee—

(i) Who is a Board- or shareholder-appointed, confirmed, or elected officer of the employer whose compensation equals or exceeds $50,000,

(ii) Who is a director of the employer,

(iii) Whose compensation equals or exceeds $100,000, or

(iv) Who owns a one-percent or greater equity, capital, or profits interest in the employer.

For purposes of determining who is a one-percent owner under paragraph (f)(5)(iv) of this section, any individual who owns (or is considered as owning under section 318(a) or principles similar to section 318(a) for entities other than corporations) one percent or more of the fair market value of an entity (the “owned entity”) is considered a one-percent owner of all entities which would be aggregated with the owned entity under the rules of section 414 (b), (c), (m), or (o). For purposes of determining who is an officer or director with respect to an employer under this paragraph (f)(5), notwithstanding anything in this section to the contrary, if an entity would be aggregated with other entities under the rules of section 414 (b), (c), (m), or (o), the officer definition (but not the compensation requirement) and the director definition apply to each such separate entity rather tha to the aggregated employer. An employee who is an officer or a director of an entity (the “first entity”) shall be treated as an officer or a director of all entities aggregated with the first entity under the rules of section 414 (b), (c), (m), or (o). Instead of applying the control employee definition of this paragraph (f)(5), an employer may treat all, and only, employees who are “highly compensated” employees (as defined in § 1.132-8(g)) as control employees for purposes of this paragraph (f).

(6) ***Control employee defined—Government employer.*** For purposes of this paragraph (f), a control employee of a government employer is any—

(i) Elected official, or

(ii) Employee whose compensation equals or exceeds the compensation paid to a Federal Government employee holding a position at Executive Level V, determined under Chapter 11 of title 2, United States Code, as adjusted by section 5318 of title 5 United States Code.

For purposes of this paragraph (f), the term "government" includes any Federal, state or local governmental unit, and any agency or instrumentality thereof. Instead of applying the control employee definition of paragraph (f)(6), an employer may treat all and only employees who are "highly compensated" employees (as defined in § 1.132-8(f)) as control employees for purposes of this paragraph (f).

(7) ***"Compensation" defined.*** For purposes of this paragraph (f), the term "compensation" has the same meaning as in section 414(q)(7). Compensation includes all amounts received from all entities treated as a single employer under section 414 (b), (c), (m), or (o). Levels of compensation shall be adjusted at the same time and in the same manner as provided in section 415(d). The first such adjustment shall be for calendar year 1988.

(g) ***Non-commercial flight valuation rule*** —

(1) ***In general.*** Under the non-commercial flight valuation rule of this paragraph (g), except as provided in paragraph (g)(12) of this section, if an employee is provided with a flight on an employer-provided aircraft, the value of the flight is calculated using the aircraft valuation formula of paragraph (g)(5) of this section. For purposes of this paragraph (g), the value of a flight on an employer-provided aircraft by an individual who is less than two years old is deemed to be zero. See paragraph (b)(1) of this section for rules relating to the amount includible in income when an employee reimburses the employee's employer for all or part of the fair market value of the benefit provided.

(2) ***Eligible flights and eligible aircraft.*** The valuation rule of this paragraph (g) may be used to value flights on all employer-provided aircraft, including helicopters. The valuation rule of this paragraph (g) may be used to value international as well as domestic flights. The valuation rule of this paragraph (g) may not be used to value a flight on any commercial aircraft on which air transportation is sold to the public on a per-seat basis. For a special valuation rule relating to certain flights on commercial aircraft, see paragraph (h) of this section.

(3) ***Definition of a flight*** —

(i) ***General rule.*** Except as otherwise provided in paragraph (g)(3)(iii) of this section (relating to intermediate stops), for purposes of this paragraph (g), a flight is the distance (in statute miles, *i.e.*, 5,280 feet per statute mile) between the place at which the individual boards the aircraft and the place at which the individual deplanes.

(ii) ***Valuation of each flight.*** Under the valuation rule of this paragraph (g), value is determined separately for each flight. Thus, a round-trip is comprised of at least two flights. For example, an employee who takes a personal trip on an employer-provided aircraft from New York City to Denver, then Denver to Los Angeles, and finally Los Angeles to New York City has taken three flights and must apply the aircraft valuation formula separately to each flight. The value of a flight must be determined on a passenger-by-passenger basis. For example, if an individual accompanies an employee and the flight taken by the individual would be taxed to the employee, the employee would be taxed on the special rule value of the flight by the employee and the flight by the individual.

(iii) ***Intermediate stop.*** If a landing is necessitated by weather conditions, by an emergency, for purposes of refueling or obtaining other services relating to the aircraft or for any other purpose unrelated to the personal purposes of the employee whose flight is being valued, that landing is an intermediate stop. Additional mileage attributable to an intermediate stop is not considered when determining the distance of an employee's flight.

(iv) ***Examples.*** The rules of paragraph (g)(3)(iii) of this section may be illustrated by the following examples:

Example 1. Assume that an employee's trip originates in St. Louis, Missouri, with Seattle, Washington as its destination, but, because of weather conditions, the aircraft lands in Denver, Colorado, and the employee stays in Denver overnight. Assume further that the next day the aircraft flies to Seattle where the employee deplanes. The employee's flight is the distance between the airport in St. Louis and the airport in Seattle.

Example 2. Assume that a trip originates in New York, New York, with five passengers and that the aircraft makes a stop in Chicago, Illinois, so that one of the passengers can deplane for a purpose unrelated to the personal purposes of the other passengers whose flights are being valued. The aircraft then goes on to Los Angeles, California, where the other four passengers will deplane. The flight of the passenger who deplaned in Chicago is the distance between the airport in New York and the airport in Chicago. The stop in Chicago is disregarded as an intermediate stop, however, when measuring the flights taken by each of the other four passengers. Their flights would be the distance between the airport in New York and the airport in Los Angeles.

(4) ***Personal and non-personal flights*** —

(i) In *general.* The valuation rule of this paragraph (g) applies to personal flights on employer-provided aircraft. A personal flight is one the value of which is not excludable under another section of subtitle A of the Internal Revenue Code of 1986, such as under section 132(d) (relating to a working condition fringe). However, solely for purposes of paragraphs (g)(4)(ii) and (g)(4)(iii) of this section, references to personal flights do not include flights a portion of which would not be excludable from income by reason of section 274(c).

(ii) ***Trip primarily for employer's business.*** If an employee combines, in one trip, personal and business flights on an employer-provided aircraft and the employee's trip is primarily for the employer's business (see § 1.162-2(b)(2)), the employee must include in income the excess of the value of all the flights that comprise the trip over the value of the flights that would have been taken had there been no personal flights but only business flights. For example, assume that an employee flies on an employer-provided aircraft from Chicago, Illinois, to Miami, Florida, for the employer's business and that from Miami the employee flies on the employer-provided aircraft to Orlando, Florida, for personal purposes and then flies back to Chicago. Assume further that the primary purpose of the trip is for the employer's business. The amount includible in income is the excess of the value of the three flights (Chicago to Miami, Miami to Orlando, and Orlando to Chicago), over the value of the flights that would have been taken had there been no personal flights but only business flights (Chicago to Miami and Miami to Chicago).

(iii) ***Primarily personal trip.*** If an employee combines, in one trip, personal and business flights on an employer-provided aircraft and the employee's trip is primarily personal (see § 1.162-2(b)(2)), the amount includible in the employee's income is the value of the personal flights that would

have been taken had there been no business flights but only personal flights. For example, assume that an employee flies on an employer-provided aircraft from San Francisco, California, to Los Angeles, California, for the employer's business and that from Los Angeles the employee flies on an employer-provided aircraft to Palm Springs, California, primarily for personal reasons and then flies back to San Francisco. Assume further that the primary purpose of the trip is personal. The amount includible in the employee's income is the value of personal flights that would have been taken had there been no business flights but only personal flights (San Francisco to Palm Springs and Palm Springs to San Francisco).

(iv) ***Application of section 274(c).*** The value of employer- provided travel outside the United States away from home may not be excluded from the employee's gross income as a working condition fringe, by either the employer or the employee, to the extent not deductible by reason of section 274(c). The valuation rule of this paragraph (g) applies to that portion of the value any flight not excludable by reason of section 274(c). Such value is includible in income in addition to the amounts determined under paragraphs (g)(4)(ii) and (g)(4)(iii) of this section.

(v) ***Flights by individuals who are not personal guests.*** If an individual who is not an employee of the employer providing the aircraft is on a flight, and the individual is not the personal guest of any employee of the employer, the flight by the individual is not taxable to any employee of the employer providing the aircraft. The rule in the preceding sentence applies where the individual is provided the flight by the employer for noncompensatory business reasons of the employer. For example, assume that G, an employee of company Y, accompanies A, an employee of company X, on company X's aircraft for the purpose of inspecting land under consideration for purchase by company X from company Y. The flight by G is not taxable to A. No inference may be drawn from this paragraph (g)(4)(v) concerning the taxation of a flight provided to an individual who is neither an employee of the employer nor a personal guest of any employee of the employer.

(5) ***Aircraft valuation formula.*** Under the valuation rule of this paragraph (g), the value of a flight is determined under the base aircraft valuation formula (also known as the Standard Industry Fare Level formula or SIFL) by multiplying the SIFL cents-per-mile rates applicable for the period during which the flight was taken by the appropriate aircraft multiple (as provided in paragraph (g)(7) of this section) and then adding the applicable terminal charge. The SIFL cents-per-mile rates in the formula and the terminal charge are calculated by the Department of Transportation and are revised semi-annually. The base aircraft valuation formula in effect from January 1, 1989 through June 30, 1989, is as follows: a terminal charge of $26.48 plus ($.1449 per mile for the first 500 miles, $.1105 per mile for miles between 501 and 1500, and $.1062 per mile for miles over 1500). For example, if a flight taken on January 15, 1989, by a non-control employee on an employer-provided aircraft with a maximum certified takeoff weight of 26,000 lbs. is 2,000 miles long, the value of the flight determined under this paragraph (g)(5) is: $100.36 ((.313 × (($.1449 × 500) + ($.1105 × 1,000) + ($.1062 × 500))) + $26.48). The aircraft valuation formula applies separately to each flight being valued under this paragraph (g). Therefore, the number of miles an employee has flown on employer-provided aircraft flights prior to the flight being valued does not affect the determination of the value of the flight.

(6) ***Discretion to provide new formula.*** The Commissioner may prescribe a different base aircraft valuation formula by regulation, Revenue Ruling or Revenue Procedure in the event that the calculation of the Standard Industry Fare Level is discontinued.

(7) ***Aircraft multiples —***

(i) ***In general.*** The aircraft multiples are based on the maximum certified takeoff weight of the aircraft. When applying the aircraft valuation formula to a flight, the appropriate aircraft multiple is multiplied by the product of the applicable SIFL cents-per-mile rates multiplied by the number of miles in the flight and then the terminal charge is added to the product. For purposes of applying the aircraft valuation formula described in paragraph (g)(5) of this section, the aircraft multiples are as follows:

Maximum certified take-off weight of the aircraft	Aircraft multiple for a control employee (percent)	Aircraft multiple for a non-control employee (percent)
6,000 lbs. or less	62.5	15.6
6,001-10,000 lbs.	125	23.4
10,001-25,000 lbs.	300	31.3
25,001 lbs. or more	400	31.3

(ii) ***Flights treated as provided to a control employee.*** Except as provided in paragraph (g)(12) of this section, any flight provided to an individual whose flight would be taxable to a control employee (as defined in paragraphs (g) (8) and (9) of this section) as the recipient shall be valued as if such flight had been provided to that control employee. For example, assume that the chief executive officer of an employer, his spouse, and his two children fly on an employer-provided aircraft for personal purposes. Assume further that the maximum certified takeoff weight of the aircraft is 12,000 lbs. The amount includible in the employee's income is 4 × ((300 percent × the applicable SIFL cents-per-mile rates provided in paragraph (g)(5) of this section multiplied by the number of miles in the flight) plus the applicable terminal charge).

(8) ***Control employee defined*** *—Non-government employer—*

(i) ***Definition.*** For purposes of this paragraph (g), a control employee of a non-government employer is any employee—

(A) Who is a Board- or shareholder-appointed, confirmed, or elected officer of the employer, limited to the lesser of—

(1) One percent of all employees (increased to the next highest integer, if not an integer) or

(2) Ten employees;

(B) Who is among the top one percent most highly-paid employees of the employer (increased to the next highest integer, if not an integer) limited to a maximum of 50;

(C) Who owns a five-percent or greater equity, capital, or profits interest in the employer; or

(D) Who is a director of the employer.

(ii) ***Special rules for control employee definition*** *—*

(A) ***In general.*** For purposes of this paragraph (g), any employee who is a family member (within the meaning of section 267(c)(4)) of a control employee is also a control employee. For purposes of paragraph (g)(8)(i)(B) of this section, the term “employee” does

not include any individual unless such individual is a common-law employee, partner, or one-percent or greater shareholder of the employer. Pursuant to this paragraph (g)(8), an employee may be a control employee under more than one of the requirements listed in paragraphs (g)(8)(i) (A) through (D) of this section. For example, an employee may be both an officer under paragraph (g)(8)(i)(A) of this section and a highly-paid employee under paragraph (g)(8)(i)(B) of this section. In this case, for purposes of the officer limitation rule of paragraph (g)(8)(i)(A) of this section and the highly-paid employee limitation rule of paragraph (g)(8)(i)(B) of this section, the employee would be counted in applying both limitations. For purposes of determining the one-percent limitation under paragraphs (g)(8)(i) (A) and (B) of this section, an employer shall exclude from consideration employees described in § 1.132-8(b)(3). Instead of applying the control employee definition of this paragraph (g)(8), an employer may treat all (and only) employees who are "highly compensated" employees (as defined in § 1.132-8(f)) as control employees for purposes of this paragraph (g).

(B) ***Special rules for officers, owners, and highly-paid control employees.*** In no event shall an employee whose compensation is less than $50,000 be a control employee under paragraph (g)(8)(i) (A) or (B) of this section. For purposes of determining who is a five-percent (or one-percent) owner under this paragraph (g)(8), any individual who owns (or is considered as owning under section 318(a) or principles similar to section 318(a) for entities other than corporations) five percent (or one-percent) or more of the fair market value of an entity (the "owned entity") is considered a five-percent (or one-percent) owner of all entities which would be aggregated with the owned entity under the rules of section 414(b), (c), (m), or (o). For purposes of determining who is an officer or director with respect to an employer under this paragraph (g)(8), notwithstanding anything in this section to the contrary, if the employer would be aggregated with other employers under the rules of section 414 (b), (c), (m), or (o), the officer definition and the limitations and the director definition are applied to each such separate employer rather than to the aggregated employer. An employee who is an officer or director of one employer (the "first employer") shall not be counted as an officer or a director of any other employer aggregated with the first employer under the rules of section 414 (b), (c), or (m). If applicable, the officer limitations rule of paragraph (g)(8)(i)(A) of this section is applied to employees in descending order of their compensation. Thus, if an employer has 11 board-appointed officers and the limit imposed under paragraph (g)(8)(i)(A) of this section is 10 officers, the employee with the least compensation of those officers would not be a control employee under paragraph (g)(8)(i)(A) of this section.

(9) ***Control employee defined—Government employer.*** For purposes of this paragraph (g), a control employee of a government employer is any—

(i) Elected official, or

(ii) Employee whose compensation equals or exceeds the compensation paid to a Federal Government employee holding a position at Executive Level V, determined under Chapter 11 of title 2, United States Code, as adjusted by section 5318 of title 5 United States Code.

For purposes of paragraph (f), the term "government" includes any Federal, state or local governmental unit, and any agency or instrumentality thereof. Instead of applying the control employee definition of paragraph (f)(6), an employer may treat all and only employees who are "highly compensated" employees (as defined in § 1.132-8(f)) as control employees for purposes of this paragraph (f).

(10) ***"Compensation" defined.*** For purposes of this paragraph (g), the term "compensation" has the same meaning as in section 414(q)(7). Compensation includes all amounts received from all entities treated as a single employer under section 414 (b), (c), (m), or (o). Levels of compensation shall be adjusted at the same time and in the same manner as provided in section 415(d). The first such adjustment was for calendar year 1988.

(11) ***Treatment of former employees.*** For purposes of this paragraph (g), an employee who was a control employee of the employer (as defined in this paragraph (g)) at any time after reaching age 55, or within three years of separation from the service of the employer, is a control employee with respect to flights taken after separation from the service of the employer. An individual who is treated as a control employee under this paragraph (g)(11) is not counted when determining the limitation of paragraph (g)(8)(i) (A) and (B) of this section. Thus, the total number of individuals treated as control employees under such paragraphs may exceed the limitations of such paragraphs to the extent that this paragraph (g)(11) applies.

(12) ***Seating capacity rule*** —

(i) ***In general*** —

(A) ***General rule.*** Where 50 percent or more of the regular passenger seating capacity of an aircraft (as used by the employer) is occupied by individuals whose flights are primarily for the employer's business (and whose flights are excludable from income under section 132(d)), the value of a flight on that aircraft by any employee who is not flying primarily for the employer's business (or who is flying primarily for the employer's business but the value of whose flight is not excludable under section 132(d) by reason of section 274(c)) is deemed to be zero. See § 1.132-5 which limits the working condition fringe exclusion under section 132(d) to situations where the employee receives the flight in connection with the performance of services for the employer providing the aircraft.

(B) ***Special rules*** —(*1*) *Definition of "employee."* For purposes of this paragraph (g)(12), the term "employee" includes only employees of the employer, including a partner of a partnership, providing the aircraft and does not include independent contractors and directors of the employer. A flight taken by an individual other than an "employee" as defined in the preceding sentence is considered a flight taken by an employee for purposes of this paragraph (g)(12) only if that individual is treated as an employee pursuant to section 132(f)(1) or that individual's flight is treated as a flight taken by an employee pursuant to section 132(f)(2). If—

(*i*) A flight by an individual is not considered a flight taken by an employee (as defined in this paragraph (g)(12)(i)),

(*ii*) The value of that individual's flight is not excludable under section 132(d), and

(*iii*) The seating capacity rule of this paragraph (g) (12) otherwise applies, then the value of the flight provided to such an individual is the value of a flight provided to a non-control employee pursuant to paragraph (g)(5) of this section (even if the individual who would be taxed on the value of the flight is a control employee).

(*2*) *Example.* The special rules of paragraph (g)(12)(i)(B)(*1*) of this section are illustrated by the following example:

Example. Assume that 60 percent of the regular passenger seating capacity of an employer's aircraft is occupied by individuals whose flights are primarily for the employer's business and are excludable from income under section 132(d). If a control employee, his spouse, and his dependent child fly on the employer's aircraft for primarily personal reasons, the value of the three flights is deemed to be zero. If, however, the control employee's cousin were provided a flight on the employer's aircraft, the value of the flight taken by the cousin is determined by applying the aircraft valuation formula of paragraph (g)(5) of this section (including the terminal charge) and the non-control employee aircraft multiples of paragraph (g)(7) of this section.

(ii) *Application of 50-percent test to multiple flights.* The seating capacity rule of this paragraph (g)(12) must be met both at the time the individual whose flight is being valued boards the aircraft and at the time the individual deplanes. For example, assume that employee A boards an employer-provided aircraft for personal purposes in New York, New York, and that at that time 80 percent of the regular passenger seating capacity of the aircraft is occupied by individuals whose flights are primarily for the employer's business (and whose flights are excludable from income under section 132(d)) ("the business passengers"). If the aircraft flies directly to Hartford, Connecticut where all of the passengers, including A, deplane, the requirements of the seating capacity rule of this paragraph (g)(12) have been satisfied. If instead, some of the passengers, including A, remain on the aircraft in Hartford and the aircraft continues on to Boston, Massachusetts, where they all deplane, the requirements of the seating capacity rule of this paragraph (g)(12) will not be satisfied with respect to A's flight from New York to Boston unless at least 50 percent of the seats comprising the aircraft's regular passenger seating capacity were occupied by the business passengers at the time A deplanes in Boston.

(iii) ***Regular passenger seating capacity.***

(A) ***General rule.*** Except as otherwise provided, the regular passenger seating capacity of an aircraft is the maximum number of seats that have at any time on or prior to the date of the flight been on the aircraft (while owned or leased by the employer). Except to the extent excluded pursuant to paragraph (g)(12)(v) of this section, regular seating capacity includes all seats which may be occupied by members of the flight crew. It is irrelevant that, on a particular flight, less than the maximum number of seats are available for use because, for example, some of the seats are removed.

(B) ***Special rules.*** When determining the maximum number of seats that have at any time on or prior to the date of the flight been on the aircraft (while owned or leased by the employer), seats that could not at any time be legally used during takeoff and have not at any time been used during takeoff are not counted. As of the date an employer permanently reduces the seating capacity of an aircraft, the regular passenger seating capacity is the reduced number of seats on the aircraft. The previous sentence shall not apply if at any time within 24 months after such reduction any seats are added in the aircraft. Unless the conditions of this paragraph (g)(12)(iii)(B) are satisfied, jumpseats and removable seats used solely for purposes of flight crew training are counted for purposes of the seating capacity rule of this paragraph (g)(12).

(iv) ***Examples.*** The rules of paragraph (g)(12)(iii) of this section are illustrated by the following examples:

Example 1. Employer A and employer B order the same aircraft, except that A orders it with 10 seats and B orders it with eight seats. A always uses its aircraft as a 10-seat aircraft; B always uses its aircraft as an eight-seat aircraft. The regular passenger seating capacity of A's aircraft is 10 and of B's aircraft is eight.

Example 2. Assume the same facts as in example (1), except that whenever A's chief executive officer and spouse use the aircraft eight seats are removed. Even if substantially all of the use of the aircraft is by the chief executive officer and spouse, the regular passenger seating capacity of the aircraft is 10.

Example 3. Assume the same facts as in example (1), except that whenever more than eight people want to fly in B's aircraft, two extra seats are added. Even if substantially all of the use of the aircraft occurs with eight seats, the regular passenger seating capacity of the aircraft is 10.

Example 4. Employer C purchases an aircraft with 12 seats. Three months later C remodels the interior of the aircraft and permanently removes four of the seats. Upon completion of the remodeling, the regular passenger seating capacity of the aircraft is eight. If, however, any seats are added within 24 months after the remodeling, the regular seating capacity of the aircraft is treated as 12 throughout the entire period.

(v) ***Seats occupied by flight crew.*** When determining the regular passenger seating capacity of an aircraft, any seat occupied by a member of the flight crew (whether or not such individual is an employee of the employer providing the aircraft) shall not be counted, unless the purpose of the flight by such individual is not primarily to serve as a member of the flight crew. If the seat occupied by a member of the flight crew is not counted as a passenger seat pursuant to the previous sentence, such member of the flight crew is disregarded in applying the 50-percent test described in the first sentence of paragraph (g)(12)(i) of this section. For example, assume that prior to application of this paragraph (g)(12)(v) the regular passenger seating capacity of an aircraft is one. Assume further that an employee pilots the aircraft and that the employee's flight is nor primarily for the employer's business. If the employee's spouse occupies the other seat for personal purposes, the seating capacity rule is not met and the value of both flights must be included in the employee's income. If, however, the employee's flight were primarily for the employer's business (unrelated to serving as a member of the flight crew), then the seating capacity rule is met and the value of the flight for the employee's spouse is deemed to be zero. If the employee's flight were primarily to serve as a member of the flight crew, then the seating capacity rule is not met and the value of a flight by any passenger for primarily personal reasons is not deemed to be zero.

(13) ***Erroneous use of the non-commercial flight valuation rule*** —

(i) ***Certain errors in the case of a flight by a control employee.*** If—

(A) The non-commercial flight valuation rule of this paragraph (g) is applied by an employer or a control employee, as the case may be, on a return as originally filed or on an amended return on the grounds that either—

(*1*) The control employee is not in fact a control employee, or

(2) The aircraft is within a specific weight classification, and

(B) Either position is subsequently determined to be erroneous, the valuation rule of this paragraph (g) is not available to value the flight taken by that control employee by the person or persons taking the erroneous position. With respect to the weight classifications, the previous sentence does not apply if the position taken is that the weight of the aircraft is greater than it is subsequently determined to be. If, with respect to a flight by a control employee, the seating capacity rule of paragraph (g)(12) of this section is used by an employer or the control employee, as the case may be, on a return as originally filed or on an amended return, the valuation rule of this paragraph (g) is not available to value the flight taken by that control employee by the person or persons taking the erroneous position.

(ii) ***Value of flight excluded as a working condition fringe.*** If either an employer or an employee, on a return as originally filed or on an amended return, excludes from the employee's income or wages all or any part of the value of a flight on the grounds that the flight was excludable as a working condition fringe under section 132, and that position is subsequently determined to be erroneous, the valuation rule of this paragraph (g) is not available to value the flight taken by that employee by the person or persons taking the erroneous position. Instead, the general valuation rules of paragraphs (b) (5) and (6) of this section apply.

(14) ***Consistency rules*** —

(i) ***Use by employer.*** Except as otherwise provided in paragraph (g)(13) or paragraph (g)(14)(iii) of this section or in § 1.132-5(m)(4), if the non-commercial flight valuation rule of this paragraph (g) is used by an employer to value any flight provided in a calendar year, the rule must be used to value all flights provided to all employees in the calendar year.

(ii) ***Use by employee.*** Except as otherwise provided in paragraph (g)(13) or (g)(14)(iii) of this section or in § 1.132-5(m)(4), if the non-commercial flight valuation rule of this paragraph (g) is used by an employee to value a flight provided by an employer in a calendar year, the rule must be used to value all flights provided to the employee by that employer in the calendar year.

(iii) ***Exception for entertainment flights provided to specified individuals after October 22, 2004.*** Notwithstanding the provisions of paragraph (g)(14)(i) of this section, an employer may use the general valuation rules of paragraph (b) of this section to value the entertainment use of an aircraft provided after October 22, 2004, to a specified individual. An employer who uses the general valuation rules of paragraph (b) of this section to value any entertainment use of an aircraft by a specified individual in a calendar year must use the general valuation rules of paragraph (b) of this section to value all entertainment use of aircraft provided to all specified individuals during that calendar year.

(A) ***Specified individuals defined.*** For purposes of paragraph (g)(14)(iii) of this section, *specified individual* is defined in section 274(e)(2)(B) and § 1.274-9(b).

(B) ***Entertainment defined.*** For purposes of paragraph (g)(14)(iii) of this section, *entertainment* is defined in § 1.274-2(b)(1).

(h) ***Commercial flight valuation rule*** —

(1) ***In general.*** Under the commercial flight valuation rule of this paragraph (h), the value of a space-available flight (as defined in paragraph (h) (2) of this section) on a commercial aircraft is 25 percent of the actual carrier's highest unrestricted coach fare in effect for the particular flight taken. The rule of this paragraph (h) is available only to an individual described in § 1.132-1(b)(1).

(2) ***Space-available flight.*** The commercial flight valuation rule of this paragraph (h) is available to value a space-available flight. The term "space-available flight" means a flight on a commercial aircraft—

(i) Which is subject to the same types of restrictions customarily associated with flying on an employee "stand-by" or "space-available" basis, and

(ii) Which meets the definition of a no-additional-cost service under section 132(b), except that the flight is provided to an individual other than the employee or an individual treated as the employee under section 132(f). Thus, a flight is not a space-available flight if the employer guarantees the employee a seat on the flight or if the nondiscrimination requirements of section 132(h)(1) and § 1.132-8 are not satisfied. A flight may be a space-available flight even if the airline that is the actual carrier is not the employer of the employee.

(3) ***Commercial aircraft.*** If the actual carrier does not offer, in the ordinary course of its business, air transportation to customers on a per-seat basis, the commercial flight valuation rule of this paragraph (h) is not available. Thus, if, in the ordinary course of its line of business, the employer only offers air transportation to customers on a charter basis, the commercial flight valuation rule of this paragraph (h) may not be used to value a space-available flight on the employer's aircraft. If the commercial flight valuation rule is not available, the flight may be valued under the non-commercial flight valuation rule of paragraph (g) of this section.

(4) ***Timing of inclusion.*** The date that the flight is taken is the relevant date for purposes of applying section 61(a)(1) and this section to a space-available flight on a commercial aircraft. The date of purchase or issuance of a pass or ticket is not relevant. Thus, this section applies to a flight taken on or after January 1, 1989, regardless of the date on which the pass or ticket for the flight was purchased or issued.

(5) ***Consistency rules*** —

(i) ***Use by employer.*** If the commercial flight valuation rule of this paragraph (h) is used by an employer to value any flight provided in a calendar year, the rule must be used to value all flights eligible for use of the rule provided in the calendar year.

(ii) ***Use by employee.*** If the commercial flight valuation rule of this paragraph (h) is used by an employee to value a flight provided by an employer in a calendar year, the rule must be used to value all flights provided by that employer eligible for use of the rule taken by such employee in the calendar year.

(i) [Reserved]

(j) ***Valuation of meals provided at an employer-operated eating facility for employees*** —

(1) ***In general.*** The valuation rule of this paragraph (j) may be used to value a meal provided at an employer-operated eating facility for employees (as defined in § 1.132-7). For rules relating to an exclusion for the value of meals provided at an employer-operated eating facility for employees, see section 132(e)(2) and § 1.132-7.

(2) ***Valuation formula*** —

(i) ***In general.*** The value of all meals provided at an employer-operated eating facility for employees during a calendar year ("total meal value") is 150 percent of the direct operating costs of the eating facility determined separately with respect to such eating facility whether or not the direct operating costs test is applied separately to such eating facility under § 1.132-7(b)(2). For purposes of this paragraph (j), the definition of direct operating costs provided in § 1.132-7(b) and the adjustments specified in § 1.132-7(a)(2) apply. The taxable value of meals provided at an eating facility may be determined in two ways. The "individual meal subsidy" may be treated as the taxable value of a meal provided at the eating facility (see paragraph (j)(2)(ii) of this section) to a particular employee. Alternatively, the employer may allocate the "total meal subsidy" among employees (see paragraph (j)(2)(iii) of this section).

(ii) ***"Individual meal subsidy" defined.*** The "individual meal subsidy" is determined by multiplying the amount paid by the employee for a particular meal by a fraction, the numerator of which is the total meal value and the denominator of which is the gross receipts of the eating facility for the calendar year and then subtracting the amount paid by the employee for the meal. The taxable value of meals provided to a particular employee during a calendar year, therefore, is the sum of the individual meal subsidies provided to the employee during the calendar year. This rule is available only if there is a charge for each meal selection and if each employee is charged the same price for any given meal selection.

(iii) ***Allocation of "total meal subsidy."*** Instead of using the individual meal subsidy method provided in paragraph (j)(2)(ii) of this section, the employer may allocate the "total meal subsidy" (total meal value less the gross receipts of the facility) among employees in any manner reasonable under the circumstances. It will be presumed reasonable for an employer to allocate the total meal subsidy on a per-employee basis if the employer has information that would substantiate to the satisfaction of the Commissioner that each employee was provided approximately the same number of meals at the facility.

(k) ***Commuting valuation rule for certain employees*** —

(1) ***In general.*** Under the rule of this paragraph (k), the value of the commuting use of employer-provided transportation may be determined under paragraph (k)(3) of this section if the following criteria are met by the employer and employee with respect to the transportation:

(i) The transportation is provided, solely because of unsafe conditions, to an employee who would ordinarily walk or use public transportation for commuting to or from work;

(ii) The employer has established a written policy (e.g., in the employer's personnel manual) under which the transportation is not provided for the employee's personal purposes other than for commuting due to unsafe conditions and the employer's practice in fact corresponds with the policy;

(iii) The transportation is not used for personal purposes other than commuting due to unsafe conditions; and

(iv) The employee receiving the employer-provided transportation is a qualified employee of the employer (as defined in paragraph (k)(6) of this section).

(2) ***Trip-by-trip basis.*** The special valuation rule of this paragraph (k) applies on a trip-by-trip basis. If an employer and employee fail to meet the criteria of paragraph (k)(1) of this section with respect to any trip, the value of the transportation for that trip is not determined under paragraph (k)(3) of this section and the amount includible in the employee's income is determined by reference to the fair market value of the transportation.

(3) ***Commuting value*** —

(i) ***$1.50 per one-way commute.*** If the requirements of this paragraph (k) are satisfied, the value of the commuting use of the employer-provided transportation is $1.50 per one-way commute (*i.e.*, from home to work or from work to home).

(ii) ***Value per employee.*** If transportation is provided to more than one qualified employee at the same time, the amount includible in the income of each employee is $1.50 per one-way commute.

(4) ***Definition of employer-provided transportation.*** For purposes of this paragraph (k), "employer-provided transportation" means transportation by vehicle (as defined in paragraph (f)(4) of this section) that is purchased by the employer (or that is purchased by the employee and reimbursed by the employer) from a party that is not related to the employer for the purpose of transporting a qualified employee to or from work. Reimbursements made by an employer to an employee to cover the cost of purchasing transportation (e.g., hiring cabs) must be made under a bona fide reimbursement arrangement.

(5) ***Unsafe conditions.*** Unsafe conditions exist if a reasonable person would, under the facts and circumstances, consider it unsafe for the employee to walk to or from home, or to walk to or use public transportation at the time of day the employee must commute. One of the factors indicating whether it is unsafe is the history of crime in the geographic area surrounding the employee's workplace or residence at the time of day the employee must commute.

(6) ***Qualified employee defined*** —

(i) ***In general.*** For purposes of this paragraph (k), a qualified employee is one who meets the following requirements with respect to the employer:

(A) The employee performs services during the current year, is paid on an hourly basis, is not claimed under section 213(a)(1) of the Fair Labor Standards Act of 1938 (as amended), 29 U.S.C. 201-219 (FLSA), to be exempt from the minimum wage and maximum hour provisions of the FLSA, and is within a classification with respect to which the employer actually pays, or has specified in writing that it will pay, compensation for overtime equal to or exceeding one and one-half times the regular rate as provided by section 207 of the FLSA; and

(B) The employee does not receive compensation from the employer in excess of the amount permitted by section 414(q)(1)(C) of the Code.

(ii) ***"Compensation" and "paid on an hourly basis" defined.*** For purposes of this paragraph (k), "compensation" has the same meaning as in section 414(q)(7). Compensation includes all amounts received from all entities treated as a single employer under section 414 (b), (c), (m), or (o). Levels of compensation shall be adjusted at the same time and in the same manner as provided in section 415(d). If an employee's compensation is stated on an annual basis, the employee is treated as "paid on an hourly basis" for purposes of this paragraph (k) as long as

the employee is not claimed to be exempt from the minimum wage and maximum hour provisions of the FLSA and is paid overtime wages either equal to or exceeding one and one-half the employee's regular hourly rate of pay.

(iii) ***FLSA compliance required.*** An employee will not be considered a qualified employee for purposes of this paragraph (k), unless the employer is in compliance with the recordkeeping requirements concerning that employee's wages, hours, and other conditions and practices of employment as provided in section 211(c) of the FLSA and 29 CFR part 516.

(iv) ***Issues arising under the FLSA.*** If questions arise concerning an employee's classification under the FLSA, the pronouncements and rulings of the Administrator of the Wage and Hour Division, Department of Labor are determinative.

(v) ***Non-qualified employees.*** If an employee is not a qualified employee within the meaning of this paragraph (k)(6), no portion of the value of the commuting use of employer-provided transportation is excluded under this paragraph (k).

(7) ***Examples.*** This paragraph (k) is illustrated by the following examples:

Example 1. A and B are word-processing clerks employed by Y, an accounting firm in a large metropolitan area, and both are qualified employees under paragraph (k)(6) of this section. The normal working hours for A and B are from 11:00 p.m. until 7:00 a.m. and public transportation, the only means of transportation available to A or B, would be considered unsafe by a reasonable person at the time they are required to commute from home to work. In response, Y hires a car service to pick up A and B at their homes each evening for purposes of transporting them to work. The amount includible in the income of both A and B is $1.50 for the one-way commute from home to work.

Example 2. Assume the same facts as in *Example 1,* except that Y also hires a car service to return A and B to their homes each morning at the conclusion of their shifts and public transportation would not be considered unsafe by a reasonable person at the time of day A and B commute to their homes. The value of the commute from work to home is includible in the income of both A and B by reference to fair market value since unsafe conditions do not exist for that trip.

Example 3. C is an associate for Z, a law firm in a metropolitan area. The normal working hours for C's law firm are from 9 a.m. until 6 p.m., but C's ordinary office hours are from 10 a.m. until 8 p.m. Public transportation, the only means of transportation available to C at the time C commutes from work to home during the evening, would be considered unsafe by a reasonable person. In response, Z hires a car service to take C home each evening. C does not receive annual compensation from Z in excess of the amount permitted by section 414(q)(1)(C) of the Code. However, C is treated as an employee exempt from the provisions of the FLSA and, accordingly, is not paid overtime wages. Therefore, C is not a qualified employee within the meaning of paragraph (k)(6) of this section. The value of the commute from work to home is includible in C's income by reference to fair market value.

(8) ***Effective date.*** This paragraph (k) applies to employer-provided transportation provided to a qualified employee on or after July 1, 1991.

[T.D. 8256, 54 FR 28582, July 6, 1989, as amended by T.D. 8389, 57 FR 1870, Jan. 16, 1992; T.D. 8457, 57 FR 62195, Dec. 30, 1992; T.D. 9597, 77 FR 45483, Aug. 1, 2012; T.D. 9849, 84 FR 9233, Mar. 14, 2019; T.D. 9893, 85 FR 6427, Feb. 5, 2020]

§ 1.61-22 Taxation of split-dollar life insurance arrangements.

(a) *Scope* —

(1) ***In general.*** This section provides rules for the taxation of a split-dollar life insurance arrangement for purposes of the income tax, the gift tax, the Federal Insurance Contributions Act (FICA), the Federal Unemployment Tax Act (FUTA), the Railroad Retirement Tax Act (RRTA), and the Self-Employment Contributions Act of 1954 (SECA). For the Collection of Income Tax at Source on Wages, this section also provides rules for the taxation of a split-dollar life insurance arrangement, other than a payment under a split-dollar life insurance arrangement that is a split-dollar loan under § 1.7872-15(b)(1). A split-dollar life insurance arrangement (as defined in paragraph (b) of this section) is subject to the rules of paragraphs (d) through (g) of this section, § 1.7872-15, or general tax rules. For rules to determine which rules apply to a split-dollar life insurance arrangement, see paragraph (b)(3) of this section.

(2) ***Overview.*** Paragraph (b) of this section defines a split-dollar life insurance arrangement and provides rules to determine whether an arrangement is subject to the rules of paragraphs (d) through (g) of this section, § 1.7872-15, or general tax rules. Paragraph (c) of this section defines certain other terms. Paragraph (d) of this section sets forth rules for the taxation of economic benefits provided under a split-dollar life insurance arrangement. Paragraph (e) of this section sets forth rules for the taxation of amounts received under a life insurance contract that is part of a split-dollar life insurance arrangement. Paragraph (f) of this section provides rules for additional tax consequences of a split-dollar life insurance arrangement, including the treatment of death benefit proceeds. Paragraph (g) of this section provides rules for the transfer of a life insurance contract (or an undivided interest in the contract) that is part of a split-dollar life insurance arrangement. Paragraph (h) of this section provides examples illustrating the application of this section. Paragraph (j) of this section provides the effective date of this section.

(b) *Split-dollar life insurance arrangement* —

(1) ***In general.*** A split-dollar life insurance arrangement is any arrangement between an owner and a non-owner of a life insurance contract that satisfies the following criteria—

(i) Either party to the arrangement pays, directly or indirectly, all or any portion of the premiums on the life insurance contract, including a payment by means of a loan to the other party that is secured by the life insurance contract;

(ii) At least one of the parties to the arrangement paying premiums under paragraph (b)(1)(i) of this section is entitled to recover (either conditionally or unconditionally) all or any portion of those premiums and such recovery is to be made from, or is secured by, the proceeds of the life insurance contract; and

(iii) The arrangement is not part of a group-term life insurance plan described in section 79 unless the group-term life insurance plan provides permanent benefits to employees (as defined in § 1.79-0).

(2) *Special rule* —

(i) ***In general.*** Any arrangement between an owner and a non-owner of a life insurance contract is treated as a split-dollar life insurance arrangement (regardless of whether the criteria of paragraph (b)(1) of this section are satisfied) if the arrangement is described in paragraph (b)(2)(ii) or (iii) of this section.

(ii) ***Compensatory arrangements.*** An arrangement is described in this paragraph (b)(2)(ii) if the following criteria are satisfied—

(A) The arrangement is entered into in connection with the performance of services and is not part of a group-term life insurance plan described in section 79;

(B) The employer or service recipient pays, directly or indirectly, all or any portion of the premiums; and

(C) Either—

(*1*) The beneficiary of all or any portion of the death benefit is designated by the employee or service provider or is any person whom the employee or service provider would reasonably be expected to designate as the beneficiary; or

(*2*) The employee or service provider has any interest in the policy cash value of the life insurance contract.

(iii) ***Shareholder arrangements.*** An arrangement is described in this paragraph (b)(2)(iii) if the following criteria are satisfied—

(A) The arrangement is entered into between a corporation and another person in that person's capacity as a shareholder in the corporation;

(B) The corporation pays, directly or indirectly, all or any portion of the premiums; and

(C) Either—

(*1*) The beneficiary of all or any portion of the death benefit is designated by the shareholder or is any person whom the shareholder would reasonably be expected to designate as the beneficiary; or

(*2*) The shareholder has any interest in the policy cash value of the life insurance contract.

(3) ***Determination of whether this section or § 1.7872-15 applies to a split-dollar life insurance arrangement*** —

(i) ***Split-dollar life insurance arrangements involving split-dollar loans under § 1.7872-15.*** Except as provided in paragraph (b)(3)(ii) of this section, paragraphs (d) through (g) of this section do not apply to any split-dollar loan as defined in § 1.7872-15(b)(1). Section 1.7872-15 applies to any such loan. *See* paragraph (b)(5) of this section for the treatment of a payment made by a non-owner under a split-dollar life insurance arrangement if the payment is not a split-dollar loan.

(ii) ***Exceptions.*** Paragraphs (d) through (g) of this section apply (and § 1.7872-15 does not apply) to any split-dollar life insurance arrangement if—

(A) The arrangement is entered into in connection with the performance of services, and the employer or service recipient is the owner of the life insurance contract (or is treated as the owner of the contract under paragraph (c)(1)(ii)(A)(*1*) of this section); or

(B) The arrangement is entered into between a donor and a donee (for example, a life insurance trust) and the donor is the owner of the life insurance contract (or is treated as the owner of the contract under paragraph (c)(1)(ii)(A)(*2*) of this section).

(4) ***Consistency requirement.*** A split-dollar life insurance arrangement described in paragraph (b)(1) or (2) of this section must be treated in the same manner by the owner and the non-owner of the life insurance contract under either the rules of this section or § 1.7872-15. In addition, the owner and non-owner must fully account for all amounts under the arrangement under paragraph (b)(5) of this section, paragraphs (d) through (g) of this section, or § 1.7872-15.

(5) ***Non-owner payments that are not split-dollar loans.*** If a non-owner of a life insurance contract makes premium payments (directly or indirectly) under a split-dollar life insurance arrangement, and the payments are neither split-dollar loans nor consideration for economic benefits described in paragraph (d) of this section, then neither the rules of paragraphs (d) through (g) of this section nor the rules in § 1.7872-15 apply to such payments. Instead, general income tax, employment tax, self-employment tax, and gift tax principles apply to the premium payments. *See,* for example, § 1.61-2(d)(2)(ii)(A).

(6) ***Waiver, cancellation, or forgiveness.*** If a repayment obligation described in § 1.7872-15(a)(2) is waived, cancelled, or forgiven at any time, then the parties must take the amount waived, cancelled, or forgiven into account in accordance with the relationships between the parties (for example, as compensation in the case of an employee-employer relationship).

(7) ***Change in the owner.*** If payments made by a non-owner to an owner were treated as split-dollar loans under § 1.7872-15 and the split-dollar life insurance arrangement is modified such that, after the modification, the non-owner is the owner (within the meaning of paragraph (c)(1) of this section) of the life insurance contract under the arrangement, paragraphs (d) through (g) of this section apply to the split-dollar life insurance arrangement from the date of the modification. The payments made (both before and after the modification) are not treated as split-dollar loans under § 1.7872-15 on or after the date of the modification. The non-owner of the life insurance contract under the modified split-dollar life insurance arrangement must fully take into account all economic benefits provided under the arrangement under paragraph (d) of this section on or after the date of the modification. For the treatment of a transfer of the contract when the unmodified arrangement is governed by paragraphs (d) through (g) of this section, *see* paragraph (g) of this section.

(c) ***Definitions.*** The following definitions apply for purposes of this section:

(1) ***Owner*** —

(i) ***In general.*** With respect to a life insurance contract, the person named as the policy owner of such contract generally is the owner of such contract. If two or more persons are named as policy owners of a life insurance contract and each person has, at all times, all the incidents of ownership with respect to an undivided interest in the contract, each person is treated as the owner of a separate contract to the extent of such person's undivided interest. If two or more persons are named as policy owners of a life insurance contract but each person does not have, at all times, all the incidents of ownership with respect to an undivided interest in the contract, the person who is the first-named policy owner is treated as the owner of the entire contract.

(ii) ***Special rule for certain arrangements*** —

(A) ***In general.*** Notwithstanding paragraph (c)(1)(i) of this section—

(1) An employer or service recipient is treated as the owner of a life insurance contract under a split-dollar life insurance arrangement that is entered into in connection with the performance of services if, at all times, the only economic benefit that will be provided under the arrangement is current life insurance protection as described in paragraph (d)(3) of this section; and

(2) A donor is treated as the owner of a life insurance contract under a split-dollar life insurance arrangement that is entered into between a donor and a donee (for example, a life insurance trust) if, at all times, the only economic benefit that will be provided under the arrangement is current life insurance protection as described in paragraph (d)(3) of this section.

(B) ***Modifications.*** If an arrangement described in paragraph (c)(1)(ii)(A) of this section is modified such that the arrangement is no longer described in paragraph (c)(1)(ii)(A) of this section, the following rules apply:

(1) If, immediately after such modification, the employer, service recipient, or donor is the owner of the life insurance contract under the split-dollar life insurance arrangement (determined without regard to paragraph (c)(1)(ii)(A) of this section), the employer, service recipient, or donor continues to be treated as the owner of the life insurance contract.

(2) If, immediately after such modification, the employer, service recipient, or donor is not the owner of the life insurance contract under the split-dollar life insurance arrangement (determined without regard to paragraph (c)(1)(ii)(A) of this section), the employer, service recipient, or donor is treated as having made a transfer of the entire life insurance contract to the employee, service provider, or donee under the rules of paragraph (g) of this section as of the date of such modification.

(3) For purposes of this paragraph (c)(1)(ii)(B), entering into a successor split-dollar life insurance arrangement that has the effect of providing any economic benefit in addition to that described in paragraph (d)(3) of this section is treated as a modification of the prior split-dollar life insurance arrangement.

(iii) ***Attribution rules for compensatory arrangements.*** For purposes of this section, if a split-dollar life insurance arrangement is entered into in connection with the performance of services, the employer or service recipient is treated as the owner of the life insurance contract if the owner (within the meaning of paragraph (c)(1)(i) of this section) of the life insurance contract under the split-dollar life insurance arrangement is—

(A) A trust described in section 402(b);

(B) A trust that is treated as owned (within the meaning of sections 671 through 677) by the employer or the service recipient;

(C) A welfare benefit fund within the meaning of section 419(e)(1); or

(D) A member of the employer or service recipient's controlled group (within the meaning of section 414(b)) or a trade or business that is under common control with the employer or service recipient (within the meaning of section 414(c)).

(iv) ***Life insurance contracts owned by partnerships.*** [Reserved]

(2) ***Non-owner*** —

(i) ***Definition.*** With respect to a life insurance contract, a non-owner is any person (other than the owner of such contract under paragraph (c)(1) of this section) that has any direct or indirect interest in such contract (but not including a life insurance company acting only in its capacity as the issuer of a life insurance contract).

(ii) ***Example.*** The following example illustrates the provisions of this paragraph (c)(2):

> *Example.* (i) On January 1, 2009, Employer R and Trust T, an irrevocable life insurance trust that is not treated under sections 671 through 677 as owned by a grantor or other person, enter into a split-dollar life insurance arrangement in connection with the performance of services under which R will pay all the premiums on the life insurance contract until the termination of the arrangement or the death of E, an employee of R. C, the beneficiary of T, is E's child. R is the owner of the contract under paragraph (c)(1)(i) of this section. E is the insured under the life insurance contract. Upon termination of the arrangement or E's death, R is entitled to receive the lesser of the aggregate premiums or the policy cash value of the contract and T will be entitled to receive any remaining amounts. Under the terms of the arrangement and applicable state law, the policy cash value is fully accessible by R and R's creditors but T has the right to borrow or withdraw at any time the portion of the policy cash value exceeding the amount payable to R.
> (ii) Because E and T each have an indirect interest in the life insurance contract that is part of the split-dollar life insurance arrangement, each is a non-owner under paragraph (c)(2)(i) of this section. E and T each are provided economic benefits described in paragraph (d)(2) of this section pursuant to the split-dollar life insurance arrangement. Economic benefits are provided by owner R to E as a payment of compensation, and separately provided by E to T as a gift.

(3) ***Transfer of entire contract or undivided interest therein.*** A transfer of the ownership of a life insurance contract (or an undivided interest in such contract) that is part of a split-dollar life insurance arrangement occurs on the date that a non-owner becomes the owner (within the meaning of paragraph (c)(1) of this section) of the entire contract or of an undivided interest in the contract.

(4) ***Undivided interest.*** An undivided interest in a life insurance contract consists of an identical fractional or percentage interest or share in each right, benefit, and obligation with respect to the contract. In the case of any arrangement purporting to create undivided interests where, in substance, the rights, benefits or obligations are shared to any extent among the holders of such interests, the arrangement will be treated as a split-dollar life insurance arrangement.

(5) ***Employment tax.*** The term employment tax means any tax imposed by, or collected under, the Federal Insurance Contributions Act (FICA), the Federal Unemployment Tax Act (FUTA), the Railroad Retirement Tax Act (RRTA), and the Collection of Income Tax at Source on Wages.

(6) ***Self-employment tax.*** The term self-employment tax means the tax imposed by the Self-Employment Contributions Act of 1954 (SECA).

(d) ***Economic benefits provided under a split-dollar life insurance arrangement*** —

(1) ***In general.*** In the case of a split-dollar life insurance arrangement subject to the rules of paragraphs (d) through (g) of this section, economic benefits are treated as being provided to the non-owner of the life insurance contract. The non-owner (and the owner for gift and employment tax purposes) must take into account the full value of all economic benefits described in paragraph (d)(2) of this section, reduced by the consideration paid directly or indirectly by the non-owner to the owner for those economic benefits. Depending on the relationship between the owner and the non-owner, the economic benefits may constitute a payment of compensation, a distribution under section 301, a contribution to capital, a gift, or a transfer having a different tax character. Further, depending on the relationship between or among a non-owner and one or more other persons (including a non-owner or non-owners), the economic benefits may be treated as provided from the owner to the non-owner and as separately provided from the non-owner to such other person or persons (for example, as a payment of compensation from an employer to an employee and as a gift from the employee to the employee's child).

(2) ***Value of economic benefits.*** The value of the economic benefits provided to a non-owner for a taxable year under the arrangement equals—

(i) The cost of current life insurance protection provided to the non-owner as determined under paragraph (d)(3) of this section;

(ii) The amount of policy cash value to which the non-owner has current access within the meaning of paragraph (d)(4)(ii) of this section (to the extent that such amount was not actually taken into account for a prior taxable year); and

(iii) The value of any economic benefits not described in paragraph (d)(2)(i) or (ii) of this section provided to the non-owner (to the extent not actually taken into account for a prior taxable year).

(3) ***Current life insurance protection*** —

(i) ***Amount of current life insurance protection.*** In the case of a split-dollar life insurance arrangement described in paragraph (d)(1) of this section, the amount of the current life insurance protection provided to the non-owner for a taxable year (or any portion thereof in the case of the first year or the last year of the arrangement) equals the excess of the death benefit of the life insurance contract (including paid-up additions thereto) over the total amount payable to the owner (including any outstanding policy loans that offset amounts otherwise payable to the owner) under the split-dollar life insurance arrangement, less the portion of the policy cash value actually taken into account under paragraph (d)(1) of this section or paid for by the non-owner under paragraph (d)(1) of this section for the current taxable year or any prior taxable year.

(ii) ***Cost of current life insurance protection.*** The cost of current life insurance protection provided to the non-owner for any year (or any portion thereof in the case of the first year or the last year of the arrangement) equals the amount of the current life insurance protection provided to the non-owner (determined under paragraph (d)(3)(i) of this section) multiplied by the life insurance premium factor designated or permitted in guidance published in the Internal Revenue Bulletin (*see* § 601.601(d)(2)(ii) of this chapter).

(4) ***Policy cash value*** —

(i) ***In general.*** For purposes of this paragraph (d), policy cash value is determined disregarding surrender charges or other similar charges or reductions. Policy cash value includes policy cash value attributable to paid-up additions.

(ii) ***Current access.*** For purposes of this paragraph (d), a non-owner has current access to that portion of the policy cash value—

(A) To which, under the arrangement, the non-owner has a current or future right; and

(B) That currently is directly or indirectly accessible by the non-owner, inaccessible to the owner, or inaccessible to the owner's general creditors.

(5) ***Valuation date*** —

(i) ***General rules.*** For purposes of this paragraph (d), the amount of the current life insurance protection and the policy cash value shall be determined on the same valuation date. The valuation date is the last day of the non-owner's taxable year, unless the owner and non-owner agree to instead use the policy anniversary date as the valuation date. Notwithstanding the previous sentence, if the split-dollar life insurance arrangement terminates during the taxable year of the non-owner, the value of such economic benefits is determined on the day that the arrangement terminates.

(ii) ***Consistency requirement.*** The owner and non-owner of the split-dollar life insurance arrangement must use the same valuation date. In addition, the same valuation date must be used for all years prior to termination of the split-dollar life insurance arrangement unless the parties receive consent of the Commissioner to change the valuation date.

(iii) ***Artifice or device.*** Notwithstanding paragraph (d)(5)(i) of this section, if any artifice or device is used to understate the amount of any economic benefit on the valuation date in paragraph (d)(5)(i) of this section, then, for purposes of this paragraph (d), the date on which the amount of the economic benefit is determined is the date on which the amount of the economic benefit is greatest during that taxable year.

(iv) ***Special rule for certain taxes.*** For purposes of employment tax (as defined in paragraph (c)(5) of this section), self-employment tax (as defined in paragraph (c)(6) of this section), and sections 6654 and 6655 (relating to the failure to pay estimated income tax), the portions of the current life insurance protection and the policy cash value that are treated as provided by the owner to the non-owner shall be treated as so provided on the last day of the taxable year of the non-owner. Notwithstanding the previous sentence, if the split-dollar life insurance arrangement terminates during the taxable year of the non-owner, such portions of the current life insurance protection and the policy cash value shall be treated as so provided on the day that the arrangement terminates.

(6) ***Examples.*** The following examples illustrate the rules of this paragraph (d). Except as otherwise provided, both examples assume the following facts: employer (R) is the owner (as defined in paragraph (c)(1)(i) of this section) and employee (E) is the non-owner (as defined in paragraph (c)(2)(i) of this section) of a life insurance contract that is part of a split-dollar life insurance arrangement that is subject to the provisions of paragraphs (d) through (g) of this section; the contract is a life insurance contract as defined in section 7702 and not a modified endowment contract as defined in section 7702A; R does not withdraw or obtain a loan of any portion of the policy cash value and does not surrender any portion of the life insurance contract; the compensation paid to E is reasonable; E is not provided any economic benefits described in

paragraph (d)(2)(iii) of this section; E does not make any premium payments; E's taxable year is the calendar year; the value of the economic benefits is determined on the last day of E's taxable year; and E reports on E's Federal income tax return for each year that the split-dollar life insurance arrangement is in effect the amount of income required to be reported under paragraph (d) of this section. The examples are as follows:

Example 1. (i) *Facts.* On January 1 of year 1, R and E enter into the split-dollar life insurance arrangement. Under the arrangement, R pays all of the premiums on the life insurance contract until the termination of the arrangement or E's death. The arrangement provides that upon termination of the arrangement or E's death, R is entitled to receive the lesser of the aggregate premiums paid or the policy cash value of the contract and E is entitled to receive any remaining amounts. Under the terms of the arrangement and applicable state law, the policy cash value is fully accessible by R and R's creditors but E has the right to borrow or withdraw at any time the portion of the policy cash value exceeding the amount payable to R. To fund the arrangement, R purchases a life insurance contract with constant death benefit protection equal to $1,500,000. R makes premium payments on the life insurance contract of $60,000 in each of years 1, 2, and 3. The policy cash value equals $55,000 as of December 31 of year 1, $140,000 as of December 31 of year 2, and $240,000 as of December 31 of year 3. (ii) *Analysis.* Under the terms of the split-dollar life insurance arrangement, E has the right for year 1 and all subsequent years to borrow or withdraw the portion of the policy cash value exceeding the amount payable to R. Thus, under paragraph (d)(4)(ii) of this section, E has current access to such portion of the policy cash value for each year that the arrangement is in effect. In addition, because R pays all of the premiums on the life insurance contract, R provides to E all of the economic benefits that E receives under the arrangement. Therefore, under paragraph (d)(1) of this section, E includes in gross income the value of all economic benefits described in paragraphs (d)(2)(i) and (ii) of this section provided to E under the arrangement.

(iii) *Results for year 1.* For year 1, E is provided, under paragraph (d)(2)(ii) of this section, $0 of policy cash value (excess of $55,000 policy cash value determined as of December 31 of year 1 over $55,000 payable to R). For year 1, E is also provided, under paragraph (d)(2)(i) of this section, current life insurance protection of $1,445,000 ($1,500,000 minus $55,000 payable to R). Thus, E includes in gross income for year 1 the cost of $1,445,000 of current life insurance protection.

(iv) *Results for year 2.* For year 2, E is provided, under paragraph (d)(2)(ii) of this section, $20,000 of policy cash value ($140,000 policy cash value determined as of December 31 of year 2 minus $120,000 payable to R). For year 2, E is also provided, under paragraph (d)(2)(i) of this section, current life insurance protection of $1,360,000 ($1,500,000 minus the sum of $120,000 payable to R and the aggregate of $20,000 of policy cash value that E actually

includes in income on E's year 1 and year 2 federal income tax returns). Thus, E includes in gross income for year 2 the sum of $20,000 of policy cash value and the cost of $1,360,000 of current life insurance protection.

(v) *Results for year 3.* For year 3, E is provided, under paragraph (d)(2)(ii) of this section, $40,000 of policy cash value ($240,000 policy cash value determined as of December 31 of year 3 minus the sum of $180,000 payable to R and $20,000 of aggregate policy cash value that E actually included in gross income on E's year 1 and year 2 federal income tax returns). For year 3, E is also provided, under paragraph (d)(2)(i) of this section, current life insurance protection of $1,260,000 ($1,500,000 minus the sum of $180,000 payable to R and $60,000 of aggregate policy cash value that E actually includes in gross income on E's year 1, year 2, and year 3 federal income tax returns). Thus, E includes in gross income for year 3 the sum of $40,000 of policy cash value and the cost of $1,260,000 of current life insurance protection.

Example 2. (i) *Facts.* The facts are the same as in *Example 1* except that E cannot directly or indirectly access any portion of the policy cash value, but the terms of the split-dollar life insurance arrangement or applicable state law provide that the policy cash value in excess of the amount payable to R is inaccessible to R's general creditors.
(ii) *Analysis.* Under the terms of the split-dollar life insurance arrangement or applicable state law, the portion of the policy cash value exceeding the amount payable to R is inaccessible to R's general creditors and E has a current or future right to that portion of the cash value. Thus, under paragraph (d)(4)(ii) of this section, E has current access to such portion of the policy cash value for each year that the arrangement is in effect. In addition, because R pays all of the premiums on the life insurance contract, R provides to E all of the economic benefits that E receives under the arrangement. Therefore, under paragraph (d)(1) of this section, E includes in gross income the value of all economic benefits described in paragraphs (d)(2)(i) and (ii) of this section provided to E under the arrangement.

(iii) *Results for years 1, 2 and 3.* The results for this example are the same as the results in Example 1.

(e) ***Amounts received under the contract*** —

(1) ***In general.*** Except as otherwise provided in paragraph (f)(3) of this section, any amount received under a life insurance contract that is part of a split-dollar life insurance arrangement subject to the rules of paragraphs (d) through (g) of this section (including, but not limited to, a policy owner dividend, proceeds of a specified policy loan described in paragraph (e)(2) of this section, or the proceeds of a withdrawal from or partial surrender of the life insurance contract) is treated, to the extent provided directly or indirectly to a non-owner of the life insurance contract, as though such amount had been paid to the owner of the life insurance contract and then paid by the owner to the non-owner. The amount received is taxable to the owner in accordance with the rules of section 72. The non-owner (and the owner for gift tax and employment tax purposes) must take the amount

described in paragraph (e)(3) of this section into account as a payment of compensation, a distribution under section 301, a contribution to capital, a gift, or other transfer depending on the relationship between the owner and the non-owner.

(2) ***Specified policy loan.*** A policy loan is a specified policy loan to the extent—

(i) The proceeds of the loan are distributed directly from the insurance company to the non-owner;

(ii) A reasonable person would not expect that the loan will be repaid by the non-owner; or

(iii) The non-owner's obligation to repay the loan to the owner is satisfied or is capable of being satisfied upon repayment by either party to the insurance company.

(3) ***Amount required to be taken into account.*** With respect to a non-owner (and the owner for gift tax and employment tax purposes), the amount described in this paragraph (e)(3) is equal to the excess of—

(i) The amount treated as received by the owner under paragraph (e)(1) of this section; over

(ii) The amount of all economic benefits described in paragraphs (d)(2)(ii) and (iii) of this section actually taken into account by the non-owner (and the owner for gift tax and employment tax purposes) plus any consideration described in paragraph (d)(1) of this section paid by the non-owner for such economic benefits described in paragraphs (d)(2)(ii) and (iii) of this section. The amount determined under the preceding sentence applies only to the extent that neither this paragraph (e)(3)(ii) nor paragraph (g)(1)(ii) of this section previously has applied to such economic benefits.

(f) ***Other tax consequences*** —

(1) ***Introduction.*** In the case of a split-dollar life insurance arrangement subject to the rules of paragraphs (d) through (g) of this section, this paragraph (f) sets forth other tax consequences to the owner and non-owner of a life insurance contract that is part of the arrangement for the period prior to the transfer (as defined in paragraph (c)(3) of this section) of the contract (or an undivided interest therein) from the owner to the non-owner. *See* paragraph (g) of this section and § 1.83-6(a)(5) for tax consequences upon the transfer of the contract (or an undivided interest therein).

(2) ***Investment in the contract*** —

(i) ***To the non-owner.*** A non-owner does not receive any investment in the contract under section 72(e)(6) with respect to a life insurance contract that is part of a split-dollar life insurance arrangement subject to the rules of paragraphs (d) through (g) of this section.

(ii) ***To owner.*** Any premium paid by an owner under a split-dollar life insurance arrangement subject to the rules of paragraphs (d) through (g) of this section is included in the owner's investment in the contract under section 72(e)(6). No premium or amount described in paragraph (d) of this section is deductible by the owner (except as otherwise provided in § 1.83-6(a)(5)). Any amount paid by a non-owner, directly or indirectly, to the owner of the life insurance contract for current life insurance protection or for any other economic benefit under the life insurance contract is included in the owner's gross income and is included in the owner's investment in the life insurance contract for purposes of section 72(e)(6) (but only to the extent not otherwise so included by reason of having been paid by the owner as a premium or other consideration for the contract).

(3) ***Treatment of death benefit proceeds*** —

(i) ***Death benefit proceeds to beneficiary (other than the owner).*** Any amount paid to a beneficiary (other than the owner) by reason of the death of the insured is excluded from gross income by such beneficiary under section 101(a) as an amount received under a life insurance contract to the extent such amount is allocable to current life insurance protection provided to the non-owner pursuant to the split-dollar life insurance arrangement, the cost of which was paid by the non-owner, or the value of which the non-owner actually took into account pursuant to paragraph (d)(1) of this section.

(ii) ***Death benefit proceeds to owner as beneficiary.*** Any amount paid or payable to an owner in its capacity as a beneficiary by reason of the death of the insured is excluded from gross income of the owner under section 101(a) as an amount received under a life insurance contract to the extent such amount is not allocable to current life insurance protection provided to the non-owner pursuant to the split-dollar life insurance arrangement, the cost of which was paid by the non-owner, or the value of which the non-owner actually took into account pursuant to paragraph (d)(1) of this section.

(iii) ***Transfers of death benefit proceeds.*** Death benefit proceeds paid to a party to a split-dollar life insurance arrangement (or the estate or beneficiary of that party) that are not excludable from that party's income under section 101(a) to the extent provided in paragraph (f)(3)(i) or (ii) of this section, are treated as transferred to that party in a separate transaction. The death benefit proceeds treated as so transferred will be taxed in a manner similar to other transfers. For example, if death benefit proceeds paid to an employee, the employee's estate, or the employee's beneficiary are not excludable from the employee's gross income under section 101(a) to the extent provided in paragraph (f)(3)(i) of this section, then such payment is treated as a payment of compensation by the employer to the employee.

(g) ***Transfer of entire contract or undivided interest therein*** —

(1) ***In general.*** Upon a transfer within the meaning of paragraph (c)(3) of this section of a life insurance contract (or an undivided interest therein) to a non-owner (transferee), the transferee (and the owner (transferor) for gift tax and employment tax purposes) takes into account the excess of the fair market value of the life insurance contract (or the undivided interest therein) transferred to the transferee at that time over the sum of—

(i) The amount the transferee pays to the transferor to obtain the contract (or the undivided interest therein); and

(ii) The amount of all economic benefits described in paragraph (d)(2)(ii) and (iii) of this section actually taken into account by the transferee (and the transferor for gift tax and employment tax purposes), plus any consideration described in paragraph (d)(1) of this section paid by the transferee for such economic benefits described in paragraphs (d)(2)(ii) and (iii) of this section. The amount determined under the preceding sentence applies only to the extent that neither this paragraph (g)(1)(ii) nor paragraph (e)(3)(ii) of this section previously has applied to such economic benefits.

(2) ***Determination of fair market value.*** For purposes of paragraph (g)(1) of this section, the fair market value of a life insurance contract is the policy cash value and the value of all other rights under such contract (including any supplemental agreements thereto and whether or not guaranteed), other than the value of current life insurance protection. Notwithstanding the preceding sentence, the fair market value of a life insurance contract for gift tax purposes is determined under § 25.2512-6(a) of this chapter.

(3) ***Exception for certain transfers in connection with the performance of services.*** To the extent the ownership of a life insurance contract (or undivided interest in such contract) is transferred in connection with the performance of services, paragraph (g)(1) of this section does not apply until such contract (or undivided interest in such contract) is taxable under section 83. For purposes of paragraph (g)(1) of this section, fair market value is determined disregarding any lapse restrictions and at the time the transfer of such contract (or undivided interest in such contract) is taxable under section 83.

(4) ***Treatment of non-owner after transfer —***

(i) ***In general.*** After a transfer of an entire life insurance contract (except when such transfer is in connection with the performance of services and the transfer is not yet taxable under section 83), the person who previously had been the non-owner is treated as the owner of such contract for all purposes, including for purposes of paragraph (b) of this section and for purposes of § 1.61-2(d)(2)(ii)(A). After the transfer of an undivided interest in a life insurance contract (or, if later, at the time such transfer is taxable under section 83), the person who previously had been the non-owner is treated as the owner of a separate contract consisting of that interest for all purposes, including for purposes of paragraph (b) of this section and for purposes of § 1.61-2(d)(2)(ii)(A).

(ii) ***Investment in the contract after transfer —***

(A) ***In general.*** The amount treated as consideration paid to acquire the contract under section 72(g)(1), in order to determine the aggregate premiums paid by the transferee for purposes of section 72(e)(6)(A) after the transfer (or, if later, at the time such transfer is taxable under section 83), equals the greater of the fair market value of the contract or the sum of the amounts determined under paragraphs (g)(1)(i) and (ii) of this section.

(B) ***Transfers between a donor and a donee.*** In the case of a transfer of a contract between a donor and a donee, the amount treated as consideration paid by the transferee to acquire the contract under section 72(g)(1), in order to determine the aggregate premiums paid by the transferee for purposes of section 72(e)(6)(A) after the transfer, equals the sum of the amounts determined under paragraphs (g)(1)(i) and (ii) of this section except that—

(*1*) The amount determined under paragraph (g)(1)(i) of this section includes the aggregate of premiums or other consideration paid or deemed to have been paid by the transferor; and

(*2*) The amount of all economic benefits determined under paragraph (g)(1)(ii) of this section actually taken into account by the transferee does not include such benefits to the extent such benefits were excludable from the transferee's gross income at the time of receipt.

(C) ***Transfers of an undivided interest in a contract.*** If a portion of a contract is transferred to the transferee, then the amount to be included as consideration paid to acquire the contract is determined by multiplying the amount determined under paragraph (g)(4)(ii)(A) of this section (as modified by paragraph (g)(4)(ii)(B) of this section, if the transfer is between a donor and a donee) by a fraction, the numerator of which is the fair market value of the portion transferred and the denominator of which is the fair market value of the entire contract.

(D) ***Example.*** The following example illustrates the rules of this paragraph (g)(4)(ii):

Example. (i) In year 1, donor D and donee E enter into a split-dollar life insurance arrangement as defined in paragraph (b)(1) of this section. D is the owner of the life insurance contract under paragraph (c)(1) of this section. The life insurance contract is not a modified endowment contract as defined in section 7702A. In year 5, D gratuitously transfers the contract, within the meaning of paragraph (c)(3) of this section, to E. At the time of the transfer, the fair market value of the contract is $200,000 and D had paid $50,000 in premiums under the arrangement. In addition, by the time of the transfer, E had current access to $80,000 of policy cash value which was excludable from E's gross income under section 102.
(ii) E's investment in the contract is $50,000, consisting of the $50,000 of premiums paid by D. The $80,000 of policy cash value to which E had current access is not included in E's investment in the contract because such amount was excludable from E's gross income when E had current access to that policy cash value.

(iii) ***No investment in the contract for current life insurance protection.*** Except as provided in paragraph (g)(4)(ii)(B) of this section, no amount allocable to current life insurance protection provided to the transferee (the cost of which was paid by the transferee or the value of which was provided to the transferee) is treated as consideration paid to acquire the contract under section 72(g)(1) to determine the aggregate premiums paid by the transferee for purposes of determining the transferee's investment in the contract under section 72(e) after the transfer.

(h) ***Examples.*** The following examples illustrate the rules of this section. Except as otherwise provided, each of the examples assumes that the employer (R) is the owner (as defined in paragraph (c)(1) of this section) of a life insurance contract that is part of a split-dollar life insurance arrangement subject to the rules of paragraphs (d) through (g) of this section, that the employee (E) is not provided any economic benefits described in paragraph (d)(2)(iii) of this section, that the life insurance contract is not a modified endowment contract under section 7702A, that the compensation paid to E is reasonable, and that E makes no premium payments. The examples are as follows:

Example 1. (i) In year 1, R purchases a life insurance contract on the life of E. R is named as the policy owner of the contract. R and E enter into an arrangement under which R will pay all the premiums on the life insurance contract until the termination of the arrangement or E's death. Upon termination of the arrangement or E's death, R is entitled to receive the greater of the aggregate premiums or the policy cash value of the contract. The balance of the death benefit will be paid to a beneficiary designated by E.
(ii) Because R is designated as the policy owner of the contract, R is the owner of the contract under paragraph (c)(1)(i) of this section. In addition, R would be treated as the owner of the contract regardless of whether R were designated as the policy owner under paragraph (c)(1)(i) of this section because the split-dollar life insurance arrangement is described in paragraph (c)(1)(ii)(A)(*1*) of this section. E is a non-owner of the contract. Under the arrangement between R and E, a portion of the death benefit is payable to a beneficiary designated by E. The arrangement is a split-dollar life insurance arrangement under paragraph (b)(1) or (2) of this section. Because R pays all the premiums on the life insurance contract, R provides to E the entire amount of the

current life insurance protection E receives under the arrangement. Therefore, for each year that the split-dollar life insurance arrangement is in effect, E must include in gross income under paragraph (d)(1) of this section the value of current life insurance protection described in paragraph (d)(2)(i) of this section provided to E in each year.

Example 2. (i) The facts are the same as in *Example 1* except that, upon termination of the arrangement or E's death, R is entitled to receive the lesser of the aggregate premiums or the policy cash value of the contract. Under the terms of the arrangement and applicable state law, the policy cash value is fully accessible by R and R's creditors but E has the right to borrow or withdraw at any time the portion of the policy cash value exceeding the amount payable to R.
(ii) Because R is designated as the policy owner, R is the owner of the contract under paragraph (c)(1)(i) of this section. E is a non-owner of the contract. For each year that the split-dollar life insurance arrangement is in effect, E has the right to borrow or withdraw at any time the portion of the policy cash value exceeding the amount payable to R. Thus, under paragraph (d)(4)(ii) of this section, E has current access to such portion of the policy cash value for each year that the arrangement is in effect. In addition, because R pays all the premiums on the life insurance contract, R provides to E all the economic benefits that E receives under the arrangement. Therefore, for each year that the split-dollar life insurance arrangement is in effect, E must include in gross income under paragraph (d)(1) of this section, the value of all economic benefits described in paragraph (d)(2)(i) and (ii) of this section provided to E in each year.

Example 3. (i) The facts are the same as in *Example 1* except that in year 5, R and E modify the split-dollar life insurance arrangement to provide that, upon termination of the arrangement or E's death, R is entitled to receive the greater of the aggregate premiums or one-half the policy cash value of the contract. Under the terms of the modified arrangement and applicable state law, the policy cash value is fully accessible by R and R's creditors but E has the right to borrow or withdraw at any time the portion of the policy cash value exceeding the amount payable to R.
(ii) For each year that the split-dollar life insurance arrangement is in effect, E must include in gross income under paragraph (d)(1) of this section the value of the economic benefits described in paragraph (d)(2)(i) of this section provided to E under the arrangement during that year. In year 5 (and subsequent years), E has the right to borrow or withdraw at any time the portion of the policy cash value exceeding the amount payable to R. Thus, under paragraph (d)(4)(ii) of this section, E has current access to such portion of the policy cash value. Thus, in year 5 (and each subsequent year), E must also include in gross income under paragraph (d)(1) of this section the value of the economic benefits described in paragraph (d)(2)(ii) of this section provided to E in each year.

(iii) The arrangement is not described in paragraph (c)(1)(ii)(A)(*1*) of this section after it is modified in year 5. Because R is the designated owner of the life insurance contract, R continues to be treated as the owner of the contract under paragraph (c)(1)(ii)(B)(*1*) of this section after the arrangement is modified. In addition, because the modification made by R and E in year 5 does not

involve the transfer (within the meaning of paragraph (c)(3) of this section) of an undivided interest in the life insurance contract from R to E, the modification is not a transfer for purposes of paragraph (g) of this section.

Example 4. (i) The facts are the same as in *Example 2* except that in year 7, R and E modify the split-dollar life insurance arrangement to provide that, upon termination of the arrangement or E's death, R will be paid the lesser of 80 percent of the aggregate premiums or the policy cash value of the contract. Under the terms of the modified arrangement and applicable state law, the policy cash value is fully accessible by R and R's creditors but E has the right to borrow or withdraw at any time the portion of the policy cash value exceeding the lesser of 80 percent of the aggregate premiums paid by R or the policy cash value of the contract.
(ii) Commencing in year 7 (and in each subsequent year), E must include in gross income the economic benefits described in paragraph (d)(2)(ii) of this section as provided in this *Example 4(ii)* rather than as provided in *Example 2(ii).* Thus, in year 7 (and in each subsequent year) E must include in gross income under paragraph (d) of this section, the excess of the policy cash value over the lesser of 80 percent of the aggregate premiums paid by R or the policy cash value of the contract (to the extent E did not actually include such amounts in gross income for a prior taxable year). In addition, in year 7 (and each subsequent year) E must also include in gross income the value of the economic benefits described in paragraph (d)(2)(i) of this section provided to E under the arrangement in each such year.

Example 5. (i) The facts are the same as in *Example 3* except that in year 7, E is designated as the policy owner. At that time, E's rights to the contract are substantially vested as defined in § 1.83-3(b).
(ii) In year 7, R is treated as having made a transfer (within the meaning of paragraph (c)(3) of this section) of the life insurance contract to E. E must include in gross income the amount determined under paragraph (g)(1) of this section.

(iii) After the transfer of the contract to E, E is the owner of the contract and any premium payments by R will be included in E's income under paragraph (b)(5) of this section and § 1.61-2(d)(2)(ii)(A) (unless R's payments are split-dollar loans as defined in § 1.7872-15(b)(1)).

Example 6. (i) In year 1, E and R enter into a split-dollar life insurance arrangement as defined in paragraph (b)(2) of this section. Under the arrangement, R is required to make annual premium payments of $10,000 and E is required to make annual premium payments of $500. In year 5, a $500 policy owner dividend payable to E is declared by the insurance company. E directs the insurance company to use the $500 as E's premium payment for year 5.

(ii) For each year the arrangement is in effect, E must include in gross income the value of the economic benefits provided during the year, as required by paragraph (d)(2) of this section, over the $500 premium payments paid by E. In year 5, E must also include in gross income as compensation the excess, if any, of the $500 distributed to E from the proceeds of the policy owner dividend over the amount determined under paragraph (e)(3)(ii) of this section.

(iii) R must include in income the premiums paid by E during the years the split-dollar life insurance arrangement is in effect, including the $500 of the premium E paid in year 5 with proceeds of the policy owner dividend. R's investment in the contract is increased in an amount equal to the premiums paid by E, including the $500 of the premium paid by E in year 5 from the proceeds of the policy owner dividend. In year 5, R is treated as receiving a $500 distribution under the contract, which is taxed pursuant to section 72.

Example 7. (i) The facts are the same as in *Example 2* except that in year 10, E withdraws $100,000 from the cash value of the contract.
(ii) In year 10, R is treated as receiving a $100,000 distribution from the insurance company. This amount is treated as an amount received by R under the contract and taxed pursuant to section 72. This amount reduces R's investment in the contract under section 72(e). R is treated as paying the $100,000 to E as cash compensation, and E must include that amount in gross income less any amounts determined under paragraph (e)(3)(ii) of this section.

Example 8. (i) The facts are the same as in *Example 7* except E receives the proceeds of a $100,000 specified policy loan directly from the insurance company.
(ii) The transfer of the proceeds of the specified policy loan to E is treated as a loan by the insurance company to R. Under the rules of section 72(e), the $100,000 loan is not included in R's income and does not reduce R's investment in the contract. R is treated as paying the $100,000 of loan proceeds to E as cash compensation. E must include that amount in gross income less any amounts determined under paragraph (e)(3)(ii) of this section.

(i) [Reserved]

(j) ***Effective date*** —

(1) ***General rule*** —

(i) ***In general.*** This section applies to any split-dollar life insurance arrangement (as defined in paragraph (b)(1) or (2) of this section) entered into after September 17, 2003.

(ii) ***Determination of when an arrangement is entered into.*** For purposes of paragraph (j) of this section, a split-dollar life insurance arrangement is entered into on the latest of the following dates:

(A) The date on which the life insurance contract under the arrangement is issued;

(B) The effective date of the life insurance contract under the arrangement;

(C) The date on which the first premium on the life insurance contract under the arrangement is paid;

(D) The date on which the parties to the arrangement enter into an agreement with regard to the policy; or

(E) The date on which the arrangement satisfies the definition of a split-dollar life insurance arrangement (as defined in paragraph (b)(1) or (2) of this section).

(2) *Modified arrangements treated as new arrangements* —

(i) ***In general.*** For purposes of paragraph (j)(1) of this section, if an arrangement entered into on or before September 17, 2003 is materially modified after September 17, 2003, the arrangement is treated as a new arrangement entered into on the date of the modification.

(ii) ***Non-material modifications.*** The following is a non-exclusive list of changes that are not material modifications under paragraph (j)(2)(i) of this section (either alone or in conjunction with other changes listed in paragraphs (j)(2)(ii)(A) through (I) of this section)—

(A) A change solely in the mode of premium payment (for example, a change from monthly to quarterly premiums);

(B) A change solely in the beneficiary of the life insurance contract, unless the beneficiary is a party to the arrangement;

(C) A change solely in the interest rate payable under the life insurance contract on a policy loan;

(D) A change solely necessary to preserve the status of the life insurance contract under section 7702;

(E) A change solely to the ministerial provisions of the life insurance contract (for example, a change in the address to send payment);

(F) A change made solely under the terms of any agreement (other than the life insurance contract) that is a part of the split-dollar life insurance arrangement if the change is non-discretionary by the parties and is made pursuant to a binding commitment (whether set forth in the agreement or otherwise) in effect on or before September 17, 2003;

(G) A change solely in the owner of the life insurance contract as a result of a transaction to which section 381(a) applies and in which substantially all of the former owner's assets are transferred to the new owner of the policy;

(H) A change to the policy solely if such change is required by a court or a state insurance commissioner as a result of the insolvency of the insurance company that issued the policy; or

(I) A change solely in the insurance company that administers the policy as a result of an assumption reinsurance transaction between the issuing insurance company and the new insurance company to which the owner and the non-owner were not a party.

(iii) ***Delegation to Commissioner.*** The Commissioner, in revenue rulings, notices, and other guidance published in the Internal Revenue Bulletin, may provide additional guidance with respect to other modifications that are not material for purposes of paragraph (j)(2)(i) of this section. See § 601.601(d)(2)(ii) of this chapter.

[T.D. 9092, 68 FR 54344, Sept. 17, 2003; 68 FR 63735, Nov. 10, 2003]

§ 1.62-1 Adjusted gross income.

(a)-(b) [Reserved]

(c) ***Deductions allowable in computing adjusted gross income.*** The deductions specified in section 62(a) for purposes of computing adjusted gross income are—

(1) Deductions set forth in § 1.62-1T(c); and

(2) Deductions allowable under part VI, subchapter B, chapter 1 of the Internal Revenue Code, (section 161 and following) that consist of expenses paid or incurred by the taxpayer in connection with the performance of services as an employee under a reimbursement or other expense allowance arrangement (as defined in § 1.62-2) with his or her employer. For the rules pertaining to expenses paid or incurred in taxable years beginning before January 1, 1989, see § 1.62-1T (c)(2) and (f) (as contained in 26 CFR part 1 (§§ 1.61 to 1.169) revised April 1, 1992).

(d)-(h) [Reserved]

(i) ***Effective date.*** Paragraph (c) of this section is effective for taxable years beginning on or after January 1, 1989.

[T.D. 8451, 57 FR 57668, Dec. 7, 1992; 57 FR 60568, Dec. 21, 1992]

§ 1.62-1T Adjusted gross income (temporary).

(a) ***Basis for determining the amount of certain deductions.*** The term "adjusted gross income" means the gross income computed under section 61 minus such of the deductions allowed by chapter 1 of the Code as are specified in section 62(a). Adjusted gross income is used as the basis for determining the following:

(1) The limitation on the amount of miscellaneous itemized deductions (under section 67).

(2) The limitation on the amount of the deduction for casualty losses (under section 165(h)(2)),

(3) The limitation on the amount of the deduction for charitable contributions (under section 170(b)(1)),

(4) The limitation on the amount of the deduction for medical and dental expenses (under section 213),

(5) The limitation on the amount of the deduction for qualified retirement contributions for active participants in certain pension plans (under section 219(g)), and

(6) The phase-out of the exemption from the disallowance of passive activity losses and credits (under section 469(i)(3)).

(b) ***Double deduction not permitted.*** Section 62 (a) merely specifies which of the deductions provided in chapter 1 of the Code shall be allowed in computing adjusted gross income. It does not create any new deductions. The fact that a particular item may be described in more than one of the paragraphs under section 62(a) does not permit the item to be deducted twice in computing adjusted gross income or taxable income.

(c) ***Deductions allowable in computing adjusted gross income.*** The deductions specified in section 62(a) for purposes of computing adjusted gross income are:

(1) Deductions allowable under chapter 1 of the Code (other than by part VII (section 211 and following), subchapter B of such chapter) that are attributable to a trade or business carried on by the taxpayer not consisting of services performed as an employee;

(2) [Reserved]

(3) For taxable years beginning after December 31, 1986, deductions allowable under section 162 that consist of expenses paid or incurred by a qualified performing artist (as defined in section 62(b)) in connection with the performance by him or her of services in the performing arts as an employee;

(4) Deductions allowable under part VI as losses from the sale or exchange of property;

(5) Deductions allowable under part VI, section 212, or section 611 that are attributable to property held for the production of rents or royalties;

(6) Deductions for depreciation or depletion allowable under sections 167 or 611 to a life tenant of property or to an income beneficiary of property held in trust or to an heir, legatee, or devisee of an estate;

(7) Deductions allowed by section 404 for contributions on behalf of a self-employed individual;

(8) Deductions allowed by section 219 for contributions to an individual retirement account described in section 408(a), or for an individual retirement annuity described in section 408(b);

(9) Deductions allowed by section 402(e)(3) with respect to a lump-sum distribution;

(10) For taxable years beginning after December 31, 1972, deductions allowed by section 165 for losses incurred in any transaction entered into for profit though not connected with a trade or business, to the extent that such losses include amounts forfeited to a bank, mutual savings bank, savings and loan association, building and loan association, cooperative bank or homestead association as a penalty for premature withdrawal of funds from a time savings account, certificate of deposit, or similar class of deposit;

(11) For taxable years beginning after December 31, 1976, deductions for alimony and separate maintenance payments allowed by section 215;

(12) Deductions allowed by section 194 for the amortization of reforestation expenditures; and

(13) Deductions allowed by section 165 for the repayment (made in a taxable year beginning after December 28, 1980) to a trust described in paragraph (9) or (17) of section 501(c) of supplemental unemployment compensation benefits received from such trust if such repayment is required because of the receipt of trade readjustment allowances under section 231 or 232 of the Trade Act of 1974 (19 U.S.C. 2291 and 2292).

(d) ***Expenses directly related to a trade or business.*** For the purpose of the deductions specified in section 62, the performance of personal services as an employee does not constitute the carrying on of a trade or business, except as otherwise expressly provided. The practice of a profession, not as an employee, is considered the conduct of a trade or business within the meaning of such section. To be deductible for the purposes of determining adjusted gross income, expenses must be those directly, and not those merely remotely, connected with the conduct of a trade or business. For example, taxes are deductible in arriving at adjusted gross income only if they constitute expenditures directly attributable to a trade or business or to property from which rents or royalties are derived. Thus, property taxes paid or incurred on real property used in a trade or business are deductible, but state taxes on net income are not deductible even though the taxpayer's income is derived from the conduct of a trade or business.

(e) *Reimbursed and unreimbursed employee expenses* —

(1) ***In general.*** Expenses paid or incurred by an employee that are deductible from gross income under part VI in computing taxable income (determined without regard to section 67) and for which the employee is reimbursed by the employer, its agent, or third party (for whom the employee performs a benefit as an employee of the employer) under an express agreement for reimbursement or pursuant to an *express* expense allowance arrangement may be deducted from gross income in computing adjusted gross income. Except as provided in paragraphs (e)(2) and (e)(4) of this section, for taxable years beginning after December 31, 1986, if the amount of a reimbursement made by an employer, its agent, or third party to an employee is less than the total amount of the business expenses paid or incurred by the employee, the determination of to which of the employee's business expenses the reimbursement applies and the amount of each expense that is covered by the reimbursement is made on the basis of all of the facts and circumstances of the particular case.

(2) ***Facts and circumstances unclear on business expenses for meals and entertainment.*** If—

(i) The facts and circumstances do not make clear—

(A) That a reimbursement does not apply to business expenses for meals or entertainment, or

(B) The amount of business expenses for meals or entertainment that is covered by the reimbursement, and

(ii) The employee pays or incurs business expenses for meals or entertainment,

the amount of the reimbursement that applies to such expenses (or portion thereof with respect to which the facts and circumstances are unclear) shall be determined by multiplying the amount of the employee's business expenses for meals and entertainment (or portion thereof with respect to which the facts and circumstances are unclear) by a fraction, the numerator of which is the total amount of the reimbursement (or portion thereof with respect to which the facts and circumstances are unclear) and the denominator of which is the aggregate amount of all the business expenses of the employee (or portion thereof with respect to which the facts and circumstances are unclear).

(3) ***Deductibility of unreimbursed expenses.*** The amount of expenses that is determined not to be reimbursed pursuant to paragraph (e) (1) or (2) of this section is deductible from adjusted gross income in determining the employee's taxable income subject to the limitations applicable to such expenses (e.g., the 2-percent floor of section 67 and the 80-percent limitation on meal and entertainment expenses provided for in section 274(n)).

(4) ***Unreimbursed expenses of State legislators.*** For taxable years beginning after December 31, 1986, any portion of the amount allowed as a deduction to State legislators pursuant to section 162(h)1)(B) that is not reimbursed by the State or a third party shall be allocated between lodging and meals in the same ratio as the amounts allowable for lodging and meals under the Federal per diem applicable to the legislator's State capital at the end of the legislator's taxable year (see Appendix 1-A of the Federal Travel Regulations (FTR), which as of March 28, 1988, are contained in GSA Bulletin FPMR A-40, Supplement 20). For purposes of this paragraph (e)(4), the amount allowable for meals under the Federal per diem shall be the amount of the Federal per diem allowable for meals and incidental expenses reduced by $2 per legislative day (or other amount allocated to incidental expenses in 1-7.5(a)(2) of the FTR). The unreimbursed portion of each type of expense is deductible from adjusted gross income in determining the State legislator's taxable income subject to the limitations applicable to such expenses. For example, the unreimbursed

portion allocable to meals shall be reduced by 20 percent pursuant to section 274(n) before being subjected to the 2-percent floor of section 67 for purposes of computing the taxable income of a State legislator. See § 1.67-1T(a)(2).

(5) ***Expenses paid directly by an employer, its agent, or third party.*** In the case of an employer, its agent, or a third party who provides property or services to an employee or who pays an employee's expenses directly instead of reimbursing the employee, see section 132 and the regulations thereunder for the income tax treatment of such expenses.

(6) ***Examples.*** The provisions of this paragraph (e) may be illustrated by the following examples:

Example 1. During 1987, A, an employee, while on business trips away from home pays $300 for travel fares, $200 for lodging and $100 for meals. In addition, A pays $50 for business meals in the area of his place of employment ("local meals"), $250 for continuing education courses, and $100 for business-related entertainment (other than meals). The total amount of the reimbursements received by A for his employee expenses from his employer is $750, and it is assumed that A's expenses meet the deductibility requirements of sections 162 and 274. A includes the amount of the reimbursement in his gross income. A's employer designates the reimbursement to cover in full A's expenses for travel fares, lodging, and meals while away from home, local meals, and entertainment, and no facts or circumstances indicate a contrary intention of the employer. Because the facts and circumstances make clear the amount of A's business expenses for meals and entertainment that is covered by the reimbursement, the reimbursement will be allocated to these expenses. In determining his adjusted gross income under section 62, A may deduct the full amount of the reimbursement for travel fares, lodging, and meals while away from home, local meals, and entertainment. In determining his taxable income under section 63, A may deduct his expenses for continuing education courses to the extent allowable by sections 67 and 162.

Example 2. Assume the facts are the same as in example (1) except that the facts and circumstances make clear that the reimbursement covers all types of deductible expenses but they do not make clear the amount of each type of expense that is covered by the reimbursement. The amount of the reimbursement that is allocated to A's business expenses for meals and entertainment is $187.50. This amount is determined by multiplying the total amount of A's business expenses for meals and entertainment ($250) by the ratio of A's total reimbursement to A's total business expenses ($750/$1,000). The remaining amount of the reimbursement, $562.50 ($750−$187.50), is allocated to A's business expenses other than meal and entertainment expenses. Therefore, in determining his adjusted gross income under section 62, A may deduct $750 for reimbursed business expenses (including meals and entertainment). In determining his taxable income under section 63, A may deduct (subject to the limitations and conditions of sections 67, 162, and 274) the unreimbursed portion of his expenses for meals and entertainment ($62.50 ($250−$187.50), and other employee business expenses ($187.50 ($750−$562.50)).

Example 3. Assume the facts are the same as in example (1) except that the amount of the reimbursement is $500. Assume further that the facts and circumstances make clear that the reimbursement covers $100 of expenses for meals and that the remaining $400 of the reimbursement covers all types of deductible expenses (including any expenses for meals in excess of the $100 already designated) other than expenses for entertainment. The amount of the reimbursement that is allocated to A's business expenses for meals and entertainment is $125. This amount is equal to the sum of the amount of the reimbursement that clearly applies

to meals ($100) and the amount of the reimbursement with respect to which the facts are unclear that is allocated to meals ($25). The latter amount is determined by multiplying the total amount of A's business expenses for meals and entertainment with respect to which the facts are unclear ($50) by the ratio of A's total reimbursement with respect to which the facts are unclear to A's total business expenses with respect to which the facts are unclear ($400/$800). The remaining amount of the reimbursement, $375 ($500−$125) is allocated to A's business expenses other than meals and entertainment. Therefore, in determining his adjusted gross income under section 62, A may deduct $500 for reimbursed business expenses (including meals). In determining his taxable income under section 63, A may deduct (subject to the limitations and conditions of sections 67, 162, and 274) the unreimbursed portion of his expenses for meals ($25 ($150−$125)), entertainment ($100), and other employee business expenses ($375 ($750−$375)).

Example 4. During 1987 B, a research scientist, is employed by Corporation X. B gives a speech before members of Association Y, a professional organization of scientists, describing her most recent research findings. Pursuant to a reimbursement arrangement, Y reimburses B for the full amount of her travel fares to the site of the speech and for the full amount of her expenses for lodging and meals while there. B includes the amount of the reimbursement in her gross income. B may deduct the full amount of her travel expenses pursuant to section 62(a)(2)(A) in computing her adjusted gross income.

(f) [Reserved]

(g) ***Moving expenses.*** For taxable years beginning after December 31, 1986, a taxpayer described in section 217(a) shall not take into account the deduction described in section 217 relating to moving expenses in computing adjusted gross income under section 62 even if the taxpayer is reimbursed for his or her moving expenses. Such a taxpayer shall include the amount of any reimbursement for moving expenses in income pursuant to section 82. The deduction described in section 217 shall be taken into account in computing the taxable income of the taxpayer under section 63. Pursuant to section 67(b)(6), the 2-percent floor described in section 67(a) does not apply to moving expenses.

(h) ***Cross-reference.*** See 26 CFR 1.62-1 (Rev. as of April 1, 1986) with respect to pre-1987 deductions for travel, meal, lodging, transportation, and other trade or business expenses of an employee, reimbursed expenses of an employee, expenses of an outside salesperson, long-term capital gains, contributions described in section 405(c) to a bond purchase plan on behalf of a self-employed individual, moving expenses, amounts not received as benefits pursuant to section 1379(b)(3), and retirement bonds described in section 409 (allowed by section 219).

[T.D. 8189, 53 FR 9873, Mar. 28, 1988, as amended by T.D. 8276, 54 FR 51024, Dec. 12, 1989; T.D. 8324, 55 FR 51691, Dec. 17, 1990; T.D. 8451, 57 FR 57668, Dec. 7, 1992]

§ 1.62-2 Reimbursements and other expense allowance arrangements.

(a) ***Table of contents.*** The contents of this section are as follows:

(a) Table of contents.

(b) Scope.

(c) Reimbursement or other expense allowance arrangement.

(1) Defined.

(2) Accountable plans.

(i) In general.

(ii) Special rule for failure to return excess.

(3) Nonaccountable plans.

(i) In general.

(ii) Special rule for failure to return excess.

(4) Treatment of payments under accountable plans.

(5) Treatment of payments under nonaccountable plans.

(d) Business connection.

(1) In general.

(2) Other bona fide expenses.

(3) Reimbursement requirement.

(i) In general.

(ii) Per diem allowances.

(e) Substantiation.

(1) In general.

(2) Expenses governed by section 274(d).

(3) Expenses not governed by section 274(d).

(f) Returning amounts in excess of expenses.

(1) In general.

(2) Per diem or mileage allowances.

(g) Reasonable period.

(1) In general.

(2) Safe harbors.

(i) Fixed date method.

(ii) Periodic payment method.

(3) Pattern of overreimbursements.

(h) Withholding and payment of employment taxes.

(1) When excluded from wages.

(2) When included in wages.

(i) Accountable plans.

(A) General rule.

(B) Per diem or mileage allowances.

(*1*) In general.

(*2*) Reimbursements.

(*3*) Advances.

(*4*) Special rules.

(ii) Nonaccountable plans.

(i) Application.

(j) Examples.

(k) Anti-abuse provision.

(l) Cross references.

(m) Effective dates.

(b) ***Scope.*** For purposes of determining "adjusted gross income," section 62(a)(2)(A) allows an employee a deduction for expenses allowed by part VI (section 161 and following), subchapter B, chapter 1 of the Code, paid by the employee, in connection with the performance of services as an employee of the

employer, under a reimbursement or other expense allowance arrangement with a payor (the employer, its agent, or a third party). Section 62(c) provides that an arrangement will not be treated as a reimbursement or other expense allowance arrangement for purposes of section 62(a)(2)(A) if—

(1) Such arrangement does not require the employee to substantiate the expenses covered by the arrangement to the payor, or

(2) Such arrangement provides the employee the right to retain any amount in excess of the substantiated expenses covered under the arrangement.

This section prescribes rules relating to the requirements of section 62(c).

(c) ***Reimbursement or other expense allowance arrangement*** —

(1) ***Defined.*** For purposes of §§ 1.62-1, 1.62-1T, and 1.62-2, the phrase "reimbursement or other expense allowance arrangement" means an arrangement that meets the requirements of paragraphs (d) (business connection, (e) (substantiation), and (f) (returning amounts in excess of expenses) of this section. A payor may have more than one arrangement with respect to a particular employee, depending on the facts and circumstances. See paragraph (d)(2) of this section (payor treated as having two arrangements under certain circumstances).

(2) ***Accountable plans*** —

(i) ***In general.*** Except as provided in paragraph (c)(2)(ii) of this section, if an arrangement meets the requirements of paragraphs (d), (e), and (f) of this section, all amounts paid under the arrangement are treated as paid under an "accountable plan."

(ii) ***Special rule for failure to return excess.*** If an arrangement meets the requirements of paragraphs (d), (e), and (f) of this section, but the employee fails to return, within a reasonable period of time, any amount in excess of the amount of the expenses substantiated in accordance with paragraph (e) of this section, only the amounts paid under the arrangement that are not in excess of the substantiated expenses are treated as paid under an accountable plan.

(3) ***Nonaccountable plans*** —

(i) ***In general.*** If an arrangement does not satisfy one or more of the requirements of paragraphs (d), (e), or (f) of this section, all amounts paid under the arrangement are treated as paid under a "nonaccountable plan." If a payor provides a nonaccountable plan, an employee who receives payments under the plan cannot compel the payor to treat the payments as paid under an accountable plan by voluntarily substantiating the expenses and returning any excess to the payor.

(ii) ***Special rule for failure to return excess.*** If an arrangement meets the requirements of paragraphs (d), (e), and (f) of this section, but the employee fails to return, within a reasonable period of time, any amount in excess of the amount of the expenses substantiated in accordance with paragraph (e) of this section, the amounts paid under the arrangement that are in excess of the substantiated expenses are treated as paid under a nonaccountable plan.

(4) ***Treatment of payments under accountable plans.*** Amounts treated as paid under an accountable plan are excluded from the employee's gross income, are not reported as wages or other compensation on the employee's Form W-2, and are exempt from the withholding and payment of employment

taxes (Federal Insurance Contributions Act (FICA), Federal Unemployment Tax Act (FUTA), Railroad Retirement Tax Act (RRTA), Railroad Unemployment Repayment Tax (RURT), and income tax.) See paragraph (l) of this section for cross references.

(5) ***Treatment of payments under nonaccountable plans.*** Amounts treated as paid under a nonaccountable plan are included in the employee's gross income, must be reported as wages or other compensation on the employee's Form W-2, and are subject to withholding and payment of employment taxes (FICA, FUTA, RRTA, RURT, and income tax). See paragraph (h) of this section. Expenses attributable to amounts included in the employee's gross income may be deducted, provided the employee can substantiate the full amount of his or her expenses (*i.e.*, the amount of the expenses, if any, the reimbursement for which is treated as paid under an accountable plan as well as those for which the employee is claiming the deduction) in accordance with §§ 1.274-5T and 1.274(d)-1 or § 1.162-17, but only as a miscellaneous itemized deduction subject to the limitations applicable to such expenses (e.g., the 80-percent limitation on meal and entertainment expenses provided in section 274(n) and the 2-percent floor provided in section 67).

(d) ***Business connection*** —

(1) ***In general.*** Except as provided in paragraphs (d)(2) and (d)(3) of this section, an arrangement meets the requirements of this paragraph (d) if it provides advances, allowances (including per diem allowances, allowances only for meals and incidental expenses, and mileage allowances), or reimbursements only for business expenses that are allowable as deductions by part VI (section 161 and the following), subchapter B, chapter 1 of the Code, and that are paid or incurred by the employee in connection with the performance of services as an employee of the employer. The payment may be actually received from the employer, its agent, or a third party for whom the employee performs a service as an employee of the employer, and may include amounts charged directly or indirectly to the payor through credit card systems or otherwise. In addition, if both wages and the reimbursement or other expense allowance are combined in a single payment, the reimbursement or other expense allowance must be identified either by making a separate payment or by specifically identifying the amount of the reimbursement or other expense allowance.

(2) ***Other bona fide expenses.*** If an arrangement provides advances, allowances, or reimbursements for business expenses described in paragraph (d)(1) of this section (*i.e.*, deductible employee business expenses) and for other bona fide expenses related to the employer's business (e.g., travel that is not away from home) that are not deductible under part VI (section 161 and the following), subchapter B, chapter 1 of the Code, the payor is treated as maintaining two arrangements. The portion of the arrangement that provides payments for the deductible employee business expenses is treated as one arrangement that satisfies this paragraph (d). The portion of the arrangement that provides payments for the nondeductible employee expenses is treated as a second arrangement that does not satisfy this paragraph (d) and all amounts paid under this second arrangement will be treated as paid under a nonaccountable plan. See paragraphs (c)(5) and (h) of this section.

(3) ***Reimbursement requirement*** —

(i) ***In general.*** If a payor arranges to pay an amount to an employee regardless of whether the employee incurs (or is reasonably expected to incur) business expenses of a type described in paragraph (d)(1) or (d)(2) of this section, the arrangement does not satisfy this paragraph (d) and all amounts paid under the arrangement are treated as paid under a nonaccountable plan. See paragraphs (c)(5) and (h) of this section.

(ii) ***Per diem allowances.*** An arrangement providing a per diem allowance for travel expenses of a type described in paragraph (d)(1) or (d)(2) of this section that is computed on a basis similar to that used in computing the employee's wages or other compensation (e.g., the number of hours worked, miles traveled, or pieces produced) meets the requirements of this paragraph (d) only if, on December 12, 1989, the per diem allowance was identified by the payor either by making a separate payment or by specifically identifying the amount of the per diem allowance, or a per diem allowance computed on that basis was commonly used in the industry in which the employee is employed. See section 274(d) and § 1.274(d)-1. A per diem allowance described in this paragraph (d)(3)(ii) may be adjusted in a manner that reasonably reflects actual increases in employee business expenses occurring after December 12, 1989.

(e) ***Substantiation*** —

(1) ***In general.*** An arrangement meets the requirements of this paragraph (e) if it requires each business expense to be substantiated to the payor in accordance with paragraph (e)(2) or (e)(3) of this section, whichever is applicable, within a reasonable period of time. See § 1.274-5T or § 1.162-17.

(2) ***Expenses governed by section 274(d).*** An arrangement that reimburses travel, entertainment, use of a passenger automobile or other listed property, or other business expenses governed by section 274(d) meets the requirements of this paragraph (e)(2) if information sufficient to satisfy the substantiation requirements of section 274(d) and the regulations thereunder is submitted to the payor. See § 1.274-5. Under section 274(d), information sufficient to substantiate the requisite elements of each expenditure or use must be submitted to the payor. For example, with respect to travel away from home, § 1.274-5(b)(2) requires that information sufficient to substantiate the amount, time, place, and business purpose of the expense must be submitted to the payor. Similarly, with respect to use of a passenger automobile or other listed property, § 1.274-5(b)(6) requires that information sufficient to substantiate the amount, time, use, and business purpose of the expense must be submitted to the payor. *See* § 1.274-5(g) and (j), which grant the Commissioner the authority to establish optional methods of substantiating certain expenses. Substantiation of the amount of a business expense in accordance with rules prescribed pursuant to the authority granted by § 1.274-5(g) or (j) will be treated as substantiation of the amount of such expense for purposes of this section.

(3) ***Expenses not governed by section 274(d).*** An arrangement that reimburses business expenses not governed by section 274(d) meets the requirements of this paragraph (e)(3) if information is submitted to the payor sufficient to enable the payor to identify the specific nature of each expense and to conclude that the expense is attributable to the payor's business activities. Therefore, each of the elements of an expenditure or use must be substantiated to the payor. It is not sufficient if an employee merely aggregates expenses into broad categories (such as “travel”) or reports individual expenses through the use of vague, nondescriptive terms (such as “miscellaneous business expenses”). See § 1.162-17(b).

(f) ***Returning amounts in excess of expenses—***

(1) ***In general.*** Except as provided in paragraph (f)(2) of this section, an arrangement meets the requirements of this paragraph (f) if it requires the employee to return to the payor within a reasonable period of time may amount paid under the arrangement in excess of the expenses substantiated in accordance with paragraph (e) of this section. The determination of whether an arrangement requires an employee to return amounts in excess of substantiated expenses will depend on the facts and circumstances. An arrangement whereby money is advanced to an employee to defray expenses will be treated as satisfying the requirements of this paragraph (f) only

if the amount of money advanced is reasonably calculated not to exceed the amount of anticipated expenditures, the advance of money is made on a day within a reasonable period of the day that the anticipated expenditures are paid or incurred, and any amounts in excess of the expenses substantiated in accordance with paragraph (e) of this section are required to be returned to the payor within a reasonable period of time after the advance is received.

(2) ***Per diem or mileage allowances.*** The Commissioner may, in his discretion, prescribe rules in pronouncements of general applicability under which a reimbursement or other expense allowance arrangement that provides per diem allowances providing for ordinary and necessary expenses of traveling away from home (exclusive of transportation costs to and from destination) or mileage allowances providing for ordinary and necessary expenses of local travel and tranportation while traveling away from home will be treated as satisfying the requirements of this paragraph (f), even though the arrangement does not require the employee to return the portion of such an allowance that relates to the days or miles of travel substantiated and that exceeds the amount of the employee's expenses deemed substantiated pursuant to rules prescribed under section 274(d), provided the allowance is paid at a rate for each day or mile of travel that is reasonably calculated not to exceed the amount of the employee's expenses or anticipated expenses and the employee is required to return to the payor within a reasonable period of time any portion of such allowance which relates to days or miles of travel not substantiated in accordance with paragraph (e) of this section.

(g) ***Reasonable period*** —

(1) ***In general.*** The determination of a reasonable period of time will depend on the facts and circumstances.

(2) ***Safe harbors*** —

(i) ***Fixed date method.*** An advance made within 30 days of when an expense is paid or incurred, an expense substantiated to the payor within 60 days after it is paid or incurred, or an amount returned to the payor within 120 days after an expense is paid or incurred will be treated as having occurred within a reasonable period of time.

(ii) ***Periodic statement method.*** If a payor provides employees with periodic statements (no less frequently than quarterly) stating the amount, if any, paid under the arrangement in excess of the expenses the employee has substantiated in accordance with paragraph (e) of this section, and requesting the employee to substantiate any additional business expenses that have not yet been substantiated (whether or not such expenses relate to the expenses with respect to which the original advance was paid) and/or to return any amounts remaining unsubstantiated within 120 days of the statement, an expense substantiated or an amount returned within that period will be treated as being substantiated or returned within a reasonable period of time.

(3) ***Pattern of overreimbursements.*** If, under a reimbursement or other expense allowance arrangement, a payor has a plan or practice to provide amounts to employees in excess of expenses substantiated in accordance with paragraph (e) of this section and to avoid reporting and withholding on such amounts, the payor may not use either of the safe harbors provided in paragraph (g)(2) of this section for any years during which such plan or practice exists.

(h) ***Withholding and payment of employment taxes*** —

(1) ***When excluded from wages.*** If an arrangement meets the requirements of paragraphs (d), (e), and (f) of this section, the amounts paid under the arrangement that are not in excess of the expenses substantiated in accordance with paragraph (e) of this section (*i.e.*, the amounts treated as paid under an accountable plan) are not wages and are not subject to withholding and payment of employment taxes. If an arrangement provides advances, allowances, or reimbursements for meal and entertainment expenses and a portion of the payment is treated as paid under a nonaccountable plan under paragraph (d)(2) of this section due solely to section 274(n), then notwithstanding paragraph (h)(2)(ii) of this section, these nondeductible amounts are neither treated as gross income nor subject to withholding and payment of employment taxes.

(2) ***When included in wages*** —

(i) ***Accountable plans*** —

(A) ***General rule.*** Except as provided in paragraph (h)(2)(i)(B) of this section, if the expenses covered under an arrangement that meets the requirements of paragraphs (d), (e), and (f) of this section are not substantiated to the payor in accordance with paragraph (e) of this section within a reasonable period of time or if any amounts in excess of the substantiated expenses are not returned to the payor in accordance with paragraph (f) of this section within a reasonable period of time, the amount which is treated as paid under a nonaccountable plan under paragraph (c)(3)(ii) of this section is subject to withholding and payment of employment taxes no later than the first payroll period following the end of the reasonable period. A payor may treat any amount not substantiated or returned within the periods specified in paragraph (g)(2) of this section as not substantiated or returned within a reasonable period of time.

(B) ***Per diem or mileage allowances*** —

(*1*) ***In general.*** If a payor pays a per diem or mileage allowance under an arrangement that meets the requirements of the paragraphs (d), (e), and (f) of this section, the portion, if any, of the allowance paid that relates to days or miles of travel substantiated in accordance with paragraph (e) of this section and that exceeds the amount of the employee's expenses deemed substantiated for such travel pursuant to rules prescribed under section 274(d) and § 1.274(d)-1 or § 1.274-5T(j) is treated as paid under a nonaccountable plan. See paragraph (c)(3)(ii) of this section. Because the employee is not required to return this excess portion, the reasonable period of time provisions of paragraph (g) of this section (relating to the return of excess amounts) do not apply to this excess portion.

(*2*) ***Reimbursements.*** Except as provided in paragraph (h)(2)(i)(B)(*4*) of this section, in the case of a per diem or mileage allowance paid as a reimbursement at a rate for each day or mile of travel that exceeds the amounts of the employee's expenses deemed substantiated for a day or mile of travel, the excess portion described in paragraph (h)(2)(i) of this section is subject to withholding and payment of employment taxes in the payroll period in which the payor reimburses the expenses for the days or miles of travel substantiated in accordance with paragraph (e) of this section.

(*3*) ***Advances.*** Except as provided in paragraph (h)(2)(i)(B)(*4*) of this section, in the case of a per diem or mileage allowance paid as an advance at a rate for each day or mile of travel that exceeds the amount of the employee's expenses deemed substantiated for a day or mile of travel, the excess portion described in paragraph (h)(2)(i) of this

section is subject to withholding and payment of employment taxes no later than the first payroll period following the payroll period in which the expenses with respect to which the advance was paid (*i.e.*, the days or miles of travel) are substantiated in accordance with paragraph (e) of this section. The expenses with respect to which the advance was paid must be substantiated within a reasonable period of time. See paragraph (g) of this section.

(4) ***Special rules.*** The Commissioner may, in his discretion, prescribe special rules in pronouncements of general applicability regarding the timing of withholding and payment of employment taxes on per diem and mileage allowances.

(ii) ***Nonaccountable plans.*** If an arrangement does not satisfy one or more of the requirements of paragraphs (d), (e), or (f) of this section, all amounts paid under the arrangement are wages and are subject to withholding and payment of employment taxes when paid.

(i) ***Application.*** The requirements of paragraphs (d) (business connection), (e) (substantiation), and (f) (returning amounts in excess of expenses) of this section will be applied on an employee-by-employee basis. Thus, for example, the failure by one employee to substantiate expenses under an arrangement in accordance with paragraph (e) of this section will not cause amounts paid to other employees to be treated as paid under a nonaccountable plan.

(j) ***Examples.*** The rules contained in this section may be illustrated by the following examples:

Example 1 Reimbursement requirement. Employer S pays its engineers $200 a day. On those days that an engineer travels away from home on business for Employer S, Employer S designates $50 of the $200 as paid to reimburse the engineer's travel expenses. Because Employer S would pay an engineer $200 a day regardless of whether the engineer was traveling away from home, the arrangement does not satisfy the reimbursement requirement of paragraph (d)(3)(i) of this section. Thus, no part of the $50 Employer S designated as a reimbursement is treated as paid under an accountable plan. Rather, all payments under the arrangement are treated as paid under a nonaccountable plan. Employer S must report the entire $200 as wages or other compensation on the employees' Forms W-2 and must withhold and pay employment taxes on the entire $200 when paid.

Example 2 Reimbursement requirement, multiple arrangements. Airline T pays all its employees a salary. Airline T also pays an allowance under an arrangement that otherwise meets the requirements of paragraphs (d), (e), and (f) of this section to its pilots and flight attendants who travel away from their home base airports, whether or not they are “away from home.” Because the allowance is paid only to those employees who incur (or are reasonably expected to incur) expenses of a type described in paragraph (d)(1) or (d)(2) of this section, the arrangement satisfies the reimbursement requirement of paragraph (d)(3)(i) of this section. Under paragraph (d)(2) of this section, Airline T is treated as maintaining two arrangements. The portion of the arrangement providing the allowances for away from home travel is treated as an accountable plan. The portion of the arrangement providing the allowances for non-away from home travel is treated as a nonaccountable plan. Airline T must report the non-away from home allowances as wages or other compensation on the employees' Forms W-2 and must withhold and pay employment taxes on these payments when paid.

Example 3. Reimbursement requirement. Corporation R pays all its salespersons a salary. Corporation R also pays a travel allowance under an arrangement that otherwise meets the requirements of paragraphs (d), (e), and (f) of this section. This allowance is paid to all salespersons, including salespersons that Corporation R knows, or has reason to know, do not travel away from their offices

on Corporation R business and would not be reasonably expected to incur travel expenses. Because the allowance is not paid only to those employees who incur (or are reasonably expected to incur) expenses of a type described in paragraph (d)(1) or (d)(2) of this section, the arrangement does not satisfy the reimbursement requirement of paragraph (d)(3)(i) of this section. Thus, no part of the allowance Corporation R designated as a reimbursement is treated as paid under an accountable plan. Rather, all payments under the arrangement are treated as paid under a nonaccountable plan. Corporation R must report all payments under the arrangement as wages or other compensation on the employees' Forms W-2 and must withhold and pay employment taxes on the payments when paid.

Example 4 Separate arrangement, miscellaneous expenses. Under an arrangement that meets the requirements of paragraphs (d), (e), and (f) of this section, County U reimburses its employees for lodging and meal expenses incurred when they travel away from home on County U business. For its own convenience, County U also separately pays certain of its employees a $25 monthly allowance to cover the cost of small miscellaneous office expenses. County U does not require its employees to substantiate these miscellaneous expenses and does not require them to return the amounts by which the monthly allowance exceeds the miscellaneous expenses. The monthly allowance arrangement is a nonaccountable plan. County U must report the monthly allowances as wages or other compensation on the employees' Forms W-2 and must withhold and pay employment taxes on the monthly allowances when paid. The nonaccountable plan providing the monthly allowances is treated as separate from the accountable plan providing reimbursements for lodging and meal expenses incurred for travel away from home on County U business.

Example 5 Excessive advances. In anticipation of employee business expenses that Corporation V does not reasonably expect to exceed $400 in any quarter, Corporation V nonetheless advances $1,000 to Employee A for such expenses. Whenever Employee A substantiates an expense in accordance with paragraph (e) of this section, Corporation V provides an additional advance in an amount equal to the amount substantiated, thereby providing a continuing advance of $1,000. Because the amounts advanced under this arrangement are not reasonably calculated so as not to exceed the amount of anticipated expenditures and because the advance of money is not made on a day within a reasonable period of the day that the anticipated expenditures are paid or incurred, the arrangement is a nonaccountable plan. The arrangement fails to satisfy the requirements of paragraphs (d) (business connection) and (f) (reasonable calculation of advances) of this section. Thus, Corporation V must report the entire amount of each advance as wages or other compensation and must withhold and pay employment taxes on the entire amount of each advance when paid.

Example 6 Excess mileage advance. Under an arrangement that meets the requirements of paragraphs (d), (e), and (f) of this section, Employer W pays its employees a mileage allowance at a rate of 30 cents per mile (when the amount deemed substantiated for each mile of travel substantiated is 26 cents per mile) to cover automobile business expenses. The allowance is paid at a rate for each mile of travel that is reasonably calculated not to exceed the amount of the employee's expenses or anticipated expenses. Employer W does not require the return of the portion of the mileage allowance (4 cents) that exceeds the amount deemed substantiated for each mile of travel substantiated in accordance with paragraph (e) of this section. In June, Employer W advances Employee B $150 for 500 miles to be traveled by Employee B during the month. In July, Employee B substantiates 500 miles of business travel. The amount deemed substantiated by Employee B is $130. However, Employer W does not require Employee B to return the remaining $20 of the

advance. No later than the first payroll period following the payroll period in which the business miles of travel are substantiated, Employer W must withhold and pay employment taxes on $20 (500 miles × 4 cents per mile).

Example 7 Excess per diem reimbursement. Under an arrangement that meets the requirements of paragraphs (d), (e), and (f) of this section, Employer X pays its employees a per diem allowance to cover lodging, meal, and incidental expenses incurred for travel away from home on Employer X business at a rate equal to 120 percent of the amount deemed substantiated for each day of travel to the localities to which the employees travel. Employer X does not require the employees to return the 20 percent by which the reimbursement for those expenses exceeds the amount deemed substantiated for each day of travel substantiated in accordance with paragraph (e) of this section. Employee C substantiates six days of business travel away from home: Two days in a locality for which the amount deemed substantiated is $100 a day and four days in a locality for which the amount deemed substantiated is $125 a day. Employer X reimburses Employee C $840 for the six days of travel away from home (2 × (120% × $100) + 4 × (120% × $125)), and does not require Employee C to return the excess portion ($140 excess portion = (2 days × $20 ($120−$100) + 4 days × $25 ($150-$125)). For the payroll period in which Employer X reimburses the expenses, Employer X must withhold and pay employment taxes on $140.

Example 8. Return Requirement. Employer Y provides expense allowances to certain of its employees to cover business expenses of a type described in paragraph (d)(1) of this section under an arrangement that requires the employees to substantiate their expenses within a reasonable period of time and to return any excess amounts within a reasonable period of time. Each time an employee returns an excess amount to Employer Y, however, Employer Y pays the employee a "bonus" equal to the amount returned by the employee. The arrangement fails to satisfy the requirements of paragraph (f) (returning amounts in excess of expenses) of this section. Thus, Employer Y must report the entire amount of the expense allowance payments as wages or other compensation and must withhold and pay employment taxes on the payments when paid. Compare example (6) (where the employee is not required to return the portion of the mileage allowance that exceeds the amount deemed substantiated for each mile of travel substantiated).

Example 9 Timely substantiation. Employer Z provides a $500 advance to Employee D for a trip away from home on Employer Z business. Employee D incurs $500 in business expenses on the trip. Employer Z uses the periodic statement method safe harbor. At the end of the quarter during which the trip occurred, Employer Z sends a quarterly statement to Employee D stating that $500 was advanced to Employee D during the quarter and that no expenses were substantiated and no excess amounts returned. The statement advises Employee D that Employee D must substantiate any additional business expenses within 120 days of the date of the statement, and must return any unsubstantiated excess within the 120-day period. Employee D fails to substantiate any expenses or to return the excess within the 120-day period. Employer Z treats the $500 as wages and withholds and pays employment taxes on the $500. After the 120-day period has expired, Employee D substantiates the $500 in travel expenses in accordance with paragraph (e) of this section. Employer Z properly reported and withheld and paid employment taxes on the $500 and no adjustments may be made. Employee D must include the $500 in gross income and may deduct the $500 of expenses as a miscellaneous itemized deduction subject to the 2-percent floor provided in section 67.

(k) ***Anti-abuse provision.*** If a payor's reimbursement or other expense allowance arrangement evidences a pattern of abuse of the rules of section 62(c) and this section, all payments made under the arrangement will be treated as made under a nonaccountable plan.

(l) ***Cross references.*** For employment tax regulations relating to reimbursement and expense allowance arrangements, see §§ 31.3121 (a)-3, 31.3231(e)-(3), 31.3306(b)-2, and 31.3401(a)-4, which generally apply to payments made under reimbursement or other expense allowance arrangements received by an employee on or after July 1, 1990 with respect to expenses paid or incurred on or after July 1, 1990. For reporting requirements, see § 1.6041-3(i), which generally applies to payments made under reimbursement or other expense allowance arrangements received by an employee on or after January 1, 1989 with respect to expenses paid or incurred on or after January 1, 1989.

(m) ***Effective dates.*** This section generally applies to payments made under reimbursement or other expense allowance arrangements received by an employee in taxable years of the employee beginning on or after January 1, 1989, with respect to expenses paid or incurred in taxable years beginning on or after January 1, 1989. Paragraph (h) of this section generally applies to payments made under reimbursement or other expense allowance arrangements received by an employee on or after July 1, 1990 with respect to expenses paid or incurred on or after July 1, 1990. Paragraphs (d)(3)(ii) and (h)(2)(i)(B) of this section apply to payments made under reimbursement or other expense allowance arrangements received by an employee on or after January 1, 1991 with respect to expenses paid or incurred on or after January 1, 1991. Paragraph (e)(2) of this section applies to payments made under reimbursement or other expense allowance arrangements received by an employee with respect to expenses paid or incurred after December 31, 1997.

[T.D. 8324, 55 FR 51691, Dec. 17, 1990; 56 FR 8911, Mar. 4, 1991, as amended by T.D. 8451, 57 FR 57668, Dec. 7, 1992; T.D. 8666, 61 FR 27005, May 30, 1996; T.D. 8784, 63 FR 52600, Oct. 1, 1998; T.D. 8864, 65 FR 4122, Jan. 26, 2000; T.D. 9064, 68 FR 39011, July 1, 2003]

§ 1.63-1 Change of treatment with respect to the zero bracket amount and itemized deductions.

(a) ***In general.*** An individual who files a return on which the individual itemizes deductions in accordance with section 63(g) may later make a change of treatment by recomputing taxable income for the taxable year to which that return relates without itemizing deductions. Similarly, an individual who files a return on which the individual computes taxable income without itemizing deductions may later make a change of treatment by itemizing deductions in accordance with section 63(g) in recomputing taxable income for the taxable year to which that return relates.

(b) ***No extension of time for claiming credit or refund.*** A change of treatment described in paragraph (a) of this section does not extend the period of time prescribed in section 6511 within which the taxpayer may make a claim for credit or refund of tax.

(c) ***Special requirements if spouse filed separate return*** —

(1) ***Requirements.*** If the spouse of the taxpayer filed a separate return for a taxable year corresponding to the taxable year of the taxpayer, the taxpayer may not make a change of treatment described in paragraph (a) of this section for that year unless—

(i) The spouse makes a change of treatment on the separate return consistent with the change of treatment sought by the taxpayer; and

(ii) The taxpayer and the taxpayer's spouse file a consent in writing to the assessment of any deficiency of either spouse to the extent attributable to the change of treatment, even though the assessment of the deficiency would otherwise be prevented by the operation of any law or

rule of law. The consent must be filed with the district director for the district in which the taxpayer applies for the change of treatment, and the period during which a deficiency may be assessed shall be established by agreement of the spouses and the district director.

(2) ***Corresponding taxable year.*** A taxable year of one spouse corresponds to a taxable year of the other spouse if both taxable years end in the same calendar year. If the taxable year of one spouse ends with death, however, the corresponding taxable year of the surviving spouse is that in which the death occurs.

(d) ***Inapplicable if tax liability has been compromised.*** The taxpayer may not make a change of treatment described in paragraph (a) of this section for any taxable year if—

(1) The tax liability of the taxpayer for the taxable year has been compromised under section 7122; or

(2) The tax liability of the taxpayer's spouse for a taxable year corresponding to the taxable year of the taxpayer has been compromised under section 7122. See paragraph (c)(2) of this section for the determination of a corresponding taxable year.

(e) ***Effective date.*** This section applies to taxable years beginning after 1976.

[T.D. 7585, 44 FR 1105, Jan. 4, 1979]

§ 1.63-2 Cross reference.

For rules with respect to charitable contribution deductions for nonitemizing taxpayers, see section 63 (b)(1)(C) and (i) and section 170(i) of the Internal Revenue Code of 1954.

(Secs. 170(a)(1) and 7805 of the Internal Revenue Code of 1954 (68A Stat. 58, 26 U.S.C. 170(a)(1); 68A Stat. 917, 26 U.S.C. 7805)

[T.D. 8002, 49 FR 50666, Dec. 31, 1984]

§ 1.66-1 Treatment of community income.

(a) ***In general.*** Married individuals domiciled in a community property state who do not elect to file a joint individual Federal income tax return under section 6013 generally must report half of the total community income earned by the spouses during the taxable year except at times when one of the following exceptions applies:

(1) The spouses live apart and meet the qualifications of § 1.66-2.

(2) The Secretary denies a spouse the Federal income tax benefits resulting from community property law under § 1.66-3, because that spouse acted as if solely entitled to the income and failed to notify his or her spouse of the nature and amount of the income prior to the due date for the filing of his or her spouse's return.

(3) A requesting spouse qualifies for traditional relief from the Federal income tax liability resulting from the operation of community property law under § 1.66-4(a).

(4) A requesting spouse qualifies for equitable relief from the Federal income tax liability resulting from the operation of community property law under § 1.66-4(b).

(b) ***Applicability.***

(1) The rules of this section apply only to community income, as defined by state law. The rules of this section do not apply to income that is not community income. Thus, the rules of this section do not apply to income from property that was formerly community property, but in accordance with state law, has ceased to be community property, becoming, e.g., separate property or property held by joint tenancy or tenancy in common.

(2) When taxpayers report income under paragraph (a) of this section, *all* community income for the calendar year is treated in accordance with the rules provided by section 879(a). Unlike the other provisions under section 66, section 66(a) does not permit inclusion on an item-by-item basis.

(c) ***Transferee liability.*** The provisions of section 66 do not negate liability that arises under the operation of other laws. Therefore, a spouse who is not subject to Federal income tax on community income may nevertheless remain liable for the unpaid tax (including additions to tax, penalties, and interest) to the extent provided by Federal or state transferee liability or property laws (other than community property laws). For the rules regarding the liability of transferees, see sections 6901 through 6904 and the regulations thereunder.

[T.D. 9074, 68 FR 41070, July 10, 2003]

§ 1.66-2 Treatment of community income where spouses live apart.

(a) Community income of spouses domiciled in a community property state will be treated in accordance with the rules provided by section 879(a) if all of the following requirements are satisfied—

(1) The spouses are married to each other at any time during the calendar year;

(2) The spouses live apart at all times during the calendar year;

(3) The spouses do not file a joint return with each other for a taxable year beginning or ending in the calendar year;

(4) One or both spouses have earned income that is community income for the calendar year; and

(5) No portion of such earned income is transferred (directly or indirectly) between such spouses before the close of the calendar year.

(b) ***Living apart.*** For purposes of this section, living apart requires that spouses maintain separate residences. Spouses who maintain separate residences due to temporary absences are not considered to be living apart. Spouses who are not members of the same household under § 1.6015-3(b) are considered to be living apart for purposes of this section.

(c) ***Transferred income.*** For purposes of this section, transferred income does not include a *de minimis* amount of earned income that is transferred between the spouses. In addition, any amount of earned income transferred for the benefit of the spouses' child will not be treated as an indirect transfer to one spouse. Additionally, income transferred between spouses is presumed to be a transfer of earned income. This presumption is rebuttable.

(d) ***Examples.*** The following examples illustrate the rules of this section:

Example 1 Living apart. H and W are married, domiciled in State A, a community property state, and have lived apart the entire year of 2002. W, who is in the Army, was stationed in Korea for the entire calendar year. During their separation, W intended to return home to H, and H intended to live with W

upon W's return. H and W do not file a joint return for taxable year 2002. H and W may not report their income under this section because a temporary absence due to military service is not living apart as contemplated under this section.

Example 2 Transfer of earned income—de minimis exception. H and W are married, domiciled in State B, a community property state, and have lived apart the entire year of 2002. H and W are estranged and intend to live apart indefinitely. H and W do not file a joint return for taxable year 2002. H occasionally visits W and their two children, who live with W. When H visits, he often buys gifts for the children, takes the children out to dinner, and occasionally buys groceries or gives W money to buy the children new clothes for school. Both W and H have earned income in the year 2002 that is community income under the laws of State B. H and W may report their income on separate returns under this section.

Example 3 Transfer of earned income—source of transfer. H and W are married, domiciled in State C, a community property state, and have lived apart the entire year of 2002. H and W are estranged and intend to live apart indefinitely. H and W do not file a joint return for taxable year 2002. W provides H $1,000 a month from March 2002 through August 2002 while H is working part-time and seeking full-time employment. W is not legally obligated to make the $1,000 payments. W earns $75,000 in 2002 in wage income. W also receives $10,000 in capital gains income in December 2002. H wants to report his income in accordance with this section, alleging that the $6,000 that he received from W was not from W's earned income, but from the capital gains income W received in 2002. The facts and circumstances surrounding the periodic payments to H from W do not indicate that W made the payments out of her capital gains. H and W may not report their income in accordance with this section, as the $6,000 W transferred to H is presumed to be from W's earned income, and H has not presented any facts to rebut the presumption.

[T.D. 9074, 68 FR 41070, July 10, 2003]

§ 1.66-3 Denial of the Federal income tax benefits resulting from the operation of community property law where spouse not notified.

(a) ***In general.*** The Secretary may deny the Federal income tax benefits of community property law to any spouse with respect to any item of community income if that spouse acted as if solely entitled to the income and failed to notify his or her spouse of the nature and amount of the income before the due date (including extensions) for the filing of the return of his or her spouse for the taxable year in which the item of income was derived. Whether a spouse has acted as if solely entitled to the item of income is a facts and circumstances determination. This determination focuses on whether the spouse used, or made available, the item of income for the benefit of the marital community.

(b) ***Effect.*** The item of community income will be included, in its entirety, in the gross income of the spouse to whom the Secretary denied the Federal income tax benefits resulting from community property law. The tax liability arising from the inclusion of the item of community income must be assessed in accordance with section 6212 against this spouse.

(c) ***Examples.*** The following examples illustrate the rules of this section:

> *Example 1 Acting as if solely entitled to income.* (i) H and W are married and are domiciled in State A, a community property state. W's Form W-2 for taxable year 2000 showed wage income of $35,000. W also received a Form 1099-INT, "Interest Income," showing $1,000 W received in

taxable year 2000. W's wage income was directly deposited into H and W's joint account, from which H and W paid bills and household expenses. W did not inform H of her interest income or the Form 1099-INT, but W gave H a copy of the W-2 when she received it in January 2001. W did not use her interest income for bills or household expenses. Instead W gave her interest income to her brother, who was unemployed. Neither the separate return filed by H nor the separate return filed by W included the interest income. In 2002, the IRS audits both H and W. The Internal Revenue Service (IRS) may raise section 66(b) as to W's interest income, denying W the Federal income tax benefit resulting from community property law as to this item of income.
(ii) H and W are married and are domiciled in State B, a community property state. For taxable year 2000, H receives $45,000 in wage income that H places in a separate account. H and W maintain separate residences. H's wage income is community income under the laws of State B. That same year, W loses her job, and H pays W's mortgage and household expenses for several months while W seeks employment. Neither H nor W files a return for 2000, the taxable year for which the IRS subsequently audits them. The IRS may not raise section 66(b) and deny H the Federal income tax benefits resulting from the operation of community property law as to H's wage income of $45,000, as H has not treated this income as if H were solely entitled to it.

Example 2 Notification of nature and amount of the income. H and W are married and domiciled in State C, a community property state. H and W do not file a joint return for taxable year 2001. H's and W's earned income for 2001 is community income under the laws of State C. H receives $50,000 in wage income in 2001. In January 2002, H receives a Form W-2 that erroneously states that H earned $45,000 in taxable year 2001. H provides W a copy of H's Form W-2 in February 2002. W files for an extension prior to April 15, 2002. H receives a corrected Form W-2 reflecting wages of $50,000 in May 2002. H provides a copy of the corrected Form W-2 to W in May 2002. W files a separate return in June 2002, but reports one half of $45,000 ($22,500) of wage income that H earned. H files a separate return reporting half of $50,000 ($25,000) in wage income. The IRS audits both H and W. Even if H had acted as if solely entitled to the wage income, the IRS may not raise section 66(b) as to this income because H notified W of the nature and amount of the income prior to the due date of W's return (including extensions).

[T.D. 9074, 68 FR 41070, July 10, 2003]

§ 1.66-4 Request for relief from the Federal income tax liability resulting from the operation of community property law.

(a) ***Traditional relief*** —

(1) ***In general.*** A requesting spouse will receive relief from the Federal income tax liability resulting from the operation of community property law for an item of community income if—

(i) The requesting spouse did not file a joint Federal income tax return for the taxable year for which he or she seeks relief;

(ii) The requesting spouse did not include in gross income for the taxable year an item of community income properly includible therein, which, under the rules contained in section 879(a), would be treated as the income of the nonrequesting spouse;

(iii) The requesting spouse establishes that he or she did not know of, and had no reason to know of, the item of community income; and

(iv) Taking into account all of the facts and circumstances, it is inequitable to include the item of community income in the requesting spouse's individual gross income.

(2) ***Knowledge or reason to know.***

(i) A requesting spouse had knowledge or reason to know of an item of community income if he or she either actually knew of the item of community income, or if a reasonable person in similar circumstances would have known of the item of community income. All of the facts and circumstances are considered in determining whether a requesting spouse had reason to know of an item of community income. The relevant facts and circumstances include, but are not limited to, the nature of the item of community income, the amount of the item of community income relative to other income items, the couple's financial situation, the requesting spouse's educational background and business experience, and whether the item of community income was reflected on prior years' returns (e.g., investment income omitted that was regularly reported on prior years' returns).

(ii) If the requesting spouse is aware of the source of community income or the income-producing activity, but is unaware of the specific amount of the nonrequesting spouse's community income, the requesting spouse is considered to have knowledge or reason to know of the item of community income. The requesting spouse's lack of knowledge of the specific amount of community income does not provide a basis for relief under this section.

(3) ***Inequitable.*** All of the facts and circumstances are considered in determining whether it is inequitable to hold a requesting spouse liable for a deficiency attributable to an item of community income. One relevant factor for this purpose is whether the requesting spouse benefitted, directly or indirectly, from the omitted item of community income. A benefit includes normal support, but does not include *de minimis* amounts. Evidence of direct or indirect benefit may consist of transfers of property or rights to property, including transfers received several years after the filing of the return. Thus, for example, if a requesting spouse receives from the nonrequesting spouse property (including life insurance proceeds) that is traceable to items of community income attributable to the nonrequesting spouse, the requesting spouse will have benefitted from those items of community income. Other factors may include, if the situation warrants, desertion, divorce or separation. Factors relevant to whether it would be inequitable to hold a requesting spouse liable, more specifically described under the applicable administrative procedure issued under section 66(c) (Revenue Procedure 2000-15 (2000-1 C.B. 447) (See § 601.601(d)(2) of this chapter), or other applicable guidance published by the Secretary), are to be considered in making a determination under this paragraph.

(b) ***Equitable relief.*** Equitable relief may be available when the four requirements of paragraph (a)(1) of this section are not satisfied, but it would be inequitable to hold the requesting spouse liable for the unpaid tax or deficiency. Factors relevant to whether it would be inequitable to hold a requesting spouse liable, more specifically described under the applicable administrative procedure issued under section 66(c) (Revenue Procedure 2000-15 (2000-1 C.B. 447), or other applicable guidance published by the Secretary), are to be considered in making a determination under this paragraph.

(c) ***Applicability.*** Traditional relief under paragraph (a) of this section applies only to deficiencies arising out of items of omitted income. Equitable relief under paragraph (b) of this section applies to any deficiency or any unpaid tax (or any portion of either). Equitable relief is available only for the portion of liabilities that were unpaid as of July 22, 1998, and for liabilities that arise after July 22, 1998.

(d) ***Effect of relief.*** When the requesting spouse qualifies for relief under paragraph (a) or (b) of this section, the IRS must assess any deficiency of the nonrequesting spouse arising from the granting of relief to the requesting spouse in accordance with section 6212.

(e) ***Examples.*** The following examples illustrate the rules of this section:

Example 1 Item-by-item approach. H and W are married, living together, and domiciled in State A (a community property state). H and W file separate returns for taxable year 2002 on April 15, 2003. H earns $56,000 in wages, and W earns $46,000 in wages, in 2002. H reports half of his wage income as shown on his Form W-2, in the amount of $28,000, and half of W's wage income as shown on her Form W-2, in the amount of $23,000. W reports half of her wage income as shown on her W-2, in the amount of $23,000, and half of H's wage income as shown on his Form W-2, in the amount of $28,000. Neither H nor W reports W's income from her sole proprietorship of $34,000 or W's investment income of $5,000 for taxable year 2002. The Internal Revenue Service (IRS) proposes deficiencies with respect to H's and W's taxable year 2002 returns due to the omission of W's income from her sole proprietorship and investments. H timely requests relief under section 66(c). Because the IRS determines that H satisfies the four requirements of the traditional relief provision of section 66(c) with respect to W's omitted investment income, the IRS grants H's request for relief as to the omitted investment income. The IRS determines that H does not satisfy the four requirements of the traditional relief provision of section 66(c) as to W's sole proprietorship income. The IRS further determines that, under the equitable relief provision of section 66(c), it is not inequitable to hold H liable for the sole proprietorship income. Relief is applicable on an item-by-item basis. Thus, H is liable for the tax on half of his wage income in the amount of $28,000, half of W's wage income in the amount of $23,000, half of W's sole proprietorship income in the amount of $17,000, but none of W's investment income, for which H obtained relief under section 66(c). W is liable for the tax on half of H's wage income in the amount of $28,000, half of W's wage income in the amount of $23,000, half of W's sole proprietorship income in the amount of $17,000, and all of W's investment income in the amount of $5,000, because H obtained relief under section 66(c).

Example 2 Benefit. H and W are married, living together, and domiciled in State B (a community property state). Neither H nor W files a return for taxable year 2000. H earns $60,000 in 2000, which he deposits in a joint account. H and W pay the mortgage payment, household bills, and other family expenses out of the joint account. W earns $20,000 in 2000. W uses a portion of the $20,000 to make monthly loan payments on the family cars, but loses the remainder at the local racetrack. In 2002, the IRS audits H and W. H requests relief under section 66(c), stating that he did not know or have reason to know of W's additional income, as H travels extensively while W handles the family finances. Regardless of whether H had knowledge or reason to know of the source of W's income, H is not eligible for traditional relief under section 66(c) because H benefitted from W's income. H's benefit, the portion of W's income used to make monthly payments on the car loans, was more than a de minimis amount. While this benefit was not in excess of normal support, it is enough to preclude relief under the traditional relief provision of section 66(c). H may still qualify for equitable relief under section 66(c), depending on all of the facts and circumstances.

(f) ***Fraudulent scheme.*** If the Secretary establishes that a spouse transferred assets to his or her spouse as part of a fraudulent scheme, relief is not available under this section. For purposes of this section, a fraudulent scheme includes a scheme to defraud the Secretary or another third party, such as a creditor, ex-spouse, or business partner.

(g) ***Definitions*** —

(1) ***Requesting spouse.*** A requesting spouse is an individual who does not file a joint Federal income tax return with the nonrequesting spouse for the taxable year in question, and who requests relief from the Federal income tax liability resulting from the operation of community property law under this section for the portion of the liability arising from his or her share of community income for such taxable year.

(2) ***Nonrequesting spouse.*** A nonrequesting spouse is the individual to whom the requesting spouse was married and whose income or deduction gave rise to the tax liability from which the requesting spouse seeks relief in whole or in part.

(h) ***Effect of prior closing agreement or offer in compromise.*** A requesting spouse is not entitled to relief from the Federal income tax liability resulting from the operation of community property law under section 66 for any taxable year for which the requesting spouse has entered into a closing agreement (other than an agreement pursuant to section 6224(c) relating to partnership items) with the Secretary that disposes of the same liability that is the subject of the request for relief. In addition, a requesting spouse is not entitled to relief from the Federal income tax liability resulting from the operation of community property law under section 66 for any taxable year for which the requesting spouse has entered into an offer in compromise with the Secretary. For rules relating to the effect of closing agreements and offers in compromise, see sections 7121 and 7122, and the regulations thereunder.

(i) [Reserved]

(j) ***Time and manner for requesting relief*** —

(1) ***Requesting relief.*** To request relief from the Federal income tax liability resulting from the operation of community property law under this section, a requesting spouse must file, within the time period prescribed in paragraph (j)(2) of this section, Form 8857, “Request for Innocent Spouse Relief” (or other specified form), or other written request, signed under penalties of perjury, stating why relief is appropriate. The requesting spouse must include the nonrequesting spouse's name and taxpayer identification number in the written request. The requesting spouse must also comply with the Secretary's reasonable requests for information that will assist the Secretary in identifying and locating the nonrequesting spouse.

(2) ***Time period for filing a request for relief*** —

(i) ***Traditional relief.*** The earliest time for submitting a request for relief from the Federal income tax liability resulting from the operation of community property law under paragraph (a) of this section, for an amount underreported on, or omitted from, the requesting spouse's separate return, is the date the requesting spouse receives notification of an audit or a letter or notice from the IRS stating that there may be an outstanding liability with regard to that year (as described in paragraph (j)(2)(iii) of this section). The latest time for requesting relief under paragraph (a) of this section is 6 months before the expiration of the period of limitations on assessment, including extensions, against the nonrequesting spouse for the taxable year that is the subject of the request for relief, unless the examination of the requesting spouse's return

commences during that 6-month period. If the examination of the requesting spouse's return commences during that 6-month period, the latest time for requesting relief under paragraph (a) of this section is 30 days after the commencement of the examination.

(ii) ***Equitable relief.*** The earliest time for submitting a request for relief from the Federal income tax liability resulting from the operation of community property law under paragraph (b) of this section is the date the requesting spouse receives notification of an audit or a letter or notice from the IRS stating that there may be an outstanding liability with regard to that year (as described in paragraph (j)(2)(iii) of this section). A request for equitable relief from the Federal income tax liability resulting from the operation of community property law under paragraph (b) of this section for a liability that is properly reported but unpaid is properly submitted with the requesting spouse's individual Federal income tax return, or after the requesting spouse's individual Federal income tax return is filed.

(iii) ***Premature requests for relief.*** The Secretary will not consider a premature request for relief under this section. The notices or letters referenced in this paragraph (j)(2) do not include notices issued pursuant to section 6223 relating to TEFRA partnership proceedings. These notices or letters include notices of computational adjustment to a partner or partner's spouse (Notice of Income Tax Examination Changes) that reflect a computation of the liability attributable to partnership items of the partner or the partner's spouse.

(k) ***Nonrequesting spouse's notice and opportunity to participate in administrative proceedings*** —

(1) ***In general.*** When the Secretary receives a request for relief from the Federal income tax liability resulting from the operation of community property law under this section, the Secretary must send a notice to the nonrequesting spouse's last known address that informs the nonrequesting spouse of the requesting spouse's request for relief. The notice must provide the nonrequesting spouse with an opportunity to submit any information for consideration in determining whether to grant the requesting spouse relief from the Federal income tax liability resulting from the operation of community property law. The Secretary will share with each spouse the information submitted by the other spouse, unless the Secretary determines that the sharing of this information will impair tax administration.

(2) ***Information submitted.*** The Secretary will consider all of the information (as relevant to the particular relief provision) that the nonrequesting spouse submits in determining whether to grant relief from the Federal income tax liability resulting from the operation of community property law under this section.

[T.D. 9074, 68 FR 41070, July 10, 2003]

§ 1.66-5 Effective date.

Sections 1.66-1 through 1.66-4 are applicable on July 10, 2003. In addition, § 1.66-4 applies to any request for relief filed prior to July 10, 2003, for which the Internal Revenue Service has not issued a preliminary determination as of July 10, 2003.

[T.D. 9074, 68 FR 41070, July 10, 2003]

§ 1.67-1T 2-percent floor on miscellaneous itemized deductions (temporary).

(a) ***Type of expenses subject to the floor*** —

(1) ***In general.*** With respect to individuals, section 67 disallows deductions for miscellaneous itemized deductions (as defined in paragraph (b) of this section) in computing taxable income (*i.e.,* so-called "below-the-line" deductions) to the extent that such otherwise allowable deductions do not exceed 2 percent of the individual's adjusted gross income (as defined in section 62 and the regulations thereunder). Examples of expenses that, if otherwise deductible, are subject to the 2-percent floor include but are not limited to—

(i) Unreimbursed employee expenses, such as expenses for transportation, travel fares and lodging while away from home, business meals and entertainment, continuing education courses, subscriptions to professional journals, union or professional dues, professional uniforms, job hunting, and the business use of the employee's home.

(ii) Expenses for the production or collection of income for which a deduction is otherwise allowable under section 212 (1) and (2), such as investment advisory fees, subscriptions to investment advisory publications, certain attorneys' fees, and the cost of safe deposit boxes,

(iii) Expenses for the determination of any tax for which a deduction is otherwise allowable under section 212(3), such as tax counsel fees and appraisal fees, and

(iv) Expenses for an activity for which a deduction is otherwise allowable under section 183.

See section 62 with respect to deductions that are allowable in computing adjusted gross income (*i.e.,* so-called "above-the-line" deductions).

(2) ***Other limitations.*** Except as otherwise provided in paragraph (d) of this section, to the extent that any limitation or restriction is placed on the amount of a miscellaneous itemized deduction, that limitation shall apply prior to the application of the 2-percent floor. For example, in the case of an expense for food or beverages, only 80 percent of which is allowable as a deduction because of the limitations provided in section 274(n), the otherwise deductible 80 percent of the expense is treated as a miscellaneous itemized deduction and is subject to the 2-percent limitation of section 67.

(b) ***Definition of miscellaneous itemized deductions.*** For purposes of this section, the term "miscellaneous itemized deductions" means the deductions allowable from adjusted gross income in determining taxable income, as defined in section 63, other than—

(1) The standard deduction as defined in section 63(c),

(2) Any deduction allowable for impairment-related work expenses as defined in section 67(d),

(3) The deduction under section 72(b)(3) (relating to deductions if annuity payments cease before the investment is recovered),

(4) The deductions allowable under section 151 for personal exemptions,

(5) The deduction under section 163 (relating to interest),

(6) The deduction under section 164 (relating to taxes),

(7) The deduction under section 165(a) for losses described in subsection (c)(3) or (d) of section 165,

(8) The deduction under section 170 (relating to charitable contributions and gifts),

(9) The deduction under section 171 (relating to deductions for amortizable bond premiums),

(10) The deduction under section 213 (relating to medical and dental expenses),

(11) The deduction under section 216 (relating to deductions in connection with cooperative housing corporations),

(12) The deduction under section 217 (relating to moving expenses),

(13) The deduction under section 691(c) (relating to the deduction for estate taxes in the case of income in respect of the decedent),

(14) The deduction under 1341 (relating to the computation of tax if a taxpayer restores a substantial amount held under claim of right), and

(15) Any deduction allowable in connection with personal property used in a short sale.

(c) ***Allocation of expenses.*** If a taxpayer incurs expenses that relate to both a trade or business activity (within the meaning of section 162) and a production of income or tax preparation activity (within the meaning of section 212), the taxpayer shall allocate such expenses between the activities on a reasonable basis.

(d) ***Members of Congress*** —

(1) ***In general.*** With respect to the deduction for living expenses of Members of Congress referred to in section 162(a), the 2-percent floor described in section 67 and paragraph (a) of this section shall be applied to the deduction before the application of the $3,000 limitation on deductions for living expenses referred to in section 162(a). (For purposes of this paragraph (d), the term "Member(s) of Congress" includes any Delegate or Resident Commissioner.) The amount of miscellaneous itemized deductions of a Member of Congress that is disallowed pursuant to section 67 and paragraph (a) of this section shall be allocated between deductions for living expenses (within the meaning of section 162(a)) and other miscellaneous itemized deductions. The amount of deductions for living expenses of a Member of Congress that is disallowed pursuant to section 67 and paragraph (a) of this section is determined by multiplying the aggregate amount of such living expenses (determined without regard to the $3,000 limitation of section 162(a) but with regard to any other limitations) by a fraction, the numerator of which is the aggregate amount disallowed pursuant to section 67 and paragraph (a) of this section with respect to miscellaneous itemized deductions of the Member of Congress and the denominator of which is the amount of miscellaneous itemized deductions (including deductions for living expenses) of the Member of Congress (determined without regard to the $3,000 limitation of section 162(a) but without regard to any other limitations). The amount of deductions for miscellaneous itemized deductions (other than deductions for living expenses) of a Member of Congress that are disallowed pursuant to section 67 and paragraph (a) of this section is determined by multiplying the amount of miscellaneous itemized deductions (other than deductions for living expenses) of the Member of Congress (determined with regard to any limitations) by the fraction described in the preceding sentence.

(2) ***Example.*** The provisions of this paragraph (d) may be illustrated by the following example:

Example. For 1987 A, a Member of Congress, has adjusted gross income of $100,000, and miscellaneous itemized deductions of $10,750 of which $3,750 is for meals, $3,000 is for other living expenses, and $4,000 is for other miscellaneous itemized deductions (none of which is subject to any percentage limitations other than the 2-percent floor of section 67). The amount of A's business meal expenses that are disallowed under section 274(n) is $750 ($3,750 × 20%). The amount of A's miscellaneous itemized deductions that are disallowed under section 67 is $2,000 ($100,000 × 2%). The portion of the amount disallowed under section 67 that is allocated to A's living expenses is $1,200. This portion is equal to the amount of A's deductions for living expenses allowable after the application of section 274(n) and before the application

of section 67 ($6,000) multiplied by the ratio of A's total miscellaneous itemized deductions disallowed under section 67 to A's total miscellaneous itemized deductions, determined without regard to the $3,000 limitation of section 162(a) ($2,000/$10,000). Thus, after application of section 274(n) and section 67, A's deduction for living expenses is $4,800 ($6,750−$750−$1,200). However, pursuant to section 162(a), A may deduct only $3,000 of such expenses. The amount of A's other miscellaneous itemized deductions that are disallowed under section 67 is $800 ($4,000 × $2,000/$10,000). Thus, $3,200 ($4,000−$800) of A's miscellaneous itemized deductions (other than deductions for living expenses) are allowable after application of section 67. A's total allowable miscellaneous itemized deductions are $6,200 ($3,000 + $3,200).

(e) ***State legislators.*** See § 1.62-1T(e)(4) with respect to rules regarding state legislator's expenses.

[T.D. 8189, 53 FR 9875, Mar. 28, 1988]

§ 1.67-2T Treatment of pass-through entities (temporary).

(a) ***Application of section 67.*** This section provides rules for the application of section 67 to partners, shareholders, beneficiaries, participants, and others with respect to their interests in pass-through entities (as defined in paragraph (g) of this section). In general, an affected investor (as defined in paragraph (h) of this section) in a pass-through entity shall separately take into account as an item of income and as an item of expense an amount equal to his or her allocable share of the affected expenses (as defined in paragraph (i) of this section) of the pass-through entity for purposes of determining his or her taxable income. Except as provided in paragraph (e)(1)(ii)(B) of this section, the expenses so taken into account shall be treated as paid or incurred by the affected investor in the same manner as paid or incurred by the pass-through entity. For rules regarding the application of section 67 to affected investors in—

(1) Partnerships, S corporations, and grantor trusts, see paragraph (b) of this section,

(2) Real estate mortgage investment conduits, see paragraph (c) of this section,

(3) Common trust funds, see paragraph (d) of this section,

(4) Nonpublicly offered regulated investment companies, see paragraph (e) of this section, and

(5) Publicly offered regulated investment companies, see paragraph (p) of this section.

(b) ***Partnerships, S corporations, and grantor trusts*** —

(1) ***In general.*** Pursuant to section 702(a) and 1366(a) of the Code and the regulations thereunder, each partner of a partnership or shareholder of an S corporation shall take into account separately his or her distributive or pro rata share of any items of deduction of such partnership or corporation that are defined as miscellaneous itemized deductions pursuant to section 67(b). The 2-percent limitation described in section 67 does not apply to the partnership or corporation with respect to such deductions, but such deductions shall be included in the deductions of the partner or shareholder to which that limitation applies. Similarly, the limitation applies to the grantor or other person treated as the owner of a grantor trust with respect to items that are paid or incurred by a grantor trust and are treated as miscellaneous itemized deductions of the grantor or other person pursuant to Subpart E, Part 1, Subchapter J, Chapter 1 of the Code, but not to the trust itself. The 2-percent limitation applies to amounts otherwise deductible in taxable years of partners, shareholders, or grantors beginning after December 31, 1986, regardless of the taxable year of the partnership, corporation, or trust.

(2) ***Example.*** The provisions of this paragraph (b) may be illustrated by the following example:

Example. P, a partnership, incurs $1,000 in expenses to which section 212 applies during its taxable year. A, an individual, is a partner in P. A's distributive share of the expenses to which section 212 applies is $20, determined without regard to the 2-percent limitation of section 67. Pursuant to section 702(a), A must take $20 of expenses to which section 212 applies into account in determining his income tax. Pursuant to section 67, in determining his taxable income A may deduct his miscellaneous itemized deductions (including his $20 distributive share of deductions from P) to the extent the total amount exceeds 2 percent of his adjusted gross income.

(c) ***Real estate mortgage investment conduit.*** See § 1.67-3T for rules regarding the application of section 67 to holders of interests in REMICs.

(d) ***Common trust funds*** —

(1) ***In general.*** For purposes of determining the taxable income of an affected investor that is a participant in a common trust fund—

(i) The ordinary taxable income and ordinary net loss of the common trust fund shall be computed under section 584(d)(2) without taking into account any affected expenses, and

(ii) Each affected investor shall be treated as having paid or incurred an expense described in section 212 in an amount equal to the affected investor's proportionate share of the affected expenses.

The 2-percent limitation described in section 67 applies to amounts otherwise deductible in taxable years of participants beginning after December 31, 1986, regardless of the taxable year of the common trust fund.

(2) ***Example.*** The provisions of this paragraph (d) may be illustrated by the following example:

Example. During 1987, the gross income and deductions of common trust fund C, a calendar year taxpayer, consist of the following items:

(i) $50,000 of short-term capital gains;

(ii) $150,000 of long-term capital gains;

(iii) $1,000,000 of dividend income;

(iv) $10,000 of deductions that are not affected expenses; and

(v) $60,000 of deductions that are affected expenses. The proportionate share of Trust T in the income and losses of C is one percent. In computing its taxable income for 1987, T, a calendar year taxpayer, shall take into account the following items:

(A) $500 of short-term capital gains (one percent of $50,000, C's short-term capital gains);

(B) $1,500 of long-term capital gains (one percent of $150,000, C's long-term capital gains);

(C) $9,900 of ordinary taxable income (one percent of $990,000, the excess of $100,000, C's gross income after excluding capital gains and losses, over $10,000, C's deductions that are not affected expenses);

(D) $600 of expenses described in section 212 (one percent of $60,000, C's affected expenses).

(e) ***Nonpublicly offered regulated investment companies*** —

(1) ***In general.*** For purposes of determining the taxable income of an affected investor that is a shareholder of a nonpublicly offered regulated investment company (as defined in paragraph (g)(3) of this section) during a calendar year—

(i) The current earnings and profits of the nonpublicly offered regulated investment company shall be computed without taking into account any affected RIC expenses that are allocated among affected investors, and

(ii) The affected investor shall be treated—

(A) As having received or accrued a dividend in an amount equal to the affected investor's allocable share of the affected RIC expenses of the nonpublicly offered regulated investment company for the calendar year, and

(B) As having paid or incurred an expense described in section 212 (or section 162 in the case of an affected investor that is a nonpublicly offered regulated investment company) in an amount equal to the affected investor's allocable share of the affected RIC expenses of the nonpublicly offered regulated investment company for the calendar year

in the affected investor's taxable year with which (or within which) the calendar year with respect to which the expenses are allocated ends. An affected investor's allocable share of the affected RIC expenses is the amount allocated to that affected investor pursuant to paragraph (k) of this section.

(2) ***Shareholders that are not affected investors.*** A shareholder of a nonpublicly offered regulated investment company that is not an affected investor shall not take into account in computing its taxable income any amount of income or expense with respect to its allocable share of affected RIC expenses.

(3) ***Example.*** The provisions of this paragraph (e) may be illustrated by the following example:

Example. During calendar year 1987, nonpublicly offered regulated investment company M distributes to individual shareholder A, a calendar year taxpayer, capital gain dividends of $1,000 and other dividends of $5,000. A's allocable share of the affected RIC expenses of M is $200. In computing A's taxable income for 1987, A shall take into account the following items:

(i) $1,000 of long-term capital gains (the capital gain dividends received by A);

(ii) $5,200 of dividend income (the sum of the other dividends received by A and A's allocable share of the affected RIC expenses of M); and

(iii) $200 of expenses described in section 212 (A's allocable share of the affected RIC expenses of M). A is allowed a deduction for miscellaneous itemized deductions (including A's $200 allocable share of the affected RIC expenses of M, which is treated as an expense described in section 212) for 1987 only to the extent the aggregate of such deductions exceeds 2 percent of A's adjusted gross income for 1987.

(f) ***Cross-reference.*** See § 1.67-1T with respect to limitations on deductions for expenses described in section 212 (including amounts treated as such expenses under this section).

(g) *Pass-through entity* —

(1) ***In general.*** Except as provided in paragraph (g)(2) of this section, for purposes of section 67(c) and this section, a pass-through entity is—

(i) A trust (or any portion thereof) to which Subpart E, Part 1, Subchapter J, Chapter 1 of the Code applies,

(ii) A partnership,

(iii) An S corporation,

(iv) A common trust fund described in section 584,

(v) A nonpublicly offered regulated investment company,

(vi) A real estate mortgage investment conduit, and

(vii) Any other person—

(A) Which is not subject to the income tax imposed by Subtitle A, Chapter 1, or which is allowed a deduction in computing such tax for distributions to owners or beneficiaries, and

(B) The character of the income of which may affect the character of the income recognized with respect to that person by its owners or beneficiaries.

Entities that do not meet the requirements of paragraph (g)(1)(vii) (A) and (B) of this section, such as qualified pension plans, individual retirement accounts, and insurance companies holding assets in separate asset accounts to fund variable contracts defined in section 817(d), are not described in this paragraph (g)(1).

(2) ***Exception.*** For purposes of section 67(c) and this section, a pass-through entity does not include:

(i) An estate;

(ii) A trust (or any portion thereof) not described in paragraph (g)(1)(i) of this section,

(iii) A cooperative described in section 1381(a)(2), determined without regard to subparagraphs (A) and (C) thereof, or

(iv) A real estate investment trust.

(3) ***Nonpublicly offered regulated investment company—***

(i) ***In general.*** For purposes of this section, the term “nonpublicly offered regulated investment company” means a regulated investment company to which Part I of Subchapter M of the Code applies that is not a publicly offered regulated investment company.

(ii) ***Publicly offered regulated investment company.*** For purposes of this section, the term “publicly offered regulated investment company” means a regulated investment company to which Part I of Subchapter M of the Code applies the shares of which are—

(A) Continuously offered pursuant to a public offering (within the meaning of section 4 of the Securities Act of 1933, as amended (15 U.S.C. 77a to 77aa)),

(B) Regularly traded on an established securities market, or

(C) Held by or for no fewer than 500 persons at all times during the taxable year.

(h) ***Affected investor*** —(1) *In general.* For purposes of this section, the term "affected investor" means a partner, shareholder, beneficiary, participant, or other interest holder in a pass-through entity at any time during the pass-through entity's taxable year that is—

(i) An individual (other than a nonresident alien whose income with respect to his or her interest in the pass-through entity is not effectively connected with the conduct of a trade or business within the United States),

(ii) A person, including a trust or estate, that computes its taxable income in the same manner as in the case of an individual; or

(iii) A pass-through entity if one or more of its partners, shareholders, beneficiaries, participants, or other interest holders is (A) a pass-through entity or (B) a person described in paragraph (h)(1) (i) or (ii) of this section.

(2) ***Examples.*** The provisions of this paragraph (h) may be illustrated by the following examples:

Example 1. Corporation X holds shares of nonpublicly offered regulated investment company R in its capacity as a nominee or custodian for individual A, the beneficial owner of the shares. Because the owner of the shares for Federal income tax purposes is an individual, the shares are owned by an affected investor.

Example 2. Individual retirement account I owns shares of a nonpublicly offered regulated investment company. Because an individual retirement account is not a person described in paragraph (h)(1) of this section, the shares are not owned by an affected investor.

(i) ***Affected expenses*** —

(1) ***In general.*** In general, for purposes of this section, the term "affected expenses" means expenses that, if paid or incurred by an individual, would be deductible, if at all, as miscellaneous itemized deductions as defined in section 67(b).

(2) ***Special rule for nonpublicly offered regulated investment companies.*** In the case of a nonpublicly offered regulated investment company, the term "affected expenses" means only affected RIC expenses.

(j) ***Affected RIC expenses*** —

(1) ***In general.*** In general, for purposes of this section the term "affected RIC expenses" means the excess of—

(i) The aggregate amount of the expenses (other than expenses described in sections 62(a)(3) and 67(b) and § 1.67-1T(b)) paid or incurred in the calendar year that are allowable as a deduction in determining the investment company taxable income (without regard to section 852(b)(2)(D)) of the nonpublicly offered regulated investment company for a taxable year that begins or ends with or within the calendar year, over

(ii) The amount of expenses taken into account under paragraph (j)(1)(i) of this section that are allocable to the following items (whether paid separately or included as part of a fee paid to an investment advisor or other person for a variety of services):

(A) Registration fees;

(B) Directors' or trustees' fees;

(C) Periodic meetings of directors, trustees, or shareholders;

(D) Transfer agent fees;

(E) Legal and accounting fees (other than fees for income tax return preparation or income tax advice); and

(F) Shareholder communications required by law (e.g. the preparation and mailing of prospectuses and proxy statements).

Expenses described in paragraph (j)(1)(ii) (A) through (F) of this section do not include, for example, expenses allocable to investment advice, marketing activities, shareholder communications and other services not specifically described in paragraph (j)(1)(ii) (A) through (F) of this section, and custodian fees.

(2) ***Safe harbor.*** If a nonpublicly offered regulated investment company makes an election under this paragraph (j)(2), the affected RIC expenses for a calendar year shall be treated as equal to 40 percent of the amount determined under paragraph (j)(1)(i) of this section for that calendar year. The nonpublicly offered regulated investment company shall make the election by attaching to its income tax return for the taxable year that includes the last day of the first calendar year for which the nonpublicly offered regulated investment company makes the election a statement that it is making an election under paragraph (j)(2) of this section. An election made pursuant to this paragraph (j)(2) shall remain in effect for all subsequent calendar years unless revoked with the consent of the Commissioner.

(3) ***Reduction for unused RIC expenses.*** The amount determined under paragraph (j)(1)(i) of this section shall be reduced by the nonpublicly offered regulated investment company's net operating loss, if any, for the taxable year ending with or within the calendar year. In computing the nonpublicly offered regulated investment company's net operating loss for purposes of this section, the deduction for dividends paid shall not be allowed and any net capital gain for the taxable year shall be excluded.

(4) ***Exception.*** The affected RIC expenses of a nonpublicly offered regulated investment company will be treated as zero if the amount of its gross income for the calendar year (determined without regard to capital gain net income) is not greater than 1 percent of the sum of

(i) such gross income and

(ii) the amount of its interest income for the calendar year that is not includible in gross income pursuant to section 103.

(k) ***Allocation of expenses among nonpublicly offered regulated investment company shareholders*** —

(1) ***General rule.*** A nonpublicly offered regulated investment company shall allocate to each of its affected investors that is a shareholder at any time during the calendar year, the affected investor's allocable share of the affected RIC expenses of the nonpublicly offered regulated investment company for that calendar year. (See paragraph (m) of this section for rules regarding estimates with respect to the amount of an affected investor's share of affected RIC expenses upon which certain persons can rely for certain purposes.) A nonpublicly offered regulated investment company may use any reasonable method to make the allocation. A method of allocation shall not be reasonable if—

(i) The method can be expected to have the effect, if applied to all affected RIC expenses and all shareholders (whether or not affected investors), of allocating to the shareholders an amount of affected RIC expenses that is less than the affected RIC expenses of the nonpublicly offered regulated investment company for the calendar year,

(ii) The method can be expected to have the effect of allocating a disproportionately high share of the affected RIC expenses of the nonpublicly offered regulated investment company to shareholders that are not affected investors or affected investors, the amount of whose miscellaneous itemized deductions (including their allocable share of affected RIC expenses) exceeds the 2-percent floor described in section 67, or

(iii) A principal purpose of the method of allocation is to avoid allocating affected RIC expenses to persons described in paragraph (h)(1) (i) or (ii) of this section whose miscellaneous itemized deductions (inclusive of their allocable share of affected RIC expenses) may not exceed the 2-percent floor described in section 67.

(2) ***Reasonable allocation method described*** —

(i) ***In general.*** The allocation method described in this paragraph (k)(2) shall be treated as a reasonable allocation method. Under the method described in this paragraph, an affected investor's allocable share of the affected RIC expenses of a nonpublicly offered regulated investment company is the amount that bears the same ratio to the amount of affected RIC expenses of the nonpublicly offered regulated investment company for the calendar year as—

(A) The amount of dividends paid to the affected investor during the calendar year, bears to

(B) The sum of—

(*1*) The aggregate amount of dividends paid by the nonpublicly offered regulated investment company during the calendar year to all shareholders, and

(*2*) Any amount on which tax is imposed under section 852(b)(1) for any taxable year of the nonpublicly offered regulated investment company ending within or with the calendar year.

(ii) ***Exception.*** Paragraph (k)(2)(i) of this section does not apply if the amount of the deduction for dividends paid during the calendar year is zero.

(iii) ***Dividends paid.*** For purposes of this paragraph (k)(2)—

(A) Dividends that are treated as paid during a calendar year pursuant to section 852(b)(7) are treated as paid during that calendar year and not during the succeeding calendar year.

(B) The term “dividends paid” does not include capital gain dividends (as defined in section 852(b)(3)(C)), exempt-interest dividends (as defined in section 852(b)(5)(A)), or any amount to which section 302(a) applies.

(C) The dividends paid during a calendar year is determined without regard to section 855(a).

(3) ***Reasonable allocation made by District Director.*** If a nonpublicly offered regulated investment company does not make a reasonable allocation of affected RIC expenses to its affected investors as required by paragraph (k)(1) of this section, a reasonable allocation shall be made by the District Director of the internal revenue district in which the principal place of business or principal office or agency of the nonpublicly offered regulated investment company is located.

(4) ***Examples.*** The provisions of this paragraph (k) may be illustrated by the following examples:

Example 1. Nonpublicly offered regulated investment company M, in calculating its investment company taxable income, claims a dividends paid deduction for a portion of redemption distributions (to which section 302(a) applies) to shareholders, as well as for nonredemption distributions. M allocates affected expenses among shareholders who have received nonredemption distributions by multiplying the amount of nonredemption distributions distributed to each shareholder by a fraction, the numerator of which is the affected RIC expenses of M and the denominator of which is M's investment company taxable income, determined on a calendar year basis and without regard to deductions described in section 852(b)(2)(D). No affected RIC expenses are allocated with respect to the redemption distributions. This allocation method can be expected to have the effect of allocating among the shareholders an amount of expenses that is less than the total amount of affected RIC expenses of M. Accordingly, the allocation method is not reasonable.

Example 2. Nonpublicly offered regulated investment company N has two classes of stock, a “capital” class and an “income” class. Owners of the capital class receive the benefit of all capital appreciation on the stocks owned by N, and bear the burden of certain capital expenditures of N; owners of the income class receive the benefit of all other income of N, and bear the burden of all expenses of N that are deductible under section 162. M allocates all affected RIC expenses among shareholders of the income class shares under a method that would be reasonable if the income class were the only class of N stock. Corporations and other shareholders that are not affected investors own a higher proportion of income class shares than of capital class shares. The affected RIC expenses of N are properly allocated among the shareholders who bear the burden of those expenses. Accordingly, the allocation method does not have the effect of allocating a disproportionately high share of the affected RIC expenses of N to shareholders that are not affected investors merely because a disproportionate share of income class shares are owned by shareholders that are not affected investors. The allocation method is reasonable.

Example 3. Nonpublicly offered regulated investment company O has two classes of stock, Class A and Class B. Shares of Class A, which may be purchased without payment of a sales or brokerage commission, are charged with the expenses of a Rule 12b-1 distribution plan of O. Shares of Class B, which may be purchased only upon payment of a sales or brokerage commission, are not charged with the expenses of the Rule 12b-1 distribution plan of O. O allocates all affected RIC expenses among shareholders of Class A and Class B shares under a method that would be reasonable if Class A or Class B shares, respectively, were the only class of O stock. The affected RIC expenses attributable to the Rule 12b-1 plan are allocated to the shareholders of Class A shares. Shareholders that are not affected investors own a higher proportion of Class A shares than of Class B shares. The affected RIC expenses of O are properly allocated among the shareholders who bear the burden of those expenses. Accordingly, the allocation method does not have the effect of allocating a disproportionately high share of the affected RIC expenses of O to shareholders that are not affected investors merely because a disproportionately high share of Class A shares are owned by persons that are not affected investors. The allocation method is reasonable.

Example 4. Assume the facts are the same as in example (3) except that a portion of the affected RIC expenses attributable to the Rule 12b-1 plan are allocated to the shareholders of Class B shares, and shareholders that are not affected investors own a higher proportion of Class B shares than of Class A shares. Thus, the affected RIC expenses are not allocated among the

class of shareholders that bear the burden of the expenses. Accordingly, the allocation method has the effect of allocating a disproportionate share of the affected RIC expenses of O to the shareholders of Class B shares. Because shareholders that are not affected investors own a higher proportion of Class B shares than Class A shares, the method can be expected to allocate a disproportionately high share of the affected RIC expenses of O to shareholders that are not affected investors. Accordingly, the allocation method is not reasonable.

(l) ***Affected RIC expenses not subject to backup withholding.*** The amount of dividend income that an affected investor in a nonpublicly offered regulated investment company is treated as having received or accrued under paragraph (e)(1)(ii) of this section is not subject to backup withholding under section 3406.

(m) ***Reliance by nominees and pass-through investors on notices*** —

(1) ***General rule.*** Persons described in paragraph (m)(3) of this section may, for the purposes described in that paragraph (m)(3), treat an affected investor's allocable share of the affected RIC expenses of a nonpublicly offered regulated investment company as being equal to an amount determined by the nonpublicly offered regulated investment company on the basis of a reasonable estimate (e.g., of allocable expenses as a percentage of dividend distributions or allocable expenses per share) that is

(i) reported in writing by the nonpublicly offered regulated investment company to the person or

(ii) reported in a newspaper or financial publication having a nationwide circulation (e.g., the *Wall Street Journal* or *Standard and Poor's Weekly Dividend Record*).

(2) ***Estimates must be reasonable.*** In general, for purposes of paragraph (m)(1) of this section, estimates of affected RIC expenses of a nonpublicly offered regulated investment company will be treated as reasonable only if the nonpublicly offered regulated investment company makes a reasonable effort to offset material understatements (or overstatements) of affected RIC expenses for a period by increasing (or decreasing) estimates of affected RIC expenses for a subsequent period. Understatements or overstatements of affected RIC expenses that are not material may be corrected by making offsetting adjustments in future periods, provided that understatements and overstatements are treated consistently.

(3) ***Application.*** Paragraph (m)(1) of this section shall apply to the following persons for the following purposes:

(i) A nominee who, pursuant to section 6042(a)(1)(B) and paragraph (n)(2) of this section, is required to report dividends paid by a nonpublicly offered regulated investment company to the Internal Revenue Service and to the person to whom the payment is made, for purposes of reporting to the Internal Revenue Service and the person to whom the payment is made the amount of affected RIC expenses allocated to such person.

(ii) An affected investor to whom a nominee (to which paragraph (m)(3)(i) of this section applies) reports, for purposes of calculating the affected investor's taxable income and the amount of its affected expenses.

(iii) A shareholder that is a pass-through entity, for purposes of calculating its taxable income and the amount of its affected expenses.

(n) ***Return of information and reporting to affected investors by a nonpublicly offered regulated investment company*** —

(1) ***In general*** —

(i) ***Return of information.*** A nonpublicly offered regulated investment company shall make an information return (e.g., Form 1099-DIV, Dividends and Distributions, for 1987) with respect to each affected investor to which an allocation of affected RIC expenses is required to be made pursuant to paragraph (k) of this section and for which the nonpublicly offered regulated investment company is required to make an information return to the Internal Revenue Service pursuant to section 6042 (or would be required to make such information return but for the $10 threshold described in section 6042 (a)(1) (A) and (B). The nonpublicly offered regulated investment company shall make the information return for each calendar year and shall state separately on such return—

(A) The amount of affected RIC expenses required to be allocated to the affected investor for the calendar year pursuant to paragraph (k) of this section,

(B) The sum of—

(*1*) The aggregate amount of the dividends paid to the affected investor during the calendar year, and

(*2*) The amount of the affected RIC expenses required to be allocated to the affected investor for the calendar year pursuant to paragraph (k) of this section, and

(C) Such other information as may be specified by the form or its instructions.

(ii) ***Statement to be furnished to affected investors.*** A nonpublicly offered regulated investment company shall provide to each affected investor for each calendar year (whether or not the nonpublicly offered regulated investment company is required to make an information return with respect to the affected investor pursuant to section 6042), a written statement showing the following information:

(A) The information described in paragraph (n)(1)(i) of this section with respect to the affected investor;

(B) The name and address of the nonpublicly offered regulated investment company;

(C) The name and address of the affected investor; and

(D) If the nonpublicly offered regulated investment company is required to report the amount of the affected investor's allocation of affected RIC expense to the Internal Revenue Service pursuant to paragraph (n)(1)(i) of this section a statement to that effect.

(iii) ***Affected investor's shares held by a nominee.*** If an affected investor's shares in a nonpublicly offered regulated investment company are held in the name of a nominee, the nonpublicly offered regulated investment company may make the information return described in paragraph (n)(1)(i) of this section with respect to the nominee in lieu of the affected investor and may provide the written statement described in paragraph (n)(1)(ii) of this section to such nominee in lieu of the affected investor.

(2) ***By a nominee*** —

(i) ***In general.*** Except as otherwise provided for in paragraph (n)(2)(iii) of this section, in any case in which a nonpublicly offered regulated investment company provides, pursuant to paragraph (n)(1)(iii) of this section, a written statement to the nominee of an affected investor for a calendar year, the nominee shall—

(A) If the nominee is required to make an information return pursuant to section 6042 (or would be required to make an information return but for the $10 threshold described in section 6042(a)(1) (A) and (B), make an information return (e.g., Form 1099-DIV, Dividends and Distributions, for 1987) for the calendar year with respect to each affected investor and state separately on such information return the information described in paragraph (n)(1)(i) of this section, and

(B) Furnish each affected investor with a written statement for the calendar year showing the information required by paragraph (n)(2)(ii) of this section (whether or not the nominee is required to make an information return with respect to the affected investor pursuant to section 6042).

(ii) ***Form of statement.*** The written statement required to be furnished for a calendar year pursuant to paragraph (n)(2)(i)(B) of this section shall show the following information:

(A) The affected investor's proportionate share of the items described in paragraph (n)(1)(i) of this section for the calendar year,

(B) The name and address of the nominee,

(C) The name and address of the affected investor, and

(D) If the nominee is required to report the affected investor's share of the allocable investment expenses to the Internal Revenue Service pursuant to paragraph (n)(2)(i)(A) of this section, a statement to that effect.

(iii) ***Return not required.*** A nominee is not required to make an information return with respect to an affected investor pursuant to paragraph (n)(2)(i)(A) of this section if the nominee is excluded from the requirements of section 6042 pursuant to § 1.6042-2(a)(1) (ii) or (iii).

(iv) ***Statement not required.*** A nominee is not required to furnish a written statement to an affected investor pursuant to paragraph (n)(2)(i)(B) of this section if the nonpublicly offered regulated investment company furnishes the written statement to the affected investor pursuant to an agreement with the nominee described in § 1.6042-2(a)(1)(iii).

(v) ***Special rule.*** Paragraph (n)(1) (i) and (ii) of this section applies to a nonpublicly offered regulated investment company that agrees with the nominee to satisfy the requirements of section 6042 as described in § 1.6042-2(a)(1)(iii) with respect to the affected investor.

(3) ***Time and place for furnishing returns.*** The returns required by paragraph (n)(1)(i) and (2)(i)(A) of this section for any calendar year shall be filed at the time and place that a return required under section 6042 is required to be filed. See § 1.6042-2(c) .

(4) ***Time for furnishing statements.*** The statements required by paragraph (n)(1)(ii) and (2)(i)(B) of this section to be furnished by a nonpublicly offered regulated investment company and a nominee, respectively, to an affected investor for a calendar year shall be furnished to such affected investor on or before January 31 of the following year.

(5) ***Duplicative returns and statements not required*** —

(i) ***Information return.*** The requirements of paragraph (n)(1)(i) and (2)(i)(A) of this section for the making of an information return shall be met by the timely filing of an information return pursuant to section 6042 that contains the information required by paragraph (n)(1)(i).

(ii) ***Written statement.*** The requirements of paragraph (n)(1)(ii) and (2)(i)(B) of this section for the furnishing of a written statement (including the statement required by paragraph (n)(1)(ii)(D) and (2)(ii)(D) of this section) shall be met by furnishing the affected investor a copy of the information return to which section 6042 applies (whether or not the nonpublicly offered regulated investment company or nominee is required to file an information return with respect to the affected investor pursuant to section 6042) that contains the information required by paragraph (n)(1)(ii) or (2)(ii), whichever is applicable, of this section. Nonpublicly offered regulated investment companies and nominees may use a substitute form that contains provisions substantially similar to those of the prescribed form if the nonpublicly offered regulated investment company or nominee complies with all revenue procedures relating to substitute forms in effect at the time. The statement shall be furnished either in person or in a statement mailed by first-class mail that includes adequate notice that the statement is enclosed. A statement shall be considered to be furnished to an affected investor within the meaning of this section if it is mailed to such affected investor at its last known address.

(o) ***Return of information by a common trust fund.*** With respect to each affected investor to which paragraph (d) of this section applies, the common trust fund shall state on the return it is required to make pursuant to section 6032 for its taxable year, the following information:

(1) The amount of the affected investor's proportionate share of the affected expenses for the taxable year as described in paragraph (d)(1)(ii) of this section.

(2) The amount of the affected investor's proportionate share of ordinary taxable income or ordinary net loss for the taxable year determined pursuant to paragraph (d)(1)(i) of this section, and

(3) Such other information as may be specified by the form or its instructions.

(p) ***Publicly offered regulated investment companies.*** [Reserved]

[T.D. 8189, 53 FR 9876, Mar. 28, 1988; 53 FR 13464, Apr. 25, 1988]

§ 1.67-3 Allocation of expenses by real estate mortgage investment conduits.

(a) ***Allocation of allocable investment expenses.*** [Reserved]

(b) ***Treatment of allocable investment expenses.*** [Reserved]

(c) ***Computation of proportionate share.*** [Reserved]

(d) ***Example.*** [Reserved]

(e) ***Allocable investment expenses not subject to backup withholding.*** [Reserved]

(f) ***Notice to pass-through interest holders*** —

(1) ***Information required.*** A REMIC must provide to each pass-through interest holder to which an allocation of allocable investment expense is required to be made under § 1.67-3T(a)(1) notice of the following—

(i) If, pursuant to paragraph (f)(2)(i) or (ii) of this section, notice is provided for a calendar quarter, the aggregate amount of expenses paid or accrued during the calendar quarter for which the REMIC is allowed a deduction under section 212;

(ii) If, pursuant to paragraph (f)(2)(ii) of this section, notice is provided to a regular interest holder for a calendar year, the aggregate amount of expenses paid or accrued during each calendar quarter that the regular interest holder held the regular interest in the calendar year and for which the REMIC is allowed a deduction under section 212; and

(iii) The proportionate share of these expenses allocated to that pass-through interest holder, as determined under § 1.67-3T(c).

(2) *Statement to be furnished* —

(i) ***To residual interest holder.*** For each calendar quarter, a REMIC must provide to each pass-through interest holder who holds a residual interest during the calendar quarter the notice required under paragraph (f)(1) of this section on Schedule Q (Form 1066), as required in § 1.860F-4(e).

(ii) ***To regular interest holder.*** For each calendar year, a single-class REMIC (as described in § 1.67-3T(a)(2)(ii)(B)) must provide to each pass-through interest holder who held a regular interest during the calendar year the notice required under paragraph (f)(1) of this section. Quarterly reporting is not required. The information required to be included in the notice may be separately stated on the statement described in § 1.6049-7(f) instead of on a separate statement provided in a separate mailing. See § 1.6049-7(f)(4). The separate statement provided in a separate mailing must be furnished to each pass-through interest holder no later than the last day of the month following the close of the calendar year.

(3) *Returns to the Internal Revenue Service* —

(i) ***With respect to residual interest holders.*** Any REMIC required under paragraphs (f)(1) and (2)(i) of this section to furnish information to any pass-through interest holder who holds a residual interest must also furnish such information to the Internal Revenue Service as required in § 1.860F-4(e)(4).

(ii) ***With respect to regular interest holders.*** A single-class REMIC (as described in § 1.67-3T(a)(2)(ii)(B)) must make an information return on Form 1099 for each calendar year, with respect to each pass-through interest holder who holds a regular interest to which an allocation of allocable investment expenses is required to be made pursuant to § 1.67-3T(a)(1) and (2)(ii). The preceding sentence applies with respect to a holder for a calendar year only if the REMIC is required to make an information return to the Internal Revenue Service with respect to that holder for that year pursuant to section 6049 and § 1.6049-7(b)(2)(i) (or would be required to make an information return but for the $10 threshold described in section 6049(a)(1) and § 1.6049-7(b)(2)(i)). The REMIC must state on the information return—

(A) The sum of—

(*1*) The aggregate amounts includible in gross income as interest (as defined in § 1.6049-7(a)(1)(i) and (ii)), for the calendar year; and

(2) The sum of the amount of allocable investment expenses required to be allocated to the pass-through interest holder for each calendar quarter during the calendar year pursuant to § 1.67-3T(a); and

(B) Any other information specified by the form or its instructions.

(4) *Interest held by nominees and other specified persons* —

(i) ***Pass-through interest holder's interest held by a nominee.*** If a pass-through interest holder's interest in a REMIC is held in the name of a nominee, the REMIC may make the information return described in paragraphs (f)(3)(i) and (ii) of this section with respect to the nominee in lieu of the pass-through interest holder and may provide the written statement described in paragraphs (f)(2)(i) and (ii) of this section to that nominee in lieu of the pass-through interest holder.

(ii) ***Regular interests in a single-class REMIC held by certain persons.*** If a person specified in § 1.6049-7(e)(4) holds a regular interest in a single-class REMIC (as described in § 1.67-3T(a)(2)(ii)(B)), then the single-class REMIC must provide the information described in paragraphs (f)(1) and (f)(3)(ii)(A) and (B) of this section to that person with the information specified in § 1.6049-7(e)(2) as required in § 1.6049-7(e).

(5) ***Nominee reporting*** —

(i) ***In general.*** In any case in which a REMIC provides information pursuant to paragraph (f)(4) of this section to a nominee of a pass-through interest holder for a calendar quarter or, as provided in paragraph (f)(2)(ii) of this section, for a calendar year—

(A) The nominee must furnish each pass-through interest holder with a written statement described in paragraph (f)(2)(i) or (ii) of this section, whichever is applicable, showing the information described in paragraph (f)(1) of this section; and

(B) The nominee must make an information return on Form 1099 for each calendar year, with respect to the pass-through interest holder and state on this information return the information described in paragraphs (f)(3)(ii) (A) and (B) of this section, if—

(*1*) The nominee is a nominee for a pass-through interest holder who holds a regular interest in a single-class REMIC (as described in § 1.67-3T(a)(2)(ii)(B)); and

(*2*) The nominee is required to make an information return pursuant to section 6049 and § 1.6049-7 (b)(2)(i) and (b)(2)(ii)(B) (or would be required to make an information return but for the $10 threshold described in section 6049(a)(2) and § 1.6049-7(b)(2)(i)) with respect to the pass-through interest holder.

(ii) ***Time for furnishing statement.*** The statement required by paragraph (f)(5)(i)(A) of this section to be furnished by a nominee to a pass-through interest holder for a calendar quarter or calendar year must be furnished to this holder no later than 30 days after receiving the written statement described in paragraph (f)(2)(i) or (ii) of this section from the REMIC. If, however, pursuant to paragraph (f)(2)(ii) of this section, the information is separately stated on the statement described in § 1.6049-7(f), then the information must be furnished to the pass-through interest holder in the time specified in § 1.6049-7(f)(5).

(6) ***Special rules*** —

(i) ***Time and place for furnishing returns.*** The returns required by paragraphs (f)(3)(ii) and (f)(5)(i)(B) of this section for any calendar year must be filed at the time and place that a return required under section 6049 and § 1.6049-7(b)(2) is required to be filed. See § 1.6049-4(g) and § 1.6049-7(b)(2)(iv).

(ii) ***Duplicative returns not required.*** The requirements of paragraphs (f)(3)(ii) and (f)(5)(i)(B) of this section for the making of an information return are satisfied by the timely filing of an information return pursuant to section 6049 and § 1.6049-7(b)(2) that contains the information required by paragraph (f)(3)(ii) of this section.

[T.D. 8431, 57 FR 40321, Sept. 3, 1992]

§ 1.67-3T Allocation of expenses by real estate mortgage investment conduits (temporary).

(a) ***Allocation of allocable investment expenses*** —

(1) ***In general.*** A real estate mortgage investment conduit or REMIC (as defined in section 860D) shall allocate to each of its pass-through interest holders that holds an interest at any time during the calendar quarter the holder's proportionate share (as determined under paragraph (c) of this section) of the aggregate amount of allocable investment expenses of the REMIC for the calendar quarter.

(2) ***Pass-through interest holder*** —

(i) ***In general*** —

(A) ***Meaning of term.*** Except as provided in paragraph (a)(2)(ii) of this section, the term "pass-through interest holder" means any holder of a REMIC residual interest (as definition in section 860G(a)(2)) that is—

(*1*) An individual (other than a nonresident alien whose income with respect to his or her interest in the REMIC is not effectively connected with the conduct of a trade or business within the United States),

(*2*) A person, including a trust or estate, that computes its taxable income in the same manner as in the case of an individual, or

(*3*) A pass-through entity (as defined in paragraph (a)(3) of this section) if one or more of its partners, shareholders, beneficiaries, participants, or other interest holders is

(*i*) a pass-through entity or

(*ii*) a person described in paragraph (a)(2)(i)(A) (*1*) or (*2*) of this section.

(B) ***Examples.*** The provisions of this paragraph (a)(2)(i) may be illustrated by the following examples:

Example 1. Corporation X holds a residual interest in REMIC R in its capacity as a nominee or custodian for individual A, the beneficial owner of the interest. Because the owner of the interest for Federal income tax purposes is an individual, the interest is owned by a pass-through interest holder.

Example 2. Individual retirement account I holds a residual interest in a REMIC. Because an individual retirement account is not a person described in paragraph (a)(2)(i)(A) of this section, the interest is not held by a pass-through interest holder.

(ii) ***Single-class REMIC*** —

(A) ***In general.*** In the case of a single-class REMIC, the term "pass-through interest holder" means any holder of either—

(*1*) A REMIC regular interest (as defined in section 860G(a)(1)), or

(*2*) A REMIC residual interest, that is described in paragraph (a)(2)(i)(A) (*1*), (*2*), or (*3*) of this section.

(B) ***Single-class REMIC.*** For purposes of paragraph (a)(2)(ii)(A) of this section, a single-class REMIC IS either—

(*1*) A REMIC that would be classified as an investment trust under § 301.7701-4(c)(1) but for its qualification as a REMIC under section 860D and § 1.860D-1T, or

(*2*) A REMIC that—

(*i*) Is substantially similar to an investment trust under § 301.7701-4(c)(1), and

(*ii*) Is structured with the principal purpose of avoiding the requirement of paragraphs (a)(1) and (2)(ii)(A) of this section to allocate allocable investment expenses to pass-through interest holders that hold regular interests in the REMIC.

For purposes of this paragraph (a)(2)(ii)(B), in determining whether a REMIC would be classified as an investment trust or is substantially similar to an investment trust, all interests in the REMIC shall be treated as ownership interests in the REMIC, without regard to whether or not they would be classified as debt for Federal income tax purposes in the absence of a REMIC election.

(C) ***Examples.*** The provisions of paragraph (a)(2)(ii) of this section must be illustrated by the following examples:

Example 1. Corporation M transfers mortgages to a bank under a trust agreement as described in Example (2) of § 301.7701-4(c)(2). There are two classes of certificates. Holders of class C certificates are entitled to receive 90 percent of the payment of principal and interest on the mortgages; holders of class D certificates are entitled to receive the remaining 10 percent. The two classes of certificates are identical except that, in the event of a default on the underlying mortgages, the payment rights of class D certificates holders are subordinated to the rights of class C certificate holders. M sells the class C certificates to investors and retains the class D certificates. The trust would be classified as an investment trust under § 301.7701-4(c)(1) but for its qualification a REMIC under section 860D the class C certificates represent regular interests in the REMIC and the class D certificates represent residual interest in the REMIC. The REMIC is a single-class REMIC within the meaning of paragraph (a)(2)(ii)(B)(*1*) of this section and, accordingly, holders of both the class C and class D certificates who are described in paragraph (a)(2)(i)(A) (*1*), (*2*), or (*3*) of this section are treated as pass-through interest holders.

Example 2. Assume that the facts are the same as in Example (1) except that M structures the REMIC to include a second regular interest represented by class E certificates. The principal purpose of M in structuring the REMIC to include class E certificates is to avoid allocating allocable investment expenses to class C certificate holders. The class E certificate holders are entitled to receive the payments otherwise due the class D certificate holders until they have been paid a stated amount of principal plus interest. The fair market value of the class E certificate is ten percent of the fair

market value of the class D certificate and, therefore, less than one percent of the fair market value of the REMIC. The REMIC would not be classified as an investment trust under § 301.7701-4(c)(1) because the existence of the class E certificates is not incidental to the trust's purpose of facilitating direct investment in the assets of the trust. Nevertheless, because the fair market value of the class E certificates is de minimis, the REMIC is substantially similar to an investment trust under § 301.7701-4(c)(1). In addition, avoidance of the requirement to allocate allocable investment expenses to regular interest holders is the principal purpose of M in structuring the REMIC to include class E certificates. Therefore, the REMIC is a single-class REMIC within the meaning of paragraph (a)(2)(ii)(B)(*2*) of this section, and, accordingly, holders of both residual and regular interests who are described in paragraph (a)(2)(i)(A) (*1*), (*2*), or (*3*) of this section are treated as pass-through interest holders.

(3) ***Pass-through entity*** —

(i) ***In general.*** Except as provided in paragraph (a)(3)(ii) of this section, for purposes of this section, a pass-through entity is—

(A) A trust (or any portion thereof) to which Subpart E, Part 1, Subchapter J, Chapter 1 of the Code applies,

(B) A partnership,

(C) An S corporation,

(D) A common trust fund described in section 584,

(E) A nonpublicly offered regulated investment company (as defined in paragraph (a)(5)(i) of this section),

(F) A REMIC, and

(G) Any other person—

(*1*) Which is not subject to income tax imposed by Subtitle A, Chapter 1, or which is allowed a deduction in computing such tax for distributions to owners or beneficiaries, and

(*2*) The character of the income of which may affect the character of the income recognized with respect to that person by its owners or beneficiaries.

Entities that do not meet the requirements of paragraphs (a)(3)(i)(G) (*1*) and (*2*), such as qualified pension plans, individual retirement accounts, and insurance companies holding assets in separate asset accounts to fund variable contracts defined in section 817(d), are not described in this paragraph (a)(3)(i).

(ii) ***Exception.*** For purposes of this section, a pass-through entity does not include—

(A) An estate,

(B) A trust (or any portion thereof) not described in paragraph (a)(3)(i)(A) of this section,

(C) A cooperative described without regard to subparagraphs (A) and (C) thereof, or

(D) A real estate investment trust.

(4) ***Allocable investment expenses.*** The term "allocable investment expenses" means the aggregate amount of the expenses paid or accrued in the calendar quarter for which a deduction is allowable under section 212 in determining the taxable income of the REMIC for the calendar quarter.

(5) ***Nonpublicly offered regulated investment company*** —

(i) ***In general.*** For purposes of this section, the term "nonpublicly offered regulated investment company" means a regulated investment company to which Part I of Subchapter M of the Code applies that is not a publicly offered regulated investment company.

(ii) ***Publicly offered regulated investment company.*** For purposes of this section, the term "publicly offered regulated investment company" means a regulated investment company to which Part I of subchapter M of the Code applies, the shares of which are—

(A) Continuously offered pursuant to a public offering (within the meaning of section 4 of the Securities Act of 1933, as amended (15 U.S.C. 77a to 77aa)),

(B) Regularly traded on an established securities market, or

(C) Held by or for no fewer than 500 persons at all times during the taxable year.

(b) ***Treatment of allocable investment expenses*** —

(1) ***By pass-through interest holders*** —

(i) ***Taxable year ending with calendar quarter.*** A pass-through interest holder whose taxable year is the calendar year or ends with a calendar quarter shall be treated as having—

(A) Received or accrued income, and

(B) Paid or incurred an expense described in section 212 (or section 162 in the case of a pass-through interest holder that is a regulated investment company), in an amount equal to the pass-through interest holder's proportionate share of the allocable investment expenses of the REMIC for those calendar quarters that fall within the holder's taxable year.

(ii) ***Taxable year not ending with calendar quarter.*** A pass-through interest holder whose taxable year does not end with a calendar quarter shall be treated as having—

(A) Received or accrued income, and

(B) Paid or incurred an expense described in section 212 (or section 162 in the case of a pass-through interest holder that is a regulated investment company), in an amount equal to the sum of—

(C) The pass-through interest holder's proportionate share of the allocable investment expenses of the REMIC for those calendar quarters that fall within the holder's taxable year, and

(D) For each calendar quarter that overlaps the beginning or end of the taxable year, the sum of the daily amounts of the allocable investment expenses allocated to the holder pursuant to paragraph (c)(1)(ii) of this section for the days in the quarter that fall within the holder's taxable year.

(2) ***Proportionate share of allocable investment expenses.*** For purposes of paragraph (b) of this section, a pass-through interest holder's proportionate share of the allocable investment expenses is the amount allocated to the pass-through interest holder pursuant to paragraph (a)(1) of this section.

(3) ***Cross-reference.*** See § 1.67-1T with respect to limitations on deductions for expenses described in section 212 (including amounts treated as such expenses under this section).

(4) ***Interest income to holders of regular interests in certain REMICs.*** Any amount allocated under this section to the holder of a regular interest in a single-class REMIC (as described in paragraph (a)(2)(ii)(B) of this section) shall be treated as interest income.

(5) ***No adjustment to basis.*** The basis of any holder's interest in a REMIC shall not be increased or decreased by the amount of the holder's proportionate share of allocable investment expenses.

(6) ***Interest holders other than pass-through interest holders.*** An interest holder of a REMIC that is not a pass-through interest holder shall not take into account in computing its taxable income any amount of income or expense with respect to its proportionate share of allocable investment expenses.

(c) ***Computation of proportionate share*** —

(1) ***In general.*** For purposes of paragraph (a)(1) of this section, a REMIC shall compute a pass-through interest holder's proportionate share of the REMIC's allocable investment expenses by—

(i) Determining the daily amount of the allocable investment expenses for the calendar quarter by dividing the total amount of such expenses by the number of days in that calendar quarter.

(ii) Allocating the daily amount of the allocable investment expenses to the pass-through interest holder in proportion to its respective holdings on that day, and

(iii) Totaling the interest holder's daily amounts of allocable investment expenses for the calendar quarter.

(2) ***Other holders taken into account.*** For purposes of paragraph (c)(1)(ii) of this section, a pass-through interest holder's proportionate share of the daily amount of the allocable investment expenses is determined by taking into account all holders of residual interests in the REMIC, whether or not pass-through interest holders.

(3) ***Single-class REMIC*** —

(i) ***Daily allocation.*** In lieu of the allocation specified in paragraph (c)(1)(ii) of this section, a single-class REMIC (as described in paragraph (a)(2)(ii)(B) of this section) shall allocate the daily amount of the allocable investment expenses to each pass-through interest holder in proportion to the amount of income accruing to the holder with respect to its interest in the REMIC on that day.

(ii) ***Other holders taken into account.*** For purposes of paragraph (c)(3)(i) of this section, the amount of the allocable investment expenses that is allocated on any day to each pass-through interest holder shall be determined by multiplying the daily amount of allocable investment expenses (determined pursuant to paragraph (c)(1)(i) of this section) by a fraction, the numerator of which is equal to the amount of income that accrues (but not less than zero) to the pass-through interest holder on that day and the denominator of which is the total amount of income (as determined under paragraph (c)(3)(iii) of this section) that accrues to all regular and residual interest holders, whether or not pass-through interest holders, on that day.

(iii) ***Total income accruing.*** The total amount of income that accrues to all regular and residual interest holders is the sum of—

(A) The amount includible under section 860B in the gross income (but not less than zero) of the regular interest holders, and

(B) The amount of REMIC taxable income (but not less than zero) taken into account under section 860C by the residual interest holders.

(4) ***Dates of purchase and disposition.*** For purposes of this section, a pass-through interest holder holds an interest on the date of its purchase but not on the date of its disposition.

(d) ***Example.*** The provisions of this section may be illustrated by the following example:

Example. (i) During the calendar quarter ending March 31, 1989, REMIC X, which is not a single-class REMIC, incurs $900 of allocable investment expenses. At the beginning of the calendar quarter, X has 4 residual interest holders, who hold equal proportionate shares, and 10 regular interest holders. The residual interest holders, all of whom have calendar-year taxable years, are as follows:
A, an individual,

C, a C corporation that is a nominee for individual I.

S, an S corporation, and

M, a C corporation that is not a nominee.

(ii) Except for A, all of the residual interest holders hold their interests in X for the entire calendar quarter. On January 31, 1989, A sells his interest to S. Thus, for the first month of the calendar quarter, each residual interest holder holds a 25 percent interest (100%/4 interest holders) in X. For the last two months, S's holding is increased to 50 percent and A's holding is decreased to zero. The daily amount of allocable investment expenses for the calendar quarter is $10 ($900/90 days).

(iii) The amount of allocable investment expenses apportioned to the residual interest holders is as follows:

(A) $75 ($10 × 25% × 30 days) is allocated to A for the 30 days that A holds an interest in X during the calendar quarter. A includes $75 in gross income in calendar year 1989. The amount of A's expenses described in section 212 is increased by $75 in calendar year 1989. A's deduction under section 212 (including the $75 amount of the allocation) is subject to the limitations contained in section 67.

(B) $225 ($10 × 25% × 90 days) is allocated to C. Because C is a nominee for I, C does not include $225 in gross income or increase its deductible expenses by $225. Instead, I includes $225 in gross income in calendar year 1989, her taxable year. The amount of I's expenses described in section 212 is increased by $225. I's deduction under section 212 (including the $225 amount of the allocation) is subject to the limitations contained in section 67.

(C) $375 (($10 × 25% × 30 days) + ($10 × 50% × 60 days)) is allocated to S. S includes in gross income $375 of allocable investment expenses in calendar year 1989. The amount of S's expenses described in section 212 for that taxable year is increased by $375. S allocates the $375 to its shareholders in accordance with the rules described in sections 1366 and 1377 in calendar year 1989. Thus, each shareholder of S includes its pro rata share of the $375 in gross income in its taxable year in which or with which calendar year 1989 ends. The amount of each shareholder's expenses described in section 212 is increased by the amount of the shareholder's allocation for the shareholder's taxable year in which or with which calendar year 1989 ends. The shareholder's deduction under section 212 (including the allocation under this section) is subject to the limitations contained in section 67.

(D) No amount is allocated to M. However, M's interest is taken into account for purposes of determining the proportionate share of those residual interest holders to whom an allocation is required to be made.

(iv) No allocation is made to the 10 regular interest holders pursuant to paragraph (a) of this section. In addition, the interests held by these interest holders are not taken into account for purposes of determining the proportionate share of the residual interest holders to whom an allocation is required to be made.

(e) ***Allocable investment expenses not subject to backup withholding.*** The amount of allocable investment expenses required to be allocated to a pass-through interest holder pursuant to paragraph (a)(1) of this section is not subject to backup withholding under section 3406.

(f) ***Notice to pass-through interest holders*** —

(1) ***Information required.*** A REMIC must provide to each pass-through interest holder to which an allocation of allocable investment expense is required to be made under paragraph (a)(1) of this section notice of the following—

(i) If, pursuant to paragraph (f)(2) (i) or (ii) of this section, notice is provided for a calendar quarter, the aggregate amount of expenses paid or accrued during the calendar quarter for which the REMIC is allowed a deduction under section 212;

(ii) If, pursuant to paragraph (f)(2)(ii) of this section, notice is provided to a regular interest holder for a calendar year, the aggregate amount of expenses paid or accrued during each calendar quarter that the regular interest holder held the regular interest in the calendar year and for which the REMIC is allowed a deduction under section 212; and

(iii) The proportionate share of these expenses allocated to that pass-through interest holder, as determined under paragraph (c) of this section.

(2) ***Statement to be furnished*** —

(i) ***To residual interest holder.*** For each calendar quarter, a REMIC shall provide to each pass-through interest holder who holds a residual interest during the calendar quarter the notice required under paragraph (f)(1) of this section on Schedule Q (Form 1066), as required in § 1.860F-4(e).

(ii) ***To regular interest holder*** —

(A) ***In general.*** For each calendar year, a single-class REMIC (as described in paragraph (a)(2)(ii)(B) of this section) must provide to each pass-through interest holder who held a regular interest during the calendar year the notice required under paragraph (f)(1) of this section. Quarterly reporting is not required. The information required to be included in the notice may be separately stated on the statement described in § 1.6049-7(f) instead of on a separate statement provided in a separate mailing. See § 1.6049-7(f)(4). The separate statement provided in a separate mailing must be furnished to each pass-through interest holder no later than the last day of the month following the close of the calendar year.

(B) ***Special rule for 1987.*** The information required under paragraph (f)(2)(ii)(A) of this section for any calendar quarter of 1987 shall be mailed (or otherwise delivered) to each pass-through interest holder who holds a regular interest during that calendar quarter no later than March 28, 1988.

(3) ***Returns to the Internal Revenue Service*** —

(i) ***With respect to residual interest holders.*** Any REMIC required under paragraphs (f)(1) and (2)(i) of this section to furnish information to any pass-through interest holder who holds a residual interest shall also furnish such information to the Internal Revenue Service as required in § 1.860F-4(e)(4).

(ii) ***With respect to regular interest holders.*** A single-class REMIC (as described in paragraph (a)(2)(ii)(B) of this section) shall make an information return on Form 1099 for each calendar year beginning after December 31, 1987, with respect to each pass-through interest holder who holds a regular interest to which an allocation of allocable investment expenses is required to be made pursuant to paragraphs (a)(1) and (2)(ii) of this section. The preceding sentence applies with respect to a holder for a calendar year only if the REMIC is required to make an information return to the Internal Revenue Service with respect to that holder for that year pursuant to section 6049 and § 1.6049-7(b)(2)(i) (or would be required to make an information return but for the $10 threshold described in section 6049(a)(1) and § 1.6049-7(b)(2)(i)). The REMIC shall state on the information return—

(A) The sum of—

(*1*) The aggregate amounts includible in gross income as interest (as defined in § 1.6049-7(a)(1) (i) and (ii)), for the calendar year, and

(*2*) The sum of the amount of allocable investment expenses required to be allocated to the pass-through interest holder for each calendar quarter during the calendar year pursuant to paragraph (a) of this section, and

(B) Any other information specified by the form or its instructions.

(4) *Interest held by nominees and other specified persons* —

(i) ***Pass-through interest holder's interest held by a nominee.*** If a pass-through interest holder's interest in a REMIC is held in the name of a nominee, the REMIC may make the information return described in paragraphs (f)(3) (i) and (ii) of this section with respect to the nominee in lieu of the pass-through interest holder and may provide the written statement described in paragraphs (f)(2) (i) and (ii) of this section to that nominee in lieu of the pass-through interest holder.

(ii) ***Regular interests in a single-class REMIC held by certain persons.*** For calendar quarters and calendar years after December 31, 1991, if a person specified in § 1.6049-7(e)(4) holds a regular interest in a single-class REMIC (as described in paragraph (a)(2)(ii)(B) of this section), then the single-class REMIC must provide the information described in paragraphs (f)(1) and (f)(3)(ii) (A) and (B) of this section to that person with the information specified in § 1.6049-7(e)(2) as required in § 1.6049-7(e).

(5) *Nominee reporting* —

(i) ***In general.*** In any case in which a REMIC provides information pursuant to paragraph (f)(4) of this section to a nominee of a pass-through interest holder for a calendar quarter or, as provided in paragraph (f)(2)(ii) of this section, for a calendar year—

(A) The nominee shall furnish each pass-through interest holder with a written statement described in paragraph (f)(2) (i) or (ii) of this section, whichever is applicable, showing the information described in paragraph (f)(1) of this section, and

(B) If—

(*1*) The nominee is a nominee for a pass-through interest holder who holds a regular interest in a single-class REMIC (as described in paragraph (a)(2)(ii)(B) of this section), and

(*2*) The nominee is required to make an information return pursuant to section 6049 and § 1.6049-7(b)(2)(i) and (b)(2)(ii)(B) (or would be required to make an information return but for the $10 threshold described in section 6049(a)(2) and § 1.6049-7(b)(2)(i)) with respect to the pass-through interest holder,

the nominee shall make an information return on Form 1099 for each calendar year beginning after December 31, 1987, with respect to the pass-through interest holder and state on this information return the information described in paragraph (f)(3)(ii) (A) and (B) of this section.

(ii) ***Time for furnishing statement.*** The statement required by paragraph (f)(5)(i)(A) of this section to be furnished by a nominee to a pass-through interest holder for a calendar quarter or calendar year shall be furnished to this holder no later than 30 days after receiving the written statement described in paragraph (f)(2) (i) or (ii) of this section from the REMIC. If, however, pursuant to paragraph (f)(2)(ii) of this section, the information is separately stated on the statement described in § 1.6049-7(f), then the information must be furnished to the pass-through interest holder in the time specified in § 1.6049-7(f)(5).

(6) *Special rules* —

(i) ***Time and place for furnishing returns.*** The returns required by paragraphs (f)(3)(ii) and (f)(5)(i)(B) of this section for any calendar year shall be filed at the time and place that a return required under section 6049 and § 1.6049-7(b)(2) is required to be filed. See § 1.6049-4(g) and § 1.6049-7(b)(2)(iv).

(ii) ***Duplicative returns not required.*** The requirements of paragraphs (f)(3)(ii) and (f)(5)(i)(B) of this section for the making of an information return shall be met by the timely filing of an information return pursuant to section 6049 and § 1.6049-7(b)(2) that contains the information required by paragraph (f)(3)(ii) of this section.

[T.D. 8186, 53 FR 7507, Mar. 9, 1988, as amended by T.D. 8366, 56 FR 49515, Sept. 30, 1991]

§ 1.67-4 Costs paid or incurred by estates or non-grantor trusts.

(a) ***Deductions —***

(1) ***Section 67(e) deductions —***

(i) ***In general.*** An estate or trust (including the S portion of an electing small business trust) not described in § 1.67-2T(g)(1)(i) (a non-grantor trust) must compute its adjusted gross income in the same manner as an individual, except that the following deductions (section 67(e) deductions) are allowed in arriving at adjusted gross income:

(A) Costs that are paid or incurred in connection with the administration of the estate or trust that would not have been incurred if the property were not held in such estate or trust; and

(B) Deductions allowable under section 642(b) (relating to the personal exemption) and sections 651 and 661 (relating to distributions).

(ii) ***Not disallowed under section 67(g).*** Section 67(e) deductions are not itemized deductions under section 63(d) and are not miscellaneous itemized deductions under section 67(b). Therefore, section 67(e) deductions are not disallowed under section 67(g).

(2) ***Deductions subject to 2-percent floor.*** A cost is not a section 67(e) deduction and thus is subject to both the 2-percent floor in section 67(a) and section 67(g) to the extent that it is included in the definition of miscellaneous itemized deductions under section 67(b), is incurred by an estate or non-grantor trust (including the S portion of an electing small business trust), and commonly or customarily would be incurred by a hypothetical individual holding the same property.

(b) ***"Commonly" or "Customarily" Incurred —***

(1) ***In general.*** In analyzing a cost to determine whether it commonly or customarily would be incurred by a hypothetical individual owning the same property, it is the type of product or service rendered to the estate or non-grantor trust in exchange for the cost, rather than the description of the cost of that product or service, that is determinative. In addition to the types of costs described as commonly or customarily incurred by individuals in paragraphs (b)(2), (3), (4), and (5) of this section, costs that are incurred commonly or customarily by individuals also include, for example, costs incurred in defense of a claim against the estate, the decedent, or the non-grantor trust that are unrelated to the existence, validity, or administration of the estate or trust.

(2) ***Ownership costs.*** Ownership costs are costs that are chargeable to or incurred by an owner of property simply by reason of being the owner of the property. Thus, for purposes of section 67(e), ownership costs are commonly or customarily incurred by a hypothetical individual owner of such

property. Such ownership costs include, but are not limited to, partnership costs deemed to be passed through to and reportable by a partner if these costs are defined as miscellaneous itemized deductions pursuant to section 67(b), condominium fees, insurance premiums, maintenance and lawn services, and automobile registration and insurance costs. Other expenses incurred merely by reason of the ownership of property may be fully deductible under other provisions of the Code, such as sections 62(a)(4), 162, or 164(a), which would not be miscellaneous itemized deductions subject to section 67(e).

(3) ***Tax preparation fees.*** Costs relating to all estate and generation-skipping transfer tax returns, fiduciary income tax returns, and the decedent's final individual income tax returns are not subject to the 2-percent floor. The costs of preparing all other tax returns (for example, gift tax returns) are costs commonly and customarily incurred by individuals and thus are subject to the 2-percent floor.

(4) ***Investment advisory fees.*** Fees for investment advice (including any related services that would be provided to any individual investor as part of an investment advisory fee) are incurred commonly or customarily by a hypothetical individual investor and therefore are subject to the 2-percent floor. However, certain incremental costs of investment advice beyond the amount that normally would be charged to an individual investor are not subject to the 2-percent floor. For this purpose, such an incremental cost is a special, additional charge that is added solely because the investment advice is rendered to a trust or estate rather than to an individual or attributable to an unusual investment objective or the need for a specialized balancing of the interests of various parties (beyond the usual balancing of the varying interests of current beneficiaries and remaindermen) such that a reasonable comparison with individual investors would be improper. The portion of the investment advisory fees not subject to the 2-percent floor by reason of the preceding sentence is limited to the amount of those fees, if any, that exceeds the fees normally charged to an individual investor.

(5) ***Appraisal fees.*** Appraisal fees incurred by an estate or a non-grantor trust to determine the fair market value of assets as of the decedent's date of death (or the alternate valuation date), to determine value for purposes of making distributions, or as otherwise required to properly prepare the estate's or trust's tax returns, or a generation-skipping transfer tax return, are not incurred commonly or customarily by an individual and thus are not subject to the 2-percent floor. The cost of appraisals for other purposes (for example, insurance) is commonly or customarily incurred by individuals and is subject to the 2-percent floor.

(6) ***Certain fiduciary expenses.*** Certain other fiduciary expenses are not commonly or customarily incurred by individuals, and thus are not subject to the 2-percent floor. Such expenses include without limitation the following: Probate court fees and costs; fiduciary bond premiums; legal publication costs of notices to creditors or heirs; the cost of certified copies of the decedent's death certificate; and costs related to fiduciary accounts.

(c) ***Bundled fees*** —

(1) ***In general.*** If an estate or a non-grantor trust pays a single fee, commission, or other expense (such as a fiduciary's commission, attorney's fee, or accountant's fee) for both costs that are subject to the 2-percent floor and costs (in more than a de minimis amount) that are not, then, except to the extent provided otherwise by guidance published in the Internal Revenue Bulletin, the single fee, commission, or other expense (bundled fee) must be allocated, for purposes of computing the adjusted gross income of the estate or non-grantor trust in compliance with section 67(e), between the costs that are subject to the 2-percent floor and those that are not.

(2) ***Exception.*** If a bundled fee is not computed on an hourly basis, only the portion of that fee that is attributable to investment advice is subject to the 2-percent floor; the remaining portion is not subject to that floor.

(3) ***Expenses not subject to allocation.*** Out-of-pocket expenses billed to the estate or non-grantor trust are treated as separate from the bundled fee. In addition, payments made from the bundled fee to third parties that would have been subject to the 2-percent floor if they had been paid directly by the estate or non-grantor trust are subject to the 2-percent floor, as are any fees or expenses separately assessed by the fiduciary or other payee of the bundled fee (in addition to the usual or basic bundled fee) for services rendered to the estate or non-grantor trust that are commonly or customarily incurred by an individual.

(4) ***Reasonable method.*** Any reasonable method may be used to allocate a bundled fee between those costs that are subject to the 2-percent floor and those costs that are not, including without limitation the allocation of a portion of a fiduciary commission that is a bundled fee to investment advice. Facts that may be considered in determining whether an allocation is reasonable include, but are not limited to, the percentage of the value of the corpus subject to investment advice, whether a third party advisor would have charged a comparable fee for similar advisory services, and the amount of the fiduciary's attention to the trust or estate that is devoted to investment advice as compared to dealings with beneficiaries and distribution decisions and other fiduciary functions. The reasonable method standard does not apply to determine the portion of the bundled fee attributable to payments made to third parties for expenses subject to the 2-percent floor or to any other separately assessed expense commonly or customarily incurred by an individual, because those payments and expenses are readily identifiable without any discretion on the part of the fiduciary or return preparer.

(d) ***Applicability date.*** This section applies to taxable years beginning after December 31, 2014. Paragraph (a) of this section applies to taxable years beginning after October 19, 2020. Taxpayers may choose to apply paragraph (a) of this section to taxable years beginning after December 31, 2017, and on or before October 19, 2020.

[T.D. 9664, 79 FR 26619, May 9, 2014, as amended at 79 FR 41636, July 17, 2014; T.D. 9918, 85 FR 66224, Oct. 19, 2020]

ITEMS SPECIFICALLY INCLUDED IN GROSS INCOME

§ 1.71-1 Alimony and separate maintenance payments; income to wife or former wife.

(a) ***In general.*** Section 71 provides rules for treatment in certain cases of payments in the nature of or in lieu of alimony or an allowance for support as between spouses who are divorced or separated. For convenience, the payee spouse will hereafter in this section be referred to as the “wife” and the spouse from whom she is divorced or separated as the “husband.” See section 7701(a)(17). For rules relative to the deduction by the husband of periodic payments not attributable to transferred property, see section 215 and the regulations thereunder. For rules relative to the taxable status of income of an estate or trust in case of divorce, etc., see section 682 and the regulations thereunder.

(b) ***Alimony or separate maintenance payments received from the husband*** —

(1) ***Decree of divorce or separate maintenance.***

(i) In the case of divorce or legal separation, paragraph (1) of section 71(a) requires the inclusion in the gross income of the wife of periodic payments (whether or not made at regular intervals) received by her after a decree of divorce or of separate maintenance. Such periodic payments

must be made in discharge of a legal obligation imposed upon or incurred by the husband because of the marital or family relationship under a court order or decree divorcing or legally separating the husband and wife or a written instrument incident to the divorce status or legal separation status.

(ii) For treatment of payments attributable to property transferred (in trust or otherwise), see paragraph (c) of this section.

(2) ***Written separation agreement.***

(i) Where the husband and wife are separated and living apart and do not file a joint income tax return for the taxable year, paragraph (2) of section 71(a) requires the inclusion in the gross income of the wife of periodic payments (whether or not made at regular intervals) received by her pursuant to a written separation agreement executed after August 16, 1954. The periodic payments must be made under the terms of the written separation agreement after its execution and because of the marital or family relationship. Such payments are includable in the wife's gross income whether or not the agreement is a legally enforceable instrument. Moreover, if the wife is divorced or legally separated subsequent to the written separation agreement, payments made under such agreement continue to fall within the provisions of section 71(a)(2).

(ii) For purposes of section 71(a)(2) any written separation agreement executed on or before August 16, 1954, which is altered or modified in writing by the parties in any material respect after that date will be treated as an agreement executed after August 16, 1954, with respect to payments made after the date of alteration or modification.

(iii) For treatment of payments attributable to property transferred (in trust or otherwise), see paragraph (c) of this section.

(3) ***Decree for support.***

(i) Where the husband and wife are separated and living apart and do not file a joint income tax return for the taxable year, paragraph (3) of section 71(a) requires the inclusion in the gross income of the wife of periodic payments (whether or not made at regular intervals) received by her after August 16, 1954, from her husband under any type of court order or decree (including an interlocutory decree of divorce or a decree of alimony pendente lite) entered after March 1, 1954, requiring the husband to make the payments for her support or maintenance. It is not necessary for the wife to be legally separated or divorced from her husband under a court order or decree; nor is it necessary for the order or decree for support to be for the purpose of enforcing a written separation agreement.

(ii) For purposes of section 71(a)(3), any decree which is altered or modified by a court order entered after March 1, 1954, will be treated as a decree entered after such date.

(4) ***Scope of section 71(a).*** Section 71(a) applies only to payments made because of the family or marital relationship in recognition of the general obligation to support which is made specific by the decree, instrument, or agreement. Thus, section 71(a) does not apply to that part of any periodic payment which is attributable to the repayment by the husband of, for example, a bona fide loan previously made to him by the wife, the satisfaction of which is specified in the decree, instrument, or agreement as a part of the general settlement between the husband and wife.

(5) ***Year of inclusion.*** Periodic payments are includible in the wife's income under section 71(a) only for the taxable year in which received by her. As to such amounts, the wife is to be treated as if she makes her income tax returns on the cash receipts and disbursements method, regardless of whether she normally makes such returns on the accrual method. However, if the periodic payments described in section 71(a) are to be made by an estate or trust, such periodic payments are to be included in the wife's taxable year in which they are includible according to the rules as to income of estates and trusts provided in sections 652, 662, and 682, whether or not such payments are made out of the income of such estates or trusts.

(6) ***Examples.*** The foregoing rules are illustrated by the following examples in which it is assumed that the husband and wife file separate income tax returns on the calendar year basis:

Example 1. W files suit for divorce from H in 1953. In consideration of W's promise to relinquish all marital rights and not to make public H's financial affairs, H agrees in writing to pay $200 a month to W during her lifetime if a final decree of divorce is granted without any provision for alimony. Accordingly, W does not request alimony and no provision for alimony is made under a final decree of divorce entered December 31, 1953. During 1954, H pays W $200 a month, pursuant to the promise. The $2,400 thus received by W is includible in her gross income under the provisions of section 71(a)(1). Under section 215, H is entitled to a deduction of $2,400 from his gross income.

Example 2. During 1945, H and W enter into an antenuptial agreement, under which, in consideration of W's relinquishment of all marital rights (including dower) in H's property, and, in order to provide for W's support and household expenses, H promises to pay W $200 a month during her lifetime. Ten years after their marriage, W sues H for divorce but does not ask for or obtain alimony because of the provision already made for her support in the antenuptial agreement. Likewise, the divorce decree is silent as to such agreement and H's obligation to support W. Section 71(a) does not apply to such a case. If, however, the decree were modified so as to refer to the antenuptial agreement, or if reference had been made to the antenuptial agreement in the court's decree or in a written instrument incident to the divorce status, section 71(a)(1) would require the inclusion in W's gross income of the payments received by her after the decree. Similarly, if a written separation agreement were executed after August 16, 1954, and incorporated the payment provisions of the antenuptial agreement, section 71(a)(2) would require the inclusion in W's income of payments received by W after W begins living apart from H, whether or not the divorce decree was subsequently entered and whether or not W was living apart from H when the separation agreement was executed, provided that such payments were made after such agreement was executed and pursuant to its terms. As to including such payments in W's income, if made by a trust created under the antenuptial agreement, regardless of whether referred to in the decree or a later instrument, or created pursuant to the written separation agreement, see section 682 and the regulations thereunder.

Example 3. H and W are separated and living apart during 1954. W sues H for support and on February 1, 1954, the court enters a decree requiring H to pay $200 a month to W for her support and maintenance. No part of the $200 a month support payments is includible in W's income under section 71(a)(3) or deductible by H under section 215. If, however, the decree had been entered after March 1, 1954, or had been altered or modified by a court order entered after March 1, 1954, the payments received by W after August 16, 1954, under the decree as altered or modified would be includible in her income under section 71(a)(3) and deductible by H under section 215.

Example 4. W sues H for divorce in 1954. On January 15, 1954, the court awards W temporary alimony of $25 a week pending the final decree. On September 1, 1954, the court grants W a divorce and awards her $200 a month permanent alimony. No part of the $25 a week temporary alimony received prior to the decree is includible in W's income under section 71(a), but the $200 a month received during the remainder of 1954 by W is includible in her income for 1954. Under section 215, H is entitled to deduct such $200 payments from his income. If, however, the decree awarding W temporary alimony had been entered after March 1, 1954, or had been altered or modified by a court order entered after March 1, 1954, temporary alimony received by her after August 16, 1954, would be includible in her income under section 71(a)(3) and deductible by H under section 215.

(c) ***Alimony and separate maintenance payments attributable to property.***

(1)

(i) In the case of divorce or legal separation, paragraph (1) of section 71(a) requires the inclusion in the gross income of the wife of periodic payments (whether or not made at regular intervals) attributable to property transferred, in trust or otherwise, and received by her after a decree of divorce or of separate maintenance. Such property must have been transferred in discharge of a legal obligation imposed upon or incurred by the husband because of the marital or family relationship under a decree of divorce or separate maintenance or under a written instrument incident to such divorce status or legal separation status.

(ii) Where the husband and wife are separated and living apart and do not file a joint income tax return for the taxable year, paragraph (2) of section 71(a) requires the inclusion in the gross income of the wife of periodic payments (whether or not made at regular intervals) received by her which are attributable to property transferred, in trust or otherwise, under a written separation agreement executed after August 16, 1954. The property must be transferred because of the marital or family relationship. The periodic payments attributable to the property must be received by the wife after the written separation agreement is executed.

(iii) The periodic payments received by the wife attributable to property transferred under subdivisions (i) and (ii) of this subparagraph and includible in her gross income are not to be included in the gross income of the husband.

(2) The full amount of periodic payments received under the circumstances described in section 71(a) (1), (2), and (3) is required to be included in the gross income of the wife regardless of the source of such payments. Thus, it matters not that such payments are attributable to property in trust, to life insurance, endowment, or annuity contracts, or to any other interest in property, or are paid directly or indirectly by the husband from his income or capital. For example, if in order to meet an alimony or separate maintenance obligation of $500 a month the husband purchases or assigns for the benefit of his wife a commercial annuity contract paying such amount, the full $500 a month received by the wife is includible in her income, and no part of such amount is includible in the husband's income or deductible by him. See section 72(k) and the regulations thereunder. Likewise, if property is transferred by the husband, subject to an annual charge of $5,000, payable to his wife in discharge of his alimony or separate maintenance obligation under the divorce or separation decree or written instrument incident to the divorce status or legal separation status or if such property is transferred pursuant to a written separation agreement and subject to a similar annual charge, the $5,000 received annually is, under section 71(a) (1) or (2), includible in the wife's income, regardless of whether such amount is paid out of income or principal of the property.

(3) The same rule applies to periodic payments attributable to property in trust. The full amount of periodic payments to which section 71(a) (1) and (2) applies is includible in the wife's income regardless of whether such payments are made out of trust income. Such periodic payments are to be included in the wife's income under section 71(a) (1) or (2) and are to be excluded from the husband's income even though the income of the trust would otherwise be includible in his income under Subpart E, Part I, Subchapter J, Chapter 1 of the Code, relating to trust income attributable to grantors and others as substantial owners. As to periodic payments received by a wife attributable to property in trust in cases to which section 71(a) (1) or (2) does not apply because the husband's obligation is not specified in the decree or an instrument incident to the divorce status or legal separation status or the property was not transferred under a written separation agreement, see section 682 and the regulations thereunder.

(4) Section 71(a) (1) or (2) does not apply to that part of any periodic payment attributable to that portion of any interest in property transferred in discharge of the husband's obligation under the decree or instrument incident to the divorce status or legal separation status, or transferred pursuant to the written separation agreement, which interest originally belonged to the wife. It will apply, however, if she received such interest from her husband in contemplation of or as an incident to the divorce or separation without adequate and full consideration in money or money's worth, other than the release of the husband or his property from marital obligations. An example of the first rule is a case where the husband and wife transfer securities, which were owned by them jointly, in trust to pay an annuity to the wife. In this case, the full amount of that part of the annuity received by the wife attributable to the husband's interest in the securities transferred in discharge of his obligation under the decree, or instrument incident to the divorce status or legal separation status, or transferred under the written separation agreement, is taxable to her under section 71(a) (1) or (2), while that portion of the annuity attributable to the wife's interest in the securities so transferred is taxable to her only to the extent it is out of trust income as provided in Part I (sections 641 and following), Subchapter J, Chapter 1 of the Code. If, however, the husband's transfer to his wife is made before such property is transferred in discharge of his obligation under the decree or written instrument, or pursuant to the separation agreement in an attempt to avoid the application of section 71(a) (1) or (2) to part of such payments received by his wife, such transfers will be considered as a part of the same transfer by the husband of his property in discharge of his obligation or pursuant to such agreement. In such a case, section 71(a) (1) or (2) will be applied to the full amount received by the wife. As to periodic payments received under a joint purchase of a commercial annuity contract, see section 72 and the regulations thereunder.

(d) ***Periodic and installment payments.***

(1) In general, installment payments discharging a part of an obligation the principal sum of which is, in terms of money or property, specified in the decree, instrument, or agreement are not considered “periodic payments” and therefore are not to be included under section 71(a) in the wife's income.

(2) An exception to the general rule stated in subparagraph (1) of this paragraph is provided, however, in cases where such principal sum, by the terms of the decree, instrument, or agreement, may be or is to be paid over a period ending more than 10 years from the date of such decree, instrument, or agreement. In such cases, the installment payment is considered a periodic payment for the purposes of section 71(a) but only to the extent that the installment payment, or sum of the installment payments, received during the wife's taxable year does not exceed 10 percent of the principal sum. This 10-percent limitation applies to installment payments made in advance but does not apply to delinquent installment payments for a prior taxable year of the wife made during her taxable year.

(3)

(i) Where payments under a decree, instrument, or agreement are to be paid over a period ending 10 years or less from the date of such decree, instrument, or agreement, such payments are not installment payments discharging a part of an obligation the principal sum of which is, in terms of money or property, specified in the decree, instrument, or agreement (and are considered periodic payments for the purposes of section 71(a)) only if such payments meet the following two conditions:

(*a*) Such payments are subject to any one or more of the contingencies of death of either spouse, remarriage of the wife, or change in the economic status of either spouse, and

(*b*) Such payments are in the nature of alimony or an allowance for support.

(ii) Payments meeting the requirements of subdivision (i) are considered periodic payments for the purposes of section 71(a) regardless of whether—

(*a*) The contingencies described in subdivision (i)(*a*) of this subparagraph are set forth in the terms of the decree, instrument, or agreement, or are imposed by local law, or

(*b*) The aggregate amount of the payments to be made in the absence of the occurrence of the contingencies described in subdivision (i)(*a*) of this subparagraph is explicitly stated in the decree, instrument, or agreement or may be calculated from the face of the decree, instrument, or agreement, or

(*c*) The total amount which will be paid may be calculated actuarially.

(4) Where payments under a decree, instrument, or agreement are to be paid over a period ending more than ten years from the date of such decree, instrument, or agreement, but where such payments meet the conditions set forth in subparagraph (3)(i) of this paragraph, such payments are considered to be periodic payments for the purpose of section 71 without regard to the rule set forth in subparagraph (2) of this paragraph. Accordingly, the rules set forth in subparagraph (2) of this paragraph are not applicable to such payments.

(5) The rules as to periodic and installment payments are illustrated by the following examples:

Example 1. Under the terms of a written instrument, H is required to make payments to W which are in the nature of alimony, in the amount of $100 a month for nine years. The instrument provides that if H or W dies the payments are to cease. The payments are periodic.

Example 2. The facts are the same as in example (1) except that the written instrument explicitly provides that H is to pay W the sum of $10,800 in monthly payments of $100 over a period of nine years. The payments are periodic.

Example 3. Under the terms of a written instrument, H is to pay W $100 a month over a period of nine years. The monthly payments are not subject to any of the contingencies of death of H or W, remarriage of W, or change in the economic status of H or W under the terms of the written instrument or by reason of local law. The payments are not periodic.

Example 4. A divorce decree in 1954 provides that H is to pay W $20,000 each year for the next five years, beginning with the date of the decree, and then $5,000 each year for the next ten years. Assuming the wife makes her returns on the calendar year basis, each payment received in the years 1954 to 1958, inclusive, is treated as a periodic payment under section 71(a)(1), but only to the extent of 10 percent of the principal sum of $150,000. Thus, for such taxable years, only $15,000 of the $20,000

received is includible under section 71(a)(1) in the wife's income and is deductible by the husband under section 215. For the years 1959 to 1968, inclusive, the full $5,000 received each year by the wife is includible in her income and is deductible from the husband's income.

(e) ***Payments for support of minor children.*** Section 71(a) does not apply to that part of any periodic payment which, by the terms of the decree, instrument, or agreement under section 71(a), is specifically designated as a sum payable for the support of minor children of the husband. The statute prescribes the treatment in cases where an amount or portion is so fixed but the amount of any periodic payment is less than the amount of the periodic payment specified to be made. In such cases, to the extent of the amount which would be payable for the support of such children out of the originally specified periodic payment, such periodic payment is considered a payment for such support. For example, if the husband is by terms of the decree, instrument, or agreement required to pay $200 a month to his divorced wife, $100 of which is designated by the decree, instrument, or agreement to be for the support of their minor children, and the husband pays only $150 to his wife, $100 is nevertheless considered to be a payment by the husband for the support of the children. If, however, the periodic payments are received by the wife for the support and maintenance of herself and of minor children of the husband without such specific designation of the portion for the support of such children, then the whole of such amounts is includible in the income of the wife as provided in section 71(a). Except in cases of a designated amount or portion for the support of the husband's minor children, periodic payments described in section 71(a) received by the wife for herself and any other person or persons are includible in whole in the wife's income, whether or not the amount or portion for such other person or persons is designated.

§ 1.71-1T Alimony and separate maintenance payments (temporary).

(a) ***In general.***

Q-1 What is the income tax treatment of alimony or separate maintenance payments?

A-1 Alimony or separate maintenance payments are, under section 71, included in the gross income of the payee spouse and, under section 215, allowed as a deduction from the gross income of the payor spouse.

Q-2 What is an alimony or separate maintenance payment?

A-2 An alimony or separate maintenance payment is any payment received by or on behalf of a spouse (which for this purpose includes a former spouse) of the payor under a divorce or separation instrument that meets all of the following requirements:

(a) The payment is in cash (see A-5).

(b) The payment is not designated as a payment which is excludible from the gross income of the payee and nondeductible by the payor (see A-8).

(c) In the case of spouses legally separated under a decree of divorce or separate maintenance, the spouses are not members of the same household at the time the payment is made (see A-9).

(d) The payor has no liability to continue to make any payment after the death of the payee (or to make any payment as a substitute for such payment) and the divorce or separation instrument states that there is no such liability (see A-10).

(e) The payment is not treated as child support (see A-15).

(f) To the extent that one or more annual payments exceed $10,000 during any of the 6-post-separation years, the payor is obligated to make annual payments in each of the 6-post-separation years (see A-19).

Q-3 In order to be treated as alimony or separate maintenance payments, must the payments be “periodic” as that term was defined prior to enactment of the Tax Reform Act of 1984 or be made in discharge of a legal obligation of the payor to support the payee arising out of a marital or family relationship?

A-3 No. The Tax Reform Act of 1984 replaces the old requirements with the requirements described in A-2 above. Thus, the requirements that alimony or separate maintenance payments be “periodic” and be made in discharge of a legal obligation to support arising out of a marital or family relationship have been eliminated.

Q-4 Are the instruments described in section 71(a) of prior law the same as divorce or separation instruments described in section 71, as amended by the Tax Reform Act of 1984?

A-4 Yes.

(b) *Specific requirements.*

Q-5 May alimony or separate maintenance payments be made in a form other than cash?

A-5 No. Only cash payments (including checks and money orders payable on demand) qualify as alimony or separate maintenance payments. Transfers of services or property (including a debt instrument of a third party or an annuity contract), execution of a debt instrument by the payor, or the use of property of the payor do not qualify as alimony or separate maintenance payments.

Q-6 May payments of cash to a third party on behalf of a spouse qualify as alimony or separate maintenance payments if the payments are pursuant to the terms of a divorce or separation instrument?

A-6 Yes. Assuming all other requirements are satisfied, a payment of cash by the payor spouse to a third party under the terms of the divorce or separation instrument will qualify as a payment of cash which is received “on behalf of a spouse”. For example, cash payments of rent, mortgage, tax, or tuition liabilities of the payee spouse made under the terms of the divorce or separation instrument will qualify as alimony or separate maintenance payments. Any payments to maintain property owned by the payor spouse and used by the payee spouse (including mortgage payments, real estate taxes and insurance premiums) are not payments on behalf of a spouse even if those payments are made pursuant to the terms of the divorce or separation instrument. Premiums paid by the payor spouse for term or whole life insurance on the payor's life made under the terms of the divorce or separation instrument will qualify as payments on behalf of the payee spouse to the extent that the payee spouse is the owner of the policy.

Q-7 May payments of cash to a third party on behalf of a spouse qualify as alimony or separate maintenance payments if the payments are made to the third party at the written request of the payee spouse?

A-7 Yes. For example, instead of making an alimony or separate maintenance payment directly to the payee, the payor spouse may make a cash payment to a charitable organization if such payment is pursuant to the written request, consent or ratification of the payee spouse. Such request, consent or ratification must state that the parties intend the payment to be treated as an alimony or separate maintenance payment to the payee spouse subject to the rules of section 71, and must be received by the payor spouse prior to the date of filing of the payor's first return of tax for the taxable year in which the payment was made.

Q-8 How may spouses designate that payments otherwise qualifying as alimony or separate maintenance payments shall be excludible from the gross income of the payee and nondeductible by the payor?

A-8 The spouses may designate that payments otherwise qualifying as alimony or separate maintenance payments shall be nondeductible by the payor and excludible from gross income by the payee by so providing in a divorce or separation instrument (as defined in section 71(b)(2)). If the spouses have executed a written separation agreement (as described in section 71(b)(2)(B)), any writing signed by both spouses which designates otherwise qualifying alimony or separate maintenance payments as nondeductible and excludible and which refers to the written separation agreement will be treated as a written separation agreement (and thus a divorce or separation instrument) for purposes of the preceding sentence. If the spouses are subject to temporary support orders (as described in section 71(b)(2)(C)), the designation of otherwise qualifying alimony or separate payments as nondeductible and excludible must be made in the original or a subsequent temporary support order. A copy of the instrument containing the designation of payments as not alimony or separate maintenance payments must be attached to the payee's first filed return of tax (Form 1040) for each year in which the designation applies.

Q-9 What are the consequences if, at the time a payment is made, the payor and payee spouses are members of the same household?

A-9 Generally, a payment made at the time when the payor and payee spouses are members of the same household cannot qualify as an alimony or separate maintenance payment if the spouses are legally separated under a decree of divorce or of separate maintenance. For purposes of the preceding sentence, a dwelling unit formerly shared by both spouses shall not be considered two separate households even if the spouses physically separate themselves within the dwelling unit. The spouses will not be treated as members of the same household if one spouse is preparing to depart from the household of the other spouse, and does depart not more than one month after the date the payment is made. If the spouses are not legally separated under a decree of divorce or separate maintenance, a payment under a written separation agreement or a decree described in section 71(b)(2)(C) may qualify as an alimony or separate maintenance payment notwithstanding that the payor and payee are members of the same household at the time the payment is made.

Q-10 Assuming all other requirements relating to the qualification of certain payments as alimony or separate maintenance payments are met, what are the consequences if the payor spouse is required to continue to make the payments after the death of the payee spouse?

A-10 None of the payments before (or after) the death of the payee spouse qualify as alimony or separate maintenance payments.

Q-11 What are the consequences if the divorce or separation instrument fails to state that there is no liability for any period after the death of the payee spouse to continue to make any payments which would otherwise qualify as alimony or separate maintenance payments?

A-11 If the instrument fails to include such a statement, none of the payments, whether made before or after the death of the payee spouse, will qualify as alimony or separate maintenance payments.

Example 1. A is to pay B $10,000 in cash each year for a period of 10 years under a divorce or separation instrument which does not state that the payments will terminate upon the death of B. None of the payments will qualify as alimony or separate maintenance payments.

Example 2. A is to pay B $10,000 in cash each year for a period of 10 years under a divorce or separation instrument which states that the payments will terminate upon the death of B. In addition, under the instrument, A is to pay B or B's estate $20,000 in cash each year for a period of 10 years. Because the $20,000 annual payments will not terminate upon the death of B, these payments will not qualify as alimony or separate maintenance payments. However, the separate $10,000 annual payments will qualify as alimony or separate maintenance payments.

Q-12 Will a divorce or separation instrument be treated as stating that there is no liability to make payments after the death of the payee spouse if the liability to make such payments terminates pursuant to applicable local law or oral agreement?

A-12 No. Termination of the liability to make payments must be stated in the terms of the divorce or separation instrument.

Q-13 What are the consequences if the payor spouse is required to make one or more payments (in cash or property) after the death of the payee spouse as a substitute for the continuation of pre-death payments which would otherwise qualify as alimony or separate maintenance payments?

A-13 If the payor spouse is required to make any such substitute payments, none of the otherwise qualifying payments will qualify as alimony or separate maintenance payments. The divorce or separation instrument need not state, however, that there is no liability to make any such substitute payment.

Q-14 Under what circumstances will one or more payments (in cash or property) which are to occur after the death of the payee spouse be treated as a substitute for the continuation of payments which would otherwise qualify as alimony or separate maintenance payments?

A-14 To the extent that one or more payments are to begin to be made, increase in amount, or become accelerated in time as a result of the death of the payee spouse, such payments may be treated as a substitute for the continuation of payments terminating on the death of the payee spouse which would otherwise qualify as alimony or separate maintenance payments. The determination of whether or not such payments are a substitute for the continuation of payments which would otherwise qualify as alimony or separate maintenance payments, and of the amount of the otherwise qualifying alimony or separate maintenance payments for which any such payments are a substitute, will depend on all of the facts and circumstances.

Example 1. Under the terms of a divorce decree, A is obligated to make annual alimony payments to B of $30,000, terminating on the earlier of the expiration of 6 years or the death of B. B maintains custody of the minor children of A and B. The decree provides that at the death of B, if there are minor children of A and B remaining, A will be obligated to make annual payments of $10,000 to a trust, the income and corpus of which are to be used for the benefit of the children until the youngest child attains the age of majority. These facts indicate that A's liability to make annual $10,000 payments in trust for the benefit of his minor children upon the death of B is a substitute for $10,000 of the $30,000 annual payments to B. Accordingly, $10,000 of each of the $30,000 annual payments to B will not qualify as alimony or separate maintenance payments.

Example 2. Under the terms of a divorce decree, A is obligated to make annual alimony payments to B of $30,000, terminating on the earlier of the expiration of 15 years or the death of B. The divorce decree provides that if B dies before the expiration of the 15 year period, A will pay to B's estate the difference between the total amount that A would have paid had B survived, minus the amount actually paid. For example, if B dies at the end of the 10th year in which payments are made, A will pay to B's estate $150,000 ($450,000-$300,000). These facts indicate that A's liability to make a lump sum payment to B's estate upon the death of B is a substitute for the full amount of each of the annual $30,000 payments to

B. Accordingly, none of the annual $30,000 payments to B will qualify as alimony or separate maintenance payments. The result would be the same if the lump sum payable at B's death were discounted by an appropriate interest factor to account for the prepayment.

(c) *Child support payments.*

Q-15 What are the consequences of a payment which the terms of the divorce or separation instrument fix as payable for the support of a child of the payor spouse?

A-15 A payment which under the terms of the divorce or separation instrument is fixed (or treated as fixed) as payable for the support of a child of the payor spouse does not qualify as an alimony or separate maintenance payment. Thus, such a payment is not deductible by the payor spouse or includible in the income of the payee spouse.

Q-16 When is a payment fixed (or treated as fixed) as payable for the support of a child of the payor spouse?

A-16 A payment is fixed as payable for the support of a child of the payor spouse if the divorce or separation instrument specifically designates some sum or portion (which sum or portion may fluctuate) as payable for the support of a child of the payor spouse. A payment will be treated as fixed as payable for the support of a child of the payor spouse if the payment is reduced (a) on the happening of a contingency relating to a child of the payor, or (b) at a time which can clearly be associated with such a contingency. A payment may be treated as fixed as payable for the support of a child of the payor spouse even if other separate payments specifically are designated as payable for the support of a child of the payor spouse.

Q-17 When does a contingency relate to a child of the payor?

A-17 For this purpose, a contingency relates to a child of the payor if it depends on any event relating to that child, regardless of whether such event is certain or likely to occur. Events that relate to a child of the payor include the following: the child's attaining a specified age or income level, dying, marrying, leaving school, leaving the spouse's household, or gaining employment.

Q-18 When will a payment be treated as to be reduced at a time which can clearly be associated with the happening of a contingency relating to a child of the payor?

A-18 There are two situations, described below, in which payments which would otherwise qualify as alimony or separate maintenance payments will be presumed to be reduced at a time clearly associated with the happening of a contingency relating to a child of the payor. In all other situations, reductions in payments will not be treated as clearly associated with the happening of a contingency relating to a child of the payor.

The first situation referred to above is where the payments are to be reduced not more than 6 months before or after the date the child is to attain the age of 18, 21, or local age of majority. The second situation is where the payments are to be reduced on two or more occasions which occur not more than one year before or after a different child of the payor spouse attains a certain age between the ages of 18 and 24, inclusive. The certain age referred to in the preceding sentence must be the same for each such child, but need not be a whole number of years.

The presumption in the two situations described above that payments are to be reduced at a time clearly associated with the happening of a contingency relating to a child of the payor may be rebutted (either by the Service or by taxpayers) by showing that the time at which the payments are to be reduced was determined independently of any contingencies relating to the children of the payor. The presumption in

the first situation will be rebutted conclusively if the reduction is a complete cessation of alimony or separate maintenance payments during the sixth post-separation year (described in A-21) or upon the expiration of a 72-month period. The presumption may also be rebutted in other circumstances, for example, by showing that alimony payments are to be made for a period customarily provided in the local jurisdiction, such as a period equal to one-half the duration of the marriage.

Example: A and B are divorced on July 1, 1985, when their children, C (born July 15, 1970) and D (born September 23, 1972), are 14 and 12, respectively. Under the divorce decree, A is to make alimony payments to B of $2,000 per month. Such payments are to be reduced to $1,500 per month on January 1, 1991 and to $1,000 per month on January 1, 1995. On January 1, 1991, the date of the first reduction in payments, C will be 20 years 5 months and 17 days old. On January 1, 1995, the date of the second reduction in payments, D will be 22 years 3 months and 9 days old. Each of the reductions in payments is to occur not more than one year before or after a different child of A attains the age of 21 years and 4 months. (Actually, the reductions are to occur not more than one year before or after C and D attain *any* of the ages 21 years 3 months and 9 days through 21 years 5 months and 17 days.) Accordingly, the reductions will be presumed to clearly be associated with the happening of a contingency relating to C and D. Unless this presumption is rebutted, payments under the divorce decree equal to the sum of the reduction ($1,000 per month) will be treated as fixed for the support of the children of A and therefore will not qualify as alimony or separate maintenance payments.

(d) *Excess front-loading rules.*

Q-19 What are the excess front-loading rules?

A-19 The excess front-loading rules are two special rules which may apply to the extent that payments in any calendar year exceed $10,000. The first rule is a minimum term rule, which must be met in order for any annual payment, to the extent in excess of $10,000, to qualify as an alimony or separate maintenance payment (see A-2(f)). This rule requires that alimony or separate maintenance payments be called for, at a minimum, during the 6 "post-separation years". The second rule is a recapture rule which characterizes payments retrospectively by requiring a recalculation and inclusion in income by the payor and deducation by the payee of previously paid alimony or separate maintenance payment to the extent that the amount of such payments during any of the 6 "post-separation years" falls short of the amount of payments during a prior year by more than $10,000.

Q-20 Do the excess front-loading rules apply to payments to the extent that annual payments never exceed $10,000?

A-20 No. For example, A is to make a single $10,000 payment to B. Provided that the other requirements of section 71 are met, the payment will qualify as an alimony or separate maintenance payment. If A were to make a single $15,000 payment to B, $10,000 of the payment would qualify as an alimony or separate maintenance payment and $5,000 of the payment would be disqualified under the minimum term rule because payments were not to be made for the minimum period.

Q-21 Do the excess front-loading rules apply to payments received under a decree described in section 71(b)(2)(C)?

A-21 No. Payments under decrees described in section 71(b)(2)(C) are to be disregarded entirely for purposes of applying the excess front-loading rules.

Q-22 Both the minimum term rule and the recapture rule refer to 6 "post-separation years". What are the 6 "post separation years"?

A-22 The 6 "post-separation years" are the 6 consecutive calendar years beginning with the first calendar year in which the payor pays to the payee an alimony or separate maintenance payment (except a payment made under a decree described in section 71(b)(2)(C)). Each year within this period is referred to as a "post-separation year". The 6-year period need not commence with the year in which the spouses separate or divorce, or with the year in which payments under the divorce or separation instrument are made, if no payments during such year qualify as alimony or separate maintenance payments. For example, a decree for the divorce of A and B is entered in October, 1985. The decree requires A to make monthly payments to B commencing November 1, 1985, but A and B are members of the same household until February 15, 1986 (and as a result, the payments prior to January 16, 1986, do not qualify as alimony payments). For purposes of applying the excess front-loading rules to payments from A to B, the 6 calendar years 1986 through 1991 are post-separation years. If a spouse has been making payments pursuant to a divorce or separation instrument described in section 71(b)(2) (A) or (B), a modification of the instrument or the substitution of a new instrument (for example, the substitution of a divorce decree for a written separation agreement) will not result in the creation of additional post-separation years. However, if a spouse has been making payments pursuant to a divorce or separation instrument described in section 71(b)(2)(C), the 6-year period does not begin until the first calendar year in which alimony or separate maintenance payments are made under a divorce or separation instrument described in section 71(b)(2) (A) or (B).

Q-23 How does the minimum term rule operate?

A-23 The minimum term rule operates in the following manner. To the extent payments are made in excess of $10,000, a payment will qualify as an alimony or separate maintenance payment only if alimony or separate maintenance payments are to be made in each of the 6 post-separation years. For example, pursuant to a divorce decree, A is to make alimony payments to B of $20,000 in each of the 5 calendar years 1985 through 1989. A is to make no payment in 1990. Under the minimum term rule, only $10,000 will qualify as an alimony payment in each of the calendar years 1985 through 1989. If the divorce decree also required A to make a $1 payment in 1990, the minimum term rule would be satisfied and $20,000 would be treated as an alimony payment in each of the calendar years 1985 through 1989. The recapture rule would, however, apply for 1990. For purposes of determining whether alimony or separate maintenance payments are to be made in any year, the possible termination of such payments upon the happening of a contingency (other than the passage of time) which has not yet occurred is ignored (unless such contingency may cause all or a portion of the payment to be treated as a child support payment).

Q-24 How does the recapture rule operate?

A-24 The recapture rule operates in the following manner. If the amount of alimony or separate maintenance payments paid in any post-separation year (referred to as the "computation year") falls short of the amount of alimony or separate maintenance payments paid in any prior post-separation year by more than $10,000, the payor must compute an "excess amount" for the computation year. The excess amount for any computation year is the sum of excess amounts determined with respect to each prior post-separation year. The excess amount determined with respect to a prior post-separation year is the excess of (1) the amount of alimony or separate maintenance payments paid by the payor spouse during such prior post-separation year, over (2) the amount of the alimony or separate maintenance payments paid by the payor spouse during the computation year plus $10,000. For purposes of this calculation, the amount of alimony or separate maintenance payments made by the payor spouse during any post-separation year preceding the computation year is reduced by any excess amount previously determined with respect to such year. The rules set forth above may be illustrated by the following example. A makes alimony

payments to B of $25,000 in 1985 and $12,000 in 1986. The excess amount with respect to 1985 that is recaptured in 1986 is $3,000 ($25,000− ($12,000 + $10,000)). For purposes of subsequent computation years, the amount deemed paid in 1985 is $22,000. If A makes alimony payments to B of $1,000 in 1987, the excess amount that is recaptured in 1987 will be $12,000. This is the sum of an $11,000 excess amount with respect to 1985 ($22,000−$1,000 + $10,000)) and a $1,000 excess amount with respect to 1986 ($12,000−($1,000 + $10,000)). If, prior to the end of 1990, payments decline further, additional recapture will occur. The payor spouse must include the excess amount in gross income for his/her taxable year begining with or in the computation year. The payee spouse is allowed a deduction for the excess amount in computing adjusted gross income for his/her taxable year beginning with or in the computation year. However, the payee spouse must compute the excess amount by reference to the date when payments were made and not when payments were received.

Q-25 What are the exceptions to the recapture rule?

A-25 Apart from the $10,000 threshold for application of the recapture rule, there are three exceptions to the recapture rule. The first exception is for payments received under temporary support orders described in section 71(b)(2)(C) (see A-21). The second exception is for any payment made pursuant to a continuing liability over the period of the post-separation years to pay a fixed portion of the payor's income from a business or property or from compensation for employment or self-employment. The third exception is where the alimony or separate manitenance payments in any post-separation year cease by reason of the death of the payor or payee or the remarriage (as defined under applicable local law) of the payee before the close of the computation year. For example, pursuant to a divorce decree, A is to make cash payments to B of $30,000 in each of the calendar years 1985 through 1990. A makes cash payments of $30,000 in 1985 and $15,000 in 1986, in which year B remarries and A's alimony payments cease. The recapture rule does not apply for 1986 or any subsequent year. If alimony or separate maintenance payments made by A decline or cease during a post-separation year for any other reason (including a failure by the payor to make timely payments, a modification of the divorce or separation instrument, a reduction in the support needs of the payee, or a reduction in the ability of the payor to provide support) excess amounts with respect to prior post-separation years will be subject to recapture.

(e) *Effective dates.*

Q-26 When does section 71, as amended by the Tax Reform Act of 1984, become effective?

A-26 Generally, section 71, as amended, is effective with respect to divorce or separation instruments (as defined in section 71(b)(2)) executed after December 31, 1984. If a decree of divorce or separate maintenance executed after December 31, 1984, incorporates or adopts without change the terms of the alimony or separate maintenance payments under a divorce or separation instrument executed before January 1, 1985, such decree will be treated as executed before January 1, 1985. A change in the amount of alimony or separate maintenance payments or the time period over which such payments are to continue, or the addition or deletion of any contingencies or conditions relating to such payments is a change in the terms of the alimony or separate maintenance payments. For example, in November 1984, A and B executed a written separation agreement. In February 1985, a decree of divorce is entered in substitution for the written separation agreement. The decree of divorce does not change the terms of the alimony A pays to B. The decree of divorce will be treated as executed before January 1, 1985 and hence alimony payments under the decree will be subject to the rules of section 71 prior to amendment by the Tax Reform Act of 1984. If the amount or time period of the alimony or separate maintenance payments are not specified in the pre-1985 separation agreement or if the decree of divorce changes the amount or term of such payments, the decree of divorce will not be treated as executed before January 1, 1985, and alimony payments under the decree will be subject to the rules of section 71, as amended by the Tax Reform Act of 1984.

Section 71, as amended, also applies to any divorce or separation instrument executed (or treated as executed) before January 1, 1985 that has been modified on or after January 1, 1985, if such modification expressly provides that section 71, as amended by the Tax Reform Act of 1984, shall apply to the instrument as modified. In this case, section 71, as amended, is effective with respect to payments made after the date the instrument is modified.

(Secs. 1041(d)(4) (98 Stat. 798, 26 U.S.C. 1041(d)(4), 152(e)(2)(A) (98 Stat. 802, 26 U.S.C. 152(e)(2)(A), 215(c) (98 Stat. 800, 26 U.S.C. 215(c)) and 7805 (68A Stat. 917, 26 U.S.C. 7805) of the Internal Revenue Code of 1954.

[T.D. 7973, 49 FR 34455, Aug. 31, 1984; 49 FR 36645, Sept. 19, 1984]

§ 1.71-2 Effective date; taxable years ending after March 31, 1954, subject to the Internal Revenue Code of 1939.

Pursuant to section 7851(a)(1)(C), the regulations prescribed in § 1.71-1, to the extent that they relate to payments under a written separation agreement executed after August 16, 1954, and to the extent that they relate to payments under a decree for support received after August 16, 1954, under a decree entered after March 1, 1954, shall also apply to taxable years beginning before January 1, 1954, and ending after August 16, 1954, although such years are subject to the Internal Revenue Code of 1939.

§ 1.72-1 Introduction.

(a) ***General principle.*** Section 72 prescribes rules relating to the inclusion in gross income of amounts received under a life insurance, endowment, or annuity contract unless such amounts are specifically excluded from gross income under other provisions of Chapter 1 of the Code. In general, these rules provide that amounts subject to the provisions of section 72 are includible in the gross income of the recipient except to the extent that they are considered to represent a reduction or return of premiums or other consideration paid.

(b) ***Amounts to be considered as a return of premiums.*** For the purpose of determining the extent to which amounts received represent a reduction or return of premiums or other consideration paid, the provisions of section 72 distinguish between “amounts received as an annuity” and “amounts not received as an annuity”. In general, “amounts received as an annuity” are amounts which are payable at regular intervals over a period of more than one full year from the date on which they are deemed to begin, provided the total of the amounts so payable or the period for which they are to be paid can be determined as of that date. See paragraph (b) (2) and (3) of § 1.72-2. Any other amounts to which the provisions of section 72 apply are considered to be “amounts not received as an annuity”. See § 1.72-11.

(c) ***“Amounts received as an annuity.”***

(1) In the case of “amounts received as an annuity” (other than certain employees' annuities described in section 72(d) and in § 1.72-13), a proportionate part of each amount so received is considered to represent a return of premiums or other consideration paid. The proportionate part of each annuity payment which is thus excludable from gross income is determined by the ratio which the investment in the contract as of the date on which the annuity is deemed to begin bears to the expected return under the contract as of that date. See § 1.72-4.

(2) In the case of employees' annuities of the type described in section 72(d), no amount received as an annuity in a taxable year to which the Internal Revenue Code of 1954 applies is includible in the gross income of a recipient until the aggregate of all amounts received thereunder and excluded

from gross income under the applicable income tax law exceeds the consideration contributed (or deemed contributed) by the employee under § 1.72-8. Thereafter, all amounts so received are includible in the gross income of the recipient. See § 1.72-13.

(d) ***"Amounts not received as an annuity".*** In the case of "amounts not received as an annuity", if such amounts are received after an annuity has begun and during its continuance, amounts so received are generally includible in the gross income of the recipient. Amounts not received as an annuity which are received at any other time are generally includible in the gross income of the recipient only to the extent that such amounts, when added to all amounts previously received under the contract which were excludable from the gross income of the recipient under the income tax law applicable at the time of receipt, exceed the premiums or other consideration paid (see § 1.72-11). However, if the aggregate of premiums or other consideration paid for the contract includes amounts for which a deduction was allowed under section 404 as contributions on behalf of an owner-employee, the amounts received under the circumstances of the preceding sentence shall be includible in gross income until the amount so included equals the amount for which the deduction was so allowed. See paragraph (b) of § 1.72-17.

(e) ***Classification of recipients.*** For the purpose of the regulations under section 72, a recipient shall be considered an "annuitant" if he receives amounts under an annuity contract during the period that the annuity payments are to continue, whether for a term certain or during the continuing life or lives of the person or persons whose lives measure the duration of such annuity. However, a recipient shall be considered a "beneficiary" rather than an "annuitant" if the amounts he receives under a contract are received after the term of the annuity for a life or lives has expired and such amounts are paid by reason of the fact that the contract guarantees that payments of some minimum amount or for some minimum period shall be made. For special rules with respect to beneficiaries, see paragraphs (a)(1)(iii) and (c) of § 1.72-11.

[T.D. 6500, 25 FR 11402, Nov. 26, 1960, as amended by T.D. 6676, 28 FR 10134, Sept. 17, 1963]

§ 1.72-2 Applicability of section.

(a) ***Contracts.***

(1) The contracts under which amounts paid will be subject to the provisions of section 72 include contracts which are considered to be life insurance, endowment, and annuity contracts in accordance with the customary practice of life insurance companies. For the purposes of section 72, however, it is immaterial whether such contracts are entered into with an insurance company. The term "endowment contract" also includes the "face-amount certificates" described in section 72(1).

(2) If two or more annuity obligations or elements to which section 72 applies are acquired for a single consideration, such as an obligation to pay an annuity to A for his life accompanied by an obligation to pay an annuity to B for his life, there being a single consideration paid for both obligations (whether paid by one or more persons in equal or different amounts, and whether paid in a single sum or otherwise), such annuity elements shall be considered to comprise a single contract for the purpose of the application of section 72 and the regulations thereunder. For rules relating to the allocation of investment in the contract in the case of annuity elements payable to two or more persons, see paragraph (b) of § 1.72-6.

(3)

(i) Sections 402 and 403 provide that certain distributions by employees' trusts and certain payments under employee plans are taxable under section 72. For taxable years beginning before January 1, 1964, section 72(e)(3), as in effect before such date, does not apply to such distributions or payments. For purposes of applying section 72 to such distributions and payments (other than those described in subdivision (iii) of this subparagraph), each separate program of the employer consisting of interrelated contributions and benefits shall be considered a single contract. Therefore, all distributions or payments (other than those described in subdivision (iii) of this subparagraph) which are attributable to a separate program of interrelated contributions and benefits are considered as received under a single contract. A separate program of interrelated contributions and benefits may be financed by the purchase from an insurance company of one or more group contracts or one or more individual contracts, or may be financed partly by the purchase of contracts from an insurance company and partly through an investment fund, or may be financed completely through an investment fund. A program may be considered separate for purposes of section 72 although it is only a part of a plan which qualifies under section 401. There may be several trusts under one separate program, or several separate programs may make use of a single trust. See, however, subdivision (iii) of this subparagraph for rules relating to what constitutes a “contract” for purposes of applying section 72 to distributions commencing before October 20, 1960.

(ii) The following types of benefits, and the contributions used to provide them, are examples of separate programs of interrelated contributions and benefits:

(*a*) Definitely determinable retirement benefits.

(*b*) Definitely determinable benefits payable prior to retirement in case of disability.

(*c*) Life insurance.

(*d*) Accident and health insurance.

However, retirement benefits and life insurance will be considered part of a single separate program of interrelated contributions and benefits to the extent they are provided under retirement income, endowment, or other contracts providing life insurance protection. See examples (6), (7), and (8) contained in subdivision (iv) of this subparagraph for illustrations of the principles of this subdivision. See, also, § 1.72-15 for rules relating to the taxation of amounts received under an employee plan which provides both retirement benefits and accident and health benefits.

(iii) If any amount which is taxable under section 72 by reason of section 402 or 403 is actually distributed or made available to any person under an employees' trust or plan (other than the Civil Service Retirement Act, 5 U.S.C. ch. 14) before October 20, 1960, section 72 shall, notwithstanding any other provisions in this subparagraph, be applied to all the distributions with respect to such person (or his beneficiaries) under such trust or plan (whether received before or after October 20, 1960) as though such distributions were provided under a single contract. For purposes of applying section 72 to distributions to which this subdivision applies, therefore, the term “contract” shall be considered to include the entire interest of an employee in each trust or plan described in sections 402 and 403 to the extent that distributions thereunder are subject to the provisions of section 72. Section 72 shall be applied to distributions received under the Civil Service Retirement Act in the manner prescribed in subdivision (i) of this subparagraph (see example (4) in subdivision (iv) of this subparagraph).

(iv) The application of this subparagraph may be illustrated by the following examples:

Example 1. On January 1, 1961, X Corporation established a noncontributory profit-sharing plan for its employees providing that the amount standing to the account of each participant will be paid to him at the time of his retirement and also established a contributory pension plan for its employees providing for the payment to each participant of a lifetime pension after retirement. The profit-sharing plan is designed to enable the employees to participate in the profits of X Corporation; the amount of the contributions to it are determined by reference to the profits of X Corporation; and the amount of any distribution is determined by reference to the amount of contributions made on behalf of any participant and the earnings thereon. On the other hand, the pension plan is designed to provide a lifetime pension for a retired employee; the amount of the pension is to be determined by a formula set forth in the plan; and the amount of contributions to the plan is the amount necessary to provide such pensions. In view of the fact that each of these plans constitutes a separate program of interrelated contributions and benefits, the distributions from each shall be treated as received under a separate contract. If these plans had been established before October 20, 1960, then, in the case of an employee who receives a distribution under the plans before October 20, 1960, the determination as to whether that distribution and all subsequent distributions to such employee are received under a single contract or under more than one contract shall be made by applying the rules in subdivision (iii) of this subparagraph. On the other hand, in the case of an employee who does not receive any distribution under these plans before October 20, 1960, the determination as to whether distributions to him are received under a single contract or under more than one contract shall be made in accordance with the rules illustrated by this example.

Example 2. On January 1, 1961, Z Corporation established a profit-sharing plan for its employees providing that any employee may make contributions, not in excess of 6 percent of his compensation, to a trust and that the employer would make matching contributions out of profits. Under the plan, a participant may receive a periodic distribution of the amount standing in his account during any period that he is absent from work due to a personal injury or sickness. On separation from service, the participant is entitled to receive a distribution of the balance standing in his account in accordance with one of several options. One option provides for the immediate distribution of one-half of the account and for the periodic distribution of the remaining one-half of the account. In addition, any participant may, after the completion of five years of participation, withdraw any part of his account, but in the case of such a withdrawal, the participant forfeits his rights to participate in the plan for a period of two years. Thus, a participant may receive distributions before separation from service; he may receive a distribution of a lump sum upon separation from service; he may also receive periodic distributions upon separation from service. However, since it is the total amount received under all the options that is interrelated with the contributions to the plan and not the amount received under any one option, this profit-sharing plan consists of only one separate program of interrelated contributions and benefits and all distributions under the plan (regardless of the option under which received) are treated as received under one contract. However, if, instead of providing that the amount standing in an employee's account would be paid to him during any period that he is absent from work due to a personal injury or sickness, the plan provided that a portion of the amount in the employee's account would be used to purchase incidental accident and health insurance, this plan would consist of two separate programs of interrelated contributions and benefits. The accident and health insurance, and the contributions used to purchase it, would be considered as one separate program of interrelated contributions and benefits and, therefore, a separate contract; whereas, the remaining contributions and benefits would be considered another separate program of interrelated contributions and benefits and, consequently, another separate contract.

Example 3. On January 1, 1961, N Corporation established a profit-sharing plan for its employees providing that the employees may make contributions, not in excess of 6 percent of their compensation, to a trust and that N Corporation would make matching contributions out of its profits. Under the plan, the employee may elect each year to have his and the employer's contributions for such year placed in either a savings arrangement or a retirement arrangement. Such an election is irrevocable. Under the savings arrangement, contributions to such arrangement for any one year and the earnings thereon will be distributed five years later. The retirement arrangement provides that all contributions thereto and the earnings thereon will be distributed when the employee is separated from the service of N Corporation. Since the distributions under the retirement arrangement are attributable solely to the contributions made to such arrangement and are not affected in any manner by contributions or distributions under the savings arrangement or any other plan, such distributions are treated as received under a separate program of interrelated contributions and benefits. Similarly, since distributions during any year under the savings arrangement are attributable only to contributions to such arrangement made during the fifth preceding year and are not affected in any manner by any other contributions to or distributions from such arrangement or any other plan, the savings arrangement constitutes a series of separate programs of interrelated contributions and benefits. The contributions to the savings arrangement for any year and the distribution in a subsequent year based thereon constitute a separate contract for purposes of section 72.

Example 4. The Civil Service Retirement Act (5 U.S.C. Ch. 14) which provides retirement benefits for participating employees, consists of a compulsory program and a voluntary program. Under the compulsory program, all participating employees are required to make certain contributions and, upon retirement, are provided retirement benefits computed on the basis of compensation and length of service. Under the voluntary program, such participating employees are permitted to make contributions in addition to those required under the compulsory program and, upon retirement, are provided additional retirement benefits computed on the basis of their voluntary contributions. Distributions received under the Act constitute distributions from two separate contracts for purposes of section 72. Distributions received under the compulsory program are considered as received under a separate program of interrelated contributions and benefits since they are computed solely under the compulsory program and are not affected by any contributions or distributions under the voluntary program or under any other plan. For similar reasons, distributions which are attributable to the voluntary contributions are considered as received under a separate program of interrelated contributions and benefits.

Example 5. On January 1, 1961, M Corporation established a contributory pension plan for its employees and created a trust to which it makes contributions to fund such plan. The plan provides that each participant will receive after age 65 a pension of $1^1/_2$ percent of his compensation for each year of service performed subsequent to the establishment of such plan. In order to fund part of the benefits under the plan, the trustee purchased a group annuity contract. The remaining part of the benefits are to be paid out of a separate investment fund. This pension plan constitutes a single program of interrelated contributions and benefits and, therefore, all distributions received by an employee under the plan are considered as received under a single contract for purposes of section 72.

Example 6. On January 1, 1961, Y Corporation established a noncontributory pension plan (including incidental death benefits) for its employees and created a trust to which it makes contributions to fund such plan. The plan provides that each participant will receive after age 65 a pension of $1^1/_2$ percent of his compensation for each year of service performed subsequent to the establishment of such plan. In addition, such plan provides for the payment of a death benefit if the employee dies

before age 65. The trustee funded the death benefits through the purchase of a group term insurance policy and funded the retirement benefits through the purchase of a group annuity contract. Because of a subsequent change in funding from the deferred annuity method to the deposit administration method, the trustee purchased a second group annuity contract to provide the retirement benefits under the plan accruing after the effective date of the change in method of funding. Thus, retirement benefits distributed to an employee whose service with Y Corporation commenced before the effective date of the change in method of funding will be attributable to both group annuity contracts. This pension plan includes two separate programs of interrelated contributions and benefits. The death benefits, and the contributions required to provide them, are considered as one separate program of interrelated contributions and benefits; whereas, the retirement benefits, and the contributions required to provide them, are considered as another separate program of interrelated contributions and benefits. Therefore, any retirement benefits received by an employee, whether attributable to one or both of the group annuity contracts, shall be considered as received under a single contract for purposes of section 72. In determining the tax treatment of any such retirement benefits under section 72, no amount of the premiums used to purchase the group term insurance policy shall be taken into account, since such premiums, and the death benefits which they purchased, constitute a separate program of interrelated contributions and benefits.

Example 7. Assume the same facts as in example (6) except that, in lieu of funding the benefits in the manner described in that example, the trustee purchased individual retirement income contracts from an insurance company. Additional individual retirement income contracts are purchased in order to fund any increase in benefits resulting from increases in salary. Therefore, distributions to a particular employee may be attributable to a single retirement income contract or to more than one such contract. All distributions received by an employee under the pension plan, whether attributable to one or more retirement income contracts and whether made directly from the insurance company to the employee or made through the trustee, are considered as received under a single contract for purposes of section 72. For rules relating to the tax treatment of contributions and distributions under retirement income, endowment, or other life insurance contracts purchased by a trust described in section 401(a) and exempt under section 501(a), see paragraph (a) (2), (3), and (4) of § 1.402(a)-1.

Example 8. Assume the same facts as in example (6) except that, in lieu of funding the benefits in the manner described in that example, the trustee funded the death benefits and part of the retirement benefits by purchasing individual retirement income contracts from an insurance company. The remaining part of the retirement benefits (such as any increase in benefits resulting from increases in salary) are to be paid out of a separate investment fund. This pension plan includes, with respect to each participant, two separate contracts for purposes of section 72. The retirement income contract purchased by the trust for each participant is a separate program of interrelated contributions and benefits and all distributions attributable to such contract (whether made directly from the insurance company to the employee or made through the trustee) are considered as received under a single contract. For rules relating to the tax treatment of contributions and distributions under retirement income, endowment, or other life insurance contracts purchased by a trust described in section 401(a) and exempt under section 501(a), see paragraph (a) (2), (3), and (4) of § 1.402(a)-1. The remaining distributions under the plan are considered as received under another separate program of interrelated contributions and benefits.

(b) ***Amounts.***

(1)

(i) In general, the amounts to which section 72 applies are any amounts received under the contracts described in paragraph (a)(1) of this section. However, if such amounts are specifically excluded from gross income under other provisions of Chapter 1 of the Code, section 72 shall not apply for the purpose of including such amounts in gross income. For example, section 72 does not apply to amounts received under a life insurance contract if such amounts are paid by reason of the death of the insured and are excludable from gross income under section 101(a). See also sections 101(d), relating to proceeds of life insurance paid at a date later than death, and 104(a)(4), relating to compensation for injuries or sickness.

(ii) Section 72 does not exclude from gross income any amounts received under an agreement to hold an amount and pay interest thereon. See paragraph (a) of § 1.72-14. However, section 72 does apply to amounts received by a surviving annuitant under a joint and survivor annuity contract since such amounts are not considered to be paid by reason of the death of an insured. For a special deduction for the estate tax attributable to the inclusion of the value of the interest of a surviving annuitant under a joint and survivor annuity contract in the estate of the deceased primary annuitant, see section 691(d) and the regulations thereunder.

(2) Amounts subject to section 72 in accordance with subparagraph (1) of this paragraph are considered “amounts received as an annuity” only in the event that all of the following tests are met:

(i) They must be received on or after the “annuity starting date” as that term is defined in paragraph (b) of § 1.72-4;

(ii) They must be payable in periodic installments at regular intervals (whether annually, semiannually, quarterly, monthly, weekly, or otherwise) over a period of more than one full year from the annuity starting date; and

(iii) Except as indicated in subparagraph (3) of this paragraph, the total of the amounts payable must be determinable at the annuity starting date either directly from the terms of the contract or indirectly by the use of either mortality tables or compound interest computations, or both, in conjunction with such terms and in accordance with sound actuarial theory.

For the purpose of determining whether amounts subject to section 72(d) and § 1.72-13 are “amounts received as an annuity”, however, the provisions of subdivision (i) of this subparagraph shall be disregarded. In addition, the term “amounts received as an annuity” does not include amounts received to which the provisions of paragraph (b) or (c) of § 1.72-11 apply, relating to dividends and certain amounts received by a beneficiary in the nature of a refund. If an amount is to be paid periodically until a fund plus interest at a fixed rate is exhausted, but further payments may be made thereafter because of earnings at a higher interest rate, the requirements of subdivision (iii) of this subparagraph are met with respect to the payments determinable at the outset by means of computations involving the fixed interest rate, but any payments received after the expiration of the period determinable by such computations shall be taxable as dividends received after the annuity starting date in accordance with paragraph (b)(2) of § 1.72-11.

(3)

(i) Notwithstanding the requirement of subparagraph (2)(iii) of this paragraph, if amounts are to be received for a definite or determinable time (whether for a period certain or for a life or lives) under a contract which provides:

(*a*) That the amount of the periodic payments may vary in accordance with investment experience (as in certain profit-sharing plans), cost of living indices, or similar fluctuating criteria, or

(*b*) For specified payments the value of which may vary for income tax purposes, such as in the case of any annuity payable in foreign currency,

each such payment received shall be considered as an amount received as an annuity only to the extent that it does not exceed the amount computed by dividing the investment in the contract, as adjusted for any refund feature, by the number of periodic payments anticipated during the time that the periodic payments are to be made. If payments are to be made more frequently than annually, the amount so computed shall be multiplied by the number of periodic payments to be made during the taxable year for the purpose of determining the total amount which may be considered received as an annuity during such year. To this extent, the payments received shall be considered to represent a return of premium or other consideration paid and shall be excludable from gross income in the taxable year in which received. See paragraph (d)(2) and (3) of § 1.72-4. To the extent that the payments received under the contract during the taxable year exceed the total amount thus considered to be received as an annuity during such year, they shall be considered to be amounts not received as an annuity and shall be included in the gross income of the recipient. See section 72(e) and paragraph (b)(2) of § 1.72-11.

(ii) For purposes of subdivision (i) of this subparagraph, the number of periodic payments anticipated during the time payments are to be made shall be determined by multiplying the number of payments to be made each year

(*a*) by the number of years payments are to be made, or

(*b*) if payments are to be made for a life or lives, by the multiple found by the use of the appropriate tables contained in § 1.72-9, as adjusted in accordance with the table in paragraph (a)(2) of § 1.72-5.

(iii) For an example of the computation to be made in accordance with this subparagraph and a special election which may be made in a taxable year subsequent to a taxable year in which the total payments received under a contract described in this subparagraph are less than the total of the amounts excludable from gross income in such year under subdivision (i) of this subparagraph, see paragraph (d)(3) of § 1.72-4.

[T.D. 6500, 25 FR 11402, Nov. 26, 1960, as amended by T.D. 6497, 25 FR 10019, Oct. 20, 1960; T.D. 6885, 31 FR 7798, June 2, 1966]

§ 1.72-3 Excludable amounts not income.

In general, amounts received under contracts described in paragraph (a)(1) of § 1.72-2 are not to be included in the income of the recipient to the extent that such amounts are excludable from gross income as the result of the application of section 72 and the regulations thereunder.

§ 1.72-4 Exclusion ratio.

(a) *General rule.*

(1)

(i) To determine the proportionate part of the total amount received each year as an annuity which is excludable from the gross income of a recipient in the taxable year of receipt (other than amounts received under

(*a*) certain employee annuities described in section 72(d) and § 1.72-13, or

(*b*) certain annuities described in section 72(o) and § 1.122-1), an exclusion ratio is to be determined for each contract. In general, this ratio is determined by dividing the investment in the contract as found under § 1.72-6 by the expected return under such contract as found under § 1.72-5. Where a single consideration is given for a particular contract which provides for two or more annuity elements, an exclusion ratio shall be determined for the contract as a whole by dividing the investment in such contract by the aggregate of the expected returns under all the annuity elements provided thereunder. However, where the provisions of paragraph (b)(3) of § 1.72-2 apply to payments received under such a contract, see paragraph (b)(3) of § 1.72-6. In the case of a contract to which § 1.72-6(d) (relating to contracts in which amounts were invested both before July 1, 1986, and after June 30, 1986) applies, the exclusion ratio for purposes of this paragraph (a) is determined in accordance with § 1.72-6(d) and, in particular, § 1.72-6(d)(5)(i).

(ii) The exclusion ratio for the particular contract is then applied to the total amount received as an annuity during the taxable year by each recipient. See, however, paragraph (e)(3) of § 1.72-5. Any excess of the total amount received as an annuity during the taxable year over the amount determined by the application of the exclusion ratio to such total amount shall be included in the gross income of the recipient for the taxable year of receipt.

(2) The principles of subparagraph (1) may be illustrated by the following example:

Example. Taxpayer A purchased an annuity contract providing for payments of $100 per month for a consideration of $12,650. Assuming that the expected return under this contract is $16,000 the exclusion ratio to be used by A is $12,650 ÷ 16,000; or 79.1 percent (79.06 rounded to the nearest tenth). If 12 such monthly payments are received by A during his taxable year, the total amount he may exclude from his gross income in such year is $949.20 ($1,200 × 79.1 percent).The balance of $250.80 ($1,200 less $949.20) is the amount to be included in gross income. If A instead received only five such payments during the year, he should exclude $395.50 (500 × 79.1 percent) of the total amounts received.

For examples of the computation of the exclusion ratio in cases where two annuity elements are acquired for a single consideration, see paragraph (b)(1) of § 1.72-6.

(3) The exclusion ratio shall be applied only to amounts received as an annuity within the meaning of that term under paragraph (b) (2) and (3) of § 1.72-2. Where the periodic payments increase in amount after the annuity starting date in a manner not provided by the terms of the contract at such date, the portion of such payments representing the increase is not an amount received as an annuity. For the treatment of amounts not received as an annuity, see section 72(e) and § 1.72-11. For special rules where paragraph (b)(3) of § 1.72-2 applies to amounts received, see paragraph (d)(3) of this section.

(4) After an exclusion ratio has been determined for a particular contract, it shall be applied to any amounts received as an annuity thereunder unless or until one of the following occurs:

(i) The contract is assigned or transferred for a valuable consideration (see section 72(g) and paragraph (a) of § 1.72-10);

(ii) The contract matures or is surrendered, redeemed, or discharged in accordance with the provisions of paragraph (c) or (d) of § 1.72-11;

(iii) The contract is exchanged (or is considered to have been exchanged) in a manner described in paragraph (e) of § 1.72-11.

(b) ***Annuity starting date.***

(1) Except as provided in subparagraph (2) of this paragraph, the annuity starting date is the first day of the first period for which an amount is received as an annuity, except that if such date was before January 1, 1954, then the annuity starting date is January 1, 1954. The first day of the first period for which an amount is received as an annuity shall be whichever of the following is the later:

(i) The date upon which the obligations under the contract became fixed, or

(ii) The first day of the period (year, half-year, quarter, month, or otherwise, depending on whether payments are to be made annually, semiannually, quarterly, monthly, or otherwise) which ends on the date of the first annuity payment.

(2) Notwithstanding the provisions of paragraph (b)(1) of this section, the annuity starting date shall be determined in accordance with whichever of the following provisions is appropriate:

(i) In the case of a joint and survivor annuity contract described in section 72(i) and paragraph (b)(3) of § 1.72-5, the annuity starting date is January 1, 1954, or the first day of the first period for which an amount is received as an annuity by the surviving annuitant, whichever is the later;

(ii) In the case of the transfer of an annuity contract for a valuable consideration, as described in section 72(g) and paragraph (a) of § 1.72-10, the annuity starting date shall be January 1, 1954, or the first day of the first period for which the transferee received an amount as an annuity, whichever is the later;

(iii) If the provisions of paragraph (e) of § 1.72-11 apply to an exchange of one contract for another, or to a transaction deemed to be such an exchange, the annuity starting date of the contract received (or deemed received) in exchange shall be January 1, 1954, or the first day of the first period for which an amount is received as an annuity under such contract, whichever is the later; and

(iv) In the case of an employee who has retired from work because of personal injuries or sickness, and who is receiving amounts under a plan that is a wage continuation plan under section 105(d) and § 1.105-4, the annuity starting date shall be the date the employee reaches mandatory retirement age, as defined in § 1.105-4(a)(3)(i)(B). (See also §§ 1.72-15 and 1.105-6 for transitional and other special rules.)

(c) ***Fiscal year taxpayers.*** Fiscal year taxpayers receiving amounts as annuities in a taxable year to which the Internal Revenue Code of 1954 applies shall determine the annuity starting date in accordance with section 72(c)(4) and this section. The annuity starting date for fiscal year taxpayers receiving amounts as an annuity in a taxable year to which the Internal Revenue Code of 1939 applies shall be January 1, 1954, except where the first day of the first period for which an amount is received by such a taxpayer as an annuity is subsequent thereto and before the end of a fiscal year to which the Internal Revenue Code of 1939 applied. In such case, the latter date shall be the annuity starting date. In all cases where a fiscal year taxpayer received an amount as an annuity in a taxable year to which the Internal Revenue Code of

1939 applied and subsequent to the annuity starting date determined in accordance with the provisions of this paragraph, such amount shall be disregarded for the purposes of section 72 and the regulations thereunder.

(d) ***Exceptions to the general rule.***

(1) Where the provisions of section 72 would otherwise require an exclusion ratio to be determined, but the investment in the contract (determined under § 1.72-6) is an amount of zero or less, no exclusion ratio shall be determined and all amounts received under such a contract shall be includible in the gross income of the recipient for the purposes of section 72.

(2) Where the investment in the contract is equal to or greater than the total expected return under such contract found under § 1.72-5, the exclusion ratio shall be considered to be 100 percent and all amounts received as an annuity under such contract shall be excludable from the recipient's gross income. See, for example, paragraph (f)(1) of § 1.72-5. In the case of a contract to which § 1.72-6(d) (relating to contracts in which amounts were invested both before July 1, 1986, and after June 30, 1986) applies, this paragraph (d)(2) is applied in the manner prescribed in § 1.72-6(d) and, in particular, § 1.72-6(d)(5)(ii).

(3)

(i) If a contract provides for payments to be made to a taxpayer in the manner described in paragraph (b)(3) of § 1.72-2, the investment in the contract shall be considered to be equal to the expected return under such contract and the resulting exclusion ratio (100%) shall be applied to all amounts received as an annuity under such contract. For any taxable year, payments received under such a contract shall be considered to be amounts received as an annuity only to the extent that they do not exceed the portion of the investment in the contract which is properly allocable to that year and hence excludable from gross income as a return of premiums or other consideration paid for the contract. The portion of the investment in the contract which is properly allocable to any taxable year shall be determined by dividing the investment in the contract (adjusted for any refund feature in the manner described in paragraph (d) of § 1.72-7) by the applicable multiple (whether for a term certain, life, or lives) which would otherwise be used in determining the expected return for such a contract under § 1.72-5. The multiple shall be adjusted in accordance with the provisions of the table in paragraph (a)(2) of § 1.72-5, if any adjustment is necessary, before making the above computation. If payments are to be made more frequently than annually and the number of payments to be made in the taxable year in which the annuity begins are less than the number of payments to be made each year thereafter, the amounts considered received as an annuity (as otherwise determined under this subdivision) shall not exceed, for such taxable year (including a short taxable year), an amount which bears the same ratio to the portion of the investment in the contract considered allocable to each taxable year as the number of payments to be made in the first year bears to the number of payments to be made in each succeeding year. Thus, if payments are to be made monthly, only seven payments will be made in the first taxable year, and the portion of the investment in the contract allocable to a full year of payments is $600, the amounts considered received as an annuity in the first taxable year cannot exceed $350 ($600 × $^{7}/_{12}$). See subdivision (iii) of this subparagraph for an example illustrating the determination of the portion of the investment in the contract allocable to one taxable year of the taxpayer.

(ii) If subdivision (i) of this subparagraph applies to amounts received by a taxpayer and the total amount of payments he receives in a taxable year is less than the total amount excludable for such year under subdivision (i) of this subparagraph, the taxpayer may elect, in a succeeding taxable year in which he receives another payment, to redetermine the amounts to be received as an annuity during the current and succeeding taxable years. This shall be computed in accordance with the provisions of subdivision (i) of this subparagraph except that:

(*a*) The difference between the portion of the investment in the contract allocable to a taxable year, as found in accordance with subdivision (i) of this subparagraph, and the total payments actually received in the taxable year prior to the election shall be divided by the applicable life expectancy of the annuitant (or annuitants), found in accordance with the appropriate table in § 1.72-9 (and adjusted in accordance with paragraph (a)(2) of § 1.72-5), or by the remaining term of a term certain annuity, computed as of the first day of the first period for which an amount is received as an annuity in the taxable year of the election; and

(*b*) The amount determined under (*a*) of this subdivision shall be added to the portion of the investment in the contract allocable to each taxable year (as otherwise found). To the extent that the total periodic payments received under the contract in the taxable year of the election or any succeeding taxable year does not equal this total sum, such payments shall be excludable from the gross income of the recipient. To the extent such payments exceed the sum so found, they shall be fully includible in the recipient's gross income. See subdivision (iii) of this subparagraph for an example illustrating the redetermination of amounts to be received as an annuity and subdivision (iv) of this subparagraph for the method of making the election provided by this subdivision.

(iii) The application of the principles of paragraph (d)(3) (i) and (ii) of this section may be illustrated by the following example:

Example. Taxpayer A, a 64 year old male, files his return on a calendar year basis and has a life expectancy of 15.6 years on June 30, 1954, the annuity starting date of a contract to which § 1.72-2(b)(3) applies and which he purchased for $20,000. The contract provides for variable annual payments for his life. He receives a payment of $1,000 on June 30, 1955, but receives no other payment until June 30, 1957. He excludes the $1,000 payment from his gross income for the year 1955 since this amount is less than $1,324.50, the amount determined by dividing his investment in the contract ($20,000) by his life expectancy adjusted for annual payments, 15.1 (15.6−0.5), as of the original annuity starting date. Taxpayer A may elect, in his return for the taxable year 1957, to redetermine amounts to be received as an annuity under his contract as of June 30, 1956. For the purpose of determining the extent to which amounts received in 1957 or thereafter shall be considered amounts received as an annuity (to which a 100 percent exclusion ratio shall apply) he shall add $118.63 to the $1,324.50 originally determined to be receivable as an annuity under the contract, making a total of $1,443.13. This is determined by dividing the difference between what was excludable in 1955 and 1956, $2,649 (2 × $1,324.50) and what he actually received in those years ($1,000) by his life expectancy adjusted for annual payments, 13.9 (14.4−0.5), as of his age at his nearest birthday (66) on the first day of the first period for which he received an amount as an annuity in the taxable year of election (June 30, 1956). The result, $1,443.13, is excludable in that year and each year thereafter as an amount received as an annuity to which the 100% exclusion ratio applies. It will be noted that in this example the taxpayer received amounts

less than the excludable amounts in two successive years and deferred making his election until the third year, and thus was able to accumulate the portion of the investment in the contract allocable to each taxable year to the extent he failed to receive such portion in both years. Assuming that he received $1,500 in the taxable year of his election, he would include $56.87 in his gross income and exclude $1,443.13 therefrom for that year.

(iv) If the taxpayer chooses to make the election described in subdivision (ii) of this subparagraph, he shall file with his return a statement that he elects to make a redetermination of the amounts excludable from gross income under his annuity contract in accordance with the provisions of paragraph (d)(3) of § 1.72-4. This statement shall also contain the following information:

(*a*) The original annuity starting date and his age on that date,

(*b*) The date of the first day of the first period for which he received an amount in the current taxable year,

(*c*) The investment in the contract originally determined (as adjusted for any refund feature), and

(*d*) The aggregate of all amounts received under the contract between the date indicated in (*a*) of this subdivision and the day after the date indicated in (*b*) of this subdivision to the extent such amounts were excludable from gross income.

He shall include in gross income any amounts received during the taxable year for which the return is made in accordance with the redetermination made under this subparagraph.

(v) In the case of a contract to which § 1.72-6(d) (relating to contracts in which amounts were invested both before July 1, 1986, and after June 30, 1986) applies, this paragraph (d)(3) is applied in the manner prescribed in § 1.72-6(d) and, in particular, § 1.72-6(d)(5)(iii). This application may be illustrated by the following example:

> *Example.* B, a male calendar year taxpayer, purchases a contract which provides for variable annual payments for life and to which § 1.72-2(b)(3) applies. The annuity starting date of the contract is June 30, 1990, when B is 64 years old. B receives a payment of $1,000 on June 30, 1991, but receives no other payment until June 30, 1993. B's total investment in the contract is $25,000. B's pre-July 1986 investment in the contract is $12,000. If B makes the election described in § 1.72-6(d)(6), separate computations are required to determine the amounts received as an annuity and excludable from gross income with respect to the pre-July 1986 investment in the contract and the post-June 1986 investment in the contract. In the separate computations, B first determines the applicable portions of the total payment received which are allocable to the pre-July 1986 investment in the contract and the post-June 1986 investment in the contract. The portion of the payment received allocable to the pre-July 1986 investment in the contract is $480 ($12,000/$25,000 × $1,000). The portion of the payment received allocable to the post-June 1986 investment in the contract is $520 ($13,000/$25,000 × $1,000).

Second, B determines the pre-July 1986 investment in the contract and the post-June 1986 investment in the contract allocable to the taxable year by dividing the pre-July 1986 and post-June 1986 investments in the contract by the applicable life expectancy multiple. The life expectancy multiple applicable to pre-July 1986 investment in the contract is B's life expectancy as of the original annuity starting date adjusted for annual payments and is determined under Table I of § 1.72-9 [15.1 (15.6–0.5)]. The life expectancy multiple applicable to post-June 1986 investment in the contract is determined under Table V of § 1.72-9 (20.3 (20.8-0.5)). Thus, the pre-July 1986 investment in the contract allocable to each taxable year is $794.70 ($12,000 ÷ 15.1), and the post-June 1986 investment in the contract so allocable is $640.39 ($13,000 ÷ 20.3). Because the applicable portions of the total payment received in 1991 under the contract ($480 allocable to the pre-July 1986 investment in the contract and $520 allocable to the post-June 1986 investment in the contract) are treated as amounts received as an annuity and are excludable from gross income to the extent they do not exceed the portion of the corresponding investment in the contract allocable to 1991 ($794.70 pre-July 1986 investment in the contract and $640.39 post-June 1986 investment in the contract), the entire amount of each applicable portion of the total payment is excludable from gross income. B may elect, in the return filed for taxable year 1993, to redetermine amounts to be received as an annuity under the contract as of June 30, 1992. The extent to which the amounts received in 1993 or thereafter shall be considered amounts received as an annuity is determined as follows:

Pre-July 1986 investment in the contract allocable to taxable years 1991 and 1992 ($794.70 × 2)	$1,589.40
Less: Portion of total payments allocable to pre-July 1986 investment in the contract actually received as an annuity in taxable years 1991 and 1992	480.00
	1,109.40
Divided by: Life expectancy multiple applicable to pre-July 1986 investment in the contract for B, age 66 (14.4—0.5)	13.9
	79.81
Plus: Amount originally determined with respect to pre-July 1986 investment in the contract	794.70
Pre-July 1986 amount	874.51
Post-June 1986 investment in the contract allocable to taxable years 1991 and 1992 ($640.39 × 2)	$1,280.78
Less: Portion of total payments allocable to post-June 1986 investment in the contract actually received as an annuity in taxable years 1991 and 1992	520.00
	760.78

Divided by: Life expectancy multiple applicable to post-June 1986 investment in the contract for B, age 66 (19.2–0.5)	18.7
	40.68
Plus: Amount originally determined with respect to post-June 1986 investment in the contract	640.39
Post-June 1986 amount	681.07

(vi) The method of making an election to perform the separate computations illustrated in paragraph (d)(3)(v) of this section is described in § 1.72-6(d)(6).

(e) ***Exclusion ratio in the case of two or more annuity elements acquired for a single consideration.***

(1)

(i) Where two or more annuity elements are provided under a contract described in paragraph (a)(2) of § 1.72-2, an exclusion ratio shall be determined for the contract as a whole and applied to all amounts received as an annuity under any of the annuity elements. To obtain this ratio, the investment in the contract determined in accordance with § 1.72-6 shall be divided by the aggregate of the expected returns found with respect to each of the annuity elements in accordance with § 1.72-5. For this purpose, it is immaterial that payments under one or more of the annuity elements involved have not commenced at the time when an amount is first received as an annuity under one or more of the other annuity elements.

(ii) The exclusion ratio found under subdivision (i) of this subparagraph does not apply to:

(*a*) An annuity element payable to a surviving annuitant under a joint and survivor annuity contract to which section 72(i) and paragraphs (b)(3) and (e)(3) of § 1.72-5 apply, or to

(*b*) A contract under which one or more of the constituent annuity elements provides for payments described in paragraph (b)(3) of § 1.72-2.

For rules with respect to a contract providing for annuity elements described in (*b*) of this subdivision, see subparagraph (2) of this paragraph.

(2) If one or more of the annuity elements under a contract described in paragraph (a)(2) of § 1.72-2 provides for payments to which paragraph (b)(3) of § 1.72-2 applies:

(i) With respect to the annuity elements to which paragraph (b)(3) of § 1.72-2 does not apply, an exclusion ratio shall be determined by dividing the portion of the investment in the entire contract which is properly allocable to all such elements (in the manner provided in paragraph (b)(3)(ii) of § 1.72-6) by the aggregate of the expected returns thereunder and such ratio shall be applied in the manner described in subdivision (i) of subparagraph (1); and

(ii) With respect to the annuity elements to which paragraph (b)(3) of § 1.72-2 does apply, the investment in the entire contract shall be reduced by the portion thereof found in subdivision (i) of this subparagraph and the resulting amount shall be used to determine the extent to which the aggregate of the payments received during the taxable year under all such elements is excludable from gross income. The amount so excludable shall be allocated to each recipient under such elements in the same ratio that the total of payments he receives each year bears

to the total of the payments received by all such recipients during the year. The exclusion ratio with respect to the amounts so allocated shall be 100 percent. See paragraph (f)(2) of § 1.72-5 and paragraph (b)(3) of § 1.72-6.

(iii) In the case of a contract to which § 1.72-6(d) (relating to contracts in which amounts were invested both before July 1, 1986, and after June 30, 1986) applies, this paragraph (e) is applied in the manner prescribed in § 1.72-6(d) and, in particular, § 1.72-6(d)(5)(iv).

[T.D. 6500, 25 FR 11402, Nov. 26, 1960, as amended by T.D. 7352, 40 FR 16663, Apr. 14, 1975; T.D. 8115, 51 FR 45691, Dec. 19, 1986; 52 FR 10223, Mar. 31, 1987]

§ 1.72-5 Expected return.

(a) ***Expected return for but one life.***

(1) If a contract to which section 72 applies provides that one annuitant is to receive a fixed monthly income for life, the expected return is determined by multiplying the total of the annuity payments to be received annually by the multiple shown in Table I or V (whichever is applicable) of § 1.72-9 under the age (as of the annuity starting date) and, if applicable, sex of the measuring life (usually the annuitant's). Thus, where a male purchases a contract before July 1, 1986, providing for an immediate annuity of $100 per month for his life and, as of the annuity starting date (in this case the date of purchase), the annuitant's age at his nearest birthday is 66, the expected return is computed as follows:

Monthly payment of $100 × 12 months equals annual payment of	$1,200
Multiple shown in Table I, male, age 66	14.4
Expected return (1,200 × 14.4)	17,280

If, however, the taxpayer had purchased the contract after June 30, 1986, the expected return would be $23,040, determined by multiplying 19.2 (multiple shown in Table V, age 66) by $1,200.

(2)

(i) If payments are to be made quarterly, semiannually, or annually, an adjustment of the applicable multiple shown in Table I or V (whichever is applicable) may be required. A further adjustment may be required where the interval between the annuity starting date and the date of the first payment is less than the interval between future payments. Neither adjustment shall be made, however, if the payments are to be made more frequently than quarterly. The amount of the adjustment, if any, is to be found in accordance with the following table:

If the number of whole months from the annuity starting date to the first payment date is—	0-1	2	3	4	5	6	7	8	9	10	11	12
And the payments under the contract are to be made:												
Annually	+ 0.5	+ 0.4	+ 0.3	+ 0.2	+ 0.1	0	0	−0.1	−0.2	−0.3	−0.4	−0.5
Semiannually	+ .2	+ .1	0	0	−.1	−.2						
Quarterly	+ .1	0	−.1									

Thus, for a male, age 66, the multiple found in Table I, adjusted for quarterly payments the first of which is to be made one full month after the annuity starting date, is 14.5 (14.4 + 0.1); for semiannual payments the first of which is to be made six full months from the annuity starting date, the adjusted multiple is 14.2 (14.4−0.2); for annual payments the first of which is to be made one full month from the annuity starting date, the adjusted multiple is 14.9 (14.4 + 0.5). If the annuitant in the example shown in subparagraph (1) of this paragraph were to receive an annual payment of $1,200 commencing 12 full months after his annuity starting date, the amount of the expected return would be $16,680 ($1,200 × 13.9 [14.4−0.5]). Similarly, for an annuitant, age 50, the multiple found in Table V, adjusted for quarterly payments the first of which is to be made one full month after the annuity starting date, is 33.2 (33.1 + 0.1); for semiannual payments the first of which is to be made six full months from the annuity starting date, the adjusted multiple is 32.9 (33.1−0.2); for annual payments the first of which is to be made one full month from the annuity starting date, the adjusted multiple is 33.6 (33.1 + 0.5).

(ii) Notwithstanding the table in subdivision (i) of this subparagraph, adjustments of multiples for early or other than monthly payments determined prior to February 19, 1956, under the table prescribed in paragraph 1(b)(4) of T.D. 6118 (19 FR 9897, C.B. 1955-1, 699), approved December 30, 1954, need not be redetermined.

(3) If the contract provides for fixed payments to be made to an annuitant until death or until the expiration of a specified limited period, whichever occurs earlier, the expected return of such temporary life annuity is determined by multiplying the total of the annuity payments to be received annually by the multiple shown in Table IV or VIII (whichever is applicable) of § 1.72-9 for the age (as of the annuity starting date) and, if applicable, sex of the annuitant and the nearest whole number of years in the specified period. For example, if a male annuitant, age 60 (at his nearest birthday), is to receive $60 per month for five years or until he dies, whichever is earlier, and there is no post-June 1986, investment in the contract, the expected return under such a contract is $3,456, computed as follows:

Monthly payments of $60 × 12 months equals annual payment of	$720
Multiple shown in Table IV for male, age 60, for term of 5 years	4.8
Expected return for 5 year temporary life annuity of $720 per year ($720 × 4.8)	$3,456

If the annuitant purchased the same contract after June 30, 1986, the expected return under the contract would be $3,528, computed as follows:

Monthly payments of $60 × 12 months equals annual payment of	$720.00
Multiple shown in Table VIII for annuitant, age 60, for term of 5 years	4.9

Expected return for 5-year temporary life annuity of $720 per year ($720 × 4.9)	$3,528.00

The adjustment provided by subparagraph (2) of this paragraph shall not be made with respect to the multiple found in Table IV or VIII (whichever is applicable).

(4) If the contract provides for payments to be made to an annuitant for the annuitant's lifetime, but the amount of the annual payments is to be decreased after the expiration of a specified limited period, the expected return is computed by considering the contract as a combination of a whole life annuity for the smaller amount plus a temporary life annuity for an amount equal to the difference between the larger and the smaller amount. For example, if a male annuitant, age 60, is to receive $150 per month for five years or until his earlier death, and is to receive $90 per month for the remainder of his lifetime after such five years, the expected return is computed as if the annuitant's contract consisted of a whole life annuity for $90 per month plus a five year temporary life annuity of $60 per month. In such circumstances, the expected return if there is no post-June 1986 investment in the contract is computed as follows:

Monthly payments of $90 × 12 months equals annual payment of	$1,080
Multiple shown in Table I for male, age 60	18.2
Expected return for whole life annuity of $1,080 per year	$19,656
Expected return for 5-year temporary life annuity of $720 per year (as found in subparagraph (3) of this paragraph (a))	$3,456
Total expected return	$23,112

If the annuitant purchased the same contract after June 30, 1986, the expected return would be $29,664, computed as follows:

Monthly payments of $90 × 12 months equals annual payment of	$1,080
Multiple shown in Table V for annuitant, age 60	24.2
Expected return for whole life annuity of $1,080 per year	$26,136
Plus: Expected return for 5-year temporary life annuity of $720 per year (as found in subparagraph (3) of this paragraph (a))	$3,528
Total expected return	$29,664

If payments are to be made quarterly, semiannually, or annually, an appropriate adjustment of the multiple found in Table I or V (whichever is applicable) for the whole life annuity should be made in accordance with subparagraph (2) of this paragraph.

(5) If the contract described in subparagraph (4) of this paragraph provided that the amount of the annual payments to the annuitant were to be increased (instead of decreased) after the expiration of a specified limited period, the expected return would be computed as if the annuitant's contract consisted of a whole life annuity for the larger amount minus a temporary life annuity for an amount equal to the difference between the larger and smaller amount. Thus, if the annuitant described in subparagraph (4) of this paragraph were to receive $90 per month for five years or until his earlier death, and to receive $150 per month for the remainder of his lifetime after such five years, the expected return would be computed by subtracting the expected return under a five year temporary life annuity of $60 per month from the expected return under a whole life annuity of $150 per month. In such circumstances, the expected return if there is no post-June 1986 investment in the contract is computed as follows:

Monthly payments of $150 × 12 months equals annual payment of	$1,800
Multiple shown in Table 1 (male, age 60)	18.2
Expected return for annuity for whole life of $1,800 per year	$32,760
Less expected return for 5-year temporary life annuity of $720 per year (as found in subparagraph (3))	$3,456
Net expected return	$29,304

If the annuitant purchased the same contract after June 30, 1986, the expected return would be $40,032, computed as follows:

Monthly payments of $150 × 12 months equals annual payments of	$1,800
Multiple shown in Table V (age 60)	24.2
Expected return for annuity for whole life of $1,800 per year	$43,560
Less expected return for 5-year temporary life annuity of $720 per year (as found in subparagraph (3) of this paragraph (a))	$3,528
Net expected return	$40,032

If payments are to be made quarterly, semiannually, or annually, an appropriate adjustment of the multiple found in Table I or V (whichever is applicable) for the whole life annuity should be made in accordance with subparagraph (2) of this paragraph.

(b) ***Expected return under joint and survivor and joint annuities.***

(1) In the case of a joint and survivor annuity contract involving two annuitants which provides the first annuitant with a fixed monthly income for life and, after the death of the first annuitant, provides an identical monthly income for life to a second annuitant, the expected return shall be determined by multiplying the total amount of the payments to be received annually by the multiple obtained from Table II or VI (whichever is applicable) of § 1.72-9 under the ages (as of the annuity starting date) and, if applicable, sexes of the living annuitants. For example, a husband purchases a joint and

survivor annuity contract providing for payments of $100 per month for life and, after his death, for the same amount to his wife for the remainder of her life. As of the annuity starting date his age at his nearest birthday is 70 and that of his wife at her nearest birthday is 67. If there is no post-June 1986 investment in the contract, the expected return is computed as follows:

Monthly payments of $100 × 12 months equals annual payment of	$1,200
Multiple shown in Table II (male, age 70, female, age 67)	19.7
Expected return ($1,200 × 19.7)	$23,640

If the annuitants purchased the same contract after June 30, 1986, the expected return would be $26,400, computed as follows:

Monthly payments of $100 × 12 months equals annual payment of	$1,200
Multiple shown in Table VI (ages 70, 67)	22.0
Expected return ($1,200 × 22.0)	$26,400

If payments are to be made quarterly, semiannually, or annually, an appropriate adjustment of the multiple found in Table II or VI (whichever is applicable) should be made in accordance with paragraph (a)(2) of this section.

(2) If a contract of the type described in subparagraph (1) of this paragraph provides that a different (rather than an identical) monthly income is payable to the second annuitant, the expected return is computed in the following manner. The applicable multiple in Table II or VI (whichever is applicable) is first found as in the example in subparagraph (1) of this paragraph. The multiple applicable to the first annuitant is then found in Table I or V (whichever is applicable) as though the contract were for a single life annuity. The multiple from Table I or V is then subtracted from the multiple obtained from Table II or VI and the resulting multiple is applied to the total payments to be received annually under the contract by the second annuitant. The result is the expected return with respect to the second annuitant. The portion of the expected return with respect to payments to be made during the first annuitant's life is then computed by applying the multiple found in Table I or V to the total annual payments to be received by such annuitant under the contract. The expected returns with respect to each of the annuitants separately are then aggregated to obtain the expected return under the entire contract.

> *Example 1.* A husband purchases a joint and survivor annuity providing for payments of $100 per month for his life and, after his death, payments to his wife of $50 per month for her life. As of the annuity starting date his age at his nearest birthday is 70 and that of his wife at

her nearest birthday is 67. There is no post-June 1986 investment in the contract.

Multiple from Table II (male, age 70, female, age 67)	19.7
Multiple from Table I (male, age 70)	12.1
Difference (multiple applicable to second annuitant)	7.6
Portion of expected return, second annuitant ($600 × 7.6)	$4,560
Portion of expected return, first annuitant ($1,200 × 12.1)	$14,520
Expected return under the contract	$19,080

The expected return thus found, $19,080, is to be used in computing the amount to be excluded from gross income. Thus, if the investment in the contract in this example is $14,310, the exclusion ratio is $14,310 ÷ $19,080; or 75 percent. The amount excludable from each monthly payment made to the husband is 75 percent of $100, or $75, and the remaining $25 of each payment received by him shall be included in his gross income. After the husband's death, the amount excludable by the second annuitant (the surviving wife) would be 75 percent of each monthly payment of $50, or $37.50, and the remaining $12.50 of each payment shall be included in her gross income.

Example 2. If the same contract were purchased after June 30, 1986, the expected return would be $22,800, computed as follows:

Multiple from Table VI (ages 70, 67)	22.0
Multiple from Table V (age 70)	16.0
Difference (multiple applicable to second annuitant)	6.0
Portion of expected return, second annuitant ($600 × 6.0)	$3,600
Plus: Portion of expected return, first annuitant ($1,200 × 16.0)	$19,200
Expected return under the contract	$22,800

If the investment in the contract is $14,310, the exclusion ratio is $14,310 ÷ $22,800, or 62.8 percent. Thus, the husband would exclude $62.80 of each $100 payment received by him. After his death, his wife would exclude 62.8 percent, or $31.40, of each $50 monthly payment.

Example 3. If amounts were invested in the same contract both before July 1, 1986, and after June 30, 1986, and the election described in § 1.72-6(d)(6) were made, two exclusion ratios would be determined pursuant to § 1.72-6(d). Assume that the husband's total investment in the contract is $14,310 and that $7,310 is the pre-July 1986 investment in the contract. The pre-July 1986 exclusion ratio would be $7,310 ÷ $19,080, or 38.3 percent. The post-June 1986 exclusion ratio would be $7,000 ÷ $22,800, or 30.7 percent. The

husband would exclude $69.00 ($38.30 + $30.70) of the $100 monthly payment received by him. The remaining $31.00 would be included in his gross income. After the husband's death, the amount excludable by his wife would be $34.50 (38.3 percent of $50 plus 30.7 percent of $50). The remaining $15.50 would be included in gross income.

The same method is used if the payments are to be increased after the death of the first annuitant. Thus, if the payments to be made until the husband's death were $50 per month and his widow were to receive $100 per month thereafter until her death, the 7.6 multiple in example (1) above would be applied to the $100 payments, yielding an expected return with respect to this portion of the annuity contract of $9,120 ($1,200 × 7.6). An expected return of $7,260 ($600 × 12.1) would be obtained with respect to the payments to be made to the husband, yielding a total expected return under the contract of $16,380 ($9,120 plus $7,260). If payments are to be made quarterly, semiannually, or annually, an appropriate adjustment of the multiples found in Tables I and II or Tables V and VI (whichever are applicable) should be made in accordance with paragraph (a)(2) of this section.

(3) In the case of a joint and survivor annuity contract in respect of which the first annuitant died in 1951, 1952, or 1953, and the basis of the surviving annuitant's interest in the contract was determinable under section 113(a)(5) of the Internal Revenue Code of 1939, such basis shall be considered the “aggregate of premiums or other consideration paid” by the surviving annuitant for the contract. (For rules governing this determination, see 26 CFR (1939) 39.22(b)(2)-2 and 39.113(a)(5)-1 (Regulations 118).) In determining such an annuitant's investment in the contract, such aggregate shall be reduced by any amounts received under the contract by the surviving annuitant before the annuity starting date, to the extent such amounts were excludable from his gross income at the time of receipt. The expected return of the surviving annuitant in such cases shall be determined in the manner prescribed in paragraph (a) of this section, as though the surviving annuitant alone were involved. For this purpose, the appropriate multiple for the survivor shall be obtained from Table I as of the annuity starting date determined in accordance with paragraph (b)(2)(i) of § 1.72-4.

(4) If a contract involving two annuitants provides for fixed monthly payments to be made as a joint life annuity until the death of the first annuitant to die (in other words, only as long as both remain alive), the expected return under such contract shall be determined by multiplying the total of the annuity payments to be received annually under the contract by the multiple obtained from Table IIA or VIA (whichever is applicable) of § 1.72-9 under the ages (as of the annuity starting date) and, if applicable, sexes of the annuitants. If, however, payments are to be made under the contract quarterly, semiannually, or annually, an appropriate adjustment of the multiple found in Table IIA or VIA shall be made in accordance with paragraph (a)(2) of this section.

(5) If a joint and survivor annuity contract involving two annuitants provides that a specified amount shall be paid during their joint lives and a different specified amount shall be paid to the survivor upon the death of whichever of the annuitants is the first to die, the following preliminary computation shall be made in all cases preparatory to determining the expected return under the contract:

(i) From Table II or VI (whichever is applicable), obtain the multiple under both of the annuitants' ages (as of the annuity starting date) and, if applicable, their appropriate sexes;

(ii) From Table IIA or VIA (whichever is applicable), obtain the multiple applicable to both annuitants' ages (as of the annuity starting date) and, if applicable, their appropriate sexes;

(iii) Apply the multiple found in subdivision (i) of this subparagraph to the total of the amounts to be received annually after the death of the first to die; and

(iv) Apply the multiple found in subdivision (ii) of this subparagraph to the difference between the total of the amounts to be received annually before and the total of the amounts to be received annually after the death of the first to die.

If the original annual payment is in excess of the annual payment to be made after the death of the first to die, the expected return is the sum of the amounts determined under subdivisions (iii) and (iv) of this subparagraph. This may be illustrated by the following examples:

Example 1. A husband purchases a joint and survivor annuity providing for payments of $100 a month for as long as both he and his wife live, and, after the death of the first to die, payments to the survivor of $75 a month for life. As of the annuity starting date, his age at his nearest birthday is 70 and that of his wife at her nearest birthday is 67. If there is no post-June 1986 investment in the contract, the expected return under the contract is computed as follows:

Multiple from Table II (male age 70, female age 67)	19.7
Multiple from Table IIA (male age 70, female age 67)	9.3
Portion of expected return ($900 × 19.7—sum per year after first death)	$17,730
Plus: Portion of expected return ($300 × 9.3—amount of change in sum at first death)	$2,790
Expected return under the contract	$20,520

The total expected return in this example, $20,520, is to be used in computing the amount to be excluded from gross income. Thus, if the investment in the contract is $17,887, the exclusion ratio is $17,887 ÷ $20,520, or 87.2 percent. The amount excludable from each monthly payment made while both are alive is 87.2 percent of $100, or $87.20, and the remaining $12.80 of each payment shall be included in gross income. After the death of the first to die, the amount excludable by the survivor shall be 87.2 percent of each monthly payment of $75, or $65.40, and the remaining $9.60 of each payment shall be included in gross income.

Example 2. Assume the same facts as in example (1), except that the contract is purchased after June 30, 1986.

The expected return under the contract is computed as follows:

Multiple from Table VI (ages 70, 67)	22.0
Multiple from Table VIA (ages 70, 67)	12.4
Portion of expected return ($900 × 22.0—sum per year after first death)	$19,800
Plus: Portion of expected return ($300 × 12.4—amount of change in sum at first death)	$3,720
Expected return under the contract	$23,520

Thus, if the investment in the contract is $17,887, the exclusion ratio is $17,887 ÷ $23,520, or 76.1 percent. The amount excludable from each monthly payment made while both are alive would be 76.1 percent of $100, or $76.10, and the remaining $23.90 of each payment would be included in gross income. After the death of the first to die, the amount excludable by the survivor would be 76.1 percent of each monthly payment of $75, or $57.08, and the remaining $17.92 of each payment would be included in gross income.

Example 3. Assume the same facts as in examples (1) and (2), except that the total investment in the contract is $17,887, and that the pre-July 1986 investment in the contract is $8,000. Assume also that one of the annuitants makes the election described in § 1.72-6(d)(6). Separate computations shall be performed pursuant to § 1.72-6(d) to determine the amount excludable from gross income. The pre-July 1986 exclusion ratio would be $8,000 ÷ $20,520, or 39 percent. The post-June 1986 exclusion ratio would be $9,887 ÷ $23,520, or 42 percent. The amount excludable from each monthly payment made while both are alive would be $81 ((.39 × 100) + (.42 × 100)), and the remaining $19 would be included in gross income. After the death of the first to die, the amount excludable by the survivor would be $60.75 ((.39 × 75) + (.42 × 75)), and the remaining $14.25 would be included in gross income.

If the original annual payment is less than the annual payment to be made after the death of the first to die, the expected return is the difference between the amounts determined under subdivisions (iii) and (iv) of this subparagraph. If, however, payments are to be made quarterly, semiannually, or annually under the contract, the multiples obtained from both Tables II and IIA or Tables VI and VIA (whichever are applicable) shall first be adjusted in a manner prescribed in paragraph (a)(2) of this section.

(6) If a contract provides for the payment of life annuities to two persons during their respective lives and, after the death of one (without regard to which one dies first), provides that the survivor shall receive for life both his own annuity payments and the payments made formerly to the deceased person, the expected return shall be determined in accordance with paragraph (e)(4) of this section.

(7) If paragraph (b)(3) of § 1.72-2 applies to payments provided under a contract and this paragraph applies to such payments, the principles of this paragraph shall be used in making the computations described in paragraph (d)(3) of § 1.72-4. This may be illustrated by the following examples, examples (1) through (3) of which assume that there is no post-June 1986 investment in the contract:

Example 1. Taxpayer A, a male age 63, pays $24,000 for a contract which provides that the proceeds (both income and return of capital) from eight units of an investment fund shall be paid monthly to him for his life and that after his death the proceeds from six such units shall be paid monthly to B, a female age 55, for her life. The portion of the investment in the contract allocable to each taxable year of A is $955.20 and that allocable to each taxable year of B is $716.40. This is determined in the following manner:

Multiple from Table II (male, age 63, and female, age 55)	28.1
Number of units to be paid, in effect, as a joint and survivor annuity	× 6
Number of total annual unit payments anticipatable with respect to the joint and survivor annuity element	168.6
Multiple from Table I (male, age 63)	16.2
Number of units to be paid, in effect, as a single life annuity	× 2
Number of total annual unit payments anticipatable with respect to A alone	32.4
Total number of unit payments anticipatable	201
Portion of investment in the contract allocable to unit payments ($24,000 ÷ 201) on an annual basis	$119.40
Number of units payable to A while he continues to live	× 8
Portion of the investment in the contract allocable to each taxable year of A	$955.20
Portion of investment in the contract allocable to unit payments ($24,000 ÷ 201) on an annual basis	$119.40
Number of units payable to B for her life after A's death	× 6
Portion of the investment in the contract allocable to each taxable year of B	$716.40

For the purpose of the above computation it is immaterial whether or not A lives to or beyond the life expectancy shown for him in Table I.

Example 2. Assume that Taxpayer A in example (1) receives payments for five years which are at least as large as the portion of the investment in the contract allocable to such years, but in the sixth year he receives a total of only $626.40 rather than the $955.20 allocable to such year. A is 69 and B is 61 at the beginning of the first monthly period for which an amount is payable in the seventh taxable year. A makes the election in that year provided under paragraph (d)(3) of § 1.72-4. The difference between the portion of the investment in the contract allocable to the sixth year and the amount actually received in that year is $328.80 ($955.20 less $626.40). In this case, 139.2 unit payments are anticipatable (on an annual basis), since the appropriate multiple from Table II of § 1.72-9, 23.2, multiplied by the number of units payable, in effect, as a joint and survivor annuity yields this result (6 × 23.2). A's appropriate multiple from Table I of § 1.72-9 for the two units which will cease to be paid at his death is 12.6, and the total number of unit payments anticipatable (on an annual basis) is, therefore, 164.4 (2 × 12.6 plus 139.2). Dividing the difference previously found ($328.80) by the total number of unit payments thus determined (164.4) indicates that A will have an additional allocation of the investment in the contract of $16 to the seventh and every succeeding full taxable year (8

units × $2), and B will have an additional allocation of the investment in the contract of $12 (6 units × $2) to each taxable year in which she receives 12 monthly payments subsequent to the death of A. The total allocable to each taxable year of A is, therefore, $971.20, and that allocable to each taxable year of B will be $728.40.

Example 3. If, in example (2), A had died at the end of the fifth year, in the sixth year B would have received a payment of $469.80 (that portion of the $626.40 that A would have received which is in the same ratio that 6 units bear to 8 units) and would thus have received $246.60 less than the portion of the investment in the contract originally determined to be allocable to each of her taxable years. In these circumstances, B would be entitled to elect to redetermine the portion of the investment in the contract allocable to the taxable year of election and all subsequent years. The new amount allocable thereto would be found by dividing the $246.60 difference by her life expectancy as of the first day of the first period for which she received an amount as an annuity in the seventh year of the annuity contract, and adding the result to her originally determined allocation of $716.40.

Example 4. On July 1, 1986, Taxpayer C, age 60, pays $28,000 for a contract which provides that the proceeds (both income and return of capital) from 10 units of an investment fund shall be paid monthly to C for C's life and that after C's death the proceeds from 4 such units shall be paid monthly to D, age 57, for D's life. The portion of the investment in the contract allocable to each taxable year of C is $1,037.00 and that allocable to each taxable year of D is $414.80. This is determined as follows:

Multiple from Table VI (ages 60, 57)	31.2
Number of units to be paid, in effect, as a joint and survivor annuity	× 4
Number of total annual unit payments anticipatable with respect to the joint and survivor annuity element	124.8
Multiple from Table V (age 60)	24.2
Number of units to be paid, in effect, as a single life annuity	× 6
Number of total annual unit payments anticipatable with respect to C alone	145.2
Total number of unit payments anticipatable	270
Portion of investment in the contract allocable to unit payments ($28,000 ÷ 270) on an annual basis	103.70
Number of units payable to C while C continues to live	× 10
Portion of the investment in the contract allocable to each taxable year of C	$1,037.00
Portion of investment in the contract allocable to unit payments ($28,000 ÷ 270) on an annual basis	$103.70
Number of units payable to D for D's life after C's death	× 4
Portion of the investment in the contract allocable to each taxable year of D	$414.80

For purposes of the above computation it is immaterial whether or not C lives to or beyond the life expectancy shown in Table V.

Example 5. Assume the same facts as in example (4), except that C's total investment in the contract is $28,000, and C's pre-July 1986 investment in the contract is $16,000. If C makes the election described in § 1.72-6(d)(6), separate computations are required to determine the amount excludable from gross income with respect to the pre-July 1986 investment in the contract and the post-June 1986 investment in the contract. The annuitant shall apply the appropriate pre-July 1986 and post-June 1986 life expectancy multiples to the applicable portions of the units to be paid as a joint and survivor annuity, and as a single life annuity. *Pre-July 1986 Computation (all references to unit payments are to the pre-July 1986 applicable portion of such payments):*

Multiple from Table II (male, age 60, female, age 57)	27.6
Number of units to be paid, in effect, as a joint and survivor annuity	× 4
Number of total annual unit payments anticipatable with respect to the joint and survivor annuity element	110.40
Multiple from Table I (male, age 60)	18.2
Number of units to be paid, in effect, as a single life annuity	× 6
Number of total annual unit payments anticipatable with respect to C alone	109.20
Total number of unit payments anticipatable	219.6
Portion of pre-July 1986 investment in the contract allocable to unit payments ($16,000 ÷ 219.60) on an annual basis	$72.86
Number of units payable to C while C continues to live	× 10
Portion of pre-July 1986 investment in the contract allocable to each taxable year of C	728.60
Portion of pre-July 1986 investment in the contract allocable to unit payments ($16,000 ÷ 219.60) on an annual basis	72.86
Number of units payable to D for D's life after C's death	× 4
Portion of pre-July 1986 investment in the contract allocable to each taxable year of D	$291.44

Post-June 1986 Computation (all references to unit payments are to the post-June 1986 applicable portion of such payments):

Multiple from Table VI (ages 60, 57)	31.2
Number of units to be paid, in effect, as a joint and survivor annuity	x4
Number of total annual unit payments anticipatable with respect to the joint and survivor annuity element	124.80
Multiple from Table V (age 60)	24.2

Number of units to be paid, in effect, as a single life annuity	× 6
Number of total annual unit payments anticipatable with respect to C alone	145.20
Total number of unit payments anticipatable	270
Portion of post-June 1986 investment in the contract allocable to unit payments ($12,000 ÷ 270) on an annual basis	$44.44
Number of units payable to C while C continues to live	× 10
Portion of post-June 1986 investment in the contract allocable to each taxable year of C	$444.40
Portion of post-June 1986 investment in the contract allocable to unit payments ($12,000 ÷ 270) on an annual basis	44.44
Number of units payable to D for D's life after C's death	× 4
Portion of post-June 1986 investment in the contract allocable to each taxable year of D	$177.78
Total computation:	
Total portion of the investment in the contract allocable to each taxable year of C ($728.60 + $444.40)	$1,173.00
Total portion of the investment in the contract allocable to each taxable year of D ($291.44 + $177.78)	$469.22

Example 6. Assume that taxpayer C in example (4) receives payments for four years which are at least as large as the portion of the investment in the contract allocable to such years, but in the fifth year receives a total of only $600 rather than the $1,037 allocable to such year. C is 65 and D is 62 at the beginning of the first monthly period for which an amount is payable in the sixth taxable year. C makes the election in that year provided under paragraph (d)(3) of § 1.72-4. The difference between the portion of the investment in the contract allocable to the fifth year and the amount actually received in that year is $437 ($1,037−$600). In this case, 106 unit payments are anticipatable with respect to the joint and survivor annuity element, since the appropriate multiple from Table VI of § 1.72-9, 26.5, multiplied by the number of units payable, in effect, as a joint and survivor annuity yields this result (4 × 26.0). C's appropriate multiple from Table V of § 1.72-9 for the six units which will cease to be paid at C's death is 20.0, and the number of unit payments anticipatable with respect to C alone is 120 (6 × 20). The total number of unit payments anticipatable is, therefore, 226 (120 plus 106). Dividing the difference previously found ($437) by the total number of unit payments thus determined (226) indicates that C will have an additional allocation of the investment in the contract of $19.30 to the sixth and every succeeding full taxable year (10 units × $1.93), and D will have an additional allocation of the investment in the contract of $7.72 (4 units × $1.93) to each taxable year in which D receives 12 monthly payments subsequent to the death of C. The total allocable to each taxable year of C is, therefore, $1,056.30, and that allocable to each taxable year of D will be $422.52.

Example 7. If, in example (6), C had died at the end of the fourth year, in the fifth year D would have received a payment of $240 (that portion of the $600 that C would have received which is in the same ratio that 4 units bear to 10 units) and would thus have received $174.80 less than the portion of the investment in the contract allocable to each of D's taxable years. In these circumstances, D would be entitled to elect to redetermine the portion of the investment in the contract allocable to the taxable year of election and all subsequent years. The new amount allocable thereto would be found by

dividing the $174.80 difference by D's life expectancy as of the first day of the first period for which D received an amount as an annuity in the sixth year of the annuity contract, and adding the result to D's originally determined allocation of $414.80.

(c) ***Expected return for term certain.*** In the case of a contract providing for specific periodic payments which are to be paid for a term certain such as a fixed number of months or years, without regard to life expectancy, the expected return is determined by multiplying the fixed number of years or months for which payments are to be made on or after the annuity starting date by the amount of the payment provided in the contract for each such period.

(d) ***Expected return with respect to amount certain.*** In the case of contracts involving no life or lives as a measurement of their duration, but under which a determinable total amount is to be paid in installments of lesser amounts paid at periodic intervals, the expected return shall be the total amount guaranteed. If an amount is to be paid periodically until a fund plus interest at a fixed rate is exhausted, but further payments may be made thereafter because of earnings at a higher interest rate, this paragraph shall apply to the total amount anticipatable as a result of the amount of the fund plus the fixed interest thereon. Any amount which may be paid as the result of earnings at a greater interest rate shall be disregarded in determining the expected return. If such an amount is later received, it shall be considered an amount not received as an annuity after the annuity starting date. See paragraph (b)(2) of § 1.72-11.

(e) ***Expected return where two or more annuity elements providing for fixed payments are acquired for a single consideration.***

(1) In the case of a contract described in paragraph (a)(2) of § 1.72-2, which provides for specified payments to be made under two or more annuity elements, the expected return shall be found for the contract as a whole by aggregating the expected returns found with respect to each annuity element. If individual life annuity elements are involved (including joint and survivor annuities where the primary annuitant died before January 1, 1954) the expected return for each of them shall be determined in the manner prescribed in paragraph (a) of this section. If joint and survivor annuity elements are involved, the expected return for such elements shall be determined under the appropriate subparagraph of paragraph (b) of this section. If terms certain or amounts certain are involved, the expected returns for such elements shall be determined under paragraph (c) or (d) of this section, respectively.

(2) The aggregate expected return found in accordance with the rules set forth in subparagraph (1) of this paragraph shall constitute the expected return for the contract as a whole. The investment in the contract shall be divided by the amount thus determined to obtain the exclusion ratio for the contract as a whole, This exclusion ratio shall be applied to all amounts received as an annuity under the contract by any recipient (in accordance with the provisions of § 1.72-4), except in the case of amounts received by a surviving annuitant under a joint and survivor annuity element to which the provisions of section 72(i) and paragraph (b)(3) of this section would apply if it were a separate contract. See subparagraph (3) of this paragraph.

(3) In the case of a contract providing two or more annuity elements, one of which is a joint and survivor annuity element of the type described in section 72(i) and paragraph (b)(3) of this section, the general exclusion ratio for the contract as a whole, for the purpose of computations with respect to all the other annuity elements shall be determined in accordance with the principles of subparagraphs (1) and (2) of this paragraph. A special exclusion ratio shall thereafter be determined for the surviving annuitant receiving payments under the annuity element described in section 72(i) and paragraph (b)(3) of this section by using the investment in the contract and the expected return determined in accordance with the provisions of paragraph (b)(3) of this section.

(4) In the case of a contract providing for payments to be made to two persons in the manner described in paragraph (b)(6) of this section, the expected return is to be computed as though there were two joint and survivor annuities under the same contract, in the following manner. First, the multiple appropriate to the ages (as of the annuity starting date) and, if applicable, sexes of the annuitants involved shall be found in Table II or VI (whichever is applicable) of § 1.72-9 and adjusted, if necessary, in the manner described in paragraph (a)(2) of this section. Second, the multiple so found shall be applied to the sum of the payments to be made each year to both annuitants. The result is the expected return for the contract as a whole.

(5) For rules relating to expected return where two or more annuity elements are acquired for a single consideration and one or more of such elements does not specify a fixed payment for each period, see paragraph (f) of this section.

(f) ***Expected return with respect to obligations providing for payments described in paragraph (b)(3) of § 1.72-2.***

(1) If a contract to which section 72 applies provides only for payments to be made in a manner described in paragraph (b)(3) of § 1.72-2, the expected return for such contract as a whole shall be an amount equal to the investment in the contract found in accordance with section 72(c)(1) and § 1.72-6, as adjusted for any refund feature in accordance with § 1.72-7.

(2) If a contract to which section 72 applies provides for annuity elements, one or more of which (but not all) provide for payments to be made in a manner described in paragraph (b)(3) of § 1.72-2:

(i) With respect to the portion of the contract providing for annuity elements to which paragraph (b)(3) of § 1.72-2 does not apply, the expected return shall be the aggregate of the expected returns found for each of such elements in accordance with the appropriate paragraph of this section; and

(ii) With respect to all annuity elements to which paragraph (b)(3) of § 1.72-2 does apply, the expected return for all such elements shall be an amount equal to the portion of the investment in the contract allocable to such elements in accordance with the provisions of paragraph (e)(2)(ii) of § 1.72-4 and paragraph (b)(3)(ii)(*b*) of § 1.72-6.

(g) ***Expected return with respect to contracts subject to § 1.72-6(d).*** In the case of a contract to which § 1.72-6(d) (relating to contracts in which amounts were invested both before July 1, 1986, and after June 30, 1986) applies, an expected return is computed using the multiples in Tables I through IV of § 1.72-9 with respect to the pre-July 1986 investment in the contract and a second expected return is computed using the multiples in Tables V through VIII of § 1.72-9 with respect to the post-June 1986 investment in the contract.

[T.D. 6500, 25 FR 11402, Nov. 26, 1960; 25 FR 14021, Dec. 21, 1960, as amended by T.D. 8115, 51 FR 45694, Dec. 19, 1986]

§ 1.72-6 Investment in the contract.

(a) ***General rule.***

(1) For the purpose of computing the "investment in the contract", it is first necessary to determine the "aggregate amount of premiums or other consideration paid" for such contract. See section 72(c)(1). This determination is made as of the later of the annuity starting date of the contract or the date on which an amount is first received thereunder as an annuity. The amount so found is then reduced by the sum of the following amounts in order to find the investment in the contract:

(i) The total amount of any return of premiums or dividends received (including unrepaid loans or dividends applied against the principal or interest on such loans) on or before the date on which the foregoing determination is made, and

(ii) The total of any other amounts received with respect to the contract on or before such date which were excludable from the gross income of the recipient under the income tax law applicable at the time of receipt.

Amounts to which subdivision (ii) of this subparagraph applies shall include, for example, amounts considered to be return of premiums or other consideration paid under section 22(b)(2) of the Internal Revenue Code of 1939 and amounts considered to be an employer-provided death benefit under section 22(b)(1)(B) of such Code. For rules relating to the extent to which an employee or his beneficiary may include employer contributions in the aggregate amount of premiums or other consideration paid, see § 1.72-8. If the aggregate amount of premiums or other consideration paid for the contract includes amounts for which deductions were allowed under section 404 as contributions on behalf of a self-employed individual, such amounts shall not be included in the investment in the contract.

(2) For the purpose of subparagraph (1) of this paragraph, amounts received subsequent to the receipt of an amount as an annuity or subsequent to the annuity starting date, whichever is the later, shall be disregarded. See, however, § 1.72-11.

(3) The application of this paragraph may be illustrated by the following examples:

Example 1. In 1950, B purchased an annuity contract for $10,000 which was to provide him with an annuity of $1,000 per year for life. He received $1,000 in each of the years 1950, 1951, 1952, and 1953, prior to the annuity starting date (January 1, 1954). Under the Internal Revenue Code of 1939, $300 of each of these payments (3 percent of $10,000) was includible in his gross income, and the remaining $700 was excludable therefrom during each of the taxable years mentioned. In computing B's investment in the contract as of January 1, 1954, the total amount excludable from his gross income during the years 1950 through 1953 ($2,800) must be subtracted from the consideration paid ($10,000). Accordingly, B's investment in the contract as of January 1, 1954, is $7,200 ($10,000 less $2,800).

Example 2. In 1945, C contracted for an annuity to be paid to him beginning December 31, 1960. In 1945 and in each successive year until 1960, he paid a premium of $5,000. Assuming he receives no payments of any kind under the contract until the date on which he receives the first annual payment as an annuity (December 31, 1960), his investment in the contract as of the annuity starting date (December 31, 1959) will be $75,000 ($5,000 paid each year for the 15 years from 1945 to 1959, inclusive).

Example 3. Assume the same facts as in example (2), except that prior to the annuity starting date C has already received from the insurer dividends of $1,000 each in 1949, 1954, and 1959, such dividends not being includible in his gross income in any of those years. C's investment in the contract, as of the annuity starting date, will then be $72,000 ($75,000-$3,000).

(b) ***Allocation of the investment in the contract where two or more annuity elements are acquired for a single consideration.***

(1) In the case of a contract described in § 1.72-2(a)(2) which provides for two or more annuity elements, the investment in the contract determined under paragraph (a) shall be allocated to each of the annuity elements in the ratio that the expected return under each annuity element bears to the

aggregate of the expected returns under all the annuity elements. The exclusion ratio for the contract as a whole shall be determined by dividing the investment in the contract (after adjustment for the present value of any or all refund features) by the aggregate of the expected returns under all the annuity elements. This may be illustrated by the following examples:

Example 1. If a contract provides for annuity payments of $1,000 per year for life (with no refund feature) to both A and B, a male and female, respectively, each 70 years of age as of the annuity starting date, such contract is acquired for consideration of $19,575 (without regard to whether paid by A, B, or both), and there is no post-June 1986 investment in the contract, the investment in the contract shall be allocated by determining the exclusion ratio for the contract as a whole in the following manner:

Expectancy of A under Table I and § 1.72-5(a)(2), 11.6 (12.1-0.5), multiplied by $1,000	$11,600
Plus: Expectancy of B computed in a similar manner ($1,000 × 14.5 [15.0−0.5])	14,500
Total expected return	26,100

The exclusion ratio for both A and B is then $19,575 ÷ $26,100, or 75 percent. A and B shall each exclude from gross income three-fourths ($750) of each $1,000 annual payment received and shall include the remaining one-fourth ($250) of each $1,000 annual payment received in gross income.

Example 2. Assume the same facts as in example (1) except that of the total investment in the contract of $19,575, the pre-July 1986 investment in the contract is $10,000. If the election described in § 1.72-6(d)(6) is made with respect to the contract, the investment in the contract shall be allocated by determining an exclusion ratio for the contract as a whole based on separately computed exclusion ratios with respect to the pre-July 1986 investment in the contract and the post-June 1986 investment in the contract in the following manner:

Expectancy of A under Table I and § 1.72-5(a)(2), 11.6 (12.1-0.5), multiplied by $1,000	$11,600
Plus: Expectancy of B under Table I and § 1.72-5(a)(2), 14.5 (15.0-0.5), multiplied by $1,000	$14,500
Pre-July 1986 expected return	$26,100
Expectancy of A under Table V and § 1.72-5(a)(2), 15.5 (16.0-0.5), multiplied by $1,000	$15,500
Plus: Expectancy of B under Table V and § 1.72-5(a)(2), 15.5 (16.0-0.5),	$15,500

multiplied by $1,000	
Post-June 1986 expected return	$31,000
Pre-July 1986 exclusion ratio ($10,000 ÷ $26,100)	38.3
Post-June 1986 exclusion ratio ($9,575 ÷ 31,000)	30.9
A and B shall each exclude from gross income $692 (38.3 percent of $1,000 + 30.9 percent of $1,000) of each $1,000 payment and include the remaining $308 in gross income	

(2) In the case of a contract providing for specified annual annuity payments to be made to two persons during their joint lives and the payment of the aggregate of the two individual payments to the survivor for his life, the investment in the contract shall be allocated in accordance with the provisions of subparagraph (1) of this paragraph. For this purpose, the investment in the contract (without regard to the fact that differing amounts may have been contributed by the two annuitants) shall be divided by the expected return determined in accordance with paragraph (e)(4) of § 1.72-5. The resulting exclusion ratio shall then be applied to any amounts received as an annuity by either annuitant.

(3) In the case of a contract providing two or more annuity elements, one or more of which provides for payments to be made in a manner described in paragraph (b)(3) of § 1.72-2, the investment in the contract shall be allocated to the various annuity elements in the following manner.

(i) If all the annuity elements provide for payments to be made in the manner described in paragraph (b)(3) of § 1.72-2, the investment in the contract shall be allocated on the basis of the amounts received by each recipient by apportioning the amount determined to be excludable under that section to each recipient in the same ratio as the total of the amounts received by him in the taxable year bears to the total of the amounts received by all recipients during the same period; and

(ii) If one or more, but not all, of the annuity elements provide for payments to be made in a manner described in paragraph (b)(3) of § 1.72-2:

(*a*) With respect to all annuity elements to which that section does not apply, the investment in the contract for all such elements shall be the portion of the investment in the contract as a whole (found in accordance with the provisions of this section) which is properly allocable to all such elements; and

(*b*) With respect to all annuity elements to which paragraph (b)(3) of § 1.72-2 does apply, the investment in the contract for all such elements shall be the investment in the contract as a whole (found in accordance with the provisions of this section) as reduced by the portion thereof determined under (*a*) of this subdivision.

For the purpose of determining, pursuant to (*a*) of this subdivision, the portion of the investment in the contract as a whole properly allocable to a particular annuity element, reference shall be made to the present value of such annuity element determined in accordance with paragraph (e)(1)(iii) (*b*) of § 1.101-2.

(iii) In the case of a contract to which paragraph (d) of this section applies, this paragraph (b) is applied in the manner prescribed in paragraph (d) and, in particular, paragraph (d)(5)(v) of this section.

(c) *Special rules.*

(1) For the special rule for determining the investment in the contract for a surviving annuitant in cases where the prior annuitant of a joint and survivor annuity contract died in 1951, 1952, or 1953, see paragraph (b)(3) of § 1.72-5.

(2) For special rules relating to the determination of the investment in the contract where employer contributions are involved, see § 1.72-8. See also paragraph (b) of § 1.72-16 for a special rule relating to the determination of the premiums or other consideration paid for a contract where an employee is taxable on the premiums paid for life insurance protection that is purchased by and considered to be a distribution from an exempt employees' trust.

(3) For the determination of an adjustment in investment in the contract in cases where a contract contains a refund feature, see § 1.72-7.

(4) In the case of “face-amount certificates” described in section 72(1), the amount of consideration paid for purposes of computing the investment in the contract shall include any amount added to the holder's basis by reason of section 1232(a)(3)(E) (relating to basis adjustment for amount of original issue discount ratably included in gross income as interest under section 1232(a)(3)).

(d) *Pre-July 1986 and post-June 1986 investment in the contract.*

(1) This paragraph (d) applies to an annuity contract if:

(i) The investment in the contract includes a pre-July 1986 investment in the contract and a post-June 1986 investment in the contract (both as defined in § 1.72-6(d)(3));

(ii) The use of a multiple found in Tables I through VIII of § 1.72-9 is required to determine the expected return under the contract; and

(iii) The election described in paragraph (d)(6) of this section is made with respect to the contract.

(2) In the case of annuity contract to which this paragraph (d) applies—

(i) All computations required to determine the amount excludable from gross income shall be performed separately with respect to the pre-July 1986 investment in the contract and the post-June 1986 investment in the contract as if each such amount were the entire investment in the contract;

(ii) The multiples in Tables I through IV shall be used for computations involving the pre-July 1986 investment in the contract and the multiples in Tables V through VIII shall be used for computations involving the post-June 1986 investment in the contract; and

(iii) The amount excludable from gross income shall be the sum of the amounts determined under the separate computations required by paragraph (d)(2)(i) of this section.

(3) For purposes of the regulations under section 72, the pre-July 1986 investment in the contract and post-June 1986 investment in the contract are determined in accordance with the following rules:

(i)

(A) Except as provided in § 1.72-9, if the annuity starting date of the contract occurs before July 1, 1986, the pre-July 1986 investment in the contract is the total investment in the contract as of the annuity starting date;

(B) Except as provided in § 1.72-9, if the annuity starting date of the contract occurs after June 30, 1986, and the contract does not provide for a disqualifying form of payment or settlement, the pre-July 1986 investment in the contract is the investment in the contract computed as of June 30, 1986, as if June 30, 1986, had been the later of the annuity starting date of the contract or the date on which an amount is first received thereunder as an annuity;

(C) If the annuity starting date of the contract occurs after June 30, 1986, and the contract provides, at the option of the annuitant or of any other person (including, in the case of an employee's annuity, an option exercisable only by, or with the consent of, the employer), for a disqualifying form of payment or settlement, the pre-July 1986 investment in the contract is zero (*i.e.*, the total investment in the contract is post-June 1986 investment in the contract).

(ii) The post-June 1986 investment in the contract is the amount by which the total investment in the contract as of the annuity starting date exceeds the pre-July 1986 investment in the contract.

(iii) For purposes of paragraph (d)(3)(i) of this section, a disqualifying form of payment or settlement is any form of payment or settlement (whether or not selected) that permits the receipt of amounts under the contract in a form other than a life annuity. For example, each of the following options provides for a disqualifying form of payment or settlement:

(A) An option to receive a lump sum in full discharge of the obligation under the contract.

(B) An option to receive an amount under the contract after June 30, 1986, and before the annuity starting date.

(C) An option to receive an annuity for a period certain.

(D) An option to receive payments under a refund feature (within the meaning of paragraphs (b) and (c) of § 1.72-7) that is substantially equivalent to an annuity for a period certain.

(E) An option to receive a temporary life annuity (within the meaning of § 1.72-5 (a)(3)) that is substantially equivalent to an annuity for a period certain.

An option to receive alternative forms of life annuity is not a disqualifying option for purposes of paragraph (d)(3)(i) of this section. Thus, if the sole options provided under a contract are a single life annuity and a joint and survivor life annuity, paragraph (d)(3)(i) (C) of this section does not apply to such contract.

(iv) For purposes of paragraph (d)(3)(iii) of this section, a refund feature is substantially equivalent to an annuity for a period certain if its value determined under Table VII of § 1.72-9 exceeds 50 percent. Similarly, a temporary life annuity is substantially equivalent to an annuity for a period certain if the multiple determined under Table VIII of § 1.72-9 exceeds 50 percent of the maximum duration of the annuity.

(4) In any separate computation under this paragraph (d), only the applicable portion of other amounts (such as the total expected return under the contract, or the total amount guaranteed under the contract as of the annuity starting date) shall be taken into account if the use of the entire amount in such computation is inconsistent with the use in the computation of only a portion of the investment in the contract. For example, such use is generally inconsistent if the computation requires a comparison of the investment in the contract and such other amount for the purpose of using the greater (or lesser) amount or the difference between the two. For purposes of the first sentence of this paragraph (d)(4), the applicable portion is the amount that bears the same ratio to the entire amount as the pre-July 1986, investment in the contract or the post-June 1986 investment in the contract, whichever is applicable, bears to the total investment in the contract as of the annuity starting date.

(5) *Application to particular computations.*

(i) In the case of a contract to which this paragraph (d) applies, the exclusion ratio for purposes of § 1.72-4 (a) is the sum of the exclusion ratios separately computed in accordance with this paragraph (d). The exclusion ratio with respect to the pre-July 1986 investment in the contract is determined by dividing the pre-July 1986 investment in the contract by the expected return as found under § 1.72-5 by applying the appropriate multiples of Tables I through IV of § 1.72-9. Similarly, the exclusion ratio with respect to the post-June 1986 investment in the contract is determined by dividing the post-June 1986 investment in the contract by the expected return as found under § 1.72-5 by applying the appropriate multiples in Tables V through VIII of § 1.72-9.

(ii) The applicability of § 1.72-4(d)(2) to a contract to which this paragraph (d) applies shall be determined separately with respect to the post-June 1986 investment in the contract and the pre-July 1986 investment in the contract and in each such determination only the applicable portion of the total expected return under the contract shall be taken into account. If § 1.72-4(d)(2) applies with respect to either such investment in the contract, the separately computed exclusion ratio shall be considered to be the applicable portion of 100 percent.

(iii) If § 1.72-4(d)(3) applies to a contract to which this paragraph (d) applies—

(A) The applicable portions (as defined in paragraph (d)(4) of this section) of payments received under the contract for a taxable year shall be separately computed;

(B) The pre-July 1986 investment in the contract and the post-June 1986 investment in the contract shall be separately allocated to the taxable year; and

(C) The separate applicable portions of the payments received under the contract for the taxable year shall be considered to be amounts received as an annuity (for which the exclusion ratio is 100 percent) only to the extent they do not exceed the portions of the corresponding investments in the contract which are properly allocable to that year.

See the example in § 1.72-4(d)(3)(v).

(iv) If § 1.72-4(e) applies to a contract to which this paragraph (d) applies, the exclusion ratio shall be separately computed with respect to the pre-July 1986 investment in the contract and the post-June 1986 investment in the contract. For purposes of the separate computations under § 1.72-4(e)(2)(ii), only the applicable portion of payments received shall be taken into account and the exclusion ratio (100%) shall be applied to the separately computed portion allocated to each participant.

(v) If paragraph (b)(3) of this section applies to a contract to which this paragraph (d) applies, separate allocations are required with respect to the pre-July 1986 investment in the contract and the post-June 1986 investment in the contract.

For purposes of the separate computations required to determine the portion of the investment in the contract properly allocable to a particular annuity element, only the applicable portion of the present value of the annuity element determined in accordance with § 1.101-2(e)(1)(iii)(b) is taken into account.

(vi) If § 1.72-7 applies to a contract to which this paragraph (d) applies, separate computations are required to determine the adjustment to the pre-July 1986 investment in the contract and the post-June 1986 investment in the contract. For purposes of such separate computations, only the applicable portions of the amounts described in § 1.72-7 (b)(3)(ii), (c)(1)(ii)(B), (c)(2)(vii)(B), and (d)(1)(ii) are taken into account. Similarly, in the case of computations with respect to the guarantee of a specified amount under § 1.72-7(d)(1), only the applicable portion of such amount is taken into account.

(6) This paragraph (d) applies to a contract only if the first taxpayer to receive an amount as an annuity under the contract elects to perform separate computations with respect to the pre-July 1986 investment in the contract and the post-June 1986 investment in the contract as if each such amount were the entire investment in contract. If two or more annuitants receive an amount as an annuity under the contract at the same time (such as under a joint-and-last-survivorship annuity contract), an election by one of the annuitants is treated as an election by each of the annuitants. The election is made by attaching a statement to the first return filed by the taxpayer for the first taxable year in which an amount is received as an annuity under the contract. The statement must indicate that the taxpayer is electing to apply the provisions of paragraph (d) of § 1.72-6, and must also contain the name, address, and taxpayer identification number of each annuitant under the contract, and the amount of the pre-July 1986 investment in the contract.

(7) If the investment in the contract includes a post-June 1986 investment in the contract and the election described in paragraph (d)(6) of this section is not made—

(i) The amount excludable from gross income shall be determined without regard to the separate computations described in this paragraph (d); and

(ii) Only the multiples found in Tables V through VIII shall be used in determining the amount excludable from gross income.

[T.D. 6500, 25 FR 11402, Nov. 26, 1960, as amended by T.D. 6676, 28 FR 10134, Sept. 17, 1963; T.D. 7311, 39 FR 11880, Apr. 1, 1974; T.D. 8115, 51 FR 45700, Dec. 19, 1986; 52 FR 10223, Mar. 31, 1987]

§ 1.72-7 Adjustment in investment where a contract contains a refund feature.

(a) ***Definition of a contract containing a refund feature.*** A contract to which section 72 applies, contains a refund feature if:

(1) The total amount receivable as an annuity under such contract depends, in whole or in part, on the continuing life of one or more persons,

(2) The contract provides for payments to be made to a beneficiary or the estate of an annuitant on or after the death of the annuitant if a specified amount or a stated number of payments has not been paid to the annuitant or annuitants prior to death, and

(3) Such payments are in the nature of a refund of the consideration paid. See paragraph (c)(1) of § 1.72-11.

(b) ***Adjustment of investment for the refund feature in the case of a single life annuity.*** Where a single life annuity contract to which section 72 applies contains a refund feature and the special rule of paragraph (d) of this section does not apply, the investment in the contract shall be adjusted in the following manner:

(1) Determine the number of years necessary for the guaranteed amount to be fully paid by dividing the maximum amount guaranteed as of the annuity starting date by the amount to be received annually under the contract to the extent such amount reduces the guaranteed amount. The number of years should be stated in terms of the nearest whole year, considering for this purpose a fraction of one-half or more as an additional whole year.

(2) Consult Table III or VII (whichever is applicable) of § 1.72-9 for the appropriate percentage under the whole number of years found in subparagraph (1) of this paragraph and the age (as of the annuity starting date) and, if applicable, sex of the annuitant.

(3) Multiply the percentage found in subparagraph (2) of this paragraph by whichever of the following is the smaller:

(i) The investment in the contract found in accordance with § 1.72-6 or

(ii) the total amount guaranteed as of the annuity starting date.

(4) Subtract the amount found in subparagraph (3) of this paragraph from the investment in the contract found in accordance with § 1.72-6.

The resulting amount is the investment in the contract adjusted for the present value of the refund feature without discount for interest and is to be used in determining the exclusion ratio to be applied to the payments received as an annuity. The percentage found in Tables III or VII shall not be adjusted in a manner described in paragraph (a)(2) of § 1.72-5. These principles may be illustrated by the following examples:

> *Example 1.* On January 1, 1954, a husband, age 65, purchased for $21,053, an immediate installment refund annuity payable $100 per month for life. The contract provided that in the event the husband did not live long enough to recover the full purchase price, payments were to be made to his wife until the total payments under the contract equaled the purchase price. The investment in the contract adjusted for the purpose of determining the exclusion ratio is computed in the following manner:

Cost of the annuity contract (investment in the contract, unadjusted)	$21,053
Amount to be received annually	$1,200
Number of years for which payment guaranteed ($21,053 divided by $1,200)	17.5
Rounded to nearest whole number of years	18
Percentage located in Table III for age 65 (age of the annuitant as of the	30

annuity starting date) and 18 (the number of whole years) (percent)	
Subtract value of the refund feature to the nearest dollar (30 percent of $21,053)	$6,316
Investment in the contract adjusted for the present value of the refund feature without discount for interest	$14,737

Example 2. Assume the same facts as in example (1), except that the total investment in the contract was made after June 30, 1986. The investment in the contract adjusted for the purpose of determining the exclusion ratio is computed as follows:

Cost of the annuity contract (investment in the contract, unadjusted)	$21,053
Amount to be received annually	$1,200
Number of years for which payment guaranteed ($21,053 ÷ $1,200)	17.5
Rounded to nearest whole number of years	18
Percentage in Table VII for age 65 and 18 years (percent)	15
Subtract value of the refund feature to the nearest dollar (15 percent of $21,053)	$3,158
Investment in the contract adjusted for the present value of the refund feature without discount for interest	$17,895

Example 3. Assume the same facts as in example (1), except that the pre-July 1986 investment in the contract is $10,000 and the post-June 1986 investment in the contract is $11,053. If the annuitant makes the election described in § 1.72-6(d)(6), separate computations must be performed pursuant to § 1.72-6(d) to determine the adjusted investment in the contract. The pre-July 1986 investment in the contract and the post-June 1986 investment in the contract adjusted for the purpose of determining the exclusion ratios are, respectively, $7,000 and $9,395, determined as follows:

Pre-July 1986 investment in the contract (unadjusted)	$10,000
Pre-July 1986 portion of the amount to be received annually ($10,000/$21,053 × $1,200)	$570.00
Number of years for which payment guaranteed ($10,000 ÷ $570)	17.50
Rounded to nearest whole number of years	18
Percentage in Table III for age 65 and 18 years (percent)	30

Subtract value of the refund feature to the nearest dollar (30 percent of $10,000)	$3,000
Pre-July 1986 investment in the contract adjusted for the present value of the refund feature without discount for interest	$7,000
Post-June 1986 investment in the contract (unadjusted)	$11,053
Post-June 1986 portion of the amount to be received annually ($11,053/$21,053 × $1,200)	$630
Number of years for which payment guaranteed ($11,053 ÷ $630)	17.54
Rounded to nearest whole number of years	18
Percentage in Table VII for age 65 and 18 years (percent)	15
Subtract value of the refund feature to the nearest dollar (15 percent of $11,053)	$1,658
Post-June 1986 investment in the contract adjusted for the present value of the refund feature without discount for interest	$9,395

If, in the above examples, the guaranteed amount had exceeded the investment in the contract (or applicable portion thereof), the percentage found in Table III or VII (whichever is applicable) should have been applied to the lesser of these amounts since any excess of the guaranteed amount over the investment in the contract (as found under § 1.72-6) would not have constituted a refund of premiums or other consideration paid. In such a case, however, a different multiple might have been obtained from Table III or VII (whichever is applicable) since the number of years for which payments were guaranteed would have been greater.

(c) ***Adjustment of investment for the refund feature in the case of a joint and survivor annuity.***

(1) Except as provided in paragraph (c)(2) of this section, if a joint and survivor annuity contract described in paragraph (b) (1), (2) or (6) of § 1.72-5 contains a refund feature and the special rule of paragraph (d) of this section does not apply, the investment in the contract shall be adjusted in the following manner:

(i) Find the percentage determined under the following formula:

$$V = \frac{\sum_{t=0}^{N-1} \frac{d_{x+t}}{l_x}\left[(N - \tfrac{1}{2} - t) - P\left(\frac{T_{y+t+1} - T_{y+t+M+1}}{l_y}\right)\right]}{N}$$

In which:

V = The percentage, rounded to the nearest whole percent,

x = The age at the nearest birthday of the primary annuitant,

y = The age at the nearest birthday of the survivor annuitant,

N = The guaranteed amount divided by the annual annuity payable to the primary annuitant, rounded to the nearest integer,

P = The annual annuity continued to the survivor annuitant divided by the annual annuity payable to the primary annuitant,

$$M = \frac{N - \frac{1}{2} - t,}{P}$$

l_x=The number of survivors at age x, $d = l_x - l_{x+1}$, and

$$T_x = \sum_{s=0}^{\infty} \frac{1}{2}\left(l_{x+s} + l_{x+s+1}\right).$$

(ii) Multiply the percentage found in paragraph (c)(1)(i) of this section by the lesser of

(A) the investment in the contract found in accordance with § 1.72-6, or

(B) the total amount guaranteed as of the annuity starting date.

(iii) Subtract the amount found in paragraph (c)(1)(ii) of this section from the investment in the contract found in accordance with § 1.72-6.

In the case of a contract providing for payments to be made to two persons in the manner described in paragraph (b)(6) of § 1.72-5, this paragraph (c)(1) is applied as though the older person were the primary annuitant and the younger person were the survivor annuitant. For purposes of this paragraph (c)(1), the number of survivors at age$_x$ (l_x) is determined under the following table:

x	lx
5	1000000.
6	999729.
7	999493.
8	999284.
9	999069.
10	998849.
11	998620.
12	998382.
13	998135.

x	lx
14	997876.
15	997606.
16	997322.
17	997025.
18	996714.
19	996387.
20	996044.
21	995684.
22	995304.
23	994905.
24	994484.
25	994041.
26	993573.
27	993080.
28	992563.
29	992024.
30	991461.
31	990876.
32	990269.
33	989638.
34	988984.
35	988303.
36	987593.
37	986846.
38	986055.
39	985210.
40	984298.
41	983310.
42	982230.
43	981046.
44	979742.
45	978302.
46	976709.
47	974945.
48	972992.
49	970832.
50	968447.
51	966000.
52	963313.

x	lx
53	960375.
54	957175.
55	953705.
56	949954.
57	945912.
58	941568.
59	936908.
60	931903.
61	926451.
62	920540.
63	914090.
64	907011.
65	899221.
66	890428.
67	880797.
68	870298.
69	858904.
70	846565.
71	832316.
72	816861.
73	800078.
74	781837.
75	762012.
76	740743.
77	717689.
78	692780.
79	665977.
80	637260.
81	607339.
82	575531.
83	541919.
84	506647.
85	469931.
86	432459.
87	394138.
88	355393.
89	316712.
90	278663.
91	242020.

x	lx
92	207150.
93	174602.
94	144828.
95	118151.
96	94871.7
97	74863.6
98	58042.2
99	44176.1
100	32956.4
101	24044.8
102	17104.1
103	11815.5
104	7886.75
105	5054.94
106	3086.95
107	1778.82
108	955.465
109	470.955
110	208.668
111	80.7899
112	26.2340
113	6.69620
114	1.19385
115	.111460

(2) If the multiples in Tables I through IV of § 1.72-9 are used to determine any portion of the expected return under a contract described in paragraph (c)(1) of this section, only the post-June 1986 investment in the contract (if any) shall be adjusted in the manner described in paragraph (c)(1) of this section, and the pre-July 1986 investment in the contract shall, in the case of a contract described in paragraph (b) (1) or (6) of § 1.72-5, be adjusted in the following manner:

(i) Determine the number of years necessary for the guaranteed amount to be fully paid by dividing the maximum amount guaranteed as of the annuity starting date by the amount to be received annually under the contract. The number of years should be stated in terms of the nearest whole year, considering for this purpose a fraction of one-half or more as an additional whole year.

(ii) Consult Table III of § 1.72-9 for the appropriate percentages under the whole number of years found in subdivision (i) of this subparagraph and the age (as of the annuity starting date) and sex of each annuitant. If the annuitants are not of the same sex, substitute for the female annuitant a male annuitant 5 years younger, or for the male annuitant a female annuitant 5 years older, so that Table III will be entered in both cases with the ages of annuitants of the same sex.

(iii) Find the sum of the two percentages found in accordance with subdivision (ii) of this subparagraph.

(iv) To the age of the elder of the two annuitants (as determined under subdivision (ii) of this subparagraph), add the number of years (indicated in the table below) opposite the number of years by which such annuitants' ages differ:

Number of years difference in age (2 male annuitants or 2 female annuitants)	Addition to older age in years
0 to 1, inclusive	9
2 to 3, inclusive	8
4 to 5, inclusive	7
6 to 8, inclusive	6
9 to 11, inclusive	5
12 to 15, inclusive	4
16 to 20, inclusive	3
21 to 27, inclusive	2
28 to 42, inclusive	1
Over 42	0

(v) Consult Table III for the appropriate percentage under the whole number of years found in subdivision (i) of this subparagraph and the age and sex of the elder annuitant as adjusted under subdivision (iv) of this subparagraph.

(vi) Subtract the percentage obtained in subdivision (v) of this subparagraph from the sum of the percentages found under subdivision (iii) of this subparagraph. If the result is less than one, subdivisions (vii) and (viii) of this subparagraph shall be disregarded and no adjustment made to the investment in the contract.

(vii) Multiply the percentage found in subdivision (vi) of this subparagraph by whichever of the following is the smaller:

(A) the investment in the contract found in accordance with § 1.72-6 or

(B) the total amount guaranteed as of the annuity starting date.

(viii) Subtract the amount found in subdivision (vii) of this subparagraph from the investment in the contract found in accordance with § 1.72-6.

(3) The principles of this paragraph (c) may be illustrated by the following examples:

Example 1. Prior to July 1, 1986, Taxpayer A, a 70-year-old male, purchases a joint and last survivor annuity for $33,050. The contract provides for payments of $100 a month to be paid first to himself for life and then to B, his 40-year-old daughter, if she survives him. The contract further provides that in the event both die before ten years' payments have been made, payments will be continued to C, a beneficiary, or to C's estate, until ten years' payments have been made. If there is no post-June 1986 investment in the contract, the investment in the contract adjusted for the purpose of determining the exclusion ratio is computed in the following manner:

Cost of the annuity contract (investment in the contract unadjusted)	$33,050
Guaranteed amount ($1,200 × 10)	$12,000
Percentage in Table III for male, age 70 (or female, age 75) for duration of the guarantee (10)	21
Percentage in Table III for female, age 40 (or male, age 35) for duration of the guarantee (10)	2
Sum of percentages obtained	23
Difference in years of age between two males, aged 70 and 35 (or 2 females, aged 75 and 40)	35
Addition, in years, to older age	1
Percentage in Table III for male one year older than A	22
Difference between percentages obtained (23 percent less 22 percent)	1
Value of the refund feature to the nearest dollar (1 percent of $12,000)	$120
Investment in the contract adjusted for present value of the refund feature	$32,930

Example 2. The facts are the same as in example (1), except that the total investment in the contract was made after June 30, 1986, A is 73 years of age, and B is A's 70 year old spouse. The percentage determined under the formula in paragraph (c)(1)(i) of this section is two percent. Thus, the amount determined under paragraph (c)(1)(ii) of this section is $240 (2 percent of $12,000), and the investment in the contract adjusted for the present value of the refund feature is $32,810 ($33,050—$240).

(4) If an annuity described in paragraph (b) of § 1.72-5 contains a refund feature and the manner of determining the adjustment to the investment in the contract (or to any part of such investment) is not prescribed or requires use of the formula in paragraph (c)(1)(i) of this section, the Commissioner will determine the amount of the adjustment upon request. The request must contain the date of birth of each annuitant, the guaranteed amount, the annual annuity payable to each annuitant, and the annuity starting date. Send the request to the Commissioner of Internal Revenue, Attention: OP:E:EP:GA, Washington, D.C. 20224.

(d) ***Adjustment of investment in the contract where paragraph (b)(3) of § 1.72-2 applies to payments.***

(1) If paragraph (b)(3) of § 1.72-2 applies to payments to be made under a contract and this section also applies because of the provision for a refund feature, an adjustment shall be made to the investment in the contract in accordance with this paragraph before making the computations required by paragraph (d)(3) of § 1.72-4 and paragraph (d)(7) of § 1.72-5. In the case of the guarantee of a specified amount, the adjustment shall be made by applying the appropriate multiple from Table III or VII (whichever is applicable), as otherwise determined under this section, to the investment in the contract or the guranteed amount, whichever is the lesser. The guarantee period shall be found by dividing the amount guaranteed by the amount determined by placing the payments received during the first taxable year (to guaranteed amount) on an annual basis. Thus, if monthly payments are first received by a taxpayer on a calendar year basis in August, his total payments (to the extent that they reduce the guaranteed amount) for the taxable year would be divided by 5 and multiplied by 12. The guaranteed amount would then be divided by the result of this computation to obtain the guarantee period. If the contract merely guarantees that proceeds from a unit or units of a fund shall be paid for a fixed number of years or the life (or lives) of an annuitant (or annuitants), whichever is the longer, the fixed number of years is the guarantee period. The appropriate percentage in Table III or VII shall be applied to whichever of the following is the smaller:

(i) the investment in the contract; or

(ii) the product of the payments received in the first taxable year, placed on an annual basis, multiplied by the number of years for which payment of the proceeds of a unit or units is guaranteed.

(2) The principles of this paragraph may be illustrated by the following examples:

Example 1. Taxpayer A, a 50-year-old male purchases for $25,000 a contract which provides for variable monthly payments to be paid to him for his life. The contract also provides that if he should die before receiving payments for fifteen years, payments shall continue according to the original formula to his estate or beneficiary until payments have been made for that period. Beginning with the month of September, A receives payments which total $450 for the first taxable year of receipt. This amount, placed on an annual basis, is $1,350 ($450 divided by 4, or $112.50; $112.50 multiplied by 12, or $1,350). If there is no post-June 1986 investment in the contract, the guaranteed amount is considered to be $20,250 ($1,350 × 15), and the multiple from Table III (found in the same manner as in paragraph (b) of this section), 9 percent, applied to $20,250 (since this amount is less than the investment in the contract), results in a refund adjustment of $1,822,50. The latter amount, subtracted from the investment in the contract of $25,000, results in an adjusted investment in the contract of $23,177.50. If A dies before receiving payments for 15 years and the remaining payments are made to B, his beneficiary, B shall exclude the entire amount of such payments from his gross income until the amounts so received by B, together with the amount received by A and excludable from A's gross income, equal or exceed $25,000. Any excess and any payments thereafter received by B shall be fully includible in gross income.

Example 2. Assume the same facts as in example (1), except that the total investment in the contract was made after June 30, 1986. The applicable multiple found in Table VII is 3 percent. When this is applied to the guaranteed amount of $20,250, it results in a refund adjustment of $607.50. The adjusted investment in the contract in $24,392.50 ($25,000—$607.50).

(e) ***Adjustment of the investment in the contract where more than one annuity element is provided for a single consideration.*** In the case of contracts to which paragraph (b) of § 1.72-6 applies for the purpose of allocating the investment in the contract to two or more annuity elements which are provided for a single

consideration, if one or more of such elements involves a refund feature, the portion of the investment in the contract properly allocable to each such element shall be adjusted for the refund feature before aggregating all the investments in order to obtain the exclusion ratio which is to apply to the contract as a whole.

Example 1. If taxpayer A, an insured 70 years of age, upon maturity of an endowment policy which cost him a net amount of $86,000, elected a dual settlement consisting of (1) monthly payments for his life aggregating $4,146 per year with 10 years' payments certain, and (2) monthly payments for his 60-year-old brother, B, aggregating $2,820 per year with 20 years' payments certain, the exclusion ratio to be used by both A and B if there is no post-June 1986 investment in the contract would be determined in the following manner:

A's expected return (A's payments per year of $4,146 multiplied by his life expectancy from Table 1 of 12.1)	$50,166.60
B's expected return (B's payments per year of $2,820 multiplied by his life expectancy from Table 1 of 18.2)	$51,324.00
Sum of expected returns to be used in determining exclusion ratio	$101,490.60
Percentage of total expected return attributable to A's expectancy of life ($50,166.60 ÷ $101,490.60)	49.4
Percentage of total expected return attributable to B's expectancy of life ($51,324 ÷ $101,490.60)	50.6
Portion of investment in the contract allocable to A's annuity (49.4 percent of $86,000)	$42,484.00
Portion of investment in the contract allocable to B's annuity (50.6 percent of $86,000)	$43,516.00
Value of the refund feature with respect to A's annuity (percentage from Table III for male, age 70, and duration 10, or 21 percent, multiplied by lesser of guaranteed amount and allocable portion of investment in the contract, $41,460)	$8,707.00
A's allocable portion of the investment in the contract adjusted for refund feature ($42,484 less $8,707.00)	$33,777.00
Value of the refund feature with respect to B's annuity (percentage from Table III for male, age 60, and duration 20, or 25 percent, multiplied by lesser of guaranteed amount and allocable portion of investment in the contract, $43,516)	$10,879.00
B's allocable portion of the investment in the contract adjusted for refund feature ($43,516 less $10,879.00)	$32,637.00
Sum of A's and B's allocable portions of the investment in the contract after adjustment for the refund feature	$66,414.00
Exclusion ratio for the contract as a whole (total adjusted investment in the contract, $66,414, divided by the total expected return from above, $101,490.60) (percent)	65.4

Example 2. Assume the same facts as in example (1) except that the total investment in the

contract was made after June 30, 1986. The exclusion ratio to be used by both A and B would be 56.9 percent, determined as follows:

A's expected return (A's payments per year of $4,146 multiplied by his life expectancy from Table V of 16.0)	$66,336.00
B's expected return (B's payments per year of $2,820 multiplied by his life expectancy from Table V of 24.2)	$68,244.00
Sum of expected returns to be used in determining exclusion ratio	$134,580.00
Percentage of total expected return attributable to A's expectancy of life ($66,336.00 ÷ $134,580.00)	49.3
Percentage of total expected return attributable to B's expectancy of life ($68,244.00 ÷ $134,580.00)	50.7
Portion of investment in the contract allocable to A's annuity (49.3 percent of $86,000)	$42,398.00
Portion of investment in the contract allocable to B's annuity (50.7 percent of $86,000)	$43,602.00
Value of the refund feature with respect to A's annuity (percentage from Table VII for age 70 and duration 10, or 11 percent, multiplied by lesser of the guaranteed amount and allocable portion of investment in the contract, $41,460)	$4,560.60
A's allocable portion of the investment in the contract adjusted for refund feature ($42,398 less $4,560.60)	$37,837.40
Value of the refund feature with respect to B's annuity (percentage from Table VII for age 60 and duration 20, or 11 percent, multiplied by lesser of guaranteed amount and allocable portion of investment in the contract, $43,602)	$4,796.22
B's allocable portion of the investment in the contract adjusted for refund feature ($43,602 less $4,796.22)	$38,805.78
Sum of A's and B's allocable portions of the investment in the contract after adjustment for the refund feature	$76,643.18
Exclusion ratio for the contract as a whole (total adjusted investment in the contract, $76,643.18, divided by the total expected return from above, $134,580.00) (percent)	56.9

(f) ***Adjustment of investment in the contract with respect to contracts subject to § 1.72-6(d).*** In the case of a contract to which § 1.72-6(d) (relating to contracts in which amounts were invested both before July 1, 1986, and after June 30, 1986) applies, this section is applied in the manner prescribed in § 1.72-6(d) and, in particular, § 1.72-6(d)(5)(vi).

[T.D. 6500, 25 FR 11402, Nov. 26, 1960; 25 FR 14021, Dec. 21, 1960, as amended by T.D. 8115, 51 FR 45702, Dec. 19, 1986]

§ 1.72-8 Effect of certain employer contributions with respect to premiums or other consideration paid or contributed by an employee.

(a) ***Contributions in the nature of compensation —***

(1) ***Amounts includible in gross income of employee under subtitle A of the Code or prior income tax laws.*** Section 72(f) provides that for the purposes of section 72 (c), (d), and (e), amounts contributed by an employer for the benefit of an employee or his beneficiaries shall constitute consideration paid or contributed by the employee to the extent that such amounts were includible in the gross income of the employee under subtitle A of the Code or prior income tax laws. Amounts to which this paragraph applies include, for example, contributions made by an employer to or under a trust or plan which fails to qualify under the provisions of section 401(a), provided that the employee's rights to such contributions are nonforfeitable at the time the contributions are made. See sections 402(b) and 403(c) and the regulations thereunder. This subparagraph also applies to premiums paid by an employer (other than premiums paid on behalf of an owner-employee) for life insurance protection for an employee if such premiums are includible in the gross income of the employee when paid. See § 1.72-16. However, such premiums shall only be considered as premiums and other consideration paid by the employee with respect to any benefits attributable to the contract providing the life insurance protection. See § 1.72-16.

(2) ***Amounts not includible in gross income of employee at time contributed if paid directly to employee at that time.*** Except as provided in subparagraph (3) of this paragraph, section 72(f) provides that for the purposes of section 72 (c), (d), and (e), amounts contributed by an employer for the benefit of an employee or his beneficiaries shall constitute consideration paid or contributed by the employee to the extent that such amounts would not have been includible in the gross income of the employee at the time contributed had they been paid directly to the employee at that time. Amounts to which this subparagraph applies include, for example, contributions made by an employer after December 31, 1950, and before January 1, 1963, if made on account of foreign services rendered by an employee during a period in which the employee qualified as a bona fide resident of a foreign country under section 911(a) of the Internal Revenue Code of 1954, or under section 116(a) of the Internal Revenue Code of 1939. In such a case, it would be immaterial whether such contributions were made under a qualified plan or otherwise. See subparagraph (4) of this paragraph for rules governing the determination of the amount of employer foreign service contributions to which this subparagraph applies. On the other hand, if contributions are made by an employer to a qualified plan at a time when compensation paid directly to the employee concerned with respect to the same services rendered would have been includible in the gross income of the employee, such as in the case of an employee of a State government where contributions are made in 1955 with respect to services rendered by the employee prior to the year 1939, this subparagraph does not apply to such contributions.

(3) ***Limitation*** —

(i) ***In general.*** Except as provided in subdivision (ii) of this subparagraph, the provisions of subparagraph (2) of this paragraph shall not apply to amounts which were contributed by the employer after December 31, 1962, and which would not have been includible in the gross income of the employee by reason of the application of section 911, if such amounts had been paid directly to the employee at the time of contribution. Employer contributions attributable to foreign services performed by the employee after December 31, 1962, do not constitute, for purposes of section 72 (c), (d), and (e), consideration paid or contributed by the employee.

(ii) ***Exception.*** The provisions of subdivision (i) of this subparagraph shall not apply to amounts which were contributed by the employer to provide pension or annuity credits (determined in accordance with the provisions of subparagraph (4) of this paragraph) to the extent such credits are—

(*a*) Attributable to foreign services performed before January 1, 1963, with respect to which the employee qualified for the benefits of section 911(a) (or corresponding provisions of prior revenue laws), and

(*b*) Provided pursuant to pension or annuity plan provisions in existence on March 12, 1962, and on that date applicable to such services.

Amounts described in this subdivision constitute, for purposes of section 72 (c), (d), and (e), consideration paid or contributed by the employee even though such amounts are contributed by the employer after December 31, 1962.

(4) ***Determination of employer foreign service contributions which constitute consideration paid or contributed by employee.*** For purposes of subparagraphs (2) and (3)(ii) of this paragraph, employer foreign service contributions which constitute, for purposes of section 72 (c), (d), and (e), consideration paid or contributed by the employee shall be determined as follows:

(i) ***Treatment of identifiable contributions.*** If, under the terms of the pension or annuity plan under which employer contributions were made, such contributions may be identified as—

(*a*) Attributable to foreign services performed before January 1, 1963, with respect to which the employee qualified for the benefits of section 911(a) (or corresponding provisions of prior revenue laws), and

(*b*) Made under pension or annuity plan provisions in existence on March 12, 1962, which were applicable to the services referred to in (*a*) of this subdivision on that date,

the amount of employer contributions so identified shall be considered paid or contributed by the employee.

(ii) ***Alternative rule for unidentifiable contributions.*** If employer contributions may not be identified in the manner described in subdivision (i) of this subparagraph, the amount of employer contributions attributable to foreign services performed before January 1, 1963, and considered paid or contributed by the employee shall be determined on the basis of an estimated allocation which is reasonable and consistent with the circumstances and the provisions of the pension or annuity plan under which such contributions are made. For example, if an employee's benefits under a pension or annuity plan, which is unchanged after March 12, 1962, are determined with respect to his basic compensation during his entire period of credited service, the amount of employer contributions considered paid or contributed by the employee shall be an amount which bears the same ratio to total employer contributions for such employee under the pension or annuity plan as his basic compensation attributable to foreign services performed before January 1, 1963, with respect to which he qualified for the benefits of section 911(a) (or corresponding provisions of prior revenue laws) bears to his total basic compensation. On the other hand, if an employee's benefits under a pension or annuity plan, which is unchanged after March 12, 1962, are determined with respect to his basic compensation during his final five years of credited service, the amount of employer contributions considered paid or contributed by the employee shall be an amount which bears the same ratio to total employer contributions for such employee as his number of years of credited service before January 1, 1963, with respect to which he qualified for the benefits of section 911(a) (or corresponding provisions of prior revenue laws) bears to his total number of years of credited service.

(5) ***Amounts not includible in gross income of employee under subtitle A of the Code or prior income tax laws.*** Amounts contributed by an employer which were not includible in the gross income of the employee under Subtitle A of the Code or prior income tax laws, but which would have been includible therein had they been paid directly to the employee, do not constitute consideration paid or contributed by the employee for the purposes of section 72. For example, contributions made by an employer under a qualified employees' trust or plan, which contributions would have been includible in the gross income of the employee had such contributions been paid to him directly as compensation, do not constitute consideration paid or contributed by the employee. Accordingly, the aggregate amount of premiums or other consideration paid or contributed by an employee, insofar as compensatory employer contributions are concerned, consists solely of the

(i) sum of all amounts actually contributed by the employee, plus

(ii) contributions in the nature of compensation which are deemed to be paid or contributed by the employee under this paragraph.

(b) ***Contributions in the nature of death benefits.*** In the case of an employee's beneficiary, the aggregate amount of premiums or other consideration paid or deemed to be paid or contributed by the employee shall also include:

(1) Amounts (other than amounts paid as an annuity) to the extent such amounts are excludable from the beneficiary's gross income as a death benefit under section 101(b), and

(2) Any amount or amounts of death benefits which are treated as additional consideration contributed by the employee under section 101(b)(2)(D) and the regulations thereunder, or which were excludable from the beneficiary's gross income as a death benefit under section 22(b)(1)(B) of the Internal Revenue Code of 1939 and the regulations thereunder.

Accordingly, in the case of an employee's beneficiary, any such amount shall be added to any amount or amounts deemed paid or contributed by the employee under paragraph (a)(1) of this section and to any amounts actually contributed by the employee for the purpose of finding the aggregate amount of premiums or other consideration paid or contributed by the employee.

(c) ***Amounts "made available" to an employee or his beneficiary.*** Any amount which, although not actually paid, is made available to and includable in the gross income of an employee or his beneficiary under the rules of sections 402 and 403 and the regulations thereunder, shall be considered an amount contributed by the employee and shall be aggregated with amounts, if any, to which paragraphs (a) and (b) of this section apply for the purpose of determining the aggregate amount of premiums or other consideration paid by the employee.

(d) ***Amounts includable in gross income of employee when his rights under annuity contract change to nonforfeitable rights.*** Any amount which, by reason of section 403(d) and after the application of paragraph (b) of § 1.403 (b)-1, is required to be included in an employee's gross income for the year when his rights under an annuity contract change from forfeitable to nonforfeitable rights shall be considered an amount contributed by the employee and shall be aggregated with amounts, if any, to which paragraphs (a), (b), and (c) of this section apply for the purpose of determining the aggregate amount of premiums or other consideration paid or contributed by the employee for such annuity contract. In other words, if, under section 403(d), an employee of an organization exempt from tax under section 501(a) or 521(a) is required to include an amount in gross income by reason of his rights under an annuity contract changing from forfeitable to nonforfeitable rights, such amount, to the extent it is not excludable from gross income under paragraph (b) of § 1.403 (b)-1, shall be considered an amount contributed by such employee for the annuity contract.

[T.D. 6500, 25 FR 11402, Nov. 26, 1960, as amended by T.D. 6665, 28 FR 7245, July 16, 1963; T.D. 6783, 29 FR 18356, Dec. 24, 1964]

§ 1.72-9 Tables.

The following tables are to be used in connection with computations under section 72 and the regulations thereunder. Tables I, II, IIA, III, and IV are to be used if the investment in the contract does not include a post-June 1986 investment in the contract (as defined in § 1.72-6(d)(3)). Tables V, VI, VIA, VII, and VIII are to be used if the investment in the contract includes a post-June 1986 investment in the contract (as defined in § 1.72-6(d)(3)).

In the case of a contract under which amounts are received as an annuity after June 30, 1986, a taxpayer receiving such amounts may elect to treat the entire investment in the contract as post-June 1986 investment in the contract and thus apply Tables V through VIII. A taxpayer may make the election for any taxable year in which such amounts are received by attaching to the taxpayer's return for such taxable year a statement that the taxpayer is electing under § 1.72-9 to treat the entire investment in the contract as post-June 1986 investment in the contract. The statement must contain the taxpayer's name, address, and taxpayer identification number. The election is irrevocable and applies with respect to all amounts that the taxpayer receives as an annuity under the contract in the taxable year for which the election is made or in any subsequent taxable year. (Note that for purposes of the examples in §§ 1.72-4 through 1.72-11 the election described in this section is disregarded (*i.e.*, it assumed that the taxpayer does not make an election under this section).) See also § 1.72-6(d)(3) for rules treating the entire investment in a contract as post-June 1986 investment in a contract if the annuity starting date of the contract is after June 30, 1986, and the contract provides for a disqualifying form of payment or settlement, such as an option to receive a lump sum in full discharge of the obligation under the contract. In addition, see § 1.72-6(d) for special rules concerning the tables to be used and the separate computations required if the investment in the contract includes both a pre-July 1986 investment in the contract and a post-June 1986 investment in the contract and the election described in § 1.72-6(d)(6) is made with respect to the contract.

TABLE I—ORDINARY LIFE ANNUITIES—ONE LIFE—EXPECTED RETURN MULTIPLES

Ages		Multiples
Male	Female	
6	11	65.0
7	12	64.1
8	13	63.2
9	14	62.3
10	15	61.4
11	16	60.4
12	17	59.5
13	18	58.6
14	19	57.7
15	20	56.7
16	21	55.8
17	22	54.9

Ages		Multiples
Male	Female	
18	23	53.9
19	24	53.0
20	25	52.1
21	26	51.1
22	27	50.2
23	28	49.3
24	29	48.3
25	30	47.4
26	31	46.5
27	32	45.6
28	33	44.6
29	34	43.7
30	35	42.8
31	36	41.9
32	37	41.0
33	38	40.0
34	39	39.1
35	40	38.2
36	41	37.3
37	42	36.5
38	43	35.6
39	44	34.7
40	45	33.8
41	46	33.0
42	47	32.1
43	48	31.2
44	49	30.4
45	50	29.6
46	51	28.7
47	52	27.9
48	53	27.1
49	54	26.3
50	55	25.5
51	56	24.7
52	57	24.0
53	58	23.2
54	59	22.4

Ages		Multiples
Male	Female	
55	60	21.7
56	61	21.0
57	62	20.3
58	63	19.6
59	64	18.9
60	65	18.2
61	66	17.5
62	67	16.9
63	68	16.2
64	69	15.6
65	70	15.0
66	71	14.4
67	72	13.8
68	73	13.2
69	74	12.6
70	75	12.1
71	76	11.6
72	77	11.0
73	78	10.5
74	79	10.1
75	80	9.6
76	81	9.1
77	82	8.7
78	83	8.3
79	84	7.8
80	85	7.5
81	86	7.1
82	87	6.7
83	88	6.3
84	89	6.0
85	90	5.7
86	91	5.4
87	92	5.1
88	93	4.8
89	94	4.5
90	95	4.2
91	96	4.0

Ages		Multiples
Male	Female	
92	97	3.7
93	98	3.5
94	99	3.3
95	100	3.1
96	101	2.9
97	102	2.7
98	103	2.5
99	104	2.3
100	105	2.1
101	106	1.9
102	107	1.7
103	108	1.5
104	109	1.3
105	110	1.2
106	111	1.0
107	112	.8
108	113	.7
109	114	.6
110	115	.5
111	116	0

Table II—Ordinary Joint Life and Last Survivor Annuities—Two Lives—Expected Return Multiples

Male	Female	Ages														
		Male 6	7	8	9	10	11	12	13	14	15	16	17	18	19	20
		Female 11	12	13	14	15	16	17	18	19	20	21	22	23	24	25
6	11	73.5	73.0	72.6	72.2	71.8	71.4	71.0	70.7	70.4	70.0	69.7	69.5	69.2	68.9	68.7
7	12	73.0	72.6	72.1	71.7	71.3	70.9	70.5	70.1	69.8	69.4	69.1	68.8	68.5	68.3	68.0
8	13	72.6	72.1	71.6	71.2	70.8	70.4	70.0	69.6	69.2	68.9	68.5	68.2	67.9	67.6	67.3
9	14	72.2	71.7	71.2	70.7	70.3	69.9	69.4	69.0	68.7	68.3	67.9	67.6	67.3	67.0	66.7
10	15	71.8	71.3	70.8	70.3	69.8	69.4	68.9	68.5	68.1	67.7	67.4	67.0	66.7	66.4	66.1
11	16	71.4	70.9	70.4	69.9	69.4	68.9	68.5	68.0	67.6	67.2	66.8	66.5	66.1	65.8	65.4
12	17	71.0	70.5	70.0	69.4	68.9	68.5	68.0	67.5	67.1	66.7	66.3	65.9	65.5	65.2	64.8
13	18	70.7	70.1	69.6	69.0	68.5	68.0	67.5	67.1	66.6	66.2	65.8	65.4	65.0	64.6	64.2
14	19	70.4	69.8	69.2	68.7	68.1	67.6	67.1	66.6	66.1	65.7	65.3	64.8	64.4	64.0	63.7
15	20	70.0	69.4	68.9	68.3	67.7	67.2	66.7	66.2	65.7	65.2	64.8	64.3	63.9	63.5	63.1
16	21	69.7	69.1	68.5	67.9	67.4	66.8	66.3	65.8	65.3	64.8	64.3	63.8	63.4	63.0	62.6
17	22	69.5	68.8	68.2	67.6	67.0	66.5	65.9	65.4	64.8	64.3	63.8	63.4	62.9	62.5	62.0
18	23	69.2	68.5	67.9	67.3	66.7	66.1	65.5	65.0	64.4	63.9	63.4	62.9	62.4	62.0	61.5
19	24	68.9	68.3	67.6	67.0	66.4	65.8	65.2	64.6	64.0	63.5	63.0	62.5	62.0	61.5	61.0
20	25	68.7	68.0	67.3	66.7	66.1	65.4	64.8	64.2	63.7	63.1	62.6	62.0	61.5	61.0	60.6

Male	Female	Ages													
		Male 21	22	23	24	25	26	27	28	29	30	31	32	33	34
		Female 26	27	28	29	30	31	32	33	34	35	36	37	38	39
6	11	68.4	68.2	68.0	67.8	67.6	67.5	67.3	67.1	67.0	66.8	66.7	66.6	66.5	66.4
7	12	67.8	67.5	67.3	67.1	66.9	66.7	66.5	66.4	66.2	66.1	65.9	65.8	65.7	65.6
8	13	67.1	66.8	66.6	66.4	66.2	66.0	65.8	65.6	65.4	65.3	65.1	65.0	64.9	64.7
9	14	66.4	66.2	65.9	65.7	65.4	65.2	65.0	64.8	64.7	64.5	64.3	64.2	64.1	63.9
10	15	65.8	65.5	65.2	65.0	64.7	64.5	64.3	64.1	63.9	63.7	63.6	63.4	63.3	63.1
11	16	65.1	64.8	64.6	64.3	64.1	63.8	63.6	63.4	63.2	63.0	62.8	62.6	62.5	62.3
12	17	64.5	64.2	63.9	63.6	63.4	63.1	62.9	62.7	62.4	62.2	62.0	61.9	61.7	61.5
13	18	63.9	63.6	63.3	63.0	62.7	62.4	62.2	61.9	61.7	61.5	61.3	61.1	60.9	60.8
14	19	63.3	63.0	62.7	62.3	62.0	61.8	61.5	61.2	61.0	60.8	60.6	60.4	60.2	60.0
15	20	62.7	62.4	62.0	61.7	61.4	61.1	60.8	60.6	60.3	60.1	59.8	59.6	59.4	59.2
16	21	62.2	61.8	61.4	61.1	60.8	60.5	60.2	59.9	59.6	59.4	59.1	58.9	58.7	58.5
17	22	61.6	61.2	60.9	60.5	60.2	59.8	59.5	59.2	58.9	58.7	58.4	58.2	57.9	57.7
18	23	61.1	60.7	60.3	59.9	59.6	59.2	58.9	58.6	58.3	58.0	57.7	57.5	57.2	57.0
19	24	60.6	60.2	59.7	59.4	59.0	58.6	58.3	57.9	57.6	57.3	57.0	56.8	56.5	56.3
20	25	60.1	59.6	59.2	58.8	58.4	58.0	57.7	57.3	57.0	56.7	56.4	56.1	55.8	55.6
21	26	59.6	59.1	58.7	58.3	57.9	57.5	57.1	56.7	56.4	56.0	55.7	55.4	55.1	54.9
22	27	59.1	58.7	58.2	57.7	57.3	56.9	56.5	56.1	55.8	55.4	55.1	54.8	54.5	54.2
23	28	58.7	58.2	57.7	57.2	56.8	56.4	55.9	55.5	55.2	54.8	54.4	54.1	53.8	53.5
24	29	58.3	57.7	57.2	56.8	56.3	55.8	55.4	55.0	54.6	54.2	53.8	53.5	53.2	52.8
25	30	57.9	57.3	56.8	56.3	55.8	55.3	54.9	54.4	54.0	53.6	53.2	52.9	52.5	52.2
26	31	57.5	56.9	56.4	55.8	55.3	54.8	54.4	53.9	53.5	53.1	52.7	52.3	51.9	51.6
27	32	57.1	56.5	55.9	55.4	54.9	54.4	53.9	53.4	53.0	52.5	52.1	51.7	51.3	50.9
28	33	56.7	56.1	55.5	55.0	54.4	53.9	53.4	52.9	52.4	52.0	51.6	51.1	50.7	50.3
29	34	56.4	55.8	55.2	54.6	54.0	53.5	53.0	52.4	52.0	51.5	51.0	50.6	50.2	49.3
30	35	56.0	55.4	54.8	54.2	53.6	53.1	52.5	52.0	51.5	51.0	50.5	50.1	49.6	49.2
31	36	55.7	55.1	54.4	53.8	53.2	52.7	52.1	51.6	51.0	50.5	50.0	49.5	49.1	48.7
32	37	55.4	54.8	54.1	53.5	52.9	52.3	51.7	51.1	50.6	50.1	49.5	49.1	48.6	48.1
33	38	55.1	54.5	53.8	53.2	52.5	51.9	51.3	50.7	50.2	49.6	49.1	48.6	48.1	47.6
34	39	54.9	54.2	53.5	52.8	52.2	51.6	50.9	50.3	49.8	49.2	48.7	48.1	47.6	47.1

Male	Female	Ages														
		Male 35	36	37	38	39	40	41	42	43	44	45	46	47	48	49
		Female 40	41	42	43	44	45	46	47	48	49	50	51	52	53	54
6	11	66.3	66.2	66.1	66.0	65.9	65.9	65.8	65.7	65.7	65.6	65.6	65.5	65.5	65.5	65.4
7	12	65.4	65.3	65.3	65.2	65.1	65.0	64.9	64.9	64.8	64.8	64.7	64.7	64.6	64.6	64.5
8	13	64.6	64.5	64.4	64.3	64.2	64.2	64.1	64.0	64.0	63.9	63.8	63.8	63.7	63.7	63.7
9	14	63.8	63.7	63.6	63.5	63.4	63.3	63.2	63.2	63.1	63.0	63.0	62.9	62.9	62.8	62.8
10	15	63.0	62.9	62.8	62.7	62.6	62.5	62.4	62.3	62.2	62.2	62.1	62.0	62.0	61.9	61.9
11	16	62.2	62.1	61.9	61.8	61.7	61.6	61.5	61.4	61.4	61.3	61.2	61.2	61.1	61.0	61.0
12	17	61.4	61.3	61.1	61.0	60.9	60.8	60.7	60.6	60.5	60.4	60.4	60.3	60.2	60.2	60.1
13	18	60.6	60.5	60.3	60.2	60.1	60.0	59.9	59.8	59.7	59.6	59.5	59.4	59.4	59.3	59.2
14	19	59.8	59.7	59.5	59.4	59.3	59.1	59.0	58.9	58.8	58.7	58.6	58.6	58.5	58.4	58.4
15	20	59.0	58.9	58.7	58.6	58.4	58.3	58.2	58.1	58.0	57.9	57.8	57.7	57.6	57.6	57.5
16	21	58.3	58.1	57.9	57.8	57.6	57.5	57.4	57.2	57.1	57.0	56.9	56.8	56.8	56.7	56.6
17	22	57.5	57.3	57.2	57.0	56.8	56.7	56.6	56.4	56.3	56.2	56.1	56.0	55.9	55.8	55.7
18	23	56.8	56.6	56.4	56.2	56.0	55.9	55.7	55.6	55.5	55.4	55.2	55.1	55.1	55.0	54.9
19	24	56.0	55.8	55.6	55.4	55.3	55.1	54.9	54.8	54.7	54.5	54.4	54.3	54.2	54.1	54.0
20	25	55.3	55.1	54.9	54.7	54.5	54.3	54.1	54.0	53.8	53.7	53.6	53.5	53.4	53.3	53.2
21	26	54.6	54.4	54.1	53.9	53.7	53.5	53.4	53.2	53.0	52.9	52.8	52.6	52.5	52.4	52.3
22	27	53.9	53.6	53.4	53.2	53.0	52.8	52.6	52.4	52.2	52.1	51.9	51.8	51.7	51.6	51.5
23	28	53.2	52.9	52.7	52.5	52.2	52.0	51.8	51.6	51.5	51.3	51.1	51.0	50.9	50.7	50.6
24	29	52.5	52.3	52.0	51.7	51.5	51.3	51.1	50.9	50.7	50.5	50.3	50.2	50.0	49.9	49.8
25	30	51.9	51.6	51.3	51.0	50.8	50.5	50.3	50.1	49.9	49.7	49.6	49.4	49.2	49.1	49.0
26	31	51.2	50.9	50.6	50.3	50.1	49.8	49.6	49.4	49.2	49.0	48.8	48.6	48.4	48.3	48.1
27	32	50.6	50.3	50.0	49.7	49.4	49.1	48.9	48.6	48.4	48.2	48.0	47.8	47.6	47.5	47.3
28	33	50.0	49.6	49.3	49.0	48.7	48.4	48.2	47.9	47.7	47.5	47.2	47.1	46.9	46.7	46.5
29	34	49.4	49.0	48.7	48.3	48.0	47.7	47.5	47.2	47.0	46.7	46.5	46.3	46.1	45.9	45.7
30	35	48.8	48.4	48.1	47.7	47.4	47.1	46.8	46.5	46.2	46.0	45.8	45.5	45.3	45.2	45.0
31	36	48.2	47.8	47.5	47.1	46.8	46.4	46.1	45.8	45.6	45.3	45.0	44.8	44.6	44.4	44.2
32	37	47.7	47.3	46.9	46.5	46.1	45.8	45.5	45.2	44.9	44.6	44.3	44.1	43.9	43.7	43.4
33	38	47.2	46.7	46.3	45.9	45.5	45.2	44.8	44.5	44.2	43.9	43.7	43.4	43.2	42.9	42.7
34	39	46.7	46.2	45.8	45.4	45.0	44.6	44.2	43.9	43.6	43.3	43.0	42.7	42.5	42.2	42.0

Male	Female	Ages													
		Male 50	51	52	53	54	55	56	57	58	59	60	61	62	63
		Female 55	56	57	58	59	60	61	62	63	64	65	66	67	68
6	11	65.4	65.4	65.3	65.3	65.3	65.3	65.3	65.2	65.2	65.2	65.2	65.2	65.2	65.2
7	12	64.5	64.5	64.4	64.4	64.4	64.4	64.3	64.3	64.3	64.3	64.3	64.3	64.3	64.2
8	13	63.6	63.6	63.5	63.5	63.5	63.5	63.4	63.4	63.4	63.4	63.4	63.4	63.3	63.3
9	14	62.7	62.7	62.7	62.6	62.6	62.6	62.5	62.5	62.5	62.5	62.5	62.4	62.4	62.4
10	15	61.8	61.8	61.8	61.7	61.7	61.7	61.6	61.6	61.6	61.6	61.6	61.5	61.5	61.5
11	16	61.0	60.9	60.9	60.8	60.8	60.8	60.7	60.7	60.7	60.7	60.6	60.6	60.6	60.6
12	17	60.1	60.0	60.0	59.9	59.9	59.9	59.8	59.8	59.8	59.8	59.7	59.7	59.7	59.7
13	18	59.2	59.1	59.1	59.0	59.0	59.0	58.9	58.9	58.9	58.9	58.8	58.8	58.8	58.8
14	19	58.3	58.2	58.2	58.2	58.1	58.1	58.0	58.0	58.0	57.9	57.9	57.9	57.9	57.9
15	20	57.4	57.4	57.3	57.3	57.2	57.2	57.1	57.1	57.1	57.0	57.0	57.0	57.0	56.9
16	21	56.5	56.5	56.4	56.4	56.3	56.3	56.2	56.2	56.2	56.1	56.1	56.1	56.1	56.0
17	22	55.7	55.6	55.5	55.5	55.4	55.4	55.3	55.3	55.3	55.2	55.2	55.2	55.1	55.1
18	23	54.8	54.7	54.7	54.6	54.6	54.5	54.5	54.4	54.4	54.3	54.3	54.3	54.2	54.2
19	24	53.9	53.9	53.8	53.7	53.7	53.6	53.6	53.5	53.5	53.4	53.4	53.4	53.3	53.3
20	25	53.1	53.0	52.9	52.8	52.8	52.7	52.7	52.6	52.6	52.5	52.5	52.4	52.4	52.4
21	26	52.2	52.1	52.0	52.0	51.9	51.8	51.8	51.7	51.7	51.6	51.6	51.5	51.5	51.5
22	27	51.4	51.3	51.2	51.1	51.0	51.0	50.9	50.8	50.8	50.7	50.7	50.6	50.6	50.6
23	28	50.5	50.4	50.3	50.2	50.2	50.1	50.0	50.0	49.9	49.8	49.8	49.7	49.7	49.7
24	29	49.7	49.6	49.5	49.4	49.3	49.2	49.1	49.1	49.0	49.0	48.9	48.9	48.8	48.8
25	30	48.8	48.7	48.6	48.5	48.4	48.3	48.3	48.2	48.1	48.1	48.0	48.0	47.9	47.9
26	31	48.0	47.9	47.8	47.7	47.6	47.5	47.4	47.3	47.3	47.2	47.1	47.1	47.0	47.0
27	32	47.2	47.1	46.9	46.8	46.7	46.6	46.5	46.5	46.4	46.3	46.2	46.2	46.1	46.1
28	33	46.4	46.3	46.1	46.0	45.9	45.8	45.7	45.6	45.5	45.4	45.4	45.3	45.2	45.2
29	34	45.6	45.4	45.3	45.2	45.1	44.9	44.8	44.7	44.7	44.6	44.5	44.4	44.4	44.3
30	35	44.8	44.6	44.5	44.4	44.2	44.1	44.0	43.9	43.8	43.7	43.6	43.6	43.5	43.4
31	36	44.0	43.9	43.7	43.6	43.4	43.3	43.2	43.1	43.0	42.9	42.8	42.7	42.6	42.0
32	37	43.3	43.1	42.9	42.8	42.6	42.5	42.4	42.2	42.1	42.0	41.9	41.9	41.8	41.7
33	38	42.5	42.3	42.1	42.0	41.8	41.7	41.5	41.4	41.3	41.2	41.1	41.0	40.9	40.8
34	39	41.8	41.6	41.4	41.2	41.0	40.9	40.7	40.6	40.5	40.4	40.3	40.2	40.1	40.0

Male	Female	Ages														
		Male 64	65	66	67	68	69	70	71	72	73	74	75	76	77	78
		Female 69	70	71	72	73	74	75	76	77	78	79	80	81	82	83
6	11	65.1	65.1	65.1	65.1	65.1	65.1	65.1	65.1	65.1	65.1	65.1	65.1	65.1	65.1	65.1
7	12	64.2	64.2	64.2	64.2	64.2	64.2	64.2	64.2	64.2	64.2	64.2	64.2	64.2	64.1	64.1
8	13	63.3	63.3	63.3	63.3	63.3	63.3	63.3	63.3	63.3	63.2	63.2	63.2	63.2	63.2	63.2
9	14	62.4	62.4	62.4	62.4	62.4	62.4	62.3	62.3	62.3	62.3	62.3	62.3	62.3	62.3	62.3
10	15	61.5	61.5	61.5	61.5	61.4	61.4	61.4	61.4	61.4	61.4	61.4	61.4	61.4	61.4	61.4
11	16	60.6	60.6	60.6	60.5	60.5	60.5	60.5	60.5	60.5	60.5	60.5	60.5	60.5	60.5	60.5
12	17	59.7	59.6	59.6	59.6	59.6	59.6	59.6	59.6	59.6	59.6	59.6	59.6	59.6	59.5	59.5
13	18	58.8	58.7	58.7	58.7	58.7	58.7	58.7	58.7	58.7	58.7	58.6	58.6	58.6	58.6	58.6
14	19	57.8	57.8	57.8	57.8	57.8	57.8	57.8	57.7	57.7	57.7	57.7	57.7	57.7	57.7	57.7
15	20	56.9	56.9	56.9	56.9	56.9	56.8	56.8	56.8	56.8	56.8	56.8	56.8	56.8	56.8	56.8
16	21	56.0	56.0	56.0	56.0	55.9	55.9	55.9	55.9	55.9	55.9	55.9	55.9	55.9	55.9	55.8
17	22	55.1	55.1	55.1	55.0	55.0	55.0	55.0	55.0	55.0	55.0	55.0	54.9	54.9	54.9	54.9
18	23	54.2	54.2	54.1	54.1	54.1	54.1	54.1	54.1	54.0	54.0	54.0	54.0	54.0	54.0	54.0
19	24	53.3	53.2	53.2	53.2	53.2	53.2	53.2	53.1	53.1	53.1	53.1	53.1	53.1	53.1	53.1
20	25	52.4	52.3	52.3	52.3	52.3	52.2	52.2	52.2	52.2	52.2	52.2	52.2	52.2	52.1	52.1
21	26	51.4	51.4	51.4	51.4	51.3	51.3	51.3	51.3	51.3	51.3	51.3	51.2	51.2	51.2	51.2
22	27	50.5	50.5	50.5	50.5	50.4	50.4	50.4	50.4	50.4	50.3	50.3	50.3	50.3	50.3	50.3
23	28	49.6	49.6	49.6	49.5	49.5	49.5	49.5	49.5	49.4	49.4	49.4	49.4	49.4	49.4	49.4
24	29	48.7	48.7	48.7	48.6	48.6	48.6	48.6	48.5	48.5	48.5	48.5	48.5	48.5	48.4	48.4
25	30	47.8	47.8	47.8	47.7	47.7	47.7	47.6	47.6	47.6	47.6	47.6	47.5	47.5	47.5	47.5
26	31	46.9	46.9	46.8	46.8	46.8	46.8	46.7	46.7	46.7	46.7	46.6	46.6	46.6	46.6	46.6
27	32	46.0	46.0	45.9	45.9	45.9	45.8	45.8	45.8	45.8	45.7	45.7	45.7	45.7	45.7	45.7
28	33	45.1	45.1	45.1	45.0	45.0	44.9	44.9	44.9	44.9	44.8	44.8	44.8	44.8	44.8	44.8
29	34	44.3	44.2	44.2	44.1	44.1	44.0	44.0	44.0	44.0	43.9	43.9	43.9	43.9	43.9	43.8
30	35	43.4	43.3	43.3	43.2	43.2	43.1	43.1	43.1	43.1	43.0	43.0	43.0	43.0	42.9	42.9
31	36	42.5	42.4	42.4	42.3	42.3	42.3	42.2	42.2	42.2	42.1	42.1	42.1	42.1	42.0	42.0
32	37	41.6	41.6	41.5	41.5	41.4	41.4	41.3	41.3	41.3	41.2	41.2	41.2	41.2	41.1	41.1
33	38	40.8	40.7	40.7	40.6	40.5	40.5	40.5	40.4	40.4	40.3	40.3	40.3	40.3	40.2	40.2
34	39	39.9	39.9	39.8	39.7	39.7	39.6	39.6	39.5	39.5	39.5	39.4	39.4	39.4	39.3	39.3

Male	Female	Ages													
		Male 79	80	81	82	83	84	85	86	87	88	89	90	91	92
		Female 84	85	86	87	88	89	90	91	92	93	94	95	96	97
6	11	65.1	65.1	65.1	65.1	65.1	65.1	65.1	65.1	65.1	65.0	65.0	65.0	65.0	65.0
7	12	64.1	64.1	64.1	64.1	64.1	64.1	64.1	64.1	64.1	64.1	64.1	64.1	64.1	64.1
8	13	63.2	63.2	63.2	63.2	63.2	63.2	63.2	63.2	63.2	63.2	63.2	63.2	63.2	63.2
9	14	62.3	62.3	62.3	62.3	62.3	62.3	62.3	62.3	62.3	62.3	62.3	62.3	62.3	62.3
10	15	61.4	61.4	61.4	61.4	61.4	61.4	61.4	61.4	61.4	61.4	61.4	61.4	61.4	61.4
11	16	60.5	60.5	60.5	60.5	60.5	60.5	60.4	60.4	60.4	60.4	60.4	60.4	60.4	60.4
12	17	59.5	59.5	59.5	59.5	59.5	59.5	59.5	59.5	59.5	59.5	59.5	59.5	59.5	59.5
13	18	58.6	58.6	58.6	58.6	58.6	58.6	58.6	58.6	58.6	58.6	58.6	58.6	58.6	58.6
14	19	57.7	57.7	57.7	57.7	57.7	57.7	57.7	57.7	57.7	57.7	57.7	57.7	57.7	57.7
15	20	56.8	56.8	56.8	56.8	56.8	56.8	56.7	56.7	56.7	56.7	56.7	56.7	56.7	56.7
16	21	55.8	55.8	55.8	55.8	55.8	55.8	55.8	55.8	55.8	55.8	55.8	55.8	55.8	55.8
17	22	54.9	54.9	54.9	54.9	54.9	54.9	54.9	54.9	54.9	54.9	54.9	54.9	54.9	54.9
18	23	54.0	54.0	54.0	54.0	54.0	54.0	54.0	54.0	54.0	54.0	54.0	54.0	54.0	53.9
19	24	53.1	53.1	53.1	53.0	53.0	53.0	53.0	53.0	53.0	53.0	53.0	53.0	53.0	53.0
20	25	52.1	52.1	52.1	52.1	52.1	52.1	52.1	52.1	52.1	52.1	52.1	52.1	52.1	52.1
21	26	51.2	51.2	51.2	51.2	51.2	51.2	51.2	51.2	51.2	51.2	51.2	51.2	51.2	51.2
22	27	50.3	50.3	50.3	50.3	50.3	50.2	50.2	50.2	50.2	50.2	50.2	50.2	50.2	50.2
23	28	49.4	49.3	49.3	49.3	49.3	49.3	49.3	49.3	49.3	49.3	49.3	49.3	49.3	49.3
24	29	48.4	48.4	48.4	48.4	48.4	48.4	48.4	48.4	48.4	48.4	48.4	48.4	48.4	48.4
25	30	47.5	47.5	47.5	47.5	47.5	47.5	47.5	47.5	47.4	47.4	47.4	47.4	47.4	47.4
26	31	46.6	46.6	46.6	46.6	46.5	46.5	46.5	46.5	46.5	46.5	46.5	46.5	46.5	46.5
27	32	45.7	45.6	45.6	45.6	45.6	45.6	45.6	45.6	45.6	45.6	45.6	45.6	45.6	45.6
28	33	44.7	44.7	44.7	44.7	44.7	44.7	44.7	44.7	44.7	44.7	44.7	44.7	44.7	44.7
29	34	43.8	43.8	43.8	43.8	43.8	43.8	43.8	43.8	43.8	43.7	43.7	43.7	43.7	43.7
30	35	42.9	42.9	42.9	42.9	42.9	42.9	42.8	42.8	42.8	42.8	42.8	42.8	42.8	42.8
31	36	42.0	42.0	42.0	42.0	42.0	41.9	41.9	41.9	41.9	41.9	41.9	41.9	41.9	41.9
32	37	41.1	41.1	41.1	41.1	41.0	41.0	41.0	41.0	41.0	41.0	41.0	41.0	41.0	41.0
33	38	40.2	40.2	40.2	40.2	40.1	40.1	40.1	40.1	40.1	40.1	40.1	40.1	40.1	40.1
34	39	39.3	39.3	39.3	39.3	39.2	39.2	39.2	39.2	39.2	39.2	39.2	39.2	39.2	39.2

Male	Female	Ages															
		Male 93	94	95	96	97	98	99	100	101	102	103	104	105	106	107	108
		Female 98	99	100	101	102	103	104	105	106	107	108	109	110	111	112	113
6	11	65.0	65.0	65.0	65.0	65.0	65.0	65.0	65.0	65.0	65.0	65.0	65.0	65.0	65.0	65.0	65.0
7	12	64.1	64.1	64.1	64.1	64.1	64.1	64.1	64.1	64.1	64.1	64.1	64.1	64.1	64.1	64.1	64.1
8	13	63.2	63.2	63.2	63.2	63.2	63.2	63.2	63.2	63.2	63.2	63.2	63.2	63.2	63.2	63.2	63.2
9	14	62.3	62.3	62.3	62.3	62.3	62.3	62.3	62.3	62.3	62.3	62.3	62.3	62.3	62.3	62.3	62.3
10	15	61.4	61.4	61.4	61.4	61.4	61.4	61.4	61.4	61.4	61.4	61.4	61.4	61.4	61.4	61.4	61.4
11	16	60.4	60.4	60.4	60.4	60.4	60.4	60.4	60.4	60.4	60.4	60.4	60.4	60.4	60.4	60.4	60.4
12	17	59.5	59.5	59.5	59.5	59.5	59.5	59.5	59.5	59.5	59.5	59.5	59.5	59.5	59.5	59.5	59.5
13	18	58.6	58.6	58.6	58.6	58.6	58.6	58.6	58.6	58.6	58.6	58.6	58.6	58.6	58.6	58.6	58.6
14	19	57.7	57.7	57.7	57.7	57.7	57.7	57.7	57.7	57.7	57.7	57.7	57.7	57.7	57.7	57.7	57.7
15	20	56.7	56.7	56.7	56.7	56.7	56.7	56.7	56.7	56.7	56.7	56.7	56.7	56.7	56.7	56.7	56.7
16	21	55.8	55.8	55.8	55.8	55.8	55.8	55.8	55.8	55.8	55.8	55.8	55.8	55.8	55.8	55.8	55.8
17	22	54.9	54.9	54.9	54.9	54.9	54.9	54.9	54.9	54.9	54.9	54.9	54.9	54.9	54.9	54.9	54.9
18	23	53.9	53.9	53.9	53.9	53.9	53.9	53.9	53.9	53.9	53.9	53.9	53.9	53.9	53.9	53.9	53.9
19	24	53.0	53.0	53.0	53.0	53.0	53.0	53.0	53.0	53.0	53.0	53.0	53.0	53.0	53.0	53.0	53.0
20	25	52.1	52.1	52.1	52.1	52.1	52.1	52.1	52.1	52.1	52.1	52.1	52.1	52.1	52.1	52.1	52.1
21	26	51.2	51.2	51.2	51.2	51.2	51.2	51.1	51.1	51.1	51.1	51.1	51.1	51.1	51.1	51.1	51.1
22	27	50.2	50.2	50.2	50.2	50.2	50.2	50.2	50.2	50.2	50.2	50.2	50.2	50.2	50.2	50.2	50.2
23	28	49.3	49.3	49.3	49.3	49.3	49.3	49.3	49.3	49.3	49.3	49.3	49.3	49.3	49.3	49.3	49.3
24	29	48.4	48.4	48.4	48.4	48.4	48.4	48.4	48.4	48.4	48.4	48.4	48.4	48.4	48.4	48.3	48.3
25	30	47.4	47.4	47.4	47.4	47.4	47.4	47.4	47.4	47.4	47.4	47.4	47.4	47.4	47.4	47.4	47.4
26	31	46.5	46.5	46.5	46.5	46.5	46.5	46.5	46.5	46.5	46.5	46.5	46.5	46.5	46.5	46.5	46.5
27	32	45.6	45.6	45.6	45.6	45.6	45.6	45.6	45.6	45.6	45.6	45.6	45.6	45.6	45.6	45.6	45.6
28	33	44.7	44.6	44.6	44.6	44.6	44.6	44.6	44.6	44.6	44.6	44.6	44.6	44.6	44.6	44.6	44.6
29	34	43.7	43.7	43.7	43.7	43.7	43.7	43.7	43.7	43.7	43.7	43.7	43.7	43.7	43.7	43.7	43.7
30	35	42.8	42.8	42.8	42.8	42.8	42.8	42.8	42.8	42.8	42.8	42.8	42.8	42.8	42.8	42.8	42.8
31	36	41.9	41.9	41.9	41.9	41.9	41.9	41.9	41.9	41.9	41.9	41.9	41.9	41.9	41.9	41.9	41.9
32	37	41.0	41.0	41.0	41.0	41.0	41.0	41.0	41.0	41.0	41.0	41.0	41.0	41.0	41.0	41.0	41.0
33	38	40.1	40.1	40.1	40.1	40.1	40.1	40.1	40.1	40.1	40.1	40.1	40.1	40.1	40.1	40.1	40.0
34	39	39.2	39.2	39.2	39.2	39.2	39.2	39.2	39.2	39.2	39.2	39.2	39.1	39.1	39.1	39.1	39.1

Male	Female	Ages												
		Male 35	36	37	38	39	40	41	42	43	44	45	46	47
		Female 40	41	42	43	44	45	46	47	48	49	50	51	52
35	40	46.2	45.7	45.3	44.8	44.4	44.0	43.6	43.3	43.0	42.6	42.3	42.0	41.8
36	41	45.7	45.2	44.8	44.3	43.9	43.5	43.1	42.7	42.3	42.0	41.7	41.4	41.1
37	42	45.3	44.8	44.3	43.8	43.4	42.9	42.5	42.1	41.8	41.4	41.1	40.7	40.4
38	43	44.8	44.3	43.8	43.3	42.9	42.4	42.0	41.6	41.2	40.8	40.5	40.1	39.8
39	44	44.4	43.9	43.4	42.9	42.4	41.9	41.5	41.0	40.6	40.2	39.9	39.5	39.2
40	45	44.0	43.5	42.9	42.4	41.9	41.4	41.0	40.5	40.1	39.7	39.3	38.9	38.6
41	46	43.6	43.1	42.5	42.0	41.5	41.0	40.5	40.0	39.6	39.2	38.8	38.4	38.0
42	47	43.3	42.7	42.1	41.6	41.0	40.5	40.0	39.6	39.1	38.7	38.2	37.8	37.5
43	48	43.0	42.3	41.8	41.2	40.6	40.1	39.6	39.1	38.6	38.2	37.7	37.3	36.9
44	49	42.6	42.0	41.4	40.8	40.2	39.7	39.2	38.7	38.2	37.7	37.2	36.8	36.4
45	50	42.3	41.7	41.1	40.5	39.9	39.3	38.8	38.2	37.7	37.2	36.8	36.3	35.9
46	51	42.0	41.4	40.7	40.1	39.5	38.9	38.4	37.8	37.3	36.8	36.3	35.9	35.4
47	52	41.8	41.1	40.4	39.8	39.2	38.6	38.0	37.5	36.9	36.4	35.9	35.4	35.0

Male	Female	Ages												
		Male 48	49	50	51	52	53	54	55	56	57	58	59	60
		Female 53	54	55	56	57	58	59	60	61	62	63	64	65
35	40	41.5	41.3	41.0	40.8	40.6	40.4	40.3	40.1	40.0	39.8	39.7	39.6	39.5
36	41	40.8	40.6	40.3	40.1	39.9	39.7	39.5	39.3	39.2	39.0	38.9	38.8	38.6
37	42	40.2	39.9	39.6	39.4	39.2	39.0	38.8	38.6	38.4	38.3	38.1	38.0	37.9
38	43	39.5	39.2	39.0	38.7	38.5	38.3	38.1	37.9	37.7	37.5	37.3	37.2	37.1
39	44	38.9	38.6	38.3	38.0	37.8	37.6	37.3	37.1	36.9	36.8	36.6	36.4	36.3
40	45	38.3	38.0	37.7	37.4	37.1	36.9	36.6	36.4	36.2	36.0	35.9	35.7	35.5
41	46	37.7	37.3	37.0	36.7	36.5	36.2	36.0	35.7	35.5	35.3	35.1	35.0	34.8
42	47	37.1	36.8	36.4	36.1	35.8	35.6	35.3	35.1	34.8	34.6	34.4	34.2	34.1
43	48	36.5	36.2	35.8	35.5	35.2	34.9	34.7	34.4	34.2	33.9	33.7	33.5	33.3
44	49	36.0	35.6	35.3	34.9	34.6	34.3	34.0	33.8	33.5	33.3	33.0	32.8	32.6
45	50	35.5	35.1	34.7	34.4	34.0	33.7	33.4	33.1	32.9	32.6	32.4	32.2	31.9
46	51	35.0	34.6	34.2	33.8	33.5	33.1	32.8	32.5	32.2	32.0	31.7	31.5	31.3
47	52	34.5	34.1	33.7	33.3	32.9	32.6	32.2	31.9	31.6	31.4	31.1	30.9	30.6
48	53	34.0	33.6	33.2	32.8	32.4	32.0	31.7	31.4	31.1	30.8	30.5	30.2	30.0
49	54	33.6	33.1	32.7	32.3	31.9	31.5	31.2	30.8	30.5	30.2	29.9	29.6	29.4
50	55	33.2	32.7	32.3	31.8	31.4	31.0	30.6	30.3	29.9	29.6	29.3	29.0	28.8
51	56	32.8	32.3	31.8	31.4	30.9	30.5	30.1	29.8	29.4	29.1	28.8	28.5	28.2
52	57	32.4	31.9	31.4	30.9	30.5	30.1	29.7	29.3	28.9	28.6	28.2	27.9	27.6
53	58	32.0	31.5	31.0	30.5	30.1	29.6	29.2	28.8	28.4	28.1	27.7	27.4	27.1
54	59	31.7	31.2	30.6	30.1	29.7	29.2	28.8	28.3	27.9	27.6	27.2	26.9	26.5
55	60	31.4	30.8	30.3	29.8	29.3	28.8	28.3	27.9	27.5	27.1	26.7	26.4	26.0
56	61	31.1	30.5	29.9	29.4	28.9	28.4	27.9	27.5	27.1	26.7	26.3	25.9	25.5
57	62	30.8	30.2	29.6	29.1	28.6	28.1	27.6	27.1	26.7	26.2	25.8	25.4	25.1
58	63	30.5	29.9	29.3	28.8	28.2	27.7	27.2	26.7	26.3	25.8	25.4	25.0	24.6
59	64	30.2	29.6	29.0	28.5	27.9	27.4	26.9	26.4	25.9	25.4	25.0	24.6	24.2
60	65	30.0	29.4	28.8	28.2	27.6	27.1	26.5	26.0	25.5	25.1	24.6	24.2	23.8

Male	Female	Ages												
		Male 61	62	63	64	65	66	67	68	69	70	71	72	73
		Female 66	67	68	69	70	71	72	73	74	75	76	77	78
35	40	39.4	39.3	39.2	39.1	39.0	38.9	38.9	38.8	38.8	38.7	38.7	38.6	38.6
36	41	38.5	38.4	38.3	38.2	38.2	38.1	38.0	38.0	37.9	37.9	37.8	37.8	37.7
37	42	37.7	37.6	37.5	37.4	37.3	37.3	37.2	37.1	37.1	37.0	36.9	36.9	36.9
38	43	36.9	36.8	36.7	36.6	36.5	36.4	36.4	36.3	36.2	36.2	36.1	36.0	36.0
39	44	36.2	36.0	35.9	35.8	35.7	35.6	35.5	35.5	35.4	35.3	35.3	35.2	35.2
40	45	35.4	35.3	35.1	35.0	34.9	34.8	34.7	34.6	34.6	34.5	34.4	34.4	34.3
41	46	34.6	34.5	34.4	34.2	34.1	34.0	33.9	33.8	33.8	33.7	33.6	33.5	33.5
42	47	33.9	33.7	33.6	33.5	33.4	33.2	33.1	33.0	33.0	32.9	32.8	32.7	32.7
43	48	33.2	33.0	32.9	32.7	32.6	32.5	32.4	32.3	32.2	32.1	32.0	31.9	31.9
44	49	32.5	32.3	32.1	32.0	31.8	31.7	31.6	31.5	31.4	31.3	31.2	31.1	31.1
45	50	31.8	31.6	31.4	31.3	31.1	31.0	30.8	30.7	30.6	30.5	30.4	30.4	30.3
46	51	31.1	30.9	30.7	30.5	30.4	30.2	30.1	30.0	29.9	29.8	29.7	29.6	29.5
47	52	30.4	30.2	30.0	29.8	29.7	29.5	29.4	29.3	29.1	29.0	28.9	28.8	28.7
48	53	29.8	29.5	29.3	29.2	29.0	28.8	28.7	28.5	28.4	28.3	28.2	28.1	28.0
49	54	29.1	28.9	28.7	28.5	28.3	28.1	28.0	27.8	27.7	27.6	27.5	27.4	27.3
50	55	28.5	28.3	28.1	27.8	27.6	27.5	27.3	27.1	27.0	26.9	26.7	26.6	26.5
51	56	27.9	27.7	27.4	27.2	27.0	26.8	26.6	26.5	26.3	26.2	26.0	25.9	25.8
52	57	27.3	27.1	26.8	26.6	26.4	26.2	26.0	25.8	25.7	25.5	25.4	25.2	25.1
53	58	26.8	26.5	26.2	26.0	25.8	25.6	25.4	25.2	25.0	24.8	24.7	24.6	24.4
54	59	26.2	25.9	25.7	25.4	25.2	25.0	24.7	24.6	24.4	24.2	24.0	23.9	23.8
55	60	25.7	25.4	25.1	24.9	24.6	24.4	24.1	23.9	23.8	23.6	23.4	23.3	23.1
56	61	25.2	24.9	24.6	24.3	24.1	23.8	23.6	23.4	23.2	23.0	22.8	22.6	22.5
57	62	24.7	24.4	24.1	23.8	23.5	23.3	23.0	22.8	22.6	22.4	22.2	22.0	21.9
58	63	24.3	23.9	23.6	23.3	23.0	22.7	22.5	22.2	22.0	21.8	21.6	21.4	21.3
59	64	23.8	23.5	23.1	22.8	22.5	22.2	21.9	21.7	21.5	21.2	21.0	20.9	20.7
60	65	23.4	23.0	22.7	22.3	22.0	21.7	21.4	21.2	20.9	20.7	20.5	20.3	20.1
61	66	23.0	22.6	22.2	21.9	21.6	21.3	21.0	20.7	20.4	20.2	20.0	19.8	19.6
62	67	22.6	22.2	21.8	21.5	21.1	20.8	20.5	20.2	19.9	19.7	19.5	19.2	19.0
63	68	22.2	21.8	21.4	21.1	20.7	20.4	20.1	19.8	19.5	19.2	19.0	18.7	18.5
64	69	21.9	21.5	21.1	20.7	20.3	20.0	19.6	19.3	19.0	18.7	18.5	18.2	18.0
65	70	21.6	21.1	20.7	20.3	19.9	19.6	19.2	18.9	18.6	18.3	18.0	17.8	17.5
66	71	21.3	20.8	20.4	20.0	19.6	19.2	18.8	18.5	18.2	17.9	17.6	17.3	17.1
67	72	21.0	20.5	20.1	19.6	19.2	18.8	18.5	18.1	17.8	17.5	17.2	16.9	16.7

Male	Female	Ages												
		Male 61	62	63	64	65	66	67	68	69	70	71	72	73
		Female 66	67	68	69	70	71	72	73	74	75	76	77	78
68	73	20.7	20.2	19.8	19.3	18.9	18.5	18.1	17.8	17.4	17.1	16.8	16.5	16.2
69	74	20.4	19.9	19.5	19.0	18.6	18.2	17.8	17.4	17.1	16.7	16.4	16.1	15.8
70	75	20.2	19.7	19.2	18.7	18.3	17.9	17.5	17.1	16.7	16.4	16.1	15.8	15.5
71	76	20.0	19.5	19.0	18.5	18.0	17.6	17.2	16.8	16.4	16.1	15.7	15.4	15.1
72	77	19.8	19.2	18.7	18.2	17.8	17.3	16.9	16.5	16.1	15.8	15.4	15.1	14.8
73	78	19.6	19.0	18.5	18.0	17.5	17.1	16.7	16.2	15.8	15.5	15.1	14.8	14.4

Male	Female	Ages											
		Male 74	75	76	77	78	79	80	81	82	83	84	85
		Female 79	80	81	82	83	84	85	86	87	88	89	90
35	40	38.6	38.5	38.5	38.5	38.4	38.4	38.4	38.4	38.4	38.4	38.3	38.3
36	41	37.7	37.6	37.6	37.6	37.6	27.5	37.5	37.5	37.5	37.5	37.5	37.4
37	42	36.8	36.8	36.7	36.7	36.7	36.7	36.6	36.6	36.6	36.6	36.6	36.6
38	43	36.0	35.9	35.9	35.9	35.8	35.8	35.8	35.8	35.7	35.7	35.7	35.7
39	44	35.1	35.1	35.0	35.0	35.0	34.9	34.9	34.9	34.9	34.8	34.8	34.8
40	45	34.3	34.2	34.2	34.1	34.1	34.1	34.1	34.0	34.0	34.0	34.0	34.0
41	46	33.4	33.4	33.3	33.3	33.3	33.2	33.2	33.2	33.2	33.1	33.1	33.1
42	47	32.6	32.6	32.5	32.5	32.4	32.4	32.4	32.3	32.3	32.3	32.3	32.3
43	48	31.8	31.8	31.7	31.7	31.6	31.6	31.5	31.5	31.5	31.5	31.4	31.4
44	49	31.0	30.9	30.9	30.8	30.8	30.8	30.7	30.7	30.7	30.6	30.6	30.6
45	50	30.2	30.1	30.1	30.0	30.0	29.9	29.9	29.9	29.8	29.8	29.8	29.8
46	51	29.4	29.4	29.3	29.2	29.2	29.2	29.1	29.1	29.0	29.0	29.0	28.9
47	52	28.7	28.6	28.5	28.5	28.4	28.4	28.3	28.3	28.2	28.2	28.2	28.1
48	53	27.9	27.8	27.8	27.7	27.6	27.6	27.5	27.5	27.5	27.4	27.4	27.4
49	54	27.2	27.1	27.0	26.9	26.9	26.8	26.8	26.7	26.7	26.6	26.6	26.6
50	55	26.4	26.3	26.3	26.2	26.1	26.1	26.0	26.0	25.9	25.9	25.8	25.8
51	56	25.7	25.6	25.5	25.5	25.4	25.3	25.3	25.2	25.2	25.1	25.1	25.0
52	57	25.0	24.9	24.8	24.7	24.7	24.6	24.5	24.5	24.4	24.4	24.3	24.3
53	58	24.3	24.2	24.1	24.0	23.9	23.9	23.8	23.7	23.7	23.6	23.6	23.5
54	59	23.6	23.5	23.4	23.3	23.2	23.2	23.1	23.0	23.0	22.9	22.9	22.8
55	60	23.0	22.9	22.8	22.7	22.6	22.5	22.4	22.3	22.3	22.2	22.2	22.1
56	61	22.3	22.2	22.1	22.0	21.9	21.8	21.7	21.6	21.6	21.5	21.5	21.4
57	62	21.7	21.6	21.5	21.3	21.2	21.1	21.1	21.0	20.9	20.8	20.8	20.7
58	63	21.1	21.0	20.8	20.7	20.6	20.5	20.4	20.3	20.2	20.2	20.1	20.0
59	64	20.5	20.4	20.2	20.1	20.0	19.9	19.8	19.7	19.6	19.5	19.4	19.4
60	65	19.9	19.8	19.6	19.5	19.4	19.3	19.1	19.0	19.0	18.9	18.8	18.7
61	66	19.4	19.2	19.1	18.9	18.8	18.7	18.5	18.4	18.3	18.3	18.2	18.1
62	67	18.8	18.7	18.5	18.3	18.2	18.1	18.0	17.8	17.7	17.7	17.6	17.5
63	68	18.3	18.1	18.0	17.8	17.6	17.5	17.4	17.3	17.2	17.1	17.0	16.9
64	69	17.8	17.6	17.4	17.3	17.1	17.0	16.8	16.7	16.6	16.5	16.4	16.3
65	70	17.3	17.1	16.9	16.7	16.6	16.4	16.3	16.2	16.0	15.9	15.8	15.8
66	71	16.9	16.6	16.4	16.3	16.1	15.9	15.8	15.6	15.5	15.4	15.3	15.2
67	72	16.4	16.2	16.0	15.8	15.6	15.4	15.3	15.1	15.0	14.9	14.8	14.7

Male	Female	Ages											
		Male 74	75	76	77	78	79	80	81	82	83	84	85
		Female 79	80	81	82	83	84	85	86	87	88	89	90
68	73	16.0	15.7	15.5	15.3	15.1	15.0	14.8	14.6	14.5	14.4	14.3	14.2
69	74	15.6	15.3	15.1	14.9	14.7	14.5	14.3	14.2	14.0	13.9	13.8	13.7
70	75	15.2	14.9	14.7	14.5	14.3	14.1	13.9	13.7	13.6	13.4	13.3	13.2
71	76	14.8	14.5	14.3	14.1	13.8	13.6	13.5	13.3	13.1	13.0	12.8	12.7
72	77	14.5	14.2	13.9	13.7	13.5	13.2	13.0	12.9	12.7	12.5	12.4	12.3
73	78	14.1	13.8	13.6	13.3	13.1	12.9	12.7	12.5	12.3	12.1	12.0	11.8
74	79	13.8	13.5	13.2	13.0	12.7	12.5	12.3	12.1	11.9	11.7	11.6	11.4
75	80	13.5	13.2	12.9	12.6	12.4	12.2	11.9	11.7	11.5	11.4	11.2	11.0
76	81	13.2	12.9	12.6	12.3	12.1	11.8	11.6	11.4	11.2	11.0	10.8	10.7
77	82	13.0	12.6	12.3	12.1	11.8	11.5	11.3	11.1	10.8	10.7	10.5	10.3
78	83	12.7	12.4	12.1	11.8	11.5	11.2	11.0	10.7	10.5	10.3	10.1	10.0
79	84	12.5	12.2	11.8	11.5	11.2	11.0	10.7	10.5	10.2	10.0	9.8	9.6
80	85	12.3	11.9	11.6	11.3	11.0	10.7	10.4	10.2	10.0	9.7	9.5	9.3
81	86	12.1	11.7	11.4	11.1	10.7	10.5	10.2	9.9	9.7	9.5	9.3	9.1
82	87	11.9	11.5	11.2	10.8	10.5	10.2	10.0	9.7	9.4	9.2	9.0	8.8
83	88	11.7	11.4	11.0	10.7	10.3	10.0	9.7	9.5	9.2	9.0	8.7	8.5
84	89	11.6	11.2	10.8	10.5	10.1	9.8	9.5	9.3	9.0	8.7	8.5	8.3
85	90	11.4	11.0	10.7	10.3	10.0	9.6	9.3	9.1	8.8	8.5	8.3	8.1

Male	Female	Ages											
		Male 86	87	88	89	90	91	92	93	94	95	96	97
		Female 91	92	93	94	95	96	97	98	99	100	101	102
35	40	38.3	38.3	38.3	38.3	38.3	38.3	38.3	38.3	38.3	38.3	38.3	38.3
36	41	37.4	37.4	37.4	37.4	37.4	37.4	37.4	37.4	37.4	37.4	37.4	37.4
37	42	36.5	36.5	36.5	36.5	36.5	36.5	36.5	36.5	36.5	36.5	36.5	36.5
38	43	35.7	35.7	35.6	35.6	35.6	35.6	35.6	35.6	35.6	35.6	35.6	35.6
39	44	34.8	34.8	34.8	34.8	34.8	34.8	34.7	34.7	34.7	34.7	34.7	34.7
40	45	33.9	33.9	33.9	33.9	33.9	33.9	33.9	33.9	33.9	33.9	33.9	33.9
41	46	33.1	33.1	33.1	33.0	33.0	33.0	33.0	33.0	33.0	33.0	33.0	33.0
42	47	32.2	32.2	32.2	32.2	32.2	32.2	32.2	32.2	32.2	32.1	32.1	32.1
43	48	31.4	31.4	31.4	31.3	31.3	31.3	31.3	31.3	31.3	31.3	31.3	31.3
44	49	30.6	30.5	30.5	30.5	30.5	30.5	30.5	30.5	30.5	30.5	30.5	30.4
45	50	29.7	29.7	29.7	29.7	29.7	29.7	29.7	29.6	29.6	29.6	29.6	29.6
46	51	28.9	28.9	28.9	28.9	28.9	28.8	28.8	28.8	28.8	28.8	28.8	28.8
47	52	28.1	28.1	28.1	28.1	28.0	28.0	28.0	28.0	28.0	28.0	28.0	28.0
48	53	27.3	27.3	27.3	27.3	27.2	27.2	27.2	27.2	27.2	27.2	27.2	27.2
49	54	26.5	26.5	26.5	26.5	26.5	26.4	26.4	26.4	26.4	26.4	26.4	26.4
50	55	25.8	25.7	25.7	25.7	25.7	25.7	25.6	25.6	25.6	25.6	25.6	25.6
51	56	25.0	25.0	24.9	24.9	24.9	24.9	24.9	24.9	24.8	24.8	24.8	24.8
52	57	24.3	24.2	24.2	24.2	24.1	24.1	24.1	24.1	24.1	24.1	24.1	24.0
53	58	23.5	23.5	23.4	23.4	23.4	23.4	23.4	23.3	23.3	23.3	23.3	23.3
54	59	22.8	22.7	22.7	22.7	22.7	22.6	22.6	22.6	22.6	22.6	22.6	22.5
55	60	22.1	22.0	22.0	22.0	21.9	21.9	21.9	21.9	21.8	21.8	21.8	21.8
56	61	21.4	21.3	21.3	21.3	21.2	21.2	21.2	21.1	21.1	21.1	21.1	21.1
57	62	20.7	20.6	20.6	20.6	20.5	20.5	20.5	20.4	20.4	20.4	20.4	20.4
58	63	20.0	19.9	19.9	19.9	19.8	19.8	19.8	19.8	19.7	19.7	19.7	19.7
59	64	19.3	19.3	19.2	19.2	19.2	19.1	19.1	19.1	19.0	19.0	19.0	19.0

Male	Female	Ages										
		Male 98	99	100	101	102	103	104	105	106	107	108
		Female 103	104	105	106	107	108	109	110	111	112	113
35	40	38.3	38.3	38.3	38.3	38.3	38.3	38.2	38.2	38.2	38.2	38.2
36	41	37.4	37.4	37.4	37.4	37.4	37.4	37.4	37.4	37.4	37.4	37.3
37	42	36.5	36.5	36.5	36.5	36.5	36.5	36.5	36.5	36.5	36.5	36.5
38	43	35.6	35.6	35.6	35.6	35.6	35.6	35.6	35.6	35.6	35.6	35.6
39	44	34.7	34.7	34.7	34.7	34.7	34.7	34.7	34.7	34.7	34.7	34.7
40	45	33.9	33.8	33.8	33.8	33.8	33.8	33.8	33.8	33.8	33.8	33.8
41	46	33.0	33.0	33.0	33.0	33.0	33.0	33.0	33.0	33.0	33.0	33.0
42	47	32.1	32.1	32.1	32.1	32.1	32.1	32.1	32.1	32.1	32.1	32.1
43	48	31.3	31.3	31.3	31.3	31.3	31.3	31.3	31.3	31.3	31.3	31.3
44	49	30.4	30.4	30.4	30.4	30.4	30.4	30.4	30.4	30.4	30.4	30.4
45	50	29.6	29.6	29.6	29.6	29.6	29.6	29.6	29.6	29.6	29.6	29.6
46	51	28.8	28.8	28.8	28.8	28.8	28.8	28.8	28.8	28.8	28.8	28.7
47	52	28.0	28.0	28.0	28.0	28.0	28.0	28.0	27.9	27.9	27.9	27.9
48	53	27.2	27.2	27.2	27.2	27.2	27.1	27.1	27.1	27.1	27.1	27.1
49	54	26.4	26.4	26.4	26.4	26.4	26.3	26.3	26.3	26.3	26.3	26.3
50	55	25.6	25.6	25.6	25.6	25.6	25.6	25.6	25.6	25.5	25.5	25.5
51	56	24.8	24.8	24.8	24.8	24.8	24.8	24.8	24.8	24.8	24.8	24.7
52	57	24.0	24.0	24.0	24.0	24.0	24.0	24.0	24.0	24.0	24.0	24.0
53	58	23.3	23.3	23.3	23.3	23.3	23.3	23.2	23.2	23.2	23.2	23.2
54	59	22.5	22.5	22.5	22.5	22.5	22.5	22.5	22.5	22.5	22.5	22.5
55	60	21.8	21.8	21.8	21.8	21.8	21.8	21.8	21.8	21.8	21.7	21.7
56	61	21.1	21.1	21.1	21.1	21.1	21.0	21.0	21.0	21.0	21.0	21.0
57	62	20.4	20.4	20.4	20.3	20.3	20.3	20.3	20.3	20.3	20.3	20.3
58	63	19.7	19.7	19.7	19.6	19.6	19.6	19.6	19.6	19.6	19.6	19.6
59	64	19.0	19.0	19.0	19.0	19.0	18.9	18.9	18.9	18.9	18.9	18.9

Male	Female	Ages											
		Male 86	87	88	89	90	91	92	93	94	95	96	97
		Female 91	92	93	94	95	96	97	98	99	100	101	102
60	65	18.7	18.6	18.6	18.5	18.5	18.5	18.4	18.4	18.4	18.4	18.3	18.3
61	66	18.1	18.0	17.9	17.9	17.9	17.8	17.8	17.8	17.7	17.7	17.7	17.7
62	67	17.4	17.4	17.3	17.3	17.2	17.2	17.1	17.1	17.1	17.1	17.0	17.0
63	68	16.8	16.8	16.7	16.7	16.6	16.6	16.5	16.5	16.5	16.4	16.4	16.4
64	69	16.2	16.2	16.1	16.1	16.0	16.0	15.9	15.9	15.9	15.8	15.8	15.8
65	70	15.7	15.6	15.5	15.5	15.4	15.4	15.3	15.3	15.3	15.2	15.2	15.2
66	71	15.1	15.0	15.0	14.9	14.8	14.8	14.7	14.7	14.7	14.6	14.6	14.6
67	72	14.6	14.5	14.4	14.4	14.3	14.2	14.2	14.1	14.1	14.1	14.1	14.0
68	73	14.1	14.0	13.9	13.8	13.8	13.7	13.6	13.6	13.6	13.5	13.5	13.5
69	74	13.6	13.5	13.4	13.3	13.2	13.2	13.1	13.1	13.0	13.0	13.0	12.9
70	75	13.1	13.0	12.9	12.8	12.7	12.7	12.6	12.5	12.5	12.5	12.4	12.4
71	76	12.6	12.5	12.4	12.3	12.2	12.2	12.1	12.1	12.0	12.0	11.9	11.9
72	77	12.1	12.0	11.9	11.8	11.8	11.7	11.6	11.6	11.5	11.5	11.4	11.4
73	78	11.7	11.6	11.5	11.4	11.3	11.2	11.2	11.1	11.0	11.0	11.0	10.9
74	79	11.3	11.2	11.1	11.0	10.9	10.8	10.7	10.7	10.6	10.6	10.5	10.5
75	80	10.9	10.8	10.7	10.5	10.5	10.4	10.3	10.2	10.2	10.1	10.1	10.0
76	81	10.5	10.4	10.3	10.2	10.1	10.0	9.9	9.8	9.7	9.7	9.7	9.6
77	82	10.2	10.0	9.9	9.8	9.7	9.6	9.5	9.4	9.3	9.3	9.2	9.2
78	83	9.8	9.7	9.5	9.4	9.3	9.2	9.1	9.0	9.0	8.9	8.9	8.8
79	84	9.5	9.3	9.2	9.2	8.9	8.8	8.8	8.7	8.6	8.5	8.5	8.4
80	85	9.2	9.0	8.9	8.7	8.6	8.5	8.4	8.3	8.3	8.2	8.1	8.1
81	86	8.9	8.7	8.6	8.4	8.3	8.2	8.1	8.0	7.9	7.9	7.8	7.7
82	87	8.6	8.4	8.3	8.1	8.0	7.9	7.8	7.7	7.6	7.5	7.5	7.4
83	88	8.3	8.2	8.0	7.9	7.7	7.6	7.5	7.4	7.3	7.2	7.2	7.1
84	89	8.1	7.9	7.8	7.6	7.5	7.3	7.2	7.1	7.0	7.0	6.9	6.8

Male	Female	Ages										
		Male 98	99	100	101	102	103	104	105	106	107	108
		Female 103	104	105	106	107	108	109	110	111	112	113
60	65	18.3	18.3	18.3	18.3	18.3	18.3	18.3	18.2	18.2	18.2	18.2
61	66	17.7	17.7	17.6	17.6	17.6	17.6	17.6	17.6	17.6	17.6	17.5
62	67	17.0	17.0	17.0	17.0	17.0	17.0	16.9	16.9	16.9	16.9	16.9
63	68	16.4	16.4	16.4	16.3	16.3	16.3	16.3	16.3	16.3	16.3	16.2
64	69	15.8	15.8	15.7	15.7	15.7	15.7	15.7	15.7	15.7	15.7	15.6
65	70	15.2	15.2	15.1	15.1	15.1	15.1	15.1	15.1	15.1	15.0	15.0
66	71	14.6	14.6	14.5	14.5	14.5	14.5	14.5	14.5	14.5	14.4	14.4
67	72	14.0	14.0	14.0	14.0	13.9	13.9	13.9	13.9	13.9	13.9	13.8
68	73	13.5	13.4	13.4	13.4	13.4	13.4	13.3	13.3	13.3	13.3	13.2
69	74	12.9	12.9	12.9	12.8	12.8	12.8	12.8	12.8	12.8	12.7	12.7
70	75	12.4	12.4	12.3	12.3	12.3	12.3	12.3	12.2	12.2	12.2	12.1
71	76	11.9	11.9	11.8	11.8	11.8	11.8	11.7	11.7	11.7	11.7	11.6
72	77	11.4	11.4	11.3	11.3	11.3	11.3	11.2	11.2	11.2	11.2	11.1
73	78	10.9	10.9	10.9	10.8	10.8	10.8	10.7	10.7	10.7	10.7	10.6
74	79	10.5	10.4	10.4	10.4	10.3	10.3	10.3	10.3	10.2	10.2	10.1
75	80	10.0	10.0	9.9	9.9	9.9	9.8	9.8	9.8	9.8	9.7	
76	81	9.6	9.5	9.5	9.5	9.4	9.4	9.4	9.4	9.3	9.3	
77	82	9.2	9.1	9.1	9.1	9.0	9.0	9.0	8.9	8.9	8.9	
78	83	8.8	8.7	8.7	8.7	8.6	8.6	8.5	8.5	8.5	8.4	
79	84	8.4	8.4	8.3	8.3	8.2	8.2	8.2	8.1	8.1	8.0	
80	85	8.0	8.0	7.9	7.9	7.9	7.8	7.8	7.7	7.7	7.6	
81	86	7.7	7.6	7.6	7.6	7.5	7.5	7.4	7.4	7.3	7.3	
82	87	7.4	7.3	7.3	7.2	7.2	7.1	7.1	7.0	7.0	6.9	
83	88	7.1	7.0	6.9	6.9	6.8	6.8	6.7	6.7	6.7	6.6	
84	89	6.8	6.7	6.6	6.6	6.5	6.5	6.4	6.4	6.3		

Male	Female	Ages										
		Male 86	87	88	89	90	91	92	93	94	95	96
		Female 91	92	93	94	95	96	97	98	99	100	101
85	90	7.9	7.7	7.5	7.4	7.2	7.1	7.0	6.9	6.8	6.7	6.6
86	91	7.7	7.5	7.3	7.1	7.0	6.8	6.7	6.6	6.5	6.4	6.4
87	92	7.5	7.3	7.1	6.9	6.8	6.6	6.5	6.4	6.3	6.2	6.1
88	93	7.3	7.1	6.9	6.7	6.6	6.4	6.3	6.2	6.1	6.0	5.9
89	94	7.1	6.9	6.7	6.5	6.4	6.2	6.1	6.0	5.9	5.8	5.7
90	95	7.0	6.8	6.6	6.4	6.2	6.1	5.9	5.8	5.7	5.6	5.5
91	96	6.8	6.6	6.4	6.2	6.1	5.9	5.8	5.7	5.5	5.4	5.3
92	97	6.7	6.5	6.3	6.1	5.9	5.8	5.6	5.5	5.4	5.3	5.2
93	98	6.6	6.4	6.2	6.0	5.8	5.7	5.5	5.4	5.2	5.1	5.0
94	99	6.5	6.3	6.1	5.9	5.7	5.5	5.4	5.2	5.1	5.0	4.9
95	100	6.4	6.2	6.0	5.8	5.6	5.4	5.3	5.1	5.0	4.9	4.7
96	101	6.4	6.1	5.9	5.7	5.5	5.3	5.2	5.0	4.9	4.7	4.6
97	102	6.3	6.1	5.8	5.6	5.4	5.2	5.1	4.9	4.8	4.6	4.5
98	103	6.2	6.0	5.8	5.5	5.3	5.1	5.0	4.8	4.7	4.5	4.4
99	104	6.2	5.9	5.7	5.5	5.2	5.1	4.9	4.7	4.6	4.4	4.3

Male	Female	Ages									
		Male 97	98	99	100	101	102	103	104	105	106
		Female 102	103	104	105	106	107	108	109	110	111
85	90	6.6	6.5	6.4	6.4	6.3	6.2	6.2	6.1	6.1	6.0
86	91	6.3	6.2	6.2	6.1	6.0	6.0	5.9	5.9	5.8	5.7
87	92	6.1	6.0	5.9	5.8	5.8	5.7	5.6	5.6	5.5	5.4
88	93	5.8	5.8	5.7	5.6	5.5	5.5	5.4	5.3	5.3	5.1
89	94	5.6	5.5	5.5	5.4	5.3	5.2	5.2	5.1	5.0	
90	95	5.4	5.3	5.2	5.2	5.1	5.0	4.9	4.9	4.8	
91	96	5.2	5.1	5.1	5.0	4.9	4.8	4.7	4.6	4.5	
92	97	5.1	5.0	4.9	4.8	4.7	4.6	4.5	4.4		
93	98	4.9	4.8	4.7	4.6	4.5	4.4	4.3	4.2		
94	99	4.8	4.7	4.6	4.5	4.4	4.3	4.1			
95	100	4.6	4.5	4.4	4.3	4.2	4.1	4.0			
96	101	4.5	4.4	4.3	4.2	4.1	3.9				
97	102	4.4	4.3	4.1	4.0	3.9	3.7				
98	103	4.3	4.1	4.0	3.9	3.7					
99	104	4.1	4.0	3.9	3.7						

Table IIA—Annuities for Joint Life Only—Two Lives—Expected Return Multiples

Male	Female	Ages														
		Male 6	7	8	9	10	11	12	13	14	15	16	17	18	19	20
		Female 11	12	13	14	15	16	17	18	19	20	21	22	23	24	25
6	11	56.6	56.1	55.7	55.1	54.6	54.1	53.5	52.9	52.3	51.7	51.1	50.5	49.8	49.1	48.4
7	12	56.1	55.7	55.2	54.7	54.2	53.7	53.1	52.6	52.0	51.4	50.8	50.2	49.5	48.9	48.2
8	13	55.7	55.2	54.8	54.3	53.8	53.3	52.8	52.2	51.6	51.1	50.5	49.9	49.2	48.6	47.9
9	14	55.1	54.7	54.3	53.8	53.3	52.9	52.3	51.8	51.3	50.7	50.1	49.5	48.9	48.3	47.7
10	15	54.6	54.2	53.8	53.3	52.9	52.4	51.9	51.4	50.9	50.3	49.8	49.2	48.6	48.0	47.4
11	16	54.1	53.7	53.3	52.9	52.4	52.0	51.5	51.0	50.5	50.0	49.4	48.8	48.3	47.7	47.1
12	17	53.5	53.1	52.8	52.3	51.9	51.5	51.0	50.6	50.1	49.6	49.0	48.5	47.9	47.3	46.7
13	18	52.9	52.6	52.2	51.8	51.4	51.0	50.6	50.1	49.6	49.1	48.6	48.1	47.5	47.0	46.4
14	19	52.3	52.0	51.6	51.3	50.9	50.5	50.1	49.6	49.2	48.7	48.2	47.7	47.2	46.6	46.1
15	20	51.7	51.4	51.1	50.7	50.3	50.0	49.6	49.1	48.7	48.2	47.8	47.3	46.8	46.2	45.7
16	21	51.1	50.8	50.5	50.1	49.8	49.4	49.0	48.6	48.2	47.8	47.3	46.8	46.3	45.8	45.3
17	22	50.5	50.2	49.9	49.5	49.2	48.8	48.5	48.1	47.7	47.3	46.8	46.4	45.9	45.4	44.9
18	23	49.8	49.5	49.2	48.9	48.6	48.3	47.9	47.5	47.2	46.8	46.3	45.9	45.4	45.0	44.5
19	24	49.1	48.9	48.6	48.3	48.0	47.7	47.3	47.0	46.6	46.2	45.8	45.4	45.0	44.5	44.0
20	25	48.4	48.2	47.9	47.7	47.4	47.1	46.7	46.4	46.1	45.7	45.3	44.9	44.5	44.0	43.6

Male	Female	Ages													
		Male 21	22	23	24	25	26	27	28	29	30	31	32	33	34
		Female 26	27	28	29	30	31	32	33	34	35	36	37	38	39
6	11	47.7	47.0	46.3	45.6	44.8	44.1	43.3	42.5	41.8	41.0	40.2	39.4	38.6	37.8
7	12	47.5	46.8	46.1	45.4	44.6	43.9	43.2	42.4	41.6	40.9	40.1	39.3	38.5	37.7
8	13	47.3	46.6	45.9	45.2	44.5	43.7	43.0	42.2	41.5	40.7	39.9	39.2	38.4	37.6
9	14	47.0	46.3	45.6	45.0	44.2	43.5	42.8	42.1	41.3	40.6	39.8	39.0	38.3	37.5
10	15	46.7	46.1	45.4	44.7	44.0	43.3	42.6	41.9	41.1	40.4	39.7	38.9	38.1	37.4
11	16	46.4	45.8	45.1	44.5	43.8	43.1	42.4	41.7	41.0	40.2	39.5	38.8	38.0	37.2
12	17	46.1	45.5	44.9	44.2	43.6	42.9	42.2	41.5	40.8	40.1	39.3	38.6	37.9	37.1
13	18	45.8	45.2	44.6	43.9	43.3	42.6	42.0	41.3	40.6	39.9	39.2	38.4	37.7	37.0
14	19	45.5	44.9	44.3	43.7	43.0	42.4	41.7	41.0	40.4	39.7	39.0	38.3	37.5	36.8
15	20	45.1	44.6	44.0	43.4	42.7	42.1	41.5	40.8	40.1	39.5	38.8	38.1	37.4	36.6
16	21	44.8	44.2	43.6	43.0	42.4	41.8	41.2	40.5	39.9	39.2	38.6	37.9	37.2	36.5
17	22	44.4	43.8	43.3	42.7	42.1	41.5	40.9	40.3	39.6	39.0	38.3	37.7	37.0	36.3
18	23	44.0	43.5	42.9	42.4	41.8	41.2	40.6	40.0	39.4	38.7	38.1	37.4	36.8	36.1
19	24	43.6	43.1	42.5	42.0	41.4	40.9	40.3	39.7	39.1	38.5	37.8	37.2	36.5	35.9
20	25	43.1	42.6	42.1	41.6	41.1	40.5	40.0	39.4	38.8	38.2	37.6	36.9	36.3	35.7
21	26	42.7	42.2	41.7	41.2	40.7	40.2	39.6	39.1	38.5	37.9	37.3	36.7	36.1	35.4
22	27	42.2	41.8	41.3	40.8	40.3	39.8	39.3	38.7	38.2	37.6	37.0	36.4	35.8	35.2
23	28	41.7	41.3	40.8	40.4	39.9	39.4	38.9	38.4	37.8	37.3	36.7	36.1	35.5	34.9
24	29	41.2	40.8	40.4	39.9	39.5	39.0	38.5	38.0	37.5	36.9	36.4	35.8	35.2	34.6
25	30	40.7	40.3	39.9	39.5	39.0	38.6	38.1	37.6	37.1	36.6	36.0	35.5	34.9	34.4
26	31	40.2	39.8	39.4	39.0	38.6	38.1	37.7	37.2	36.7	36.2	35.7	35.2	34.6	34.1
27	32	39.6	39.3	38.9	38.5	38.1	37.7	37.2	36.8	36.3	35.8	35.3	34.8	34.3	33.7
28	33	39.1	38.7	38.4	38.0	37.6	37.2	36.8	36.3	35.9	35.4	34.9	34.5	33.9	33.4
29	34	38.5	38.2	37.8	37.5	37.1	36.7	36.3	35.9	35.5	35.0	34.6	34.1	33.6	33.1
30	35	37.9	37.6	37.3	36.9	36.6	36.2	35.8	35.4	35.0	34.6	34.1	33.7	33.2	32.7
31	36	37.3	37.0	36.7	36.4	36.0	35.7	35.3	34.9	34.6	34.1	33.7	33.3	32.8	32.3
32	37	36.7	36.4	36.1	35.8	35.5	35.2	34.8	34.5	34.1	33.7	33.3	32.9	32.4	32.0
33	38	36.1	35.8	35.5	35.2	34.9	34.6	34.3	33.9	33.6	33.2	32.8	32.4	32.0	31.6
34	39	35.4	35.2	34.9	34.6	34.4	34.1	33.7	33.4	33.1	32.7	32.3	32.0	31.6	31.1

Male	Female	Ages														
		Male 35	36	37	38	39	40	41	42	43	44	45	46	47	48	49
		Female 40	41	42	43	44	45	46	47	48	49	50	51	52	53	54
6	11	37.0	36.2	35.4	34.6	33.8	33.0	32.2	31.4	30.6	29.8	29.0	28.2	27.5	26.7	25.9
7	12	36.9	36.1	35.3	34.5	33.7	32.9	32.1	31.3	30.5	29.8	29.0	28.2	27.4	26.7	25.9
8	13	36.8	36.0	35.2	34.4	33.7	32.9	32.1	31.3	30.5	29.7	28.9	28.2	27.4	26.6	25.9
9	14	36.7	35.9	35.1	34.4	33.6	32.8	32.0	31.2	30.4	29.7	28.9	28.1	27.3	26.6	25.8
10	15	36.6	35.8	35.1	34.3	33.5	32.7	31.9	31.2	30.4	29.6	28.8	28.1	27.3	26.5	25.8
11	16	36.5	35.7	34.9	34.2	33.4	32.6	31.9	31.1	30.3	29.5	28.8	28.0	27.3	26.5	25.7
12	17	36.4	35.6	34.8	34.1	33.3	32.5	31.8	31.0	30.2	29.5	28.7	28.0	27.2	26.4	25.7
13	18	36.2	35.5	34.7	34.0	33.2	32.4	31.7	30.9	30.2	29.4	28.7	27.9	27.1	26.4	25.7
14	19	36.1	35.3	34.6	33.8	33.1	32.3	31.6	30.8	30.1	29.3	28.6	27.8	27.1	26.3	25.6
15	20	35.9	35.2	34.5	33.7	33.0	32.2	31.5	30.7	30.0	29.3	28.5	27.8	27.0	26.3	25.6
16	21	35.8	35.0	34.3	33.6	32.9	32.1	31.4	30.6	29.9	29.2	28.4	27.7	27.0	26.2	25.5
17	22	35.6	34.9	34.2	33.4	32.7	32.0	31.3	30.5	29.8	29.1	28.3	27.6	26.9	26.2	25.4
18	23	35.4	34.7	34.0	33.3	32.6	31.9	31.2	30.4	29.7	29.0	28.3	27.5	26.8	26.1	25.4
19	24	35.2	34.5	33.8	33.1	32.4	31.7	31.0	30.3	29.6	28.9	28.2	27.4	26.7	26.0	25.3
20	25	35.0	34.3	33.7	33.0	32.3	31.6	30.9	30.2	29.5	28.8	28.1	27.3	26.6	25.9	25.2
21	26	34.8	34.1	33.5	32.8	32.1	31.4	30.7	30.0	29.3	28.6	27.9	27.2	26.5	25.8	25.1
22	27	34.5	33.9	33.3	32.6	31.9	31.3	30.6	29.9	29.2	28.5	27.8	27.1	26.4	25.7	25.1
23	28	34.3	33.7	33.0	32.4	31.7	31.1	30.4	29.7	29.1	28.4	27.7	27.0	26.3	25.6	25.0
24	29	34.0	33.4	32.8	32.2	31.5	30.9	30.2	29.6	28.9	28.2	27.6	26.9	26.2	25.5	24.9
25	30	33.8	33.2	32.6	32.0	31.3	30.7	30.1	29.4	28.8	28.1	27.4	26.8	26.1	25.4	24.8
26	31	33.5	32.9	32.3	31.7	31.1	30.5	29.9	29.2	28.6	27.9	27.3	26.6	26.0	25.3	24.6
27	32	33.2	32.6	32.1	31.5	30.9	30.3	29.6	29.0	28.4	27.8	27.1	26.5	25.8	25.2	24.5
28	33	32.9	32.3	31.8	31.2	30.6	30.0	29.4	28.8	28.2	27.6	27.0	26.3	25.7	25.0	24.4
29	34	32.6	32.0	31.5	30.9	30.4	29.8	29.2	28.6	28.0	27.4	26.8	26.2	25.5	24.9	24.3
30	35	32.2	31.7	31.2	30.6	30.1	29.5	29.0	28.4	27.8	27.2	26.6	26.0	25.4	24.7	24.1
31	36	31.9	31.4	30.9	30.3	29.8	29.3	28.7	28.1	27.6	27.0	26.4	25.8	25.2	24.6	24.0
32	37	31.5	31.0	30.5	30.0	29.5	29.0	28.4	27.9	27.3	26.8	26.2	25.6	25.0	24.4	23.8
33	38	31.1	30.7	30.2	29.7	29.2	28.7	28.2	27.6	27.1	26.5	26.0	25.4	24.8	24.2	23.6
34	39	30.7	30.3	29.8	29.3	28.9	28.4	27.9	27.3	26.8	26.3	25.7	25.2	24.6	24.0	23.5

Male	Female	Ages													
		Male 50	51	52	53	54	55	56	57	58	59	60	61	62	63
		Female 55	56	57	58	59	60	61	62	63	64	65	66	67	68
6	11	25.2	24.4	23.7	22.9	22.2	21.5	20.8	20.1	19.4	18.7	18.0	17.4	16.7	16.1
7	12	25.1	24.4	23.6	22.9	22.2	21.5	20.8	20.1	19.4	18.7	18.0	17.4	16.7	16.1
8	13	25.1	24.4	23.6	22.9	22.2	21.4	20.7	20.0	19.4	18.7	18.0	17.4	16.7	16.1
9	14	25.1	24.3	23.6	22.9	22.1	21.4	20.7	20.0	19.3	18.7	18.0	17.3	16.7	16.1
10	15	25.0	24.3	23.6	22.8	22.1	21.4	20.7	20.0	19.3	18.6	18.0	17.3	16.7	16.1
11	16	25.0	24.3	23.5	22.8	22.1	21.4	20.7	20.0	19.3	18.6	18.0	17.3	16.7	16.1
12	17	25.0	24.2	23.5	22.8	22.1	21.4	20.7	20.0	19.3	18.6	18.0	17.3	16.7	16.0
13	18	24.9	24.2	23.5	22.7	22.0	21.3	20.6	19.9	19.3	18.6	17.9	17.3	16.7	16.0
14	19	24.9	24.1	23.4	22.7	22.0	21.3	20.6	19.9	19.2	18.6	17.9	17.3	16.6	16.0
15	20	24.8	24.1	23.4	22.7	22.0	21.3	20.6	19.9	19.2	18.5	17.9	17.3	16.6	16.0
16	21	24.8	24.0	23.3	22.6	21.9	21.2	20.5	19.9	19.2	18.5	17.9	17.2	16.6	16.0
17	22	24.7	24.0	23.3	22.6	21.9	21.2	20.5	19.8	19.2	18.5	17.8	17.2	16.6	16.0
18	23	24.7	23.9	23.2	22.5	21.8	21.1	20.5	19.8	19.1	18.5	17.8	17.2	16.6	15.9
19	24	24.6	23.9	23.2	22.5	21.8	21.1	20.4	19.8	19.1	18.4	17.8	17.2	16.5	15.9
20	25	24.5	23.8	23.1	22.4	21.7	21.1	20.4	19.7	19.1	18.4	17.8	17.1	16.5	15.9
21	26	24.4	23.7	23.1	22.4	21.7	21.0	20.3	19.7	19.0	18.4	17.7	17.1	16.5	15.9
22	27	24.4	23.7	23.0	22.3	21.6	21.0	20.3	19.6	19.0	18.3	17.7	17.1	16.5	15.9
23	28	24.3	23.6	22.9	22.2	21.6	20.9	20.2	19.6	18.9	18.3	17.7	17.0	16.4	15.8
24	29	24.2	23.5	22.8	22.2	21.5	20.8	20.2	19.5	18.9	18.3	17.6	17.0	16.4	15.8
25	30	24.1	23.4	22.8	22.1	21.4	20.8	20.1	19.5	18.8	18.2	17.6	17.0	16.4	15.8
26	31	24.0	23.3	22.7	22.0	21.4	20.7	20.1	19.4	18.8	18.2	17.5	16.9	16.3	15.7
27	32	23.9	23.2	22.6	21.9	21.3	20.6	20.0	19.4	18.7	18.1	17.5	16.9	16.3	15.7
28	33	23.8	23.1	22.5	21.8	21.2	20.6	19.9	19.3	18.7	18.1	17.4	16.8	16.2	15.6
29	34	23.6	23.0	22.4	21.7	21.1	20.5	19.8	19.2	18.6	18.0	17.4	16.8	16.2	15.6
30	35	23.5	22.9	22.3	21.6	21.0	20.4	19.8	19.1	18.5	17.9	17.3	16.7	16.1	15.6
31	36	23.4	22.7	22.1	21.5	20.9	20.3	19.7	19.1	18.5	17.9	17.3	16.7	16.1	15.5
32	37	23.2	22.6	22.0	21.4	20.8	20.2	19.6	19.0	18.4	17.8	17.2	16.6	16.0	15.5
33	38	23.1	22.5	21.9	21.3	20.7	20.1	19.5	18.9	18.3	17.7	17.1	16.5	16.0	15.4
34	39	22.9	22.3	21.7	21.1	20.5	20.0	19.4	18.8	18.2	17.6	17.0	16.5	15.9	15.3

Male	Female	Ages														
		Male 64	65	66	67	68	69	70	71	72	73	74	75	76	77	78
		Female 69	70	71	72	73	74	75	76	77	78	79	80	81	82	83
6	11	15.5	14.9	14.3	13.7	13.1	12.6	12.0	11.5	11.0	10.5	10.0	9.6	9.1	8.7	8.2
7	12	15.5	14.9	14.3	13.7	13.1	12.6	12.0	11.5	11.0	10.5	10.0	9.6	9.1	8.7	8.2
8	13	15.5	14.9	14.3	13.7	13.1	12.6	12.0	11.5	11.0	10.5	10.0	9.6	9.1	8.7	8.2
9	14	15.5	14.9	14.3	13.7	13.1	12.6	12.0	11.5	11.0	10.5	10.0	9.5	9.1	8.7	8.2
10	15	15.4	14.8	14.3	13.7	13.1	12.6	12.0	11.5	11.0	10.5	10.0	9.5	9.1	8.7	8.2
11	16	15.4	14.8	14.2	13.7	13.1	12.6	12.0	11.5	11.0	10.5	10.0	9.5	9.1	8.7	8.2
12	17	15.4	14.8	14.2	13.7	13.1	12.5	12.0	11.5	11.0	10.5	10.0	9.5	9.1	8.6	8.2
13	18	15.4	14.8	14.2	13.6	13.1	12.5	12.0	11.5	11.0	10.5	10.0	9.5	9.1	8.6	8.2
14	19	15.4	14.8	14.2	13.6	13.1	12.5	12.0	11.5	11.0	10.5	10.0	9.5	9.1	8.6	8.2
15	20	15.4	14.8	14.2	13.6	13.1	12.5	12.0	11.5	11.0	10.5	10.0	9.5	9.1	8.6	8.2
16	21	15.4	14.8	14.2	13.6	13.1	12.5	12.0	11.5	11.0	10.5	10.0	9.5	9.1	8.6	8.2
17	22	15.4	14.8	14.2	13.6	13.0	12.5	12.0	11.5	10.9	10.5	10.0	9.5	9.1	8.6	8.2
18	23	15.3	14.7	14.2	13.6	13.0	12.5	12.0	11.4	10.9	10.4	10.0	9.5	9.1	8.6	8.2
19	24	15.3	14.7	14.1	13.6	13.0	12.5	12.0	11.4	10.9	10.4	10.0	9.5	9.1	8.6	8.2
20	25	15.3	14.7	14.1	13.6	13.0	12.5	11.9	11.4	10.9	10.4	10.0	9.5	9.0	8.6	8.2
21	26	15.3	14.7	14.1	13.5	13.0	12.5	11.9	11.4	10.9	10.4	9.9	9.5	9.0	8.6	8.2
22	27	15.3	14.7	14.1	13.5	13.0	12.4	11.9	11.4	10.9	10.4	9.9	9.5	9.0	8.6	8.2
23	28	15.2	14.6	14.1	13.5	13.0	12.4	11.9	11.4	10.9	10.4	9.9	9.5	9.0	8.6	8.2
24	29	15.2	14.6	14.0	13.5	12.9	12.4	11.9	11.4	10.9	10.4	9.9	9.5	9.0	8.6	8.2
25	30	15.2	14.6	14.0	13.5	12.9	12.4	11.9	11.4	10.9	10.4	9.9	9.5	9.0	8.6	8.2
26	31	15.1	14.6	14.0	13.4	12.9	12.4	11.9	11.3	10.8	10.4	9.9	9.4	9.0	8.6	8.2
27	32	15.1	14.5	14.0	13.4	12.9	12.4	11.8	11.3	10.8	10.4	9.9	9.4	9.0	8.6	8.2
28	33	15.1	14.5	13.9	13.4	12.9	12.3	11.8	11.3	10.8	10.3	9.9	9.4	9.0	8.6	8.1
29	34	15.0	14.5	13.9	13.4	12.8	12.3	11.8	11.3	10.8	10.3	9.9	9.4	9.0	8.5	8.1
30	35	15.0	14.4	13.9	13.3	12.8	12.3	11.8	11.3	10.8	10.3	9.8	9.4	9.0	8.5	8.1
31	36	14.9	14.4	13.8	13.3	12.8	12.2	11.7	11.2	10.8	10.3	9.8	9.4	8.9	8.5	8.1
32	37	14.9	14.3	13.8	13.3	12.7	12.2	11.7	11.2	10.7	10.3	9.8	9.4	8.9	8.5	8.1
33	38	14.8	14.3	13.8	13.2	12.7	12.2	11.7	11.2	10.7	10.2	9.8	9.3	8.9	8.5	8.1
34	39	14.8	14.2	13.7	13.2	12.7	12.2	11.7	11.2	10.7	10.2	9.8	9.3	8.9	8.5	8.1

Male	Female	Ages														
		Male 79	80	81	82	83	84	85	86	87	88	89	90	91	92	93
		Female 84	85	86	87	88	89	90	91	92	93	94	95	96	97	98
6	11	7.8	7.4	7.1	6.7	6.3	6.0	5.7	5.4	5.1	4.8	4.5	4.2	4.0	3.7	3.5
7	12	7.8	7.4	7.1	6.7	6.3	6.0	5.7	5.4	5.1	4.8	4.5	4.2	4.0	3.7	3.5
8	13	7.8	7.4	7.0	6.7	6.3	6.0	5.7	5.4	5.1	4.8	4.5	4.2	4.0	3.7	3.5
9	14	7.8	7.4	7.0	6.7	6.3	6.0	5.7	5.4	5.1	4.8	4.5	4.2	4.0	3.7	3.5
10	15	7.8	7.4	7.0	6.7	6.3	6.0	5.7	5.4	5.1	4.8	4.5	4.2	4.0	3.7	3.5
11	16	7.8	7.4	7.0	6.7	6.3	6.0	5.7	5.4	5.1	4.8	4.5	4.2	4.0	3.7	3.5
12	17	7.8	7.4	7.0	6.7	6.3	6.0	5.7	5.4	5.1	4.8	4.5	4.2	4.0	3.7	3.5
13	18	7.8	7.4	7.0	6.7	6.3	6.0	5.7	5.3	5.1	4.8	4.5	4.2	4.0	3.7	3.5
14	19	7.8	7.4	7.0	6.7	6.3	6.0	5.7	5.3	5.0	4.8	4.5	4.2	4.0	3.7	3.5
15	20	7.8	7.4	7.0	6.7	6.3	6.0	5.7	5.3	5.0	4.8	4.5	4.2	4.0	3.7	3.5
16	21	7.8	7.4	7.0	6.7	6.3	6.0	5.7	5.3	5.0	4.8	4.5	4.2	4.0	3.7	3.5
17	22	7.8	7.4	7.0	6.7	6.3	6.0	5.7	5.3	5.0	4.8	4.5	4.2	4.0	3.7	3.5
18	23	7.8	7.4	7.0	6.7	6.3	6.0	5.7	5.3	5.0	4.8	4.5	4.2	4.0	3.7	3.5
19	24	7.8	7.4	7.0	6.7	6.3	6.0	5.7	5.3	5.0	4.8	4.5	4.2	4.0	3.7	3.5
20	25	7.8	7.4	7.0	6.7	6.3	6.0	5.6	5.3	5.0	4.8	4.5	4.2	4.0	3.7	3.5
21	26	7.8	7.4	7.0	6.7	6.3	6.0	5.6	5.3	5.0	4.8	4.5	4.2	4.0	3.7	3.5
22	27	7.8	7.4	7.0	6.7	6.3	6.0	5.6	5.3	5.0	4.8	4.5	4.2	4.0	3.7	3.5
23	28	7.8	7.4	7.0	6.6	6.3	6.0	5.6	5.3	5.0	4.8	4.5	4.2	4.0	3.7	3.5
24	29	7.8	7.4	7.0	6.6	6.3	6.0	5.6	5.3	5.0	4.7	4.5	4.2	4.0	3.7	3.5
25	30	7.8	7.4	7.0	6.6	6.3	6.0	5.6	5.3	5.0	4.7	4.5	4.2	4.0	3.7	3.5
26	31	7.8	7.4	7.0	6.6	6.3	6.0	5.6	5.3	5.0	4.7	4.5	4.2	4.0	3.7	3.5
27	32	7.7	7.4	7.0	6.6	6.3	5.9	5.6	5.3	5.0	4.7	4.5	4.2	4.0	3.7	3.5
28	33	7.7	7.4	7.0	6.6	6.3	5.9	5.6	5.3	5.0	4.7	4.5	4.2	4.0	3.7	3.5
29	34	7.7	7.3	7.0	6.6	6.3	5.9	5.6	5.3	5.0	4.7	4.5	4.2	4.0	3.7	3.5
30	35	7.7	7.3	7.0	6.6	6.3	5.9	5.6	5.3	5.0	4.7	4.5	4.2	4.0	3.7	3.5
31	36	7.7	7.3	7.0	6.6	6.3	5.9	5.6	5.3	5.0	4.7	4.5	4.2	4.0	3.7	3.5
32	37	7.7	7.3	7.0	6.6	6.3	5.9	5.6	5.3	5.0	4.7	4.5	4.2	4.0	3.7	3.5
33	38	7.7	7.3	6.9	6.6	6.2	5.9	5.6	5.3	5.0	4.7	4.5	4.2	3.9	3.7	3.5
34	39	7.7	7.3	6.9	6.6	6.2	5.9	5.6	5.3	5.0	4.7	4.4	4.2	3.9	3.7	3.5

Male	Female	Ages														
		Male 94	95	96	97	98	99	100	101	102	103	104	105	106	107	108
		Female 99	100	101	102	103	104	105	106	107	108	109	110	111	112	113
6	11	3.3	3.1	2.9	2.7	2.5	2.3	2.1	1.9	1.7	1.5	1.3	1.2	1.0	0.8	0.7
7	12	3.3	3.1	2.9	2.7	2.5	2.3	2.1	1.9	1.7	1.5	1.3	1.2	1.0	0.8	0.7
8	13	3.3	3.1	2.9	2.7	2.5	2.3	2.1	1.9	1.7	1.5	1.3	1.2	1.0	0.8	0.7
9	14	3.3	3.1	2.9	2.7	2.5	2.3	2.1	1.9	1.7	1.5	1.3	1.2	1.0	0.8	0.7
10	15	3.3	3.1	2.9	2.7	2.5	2.3	2.1	1.9	1.7	1.5	1.3	1.2	1.0	0.8	0.7
11	16	3.3	3.1	2.9	2.7	2.5	2.3	2.1	1.9	1.7	1.5	1.3	1.2	1.0	0.8	0.7
12	17	3.3	3.1	2.9	2.7	2.5	2.3	2.1	1.9	1.7	1.5	1.3	1.2	1.0	0.8	0.7
13	18	3.3	3.1	2.9	2.7	2.5	2.3	2.1	1.9	1.7	1.5	1.3	1.2	1.0	0.8	0.7
14	19	3.3	3.1	2.9	2.7	2.5	2.3	2.1	1.9	1.7	1.5	1.3	1.2	1.0	0.8	0.7
15	20	3.3	3.1	2.9	2.7	2.5	2.3	2.1	1.9	1.7	1.5	1.3	1.2	1.0	0.8	0.7
16	21	3.3	3.1	2.9	2.7	2.5	2.3	2.1	1.9	1.7	1.5	1.3	1.2	1.0	0.8	0.7
17	22	3.3	3.1	2.9	2.7	2.5	2.3	2.1	1.9	1.7	1.5	1.3	1.2	1.0	0.8	0.7
18	23	3.3	3.1	2.9	2.7	2.5	2.3	2.1	1.9	1.7	1.5	1.3	1.2	1.0	0.8	0.7
19	24	3.3	3.1	2.9	2.7	2.5	2.3	2.1	1.9	1.7	1.5	1.3	1.2	1.0	0.8	0.7
20	25	3.3	3.1	2.9	2.7	2.5	2.3	2.1	1.9	1.7	1.5	1.3	1.2	1.0	0.8	0.7
21	26	3.3	3.1	2.9	2.7	2.5	2.3	2.1	1.9	1.7	1.5	1.3	1.2	1.0	0.8	0.7
22	27	3.3	3.1	2.9	2.7	2.5	2.3	2.1	1.9	1.7	1.5	1.3	1.2	1.0	0.8	0.7
23	28	3.3	3.1	2.9	2.7	2.5	2.3	2.1	1.9	1.7	1.5	1.3	1.2	1.0	0.8	0.7
24	29	3.3	3.1	2.9	2.7	2.5	2.3	2.1	1.9	1.7	1.5	1.3	1.2	1.0	0.8	0.7
25	30	3.3	3.1	2.9	2.7	2.5	2.3	2.1	1.9	1.7	1.5	1.3	1.2	1.0	0.8	0.7
26	31	3.3	3.1	2.9	2.7	2.5	2.3	2.1	1.9	1.7	1.5	1.3	1.2	1.0	0.8	0.7
27	32	3.3	3.1	2.9	2.7	2.5	2.3	2.1	1.9	1.7	1.5	1.3	1.2	1.0	0.8	0.7
28	33	3.3	3.1	2.9	2.7	2.5	2.3	2.1	1.9	1.7	1.5	1.3	1.2	1.0	0.8	0.7
29	34	3.3	3.1	2.9	2.7	2.5	2.3	2.1	1.9	1.7	1.5	1.3	1.2	1.0	0.8	0.7
30	35	3.3	3.1	2.9	2.7	2.5	2.3	2.1	1.9	1.7	1.5	1.3	1.2	1.0	0.8	0.7
31	36	3.3	3.1	2.9	2.7	2.5	2.3	2.1	1.9	1.7	1.5	1.3	1.2	1.0	0.8	0.7
32	37	3.3	3.1	2.9	2.7	2.5	2.3	2.1	1.9	1.7	1.5	1.3	1.2	1.0	0.8	0.7
33	38	3.3	3.1	2.9	2.7	2.5	2.3	2.1	1.9	1.7	1.5	1.3	1.2	1.0	0.8	0.7
34	39	3.3	3.1	2.9	2.7	2.5	2.3	2.1	1.9	1.7	1.5	1.3	1.2	1.0	0.8	0.7

Male	Female	Ages												
		Male 35	36	37	38	39	40	41	42	43	44	45	46	47
		Female 40	41	42	43	44	45	46	47	48	49	50	51	52
35	40	30.3	29.9	29.4	29.0	28.5	28.0	27.5	27.0	26.5	26.0	25.5	24.9	24.4
36	41	29.9	29.5	29.0	28.6	28.2	27.7	27.2	26.7	26.2	25.7	25.2	24.7	24.2
37	42	29.4	29.0	28.6	28.2	27.8	27.3	26.9	26.4	25.9	25.5	25.0	24.4	23.9
38	43	29.0	28.6	28.2	27.8	27.4	27.0	26.5	26.1	25.6	25.2	24.7	24.2	23.7
39	44	28.5	28.2	27.8	27.4	27.0	26.6	26.2	25.8	25.3	24.8	24.4	23.9	23.4
40	45	28.0	27.7	27.3	27.0	26.6	26.2	25.8	25.4	25.0	24.5	24.1	23.6	23.1
41	46	27.5	27.2	26.9	26.5	26.2	25.8	25.4	25.0	24.6	24.2	23.8	23.3	22.9
42	47	27.0	26.7	26.4	26.1	25.8	25.4	25.0	24.6	24.2	23.8	23.4	23.0	22.6
43	48	26.5	26.2	25.9	25.6	25.3	25.0	24.6	24.2	23.9	23.5	23.1	22.7	22.2
44	49	26.0	25.7	25.5	25.2	24.8	24.5	24.2	23.8	23.5	23.1	22.7	22.3	21.9
45	50	25.5	25.2	25.0	24.7	24.4	24.1	23.8	23.4	23.1	22.7	22.4	22.0	21.6
46	51	24.9	24.7	24.4	24.2	23.9	23.6	23.3	23.0	22.7	22.3	22.0	21.6	21.2
47	52	24.4	24.2	23.9	23.7	23.4	23.1	22.9	22.6	22.2	21.9	21.6	21.2	20.9

Male	Female	Ages												
		Male 48	49	50	51	52	53	54	55	56	57	58	59	60
		Female 53	54	55	56	57	58	59	60	61	62	63	64	65
35	40	23.8	23.3	22.7	22.1	21.6	21.0	20.4	19.8	19.3	18.7	18.1	17.5	17.0
36	41	23.6	23.1	22.5	22.0	21.4	20.8	20.3	19.7	19.1	18.6	18.0	17.4	16.9
37	42	23.4	22.9	22.3	21.8	21.2	20.7	20.1	19.6	19.0	18.4	17.9	17.3	16.8
38	43	23.2	22.6	22.1	21.6	21.1	20.5	20.0	19.4	18.9	18.3	17.8	17.2	16.7
39	44	22.9	22.4	21.9	21.4	20.9	20.3	19.8	19.3	18.7	18.2	17.7	17.1	16.6
40	45	22.7	22.2	21.7	21.2	20.7	20.1	19.6	19.1	18.6	18.0	17.5	17.0	16.5
41	46	22.4	21.9	21.4	20.9	20.4	19.9	19.4	18.9	18.4	17.9	17.4	16.9	16.3
42	47	22.1	21.6	21.2	20.7	20.2	19.7	19.2	18.7	18.2	17.7	17.2	16.7	16.2
43	48	21.8	21.4	20.9	20.5	20.0	19.5	19.0	18.6	18.1	17.6	17.1	16.6	16.1
44	49	21.5	21.1	20.6	20.2	19.8	19.3	18.8	18.4	17.9	17.4	16.9	16.4	15.9
45	50	21.2	20.8	20.4	19.9	19.5	19.1	18.6	18.1	17.7	17.2	16.7	16.3	15.8
46	51	20.9	20.5	20.1	19.7	19.2	18.8	18.4	17.9	17.5	17.0	16.6	16.1	15.6
47	52	20.5	20.1	19.8	19.4	19.0	18.5	18.1	17.7	17.3	16.8	16.4	15.9	15.5
48	53	20.2	19.8	19.4	19.1	18.7	18.3	17.9	17.5	17.0	16.6	16.2	15.7	15.3
49	54	19.8	19.5	19.1	18.8	18.4	18.0	17.6	17.2	16.8	16.4	16.0	15.5	15.1
50	55	19.4	19.1	18.8	18.4	18.1	17.7	17.3	16.9	16.6	16.2	15.8	15.3	14.9
51	56	19.1	18.8	18.4	18.1	17.8	17.4	17.0	16.7	16.3	15.9	15.5	15.1	14.7
52	57	18.7	18.4	18.1	17.8	17.4	17.1	16.8	16.4	16.0	15.7	15.3	14.9	14.5
53	58	18.3	18.0	17.7	17.4	17.1	16.8	16.4	16.1	15.8	15.4	15.1	14.7	14.3
54	59	17.9	17.6	17.3	17.0	16.8	16.4	16.1	15.8	15.5	15.1	14.8	14.4	14.1
55	60	17.5	17.2	16.9	16.7	16.4	16.1	15.8	15.5	15.2	14.9	14.5	14.2	13.9
56	61	17.0	16.8	16.6	16.3	16.0	15.8	15.5	15.2	14.9	14.6	14.3	13.9	13.6
57	62	16.6	16.4	16.2	15.9	15.7	15.4	15.1	14.9	14.6	14.3	14.0	13.7	13.4
58	63	16.2	16.0	15.8	15.5	15.3	15.1	14.8	14.5	14.3	14.0	13.7	13.4	13.1
59	64	15.7	15.5	15.3	15.1	14.9	14.7	14.4	14.2	13.9	13.7	13.4	13.1	12.8
60	65	15.3	15.1	14.9	14.7	14.5	14.3	14.1	13.9	13.6	13.4	13.1	12.8	12.6

Male	Female	Ages												
		Male 61	62	63	64	65	66	67	68	69	70	71	72	73
		Female 66	67	68	69	70	71	72	73	74	74	76	77	78
35	40	16.4	15.8	15.3	14.7	14.2	13.7	13.1	12.6	12.1	11.6	11.1	10.7	10.2
36	41	16.3	15.8	15.2	14.7	14.1	13.6	13.1	12.6	12.1	11.6	11.1	10.6	10.2
37	42	16.2	15.7	15.1	14.6	14.1	13.6	13.0	12.5	12.0	11.5	11.1	10.6	10.1
38	43	16.1	15.6	15.1	14.5	14.0	13.5	13.0	12.5	12.0	11.5	11.0	10.6	10.1
39	44	16.0	15.5	15.0	14.5	13.9	13.4	12.9	12.4	11.9	11.5	11.0	10.5	10.1
40	45	15.9	15.4	14.9	14.4	13.9	13.4	12.9	12.4	11.9	11.4	11.0	10.5	10.0
41	46	15.8	15.3	14.8	14.3	13.8	13.3	12.8	12.3	11.8	11.4	10.9	10.5	10.0
42	47	15.7	15.2	14.7	14.2	13.7	13.2	12.7	12.3	11.8	11.3	10.9	10.4	10.0
43	48	15.6	15.1	14.6	14.1	13.6	13.1	12.7	12.2	11.7	11.3	10.8	10.4	9.9
44	49	15.5	15.0	14.5	14.0	13.5	13.1	12.6	12.1	11.7	11.2	10.8	10.3	9.9
45	50	15.3	14.8	14.4	13.9	13.4	13.0	12.5	12.0	11.6	11.1	10.7	10.3	9.8
46	51	15.2	14.7	14.2	13.8	13.3	12.9	12.4	12.0	11.5	11.1	10.6	10.2	9.8
47	52	15.0	14.6	14.1	13.7	13.2	12.8	12.3	11.9	11.4	11.0	10.6	10.1	9.7
48	53	14.9	14.4	14.0	13.5	13.1	12.6	12.2	11.8	11.3	10.9	10.5	10.1	9.7
49	54	14.7	14.3	13.8	13.4	13.0	12.5	12.1	11.7	11.3	10.8	10.4	10.0	9.6
50	55	14.5	14.1	13.7	13.3	12.8	12.4	12.0	11.6	11.2	10.7	10.3	9.9	9.5
51	56	14.3	13.9	13.5	13.1	12.7	12.3	11.9	11.5	11.1	10.7	10.3	9.9	9.5
52	57	14.1	13.7	13.3	12.9	12.5	12.1	11.7	11.3	10.9	10.6	10.2	9.8	9.4
53	58	13.9	13.6	13.2	12.8	12.4	12.0	11.6	11.2	10.8	10.5	10.1	9.7	9.3
54	59	13.7	13.4	13.0	12.6	12.2	11.9	11.5	11.1	10.7	10.3	10.0	9.6	9.2
55	60	13.5	13.2	12.8	12.4	12.1	11.7	11.3	11.0	10.6	10.2	9.9	9.5	9.1
56	61	13.3	12.9	12.6	12.2	11.9	11.5	11.2	10.8	10.5	10.1	9.8	9.4	9.0
57	62	13.0	12.7	12.4	12.1	11.7	11.4	11.0	10.7	10.3	10.0	9.6	9.3	8.9
58	63	12.8	12.5	12.2	11.8	11.5	11.2	10.9	10.5	10.2	9.8	9.5	9.2	8.8
59	64	12.6	12.3	11.9	11.6	11.3	11.0	10.7	10.4	10.0	9.7	9.4	9.1	8.7
60	65	12.3	12.0	11.7	11.4	11.1	10.8	10.5	10.2	9.9	9.6	9.3	8.9	8.6
61	66	12.0	11.8	11.5	11.2	10.9	10.6	10.3	10.0	9.7	9.4	9.1	8.8	8.5
62	67	11.8	11.5	11.2	11.0	10.7	10.4	10.1	9.8	9.6	9.3	9.0	8.7	8.4
63	68	11.5	11.2	11.0	10.7	10.5	10.2	9.9	9.7	9.4	9.1	8.8	8.5	8.2
64	69	11.2	11.0	10.7	10.5	10.2	10.0	9.7	9.5	9.2	8.9	8.7	8.4	8.1
65	70	10.9	10.7	10.5	10.2	10.0	9.8	9.5	9.3	9.0	8.8	8.5	8.2	8.0
66	71	10.6	10.4	10.2	10.0	9.8	9.5	9.3	9.1	8.8	8.6	8.3	8.1	7.8
67	72	10.3	10.1	9.9	9.7	9.5	9.3	9.1	8.9	8.6	8.4	8.1	7.9	7.7

Male	Female	Ages												
		Male 61	62	63	64	65	66	67	68	69	70	71	72	73
		Female 66	67	68	69	70	71	72	73	74	74	76	77	78
68	73	10.0	9.8	9.7	9.5	9.3	9.1	8.9	8.6	8.4	8.2	8.0	7.7	7.5
69	74	9.7	9.6	9.4	9.2	9.0	8.8	8.6	8.4	8.2	8.0	7.8	7.6	7.3
70	75	9.4	9.3	9.1	8.9	8.8	8.6	8.4	8.2	8.0	7.8	7.6	7.4	7.2
71	76	9.1	9.0	8.8	8.7	8.5	8.3	8.1	8.0	7.8	7.6	7.4	7.2	7.0
72	77	8.8	8.7	8.5	8.4	8.2	8.1	7.9	7.7	7.6	7.4	7.2	7.0	6.8
73	78	8.5	8.4	8.2	8.1	8.0	7.8	7.7	7.5	7.3	7.2	7.0	6.8	6.7

Male	Female	Ages												
		Male 74	75	76	77	78	79	80	81	82	83	84	85	86
		Female 79	80	81	82	83	84	85	86	87	88	89	90	91
35	40	9.7	9.3	8.9	8.5	8.1	7.7	7.3	6.9	6.6	6.2	5.9	5.6	5.3
36	41	9.7	9.3	8.9	8.4	8.0	7.7	7.3	6.9	6.6	6.2	5.9	5.6	5.3
37	42	9.7	9.3	8.8	8.4	8.0	7.6	7.3	6.9	6.5	6.2	5.9	5.6	5.3
38	43	9.7	9.2	8.8	8.4	8.0	7.6	7.2	6.9	6.5	6.2	5.9	5.6	5.3
39	44	9.6	9.2	8.8	8.4	8.0	7.6	7.2	6.9	6.5	6.2	5.9	5.6	5.3
40	45	9.6	9.2	8.8	8.4	8.0	7.6	7.2	6.9	6.5	6.2	5.9	5.5	5.2
41	46	9.6	9.2	8.7	8.3	7.9	7.6	7.2	6.8	6.5	6.2	5.8	5.5	5.2
42	47	9.5	9.1	8.7	8.3	7.9	7.5	7.2	6.8	6.5	6.2	5.8	5.5	5.2
43	48	9.5	9.1	8.7	8.3	7.9	7.5	7.2	6.8	6.5	6.1	5.8	5.5	5.2
44	49	9.5	9.0	8.6	8.2	7.9	7.5	7.1	6.8	6.4	6.1	5.8	5.5	5.2
45	50	9.4	9.0	8.6	8.2	7.8	7.5	7.1	6.8	6.4	6.1	5.8	5.5	5.2
46	51	9.4	9.0	8.6	8.2	7.8	7.4	7.1	6.7	6.4	6.1	5.8	5.5	5.2
47	52	9.3	8.9	8.5	8.1	7.8	7.4	7.1	6.7	6.4	6.1	5.8	5.5	5.2
48	53	9.3	8.9	8.5	8.1	7.7	7.4	7.0	6.7	6.4	6.0	5.7	5.4	5.1
49	54	9.2	8.8	8.4	8.1	7.7	7.3	7.0	6.7	6.3	6.0	5.7	5.4	5.1
50	55	9.1	8.8	8.4	8.0	7.7	7.3	7.0	6.6	6.3	6.0	5.7	5.4	5.1
51	56	9.1	8.7	8.3	8.0	7.6	7.3	6.9	6.6	6.3	6.0	5.7	5.4	5.1
52	57	9.0	8.6	8.3	7.9	7.6	7.2	6.9	6.6	6.2	5.9	5.6	5.4	5.1
53	58	8.9	8.6	8.2	7.9	7.5	7.2	6.9	6.5	6.2	5.9	5.6	5.3	5.1
54	59	8.9	8.5	8.2	7.8	7.5	7.1	6.8	6.5	6.2	5.9	5.6	5.3	5.0
55	60	8.8	8.4	8.1	7.7	7.4	7.1	6.8	6.4	6.1	5.8	5.6	5.3	5.0
56	61	8.7	8.4	8.0	7.7	7.3	7.0	6.7	6.4	6.1	5.8	5.5	5.3	5.0
57	62	8.6	8.3	7.9	7.6	7.3	7.0	6.7	6.4	6.1	5.8	5.5	5.2	5.0
58	63	8.5	8.2	7.9	7.5	7.2	6.9	6.6	6.3	6.0	5.7	5.5	5.2	4.9
59	64	8.4	8.1	7.8	7.5	7.1	6.8	6.5	6.3	6.0	5.7	5.4	5.2	4.9
60	65	8.3	8.0	7.7	7.4	7.1	6.8	6.5	6.2	5.9	5.6	5.4	5.1	4.9
61	66	8.2	7.9	7.6	7.3	7.0	6.7	6.4	6.1	5.9	5.6	5.3	5.1	4.8
62	67	8.1	7.8	7.5	7.2	6.9	6.6	6.4	6.1	5.8	5.5	5.3	5.0	4.8
63	68	8.0	7.7	7.4	7.1	6.8	6.6	6.3	6.0	5.7	5.5	5.2	5.0	4.7
64	69	7.8	7.6	7.3	7.0	6.7	6.5	6.2	5.9	5.7	5.4	5.2	4.9	4.7
65	70	7.7	7.4	7.2	6.9	6.6	6.4	6.1	5.9	5.6	5.4	5.1	4.9	4.7
66	71	7.6	7.3	7.1	6.8	6.5	6.3	6.0	5.8	5.5	5.3	5.1	4.8	4.6
67	72	7.4	7.2	6.9	6.7	6.4	6.2	6.0	5.7	5.5	5.2	5.0	4.8	4.6

Male	Female	Ages												
		Male 74	75	76	77	78	79	80	81	82	83	84	85	86
		Female 79	80	81	82	83	84	85	86	87	88	89	90	91
68	73	7.3	7.0	6.8	6.6	6.3	6.1	5.9	5.6	5.4	5.2	4.9	4.7	4.5
69	74	7.1	6.9	6.7	6.4	6.2	6.0	5.8	5.5	5.3	5.1	4.9	4.7	4.5
70	75	7.0	6.8	6.5	6.3	6.1	5.9	5.7	5.4	5.2	5.0	4.8	4.6	4.4
71	76	6.8	6.6	6.4	6.2	6.0	5.8	5.6	5.3	5.1	4.9	4.7	4.5	4.3
72	77	6.6	6.4	6.3	6.1	5.9	5.7	5.5	5.3	5.0	4.9	4.7	4.5	4.3
73	78	6.5	6.3	6.1	5.9	5.7	5.5	5.3	5.1	5.0	4.8	4.6	4.4	4.2
74	79	6.3	6.1	6.0	5.8	5.6	5.4	5.2	5.0	4.9	4.7	4.5	4.3	4.1
75	80	6.1	6.0	5.8	5.6	5.5	5.3	5.1	4.9	4.8	4.6	4.4	4.2	4.1
76	81	6.0	5.8	5.6	5.5	5.3	5.2	5.0	4.8	4.7	4.5	4.3	4.1	4.0
77	82	5.8	5.6	5.5	5.3	5.2	5.0	4.9	4.7	4.5	4.4	4.2	4.1	3.9
78	83	5.6	5.5	5.3	5.2	5.0	4.9	4.7	4.6	4.4	4.3	4.1	4.0	3.8
79	84	5.4	5.3	5.2	5.0	4.9	4.7	4.6	4.5	4.3	4.2	4.0	3.9	3.7
80	85	5.2	5.1	5.0	4.9	4.7	4.6	4.5	4.3	4.2	4.1	3.9	3.8	3.6
81	86	5.0	4.9	4.8	4.7	4.6	4.5	4.3	4.2	4.1	3.9	3.8	3.7	3.6
82	87	4.9	4.8	4.7	4.5	4.4	4.3	4.2	4.1	4.0	3.8	3.7	3.6	3.5
83	88	4.7	4.6	4.5	4.4	4.3	4.2	4.1	3.9	3.8	3.7	3.6	3.5	3.4
84	89	4.5	4.4	4.3	4.2	4.1	4.0	3.9	3.8	3.7	3.6	3.5	3.4	3.3
85	90	4.3	4.2	4.1	4.1	4.0	3.9	3.8	3.7	3.6	3.5	3.4	3.3	3.2
86	91	4.1	4.1	4.0	3.9	3.8	3.7	3.6	3.6	3.5	3.4	3.3	3.2	3.1

Male	Female	Ages										
		Male 87	88	89	90	91	92	93	94	95	96	97
		Female 92	93	94	95	96	97	98	99	100	101	102
35	40	5.0	4.7	4.4	4.2	3.9	3.7	3.5	3.3	3.1	2.9	2.7
36	41	5.0	4.7	4.4	4.2	3.9	3.7	3.5	3.3	3.1	2.9	2.7
37	42	5.0	4.7	4.4	4.2	3.9	3.7	3.5	3.3	3.1	2.9	2.7
38	43	5.0	4.7	4.4	4.2	3.9	3.7	3.5	3.3	3.1	2.8	2.6
39	44	5.0	4.7	4.4	4.2	3.9	3.7	3.5	3.3	3.0	2.8	2.6
40	45	5.0	4.7	4.4	4.2	3.9	3.7	3.5	3.3	3.0	2.8	2.6
41	46	5.0	4.7	4.4	4.2	3.9	3.7	3.5	3.2	3.0	2.8	2.6
42	47	4.9	4.7	4.4	4.2	3.9	3.7	3.5	3.2	3.0	2.8	2.6
43	48	4.9	4.7	4.4	4.1	3.9	3.7	3.5	3.2	3.0	2.8	2.6
44	49	4.9	4.7	4.4	4.1	3.9	3.7	3.4	3.2	3.0	2.8	2.6
45	50	4.9	4.6	4.4	4.1	3.9	3.7	3.4	3.2	3.0	2.8	2.6
46	51	4.9	4.6	4.4	4.1	3.9	3.7	3.4	3.2	3.0	2.8	2.6
47	52	4.9	4.6	4.4	4.1	3.9	3.7	3.4	3.2	3.0	2.8	2.6
48	53	4.9	4.6	4.4	4.1	3.9	3.6	3.4	3.2	3.0	2.8	2.6
49	54	4.9	4.6	4.3	4.1	3.9	3.6	3.4	3.2	3.0	2.8	2.6
50	55	4.8	4.6	4.3	4.1	3.9	3.6	3.4	3.2	3.0	2.8	2.6
51	56	4.8	4.6	4.3	4.1	3.8	3.6	3.4	3.2	3.0	2.8	2.6
52	57	4.8	4.5	4.3	4.1	3.8	3.6	3.4	3.2	3.0	2.8	2.6
53	58	4.8	4.5	4.3	4.0	3.8	3.6	3.4	3.2	3.0	2.8	2.6
54	59	4.8	4.5	4.3	4.0	3.8	3.6	3.4	3.2	3.0	2.8	2.6
55	60	4.7	4.5	4.3	4.0	3.8	3.6	3.4	3.2	3.0	2.8	2.6
56	61	4.7	4.5	4.2	4.0	3.8	3.6	3.3	3.1	2.9	2.8	2.6
57	62	4.7	4.5	4.2	4.0	3.8	3.5	3.3	3.1	2.9	2.7	2.6
58	63	4.7	4.4	4.2	4.0	3.7	3.5	3.3	3.1	2.9	2.7	2.5
59	64	4.6	4.4	4.2	3.9	3.7	3.5	3.3	3.1	2.9	2.7	2.5

Male	Female	Ages										
		Male 98	99	100	101	102	103	104	105	106	107	108
		Female 103	104	105	106	107	108	109	110	111	112	113
35	40	2.5	2.3	2.1	1.9	1.7	1.5	1.3	1.2	1.0	0.8	0.7
36	41	2.5	2.3	2.1	1.9	1.7	1.5	1.3	1.2	1.0	0.8	0.7
37	42	2.5	2.3	2.1	1.9	1.7	1.5	1.3	1.1	1.0	0.8	0.7
38	43	2.5	2.3	2.1	1.9	1.7	1.5	1.3	1.1	1.0	0.8	0.7
39	44	2.4	2.3	2.1	1.9	1.7	1.5	1.3	1.1	1.0	0.8	0.7
40	45	2.4	2.2	2.1	1.9	1.7	1.5	1.3	1.1	1.0	0.8	0.7
41	46	2.4	2.2	2.1	1.9	1.7	1.5	1.3	1.1	1.0	0.8	0.7
42	47	2.4	2.2	2.0	1.9	1.7	1.5	1.3	1.1	1.0	0.8	0.7
43	48	2.4	2.2	2.0	1.9	1.7	1.5	1.3	1.1	1.0	0.8	0.7
44	49	2.4	2.2	2.0	1.9	1.7	1.5	1.3	1.1	1.0	0.8	0.7
45	50	2.4	2.2	2.0	1.8	1.7	1.5	1.3	1.1	1.0	0.8	0.7
46	51	2.4	2.2	2.0	1.8	1.7	1.5	1.3	1.1	1.0	0.8	0.7
47	52	2.4	2.2	2.0	1.8	1.7	1.5	1.3	1.1	1.0	0.8	0.7
48	53	2.4	2.2	2.0	1.8	1.7	1.5	1.3	1.1	1.0	0.8	0.7
49	54	2.4	2.2	2.0	1.8	1.7	1.5	1.3	1.1	1.0	0.8	0.7
50	55	2.4	2.2	2.0	1.8	1.6	1.5	1.3	1.1	1.0	0.8	0.7
51	56	2.4	2.2	2.0	1.8	1.6	1.5	1.3	1.1	1.0	0.8	0.7
52	57	2.4	2.2	2.0	1.8	1.6	1.5	1.3	1.1	1.0	0.8	0.7
53	58	2.4	2.2	2.0	1.8	1.6	1.5	1.3	1.1	1.0	0.8	0.7
54	59	2.4	2.2	2.0	1.8	1.6	1.5	1.3	1.1	1.0	0.8	0.7
55	60	2.4	2.2	2.0	1.8	1.6	1.4	1.3	1.1	1.0	0.8	0.7
56	61	2.4	2.2	2.0	1.8	1.6	1.4	1.3	1.1	1.0	0.8	0.7
57	62	2.4	2.2	2.0	1.8	1.6	1.4	1.3	1.1	0.9	0.8	0.7
58	63	2.4	2.2	2.0	1.8	1.6	1.4	1.3	1.1	0.9	0.8	0.7
59	64	2.3	2.2	2.0	1.8	1.6	1.4	1.3	1.1	0.9	0.8	0.7

Male	Female	Ages										
		Male 87	88	89	90	91	92	93	94	95	96	97
		Female 92	93	94	95	96	97	98	99	100	101	102
60	65	4.6	4.4	4.1	3.9	3.7	3.5	3.3	3.1	2.9	2.7	2.5
61	66	4.6	4.3	4.1	3.9	3.7	3.5	3.3	3.1	2.9	2.7	2.5
62	67	4.5	4.3	4.1	3.9	3.7	3.5	3.3	3.1	2.9	2.7	2.5
63	68	4.5	4.3	4.1	3.8	3.6	3.4	3.2	3.0	2.9	2.7	2.5
64	69	4.5	4.2	4.0	3.8	3.6	3.4	3.2	3.0	2.8	2.7	2.5
65	70	4.4	4.2	4.0	3.8	3.6	3.4	3.2	3.0	2.8	2.6	2.5
66	71	4.4	4.2	4.0	3.8	3.6	3.4	3.2	3.0	2.8	2.6	2.4
67	72	4.3	4.1	3.9	3.7	3.5	3.3	3.1	3.0	2.8	2.6	2.4
68	73	4.3	4.1	3.9	3.7	3.5	3.3	3.1	2.9	2.8	2.6	2.4
69	74	4.2	4.0	3.8	3.6	3.5	3.3	3.1	2.9	2.7	2.6	2.4
70	75	4.2	4.0	3.8	3.6	3.4	3.2	3.1	2.9	2.7	2.5	2.4
71	76	4.1	3.9	3.8	3.6	3.4	3.2	3.0	2.9	2.7	2.5	2.3
72	77	4.1	3.9	3.7	3.5	3.3	3.2	3.0	2.8	2.7	2.5	2.3
73	78	4.0	3.8	3.7	3.5	3.3	3.1	3.0	2.8	2.6	2.5	2.3
74	79	3.9	3.8	3.6	3.4	3.3	3.1	2.9	2.8	2.6	2.4	2.3
75	80	3.9	3.7	3.5	3.4	3.2	3.0	2.9	2.7	2.6	2.4	2.2
76	81	3.8	3.6	3.5	3.3	3.2	3.0	2.8	2.7	2.5	2.4	2.2
77	82	3.7	3.6	3.4	3.3	3.1	3.0	2.8	2.6	2.5	2.3	2.2
78	83	3.7	3.5	3.4	3.2	3.1	2.9	2.7	2.6	2.4	2.3	2.1
79	84	3.6	3.4	3.3	3.1	3.0	2.8	2.7	2.5	2.4	2.2	2.1
80	85	3.5	3.4	3.2	3.1	2.9	2.8	2.6	2.5	2.3	2.2	2.0
81	86	3.4	3.3	3.1	3.0	2.9	2.7	2.6	2.4	2.3	2.1	2.0
82	87	3.3	3.2	3.1	2.9	2.8	2.7	2.5	2.4	2.2	2.1	2.0
83	88	3.2	3.1	3.0	2.9	2.7	2.6	2.5	2.3	2.2	2.0	1.9
84	89	3.1	3.0	2.9	2.8	2.7	2.5	2.4	2.3	2.1	2.0	1.9

Male	Female	Ages										
		Male 98	99	100	101	102	103	104	105	106	107	108
		Female 103	104	105	106	107	108	109	110	111	112	113
60	65	2.3	2.1	2.0	1.8	1.6	1.4	1.3	1.1	0.9	0.8	0.7
61	66	2.3	2.1	2.0	1.8	1.6	1.4	1.2	1.1	0.9	0.8	0.7
62	67	2.3	2.1	1.9	1.8	1.6	1.4	1.2	1.1	0.9	0.8	0.7
63	68	2.3	2.1	1.9	1.7	1.6	1.4	1.2	1.1	0.9	0.8	0.7
64	69	2.3	2.1	1.9	1.7	1.6	1.4	1.2	1.1	0.9	0.8	0.7
65	70	2.3	2.1	1.9	1.7	1.6	1.4	1.2	1.1	0.9	0.8	0.7
66	71	2.3	2.1	1.9	1.7	1.5	1.4	1.2	1.1	0.9	0.8	0.7
67	72	2.2	2.1	1.9	1.7	1.5	1.4	1.2	1.0	0.9	0.7	0.7
68	73	2.2	2.0	1.9	1.7	1.5	1.4	1.2	1.0	0.9	0.7	0.7
69	74	2.2	2.0	1.8	1.7	1.5	1.3	1.2	1.0	0.9	0.7	0.6
70	75	2.2	2.0	1.8	1.7	1.5	1.3	1.2	1.0	0.9	0.7	0.6
71	76	2.2	2.0	1.8	1.6	1.5	1.3	1.2	1.0	0.9	0.7	0.6
72	77	2.1	2.0	1.8	1.6	1.5	1.3	1.1	1.0	0.8	0.7	0.6
73	78	2.1	1.9	1.8	1.6	1.4	1.3	1.1	1.0	0.8	0.7	0.6
74	79	2.1	1.9	1.7	1.6	1.4	1.3	1.1	1.0	0.8	0.7	0.6
75	80	2.1	1.9	1.7	1.6	1.4	1.3	1.1	1.0	0.8	0.7	
76	81	2.0	1.9	1.7	1.5	1.4	1.2	1.1	0.9	0.8	0.7	
77	82	2.0	1.8	1.7	1.5	1.4	1.2	1.1	0.9	0.8	0.7	
78	83	2.0	1.8	1.6	1.5	1.3	1.2	1.0	0.9	0.8	0.7	
79	84	1.9	1.8	1.6	1.5	1.3	1.2	1.0	0.9	0.8	0.7	
80	85	1.9	1.7	1.6	1.4	1.3	1.1	1.0	0.9	0.7	0.7	
81	86	1.8	1.7	1.5	1.4	1.3	1.1	1.0	0.8	0.7	0.6	
82	87	1.8	1.7	1.5	1.4	1.2	1.1	1.0	0.8	0.7	0.6	
83	88	1.8	1.6	1.5	1.3	1.2	1.1	0.9	0.8	0.7	0.6	
84	89	1.7	1.6	1.4	1.3	1.2	1.0	0.9	0.8	0.7		

Male	Female	Ages									
		Male 87	88	89	90	91	92	93	94	95	96
		Female 92	93	94	95	96	97	98	99	100	101
85	90	3.1	2.9	2.8	2.7	2.6	2.5	2.3	2.2	2.1	1.9
86	91	3.0	2.8	2.7	2.6	2.5	2.4	2.3	2.1	2.0	1.9
87	92	2.9	2.8	2.6	2.5	2.4	2.3	2.2	2.1	1.9	1.8
88	93	2.8	2.7	2.6	2.4	2.3	2.2	2.1	2.0	1.9	1.7
89	94	2.6	2.6	2.5	2.4	2.2	2.1	2.0	1.9	1.8	1.7
90	95	2.5	2.4	2.4	2.3	2.2	2.0	1.9	1.8	1.7	1.6
91	96	2.4	2.3	2.2	2.2	2.1	2.0	1.9	1.7	1.6	1.5
92	97	2.3	2.2	2.1	2.0	2.0	1.9	1.8	1.7	1.6	1.5
93	98	2.2	2.1	2.0	1.9	1.9	1.8	1.7	1.6	1.5	1.4
94	99	2.1	2.0	1.9	1.8	1.7	1.7	1.6	1.5	1.4	1.3
95	100	1.9	1.9	1.8	1.7	1.6	1.6	1.5	1.4	1.3	1.2
96	101	1.8	1.7	1.7	1.6	1.5	1.5	1.4	1.3	1.2	1.1
97	102	1.7	1.6	1.6	1.5	1.4	1.4	1.3	1.2	1.1	1.1
98	103	1.6	1.5	1.4	1.4	1.3	1.3	1.2	1.1	1.0	1.0
99	104	1.4	1.4	1.3	1.3	1.2	1.1	1.1	1.0	1.0	0.9

Male	Female	Ages									
		Male 97	98	99	100	101	102	103	104	105	106
		Female 102	103	104	105	106	107	108	109	110	111
85	90	1.8	1.7	1.5	1.4	1.3	1.1	1.0	0.9	0.8	0.7
86	91	1.7	1.6	1.5	1.3	1.2	1.1	1.0	0.8	0.7	0.7
87	92	1.7	1.6	1.4	1.3	1.2	1.1	0.9	0.8	0.7	0.6
88	93	1.6	1.5	1.4	1.3	1.1	1.0	0.9	0.8	0.7	0.6
89	94	1.6	1.4	1.3	1.2	1.1	1.0	0.9	0.7	0.7	
90	95	1.5	1.4	1.3	1.2	1.0	0.9	0.8	0.7	0.6	
91	96	1.4	1.3	1.2	1.1	1.0	0.9	0.8	0.7	0.6	
92	97	1.4	1.3	1.1	1.0	0.9	0.8	0.7	0.7		
93	98	1.3	1.2	1.1	1.0	0.9	0.8	0.7	0.6		
94	99	1.2	1.1	1.0	0.9	0.8	0.7	0.7			
95	100	1.1	1.0	1.0	0.9	0.8	0.7	0.6			
96	101	1.1	1.0	0.9	0.8	0.7	0.7				
97	102	1.0	0.9	0.8	0.7	0.7	0.6				
98	103	0.9	0.8	0.7	0.7	0.6					
99	104	0.8	0.7	0.7	0.6						

Table III—Percent Value of Refund Feature

Ages		Duration of guaranteed amount—[Years]												
Male	Female	1	2	3	4	5	6	7	8	9	10	11	12	13
6	11									1	1	1	1	1
7	12									1	1	1	1	1
8	13								1	1	1	1	1	1
9	14								1	1	1	1	1	1
10	15								1	1	1	1	1	1
11	16								1	1	1	1	1	1
12	17								1	1	1	1	1	1
13	18								1	1	1	1	1	1
14	19								1	1	1	1	1	1
15	20								1	1	1	1	1	1
16	21								1	1	1	1	1	1
17	22								1	1	1	1	1	1
18	23								1	1	1	1	1	1
19	24								1	1	1	1	1	1
20	25								1	1	1	1	1	1
21	26								1	1	1	1	1	1
22	27							1	1	1	1	1	1	1
23	28							1	1	1	1	1	1	1
24	29							1	1	1	1	1	1	1
25	30							1	1	1	1	1	1	1
26	31						1	1	1	1	1	1	1	1
27	32						1	1	1	1	1	1	1	1
28	33						1	1	1	1	1	1	1	1
29	34						1	1	1	1	1	1	1	2
30	35					1	1	1	1	1	1	1	2	2
31	36					1	1	1	1	1	1	1	2	2
32	37					1	1	1	1	1	1	2	2	2
33	38				1	1	1	1	1	1	1	2	2	2
34	39				1	1	1	1	1	1	2	2	2	2
35	40				1	1	1	1	1	2	2	2	2	2
36	41				1	1	1	1	1	2	2	2	2	3

Ages		Duration of guaranteed amount—[Years]												
Male	Female	1	2	3	4	5	6	7	8	9	10	11	12	13
37	42			1	1	1	1	1	2	2	2	2	3	3
38	43			1	1	1	1	1	2	2	2	2	3	3
39	44			1	1	1	1	2	2	2	2	3	3	3
40	45			1	1	1	1	2	2	2	3	3	3	4
41	46			1	1	1	1	2	2	2	3	3	3	4
42	47			1	1	1	2	2	2	3	3	3	4	4
43	48		1	1	1	1	2	2	2	3	3	4	4	4
44	49		1	1	1	1	2	2	3	3	3	4	4	5
45	50		1	1	1	2	2	2	3	3	4	4	5	5
46	51		1	1	1	2	2	3	3	3	4	4	5	5
47	52		1	1	1	2	2	3	3	4	4	5	5	6
48	53		1	1	2	2	2	3	3	4	5	5	6	6
49	54		1	1	2	2	3	3	4	4	5	5	6	7
50	55		1	1	2	2	3	3	4	5	5	6	7	7
51	56		1	1	2	3	3	4	4	5	6	6	7	8
52	57	1	1	2	2	3	3	4	5	5	6	7	8	8
53	58	1	1	2	2	3	4	4	5	6	7	7	8	9
54	59	1	1	2	2	3	4	5	5	6	7	8	9	10
55	60	1	1	2	3	3	4	5	6	7	8	8	9	10
56	61	1	1	2	3	4	4	5	6	7	8	9	10	11
57	62	1	1	2	3	4	5	6	7	8	9	10	11	12
58	63	1	2	2	3	4	5	6	7	8	9	10	12	13
59	64	1	2	3	4	5	6	7	8	9	10	11	12	14
60	65	1	2	3	4	5	6	7	8	10	11	12	13	15
61	66	1	2	3	4	5	6	8	9	10	12	13	14	16
62	67	1	2	3	4	6	7	8	10	11	12	14	15	17
63	68	1	2	4	5	6	7	9	10	12	13	15	16	18
64	69	1	3	4	5	7	8	9	11	13	14	16	17	19
65	70	1	3	4	6	7	9	10	12	13	15	17	19	20
66	71	1	3	4	6	8	9	11	13	14	16	18	20	22
67	72	2	3	5	6	8	10	12	14	15	17	19	21	23
68	73	2	3	5	7	9	11	13	14	16	18	21	23	25
69	74	2	4	6	7	9	11	13	16	18	20	22	24	26
70	75	2	4	6	8	10	12	14	17	19	21	23	26	28

Ages		Duration of guaranteed amount—[Years]												
Male	Female	1	2	3	4	5	6	7	8	9	10	11	12	13
71	76	2	4	6	9	11	13	15	18	20	22	25	27	29
72	77	2	5	7	9	12	14	16	19	21	24	26	29	31
73	78	2	5	7	10	12	15	18	20	23	25	28	30	33
74	79	3	5	8	11	13	16	19	22	24	27	30	32	35
75	80	3	6	8	11	14	17	20	23	26	29	31	34	37
76	81	3	6	9	12	15	18	21	24	27	30	33	36	39
77	82	3	7	10	13	16	20	23	26	29	32	35	38	41
78	83	4	7	11	14	17	21	24	28	31	34	37	40	43
79	84	4	8	11	15	19	22	26	29	33	36	39	42	45
80	85	4	8	12	16	20	24	27	31	34	38	41	44	47
81	86	4	9	13	17	21	25	29	33	36	40	43	46	49
82	87	5	9	14	18	23	27	31	35	38	42	45	48	51
83	88	5	10	15	19	24	28	33	37	40	44	47	50	53
84	89	5	11	16	21	26	30	34	38	42	46	49	52	55
85	90	6	11	17	22	27	32	36	41	44	48	51	55	57

Ages		Duration of guaranteed amount—[Years]												
Male	Female	14	15	16	17	18	19	20	21	22	23	24	25	26
6	11	1	1	1	1	1	1	1	1	1	1	2	2	2
7	12	1	1	1	1	1	1	1	1	1	1	2	2	2
8	13	1	1	1	1	1	1	1	1	1	1	2	2	2
9	14	1	1	1	1	1	1	1	1	1	1	2	2	2
10	15	1	1	1	1	1	1	1	1	1	2	2	2	2
11	16	1	1	1	1	1	1	1	1	1	2	2	2	2
12	17	1	1	1	1	1	1	1	1	1	2	2	2	2
13	18	1	1	1	1	1	1	1	1	2	2	2	2	2
14	19	1	1	1	1	1	1	1	1	2	2	2	2	2
15	20	1	1	1	1	1	1	1	1	2	2	2	2	2
16	21	1	1	1	1	1	1	1	2	2	2	2	2	2
17	22	1	1	1	1	1	1	1	2	2	2	2	2	2
18	23	1	1	1	1	1	1	2	2	2	2	2	2	2
19	24	1	1	1	1	1	2	2	2	2	2	2	2	2
20	25	1	1	1	1	1	2	2	2	2	2	2	2	3
21	26	1	1	1	1	2	2	2	2	2	2	2	3	3
22	27	1	1	1	1	2	2	2	2	2	2	3	3	3
23	28	1	1	1	2	2	2	2	2	2	2	3	3	3
24	29	1	1	2	2	2	2	2	2	2	3	3	3	3
25	30	1	1	2	2	2	2	2	2	3	3	3	3	3
26	31	1	2	2	2	2	2	2	3	3	3	3	3	4
27	32	2	2	2	2	2	2	3	3	3	3	3	4	4
28	33	2	2	2	2	2	3	3	3	3	3	4	4	4
29	34	2	2	2	2	2	3	3	3	3	4	4	4	5
30	35	2	2	2	2	3	3	3	3	4	4	4	5	5
31	36	2	2	2	3	3	3	3	4	4	4	5	5	5
32	37	2	2	3	3	3	3	4	4	4	5	5	5	6
33	38	2	3	3	3	3	4	4	4	5	5	5	6	6
34	39	3	3	3	3	4	4	4	5	5	5	6	6	7
35	40	3	3	3	4	4	4	5	5	5	6	6	7	7
36	41	3	3	4	4	4	5	5	5	6	6	7	7	8
37	42	3	3	4	4	4	5	5	6	6	7	7	8	8
38	43	3	4	4	4	5	5	6	6	7	7	8	8	9
39	44	4	4	4	5	5	6	6	7	7	8	8	9	9

Ages		Duration of guaranteed amount—[Years]												
Male	Female	14	15	16	17	18	19	20	21	22	23	24	25	26
40	45	4	4	5	5	6	6	7	7	8	8	9	9	10
41	46	4	5	5	6	6	7	7	8	8	9	9	10	11
42	47	5	5	5	6	6	7	8	8	9	9	10	11	12
43	48		5	6	6	7	8	8	9	9	10	11	12	12
44	49	5	6	6	7	7	8	9	9	10	11	12	12	13
45	50	6	6	7	7	8	9	9	10	11	12	12	13	14
46	51	6	7	7	8	9	9	10	11	12	12	13	14	15
47	52	7	7	8	9	9	10	11	12	12	13	14	15	16
48	53	7	8	8	9	10	11	12	12	13	14	15	16	17
49	54	8	8	9	10	11	11	12	13	14	15	16	17	18
50	55	8	9	10	11	11	12	13	14	15	16	17	18	20
51	56	9	10	10	11	12	13	14	15	16	17	18	20	21
52	57	9	10	11	12	13	14	15	16	17	18	20	21	22
53	58	10	11	12	13	14	15	16	17	19	20	21	22	24
54	59	11	12	13	14	15	16	17	18	20	21	22	24	25
55	60	11	13	14	15	16	17	18	20	21	22	24	25	26
56	61	12	13	15	16	17	18	20	21	22	24	25	27	28
57	62	13	14	16	17	18	20	21	22	24	25	27	28	30
58	63	14	15	17	18	19	21	22	24	25	27	28	30	31
59	64	15	16	18	19	21	22	24	25	27	28	30	31	33
60	65	16	18	19	20	22	24	25	27	28	30	32	33	35
61	66	17	19	20	22	23	25	27	28	30	32	33	35	37
62	67	18	20	22	23	25	27	28	30	32	33	35	37	38
63	68	20	21	23	25	26	28	30	32	33	35	37	39	40
64	69	21	23	24	26	28	30	32	33	35	37	39	41	42
65	70	22	24	26	28	30	32	33	35	37	39	41	42	44
66	71	24	26	28	29	31	33	35	37	39	41	43	44	46
67	72	25	27	29	31	33	35	37	39	41	43	45	46	48
68	73	27	29	31	33	35	37	39	41	43	45	47	48	50
69	74	28	30	33	35	37	39	41	43	45	47	48	50	52
70	75	30	32	34	37	39	41	43	45	47	49	50	52	54
71	76	32	34	36	39	41	43	45	47	49	51	52	54	56
72	77	34	36	38	41	43	45	47	49	51	53	54	56	58
73	78	35	38	40	43	45	47	49	51	53	55	56	58	59

Ages		Duration of guaranteed amount—[Years]												
Male	Female	14	15	16	17	18	19	20	21	22	23	24	25	26
74	79	37	40	42	45	47	49	51	53	55	57	58	60	61
75	80	39	42	44	47	49	51	53	55	57	58	60	62	63
76	81	41	44	46	49	51	53	55	57	59	60	62	63	65
77	82	43	46	48	51	53	55	57	59	61	62	64	65	66
78	83	45	48	50	53	55	57	59	61	62	64	65	67	68
79	84	48	50	53	55	57	59	61	63	64	66	67	68	70
80	85	50	52	55	57	59	61	63	64	66	67	69	70	71
81	86	52	54	57	59	61	63	65	66	68	69	70	72	73
82	87	54	56	59	61	63	65	66	68	69	71	72	73	74
83	88	56	58	61	63	65	66	68	70	71	72	73	74	75
84	89	58	60	63	65	67	68	70	71	73	74	75	76	77
85	90	60	62	65	67	68	70	71	73	74	75	76	77	

Ages		Duration of guaranteed amount—[Years]								
Male	Female	27	28	29	30	31	32	33	34	35
6	11	2	2	2	2	2	2	2	2	2
7	12	2	2	2	2	2	2	2	2	3
8	13	2	2	2	2	2	2	2	2	3
9	14	2	2	2	2	2	2	2	3	3
10	15	2	2	2	2	2	2	3	3	3
11	16	2	2	2	2	2	2	3	3	3
12	17	2	2	2	2	2	3	3	3	3
13	18	2	2	2	2	2	3	3	3	3
14	19	2	2	2	2	3	3	3	3	3
15	20	2	2	2	3	3	3	3	3	3
16	21	2	2	3	3	3	3	3	3	4
17	22	2	2	3	3	3	3	3	4	4
18	23	2	3	3	3	3	3	4	4	4
19	24	3	3	3	3	3	4	4	4	4
20	25	3	3	3	3	4	4	4	4	5
21	26	3	3	3	4	4	4	4	5	5
22	27	3	3	4	4	4	4	5	5	5
23	28	3	3	4	4	4	5	5	5	5
24	29	3	4	4	4	5	5	5	5	6
25	30	4	4	4	5	5	5	6	6	6
26	31	4	4	5	5	5	6	6	6	7
27	32	4	5	5	5	6	6	6	7	7
28	33	5	5	5	6	6	6	7	7	8
29	34	5	5	6	6	6	7	7	8	8
30	35	5	6	6	6	7	7	8	8	9
31	36	6	6	6	7	7	8	8	9	9
32	37	6	7	7	7	8	8	9	10	10
33	38	7	7	7	8	8	9	10	10	11
34	39	7	8	8	9	9	10	10	11	12
35	40	8	8	9	9	10	10	11	12	12
36	41	8	9	9	10	10	11	12	13	13
37	42	9	9	10	11	11	12	13	13	14
38	43	9	10	11	11	12	13	13	14	15
39	44	10	11	11	12	13	14	14	15	16

Ages		Duration of guaranteed amount—[Years]								
Male	Female	27	28	29	30	31	32	33	34	35
40	45	11	11	12	13	14	15	15	16	17
41	46	11	12	13	14	15	16	16	17	18
42	47	12	13	14	15	16	17	18	18	19
43	48	13	14	15	16	17	18	19	20	21
44	49	14	15	16	17	18	19	20	21	22
45	50	15	16	17	18	19	20	21	22	23
46	51	16	17	18	19	20	21	22	24	25
47	52	17	18	19	20	21	23	24	25	26
48	53	18	19	20	22	23	24	25	26	28
49	54	19	21	22	23	24	25	27	28	29
50	55	21	22	23	24	26	27	28	29	31
51	56	22	23	25	26	27	28	30	31	32
52	57	23	25	26	27	29	30	31	33	34
53	58	25	26	28	29	30	32	33	34	36
54	59	26	28	29	31	32	33	35	36	38
55	60	28	29	31	32	34	35	36	38	39
56	61	29	31	32	34	35	37	38	40	41
57	62	31	33	34	36	37	39	40	41	43
58	63	33	34	36	37	39	40	42	43	45
59	64	35	36	38	39	41	42	44	45	47
60	65	36	38	40	41	43	44	46	47	48
61	66	38	40	41	43	44	46	47	49	50
62	67	40	42	43	45	46	48	49	51	52
63	68	42	44	45	47	48	50	51	52	54
64	69	44	46	47	49	50	52	53	54	55
65	70	46	47	49	50	52	53	55	56	57
66	71	48	49	51	52	54	55	56	58	59
67	72	50	51	53	54	56	57	58	59	61
68	73	52	53	55	56	57	59	60	61	62
69	74	53	55	56	58	59	60	62	63	64
70	75	55	57	58	60	61	62	62	64	65
71	76	57	59	60	61	63	64	65	66	67
72	77	59	60	62	63	64	65	66	67	68
73	78	61	62	64	65	66	67	68	69	70

Ages		Duration of guaranteed amount—[Years]								
Male	Female	27	28	29	30	31	32	33	34	35
74	79	63	64	65	66	67	68	69	70	71
75	80	64	66	67	68	69	70	71	72	72
76	81	66	67	68	69	70	71	72	73	
77	82	68	69	70	71	72	73	74		
78	83	69	70	71	72	73	74			
79	84	71	72	73	74	75				
80	85	72	73	74	75					
81	86	74	75	75						
82	87	75	76							
83	88	76								
84	89									
85	90									

Ages		Duration of guaranteed amount—[Years]													
Male	Female	1	2	3	4	5	6	7	8	9	10	11	12	13	14
86	91	6	12	18	24	29	34	38	43	47	50	54	57	59	62
87	92	7	13	19	25	31	36	40	45	49	52	56	59	61	64
88	93	7	14	21	27	32	38	42	47	51	55	58	61	63	66
89	94	8	15	22	28	34	40	45	49	53	57	60	63	65	68
90	95	8	16	23	30	36	42	47	51	55	59	62	65	67	70
91	96	9	17	25	32	38	44	49	53	57	61	64	67	69	71
92	97	9	18	26	34	40	46	51	55	59	63	66	69	71	73
93	98	10	20	28	36	42	48	53	58	62	65	68	70	73	75
94	99	11	21	30	37	44	50	55	60	64	67	70	72	74	76
95	100	12	22	31	39	46	52	58	62	66	69	72	74	76	78
96	101	12	24	33	42	49	55	60	64	68	71	73	76	78	79
97	102	13	25	35	44	51	57	62	66	70	73	75	77	79	
98	103	14	27	37	46	54	60	65	69	72	75	77	79		
99	104	15	29	40	49	56	62	67	71	74	77	79			
100	105	17	31	43	52	59	65	70	74	76	79				
101	106	18	33	46	55	63	68	73	76	79					
102	107	20	36	49	59	66	71	75	78						
103	108	22	40	53	62	69	74	78							
104	109	24	43	57	66	73	77								
105	110	27	48	61	70	76									
106	111		53	66	74										
107	112	35	53	71											
108	113	40	64												

Ages		Duration of guaranteed amount—[Years]										
Male	Female	15	16	17	18	19	20	21	22	23	24	25
86	91	64	66	68	70	72	73	74	75	76	77	
87	92	66	68	70	72	73	74	76	77	78		
88	93	68	70	72	73	75	76	77	78			
89	94	70	72	73	75	76	77	78				
90	95	72	73	75	76	77	79					
91	96	73	75	76	78	79						
92	97	75	76	78	79							
93	98	76	78	79								
94	99	78	79									
95	100	79										

Table IV—Temporary Life Annuities [1]—One Life—Expected Return Multiples
[See footnote at end of table]

Ages		Temporary period—maximum duration of annuity—[Years]									
Male	Female	1	2	3	4	5	6	7	8	9	10
0 to 8	0 to 13	1.0	2.0	3.0	4.0	5.0	6.0	7.0	8.0	8.9	9.9
9	14	1.0	2.0	3.0	4.0	5.0	6.0	7.0	8.0	8.9	9.9
10	15	1.0	2.0	3.0	4.0	5.0	6.0	7.0	8.0	8.9	9.9
11	16	1.0	2.0	3.0	4.0	5.0	6.0	7.0	8.0	8.9	9.9
12	17	1.0	2.0	3.0	4.0	5.0	6.0	7.0	8.0	8.9	9.9
13	18	1.0	2.0	3.0	4.0	5.0	6.0	7.0	8.0	8.9	9.9
14	19	1.0	2.0	3.0	4.0	5.0	6.0	7.0	8.0	8.9	9.9
15	20	1.0	2.0	3.0	4.0	5.0	6.0	7.0	8.0	8.9	9.9
16	21	1.0	2.0	3.0	4.0	5.0	6.0	7.0	8.0	8.9	9.9
17	22	1.0	2.0	3.0	4.0	5.0	6.0	7.0	8.0	8.9	9.9
18	23	1.0	2.0	3.0	4.0	5.0	6.0	7.0	8.0	8.9	9.9
19	24	1.0	2.0	3.0	4.0	5.0	6.0	7.0	8.0	8.9	9.9
20	25	1.0	2.0	3.0	4.0	5.0	6.0	7.0	8.0	8.9	9.9
21	26	1.0	2.0	3.0	4.0	5.0	6.0	7.0	8.0	8.9	9.9
22	27	1.0	2.0	3.0	4.0	5.0	6.0	7.0	8.0	8.9	9.9
23	28	1.0	2.0	3.0	4.0	5.0	6.0	7.0	8.0	8.9	9.9
24	29	1.0	2.0	3.0	4.0	5.0	6.0	7.0	7.9	8.9	9.9
25	30	1.0	2.0	3.0	4.0	5.0	6.0	7.0	7.9	8.9	9.9
26	31	1.0	2.0	3.0	4.0	5.0	6.0	7.0	7.9	8.9	9.9
27	32	1.0	2.0	3.0	4.0	5.0	6.0	7.0	7.9	8.9	9.9
28	33	1.0	2.0	3.0	4.0	5.0	6.0	7.0	7.9	8.9	9.9
29	34	1.0	2.0	3.0	4.0	5.0	6.0	6.9	7.9	8.9	9.9
30	35	1.0	2.0	3.0	4.0	5.0	6.0	6.9	7.9	8.9	9.9
31	36	1.0	2.0	3.0	4.0	5.0	6.0	6.9	7.9	8.9	9.9
32	37	1.0	2.0	3.0	4.0	5.0	6.0	6.9	7.9	8.9	9.9
33	38	1.0	2.0	3.0	4.0	5.0	6.0	6.9	7.9	8.9	9.9
34	39	1.0	2.0	3.0	4.0	5.0	5.9	6.9	7.9	8.9	9.8
35	40	1.0	2.0	3.0	4.0	5.0	5.9	6.9	7.9	8.9	9.8
36	41	1.0	2.0	3.0	4.0	5.0	5.9	6.9	7.9	8.9	9.8

Ages		Temporary period—maximum duration of annuity—[Years]									
Male	Female	1	2	3	4	5	6	7	8	9	10
37	42	1.0	2.0	3.0	4.0	5.0	5.9	6.9	7.9	8.8	9.8
38	43	1.0	2.0	3.0	4.0	5.0	5.9	6.9	7.9	8.8	9.8
39	44	1.0	2.0	3.0	4.0	4.9	5.9	6.9	7.9	8.8	9.8
40	45	1.0	2.0	3.0	4.0	4.9	5.9	6.9	7.8	8.8	9.7
41	46	1.0	2.0	3.0	4.0	4.9	5.9	6.9	7.8	8.8	9.7
42	47	1.0	2.0	3.0	4.0	4.9	5.9	6.9	7.8	8.8	9.7
43	48	1.0	2.0	3.0	4.0	4.9	5.9	6.9	7.8	8.8	9.7
44	49	1.0	2.0	3.0	4.0	4.9	5.9	6.8	7.8	8.7	9.7
45	50	1.0	2.0	3.0	3.9	4.9	5.9	6.8	7.8	8.7	9.6
46	51	1.0	2.0	3.0	3.9	4.9	5.9	6.8	7.8	8.7	9.6
47	52	1.0	2.0	3.0	3.9	4.9	5.9	6.8	7.7	8.7	9.6
48	53	1.0	2.0	3.0	3.9	4.9	5.9	6.8	7.7	8.6	9.5
49	54	1.0	2.0	3.0	3.9	4.9	5.8	6.8	7.7	8.6	9.5
50	55	1.0	2.0	3.0	3.9	4.9	5.8	6.8	7.7	8.6	9.5
51	56	1.0	2.0	3.0	3.9	4.9	5.8	6.7	7.7	8.6	9.4
52	57	1.0	2.0	3.0	3.9	4.9	5.8	6.7	7.6	8.5	9.4
53	58	1.0	2.0	2.9	3.9	4.9	5.8	6.7	7.6	8.5	9.3
54	59	1.0	2.0	2.9	3.9	4.8	5.8	6.7	7.6	8.4	9.3
55	60	1.0	2.0	2.9	3.9	4.8	5.8	6.7	7.5	8.4	9.2
56	61	1.0	2.0	2.9	3.9	4.8	5.7	6.6	7.5	8.4	9.2
57	62	1.0	2.0	2.9	3.9	4.8	5.7	6.6	7.5	8.3	9.1
58	63	1.0	2.0	2.9	3.9	4.8	5.7	6.6	7.4	8.3	9.1
59	64	1.0	2.0	2.9	3.9	4.8	5.7	6.5	7.4	8.2	9.0
60	65	1.0	2.0	2.9	3.8	4.8	5.6	6.5	7.3	8.1	8.9
61	66	1.0	2.0	2.9	3.8	4.7	5.6	6.5	7.3	8.1	8.8
62	67	1.0	2.0	2.9	3.8	4.7	5.6	6.4	7.2	8.0	8.8
63	68	1.0	2.0	2.9	3.8	4.7	5.6	6.4	7.2	7.9	8.7
64	69	1.0	1.9	2.9	3.8	4.7	5.5	6.3	7.1	7.9	8.6
65	70	1.0	1.9	2.9	3.8	4.6	5.5	6.3	7.1	7.8	8.5
66	71	1.0	1.9	2.9	3.8	4.6	5.4	6.2	7.0	7.7	8.4
67	72	1.0	1.9	2.9	3.7	4.6	5.4	6.2	6.9	7.6	8.3
68	73	1.0	1.9	2.8	3.7	4.6	5.4	6.1	6.8	7.5	8.2
69	74	1.0	1.9	2.8	3.7	4.5	5.3	6.1	6.8	7.4	8.0
70	75	1.0	1.9	2.8	3.7	4.5	5.3	6.0	6.7	7.3	7.9

Ages		Temporary period—maximum duration of annuity—[Years]									
Male	Female	1	2	3	4	5	6	7	8	9	10
71	76	1.0	1.9	2.8	3.7	4.5	5.2	5.9	6.6	7.2	7.8
72	77	1.0	1.9	2.8	3.6	4.4	5.2	5.8	6.5	7.1	7.6
73	78	1.0	1.9	2.8	3.6	4.4	5.1	5.8	6.4	7.0	7.5
74	79	1.0	1.9	2.8	3.6	4.3	5.0	5.7	6.3	6.8	7.3
75	80	1.0	1.9	2.7	3.5	4.3	5.0	5.6	6.2	6.7	7.1
76	81	1.0	1.9	2.7	3.5	4.2	4.9	5.5	6.1	6.5	7.0
77	82	1.0	1.9	2.7	3.5	4.2	4.8	5.4	5.9	6.4	6.8
78	83	1.0	1.9	2.7	3.4	4.1	4.7	5.3	5.8	6.2	6.6
79	84	1.0	1.8	2.7	3.4	4.1	4.7	5.2	5.7	6.1	6.4
80	85	1.0	1.8	2.6	3.4	4.0	4.6	5.1	5.5	5.9	6.2
81	86	1.0	1.8	2.6	3.3	3.9	4.5	5.0	5.4	5.7	6.0
82	87	1.0	1.8	2.6	3.3	3.9	4.4	4.8	5.2	5.6	5.8
83	88	.9	1.8	2.6	3.2	3.8	4.3	4.7	5.1	5.4	5.6
84	89	.9	1.8	2.5	3.2	3.7	4.2	4.6	4.9	5.2	5.4
85	90	.9	1.8	2.5	3.1	3.6	4.1	4.5	4.8	5.0	5.2
86	91	.9	1.8	2.5	3.1	3.6	4.0	4.3	4.6	4.8	5.0

Ages		Temporary period—maximum duration of annuity—[Years]									
Male	Female	11	12	13	14	15	16	17	18	19	20
0 to 8	0 to 13	10.9	11.9	12.9	13.9	14.9	15.8	16.8	17.8	18.8	19.7
9	14	10.9	11.9	12.9	13.9	14.9	15.8	16.8	17.8	18.8	19.7
10	15	10.9	11.9	12.9	13.9	14.9	15.8	16.8	17.8	18.8	19.7
11	16	10.9	11.9	12.9	13.9	14.9	15.8	16.8	17.8	18.8	19.7
12	17	10.9	11.9	12.9	13.9	14.9	15.8	16.8	17.8	18.8	19.7
13	18	10.9	11.9	12.9	13.9	14.9	15.8	16.8	17.8	18.8	19.7
14	19	10.9	11.9	12.9	13.9	14.9	15.8	16.8	17.8	18.8	19.7
15	20	10.9	11.9	12.9	13.9	14.9	15.8	16.8	17.8	18.7	19.7
16	21	10.9	11.9	12.9	13.9	14.8	15.8	16.8	17.8	18.7	19.7
17	22	10.9	11.9	12.9	13.9	14.8	15.8	16.8	17.8	18.7	19.7
18	23	10.9	11.9	12.9	13.9	14.8	15.8	16.8	17.8	18.7	19.7
19	24	10.9	11.9	12.9	13.9	14.8	15.8	16.8	17.7	18.7	19.7
20	25	10.9	11.9	12.9	13.9	14.8	15.8	16.8	17.7	18.7	19.7
21	26	10.9	11.9	12.9	13.8	14.8	15.8	16.8	17.7	18.7	19.6
22	27	10.9	11.9	12.9	13.8	14.8	15.8	16.7	17.7	18.7	19.6
23	28	10.9	11.9	12.9	13.8	14.8	15.8	16.7	17.7	18.7	19.6
24	29	10.9	11.9	12.9	13.8	14.8	15.8	16.7	17.7	18.6	19.6
25	30	10.9	11.9	12.8	13.8	14.8	15.7	16.7	17.7	18.6	19.6
26	31	10.9	11.9	12.8	13.8	14.8	15.7	16.7	17.6	18.6	19.5
27	32	10.9	11.9	12.8	13.8	14.8	15.7	16.7	17.6	18.6	19.5
28	33	10.9	11.8	12.8	13.8	14.7	15.7	16.6	17.6	18.5	19.5
29	34	10.9	11.8	12.8	13.8	14.7	15.7	16.6	17.6	18.5	19.4
30	35	10.9	11.8	12.8	13.7	14.7	15.6	16.6	17.5	18.4	19.4
31	36	10.8	11.8	12.8	13.7	14.7	15.6	16.5	17.5	18.4	19.3
32	37	10.8	11.8	12.7	13.7	14.6	15.6	16.5	17.4	18.4	19.3
33	38	10.8	11.8	12.7	13.7	14.6	15.6	16.5	17.4	18.3	19.2
34	39	10.8	11.8	12.7	13.6	14.6	15.5	16.4	17.4	18.3	19.2
35	40	10.8	11.7	12.7	13.6	14.6	15.5	16.4	17.3	18.2	19.1
36	41	10.8	11.7	12.7	13.6	14.5	15.4	16.3	17.2	18.1	19.0
37	42	10.8	11.7	12.6	13.6	14.5	15.4	16.3	17.2	18.1	18.9
38	43	10.7	11.7	12.6	13.5	14.4	15.3	16.2	17.1	18.0	18.9
39	44	10.7	11.6	12.6	13.5	14.4	15.3	16.2	17.1	17.9	18.8
40	45	10.7	11.6	12.5	13.5	14.4	15.2	16.1	17.0	17.8	18.7
41	46	10.7	11.6	12.5	13.4	14.3	15.2	16.1	16.9	17.8	18.6

Ages		Temporary period—maximum duration of annuity—[Years]									
Male	Female	11	12	13	14	15	16	17	18	19	20
42	47	10.6	11.6	12.5	13.4	14.3	15.1	16.0	16.8	17.7	18.5
43	48	10.6	11.5	12.4	13.3	14.2	15.1	15.9	16.7	17.6	18.4
44	49	10.6	11.5	12.4	13.3	14.1	15.0	15.8	16.7	17.5	18.3
45	50	10.5	11.4	12.3	13.2	14.1	14.9	15.7	16.6	17.4	18.1
46	51	10.5	11.4	12.3	13.2	14.0	14.8	15.7	16.5	17.2	18.0
47	52	10.5	11.4	12.2	13.1	13.9	14.7	15.6	16.3	17.1	17.8
48	53	10.4	11.3	12.2	13.0	13.8	14.7	15.4	16.2	17.0	17.7
49	54	10.4	11.3	12.1	12.9	13.8	14.6	15.3	16.1	16.8	17.5
50	55	10.3	11.2	12.0	12.9	13.7	14.5	15.2	16.0	16.7	17.4
51	56	10.3	11.1	12.0	12.8	13.6	14.3	15.1	15.8	16.5	17.2
52	57	10.2	11.1	11.9	12.7	13.5	14.2	14.9	15.6	16.3	17.0
53	58	10.2	11.0	11.8	12.6	13.4	14.1	14.8	15.5	16.1	16.8
54	59	10.1	10.9	11.7	12.5	13.2	14.0	14.6	15.3	15.9	16.5
55	60	10.1	10.9	11.6	12.4	13.1	13.8	14.5	15.1	15.7	16.3
56	61	10.0	10.8	11.5	12.3	13.0	13.7	14.3	14.9	15.5	16.1
57	62	9.9	10.7	11.4	12.2	12.8	13.5	14.1	14.7	15.3	15.8
58	63	9.8	10.6	11.3	12.0	12.7	13.3	13.9	14.5	15.0	15.5
59	64	9.8	10.5	11.2	11.9	12.5	13.2	13.7	14.3	14.8	15.3
60	65	9.7	10.4	11.1	11.7	12.4	13.0	13.5	14.0	14.5	15.0
61	66	9.6	10.3	11.0	11.6	12.2	12.8	13.3	13.8	14.2	14.7
62	67	9.5	10.2	10.8	11.4	12.0	12.5	13.1	13.5	14.0	14.3
63	68	9.4	10.0	10.7	11.3	11.8	12.3	12.8	13.2	13.7	14.0
64	69	9.3	9.9	10.5	11.1	11.6	12.1	12.5	13.0	13.3	13.7
65	70	9.1	9.8	10.3	10.9	11.4	11.9	12.3	12.7	13.0	13.3
66	71	9.0	9.6	10.2	10.7	11.2	11.6	12.0	12.4	12.7	13.0
67	72	8.9	9.5	10.0	10.5	10.9	11.3	11.7	12.0	12.3	12.6
68	73	8.7	9.3	9.8	10.3	10.7	11.1	11.4	11.7	12.0	12.2
69	74	8.6	9.1	9.6	10.0	10.4	10.8	11.1	11.4	11.6	11.8
70	75	8.4	8.9	9.4	9.8	10.2	10.5	10.8	11.0	11.2	11.4
71	76	8.3	8.7	9.2	9.6	9.9	10.2	10.4	10.7	10.9	11.0
72	77	8.1	8.6	8.9	9.3	9.6	9.9	10.1	10.3	10.5	10.6
73	78	7.9	8.3	8.7	9.0	9.3	9.6	9.8	9.9	10.1	10.2
74	79	7.7	8.1	8.5	8.8	9.0	9.2	9.4	9.6	9.7	9.8
75	80	7.6	7.9	8.2	8.5	8.7	8.9	9.1	9.2	9.3	9.4

Ages		Temporary period—maximum duration of annuity—[Years]									
Male	Female	11	12	13	14	15	16	17	18	19	20
76	81	7.4	7.7	8.0	8.2	8.4	8.6	8.7	8.8	8.9	9.0
77	82	7.1	7.5	7.7	7.9	8.1	8.3	8.4	8.5	8.5	8.6
78	83	6.9	7.2	7.4	7.6	7.8	7.9	8.0	8.1	8.2	8.2
79	84	6.7	7.0	7.2	7.3	7.5	7.6	7.7	7.7	7.8	7.8
80	85	6.5	6.7	6.9	7.1	7.2	7.3	7.3	7.4	7.4	7.4
81	86	6.3	6.5	6.6	6.8	6.9	6.9	7.0	7.0	7.1	
82	87	6.0	6.2	6.4	6.5	6.5	6.6	6.7	6.7		
83	88	5.8	6.0	6.1	6.2	6.2	6.3	6.3			
84	89	5.6	5.7	5.8	5.9	5.9	6.0				
85	90	5.3	5.5	5.5	5.6	5.6					
86	91	5.1	5.2	5.3	5.3						

Ages		Temporary period—maximum duration of annuity—[Years]									
Male	Female	21	22	23	24	25	26	27	28	29	30
0 to 8	0 to 13	20.7	21.7	22.7	23.6	24.6	25.6	26.5	27.5	28.4	29.4
9	14	20.7	21.7	22.7	23.6	24.6	25.5	26.5	27.5	28.4	29.4
10	15	20.7	21.7	22.7	23.6	24.6	25.5	26.5	27.5	28.4	29.4
11	16	20.7	21.7	22.6	23.6	24.6	25.5	26.5	27.4	28.4	29.3
12	17	20.7	21.7	22.6	23.6	24.6	25.5	26.5	27.4	28.4	29.3
13	18	20.7	21.7	22.6	23.6	24.6	25.5	26.5	27.4	28.4	29.3
14	19	20.7	21.7	22.6	23.6	24.5	25.5	26.4	27.4	28.3	29.3
15	20	20.7	21.6	22.6	23.6	24.5	25.5	26.4	27.4	28.3	29.2
16	21	20.7	21.6	22.6	23.6	24.5	25.5	26.4	27.3	28.3	29.2
17	22	20.7	21.6	22.6	23.5	24.5	25.4	26.4	27.3	28.2	29.2
18	23	20.7	21.6	22.6	23.5	24.5	25.4	26.3	27.3	28.2	29.1
19	24	20.6	21.6	22.5	23.5	24.4	25.4	26.3	27.2	28.1	29.1
20	25	20.6	21.6	22.5	23.5	24.4	25.3	26.3	27.2	28.1	29.0
21	26	20.6	21.5	22.5	23.4	24.4	25.3	26.2	27.1	28.0	28.9
22	27	20.6	21.5	22.5	23.4	24.3	25.3	26.2	27.1	28.0	28.9
23	28	20.6	21.5	22.4	23.4	24.3	25.2	26.1	27.0	27.9	28.8
24	29	20.5	21.5	22.4	23.3	24.2	25.2	26.1	27.0	27.8	28.7
25	30	20.5	21.4	22.4	23.3	24.2	25.1	26.0	26.9	27.8	28.6
26	31	20.5	21.4	22.3	23.2	24.1	25.0	25.9	26.8	27.7	28.5
27	32	20.4	21.3	22.3	23.2	24.1	25.0	25.8	26.7	27.6	28.4
28	33	20.4	21.3	22.2	23.1	24.0	24.9	25.8	26.6	27.5	28.3
29	34	20.3	21.2	22.1	23.0	23.9	24.8	25.7	26.5	27.4	28.2
30	35	20.3	21.2	22.1	23.0	23.8	24.7	25.6	26.4	27.2	28.1
31	36	20.2	21.1	22.0	22.9	23.8	24.6	25.5	26.3	27.1	27.9
32	37	20.2	21.1	21.9	22.8	23.7	24.5	25.4	26.2	27.0	27.8
33	38	20.1	21.0	21.9	22.7	23.6	24.4	25.2	26.0	26.8	27.6
34	39	20.0	20.9	21.8	22.6	23.5	24.3	25.1	25.9	26.7	27.4
35	40	20.0	20.8	21.7	22.5	23.3	24.2	25.0	25.7	26.5	27.2
36	41	19.9	20.7	21.6	22.4	23.2	24.0	24.8	25.6	26.3	27.0
37	42	19.8	20.6	21.5	22.3	23.1	23.9	24.6	25.4	26.1	26.8
38	43	19.7	20.5	21.4	22.2	23.0	23.7	24.5	25.2	25.9	26.6
39	44	19.6	20.4	21.2	22.0	22.8	23.6	24.3	25.0	25.7	26.4

Footnote to Table IV:

[1] *The multiples in this table are not applicable to annuities for a term certain; for such cases see paragraph (c) of § 1.72-5.*

Ages		Temporary period—maximum duration of annuity—[Years]									
Male	Female	21	22	23	24	25	26	27	28	29	30
40	45	19.5	20.3	21.1	21.9	22.6	23.4	24.1	24.8	25.5	26.1
41	46	19.4	20.2	21.0	21.7	22.5	23.2	23.9	24.6	25.2	25.9
42	47	19.3	20.1	20.8	21.6	22.3	23.0	23.7	24.3	25.0	25.6
43	48	19.2	19.9	20.7	21.4	22.1	22.8	23.4	24.1	24.7	25.3
44	49	19.0	19.8	20.5	21.2	21.9	22.6	23.2	23.8	24.4	25.0
45	50	18.9	19.6	20.3	21.0	21.7	22.3	22.9	23.5	24.1	24.6
46	51	18.7	19.4	20.1	20.8	21.5	22.1	22.7	23.2	23.8	24.3
47	52	18.6	19.3	19.9	20.6	21.2	21.8	22.4	22.9	23.4	23.9
48	53	18.4	19.1	19.7	20.4	21.0	21.5	22.1	22.6	23.1	23.5
49	54	18.2	18.9	19.5	20.1	20.7	21.2	21.7	22.2	22.7	23.1
50	55	18.0	18.7	19.3	19.8	20.4	20.9	21.4	21.9	22.3	22.7
51	56	17.8	18.4	19.0	19.6	20.1	20.6	21.1	21.5	21.9	22.3
52	57	17.6	18.2	18.7	19.3	19.8	20.2	20.7	21.1	21.5	21.8
53	58	17.4	17.9	18.5	19.0	19.4	19.9	20.3	20.7	21.0	21.3
54	59	17.1	17.7	18.2	18.7	19.1	19.5	19.9	20.2	20.6	20.8
55	60	16.9	17.4	17.9	18.3	18.7	19.1	19.5	19.8	20.1	20.3
56	61	16.6	17.1	17.5	18.0	18.4	18.7	19.0	19.3	19.6	19.8
57	62	16.3	16.8	17.2	17.6	18.0	18.3	18.6	18.9	19.1	19.3
58	63	16.0	16.5	16.9	17.2	17.6	17.9	18.1	18.4	18.6	18.8
59	64	15.7	16.1	16.5	16.8	17.1	17.4	17.7	17.9	18.1	18.2
60	65	15.4	15.8	16.1	16.4	16.7	17.0	17.2	17.4	17.5	17.7
61	66	15.1	15.4	15.7	16.0	16.3	16.5	16.7	16.9	17.0	17.1
62	67	14.7	15.0	15.3	15.6	15.8	16.0	16.2	16.3	16.4	16.5
63	68	14.4	14.6	14.9	15.1	15.3	15.5	15.7	15.8	15.9	16.0
64	69	14.0	14.3	14.5	14.7	14.9	15.0	15.2	15.3	15.3	15.4
65	70	13.6	13.8	14.1	14.2	14.4	14.5	14.6	14.7	14.8	14.9
66	71	13.2	13.4	13.6	13.8	13.9	14.0	14.1	14.2	14.2	14.3
67	72	12.8	13.0	13.2	13.3	13.4	13.5	13.6	13.7	13.7	13.7
68	73	12.4	12.6	12.7	12.8	12.9	13.0	13.1	13.1	13.2	13.2
69	74	12.0	12.1	12.3	12.4	12.4	12.5	12.6	12.6	12.6	12.6
70	75	11.6	11.7	11.8	11.9	12.0	12.0	12.0	12.1	12.1	12.1
71	76	11.2	11.3	11.3	11.4	11.5	11.5	11.5	11.6	11.6	

Footnote to Table IV:

[1] *The multiples in this table are not applicable to annuities for a term certain; for such cases see paragraph (c) of § 1.72-5.*

Ages		Temporary period—maximum duration of annuity—[Years]									
Male	Female	21	22	23	24	25	26	27	28	29	30
72	77	10.7	10.8	10.9	10.9	11.0	11.0	11.0	11.0		
73	78	10.3	10.4	10.4	10.5	10.5	10.5	10.5			
74	79	9.9	9.9	10.0	10.0	10.1	10.1				
75	80	9.5	9.5	9.6	9.6	9.6					
76	81	9.1	9.1	9.1	9.1						
77	82	8.6	8.7	8.7							
78	83	8.2	8.3								
79	84	7.8									

Footnote to Table IV:

[1] *The multiples in this table are not applicable to annuities for a term certain; for such cases see paragraph (c) of § 1.72-5.*

Table V—Ordinary Life Annuities One Life—Expected Return Multiples

Age	Multiple
5	76.6
6	75.6
7	74.7
8	73.7
9	72.7
10	71.7
11	70.7
12	69.7
13	68.8
14	67.8
15	66.8
16	65.8
17	64.8
18	63.9
19	62.9
20	61.9
21	60.9
22	59.9
23	59.0
24	58.0
25	57.0
26	56.0
27	55.1
28	54.1
29	53.1
30	52.2
31	51.2
32	50.2
33	49.3
34	48.3
35	47.3
36	46.4
37	45.4
38	44.4
39	43.5
40	42.5

Age	Multiple
41	41.5
42	40.6
43	39.6
44	38.7
45	37.7
46	36.8
47	35.9
48	34.9
49	34.0
50	33.1
51	32.2
52	31.3
53	30.4
54	29.5
55	28.6
56	27.7
57	26.8
58	25.9
59	25.0
60	24.2
61	23.3
62	22.5
63	21.6
64	20.8
65	20.0
66	19.2
67	18.4
68	17.6
69	16.8
70	16.0
71	15.3
72	14.6
73	13.9
74	13.2
75	12.5
76	11.9
77	11.2
78	10.6
79	10.0

Age	Multiple
80	9.5
81	8.9
82	8.4
83	7.9
84	7.4
85	6.9
86	6.5
87	6.1
88	5.7
89	5.3
90	5.0
91	4.7
92	4.4
93	4.1
94	3.9
95	3.7
96	3.4
97	3.2
98	3.0
99	2.8
100	2.7
101	2.5
102	2.3
103	2.1
104	1.9
105	1.8
106	1.6
107	1.4
108	1.3
109	1.1
110	1.0
111	.9
112	.8
113	.7
114	.6
115	.5

Table VI—Ordinary Joint Life and Last Survivor Annuities; Two Lives—Expected Return Multiples

Ages	5	6	7	8	9	10	11	12	13	14
5	83.8	83.3	82.8	82.4	82.0	81.6	81.2	80.9	80.6	80.3
6	83.3	82.8	82.3	81.8	81.4	81.0	80.6	80.3	79.9	79.6
7	82.8	82.3	81.8	81.3	80.9	80.4	80.0	79.6	79.3	78.9
8	82.4	81.8	81.3	80.8	80.3	79.9	79.4	79.0	78.6	78.3
9	82.0	81.4	80.9	80.3	79.8	79.3	78.9	78.4	78.0	77.6
10	81.6	81.0	80.4	79.9	79.3	78.8	78.3	77.9	77.4	77.0
11	81.2	80.6	80.0	79.4	78.9	78.3	77.8	77.3	76.9	76.4
12	80.9	80.3	79.6	79.0	78.4	77.9	77.3	76.8	76.3	75.9
13	80.6	79.9	79.3	78.6	78.0	77.4	76.9	76.3	75.8	75.3
14	80.3	79.6	78.9	78.3	77.6	77.0	76.4	75.9	75.3	74.8
15	80.0	79.3	78.6	77.9	77.3	76.6	76.0	75.4	74.9	74.3
16	79.8	79.0	78.3	77.6	76.9	76.3	75.6	75.0	74.4	73.9
17	79.5	78.8	78.0	77.3	76.6	75.9	75.3	74.6	74.0	73.4
18	79.3	78.5	77.8	77.0	76.3	75.6	74.9	74.3	73.6	73.0
19	79.1	78.3	77.5	76.8	76.0	75.3	74.6	73.9	73.3	72.6
20	78.9	78.1	77.3	76.5	75.8	75.0	74.3	73.6	72.9	72.3
21	78.7	77.9	77.1	76.3	75.5	74.8	74.0	73.3	72.6	71.9
22	78.6	77.7	76.9	76.1	75.3	74.5	73.8	73.0	72.3	71.6
23	78.4	77.6	76.7	75.9	75.1	74.3	73.5	72.8	72.0	71.3
24	78.3	77.4	76.6	75.7	74.9	74.1	73.3	72.6	71.8	71.1
25	78.2	77.3	76.4	75.6	74.8	73.9	73.1	72.3	71.6	70.8
26	78.0	77.2	76.3	75.4	74.6	73.8	72.9	72.1	71.3	70.6
27	77.9	77.1	76.2	75.3	74.4	73.6	72.8	71.9	71.1	70.3
28	77.8	76.9	76.1	75.2	74.3	73.4	72.6	71.8	70.9	70.1
29	77.7	76.8	76.0	75.1	74.2	73.3	72.5	71.6	70.8	70.0
30	77.7	76.8	75.9	75.0	74.1	73.2	72.3	71.5	70.6	69.8
31	77.6	76.7	75.8	74.9	74.0	73.1	72.2	71.3	70.5	69.6
32	77.5	76.6	75.7	74.8	73.9	73.0	72.1	71.2	70.3	69.5
33	77.5	76.5	75.6	74.7	73.8	72.9	72.0	71.1	70.2	69.3
34	77.4	76.5	75.5	74.6	73.7	72.8	71.9	71.0	70.1	69.2
35	77.3	76.4	75.5	74.5	73.6	72.7	71.8	70.9	70.0	69.1
36	77.3	76.3	75.4	74.5	73.5	72.6	71.7	70.8	69.9	69.0

Ages	5	6	7	8	9	10	11	12	13	14
37	77.2	76.3	75.4	74.4	73.5	72.6	71.6	70.7	69.8	68.9
38	77.2	76.2	75.3	74.4	73.4	72.5	71.6	70.6	69.7	68.8
39	77.2	76.2	75.3	74.3	73.4	72.4	71.5	70.6	69.6	68.7
40	77.1	76.2	75.2	74.3	73.3	72.4	71.4	70.5	69.6	68.6
41	77.1	76.1	75.2	74.2	73.3	72.3	71.4	70.4	69.5	68.6
42	77.0	76.1	75.1	74.2	73.2	72.3	71.3	70.4	69.4	68.5
43	77.0	76.1	75.1	74.1	73.2	72.2	71.3	70.3	69.4	68.5
44	77.0	76.0	75.1	74.1	73.1	72.2	71.2	70.3	69.3	68.4
45	77.0	76.0	75.0	74.1	73.1	72.2	71.2	70.2	69.3	68.4
46	76.9	76.0	75.0	74.0	73.1	72.1	71.2	70.2	69.3	68.3
47	76.9	75.9	75.0	74.0	73.1	72.1	71.1	70.2	69.2	68.3
48	76.9	75.9	75.0	74.0	73.0	72.1	71.1	70.1	69.2	68.2
49	76.9	75.9	74.9	74.0	73.0	72.0	71.1	70.1	69.1	68.2
50	76.9	75.9	74.9	73.9	73.0	72.0	71.0	70.1	69.1	68.2
51	76.8	75.9	74.9	73.9	73.0	72.0	71.0	70.1	69.1	68.1
52	76.8	75.9	74.9	73.9	72.9	72.0	71.0	70.0	69.1	68.1
53	76.8	75.8	74.9	73.9	72.9	71.9	71.0	70.0	69.0	68.1
54	76.8	75.8	74.8	73.9	72.9	71.9	71.0	70.0	69.0	68.1
55	76.8	75.8	74.8	73.9	72.9	71.9	70.9	70.0	69.0	68.0
56	76.8	75.8	74.8	73.8	72.9	71.9	70.9	69.9	69.0	68.0
57	76.8	75.8	74.8	73.8	72.9	71.9	70.9	69.9	69.0	68.0
58	76.8	75.8	74.8	73.8	72.8	71.9	70.9	69.9	68.9	68.0
59	76.7	75.8	74.8	73.8	72.8	71.9	70.9	69.9	68.9	68.0
60	76.7	75.8	74.8	73.8	72.8	71.8	70.9	69.9	68.9	67.9
61	76.7	75.7	74.8	73.8	72.8	71.8	70.9	69.9	68.9	67.9
62	76.7	75.7	74.8	73.8	72.8	71.8	70.8	69.9	68.9	67.9
63	76.7	75.7	74.8	73.8	72.8	71.8	70.8	69.9	68.9	67.9
64	76.7	75.7	74.7	73.8	72.8	71.8	70.8	69.8	68.9	67.9
65	76.7	75.7	74.7	73.8	72.8	71.8	70.8	69.8	68.9	67.9
66	76.7	75.7	74.7	73.7	72.8	71.8	70.8	69.8	68.9	67.9
67	76.7	75.7	74.7	73.7	72.8	71.8	70.8	69.8	68.8	67.9
68	76.7	75.7	74.7	73.7	72.8	71.8	70.8	69.8	68.8	67.9
69	76.7	75.7	74.7	73.7	72.7	71.8	70.8	69.8	68.8	67.8
70	76.7	75.7	74.7	73.7	72.7	71.8	70.8	69.8	68.8	67.8
71	76.7	75.7	74.7	73.7	72.7	71.8	70.8	69.8	68.8	67.8
72	76.7	75.7	74.7	73.7	72.7	71.8	70.8	69.8	68.8	67.8

Ages	5	6	7	8	9	10	11	12	13	14
73	76.7	75.7	74.7	73.7	72.7	71.7	70.8	69.8	68.8	67.8
74	76.7	75.7	74.7	73.7	72.7	71.7	70.8	69.8	68.8	67.8
75	76.7	75.7	74.7	73.7	72.7	71.7	70.8	69.8	68.8	67.8
76	76.6	75.7	74.7	73.7	72.7	71.7	70.8	69.8	68.8	67.8
77	76.6	75.7	74.7	73.7	72.7	71.7	70.8	69.8	68.8	67.8
78	76.6	75.7	74.7	73.7	72.7	71.7	70.7	69.8	68.8	67.8
79	76.6	75.7	74.7	73.7	72.7	71.7	70.7	69.8	68.8	67.8
80	76.6	75.7	74.7	73.7	72.7	71.7	70.7	69.8	68.8	67.8
81	76.6	75.7	74.7	73.7	72.7	71.7	70.7	69.8	68.8	67.8
82	76.6	75.7	74.7	73.7	72.7	71.7	70.7	69.8	68.8	67.8
83	76.6	75.7	74.7	73.7	72.7	71.7	70.7	69.8	68.8	67.8
84	76.6	75.7	74.7	73.7	72.7	71.7	70.7	69.8	68.8	67.8
85	76.6	75.7	74.7	73.7	72.7	71.7	70.7	69.8	68.8	67.8
86	76.6	75.7	74.7	73.7	72.7	71.7	70.7	69.8	68.8	67.8
87	76.6	75.7	74.7	73.7	72.7	71.7	70.7	69.8	68.8	67.8
88	76.6	75.7	74.7	73.7	72.7	71.7	70.7	69.8	68.8	67.8
89	76.6	75.7	74.7	73.7	72.7	71.7	70.7	69.7	68.8	67.8
90	76.6	75.6	74.7	73.7	72.7	71.7	70.7	69.7	68.8	67.8
91	76.6	75.6	74.7	73.7	72.7	71.7	70.7	69.7	68.8	67.8
92	76.6	75.6	74.7	73.7	72.7	71.7	70.7	69.7	68.8	67.8
93	76.6	75.6	74.7	73.7	72.7	71.7	70.7	69.7	68.8	67.8
94	76.6	75.6	74.7	73.7	72.7	71.7	70.7	69.7	68.8	67.8
95	76.6	75.6	74.7	73.7	72.7	71.7	70.7	69.7	68.8	67.8
96	76.6	75.6	74.7	73.7	72.7	71.7	70.7	69.7	68.8	67.8
97	76.6	75.6	74.7	73.7	72.7	71.7	70.7	69.7	68.8	67.8
98	76.6	75.6	74.7	73.7	72.7	71.7	70.7	69.7	68.8	67.8
99	76.6	75.6	74.7	73.7	72.7	71.7	70.7	69.7	68.8	67.8
100	76.6	75.6	74.7	73.7	72.7	71.7	70.7	69.7	68.8	67.8
101	76.6	75.6	74.7	73.7	72.7	71.7	70.7	69.7	68.8	67.8
102	76.6	75.6	74.7	73.7	72.7	71.7	70.7	69.7	68.8	67.8
103	76.6	75.6	74.7	73.7	72.7	71.7	70.7	69.7	68.8	67.8
104	76.6	75.6	74.7	73.7	72.7	71.7	70.7	69.7	68.8	67.8
105	76.6	75.6	74.7	73.7	72.7	71.7	70.7	69.7	68.8	67.8
106	76.6	75.6	74.7	73.7	72.7	71.7	70.7	69.7	68.8	67.8
107	76.6	75.6	74.7	73.7	72.7	71.7	70.7	69.7	68.8	67.8
108	76.6	75.6	74.7	73.7	72.7	71.7	70.7	69.7	68.8	67.8

Ages	5	6	7	8	9	10	11	12	13	14
109	76.6	75.6	74.7	73.7	72.7	71.7	70.7	69.7	68.8	67.8
110	76.6	75.6	74.7	73.7	72.7	71.7	70.7	69.7	68.8	67.8
111	76.6	75.6	74.7	73.7	72.7	71.7	70.7	69.7	68.8	67.8
112	76.6	75.6	74.7	73.7	72.7	71.7	70.7	69.7	68.8	67.8
113	76.6	75.6	74.7	73.7	72.7	71.7	70.7	69.7	68.8	67.8
114	76.6	75.6	74.7	73.7	72.7	71.7	70.7	69.7	68.8	67.8
115	76.6	75.6	74.7	73.7	72.7	71.7	70.7	69.7	68.8	67.8

Table VI—Ordinary Joint Life and Last Survivor Annuities; Two Lives—Expected Return Multiples

Ages	15	16	17	18	19	20	21	22	23	24
15	73.8	73.3	72.9	72.4	72.0	71.6	71.3	70.9	70.6	70.3
16	73.3	72.8	72.3	71.9	71.4	71.0	70.7	70.3	70.0	69.6
17	72.9	72.3	71.8	71.3	70.9	70.5	70.0	69.7	69.3	69.0
18	72.4	71.9	71.3	70.8	70.4	69.0	69.5	69.9	68.7	68.3
19	72.0	71.4	70.9	70.4	69.8	69.4	68.9	68.5	68.1	67.7
20	71.6	71.0	70.5	69.9	69.4	68.8	68.4	67.9	67.5	67.1
21	71.3	70.7	70.0	69.5	68.9	68.4	67.9	67.4	66.9	66.5
22	70.9	70.3	69.7	69.0	68.5	67.9	67.4	66.9	66.4	65.9
23	70.6	70.0	69.3	68.7	68.1	67.5	66.9	66.4	65.9	65.4
24	70.3	69.6	69.0	68.3	67.7	67.1	66.5	65.9	65.4	64.9
25	70.1	69.3	68.6	68.0	67.3	66.7	66.1	65.5	64.9	64.4
26	69.8	69.1	68.3	67.6	67.0	66.3	65.7	65.1	64.5	63.9
27	69.6	68.8	68.1	67.3	66.7	66.0	65.3	64.7	64.1	63.5
28	69.3	68.6	67.8	67.1	66.4	65.7	65.0	64.3	63.7	63.1
29	69.1	68.4	67.6	66.8	66.1	65.4	64.7	64.0	63.3	62.7
30	69.0	68.2	67.4	66.6	65.8	65.1	64.4	63.7	63.0	62.3
31	68.8	68.0	67.2	66.4	65.6	64.8	64.1	63.4	62.7	62.0
32	68.6	67.8	67.0	66.2	65.4	64.6	63.8	63.1	62.4	61.7
33	68.5	67.6	66.8	66.0	65.2	64.4	63.6	62.8	62.1	61.4
34	68.3	67.5	66.6	65.8	65.0	64.2	63.4	62.6	61.9	61.1
35	68.2	67.4	66.5	65.6	64.8	64.0	63.2	62.4	61.6	60.9
36	68.1	67.2	66.4	65.5	64.7	63.8	63.0	62.2	61.4	60.6
37	68.0	67.1	66.2	65.4	64.5	63.7	62.8	62.0	61.2	60.4
38	67.9	67.0	66.1	65.2	64.4	63.5	62.7	61.8	61.0	60.2
39	67.8	66.9	66.0	65.1	64.2	63.4	62.5	61.7	60.8	60.0
40	67.7	66.8	65.9	65.0	64.1	63.3	62.4	61.5	60.7	59.9
41	67.7	66.7	65.8	64.9	64.0	63.1	62.3	61.4	60.5	59.7
42	67.6	66.7	65.7	64.8	63.9	63.0	62.2	61.3	60.4	59.6
43	67.5	66.6	65.7	64.8	63.8	62.9	62.1	61.2	60.3	59.4
44	67.5	66.5	65.6	64.7	63.8	62.9	62.0	61.1	60.2	59.3
45	67.4	66.5	65.5	64.6	63.7	62.8	61.9	61.0	60.1	59.2
46	67.4	66.4	65.4	64.6	63.6	62.7	61.8	60.9	60.0	59.1

Ages	15	16	17	18	19	20	21	22	23	24
47	67.3	66.4	65.4	64.5	63.6	62.6	61.7	60.8	59.9	59.0
48	67.3	66.3	65.4	64.4	63.5	62.6	61.6	60.7	59.8	58.9
49	67.2	66.3	65.3	64.4	63.5	62.5	61.6	60.7	59.7	58.8
50	67.2	66.2	65.3	64.3	63.4	62.5	61.5	60.6	59.7	58.8
51	67.2	66.2	65.3	64.3	63.4	62.4	61.5	60.5	59.6	58.7
52	67.1	66.2	65.2	64.3	63.3	62.4	61.4	60.5	59.6	58.6
53	67.1	66.2	65.2	64.2	63.3	62.3	61.4	60.4	59.5	58.6
54	67.1	66.1	65.2	64.2	63.2	62.3	61.3	60.4	59.5	58.5
55	67.1	66.1	65.1	64.2	63.2	62.3	61.3	60.4	59.4	58.5
56	67.0	66.1	65.1	64.1	63.2	62.2	61.3	60.3	59.4	58.4
57	67.0	66.1	65.1	64.1	63.2	62.2	61.2	60.3	59.3	58.4
58	67.0	66.0	65.1	64.1	63.1	62.2	61.2	60.3	59.3	58.4
59	67.0	66.0	65.0	64.1	63.1	62.1	61.2	60.2	59.3	58.3
60	67.0	66.0	65.0	64.1	63.1	62.1	61.2	60.2	59.2	58.3
61	67.0	66.0	65.0	64.0	63.1	62.1	61.1	60.2	59.2	58.3
62	66.9	66.0	65.0	64.0	63.1	62.1	61.1	60.2	59.2	58.2
63	66.9	66.0	65.0	64.0	63.0	62.1	61.1	60.1	59.2	58.2
64	66.9	65.9	65.0	64.0	63.0	62.1	61.1	60.1	59.2	58.2
65	66.9	65.9	65.0	64.0	63.0	62.0	61.1	60.1	59.1	58.2
66	66.9	65.9	64.9	64.0	63.0	62.0	61.1	60.1	59.1	58.2
67	66.9	65.9	64.9	64.0	63.0	62.0	61.1	60.1	59.1	58.1
68	66.9	65.9	64.9	64.0	63.0	62.0	61.0	60.1	59.1	58.1
69	66.9	65.9	64.9	63.9	63.0	62.0	61.0	60.0	59.1	58.1
70	66.9	65.9	64.9	63.9	63.0	62.0	61.0	60.0	59.1	58.1
71	66.9	65.9	64.9	63.9	62.9	62.0	61.0	60.0	59.1	58.1
72	66.9	65.9	64.9	63.9	62.9	62.0	61.0	60.0	59.0	58.1
73	66.8	65.9	64.9	63.9	62.9	62.0	61.0	60.0	59.0	58.1
74	66.8	65.9	64.9	63.9	62.9	62.0	61.0	60.0	59.0	58.1
75	66.8	65.9	64.9	63.9	62.9	61.9	61.0	60.0	59.0	58.1
76	66.8	65.9	64.9	63.9	62.9	61.9	61.0	60.0	59.0	58.0
76	66.8	65.9	64.9	63.9	62.9	61.9	61.0	60.0	59.0	58.0
77	66.8	65.9	64.9	63.9	63.9	62.9	61.0	60.0	59.0	58.0
78	66.8	65.8	64.9	63.9	62.9	61.9	61.0	60.0	59.0	58.0
79	66.8	65.8	64.9	63.9	62.9	61.9	61.0	60.0	59.0	58.0
80	66.8	65.9	64.9	63.9	62.9	61.9	60.9	60.0	59.0	58.0
81	66.8	65.8	64.9	63.9	62.9	61.9	60.9	60.0	59.0	58.0

Ages	15	16	17	18	19	20	21	22	23	24
82	66.8	65.8	64.9	63.9	62.9	61.9	60.9	60.0	59.0	58.0
83	66.8	65.8	64.9	63.9	62.9	61.9	60.9	60.0	59.0	58.0
84	66.8	65.8	64.8	63.9	62.9	61.9	60.9	60.0	59.0	58.0
85	66.8	65.8	64.8	63.9	62.9	61.9	60.9	60.0	59.0	58.0
86	66.8	65.8	64.8	63.9	62.9	61.9	60.9	60.0	59.0	58.0
87	66.8	65.8	64.8	63.9	62.9	61.9	60.9	60.0	59.0	58.0
88	66.8	65.8	64.8	63.9	62.9	61.9	60.9	60.0	59.0	58.0
89	66.8	65.8	64.8	63.9	62.9	61.9	60.9	60.0	59.0	58.0
90	66.8	65.8	64.8	63.9	62.9	61.9	60.9	60.0	59.0	58.0
91	66.8	65.8	64.8	63.9	62.9	61.9	60.9	60.0	59.0	58.0
92	66.8	65.8	64.8	63.9	62.9	61.9	60.9	59.9	59.0	58.0
93	66.8	65.8	64.8	63.9	62.9	61.9	60.9	59.9	59.0	58.0
94	66.8	65.8	64.8	63.9	62.9	61.9	60.9	59.9	59.0	58.0
95	66.8	65.8	64.8	63.9	62.9	61.9	60.9	59.9	59.0	58.0
96	66.8	65.8	64.8	63.9	62.9	61.9	60.9	59.9	59.0	58.0
97	66.8	65.8	64.8	63.9	62.9	61.9	60.9	59.9	59.0	58.0
98	66.8	65.8	64.8	63.9	62.9	61.9	60.9	59.9	59.0	58.0
99	66.8	65.8	64.8	63.9	62.9	61.9	60.9	59.9	59.0	58.0
100	66.8	65.8	64.8	63.9	62.9	61.9	60.9	59.9	59.0	58.0
101	66.8	65.8	64.8	63.9	62.9	61.9	60.9	59.9	59.0	58.0
102	66.8	65.8	64.8	63.9	62.9	61.9	60.9	59.9	59.0	58.0
103	66.8	65.8	64.8	63.9	62.9	61.9	60.9	59.9	59.0	58.0
104	66.8	65.8	64.8	63.9	62.9	61.9	60.9	59.9	59.0	58.0
105	66.8	65.8	64.8	63.9	62.9	61.9	60.9	59.9	59.0	58.0
106	66.8	65.8	64.8	63.9	62.9	61.9	60.9	59.9	59.0	58.0
107	66.8	65.8	64.8	63.9	62.9	61.9	60.9	59.9	59.0	58.0
108	66.8	65.8	64.8	63.9	62.9	61.9	60.9	59.9	59.0	58.0
109	66.8	65.8	64.8	63.9	62.9	61.9	60.9	59.9	59.0	58.0
110	66.8	65.8	64.8	63.9	62.9	61.9	60.9	59.9	59.0	58.0
111	66.8	65.8	64.8	63.9	62.9	61.9	60.9	59.9	59.0	58.0
112	66.8	65.8	64.8	63.9	62.9	61.9	60.9	59.9	59.0	58.0
113	66.8	65.8	64.8	63.9	62.9	61.9	60.9	59.9	59.0	58.0
114	66.8	65.8	64.8	63.9	62.9	61.9	60.9	59.9	59.0	58.0
115	66.8	65.8	64.8	63.9	62.9	61.9	60.9	59.9	59.0	58.0

Table VI—Ordinary Joint Life and Last Survivor Annuities; Two Lives—Expected Return Multiples

Ages	25	26	27	28	29	30	31	32	33	34
25	63.9	63.4	62.9	62.5	62.1	61.7	61.3	61.0	60.7	60.4
26	63.4	62.9	62.4	61.9	61.5	61.1	60.7	60.4	60.0	59.7
27	62.9	62.4	61.9	61.4	60.9	60.5	60.1	59.7	59.4	59.0
28	62.5	61.9	61.4	60.9	60.4	60.0	59.5	59.1	58.7	58.4
29	62.1	61.5	60.9	60.4	59.9	59.4	59.0	58.5	58.1	57.7
30	61.7	61.1	60.5	60.0	59.4	58.9	58.4	58.0	57.5	57.1
31	61.3	60.7	60.1	59.5	59.0	58.4	57.9	57.4	57.0	56.5
32	61.0	60.4	59.7	59.1	58.5	58.0	57.4	56.9	56.4	56.0
33	60.7	60.0	59.4	58.7	58.1	57.5	57.0	56.4	55.9	55.5
34	60.4	59.7	59.0	58.4	57.7	57.1	56.5	56.0	55.5	54.9
35	60.1	59.4	58.7	58.0	57.4	56.7	56.1	55.6	55.0	54.5
36	59.9	59.1	58.4	57.7	57.0	56.4	55.8	55.1	54.6	54.0
37	59.6	58.9	58.1	57.4	56.7	56.0	55.4	54.8	54.2	53.6
38	59.4	58.6	57.9	57.9	56.4	55.7	55.1	54.4	53.8	53.2
39	59.2	58.4	57.7	56.9	56.2	55.4	54.7	54.1	53.4	52.8
40	59.0	58.2	57.4	56.7	55.9	55.2	54.5	53.8	53.1	52.4
41	58.9	58.0	57.2	56.4	55.7	54.9	54.2	53.5	52.8	52.1
42	58.7	57.9	57.1	56.2	55.5	54.7	53.9	53.2	52.5	51.8
43	58.6	57.7	56.9	56.1	55.3	54.5	53.7	52.9	52.2	51.5
44	58.4	57.6	56.7	55.9	55.1	54.3	53.5	52.7	52.0	51.2
45	58.3	57.4	56.6	55.7	54.9	54.1	53.3	52.5	51.7	51.0
46	58.2	57.3	56.5	55.6	54.8	53.9	53.1	52.3	51.5	50.7
47	58.1	57.2	56.3	55.5	54.6	53.8	52.9	52.1	51.3	50.5
48	58.0	57.1	56.2	55.3	54.5	53.6	52.8	51.9	51.1	50.3
49	57.9	57.0	56.1	55.2	54.4	53.5	52.6	51.8	51.0	50.1
50	57.8	56.9	56.0	55.1	54.2	53.4	52.5	51.7	50.8	50.0
51	57.8	56.9	55.9	55.0	54.1	53.3	52.4	51.5	50.7	49.8
52	57.7	56.8	55.9	55.0	54.1	53.2	52.3	51.4	50.5	49.7
53	57.6	56.7	55.8	54.9	54.0	53.1	52.2	51.3	50.4	49.6
54	57.6	56.7	55.7	54.8	53.9	53.0	52.1	51.2	50.3	49.4
55	57.5	56.6	55.7	54.7	53.8	52.9	52.0	51.1	40.2	49.3
56	57.5	56.5	55.6	54.7	53.8	52.8	51.9	51.0	50.1	49.2

Ages	25	26	27	28	29	30	31	32	33	34
57	57.4	56.5	55.6	54.6	53.7	52.8	51.9	50.9	50.0	49.1
58	57.4	56.5	55.5	54.6	53.6	52.7	51.8	50.9	50.0	49.1
59	57.4	56.4	55.5	54.5	53.6	52.7	51.7	50.8	49.9	49.0
60	57.3	56.4	55.4	54.5	53.6	52.6	51.7	50.8	49.8	48.9
61	57.3	56.4	55.4	54.5	53.5	52.6	51.6	50.7	49.8	48.9
62	57.3	56.3	55.4	54.4	53.5	52.5	51.6	50.7	49.7	48.8
63	57.3	56.3	55.3	54.4	53.4	52.5	51.6	50.6	49.7	48.7
64	57.2	56.3	55.3	54.4	53.4	52.5	51.5	50.6	49.6	48.7
65	57.2	56.3	55.3	54.3	53.4	52.4	51.5	50.5	49.6	48.7
66	57.2	56.2	55.3	54.3	53.4	52.4	51.5	50.5	49.6	48.6
67	57.2	56.2	55.3	54.3	53.3	52.4	51.4	50.5	49.5	48.6
68	57.2	56.2	55.2	54.3	53.3	52.4	51.4	50.4	49.5	48.6
69	57.1	56.2	55.2	54.3	53.3	52.3	51.4	50.4	49.5	48.5
70	57.1	56.2	55.2	54.2	53.3	52.3	51.4	50.4	49.4	48.5
71	57.1	56.2	55.2	54.2	53.3	52.3	51.3	50.4	49.4	48.5
72	57.1	56.1	55.2	54.2	53.2	52.3	51.3	50.4	49.4	48.5
73	57.1	56.1	55.2	54.2	53.2	52.3	51.3	50.3	49.4	48.4
74	57.1	56.1	55.2	54.2	53.2	52.3	51.3	50.3	49.4	48.4
75	57.1	56.1	55.1	54.2	53.2	52.2	51.3	50.3	49.4	48.4
76	57.1	56.1	55.1	54.2	53.2	52.2	51.3	50.3	49.3	48.4
77	57.1	56.1	55.1	54.2	53.2	52.2	51.3	50.3	49.3	48.4
78	57.1	56.1	55.1	54.2	53.2	52.2	51.3	50.3	49.3	48.4
79	57.1	56.1	55.1	54.1	53.2	52.2	51.2	50.3	49.3	48.4
80	57.1	56.1	55.1	54.1	53.2	52.2	51.2	50.3	49.3	48.3
81	57.0	56.1	55.1	54.1	53.2	52.2	51.2	50.3	49.3	48.3
82	57.0	56.1	55.1	54.1	53.2	52.2	51.2	50.3	49.3	48.3
83	57.0	56.1	55.1	54.1	53.2	52.2	51.2	50.3	49.3	48.3
84	57.0	56.1	55.1	54.1	53.2	52.2	51.2	50.3	49.3	48.3
85	57.0	56.1	55.1	54.1	53.2	52.2	51.2	50.2	49.3	48.3
86	57.0	56.1	55.1	54.1	53.1	52.2	51.2	50.2	49.3	48.3
87	57.0	56.1	55.1	54.1	53.1	52.2	51.2	50.2	49.3	48.3
88	57.0	56.1	55.1	54.1	53.1	52.2	51.2	50.2	49.3	48.3
89	57.0	56.1	55.1	54.1	53.1	52.2	51.2	50.2	49.3	48.3
90	57.0	56.1	55.1	54.1	53.1	52.2	51.2	50.2	49.3	48.3
91	57.0	56.1	55.1	54.1	53.1	52.2	51.2	50.2	49.3	48.3
92	57.0	56.1	55.1	54.1	53.1	52.2	51.2	50.2	49.3	48.3

Ages	25	26	27	28	29	30	31	32	33	34
93	57.0	56.1	55.1	54.1	53.1	52.2	51.2	50.2	49.3	48.3
94	57.0	56.0	55.1	54.1	53.1	52.2	51.2	50.2	49.3	48.3
95	57.0	56.0	55.1	54.1	53.1	52.2	51.2	50.2	49.3	48.3
96	57.0	56.0	55.1	54.1	53.1	52.2	51.2	50.2	49.3	48.3
97	57.0	56.0	55.1	54.1	53.1	52.2	51.2	50.2	49.3	48.3
98	57.0	56.0	55.1	54.1	53.1	52.2	51.2	50.2	49.3	48.3
99	57.0	56.0	55.1	54.1	53.1	52.2	51.2	50.2	49.3	48.3
100	57.0	56.0	55.1	54.1	53.1	52.2	51.2	50.2	49.3	48.3
101	57.0	56.0	55.1	54.1	53.1	52.2	51.2	50.2	49.3	48.3
102	57.0	56.0	55.1	54.1	53.1	52.2	51.2	50.2	49.3	48.3
103	57.0	56.0	55.1	54.1	53.1	52.2	51.2	50.2	49.3	48.3
104	57.0	56.0	55.1	54.1	53.1	52.2	51.2	50.2	49.3	48.3
105	57.0	56.0	55.1	54.1	53.1	52.2	51.2	50.2	49.3	48.3
106	57.0	56.0	55.1	54.1	53.1	52.2	51.2	50.2	49.3	48.3
107	57.0	56.0	55.1	54.1	53.1	52.2	51.2	50.2	49.3	48.3
108	57.0	56.0	55.1	54.1	53.1	52.2	51.2	50.2	49.3	48.3
109	57.0	56.0	55.1	54.1	53.1	52.2	51.2	50.2	49.3	48.3
110	57.0	56.0	55.1	54.1	53.1	52.2	51.2	50.2	49.3	48.3
111	57.0	56.0	55.1	54.1	53.1	52.2	51.2	50.2	49.3	48.3
112	57.0	56.0	55.1	54.1	53.1	52.2	51.2	50.2	49.3	48.3
113	57.0	56.0	55.1	54.1	53.1	52.2	51.2	50.2	49.3	48.3
114	57.0	56.0	55.1	54.1	53.1	52.2	51.2	50.2	49.3	48.3
115	57.0	56.0	55.1	54.1	53.1	52.2	51.2	50.2	49.3	48.3

Table VI—Ordinary Joint Life and Last Survivor Annuities; Two Lives—Expected Return Multiples

Ages	35	36	37	38	39	40	41	42	43	44
35	54.0	53.5	53.0	52.6	52.2	51.8	51.4	51.1	50.8	50.5
36	53.5	53.0	52.5	52.0	51.6	51.2	50.8	50.4	50.1	49.8
37	53.0	52.5	52.0	51.5	51.0	50.6	50.2	49.8	49.5	49.1
38	52.6	52.0	51.5	51.0	50.5	50.0	49.6	49.2	48.8	48.5
39	52.2	51.6	51.0	50.5	50.0	49.5	49.1	48.6	48.2	47.8
40	51.8	51.2	50.6	50.0	49.5	49.0	48.5	48.1	47.6	47.2
41	51.4	50.8	50.2	49.6	49.1	48.5	48.0	47.5	47.1	46.7
42	51.1	50.4	49.8	49.2	48.6	48.1	47.5	47.0	46.6	46.1
43	50.8	50.1	49.5	48.8	48.2	47.6	47.1	46.6	46.0	45.6
44	50.5	49.8	49.1	48.5	47.8	47.2	46.7	46.1	45.6	45.1
45	50.2	49.5	48.8	48.1	47.5	46.9	46.3	45.7	45.1	44.6
46	50.0	49.2	48.5	47.8	47.2	46.5	45.9	45.3	44.7	44.1
47	49.7	49.0	48.3	47.5	46.8	46.2	45.5	44.9	44.3	43.7
48	49.5	48.8	48.0	47.3	46.6	45.9	45.2	44.5	43.9	43.3
49	49.3	48.5	47.8	47.0	46.3	45.6	44.9	44.2	43.6	42.9
50	49.2	48.4	47.6	46.8	46.0	45.3	44.6	43.9	43.2	42.6
51	49.0	48.2	47.4	46.6	45.8	45.1	44.3	43.6	42.9	44.2
52	48.8	48.0	47.2	46.4	45.6	44.8	44.1	43.3	42.6	41.9
53	48.7	47.9	47.0	46.2	45.4	44.6	43.9	43.1	42.4	41.7
54	48.6	47.7	46.9	46.0	45.2	44.4	43.6	42.9	42.1	41.4
55	48.5	47.6	46.7	45.9	45.1	44.2	43.4	42.7	41.9	41.2
56	48.3	47.5	46.6	45.8	44.9	44.1	43.3	42.5	41.7	40.9
57	48.3	47.4	46.5	45.6	44.8	43.9	43.1	42.3	41.5	40.7
58	48.2	47.3	46.4	45.5	44.7	43.8	43.0	42.1	41.3	40.5
59	48.1	47.2	46.3	45.4	44.5	43.7	42.8	42.0	41.2	40.4
60	48.0	47.1	46.2	45.3	44.4	43.6	42.7	41.9	41.0	40.2
61	47.9	47.0	46.1	45.2	44.3	43.5	42.6	41.7	40.9	40.0
62	47.9	47.0	46.0	45.1	44.2	43.4	42.5	41.6	40.8	39.9
63	47.8	46.9	46.0	45.1	44.2	43.3	42.4	41.5	40.6	39.8
64	47.8	46.8	45.9	45.0	44.1	43.2	42.3	41.4	40.5	39.7
65	47.7	46.8	45.9	44.9	44.0	43.1	42.2	41.3	40.4	39.6
66	47.7	46.7	45.8	44.9	44.0	43.1	42.2	41.3	40.4	39.5

Ages	35	36	37	38	39	40	41	42	43	44
67	47.6	46.7	45.8	44.8	43.9	43.0	42.1	41.2	40.3	39.4
68	47.6	46.7	45.7	44.8	43.9	42.9	42.0	41.1	40.2	39.3
69	47.6	46.6	45.7	44.8	43.8	42.9	42.0	41.1	40.2	39.3
70	47.5	46.6	45.7	44.7	43.8	42.9	41.9	41.0	40.1	39.2
71	47.5	46.6	45.6	44.7	43.8	42.8	41.9	41.0	40.1	39.1
72	47.5	46.6	45.6	44.7	43.7	42.8	41.9	40.9	40.0	39.1
73	47.5	46.5	45.6	44.6	43.7	42.8	41.8	40.9	40.0	39.0
74	47.5	46.5	45.6	44.6	43.7	42.7	41.8	40.9	39.9	39.0
75	47.4	46.5	45.5	44.6	43.6	42.7	41.8	40.8	39.9	39.0
76	47.4	46.5	45.5	44.6	43.6	42.7	41.7	40.8	39.9	38.9
77	47.4	46.5	45.5	44.6	43.6	42.7	41.7	40.8	39.8	38.9
78	47.4	46.4	45.5	44.5	43.6	42.6	41.7	40.7	39.8	38.9
79	47.4	46.4	45.5	44.5	43.6	42.6	41.7	40.7	39.8	38.9
80	47.4	46.4	45.5	44.5	43.6	42.6	41.7	40.7	39.8	38.8
81	47.4	46.4	45.5	44.5	43.5	42.6	41.6	40.7	39.8	38.8
82	47.4	46.4	45.4	44.5	43.5	42.6	41.6	40.7	39.7	38.8
83	47.4	46.4	45.4	44.5	43.5	42.6	41.6	40.7	39.7	38.8
84	47.4	46.4	45.4	44.5	43.5	42.6	41.6	40.7	39.7	38.8
85	47.4	46.4	45.4	44.5	43.5	42.6	41.6	40.7	39.7	38.8
86	47.3	46.4	45.4	44.5	43.5	42.5	41.6	40.6	39.7	38.8
87	47.3	46.4	45.4	44.5	43.5	42.5	41.6	40.6	39.7	38.7
88	47.3	46.4	45.4	44.5	43.5	42.5	41.6	40.6	39.7	38.7
89	47.3	46.4	45.4	44.4	43.5	42.5	41.6	40.6	39.7	38.7
90	47.3	46.4	45.4	44.4	43.5	42.5	41.6	40.6	39.7	38.7
91	47.3	46.4	45.4	44.4	43.5	42.5	41.6	40.6	39.7	39.7
92	47.3	46.4	45.4	44.4	44.4	43.5	42.5	41.6	40.6	38.7
93	47.3	46.4	45.4	43.5	42.5	41.6	40.6	39.7	39.7	38.7
94	47.3	46.4	45.4	44.4	43.5	42.5	41.6	40.6	39.7	38.7
95	47.3	46.4	45.4	44.4	43.5	42.5	41.6	40.6	39.7	38.7
96	47.3	46.4	45.4	44.4	43.5	42.5	41.6	40.6	39.7	38.7
97	47.3	46.4	45.4	44.4	43.5	42.5	41.6	40.6	39.6	38.7
98	47.3	46.4	45.4	44.4	43.5	42.5	41.6	40.6	39.6	38.7
99	47.3	46.4	45.4	44.4	43.5	42.5	41.5	40.6	39.6	38.7
100	47.3	46.4	45.4	44.4	43.5	42.5	41.5	40.6	39.6	38.7
101	47.3	46.4	45.4	44.4	43.5	42.5	41.5	40.6	39.6	38.7
102	47.3	46.4	45.4	44.4	43.5	42.5	41.5	40.6	39.6	38.7

Ages	35	36	37	38	39	40	41	42	43	44
103	47.3	46.4	45.4	44.4	43.5	42.5	41.5	40.6	39.6	38.7
104	47.3	46.4	45.4	44.4	43.5	42.5	41.5	40.6	39.6	38.7
105	47.3	46.4	45.4	44.4	43.5	42.5	41.5	40.6	39.6	38.7
106	47.3	46.4	45.4	44.4	43.5	42.5	41.5	40.6	39.6	38.7
107	47.3	46.4	45.4	44.4	43.5	42.5	41.5	40.6	39.6	38.7
108	47.3	46.4	45.4	44.4	43.5	42.5	41.5	40.6	39.6	38.7
109	47.3	46.4	45.4	44.4	43.5	42.5	41.5	40.6	39.6	38.7
110	47.3	46.4	45.4	44.4	43.5	42.5	41.5	40.6	39.6	38.7
111	47.3	46.4	45.4	44.4	43.5	42.5	41.5	40.6	39.6	38.7
112	47.3	46.4	45.4	44.4	43.5	42.5	41.5	40.6	39.6	38.7
113	47.3	46.4	45.4	44.4	43.5	42.5	41.5	40.6	39.6	38.7
114	47.3	46.4	45.4	44.4	43.5	42.5	41.5	40.6	39.6	38.7
114	47.3	46.4	45.4	44.4	43.5	42.5	41.5	40.6	39.6	38.7
115	47.3	46.4	45.4	44.4	43.5	42.5	41.5	40.6	39.6	38.7

Table VI—Ordinary Joint Life and Last Survivor Annuities; Two Lives—Expected Return Multiples

Ages	45	46	47	48	49	50	51	52	53	54
45	44.1	43.6	43.2	42.7	42.3	42.0	41.6	41.3	41.0	40.7
46	43.6	43.1	42.6	42.2	41.8	41.4	41.0	40.6	40.3	40.0
47	43.2	42.6	42.1	41.7	41.2	40.8	40.4	40.0	39.7	39.3
48	42.7	42.2	41.7	41.2	40.7	40.2	39.8	39.4	39.0	38.7
49	42.3	41.8	41.2	40.7	40.2	39.7	39.3	38.8	38.4	38.1
50	42.0	41.4	40.8	40.2	39.7	39.2	38.7	38.3	37.9	37.5
51	41.6	41.0	40.4	39.8	39.3	38.7	38.2	37.8	37.3	36.9
52	41.3	40.6	40.0	39.4	38.8	38.3	37.8	37.3	36.8	36.4
53	41.0	40.3	39.7	39.0	38.4	37.9	37.3	36.8	36.3	35.8
54	40.7	40.0	39.3	38.7	38.1	37.5	36.9	36.4	35.8	35.3
55	40.4	39.7	39.0	38.4	37.7	37.1	36.5	35.9	35.4	34.9
56	40.2	39.5	38.7	38.1	37.4	36.8	36.1	35.6	35.0	34.4
57	40.0	39.2	38.5	37.8	37.1	36.4	35.8	35.2	34.6	34.0
58	39.7	39.0	38.2	37.5	36.8	36.1	35.5	34.8	34.2	33.6
59	39.6	38.8	38.0	37.3	36.6	35.9	35.2	34.5	33.9	33.3
60	39.4	38.6	37.8	37.1	36.3	35.6	34.9	34.2	33.6	32.9
61	39.2	38.4	37.6	36.9	36.1	35.4	34.6	33.9	33.3	32.6
62	39.1	38.3	37.5	36.7	35.9	35.1	34.4	33.7	33.0	32.3
63	38.9	38.1	37.3	36.5	35.7	34.9	34.2	33.5	32.7	32.0
64	38.8	38.0	37.2	36.3	35.5	34.8	34.0	33.2	32.5	31.8
65	38.7	37.9	37.0	36.2	35.4	34.6	33.8	33.0	32.3	31.6
66	38.6	37.8	36.9	36.1	35.2	34.4	33.6	32.9	32.1	31.4
67	38.5	37.7	36.8	36.0	35.1	34.3	33.5	32.7	31.9	31.2
68	38.4	37.6	36.7	35.8	35.0	34.2	33.4	32.5	31.8	31.0
69	38.4	37.5	36.6	35.7	34.9	34.1	33.2	32.4	31.6	30.8
70	38.3	37.4	36.5	35.7	34.8	34.0	33.1	32.3	31.5	30.7
71	38.2	37.3	36.5	35.6	34.7	33.9	33.0	32.2	31.4	30.5
72	38.2	37.3	36.4	35.5	34.6	33.8	32.9	32.1	31.2	30.4
73	38.1	37.2	36.3	35.4	34.6	33.7	32.8	32.0	31.1	30.3
74	38.1	37.2	36.3	35.4	34.5	33.6	32.8	31.9	31.1	30.2
75	38.1	37.1	36.2	35.3	34.5	33.6	32.7	31.8	31.0	30.1
76	38.0	37.1	36.2	35.3	34.4	33.5	32.6	31.8	30.9	30.1

Ages	45	46	47	48	49	50	51	52	53	54
77	38.0	37.1	36.2	35.3	34.4	33.5	32.6	31.7	30.8	30.0
78	38.0	37.0	36.1	35.2	34.3	33.4	32.5	31.7	30.8	29.9
79	37.9	37.0	36.1	35.2	34.3	33.4	32.5	31.6	30.7	29.9
80	37.9	37.0	36.1	35.2	34.2	33.4	32.5	31.6	30.7	29.8
81	37.9	37.0	36.0	35.1	34.2	33.3	32.4	31.5	30.7	29.8
82	37.9	36.9	36.0	35.1	34.2	33.3	32.4	31.5	30.6	29.7
83	37.9	36.9	36.0	35.1	34.2	33.3	32.4	31.5	30.6	29.7
84	37.8	36.9	36.9	35.0	34.2	33.2	32.3	31.4	30.6	29.7
85	37.8	36.9	36.0	35.1	34.1	33.2	32.3	31.4	30.5	29.6
86	38.8	36.9	36.0	35.0	34.1	33.2	32.3	31.4	30.5	29.6
87	37.8	36.9	35.9	35.0	34.1	33.2	32.3	31.4	30.5	29.6
88	37.8	36.9	35.9	35.0	34.1	33.2	32.3	31.4	30.5	29.6
89	37.8	36.9	35.9	35.0	34.1	33.2	32.3	31.4	30.5	29.6
90	37.8	36.9	35.9	35.0	34.1	33.2	32.3	31.3	30.5	29.6
91	37.8	36.8	35.9	35.0	34.1	33.2	32.2	31.3	30.4	29.5
92	37.8	36.8	35.9	35.0	34.1	33.2	32.2	31.3	30.4	29.5
93	37.8	36.8	35.9	35.0	34.1	33.1	32.2	31.3	30.4	29.5
94	37.8	36.8	35.9	35.0	34.1	33.1	32.2	31.3	30.4	29.5
95	37.8	36.8	35.9	35.0	34.0	33.1	32.2	31.3	30.4	29.5
96	37.8	36.8	35.9	35.0	34.0	33.1	32.2	31.3	30.4	29.5
97	37.8	36.8	35.9	35.0	34.0	33.1	32.2	31.3	30.4	29.5
98	37.8	36.8	35.9	35.0	34.0	33.1	32.2	31.3	30.4	29.5
99	37.8	36.8	35.9	35.0	34.0	33.1	32.2	31.3	30.4	29.5
101	37.8	36.8	35.9	35.0	34.0	33.1	32.2	31.3	30.4	29.5
102	37.8	36.8	35.9	35.0	34.0	33.1	32.2	31.3	30.4	29.5
103	37.7	36.8	35.9	34.9	34.0	33.1	32.2	31.3	30.4	29.5
104	37.7	36.8	35.9	34.9	34.0	33.1	32.2	31.3	30.4	29.5
105	37.7	36.8	35.9	34.9	34.0	33.1	32.2	31.3	30.4	29.5
106	37.7	36.8	35.9	34.9	34.0	33.1	32.2	31.3	30.4	29.5
107	37.7	36.8	35.9	34.9	34.0	33.1	32.2	31.3	30.4	29.5
108	37.7	36.8	35.9	34.9	34.0	33.1	32.2	31.3	30.4	29.5
109	37.7	36.8	35.9	34.9	34.0	33.1	32.2	31.3	30.4	29.5
110	37.7	36.8	35.9	34.9	34.0	33.1	32.2	31.3	30.4	29.5
111	37.7	36.8	35.9	34.9	34.0	33.1	32.2	31.3	30.4	29.5
112	37.7	36.8	35.9	34.9	34.0	33.1	32.2	31.3	30.4	29.5
113	37.7	36.8	35.9	34.9	34.0	33.1	32.2	31.3	30.4	29.5

Ages	45	46	47	48	49	50	51	52	53	54
114	37.7	36.8	35.9	34.9	34.0	33.1	32.2	31.3	30.4	29.5
115	37.7	36.8	35.9	34.9	34.0	33.1	32.2	31.3	30.4	29.5

Table VI—Ordinary Joint Life and Last Survivor Annuities; Two Lives—Expected Return Multiples

Ages	55	56	57	58	59	60	61	62	63	64
55	34.4	33.9	33.5	33.1	32.7	32.3	32.0	31.7	31.4	31.1
56	33.9	33.4	33.0	32.5	32.1	31.7	31.4	31.0	30.7	30.4
57	33.5	33.0	32.5	32.0	31.6	31.2	30.8	30.4	30.1	29.8
58	33.1	32.5	32.0	31.5	31.1	30.6	30.2	29.9	29.5	29.2
59	32.7	32.1	31.6	31.1	30.6	30.1	29.7	29.3	28.9	28.6
60	32.3	31.7	31.2	30.6	30.1	29.7	29.2	28.8	28.4	28.0
61	32.0	31.4	30.8	30.2	29.7	29.2	28.7	28.3	27.8	27.4
62	31.7	31.0	30.4	29.9	29.3	28.8	28.3	27.8	27.3	26.9
63	31.4	30.7	30.1	29.5	28.9	28.4	27.8	27.3	26.9	26.4
64	31.1	30.4	29.8	29.2	28.6	28.0	27.4	26.9	26.4	25.9
65	30.9	30.2	29.5	28.9	28.2	27.6	27.1	26.5	26.0	25.5
66	30.6	29.9	29.2	28.6	27.9	27.3	26.7	26.1	25.6	25.1
67	30.4	29.7	29.0	28.3	27.6	27.0	26.4	25.8	25.2	24.7
68	30.2	29.5	28.8	28.1	27.4	26.7	26.1	25.5	24.9	24.3
69	30.1	29.3	28.6	27.8	27.1	26.5	25.8	25.2	24.6	24.0
70	29.9	29.1	28.4	27.6	26.9	26.2	25.6	24.9	24.3	23.7
71	29.7	29.0	28.2	27.5	26.7	26.0	25.3	24.7	24.0	23.4
72	29.6	28.8	28.1	27.3	26.5	25.8	25.1	24.4	23.8	23.1
73	29.5	28.7	27.9	27.1	26.4	25.6	24.9	24.2	23.5	22.9
74	29.4	28.6	27.8	27.0	26.2	25.5	24.7	24.0	23.3	22.7
75	29.3	28.5	27.7	26.9	26.1	25.3	24.6	23.8	23.1	22.4
76	29.2	28.4	27.6	26.8	26.0	25.2	24.4	23.7	23.0	22.3
77	29.1	28.3	27.5	26.7	25.9	25.1	24.3	23.6	22.8	22.1
78	29.1	28.2	27.4	26.6	25.8	25.0	24.2	23.4	22.7	21.9
79	29.0	28.2	27.3	26.5	25.7	24.9	24.1	23.3	22.6	21.8
80	29.0	28.1	27.3	26.4	25.6	24.8	24.0	23.2	22.4	21.7
81	28.9	28.1	27.2	26.4	25.5	24.7	23.9	23.1	22.3	21.6
82	28.9	28.0	27.2	26.3	25.5	24.6	23.8	23.0	22.3	21.5
83	28.8	28.0	27.1	26.3	25.4	24.6	23.8	23.0	22.2	21.4
84	28.8	27.9	27.1	26.2	25.4	24.5	23.7	22.9	22.1	21.3
85	28.8	27.9	27.0	26.2	25.3	24.5	23.7	22.8	22.0	21.3
86	28.7	27.9	27.0	26.1	25.3	24.5	23.6	22.8	22.0	21.2

Ages	55	56	57	58	59	60	61	62	63	64
87	28.7	27.8	27.0	26.1	25.3	24.4	23.6	22.8	21.9	21.1
88	28.7	27.8	27.0	26.1	25.2	24.4	23.5	22.7	21.9	21.1
89	28.7	27.8	26.9	26.1	25.2	24.4	23.5	22.7	21.9	21.1
90	28.7	27.8	26.9	26.1	25.2	24.3	23.5	22.7	21.8	21.0
91	28.7	27.8	26.9	26.0	25.2	24.3	23.5	22.6	21.8	21.0
92	28.6	27.8	26.9	26.0	25.2	24.3	23.5	22.6	21.8	21.0
93	28.6	27.8	26.9	26.0	25.1	24.3	23.4	22.6	21.8	20.9
94	28.6	27.7	26.9	26.0	25.1	24.3	23.4	22.6	21.7	20.9
95	28.6	27.7	26.9	26.0	25.1	24.3	23.4	22.6	21.7	20.9
96	28.6	27.7	26.9	26.0	25.1	24.2	23.4	22.6	21.7	20.9
97	28.6	27.7	26.8	26.0	25.1	24.2	23.4	22.5	21.7	20.9
98	28.6	27.7	26.8	26.0	25.1	24.2	23.4	22.5	21.7	20.9
99	28.6	27.7	26.8	26.0	25.1	24.2	23.4	22.5	21.7	20.9
100	28.6	27.7	26.8	26.0	25.1	24.2	23.4	22.5	21.7	20.8
101	28.6	27.7	26.8	25.9	25.1	24.2	23.4	22.5	21.7	20.8
102	28.6	27.7	26.8	25.9	25.1	24.2	23.3	22.5	21.7	20.8
103	28.6	27.7	26.8	25.9	25.1	24.2	23.3	22.5	21.7	20.8
104	28.6	27.7	26.8	25.9	25.1	24.2	23.3	22.5	21.6	20.8
105	28.6	27.7	26.8	25.9	25.1	24.2	23.3	22.5	21.6	20.8
106	28.6	27.7	26.8	25.9	25.1	24.2	23.3	22.5	21.6	20.8
107	28.6	27.7	26.8	25.9	25.1	24.2	23.3	22.5	21.6	20.8
108	28.6	27.7	26.8	25.9	25.1	24.2	23.3	22.5	21.6	20.8
109	28.6	27.7	26.8	25.9	25.1	24.2	23.3	22.5	21.6	20.8
110	28.6	27.7	26.8	25.9	25.1	24.2	23.3	22.5	21.6	20.8
111	28.6	27.7	26.8	25.9	25.0	24.2	23.3	22.5	21.6	20.8
112	28.6	27.7	26.8	25.9	25.0	24.2	23.3	22.5	21.6	20.8
113	28.6	27.7	26.8	25.9	25.0	24.2	23.3	22.5	21.6	20.8
114	28.6	27.7	26.8	25.9	25.0	24.2	23.3	22.5	21.6	20.8
115	28.6	27.7	26.8	25.9	25.0	24.2	23.3	22.5	21.6	20.8

Table VI—Ordinary Joint Life and Last Survivor Annuities; Two Lives—Expected Return Multiples

Ages	65	66	67	68	69	70	71	72	73	74
65	25.0	24.6	24.2	23.8	23.4	23.1	22.8	22.5	22.2	22.0
66	24.6	24.1	23.7	23.3	22.9	22.5	22.2	21.9	21.6	21.4
67	24.2	23.7	23.2	22.8	22.4	22.0	21.7	21.3	21.0	20.8
68	23.8	23.3	22.8	22.3	21.9	21.5	21.2	20.8	20.5	20.2
69	23.4	22.9	22.4	21.9	21.5	21.1	20.7	20.3	20.0	19.6
70	23.1	22.5	22.0	21.5	21.1	20.6	20.2	19.8	19.4	19.1
71	22.8	22.2	21.7	21.2	20.7	20.2	19.8	19.4	19.0	18.6
72	22.5	21.9	21.3	20.8	20.3	19.8	19.4	18.9	18.5	18.2
73	22.2	21.6	21.0	20.5	20.0	19.4	19.0	18.5	18.1	17.7
74	22.0	21.4	20.8	20.2	19.6	19.1	18.6	18.2	17.7	17.3
75	21.8	21.1	20.5	19.9	19.3	18.8	18.3	17.8	17.3	16.9
76	21.6	20.9	20.3	19.7	19.1	18.5	18.0	17.5	17.0	16.5
77	21.4	20.7	20.1	19.4	18.8	18.3	17.7	17.2	16.7	16.2
78	21.2	20.5	19.9	19.2	18.6	18.0	17.5	16.9	16.4	15.9
79	21.1	20.4	19.7	19.0	18.4	17.8	17.2	16.7	16.1	15.6
80	21.0	20.2	19.5	18.9	18.2	17.6	17.0	16.4	15.9	15.4
81	20.8	20.1	19.4	18.7	18.1	17.4	16.8	16.2	15.7	15.1
82	20.7	20.0	19.3	18.6	17.9	17.3	16.6	16.0	15.5	14.9
83	20.6	19.9	19.2	18.5	17.8	17.1	16.5	15.9	15.3	14.7
84	20.5	19.8	19.1	18.4	17.7	17.0	16.3	15.7	15.1	14.5
85	20.5	19.7	19.0	18.3	17.6	16.9	16.2	15.6	15.0	14.4
86	20.4	19.6	18.9	18.2	17.5	16.8	16.1	15.5	14.8	14.2
87	20.4	19.6	18.8	18.1	17.4	16.7	16.0	15.4	14.7	14.1
88	20.3	19.5	18.8	18.0	17.3	16.6	15.9	15.3	14.6	14.0
89	20.3	19.5	18.7	18.0	17.2	16.5	15.8	15.2	14.5	13.9
90	20.2	19.4	18.7	17.9	17.2	16.5	15.8	15.1	14.5	13.8
91	20.2	19.4	18.6	17.9	17.1	16.4	15.7	15.0	14.4	13.7
92	20.2	19.4	18.6	17.8	17.1	16.4	15.7	15.0	14.3	13.7
93	20.1	19.3	18.6	17.8	17.1	16.3	15.6	14.9	14.3	13.6
94	20.1	19.3	18.5	17.8	17.0	16.3	15.6	14.9	14.2	13.6
95	20.1	19.3	18.5	17.8	17.0	16.3	15.6	14.9	14.2	13.5
96	20.1	19.3	18.5	17.7	17.0	16.2	15.5	14.8	14.2	13.5

Ages	65	66	67	68	69	70	71	72	73	74
97	20.1	19.3	18.5	17.7	17.0	16.2	15.5	14.8	14.1	13.5
98	20.1	19.3	18.5	17.7	16.9	16.2	15.5	14.8	14.1	13.4
99	20.0	19.2	18.5	17.7	16.9	16.2	15.5	14.7	14.1	13.4
100	20.0	19.2	18.4	17.7	16.9	16.2	15.4	14.7	14.0	13.4
101	20.0	19.2	18.4	17.7	16.9	16.1	15.4	14.7	14.0	13.3
102	20.0	19.2	18.4	17.6	16.9	16.1	15.4	14.7	14.0	13.3
103	20.0	19.2	18.4	17.6	16.9	16.1	15.4	14.7	14.0	13.3
104	20.0	19.2	18.4	17.6	16.9	16.1	15.4	14.7	14.0	13.3
105	20.0	19.2	18.4	17.6	16.8	16.1	15.4	14.6	13.9	13.3
106	20.0	19.2	18.4	17.6	16.8	16.1	15.3	14.6	13.9	13.3
107	20.0	19.2	18.4	17.6	16.8	16.1	15.3	14.6	13.9	13.2
108	20.0	19.2	18.4	17.6	16.8	16.1	15.3	14.6	13.9	13.2
109	20.0	19.2	18.4	17.6	16.8	16.1	15.3	14.6	13.9	13.2
110	20.0	19.2	18.4	17.6	16.8	16.1	15.3	14.6	13.9	13.2
111	20.0	19.2	18.4	17.6	16.8	16.0	15.3	14.6	13.9	13.2
112	20.0	19.2	18.4	17.6	16.8	16.0	15.3	14.6	13.9	13.2
113	20.0	19.2	18.4	17.6	16.8	16.0	15.3	14.6	13.9	13.2
114	20.0	19.2	18.4	17.6	16.8	16.0	15.3	14.6	13.9	13.2
115	20.0	19.2	18.4	17.6	16.8	16.0	15.3	14.6	13.9	13.2

Table VI—Ordinary Joint Life and Last Survivor Annuities; Two Lives—Expected Return Multiples

Ages	75	76	77	78	79	80	81	82	83	84
75	16.5	16.1	15.8	15.4	15.1	14.9	14.6	14.4	14.2	14.0
76	16.1	15.7	15.4	15.0	14.7	14.4	14.1	13.9	13.7	13.5
77	15.8	15.4	15.0	14.6	14.3	14.0	13.7	13.4	13.2	13.0
78	15.4	15.0	14.6	14.2	13.9	13.5	13.2	13.0	12.7	12.5
79	15.1	14.7	14.3	13.9	13.5	13.2	12.8	12.5	12.3	12.0
80	14.9	14.4	14.0	13.5	13.2	12.8	12.5	12.2	11.9	11.6
81	14.6	14.1	13.7	13.2	12.8	12.5	12.1	11.8	11.5	11.2
82	14.4	13.9	13.4	13.0	12.5	12.2	11.8	11.5	11.1	10.9
83	14.2	13.7	13.2	12.7	12.3	11.9	11.5	11.1	10.8	10.5
84	14.0	13.5	13.0	12.5	12.0	11.6	11.2	10.9	10.5	10.2
85	13.8	13.3	12.8	12.3	11.8	11.4	11.0	10.6	10.2	9.9
86	13.7	13.1	12.6	12.1	11.6	11.2	10.8	10.4	10.0	9.7
87	13.5	13.0	12.4	11.9	11.4	11.0	10.6	10.1	9.8	9.4
88	13.4	12.8	12.3	11.8	11.3	10.8	10.4	10.0	9.6	9.2
89	13.3	12.7	12.2	11.6	11.1	10.7	10.2	9.8	9.4	9.0
90	13.2	12.6	12.1	11.5	11.0	10.5	10.1	9.6	9.2	8.8
91	13.1	12.5	12.0	11.4	10.9	10.4	9.9	9.5	9.1	8.7
92	13.1	12.5	11.9	11.3	10.8	10.3	9.8	9.4	8.9	8.5
93	13.0	12.4	11.8	11.3	10.7	10.2	9.7	9.3	8.8	8.4
94	12.9	12.3	11.7	11.2	10.6	10.1	9.6	9.2	8.7	8.3
95	12.9	12.3	11.7	11.1	10.6	10.1	9.6	9.1	8.6	8.2
96	12.9	12.2	11.6	11.1	10.5	10.0	9.5	9.0	8.5	8.1
97	12.8	12.2	11.6	11.0	10.5	9.9	9.4	8.9	8.5	8.0
98	12.8	12.2	11.5	11.0	10.4	9.9	9.4	8.9	8.4	8.0
99	12.7	12.1	11.5	10.9	10.4	9.8	9.3	8.8	8.3	7.9
100	12.7	12.1	11.5	10.9	10.3	9.8	9.2	8.7	8.3	7.8
101	12.7	12.1	11.4	10.8	10.3	9.7	9.2	8.7	8.2	7.8
102	12.7	12.0	11.4	10.8	10.2	9.7	9.2	8.7	8.2	7.7
103	12.6	12.0	11.4	10.8	10.2	9.7	9.1	8.6	8.1	7.7
104	12.6	12.0	11.4	10.8	10.2	9.6	9.1	8.6	8.1	7.6
105	12.6	12.0	11.3	10.7	10.2	9.6	9.1	8.5	8.0	7.6
106	12.6	11.9	11.3	10.7	10.1	9.6	9.0	8.5	8.0	7.5

Ages	75	76	77	78	79	80	81	82	83	84
107	12.6	11.9	11.3	10.7	10.1	9.6	9.0	8.5	8.0	7.5
108	12.6	11.9	11.3	10.7	10.1	9.5	9.0	8.5	8.0	7.5
109	12.6	11.9	11.3	10.7	10.1	9.5	9.0	8.4	7.9	7.5
110	12.6	11.9	11.3	10.7	10.1	9.5	9.0	8.4	7.9	7.4
111	12.5	11.9	11.3	10.7	10.1	9.5	8.9	8.4	7.9	7.4
112	12.5	11.9	11.3	10.6	10.1	9.5	8.9	8.4	7.9	7.4
113	12.5	11.9	11.2	10.6	10.0	9.5	8.9	8.4	7.9	7.4
114	12.5	11.9	11.2	10.6	10.0	9.5	8.9	8.4	7.9	7.4
115	12.5	11.9	11.2	10.6	10.0	9.5	8.9	8.4	7.9	7.4

Table VI—Ordinary Joint Life and Last Survivor Annuities; Two Lives—Expected Return Multiples

Ages	85	86	87	88	89	90	91	92	93	94
85	9.6	9.3	9.1	8.9	8.7	8.5	8.3	8.2	8.0	7.9
86	9.3	9.1	8.8	8.6	8.3	8.2	8.0	7.8	7.7	7.6
87	9.1	8.8	8.5	8.3	8.1	7.9	7.7	7.5	7.4	7.2
88	8.9	8.6	8.3	8.0	7.8	7.6	7.4	7.2	7.1	6.9
89	8.7	8.3	8.1	7.8	7.5	7.3	7.1	6.9	6.8	6.6
90	8.5	8.2	7.9	7.6	7.3	7.1	6.9	6.7	6.5	6.4
91	8.3	8.0	7.7	7.4	7.1	6.9	6.7	6.5	6.3	6.2
92	8.2	7.8	7.5	7.2	6.9	6.7	6.5	6.3	6.1	5.9
93	8.0	7.7	7.4	7.1	6.8	6.5	6.3	6.1	5.9	5.8
94	7.9	7.6	7.2	6.9	6.6	6.4	6.2	5.9	5.8	5.6
95	7.8	7.5	7.1	6.8	6.5	6.3	6.0	5.8	5.6	5.4
96	7.7	7.3	7.0	6.7	6.4	6.1	5.9	5.7	5.5	5.3
97	7.6	7.3	6.9	6.6	6.3	6.0	5.8	5.5	5.3	5.1
98	7.6	7.2	6.8	6.5	6.2	5.9	5.6	5.4	5.2	5.0
99	7.5	7.1	6.7	6.4	6.1	5.8	5.5	5.3	5.1	4.9
100	7.4	7.0	6.6	6.3	6.0	5.7	5.4	5.2	5.0	4.8
101	7.3	6.9	6.6	6.2	5.9	5.6	5.3	5.1	4.9	4.7
102	7.3	6.9	6.5	6.2	5.8	5.5	5.3	5.0	4.8	4.6
103	7.2	6.8	6.4	6.1	5.8	5.5	5.2	4.9	4.7	4.5
104	7.2	6.8	6.4	6.0	5.7	5.4	5.1	4.8	4.6	4.4
105	7.1	6.7	6.3	6.0	5.6	5.3	5.0	4.8	4.5	4.3
106	7.1	6.7	6.3	5.9	5.6	5.3	5.0	4.7	4.5	4.2
107	7.1	6.6	6.2	5.9	5.5	5.2	4.9	4.6	4.4	4.2
108	7.0	6.6	6.2	5.8	5.5	5.2	4.9	4.6	4.3	4.1
109	7.0	6.6	6.2	5.8	5.5	5.1	4.8	4.5	4.3	4.1
110	7.0	6.6	6.2	5.8	5.4	5.1	4.8	4.5	4.3	4.0
111	7.0	6.5	6.1	5.7	5.4	5.1	4.8	4.5	4.2	4.0
112	7.0	6.5	6.1	5.7	5.4	5.0	4.7	4.4	4.2	3.9
113	6.9	6.5	6.1	5.7	5.4	5.0	4.7	4.4	4.2	3.9
114	6.9	6.5	6.1	5.7	5.3	5.0	4.7	4.4	4.1	3.9
115	6.9	6.5	6.1	5.7	5.3	5.0	4.7	4.4	4.1	3.9

Table VI—Ordinary Joint Life and Last Survivor Annuities; Two Lives—Expected Return Multiples

Ages	95	96	97	98	99	100	101	102	103	104
95	5.3	5.1	5.0	4.8	4.7	4.6	4.5	4.4	4.3	4.2
96	5.1	5.0	4.8	4.7	4.5	4.4	4.3	4.2	4.1	4.0
97	5.0	4.8	4.7	4.5	4.4	4.3	4.1	4.0	3.9	3.8
98	4.8	4.7	4.5	4.4	4.2	4.1	4.0	3.9	3.8	3.7
99	4.7	4.5	4.4	4.2	4.1	4.0	3.8	3.7	3.6	3.5
100	4.6	4.4	4.3	4.1	4.0	3.8	3.7	3.6	3.5	3.3
101	4.5	4.3	4.1	4.0	3.8	3.7	3.6	3.4	3.3	3.2
102	4.4	4.2	4.0	3.9	3.7	3.6	3.4	3.3	3.2	3.1
103	4.3	4.1	3.9	3.8	3.6	3.5	3.3	3.2	3.0	2.9
104	4.2	4.0	3.8	3.7	3.5	3.3	3.2	3.1	2.9	2.8
105	4.1	3.9	3.7	3.6	3.4	3.2	3.1	2.9	2.8	2.7
106	4.0	3.8	3.6	3.5	3.3	3.1	3.0	2.8	2.7	2.5
107	4.0	3.8	3.6	3.4	3.2	3.1	2.9	2.7	2.6	2.4
108	3.9	3.7	3.5	3.3	3.1	3.0	2.8	2.7	2.5	2.3
109	3.8	3.6	3.4	3.3	3.1	2.9	2.7	2.6	2.4	2.3
110	3.8	3.6	3.4	3.2	3.0	2.8	2.7	2.5	2.3	2.2
111	3.8	3.5	3.3	3.2	3.0	2.8	2.6	2.4	2.3	2.1
112	3.7	3.5	3.3	3.1	2.9	2.8	2.6	2.4	2.2	2.1
113	3.7	3.5	3.3	3.1	2.9	2.7	2.5	2.4	2.2	2.0
114	3.7	3.5	3.3	3.1	2.9	2.7	2.5	2.3	2.1	2.0
115	3.7	3.4	3.2	3.0	2.8	2.7	2.5	2.3	2.1	1.9

Table VI—Ordinary Joint Life and Last Survivor Annuities; Two Lives—Expected Return Multiples

Ages	105	106	107	108	109	110	111	112	113	114	115
105	2.5	2.4	2.3	2.2	2.1	2.0	2.0	1.9	1.8	1.8	1.8
106	2.4	2.3	2.2	2.1	2.0	1.9	1.8	1.7	1.7	1.6	1.6
107	2.3	2.2	2.1	1.9	1.8	1.7	1.7	1.6	1.5	1.5	1.4
108	2.2	2.1	1.9	1.8	1.7	1.6	1.5	1.5	1.4	1.3	1.3
109	2.1	2.0	1.8	1.7	1.6	1.5	1.4	1.3	1.3	1.2	1.1
110	2.0	1.9	1.7	1.6	1.5	1.4	1.3	1.2	1.1	1.1	1.0
111	2.0	1.8	1.7	1.5	1.4	1.3	1.2	1.1	1.0	.9	.9
112	1.9	1.7	1.6	1.5	1.3	1.2	1.1	1.0	.9	.8	.8
113	1.8	1.7	1.5	1.4	1.3	1.1	1.0	.9	.8	.7	.7
114	1.8	1.6	1.5	1.3	1.2	1.1	.9	.8	.7	.6	.6
115	1.8	1.6	1.4	1.3	1.1	1.0	.9	.8	.7	.6	.5

Table VIa—Annuities for Joint Life Only; Two Lives—Expected Return Multiples

Ages	5	6	7	8	9	10	11	12	13	14
5	69.5	69.0	68.4	67.9	67.3	66.7	66.1	65.5	64.8	64.1
6	69.0	68.5	68.0	67.5	66.9	66.4	65.8	65.1	64.5	63.8
7	68.4	68.0	67.5	67.0	66.5	66.0	65.4	64.8	64.2	63.5
8	67.9	67.5	67.0	66.6	66.1	65.5	65.0	64.4	63.8	63.2
9	67.3	66.9	66.5	66.1	65.6	65.1	64.6	64.0	63.4	62.8
10	66.7	66.4	66.0	65.5	65.1	64.6	64.1	63.6	63.0	62.5
11	66.1	65.8	65.4	65.0	64.6	64.1	63.6	63.1	62.6	62.1
12	65.5	65.1	64.8	64.4	64.0	63.6	63.1	62.7	62.2	61.7
13	64.8	64.5	64.2	63.8	63.4	63.0	62.6	62.2	61.7	61.2
14	64.1	63.8	63.5	63.2	62.8	62.5	62.1	61.7	61.2	60.7
15	63.4	63.1	62.9	62.6	62.2	61.9	61.5	61.1	60.7	60.2
16	62.7	62.4	62.2	61.9	61.6	61.3	60.9	60.5	60.1	59.7
17	61.9	61.7	61.5	61.2	60.9	60.6	60.3	59.9	59.6	59.2
18	61.2	61.0	60.7	60.5	60.2	60.0	59.7	59.3	59.0	58.6
19	60.4	60.2	60.0	59.8	59.5	59.3	59.0	58.7	58.4	58.0
20	59.6	59.4	59.2	59.0	58.8	58.6	58.3	58.0	57.7	57.4
21	58.8	58.7	58.5	58.3	58.1	57.8	57.6	57.3	57.1	56.8
22	58.0	57.8	57.7	57.5	57.3	57.1	56.9	56.6	56.4	56.1
23	57.2	57.0	56.9	56.7	56.5	56.4	56.1	55.9	55.7	55.4
24	56.3	56.2	56.1	55.9	55.8	55.6	55.4	55.2	55.0	54.7
25	55.5	55.4	55.2	55.1	55.0	54.8	54.6	54.4	54.2	54.0
26	54.6	54.5	54.4	54.3	54.1	54.0	53.8	53.7	53.5	53.3
27	53.8	53.7	53.6	53.4	53.3	53.2	53.0	52.9	52.7	52.5
28	52.9	52.8	52.7	52.6	52.5	52.4	52.2	52.1	51.9	51.7
29	52.0	51.9	51.8	51.7	51.6	51.5	51.4	51.3	51.1	51.0
30	51.1	51.0	51.0	50.9	50.8	50.7	50.6	50.4	50.3	50.2
31	50.2	50.2	50.1	50.0	49.9	49.8	49.7	49.6	49.5	49.3
32	49.3	49.3	49.2	49.1	49.0	49.0	48.9	48.8	48.6	48.5
33	48.4	48.4	48.3	48.2	48.2	48.1	48.0	47.9	47.8	47.7
34	47.5	47.5	47.4	47.4	47.3	47.2	47.1	47.0	47.0	46.8
35	46.6	46.6	46.5	46.5	46.4	46.3	46.3	46.2	46.1	46.0
36	45.7	45.7	45.6	45.6	45.5	45.4	45.4	45.3	45.2	45.1

Ages	5	6	7	8	9	10	11	12	13	14
37	44.8	44.7	44.7	44.6	44.6	44.5	44.5	44.4	44.3	44.3
38	43.9	43.8	43.8	43.7	43.7	43.6	43.6	43.5	43.5	43.4
39	42.9	42.9	42.9	42.8	42.8	42.7	42.7	42.6	42.6	42.5
40	42.0	42.0	42.0	41.9	41.9	41.8	41.8	41.7	41.7	41.6
41	41.1	41.1	41.0	41.0	41.0	40.9	40.9	40.8	40.8	40.7
42	40.2	40.1	40.1	40.1	40.1	40.0	40.0	39.9	39.9	39.8
43	39.2	39.2	39.2	39.2	39.1	39.1	39.1	39.0	39.0	39.0
44	38.3	38.3	38.3	38.3	38.2	38.2	38.2	38.1	38.1	38.1
45	37.4	37.4	37.4	37.3	37.3	37.3	37.3	37.2	37.2	37.2
46	36.5	36.5	36.5	36.4	36.4	36.4	36.4	36.3	36.3	36.3
47	35.6	35.6	35.5	35.5	35.5	35.5	35.5	35.4	35.4	35.4
48	34.7	34.7	34.6	34.6	34.6	34.6	34.6	34.5	34.5	34.5
49	33.8	33.8	33.7	33.7	33.7	33.7	33.7	33.7	33.6	33.6
50	32.9	32.9	32.8	32.8	32.8	32.8	32.8	32.8	32.7	32.7
51	32.0	32.0	31.9	31.9	31.9	31.9	31.9	31.9	31.9	31.8
52	31.1	31.1	31.1	31.0	31.0	31.0	31.0	31.0	31.0	30.9
53	30.2	30.2	30.2	30.2	30.1	30.1	30.1	30.1	30.1	30.1
54	29.3	29.3	29.3	29.3	29.3	29.2	29.2	29.2	29.2	29.2
55	28.4	28.4	28.4	28.4	28.4	28.4	28.4	28.3	28.3	28.3
56	27.5	27.5	27.5	27.5	27.5	27.5	27.5	27.5	27.5	27.5
57	26.7	26.7	26.7	26.6	26.6	26.6	26.6	26.6	26.6	26.6
58	25.8	25.8	25.8	25.8	25.8	25.8	25.8	25.7	25.7	25.7
59	24.9	24.9	24.9	24.9	24.9	24.9	24.9	24.9	24.9	24.9
60	24.1	24.1	24.1	24.1	24.1	24.0	24.0	24.0	24.0	24.0
61	23.2	23.2	23.2	23.2	23.2	23.2	23.2	23.2	23.2	23.2
62	22.4	22.4	22.4	22.4	22.4	22.4	22.3	22.3	22.3	22.3
63	21.5	21.5	21.5	21.5	21.5	21.5	21.5	21.5	21.5	21.5
64	20.7	20.7	20.7	20.7	20.7	20.7	20.7	20.7	20.7	20.7
65	19.9	19.9	19.9	19.9	19.9	19.9	19.9	19.9	19.9	19.9
66	19.1	19.1	19.1	19.1	19.1	19.1	19.1	19.1	19.1	19.1
67	18.3	18.3	18.3	18.3	18.3	18.3	18.3	18.3	18.3	18.3
68	17.5	17.5	17.5	17.5	17.5	17.5	17.5	17.5	17.5	17.5
69	16.8	16.8	16.8	16.7	16.7	16.7	16.7	16.7	16.7	16.7
70	16.0	16.0	16.0	16.0	16.0	16.0	16.0	16.0	16.0	16.0
71	15.3	15.3	15.3	15.3	15.3	15.3	15.3	15.3	15.3	15.2
72	14.6	14.6	14.5	14.5	14.5	14.5	14.5	14.5	14.5	14.5

Ages	5	6	7	8	9	10	11	12	13	14
73	13.9	13.9	13.8	13.8	13.8	13.8	13.8	13.8	13.8	13.8
74	13.2	13.2	13.2	13.2	13.2	13.2	13.2	13.2	13.2	13.2
75	12.5	12.5	12.5	12.5	12.5	12.5	12.5	12.5	12.5	12.5
76	11.9	11.9	11.8	11.8	11.8	11.8	11.8	11.8	11.8	11.8
77	11.2	11.2	11.2	11.2	11.2	11.2	11.2	11.2	11.2	11.2
78	10.6	10.6	10.6	10.6	10.6	10.6	10.6	10.6	10.6	10.6
79	10.0	10.0	10.0	10.0	10.0	10.0	10.0	10.0	10.0	10.0
80	9.5	9.5	9.5	9.5	9.5	9.5	9.5	9.5	9.4	9.4
81	8.9	8.9	8.9	8.9	8.9	8.9	8.9	8.9	8.9	8.9
82	8.4	8.4	8.4	8.4	8.4	8.4	8.4	8.4	8.4	8.4
83	7.9	7.9	7.9	7.9	7.9	7.9	7.9	7.9	7.9	7.9
84	7.4	7.4	7.4	7.4	7.4	7.4	7.4	7.4	7.4	7.4
85	6.9	6.9	6.9	6.9	6.9	6.9	6.9	6.9	6.9	6.9
86	6.5	6.5	6.5	6.5	6.5	6.5	6.5	6.5	6.5	6.5
87	6.1	6.1	6.1	6.1	6.1	6.1	6.1	6.1	6.1	6.1
88	5.7	5.7	5.7	5.7	5.7	5.7	5.7	5.7	5.7	5.7
89	5.3	5.3	5.3	5.3	5.3	5.3	5.3	5.3	5.3	5.3
90	5.0	5.0	5.0	5.0	5.0	5.0	5.0	5.0	5.0	5.0
91	4.7	4.7	4.7	4.7	4.7	4.7	4.7	4.7	4.7	4.7
92	4.4	4.4	4.4	4.4	4.4	4.4	4.4	4.4	4.4	4.4
93	4.1	4.1	4.1	4.1	4.1	4.1	4.1	4.1	4.1	4.1
94	3.9	3.9	3.9	3.9	3.9	3.9	3.9	3.9	3.9	3.9
95	3.7	3.7	3.7	3.7	3.7	3.7	3.6	3.6	3.6	3.6
96	3.4	3.4	3.4	3.4	3.4	3.4	3.4	3.4	3.4	3.4
97	3.2	3.2	3.2	3.2	3.2	3.2	3.2	3.2	3.2	3.2
98	3.0	3.0	3.0	3.0	3.0	3.0	3.0	3.0	3.0	3.0
99	2.8	2.8	2.8	2.8	2.8	2.8	2.8	2.8	2.8	2.8
100	2.7	2.7	2.7	2.7	2.7	2.7	2.7	2.7	2.7	2.7
101	2.5	2.5	2.5	2.5	2.5	2.5	2.5	2.5	2.5	2.5
102	2.3	2.3	2.3	2.3	2.3	2.3	2.3	2.3	2.3	2.3
103	2.1	2.1	2.1	2.1	2.1	2.1	2.1	2.1	2.1	2.1
104	1.9	1.9	1.9	1.9	1.9	1.9	1.9	1.9	1.9	1.9
105	1.8	1.8	1.8	1.8	1.8	1.8	1.8	1.8	1.8	1.8
106	1.6	1.6	1.6	1.6	1.6	1.6	1.6	1.6	1.6	1.6
107	1.4	1.4	1.4	1.4	1.4	1.4	1.4	1.4	1.4	1.4
108	1.3	1.3	1.3	1.3	1.3	1.3	1.3	1.3	1.3	1.3

Ages	5	6	7	8	9	10	11	12	13	14
109	1.1	1.1	1.1	1.1	1.1	1.1	1.1	1.1	1.1	1.1
110	1.0	1.0	1.0	1.0	1.0	1.0	1.0	1.0	1.0	1.0
111	.9	.9	.9	.9	.9	.9	.9	.9	.9	.9
112	.8	.8	.8	.8	.8	.8	.8	.8	.8	.8
113	.7	.7	.7	.7	.7	.7	.7	.7	.7	.7
114	.6	.6	.6	.6	.6	.6	.6	.6	.6	.6
115	.5	.5	.5	.5	.5	.5	.5	.5	.5	.5

Table VIa—Annuities for Joint Life Only; Two Lives—Expected Return Multiples

Ages	15	16	17	18	19	20	21	22	23	24
15	59.8	59.3	58.8	58.2	57.6	57.0	56.4	55.8	55.1	54.5
16	59.3	58.8	58.3	57.8	57.2	56.7	56.1	55.5	54.8	54.2
17	58.8	58.3	57.8	57.3	56.8	56.3	55.7	55.1	54.5	53.9
18	58.2	57.8	57.3	56.9	56.4	55.9	55.3	54.7	54.2	53.5
19	57.6	57.2	56.8	56.4	55.9	55.4	54.9	54.4	53.8	53.2
20	57.0	56.7	56.3	55.9	55.4	54.9	54.5	53.9	53.4	52.8
21	56.4	56.1	55.7	55.3	54.9	54.5	54.0	53.5	53.0	52.4
22	55.8	55.5	55.1	54.7	54.4	53.9	53.5	53.0	52.5	52.0
23	55.1	54.8	54.5	54.2	53.8	53.4	53.0	52.5	52.1	51.6
24	54.5	54.2	53.9	53.5	53.2	52.8	52.4	52.0	51.6	51.1
25	53.8	53.5	53.2	52.9	52.6	52.2	51.9	51.5	51.1	50.6
26	53.0	52.8	52.5	52.3	52.0	51.6	51.3	50.9	50.5	50.1
27	52.3	52.1	51.8	51.6	51.3	51.0	50.7	50.3	50.0	49.6
28	51.5	51.3	51.1	50.9	50.6	50.3	50.0	49.7	49.4	49.0
29	50.8	50.6	50.4	50.2	49.9	49.7	49.4	49.1	48.8	48.4
30	50.0	49.8	49.6	49.4	49.2	49.0	48.7	48.4	48.1	47.8
31	49.2	49.0	48.9	48.7	48.5	48.3	48.0	47.8	47.5	47.2
32	48.4	48.2	48.1	47.9	47.7	47.5	47.3	47.1	46.8	46.5
33	47.6	47.4	47.3	47.1	47.0	46.8	46.6	46.3	46.1	45.9
34	46.7	46.6	46.5	46.3	46.2	46.0	45.8	45.6	45.4	45.2
35	45.9	45.8	45.7	45.5	45.4	45.2	45.1	44.9	44.7	44.4
36	45.0	44.9	44.8	44.7	44.6	44.4	44.3	44.1	43.9	43.7
37	44.2	44.1	44.0	43.9	43.8	43.6	43.5	43.3	43.2	43.0
38	43.3	43.2	43.1	43.0	42.9	42.8	42.7	42.5	42.4	42.2
39	42.4	42.4	42.3	42.2	42.1	42.0	41.9	41.7	41.6	41.4
40	41.6	41.5	41.4	41.3	41.2	41.1	41.0	40.9	40.8	40.6
41	40.7	40.6	40.5	40.5	40.4	40.3	40.2	40.1	40.0	39.8
42	39.8	39.7	39.7	39.6	39.5	39.4	39.4	39.3	39.1	39.0
43	38.9	38.9	38.8	38.7	38.7	38.6	38.5	38.4	38.3	38.2
44	38.0	38.0	37.9	37.9	37.8	37.7	37.7	37.6	37.5	37.4
45	37.1	37.1	37.0	37.0	36.9	36.9	36.8	36.7	36.6	36.5
46	36.2	36.2	36.2	36.1	36.1	36.0	35.9	35.9	35.8	35.7

Ages	15	16	17	18	19	20	21	22	23	24
47	35.3	35.3	35.3	35.2	35.2	35.1	35.1	35.0	34.9	34.9
48	34.5	34.4	34.4	34.4	34.3	34.3	34.2	34.2	34.1	34.0
49	33.6	33.5	33.5	33.5	33.4	33.4	33.4	33.3	33.2	33.2
50	32.7	32.7	32.6	32.6	32.6	32.5	32.5	32.4	32.4	32.3
51	31.8	31.8	31.8	31.7	31.7	31.7	31.6	31.6	31.5	31.5
52	30.9	30.9	30.9	30.9	30.8	30.8	30.8	30.7	30.7	30.6
53	30.0	30.0	30.0	30.0	30.0	29.9	29.9	29.9	29.8	29.8
54	29.2	29.2	29.1	29.1	29.1	29.1	29.0	29.0	29.0	28.9
55	28.3	28.3	28.3	28.3	28.2	28.2	28.2	28.2	28.1	28.1
56	27.4	27.4	27.4	27.4	27.4	27.3	27.3	27.3	27.3	27.2
57	26.6	26.6	26.5	26.5	26.5	26.5	26.5	26.5	26.4	26.4
58	25.7	25.7	25.7	25.7	25.7	25.6	25.6	25.6	25.6	25.6
59	24.9	24.8	24.8	24.8	24.8	24.8	24.8	24.8	24.7	24.7
60	24.0	24.0	24.0	24.0	24.0	23.9	23.9	23.9	23.9	23.9
61	23.2	23.2	23.1	23.1	23.1	23.1	23.1	23.1	23.1	23.0
62	22.3	22.3	22.3	22.3	22.3	22.3	22.3	22.2	22.2	22.2
63	21.5	21.5	21.5	21.5	21.5	21.4	21.4	21.4	21.4	21.4
64	20.7	20.7	20.7	20.6	20.6	20.6	20.6	20.6	20.6	20.6
65	19.9	19.8	19.8	19.8	19.8	19.8	19.8	19.8	19.8	19.8
66	19.1	19.0	19.0	19.0	19.0	19.0	19.0	19.0	19.0	19.0
67	18.3	18.3	18.3	18.3	18.2	18.2	18.2	18.2	18.2	18.2
68	17.5	17.5	17.5	17.5	17.5	17.5	17.5	17.5	17.4	17.4
69	16.7	16.7	16.7	16.7	16.7	16.7	16.7	16.7	16.7	16.7
70	16.0	16.0	16.0	16.0	16.0	16.0	15.9	15.9	15.9	15.9
71	15.2	15.2	15.2	15.2	15.2	15.2	15.2	15.2	15.2	15.2
72	14.5	14.5	14.5	14.5	14.5	14.5	14.5	14.5	14.5	14.5
73	13.8	13.8	13.8	13.8	13.8	13.8	13.8	13.8	13.8	13.8
74	13.2	13.1	13.1	13.1	13.1	13.1	13.1	13.1	13.1	13.1
75	12.5	12.5	12.5	12.5	12.5	12.5	12.5	12.5	12.5	12.5
76	11.8	11.8	11.8	11.8	11.8	11.8	11.8	11.8	11.8	11.8
77	11.2	11.2	11.2	11.2	11.2	11.2	11.2	11.2	11.2	11.2
78	10.6	10.6	10.6	10.6	10.6	10.6	10.6	10.6	10.6	10.6
79	10.0	10.0	10.0	10.0	10.0	10.0	10.0	10.0	10.0	10.0
80	9.4	9.4	9.4	9.4	9.4	9.4	9.4	9.4	9.4	9.4
81	8.9	8.9	8.9	8.9	8.9	8.9	8.9	8.9	8.9	8.9
82	8.4	8.4	8.4	8.4	8.4	8.4	8.4	8.4	8.4	8.4

Ages	15	16	17	18	19	20	21	22	23	24
83	7.9	7.9	7.9	7.9	7.9	7.9	7.9	7.9	7.8	7.8
84	7.4	7.4	7.4	7.4	7.4	7.4	7.4	7.4	7.4	7.4
85	6.9	6.9	6.9	6.9	6.9	6.9	6.9	6.9	6.9	6.9
86	6.5	6.5	6.5	6.5	6.5	6.5	6.5	6.5	6.5	6.5
87	6.1	6.1	6.1	6.1	6.1	6.1	6.1	6.1	6.1	6.1
88	5.7	5.7	5.7	5.7	5.7	5.7	5.7	5.7	5.7	5.7
89	5.3	5.3	5.3	5.3	5.3	5.3	5.3	5.3	5.3	5.3
90	5.0	5.0	5.0	5.0	5.0	5.0	5.0	5.0	5.0	5.0
91	4.7	4.7	4.7	4.7	4.7	4.7	4.7	4.7	4.7	4.7
92	4.4	4.4	4.4	4.4	4.4	4.4	4.4	4.4	4.4	4.4
93	4.1	4.1	4.1	4.1	4.1	4.1	4.1	4.1	4.1	4.1
94	3.9	3.9	3.9	3.9	3.9	3.9	3.9	3.9	3.9	3.9
95	3.6	3.6	3.6	3.6	3.6	3.6	3.6	3.6	3.6	3.6
96	3.4	3.4	3.4	3.4	3.4	3.4	3.4	3.4	3.4	3.4
97	3.2	3.2	3.2	3.2	3.2	3.2	3.2	3.2	3.2	3.2
98	3.0	3.0	3.0	3.0	3.0	3.0	3.0	3.0	3.0	3.0
99	2.8	2.8	2.8	2.8	2.8	2.8	2.8	2.8	2.8	2.8
100	2.7	2.7	2.7	2.7	2.7	2.7	2.7	2.7	2.7	2.7
101	2.5	2.5	2.5	2.5	2.5	2.5	2.5	2.5	2.5	2.5
102	2.3	2.3	2.3	2.3	2.3	2.3	2.3	2.3	2.3	2.3
103	2.1	2.1	2.1	2.1	2.1	2.1	2.1	2.1	2.1	2.1
104	1.9	1.9	1.9	1.9	1.9	1.9	1.9	1.9	1.9	1.9
105	1.8	1.8	1.8	1.8	1.8	1.8	1.8	1.8	1.8	1.8
106	1.6	1.6	1.6	1.6	1.6	1.6	1.6	1.6	1.6	1.6
107	1.4	1.4	1.4	1.4	1.4	1.4	1.4	1.4	1.4	1.4
108	1.3	1.3	1.3	1.3	1.3	1.3	1.3	1.3	1.3	1.3
109	1.1	1.1	1.1	1.1	1.1	1.1	1.1	1.1	1.1	1.1
110	1.0	1.0	1.0	1.0	1.0	1.0	1.0	1.0	1.0	1.0
111	.9	.9	.9	.9	.9	.9	.9	.9	.9	.9
112	.8	.8	.8	.8	.8	.8	.8	.8	.8	.8
113	.7	.7	.7	.7	.7	.7	.7	.7	.7	.7
114	.6	.6	.6	.6	.6	.6	.6	.6	.6	.6
115	.5	.5	.5	.5	.5	.5	.5	.5	.5	.5

Table VIa—Annuities for Joint Life Only; Two Lives—Expected Return Multiples

Ages	25	26	27	28	29	30	31	32	33	34
25	50.2	49.7	49.2	48.6	48.1	47.5	46.9	46.2	45.6	44.9
26	49.7	49.2	48.7	48.2	47.7	47.1	46.5	45.9	45.3	44.6
27	49.2	48.7	48.3	47.8	47.3	46.7	46.2	45.6	45.0	44.3
28	48.6	48.2	47.8	47.3	46.8	46.3	45.8	45.2	44.6	44.0
29	48.1	47.7	47.3	46.8	46.4	45.9	45.4	44.8	44.3	43.7
30	47.5	47.1	46.7	46.3	45.9	45.4	44.9	44.4	43.9	43.3
31	46.9	46.5	46.2	45.8	45.4	44.9	44.5	44.0	43.5	42.9
32	46.2	45.9	45.6	45.2	44.8	44.4	44.0	43.5	43.0	42.5
33	45.6	45.3	45.0	44.6	44.3	43.9	43.5	43.0	42.6	42.1
34	44.9	44.6	44.3	44.0	43.7	43.3	42.9	42.5	42.1	41.6
35	44.2	44.0	43.7	43.4	43.1	42.7	42.4	42.0	41.6	41.1
36	43.5	43.3	43.0	42.7	42.4	42.1	41.8	41.4	41.0	40.6
37	42.8	42.5	42.3	42.1	41.8	41.5	41.2	40.8	40.5	40.1
38	42.0	41.8	41.6	41.4	41.1	40.8	40.6	40.2	39.9	39.5
39	41.3	41.1	40.9	40.7	40.4	40.2	39.9	39.6	39.3	39.0
40	40.5	40.3	40.1	39.9	39.7	39.5	39.2	39.0	38.7	38.4
41	39.7	39.5	39.4	39.2	39.0	38.8	38.5	38.3	38.0	37.7
42	38.9	38.8	38.6	38.4	38.3	38.1	37.8	37.6	37.4	37.1
43	38.1	38.0	37.8	37.7	37.5	37.3	37.1	36.9	36.7	36.4
44	37.3	37.2	37.0	36.9	36.7	36.6	36.4	36.2	36.0	35.8
45	36.5	36.3	36.2	36.1	36.0	35.8	35.6	35.5	35.3	35.1
46	35.6	35.5	35.4	35.3	35.2	35.0	34.9	34.7	34.5	34.4
47	34.8	34.7	34.6	34.5	34.4	34.3	34.1	34.0	33.8	33.6
48	34.0	33.9	33.8	33.7	33.6	33.5	33.4	33.2	33.1	32.9
49	33.1	33.0	33.0	32.9	32.8	32.7	32.6	32.4	32.3	32.2
50	32.3	32.2	32.1	32.1	32.0	31.9	31.8	31.7	31.5	31.4
51	31.4	31.4	31.3	31.2	31.2	31.1	31.0	30.9	30.8	30.6
52	30.6	30.5	30.5	30.4	30.3	30.3	30.2	30.1	30.0	29.9
53	29.7	29.7	29.6	29.6	29.5	29.5	29.4	29.3	29.2	29.1
54	28.9	28.9	28.8	28.8	28.7	28.6	28.6	28.5	28.4	28.3
55	28.1	28.0	28.0	27.9	27.9	27.8	27.8	27.7	27.6	27.5
56	27.2	27.2	27.1	27.1	27.0	27.0	26.9	26.9	26.8	26.7

Ages	25	26	27	28	29	30	31	32	33	34
57	26.4	26.3	26.3	26.3	26.2	26.2	26.1	26.1	26.0	25.9
58	25.5	25.5	25.5	25.4	25.4	25.4	25.3	25.3	25.2	25.1
59	24.7	24.7	24.6	24.6	24.6	24.5	24.5	24.5	24.4	24.3
60	23.9	23.8	23.8	23.8	23.8	23.7	23.7	23.6	23.6	23.5
61	23.0	23.0	23.0	23.0	22.9	22.9	22.9	22.8	22.8	22.7
62	22.2	22.2	22.2	22.1	22.1	22.1	22.1	22.0	22.0	21.9
63	21.4	21.4	21.3	21.3	21.3	21.3	21.3	21.2	21.2	21.2
64	20.6	20.6	20.5	20.5	20.5	20.5	20.5	20.4	20.4	20.4
65	19.8	19.8	19.7	19.7	19.7	19.7	19.7	19.6	19.6	19.6
66	19.0	19.0	19.0	18.9	18.9	18.9	18.9	18.9	18.8	18.8
67	18.2	18.2	18.2	18.2	18.2	18.1	18.1	18.1	18.1	18.1
68	17.4	17.4	17.4	17.4	17.4	17.4	17.4	17.3	17.3	17.3
69	16.7	16.7	16.7	16.6	16.6	16.6	16.6	16.6	16.6	16.6
70	15.9	15.9	15.9	15.9	15.9	15.9	15.9	15.9	15.8	15.8
71	15.2	15.2	15.2	15.2	15.2	15.2	15.2	15.1	15.1	15.1
72	14.5	14.5	14.5	14.5	14.5	14.5	14.5	14.4	14.4	14.4
73	13.8	13.8	13.8	13.8	13.8	13.8	13.8	13.8	13.7	13.7
74	13.1	13.1	13.1	13.1	13.1	13.1	13.1	13.1	13.1	13.1
75	12.5	12.5	12.5	12.4	12.4	12.4	12.4	12.4	12.4	12.4
76	11.8	11.8	11.8	11.8	11.8	11.8	11.8	11.8	11.8	11.8
77	11.2	11.2	11.2	11.2	11.2	11.2	11.2	11.2	11.2	11.1
78	10.6	10.6	10.6	10.6	10.6	10.6	10.6	10.6	10.6	10.5
79	10.0	10.0	10.0	10.0	10.0	10.0	10.0	10.0	10.0	10.0
80	9.4	9.4	9.4	9.4	9.4	9.4	9.4	9.4	9.4	9.4
81	8.9	8.9	8.9	8.9	8.9	8.9	8.9	8.9	8.9	8.9
82	8.4	8.4	8.3	8.3	8.3	8.3	8.3	8.3	8.3	8.3
83	7.8	7.8	7.8	7.8	7.8	7.8	7.8	7.8	7.8	7.8
84	7.4	7.4	7.4	7.4	7.4	7.4	7.4	7.4	7.4	7.4
85	6.9	6.9	6.9	6.9	6.9	6.9	6.9	6.9	6.9	6.9
86	6.5	6.5	6.5	6.5	6.5	6.5	6.5	6.5	6.5	6.5
87	6.1	6.1	6.1	6.1	6.1	6.1	6.1	6.1	6.1	6.1
88	5.7	5.7	5.7	5.7	5.7	5.7	5.7	5.7	5.7	5.7
89	5.3	5.3	5.3	5.3	5.3	5.3	5.3	5.3	5.3	5.3
90	5.0	5.0	5.0	5.0	5.0	5.0	5.0	5.0	5.0	5.0
91	4.7	4.7	4.7	4.7	4.7	4.7	4.7	4.7	4.7	4.7
92	4.4	4.4	4.4	4.4	4.4	4.4	4.4	4.4	4.4	4.4

Ages	25	26	27	28	29	30	31	32	33	34
93	4.1	4.1	4.1	4.1	4.1	4.1	4.1	4.1	4.1	4.1
94	3.9	3.9	3.9	3.9	3.9	3.9	3.9	3.9	3.9	3.9
95	3.6	3.6	3.6	3.6	3.6	3.6	3.6	3.6	3.6	3.6
96	3.4	3.4	3.4	3.4	3.4	3.4	3.4	3.4	3.4	3.4
97	3.2	3.2	3.2	3.2	3.2	3.2	3.2	3.2	3.2	3.2
98	3.0	3.0	3.0	3.0	3.0	3.0	3.0	3.0	3.0	3.0
99	2.8	2.8	2.8	2.8	2.8	2.8	2.8	2.8	2.8	2.8
100	2.7	2.7	2.7	2.7	2.7	2.7	2.7	2.7	2.7	2.7
101	2.5	2.5	2.5	2.5	2.5	2.5	2.5	2.5	2.5	2.5
102	2.3	2.3	2.3	2.3	2.3	2.3	2.3	2.3	2.3	2.3
103	2.1	2.1	2.1	2.1	2.1	2.1	2.1	2.1	2.1	2.1
104	1.9	1.9	1.9	1.9	1.9	1.9	1.9	1.9	1.9	1.9
105	1.8	1.8	1.8	1.8	1.8	1.8	1.8	1.8	1.8	1.8
106	1.6	1.6	1.6	1.6	1.6	1.6	1.6	1.6	1.6	1.6
107	1.4	1.4	1.4	1.4	1.4	1.4	1.4	1.4	1.4	1.4
108	1.3	1.3	1.3	1.3	1.3	1.3	1.3	1.3	1.3	1.3
109	1.1	1.1	1.1	1.1	1.1	1.1	1.1	1.1	1.1	1.1
110	1.0	1.0	1.0	1.0	1.0	1.0	1.0	1.0	1.0	1.0
111	.9	.9	.9	.9	.9	.9	.9	.9	.9	.9
112	.8	.8	.8	.8	.8	.8	.8	.8	.8	.8
113	.7	.7	.7	.7	.7	.7	.7	.7	.7	.7
114	.6	.6	.6	.6	.6	.6	.6	.6	.6	.6
115	.5	.5	.5	.5	.5	.5	.5	.5	.5	.5

Table VIa—Annuities for Joint Life Only; Two Lives—Expected Return Multiples

Ages	35	36	37	38	39	40	41	42	43	44
35	40.7	40.2	39.7	39.2	38.6	38.0	37.4	36.8	36.2	35.5
36	40.2	39.7	39.3	38.7	38.2	37.7	37.1	36.5	35.9	35.2
37	39.7	39.3	38.8	38.3	37.8	37.3	36.7	36.2	35.6	34.9
38	39.2	38.7	38.3	37.9	37.4	36.9	36.3	35.8	35.2	34.6
39	38.6	38.2	37.8	37.4	36.9	36.4	35.9	35.4	34.9	34.3
40	38.0	37.7	37.3	36.9	36.4	36.0	35.5	35.0	34.5	34.0
41	37.4	37.1	36.7	36.3	35.9	35.5	35.1	34.6	34.1	33.6
42	36.8	36.5	36.2	35.8	35.4	35.0	34.6	34.1	33.7	33.2
43	36.2	35.9	35.6	35.2	34.9	34.5	34.1	33.7	33.2	32.8
44	35.5	35.2	34.9	34.6	34.3	34.0	33.6	33.2	32.8	32.3
45	34.8	34.6	34.3	34.0	33.7	33.4	33.0	32.7	32.3	31.8
46	34.1	33.9	33.7	33.4	33.1	32.8	32.5	32.1	31.8	31.4
47	33.4	33.2	33.0	32.8	32.5	32.2	31.9	31.6	31.2	30.8
48	32.7	32.5	32.3	32.1	31.8	31.6	31.3	31.0	30.7	30.3
49	32.0	31.8	31.6	31.4	31.2	30.9	30.7	30.4	30.1	29.8
50	31.3	31.1	30.9	30.7	30.5	30.3	30.0	29.8	29.5	29.2
51	30.5	30.4	30.2	30.0	29.8	29.6	29.4	29.2	28.9	28.6
52	29.7	29.6	29.5	29.3	29.1	28.9	28.7	28.5	28.3	28.0
53	29.0	28.9	28.7	28.6	28.4	28.2	28.1	27.9	27.6	27.4
54	28.2	28.1	28.0	27.8	27.7	27.5	27.4	27.2	27.0	26.8
55	27.4	27.3	27.2	27.1	27.0	26.8	26.7	26.5	26.3	26.1
56	26.7	26.6	26.5	26.3	26.2	26.1	26.0	25.8	25.6	25.4
57	25.9	25.8	25.7	25.6	25.5	25.4	25.2	25.1	24.9	24.8
58	25.1	25.0	24.9	24.8	24.7	24.6	24.5	24.4	24.2	24.1
59	24.3	24.2	24.1	24.1	24.0	23.9	23.8	23.6	23.5	23.4
60	23.5	23.4	23.4	23.3	23.2	23.1	23.0	22.9	22.8	22.7
61	22.7	22.6	22.6	22.5	22.4	22.4	22.3	22.2	22.1	22.0
62	21.9	21.9	21.8	21.7	21.7	21.6	21.5	21.4	21.3	21.2
63	21.1	21.1	21.0	21.0	20.9	20.8	20.8	20.7	20.6	20.5
64	20.3	20.3	20.2	20.2	20.1	20.1	20.0	20.0	19.9	19.8
65	19.6	19.5	19.5	19.4	19.4	19.3	19.3	19.2	19.1	19.1
66	18.8	18.8	18.7	18.7	18.6	18.6	18.5	18.5	18.4	18.4

Ages	35	36	37	38	39	40	41	42	43	44
67	18.0	18.0	18.0	17.9	17.9	17.9	17.8	17.8	17.7	17.6
68	17.3	17.3	17.2	17.2	17.2	17.1	17.1	17.0	17.0	16.9
69	16.5	16.5	16.5	16.5	16.4	16.4	16.4	16.3	16.3	16.2
70	15.8	15.8	15.8	15.7	15.7	15.7	15.6	15.6	15.6	15.5
71	15.1	15.1	15.1	15.0	15.0	15.0	15.0	14.9	14.9	14.9
72	14.4	14.4	14.4	14.3	14.3	14.3	14.3	14.2	14.2	14.2
73	13.7	13.7	13.7	13.7	13.7	13.6	13.6	13.6	13.6	13.5
74	13.1	13.0	13.0	13.0	13.0	13.0	13.0	12.9	12.9	12.9
75	12.4	12.4	12.4	12.4	12.3	12.3	12.3	12.3	12.3	12.2
76	11.8	11.8	11.7	11.7	11.7	11.7	11.7	11.7	11.6	11.6
77	11.1	11.1	11.1	11.1	11.1	11.1	11.1	11.1	11.0	11.0
78	10.5	10.5	10.5	10.5	10.5	10.5	10.5	10.5	10.5	10.4
79	10.0	10.0	9.9	9.9	9.9	9.9	9.9	9.9	9.9	9.9
80	9.4	9.4	9.4	9.4	9.4	9.4	9.4	9.3	9.3	9.3
81	8.9	8.8	8.8	8.8	8.8	8.8	8.8	8.8	8.8	8.8
82	8.3	8.3	8.3	8.3	8.3	8.3	8.3	8.3	8.3	8.3
83	7.8	7.8	7.8	7.8	7.8	7.8	7.8	7.8	7.8	7.8
84	7.3	7.3	7.3	7.3	7.3	7.3	7.3	7.3	7.3	7.3
85	6.9	6.9	6.9	6.9	6.9	6.9	6.9	6.9	6.9	6.9
86	6.5	6.5	6.5	6.5	6.4	6.4	6.4	6.4	6.4	6.4
87	6.1	6.0	6.0	6.0	6.0	6.0	6.0	6.0	6.0	6.0
88	5.7	5.7	5.7	5.7	5.7	5.7	5.7	5.6	5.6	5.6
89	5.3	5.3	5.3	5.3	5.3	5.3	5.3	5.3	5.3	5.3
90	5.0	5.0	5.0	5.0	5.0	5.0	5.0	5.0	5.0	5.0
91	4.7	4.7	4.7	4.7	4.7	4.7	4.7	4.7	4.6	4.6
92	4.4	4.4	4.4	4.4	4.4	4.4	4.4	4.4	4.4	4.4
93	4.1	4.1	4.1	4.1	4.1	4.1	4.1	4.1	4.1	4.1
94	3.9	3.9	3.9	3.9	3.9	3.9	3.9	3.9	3.9	3.9
95	3.6	3.6	3.6	3.6	3.6	3.6	3.6	3.6	3.6	3.6
96	3.4	3.4	3.4	3.4	3.4	3.4	3.4	3.4	3.4	3.4
97	3.2	3.2	3.2	3.2	3.2	3.2	3.2	3.2	3.2	3.2
98	3.0	3.0	3.0	3.0	3.0	3.0	3.0	3.0	3.0	3.0
99	2.8	2.8	2.8	2.8	2.8	2.8	2.8	2.8	2.8	2.8
100	2.7	2.7	2.7	2.7	2.7	2.7	2.7	2.7	2.6	2.6
101	2.5	2.5	2.5	2.5	2.5	2.5	2.5	2.5	2.5	2.5
102	2.3	2.3	2.3	2.3	2.3	2.3	2.3	2.3	2.3	2.3

Ages	35	36	37	38	39	40	41	42	43	44
103	2.1	2.1	2.1	2.1	2.1	2.1	2.1	2.1	2.1	2.1
104	1.9	1.9	1.9	1.9	1.9	1.9	1.9	1.9	1.9	1.9
105	1.8	1.8	1.8	1.8	1.8	1.8	1.8	1.8	1.8	1.8
106	1.6	1.6	1.6	1.6	1.6	1.6	1.6	1.6	1.6	1.6
107	1.4	1.4	1.4	1.4	1.4	1.4	1.4	1.4	1.4	1.4
108	1.3	1.3	1.3	1.3	1.3	1.3	1.3	1.3	1.3	1.3
109	1.1	1.1	1.1	1.1	1.1	1.1	1.1	1.1	1.1	1.1
110	1.0	1.0	1.0	1.0	1.0	1.0	1.0	1.0	1.0	1.0
111	.9	.9	.9	.9	.9	.9	.9	.9	.9	.9
112	.8	.8	.8	.8	.8	.8	.8	.8	.8	.8
113	.7	.7	.7	.7	.7	.7	.7	.7	.7	.7
114	.6	.6	.6	.6	.6	.6	.6	.6	.6	.6
115	.5	.5	.5	.5	.5	.5	.5	.5	.5	.5

Table VIa—Annuities for Joint Life Only; Two Lives—Expected Return Multiples

Ages	45	46	47	48	49	50	51	52	53	54
45	31.4	30.9	30.5	30.0	29.4	28.9	28.3	27.7	27.1	26.5
46	30.9	30.5	30.0	29.6	29.1	28.5	28.0	27.4	26.9	26.3
47	30.5	30.0	29.6	29.2	28.7	28.2	27.7	27.1	26.6	26.0
48	30.0	29.6	29.2	28.7	28.3	27.8	27.3	26.8	26.3	25.7
49	29.4	29.1	28.7	28.3	27.9	27.4	26.9	26.5	25.9	25.4
50	28.9	28.5	28.2	27.4	27.4	27.0	26.5	26.1	25.6	25.1
51	28.3	28.0	27.7	27.3	26.9	26.5	26.1	25.7	25.2	24.7
52	27.7	27.4	27.1	26.8	26.5	26.1	25.7	25.3	24.8	24.4
53	27.1	26.9	26.6	26.3	25.9	25.6	25.2	24.8	24.4	24.0
54	26.5	26.3	26.0	25.7	25.4	25.1	24.7	24.4	24.0	23.6
55	25.9	25.7	25.4	25.1	24.9	24.6	24.2	23.9	23.5	23.2
56	25.2	25.0	24.8	24.6	24.3	24.0	23.7	23.4	23.1	22.7
57	24.6	24.4	24.2	24.0	23.7	23.5	23.2	22.9	22.6	22.2
58	23.9	23.7	23.5	23.3	23.1	22.9	22.6	22.4	22.1	21.7
59	23.2	23.1	22.9	22.7	22.5	22.3	22.1	21.8	21.5	21.2
60	22.5	22.4	22.2	22.1	21.9	21.7	21.5	21.2	21.0	20.7
61	21.8	21.7	21.6	21.4	21.2	21.1	20.9	20.6	20.4	20.2
62	21.1	21.0	20.9	20.7	20.6	20.4	20.2	20.0	19.8	19.6
63	20.4	20.3	20.2	20.1	19.9	19.8	19.6	19.4	19.2	19.0
64	19.7	19.6	19.5	19.4	19.3	19.1	19.0	18.8	18.6	18.5
65	19.0	18.9	18.8	18.7	18.6	18.5	18.3	18.2	18.0	17.9
66	18.3	18.2	18.1	18.0	17.9	17.8	17.7	17.6	17.4	17.3
67	17.6	17.5	17.4	17.3	17.3	17.2	17.1	16.9	16.8	16.7
68	16.9	16.8	16.7	16.7	16.6	16.5	16.4	16.3	16.2	16.1
69	16.2	16.1	16.1	16.0	15.9	15.8	15.8	15.7	15.6	15.4
70	15.5	15.4	15.4	15.3	15.3	15.2	15.1	15.0	14.9	14.8
71	14.8	14.8	14.7	14.7	14.6	14.5	14.5	14.4	14.3	14.2
72	14.1	14.1	14.1	14.0	14.0	13.9	13.8	13.8	13.7	13.6
73	13.5	13.5	13.4	13.4	13.3	13.3	13.2	13.2	13.1	13.0
74	12.8	12.8	12.8	12.7	12.7	12.7	12.6	12.6	12.5	12.4
75	12.2	12.2	12.2	12.1	12.1	12.1	12.0	12.0	11.9	11.9
76	11.6	11.6	11.6	11.5	11.5	11.5	11.4	11.4	11.3	11.3

Ages	45	46	47	48	49	50	51	52	53	54
77	11.0	11.0	11.0	10.9	10.9	10.9	10.8	10.8	10.8	10.7
78	10.4	10.4	10.4	10.4	10.3	10.3	10.3	10.2	10.2	10.2
79	9.9	9.8	9.8	9.8	9.8	9.8	9.7	9.7	9.7	9.6
80	9.3	9.3	9.3	9.3	9.2	9.2	9.2	9.2	9.1	9.1
81	8.8	8.8	8.7	8.7	8.7	8.7	8.7	8.7	8.6	8.6
82	8.3	8.2	8.2	8.2	8.2	8.2	8.2	8.2	8.1	8.1
83	7.8	7.8	7.7	7.7	7.7	7.7	7.7	7.7	7.7	7.6
84	7.3	7.3	7.3	7.3	7.3	7.2	7.2	7.2	7.2	7.2
85	6.8	6.8	6.8	6.8	6.8	6.8	6.8	6.8	6.8	6.7
86	6.4	6.4	6.4	6.4	6.4	6.4	6.4	6.4	6.3	6.3
87	6.0	6.0	6.0	6.0	6.0	6.0	6.0	6.0	6.0	5.9
88	5.6	5.6	5.6	5.6	5.6	5.6	5.6	5.6	5.6	5.6
89	5.3	5.3	5.3	5.3	5.3	5.3	5.2	5.2	5.2	5.2
90	5.0	4.9	4.9	4.9	4.9	4.9	4.9	4.9	4.9	4.9
91	4.6	4.6	4.6	4.6	4.6	4.6	4.6	4.6	4.6	4.6
92	4.4	4.4	4.4	4.3	4.3	4.3	4.3	4.3	4.3	4.3
93	4.1	4.1	4.1	4.1	4.1	4.1	4.1	4.1	4.1	4.1
94	3.9	3.9	3.8	3.8	3.8	3.8	3.8	3.8	3.8	3.8
95	3.6	3.6	3.6	3.6	3.6	3.6	3.6	3.6	3.6	3.6
96	3.4	3.4	3.4	3.4	3.4	3.4	3.4	3.4	3.4	3.4
97	3.2	3.2	3.2	3.2	3.2	3.2	3.2	3.2	3.2	3.2
98	3.0	3.0	3.0	3.0	3.0	3.0	3.0	3.0	3.0	3.0
99	2.8	2.8	2.8	2.8	2.8	2.8	2.8	2.8	2.8	2.8
100	2.6	2.6	2.6	2.6	2.6	2.6	2.6	2.6	2.6	2.6
101	2.5	2.5	2.5	2.5	2.5	2.5	2.5	2.5	2.5	2.5
102	2.3	2.3	2.3	2.3	2.3	2.3	2.3	2.3	2.3	2.3
103	2.1	2.1	2.1	2.1	2.1	2.1	2.1	2.1	2.1	2.1
104	1.9	1.9	1.9	1.9	1.9	1.9	1.9	1.9	1.9	1.9
105	1.8	1.8	1.8	1.8	1.8	1.8	1.8	1.8	1.8	1.8
106	1.6	1.6	1.6	1.6	1.6	1.6	1.6	1.6	1.6	1.6
107	1.4	1.4	1.4	1.4	1.4	1.4	1.4	1.4	1.4	1.4
108	1.3	1.3	1.3	1.3	1.3	1.3	1.3	1.3	1.3	1.3
109	1.1	1.1	1.1	1.1	1.1	1.1	1.1	1.1	1.1	1.1
110	1.0	1.0	1.0	1.0	1.0	1.0	1.0	1.0	1.0	1.0
111	.9	.9	.9	.9	.9	.9	.9	.9	.9	.9
112	.8	.8	.8	.8	.8	.8	.8	.8	.8	.8

Ages	45	46	47	48	49	50	51	52	53	54
113	.7	.7	.7	.7	.7	.7	.7	.7	.7	.7
114	.6	.6	.6	.6	.6	.6	.6	.6	.6	.6
115	.5	.5	.5	.5	.5	.5	.5	.5	.5	.5

Table VIa—Annuities for Joint Life Only; Two Lives—Expected Return Multiples

Ages	55	56	57	58	59	60	61	62	63	64
55	22.7	22.3	21.9	21.4	20.9	20.4	19.9	19.4	18.8	18.3
56	22.3	21.9	21.5	21.1	20.6	20.1	19.6	19.1	18.6	18.0
57	21.9	21.5	21.1	20.7	20.3	19.8	19.3	18.8	18.3	17.8
58	21.4	21.1	20.7	20.3	19.9	19.5	19.0	18.5	18.0	17.5
59	20.9	20.6	20.3	19.9	19.5	19.1	18.7	18.2	17.7	17.3
60	20.4	20.1	19.8	19.5	19.1	18.7	18.3	17.9	17.4	17.0
61	29.9	19.6	19.3	19.0	18.7	18.3	17.9	17.5	17.1	16.7
62	19.4	19.1	18.8	18.5	18.2	17.9	17.5	17.1	16.8	16.3
63	18.8	18.6	18.3	18.0	17.7	17.4	17.1	16.8	16.4	16.0
64	18.3	18.0	17.8	17.5	17.3	17.0	16.7	16.3	16.0	15.6
65	17.7	17.5	17.3	17.0	16.8	16.5	16.2	15.9	15.6	15.3
66	17.1	16.9	16.7	16.5	16.3	16.0	15.8	15.5	15.2	14.9
67	16.5	16.3	16.2	16.0	15.8	15.5	15.3	15.0	14.7	14.5
68	15.9	15.8	15.6	15.4	15.2	15.0	14.8	14.6	14.3	14.0
69	15.3	15.2	15.0	14.9	14.7	14.5	14.3	14.1	13.9	13.6
70	14.7	14.6	14.5	14.3	14.2	14.0	13.8	13.6	13.4	13.2
71	14.1	14.0	13.9	13.8	13.6	13.5	13.3	13.1	12.9	12.7
72	13.5	13.4	13.3	13.2	13.1	12.9	12.8	12.6	12.4	12.3
73	13.0	12.9	12.8	12.7	12.5	12.4	12.3	12.1	12.0	11.8
74	12.4	12.3	12.2	12.1	12.0	11.9	11.8	11.6	11.5	11.3
75	11.8	11.7	11.7	11.6	11.5	11.4	11.3	11.1	11.0	10.9
76	11.2	11.2	11.1	11.0	10.9	10.9	10.8	10.6	10.5	10.4
77	10.7	10.6	10.6	10.5	10.4	10.3	10.3	10.2	10.0	9.9
78	10.1	10.1	10.0	10.0	9.9	9.8	9.8	9.7	9.6	9.5
79	9.6	9.6	9.5	9.5	9.4	9.3	9.3	9.2	9.1	9.0
80	9.1	9.0	9.0	9.0	8.9	8.9	8.8	8.7	8.7	8.6
81	8.6	8.5	8.5	8.5	8.4	8.4	8.3	8.3	8.2	8.1
82	8.1	8.1	8.0	8.0	8.0	7.9	7.9	7.8	7.8	7.7
83	7.6	7.6	7.6	7.5	7.5	7.5	7.4	7.4	7.3	7.3
84	7.2	7.1	7.1	7.1	7.1	7.0	7.0	7.0	6.9	6.9
85	6.7	6.7	6.7	6.7	6.6	6.6	6.6	6.5	6.5	6.5
86	6.3	6.3	6.3	6.3	6.2	6.2	6.2	6.2	6.1	6.1

Ages	55	56	57	58	59	60	61	62	63	64
87	5.9	5.9	5.9	5.9	5.9	5.8	5.8	5.8	5.8	5.7
88	5.6	5.5	5.5	5.5	5.5	5.5	5.5	5.4	5.4	5.4
89	5.2	5.2	5.2	5.2	5.2	5.1	5.1	5.1	5.1	5.1
90	4.9	4.9	4.9	4.9	4.9	4.8	4.8	4.8	4.8	4.8
91	4.6	4.6	4.6	4.6	4.6	4.5	4.5	4.5	4.5	4.5
92	4.3	4.3	4.3	4.3	4.3	4.3	4.3	4.2	4.2	4.2
93	4.1	4.1	4.0	4.0	4.0	4.0	4.0	4.0	4.0	4.0
94	3.8	3.8	3.8	3.8	3.8	3.8	3.8	3.8	3.8	3.7
95	3.6	3.6	3.6	3.6	3.6	3.6	3.6	3.6	3.5	3.5
96	3.4	3.4	3.4	3.4	3.4	3.4	3.4	3.3	3.3	3.3
97	3.2	3.2	3.2	3.2	3.2	3.2	3.2	3.2	3.1	3.1
98	3.0	3.0	3.0	3.0	3.0	3.0	3.0	3.0	3.0	3.0
99	2.8	2.8	2.8	2.8	2.8	2.8	2.8	2.8	2.8	2.8
100	2.6	2.6	2.6	2.6	2.6	2.6	2.6	2.6	2.6	2.6
101	2.5	2.4	2.4	2.4	2.4	2.4	2.4	2.4	2.4	2.4
102	2.3	2.3	2.3	2.3	2.3	2.3	2.3	2.3	2.3	2.2
103	2.1	2.1	2.1	2.1	2.1	2.1	2.1	2.1	2.1	2.1
104	1.9	1.9	1.9	1.9	1.9	1.9	1.9	1.9	1.9	1.9
105	1.8	1.8	1.8	1.8	1.8	1.8	1.7	1.7	1.7	1.7
106	1.6	1.6	1.6	1.6	1.6	1.6	1.6	1.6	1.6	1.6
107	1.4	1.4	1.4	1.4	1.4	1.4	1.4	1.4	1.4	1.4
108	1.3	1.3	1.3	1.3	1.3	1.3	1.3	1.3	1.3	1.3
109	1.1	1.1	1.1	1.1	1.1	1.1	1.1	1.1	1.1	1.1
110	1.0	1.0	1.0	1.0	1.0	1.0	1.0	1.0	1.0	1.0
111	.9	.9	.9	.9	.9	.9	.9	.9	.9	.9
112	.8	.8	.8	.8	.8	.8	.8	.8	.8	.8
113	.7	.7	.7	.7	.7	.7	.7	.7	.7	.7
114	.6	.6	.6	.6	.6	.6	.6	.6	.6	.6
115	.5	.5	.5	.5	.5	.5	.5	.5	.5	.5

Table VIA—Annuities for Joint Life Only; Two Lives—Expected Return Multiples

Ages	65	66	67	68	69	70	71	72	73	74
65	14.9	14.5	14.1	13.7	13.3	12.9	12.5	12.0	11.6	11.2
66	14.5	14.2	13.8	13.4	13.1	12.6	12.2	11.8	11.4	11.0
67	14.1	13.8	13.5	13.1	12.8	12.4	12.0	11.6	11.2	10.8
68	13.7	13.4	13.1	12.8	12.5	12.1	11.7	11.4	11.0	10.6
69	13.3	13.1	12.8	12.5	12.1	11.8	11.4	11.1	10.7	10.4
70	12.9	12.6	12.4	12.1	11.8	11.5	11.2	10.8	10.5	10.1
71	12.5	12.2	12.0	11.7	11.4	11.2	10.9	10.5	10.2	9.9
72	12.0	11.8	11.6	11.4	11.1	10.8	10.5	10.2	9.9	9.6
73	11.6	11.4	11.2	11.0	10.7	10.5	10.2	9.9	9.7	9.4
74	11.2	11.0	10.8	10.6	10.4	10.1	9.9	9.6	9.4	9.1
75	10.7	10.5	10.4	10.2	10.0	9.8	9.5	9.3	9.1	8.8
76	10.3	10.1	9.9	9.8	9.6	9.4	9.2	9.0	8.8	8.5
77	9.8	9.7	9.5	9.4	9.2	9.0	8.8	8.6	8.4	8.2
78	9.4	9.2	9.1	9.0	8.8	8.7	8.5	8.3	8.1	7.9
79	8.9	8.8	8.7	8.6	8.4	8.3	8.1	8.0	7.8	7.6
80	8.5	8.4	8.3	8.2	8.0	7.9	7.8	7.6	7.5	7.3
81	8.0	8.0	7.9	7.9	7.7	7.5	7.4	7.3	7.1	7.0
82	7.6	7.5	7.5	7.4	7.3	7.2	7.1	6.9	6.8	6.7
83	7.2	7.1	7.1	7.0	6.9	6.8	6.7	6.6	6.5	6.4
84	6.8	6.7	6.7	6.6	6.5	6.4	6.4	6.3	6.2	6.0
85	6.4	6.4	6.3	6.2	6.2	6.1	6.0	5.9	5.8	5.7
86	6.0	6.0	5.9	5.9	5.8	5.8	5.7	5.6	5.5	5.4
87	5.7	5.6	5.6	5.6	5.5	5.4	5.4	5.3	5.2	5.2
88	5.3	5.3	5.3	5.2	5.2	5.1	5.1	5.0	5.0	4.9
89	5.0	5.0	5.0	4.9	4.9	4.8	4.8	4.7	4.7	4.6
90	4.7	4.7	4.7	4.6	4.6	4.6	4.5	4.5	4.4	4.4
91	4.5	4.4	4.4	4.4	4.3	4.3	4.3	4.2	4.2	4.1
92	4.2	4.2	4.1	4.1	4.1	4.1	4.0	4.0	3.9	3.9
93	3.9	3.9	3.9	3.9	3.9	3.8	3.8	3.8	3.7	3.7
94	3.7	3.7	3.7	3.7	3.6	3.6	3.6	3.6	3.5	3.5
95	3.5	3.5	3.5	3.5	3.4	3.4	3.4	3.4	3.3	3.3
96	3.3	3.3	3.3	3.3	3.3	3.2	3.2	3.2	3.2	3.1

Ages	65	66	67	68	69	70	71	72	73	74
97	3.1	3.1	3.1	3.1	3.1	3.1	3.0	3.0	3.0	3.0
98	2.9	2.9	2.9	2.9	2.9	2.9	2.9	2.9	2.8	2.8
99	2.8	2.8	2.8	2.7	2.7	2.7	2.7	2.7	2.7	2.6
100	2.6	2.6	2.6	2.6	2.6	2.5	2.5	2.5	2.5	2.5
101	2.4	2.4	2.4	2.4	2.4	2.4	2.4	2.4	2.3	2.3
102	2.2	2.2	2.2	2.2	2.2	2.2	2.2	2.2	2.2	2.2
103	2.1	2.1	2.1	2.1	2.1	2.0	2.0	2.0	2.0	2.0
104	1.9	1.9	1.9	1.9	1.9	1.9	1.9	1.9	.19	1.9
105	1.7	1.7	1.7	1.7	.17	1.7	1.7	1.7	1.7	1.7
106	1.6	1.6	.16	1.6	1.6	1.6	1.6	1.6	1.5	1.5
107	1.4	1.4	1.4	1.4	1.4	1.4	1.4	1.4	1.4	1.4
108	1.3	1.3	1.3	1.3	1.3	1.3	1.3	1.3	1.3	1.3
109	1.1	1.1	1.1	1.1	1.1	1.1	1.1	1.1	1.1	1.1
110	1.0	1.0	1.0	1.0	1.0	1.0	1.0	1.0	1.0	1.0
111	.9	.9	.9	.9	.9	.9	.9	.9	.9	.9
112	.8	.8	.8	.8	.8	.8	.8	.8	.8	.8
113	.7	.7	.7	.7	.7	.6	.6	.6	.6	.6
114	.6	.6	.6	.6	.6	.6	.5	.5	.5	.5
115	.5	.5	.5	.5	.5	.5	.5	.5	.5	.5

Table VIA—Annuities for Joint Life Only; Two Lives—Expected Return Multiples

Ages	75	76	77	78	79	80	81	82	83	84
75	8.6	8.3	8.0	7.7	7.4	7.1	6.8	6.5	6.2	5.9
76	8.3	8.0	7.8	7.5	7.2	6.9	6.7	6.4	6.1	5.8
77	8.0	7.8	7.5	7.3	7.0	6.8	6.5	6.2	5.9	5.7
78	7.7	7.5	7.3	7.0	6.8	6.6	6.3	6.0	5.8	5.5
79	7.4	7.2	7.0	6.8	6.6	6.3	6.1	5.9	5.6	5.4
80	7.1	6.9	6.8	6.6	6.3	6.1	5.9	5.7	5.5	5.2
81	6.8	6.7	6.5	6.3	6.1	5.9	5.7	5.5	5.3	5.1
82	6.5	6.4	6.2	6.0	5.9	5.7	5.5	5.3	5.1	4.9
83	6.2	6.1	5.9	5.8	5.6	5.5	5.3	5.1	4.9	4.7
84	5.9	5.8	5.7	5.5	5.4	5.2	5.1	4.9	4.7	4.6
85	5.6	5.5	5.4	5.3	5.2	5.0	4.9	4.7	4.6	4.4
86	5.4	5.3	5.1	5.0	4.9	4.8	4.7	4.5	4.4	4.2
87	5.1	5.0	4.9	4.8	4.7	4.6	4.4	4.3	4.2	4.1
88	4.8	4.7	4.6	4.5	4.4	4.3	4.2	4.1	4.0	3.9
89	4.5	4.5	4.4	4.3	4.2	4.1	4.0	3.9	3.8	3.7
90	4.3	4.2	4.2	4.1	4.0	3.9	3.8	3.8	3.7	3.5
91	4.1	4.0	4.0	3.9	3.8	3.7	3.7	3.6	3.5	3.4
92	3.9	3.8	3.7	3.7	3.6	3.6	3.5	3.4	3.3	3.2
93	3.7	3.6	3.6	3.5	3.4	3.4	3.3	3.2	3.2	3.1
94	3.5	3.4	3.4	3.3	3.3	3.2	3.2	3.1	3.0	3.0
95	3.3	3.2	3.2	3.2	3.1	3.1	3.0	3.0	2.9	2.8
96	3.1	3.1	3.0	3.0	3.0	2.9	2.9	2.8	2.8	2.7
97	2.9	2.9	2.9	2.9	2.8	2.8	2.7	2.7	2.6	2.6
98	2.8	2.8	2.7	2.7	2.7	2.6	2.6	2.6	2.5	2.5
99	2.6	2.6	2.6	2.6	2.5	2.5	2.5	2.4	2.4	2.3
100	2.5	2.5	2.4	2.4	2.4	2.4	2.3	2.3	2.3	2.2
101	2.3	2.3	2.3	2.3	2.2	2.2	2.2	2.2	2.1	2.1
102	2.2	2.1	2.1	2.1	2.1	2.1	2.0	2.0	2.0	2.0
103	2.0	2.0	2.0	2.0	1.9	1.9	1.9	1.9	1.9	1.8
104	1.8	1.8	1.8	1.8	1.8	1.8	1.8	1.7	1.7	1.7
105	1.7	1.7	1.7	1.7	1.6	1.6	1.6	1.6	1.6	1.6
106	1.5	1.5	1.5	1.5	1.5	1.5	1.5	1.5	1.5	1.4

Ages	75	76	77	78	79	80	81	82	83	84
107	1.4	1.4	1.4	1.4	1.4	1.4	1.3	1.3	1.3	1.3
108	1.3	1.2	1.2	1.2	1.2	1.2	1.2	1.2	1.2	1.2
109	1.1	1.1	1.1	1.1	1.1	1.1	1.1	1.1	1.1	1.1
110	1.0	1.0	1.0	1.0	1.0	1.0	1.0	1.0	1.0	1.0
111	.9	.9	.9	.9	.9	.9	.9	.9	.8	.8
112	.8	.8	.8	.7	.7	.7	.7	.7	.7	.7
113	.6	.6	.6	.6	.6	.6	.6	.6	.6	.6
114	.5	.5	.5	.5	.5	.5	.5	.5	.5	.5
115	.5	.5	.5	.5	.5	.5	.5	.5	.5	.5

Table VIa—Annuities for Joint Life Only; Two Lives—Expected Return Multiples

Ages	85	86	87	88	89	90	91	92	93	94
85	4.2	4.1	3.9	3.8	3.6	3.4	3.3	3.2	3.0	2.9
86	4.1	3.9	3.8	3.6	3.5	3.3	3.2	3.1	2.9	2.8
87	3.9	3.8	3.6	3.5	3.4	3.2	3.1	3.0	2.8	2.7
88	3.8	3.6	3.5	3.4	3.2	3.1	3.0	2.9	2.8	2.6
89	3.6	3.5	3.4	3.2	3.1	3.0	2.9	2.8	2.7	2.6
90	3.4	3.3	3.2	3.1	3.0	2.9	2.8	2.7	2.6	2.5
91	3.3	3.2	3.1	3.0	2.9	2.8	2.7	2.6	2.5	2.4
92	3.2	3.1	3.0	2.9	2.8	2.7	2.6	2.5	2.4	2.3
93	3.0	2.9	2.8	2.8	2.7	2.6	2.5	2.4	2.3	2.3
94	2.9	2.8	2.7	2.6	2.6	2.5	2.4	2.3	2.3	2.2
95	2.8	2.7	2.6	2.5	2.5	2.4	2.3	2.2	2.2	2.1
96	2.6	2.6	2.5	2.4	2.4	2.3	2.2	2.2	2.1	2.0
97	2.5	2.5	2.4	2.3	2.3	2.2	2.2	2.1	2.0	2.0
98	2.4	2.4	2.3	2.2	2.2	2.1	2.1	2.0	2.0	1.9
99	2.3	2.2	2.2	2.1	2.1	2.0	2.0	1.9	1.9	1.8
100	2.2	2.1	2.1	2.0	2.0	1.9	1.9	1.9	1.8	1.8
101	2.1	2.0	2.0	1.9	1.9	1.9	1.8	1.8	1.7	1.7
102	1.9	1.9	1.9	1.8	1.8	1.8	1.7	1.7	1.6	1.6
103	1.8	1.8	1.8	1.7	1.7	1.7	1.6	1.6	1.5	1.5
104	1.7	1.7	1.6	1.6	1.6	1.5	1.5	1.5	1.5	1.4
105	1.6	1.5	1.5	1.5	1.5	1.4	1.4	1.4	1.4	1.3
106	1.4	1.4	1.4	1.4	1.4	1.3	1.3	1.3	1.3	1.2
107	1.3	1.3	1.3	1.3	1.2	1.2	1.2	1.2	1.2	1.2
108	1.2	1.2	1.2	1.1	1.1	1.1	1.1	1.1	1.1	1.1
109	1.1	1.1	1.0	1.0	1.0	1.0	1.0	1.0	1.0	1.0
110	.9	.9	.9	.9	.9	.9	.9	.9	.9	.9
111	.8	.8	.8	.8	.8	.8	.8	.8	.8	.8
112	.7	.7	.7	.7	.7	.7	.7	.7	.7	.7
113	.6	.6	.6	.6	.6	.6	.6	.6	.6	.6
114	.5	.5	.5	.5	.5	.5	.5	.5	.5	.5
115	.5	.5	.5	.5	.5	.5	.5	.5	.5	.5

Table VIa—Annuities for Joint Life Only; Two Lives—Expected Return Multiples

Ages	95	96	97	98	99	100	101	102	103	104
95	2.0	2.0	1.9	1.8	1.8	1.7	1.6	1.6	1.5	1.4
96	2.0	1.9	1.9	1.8	1.7	1.7	1.6	1.5	1.5	1.4
97	1.9	1.9	1.8	1.7	1.7	1.6	1.6	1.5	1.4	1.3
98	1.8	1.8	1.7	1.7	1.6	1.6	1.5	1.5	1.4	1.3
99	1.8	1.7	1.7	1.6	1.6	1.5	1.5	1.4	1.4	1.3
100	1.7	1.7	1.6	1.6	1.5	1.5	1.4	1.4	1.3	1.3
101	1.6	1.6	1.6	1.5	1.5	1.4	1.4	1.3	1.3	1.2
102	1.6	1.5	1.5	1.5	1.4	1.4	1.3	1.3	1.2	1.2
103	1.5	1.5	1.4	1.4	1.4	1.3	1.3	1.2	1.2	1.1
104	1.4	1.4	1.3	1.3	1.3	1.3	1.2	1.2	1.1	1.1
105	1.3	1.3	1.3	1.2	1.2	1.2	1.2	1.1	1.1	1.0
106	1.2	1.2	1.2	1.2	1.1	1.1	1.1	1.1	1.0	1.0
107	1.1	1.1	1.1	1.1	1.1	1.0	1.0	1.0	1.0	9
108	1.0	1.0	1.0	1.0	1.0	1.0	1.0	.9	.9	.9
109	1.0	.9	.9	.9	.9	.9	.9	.9	.8	.8
110	.9	.9	.8	.8	.8	.8	.8	.8	.8	.8
111	.8	.8	.8	.8	.8	.7	.7	.7	.7	.7
112	.7	.7	.7	.7	.7	.7	.7	.7	.6	.6
113	.6	.6	.6	.6	.6	.6	.6	.6	.6	.6
114	.5	.5	.5	.5	.5	.5	.5	.5	.5	.5
115	.5	.5	.5	.5	.5	.5	.5	.5	.5	.5

Table VIaa—Annuities for Joint Life Only; Two Lives—Expected Return Multiples

Ages	105	106	107	108	109	110	111	112	113	114	115
105	1.0	1.0	.9	.9	.8	.7	.7	.6	.6	.5	.5
106	1.0	.9	.9	.8	.8	.7	.7	.6	.6	.5	.5
107	.9	.9	.8	.8	.7	.7	.7	.6	.6	.5	.5
108	.9	.8	.8	.8	.7	.7	.6	.6	.5	.5	.5
109	.8	.8	.7	.7	.7	.7	.6	.6	.5	.5	.5
110	.7	.7	.7	.7	.7	.6	.6	.6	.5	.5	.5
111	.7	.7	.7	.6	.6	.6	.6	.5	.5	.5	.5
112	.6	.6	.6	.6	.6	.6	.5	.5	.5	.5	.5
113	.6	.6	.6	.5	.5	.5	.5	.5	.5	.5	.5
114	.5	.5	.5	.5	.5	.5	.5	.5	.5	.5	.5
115	.5	.5	.5	.5	.5	.5	.5	.5	.5	.5	.5

Table VII—Percent Value of Refund Feature; Duration of Guaranteed Amount

Age	Years—									
	1	2	3	4	5	6	7	8	9	10
5	0	0	0	0	0	0	0	0	0	0
6	0	0	0	0	0	0	0	0	0	0
7	0	0	0	0	0	0	0	0	0	0
8	0	0	0	0	0	0	0	0	0	0
9	0	0	0	0	0	0	0	0	0	0
10	0	0	0	0	0	0	0	0	0	0
11	0	0	0	0	0	0	0	0	0	0
12	0	0	0	0	0	0	0	0	0	0
13	0	0	0	0	0	0	0	0	0	0
14	0	0	0	0	0	0	0	0	0	0
15	0	0	0	0	0	0	0	0	0	0
16	0	0	0	0	0	0	0	0	0	0
17	0	0	0	0	0	0	0	0	0	0
18	0	0	0	0	0	0	0	0	0	0
19	0	0	0	0	0	0	0	0	0	0
20	0	0	0	0	0	0	0	0	0	0
21	0	0	0	0	0	0	0	0	0	0
22	0	0	0	0	0	0	0	0	0	0
23	0	0	0	0	0	0	0	0	0	0
24	0	0	0	0	0	0	0	0	0	0
25	0	0	0	0	0	0	0	0	0	0
26	0	0	0	0	0	0	0	0	0	0
27	0	0	0	0	0	0	0	0	0	0
28	0	0	0	0	0	0	0	0	0	0
29	0	0	0	0	0	0	0	0	0	0
30	0	0	0	0	0	0	0	0	0	0
31	0	0	0	0	0	0	0	0	0	0
32	0	0	0	0	0	0	0	0	0	0
33	0	0	0	0	0	0	0	0	0	0
34	0	0	0	0	0	0	0	0	0	0

Age	Years—									
	1	2	3	4	5	6	7	8	9	10
35	0	0	0	0	0	0	0	0	0	0
36	0	0	0	0	0	0	0	0	0	0
37	0	0	0	0	0	0	0	0	0	1
38	0	0	0	0	0	0	0	0	0	1
39	0	0	0	0	0	0	0	0	1	1
40	0	0	0	0	0	0	0	1	1	1
41	0	0	0	0	0	0	0	1	1	1
42	0	0	0	0	0	0	1	1	1	1
43	0	0	0	0	0	0	1	1	1	1
44	0	0	0	0	0	1	1	1	1	1
45	0	0	0	0	0	1	1	1	1	1
46	0	0	0	0	1	1	1	1	1	1
47	0	0	0	0	1	1	1	1	1	1
48	0	0	0	0	1	1	1	1	1	1
49	0	0	0	1	1	1	1	1	1	2
50	0	0	0	1	1	1	1	1	1	2
51	0	0	0	1	1	1	1	1	2	2
52	0	0	0	1	1	1	1	1	2	2
53	0	0	1	1	1	1	1	2	2	2
54	0	0	1	1	1	1	1	2	2	2
55	0	0	1	1	1	1	2	2	2	2
56	0	0	1	1	1	1	2	2	2	3
57	0	0	1	1	1	2	2	2	3	3
58	0	1	1	1	1	2	2	2	3	3
59	0	1	1	1	1	2	2	3	3	4
60	0	1	1	1	2	2	2	3	3	4
61	0	1	1	1	2	2	3	3	4	4
62	0	1	1	2	2	2	3	4	4	5
63	0	1	1	2	2	3	3	4	5	5
64	0	1	1	2	2	3	4	4	5	6
65	0	1	2	2	3	3	4	5	6	6
66	1	1	2	2	3	4	5	5	6	7
67	1	1	2	3	3	4	5	6	7	8
68	1	1	2	3	4	5	6	7	8	9
69	1	1	2	3	4	5	6	7	8	10

Age	Years—									
	1	2	3	4	5	6	7	8	9	10
70	1	2	3	4	5	6	7	8	9	11
71	1	2	3	4	5	6	8	9	10	12
72	1	2	3	4	6	7	8	10	11	13
73	1	2	4	5	6	8	9	11	13	14
74	1	3	4	5	7	9	10	12	14	16
75	1	3	4	6	8	9	11	13	15	17
76	2	3	5	7	9	10	12	15	17	19
77	2	4	5	7	9	12	14	16	18	21
78	2	4	6	8	10	13	15	18	20	23
79	2	4	7	9	11	14	17	19	22	25
80	2	5	7	10	13	15	18	21	24	27
81	3	5	8	11	14	17	20	23	26	29
82	3	6	9	12	15	19	22	25	28	32
83	3	7	10	13	17	20	24	27	31	34
84	4	7	11	15	19	22	26	30	33	37
85	4	8	12	16	20	24	28	32	36	40
86	4	9	13	18	22	27	31	35	39	42
87	5	10	15	20	24	29	33	37	41	45
88	5	11	16	21	26	31	36	40	44	48
89	6	12	18	23	28	33	38	43	47	50
90	7	13	19	25	31	36	41	45	49	53
91	7	14	21	27	33	38	43	48	52	55
92	8	15	22	29	35	40	45	50	54	58
93	9	17	24	31	37	43	48	52	56	60
94	9	18	26	33	39	45	50	54	58	62
95	10	19	27	35	41	47	52	57	60	64
96	11	20	29	36	43	49	54	59	62	66
97	11	21	30	38	45	51	56	61	64	68
98	12	23	32	40	47	53	58	63	66	69
99	13	24	34	42	49	55	60	65	68	71
100	14	26	36	44	52	58	63	67	70	73
101	14	27	38	47	54	60	65	69	72	75
102	15	29	40	49	56	62	67	71	74	77
103	17	31	42	52	59	65	69	73	76	78
104	18	33	45	55	62	67	72	75	78	80

Age	Years—									
	1	2	3	4	5	6	7	8	9	10
105	19	36	48	58	65	70	74	77	80	82
106	21	38	51	61	68	73	77	79	82	84
107	23	42	55	64	71	75	79	81	84	85
108	25	45	58	67	73	78	81	83	85	87
109	28	49	62	71	76	80	83	85	87	88
110	31	52	66	74	79	82	85	87	88	89
111	34	57	70	77	82	85	87	88	90	91
112	37	61	73	80	84	87	88	90	91	92
113	41	66	77	83	86	88	90	91	92	93
114	45	70	80	85	88	90	92	93	93	94
115	50	75	83	88	90	92	93	94	94	95

Table VII—Percent Value of Refund Feature; Duration of Guaranteed Amount

Age	Years—									
	11	12	13	14	15	16	17	18	19	20
5	0	0	0	0	0	0	0	0	0	0
6	0	0	0	0	0	0	0	0	0	0
7	0	0	0	0	0	0	0	0	0	0
8	0	0	0	0	0	0	0	0	0	0
9	0	0	0	0	0	0	0	0	0	0
10	0	0	0	0	0	0	0	0	0	0
11	0	0	0	0	0	0	0	0	0	0
12	0	0	0	0	0	0	0	0	0	0
13	0	0	0	0	0	0	0	0	0	0
14	0	0	0	0	0	0	0	0	0	0
15	0	0	0	0	0	0	0	0	0	0
16	0	0	0	0	0	0	0	0	0	0
17	0	0	0	0	0	0	0	0	0	0
18	0	0	0	0	0	0	0	0	0	0
19	0	0	0	0	0	0	0	0	0	0
20	0	0	0	0	0	0	0	0	0	1
21	0	0	0	0	0	0	0	0	0	1
22	0	0	0	0	0	0	0	0	1	1
23	0	0	0	0	0	0	0	1	1	1
24	0	0	0	0	0	0	0	1	1	1
25	0	0	0	0	0	0	1	1	1	1
26	0	0	0	0	0	0	1	1	1	1
27	0	0	0	0	0	1	1	1	1	1
28	0	0	0	0	1	1	1	1	1	1
29	0	0	0	0	1	1	1	1	1	1
30	0	0	0	1	1	1	1	1	1	1
31	0	0	0	1	1	1	1	1	1	1
32	0	0	1	1	1	1	1	1	1	1
33	0	0	1	1	1	1	1	1	1	1
34	0	1	1	1	1	1	1	1	1	1

Age	Years—									
	11	12	13	14	15	16	17	18	19	20
35	0	1	1	1	1	1	1	1	1	1
36	1	1	1	1	1	1	1	1	1	1
37	1	1	1	1	1	1	1	1	1	1
38	1	1	1	1	1	1	1	1	1	2
39	1	1	1	1	1	1	1	1	2	2
40	1	1	1	1	1	1	1	2	2	2
41	1	1	1	1	1	1	2	2	2	2
42	1	1	1	1	1	2	2	2	2	2
43	1	1	1	1	2	2	2	2	2	3
44	1	1	1	2	2	2	2	2	3	3
45	1	1	2	2	2	2	2	3	3	3
46	1	2	2	2	2	2	3	3	3	3
47	1	2	2	2	2	2	3	3	3	4
48	2	2	2	2	2	3	3	3	4	4
49	2	2	2	2	3	3	3	4	4	4
50	2	2	2	3	3	3	3	4	4	5
51	2	2	3	3	3	3	4	4	4	5
52	2	2	3	3	3	4	4	5	5	5
53	2	3	3	3	4	4	5	5	5	6
54	3	3	3	4	4	4	5	5	6	7
55	3	3	4	4	4	5	5	6	7	7
56	3	3	4	4	5	5	6	7	7	8
57	3	4	4	5	5	6	6	7	8	9
58	4	4	5	5	6	6	7	8	9	9
59	4	5	5	6	6	7	8	9	9	10
60	4	5	6	6	7	8	9	10	10	11
61	5	6	6	7	8	9	10	10	11	13
62	5	6	7	8	9	10	11	12	13	14
63	6	7	8	9	10	11	12	13	14	15
64	7	8	8	9	10	12	13	14	15	17
65	7	8	9	10	12	13	14	15	17	18
66	8	9	10	12	13	14	15	17	18	20
67	9	10	11	13	14	15	17	18	20	22
68	10	11	13	14	15	17	19	20	22	24
69	11	12	14	15	17	19	20	22	24	26

Age	Years—									
	11	12	13	14	15	16	17	18	19	20
70	12	14	15	17	19	20	22	24	26	28
71	13	15	17	18	20	22	24	26	28	30
72	15	17	18	20	22	24	26	28	30	32
73	16	18	20	22	24	26	28	31	33	35
74	18	20	22	24	26	28	31	33	35	37
75	19	22	24	26	28	31	33	35	38	40
76	21	24	26	28	31	33	36	38	40	43
77	23	26	28	31	33	36	38	41	43	45
78	25	28	31	33	36	38	41	43	46	48
79	28	30	33	36	38	41	44	46	48	51
80	30	33	36	38	41	44	46	49	51	53
81	32	35	38	41	44	47	49	51	54	56
82	35	38	41	44	47	49	52	54	56	58
83	38	41	44	47	49	52	54	57	59	61
84	40	44	47	49	52	55	57	59	61	63
85	43	46	49	52	55	57	59	62	63	65
86	46	49	52	55	57	60	62	64	66	67
87	48	52	55	57	60	62	64	66	68	69
88	51	54	57	60	62	64	66	68	70	71
89	54	57	60	62	65	67	68	70	72	73
90	56	59	62	64	67	69	70	72	74	75
91	59	62	64	67	69	71	72	74	75	76
92	61	64	66	69	71	72	74	75	77	78
93	63	66	68	70	72	74	75	77	78	79
94	65	68	70	72	74	75	77	78	79	80
95	67	69	72	74	75	77	78	79	81	82
96	69	71	73	75	77	78	80	81	82	83
97	70	73	75	77	78	80	81	82	83	84
98	72	74	76	78	79	81	82	83	84	85
99	74	76	78	79	81	82	83	84	85	86
100	75	78	79	81	82	83	84	85	86	86
101	77	79	81	82	83	84	85	86	87	87
102	79	81	82	83	84	85	86	87	88	88
103	80	82	83	85	86	87	87	88	89	89
104	82	84	85	86	87	88	88	89	90	90

Age	Years—									
	11	12	13	14	15	16	17	18	19	20
105	84	85	86	87	88	89	89	90	90	91
106	85	86	87	88	89	90	90	91	91	92
107	87	88	89	89	90	91	91	92	92	93
108	88	89	90	90	91	92	92	93	93	93
109	89	90	91	92	92	93	93	93	94	94
110	90	91	92	92	93	93	94	94	94	95
111	92	92	93	93	94	94	95	95	95	95
112	93	93	94	94	95	95	95	96	96	96
113	94	94	95	95	95	96	96	96	96	97
114	95	95	95	96	96	96	97	97	97	97
115	95	96	96	96	97	97	97	97	97	98

Table VII—Percent Value of Refund Feature; Duration of Guaranteed Amount

Age	Years—									
	21	22	23	24	25	26	27	28	29	30
5	0	0	0	0	0	0	0	0	0	0
6	0	0	0	0	0	0	0	0	0	0
7	0	0	0	0	0	0	0	0	0	0
8	0	0	0	0	0	0	0	0	0	1
9	0	0	0	0	0	0	0	0	1	1
10	0	0	0	0	0	0	0	1	1	1
11	0	0	0	0	0	0	1	1	1	1
12	0	0	0	0	0	0	1	1	1	1
13	0	0	0	0	0	1	1	1	1	1
14	0	0	0	0	1	1	1	1	1	1
15	0	0	0	1	1	1	1	1	1	1
16	0	0	1	1	1	1	1	1	1	1
17	0	0	1	1	1	1	1	1	1	1
18	0	1	1	1	1	1	1	1	1	1
19	1	1	1	1	1	1	1	1	1	1
20	1	1	1	1	1	1	1	1	1	1
21	1	1	1	1	1	1	1	1	1	1
22	1	1	1	1	1	1	1	1	1	1
23	1	1	1	1	1	1	1	1	1	1
24	1	1	1	1	1	1	1	1	1	1
25	1	1	1	1	1	1	1	1	1	1
26	1	1	1	1	1	1	1	1	1	1
27	1	1	1	1	1	1	1	1	1	2
28	1	1	1	1	1	1	1	1	2	2
29	1	1	1	1	1	1	1	2	2	2
30	1	1	1	1	1	1	2	2	2	2
31	1	1	1	1	1	2	2	2	2	2
32	1	1	1	1	2	2	2	2	2	2
33	1	1	1	2	2	2	2	2	2	2
34	1	1	2	2	2	2	2	2	2	3

Age	Years—									
	21	22	23	24	25	26	27	28	29	30
35	1	2	2	2	2	2	2	2	3	3
36	2	2	2	2	2	2	2	3	3	3
37	2	2	2	2	2	2	3	3	3	3
38	2	2	2	2	2	3	3	3	3	4
39	2	2	2	2	3	3	3	3	4	4
40	2	2	3	3	3	3	3	4	4	4
41	2	3	3	3	3	3	4	4	4	5
42	3	3	3	3	3	4	4	4	5	5
43	3	3	3	4	4	4	4	5	5	6
44	3	3	4	4	4	4	5	5	6	6
45	3	4	4	4	5	5	5	6	6	7
46	4	4	4	5	5	5	6	6	7	7
47	4	4	5	5	5	6	6	7	7	8
48	4	5	5	5	6	6	7	7	8	9
49	5	5	5	6	6	7	8	8	9	10
50	5	5	6	6	7	8	8	9	10	10
51	5	6	6	7	8	8	9	10	11	11
52	6	7	7	8	8	9	10	11	11	12
53	7	7	8	8	9	10	11	12	13	14
54	7	8	8	9	10	11	12	13	14	15
55	8	9	9	10	11	12	13	14	15	16
56	9	9	10	11	12	13	14	15	16	18
57	9	10	11	12	13	14	15	17	18	19
58	10	11	12	13	14	16	17	18	19	21
59	11	12	13	15	16	17	18	20	21	22
60	12	14	15	16	17	19	20	21	23	24
61	14	15	16	17	19	20	22	23	25	26
62	15	16	18	19	20	22	23	25	27	28
63	16	18	19	21	22	24	25	27	29	30
64	18	19	21	23	24	26	28	29	31	33
65	20	21	23	25	26	28	30	31	33	35
66	21	23	25	27	28	30	32	34	35	37
67	23	25	27	29	31	32	34	36	38	40
68	25	27	29	31	33	35	37	38	40	42
69	28	29	31	33	35	37	39	41	43	44

Age	Years—									
	21	22	23	24	25	26	27	28	29	30
70	30	32	34	36	38	40	42	43	45	47
71	32	34	36	38	40	42	44	46	47	49
72	35	37	39	41	43	45	46	48	50	51
73	37	39	41	43	45	47	49	51	52	54
74	40	42	44	46	48	50	51	53	54	56
75	42	44	46	48	50	52	54	55	57	58
76	45	47	49	51	53	54	56	58	59	60
77	47	50	51	53	55	57	58	60	61	62
78	50	52	54	56	57	59	61	62	63	64
79	53	55	56	58	60	61	63	64	65	66
80	55	57	59	60	62	63	65	66	67	68
81	58	59	61	63	64	66	67	68	69	70
82	60	62	63	65	66	68	69	70	71	72
83	62	64	66	67	68	70	71	72	73	74
84	65	66	68	69	70	71	72	73	74	75
85	67	68	70	71	72	73	74	75	76	77
86	69	70	72	73	74	75	76	77	77	78
87	71	72	73	75	76	76	77	78	79	80
88	73	74	75	76	77	78	79	80	80	81
89	74	76	77	78	79	79	80	81	81	82
90	76	77	78	79	80	81	81	82	83	83
91	78	79	79	80	81	82	83	83	84	84
92	79	80	81	82	82	83	84	84	85	85
93	80	81	82	83	83	84	85	85	86	86
94	81	82	83	84	84	85	85	86	86	87
95	82	83	84	85	85	86	86	87	87	88
96	83	84	85	86	86	87	87	88	88	88
97	84	85	86	86	87	87	88	88	89	89
98	85	86	87	87	88	88	89	89	89	90
99	86	87	87	88	88	89	89	90	90	90
100	87	88	88	89	89	90	90	90	91	91
101	88	89	89	90	90	90	91	91	91	92
102	89	89	90	90	91	91	91	92	92	92
103	90	90	91	91	91	92	92	92	93	93
104	91	91	91	92	92	92	93	93	93	93

Age	Years—									
	21	22	23	24	25	26	27	28	29	30
105	91	92	92	92	93	93	93	94	94	94
106	92	93	93	93	93	94	94	94	94	95
107	93	93	94	94	94	94	95	95	95	95
108	94	94	94	94	95	95	95	95	95	96
109	94	95	95	95	95	95	96	96	96	96
110	95	95	95	96	96	96	96	96	96	96
111	96	96	96	96	96	96	97	97	97	97
112	96	96	96	97	97	97	97	97	97	97
113	97	97	97	97	97	97	97	98	98	98
114	97	97	97	98	98	98	98	98	98	98
115	98	98	98	98	98	98	98	98	98	98

Table VII—Percent Value of Refund Feature; Duration of Guaranteed Amount

Age	Years—									
	31	32	33	34	35	36	37	38	39	40
5	0	1	1	1	1	1	1	1	1	1
6	0	1	1	1	1	1	1	1	1	1
7	1	1	1	1	1	1	1	1	1	1
8	1	1	1	1	1	1	1	1	1	1
9	1	1	1	1	1	1	1	1	1	1
10	1	1	1	1	1	1	1	1	1	1
11	1	1	1	1	1	1	1	1	1	1
12	1	1	1	1	1	1	1	1	1	1
13	1	1	1	1	1	1	1	1	1	1
14	1	1	1	1	1	1	1	1	1	1
15	1	1	1	1	1	1	1	1	1	1
16	1	1	1	1	1	1	1	1	1	1
17	1	1	1	1	1	1	1	1	1	1
18	1	1	1	1	1	1	1	1	1	2
19	1	1	1	1	1	1	1	1	2	2
20	1	1	1	1	1	1	1	2	2	2
21	1	1	1	1	1	1	2	2	2	2
22	1	1	1	1	1	2	2	2	2	2
23	1	1	1	2	2	2	2	2	2	2
24	1	1	2	2	2	2	2	2	2	2
25	1	2	2	2	2	2	2	2	2	3
26	2	2	2	2	2	2	2	2	3	3
27	2	2	2	2	2	2	2	3	3	3
28	2	2	2	2	2	2	3	3	3	3
29	2	2	2	2	2	3	3	3	3	4
30	2	2	2	3	3	3	3	3	4	4
31	2	2	3	3	3	3	3	4	4	4
32	2	3	3	3	3	3	4	4	4	5
33	3	3	3	3	3	4	4	4	5	5
34	3	3	3	3	4	4	4	5	5	5

Age	Years—									
	31	32	33	34	35	36	37	38	39	40
35	3	3	3	4	4	4	5	5	5	6
36	3	4	4	4	4	5	5	5	6	6
37	4	4	4	4	5	5	6	6	6	7
38	4	4	5	5	5	6	6	7	7	8
39	4	5	5	5	6	6	7	7	8	8
40	5	5	5	6	6	7	7	8	8	9
41	5	5	6	6	7	7	8	9	9	10
42	6	6	6	7	7	8	9	9	10	11
43	6	7	7	8	8	9	9	10	11	12
44	7	7	8	8	9	10	10	11	12	13
45	7	8	8	9	10	10	11	12	13	14
46	8	9	9	10	11	11	12	13	14	15
47	9	9	10	11	12	12	13	14	15	16
48	9	10	11	12	13	14	15	16	17	18
49	10	11	12	13	14	15	16	17	18	19
50	11	12	13	14	15	16	17	18	20	21
51	12	13	14	15	16	17	19	20	21	22
52	13	14	15	17	18	19	20	21	23	24
53	15	16	17	18	19	20	22	23	24	26
54	16	17	18	19	21	22	23	25	26	28
55	17	18	20	21	22	24	25	27	28	30
56	19	20	21	23	24	26	27	29	30	32
57	20	22	23	25	26	28	29	31	32	34
58	22	24	25	27	28	30	31	33	34	36
59	24	25	27	28	30	32	33	35	36	38
60	26	27	29	31	32	34	35	37	38	40
61	28	29	31	33	34	36	37	39	40	42
62	30	32	33	35	36	38	40	41	42	44
63	32	34	35	37	39	40	42	43	45	46
64	34	36	38	39	41	42	44	45	47	48
65	37	38	40	42	43	45	46	47	49	50
66	39	41	42	44	45	47	48	50	51	52
67	41	43	45	46	48	49	50	52	53	54
68	44	45	47	48	50	51	52	54	55	56
69	46	48	49	51	52	53	54	56	57	58

Age	Years—									
	31	32	33	34	35	36	37	38	39	40
70	48	50	51	53	54	55	57	58	59	60
71	51	52	54	55	56	57	59	60	61	62
72	53	54	56	57	58	59	60	62	62	63
73	55	57	58	59	60	61	62	63	64	65
74	57	59	60	61	62	63	64	65	66	67
75	59	61	62	63	64	65	66	67	68	69
76	62	63	64	65	66	67	68	69	69	70
77	64	65	66	67	68	69	70	70	71	72
78	66	67	68	69	70	70	71	72	73	73
79	67	68	69	70	71	72	73	73	74	75
80	69	70	71	72	73	74	74	75	76	76
81	71	72	73	74	74	75	76	76	77	78
82	73	74	74	75	76	77	77	78	78	79
83	74	75	76	77	77	78	79	79	80	80
84	76	77	77	78	79	79	80	80	81	81
85	78	78	79	79	80	81	81	82	82	83
86	79	80	80	81	81	82	82	83	83	84
87	80	81	81	82	83	83	83	84	84	85
88	82	82	83	83	84	84	85	85	85	86
89	83	83	84	84	85	85	85	86	86	87
90	84	84	85	85	86	86	86	87	87	87
91	85	85	86	86	87	87	87	88	88	88
92	86	86	87	87	87	88	88	88	89	89
93	87	87	87	88	88	88	89	89	89	90
94	87	88	88	88	89	89	89	90	90	90
95	88	88	89	89	89	90	90	90	91	91
96	89	89	89	90	90	90	91	91	91	91
97	89	90	90	90	91	91	91	91	92	92
98	90	90	91	91	91	91	92	92	92	92
99	91	91	91	92	92	92	92	92	93	93
100	91	92	92	92	92	92	93	93	93	93
101	92	92	92	93	93	93	93	93	94	94
102	92	93	93	93	93	94	94	94	94	94
103	93	93	93	94	94	94	94	94	94	95
104	94	94	94	94	94	95	95	95	95	95

Age	Years—									
	31	32	33	34	35	36	37	38	39	40
105	94	94	95	95	95	95	95	95	95	95
106	95	95	95	95	95	95	96	96	96	96
107	95	95	96	96	96	96	96	96	96	96
108	96	96	96	96	96	96	96	96	97	97
109	96	96	96	97	97	97	97	97	97	97
110	97	97	97	97	97	97	97	97	97	97
111	97	97	97	97	97	97	98	98	98	98
112	97	97	98	98	98	98	98	98	98	98
113	98	98	98	98	98	98	98	98	98	98
114	98	98	98	98	98	98	98	98	98	99
115	98	98	98	99	99	99	99	99	99	99

Table VIII—Temporary Life Annuities; [1] One Life—Expected Return Multiples [See footnote at end of tables] Temporary Period—Maximum Duration of Annuity

Age	Years—									
	1	2	3	4	5	6	7	8	9	10
5	1.0	2.0	3.0	4.0	5.0	6.0	7.0	8.0	9.0	10.0
6	1.0	2.0	3.0	4.0	5.0	6.0	7.0	8.0	9.0	10.0
7	1.0	2.0	3.0	4.0	5.0	6.0	7.0	8.0	9.0	10.0
8	1.0	2.0	3.0	4.0	5.0	6.0	7.0	8.0	9.0	10.0
9	1.0	2.0	3.0	4.0	5.0	6.0	7.0	8.0	9.0	10.0
10	1.0	2.0	3.0	4.0	5.0	6.0	7.0	8.0	9.0	10.0
11	1.0	2.0	3.0	4.0	5.0	6.0	7.0	8.0	9.0	10.0
12	1.0	2.0	3.0	4.0	5.0	6.0	7.0	8.0	9.0	10.0
13	1.0	2.0	3.0	4.0	5.0	6.0	7.0	8.0	9.0	10.0
14	1.0	2.0	3.0	4.0	5.0	6.0	7.0	8.0	9.0	10.0
15	1.0	2.0	3.0	4.0	5.0	6.0	7.0	8.0	9.0	10.0
16	1.0	2.0	3.0	4.0	5.0	6.0	7.0	8.0	9.0	10.0
17	1.0	2.0	3.0	4.0	5.0	6.0	7.0	8.0	9.0	10.0
18	1.0	2.0	3.0	4.0	5.0	6.0	7.0	8.0	9.0	10.0
19	1.0	2.0	3.0	4.0	5.0	6.0	7.0	8.0	9.0	10.0
20	1.0	2.0	3.0	4.0	5.0	6.0	7.0	8.0	9.0	10.0
21	1.0	2.0	3.0	4.0	5.0	6.0	7.0	8.0	9.0	10.0
22	1.0	2.0	3.0	4.0	5.0	6.0	7.0	8.0	9.0	10.0
23	1.0	2.0	3.0	4.0	5.0	6.0	7.0	8.0	9.0	10.0
24	1.0	2.0	3.0	4.0	5.0	6.0	7.0	8.0	9.0	10.0
25	1.0	2.0	3.0	4.0	5.0	6.0	7.0	8.0	9.0	10.0
26	1.0	2.0	3.0	4.0	5.0	6.0	7.0	8.0	9.0	10.0
27	1.0	2.0	3.0	4.0	5.0	6.0	7.0	8.0	9.0	10.0
28	1.0	2.0	3.0	4.0	5.0	6.0	7.0	8.0	9.0	10.0
29	1.0	2.0	3.0	4.0	5.0	6.0	7.0	8.0	9.0	10.0
30	1.0	2.0	3.0	4.0	5.0	6.0	7.0	8.0	9.0	10.0
31	1.0	2.0	3.0	4.0	5.0	6.0	7.0	8.0	9.0	10.0

Age	Years—									
	1	2	3	4	5	6	7	8	9	10
32	1.0	2.0	3.0	4.0	5.0	6.0	7.0	8.0	9.0	10.0
33	1.0	2.0	3.0	4.0	5.0	6.0	7.0	8.0	9.0	10.0
34	1.0	2.0	3.0	4.0	5.0	6.0	7.0	8.0	9.0	10.0
35	1.0	2.0	3.0	4.0	5.0	6.0	7.0	8.0	9.0	10.0
36	1.0	2.0	3.0	4.0	5.0	6.0	7.0	8.0	9.0	10.0
37	1.0	2.0	3.0	4.0	5.0	6.0	7.0	8.0	9.0	9.9
38	1.0	2.0	3.0	4.0	5.0	6.0	7.0	8.0	9.0	9.9
39	1.0	2.0	3.0	4.0	5.0	6.0	7.0	8.0	9.0	9.9
40	1.0	2.0	3.0	4.0	5.0	6.0	7.0	8.0	8.9	9.9
41	1.0	2.0	3.0	4.0	5.0	6.0	7.0	8.0	8.9	9.9
42	1.0	2.0	3.0	4.0	5.0	6.0	7.0	8.0	8.9	9.9
43	1.0	2.0	3.0	4.0	5.0	6.0	7.0	7.9	8.9	9.9
44	1.0	2.0	3.0	4.0	5.0	6.0	7.0	7.9	8.9	9.9
45	1.0	2.0	3.0	4.0	5.0	6.0	7.0	7.9	8.9	9.9
46	1.0	2.0	3.0	4.0	5.0	6.0	6.9	7.9	8.9	9.9
47	1.0	2.0	3.0	4.0	5.0	6.0	6.9	7.9	8.9	9.9
48	1.0	2.0	3.0	4.0	5.0	6.0	6.9	7.9	8.9	9.9
49	1.0	2.0	3.0	4.0	5.0	6.0	6.9	7.9	8.9	9.8
50	1.0	2.0	3.0	4.0	5.0	5.9	6.9	7.9	8.9	9.8
51	1.0	2.0	3.0	4.0	5.0	5.9	6.9	7.9	8.9	9.8
52	1.0	2.0	3.0	4.0	5.0	5.9	6.9	7.9	8.8	9.8
53	1.0	2.0	3.0	4.0	5.0	5.9	6.9	7.9	8.8	9.8
54	1.0	2.0	3.0	4.0	4.9	5.9	6.9	7.9	8.8	9.8
55	1.0	2.0	3.0	4.0	4.9	5.9	6.9	7.8	8.8	9.7
56	1.0	2.0	3.0	4.0	4.9	5.9	6.9	7.8	8.8	9.7
57	1.0	2.0	3.0	4.0	4.9	5.9	6.9	7.8	8.8	9.7
58	1.0	2.0	3.0	4.0	4.9	5.9	6.9	7.8	8.7	9.7
59	1.0	2.0	3.0	4.0	4.9	5.9	6.8	7.8	8.7	9.6
60	1.0	2.0	3.0	3.9	4.9	5.9	6.8	7.8	8.7	9.6
61	1.0	2.0	3.0	3.9	4.9	5.9	6.8	7.7	8.7	9.6
62	1.0	2.0	3.0	3.9	4.9	5.8	6.8	7.7	8.6	9.5
63	1.0	2.0	3.0	3.9	4.9	5.8	6.8	7.7	8.6	9.5
64	1.0	2.0	3.0	3.9	4.9	5.8	6.7	7.6	8.5	9.4
65	1.0	2.0	3.0	3.9	4.9	5.8	6.7	7.6	8.5	9.3
66	1.0	2.0	2.9	3.9	4.8	5.8	6.7	7.6	8.4	9.3

Age	Years—									
	1	2	3	4	5	6	7	8	9	10
67	1.0	2.0	2.9	3.9	4.8	5.7	6.6	7.5	8.4	9.2
68	1.0	2.0	2.9	3.9	4.8	5.7	6.6	7.5	8.3	9.1
69	1.0	2.0	2.9	3.9	4.8	5.7	6.6	7.4	8.2	9.0
70	1.0	2.0	2.9	3.9	4.8	5.6	6.5	7.3	8.1	8.9
71	1.0	2.0	2.9	3.8	4.7	5.6	6.5	7.3	8.1	8.8
72	1.0	2.0	2.9	3.8	4.7	5.6	6.4	7.2	8.0	8.7
73	1.0	2.0	2.9	3.8	4.7	5.5	6.3	7.1	7.9	8.6
74	1.0	1.9	2.9	3.8	4.6	5.5	6.3	7.0	7.7	8.4
75	1.0	1.9	2.9	3.8	4.6	5.4	6.2	6.9	7.6	8.3
76	1.0	1.9	2.8	3.7	4.6	5.4	6.1	6.8	7.5	8.1
77	1.0	1.9	2.8	3.7	4.5	5.3	6.0	6.7	7.3	7.9
78	1.0	1.9	2.8	3.7	4.5	5.2	5.9	6.6	7.2	7.7
79	1.0	1.9	2.8	3.6	4.4	5.1	5.8	6.4	7.0	7.5
80	1.0	1.9	2.8	3.6	4.4	5.1	5.7	6.3	6.8	7.3
81	1.0	1.9	2.8	3.6	4.3	5.0	5.6	6.1	6.6	7.0
82	1.0	1.9	2.7	3.5	4.2	4.9	5.4	6.0	6.4	6.8
83	1.0	1.9	2.7	3.5	4.1	4.8	5.3	5.8	6.2	6.5
84	1.0	1.8	2.7	3.4	4.1	4.6	5.2	5.6	6.0	6.3
85	1.0	1.8	2.6	3.3	4.0	4.5	5.0	5.4	5.7	6.0
86	1.0	1.8	2.6	3.3	3.9	4.4	4.8	5.2	5.5	5.7
87	.9	1.8	2.5	3.2	3.8	4.3	4.7	5.0	5.3	5.5
88	.9	1.8	2.5	3.1	3.7	4.1	4.5	4.8	5.0	5.2
89	.9	1.8	2.5	3.1	3.6	4.0	4.3	4.6	4.8	4.9
90	.9	1.7	2.4	3.0	3.4	3.8	4.1	4.4	4.5	4.7
91	.9	1.7	2.4	2.9	3.3	3.7	4.0	4.2	4.3	4.4
92	.9	1.7	2.3	2.8	3.2	3.5	3.8	4.0	4.1	4.2
93	.9	1.7	2.3	2.7	3.1	3.4	3.6	3.8	3.9	4.0
94	.9	1.6	2.2	2.7	3.0	3.3	3.5	3.6	3.7	3.8
95	.9	1.6	2.2	2.6	2.9	3.1	3.3	3.4	3.5	3.6
96	.9	1.6	2.1	2.5	2.8	3.0	3.2	3.3	3.3	3.4
97	.9	1.6	2.1	2.4	2.7	2.9	3.0	3.1	3.2	3.2
98	.9	1.5	2.0	2.4	2.6	2.8	2.9	3.0	3.0	3.0
99	.9	1.5	2.0	2.3	2.5	2.6	2.7	2.8	2.8	2.8
100	.9	1.5	1.9	2.2	2.4	2.5	2.6	2.6	2.6	2.7
101	.8	1.4	1.8	2.1	2.3	2.4	2.4	2.5	2.5	2.5

Age	Years—									
	1	2	3	4	5	6	7	8	9	10
102	.8	1.4	1.8	2.0	2.1	2.2	2.3	2.3	2.3	2.3
103	.8	1.4	1.7	1.9	2.0	2.1	2.1	2.1	2.1	2.1
104	.8	1.3	1.6	1.8	1.9	1.9	1.9	1.9	1.9	1.9
105	.8	1.3	1.5	1.7	1.7	1.8	1.8	1.8	1.8	1.8
106	.8	1.2	1.4	1.5	1.6	1.6	1.6	1.6	1.6	1.6
107	.7	1.1	1.3	1.4	1.4	1.4	1.4	1.4	1.4	1.4
108	.7	1.1	1.2	1.3	1.3	1.3	1.3	1.3	1.3	1.3
109	.7	1.0	1.1	1.1	1.1	1.1	1.1	1.1	1.1	1.1
110	.7	.9	1.0	1.0	1.0	1.0	1.0	1.0	1.0	1.0
111	.6	.8	.9	.9	.9	.9	.9	.9	.9	.9
112	.6	.7	.8	.8	.8	.8	.8	.8	.8	.8
113	.6	.6	.7	.7	.7	.7	.7	.7	.7	.7
114	.5	.6	.6	.6	.6	.6	.6	.6	.6	.6
115	.5	.5	.5	.5	.5	.5	.5	.5	.5	.5

Table VIII—Temporary Life Annuities;[1] One Life—Expected Return Multiples
[See footnote at end of tables]
Temporary Period—Maximum Duration of Annuity

Age	Years—									
	11	12	13	14	15	16	17	18	19	20
5	11.0	12.0	13.0	14.0	15.0	16.0	17.0	18.0	19.0	19.9
6	11.0	12.0	13.0	14.0	15.0	16.0	17.0	18.0	19.0	19.9
7	11.0	12.0	13.0	14.0	15.0	16.0	17.0	18.0	19.0	19.9
8	11.0	12.0	13.0	14.0	15.0	16.0	17.0	18.0	18.9	19.9
9	11.0	12.0	13.0	14.0	15.0	16.0	17.0	18.0	18.9	19.9
10	11.0	12.0	13.0	14.0	15.0	16.0	17.0	18.0	18.9	19.9
11	11.0	12.0	13.0	14.0	15.0	16.0	17.0	17.9	18.9	19.9
12	11.0	12.0	13.0	14.0	15.0	16.0	17.0	17.9	18.9	19.9
13	11.0	12.0	13.0	14.0	15.0	16.0	17.0	17.9	18.9	19.9
14	11.0	12.0	13.0	14.0	15.0	16.0	16.9	17.9	18.9	19.9
15	11.0	12.0	13.0	14.0	15.0	16.0	16.9	17.9	18.9	19.9
16	11.0	12.0	13.0	14.0	15.0	16.0	16.9	17.9	18.9	19.9
17	11.0	12.0	13.0	14.0	15.0	15.9	16.9	17.9	18.9	19.9
18	11.0	12.0	13.0	14.0	15.0	15.9	16.9	17.9	18.9	19.9
19	11.0	12.0	13.0	14.0	15.0	15.9	16.9	17.9	18.9	19.9
20	11.0	12.0	13.0	14.0	14.9	15.9	16.9	17.9	18.9	19.9
21	11.0	12.0	13.0	14.0	14.9	15.9	16.9	17.9	18.9	19.9
22	11.0	12.0	13.0	14.0	14.9	15.9	16.9	17.9	18.9	19.9
23	11.0	12.0	13.0	13.9	14.9	15.9	16.9	17.9	18.9	19.9
24	11.0	12.0	13.0	13.9	14.9	15.9	16.9	17.9	18.9	19.9
25	11.0	12.0	13.0	13.9	14.9	15.9	16.9	17.9	18.9	19.9
26	11.0	12.0	12.9	13.9	14.9	15.9	16.9	17.9	18.9	19.9
27	11.0	12.0	12.9	13.9	14.9	15.9	16.9	17.9	18.9	19.9
28	11.0	12.0	12.9	13.9	14.9	15.9	16.9	17.9	18.9	19.8
29	11.0	12.0	12.9	13.9	14.9	15.9	16.9	17.9	18.9	19.8
30	11.0	11.9	12.9	13.9	14.9	15.9	16.9	17.9	18.8	19.8
31	11.0	11.9	12.9	13.9	14.9	15.9	16.9	17.9	18.8	19.8

Age	Years—									
	11	12	13	14	15	16	17	18	19	20
32	11.0	11.9	12.9	13.9	14.9	15.9	16.9	17.8	18.8	19.8
33	11.0	11.9	12.9	13.9	14.9	15.9	16.9	17.8	18.8	19.8
34	10.9	11.9	12.9	13.9	14.9	15.9	16.8	17.8	18.8	19.8
35	10.9	11.9	12.9	13.9	14.9	15.9	16.8	17.8	18.8	19.7
36	10.9	11.9	12.9	13.9	14.9	15.8	16.8	17.8	18.8	19.7
37	10.9	11.9	12.9	13.9	14.9	15.8	16.8	17.8	18.7	19.7
38	10.9	11.9	12.9	13.9	14.8	15.8	16.8	17.8	18.7	19.7
39	10.9	11.9	12.9	13.9	14.8	15.8	16.8	17.7	18.7	19.6
40	10.9	11.9	12.9	13.8	14.8	15.8	16.7	17.7	18.7	19.6
41	10.9	11.9	12.9	13.8	14.8	15.8	16.7	17.7	18.6	19.6
42	10.9	11.9	12.8	13.8	14.8	15.7	16.7	17.6	18.6	19.5
43	10.9	11.9	12.8	13.8	14.8	15.7	16.7	17.6	18.6	19.5
44	10.9	11.8	12.8	13.8	14.7	15.7	16.6	17.6	18.5	19.4
45	10.9	11.8	12.8	13.8	14.7	15.7	16.6	17.5	18.5	19.4
46	10.9	11.8	12.8	13.7	14.7	15.6	16.6	17.5	18.4	19.3
47	10.8	11.8	12.8	13.7	14.7	15.6	16.5	17.5	18.4	19.3
48	10.8	11.8	12.7	13.7	14.6	15.6	16.5	17.4	18.3	19.2
49	10.8	11.8	12.7	13.7	14.6	15.5	16.4	17.4	18.3	19.2
50	10.8	11.7	12.7	13.6	14.6	15.5	16.4	17.3	18.2	19.1
51	10.8	11.7	12.7	13.6	14.5	15.4	16.3	17.2	18.1	19.0
52	10.8	11.7	12.6	13.6	14.5	15.4	16.3	17.2	18.0	18.9
53	10.7	11.7	12.6	13.5	14.4	15.3	16.2	17.1	18.0	18.8
54	10.7	11.6	12.6	13.5	14.4	15.3	16.2	17.0	17.9	18.7
55	10.7	11.6	12.5	13.4	14.3	15.2	16.1	16.9	17.8	18.6
56	10.7	11.6	12.5	13.4	14.3	15.1	16.0	16.8	17.6	18.4
57	10.6	11.5	12.4	13.3	14.2	15.1	15.9	16.7	17.5	18.3
58	10.6	11.5	12.4	13.3	14.1	15.0	15.8	16.6	17.4	18.1
59	10.6	11.4	12.3	13.2	14.0	14.9	15.7	16.4	17.2	17.9
60	10.5	11.4	12.3	13.1	13.9	14.7	15.5	16.3	17.0	17.7
61	10.5	11.3	12.2	13.0	13.8	14.6	15.4	16.1	16.8	17.5
62	10.4	11.3	12.1	12.9	13.7	14.5	15.2	15.9	16.6	17.2
63	10.3	11.2	12.0	12.8	13.6	14.3	15.0	15.7	16.3	17.0
64	10.3	11.1	11.9	12.7	13.4	14.1	14.8	15.5	16.1	16.7
65	10.2	11.0	11.8	12.5	13.2	13.9	14.6	15.2	15.8	16.3
66	10.1	10.9	11.6	12.4	13.1	13.7	14.4	14.9	15.5	16.0

Age	Years—									
	11	12	13	14	15	16	17	18	19	20
67	10.0	10.8	11.5	12.2	12.9	13.5	14.1	14.7	15.2	15.6
68	9.9	10.6	11.4	12.0	12.7	13.3	13.8	14.3	14.8	15.3
69	9.8	10.5	11.2	11.8	12.4	13.0	13.5	14.0	14.4	14.8
70	9.6	10.3	11.0	11.6	12.2	12.7	13.2	13.7	14.0	14.4
71	9.5	10.2	10.8	11.4	11.9	12.4	12.9	13.3	13.6	13.9
72	9.4	10.0	10.6	11.2	11.7	12.1	12.5	12.9	13.2	13.5
73	9.2	9.8	10.4	10.9	11.4	11.8	12.1	12.5	12.7	13.0
74	9.0	9.6	10.1	10.6	11.0	11.4	11.7	12.0	12.3	12.5
75	8.8	9.4	9.9	10.3	10.7	11.0	11.3	11.6	11.8	12.0
76	8.6	9.1	9.6	10.0	10.3	10.6	10.9	11.1	11.3	11.4
77	8.4	8.9	9.3	9.7	10.0	10.2	10.5	10.6	10.8	10.9
78	8.2	8.6	9.0	9.3	9.6	9.8	10.0	10.2	10.3	10.4
79	7.9	8.3	8.7	9.0	9.2	9.4	9.5	9.7	9.8	9.8
80	7.7	8.0	8.3	8.6	8.8	9.0	9.1	9.2	9.3	9.3
81	7.4	7.7	8.0	8.2	8.4	8.5	8.6	8.7	8.8	8.8
82	7.1	7.4	7.6	7.8	8.0	8.1	8.2	8.2	8.3	8.3
83	6.8	7.1	7.3	7.4	7.5	7.6	7.7	7.8	7.8	7.8
84	6.5	6.7	6.9	7.0	7.1	7.2	7.3	7.3	7.3	7.4
85	6.2	6.4	6.6	6.7	6.7	6.8	6.8	6.9	6.9	6.9
86	5.9	6.1	6.2	6.3	6.4	6.4	6.4	6.5	6.5	6.5
87	5.6	5.8	5.9	5.9	6.0	6.0	6.0	6.1	6.1	6.1
88	5.3	5.4	5.5	5.6	5.6	5.6	5.7	5.7	5.7	5.7
89	5.1	5.1	5.2	5.3	5.3	5.3	5.3	5.3	5.3	5.3
90	4.8	4.9	4.9	4.9	5.0	5.0	5.0	5.0	5.0	5.0
91	4.5	4.6	4.6	4.6	4.7	4.7	4.7	4.7	4.7	4.7
92	4.3	4.3	4.3	4.4	4.4	4.4	4.4	4.4	4.4	4.4
93	4.0	4.1	4.1	4.1	4.1	4.1	4.1	4.1	4.1	4.1
94	3.8	3.8	3.9	3.9	3.9	3.9	3.9	3.9	3.9	3.9
95	3.6	3.6	3.6	3.6	3.7	3.7	3.7	3.7	3.7	3.7
96	3.4	3.4	3.4	3.4	3.4	3.4	3.4	3.4	3.4	3.4
97	3.2	3.2	3.2	3.2	3.2	3.2	3.2	3.2	3.2	3.2
98	3.0	3.0	3.0	3.0	3.0	3.0	3.0	3.0	3.0	3.0
99	2.8	2.8	2.8	2.8	2.8	2.8	2.8	2.8	2.8	2.8
100	2.7	2.7	2.7	2.7	2.7	2.7	2.7	2.7	2.7	2.7
101	2.5	2.5	2.5	2.5	2.5	2.5	2.5	2.5	2.5	2.5

Age	Years—									
	11	12	13	14	15	16	17	18	19	20
102	2.3	2.3	2.3	2.3	2.3	2.3	2.3	2.3	2.3	2.3
103	2.1	2.1	2.1	2.1	2.1	2.1	2.1	2.1	2.1	2.1
104	1.9	1.9	1.9	1.9	1.9	1.9	1.9	1.9	1.9	1.9
105	1.8	1.8	1.8	1.8	1.8	1.8	1.8	1.8	1.8	1.8
106	1.6	1.6	1.6	1.6	1.6	1.6	1.6	1.6	1.6	1.6
107	1.4	1.4	1.4	1.4	1.4	1.4	1.4	1.4	1.4	1.4
108	1.3	1.3	1.3	1.3	1.3	1.3	1.3	1.3	1.3	1.3
109	1.1	1.1	1.1	1.1	1.1	1.1	1.1	1.1	1.1	1.1
110	1.0	1.0	1.0	1.0	1.0	1.0	1.0	1.0	1.0	1.0
111	.9	.9	.9	.9	.9	.9	.9	.9	.9	.9
112	.8	.8	.8	.8	.8	.8	.8	.8	.8	.8
113	.7	.7	.7	.7	.7	.7	.7	.7	.7	.7
114	.6	.6	.6	.6	.6	.6	.6	.6	.6	.6
115	.5	.5	.5	.5	.5	.5	.5	.5	.5	.5

Table VIII—Temporary Life Annuities; [1] One Life—Expected Return Multiples
[See footnote at end of tables]
Temporary Period—Maximum Duration of Annuity

Age	Years—									
	21	22	23	24	25	26	27	28	29	30
5	20.9	21.9	22.9	23.9	24.9	25.9	26.9	27.9	28.9	29.9
6	20.9	21.9	22.9	23.9	24.9	25.9	26.9	27.9	28.9	29.9
7	20.9	21.9	22.9	23.9	24.9	25.9	26.9	27.9	28.9	29.9
8	20.9	21.9	22.9	23.9	24.9	25.9	26.9	27.9	28.9	29.8
9	20.9	21.9	22.9	23.9	24.9	25.9	26.9	27.9	28.9	29.8
10	20.9	21.9	22.9	23.9	24.9	25.9	26.9	27.9	28.8	29.8
11	20.9	21.9	22.9	23.9	24.9	25.9	26.9	27.9	28.8	29.8
12	20.9	21.9	22.9	23.9	24.9	25.9	26.9	27.8	28.8	29.8
13	20.9	21.9	22.9	23.9	24.9	25.9	26.9	27.8	28.8	29.8
14	20.9	21.9	22.9	23.9	24.9	25.9	26.8	27.8	28.8	29.8
15	20.9	21.9	22.9	23.9	24.9	25.9	26.8	27.8	28.8	29.8
16	20.9	21.9	22.9	23.9	24.9	25.8	26.8	27.8	28.8	29.8
17	20.9	21.9	22.9	23.9	24.9	25.8	26.8	27.8	28.8	29.8
18	20.9	21.9	22.9	23.9	24.8	25.8	26.8	27.8	28.8	29.7
19	20.9	21.9	22.9	23.9	24.8	25.8	26.8	27.8	28.8	29.7
20	20.9	21.9	22.9	23.8	24.8	25.8	26.8	27.8	28.7	29.7
21	20.9	21.9	22.9	23.8	24.8	25.8	26.8	27.8	28.7	29.7
22	20.9	21.9	22.8	23.8	24.8	25.8	26.8	27.7	28.7	29.7
23	20.9	21.9	22.8	23.8	24.8	25.8	26.7	27.7	28.7	29.7
24	20.9	21.8	22.8	23.8	24.8	25.8	26.7	27.7	28.7	29.6
25	20.9	21.8	22.8	23.8	24.8	25.7	26.7	27.7	28.6	29.6
26	20.8	21.8	22.8	23.8	24.8	25.7	26.7	27.7	28.6	29.6
27	20.8	21.8	22.8	23.8	24.7	25.7	26.7	27.6	28.6	29.5
28	20.8	21.8	22.8	23.7	24.7	25.7	26.6	27.6	28.6	29.5
29	20.8	21.8	22.8	23.7	24.7	25.7	26.6	27.6	28.5	29.5
30	20.8	21.8	22.7	23.7	24.7	25.6	26.6	27.5	28.5	29.4
31	20.8	21.8	22.7	23.7	24.6	25.6	26.6	27.5	28.4	29.4

Age	Years—									
	21	22	23	24	25	26	27	28	29	30
32	20.8	21.7	22.7	23.7	24.6	25.6	26.5	27.5	28.4	29.3
33	20.8	21.7	22.7	23.6	24.6	25.5	26.5	27.4	28.4	29.3
34	20.7	21.7	22.7	23.6	24.6	25.5	26.4	27.4	28.3	29.2
35	20.7	21.7	22.6	23.6	24.5	25.5	26.4	27.3	28.2	29.2
36	20.7	21.6	22.6	23.5	24.5	25.4	26.3	27.3	28.2	29.1
37	20.7	21.6	22.6	23.5	24.4	25.4	26.3	27.2	28.1	29.0
38	20.6	21.6	22.5	23.4	24.4	25.3	26.2	27.1	28.0	28.9
39	20.6	21.5	22.5	23.4	24.3	25.2	26.1	27.0	27.9	28.8
40	20.6	21.5	22.4	23.3	24.3	25.2	26.1	27.0	27.8	28.7
41	20.5	21.4	22.4	23.3	24.2	25.1	26.0	26.9	27.7	28.6
42	20.5	21.4	22.3	23.2	24.1	25.0	25.9	26.8	27.6	28.5
43	20.4	21.3	22.2	23.2	24.0	24.9	25.8	26.6	27.5	28.3
44	20.4	21.3	22.2	23.1	24.0	24.8	25.7	26.5	27.3	28.2
45	20.3	21.2	22.1	23.0	23.9	24.7	25.6	26.4	27.2	28.0
46	20.2	21.1	22.0	22.9	23.8	24.6	25.4	26.2	27.0	27.8
47	20.2	21.1	21.9	22.8	23.6	24.5	25.3	26.1	26.8	27.6
48	20.1	21.0	21.8	22.7	23.5	24.3	25.1	25.9	26.6	27.4
49	20.0	20.9	21.7	22.6	23.4	24.2	25.0	25.7	26.4	27.1
50	19.9	20.8	21.6	22.4	23.2	24.0	24.8	25.5	26.2	26.9
51	19.8	20.7	21.5	22.3	23.1	23.8	24.6	25.3	25.9	26.6
52	19.7	20.6	21.4	22.1	22.9	23.6	24.3	25.0	25.7	26.3
53	19.6	20.4	21.2	22.0	22.7	23.4	24.1	24.7	25.3	25.9
54	19.5	20.3	21.0	21.8	22.5	23.2	23.8	24.4	25.0	25.6
55	19.3	20.1	20.8	21.6	22.2	22.9	23.5	24.1	24.6	25.2
56	19.2	19.9	20.6	21.3	22.0	22.6	23.2	23.7	24.3	24.7
57	19.0	19.7	20.4	21.1	21.7	22.3	22.8	23.4	23.8	24.3
58	18.8	19.5	20.2	20.8	21.4	21.9	22.5	22.9	23.4	23.8
59	18.6	19.3	19.9	20.5	21.1	21.6	22.0	22.5	22.9	23.2
60	18.4	19.0	19.6	20.2	20.7	21.2	21.6	22.0	22.4	22.7
61	18.1	18.7	19.3	19.8	20.3	20.7	21.1	21.5	21.8	22.1
62	17.8	18.4	18.9	19.4	19.9	20.3	20.6	21.0	21.2	21.5
63	17.5	18.1	18.5	19.0	19.4	19.8	20.1	20.4	20.6	20.8
64	17.2	17.7	18.1	18.6	18.9	19.3	19.5	19.8	20.0	20.2
65	16.8	17.3	17.7	18.1	18.4	18.7	18.9	19.2	19.3	19.5
66	16.5	16.9	17.3	17.6	17.9	18.1	18.3	18.5	18.7	18.8

Age	Years—									
	21	22	23	24	25	26	27	28	29	30
67	16.1	16.4	16.8	17.1	17.3	17.5	17.7	17.9	18.0	18.1
68	15.6	16.0	16.3	16.5	16.7	16.9	17.1	17.2	17.3	17.4
69	15.2	15.5	15.7	16.0	16.1	16.3	16.4	16.5	16.6	16.7
70	14.7	15.0	15.2	15.4	15.5	15.7	15.8	15.8	15.9	15.9
71	14.2	14.4	14.6	14.8	14.9	15.0	15.1	15.2	15.2	15.2
72	13.7	13.9	14.1	14.2	14.3	14.4	14.4	14.5	14.5	14.5
73	13.2	13.3	13.5	13.6	13.7	13.7	13.8	13.8	13.8	13.9
74	12.6	12.8	12.9	13.0	13.0	13.1	13.1	13.1	13.2	13.2
75	12.1	12.2	12.3	12.4	12.4	12.5	12.5	12.5	12.5	12.5
76	11.5	11.6	11.7	11.8	11.8	11.8	11.8	11.9	11.9	11.9
77	11.0	11.1	11.1	11.2	11.2	11.2	11.2	11.2	11.2	11.2
78	10.4	10.5	10.5	10.6	10.6	10.6	10.6	10.6	10.6	10.6
79	9.9	9.9	10.0	10.0	10.0	10.0	10.0	10.0	10.0	10.0
80	9.4	9.4	9.4	9.4	9.5	9.5	9.5	9.5	9.5	9.5
81	8.8	8.9	8.9	8.9	8.9	8.9	8.9	8.9	8.9	8.9
82	8.3	8.4	8.4	8.4	8.4	8.4	8.4	8.4	8.4	8.4
83	7.8	7.9	7.9	7.9	7.9	7.9	7.9	7.9	7.9	7.9
84	7.4	7.4	7.4	7.4	7.4	7.4	7.4	7.4	7.4	7.4
85	6.9	6.9	6.9	6.9	6.9	6.9	6.9	6.9	6.9	6.9
86	6.5	6.5	6.5	6.5	6.5	6.5	6.5	6.5	6.5	6.5
87	6.1	6.1	6.1	6.1	6.1	6.1	6.1	6.1	6.1	6.1
88	5.7	5.7	5.7	5.7	5.7	5.7	5.7	5.7	5.7	5.7
89	5.3	5.3	5.3	5.3	5.3	5.3	5.3	5.3	5.3	5.3
90	5.0	5.0	5.0	5.0	5.0	5.0	5.0	5.0	5.0	5.0
91	4.7	4.7	4.7	4.7	4.7	4.7	4.7	4.7	4.7	4.7
92	4.4	4.4	4.4	4.4	4.4	4.4	4.4	4.4	4.4	4.4
93	4.1	4.1	4.1	4.1	4.1	4.1	4.1	4.1	4.1	4.1
94	3.9	3.9	3.9	3.9	3.9	3.9	3.9	3.9	3.9	3.9
95	3.7	3.7	3.7	3.7	3.7	3.7	3.7	3.7	3.7	3.7
96	3.4	3.4	3.4	3.4	3.4	3.4	3.4	3.4	3.4	3.4
97	3.2	3.2	3.2	3.2	3.2	3.2	3.2	3.2	3.2	3.2
98	3.0	3.0	3.0	3.0	3.0	3.0	3.0	3.0	3.0	3.0
99	2.8	2.8	2.8	2.8	2.8	2.8	2.8	2.8	2.8	2.8
100	2.7	2.7	2.7	2.7	2.7	2.7	2.7	2.7	2.7	2.7
101	2.5	2.5	2.5	2.5	2.5	2.5	2.5	2.5	2.5	2.5

Age	Years—									
	21	22	23	24	25	26	27	28	29	30
102	2.3	2.3	2.3	2.3	2.3	2.3	2.3	2.3	2.3	2.3
103	2.1	2.1	2.1	2.1	2.1	2.1	2.1	2.1	2.1	2.1
104	1.9	1.9	1.9	1.9	1.9	1.9	1.9	1.9	1.9	1.9
105	1.8	1.8	1.8	1.8	1.8	1.8	1.8	1.8	1.8	1.8
106	1.6	1.6	1.6	1.6	1.6	1.6	1.6	1.6	1.6	1.6
107	1.4	1.4	1.4	1.4	1.4	1.4	1.4	1.4	1.4	1.4
108	1.3	1.3	1.3	1.3	1.3	1.3	1.3	1.3	1.3	1.3
109	1.1	1.1	1.1	1.1	1.1	1.1	1.1	1.1	1.1	1.1
110	1.0	1.0	1.0	1.0	1.0	1.0	1.0	1.0	1.0	1.0
111	.9	.9	.9	.9	.9	.9	.9	.9	.9	.9
112	.8	.8	.8	.8	.8	.8	.8	.8	.8	.8
113	.7	.7	.7	.7	.7	.7	.7	.7	.7	.7
114	.6	.6	.6	.6	.6	.6	.6	.6	.6	.6
115	.5	.5	.5	.5	.5	.5	.5	.5	.5	.5

Table VIII—Temporary Life Annuities;[1] One Life—Expected Return Multiples
[See footnote at end of tables]
Temporary Period—Maximum Duration of Annuity

Age	Years—									
	31	32	33	34	35	36	37	38	39	40
5	30.8	31.8	32.8	33.8	34.8	35.8	36.8	37.7	38.7	39.7
6	30.8	31.8	32.8	33.8	34.8	35.8	36.8	37.7	38.7	39.7
7	30.8	31.8	32.8	33.8	34.8	35.8	36.7	37.7	38.7	39.7
8	30.8	31.8	32.8	33.8	34.8	35.7	36.7	37.7	38.7	39.7
9	30.8	31.8	32.8	33.8	34.8	35.7	36.7	37.7	38.7	39.6
10	30.8	31.8	32.8	33.8	34.7	35.7	36.7	37.7	38.6	39.6
11	30.8	31.8	32.8	33.8	34.7	35.7	36.7	37.7	38.6	39.6
12	30.8	31.8	32.8	33.7	34.7	35.7	36.7	37.6	38.6	39.6
13	30.8	31.8	32.7	33.7	34.7	35.7	36.6	37.6	38.6	39.5
14	30.8	31.8	32.7	33.7	34.7	35.7	36.6	37.6	38.6	39.5
15	30.8	31.7	32.7	33.7	34.7	35.6	36.6	37.6	38.5	39.5
16	30.8	31.7	32.7	33.7	34.6	35.6	36.6	37.5	38.5	39.4
17	30.7	31.7	32.7	33.7	34.6	35.6	36.5	37.5	38.5	39.4
18	30.7	31.7	32.7	33.6	34.6	35.6	36.5	37.5	38.4	39.4
19	30.7	31.7	32.6	33.6	34.6	35.5	36.5	37.4	38.4	39.3
20	30.7	31.7	32.6	33.6	34.5	35.5	36.4	37.4	38.3	39.3
21	30.7	31.6	32.6	33.6	34.5	35.5	36.4	37.4	38.3	39.2
22	30.6	31.6	32.6	33.5	34.5	35.4	36.4	37.3	38.2	39.2
23	30.6	31.6	32.5	33.5	34.4	35.4	36.3	37.3	38.2	39.1
24	30.6	31.5	32.5	33.5	34.4	35.3	36.3	37.2	38.1	39.0
25	30.6	31.5	32.5	33.4	34.3	35.3	36.2	37.1	38.1	39.0
26	30.5	31.5	32.4	33.4	34.3	35.2	36.2	37.1	38.0	38.9
27	30.5	31.4	32.4	33.3	34.2	35.2	36.1	37.0	37.9	38.8
28	30.5	31.4	32.3	33.3	34.2	35.1	36.0	36.9	37.8	38.7
29	30.4	31.4	32.3	33.2	34.1	35.0	35.9	36.8	37.7	38.6
30	30.4	31.3	32.2	33.1	34.1	35.0	35.8	36.7	37.6	38.5
31	30.3	31.2	32.2	33.1	34.0	34.9	35.8	36.6	37.5	38.3
32	30.3	31.2	32.1	33.0	33.9	34.8	35.6	36.5	37.4	38.2
33	30.2	31.1	32.0	32.9	33.8	34.7	35.5	36.4	37.2	38.0

[1] *The multiples in this table are not applicable to annuities for a term certain; for such cases see paragraph (c) of § 1.72-5.*

Age	Years—									
	31	32	33	34	35	36	37	38	39	40
34	30.1	31.0	31.9	32.8	33.7	34.6	35.4	36.2	37.1	37.9
35	30.1	31.0	31.8	32.7	33.6	34.4	35.3	36.1	36.9	37.7
36	30.0	30.9	31.7	32.6	33.5	34.3	35.1	35.9	36.7	37.4
37	29.9	30.8	31.6	32.5	33.3	34.1	34.9	35.7	36.5	37.2
38	29.8	30.7	31.5	32.3	33.2	34.0	34.7	35.5	36.2	37.0
39	29.7	30.5	31.4	32.2	33.0	33.8	34.5	35.3	36.0	36.7
40	29.6	30.4	31.2	32.0	32.8	33.6	34.3	35.0	35.7	36.4
41	29.4	30.2	31.0	31.8	32.6	33.3	34.1	34.7	35.4	36.0
42	29.3	30.1	30.9	31.6	32.4	33.1	33.8	34.4	35.1	35.7
43	29.1	29.9	30.7	31.4	32.1	32.8	33.5	34.1	34.7	35.3
44	28.9	29.7	30.5	31.2	31.9	32.5	33.2	33.8	34.3	34.9
45	28.8	29.5	30.2	30.9	31.6	32.2	32.8	33.4	33.9	34.4
46	28.5	29.3	30.0	30.6	31.3	31.9	32.4	33.0	33.5	33.9
47	28.3	29.0	29.7	30.3	30.9	31.5	32.0	32.5	33.0	33.4
48	28.1	28.7	29.4	30.0	30.6	31.1	31.6	32.1	32.5	32.9
49	27.8	28.4	29.0	29.6	30.2	30.7	31.1	31.5	31.9	32.3
50	27.5	28.1	28.7	29.2	29.7	30.2	30.6	31.0	31.4	31.7
51	27.2	27.8	28.3	28.8	29.3	29.7	30.1	30.4	30.7	31.0
52	26.8	27.4	27.9	28.4	28.8	29.2	29.5	29.8	30.1	30.3
53	26.5	27.0	27.4	27.9	28.3	28.6	28.9	29.2	29.4	29.6
54	26.1	26.5	27.0	27.4	27.7	28.0	28.3	28.5	28.7	28.9
55	25.6	26.1	26.5	26.8	27.1	27.4	27.6	27.8	28.0	28.1
56	25.2	25.6	25.9	26.2	26.5	26.7	26.9	27.1	27.2	27.3
57	24.7	25.0	25.3	25.6	25.8	26.0	26.2	26.3	26.5	26.5
58	24.1	24.4	24.7	25.0	25.2	25.3	25.5	25.6	25.7	25.7
59	23.6	23.8	24.1	24.3	24.4	24.6	24.7	24.8	24.9	24.9
60	23.0	23.2	23.4	23.6	23.7	23.8	23.9	24.0	24.0	24.1
61	22.3	22.5	22.7	22.9	23.0	23.1	23.1	23.2	23.2	23.3
62	21.7	21.9	22.0	22.1	22.2	22.3	22.3	22.4	22.4	22.4
63	21.0	21.1	21.3	21.4	21.4	21.5	21.5	21.6	21.6	21.6
64	20.3	20.4	20.5	20.6	20.6	20.7	20.7	20.7	20.8	20.8
65	19.6	19.7	19.8	19.8	19.9	19.9	19.9	19.9	19.9	20.0
66	18.9	19.0	19.0	19.1	19.1	19.1	19.1	19.1	19.1	19.1
67	18.2	18.2	18.3	18.3	18.3	18.3	18.3	18.3	18.4	18.4

[1] *The multiples in this table are not applicable to annuities for a term certain; for such cases see paragraph (c) of § 1.72-5.*

Age	Years—									
	31	32	33	34	35	36	37	38	39	40
68	17.4	17.5	17.5	17.5	17.5	17.6	17.6	17.6	17.6	17.6
69	16.7	16.7	16.8	16.8	16.8	16.8	16.8	16.8	16.8	16.8
70	16.0	16.0	16.0	16.0	16.0	16.0	16.0	16.0	16.0	16.0
71	15.3	15.3	15.3	15.3	15.3	15.3	15.3	15.3	15.3	15.3
72	14.6	14.6	14.6	14.6	14.6	14.6	14.6	14.6	14.6	14.6
73	13.9	13.9	13.9	13.9	13.9	13.9	13.9	13.9	13.9	13.9
74	13.2	13.2	13.2	13.2	13.2	13.2	13.2	13.2	13.2	13.2
75	12.5	12.5	12.5	12.5	12.5	12.5	12.5	12.5	12.5	12.5
76	11.9	11.9	11.9	11.9	11.9	11.9	11.9	11.9	11.9	11.9
77	11.2	11.2	11.2	11.2	11.2	11.2	11.2	11.2	11.2	11.2
78	10.6	10.6	10.6	10.6	10.6	10.6	10.6	10.6	10.6	10.6
79	10.0	10.0	10.0	10.0	10.0	10.0	10.0	10.0	10.0	10.0
80	9.5	9.5	9.5	9.5	9.5	9.5	9.5	9.5	9.5	9.5
81	8.9	8.9	8.9	8.9	8.9	8.9	8.9	8.9	8.9	8.9
82	8.4	8.4	8.4	8.4	8.4	8.4	8.4	8.4	8.4	8.4
83	7.9	7.9	7.9	7.9	7.9	7.9	7.9	7.9	7.9	7.9
84	7.4	7.4	7.4	7.4	7.4	7.4	7.4	7.4	7.4	7.4
85	6.9	6.9	6.9	6.9	6.9	6.9	6.9	6.9	6.9	6.9
86	6.5	6.5	6.5	6.5	6.5	6.5	6.5	6.5	6.5	6.5
87	6.1	6.1	6.1	6.1	6.1	6.1	6.1	6.1	6.1	6.1
88	5.7	5.7	5.7	5.7	5.7	5.7	5.7	5.7	5.7	5.7
89	5.3	5.3	5.3	5.3	5.3	5.3	5.3	5.3	5.3	5.3
90	5.0	5.0	5.0	5.0	5.0	5.0	5.0	5.0	5.0	5.0
91	4.7	4.7	4.7	4.7	4.7	4.7	4.7	4.7	4.7	4.7
92	4.4	4.4	4.4	4.4	4.4	4.4	4.4	4.4	4.4	4.4
93	4.1	4.1	4.1	4.1	4.1	4.1	4.1	4.1	4.1	4.1
94	3.9	3.9	3.9	3.9	3.9	3.9	3.9	3.9	3.9	3.9
95	3.7	3.7	3.7	3.7	3.7	3.7	3.7	3.7	3.7	3.7
96	3.4	3.4	3.4	3.4	3.4	3.4	3.4	3.4	3.4	3.4
97	3.2	3.2	3.2	3.2	3.2	3.2	3.2	3.2	3.2	3.2
98	3.0	3.0	3.0	3.0	3.0	3.0	3.0	3.0	3.0	3.0
99	2.8	2.8	2.8	2.8	2.8	2.8	2.8	2.8	2.8	2.8
100	2.7	2.7	2.7	2.7	2.7	2.7	2.7	2.7	2.7	2.7
101	2.5	2.5	2.5	2.5	2.5	2.5	2.5	2.5	2.5	2.5

[1] *The multiples in this table are not applicable to annuities for a term certain; for such cases see paragraph (c) of § 1.72-5.*

Age	Years—									
	31	32	33	34	35	36	37	38	39	40
102	2.3	2.3	2.3	2.3	2.3	2.3	2.3	2.3	2.3	2.3
103	2.1	2.1	2.1	2.1	2.1	2.1	2.1	2.1	2.1	2.1
104	1.9	1.9	1.9	1.9	1.9	1.9	1.9	1.9	1.9	1.9
105	1.8	1.8	1.8	1.8	1.8	1.8	1.8	1.8	1.8	1.8
106	1.6	1.6	1.6	1.6	1.6	1.6	1.6	1.6	1.6	1.6
107	1.4	1.4	1.4	1.4	1.4	1.4	1.4	1.4	1.4	1.4
108	1.3	1.3	1.3	1.3	1.3	1.3	1.3	1.3	1.3	1.3
109	1.1	1.1	1.1	1.1	1.1	1.1	1.1	1.1	1.1	1.1
110	1.0	1.0	1.0	1.0	1.0	1.0	1.0	1.0	1.0	1.0
111	.9	.9	.9	.9	.9	.9	.9	.9	.9	.9
112	.8	.8	.8	.8	.8	.8	.8	.8	.8	.8
113	.7	.7	.7	.7	.7	.7	.7	.7	.7	.7
114	.6	.6	.6	.6	.6	.6	.6	.6	.6	.6
115	.5	.5	.5	.5	.5	.5	.5	.5	.5	.5

[1] *The multiples in this table are not applicable to annuities for a term certain; for such cases see paragraph (c) of § 1.72-5.*

If (a) the terms of the contract involve a life or lives, and are such that the above tables cannot be correctly applied, and (b) the amounts received under the contract are at least partly "amounts received as an annuity" under a contract to which section 72 applies, the taxpayer may submit with his return an actuarial computation based upon the applicable annuity table (described below) with ages set back one year, showing the appropriate factors applied in his case, subject to the approval of the Commissioner upon examination of such return. The applicable annuity table is the 1937 Standard Annuity Table (if the investment in the contract does not include a post-June 1986 investment in the contract) or the gender-neutral version of the 1983 Basic Table (if the investment in the contract includes a post-June 1986 investment in the contract). In the case of a contract to which § 1.72-6(d) (relating to contracts in which amounts were invested both before July 1, 1986, and after June 30, 1986) applies, the actuarial computation shall be based on both tables in accordance with the principles of § 1.72-6(d). Computations involving factors to compensate for the effects of contingencies other than mortality, such as marriage or remarriage, re-employment, recovery from disability, or the like, will not be approved.

[T.D. 6500, 25 FR 11402, Nov. 26, 1960; 25 FR 14021, Dec. 21, 1960, as amended by T.D. 8115, 51 FR 45706, Dec. 19, 1986; 60 FR 16381, Mar. 30, 1995]

§ 1.72-10 Effect of transfer of contracts on investment in the contract.

(a) If a contract to which section 72 applies, or any interest therein, is transferred for a valuable consideration, by assignment or otherwise, only the actual value of the consideration given for such transfer and the amount of premiums or other consideration subsequently paid by the transferee shall be included in the transferee's aggregate of premiums or other consideration paid. In accordance with the provisions of section 72(g)(3) and paragraph (b) of § 1.72-4, an annuity starting date shall be determined for the transferee without regard to the annuity starting date, if any, of the transferor. In determining the transferee's investment in the contract, the aggregate amount of premiums or other consideration paid shall be reduced by all amounts received by the transferee before the receipt of an amount as an annuity or before the annuity starting date, whichever is the later, to the extent that such amounts were excludable from his gross income under the applicable income tax law at the time of receipt. For the treatment of amounts received by the transferee subsequent to both the annuity starting date and the date of receipt of a payment as an annuity, but not received as annuity payments, see § 1.72-11. For a limitation on adjustments to the basis of annuity contracts sold, see section 1021.

(b) In the case of a transfer of such a contract without valuable consideration, the annuity starting date and the expected return under the contract shall be determined as though no such transfer had taken place. See paragraph (b) of § 1.72-4. The transferee shall include the aggregate of premiums or other consideration paid or deemed to have been paid by his transferor in the aggregate of premiums or other consideration as though paid by him. In determining the transferee's investment in the contract, the transferee's aggregate amount of premiums or other consideration paid (as so found) shall be reduced by all amounts either received or deemed to have been received by himself or his transferor before the annuity starting date, or before the date on which an amount is first received as an annuity, whichever is the later, to the extent that such amounts were excludable from the gross income of the actual recipient under the applicable income tax law at the time of receipt. For treatment of amounts received subsequent to both the above dates by such transferee, but not received as annuity payments, see § 1.72-11.

§ 1.72-11 Amounts not received as annuity payments.

(a) *Introductory.*

(1) This section applies to amounts received under a contract to which section 72 applies if either:

(i) Paragraph (b) of § 1.72-2 is inapplicable to such amounts.

(ii) Paragraph (b) of § 1.72-2 is applicable but the annuity payments received differ either in amount, duration, or both, from those originally provided under the contract, or

(iii) Paragraph (b) of § 1.72 is applicable, but such annuity payments are received by a beneficiary after the death of an annuitant (or annuitants) in full discharge of the obligation under the contract and solely because of a guarantee.

The payments referred to in subdivision (i) of this subparagraph include all amounts other than "amounts received as an annuity" as that term is defined in paragraphs (b) (2) and (3) of § 1.72-2. If such amounts are received as dividends or payments in the nature of dividends, or as a return of premiums, see paragraph (b) of this section. If such amounts are paid in full discharge of the obligation under the contract and are in the nature of a refund of the consideration, see paragraph (c) of this section. If such amounts are paid upon the surrender, redemption, or maturity of the contract, see paragraph (d) of this section. The payments referred to in subdivision (ii) of this subparagraph include all annuity payments which are paid as the result of a modification or an exchange of the annuity obligations originally provided under a contract for different annuity obligations (whether or not such modification or exchange is accompanied by the payment of an amount to which subdivision (i) of this subparagraph applies). If the duration of the new annuity obligations differs from the duration of the old annuity obligations, paragraph (e) of this section applies to the new annuity obligations and paragraph (d) of this section applies to any lump sum payment received. If, however, the duration of the new annuity obligations is the same as the duration of the old obligations, paragraph (f) of this section applies to the new obligations and to any lump sum received in connection therewith. The annuity payments referred to in subdivision (iii) of this subparagraph are annuity payments which are made to a beneficiary after the death of annuitant (or annuitants) in full discharge of the obligations under a contract because of a provision in the contract requiring the payment of a guaranteed amount or minimum number of payments for a fixed period; see paragraph (c) of this section.

(2) The principles of this section apply, to the extent appropriate thereto, to amounts paid which are taxable under section 72 (except, for taxable years beginning before January 1, 1964, section 72(e)(3)) in accordance with sections 402 and 403 and the regulations thereunder. However, if contributions used to purchase the contract include amounts for which a deduction was allowed under section 404 as contributions on behalf of an owner-employee, the rules of this section are modified by the rules of paragraph (b) of § 1.72-17. Further, in applying the provisions of this section, the aggregate premiums or other consideration paid shall not include contributions on behalf of self-employed individuals to the extent that deductions were allowed under section 404 for such contributions. Nor, shall the aggregate of premiums or other consideration paid include amounts used to purchase life, accident, health, or other insurance protection for an owner-employee. See paragraph (b)(4) of § 1.72-16 and paragraph (c) of § 1.72-17. The principles of this section also apply to payments made in the manner described in paragraph (b)(3)(i) of § 1.72-2.

(b) ***Amounts received in the nature of dividends or similar distributions.***

(1) If dividends (or payments in the nature of dividends or a return of premiums or other consideration) are received under a contract to which section 72 applies and such payments are received before the annuity starting date or before the date on which an amount is first received as an annuity, whichever is the later, such payments are includible in the gross income of the recipient only to the extent that they, taken together with all previous payments received under the contract which were excludable from the gross income of the recipient under the applicable income tax law, exceed the aggregate of

premiums or other consideration paid or deemed to have been paid by the recipient. Such payments shall also be subtracted from the consideration paid (or deemed paid) both for the purpose of determining an exclusion ratio to be applied to subsequent amounts paid as an annuity and for the purpose of determining the applicability of section 72(d) and § 1.72-13, relating to employee contributions recoverable in three years.

(2) If dividends or payments in the nature of dividends are paid under a contract to which section 72 applies and such payments are received on or after the annuity starting date or the date on which an amount is first received as an annuity, whichever is later, such payments shall be fully includible in the gross income of the recipient. The receipt of such payments shall not affect the aggregate of premiums or other consideration paid nor the amounts contributed or deemed to have been contributed by an employee as otherwise calculated for purposes of section 72. Since the investment in the contract and the expected return are not affected by a payment which is fully includible in the gross income of the recipient under this rule, the exclusion ratio will not be affected by such payment and will continue to be applied to amounts received as annuity payments in the future as though such payment had not been made. This subparagraph shall apply to amounts received under a contract described in paragraph (b)(3)(i) of § 1.72-2 to the extent that the amounts received exceed the portion of the investment in the contract allocable to each taxable year in accordance with paragraph (d)(3) of § 1.72-4. Hence, such excess is fully includible in the gross income of the recipient.

(c) ***Amounts received in the nature of a refund of the consideration under a contract and in full discharge of the obligation thereof.***

(1) Any amount received under a contract to which section 72 applies, if it is at least in part a refund of the consideration paid, including amounts payable to a beneficiary after the death of an annuitant by reason of a provision in the contract for a life annuity with minimum period of payments certain or with a minimum amount which must be paid in any event, shall be considered an amount received in the nature of a refund of the consideration paid for such contract. If such an amount is in full discharge of an obligation to pay a fixed amount (whether in a lump sum or otherwise) or to pay amounts for a fixed number of years (including amounts described in paragraph (b)(3)(i) of § 1.72-2), it shall be included in the gross income of the recipient only to the extent that it, when added to amounts previously received under the contract which were excludable from gross income under the law applicable at the time of receipt, exceeds the aggregate of premiums or other consideration paid. See section 73(e)(2)(A). This paragraph shall not apply if the total of the amounts to be paid in discharge of the obligation can in any event exceed the total of the annuity payments which would otherwise fully discharge the obligation. For rules to be applied in such a case, see paragraph (e) of this section.

(2) The principles of subparagraph (1) of this paragraph may be illustrated by the following examples:

> *Example 1.* A, a male employee, retired on December 31, 1954, at the age of 60. A life annuity of $75 per month was payable to him beginning January 31, 1955. The annuity contract guaranteed that if A did not live for at least ten years after his retirement his beneficiary, B, would receive the monthly payments for any balance of such ten-year period which remained at the date of A's death. Under section 72, A was deemed to have paid $3,600 toward the cost of the annuity. A lived for five years after his retirement receiving a total of $4,500 in annuity payments. After A's death, B began receiving the monthly payments of $75

beginning with the January 31, 1960 payment. B will exclude such payments from his gross income throughout 1960, 1961, and 1962, and will exclude only $18 of the first payment in 1963 from his gross income for that year. Thereafter, B will include the entire amount of all such payments in his gross income for the taxable year of receipt. This result is determined as follows:

A's investment in the contract (unadjusted)		$3,600
Multiple from Table III of § 1.72-9 for male, age 60, where duration of guaranteed amount is 10 years (percent)	11	
Subtract value of the refund feature to the nearest dollar (11 percent of $3,600)		396
Investment in the contract adjusted for the present value of the refund feature without discount for interest		3,204
Aggregate of premiums or other consideration paid		3,600
A's exclusion ratio ($3,204 ÷ $16,380 [$900 × 18.2]) (percent)	19.6	
Subtract amount excludable during five years A received payments (19.6 percent of $4,500 [$900 × 5])		882
Remainder of aggregate of premiums or other consideration paid excludable from gross income of B under section 72(e)		2,718

As a result of the above computation, the number of payments to B which will exhaust the remainder of consideration paid which is excludable from gross income of the recipient is $36^{6}/_{25}$ ($2,718 ÷ $75) and B will exclude the payments from his gross income for three years, then exclude only $18 of the first payment for the fourth year from his gross income, and thereafter include the entire amount of all payments he receives in his gross income.

Example 2. The facts are the same as in example (1), except that B, the beneficiary, elects to receive $50 per month for his life in lieu of the payments guaranteed under the original contractual obligation. Since such amounts will be received as an annuity and may, because of the length of time B may live, exceed the amount guaranteed, they are not amounts to which this paragraph applies. See paragraph (e) of this section.

Example 3. The facts are the same as in example (1), except that B, the beneficiary, elects to receive the remaining guaranteed amount in installments which are larger or smaller than the $75 per month provided until, under the terms of the contract, the guaranteed amount is exhausted. The rule of subparagraph (1) of this paragraph and the computation illustrated in example (1) apply to such installments since the total of such installments will not exceed the original amount guaranteed to be paid at A's death in any event.

Example 4. C pays $12,000 for a contract providing that he is to be paid an annuity of $1,000 per year for 15 years. His exclusion ratio is therefore 80 percent ($12,000 ÷ $15,000). He directs that the annuity is to be paid to D, his beneficiary, if he should die before the full 15-year period has expired. C dies after 5 years and D is paid $1,000 in 1960. D will include $200 ($1,000−$800 [80

percent of $1,000]) in his gross income for the taxable year in which he receives the $1,000 since section 72(e) and this section do not apply to the annuity payments made in accordance with the provisions and during the term of the contract. D will continue with the same exclusion ratio used by C (80 percent).

Example 5. In 1954, E paid $50,000 into a fund and was promised an annual income for life the amount of which would depend in part upon the earnings realized from the investment of the fund in accordance with an agreed formula. The contract also specified that if E should die before ten years had elapsed, his beneficiary, F, would be paid the amounts determined annually under the formula until ten payments had been received by E and F together. E died in 1960, having received five payments totaling $30,000. Assuming that $22,000 of this amount was properly excludable from E's gross income prior to his death, F will exclude from his gross income the payments he receives until the taxable year in which his total receipts from the fund exceed $28,000 ($50,000−$22,000). F will include any excess over the $28,000 in his gross income for that taxable year. Thereafter, F will include in his gross income the entire amount of any payments made to him from the fund.

Example 6. Assume the facts are the same as in example (1), except that the total investment in the contract is made after June 30, 1986, that A is to receive payments under the life annuity contract beginning on January 31, 1987, and that B will begin to receive the monthly payments on January 31, 1992. B will exclude the $75 monthly payments from gross income throughout 1992, 1993, and 1994. B will exclude only the first two monthly payments and $21 of the third monthly payment in 1995. This is determined as follows:

A's investment in the contract (unadjusted)	$3,600
Multiple from Table VII, age 60, 10 years (percent)	4
Subtract value of the refund feature (4 percent of $3,600	$144
Investment in the contract adjusted for the present value of the refund feature without discount for interest	$3,456
Aggregate of premiums or other consideration paid	$3,600.00
A's exclusion ratio ($3,456 ÷ $21,780 [$900 × 24.2]) (percent)	15.9
Subtract amount excludable during five years A received payments (15.9 percent of $4,500 [$900 × 5])	$715.50
Remainder of aggregate of premiums or other consideration paid	$2,884.50

excludable from gross income of B under section 72(e)

As a result of the above computation, the number of payments to B which will exhaust the remainder of consideration paid which is excludable from gross income of the recipient is $38^{23}/_{50}$ ($2,884.50 ÷ 75) and B will exclude the payments from gross income for three years, then exclude only the first two monthly payments and $34.50 of the third. Thereafter B shall include the entire amount of all payments received in gross income.

(3) For the purpose of applying the rule contained in subparagraph (1) of this paragraph, it is immaterial whether the recipient of the amount received in full discharge of the obligation is the same person as the recipient of amounts previously received under the contract which were excludable from gross income, except in the case of a contract transferred for a valuable consideration, with respect to which see paragraph (a) of § 1.72-10. For the limit on the tax, for taxable years beginning before January 1, 1964, attributable to the receipt of a lump sum to which this paragraph applies, see paragraph (g) of this section.

(d) ***Amounts received upon the surrender, redemption, or maturity of a contract.***

(1) Any amount received upon the surrender, redemption, or maturity of a contract to which section 72 applies, which is not received as an annuity under the regulations of paragraph (b) of § 1.72-2, shall be included in the gross income of the recipient to the extent that it, when added to amounts previously received under the contract and which were excludable from the gross income of the recipient under the law applicable at the time of receipt, exceeds the aggregate of premiums or other consideration paid. See section 72(e)(2)(B). If amounts are to be received as an annuity, whether in lieu of or in addition to amounts described in the preceding sentence, such amounts shall be included in the gross income of the recipient in accordance with the provisions of paragraph (e) or (f) of this section, whichever is applicable. The rule stated in the first sentence of this paragraph shall not apply to payments received as an annuity or otherwise after the date of the first receipt of an amount as an annuity subsequent to the maturity, redemption, or surrender of the original contract. If amounts are so received and are other than amounts received as an annuity, they are includible in the gross income of the recipient. See section 72(e)(1)(A) and paragraph (b)(2) of this section.

(2) For the purpose of applying the rule contained in subparagraph (1) of this paragraph, it is immaterial whether the recipient of the amount received upon the surrender, redemption, or maturity of the contract is the same as the recipient of amounts previously received under the contract which were excludable from gross income, except in the case of a contract transferred for a valuable consideration, with respect to which see paragraph (a) of § 1.72-10. For the limit on the amount of tax, for taxable years beginning before January 1, 1964, attributable to the receipt of certain lump sums to which this paragraph applies, see paragraph (g) of this section.

(e) ***Periodic payments received for a different term.*** If, after the date on which an amount is first received as an annuity under a contract to which section 72 applies, the terms of the contract are modified or the annuity obligations are exchanged so that periodic payments are to be received for a different term than originally provided under the contract (whether or not accompanied by the receipt of a lump sum to which

paragraph (d) of this section applies), the rules of this paragraph shall apply to such payments. Hence, the provisions of section 72(e) and paragraphs (b), (c), (d), and (f) of this section are inapplicable for the purpose of determining the includibility of such payments in gross income and the general principles of section 72 with respect to the use of an exclusion ratio shall be applied to such payments as if they were provided under a new contract received in exchange for the contract providing the original annuity payments. If such payments are received as the result of the surrender, redemption, or discharge of a contract to which section 72 applies, they shall be considered to be received as an annuity under a contract exchanged for the contract whose redemption, surrender, or discharge was involved. For the purpose of determining the extent to which the payments so received are to be included in the gross income of the recipient, an exclusion ratio shall be determined for such contract as of the later of January 1, 1954, or the first day of the first period for which an amount is received as an annuity thereunder, whichever is the later. See paragraph (b) of § 1.72-4. In determining the investment in the contract for this purpose, any lump sum amount received at the time of the exchange shall not be considered an amount to which paragraph (a)(2) of § 1.72-6 applies. However, such lump sum shall be subtracted from the aggregate of premiums or other consideration paid to the extent it is excludable as an amount not received as an annuity under this section as if it were an amount received before the annuity starting date of the contract obtained in exchange.

(f) ***Periodic payments received for the same term after a lump sum withdrawal.***

(1) If, after the date of the first receipt of a payment as an annuity, the annuitant receives a lump sum and is thereafter to receive annuity payments in a reduced amount under the contract for the same term, life, or lives as originally specified in the contract, a portion of the contract shall be considered to have been surrendered or redeemed in consideration of the payment of such lump sum and the exclusion ratio originally determined for the contract shall continue to apply to the amounts received as an annuity without regard to the fact that such amounts are less than the original amounts which were to be paid periodically. The lump sum shall be includible in the gross income of the recipient in accordance with the provisions of subparagraph (2) of this paragraph. However, except in the case of amounts to which sections 402 and 403 apply, the tax, for taxable years beginning before January 1, 1964, attributable to the inclusion of all or part of the lump sum in gross income shall not exceed the amount determined under section 72(e)(3) and paragraph (g) of this section. For taxable years beginning after December 31, 1963, such amounts may be taken into account in computations under sections 1301 through 1305 (relating to income averaging).

(2) There shall be excluded from gross income that portion of the lump sum which bears the same ratio to the aggregate premiums or other consideration paid for the contract, as reduced by all amounts previously received under the contract and excludable from the gross income of the recipient under the applicable income tax law, as:

(i) In the case of payments to be made in the manner described in paragraph (b)(2) of § 1.72-2, the amount of the reduction in the annuity payments to be made thereafter bears to the annuity payments originally provided under the contract, or

(ii) In the case of a contract providing for payments to be made in the manner described in paragraph (b)(3)(i) of § 1.72-2, the amount of the reduction in the number of units per period to be paid thereafter bears to the number of units per period payable under the contract immediately before the lump sum withdrawal.

(3) This paragraph may be illustrated by the following examples:

Example 1. Taxpayer A pays $20,000 for an annuity contract providing for payments to him of $100 per month for his life. At the annuity starting date he has a life expectancy of 20 years. His expected return is therefore $24,000 and the exclusion ratio is five-sixths. He continues to receive the original annuity payments for 5 years, receiving a total of $6,000, and properly excludes a total of $5,000 from his gross income in his income tax returns for those years. At the beginning of the next year, A agrees with the insurer to take a reduced annuity of $75 per month and a lump sum payment of $4,000 in cash. Of the lump sum he receives, he will include $250 and exclude $3,750 from his gross income for his taxable year of receipt, determined as follows:

Aggregate of premiums or other consideration paid	$20,000
Less amounts received as an annuity to the extent they were excludable from A's income	$5,000
Remainder of the consideration	$15,000
Ratio of the reduction in the amount of the annuity payments to the original annuity payments	25/$100 or $^1/_4$
Lump sum received	$4,000
Less one-fourth of the remainder of the consideration ($^1/_4$ of $15,000)	$3,750
Portion of the lump sum includible in gross income	$250

For taxable years beginning before January 1, 1964, the limit on tax of section 72(e)(3), as in effect before such date, applies to the portion of the lump sum includible in gross income. For taxable years beginning after December 31, 1963, such portion may be taken into account in computations under sections 1301 through 1305 (relating to income averaging). If, in this example, the annuity were a pension payable to A as a retired employee, but the facts were otherwise the same (assuming that, for instance, the $20,000 aggregate of premiums or other consideration paid were A's contributions as determined under section 72(f) and § 1.72-8) the result would be the same except that the tax attributable to the inclusion of the $250 in A's gross income, for taxable years beginning before January 1, 1964, would not be limited by section 72(e)(3), as in effect before such date. If such a lump sum is received in a taxable year beginning after December 31, 1963, the portion of such sum includible in gross income may be taken into account in computations under sections 1301 through 1305 (relating to income averaging).

Example 2. Taxpayer B pays $30,000 for a contract providing for monthly payments to be made to him for 15 years with respect to the principal and earnings of 10 units of an investment fund. B receives $12,000 during the first 5 years of participation and of this amount he has properly excluded a total of $10,000 from his gross income in his income

returns for the taxable years, since $2,000 of $2,400 he received in each such year represented his investment divided by the term of the annuity ($30,000 ÷ 15). At the beginning of the 6th year, B agrees to take $11,000 in a lump sum and thereafter to accept the payments arising with respect to five units for the remaining 10 years of payments in full discharge of the original obligations of the contract. B shall include $1,000 in his gross income for the 6th year as the result of the lump sum he receives and allocates $1,000 of his original investment in the contract to each of the remaining 10 years with respect to the payments which will continue, determined as follows:

Aggregate of premiums or other consideration paid	$30,000
Total amount received and excludable from gross income	$10,000
Remainder of the consideration	$20,000
Ratio of units discontinued to the total units originally provided	$^{5}/_{10}$ or $^{1}/_{2}$
Lump sum received at the time of reduction in the number of units to be paid	$11,000
Less one-half of the remainder of the consideration ($^{1}/_{2}$ of $20,000)	$10,000
Portion of the lump sum received and includible in gross income	$1,000
Remainder of the consideration less the portion of such remainder attributable to the excludable portion of the lump sum ($20,000−$10,000)	$10,000
Remainder of the consideration properly allocable to each taxable year for the remaining 10 years ($10,000 ÷ 10)	$1,000

For the taxable years beginning before January 1, 1964, the limit on tax of section 72(e)(3), as in effect before such date, applies to the portion of the lump sum received and includible in gross income. For taxable years beginning after December 31, 1963, such portion may be taken into account in computations under sections 1301 through 1305 (relating to income averaging).

(g) ***Limit on tax attributable to the receipt of a lump sum.***

(1) For taxable years beginning before January 1, 1964, if the entire amount of the proceeds received upon the redemption, maturity, surrender, or discharge of a contract to which section 72 applies is received in a lump sum and paragraph (c), (d), or (f) of this section is applicable in determining the portion of such amount which is includible in gross income, the tax attributable to such portion shall not exceed the tax which would have been attributable thereto had such portion been received ratably in the taxable year in which received and the 2 preceding taxable years. The amount of tax attributable to the includible portion of the lump sum received shall be the lesser of:

(i) The difference between the amount of tax for the taxable year of receipt computed by including such portion in gross income and the amount of tax for such taxable year computed by excluding such portion from gross income; or

(ii) The difference between the total amount of tax for the taxable year of receipt and the 2 preceding taxable years computed by including one-third of such portion in gross income for each of the 3 taxable years, and the total amount of the tax for the taxable year of receipt and the 2 preceding taxable years computed by entirely excluding such portion from the gross income of all 3 taxable years.

For the definition of "taxable year", see section 441(b). This subparagraph shall not apply, for taxable years beginning before January 1, 1964, to payments excepted from the application of section 72(e)(3), as in effect before such date, under the provisions of section 402 or 403. See paragraph (a) of § 1.72-2 and paragraph (d) of § 1.72-14.

(2) For taxable years beginning after December 31, 1963, any amount includible in gross income to which this section relates may be taken into account in computations under sections 1301 through 1305 (relating to income averaging).

(h) ***Amounts deemed to be paid or received by a transferee.*** Amounts deemed to have been paid or received by a transferee for the purposes of § 1.72-10 shall also be deemed to have been so paid or received by such transferee for the purposes of this section. Thus, if a donee is deemed to have paid the premiums or other consideration actually paid by his transferor for the purposes of section 72(g) and paragraph (b) of § 1.72-10, such consideration shall be deemed premiums or other consideration paid by the donee for the purposes of this section.

[T.D. 6500, 25 FR 11402, Nov. 26, 1960, as amended by T.D. 6885, 31 FR 7798, June 2, 1966; T.D. 8115, 51 FR 45734, Dec. 19, 1986]

§ 1.72-12 Effect of taking an annuity in lieu of a lump sum upon the maturity of a contract.

If a contract to which section 72 applies provides for the payment of a lump sum in full discharge of the obligation thereunder and the obligee entitled thereto, prior to receiving any portion of such lump sum and within 60 days after the date on which such lump sum first becomes payable, exercises an option or irrevocably agrees with the obligor to take, in lieu thereof, payments which will constitute "amounts received as an annuity", as that term is defined in paragraph (b) of § 1.72-2, no part of such lump sum shall be deemed to have been received by the obligee at the time he was first entitled thereto merely because he would have been entitled to such amount had he not exercised the option or made such an agreement with the obligor.

§ 1.72-13 Special rule for employee contributions recoverable in three years.

(a) ***Amounts received as an annuity.***

(1) Section 72(d) provides a special rule for the treatment of amounts received as an annuity by an employee (or by the beneficiary or beneficiaries of an employee) under a contract to which section 72 applies. This special rule is applicable only in the event that:

(i) At least part of the consideration paid for the contract is contributed by the employer, and

(ii) The aggregate amount receivable as an annuity under such contract by the employee (or by his beneficiary or beneficiaries if the employee died before any amount was received as an annuity under the contract) within the 3-year period beginning on the date (whether or not before January 1, 1954) on which an amount is first received as an annuity equals or exceeds the total consideration contributed (or deemed contributed under section 72(f) and § 1.72-8) by the employee as of such date as reduced by all amounts previously received and excludable from the gross income of the recipient under the applicable income tax law.

In such an event, section 72(d) provides that all amounts received as an annuity under the contract during a taxable year to which the Code applies shall be excluded from gross income until the total of the amounts excluded under that section plus all amounts excluded under prior income tax laws equals or exceeds the consideration contributed (or deemed contributed) by the employee. The excess, if any, and all amounts received by any recipient thereafter (whether or not received as an annuity), shall be fully included in gross income. See paragraph (b) of this section.

(2) If the aggregate amount receivable as an annuity under the contract within three years from the date on which an amount is first received as an annuity thereunder will not equal or exceed the consideration contributed (or deemed contributed) by the employee in accordance with the provisions of § 1.72-8, computed as of such date, the special rule of section 72(d) shall not apply to amounts received as an annuity under the contract and the general rules of section 72 shall apply thereto.

(3) The aggregate of the amounts receivable as an annuity within the prescribed 3-year period shall be the total of all annuity payments anticipatable by an employee (or a beneficiary or beneficiaries of an employee, if the employee died before any amount was received as an annuity) under the contract as a whole as defined in paragraph (a) of § 1.72-2. See paragraph (a)(3) of § 1.72-2 for rules for determining what constitutes “the contract” in the case of distributions from an employees' trust or plan.

(4) If subparagraphs (1) and (3) of this paragraph apply to amounts received as an annuity under a contract, the rule prescribed in subparagraph (1) of this paragraph shall apply to all amounts so received thereunder regardless of the fact that they may be payable

(i) to more than one beneficiary,

(ii) for the same or different intervals,

(iii) in different sums, or

(iv) for a different period certain, life, or lives.

(5) For purposes of section 72(d), contributions which are made with respect to a self-employed individual and which are allowed as a deduction under section 404(a) are not considered contributions by the employee, but such contributions are considered contributions by the employer. A contribution which is deemed paid in a prior taxable year under the provisions of section 404(a)(6) shall be considered made with respect to a self-employed individual if the individual on whose behalf the contribution is made was self-employed for the taxable year in which the contribution is deemed paid, whether or not such individual is self-employed at the time the contribution is actually paid. Contributions with respect to a self-employed individual who is an owner-employee used to purchase life, accident, health, or other insurance protection for such owner-employee shall not be treated as consideration for the contract contributed by the employee in computing the employee contributions for purposes of section 72(d).

(b) ***Amounts not received as an annuity.*** If the rule of paragraph (a) of this section applies to a contract and, after the date on which an annuity payment is first received, amounts are received other than as an annuity under such contract in a taxable year to which the Code applies, they shall be included in the gross income of the recipient in accordance with the provisions of § 1.72-11. Thus, if such amounts are received as a dividend or a similar distribution after the date on which an amount is first received as an annuity under the contract, they shall be included in the gross income of the recipient (in accordance with

section 72(e)(1)(A) and paragraph (b)(2) of § 1.72-11. All other amounts not received as an annuity shall be included in the gross income of the recipient in accordance with the provisions of section 72(e)(1)(B) and paragraph (c), (d), or (f), whichever is applicable, of § 1.72-11. See section 72(e)(2).

(c) ***Amounts received after the exhaustion of employee contributions.***

(1) Amounts received under a contract to which the rule of paragraph (a) of this section applies (whether or not such amounts are received as an annuity) shall be included in the gross income of the recipient if such amounts are received after the date on which the aggregate of all amounts excluded from gross income by the recipients under section 72(d) and prior income tax laws equalled or exceeded the consideration contributed (or deemed contributed) by the employee.

(2) If the rule of paragraph (a) of this section applies to amounts received by an employee (or his beneficiary or beneficiaries) under a joint and survivor annuity contract, payments made to a prior annuitant may entirely exhaust the amounts excludable from gross income. In such case, amounts paid to the surviving annuitant (or annuitants) shall be included in gross income by such recipients.

(d) ***Application of section 72(d) to a contract, trust, or plan providing for payments in a manner described in paragraph (b)(3)(i) of § 1.72-2.*** For the purpose of applying section 72(d) and this section, any amount received in the nature of a periodic payment under a contract, trust, or plan which provides for the payment of amounts in a manner described in paragraph (b)(3)(i) of § 1.72-2 shall be considered an amount received as an annuity notwithstanding the provisions of any other section of the regulations under section 72. The special exclusion rule of section 72(d) and paragraph (a) of this section shall apply to all amounts so received if the first amount received, when multiplied by the number of periodic payments to be made within the three years beginning on the date of its receipt, results in an amount in excess of the aggregate premiums or other consideration contributed (or deemed contributed) by the employee as of that date. If more than one series of periodic payments is to be paid under the same contract, trust, or plan, all payments anticipatable, whether because fixed in amount or determinable in the manner described in the preceding sentence, shall be aggravated for the purpose of determining the applicability of section 72 (d) to the contract, trust, or plan as a whole.

(e) ***Inapplicability of section 72(d) and this section.*** Section 72(d) and this section do not apply to:

(1) Amounts received as proceeds of a life insurance contract to which section 101(a) applies, nor to

(2) Amounts paid to a surviving annuitant under a joint and survivor annuity contract to which paragraph (b)(3) of § 1.72-5 applies, nor to

(3) Amounts paid to an annuitant under Chapter 73 of title 10 of the United States Code with respect to which section 72(o) and § 1.122-1 apply.

See also paragraph (d) of § 1.72-14.

[T.D. 6500, 25 FR 11402, Nov. 26, 1960, as amended by T.D. 6497, 25 FR 10021, Oct. 20, 1960; T.D. 6676, 28 FR 10135, Sept. 17, 1963; T.D. 7043, 35 FR 8477, June 2, 1970]

§ 1.72-14 Exceptions from application of principles of section 72.

(a) ***Payments of interest.*** If any amount is received under an agreement to pay interest on a sum or sums held by the obligor, such amount shall not be excludable from the gross income of the recipient under the provisions of section 72 to the extent that it is an actual interest payment. See section 72(j). An amount shall be considered to be held under an agreement to pay interest thereon if the amount payable after the

term of the annuity (whether for a term certain or for a life or lives) is substantially equal to or larger than the aggregate amount of premiums or other consideration paid therefor. For this purpose, however, the aggregate amount of premiums or other consideration paid shall include all contributions made by an employer and not merely those to which section 72(f) applies.

(b) ***Alimony payments.*** To the extent that payments made to a wife are includable in her gross income by reason of either or both section 71 and 682, they shall not be excluded from the wife's gross income under the principles of section 72 although made under a contract to which that section applies. However, section 72 shall apply in the case of amounts received under such a contract if a husband and wife are entitled to make and do make a single return jointly.

(c) ***Certain "face-amount certificates."*** The principles of section 72 do not apply to "face-amount certificates" described in section 72(1) which were issued before January 1, 1955.

(d) ***Employer plans.*** The provisions of §§ 1.72-1 to 1.72-13, inclusive, shall be disregarded to the extent that they are inconsistent with the treatment of amounts received provided in section 402 (relating to the taxability of a beneficiary of an employees' trust), section 403 (relating to the taxation of employee annuities), or the regulations under either of such sections.

§ 1.72-15 Applicability of section 72 to accident or health plans.

(a) ***Applicability of section.*** This section provides the rules for determining the taxation of amounts received from an employer-established plan which provides for distributions that are taxable under section 72 (or for distributions that are taxable under section 402 (a)(2) or (e), or section 403(a)(2), in the case of lump sum distributions) and which also provides for distributions that may be excludable from gross income under section 104 or 105 as accident or health benefits. For example, this section will apply to a pension plan described in section 401 and exempt under section 501 which provides for the payment of pensions at retirement and the payment of an earlier pension in the event of permanent disability. This section will also apply to a profit-sharing plan described in section 401 and exempt under section 501 which provides for periodic distribution of the amount standing to the account of a participant during any period that the participant is absent from work due to a personal injury or sickness and for the distribution of any balance standing to the account of the participant upon his separation from service. For purposes of this section, the term "contributions of the employee" includes contributions by the employer which were includible in the employee's gross income. Paragraphs (d), (h), and (i) of this section apply for taxable years beginning on or after January 1, 2015.

(b) ***General rule.*** Section 72 does not apply to any amount received as an accident or health benefit, and the tax treatment of any such amount shall be determined under sections 104 and 105. See paragraphs (c) and (d) of this section, paragraph (d) of § 1.104-1, and §§ 1.105-1 through 1.105-5. Section 72 (or, in the case of certain total distributions, section 402(a)(2) or section 403(a)(2)) does apply to any amount which is received under a plan to which this section applies and which is not an accident or health benefit. See paragraph (e) of this section.

(c) ***Accident or health benefits attributable to employee contributions.***

(1) If a plan to which this section applies provides that any portion of the accident or health benefits is attributable to the contributions of the employee to such plan, then such portion of such benefits is excludable from gross income under section 104(a)(3) and paragraph (d) of § 1.104-1. Neither section 72 nor section 105 applies to any accident or health benefits (whether paid before or after retirement) attributable to contributions of the employee. Since such portion is excludable under

section 104(a)(3), such portion is not subject to the dollar limitation of section 105(d) and if such portion is payable after the retirement of the employee, it is excludable without regard to the provisions of § 1.105-4 and section 72.

(2) In determining the taxation of any amounts received as accident or health benefits from a plan to which this section applies, the first step is to determine the portion, if any, of the contributions of the employee which is used to provide the accident or health benefits and the portion of the accident or health benefits attributable to such portion of the employee's contributions. If such a plan expressly provides that the accident or health benefits are provided in whole or in part by employee contributions and the portion of employee contributions to be used for such purpose, the contributions so used will be treated as used to provide accident or health benefits. However, if the plan does not expressly provide that the accident or health benefits are to be provided with employee contributions and the portion of employee contributions to be used for such purpose, it will be presumed that none of the employee contributions is used to provide such benefits. Thus, in the case of a contributory pension plan, it will be presumed that the disability pension is provided by employer contributions, unless the plan expressly provides otherwise, or in the case of a contributory profit-sharing plan providing that a portion of the amount standing to the account of each participant will be used to purchase accident or health insurance, it will be presumed that such insurance is purchased with employer contributions, unless the plan expressly provides otherwise. Similarly, unless the plan expressly provides otherwise, it will be presumed that if a contributory profit-sharing plan provides for periodic distributions from the account of a participant during any absence from work because of a personal injury or sickness, all such distributions which do not exceed the contributions of the employer plus earnings thereon are provided by employer contributions.

(3) Any employee contributions that are treated under subparagraph (2) of this paragraph as used to provide accident or health benefits shall not be included for any purpose under section 72 as employee contributions or as aggregate premiums or other consideration paid. Thus, in the case of a pension plan, or in the case of a profit-sharing plan providing that a portion of the amount standing to the account of each participant will be used to purchase accident or health insurance, any employee whose contributions are so used must make the adjustment provided by this subparagraph irrespective of whether such employee receives any accident or health benefits under such plan. However, in the case of a profit-sharing plan providing for periodic distributions from the account of a participant during any absence from work because of a personal injury or sickness, an adjustment under this subparagraph is required only when an employee receives distributions in excess of the employer contributions and earnings thereon or receives distributions consisting in whole or in part of his own contributions.

(4) If any of the employee contributions are treated under subparagraph (2) of this paragraph as used to provide any of the accident or health benefits, the portion of the benefits attributable to employee contributions shall be determined in accordance with § 1.105-1. Any accident or health benefits that are excludable under section 104(a)(3) shall not be included in the expected return for purposes of section 72.

(d) ***Accident or health benefits attributable to employer contributions.*** Any amounts received as accident or health benefits and not attributable to contributions of the employee are includible in gross income except to the extent that the amounts are excludable from gross income under section 105(b) or (c) and the regulations under those sections. See § 1.402(a)-1(e) for rules relating to the use of a qualified plan under section 401(a) to pay premiums for accident or health insurance.

(e) ***Other benefits under the plan.*** The taxability of amounts that are received under a plan to which this section applies and that are not accident or health benefits is determined under section 72 (or, in the case of certain total distributions, under section 402(a)(2) or section 403(a)(2)) without regard to any exclusion or inclusion of accident or health benefits under sections 104 and 105. For example, the investment in the contract or aggregate premiums paid is determined without regard to the exclusion of any amount under section 104 or 105, and the annuity starting date is determined without regard to the receipt of any accident or health benefits. However, if any employee contributions are used to provide any accident or health benefits, the investment in the contract or aggregate premiums paid must be adjusted as provided in paragraph (c)(3) of this section.

(f) [Reserved]

(g) ***Payments to or on behalf of a self-employed individual.*** A self-employed individual is not considered an employee for purposes of section 105, relating to amounts received by employees under accident and health plans, nor for purposes of excluding under section 104(a)(3) amounts received by him under an accident and health plan as referred to in section 105(e). See section 105(g) and paragraph (a) of § 1.105-1. Therefore, the other paragraphs of this section are not applicable to amounts received by or on behalf of a self-employed individual. Except where accident or health benefits are provided through an insurance contract or an arrangement having the effect of insurance, all amounts received by or on behalf of a self-employed individual from a plan described in section 401(a) and exempt under section 501(a) or a plan described in section 403(a) shall be taxed as otherwise provided in section 72, 402, or 403. If the accident or health benefits are paid under an insurance contract or under an arrangement having the effect of insurance, section 104(a)(3) shall apply. Section 72 shall not apply to any amounts received under such circumstances.

(h) ***Medical benefits for retired employees, etc.*** See § 1.402(a)-1(e)(2) for rules relating to the payment of medical benefits described in section 401(h) under a qualified pension or annuity plan.

(i) ***Special rules*** —

(1) ***In general.*** For purposes of section 72(b) and (d) and this section, the taxpayer must maintain such records as are necessary to substantiate the amount treated as an investment in the taxpayer's annuity contract.

(2) ***Delegation to Commissioner.*** The Commissioner may prescribe a form and instructions with respect to the taxpayer's past and current treatment of amounts received under section 72 or 105, and the taxpayer's computation, or recomputation, of the taxpayer's investment in his or her annuity contract. This form may be required to be filed with the taxpayer's returns for years in which the amounts are excluded under section 72 or 105.

[T.D. 6500, 25 FR 11402, Nov. 26, 1960, as amended by T.D. 6676, 28 FR 10135, Sept. 17, 1963; T.D. 6722, 29 FR 5069, Apr. 14, 1964; T.D. 6770, 29 FR 15366, Nov. 17, 1964; T.D. 7352, 40 FR 16664, Apr. 14, 1975; T.D. 9665, 79 FR 26841, May 12, 2014; T.D. 9849, 84 FR 9233, Mar. 14, 2019]

§ 1.72-16 Life insurance contracts purchased under qualified employee plans.

(a) ***Applicability of section.*** This section provides rules for the tax treatment of premiums paid under qualified pension, annuity, or profit-sharing plans for the purchase of life insurance contracts and rules for the tax treatment of the proceeds of such a life insurance contract and of annuity contracts purchased under

such plans. For purposes of this section, the term "life insurance contract" means a retirement income, an endowment, or other contract providing life insurance protection. The rules of this section apply to plans covering only common-law employees as well as to plans covering self-employed individuals.

(b) ***Treatment of cost of life insurance protection.***

(1) The rules of this paragraph are applicable to any life insurance contract—

(i) Purchased as a part of a plan described in section 403(a), or

(ii) Purchased by a trust described in section 401(a) which is exempt from tax under section 501(a) if the proceeds of such contract are payable directly or indirectly to a participant in such trust or to a beneficiary of such participant.

The proceeds of a contract described in subdivision (ii) of this subparagraph will be considered payable indirectly to a participant or beneficiary of such participant where they are payable to the trustee but under the terms of the plan the trustee is required to pay over all of such proceeds to the beneficiary.

(2) If under a plan or trust described in subparagraph (1) of this paragraph, amounts which were allowed as a deduction under section 404, or earnings of the trust, are applied toward the purchase of a life insurance contract described in subparagraph (1) of this paragraph, the cost of the life insurance protection under such contract shall be included in the gross income of the participant for the taxable year or years in which such contributions or earnings are so applied.

(3) If the amount payable upon death at any time during the year exceeds the cash value of the insurance policy at the end of the year, the entire amount of such excess is considered current life insurance protection. The cost of such insurance will be considered to be a reasonable net premium cost, as determined by the Commissioner, for such amount of insurance for the appropriate period.

(4) The amount includible in the gross income of the employee under this paragraph shall be considered as premiums or other consideration paid or contributed by the employee only with respect to any benefits attributable to the contract (within the meaning of paragraph (a)(3) of § 1.72-2) providing the life insurance protection. However, if under the rules of this paragraph an owner-employee is required to include any amounts in his gross income, such amounts shall not in any case be treated as part of his investment in the contract.

(5) The determination of the cost of life insurance protection may be illustrated by the following example:

Example. An annual premium policy purchased by a qualified trust for a common-law employee provides an annuity of $100 per month upon retirement at age 65, with a minimum death benefit of $10,000. The insurance payable if death occurred in the first year would be $10,000. The cash value at the end of the first year is 0. The net insurance is therefore $10,000 minus 0, or $10,000. Assuming that the Commissioner has determined that a reasonable net premium cost for the employee's age is $5.85 per $1,000, the premium for $10,000 of life insurance is therefore $58.50, and this is the amount to be reported as income by the employee for his taxable year in which the premium is paid. The balance of the premium is the amount contributed for the annuity, which is not taxable to the employee under a plan meeting the requirements of section 401(a), except as provided under section 402(a). Assuming that the

cash value at the end of the second year is $500, the net insurance would then be $9,500 for the second year. With a net 1-year term rate of $6.30 for the employee's age in the second year, the amount to be reported as income to the employee would be $59.85.

(6) This paragraph shall not apply if the trust has a right under any circumstances to retain any part of the proceeds of the life insurance contract. But see paragraph (c)(4) of this section relating to the taxability of the distribution of such proceeds to a beneficiary.

(c) ***Treatment of proceeds of life insurance and annuity contracts.***

(1) If under a qualified pension, annuity, or profit-sharing plan, there is purchased either—

(i) A life insurance contract described in paragraph (b)(1) of this section, and the employee either paid the cost of the insurance or was taxable on the cost of the insurance under paragraph (b) of this section, or

(ii) An annuity contract,

the amounts payable under any such contract by reason of the death of the employee are taxable under the rules of subparagraph (2) of this paragraph, except in the case of a joint and survivor annuity.

(2)

(i) In the case of an annuity contract, the death benefit is the accumulation of the premiums (plus earnings thereon) which is intended to fund pension or other deferred benefits under a pension, annuity, or profit-sharing plan. Such death benefits are not in the nature of life insurance and are not excludable from gross income under section 101(a).

(ii) In the case of a life insurance contract under which there is a reserve accumulation which is intended to fund pension or other deferred benefits under a pension, annuity, or profit-sharing plan, such reserve accumulation constitutes the source of the cash value of the contract and approximates the amount of such cash value. The portion of the proceeds paid upon the death of the insured employee which is equal to the cash value immediately before death is not excludable from gross income under section 101(a). The remaining portion, if any, of the proceeds paid to the beneficiary by reason of the death of the insured employee—that is, the amount in excess of the cash value—constitutes current insurance protection and is excludable under section 101(a).

(iii) The death benefit under an annuity contract, or the portion of the death proceeds under a life insurance contract which is equal to the cash value of the contract immediately before death, constitutes a distribution under the plan consisting in whole or in part of deferred compensation and is taxable to the beneficiary in accordance with section 72(m)(3) and the provisions of this paragraph, except to the extent that the limited exclusion from income provided in section 101(b) is applicable.

(iv) In the case of a life insurance contract under which the benefits are paid at a date or dates later than the death of the employee, section 101(d) is applicable only to the portion of the benefits which is attributable to the amount excludable under section 101(a). The portion of such benefits which is attributable to the cash value of the contract immediately before death is taxable under section 72, and in such case, any amount excludable under section 101(b) is treated as additional consideration paid by the employee in accordance with section 101(b)(2)(D).

(3) The application of the rules under subparagraph (2) of this paragraph with respect to the taxability of proceeds of a life insurance contract paid by reason of the death of an insured common-law employee who has paid no contributions under the plan is illustrated by the following examples:

Example 1.

Total face amount of the contract payable in a lump sum at time of death	$25,000
Cash value of the contract immediately before death	11,000
Excess over cash value, excludable under section 101(a)	14,000
Cash value subject to limited exclusion under section 101(b)	11,000
Excludable under section 101(b) (assuming that there is no other death benefit paid by or on behalf of any employer with respect to the employee)	5,000
Balance taxable in accordance with section 402(a)(2) or 403(a)(2) (assuming a total distribution in one taxable year of the distributee)	6,000
Portion of premiums taxed to employee under the provisions of paragraph (b) of this section and considered as contributions of the employee	940
Balance taxable as long-term capital gain	5,060

Example 2. The facts are the same as in example (1), except that the contract provides that the beneficiary may elect within 60 days after the death of the employee either to take the $25,000 or to receive 10 annual installments of $3,000 each, and the beneficiary elects to receive the 10 installments. In addition, the employee's rights to the cash value immediately before his death were forfeitable at least to the extent of $5,000. Section 101(d) is applicable to the amount excludable under section 101(a), that is, $14,000. The portion of each annual installment of $3,000 which is attributable to this $14,000 is determined by allocating each installment in accordance with the ratio which this $14,000 bears to the total amount which was payable at death ($25,000). Accordingly, the portion of each annual installment which is subject to section 101(d) is $1,680 ($^{14}/_{25}$ of $3,000), of which $1,400 ($^{1}/_{10}$ of $14,000) is excludable under section 101(a), and the remaining $280 is includible in the gross income of the beneficiary. However, if the beneficiary is a surviving spouse as defined in section 101(d)(3), the exclusion provided by section 101(d)(1)(B) is applicable to such $280. The remaining portion of each annual $3,000 installment, $1,320, is attributable to the cash value of the contract and is treated under section 72, as follows:

Amount actually contributed by the employee	0
Amount considered contributed by employee by reason of section 101(b)	$5,000

Portion of premiums taxed to employee under the provisions of paragraph (b) of this section and considered as contributions of the employee	$940
Investment in the contract	$5,940
Expected return, 10 × $1,320	$13,200
Exclusion ratio, $5,940 ÷ $13,200	0.45
Annual exclusion, 0.45 × $1,320	$594

Accordingly, $594 of the $1,320 portion of each annual installment is excludable each year under section 72, and the remaining $726 is includible. Thus, if the beneficiary is not a surviving spouse, a total of $1,006 ($280 plus $726) of each annual $3,000 installment is includible in income each year. If the beneficiary is a surviving spouse, and can exclude all of the $280 under section 101(d)(1)(B), the amount includible in gross income each year is $726 of each annual $3,000 installment.

(4) If an employee neither paid the total cost of the life insurance protection provided under a life insurance contract, nor was taxable under paragraph (b) of this section with respect thereto, no part of the proceeds of such a contract which are paid to the beneficiaries of the employee as a death benefit is excludable under section 101(a). The entire distribution is taxable to the beneficiaries under section 402(a) or 403(a) except to the extent that a limited exclusion may be allowable under section 101(b).

[T.D. 6676, 28 FR 10135, Sept. 17, 1963]

§ 1.72-17 Special rules applicable to owner-employees.

(a) ***In general.*** Under section 401(c) and section 403(a), certain self-employed individuals may participate in qualified pension, annuity, and profit-sharing plans, and the amounts received by such individuals from such plans are taxable under section 72. Section 72(m) and this section contain special rules for the taxation of amounts received from qualified pension, profit-sharing, or annuity plans covering an owner-employee. For purposes of section 72 and the regulations thereunder, the term “employee” shall include the self-employed individual who is treated as an employee by section 401(c)(1) (see paragraph (b) of § 1.401-10), and the term “owner-employee” has the meaning assigned to it in section 401(c)(3) (see paragraph (d) of § 1.401-10). See also paragraph (a)(2) of § 1.401-10 for the rule for determining when a plan covers an owner-employee. For purposes of this section, a self-employed individual may not treat as consideration for the contract contributed by the employee any contributions under the plan for which deductions were allowed under section 404 and which, consequently, are considered employer contributions.

(b) ***Certain amounts received before annuity starting date.***

(1) The rules of this paragraph are applicable to amounts received from a qualified pension, profit-sharing, or annuity plan by an employee (or his beneficiary) who is or was an owner-employee with respect to such plan when such amounts—

(i) Are received before the annuity starting date; and

(ii) Are not received as an annuity.

For the definition of annuity starting date, see paragraph (b) of § 1.72-4 and subparagraph (4) of this paragraph. As to what constitutes amounts not received as an annuity, see paragraphs (c) and (d) of § 1.72-11.

(2) Amounts to which this paragraph applies shall be included in the recipient's gross income for the taxable year in which received. However, the sum of the amounts so included under this subparagraph in all taxable years shall not exceed the aggregate deductions allowed under section 404 for premiums or other consideration paid under the plan on behalf of the employee while he was an owner-employee, including any such deductions taken in the taxable year of receipt.

(3) Any amounts to which this paragraph applies and which are not includible in gross income under the rules of subparagraph (2) of this paragraph shall be subject to the provisions of section 72(e) and § 1.72-11. However, for taxable years beginning before January 1, 1964, section 72(e)(3), as in effect before such date, shall not apply to such amounts. For taxable years beginning after December 31, 1963, such amounts (other than amounts subject to a penalty under section 72(m)(5) and paragraph (e) of this section) may be taken into account in computations under sections 1301 through 1305 (relating to income averaging).

(4) Under section 401(d)(4), a qualified pension, profit-sharing, or annuity plan may not provide for distributions to an owner-employee before he reaches age $59^1/_2$ years, except in the case of his earlier disability. Therefore, in the case of a distribution from a qualified plan to an individual for whom contributions have been made to the plan as an owner-employee, the annuity starting date cannot be prior to the time such individual attains the age $59^1/_2$ years unless he is entitled to benefits before reaching such age because of his disability. For taxable years beginning after December 31, 1966, see section 72(m)(7) and paragraph (f) of this section for the meaning of disabled. For taxable years beginning before January 1, 1967, see section 213(g)(3) for the meaning of disabled.

(5) The rules of this paragraph are not applicable to amounts credited to an individual in his capacity as a policy-holder of an annuity, endowment, or life insurance contract which are in the nature of a dividend or refund of premium, and which are applied in accordance with paragraph (a)(4) of § 1.404(a)-8 towards the purchase of benefits under the policy.

(6) The rules of this paragraph may be illustrated by the following example:

Example. B, a self-employed individual, received $8,000 as a distribution under a qualified pension plan before the annuity starting date. At the time of such distribution, $10,000 had been contributed (the whole amount being allowed as a deduction) under the plan on behalf of such individual while he was a common-law employee and $5,000 had been contributed under the plan on his behalf while he was an owner-employee, of which $2,500 was allowed as a deduction. In addition, B had contributed $1,000 on his own behalf as an employee under the plan. Of the $8,000, $2,500 (the amount allowed as a deduction with respect to contributions on behalf of the individual while he was an owner-employee) is includable in gross income under subparagraph (2) of this paragraph. With respect to the remaining $5,500, B has a basis of $3,500, consisting of the $2,500 contributed on his behalf while he was an owner-employee which was not allowed as a deduction and the $1,000 which B contributed as an employee. The difference between the $5,500 and B's basis of $3,500, or $2,000, is includable in gross income under section 72(e).

(c) ***Amounts paid for life, accident, health, or other insurance.*** Amounts used to purchase life, accident, health, or other insurance protection for an owner-employee shall not be taken into account in computing the following:

(1) The aggregate amount of premiums or other consideration paid for the contract for purposes of determining the investment in the contract under section 72(c)(1)(A) and § 1.72-6;

(2) The consideration for the contract contributed by the employee for purposes of section 72(d)(1) and § 1.72-13, which provide the method of taxing employees' annuities where the employee's contributions will be recoverable within 3 years; and

(3) The aggregate premiums or other consideration paid for purposes of section 72(e)(1)(B) and § 1.72-11, which provide the rules for taxing amounts not received as annuities prior to the annuity starting date.

The cost of such insurance protection will be considered to be a reasonable net premium cost, as determined by the Commissioner, for the appropriate period.

(d) ***Amounts constructively received.***

(1) If during any taxable year an owner-employee assigns or pledges (or agrees to assign or pledge) any portion of his interest in a trust described in section 401(a) which is exempt from tax under section 501(a), or any portion of the value of a contract purchased as part of a plan described in section 403(a), such portion shall be treated as having been received by such owner-employee as a distribution from the trust or as an amount received under the contract during such taxable year.

(2) If during any taxable year an owner-employee receives, either directly or indirectly, any amount from any insurance company as a loan under a contract purchased by a trust described in section 401(a) which is exempt from tax under section 501(a) or purchased as part of a plan described in section 403(a), and issued by such insurance company, such amount shall be treated as an amount received under the contract during such taxable year. An owner-employee will be considered to have received an amount under a contract if a premium, which is otherwise in default, is paid by the insurance company in the form of a loan against the cash surrender value of the contract. Further, an owner-employee will be considered to have received an amount to which this subparagraph applies if an amount is received from the issuer of a face-amount certificate as a loan under such a certificate purchased as part of a qualified trust or plan.

(e) ***Penalties applicable to certain amounts received by owner-employees.***

(1)

(i) The rules of this paragraph are applicable to amounts, to the extent includable in gross income, received from a trust described in section 401(a) or under a plan described in section 403(a) by or on behalf of an individual who is or has been an owner-employee with respect to such plan or trust—

(*a*) Which are received before the owner-employee reaches the age $59^{1}/_{2}$ years and which are attributable to contributions paid on behalf of such owner-employee (whether or not paid by him) while he was an owner-employee (see subdivision (ii) of this subparagraph),

(*b*) Which are in excess of the benefits provided for such owner-employee under the plan formula (see subdivision (iii) of this subparagraph), or

(*c*) Which are received by reason of a distribution of the owner-employee's entire interest under the provisions of section 401(e)(2)(E), relating to excess contributions on behalf of an owner-employee which are willfully made.

(ii) The amounts referred to in subdivision (i)(*a*) of this subparagraph do not include—

(*a*) Amounts received by reason of the owner-employee becoming disabled, or

(*b*) Amounts received by the owner-employee in his capacity as a policy-holder of an annuity, endowment, or life insurance contract which are in the nature of a dividend or similar distribution.

Amounts attributable to contributions paid on behalf of an owner-employee and which are paid to a person other than the owner-employee before the owner-employee dies or reaches the age $59^1/_2$ shall be considered received by the owner-employee for purposes of this paragraph. For taxable years beginning after December 31, 1966, see section 72(m)(7) and paragraph (f) of this section for the meaning of disabled. For taxable years beginning before January 1, 1967, see section 213(g)(3) for the meaning of disabled. For taxable years beginning after December 31, 1968, if an amount is not included in the amounts referred to in subdivision (i)(*a*) of this subparagraph solely by reason of the owner-employee becoming disabled and if a penalty would otherwise be applicable with respect to all or a portion of such amount, then for the taxable year in which such amount is received, there must be submitted with the owner-employee's income tax return a doctor's statement as to the impairment, and a statement by the owner-employee with respect to the effect of such impairment upon his substantial gainful activity and the date such impairment occurred. For taxable years which are subsequent to the first taxable year beginning after December 31, 1968, with respect to which the statements referred to in the preceding sentence are submitted, the owner-employee may, in lieu of such statements, submit a statement declaring the continued existence (without substantial diminution) of the impairment and its continued effect upon his substantial gainful activity.

(iii) This paragraph applies to amounts described in subdivision (i)(*b*) of this subparagraph (relating to excess benefits) even though a portion of such amounts may be attributable to contributions made on behalf of an individual while he was not an owner-employee and even though the amounts are received by his successor. However, these amounts do not include the portion of a distribution to which section 402(a)(2) or 403(a)(2) (relating to certain total distributions in one taxable year) applies.

(iv)

(*a*) For purposes of subdivision (i)(*a*) of this subparagraph, the portion of any distribution or payment attributable to contributions on behalf of an employee-participant while he was an owner-employee includes the contributions made on his behalf while he was an owner-employee and the increments in value attributable to such contributions.

(*b*) The increments in value of an individual's account may be allocated to contributions on his behalf while he was an owner-employee either by maintaining a separate account, or an accounting, which reflects the actual increment attributable to such contributions, or by the method described in (*c*) of this subdivision.

(*c*) Where an individual is covered under the same plan both as an owner-employee and as a nonowner-employee, the portion of the increment in value of his interest attributable to contributions made on his behalf while he was an owner-employee may be determined by

multiplying the total increment in value in his account by a fraction. The numerator of the fraction is the total contributions made on behalf of the individual as an owner-employee, weighted for the number of years that each contribution was in the plan. The denominator is the total contributions made on behalf of the individual, whether or not an owner-employee, weighted for the number of years each contribution was in the plan. The contributions are weighted for the number of years in the plan by multiplying each contribution by the number of years it was in the plan. For purposes of this computation, any forfeiture allocated to the account of the individual is treated as a contribution to the account made at the time so allocated.

(*d*) The method described in (*c*) of this subdivision may be illustrated by the following example:

Example. B was a member of the XYZ Partnership and a participant in the partnership's profit-sharing plan which was created in 1963. Until the end of 1967, B's interest in the partnership was less than 10 percent. On January 1, 1968, B obtained an interest in excess of 10 percent in the partnership and continued to participate in the profit-sharing plan until 1972. During 1972, prior to the time he attained the age of 59 1/2 years and during a time when he was not disabled, B withdrew his entire interest in the profit-sharing plan. At that time his interest was $15,000, $9,600 contributions and $5,400 increment attributable to the contributions. The portion of the increment attributable to contributions while B was an owner-employee is $667.80, determined as follows:

	A	B	C
	Contribution	**Number of years contribution was in trust—**	**Contribution weighted for years in trust (A × B)**
1972	$1,000	0	0
1971	800	1	800
1970	1,200	2	2,400
1969	600	3	1,800
1968	200	4	800
1967	400	5	2,000
1966	2,000	6	12,000
1965	1,000	7	7,000
1964	1,500	8	12,000
1963	900	9	8,100
Total	$9,600		46,900

Total weighted contributions as owner-employee (1968-1972)—5,800.

> Total weighted contributions—46,900.
>
> $5,400 × (5,800 ÷ 46,900) = $667.80

(2)

(i) If the aggregate of the amounts to which this paragraph applies received by any person in his taxable year equals or exceeds $2,500 the tax with respect to such amount shall be the greater of—

(*a*) The increase in tax attributable to the inclusion of the amounts so received in his gross income for the taxable year in which received, or

(*b*) 110 percent of the aggregate increase in taxes, for such taxable year and the four immediately preceding taxable years, which would have resulted if such amounts had been included in such person's gross income ratably over such taxable years. However, if deductions were allowed under section 404 for contributions to the plan on behalf of the individual as an owner-employee for less than four prior taxable years (whether or not consecutive), the number of immediately preceding taxable years taken into account shall be the number of prior taxable years in which such deductions were allowed.

(ii) If the aggregate of the amounts to which this paragraph applies received by any person in his taxable year is less than $2,500, the tax with respect to such amounts shall be 110 percent of the increase in tax which results from including such amounts in the person's gross income for the taxable year in which received.

(3)

(i) For purposes of making the ratable inclusion computations of subparagraph (2)(i) of this paragraph, the taxable income of the recipient for each taxable year involved (notwithstanding section 63, relating to definition of taxable income) shall be treated as being not less than the amount required to be treated as includible in the taxable year pursuant to the ratable inclusion.

(ii) For purposes of subparagraph (2)(i)(*a*) and (ii) of this paragraph, the recipient's taxable income (notwithstanding section 63, relating to definition of taxable income) shall be treated as being not less than the aggregate of the amounts to which this paragraph applies reduced by the deductions allowed the recipient for such taxable year under section 151 (relating to deductions for personal exemptions).

(iii) In any case in which the application of subdivision (i) or (ii) of this subparagraph results in an increase in taxable income for any taxable year, the resulting increase in taxes imposed by section 1 or 3 for such taxable year shall be reduced by the credits against tax provided by section 31 (tax withheld on wages) and section 39 (certain uses of gasoline and lubricating oil), but shall not be reduced by any other credits against tax.

(4) The application of the rules of subparagraph (2)(i) and (3) of this paragraph may be illustrated by the following example:

Example. B, a sole proprietor and a calendar-year basis taxpayer, established a qualified pension trust to which he made annual contributions for 10 years of 10 percent of his earned income. B withdrew his entire interest in the trust during 1973 when he was 55 years old and not disabled and for which, without regard to the distribution, he had a net operating loss and for which he is allowed under

section 151 a deduction for one personal exemption. The portion of the distribution includible in B's gross income is $25,750. In addition, B had a net operating loss for 1972. The other 3 taxable years involved in the computation under subparagraph (2)(i) of this paragraph were years of substantial income. For purposes of determining B's increase in tax attributable to the receipt of the $25,750 (before the application of the provisions of subparagraph (2)(i)(*b*) of this paragraph), B's taxable income for the year he received the $25,750 is treated, under subparagraph (3)(ii) of this paragraph, as being $25,000 ($25,750 minus $750, the amount of the deduction allowed for each personal exemption under section 151 for 1973). For purposes of determining whether 110 percent of the aggregate increase in taxes which would have resulted if 20 percent of the amount of the withdrawal had been included in B's gross income for the year of receipt and for each of the 4 preceding taxable years is greater (and thus is the amount of his increase in tax attributable to the receipt of the $25,750), B's taxable income for the taxable year of receipt, and for the immediately preceding taxable year, is treated, under subparagraph (3)(i) of this paragraph, as being $5,150 ($25,750 divided by 5).

(f) ***Meaning of disabled.***

(1) For taxable years beginning after December 31, 1966, section 72(m)(7) provides that an individual shall be considered to be disabled if he is unable to engage in any substantial gainful activity by reason of any medically determinable physical or mental impairment which can be expected to result in death or to be of long-continued and indefinite duration. In determining whether an individual's impairment makes him unable to engage in any substantial gainful activity, primary consideration shall be given to the nature and severity of his impairment. Consideration shall also be given to other factors such as the individual's education, training, and work experience. The substantial gainful activity to which section 72(m)(7) refers is the activity, or a comparable activity, in which the individual customarily engaged prior to the arising of the disability (or prior to retirement if the individual was retired at the time the disability arose).

(2) Whether or not the impairment in a particular case constitutes a disability is to be determined with reference to all the facts in the case. The following are examples of impairments which would ordinarily be considered as preventing substantial gainful activity:

(i) Loss of use of two limbs;

(ii) Certain progressive diseases which have resulted in the physical loss or atrophy of a limb, such as diabetes, multiple sclerosis, or Buerger's disease;

(iii) Diseases of the heart, lungs, or blood vessels which have resulted in major loss of heart or lung reserve as evidenced by X-ray, electrocardiogram, or other objective findings, so that despite medical treatment breathlessness, pain, or fatigue is produced on slight exertion, such as walking several blocks, using public transportation, or doing small chores;

(iv) Cancer which is inoperable and progressive;

(v) Damage to the brain or brain abnormality which has resulted in severe loss of judgment, intellect, orientation, or memory;

(vi) Mental diseases (e.g. psychosis or severe psychoneurosis) requiring continued institutionalization or constant supervision of the individual;

(vii) Loss or diminution of vision to the extent that the affected individual has a central visual acuity of no better than 20/200 in the better eye after best correction, or has a limitation in the fields of vision such that the widest diameter of the visual fields subtends an angle no greater than 20 degrees;

(viii) Permanent and total loss of speech;

(ix) Total deafness uncorrectible by a hearing aid.

The existence of one or more of the impairments described in this subparagraph (or of an impairment of greater severity) will not, however, in and of itself always permit a finding that an individual is disabled as defined in section 72(m)(7). Any impairment, whether of lesser or greater severity, must be evaluated in terms of whether it does in fact prevent the individual from engaging in his customary or any comparable substantial gainful activity.

(3) In order to meet the requirements of section 72(m)(7), an impairment must be expected either to continue for a long and indefinite period or to result in death. Ordinarily, a terminal illness because of disease or injury would result in disability. Indefinite is used in the sense that it cannot reasonably be anticipated that the impairment will, in the foreseeable future, be so diminished as no longer to prevent substantial gainful activity. For example, an individual who suffers a bone fracture which prevents him from working for an extended period of time will not be considered disabled, if his recovery can be expected in the foreseeable future; if the fracture persistently fails to knit, the individual would ordinarily be considered disabled.

(4) An impairment which is remediable does not constitute a disability within the meaning of section 72(m)(7). An individual will not be deemed disabled if, with reasonable effort and safety to himself, the impairment can be diminished to the extent that the individual will not be prevented by the impairment from engaging in his customary or any comparable substantial gainful activity.

(g) ***Years to which this section applies.*** This section applies to taxable years ending before September 3, 1974. For taxable years ending after September 2, 1974, see § 1.72-17A.

[T.D. 6676, 28 FR 10136, Sept. 17, 1963, as amended by T.D. 6885, 31 FR 7800, June 2, 1966; T.D. 6985, 33 FR 19811, Dec. 27, 1968; T.D. 7114, 36 FR 9018, May 18, 1971; T.D. 7636, 44 FR 47049, Aug. 10, 1979]

§ 1.72-17A Special rules applicable to employee annuities and distributions under deferred compensation plans to self-employed individuals and owner-employees.

(a) ***In general.*** Section 72(m) and this section contain special rules for the taxation of amounts received from qualified pension, profit-sharing, or annuity plans covering an owner-employee. This section applies to such amounts for taxable years of the recipient ending after September 2, 1974, unless another date is specified. For purposes of this section, the term “employee” shall include the self-employed individual who is treated as an employee by section 401(c)(1), and the term “owner-employee” has the meaning assigned to it in section 401(c)(3). Paragraph (b) of this section provides rules dealing with the computation of consideration paid by self-employed individuals and paragraph (c) of this section provides rules dealing with such computation when insurance is purchased for owner-employees. Paragraph (d) of this section provides rules for constructive receipt and, for purposes of these rules, treats as an owner-employee an individual for whose benefit an individual retirement account or annuity described in section 408 (a) or (b) is maintained after December 31, 1974. Paragraph (e) of this section provides rules for penalties provided by section 72(m)(5) with respect to certain distributions received by owner-employees

or their successors. Paragraph (f) of this section provides rules for determining whether a person is disabled within the meaning of section 72(m)(7). See § 1.72-16, relating to life insurance contracts purchased under qualified employee plans, for rules under section 72(m)(3).

(b) ***Computation of consideration paid by self-employed individuals.*** Under section 72(m)(2), consideration paid or contributed for the contract by any self-employed individual shall for purposes of section 72 be deemed not to include any contributions paid or contributed under a plan described in paragraph (a), or any other plan of deferred compensation described in section 404(a) (whether or not qualified), if the contributions are—

(1) Paid under such plan with respect to a time during which the employee was an employee only by reason of sections 401(c)(1) and 404(a)(8), and

(2) Deductible under section 404 by the employer, including an employer within the meaning of sections 401(c)(4) and 404(a)(8), of such self-employed individual at the time of such payment, or subsequent to such time of payment.

For purposes of this paragraph the term “consideration paid or contributed for the contract” has the same meaning as under subparagraphs (1), (2), and (3) of paragraph (c) of this section.

(c) ***Amounts paid for life, accident, health, or other insurance.*** Under section 72(m)(2), amounts used to purchase life, accident, health, or other insurance protection for an owner-employee shall not be taken into account in computing the following:

(1) The aggregate amount of premiums or other consideration paid for the contract for purposes of determining the investment in the contract under section 72(c)(1)(A) and § 1.72-6;

(2) The consideration for the contract contributed by the employee for purposes of section 72(d)(1) and § 1.72-13, which provide the method of taxing employee's annuities where the employee's contributions will be recoverable within 3 years; and

(3) The aggregate premiums or other consideration paid for purposes of section 72(e)(1)(B) and § 1.72-11, which provide the rules for taxing amounts not received as annuities prior to the annuity starting date.

The cost of such insurance protection will be considered to be a reasonable net premium cost, as determined by the Commissioner, for the appropriate period.

(d) ***Amounts constructively received.***

(1) The references in this paragraph (d) to section 72(m)(4) are to that section as in effect on August 13, 1982. Section 236(b)(1) of the Tax Equity and Fiscal Responsibility Act of 1982 (96 Stat. 324) repealed section 72(m)(4), generally effective for assignments, pledges and loans made after August 13, 1982, and added section 72(p). See section 72(p) and § 1.72(p)-1 for rules governing the income tax treatment of certain assignments, pledges and loans from qualified employer plans made after August 13, 1982.

(2) Under section 72(m)(4)(A), if during any taxable year an owner-employee assigns or pledges (or agrees to assign or pledge) any portion of his interest in a trust described in section 401(a) which is exempt from tax under section 501(a), or any portion of the value of a contract purchased as part of a plan described in section 403(a), such portion shall be treated as having been received by such owner-employee as a distribution from the trust or as an amount received under the contract during such taxable year.

(3)

(i) Under paragraphs (4)(A) and (6) of section 72(m), if after December 31, 1974, during any taxable year an individual for whose benefit an individual retirement account or annuity described in section 408 (a) or (b) is maintained assigns or pledges (or agrees to assign or pledge) any portion of his interest in such account or annuity, such portion shall be treated as having been received by such individual as a distribution from such account or trust during such taxable year. See subsections (d) and (f) of section 408 and the regulations thereunder for the tax treatment of an amount treated as a distribution under this subparagraph.

(ii) Notwithstanding subdivision (i) of this subparagraph, if an individual retirement account or annuity, or portion thereof, is subject to the additional tax imposed by section 408(f), that amount shall be deemed not to be a distribution under section 72(m)(4)(A) and subdivision (i) of this subparagraph.

(4) Under section 72(m)(4)(B), if during any taxable year an owner-employee receives, either directly or indirectly, any amount from any insurance company as a loan under a contract purchased by a trust described in section 401(a) which is exempt from tax under section 501(a) or purchased as part of a plan described in section 403(a), and issued by such insurance company, such amount shall be treated as an amount received under the contract during such taxable year. An owner-employee will be considered to have received an amount under a contract if a premium, which is otherwise in default, is paid by the insurance company in the form of a loan against the cash surrender value of the contract. Further, an owner-employee will be considered to have received an amount to which this subparagraph applies if an amount is received from the issuer of a face-amount certificate as a loan under such a certificate purchased as part of a qualified trust or plan.

(e) ***Penalties applicable to certain amounts received with respect to owner-employees under section 72(m)(5).***

(1)

(i) For taxable years of the recipient beginning after December 31, 1975, if any person receives an amount to which subparagraph (2) of this paragraph applies, his tax under Chapter 1 for the taxable year in which such amount is received shall be increased by an amount equal to 10 percent of the portion of the amount so received which is includible in his gross income for such taxable year.

(ii) For taxable years of the recipient beginning before January 1, 1976, see subparagraph (3) of this paragraph.

(2)

(i) This subparagraph is applicable to amounts, to the extent includible in gross income, received from a qualified trust described in section 401(a) or under a plan described in section 403(a) by or on behalf of an individual who is or has been an owner-employee with respect to such trust or plan—

(A) Which are received before the owner-employee reaches the age of $59^{1}/_{2}$ years, and which are attributable to contributions paid on behalf of such owner-employee by his employer (that is employer contributions within the meaning of section 401(c)(5)(A) and the increments in value attributable to such employer contributions) and the increments in value attributable to contributions made by him as an owner-employee while he was an

owner-employee (that is, the increments attributable to owner-employee contributions within the meaning of section 401(c)(5)(B), but not such contributions; see subdivision (ii) of this subparagraph).

(B) Which are in excess of the benefits provided for such owner-employee under the plan formula (see subdivision (iii) of this subparagraph), or

(C) Which are subject to the transitional rules with respect to willful excess contributions made on behalf of an owner-employee in his employer's taxable years which begin before January 1, 1976 (see subdivision (v) of this subparagraph).

(ii) The amounts referred to in subdivision (i)(A) of this subparagraph do not include—

(A) Amounts received by reason of the owner-employee becoming disabled (see paragraph (f) of this section).

(B) Amounts received by the owner-employee in his capacity as a policyholder of an annuity, endowment, or life insurance contract which are in the nature of a dividend or similar distribution, or

(C) Amounts attributable to contributions (and increments in value thereon) made for years for which the recipient was not an owner-employee.

If an amount is not included in the amounts referred to in subdivision (i)(A) of this subparagraph solely by reason of the owner-employee's becoming disabled and if a penalty would otherwise be applicable with respect to all or a portion of such amount, then for the owner-employee's taxable year in which such amount is received, there must be submitted with his income tax return a doctor's statement as to the impairment, and a statement by the owner-employee with respect to the effect of such impairment upon his substantial gainful activity and the date such impairment occurred. For taxable years which are subsequent to the first taxable year with respect to which the statements referred to in the preceding sentence are submitted, the owner-employee may, in lieu of such statements, submit a statement declaring the continued existence (without substantial diminution) of the impairment and its continued effect upon his substantial gainful activity.

(iii) This subparagraph applies to amounts described in subdivision (i)(B) of this subparagraph (relating to benefits in excess of the plan formula) even though a portion of such amounts may be attributable to contributions made on behalf of an individual while he was not an owner-employee and even if he is deceased and the amounts are received by his successor.

(iv)

(A) The rules described in subdivisions (i)(A) and (iii) of this subparagraph, relating to the treatment under section 72(m)(5)(A)(i) of certain premature distributions, may be illustrated by the following example:

> *Example.* (1) A was a member of the X partnership, consisting of partners A through I, and a participant in the partnership's qualified profit-sharing plan which was established on January 1, 1972. A's taxable years, the X partnership's taxable years, the plan years, and other relevant years are all calendar years at all relevant times. For the three calendar years, 1972 through 1974, A was an owner-employee

in the X partnership. On January 1, 1975, new partners J and K became partners in the X partnership, and as of that date, each of partners A through K held a $^{1}/_{11}$ interest in the capital and profits of the X partnership. On that date, A became a partner who was not an owner-employee. A continued in this status for the 2 calendar years 1975 and 1976. On January 1, 1977, when A was 50 years old and not disabled, he liquidated his interest in the X partnership and became an employee of an unrelated employer. On that date, A received a distribution representing his entire interest in the X partnership's plan of $54,000 cash in violation of the plan provision required by section 401(d)(4)(B). As of that date, the distribution was attributable to the following sources and times, computed by the plan in a manner consistent with the subparagraph:

	A	B	C	D
Calendar years	**X contributions on behalf of A deductible under sec. 404**	**A's contributions made as an employee**	**Increments in value attributable to column A yearly contributions**	**Increments in value attributable to column B yearly contributions**
1977	0	0	0	0
1976	$7,500	$2,500	$900	$300
1975	7,500	2,500	4,000	1,300
1974	7,500	2,500	1,800	700
1973	2,500	2,500	1,200	1,200
1972	2,500	2,500	1,300	1,300
Totals	27,500	12,500	9,200	4,800

(2) The amount of the $54,000 distribution to which subdivision (i)(A) of this subparagraph applies is $20,000, computed as follows:

X contributions on behalf of A made in years A was an owner-employee:	
1974	$7,500
1973	2,500
1972	2,500
Total	12,500

Increments in value attributable to such contributions:	
1974	1,800
1973	1,200
1972	1,300
Total	4,300
Increments in value attributable to contributions made by A as an employee for years in which he was an owner-employee:	
1974	700
1973	1,200
1972	1,300
Total	3,200
Grand total	20,000

In this example, the $20,000 amount computed above would be includible in A's gross income for 1977 and would be subject to the 10 percent tax described in subparagraph (1)(i) of this paragraph.

(*3*) Subdivision (i)(A) of this subparagraph does not apply to the contributions made by X on behalf of A for 1976 and 1975 ($7,500 each year, totaling $15,000) nor to the increments in value attributable to those contributions ($900 for 1976 and $4,000 for 1975, totaling $4,900), because A was not an owner-employee with respect to these two years, 1976 and 1975, on account of which these employer contributions were made. For the same reason, subdivision (i)(A) of this subparagraph does not apply to the increments in value attributable to A's contributions for 1976 and 1975 ($300 and $1,300, respectively, totaling $1,600). See section 4972(c) for the amount of employee contributions which is permitted to be contributed by an owner-employee (as an employee) without subjecting an owner-employee to the tax on excess contributions.

(*4*) Subdivision (i)(A) of this subparagraph does not apply to the contributions made by A, as an employee during the years when he was an owner-employee ($2,500 during each of the years 1972, 1973, and 1974, totaling $7,500), because the distribution was received in a taxable year of A ending after September 2, 1974; see subparagraph (3) of this paragraph. Furthermore, because the distribution of the amount of A's contributions ($12,500) constitutes consideration for the contract paid by A for purposes of section 72, the $7,500 amount described in the preceding sentence is not includible in his gross income, and that amount is not subject to the rules of this subparagraph; see subdivision (i) of this subparagraph, and paragraphs

(b) and (c) of this section.

(B) The increments in value of an individual's account may be allocated to contributions on his behalf, by his employer or by such individual as an owner-employee, while he was an owner-employee either by maintaining a separate account, or an accounting, which reflects the actual increment attributable to such contributions, or by the method described in (C) of this subdivision.

(C) Where an individual is covered under the same plan both as an owner-employee and as a non-owner-employee, the portion of the increment in value of his interest attributable to contributions made on his behalf while he was an owner-employee may be determined by multiplying the total increment in value in his account by a fraction. The numerator of the fraction is the total contributions made on behalf of the individual as an owner-employee, weighted for the number of years that each contribution was in the plan. The denominator is the total contributions made on behalf of the individual, whether or not as an owner-employee, weighted for the number of years each contribution was in the plan. The contributions are weighted for the number of years in the plan by multiplying each contribution by the number of years it was in the plan. For purposes of this computation, any forfeiture allocated to the account of the individual is treated as a contribution to the account made at the time so allocated. For purposes of this computation, where the individual has received a prior distribution from such account, an appropriate adjustment must be made to reflect such prior distribution.

(D) The method described in (C) of this subdivision may be illustrated by the following example:

Example. B was a member of the XYZ Partnership and a participant in the partnership's profit-sharing plan which was created in 1973. Until the end of 1977, B's interest in the partnership was less than 10 percent. On January 1, 1978, B obtained an interest in excess of 10 percent in the partnership and continued to participate in the profit-sharing plan until 1982. During 1982, prior to the time he attained the age of $59^{1}/_{2}$ years and during a time when he was not disabled, B, who had not received any prior plan distributions, withdrew his entire interest in the profit-sharing plan. At the time his interest was $15,000, $9,600 contributions and $5,400 increment attributable to the contributions. The portion of the increment attributable to contributions while B was an owner-employee is $667.80, determined as follows:

	A	B	C
	Contribution	**Number of years contribution was in trust**	**Contribution weighted for years in trust (A × B)**
1982	$1,000	0	0

	A	B	C
	Contribution	Number of years contribution was in trust	Contribution weighted for years in trust (A × B)
1981	800	1	800
1980	1,200	2	2,400
1979	600	3	1,800
1978	200	4	800
1977	400	5	2,000
1976	2,000	6	12,000
1975	1,000	7	7,000
1974	1,500	8	12,000
1973	900	9	8,100
Total	9,600		46,900

Total weighted contributions as owner-employee (1978-1982) = $5,800.

Total weighted contributions = $46,900.

$$\$5{,}400 \times (5{,}800 \div 46{,}900) = \$667.80$$

(E)

(*1*) The rules set forth in subdivision (iv)(E)(*2*) of this subparagraph shall be used to determine the amounts to which subdivision (i)(A) of this subparagraph applies in the case of a distribution of less than the entire balance of the employee's account from a plan in which he has been covered at different times as owner-employee or as an employee other than an owner-employee.

(*2*) Distributions or payments from a plan for any employee taxable year shall be deemed to be attributable to contributions to the plan, and increments thereon, in the following order—

(*i*) Excess contributions, within the meaning of section 4972 (b), designated as such by the trustee;

(*ii*) Employee contributions;

(*iii*) Employer contributions, other than those described in (*i*), and the increments in value attributable to the employee's own contributions and his employer's contributions on the basis of the taxable years of his employer in succeeding order of time whether or not the employee was an owner-employee for any such year.

For purposes of (*iii*) of this subdivision, the time of contributions made on the basis of any employer taxable year shall take into account the rule specified in section 404(a)(6), relating to time when contributions deemed made.

(v) The amounts referred to in subdivision (i)(C) of this subparagraph are amounts which are received by reason of a distribution of the owner-employee's entire interest under the provisions of section 401(e)(2)(E), as in effect on September 1, 1974, relating to excess contributions on behalf of an owner-employee which are willfully made. Notwithstanding the preceding sentence, an owner-employee's entire interest in all plans with respect to which he is an owner-employee (within the meaning of subsections (d)(8)(C) and (e)(2)(E)(ii) of section 401, as in effect on September 1, 1974) does not include any distribution or payment attributable to his employer's contributions or his own contributions made with respect to his employer's taxable years beginning after December 31, 1975. However, his entire interest in all plans does include all of the distribution or payment attributable to his employer's contributions and his own contributions made with respect to all of his employer's taxable years beginning before January 1, 1976, if any portion thereof is attributable in whole or in part to such a willful excess contribution and such entire interest is received because of a willful excess contribution pursuant to section 401(e)(2)(E)(ii). A distribution or payment is described in the preceding sentence even though it is received in an owner-employee's taxable year beginning after December 31, 1975. For purposes of computing the increments in value attributable to employer taxable years which begin before January 1, 1976, and such increments attributable to such years beginning after December 31, 1975, the rules specified in subdivision (iv)(B), (C), (D), and (E) of this subparagraph shall be applied to the extent applicable.

(3)

(i) For taxable years of the recipient beginning before January 1, 1976, the tax with respect to amounts to which subparagraph (2) of this paragraph applies shall be computed under subparagraphs (B), (C), (D), and (E) of section 72(m)(5) as such subparagraphs were in effect prior to the amendments made by subsections (g)(1) and (2)(A) of section 2001 of the Employee Retirement Income Security Act of 1974 (88 Stat. 957) except as provided in subdivisions (ii) and (iii) of this subparagraph (see paragraph (e) of § 1.72-17). For purposes of the preceding sentence, amounts to which subparagraph (2) of this paragraph applies in the case of an amount described in section 72(m)(5)(A)(i) shall be determined under subdivisions (i)(*a*) and (ii) of § 1.72-17(e)(1), except as provided in subdivision (ii) of this subparagraph. For purposes of the first sentence of this subdivision, amounts to which subparagraph (2) of this paragraph applies in the case of an amount described in section 72(m)(5)(A)(ii) shall be determined under subdivisions (i)(*b*) and (iii) of § 1.72-17(e)(1), except as provided in subdivision (iii) of this subparagraph.

(ii) For purposes of applying section 72(m)(5)(A)(i), after the amendment made by section 2001(h)(3) of such Act, and subdivisions (i)(*a*) and (ii) of § 1.72-17(e)(1), to a distribution or payment received in recipient taxable years ending after September 2, 1974, and beginning before January 1, 1976, with respect to contributions made on behalf of an owner-employee which were made by him as an owner-employee (that is, employee contributions within the meaning of section 401(c)(5)(B)) the portion of any distribution or payment attributable to such contributions shall not include such contributions but shall include the increments in value attributable to such contributions.

(iii) For purposes of applying section 72(m)(5)(D) and subdivisions (i)(*b*) and (iii) of § 1.72-17(e)(1) to recipient taxable years beginning after December 31, 1973, and beginning before January 1, 1976, in the case of distributions or payments made after December 31, 1973, the amounts to which section 402 (a)(2) or 403(a)(2) applies after the amendments made by section 2005(b)

(1) and (2) of such Act (88 Stat. 990 and 991) (which are amounts to which subdivision (i)(*b*) of § 1.72-17(e)(1) does not apply) shall be deemed to be the amount which is treated as a gain from the sale or exchange of a capital asset held for more than 6 months under either of such sections.

(f) ***Meaning of disabled.***

(1) Section 72(m)(7) provides that an individual shall be considered to be disabled if he is unable to engage in any substantial gainful activity by reason of any medically determinable physical or mental impairment which can be expected to result in death or to be of long-continued and indefinite duration. In determining whether an individual's impairment makes him unable to engage in any substantial gainful activity, primary consideration shall be given to the nature and severity of his impairment. Consideration shall also be given to other factors such as the individual's education, training, and work experience. The substantial gainful activity to which section 72(m)(7) refers is the activity, or a comparable activity, in which the individual customarily engaged prior to the arising of the disability or prior to retirement if the individual was retired at the time the disability arose.

(2) Whether or not the impairment in a particular case constitutes a disability is to be determined with reference to all the facts in the case. The following are examples of impairments which would ordinarily be considered as preventing substantial gainful activity:

(i) Loss of use of two limbs;

(ii) Certain progressive diseases which have resulted in the physical loss or atrophy of a limb, such as diabetes, multiple sclerosis, or Buerger's disease;

(iii) Diseases of the heart, lungs, or blood vessels which have resulted in major loss of heart or lung reserve as evidenced by X-ray, electrocardiogram, or other objective findings, so that despite medical treatment breathlessness, pain, or fatigue is produced on slight exertion, such as walking several blocks, using public transportation, or doing small chores;

(iv) Cancer which is inoperable and progressive;

(v) Damage to the brain or brain abnormality which has resulted in severe loss of judgment, intellect, orientation, or memory;

(vi) Mental diseases (e.g. psychosis or severe psychoneurosis) requiring continued institutionalization or constant supervision of the individual;

(vii) Loss or diminution of vision to the extent that the affected individual has a central visual acuity of no better than 20/200 in the better eye after best correction, or has a limitation in the fields of vision such that the widest diameter of the visual fields subtends an angle no greater than 20 degrees;

(viii) Permanent and total loss of speech;

(ix) Total deafness uncorrectible by a hearing aid.

The existence of one or more of the impairments described in this subparagraph (or of an impairment of greater severity) will not, however, in and of itself always permit a finding that an individual is disabled as defined in section 72(m)(7). Any impairment, whether of lesser or greater severity, must be evaluated in terms of whether it does in fact prevent the individual from engaging in his customary or any comparable substantial gainful activity.

(3) In order to meet the requirements of section 72(m)(7), an impairment must be expected either to continue for a long and indefinite period or to result in death. Ordinarily, a terminal illness because of disease or injury would result in disability. The term "indefinite" is used in the sense that it cannot reasonably be anticipated that the impairment will, in the foreseeable future, be so diminished as no longer to prevent substantial gainful activity. For example, an individual who suffers a bone fracture which prevents him from working for an extended period of time will not be considered disabled, if his recovery can be expected in the foreseeable future; if the fracture persistently fails to knit, the individual would ordinarily be considered disabled.

(4) An impairment which is remediable does not constitute a disability within the meaning of section 72(m)(7). An individual will not be deemed disabled if, with reasonable effort and safety to himself, the impairment can be diminished to the extent that the individual will not be prevented by the impairment from engaging in his customary or any comparable substantial gainful activity.

[T.D. 7636, 44 FR 47049, Aug. 10, 1979, as amended by T.D. 8894, 65 FR 46591, July 31, 2000; T.D.9849, 84 FR 9233, Mar. 14, 2019]

§ 1.72-18 Treatment of certain total distributions with respect to self-employed individuals.

(a) ***In general.*** The Self-Employed Individuals Tax Retirement Act of 1962 permits self-employed individuals to be treated as employees for purposes of participation in pension, profit-sharing, and annuity plans described in sections 401(a) and 403(a). In general, amounts received by a distributee or payee which are attributable to contributions made on behalf of a participant while he was self-employed are taxed in the same manner as amounts which are attributable to contributions made on behalf of a common-law employee. However, such amounts which are paid in one taxable year representing the total distributions payable to a distributee or payee with respect to an employee are not eligible for the capital gains treatment of section 402(a)(2) or 403(a)(2). This section sets forth the treatment of such distributions, except where such a distribution is subject to the penalties of section 72(m)(5) and paragraph (e) of § 1.72-17.

(b) ***Distributions to which this section applies.***

(1)

(i) Except as provided in subparagraphs (2) and (3) of this paragraph, this section applies to amounts distributed to a distributee in one taxable year of the distributee in the case of an employees' trust described in section 401(a) which is exempt under section 501(a), or to amounts paid to a payee in one taxable year of the payee in the case of an annuity plan described in section 403(a), which constitute the total distributions payable, or the total amounts payable, to the distributee or payee with respect to an employee.

(ii) For the total distributions or amounts payable to a distributee or payee to be considered paid within one taxable year of the distributee or payee for purposes of this section, all amounts to the credit of the employee-participant through the end of such taxable year which are payable to the distributee or payee must be distributed or paid within such taxable year. Thus, the provisions of this section are not applicable to a distribution or payment to a distributee or payee if the trust or plan retains any amounts after the close of such taxable year which are payable to the same distributee or payee even though the amounts retained may be attributable to contributions on behalf of the employee-participant while he was a common-law employee in the business with respect to which the plan was established.

(iii) For purposes of this section, the total amounts payable to a distributee or the amounts to the credit of the employee do not include United States Retirement Plan Bonds held by a trust to the credit of the employee. Thus, a distribution to a distributee by a qualified trust may constitute a distribution to which this section applies even though the trust retains retirement plan bonds registered in the name of the employee on whose behalf the distribution is made which are to be distributed to the same distributee. Moreover, the proceeds of a retirement bond received as part of a distribution which constitutes the total distributions payable to the distributee are not entitled to the special tax treatment of this section.

(iv) If the amounts payable to a distributee from a qualified trust with respect to an employee-participant includes an annuity contract, such contract must be distributed along with all other amounts payable to the distributee in order to have a distribution to which this section applies. However, the proceeds of an annuity contract received in a total distribution will not be entitled to the tax treatment of this section unless the contract is surrendered in the taxable year of the distributee in which the total distribution was received.

(v) In the case of a qualified annuity plan, the term “total amounts” means all annuities payable to a payee. If more than one annuity contract is received under the plan by a distributee, this section shall not apply to an amount received on surrender of any such contracts unless all contracts under the plan payable to the payee are surrendered within one taxable year of the payee.

(vi)

(*a*) The provisions of this section are applicable where the total amounts payable to a distributee or payee are paid within one taxable year of the distributee or payee whether or not a portion of the employee-participant's interest which is payable to another distributee or payee is paid within the same taxable year. However, a distributee or payee who, in prior taxable years received amounts (except amounts described in (*b*) of this subdivision) after the employee-participant ceases to be eligible for additional contributions to be made on his behalf, does not receive a distribution or payment to which this section applies, even though the total amount remaining to be paid to such distributee or payee with respect to such employee is paid within one taxable year. On the other hand, a distribution to a distributee or payee prior to the time that the employee-participant ceases to be eligible for additional contributions on his behalf does not preclude the application of this section to a later distribution to the same distributee or payee.

(*b*) The receipt of an amount which constitutes—

(*1*) A payment in the nature of a dividend or similar distribution to an individual in his capacity as a policyholder of an annuity, endowment, or life insurance contract, or

(*2*) A return of excess contributions which were not willfully made,

does not prevent the application of this section to a total distribution even though the amount is received after the employee-participant ceases to be eligible for additional contributions and in a taxable year other than the taxable year in which the total amount is received.

(vii) For purposes of this section, the total amounts payable to a distributee or payee, or the amounts to the credit of the employee, do not include any amounts which have been placed in a separate account for the funding of medical benefits described in section 401(h) as defined in paragraph (a) of § 1.401-14. Thus, a distribution by a qualified trust or annuity plan may

constitute a distribution to which this section applies even though amounts attributable to the funding of section 401(h) medical benefits as defined in paragraph (a) of § 1.401-14 are not so distributed.

(2) This section shall apply—

(i) Only if the distribution or payment is made—

(*a*) On account of the employee's death at any time,

(*b*) After the employee has attained the age $59^{1}/_{2}$ years, or

(*c*) After the employee has become disabled; and

(ii) Only to so much of the distribution or payment as is attributable to contributions made on behalf of an employee while he was a self-employed individual in the business with respect to which the plan was established. Any distribution or payment, or any portion thereof, which is not so attributable shall be subject to the rules of taxation which apply to any distribution or payment that is attributable to contributions on behalf of common-law employees.

For taxable years beginning after December 31, 1966, see section 72(m)(7) and paragraph (f) of § 1.72-17 for the meaning of disabled. For taxable years beginning before January 1, 1967, see section 213(g)(3) for the meaning of disabled. For taxable years beginning after December 31, 1968, if this section is applicable by reason of the distribution or payment being made after the employee has become disabled, then for the taxable year in which the amounts to which this section applies are distributed or paid, there shall be submitted with the recipient's income tax return a doctor's statement as to the nature and effect of the employee's impairment.

(3) This section shall not apply to—

(i) Distributions or payments to which the penalty provisions of section 72(m)(5) and paragraph (e) of § 1.72-17 apply,

(ii) Distributions or payments from a trust or plan made to or on behalf of an individual prior to the time such individual ceases to be eligible for additional contributions (except the contribution attributable to the last year of service) to be made to the trust or plan on his behalf as a self-employed individual, and

(iii) Distributions or payments made to the employee from a plan or trust unless contributions which were allowed as a deduction under section 404 have been made on behalf of such employee as a self-employed individual under such trust or plan for 5 or more taxable years (whether or not consecutive) prior to the taxable year in which such distributions or payments are made. Distributions or payments to which this section does not apply by reason of this subdivision are taxed as otherwise provided in section 72. However, for taxable years beginning before January 1, 1964, section 72(e)(3), as in effect before such date, is not applicable. For taxable years beginning after December 31, 1963, such distributions or payments may be taken into account in computations under sections 1301 through 1305 (relating to income averaging).

(4) The portion of any distribution or payment attributable to contributions on behalf of an employee-participant while he was self-employed includes the contributions made on his behalf while he was self-employed and the increments in value attributable to such contributions. Where the amounts to the credit of an employee-participant include amounts attributable to contributions on his behalf while he was a self-employed individual and amounts attributable to contributions on his behalf

while he was a common-law employee, the increment in value attributable to the employee-participant's interest shall be allocated to the contributions on his behalf while he was self-employed either by maintaining a separate account, or an accounting, which reflects the actual increment attributable to such contributions, or by the method described in paragraph (e)(1)(iv)(c) of § 1.72-17. However, if the latter method is used, the numerator of the fraction is the total contributions made on behalf of the individual as a self-employed individual, weighted for the number of years that each contribution was in the plan.

(c) ***Amounts includible in gross income.***

(1) Where a total distribution or payment to which this section applies is made to one distributee or payee and includes the total amount remaining to the credit of the employee-participant on whose behalf the distribution or payment was made, the distributee or payee shall include in gross income an amount equal to the portion of the distribution or payment which exceeds the employee-participant's investment in the contract. For purposes of this paragraph, the investment in the contract shall be reduced by any amounts previously received from the plan or trust by or on behalf of the employee-participant which were excludable from gross income as a return of the investment in the contract.

(2) In the case of a distribution to which this section applies and which is made to more than one distributee or payee, each element of the amounts to the credit of an employee-participant shall be allocated among the several distributees or payees on the basis of the ratio of the value of the distributee's or payee's distribution or payment to the total amount to the credit of the employee-participant. The elements to be so allocated include the investment in the contract, the increments in value, and the portion of the amounts to the credit of the employee-participant which is attributable to the contributions on behalf of the employee-participant while he was a self-employed individual.

(d) ***Computation of tax.***

(1) The tax attributable to the amounts to which this section applies for the taxable year in which such amounts are received is the greater of—

(i) 5 times the increase in tax which would result from the inclusion in gross income of the recipient of 20 percent of so much of the amount so received as is includible in gross income, or

(ii) 5 times the increase which would result if the taxable income of the recipient for such taxable year equaled 20 percent of the excess of the aggregate of the amounts so received and includible in gross income over the amount of the deductions allowed the recipient for such taxable year under section 151 (relating to deduction for personal exemptions).

In any case in which the application of subdivision (ii) of this subparagraph results in an increase in taxable income for any taxable year, the resulting increase in taxes imposed by section 1 or 3 for such taxable year shall be reduced by the credit against tax provided by section 31 (tax withheld on wages), but shall not be reduced by any other credits against tax.

(2) The application of the rules of this paragraph may be illustrated by the following example:

Example. B, a sole proprietor and a calendar-year basis taxpayer, established a qualified pension trust to which he made annual contributions for 10 years of 10 percent of his earned income. B withdrew his entire interest in the trust during 1973, for which year, without regard to the distribution, he had a net operating loss and is allowed under section 151 a deduction for one personal exemption. At the time of the

withdrawal, B was 64 years old. The amount of the distribution that is includible in his gross income is $25,750. Because of B's net operating loss, the tax attributable to the distribution is determined under the rule of subparagraph (1)(ii) of this paragraph. For purposes of determining the tax attributable to the $25,750, B's taxable income for 1973 is treated, under subparagraph (1)(ii) of this paragraph, as being 20 percent of $25,000 ($25,750 minus $750, the amount of the deduction allowed for each personal exemption under section 151 for 1973). Thus, under subparagraph (1) of this paragraph, the tax attributable to the $25,750 would be 5 times the increase which would result if the taxable income of B for the taxable year he received such amount equaled $5,000. B has had no amounts withheld from wages and thus is not entitled to reduce the increase in taxes by the credit against tax provided in section 31 and may not reduce the increase in taxes by any other credits against tax.

[T.D. 6676, 28 FR 10138, Sept. 17, 1963, as amended by T.D. 6722, 29 FR 5070, Apr. 14, 1964, T.D. 6885, 31 FR 7800, June 2, 1966, T.D. 6985, 33 FR 19812, Dec. 27, 1968; T.D. 7114, 36 FR 9018, May 18, 1971; T.D. 9849, 84 FR 9233, Mar. 14, 2019]

§ 1.72(e)-1T Treatment of distributions where substantially all contributions are employee contributions (temporary).

Q-1: How did the Tax Reform Act (TRA) of 1984 change the law with regard to the treatment of non-annuity distributions (*i.e.*, amounts distributed prior to the annuity starting date and not received as annuities) from a qualified plan that is treated as a single contract under section 72 and under which substantially all of the contributions are employee contributions?

A-1:

(a) Prior to the amendment of section 72(e) by the TRA of 1984, non-annuity distributions from such a qualified plan generally were allocable, first, to nondeductible employee contributions and thus were not includible in gross income. After distributions equaled the balance of nondeductible employee contributions, further non-annuity distributions generally were includible in gross income.

(b) Pursuant to section 72(e)(7), as added by the TRA of 1984, non-annuity distributions from such a qualified plan that are allocable to investment in the plan after August 13, 1982 (as determined in accordance with section 72(e)(5)(B)), generally will be treated, first, as allocable to income and, second, as allocable to nondeductible employee contributions. Distributions allocable to income are includible in gross income. Distributions allocable to nondeductible employee contributions are not includible in gross income.

Q-2: To which qualified plans and contracts does section 72(e)(7) apply?

A-2: Section 72(e)(7) applies to any plan or contract under which substantially all of the contributions are employee contributions if—

(a) Such plan is described in section 401(a) and the related trust or trusts are exempt from tax under section 501(a); or

(b) Such contract is—

(1) Purchased by a trust described in (a) above,

(2) Purchased as part of a plan described in section 403(a), or

(3) Described in section 403(b).

Q-3: What is the definition of a qualified plan or contract under which substantially all of the contributions are employee contributions?

A-3:

(a) A qualified plan or contract under which substantially all of the contributions are employee contributions is a plan or contract with respect to which 85 percent or more of the total contributions during the "representative period" are employee contributions. The "representative period" means the five-plan-year period preceding the plan year during which a distribution occurs. However, if less than 85 percent of the total contributions for all plan years during which the plan or contract is in existence prior to the plan year of distribution are employee contributions, then the plan or contract is not one with respect to which substantially all of the contributions are employee contributions.

(b) For purposes of the 85 percent test, contributions made to a predecessor plan or contract are aggregated with contributions made to the plan or contract to which the 85 percent test is being applied (the successor plan or contract). For purposes of the preceding sentence, a predecessor plan or contract is a plan or contract the terms of which are substantially the same as the successor plan or contract.

Q-4: What is the definition of employee contributions for purposes of section 72(e)(7)?

A-4: For purposes of section 72(e)(7), employee contributions are those amounts contributed by the employee and those amounts considered contributed by the employee under section 72(f). For example, amounts contributed to a section 401(k) qualified cash or deferred arrangement, pursuant to an employee's election to defer such amounts, are employer contributions to the extent that such amounts are not currently includible in gross income. In addition, deductible employee contributions under section 72(o) are disregarded in their entirety (*i.e.*, treated as neither employee contributions nor employer contributions) in determining whether substantially all the contributions are employee contributions.

Q-5: How is the 85 percent test of section 72(e)(7) applied to a qualified plan or contract?

A-5:

(a) Except as provided in paragraphs (b), (c), and (d), the 85 percent test is applied separately with respect to each contract under section 72.

(b) If a single qualified plan described in section 401(a) or section 403(a) comprises more than one contract under section 72, regardless of whether such plan includes multiple trusts or combinations of profit-sharing and pension features, these contracts are aggregated for purposes of applying the 85 percent test. Thus, if substantially all of the contributions under a qualified plan comprising two contracts under section 72 are employee contributions, section 72(e)(5)(D) shall not apply to non-annuity distributions under either of the contracts.

(c) With respect to the plans maintained by the Federal Government or by instrumentalities of the Federal Government, the 85 percent test shall be applied by aggregating all such plans. This aggregation rule applies only to those plans that are actively administered by the Federal Government or an instrumentality thereof. Thus, if a plan of the Federal Government is administered by a commercial financial institution, it would not be aggregated with other plans of the Federal Government and its instrumentalities for purposes of applying the 85 percent test.

(d) In the case of a contract described in section 403(b), the 85 percent test is applied separately to each such contract.

Q-6: Is a loan from a qualified plan or contract described in section 72(e)(7) treated as a distribution under section 72(e)(4)(A)?

A-6: Yes. Pursuant to section 72(e)(4)(A), if an employee receives, either directly or indirectly, any amount as a loan from a qualified plan or contract described in section 72(e)(7), such amount shall be treated as a distribution from the plan or contract of an amount not received as an annuity. Similarly, if an employee assigns or pledges, or agrees to assign or pledge, any portion of the value of any qualified plan or contract, such portion shall be treated as a distribution from the plan or contract of an amount not received as an annuity.

Q-7: Does the five percent penalty for premature distributions from annuity contracts, as described in section 72(q), apply to distributions from a qualified plan or contract described in section 72(e)(7)?

A-7: No.

Q-8: When is section 72(e)(7) effective?

A-8: Section 72(e)(7) is effective for amounts received or loans made on or after October 17, 1984. For purposes of this effective date provision, loan amounts outstanding on October 16, 1984, which are renegotiated, extended, renewed, or revised after that date generally are treated as loans made on the date of the renegotiation, etc.

[T.D. 8073, 51 FR 4314, Feb. 4, 1986; 51 FR 7262, Mar. 3, 1986]

§ 1.72(p)-1 Loans treated as distributions.

The questions and answers in this section provide guidance under section 72(p) pertaining to loans from qualified employer plans (including government plans and tax-sheltered annuities and employer plans that were formerly qualified). The examples included in the questions and answers in this section are based on the assumption that a bona fide loan is made to a participant from a qualified defined contribution plan pursuant to an enforceable agreement (in accordance with paragraph (b) of Q&A-3 of this section), with adequate security and with an interest rate and repayment terms that are commercially reasonable. (The particular interest rate used, which is solely for illustration, is 8.75 percent compounded annually.) In addition, unless the contrary is specified, it is assumed in the examples that the amount of the loan does not exceed 50 percent of the participant's nonforfeitable account balance, the participant has no other outstanding loan (and had no prior loan) from the plan or any other plan maintained by the participant's employer or any other person required to be aggregated with the employer under section 414(b), (c) or (m), and the loan is not excluded from section 72(p) as a loan made in the ordinary course of an investment program as described in Q&A-18 of this section. The regulations and examples in this section do not provide guidance on whether a loan from a plan would result in a prohibited transaction under section 4975 of the Internal Revenue Code or on whether a loan from a plan covered by title I of the Employee Retirement Income Security Act of 1974 (88 Stat. 829) (ERISA) would be consistent with the fiduciary standards of ERISA or would result in a prohibited transaction under section 406 of ERISA. The questions and answers are as follows:

Q-1: In general, what does section 72(p) provide with respect to loans from a qualified employer plan?

A-1:

(a) ***Loans.*** Under section 72(p), an amount received by a participant or beneficiary as a loan from a qualified employer plan is treated as having been received as a distribution from the plan (a deemed distribution), unless the loan satisfies the requirements of Q&A-3 of this section. For purposes of

section 72(p) and this section, a loan made from a contract that has been purchased under a qualified employer plan (including a contract that has been distributed to the participant or beneficiary) is considered a loan made under a qualified employer plan.

(b) ***Pledges and assignments.*** Under section 72(p), if a participant or beneficiary assigns or pledges (or agrees to assign or pledge) any portion of his or her interest in a qualified employer plan as security for a loan, the portion of the individual's interest assigned or pledged (or subject to an agreement to assign or pledge) is treated as a loan from the plan to the individual, with the result that such portion is subject to the deemed distribution rule described in paragraph (a) of this Q&A-1. For purposes of section 72(p) and this section, any assignment or pledge of (or agreement to assign or to pledge) any portion of a participant's or beneficiary's interest in a contract that has been purchased under a qualified employer plan (including a contract that has been distributed to the participant or beneficiary) is considered an assignment or pledge of (or agreement to assign or pledge) an interest in a qualified employer plan. However, if all or a portion of a participant's or beneficiary's interest in a qualified employer plan is pledged or assigned as security for a loan from the plan to the participant or the beneficiary, only the amount of the loan received by the participant or the beneficiary, not the amount pledged or assigned, is treated as a loan.

Q-2: What is a qualified employer plan for purposes of section 72(p)?

A-2: For purposes of section 72(p) and this section, a qualified employer plan means—

(a) A plan described in section 401(a) which includes a trust exempt from tax under section 501(a);

(b) An annuity plan described in section 403(a);

(c) A plan under which amounts are contributed by an individual's employer for an annuity contract described in section 403(b);

(d) Any plan, whether or not qualified, established and maintained for its employees by the United States, by a State or political subdivision thereof, or by an agency or instrumentality of the United States, a State or a political subdivision of a State; or

(e) Any plan which was (or was determined to be) described in paragraph (a), (b), (c), or (d) of this Q&A-2.

Q-3: What requirements must be satisfied in order for a loan to a participant or beneficiary from a qualified employer plan not to be a deemed distribution?

A-3:

(a) ***In general.*** A loan to a participant or beneficiary from a qualified employer plan will not be a deemed distribution to the participant or beneficiary if the loan satisfies the repayment term requirement of section 72(p)(2)(B), the level amortization requirement of section 72(p)(2)(C), and the enforceable agreement requirement of paragraph (b) of this Q&A-3, but only to the extent the loan satisfies the amount limitations of section 72(p)(2)(A).

(b) ***Enforceable agreement requirement.*** A loan does not satisfy the requirements of this paragraph unless the loan is evidenced by a legally enforceable agreement (which may include more than one document) and the terms of the agreement demonstrate compliance with the requirements of section 72(p)(2) and this section. Thus, the agreement must specify the amount and date of the loan and the repayment schedule. The agreement does not have to be signed if the agreement is enforceable under applicable law without being signed. The agreement must be set forth either—

(1) In a written paper document; or

(2) In a document that is delivered through an electronic medium under an electronic system that satisfies the requirements of § 1.401(a)-21 of this chapter.

Q-4: If a loan from a qualified employer plan to a participant or beneficiary fails to satisfy the requirements of Q&A-3 of this section, when does a deemed distribution occur?

A-4:

(a) ***Deemed distribution.*** For purposes of section 72, a deemed distribution occurs at the first time that the requirements of Q&A-3 of this section are not satisfied, in form or in operation. This may occur at the time the loan is made or at a later date. If the terms of the loan do not require repayments that satisfy the repayment term requirement of section 72(p)(2)(B) or the level amortization requirement of section 72(p)(2)(C), or the loan is not evidenced by an enforceable agreement satisfying the requirements of paragraph (b) of Q&A-3 of this section, the entire amount of the loan is a deemed distribution under section 72(p) at the time the loan is made. If the loan satisfies the requirements of Q&A-3 of this section except that the amount loaned exceeds the limitations of section 72(p)(2)(A), the amount of the loan in excess of the applicable limitation is a deemed distribution under section 72(p) at the time the loan is made. If the loan initially satisfies the requirements of section 72(p)(2)(A), (B) and (C) and the enforceable agreement requirement of paragraph (b) of Q&A-3 of this section, but payments are not made in accordance with the terms applicable to the loan, a deemed distribution occurs as a result of the failure to make such payments. See Q&A-10 of this section regarding when such a deemed distribution occurs and the amount thereof and Q&A-11 of this section regarding the tax treatment of a deemed distribution.

(b) ***Examples.*** The following examples illustrate the rules in paragraph (a) of this Q&A-4 and are based upon the assumptions described in the introductory text of this section:

> *Example 1.* (i) A participant has a nonforfeitable account balance of $200,000 and receives $70,000 as a loan repayable in level quarterly installments over five years.
> (ii) Under section 72(p), the participant has a deemed distribution of $20,000 (the excess of $70,000 over $50,000) at the time of the loan, because the loan exceeds the $50,000 limit in section 72(p)(2)(A)(i). The remaining $50,000 is not a deemed distribution.

> *Example 2.* (i) A participant with a nonforfeitable account balance of $30,000 borrows $20,000 as a loan repayable in level monthly installments over five years.
> (ii) Because the amount of the loan is $5,000 more than 50% of the participant's nonforfeitable account balance, the participant has a deemed distribution of $5,000 at the time of the loan. The remaining $15,000 is not a deemed distribution. (Note also that, if the loan is secured solely by the participant's account balance, the loan may be a prohibited transaction under section 4975 because the loan may not satisfy 29 CFR 2550.408b-1(f)(2).)

> *Example 3.* (i) The nonforfeitable account balance of a participant is $100,000 and a $50,000 loan is made to the participant repayable in level quarterly installments over seven years. The loan is not eligible for the section 72(p)(2)(B)(ii) exception for loans used to acquire certain dwelling units.

(ii) Because the repayment period exceeds the maximum five-year period in section 72(p)(2)(B)(i), the participant has a deemed distribution of $50,000 at the time the loan is made.

Example 4. (i) On August 1, 2002, a participant has a nonforfeitable account balance of $45,000 and borrows $20,000 from a plan to be repaid over five years in level monthly installments due at the end of each month. After making monthly payments through July 2003, the participant fails to make any of the payments due thereafter.
(ii) As a result of the failure to satisfy the requirement that the loan be repaid in level monthly installments, the participant has a deemed distribution. See paragraph (c) of Q&A-10 of this section regarding when such a deemed distribution occurs and the amount thereof.

Q-5: What is a principal residence for purposes of the exception in section 72(p)(2)(B)(ii) from the requirement that a loan be repaid in five years?

A-5: Section 72(p)(2)(B)(ii) provides that the requirement in section 72(p)(2)(B)(i) that a plan loan be repaid within five years does not apply to a loan used to acquire a dwelling unit which will within a reasonable time be used as the principal residence of the participant (a principal residence plan loan). For this purpose, a principal residence has the same meaning as a principal residence under section 121.

Q-6: In order to satisfy the requirements for a principal residence plan loan, is a loan required to be secured by the dwelling unit that will within a reasonable time be used as the principal residence of the participant?

A-6: A loan is not required to be secured by the dwelling unit that will within a reasonable time be used as the participant's principal residence in order to satisfy the requirements for a principal residence plan loan.

Q-7: What tracing rules apply in determining whether a loan qualifies as a principal residence plan loan?

A-7: The tracing rules established under section 163(h)(3)(B) apply in determining whether a loan is treated as for the acquisition of a principal residence in order to qualify as a principal residence plan loan.

Q-8: Can a refinancing qualify as a principal residence plan loan?

A-8:

(a) ***Refinancings.*** In general, no, a refinancing cannot qualify as a principal residence plan loan. However, a loan from a qualified employer plan used to repay a loan from a third party will qualify as a principal residence plan loan if the plan loan qualifies as a principal residence plan loan without regard to the loan from the third party.

(b) ***Example.*** The following example illustrates the rules in paragraph (a) of this Q&A-8 and is based upon the assumptions described in the introductory text of this section:

Example. (i) On July 1, 2003, a participant requests a $50,000 plan loan to be repaid in level monthly installments over 15 years. On August 1, 2003, the participant acquires a principal residence and pays a portion of the purchase price with a $50,000 bank loan. On September 1, 2003, the plan loans $50,000 to the participant, which the participant uses to pay the bank loan.

(ii) Because the plan loan satisfies the requirements to qualify as a principal residence plan loan (taking into account the tracing rules of section 163(h)(3)(B)), the plan loan qualifies for the exception in section 72(p)(2)(B)(ii).

Q-9: Does the level amortization requirement of section 72(p)(2)(C) apply when a participant is on a leave of absence without pay?

A-9:

(a) ***Leave of absence.*** The level amortization requirement of section 72(p)(2)(C) does not apply for a period, not longer than one year (or such longer period as may apply under section 414(u) and paragraph (b) of this Q&A-9), that a participant is on a *bona fide* leave of absence, either without pay from the employer or at a rate of pay (after applicable employment tax withholdings) that is less than the amount of the installment payments required under the terms of the loan. However, the loan (including interest that accrues during the leave of absence) must be repaid by the latest permissible term of the loan and the amount of the installments due after the leave ends must not be less than the amount required under the terms of the original loan.

(b) ***Military service.*** In accordance with section 414(u)(4), if a plan suspends the obligation to repay a loan made to an employee from the plan for any part of a period during which the employee is performing service in the uniformed services (as defined in 38 U.S.C. chapter 43), whether or not qualified military service, such suspension shall not be taken into account for purposes of section 72(p) or this section. Thus, if a plan suspends loan repayments for any part of a period during which the employee is performing military service described in the preceding sentence, such suspension shall not cause the loan to be deemed distributed even if the suspension exceeds one year and even if the term of the loan is extended. However, the loan will not satisfy the repayment term requirement of section 72(p)(2)(B) and the level amortization requirement of section 72(p)(2)(C) unless loan repayments resume upon the completion of such period of military service and the loan is repaid thereafter by amortization in substantially level installments over a period that ends not later than the latest permissible term of the loan.

(c) ***Latest permissible term of a loan.*** For purposes of this Q&A-9, the latest permissible term of a loan is the latest date permitted under section 72(p)(2)(B) (*i.e.,* five years from the date of the loan, assuming that the replacement loan does not qualify for the exception at section 72(p)(2)(B)(ii) for principal residence plan loans) plus any additional period of suspension permitted under paragraph (b) of this Q&A-9.

(d) ***Examples.*** The following examples illustrate the rules of this Q&A-9 and are based upon the assumptions described in the introductory text of this section:

Example 1. (i) On July 1, 2003, a participant with a nonforfeitable account balance of $80,000 borrows $40,000 to be repaid in level monthly installments of $825 each over 5 years. The loan is not a principal residence plan loan. The participant makes 9 monthly payments and commences an unpaid leave of absence that lasts for 12 months. The participant was not performing military service during this period. Thereafter, the participant resumes active employment and resumes making repayments on the loan until the loan is repaid. The amount of each monthly installment is increased to $1,130 in order to repay the loan by June 30, 2008.

(ii) Because the loan satisfies the requirements of section 72(p)(2), the participant does not have a deemed distribution. Alternatively, section 72(p)(2) would be satisfied if the participant continued the monthly installments of $825 after resuming active employment and on June 30, 2008 repaid the full balance remaining due.

Example 2. (i) The facts are the same as in *Example 1,* except the participant was on leave of absence performing service in the uniformed services (as defined in chapter 43 of title 38, United States Code) for two years and the rate of interest charged during this period of military service is reduced to 6 percent compounded annually under 50 App. section 526 (relating to the Soldiers' and Sailors' Civil Relief Act Amendments of 1942). After the military service ends on April 2, 2006, the participant resumes active employment on April 19, 2006, continues the monthly installments of $825 thereafter, and on June 30, 2010, repays the full balance remaining due ($6,487).
(ii) Because the loan satisfies the requirements of section 72(p)(2) and paragraph (b) of this Q&A-9, the participant does not have a deemed distribution. Alternatively, section 72(p)(2) would also be satisfied if the amount of each monthly installment after April 19, 2006, is increased to $930 in order to repay the loan by June 30, 2010 (without any balance remaining due then).

Q-10: If a participant fails to make the installment payments required under the terms of a loan that satisfied the requirements of Q&A-3 of this section when made, when does a deemed distribution occur and what is the amount of the deemed distribution?

A-10:

(a) ***Timing of deemed distribution.*** Failure to make any installment payment when due in accordance with the terms of the loan violates section 72(p)(2)(C) and, accordingly, results in a deemed distribution at the time of such failure. However, the plan administrator may allow a cure period and section 72(p)(2)(C) will not be considered to have been violated if the installment payment is made not later than the end of the cure period, which period cannot continue beyond the last day of the calendar quarter following the calendar quarter in which the required installment payment was due.

(b) ***Amount of deemed distribution.*** If a loan satisfies Q&A-3 of this section when made, but there is a failure to pay the installment payments required under the terms of the loan (taking into account any cure period allowed under paragraph (a) of this Q&A-10), then the amount of the deemed distribution equals the entire outstanding balance of the loan (including accrued interest) at the time of such failure.

(c) ***Example.*** The following example illustrates the rules in paragraphs (a) and (b) of this Q&A-10 and is based upon the assumptions described in the introductory text of this section:

Example. (i) On August 1, 2002, a participant has a nonforfeitable account balance of $45,000 and borrows $20,000 from a plan to be repaid over 5 years in level monthly installments due at the end of each month. After making all monthly payments due through July 31, 2003, the participant fails to make the payment due on August 31, 2003 or any other

monthly payments due thereafter. The plan administrator allows a three-month cure period. (ii) As a result of the failure to satisfy the requirement that the loan be repaid in level installments pursuant to section 72(p)(2)(C), the participant has a deemed distribution on November 30, 2003, which is the last day of the three-month cure period for the August 31, 2003 installment. The amount of the deemed distribution is $17,157, which is the outstanding balance on the loan at November 30, 2003. Alternatively, if the plan administrator had allowed a cure period through the end of the next calendar quarter, there would be a deemed distribution on December 31, 2003 equal to $17,282, which is the outstanding balance of the loan at December 31, 2003.

Q-11: Does section 72 apply to a deemed distribution as if it were an actual distribution?

A-11:

(a) ***Tax basis.*** If the employee's account includes after-tax contributions or other investment in the contract under section 72(e), section 72 applies to a deemed distribution as if it were an actual distribution, with the result that all or a portion of the deemed distribution may not be taxable.

(b) ***Section 72(t) and (m).*** Section 72(t) (which imposes a 10 percent tax on certain early distributions) and section 72(m)(5) (which imposes a separate 10 percent tax on certain amounts received by a 5-percent owner) apply to a deemed distribution under section 72(p) in the same manner as if the deemed distribution were an actual distribution.

Q-12: Is a deemed distribution under section 72(p) treated as an actual distribution for purposes of the qualification requirements of section 401, the distribution provisions of section 402, the distribution restrictions of section 401(k)(2)(B) or 403(b)(11), or the vesting requirements of § 1.411(a)-7(d)(5) (which affects the application of a graded vesting schedule in cases involving a prior distribution)?

A-12: No; thus, for example, if a participant in a money purchase plan who is an active employee has a deemed distribution under section 72(p), the plan will not be considered to have made an in-service distribution to the participant in violation of the qualification requirements applicable to money purchase plans. Similarly, the deemed distribution is not eligible to be rolled over to an eligible retirement plan and is not considered an impermissible distribution of an amount attributable to elective contributions in a section 401(k) plan. See also § 1.402(c)-2(c)(3) and § 1.401(k)-1(d)(5)(iii).

Q-13: How does a reduction (offset) of an account balance in order to repay a plan loan differ from a deemed distribution?

A-13:

(a) ***Difference between deemed distribution and plan loan offset amount.***

(1) Loans to a participant from a qualified employer plan can give rise to two types of taxable distributions—

(i) A deemed distribution pursuant to section 72(p); and

(ii) A distribution of an offset amount.

(2) As described in Q&A-4 of this section, a deemed distribution occurs when the requirements of Q&A-3 of this section are not satisfied, either when the loan is made or at a later time. A deemed distribution is treated as a distribution to the participant or beneficiary only for certain

tax purposes and is not a distribution of the accrued benefit. A distribution of a plan loan offset amount (as defined in § 1.402(c)-2(g)(3)(i)) occurs when, under the terms governing a plan loan, the accrued benefit of the participant or beneficiary is reduced (offset) in order to repay the loan (including the enforcement of the plan's security interest in the accrued benefit). A distribution of a plan loan offset amount could occur in a variety of circumstances, such as where the terms governing the plan loan require that, in the event of the participant's request for a distribution, a loan be repaid immediately or treated as in default.

(b) ***Plan loan offset.*** In the event of a plan loan offset, the amount of the account balance that is offset against the loan is an actual distribution for purposes of the Internal Revenue Code, not a deemed distribution under section 72(p). Accordingly, a plan may be prohibited from making such an offset under the provisions of section 401(a), 401(k)(2)(B) or 403(b)(11) prohibiting or limiting distributions to an active employee. See Example 6 in § 1.402(c)-2(g)(5)(vi). See also Q&A-19 of this section for rules regarding the treatment of a loan after a deemed distribution.

Q-14: How is the amount includible in income as a result of a deemed distribution under section 72(p) required to be reported?

A-14: The amount includible in income as a result of a deemed distribution under section 72(p) is required to be reported on Form 1099-R (or any other form prescribed by the Commissioner).

Q-15: What withholding rules apply to plan loans?

A-15: To the extent that a loan, when made, is a deemed distribution or an account balance is reduced (offset) to repay a loan, the amount includible in income is subject to withholding. If a deemed distribution of a loan or a loan repayment by benefit offset results in income at a date after the date the loan is made, withholding is required only if a transfer of cash or property (excluding employer securities) is made to the participant or beneficiary from the plan at the same time. See §§ 35.3405-1, f-4, and 31.3405(c)-1, Q&A-9 and Q&A-11, of this chapter for further guidance on withholding rules.

Q-16: If a loan fails to satisfy the requirements of Q&A-3 of this section and is a prohibited transaction under section 4975, is the deemed distribution of the loan under section 72(p) a correction of the prohibited transaction?

A-16: No, a deemed distribution is not a correction of a prohibited transaction under section 4975. See §§ 141.4975-13 and 53.4941(e)-1(c)(1) of this chapter for guidance concerning correction of a prohibited transaction.

Q-17: What are the income tax consequences if an amount is transferred from a qualified employer plan to a participant or beneficiary as a loan, but there is an express or tacit understanding that the loan will not be repaid?

A-17: If there is an express or tacit understanding that the loan will not be repaid or, for any reason, the transaction does not create a debtor-creditor relationship or is otherwise not a bona fide loan, then the amount transferred is treated as an actual distribution from the plan for purposes of the Internal Revenue Code, and is not treated as a loan or as a deemed distribution under section 72(p).

Q-18: If a qualified employer plan maintains a program to invest in residential mortgages, are loans made pursuant to the investment program subject to section 72(p)?

A-18:

(a) Residential mortgage loans made by a plan in the ordinary course of an investment program are not subject to section 72(p) if the property acquired with the loans is the primary security for such loans and the amount loaned does not exceed the fair market value of the property. An investment program exists only if the plan has established, in advance of a specific investment under the program, that a certain percentage or amount of plan assets will be invested in residential mortgages available to persons purchasing the property who satisfy commercially customary financial criteria. A loan will not be considered as made under an investment program if—

(1) Any of the loans made under the program matures upon a participant's termination from employment;

(2) Any of the loans made under the program is an earmarked asset of a participant's or beneficiary's individual account in the plan; or

(3) The loans made under the program are made available only to participants or beneficiaries in the plan.

(b) Paragraph (a)(3) of this Q&A-18 shall not apply to a plan which, on December 20, 1995, and at all times thereafter, has had in effect a loan program under which, but for paragraph (a)(3) of this Q&A-18, the loans comply with the conditions of paragraph (a) of this Q&A-18 to constitute residential mortgage loans in the ordinary course of an investment program.

(c) No loan that benefits an officer, director, or owner of the employer maintaining the plan, or their beneficiaries, will be treated as made under an investment program.

(d) This section does not provide guidance on whether a residential mortgage loan made under a plan's investment program would result in a prohibited transaction under section 4975, or on whether such a loan made by a plan covered by title I of ERISA would be consistent with the fiduciary standards of ERISA or would result in a prohibited transaction under section 406 of ERISA. See 29 CFR 2550.408b-1.

Q-19: If there is a deemed distribution under section 72(p), is the interest that accrues thereafter on the amount of the deemed distribution an indirect loan for income tax purposes and what effect does the deemed distribution have on subsequent loans?

A-19:

(a) ***General rule.*** Except as provided in paragraph (b) of this Q&A-19, a deemed distribution of a loan is treated as a distribution for purposes of section 72. Therefore, a loan that is deemed to be distributed under section 72(p) ceases to be an outstanding loan for purposes of section 72, and the interest that accrues thereafter under the plan on the amount deemed distributed is disregarded for purposes of applying section 72 to the participant or the beneficiary. Even though interest continues to accrue on the outstanding loan (and is taken into account for purposes of determining the tax treatment of any subsequent loan in accordance with paragraph (b) of this Q&A-19), this additional interest is not treated as an additional loan (and thus, does not result in an additional deemed distribution) for purposes of section 72(p). However, a loan that is deemed distributed under section 72(p) is not considered distributed for all purposes of the Internal Revenue Code. *See* Q&A-11 through Q&A-16 of this section.

(b) ***Effect on subsequent loans*** —

(1) ***Application of section 72(p)(2)(A).*** A loan that is deemed distributed under section 72(p) (including interest accruing thereafter) and that has not been repaid (such as by a plan loan offset) is considered outstanding for purposes of applying section 72(p)(2)(A) to determine the maximum amount of any subsequent loan to the participant or beneficiary.

(2) ***Additional security for subsequent loans.*** If a loan is deemed distributed to a participant or beneficiary under section 72(p) and has not been repaid (such as by a plan loan offset), then no payment made thereafter to the participant or beneficiary is treated as a loan for purposes of section 72(p)(2) unless the loan otherwise satisfies section 72(p)(2) and this section and either of the following conditions is satisfied:

(i) There is an arrangement among the plan, the participant or beneficiary, and the employer, enforceable under applicable law, under which repayments will be made by payroll withholding. For this purpose, an arrangement will not fail to be enforceable merely because a party has the right to revoke the arrangement prospectively.

(ii) The plan receives adequate security from the participant or beneficiary that is in addition to the participant's or beneficiary's accrued benefit under the plan.

(3) ***Condition no longer satisfied.*** If, following a deemed distribution that has not been repaid, a payment is made to a participant or beneficiary that satisfies the conditions in paragraph (b)(2) of this Q&A-19 for treatment as a plan loan and, subsequently, before repayment of the second loan, the conditions in paragraph (b)(2) of this Q&A-19 are no longer satisfied with respect to the second loan (for example, if the loan recipient revokes consent to payroll withholding), the amount then outstanding on the second loan is treated as a deemed distribution under section 72(p).

Q-20: May a participant refinance an outstanding loan or have more than one loan outstanding from a plan?

A-20:

(a) ***Refinancings and multiple loans*** —

(1) ***General rule.*** A participant who has an outstanding loan that satisfies section 72(p)(2) and this section may refinance that loan or borrow additional amounts if, under the facts and circumstances, the loans collectively satisfy the amount limitations of section 72(p)(2)(A) and the prior loan and the additional loan each satisfy the requirements of section 72(p)(2)(B) and (C) and this section. For this purpose, a refinancing includes any situation in which one loan replaces another loan.

(2) ***Loans that repay a prior loan and have a later repayment date.*** For purposes of section 72(p)(2) and this section (including the amount limitations of section 72(p)(2)(A)), if a loan that satisfies section 72(p)(2) is replaced by a loan (a replacement loan) and the term of the replacement loan ends after the latest permissible term of the loan it replaces (the replaced loan), then the replacement loan and the replaced loan are both treated as outstanding on the date of the transaction. For purposes of the preceding sentence, the latest permissible term of the replaced loan is the latest date permitted under section 72(p)(2)(C) (*i.e.,* five years from the original date of the replaced loan, assuming that the replaced loan does not qualify for the exception at section 72(p)(2)(B)(ii) for principal residence plan loans and that no additional period of suspension applied to the replaced loan under Q&A-9 (b) of this section). Thus, for example, if the term of the replacement loan ends after the latest permissible term of the replaced loan and the sum of the amount of the replacement loan plus the outstanding balance

of all other loans on the date of the transaction, including the replaced loan, fails to satisfy the amount limitations of section 72(p)(2)(A), then the replacement loan results in a deemed distribution. This paragraph (a)(2) does not apply to a replacement loan if the terms of the replacement loan would satisfy section 72(p)(2) and this section determined as if the replacement loan consisted of two separate loans, the replaced loan (amortized in substantially level payments over a period ending not later than the last day of the latest permissible term of the replaced loan) and, to the extent the amount of the replacement loan exceeds the amount of the replaced loan, a new loan that is also amortized in substantially level payments over a period ending not later than the last day of the latest permissible term of the replacement loan.

(b) ***Examples.*** The following examples illustrate the rules of this Q&A-20 and are based on the assumptions described in the introductory text of this section:

Example 1. (i) A participant with a vested account balance that exceeds $100,000 borrows $40,000 from a plan on January 1, 2005, to be repaid in 20 quarterly installments of $2,491 each. Thus, the term of the loan ends on December 31, 2009. On January 1, 2006, when the outstanding balance on the loan is $33,322, the loan is refinanced and is replaced by a new $40,000 loan from the plan to be repaid in 20 quarterly installments. Under the terms of the refinanced loan, the loan is to be repaid in level quarterly installments (of $2,491 each) over the next 20 quarters. Thus, the term of the new loan ends on December 31, 2010.
(ii) Under section 72(p)(2)(A), the amount of the new loan, when added to the outstanding balance of all other loans from the plan, must not exceed $50,000 reduced by the excess of the highest outstanding balance of loans from the plan during the 1-year period ending on December 31, 2005, over the outstanding balance of loans from the plan on January 1, 2006, with such outstanding balance to be determined immediately prior to the new $40,000 loan. Because the term of the new loan ends later than the term of the loan it replaces, under paragraph (a)(2) of this Q&A-20, both the new loan and the loan it replaces must be taken into account for purposes of applying section 72(p)(2), including the amount limitations in section 72(p)(2)(A). The amount of the new loan is $40,000, the outstanding balance on January 1, 2006, of the loan it replaces is $33,322, and the highest outstanding balance of loans from the plan during 2005 was $40,000. Accordingly, under section 72(p)(2)(A), the sum of the new loan and the outstanding balance on January 1, 2006, of the loan it replaces must not exceed $50,000 reduced by $6,678 (the excess of the $40,000 maximum outstanding loan balance during 2005 over the $33,322 outstanding balance on January 1, 2006, determined immediately prior to the new loan) and, thus, must not exceed $43,322. The sum of the new loan ($40,000) and the outstanding balance on January 1, 2006, of the loan it replaces ($33,322) is $73,322. Since $73,322 exceeds the $43,322 limit under section 72(p)(2)(A) by $30,000, there is a deemed distribution of $30,000 on January 1, 2006.

(iii) However, no deemed distribution would occur if, under the terms of the refinanced loan, the amount of the first 16 installments on the refinanced loan were equal to $2,907, which is the sum of the $2,491 originally scheduled quarterly installment payment amount under the first loan, plus $416 (which is the amount required to repay, in level quarterly installments

over 5 years beginning on January 1, 2006, the excess of the refinanced loan over the January 1, 2006, balance of the first loan ($40,000 minus $33,322 equals $6,678)), and the amount of the 4 remaining installments was equal to $416. The refinancing would not be subject to paragraph (a)(2) of this Q&A-20 because the terms of the new loan would satisfy section 72(p)(2) and this section (including the substantially level amortization requirements of section 72(p)(2)(B) and (C)) determined as if the new loan consisted of 2 loans, one of which is in the amount of the first loan ($33,322) and is amortized in substantially level payments over a period ending December 31, 2009 (the last day of the term of the first loan) and the other of which is in the additional amount ($6,678) borrowed under the new loan. Similarly, the transaction also would not result in a deemed distribution (and would not be subject to paragraph (a)(2) of this Q&A-20) if the terms of the refinanced loan provided for repayments to be made in level quarterly installments (of $2,990 each) over the next 16 quarters.

Example 2. (i) The facts are the same as in *Example 1*(i), except that the applicable interest rate used by the plan when the loan is refinanced is significantly lower due to a reduction in market rates of interest and, under the terms of the refinanced loan, the amount of the first 16 installments on the refinanced loan is equal to $2,848 and the amount of the next 4 installments on the refinanced loan is equal to $406. The $2,848 amount is the sum of $2,442 to repay the first loan by December 31, 2009 (the term of the first loan), plus $406 (which is the amount to repay, in level quarterly installments over 5 years beginning on January 1, 2006, the $6,678 excess of the refinanced loan over the January 1, 2006, balance of the first loan). (ii) The transaction does not result in a deemed distribution (and is not subject to paragraph (a)(2) of this Q&A-20) because the terms of the new loan would satisfy section 72(p)(2) and this section (including the substantially level amortization requirements of section 72(p)(2)(B) and (C)) determined as if the new loan consisted of 2 loans, one of which is in the amount of the first loan ($33,322) and is amortized in substantially level payments over a period ending December 31, 2009 (the last day of the term of the first loan), and the other of which is in the additional amount ($6,678) borrowed under the new loan. The transaction would also not result in a deemed distribution (and not be subject to paragraph (a)(2) of this Q&A-20) if the terms of the new loan provided for repayments to be made in level quarterly installments (of $2,931 each) over the next 16 quarters.

Q-21: Is a participant's tax basis under the plan increased if the participant repays the loan after a deemed distribution?

A-21:

(a) ***Repayments after deemed distribution.*** Yes, if the participant or beneficiary repays the loan after a deemed distribution of the loan under section 72(p), then, for purposes of section 72(e), the participant's or beneficiary's investment in the contract (tax basis) under the plan increases by the amount of the cash repayments that the participant or beneficiary makes on the loan after the deemed distribution. However, loan repayments are not treated as after-tax contributions for other purposes, including sections 401(m) and 415(c)(2)(B).

(b) ***Example.*** The following example illustrates the rules in paragraph (a) of this Q&A-21 and is based on the assumptions described in the introductory text of this section:

> *Example.* (i) A participant receives a $20,000 loan on January 1, 2003, to be repaid in 20 quarterly installments of $1,245 each. On December 31, 2003, the outstanding loan balance ($19,179) is deemed distributed as a result of a failure to make quarterly installment payments that were due on September 30, 2003 and December 31, 2003. On June 30, 2004, the participant repays $5,147 (which is the sum of the three installment payments that were due on September 30, 2003, December 31, 2003, and March 31, 2004, with interest thereon to June 30, 2004, plus the installment payment due on June 30, 2004). Thereafter, the participant resumes making the installment payments of $1,245 from September 30, 2004 through December 31, 2007. The loan repayments made after December 31, 2003 through December 31, 2007 total $22,577.
> (ii) Because the participant repaid $22,577 after the deemed distribution that occurred on December 31, 2003, the participant has investment in the contract (tax basis) equal to $22,577 (14 payments of $1,245 each plus a single payment of $5,147) as of December 31, 2007.

Q-22: When is the effective date of section 72(p) and the regulations in this section?

A-22:

(a) ***Statutory effective date.*** Section 72(p) generally applies to assignments, pledges, and loans made after August 13, 1982.

(b) ***Regulatory effective date.*** This section applies to assignments, pledges, and loans made on or after January 1, 2002.

(c) ***Loans made before the regulatory effective date*** —

(1) ***General rule.*** A plan is permitted to apply Q&A-19 and Q&A-21 of this section to a loan made before the regulatory effective date in paragraph (b) of this Q&A-22 (and after the statutory effective date in paragraph (a) of this Q&A-22) if there has not been any deemed distribution of the loan before the transition date or if the conditions of paragraph (c)(2) of this Q&A-22 are satisfied with respect to the loan.

(2) ***Consistency transition rule for certain loans deemed distributed before the regulatory effective date.***

(i) The rules in this paragraph (c)(2) of this Q&A-22 apply to a loan made before the regulatory effective date in paragraph (b) of this Q&A-22 (and after the statutory effective date in paragraph (a) of this Q&A-22) if there has been any deemed distribution of the loan before the transition date.

(ii) The plan is permitted to apply Q&A-19 and Q&A-21 of this section to the loan beginning on any January 1, but only if the plan reported, in Box 1 of Form 1099-R, for a taxable year no later than the latest taxable year that would be permitted under this section (if this section had been in effect for all loans made after the statutory effective date in paragraph (a) of this Q&A-22), a gross distribution of an amount at least equal to the initial default amount.

For purposes of this section, the initial default amount is the amount that would be reported as a gross distribution under Q&A-4 and Q&A-10 of this section and the transition date is the January 1 on which a plan begins applying Q&A-19 and Q&A-21 of this section to a loan.

(iii) If a plan applies Q&A-19 and Q&A-21 of this section to such a loan, then the plan, in its reporting and withholding on or after the transition date, must not attribute investment in the contract (tax basis) to the participant or beneficiary based upon the initial default amount.

(iv) This paragraph (c)(2)(iv) of this Q&A-22 applies if—

(A) The plan attributed investment in the contract (tax basis) to the participant or beneficiary based on the deemed distribution of the loan;

(B) The plan subsequently made an actual distribution to the participant or beneficiary before the transition date; and

(C) Immediately before the transition date, the initial default amount (or, if less, the amount of the investment in the contract so attributed) exceeds the participant's or beneficiary's investment in the contract (tax basis). If this paragraph (c)(2)(iv) of this Q&A-22 applies, the plan must treat the excess (the loan transition amount) as a loan amount that remains outstanding and must include the excess in the participant's or beneficiary's income at the time of the first actual distribution made on or after the transition date.

(3) ***Examples.*** The rules in paragraph (c)(2) of this Q&A-22 are illustrated by the following examples, which are based on the assumptions described in the introductory text of this section (and, except as specifically provided in the examples, also assume that no distributions are made to the participant and that the participant has no investment in the contract with respect to the plan). *Example 1, Example 2,* and *Example 4* of this paragraph (c)(3) of this Q&A-22 illustrate the application of the rules in paragraph (c)(2) of this Q&A-22 to a plan that, before the transition date, did not treat interest accruing after the initial deemed distribution as resulting in additional deemed distributions under section 72(p). Example 3 of this paragraph (c)(3) of this Q&A-22 illustrates the application of the rules in paragraph (c)(2) of this Q&A-22 to a plan that, before the transition date, treated interest accruing after the initial deemed distribution as resulting in additional deemed distributions under section 72(p). The examples are as follows:

> *Example 1.* (i) In 1998, when a participant's account balance under a plan is $50,000, the participant receives a loan from the plan. The participant makes the required repayments until 1999 when there is a deemed distribution of $20,000 as a result of a failure to repay the loan. For 1999, as a result of the deemed distribution, the plan reports, in Box 1 of Form 1099-R, a gross distribution of $20,000 (which is the initial default amount in accordance with paragraph (c)(2)(ii) of this Q&A-22) and, in Box 2 of Form 1099-R, a taxable amount of $20,000. The plan then records an increase in the participant's tax basis for the same amount ($20,000). Thereafter, the plan disregards, for purposes of section 72, the interest that accrues on the loan after the 1999 deemed distribution. Thus, as of December 31, 2001, the total taxable amount reported by the

plan as a result of the deemed distribution is $20,000 and the plan's records show that the participant's tax basis is the same amount ($20,000). As of January 1, 2002, the plan decides to apply Q&A-19 of this section to the loan. Accordingly, it reduces the participant's tax basis by the initial default amount of $20,000, so that the participant's remaining tax basis in the plan is zero. Thereafter, the amount of the outstanding loan is not treated as part of the account balance for purposes of section 72. The participant attains age 59$^{1}/_{2}$ in the year 2003 and receives a distribution of the full account balance under the plan consisting of $60,000 in cash and the loan receivable. At that time, the plan's records reflect an offset of the loan amount against the loan receivable in the participant's account and a distribution of $60,000 in cash.
(ii) For the year 2003, the plan must report a gross distribution of $60,000 in Box 1 of Form 1099-R and a taxable amount of $60,000 in Box 2 of Form 1099-R.

Example 2. (i) The facts are the same as in *Example 1,* except that in 1999, immediately prior to the deemed distribution, the participant's account balance under the plan totals $50,000 and the participant's tax basis is $10,000. For 1999, the plan reports, in Box 1 of Form 1099-R, a gross distribution of $20,000 (which is the initial default amount in accordance with paragraph (c)(2)(ii) of this Q&A-22) and reports, in Box 2 of Form 1099-R, a taxable amount of $16,000 (the $20,000 deemed distribution minus $4,000 of tax basis ($10,000 times ($20,000/$50,000)) allocated to the deemed distribution). The plan then records an increase in tax basis equal to the $20,000 deemed distribution, so that the participant's remaining tax basis as of December 31, 1999, totals $26,000 ($10,000 minus $4,000 plus $20,000). Thereafter, the plan disregards, for purposes of section 72, the interest that accrues on the loan after the 1999 deemed distribution. Thus, as of December 31, 2001, the total taxable amount reported by the plan as a result of the deemed distribution is $16,000 and the plan's records show that the participant's tax basis is $26,000. As of January 1, 2002, the plan decides to apply Q&A-19 of this section to the loan. Accordingly, it reduces the participant's tax basis by the initial default amount of $20,000, so that the participant's remaining tax basis in the plan is $6,000. Thereafter, the amount of the outstanding loan is not treated as part of the account balance for purposes of section 72. The participant attains age 59$^{1}/_{2}$ in the year 2003 and receives a distribution of the full account balance under the plan consisting of $60,000 in cash and the loan receivable. At that time, the plan's records reflect an offset of the loan amount against the loan receivable in the participant's account and a distribution of $60,000 in cash.
(ii) For the year 2003, the plan must report a gross distribution of $60,000 in Box 1 of Form 1099-R and a taxable amount of $54,000 in Box 2 of Form 1099-R.

Example 3. (i) In 1993, when a participant's account balance in a plan is $100,000, the

participant receives a loan of $50,000 from the plan. The participant makes the required loan repayments until 1995 when there is a deemed distribution of $28,919 as a result of a failure to repay the loan. For 1995, as a result of the deemed distribution, the plan reports, in Box 1 of Form 1099-R, a gross distribution of $28,919 (which is the initial default amount in accordance with paragraph (c)(2)(ii) of this Q&A-22) and, in Box 2 of Form 1099-R, a taxable amount of $28,919. For 1995, the plan also records an increase in the participant's tax basis for the same amount ($28,919). Each year thereafter through 2001, the plan reports a gross distribution equal to the interest accruing that year on the loan balance, reports a taxable amount equal to the interest accruing that year on the loan balance reduced by the participant's tax basis allocated to the gross distribution, and records a net increase in the participant's tax basis equal to that taxable amount. As of December 31, 2001, the taxable amount reported by the plan as a result of the loan totals $44,329 and the plan's records for purposes of section 72 show that the participant's tax basis totals the same amount ($44,329). As of January 1, 2002, the plan decides to apply Q&A-19 of this section. Accordingly, it reduces the participant's tax basis by the initial default amount of $28,919, so that the participant's remaining tax basis in the plan is $15,410 ($44,329 minus $28,919). Thereafter, the amount of the outstanding loan is not treated as part of the account balance for purposes of section 72. The participant attains age $59^1/_2$ in the year 2003 and receives a distribution of the full account balance under the plan consisting of $180,000 in cash and the loan receivable equal to the $28,919 outstanding loan amount in 1995 plus interest accrued thereafter to the payment date in 2003. At that time, the plan's records reflect an offset of the loan amount against the loan receivable in the participant's account and a distribution of $180,000 in cash.
(ii) For the year 2003, the plan must report a gross distribution of $180,000 in Box 1 of Form 1099-R and a taxable amount of $164,590 in Box 2 of Form 1099-R ($180,000 minus the remaining tax basis of $15,410).

Example 4. (i) The facts are the same as in Example 1, except that in 2000, after the deemed distribution, the participant receives a $10,000 hardship distribution. At the time of the hardship distribution, the participant's account balance under the plan totals $50,000. For 2000, the plan reports, in Box 1 of Form 1099-R, a gross distribution of $10,000 and, in Box 2 of Form 1099-R, a taxable amount of $6,000 (the $10,000 actual distribution minus $4,000 of tax basis ($10,000 times ($20,000/$50,000)) allocated to this actual distribution). The plan then records a decrease in tax basis equal to $4,000, so that the participant's remaining tax basis as of December 31, 2000, totals $16,000 ($20,000 minus $4,000). After 1999, the plan disregards, for purposes of section 72, the interest that accrues on the loan after the 1999 deemed distribution. Thus, as of December 31, 2001, the total taxable amount reported by the plan as a result of the

deemed distribution plus the 2000 actual distribution is $26,000 and the plan's records show that the participant's tax basis is $16,000. As of January 1, 2002, the plan decides to apply Q&A-19 of this section to the loan. Accordingly, it reduces the participant's tax basis by the initial default amount of $20,000, so that the participant's remaining tax basis in the plan is reduced from $16,000 to zero. However, because the $20,000 initial default amount exceeds $16,000, the plan records a loan transition amount of $4,000 ($20,000 minus $16,000). Thereafter, the amount of the outstanding loan, other than the $4,000 loan transition amount, is not treated as part of the account balance for purposes of section 72. The participant attains age 59 1/2 in the year 2003 and receives a distribution of the full account balance under the plan consisting of $60,000 in cash and the loan receivable. At that time, the plan's records reflect an offset of the loan amount against the loan receivable in the participant's account and a distribution of $60,000 in cash.

(ii) In accordance with paragraph (c)(2)(iv) of this Q&A-22, the plan must report in Box 1 of Form 1099-R a gross distribution of $64,000 and in Box 2 of Form 1099-R a taxable amount for the participant for the year 2003 equal to $64,000 (the sum of the $60,000 paid in the year 2003 plus $4,000 as the loan transition amount).

(d) ***Effective date for Q&A-19(b)(2) and Q&A-20.*** Q&A-19(b)(2) and Q&A-20 of this section apply to assignments, pledges, and loans made on or after January 1, 2004.

[T.D. 8894, 65 FR 46591, July 31, 2000, as amended by T.D. 9021, 67 FR 71824, Dec. 3, 2002; 68 FR 9532, 9535, Feb. 28, 2003; T.D. 9169, 69 FR 78153, Dec. 29, 2004; T.D. 9294, 71 FR 61883, Oct. 20, 2006; T.D. 10001, 89 FR 58906, July 19, 2024]

§ 1.73-1 Services of child.

(a) Compensation for personal services of a child shall, regardless of the provisions of State law relating to who is entitled to the earnings of the child, and regardless of whether the income is in fact received by the child, be deemed to be the gross income of the child and not the gross income of the parent of the child. Such compensation, therefore, shall be included in the gross income of the child and shall be reflected in the return rendered by or for such child. The income of a minor child is not required to be included in the gross income of the parent for income tax purposes. For requirements for making the return by such child, or for such child by his guardian, or other person charged with the care of his person or property, see section 6012.

(b) In the determination of taxable income or adjusted gross income, as the case may be, all expenditures made by the parent or the child attributable to amounts which are includible in the gross income of the child and not of the parent solely by reason of section 73 are deemed to have been paid or incurred by the child. In such determination, the child is entitled to take deductions not only for expenditures made on his behalf by his parent which would be commonly considered as business expenses, but also for other expenditures such as charitable contributions made by the parent in the name of the child and out of the child's earnings.

(c) For purposes of section 73, the term "parent" includes any individual who is entitled to the services of the child by reason of having parental rights and duties in respect of the child. See section 6201(c) and the regulations in Part 301 of this chapter (Procedure and Administration) for assessment of tax against the parent in certain cases.

§ 1.74-1 Prizes and awards.

(a) ***Inclusion in gross income.***

(1) Section 74(a) requires the inclusion in gross income of all amounts received as prizes and awards, unless such prizes or awards qualify as an exclusion from gross income under subsection (b), or unless such prize or award is a scholarship or fellowship grant excluded from gross income by section 117. Prizes and awards which are includible in gross income include (but are not limited to) amounts received from radio and television giveaway shows, door prizes, and awards in contests of all types, as well as any prizes and awards from an employer to an employee in recognition of some achievement in connection with his employment.

(2) If the prize or award is not made in money but is made in goods or services, the fair market value of the goods or services is the amount to be included in income.

(b) ***Exclusion from gross income.*** Section 74(b) provides an exclusion from gross income of any amount received as a prize or award, if

(1) such prize or award was made primarily in recognition of past achievements of the recipient in religious, charitable, scientific, educational, artistic, literary, or civic fields;

(2) the recipient was selected without any action on his part to enter the contest or proceedings; and

(3) the recipient is not required to render substantial future services as a condition to receiving the prize or award. Thus, such awards as the Nobel prize and the Pulitzer prize would qualify for the exclusion. Section 74(b) does not exclude prizes or awards from an employer to an employee in recognition of some achievement in connection with his employment.

(c) ***Scholarships and fellowship grants.*** See section 117 and the regulations thereunder for provisions relating to scholarships and fellowship grants.

§ 1.75-1 Treatment of bond premiums in case of dealers in tax-exempt securities.

(a) ***In general.***

(1) Section 75 requires certain adjustments to be made by dealers in securities with respect to premiums paid on municipal bonds which are held for sale to customers in the ordinary course of the trade or business. The adjustments depend upon the method of accounting used by the taxpayer in computing the gross income from the trade or business. See paragraphs (b) and (c) of this section.

(2) The term "municipal bond" under section 75 means any obligation issued by a government or political subdivision thereof if the interest on the obligation is excludable from gross income under section 103. However, such term does not include an obligation—

(i) If the earliest maturity or call date of the obligation is more than 5 years from the date of acquisition by the taxpayer or the obligation is sold or otherwise disposed of by the taxpayer within 30 days after the date of acquisition by him, and

(ii) If, in case of an obligation acquired after December 31, 1957, the amount realized upon its sale (or, in the case of any other disposition, its fair market value at the time of disposition) is higher than its adjusted basis.

For purposes of this subparagraph, the amount realized on the sale of the obligation, or the fair market value of the obligation, shall not include any amount attributable to interest, and the adjusted basis shall be computed without regard to any adjustment for amortization of bond premium required under section 75 and section 1016(a)(6). For purposes of determining whether the obligation is sold or otherwise disposed of by the taxpayer within 30 days after the date of its acquisition by him, it is immaterial whether or not such 30-day period is entirely within one taxable year.

(3) The term "cost of securities sold" means the amount ascertained by subtracting the inventory value of the closing inventory of a taxable year from the sum of the inventory value of the opening inventory for such year and the cost of securities and other property purchased during such year which would properly be included in the inventory of the taxpayer if on hand at the close of the taxable year.

(b) ***Inventories not valued at cost.***

(1) In the case of a dealer in securities who computes gross income from his trade or business by the use of inventories and values such inventories on any basis other than cost, the adjustment required by section 75 is, except as provided in subparagraph (2) of this paragraph, the reduction of "cost of securities sold" by the amount equal to the amortizable bond premium which would be disallowed as a deduction under section 171(a)(2) with respect to the municipal bond if the dealer were an ordinary investor holding such bond. Such amortizable bond premium is computed under section 171(b) by reference to the cost or other original basis of the bond on the date of acquisition (determined without regard to section 1013, relating to inventory value on a subsequent date).

(2) With respect to an obligation acquired after December 31, 1957, which has as its earliest maturity or call date a date more than five years from the date on which it was acquired by the taxpayer, the following rules shall apply:

(i) If the taxpayer holds the obligation at the end of the taxable year, he is not required by section 75 to reduce the "cost of securities sold" for such year with respect to the obligation.

(ii) If the taxpayer sells or otherwise disposes of the obligation during the taxable year, he shall reduce the "cost of securities sold" for the taxable year of the sale or disposition unless he sold the obligation for more than its adjusted basis or otherwise disposed of it when its fair market value was more than its adjusted basis. For purposes of determining whether or not the taxpayer sold the obligation for more than its adjusted basis, or otherwise disposed of it when its fair market value was more than its adjusted basis, the amount realized on the sale of the obligation, or the fair market value of the obligation, shall not include any amount attributable to interest, and the adjusted basis shall be computed without regard to any adjustment for amortization of bond premium required under sections 75 and 1016(a)(6). The amount of the reduction referred to in the first sentence of this subdivision is the total amount by which the adjusted basis of the obligation would be required to be reduced under section 1016(a)(5) were the obligation subject to the amortizable bond premium provisions of section 171; that is, the amount of the amortizable bond premium attributable to the period during which the obligation was held which would be disallowed as a deduction under section 171(a)(2) if the taxpayer were an ordinary investor.

(3) This paragraph may be illustrated by the following examples:

Example 1. X, a dealer in securities who values his inventories on a basis other than cost, makes his income tax returns on the calendar year basis. On July 1, 1954, he bought, for $1,060 each, three municipal bonds (A, B, an C) having a face obligation of $1,000, and maturing on July 1, 1959. Bond A is sold on December 31, 1954, bond B is sold on December 31, 1955, and bond C is sold on June 30, 1956. For each bond the amortizable bond premium to maturity is $60, the period from date of acquisition to maturity is 60 months, and the amortizable bond premium per month is $1. The adjustment for each of the years 1954, 1955, and 1956 is as follows:

Bond	Date acquired	Date sold	Adjustment to "cost of securities sold" for—		
			1954	1955	1956
A	July 1, 1954	Dec. 31, 1954	$6		
B	July 1, 1954	Dec. 31, 1955	6	$12	
C	July 1, 1954	Jun. 30, 1956	6	12	$6
Total			18	24	6

Example 2. Y is a dealer in securities who values his inventories on a basis other than cost. He makes his income tax returns on the calendar year basis. On January 1, 1958, Y bought five bonds (D, E, F, G, and H) issued by various municipalities. Each bond has a face obligation of $1,000 and was purchased for $1,060. The interest on each is excludable from gross income under section 103. Bonds D, E, and F mature on December 31, 1962, and bonds G and H mature on December 31, 1967. The amortizable bond premium per month is $1 with respect to bonds D, E, and F, and is $.50 with respect to bonds G and H. The following table indicates the reduction in "cost of securities sold" which Y should make for the years shown, assuming that he sells the bonds on the dates and for the prices set forth:

Bond	Date sold	Sale price	Adjustment to "cost of securities sold" for—		
			1958	1959	1960
D	Feb. 1, 1959	$1,090	$12	$1	
E	Jan. 30, 1958	1,100	None		
F	Jan. 30, 1958	1,000	1		
G	Dec. 31, 1960	1,065	None	None	None
H	Dec. 31, 1960	1,050	None	None	$18

Bond	Date sold	Sale price	Adjustment to "cost of securities sold" for—		
			1958	1959	1960
Total			13	1	18

An adjustment to "cost of securities sold" must be made with respect to bond D (even though it was ultimately sold at a gain) because the bond neither had an earliest maturity or call date of more than 5 years from the date on which Y acquired it, nor was it disposed of within 30 days after such date. An adjustment must be made for the years 1958 and 1959 since section 75(a)(1) requires that an adjustment be made with respect to such a bond at the close of each taxable year in which it is held. On the other hand, since bonds E, F, G, and H either were disposed of within 30 days after the date of such acquisition or had an earliest maturity or call date more than 5 years from the date of acquisition, and were acquired after December 31, 1957, it is necessary to determine whether Y disposed of them at a loss so as to require an adjustment under section 75. No adjustment is necessary with respect to bonds E and G because they were sold at a gain. An adjustment to "cost of securities sold" is required with respect to bonds F and H because they were sold at a loss. As in the case of bond D, an adjustment with respect to bond F is made in 1958 in accordance with section 75(a)(1); however, the adjustment with respect to bond H is made entirely in 1960, the taxable year in which Y sold that bond, in accordance with the last sentence of section 75(a). If Y had acquired bonds before January 1, 1958, it would be unnecessary to determine whether they were disposed of at a loss since that factor is significant only with respect to bonds acquired on or after that date.

(c) ***Inventories not used or inventories valued at cost.***

(1) In the case of a dealer in securities who computes gross income from his trade or business without the use of inventories or by use of inventories valued at cost, the adjustment required by section 75 is a reduction of the adjusted basis of each municipal bond sold or otherwise disposed of during the taxable year. The amount of such reduction is the total amount by which the adjusted basis of the bond would be required to be reduced under section 1016(a)(5) were the bond subject to the amortizable bond premium provisions of section 171; that is, the amount of the amortizable bond premium attributable to the period during which the bond was held which would be disallowed as a deduction under section 171(a)(2) if the taxpayer were an ordinary investor.

(2) Subparagraph (1) of this paragraph may be illustrated by the following example:

Example. Z, a dealer in securities who values his inventories on the basis of cost, makes his income tax returns on the calendar year basis. On January 1, 1954, he buys, for $1,060 each, three municipal bonds (I, J, and K) having a face obligation of $1,000, and maturing on January 1, 1959. Bond I is sold on December 31, 1954, bond J is sold on June 30, 1955, and bond K is sold on December 31, 1956. For each bond, the amortizable bond premium to

maturity is $60, the period from the date of acquisition to maturity is 60 months, and the amortizable bond premium per month is $1.

Bond	Date acquired	Date sold	Adjustment for—		
			1954	1955	1956
I	Jan. 1, 1954	Dec. 31,1954	$12		
J	Jan. 1,1954	June 30,1955	None	$18	
K	Jan. 1,1954	Dec. 31,1956	None	None	$36

(d) ***Bonds acquired before July 1, 1950.*** Under section 203(c) of the Revenue Act of 1950, adjustment is required for a municipal bond acquired before July 1, 1950, only with respect to taxable years beginning on or after that date. Accordingly, if the municipal bond was acquired before July 1, 1950, then for purposes of section 75 the amortizable bond premium under section 171 must be computed after adjusting the bond premium to the extent proper to reflect unamortized bond premium for so much of the holding period (as determined under section 1223) as precedes the taxable year of the dealer beginning on or after July 1, 1950. Thus, in example (1) of paragraph (b) and in the example in paragraph (c) of this section, the first taxable year beginning on or after July 1, 1950, is, for each dealer, the taxable year beginning January 1, 1951. If each dealer had purchased for $1,060 on April 1, 1950, a municipal bond having a face obligation of $1,000 and maturing April 1, 1955, and had sold such bond on February 28, 1955, the adjustment under section 75 would be computed as follows:

	Dealer *X*	Dealer *Z*
Bond premium	$60	$60
Adjustment for holding period prior to Jan. 1, 1951	9	9
Amortizable bond premium to maturity, as adjusted	51	51
Amortizable bond premium per month	1	1
Total adjustments under sec. (o), 1939 Code, for years 1951-53	36	None
Adjustment under sec. 75 for 1954	12	None
Adjustment under sec. 75 for 1955	2	50

[T.D. 6647, 28 FR 3519, Apr. 11, 1963]

§ 1.77-1 Election to consider Commodity Credit Corporation loans as income.

A taxpayer who receives a loan from the Commodity Credit Corporation may, at his election, include the amount of such loan in his gross income for the taxable year in which the loan is received. If a taxpayer makes such an election (or has made such an election under section 123 of the Internal Revenue Code of 1939 or under section 223(d) of the Revenue Act of 1939 (53 Stat. 897)), then for subsequent taxable years he shall include in his gross income all amounts received during those years as loans from the Commodity Credit Corporation, unless he

secures the permission of the Commissioner to change to a different method of accounting. Application for permission to change such method of accounting and the basis upon which the return is made shall be filed with the Commission of Internal Revenue, Washington, D.C. 20224, within 90 days after the beginning of the taxable year to be covered by the return.

§ 1.77-2 Effect of election to consider commodity credit loans as income.

(a) If a taxpayer elects or has elected under section 77, section 123 of the Internal Revenue Code of 1939, or section 223(d) of the Revenue Act of 1939 (53 Stat. 897), as amended, to include in his gross income the amount of a loan from the Commodity Credit Corporation for the taxable year in which it is received, then—

(1) No part of the amount realized by the Commodity Credit Corporation upon the sale or other disposition of the commodity pledged for such loan shall be recognized as income to the taxpayer, unless the taxpayer receives an amount in addition to that advanced to him as the loan, in which event such additional amount shall be included in the gross income of the taxpayer for the taxable year in which it is received, and

(2) No deductible loss to the taxpayer shall be recognized on account of any deficiency realized by the Commodity Credit Corporation on such loan if the taxpayer was relieved from liability for such deficiency.

(b) The application of paragraph (a) of this section may be illustrated by the following example:

Example. A, a taxpayer who elected for his taxable year 1952 to include in gross income amounts received as loans from the Commodity Credit Corporation, received as loans $500 in 1952, $700 in 1953, and $900 in 1954. In 1956 all the pledged commodity was sold by the Commodity Credit Corporation for an amount $100 and $200 less than the loans with respect to the commodity pledged in 1952 and 1953, respectively, and for an amount $150 greater than the loan with respect to the commodity pledged in 1954. A, in making his return for 1956, shall include in gross income the sum of $150 if it is received during that year, but will not be allowed a deduction for the deficiencies of $100 and $200 unless he is required to satisfy such deficiencies and does satisfy them during that year.

§ 1.78-1 Gross up for deemed paid foreign tax credit.

(a) ***Taxes deemed paid by certain domestic corporations treated as a dividend.*** If a domestic corporation chooses to have the benefits of the foreign tax credit under section 901 for any taxable year, an amount that is equal to the U.S. dollar amount of foreign income taxes deemed to be paid by the corporation for the year under section 960 (in the case of section 960(d), determined without regard to the phrase "80 percent of" in section 960(d)(1)) is, to the extent provided by this section, treated as a dividend (*a section 78 dividend*) received by the domestic corporation from the foreign corporation. A section 78 dividend is treated as a dividend for all purposes of the Code, except that it is not treated as a dividend for purposes of section 245 or 245A, and does not increase the earnings and profits of the domestic corporation or decrease the earnings and profits of the foreign corporation. Any reduction under section 907(a) of the foreign income taxes deemed paid with respect to combined foreign oil and gas income does not affect the amount treated as a section 78 dividend. See § 1.907(a)-1(e)(3). Similarly, any reduction under section 901(e) of the foreign income taxes deemed paid with respect to foreign mineral income does not affect the amount treated as a section 78 dividend. See § 1.901-3(a)(2)(i), (b)(2)(i)(b), and (d) *Example 8.* Any reduction under section 6038(c)(1)(B) in the foreign taxes paid or accrued by a foreign corporation is taken into account in determining foreign taxes deemed paid and the amount treated as a section 78 dividend. See, for example, § 1.6038-2(k)(5) *Example 1.* To the extent provided in the Code, section 78

does not apply to any tax not allowed as a credit. See, for example, sections 901(j)(3), 901(k)(7), 901(l)(4), 901(m)(6), and 908(b). For rules on determining the source of a section 78 dividend in computing the limitation on the foreign tax credit under section 904, see §§ 1.861-3(a)(3), 1.862-1(a)(1)(ii), and 1.904-5(m)(6). For rules on assigning a section 78 dividend to a separate category, see § 1.904-4.

(b) ***Date on which section 78 dividend is received.*** A section 78 dividend is considered received by a domestic corporation on the date on which—

(1) The corporation includes in gross income under section 951(a)(1)(A) the amounts by reason of which there are deemed paid under section 960(a) the foreign income taxes that give rise to that section 78 dividend, notwithstanding that the foreign income taxes may be carried back or carried over to another taxable year and deemed to be paid or accrued in such other taxable year under section 904(c); or

(2) The corporation includes in gross income under section 951A(a) the amounts by reason of which there are deemed paid under section 960(d) the foreign income taxes that give rise to that section 78 dividend.

(c) ***Applicability date.*** This section applies to taxable years of foreign corporations that begin after December 31, 2017, and to taxable years of United States shareholders in which or with which such taxable years of foreign corporations end. The second sentence of paragraph (a) of this section also applies to section 78 dividends that are received after December 31, 2017, by reason of taxes deemed paid under section 960(a) with respect to a taxable year of a foreign corporation beginning before January 1, 2018.

[T.D. 9866, 84 FR 29335, June 21, 2019]

§ 1.79-0 Group-term life insurance—definitions of certain terms.

The following definitions apply for purposes of section 79, this section, and §§ 1.79-1, 1.79-2, and 1.79-3.

Carried directly or indirectly. A policy of life insurance is “carried directly or indirectly” by an employer if—

(a) The employer pays any part of the cost of the life insurance directly or through another person; or

(b) The employer or two or more employers arrange for payment of the cost of the life insurance by their employees and charge at least one employee less than the cost of his or her insurance, as determined under Table I of § 1.79-3(d)(2), and at least one other employee more than the cost of his or her insurance, determined in the same way.

Employee. An “employee” is—

(a) A person who performs services if his or her relationship to the person for whom services are performed is the legal relationship of employer and employee described in § 31.3401(c)-1; or

(b) A full-time life insurance salesperson described in section 7701(a)(20); or

(c) A person who formerly performed services as an employee.

A person who formerly performed services as an employee and currently performs services for the same employer as an independent contractor is considered an employee only with respect to insurance provided because of the person's former services as an employee.

Group of employees. A "group of employees" is all employees of an employer, or less than all employees if membership in the group is determined solely on the basis of age, marital status, or factors related to employment. Examples of factors related to employment are membership in a union some or all of whose members are employed by the employer, duties performed, compensation received, and length of service. Ordinarily the purchase of something other than group-term life insurance is not a factor related to employment. For example, if an employer provides credit life insurance to all employees who purchase automobiles, these employees are not a "group of employees" because membership is not determined solely on the basis of age, marital status, or factors related to employment. On the other hand, participation in an employer's pension, profit-sharing or accident and health plan is considered a factor related to employment even if employees are required to contribute to the cost of the plan. Ownership of stock in the employer corporation is not a factor related to employment. However, participation in an employer's stock bonus plan may be a factor related to employment and a "group of employees" may include employees who own stock in the employer corporation.

Permanent benefit. A "permanent benefit" is an economic value extending beyond one policy year (for example, a paid-up or cash surrender value) that is provided under a life insurance policy. However, the following features are not permanent benefits:

(a) A right to convert (or continue) life insurance after group life insurance coverage terminates;

(b) Any other feature that provides no economic benefit (other than current insurance protection) to the employee; or

(c) A feature under which term life insurance is provided at a level premium for a period of five years or less.

Policy. The term "policy" includes two or more obligations of an insurer (or its affiliates) that are sold in conjunction. Obligations that are offered or available to members of a group of employees are sold in conjunction if they are offered or available because of the employment relationship. The actuarial sufficiency of the premium charged for each obligation is not taken into account in determining whether the obligations are sold in conjunction. In addition, obligations may be sold in conjunction even if the obligations are contained in separate documents, each document is filed with and approved by the applicable state insurance commission, or each obligation is independent of any other obligation. Thus, a group of individual contracts under which life insurance is provided to a group of employees may be a policy. Similarly, two benefits provided to a group of employees, one term life insurance and the other a permanent benefit, may be a policy, even if one of the benefits is provided only to employees who decline the other benefit. However, an employer may elect to treat two or more obligations each of which provides no permanent benefits as separate policies if the premiums are properly allocated among such policies. An employer also may elect to treat an obligation which provides permanent benefits as a separate policy if—

(a) The insurer sells the obligation directly to the employee who pays the full cost thereof;

(b) The participation of the employer with respect to sales of the obligation to employees is limited to selection of the insurer and the type of coverage and to sales assistance activities such as providing employee lists to the insurer, permitting the insurer to use the employer's premises for solicitation, and collecting premiums through payroll deduction;

(c) The insurer sells the obligation on the same terms and in substantial amounts to individuals who do not purchase (and whose employers do not purchase) any other obligation from the insurer; and

(d) No employer-provided benefit is conditioned on purchase of the obligation.

[T.D. 7623, 44 FR 28797, May 17, 1979, as amended by T.D. 7917, 48 FR 45762, Oct. 7, 1983]

§ 1.79-1 Group-term life insurance—general rules.

(a) ***What is group-term life insurance?*** Life insurance is not group-term life insurance for purposes of section 79 unless it meets the following conditions:

(1) It provides a general death benefit that is excludable from gross income under section 101(a).

(2) It is provided to a group of employees.

(3) It is provided under a policy carried directly or indirectly by the employer.

(4) The amount of insurance provided to each employee is computed under a formula that precludes individual selection. This formula must be based on factors such as age, years of service, compensation, or position. This condition may be satisfied even if the amount of insurance provided is determined under a limited number of alternative schedules that are based on the amount each employee elects to contribute. However, the amount of insurance provided under each schedule must be computed under a formula that precludes individual selection.

(b) ***May group-term life insurance be combined with other benefits?*** No part of the life insurance provided under a policy that provides a permanent benefit is group-term life insurance unless—

(1) The policy or the employer designates in writing the part of the death benefit provided to each employee that is group-term life insurance; and

(2) The part of the death benefit that is provided to an employee and designated as the group-term life insurance benefit for any policy year is not less than the difference between the total death benefit provided under the policy and the employee's deemed death benefit (DDB) at the end of the policy year determined under paragraph (d)(3) of this section.

(c) ***May a group include fewer than 10 employees?***

(1) As a general rule, life insurance provided to a group of employees cannot qualify as group-term life insurance for purposes of section 79 unless, at some time during the calendar year, it is provided to at least 10 full-time employees who are members of the group of employees. For purposes of this rule, all life insurance provided under policies carried directly or indirectly by the employer is taken into account in determining the number of employees to whom life insurance is provided.

(2) The general rule of paragraph (c)(1) of this section does not apply if the following conditions are met:

(i) The insurance is provided to all full-time employees of the employer or, if evidence of insurability affects eligibility, to all full-time employees who provide evidence of insurability satisfactory to the insurer.

(ii) The amount of insurance provided is computed either as a uniform percentage of compensation or on the basis of coverage brackets established by the insurer. However, the amount computed under either method may be reduced in the case of employees who do not provide evidence of insurability satisfactory to the insurer. In general, no bracket may exceed $2^{1}/_{2}$ times the next lower bracket and the lowest bracket must be at least 10 percent of the highest bracket. However, the insurer may establish a separate schedule of coverage brackets

for employees who are over age 65, but no bracket in the over-65 schedule may exceed $2^1/_2$ times the next lower bracket and the lowest bracket in the over-65 schedule must be at least 10 percent of the highest bracket in the basic schedule.

(iii) Evidence of insurability affecting employee's eligibility for insurance or the amount of insurance provided to that employee is limited to a medical questionnaire completed by the employee that does not require a physical examination.

(3) The general rule of paragraph (c)(1) of this section does not apply if the following conditions are met:

(i) The insurance is provided under a common plan to the employees of two or more unrelated employers.

(ii) The insurance is restricted to, but mandatory for, all employees of the employer who belong to or are represented by an organization (such as a union) that carries on substantial activities in addition to obtaining insurance.

(iii) Evidence of insurability does not affect an employee's eligibility for insurance or the amount of insurance provided to that employee.

(4) For purposes of paragraph (c) (2) and (3) of this section, employees are not taken into account if they are denied insurance for the following reasons:

(i) They are not eligible for insurance under the terms of the policy because they have not been employed for a waiting period, specified in the policy, which does not exceed six months.

(ii) They are part-time employees. Employees whose customary employment is for not more than 20 hours in any week, or 5 months in any calendar year, are presumed to be part-time employees.

(iii) They have reached the age of 65.

(5) For purposes of paragraph (c) (1) and (2) of this section, insurance is considered to be provided to an employee who elects not to receive insurance unless, in order to receive the insurance, the employee is required to contribute to the cost of benefits other than term life insurance. Thus, if an employee could receive term life insurance by contributing to its cost, the employee is taken into account in determining whether the insurance is provided to 10 or more employees even if such employee elects not to receive the insurance. However, an employee who must contribute to the cost of permanent benefits to obtain term life insurance is not taken into account in determining whether the term life insurance is provided to 10 or more employees unless the term life insurance is actually provided to such employee.

(d) ***How much must an employee receiving permanent benefits include in income?*** —

(1) ***In general.*** If an insurance policy that meets the requirements of this section provides permanent benefits to an employee, the cost of the permanent benefits reduced by the amount paid for permanent benefits by the employee is included in the employee's income. The cost of the permanent benefits is determined under the formula in paragraph (d)(2) of this section.

(2) ***Formula for determining cost of the permanent benefits.*** In each policy year the cost of the permanent benefits for any particular employee must be no less than:

X $(DDB_2 - DDB_1)$

where

DDB_2 is the employee's deemed death benefit at the end of the policy year:

DDB_1 is the employee's deemed death benefit at the end of the preceding policy year; and

X is the net single premium for insurance (the premium for one dollar of paid-up whole-life insurance) at the employee's attained age at the beginning of the policy year.

(3) ***Formula for determining deemed death benefit.*** The deemed death benefit (DDB) at the end of any policy year for any particular employee is equal to—

R/Y

Where—

R is the net level premium reserve at the end of that policy year for all benefits provided to the employee by the policy or, if greater, the fair market value of the policy at the end of that policy year; and

Y is the net single premium for insurance (the premium for one dollar of paid-up, whole life insurance) at the employee's age at the end of that policy year.

(4) ***Mortality tables and interest rates used.*** For purposes of paragraph (d) (2) and (3) of this section, the net level premium reserve (*R*) and the net single premium (*X* or *Y*) shall be based on the 1958 CSO Mortality Table and 4 percent interest.

(5) ***Dividends.*** If an insurance policy that meets the requirements of this section provides permanent benefits, part or all of the dividends under the policy may be includible in the employee's income. If the employee pays nothing for the permanent benefits, all dividends under the policy that are actually or constructively received by the employee are includible in the employee's income. In all other cases, the amount of dividends included in the employee's income is equal to:

$(D + C) - (PI + DI + AP)$

where

D is the total amount of dividends actually or constructively received under the policy by the employee in the current and all preceding taxable years of the employee;

C is the total cost of the permanent benefits for the current and all preceding taxable years of the employee determined under the formulas in paragraph (d) (2) and (6) of this section:

PI is the total amount of premium included in the employee's income under paragraph (d)(1) of this section for the current and all preceding taxable years of the employee;

DI is the total amount of dividends included in the employee's income under this paragraph (d)(5) in all preceding taxable years of the employee; and

AP is the total amount paid for permanent benefits by the employee in the current and all preceding taxable years of the employee.

(6) ***Different policy and taxable years.***

(i) If a policy year begins in one employee taxable year and ends in another employee taxable year, the cost of the permanent benefits, determined under the formula in paragraph (d)(2) of this section, is allocated between the employee taxable years.

(ii) The cost of permanent benefits for a policy year is allocated first to the employee taxable year in which the policy year begins. The cost of permanent benefits allocated to that policy year is equal to:

$F \times C$

where

F is the fraction of the premium for that policy year that is paid on or before the last day of the employee taxable year; and

C is the cost of permanent benefits for the policy year determined under the formula in paragraph (d)(2) of this section.

(iii) Any part of the cost of permanent benefits that is not allocated to the employee taxable year in which the policy year begins is allocated to the subsequent employee taxable year.

(iv) The cost of permanent benefits for an employee taxable year is the sum of the costs of permanent benefits allocated to that year under paragraph (d)(6) (ii) and (iii) of this section.

(7) ***Example.*** The provisions of this paragraph may be illustrated by the following example:

Example. An employer provides insurance to employee A under a policy that meets the requirements of this section. Under the policy, A, who is 47 years old, received $70,000 of group-term life insurance and elects to receive a permanent benefit under the policy. A pays $2 for each $1,000 of group-term life insurance through payroll deductions and the employer pays the remainder of the premium for the group-term life insurance. The employer also pays one half of the premium specified in the policy for the permanent benefit. A pays the other half of the premium for the permanent benefit through payroll deductions. The policy specifies that the annual premium paid for the permanent benefit is $300. However, the amount of premium allocated to the permanent benefit by the formula in paragraph (d)(2) of this section is $350. A is a calendar year taxpayer; the policy year begins January 1. In year 2000, $200 is includible in A's income because of insurance provided by the employer. This amount is computed as follows:

(1) Cost of permanent benefits	$350
(2) Amounts considered paid by A for permanent benefits ($^1/_2 \times$ $300)	150
(3) Line (1) minus line (2)	200

(4) Cost of $70,000 of group-term life insurance under Table I of § 1.79-3	126
(5) Cost of $50,000 of group-term life insurance under Table I of § 1.79-3	90
(6) Cost of group-term insurance in excess of $50,000 (line (4) minus line(5))	36
(7) Amount considered paid by A for group-term life insurance (70 × $2)	140
(8) Line (6) minus line (7) (but not less than 0)	0
(9) Amount includible in income (line (3) plus line (8))	200

(e) ***What is the effect of State law limits?*** Section 79 does not apply to life insurance in excess of the limits under applicable state law on the amount of life insurance that can be provided to an employee under a single contract of group-term life insurance.

(f) ***Cross references.***

(1) See section 79(b) and § 1.79-2 for rules relating to group-term life insurance provided to certain retired individuals.

(2) See section 61(a) and the regulations thereunder for rules relating to life insurance not meeting the requirements of section 79, this section, or § 1.79-2, such as insurance provided on the life of a non-employee (for example, an employee's spouse), insurance not provided as compensation for personal services performed as an employee, insurance not provided under a policy carried directly or indirectly by the employer, or permanent benefits.

(3) See sections 106 and § 1.106-1 for rules relating to certain insurance that does not provide general death benefits, such as travel insurance or accident and health insurance (including amounts payable under a double indemnity clause or rider).

(g) [Reserved]

(h) ***Effective date.*** Section 1.79-0 applies to insurance provided in employee taxable years beginning on or after January 1, 1977 (except as provided in 26 CFR 1.79-1(g) (revised as of April 1, 1983) with respect to insurance provided in employee taxable years beginning in 1977). Sections 1.79-1 through 1.79-3 apply to insurance provided in employee taxable years beginning after December 31, 1982. See 26 CFR 1.79-1 through 1.79-3 (revised as of April 1, 1983) for rules applicable to insurance provided in employee taxable years beginning before January 1, 1983.

(Secs. 79(c) and 7805 of the Internal Revenue Code of 1954 (78 Stat. 36, 26 U.S.C. 79(c); 68A Stat. 917, 26 U.S.C. 7805))

[T.D. 7623, 44 FR 28797, May 17, 1979, as amended by T.D. 7917, 48 FR 45762, Oct. 7, 1983; T.D. 7924, 48 FR 54595, Dec. 6, 1983; T.D. 8821, 64 FR 29790, June 3, 1999; T.D. 9223, 70 FR 50971, Aug. 29, 2005]

§ 1.79-2 Exceptions to the rule of inclusion.

(a) ***In general.***

(1) Section 79(b) provides exceptions for the cost of group-term life insurance provided under certain policies otherwise described in section 79(a). The policy or policies of group-term life insurance which are described in section 79(a) but which qualify for one of the exceptions set forth in section

79(b) are described in paragraphs (b) through (d) of this section. Paragraph (b) of this section discusses the exception provided in section 79(b) (1); paragraph (c) of this section discusses the exception provided in section 79(b)(2); and paragraph (d) of this section discusses the exception provided in section 79(b)(3).

(2)

(i) If a policy of group-term life insurance qualifies for an exception provided by section 79(b), then the amount equal to the cost of such insurance is excluded from the application of the provisions of section 79(a).

(ii) If a policy, or portion of a policy of group-term life insurance qualifies for an exception provided by section 79(b), the amount (if any) paid by the employee toward the purchase of such insurance is not to be taken into account as an amount referred to in section 79 (a)(2). In the case of a policy or policies of group-term life insurance which qualify for an exception provided by section 79(b) (1) or (3), the amount paid by the employee which is not to be taken into account as an amount referred to in section 79(a) (2) is the amount paid by the employee for the particular policy or policies of group-term life insurance which qualify for an exception provided under such section. If the exception provided in section 79(b)(2) is applicable only to a portion of the group-term life insurance on the employee's life, the amount considered to be paid by the employee toward the purchase of such portion is the amount equal to the excess of the cost of such portion of the insurance over the amount otherwise includible in the employee's gross income with respect to the group-term life insurance on his life carried directly or indirectly by such employer.

(iii) The rules of this subparagraph may be illustrated by the following example:

Example. A is an employee of X Corporation and is also an employee of Y Corporation, a subsidiary of X Corporation. A is provided, under a separate plan arranged by each of his employers, group-term life insurance on his life. During his taxable year, under the group-term life insurance plan of X Corporation, A is provided $60,000 of group-term life insurance on his life, and A pays $360.00 toward the purchase of such insurance. Under the group-term life insurance plan of Y Corporation, A is provided $65,000 of group-term life insurance on his life, but does not pay any part of the cost of such insurance. At the beginning of his taxable year, A terminates his employment with the X Corporation after he has reached the retirement age with respect to such employer, and the policy carried by the X Corporation qualifies for the exception provided by section 79(b)(1). For that taxable year, the cost of the group-term life insurance on A's life which is provided under the plan of X Corporation is not taken into account in determining the amount includible in A's gross income under section 79(a), and A may not take into account as an amount described in section 79(a)(2) the $360.00 he pays toward the purchase of such insurance.

(b) ***Retired and disabled employees*** —

(1) ***In general.*** Section 79(b)(1) provides an exception for the cost of group-term life insurance on the life of an individual which is provided under a policy or policies otherwise described in section 79(a) if the individual has terminated his employment (as defined in subparagraph (2) of this paragraph) with such employer and either has reached the retirement age with respect to such employer (as defined in subparagraph (3) of this paragraph), or has become disabled (as defined in subparagraph (4)(i) of this paragraph). If an individual who has terminated his employment attains retirement age or has become disabled during his taxable year, or if an employee who has attained retirement age or has become disabled terminates his employment during the taxable year, the exception provided by

section 79(b)(1) applies only to the portion of the cost of group-term life insurance which is provided subsequent to the happening of the last event which qualifies the policy of insurance on the employee's life for the exception provided in such section.

(2) ***Termination of employment.*** For purposes of section 79(b)(1), an individual has terminated his employment with an employer providing such individual group-term life insurance when such individual no longer renders services to that employer as an employee of such employer.

(3) ***Retirement age.*** For purposes of section 79(b)(1) and this section, the meaning of the term "retirement age" is determined in accordance with the following rules—

(i)

(*a*) If the employee is covered under a written pension or annuity plan of the employer providing such individual group-term life insurance on his life (whether or not such plan is qualified under section 401(a) or 403(a)), then his retirement age shall be considered to be the earlier of—

(*1*) The earliest age indicated by such plan at which an active employee has the right (or an inactive individual would have the right had he continued in employment) to retire without disability and without the consent of his employer and receive immediate retirement benefits computed at either the full rate or a rate proportionate to completed service as set forth in the normal retirement formula of the plan, *i.e.*, without actuarial or similar reduction because of retirement before some later specified age, or

(*2*) The age at which it has been the practice of the employer to terminate, due to age, the services of the class of employees to which he last belonged.

(*b*) For purposes of (*a*) of this subdivision, if an employee is covered under more than one pension or annuity plan of the employer, his retirement age shall be determined with regard to that plan which covers that class of employees of the employer to which the employee last belonged. If the class of employees to which the employee last belonged is covered under more than one pension or annuity plan, then the employee's retirement age shall be determined with regard to that plan which covers the greatest number of the employer's employees.

(ii) In the absence of a written employee's pension or annuity plan described in subdivision (i) of this subparagraph, retirement age is the age, if any, at which it has been the practice of the employer to terminate, due to age, the services of the class of employees to which the particular employee last belonged, provided such age is reasonable in view of all the pertinent facts and circumstances.

(iii) If neither subdivision (i) or (ii) of this subparagraph applies, the retirement age is considered to be age 65.

(4) ***Disabled.***

(i) For taxable years beginning after December 31, 1966, an individual is considered disabled for purposes of section 79(b)(1) and subparagraph (1) of this paragraph if he is disabled within the meaning of section 72(m)(7) and paragraph (f) of § 1.72-17. For taxable years beginning before January 1, 1967, an individual is considered disabled for purposes of section 79(b)(1) and

subparagraph (1) of this paragraph if he is disabled within the meaning of section 213(g)(3), relating to the meaning of disabled, but the determination of the individual's status shall be made without regard to the provisions of section 213(g)(4), relating to the determination of status.

(ii)

(*a*) In any taxable year in which an individual seeks to apply the exception set forth in section 79(b)(1) by reason of his being disabled within the meaning of subdivision (i) of this subparagraph, and in which the aggregate amount of insurance on the individual's life subject to the rule of inclusion set forth in section 79(a), but determined without regard to the amount of any insurance subject to any exception set forth in section 79(b), is greater than $50,000 of such insurance, the substantiation required by (*b*) or (*c*) of this subdivision must be submitted with the individual's tax return.

(*b*) For the first taxable year for which the individual seeks to apply the exception set forth in section 79(b)(1) by reason of his being disabled within the meaning of subdivision (i) of this subparagraph, there must be submitted with his income tax return a doctor's statement as to his impairment. There must also be submitted with the return a statement by the individual with respect to the effect of the impairment upon his substantial gainful activity, and the date such impairment occurred. For subsequent taxable years, the taxpayer may, in lieu of such statements, submit a statement declaring the continued existence (without substantial diminution) of the impairment and its continued effect upon his substantial gainful activity.

(*c*) In lieu of the substantiation required to be submitted by (*b*) of this subdivision for the taxable year, the individual may submit a signed statement issued to him by the insurer to the effect that the individual is disabled within the meaning of subdivision (i) of this paragraph. Such statement must set forth the basis for the insurer's determination that the individual was so disabled, and, for the first taxable year in which the individual is so disabled, the date such disability occurred.

(c) ***Employer or charity a beneficiary*** —

(1) ***General rule.*** Section 79(b)(2) provides an exception with respect to the amounts referred to in section 79 (a) for the cost of any portion of the group-term life insurance on the life of an employee provided during part or all of the taxable year of the employee under which the employer is directly or indirectly the beneficiary, or under which a person described in section 170(c) (relating to definition of charitable contributions) is the sole beneficiary, for the entire period during such taxable year for which the employee receives such insurance.

(2) ***Employer is a beneficiary.*** For purposes of section 79(b)(2) and subparagraph (1) of this paragraph, the determination of whether the employer is directly or indirectly the beneficiary under a policy or policies of group-term life insurance depends upon the facts and circumstances of the particular case. Such determination is not made solely with regard to whether the employer possesses all the incidents of ownership in the policy. Thus, for example, if the employer is the nominal beneficiary under a policy of group-term life insurance on the life of his employee but there is an arrangement whereby the employer is required to pay over all (or a portion) of the proceeds of such policy to the employee's estate or his beneficiary, the employer is not considered a beneficiary under such policy (or such portion of the policy).

(3) ***Charity a beneficiary.***

(i) For purposes of section 79(b)(2) and subparagraph (1) of this paragraph, a person described in section 170(c) is a beneficiary under a policy providing group-term life insurance if such person is designated the beneficiary under the policy by any assignment or designation of beneficiary under the policy which, under the law of the jurisdiction which is applicable to the policy, has the effect of making such person the beneficiary under such policy (whether or not such designation is revocable during the taxable year). Such a designation may be made by the employee with respect to any portion of the group-term life insurance on his life. However, no deduction is allowed under section 170, relating to charitable, etc., contributions and gifts, with respect to any such assignment or designation.

(ii) A person described in section 170(c) must be designated the sole beneficiary under the policy or portion of the policy. Such requirement is satisfied if the person described in section 170(c) is the beneficiary under such policy or portion of the policy, and there is no contingent or similar beneficiary under such policy or such portion other than a person described in section 170(c). A general “preference beneficiary clause” in a policy governing payment where there is no designated beneficiary in existence at the death of the employee will not of itself be considered to create a contingent or similar beneficiary. A person described in section 170(c) may be designated the beneficiary under a portion of the policy if such person is designated the sole beneficiary under a beneficiary designation which is expressed, for example, as a fraction of the amount of insurance on the insured's life.

(iii) If a person described in section 170(c) is designated, before May 1, 1964, the beneficiary under the policy (or portion thereof) and such person remains the beneficiary for the period beginning May 1, 1964, and ending with the close of the first taxable year of the employee ending after April 30, 1964, such person shall be treated as the beneficiary under the policy (or the portion thereof) for the period beginning January 1, 1964, and ending April 30, 1964.

(d) ***Insurance contracts purchased under qualified employee plans.***

(1) Section 79(b)(3) provides an exception with respect to the cost of any group-term life insurance which is provided under a life insurance contract purchased as a part of a plan described in section 403(a), or purchased by a trust described in section 401(a) which is exempt from tax under section 501(a) if the proceeds of such contract are payable directly or indirectly to a participant in such trust or to a beneficiary of such participant. The provisions of section 72(m)(3) and § 1.72-16 apply to the cost of such group-term life insurance, and, therefore, no part of such cost is excluded from the gross income of the employee by reason of the provisions of section 79.

(2) Whether the life insurance protection on an employee's life is provided under a qualified employee plan referred to in subparagraph (1) of this paragraph depends upon the provisions of such plan. In determining whether a pension, profit-sharing, stock bonus, or annuity plan satisfies the requirements for qualification set forth in sections 401(a) or 403(a), only group-term life insurance which is provided under such plan is taken into account.

[T.D. 6888, 31 FR 9201, July 6, 1966, as amended by T.D. 6919, 32 FR 7390, May 18, 1967; T.D. 6985, 33 FR 19812, Dec. 27, 1968; T.D. 7623, 44 FR 28800, May 17, 1979]

§ 1.79-3 Determination of amount equal to cost of group-term life insurance.

(a) ***In general.*** This section prescribes the rules for determining the amount equal to the cost of group-term life insurance on an employee's life which is to be included in his gross income pursuant to the rule of inclusion set forth in section 79(a). Such amount is determined by—

(1) Computing the cost of the portion of the group-term life insurance on the employee's life to be taken into account (determined in accordance with the rules set forth in paragraph (b) of this section) for each "period of coverage" (as defined in paragraph (c) of this section) and aggregating the costs so determined, then

(2) Reducing the amount determined under subparagraph (1) of this paragraph by the amount determined in accordance with the rules set forth in paragraph (e) of this section, relating to the amount paid by the employee toward the purchase of group-term life insurance.

(b) ***Determination of the portion of the group-term life insurance on the employee's life to be taken into account.***

(1) For each "period of coverage" (as defined in paragraph (c) of this section), the portion of the group-term life insurance to be taken into account in computing the amount includible in an employee's gross income for purposes of paragraph (a)(1) of this section is the sum of the proceeds payable upon the death of the employee under each policy, or portion of a policy, of group-term life insurance on such employee's life to which the rule of inclusion set forth in section 79(a) applies, less $50,000 of such insurance. Thus, the amount of any proceeds payable under a policy, or portion of a policy, which qualifies for one of the exceptions to the rule of inclusion provided by section 79(b) is not taken into account. For the regulations relating to such exceptions to the rule of inclusion, see § 1.79-2.

(2) For purposes of making the computation required by subparagraph (1) of this paragraph in any case in which the amount payable under the policy, or portion thereof, varies during the period of coverage, the amount payable under such policy during such period is considered to be the average of the amount payable under such policy at the beginning and the end of such period.

(3)

(i) For purposes of making the computation required by subparagraph (1) of this paragraph in any case in which the amount payable under the policy is not payable as a specific amount upon the death of the employee in full discharge of the liability of the insurer, and such form of payment is not one of alternative methods of payment, the amount payable under such policy is the present value of the agreement by the insurer under the policy to make the payments to the beneficiary or beneficiaries entitled to such amounts upon the employee's death. For each period of coverage, such present value is to be determined as if the first and last day of such period is the date of death of the employee.

(ii) The present value of the agreement by the insurer under the policy to make payments shall be determined by the use of the mortality tables and interest rate employed by the insurer with respect to such a policy in calculating the amount held by the insurer (as defined in section 101(d)(2)), unless the Commissioner otherwise determines that a particular mortality table and interest rate, representative of the mortality table and interest rate used by commercial insurance companies with respect to such policies, shall be used to determine the present value of the policy for purposes of this subdivision.

(iii) For purposes of making the computation required by subdivision (i) of this subparagraph in any case in which it is necessary to determine the age of an employee's beneficiary and such beneficiary remains the same (under the policy, or the portion of the policy, with respect to which the determination of the present value of the agreement of the insurer to pay benefits is being made) for the entire period during the employee's taxable year for which such policy is in effect, the age of such beneficiary is such beneficiary's age at his nearest birthday on June 30th of the calendar year.

(iv) If the policy of group-term life insurance on the employee's life is such that the present value of the agreement by the insurer under the policy to pay benefits cannot be determined by the rules prescribed in this subparagraph, the taxpayer may submit with his return a computation of such present value, consistent with the actuarial and other assumptions set forth in this subparagraph, showing the appropriate factors applied in his case. Such computation shall be subject to the approval of the Commissioner upon examination of such return.

(c) ***Period of coverage.*** For purposes of this section, the phrase “period of coverage” means any one calendar month period, or part thereof, during the employee's taxable year during which the employee is provided group-term life insurance on his life to which the rule of inclusion set forth in section 79(a) applies. The phrase “part thereof” as used in the preceding sentence means any continuous period which is less than the one calendar month period referred to in the preceding sentence for which premiums are charged by the insurer.

(d) ***The cost of the portion of the group-term life insurance on an employee's life.***

(1) This paragraph sets forth the rules for determining the cost, for each period of coverage, of the portion of the group-term life insurance on the employee's life to be taken into account in computing the amount includible in the employee's gross income for purposes of paragraph (a)(1) of this section. The portion of the group-term life insurance on the employee's life to be taken into account is determined in accordance with the provisions of paragraph (b) of this section. Table I, which is set forth in subparagraph (2) of this paragraph, determines the cost for each $1,000 of such portion of the group-term life insurance on the employee's life for each one-month period. The cost of the portion of the group-term life insurance on the employee's life for each period of coverage of one month is obtained by multiplying the number of thousand dollars of such insurance computed to the nearest tenth which is provided during such period by the appropriate amount set forth in Table I. In any case in which group-term life insurance is provided for a period of coverage of less than one month, the amount set forth in Table I is prorated over such period of coverage.

(2) For the cost of group-term life insurance provided after June 30, 1999, the following table sets forth the cost of $1,000 of group-term life insurance provided for one month, computed on the basis of 5-year age brackets. See 26 CFR 1.79-3(d)(2) in effect prior to July 1, 1999, and contained in the 26

CFR part 1 edition revised as of April 1, 1999, for a table setting forth the cost of group-term life insurance provided before July 1, 1999. For purposes of Table I, the age of the employee is the employee's attained age on the last day of the employee's taxable year.

TABLE I—UNIFORM PREMIUMS FOR $1,000 OF GROUP-TERM LIFE INSURANCE PROTECTION

5-year age bracket	Cost per $1,000 of protection for one month
Under 25	$0.05
25 to 29	.06
30 to 34	.08
35 to 39	.09
40 to 44	.10
45 to 49	.15
50 to 54	.23
55 to 59	.43
60 to 64	.66
65 to 69	1.27
70 and above	2.06

(3) The net premium cost of group-term life insurance as provided in Table I of subparagraph (2) of this paragraph applies only to the cost of group-term life insurance subject to the rule of inclusion set forth in section 79(a). Therefore, such net premium cost is not applicable to the determination of the cost of group-term life insurance provided under a policy which is not subject to such rule of inclusion.

(e) *Effective date* —

(1) ***General effective date for table.*** Except as provided in paragraph (e)(2) of this section, the table in paragraph (d)(2) of this section is applicable July 1, 1999. Until January 1, 2000, an employer may calculate imputed income for all its employees under age 30 using the 5-year age bracket for ages 25 to 29.

(2) ***Effective date for table for purposes of § 1.79-0.*** For a policy of life insurance issued under a plan in existence on June 30, 1999, which would not be treated as carried directly or indirectly by an employer under § 1.79-0 (taking into account the Table I in effect on that date), until January 1, 2003, an employer may use either the table in paragraph (d)(2) of this section or the table in effect prior to July 1, 1999 (as described in paragraph (d)(2) of this section) for determining if the policy is carried directly or indirectly by the employer.

(f) ***Amount paid by the employee toward the purchase of group-term life insurance.***

(1) Except as otherwise provided in subparagraph (2) of this paragraph, if an employee pays any amount toward the purchase of group-term life insurance provided for a taxable year which is subject to the rule of inclusion set forth in paragraph (a)(2) of § 1.79-1, the sum of all such amounts is the amount referred to in section 79(a)(2) and paragraph (a)(2) of this section. The rule of the preceding sentence applies even though the payments made by the employee are made with respect to a period of coverage during which no portion of the group-term life insurance on his life is taken into account under paragraph (b)(1) of this section.

(2) In determining the amount paid by the employee for purposes of section 79(a)(2) and paragraph (a)(2) of this section, there is not taken into account any amounts paid by the employee for group-term life insurance provided (or to be provided) for a different taxable year (other than amounts applicable to regular pay periods extending into the next taxable year). Thus, for example, if part of an employee's payment during a taxable year represents a prepayment for insurance to be provided after his retirement, such part does not reduce the amount includible in his gross income for the current taxable year. Furthermore, in determining such amount, there is not taken into account any amount paid by an employee toward the purchase of group-term life insurance which qualifies for one of the exceptions described in section 79(b). The amount paid by an employee toward the purchase of group-term life insurance which qualifies for one of the exceptions described in section 79(b) is determined under the rules of paragraph (a)(2) of § 1.79-2.

(3) If payments are made by the employer and his employees to provide group-term life insurance which is subject to the rule of inclusion set forth in section 79(a) as well as to provide other benefits for the employees, and if the amount paid by the employee toward the purchase of such insurance cannot be determined by the provisions of the policy or plan under which such benefits are provided, then the determination of the portion of the cost of group-term life insurance (computed in accordance with the provisions of this section) which is attributable to the contributions of the employee shall be made in accordance with the provisions of this subparagraph. The amount paid by the employee toward the purchase of all the group-term life insurance on his life for his taxable year (or for the portion of his taxable year if such portion is the basis of the computation) under such group policy shall be an amount determined first by ascertaining the total amount paid by all employees who are covered for multiple benefits which is allocable toward the purchase of group-term life insurance on their lives for the year, and then by ascertaining the pro rata portion of such total amount attributable to the individual employee. The total amount paid by all employees who are covered for multiple benefits which is allocable toward the purchase of group-term life insurance on their lives with respect to such year shall be an amount which bears the same ratio to the total amount paid by all employees for multiple benefits with respect to such year as the aggregate premiums paid to the insurer for group-term life insurance on such employees' lives with respect to such year bears to the aggregate premiums paid to the insurer for such multiple benefits with respect to such year. The pro rata portion of such total amount attributable to the individual employee for the cost of group-term life insurance on his life shall be an amount which bears the same ratio to the total amount paid by all employees which is allocable toward the purchase of group-term insurance on their lives with respect to such year as the amount of group-term life insurance on the life of the employee at a specified time during the year, as determined by the employer, bears to the total amount of group-term life insurance on the lives of all employees insured for such multiple benefits at such time.

(g) *Effect of provision of other benefits* —

(1) ***In general.*** This paragraph discusses the effect of the provision of certain benefits other than group-term life insurance on the life of the employee if the provision of such benefits is contingent upon the underwriting of group-term life insurance on the employee's life to which the rule of inclusion set forth in section 79(a) applies.

(2) ***Dependent coverage.*** An amount equal to the cost of group-term life insurance on the life of the spouse or other family member of the employee which is provided under a policy of group-term life insurance carried directly or indirectly by his employer is not subject to the provisions of section 79 since it is not on the life of the employee. See paragraph (d)(2)(ii)(*b*) of § 1.61-2 for rules regarding the tax treatment of such insurance.

(3) ***Disability provisions.*** Payments made for disability benefits provided under a group-term life insurance contract are considered to constitute payments made for accident and health insurance. Thus, employer contributions to provide such benefits are excluded from gross income by reason of the provisions of section 106.

(4) ***Cost of other benefits.*** If a benefit described in this paragraph is provided under a policy under which both the employer and his employees contribute, then, except as otherwise provided in this subparagraph, the employer and the employees will be treated as contributing toward the payment of such benefit at the same rate as they contribute toward the cost of group-term life insurance on the employees' lives. A separate allocation of employer and employee contributions for such benefits is permissible only if—

(i) Such separate allocation is set forth in the group policy and is applicable to all the employees covered under such policy;

(ii) Such separate allocation is followed in transactions between the insurer and the group-policyholder; and

(iii) The allocation set forth in the policy satisfies the requirements of the law of the jurisdiction which is applicable to the contract regarding any minimum or maximum contribution rate by the employer or the employees.

(Secs. 79(c) and 7805 of the Internal Revenue Code of 1954 (78 Stat. 36, 26 U.S.C. 79(c); 68A Stat. 917, 28 U.S.C. 7805))

[T.D. 6888, 31 FR 9203, July 6, 1966, as amended by T.D. 7623, 44 FR 28800, May 17, 1979; T.D. 7924, 48 FR 54595, Dec. 6, 1983; T.D. 8273, 54 FR 47979, Nov. 20, 1989; T.D. 8424, 57 FR 33635, July 30, 1992; T.D. 8821, 64 FR 29790, June 3, 1999]

§ 1.79-4T Questions and answers relating to the nondiscrimination requirements for group-term life insurance (temporary).

Q-1: When does section 79, as amended by the Tax Reform Act of 1984, become effective?

A-1:

(a) Generally, section 79, as amended, applies to taxable years (of the employee receiving insurance coverage) beginning after December 31, 1983. There are, however, several exceptions to this effective date where there is coverage under a group-term life insurance plan of the employer that was in existence on January 1, 1984, or a comparable successor to such a plan maintained by the employer or a successor employer.

(b) First, the new rules of section 79 (b) and (e), that require the inclusion in income of a retired employee of amounts attributable to the cost of group-term life insurance in excess of $50,000 and that include former employees within the definition of the term "employee," will not apply to any employee who retired from employment on or before January 1, 1984.

(c) Second, in the case of an individual who retires after January 1, 1984, and before January 1, 1987, the new rules of section 79 (b) and (e) do not apply if

(1) the individual attained age 55 on or before January 1, 1984, and

(2) the plan was maintained by the same employer who employed the individual during 1983, or by a successor employer.

(d) Third, in the case of an individual who retires after December 31, 1986, the new rules of section 79 (b) and (e) do not apply if (1) the individual attained age 55 on or before January 1, 1984, (2) the plan was maintained by the same employer who employed the individual during 1983, or by a successor employer, and (3) the plan is not, after December 31, 1986, a discriminatory group-term life insurance plan (not taking into account any group-term life insurance coverage provided to employees who retired before January 1, 1987).

(e) For purposes of determining whether a plan is, after December 31, 1986, a discriminatory group-term life insurance plan, there shall be ignored any insurance coverage provided pursuant to a state law requirement that an insurer continue to provide insurance coverage for a period of time not in excess of two months following the termination of a policy.

Q-2: What is meant by a "group-term life insurance plan of the employer that was in existence on January 1, 1984"?

A-2: A group-term life insurance plan of the employer was in existence on January 1, 1984, only if the group policy or policies providing group-term life insurance benefits under the plan were executed on or before January 1, 1984, and were not terminated prior to such date. The applicability of section 79, as amended, to an employee will not be affected by the transfer of the employee between employers treated as a single employer under section 79(d)(7) if the employee continues, after the transfer, to be provided with group-term life insurance benefits under a plan that is comparable (determined under the principles set forth in Q&A 3) to the plan provided by the former employer.

Q-3: When is a plan of group-term life insurance a "comparable successor" to another such plan?

A-3: A plan of group-term life insurance will be a comparable successor to another plan of group-term life insurance (the first plan) only if the plan does not differ from the first plan in any significant aspect with respect to individuals who are potentially eligible for benefits provided under the grandfather provisions in Q&A 1. These individuals consist of those persons who are covered under a plan of group-term life insurance of the employer that was in existence on January 1, 1984, or a comparable successor to such a plan maintained by the employer or a successor employer, and who either retired on or before January 1, 1984, or who both attained age 55 on or before January 1, 1984, and were employed by the employer maintaining the plan (or a predecessor of that employer) during the year 1983. Accordingly, if significant additional or reduced benefits are provided only to individuals who are not described in the preceding sentence, the plan will be considered a comparable successor plan. A plan will not fail to be a comparable successor plan merely because the employer purchases a policy or policies identical to the employer's first plan from a different insurance company. If the new plan provides significant additional or reduced benefits (either as to the type or amount available) to employees, or provides benefits to a category of employees that was formerly excluded from participating in the plan, the plan is generally not a

comparable successor to the first plan. However, a plan will not be considered as providing significant additional or reduced benefits merely because a participant's coverage is based on a percentage of compensation and the participant's compensation for the taxable year has been increased or decreased. Furthermore, a plan will not be considered a non-comparable successor plan merely because it is amended, either to decrease benefits provided to key employees or to increase benefits provided to non-key employees, solely in order to comply with the nondiscrimination requirements of section 79(d). Finally, a plan will not be considered a non-comparable successor plan merely because a policy that is part of a discriminatory plan is terminated in order to end discriminatory coverage.

Q-4: For purposes of determining the effective date of section 79, as amended by the Tax Reform Act of 1984, what is a “successor employer”?

A-4: A successor employer is an employer who employs a group of individuals formerly employed by another employer as a result of a business merger, acquisition or division.

Q-5: Under what circumstances will separate policies of group-term life insurance of an employer be considered to be a single plan in determining whether the employer's plan of group-term life insurance is discriminatory?

A-5: All policies providing group-term life insurance to a common key employee or key employees (as defined in this Q&A) carried directly or indirectly by an employer (or by a group of employers described in section 79(d)(7)) will be considered as a single plan for purposes of determining whether an employer's group-term life insurance plan is discriminatory. For example, if a key employee receives $50,000 of group-term life insurance coverage under one policy and the same key employee receives an additional $250,000 of coverage under a separate group-term life insurance policy, the two policies will be treated as a single plan in determining whether the group-term life insurance provided by the employer is discriminatory. If it is discriminatory, the key employees covered by either policy will not receive the benefit of section 79(a)(1) or section 79(c) for either policy. The result is the same even if each policy, considered alone, would be nondiscriminatory. A policy that provides group-term life insurance to a key employee and a policy under which the same key employee is eligible to receive group-term life insurance upon separation from service will be considered to provide group-term life insurance to a common key employee. In addition, an employer may treat two or more policies that do not provide group-term life insurance to a common key employee as constituting a single plan for purposes of satisfying the nondiscrimination provisions of section 79(d). For example, if the employer provides group-term life insurance coverage for non-key employees under one policy and provides group-term life insurance coverage for key employees under a second policy, the two policies may be considered together in determining whether the requirements of section 79(d) are satisfied with regard to the second policy. For purposes of this section, the term “key employee” has the meaning given to such term by paragraph (1) of section 416(i), except that subparagraph (A)(iv) of such paragraph shall be applied by not taking into account employees described in section 79(d)(3)(B) who are not participants in the plan. For purposes of this section, all references to “plan year” or “plan years” in section 416(g)(4)(C) and section 416(i) shall be deleted and replaced with “taxable year of the employer” or “taxable years of the employer,” respectively.

Q-6: In the case of a discriminatory group-term life insurance plan, what amounts should be included in the gross income of a key employee?

A-6:

(a) In the case of a discriminatory group-term life insurance plan, each key employee must include in gross income for the taxable year the cost of his or her insurance benefit for that year provided by the employer under the plan.

(b) The cost of group-term life insurance coverage provided by an employer for a key employee during the employee's taxable year is determined by apportioning the net premium (group premium less policy dividends, premium refunds or experience rating credits) allocable to the group-term life insurance coverage during the key employee's taxable year, less the actual cost allocated to other key employees pursuant to the method described in the subparagraph (d) of this answer, if applicable, among the covered employees. In the event that the employer has other forms and types of coverage with the same insurer, the employer must make a reasonable allocation of the total premiums paid to the insurer. For example, where an employer has both health insurance coverage and a plan of group-term life insurance with the same insurer, and there is no volume discount, the net premium for the plan of group-term life insurance must include the excess, if any, of the payments the employer makes for the health insurance coverage over the payments the employer would make for such coverage if the plan of group-term life insurance for which this calculation is being made did not exist.

(c) In general, the portion of the net premium for group-term life insurance that should be apportioned to a key employee, other than a key employee to whom the method in subparagraph (d) of this answer is applicable, is determined by:

(1) Calculating a “tabular” premium for the entire group (with the exception of all key employees to whom the method in subparagraph (d) of this answer is applicable), in the manner described below,

(2) determining the ratio of the total actual net premium (less the actual cost allocated to key employees pursuant to the method in the subparagraph (d) of this answer) to the total tabular premium and

(3) multiplying the tabular premium for the key employee at his or her attained age by such ratio. Thus, if the total actual net premium is 125 percent of the total tabular premium for all covered employees and the tabular premium at the key employee's attained age is $2.00 per thousand per month, the cost for such employee would be $2.50 per thousand per month ($2.00 times 125 percent). For these purposes the table used to calculate tabular premiums will be determined as follows:

(i) If the group policy contains a reasonable table (based on recognized mortality assumptions) of premium rates on an attained age basis (which table may use age brackets not exceeding five years) with reference to which the group premium is determined, such table will be used;

(ii) If such table is not available, the 1960 Basic Group Table published by the Society of Actuaries will be used.

(d) In cases where the mortality charge for group-term life insurance coverage provided to a key employee is calculated separately by the insurer (for example, where the charge for the coverage provided to a key employee is based on a medical examination) and the amount of such mortality charge plus a proportionate share of the loading charge for the coverage provided to the group is higher than the amount that would be allocable to such employee under the allocation method in subparagraph (c) the cost of group-term life insurance coverage for that employee shall be that higher amount.

Q-7: Must all active and former employees be considered in applying the coverage tests in section 79(d)(3) to determine whether or not a plan of group-term life insurance is discriminatory with respect to coverage?

A-7: No. Generally, a plan of group-term life insurance which covers both active and former employees will not satisfy the nondiscrimination requirements of section 79(d) unless the coverage tests in section 79(d)(3) are satisfied with respect to both the active and the former employees of the employer, except to the extent they are excluded from tests for discrimination by application of the grandfather provisions set forth in Q&A 1. However, for purposes of determining whether a plan is discriminatory with respect to coverage, the coverage tests must be applied separately to active and former employees. In addition, if the plan limits participation by former employees to employees who retired from employment with the employer, then only retired employees must be considered in applying the coverage tests to former employees. Also, in applying the coverage tests in section 79(d)(3), the employer may make reasonable mortality assumptions regarding former employees who are not covered under the plan but must be considered in applying the coverage tests. Furthermore, only those former employees who terminated employment on or after the earliest date of termination from employment for any former employee covered by the plan must be considered. Finally, for purposes of determining whether a plan of group-term life insurance of the employer (or a successor employer) that was in existence on January 1, 1984 (or a comparable successor to such a plan) is discriminatory, after December 31, 1986, with respect to group-term life insurance coverage for former employees, coverage provided to employees who retired on or before December 31, 1986, shall not be taken into account.

Q-8: Will a group-term life insurance plan be considered discriminatory if active employees receive greater benefits as a percentage of compensation than former employees, or vice versa?

A-8: No. For purposes of determining whether a plan is discriminatory with respect to the type and amount of benefits available, insurance coverage for former employees must be tested separately from insurance coverage for active employees. For example, a group-term life insurance plan that provides group-term life insurance benefits equal to 200 percent of compensation for all active employees and 100 percent of final compensation (based on the average annual compensation for the final five years) for all former employees would satisfy the nondiscrimination requirements of section 79(d). However, a group-term life insurance plan that provides group-term life insurance benefits equal to 200 percent of compensation for all active employees and 100 percent of final compensation (based on the average annual compensation for the final five years) only for key employees who are no longer employed by the employer (or a successor employer) would not satisfy the nondiscrimination requirement of section 79(d)(2)(A).

Q-9: Under what circumstances will the amount of benefits available under a plan of group-term life insurance be considered not to discriminate in favor of participants who are key employees?

A-9: A plan of group-term life insurance will be considered not to discriminate in favor of participants who are key employees, as to the amount of benefits available, if the plan provides a fixed amount of insurance which is the same for all covered employees. In other circumstances, the determination of whether a plan is nondiscriminatory will be based on all of the facts and circumstances. Such plans will be considered not to discriminate in favor of participants who are key employees, as to the amount of benefits available, if the plan contains no group of employees described in the following sentence that, if tested separately, would fail to satisfy the requirements of section 79(d)(2)(A). The group subject to separate testing under the preceding sentence consists of a key employee and all other participants (including other key employees) who receive, under the plan, an amount of insurance (as a multiple of compensation (either total compensation or the basic or regular rate of compensation)) that is equal to or greater than the amount of insurance received by such key employee. As described in Q&As 7&8, active and former employees are tested separately under section 79(d)(2)(A).

Example: Assume that a plan of group-term life insurance has 500 participants, 10 of whom are key employees. Under the plan, 400 of the non-key employees receive an amount of insurance equal to 100 percent of compensation, while all of the key employees and 90 of the non-key employees receive an amount of insurance equal to 200 percent of compensation. The plan will be considered not to discriminate in favor of the participants who are key employees because, tested separately, the group of participants receiving an amount of insurance equal to or greater than 200 percent of compensation would satisfy the requirements of section 79(d)(2)(A) (by reason of section 79(d)(3)(A)(ii)). If one of the key employees received an amount of insurance equal to 300 percent of compensation, the plan would be considered to discriminate in favor of participants who are key employees, because, tested separately, the group consisting of the single key employee receiving an amount of insurance equal to or greater than 300 percent of compensation would fail to satisfy the requirements of section 79(d)(2)(A).

In determining the groups of employees that are tested separately for this purpose, allowance shall be made for reasonable differences in amount of insurance (as a multiple of compensation) due to rounding, the use of compensation brackets or other similar factors. Thus, if a plan bases group-term life insurance coverage on "compensation brackets," it is not intended that any participants will be treated as receiving an amount of insurance (as a multiple of compensation) that is greater (or less) than that of any other participant merely because the first participant's compensation is at the lower (or higher) end of a compensation bracket while the second participant's compensation is at the higher (or lower) end of a compensation bracket. However, any compensation brackets utilized by a plan will be examined to determine if the brackets, or compensation groupings, result in discrimination in favor of key employees. In addition, a plan does not meet the requirements for nondiscrimination as to the type and amount of benefits available under the plan unless all types of benefits (including permanent benefits) and all terms and conditions with respect to such benefits which are available to any participant who is a key employee are also available on a nondiscriminatory basis to non-key employee participants.

Q-10: How is additional coverage purchased by employees under a plan of group-term life insurance treated for purposes of determining whether a plan of group-term life insurance is discriminatory?

A-10:

(a) The extent to which employees purchase additional coverage under a plan of group-term life insurance is not taken into account for purposes of determining whether a plan of group-term life insurance is discriminatory. For example, a plan providing insurance to all employees of 1 times annual compensation, which gives all employees the option to purchase additional insurance of 1 times annual compensation at their own expense, would not be considered discriminatory as to the type and amount of benefits available, even if the group (or groups) of participants who purchase additional insurance, if tested separately, would not satisfy the requirements of section 79(d)(2)(A). Solely for this purpose, the choice of an amount of group-term life insurance as a benefit under a cafeteria plan will be treated as the purchase of group-term life insurance by an employee. If additional insurance coverage is available to any key employee that is not available, on a nondiscriminatory basis, to non-key employees, the plan will be considered discriminatory, even if the full cost of such additional insurance coverage is paid by the employee(s) electing such benefits.

(b) If the employer bears a part of the expense of any additional coverage that is purchased by an employee under a plan of group-term life insurance, the additional insurance shall be treated, in part, as an amount of insurance provided by the employer under the plan and, in part, as an amount of insurance purchased by the employee. Except to the extent provided in subparagraph (a) above, the portion of insurance treated as an amount of insurance purchased by the employee is not taken into account for purposes of determining whether the plan is discriminatory. Whether such insurance

(together with any other insurance provided by the employer under the plan) will cause the plan to be considered to discriminate in favor of participants who are key employees is determined under the rules of Q&A 9.

Q-11: What effect do the provisions of section 79(d)(1) have if a plan of group-term life insurance is discriminatory for only part of a year?

A-11: If a plan of group-term life insurance is discriminatory at any time during the key employee's taxable year, then it is a discriminatory group-term life insurance plan for that taxable year and the provisions of section 79(d)(1) will be applicable with respect to all group-term life insurance costs allocable to that employee for that year.

Q-12: Are the section 79(d) provisions independent from the requirements contained in Treas. Reg. § 1.79-1?

A-12: Yes. Treasury regulation § 1.79-1(c)(1) provides that life insurance provided to a group of employees cannot qualify as group-term life insurance if it is provided to less than ten full-time employees unless certain requirements are satisfied. The satisfaction of these requirements does not guarantee that the plan will be nondiscriminatory, and vice versa. Treasury regulation § 1.79-1(a)(4) provides that life insurance is not group-term life insurance unless the amount of insurance provided to each employee is computed under a formula that precludes individual selection. The mere fact that a life insurance policy is nondiscriminatory is not determinative as to whether the policy precludes individual selection, and vice versa.

[T.D. 8073, 51 FR 4315, Feb. 4, 1986; 51 FR 7262, Mar. 3, 1986]

§ 1.82-1 Payments for or reimbursements of expenses of moving from one residence to another residence attributable to employment or self-employment.

(a) ***Reimbursements in gross income*** —

(1) ***In general.*** Any amount received or accrued, directly or indirectly, by an individual as a payment for or reimbursement of expenses of moving from one residence to another residence attributable to employment or self-employment is includible in gross income under section 82 as compensation for services in the taxable year received or accrued. For rules relating to the year a deduction may be allowed for expenses of moving from one residence to another residence, see section 217 and the regulations thereunder.

(2) ***Amounts received or accrued as reimbursement or payment.*** For purposes of this section, amounts are considered as being received or accrued by an individual as reimbursement or payment whether received in the form of money, property, or services. A cash basis taxpayer will include amounts in gross income under section 82 when they are received or treated as received by him. Thus, for example, if an employer moves an employee's household goods and personal effects from the employee's old resident to his new residence using the employer's facilities, the employee is considered as having received a payment in the amount of the fair market value of the services furnished at the time the services are furnished by the employer. If the employer pays a mover for moving the employee's household goods and personal effects, the employee is considered as having received the payment at the time the employer pays the mover, rather than at the time the mover moves the employee's household goods and personal effects. Where an employee receives a loan or advance from an employer to enable him to pay his moving expenses, the employee will not be deemed to have received a reimbursement of moving expenses until such time as he accounts to his

employer if he is not required to repay such loan or advance and if he makes such accounting within a reasonable time. Such loan or advance will be deemed to be a reimbursement of moving expenses at the time of such accounting to the extent used by the employee for such moving expenses.

(3) ***Direct or indirect payments or reimbursements.*** For purposes of this section amounts are considered as being received or accrued whether received directly (paid or provided to an individual by an employer, a client, a customer, or similar person) or indirectly (paid to a third party on behalf of an individual by an employer, a client, a customer, or similar person). Thus, if an employer pays a mover for the expenses of moving an employee's household goods and personal effects from one residence to another residence, the employee has indirectly received a payment which is includible in his gross income under section 82.

(4) ***Expenses of moving from one residence to another residence.*** An expense of moving from one residence to another residence is any expenditure, cost, loss, or similar item paid or incurred in connection with a move from one residence to another residence. Moving expenses include (but are not limited to) any expenditure, cost, loss, or similar item directly or indirectly resulting from the acquisition, sale, or exchange of property, the transportation of goods or property, or travel (by the taxpayer or any other person) in connection with a change in residence. Such expenses include items described in section 217(b) (relating to the definition of moving expenses), irrespective of the dollar limitations contained in section 217(b)(3) and the conditions contained in section 217(c), as well as items not described in section 217 (b), such as a loss sustained on the sale or exchange of personal property, storage charges, taxes, or expenses of refitting rugs or draperies.

(5) ***Attributable to employment or self-employment.*** Any amount received or accrued from an employer, a client, a customer, or similar person in connection with the performance of services for such employer, client, customer, or similar person, is attributable to employment or self-employment. Thus, for example, if an employer reimburses an employee for a loss incurred on the sale of the employee's house, reimbursement is attributable to the performance of services if made because of the employer-employee relationship. Similarly, if an employer in order to prevent an employee's sustaining a loss on a sale of a house acquires the property from the employee at a price in excess of fair market value, the employee is considered to have received a payment attributable to employment to the extent that such payment exceeds the fair market value of the property.

(b) ***Effective date*** —

(1) ***In general.*** Except as provided in subparagraph (2) of this paragraph, paragraph (a) of this section is applicable only to amounts received or accrued in taxable years beginning after December 31, 1969.

(2) ***Election with respect to payments or reimbursements for expenses paid or incurred before January 1, 1971.*** Paragraph (a) of this section does not apply with respect to moving expenses paid or incurred before January 1, 1971, in connection with the commencement of work by an employee at a new principal place of work where such employee had been notified by his employer on or before December 19, 1969, of such move and the employee makes an election under paragraph (h) of § 1.217-2.

[T.D. 7195, 37 FR 13533, July 11, 1972, as amended by T.D. 7578, 43 FR 59355, Dec. 20, 1978]

§ 1.83-1 Property transferred in connection with the performance of services.

(a) ***Inclusion in gross income*** —

(1) ***General rule.*** Section 83 provides rules for the taxation of property transferred to an employee or independent contractor (or beneficiary thereof) in connection with the performance of services by such employee or independent contractor. In general, such property is not taxable under section 83(a) until it has been transferred (as defined in § 1.83-3(a)) to such person and become substantially vested (as defined in § 1.83-3(b)) in such person. In that case, the excess of—

(i) The fair market value of such property (determined without regard to any lapse restriction, as defined in § 1.83-3(i)) at the time that the property becomes substantially vested, over

(ii) The amount (if any) paid for such property,

shall be included as compensation in the gross income of such employee or independent contractor for the taxable year in which the property becomes substantially vested. Until such property becomes substantially vested, the transferor shall be regarded as the owner of such property, and any income from such property received by the employee or independent contractor (or beneficiary thereof) or the right to the use of such property by the employee or independent contractor constitutes additional compensation and shall be included in the gross income of such employee or independent contractor for the taxable year in which such income is received or such use is made available. This paragraph applies to a transfer of property in connection with the performance of services even though the transferor is not the person for whom such services are performed.

(2) ***Life insurance.*** The cost of life insurance protection under a life insurance contract, retirement income contract, endowment contract, or other contract providing life insurance protection is taxable generally under section 61 and the regulations thereunder during the period such contract remains substantially nonvested (as defined in § 1.83-3(b)). For the taxation of life insurance protection under a split-dollar life insurance arrangement (as defined in § 1.61-22(b)(1) or (2)), see § 1.61-22.

(3) ***Cross references.*** For rules concerning the treatment of employers and other transferors of property in connection with the performance of services, see section 83(h) and § 1.83-6. For rules concerning the taxation of beneficiaries of an employees' trust that is not exempt under section 501(a), see section 402(b) and the regulations thereunder.

(b) ***Subsequent sale, forfeiture, or other disposition of nonvested property.***

(1) If substantially nonvested property (that has been transferred in connection with the performance of services) is subsequently sold or otherwise disposed of to a third party in an arm's length transaction while still substantially nonvested, the person who performed such services shall realize compensation in an amount equal to the excess of—

(i) The amount realized on such sale or other disposition, over

(ii) The amount (if any) paid for such property.

Such amount of compensation is includible in his gross income in accordance with his method of accounting. Two preceding sentences also apply when the person disposing of the property has received it in a non-arm's length transaction described in paragraph (c) of this section. In addition, section 83(a) and paragraph (a) of this section shall thereafter cease to apply with respect to such property.

(2) If substantially nonvested property that has been transferred in connection with the performance of services to the person performing such services is forfeited while still substantially nonvested and held by such person, the difference between the amount paid (if any) and the amount received upon forfeiture (if any) shall be treated as an ordinary gain or loss. This paragraph (b)(2) does not apply to property to which § 1.83-2(a) applies.

(3) This paragraph (b) shall not apply to, and no gain shall be recognized on, any sale, forfeiture, or other disposition described in this paragraph to the extent that any property received in exchange therefor is substantially nonvested. Instead, section 83 and this section shall apply with respect to such property received (as if it were substituted for the property disposed of).

(c) ***Dispositions of nonvested property not at arm's length.*** If substantially nonvested property (that has been transferred in connection with the performance of services) is disposed of in a transaction which is not at arm's length and the property remains substantially nonvested, the person who performed such services realizes compensation equal in amount to the sum of any money and the fair market value of any substantially vested property received in such disposition. Such amount of compensation is includible in his gross income in accordance with his method of accounting. However, such amount of compensation shall not exceed the fair market value of the property disposed of at the time of disposition (determined without regard to any lapse restriction), reduced by the amount paid for such property. In addition, section 83 and these regulations shall continue to apply with respect to such property, except that any amount previously includible in gross income under this paragraph (c) shall thereafter be treated as an amount paid for such property. For example, if in 1971 an employee pays $50 for a share of stock which has a fair market value of $100 and is substantially monvested at that time and later in 1971 (at a time when the property still has a fair market value of $100 and is still substantially nonvested) the employee disposes of, in a transaction not at arm's length, the share of stock to his wife for $10, the employee realizes compensation of $10 in 1971. If in 1972, when the share of stock has a fair market value of $120, it becomes substantially vested, the employee realizes additional compensation in 1972 in the amount of $60 (the $120 fair market value of the stock less both the $50 price paid for the stock and the $10 taxed as compensation in 1971). For purposes of this paragraph, if substantially nonvested property has been transferred to a person other than the person who performed the services, and the transferee dies holding the property while the property is still substantially nonvested and while the person who performed the services is alive, the transfer which results by reason of the death of such transferee is a transfer not at arm's length.

(d) ***Certain transfers upon death.*** If substantially nonvested property has been transferred in connection with the performance of services and the person who performed such services dies while the property is still substantially nonvested, any income realized on or after such death with respect to such property under this section is income in respect of a decedent to which the rules of section 691 apply. In such a case the income in respect of such property shall be taxable under section 691 (except to the extent not includible under section 101(b)) to the estate or beneficiary of the person who performed the services, in accordance with section 83 and the regulations thereunder. However, if an item of income is realized upon such death before July 21, 1978, because the property became substantially vested upon death, the person responsible for filing decedent's income tax return for decedent's last taxable year may elect to treat such item as includible in gross income for decedent's last taxable year by including such item in gross income on the return or amended return filed for decedent's last taxable year.

(e) ***Forfeiture after substantial vesting.*** If a person is taxable under section 83(a) when the property transferred becomes substantially vested and thereafter the person's beneficial interest in such property is nevertheless forfeited pursuant to a lapse restriction, any loss incurred by such person (but not by a

beneficiary of such person) upon such forfeiture shall be an ordinary loss to the extent the basis in such property has been increased as a result of the recognition of income by such person under section 83(a) with respect to such property.

(f) ***Examples.*** The provisions of this section may be illustrated by the following examples:

Example 1. On November 1, 1978, X corporation sells to E, an employee, 100 shares of X corporation stock at $10 per share. At the time of such sale the fair market value of the X corporation stock is $100 per share. Under the terms of the sale each share of stock is subject to a substantial risk of forfeiture which will not lapse until November 1, 1988. Evidence of this restriction is stamped on the face of E's stock certificates, which are therefore nontransferable (within the meaning of § 1.83-3(d)). Since in 1978 E's stock is substantially nonvested, E does not include any of such amount in his gross income as compensation in 1978. On November 1, 1988, the fair market value of the X corporation stock is $250 per share. Since the X corporation stock becomes substantially vested in 1988, E must include $24,000 (100 shares of X corporation stock × $250 fair market value per share less $10 price paid by E for each share) as compensation for 1988. Dividends paid by X to E on E's stock after it was transferred to E on November 1, 1973, are taxable to E as additional compensation during the period E's stock is substantially nonvested and are deductible as such by X.

Example 2. Assume the facts are the same as in example (1), except that on November 1, 1985, each share of stock of X corporation in E's hands could as a matter of law be transferred to a bona fide purchaser who would not be required to forfeit the stock if the risk of forfeiture materialized. In the event, however, that the risk materializes, E would be liable in damages to X. On November 1, 1985, the fair market value of the X corporation stock is $230 per share. Since E's stock is transferable within the meaning of § 1.83-3(d) in 1985, the stock is substantially vested and E must include $22,000 (100 shares of X corporation stock × $230 fair market value per share less $10 price paid by E for each share) as compensation for 1985.

Example 3. Assume the facts are the same as in example (1) except that, in 1984 E sells his 100 shares of X corporation stock in an arm's length sale to I, an investment company, for $120 per share. At the time of this sale each share of X corporation's stock has a fair market value of $200. Under paragraph (b) of this section, E must include $11,000 (100 shares of X corporation stock × $120 amount realized per share less $10 price paid by E per share) as compensation for 1984 notwithstanding that the stock remains nontransferable and is still subject to a substantial risk of forfeiture at the time of such sale. Under § 1.83-4(b)(2), I's basis in the X corporation stock is $120 per share.

[T.D. 7554, 43 FR 31913, July 24, 1978, as amended by T.D. 9092, 68 FR 54351, Sept. 17, 2003]

§ 1.83-2 Election to include in gross income in year of transfer.

(a) ***In general.*** If property is transferred (within the meaning of § 1.83-3(a)) in connection with the performance of services, the person performing such services may elect to include in gross income under section 83(b) the excess (if any) of the fair market value of the property at the time of transfer (determined without regard to any lapse restriction, as defined in § 1.83-3(i)) over the amount (if any) paid for such property, as compensation for services. The fact that the transferee has paid full value for the property transferred, realizing no bargain element in the transaction, does not preclude the use of the election as provided for in this section. If this election is made, the substantial vesting rules of section 83(a) and the regulations thereunder do not apply with respect to such property, and except as otherwise provided in section 83(d)(2) and the regulations thereunder (relating to the cancellation of a nonlapse

restriction), any subsequent appreciation in the value of the property is not taxable as compensation to the person who performed the services. Thus, property with respect to which this election is made shall be includible in gross income as of the time of transfer, even though such property is substantially nonvested (as defined in § 1.83-3(b)) at the time of transfer, and no compensation will be includible in gross income when such property becomes substantially vested (as defined in § 1.83-3(b)). In computing the gain or loss from the subsequent sale or exchange of such property, its basis shall be the amount paid for the property increased by the amount included in gross income under section 83(b). If property for which a section 83(b) election is in effect is forfeited while substantially nonvested, such forfeiture shall be treated as a sale or exchange upon which there is realized a loss equal to the excess (if any) of—

(1) The amount paid (if any) for such property, over,

(2) The amount realized (if any) upon such forfeiture.

If such property is a capital asset in the hands of the taxpayer, such loss shall be a capital loss. A sale or other disposition of the property that is in substance a forfeiture, or is made in contemplation of a forfeiture, shall be treated as a forfeiture under the two immediately preceding sentences.

(b) ***Time for making election.*** Except as provided in the following sentence, the election referred to in paragraph (a) of this section shall be filed not later than 30 days after the date the property was transferred (or, if later, January 29, 1970) and may be filed prior to the date of transfer. Any statement filed before February 15, 1970, which was amended not later than February 16, 1970, in order to make it conform to the requirements of paragraph (e) of this section, shall be deemed a proper election under section 83(b).

(c) ***Manner of making election.*** The election referred to in paragraph (a) of this section is made by filing one copy of a written statement with the internal revenue office with which the person who performed the services files his return.

(d) ***Additional copies.*** The person who performed the services shall also submit a copy of the statement referred to in paragraph (c) of this section to the person for whom the services are performed. In addition, if the person who performs the services and the transferee of such property are not the same person, the person who performs the services shall submit a copy of such statement to the transferee of the property.

(e) ***Content of statement.*** The statement shall be signed by the person making the election and shall indicate that it is being made under section 83(b) of the Code, and shall contain the following information:

(1) The name, address and taxpayer identification number of the taxpayer;

(2) A description of each property with respect to which the election is being made;

(3) The date or dates on which the property is tansferred and the taxable year (for example, “calendar year 1970” or “fiscal year ending May 31, 1970”) for which such election was made;

(4) The nature of the restriction or restrictions to which the property is subject;

(5) The fair market value at the time of transfer (determined without regard to any lapse restriction, as defined in § 1.83-3(i)) of each property with respect to which the election is being made;

(6) The amount (if any) paid for such property; and

(7) With respect to elections made after July 21, 1978, a statement to the effect that copies have been furnished to other persons as provided in paragraph (d) of this section.

(f) ***Revocability of election.*** An election under section 83(b) may not be revoked except with the consent of the Commissioner. Consent will be granted only in the case where the transferee is under a mistake of fact as to the underlying transaction and must be requested within 60 days of the date on which the mistake of fact first became known to the person who made the election. In any event, a mistake as to the value, or decline in the value, of the property with respect to which an election under section 83(b) has been made or a failure to perform an act contemplated at the time of transfer of such property does not constitute a mistake of fact.

(g) ***Effective/applicability date.*** Paragraph (c) of this section applies to property transferred on or after January 1, 2016.

[T.D. 7554, 43 FR 31915, July 24, 1978, as amended by T.D. 9779, 81 FR 48708, July 26, 2016]

§ 1.83-3 Meaning and use of certain terms.

(a) ***Transfer*** —

(1) ***In general.*** For purposes of section 83 and the regulations thereunder, a transfer of property occurs when a person acquires a beneficial ownership interest in such property (disregarding any lapse restriction, as defined in § 1.83-3(i)). For special rules applying to the transfer of a life insurance contract (or an undivided interest therein) that is part of a split-dollar life insurance arrangement (as defined in § 1.61-22(b)(1) or (2)), *see* § 1.61-22(g).

(2) ***Option.*** The grant of an option to purchase certain property does not constitute a transfer of such property. However, see § 1.83-7 for the extent to which the grant of the option itself is subject to section 83. In addition, if the amount paid for the transfer of property is an indebtedness secured by the transferred property, on which there is no personal liability to pay all or a substantial part of such indebtedness, such transaction may be in substance the same as the grant of an option. The determination of the substance of the transaction shall be based upon all the facts and circumstances. The factors to be taken into account include the type of property involved, the extent to which the risk that the property will decline in value has been transferred, and the likelihood that the purchase price will, in fact, be paid. See also § 1.83-4(c) for the treatment of forgiveness of indebtedness that has constituted an amount paid.

(3) ***Requirement that property be returned.*** Similarly, no transfer may have occurred where property is transferred under conditions that require its return upon the happening of an event that is certain to occur, such as the termination of employment. In such a case, whether there is, in fact, a transfer depends upon all the facts and circumstances. Factors which indicate that no transfer has occurred are described in paragraph (a) (4), (5), and (6) of this section.

(4) ***Similarity to option.*** An indication that no transfer has occurred is the extent to which the conditions relating to a transfer are similar to an option.

(5) ***Relationship to fair market value.*** An indication that no transfer has occurred is the extent to which the consideration to be paid the transferee upon surrendering the property does not approach the fair market value of the property at the time of surrender. For purposes of paragraph (a) (5) and (6) of this section, fair market value includes fair market value determined under the rules of § 1.83-5(a)(1), relating to the valuation of property subject to nonlapse restrictions. Therefore, the existence of a nonlapse restriction referred to in § 1.83-5(a)(1) is not a factor indicating no transfer has occurred.

(6) ***Risk of loss.*** An indication that no transfer has occurred is the extent to which the transferee does not incur the risk of a beneficial owner that the value of the property at the time of transfer will decline substantially. Therefore, for purposes of this (6), risk of decline in property value is not limited to the risk that any amount paid for the property may be lost.

(7) ***Examples.*** The provisions of this paragraph may be illustrated by the following examples:

Example 1. On January 3, 1971, X corporation sells for $500 to S, a salesman of X, 10 shares of stock in X corporation with a fair market value of $1,000. The stock is nontransferable and subject to return to the corporation (for $500) if S's sales do not reach a certain level by December 31, 1971. Disregarding the restriction concerning S's sales (since the restrictions is a lapse restriction), S's interest in the stock is that of a beneficial owner and therefore a transfer occurs on January 3, 1971.

Example 2. On November 17, 1972, W sells to E 100 shares of stock in W corporation with a fair market value of $10,000 in exchange for a $10,000 note without personal liability. The note requires E to make yearly payments of $2,000 commencing in 1973. E collects the dividends, votes the stock and pays the interest on the note. However, he makes no payments toward the face amount of the note. Because E has no personal liability on the note, and since E is making no payments towards the face amount of the note, the likelihood of E paying the full purchase price is in substantial doubt. As a result E has not incurred the risks of a beneficial owner that the value of the stock will decline. Therefore, no transfer of the stock has occurred on November 17, 1972, but an option to purchase the stock has been granted to E.

Example 3. On January 3, 1971, X corporation purports to transfer to E, an employee, 100 shares of stock in X corporation. The X stock is subject to the sole restriction that E must sell such stock to X on termination of employment for any reason for an amount which is equal to the excess (if any) of the book value of the X stock at termination of employment over book value on January 3, 1971. The stock is not transferable by E and the restrictions on transfer are stamped on the certificate. Under these facts and circumstances, there is no transfer of the X stock within the meeting of section 83.

Example 4. Assume the same facts as in example (3) except that E paid $3,000 for the stock and that the restriction required E upon termination of employment to sell the stock to M for the total amount of dividends that have been declared on the stock since September 2, 1971, or $3,000 whichever is higher. Again, under the facts and circumstances, no transfer of the X stock has occurred.

Example 5. On July 4, 1971, X corporation purports to transfer to G, an employee, 100 shares of X stock. The stock is subject to the sole restriction that upon termination of employment G must sell the stock to X for the greater of its fair market value at such time or $100, the amount G paid for the stock. On July 4, 1971 the X stock has a fair market value of $100. Therefore, G does not incur the risk of a beneficial owner that the value of the stock at the time of transfer ($100) will decline substantially. Under these facts and circumstances, no transfer has occurred.

(b) ***Substantially vested and substantially nonvested property.*** For purposes of section 83 and the regulations thereunder, property is substantially nonvested when it is subject to a substantial risk of forfeiture, within the meaning of paragraph (c) of this section, and is nontransferable, within the meaning of paragraph (d) of this section. Property is substantially vested for such purposes when it is either transferable or not subject to a substantial risk of forfeiture.

(c) *Substantial risk of forfeiture* —

(1) ***In general.*** For purposes of section 83 and these regulations, whether a risk of forfeiture is substantial or not depends upon the facts and circumstances. Except as set forth in paragraphs (j) and (k) of this section, a substantial risk of forfeiture exists only if rights in property that are transferred are conditioned, directly or indirectly, upon the future performance (or refraining from performance) of substantial services by any person, or upon the occurrence of a condition related to a purpose of the transfer if the possibility of forfeiture is substantial. Property is not transferred subject to a substantial risk of forfeiture if at the time of transfer the facts and circumstances demonstrate that the forfeiture condition is unlikely to be enforced. Further, property is not transferred subject to a substantial risk of forfeiture to the extent that the employer is required to pay the fair market value of a portion of such property to the employee upon the return of such property. The risk that the value of property will decline during a certain period of time does not constitute a substantial risk of forfeiture. A nonlapse restriction, standing by itself, will not result in a substantial risk of forfeiture. A restriction on the transfer of property, whether contractual or by operation of applicable law, will result in a substantial risk of forfeiture only if and to the extent that the restriction is described in paragraph (j) or (k) of this section. For this purpose, transfer restrictions that will not result in a substantial risk of forfeiture include, but are not limited to, restrictions that if violated, whether by transfer or attempted transfer of the property, would result in the forfeiture of some or all of the property, or liability by the employee for any damages, penalties, fees, or other amount.

(2) ***Illustrations of substantial risks of forfeiture.*** The regularity of the performance of services and the time spent in performing such services tend to indicate whether services required by a condition are substantial. The fact that the person performing services has the right to decline to perform such services without forfeiture may tend to establish that services are insubstantial. Where stock is transferred to an underwriter prior to a public offering and the full enjoyment of such stock is expressly or impliedly conditioned upon the successful completion of the underwriting, the stock is subject to a substantial risk of forfeiture. Where an employee receives property from an employer subject to a requirement that it be returned if the total earnings of the employer do not increase, such property is subject to a substantial risk of forfeiture. On the other hand, requirements that the property be returned to the employer if the employee is discharged for cause or for committing a crime will not be considered to result in a substantial risk of forfeiture. An enforceable requirement that the property be returned to the employer if the employee accepts a job with a competing firm will not ordinarily be considered to result in a substantial risk of forfeiture unless the particular facts and circumstances indicate to the contrary. Factors which may be taken into account in determining whether a convenant not to compete constitutes a substantial risk of forfeiture are the age of the employee, the availability of alternative employment opportunities, the likelihood of the employee's obtaining such other employment, the degree of skill possessed by the employee, the employee's health, and the practice (if any) of the employer to enforce such covenants. Similarly, rights in property transferred to a retiring employee subject to the sole requirement that it be returned unless he renders consulting services upon the request of his former employer will not be considered subject to a substantial risk of forfeiture unless he is in fact expected to perform substantial services.

(3) ***Enforcement of forfeiture condition.*** In determining whether the possibility of forfeiture is substantial in the case of rights in property transferred to an employee of a corporation who owns a significant amount of the total combined voting power or value of all classes of stock of the employer corporation or of its parent corporation, there will be taken into account

(i) the employee's relationship to other stockholders and the extent of their control, potential control and possible loss of control of the corporation,

(ii) the position of the employee in the corporation and the extent to which he is subordinate to other employees,

(iii) the employee's relationship to the officers and directors of the corporation,

(iv) the person or persons who must approve the employee's discharge, and

(v) past actions of the employer in enforcing the provisions of the restrictions. For example, if an employee would be considered as having received rights in property subject to a substantial risk of forfeiture, but for the fact that the employee owns 20 percent of the single class of stock in the transferor corporation, and if the remaining 80 percent of the class of stock is owned by an unrelated individual (or members of such an individual's family) so that the possibility of the corporation enforcing a restriction on such rights is substantial, then such rights are subject to a substantial risk of forfeiture. On the other hand, if 4 percent of the voting power of all the stock of a corporation is owned by the president of such corporation and the remaining stock is so diversely held by the public that the president, in effect, controls the corporation, then the possibility of the corporation enforcing a restriction on rights in property transferred to the president is not substantial, and such rights are not subject to a substantial risk of forfeiture.

(4) ***Examples.*** The rules contained in paragraph (c)(1) of this section may be illustrated by the following examples. In each example it is assumed that, if the conditions on transfer are not satisfied, the forfeiture provision will be enforced.

Example 1. On November 1, 1971, corporation X transfers in connection with the performance of services to E, an employee, 100 shares of corporation X stock for $90 per share. Under the terms of the transfer, E will be subject to a binding commitment to resell the stock to corporation X at $90 per share if he leaves the employment of corporation X for any reason prior to the expiration of a 2-year period from the date of such transfer. Since E must perform substantial services for corporation X and will not be paid more than $90 for the stock, regardless of its value, if he fails to perform such services during such 2-year period, E's rights in the stock are subject to a substantial risk of forfeiture during such period.

Example 2. On November 10, 1971, corporation X transfers in connection with the performance of services to a trust for the benefit of employees, $100*x*. Under the terms of the trust any child of an employee who is an enrolled full-time student at an accredited educational institution as a candidate for a degree will receive an annual grant of cash for each academic year the student completes as a student in good standing, up to a maximum of four years. E, an employee, has a child who is enrolled as a full-time student at an accredited college as a candidate for a degree. Therefore, E has a beneficial interest in the assets of the trust equalling the value of four cash grants. Since E's child must complete one year of college in order to receive a cash grant, E's interest in the trust assets are subject to a substantial risk of forfeiture to the extent E's child has not become entitled to any grants.

Example 3. On November 25, 1971, corporation X gives to E, an employee, in connection with his performance of services to corporation X, a bonus of 100 shares of corporation X stock. Under the terms of the bonus arrangement E is obligated to return the corporation X stock to corporation X if he terminates his employment for any reason. However, for each year occurring after November 25, 1971, during which E remains employed with corporation X, E ceases to be obligated to return 10 shares of the corporation X stock. Since in each year occurring after

November 25, 1971, for which E remains employed he is not required to return 10 shares of corporation X's stock, E's rights in 10 shares each year for 10 years cease to be subject to a substantial risk of forfeiture for each year he remains so employed.

Example 4. (a) Assume the same facts as in example (3) except that for each year occurring after November 25, 1971, for which E remains employed with corporation X, X agrees to pay, in redemption of the bonus shares given to E if he terminates employment for any reason, 10 percent of the fair market value of each share of stock on the date of such termination of employment. Since corporation X will pay E 10 percent of the value of his bonus stock for each of the 10 years after November 25, 1971, in which he remains employed by X, and the risk of a decline in value is not a substantial risk of forfeiture, E's interest in 10 percent of such bonus stock becomes substantially vested in each of those years.
(b) The following chart illustrates the fair market value of the bonus stock and the fair market value of the portion of bonus stock that becomes substantially vested on November 25, for the following years:

Year	Fair market value of	
	All stock	Portion of stock that becomes vested
1972	$200	$20
1973	300	30
1974	150	15
1975	150	15
1976	100	10

If E terminates his employment on July 1, 1977, when the fair market value of the bonus stock is $100, E must return the bonus stock to X, and X must pay, in redemption of the bonus stock, $50 (50 percent of the value of the bonus stock on the date of termination of employment). E has recognized income under section 83(a) and § 1.83-1(a) with respect to 50 percent of the bonus stock, and E's basis in that portion of the stock equals the amount of income recognized, $90. Under § 1.83-1(e), the $40 loss E incurred upon forfeiture ($90 basis less $50 redemption payment) is an ordinary loss.

Example 5. On January 7, 1971, corporation X, a computer service company, transfers to E, 100 shares of corporation X stock for $50. E is a highly compensated salesman who sold X's products in a three-state area since 1960. At the time of transfer each share of X stock has a fair market value of $100. The stock is transferred to E in connection with his termination of employment with X. Each share of X stock is subject to the sole condition that E can keep such share only if he does not engage in competition with X for a 5-year period in the three-state area where E had previously sold X's products. E, who is 45 years old, has no intention of retiring from the work

force. In order to earn a salary comparable to his current compensation, while preventing the risk of forfeiture from arising, E will have to expend a substantial amount of time and effort in another industry or market to establish the necessary business contacts. Thus, under these facts and circumstances E's rights in the stock are subject to a substantial risk of forfeiture.

Example 6. On April 3, 2013, Y corporation grants to Q, an officer of Y, a nonstatutory option to purchase Y common stock. Although the option is immediately exercisable, it has no readily ascertainable fair market value when it is granted. Under the option, Q has the right to purchase 100 shares of Y common stock for $10 per share, which is the fair market value of a Y share on the date of grant of the option. On August 1, 2013, Y sells its common stock in an initial public offering. Pursuant to an underwriting agreement entered into in connection with the initial public offering, Q agrees not to sell, otherwise dispose of, or hedge any Y common stock from August 1 through February 1 of 2014 ("the lock-up period"). Q exercises the option and Y shares are transferred to Q on November 15, 2013, during the lock-up period. The underwriting agreement does not impose a substantial risk of forfeiture on the Y shares acquired by Q because the provisions of the agreement do not condition Q's rights in the shares upon anyone's future performance (or refraining from performance) of substantial services or on the occurrence of a condition related to the purpose of the transfer of shares to Q. Accordingly, neither section 83(c)(3) nor the imposition of the lock-up period by the underwriting agreement precludes taxation under section 83 when the shares resulting from exercise of the option are transferred to Q.

Example 7. Assume the same facts as in *Example 6,* except that on August 1, 2013, Y also adopts an insider trading compliance program, under which, as applied to 2013, insiders (such as Q) may trade Y shares only during a limited number of days following each quarterly earnings release ("a trading window"). Under the program, if Q trades Y shares outside a trading window without Y's permission, Y has the right to terminate Q's employment. However, the exercise of the nonstatutory options outside a trading window for Y shares is not prohibited under the insider trading compliance program. Q fully exercises the option, and Y shares are transferred to Q, on November 15, 2013. The exercise of the option occurs outside a trading window, and, on the date of exercise, Q is in possession of material nonpublic information concerning Y that would subject him to liability under Rule 10b-5 under the Securities Exchange Act of 1934 if Q sold the Y shares while in possession of such information. Neither the insider trading compliance program nor the potential liability under Rule 10b-5 impose a substantial risk of forfeiture on the Y shares acquired by Q because the provisions of the program and Rule 10b-5 do not condition Q's rights in the shares upon anyone's future performance (or refraining from performance) of substantial services or on the occurrence of a condition related to the purpose of the transfer of shares to Q. Accordingly, none of section 83(c)(3), the imposition of the trading windows by the insider trading compliance program, and the potential liability under Rule 10b-5 preclude taxation under section 83 when the shares resulting from exercise of the option are transferred to Q.

(d) ***Transferability of property.*** For purposes of section 83 and the regulations thereunder, the rights of a person in property are transferable if such person can transfer any interest in the property to any person other than the transferor of the property, but only if the rights in such property of such transferee are not subject to a substantial risk of forfeiture. Accordingly, property is transferable if the person performing the services or receiving the property can sell, assign, or pledge (as collateral for a loan, or as security for the performance of an obligation, or for any other purpose) his interest in the property to any person other than the transferor of such property and if the transferee is not required to give up the property or its value

in the event the substantial risk of forfeiture materializes. On the other hand, property is not considered to be transferable merely because the person performing the services or receiving the property may designate a beneficiary to receive the property in the event of his death.

(e) ***Property.*** For purposes of section 83 and the regulations thereunder, the term "property" includes real and personal property other than either money or an unfunded and unsecured promise to pay money or property in the future. The term also includes a beneficial interest in assets (including money) which are transferred or set aside from the claims of creditors of the transferor, for example, in a trust or escrow account. See, however, § 1.83-8(a) with respect to employee trusts and annuity plans subject to section 402(b) and section 403(c). In the case of a transfer of a life insurance contract, retirement income contract, endowment contract, or other contract providing life insurance protection, or any undivided interest therein, the policy cash value and all other rights under such contract (including any supplemental agreements thereto and whether or not guaranteed), other than current life insurance protection, are treated as property for purposes of this section. However, in the case of the transfer of a life insurance contract, retirement income contract, endowment contract, or other contract providing life insurance protection, which was part of a split-dollar arrangement (as defined in § 1.61-22(b)) entered into (as defined in § 1.61-22(j)) on or before September 17, 2003, and which is not materially modified (as defined in § 1.61-22(j)(2)) after September 17, 2003, only the cash surrender value of the contract is considered to be property. Where rights in a contract providing life insurance protection are substantially nonvested, see § 1.83-1(a)(2) for rules relating to taxation of the cost of life insurance protection.

(f) ***Property transferred in connection with the performance of services.*** Property transferred to an employee or an independent contractor (or beneficiary thereof) in recognition of the performance of, or the refraining from performance of, services is considered transferred in connection with the performance of services within the meaning of section 83. The existence of other persons entitled to buy stock on the same terms and conditions as an employee, whether pursuant to a public or private offering may, however, indicate that in such circumstances a transfer to the employee is not in recognition of the performance of, or the refraining from performance of, services. The transfer of property is subject to section 83 whether such transfer is in respect of past, present, or future services.

(g) ***Amount paid.*** For purposes of section 83 and the regulations thereunder, the term "amount paid" refers to the value of any money or property paid for the transfer of property to which section 83 applies, and does not refer to any amount paid for the right to use such property or to receive the income therefrom. Such value does not include any stated or unstated interest payments. For rules regarding the calculation of the amount of unstated interest payments, see § 1.483-1(c). When section 83 applies to the transfer of property pursuant to the exercise of an option, the term "amount paid" refers to any amount paid for the grant of the option plus any amount paid as the exercise price of the option. For rules regarding the forgiveness of indebtedness treated as an amount paid, see § 1.83-4(c).

(h) ***Nonlapse restriction.*** For purposes of section 83 and the regulations thereunder, a restriction which by its terms will never lapse (also referred to as a "nonlapse restriction") is a permanent limitation on the transferability of property—

(1) Which will require the transferee of the property to sell, or offer to sell, such property at a price determined under a formula, and

(2) Which will continue to apply to and be enforced against the transferee or any subsequent holder (other than the transferor).

A limitation subjecting the property to a permanent right of first refusal in a particular person at a price determined under a formula is a permanent nonlapse restriction. Limitations imposed by registration requirements of State or Federal security laws or similar laws imposed with respect to sales or other dispositions of stock or securities are not nonlapse restrictions. An obligation to resell or to offer to sell property transferred in connection with the performance of services to a specific person or persons at its fair market value at the time of such sale is not a nonlapse restriction. See § 1.83-5(c) for examples of nonlapse restrictions.

(i) ***Lapse restriction.*** For purposes of section 83 and the regulations thereunder, the term "lapse restriction" means a restriction other than a nonlapse restriction as defined in paragraph (h) of this section, and includes (but is not limited to) a restriction that carries a substantial risk of forfeiture.

(j) ***Sales which may give rise to suit under section 16(b) of the Securities Exchange Act of 1934*** —

(1) ***In general.*** For purposes of section 83 and the regulations thereunder if the sale of property at a profit within six months after the purchase of the property could subject a person to suit under section 16(b) of the Securities Exchange Act of 1934, the person's rights in the property are treated as subject to a substantial risk of forfeiture and as not transferable until the earlier of

(i) the expiration of such six-month period, or

(ii) the first day on which the sale of such property at a profit will not subject the person to suit under section 16(b) of the Securities Exchange Act of 1934. However, whether an option is "transferable by the optionee" for purposes of § 1.83-7(b)(2)(i) is determined without regard to section 83(c)(3) and this paragraph (j).

(2) ***Examples.*** The provisions of this paragraph may be illustrated by the following examples:

Example 1. On January 1, 1983, X corporation sells to P, a beneficial owner of 12% of X corporation stock, in connection with P's performance of services, 100 shares of X corporation stock at $10 per share. At the time of the sale the fair market value of the X corporation stock is $100 per share. P, as a beneficial owner of more 10% of X corporation stock, is liable to suit under section 16(b) of the Securities Exchange Act of 1934 for recovery of any profit from any sale and purchase or purchase and sale of X corporation stock within a six-month period, but no other restrictions apply to the stock. Because the section 16(b) restriction is applicable to P, P's rights in the 100 shares of stock purchased on January 1, 1983, are treated as subject to a substantial risk of forfeiture and as not transferable through June 29, 1983. P chooses not to make an election under section 83 (b) and therefore does not include any amount with respect to the stock purchase in gross income as compensation on the date of purchase. On June 30, 1983, the fair market value of X corporation stock is $250 per share. P must include $24,000 (100 shares of X corporation stock × $240 ($250 fair market value per share less $10 price paid by P for each share)) in gross income as compensation on June 30, 1983. If, in this example, restrictions other than section 16(b) applied to the stock, such other restrictions (but not section 16(b)) would be taken into account in determining whether the stock is subject to a substantial risk of foreiture and is nontransferable for periods after June 29, 1983.

Example 2. Assume the same facts as in example (1) except that P is not an insider on or after May 1, 1983, and the section 16(b) restriction does not apply beginning on that date. On May 1, 1983, P must include in gross income as compensation the difference between the fair market value of the stock on that date and the amount paid for the stock.

Example 3. Assume the same facts as in example (1) except that on June 1, 1983, X corporation sells to P an additional 100 shares of X corporation stock at $20 per share. At the time of the sale the fair market value of the X corporation stock is $150 per share. On June 30, 1983, P must include $24,000 in gross income as compensation with respect to the January 1, 1983 purchase. On November 30, 1983, the fair market value of X corporation stock is $200 per share. Accordingly, on that date P must include $18,000 (100 shares of X corporation stock × $180 ($200 fair market value per share less $20 price paid by P for each share)) in gross income as compensation with respect to the June 1, 1983 purchase.

Example 4. (i) On June 3, 2013, Y corporation grants to Q, an officer of Y, a nonstatutory option to purchase Y common stock. Y stock is traded on an established securities market. Although the option is immediately exercisable, it has no readily ascertainable fair market value when it is granted. Under the option, Q has the right to purchase 100 shares of Y common stock for $10 per share, which is the fair market value of a Y share on the date of grant of the option. The grant of the option is not one that satisfies the requirements for a transaction that is exempt from section 16(b) of the Securities Exchange Act of 1934. On December 15, 2013, Y stock is trading at more than $10 per share. On that date, Q fully exercises the option, paying the exercise price in cash, and receives 100 Y shares. Q's rights in the shares received as a result of the exercise are not conditioned upon the future performance of substantial services. Because no exemption from section 16(b) was available for the June 3, 2013 grant of the option, the section 16(b) liability period expires on December 1, 2013. Accordingly, the section 16(b) liability period expires *before* the date that Q exercises the option and the Y common stock is transferred to Q. Thus, the shares acquired by Q pursuant to the exercise of the option are not subject to a substantial risk of forfeiture under section 83(c)(3) as a result of section 16(b). As a result, section 83(c)(3) does not preclude taxation under section 83 when the shares acquired pursuant to the December 15, 2013 exercise of the option are transferred to Q.
(ii) Assume the same facts as in paragraph (i) of this *Example 4* except that Q exercises the nonstatutory option on October 30, 2013 when Y stock is trading at more than $10 per share. The shares acquired are subject to a substantial risk of forfeiture under section 83(c)(3) as a result of section 16(b) through December 1, 2013.

(iii) Assume the same facts as in paragraph (i) of this *Example 4* except that on November 5, 2013, Q also purchases 100 shares of Y common stock on the public market. The purchase of the shares is not a transaction exempt from section 16(b) of the Securities Exchange Act of 1934. Because no exemption from section 16(b) was available for the November 5, 2013 purchase of shares, the section 16(b) liability period with respect to such shares will last for a period of six months after the November 5, 2013 purchase of shares. Notwithstanding the non-exempt purchase of Y common stock on November 5, 2013, the shares acquired by Q pursuant to the December 15,

> 2013 exercise of the option are not subject to a substantial risk of forfeiture under section 83(c)(3) as a result of section 16(b). As a result, section 83(c)(3) does not preclude taxation under section 83 when the shares acquired pursuant to the December 15, 2013 exercise of the option are transferred to Q.

(k) For purposes of section 83 and the regulations thereunder, property is subject to substantial risk of forfeiture and is not transferable so long as the property is subject to a restriction on transfer to comply with the "Pooling-of-Interests Accounting" rules set forth in Accounting Series Release Numbered 130 ((10/5/72) 37 FR 20937; 17 CFR 211.130) and Accounting Series Release Numbered 135 ((1/18/73) 38 FR 1734; 17 CFR 211.135).

(l) ***Effective/applicability date.*** This section applies to property transferred on or after January 1, 2013. For rules relating to property transferred before that date, see § 1.83-3 as contained in 26 CFR part 1 (as of April 1, 2012).

[T.D. 7554, 43 FR 31916, July 24, 1978, as amended by T.D. 8042, 50 FR 31713, Aug. 6, 1985; 50 FR 39664, Sept. 30, 1985; T.D. 9092, 68 FR 54351, Sept. 17, 2003; T.D. 9223, 70 FR 50971, Aug. 29, 2005; T.D. 9659, 79 FR 10664, Feb. 26, 2014]

§ 1.83-4 Special rules.

(a) ***Holding period.*** Under section 83(f), the holding period of transferred property to which section 83(a) applies shall begin just after such property is substantially vested. However, if the person who has performed the services in connection with which property is transferred has made an election under section 83(b), the holding period of such property shall begin just after the date such property is transferred. If property to which section 83 and the regulations thereunder apply is transferred at arm's length, the holding period of such property in the hands of the transferee shall be determined in accordance with the rules provided in section 1223.

(b) ***Basis.***

(1) Except as provided in paragraph (b)(2) of this section, if property to which section 83 and the regulations thereunder apply is acquired by any person (including a person who acquires such property in a subsequent transfer which is not at arm's length), while such property is still substantially nonvested, such person's basis for the property shall reflect any amount paid for such property and any amount includible in the gross income of the person who performed the services (including any amount so includible as a result of a disposition by the person who acquired such property.) Such basis shall also reflect any adjustments to basis provided under sections 1015, 1016, and 1022.

(2) If property to which § 1.83-1 applies is transferred at arm's length, the basis of the property in the hands of the transferee shall be determined under section 1012 and the regulations thereunder.

(c) ***Forgiveness of indebtedness treated as an amount paid.*** If an indebtedness that has been treated as an amount paid under § 1.83-1(a)(1)(ii) is subsequently cancelled, forgiven or satisfied for an amount less than the amount of such indebtedness, the amount that is not, in fact, paid shall be includible in the gross income of the service provider in the taxable year in which such cancellation, forgiveness or satisfaction occurs.

(d) ***Effective/applicability date.*** The provisions in this section are applicable for taxable years beginning on or after July 21, 1978. The provisions of paragraph (b)(1) of this section relating to section 1022 are effective on and after January 19, 2017.

[T.D. 7554, 43 FR 31918, July 24, 1978, as amended by T.D. 9811, 82 FR 6236, Jan. 19, 2017]

§ 1.83-5 Restrictions that will never lapse.

(a) ***Valuation.*** For purposes of section 83 and the regulations thereunder, in the case of property subject to a nonlapse restriction (as defined in § 1.83-3(h)), the price determined under the formula price will be considered to be the fair market value of the property unless established to the contrary by the Commissioner, and the burden of proof shall be on the commissioner with respect to such value. If stock in a corporation is subject to a nonlapse restriction which requires the transferee to sell such stock only at a formula price based on book value, a reasonable multiple of earnings or a reasonable combination thereof, the price so determined will ordinarily be regarded as determinative of the fair market value of such property for purposes of section 83. However, in certain circumstances the formula price will not be considered to be the fair market value of property subject to such a formula price restriction, even though the formula price restriction is a substantial factor in determining such value. For example, where the formula price is the current book value of stock, the book value of the stock at some time in the future may be a more accurate measure of the value of the stock than the current book value of the stock for purposes of determining the fair market value of the stock at the time the stock becomes substantially vested.

(b) ***Cancellation*** —

(1) ***In general.*** Under section 83(d)(2), if a nonlapse restriction imposed on property that is subject to section 83 is cancelled, then, unless the taxpayer establishes—

(i) That such cancellation was not compensatory, and

(ii) That the person who would be allowed a deduction, if any, if the cancellation were treated as compensatory, will treat the transaction as not compensatory, as provided in paragraph (c)(2) of this section, the excess of the fair market value of such property (computed without regard to such restriction) at the time of cancellation, over the sum of—

(iii) The fair market value of such property (computed by taking the restriction into account) immediately before the cancellation, and

(iv) The amount, if any, paid for the cancellation, shall be treated as compensation for the taxable year in which such cancellation occurs. Whether there has been a noncompensatory cancellation of a nonlapse restriction under section 83(d)(2) depends upon the particular facts and circumstances. Ordinarily the fact that the employee or independent contractor is required to perform additional services or that the salary or payment of such a person is adjusted to take the cancellation into account indicates that such cancellation has a compensatory purpose. On the other hand, the fact that the original purpose of a restriction no longer exists may indicate that the purpose of such cancellation is noncompensatory. Thus, for example, if a so-called “buy-sell” restriction was imposed on a corporation's stock to limit ownership of such stock and is being cancelled in connection with a public offering of the stock, such cancellation will generally be regarded as noncompensatory. However, the mere fact that the employer is willing to forego a deduction under section 83(h) is insufficient evidence to establish a noncompensatory cancellation of a nonlapse restriction. The refusal by a corporation or

shareholder to repurchase stock of the corporation which is subject to a permanent right of first refusal will generally be treated as a cancellation of a nonlapse restriction. The preceding sentence shall not apply where there is no nonlapse restriction, for example, where the price to be paid for the stock subject to the right of first refusal is the fair market value of the stock. Section 83(d)(2) and this (1) do not apply where immediately after the cancellation of a nonlapse restriction the property is still substantially nonvested and no section 83(b) election has been made with respect to such property. In such a case the rules of section 83(a) and § 1.83-1 shall apply to such property.

(2) ***Evidence of noncompensatory cancellation.*** In addition to the information necessary to establish the factors described in paragraph (b)(1) of this section, the taxpayer shall request the employer to furnish the taxpayer with a written statement indicating that the employer will not treat the cancellation of the nonlapse restriction as a compensatory event, and that no deduction will be taken with respect to such cancellation. The taxpayer shall file such written statement with his income tax return for the taxable year in which or with which such cancellation occurs.

(c) ***Examples.*** The provisions of this section may be illustrated by the following examples:

Example 1. On November 1, 1971, X corporation whose shares are closely held and not regularly traded, transfers to E, an employee, 100 shares of X corporation stock subject to the condition that, if he desires to dispose of such stock during the period of his employment, he must resell the stock to his employer at its then existing book value. In addition, E or E's estate is obligated to offer to sell the stock at his retirement or death to his employer at its then existing book value. Under these facts and circumstances, the restriction to which the shares of X corporation stock are subject is a nonlapse restriction. Consequently, the fair market value of the X stock is includible in E's gross income as compensation for taxable year 1971. However, in determining the fair market value of the X stock, the book value formula price will ordinarily be regarded as being determinative of such value.

Example 2. Assume the facts are the same as in example (1), except that the X stock is subject to the condition that if E desires to dispose of the stock during the period of his employment he must resell the stock to his employer at a multiple of earnings per share that is in this case a reasonable approximation of value at the time of transfer to E. In addition, E or E's estate is obligated to offer to sell the stock at his retirement or death to his employer at the same multiple of earnings. Under these facts and circumstances, the restriction to which the X corporation stock is subject is a nonlapse restriction. Consequently, the fair market value of the X stock is includible in E's gross income for taxable year 1971. However, in determining the fair market value of the X stock, the multiple-of-earnings formula price will ordinarily be regarded as determinative of such value.

Example 3. On January 4, 1971, X corporation transfers to E, an employee, 100 shares of stock in X corporation. Each such share of stock is subject to an agreement between X and E whereby E agrees that such shares are to be held solely for investment purposes and not for resale (a so-called investment letter restriction). E's rights in such stock are substantially vested upon transfer, causing the fair market value of each share of X corporation stock to be includible in E's gross income as compensation for taxable year 1971. Since such an investment letter restriction does not constitute a nonlapse restriction, in determining the fair market value of each share, the investment letter restriction is disregarded.

Example 4. On September 1, 1971, X corporation transfers to B, an independent contractor, 500 shares of common stock in X corporation in exchange for B's agreement to provide services in the construction of an office building on property owned by X corporation. X corporation has 100 shares

of preferred stock outstanding and an additional 500 shares of common stock outstanding. The preferred stock has a liquidation value of $1,000*x*, which is equal to the value of all assets owned by X. Therefore, the book value of the common stock in X corporation is $0. Under the terms of the transfer, if B wishes to dispose of the stock, B must offer to sell the stock to X for 150 percent of the then existing book value of B's common stock. The stock is also subject to a substantial risk of forfeiture until B performs the agreed-upon services. B makes a timely election under section 83(b) to include the value of the stock in gross income in 1971. Under these facts and circumstances, the restriction to which the shares of X corporation common stock are subject is a nonlapse restriction. In determining the fair market value of the X common stock at the time of transfer, the book value formula price would ordinarily be regarded as determinative of such value. However, the fair market value of X common stock at the time of transfer, subject to the book value restriction, is greater than $0 since B was willing to agree to provide valuable personal services in exchange for the stock. In determining the fair market value of the stock, the expected book value after construction of the office building would be given great weight. The likelihood of completion of construction would be a factor in determining the expected book value after completion of construction.

[T.D. 7554, 43 FR 31918, July 24, 1978]

§ 1.83-6 Deduction by employer.

(a) ***Allowance of deduction*** —

(1) ***General rule.*** In the case of a transfer of property in connection with the performance of services, or a compensatory cancellation of a nonlapse restriction described in section 83(d) and § 1.83-5, a deduction is allowable under section 162 or 212 to the person for whom the services were performed. The amount of the deduction is equal to the amount included as compensation in the gross income of the service provider under section 83 (a), (b), or (d)(2), but only to the extent the amount meets the requirements of section 162 or 212 and the regulations thereunder. The deduction is allowed only for the taxable year of that person in which or with which ends the taxable year of the service provider in which the amount is included as compensation. For purposes of this paragraph, any amount excluded from gross income under section 79 or section 101(b) or subchapter N is considered to have been included in gross income.

(2) ***Special Rule.*** For purposes of paragraph (a)(1) of this section, the service provider is deemed to have included the amount as compensation in gross income if the person for whom the services were performed satisfies in a timely manner all requirements of section 6041 or section 6041A, and the regulations thereunder, with respect to that amount of compensation. For purposes of the preceding sentence, whether a person for whom services were performed satisfies all requirements of section 6041 or section 6041A, and the regulations thereunder, is determined without regard to § 1.6041-3(c) (exception for payments to corporations). In the case of a disqualifying disposition of stock described in section 421(b), an employer that otherwise satisfies all requirements of section 6041 and the regulations thereunder will be considered to have done so timely for purposes of this paragraph (a)(2) if Form W-2 or Form W-2c, as appropriate, is furnished to the employee or former employee, and is filed with the federal government, on or before the date on which the employer files the tax return claiming the deduction relating to the disqualifying disposition.

(3) ***Exceptions.*** Where property is substantially vested upon transfer, the deduction shall be allowed to such person in accordance with his method of accounting (in conformity with sections 446 and 461). In the case of a transfer to an employee benefit plan described in § 1.162-10(a) or a transfer to an employees' trust or annuity plan described in section 404(a)(5) and the regulations thereunder, section 83(h) and this section do not apply.

(4) ***Capital expenditure, etc.*** No deduction is allowed under section 83(h) to the extent that the transfer of property constitutes a capital expenditure, an item of deferred expense, or an amount properly includible in the value of inventory items. In the case of a capital expenditure, for example, the basis of the property to which such capital expenditure relates shall be increased at the same time and to the same extent as any amount includible in the employee's gross income in respect of such transfer. Thus, for example, no deduction is allowed to a corporation in respect of a transfer of its stock to a promoter upon its organization, notwithstanding that such promoter must include the value of such stock in his gross income in accordance with the rules under section 83.

(5) ***Transfer of life insurance contract (or an undivided interest therein)*** —

(i) ***General rule.*** In the case of a transfer of a life insurance contract (or an undivided interest therein) described in § 1.61-22(c)(3) in connection with the performance of services, a deduction is allowable under paragraph (a)(1) of this section to the person for whom the services were performed. The amount of the deduction, if allowable, is equal to the sum of the amount included as compensation in the gross income of the service provider under § 1.61-22(g)(1) and the amount determined under § 1.61-22(g)(1)(ii).

(ii) ***Effective date*** —

(A) ***General rule.*** Paragraph (a)(5)(i) of this section applies to any split-dollar life insurance arrangement (as defined in § 1.61-22(b)(1) or (2)) entered into after September 17, 2003. For purposes of this paragraph (a)(5), an arrangement is entered into as determined under § 1.61-22(j)(1)(ii).

(B) ***Modified arrangements treated as new arrangements.*** If an arrangement entered into on or before September 17, 2003 is materially modified (within the meaning of § 1.61-22(j)(2)) after September 17, 2003, the arrangement is treated as a new arrangement entered into on the date of the modification.

(6) ***Effective date.*** Paragraphs (a)(1) and (2) of this section apply to deductions for taxable years beginning on or after January 1, 1995. However, taxpayers may also apply paragraphs (a)(1) and (2) of this section when claiming deductions for taxable years beginning before that date if the claims are not barred by the statute of limitations. Paragraphs (a) (3) and (4) of this section are effective as set forth in § 1.83-8(b).

(b) ***Recognition of gain or loss.*** Except as provided in section 1032, at the time of a transfer of property in connection with the performance of services the transferor recognizes gain to the extent that the transferor receives an amount that exceeds the transferor's basis in the property. In addition, at the time a deduction is allowed under section 83(h) and paragraph (a) of this section, gain or loss is recognized to the extent of the difference between

(1) the sum of the amount paid plus the amount allowed as a deduction under section 83(h), and

(2) the sum of the taxpayer's basis in the property plus any amount recognized pursuant to the previous sentence.

(c) ***Forfeitures.*** If, under section 83(h) and paragraph (a) of this section, a deduction, an increase in basis, or a reduction of gross income was allowable (disregarding the reasonableness of the amount of compensation) in respect of a transfer of property and such property is subsequently forfeited, the amount of such deduction, increase in basis or reduction of gross income shall be includible in the gross income of the person to whom it was allowable for the taxable year of forfeiture. The basis of such property in the hands of the person to whom it is forfeited shall include any such amount includible in the gross income of such person, as well as any amount such person pays upon forfeiture.

(d) ***Special rules for transfers by shareholders*** —

(1) ***Transfers.*** If a shareholder of a corporation transfers property to an employee of such corporation or to an independent contractor (or to a beneficiary thereof), in consideration of services performed for the corporation, the transaction shall be considered to be a contribution of such property to the capital of such corporation by the shareholder, and immediately thereafter a transfer of such property by the corporation to the employee or independent contractor under paragraphs (a) and (b) of this section. For purposes of this (1), such a transfer will be considered to be in consideration for services performed for the corporation if either the property transferred is substantially nonvested at the time of transfer or an amount is includible in the gross income of the employee or independent contractor at the time of transfer under § 1.83-1(a)(1) or § 1.83-2(a). In the case of such a transfer, any money or other property paid to the shareholder for such stock shall be considered to be paid to the corporation and transferred immediately thereafter by the corporation to the shareholder as a distribution to which section 302 applies. For special rules that may applyto a corporation's transfer of its own stock to any person in consideration of services performed for another corporation or partnership, see § 1.1032-3. The preceding sentence applies to transfers of stock and amounts paid for such stock occurring on or after May 16, 2000.

(2) ***Forfeiture.*** If, following a transaction described in paragraph (d)(1) of this section, the transferred property is forfeited to the shareholder, paragraph (c) of this section shall apply both with respect to the shareholder and with respect to the corporation. In addition, the corporation shall in the taxable year of forfeiture be allowed a loss (or realize a gain) to offset any gain (or loss) realized under paragraph (b) of this section. For example, if a shareholder transfers property to an employee of the corporation as compensation, and as a result the shareholder's basis of $200*x* in such property is allocated to his stock in such corporation and such corporation recognizes a short-term capital gain of $800*x,* and is allowed a deduction of $1,000*x* on such transfer, upon a subsequent forfeiture of the property to the shareholder, the shareholder shall take $200*x* into gross income, and the corporation shall take $1,000*x* into gross income and be allowed a short-term capital loss of $800*x.*

(e) ***Options.*** [Reserved]

(f) ***Reporting requirements.*** [Reserved]

[T.D. 7554, 43 FR 31919, July 24, 1978, as amended by T.D. 8599, July 19, 1995; T.D. 8883, 65 FR 31076, May 16, 2000; T.D. 9092, 68 FR 54352, Sept. 17, 2003]

§ 1.83-7 Taxation of nonqualified stock options.

(a) ***In general.*** If there is granted to an employee or independent contractor (or beneficiary thereof) in connection with the performance of services, an option to which section 421 (relating generally to certain qualified and other options) does not apply, section 83(a) shall apply to such grant if the option has a readily ascertainable fair market value (determined in accordance with paragraph (b) of this section) at

the time the option is granted. The person who performed such services realizes compensation upon such grant at the time and in the amount determined under section 83(a). If section 83(a) does not apply to the grant of such an option because the option does not have a readily ascertainable fair market value at the time of grant, sections 83(a) and 83(b) shall apply at the time the option is exercised or otherwise disposed of, even though the fair market value of such option may have become readily ascertainable before such time. If the option is exercised, sections 83(a) and 83(b) apply to the transfer of property pursuant to such exercise, and the employee or independent contractor realizes compensation upon such transfer at the time and in the amount determined under section 83(a) or 83(b). If the option is sold or otherwise disposed of in an arm's length transaction, sections 83(a) and 83(b) apply to the transfer of money or other property received in the same manner as sections 83(a) and 83(b) would have applied to the transfer of property pursuant to an exercise of the option. The preceding sentence does not apply to a sale or other disposition of the option to a person related to the service provider that occurs on or after July 2, 2003. For this purpose, a person is related to the service provider if—

(1) The person and the service provider bear a relationship to each other that is specified in section 267(b) or 707(b)(1), subject to the modifications that the language “20 percent” is used instead of “50 percent” each place it appears in sections 267(b) and 707(b)(1), and section 267(c)(4) is applied as if the family of an individual includes the spouse of any member of the family; or

(2) The person and the service provider are engaged in trades or businesses under common control (within the meaning of section 52(a) and (b)); provided that a person is not related to the service provider if the person is the service recipient with respect to the option or the grantor of the option.

(b) ***Readily ascertainable defined*** —

(1) ***Actively traded on an established market.*** Options have a value at the time they are granted, but that value is ordinarily not readily ascertainable unless the option is actively traded on an established market. If an option is actively traded on an established market, the fair market value of such option is readily ascertainable for purposes of this section by applying the rules of valuation set forth in § 20.2031-2.

(2) ***Not actively traded on an established market.*** When an option is not actively traded on an established market, it does not have a readily ascertainable fair market value unless its fair market value can otherwise be measured with reasonable accuracy. For purposes of this section, if an option is not actively traded on an established market, the option does not have a readily ascertainable fair market value when granted unless the taxpayer can show that all of the following conditions exist:

(i) The option is transferable by the optionee;

(ii) The option is exerciseable immediately in full by the optionee;

(iii) The option or the property subject to the option is not subject to any restriction or condition (other than a lien or other condition to secure the payment of the purchase price) which has a significant effect upon the fair market value of the option; and

(iv) The fair market value of the option privilege is readily ascertainable in accordance with paragraph (b)(3) of this section.

(3) ***Option privilege.*** The option privilege in the case of an option to buy is the opportunity to benefit during the option's exercise period from any increase in the value of property subject to the option during such period, without risking any capital. Similarly, the option privilege in the case of an option to sell is the opportunity to benefit during the exercise period from a decrease in the value of

property subject to the option. For example, if at some time during the exercise period of an option to buy, the fair market value of the property subject to the option is greater than the option's exercise price, a profit may be realized by exercising the option and immediately selling the property so acquired for its higher fair market value. Irrespective of whether any such gain may be realized immediately at the time an option is granted, the fair market value of an option to buy includes the value of the right to benefit from any future increase in the value of the property subject to the option (relative to the option exercise price), without risking any capital. Therefore, the fair market value of an option is not merely the difference that may exist at a particular time between the option's exercise price and the value of the property subject to the option, but also includes the value of the option privilege for the remainder of the exercise period. Accordingly, for purposes of this section, in determining whether the fair market value of an option is readily ascertainable, it is necessary to consider whether the value of the entire option privilege can be measured with reasonable accuracy. In determining whether the value of the option privilege is readily ascertainable, and in determining the amount of such value when such value is readily ascertainable, it is necessary to consider—

(i) Whether the value of the property subject to the option can be ascertained;

(ii) The probability of any ascertainable value of such property increasing or decreasing; and

(iii) The length of the period during which the option can be exercised.

(c) ***Reporting requirements.*** [Reserved]

(d) This section applies on and after July 2, 2003. For transactions prior to that date, see § 1.83-7 as published in 26 CFR part 1 (revised as of April 1, 2003).

[T.D. 7554, 43 FR 31920, July 24, 1978, as amended by T.D. 9067, 68 FR 39454, July 2, 2003; T.D. 9148, 69 FR 48392, Aug. 10, 2004]

§ 1.83-8 Applicability of section and transitional rules.

(a) ***Scope of section 83.*** Section 83 is not applicable to—

(1) A transaction concerning an option to which section 421 applies;

(2) A transfer to or from a trust described in section 401(a) for the benefit of employees or their beneficiaries, or a transfer under an annuity plan that meets the requirements of section 404(a)(2) for the benefit of employees or their beneficiaries;

(3) The transfer of an option without a readily ascertainable fair market value (as defined in § 1.83-7(b)(1)); or

(4) The transfer of property pursuant to the exercise of an option with a readily ascertainable fair market value at the date of grant. Section 83 applies to a transfer to or from a trust or under an annuity plan for the benefit of employees, independent contractors, or their beneficiaries (except as provided in paragraph (a)(2) of this section), but to the extent a transfer is subject to section 402(b) or 403(c), section 83 applies to such a transfer only as provided for in section 402(b) or 403(c).

(b) ***Transitional rules*** —

(1) ***In general.*** Except as otherwise provided in this paragraph, section 83 and the regulations thereunder shall apply to property transferred after June 30, 1969.

(2) ***Binding written contracts.*** Section 83 and the regulations thereunder shall not apply to property transferred pursuant to a binding written contract entered into before April 22, 1969. For purposes of this paragraph, a binding written contract means only a written contract under which the employee or independent contractor has an enforceable right to compel the transfer of property or to obtain damages upon the breach of such contract. A contract which provides that a person's right to such property is contingent upon the happening of an event (including the passage of time) may satisfy the requirements of this paragraph. However, if the event itself, or the determination of whether the event has occurred, rests with the board of directors or any other individual or group acting on behalf of the employer (other than an arbitrator), the contract will not be treated as giving the person an enforceable right for purposes of this paragraph.

The fact that the board of directors has the power (either expressly or impliedly) to terminate employment of an officer pursuant to a contract that contemplates the completion of services over a fixed or ascertainable period does not negate the existence of a binding written contract. Nor will the binding nature of the contract be negated by a provision in such contract which allows the employee or independent contractor to terminate the contract for any year and receive cash instead of property if such election would cause a substantial penalty, such as a forfeiture of part or all of the property received in connection with the performance of services in an earlier year.

(3) ***Options granted before April 22, 1969.*** Section 83 shall not apply to property received upon the exercise of an option granted before April 22, 1969.

(4) ***Certain written plans.*** Section 83 shall not apply to property transferred (whether or not by the exercise of an option) before May 1, 1970, pursuant to a written plan adopted and approved before July 1, 1969. A plan is to be considered as having been adopted and approved before July 1, 1969, only if prior to such date the transferor of the property undertook an ascertainable course of conduct which under applicable State law does not require further approval by the board of directors or the stockholders of any corporation. For example, if a corporation transfers property to an employee in connection with the performance of services pursuant to a plan adopted and approved before July 1, 1969, by the board of directors of such corporation, it is not necessary that the stockholders have adopted or approved such plan if State law does not require such approval. However, such approval is necessary if required by the articles of incorporation or the bylaws or if, by its terms, such plan will not become effective without such approval.

(5) ***Certain options granted pursuant to a binding written contract.*** Section 83 shall not apply to property transferred before January 1, 1973, upon the exercise of an option granted pursuant to a binding written contract (as defined in paragraph (b)(2) of this section) entered into before April 22, 1969, between a corporation and the transferor of such property requiring the transferor to grant options to employees of such corporation (or a subsidiary of such corporation) to purchase a determinable number of shares of stock of such corporation, but only if the transferee was an employee of such corporation (or a subsidiary of such corporation) on or before April 22, 1969.

(6) ***Certain tax free exchanges.*** Section 83 shall not apply to property transferred in exchange for (or pursuant to the exercise of a conversion privilege contained in) property transferred before July 1, 1969, or in exchange for property to which section 83 does not apply (by reason of paragraphs (1), (2), (3), or (4) of section 83(i)), if section 354, 355, 356, or 1036 (or so much of section 1031 as relates to section 1036) applies, or if gain or loss is not otherwise required to be recognized upon the exercise of such conversion privilege, and if the property received in such exchange is subject to restrictions and conditions substantially similar to those to which the property given in such exchange was subject.

[T.D. 7554, 43 FR 31921, July 24, 1978]

§ 1.84-1 Transfer of appreciated property to political organizations.

(a) ***Transfer defined.*** A transfer after May 7, 1974, of property to a political organization (as defined in section 527(e)(1), and including a newsletter fund to the extent provided under section 527(g)) is treated as a sale of the property to the political organization if the fair market value of the property exceeds its adjusted basis. The transferor is treated as having realized an amount equal to the fair market value of the property on the date of the transfer. For purposes of this section, a transfer is any assignment, conveyance, or delivery of property other than a bona fide sale for an adequate and full consideration in money or money's worth, whether the transfer is in trust or otherwise, whether the transfer is direct or indirect and whether the property is real or personal, tangible or intangible. Thus, for example, a sale at less than fair market value (other than an ordinary trade discount), or a receipt of property by a political organization under an agency agreement entitling the organization to sell the property and retain all or a portion of the proceeds of the sale, is a transfer within the meaning, of this section. The term “transfer” also includes an illegal contribution of property.

(b) ***Amount realized.*** A transferor to whom this section applies realizes an amount equal to the fair market value of the property on the date of the transfer. For purposes of this section, the definition of fair market value set forth in § 1.170A-1(c) (2) and (3) is incorporated by reference.

(c) ***Amount recognized.*** A transferor to whom this section applies is treated as having sold the property to the political organization on the date of the transfer. Therefore, the rules of chapter 1 of subtitle A (relating to income tax) apply to the gain realized under this section as if this gain were an amount realized upon the sale of the property. These rules include those of section 55 and section 56 (relating to minimum tax for tax preference), section 306 (relating to disposition of certain stock), section 1201 (relating to the alternative tax on certain capital gains), section 1245 (relating to gain from dispositions of certain depreciable property), and section 1250 (relating to gain from dispositions of certain depreciable realty).

(d) ***Holding period.*** The holding period of property transferred to a political organization to which this section applies begins on the day after the date of acquisition of the property by the political organization.

[T.D. 7671, 45 FR 8003, Feb. 6, 1980]

§ 1.85-1 Unemployment compensation.

(a) ***Introduction.*** Section 85 prescribes rules relating to the inclusion in gross income of unemployment compensation (as defined in paragraph (b)(1) of this section) paid in taxable years beginning after December 31, 1978, pursuant to governmental programs. In general, these rules provide that unemployment compensation paid pursuant to governmental programs is includible in the gross income of a taxpayer if the taxpayer's modified adjusted gross income (as defined in paragraph (b)(2) of this section) exceeds a statutory base amount (as defined in paragraph (b)(3) of this section). If there is such an excess, however, the amount included in gross income is limited under paragraph (c)(1) of this section to the lesser of one-half of such excess or the amount of the unemployment compensation. If such taxpayer's modified adjusted gross income does not exceed the applicable statutory base amount, none of the unemployment compensation is included in the taxpayer's gross income.

(b) ***Definitions*** —

(1) ***Unemployment compensation*** —

(i) ***General rule.*** Except as provided in paragraph (b)(1)(iii) of this section, the term "unemployment compensation" means any amount received under a law of the United States, or of a State, which is in the nature of unemployment compensation. Thus, section 85 applies only to unemployment compensation paid pursuant to governmental programs and does not apply to amounts paid pursuant to private nongovernmental unemployment compensation plans (which are includible in income without regard to section 85). Generally, unemployment compensation programs are those designed to protect taxpayers against the loss of income caused by involuntary layoff. Ordinarily, unemployment compensation is paid in cash and on a periodic basis. The amount of the payments is usually computed in accordance with formula based on the taxpayer's length of prior employment and wages. Such payments, however, may be made in a lump sum or other than in cash or on some other basis.

(ii) ***Disability and worker's compensation payments.*** Amounts in the nature of unemployment compensation also include cash disability payments made pursuant to a governmental program as a substitute for case unemployment payments to an unemployed taxpayer who is ineligible for such payments solely because of the disability. Usually these disability payments are paid in the same weekly amount and for the same period as the unemployment compensation benefits to which the unemployed taxpayer otherwise would have been entitled. Amounts received under workmen's compensation acts as compensation for personal injuries or sickness are not amounts in the nature of unemployment compensation. See section 104(a)(1) relating to the exclusion from gross income of such amounts.

(iii) ***Employee contributions to a governmental plan.*** If a governmental unemployment compensation program is funded in part by an employee's contribution which is not deductible by the employee, an amount paid to such employee under the program is not to be considered unemployment compensation until an amount equal to the total nondeductible contributions paid by the employee to such program has been paid to such employee.

(iv) ***Examples of governmental unemployment compensation programs.*** Governmental unemployment compensation programs include (but are not limited to) programs established under:

(A) A State law approved by the Secretary of Labor pursuant to section 3304 of the Internal Revenue Code of 1954.

(B) Chapter 85 of title 5, United States Code, relating to unemployment compensation for Federal employees generally and for ex-servicemen.

(C) Trade Act of 1974, sections 231 and 232 (19 U.S.C. 2291 and 2292).

(D) Disaster Relief Act of 1974, section 407 (42 U.S.C. 5177).

(E) The Airline Deregulation Act of 1978 (49 U.S.C. 1552(b)).

(F) The Railroad Unemployment Insurance Act, section 2 (45 U.S.C. 352).

(2) ***Modified adjusted gross income.*** The term "modified adjusted gross income" means the sum of the following amounts:

(i) Adjusted gross income (as defined in section 62);

(ii) All disability payments of the type that are eligible for exclusion from gross income under section 105(d); and

(iii) All amounts of unemployment compensation (as defined in paragraph (b)(1) of this section).

(3) ***Base amount.*** The term "base amount" means—

(i) $25,000 in the case of a joint return under section 6013.

(ii) Zero in the case of a taxpayer who—

(A) Is married (within the meaning of section 143) at the close of the taxable year,

(B) Does not file a joint return for such taxable year, and

(C) Does not live apart (as defined in paragraph (b)(4) of this section) from his or her spouse at all times during the taxable year.

(iii) $20,000 in the case of all other taxpayers.

(4) ***Living apart.*** A taxpayer does not "live apart" from his or her spouse at all times during a taxable year if for any period during the taxable year the taxpayer is a member of the same household as such taxpayer's spouse. A taxpayer is a member of a household for any period, including temporary absences due to special circumstances, during which the household is the taxpayer's place of abode. A temporary absence due to special circumstances includes a nonpermanent absence caused by illness, education, business, vacation, or military service.

(c) ***Limitations*** —

(1) ***General rule.*** If for a taxable year, a taxpayer's modified adjusted gross income does not exceed the applicable statutory base amount, no amount of unemployment compensation is included in gross income for the taxable year. If there is such an excess, the taxpayer includes in gross income for the taxable year the lesser of the following:

(i) One-half of the excess of the taxpayer's modified adjusted gross income over such taxpayer's base amount, or

(ii) The amount of unemployment compensation.

(2) ***Exception for fraudulently received unemployment compensation.*** If a taxpayer fraudulently receives unemployment compensation under any governmental unemployment compensation program, then the entire amount of such fraudulently received unemployment compensation must be included in the taxpayer's gross income for the taxable year in which the benefits were received. Thus, the limitation in section 85 and in paragraph (c)(1) of this section, does not apply to such amounts.

(3) ***Examples.*** The application of this paragraph may be illustrated by the following examples:

Example 1. H and W are married taxpayers who for calendar year 1979 file a joint income tax return. During 1979 H receives $4,500 of disability income that is eligible for an exclusion under section 105(d). W works for part of 1979 and receives $20,000 as compensation and also receives $5,000 of unemployment compensation in 1979. Assume that H and W's adjusted gross income is $20,000. The modified adjusted gross income of H and W is $29,500 ($4,500 + $20,000 + $5,000). Since their modified adjusted gross income ($29,500) is greater than their base amount ($25,000), some of the unemployment compensation received by W must be included in their gross income on their 1979 joint income tax return. Under paragraph (c)(1) of this section, of the $5,000 which is unemployment compensation, the lesser of $2,250

(($29,500—$25,000) ÷ 2) or $5,000 must be included in their gross income. Thus, $2,250 of the $5,000 received by W in 1979 is included in the gross income of H and W on their joint income tax return for 1979.

Example 2. Assume the same facts in example (1) except H received $5,000 of disability income that is eligible for an exclusion under section 105(d) and W receives $28,000 as compensation, and $4,000 which is unemployment compensation. Assume that H and W's adjusted gross income is $28,000. The modified adjusted gross income of H and W is $37,000 ($4,000 + $28,000 + $5,000). Since their modified adjusted gross income ($37,000) is greater than their base amount ($25,000), all of the unemployment compensation received by W must be included in their gross income on their 1979 joint income tax return. Under paragraph (c)(1) of this section, of the $4,000 which is unemployment compensation, the lesser of $6,000 (($37,000—$25,000) ÷ 2) or $4,000 must be included in their gross income. Thus, all of the $4,000 unemployment compensation received by W is included in the gross income of H and W on their joint income tax return for 1979.

(d) ***Cross reference.*** See section 6050B, relating to the requirement that every person who makes payments of unemployment compensation aggregating $10 or more to any individual during any calendar year file an information return with the Internal Revenue Service.

[T.D. 7705, 45 FR 46069, July 9, 1980]

§ 1.88-1 Nuclear decommissioning costs.

(a) ***In general.*** Section 88 provides that the amount of nuclear decommissioning costs directly or indirectly charged to the customers of a taxpayer that is engaged in the furnishing or sale of electric energy generated by a nuclear power plant must be included in the gross income of such taxpayer in the same manner as amounts charged for electric energy. For this purpose, decommissioning costs directly or indirectly charged to the customers of a taxpayer include all decommissioning costs that consumers are liable to pay by reason of electric energy furnished by the taxpayer during the taxable year, whether payable to the taxpayer, a trust, State government, or other entity, and even though the taxpayer may not control the investment or current expenditure of the amount and the amount may not be paid to the taxpayer at the time decommissioning costs are incurred. However, decommissioning costs payable to a taxpayer holding a qualified leasehold interest (as described in paragraph (b)(2)(ii) of § 1.468A-1) are included in the gross income of such taxpayer, and not in the gross income of the lessor.

(b) ***Examples.*** The following examples illustrate the application of the principles of paragraph (a) of this section:

Example 1. X corporation, an accrual method taxpayer engaged in the sale of electric energy generated by a nuclear power plant owned by X, is authorized by the public utility commission of State A to collect nuclear decommissioning costs from ratepayers residing in State A. With respect to the sale of electric energy, X includes in income amounts that have been billed to customers as well as estimated unbilled amounts that relate to energy provided by X after the previous billing but before the end of the taxable year ("accrued unbilled amounts"). The decommissioning costs are included in the monthly bills provided by X to its ratepayers and the entire amount billed is remitted directly to X. Under paragraph (a) of this section, the decommissioning costs must be included in the gross income of X in the same manner as amounts charged for electric energy (*i.e.,* by including in income decommissioning costs that relate to amounts billed as well as decommissioning costs that relate to accrued unbilled amounts). The same rule would apply if the decommissioning costs charged to

ratepayers were separately billed and the amounts billed were remitted to State A to be held in trust for the purpose of decommissioning the nuclear power plant owned by X. In that case, X must include in gross income decommissioning costs that relate to amounts billed as well as decommissioning costs that relate to accrued unbilled amounts.

Example 2. Assume the same facts as in Example (1), except that X and M, a municipality located in State A, have entered into a life-of-unit contract pursuant to which

(i) M is entitled to 20 percent of the electric energy generated by the nuclear power plant owned by X, and

(ii) M is obligated to pay 20 percent of the plant operating costs, including decommissioning costs, incurred by X. Under paragraph (a) of this section, the decommissioning costs that relate to electric energy consumed or distributed by M during any taxable year must be included in the gross income of X for such taxable year. The result contained in this example would be the same if M was a State or an agency or instrumentality of a State or a political subdivision thereof.

(c) ***Cross reference.*** For special rules relating to the deduction for amounts paid to a nuclear decommissioning fund, see § 1.468A-1 through § 1.468A-5, 1.468A-7, 1.468A-8.

(d) ***Effective date.***

(1) Section 88 and this section apply to nuclear decommissioning costs directly or indirectly charged to the customers of a taxpayer on or after July 18, 1984, and with respect to taxable years ending on or after such date.

(2) If the amount of nuclear decommissioning costs directly or indirectly charged to the customers of a taxpayer before July 18, 1984, was includible in gross income in a different manner than amounts charged for electric energy, such amount must be included in gross income for the taxable year in which includible in gross income under the method of accounting of the taxpayer that was in effect when such amount was charged to customers.

[T.D. 8184, 53 FR 6804, Mar. 3, 1988]

ITEMS SPECIFICALLY EXCLUDED FROM GROSS INCOME

§ 1.101-1 Exclusion from gross income of proceeds of life insurance contracts payable by reason of death.

(a)

(1) ***In general.*** Section 101(a)(1) states the general rule that the proceeds of life insurance policies, if paid by reason of the death of the insured, are excluded from the gross income of the recipient. Death benefit payments having the characteristics of life insurance proceeds payable by reason of death under contracts, such as workmen's compensation insurance contracts, endowment contracts, or accident and health insurance contracts, issued on or before December 31, 1984, are covered by this provision. The exclusion from gross income allowed by section 101(a) applies whether payment is made to the estate of the insured or to any beneficiary (individual, corporation, or partnership) and whether it is made directly or in trust. The extent to which this exclusion applies in cases where life insurance policies have been transferred for a valuable consideration is stated in

section 101(a)(2) and in paragraph (b) of this section. In cases where the proceeds of a life insurance policy, payable by reason of the death of the insured, are paid other than in a single sum at the time of such death, the amounts to be excluded from gross income may be affected by the provisions of section 101 (c) (relating to amounts held under agreements to pay interest) or section 101(d) (relating to amounts payable at a date later than death). See §§ 1.101-3 and 1.101-4. However, neither section 101(c) nor section 101(d) applies to a single sum payment which does not exceed the amount payable at the time of death even though such amount is actually paid at a date later than death. If the life insurance contract is an employer-owned life insurance contract within the definition of section 101(j)(3), the amount to be excluded from gross income may be affected by the provisions of section 101(j).

(2) ***Cross references.*** For rules governing the taxability of insurance proceeds constituting benefits payable on the death of an employee—

(i) Under pension, profit-sharing, or stock bonus plans described in section 401(a) and exempt from tax under section 501(a), or under annuity plans described in section 403(a), see section 72 (m)(3) and paragraph (c) of § 1.72-16;

(ii) Under annuity contracts to which § 1.403(b)-3 applies, see § 1.403(b)-7; or

(iii) Under eligible State deferred compensation plans described in section 457(b), see paragraph (c) of § 1.457-1.

For the definition of a life insurance company, see section 801.

(b) ***Transfers of life insurance policies.***

(1) ***Transfer of an interest in a life insurance contract for valuable consideration*** —

(i) ***In general.*** In the case of a transfer of an interest in a life insurance contract for valuable consideration, including a reportable policy sale for valuable consideration, the amount of the proceeds attributable to the interest that is excludable from gross income under section 101(a)(1) is limited under section 101(a)(2) to the sum of the actual value of the consideration for the transfer paid by the transferee and the premiums and other amounts subsequently paid by the transferee with respect to the interest. For exceptions to this general rule for certain transfers for valuable consideration that are not reportable policy sales, see paragraph (b)(1)(ii) of this section. The application of section 101(d), (f) or (j), which is not addressed in paragraph (b) of this section, may further limit the amount of the proceeds excludable from gross income.

(ii) ***Exceptions*** —

(A) ***Exception for carryover basis transfers.*** The limitation described in paragraph (b)(1)(i) of this section does not apply to the transfer of an interest in a life insurance contract for valuable consideration if each of the following requirements are satisfied. First, the transfer is not a reportable policy sale. Second, the basis of the interest, for the purpose of determining gain or loss with respect to the transferee, is determinable in whole or in part by reference to the basis of the interest in the hands of the transferor (see section 101(a)(2)(A)). Third, paragraph (b)(1)(ii)(B) of this section does not apply. In the case of a transfer described in this paragraph (b)(1)(ii)(A), the amount of the proceeds attributable to the interest that is excludable from gross income under section 101(a)(1) is limited to the sum of the amount that would have been excludable by the transferor if the transfer had not occurred and the premiums and other amounts subsequently paid by the

transferee with respect to the interest. The preceding sentence applies without regard to whether the interest previously has been transferred and the nature of any prior transfer of the interest.

(B) ***Exception for transfers to certain persons*** —

(*1*) ***In general.*** The limitation described in paragraph (b)(1)(i) of this section does not apply to the transfer of an interest in a life insurance contract for valuable consideration if both of the following requirements are satisfied. First, the transfer is not a reportable policy sale and the interest was not previously transferred for valuable consideration in a reportable policy sale. Second, the interest is transferred to the insured, a partner of the insured, a partnership in which the insured is a partner, or a corporation in which the insured is a shareholder or officer (see section 101(a)(2)(B)).

(*2*) ***Transfers to certain persons subsequent to a reportable policy sale.*** Except as provided in paragraph (b)(1)(ii)(B)(*3*) of this section, if a transfer of an interest in a life insurance contract would be described in paragraph (b)(1)(ii)(B)(*1*) of this section, but for the fact that the interest previously was transferred for valuable consideration in a reportable policy sale (whether in the immediately preceding transfer or an earlier transfer), then the amount of the proceeds attributable to the interest that is excludable from gross income under section 101(a)(1) is limited to the sum of—

(*i*) The higher of the amount that would have been excludable by the transferor if the transfer had not occurred or the actual value of the consideration for the transfer paid by the transferee; and

(*ii*) The premiums and other amounts subsequently paid by the transferee with respect to the interest.

(*3*) ***Transfers to the insured subsequent to a reportable policy sale*** —

(*i*) Except as provided in paragraph (b)(1)(ii)(B)(*3*)(*ii*) of this section, to the extent that an interest (or portion of an interest) in a life insurance contract that was transferred for valuable consideration in a reportable policy sale subsequently is transferred to the insured for valuable consideration, the limitations described in paragraph (b)(1)(i) of this section and paragraph (b)(1)(ii)(B)(*2*) of this section do not apply. To the extent that fair market value is not paid by the insured for the transferred interest, the transfer of the portion of the interest with a value in excess of the consideration paid will be treated as a gift under the bargain sale rule in paragraph (b)(2)(iii) of this section.

(*ii*) This paragraph (b)(1)(ii)(B)(*3*)(*ii*) applies with respect to an interest described in paragraph (b)(1)(ii)(B)(*3*)(*i*) of this section (or portion of such an interest) that subsequently is transferred by the insured to any other person. If all subsequent transfers of the interest (or portion of the interest) are gratuitous transfers that are not reportable policy sales, the amount of the proceeds excluded from gross income is determined under paragraph (b)(2)(i) of this section, taking into account the application of paragraph (b)(1)(ii)(B)(*3*)(*i*) of this section to the insured's acquisition of the interest. If any subsequent transfer of the interest (or portion of the interest) is for valuable consideration or is a reportable policy

sale, the amount of the policy proceeds excludable from gross income is determined in accordance with paragraph (b) of this section; if the amount that would have been excludable from gross income by the insured following the transaction described in paragraph (b)(1)(ii)(B)(*3*)(*i*) of this section if no subsequent transfer had occurred is relevant, that amount is determined under paragraph (b)(1)(ii)(B)(*2*) of this section. Paragraph (g)(8) (*Example 8*) of this section and paragraph (g)(9) (*Example 9*) of this section illustrate the application of this paragraph (b)(1)(ii)(B)(*3*)(*ii*).

(2) ***Other transfers*** —

(i) ***Gratuitous transfer of an interest in a life insurance contract.*** To the extent that a transfer of an interest in a life insurance contract is gratuitous, including a reportable policy sale that is not for valuable consideration, the amount of the proceeds attributable to the interest that is excludable from gross income under section 101(a)(1) is limited to the sum of the amount of the proceeds attributable to the gratuitously transferred interest that would have been excludable by the transferor if the transfer had not occurred and the premiums and other amounts subsequently paid by the transferee with respect to the interest. However, if an interest in a life insurance contract is transferred gratuitously to the insured, and that interest has not previously been transferred for value in a reportable policy sale, the entire amount of the proceeds attributable to the interest transferred to the insured is excludable from gross income.

(ii) ***Partial transfers.*** When only part of an interest in a life insurance contract is transferred, the transferor's exclusion is ratably apportioned between or among the several parts. If multiple parts of an interest are transferred, the transfer of each part is treated as a separate transaction, with each transaction subject to the rule under paragraph (b) of this section that is applicable to the type of transfer involved.

(iii) ***Bargain sales.*** When the transfer of an interest in a life insurance contract is in part a transfer for valuable consideration and in part a gratuitous transfer, the transfer of each part is treated as a separate transaction for purposes of determining the amount of the proceeds attributable to the interest that is excludable from gross income under section 101(a)(1). Each separate transaction is subject to the rule under paragraph (b) of this section that is applicable to the type of transfer involved.

(3) ***Determination of amounts paid by the transferee.*** For purposes of paragraphs (b)(1) and (2) of this section, in determining the amounts, if any, of consideration paid by the transferee for the transfer of an interest in a life insurance contract and premiums and other amounts subsequently paid by the transferee with respect to that interest, the amounts paid by the transferee are reduced, but not below zero, by amounts received by the transferee under the life insurance contract that are not received as an annuity, to the extent excludable from gross income under section 72(e).

(c) ***Reportable policy sale*** —

(1) ***In general.*** Except as provided in paragraph (c)(2) of this section, a reportable policy sale for purposes of this section and section 6050Y is any direct or indirect acquisition of an interest in a life insurance contract if the acquirer has, at the time of the acquisition, no substantial family, business, or financial relationship with the insured apart from the acquirer's interest in the life insurance contract.

(2) ***Exceptions.*** None of the following transactions is a reportable policy sale:

(i) A transfer of an interest in a life insurance contract between entities with the same beneficial owners, if the ownership interest of each beneficial owner in the transferor entity does not vary by more than a 20 percent ownership interest from that beneficial owner's ownership interest in the transferee entity. In a series of transfers, the prior sentence is applied by comparing the beneficial owners' ownership interest in the first transferor entity and the last transferee entity. For purposes of this paragraph (c)(2)(i), each beneficial owner of a trust is deemed to have an ownership interest determined by the broadest possible exercise of a trustee's discretion in that beneficial owner's favor. Paragraph (g)(13) (*Example 13*) of this section provides an illustration of the application of this paragraph (c)(2)(i).

(ii) A transfer between corporations that are members of an affiliated group (as defined in section 1504(a)) that files a consolidated U.S. income tax return for the taxable year in which the transfer occurs.

(iii) The indirect acquisition of an interest in a life insurance contract by a person if—

(A) A partnership, trust, or other entity in which an ownership interest is being acquired directly or indirectly holds the interest in the life insurance contract and acquired that interest before January 1, 2019, or acquired that interest in a reportable policy sale reported in compliance with section 6050Y(a) and § 1.6050Y-2; or

(B) Immediately before the acquisition, no more than 50 percent of the gross value of the assets (as determined under paragraph (f)(4) of this section) of the partnership, trust, or other entity that directly or indirectly holds the interest in the life insurance contract, and in which an ownership interest is being directly acquired, consists of life insurance contracts, provided that, after the acquisition, with respect to that partnership, trust, or other entity, the person indirectly acquiring the interest in the life insurance contract and his or her family members own, in the aggregate—

(*1*) With respect to an S corporation, stock possessing 5 percent or less of the total combined voting power of all classes of stock entitled to vote and 5 percent or less of the total value of shares of all classes of stock of the S corporation;

(*2*) With respect to a trust or decedent's estate, 5 percent or less of the corpus and 5 percent or less of the annual income (taking into account, for the purpose of determining any person's ownership interest, the maximum amount of income and corpus that could be distributed to or held for the benefit of that person); or

(*3*) With respect to a partnership or other entity that is not a corporation or a trust, 5 percent or less of the capital interest and 5 percent or less of the profits interest.

(iv) The acquisition of a life insurance contract by an insurance company that issues a life insurance contract in an exchange pursuant to section 1035.

(v) The acquisition of a life insurance contract by a policyholder in an exchange pursuant to section 1035, if the policyholder has a substantial family, business, or financial relationship with the insured, apart from its interest in the life insurance contract, at the time of the exchange.

(d) ***Substantial relationship*** —

(1) ***Substantial family relationship.*** For purposes of this section, a substantial family relationship means the relationship between an individual and any family member of that individual as defined in paragraph (f)(3) of this section. In addition, a substantial family relationship exists between an individual and his or her former spouse with regard to the transfer of an interest in a life insurance contract to (or in trust for the benefit of) that former spouse incident to divorce.

(2) ***Substantial business relationship.*** For purposes of this section, a substantial business relationship between the insured and the acquirer exists in each of the following situations:

(i) The insured is a key person (as defined in section 264) of, or materially participates (within the meaning of section 469) in, an active trade or business as an owner, employee, or contractor, and at least 80 percent of that trade or business is owned (directly or indirectly, through one or more partnerships, trusts, or other entities) by the acquirer or the beneficial owners of the acquirer.

(ii) The acquirer acquires an active trade or business and acquires the interest in the life insurance contract either as part of that acquisition or from a person owning significant property leased to the acquired trade or business or life insurance policies held to facilitate the succession of the ownership of the business if—

(A) The insured—

(*1*) Is an employee within the meaning of section 101(j)(5)(A) of the acquired trade or business immediately preceding the acquisition (for purposes of this paragraph (d)(2)(ii)(A)(*1*), however, the reference in section 101(j)(5)(A) to highly compensated employee within the meaning of section 414(q) does not include a former employee); or

(*2*) Was a director, highly compensated employee, or highly compensated individual within the meaning of section 101(j)(2)(A)(ii) of the acquired trade or business, and the acquirer, immediately after the acquisition, has ongoing financial obligations to the insured with respect to the insured's employment by the trade or business (for example, the life insurance contract is maintained by the acquirer to fund current or future retirement, pension, or survivorship obligations based on the insured's relationship with the entity or to fund a buy-out of the insured's interest in the acquired trade or business); and

(B) The acquirer either carries on the acquired trade or business or uses a significant portion of the acquired business assets in an active trade or business that does not include investing in interests in life insurance contracts.

(3) ***Substantial financial relationship.*** For purposes of this section, a substantial financial relationship between the insured and the acquirer exists in each of the following situations:

(i) The acquirer (directly or indirectly, through one or more partnerships, trusts, or other entities of which it is a beneficial owner) has, or the beneficial owners of the acquirer have, a common investment (other than the interest in the life insurance contract) with the insured and a buy-out of the insured's interest in the common investment by the co-investor(s) after the insured's death is reasonably foreseeable.

(ii) The acquirer maintains the life insurance contract on the life of the insured to provide funds to purchase assets of or to satisfy liabilities of the insured or the insured's estate, heirs, legatees, or other successors in interest, or to satisfy other liabilities arising upon or by reason of the death of the insured.

(iii) The acquirer is an organization described in sections 170(c), 2055(a), and 2522(a) that previously received from the insured either financial support in a substantial amount or significant volunteer support or that meets other requirements prescribed in guidance published in the Internal Revenue Bulletin (see § 601.601(d)(2) of this chapter) for establishing that a substantial financial relationship exists between the insured and the organization.

(4) ***Special rules.*** Paragraphs (d)(4)(i), (ii), and (iii) of this section apply for purposes of determining whether a substantial relationship (whether family, business, or financial) exists under paragraph (d)(1), (2), or (3) of this section, respectively.

(i) ***Indirect acquisitions.*** The acquirer of an interest in a life insurance contract in an indirect acquisition is deemed to have a substantial business or financial relationship with the insured if the direct holder of the interest in the life insurance contract has a substantial business or financial relationship with the insured immediately before and after the date the acquirer acquires its interest.

(ii) ***Acquisitions by certain persons.*** The sole fact that an acquirer is a partner of the insured, a partnership in which the insured is a partner, or a corporation in which the insured is a shareholder or officer, is not sufficient to establish a substantial business or financial relationship with the insured. In addition, an acquirer need not be a partner of the insured, a partnership in which the insured is a partner, or a corporation in which the insured is a shareholder or officer to have a substantial business or financial relationship with the insured.

(iii) ***Acquisitions by those with differing types of substantial relationships.*** A substantial family, business, or financial relationship exists between the insured and a partnership, trust, or other entity if each beneficial owner of that partnership, trust, or other entity has a substantial family, business, or financial relationship with the insured. For example, a substantial family, business, or financial relationship exists between the insured and a trust if each trust beneficiary is a family member of the insured or an organization described in paragraph (d)(3)(iii) of this section.

(e) ***Interest in a life insurance contract*** —

(1) ***Definition.*** For purposes of this section and section 6050Y, the term *interest in a life insurance contract* means the interest held by any person that has taken title to or possession of the life insurance contract (also referred to as a life insurance policy), in whole or part, for state law purposes, including any person that has taken title or possession as nominee for another person, and the interest held by any person that has an enforceable right to receive all or a part of the proceeds of a life insurance contract or to any other economic benefits of the policy as described in § 20.2042-1(c)(2) of this chapter, such as the enforceable right to designate a contract beneficiary. Any person named as the owner in the life insurance contract generally is the owner (or an owner) of the contract and holds an interest in the contract.

(2) ***Transfer of an interest in a life insurance contract.*** For purposes of this section and section 6050Y, the term *transfer of an interest in a life insurance contract* means the transfer of any interest in the life insurance contract, including any transfer of title to, possession of, or legal or beneficial ownership of the life insurance contract itself. The creation of an enforceable right to receive all or a part of the

proceeds of a life insurance contract constitutes the transfer of an interest in the life insurance contract. The following events are not a transfer of an interest in a life insurance contract: The revocable designation of a beneficiary of the policy proceeds (until the designation becomes irrevocable other than by reason of the death of the insured); the pledging or assignment of a policy as collateral security; and the issuance of a life insurance contract to a policyholder, other than the issuance of a policy in an exchange pursuant to section 1035.

(3) ***Acquisition of an interest in a life insurance contract.*** For purposes of this section and section 6050Y, the acquisition of an interest in a life insurance contract may be direct or indirect.

(i) ***Direct acquisition of an interest in a life insurance contract.*** For purposes of this section and section 6050Y, the transfer of an interest in a life insurance contract results in the direct acquisition of the interest by the transferee (acquirer).

(ii) ***Indirect acquisition of an interest in a life insurance contract.*** For purposes of this section and section 6050Y, an indirect acquisition of an interest in a life insurance contract occurs when a person (acquirer) becomes a beneficial owner of a partnership, trust, or other entity that holds (whether directly or indirectly) the interest (whether legal or beneficial) in the life insurance contract. For purposes of this paragraph (e)(3)(ii), the term *other entity* does not include a C corporation, unless more than 50 percent of the gross value of the assets of the C corporation consists of life insurance contracts (as determined under paragraph (f)(4) of this section) immediately before the indirect acquisition.

(f) ***Definitions.*** The following definitions apply for purposes of this section:

(1) ***Beneficial owner.*** A beneficial owner of a partnership, trust, or other entity is an individual or C corporation with an ownership interest in that entity. The interest may be held directly or indirectly, through one or more other partnerships, trusts, or other entities. For instance, an individual that directly owns an interest in a partnership (P1), which directly owns an interest in another partnership (P2), is an indirect beneficial owner of P2 and any assets or other entities owned by P2 directly or indirectly. For purposes of this paragraph (f)(1), the beneficial owners of a trust include those who may receive current distributions of trust income or corpus and those who could receive distributions if the trust were to terminate currently.

(2) ***C corporation.*** The term *C corporation* has the meaning given to it in section 1361(a)(2).

(3) ***Family member.*** With respect to any individual, the term *family member* refers to any person described in paragraphs (f)(3)(i) through (vi) of this section. For purposes of this paragraph (f)(3), full effect is given to a legal adoption, and a step-child is deemed to be a descendant. The family members of an individual include:

(i) The individual;

(ii) The individual's spouse or a person with whom the individual is in a registered domestic partnership, civil union, or other similar relationship established under state law;

(iii) Any parent, grandparent, or great-grandparent of the individual or of the person described in paragraph (f)(3)(ii) of this section and any spouse of such parent, grandparent, or great-grandparent, or person with whom the parent, grandparent, or great-grandparent is in a registered domestic partnership, civil union, or other similar relationship established under state law;

(iv) Any lineal descendant of the individual or of any person described in paragraph (f)(3)(ii) or (iii) of this section;

(v) Any spouse of a lineal descendant described in paragraph (f)(3)(iv) of this section and any person with whom such a lineal descendant is in a registered domestic partnership, civil union, or other similar relationship established under state law; and

(vi) Any lineal descendant of a person described in paragraph (f)(3)(v) of this section.

(4) *Gross value of assets* —

(i) ***Determination of gross value of assets.*** Except as provided in paragraph (f)(4)(ii) or (iii) of this section, for purposes of paragraphs (c)(2)(iii)(B) and (e)(3)(ii) of this section, the term *gross value of assets* means, with respect to any entity, the fair market value of the entity's assets, including assets beneficially owned by the entity under paragraph (f)(1) of this section as a beneficial owner of a partnership, trust, or other entity.

(ii) ***Determination of gross value of assets of publicly traded entity.*** For purposes of determining the gross value of assets of an entity that is publicly traded, if the entity's annual Form 10-K filed with the United States Securities and Exchange Commission (or equivalent annual filing if the entity is publicly traded in a non-U.S. jurisdiction) for the period immediately preceding a person's acquisition of an ownership interest in the entity does not contain information demonstrating that more than 50 percent of the gross value of the entity's assets consists of life insurance contracts, that person may assume that no more than 50 percent of the gross value of the entity's assets consists of life insurance contracts, unless that person has actual knowledge or reason to know that more than 50 percent of the gross value of the entity's assets consists of life insurance contracts.

(iii) ***Safe harbor definition of gross value of assets.*** An entity may choose to determine the gross value of all the entity's assets for purposes of this section using the following alternative definition of *gross value of assets:*

(A) In the case of assets that are life insurance policies or annuity or endowment contracts that have cash values, the cash surrender value as defined in section 7702(f)(2)(A); and

(B) In the case of assets not described in paragraph (f)(4)(iii)(A) of this section, the adjusted bases (within the meaning of section 1016) of such assets.

(5) ***Transfer for valuable consideration.*** A transfer for valuable consideration means any transfer of an interest in a life insurance contract for cash or other consideration reducible to a money value.

(g) ***Examples.*** The application of this section is illustrated by the following examples. Each example assumes that the transferee did not receive any amounts under the life insurance contract other than the amounts described in the examples. With the exception of paragraph (g)(7) (*Example 7*) of this section, the bargain sale rules set forth in paragraph (b)(2)(iii) of this section do not apply in the examples because the consideration paid for the policy transferred is fair market value:

(1) ***Example 1.*** A is the initial policyholder of a $100,000 insurance policy on A's life. A sells the policy to B, A's child, for $6,000, its fair market value. B is not a partner in a partnership in which A is a partner. B receives the proceeds of $100,000 upon the death of A. Because the transfer to B was for valuable consideration, and none of the exceptions in paragraph (b)(1)(ii) of this section applies, the amount

of the proceeds B may exclude from B's gross income under this section is limited under paragraph (b)(1)(i) of this section to $6,000 plus any premiums and other amounts paid by B with respect to the policy subsequent to the transfer.

(2) ***Example 2.*** The facts are the same as in *Example 1* in paragraph (g)(1) of this section except that, before A's death, B gratuitously transfers the policy back to A. A's estate receives the proceeds of $100,000 on A's death. Because the transfer from B to A is a gratuitous transfer to the insured, and the preceding transfer from A to B was not a reportable policy sale, the amount of the proceeds A's estate may exclude from gross income under this section is not limited by paragraph (b)(2)(i) of this section.

(3) ***Example 3.*** The facts are the same as in *Example 1* in paragraph (g)(1) of this section except that, before A's death, B sells the policy back to A for its fair market value. A's estate receives the proceeds of $100,000 on A's death. The transfer from A to B is not a reportable policy sale because the acquirer B has a substantial family relationship with the insured, A. The transfer from B to A also is not a reportable policy sale because the acquirer A has a substantial family relationship with the insured, A. Accordingly, paragraph (b)(1)(ii)(B)(*1*) of this section applies to the transfer to A, and the amount of the proceeds A's estate may exclude from gross income is not limited by paragraph (b) of this section.

(4) ***Example 4.*** A is the initial policyholder of a $100,000 insurance policy on A's life. A transfers the policy for $6,000, its fair market value, to an individual, C, who does not have a substantial family, business, or financial relationship with A. The transfer from A to C is a reportable policy sale. C receives the proceeds of $100,000 on A's death. The amount of the proceeds C may exclude from C's gross income under this section is limited under paragraph (b)(1)(i) of this section to $6,000 plus any premiums and other amounts paid by C with respect to the policy subsequent to the transfer.

(5) ***Example 5.*** The facts are the same as in *Example 4* in paragraph (g)(4) of this section, except that before A's death, C transfers the policy to D, a partner of A who co-owns real property with A, for $8,000, the policy's fair market value. D receives the proceeds of $100,000 on A's death. The transfer from C to D is not a reportable policy sale because the acquirer D has a substantial financial relationship with the insured, A. However, because that transfer follows a reportable policy sale (the transfer from A to C), the amount of the proceeds that D may exclude from gross income under this section is limited by paragraph (b)(1)(ii)(B)(*2*) of this section to the sum of—

(i) The higher of the amount C could have excluded had the transfer to D not occurred ($6,000 plus any premiums and other amounts paid by C with respect to the policy subsequent to the transfer to C, as described in *Example 4* in paragraph (g)(4) of this section) or the actual value of the consideration for that transfer paid by D ($8,000); and

(ii) Any premiums and other amounts paid by D with respect to the policy subsequent to the transfer to D.

(6) ***Example 6.*** The facts are the same as in *Example 4* in paragraph (g)(4) of this section, except that before A's death, C transfers the policy back to A for $8,000, its fair market value. A's estate receives the proceeds of $100,000 on A's death. The transfer from C to A is not a reportable policy sale because the acquirer A has a substantial family relationship with the insured, A. Although the transfer follows a reportable policy sale (the initial transfer from A to C), A's estate may exclude all of the policy proceeds from gross income because paragraph (b)(1)(ii)(B)(*3*)(*i*) of this section applies and, therefore, the amount of the proceeds that A may exclude from gross income is not limited by paragraph (b)(1)(i) of this section or (b)(1)(ii)(B)(*2*) of this section.

(7) ***Example 7.*** The facts are the same as in *Example 6* in paragraph (g)(6) of this section, except that C transfers the policy back to A for $4,000, rather than its fair market value of $8,000. A's estate receives the proceeds of $100,000 on A's death. Because A did not pay fair market value for the policy, the transfer is bifurcated and treated as a bargain sale under paragraph (b)(2)(iii) of this section. A therefore is treated as having purchased 50% of the policy interest for valuable consideration equal to fair market value and as having received 50% of the policy interest in a gratuitous transfer. The transfer from C to A is not a reportable policy sale because the acquirer, A, has a substantial family relationship with the insured, A, but the transfer from C to A follows a reportable policy sale (the transfer from A to C).

(i) ***Treatment of policy interest purchased by A.*** A's estate may exclude from income all of the policy proceeds related to the 50% policy interest transferred for valuable consideration ($50,000) because, under paragraph (b)(1)(ii)(B)(*3*)(*i*) of this section, the amount of the proceeds that may be excluded from gross income is not limited by paragraph (b)(1)(i) of this section or (b)(1)(ii)(B)(*2*) of this section.

(ii) ***Treatment of policy interest gratuitously transferred to A.*** The amount of the policy proceeds related to the 50% policy interest transferred gratuitously that A's estate may exclude from income is limited under paragraph (b)(2)(i) of this section to the sum of the amount C could have excluded with respect to 50% of the policy had the transfer back to A not occurred (that is, 50% of the $6,000 that C paid A for the policy, plus 50% of any premiums and other amounts paid by C with respect to the policy subsequent to the transfer to C), plus 50% of any premiums and other amounts paid by A with respect to the policy subsequent to the transfer to A.

(8) ***Example 8.*** The facts are the same as in *Example 6* in paragraph (g)(6) of this section, except that, before A's death, A gratuitously transfers 50% of the policy interest to B, A's child, and sells 50% of the policy interest for its fair market value to an individual, E, who does not have a substantial family, business, or financial relationship with A. B and E each receive $50,000 of the proceeds on A's death. Paragraph (b)(1)(ii)(B)(*3*)(*ii*) of this section applies to determine the amount of the proceeds that B and E may exclude from gross income because the policy interests transferred to B and E were first transferred for valuable consideration in a reportable policy sale (the transfer by A to C) and then transferred to the insured, A, for fair market value.

(i) ***Treatment of policy interest transferred to B.*** With respect to the portion of the policy interest transferred to B, because the transfer to B was the only transfer subsequent to the transfer to A and the transfer to B was gratuitous and not a reportable policy sale, under paragraph (b)(1)(ii)(B)(*3*)(*ii*) of this section, the amount of the policy proceeds excludable from gross income by B is determined under paragraph (b)(2)(i) of this section, taking into account the application of paragraph (b)(1)(ii)(B)(*3*)(*i*) of this section to A's acquisition of the interest. Under paragraph (b)(2)(i) of this section, the amount of the proceeds B may exclude is limited to the sum of the amount A could have excluded had the transfer to B not occurred, and any premiums and other amounts paid by B with respect to the policy subsequent to the transfer to B. As described in *Example 6* in paragraph (g)(6) of this section, under paragraph (b)(1)(ii)(B)(*3*)(*i*) of this section, the amount of the proceeds that A may exclude from gross income is not limited by paragraph (b)(1)(i) of this section or (b)(1)(ii)(B)(*2*) of this section. Accordingly, the amount of the proceeds that B may exclude from gross income is not limited by paragraph (b) of this section.

(ii) ***Treatment of policy interest transferred to E.*** With respect to the portion of the policy interest transferred to E, because the transfer to E was not gratuitous and was a reportable policy sale, under paragraph (b)(1)(ii)(B)(*3*)(*ii*) of this section, the amount of the policy proceeds excludable from gross income by E is determined in accordance with paragraph (b) of this section. Accordingly, because the transfer to E was for valuable consideration, the amount excludable from gross income by E is limited by paragraph (b)(1)(i) of this section unless an exception in paragraph (b)(1)(ii) of this section applies. Because the transfer from A to E is a reportable policy sale, none of the exceptions in paragraph (b)(1)(ii) of this section apply. Therefore, the amount of the proceeds E may exclude from gross income under this section is limited by paragraph (b)(1)(i) of this section to the sum of the consideration paid by E and the premiums and other amounts paid by E with respect to the policy subsequent to the transfer to E.

(9) ***Example 9.*** The facts are the same as in *Example 8* in paragraph (g)(8) of this section, except that, before A's death, B transfers B's policy interest to Partnership F, whose partners are A and other family members of A, in exchange for a partnership interest in Partnership F. Partnership F receives $50,000 of the proceeds on A's death. With respect to the policy interest transferred to Partnership F, paragraph (b)(1)(ii)(B)(*3*)(*ii*) of this section applies to determine the amount of the proceeds that Partnership F may exclude from gross income for the reasons described in *Example 8* in paragraph (g)(8) of this section.

(i) ***Treatment of policy interest transferred to Partnership F.*** The transfer to Partnership F was not a reportable policy sale. However, because the transfer to Partnership F was not gratuitous, the amount of the policy proceeds excludable from gross income by Partnership F is determined in accordance with paragraph (b) of this section as if the amount that would have been excludable from gross income by A following the transfer to A, if no subsequent transfer had occurred, was determined under paragraph (b)(1)(ii)(B)(*2*) of this section. Because B's transfer to Partnership F was a transfer for valuable consideration to a partnership in which the insured is a partner that was preceded by a reportable policy sale (the transfer to C), the amount of the proceeds Partnership F may exclude from gross income under this section is limited under paragraph (b)(1)(ii)(B)(*2*) of this section to the higher of the amount that would have been excludable by B if the transfer to Partnership F had not occurred or the actual value of the consideration for the policy paid by Partnership F, plus any premiums and other amounts paid by Partnership F with respect to the policy subsequent to the transfer to Partnership F.

(ii) ***Amount that B could have excluded.*** Because the transfer from A to B was a gratuitous transfer, the amount of the proceeds B could have excluded from gross income under this section if the transfer to Partnership F had not occurred is limited under paragraph (b)(2)(i) of this section to the sum of the amount A could have excluded had the transfer to B not occurred, and any premiums and other amounts paid by B with respect to the policy subsequent to the transfer to B.

(iii) ***Amount that A could have excluded.*** As described in paragraph (g)(9)(i) of this section, the amount of the proceeds A could have excluded under this section if the transfer to B had not occurred must be determined under paragraph (b)(1)(ii)(B)(*2*) of this section in accordance with paragraph (b)(1)(ii)(B)(*3*)(*ii*) of this section. Under paragraph (b)(1)(ii)(B)(*2*) of this section, the amount that would have been excludable by A is limited to the higher of the amount that would have been excludable by C if the transfer to A had not occurred ($6,000 plus premiums and other amounts subsequently paid by C) or the actual value of the consideration for the policy paid by A ($8,000), plus any premiums and other amounts paid by A with respect to the policy subsequent to the transfer to A.

(10) ***Example 10.*** A is the initial policyholder of a $100,000 insurance policy on A's life. A contributes the policy to Corporation X in exchange for stock. Corporation X's basis in the policy is determinable in whole or in part by reference to A's basis in the policy. Corporation X conducts an active trade or business that it wholly owns, and A materially participates in that active trade or business as an employee of Corporation X. Corporation X receives the proceeds of $100,000 on A's death. A's contribution of the policy to Corporation X is not a reportable policy sale because Corporation X has a substantial business relationship with A under paragraph (d)(2)(i) of this section. Although Corporation X's basis in the policy is determinable in whole or in part by reference to A's basis in the policy, paragraph (b)(1)(ii)(A) of this section does not apply because the insured, A, is a shareholder of Corporation X and the other requirements under paragraph (b)(1)(ii)(B) of this section are satisfied. Accordingly, paragraph (b)(1)(ii)(B) of this section applies, and paragraph (b)(1)(ii)(A) of this section is inapplicable. Under paragraph (b)(1)(ii)(B)(*1*) of this section, Corporation X's exclusion is not limited by paragraph (b) of this section.

(11) ***Example 11.*** The facts are the same as in *Example 10* in paragraph (g)(10) of this section, except that Corporation X transfers its active trade or business and the policy on A's life to Corporation Y in a tax-free reorganization at a time when A is still employed by Corporation X, but is no longer a shareholder of Corporation X. Corporation Y's basis in the policy is determinable in whole or in part by reference to Corporation X's basis in the policy, and Corporation Y carries on the trade or business acquired from Corporation X. Corporation Y receives the proceeds of $100,000 on A's death. The transfer from Corporation X to Corporation Y is not a reportable policy sale because Corporation Y has a substantial business relationship with A under paragraph (d)(2)(ii) of this section. The amount of the proceeds that Corporation Y may exclude from gross income is limited under paragraph (b)(1)(ii)(A) of this section to the sum of the amount that would have been excludable by Corporation X had the transfer to Corporation Y not occurred, plus any premiums and other amounts paid by Corporation Y with respect to the policy subsequent to the transfer. Accordingly, because Corporation X's exclusion is not limited by paragraph (b) of this section, as described in *Example 10* in paragraph (g)(10) of this section, Corporation Y's exclusion is not limited by paragraph (b) of this section.

(12) ***Example 12.*** A is the initial policyholder of a $100,000 insurance policy on A's life. A contributes the policy to a C corporation, Corporation W, in exchange for stock. After the acquisition, A owns less than 20% of the outstanding stock of Corporation W and owns stock possessing less than 20% of the total combined voting power of all stock of Corporation W and is therefore not a key person with respect to Corporation W under section 264(e)(3). Corporation W's basis in the policy is determinable in whole or in part by reference to A's basis in the policy. However, no substantial family, business, or financial relationship exists between A and Corporation W, so A's contribution of the policy to Corporation W is a reportable policy sale. Corporation W receives the proceeds of $100,000 on A's death. Under paragraph (b)(1)(i) of this section, the amount of the proceeds Corporation W may exclude from gross income is limited to the actual value of the stock exchanged for the policy, plus any premiums and other amounts paid by Corporation W with respect to the policy subsequent to the transfer. The exceptions in paragraph (b)(1)(ii) of this section do not apply because the transfer to Corporation W is a reportable policy sale.

(13) ***Example 13.*** Partnership X and Partnership Y are owned by individuals A, B, and C. A holds 40% of the capital and profits interest of Partnership X and 20% of the capital and profits interest of Partnership Y. B holds 35% of the capital and profits interest of Partnership X and 40% of the capital and profits interest of Partnership Y. C holds 25% of the capital and profits interest of Partnership X and 40% of the capital and profits interest of Partnership Y. Partnership X is the initial policyholder of a $100,000

insurance policy on the life of A. Partnership Y purchases the policy from Partnership X. Under paragraph (c)(2)(i) of this section, this transfer is not a reportable policy sale because the ownership interest of each beneficial owner in Partnership X does not vary from that owner's interest in Partnership Y by more than a 20% ownership interest. A's ownership varies by a 20% interest, B's ownership varies by a 5% interest, and C's ownership varies by a 15% interest.

(14) ***Example 14.*** Partnership X conducts an active trade or business and is the initial policyholder of a $100,000 insurance policy on the life of its full-time employee, A. A materially participates in Partnership X's active trade or business in A's capacity as an employee. Individual B acquires a 10% profits interest in Partnership X in exchange for a cash payment of $1,000,000. Under paragraphs (d)(1) through (3) of this section, B does not have a substantial family, business, or financial relationship with A. Under paragraph (d)(4)(i) of this section, however, B is deemed to have a substantial business relationship with A because, under paragraph (d)(2)(i) of this section, Partnership X (the direct policyholder) has a substantial business relationship with A. Accordingly, although the acquisition of the 10% partnership interest by B is an indirect acquisition of a 10% interest in the insurance policy covering A's life, the acquisition is not a reportable policy sale.

(15) ***Example 15.*** The facts are the same as in *Example 14* in paragraph (g)(14) of this section, except that A is no longer an employee of Partnership X, and Partnership X has no substantial family, business, or financial relationship with A, when B acquires the profits interest in Partnership X. Also, B acquires only a 5% profits interest in exchange for a cash payment of $500,000. Partnership X does not own an interest in any other life insurance policies, and the gross value of its assets is $10 million. Although neither Partnership X nor B has a substantial family, business, or financial relationship with A at the time of B's indirect acquisition of an interest in the policy covering A's life, because B's profits interest in Partnership X does not exceed 5%, and because no more than 50% of Partnership X's asset value consists of life insurance contracts, the exception in paragraph (c)(2)(iii)(B) of this section applies, and B's indirect acquisition of an interest in the policy covering A's life is not a reportable policy sale.

(16) ***Example 16.*** A is the initial policyholder of a $100,000 insurance policy on A's life. A sells the policy for its fair market value. As a result of the sale, Bank X holds legal title to the life insurance contract as the nominee of Partnership B, and Partnership B has the enforceable right to designate the contract beneficiary. Under paragraphs (d)(1) through (4) of this section, neither Bank X nor Partnership B has a substantial family, business, or financial relationship with the insured, A, at the time of the sale. Accordingly, the transfer of legal title to the policy to Bank X is a reportable policy sale under paragraph (c)(1) of this section, unless an exception set forth in paragraph (c)(2) of this section applies. The same is true of the transfer of the economic benefits of the policy to Partnership B. At a later date, Partnership B sells its economic interest in the policy to Partnership C for fair market value. Bank X continues to hold legal title to the life insurance contract, but now holds it as Partnership C's nominee. Partnership C has no substantial family, business, or financial relationship with the insured, A, under paragraphs (d)(1) through (4) of this section at the time of the transfer. Accordingly, Partnership C's acquisition of the economic interest in the policy from Partnership B is a reportable policy sale under paragraph (c)(1) of this section, unless an exception set forth in paragraph (c)(2) of this section applies.

[T.D. 6500, 25 FR 11402, Nov. 26, 1960, as amended by T.D. 6783, 29 FR 18356, Dec. 24, 1964; T.D. 7836, 47 FR 42337, Sept. 27, 1982; T.D. 9340, 72 FR 41159, July 26, 2007; T.D. 9879, 84 FR 58478, Oct. 31, 2019; T.D. 9879, 84 FR 68043, Dec. 13, 2019]

§ 1.101-2 Employees' death benefits.

(a) *In general.*

(1) Section 101(b) states the general rule that amounts up to $5,000 which are paid to the beneficiaries or the estate of an employee, or former employee, by or on behalf of an employer and by reason of the death of the employee shall be excluded from the gross income of the recipient. This exclusion from gross income applies whether payment is made to the estate of the employee or to any beneficiary (individual, corporation, or partnership), whether it is made directly or in trust, and whether or not it is made pursuant to a contractual obligation of the employer. The exclusion applies whether payment is made in a single sum or otherwise, subject to the provisions of section 101 (c), relating to amounts held under an agreement to pay interest thereon (see § 1.101-3). The exclusion from gross income also applies to any amount not actually paid which is otherwise taxable to a beneficiary of an employee because it was made available as a distribution from an employee's trust.

(2) The exclusion does not apply to amounts constituting income payable to the employee during his life as compensation for his services, such as bonuses or payments for unused leave or uncollected salary, nor to certain other amounts with respect to which the deceased employee possessed, immediately before his death, a nonforfeitable right to receive the amounts while living (see section 101(b)(2)(B) and paragraph (d) of this section). Further, the exclusion does not apply to amounts received as an annuity under a joint and survivor annuity obligation where the employee was the primary annuitant and the annuity starting date occurred before the death of the employee (see section 101 (b)(2)(C) and paragraph (e)(1)(ii) of this section). In the case of amounts received by a beneficiary as an annuity (but not as a survivor under a joint and survivor annuity with respect to which the employee was the primary annuitant), the exclusion is applied indirectly by means of the provisions of section 72 and the regulations thereunder (see section 101(b)(2)(D) and paragraph (e)(1) (iii) and (iv) of this section). Thus, for example, the exclusion applies to amounts which are received by a survivor of an employee retired on disability under the provisions of the Civil Service retirement law (5 U.S.C. 8301 or any former corresponding provisions of law) or the Retired Serviceman's Family Protection Plan or Survivor Benefit Plan (10 U.S.C. 1431 *et seq.*), provided such employee dies before attaining mandatory retirement age (as defined in § 1.105-4 (a)(3)(i)(B)).

(3) The total amount excludable with respect to any employee may not exceed $5,000, regardless of the number of employers or the number of beneficiaries. For allocation of the exclusion among beneficiaries, see paragraph (c) of this section. For rules governing the taxability of benefits payable on the death of an employee under pension, profitsharing, or stock bonus plans described in section 401(a) and exempt under section 501(a), under annuity plans described in section 403(a), or under annuity contracts to which paragraph (a) or (b) of § 1.403(b)-1 applies, see sections 72(m)(3), 402(a), and 403 and the regulations thereunder.

(b) *Payments under certain employee benefit plans* —

(1) *In general.* Where a payment is made by reason of the death of an employee by an employer-provided welfare fund or a trust, including a stock bonus, pension, or profitsharing trust described in section 401 (a), or by an insurance company (if such payment does not constitute “life insurance” within the purview of section 101(a), the payment shall be considered to have been made by or on behalf of the employer to the extent that it exceeds amounts contributed by, or deemed contributed by, the deceased employee.

(2) *Cross references.* For provisions governing the taxability of distributions payable on the death of an employee participant—

(i) Under a trust described in section 401(a) and exempt from tax under section 501(a), see paragraph (c) of § 1.72-16 and paragraph (a)(5) of § 1.402 (a)-1;

(ii) Under an annuity plan described in section 403(a), see paragraph (c) of § 1.72-16 and paragraph (c) of § 1.403 (a)-1;

(iii) Under annuity contracts to which paragraph (a) or (b) of § 1.403 (b)-1 applies, see paragraph (c)(2) and (3) of § 1.403(b)-1;

(iv) Under eligible State deferred compensation plans described in section 457 (b), see paragraph (c) of § 1.457-1.

(c) ***Allocation of the exclusion.***

(1) Where the aggregate payments by or on behalf of an employer or employers as death benefits to the beneficiaries or the estate of a deceased employee exceed $5,000, the $5,000 exclusion shall be apportioned among them in the same proportion as the amount received by or the present value of the amount payable to each bears to the total death benefits paid or payable by or on behalf of the employer or employers.

(2) The application of the rule in subparagraph (1) of this paragraph may be illustrated by the following example:

Example. The M Corporation, the employer of A, a deceased employee who died November 30, 1954, makes payments in 1955 to the beneficiaries of A as follows: $5,000 to W, A's widow, $2,000 to B, the son of A, and $3,000 to C, the daughter of A. No other amounts are paid by any other employer of A to his estate or beneficiaries. By application of the apportionment rule stated above, W, the widow, will exclude $2,500 ($5,000/$10,000, or one-half, of $5,000); B, the son, will exclude $1,000 ($2,000/$10,000, or one-fifth, of $5,000); and C, the daughter, will exclude $1,500 ($3,000/$10,000, or three-tenths, of $5,000).

(d) ***Nonforfeitable rights.***

(1) Except as provided in subparagraphs (3) and (4) of this paragraph, the exclusion provided by section 101(b) does not apply to amounts with respect to which the deceased employee possessed, immediately before his death, a nonforfeitable right to receive the amounts while living. Section 101(b)(2)(B). For the purpose of section 101(b) and this paragraph, an employee shall be considered to have had a nonforfeitable right with respect to—

(i) Any amount to which he would have been entitled—

(*a*) If he had made an appropriate election or demand, or

(*b*) Upon termination of his employment (see examples (5) and (6) of subparagraph (2) of this paragraph); or

(ii) The present value (immediately before his death) of—

(*a*) Amounts payable as an annuity (as defined in paragraph (b) of § 1.72-2, whether immediate or deferred) by or on behalf of the employer (see example (1) of subparagraph (2) of this paragraph), or

(*b*) Amounts which would have been so payable if the employee had terminated his employment and continued to live;

or

(iii) Any amount to the extent it is paid in lieu of amounts described in either subdivision (i) or (ii) of this subparagraph. See examples (2), (3), and (4) of subparagraph (2) of this paragraph.

For purposes of subdivision (iii) of this subparagraph, any amount paid in discharge of an obligation which arose solely because of the existence of a particular fact or circumstance subsequent to the employee's death shall not be considered an amount paid in lieu of amounts described in subdivision (i) or (ii) of this subparagraph. Subdivision (iii) of this subparagraph shall apply, however, to the extent indicated therein, to amounts payable without regard to any such contingency (to the extent that such amounts are equal to or less than those described in subdivision (i) and (ii) of this subparagraph which are not paid). See paragraph (e)(1)(iii)(*b*) of this section for rules with respect to finding the present value of an annuity immediately before the employee's death.

(2) The application of paragraph (d)(1) of this section may be illustrated by the following examples, in which it is assumed that the plans are not “qualified plans” and that no employer is an organization referred to in section 170(b)(1)(A) (ii) or (vi) or a religious organization (other than a trust) which is exempt from tax under section 501(a):

Example 1. A, who was a participant under the X Company pension plan, retired on December 31, 1953. He had made no contributions to the plan. Upon his retirement, he became entitled to monthly payments of $100 payable for life, or 120 months certain. A died on October 31, 1954, having received 10 monthly payments of $100 each. After his death, the monthly payments became payable to his estate for the remaining 110 months certain. No exclusion from gross income is allowed to A's estate (or any beneficiary who receives the right to such payments from the estate), since the employee's right to the monthly payments was nonforfeitable at the date of his death. It will be noted that in this example it is unnecessary to consider the present value of the annuity to A just before his death since the payments to be made include only those certain to be made in any event under the plan whether or not A continued to live.

Example 2. C, a participant under the Y Company pension plan, died on December 15, 1954, while actively in the employment of the company, survived by a widow and minor children. Because of his years of service, he would have been entitled to an annuity for life, his own contributions to the plan and interest thereon being guaranteed, if he had retired or terminated his employment at a time immediately before his death. The plan further provides that—(a) if, but only if, an employee is survived by a widow and minor children, his widow is to receive an annuity for her life without regard to whether or not the employee had begun his annuity; (b) any payments made with respect to his widow's annuity are to reduce the guaranteed amount to an equal extent; and (c) if the employee is not so survived, the guaranteed amount is payable to his beneficiary or estate, but no amount is payable to anyone with respect to what would have been the widow's annuity. In view of these provisions, that portion of the present value of the annuity payable to C's widow which exceeds the guaranteed amount shall be considered paid neither as an amount, nor in lieu of an amount, which C had a nonforfeitable right to receive while living. The reason for this result is that the payment of such excess is contingent upon C's being survived by a widow and minor children, a circumstance existing subsequent to his

death. Conversely, to the extent that the present value of the annuity payable to C's widow does not exceed the guaranteed amount, annuity payments attributable to such present value shall be considered paid in lieu of an amount which C had a nonforfeitable right to receive while living.

Example 3. D, a participant under the Y Company pension plan, died on January 1, 1955, while actively in the employment of the company. The Y Company plan provides that where an employee dies in service, the present value of the accumulated credits which he could have obtained at that time if he had instead separated from the service shall be paid in a single sum to his surviving spouse or to his estate if no widow survives him. The present value of D's accumulated credits, at the time of his death, was $10,000. However, the plan also provides that a surviving spouse may elect to take, in lieu of a single sum, an annuity the present value of which exceeds such sum by $2,500. D's widow elects to receive an annuity (the present value of which is $12,500). Therefore, $2,500 is an amount to which the exclusion of section 101(b) and this section shall apply.

Example 4. A, an employee of the X Company, continues to work after reaching the normal retirement age of 60 years, although he could have retired at that age and obtained an annuity of $3,000 per year for his life. A is not entitled to any part of the annuity while he is employed and receiving compensation. A dies at the age of 67 while still in active employment. Since he had passed normal retirement age, his additional years of service did not entitle him to a larger annuity at age 67 than that which he could have obtained at age 60. However, the plan of the X Company provides that in the event of an employee's death prior to separation from the service, his widow is to be paid an annuity for her life in the same amount per year as that which the employee could have obtained if he had instead retired; but if no widow survives him, the present value of the annuity which the employee could have obtained at a time just before his death is to be paid to a named beneficiary or the estate of the employee. Assuming that the present value of the annuity to A's widow, whose age is 61, is $36,000 and the present value of the annuity which would have been payable to A at age 67 if he had then retired is $23,500, the present value of the widow's annuity, to the extent of $23,500, is an amount which is payable in lieu of amounts which the employee had a nonforfeitable right to receive while living because it does not exceed the value of his nonforfeitable rights and is not otherwise paid. On the other hand, the $12,500 excess of the value of the widow's annuity ($36,000) over the value of the employee's annuity ($23,500) is an amount to which section 101(b) applies since the employee had no right to any part of it. If no other death benefits are payable, a $5,000 exclusion is available (see section 101(b)(2)(D) and paragraph (e) of this section).

Example 5. The trustee of the X Corporation noncontributory profit-sharing plan is required under the provisions of the plan to pay to the beneficiary of B, an employee of the X Corporation who died on July 1, 1955, the benefit due on account of the death of B. The provisions of the profit-sharing plan give each participating employee in case of termination of employment a 10-percent vested interest in the amount accumulated in his account for each year of participation in the plan. In case of death, the entire credit in the participant's account is to be paid to his beneficiary. At the time of B's death, he had been a participant for three years and the accumulation in his account was $8,000. After his death this amount is paid to his beneficiary. At the time of B's death, the amount distributable to him on account of termination of employment would have been $2,400 (30 percent of $8,000). The difference of $5,600 ($8,000 minus $2,400), payable to the beneficiary of B, is an amount payable solely by reason of B's death. Accordingly, $5,000 of the $5,600 may be excluded from the gross income of the

beneficiary receiving such payment (assuming no other death benefits are involved). However, if it is assumed that the facts are the same as above, except that at the time of his death B has been a participant for 6 years, the amount distributable to him on account of termination of employment would have been $4,800 (60 percent of $8,000). The difference of $3,200 ($8,000 minus $4,800), payable to B's beneficiary, is an amount payable solely by reason of B's death. Accordingly, only $3,200 may be excluded from the gross income of the beneficiary receiving such payment (assuming no other death benefits are involved).

Example 6. The X Corporation instituted a trust, forming part of a pension plan, for its employees, the cost thereof being borne entirely by the corporation. The plan provides, in part, that after 10 or more years of service and attaining the age of 55, an employee can elect to retire and receive benefits before the normal retirement date contingent upon the employer's approval. If he retires without the employer's consent, or voluntarily leaves the company, no benefits are or will be payable. The plan further provides that if the employee is involuntarily separated or dies before retirement, he or his beneficiary, respectively, will receive a percentage of the reserve provided for the employee in the trust fund on the following basis: 10 to 15 years of service, 25 percent; 15 to 20 years of service, 50 percent; 20 to 25 years of service, 75 percent; 25 or more years of service, 100 percent. A, an employee of the X Corporation for 17 years, died at the age of 56 while in the employ of the corporation. At the time of his death, $15,000 was the reserve provided for him in the trust. His beneficiary receives $7,500, an amount equal to 50 percent of the reserve provided for A's retirement; accordingly, $5,000 of the $7,500 may be excluded from the gross income of the beneficiary receiving such payment (assuming no other death benefits are involved) since A, prior to his death, had only a forfeitable right to receive $7,500.

(3)

(i) Notwithstanding the rule stated in subparagraph (1) of this paragraph and illustrated in subparagraph (2) of this paragraph, the exclusion from gross income provided by section 101(b) applies to the receipt of certain amounts, paid under "qualified" plans, with respect to which the deceased employee possessed, immediately before his death, a nonforfeitable right to receive the amounts while living (see section 101(b)(2)(B) (i) and (ii)). The payments to which this exclusion applies are—

(*a*) "Total distributions payable" by a stock bonus, pension, or profit-sharing trust described in section 401(a) which is exempt from tax under section 501(a), and

(*b*) "Total amounts" paid under an annuity contract under a plan described in section 403(a), provided such distributions or amounts are paid in full within one taxable year of the distributee (see example (3) of subdivision (ii) of this subparagraph). For the purposes of applying section 101(b), "Total distributions payable" means the balance to the credit of an employee which becomes payable to a distributee on account of the employee's death, either before or after separation from the service (see section 402(a)(3)(C), the regulations thereunder, and examples (2) and (4) of subdivision (ii) of this subparagraph); and "total amounts" means the balance to the credit of an employee which becomes payable to the payee by reason of the employee's death, either before or after separation from the service (see section 403(a)(2)(B), the regulations thereunder, and example (1) of subdivision (ii) of this subparagraph). See subparagraph (4) of this paragraph relating to the exclusion of amounts which are received under annuity contracts purchased by certain exempt organizations and with respect to which the deceased employee possessed, immediately before his death, a nonforfeitable right to receive the amounts while living.

(ii) The application of the provisions of subdivision (i) of this subparagraph may be illustrated by the following examples:

Example 1. The widow of an employee elects, under a noncontributory "qualified" plan, to receive in a lump sum the present value of the annuity which C, the deceased employee, could have obtained at a time just before his death if he had retired at that time. Such present value is $6,000. Of this amount, $5,000 is excludable from the widow's gross income despite the fact that C had a nonforfeitable right to the amount in lieu of which the payment is made, since such payment is an amount to which subdivision (i) of this subparagraph applies (assuming no other death benefits are involved).

Example 2. The trustee of the X Corporation noncontributory, "qualified", profit- sharing plan is required under the provisions of the plan to pay to the beneficiary of B, an employee of the X Corporation who died on July 1, 1955, the benefit due on account of the death of B. The provisions of the profit-sharing plan give each participating employee, in case of termination of employment, a 10 percent vested interest in the amount accumulated in his account for each year of participation in the plan, but, in case of death, the entire credit to the participant's account is to be paid to his beneficiary. At the time of B's death, he had been a participant for five years. The accumulation in his account was $8,000, and the amount which would have been distributable to him in the event of termination of employment was $4,000 (50 percent of $8,000). After his death, $8,000 is paid to his beneficiary in a lump sum. (It may be noted that these are the same facts as in example (5) of subparagraph (2) of this paragraph except that the employee has been a participant for five years instead of three and the plan is a "qualified" plan.) It is immaterial that the employee had a nonforfeitable right to $4,000, because the payment of the $8,000 to the beneficiary is the payment of the "total distributions payable" within one taxable year of the distributee to which subdivision (i) of this subparagraph applies. Assuming no other death benefits are involved, the beneficiary may exclude $5,000 of the $8,000 payment from gross income.

Example 3. The facts are the same as in example (2) except that the beneficiary is entitled to receive only the $4,000 to which the employee had a nonforfeitable right and elects, 30 days after B's death, to receive it over a period of ten years. Since the "total distributions payable" are not paid within one taxable year of the distributee, no exclusion from gross income is allowable with respect to the $4,000.

Example 4. The X Corporation instituted a trust, forming part of a "qualified" profit-sharing plan for its employees, the cost thereof being borne entirely by the corporation. The plan provides, in part, that if, after 10 or more years of service, an employee leaves the employ of the corporation, either voluntarily or involuntarily, before retirement, a percentage of the reserve provided for the employee in the trust fund will be paid to the employee as follows: 10 to 15 years of service, 25 percent; 15 to 20 years of service, 50 percent; 20 to 25 years of service, 75 percent; 25 or more years of service, 100 percent. The plan further provides that if an employee dies before reaching retirement age, his beneficiary will receive a percentage of the reserve provided for the employee in the trust fund, on the same basis as shown in the preceding sentence. A, an employee of the X Corporation for 17 years, died before attaining retirement age while in the employ of the corporation. At the time of his death, $15,000 was the reserve provided for him in the trust fund. His beneficiary receives $7,500 in a lump sum, an amount equal to 50 percent of the reserve provided for A's retirement. The beneficiary may exclude from gross income

(assuming no other death benefits are involved) $5,000 of the $7,500, since the latter amount constitutes "total distributions payable" paid within one taxable year of the distributee, to which subdivision (i) of this subparagraph applies.

(4)

(i) Notwithstanding the rule stated in subparagraph (1) of this paragraph and illustrated in subparagraph (2) of this paragraph, the exclusion from gross income under section 101(b) also applies (but only to the extent provided in the next sentence) to amounts with respect to which the deceased employee possessed, immediately before his death, a nonforfeitable right to receive the amounts while living—

(*a*) If such amounts are paid under an annuity contract purchased by an employer which is an organization referred to in section 170(b)(1)(A) (ii) or (vi) or which is a religious organization (other than a trust) and which is exempt from tax under section 501(a).

(*b*) If such amounts are paid as part of a "total payment" with respect to the deceased employee; and

(*c*) If such "total payment" is paid in full within one taxable year of the payee beginning after December 31, 1957.

However, the amount that is excludable under section 101(b) by reason of this subparagraph shall not exceed an amount which bears the same ratio to the amount which would be includible in the payee's gross income if it were not for the second sentence of section 101(b)(2)(B) and this subparagraph, as the amount contributed by the employer for the annuity contract that was excludable from the deceased employee's gross income under paragraph (b) of § 1.403(b)-1 bears to the total amount contributed by the employer for the annuity contract. See section 101(b)(2)(B)(iii). For purposes of this subparagraph, a "total payment" means a payment of the balance to the credit of an employee with respect to all "section 403(b) annuities" purchased by the employer which becomes payable to the payee by reason of the employee's death, either before or after separation from the service. An annuity contract will be regarded as a "section 403(b) annuity" if any amount contributed (or considered as contributed under paragraph (b)(2) of § 1.403(b)-1) by the employer for such contract was excludable from the employee's gross income under paragraph (b) of § 1.403(b)-1. Under this definition, therefore, an annuity contract may be regarded as a "section 403(b) annuity" even though some of the employer's contributions for the contract were not excludable from the employee's gross income under paragraph (b) of § 1.403(b)-1 because, for example, the employer was not an exempt organization when such contributions were paid. For purposes of computing the ratio described in this subdivision in such a case, the total amount contributed by the employer for the contract includes the amounts contributed by the employer when it was not an exempt organization.

(ii) This subparagraph does not relate to any amounts with respect to which the deceased employee did not possess, immediately before his death, a nonforfeitable right to receive the amounts while living. Such amounts are excludable under the provisions of section 101(b) without regard to section 101(b)(2)(B) and this subparagraph. Thus, if a "total payment" received by a beneficiary of a deceased employee under an annuity contract purchased by an organization described in subdivision (i)(*a*) of this subparagraph consists both of amounts with respect to which the deceased employee possessed, immediately before his death, a nonforfeitable right to receive the amounts while living and of amounts with respect to which

the deceased employee did not possess such a nonforfeitable right, only those amounts with respect to which the deceased employee possessed such a nonforfeitable right are amounts to which this subparagraph applies. Therefore, for purposes of computing the ratio described in subdivision (i) of this subparagraph in such a case, there shall be taken into account only the employer contributions attributable to those amounts with respect to which the deceased employee possessed, immediately before his death, a nonforfeitable right to receive the amounts while living. See example (3) of subdivision (v) of this subparagraph. In no event, however, may the total amount excludable under section 101(b) with respect to any employee exceed $5,000 (See paragraph (a)(3) of this section).

(iii)

(*a*) In any case when the deceased employee's interest in the employer's contributions for an annuity contract was forfeitable at the time the contributions were made but, at a subsequent date prior to his death, such interest changed to a nonforfeitable interest, then, for purposes of computing the ratio described in subdivision (i) of this subparagraph, the cash surrender value of the contract on the date of the change (except to the extent attributable to employee contributions) shall be considered as the amount contributed by the employer for the contract. In such a case, if only part of the deceased employee's interest in the annuity changed from a forfeitable to a nonforfeitable interest, then only the corresponding part of the cash surrender value of the contract on the date of the change shall be considered as the amount contributed by the employer for the contract. Similarly, if part of the deceased employee's interest in the annuity contract changed from a forfeitable to a nonforfeitable interest on a particular date and another part of his interest so changed on a subsequent date, it is necessary, in order to compute the amount contributed by the employer for the contract, to first determine (under the rules in the preceding sentence) the amount that is considered as the amount contributed by the employer with respect to each change, and then to add these amounts together. For purposes of computing the ratio described in subdivision (i) of this subparagraph in all of the above cases, the amount contributed by the employer that was excludable from the employee's gross income under paragraph (b) of § 1.403(b)-1 is that amount which, under paragraph (b)(2) of such section, was considered as employer contributions and which, under such paragraph (b) of § 1.403(b)-1, was excludable from the deceased employee's gross income for the taxable year in which the change occurred.

(*b*) This subdivision (iii) may be illustrated by the following examples:

Example 1. X Organization contributed $4,000 toward the purchase of an annuity contract for A, an employee who died in 1970. At the time they were made, A's interest in such contributions was forfeitable. A made no contributions toward the purchase of the annuity contract. On January 1, 1960, A's entire interest in the annuity contract changed to a nonforfeitable interest. At the time of such change, the cash surrender value of the contract was $5,000. For purposes of the ratio described in subdivision (i) of this subparagraph, the total amount contributed by X Organization for the annuity contract is $5,000. If any part of such $5,000 was excludable under paragraph (b) of § 1.403(b)-1 from A's gross income for his taxable year in which the change occurred, the amount so excludable shall be considered as the amount contributed for the contract by the employer that was excludable from the employee's gross income under paragraph (b) of § 1.403(b)-1.

Example 2. Assume the same facts as in example (1) except that only one-half of A's interest in the annuity contract changed to a nonforfeitable interest on January 1, 1960, and that no other part of his interest so changed during his lifetime. For purposes of the ratio described in subdivision (i) of this subparagraph, the total amount contributed by X Organization for the annuity contract is $2,500 ($^1/_2$ of the cash surrender value of the annuity contract on the date of the change). To the extent such $2,500 was, under paragraph (b) of § 1.403(b)-1, excludable from A's gross income for the taxable year of the change, it is considered as the amount contributed by the employer that was excludable under paragraph (b) of § 1.403(b)-1.

Example 3. Assume the same facts as in example (1) except that one-half of A's interest in the annuity contract changed to a nonforfeitable interest on January 1, 1960, and the other half of his interest changed to a nonforfeitable interest on January 1, 1965. On January 1, 1965, the cash surrender value of the annuity contract was $6,000. For purposes of the ratio described in subdivision (i) of this subparagraph, the total amount contributed by X organization for the annuity contract is $5,500 (*i.e.*,$^1/_2$ × $5,000 plus $^1/_2$ × $6,000). The amount contributed by the employer that was excludable from A's gross income under paragraph (b) of § 1.403(b)-1 is an amount equal to the sum of the amount that was, under such paragraph, excludable from A's gross income for the taxable year during which the first change occurred and the amount that was, under such paragraph, excludable from A's gross income for the taxable year in which the second change occurred.

(iv) For purposes of this subparagraph, an annuity contract will be considered to have been purchased by an employer which is an organization referred to in section 170(b)(1)(A) (ii) or (vi) or which is a religious organization (other than a trust) and which is exempt from tax under section 501(a), if any of the contributions paid toward the purchase price of such contract by the employer were paid at a time when the employer was such an organization. Thus an annuity contract may be regarded as purchased by such an organization even though part of the organization's contributions for such annuity contract were paid at a time when the organization was not such an exempt organization.

(v) The application of this subparagraph may be illustrated by the following examples:

Example 1. The widow of A, a deceased employee, elects, under an annuity contract purchased for A by X Organization, to receive in a lump sum the present value of such annuity contract as of the date of A's death. Such present value is $6,000 and is received by the widow in a taxable year beginning after December 31, 1957. X Organization contributed $3,000 toward the purchase of the annuity contract and A contributed $2,000 toward such purchase. A's interest in X Organization's contributions was nonforfeitable at the time such contributions were made. Thus, just before his death, A's entire interest in the annuity contract was a nonforfeitable interest and, if he had retired at that time, he could have received the present value of $6,000. The whole amount of the $3,000 contributed by X Organization for the annuity contract was excludable from A's gross income under paragraph (b) of § 1.403(b)-1. This annuity contract was the only annuity contract purchased by X Organization for A and was not purchased as part of a qualified plan. However, all the contributions paid by X Organization were paid at a time

when X Organization was an organization referred to in section 170(b)(1)(A)(ii) and exempt from tax under section 501(a). The amount that A's widow may exclude from gross income (assuming no other death benefits) is computed in the following manner:

(*a*) Amount includible in gross income without regard to second sentence of section 101(b)(2)(B) ($6,000 minus $2,000 contributed for contract by A)	$4,000
(*b*) Total employer contributions for the contract	$3,000
(*c*) Amount of employer contributions for the contract that was excludable under paragraph (b) of § 1.403(b)-1	$3,000
(*d*) Percent of total employer contributions for the contract that were excludable under paragraph (b) of § 1.403(b)-1 ((*c*) ÷ (*b*))	100%
(*e*) Amount to which section 101(b) exclusion applies ((*d*) × (*a*))	$4,000

Example 2. The facts are the same as in example (1) except that only $2,000 of X Organization's contributions for the annuity contract was excludable from A's gross income under paragraph (b) of § 1.403(b)-1 and that the remaining $1,000 was includible in A's gross income for the taxable years during which such amounts were contributed by X Organization. The amount that A's widow may exclude from gross income (assuming no other death benefits) is computed in the following manner:

(*a*) Amount includible in gross income without regard to second sentence of section 101(b)(2)(B) ($6,000 minus $2,000 contributed for contract by A and $1,000 of X Organization's contributions includible in A's gross income)	$3,000
(*b*) Total employer contributions for the contract	$3,000
(*c*) Amount of employer contributions for the contract that was excludable under paragraph (b) of § 1.403(b)-1	$2,000
(*d*) Percent of total employer contributions for the contract that were excludable under paragraph (b) of § 1.403(b)-1 ((*c*) ÷ (*b*))	67%
(*e*) Amount to which section 101(b) exclusion applies ((*d*) × (*a*))	$2,000

Example 3. The widow of B, a deceased employee, elects, under an annuity contract purchased for B by Y Organization, to receive in a lump sum the present value of such annuity contract as of the date of B's death. Such present value is $6,000 and is received by the widow in a taxable year beginning after December 31, 1957. Y Organization contributed $4,000 toward the purchase of the contract; whereas B made no

contributions toward the purchase of the contract. This annuity contract was the only annuity contract purchased by Y Organization for B and was not purchased as part of a "qualified" plan. However, all the contributions paid by Y Organization were paid at a time when it was an organization referred to in section 170(b)(1)(A)(ii) and exempt from tax under section 501(a). B's interest in Y Organization's contributions was, at the time they were paid, forfeitable. However, prior to his death, one-half of B's interest in the annuity contract changed from a forfeitable to a nonforfeitable interest. Therefore, just before his death, B could have obtained $3,000 under the annuity contract if he had retired at that time. On the date of the change, the cash surrender value of the annuity contract was $5,000. As a result of the change, $1,500 was, under paragraph (b) of § 1.403(b)-1, excludable from B's gross income, and $600 was includible in his gross income for the taxable year in which the change occurred. Part of the value of the annuity contract on the date of the change was attributable to contributions made by Y Organization prior to January 1, 1958, and, consequently, was neither excludable from B's gross income under paragraph (b) of § 1.403(b)-1 nor includible in B's gross income (see paragraph (b) of § 1.403(d)-1). The amount that B's widow may exclude from gross income (assuming no other death benefits) is computed in the following manner:

(*a*) Amount of "total payment" with respect to which A had a forfeitable right at time of death. ($^1/_2$ × $6,000)	$3,000
(*b*) Amount includible in gross income without regard to second sentence of section 101(b)(2)(B) ($^1/_2$ × $6,000 less $600 includible in B's gross income for year when his rights changed to nonforfeitable rights)	$2,400
(*c*) Total employer contributions for the contract ($^1/_2$ of cash surrender value of contract on date B's rights changed to nonforfeitable rights)	$2,500
(*d*) Amount of employer contributions for the contract that was excludable under paragraph (b) of § 1.403(b)-1	$1,500
(*e*) Percent of total employer contributions for the contract that were excludable under paragraph (b) of § 1.403(b)-1 ((*d*) ÷ (*c*))	60%
(*f*) Amount to which section 101(b) exclusion applies by reason of the second sentence of section 101(b)(2)(B) ((*e*) × (*b*))	$1,440
(*g*) Total amount to which section 101(b) exclusion applies ((*a*) + (*f*))	$4,440

(e) ***Annuity payments.***

(1) Where death benefits are paid in the form of annuity payments, the following rules shall govern for purposes of the exclusion provided in section 101(b):

(i) The exclusion from gross income provided by section 101(b) does not apply to amounts, paid as an annuity, with respect to which the employee possessed, immediately before his death, a nonforfeitable right to receive the amounts while living, or to amounts paid as an annuity in lieu thereof. See paragraph (d) of this section.

(ii) Under section 101(b)(2)(C), no exclusion is allowable for amounts received by a surviving annuitant under a joint and survivor's annuity contract if the annuity starting date (as defined in section 72(c)(4) and paragraph (b) of § 1.72-4) occurs before the death of the employee. If the annuity starting date occurs after the death of the employee, the joint and survivor's annuity contract shall be treated as an annuity to which section 101(b)(2)(D) applies. See subdivision (iii) of this subparagraph.

(iii)

(*a*) Subject to the other limitations stated in section 101(b) and in this section (see section 101(b)(2)(D)), the amount to which the exclusion of section 101(b) shall apply, with respect to "amounts received as an annuity" (as defined in paragraph (b) of § 1.72-2) shall be the amount by which the present value of the annuity to be paid to the beneficiary, computed as of the date of the employee's death, exceeds the value (if any) of whichever of the following is the larger:

(*1*) Amounts contributed by the employee (determined in accordance with the provisions of section 72 and the regulations thereunder), or

(*2*) Amounts with respect to which the employee possessed, immediately before his death, a nonforfeitable right to receive the amounts while living, or amounts paid in lieu thereof (see paragraph (d) of this section).

(*b*) The present value of an annuity (immediately before the death of the employee), to the employee, or (immediately after the death of the employee), to his estate or beneficiary, shall be determined as follows:

(*1*) In the case of an annuity paid by an insurance company or by an organization (other than an insurance company) regularly engaged in issuing annuity contracts with an insurance company as the coinsurer or reinsurer of the obligations under the contract, by use of the discount interest rates and mortality tables used by the insurance company involved to determine the installment benefits; and

(*2*) In the case of an annuity issued after November 23, 1984, to which paragraph (e)(1)(iii)(*b*)(*1*) of this section is not applicable, by use of the appropriate tables in § 20.2031-7 of this chapter (Estate Tax Regulations).

(iv) Any amount subject to section 101(b)(2)(D) which is excludable under section 101(b) (see subdivision (iii) of this subparagraph) shall, for purposes of section 72, be treated as additional consideration paid by the employee. See paragraph (b) of § 1.72-8.

(v) Where more than one beneficiary, or more than one death benefit, is involved, the exclusion provided by section 101(b) shall be apportioned to the various beneficiaries and benefits in accordance with the proportion that the present value of each benefit bears to the total present value of all the benefits.

(2) The application of the principles of this paragraph may be illustrated by the following examples:

Example 1. (i) A died on January 1, 1969. Under the plan of the X Corporation, W, who is the widow of employee A, and who is 55 years old at the time of A's death, is entitled to an immediate annuity of $2,000 per year during her life and C, the minor child of A, is entitled to receive $1,000 per year for 15 years. A made no contributions under the plan and died while still employed by the X Corporation. At the time of A's death, the amount in his account is $18,000. Under the terms of the plan, this amount would have been distributable to him on account of voluntary termination of employment, but would not have been payable after his death except in the form of the annuities just described. This amount, accordingly, constitutes a nonforfeitable interest in lieu of which the annuities are paid. The exclusion does not apply, except to the extent that the present value of the annuities exceeds $18,000, whether or not the plan is "qualified", since the total of the amount in A's account will not be paid within one taxable year of the distributees. See subparagraph (1)(i) of this paragraph.
(ii) The computation of the exclusion applicable to the interests of W and C (assuming that the payments will not be made by an insurance company or some other organization regularly engaged in issuing annuity contracts) is, by application of the tables in § 20.2031-7 of this chapter (Estate Tax Regulations), as follows: The present value of W's interest is $26,243.60, determined by multiplying the annual payment of $2,000 by 13.1218 (the factor in Table I for a person aged 55); the present value of C's interest is $11,517.40, determined by multiplying the yearly payment of $1,000 by 11.5174 (the factor in Table II for payments for a term certain of 15 years). The present value of both annuities is $37,761 and (assuming no other death benefits are involved), the total amount excludable is $5,000, because the total present value of the annuities exceeds the employee's nonforfeitable interest by more than $5,000 ($37,761 minus $18,000 equal $19,761). The exclusion allocable to W's interest is $26,243.60/$37,761 times $5,000, or $3,474.96; the exclusion allocable to C's interest is $11,517.40/$37,761 times $5,000, or $1,525.04. That portion of the death benefit exclusion as so determined for each beneficiary is to be treated as consideration paid by the employee for purposes of section 72.

Example 2. The facts are the same as in example (1), except that the nonforfeitable interest of A, at the time of his death, amounted to $33,761. Since the present value of both annuities ($37,761) exceeds the value of such nonforfeitable interest by only $4,000, the latter amount is the total amount excludable from the gross income of the beneficiaries. This $4,000 exclusion is to be divided in the same proportions as those indicated in example (1). Thus, the exclusion allocable to W's interest is $26,243.60/$37,761 times $4,000, or $2,779.97; and the exclusion allocable to the interest of C is $11,517.40/$37,761 times $4,000, or $1,220.03. That portion of the death benefit exclusion as so determined for each beneficiary is to be treated as consideration paid by the employee for purposes of section 72.

(f) ***Distributions on behalf of a self- employed individual.***

(1) Under sections 401(c)(1) and 403(a)(3), certain self-employed individuals may be covered by a pension or profit-sharing plan described in section 401(a) and exempt under section 501(a) or under an annuity plan described in section 403(a). However, a payment pursuant to the provisions of any

such plan by reason of the death of an individual who participated in such a plan as a self-employed individual immediately before his retirement or death to the beneficiary or estate of such individual does not qualify for the exclusion provided by section 101(b).

(2) The application of this paragraph may be illustrated by the following examples:

Example 1. From 1950 to 1965, A was an employee of B, a sole proprietor. In 1963, B established a qualified pension plan covering A and all other persons who had been employed by B for more than 3 years. In 1965, A acquired from B a 40-percent interest in the capital and profits of the business. A continued to participate in the pension plan as a self-employed individual. In 1970, A died and his widow, in compliance with one of the provisions of the pension plan, elected to receive all of the benefits accrued to A prior to his death in a lump-sum distribution. As A participated in the plan as a self-employed individual immediately prior to his death, A's widow may not exclude any portion of such distribution from her gross income under section 101(b).

Example 2. A, an attorney, is employed by the X Company in their legal department. He is covered by the pension plan that X has established for its employees. Under the terms of A's contract of employment with X, A is permitted to carry on the private practice of law in his off-duty hours. A establishes his own pension plan with respect to his earnings from his private practice. On A's death, his widow elected to receive a lump-sum distribution with respect to any benefits accrued to A under both X's pension plan and A's own pension plan. To the extent that such payment otherwise complies with the requirements of section 101(b), up to $5,000 of the amount paid by X may be excluded from her gross income. No part of the distribution from A's own pension plan may be excluded from her gross income under section 101(b) because A participated in the plan as a self-employed individual immediately before his death.

[T.D. 6500, 25 FR 11402, Nov. 26, 1960, as amended by T.D. 6722, 29 FR 5070, Apr. 14, 1964; T.D. 6783, 29 FR 18357, Dec. 24, 1964; T.D. 7352, 40 FR 16666, Apr. 14, 1975; T.D. 7428, 41 FR 34619, Aug. 16, 1976; T.D. 7836, 47 FR 42337, Sept. 27, 1982; T.D. 7955, 49 FR 19975, May 11, 1984; T.D. 8540, 59 FR 30102, 30103, June 10, 1994]

§ 1.101-3 Interest payments.

(a) ***Applicability of section 101(c).*** Section 101(c) provides that if any amount excluded from gross income by section 101(a) (relating to life insurance proceeds) or section 101(b) (relating to employees' death benefits) is held under an agreement to pay interest thereon, the interest payments shall be included in gross income. This provision applies to payments made (either by an insurer or by or on behalf of an employer) of interest earned on any amount so excluded from gross income which is held without substantial diminution of the principal amount during the period when such interest payments are being made or credited to the beneficiaries or estate of the insured or the employee. For example, if a monthly payment is $100, of which $99 represents interests and $1 represents diminution of the principal amount, the principal amount shall be considered held under an agreement to pay interest thereon and the interest payment shall be included in the gross income of the recipient. Section 101(c) applies whether the election to have an amount held under an agreement to pay interest thereon is made by the insured or employee or by his beneficiaries or estate, and whether or not an interest rate is explicitly stated in the agreement. Section 101(d), relating to the payment of life insurance proceeds at a date later than death, shall not apply to any amount to which section 101(c) applies. See section 101(d)(4). However, both section 101(c) and section 101(d) may apply to payments received under a single life insurance contract. For provisions relating to the application of this rule to payments received under a permanent life insurance policy with a family income rider attached, see paragraph (h) of § 1.101-4.

(b) ***Determination of "present value".*** For the purpose of determining whether section 101(c) or section 101(d) applies, the present value (at the time of the insured's death) of any amount which is to be paid at a date later than death shall be determined by the use of the interest rate and mortality tables used by the insurer in determining the size of the payments to be made.

[T.D. 6500, 25 FR 11402, Nov. 26, 1960, as amended by T.D. 6577, 26 FR 10127, Oct. 28, 1961]

§ 1.101-4 Payment of life insurance proceeds at a date later than death.

(a) ***In general.***

(1)

(i) Section 101(d) states the provisions governing the exclusion from gross income of amounts (other than those to which section 101(c) applies) received under a life insurance contract and paid by reason of the death of the insured which are paid to a beneficiary on a date or dates later than the death of the insured. However, if the amounts payable as proceeds of life insurance to which section 101(a)(1) applies cannot in any event exceed the amount payable at the time of the insured's death, such amounts are fully excludable from the gross income of the recipient (or recipients) without regard to the actual time of payment and no further determination need be made under this section. Section 101(d)(1)(A) provides an exclusion from gross income of any amount determined by a proration, under applicable regulations, of "an amount held by an insurer with respect to any beneficiary". The quoted phrase is defined in section 101(d)(2). For the regulations governing the method of computation of this proration, see paragraphs (c) through (f) of this section. The prorated amounts are to be excluded from the gross income of the beneficiary regardless of the taxable year in which they are actually received (see example (2) of subparagraph (2) of this paragraph).

(ii) Section 101(d)(1)(B) provides an additional exclusion where life insurance proceeds are paid to the surviving spouse of an insured. For purposes of this exclusion, the term "surviving spouse" means the spouse of the insured as of the date of death, including a spouse legally separated, but not under a decree of absolute divorce (section 101(d)(3)). To the extent that the total payments, under one or more agreements, made in excess of the amounts determined by proration under section 101(d)(1)(A) do not exceed $1,000 in the taxable year of receipt, they shall be excluded from the gross income of the surviving spouse (whether or not payment of any part of such amounts is guaranteed by the insurer). Amounts excludable under section 101(d)(1)(B) are not "prorated" amounts.

(2) The principles of this paragraph may be illustrated by the following examples:

> *Example 1.* A surviving spouse elects to receive all of the life insurance proceeds with respect to one insured, amounting to $150,000, in ten annual installments of $16,500 each, based on a certain guaranteed interest rate. The prorated amount is $15,000 ($150,000 ÷ 10). As the second payment, the insurer pays $17,850, which exceeds the guaranteed payment by $1,350 as the result of earnings of the insurer in excess of those required to pay the guaranteed installments. The surviving spouse shall include $1,850 in gross income and

exclude $16,000—determined in the following manner:

Fixed payment (including guaranteed interest)	$16,500
Excess interest	1,350
Total payment	17,850
Prorated amount	15,000
Excess over prorated amount	2,850
Annual excess over prorated amount excludable under section 101(d)(1)(B)	1,000
Amount includible in gross income	1,850

Example 2. Assume the same facts as in example (1), except that the third and fourth annual installments, totalling $33,000 (2 × $16,500), are received in a single subsequent taxable year of the surviving spouse. The prorated amount of $15,000 of each annual installment, totalling $30,000, shall be excluded even though the spouse receives more than one annual installment in the single subsequent taxable year. However, the surviving spouse is entitled to only one exclusion of $1,000 under section 101(d)(1)(B) for each taxable year of receipt. The surviving spouse shall include $2,000 in her gross income for the taxable year with respect to the above installment payments ($33,000 less the sum of $30,000 plus $1,000).

Example 3. Assume the same facts as in example (1), except that the surviving spouse dies before receiving all ten annual installments and the remaining installments are paid to her estate or beneficiary. In such a case, $15,000 of each installment would continue to be excludable from the gross income of the recipient, but any amounts received in excess thereof would be fully includible.

(b) ***Amount held by an insurer.***

(1) For the purpose of the proration referred to in section 101(d)(1), an "amount held by an insurer with respect to any beneficiary" means an amount equal to the present value to such beneficiary (as of the date of death of the insured) of an agreement by the insurer under a life insurance policy (whether as an option or otherwise) to pay such beneficiary an amount or amounts at a date or dates later than the death of the insured (section 101(d)(2)). The present value of such agreement is to be computed as if the agreement under the life insurance policy had been entered into on the date of death of the insured, except that such value shall be determined by the use of the mortality table and interest rate used by the insurer in calculating payments to be made to the beneficiary under such agreement. Where an insurance policy provides an option for the payment of a specific amount upon the death of the insured in full discharge of the contract, such lump sum is the amount held by the insurer with respect to all beneficiaries (or their beneficiaries) under the contract. See, however, paragraph (e) of this section.

(2) In the case of two or more beneficiaries, the "amount held by the insurer" with respect to each beneficiary depends on the relationship of the different benefits payable to such beneficiaries. Where the amounts payable to two or more beneficiaries are independent of each other, the "amount held by the insurer with respect to each beneficiary" shall be determined and prorated over the periods involved independently. Thus, if a certain amount per month is to be paid to A for his life, and, concurrently, another amount per month is to be paid to B for his life, the "amount held by the

insurer" shall be determined and prorated for both A and B independently, but the aggregate shall not exceed the total present value of such payments to both. On the other hand, if the obligation to pay B was contingent on his surviving A, the "amount held by the insurer" shall be considered an amount held with respect to both beneficiaries simultaneously. Furthermore, it is immaterial whether B is a named beneficiary or merely the ultimate recipient of payments for a term of years. For the special rules governing the computation of the proration of the "amount held by an insurer" in determining amounts excludable under the provisions of section 101(d), see paragraphs (c) to (f), inclusive, of this section.

(3) Notwithstanding any other provision of this section, if the policy was transferred for a valuable consideration, the total "amount held by an insurer" cannot exceed the sum of the consideration paid plus any premiums or other consideration paid subsequent to the transfer if the provisions of section 101(a)(2) and paragraph (b) of § 1.101-1 limit the excludability of the proceeds to such total.

(c) ***Treatment of payments for life to a sole beneficiary.*** If the contract provides for the payment of a specified lump sum, but, pursuant to an agreement between the beneficiary and the insurer, payments are to be made during the life of the beneficiary in lieu of such lump sum, the lump sum shall be divided by the life expectancy of the beneficiary determined in accordance with the mortality table used by the insurer in determining the benefits to be paid. However, if payments are to be made to the estate or beneficiary of the primary beneficiary in the event that the primary beneficiary dies before receiving a certain number of payments or a specified total amount, such lump sum shall be reduced by the present value (at the time of the insured's death) of amounts which may be paid by reason of the guarantee, in accordance with the provisions of paragraph (e) of this section, before making this calculation. To the extent that payments received in each taxable year do not exceed the amount found from the above calculation, they are "prorated amounts" of the "amount held by an insurer" and are excludable from the gross income of the beneficiary without regard to whether he lives beyond the life expectancy used in making the calculation. If the contract in question does not provide for the payment of a specific lump sum upon the death of the insured as one of the alternative methods of payment, the present value (at the time of the death of the insured) of the payments to be made the beneficiary, determined in accordance with the interest rate and mortality table used by the insurer in determining the benefits to be paid, shall be used in the above calculation in lieu of a lump sum.

(d) ***Treatment of payments to two or more beneficiaries*** —

(1) ***Unrelated payments.*** If payments are to be made to two or more beneficiaries, but the payments to be made to each are to be made without regard to whether or not payments are made or continue to be made to the other beneficiaries, the present value (at the time of the insured's death) of such payments to each beneficiary shall be determined independently for each such beneficiary. The present value so determined shall then be divided by the term for which the payments are to be made. If the payments are to be made for the life of the beneficiary, the divisor shall be the life expectancy of the beneficiary. To the extent that payments received by a beneficiary do not exceed the amount found from the above calculation, they are "prorated amounts" of the "amount held by an insurer" with respect to such beneficiary and are excludable from the gross income of the beneficiary without regard to whether he lives beyond any life expectancy used in making the calculation. For the purpose of the calculation described above, both the "present value" of the payments to be made periodically and the "life expectancy" of the beneficiary shall be determined in accordance with the interest rate and mortality table used by the insurer in determining the benefits to be paid. If payments are to be made to the estate or beneficiary of a primary beneficiary in the event that such beneficiary dies before receiving a certain number of payments or a specified total

amount, the "present value" of payments to such beneficiary shall not include the present value (at the time of the insured's death) of amounts which may be paid by reason of such a guarantee. See paragraph (e) of this section.

(2) ***Related payments.*** If payments to be made to two or more beneficiaries are in the nature of a joint and survivor annuity (as described in paragraph (b) of § 1.72-5), the present value (at the time of the insured's death) of the payments to be made to all such beneficiaries shall be divided by the life expectancy of such beneficiaries as a group. To the extent that the payments received by a beneficiary do not exceed the amount found from the above calculation, they are "prorated amounts" of the "amount held by an insurer" with respect to such beneficiary and are excludable from the gross income of the beneficiary without regard to whether all the beneficiaries involved live beyond the life expectancy used in making the calculation. For the purpose of the calculation described above, both the "present value" of the payments to be made periodically and the "life expectancy" of all the beneficiaries as a group shall be determined in accordance with the interest rate and mortality table used by the insurer in determining the benefits to be paid. If the contract provides that certain payments are to be made in the event that all the beneficiaries of the group die before a specified number of payments or a specified total amount is received by them, the present value of payments to be made to the group shall not include the present value (at the time of the insured's death) of amounts which may be paid by reason of such a guarantee. See paragraph (e) of this section.

(3) ***Payments to secondary beneficiaries.*** Payments made by reason of the death of a beneficiary (or beneficiaries) under a contract providing that such payments shall be made in the event that the beneficiary (or beneficiaries) die before receiving a specified number of payments or a specified total amount shall be excluded from the gross income of the recipient to the extent that such payments are made solely by reason of such guarantee.

(e) ***Treatment of present value of guaranteed payments.*** In the case of payments which are to be made for a life or lives under a contract providing that further amounts shall be paid upon the death of the primary beneficiary (or beneficiaries) in the event that such beneficiary (or beneficiaries) die before receiving a specified number of payments or a specified total amount, the present value (at the time of the insured's death) of all payments to be made under the contract shall not include, for purposes of prorating the amount held by the insurer, the present value of the payments which may be made to the estate or beneficiary of the primary beneficiary. In such a case, any lump sum amount used to measure the value of the amount held by an insurer with respect to the primary beneficiary must be reduced by the value at the time of the insured's death of any amounts which may be paid by reason of the guarantee provided for a secondary beneficiary or the estate of the primary beneficiary before prorating such lump sum over the life or lives of the primary beneficiaries. Such present value (of the guaranteed payment) shall be determined by the use of the interest rate and mortality tables used by the insurer in determining the benefits to be paid.

(f) ***Treatment of payments not paid periodically.*** Payments made to beneficiaries other than periodically shall be included in the gross income of the recipients, but only to the extent that they exceed amounts payable at the time of the death of the insured to each such beneficiary or, where no such amounts are specified, the present value of such payments at that time.

(g) ***Examples.*** The principles of this section may be illustrated by the following examples:

Example 1. A life insurance policy provides for the payment of $20,000 in a lump sum to the beneficiary at the death of the insured. Upon the death of the insured, the beneficiary elects an option to leave the proceeds with the company for five years and then receive payment of $24,000, having no claim of right to any part of such sum before the entire five years have passed. Upon the payment of the

larger sum, $24,000, the beneficiary shall include $4,000 in gross income and exclude $20,000 therefrom. If it is assumed that the same insurer has determined the benefits to be paid, the same result would obtain if no lump sum amount were provided for at the death of the insured and the beneficiary were to be paid $24,000 five years later. In neither of these cases would the surviving spouse be able to exclude any additional amount from gross income since both cases involve an amount held by an insurer under an agreement to pay interest thereon to which section 101(c) applies, rather than an amount to be paid periodically after the death of the insured to which section 101(d) applies.

Example 2. A life insurance policy provides that $1,200 per year shall be paid the sole beneficiary (other than a surviving spouse) until a fund of $20,000 and interest which accrues on the remaining balance is exhausted. A guaranteed rate of interest is specified, but excess interest may be credited according to the earnings of the insurer. Assuming that the fund will be exhausted in 20 years if only the guaranteed interest is actually credited, the beneficiary shall exclude $1,000 of each installment received ($20,000 divided by 20) and any installments received, whether by the beneficiary or his estate or beneficiary, in excess of 20 shall be fully included in the gross income of the recipient. If, instead, the excess interest were to be paid each year, any portion of each installment representing an excess over $1,000 would be fully includible in the recipient's gross income. Thus, if an installment of $1,350 were received, $350 of it would be included in gross income.

Example 3. Assume that the sole life insurance policy of a decedent provides only for the payment of $5,000 per year for the life of his surviving spouse, beginning with the insured's death. If the present value of the proceeds, determined by reference to the interest rate and the mortality table used by the insurance company, is $60,000, and such beneficiary's life expectancy is 20 years, $3,000 of each $5,000 payment ($60,000 divided by 20) is excludable as the prorated portion of the "amount held by an insurer". For each taxable year in which a payment is made, an additional $1,000 is excludable from the gross income of the surviving spouse. Hence, if she receives only one $5,000 payment in her taxable year, only $1,000 is includible in her gross income in that year with respect to such payment ($5,000 less the total amount excludable, $4,000). Assuming that the policy also provides for payments of $2,000 per year for 10 years to the daughter of the insured, the present value of the payments to the daughter is to be computed separately for the purpose of determining the excludable portion of each payment to her. Assuming that such present value is $15,000, $1,500 of each payment of $2,000 received by the daughter is excludable from her gross income ($15,000 divided by 10). The remaining $500 shall be included in the gross income of the daughter.

Example 4. Beneficiaries A and B, neither of whom is the surviving spouse of the insured, are each to receive annual payments of $1,800 for each of their respective lives upon the death of the insured. The contract does not provide for payments to be made in any other manner. Assuming that the present value of the payments to be made to A, whose life expectancy according to the insurer's mortality table is 30 years, is $36,000, A shall exclude $1,200 of each payment received ($36,000 divided by 30). Assuming that the present value of the payments to be made to B, whose life expectancy according to the insurer's mortality table is 20 years, is $27,000, B shall exclude $1,350 of each payment received ($27,000 divided by 20).

Example 5. A life insurance policy provides for the payment of $76,500 in a lump sum to the beneficiary, A, at the death of the insured. Upon the insured's death, however, A selects an option for the payment of $2,000 per year for her life and for the same amount to be paid after her death to B, her daughter, for her life. Assuming that since A is 51 years of age and her daughter is 28 years of age, the insurer determined the amount of the payments by reference to a mortality table under which the life expectancy for the lives of both A and B, joint and survivor, is 51 years, $1,500 of each $2,000

payment to either A or B ($76,500 divided by 51, or $1,500) shall be excluded from the gross income of the recipient. However, if A is the surviving spouse of the insured and no other contracts of insurance whose proceeds are to be paid to her at a date later than death are involved, A shall exclude the entire payment of $2,000 in any taxable year in which she receives but one such payment because of the additional exclusion under section 101(d)(1)(B).

Example 6. Beneficiaries A and B, neither of whom is the surviving spouse of the insured, are each to receive annual payments of $1,800 for each of their respective lives upon the death of the insured, but after the death of either, the survivor is to receive the payments formerly made to the deceased beneficiary until the survivor dies. Assuming that the life expectancy, joint and survivor, of A and B in accordance with the mortality table used by the insurer is 32 years and assuming that the total present value of the benefits to both (determined in accordance with the interest rate used by the insurer) is $80,000, A and B shall each exclude $1,250 of each installment of $1,800 ($80,000 divided by the life expectancy, 32, multiplied by the fraction of the annual payment payable to each, one-half) until the death of either. Thereafter, the survivor shall exclude $2,500 of each installment of $3,600 ($80,000 divided by 32).

Example 7. A life insurance policy provides for the payment of $75,000 in a lump sum to the beneficiary, A, at the death of the insured. A, upon the insured's death, however, selects an option for the payment of $4,000 per year for life, with a guarantee that any part of the $75,000 lump sum not paid to A before his death shall be paid to B (or his estate). A's beneficiary. Assuming that, under the criteria used by the insurer in determining the benefits to be paid, the present value of the guaranteed amount to B is $13,500 and that A's life expectancy is 25 years, the lump sum shall be reduced by the present value of the guarantee to B ($75,000 less $13,500, or $61,500) and divided by A's life expectancy ($61,500 divided by 25, or $2,460). Hence, $2,460 of each $4,000 payment is excludable from A's gross income. If A is the surviving spouse of the insured and no other contracts of insurance whose proceeds are to be paid to her at a date later than death are involved, A shall exclude $3,460 of each $4,000 payment from gross income in any taxable year in which but one such payment is received. Under these facts, if any amount is paid to B by reason of the fact that A dies before receiving a total of $75,000, the residue of the lump sum paid to B shall be excluded from B's gross income since it is wholly in lieu of the present value of such guarantee plus the present value of the payments to be made to the first beneficiary, and is therefore entirely an "amount held by an insurer" paid at a date later than death (see paragraph (d)(3) of this section).

Example 8. Assume that an insurance policy does not provide for the payment of a lump sum, but provides for the payment of $1,200 per year for a beneficiary's life upon the death of the insured, and also provides that if ten payments are not made to the beneficiary before death a secondary beneficiary (whether named by the insured or by the first beneficiary) shall receive the remainder of the ten payments in similar installments. If, according to the criteria used by the insurance company in determining the benefits, the present value of the payments to the first beneficiary is $12,000 and the life expectancy of such beneficiary is 15 years, $800 of each payment received by the first beneficiary is excludable from gross income. Assuming that the same figures obtain even though the payments are to be made at the rate of $100 per month, the yearly exclusion remains the same unless more or less than twelve months' installments are received by the beneficiary in a particular taxable year. In such a case two-thirds of the total received in the particular taxable year with respect to such beneficiary shall be excluded from gross income. Under either of the above alternatives, any amount received by the second beneficiary by reason of the guarantee of ten payments is fully excludable from the beneficiary's gross income since it is wholly in lieu of the present value of such

guarantee plus the present value of the payments to be made to the first beneficiary and is therefore entirely an "amount held by an insurer" paid at a date later than death (see paragraph (d)(3) of this section).

(h) ***Applicability of both section 101(c) and 101(d) to payments under a single life insurance contract*** —

(1) ***In general.*** Section 101(d) shall not apply to interest payments on any amount held by an insurer under an agreement to pay interest thereon (see sections 101(c) and 101(d)(4) and § 1.101-3). On the other hand, both section 101(c) and section 101(d) may be applicable to payments received under a single life insurance contract, if such payments consist both of interest on an amount held by an insurer under an agreement to pay interest thereon and of amounts held by the insurer and paid on a date or dates later than the death of the insured. One instance when both section 101(c) and section 101(d) may be applicable to payments received under a single life insurance contract is in the case of a permanent life insurance policy with a family income rider attached. A typical family income rider is one which provides additional term insurance coverage for a specified number of years from the register date of the basic policy. Under the policy with such a rider, if the insured dies at any time during the term period, the beneficiary is entitled to receive (i) monthly payments of a specified amount commencing as of the date of death and continuing for the balance of the term period, and (ii) a lump sum payment of the proceeds under the basic policy to be paid at the end of the term period. If the insured dies after the expiration of the term period, the beneficiary receives only the proceeds under the basic policy. If the insured dies before the expiration of the term period, part of each monthly payment received by the beneficiary during the term period consists of interest on the proceeds of the basic policy (such proceeds being retained by the insurer until the end of the term period). The remaining part consists of an installment (principal plus interest) of the proceeds of the terms insurance purchased under the family income rider. The amount of term insurance which is provided under the family income rider is, therefore, that amount which, at the date of the insured's death, will provide proceeds sufficient to fund such remaining part of each monthly payment. Since the proceeds under the basic policy are held by the insurer until the end of the term period, that portion of each monthly payment which consists of interest on such proceeds is interest on an amount held by an insurer under an agreement to pay interest thereon and is includible in gross income under section 101(c). On the other hand, since the remaining portion of each monthly payment consists of an installment payment (principal plus interest) of the proceeds of the term insurance, it is a payment of an amount held by the insurer and paid on a date later than the death of the insured to which section 101(d) and this section applies (including the $1,000 exclusion allowed the surviving spouse under section 101(d)(1)(B)). The proceeds of the basic policy, when received in a lump sum at the end of the term period, are excludable from gross income under section 101(a).

(2) ***Example of tax treatment of amounts received under a family income rider.*** The following example illustrates the application of the principles contained in subparagraph (1) of this paragraph to payments received under a permanent life insurance policy with a family income rider attached:

> *Example.* The sole life insurance policy of the insured provides for the payment of $100,000 to the beneficiary (the insured's spouse) on his death. In addition, there is attached to the policy a family income rider which provides that, if the insured dies before the 20th anniversary of the basic policy, the beneficiary shall receive (i) monthly payments of $1,000 commencing on the date of the insured's death and ending with the payment prior to the 20th anniversary of the basic policy, and (ii) a single payment of $100,000 payable on the 20th anniversary of the basic policy. On the date of the insured's death, the beneficiary (surviving

spouse of the insured) is entitled to 36 monthly payments of $1,000 and to the single payment of $100,000 on the 20th anniversary of the basic policy. The value of the proceeds of the term insurance at the date of the insured's death is $28,409.00 (the present value of the portion of the monthly payments to which section 101(d) applies computed on the basis that the interest rate used by the insurer in determining the benefits to be paid under the contract is $2^1/_4$ percent). The amount of each monthly payment of $1,000 which is includible in the beneficiary's gross income is determined in the following manner:

(*a*) Total amount of monthly payment	$1,000.00
(*b*) Amount includible in gross income under section 101(c) as interest on the $100,000 proceeds under the basic policy held by the insurer until 20th anniversary of the basic policy (computed on the basis that the interest rate used by the insurer in determining the benefits to be paid under the contract is $2^1/_4$ percent)	185.00
(*c*) Amount to which section 101(d) applies ((a) minus (b))	815.00
(*d*) Amount excludable from gross income under section 101(d) ($28,409 ÷ 36)	789.14
(*e*) Amount includible in gross income under section 101(d) without taking into account the $1,000 exclusion allowed the beneficiary as the surviving spouse ((c) minus (d))	25.86

The beneficiary, as the surviving spouse of the insured, is entitled to exclude the amounts otherwise includible in gross income under section 101(d) (item (*e*)) to the extent such amounts do not exceed $1,000 in the taxable year of receipt. This exclusion is not applicable, however, with respect to the amount of each payment which is includible in gross income under section 101(c) (item (*b*)). In this example, therefore, the beneficiary must include $185 of each monthly payment in gross income (amount includible under section 101(c)), but may exclude the $25.86 which is otherwise includible under section 101(d). The payment of $100,000 which is payable to the beneficiary on the 20th anniversary of the basic policy will be entirely excludable from gross income under section 101(a).

(3) ***Limitation on amount considered to be an "amount held by an insurer".*** See paragraph (b)(3) of this section for a limitation on the amount which shall be considered an "amount held by an insurer" in the case of proceeds of life insurance which are paid subsequent to the transfer of the policy for a valuable consideration.

(4) ***Effective date.*** The provisions of this paragraph are applicable only with respect to amounts received during taxable years beginning after October 28, 1961, irrespective of the date of the death of the insured.

[T.D. 6500, 25 FR 11402, Nov. 26, 1960, as amended by T.D. 6577, 26 FR 10127, Oct. 28, 1961; 26 FR 10275, Nov. 2, 1961]

§ 1.101-5 [Reserved]

§ 1.101-6 Effective date.

(a) Except as otherwise provided in paragraph (h)(4) of § 1.101-4, the provisions of section 101 of the Internal Revenue Code of 1954 and §§ 1.101-1, 1.101-2, 1.101-3, and 1.101-4 are applicable only with respect to amounts received by reason of the death of an insured or an employee occurring after August 16, 1954. In the case of such amounts, these sections are applicable even though the receipt of such amounts occurred in a taxable year beginning before January 1, 1954, to which the Internal Revenue Code of 1939 applies.

(b) Notwithstanding paragraph (a) of this section, for purposes of determining whether a transfer of an interest in a life insurance contract is a reportable policy sale or a payment of death benefits is a payment of reportable death benefits subject to the reporting requirements of section 6050Y and §§ 1.6050Y-1 through 1.6050Y-4, § 1.101-1(b) through (g) apply to reportable policy sales made after December 31, 2018, and to reportable death benefits paid after December 31, 2018. For any other purpose, including for purposes of determining the amount of the proceeds of life insurance contracts payable by reason of death excluded from gross income under section 101, § 1.101-1(b) through (g) apply to amounts paid by reason of the death of the insured under a life insurance contract, or interest therein, transferred after October 31, 2019. However, under section 7805(b)(7), a taxpayer may apply the rules set forth in § 1.101-1(b) through (g) of the final regulations, in their entirety, with respect to all amounts paid by reason of the death of the insured under a life insurance contract, or interest therein, transferred after December 31, 2017, and on or before October 31, 2019.

[T.D. 6500, 25 FR 11402, Nov. 26, 1960, as amended by T.D. 6577, 26 FR 10128, Oct. 28, 1961; T.D. 9849, 84 FR 9233, Mar. 14, 2019; T.D. 9879, 84 FR 58484, Oct. 31, 2019]

§ 1.101-7 Mortality table used to determine exclusion for deferred payments of life insurance proceeds.

(a) ***Mortality table.*** Notwithstanding any provision of § 1.101-4 that otherwise would permit the use of a mortality table not described in this section, the mortality table set forth in § 1.72-7(c)(1) must be used to determine—

(1) The amount held by an insurer with respect to a beneficiary for purposes of section 101(d)(2) and § 1.101-4; and

(2) The period or periods with respect to which payments are to be made for purposes of section 101(d)(1) and § 1.101-4.

(b) ***Examples.*** The principles of this section may be illustrated by the following examples:

Example 1. A life insurance policy provides only for the payment of $5,000 per year for the life of the beneficiary, A, beginning with the insured's death. If A is 59 years of age at the time of the insured's death, the period with respect to which the payments are to be made is 25 years. This period is determined by using the mortality table set forth in § 1.72-7(c)(1), and is shown in Table V of § 1.72-9 (which contains life expectancy tables determined using this mortality table). If the present value of the proceeds, determined by reference to the interest rate used by the insurance company and the mortality table set forth in § 1.72-7(c)(1), is $75,000, $3,000 of each $5,000 payment ($75,000 divided by 25) is excluded from the gross income of A.

Example 2. A life insurance policy provides for the payment of $82,500 in a lump sum to the beneficiary, A, at the death of the insured. Upon the insured's death, however, A selects an option for the payment of $2,000 per year for life and for the same amount to be paid after A's death to B for B's life. If A is 51 years of age and B is 28 years of age at the death of the insured, the period with respect to which the payments are to be made is 55 years. This period is determined by using the mortality table set forth in § 1.72-7(c)(1), and is shown in Table VI of § 1.72-9 (which contains life expectancy tables determined using this mortality table). Accordingly $1,500 of each $2,000 payment ($82,500 divided by 55) is excluded from the gross income of the recipient.

(c) ***Effective date.*** This section applies to amounts received with respect to deaths occurring after October 22, 1986, in taxable years ending after October 22, 1986.

[T.D. 8161, 52 FR 35415, Sept. 21, 1987. Redesignated and amended by T.D. 8272, 54 FR 47980, Nov. 20, 1989]

§ 1.102-1 Gifts and inheritances.

(a) ***General rule.*** Property received as a gift, or received under a will or under statutes of descent and distribution, is not includible in gross income, although the income from such property is includible in gross income. An amount of principal paid under a marriage settlement is a gift. However, see section 71 and the regulations thereunder for rules relating to alimony or allowances paid upon divorce or separation. Section 102 does not apply to prizes and awards (see section 74 and § 1.74-1) nor to scholarships and fellowship grants (see section 117 and the regulations thereunder).

(b) ***Income from gifts and inheritances.*** The income from any property received as a gift, or under a will or statute of descent and distribution shall not be excluded from gross income under paragraph (a) of this section.

(c) ***Gifts and inheritances of income.*** If the gift, bequest, devise, or inheritance is of income from property, it shall not be excluded from gross income under paragraph (a) of this section. Section 102 provides a special rule for the treatment of certain gifts, bequests, devises, or inheritances which by their terms are to be paid, credited, or distributed at intervals. Except as provided in section 663(a)(1) and paragraph (d) of this section, to the extent any such gift, bequest, devise, or inheritance is paid, credited, or to be distributed out of income from property, it shall be considered a gift, bequest, devise, or inheritance of income from property. Section 102 provides the same treatment for amounts of income from property which is paid, credited, or to be distributed under a gift or bequest whether the gift or bequest is in terms of a right to payments at intervals (regardless of income) or is in terms of a right to income. To the extent the amounts in either case are paid, credited, or to be distributed at intervals out of income, they are not to be excluded under section 102 from the taxpayer's gross income.

(d) ***Effect of Subchapter J.*** Any amount required to be included in the gross income of a beneficiary under sections 652, 662, or 668 shall be treated for purposes of this section as a gift, bequest, devise, or inheritance of income from property. On the other hand, any amount excluded from the gross income of a beneficiary under section 663(a)(1) shall be treated for purposes of this section as property acquired by gift, bequest, devise, or inheritance.

(e) ***Income taxed to grantor or assignor.*** Section 102 is not intended to tax a donee upon the same income which is taxed to the grantor of a trust or assignor of income under section 61 or sections 671 through 677, inclusive.

§ 1.103-1 Interest upon obligations of a State, territory, etc.

(a) Interest upon obligations of a State, territory, a possession of the United States, the District of Columbia, or any political subdivision thereof (hereinafter collectively or individually referred to as "State or local governmental unit") is not includable in gross income, except as provided under section 103 (c) and (d) and the regulations thereunder.

(b) Obligations issued by or on behalf of any State or local governmental unit by constituted authorities empowered to issue such obligations are the obligations of such a unit. However, section 103(a)(1) and this section do not apply to industrial development bonds except as otherwise provided in section 103(c). See section 103(c) and §§ 1.103-7 through 1.103-12 for the rules concerning interest paid on industrial development bonds. See section 103(d) for rules concerning interest paid on arbitrage bonds. Certificates issued by a political subdivision for public improvements (such as sewers, sidewalks, streets, etc.) which are evidence of special assessments against specific property, which assessments become a lien against such property and which the political subdivision is required to enforce, are, for purposes of this section, obligations of the political subdivision even though the obligations are to be satisfied out of special funds and not out of general funds or taxes. The term "political subdivision", for purposes of this section denotes any division of any State or local governmental unit which is a municipal corporation or which has been delegated the right to exercise part of the sovereign power of the unit. As thus defined, a political subdivision of any State or local governmental unit may or may not, for purposes of this section, include special assessment districts so created, such as road, water, sewer, gas, light, reclamation, drainage, irrigation, levee, school, harbor, port improvement, and similar districts and divisions of any such unit.

[T.D. 7199, 37 FR 15486, Aug. 3, 1972]

§§ 1.103-2-1.103-6 [Reserved]

§ 1.103-7 Industrial development bonds.

(a) ***In general.*** Under section 103(c)(1) and this section, an industrial development bond issued after April 30, 1968, shall be treated as an obligation not described in section 103(a)(1) and § 1.103-1. Accordingly, interest paid on such a bond is includable in gross income unless the bond was issued by a State, or local governmental unit to finance certain exempt facilities (see section 103(c)(4) and § 1.103-8), to finance an industrial park (see section 103(c)(5) and § 1.103-9), or as part of an exempt small issue (see section 103(c)(6) and § 1.103-10). For applicable rules when an industrial development bond is held by a substantial user (or a person related to a substantial user) of such an exempt facility, or an industrial park, or a facility financed with the proceeds of such an exempt small issue, see section 103(c)(7) and § 1.103-11. See also § 1.103-12 for the transitional provisions concerning the interest paid on certain industrial development bonds issued before January 1, 1969, and certain other industrial development bonds. Even if section 103(c) does not prevent a bond from being treated as an obligation described in section 103(a)(1) and § 1.103-1, such bond shall nevertheless be treated as an obligation which is not described in section 103(a)(1) and § 1.103-1 if under section 103(d) it is an arbitrage bond. For purposes of section 103(c), the term "issue" includes a single obligation such as a single note issued in connection with a bank loan as well as a series of notes or bonds.

(b) ***Industrial development bonds*** —

(1) ***Definition.*** For purposes of this section, the term "industrial development bond" means any obligation—

(i) Which is issued as part of an issue all or a major portion of the proceeds of which are to be used directly or indirectly in any trade or business carried on by any person who is not an exempt person (as defined in subparagraph (2) of this paragraph), and

(ii) The payment of the principal or interest on which, under the terms of such obligation or any underlying arrangement (as described in subparagraph (4) of this paragraph), is in whole or in major part (*i.e.*, major portion)—

(*a*) Secured by any interest in property used or to be used in a trade or business,

(*b*) Secured by any interest in payments in respect of property used or to be used in a trade or business, or

(*c*) To be derived from payments in respect of property, or borrowed money, used or to be used in a trade or business.

See subparagraphs (3) and (4) of this paragraph for the trade or business test and the security interest test respectively. See § 1.103-8(a)(6) to determine the amount of proceeds of an issue for which the amount payable during each annual period over the term of the issue is less than the amount of interest accruing thereon in such period, e.g., in the case of an issue sold by the issuer for less than its face amount.

(2) ***Exempt person.*** The term "exempt person" means a governmental unit as defined in this subparagraph, or an organization which is described in section 501(c)(3) and this subparagraph and is exempt from taxation under section 501(a). For purposes of this subparagraph, the term "governmental unit" means a State or local governmental unit (as defined in § 1.103-1). For purposes of this subparagraph, the term "governmental unit" also includes the United States of America (or an agency or instrumentality of the United States of America), but only in the case of obligations

(i) issued on or before August 3, 1972, or

(ii) issued after August 3, 1972, with respect to which a bond resolution or any other official action was taken and in reliance on such action either

(*a*) construction of such facility to be financed with such obligations commenced or

(*b*) a binding contract was entered into, or an irrevocable bid was submitted, prior to August 3, 1972, or

(iii) issued after August 3, 1972, with respect to a program approved by Congress prior to such date but only if

(*a*) a portion of such program has been financed by obligations issued prior to such date, to which section 103(a) applied pursuant to a ruling issued by the Commissioner or his delegate prior to such date and

(*b*) construction of one or more facilities comprising a part of such program commenced prior to such date. For purposes of this subparagraph, a tax-exempt organization is an exempt person only with respect to a trade or business it carries on which is not an unrelated trade or business. Whether a particular trade or business carried on by a tax-exempt organization is an unrelated trade or business is determined by applying the rules of section 513(a) (relating to general rule for unrelated trade or business) and the

regulations thereunder to the tax-exempt organization without regard to whether the organization is an organization subject to the tax imposed by section 511 (relating to imposition of tax on unrelated business income of charitable, etc., organizations).

(3) *Trade or business test.*

(i) The trade or business test relates to the use of the proceeds of a bond issue. The test is met if all or a major portion of the proceeds of a bond issue is used in a trade or business carried on by a nonexempt person. For example, if all or a major portion of the proceeds of a bond issue is to be loaned to one or more private business users, or is to be used to acquire, construct, or reconstruct facilities to be leased or sold to such private business users, and such proceeds or facilities are to be used in trades or businesses carried on by them, such proceeds are to be used in a trade or business carried on by persons who are not exempt persons, and the debt obligations comprising the bond issue satisfy the trade or business test. If, however, less than a major portion of the proceeds of an issue is to be loaned to nonexempt persons or is to be used to acquire or construct facilities which will be used in a trade or business carried on by a nonexempt person, the debt obligations will not be industrial development bonds. Also, when publicly-owned facilities which are intended for general public use, such as toll roads or bridges, are constructed with the proceeds of a bond issue and used by nonexempt persons in their trades or businesses on the same basis as other members of the public, such use does not constitute a use in the trade or business of a nonexempt person for purposes of the trade or business test.

(ii) In determining whether a debt obligation meets the trade or business test, the indirect, as well as the direct, use of the proceeds is to be taken into account. For example, the debt obligations comprising a bond issue do not fail to satisfy the trade or business test merely because the State or local governmental unit uses the proceeds to engage in a series of financing transactions for property to be used by private business users in trades or businesses carried on by them. Similarly, if such proceeds are to be used to construct facilities to be leased or sold to any nonexempt person for use in a trade or business it carries on, such proceeds are to be used in a trade or business carried on by a nonexempt person and the debt obligations comprising such issue satisfy the trade or business test. If such proceeds are to be used to construct facilities to be leased or sold to an exempt person who will, in turn, lease or sell the facilities to a nonexempt person for use in a trade or business, such proceeds are to be used in a trade or business carried on by a nonexempt person and the debt obligations comprising such issue satisfy the trade or business test. In addition, proceeds will be treated as being used in the trade or business of a nonexempt person in situations involving other arrangements, whether in a single transaction or in a series of transactions, whereby a nonexempt person uses property acquired with the proceeds of a bond issue in its trade or business.

(iii) The use of more than 25 percent of the proceeds of an issue of obligations in the trades or businesses of nonexempt persons will constitute the use of a major portion of such proceeds in such manner. In the case of the direct or indirect use of the proceeds of an issue of obligations or the direct or indirect use of a facility constructed, reconstructed, or acquired with such proceeds, the use by all nonexempt persons in their trades or businesses must be aggregated to determine whether the trade or business test is satisfied. If more than 25 percent of the proceeds of a bond issue is used in the trades or businesses of nonexempt persons, the trade or business test is satisfied. For special rules with respect to the acquisition of the output of facilities, see subparagraph (5) of this paragraph.

(4) ***Security interest test.*** The security interest test relates to the nature of the security for, and the source of, the payment of either the principal or interest on a bond issue. The nature of the security for, and the source of, the payment may be determined from the terms of the bond indenture or on the basis of an underlying arrangement. An underlying arrangement to provide security for, or the source of, the payment of the principal or interest on an obligation may result from separate agreements between the parties or may be determined on the basis of all the facts and circumstances surrounding the issuance of the bonds. The property which is the security for, or the source of, the payment of either the principal or interest on a debt obligation need not be property acquired with bond proceeds. The security interest test is satisfied if, for example, a debt obligation is secured by unimproved land or investment securities used, directly or indirectly, in any trade or business carried on by any private business user. A pledge of the full faith and credit of a State or local governmental unit will not prevent a debt obligation from otherwise satisfying the security interest test. For example, if the payment of either the principal or interest on a bond issue is secured by both a pledge of the full faith and credit of a State or local governmental unit and any interest in property used or to be used in a trade or business, the bond issue satisfies the security interest test. For rules with respect to the acquisition of the output of facilities see subparagraph (5) of this paragraph.

(5) ***Trade or business test and security interest test with respect to certain output contracts.***

(i) The use by one or more nonexempt persons of a major portion of the subparagraph (5) output of facilities such as electric energy, gas, or water facilities constructed, reconstructed, or acquired with the proceeds of an issue satisfies the trade or business test and the security interest test if such use has the effect of transferring to nonexempt persons the benefits of ownership of such facilities, and the burdens of paying the debt service on governmental obligations used directly or indirectly to finance such facilities, so as to constitute the indirect use by them of a major portion of such proceeds. Such benefits and burdens are transferred and a major portion of the proceeds of an issue is used indirectly by the users of the subparagraph (5) output of such a facility which is owned and operated by an exempt person where—

(*a*)

(*1*) One nonexempt person agrees pursuant to a contract to take, or to take or pay for, a major portion (more than 25 percent) of the subparagraph (5) output (within the meaning of subdivision (ii) of this subparagraph) of such a facility (whether or not conditional upon the production of such output) or

(*2*) two or more nonexempt persons, each of which pays annually a guaranteed minimum payment exceeding 3 percent of the average annual debt service with respect to the obligations in question, agree, pursuant to contracts, to take, or to take or pay for, a major portion (more than 25 percent) of the subparagraph (5) output of such a facility (whether or not conditioned upon the production of such output), and

(*b*) Payment made or to be made with respect to such contract or contracts by such nonexempt person or persons exceeds a major part (more than 25 percent) of the total debt service with respect to such issue of obligations.

(ii) For purposes of this subparagraph—

(*a*) Where a contract described in subdivision (i) of this subparagraph may be extended by the issuer of obligations described therein, the term of the contract shall be considered to include the period for which such contract may be so extended.

(*b*) The subparagraph (5) output of a facility shall be determined by multiplying the number of units produced or to be produced by the facility in 1 year by the number of years in the contract term of the issue of obligations issued to provide such facility. The number of units produced or to be produced by a facility in 1 year shall be determined by reference to its nameplate capacity (or where there is no nameplate capacity, its maximum capacity) without any reduction for reserves or other unutilized capacity. The contract term of an issue begins on the date the output of a facility is first taken, pursuant to a take or a take or pay contract, by a nonexempt person and ends on the latest maturity date of any obligation of the issue (determined without regard to any optional redemption dates). If, however, on or before the date of issue of a prior issue of governmental obligations issued to provide a facility, the issuer makes a commitment in the bond indenture or related document to refinance such prior issue with one or more subsequent issues of governmental obligations, then the contract term of the issue shall be determined with regard to the latest redemption date of any obligation of the last such refinancing issue with respect to such facility (determined without regard to any optional redemption dates). Where it appears that the term of an issue (or the terms of two or more issues) is extended for purposes of extending the contract term of an issue and thereby increasing the subparagraph (5) output of the facility provided by such issue, the subparagraph (5) output of such facility shall be determined by the Commissioner without regard to the provisions of this subdivision (*b*).

(*c*) The total debt service with respect to an issue of obligations shall be the total dollar amount (excluding any penalties) payable with respect to such issue over its entire term. The entire term of an issue begins on its date of issue and ends on the latest maturity date of any obligation of the issue (determined without regard to any optional redemption dates). If, however, on or before the date of issue of a prior issue of governmental obligations the issuer makes a commitment in the bond indenture or related document to refinance such prior issue with one or more subsequent issues of governmental obligations, the entire term of the issue shall be determined with regard to the latest redemption date of any obligation of the last such refinancing issue (determined without regard to any optional redemption dates).

(*d*) Two or more nonexempt persons who are related persons (within the meaning of section 103(c)(6)(C)) shall be treated as one nonexempt person.

(c) ***Examples.*** The application of the rules contained in section 103(c) (2) and (3) and paragraph (b) of this section are illustrated by the following examples:

Example 1. State A and corporation X enter into an arrangement under which A is to provide a factory which X will lease for 20 years. The arrangement provides

(1) that A will issue $10 million of bonds,

(2) that the proceeds of the bond issue will be used to purchase land and to construct and equip a factory in accordance with X's specifications,

(3) that X will rent the facility (land, factory, and equipment) for 20 years at an annual rental equal to the amount necessary to amortize the principal and pay the interest on the outstanding bonds, and

(4) that such payments by X and the facility itself will be the security for the bonds. The bonds are industrial development bonds since they are part of an issue of obligations (1) all of the proceeds of which are to be used (by purchasing land and constructing and equipping the factory) in a trade or business by a nonexempt person, and (2) the payment of the principal and interest on which is secured by the facility and payments to be made with respect thereto.

Example 2. The facts are the same as in example (1) except that

(1) X will purchase the facility, and

(2) annual payments equal to the amount necessary to amortize the principal and pay the interest on the outstanding bonds will be made by X. The bonds are industrial development bonds for the reasons set forth in example (1).

Example 3. State B and corporation X enter into an arrangement under which B is to loan $10 million to X. The arrangement provides

(1) that B will issue $10 million of bonds,

(2) that the proceeds of the bond issue will be loaned to X to provide additional working capital and to finance the acquisition of certain new machinery,

(3) that X will repay the loan in annual installments equal to the amount necessary to amortize the principal and pay the interest on the outstanding bonds, and

(4) that the payments on the loan and the machinery will be the security for only the payment of the principal on the bonds. The bonds are industrial development bonds since they are part of an issue of obligations (1) all of the proceeds of which are to be used in a trade or business by a nonexempt person, and (2) the payment of the principal on which is secured by payments to be made in respect of property to be used in a trade or business. The result would be the same if only the payment of the interest on the bonds were secured by payments on the loan and machinery.

Example 4. The facts are the same as in example (1), (2), or (3) except that the annual payments required to be made by corporation X exceed the amount necessary to amortize the principal and pay the interest on the outstanding bonds. The bonds are industrial development bonds for the reasons set forth in such examples. The fact that corporation X is required to pay an amount in excess of the amount necessary to pay the principal and interest on the bonds does not affect their status as industrial development bonds. Similarly, if the annual payments required to be made by corporation X were sufficient to pay only a major portion of either the principal or the interest on the outstanding bonds, the bonds would be industrial development bonds for the reasons set forth in such examples.

Example 5. The facts are the same as in example (1), (2), (3), or (4) except that the issuer is a political subdivision which has taxing power and the bonds are general obligation bonds. Since both the trade or business and the security interest tests are met, the bonds are industrial development bonds notwithstanding the fact that they constitute an unconditional obligation of the issuer payable from its general revenues.

> *Example 6.* (a) State C issues its general obligation bonds to purchase land and construct a

hotel for use by the general public (*i.e.*, tourists, visitors, travelers on business, etc.). The bond indenture provides (1) that C will own and operate the project for the period required to redeem the bonds, and (2) that the project itself and the revenues derived therefrom are the security for the bonds. The bonds are not industrial development bonds since (1) the proceeds are to be used by an exempt person in a trade or business carried on by such person, and (2) a major portion of such proceeds is not to be used, directly or indirectly, in a trade or business carried on by a nonexempt person. Use of the hotel by hotel guests who are travelling in connection with trades or businesses of nonexempt persons is not an indirect use of the hotel by such nonexempt persons for purposes of section 103(c).
(b) The facts are the same as in paragraph (a) of this example except that corporation Y enters into a long-term agreement with C that Y will rent more than one-fourth of the rooms on an annual basis for a period approximately equal to one half of the term of the bonds. The bonds are industrial development bonds because (1) a major portion of the proceeds used to construct the hotel is to be used in the trade or business of corporation Y (a nonexempt person) and (2) a major portion of the principal and interest on such issue will be derived from payments in respect of the property used in the trade or business of Y.

Example 7. (a) State D and corporation Y enter into an agreement under which Y will lease for 20 years three floors of a 12- story office building to be constructed by D on land which it will acquire. D will occupy the grade floor and the remaining eight floors of the building. The portion of the costs of acquiring the land and constructing the building which are allocated to the space to be leased by Y is not in excess of 25 percent of the total costs of acquiring the land and constructing the building. Such costs, whether attributable to the acquisition of land or the construction of the building, were allocated to leased space in the same proportion that the reasonable rental value of such leased space bears to the reasonable rental value of the entire building. From the facts and circumstances presented, it is determined that such allocation was reasonable. The arrangement between D and Y provides that D will issue $10 million of bonds, that the proceeds of the bond issue will be used to purchase land and construct an office building, that Y will lease the designated floor space for 20 years at its reasonable rental value, and that such rental payments and the building itself shall be security for the bonds. The bonds are not industrial development bonds since a major portion of the proceeds is not to be used, directly or indirectly, in the trade or business of a nonexempt person.
(b) The facts are the same as in paragraph (a) of this example except that corporation Y will lease four floors, and the costs allocated to these floors are in excess of 25 percent of D's investment in the land and building. The bonds are industrial development bonds because (1) a major portion of the building is to be used in the trade or business of a nonexempt person, and (2) a major portion of the principal and interest on such issue is secured by the rental payments on the building.

Example 8. The facts are the same as in paragraph (b) of example (7) except that, instead of leasing any space to corporation Y, State D will lease the four floors to numerous unrelated private business users to be used in their trades or businesses. No lease will have a term exceeding 2 years. A major portion of the principal and interest will be paid from the revenues that D will derive from such leases. The fact that the activities of D, an exempt person, may amount to a trade or business of leasing property is not material, and the bonds are industrial development bonds for the reasons set forth in paragraph (b) of example (7). The result would be the same in the case of long-term leases.

Example 9. State E issues its obligations to finance the construction of dormitories for educational institution Z which is an organization described in section 501(c)(3) and exempt from tax under section 501(a). The dormitories are to be owned and operated by Z and their operation does not constitute an unrelated trade or business. The bonds are not industrial development bonds since the proceeds are to be used by an exempt person in a trade or business carried on by such person which is not an unrelated trade or business, as determined by applying section 513(a) to Z.

Example 10. State F issues its obligations to finance the construction of a toll road and the cost of erecting related facilities such as gasoline service stations and restaurants. Such related facilities represent less than 25 percent of the total cost of the project and are to be leased or sold to nonexempt persons. The toll road is to be owned and operated by F. The revenues from the toll road and from the rental of related facilities are the security for the bonds. The bonds are not industrial development bonds since a major portion of the proceeds is not to be used, directly or indirectly, in the trades or businesses of nonexempt persons. The fact that vehicles owned by nonexempt persons engaged in their trades or businesses may use the road in common with, or as a part of, the general public is not material.

Example 11. City G issues its obligations to finance the construction of a municipal auditorium which it will own and operate. The use of the auditorium will be open to anyone who wishes to use it for a short period of time on a rate-scale basis. The rights of such a user are only those of a transient occupant rather than the full legal possessory interests of a lessee. It is anticipated that the auditorium will be used by schools, church groups, and fraternities, and numerous commercial organizations. The revenues from the rentals of the auditorium and the auditorium building itself will be the security for the bonds. The bonds are not industrial development bonds because such use is not a use in the trade or business of a nonexempt person.

Example 12. The facts are the same as in example (11) except that one nonexempt person will have a 20-year rental agreement providing for exclusive use of the entire auditorium for more than 3 months of each year at a rental comparable to that charged short-term users. The bonds are industrial development bonds since such use is a use in the trade or business of a nonexempt person and, therefore, a major portion of the proceeds of the issue will be used in the trade or business of a nonexempt person and a major portion of the principal or interest on such issue will be secured by a facility used in such trade or business and by payments with respect to such facility.

Example 13. In order to construct an electric generating facility of a size sufficient to take advantage of the economies of scale:

(1) City H will issue $50 million of its 25-year bonds and Z (a privately owned electric utility) will use $100 million of its funds for construction of a facility they will jointly own as tenants in common.

(2) Each of the participants will share in the ownership, output, and operating expenses of the facility in proportion to its contribution to the cost of the facility, that is, one-third by H and two-thirds by Z.

(3) H's bonds will be secured by H's ownership in the facility and by revenues to be derived from the sale of H's share of the annual output of the facility.

(4) Because H will need only 50 percent of its share of the annual output of the facility, it agrees to sell to Z 25 percent of its share of such annual output for a period of 20 years pursuant to a contract under which Z agrees to take or pay for such power in all events. The facility will begin operation, and Z will begin to receive power, 4 years after the City H obligations are issued. The contract term of the issue will, therefore, be 21 years.

(5) H also agrees to sell the remaining 25 percent of its share of the annual output to numerous other private utilities under a prevailing rate schedule including demand charges.

(6) No contracts will be executed obligating any person other than Z to purchase any specified amount of the power for any specified period of time and no one such person (other than Z) will pay a demand charge or other minimum payment under conditions which, under paragraph (b)(5) of this section, result in a transfer of the benefits of ownership and the burdens of paying the debt service on obligations used directly or indirectly to provide such facilities. The bonds are not industrial development bonds because H's one-third interest in the facility (financed with bond proceeds) shall be treated as a separate property interest and, although 25 percent of H's interest in the annual output of the facility will be used directly or indirectly in the trade or business of Z, a nonexempt person, under the rule of paragraph (b)(5) of this section, such portion constitutes less than a major portion of the subparagraph (5) output of the facility. If more than 25 percent of the subparagraph (5) output of the facility were to be sold to Z pursuant to the take or pay contract, the bonds would be industrial development bonds since they would be secured by H's ownership in the facility and revenues therefrom, and under the rules of paragraph (b)(5) of this section a major portion of the proceeds of the bond issue would be used in the trade or business of Z, a nonexempt person.

Example 14. J, a political subdivision of a State, will issue several series of bonds from time to time and will use the proceeds to rehabilitate urban areas. More than 25 percent of the proceeds of each issue will be used for the rehabilitation and construction of buildings which will be leased or sold to nonexempt persons for use in their trades or businesses. There is no limitation either on the number of issues or the aggregate amount of bonds which may be outstanding. No group of bondholders has any legal claim prior to any other bondholders or creditors with respect to specific revenues of J, and there is no arrangement whereby revenues from a particular project are paid into a trust or constructive trust, or sinking fund, or are otherwise segregated or restricted for the benefit of any group of bondholders. There is, however, an unconditional obligation by J to pay the principal and interest on each issue of bonds. Further, it is apparent that J requires the revenues from the lease or sale of buildings to nonexempt persons in order to pay in full the principal and interest on the bonds in question. The bonds are industrial development bonds because a major portion of the proceeds will be used in the trades or businesses of nonexempt persons and, pursuant to an underlying arrangement, payment of the principal and interest is, in major part, to be derived from payments in respect of property or borrowed money used in the trades or businesses of nonexempt persons.

Example 15. Power Authority K, a political subdivision created by the legislature in State X to own and operate certain power generating facilities, sells all of the power from its existing facilities to four private utility systems under contracts executed in 1970, whereby such four systems are required to

take or pay for specified portions of the total power output until the year 2000. Currently, existing facilities supply all of the present needs of the four utility systems but their future power requirements are expected to increase substantially. K issues 20-year general obligation bonds to construct a large nuclear generating facility. A fifth private utility system contracts with K to take or pay for 30 percent of the subparagraph (5) output of the new facility. The balance of the power output of the new facility will be available for sale as required, but initially it is not anticipated there will be any need for such power. The revenues from the contract with the fifth private utility system will be sufficient to pay less than 25 percent of the principal or interest on the bonds. The balance, which will exceed 25 percent of the principal or interest on such bonds, will be paid from revenues from the contracts with the four systems from sale of power produced by the old facilities. The bonds will be industrial development bonds because a major portion of the proceeds will be used in the trade or business of a nonexempt person, and payment of the principal and interest, pursuant to an underlying arrangement, will be derived in major part from payments in respect of property used in the trades or businesses of nonexempt persons.

(d) *Certain refunding issues* —

(1) ***General rule.*** In the case of an issue of obligations issued to refund the outstanding face amount of an issue of obligations, the proceeds of the refunding issue will be considered to be used for the purpose for which the proceeds of the issue to be refunded were used. The rules of this subparagraph shall apply regardless of the date of issuance of the issue to be refunded and shall apply to refunding issues to be issued to refund prior refunding issues.

(2) ***Obligations issued prior to effective date.*** In the case of an issue of obligations issued to refund the outstanding face amount of an issue of obligations issued on or before April 30, 1968 (or before January 1, 1969, if the transitional rules of § 1.103-12 are applicable) which would have been industrial development bonds within the meaning of section 103(c)(2) had they been issued after such date, the refunding issue shall not be considered to be an issue of industrial development bonds if it does not make funds available for any purpose other than the debt service on the obligations. For rules as to arbitrage bonds, see section 103(d).

(3) ***Examples.*** The provisions of this paragraph may be illustrated by the following examples:

Example 1. In 1969, State A issued $20 million of 20-year revenue bonds the proceeds of which were used to contruct a sports facility which qualifies as an exempt facility described in section 103(c)(4)(B) and paragraph (c) of § 1.103-8. The sports facility will be owned and operated by X, a nonexempt person, for the use of the general public. In 1975, A issues $15 million of revenue bonds in order to refund the outstanding face amount of the 1969 issue. Since the proceeds of the 1969 issue were used for an exempt facility, the proceeds of the 1975 refunding issue will be considered to be used for the same purposes and section 103(c)(1) shall not apply to the 1975 refunding issue. The result would have been the same if the original issue had been issued in 1965. For rules as to a refunding obligation held by substantial users of facilities constructed with the proceeds of the issue refunded, see section 103(c)(7) and § 1.103-11.

Example 2. In 1967, prior to the effective date of section 103(c), city B issued $10 million of revenue bonds the proceeds of which were used to construct a manufacturing facility for corporation Y, a nonexempt person. Lease payments by Y were security for the bonds. In 1975, B issue $7 million of revenue bonds in order to retire the outstanding face amount of the 1967 issue. The interest rate of the 1975 issue is one and one-half percentage points lower than the interest rate on the 1967 issue. Both issues sold at par. All of the terms of the 1975 issue are the same

as the terms of the 1967 issue with the exception of the interest rate. The 1975 refunding issue will not be considered to be an issue of industrial development bonds since the refunding issue will not make funds available for any purpose other than the debt service on the outstanding obligations.

Example 3. The facts are the same as in example (2) except that the interest rate on the refunding issue is the same as the interest rate on the issue to be refunded. Assume further that city B issued the 1975 refunding issue in order to extend the term of the obligations issued in 1967 as the result of its inability to pay such obligations due to insufficient revenues. The results will be the same as in example (2) for the reasons stated therein.

[T.D. 7199, 37 FR 15486, Aug. 3, 1972; 37 FR 16177, Aug. 11, 1972, as amended by T.D. 7869, 48 FR 1708, Jan. 14, 1983]

§ 1.103-8 Interest on bonds to finance certain exempt facilities.

(a) ***In general*** —

(1) ***General rule.***

(i) Under section 103(b)(4), interest paid on an issue of obligations issued by a State or local governmental unit (as defined in § 1.103-1) is not includable in gross income if substantially all of the proceeds of such issue is to be used to provide one or more of the exempt facilities listed in subparagraphs (A) through (J) of section 103(b)(4) and in this section. However, interest on an obligation of such issue is includable in gross income if the obligation is held by a substantial user or a related person (as described in section 103(b)(13) and § 1.103-11). If substantially all of the proceeds of a bond issue is to be used to provide such exempt facilities, the debt obligations are treated as obligations described in section 103(a)(1) and § 1.103-1 even though such obligations are industrial development bonds as defined in section 103(b)(2) and § 1.103-7. Substantially all of the proceeds of an issue of governmental obligations are used to provide an exempt facility if 90 percent or more of such proceeds are so used. For purposes of this "substantially all" test, two rules apply. First, proceeds are reduced by amounts properly allocable on a pro rata basis between providing the exempt facility and other uses of the proceeds. Second, amounts used to provide an exempt facility include amounts paid or incurred which are chargeable to the facility's capital account or would be so chargeable either with a proper election by a taxpayer (for example, under section 266) or but for a proper election by a taxpayer to deduct such amounts. In the event the amount payable with respect to an issue during each annual period over its term is less than the amount of interest accruing thereon in such period, e.g., in the case of an issue sold by the issuer for less than its face amount, see paragraph (a)(6) of this section to determine the amount of proceeds of the issue.

(ii) The provisions of subdivision (i) of this subparagraph shall also apply to an issue of obligations substantially all of the proceeds of which is to be used to provide exempt facilities described in this section and for either or both of the following purposes:

(*a*) To acquire or develop land as the site for an industrial park described in section 103(b)(5) and § 1.103-9,

(*b*) to provide facilities to be used by an exempt person.

(iii) Section 103(b)(4) only becomes applicable where the bond issue meets both the trade or business and the security interest tests so that obligations are industrial development bonds within the meaning of section 103(b)(2). For rules as to exempt facilities including property functionally related and subordinate to such facilities, see subparagraph (3) of this paragraph. For rules with respect to the ultimate use of proceeds of obligations, see subparagraph (4) of this paragraph. For rules which limit the application of the provisions of this section see subparagraph (5) of this paragraph. For the interrelationship of the rules provided in this section and the exemption for certain small issues provided in section 103(b)(6), see § 1.103-10.

(2) ***Public use requirement.*** To qualify under section 103(b)(4) and this section as an exempt facility, a facility must serve or be available on a regular basis for general public use, or be a part of a facility so used, as contrasted with similar types of facilities which are constructed for the exclusive use of a limited number of nonexempt persons in their trades or businesses. For example, a private dock or wharf owned by or leased to, and serving only a single manufacturing plant would not qualify as a facility for general public use, but a hangar or repair facility at a municipal airport, or a dock or a wharf, would qualify even if it is owned by, or leased or permanently assigned to, a nonexempt person provided that such nonexempt person directly serves the general public, such as a common passenger carrier or freight carrier. Similarly, an airport owned or operated by a nonexempt person for general public use is a facility for public use, as is a dock or wharf which is a part of a public port. However, a landing strip which, by reason of a formal or informal agreement or by reason of geographic location, will not be available for general public use does not satisfy the public use requirement. Sewage or solid waste disposal facilities and air or water pollution control facilities, described in sections 103(b)(4) (E) and (F) and paragraphs (f) and (g) of this section, will be treated in all events as serving a general public use although they may be part of a nonpublic facility such as a manufacturing facility used in the trade or business of a nonexempt user.

(3) ***Functionally related and subordinate.*** An exempt facility includes any land, building, or other property functionally related and subordinate to such facility. Property is not functionally related and subordinate to a facility if it is not of a character and size commensurate with the character and size of such facility. Since substantially all of the proceeds of a bond issue must be used for the exempt facility (or for any combination of exempt facilities, industrial parks, and facilities to be used by exempt persons), including property functionally related and subordinate thereto, an insubstantial amount of the proceeds of a bond issue may be used for facilities which are neither exempt facilities (or a combination of exempt facilities, industrial parks and facilities to be used by exempt persons) nor functionally related and subordinate to exempt facilities. Thus, for example, where substantially all of the proceeds of an urban redevelopment bond issue are to be used by a State urban redevelopment agency for residential real property for family units within the meaning of section 103(b)(4)(A) and paragraph (b) of this section, an insubstantial amount may be used for an industrial or commercial project or for any other purpose that is not functionally related and subordinate to the residential real property for family units.

(4) ***Ultimate use of proceeds.*** The question whether substantially all of the proceeds of an issue of obligations are to be used to provide one or more of the exempt facilities listed in subparagraphs (A) through (J) of section 103(b)(4) and in this section is to be resolved by reference to the ultimate use of such proceeds. For example, such proceeds will be treated as used to provide residential rental property whether the State or local governmental unit

(i) constructs such property and leases or sells it to any person who is not an exempt person for use in such person's trade or business of leasing such property;

(ii) lends the proceeds to any such person for such purpose; or

(iii) lends the proceeds to banks or other financial institutions in order to increase the supply of funds for mortgage lending under conditions requiring such banks or other financial institutions to use such proceeds only for further lending for residential rental property.

(5) ***Limitation.***

(i) A facility qualifies under this section only to the extent that there is a valid reimbursement allocation under § 1.150-2 with respect to expenditures that are incurred before the issue date of the bonds to provide the facility and that are to be paid with the proceeds of the issue. In addition, if the original use of the facility begins before the issue date of the bonds, the facility does not qualify under this section if any person that was a substantial user of the facility at any time during the 5-year period before the issue date or any related person to that user receives (directly or indirectly) 5 percent or more of the proceeds of the issue for the user's interest in the facility and is a substantial user of the facility at any time during the 5-year period after the issue date, unless—

(A) An official intent for the facility is adopted under § 1.150-2 within 60 days after the date on which acquisition, construction, or reconstruction of that facility commenced; and

(B) For an acquisition, no person that is a substantial user or related person after the acquisition date was also a substantial user more than 60 days before the date on which the official intent was adopted.

(ii) A facility, the original use of which commences (or the acquisition of which occurs) on or after the issue date of bonds to provide that facility, qualifies under this section only to the extent that an official intent for the facility is adopted under § 1.150-2 by the issuer of the bonds within 60 days after the commencement of the construction, reconstruction, or acquisition of that facility. Temporary construction or other financing of a facility prior to the issuance of the bonds to provide that facility will not cause that facility to be one that does not qualify under this paragraph (a)(5)(ii).

(iii) For purposes of paragraph (a)(5)(i) of this section, *substantial user* has the meaning used in section 147(a)(1), *related person* has the meaning used in section 144(a)(3), and a user that is a governmental unit within the meaning of § 1.103-1 is disregarded.

(iv) Except to the extent provided in §§ 1.142-4(d), 1.148-11A(i), and 1.150-2(j), this paragraph (a)(5) applies to bonds issued after June 30, 1993, and sold before July 8, 1997. See § 1.142-4(d) for rules relating to bonds sold on or after July 8, 1997.

(6) ***Deep discount obligations.***

(i) Except as otherwise provided in paragraph (a)(7) of this section, the proceeds of any issue of obligations sold by the issuer after June 4, 1982, shall include any imputed proceeds of the issue. The imputed proceeds of an issue equal the sum of the amounts of imputed proceeds for each annual period (hereinafter, bond year) over the term of the issue.

(ii) The amount of imputed proceeds for a bond year equals—

(*a*) The sum of the amounts of interest that will accrue with respect to each obligation that is part of the issue in such year, reduced (but not below zero) by

(*b*) The sum of the amounts of principal and interest that become payable with respect to the issue in that bond year.

(iii) Interest will be deemed to accrue with respect to an obligation on an amount that, as of the commencement of that year, is equal to the sum of—

(*a*) The purchase price (as defined in § 1.103-13(d)(2)) allocable to the obligation and

(*b*) The aggregate of the amounts of interest accruing in each prior bond year with respect to the obligation, reduced by all amounts that became payable with respect to the obligation in prior bond years. Any amount that becomes payable during the 30 day period following any bond year will be deemed to have become payable in such bond year. Thus, to the extent interest on an obligation accruing during a bond year does not become payable within 30 days from the end of such year, it is treated as reinvested under the same terms as the obligation. For purposes of this subparagraph (6), the rate at which such interest accrues is equal to the yield of the obligation. Yield is computed in the same manner as set forth in § 1.103-13(c)(1)(ii) for computing yield on governmental obligations (assuming annual compounding of interest). Such computations shall be made without regard to optional call dates.

(7) ***Deep discount obligations; special rules.***

(i) There are no imputed proceeds with respect to an obligation if—

(*a*) The obligation does not have a stated interest rate (determinable at the date of issue) that increases over the term of the obligation, and

(*b*) The purchase price of the obligation is at least 95 percent of its face amount.

At the option of the issuer, any obligation described in the preceding sentence may be disregarded in computing the imputed proceeds of the issue. Payments with respect to such obligations are also disregarded in determining the amount payable with respect to the issue in that bond year. If each obligation which is part of an issue is described in this subdivision (i), there are no imputed proceeds with respect to the issue.

(ii) If the actual rate at which interest is to accrue over the term of an obligation is indeterminable at the date of issue then, in computing the yield of the obligation for purposes of this paragraph, such rate shall be determined as if the conditions as of the date of issue will not change over the term of the obligation. Thus, for example, if interest on an obligation is to be paid semiannually at a rate equal to 80 percent of the yield on six month Treasury bills at the most recent public sale immediately prior to the corresponding interest payment date and the yield on six month Treasury bills sold immediately preceding the issue date is 10 percent, then the six month Treasury bill rate is deemed to be a constant 10 percent for purposes of determining the amount of imputed proceeds of the issue. Therefore, all interest payments on the obligation would be deemed to be made at a rate of 8 percent.

(8) ***Examples.*** The principles of this paragraph may be illustrated by the following examples:

Example 1. State A issues its bonds and plans to use substantially all of the proceeds from such bond issue to purchase land and build a facility which will be used for one of the purposes described in section 103(b)(4) and this section. The arrangement provides that (1) A will issue bonds with a face amount of $21 million and with all accrued interest payable annually, the proceeds of which (after deducting bond election costs, costs of publishing notices, attorneys' fees, printing

costs, trustees' fees for fiscal agents, and similar expenses) will be $20 million; (2) $18 million of the proceeds of the bond issue will be used to purchase land and to construct such facility; (3) $2 million of the proceeds will be used for an unrelated facility which will be used by X, a nonexempt person, in a separate trade or business and for a purpose not described in section 103(b) (4) or (5); (4) X will rent both facilities for 20 years at an annual rental equal to the amount necessary to amortize the principal and pay the interest annually on the outstanding bonds; and (5) such payments by X and the facilities will be the security for the bonds. On these facts, substantially all of the proceeds will be used in connection with an exempt facility described in section 103(b)(4) and this section. Accordingly, section 103(b)(1) does not apply to the bonds unless such bonds are thereafter held by a person who is a substantial user of the facilities or a related person within the meaning of section 103(b)(13) and § 1.103-11.

Example 2. On July 1, 1982, State B sells an issue of its obligations to an underwriter in anticipation of a public offering. The initial offering price is $18,627,639.69 of which $17,000,000 is to be used to construct a pollution control facility described in section 103(b)(4)(F). X Corporation, a nonexempt person, is to use the facility and, in exchange, is obligated to pay an amount equal to the face amount of the issue when it becomes due. The obligations are issued on August 1, 1982. The face amount of the issue is $30,000,000. The issue is a term issue with all obligations maturing on August 1, 1987. The issue bears no stated rate of interest; there are no interest coupons on the obligations. The bonds are industrial development bonds with a yield (based upon annual compounding) of ten percent. Based on these facts, the amount of imputed proceeds with respect to the issue is determined as follows:

Date	Purchase price plus accumulated interest	Interest	Imputed proceeds
Aug. 1, 1983	$18,627,639.69	$1,862,763.97	$1,862,763.97
Aug. 1, 1984	20,490,403.68	2,049,040.37	2,049,040.37
Aug. 1, 1985	22,539,444.03	2,253,944.40	2,253,944.40
Aug. 1, 1986	24,793,388.43	2,479,338.84	2,479,338.84
Aug. 1, 1987	27,272,727.27	2,727,272.73	0
Total imputed proceeds			8,645,087.58

Therefore, proceeds of the issue equal $27,272,727.27 less issuance costs. Substantially all of the bond proceeds are not used to provide an exempt facility, and section 103(b)(1) applies to the issue.

Example 3. The facts are the same as example (2) except that the issue has a face amount and purchase price of $18,500,000. The issue also provides for one payment in addition to the redemption payment, in the amount of $10,267,668 payable on or after August 1, 1986, one year before maturity. Section 103(b)(1) applies to the issue.

> *Example 4.* On July 1, 1982, City E sells an issue of industrial development bonds to provide for a convention facility, as described in section 103(b)(4)(C). Assume that the bonds are issued on that date as well. The issue has a face amount of $15,240,000 and a purchase price of $11,929,382.53. The estimated cost of the facility is $11,000,000. The bonds are "zero coupon" bonds, *i.e.,* there are no interest coupons. Each series is initially offered for less than 95 percent of its face amount. The issue matures serially over a five year period, with each series being allocated a part of the purchase price of the issue. The following chart indicates the purchase price and yield for each series and debt service for the issue:

[Amount allocable to each series]

Date	1983 series at 8 percent	1984 series at 8.5 percent	1985 series at 8.75 percent	1986 series at 9.25 percent	1987 series at 9.75 percent	Interest accruing on issue*	Amount due	Imputed proceeds
July 1, 1983	2,939,814.82	2,697,020.54	2,468,629.60	2,228,732.51	1,595,185.06			0
	235,185.18	229,246.75	216,005.09	206,157.76	155,530.54	1,042,125.32	3,175,000	
July 1, 1984		2,926,267.29	2,684,634.69	2,434,890.27	1,750,715.60			0
		248,732.71	234,905.54	225,227.35	170,694.77	879,560.37	3,175,000	
July 1, 1985			2,919,540.23	2,660,117.62	1,921,410.37			0
			255,459.77	246,060.88	187,337.51	688,858.16	3,175,000	
July 1, 1986				2,906,178.50	2,108,747.88			0
				268,821.50	205,602.92	474,424.42	3,175,000	
July 1, 1987					2,314,350.80			0
					225,649.20	225,649.20	2,540,000	
Total							15,240,000	

**This column (interest accruing on the issue) contains the sums of the interest that accrues on each series in each bond year. The amount of interest accruing on the issue is computed by adding the amount of interest accruing on each series outstanding for that bond year (the bottom number in the line for each bond year). The amount of interest annually accruing on each series also is added to the purchase price of the series to determine the amount of interest accruing in subsequent years, inasmuch as there are no payments with respect to the outstanding series prior to maturity. Thus, the "principal" amount, of the top of the two numbers given in such line for each bond year, is the purchase price allocable to that series plus the amount of interest that accrued on that series in prior years.*

There are no imputed proceeds because the amount payable on the issue in each bond year exceeds the total amount of interest accruing on the issue during such bond year. Section 103(b)(1) does not apply to the bonds unless such bonds are held by a person who is a substantial user of the facility or a related person within the meaning of section 103(b)(13) and § 1.103-11.

Example 5. On July 1, 1982, City C issues industrial development bonds in the face amount of $30 million to construct a sports facility described in section 103(b)(4)(B) to be leased to D, a nonexempt person, with payments on the bonds secured by the lease. C receives $30 million in exchange for the bonds which will be used to provide the facility. The bonds mature on July 1, 2002. Each bond provides for an annual interest payment equal to ten percent of the face amount of the bond, with the last payment thereon (on July 1, 2002) including a return of the principal amount of the bond. The proceeds of the issue are $30 million. Section 103(b)(1) does not apply to the bonds unless such bonds are held by a person who is a substantial user of the facility or a related person within the meaning of section 103(b)(13) and § 1.103-11.

Example 6. The facts are the same as example (5) except that each bond provides for an annual interest payment equal to nine percent of its face amount and is sold with the option to tender the bond to D for purchase at par 5 years after the sale date of July 1, 1982 (*i.e.,* the bonds are sold with a "put" option). Such bonds also provide a put option annually thereafter. There are no imputed proceeds (without regard to § 1.103-8(a)(7)), and the result is the same as example (5).

Example 7. On July 1, 1982, City F sells an issue of industrial development bonds in the face amount of $20 million to acquire a parking facility as described in section 103(b)(4)(D). The estimated cost of the facility is $17,800,000. The issue is issued on the same date and will mature serially over the following ten years. Each bond that is part of the issue bears annual interest coupons, each of which is in an amount equal to ten percent of the face amount of the bond. Each maturity has a face amount of $2,000,000. The issue is initially offered to the public for $19,700,000, allocable to each maturity as follows:

Maturity	Purchase price
July 1, 1983	$1,990,000
July 1, 1984	$1,980,000
July 1, 1985	$1,980,000
July 1, 1986	$1,970,000
July 1, 1987	$1,970,000
July 1, 1988	$1,970,000
July 1, 1989	$1,960,000

Maturity	Purchase price
July 1, 1990	$1,960,000
July 1, 1991	$1,960,000
July 1, 1992	$1,960,000

Based on the foregoing issue proceeds equal $19,700,000 less issuance costs. There are no imputed proceeds with respect to this issue inasmuch as each bond pays interest at a constant rate in each bond year and the purchase price of each bond is at least 95 percent of its face amount. Substantially all of the proceeds are to be used to provide the exempt facility. Accordingly, section 103(b)(1) does not apply to the bonds unless such bonds are thereafter held by a person who is a substantial user of the facility or a related person within the meaning of section 103(b)(13) and § 1.103-11.

(b) ***Residential rental property*** —

(1) ***General rule for obligations issued after April 24, 1979.*** Section 103(b)(1) shall not apply to any obligation which is issued after April 24, 1979, and is part of an issue substantially all of the proceeds of which are to be used to provide a residential rental project in which 20 percent or more of the units are to be occupied by individuals or families of low or moderate income (as defined in paragraph (b)(8)(v) of this section). In the case of a targeted area project, the minimum percentage of units which are to be occupied by individuals of low or moderate income is 15 percent. See generally § 1.103-7 for rules relating to refunding issues.

(2) ***Registration requirement.*** Any obligation (including any refunding obligation) issued after December 31, 1981, to provide a residential rental project must be issued as part of an issue, each obligation of which is in registered form (as defined in paragraph (b)(8)(ii) of this section).

(3) ***Transitional rule.*** For purposes of this section, obligations issued after April 24, 1979, may be treated as issued before April 25, 1979, if the transitional requirements of section 1104 of the Mortgage Subsidy Bond Tax Act of 1980 (94 Stat. 2670) are satisfied.

(4) ***Residential rental project.***

(i) ***In general.*** A residential rental project is a building or structure, together with any functionally related and subordinate facilities, containing one or more similarly constructed units—

(*a*) Which are used on other than a transient basis, and

(*b*) Which satisfy the requirements of paragraph (b)(5)(i) of this section and are available to members of the general public in accordance with the requirement of paragraph (a)(2) of this section.

Substantially all of each project must contain such units and functionally related and subordinate facilities. Hotels, motels, dormitories, fraternity and sorority houses, rooming houses, hospitals, nursing homes, sanitariums, rest homes, and trailer parks and courts for use on a transient basis are not residential rental projects.

(ii) ***Multiple buildings.***

(*a*) Proximate buildings or structures (hereinafter "buildings") which have similarly constructed units are treated as part of the same project if they are owned for Federal tax purposes by the same person and if the buildings are financed pursuant to a common plan.

(*b*) Buildings are proximate if they are located on a single tract of land. The term "tract" means any parcel or parcels of land which are contiguous except for the interposition of a road, street, stream or similar property. Otherwise, parcels are contiguous if their boundaries meet at one or more points.

(*c*) A common plan of financing exists if, for example, all such buildings are provided by the same issue or several issues subject to a common indenture.

(iii) ***Functionally related and subordinate facilities.*** Under paragraph (a)(3) of this section, facilities that are functionally related and subordinate to residential rental projects include facilities for use by the tenants, for example, swimming pools, other recreational facilities, parking areas, and other facilities which are reasonably required for the project, for example, heating and cooling equipment, trash disposal equipment or units for resident managers or maintenance personnel.

(iv) ***Owner-occupied residences.*** For purposes of section 103 (b)(4)(A) and this paragraph (b), the term "residential rental project" does not include any building or structure which contains fewer than five units, one unit of which is occupied by an owner of the units.

(5) ***Requirement must be continuously satisfied*** —

(i) ***Rental requirement.*** Once available for occupancy, each unit (as defined in paragraph (b)(8)(i) of this section) in a residential rental project must be rented or available for rental on a continuous basis during the longer of—

(*a*) The remaining term of the obligation, or

(*b*) The qualified project period (as defined in paragraph (b)(7) of this section).

(ii) ***Low or moderate income occupancy requirement.*** Individuals or families of low or moderate income must occupy that percentage of completed units in such project applicable to the project under paragraph (b)(1) of this section continuously during the qualified project period. For this purpose, a unit occupied by an individual or family who at the commencement of the occupancy is of low or moderate income is treated as occupied by such an individual or family during their tenancy in such unit, even though they subsequently cease to be of low or moderate income. Moreover, such unit is treated as occupied by an individual or family of low or moderate income until reoccupied, other than for a temporary period, at which time the character of the unit shall be redetermined. In no event shall such temporary period exceed 31 days.

(6) ***Effect of post-issuance noncompliance*** —

(i) ***In general.*** Unless corrected within a reasonable period, noncompliance with the requirements of this paragraph (b) shall cause the project to be treated as other than a project described in section 103 (b)(4)(A) and this paragraph (b) as of the date of issue. After an issue to provide such project ceases to qualify, subsequent conformity with the requirements will not alter the taxable status of such issue.

(ii) ***Correction of noncompliance.*** If the issuer corrects any noncompliance arising from events occurring after the issuance of the obligation within a reasonable period, such noncompliance (e.g., an unauthorized sublease) shall not cause the project to be a project not described in this paragraph (b). A reasonable period is at least 60 days after such error is first discovered or would have been discovered by the exercise of reasonable diligence.

(iii) ***Involuntary loss.***

(*a*) The requirements of paragraph (b) shall cease to apply to a project in the event of involuntary noncompliance caused by fire, seizure, requisition, foreclosure, transfer of title by deed in lieu of foreclosure, change in a Federal law or an action of a Federal agency after the date of issue which prevents an issuer from enforcing the requirements of this paragraph, or condemnation or similar event but only if, within a reasonable period, either the obligation used to provide such project is retired or amounts received as a consequence of such event are used to provide a project which meets the requirement of section 103 (b)(4)(A) and this paragraph (b).

(*b*) The provisions of paragraph (b)(6)(iii)(*a*) of this section shall cease to apply to a project subject to foreclosure, transfer of title by deed in lieu of foreclosure or similar event if, at anytime during that part of the qualified project period subsequent to such event, the obligor on the acquired purpose obligation (as defined in § 1.103-13(b)(4)(iv)(*a*)) or a related person (as defined in § 1.103-10(e)) obtains an ownership interest in such project for tax purposes.

(7) ***Qualified project period.*** The term “qualified project period” means—

(i) For obligations issued after April 24, 1979, and prior to September 4, 1982, a period of 20 years commencing on the later of the date that the project becomes available for occupancy or the date of issue of the obligations. The requirement of paragraph (b)(5)(ii) of this section shall be deemed met if the owner of the project contracts with a Federal or state agency to maintain at least 20 percent (or 15 percent in the case of targeted areas) of the units for low or moderate income individuals or families (as defined in paragraph (b)(8)(v) of this section) for 20 years in consideration for rent subsidies for such individuals or families for such period.

(ii) For obligations issued after September 3, 1982, a period beginning on the later of the first day on which at least 10 percent of the units in the project are first occupied or the date of issue of an obligation described in section 103(b)(4)(A) and this paragraph and ending on the later of the date—

(*a*) Which is 10 years after the date on which at least 50 percent of the units in the project are first occupied,

(*b*) Which is a qualified number of days after the date on which any of the units in the project is first occupied, or

(c) On which any assistance provided with respect to the project under section 8 of the United States Housing Act of 1937 terminates.

For purposes of this paragraph (b)(7)(ii), the term "qualified number of days" means 50 percent of the total number of days comprising the term of the obligation with the longest maturity in the issue used to provide the project. In the case of a refunding of such an issue, the longest maturity is equal to the sum of the period the prior issue was outstanding and the longest term of any refunding obligations.

(8) ***Other definitions.*** For purposes of this paragraph—

(i) ***Unit.*** The term "unit" means any accommodation containing separate and complete facilities for living, sleeping, eating, cooking, and sanitation. Such accommodations may be served by centrally located equipment, such as air conditioning or heating. Thus, for example, an apartment containing a living area, a sleeping area, bathing and sanitation facilities, and cooking facilities equipped with a cooking range, refrigerator, and sink, all of which are separate and distinct from other apartments, would constitute a unit.

(ii) ***In registered form.*** The term "in registered form" has the same meaning as in section 6049. With respect to obligations issued after December 31, 1982, such term shall have the same meaning as prescribed in section 103(j) (including the regulations thereunder).

(iii) ***Targeted area project.*** The term "targeted area project" means a project located in a qualified census tract (as defined in § 6a.103A-2(b)(4)) or an area of chronic economic distress (as defined in § 6a.103A-2(b)(5)).

(iv) ***Building or structure.*** The term "building or structure" generally means a discrete edifice or other man-made construction consisting of an independent foundation, outer walls, and roof. A single unit which is not an entire building but is merely a part of a building is not a building or structure within the meaning of this section. As such, while single townhouses are not buildings if their foundation, outer walls, and roof are not independent, detached houses and rowhouses are buildings.

(v) ***Low or moderate income.*** Individuals and families of low or moderate income shall be determined in a manner consistent with determinations of lower income families under section 8 of the United States Housing Act of 1937, as amended, except that the percentage of median gross income which qualifies as low or moderate income shall be 80 percent. Therefore, occupants of a unit are considered individuals or families of low or moderate income only if their adjusted income (computed in the manner prescribed with § 1.167(k)-3(b)(3)) does not exceed 80 percent of the median gross income for the area. Notwithstanding the foregoing, the occupants of a unit shall not be considered to be of low or moderate income if all the occupants are students (as defined in section 151(e)(4)), no one of whom is entitled to file a joint return under section 6013. The method of determining low or moderate income in effect on the date of issue will be determinative for such issue, even if such method is subsequently changed. In the event programs under section 8(f) of the Housing Act of 1937, as amended, are terminated prior to the date of issue, the applicable method shall be that in effect immediately prior to the date of such termination.

(9) ***Examples.*** The following examples illustrate the application of this paragraph (b).

Example 1. In August 1982, City X issues $10 million of registered bonds with a term of 20 years to be used to finance the construction of an apartment building to be available to members of the general public. X loans the proceeds of the bonds to Corporation M, the tax owner of the project. The loan is secured by a promissory note from M and a mortgage on the project. The mortgage requires annual payments sufficient to amortize the principal and interest on the bonds. Corporation M maintains 20 percent of the units in the project for low or moderate income individuals and meets all of the requirements of this section until 2002, at which time M converts the project to offices. The bonds are industrial development bonds, but because the proceeds are used for construction of residential rental property, which is an exempt facility under section 103(b)(4)(A) and paragraph (b) of this section, section 103(b)(1) does not apply.

Example 2. The facts are the same as in example (1), except that the building is constructed adjacent to a factory, and the factory employees are to be given preference in selecting tenants. The bonds are industrial development bonds and the facility is not an exempt facility under section 103(b)(4)(A) and paragraph (b) of this section because it is not a facility constructed for use by the general public.

Example 3. The facts are the same as in example (1), except that the proceeds of the obligation are provided to N, a cooperative housing corporation, to finance the construction of a cooperative housing project. N sells stock in such cooperative to shareholders, some of whom occupy the units in the cooperative and some of whom rent the units to other persons. Such project is not a residential rental project within the meaning of section 103(b)(4)(A) and § 1.103-8(b) because less than all of the units in the building are used for rental. Further, the bonds are mortgage subsidy bonds under section 103A because more than a significant portion of the proceeds are used to provide financing for residences, some of which are owner-occupied and some of which are used in the trade or business of rental.

Example 4. On February 1, 1984, County Z issues registered obligations with a term of 3 years and loans the proceeds to Corporation V to construct a garden apartment project for tenants who are 65 years or older. The mortgage on the project secures the loan. At the end of 3 years, V obtains permanent financing for the project from a commercial lender. The project is not a targeted area project. V has not contracted with any Federal or State agency to provide rental assistance under section 8 of the United States Housing Act of 1937. As a condition for providing financing for construction, Z requires that the deed to the project contain a covenant that requires the project be used for elderly tenants and restricts occupancy of 20 percent of the units in the project to individuals or families of low or moderate income. Further, the deed provides that "Such covenant shall run with and bind the land, from the date that ten percent of the units in the project are first occupied until ten years after the date that at least half the units are first occupied. The right to enforce these restrictions is vested in County Z." In 1990, however, less than 20 percent of the units are occupied by families or individuals of low or moderate incomes, and three months after learning of this condition County Z had not commenced enforcement of the covenant. Although on the date of issue the proceeds of the obligation were used to provide a residential rental project, the obligation will not be treated as providing a residential rental project within the meaning of section 103(b)(4)(A) as of February 1, 1984, because the project did not meet the requirements of this paragraph for at least 10 years after at least 50 percent of the units are first occupied.

Example 5. On January 15, 1983, State X issues registered obligations with a term of 15 years, the proceeds of which are loaned to Corporation P to construct an apartment building. The project will be a "targeted area project", within the meaning of § 1.103-8(b)(8)(iii). Corporation P

intends to rent all the units to individuals for their residences, maintaining 15 percent of the units in the project for individuals having low or moderate incomes, for 15 years. In 1988, however, Corporation P converts 80 percent of the units to condominiums. Corporation P repays the loan to State X which, in turn, redeems the obligations. The obligations are not used to provide a residential rental project within the meaning of section 103(b)(4)(A), and all the interest paid or to be paid on such obligations will be includable in gross income.

Example 6. On January 15, 1984, State Z issues registered obligations with a term of 15 years the proceeds of which will be used to acquire and renovate a residential apartment building. Z sells the project to Corporation U and receives a 30-year mortgage. On June 1, 1985, the first occupants of the project commence their tenancies. At least 50 percent of the units in the project are occupied on July 1, 1985. On January 15, 1988, Z issues 35-year refunding bonds the proceeds of which are used to retire the obligations issued in 1984. The prior issue will be discharged by March 15, 1988. In order to meet the requirement of § 1.103-8(b)(5)(ii), at least 20 percent of such units must be occupied by individuals of low or moderate income until January 1, 2005.

Example 7. The facts are the same as in example (6) except that in 1987, the apartment building is substantially destroyed by fire. The building was insured at its fair market value. U does not intend to reconstruct the building but uses a portion of the insurance proceeds to repay the unpaid balance of the mortgage. Z uses this amount to redeem the outstanding bonds at the first available call date. Since the project was substantially destroyed by fire and the outstanding bonds are retired at the first available call date, the requirements of section 103(b)(4)(A) and this paragraph (b) are satisfied with respect to the obligations.

Example 8. The facts are the same as in example (6) except that in 1987 U defaults on the mortgage, and Z obtains title to the project without instituting foreclosure proceedings. Z sells the project to S and uses the proceeds to retire the outstanding bonds. Since S did not obtain the project with obligations described in section 103(b)(4), S is not required to meet the requirements of section 103(b)(4)(A) and this paragraph. Further, the 1984 obligations are obligations described in section 103(b)(4)(A).

Example 9. In September 1983, State W issues $10 million of registered bonds with a term of 3 years, the proceeds of which are to be loaned to Corporation V to finance the construction of an apartment building in a rural community. At the end of 3 years, V obtains permanent financing from Federal Agency T. Agency T will not allow the deed to contain any restrictive covenant relating to the use of the project. Under Federal law, however, T requires that V maintain all of the units in the project for rental to low-income farmworkers for the term of the mortgage, which is 20 years. Further, the mortgage between T and V provides that if T determines that low-income housing is no longer required in the community in which the project is constructed then the repayment of the mortgage may be accelerated. T determines as of the date of issue that low-income housing will be needed in the community for at least 20 years. In 1987, the project fails to meet the requirements of section 1.103-8(b)(5)(ii), relating to occupancy by individuals or families of low or moderate income. Further, T does not require V to correct the failure. Based on the foregoing, the bonds issued by W will be treated as described in section 103(b)(4)(A).

Example 10. The facts are the same as in example (9) except that in 1987, the Federal law is amended to provide that Agency T may not enforce its low-income occupancy requirement. The result is the same.

Example 11. The facts are the same as in example (9) except that in 1987 Agency T determines that due to a change in circumstances in the community in which the project is located low-income rental housing is no longer required. As such, T requires V to repay the mortgage. Since the obligations have been repaid, W has no legal right to enforce the requirements of paragraph (b) with respect to the project. Subsequent nonconformity of the project with the requirements of § 1.103-8(b) under these circumstances will not cause the obligations issued by W to be industrial development bonds within the meaning of section 103(b)(1).

(10) ***Obligations issued before April 25, 1979*** —

(i) ***General rules.*** Section 103(b)(1) shall not apply to obligations issued before April 25, 1979, which are part of an issue substantially all of the proceeds of which are to be used to provide residential real property for family units. In order to qualify under this paragraph (b) as an exempt facility, the facility must satisfy the public use requirement of paragraph (a)(2) of this section by being available for use by members of the general public.

(ii) ***Family units defined.*** For purposes of this paragraph (b) the term "family unit" means a building or any portion thereof which contains complete living facilities which are to be used on other than a transient basis by one or more persons, and facilities functionally related and subordinate thereto. Thus, an apartment which is to be used on other than a transient basis as a residence by a single person or by a family and which contains complete facilities for living, sleeping, eating, cooking, and sanitation, constitutes a family unit. Such a unit may be served by centrally located machinery and equipment as in a typical apartment building. To qualify as a family unit, the living facilities must be a separate, self-contained building or constitute one unit in a building substantially all of which consists of similar units, together with functionally related and subordinate facilities and areas. Hotels, motels, dormitories, fraternity and sorority houses, rooming houses, hospitals, sanitariums, rest homes, and trailer parks and courts for use on a transient basis do not constitute residential real property for family units.

(iii) ***Functionally related and subordinate facilities.*** Under paragraph (a)(3) of this section, facilities which are functionally related and subordinate to residential real property actually used for family units include, for example, facilities for use by the occupants such as a swimming pool, a parking area, and recreational facilities.

(c) ***Sports facilities*** —

(1) ***General rule.*** Section 103(b)(4)(B) provides that section 103(b)(1) shall not apply to obligations issued by a State or local governmental unit which are part of an issue substantially all of the proceeds of which are to be used to provide sports facilities. In order to qualify as an exempt facility under section 103(b)(4)(B) and this paragraph, the facility must satisfy the public use requirement of paragraph (a)(2) of this section by being available for use by members of the general public either as participants or as spectators.

(2) ***Sports facility defined.***

(i) For purposes of section 103(b)(4)(B) and this paragraph, the term "sports facilities" includes both outdoor and indoor facilities. The facility may be designed either as a spectator or as a participation facility. For example, the term includes both indoor and outdoor stadiums for baseball, football, ice hockey, or other sports events, as well as facilities for the participation of the general public in sports activities, such as golf courses, ski slopes, swimming pools, tennis courts, and gymnasiums. The term does not include, however, facilities such as a golf course, swimming pool, or tennis court, which are constructed for use by members of a private club or

as integral or subordinate parts of a hotel or motel, or the use of which will be restricted to a special class or group or to guests of a particular hotel or motel, since they are not facilities for the use of the general public as required by paragraph (a)(2) of this section.

(ii) Under paragraph (a)(3) of this section, facilities which are functionally related and subordinate to a sports facility, such as a parking lot, clubhouse, ski slope warming house, bath house, or ski tow, are considered to be part of a sports facility. A ski lodge which consists primarily of overnight accommodations is not functionally related and subordinate to a sports facility.

(d) *Convention or trade show facilities* —

(1) *General rule.* Section 103(b)(4)(C) provides that section 103(b)(1) shall not apply to obligations issued by a State or local governmental unit which are a part of an issue substantially all of the proceeds of which are to be used to provide convention or trade show facilities. In order to qualify under section 103(b)(4)(C) and this paragraph as an exempt facility, the facility must satisfy the public use requirement of paragraph (a)(2) of this section by being available for an appropriate charge or rental, on a rate scale basis, for use by members of the general public. The public use requirement is not satisfied if the use of a convention or trade show facility is limited by long-term leases to a single user or group of users.

(2) *Convention or trade show facilities defined.* For purposes of section 103(b)(4)(C) and this paragraph, the term “convention or trade show facilities” means special-purpose buildings or structures, such as meeting halls and display areas, which are generally used to house a convention or trade show, including, under paragraph (a)(3) of this section, facilities functionally related and subordinate to such facilities such as parking lots or railroad sidings. A hotel or motel which is available to the general public, whether or not it is intended primarily to house persons attending or participating in a convention or trade show, is neither a convention or trade show facility nor functionally related and subordinate thereto.

(e) *Certain transportation facilities* —

(1) *General rule.* Section 103(b)(4)(D) provides that section 103(b)(1) shall not apply to obligations issued by a State or local governmental unit which are part of an issue substantially all of the proceeds of which are to be used to provide

(i) airports, docks, wharves, mass commuting facilities, or public parking facilities, or

(ii) storage or training facilities directly related to any such facility. In order to qualify under section 103(b)(4)(D) and this paragraph as an exempt facility, the facility must satisfy the public use requirement of paragraph (a)(2) of this section by being available for use by members of the general public or for use by common carriers or charter carriers which serve members of the general public. A dock or wharf which is part of a public port (or a public port to be constructed in accordance with a plan which has been finally adopted on the date the obligations in question are issued) satisfies the public use test. A parking lot will be available for use by the general public unless more than an insubstantial portion thereof will be used exclusively by or for the benefit of a nonexempt person by reason of a formal or informal agreement or by reason of the remote geographic location of the facility.

(2) *Definitions.* For purposes of section 103(b)(4)(D) and this paragraph—

(i) With respect to bonds sold at or before 5:00 p.m. EST on December 29, 1978, an airport includes service accommodations for the public such as terminals, retail stores in such terminals, runways, hangars, loading facilities, repair shops, parking areas, and facilities which, under paragraph (a)(3) of this section, are functionally related and subordinate to the airport, such as facilities for the preparation of in-flight meals, restaurants, and accommodations for temporary or overnight use by passengers, and other facilities functionally related to the needs or convenience of passengers, shipping companies, and airlines. The term "airport" does not include a landing strip which, by reason of a formal or informal agreement, or by reason of geographic location, will not be available for general public use.

(ii) With respect to bonds sold after 5:00 p.m. EST on December 29, 1978—

(*a*) An airport includes facilities which are directly related and essential to—

(*1*) Servicing aircraft or enabling aircraft to take off and land, or

(*2*) Transferring passengers or cargo to or from aircraft.

A facility does not satisfy either of the foregoing requirements if the facility need not be located at, or in close proximity to, the take-off and landing area in order to perform its function. Examples of facilities which satisfy those requirements are terminals, runways, hangars, loading facilities, repair shops, and land-based navigation aids such as radar installation.

(*b*) Under paragraph (a)(3) of this section, an airport includes facilities other than those described in paragraph (e)(2)(ii)(*a*) only if they are functionally related and subordinate to an airport (as defined in paragraph (e)(2)(ii)(*a*)). A facility (or part thereof) is not functionally related and subordinate to an airport if the facility (or part thereof)—

(*1*) Is not of a character and size commensurate with the character and size of the airport at or adjacent to which the facility is located, or

(*2*) Is not located at or adjacent to that airport.

A facility may satisfy the character and size requirement although it provides minimal benefits to other airports. For example, a facility for the preparation of in-flight meals which has capacity sufficient to prepare all in-flight meals for aircraft departing the airport where the facility is located qualifies although some meals may be consumed in transit between other airports. Other examples of facilities functionally related and subordinate to an airport are restaurants and retail stores located in terminals, ground transportation parking areas, and accommodations for temporary or overnight use by passengers. Unimproved land (including agricultural land) that is adjacent to an airport and that is impaired by a significant level of airport noise is functionally related and subordinate to the airport if after its acquisition that land will not be converted to a use that is incompatible with the level of airport noise. Adjacent land with existing improvements also may be functionally related and subordinate to an airport by reason of impairment by a significant level of airport noise but only if the use of such land before its acquisition is incompatible with the airport noise level, its use after acquisition is to be compatible, and the post-acquisition use will be essentially different from the pre-acquisition use. Notwithstanding the foregoing, an interest in such improved land acquired solely to mitigate damages attributable to airport noise is treated as functionally related and subordinate to the airport. Thus, for example, amounts allocated to imposing a servitude

on improved land adjacent to an airport restricting its future use to uses compatible with airport noise are treated as amounts allocated to property functionally related and subordinate to an airport. For the purpose of determining whether land is impaired by a significant level of airport noise, any generally accepted noise estimating methodology may be used. For example, a Noise Exposure Forecast (NEF), a method for composite noise rating recommended by the Federal Aviation Administration to measure the impact of airport noise, may be used for this purpose. Compatibility may be determined by reference to regulations or general guidelines published by the Federal Aviation Administration under section 102 of the Aviation Safety and Noise Abatement Act of 1979 (49 U.S.C. 2102), or sections 11(3)(C) and 18(a)(4) of the Airport and Airway Development Act of 1970, as amended (49 U.S.C. 1711(3)(C) and 1718(a)(4)), concerning uses of land impaired by a significant level of airport noise, or, where available, by reference to the airport compatibility plan specifically addressing what constitutes a compatible use of that land.

(*c*) As an illustration of the rules of this paragraph (e)(2)(ii), an office building (or office space within a building) or a computer facility, either of which serves a system-wide or regional function of an airline, is not considered part of an airport since that facility is not described in either paragraph (e)(2)(ii)(*a*) or (*b*). However, a maintenance or overhaul facility which services aircraft is considered part of an airport under paragraph (e)(2)(ii)(*a*) since that facility is directly related and essential to servicing aircraft and must be located where aircraft take off and land in order to perform its function.

(*d*) A hotel located at or adjacent to an airport satisfies the requirements of paragraph (e)(2)(ii)(*b*), that is, it is of a character and size commensurate with the character and size of the airport at or adjacent to which it is located, if the number of guest rooms in the hotel is reasonable for the size of the airport, taking into account the current and projected passenger usage of the terminal facility. If the hotel contains meeting rooms, the number and size of these rooms must be in reasonable proportion to the number of guest rooms in the hotel. Limited recreational facilities will not prevent the hotel from being of a character and size commensurate with the character and size of the airport.

(iii) A dock or wharf includes property which, under paragraph (a)(3) of this section, is functionally related and subordinate to a dock or wharf such as the structure alongside which a vessel docks, the equipment needed to receive and to discharge cargo and passengers from the vessel, such as cranes and conveyors, related storage, handling, office, and passenger areas, and similar facilities.

(iv) A mass commuting facility includes real property together with improvements and personal property used therein, such as machinery, equipment, and furniture, serving the general public commuting on a day-to-day basis by bus, subway, rail, ferry, or other conveyance which moves over prescribed routes. Such property also includes terminals and facilities which, under paragraph (a)(3) of this section, are functionally related and subordinate to the mass commuting facility, such as parking garages, car barns, and repair shops. Use of mass commuting facilities by noncommuters in common with commuters is immaterial. Thus, a terminal leased to a common carrier bus line which serves both commuters and long distance travelers would qualify as an exempt facility.

(3) ***Related storage or training facility.*** Section 103 (b)(4)(D) includes only those storage and training facilities which are both

(i) directly related to a facility to which subparagraph (1)(i) or (ii) of this paragraph applies and

(ii) physically located on or adjacent to such a facility. For example, a storage facility would include a grain elevator, silo, warehouse, or oil and gas storage tank used in connection with a dock or wharf and located on or adjacent to such dock or wharf. Similarly, a training facility would include a building located at or adjacent to an airport for the training of flight personnel or a paved area immediately adjoining a bus garage used to train bus drivers.

(4) ***Examples.*** The principles of this paragraph may be illustrated by the following examples:

Example 1. B Airport Authority, a political subdivision of State A, owns and operates B Airport. B Airport Authority adds several runways. In view of the expanded area impaired by significant levels of airport noise, the Authority proposes to issue bonds the proceeds of which are to be used to acquire a hospital located adjacent to the airport. The noise level on the acquired property is 40 NEF. By reference to a noise exposure map setting forth noncompatible land uses and by reference to guidelines published by the Federal Aviation Administration, it is established that continued use of the land for a hospital is not compatible with the noise level. Prior to issuing the bonds, B contracts to lease the property to Corporation C to be used for warehouse space. Within 18 months of the bonds' issuance C will remodel the hospital (previously owned by D, who is unrelated to C) with its own funds and rent the facility as a warehouse. Use as a warehouse is determined to be compatible with the level of airport noise impairing the land. The improved land and prospective revenues from the facility's rental are security for the proposed issuance. Based on the foregoing, the acquired land satisfies the public use test. Furthermore, it is functionally related and subordinate to the airport because the improvements are to be used in an essentially different manner than prior to the land's acquisition. The bonds are industrial development bonds. However, section 103(b)(1) does not apply unless the provisions of section 103(b)(13) and § 1.103-11 apply.

Example 2. The facts are the same as in Example (1) except that a substantial portion of the proceeds of the bond issue is allocated to the acquisition of a limited interest in an additional tract of land (also impaired by airport noise measured at 40 NEF) on which an office building stands. The limited interest holds B harmless for damages caused by airport noise and restricts uses of the tract after the building is retired to those compatible with noise levels caused by the airport. Based on the foregoing, such interest satisfies the public use test. Furthermore, the interest is functionally related and subordinate to the airport because it is solely to mitigate damage attributable to airport noise, in part by restricting future land uses. The bonds are industrial development bonds. However, section 103(b)(1) does not apply unless the provisions of section 103(b)(13) or § 1.103-11 apply.

Example 3. On June 1, 1982, M Airport Authority, a political subdivision of State O, issues obligations, the proceeds of which are loaned to X Corporation, a nonexempt person. X uses the proceeds to construct a hotel adjacent to the main terminal building at M Airport. X will be unconditionally liable for repayment of the proposed obligations. The hotel will be used to provide temporary and overnight accommodations for airline passengers using M Airport. The number of rooms in the hotel is reasonable for an airport of M's size, taking into account the current and projected passenger usage of the terminal facility. In addition to guest rooms, the hotel will contain a restaurant, small retail stores (such as a gift shop and newstand), and limited recreation facilities (such as a swimming pool). The hotel will also contain several multipurpose rooms suitable for use as meeting rooms. The number and size of these rooms will be in reasonable proportion to the number and size of the guest rooms in the hotel. Use of

the guest rooms, restaurant and stores, recreational facilities, and meeting rooms by air passengers arriving at or departing from M Airport will be incidental to the use of the hotel by air passengers for temporary and overnight accommodations. The hotel is of a character and size commensurate with the character and size of M Airport. Consequently, applying the provisions of § 1.103-8(e)(2), the hotel is functionally related and subordinate to M Airport. The obligations are industrial development bonds. Section 103(b)(1) does not apply to the obligations, however, unless the provisions of section 103(b)(10) and § 1.103-11 apply.

Example 4. On June 1, 1982, N Airport Authority, a political subdivision of State P, issues obligations the proceeds of which are loaned to Y Corporation, a nonexempt person. Y uses the proceeds to construct a hotel adjacent to the main terminal building at N Airport. Y Corporation will be unconditionally liable for repayment of the proposed obligations. The hotel will contain extensive recreational facilities, including a large roof-top swimming pool, tennis courts, and a health club. In addition, facilities for conferences consisting of a ballroom-sized meeting room capable of being partitioned by movable panels and several smaller meeting rooms will be constructed. The number of rooms in the hotel will substantially exceed the number which is reasonably based on the current and projected passenger usage of the terminal facility. Because of the presence of extensive recreational and conference facilities, as well as the presence of on excessive number of rooms at the hotel, the hotel fails to be of a character and size commensurate with the character and size of N Airport. The result would be the same if the hotel did not have extensive recreational facilities. Consequently, the hotel is not functionally related and subordinate to N Airport under § 1.103-8(e)(2). The obligations are industrial development bonds and interest thereon is not excluded from gross income by reason of subsection (a)(1) or (b)(4) of section 103.

(f) ***Certain public utility facilities*** —

(1) ***General rule.***

(i) Section 103(b)(4)(E) provides that section 103(b)(1) shall not apply to obligations issued by a State or local governmental unit which are part of an issue substantially all of the proceeds of which are to be used to provide sewage disposal facilities, solid waste disposal facilities, or facilities for the local furnishing of electric energy or gas. In order to qualify under section 103(b)(4)(E) as an exempt facility, the facility must satisfy the public use requirement of paragraph (a)(2) of this section. A public utility facility described in this subparagraph (with the exception of sewage and solid waste disposal facilities which will be treated in all events as serving the general public) will satisfy the public use requirement only if such facility, or the output thereof, is available for use by members of the general public.

(ii) A facility for the local furnishing of electric energy or gas is, for purposes of applying the public use test in paragraph (a)(2) of this section, available for use by members of the general public if

(*a*) the owner or operator of the facility is obligated, by a legislative enactment, local ordinance, regulation, or the equivalent thereof, to furnish electric energy or gas to all persons who desire such services and who are within the service area of the owner or operator of such facility, and

(*b*) it is reasonably expected that such facility will serve or be available to a large segment of the general public in such service area. For rules with respect to facilities for the furnishing of water, see paragraph (h) of this section.

(2) ***Definitions.*** For purposes of section 103(b)(4)(E) and this paragraph—

(i) The term "sewage disposal facilities" means any property used for the collection, storage, treatment, utilization, processing, or final disposal of sewage.

(ii) The term "facilities for the local furnishing of electric energy or gas" means property which—

(*a*) Is either property of a character subject to the allowance for depreciation provided in section 167 or land,

(*b*) Is used to produce, collect, generate, transmit, store, distribute, or convey electric energy or gas.

(*c*) Is used in the trade or business of furnishing electric energy or gas, and

(*d*) Is a part of a system providing service to the general populace of one or more communities or municipalities, but in no event more than 2 contiguous counties (or a political equivalent) whether or not such counties are located in one State.

For purposes of this subdivision, a city which is not within, or does not consist of, one or more counties (or a political equivalent) shall be treated as a county (or a political equivalent). A facility for the generation of electric energy otherwise qualifying under this subdivision will not be disqualified because it is connected to a system for interconnection with other public utility systems for the emergency transfer of electric energy. The facilities need not be located in the area served by them. Also, the term "facilities for the local furnishing of electric energy or gas" does not include coal, oil, gas, nuclear cores, or other materials performing a similar function.

(g) ***Air or water pollution control facilities*** —

(1) ***General rule.*** Section 103(b)(4)(F) provides that section 103(b)(1) shall not apply to obligations issued by a State or local governmental unit which are part of an issue substantially all of the proceeds of which are to be used to provide air or water pollution control facilities. Such facilities are in all events treated as serving the general public and, thus, satisfy the public use requirement of paragraph (a)(2) of this section.

(2) ***Definitions.***

(i) For purposes of section 103(b)(4)(F) and this paragraph, property is a pollution control facility to the extent that the test of either subdivision (iii) or (iv) of this subparagraph is satisfied, but only if—

(*a*) It is property which is described in subdivision (ii) of this subparagraph and is either of a character subject to the allowance for depreciation provided in section 167 or land, and

(*b*) Either

(*1*) a Federal, State, or local agency exercising jurisdiction has certified that the facility, as designed, is in furtherance of the purpose of abating or controlling atmospheric pollutants or contaminants, or water pollution, as the case may be, or

(*2*) the facility is designed to meet or exceed applicable Federal, State, and local requirements for the control of atmospheric pollutants or contaminants, or water pollution, as the case may be, in effect at the time the obligations, the proceeds of which are to be used to provide such facilities, are issued.

(ii) Property is described in this subdivision if it is property to be used, in whole or in part, to abate or control water or atmospheric pollution or contamination by removing, altering, disposing, or storing pollutants, contaminants, wastes, or heat. In the case of property to be used to control water pollution, such property includes the necessary intercepting sewers, pumping, power, and other equipment, and their appurtenances. For rules relating to facilities which remove pollutants from fuel or certain other items, see subdivision (vi) of this subparagraph.

(iii) In the case of an expenditure for property which is designed for no significant purpose other than the control of pollution, the total expenditure for such property satisfies the test of this subdivision. Thus, where property which is to serve no function other than the control of pollution is to be added to an existing manufacturing or production facility, the total expenditure for such property satisfies the test of this subdivision. Also, if an expenditure for property would not be made but for the purpose of controlling pollution, and if the expenditure has no significant purpose other than the purpose of pollution control, the total expenditure for such property satisfies the test of this subdivision even though such property serves one or more functions in addition to its function as a pollution control facility.

(iv) In the case of property to be placed in service for the purpose of controlling pollution and for a significant purpose other than controlling pollution, only the incremental cost of such facility satisfies the test of this subdivision. The "incremental cost" of property is the excess of its total cost over that portion of its cost expended for a purpose other than the control of pollution.

(v) An expenditure has a significant purpose other than the control of pollution if it results in an increase in production or capacity, or in a material extension of the useful life of a manufacturing or production facility or a part thereof.

(h) *Water facilities* —

(1) ***General rule.*** Section 103(b)(4)(G) provides that section 103(b)(1) shall not apply to obligations issued by a State or local governmental unit which are part of an issue substantially all of the proceeds of which are to be used to provide facilities for the furnishing of water which are available, on reasonable demand, to members of the general public. A water facility will satisfy the public use test of paragraph (a)(2) of this section if it will provide water, on reasonable demand, to any member of the general public within the service area of the water system of which such facility is a part.

(2) ***Definition.*** For purposes of section 103(b)(4)(G) and this paragraph, the "water facilities" include artesian wells, reservoirs, dams, related equipment and pipelines, and other facilities used to furnish water for domestic, industrial, irrigation, or other purposes.

(3) ***Effective date.*** The provisions of this paragraph apply in the case of facilities provided by obligations issued after January 1, 1969. In the case of facilities provided by obligations issued on or before such date to which section 103(b) is applicable, the provisions of paragraph (f) of this section shall apply. For such purposes, wherever the term "local furnishing of electric energy or gas" appears in paragraph (f) of this section, such term shall be deemed to read "local furnishing of electric energy, gas, or water."

(i) ***Examples.*** The application of section 103(b)(4) and this section are illustrated by the following examples:

Example 1. City B plans to issue $10 million of bonds to be used to construct a sports stadium. The revenues from the facility and the facility itself will be the security for the bonds. A professional football team rents the facility on a long-term leasee for part of the year and a professional baseball team rents the sports facility for the remainder of the year. Tickets are sold by the teams to the

general public. The bonds are industrial development bonds, but since the proceeds are used for a spectator facility for general public use, which is an exempt facility under section 103(b)(4)(B) and paragraph (c) of this section, section 103(b)(1) does not apply unless the provisions of section 103(b)(13) and § 1.103-11 apply.

Example 2. City C plans to issue $10 million of bonds to be used to construct a convention hall which it will own. City C plans to lease the convention hall for 25 years to corporation Y, a nonexempt person, which will operate and maintain it. The terms of the lease obligate Y to make the convention hall generally available for civic, business, and recreational shows, meetings, performances, and similar activities serving or benefiting the community. Lease payments from Y and the facility will be security for the bonds. The bonds are industrial development bonds, but since the proceeds are to be used for a facility for general public use, which is an exempt facility under section 103(b)(4)(C) and paragraph (d) of this section, section 103(b)(1) does not apply unless the provisions of section 103(b)(13) and § 1.103-11 apply.

Example 3. City D issues $100 million of its bonds and uses the proceeds to finance construction of an airport for the use of the general public. D will own and operate the airport. A major portion of the rentable space in the terminal building is leased on a long-term basis to common carrier and non-scheduled airlines. The bonds will be secured by the airport landing and runway charges and by payments with respect to such long-term leases from such commercial airlines. Such commercial airline payments are expected to constitute more than 50 percent of the total revenues from the airport. The bonds are industrial development bonds, but since the proceeds are to be used for an airport for use by the general public and by carriers serving the general public, which is an exempt facility under section 103(b)(4)(D) and paragraph (e) of this section, section 103(b)(1) does not apply unless the provisions of section 103(b)(13) and § 1.103-11 apply. The result would be the same if D hired an airport management firm to operate the airport.

Example 4. City E issues $6 million of its bonds and uses the proceeds to finance construction of a landing strip for airplanes to be located adjacent to the factories of corporations Y and Z. The landing strip will be used in the trades or businesses of Y and Z and by any member of the general public wishing to use it. However, due to its location, general public use will be negligible. The lease payments by Y and Z for the use of the facility are the security for the bonds. The bonds are industrial development bonds and the facility is not an exempt facility under section 103(b)(4)(D) and paragraph (c) of this section because it is not a facility constructed for general public use.

Example 5. State F and corporation Z enter into an arrangement which provides that F will issue $10 million of its bonds and use the proceeds to construct a facility for Z the only purpose of which is to control air and water pollution at Z's plant. The principal and interest on the bonds will be secured by the charges which F will impose on Z. The bonds are industrial development bonds, but since the proceeds are to be used for air and water pollution facilities designed to abate pollution by private persons, such facilities are for the benefit of the general public and are exempt facilities under section 103(b)(4)(F) and paragraph (g) of this section. Accordingly, section 103(b)(1) does not apply unless the provisions of section 103(b)(13) and § 1.103-11 apply.

Example 6. City G issues $20 million of its bonds and will use $6 million to finance residential rental property which qualifies as an exempt facility under section 103(b)(4)(A) and paragraph (b) of this section, $9 million to finance construction of a stadium which qualifies as an exempt facility under section 103(b)(4)(B) and paragraph (c) of this section, and $5 million for convention facilities which qualify as exempt facilities under section 103(b)(4)(C) and paragraph (d) of this section. The facilities will be used in the trades or businesses of nonexempt persons and rental payments with

respect to such facilities and the facilities themselves will be the security for the bonds. The bonds are industrial development bonds, but since all the proceeds are to be used for facilities which are exempt facilities under section 103(b)(4), section 103(b)(1) does not apply unless the provisions of section 103(b)(10) and § 1.103-11 apply. The result would be the same, if; instead of using $9 million to finance construction of a stadium, the $9 million were used to finance construction of a capitol building. [Reg. § 1.103-8].

[T.D. 7199, 37 FR 15490, Aug. 3, 1972]

Editorial Note: For FEDERAL REGISTER citations affecting § 1.103-8, see the List of CFR Sections Affected, which appears in the Finding Aids section of the printed volume and at *www.govinfo.gov*.

§ 1.103-9 Interest on bonds to finance industrial parks.

(a) ***General rule.***

(1) Under section 103(c)(5), interest paid on an issue of obligations issued by a State or local governmental unit (as defined in § 1.103-1) is not includable in gross income if substantially all of the proceeds of such issue is to be used to finance the acquisition or development of land as the site for an industrial park (referred to in this section as "industrial park bonds"). However, interest on an obligation of such an issue is includable in gross income if the obligation is held by a substantial user or a related person (as described in section 103(c)(7) and § 1.103-11). If substantially all of the proceeds of a bond issue is to be so used to finance an industrial park, the debt obligations are treated as obligations described in section 103(a)(1) and § 1.103-1 even though such obligations are industrial development bonds within the meaning of section 103(c)(2) and § 1.103-7. Whether substantially all of the proceeds of an issue of governmental obligations are used to finance an industrial park is determined consistently with the rules for exempt facilities in § 1.103-8(a)(1)(i).

(2) The provisions of subparagraph (1) of this paragraph shall also apply to an issue of obligations substantially all of the proceeds of which is to be used to acquire or develop land as the site for an industrial park described in section 103(c)(5) and this section and for either or both of the following purposes:

(i) To finance exempt facilities described in section 103(c)(4) and § 1.103-8,

(ii) to finance facilities to be used by an exempt person.

(3) Section 103(c)(5) only becomes applicable where the bond issue meets both the trade or business and the security interest tests so that the obligations are industrial development bonds within the meaning of section 103(c)(2). For the interrelationship of the rules provided in this section and the exemption for certain small issues provided in section 103(c)(6), see § 1.103-10.

(b) ***Definition of an industrial park.*** For purposes of section 103(c)(5) and this section, the term "industrial park" means a tract of land, other than a tract of land intended for use by a single enterprise, suitable primarily for use as building sites by a group of enterprises engaged in industrial, distribution, or wholesale businesses if either—

(1) The control and administration of the tract is vested in an exempt person (within the meaning of paragraph (b)(2) of § 1.103-7), or

(2) The uses of the tract are normally

(i) regulated by protective minimum restrictions, ordinarily including the size of individual sites, parking and loading regulations, and building setback lines, and

(ii) designed to be compatible, under a comprehensive plan, with the community in which the industrial park is located and with the uses of the surrounding land.

(c) ***Development of land defined.*** For purposes of section 103(c)(5) and this section, the term "development of land" includes the provision of certain improvements to an industrial park site if such improvements are incidental to the use of the land as an industrial park. Such incidental improvements include the building or installation of incidental water, sewer, sewage and waste disposal, drainage, or similar facilities (whether surface, subsurface, or both). Such incidental improvements include the provision of incidental transportation facilities, such as hard-surface roads (including curbs and gutters) and railroad spurs and sidings; power distribution facilities, such as gas and electric lines; and communication facilities. The provision of structures or buildings of any kind is not included within the meaning of the term "development of land," except for those structures or buildings which are necessary in connection with the incidental improvements encompassed by the term, such as, for example, a water pumphouse and storage tank needed in connection with the incidental provision of water facilities in an industrial park.

(d) ***Examples.*** The application of the rules contained in section 103(c)(5) and this section are illustrated by the following examples:

Example 1. City A and corporations X, Y, and Z (unrelated companies) enter into an arrangement under which A is to acquire a tract of land suitable for use as an industrial park. The arrangement provides that:

(1) A will issue $10 million of bonds to be used for the acquisition and development of a suitable tract of land;

(2) the tract will be controlled and administered by A, pursuant to a comprehensive zoning plan, for the use of a group of enterprises;

(3) A will install necessary water, sewer, and drainage facilities on the tract;

(4) A will sell substantial portions of the developed tract to X for use as a factory site and to Y for use as a warehouse site;

(5) A will lease a sizeable portion of the tract to Z for 20 years as a distribution center site; and

(6) the developed tract and the proceeds from the sale or lease of parts of the tract will be the security for the bonds. The bonds are industrial development bonds. Since, however, the proceeds of the issue are to be used for the acquisition and development of a tract of land as the site for an industrial park under section 103(c)(5), section 103(c)(1) does not apply unless the provisions of section 103(c)(7) and § 1.103-11 apply.

Example 2. The facts are the same as in example (1) except that $1 million of the proceeds of the $10 million issue are to be used for the construction of a factory by corporation W or X. The bonds are industrial development bonds. Under these circumstances, substantially all of the proceeds are treated as used or to be used for the acquisition and development of a tract of land as the site for an industrial park described in section 103(c)(5). Accordingly, section 103(c)(1) does not apply unless the provisions of section 103(c)(7) and § 1.103-11 apply.

[T.D. 7199, 37 FR 15494, Aug. 3, 1972, as amended by T.D. 7511, 42 FR 54285, Oct. 5, 1977]

§ 1.103-10 Exemption for certain small issues of industrial development bonds.

(a) ***In general.*** Section 103(b)(6) applies to certain industrial development bond issues (referred to in this section as "exempt small issues") and bonds issued to refund certain issues (referred to in this section as "exempt small refunding issues"). If an issue is an exempt small issue or an exempt small refunding issue, then under the requirements of section 103(b)(6) and this section the interest paid on the debt obligations is not includable in gross income, and the obligations are treated as obligations described in section 103(a)(1) and § 1.103-1, even though such obligations are industrial development bonds as defined in section 103(b)(2) and § 1.103-7. However, interest on an obligation of such an issue is includable in gross income if the obligation is held by a substantial user of the financed facilities or a related person (as described in section 103(b)(7) and § 1.103-11). Section 103(b)(6) only becomes applicable where the bond issue meets both the trade or business and the security interest tests so that the obligations are industrial development bonds within the meaning of section 103(b)(2). For bonds issued before January 1, 1979, in taxable years ending before such date, and for capital expenditures made before January 1, 1979, with respect to such bonds, paragraphs (b), (c), and (d) of this section shall be applied by substituting $5 million for $10 million.

(b) ***Small issue exemption*** —

(1) ***$1 million or less.*** Section 103(b)(6)(A) provides that section 103(b)(1) shall not apply to any debt obligation issued by a State or local governmental unit as part of an issue where—

(i) The aggregate authorized face amount of such issue (determined by aggregating the outstanding face amount of any prior exempt small issues described in paragraph (d) of this section and the face amount of the issue of obligations in question) is $1 million or less; and

(ii) Substantially all of the proceeds of such issue is to be used for the acquisition, construction, reconstruction, or improvement of land or property of a character subject to the allowance for depreciation under section 167. Proceeds which are loaned to a borrower for use as working capital or to finance inventory are not used in the manner described in the preceding sentence. Whether substantially all of the proceeds of an issue of governmental obligations are used in such manner is determined consistently with the rules for exempt facilities in § 1.103-8(a)(1)(i). Any obligation which is an industrial development bond within the meaning of section 103(b)(2) and which satisfies the $1 million small issue exemption requirements is an exempt small issue. See paragraph (c)(1) of this section for the treatment of refunding issues of $1 million or less.

(2) ***$10 million or less.***

(i) Under section 103(b)(6)(D), the issuing State or local governmental unit may elect to have an aggregate authorized face amount of $10 million or less, in lieu of the $1 million exemption otherwise provided for in section 103(b)(6)(A), with respect to issues of obligations that are industrial development bonds (within the meaning of section 103(b)(2)) issued after October 24, 1968. If the election is made in a timely manner, the bonds will be treated as obligations of a State or local governmental unit described in section 103(a)(1) and § 1.103-1 if the sum of—

(*a*) The aggregate face amount of the issue including the aggregate outstanding face amount of any prior $1 million or $10 million exempt small issues taken into account under section 103(b)(6)(B) and paragraph (d) of this section, and

(*b*) The aggregate amount of "section 103(b)(6)(D) capital expenditures" (within the meaning of paragraph (b)(2)(ii) of this section),

is $10 million or less. In the case of an issue of obligations that qualified for exemption under section 103(b)(6)(A) and this paragraph, if a section 103(b)(6)(D) capital expenditure made after the date of issue has the effect of making taxable the interest on the issue, under section 103(b)(6)(G) the loss of tax exemption for the interest shall begin only with the date on which the expenditure that caused the issue to cease to qualify under the $10 million limit was paid or incurred. See paragraph (b)(2)(vi) of this section for the time and manner in which the issuer may elect the $10 million exemption. See section 103(b)(6)(H) and paragraph (c)(2) of this section for the treatment of certain refinancing issues of $10 million of less.

(ii) The term "section 103(b)(6)(D) capital expenditure" is defined in this subdivision. Special rules for applying such definition in the case of certain expenditures paid or incurred by a State or local governmental unit are prescribed in subdivision (iii) of this subparagraph. Except as excluded by subdivision (iv) or (v) of this subparagraph, an expenditure (regardless of how paid, whether in cash, notes, or stock in a taxable or nontaxable transaction) is a section 103(b)(6)(D) capital expenditure if—

(*a*) The capital expenditure was financed other than out of the proceeds of issues to the extent such issues are taken into account under paragraph (b)(2)(i)(*a*) of this section.

(*b*) The capital expenditures were paid or incurred during the 6-year period which begins 3 years before the date of issuance of the issue in question and ends 3 years after such date,

(*c*) The principal user of the facility in connection with which the property resulting from the capital expenditures is used and the principal user of the facility financed by the proceeds of the issue in question is the same person or are two or more related persons (as defined in section 103(b)(6)(C) and paragraph (e) of this section),

(*d*) Both facilities referred to in (*c*) of this subdivision were (during the period described in (*b*) of this subdivision or a part thereof) located in the same incorporated municipality or in the same county outside of the incorporated municipalities in such county), and

(*e*) The capital expenditures were properly chargeable to the capital account of any person or State or local governmental unit (whether or not such person is the principal user of the facility or a related person) determined, for this purpose, without regard to any rule of the Code which permits expenditures properly chargeable to capital account to be treated as current expenses. With respect to obligations issued on or after August 8, 1972, determinations under the preceding sentence shall be made by including any expenditure which may, under any rule or election under the Code, be treated as a capital expenditure (whether or not such expenditure is so treated). With respect to obligations issued on or after August 8, 1972, for purposes of this subparagraph, capital expenditures made with respect to a contiguous or integrated facility which is located on both sides of a border between two or more political jurisdictions are made with respect to a facility located in all such jurisdictions and, therefore, shall be treated as if they were made in each such political jurisdiction.

(iii) Amounts properly chargeable to capital account under subdivision (ii) (*e*) of this subparagraph include capital expenditures made by a State or local governmental unit with respect to an exempt facility or an industrial park, within the 6-year period described in subdivision (ii)(*b*) of this subparagraph, out of the proceeds of bond issues to which section 103(b)(1) did not apply by reason of section 103(b) (4) or (5) (relating to certain exempt activities and industrial parks).

Thus, for example, the cost to the lessor of a leased plantsite financed out of the proceeds of an issue for an exempt air pollution control facility under section 103(b)(4)(F) and paragraph (g) of § 1.103-8 would constitute a section 103(b)(6)(D) capital expenditure. However, in the case of an industrial park, only the land costs allocated on an area basis to the plantsite and the actual cost of any improvements made on the plantsite, or to be used principally in connection with the actual plantsite occupied by a principal user or a related person, shall be taken into account as capital expenditures. Where the actual amount of capital expenditures made with respect to a facility by a person (including a State or local governmental unit) other than the user of such facility (or a related person) cannot be ascertained, the fair market value of the property with respect to which the capital expenditures were made, at the time of such capital expenditures, shall be deemed to be the amount of such capital expenditures. In the case of a transaction which is not in form a purchase but which is treated as a purchase for Federal income tax purposes, the purchase price for Federal income tax purposes shall constitute a capital expenditure.

(iv) A section 103(b)(6)(D) capital expenditure shall not include any "excluded expenditure" described in (*a*) through (*e*) of this subdivision (iv).

(*a*) A capital expenditure is an excluded expenditure if either it is made by a public utility company which is not the principal user of the facility financed by the proceeds of the issue in question (or a related person) with respect to property of such company, or it is made by a State or local governmental unit with respect to property of such unit, and if in either case it meets all of the following three conditions: Such property of such company or unit (as the case may be) must be used to provide gas, water, sewage disposal services, electric energy, or telephone service. Such property must be installed in, or connected to, the facility but must not consist of property which is such an integral part of the facility that the cost of such property is ordinarily included as part of the acquisition, construction, or reconstruction cost of such facility. Such property must be of a type normally paid for by the user (or a related person) in the form of periodic fees based upon time or use.

(*b*) A capital expenditure is an excluded expenditure if it is made by a person other than the user, a related person, or a State or local governmental unit and if it is made with respect to tangible personal property (within the meaning of paragraph (c) of § 1.48-1), or intangible personal property, leased to the user (or a related person) of a facility. However, the preceding sentence shall apply only if such personal property is leased by the manufacturer of such tangible or intangible personal property, or by a person in the trade or business of leasing property the same as, or similar to, such personal property, and only if, pursuant to general business practice, property of such type is ordinarily the subject of a lease.

(*c*) A capital expenditure is an excluded expenditure if it is made to replace property damaged or destroyed by fire, storm, or other casualty, to the extent that these expenditures do not exceed in dollar amount the fair market value (determined immediately before the casualty) of the property replaced.

(*d*) A capital expenditure is an excluded expenditure if it is required by a change made after the date of issue in a Federal or State law, or a local ordinance which has general application, or if it is required by a change made after such date in rules and regulations of general application issued under such law or ordinance.

(*e*) A capital expenditure is an excluded expenditure if it is required by or arises out of circumstances which could not reasonably be foreseen on the date of issue or which arise out of a mistake of law or fact. However, the aggregate dollar amount taken into account under this subdivision (*e*) with respect to any issue may not exceed $1 million. With respect to expenditures incurred prior to December 11, 1971, the dollar amount specified in the preceding sentence shall be $250,000.

(v)

(*a*) If the assets of a corporation are acquired by another corporation in a transaction to which section 381(a) (relating to carryovers in certain corporate acquisitions) applies, the exchange of consideration by the acquiring corporation for such assets is not a section 103(b)(6)(D) capital expenditure by such acquiring corporation.

(*b*) However, if an exchange referred to in (*a*) of this subdivision occurs during the 6-year period beginning 3 years before the date of issuance of an issue of obligations and ending 3 years after such date, the transferor and transferee shall be treated as having been related persons for the portion of such 6-year period preceding the date of the exchange for purposes of determining whether section 103(b)(6)(D) capital expenditures have been made. For purposes of this subdivision (*b),* the date of an exchange to which section 381 applies shall be the date of distribution or transfer within the meaning of paragraph (b) of § 1.381(b)-1.

(*c*) If section 351(a) applies to a transfer of property to a corporation solely in exchange for its stock or securities, the issuance of such stock or securities in such exchange is not a section 103(b)(6)(D) capital expenditure by such corporation.

(*d*) However, if such a transfer referred to in (*c*) of this subdivision occurs during the 6-year period beginning 3 years before the date of issuance of an issue of obligations and ending 3 years after such date, and if, with respect to the property transferred, expenditures made within such period would have been section 103(b)(6)(D) capital expenditures if the transferor and transferee had been related persons for such period, then such expenditures shall be considered to be section 103(b)(6)(D) capital expenditures made by the transferee. In addition, if a transferor and transferee are related persons immediately following such transfer, such transferor and transferee shall also be treated as having been related persons for the portion of such 6-year period preceding the date of such transfer.

(*e*) For purposes of this subdivision (v), the term “issue of obligations” means an issue being tested for purposes of qualifying or continuing to qualify under an election pursuant to section 103(b)(6)(D) as to which an amount which would be a section 103(b)(6)(D) capital expenditure solely by reason of (*b*) or (*d*) of this subdivision must be taken into account.

(*f*) If with respect to an issue of obligations an expenditure would not have been a section 103(b)(6)(D) capital expenditure but for the application of (*b*) or (*d*) of this subdivision, and if such section 103(b)(6)(D) capital expenditure has the effect of making taxable the interest on an issue of obligations which qualified for exemption under section 103(b)(6)(A) and this paragraph, the loss of tax exemption for such interest shall begin not earlier than the date of such exchange or transfer referred to in this subdivision (v).

(vi) The issuer may make the election provided by section 103(b)(6)(D) and this paragraph (b)(2) (assuming that the bonds otherwise qualify under section 103(b)(6) by noting the election affirmatively at or before the time of issuance of the issue in question on its books or records with respect to the issue. The term "books or records" includes the bond resolution or other similar legislation for the issue in question as well as the bond transcript or other compilation of bond and bond-related documents. If the issuer fails to make an election at the time and in the manner prescribed in this paragraph (b)(2), the issue will not be treated as described in section 103(b)(6)(D), and interest thereon will be includible in gross income.

(c) ***Refunding or refinancing issue exemption*** —

(1) ***$1 million or less refunding issue.*** Section 103(b)(6)(A) also provides that section 103(b)(1) shall not apply to any debt obligation issued by a State or local governmental unit as part of an issue the aggregate authorized face amount of which is $1 million or less, if substantially all of the proceeds of such issue are to be used—

(i) To redeem part of all of a prior issue substantially all of the proceeds of which were used to acquire, construct, reconstruct, or improve land or property of a character subject to the allowance for depreciation, or

(ii) To redeem part or all of a prior exempt small refunding issue.

(2) ***10 million or less refinancing issue.*** Section 103(b)(6)(H) provides that section 103(b)(1) shall not apply to any debt obligation issued by a governmental unit as part of an issue which is $10 million or less if the condition of section 103(b)(6)(H) is met and if substantially all of the proceeds are to be used—

(i) To redeem part or all of one or more prior exempt small issues, or

(ii) To redeem part or all of one or more prior exempt small refunding issues.

The condition of section 103(b)(6)(H) is that an election by the issuer of the $10 million exemption in lieu of the $1 million limit for a refunding issue may be made only if each prior issue being redeemed is an issue which qualified either for the $1 million exemption or, by reason of an election under section 103(b)(6)(D), for the $10 million exemption. In addition, in applying the capital expenditures test under section 103(b)(6)(D)(ii) and paragraph (b)(2)(i)(*b*) of this section to refinancing issues, section 103(b)(6)(D) capital expenditures are taken into account only for purposes of determining whether prior issues which were made under the section 103(b)(6)(D) election qualified under section 103(b)(6)(A) and would have continued to qualify under that section but for the redemption.

(d) ***Certain prior issues taken into account*** —

(1) ***In general.*** Section 103(b)(6)(B) provides, in effect, that if

(i) a prior issue specified in subparagraph (2) of this paragraph is an exempt small issue (including for this purpose an exempt small refunding issue) under section 103(b)(6)(A) and this section, and

(ii) such prior issue is outstanding at the time of issuance of a subsequent issue, then in determining the aggregate face amount of such subsequent issue (for purposes of determining whether such issue is a $1 million or $10 million exempt small issue under section 103(b)(6)(A) and this section) there shall be taken into account the outstanding face amount of such prior

exempt small issue. For purposes of this paragraph, the outstanding face amount of a prior exempt small issue does not include the face amount of any obligation which is to be redeemed from the proceeds of such subsequent issue.

(2) ***Prior issues specified.*** The face amount of an outstanding prior exempt small issue is taken into account under subparagraph (1) of this paragraph if—

(i) The proceeds of both the prior exempt small issue and of the subsequent issue (whether or not the State or local governmental unit issuing such obligation is the same unit for each such issue) are or will be used primarily with respect to facilities located or to be located in the same incorporated municipality or located or to be located in the same county outside of an incorporated municipality in such county (and, for purposes of this subdivision, on or after August 8, 1972, a contiguous or integrated facility which is located on both sides of a border between two or more political jurisdictions shall be treated as if it is entirely within each such political jurisdiction), and

(ii) The principal user of the financed facilities referred to in subdivision (i) of this subparagraph is or will be the same person or two or more related persons (as defined in section 103(b)(6)(C) and paragraph (e) of this section).

(3) ***Rules of application.*** The rules of this paragraph shall apply—

(i) Only in the case of outstanding prior exempt small issues which are industrial development bonds to which section 103(b)(1) would have applied but for the provisions of section 103(b)(6). Thus, for example, the provisions of this paragraph do not apply in respect of a prior issue of obligations issued on or before April 30, 1968. In addition, the provisions of this paragraph do not apply in respect of a prior issue for an exempt facility under section 103(b)(4) and § 1.103-8, or for an industrial park under section 103(b)(5) and § 1.103-9, whether or not the issue might also have qualified as an exempt small issue under section 103(b)(6)(A) and this section.

(ii) To all prior exempt small issues which meet the requirements of this paragraph. Thus, for example, in determining the aggregate face amount of an issue under section 103(b)(6)(A), the outstanding face amount of prior $1 million or $10 million exempt small issues which meet the requirements of this paragraph shall be taken into account in determining the aggregate face amount of a subsequent issue being tested for the $1 million small issue exemption. Similarly, in determining the aggregate face amount of an issue under section 103(b)(6)(A) and (D), the outstanding face amount of prior $1 million or $10 million exempt small issues which meet the requirements of this paragraph shall be taken into account in determining the aggregate face amount of a subsequent issue being tested for the $10 million small issue exemption.

(e) ***Related persons.*** For purposes of section 103(b) and §§ 1.103-7 through 1.103-11, the term "related person" means a person who is related to another person if, on the date of issue of an issue of obligations—

(1) The relationship between such persons would result in a disallowance of losses under section 267 (relating to disallowance of losses, etc., between related taxpayers) and section 707(b) (relating to losses disallowed, etc., between partners and controlled partnerships) and the regulations thereunder, or

(2) Such persons are members of the same controlled group of corporations, as defined in section 1563(a), relating to definition of controlled group of corporations (except that "more than 50 percent" shall be substituted for "at least 80 percent" each place it appears in section 1563(a)) and the regulations thereunder.

(f) ***Disqualification of certain small issues.***

(1) Section 103(b)(6) shall not apply to any obligation issued after April 24, 1979, which is part of an issue, a significant portion of the proceeds of which are to be used directly or indirectly to provide residential real property for family units. For purposes of the preceding sentence, the term "residential real property for family units" means residential rental projects (within the meaning of § 1.103-8(b)) and owner-occupied residences (within the meaning of section 103A).

(2) For purposes of paragraph (f)(1), a significant portion of the proceeds of an issue are used to provide residential real property for family units if 5 percent or more of the proceeds are so used.

(g) ***Examples.*** The application of the rules contained in section 103(b)(6) and this section are illustrated by the following examples:

Example 1. County A and corporation X enter into an arrangement under which the county will provide a factory which X will lease for 25 years. The arrangement provides

(1) that A will issue $1 million of bonds on March 1, 1970,

(2) that the proceeds of the bond issue will be used to acquire land in County A (but not in an incorporated municipality) and to construct and equip a factory on such land in accordance with X's specifications,

(3) that X will rent the facility for 25 years at an annual rental equal to the amount necessary to amortize the principal and pay the interest on the outstanding bonds, and

(4) that such payments by X and the facility itself shall be the security for the bonds. Although the bonds issued are industrial development bonds, the bonds are an exempt small issue under section 103(b)(6)(A) and this section since the aggregate authorized face amount of the bond issue is $1 million or less and all of the proceeds of the bond issue are to be used to acquire and improve land and acquire and construct depreciable property. The result would be the same if the arrangement provided that X would purchase the facility from A.

Example 2. The facts are the same as in example (1) except that, instead of acquiring land and constructing a new factory, the arrangement provides that A will acquire a vacant existing factory building and rebuild and equip the building in accordance with X's specifications. The bonds are an exempt small issue for the same reasons as in example (1).

Example 3. The facts are the same as in example (1) or (2) except that the financed facilities are additions to facilities which were financed by an issue of bonds to which section 103(b)(1) does not apply because such bonds were issued prior to May 1, 1968, or were subject to the transitional provisions of § 1.103-12. The bonds are an exempt small issue since neither of the prior bond issues are taken into account under section 103(b)(6)(B) and this section in determining the status of industrial development bonds which are issued after April 30, 1968, and which are not subject to the transitional provisions of § 1.103-12.

Example 4. The facts are the same as in example (1) except that, subsequently, corporation X proposes to County A that A build a $400,000 warehouse located in Town M (an unincorporated town located in County A) for X under terms similar to the factory arrangement described in example (1). On the proposed issue date of the subsequent bond issue, $600,000 of the first exempt small issue will be outstanding. If A issues $400,000 of bonds for such purposes, the bonds will be an exempt small issue under section 103(b)(6) and this section since, under the rules of section 103(b)(6)(B) and paragraph (d) of this section, if the aggregate authorized face amount of the new issue and the outstanding prior exempt small issue will be $1 million or less, the new issue will be an exempt small issue. If, however, the aggregate authorized face amount of the prior issue outstanding on the date of the subsequent issue were in excess of $600,000, the subsequent issue would not qualify as an exempt small issue because

(1) the combined aggregate face amount of the outstanding prior issue and the new issue would be in excess of $1 million,

(2) the facilities financed by both issues are to be located in unincorporated areas in the same county,

(3) the same taxpayer will be the principal user of both facilities, and

(4) but for the rules of section 103(b)(6)(B) and paragraph (d) of this section the prior issue would be an exempt small issue.

Example 5. The facts are the same as in example (1) except that subsequently corporation X proposes to City P and City R (incorporated municipalities located in County A) that P and R each issue bonds and each build $1 million facilities to be located in Cities P and R for the use of X under terms similar to the arrangement in example (1). Each of the $1 million issues will be an exempt small issue because each proposed facility is located within a different incorporated municipality and the proceeds of the prior outstanding exempt small issue were used to construct facilities outside of an incorporated area.

Example 6. The facts are the same as in example (1) except that $95,000 of the $1 million will be used by the corporation as working capital. The bonds are an exempt small issue for the same reason as in example (1) since substantially all of the proceeds will be used for the acquisition of land and the construction of depreciable property.

Example 7. The facts are the same as in example (1) except that on November 1, 1969, County A issued $10 million of industrial development bonds, all of the proceeds of which were issued for the acquisition of land as the site for an industrial park within the meaning of section 103(b)(5) and § 1.103-9. The proceeds of the $1 million of bonds issued in 1970 will be used to construct a factory for corporation X to be located in the industrial park. The bonds issued in 1970 are industrial development bonds within the meaning of section 103(b)(2) and § 1.103-7. Since, however, the prior 1969 issue is not an issue to which section 103(b)(6)(A) applied (see paragraph (d)(3)(i) of this section), the bonds issued in 1970 are an exempt small issue for the reasons stated in example (1).

Example 8. County B enters into three separate arrangements with three unrelated corporations whereby the county will provide separate storage facilities for each corporation. The arrangement provides

(1) that the county will issue bonds and loan to each corporation $250,000 of the proceeds which will be used to acquire land in the county and to construct the facilities,

(2) that the rental payments by the corporations will be equal to the amount necessary to amortize the principal and pay the interest on any outstanding bonds issued by the county, and

(3) that the payments by the corporations and the facilities themselves shall be the security for the industrial development bonds. For convenience, the county issues one series of bonds in the face amount of $750,000 rather than three separate series of bonds of $250,000 each. The issue is an exempt small issue under section 103(b)(6)(A) and paragraph (b)(1) of this section since the aggregate authorized face amount of the bond issue is $1 million or less, and all of the proceeds of the bond issue are to be used to acquire and improve land and acquire and construct depreciable property.

Example 9. City C and corporation Y enter into an arrangement under which C will provide a factory which Y will lease for 25 years. The arrangement provides

(1) that C will issue $4 million of bonds on March 1, 1969, after making the election under section 103(b)(6)(D) and paragraph (b)(2) of this section,

(2) that the proceeds of the bond issue will be used to acquire land in the city and to construct and equip a factory on such land in accordance with Y's specifications,

(3) that Y will rent the facilities for 25 years at an annual rental equal to the amount necessary to amortize the principal and pay the interest on the outstanding bonds,

(4) that such payments by Y and the facility itself shall be the security for the bonds, and

(5) that, if corporation Y pays or incurs capital expenditures in excess of $1 million within 3 years from the date of issue which disqualify the bonds as an exempt small issue under section 103(b)(6)(D), it will either furnish funds to C to redeem such bonds at par or at a premium, or increase the rental payments to C in an amount sufficient to pay a premium interest rate. Although the bonds issued are industrial development bonds, they are an exempt small issue under section 103(b)(6)(A) by reason of the election under section 103(b)(6)(D) and paragraph (b)(2) of this section, since the aggregate authorized face amount of the bond issue is $5 million or less and all of the proceeds of the bond issue are to be used to acquire and improve land and acquire and construct depreciable property. The provisions for redemption of the bonds or an increase in rental if the bonds are disqualified as an exempt small issue under section 103(b)(6)(A) will not disqualify an otherwise valid election under section 103(b)(6)(D) and paragraph (b)(2) of this section.

Example 10. The facts are the same as in example (9) except that corporation Y subsequently proposed to the city that it build a $1 million warehouse next to the plant for the use of Y under terms similar to the factory arrangement. Assume further that the factory building was completed by March 1, 1970, and that on January 15, 1972, the proposed issue date of the subsequent bond issue, $2 million of the first exempt small issue will be outstanding. In determining the aggregate authorized face amount of the new issue, the original face amount of a prior outstanding issue must be reduced by that portion which is to be redeemed before it is added to the face amount of the new issue. Therefore, if the city issues $3 million of bonds to redeem the remaining $2 million of bonds and to construct the warehouse the bonds will be an exempt small issue under section 103(b)(6)(A) if an election is made under section 103(b)(6)(D) and paragraph (b)(2) of this section since

(1) the face amount of the new issue ($3 million), plus

(2) the face amount of the prior outstanding exempt small issue minus the amount of such issue to be refunded ($2 million minus $2 million), plus

(3) capital expenditures during the preceding 3 years financed other than out of the proceeds of outstanding issues to which section 103(b)(6)(A) and paragraph (b) of this section applied ($2 million), do not exceed $5 million. If, however, the amount of the January 15, 1972, issue were 3^{1}/_{2}$ million, the issue would not qualify as an exempt small issue under section 103(b)(6)(A) and paragraph (b)(2) of this section.

Example 11. The facts are the same as in example (9), except that on June 15, 1971, Y purchases from an unrelated motor carrier business a warehouse terminal in the same city at a cost of $250,000 and tractor-trailers and other automotive equipment based at the terminal at a cost of $1 million. This subsequent expenditure by Y has the effect of making the interest on the city C bonds includable in the gross income of the holders of such bonds as of June 15, 1971, because the face amount of the March 1, 1969, issue ($4 million) plus the subsequent capital expenditures within 3 years of the date of issue ($1,250,000) exceed $5 million. (See section 103(b)(6)(D) and paragraph (b)(2)(i) of this section.)

Example 12. The facts are the same as in example (9), except that in March, 1970, Y will move $3 million of additional used machinery and equipment into the factory from its factory in another city. The expenditures for such machinery and equipment were incurred by Y more than 3 years prior to the date of issue of the bonds. The transfer of such used equipment into city C does not constitute a section 103(b)(6)(D) capital expenditure within the meaning of paragraph (b)(2)(ii) of this section since the expenditures with respect to such property were incurred more than 3 years prior to the date of issue of the bonds. Had the capital expenditures with respect to such property been incurred during the 6-year period beginning 3 years before the date of issue of the bonds and in the 3 years after such date, they would constitute section 103(b)(6)(D) capital expenditures.

Example 13. The facts are the same as in example (9), except that in March 1970, corporation Y enters into an arrangement with respect to machinery and equipment to be used in the facility. The arrangement is labeled by the parties as a lease but is treated as a sale for Federal income tax purposes. The amount treated as the purchase price of the machinery and equipment is a section 103(b)(6)(D) capital expenditure.

Example 14. On February 1, 1970, city D issues $5 million of its bonds to finance construction of an addition to the manufacturing plant of corporation Z. The bonds will be secured by the facility and lease payments to be made by Z which will be sufficient to pay the principal and interest on such bonds. Assume that the bonds qualify as an exempt small issue under section 103(b)(6)(A) pursuant to an election under section 103(b)(6)(D) and paragraph (b)(2) of this section. On February 1, 1971, D plans to issue $1 million of its bonds to construct a pollution control facility to be leased to Z for use at its manufacturing plant. The rental payments from the lease will be sufficient to pay the principal and interest on the bonds. The bonds will be secured by such facility and the lease payments. Capital expenditures for the pollution control facility will be paid or incurred beginning before February 1, 1973. Although the pollution control facility is an exempt facility under section 103(b)(4)(F) and paragraph (g) of § 1.103-8, amounts used for the pollution control facility shall be considered to be a section 103(b)(6)(D) capital expenditure and the interest on the February 1, 1970, issue will become taxable as of the date such capital expenditure began to be paid or incurred. See section 103(b)(6)(G) and paragraph (b)(2)(i) of this section.

Example 15. On February 1, 1970, City E issues $500,000 of its bonds to acquire and develop an industrial park within the meaning of section 103(b)(5) and paragraph (b) of § 1.103-9. The park consists of 100 acres and is divided into one 50 acre plantsite and 4 smaller sites. The aggregate acquisition cost of the undeveloped land is $150,000 or an average per acre cost of $1,500. Roads, sidewalks, sewers, utilities,

sewage, and waste disposal facilities serving the entire industrial park cost $300,000. On September 1, 1970, E leases to corporation Y for 30 years the 50 acre plantsite (with an allocated cost of $75,000) and a railroad spur track from the railroad right of way to Y's plantsite for Y's exclusive use. The spur track was constructed using $50,000 of the proceeds of the industrial park bond issue. E also proposes to issue on September 1, 1970, $4,875,000 of its bonds to construct and equip a building on the leased plantsite to be leased to Y at an additional rental sufficient to pay the principal and interest on this issue of bonds. The September 1, 1970, issue will be an exempt small issue under section 103(b)(6)(A) pursuant to an election under section 103(b)(6)(D) and paragraph (b)(2) of this section since the sum of the amount of the second issue ($4,875,000) and the capital expenditures allocated to the plantsite ($75,000 for 50 acres of land plus $50,000 for the railroad spur tract, totaling $125,000) does not exceed $5 million. The sum of $300,000 which was spent in development of the industrial park provided facilities which will serve or benefit the users generally and hence under paragraph (b)(2)(iii) of this section is not considered to have provided facilities as to which Y will be the principal user.

Example 16. On June 1, 1970, corporation Z simultaneously enters into separate arrangements with City F and City G under which each city will issue a $5 million exempt small issue of bonds the proceeds of which will be used by Z to construct separate facilities in each city. By June 1, 1971, the facilities have been completed in the respective cities. On January 1, 1972, Cities F and G, through a valid legal proceeding, merge into a new City FG. Since in this case F and G were separate cities on June 1, 1970 (the date of the bond issues), the factories are not considered to be located in the same incorporated municipality. Accordingly, each $5 million issue by City F and G will continue to qualify as an exempt small issue.

Example 17. On June 1, 1973, City H issues an exempt small issue of $4.75 million to finance a facility of corporation S to be located in City H. On October 1, 1974, S and corporation T, previously unrelated to S, consummated a statutory merger which qualifies as a reorganization described in section 368(a)(1)(A) and thus as a transaction described in section 381(a). In the transaction, T transferred to S assets with a fair market value of $1.5 million in exchange for stock of S, $300,000 of securities of S, and $100,000 cash. On March 23, 1971, T made $400,000 of capital expenditures for an addition to its factory located in City H. For purposes of testing the H issue of June 1, 1973, such expenditures would have been section 103(b)(6)(D) capital expenditures if T and S had been related persons. Under the provisions of paragraph (b)(2)(v)(*a*) of this section, the exchange of $1.5 million of stock, securities, and cash by S does not constitute a section 103(b)(6)(D) capital expenditure. Since, however, S and T are treated as related persons starting 3 years prior to the date of issue of the obligations, the $400,000 of expenditures by T constitute section 103(b)(6)(D) capital expenditures. Thus, the interest on the June 1, 1973, issue of obligations would become taxable (since the $5 million limit would be exceeded) on the date of the merger.

Example 18. In 1965 City I issues $10 million of industrial development bonds to construct and equip a factory for corporation Z. In 1975 the remaining principal amount of the bonds outstanding is $4.1 million. If I issues $4.5 million of bonds to redeem the balance of the prior issue, and for other purposes, such issue cannot qualify as an exempt small issue under section 103(b)(6)(D) and paragraph (b)(2) of this section even though at the time of issue the interest on the 1965 bonds was tax-exempt since the prior issue must be one which qualified under section 103(b)(6)(A) and this section. Further, the 1975 issue will be an issue of industrial development bonds notwithstanding the provisions of paragraph (d)(2) of § 1.103-7 which provides that certain bonds issued to refund an issue of obligations issued on or before April 30, 1968 (or January 1, 1969, in certain cases) will not be so treated. Paragraph (d)(2) of § 1.103-7 is not applicable because the 1975 issue makes funds available for a purpose other than the debt service obligation on the 1965 bonds.

Example 19. In 1969 City J issues $4 million of industrial development bonds which qualify as an exempt small issue under section 103(b)(6)(A) pursuant to an election under section 103(b)(6)(D) and paragraph (b)(2) of this section. In 1971, by reason of a $2 million addition to the factory built with the proceeds of the issue, the 1969 exempt small issue loses its tax-exempt status. In 1972, the city issues a $5 million issue to redeem the prior 1969 issue. The redemption issue will not qualify as an exempt small issue since the prior 1969 issue did not continue to qualify under section 103(b)(6)(A) and this section.

[T.D. 7199, 37 FR 15494, Aug. 3, 1972; 37 FR 16177, Aug. 11, 1972; 37 FR 17826, Sept. 1, 1972, as amended by T.D. 7511, 42 FR 54285, Oct. 5, 1977; T.D. 7840, 47 FR 46084, Oct. 15, 1982; 51 FR 16299, May 2, 1986]

§ 1.103-11 Bonds held by substantial users.

(a) ***In general.*** Section 103(c) (4), (5), or (6) (relating respectively to interest on bonds to finance certain exempt facilities, interest on bonds to finance industrial parks, and the exemption for certain small issues of industrial development bonds) does not apply, as provided in section 103(c)(7), with respect to any obligation for any period during which such obligation is held either by a person who is a substantial user of the facilities with respect to which the proceeds of such obligation were used or by a related person (within the meaning of section 103(c)(6)(C) and paragraph (e) of § 1.103-10). Therefore, in such a case, interest paid on such an obligation is includable in the gross income of a substantial user (or related person) for any period during which such obligation is held by such user (or related person).

(b) ***Substantial user.*** In general, a substantial user of a facility includes any nonexempt person who regularly uses a part of such facility in his trade or business. However, unless a facility, or a part thereof, is constructed, reconstructed, or acquired specifically for a nonexempt person or persons, such a nonexempt person shall be considered to be a substantial user of a facility only if

(1) the gross revenue derived by such user with respect to such facility is more than 5 percent of the total revenue derived by all users of such facility or

(2) the amount of area of the facility occupied by such user is more than 5 percent of the entire usable area of the facility. Under certain facts and circumstances, where a nonexempt person has a contractual or preemptive right to the exclusive use of property or a portion of property, such person may be a substantial user of such property. A substantial user may also be a lessee or sublessee of all or any portion of the facility. A licensee or similar person may also be a substantial user where his use is regular and is not merely a casual, infrequent, or sporadic use of the facility. Absent special circumstances, individuals who are physically present on or in the facility as employees of a substantial user shall not be deemed to be substantial users.

(c) ***Examples.*** The application of section 103(c)(7) and this section are illustrated by the following examples:

Example 1. Pursuant to an arrangement with corporation X, County A issues $4 million of its bonds (an exempt small issue under section 103(c)(6)(A) pursuant to an election under section 103(c)(6)(D) and paragraph (b)(2) of § 1.103-10) and will use the proceeds to finance construction of a manufacturing facility which is to be leased to X for an annual rental of $500,000. X subleases space to a restaurant operator at an annual rental of $25,000 for the operation of a canteen and lunch counter for the convenience of X's employees. The canteen is required to be open at least 5 days each week (except holidays) from 8:30 a.m. to 5 p.m., and the lunch counter must be in operation during the noon hour. The canteen regularly sells cigarettes, candy, and soft drinks, and uses advertising displays and dispensers with product names. The space physically occupied and the amount of revenue derived by the restaurant operator are more than 5 percent of the respective

amounts with respect to the entire facility. Both X and the restaurant operator are substantial users. However, absent special circumstances none of X's employees, the employees of the restaurant operator, or the customers or salesmen who regularly visit the premises to do business either with X or the restaurant operator are substantial users. Similarly, the manufacturers, distributors, and dealers of products sold in the canteen ordinarily are not substantial users.

Example 2. The facts are the same as in example (1) except that X rents food and beverage vending machines from a local dealer. The machines are regularly serviced by the local dealer under a contract with X. Title to and ownership of the machines are retained by the dealer. The local dealer is not deemed to be a substantial user if the revenue derived by such dealer from, and the space occupied by, such machines do not exceed 5 percent of the respective amounts with respect to the entire facility.

Example 3. City B proposes to issue $2 million of bonds which qualify as an exempt small issue under section 103(c)(6)(A) pursuant to an election under section 103(c)(6)(D) and paragraph (b)(2) of § 1.103-10 in order to construct a medical building for certain physicians and dentists. The facility will contain 30 offices to be leased on equal terms and for the same rental rates to each physician or dentist for use in his trade or business. Each physician or dentist will be a substantial user of the facility since the facility is being constructed specifically for such physicians and dentists. The result would be the same in the case of an office building for general commercial use.

Example 4. City C proposes to expand the airport it owns and operates with the proceeds of its bonds which qualify as bonds issued for an exempt facility under section 103(c)(4)(D) and paragraph (e) of § 1.103-8 and which are secured by a pledge of airport revenues. The airport is serviced by several commercial airlines which have long-term agreements with C for the use of runways, terminal space, and hangar and storage facilities. Each of the airlines either occupies more than 5 percent of the usable space of, or derives more than 5 percent of the revenue derived with respect to, the airport. C also leases counter and vehicle servicing and parking areas to car rental companies, space for restaurants, kiosks for the sale of newspapers and magazines, and space for the operations of a charter plane company. The latter operates its own planes, offers flying lessons and services, and stores private planes for local businesses and individuals. An airport limousine company has an exclusive franchise for passenger pickup at the terminal. Other taxi, transfer, freight, and express companies regularly deliver passengers and freight to the terminal but do not have space regularly assigned to them, nor do they have operating agreements with C. Various business concerns have advertising product displays in the terminal building. In addition to regular telephone service, coin-operated telephones, provided by the telephone company, are located throughout the terminal, at locations specified by C. None of the above exceed the 5-percent limitations of paragraph (b) of this section and the bond proceeds will not be specifically used for any of them. Only the commercial airlines, which violate the 5-percent limitations, are substantial users of the airport.

Example 5. City D issues $25 million of its revenue bonds and will use $10 million of the proceeds to finance construction of a sports facility which qualifies as an exempt facility under section 103(c)(4)(B) and paragraph (c) of § 1.103-8, $8 million to acquire and develop land as the site for an industrial park within the meaning of section 103(c)(5) and § 1.103-9, and $7 million to finance the construction of an office building to be used exclusively by the city, an exempt person. The revenues from the sports facility and the industrial park and all the facilities themselves will be the security for the bonds. The sports facility and the industrial park sites will be used in the trades of businesses of nonexempt persons. The bonds are industrial development bonds, but under the provisions of paragraph (a)(1) of § 1.103-8 and paragraph (a) of § 1.103-9, the interest on the $25 million issue will not be includable in gross income. However, the interest on bonds held shall be includable in the

gross income of a substantial user of either the sports facility or the industrial park if such substantial user holds any of the obligations of the $25 million issue. The 5-percent limitations of paragraph (b) of this section are applied separately with respect to each facility.

Example 6. Authority E issues $4 million of bonds which qualify as an exempt small issue under section 103(c)(6)(A) pursuant to an election under section 103(c)(6)(D) and paragraph (b)(2) of § 1.103-10 in order to construct a bank building on the grounds of an airport. In addition, E issues $40 million to expand the airport. The bank will not derive revenue in excess of 5 percent of the revenue derived with respect to the airport nor will it occupy more than 5 percent of the usable area of such airport. The bank will be a substantial user of the bank building constructed with the proceeds of the $4 million issue since the facility was constructed specifically for the bank. However, the bank will not be a substantial user with respect to the airport because it does not exceed the 5-percent limitations of paragraph (b) of this section. Had E issued one issue of $44 million in order to expand the airport and construct a bank building, the bank would be a substantial user of the entire facility since the $44 million issue was being used to construct a facility a portion of which was specifically for the bank.

[T.D. 7199, 37 FR 15499, Aug. 3, 1972; 37 FR 16177, Aug. 11, 1972]

§ 1.103-16 Obligations of certain volunteer fire departments.

(a) ***General rule.*** An obligation of a volunteer fire department issued after December 31, 1980, shall be treated as an obligation of a political subdivision of a State for purposes of section 103(a)(1) if—

(1) The volunteer fire department is a qualified volunteer fire department within the meaning of paragraph (b) of this section, and

(2) Substantially all of the proceeds of the issue of which the obligation is a part are to be used for the acquisition, construction, reconstruction, or improvement of a fire house or fire truck used or to be used by the qualified volunteer fire department.

An obligation of a volunteer fire department shall not be treated as an obligation of a political subdivision of a State for purposes of section 103(a)(1) unless both conditions set forth in this paragraph (a) are satisfied. Thus, for example, if an obligation is issued by an ambulance and rescue squad that is a qualified volunteer fire department as required by paragraph (a)(1) of this section, but substantially all of the proceeds of the issue of which the obligation is a part are to be used for the furnishing of emergency medical services, rather than for the purposes specified in paragraph (a)(2) of this section, the obligation shall not be treated as an obligation of a political subdivision of a State for purposes of section 103(a)(1).

(b) ***Definition of qualified volunteer fire department.*** For purposes of this section, the term "qualified volunteer fire department" means an organization—

(1) That is organized and operated to provide firefighting services or emergency medical services in an area within the jurisdiction of a political subdivision, and

(2) That is required to furnish firefighting services by written agreement with the political subdivision, and

(3) That serves persons in an area within the jurisdiction of the political subdivision that is not provided with any other firefighting services.

The requirement of paragraph (b)(2) of this section that a qualified volunteer fire department be required to furnish firefighting services by written agreement with the political subdivision may be satisfied by an ordinance or statute of the political subdivision that establishes, regulates, or funds the volunteer fire department. A volunteer fire department does not fail to satisfy the requirement of pargraph (b)(3) of this section by furnishing or receiving firefighting services on an emergency basis, or by cooperative agreement with other fire departments, to or from areas outside of the area that the volunteer fire department is organized and operated to serve. The fact that tax revenues of a political subdivision served by a volunteer fire department contribute toward the support of the volunteer fire department in the form of salary, purchase of equipment, or other defrayment of expenses will not prevent the volunteer fire department from being a "qualified volunteer fire department" within the meaning of this paragraph (b). Moreover, an obligation of a volunteer fire department receiving such support may qualify as an obligation of a political subdivision within the meaning of section 103(a)(1) independently of section 103(i) and this section if the requirements of section 103(a)(1) are satisfied. See § 1.103-1(b) for rules relating to qualification under section 103(a)(1).

(c) ***"Substantially all" test.*** Substantially all of the proceeds of an issue are used for the purposes specified in paragraph (a)(2) of this section if 90 percent or more of the proceeds are so used. Thus, for example, if more than 10 percent of the proceeds of an obligation issued by a qualified volunteer fire department are used for the purchase of an ambulance or for rescue equipment not to be used in providing fire fighting services, interest on the obligation is not exempt from tax under section 103(i) and this section. In computing this percentage—

(1) Costs are allocated between providing a firehouse or firetruck and other uses of the proceeds on a pro rata basis; and

(2) The rules set forth in § 1.103-8(a)(1)(i), relating to amounts allocable to exempt and nonexempt uses and amounts chargeable to capital account, apply.

(d) ***Refunding issues.*** An obligation which is part of an issue issued by a qualified volunteer fire department after December 31, 1980, part or all of the proceeds of which issue are used directly or indirectly to pay principal, interest, call premium, or reasonable incidental costs of refunding a prior issue qualifies as an obligation of a political subdivision under section 103(i) and this section only if—

(1) The prior issue was issued by a qualified volunteer fire department;

(2) Substantially all of the proceeds of the prior issue were used for the purposes described in paragraph (a)(2) of this section;

(3) The prior issue was issued after December 31, 1980; and

(4) The refunding issue is issued not more than 180 days before the date on which the last obligation of the prior issue is discharged (within the meaning of § 1.103-13)(b)(11)).

(e) ***Examples.*** The provisions of this section may be illustrated by the following examples:

Example 1. The County M Volunteer Fire and Rescue Association provides firefighting, ambulance, and emergency medical services in County M. The board of county commissioners of County M contracts with the County M Volunteer Fire and Rescue Association for these services, and County M is not served by any other firefighting association. On August 1, 1981, the Association issues an obligation for funds to purchase a new fire truck, a new ambulance, and rescue equipment not to be used for fighting fires. Funds to be used for the purchase of the ambulance and rescue equipment constitute more than 10 percent of the proceeds of the obligation. Thus, substantially all of the

proceeds of the obligations are not used for one of the purposes described in paragraph (a)(2) of this section. Although the County M Volunteer Fire and Rescue Association is a qualified volunteer fire department under paragraph (b) of this section because it provides firefighting and emergency medical services in an area within County M which is not provided with any other firefighting services and is required to provide these services by written agreement with County M, the August 1, 1981, obligation of County M Volunteer Fire and Rescue Association will not be treated as an obligation of a political subdivision of a State under section 103(i) and paragraph (a) of this section because substantially all of the proceeds of the obligation are not to be used for a purpose described in section 103(i)(l)(B) and paragraph (a)(2) of this section. Accordingly, interest on the August 1, 1981, obligation of County M Volunteer Fire and Rescue Association is not exempt from gross income under section 103(a)(1).

Example 2. County N Volunteer Fire Department provides firefighting services in County N by contract with the county, which is not served by any other firefighting association. On June 15, 1982, County N Volunteer Fire Department issues its obligation for funds to construct an addition to its firehouse to house a rescue squad, the rescue squad's vehicle, and rescue equipment not to be used in firefighting. Although the County N Volunteer Fire Department is a qualified volunteer fire department under paragraph (b) of this section, interest on its June 15, 1982, obligation will not be exempt from tax under section 103(i) and this section because the proceeds of this obligation will not be used for the purposes described in paragraph (a) of this section.

Example 3. The County O Volunteer Fire and Rescue Association provides firefighting, ambulance, and emergency medical services in County O. The board of county commissioners of County O contracts with the County O Volunteer Fire and Rescue Association for these services, and County O is not served by any other firefighting association. On September 1, 1983, the Association issues its obligations for funds to construct a new building to house its firefighting, ambulance, and rescue functions. Although the ambulance and rescue equipment will occupy space in the projected facility, the cost allocable on a pro rata basis to providing housing for the ambulance and rescue equipment represents less than 10 percent of the proceeds of the obligations. Thus, substantially all of the proceeds of the obligations are used for one of the purposes described in paragraph (a)(2) of this section. The County O Volunteer Fire and Rescue Association is a qualified volunteer fire department under paragraph (b) of this section because it provides firefighting and emergency medical services in an area within County O which is not provided with any other firefighting services and is required to provide these services by written agreement with County O. The obligations of County O Volunteer Fire and Rescue Association will be treated as obligations of a political subdivision of a State under section 103(i) and paragraph (a) of this section because the obligations are those of a qualified volunteer fire department and because substantially all of the proceeds of the obligations are to be used for a purpose described in section 103(i)(1)(B) and paragraph (a)(2) of this section. Accordingly, interest on the September 1, 1983, issue of obligations of County O Volunteer Fire and Rescue Association is exempt from gross income under section 103(a)(1).

[T.D. 7901, 48 FR 32981, July 20, 1983]

§ 1.103A-2 Qualified mortgage bond.

(a)-(j) [Reserved]

(k) ***Information reporting requirement*** —

(1) ***In general.*** An issue meets the requirements of this paragraph only if the issuer in good faith attempted to meet the information reporting requirements of this paragraph. Except as otherwise provided in paragraph (k)(5)(iv) of this section, the requirements of this paragraph apply to qualified veterans' mortgage bonds issued after July 18, 1984, and to qualified mortgage bonds issued after December 31, 1984. With respect to bonds issued after December 31, 1986, see the regulations under section 149(e).

(2) ***Information required.***

(i) The issuer must, based on information and reasonable expectations determined as of the date of issue, submit on Form 8038 the information required therein; the issuer need not however, include the information required by Form 8038 that is relevant only to obligations described in section 103(l)(1) and the regulations thereunder. The information that must be submitted includes—

(A) The name, address, and employer identification number of the issuer,

(B) The date of issue,

(C) The face amount of each obligation which is part of the issue,

(D) The total purchase price of the issue,

(E) The amount allocated to a reasonably required reserve or replacement fund,

(F) The amount of lendable proceeds,

(G) The stated interest rate of each maturity,

(H) The term of each maturity,

(I) In the case of an issue of qualified mortgage bonds, whether the issuer has elected under § 6a.103A-2(i)(4)(v) to pay arbitrage to the United States,

(J) In the case of an issue of qualified mortgage bonds, the issuer's market limitation as of the date of issue (as defined in § 6a.103A-2(g)), the amount of qualified mortgage bonds that the issuer has elected not to issue under section 25(c)(2) and the regulations thereunder, and the aggregate amount of qualified mortgage bonds issued to date by the issuer during the calendar year, and

(K) In the case of an issue of qualified veterans' mortgage bonds, the issuer's State veterans limit (as defined in section 103A(o)(3)(B) and the regulations thereunder) and the aggregate amount of qualified veterans' mortgage bonds issued to date by the issuer during the calendar year and prior to the date of issue of the issue for which the Form 8038 is being submitted.

(ii) With respect to issues issued after December 31, 1984, the issuer must submit a report containing information on the borrowers of the original proceeds of such issues. The report must be filed for each reporting period in which the original proceeds of any of such issues are used to provide mortgages. The issuer is not responsible for false information provided by a borrower if the issuer did not know or have reason to know that the information was false. The report must be filed on the form prescribed by the Internal Revenue Service. If no form is prescribed, or if the form prescribed is not readily available, the issuer may use its own form provided that such form is in the format set forth in paragraph (k)(3) of this section and

contains the information required by this paragraph (k)(2)(ii). The report must be titled "Qualified Mortgage Bond Information Report" or "Qualified Veterans' Mortgage Bond Information Report", and must include the name, address, and TIN of the issuer, the reporting period for which the information is provided, and the following tables containing information concerning the borrowers of the original proceeds of the issues subject to the requirements of this paragraph (k)(2)(ii) with respect to mortgages provided during the reporting period for which the report is filed:

(A) A table titled "Number of Mortgage Loans by Income and Acquisition Cost" showing the number of mortgage loans (other than those issued in connection with qualified home improvement and rehabilitation loans) made during the reporting period according to the annualized gross income of the borrowers (categorized in the following intervals of income:

$0-$9,999

$10,000-$19,999

$20,000-$29,999

$30,000-$39,999

$40,000-$49,999

$50,000-$74,999

$75,000 or more)

and according to the acquisition cost of each residence being financed (categorized in the following intervals of acquisition cost:

$0-$19,999

$20,000-$39,999

$40,000-$59,999

$60,000-$79,999

$80,000-$99,999

$100,000-$119,999

$120,000-$149,999

$150,000-$199,999

$200,000 or more)

For each interval of income and acquisition cost the table must also be categorized according to the number of borrowers that—

(1) Did not have a present ownership interest in a principal residence at any time during the 3-year period ending on the date the mortgage is executed (*i.e.,* satisfied the 3-year requirement) and purchased residences in targeted areas,

(2) Satisfied the 3-year requirement and purchased residences not located in targeted areas,

(3) Did have a present ownership interest in a principal residence at any time during the 3-year period ending on the date the mortgage is executed (*i.e.,* did not satisfy the 3-year requirement) and purchased residences in targeted areas, and

(4) Did not satisfy the 3-year requirement and purchased residences not located in targeted areas.

With respect to issues of qualified veterans' mortgage bonds, for each interval of income and acquisition cost the table need only be categorized according to the number of borrowers that satisfied the 3-year requirement and the number of borrowers that failed to satisfy the 3-year requirement.

(B) A table titled “Volume of Mortgage Loans by Income and Acquisition Cost” showing the total principal amount of the mortgage loans (other than qualified home improvement and rehabilitation loans) provided during the reporting period according to annualized gross income (categorized in the same intervals of income as the preceding table) and according to the acquisition cost of the residences acquired (categorized in the same acquisition cost intervals as the preceding table). For each interval of income and acquisition cost the table must also be categorized according to the total principal amount of the mortgage loans of borrowers that—

(1) Satisfied the 3-year requirement and purchased residences in targeted areas,

(2) Satisfied the 3-year requirement and purchased residences not located in targeted areas,

(3) Did not satisfy the 3-year requirement and purchased residences in targeted areas, and

(4) Did not satisfy the 3-year requirement and purchased residences not located in targeted areas.

With respect to issues of qualified verterans' mortgage bonds, for each interval of income and acquisition cost the table need only be categorized according to the total principal amount of the mortgage loans of borrowers that satisified the 3-year requirement and the total principal amount of the mortgage loans of borrowers that did not satisfy the 3-year requirement.

(C) For issues other than qualified veterans' mortgage bonds, a table titled “Mortgage Subsidy Bonds for Qualified Home Improvement and Rehabilitation Loans” showing the number of borrowers obtaining qualified home improvement loans and qualified rehabilitation loans

and the total of the principal amounts of such loans; the information contained in the table must also be categorized according to whether the residences with respect to which the loans were provided are located in targeted areas.

(3) *Format.*

(i) With respect to the report required by paragraph (k)(2)(ii) of this section, if no form is prescribed by the Internal Revenue Service, or if the prescribed form is not readily available, the issuer must submit the report in the format specified in this paragraph (k)(3).

(ii) With respect to issues of qualified mortgage bonds, the format of the report specified in this paragraph (k)(3) is the following:

Qualified Mortgage Bond Information Report

Name of issuer:

Address of issuer:

TIN of issuer:

Reporting period:

NUMBER OF MORTGAGE LOANS BY INCOME AND ACQUISITION COST

3-year requirement: Annualized gross monthly income of borrowers	Satisfied		Not Satisfied		Totals
	Nontargeted area	Targeted area	Nontargeted area	Targeted area	
$0 to $9,999					
$10,000 to $19,999					
$20,000 to $29,999					
$30,000 to $39,999					
$40,000 to $49,999					
$50,000 to $74,999					
$75,000 or more					
Total					
Acquisition Cost					
$0 to $19,999					
$20,000 to $39,999					
$40,000 to $59,999					
$60,000 to $79,999					
$80,000 to $99,999					
$100,000 to $119,999					

3-year requirement: Annualized gross monthly income of borrowers	Satisfied		Not Satisfied		Totals
	Nontargeted area	Targeted area	Nontargeted area	Targeted area	
$120,000 to $149,999					
$150,000 to $199,999					
$200,000 or more					
Total					

Volume of Mortgage Loans by Income and Acquisition Cost

3-year requirement: Annualized gross monthly income of borrowers	Satisfied		Not Satisfied		Totals
	Nontargeted area	Targeted area	Nontargeted area	Targeted area	
$0 to $9,999					
$10,000 to $19,999					
$20,000 to $29,999					
$30,000 to $39,999					
$40,000 to $49,999					
$50,000 to $74,999					
$75,000 or more					
Total					
Acquisition Cost					
$0 to $19,999					
$20,000 to $39,999					
$40,000 to $59,999					
$60,000 to $79,999					
$80,000 to $99,999					
$100,000 to $119,999					
$120,000 to $149,999					
$150,000 to $199,999					
$200,000 or more					

3-year requirement: Annualized gross monthly income of borrowers	Satisfied		Not Satisfied		Totals
	Nontargeted area	Targeted area	Nontargeted area	Targeted area	
Total					

Mortgage Subsidy Bonds for Qualified Home Improvement and Rehabilitation Loans

	Nontargeted area	Targeted area	Totals
Number of qualified home improvement loans			
Volume of qualified home improvement loans			
Number of qualified rehabilitation loans			
Volume of qualified rehabilitation loans			

(iii) The format of the report specified in this paragraph (k)(3) for qualified veterans' mortgage bonds is the following:

> Qualified Veterans' Mortgage Bond Information Report
>
> Name of issuer:
>
> Address of issuer:
>
> TIN of issuer:
>
> Reporting period:

Number of Mortgage Loans by Income and Acquisition Cost

3-year requirement: annualized gross monthly income of borrowers	Satisfied	Not satisfied	Totals
$0 to $9,999			
$10,000 to $19,999			
$20,000 to $29,999			
$30,000 to $39,999			

3-year requirement: annualized gross monthly income of borrowers	Satisfied	Not satisfied	Totals
$40,000 to $49,999			
$50,000 to $74,999			
$75,000 or more			
Total			
Acquistion Cost			
$0 to $19,999			
$20,000 to $39,999			
$40,000 to $59,999			
$60,000 to $79,999			
$80,000 to $99,999			
$100,000 to $119,999			
$120,000 to $149,999			
$150,000 to $199,999			
$200,000 or more			
Total			

Number of Mortgage Loans by Income and Acquisition Cost

3-year requirement: annualized gross monthly income of borrowers	Satisfied	Not satisfied	Totals
$0 to $9,999			
$10,000 to $19,999			
$20,000 to $29,999			
$30,000 to $39,999			
$40,000 to $49,999			
$50,000 to $74,999			
$75,000 or more			
Total			
Acquistion Cost			
$0 to $19,999			
$20,000 to $39,999			
$40,000 to $59,999			
$60,000 to $79,999			
$80,000 to $99,999			
$100,000 to $119,999			

3-year requirement: annualized gross monthly income of borrowers	Satisfied	Not satisfied	Totals
$120,000 to $149,999			
$150,000 to $199,999			
$200,000 or more			
Total			

(4) *Definitions and special rules.*

(i) For purposes of this paragraph the term “annualized gross income” means the borrower's gross monthly income muliplied by 12. Gross monthly income is the sum of monthly gross pay, any additional income from investments, pensions, Veterans Administration (VA) compensation, part-time employment, bonuses, dividends, interest, current overtime pay, net rental income, etc., and other income (such as alimony and child support, if the borrower has chosen to disclose such income). Information with respect to gross monthly income may be obtained from available loan documents, e.g., the sum of lines 23D and 23E on the Application for VA or FmHA Home Loan Guaranty or for HUD/FHA Insured Mortgage (VA Form 26-1802a, HUD 92900, Jan. 1982), or the total line from the Gross Monthly Income section of FHLMC Residential Loan Application form (FHLMC 65 Rev. 8/78). With respect to obligations issued prior to October 1, 1985, issuers may submit data based on annualized gross income or, instead, based on the adjusted income (as defined in § 1.167(k)-3(b)(3)) of the mortgagor's family for the previous calendar year. If data is submitted based on adjusted income, the issuer must note this fact in the report.

(ii) For purposes of this paragraph, the term “reporting period” means the following periods:

(A) The period beginning January 1, 1985, and ending on September 30, 1985,

(B) The period beginning on October 1, 1985, and ending on June 30, 1986, and

(C) After June 30, 1986, each 1-year period beginning July 1 and ending June 30.

(iii) See the regulations under section 103(l) for the definitions of the terms “date of issue”, “maturity”, and “term of issue”.

(iv) For purposes of this paragraph, verification of information concernig a borrower's gross monthly income with other available information concerning the borrower's income (e.g., Federal income tax returns) is not required. In determining whether a borrower acquiring a residence in a targeted area satisfies the 3-year requirement, the issuer may rely on a statement signed by the borrower.

(5) *Time for filing.*

(i) The report required by paragraph (k)(2)(i) of this section shall be filed not later than the 15th day of the second calendar month after the close of the calendar quarter in which the obligation is issued. The statement may be filed at any time before such date but must be

complete based on facts and reasonable expectations as of the date of issue. The statement need not be amended to report information learned subsequent to the date of issue or to reflect changed circumstances with respect to the issuer.

(ii) The report required by paragraph (k)(2)(ii) of this section (relating to use of proceeds) shall be filed not later than the 15th day of the second calendar month after the close of the reporting period, except that the report for the reporting period ending September 30, 1985, is due not later than February 15, 1986. The report may be filed at any time before such date but must be complete based on facts and reasonable expectations as of the date the report is filed. The report need not be amended to reflect information learned subsequent to the date the report is filed or to reflect changed circumstances with respect to any borrower.

(iii) The Commissioner may grant an extension of time for the filing of a report required by paragraph (k)(2) (i) or (ii) of this section if there is reasonable cause for the failure to file such report in a timely fashion.

(iv) An issue of qualified veterans' mortgage bonds issued after July 18, 1984, and prior to January 1, 1985, will be treated as satisfying the information reporting requirement of this paragraph if a Form 8038 with respect to the issue is properly filed not later than February 15, 1985; the report described in paragraph (k)(2)(ii) of this section need not be filed with respect to such issues.

(6) ***Place for filing.*** The reports required by paragraph (k)(2) (i) and (ii) of this section are to be filed at the Internal Revenue Service Center, Philadelphia, Pennsylvania 19255.

(l) ***Policy statement*** —

(1) ***In general.***

(i) For obligations issued after December 31, 1984, an issue meets the requirements of this paragraph only if the applicable elected representative of the governmental unit which is the issuer (or on behalf of which the issuing authority is empowered to issue qualified mortgage bonds) has published (after a public hearing following reasonable public notice) the report described in paragraph (l)(3) of this section by the last day of the year preceding the year in which such issue is issued and a copy of such report has been submitted to the Commissioner on or before such last day. The Commissioner may grant an extension of time for publishing and filing the report if there is reasonable cause for the failure to publish or file such report in a timely fashion. The requirements of this paragraph will be treated as met if the issuer in good faith attempted to meet the policy statement requirements of this paragraph.

(ii) With respect to reports required by paragraph (l)(1)(i) of this section to be published and submitted to the Commissioner not later than December 31, 1984, the Commissioner has determined that there is reasonable cause for the failure to publish or file such reports in a timely fashion; such a report will be considered published and filed in a timely fashion if, not later than March 11, 1985, the report is published (after a public hearing following reasonable public notice) and a copy is submitted to the Commissioner. In addition, any report submitted not later than December 31, 1984, with respect to which an issuer in good faith attempted to satisfy the requirements of section 103A(j)(5) shall be treated as substantially satisfying the requirements of this paragraph. For example, with respect to a report submitted not later than December 31, 1984, an issuer shall not be treated as failing to satisfy the requirements of section 103A(j)(5) based on the fact that

(A) the notice of public hearing failed to state the manner in which affected residents may obtain copies of the proposed report prior to the hearing, or

(B) the proposed report was not available prior to or at the public hearing. With respect to reports required to be published and submitted to the Commissioner not later than December 31, 1986, the Commissioner has determined that there is a reasonable cause for the failure to publish and file such reports in a timely fashion; such reports will be considered published and filed in a timely fashion if, not later than December 31, 1987, the report is published (after having a public hearing following reasonable public notice) and a copy is submitted to the Commissioner.

(2) ***Definitions and special rules.***

(i) In the case of an issuer that issues qualified mortgage bonds on behalf of one or more governmental units, a single report may be filed provided that such report is signed

(A) by the applicable elected representative of each governmental unit on whose behalf obligations have been issued during any preceding calendar year or

(B) by the Governor of the State in which the issuer is located.

(ii) See notice 103(k)(2)(E) and the regulations thereunder for the definition of the term “applicable elected representative”.

(iii) In the case of qualified mortgage bonds issued by, or on behalf of, a governmental unit that did not reasonably expect during the preceding calendar year to issue (or have issued on its behalf by any other issuer) qualified mortgage bonds during the current calendar year, the requirements of this paragraph will be treated as met if the applicable governmental unit which is the issuer (or on behalf of which the issuing authority is empowered to issue qualified mortgage bonds) has published (after a public hearing following reasonable public notice) the report described in paragraph (l)(3) of this section prior to the issuance of any qualified mortgage bonds and a copy of such report has been submitted to the Commissioner prior to such issuance.

(iv) For purposes of this paragraph a report will be considered to be “published” when the applicable elected representative of the governmental unit has made copies of the report available for distribution to the public. Reasonable public notice of the manner in which copies of the report may be obtained must be provided; such notice may be included as part of the public notice required by paragraph (l)(4) of this section.

(3) ***Report.***

(i) A report is described in this paragraph (l)(3) if it contains the issuer's name, TIN, and the title “Policy Report Under Section 103A” stated on the cover page of the report and if it includes—

(A) A statement of the policies of the issuer with respect to housing, development, and low-income housing assistance which such issuer is to follow in issuing qualified mortgage bonds and mortgage credit certificates, and

(B) An assessment of the compliance of such issuer during the 1-year period preceding the date of the report with—

(*1*) The statement of policy on qualified mortgage bonds and mortgage credit certificates that was set forth in the previous report, if any, of the issuer, and

(2) The intent of Congress that State and local governments are expected to use their authority to issue qualified mortgage bonds and mortgage credit certificates to the greatest extent feasible (taking into account prevailing interest rates and conditions in the housing market) to assist lower income families to afford home ownership before assisting higher income families.

(ii) For example, a report described in this paragraph (l)(3) may (but is not required to) contain—

(A) A specific statement of the policies with respect to housing, development, and low-income housing assistance which the issuer is to follow in issuing qualified mortgage bonds and mortgage credit certificates, including, for example, a statement as to—

(1) With respect to housing policies,

(*i*) whether the proceeds will be used to provide financing for the acquisition of residences, to provide qualified home improvement loans, or to provide qualified rehabilitation loans;

(*ii*) whether all or a portion of the proceeds will be targeted to new, existing, or any other particular class or type of housing;

(*iii*) how the existence of a need or absence of a need for such targeting has been determined;

(*iv*) the method by which the proceeds will be targeted;

(*v*) any other pertinent information relating to the issuer's housing policies; and

(*vi*) how the housing policies relate to the issuer's development and low-income housing assistance policies;

(2) With respect to development policies,

(*i*) whether all or a portion of the proceeds will be targeted to specific areas (including targeted areas as described in § 6a.103A-2(b)(3));

(*ii*) a description of the areas to which the proceeds will be targeted;

(*iii*) the reasons for selecting such areas;

(*iv*) whether proceeds targeted to each area are to be used to finance redevelopment of existing housing or new construction;

(*v*) any other pertinent information relating to the issuer's development policies; and

(*vi*) how the development policies relate to the issuer's low-income housing assistance policies; and

(3) With respect to low-income housing assistance policies,

(*i*) whether all or a portion of the proceeds will be targeted to low-income (*i.e.,* 80 percent of median income), moderate-income (*i.e.,* 100 percent of median income), or any other class of borrowers;

(*ii*) the method by which the proceeds will be targeted to such borrowers; and

(*iii*) any other pertinent information relating to the issuer's low-income housing assistance policies;

(B) An assessment of the compliance of the governmental unit or issuing authority during the twelve-month period ending with the date of the report with the statement of housing, development, and low-income housing assistance policies with respect to qualified mortgage bonds and mortgage credit certificates that were set forth in the report, if any, published in the preceding year with respect to such governmental unit, including, for example, a statement as to whether the governmental unit or issuing authority successfully implemented its policies and, if not, an analysis of the reasons for such failure; and

(C) An assessment of the compliance of the governmental unit or issuing authority during the twelve-month period ending with the date of the report with the intent of Congress that State and local governments are expected to use their authority to issue qualified mortgage bonds and mortgage credit certificates to the greatest extent feasible (taking into account prevailing interest rates and conditions in the housing market) to assist lower income families to afford home ownership before assisting higher income families, including, for example, a description of

(*1*) the method used by the governmental unit or issuing authority to distribute proceeds,

(*2*) whether and how that method enabled the governmental unit or issuing authority to assist lower income families before higher income families, and

(*3*) any income levels that have been defined and used by the governmental unit or issuing authority in connection with distribution of the proceeds (no specific definition of lower income and higher income is imposed on governmental units or issuing authorities).

(iii) For purposes of the assessments of compliance required by paragraph (l)(3)(i)(B) of this section to be included in the report, the “date of the report” means June 30. For purposes of the report required to be filed prior to January 1, 1986, an issuer need not perform these assessments of compliance with respect to any period prior to January 1, 1985.

(iv) An issuer that fails to establish policies with respect to the criteria provided in paragraph (l)(3)(i) of this section will not be treated as failing to satisfy the requirements of this paragraph. Thus, for example, an issuer may state in its report that none of the proceeds of the issue will be targeted to specific areas. Similarly, an issuer that fails to successfully implement its policies will not be treated as failing to satisfy the requirements of this paragraph.

(4) ***Public hearing.*** The public hearing required by paragraph (l)(1) of this section means a forum providing a reasonable opportunity for interested individuals to express their views, both orally and in writing, on the report that the applicable representative proposes to publish to satisfy the requirements of this paragraph (l). A public hearing held prior to January 1, 1985, will not fail to satisfy the requirements of this paragraph (l)(4) merely because the proposed policy statement was not available prior to the public hearing. In general, a governmental unit may select its own procedure for the hearing, provided that interested individuals have a reasonable opportunity to express their views. Thus, it may impose reasonable requirements on persons who wish to participate in the hearing, such as a requirement that persons desiring to speak at the hearing so request in writing at least 24 hours before the hearing or that they limit their oral remarks to 10 minutes. For purposes of this public hearing requirement, it is not necessary that the applicable

elected representative who will publish the report be present at the hearing, that a report on the hearing be submitted to that official, or that State administrative procedural requirements for public hearings in general be observed. However, compliance with such State procedural requirements (except those at variance with a specific requirement set forth in this paragraph) will generally assure that the hearing satisfies the requirements of this paragraph. The hearing may be conducted by any individual appointed or employed to perform such function by the governmental unit, its agencies, or by the issuer. Thus, for example, for a report to be issued by an issuing authority that acts on behalf of a county, the hearing may be conducted by the issuing authority, the county, or an appointee or employee of either.

(5) ***Reasonable public notice.***

(i) The reasonable public notice required by paragraph (l)(1) of this section means published notice which is reasonably designed to inform residents of the geographical area within the jurisdiction of the governmental unit that will publish the report. The notice must state the time and place for the hearing and contain the information required by paragraph (l)(5)(ii) of this section. Notice is presumed reasonable if published no fewer than 14 days before the hearing. Notice is presumed reasonably designed to inform affected residents only if published in one or more newspapers of general circulation available to residents of that locality or if announced by radio or televison broadcast to those residents.

(ii) The notice of hearing described in this paragraph (l)(5) must state—

(A) The time and place for the hearing,

(B) Any applicable limitations regarding participation in the hearing,

(C) With respect to any notice of hearing published after December 31, 1984, the manner in which affected residents may obtain copies of the proposed report prior to the hearing, and

(D) With respect to any notice of hearing published after December 31, 1984, that the hearing will involve the issuer's policies with respect to housing, development, and low-income housing assistance which the issuer is to follow in issuing qualified mortgage bonds and mortgage credit certificates.

(6) ***Procedure for public hearings of multiple jurisdiction issuers.*** In the case of an issuer that issues qualified mortgage bonds on behalf of two or more governmental units ("multiple jurisdiction issuer"), each governmental unit on whose behalf the issuer reasonably expects to issue qualified mortgage bonds during the succeeding calendar year must hold a public hearing following reasonable public notice prior to the publication of the report required by this paragraph. A multiple jurisdiction issuer may hold a combined hearing as long as the combined hearing is a joint undertaking that provides all residents of the participating governmental units (*i.e.,* each governmental unit on whose behalf qualified mortgage bonds were issued by the authority and each governmental unit on whose behalf the authority reasonably expects to issue qualified mortgage bonds during the succeeding calendar year) a reasonable opportunity to be heard. The location of any combined hearing is presumed to provide a reasonable opportunity for all affected residents to be heard if it is no farther than 100 miles from the seat of government of each participating governmental unit beyond whose geographic jurisdiction the hearing is conducted.

(7) ***Place for filing.*** The report is to be filed with the Internal Revenue Service Center, Philadelphia, Pennsylvania 19255.

(m) *State certification requirements* —

(1) ***In general.*** An issue meets the requirements of this paragraph only if the issuer in good faith attempted to meet the State certification requirements of this paragraph. The requirements of this paragraph apply to obligations issued after December 31, 1984; see section 149(e) and the regulations thereunder with respect to obligations issued after December 31, 1986.

(2) ***Certification.***

(i) An issue satisfied the requirements of section 103A(j)(4) and this paragraph (m)(2) only if the State official designated by law (or, if there is no State official, the Governor) certifies on or before the later of the date of issue or October 3, 1985, following a request for such certification by the issuer, that, as of the date the certification is executed, the issue meets the requirements of section 103A(g) and the regulations thereunder (relating to volume limitation). In the case of any constitutional home rule city, the certification shall be made by the chief executive officer of the city. To the extent consistent with State and local law, the Governor (or the chief executive officer of any constitutional home rule city) may delegate the responsibility to execute the certification required by this paragraph.

(ii) The certifying official need not perform an independent investigation in order to determine whether the issue meets the requirements of section 103A(g). In determining the aggregate amount of qualified mortgage bonds previously issued by an issuer during a calendar year, the certifying official may rely on copies of the reports submitted, to date, by the issuer pursuant to section 103A(j)(3) for other issues of qualified mortgage bonds issued during that year and copies of any elections previously made pursuant to section 25(c)(2) not to issue qualified mortgage bonds, together with an affidavit executed by an officer of the issuer responsible for issuing the bonds stating that the issuer has not, to date during the calendar year, issued any other qualified mortgage bonds, the amount, if any, of the issuer's market limitation that it has, to date during the calendar year, surrendered to other issuing authorities, and that it has not, to date during the calendar year, made any other elections not to issue qualified mortgage bonds. If, based on such information, the certifying official determines that, as of the date the certification is executed, the issue will not exceed the issuer's market limitation for the year, the official may certify that the issue meets the requirements of section 103A(g).

(3) ***Special rule.*** If 15 days elapse after the issuer files a proper request for the certification described in paragraph (m)(2) of this section and the issuer has not received from the State official designated by law (or, if there is no State official, the Governor) certification that the issue meets the requirements of section 103A(g) and § 6a.103A-2(g) or, in the alternative, a statement that the issue does not meet such requirements, the issuer may, instead, submit an affidavit executed by an officer of the issuer responsible for issuing the bonds stating that—

(i) The issue meets the requirements of section 103(A)(g) and § 6a.103A-2(g),

(ii) At least 15 days before the execution of the affidavit the issuer filed a proper request for the certification described in paragraph (m)(2) of this section, and

(iii) The State official designated by law (or, if there is no State official, the Governor) has not provided the certification described in paragraph (m)(2) of this section.

In the case of obligations issued prior to October 4, 1985 the preceding sentence shall be applied by substituting "30 days" for "15 days". For purposes of this paragraph, a request for certification is proper if the request includes the reports and affidavits described in paragraph (m)(2)(ii) of this section.

(4) ***Filing.*** The certification (or affidavit) required by this paragraph shall be filed with the Internal Revenue Service Center, Philadelphia, PA 19255. The certification (or affidavit) shall be submitted with the Form 8038 required to be filed by section 103A(j)(3) and paragraph (k) of this § 1.103A-2. The Commissioner may grant an extension of time for filing the certification (or affidavit) if there is a reasonable cause for the failure to file such statement in a timely fashion.

(5) ***Effect of certification.*** The fact that an issuer obtains the certification (or affidavit) described in this paragraph does not ensure that the requirements of paragraph (g) of § 6a.103A-2 are met. Obligations that do not meet the requirements of paragraph (g) of § 6a.103A-2 are not described in section 103(a).

[T.D. 8049, 50 FR 35542, Sept. 3, 1985, as amended by T.D. 8129, 52 FR 7410, Mar. 11, 1987]

§ 1.104-1 Compensation for injuries or sickness.

(a) ***In general.*** Section 104(a) provides an exclusion from gross income with respect to certain amounts described in paragraphs (b), (c), (d) and (e) of this section, which are received for personal injuries or sickness, except to the extent that such amounts are attributable to (but not in excess of) deductions allowed under section 213 (relating to medical, etc., expenses) for any prior taxable year. See section 213 and the regulations thereunder.

(b) ***Amounts received under workmen's compensation acts.*** Section 104(a)(1) excludes from gross income amounts which are received by an employee under a workmen's compensation act (such as the Longshoremen's and Harbor Workers' Compensation Act, 33 U.S.C., c. 18), or under a statute in the nature of a workmen's compensation act which provides compensation to employees for personal injuries or sickness incurred in the course of employment. Section 104(a)(1) also applies to compensation which is paid under a workmen's compensation act to the survivor or survivors of a deceased employee. However, section 104(a)(1) does not apply to a retirement pension or annuity to the extent that it is determined by reference to the employee's age or length of service, or the employee's prior contributions, even though the employee's retirement is occasioned by an occupational injury or sickness. Section 104(a)(1) also does not apply to amounts which are received as compensation for a nonoccupational injury or sickness nor to amounts received as compensation for an occupational injury or sickness to the extent that they are in excess of the amount provided in the applicable workmen's compensation act or acts. See, however, §§ 1.105-1 through 1.105-5 for rules relating to exclusion of such amounts from gross income.

(c) ***Damages received on account of personal physical injuries or physical sickness*** —

(1) ***In general.*** Section 104(a)(2) excludes from gross income the amount of any damages (other than punitive damages) received (whether by suit or agreement and whether as lump sums or as periodic payments) on account of personal physical injuries or physical sickness. Emotional distress is not considered a physical injury or physical sickness. However, damages for emotional distress attributable to a physical injury or physical sickness are excluded from income under section 104(a)(2). Section 104(a)(2) also excludes damages not in excess of the amount paid for medical

care (described in section 213(d)(1)(A) or (B)) for emotional distress. For purposes of this paragraph (c), the term *damages* means an amount received (other than workers' compensation) through prosecution of a legal suit or action, or through a settlement agreement entered into in lieu of prosecution.

(2) ***Cause of action and remedies.*** The section 104(a)(2) exclusion may apply to damages recovered for a personal physical injury or physical sickness under a statute, even if that statute does not provide for a broad range of remedies. The injury need not be defined as a tort under state or common law.

(3) ***Effective/applicability date.*** This paragraph (c) applies to damages paid pursuant to a written binding agreement, court decree, or mediation award entered into or issued after September 13, 1995, and received after January 23, 2012. Taxpayers also may apply these final regulations to damages paid pursuant to a written binding agreement, court decree, or mediation award entered into or issued after September 13, 1995, and received after August 20, 1996. If applying these final regulations to damages received after August 20, 1996, results in an overpayment of tax, the taxpayer may file a claim for refund before the period of limitations under section 6511 expires. To qualify for a refund of tax on damages paid after August 20, 1996, under a written binding agreement, court decree, or mediation award entered into or issued after September 13, 1995, a taxpayer must meet the requirements of section 1605 of the Small Business Job Protection Act of 1996, Public Law 104-188 (110 Stat. 1838).

(d) ***Accident or health insurance.*** Section 104(a)(3) excludes from gross income amounts received through accident or health insurance for personal injuries or sickness (other than amounts received by an employee, to the extent that such amounts

(1) are attributable to contributions of the employer which were not includible in the gross income of the employee, or

(2) are paid by the employer). Similar treatment is also accorded to amounts received under accident or health plans and amounts received from sickness or disability funds. See section 105(e) and § 1.105-5. If, therefore, an individual purchases a policy accident or health insurance out of his own funds, amounts received thereunder for personal injuries or sickness are excludable from his gross income under section 104(a)(3). See, however, section 213 and the regulations thereunder as to the inclusion in gross income of amounts attributable to deductions allowed under section 213 for any prior taxable year. Section 104(a)(3) also applies to amounts received by an employee for personal injuries or sickness from a fund which is maintained exclusively by employee contributions. Conversely, if an employer is either the sole contributor to such a fund, or is the sole purchaser of a policy of accident or health insurance for his employees (on either a group or individual basis), the exclusion provided under section 104(a)(3) does not apply to any amounts received by his employees through such fund or insurance. If the employer and his employees contribute to a fund or purchase insurance which pays accident or health benefits to employees, section 104(a)(3) does not apply to amounts received thereunder by employees to the extent that such amounts are attributable to the employer's contributions. See § 1.105-1 for rules relating to the determination of the amount attributable to employer contributions. Although amounts paid by or on behalf of an employer to an employee for personal injuries or sickness are not excludable from the employee's gross income under section 104(a)(3), they may be excludable therefrom under section 105. See §§ 1.105-1 through 1.105-5, inclusive. For treatment of accident or health benefits paid to or on behalf of a self- employed individual by a trust described in section 401(a) which is exempt under section 501(a) or under a plan described in section 403(a), see paragraph (g) of § 1.72-15.

(e) ***Amounts received as pensions, etc., for certain personal injuries or sickness.***

(1) Section 104(a)(4) excludes from gross income amounts which are received as a pension, annuity, or similar allowance for personal injuries or sickness resulting from active service in the armed forces of any country, or in the Coast and Geodetic Survey, or the Public Health Service. For purposes of this section, that part of the retired pay of a member of an armed force, computed under formula No. 1 or 2 of 10 U.S.C. 1401, or under 10 U.S.C. 1402(d), on the basis of years of service, which exceeds the retired pay that he would receive if it were computed on the basis of percentage of disability is not considered as a pension, annuity, or similar allowance for personal injury or sickness, resulting from active service in the armed forces of any country, or in the Coast and Geodetic Survey, or the Public Health Service (see 10 U.S.C. 1403 (formerly 37 U.S.C. 272(h), section 402(h) of the Career Compensation Act of 1949)). See paragraph (a)(3)(i)(*a*) of § 1.105-4 for the treatment of retired pay in excess of the part computed on the basis of percentage of disability as amounts received through a wage continuation plan. For the rules relating to certain reduced uniformed services retirement pay, see paragraph (c)(2) of § 1.122-1. For rules relating to a waiver by a member or former member of the uniformed services of a portion of disability retired pay in favor of a pension or compensation receivable under the laws administered by the Veterans Administration (38 U.S.C. 3105), see § 1.122-1(c)(3). For rules relating to a reduction of the disability retired pay of a member or former member of the uniformed services under the Dual Compensation Act of 1964 (5 U.S.C. 5531) by reason of Federal employment, see § 1.122-1(c)(4).

(2) Section 104(a)(4) excludes from gross income amounts which are received by a participant in the Foreign Service Retirement and Disability System in a taxable year of such participant ending after September 8, 1960, as a disability annuity payable under the provisions of section 831 of the Foreign Service Act of 1946, as amended (22 U.S.C. 1081; 60 Stat. 1021). However, if any amount is received by a survivor of a disabled or incapacitated participant, such amount is not excluded from gross income by reason of the provisions of section 104(a)(4).

[T.D. 6500, 25 FR 11402, Nov. 26, 1960, as amended by T.D. 6722, 29 FR 5070, Apr. 14, 1964; T.D. 7043, 35 FR 8477, June 2, 1970; T.D. 9573, 77 FR 3107, Jan. 23, 2012]

§ 1.105-1 Amounts attributable to employer contributions.

(a) ***In general.*** Under section 105(a), amounts received by an employee through accident or health insurance for personal injuries or sickness must be included in his gross income to the extent that such amounts

(1) are attributable to contributions of the employer which were not includible in the gross income of the employee, or

(2) are paid by the employer, unless such amounts are excluded therefrom under section 105(b), (c), or (d). For purposes of this section, the term “amounts received by an employee through an accident or health plan” refers to any amounts received through accident or health insurance, and also to any amounts which, under section 105(e), are treated as being so received. See § 1.105-5. In determining the extent to which amounts received for personal injuries or sickness by an employee through an accident or health plan are subject to the provisions of section 105(a), rather than section 104(a)(3), the provisions of paragraphs (b), (c), (d), and (e) of this section shall apply. A self-employed individual is not an employee for purposes of section 105 and §§ 1.105-1 through 1.105-5. See paragraph (g) of § 1.72-15. Thus, such an individual will not be treated as an employee with respect to benefits described in section 105 received from a plan in which he participates as an employee within the meaning of section 401(c)(1) at the time he, his spouse, or any of his dependents becomes entitled to receive such benefits.

(b) ***Noncontributory plans.*** All amounts received by employees through an accident or health plan which is financed solely by their employer, either by payment of premiums on an accident or health insurance policy (whether on a group or individual basis), by contributions to a fund which pays accident or health benefits, or by direct payment of the benefits under the plan, are subject to the provisions of section 105(a), except to the extent that they are excludable under section 105(b), (c), or (d). This rule may be illustrated by the following examples:

Example 1. Employer A maintains a plan for his employees which provides that he will continue to pay regular wages to employees who are absent from work due to sickness or personal injuries. Employees make no contributions to the plan and all benefits are paid by the employer. Amounts received by employees under the plan are subject to section 105(a), and must be included in gross income unless excluded therefrom under section 105(b), (c), or (d).

Example 2. Pursuant to a State nonoccupational disability benefits law, employer B maintains an accident and health plan for his employees. Although under the State law B is authorized to withhold from his employees' wages a specified amount for employee contributions to the State fund, in actual practice B does not so withhold and makes all contributions out of his own funds. All amounts received by B's employees from the State fund are subject to section 105(a), and must be included in gross income unless excluded therefrom under section 105 (b), (c), or (d).

(c) ***Contributory plans.***

(1) In the case of amounts received by an employee through an accident or health plan which is financed partially by his employer and partially by contributions of the employee, section 105(a) applies to the extent that such amounts are attributable to contributions of the employer which were not includible in the employee's gross income. The portion of such amounts which is attributable to such contributions of the employer shall be determined in accordance with paragraph (d) of this section in the case of an insured plan, or paragraph (e) of this section in the case of a noninsured plan. As used in this section, the phrase “contributions of the employer” means employer contributions which were not includible in the gross income of the employee. See section 106 for the exclusion from an employee's gross income of employer contributions to accident or health plans.

(2) A separate determination of the portion of the amounts received under the accident or health plan which is attributable to the contributions of the employer shall be made with respect to each class of employees in any case where the plan provides that some classes of covered employees contribute but others do not, or that the employer will make different contributions for different classes of employees, or that different classes of employees will make different contributions, and where in any such case both the contributions of the employer on account of each such class of employees and the contributions of such class of employees can be ascertained. For example, if employees contribute during the first year of employment but not thereafter, there will have to be a separate determination for first year employees, provided that the amount of the contributions of the employer on account of first-year employees and the contributions of such first-year employees can be ascertained for the required periods to apply the rules of paragraph (d) or (e) of this section. If in such a case the contributions of the employer to the plan on account of first-year employees are not distinguishable from his other contributions to the plan, then the determination shall be made for all employees under the plan, and such determination shall be used by all employees under the plan.

(3) Except as provided in paragraph (c)(2) of § 1.72-15, if the plan provides accident or health benefits as well as other benefits for the employees, and if the respective contributions made by the employer and the employees to provide the accident or health benefits cannot be ascertained, the determination of the portion of the accident or health benefits received under such plan which is

attributable to the contributions of the employer shall be made in accordance with the rules of paragraph (d) or (e) of this section on the basis of the contributions of the employer and of the employees to the entire plan.

(4) A determination of the portion attributable to the contributions of the employer, once made in accordance with the rules of this section, shall as to such portion be used for all purposes. For example, if an employee receives amounts under a wage continuation plan during the month of January and terminates his services during February, the portion of such amounts which is attributable to the contributions of the employer may be determined in order to provide the employee with such information at the time he is provided his Form W-2. The determination made for such purpose will also be used by the employee to report his income for his taxable year in which such amounts are received, without regard to the experience under the plan for the rest of the year.

(d) *Insured plans* —

(1) ***Individual policies.*** If an amount is received from an insurance company by an employee under an individual policy of accident or health insurance purchased by contributions of the employer and the employee, the portion of the amount received which is attributable to the employer's contributions shall be an amount which bears the same ratio to the amount received as the portion of the premiums paid by the employer for the current policy year bears to the total premiums paid by the employer and the employee for that year. This rule may be illustrated by the following example:

Example. Employer A maintains a plan whereby he pays two-thirds of the annual premium cost on individual policies of accident and health insurance for his employees. The remainder of each employee's premium is paid by a payroll deduction from the wages of the employee. The annual premium for employee X is $24, of which $16 is paid by the employer. Thus, 16/24 or two-thirds of all amounts received by X under such insurance policy are attributable to the contributions of the employer and are subject to section 105(a), and the remaining one-third of such amounts is excludable from X's gross income under section 104(a)(3).

(2) ***Group policies.*** If the accident or health coverage is provided under or is a part of a group insurance policy purchased by contributions of the employer and of the employees, and the net premiums for such coverage for a period of at least three policy years are known at the beginning of the calendar year, the portion of any amount received by an employee which is attributable to the contributions of the employer for such coverage shall be an amount which bears the same ratio to the amount received as the portion of the net premiums contributed by the employer for the last three policy years which are known at the beginning of the calendar year, bears to the total of the net premiums contributed by the employer and all employees for such policy years. If the net premiums for such coverage for a period of at least three policy years are not known at the beginning of the calendar year but are known for at least one policy year, such determination shall be made by using the net premiums for such coverage which are known at the beginning of the calendar year. If the net premiums for such coverage are not known at the beginning of the calendar year for even one policy year, such determination shall be made by using either

(i) a reasonable estimate of the net premiums for the first policy year, or

(ii) if the net premiums for a policy year are ascertained during the calendar year, by using such net premiums. These rules may be illustrated by the following example:

Example. An employer maintains a plan under which a portion of the cost of a group policy of accident and health insurance for his employees is paid through payroll deductions from wages of the employees. The remainder of the cost is borne by the employer. The policy year begins on November 1 and ends

on October 31. The net premium for the policy year ended October 31, 1954, is not known on January 1, 1955, because certain retroactive premium adjustments, such as dividends and credits, are not determinable until after January 1. Therefore, for purposes of this computation the last three policy years are the policy years ended October 31, 1951, 1952, and 1953. The net premium for the policy year ended October 31, 1953, was $8,000, of which the employer contributed $3,000; the net premium for the policy year ended October 31, 1952, was $9,000, of which the employer contributed $3,500; and the net premium for the policy year ended October 31, 1951, was $7,000, of which the employer contributed $1,500. The portion of any amount received under the policy by an employee at any time during 1955 which is attributable to the contributions of the employer is to be determined by using the ratio of $8,000 ($3,000 plus $3,500 plus $1,500) to $24,000 ($8,000 plus $9,000 plus $7,000. Thus, $8,000 ÷ $24,000 or one-third, of the amounts received by an employee at any time during 1955 is attributable to contributions of the employer.

(e) ***Noninsured plans.*** If the accident or health benefits are a part of a noninsured plan to which the employer and the employees contribute, and such plan has been in effect for at least three years before the beginning of the calendar year, the portion of the amount received which is attributable to the employer's contributions shall be an amount which bears the same ratio to the amount received as the contributions of the employer for the period of three calendar years next preceding the year of receipt bear to the total contributions of the employer and all the employees for such period. If, at the beginning of the calendar year of receipt, such plan has not been in effect for three years but has been in effect for at least one year, such determination shall be based upon the contributions made during the 1-year or 2-year period during which the plan has been in effect. If such plan has not been in effect for one full year at the beginning of the calendar year of receipt, such determination may be based upon the portion of the year of receipt preceding the time when the determination is made, or such determination may be made periodically (such as monthly or quarterly) and used throughout the succeeding period. For example, if an employee terminates his services on April 15, 1955, and 1955 is the first year the plan has been in effect, such determination may be based upon the contributions of the employer and the employees during the period beginning with January 1 and ending with April 15, or during the month of March, or during the quarter consisting of January, February, and March.

[T.D. 6500, 25 FR 11402, Nov. 26, 1960, as amended by T.D. 6722, 29 FR 5071, Apr. 14, 1964]

§ 1.105-2 Amounts expended for medical care.

Section 105(b) provides an exclusion from gross income with respect to the amounts referred to in section 105(a) (see § 1.105-1) which are paid, directly or indirectly, to the taxpayer to reimburse him for expenses incurred for the medical care (as defined in section 213(e)) of the taxpayer, his spouse, and his dependents (as defined in section 152). However, the exclusion does not apply to amounts which are attributable to (and not in excess of) deductions allowed under section 213 (relating to medical, etc., expenses) for any prior taxable year. See section 213 and the regulations thereunder. Section 105(b) applies only to amounts which are paid specifically to reimburse the taxpayer for expenses incurred by him for the prescribed medical care. Thus, section 105(b) does not apply to amounts which the taxpayer would be entitled to receive irrespective of whether or not he incurs expenses for medical care. For example, if under a wage continuation plan the taxpayer is entitled to regular wages during a period of absence from work due to sickness or injury, amounts received under such plan are not excludable from his gross income under section 105(b) even though the taxpayer may have incurred medical expenses during the period of illness. Such amounts may, however, be excludable from his gross income under section 105(d). See § 1.105-4. If the amounts are paid to the taxpayer solely to reimburse him for expenses which he incurred for the prescribed medical care, section 105(b) is applicable even though such amounts are paid without proof of the amount of the actual expenses incurred by the taxpayer, but section 105(b) is not applicable to the extent that such

amounts exceed the amount of the actual expenses for such medical care. If the taxpayer incurs an obligation for medical care, payment to the obligee in discharge of such obligation shall constitute indirect payment to the taxpayer as reimbursement for medical care. Similarly, payment to or on behalf of the taxpayer's spouse or dependents shall constitute indirect payment to the taxpayer.

§ 1.105-3 Payments unrelated to absence from work.

Section 105(c) provides an exclusion from gross income with respect to the amounts referred to in section 105(a) to the extent that such amounts (a) constitute payments for the permanent loss or permanent loss of use of a member or function of the body, or the permanent disfigurement, of the taxpayer, his spouse, or a dependent (as defined in section 152), and (b) are computed with reference to the nature of the injury without regard to the period the employee is absent from work. Loss of use or disfigurement shall be considered permanent when it may reasonably be expected to continue for the life of the individual. For purposes of section 105(c), loss or loss of use of a member or function of the body includes the loss or loss of use of an appendage of the body, the loss of an eye, the loss of substantially all of the vision of an eye, and the loss of substantially all of the hearing in one or both ears. The term “disfigurement” shall be given a reasonable interpretation in the light of all the particular facts and circumstances. Section 105(c) does not apply if the amount of the benefits is determined by reference to the period the employee is absent from work. For example, if an employee is absent from work as a result of the loss of an arm, and under the accident and health plan established by his employer, he is to receive $125 a week so long as he is absent from work for a period not in excess of 52 weeks, section 105(c) is not applicable to such payments. See, however, section 105(d) and § 1.105-4. However, for purposes of section 105(c), it is immaterial whether an amount is paid in a lump sum or in installments. Section 105(c) does not apply to amounts which are treated as workmen's compensation under paragraph (b) of § 1.104-1, or to amounts paid by reason of the death of the employee (see section 101).

§ 1.105-5 Accident and health plans.

(a) ***In general.*** Sections 104(a)(3) and 105 (b), (c), and (d) exclude from gross income certain amounts received through accident or health insurance. Section 105(e) provides that for purposes of sections 104 and 105 amounts received through an accident or health plan for employees, and amounts received from a sickness and disability fund for employees maintained under the law of a State, a Territory, or the District of Columbia, shall be treated as amounts received through accident or health insurance. In general, an accident or health plan is an arrangement for the payment of amounts to employees in the event of personal injuries or sickness. A plan may cover one or more employees, and there may be different plans for different employees or classes of employees. An accident or health plan may be either insured or noninsured, and it is not necessary that the plan be in writing or that the employee's rights to benefits under the plan be enforceable. However, if the employee's rights are not enforceable, an amount will be deemed to be received under a plan only if, on the date the employee became sick or injured, the employee was covered by a plan (or a program, policy, or custom having the effect of a plan) providing for the payment of amounts to the employee in the event of personal injuries or sickness, and notice or knowledge of such plan was reasonably available to the employee. It is immaterial who makes payment of the benefits provided by the plan. For example, payment may be made by the employer, a welfare fund, a State sickness or disability benefits fund, an association of employers or employees, or by an insurance company.

(b) ***Self-employed individuals.*** Under section 105(g), a self-employed individual is not treated as an employee for purposes of section 105. Therefore, for example, benefits paid under an accident or health plan as referred to in section 105(e) to or on behalf of an individual who is self-employed in the business with respect to which the plan is established will not be treated as received through accident and health insurance for purposes of sections 104(a)(3) and 105.

[T.D. 6722, 29 FR 5071, Apr. 14, 1964]

§ 1.105-11 Self-insured medical reimbursement plan.

(a) ***In general.*** Under section 105(a), amounts received by an employee through a self-insured medical reimbursement plan which are attributable to contributions of the employer, or are paid by the employer, are included in the employee's gross income unless such amounts are excludable under section 105(b). For amounts reimbursed to a highly compensated individual to be fully excludable from such individual's gross income under section 105(b), the plan must satisfy the requirements of section 105(h) and this section. Section 105(h) is not satisfied if the plan discriminates in favor of highly compensated individuals as to eligibility to participate or benefits. All or a portion of the reimbursements or payments on behalf of such individuals under a discriminatory plan are not excludable from gross income under section 105(b). However, benefits paid to participants who are not highly compensated individuals may be excluded from gross income if the requirements of section 105(b) are satisfied, even if the plan is discriminatory.

(b) ***Self-insured medical reimbursement plan*** —

(1) ***General rule*** —

(i) ***Definition.*** A self-insured medical reimbursement plan is a separate written plan for the benefit of employees which provides for reimbursement of employee medical expenses referred to in section 105(b). A plan or arrangement is self-insured unless reimbursement is provided under an individual or group policy of accident or health insurance issued by a licensed insurance company or under an arrangement in the nature of a prepaid health care plan that is regulated under federal or state law in a manner similar to the regulation of insurance companies. Thus, for example, a plan of a health maintenance organization, established under the Health Maintenance Organization Act of 1973, would qualify as a prepaid health care plan. In addition, this section applies to a self-insured medical reimbursement plan, determined in accordance with the rules of this section, maintained by an employee organization described in section 501(c)(9).

(ii) ***Shifting of risk.*** A plan underwritten by a policy of insurance or a prepaid health care plan that does not involve the shifting of risk to an unrelated third party is considered self-insured for purposes of this section. Accordingly, a cost-plus policy or a policy which in effect merely provides administrative or bookkeeping services is considered self-insured for purposes of this section. However, a plan is not considered self-insured merely because one factor the insurer uses in determining the premium is the employer's prior claims experience.

(iii) ***Captive insurance company.*** A plan underwritten by a policy of insurance issued by a captive insurance company is not considered self-insured for purposes of this section if for the plan year the premiums paid by companies unrelated to the captive insurance company equal or exceed 50 percent of the total premiums received and the policy of insurance is similar to policies sold to such unrelated companies.

(2) ***Other rules.*** The rules of this section apply to a self-insured portion of an employer's medical plan or arrangement even if the plan is in part underwritten by insurance. For example, if an employer's medical plan reimburses employees for benefits not covered under the insured portion of an overall plan, or for deductible amounts under the insured portions, such reimbursement is subject to the rules of this section. However, a plan which reimburses employees for premiums paid under an insured plan is not subject to this section. In addition, medical expense reimbursements not described in the plan are not paid pursuant to a plan for the benefit of employees, and therefore are not excludable from gross income under section 105(b). Such reimbursements will not affect the determination of whether or not a plan is discriminatory.

(c) ***Prohibited discrimination*** —

(1) ***In general.*** A self-insured medical reimbursement plan does not satisfy the requirements of section 105(h) and this paragraph for a plan year unless the plan satisfies subparagraphs (2) and (3) of this paragraph. However, a plan does not fail to satisfy the requirements of this paragraph merely because benefits under the plan are offset by benefits paid under a self-insured or insured plan of the employer or another employer, or by benefits paid under Medicare or other Federal or State law or similar foreign law. A self-insured plan may take into account the benefits provided under another plan only to the extent that the type of benefit subject to reimbursement is the same under both plans. For example, an amount reimbursed to an employee for a hospital expense under a medical plan maintained by the employer of the employee's spouse may be offset against the self-insured benefit where the self-insured plan covering the employee provides the same type of hospital benefit.

(2) ***Eligibility to participate*** —

(i) ***Percentage test.*** A plan satisfies the requirements of this subparagraph if it benefits—

(A) Seventy percent or more of all employees, or

(B) Eighty percent or more of all the employees who are eligible to benefit under the plan if 70 percent or more of all employees are eligible to benefit under the plan.

(ii) ***Classification test.*** A plan satisfies the requirements of this subparagraph if it benefits such employees as qualify under a classification of employees set up by the employer which is found by the Internal Revenue Service not to be discriminatory in favor of highly compensated individuals. In general, this determination will be made based upon the facts and circumstances of each case, applying the same standards as are applied under section 410(b)(1)(B) (relating to qualified pension, profit-sharing and stock bonus plans), without regard to the special rules in section 401(a)(5) concerning eligibility to participate.

(iii) ***Exclusion of certain employees.*** Under section 105(h)(3), for purposes of this subparagraph (2), there may be excluded from consideration:

(A) Employees who have not completed 3 years of service prior to the beginning of the plan year. For purposes of this section years of service may be determined by any method that is reasonable and consistent. A determination made in the same manner as (and not requiring service in excess of how) a year of service is determined under section 410(a)(3) shall be deemed to be reasonable. For purposes of the 3-year rule, all of an employee's years of service with the employer prior to a separation from service are not taken into account. For purposes of the 3-year rule, an employee's years of service prior to age 25, as a part-time or seasonal employee, as a member of a collective bargaining unit, or as a

nonresident alien, as each is described in this subdivision, are not excluded by reason of being so described from counting towards satisfaction of the rule. In addition, if the employer is a predecessor employer (determined in a manner consistent with section 414(a)), service for such predecessor is treated as service for the employer.

(B) Employees who have not attained age 25 prior to the beginning of the plan year.

(C) Part-time employees whose customary weekly employment is less than 35 hours, if other employees in similar work with the same employer (or, if no employees of the employer are in similar work, in similar work in the same industry and location) have substantially more hours, and seasonal employees whose customary annual employment is less than 9 months, if other employees in similar work with the same employer (or, if no employees of the employer are in similar work, in similar work in the same industry and location) have substantially more months. Notwithstanding the preceding sentence, any employee whose customary weekly employment is less than 25 hours or any employee whose customary annual employment is less than 7 months may be considered as a part-time or seasonal employee.

(D) Employees who are included in a unit of employees covered by an agreement between employee representatives and one or more employers which the Commissioner finds to be a collective bargaining agreement, if accident and health benefits were the subject of good faith bargaining between such employee representatives and such employer or employers. For purposes of determining whether such bargaining occurred, it is not material that such employees are not covered by another medical plan or that the plan was not considered in such bargaining.

(E) Employees who are nonresident aliens and who receive no earned income (within the meaning of section 911(b) and the regulations thereunder) from the employer which constitutes income from sources within the United States (within the meaning of section 861(a)(3) and the regulations thereunder).

(3) ***Nondiscriminatory benefits*** —

(i) ***In general.*** In general, benefits subject to reimbursement under a plan must not discriminate in favor of highly compensated individuals. Plan benefits will not satisfy the requirements of this subparagraph unless all the benefits provided for participants who are highly compensated individuals are provided for all other participants. In addition, all the benefits available for the dependents of employees who are highly compensated individuals must also be available on the same basis for the dependents of all other employees who are participants. A plan that provides optional benefits to participants will be treated as providing a single benefit with respect to the benefits covered by the option provided that

(A) all eligible participants may elect any of the benefits covered by the option and

(B) there are either no required employee contributions or the required employee contributions are the same amount. This test is applied to the benefits subject to reimbursement under the plan rather than the actual benefit payments or claims under the plan. The presence or absence of such discrimination will be determined by considering the type of benefit subject to reimbursement provided highly compensated individuals, as well as the amount of the benefit subject to reimbursement. A plan may establish a maximum limit for the amount of reimbursement which may be paid a participant for any single benefit, or combination of benefits. However, any maximum limit attributable to employer

contributions must be uniform for all participants and for all dependents of employees who are participants and may not be modified by reason of a participant's age or years of service. In addition, if a plan covers employees who are highly compensated individuals, and the type or the amount of benefits subject to reimbursement under the plan are in proportion to employee compensation, the plan discriminates as to benefits.

(ii) ***Discriminatory operation.*** Not only must a plan not discriminate on its face in providing benefits in favor of highly compensated individuals, the plan also must not discriminate in favor of such employees in actual operation. The determination of whether plan benefits discriminate in operation in favor of highly compensated individuals is made on the basis of the facts and circumstances of each case. A plan is not considered discriminatory merely because highly compensated individuals participating in the plan utilize a broad range of plan benefits to a greater extent than do other employees participating in the plan. In addition, if a plan (or a particular benefit provided by a plan) is terminated, the termination would cause the plan benefits to be discriminatory if the duration of the plan (or benefit) has the effect of discriminating in favor of highly compensated individuals. Accordingly, the prohibited discrimination may occur where the duration of a particular benefit coincides with the period during which a highly compensated individual utilizes the benefit.

(iii) ***Retired employees.*** To the extent that an employer provides benefits under a self-insured medical reimbursement plan to a retired employee that would otherwise be excludible from gross income under section 105(b), determined without regard to section 105(h), such benefits shall not be considered a discriminatory benefit under this paragraph (c). The preceding sentence shall not apply to a retired employee who was a highly compensated individual unless the type, and the dollar limitations, of benefits provided retired employees who were highly compensated individuals are the same for all other retired participants. If this subdivision applies to a retired participant, that individual is not considered an employee for purposes of determining the highest paid 25 percent of all employees under paragraph (d) of this section solely by reason of receiving such plan benefits.

(4) ***Multiple plans, etc.*** —

(i) ***General rule.*** An employer may designate two or more plans as constituting a single plan that is intended to satisfy the requirements of section 105(h)(2) and paragraph (c) of this section, in which case all plans so designated shall be considered as a single plan in determining whether the requirements of such section are satisfied by each of the separate plans. A determination that the combination of plans so designated does not satisfy such requirements does not preclude a determination that one or more of such plans, considered separately, satisfies such requirements. A single plan document may be utilized by an employer for two or more separate plans provided that the employer designates the plans that are to be considered separately and the applicable provisions of each separate plan.

(ii) ***Other rules.*** If the designated combined plan discriminates as to eligibility to participate or benefits, the amount of excess reimbursement will be determined under the rules of section 105(h)(7) and paragraph (e) of this section by taking into account all reimbursements made under the combined plan.

(iii) ***H.M.O. participants.*** For purposes of section 105(h)(2)(A) and paragraph (c)(2) of this section, a self-insured plan will be deemed to benefit an employee who has enrolled in a health maintenance organization (HMO) that is offered on an optional basis by the employer in lieu of coverage under the self-insured plan if, with respect to that employee, the employer's

contributions to the HMO plan equal or exceed those that would be made to the self-insured plan, and if the HMO plan is designated in accordance with subdivision (i) with the self-insured plan as a single plan. For purposes of section 105(h) and this section, except as provided in the preceding sentence, employees covered by, and benefits under, the HMO plan are not treated as part of the self-insured plan.

(d) ***Highly compensated individuals defined.*** For purposes of section 105(h) and this section, the term "highly compensated individual" means an individual who is—

(1) One of the 5 highest paid officers,

(2) A shareholder who owns (with the application of section 318) more than 10 percent in value of the stock of the employer, or

(3) Among the highest paid 25 percent of all employees (including the 5 highest paid officers, but not including employees excludable under paragraph (c)(2)(iii) of this section who are not participants in any self-insured medical reimbursement plan of the employer, whether or not designated as a single plan under paragraph (c)(4) of this section, or in a health maintenance organization plan).

The status of an employee as an officer or stockholder is determined with respect to a particular benefit on the basis of the employee's officer status or stock ownership at the time during the plan year at which the benefit is provided. In calculating the highest paid 25 percent of all employees, the number of employees included will be rounded to the next highest number. For example, if there are 5 employees, the top two are in the highest paid 25 percent. The level of an employee's compensation is determined on the basis of the employee's compensation for the plan year. For purposes of the preceding sentence, fiscal year plans may determine employee compensation on the basis of the calendar year ending within the plan year.

(e) ***Excess reimbursement of highly compensated individual*** —

(1) ***In general.*** For purposes of section 105(h) and this section, a reimbursement paid to a highly compensated individual is an excess reimbursement if it is paid pursuant to a plan that fails to satisfy the requirements of paragraph (c)(2) or (c)(3) for the plan year. The amount reimbursed to a highly compensated individual which constitutes an excess reimbursement is not excludable from such individual's gross income under section 105(b).

(2) ***Discriminatory benefit.*** In the case of a benefit available to highly compensated individuals but not to all other participants (or which otherwise discriminates in favor of highly compensated individuals as opposed to other participants), the amount of excess reimbursement equals the total amount reimbursed to the highly compensated individual with respect to the benefit.

(3) ***Discriminatory coverage.*** In the case of benefits (other than discriminatory benefits described in subparagraph (2)) paid to a highly compensated individual under a plan which fails to satisfy the requirements of paragraph (c)(2) relating to nondiscrimination in eligibility to participate, the amount of excess reimbursement is determined by multiplying the total amount reimbursed to the individual by a fraction. The numerator of the fraction is the total amount reimbursed during that plan year to all highly compensated individuals. The denominator of the fraction is the total amount reimbursed during that plan year to all participants. In computing the fraction and the total amount reimbursed to the individual, discriminatory benefits described in subparagraph (2) are not taken into account. Accordingly, any amount which is included in income by reason of the benefit's not being available to all other participants will not be taken into account.

(4) ***Examples.*** The provisions of this paragraph are illustrated by the following examples:

Example 1. Corporation M maintains a self-insured medical reimbursement plan which covers all employees. The plan provides the following maximum limits on the amount of benefits subject to reimbursement: $5,000 for officers and $1,000 for all other participants. During a plan year Employee A, one of the 5 highest paid officers, received reimbursements in the amount of $4,000. Because the amount of benefits provided for highly compensated individuals is not provided for all other participants, the plan benefits are discriminatory. Accordingly, Employee A received an excess reimbursement of $3,000 ($4,000−$1,000) which constitutes a benefit available to highly compensated individuals, but not to all other participants.

Example 2. Corporation N maintains a self-insured medical reimbursement plan which covers all employees. The plan provides a broad range of medical benefits subject to reimbursement for all participants. However, only the 5 highest paid officers are entitled to dental benefits. During the plan year Employee B, one of the 5 highest paid officers, received dental payments under the plan in the amount of $300. Because dental benefits are provided for highly compensated individuals, and not for all other participants, the plan discriminates as to benefits. Accordingly, Employee B received an excess reimbursement in the amount of $300.

Example 3. Corporation O maintains a self-insured medical reimbursement plan which discriminates as to eligibility by covering only the highest paid 40% of all employees. Benefits subject to reimbursement under the plan are the same for all participants. During a plan year Employee C, a highly compensated individual, received benefits in the amount of $1,000. The amount of excess reimbursement paid Employee C during the plan year will be calculated by multiplying the $1,000 by a fraction determined under subparagraph (3).

Example 4. Corporation P maintains a self-insured medical reimbursement plan for its employees. Benefits subject to reimbursement under the plan are the same for all plan participants. However, the plan fails the eligibility tests of section 105(h)(3)(A) and thereby discriminates as to eligibility. During the 1980 plan year Employee D, a highly compensated individual, was hospitalized for surgery and incurred medical expenses of $4,500 which were reimbursed to D under the plan. During that plan year the Corporation P medical plan paid $50,000 in benefits under the plan, $30,000 of which constituted benefits paid to highly compensated individuals. The amount of excess reimbursement not excludable by D under section 105(b) is $2,700:

$$\$4500 \times \frac{\$30,000}{\$50,000}$$

Example 5. Corporation Q maintains a self-insured medical reimbursement plan for its employees. The plan provides a broad range of medical benefits subject to reimbursement for participants. However, only the five highest paid officers are entitled to dental benefits. In addition, the plan fails the eligibility test of section 105(h)(3)(A) and thereby discriminates as to eligibility. During the calendar 1981 plan year, Employee E, a highly compensated individual, received dental benefits under the plan in the amount of $300, and no other employee received dental benefits. In addition, Employee E was

hospitalized for surgery and incurred medical expenses, reimbursement for which was available to all participants, of $4,500 which were reimbursed to E under the plan. Because dental benefits are only provided for highly compensated individuals, Employee E received an excess reimbursement under paragraph (e)(2) above in the amount of $300. For the 1981 plan year, the Corporation Q medical plan paid $50,300 in total benefits under the plan, $30,300 of which constituted benefits paid to highly compensated individuals. In computing the fraction under paragraph (e)(3), discriminatory benefits described in paragraph (e)(2) are not taken into account. Therefore, the amount of excess reimbursement not excludable to Employee E with respect to the $4,500 of medical expenses incurred is $2,700:

$$\$4500 \times \frac{\$30,000}{\$50,000}$$

and the total amount of excess reimbursements includable in E's income for 1981 is $3,000.

Example 6. (i) Corporation R maintains a calendar year self-insured medical reimbursement plan which covers all employees. The type of benefits subject to reimbursement under the plan include all medical care expenses as defined in section 213(e). The amount of reimbursement available to any employee for any calendar year is limited to 5 percent of the compensation paid to each employee during the calendar year. The amount of compensation and reimbursement paid to Employees A-F for the calendar year is as follows:

Employee	Compensation	Reimbursable amount paid
A	$100,000	$5,000
B	25,000	1,250
C	15,000	750
D	10,000	500
E	10,000	500
F	8,000	400
		8,400

(ii) Because the amount of benefits subject to reimbursement under the plan is in proportion to employee compensation the plan discriminates as to benefits. In addition, Employees A and B are highly compensated individuals. The amount of excess reimbursement paid Employees A and B during the plan year will be determined under paragraph (e)(2). Because benefits in excess of $400 (Employee F's maximum benefit)

> are provided for highly compensated individuals and not for all other participants, Employees A and B received, respectively, an excess reimbursement of $4,600 and $850.

(f) ***Certain controlled groups.*** For purposes of applying the provisions of section 105(h) and this section, all employees who are treated as employed by a single employer under section 414 (b) and (c), and the regulations thereunder (relating to special rules for qualified pension, profit-sharing and stock bonus plans), shall be treated as employed by a single employer.

(g) ***Exception for medical diagnostic procedures*** —

(1) ***In general.*** For purposes of applying section 105(h) and this section, reimbursements paid under a plan for medical diagnostic procedures for an employee, but not a dependent, are not considered to be a part of a plan described in this section. The medical diagnostic procedures include routine medical examinations, blood tests, and X-rays. Such procedures do not include expenses incurred for the treatment, cure or testing of a known illness or disability, or treatment or testing for a physical injury, complaint or specific symptom of a bodily malfunction. For example, a routine dental examination with X-rays is a medical diagnostic procedure, but X-rays and treatment for a specific complaint are not. In addition, such procedures do not include any activity undertaken for exercise, fitness, nutrition, recreation, or the general improvement of health unless they are for medical care as defined in section 213(e). The diagnostic procedures must be performed at a facility which provides no services (directly or indirectly) other than medical, and ancillary, services. For purposes of the preceding sentence, physical proximity between a medical facility and nonmedical facilities will not for that reason alone cause the medical facility not to qualify. For example, an employee's annual physical examination conducted at the employee's personal physician's office is not considered a part of the medical reimbursement plan and therefore is not subject to the nondiscrimination requirements. Accordingly, the amount reimbursed may be excludable from the employee's income if the requirements of section 105(b) are satisfied.

(2) ***Transportation, etc. expenses.*** Transportation expenses primarily for an allowable diagnostic procedure are included within the exception described in this paragraph, but only to the extent they are ordinary and necessary. Transportation undertaken merely for the general improvement of health, or in connection with a vacation, is not within the scope of this exception, nor are any incidental expenses for food or lodging; therefore, amounts reimbursed for such expenses may be excess reimbursements under paragraph (e).

(h) ***Time of inclusion.*** Excess reimbursments (determined under paragraph (e)) paid to a highly compensated individual for a plan year will be considered as received in the taxable year of the individual in which (or with which) the plan year ends. The particular plan year to which reimbursements relate shall be determined under the plan provisions. In the absence of plan provisions reimbursements shall be attributed to the plan year in which payment is made. For example, under a calendar year plan an excess reimbursement paid to A in 1981 on account of an expense incurred and subject to reimbursement for the 1980 plan year under the terms of the plan will be considered as received in 1980 by A.

(i) ***Self-insured contributory plan.*** A medical plan subject to this section may provide for employer and employee contributions. See § 1.105-1(c). The tax treatment of reimbursements attributable to employee contributions is determined under section 104(a)(3). The tax treatment of reimbursements attributable to employer contributions is determined under section 105. The amount of reimbursements which are attributable to contributions of the employer shall be determined in accordance with § 1.105-1(e).

(j) ***Effective date.*** Section 105(h) and this section are effective for taxable years beginning after December 31, 1979 and for amounts reimbursed after December 31, 1979. In determining plan discrimination and the taxability of excess reimbursements made for a plan year beginning in 1979 and ending in 1980, a plan's eligibility and benefit requirements as well as actual reimbursements made in the plan year during 1979, will not be taken into account. In addition, this section does not apply to expenses which are incurred in 1979 and paid in 1980.

(k) ***Special rules —***

(1) ***Relation to cafeteria plans.*** If a self-insured medical reimbursement plan is included in a cafeteria plan as described in section 125, the rules of this section will determine the status of a benefit as a taxable or nontaxable benefit, and the rules of section 125 will determine whether an employee is taxed as though he elected all available taxable benefits (including taxable benefits under a discriminatory medical reimbursement plan). This rule is illustrated by the following example:

Example. Corporation M maintains a cafeteria plan described in section 125. Under the plan an officer of the corporation may elect to receive medical benefits provided by a self-insured medical reimbursement plan which is subject to the rules of this section. However, the self-insured medical reimbursement plan fails the nondiscrimination rules under paragraph (c) of this section. Accordingly, the amount of excess reimbursement is taxable to the officer participating in the medical reimbursement plan pursuant to section 105(h) and this section. Therefore, the self-insured medical reimbursement plan will be considered a taxable benefit under section 125 and the regulations thereunder.

(2) ***Benefit subject to reimbursement.*** For purposes of this section, a benefit subject to reimbursement is a benefit described in the plan under which a claim for reimbursement or for a payment directly to the health service provider may be filed by a plan participant. It does not refer to actual claims or benefit reimbursements paid under a plan.

[T.D. 7754, 46 FR 3505, Jan. 15, 1981]

§ 1.106-1 Contributions by employer to accident and health plans.

(a) The gross income of an employee does not include the contributions that the employer makes to an accident or health plan for compensation (through insurance or otherwise) to the employee for personal injuries or sickness incurred by the employee, the employee's spouse, the employee's dependents (as defined in section 152 determined without regard to section 152(b)(1), (b)(2), or (d)(1)(B)), or any child (as defined in section 152(f)(1)) of the employee who as of the end of the taxable year has not attained age 27. The employer may contribute to an accident or health plan either by paying the premium (or a portion of the premium) on a policy of accident or health insurance covering one or more of his employees, or by contributing to a separate trust or fund (including a fund referred to in section 105(e)) which provides accident or health benefits directly or through insurance to one or more of his employees. However, if such insurance policy, trust, or fund provides other benefits in addition to accident or health benefits, section 106 applies only to the portion of the employer's contribution which is allocable to accident or health benefits. See paragraph (d) of § 1.104-1 and §§ 1.105-1 through 1.105-5, inclusive, for regulations relating to exclusion from an employee's gross income of amounts received through accident or health insurance and through accident or health plans. For the treatment of the payment of premiums for accident or health insurance from a qualified trust under section 401(a), see §§ 1.72-15 and 1.402(a)-1(e).

(b) ***Effective/applicability date.*** The first and last sentences of paragraph (a) of this section apply for taxable years beginning on or after January 1, 2015.

[T.D. 6500, 25 FR 11402, Nov. 26, 1960; 25 FR 14021, Dec. 21, 1960, as amended by T.D. 9665, 79 FR 26841, May 12, 2014]

§ 1.107-1 Rental value of parsonages.

(a) In the case of a minister of the gospel, gross income does not include

(1) the rental value of a home, including utilities, furnished to him as a part of his compensation, or

(2) the rental allowance paid to him as part of his compensation to the extent such allowance is used by him to rent or otherwise provide a home. In order to qualify for the exclusion, the home or rental allowance must be provided as remuneration for services which are ordinarily the duties of a minister of the gospel. In general, the rules provided in § 1.1402(c)-5 will be applicable to such determination. Examples of specific services the performance of which will be considered duties of a minister for purposes of section 107 include the performance of sacerdotal functions, the conduct of religious worship, the administration and maintenance of religious organizations and their integral agencies, and the performance of teaching and administrative duties at theological seminaries. Also, the service performed by a qualified minister as an employee of the United States (other than as a chaplain in the Armed Forces, whose service is considered to be that of a commissioned officer in his capacity as such, and not as a minister in the exercise of his ministry), or a State, Territory, or possession of the United States, or a political subdivision of any of the foregoing, or the District of Columbia, is in the exercise of his ministry provided the service performed includes such services as are ordinarily the duties of a minister.

(b) For purposes of section 107, the term “home” means a dwelling place (including furnishings) and the appurtenances thereto, such as a garage. The term “rental allowance” means an amount paid to a minister to rent or otherwise provide a home if such amount is designated as rental allowance pursuant to official action taken prior to January 1, 1958, by the employing church or other qualified organization, or if such amount is designated as rental allowance pursuant to official action taken in advance of such payment by the employing church or other qualified organization when paid after December 31, 1957. The designation of an amount as rental allowance may be evidenced in an employment contract, in minutes of or in a resolution by a church or other qualified organization or in its budget, or in any other appropriate instrument evidencing such official action. The designation referred to in this paragraph is a sufficient designation if it permits a payment or a part thereof to be identified as a payment of rental allowance as distinguished from salary or other remuneration.

(c) A rental allowance must be included in the minister's gross income in the taxable year in which it is received, to the extent that such allowance is not used by him during such taxable year to rent or otherwise provide a home. Circumstances under which a rental allowance will be deemed to have been used to rent or provide a home will include cases in which the allowance is expended

(1) for rent of a home,

(2) for purchase of a home, and

(3) for expenses directly related to providing a home. Expenses for food and servants are not considered for this purpose to be directly related to providing a home. Where the minister rents, purchases, or owns a farm or other business property in addition to a home, the portion of the rental allowance expended in connection with the farm or business property shall not be excluded from his gross income.

[T.D. 6500, 25 FR 11402, Nov. 26, 1960, as amended by T.D. 6691, 28 FR 12817, Dec. 3, 1963]

§ 1.108-1 [Reserved]

§ 1.108-2 Acquisition of indebtedness by a person related to the debtor.

(a) ***General rules.*** The acquisition of outstanding indebtedness by a person related to the debtor from a person who is not related to the debtor results in the realization by the debtor of income from discharge of indebtedness (to the extent required by section 61(a)(12) and section 108) in an amount determined under paragraph (f) of this section. Income realized pursuant to the preceding sentence is excludible from gross income to the extent provided in section 108(a). The rules of this paragraph apply if indebtedness is acquired directly by a person related to the debtor in a direct acquisition (as defined in paragraph (b) of this section) or if a holder of indebtedness becomes related to the debtor in an indirect acquisition (as defined in paragraph (c) of this section).

(b) ***Direct acquisition.*** An acquisition of outstanding indebtedness is a direct acquisition under this section if a person related to the debtor (or a person who becomes related to the debtor on the date the indebtedness is acquired) acquires the indebtedness from a person who is not related to the debtor. Notwithstanding the foregoing, the Commissioner may provide by Revenue Procedure or other published guidance that certain acquisitions of indebtedness described in the preceding sentence are not direct acquisitions for purposes of this section.

(c) ***Indirect acquisition*** —

(1) ***In general.*** An indirect acquisition is a transaction in which a holder of outstanding indebtedness becomes related to the debtor, if the holder acquired the indebtedness in anticipation of becoming related to the debtor.

(2) ***Proof of anticipation of relationship.*** In determining whether indebtedness was acquired by a holder in anticipation of becoming related to the debtor, all relevant facts and circumstances will be considered. Such facts and circumstances include, but are not limited to, the intent of the parties at the time of the acquisition, the nature of any contacts between the parties (or their respective affiliates) before the acquisition, the period of time for which the holder held the indebtedness, and the significance of the indebtedness in proportion to the total assets of the holder group (as defined in paragraph (c)(5) of this section). For example, if a holder acquired the indebtedness in the ordinary course of its portfolio investment activities and the holder's acquisition of the indebtedness preceded any discussions concerning the acquisition of the holder by the debtor (or by a person related to the debtor) or the acquisition of the debtor by the holder (or by a person related to the holder), as the case may be, these facts, taken together, would ordinarily establish that the holder did not acquire the indebtedness in anticipation of becoming related to the debtor. The absence of discussions between the debtor and the holder (or their respective affiliates), however, does not by itself establish that the holder did not acquire the indebtedness in anticipation of becoming related to the debtor (if, for example, the facts and circumstances show that the holder was considering a

potential acquisition of or by the debtor, or the relationship is created within a relatively short period of time of the acquisition, or the indebtedness constitutes a disproportionate portion of the holder group's assets).

(3) ***Indebtedness acquired within 6 months of becoming related.*** Notwithstanding any other provision of this paragraph (c), a holder of indebtedness is treated as having acquired the indebtedness in anticipation of becoming related to the debtor if the holder acquired the indebtedness less than 6 months before the date the holder becomes related to the debtor.

(4) ***Disclosure of potential indirect acquisition*** —

(i) ***In general.*** If a holder of outstanding indebtedness becomes related to the debtor under the circumstances described in paragraph (c)(4)(ii) or (iii) of this section, the debtor is required to attach the statement described in paragraph (c)(4)(iv) of this section to its tax return (or to a qualified amended return within the meaning of § 1.6664-2(c)(3)) for the taxable year in which the debtor becomes related to the holder, unless the debtor reports its income on the basis that the holder acquired the indebtedness in anticipation of becoming related to the debtor. Disclosure under this paragraph (c)(4) is in addition to, and is not in substitution for, any disclosure required to be made under section 6662, 6664 or 6694.

(ii) ***Indebtedness represents more than 25 percent of holder group's assets*** —

(A) ***In general.*** Disclosure under this paragraph (c)(4) is required if, on the date the holder becomes related to the debtor, indebtedness of the debtor represents more than 25 percent of the fair market value of the total gross assets of the holder group (as defined in paragraph (c)(5) of this section).

(B) ***Determination of total gross assets.*** In determining the total gross assets of the holder group, total gross assets do not include any cash, cash item, marketable stock or security, short-term indebtedness, option, futures contract, notional principal contract, or similar item (other than indebtedness of the debtor), nor do total gross assets include any asset in which the holder has substantially reduced its risk of loss. In addition, total gross assets do not include any ownership interest in or indebtedness of a member of the holder group.

(iii) ***Indebtedness acquired within 6 to 24 months of becoming related.*** Disclosure under this paragraph (c)(4) is required if the holder acquired the indebtedness 6 months or more before the date the holder becomes related to the debtor, but less than 24 months before that date.

(iv) ***Contents of statement.*** A statement under this paragraph (c)(4) must include the following—

(A) A caption identifying the statement as disclosure under § 1.108-2(c);

(B) An identification of the indebtedness with respect to which disclosure is made;

(C) The amount of such indebtedness and the amount of income from discharge of indebtedness is section 108(e)(4) were to apply;

(D) Whether paragraph (c)(4)(ii) or (iii) of this section applies to the transaction; and

(E) A statement describing the facts and circumstances supporting the debtor's position that the holder did not acquire the indebtedness in anticipation of becoming related to the debtor.

(v) ***Failure to disclose.*** In addition to any other penalties that may apply, if a debtor fails to provide a statement required by this paragraph (c)(4), the holder is presumed to have acquired the indebtedness in anticipation of becoming related to the debtor unless the facts and circumstances clearly established that the holder did not acquire the indebtedness in anticipation of becoming related to the debtor.

(5) ***Holder group.*** For purposes of this paragraph (c), the holder group consists of the holder of the indebtedness and all persons who are both—

(i) Related to the holder before the holder becomes related to the debtor; and

(ii) Related to the debtor after the holder becomes related to the debtor.

(6) ***Holding period*** —

(i) ***Suspensions.*** The running of the holding periods set forth in paragraphs (c)(3) and (c)(4)(iii) of this section is suspended during any period in which the holder or any person related to the holder is protected (directly or indirectly) against risk of loss by an option, a short sale, or any other device or transaction.

(ii) ***Tacking.*** For purposes of paragraphs (c)(3) and (c)(4)(iii) of this section, the period for which a holder held the debtor's indebtedness includes—

(A) The period for which the indebtedness was held by a corporation to whose attributes the holder succeeded pursuant to section 381; and

(B) The period (ending on the date on which the holder becomes related to the debtor) for which the indebtedness was held continuously by members of the holder group (as defined in paragraph (c)(5) of this section).

(d) ***Definitions*** —

(1) ***Acquisition date.*** For purposes of this section, the acquisition date is the date on which a direct acquisition of indebtedness or an indirect acquisition of indebtedness occurs.

(2) ***Relationship.*** For purposes of this section, persons are considered related if they are related within the meaning of sections 267(b) or 707(b)(1). However—

(i) Sections 267(b) and 707(b)(1) are applied as if section 267(c)(4) provided that the family of an individual consists of the individual's spouse, the individual's children, grandchildren, and parents, and any spouse of the individual's children or grandchildren; and

(ii) Two entities that are treated as a single employer under subsection (b) or (c) of section 414 are treated as having a relationship to each other that is described in section 267(b).

(e) ***Exceptions*** —

(1) ***Indebtedness retired within one year.*** This section does not apply to a direct or indirect acquisition of indebtedness with a stated maturity date on or before the date that is one year after the acquisition date, if the indebtedness is, in fact, retired on or before its stated maturity date.

(2) ***Acquisitions by securities dealers.***

(i) This section does not apply to a direct acquisition or an indirect acquisition of indebtedness by a dealer that acquires and disposes of such indebtedness in the ordinary course of its business of dealing in securities if—

(A) The dealer accounts for the indebtedness as a security held primarily for sale to customers in the ordinary course of business;

(B) The dealer disposes of the indebtedness (or it matures while held by the dealer) within a period consistent with the holding of the indebtedness for sale to customers in the ordinary course of business, taking into account the terms of the indebtedness and the conditions and practices prevailing in the markets for similar indebtedness during the period in which it is held; and

(C) The dealer does not sell or otherwise transfer the indebtedness to a person related to the debtor (other than in a sale to a dealer that in turn meets the requirements of this paragraph (e)(2)).

(ii) A dealer will continue to satisfy the conditions of this paragraph (e)(2) with respect to indebtedness that is exchanged for successor indebtedness in a transaction in which unrelated holders also exchange indebtedness of the same issue, provided that the conditions of this paragraph (e)(2) are met with respect to the successor indebtedness.

(iii) For purposes of this paragraph (e)(2), if the period consistent with the holding of indebtedness for sale to customers in the ordinary course of business is 30 days or less, the dealer is considered to dispose of indebtedness within that period if the aggregate principal amount of indebtedness of that issue sold by the dealer to customers in the ordinary course of business (or that mature and are paid while held by the dealer) in the calendar month following the month in which the indebtedness is acquired equals or exceeds the aggregate principal amount of indebtedness of that issue held in the dealer's inventory at the close of the month in which the indebtedness is acquired. If the period consistent with the holding of indebtedness for sale to customers in the ordinary course of business is greater than 30 days, the dealer is considered to dispose of the indebtedness within that period if the aggregate principal amount of indebtedness of that issue sold by the dealer to customers in the ordinary course of business (or that mature and are paid while held by the dealer) within that period equals or exceeds the aggregate principal amount of indebtedness of that issue held in inventory at the close of the day on which the indebtedness was acquired.

(f) ***Amount of discharge of indebtedness income realized*** —

(1) ***Holder acquired the indebtedness by purchase on or less than six months before the acquisition date.*** Except as otherwise provided in this paragraph (f), the amount of discharge of indebtedness income realized under paragraph (a) of this section is measured by reference to the adjusted basis of the related holder (or of the holder that becomes related to the debtor) in the indebtedness on the acquisition date if the holder acquired the indebtedness by purchase on or less than six months before the acquisition date. For purposes of this paragraph (f), indebtedness is acquired “by purchase” if the indebtedness in the hands of the holder is not substituted basis property within the meaning of section 7701(a)(42). However, indebtedness is also considered acquired by purchase within six months before the acquisition date if the holder acquired the indebtedness as transferred basis property (within the meaning of section 7701(a)(43)) from a person who acquired the indebtedness by purchase on or less than six months before the acquisition date.

(2) ***Holder did not acquire the indebtedness by purchase on or less than six months before the acquisition date.*** Except as otherwise provided in this paragraph (f), the amount of discharge of indebtedness income realized under paragraph (a) of this section is measured by reference to the fair market value

of the indebtedness on the acquisition date if the holder (or the transferor to the holder in a transferred basis transaction) did not acquire the indebtedness by purchase on or less than six months before the acquisition date.

(3) ***Acquisitions of indebtedness in nonrecognition transactions.*** [Reserved]

(4) ***Avoidance transactions.*** The amount of discharge of indebtedness income realized by the debtor under paragraph (a) of this section is measured by reference to the fair market value of the indebtedness on the acquisition date if the indebtedness is acquired in a direct or an indirect acquisition in which a principal purpose for the acquisition is the avoidance of federal income tax.

(g) ***Correlative adjustments*** —

(1) ***Deemed issuance.*** For income tax purposes, if a debtor realizes income from discharge of its indebtedness in a direct or an indirect acquisition under this section (whether or not the income is excludible under section 108(a)), the debtor's indebtedness is treated as new indebtedness issued by the debtor to the related holder on the acquisition date (the deemed issuance). The new indebtedness is deemed issued with an issue price equal to the amount used under paragraph (f) of this section to compute the amount realized by the debtor under paragraph (a) of this section (*i.e.,* either the holder's adjusted basis or the fair market value of the indebtedness, as the case may be). Under section 1273(a)(1), the excess of the stated redemption price at maturity (as defined in section 1273(a)(2)) of the indebtedness over its issue price is original issue discount (OID) which, to the extent provided in sections 163 and 1272, is deductible by the debtor and includible in the gross income of the related holder. Notwithstanding the foregoing, the Commissioner may provide by Revenue Procedure or other published guidance that the indebtedness is not treated as newly issued indebtedness for purposes of designated provisions of the income tax laws.

(2) ***Treatment of related holder.*** The related holder does not recognize any gain or loss on the deemed issuance described in paragraph (g)(1) of this section. The related holder's adjusted basis in the indebtedness remains the same as it was immediately before the deemed issuance. The deemed issuance is treated as a purchase of the indebtedness by the related holder for purposes of section 1272(a)(7) (pertaining to reduction of original issue discount where a subsequent holder pays acquisition premium) and section 1276 (pertaining to acquisitions of debt at a market discount).

(3) ***Loss deferral on disposition of indebtedness acquired in certain exchanges.***

(i) Any loss otherwise allowable to a related holder on the disposition at any time of indebtedness acquired in a direct or indirect acquisition (whether or not any discharge of indebtedness income was realized under paragraph (a) of this section) is deferred until the date the debtor retires the indebtedness if—

(A) The related holder acquired the debtor's indebtedness in exchange for its own indebtedness; and

(B) The issue price of the related holder's indebtedness was not determined by reference to its fair market value (e.g., the issue price was determined under section 1273(b)(4) or 1274(a) or any other provision of applicable law).

(ii) Any comparable tax benefit that would otherwise be available to the holder, debtor, or any person related to either, in any other transaction that directly or indirectly results in the disposition of the indebtedness is also deferred until the date the debtor retires the indebtedness.

(4) ***Examples.*** The following examples illustrate the application of this paragraph (g). In each example, all taxpayers are calendar-year taxpayers, no taxpayer is insolvent or under the jurisdiction of a court in a title 11 case and no indebtedness is qualified farm indebtedness described in section 108(g).

Example 1. (i) P, a domestic corporation, owns 70 percent of the single class of stock of S, a domestic corporation. S has outstanding indebtedness that has an issue price of $10,000,000 and provides for monthly interest payments of $80,000 payable at the end of each month and a payment at maturity of $10,000,000. The indebtedness has a stated maturity date of December 31, 1994. On January 1, 1992, P purchases S's indebtedness from I, an individual not related to S within the meaning of paragraph (d)(2) of this section, for cash in the amount of $9,000,000. S repays the indebtedness in full at maturity.
(ii) Under section 61(a)(12), section 108(e)(4), and paragraphs (a) and (f) of this section, S realizes $1,000,000 of income from discharge of indebtedness on January 1, 1992.

(iii) Under paragraph (g)(1) of this section, the indebtedness is treated as issued to P on January 1, 1992, with an issue price of $9,000,000. Under section 1273(a), the $1,000,000 excess of the stated redemption price at maturity of the indebtedness ($10,000,000) over its issue price ($9,000,000) is original issue discount, which is includible in gross income by P and deductible by S over the remaining term of the indebtedness under sections 163(e) and 1272(a).

(iv) Accordingly, S deducts and P includes in income original issue discount, in addition to stated interest, as follows: in 1992, $289,144.88; in 1993, $331,286.06; and in 1994, $379,569.06.

Example 2. The facts are the same as in *Example 1,* except that on January 1, 1992, P sells S's indebtedness to J, who is not related to S within the meaning of paragraph (d)(2) of this section, for $9,400,000 in cash. J holds S's indebtedness to maturity. On January 1, 1993, P's adjusted basis in S's indebtedness is $9,289,144.88. Accordingly, P realizes gain in the amount of $110,855.12 upon the disposition. S and J continue to deduct and include the original issue discount on the indebtedness in accordance with *Example 1.* The amount of original issue discount includible by J is reduced by the $110,855.12 acquisition premium as provided in section 1272(a)(7).

Example 3. The facts are the same as in *Example 1,* except that on February 1, 1992 (one month after P purchased S's indebtedness), S retires the indebtedness for an amount of cash equal to the fair market value of the indebtedness. Assume that the fair market value of the indebtedness is $9,022,621.41, which in this case equals the issue price of indebtedness determined under paragraph (g)(1) of this section ($9,000,000) plus the accrued original issue discount through February 1 ($22,621.41). Section 1.61-12(c)(3) provides that if indebtedness is repurchased for a price that is exceeded by the issue price of the indebtedness plus the amount of discount already deducted, the excess is income from discharge of indebtedness. Therefore, S does not realize income from discharge of indebtedness. The result would be the same if P had

contributed the indebtedness to the capital of S. Under section 108(e)(6), S would be treated as having satisfied the indebtedness with an amount of money equal to P's adjusted basis and, under section 1272(d)(2), P's adjusted basis is equal to $9,022,621.41.

Example 4. (i) P, a domestic corporation, owns 70 percent of the single class of stock of S, a domestic corporation. On January 1, 1986, P issued indebtedness that has an issue price of $5,000,000 and provides for no stated interest payments and a payment at maturity of $10,000,000. The indebtedness has a stated maturity date of December 31, 1995. On January 1, 1992, S purchases P's indebtedness from K, a partnership not related to P within the meaning of paragraph (d)(2) of this section, for cash in the amount of $6,000,000. The sum of the debt's issue price and previously deducted original issue discount is $7,578,582.83. P repays the indebtedness in full at maturity.
(ii) Under section 61(a)(12), section 108(e)(4), and paragraphs (a) and (f) of this section, P realizes $1,578,582.83 in income from discharge of indebtedness ($7,578,582.83 minus $6,000,000) on January 1, 1992.

(iii) Under paragraph (g)(1) of this section, the indebtedness is treated as issued to S on January 1, 1992, with an issue price of $6,000,000. Under section 1273(a), the $4,000,000 excess of the stated redemption price at maturity of the indebtedness ($10,000,000) over its issue price ($6,000,000) is orignial issue discount, which is includible in gross income by S and deductible by P over the remaining term of the indebtedness under sections 163(e) and 1272(a).

(iv) Accordingly, P deducts and S includes in income original issue discount as follows: in 1992, $817,316.20; in 1993, $928,650.49; in 1994, $1,055,150.67; and in 1995, $1,198,882.64.

(h) ***Effective date.*** This section applies to any transaction described in paragraph (a) and in either paragraph (b) or (c) of this section with an acquisition date on or after March 21, 1991. Although this section does not apply to direct or indirect acquisitions occurring before March 21, 1991, section 108(e)(4) is effective for any transaction after December 31, 1980, subject to the rules of section 7 of the Bankruptcy Tax Act of 1980 (Pub. L. 96-589, 94 Stat. 3389, 3411). Taxpayers may use any reasonable method of determining the amount of discharge of indebtedness income realized and the treatment of correlative adjustments under section 108(e)(4) for acquisitions of indebtedness before March 21, 1991, if such method is applied consistently by both the debtor and related holder.

[T.D. 8460, 57 FR 61808, Dec. 29, 1992]

§ 1.108-3 Intercompany losses and deductions.

(a) ***General rule.*** This section applies to certain losses and deductions from the sale, exchange, or other transfer of property between corporations that are members of a consolidated group or a controlled group (an intercompany transaction). See section 267(f) (controlled groups) and § 1.1502-13 (consolidated groups) for applicable definitions. For purposes of determining the attributes to which

section 108(b) applies, a loss or deduction not yet taken into account under section 267(f) or § 1.1502-13 (an intercompany loss or deduction) is treated as basis described in section 108(b) that the transferor retains in property. To the extent a loss not yet taken into account is reduced under this section, it cannot subsequently be taken into account under section 267(f) or § 1.1502-13. For example, if S and B are corporations filing a consolidated return, and S sells land with a $100 basis to B for $90 and the $10 loss is deferred under section 267(f) and § 1.1502-13, the deferred loss is treated for purposes of section 108(b) as $10 of basis that S has in land (even though S has no remaining interest in the land sold to B) and is subject to reduction under section 108(b)(2)(E). Similar principles apply, with appropriate adjustments, if S and B are members of a controlled group and S's loss is deferred only under section 267(f).

(b) ***Effective date.*** This section applies with respect to discharges of indebtedness occurring on or after September 11, 1995.

[T.D. 8597, 60 FR 36680, July 18, 1995]

§ 1.108-4 Election to reduce basis of depreciable property under section 108(b)(5) of the Internal Revenue Code .

(a) ***Description.*** An election under section 108(b)(5) is available whenever a taxpayer excludes discharge of indebtedness income (COD income) from gross income under sections 108(a)(1)(A), (B), or (C) (concerning title 11 cases, insolvency, and qualified farm indebtedness, respectively). See sections 108(d)(2) and (3) for the definitions of *title 11 case* and *insolvent.* See section 108(g)(2) for the definition of *qualified farm indebtedness.*

(b) ***Time and manner.*** To make an election under section 108(b)(5), a taxpayer must enter the appropriate information on Form 982, *Reduction of Tax Attributes Due to Discharge of Indebtedness (and Section 1082 Basis Adjustment),* and attach the form to the timely filed (including extensions) Federal income tax return for the taxable year in which the taxpayer has COD income that is excluded from gross income under section 108(a). An election under this section may be revoked only with the consent of the Commissioner.

(c) ***Effective date.*** This section applies to elections concerning discharges of indebtedness occurring on or after October 22, 1998.

[T.D. 8787, 63 FR 56562, Oct. 22, 1998]

§ 1.108-5 Time and manner for making election under the Omnibus Budget Reconciliation Act of 1993.

(a) ***Description.*** Section 108(c)(3)(C), as added by section 13150 of the Omnibus Budget Reconciliation Act of 1993 (Pub. L. 103-66, 107 Stat. 446), allows certain noncorporate taxpayers to elect to treat certain indebtedness described in section 108(c)(3) that is discharged after December 31, 1992, as qualified real property business indebtedness. This discharged indebtedness is excluded from gross income to the extent allowed by section 108.

(b) ***Time and manner for making election.*** The election described in this section must be made on the timely-filed (including extensions) Federal income tax return for the taxable year in which the taxpayer has discharge of indebtedness income that is excludible from gross income under section 108(a). The election is to be made on a completed Form 982, in accordance with that Form and its instructions.

(c) ***Revocability of election.*** The election described in this section is revocable with the consent of the Commissioner.

(d) ***Effective date.*** The rules set forth in this section are effective December 27, 1993.

[T.D. 8688, 61 FR 65322, Dec. 12, 1996. Redesignated by T.D. 8787, 63 FR 56563, Oct. 22, 1998]

§ 1.108-6 Limitations on the exclusion of income from the discharge of qualified real property business indebtedness.

(a) ***Indebtedness in excess of value.*** With respect to any qualified real property business indebtedness that is discharged, the amount excluded from gross income under section 108(a)(1)(D) (concerning discharges of qualified real property business indebtedness) shall not exceed the excess, if any, of the outstanding principal amount of that indebtedness immediately before the discharge over the net fair market value of the qualifying real property, as defined in § 1.1017-1(c)(1), immediately before the discharge. For purposes of this section, *net fair market value* means the fair market value of the qualifying real property (notwithstanding section 7701(g)), reduced by the outstanding principal amount of any qualified real property business indebtedness (other than the discharged indebtedness) that is secured by such property immediately before and after the discharge. Also, for purposes of section 108(c)(2)(A) and this section, outstanding principal amount means the principal amount of indebtedness together with all additional amounts owed that, immediately before the discharge, are equivalent to principal, in that interest on such amounts would accrue and compound in the future, except that outstanding principal amount shall not include amounts that are subject to section 108(e)(2) and shall be adjusted to account for unamortized premium and discount consistent with section 108(e)(3).

(b) ***Overall limitation.*** The amount excluded from gross income under section 108(a)(1)(D) shall not exceed the aggregate adjusted bases of all depreciable real property held by the taxpayer immediately before the discharge (other than depreciable real property acquired in contemplation of the discharge) reduced by the sum of any—

(1) Depreciation claimed for the taxable year the taxpayer excluded discharge of indebtedness from gross income under section 108(a)(1)(D); and

(2) Reductions to the adjusted bases of depreciable real property required under section 108(b) or section 108(g) for the same taxable year.

(c) ***Effective date.*** This section applies to discharges of qualified real property business indebtedness occurring on or after October 22, 1998.

[T.D. 8787, 63 FR 56563, Oct. 22, 1998]

§ 1.108-7 Reduction of attributes.

(a) ***In general.***

(1) If a taxpayer excludes discharge of indebtedness income (COD income) from gross income under section 108(a)(1)(A), (B), or (C), then the amount excluded shall be applied to reduce the following tax attributes of the taxpayer in the following order:

(i) Net operating losses.

(ii) General business credits.

(iii) Minimum tax credits.

(iv) Capital loss carryovers.

(v) Basis of property.

(vi) Passive activity loss and credit carryovers.

(vii) Foreign tax credit carryovers.

(2) The taxpayer may elect under section 108(b)(5), however, to apply any portion of the excluded COD income to reduce first the basis of depreciable property. To the extent the excluded COD income is not so applied, the taxpayer must then reduce any remaining tax attributes in the order specified in section 108(b)(2). If the excluded COD income exceeds the sum of the taxpayer's tax attributes, the excess is permanently excluded from the taxpayer's gross income. For rules relating to basis reductions required by sections 108(b)(2)(E) and 108(b)(5), *see* sections 1017 and 1.1017-1. For rules relating to the time and manner for making an election under section 108(b)(5), *see* § 1.108-4.

(b) ***Carryovers and carrybacks.*** The tax attributes subject to reduction under section 108(b)(2) and paragraph (a)(1) of this section that are carryovers to the taxable year of the discharge, or that may be carried back to taxable years preceding the year of the discharge, are taken into account by the taxpayer for the taxable year of the discharge or the preceding years, as the case may be, before such attributes are reduced pursuant to section 108(b)(2) and paragraph (a)(1) of this section.

(c) ***Transactions to which section 381 applies.*** If a taxpayer realizes COD income that is excluded from gross income under section 108(a) either during or after a taxable year in which the taxpayer is the distributor or transferor of assets in a transaction described in section 381(a), any tax attributes to which the acquiring corporation succeeds, including the basis of property acquired by the acquiring corporation in the transaction, must reflect the reductions required by section 108(b). For this purpose, all attributes listed in section 108(b)(2) immediately prior to the transaction described in section 381(a), but after the determination of tax for the year of the distribution or transfer of assets, including basis of property, will be available for reduction under section 108(b)(2). However, the basis of stock or securities of the acquiring corporation, if any, received by the taxpayer in exchange for the transferred assets shall not be available for reduction under section 108(b)(2).

(d) ***Special rules for S corporations*** —

(1) ***In general.*** If an S corporation excludes COD income from gross income under section 108(a)(1)(A), (B), or (C), the amount excluded shall be applied to reduce the S corporation's tax attributes under paragraph (a)(1) of this section. For purposes of paragraph (a)(1)(i) of this section, the aggregate amount of the shareholders' losses or deductions that are disallowed for the taxable year of the discharge under section 1366(d)(1), including disallowed losses or deductions of a shareholder that transfers all of the shareholder's stock in the S corporation during the taxable year of the discharge, is treated as the net operating loss tax attribute (deemed NOL) of the S corporation for the taxable year of the discharge.

(2) ***Allocation of excess losses or deductions*** —

(i) ***In general.*** If the amount of an S corporation's deemed NOL exceeds the amount of the S corporation's COD income that is excluded from gross income under section 108(a)(1)(A), (B), or (C), the excess deemed NOL shall be allocated to the shareholder or shareholders of the S corporation as a loss or deduction that is disallowed under section 1366(d) for the taxable year of the discharge.

(ii) *Multiple shareholders* —

(A) ***In general.*** If an S corporation has multiple shareholders, to determine the amount of the S corporation's excess deemed NOL to be allocated to each shareholder under paragraph (d)(2)(i) of this section, calculate with respect to each shareholder the shareholder's excess amount. The shareholder's excess amount is the amount (if any) by which the shareholder's losses or deductions disallowed under section 1366(d)(1) (before any reduction under paragraph (a)(1) of this section) exceed the amount of COD income that would have been taken into account by that shareholder under section 1366(a) had the COD income not been excluded under section 108(a).

(B) ***Shareholders with a shareholder's excess amount.*** Each shareholder that has a shareholder's excess amount, as determined under paragraph (d)(2)(ii)(A) of this section, is allocated an amount equal to the S corporation's excess deemed NOL multiplied by a fraction, the numerator of which is the shareholder's excess amount and the denominator of which is the sum of all shareholders' excess amounts.

(C) ***Shareholders with no shareholder's excess amount.*** If a shareholder does not have a shareholder's excess amount as determined in paragraph (d)(2)(ii)(A) of this section, none of the S corporation's excess deemed NOL shall be allocated to that shareholder.

(iii) ***Terminating shareholder.*** Any amount of the S corporation's excess deemed NOL allocated under paragraph (d)(2) of this section to a shareholder that had transferred all of the shareholder's stock in the corporation during the taxable year of the discharge is permanently disallowed under § 1.1366-2(a)(6), unless the transfer of stock is described in section 1041(a). If the transfer of stock is described in section 1041(a), the amount of the S corporation's excess deemed NOL allocated to the transferor under paragraph (d)(2) of this section shall be treated as a loss or deduction incurred by the corporation in the succeeding taxable year with respect to the transferee. *See* section 1366(d)(2)(B).

(3) ***Character of excess losses or deductions allocated to a shareholder.*** The character of an S corporation's excess deemed NOL that is allocated to a shareholder under paragraph (d)(2) of this section consists of a proportionate amount of each item of the shareholder's loss or deduction that is disallowed for the taxable year of the discharge under section 1366(d)(1).

(4) ***Information requirements.*** If an S corporation excludes COD income from gross income under section 108(a) for a taxable year, each shareholder of the S corporation during the taxable year of the discharge must report to the S corporation the amount of the shareholder's losses and deductions that are disallowed for the taxable year of the discharge under section 1366(d)(1), even if that amount is zero. If a shareholder fails to report the amount of the shareholder's losses and deductions that are disallowed for the taxable year of the discharge under section 1366(d)(1) to the S corporation, or if the S corporation knows that the amount reported by the shareholder is inaccurate, or if the information, as reported, appears to be incomplete or incorrect, the S corporation may rely on its own books and records, as well as other information available to the S corporation, to determine the amount of the shareholder's losses and deductions that are disallowed for the taxable year of the discharge under section 1366(d)(1), provided that the S corporation knows or reasonably believes that its information presents an accurate reflection of the shareholder's disallowed losses and deductions under section 1366(d)(1). The S corporation must report to each shareholder the amount of the S corporation's excess deemed NOL that is allocated to that shareholder under paragraph (d)(2) of this section, even if that amount is zero, in accordance with applicable forms and instructions.

(e) ***Examples.*** The following examples illustrate the application of this section:

Example 1. (i) *Facts.* In Year 4, X, a corporation in a title 11 case, is entitled under section 108(a)(1)(A) to exclude from gross income $100,000 of COD income. For Year 4, X has gross income in the amount of $50,000. In each of Years 1 and 2, X had no taxable income or loss. In Year 3, X had a net operating loss of $100,000, the use of which when carried over to Year 4 is not subject to any restrictions other than those of section 172.
(ii) *Analysis.* Pursuant to paragraph (b) of this section, X takes into account the net operating loss carryover from Year 3 in computing its taxable income for Year 4 before any portion of the COD income excluded under section 108(a)(1)(A) is applied to reduce tax attributes. Thus, the amount of the net operating loss carryover that is reduced under section 108(b)(2) and paragraph (a) of this section is $50,000.

Example 2. (i) *Facts.* The facts are the same as in *Example 1,* except that in Year 4 X sustains a net operating loss in the amount of $100,000. In addition, in each of Years 2 and 3, X reported taxable income in the amount of $25,000.
(ii) *Analysis.* Pursuant to paragraph (b) of this section and section 172, the net operating loss sustained in Year 4 is carried back to Years 2 and 3 before any portion of the COD income excluded under section 108(a)(1)(A) is applied to reduce tax attributes. Thus, the amount of the net operating loss that is reduced under section 108(b)(2) and paragraph (a) of this section is $50,000.

Example 3. (i) *Facts.* In Year 2, X, a corporation in a title 11 case, has outstanding debts of $200,000 and a depreciable asset that has an adjusted basis of $75,000 and a fair market value of $100,000. X has no other assets or liabilities. X has a net operating loss of $80,000 that is carried over to Year 2 but has no general business credit, minimum tax credit, or capital loss carryovers. Under a plan of reorganization, X transfers its asset to Corporation Y in exchange for Y stock with a value of $100,000. X distributes the Y stock to its creditors in exchange for release of their claims against X. X's shareholders receive nothing in the transaction. The transaction qualifies as a reorganization under section 368(a)(1)(G) that satisfies the requirements of section 354(b)(1)(A) and (B). For Year 2, X has gross income of $10,000 (without regard to any income from the discharge of indebtedness) and is allowed a depreciation deduction of $10,000 in respect of the asset. In addition, it generates no general business credits.
(ii) *Analysis.* On the distribution of Y stock to X's creditors, under section 108(a)(1)(A), X is entitled to exclude from gross income the debt discharge amount of $100,000. (Under section 108(e)(8), X is treated as satisfying $100,000 of the debt owed the creditors for $100,000, the fair market value of the Y stock transferred to those creditors.) In Year 2, X has no taxable income or loss because its gross income is exactly offset by the depreciation deduction. As a result of the depreciation deduction, X's basis in the asset is reduced by $10,000 to $65,000. Pursuant to paragraph (c) of this section, the amount of X's net operating loss to which Y succeeds pursuant to section 381 and the basis of X's property transferred to Y must take into account the reductions required by section

108(b). Pursuant to paragraph (a) of this section, X's net operating loss carryover in the amount of $80,000 is reduced by $80,000 of the COD income excluded under section 108(a)(1). In addition, X's basis in the asset is reduced by $20,000, the extent to which the COD income excluded under section 108(a)(1) did not reduce the net operating loss. Accordingly, as a result of the reorganization, there is no net operating loss to which Y succeeds under section 381. Pursuant to section 361, X recognizes no gain or loss on the transfer of its property to Y. Pursuant to section 362(b), Y's basis in the asset acquired from X is $45,000.

Example 4. (i) *Facts.* The facts are the same as in *Example 3,* except that X elects under section 108(b)(5) to reduce first the basis of its depreciable asset.
(ii) *Analysis.* As in *Example 3,* on the distribution of Y stock to X's creditors, under section 108(a)(1)(A), X is entitled to exclude from gross income the debt discharge amount of $100,000. In addition, in Year 2, X has no taxable income or loss because its gross income is exactly offset by the depreciation deduction. As a result of the depreciation deduction, X's basis in the asset is reduced by $10,000 to $65,000. Pursuant to paragraph (c) of this section, the amount of X's net operating loss to which Y succeeds pursuant to section 381 and the basis of X's property transferred to Y must take into account the reductions required by section 108(b). As a result of the election under section 108(b)(5), X's basis in the asset is reduced by $65,000 to $0. In addition, X's net operating loss is reduced by $35,000, the extent to which the amount excluded from income under section 108(a)(1)(A) does not reduce X's asset basis. Accordingly, as a result of the reorganization, Y succeeds to X's net operating loss in the amount of $45,000 under section 381. Pursuant to section 361, X recognizes no gain or loss on the transfer of its property to Y. Pursuant to section 362(b), Y's basis in the asset acquired from X is $0.

Example 5. (i) *Facts.* During the entire calendar year 2009, A, B, and C each own equal shares of stock in X, a calendar year S corporation. As of December 31, 2009, A, B, and C each have a zero stock basis and X does not have any indebtedness to A, B, or C. For the 2009 taxable year, X excludes from gross income $45,000 of COD income under section 108(a)(1)(A). The COD income (had it not been excluded) would have been allocated $15,000 to A, $15,000 to B, and $15,000 to C under section 1366(a). For the 2009 taxable year, X has $30,000 of losses and deductions that X passes through pro rata to A, B, and C in the amount of $10,000 each. The losses and deductions that pass through to A, B, and C are disallowed under section 1366(d)(1). In addition, B has $10,000 of section 1366(d) losses from prior years and C has $20,000 of section 1366(d) losses from prior years. A's ($10,000), B's ($20,000) and C's ($30,000) combined $60,000 of disallowed losses and deductions for the taxable year of the discharge are treated as a current year net operating loss tax attribute of X under section 108(d)(7)(B) (deemed NOL) for purposes of the section 108(b) reduction of tax attributes.
(ii) *Allocation.* Under section 108(b)(2)(A), X's $45,000 of excluded COD income reduces the $60,000 deemed NOL to $15,000. Therefore, X has a $15,000 excess net operating loss (excess deemed NOL) to allocate to its shareholders. Under paragraph (d)(2)(ii)(C) of this section, none of

the $15,000 excess deemed NOL is allocated to A because A's section 1366(d) losses and deductions immediately prior to the section 108(b)(2)(A) reduction ($10,000) do not exceed A's share of the excluded COD income for 2008 ($15,000). Thus, A has no shareholder's excess amount. Each of B's and C's respective section 1366(d) losses and deductions immediately prior to the section 108(b)(2)(A) reduction exceed each of B's and C's respective shares of the excluded COD income for 2008. B's excess amount is $5,000 ($20,000−$15,000) and C's excess amount is $15,000 ($30,000−$15,000). Therefore, the total of all shareholders' excess amounts is $20,000. Under paragraph (d)(2) of this section, X will allocate $3,750 of the $15,000 excess deemed NOL to B ($15,000 × $5,000/$20,000) and $11,250 of the $15,000 excess deemed NOL to C ($15,000 × $15,000/$20,000). These amounts are treated as losses and deductions disallowed under section 1366(d)(1) for the taxable year of the discharge. Accordingly, at the beginning of 2010, A has no section 1366(d)(2) carryovers, B has $3,750 of carryovers, and C has $11,250 of carryovers.

(iii) *Character.* Immediately prior to the section 108(b)(2)(A) reduction, B's $20,000 of section 1366(d) losses and deductions consisted of $8,000 of long-term capital losses, $7,000 of section 1231 losses, and $5,000 of ordinary losses. After the section 108(b)(2)(A) tax attribute reduction, X will allocate $3,750 of the excess deemed NOL to B. Under paragraph (d)(3) of this section, the $3,750 excess deemed NOL allocated to B consists of $1,500 of long-term capital losses (($8,000/$20,000) × $3,750), $1,312.50 of section 1231 losses (($7,000/$20,000) × $3,750), and $937.50 of ordinary losses (($5,000/$20,000) × $3,750). As a result, at the beginning of 2010, B's $3,750 of section 1366(d)(2) carryovers consist of $1,500 of long-term capital losses, $1,312.50 of section 1231 losses, and $937.50 of ordinary losses.

Example 6. (i) A and B each own 50 percent of the shares of stock in X, a calendar year S corporation. On March 1, 2009, X realizes $12,000 of COD income and excludes this amount from gross income under section 108(a)(1)(A) for X's 2009 taxable year. On June 30, 2009, A sells all of her shares of stock in X to C in a transfer not described in section 1041(a). X does not make a terminating election under section 1377(a)(2). The COD income (had it not been excluded) would have been allocated $3,000 to A, $6,000 to B, and $3,000 to C under section 1366(a). Prior to the section 108(b)(2)(A) reduction, for the taxable year of the discharge the shareholders have disallowed losses and deductions under section 1366(d) (including disallowed losses carried over to the current year under section 1366(d)(2)) in the following amounts: A—$5,000, B—$13,000, and C—$2,000. The combined $20,000 of disallowed losses and deductions for the taxable year of the discharge are treated as a current year net operating loss tax attribute of X under section 108(d)(7)(B) (deemed NOL).
(ii) Under section 108(b)(2)(A), X's $12,000 of excluded COD income reduces the $20,000 deemed NOL to $8,000. Therefore, X has an $8,000 excess net operating loss (excess deemed NOL) to allocate to its shareholders. Under paragraph (d)(2)(ii)(C) of this section, none of the $8,000 excess deemed NOL is allocated to C because C's section 1366(d) losses and deductions immediately prior to the section 108(b)(2)(A) reduction ($2,000) do not exceed C's share of the excluded COD income for 2008 ($3,000). However, each of A's and B's respective section 1366(d)

losses and deductions immediately prior to the section 108(b)(2)(A) reduction exceed each of A's and B's respective shares of the excluded COD income for 2009. A's excess amount is $2,000 ($5,000−$3,000) and B's excess amount is $7,000 ($13,000−$6,000). Therefore, the total of all shareholders' excess amounts is $9,000. Under paragraph (d)(2) of this section, X will allocate $1,777.78 of the $8,000 excess deemed NOL to A ($8,000 × $2,000/$9,000) and $6,222.22 of the $8,000 excess deemed NOL to B ($8,000 × $7,000/$9,000). However, because A transferred all of her shares of stock in X in a transaction not described in section 1041(a), A's $1,777.78 of section 1366(d) losses and deductions are permanently disallowed under paragraph (d)(2)(iii) of this section. Accordingly, at the beginning of 2010, B has $6,222.22 of section 1366(d)(2) carryovers and C has no section 1366(d)(2) carryovers.

Example 7. The facts are the same as in *Example 6,* except that X, with the consent of A and C, makes a terminating election under section 1377(a)(2) upon A's sale of her stock in X to C. Therefore, the COD income (had it not been excluded) would have been allocated $6,000 to A, $6,000 to B, and $0 to C. Under paragraph (d)(2)(ii)(C) of this section, none of the $8,000 excess deemed NOL is allocated to A because A's section 1366(d) losses and deductions immediately prior to the section 108(b)(2)(A) reduction ($5,000) do not exceed A's share of the excluded COD income for 2009 ($6,000). However, each of B's and C's respective section 1366(d) losses and deductions immediately prior to the section 108(b)(2)(A) reduction exceed each of B's and C's respective shares of the excluded COD income for 2009. B's excess amount is $7,000 ($13,000−$6,000), C's excess amount is $2,000 ($2,000−$0). Therefore, the total of all shareholders' excess amounts is $9,000. Under paragraph (d)(2) of this section, X will allocate $6,222.22 of the $8,000 excess deemed NOL to B ($8,000 × $7,000/$9,000) and $1,777.78 of the $8,000 excess deemed NOL to C. Accordingly, at the beginning of 2010, B has $6,222.22 of section 1366(d)(2) carryovers and C has $1,777.78 of section 1366(d)(2) carryovers.

(f) ***Effective/applicability date*** —

(1) Paragraphs (a), (b), (c), and *Examples 1, 2, 3,* and *4* of paragraph (e) of this section apply to discharges of indebtedness occurring on or after May 10, 2004.

(2) Paragraph (d) and *Examples 5, 6,* and *7* of paragraph (e) of this section apply to discharges of indebtedness occurring on or after October 30, 2009. Paragraph (d)(2)(iii) of this section applies on and after July 23, 2014. For rules that apply before that date, see 26 CFR part 1 (revised as of April 1, 2014).

[T.D. 9080, 68 FR 42592, July 18, 2003; 68 FR 56556, Oct. 1, 2003. Redesignated and amended by T.D. 9127, 69 FR 26039, May 11, 2004; T.D. 9469, 74 FR 56111, Oct. 30, 2009; T.D. 9682, 79 FR 42677, July 23, 2014]

§ 1.108-8 Indebtedness satisfied by partnership interest.

(a) ***In general.*** For purposes of determining income of a debtor from discharge of indebtedness (COD income), if a debtor partnership transfers a capital or profits interest in the partnership to a creditor in satisfaction of its recourse or nonrecourse indebtedness (a debt-for-equity exchange), the partnership is treated as having satisfied the indebtedness with an amount of money equal to the fair market value of the partnership interest.

(b) ***Determination of fair market value*** —

(1) ***In general.*** All the facts and circumstances are considered in determining the fair market value of a partnership interest transferred by a debtor partnership to a creditor in satisfaction of the debtor partnership's indebtedness (debt-for-equity interest) for purposes of paragraph (a) of this section. If the fair market value of the debt-for-equity interest does not equal the fair market value of the indebtedness exchanged, then general tax law principles shall apply to account for the difference.

(2) ***Safe harbor*** —

(i) ***General rule.*** For purposes of paragraph (a) of this section, the fair market value of a debt-for-equity interest is deemed to be equal to the liquidation value of the debt-for-equity interest, as defined in paragraph (b)(2)(iii) of this section, if the following requirements are satisfied—

(A) The creditor, debtor partnership, and its partners treat the fair market value of the indebtedness as being equal to the liquidation value of the debt-for-equity interest for purposes of determining the tax consequences of the debt-for-equity exchange;

(B) If, as part of the same overall transaction, the debtor partnership transfers more than one debt-for-equity interest to one or more creditors, then each creditor, debtor partnership, and its partners treat the fair market value of each debt-for-equity interest transferred by the debtor partnership to such creditors as equal to its liquidation value;

(C) The debt-for-equity exchange is a transaction that has terms that are comparable to terms that would be agreed to by unrelated parties negotiating with adverse interests; and

(D) Subsequent to the debt-for-equity exchange, the debtor partnership does not redeem the debt-for-equity interest, and no person bearing a relationship to the debtor partnership or its partners that is specified in section 267(b) or section 707(b) purchases the debt-for-equity interest, as part of a plan at the time of the debt-for-equity exchange that has as a principal purpose the avoidance of COD income by the debtor partnership.

(ii) ***Tiered-partnership rule.*** For purposes of this paragraph (b)(2), the liquidation value of a debt-for-equity interest in a partnership (upper-tier partnership) that directly or indirectly owns an interest in one or more partnerships (lower-tier partnership(s)) is determined by taking into account the liquidation value of such lower-tier partnership interests.

(iii) ***Definition of liquidation value.*** For purposes of this paragraph (b)(2), the liquidation value of a debt-for-equity interest equals the amount of cash that the creditor would receive with respect to the debt-for-equity interest if, immediately after the debt-for-equity exchange, the partnership sold all of its assets (including goodwill, going concern value, and any other intangibles) for cash equal to the fair market value of those assets and then liquidated.

(c) ***Example.*** The following example illustrates the provisions of this section:

> *Example.* (i) AB partnership has $1,000 of outstanding indebtedness owed to C. C agrees to transfer to AB partnership the $1,000 indebtedness in a debt-for-equity exchange for a debt-for-equity interest in AB partnership. The liquidation value of C's debt-for-equity interest is $700, which is the amount of cash that C would receive with respect to that interest if, immediately after the debt-for-equity exchange, AB partnership sold all of its assets for cash equal to the fair market value of those assets and then liquidated. Each of the requirements of the liquidation value safe harbor described in paragraph (b)(2) of this section is satisfied.

> (ii) Because the requirements in paragraph (b)(2) of this section are satisfied, the fair market value of C's debt-for-equity interest in AB partnership for purposes of determining AB partnership's COD income is the liquidation value of C's debt-for-equity interest, or $700. Accordingly, AB partnership is treated as satisfying the $1,000 indebtedness for $700 under section 108(e)(8).

(d) ***Effective/applicability date.*** This section applies to debt-for-equity exchanges occurring on or after November 17, 2011.

[T.D. 9557, 76 FR 71258, Nov. 17, 2011]

§ 1.108-9 Application of the bankruptcy and the insolvency provisions of section 108 to grantor trusts and disregarded entities.

(a) ***General rule*** —

(1) ***Owner is the taxpayer.*** For purposes of applying section 108(a)(1)(A) and (B) to discharge of indebtedness income of a grantor trust or a disregarded entity, neither the grantor trust nor the disregarded entity shall be considered to be the "taxpayer," as that term is used in section 108(a)(1) and (d)(1) through (3). Rather, for purposes of section 108(a)(1)(A) and (B) and (d)(1) through (3) and subject to section 108(d)(6), the owner of the grantor trust or the owner of the disregarded entity is the "taxpayer."

(2) ***The bankruptcy exclusion.*** If indebtedness of a grantor trust or a disregarded entity is discharged in a title 11 case, section 108(a)(1)(A) applies to that discharged indebtedness only if the owner of the grantor trust or the owner of the disregarded entity is under the jurisdiction of the court in a title 11 case as the title 11 debtor. If the grantor trust or the disregarded entity is under the jurisdiction of the court in a title 11 case as the title 11 debtor, but the owner of the grantor trust or the owner of the disregarded entity is not, section 108(a)(1)(A) does not apply to the discharge of indebtedness income.

(3) ***The insolvency exclusion.*** Section 108(a)(1)(B) applies to the discharged indebtedness of a grantor trust or a disregarded entity only to the extent the owner of the grantor trust or the owner of the disregarded entity is insolvent. If the grantor trust or the disregarded entity is insolvent, but the owner of the grantor trust or the owner of the disregarded entity is solvent, section 108(a)(1)(B) does not apply to the discharge of indebtedness income.

(b) ***Application to partnerships.*** Under section 108(d)(6), in the case of a partnership, section 108(a)(1)(A) and (B) applies at the partner level. If a partnership holds an interest in a grantor trust or a disregarded entity, the applicability of section 108(a)(1)(A) and (B) to the discharge of indebtedness income is tested by looking to each partner to whom the income is allocable.

(c) ***Definitions*** —

(1) ***Disregarded entity.*** For purposes of this section, a *disregarded entity* is an entity that is disregarded as an entity separate from its owner for Federal income tax purposes. See § 301.7701-2(c)(2)(i) of this chapter, the Procedure and Administration Regulations. Examples of disregarded entities include a domestic single-member limited liability company that does not elect to be classified as a corporation for Federal income tax purposes pursuant to § 301.7701-3 of this chapter, a corporation that is a qualified REIT subsidiary (within the meaning of section 856(i)(2)), and a corporation that is a qualified subchapter S subsidiary (within the meaning of section 1361(b)(3)(B)).

(2) ***Grantor trust.*** For purposes of this section, a *grantor trust* is any portion of a trust that is treated under subpart E of part I of subchapter J of chapter 1 of subtitle A of title 26 of the United States Code as being owned by the grantor or another person.

(3) ***Owner.*** Notwithstanding any other provision of this section to the contrary, neither a grantor trust nor a disregarded entity shall be considered an owner for purposes of this section.

(4) ***Title 11 debtor.*** For purposes of this section, a *title 11 debtor* is a debtor in a case under title 11 of the United States Code, as defined in 11 U.S.C. 101(13).

(d) ***Applicability date.*** The rules of this section apply to discharge of indebtedness income occurring on or after June 10, 2016.

[T.D. 9771, 81 FR 37507, June 10, 2016]

§ 1.108(c)-1T [Reserved]

§ 1.108(i)-0 Definitions and effective/applicability dates.

(a) ***Definitions.*** For purposes of regulations under section 108(i)—

(1) ***Acquisition.*** An *acquisition,* with respect to any applicable debt instrument, includes an acquisition of the debt instrument for cash or other property, the exchange of the debt instrument for another debt instrument (including an exchange resulting from a modification of the debt instrument), the exchange of the debt instrument for corporate stock or a partnership interest, the contribution of the debt instrument to capital, the complete forgiveness of the indebtedness by the holder of the debt instrument, and a direct or an indirect acquisition within the meaning of § 1.108-2.

(2) ***Applicable debt instrument.*** An *applicable debt instrument* is a debt instrument that was issued by a C corporation or any other person in connection with the conduct of a trade or business by such person. In the case of an intercompany obligation (as defined in § 1.1502-13(g)(2)(ii)), *applicable debt instrument* includes only an instrument for which COD income is realized upon the instrument's deemed satisfaction under § 1.1502-13(g)(5).

(3) ***C corporation issuer. C corporation issuer*** means a C corporation that issues a debt instrument with any deferred OID deduction.

(4) ***C corporation partner.*** A *C corporation partner* is a C corporation that is a direct or indirect partner of an electing partnership or a related partnership.

(5) ***COD income. COD income*** means income from the discharge of indebtedness, as determined under sections 61(a)(12) and 108(a) and the regulations under those sections.

(6) ***COD income amount.*** A *COD income amount* is a partner's distributive share of COD income with respect to an applicable debt instrument of an electing partnership.

(7) ***Debt instrument. Debt instrument*** means a bond, debenture, note, certificate, or any other instrument or contractual arrangement constituting indebtedness (within the meaning of section 1275(a)(1)).

(8) ***Deferral period.*** For a reacquisition that occurs in 2009, *deferral period* means the taxable year of the reacquisition and the four taxable years following such taxable year. For a reacquisition that occurs in 2010, *deferral period* means the taxable year of the reacquisition and the three taxable years following such taxable year.

(9) ***Deferred amount.*** A *deferred amount* is the portion of a partner's COD income amount with respect to an applicable debt instrument that is deferred under section 108(i).

(10) ***Deferred COD income. Deferred COD income*** means COD income that is deferred under section 108(i).

(11) ***Deferred item.*** A *deferred item* is any item of deferred COD income or deferred OID deduction that has not been previously taken into account under section 108(i).

(12) ***Deferred OID deduction.*** A *deferred OID deduction* means an otherwise allowable deduction for OID that is deferred under section 108(i)(2) with respect to a debt instrument issued (or treated as issued under section 108(e)(4)) in a debt-for-debt exchange described in section 108(i)(2)(A) or a deemed debt-for-debt exchange described in § 1.108(i)-3(a).

(13) ***Deferred section 465 amount.*** A *deferred section 465 amount* is described in paragraph (d)(3) of § 1.108(i)-2.

(14) ***Deferred section 752 amount.*** A *deferred section 752 amount* is described in paragraph (b)(3) of § 1.108(i)-2.

(15) ***Direct partner.*** A *direct partner* is a person that owns a direct interest in a partnership.

(16) ***Electing corporation.*** An *electing corporation* is a C corporation with deferred COD income by reason of a section 108(i) election.

(17) ***Electing entity.*** An *electing entity* is an entity that is a taxpayer that makes an election under section 108(i).

(18) ***Electing member.*** An *electing member* is an electing corporation that is a member of an affiliated group that files a consolidated return.

(19) ***Electing partnership.*** An *electing partnership* is a partnership that makes an election under section 108(i).

(20) ***Electing S corporation.*** An *electing S corporation* is an S corporation that makes an election under section 108(i).

(21) ***Included amount.*** An *included amount* is the portion of a partner's COD income amount with respect to an applicable debt instrument that is not deferred under section 108(i) and is included in the partner's distributive share of partnership income for the taxable year of the partnership in which the reacquisition occurs.

(22) ***Inclusion period.*** The *inclusion period* is the five taxable years following the last taxable year of the deferral period.

(23) ***Indirect partner.*** An *indirect partner* is a person that owns an interest in a partnership through an S corporation and/or one or more partnerships.

(24) ***Issuing entity.*** An *issuing entity* is any entity that is—

(i) A related partnership;

(ii) A related S corporation;

(iii) An electing partnership that issues a debt instrument (or is treated as issuing a debt instrument under section 108(e)(4)) in a debt-for-debt exchange described in section 108(i)(2)(A) or a deemed debt-for-debt exchange described in § 1.108(i)-3(a); or

(iv) An electing S corporation that issues a debt instrument (or is treated as issuing a debt instrument under section 108(e)(4)) in a debt-for-debt exchange described in section 108(i)(2)(A) or a deemed debt-for-debt exchange described in § 1.108(i)-3(a).

(25) ***OID. OID*** means original issue discount, as determined under sections 1271 through 1275 (and the regulations under those sections). If the amount of OID with respect to a debt instrument is less than a de minimis amount as determined under § 1.1273-1(d), the OID is treated as zero for purposes of section 108(i)(2).

(26) ***Reacquisition.*** A *reacquisition,* with respect to any applicable debt instrument, is any event occurring after December 31, 2008 and before January 1, 2011, that causes COD income with respect to such applicable debt instrument, including any acquisition of the debt instrument by the debtor that issued (or is otherwise the obligor under) the debt instrument or a person related to such debtor (within the meaning of section 108(i)(5)(A)).

(27) ***Related partnership.*** A *related partnership* is a partnership that is related to the electing entity (within the meaning of section 108(i)(5)(A)) and that issues a debt instrument in a debt-for-debt exchange described in section 108(i)(2)(A) or a deemed debt-for-debt exchange described in § 1.108(i)-3(a).

(28) ***Related S corporation.*** A *related S corporation* is an S corporation that is related to the electing entity (within the meaning of section 108(i)(5)(A)) and that issues a debt instrument in a debt-for-debt exchange described in section 108(i)(2)(A) or a deemed debt-for-debt exchange described in § 1.108(i)-3(a).

(29) ***Separate interest.*** A *separate interest* is a direct interest in an electing partnership or in a partnership or S corporation that is a direct or indirect partner of an electing partnership.

(30) ***S corporation partner.*** An *S corporation partner* is an S corporation that is a direct or indirect partner of an electing partnership or a related partnership.

(b) ***Effective/Applicability dates*** —

(1) ***In general.*** The rules of this section, § 1.108(i)-1, and § 1.108(i)-2, apply on or after July 2, 2013, to reacquisitions of applicable debt instruments in taxable years ending after December 31, 2008. In addition, the rules of § 1.108(i)-3 apply on or after July 2, 2013, to debt instruments issued after December 31, 2008, in connection with reacquisitions of applicable debt instruments in taxable years ending after December 31, 2008.

(2) ***Prior periods.*** For rules applying before July 2, 2013, see § 1.108(i)-0T, § 1.108(i)-1T, § 1.108(i)-2T, and § 1.108(i)-3T, as contained in 26 CFR part 1, revised April 1, 2013.

[T.D. 9622, 78 FR 39986, July 3, 2013; 78 FR 48607, Aug. 9, 2013]

§ 1.108(i)-1 Deferred discharge of indebtedness income and deferred original issue discount deductions of C corporations.

(a) ***Overview.*** Section 108(i)(1) provides an election for the deferral of COD income arising in connection with the reacquisition of an applicable debt instrument. An electing corporation generally includes deferred COD income ratably over the inclusion period. Paragraph (b) of this section provides rules for the

mandatory acceleration of an electing corporation's remaining deferred COD income, the mandatory acceleration of a C corporation issuer's deferred OID deductions, and for the elective acceleration of an electing member's (other than the common parent's) remaining deferred COD income. Paragraph (c) of this section provides examples illustrating the application of the mandatory and elective acceleration rules. Paragraph (d) of this section provides rules for the computation of an electing corporation's earnings and profits. Paragraph (e) of this section refers to the effective/applicability dates.

(b) ***Acceleration events*** —

(1) ***Deferred COD income.*** Except as otherwise provided in paragraphs (b)(2) and (3) of this section, and § 1.108(i)-2(b)(6) (in the case of a corporate partner), an electing corporation's deferred COD income is taken into account ratably over the inclusion period.

(2) ***Mandatory acceleration events.*** An electing corporation takes into account all of its remaining deferred COD income, including its share of an electing partnership's deferred COD income, immediately before the occurrence of any one of the events described in this paragraph (b)(2) (mandatory acceleration events), regardless of whether the electing corporation is in a title 11 or similar case at the time the mandatory acceleration event occurs.

(i) ***Changes in tax status.*** The electing corporation changes its tax status. For purposes of the preceding sentence, an electing corporation is treated as changing its tax status if it becomes one of the following entities:

(A) A tax-exempt entity as defined in § 1.337(d)-4(c)(2).

(B) An S corporation as defined in section 1361(a)(1).

(C) A qualified subchapter S subsidiary as defined in section 1361(b)(3)(B).

(D) An entity operating on a cooperative basis within the meaning of section 1381.

(E) A regulated investment company (RIC) as defined in section 851 or a real estate investment trust (REIT) as defined in section 856.

(F) A qualified REIT subsidiary as defined in section 856(i), but only if the qualified REIT subsidiary was not a REIT immediately before it became a qualified REIT subsidiary.

(ii) ***Cessation of corporate existence*** —

(A) ***In general.*** The electing corporation ceases to exist for Federal income tax purposes.

(B) ***Exception for section 381(a) transactions*** —

(*1*) ***In general.*** The electing corporation is not treated as ceasing to exist and is not required to take into account its remaining deferred COD income solely because its assets are acquired in a transaction to which section 381(a) applies. In such a case, the acquiring corporation succeeds to the electing corporation's remaining deferred COD income and becomes subject to section 108(i) and the regulations thereunder, including all reporting requirements, as if the acquiring corporation were the electing corporation. A transaction is not treated as one to which section 381(a) applies for purposes of this paragraph (b)(2)(ii)(B) in the following circumstances—

(*i*) The acquisition of the assets of an electing corporation by an S corporation, if the acquisition is described in section 1374(d)(8);

(*ii*) The acquisition of the assets of an electing corporation by a RIC or REIT, if the acquisition is described in § 1.337(d)-7(a)(2)(ii);

(*iii*) The acquisition of the assets of a domestic electing corporation by a foreign corporation;

(*iv*) The acquisition of the assets of a foreign electing corporation by a domestic corporation, if as a result of the transaction, one or more exchanging shareholders include in income as a deemed dividend the all earnings and profits amount with respect to stock in the foreign electing corporation pursuant to § 1.367(b)-3(b)(3);

(*v*) The acquisition of the assets of an electing corporation by a tax-exempt entity as defined in § 1.337(d)-4(c)(2); or

(*vi*) The acquisition of the assets of an electing corporation by an entity operating on a cooperative basis within the meaning of section 1381.

(2) ***Special rules for consolidated groups*** —

(*i*) ***Liquidations.*** For purposes of paragraph (b)(2)(ii)(B) of this section, the acquisition of assets by distributee members of a consolidated group upon the liquidation of an electing corporation is not treated as a transaction to which section 381(a) applies, unless immediately prior to the liquidation, one of the distributee members owns stock in the electing corporation meeting the requirements of section 1504(a)(2) (without regard to § 1.1502-34). See § 1.1502-80(g).

(*ii*) ***Taxable years.*** In the case of an intercompany transaction to which section 381(a) applies, the transaction does not cause the transferor or distributor to have a short taxable year for purposes of determining the taxable year of the deferral and inclusion period.

(iii) ***Net value acceleration rule*** —

(A) ***In general.*** The electing corporation engages in an impairment transaction and, immediately after the transaction, the gross value of the electing corporation's assets (gross asset value) is less than one hundred and ten percent of the sum of its total liabilities and the tax on the net amount of its deferred items (the net value floor) (the net value acceleration rule). Impairment transactions are any transactions, however effected, that impair an electing corporation's ability to pay the amount of Federal income tax liability on its deferred COD income and include, for example, distributions (including section 381(a) transactions), redemptions, below-market sales, charitable contributions, and the incurrence of additional indebtedness without a corresponding increase in asset value. Value-for-value sales or exchanges (for example, an exchange to which section 351 or section 721 applies), or mere declines in the market value of the electing corporation's assets are not impairment transactions. In addition, an electing corporation's investments and expenditures in pursuance of its good faith business judgment are not impairment transactions. For purposes of determining an electing corporation's gross asset value, the amount of any distribution that is not treated as an impairment transaction under paragraph (b)(2)(iii)(D) of this section (distributions and charitable contributions consistent with historical practice) or under paragraph (b)(2)(iii)(E) of this section (special

rules for RICs and REITs) is treated as an asset of the electing corporation. Solely for purposes of computing the amount of the net value floor, the tax on the deferred items is determined by applying the highest rate of tax specified in section 11(b) for the taxable year.

(B) ***Transactions integrated.*** Any transaction that occurs before the reacquisition of an applicable debt instrument, but that occurs pursuant to the same plan as the reacquisition, is taken into account in determining whether the gross asset value of the electing corporation is less than the net value floor.

(C) ***Corrective action to restore net value.*** An electing corporation is not required to take into account its deferred COD income under the net value acceleration rule of paragraph (b)(2)(iii)(A) of this section if, before the due date of the electing corporation's return (including extensions), value is restored in a transaction in an amount equal to the lesser of—

(*1*) The amount of value that was removed from the electing corporation in one or more impairment transactions (net of amounts previously restored under this paragraph (b)(2)(iii)(C)); or

(*2*) The amount by which the electing corporation's net value floor exceeds its gross asset value.

For example, assume an electing corporation incurs $50 of debt, distributes the $50 of proceeds to its shareholder, and immediately after the distribution, the electing corporation's gross asset value is below the net value floor by $25. The electing corporation may avoid the inclusion of its remaining deferred COD income if value of at least $25 is restored to it before the due date of the electing corporation's tax return (including extensions) for the taxable year that includes the distribution. The value that must be restored is determined at the time of the impairment transaction on a net value basis (for example, additional borrowings by an electing corporation do not restore value).

(D) ***Exceptions for distributions and charitable contributions that are consistent with historical practice.*** An electing corporation's distributions are not treated as impairment transactions (and are not taken into account as a reduction of the electing corporation's gross asset value when applying the net value acceleration rule to any impairment transaction), to the extent that the distributions are described in section 301(c) and the amount of these distributions, in the aggregate, for the applicable taxable year (applicable distribution amount) does not exceed the annual average amount of section 301(c) distributions over the preceding three taxable years (average distribution amount). If an electing corporation's applicable distribution amount exceeds its average distribution amount (excess amount), then the amount of the impairment transaction equals the excess amount. Appropriate adjustments must be made to take into account any issuances or redemptions of stock, or similar transactions, occurring during the taxable year of distribution or any of the preceding three taxable years. If the electing corporation has a short taxable year for the year of the distribution or for any of the preceding three taxable years, the amounts are determined on an annualized basis. If an electing corporation has been in existence for less than three years, the period during which the electing corporation has been in existence is substituted for the preceding three taxable years. For purposes of determining an electing corporation's average distribution amount, the

electing corporation does not take into account the distribution history of a distributor or transferor in a transaction to which section 381(a) applies (other than a transaction described in section 368(a)(1)(F)). Rules similar to those prescribed in this paragraph (b)(2)(iii)(D) also apply to an electing corporation's charitable contributions (within the meaning of section 170(c)) that are consistent with its historical practice.

(E) *Special rules for RICs and REITs* —

(1) ***Distributions.*** Notwithstanding paragraph (b)(2)(iii)(D) of this section, in the case of a RIC or REIT, any distribution with respect to stock that is treated as a dividend under section 852 or 857 is not treated as an impairment transaction (and is not taken into account as a reduction in gross asset value when applying the net value acceleration rule to any impairment transaction).

(2) ***Redemptions by RICs.*** Any redemption of a redeemable security, as defined in 15 U.S.C. section 80a-2(a)(32), by a RIC in the ordinary course of business is not treated as an impairment transaction (and is not taken into account as a reduction in gross asset value when applying the net value acceleration rule to any impairment transaction).

(F) *Special rules for consolidated groups* —

(1) ***Impairment transactions and net value acceleration rule.*** In the case of an electing member, the determination of whether the member has engaged in an impairment transaction is made on a group-wide basis. An electing member is treated as engaging in an impairment transaction if any member's transaction impairs the group's ability to pay the tax liability associated with all electing members' deferred COD income. Accordingly, intercompany transactions are not impairment transactions. Similarly, the net value acceleration rule is applied by reference to the gross asset value of all members (excluding stock of members whether or not described in section 1504(a)(4)), the liabilities of all members, and the tax on all members' deferred items. For example, assume P is the common parent of the P-S consolidated group, S has a section 108(i) election in effect, and S makes a $100 distribution to P which, on a separate entity basis, would reduce S's gross asset value below the net value floor. S's intercompany distribution to P is not an impairment transaction. However, if P makes a $100 distribution to its shareholder, P's distribution is an impairment transaction (unless the distribution is consistent with its historical practice under paragraph (b)(2)(iii)(D) of this section), and the net value acceleration rule is applied by reference to the assets, liabilities, and deferred items of the P-S group.

(2) ***Departing member.*** If an electing member that previously engaged in one or more impairment transactions on a separate entity basis ceases to be a member of a consolidated group (departing member), the cessation is treated as an impairment transaction and the net value acceleration rule under paragraph (b)(2)(iii)(A) of this section is applied to the departing member on a separate entity basis immediately after ceasing to be a member (and taking into account the impairment transaction(s) that occurred on a separate entity basis). If the departing member's gross asset value is below the net value floor, the departing member's remaining deferred COD income is taken into account immediately before the departing member ceases to be a member (unless value is restored under paragraph (b)(2)(iii)(C) of this section). If

the departing member's deferred COD income is not accelerated, the departing member is subject to the reporting requirements of section 108(i) on a separate entity basis. If the departing member becomes a member of another consolidated group, the cessation is treated as an impairment transaction and the net value acceleration rule under paragraph (b)(2)(iii)(A) of this section is applied by reference to the assets, liabilities, and the tax on deferred items of the members of the acquiring group immediately after the transaction. If the acquiring group's gross asset value is below the net value floor, the departing member's remaining deferred COD income is taken into account immediately before the departing member ceases to be a member (unless value is restored under paragraph (b)(2)(iii)(C) of this section). If the departing member's remaining deferred COD income is not accelerated, the common parent of the acquiring group succeeds to the reporting requirements of section 108(i) with respect to the departing member.

(3) ***Elective acceleration for certain consolidated group members*** —

(i) ***In general.*** An electing member (other than the common parent) of a consolidated group may elect at any time to accelerate in full (and not in part) the inclusion of its remaining deferred COD income with respect to all applicable debt instruments by filing a statement described in paragraph (b)(3)(ii) of this section. Once made, an election to accelerate deferred COD income under this paragraph (b)(3) is irrevocable.

(ii) ***Time and manner for making election*** —

(A) ***In general.*** The election to accelerate the inclusion of an electing member's remaining deferred COD income with respect to all applicable debt instruments is made on a statement attached to a timely filed tax return (including extensions) for the year in which the deferred COD income is taken into account. The election is made by the common parent on behalf of the electing member. See § 1.1502-77(a).

(B) ***Additional information.*** The statement must include—

(*1*) ***Label.*** A label entitled "SECTION 1.108(i)-1 ELECTION AND INFORMATION STATEMENT BY [INSERT NAME AND EMPLOYER IDENTIFICATION NUMBER OF THE ELECTING MEMBER]"; and

(*2*) ***Required Information.*** An identification of each applicable debt instrument to which an election under this paragraph (b)(3) applies and the corresponding amount of—

(*i*) Deferred COD income that is accelerated under this paragraph (b)(3); and

(*ii*) Deferred OID deductions that are accelerated under paragraph (b)(4) of this section.

(4) ***Deferred OID deductions*** —

(i) ***In general.*** Except as otherwise provided in paragraph (b)(4)(ii) of this section and § 1.108(i)-2(b)(6) (in the case of a C corporation partner), a C corporation issuer's deferred OID deductions are taken into account ratably over the inclusion period.

(ii) ***OID acceleration events.*** A C corporation issuer takes into account all of its remaining deferred OID deductions with respect to a debt instrument immediately before the occurrence of any one of the events described in this paragraph (b)(4)(ii), regardless of whether the C corporation issuer is in a title 11 or similar case.

(A) ***Inclusion of deferred COD income.*** An electing entity or its owners take into account all of the remaining deferred COD income to which the C corporation issuer's deferred OID deductions relate. If, under § 1.108(i)-2(b) or (c), an electing entity or its owners take into account only a portion of the deferred COD income to which the deferred OID deductions relate, then the C corporation issuer takes into account a proportionate amount of the remaining deferred OID deductions.

(B) ***Changes in tax status.*** The C corporation issuer changes its tax status within the meaning of paragraph (b)(2)(i) of this section.

(C) ***Cessation of corporate existence*** —

(*1*) ***In general.*** The C corporation issuer ceases to exist for Federal income tax purposes.

(*2*) ***Exception for section 381(a) transactions*** —

(*i*) ***In general.*** A C corporation issuer is not treated as ceasing to exist and does not take into account its remaining deferred OID deductions in a transaction to which section 381(a) applies, taking into account the application of § 1.1502-34, as appropriate. See § 1.1502-80(g). This exception does not apply to a transaction that is not treated as one to which section 381(a) applies under paragraph (b)(2)(iii)(B)(*1*) of this section.

(*ii*) ***Taxable years.*** In the case of an intercompany transaction to which section 381(a) applies, the transaction does not cause the transferor or distributor to have a short taxable year for purposes of determining the taxable year of the deferral and inclusion period.

(c) ***Examples.*** The application of this section is illustrated by the following examples. Unless otherwise stated, P, S, S1, and X are domestic C corporations, and each files a separate return on a calendar year basis:

> *Example 1. Net value acceleration rule.* (i) *Facts.* On January 1, 2009, S reacquires its own note and realizes $400 of COD income. Pursuant to an election under section 108(i), S defers recognition of the entire $400 of COD income. Therefore, absent a mandatory acceleration event, S will take into account $80 of its deferred COD income in each year of the inclusion period. On December 31, 2010, S makes a $25 distribution to its sole shareholder, P, and this is the only distribution made by S in the past four years. Immediately following the distribution, S's gross asset value is $100, S has no liabilities, and the Federal income tax on S's $400 of deferred COD income is $140. Accordingly, S's net value floor is $154 (110% × $140).

(ii) *Analysis.* Under paragraph (b)(2)(iii)(A) of this section, S's distribution is an impairment transaction. Immediately following the distribution, S's gross asset value of $100 is less than the net value floor of $154. Accordingly, under the net value acceleration rule of paragraph (b)(2)(iii)(A) of this section, S takes into account its $400 of deferred COD income immediately before the distribution.

(iii) *Corrective action to restore value.* The facts are the same as in paragraph (i) of this *Example 1,* except that P contributes assets with a value of $25 to S before the due date of S's 2010 return (including extensions). Because P restores $25 of value to S (the lesser of the amount of value removed in the distribution ($25) or the amount by which S's net value floor exceeds its gross asset value ($54)), under paragraph (b)(2)(iii)(C) of this section, S does not take into account its $400 of deferred COD income.

Example 2. Distributions consistent with historical practice. (i) *Facts.* P, a publicly traded corporation, makes a valid section 108(i) election with respect to COD income realized in 2009. On December 31, 2009, P distributes $25 million on its 5 million shares of common stock outstanding. As of January 1, 2006, P has 10 million shares of common stock outstanding, and on March 31, 2006, P distributes $10 million on those 10 million shares. On September 15, 2006, P effects a 2:1 reverse stock split, and on December 31, 2006, P distributes $10 million on its 5 million shares of common stock outstanding. In each of 2007 and 2008, P distributes $5 million on its 5 million shares of common stock outstanding. All of the distributions are described in section 301(c).
(ii) *Amount of impairment transaction.* Under paragraph (b)(2)(iii)(D) of this section, P's 2009 distributions are not treated as impairment transactions (and are not taken into account as a reduction of P's gross asset value when applying the net value acceleration rule to any impairment transaction), to the extent that the aggregate amount distributed in 2009 (the applicable distribution amount) does not exceed the annual average amount of distributions (the average distribution amount) over the preceding three taxable years. Accordingly, P's applicable distribution amount for 2009 is $25 million, and its average distribution amount is $10 million ($20 million (2006) plus $5 million (2007) plus $5 million (2008) divided by 3). The reverse stock split in 2006 is not a transaction requiring an adjustment to the determination of the average distribution amount. Because P's applicable distribution amount of $25 million exceeds its average distribution amount of $10 million, under paragraph (b)(2)(iii)(D) of this section, the amount of P's 2009 distribution that is treated as an impairment transaction is $15 million. The balance of the 2009 distribution, $10 million, is not treated as an impairment transaction (and is not taken into account as a reduction in P's gross asset value when applying the net value acceleration rule to any impairment transaction).

(iii) *Distribution history.* The facts are the same as in paragraph (i) of this *Example 2,* except that in 2010, P merges into X in a transaction to which section 381(a) applies, with X succeeding to P's deferred COD income, and X makes a distribution to its shareholders. For purposes of determining whether X's distribution is consistent with its historical practice, the average distribution amount is determined solely with respect to X's distribution history.

Example 3. Cessation of corporate existence. (i) *Transaction to which section 381(a) applies.* P owns all of the stock of S. In 2009, S reacquires its own note and elects to defer recognition of its $400 of COD income under section 108(i). On December 31, 2010, S liquidates into P in a transaction that qualifies under section 332. Under paragraph (b)(2) of this section, S must take into account all of its remaining deferred COD income upon the occurrence of any one of the mandatory acceleration events. Although S ceases its corporate existence as a result of the liquidation, S is not required to take into account its remaining deferred COD income under the exception in paragraph (b)(2)(ii)(B) of this section because its assets are acquired in a transaction to which section 381(a) applies. However, under paragraph (b)(2)(iii)(A) of this section, S's distribution to P is an impairment transaction and the net value acceleration rule is applied with respect to the assets, liabilities, and deferred items of P (S's successor) immediately following the distribution. If S's deferred COD income is not taken into account under the net value acceleration rule of (b)(2)(iii) of this section, P succeeds to S's remaining deferred COD income and to S's reporting requirements as if P were the electing corporation.
(ii) *Debt-laden distributee.* The facts are the same as in paragraph (i) of this *Example 3,* except that in the liquidation, S distributes $100 of assets to P, a holding company whose only asset is its stock in S. Assume that immediately following the distribution, P's gross asset value is $100, P has $60 of liabilities, and the Federal income tax on the $400 of deferred COD income is $140. Under paragraph (b)(2) of this section, S must take into account all of its remaining deferred COD income upon the occurrence of any one of the mandatory acceleration events. Although S ceases its corporate existence as a result of the liquidation, S is not required to take into account its remaining deferred COD income under the exception in paragraph (b)(2)(ii)(B) of this section because its assets are acquired in a transaction to which section 381(a) applies. However, under paragraph (b)(2)(iii)(A) of this section, S's distribution to P is an impairment transaction and the net value acceleration rule is applied with respect to the assets, liabilities, and deferred items of P (S's successor). Immediately following the distribution, P's gross asset value of $100 is less than the net value floor of $220 [110% × ($60 + $140)]. Accordingly, under the net value acceleration rule of paragraph (b)(2)(iii)(A) of this section, S is required to take into account its $400 of deferred COD income immediately before the distribution, unless value is restored to P pursuant to paragraph (b)(2)(iii)(C) of this section.

(iii) *Foreign acquirer.* The facts are the same as in paragraph (i) of this *Example 3,* except that P is a foreign corporation. Although S's assets are acquired in a transaction to which section 381(a) applies, under paragraph (b)(2)(ii)(B)(*1*)(*iii*) of this section, the exception to accelerated inclusion does not apply and S takes into account its remaining deferred COD income immediately before the liquidation. See also section 367(e)(2) and the regulations thereunder.

(iv) *Section 338 transaction.* P, the common parent of a consolidated group (P group), owns all the stock of S1, one of the members of the P group. In 2009, S1 reacquires its own indebtedness and realizes $30 of COD income. Pursuant to an election under section 108(i), S1 defers recognition of the entire $30 of COD income. In 2010, P sells all the stock of S1 to X, an unrelated corporation, for $300, and P and X make a timely section 338(h)(10) election with respect to the sale. Under paragraph (b)(2)(ii)(A) of this section, an electing corporation takes into account its remaining deferred COD income when it ceases its existence for Federal income tax purposes unless the exception in paragraph (b)(2)(ii)(B) of this section applies. Pursuant to section 338(h)(10) and the regulations, S1 is treated as transferring all of its assets to an unrelated person in exchange for consideration that includes the discharge of its liabilities. This deemed value-for-value exchange is not an impairment transaction. Following the deemed sale, while S1 is still a member of the P group, S1 is treated as distributing all of its assets to P and as ceasing its existence. Under these facts, the distribution of all of S1's assets constitutes a deemed liquidation, and is a transaction to which sections 332 and 381(a) apply. Although S1 ceases its corporate existence as a result of the liquidation, S1 is not required to take into account its remaining deferred COD income under the exception in paragraph (b)(2)(ii)(B) of this section because its assets are acquired in a transaction to which section 381(a) applies. P succeeds to S1's remaining deferred COD income and to S1's reporting requirements as if P were the electing corporation. Under paragraph (b)(2)(iii)(F)(*1*) of this section, the intercompany distribution from S1 to P is not an impairment transaction.

(d) ***Earnings and profits*** —

(1) ***In general.*** Deferred COD income increases earnings and profits in the taxable year that it is realized and not in the taxable year or years that the deferred COD income is includible in gross income. Deferred OID deductions decrease earnings and profits in the taxable year or years in which the deduction would be allowed without regard to section 108(i).

(2) ***Exceptions*** —

(i) ***RICs and REITs.*** Notwithstanding paragraph (d)(1) of this section, deferred COD income increases earnings and profits of a RIC or REIT in the taxable year or years in which the deferred COD income is includible in gross income and not in the year that the deferred COD income is realized. Deferred OID deductions decrease earnings and profits of a RIC or REIT in the taxable year or years that the deferred OID deductions are deductible.

(ii) ***Alternative minimum tax.*** For purposes of calculating alternative minimum taxable income, any items of deferred COD income or deferred OID deduction increase or decrease, respectively, adjusted current earnings under section 56(g)(4) in the taxable year or years that the item is includible or deductible.

(e) ***Effective/applicability dates.*** For *effective/applicability dates,* see § 1.108(i)-0(b).

[T.D. 9622, 78 FR 39987, July 3, 2013; 78 FR 48607, Aug. 9, 2013]

§ 1.108(i)-2 Application of section 108(i) to partnerships and S corporations.

(a) ***Overview.*** Under section 108(i), a partnership or an S corporation may elect to defer COD income arising in connection with a reacquisition of an applicable debt instrument for the deferral period. COD income deferred under section 108(i) is included in gross income ratably over the inclusion period, or earlier upon the occurrence of any acceleration event described in paragraph (b)(6) or (c)(3) of this section. If a debt instrument is issued (or treated as issued under section 108(e)(4)) in a debt-for-debt exchange described in section 108(i)(2)(A) or a deemed debt-for-debt exchange described in § 1.108(i)-3(a), some or all of the deductions for OID with respect to such debt instrument must be deferred during the deferral period. The aggregate amount of OID deductions deferred during the deferral period is generally allowed as a deduction ratably over the inclusion period, or earlier upon the occurrence of any acceleration event described in paragraph (b)(6) or (c)(3) of this section. Paragraph (b) of this section provides rules that apply to partnerships. Paragraph (c) of this section provides rules that apply to S corporations. Paragraph (d) of this section provides general rules that apply to partnerships and S corporations. Paragraph (e) of this section provides election procedures and reporting requirements. Paragraph (f) of this section contains the effective/applicability date. See § 1.108(i)-0(a) for definitions that apply to this section.

(b) ***Specific rules applicable to partnerships*** —

(1) ***Allocation of COD income and partner's deferred amounts.*** An electing partnership that defers any portion of COD income realized from a reacquisition of an applicable debt instrument under section 108(i) must allocate all of the COD income with respect to the applicable debt instrument to its direct partners that are partners in the electing partnership immediately before the reacquisition in the manner in which the income would be included in the distributive shares of the partners under section 704 and the regulations under section 704, including § 1.704-1(b)(2)(iii), without regard to section 108(i). The electing partnership may determine, in any manner, the portion, if any, of a partner's COD income amount with respect to an applicable debt instrument that is the deferred amount, and the portion, if any, that is the included amount. However, no partner's deferred amount with respect to an applicable debt instrument may exceed that partner's COD income amount with respect to such applicable debt instrument, and the aggregate amount of the partners' COD income amounts and deferred amounts with respect to each applicable debt instrument must equal the electing partnership's COD income amount and deferred amount, respectively, with respect to each such applicable debt instrument.

(2) ***Basis adjustments and capital account maintenance*** —

(i) ***Basis adjustments.*** The adjusted basis of a partner's interest in a partnership is not increased under section 705(a)(1) by the partner's deferred amount in the taxable year of the reacquisition. The adjusted basis of a partner's interest in a partnership is not decreased under section 705(a)(2) by the partner's share of any deferred OID deduction in the taxable year in which the deferred OID accrues. The adjusted basis of a partner's interest in a partnership is adjusted under section 705(a) by the partner's share of the electing partnership's deferred items for the taxable year in which the partner takes into account such deferred items under this section.

(ii) ***Capital account maintenance.*** For purposes of maintaining a partner's capital account under § 1.704-1(b)(2)(iv) and notwithstanding § 1.704-1(b)(2)(iv)(*n*), the capital account of a partner of a partnership is adjusted under § 1.704-1(b)(2)(iv) for a partner's share of an electing partnership's deferred items as if no election under section 108(i) were made.

(3) ***Deferred section 752 amount*** —

(i) ***In general.*** An electing partnership shall determine, for each of its direct partners with a deferred amount, the partner's deferred section 752 amount, if any, with respect to an applicable debt instrument. A partner's deferred section 752 amount with respect to an applicable debt instrument equals the decrease in the partner's share of a partnership liability under section 752(b) resulting from the reacquisition of the applicable debt instrument that is not treated as a current distribution of money under section 752(b) by reason of section 108(i)(6) (deferred section 752 amount). A partner's deferred section 752 amount is treated as a distribution of money by the partnership to the partner under section 752(b) at the same time and, to the extent remaining, in the same amount as the partner recognizes the deferred amount with respect to the applicable debt instrument.

(ii) ***Electing partnership's computation of a partner's deferred section 752 amount.*** To compute a partner's deferred section 752 amount, the electing partnership must first determine the amount of gain that its direct partner would recognize in the taxable year of a reacquisition under section 731 as a result of the reacquisition of one or more applicable debt instruments during the taxable year absent the deferral provided in the second sentence of section 108(i)(6) (the section 108(i)(6) deferral). If a direct partner of an electing partnership would not recognize any gain under section 731 as a result of the reacquisition of one or more applicable debt instruments during the taxable year absent the section 108(i)(6) deferral, the partner will not have a deferred section 752 amount with respect to any applicable debt instrument that is reacquired during the taxable year. If a direct partner of an electing partnership would recognize gain under section 731 as a result of the reacquisition of one or more applicable debt instruments during the taxable year absent the section 108(i)(6) deferral, the partner's deferred section 752 amount for all applicable debt instruments that are reacquired during the taxable year is equal to the lesser of the partner's aggregate deferred amounts from the electing partnership for all applicable debt instruments reacquired during the taxable year, or the gain that the partner would recognize in the taxable year of the reacquisitions under section 731 as a result of the reacquisitions absent the section 108(i)(6) deferral. In determining the amount of gain that the direct partner would recognize in the taxable year of a reacquisition under section 731 as a result of the reacquisition of one or more applicable debt instruments during the taxable year absent the section 108(i)(6) deferral, the rule under § 1.731-1(a)(1)(ii) applies to any deemed distribution of money under section 752(b) resulting from a decrease in the partner's share of a reacquired applicable debt instrument that is treated as an advance or drawing of money. The amount of any deemed distribution of money under section 752(b) resulting from a decrease in the partner's share of a reacquired applicable debt instrument that is treated as an advance or drawing of money under § 1.731-1(a)(1)(ii) is determined as if no COD income resulting from the reacquisition of the applicable debt instrument is deferred under section 108(i).

(iii) ***Multiple section 108(i) elections.*** If a direct partner of an electing partnership has a deferred section 752 amount under paragraph (b)(3)(ii) of this section for the taxable year of a reacquisition, and the partner has a deferred amount with respect to more than one applicable debt instrument from the electing partnership for which a section 108(i) election is made in

that taxable year, the partner's deferred section 752 amount with respect to each such applicable debt instrument equals the partner's deferred section 752 amount as determined under paragraph (b)(3)(ii) of this section, multiplied by a ratio, the numerator of which is the partner's deferred amount with respect to such applicable debt instrument, and the denominator of which is the partner's aggregate deferred amounts from the electing partnership for all applicable debt instruments reacquired during the taxable year.

(iv) ***Electing partnership's request for information.*** At the request of an electing partnership, each direct partner of the electing partnership that has a deferred amount with respect to such partnership must provide to the electing partnership a written statement containing information requested by the partnership that is necessary to determine the partner's deferred section 752 amount (such as the partner's adjusted basis in the partner's interest in the electing partnership). The written statement must be signed under penalties of perjury and provided to the requesting partnership within 30 days of the date of the request by the electing partnership.

(v) ***Examples.*** The following examples illustrate the rules under paragraph (b)(3) of this section:

Example 1. (i) A and B each hold a 50 percent interest in Partnership, a calendar-year partnership. As of January 1, 2009, A and B each have an adjusted basis of $50 in their partnership interests. Partnership has two applicable debt instruments outstanding, debt one of $300 and debt two of $200. A and B share equally in the debt for section 752(b) purposes. On March 1, 2009, debt one is cancelled and Partnership realizes $300 of COD income. On December 1, 2009, debt two is cancelled and Partnership realizes $200 of COD income. The Partnership has no other income or loss items for 2009. A and B are each allocated $150 of COD income from debt one and $100 of COD income from debt two. Partnership makes an election under section 108(i) to defer $225 of the $300 of COD income realized from the reacquisition of debt one, $150 of which is A's deferred amount, and $75 of which is B's deferred amount. Partnership also makes an election under section 108(i) to defer $125 of the $200 of COD income realized from the reacquisition of debt two, $100 of which is A's deferred amount, and $25 of which is B's deferred amount. A has no included amount for either debt. B has an included amount of $75 with respect to debt one and an included amount of $75 with respect to debt two for 2009.

(ii) Under paragraph (b)(3)(ii) of this section, the amount of gain that A would recognize under section 731 as a result of the reacquisitions absent the section 108(i)(6) deferral is $200. Thus, A's deferred section 752 amount with respect to debt one and debt two equals $200 (the lesser of A's aggregate deferred amounts with respect to debt one and debt two of $250, or gain that A would recognize under section 731 in 2009, as a result of the reacquisitions absent the section 108(i)(6) deferral, of $200). Under paragraph (b)(3)(iii) of this section, $120 of A's $200 deferred section 752 amount relates to debt one ($200 × $150/$250) and $80 relates to debt two ($200 × $100/$250).

(iii) Under paragraph (b)(3)(ii) of this section, the amount of gain that B would recognize under section 731 as a result of the reacquisitions absent the section 108(i)(6) deferral is $50. Thus, B's deferred section 752 amount with respect to debt one and debt two equals $50 (the lesser of B's aggregate deferred amounts with respect to debt one and debt two of $100, or gain that B would recognize under section 731 in 2009, as a result of the reacquisitions absent the section 108(i)(6) deferral, of $50). Under paragraph (b)(3)(iii) of this section, $37.50 of B's $50 deferred section 752 amount relates to debt one ($50 × $75/$100) and $12.50 relates to debt two ($50 × $25/$100).

(iv) A will recognize $50 of deferred COD income ($30 with respect to debt one and $20 with respect to debt two) in each of the five taxable years of the inclusion period, provided there are no earlier acceleration events under paragraph (b)(6) of this section. Under paragraph (b)(3)(i) of this section, A will be treated as receiving a $30 deemed distribution under section 752(b) with respect to debt one and a $20 deemed distribution with respect to debt two in each of the first, second, third, and fourth taxable years of the inclusion period. A will not have any remaining deferred section 752 amounts in the fifth taxable year of the inclusion period.

(v) B will recognize $20 of deferred COD income ($15 with respect to debt one and $5 with respect to debt two) in each of the five taxable years of the inclusion period, provided there are no earlier acceleration events under paragraph (b)(6) of this section. Under paragraph (b)(3)(i) of this section, B will be treated as receiving a $15 deemed distribution under section 752(b) with respect to debt one and a $5 deemed distribution with respect to debt two in the first and second taxable year of the inclusion period, and a $7.50 deemed distribution under section 752(b) with respect to debt one ($10 × $15/$20) and a $2.50 deemed distribution with respect to debt two ($10 × $5/$20) in the third taxable year of the inclusion period. B will not have any remaining deferred section 752 amounts in the fourth and fifth taxable years of the inclusion period.

Example 2. (i) The facts are the same as in *Example 1,* except that Partnership has gross income for the year (including the $500 of COD income) of $700 and other separately stated losses of $500. A's and B's distributive share of each item is 50 percent.
(ii) In determining the amount of gain that A would recognize under section 731 as a result of the reacquisitions absent the section 108(i)(6) deferral, Partnership first increases A's $50 adjusted basis in his interest in Partnership by A's distributive share of Partnership income (other than the deferred amounts relating to debt one and debt two) of $100, and then decreases A's adjusted basis in Partnership by deemed distributions under section 752(b) of $250 and, thereafter, by A's distributive share of Partnership losses of $250, but only to the extent that A's basis is not reduced below zero. Under paragraph (b)(3)(ii) of this section, the amount of gain that A would recognize under

section 731 as a result of the reacquisitions absent section 108(i)(6) deferral is $100. Thus, A's deferred section 752 amount with respect to debt one and debt two equals $100 (the lesser of A's aggregate deferred amounts with respect to debt one and debt two of $250, or gain that A would recognize under section 731 as a result of the reacquisitions absent the deferral section 108(i)(6) deferral of $100). Under paragraph (b)(3)(iii) of this section, A's deferred section 752 amount with respect to debt one is $60 ($100 × $150/$250), and A's deferred section 752 amount with respect to debt two is $40 ($100 × $100/$250). A's $250 of Partnership losses are suspended under section 704(d).

(iii) In determining the amount of gain that B would recognize under section 731 as a result of the reacquisitions absent the section 108(i)(6) deferral, Partnership first increases B's $50 adjusted basis in his interest in Partnership by B's distributive share of Partnership income (other than the deferred amounts relating to debt one and debt two) of $250 ($100 other income plus $150 included amount with respect to debt one and debt two), and then decreases B's adjusted basis in Partnership by deemed distributions under section 752(b) of $250 and, thereafter, by B's distributive share of Partnership losses of $250, but only to the extent that B's basis is not reduced below zero. Under paragraph (b)(3)(ii) of this section, B would not recognize any gain under section 731 as a result of the reacquisitions absent the section 108(i)(6) deferral. Thus, B has no deferred section 752 amount with respect to either debt one or debt two. B may deduct his distributive share of Partnership losses to the extent of $50, with the remaining $200 suspended under section 704(d).

(4) *Tiered partnerships* —

(i) ***In general.*** If a partnership (upper-tier partnership) is a direct or indirect partner of an electing partnership and directly or indirectly receives an allocation of a COD income amount from the electing partnership, all or a portion of which is deferred under section 108(i), the upper-tier partnership must allocate its COD income amount to its partners that are partners in the upper-tier partnership immediately before the reacquisition in the manner in which the income would be included in the distributive shares of the partners under section 704 and the regulations under section 704, including § 1.704-1(b)(2)(iii), without regard to section 108(i). The upper-tier partnership may determine, in any manner, the portion, if any, of a partner's COD income amount with respect to an applicable debt instrument that is the deferred amount, and the portion, if any, that is the included amount. However, no partner's deferred amount with respect to an applicable debt instrument may exceed that partner's COD income amount with respect to such applicable debt instrument, and the aggregate amount of the partners' COD income amounts and deferred amounts with respect to each applicable debt instrument must equal the upper-tier partnership's COD income amount and deferred amount, respectively, with respect to each such applicable debt instrument.

(ii) ***Deferred section 752 amount.*** The computation of a partner's deferred section 752 amount, as described in paragraph (b)(3)(ii) of this section, is calculated only for direct partners of the electing partnership. An upper-tier partnership's deferred section 752 amount with respect to

an applicable debt instrument of the electing partnership is allocated only to those partners of the upper-tier partnership that have a deferred amount with respect to that applicable debt instrument, and in proportion to such partners' share of the upper-tier partnership's deferred amount with respect to that applicable debt instrument. A partner's share of the upper-tier partnership's deferred section 752 amount with respect to an applicable debt instrument must not exceed that partner's share of the upper-tier partnership's deferred amount with respect to the applicable debt instrument to which the deferred section 752 amount relates. The deferred section 752 amount of a partner of an upper-tier partnership is treated as a distribution of money by the upper-tier partnership to the partner under section 752(b), at the same time and, to the extent remaining, in the same amount as the partner recognizes the deferred amount with respect to the applicable debt instrument.

(iii) ***Examples.*** The following examples illustrate the rules under paragraph (b)(4) of this section:

Example 1. (i) PRS, a calendar-year partnership, has two equal partners, A, an individual, and XYZ, a partnership. As of January 1, 2009, A and XYZ each have an adjusted basis of $50 in their partnership interests. PRS has a $500 applicable debt instrument outstanding. On June 1, 2009, the creditor agrees to cancel the $500 indebtedness. PRS realizes $500 of COD income as a result of the reacquisition. PRS has no other income or loss items for 2009. PRS makes an election under section 108(i) to defer $200 of the $500 of COD income. PRS allocates the $500 of COD income equally between its partners ($250 each). PRS determines that, for each partner, $100 of the COD income amount is the deferred amount, and $150 is the included amount. For 2009, each of A's and XYZ's share of the decrease in PRS's reacquired applicable debt instrument is $250. (ii) XYZ has two equal partners, individuals X and Y. X and Y share equally in XYZ's liabilities. XYZ allocates the $250 COD income amount from PRS equally between X and Y ($125 each). XYZ determines that X has a deferred amount of $100 and an included amount of $25. All $125 of Y's COD income amount is Y's included amount. For 2009, each of X's and Y's share of XYZ's $250 decrease in liability with respect to the reacquired applicable debt instrument of PRS is $125.

(iii) Under paragraph (b)(3)(ii) of this section, PRS determines that XYZ has a deferred section 752 amount of $50. Therefore, for 2009, of XYZ's $250 share of the decrease in PRS's reacquired applicable debt instrument, $200 is treated as a deemed distribution under section 752(b) and $50 is the deferred section 752 amount.

(iv) Under paragraph (b)(4)(ii) of this section, none of XYZ's $50 deferred section 752 amount is allocated to Y because Y does not have a deferred amount with respect to the reacquired applicable debt interest. XYZ's entire $50 of deferred section 752 amount is allocated to X. Therefore, of X's $125 share of the XYZ's decrease in liability with respect to the reacquired applicable debt instrument of PRS, $75 is treated as a deemed distribution under section 752(b) and $50 is X's deferred section 752 amount. Y's $125

share of XYZ's decrease in liability with respect to the reacquired applicable debt instrument of PRS is treated as a deemed distribution under section 752(b) and none is a deferred section 752 amount.

Example 2. (i) The facts are the same as in *Example 1,* except for the following: XYZ has three partners, X, Y, and Z. The profits and losses of XYZ are shared 25 percent by X, 25 percent by Y, and 50 percent by Z. XYZ allocates its $250 COD income amount from PRS $62.50 to each of X and Y, and $125 to Z. XYZ determines that X has a deferred amount of $50 and an included amount of $12.50, Y has a deferred amount of $0 and an included amount of $62.50, and Z has a deferred amount of $50 and an included amount of $75 with respect to the applicable debt instrument. X's, Y's, and Z's share of XYZ's decrease in liability with respect to the reacquired applicable debt instrument of PRS is $62.50, $62.50 and $125, respectively.
(ii) Under paragraph (b)(4)(ii) of this section, none of XYZ's $50 deferred section 752 amount is allocated to Y because Y does not have a deferred amount with respect to the reacquired applicable debt instrument. XYZ's $50 deferred section 752 amount is allocated to X and Z in proportion to X's and Z's share of XYZ's deferred amount, or $25 each ($50 × ($50/$100)). Therefore, of X's $62.50 share of XYZ's decrease in liability with respect to the reacquired applicable debt instrument, $37.50 is treated as a deemed distribution under section 752(b) and $25 is X's deferred section 752 amount. All of Y's $62.50 share of XYZ's decrease in liability with respect to the reacquired applicable debt instrument is treated as a deemed distribution under section 752(b). Of Z's $125 share of XYZ's decrease in liability with respect to the reacquired applicable debt instrument, $100 is treated as a deemed distribution under section 752(b) and $25 is Z's deferred section 752 amount.

(5) ***S corporation partner*** —

(i) ***In general.*** If an S corporation partner has a deferred amount with respect to an applicable debt instrument of an electing partnership, such deferred amount is shared pro rata only among those shareholders that are shareholders of the S corporation partner immediately before the reacquisition of the applicable debt instrument.

(ii) ***Basis adjustments.*** The adjusted basis of a shareholder's stock in an S corporation partner is not increased under section 1367(a)(1) by the shareholder's share of the S corporation partner's deferred amount in the taxable year of the reacquisition. The adjusted basis of a shareholder's stock in an S corporation partner is not decreased under section 1367(a)(2) by the shareholder's share of the S corporation partner's deferred OID deduction in the taxable year in which the deferred OID accrues. The adjusted basis of a shareholder's stock in an S corporation partner is adjusted under section 1367(a) by the shareholder's share of the S corporation partner's share of the electing partnership's deferred items for the taxable year in which the shareholder takes into account its share of such deferred items under this section.

(iii) ***Accumulated adjustments account.*** The accumulated adjustments account (AAA), as defined in section 1368(e)(1), of an S corporation partner that has a deferred amount with respect to an applicable debt instrument of an electing partnership is not increased by its deferred amount in the taxable year of the reacquisition. The AAA of an S corporation partner is not decreased by its share of any deferred OID deduction in the taxable year in which the deferred OID accrues. The AAA of an S corporation partner is adjusted under section 1368(e) by a shareholder's share of the S corporation partner's share of the electing partnership's deferred items for the S period (as defined in section 1368(e)(2)) in which the shareholder of the S corporation partner takes into account its share of the deferred items under this section.

(6) ***Acceleration of deferred items*** —

(i) ***Electing partnership-level events***

(A) ***General rules.*** Except as provided in paragraph (b)(6)(iii) of this section, a direct or indirect partner's share of an electing partnership's deferred items is accelerated and must be taken into account by such partner—

(*1*) In the taxable year in which the electing partnership liquidates;

(*2*) In the taxable year in which the electing partnership sells, exchanges, transfers (including contributions and distributions), or gifts substantially all of its assets;

(*3*) In the taxable year in which the electing partnership ceases doing business; or

(*4*) In the taxable year that includes the day before the day on which the electing partnership files a petition in a title 11 or similar case.

(B) ***Substantially all requirement.*** For purposes of this paragraph (b)(6), substantially all of a partnership's assets means assets representing at least 90 percent of the fair market value of the net assets, and at least 70 percent of the fair market value of the gross assets, held by the partnership immediately prior to the sale, exchange, transfer, or gift. For purposes of applying the rule in paragraph (b)(6)(i)(A)(*2*) of this section, a sale, exchange, transfer, or gift by any direct or indirect lower-tier partnership of the electing partnership (lower-tier partnership) of all or part of its assets is not treated as a sale, exchange, transfer, or gift of the assets of any partnership that holds, directly or indirectly, an interest in such lower-tier partnership. However, for purposes of applying the rule in paragraph (b)(6)(i)(A)(*2*) of this section, a sale, exchange, transfer, or gift of substantially all of the assets of a transferee partnership (as described in paragraph (b)(6)(iii)(A)(*1*) of this section), or of a lower-tier partnership that received assets of the electing partnership from a transferee partnership or another lower-tier partnership in a transaction governed all or in part by section 721, is treated as a sale, exchange, transfer, or gift by the holder of an interest in such transferee partnership or lower-tier partnership of its entire interest in that transferee partnership or lower-tier partnership.

(ii) ***Direct or indirect partner-level events*** —

(A) ***General rules.*** Except as provided in paragraph (b)(6)(iii) of this section, a direct or indirect partner's share of an electing partnership's deferred items with respect to a separate interest is accelerated and must be taken into account by such partner in the taxable year in which—

(*1*) The partner dies or liquidates;

(2) The partner sells, exchanges (including redemptions treated as exchanges under section 302), transfers (including contributions and distributions), or gifts (including transfers treated as gifts under section 1041) all or a portion of its separate interest;

(3) The partner's separate interest is redeemed within the meaning of paragraph (b)(6)(ii)(B)(2) of this section; or

(4) The partner abandons its separate interest.

(B) *Meaning of terms; special rules* —

(1) ***Partial transfers.*** For purposes of paragraph (b)(6)(ii)(A)(2) of this section, if a partner sells, exchanges (including redemptions treated as exchanges under section 302), transfers (including contributions and distributions), or gifts (including transfers treated as gifts under section 1041) a portion of its separate interest, such partner's share of the electing partnership's deferred items with respect to the separate interest proportionate to the separate interest sold, exchanged, transferred, or gifted is accelerated and must be taken into account by such partner.

(2) ***Redemptions.*** For purposes of paragraph (b)(6)(ii)(A)(3) of this section, a partner's separate interest is redeemed if the partner receives a distribution of cash and/or property in complete liquidation of such separate interest.

(3) ***S corporation partners.*** In addition to the rules in paragraphs (b)(6)(i) and (ii) of this section, an S corporation partner's share of the electing partnership's deferred items is accelerated and the shareholders of the S corporation partner must take into account their respective shares of the S corporation partner's share of the electing partnership's deferred items in the taxable year in which the S corporation partner's election under section 1362(a) terminates.

(4) ***C corporation partners.*** In addition to the rules in paragraphs (b)(6)(i), (ii), and (iii) of this section, the acceleration rules in § 1.108(i)-1(b) and the earnings and profits rules in § 1.108(i)-1(d) apply to partners that are electing corporations.

(iii) ***Events not constituting acceleration.*** Notwithstanding the rules in paragraphs (b)(6)(i) and (ii) of this section, a direct or indirect partner's share of an electing partnership's deferred items with respect to a separate interest is not accelerated by any of the events described in this paragraph (b)(6)(iii).

(A) *Section 721 contributions* —

(1) ***Electing partnership contributions.*** A direct or indirect partner's share of an electing partnership's deferred items is not accelerated if the electing partnership contributes all or a portion of its assets in a transaction governed all or in part by section 721(a) to another partnership (transferee partnership) in exchange for an interest in the transferee partnership provided that the electing partnership does not terminate under section 708(b)(1)(A) or transfer its assets and liabilities in a transaction described in section 708(b)(2)(A) or section 708(b)(2)(B). See paragraph (b)(6)(iii)(D) of this section for transactions governed by section 708(b)(2)(A). Notwithstanding the rules in this paragraph (b)(6)(iii)(A)(1), the rules in paragraphs (b)(6)(i)(A) and (b)(6)(ii)(A) of this section apply to any part of the transaction to which section 721(a) does not apply.

(2) ***Partner contributions.*** A direct or indirect partner's share of an electing partnership's deferred items with respect to a separate interest is not accelerated if the holder of such interest (contributing partner) contributes its entire separate interest (contributed separate interest) in a transaction governed all or in part by section 721(a) to another partnership (transferee partnership) in exchange for an interest in the transferee partnership provided that the partnership in which the separate interest is held does not terminate under section 708(b)(1)(A) or transfer its assets and liabilities in a transaction described in section 708(b)(2)(A) or section 708(b)(2)(B). See paragraph (b)(6)(iii)(D) of this section for transactions governed by section 708(b)(2)(A). The transferee partnership becomes subject to section 108(i), including all reporting requirements under this section, with respect to the contributing partner's share of the electing partnership's deferred items associated with the contributed separate interest. The transferee partnership must allocate and report the share of the electing partnership's deferred items that is associated with the contributed separate interest to the contributing partner to the same extent that such share of the electing partnership's deferred items would have been allocated and reported to the contributing partner in the absence of such contribution. Notwithstanding the rules in this paragraph (b)(6)(iii)(A)(*2*), the rules in paragraph (b)(6)(ii)(A) of this section apply to any part of the transaction to which section 721(a) does not apply.

(B) ***Section 1031 exchanges.*** A direct or indirect partner's share of the electing partnership's deferred items is not accelerated if the electing partnership transfers property held for productive use in a trade or business or for investment in exchange for property of like kind which is to be held either for productive use in a trade or business or for investment in a transaction to which section 1031(a)(1) applies. Notwithstanding the rules in this paragraph (b)(6)(iii)(B), to the extent the electing partnership receives money or other property which does not meet the requirements of section 1031(a) (boot) in the exchange, a proportionate amount of the property transferred by the electing partnership equal to the proportion of the boot to the total consideration received in the exchange shall be treated as sold for purposes of paragraph (b)(6)(i)(A)(*2*) of this section.

(C) ***Section 708(b)(1)(B) terminations.*** A direct or indirect partner's share of the deferred items of an electing partnership with respect to a separate interest is not accelerated if the electing partnership or a partnership that is a direct or indirect partner of the electing partnership terminates under section 708(b)(1)(B). Notwithstanding the rules in this paragraph (b)(6)(iii)(C), the rules in paragraph (b)(6)(ii)(A) of this section apply to the event that causes the termination under section 708(b)(1)(B) to the extent not otherwise excepted under paragraph (b)(6)(iii) of this section.

(D) ***Section 708(b)(2)(A) mergers or consolidations.*** A direct or indirect partner's share of the deferred items of an electing partnership with respect to a separate interest is not accelerated if the partnership in which the separate interest is held (the merger transaction partnership) merges into or consolidates with another partnership in a transaction to which section 708(b)(2)(A) applies. The resulting partnership or new partnership, as determined under § 1.708-1(c)(1), becomes subject to section 108(i), including all reporting requirements under this section, to the same extent that the merger transaction partnership was so subject prior to the transaction, and must allocate and report any merger transaction partnership's deferred items to the same extent and to the

same partners that the merger transaction partnership allocated and reported such items prior to such transaction. Notwithstanding the rules in this paragraph (b)(6)(iii)(D), the rules in paragraphs (b)(6)(i)(A)(*2*) and (b)(6)(ii)(A)(*2*) of this section apply to that portion of the transaction that is treated as a sale, and the rules of (b)(6)(ii)(A)(*3*) apply if, as part of the transaction, the partner's separate interest is redeemed and the partner does not receive an interest in the resulting partnership with respect to such separate interest.

(E) ***Certain distributions of separate interests.*** If a partnership (upper-tier partnership) that is a direct or indirect partner of an electing partnership distributes its entire separate interest (distributed separate interest) to one or more of its partners (distributee partners) that have a share of the electing partnership's deferred items from upper-tier partnership with respect to the distributed separate interest, the distributee partners' shares of the electing partnership's deferred items with respect to such distributed separate interest are not accelerated. The partnership, the separate interest in which was distributed, must allocate and report the share of the electing partnership's deferred items associated with the distributed separate interest only to such distributee partners that had a share of the electing partnership's deferred items from the upper-tier partnership with respect to the distributed separate interest prior to the distribution. This paragraph (b)(6)(iii)(E) does not apply if the electing partnership terminates under section 708(b)(1)(A).

(F) ***Section 381 transactions.*** A C corporation partner's share of an electing partnership's deferred items is not accelerated if, as part of a transaction described in paragraph (b)(6)(ii)(A) of this section, the assets of the C corporation partner are acquired by another C corporation (acquiring C corporation) in a transaction that is treated, under § 1.108(i)-1(b)(2)(ii)(B), as a transaction to which section 381(a) applies. An S corporation partner's share of an electing partnership's deferred items is not accelerated if, as part of a transaction described in paragraph (b)(6)(ii)(A) of this section, the assets of the S corporation partner are acquired by another S corporation (acquiring S corporation) in a transaction to which section 381(a) applies. In such cases, the acquiring C corporation or acquiring S corporation, as the case may be, succeeds to the C corporation partner's or the S corporation partner's remaining share of the electing partnership's deferred items and becomes subject to section 108(i), including all reporting requirements under this section, as if the acquiring C corporation or acquiring S corporation were the C corporation partner or the S corporation partner, respectively. The acquiring S corporation must allocate and report the S corporation partner's deferred items to the same extent as the S corporation partner would have been required to allocate and report those deferred items, and only to those shareholders of the S corporation partner who had a share of the S corporation partner's deferred items from the electing partnership prior to the transaction. This paragraph (b)(6)(iii)(F) does not apply if the electing partnership terminates under section 708(b)(1)(A).

(G) ***Intercompany transfers.*** A C corporation partner's share of an electing partnership's deferred items is not accelerated if, as part of a transaction described in paragraph (b)(6)(ii)(A) of this section, the C corporation partner transfers its entire separate interest in an intercompany transaction, as described in § 1.1502-13(b)(1)(i), and the electing partnership does not terminate under section 708(b)(1)(A) as a result of the intercompany transaction.

(H) ***Retirement of a debt instrument.*** See § 1.108(i)-3(c)(1) for rules regarding the retirement of a debt instrument that is subject to section 108(i).

(I) ***Other non-acceleration events.*** A direct or indirect partner's share of an electing partnership's deferred items is not accelerated with respect to any transaction if the Commissioner makes a determination by published guidance that such transaction is not an acceleration event under the rules of this paragraph (b)(6).

(iv) ***Related partnerships.*** A direct or indirect partner's share of a related partnership's deferred OID deduction (as determined in paragraph (d)(2) of this section) that has not previously been taken into account is accelerated and taken into account by the direct or indirect partner in the taxable year in which, and to the extent that, the deferred COD income to which the related partnership's deferred OID deduction relates is taken into account by the electing entity or its owners.

(v) ***Examples.*** The following examples illustrate the rules under this paragraph (b)(6):

> *Example 1.* Meaning of "separate interest."
> (i) Electing partnership (EP) has three partners, MT1, MT2, and UT, each of which is a partnership. The partners of MT1 are X and UT. The partners of MT2 are Y, UT, and B. The partners of UT are A, B, and C. In addition to their interests in the partnerships noted, MT1, MT2, and UT own other assets.
>
> (ii) Within the meaning of paragraph (a)(29) of § 1.108(i)-0, A and C each hold one separate interest (their interests in UT), B holds two separate interests (its interests in UT and MT2), UT holds three separate interests (its interests in MT1, MT2, and EP), MT1 and MT2 each hold one separate interest (their interests in EP), and X and Y each hold one separate interest (their interests in MT1 and MT2, respectively) with respect to EP.

> *Example 2.* Distributions of separate interests in an electing partnership.
> (i) The facts are the same as in *Example 1,* except that A, as a direct partner of UT, has a share of EP's deferred items with respect to UT's interests in MT1 and EP. A does not have a share of EP's deferred items with respect to UT's interest in MT2. B, as a direct partner of UT, has a share of EP's deferred items with respect to UT's interest in MT1 and MT2, but not with respect to UT's interest in EP. B also has a share of EP's deferred items with respect to its separate interest in MT2. C does not have any share of EP's deferred items with respect to UT's interest in MT1, MT2, or EP.
>
> (ii) UT distributes 40 percent of its separate interest in MT1 to A in redemption of A's interest in UT. Under paragraphs (b)(6)(ii)(A)(*2*) and (b)(6)(ii)(B)(*1*) of this section, a portion of UT's interest in MT1 has been transferred and a corresponding portion (40 percent) of UT's share of EP's deferred items from MT1 is accelerated. Thus, 40 percent of A's and B's share of EP's deferred items from UT with respect to UT's interest in MT1 is accelerated. Further, because A's interest in UT is redeemed within the meaning of paragraph (b)(6)(ii)(B)(*2*) of this section, all of A's shares of EP's deferred items from UT

are accelerated under paragraph (b)(6)(ii)(A)(*3*) of this section. UT continues to allocate and report to B its remaining share of EP's deferred items from its separate interest in MT1 that was not distributed to A.

(iii) UT distributes its entire separate interest in MT1 to B (other than in redemption of B's interest in UT). Under paragraph (b)(6)(ii)(A)(*2*) of this section, UT's share of EP's deferred items from MT1 would be accelerated. However, because UT distributes its entire separate interest in MT1 to B, B's share of EP's deferred items from UT with respect to UT's separate interest in MT1 is not accelerated under paragraph (b)(6)(iii)(E) of this section. MT1 allocates and reports to B B's share of EP's deferred items from UT's separate interest in MT1 that was distributed to B.

(iv) UT distributes its entire separate interest in MT1 to A and B (other than in redemption of their interests in UT). Under paragraph (b)(6)(iii)(E) of this section, none of A's or B's shares of EP's deferred items from UT with respect to UT's separate interest in MT1 is accelerated, and MT1 allocates and reports to A and B their respective share of EP's deferred items from UT's separate interest in MT1 that was distributed to A and B.

Example 3. Partial sale of interest by an indirect partner.
(i) Individual A holds a 50 percent partnership interest in UTP, a partnership that holds a 50 percent interest in EP, a partnership that makes an election to defer COD income under section 108(i). A's share of UTP's deferred amount with respect to EP's election under section 108(i) is $100. During a taxable year within the deferral period, A sells 25 percent of his partnership interest in UTP to an unrelated third party.

(ii) Under paragraphs (b)(6)(ii)(A)(*2*) and (b)(6)(ii)(B)(*1*) of this section, 25 percent of A's $100 deferred amount is accelerated as a result of A's partial sale of his interest in UTP. Thus, A must recognize $25 of his deferred amount in the taxable year of the sale. A's remaining deferred amount is $75.

Example 4. Section 708(b)(1)(B) termination of electing partnership.
(i) A and B are equal partners in partnership AB. On January 1, 2009, AB reacquires an applicable debt instrument and makes an election under section 108(i) to defer $400 of COD income. A and B each have a deferred amount with respect to the applicable debt instrument of $200. On January 1, 2010, A sells its entire 50 percent interest in AB to C in a transfer that terminates the partnership under section 708(b)(1)(B).

(ii) Under paragraph (b)(6)(iii)(C) of this section, the technical termination of AB under section 708(b)(1)(B) does not cause A's or B's shares of AB's deferred items to be accelerated. However, A's $200 deferred amount is accelerated under paragraph (b)(6)(ii)(A)(*2*) of this section as a result of the sale.

Example 5. Section 708(b)(2)(A) mergers.

(i) A, B, and C are equal partners in partnership X, which has made an election under section 108(i) to defer $150 of COD income. The fair market value of each interest in partnership X is $100. A, B, and C each has a deferred amount of $50 with respect to partnership X's election under section 108(i). E, F, and G are partners in partnership Y. Partnership X and partnership Y merge in a taxable year during the deferral period of partnership X's election under section 108(i). Under section 708(b)(2)(A), the resulting partnership is considered a continuation of partnership Y and partnership X is considered terminated. Under state law, partnerships X and Y undertake the assets-over form of § 1.708-1(c)(3)(i) to accomplish the merger. C does not want to become a partner in partnership Y, and partnership X does not have the resources to redeem C's interest before the merger. C, partnership X, and partnership Y enter into a merger agreement that satisfies the requirements of § 1.708-1(c)(4) and specifies that partnership Y will purchase C's interest in partnership X for $100 before the merger, and as part of the agreement, C consents to treat the transaction in a manner that is consistent with the agreement. As part of the merger, partnership X receives from partnership Y $100 (which will be distributed to C immediately before the merger), $100 (which will be distributed equally to A and B ($50 each)), and interests in partnership Y with a value of $100 (which will be distributed equally to A and B) in exchange for partnership X's assets and liabilities.

(ii) Under the general rule of paragraph (b)(6)(iii)(D) of this section, and except as provided below, the deferred items of partnership X are not accelerated as a result of the merger with partnership Y. Partnership Y, the resulting partnership that is considered the continuation of partnership X, becomes subject to section 108(i), including all reporting requirements under section 108(i), to the same extent that partnership X was subject to such rules. Under paragraph (b)(6)(iii)(D) of this section, partnership Y must allocate and report partnership X's deferred items to A and B in the same manner as partnership X had prior to the merger transaction.

(iii) Under § 1.708-1(c)(4), C is treated as selling its interest in partnership X immediately before the merger. As a result, C's $50 deferred amount is accelerated under paragraph (b)(6)(ii)(A)(2) of this section.

(iv) Under section 707(a)(2)(B), partnership X is deemed to have sold a portion of its assets to partnership Y. Because partnership X is not treated as selling substantially all of its assets under paragraph (b)(6)(i)(B) of this section, A's and B's deferred amounts are not accelerated under paragraph (b)(6)(i)(A)(2) of this section.

> (v) Because A's and B's interests in partnership X are redeemed within the meaning of paragraph (b)(6)(ii)(B)(*2*) of this section, all of their shares of partnership X's deferred items would be accelerated under paragraph (b)(6)(ii)(A)(*3*). However, because they receive an interest in partnership Y in the merger, none of A's and B's share of partnership X's deferred items is accelerated.

(7) ***Withholding under section 1446.*** See section 1446 regarding withholding by a partnership on a foreign partner's share of income effectively connected with a U.S. trade or business.

(c) ***Specific rules applicable to S corporations*** —

(1) ***Deferred COD income.*** An electing S corporation's COD income deferred under section 108(i) (an S corporation's deferred COD income) is shared pro rata among those shareholders that are shareholders of the electing S corporation immediately before the reacquisition of the applicable debt instrument. Any COD income deferred under section 108(i) is taken into account under section 1366(a) by those shareholders in the inclusion period, or earlier upon the occurrence of an acceleration event described in paragraph (c)(3) of this section.

(2) ***Basis adjustments and accumulated adjustments account*** —

(i) ***Basis adjustments.*** The adjusted basis of a shareholder's stock in an electing S corporation is not increased under section 1367(a)(1) by the shareholder's share of the S corporation's deferred COD income in the taxable year of the reacquisition. The adjusted basis of a shareholder's stock in an electing S corporation or a related S corporation is not decreased under section 1367(a)(2) by the shareholder's share of the S corporation's deferred OID deduction in the taxable year in which the deferred OID accrues. The adjusted basis of a shareholder's stock in an electing S corporation or a related S corporation is adjusted under section 1367(a) by the shareholder's share of the S corporation's deferred items for the taxable year in which the shareholder takes into account its share of the deferred items under this section.

(ii) ***Accumulated adjustments account.*** The AAA of an electing S corporation is not increased by the S corporation's deferred COD income in the taxable year of a reacquisition. The AAA of an electing S corporation or a related S corporation is not decreased by the S corporation's deferred OID deduction in the taxable year in which the deferred OID accrues. The AAA of an electing S corporation or a related S corporation is adjusted under section 1368(e) by a shareholder's share of the S corporation's deferred items for the S period (as defined in section 1368(e)(2)) in which a shareholder of the S corporation takes into account its share of the deferred items under this section.

(3) ***Acceleration of deferred items*** —

(i) ***Electing S corporation-level events*** —

(A) ***General rules.*** Except as provided in paragraph (c)(3)(iii) of this section, a shareholder's share of an electing S corporation's deferred items is accelerated and must be taken into account by such shareholder—

(*1*) In the taxable year in which the electing S corporation liquidates;

(2) In the taxable year in which the electing S corporation sells, exchanges, transfers (including contributions and distributions), or gifts substantially all of its assets;

(3) In the taxable year in which the electing S corporation ceases doing business;

(4) In the taxable year in which the electing S corporation's election under section 1362(a) terminates; or

(5) In the taxable year that includes the day before the day on which the electing S corporation files a petition in a title 11 or similar case.

(B) ***Substantially all requirement.*** For purposes of this paragraph (c)(3), substantially all of an electing S corporation's or partnership's assets means assets representing at least 90 percent of the fair market value of the net assets, and at least 70 percent of the fair market value of the gross assets, held by the S corporation or partnership immediately prior to the sale, exchange, transfer, or gift. For purposes of applying the rule in paragraph (c)(3)(i)(A)(2) of this section, a sale, exchange, transfer, or gift by any direct or indirect lower-tier partnership of the electing S corporation (lower-tier partnership) of all or part of its assets is not treated as a sale, exchange, transfer, or gift of the assets of any person that holds, directly or indirectly, an interest in such lower-tier partnership. However, for purposes of applying the rule in paragraph (c)(3)(i)(A)(2) of this section, a sale, exchange, transfer, or gift of substantially all of the assets of a transferee partnership (as described in paragraph (c)(3)(iii)(A) of this section), or of a lower-tier partnership that received assets of the electing S corporation from a transferee partnership of the electing S corporation or another lower-tier partnership in a transaction governed all or in part by section 721, is treated as a sale, exchange, transfer, or gift by the holder of an interest in such transferee partnership or lower-tier partnership of its entire interest in that transferee partnership or lower-tier partnership.

(ii) ***Shareholder events*** —

(A) ***General rules.*** Except as provided in paragraph (c)(3)(iii) of this section, a shareholder's share of an electing S corporation's deferred items is accelerated and must be taken into account by such shareholder in the taxable year in which—

(1) The shareholder dies;

(2) The shareholder sells, exchanges (including redemptions treated as exchanges under section 302), transfers (including contributions and distributions), or gifts (including transfers treated as gifts under section 1041) all or a portion of its interest in the electing S corporation; or

(3) The shareholder abandons its interest in the electing S corporation.

(B) ***Partial transfers.*** For purposes of paragraph (c)(3)(ii)(A)(2) of this section, if a shareholder of an electing S corporation sells, exchanges (including redemptions treated as exchanges under section 302), transfers (including contributions or distributions), or gifts (including transfers treated as gifts under section 1041) a portion of its interest in the electing S corporation, such shareholder's share of the electing S corporation's deferred items proportionate to the interest that was sold, exchanged, transferred, or gifted is accelerated and must be taken into account by such shareholder.

(iii) ***Events not constituting acceleration.*** Notwithstanding the rules in paragraphs (c)(3)(i) and (ii) of this section, a shareholder's share of an electing S corporation's deferred items is not accelerated by any of the events described in this paragraph (c)(3)(iii).

(A) ***Electing S corporation's contributions.*** A shareholder's share of an electing S corporation's deferred items is not accelerated if the electing S corporation contributes all or a portion of its assets in a transaction governed all or in part by section 721(a) to a partnership (transferee partnership) in exchange for an interest in the transferee partnership. Notwithstanding the rules in this paragraph (c)(3)(iii)(A), the rules in paragraph (c)(3)(i)(A) of this section apply to any part of the transaction to which section 721(a) does not apply.

(B) ***Section 1031 exchanges.*** A shareholder's share of an electing S corporation's deferred items is not accelerated if the electing S corporation transfers property held for productive use in a trade or business or for investment in exchange for property of like kind which is to be held either for productive use in a trade or business or for investment in a transaction to which section 1031(a)(1) applies. Notwithstanding the rules in this paragraph (c)(3)(iii)(B), to the extent the electing S corporation receives money or other property which does not meet the requirements of section 1031(a) (boot) in the exchange, a proportionate amount of the property transferred by the electing S corporation equal to the proportion of the boot to the total consideration received in the exchange shall be treated as sold for purposes of paragraph (c)(3)(i)(A)(2) of this section.

(C) ***Section 381 transactions.*** A shareholder's share of an electing S corporation's deferred items is not accelerated if, as part of a transaction described in paragraph (c)(3)(i)(A) of this section, the electing S corporation's assets are acquired by another S corporation (acquiring S corporation) in a transaction to which section 381(a) applies. In such a case, the acquiring S corporation succeeds to the electing S corporation's remaining deferred items and becomes subject to section 108(i), including all reporting requirements under this section, as if the acquiring S corporation were the electing S corporation. The acquiring S corporation must allocate and report the electing S corporation's deferred items to the same extent that the electing S corporation would have been required to allocate and report those deferred items, and only to those shareholders who had a share of the electing S corporation's deferred items prior to the transaction.

(D) ***Retirement of a debt instrument.*** See § 1.108(i)-3(c)(1) for rules regarding the retirement of a debt instrument that is subject to section 108(i).

(E) ***Other non-acceleration events.*** A shareholder's share of an electing S corporation's deferred items is not accelerated with respect to any transaction if the Commissioner makes a determination by published guidance that such transaction is not an acceleration event under the rules of this paragraph (c)(3).

(iv) ***Related S corporations.*** A shareholder's share of a related S corporation's deferred OID deduction (as determined in paragraph (d)(2) of this section) that has not previously been taken into account is accelerated and taken into account by the shareholder in the taxable year in which, and to the extent that, deferred COD income to which the related S corporation's deferred OID deduction relates is taken into account by the electing entity or its owners.

(d) ***General rules applicable to partnerships and S corporations*** —

(1) ***Applicable debt instrument (trade or business requirement).*** The determination of whether a debt instrument issued by a partnership or an S corporation is treated as a debt instrument issued in connection with the conduct of a trade or business by the partnership or S corporation for purposes

of this section is based on all the facts and circumstances. However, a debt instrument issued by a partnership or an S corporation shall be treated as an applicable debt instrument for purposes of this section if the electing partnership or electing S corporation can establish that—

(i) The gross fair market value of the trade or business assets of the partnership or S corporation that issued the debt instrument represented at least 80 percent of the gross fair market value of that partnership's or S corporation's total assets on the date of issuance;

(ii) The trade or business expenditures of the partnership or S corporation that issued the debt instrument represented at least 80 percent of the partnership's or S corporation's total expenditures for the taxable year of issuance;

(iii) At least 95 percent of interest paid or accrued on the debt instrument issued by the partnership or S corporation was allocated to one or more trade or business expenditures under § 1.163-8T for the taxable year of issuance;

(iv) At least 95 percent of the proceeds from the debt instrument issued by the partnership or S corporation were used by the partnership or S corporation to acquire one or more trades or businesses within six months from the date of issuance; or

(v) The partnership or S corporation issued the debt instrument to a seller of a trade or business to acquire the trade or business.

(2) ***Deferral of OID at entity level*** —

(i) ***In general.*** For each taxable year during the deferral period, an issuing entity determines the amount of its deferred OID deduction with respect to a debt instrument, if any. An issuing entity's deferred OID deduction for a taxable year is the lesser of:

(A) The OID that accrues in a current taxable year during the deferral period with respect to the debt instrument (less any of such OID that is allowed as a deduction in the current taxable year as a result of an acceleration event), or

(B) The excess, if any, of the electing entity's deferred COD income (less the aggregate amount of such deferred COD income that has been included in income in the current taxable year and any previous taxable year during the deferral period) over the aggregate amount of OID that accrued in previous taxable years during the deferral period with respect to the debt instrument (less the aggregate amount of such OID that has been allowed as a deduction in the current taxable year and any previous taxable year during the deferral period).

(ii) ***Excess deferred OID deduction.*** If, as a result of an acceleration event during a taxable year in the deferral period, an issuing entity's aggregate deferred OID deduction for previous taxable years with respect to a debt instrument (less the aggregate amount of such deferred OID deduction that has been allowed as a deduction in a previous taxable year during the deferral period) exceeds the amount of the electing entity's deferred COD income (less the aggregate amount of such deferred COD income that has been included in income in the current taxable year and any previous taxable year during the deferral period), the excess deferred OID deduction shall be allowed as a deduction in the taxable year in which the acceleration event occurs.

(iii) ***Examples.*** The following examples illustrate the rules under paragraph (d)(2) of this section:

Example 1. Partner joins partnership during deferral period. (i) A and B each hold a 50 percent interest in AB partnership, a calendar-year partnership. On January 1, 2009, AB partnership issues a new debt instrument with OID and uses all of the proceeds to reacquire an outstanding applicable debt instrument of AB partnership, realizing $100 of COD income, and makes an election under section 108(i) to defer $50 of the COD income. During the deferral period, a total of $150 of OID accrues on the new debt instrument issued as part of the reacquisition. A and B each have a deferred amount of $25 with respect to the applicable debt instrument reacquired by AB partnership. For 2009, $28 of OID accrues on the new debt instrument and A and B are each allocated $14 of accrued OID with respect to the new debt instrument. On January 1, 2010, C contributes cash to AB partnership in exchange for a $^1/_3$ partnership interest. For 2010, $29 of OID accrues on the new debt instrument, and A, B, and C are each allocated $9.67 of accrued OID.
(ii) Under paragraph (d)(2) of this section, AB partnership's deferred OID deduction for 2009 is the lesser of: $28 of OID that accrues on the new debt instrument in 2009, or the excess of AB partnership's deferred COD income of $50 over the aggregate amount of OID that accrued on the debt instrument in previous taxable years during the deferral period of $0, or $50. Thus, all $28 of the OID that accrues on the debt instrument in 2009 is deferred under section 108(i).

(iii) Under paragraph (d)(2) of this section, AB partnership's deferred OID deduction for 2010 is the lesser of: $29 of OID that accrues on the new debt instrument in 2010, or the excess of AB partnership's deferred COD income of $50 over the aggregate amount of OID that accrued on the debt instrument in previous taxable years during the deferral period of $28, or $22. Thus, $22 of the $29 of OID that accrues in 2010 is deferred under section 108(i). A, B, and C will each defer $7.33 of the $9.67 of accrued OID that was allocated to each of them.

Example 2. Acceleration of deferred items during deferral period. (i) On January 1, 2009, ABC partnership, a calendar-year partnership with three partners, issues a new debt instrument with OID and uses all of the proceeds to reacquire an outstanding applicable debt instrument of ABC partnership. ABC partnership realizes $150 of COD income and makes an election under section 108(i) to defer the $150 of COD income. A's deferred amount with respect to the applicable debt instrument is $75, while B and C each have a deferred amount of $37.50. In 2009, $28 of OID accrues on the new debt instrument and is allocated $7.00 to A and $10.50 to each of B and C. In 2010, $29 of OID accrues on the new debt instrument and is allocated $7.25 to A and $10.87 to each of B and C. In 2011, $30 of OID accrues on the new debt instrument and is allocated $7.50 to A and $11.25 to each of B and C. In 2012, $31 of OID accrues on the new debt instrument and is allocated $7.75 to A and $11.62 to each of B and C. On December 31,

2012, A's entire share of ABC partnership's deferred items is accelerated under paragraph (b)(6) of this section. For 2012, A includes $75 of COD income in income and is allowed a deduction of $21.75 for A's share of ABC partnership's deferred OID deduction for taxable years 2009 through 2011, and a deduction of $7.75 for A's share of ABC partnership's OID that accrues on the debt instrument in 2012.
(ii) Under paragraph (d)(2) of this section, ABC partnership's deferred OID deduction for 2012 is the lesser of: $23.25 ($31 of OID that accrues on the new debt instrument in 2012 less $7.75 of this OID that is allowed as a deduction to A in 2012) or $9.75 (the excess of $75 (ABC partnership's deferred COD income of $150 less A's share of ABC partnership's deferred COD income that is included in A's income for 2012 of $75) over $65.25 (the aggregate amount of OID that accrued in previous taxable years of $87 less the aggregate amount of such OID that has been allowed as a deduction by A in 2012 of $21.75)). Thus, of the $31 of OID that accrues in 2012, $9.75 is deferred under section 108(i).

(3) ***Effect of an election under section 108(i) on recapture amounts under section 465(e)*** —

(i) ***In general.*** To the extent that a decrease in a partner's or shareholder's amount at risk (as defined in section 465) in an activity as a result of a reacquisition of an applicable debt instrument would cause a partner with a deferred amount or a shareholder with a share of the S corporation's deferred COD income to have income under section 465(e) in the taxable year of the reacquisition, such decrease (not to exceed the partner's deferred amount or the shareholder's share of the S corporation's deferred COD income with respect to that applicable debt instrument) (deferred section 465 amount) shall not be taken into account for purposes of determining the partner's or shareholder's amount at risk in an activity under section 465 as of the close of the taxable year of the reacquisition. A partner's or shareholder's deferred section 465 amount is treated as a decrease in the partner's or shareholder's amount at risk in an activity at the same time, and to the extent remaining in the same amount, as the partner recognizes its deferred amount or the S corporation shareholder recognizes its share of the S corporation's deferred COD income.

(ii) ***Example.*** The following example illustrates the rules in paragraph (d)(3) of this section:

Example. (i) PRS is a calendar-year partnership with two equal partners, individuals A and B. PRS is engaged in an activity described in section 465(c) (Activity). PRS has a $500 recourse applicable debt instrument outstanding. Each partner's amount at risk on January 1, 2009 is $50. On June 1, 2009, the creditor agrees to cancel the $500 indebtedness. PRS realizes $500 of COD income as a result of the reacquisition. The partners' share of the liabilities of PRS decreases by $500 under section 752(b), and each partner's amount at risk is decreased by $250. Other than the $500 of COD income, PRS's income and expenses for 2009 are equal. PRS makes an election under section 108(i) to defer $200 of the $500 COD income realized in connection with the reacquisition. PRS allocates the $500 of COD income equally between its partners, A and B. A and B each have a COD income amount of $250 with respect to the applicable debt

instrument. PRS determines that, for both partners A and B, $100 of the $250 COD income amount is the deferred amount, and $150 is the included amount. Beginning in each taxable year 2014 through 2018, A and B each include $20 of the deferred amount in gross income.
(ii) Under paragraph (d)(3)(i) of this section, $50 of the $250 decrease in A's and B's amount at risk in Activity is the deferred section 465 amount for each of A and B and is not taken into account for purposes of determining A's and B's amount at risk in Activity at the close of 2009. In taxable year 2014, A's and B's amount at risk in Activity is decreased by $20 (deferred section 465 amount that equals the deferred amount included in A's and B's gross income in 2014). In taxable year 2015, A's and B's amount at risk in Activity is decreased by $20 for the deferred section 465 amount that equals the deferred amount included in A's and B's gross income in 2015. In taxable year 2016, A's and B's amount at risk in Activity is decreased by $10 (the remaining amount of the deferred section 465 amount).

(e) ***Election procedures and reporting requirements*** —

(1) ***Partnerships*** —

(i) ***In general.*** A partnership makes an election under section 108(i) by following procedures outlined in guidance and applicable forms and instructions issued by the Commissioner. An electing partnership (or its successor) must provide to its partners certain information as required by guidance and applicable forms and instructions issued by the Commissioner.

(ii) ***Tiered passthrough entities.*** A partnership that is a direct or indirect partner of an electing partnership (or its successor) or a related partnership or an S corporation partner must provide to its partners or shareholders, as the case may be, certain information as required by guidance and applicable forms and instructions issued by the Commissioner.

(iii) ***Related partnerships.*** A related partnership must provide to its partners certain information as required by guidance and applicable forms and instructions issued by the Commissioner.

(2) ***S corporations*** —

(i) ***In general.*** An S corporation makes an election under section 108(i) by following procedures outlined in guidance and applicable forms and instructions issued by the Commissioner. An electing S corporation (or its successor) must provide to its shareholders certain information as required by guidance and applicable forms and instructions issued by the Commissioner.

(ii) ***Related S corporations.*** A related S corporation must provide to its shareholders certain information as required by guidance and applicable forms and instructions issued by the Commissioner.

(f) ***Effective/applicability dates.*** For the applicability dates of this section, see § 1.108(i)-0(b).

[T.D. 9623, 78 FR 39975, July 3, 2013; 78 FR 49366, Aug. 14, 2013]

§ 1.108(i)-3 Rules for the deduction of OID.

(a) *Deemed debt-for-debt exchanges* —

(1) ***In general.*** For purposes of section 108(i)(2) (relating to deferred OID deductions that arise in certain debt-for-debt exchanges involving the reacquisition of an applicable debt instrument), if the proceeds of any debt instrument are used directly or indirectly by the issuer or a person related to the issuer (within the meaning of section 108(i)(5)(A)) to reacquire an applicable debt instrument, the debt instrument shall be treated as issued for the applicable debt instrument being reacquired. Therefore, section 108(i)(2) may apply, for example, to a debt instrument issued by a corporation for cash in which some or all of the proceeds are used directly or indirectly by the corporation's related subsidiary in the reacquisition of the subsidiary's applicable debt instrument.

(2) ***Directly or indirectly.*** Whether the proceeds of an issuance of a debt instrument are used directly or indirectly to reacquire an applicable debt instrument depends upon all of the facts and circumstances surrounding the issuance and the reacquisition. The proceeds of an issuance of a debt instrument will be treated as being used indirectly to reacquire an applicable debt instrument if—

(i) At the time of the issuance of the debt instrument, the issuer of the debt instrument anticipated that an applicable debt instrument of the issuer or a person related to the issuer would be reacquired by the issuer, and the debt instrument would not have been issued if the issuer had not so anticipated such reacquisition;

(ii) At the time of the issuance of the debt instrument, the issuer of the debt instrument or a person related to the issuer anticipated that an applicable debt instrument would be reacquired by a related person and the related person receives cash or property that it would not have received unless the reacquisition had been so anticipated; or

(iii) At the time of the reacquisition, the issuer or a person related to the issuer foresaw or reasonably should have foreseen that the issuer or a person related to the issuer would be required to issue a debt instrument, which it would not have otherwise been required to issue if the reacquisition had not occurred, in order to meet its future economic needs.

(b) ***Proportional rule for accruals of OID.*** For purposes of section 108(i)(2), if only a portion of the proceeds from the issuance of a debt instrument are used directly or indirectly to reacquire an applicable debt instrument, the rules of section 108(i)(2)(A) will apply to the portion of OID on the debt instrument that is equal to the portion of the proceeds from such instrument used to reacquire the outstanding applicable debt instrument. Except as provided in the last sentence of section 108(i)(2)(A), the amount of deferred OID deduction that is subject to section 108(i)(2)(A) for a taxable year is equal to the product of the amount of OID that accrues in the taxable year under section 1272 or section 1275 (and the regulations under those sections), whichever section is applicable, and a fraction, the numerator of which is the portion of the total proceeds from the issuance of the debt instrument used directly or indirectly to reacquire the applicable debt instrument and the denominator of which is the total proceeds from the issuance of the debt instrument.

(c) *No acceleration* —

(1) ***Retirement.*** Retirement of a debt instrument subject to section 108(i)(2) does not accelerate deferred OID deductions.

(2) ***Cross-reference.*** See § 1.108(i)-1 and § 1.108(i)-2 for rules relating to the acceleration of deferred OID deductions.

(d) ***Examples.*** The application of this section is illustrated by the following examples. Unless otherwise stated, all taxpayers in the following examples are calendar-year taxpayers, and P and S each file separate returns:

Example 1. (i) *Facts.* P, a domestic corporation, owns all of the stock of S, a domestic corporation. S has a debt instrument outstanding that has an adjusted issue price of $100,000. On January 1, 2010, P issues for $160,000 a four-year debt instrument that has an issue price of $160,000 and a stated redemption price at maturity of $200,000, resulting in $40,000 of OID. In P's discussion with potential lenders/holders, and as described in offering materials provided to potential lenders/holders, P disclosed that it planned to use all or a portion of the proceeds from the issuance of the debt instrument to reacquire outstanding debt of P and its affiliates. Following the issuance, P makes a $70,000 capital contribution to S. S then reacquires its debt instrument from X, a person not related to S within the meaning of section 108(i)(5)(A), for $70,000. At the time of the reacquisition, the adjusted issue price of S's debt instrument is $100,000. Under § 1.61-12(c), S realizes $30,000 of COD income. S makes a section 108(i) election for the $30,000 of COD income.
(ii) *Analysis.* Under the facts, at the time of P's issuance of its $160,000 debt instrument, P anticipated that the loan proceeds would be used to reacquire the debt of S, and P's debt instrument would not have been issued for an amount greater than $90,000 if P had not anticipated that S would use the proceeds to reacquire its debt. Pursuant to paragraph (a) of this section, the proceeds from P's issuance of its debt instrument are treated as being used indirectly to reacquire S's applicable debt instrument. Therefore, section 108(i)(2)(B) applies to P's debt instrument and P's OID deductions on its debt instrument are subject to deferral under section 108(i)(2)(A). However, because only a portion of the proceeds from P's debt instrument are used by S to reacquire its applicable debt instrument, only a portion of P's total OID deductions will be deferred under section 108(i)(2)(A). See section 108(i)(2)(B). Accordingly, a maximum of $17,500 ($40,000 × $70,000/$160,000) of P's $40,000 total OID deductions is subject to deferral under section 108(i)(2)(A). Under paragraph (b) of this section, the amount of P's deferred OID deduction each taxable year under section 108(i)(2)(A) is equal to the product of the amount of OID that accrues in the taxable year under section 1272 for the debt instrument and a fraction ($70,000/$160,000). As a result, P's deferred OID deductions are the following amounts: $4,015.99 for 2010 ($9,179.40 × $70,000/$160,000); $4,246.39 for 2011 ($9,706.04 × $70,000/$160,000); $4,490.01 for 2012 ($10,262.88 × $70,000/$160,000); and $4,747.61 for 2013 ($10,851.68 × $70,000/$160,000).

Example 2. (i) *Facts.* The facts are the same as in *Example 1,* except that S makes a section 108(i) election for only $10,000 of the $30,000 of COD income.

(ii) *Analysis.* The maximum amount of P's deferred OID deductions under section 108(i)(2)(A) is $10,000 rather than $17,500 because S made a section 108(i) election for only $10,000 of the $30,000 of COD income. Under section 108(i)(2)(A), because the amount of OID that accrues prior to 2014 attributable to the portion of the debt instrument issued to indirectly reacquire S's applicable debt instrument under paragraph (b) of this section ($17,500) exceeds the amount of deferred COD income under section 108(i) ($10,000), P's deferred OID deductions are the following amounts: $4,015.99 for 2010; $4,246.39 for 2011; $1,737.62 for 2012; and $0 for 2013.

Example 3. (i) *Facts.* The facts are the same as in *Example 1,* except that P pays $200,000 in cash to the lenders/holders on December 31, 2012, to retire the debt instrument. P did not directly or indirectly obtain the funds to retire the debt instrument from the issuance of another debt instrument with OID.
(ii) *Analysis.* Under paragraph (c)(1) of this section, the retirement of P's debt instrument is not an acceleration event for the deferred OID deductions of $4,015.99 for 2010, $4,246.39 for 2011, and $4,490.01 for 2012. Except as provided in § 1.108(i)-1(b)(4), these amounts will be taken into account during the inclusion period. P, however, paid a repurchase premium of $10,851.68 in 2012 ($200,000 minus the adjusted issue price of $189,148.32) to retire the debt instrument. If otherwise allowable, P may deduct this amount in 2012 under § 1.163-7(c).

(e) ***Effective/applicability dates.*** For *effective/applicability dates,* see § 1.108(i)-0(b).

[T.D. 9622, 78 FR 39991, July 3, 2013]

§ 1.109-1 Exclusion from gross income of lessor of real property of value of improvements erected by lessee.

(a) Income derived by a lessor of real property upon the termination, through forfeiture or otherwise, of the lease of such property and attributable to buildings erected or other improvements made by the lessee upon the leased property is excluded from gross income. However, where the facts disclose that such buildings or improvements represent in whole or in part a liquidation in kind of lease rentals, the exclusion from gross income shall not apply to the extent that such buildings or improvements represent such liquidation. The exclusion applies only with respect to the income realized by the lessor upon the termination of the lease and has no application to income, if any, in the form of rent, which may be derived by a lessor during the period of the lease and attributable to buildings erected or other improvements made by the lessee. It has no application to income which may be realized by the lessor upon the termination of the lease but not attributable to the value of such buildings or improvements. Neither does it apply to income derived by the lessor subsequent to the termination of the lease incident to the ownership of such buildings or improvements.

(b) The provisions of this section may be illustrated by the following example:

Example. The A Corporation leased in 1945 for a period of 50 years unimproved real property to the B Corporation under a lease providing that the B Corporation erect on the leased premises an office building costing $500,000, in addition to paying the A Corporation a lease rental of $10,000 per annum beginning on the date of completion of the improvements, the sum of $100,000 being placed in escrow for the payment of the rental. The building was completed on January 1, 1950. The lease provided that all

improvements made by the lessee on the leased property would become the absolute property of the A Corporation on the termination of the lease by forfeiture or otherwise and that the lessor would become entitled on such termination to the remainder of the sum, if any, remaining in the escrow fund. The B Corporation forfeited its lease on January 1, 1955, when the improvements had a value of $100,000. Under the provisions of section 109, the $100,000 is excluded from gross income. The amount of $50,000 representing the remainder in the escrow fund is forfeited to the A Corporation and is included in the gross income of that taxpayer. As to the basis of the property in the hands of the A Corporation, see § 1.1019-1.

§ 1.110-1 Qualified lessee construction allowances.

(a) ***Overview.*** Amounts provided to a lessee by a lessor for property to be constructed and used by the lessee pursuant to a lease are not includible in the lessee's gross income if the amount is a qualified lessee construction allowance under paragraph (b) of this section.

(b) ***Qualified lessee construction allowance*** —

(1) ***In general.*** A qualified lessee construction allowance means any amount received in cash (or treated as a rent reduction) by a lessee from a lessor—

(i) Under a short-term lease of retail space;

(ii) For the purpose of constructing or improving qualified long-term real property for use in the lessee's trade or business at that retail space; and

(iii) To the extent the amount is expended by the lessee in the taxable year received on the construction or improvement of qualified long-term real property for use in the lessee's trade or business at that retail space.

(2) ***Definitions*** —

(i) ***Qualified long-term real property*** is nonresidential real property under section 168(e)(2)(B) that is part of, or otherwise present at, the retail space referred to in paragraph (b)(1)(i) of this section and which reverts to the lessor at the termination of the lease. Thus, qualified long-term real property does not include property qualifying as section 1245 property under section 1245(a)(3).

(ii) ***Short-term lease*** is a lease (or other agreement for occupancy or use) of retail space for 15 years or less (as determined pursuant to section 168(i)(3)).

(iii) ***Retail space*** is nonresidential real property under section 168(e)(2)(B) that is leased, occupied, or otherwise used by the lessee in its trade or business of selling tangible personal property or services to the general public. The term *retail space* includes not only the space where the retail sales are made, but also space where activities supporting the retail activity are performed (such as an administrative office, a storage area, and employee lounge). Examples of services typically sold to the general public include services provided by hair stylists, tailors, shoe repairmen, doctors, lawyers, accountants, insurance agents, stock brokers, securities dealers (including dealers who sell securities out of inventory), financial advisors and bankers. For purposes of this paragraph (b)(2)(iii), a taxpayer is selling to the general public if the products or services for sale are made available to the general public, even if the product or service is targeted to certain customers or clients.

(3) ***Purpose requirement.*** An amount will meet the requirement in paragraph (b)(1)(ii) of this section only to the extent that the lease agreement for the retail space expressly provides that the construction allowance is for the purpose of constructing or improving qualified long-term real property for use in the lessee's trade or business at the retail space. An ancillary agreement between the lessor and the lessee providing for a construction allowance, executed contemporaneously with the lease or during the term of the lease, is considered a provision of the lease agreement for purposes of the preceding sentence, provided the agreement is executed before payment of the construction allowance.

(4) ***Expenditure requirement*** —

(i) ***In general.*** Expenditures referred to in paragraph (b)(1)(iii) of this section may be treated as being made first from the lessee's construction allowance. Tracing of the construction allowance to the actual lessee expenditures for the construction or improvement of qualified long-term real property is not required. However, the lessee should maintain accurate records of the amount of the qualified lessee construction allowance received and the expenditures made for qualified long-term real property.

(ii) ***Time when expenditures deemed made.*** For purposes of paragraph (b)(1)(iii) of this section, an amount is deemed to have been expended by a lessee in the taxable year in which the construction allowance was received by the lessee if—

(A) The amount is expended by the lessee within $8^1/_2$ months after the close of the taxable year in which the amount was received; or

(B) The amount is a reimbursement from the lessor for amounts expended by the lessee in a prior year and for which the lessee has not claimed any depreciation deductions.

(5) ***Consistent treatment by lessor.*** Qualified long-term real property constructed or improved with any amount excluded from a lessee's gross income by reason of paragraph (a) of this section must be treated as nonresidential real property owned by the lessor (for purposes of depreciation under 168(e)(2)(B) and determining gain or loss under section 168(i)(8)(B)). For purposes of the preceding sentence, the lessor must treat the construction allowance as fully expended in the manner required by paragraph (b)(1)(iii) of this section unless the lessor is notified by the lessee in writing to the contrary. General tax principles apply for purposes of determining when the lessor may begin depreciation of its nonresidential real property. The lessee's exclusion from gross income under paragraph (a) of this section, however, is not dependent upon the lessor's treatment of the property as nonresidential real property.

(c) ***Information required to be furnished*** —

(1) ***In general.*** The lessor and the lessee described in paragraph (b) of this section who are paying and receiving a qualified lessee construction allowance, respectively, must furnish the information described in paragraph (c)(3) of this section in the time and manner prescribed in paragraph (c)(2) of this section.

(2) ***Time and manner for furnishing information.*** The requirement to furnish information under paragraph (c)(1) of this section is met by attaching a statement with the information described in paragraph (c)(3) of this section to the lessor's or the lessee's, as applicable, timely filed (including extensions) Federal income tax return for the taxable year in which the construction allowance was paid by the lessor or received by the lessee (either in cash or treated as a rent reduction), as applicable. A lessor or a lessee may report the required information for several qualified lessee construction allowances

on a combined statement. However, a lessor's or a lessee's failure to provide information with respect to each lease will be treated as a separate failure to provide information for purposes of paragraph (c)(4) of this section.

(3) ***Information required*** —

(i) ***Lessor.*** The statement provided by the lessor must contain the lessor's name (and, in the case of a consolidated group, the parent's name), employer identification number, taxable year and the following information for each lease:

(A) The lessee's name (in the case of a consolidated group, the parent's name).

(B) The address of the lessee.

(C) The employer identification number of the lessee.

(D) The location of the retail space (including mall or strip center name, if applicable, and store name).

(E) The amount of the construction allowance.

(F) The amount of the construction allowance treated by the lessor as nonresidential real property owned by the lessor.

(ii) ***Lessee.*** The statement provided by the lessee must contain the lessee's name (and, in the case of a consolidated group, the parent's name), employer identification number, taxable year and the following information for each lease:

(A) The lessor's name (in the case of a consolidated group, the parent's name).

(B) The address of the lessor.

(C) The employer identification number of the lessor.

(D) The location of the retail space (including mall or strip center name, if applicable, and store name).

(E) The amount of the construction allowance.

(F) The amount of the construction allowance that is a qualified lessee construction allowance under paragraph (b) of this section.

(4) ***Failure to furnish information.*** A lessor or a lessee that fails to furnish the information required in this paragraph (c) may be subject to a penalty under section 6721.

(d) ***Effective date.*** This section is applicable to leases entered into on or after October 5, 2000.

[T.D. 8901, 65 FR 53586, Sept. 5, 2000]

§ 1.111-1 Recovery of certain items previously deducted or credited.

(a) ***General.*** Section 111 provides that income attributable to the recovery during any taxable year of bad debts, prior taxes, and delinquency amounts shall be excluded from gross income to the extent of the "recovery exclusion" with respect to such items. The rule of exclusion so prescribed by statute applies equally with respect to all other losses, expenditures and accruals made the basis of deductions from gross income for prior taxable years, including war losses referred to in section 127 of the Internal

Revenue Code of 1939, but not including deductions with respect to depreciation, depletion, amortization, or amortizable bond premiums. The term "recovery exclusion" as used in this section means an amount equal to the portion of the bad debts, prior taxes, and delinquency amounts (the items specifically referred to in section 111), and of all other items subject to the rule of exclusion which, when deducted or credited for a prior taxable year, did not result in a reduction of any tax of the taxpayer under subtitle A (other than the accumulated earnings tax imposed by section 531 or the personal holding company tax imposed by section 541) of the Internal Revenue Code of 1954 or corresponding provisions of prior income tax laws (other than the World War II excess profits tax imposed under subchapter E, chapter 2 of the Internal Revenue Code of 1939).

(1) ***Section 111 items.*** The term "section 111 items" as used in this section means bad debts, prior taxes, delinquency amounts, and all other items subject to the rule of exclusion, for which a deduction or credit was allowed for a prior taxable year. If a bad debt was previously charged against a reserve by a taxpayer on the reserve method of treating bad debts, it was not deducted, and it is therefore not considered a section 111 item. Bad debts, prior taxes, and delinquency amounts are defined in section 111(b) (1), (2), and (3), respectively. An example of a delinquency amount is interest on delinquent taxes. An example of the other items not expressly referred to in section 111 but nevertheless subject to the rule of exclusion is a loss sustained upon the sale of stock and later recovered, in whole or in part, through an action against the party from whom such stock had been purchased.

(2) ***Definition of "recovery".*** Recoveries result from the receipt of amounts in respect of the previously deducted or credited section 111 items, such as from the collection or sale of a bad debt, refund or credit of taxes paid, or cancellation of taxes accrued. Care should be taken in the case of bad debts which were treated as only partially worthless in prior years to distinguish between the item described in section 111, that is, the part of such debt which was deducted, and the part not previously deducted, which is not a section 111 item and is considered the first part collected. The collection of the part not deducted is not considered a "recovery". Furthermore, the term "recovery" does not include the gain resulting from the receipt of an amount on account of a section 111 item which, together with previous such receipts, exceeds the deduction or credit previously allowed for such item. For instance, a $100 corporate bond purchased for $40 and later deducted as worthless is subsequently collected to the extent of $50. The $10 gain (excess of $50 collection over $40 cost) is not a recovery of a section 111 item. Such gain is in no case excluded from gross income under section 111, regardless of whether the $40 recovery is or is not excluded.

(3) ***Treatment of debt deducted in more than one year by reason of partial worthlessness.*** In the case of a bad debt deducted in part for two or more prior years, each such deduction of a part of the debt is considered a separate section 111 item. A recovery with respect to such debt is considered first a recovery of those items (or portions thereof), resulting from such debt, for which there are recovery exclusions. If there are recovery exclusions for two or more items resulting from the same bad debt, such items are considered recovered in the order of the taxable years for which they were deducted, beginning with the latest. The recovery exclusion for any such item is determined by considering the recovery exclusion with respect to the prior year for which such item was deducted as being first used to offset all other applicable recoveries in the year in which the bad debt is recovered.

(4) ***Special provisions as to worthless bonds, etc., which are treated as capital losses.*** Certain bad debts arising from the worthlessness of securities and certain nonbusiness bad debts are treated as losses from the sale or exchange of capital assets. See sections 165(g) and 166(d). The amounts of the deductions allowed for any year under section 1211 on account of such losses for such year are considered to be section 111 items. Any part of such losses which, under section 1211, is a

deduction for a subsequent year through the capital loss carryover (any later receipt of an amount with respect to such deducted loss is a recovery) is considered a section 111 item for the year in which such loss was sustained.

(b) ***Computation of recovery exclusion*** —

(1) ***Amount of recovery exclusion allowable for year of recovery.*** For the year of any recovery, the section 111 items which were deducted or credited for one prior year are considered as a group and the recovery thereon is considered separately from recoveries of any items which were deducted or credited for other years. This recovery is excluded from gross income to the extent of the recovery exclusion with respect to this group of items as (i) determined for the original year for which such items were deducted or credited (see subparagraph (2) of this paragraph) and (ii) reduced by the excludable recoveries in intervening years on account of all section 111 items for such original year. A taxpayer claiming a recovery exclusion shall submit, at the time the exclusion is claimed, the computation of the recovery exclusion claimed for the original year for which the items were deducted or credited, and computations showing the amount recovered in intervening years on account of the section 111 items deducted or credited for the original year.

(2) ***Determination of recovery exclusion for original year for which items were deducted or credited.***

(i) The recovery exclusion for the taxable year for which section 111 items were deducted or credited (that is, the "original taxable year") is the portion of the aggregate amount of such deductions and credits which could be disallowed without causing an increase in any tax of the taxpayer imposed under subtitle A (other than the accumulated earnings tax imposed by section 531 or the personal holding company tax imposed by section 541) of the Internal Revenue Code of 1954 or corresponding provisions of prior income tax laws (other than the World War II excess profits tax imposed under subchapter E, chapter 2 of the Internal Revenue Code of 1939). For the purpose of such recovery exclusion, consideration must be given to the effect of net operating loss carryovers and carrybacks or capital loss carryovers.

(ii) This rule shall be applied by determining the recovery exclusion as the aggregate amount of the section 111 items for the original year for which such items were deducted or credited reduced by whichever of the following amounts is the greater:

(*a*) The difference between

(*1*) the taxable income for such original year and

(*2*) the taxable income computed without regard to the section 111 items for such original year.

(*b*) In the case of a taxpayer subject to any income tax in lieu of normal tax or surtax or both (except the alternative tax on capital gains imposed by section 1201, which is disregarded), the difference between

(*1*) the income subject to such tax for such original year and

(*2*) the income subject to such tax computed without regard to the section 111 items for such original year.

(Neither the amount determined under (*1*) nor the amount under (*2*) of (*a*) or (*b*) of this subdivision shall in any case be considered less than zero.) For this determination of the recovery exclusion, the aggregate of the section 111 items must be further decreased by

the portion thereof which caused a reduction in tax in preceding or succeeding taxable years through any net operating loss carryovers or carrybacks or capital loss carryovers affected by such items. This decrease is the aggregate of the largest amount determined for each of such preceding and succeeding years under (*a*) and (*b*) of this subdivision, the computation of each carryover or carryback to the preceding or succeeding year being made under (*1*) of (*a*) and (*b*) of this subdivision with regard to the section 111 items for the original year and such computation being made under (*2*) of (*a*) and (*b*) of this subdivision without regard to such items. For the purpose of the preceding sentence, the computations under both (*1*) and (*2*) of (*a*) and (*b*) of this subdivision shall be made without regard to any section 111 items for such preceding or succeeding year and the carryovers and carrybacks to such year shall be determined without regard to any section 111 items for years subsequent to the original year.

(iii) The determination of the recovery exclusion for original taxable years subject to the provisions of the Internal Revenue Code of 1939 shall be made under 26 CFR (1939) 39.22(b)(12)-1(b)(2) (Regulations 118).

(3) ***Example.*** The provisions of this paragraph may be illustrated by the following example:

Example. A single individual with no dependents has for his 1954 taxable year the following income and deductions:

	With deduction of section 111 items	Without deduction of section 111 items
Gross income	$25,000	$25,000
Less deductions:		
Depreciation	20,000	20,000
Business bad debts and taxes	6,300	
Personal exemption	600	600
	26,900	20,600
Taxable income or (loss)	(1,900)	4,400
Adjustment under section 172(d)(3)	600	
Net operating loss	(1,300)	

The full amount of the net operating loss of $1,300 is carried back and allowed as a deduction for 1952. The aggregate of the section 111 items for 1954 is $6,300 (bad debts and taxes). The recovery exclusion on account of section 111 items for 1954 is $600, determined by reducing the $6,300 aggregate of the section 111 items by $5,700, *i.e.*, the sum of (1) the difference between the amount of the taxable income for 1954 computed without regard to the section 111 items ($4,400) and the amount of the taxable income for 1954 (not

> less than zero) computed by taking such items into account, and (2) the amount of the net operating loss ($1,300) which caused the reduction in tax for 1952 by reason of the carryback provisions. If in 1956 the taxpayer recovers $400 of the bad debts, all of the recovery is excluded from the income by reason of the recovery exclusion of $600 determined for the original year 1954. If in 1957 the taxpayer recovers an additional $300 of the bad debts, only $200 is excluded from gross income. That is, the recovery exclusion of $600 determined for the original year 1954 is reduced by the $400 recovered in 1956, leaving a balance of $200 which is used in 1957. The balance of the amount recovered in 1957, $100 ($300 less $200), is included in gross income for 1957.

(c) ***Provisions as to taxes imposed by section 531 (relating to the accumulated earnings tax) and section 541 (relating to the tax on personal holding companies).*** A recovery exclusion allowed for purposes of subtitle A (other than section 531 or section 541) of the Internal Revenue Code of 1954 shall also be allowed for the purpose of determining the accumulated earnings tax under section 531 or the personal holding company tax under section 541 regardless of whether or not the section 111 items on which such recovery exclusion is based resulted in a reduction of the tax under section 531 or section 541 of the Internal Revenue Code of 1954 (or corresponding provisions of prior income tax laws) for the prior taxable year. Furthermore, if there is recovery of a section 111 item which was not allowable as a deduction or credit for the prior taxable year for purposes of Subtitle A (not including section 531 or section 541) or corresponding provisions of prior income tax laws (other than Subchapter E, Chapter 2 of the Internal Revenue Code of 1939, relating to World War II excess profits tax), but was allowable for such prior taxable year in determining the tax under section 531 or section 541 (or corresponding provisions of prior income tax laws) then for the purpose of determining the tax under section 531 or section 541 a recovery exclusion shall be allowable with respect to such recovery if the section 111 item did not result in a reduction of the tax under section 531 or section 541 (or corresponding provisions of prior income tax laws).

§ 1.112-1 Combat zone compensation of members of the Armed Forces.

(a) ***Combat zone compensation exclusion*** —

(1) ***Amount excluded.*** In addition to the exemptions and credits otherwise applicable, section 112 excludes from gross income the following compensation of members of the Armed Forces:

(i) ***Enlisted personnel.*** Compensation received for active service as a member below the grade of commissioned officer in the Armed Forces of the United States for any month during any part of which the member served in a combat zone or was hospitalized at any place as a result of wounds, disease, or injury incurred while serving in the combat zone.

(ii) ***Commissioned officers.*** Compensation not exceeding the monthly dollar limit received for active service as a commissioned officer in the Armed Forces of the United States for any month during any part of which the officer served in a combat zone or was hospitalized at any place as a result of wounds, disease, or injury incurred while serving in the combat zone. The monthly dollar limit is the monthly amount excludable from the officer's income under section 112(b) as amended. Beginning in 1966, the monthly dollar limit for periods of active service after 1965 became $500. As of September 10, 1993, the monthly dollar limit continues to be $500.

(2) ***Time limits on exclusion during hospitalization.*** Compensation received for service for any month of hospitalization that begins more than 2 years after the date specified by the President in an Executive Order as the date of the termination of combatant activities in the combat zone cannot be excluded under section 112. Furthermore, compensation received while hospitalized after January 1978 for wounds, disease, or injury incurred in the Vietnam combat zone designated by Executive Order 11216 cannot be excluded under section 112.

(3) ***Special terms.*** A commissioned warrant officer is not a *commissioned officer* under section 112(b) and is entitled to the exclusion allowed to enlisted personnel under section 112(a). *Compensation,* for the purpose of section 112, does not include pensions and retirement pay. *Armed Forces of the United States* is defined (and members of the Armed Forces are described) in section 7701(a)(15).

(4) ***Military compensation only.*** Only compensation paid by the Armed Forces of the United States to members of the Armed Forces can be excluded under section 112, except for compensation paid by an agency or instrumentality of the United States or by an international organization to a member of the Armed Forces whose military active duty status continues during the member's assignment to the agency or instrumentality or organization on official detail. Compensation paid by other employers (whether private enterprises or governmental entities) to members of the Armed Forces cannot be excluded under section 112 even if the payment is made to supplement the member's military compensation or is labeled by the employer as compensation for active service in the Armed Forces of the United States. Compensation paid to civilian employees of the federal government, including civilian employees of the Armed Forces, cannot be excluded under section 112, except as provided in section 112(d)(2) (which extends the exclusion to compensation of civilian employees of the federal government in missing status due to the Vietnam conflict).

(b) ***Service in combat zone*** —

(1) ***Active service.*** The exclusion under section 112 applies only if active service is performed in a combat zone. A member of the Armed Forces is in active service if the member is actually serving in the Armed Forces of the United States. Periods during which a member of the Armed Forces is absent from duty on account of sickness, wounds, leave, internment by the enemy, or other lawful cause are periods of active service. A member of the Armed Forces in active service in a combat zone who becomes a prisoner of war or missing in action in the combat zone is deemed, for the purpose of section 112, to continue in active service in the combat zone for the period for which the member is treated as a prisoner of war or as missing in action for military pay purposes.

(2) ***Combat zone status.*** Except as provided in paragraphs (e) and (f) of this section, service is performed in a combat zone only if it is performed in an area which the President of the United States has designated by Executive Order, for the purpose of section 112, as an area in which Armed Forces of the United States are or have been engaged in combat, and only if it is performed on or after the date designated by the President by Executive Order as the date of the commencing of combatant activities in that zone and on or before the date designated by the President by Executive Order as the date of the termination of combatant activities in that zone.

(3) ***Partial month service.*** If a member of the Armed Forces serves in a combat zone for any part of a month, the member is entitled to the exclusion for that month to the same extent as if the member has served in that zone for the entire month. If a member of the Armed Forces is hospitalized for a part of a month as a result of wounds, disease, or injury incurred while serving in that zone, the member is entitled to the exclusion for the entire month.

(4) ***Payment time and place.*** The time and place of payment are irrelevant in considering whether compensation is excludable under section 112; rather, the time and place of the entitlement to compensation determine whether the compensation is excludable under section 112. Thus, compensation can be excluded under section 112 whether or not it is received outside a combat zone, or while the recipient is hospitalized, or in a year different from that in which the service was rendered for which the compensation is paid, provided that the member's entitlement to the compensation fully accrued in a month during which the member served in the combat zone or was hospitalized as a result of wounds, disease, or injury incurred while serving in the combat zone. For this purpose, entitlement to compensation fully accrues upon the completion of all actions required of the member to receive the compensation. Compensation received by a member of the Armed Forces for services rendered while in active service can be excluded under section 112 even though payment is received subsequent to discharge or release from active service. Compensation credited to a deceased member's account for a period subsequent to the established date of the member's death and received by the member's estate can be excluded from the gross income of the estate under section 112 to the same extent that it would have been excluded from the gross income of the member had the member lived and received the compensation.

(5) ***Examples of combat zone compensation.*** The rules of this section are illustrated by the following examples:

Example 1. On January 5, outside of a combat zone, an enlisted member received basic pay for active duty services performed from the preceding December 1 through December 31. On December 4 (and no other date), the member performed services within a combat zone. The member may exclude from income the entire payment received on January 5, although the member served in the combat zone only one day during December, received the payment outside of the combat zone, and received the payment in a year other than the year in which the combat zone services were performed.

Example 2. From March through December, an enlisted member became entitled to 25 days of annual leave while serving in a combat zone. The member used all 25 days of leave in the following year. The member may exclude from income the compensation received for those 25 days, even if the member performs no services in the combat zone in the year the compensation is received.

Example 3. From March through December, a commissioned officer became entitled to 25 days of annual leave while serving in a combat zone. During that period the officer also received basic pay of $1,000 per month from which the officer excluded from income $500 per month (exhausting the monthly dollar limit under section 112 for that period). The officer used all 25 days of leave in the following year. The officer may not exclude from income any compensation received in the following year related to those 25 days of leave, since the officer had already excluded from income the maximum amount of combat zone compensation for the period in which the leave was earned.

Example 4. In November, while serving in a combat zone, an enlisted member competing for a cash award submitted an employee suggestion. After November, the member neither served in a combat zone nor was hospitalized for wounds incurred in the combat zone. In June of the following year, the member's suggestion was selected as the winner of the competition and the award was paid. The award can be excluded from income as combat zone compensation although granted and received outside of the combat zone, since the member completed the necessary action to win the award (submission of the suggestion) in a month during which the member served in the combat zone.

Example 5. In July, while serving in a combat zone, an enlisted member voluntarily reenlisted. After July, the member neither served in a combat zone nor was hospitalized for wounds incurred in the combat zone. In February of the following year, the member received a bonus as a result of the July

reenlistment. The reenlistment bonus can be excluded from income as combat zone compensation although received outside of the combat zone, since the member completed the necessary action for entitlement to the reenlistment bonus in a month during which the member served in the combat zone.

Example 6. In July, while serving outside a combat zone, an enlisted member voluntarily reenlisted. In February of the following year, the member, while performing services in a combat zone, received a bonus as a result of the July reenlistment. The reenlistment bonus cannot be excluded from income as combat zone compensation although received while serving in the combat zone, since the member completed the necessary action for entitlement to the reenlistment bonus in a month during which the member had neither served in the combat zone nor was hospitalized for wounds incurred while serving in a combat zone.

(c) ***Hospitalization*** —

(1) ***Presumption of combat zone injury.*** If an individual is hospitalized for wound, disease, or injury while serving in a combat zone, the wound, disease, or injury will be presumed to have been incurred while serving in a combat zone, unless the contrary clearly appears. In certain cases, however, a wound, disease, or injury may have been incurred while serving in a combat zone even though the individual was not hospitalized for it while so serving. In exceptional cases, a wound, disease, or injury will not have been incurred while serving in a combat zone even though the individual was hospitalized for it while so serving.

(2) ***Length of hospitalization.*** An individual is hospitalized only until the date the individual is discharged from the hospital.

(3) ***Examples of combat zone injury.*** The rules of this paragraph (c) are illustrated by the following examples:

Example 1. An individual is hospitalized for a disease in the combat zone where the individual has been serving for three weeks. The incubation period of the disease is two to four weeks. The disease is incurred while serving in the combat zone.

Example 2. The facts are the same as in *Example 1* except that the incubation period of the disease is one year. The disease is not incurred while serving in the combat zone.

Example 3. A member of the Air Force, stationed outside the combat zone, is shot while participating in aerial combat over the combat zone, but is not hospitalized until returning to the home base. The injury is incurred while serving in a combat zone.

Example 4. An individual is hospitalized for a disease three weeks after having departed from a combat zone. The incubation period of the disease is two to four weeks. The disease is incurred while serving in a combat zone.

(d) ***Married members.*** The exclusion under section 112 applies without regard to the marital status of the recipient of the compensation. If both spouses meet the requirements of the statute, then each spouse is entitled to the benefit of an exclusion. In the case of a husband and wife domiciled in a State recognized for Federal income tax purposes as a community property State, any exclusion from gross income under section 112 operates before apportionment of the gross income of the spouses under community property law. For example, a husband and wife are domiciled in a community property State and the member spouse is entitled, as a commissioned officer, to the benefit of the exclusion under section

112(b) of $500 for each month. The member receives $7,899 as compensation for active service for 3 months in a combat zone. Of that amount, $1,500 is excluded from gross income under section 112(b) and $6,399 is taken into account in determining the gross income of both spouses.

(e) ***Service in area outside combat zone*** —

(1) ***Combat zone treatment.*** For purposes of section 112, a member of the Armed Forces who performs military service in an area outside the area designated by Executive Order as a combat zone is deemed to serve in that combat zone while the member's service is in direct support of military operations in that zone and qualifies the member for the special pay for duty subject to hostile fire or imminent danger authorized under section 310 of title 37 of the United States Code, as amended (37 U.S.C. 310) (hostile fire/imminent danger pay).

(2) ***Examples of combat zone treatment.*** The examples in this paragraph (e)(2) are based on the following circumstances: Certain areas, airspace, and adjacent waters are designated as a combat zone for purposes of section 112 as of May 1. Some members of the Armed Forces are stationed in the combat zone; others are stationed in two foreign countries outside the combat zone, named Nearby Country and Destination Country.

Example 1. B is a member of an Armed Forces ground unit stationed in the combat zone. On May 31, B's unit crosses into Nearby Country. B performs military service in Nearby Country in direct support of the military operations in the combat zone from June 1 through June 8 that qualifies B for hostile fire/imminent danger pay. B does not return to the combat zone during June. B is deemed to serve in the combat zone from June 1 through June 8. Accordingly, B is entitled to the exclusion under section 112 for June. Of course, B is also entitled to the exclusion for any month (May, in this example) in which B actually served in the combat zone.

Example 2. B is a member of an Armed Forces ground unit stationed in the combat zone. On May 31, B's unit crosses into Nearby Country. On June 1, B is wounded while performing military service in Nearby Country in direct support of the military operations in the combat zone that qualifies B for hostile fire/imminent danger pay. On June 2, B is transferred for treatment to a hospital in the United States. B is hospitalized from June through October for those wounds. B is deemed to have incurred the wounds while serving in the combat zone on June 1. Accordingly, B is entitled to the exclusion under section 112 for June through October. Of course, B is also entitled to the exclusion for any month (May, in this example) in which B actually served in the combat zone.

Example 3. B is stationed in Nearby Country for the entire month of June as a member of a ground crew servicing combat aircraft operating in the combat zone. B's service in Nearby Country during June does not qualify B for hostile fire/imminent danger pay. Accordingly, B is not deemed to serve in the combat zone during June and is not entitled to the exclusion under section 112 for that month.

Example 4. B is assigned to an air unit stationed in Nearby Country for the entire month of June. In June, members of air units of the Armed Forces stationed in Nearby Country fly combat and supply missions into and over Destination Country in direct support of military operations in the combat zone. B flies combat missions over Destination Country from Nearby Country from June 1 through June 8. B's service qualifies B for hostile fire/imminent danger pay. Accordingly, B is deemed to serve in the combat zone during June and is entitled to the exclusion under section 112. The result would be the same if B were to fly supply missions into Destination Country from Nearby Country in direct support of operations in the combat zone qualifying B for hostile fire/imminent danger pay.

Example 5. Assigned to an air unit stationed in Nearby Country, B was killed in June when B's plane crashed on returning to the airbase in Nearby Country. B was performing military service in direct support of the military operations in the combat zone at the time of B's death. B's service also qualified B for hostile fire/imminent danger pay. B is deemed to have died while serving in the combat zone or to have died as a result of wounds, disease, or injury incurred while serving in the combat zone for purposes of section 692(a) and section 692(b) (providing relief from certain income taxes for members of the Armed Forces dying in a combat zone or as a result of wounds, disease, or injury incurred while serving in a combat zone) and section 2201 (providing relief from certain estate taxes for members of the Armed Forces dying in a combat zone or by reason of combat-zone-incurred wounds). The result would be the same if B's mission had been a supply mission instead of a combat mission.

Example 6. In June, B was killed as a result of an off-duty automobile accident while leaving the airbase in Nearby Country shortly after returning from a mission over Destination Country. At the time of B's death, B was not performing military duty qualifying B for hostile fire/imminent danger pay. B is not deemed to have died while serving in the combat zone or to have died as the result of wounds, disease, or injury incurred while serving in the combat zone. Accordingly, B does not qualify for the benefits of section 692(a), section 692(b), or section 2201.

Example 7. B performs military service in Nearby Country from June 1 through June 8 in direct support of the military operations in the combat zone. Nearby Country is designated as an area in which members of the Armed Forces qualify for hostile fire/imminent danger pay due to imminent danger, even though members in Nearby Country are not subject to hostile fire. B is deemed to serve in the combat zone from June 1 through June 8. Accordingly, B is entitled to the exclusion under section 112 for June.

(f) ***Nonqualifying presence in combat zone*** —

(1) ***Inapplicability of exclusion.*** The following members of the Armed Forces are not deemed to serve in a combat zone within the meaning of section 112(a)(1) or section 112(b)(1) or to be hospitalized as a result of wounds, disease, or injury incurred while serving in a combat zone within the meaning of section 112(a)(2) or section 112(b)(2)—

(i) Members present in a combat zone while on leave from a duty station located outside a combat zone;

(ii) Members who pass over or through a combat zone during the course of a trip between two points both of which lie outside a combat zone; or

(iii) Members present in a combat zone solely for their own personal convenience.

(2) ***Exceptions for temporary duty or special pay.*** Paragraph (f)(1) of this section does not apply to members of the Armed Forces who—

(i) Are assigned on official temporary duty to a combat zone (including official temporary duty to the airspace of a combat zone); or

(ii) Qualify for hostile fire/imminent danger pay.

(3) ***Examples of nonqualifying presence and its exceptions.*** The examples in this paragraph (f)(3) are based on the following circumstances: Certain areas, airspace, and adjacent waters are designated as a combat zone for purposes of section 112 as of May 1. Some members of the Armed Forces are stationed in the combat zone; others are stationed in two foreign countries outside the combat zone, named Nearby Country and Destination Country.

Example 1. B is a member of the Armed Forces assigned to a unit stationed in Nearby Country. On June 1, B voluntarily visits a city within the combat zone while on leave. B is not deemed to serve in a combat zone since B is present in a combat zone while on leave from a duty station located outside a combat zone.

Example 2. B is a member of the Armed Forces assigned to a unit stationed in Nearby Country. During June, B takes authorized leave and elects to spend the leave period by visiting a city in the combat zone. While on leave in the combat zone, B is subject to hostile fire qualifying B for hostile fire/imminent danger pay. Although B is present in the combat zone while on leave from a duty station outside the combat zone, B qualifies for the exclusion under section 112 because B qualifies for hostile fire/imminent danger pay while in the combat zone.

Example 3. B is a member of the Armed Forces assigned to a ground unit stationed in the combat zone. During June, B takes authorized leave and elects to spend the leave period in the combat zone. B is not on leave from a duty station located outside a combat zone, nor is B present in a combat zone solely for B's own personal convenience. Accordingly, B's combat zone tax benefits continue while B is on leave in the combat zone.

Example 4. B is assigned as a navigator to an air unit stationed in Nearby Country. On June 4, during the course of a flight between B's home base in Nearby Country and another base in Destination Country, the aircraft on which B serves as a navigator flies over the combat zone. B is not on official temporary duty to the airspace of the combat zone and does not qualify for hostile fire/imminent danger pay as a result of the flight. Accordingly, B is not deemed to serve in a combat zone since B passes over the combat zone during the course of a trip between two points both of which lie outside the combat zone without either being on official temporary duty to the combat zone or qualifying for hostile fire/imminent danger pay.

Example 5. B is a member of the Armed Forces assigned to a unit stationed in Nearby Country. B enters the combat zone on a 3-day pass. B is not on official temporary duty and does not qualify for hostile fire/imminent danger pay while present in the combat zone. Accordingly, B is not deemed to serve in a combat zone since B is present in the combat zone solely for B's own personal convenience.

Example 6. B, stationed in Nearby Country, is a military courier assigned on official temporary duty to deliver military pouches in the combat zone and in Destination Country. On June 1, B arrives in the combat zone from Nearby Country, and on June 2, B departs for Destination Country. Although B passes through the combat zone during the course of a trip between two points outside the combat zone, B is nevertheless deemed to serve in a combat zone while in the combat zone because B is assigned to the combat zone on official temporary duty.

Example 7. B is a member of an Armed Forces ground unit stationed in Nearby Country. On June 1, B took authorized leave and elected to spend the leave period by visiting a city in the combat zone. On June 2, while on leave in the combat zone, B was wounded by hostile fire qualifying B for hostile fire/imminent danger pay. On June 3, B was transferred for treatment to a hospital in the United States. B is hospitalized from June through October for those wounds. Although B was present in the combat zone while on leave from a duty station outside the combat zone, B is deemed to have incurred the wounds while serving in the combat zone on June 2, because B qualified for hostile fire/imminent danger pay while in the combat zone. Accordingly, B is entitled to the exclusion under section 112 for June through October.

Example 8. The facts are the same as in *Example 7* except that B dies on September 1 as a result of the wounds incurred in the combat zone. B is deemed to have died as a result of wounds, disease, or injury incurred while serving in the combat zone for purposes of section 692(a) and section 692(b) (providing relief from certain income taxes for members of the Armed Forces dying in a combat zone or as a result of wounds, disease, or injury incurred while serving in a combat zone) and section 2201 (providing relief from certain estate taxes for members of the Armed Forces dying in a combat zone or by reason of combat-zone-incurred wounds).

[T.D. 8489, 58 FR 47640, Sept. 10, 1993]

§ 1.113-1 Mustering-out payments for members of the Armed Forces.

For the purposes of the exclusion from gross income under section 113 of mustering-out payments with respect to service in the Armed Forces, mustering-out payments are payments made to any recipients pursuant to the provisions of 38 U.S.C. 2105 (formerly section 5 of the Mustering-out Payment Act of 1944 and section 505 of the Veterans' Readjustment Assistance Act of 1952).

§ 1.117-1 Exclusion of amounts received as a scholarship or fellowship grant.

(a) ***In general.*** Any amount received by an individual as a scholarship at an educational institution or as a fellowship grant, including the value of contributed services and accommodations, shall be excluded from the gross income of the recipient, subject to the limitations set forth in section 117(b) and § 1.117-2. The exclusion from gross income of an amount which is a scholarship or fellowship grant is controlled solely by section 117. Accordingly, to the extent that a scholarship or a fellowship grant exceeds the limitations of section 117(b) and § 1.117-2, it is includible in the gross income of the recipient notwithstanding the provisions of section 102 relating to exclusion from gross income of gifts, or section 74(b) relating to exclusion from gross income of certain prizes and awards. For definitions, see § 1.117-3.

(b) ***Exclusion of amounts received to cover expenses.***

(1) Subject to the limitations provided in subparagraph (2) of this paragraph, any amount received by an individual to cover expenses for travel (including meals and lodging while traveling and an allowance for travel of the individual's family), research, clerical help, or equipment is excludable from gross income provided that such expenses are incident to a scholarship or fellowship grant which is excludable from gross income under section 117(a)(1). If, however, only a portion of a scholarship or fellowship grant is excludable from gross income under section 117(a)(1) because of the part-time employment limitation contained in section 117(b)(1) or because of the expiration of the 36-month period described in section 117(b)(2)(B), only the amount received to cover expenses incident to such excludable portion is excludable from gross income. The requirement that these expenses be incident to the scholarship or the fellowship grant means that the expenses of travel, research, clerical help, or equipment must be incurred by the individual in order to effectuate the purpose for which the scholarship or the fellowship grant was awarded.

(2)

(i) In the case of a scholarship or fellowship grant which is awarded after July 28, 1956, the exclusion provided under subparagraph (1) of this paragraph is not applicable unless the amount received by the individual is specifically designated to cover expenses for travel, research, clerical help, or equipment.

(ii) In the case of a scholarship or fellowship grant awarded before July 29, 1956, the exclusion provided under subparagraph (1) of this paragraph is not applicable unless the recipient establishes, by competent evidence, that the amount was received to cover expenses for travel, research, clerical help, or equipment, but such amount need not be specifically designated. The fact that the recipient actually incurred expenses for travel, research, clerical help, or equipment is not sufficient to establish that the amount was received to cover such expenses.

(iii) The exclusion provided under subparagraph (1) of this paragraph is applicable only to the extent that the amount received for travel, research, clerical help, or equipment is actually expended for such expenses by the recipient during the term of the scholarship or fellowship grant and within a reasonable time before and after such term.

(3) The portion of any amount received to cover the expenses described in subparagraph (1) of this paragraph which is not actually expended for such expenses within the exclusion period described in subparagraph (2) of this paragraph shall, if not returned to the grantor within this period, be included in the gross income of the recipient for the taxable year in which such exclusion period expires.

§ 1.117-2 Limitations.

(a) *Individuals who are candidates for degrees* —

(1) *In general.* Under the limitations provided by section 117(b)(1) in the case of an individual who is a candidate for a degree at an educational institution, the exclusion from gross income shall not apply (except as otherwise provided in subparagraph (2) of this paragraph) to that portion of any amount received as payment for teaching, research, or other services in the nature of parttime employment required as a condition to receiving the scholarship or fellowship grant. Payments for such part-time employment shall be included in the gross income of the recipient in an amount determined by reference to the rate of compensation ordinarily paid for similar services performed by an individual who is not the recipient of a scholarship or a fellowship grant. A typical example of employment under this subparagraph is the case of an individual who is required, as a condition to receiving the scholarship or the fellowship grant, to perform part-time teaching services. A requirement that the individual shall furnish periodic reports to the grantor of the scholarship or the fellowship grant for the purpose of keeping the grantor informed as to the general progress of the individual shall not be deemed to constitute the performance of services in the nature of part-time employment.

(2) *Exception.* If teaching, research, or other services are required of all candidates (whether or not recipients of scholarships or fellowship grants) for a particular degree as a condition to receiving the degree, such teaching, research, or other services on the part of the recipient of a scholarship or fellowship grant who is a candidate for such degree shall not be regarded as part-time employment within the meaning of this paragraph. Thus, if all candidates for a particular education degree are required, as part of their regular course of study or curriculum, to perform part-time practice teaching services, such services are not to be regarded as part-time employment within the meaning of this paragraph.

(b) *Individuals who are not candidates for degrees* —

(1) *Conditions for exclusion.* In the case of an individual who is not a candidate for a degree at an educational institution, the exclusion from gross income of an amount received as a scholarship or a fellowship grant shall apply (to the extent provided in subparagraph (2) of this paragraph) only if the grantor of the scholarship or fellowship grant is—

(i) An organization described in section 501(c)(3) which is exempt from tax under section 501(a),

(ii) The United States or an instrumentality or agency thereof, or a State, a territory, or a possession of the United States, or any political subdivision thereof, or the District of Columbia, or

(iii) For taxable years beginning after December 31, 1961, a foreign government, an international organization, or a binational or multinational educational and cultural foundation or commission created or continued pursuant to section 103 of the Mutual Educational and Cultural Exchange Act of 1961 (22 U.S.C. 2453).

(2) ***Extent of exclusion.***

(i) In the case of an individual who is not a candidate for a degree, the amount received as a scholarship or a fellowship grant which is excludable from gross income under section 117(a)(1) shall not exceed an amount equal to $300 times the number of months for which the recipient received amounts under the scholarship or fellowship grant during the taxable year. In determining the number of months during the period for which the recipient received amounts under a scholarship or fellowship grant, computation shall be made on the basis of whole calendar months. A whole calendar month means a period of time terminating with the day of the succeeding month numerically corresponding to the day of the month of its beginning, less one, except that if there be no corresponding day of the succeeding month the period terminates with the last day of the succeeding month. For purposes of this computation a fractional part of a calendar month consisting of a period of time including 15 days or more shall be considered to be a whole calendar month and a fractional part of a calendar month consisting of a period of time including 14 days or less shall be disregarded. For example, if an individual receives a fellowship grant on September 13 which is to expire on June 12 of the following year, the grant shall be considered to have extended for a period of 9 months. If in the preceding example the grant expired on June 27, instead of June 12, the grant shall be considered to have extended for a period of 10 months.

(ii) No exclusion shall be allowed under section 117(a)(1) to an individual who is not a candidate for a degree after the recipient has, as an individual who is not a candidate for a degree, been entitled to an exclusion under that section for a period of 36 months. This limitation applies if the individual has received any amount which was either excluded or excludable from his gross income under section 117(a)(1) for any prior 36 months, whether or not consecutive. For example, if the individual received a fellowship grant of $7,200 for 3 years (which he elected to receive in 36 monthly installments of $200), his exclusion period would be exhausted even though he did not in any of the 36 months make use of the maximum exclusion. Accordingly, such individual would be entitled to no further exclusion from gross income with respect to any additional grants which he may receive as an individual who is not a candidate for a degree.

(iii) If an individual who is not a candidate for a degree receives amounts from more than one scholarship or fellowship grant during the taxable year, the total amounts received in the taxable year shall be aggregated for the purpose of computing the amount which may be excludable from gross income for such taxable year. If amounts are received from more than one scholarship or fellowship grant during the same month or months within the taxable year, such month or months shall be counted only once for the purpose of determining the number of months for which the individual received such amounts under the scholarships or fellowship grants during the taxable year. For example, if an individual receives a fellowship grant from one source for the months of January to June of the taxable year and also receives a fellowship

grant from another source for the months of March through December of the same taxable year, he shall be considered to have received amounts for 12 months of the taxable year. See example (4) in subparagraph (3) of this paragraph for further illustration.

(3) ***Examples.*** The application of this paragraph may be further illustrated by the following examples, it being assumed that in each example the grantor is a grantor who is described in section 117(b)(2)(A) and subparagraph (1) of this paragraph:

Example 1. B, an individual who files his return on the calendar year basis, is awarded a post-doctorate fellowship grant in March 1955. The grant is to commence on September 1, 1955, and is to end on May 31, 1956, so that it will extend over a period of 9 months. The amount of the fellowship grant is $4,500 and B receives this amount in monthly installments of $500 on the first day of each month commencing September 1, 1955. During the taxable year 1955, B receives a total of $2,000 with respect to the 4-month period September through December, inclusive. He may exclude $1,200 from gross income in the taxable year 1955 ($300 × 4) and must include the remaining $800 in gross income for that year. For the year 1956, he will exclude $1,500 ($300 × 5) from gross income with respect to the $2,500 which he receives in that year and must include in gross income $1,000.

Example 2. Assume the same facts as in example (1) except that B receives the full amount of the grant ($4,500) on September 1, 1955. Since the amount received in the taxable year 1955 is for the full term of the fellowship grant (9 months), B may exclude $2,700 ($300 × 9) from gross income for the taxable year 1955. The remaining $1,800 must be included in gross income for that year.

Example 3. C, an individual who files his return on the calendar year basis, is awarded a post-doctorate fellowship grant in March 1955. The amount of the grant is $4,500 for a period commencing on September 1, 1955, and ending 24 months thereafter. C receives the full amount of the grant on September 1, 1955. C may exclude from gross income for the taxable year 1955, the full amount of the grant ($4,500) since this amount does not exceed an amount equal to $300 times the number of months (24) for which he received the amount of the grant during that taxable year.

Example 4. (i) F, an individual who files his return on the calendar year basis, is awarded a post-doctorate fellowship grant (Grant A) for two years commencing June 1, 1955, in the amount of $4,800. He elects to receive his grant in monthly installments of $200 commencing June 1, 1955. On March 1, 1956, F is awarded another post-doctorate fellowship grant (Grant B) for two years commencing September 1, 1956, in the amount of $7,200. He elects to receive this grant in monthly installments of $300 commencing September 1, 1956.
(ii) For the calendar year 1955, F receives $1,400 from Grant A which he is entitled to exclude from gross income since it does not exceed an amount equal to $300 times the number of months (7) for which he received amounts under the grant in the taxable year.

(iii) For the calendar year 1956, F receives $3,600 as the aggregate of amounts received under fellowship grants ($2,400 from Grant A and $1,200 from Grant B). F will be entitled to exclude the entire amount of $3,600 from gross income for the calendar year 1956 since such amount does not exceed an amount equal to $300 times the number of months (12) for which he received amounts under the grants in the taxable year.

(iv) For the calendar year 1957, F receives $4,600 as the aggregate of amounts received under fellowship grants ($1,000 from Grant A and $3,600 from Grant B). F will be entitled to exclude $3,600 ($300 × 12) from gross income for the calendar year 1957 and he will have to include $1,000 in gross income.

(v) For the calendar year 1958, F receives $2,400 from Grant B. F is entitled to exclude $1,500 ($300 × 5) from gross income for the calendar year 1958 and he will have to include $900 in gross income. While F receives amounts under fellowship Grant B for 8 months during the calendar year 1958, he is limited to an amount equal to $300 times 5 (months) because of the fact that he has already been entitled to exclude (and has in fact excluded) amounts received as a fellowship grant for a period of 31 months. Accordingly, he can only exclude amounts received under the fellowship grant for 5 months during the calendar year 1958, because of the 36-month limitation period. The fact that he was entitled to exclude only $1,400 ($200 a month for 7 months) instead of the maximum amount of $2,100 ($300 × 7) in 1955, is immaterial and the limitation period of 36 months is applicable.

(vi) The following chart illustrates the computation of the number of months for which F received amounts under the fellowship grants during the respective taxable years and the computation of the total amounts received under the fellowship grants during each taxable year:

Period for which received and source	Number of months	Amounts received
1955:		
June 1 to December 31	7	
Grant A		$1,400
Grant B		None
Aggregate	7	1,400
1956:		
January 1 to August 31	8	
Grant A		1,600
Grant B		None
September 1 to December 31	4	
Grant A		800
Grant B		1,200
Aggregate	12	3,600
1957:		

Period for which received and source	Number of months	Amounts received
January 1 to May 31	5	
Grant A		1,000
Grant B		1,500
June 1 to December 31	7	
Grant A		None
Grant B		2,100
Aggregate	12	4,600
1958:		
January 1 to August 31	8	
Grant A		None
Grant B		2,400
Aggregate		2,400

[T.D. 6500, 25 FR 11402, Nov. 26, 1960, as amended by T.D. 6782, 29 FR 18355, Dec. 24, 1964]

§ 1.117-3 Definitions.

(a) ***Scholarship.*** A scholarship generally means an amount paid or allowed to, or for the benefit of, a student, whether an undergraduate or a graduate, to aid such individual in pursuing his studies. The term includes the value of contributed services and accommodations (see paragraph (d) of this section) and the amount of tuition, matriculation, and other fees which are furnished or remitted to a student to aid him in pursuing his studies. The term also includes any amount received in the nature of a family allowance as a part of a scholarship. However, the term does not include any amount provided by an individual to aid a relative, friend, or other individual in pursuing his studies where the grantor is motivated by family or philanthropic considerations. If an educational institution maintains or participates in a plan whereby the tuition of a child of a faculty member of such institution is remitted by any other participating educational institution attended by such child, the amount of the tuition so remitted shall be considered to be an amount received as a scholarship.

(b) ***Educational organization.*** For definition of “educational organization” paragraphs (a) and (b) of section 117 adopt the definition of that term which is prescribed in section 151(e)(4). Accordingly, for purposes of section 117 the term “educational organization” means only an educational organization which normally maintains a regular faculty and curriculum and normally has a regularly organized body of students in attendance at the place where its educational activities are carried on. See section 151(e)(4) and regulations thereunder.

(c) ***Fellowship grant.*** A fellowship grant generally means an amount paid or allowed to, or for the benefit of, an individual to aid him in the pursuit of study or research. The term includes the value of contributed services and accommodations (see paragraph (d) of this section) and the amount of tuition, matriculation, and other fees which are furnished or remitted to an individual to aid him in the pursuit of study or research. The term also includes any amount received in the nature of a family allowance as a

part of a fellowship grant. However, the term does not include any amount provided by an individual to aid a relative, friend, or other individual in the pursuit of study or research where the grantor is motivated by family or philanthropic considerations.

(d) ***Contributed services and accommodations.*** The term "contributed services and accommodations" means such services and accommodations as room, board, laundry service, and similar services or accommodations which are received by an individual as a part of a scholarship or fellowship grant.

(e) ***Candidate for a degree.*** The term "candidate for a degree" means an individual, whether an undergraduate or a graduate, who is pursuing studies or conducting research to meet the requirements for an academic or professional degree conferred by colleges or universities. It is not essential that such study or research be pursued or conducted at an educational institution which confers such degrees if the purpose thereof is to meet the requirements for a degree of a college or university which does confer such degrees. A student who receives a scholarship for study at a secondary school or other educational institution is considered to be a "candidate for a degree."

[T.D. 6500, 25 FR 11402, Nov. 26, 1960; 25 FR 14021, Dec. 21, 1960, as amended by T.D. 8032, 50 FR 27232, July 2, 1985]

§ 1.117-4 Items not considered as scholarships or fellowship grants.

The following payments or allowances shall not be considered to be amounts received as a scholarship or a fellowship grant for the purpose of section 117:

(a) ***Educational and training allowances to veterans.*** Educational and training allowances to a veteran pursuant to section 400 of the Servicemen's Readjustment Act of 1944 (58 Stat. 287) or pursuant to 38 U.S.C. 1631 (formerly section 231 of the Veterans' Readjustment Assistance Act of 1952).

(b) ***Allowances to members of the Armed Forces of the United States.*** Tuition and subsistence allowances to members of the Armed Forces of the United States who are students at an educational institution operated by the United States or approved by the United States for their education and training, such as the United States Naval Academy and the United States Military Academy.

(c) ***Amounts paid as compensation for services or primarily for the benefit of the grantor.***

(1) Except as provided in paragraph (a) of §§ 1.117-2 and 1.117-5, any amount paid or allowed to, or on behalf of, an individual to enable him to pursue studies or research, if such amount represents either compensation for past, present, or future employment services or represents payment for services which are subject to the direction or supervision of the grantor.

(2) Any amount paid or allowed to, or on behalf of, an individual to enable him to pursue studies or research primarily for the benefit of the grantor.

However, amounts paid or allowed to, or on behalf of, an individual to enable him to pursue studies or research are considered to be amounts received as a scholarship or fellowship grant for the purpose of section 117 if the primary purpose of the studies or research is to further the education and training of the recipient in his individual capacity and the amount provided by the grantor for such purpose does not represent compensation or payment for the services described in subparagraph (1) of this paragraph. Neither the fact that the recipient is required to furnish reports of his progress to the grantor, nor the fact that the results of his studies or research may be of some incidental benefits to the grantor shall, of itself, be considered to destroy the essential character of such amount as a scholarship or fellowship grant.

[T.D. 6500, 25 FR 11402, Nov. 26, 1960; 25 FR 14021, Dec. 21, 1960, as amended by T.D. 8032, 50 FR 27232, July 2, 1985]

§ 1.117-5 Federal grants requiring future service as a Federal employee.

(a) ***In general.*** Under section 117(c), amounts received by an individual under a Federal program as a scholarship or grant for qualified tuition and expenses at an institution of higher education are excluded from the gross income of the recipient even though the recipient is required to perform future service as a Federal employee. See paragraph (c) of this section for the definitions of the terms "qualified tuition and expenses" and "institution of higher education."

(b) ***Exception for uniformed services scholarship programs.*** The requirements of this section do not apply to amounts received before 1985 by a member of a uniformed service who entered training before 1981 under the Armed Forces Health Professions Scholarship Program, National Public Health Service Corps Scholarship Training Program, or other substantially similar Federal programs requiring the recipient to work for a uniformed Federal service after completion of studies. These awards are governed by section 4 of Pub. L. 93-483 as amended by Pub. L. 95-171, Pub. L. 95-600 and Pub. L. 96-167. See section 101(3) of title 37, United States Code for the definition of the term "uniformed service."

(c) ***Definitions*** —

(1) ***Qualified tuition and related expenses.*** For purposes of section 117(c) and this section, qualified tuition and related expenses are those amounts which under the terms of the Federal program are required to be used and in fact are used for payment of:

(i) Tuition and fees that are required for the recipient's enrollment or attendance at an institution of higher education; and

(ii) Those amounts used for payment of fees, books, supplies and equipment required for courses of instruction at such an institution.

Incidental expenses are not considered related expenses and thus are not excludable from gross income under section 117(c). Incidental expenses include room and board at an institution of higher education, expenses for travel (including expenses for meals and lodging incurred during travel and allowances for travel of the recipient's family), research, clerical help, equipment and other expenses which are not required for enrollment at the institution or in a course of instruction at such institution.

(2) ***Institution of higher education.*** To qualify as an institution of higher education under this section, the institution must be a public or other nonprofit institution in any state which—

(i) Admits as regular students only individuals who have a certificate of graduation from a high school or the recognized equivalent of such a certificate;

(ii) Is legally authorized within the state to provide a program of education beyond high school; and

(iii) Provides an education program for which it awards a bachelor's or higher degree or which is acceptable for full credit towards such a degree, or which trains and prepares students for gainful employment in a recognized health profession. For purposes of this section, recognized health professions are those health professions which are supervised or monitored by appropriate state or Federal agencies or governing professional associations and which require members to be currently licensed or certified in order to practice.

(3) ***Service as a Federal employee*** —

(i) ***In general.*** Except as otherwise provided in paragraph (c)(3)(ii) of this section, service as a Federal employee refers to employment of the recipient by the Federal government to work directly for the Federal government. Thus, Federal grants or scholarships which do not require the recipient to work directly for the Federal government are not governed by the rules of this section.

(ii) ***Service in a health manpower shortage area.*** For purposes of this section an obligation under a grant for the recipient to serve in a health related field in a health manpower shortage area as designated by the Secretary of Health and Human Services according to the criteria of the Public Health Services Act (42 U.S.C. 254(e)) and the regulations promulgated thereunder (42 CFR 5.1-5.4) will be considered an obligation to serve as a Federal employee.

(d) ***Records required for exclusion from gross income.*** To exclude amounts received under Federal programs requiring future services as a Federal employee, the recipient must maintain records that establish that the amounts received under such programs were used for qualified tuition and related expenses as defined in paragraph (c)(1) of this section. Qualifying uses may be established by providing to the Service, upon request, copies of relevant bills, receipts, cancelled checks or other convenient documentation or records which clearly reflect the use of the money received under the grant. The recipient must also submit, upon request, documentation establishing receipt of the grant and setting out the terms and requirements of the particular grant.

(e) ***Applicability of rules of §§ 117(a) and 117(b).*** Except where a different rule has been expressly provided in this section, amounts received under Federal grants requiring future service as a Federal employee, and which meet the requirements for exclusion from gross income under this section, are subject to the rules, limitations and definitions specified in §§ 117 (a) and (b) of the Code and §§ 1.117-1 through 1.117-4.

(f) ***Effective date.*** Except as provided in paragraph (b) of this section, this section will apply to amounts received after December 31, 1980 under Federal programs which meet the requirements of this section.

[T.D. 8032, 50 FR 27232, July 2, 1985]

§ 1.118-1 Contributions to the capital of a corporation.

In the case of a corporation, section 118 provides an exclusion from gross income with respect to any contribution of money or property to the capital of the taxpayer. Thus, if a corporation requires additional funds for conducting its business and obtains such funds through voluntary pro rata payments by its shareholders, the amounts so received being credited to its surplus account or to a special account, such amounts do not constitute income, although there is no increase in the outstanding shares of stock of the corporation. In such a case the payments are in the nature of assessments upon, and represent an additional price paid for, the shares of stock held by the individual shareholders, and will be treated as an addition to and as a part of the operating capital of the company. Section 118 also applies to contributions to capital made by persons other than shareholders. For example, the exclusion applies to the value of land or other property contributed to a corporation by a governmental unit or by a civic group for the purpose of inducing the corporation to locate its business in a particular community, or for the purpose of enabling the corporation to expand its operating facilities. However, the exclusion does not apply to any money or property transferred to the corporation in consideration for goods or services rendered, or to subsidies paid for the purpose of inducing the taxpayer to limit production. See section 362 for the basis of property acquired by a corporation through a contribution to its capital by its stockholders or by nonstockholders.

§ 1.118-2 Contribution in aid of construction.

(a) *Special rule for water and sewerage disposal utilities* —

(1) ***In general.*** For purposes of section 118, the term *contribution to the capital of the taxpayer* includes any amount of money or other property received from any person (whether or not a shareholder) by a regulated public utility that provides water or sewerage disposal services if—

(i) The amount is a contribution in aid of construction under paragraph (b) of this section;

(ii) In the case of a contribution of property other than water or sewerage disposal facilities, the amount satisfies the expenditure rule under paragraph (c) of this section; and

(iii) The amount (or any property acquired or constructed with the amount) is not included in the taxpayer's rate base for ratemaking purposes.

(2) *Definitions* —

(i) ***Regulated public utility*** has the meaning given such term by section 7701(a)(33), except that such term does not include any utility which is not required to provide water or sewerage disposal services to members of the general public in its service area.

(ii) ***Water or sewerage disposal facility*** is defined as tangible property described in section 1231(b) that is used predominately (80% or more) in the trade or business of furnishing water or sewerage disposal services.

(b) *Contribution in aid of construction* —

(1) ***In general.*** For purposes of section 118(c) and this section, the term *contribution in aid of construction* means any amount of money or other property contributed to a regulated public utility that provides water or sewerage disposal services to the extent that the purpose of the contribution is to provide for the expansion, improvement, or replacement of the utility's water or sewerage disposal facilities.

(2) ***Advances.*** A contribution in aid of construction may include an amount of money or other property contributed to a regulated public utility for a water or sewerage disposal facility subject to a contingent obligation to repay the amount, in whole or in part, to the contributor (commonly referred to as an advance). For example, an amount received by a utility from a developer to construct a water facility pursuant to an agreement under which the utility will pay the developer a percentage of the receipts from the facility over a fixed period may constitute a contribution in aid of construction. Whether an advance is a contribution or a loan is determined under general principles of federal tax law based on all the facts and circumstances. For the treatment of any amount of a contribution in aid of construction that is repaid by the utility to the contributor, see paragraphs (c)(2)(ii) and (d)(2) of this section.

(3) *Customer connection fee* —

(i) ***In general.*** Except as provided in paragraph (b)(3)(ii) of this section, a customer connection fee is not a contribution in aid of construction under this paragraph (b) and generally is includible in income. The term *customer connection fee* includes any amount of money or other property transferred to the utility representing the cost of installing a connection or service line (including the cost of meters and piping) from the utility's main water or sewer lines to the line owned by the customer or potential customer. A customer connection fee also includes any amount paid as a service charge for starting or stopping service.

(ii) *Exceptions* —

(A) ***Multiple customers.*** Money or other property contributed for a connection or service line from the utility's main line to the customer's or the potential customer's line is not a customer connection fee if the connection or service line serves, or is designed to serve, more than one customer. For example, a contribution for a split service line that is designed to serve two customers is not a customer connection fee. On the other hand, if a water or sewerage disposal utility treats an apartment or office building as one utility customer, then the cost of installing a connection or service line from the utility's main water or sewer lines serving that single customer is a customer connection fee.

(B) ***Fire protection services.*** Money or other property contributed for public and private fire protection services is not a customer connection fee.

(4) *Reimbursement for a facility previously placed in service* —

(i) ***In general.*** If a water or sewerage disposal facility is placed in service by the utility before an amount is contributed to the utility, the contribution is not a contribution in aid of construction under this paragraph (b) with respect to the cost of the facility unless, no later than $8^1/_2$ months after the close of the taxable year in which the facility was placed in service, there is an agreement, binding under local law, that the utility is to receive the amount as reimbursement for the cost of acquiring or constructing the facility. An order or tariff, binding under local law, that is issued or approved by the applicable public utility commission requiring current or prospective utility customers to reimburse the utility for the cost of acquiring or constructing the facility, is a binding agreement for purposes of the preceding sentence. If an agreement exists, the basis of the facility must be reduced by the amount of the expected contributions. Appropriate adjustments must be made if actual contributions differ from expected contributions.

(ii) ***Example.*** The application of paragraph (b)(4)(i) of this section is illustrated by the following example:

Example. M, a calendar year regulated public utility that provides water services, spent $1,000,000 for the construction of a water facility that can serve 200 customers. M placed the facility in service in 2000. In June 2001, the public utility commission that regulates M approves a tariff requiring new customers to reimburse M for the cost of constructing the facility by paying a service availability charge of $5,000 per lot. Pursuant to the tariff, M expects to receive reimbursements for the cost of the facility of $100,000 per year for the years 2001 through 2010. The reimbursements are contributions in aid of construction under paragraph (b) of this section because no later than $8^1/_2$ months after the close of the taxable year in which the facility was placed in service there was a tariff, binding under local law, approved by the public utility commission requiring new customers to reimburse the utility for the cost of constructing the facility. The basis of the $1,000,000 facility is zero because the expected contributions equal the cost of the facility.

(5) ***Classification by ratemaking authority.*** The fact that the applicable ratemaking authority classifies any money or other property received by a utility as a contribution in aid of construction is not conclusive as to its treatment under this paragraph (b).

(c) *Expenditure rule* —

(1) ***In general.*** An amount satisfies the expenditure rule of section 118(c)(2) if the amount is expended for the acquisition or construction of property described in section 118(c)(2)(A), the amount is paid or incurred before the end of the second taxable year after the taxable year in which the amount was received as required by section 118(c)(2)(B), and accurate records are kept of contributions and expenditures as provided in section 118(c)(2)(C).

(2) ***Excess amount*** —

(i) ***Includible in the utility's income.*** An amount received by a utility as a contribution in aid of construction that is not expended for the acquisition or construction of water or sewerage disposal facilities as required by paragraph (c)(1) of this section (the excess amount) is not a contribution to the capital of the taxpayer under paragraph (a) of this section. Except as provided in paragraph (c)(2)(ii) of this section, such excess amount is includible in the utility's income in the taxable year in which the amount was received.

(ii) ***Repayment of excess amount.*** If the excess amount described in paragraph (c)(2)(i) of this section is repaid, in whole or in part, either—

(A) Before the end of the time period described in paragraph (c)(1) of this section, the repayment amount is not includible in the utility's income; or

(B) After the end of the time period described in paragraph (c)(1) of this section, the repayment amount may be deducted by the utility in the taxable year in which it is paid or incurred to the extent such amount was included in income.

(3) ***Example.*** The application of this paragraph (c) is illustrated by the following example:

Example. M, a calendar year regulated public utility that provides water services, received a $1,000,000 contribution in aid of construction in 2000 for the purpose of constructing a water facility. To the extent that the $1,000,000 exceeded the actual cost of the facility, the contribution was subject to being returned. In 2001, M built the facility at a cost of $700,000 and returned $200,000 to the contributor. As of the end of 2002, M had not returned the remaining $100,000. Assuming accurate records are kept, the requirement under section 118(c)(2) is satisfied for $700,000 of the contribution. Because $200,000 of the contribution was returned within the time period during which qualifying expenditures could be made, this amount is not includible in M's income. However, the remaining $100,000 is includible in M's income for its 2000 taxable year (the taxable year in which the amount was received) because the amount was neither spent nor repaid during the prescribed time period. To the extent M repays the remaining $100,000 after year 2002, M would be entitled to a deduction in the year such repayment is paid or incurred.

(d) ***Adjusted basis*** —

(1) ***Exclusion from basis.*** Except for a repayment described in paragraph (d)(2) of this section, to the extent that a water or sewerage disposal facility is acquired or constructed with an amount received as a contribution to the capital of the taxpayer under paragraph (a) of this section, the basis of the facility is reduced by the amount of the contribution. To the extent the water or sewerage disposal facility is acquired as a contribution to the capital of the taxpayer under paragraph (a) of this section, the basis of the contributed facility is zero.

(2) ***Repayment of contribution.*** If a contribution to the capital of the taxpayer under paragraph (a) of this section is repaid to the contributor, either in whole or in part, then the repayment amount is a capital expenditure in the taxable year in which it is paid or incurred, resulting in an increase in the property's adjusted basis in such year. Capital expenditures allocated to depreciable property under paragraph (d)(3) of this section may be depreciated over the remaining recovery period for that property.

(3) ***Allocation of contributions.*** An amount treated as a capital expenditure under this paragraph (d) is to be allocated proportionately to the adjusted basis of each property acquired or constructed with the contribution based on the relative cost of such property.

(4) ***Example.*** The application of this paragraph (d) is illustrated by the following example:

Example. A, a calendar year regulated public utility that provides water services, received a $1,000,000 contribution in aid of construction in 2000 as an advance from B, a developer, for the purpose of constructing a water facility. To the extent that the $1,000,000 exceeds the actual cost of the facility, the contribution is subject to being returned. Under the terms of the advance, A agrees to pay to B a percentage of the receipts from the facility over a fixed period, but limited to the cost of the facility. In 2001, A builds the facility at a cost of $700,000 and returns $300,000 to B. In 2002, A pays $20,000 to B out of the receipts from the facility. Assuming accurate records are kept, the $700,000 advance is a contribution to the capital of A under paragraph (a) of this section and is excludable from A's income. The basis of the $700,000 facility constructed with this contribution to capital is zero. The $300,000 excess amount is not a contribution to the capital of A under paragraph (a) of this section because it does not meet the expenditure rule described in paragraph (c)(1) of this section. However, this excess amount is not includible in A's income pursuant to paragraph (c)(2)(ii) of this section since the amount is repaid to B within the required time period. The repayment of the $300,000 excess amount to B in 2001 is not treated as a capital expenditure by A. The $20,000 payment to B in 2002 is treated as a capital expenditure by A in 2002 resulting in an increase in the adjusted basis of the water facility from zero to $20,000.

(e) ***Statute of limitations —***

(1) ***Extension of statute of limitations.*** Under section 118(d)(1), the statutory period for assessment of any deficiency attributable to a contribution to capital under paragraph (a) of this section does not expire before the expiration of 3 years after the date the taxpayer notifies the Secretary in the time and manner prescribed in paragraph (e)(2) of this section.

(2) ***Time and manner of notification.*** Notification is made by attaching a statement to the taxpayer's federal income tax return for the taxable year in which any of the reportable items in paragraphs (e)(2)(i) through (iii) of this section occur. The statement must contain the taxpayer's name, address, employer identification number, taxable year, and the following information with respect to contributions of property other than water or sewerage disposal facilities that are subject to the expenditure rule described in paragraph (c) of this section—

(i) The amount of contributions in aid of construction expended during the taxable year for property described in section 118(c)(2)(A) (qualified property) as required under paragraph (c)(1) of this section, identified by taxable year in which the contributions were received;

(ii) The amount of contributions in aid of construction that the taxpayer does not intend to expend for qualified property as required under paragraph (c)(1) of this section, identified by taxable year in which the contributions were received; and

(iii) The amount of contributions in aid of construction that the taxpayer failed to expend for qualified property as required under paragraph (c)(1) of this section, identified by taxable year in which the contributions were received.

(f) ***Effective date.*** This section is applicable for any money or other property received by a regulated public utility that provides water or sewerage disposal services on or after January 11, 2001.

[T.D. 8936, 66 FR 2254, Jan. 11, 2001]

§ 1.119-1 Meals and lodging furnished for the convenience of the employer.

(a) ***Meals —***

(1) ***In general.*** The value of meals furnished to an employee by his employer shall be excluded from the employee's gross income if two tests are met:

(i) The meals are furnished on the business premises of the employer, and

(ii) the meals are furnished for the convenience of the employer. The question of whether meals are furnished for the convenience of the employer is one of fact to be determined by analysis of all the facts and circumstances in each case. If the tests described in subdivisions (i) and (ii) of this subparagraph are met, the exclusion shall apply irrespective of whether under an employment contract or a statute fixing the terms of employment such meals are furnished as compensation.

(2) ***Meals furnished without a charge.***

(i) Meals furnished by an employer without charge to the employee will be regarded as furnished for the convenience of the employer if such meals are furnished for a substantial noncompensatory business reason of the employer. If an employer furnishes meals as a means of providing additional compensation to his employee (and not for a substantial noncompensatory business reason of the employer), the meals so furnished will not be regarded as furnished for the convenience of the employer. Conversely, if the employer furnishes meals to his employee for a substantial noncompensatory business reason, the meals so furnished will be regarded as furnished for the convenience of the employer, even though such meals are also furnished for a compensatory reason. In determining the reason of an employer for furnishing meals, the mere declaration that meals are furnished for a noncompensatory business reason is not sufficient to prove that meals are furnished for the convenience of the employer, but such determination will be based upon an examination of all the surrounding facts and circumstances. In subdivision (ii) of this subparagraph, there are set forth some of the substantial noncompensatory business reasons which occur frequently and which justify the conclusion that meals furnished for such a reason are furnished for the convenience of the employer. In subdivision (iii) of this subparagraph, there are set forth some of the business reasons which are considered to be compensatory and which, in the absence of a substantial noncompensatory business reason, justify the conclusion that meals furnished for such a reason are not furnished for the convenience of the employer. Generally, meals furnished before or after the working hours of the employee will not be regarded as furnished for the convenience of the employer, but see subdivision (ii) (*d*) and (*f*) of this subparagraph for some exceptions to this general rule. Meals furnished on nonworking days do not qualify for the exclusion under section 119. If the employee is required to occupy living quarters on the

business premises of his employer as a condition of his employment (as defined in paragraph (b) of this section), the exclusion applies to the value of any meal furnished without charge to the employee on such premises.

(ii)

(*a*) Meals will be regarded as furnished for a substantial noncompensatory business reason of the employer when the meals are furnished to the employee during his working hours to have the employee available for emergency call during his meal period. In order to demonstrate that meals are furnished to the employee to have the employee available for emergency call during the meal period, it must be shown that emergencies have actually occurred, or can reasonably be expected to occur, in the employer's business which have resulted, or will result, in the employer calling on the employee to perform his job during his meal period.

(*b*) Meals will be regarded as furnished for a substantial noncompensatory business reason of the employer when the meals are furnished to the employee during his working hours because the employer's business is such that the employee must be restricted to a short meal period, such as 30 or 45 minutes, and because the employee could not be expected to eat elsewhere in such a short meal period. For example, meals may qualify under this subdivision when the employer is engaged in a business in which the peak work load occurs during the normal lunch hours. However, meals cannot qualify under this subdivision (*b*) when the reason for restricting the time of the meal period is so that the employee can be let off earlier in the day.

(*c*) Meals will be regarded as furnished for a substantial noncompensatory business reason of the employer when the meals are furnished to the employee during his working hours because the employee could not otherwise secure proper meals within a reasonable meal period. For example, meals may qualify under this subdivision (*c*) when there are insufficient eating facilities in the vicinity of the employer's premises.

(*d*) A meal furnished to a restaurant employee or other food service employee for each meal period in which the employee works will be regarded as furnished for a substantial noncompensatory business reason of the employer, irrespective of whether the meal is furnished during, immediately before, or immediately after the working hours of the employee.

(*e*) If the employer furnishes meals to employees at a place of business and the reason for furnishing the meals to each of substantially all of the employees who are furnished the meals is a substantial noncompensatory business reason of the employer, the meals furnished to each other employee will also be regarded as furnished for a substantial noncompensatory business reason of the employer.

(*f*) If an employer would have furnished a meal to an employee during his working hours for a substantial noncompensatory business reason, a meal furnished to such an employee immediately after his working hours because his duties prevented him from obtaining a meal during his working hours will be regarded as furnished for a substantial noncompensatory business reason.

(iii) Meals will be regarded as furnished for a compensatory business reason of the employer when the meals are furnished to the employee to promote the morale or goodwill of the employee, or to attract prospective employees.

(3) *Meals furnished with a charge.*

(i) If an employer provides meals which an employee may or may not purchase, the meals will not be regarded as furnished for the convenience of the employer. Thus, meals for which a charge is made by the employer will not be regarded as furnished for the convenience of the employer if the employee has a choice of accepting the meals and paying for them or of not paying for them and providing his meals in another manner.

(ii) If an employer furnishes an employee meals for which the employee is charged an unvarying amount (for example, by subtraction from his stated compensation) irrespective of whether he accepts the meals, the amount of such flat charge made by the employer for such meals is not, as such, part of the compensation includible in the gross income of the employee; whether the value of the meals so furnished is excludable under section 119 is determined by applying the rules of subparagraph (2) of this paragraph. If meals furnished for an unvarying amount are not furnished for the convenience of the employer in accordance with the rules of subparagraph (2) of this paragraph, the employee shall include in gross income the value of the meals regardless of whether the value exceeds or is less than the amount charged for such meals. In the absence of evidence to the contrary, the value of the meals may be deemed to be equal to the amount charged for them.

(b) *Lodging.* The value of lodging furnished to an employee by the employer shall be excluded from the employee's gross income if three tests are met:

(1) The lodging is furnished on the business premises of the employer,

(2) The lodging is furnished for the convenience of the employer, and

(3) The employee is required to accept such lodging as a condition of his employment.

The requirement of subparagraph (3) of this paragraph that the employee is required to accept such lodging as a condition of his employment means that he be required to accept the lodging in order to enable him properly to perform the duties of his employment. Lodging will be regarded as furnished to enable the employee properly to perform the duties of his employment when, for example, the lodging is furnished because the employee is required to be available for duty at all times or because the employee could not perform the services required of him unless he is furnished such lodging. If the tests described in subparagraphs (1), (2), and (3) of this paragraph are met, the exclusion shall apply irrespective of whether a charge is made, or whether, under an employment contract or statute fixing the terms of employment, such lodging is furnished as compensation. If the employer furnishes the employee lodging for which the employee is charged an unvarying amount irrespective of whether he accepts the lodging, the amount of the charge made by the employer for such lodging is not, as such, part of the compensation includible in the gross income of the employee; whether the value of the lodging is excludable from gross income under section 119 is determined by applying the other rules of this paragraph. If the tests described in subparagraph (1), (2), and (3) of this paragraph are not met, the employee shall include in gross income the value of the lodging regardless of whether it exceeds or is less than the amount charged. In the absence of evidence to the contrary, the value of the lodging may be deemed to be equal to the amount charged.

(c) *Business premises of the employer* —

(1) ***In general.*** For purposes of this section, the term "business premises of the employer" generally means the place of employment of the employee. For example, meals and lodging furnished in the employer's home to a domestic servant would constitute meals and lodging furnished on the business premises of the employer. Similarly, meals furnished to cowhands while herding their employer's cattle on leased land would be regarded as furnished on the business premises of the employer.

(2) ***Certain camps.*** For taxable years beginning after December 31, 1981, in the case of an individual who is furnished lodging by or on behalf of his employer in a camp (as defined in paragraph (d) of this section) in a foreign country (as defined in § 1.911-2(h)), the camp shall be considered to be part of the business premises of the employer.

(d) ***Camp defined*** —

(1) ***In general.*** For the purposes of paragraph (c)(2) of this section, a camp is lodging that is all of the following:

(i) Provided by or on behalf of the employer for the convenience of the employer because the place at which the employee renders services is in a remote area where satisfactory housing is not available to the employee on the open market within a reasonable commuting distance of that place;

(ii) Located, as near as practicable, in the vicinity of the place at which the employee renders services; and

(iii) Furnished in a common area or enclave which is not available to the general public for lodging or accommodations and which normally accommodates ten or more employees.

(2) ***Satisfactory housing.*** For purposes of paragraph (d)(1)(i) of this section, facts and circumstances that may be relevant in determining whether housing available to the employee is satisfactory include, but are not limited to, the size and condition of living space and the availability and quality of utilities such as water, sewers or other waste disposal facilities, electricity, or heat. The general environment in which housing is located (e.g., climate, prevalence of insects, etc.) does not of itself make housing unsatisfactory. The general environment is relevant, however, if housing is inadequate to protect the occupants from environmental conditions. The individual employee's income level is not relevant in determining whether housing is satisfactory; it may, however, be relevant in determining whether satisfactory housing is available to the employee (see paragraph (d)(3)(i)(B) of this section).

(3) ***Availability of satisfactory housing*** —

(i) ***Facts and circumstances.*** For purposes of paragraph (d)(1)(i) of this section, facts and circumstances to be considered in determining whether satisfactory housing is available to the employee on the open market include but are not limited to:

(A) The number of housing units available on the open market in relation to the number of housing units required for the employer's employees;

(B) The cost of housing available on the open market;

(C) The quality of housing available on the open market; and

(D) The presence of warfare or civil insurrection within the area where housing would be available which would subject U.S. citizens to unusual risk of personal harm or property loss.

(ii) ***Presumptions.*** Satisfactory housing will generally be considered to be unavailable to the employee on the open market if either of the following conditions is satisfied:

(A) The foreign government requires the employer to provide housing for its employees other than housing available on the open market; or

(B) An unrelated person awarding work to the employer requires that the employer's employees occupy housing specified by such unrelated person.

The condition of either paragraph (d)(3)(ii) (A) or (B) of this section is not satisfied if the requirement described therein and imposed either by a foreign government or unrelated person applies primarily to U.S. employers and not to a significant number of third country employers or applies primarily to employers of U.S. employees and not to a significant number of employers of third country employees.

(4) ***Reasonable commuting distance.*** For purposes of paragraph (d)(1)(i) of this section, in determining whether a commuting distance is reasonable, the accessibility of the place at which the employee renders services due to geographic factors, the quality of the roads, the customarily available transportation, and the usual travel time (at the time of day such travel would be required) to the place at which the employee renders services shall be taken into account.

(5) ***Common area or enclave.*** A cluster of housing units does not satisfy paragraph (d)(1)(iii) of this section if it is adjacent to or surrounded by substantially similar housing available to the general public. Two or more common areas or enclaves that house employees who work on the same project (for example, a highway project) are considered to be one common area or enclave in determining whether they normally accommodate ten or more employees.

(e) ***Rules.*** The exclusion provided by section 119 applies only to meals and lodging furnished in kind by or on behalf of an employer to his employee. If the employee has an option to receive additional compensation in lieu of meals or lodging in kind, the value of such meals and lodging is not excludable from gross income under section 119. However, the mere fact that an employee, at his option, may decline to accept meals tendered in kind will not of itself require inclusion of the value thereof in gross income. Cash allowances for meals or lodging received by an employee are includible in gross income to the extent that such allowances constitute compensation.

(f) ***Examples.*** The provisions of section 119 may be illustrated by the following examples:

Example 1. A waitress who works from 7 a.m. to 4 p.m. is furnished without charge two meals a work day. The employer encourages the waitress to have her breakfast on his business premises before starting work, but does not require her to have breakfast there. She is required, however, to have her lunch on such premises. Since the waitress is a food service employee and works during the normal breakfast and lunch periods, the waitress is permitted to exclude from her gross income both the value of the breakfast and the value of the lunch.

Example 2. The waitress in example (1) is allowed to have meals on the employer's premises without charge on her days off. The waitress is not permitted to exclude the value of such meals from her gross income.

Example 3. A bank teller who works from 9 a.m. to 5 p.m. is furnished his lunch without charge in a cafeteria which the bank maintains on its premises. The bank furnishes the teller such meals in order to limit his lunch period to 30 minutes since the bank's peak work load occurs during the normal lunch period. If the teller had to obtain his lunch elsewhere, it would take him considerably longer than 30 minutes for lunch, and the bank strictly enforces the 30-minute time limit. The bank teller may exclude from his gross income the value of such meals obtained in the bank cafeteria.

Example 4. Assume the same facts as in example (3), except that the bank charges the bank teller an unvarying rate per meal regardless of whether he eats in the cafeteria. The bank teller is not required to include in gross income such flat amount charged as part of his compensation, and he is entitled to exclude from his gross income the value of the meals he receives for such flat charge.

Example 5. A Civil Service employee of a State is employed at an institution and is required by his employer to be available for duty at all times. The employer furnishes the employee with meals and lodging at the institution without charge. Under the applicable State statute, his meals and lodging are regarded as part of the employee's compensation. The employee would nevertheless be entitled to exclude the value of such meals and lodging from his gross income.

Example 6. An employee of an institution is given the choice of residing at the institution free of charge, or of residing elsewhere and receiving a cash allowance in addition to his regular salary. If he elects to reside at the institution, the value to the employee of the lodging furnished by the employer will be includible in the employee's gross income because his residence at the institution is not required in order for him to perform properly the duties of his employment.

Example 7. A construction worker is employed at a construction project at a remote job site in Alaska. Due to the inaccessibility of facilities for the employees who are working at the job site to obtain food and lodging and the prevailing weather conditions, the employer is required to furnish meals and lodging to the employee at the camp site in order to carry on the construction project. The employee is required to pay $40 a week for the meals and lodging. The weekly charge of $40 is not, as such, part of the compensation includible in the gross income of the employee, and under paragraphs (a) and (b) of this section the value of the meals and lodging is excludable from his gross income.

Example 8. A manufacturing company provides a cafeteria on its premises at which its employees can purchase their lunch. There is no other eating facility located near the company's premises, but the employee can furnish his own meal by bringing his lunch. The amount of compensation which any employee is required to include in gross income is not reduced by the amount charged for the meals, and the meals are not considered to be furnished for the convenience of the employer.

Example 9. A hospital maintains a cafeteria on its premises where all of its 230 employees may obtain a meal during their working hours. No charge is made for these meals. The hospital furnishes such meals in order to have each of 210 of the employees available for any emergencies that may occur, and it is shown that each such employee is at times called upon to perform services during his meal period. Although the hospital does not require such employees to remain on the premises during meal periods, they rarely leave the hospital during their meal period. Since the hospital furnishes meals to each of substantially all of its employees in order to have each of them available for emergency call during his meal period, all of the hospital employees who obtain their meals in the hospital cafeteria may exclude from their gross income the value of such meals.

[T.D. 6745, 29 FR 9380, July 9, 1964, as amended by T.D. 8006, 50 FR 2964, Jan. 23, 1985]

§ 1.120-1 Statutory subsistence allowance received by police.

(a) Section 120 excludes from the gross income of an individual employed as a police official by a State, Territory, or possession of the United States, by any of their political subdivisions, or by the District of Columbia, any amount received as a statutory subsistence allowance to the extent that such allowance does not exceed $5 per day. For purposes of this section, the term "statutory subsistence allowance" means an amount which is designated as a subsistence allowance under the laws of a State, a Territory, or a possession of the United States, any political subdivision of any of the foregoing, or the District of Columbia and which is paid to an individual who is employed as a police official of such governmental unit. A subsistence allowance paid to a police official by any of the foregoing governmental units which is not so provided by statute may not be excluded from gross income under the provisions of section 120. The term "police official" includes an employee of any of the foregoing governmental units who has police duties, such as a sheriff, a detective, a policeman, or a State police trooper, however designated.

(b) The exclusion provided by section 120 is to be computed on a daily basis, that is, for each day for which the statutory allowance is paid. If the statute providing the allowance does not specify the daily amount of such allowance, the allowance shall be converted to a daily basis for the purpose of applying the limitation provided herein. For example, if a State statute provides for a weekly subsistence allowance, the daily amount is to be determined by dividing the weekly amount by the number of days for which the allowance is paid. Thus, if a State trooper receives a weekly statutory subsistence allowance of $40 would be $8, that is, $40 divided by 5 for 5 days of the week, the daily amount would be $8, that is, $40 divided by 5. However, for purposes of this section, only $5 per day may be excluded, or $25 on a weekly basis.

(c) Expenses in respect of which the allowance under section 120 is paid may not be deducted under any provision of the income tax laws except to the extent that

(1) such expenses exceed the amount of the exclusion, and

(2) the excess is otherwise allowable as a deduction. For example, if a State statute provides a subsistence allowance of $3 per day and the taxpayer, a state trooper, incurs expenditures of $4.50 for meals while away from home overnight on official police duties only $3 would be excludable under this section. Expenses relating to such exclusion ($3) may not be deducted under any provision of the income tax laws. However, the remaining $1.50 may be an allowable deduction under section 162 as traveling expenses while away from home in the performance of official duties. See § 1.162-2.

(d) In the case of taxable years ending after September 30, 1958, section 120 and this section do not apply to amounts received as a statutory subsistence allowance for any day after September 30, 1958.

§ 1.120-3 Notice of application for recognition of status of qualified group legal services plan.

(a) ***In general.*** In order for a plan to be a qualified group legal services plan for purposes of the exclusion from gross income provided by section 120(a), the plan must give notice to the Internal Revenue Service that it is applying for recognition of its status as a qualified plan. Paragraph (b) of this section describes how the notice is to be filed for the plan. Paragraph (c) of this section describes the action that the Internal Revenue Service will take in response to the notice submitted for the plan. Paragraph (d) of this section describes the period of plan qualification.

(b) ***Filing of notice*** —

(1) ***In general.*** A notice of application for recognition of the status of a qualified group legal services plan must be filed with the key district director of internal revenue as described in § 601.201(n). The notice must be filed on Form 1024, Application for Recognition of Exemption Under section 501(a) or for Determination Under section 120, with the accompanying Schedule L, and must contain the information required by the form and any accompanying instructions. The form may be filed by either the employer adopting the plan or the person administering the plan. No Form 1024 and Schedule L may be filed for a plan before an employer adopts the plan, or proposes to adopt the plan contingent only upon the recognition of the plan as a qualified plan.

(2) ***Plans to which more than one employer contributes.*** In general, for purposes of section 120 the adoption of a plan by an employer constitutes the adoption of a separate plan to which that employer alone contributes, notwithstanding that, in form, the employer purports to adopt a plan with respect to which the employer is one of two or more contributing employers. Accordingly, a separate Schedule L must be filed pursuant to the instructions accompanying Form 1024 for each employer adopting a plan.

(3) ***Certain collectively bargained plans.*** Notwithstanding subparagraph (2) of this paragraph, if a plan to which more than one employer contributes is a plan to which this subparagraph (3) applies, the plan is treated as a single plan for purposes of section 120. Accordingly, only one Form 1024 and Schedule L is required to be filed for the plan, regardless of the number of employers originally adopting the plan. In addition, once a Form 1024 and Schedule L is filed, no additional filing is required with respect to an employer who thereafter adopts the plan. In general, this subparagraph (3) applies to any plan that is maintained pursuant to a collective bargaining agreement between employee representatives and more than one employer who is required by the plan instrument or other agreement to contribute to the plan with respect to employees (or their spouses or dependents) participating in the plan. This subparagraph does not apply, however, if all employers required to contribute to the plan are corporations which are members of a controlled group of corporations within the meaning of section 1563(a), determined without regard to section 1563(e)(3)(C). If all employers required to contribute to the plan are corporations which are members of such a controlled group, the filing requirements described in subparagraph (2) of this paragraph apply, notwithstanding that the plan is maintained pursuant to a collective bargaining agreement.

(c) ***Internal Revenue Service action on notice of application for recognition.*** The Internal Revenue Service will issue to the person submitting Form 1024 and Schedule L a ruling or determination letter stating that the plan is or is not a qualified group legal services plan. For general procedural rules, see § 601.201 (a) through (n), as that section relates to rulings and determination letters.

(d) ***Period of plan qualification*** —

(1) ***In general.*** In the case of a favorable determination, the plan will be considered a qualified group legal services plan. If a Form 1024 and Schedule L required to be filed by or on behalf of an employer is filed before—

(i) The end of the first plan year (as determined under the plan),

(ii) The end of the plan year within which the employer adopts the plan, or

(iii) July 29, 1980,

the period of plan qualification with respect to the employer will begin on the date the plan is adopted by the employer (or, if later, January 1, 1977). If the form and schedule are not filed before the latest of the dates described in subdivisions (i), (ii) and (iii), the period of plan qualification with respect to the employer will begin on the date of filing. In any case in which either the Form 1024 or Schedule L filed by or on behalf of an employer is incomplete, the date of filing is the date on which the incomplete form or schedule is filed, if the necessary additional information is provided at the request of the Commissioner within the additional time period allowed by the Commissioner. If the additional information is not provided within the additional time period, allowed, the date of filing is the date on which the additional information is filed. If no separate Form 1024 and Schedule L are required to be filed by or on behalf of an employer (see paragraph (b)(3) of this section), the period of plan qualification with respect to the employer will begin on the date the plan is adopted by the employer (or, if later, January 1, 1977). In any case in which a plan is materially modified to conform to the requirements of section 120, either before or after a Form 1024 and Schedule L are filed, the period of plan qualification will not include any period before the effective date of the modification.

(2) ***Plans in existence on June 4, 1976.***

(i) Notwithstanding paragraph (d)(1) of this section, a written group legal services plan providing for employer contributions which was in existence on June 4, 1976, will be considered a qualified group legal services plan for the period January 1, 1977, through April 2, 1977. However, if the plan is maintained pursuant to one or more agreements which were in effect on October 4, 1976, and which the Secretary of Labor finds to be collective bargaining agreements, the period of deemed qualification will extend beyond April 2, 1977, and end on the date on which the last of the collective bargaining agreements relating to the plan terminates. Extensions of a bargaining agreement which are agreed to after October 4, 1976, are to be disregarded. The period of deemed qualification for a plan maintained pursuant to a collective bargaining agreement will not, however, extend beyond December 31, 1981.

(ii) A written group legal services plan will be considered to have been in existence on June 4, 1976, if on or before that date the plan was reduced to writing and adopted by one or more employers. No amounts need have been contributed under the plan as of June 4, 1976.

(iii) Notwithstanding that a plan is a qualified plan for the period of deemed qualification described in this paragraph (d)(2), the rules of paragraphs (c) and (d)(1) of this section still apply with respect to a Form 1024 and Schedule L filed for the plan. For example, if a Form 1024 and Schedule L filed by or on behalf of an employer are filed before the latest of the 3 dates described in paragraph (d)(1) of this section, in the case of a favorable determination the plan will be a qualified plan from the date the plan is adopted by the employer (or, if later, January 1, 1977), and any period of deemed qualification and the period of qualification based upon the favorable determination will overlap. However, in the case of a plan to which this paragraph (d)(2) applies, if a Form 1024 and Schedule L required to be filed by or on behalf of an employer is not filed before the latest of the 3 dates described in paragraph (d)(1) of this section, the following rules shall apply. In general, if Form 1024 and Schedule L are filed before the end of the plan year following the plan year with or within which the plan's period of deemed qualification expires, in the event of a favorable determination the plan will be a qualified plan with respect to the employer beginning on the earlier of the day following the date on which the period of deemed qualification expires or the date on which the Form 1024 and Schedule L are filed. The period of plan qualification with respect to an employer cannot, however, include any period before the employer adopts the plan. If the Form 1024 and Schedule L are not filed before the end of the plan year following the plan year with or within which the plan's period of

deemed qualification expires, in the case of a favorable determination the plan will be a qualified plan with respect to an employer from the later of the date of filing or adoption of the plan by the employer. The rules described in paragraph (d)(1) of this section relating to incomplete filings and plan modifications apply with respect to a filing described in this paragraph (d)(2).

(e) ***Effective date.*** This section is effective for notices of application for recognition of the status of a qualified group legal services plan filed after May 29, 1980.

(Secs. 120(c)(4) and 7805 of the Internal Revenue Code of 1954, 90 Stat. 1926, 68A Stat. 917; (26 U.S.C. 120(c)(4), 7805))

[T.D. 7696, 45 FR 28320, Apr. 29, 1980]

§ 1.121-1 Exclusion of gain from sale or exchange of a principal residence.

(a) ***In general.*** Section 121 provides that, under certain circumstances, gross income does not include gain realized on the sale or exchange of property that was owned and used by a taxpayer as the taxpayer's principal residence. Subject to the other provisions of section 121, a taxpayer may exclude gain only if, during the 5-year period ending on the date of the sale or exchange, the taxpayer owned and used the property as the taxpayer's principal residence for periods aggregating 2 years or more.

(b) ***Residence*** —

(1) ***In general.*** Whether property is used by the taxpayer as the taxpayer's residence depends upon all the facts and circumstances. A property used by the taxpayer as the taxpayer's residence may include a houseboat, a house trailer, or the house or apartment that the taxpayer is entitled to occupy as a tenant-stockholder in a cooperative housing corporation (as those terms are defined in section 216(b)(1) and (2)). Property used by the taxpayer as the taxpayer's residence does not include personal property that is not a fixture under local law.

(2) ***Principal residence.*** In the case of a taxpayer using more than one property as a residence, whether property is used by the taxpayer as the taxpayer's principal residence depends upon all the facts and circumstances. If a taxpayer alternates between 2 properties, using each as a residence for successive periods of time, the property that the taxpayer uses a majority of the time during the year ordinarily will be considered the taxpayer's principal residence. In addition to the taxpayer's use of the property, relevant factors in determining a taxpayer's principal residence, include, but are not limited to—

(i) The taxpayer's place of employment;

(ii) The principal place of abode of the taxpayer's family members;

(iii) The address listed on the taxpayer's federal and state tax returns, driver's license, automobile registration, and voter registration card;

(iv) The taxpayer's mailing address for bills and correspondence;

(v) The location of the taxpayer's banks; and

(vi) The location of religious organizations and recreational clubs with which the taxpayer is affiliated.

(3) ***Vacant land*** —

(i) ***In general.*** The sale or exchange of vacant land is not a sale or exchange of the taxpayer's principal residence unless—

(A) The vacant land is adjacent to land containing the dwelling unit of the taxpayer's principal residence;

(B) The taxpayer owned and used the vacant land as part of the taxpayer's principal residence;

(C) The taxpayer sells or exchanges the dwelling unit in a sale or exchange that meets the requirements of section 121 within 2 years before or 2 years after the date of the sale or exchange of the vacant land; and

(D) The requirements of section 121 have otherwise been met with respect to the vacant land.

(ii) ***Limitations*** —

(A) ***Maximum limitation amount.*** For purposes of section 121(b)(1) and (2) (relating to the maximum limitation amount of the section 121 exclusion), the sale or exchange of the dwelling unit and the vacant land are treated as one sale or exchange. Therefore, only one maximum limitation amount of $250,000 ($500,000 for certain joint returns) applies to the combined sales or exchanges of vacant land and the dwelling unit. In applying the maximum limitation amount to sales or exchanges that occur in different taxable years, gain from the sale or exchange of the dwelling unit, up to the maximum limitation amount under section 121(b)(1) or (2), is excluded first and each spouse is treated as excluding one-half of the gain from a sale or exchange to which section 121(b)(2)(A) and § 1.121-2(a)(3)(i) (relating to the limitation for certain joint returns) apply.

(B) ***Sale or exchange of more than one principal residence in 2-year period.*** If a dwelling unit and vacant land are sold or exchanged in separate transactions that qualify for the section 121 exclusion under this paragraph (b)(3), each of the transactions is disregarded in applying section 121(b)(3) (restricting the application of section 121 to only 1 sale or exchange every 2 years) to the other transactions but is taken into account as a sale or exchange of a principal residence on the date of the transaction in applying section 121(b)(3) to that transaction and the sale or exchange of any other principal residence.

(C) ***Sale or exchange of vacant land before dwelling unit.*** If the sale or exchange of the dwelling unit occurs in a later taxable year than the sale or exchange of the vacant land and after the date prescribed by law (including extensions) for the filing of the return for the taxable year of the sale or exchange of the vacant land, any gain from the sale or exchange of the vacant land must be treated as taxable on the taxpayer's return for the taxable year of the sale or exchange of the vacant land. If the taxpayer has reported gain from the sale or exchange of the vacant land as taxable, after satisfying the requirements of this paragraph (b)(3) the taxpayer may claim the section 121 exclusion with regard to the sale or exchange of the vacant land (for any period for which the period of limitation under section 6511 has not expired) by filing an amended return.

(4) ***Examples.*** The provisions of this paragraph (b) are illustrated by the following examples:

Example 1. Taxpayer A owns 2 residences, one in New York and one in Florida. From 1999 through 2004, he lives in the New York residence for 7 months and the Florida residence for 5 months of each year. In the absence of facts and circumstances indicating otherwise, the New York residence is A's principal residence. A would be eligible for the section 121 exclusion of gain from the sale or exchange of the New York residence, but not the Florida residence.

Example 2. Taxpayer B owns 2 residences, one in Virginia and one in Maine. During 1999 and 2000, she lives in the Virginia residence. During 2001 and 2002, she lives in the Maine residence. During 2003, she lives in the Virginia residence. B's principal residence during 1999, 2000, and 2003 is the Virginia residence. B's principal residence during 2001 and 2002 is the Maine residence. B would be eligible for the 121 exclusion of gain from the sale or exchange of either residence (but not both) during 2003.

Example 3. In 1991 Taxpayer C buys property consisting of a house and 10 acres that she uses as her principal residence. In May 2005 C sells 8 acres of the land and realizes a gain of $110,000. C does not sell the dwelling unit before the due date for filing C's 2005 return, therefore C is not eligible to exclude the $110,000 of gain. In March 2007 C sells the house and remaining 2 acres realizing a gain of $180,000 from the sale of the house. C may exclude the $180,000 of gain. Because the sale of the 8 acres occurred within 2 years from the date of the sale of the dwelling unit, the sale of the 8 acres is treated as a sale of the taxpayer's principal residence under paragraph (b)(3) of this section. C may file an amended return for 2005 to claim an exclusion for $70,000 ($250,000-$180,000 gain previously excluded) of the $110,000 gain from the sale of the 8 acres.

Example 4. In 1998 Taxpayer D buys a house and 1 acre that he uses as his principal residence. In 1999 D buys 29 acres adjacent to his house and uses the vacant land as part of his principal residence. In 2003 D sells the house and 1 acre and the 29 acres in 2 separate transactions. D sells the house and 1 acre at a loss of $25,000. D realizes $270,000 of gain from the sale of the 29 acres. D may exclude the $245,000 gain from the 2 sales.

(c) ***Ownership and use requirements*** —

(1) ***In general.*** The requirements of ownership and use for periods aggregating 2 years or more may be satisfied by establishing ownership and use for 24 full months or for 730 days (365 × 2). The requirements of ownership and use may be satisfied during nonconcurrent periods if both the ownership and use tests are met during the 5-year period ending on the date of the sale or exchange.

(2) ***Use.***

(i) In establishing whether a taxpayer has satisfied the 2-year use requirement, occupancy of the residence is required. However, short temporary absences, such as for vacation or other seasonal absence (although accompanied with rental of the residence), are counted as periods of use.

(ii) ***Determination of use during periods of out-of-residence care.*** If a taxpayer has become physically or mentally incapable of self-care and the taxpayer sells or exchanges property that the taxpayer owned and used as the taxpayer's principal residence for periods aggregating at least 1 year during the 5-year period preceding the sale or exchange, the taxpayer is treated as using the property as the taxpayer's principal residence for any period of time during the 5-year period in which the taxpayer owns the property and resides in any facility (including a nursing home) licensed by a State or political subdivision to care for an individual in the taxpayer's condition.

(3) *Ownership* —

(i) ***Trusts.*** If a residence is owned by a trust, for the period that a taxpayer is treated under sections 671 through 679 (relating to the treatment of grantors and others as substantial owners) as the owner of the trust or the portion of the trust that includes the residence, the taxpayer will be treated as owning the residence for purposes of satisfying the 2-year ownership requirement of section 121, and the sale or exchange by the trust will be treated as if made by the taxpayer.

(ii) ***Certain single owner entities.*** If a residence is owned by an eligible entity (within the meaning of § 301.7701-3(a) of this chapter) that has a single owner and is disregarded for federal tax purposes as an entity separate from its owner under § 301.7701-3 of this chapter, the owner will be treated as owning the residence for purposes of satisfying the 2-year ownership requirement of section 121, and the sale or exchange by the entity will be treated as if made by the owner.

(4) ***Examples.*** The provisions of this paragraph (c) are illustrated by the following examples. The examples assume that § 1.121-3 (relating to the reduced maximum exclusion) does not apply to the sale of the property. The examples are as follows:

Example 1. Taxpayer A has owned and used his house as his principal residence since 1986. On January 31, 1998, A moves to another state. A rents his house to tenants from that date until April 18, 2000, when he sells it. A is eligible for the section 121 exclusion because he has owned and used the house as his principal residence for at least 2 of the 5 years preceding the sale.

Example 2. Taxpayer B owns and uses a house as her principal residence from 1986 to the end of 1997. On January 4, 1998, B moves to another state and ceases to use the house. B's son moves into the house in March 1999 and uses the residence until it is sold on July 1, 2001. B may not exclude gain from the sale under section 121 because she did not use the property as her principal residence for at least 2 years out of the 5 years preceding the sale.

Example 3. Taxpayer C lives in a townhouse that he rents from 1993 through 1996. On January 18, 1997, he purchases the townhouse. On February 1, 1998, C moves into his daughter's home. On May 25, 2000, while still living in his daughter's home, C sells his townhouse. The section 121 exclusion will apply to gain from the sale because C owned the townhouse for at least 2 years out of the 5 years preceding the sale (from January 19, 1997 until May 25, 2000) and he used the townhouse as his principal residence for at least 2 years during the 5-year period preceding the sale (from May 25, 1995 until February 1, 1998).

Example 4. Taxpayer D, a college professor, purchases and moves into a house on May 1, 1997. He uses the house as his principal residence continuously until September 1, 1998, when he goes abroad for a 1-year sabbatical leave. On October 1, 1999, 1 month after returning from the leave, D sells the house. Because his leave is not considered to be a short temporary absence under paragraph (c)(2) of this section, the period of the sabbatical leave may not be included in determining whether D used the house for periods aggregating 2 years during the 5-year period ending on the date of the sale. Consequently, D is not entitled to exclude gain under section 121 because he did not use the residence for the requisite period.

Example 5. Taxpayer E purchases a house on February 1, 1998, that he uses as his principal residence. During 1998 and 1999, E leaves his residence for a 2-month summer vacation. E sells the house on March 1, 2000. Although, in the 5-year period preceding the date of sale, the total time E used his residence is less than 2 years (21 months), the section 121 exclusion will

apply to gain from the sale of the residence because, under paragraph (c)(2) of this section, the 2-month vacations are short temporary absences and are counted as periods of use in determining whether E used the residence for the requisite period.

(d) ***Depreciation taken after May 6, 1997*** —

(1) ***In general.*** The section 121 exclusion does not apply to so much of the gain from the sale or exchange of property as does not exceed the portion of the depreciation adjustments (as defined in section 1250(b)(3)) attributable to the property for periods after May 6, 1997. Depreciation adjustments allocable to any portion of the property to which the section 121 exclusion does not apply under paragraph (e) of this section are not taken into account for this purpose.

(2) ***Example.*** The provisions of this paragraph (d) are illustrated by the following example:

Example. On July 1, 1999, Taxpayer A moves into a house that he owns and had rented to tenants since July 1, 1997. A took depreciation deductions totaling $14,000 for the period that he rented the property. After using the residence as his principal residence for 2 full years, A sells the property on August 1, 2001. A's gain realized from the sale is $40,000. A has no other section 1231 or capital gains or losses for 2001. Only $26,000 ($40,000 gain realized—$14,000 depreciation deductions) may be excluded under section 121. Under section 121(d)(6) and paragraph (d)(1) of this section, A must recognize $14,000 of the gain as unrecaptured section 1250 gain within the meaning of section 1(h).

(e) ***Property used in part as a principal residence*** —

(1) ***Allocation required.*** Section 121 will not apply to the gain allocable to any portion (separate from the dwelling unit) of property sold or exchanged with respect to which a taxpayer does not satisfy the use requirement. Thus, if a portion of the property was used for residential purposes and a portion of the property (separate from the dwelling unit) was used for non-residential purposes, only the gain allocable to the residential portion is excludable under section 121. No allocation is required if both the residential and non-residential portions of the property are within the same dwelling unit. However, section 121 does not apply to the gain allocable to the residential portion of the property to the extent provided by paragraph (d) of this section.

(2) ***Dwelling unit.*** For purposes of this paragraph (e), the term *dwelling unit* has the same meaning as in section 280A(f)(1), but does not include appurtenant structures or other property.

(3) ***Method of allocation.*** For purposes of determining the amount of gain allocable to the residential and non-residential portions of the property, the taxpayer must allocate the basis and the amount realized between the residential and the non-residential portions of the property using the same method of allocation that the taxpayer used to determine depreciation adjustments (as defined in section 1250(b)(3)), if applicable.

(4) ***Examples.*** The provisions of this paragraph (e) are illustrated by the following examples:

> *Example 1 Non-residential use of property not within the dwelling unit.* (i) Taxpayer A owns a property that consists of a house, a stable and 35 acres. A uses the stable and 28 acres for non-residential purposes for more than 3 years during the 5-year period preceding the sale. A uses the entire house and the remaining 7 acres as his principal residence for at least 2 years during the 5-year period preceding the sale. For periods after May 6, 1997, A claims depreciation deductions of $9,000 for the non-residential use of the stable. A sells the entire

property in 2004, realizing a gain of $24,000. A has no other section 1231 or capital gains or losses for 2004.
(ii) Because the stable and the 28 acres used in the business are separate from the dwelling unit, the allocation rules under this paragraph (e) apply and A must allocate the basis and amount realized between the portion of the property that he used as his principal residence and the portion of the property that he used for non-residential purposes. A determines that $14,000 of the gain is allocable to the non-residential-use portion of the property and that $10,000 of the gain is allocable to the portion of the property used as his residence. A must recognize the $14,000 of gain allocable to the non-residential-use portion of the property ($9,000 of which is unrecaptured section 1250 gain within the meaning of section 1(h), and $5,000 of which is adjusted net capital gain). A may exclude $10,000 of the gain from the sale of the property.

Example 2 Non-residential use of property not within the dwelling unit and rental of the entire property. (i) In 1998 Taxpayer B buys a property that includes a house, a barn, and 2 acres. B uses the house and 2 acres as her principal residence and the barn for an antiques business. In 2002, B moves out of the house and rents it to tenants. B sells the property in 2004, realizing a gain of $21,000. Between 1998 and 2004 B claims depreciation deductions of $4,800 attributable to the antiques business. Between 2002 and 2004 B claims depreciation deductions of $3,000 attributable to the house. B has no other section 1231 or capital gains or losses for 2004.
(ii) Because the portion of the property used in the antiques business is separate from the dwelling unit, the allocation rules under this paragraph (e) apply. B must allocate basis and amount realized between the portion of the property that she used as her principal residence and the portion of the property that she used for non-residential purposes. B determines that $4,000 of the gain is allocable to the non-residential portion of the property and that $17,000 of the gain is allocable to the portion of the property that she used as her principal residence.

(iii) B must recognize the $4,000 of gain allocable to the non-residential portion of the property (all of which is unrecaptured section 1250 gain within the meaning of section 1(h)). In addition, the section 121 exclusion does not apply to the gain allocable to the residential portion of the property to the extent of the depreciation adjustments attributable to the residential portion of the property for periods after May 6, 1997 ($3,000). Therefore, B may exclude $14,000 of the gain from the sale of the property.

Example 3 Non-residential use of a separate dwelling unit. (i) In 2002 Taxpayer C buys a 3-story townhouse and converts the basement level, which has a separate entrance, into a separate apartment by installing a kitchen and bathroom and removing the interior stairway that leads from the basement to the upper floors. After the conversion, the property constitutes 2 dwelling units within the meaning of paragraph (e)(2) of this section. C uses the

first and second floors of the townhouse as his principal residence and rents the basement level to tenants from 2003 to 2007. C claims depreciation deductions of $2,000 for that period with respect to the basement apartment. C sells the entire property in 2007, realizing gain of $18,000. C has no other section 1231 or capital gains or losses for 2007.
(ii) Because the basement apartment and the upper floors of the townhouse are separate dwelling units, C must allocate the gain between the portion of the property that he used as his principal residence and the portion of the property that he used for non-residential purposes under paragraph (e) of this section. After allocating the basis and the amount realized between the residential and non-residential portions of the property, C determines that $6,000 of the gain is allocable to the non-residential portion of the property and that $12,000 of the gain is allocable to the portion of the property used as his residence. C must recognize the $6,000 of gain allocable to the non-residential portion of the property ($2,000 of which is unrecaptured section 1250 gain within the meaning of section 1(h), and $4,000 of which is adjusted net capital gain). C may exclude $12,000 of the gain from the sale of the property.

Example 4 Separate dwelling unit converted to residential use. The facts are the same as in *Example 3* except that in 2007 C incorporates the basement of the townhouse into his principal residence by eliminating the kitchen and building a new interior stairway to the upper floors. C uses all 3 floors of the townhouse as his principal residence for 2 full years and sells the townhouse in 2010, realizing a gain of $20,000. Under section 121(d)(6) and paragraph (d) of this section, C must recognize $2,000 of the gain as unrecaptured section 1250 gain within the meaning of section 1(h). Because C used the entire 3 floors of the townhouse as his principal residence for 2 of the 5 years preceding the sale of the property, C may exclude the remaining $18,000 of the gain from the sale of the house.

Example 5 Non-residential use within the dwelling unit, property depreciated. Taxpayer D, an attorney, buys a house in 2003. The house constitutes a single dwelling unit but D uses a portion of the house as a law office. D claims depreciation deductions of $2,000 during the period that she owns the house. D sells the house in 2006, realizing a gain of $13,000. D has no other section 1231 or capital gains or losses for 2006. Under section 121(d)(6) and paragraph (d) of this section, D must recognize $2,000 of the gain as unrecaptured section 1250 gain within the meaning of section 1(h). D may exclude the remaining $11,000 of the gain from the sale of her house because, under paragraph (e)(1) of this section, she is not required to allocate gain to the business use within the dwelling unit.

Example 6 Non-residential use within the dwelling unit, property not depreciated. The facts are the same as in Example 5, except that D is not entitled to claim any depreciation deductions with respect to her business use of the house. D may exclude $13,000 of the gain from the sale of her house because, under paragraph (e)(1) of this section, she is not required to allocate gain to the business use within the dwelling unit.

(f) ***Effective date.*** This section is applicable for sales and exchanges on or after Decmeber 24, 2002. For rules on electing to apply the provisions of this section retroactively, see § 1.121-4(j).

[T.D. 9030, 67 FR 78361, Dec. 24, 2002]

§ 1.121-2 Limitations.

(a) *Dollar limitations* —

(1) ***In general.*** A taxpayer may exclude from gross income up to $250,000 of gain from the sale or exchange of the taxpayer's principal residence. A taxpayer is eligible for only one maximum exclusion per principal residence.

(2) ***Joint owners.*** If taxpayers jointly own a principal residence but file separate returns, each taxpayer may exclude from gross income up to $250,000 of gain that is attributable to each taxpayer's interest in the property, if the requirements of section 121 have otherwise been met.

(3) *Special rules for joint returns* —

(i) ***In general.*** A husband and wife who make a joint return for the year of the sale or exchange of a principal residence may exclude up to $500,000 of gain if—

(A) Either spouse meets the 2-year ownership requirements of § 1.121-1(a) and (c);

(B) Both spouses meet the 2-year use requirements of § 1.121-1(a) and (c); and

(C) Neither spouse excluded gain from a prior sale or exchange of property under section 121 within the last 2 years (as determined under paragraph (b) of this section).

(ii) ***Other joint returns.*** For taxpayers filing jointly, if either spouse fails to meet the requirements of paragraph (a)(3)(i) of this section, the maximum limitation amount to be claimed by the couple is the sum of each spouse's limitation amount determined on a separate basis as if they had not been married. For this purpose, each spouse is treated as owning the property during the period that either spouse owned the property.

(4) ***Examples.*** The provisions of this paragraph (a) are illustrated by the following examples. The examples assume that § 1.121-3 (relating to the reduced maximum exclusion) does not apply to the sale of the property. The examples are as follows:

Example 1. Unmarried Taxpayers A and B own a house as joint owners, each owning a 50 percent interest in the house. They sell the house after owning and using it as their principal residence for 2 full years. The gain realized from the sale is $256,000. A and B are each eligible to exclude $128,000 of gain because the amount of realized gain allocable to each of them from the sale does not exceed each taxpayer's available limitation amount of $250,000.

Example 2. The facts are the same as in *Example 1,* except that A and B are married taxpayers who file a joint return for the taxable year of the sale. A and B are eligible to exclude the entire amount of realized gain ($256,000) from gross income because the gain realized from the sale does not exceed the limitation amount of $500,000 available to A and B as taxpayers filing a joint return.

Example 3. During 1999, married Taxpayers H and W each sell a residence that each had separately owned and used as a principal residence before their marriage. Each spouse meets the ownership and use tests for his or her respective residence. Neither spouse meets the use requirement for the other spouse's residence. H and W file a joint return for the year of the sales. The gain realized from the sale of H's residence is $200,000. The gain realized from the sale of W's residence is $300,000. Because the ownership and use requirements are met for each residence by each respective spouse, H and W are each eligible to exclude up to $250,000

of gain from the sale of their individual residences. However, W may not use H's unused exclusion to exclude gain in excess of her limitation amount. Therefore, H and W must recognize $50,000 of the gain realized on the sale of W's residence.

Example 4. Married Taxpayers H and W sell their residence and file a joint return for the year of the sale. W, but not H, satisfies the requirements of section 121. They are eligible to exclude up to $250,000 of the gain from the sale of the residence because that is the sum of each spouse's dollar limitation amount determined on a separate basis as if they had not been married ($0 for H, $250,000 for W).

Example 5. Married Taxpayers H and W have owned and used their principal residence since 1998. On February 16, 2001, H dies. On September 24, 2001, W sells the residence and realizes a gain of $350,000. Pursuant to section 6013(a)(3), W and H's executor make a joint return for 2001. All $350,000 of the gain from the sale of the residence may be excluded.

Example 6. Assume the same facts as *Example 5,* except that W does not sell the residence until January 31, 2002. Because W's filing status for the taxable year of the sale is single, the special rules for joint returns under paragraph (a)(3) of this section do not apply and W may exclude only $250,000 of the gain.

(b) ***Application of section 121 to only 1 sale or exchange every 2 years*** —

(1) ***In general.*** Except as otherwise provided in § 1.121-3 (relating to the reduced maximum exclusion), a taxpayer may not exclude from gross income gain from the sale or exchange of a principal residence if, during the 2-year period ending on the date of the sale or exchange, the taxpayer sold or exchanged other property for which gain was excluded under section 121. For purposes of this paragraph (b)(1), any sale or exchange before May 7, 1997, is disregarded.

(2) ***Example.*** The following example illustrates the rules of this paragraph (b). The example assumes that § 1.121-3 (relating to the reduced maximum exclusion) does not apply to the sale of the property. The example is as follows:

Example. Taxpayer A owns a townhouse that he uses as his principal residence for 2 full years, 1998 and 1999. A buys a house in 2000 that he owns and uses as his principal residence. A sells the townhouse in 2002 and excludes gain realized on its sale under section 121. A sells the house in 2003. Although A meets the 2-year ownership and use requirements of section 121, A is not eligible to exclude gain from the sale of the house because A excluded gain within the last 2 years under section 121 from the sale of the townhouse.

(c) ***Effective date.*** This section is applicable for sales and exchanges on or after December 24, 2002. For rules on electing to apply the provisions of this section retroactively, see § 1.121-4(j).

[T.D. 9030, 67 FR 78361, Dec. 24, 2002]

§ 1.121-3 Reduced maximum exclusion for taxpayers failing to meet certain requirements.

(a) ***In general.*** In lieu of the limitation under section 121(b) and § 1.121-2, a reduced maximum exclusion limitation may be available for a taxpayer who sells or exchanges property used as the taxpayer's principal residence but fails to satisfy the ownership and use requirements described in § 1.121-1(a) and (c) or the 2-year limitation described in § 1.121-2(b).

(b) ***Primary reason for sale or exchange.*** In order for a taxpayer to claim a reduced maximum exclusion under section 121(c), the sale or exchange must be by reason of a change in place of employment, health, or unforeseen circumstances. If a safe harbor described in this section applies, a sale or exchange is deemed to be by reason of a change in place of employment, health, or unforeseen circumstances. If a safe harbor described in this section does not apply, a sale or exchange is by reason of a change in place of employment, health, or unforeseen circumstances only if the primary reason for the sale or exchange is a change in place of employment (within the meaning of paragraph (c) of this section), health (within the meaning of paragraph (d) of this section), or unforeseen circumstances (within the meaning of paragraph (e) of this section). Whether the requirements of this section are satisfied depends upon all the facts and circumstances. Factors that may be relevant in determining the taxpayer's primary reason for the sale or exchange include (but are not limited to) the extent to which—

(1) The sale or exchange and the circumstances giving rise to the sale or exchange are proximate in time;

(2) The suitability of the property as the taxpayer's principal residence materially changes;

(3) The taxpayer's financial ability to maintain the property is materially impaired;

(4) The taxpayer uses the property as the taxpayer's residence during the period of the taxpayer's ownership of the property;

(5) The circumstances giving rise to the sale or exchange are not reasonably foreseeable when the taxpayer begins using the property as the taxpayer's principal residence; and

(6) The circumstances giving rise to the sale or exchange occur during the period of the taxpayer's ownership and use of the property as the taxpayer's principal residence.

(c) ***Sale or exchange by reason of a change in place of employment*** —

(1) ***In general.*** A sale or exchange is by reason of a change in place of employment if, in the case of a qualified individual described in paragraph (f) of this section, the primary reason for the sale or exchange is a change in the location of the individual's employment.

(2) ***Distance safe harbor.*** A sale or exchange is deemed to be by reason of a change in place of employment (within the meaning of paragraph (c)(1) of this section) if—

(i) The change in place of employment occurs during the period of the taxpayer's ownership and use of the property as the taxpayer's principal residence; and

(ii) The qualified individual's new place of employment is at least 50 miles farther from the residence sold or exchanged than was the former place of employment, or, if there was no former place of employment, the distance between the qualified individual's new place of employment and the residence sold or exchanged is at least 50 miles.

(3) ***Employment.*** For purposes of this paragraph (c), *employment* includes the commencement of employment with a new employer, the continuation of employment with the same employer, and the commencement or continuation of self-employment.

(4) ***Examples.*** The following examples illustrate the rules of this paragraph (c):

Example 1. A is unemployed and owns a townhouse that she has owned and used as her principal residence since 2003. In 2004 A obtains a job that is 54 miles from her townhouse, and she sells the townhouse. Because the distance between A's new place of employment and the townhouse is at least 50 miles, the sale is within the safe harbor of paragraph (c)(2) of this section and A is entitled to claim a reduced maximum exclusion under section 121(c)(2).

Example 2. B is an officer in the United States Air Force stationed in Florida. B purchases a house in Florida in 2002. In May 2003 B moves out of his house to take a 3-year assignment in Germany. B sells his house in January 2004. Because B's new place of employment in Germany is at least 50 miles farther from the residence sold than is B's former place of employment in Florida, the sale is within the safe harbor of paragraph (c)(2) of this section and B is entitled to claim a reduced maximum exclusion under section 121(c)(2).

Example 3. C is employed by Employer R at R's Philadelphia office. C purchases a house in February 2002 that is 35 miles from R's Philadelphia office. In May 2003 C begins a temporary assignment at R's Wilmington office that is 72 miles from C's house, and moves out of the house. In June 2005 C is assigned to work in R's London office. C sells her house in August 2005 as a result of the assignment to London. The sale of the house is not within the safe harbor of paragraph (c)(2) of this section by reason of the change in place of employment from Philadelphia to Wilmington because the Wilmington office is not 50 miles farther from C's house than is the Philadelphia office. Furthermore, the sale is not within the safe harbor by reason of the change in place of employment to London because C is not using the house as her principal residence when she moves to London. However, C is entitled to claim a reduced maximum exclusion under section 121(c)(2) because, under the facts and circumstances, the primary reason for the sale is the change in C's place of employment.

Example 4. In July 2003 D, who works as an emergency medicine physician, buys a condominium that is 5 miles from her place of employment and uses it as her principal residence. In February 2004, D obtains a job that is located 51 miles from D's condominium. D may be called in to work unscheduled hours and, when called, must be able to arrive at work quickly. Because of the demands of the new job, D sells her condominium and buys a townhouse that is 4 miles from her new place of employment. Because D's new place of employment is only 46 miles farther from the condominium than is D's former place of employment, the sale is not within the safe harbor of paragraph (c)(2) of this section. However, D is entitled to claim a reduced maximum exclusion under section 121(c)(2) because, under the facts and circumstances, the primary reason for the sale is the change in D's place of employment.

(d) ***Sale or exchange by reason of health*** —

(1) ***In general.*** A sale or exchange is by reason of health if the primary reason for the sale or exchange is to obtain, provide, or facilitate the diagnosis, cure, mitigation, or treatment of disease, illness, or injury of a qualified individual described in paragraph (f) of this section, or to obtain or provide medical or personal care for a qualified individual suffering from a disease, illness, or injury. A sale or exchange that is merely beneficial to the general health or well-being of an individual is not a sale or exchange by reason of health.

(2) ***Physician's recommendation safe harbor.*** A sale or exchange is deemed to be by reason of health if a physician (as defined in section 213(d)(4)) recommends a change of residence for reasons of health (as defined in paragraph (d)(1) of this section).

(3) ***Examples.*** The following examples illustrate the rules of this paragraph (d):

Example 1. In 2003 A buys a house that she uses as her principal residence. A is injured in an accident and is unable to care for herself. A sells her house in 2004 and moves in with her daughter so that the daughter can provide the care that A requires as a result of her injury. Because, under the facts and circumstances, the primary reason for the sale of A's house is A's health, A is entitled to claim a reduced maximum exclusion under section 121(c)(2).

Example 2. H's father has a chronic disease. In 2003 H and W purchase a house that they use as their principal residence. In 2004 H and W sell their house in order to move into the house of H's father so that they can provide the care he requires as a result of his disease. Because, under the facts and circumstances, the primary reason for the sale of their house is the health of H's father, H and W are entitled to claim a reduced maximum exclusion under section 121(c)(2).

Example 3. H and W purchase a house in 2003 that they use as their principal residence. Their son suffers from a chronic illness that requires regular medical care. Later that year their son begins a new treatment that is available at a hospital 100 miles away from their residence. In 2004 H and W sell their house so that they can be closer to the hospital to facilitate their son's treatment. Because, under the facts and circumstances, the primary reason for the sale is to facilitate the treatment of their son's chronic illness, H and W are entitled to claim a reduced maximum exclusion under section 121(c)(2).

Example 4. B, who has chronic asthma, purchases a house in Minnesota in 2003 that he uses as his principal residence. B's doctor tells B that moving to a warm, dry climate would mitigate B's asthma symptoms. In 2004 B sells his house and moves to Arizona to relieve his asthma symptoms. The sale is within the safe harbor of paragraph (d)(2) of this section and B is entitled to claim a reduced maximum exclusion under section 121(c)(2).

Example 5. In 2003 H and W purchase a house in Michigan that they use as their principal residence. H's doctor tells H that he should get more outdoor exercise, but H is not suffering from any disease that can be treated or mitigated by outdoor exercise. In 2004 H and W sell their house and move to Florida so that H can increase his general level of exercise by playing golf year-round. Because the sale of the house is merely beneficial to H's general health, the sale of the house is not by reason of H's health. H and W are not entitled to claim a reduced maximum exclusion under section 121(c)(2).

(e) ***Sale or exchange by reason of unforeseen circumstances*** —

(1) ***In general.*** A sale or exchange is by reason of unforeseen circumstances if the primary reason for the sale or exchange is the occurrence of an event that the taxpayer could not reasonably have anticipated before purchasing and occupying the residence. A sale or exchange by reason of unforeseen circumstances (other than a sale or exchange deemed to be by reason of unforeseen circumstances under paragraph (e)(2) or (3) of this section) does not qualify for the reduced maximum exclusion if the primary reason for the sale or exchange is a preference for a different residence or an improvement in financial circumstances.

(2) ***Specific event safe harbors.*** A sale or exchange is deemed to be by reason of unforeseen circumstances (within the meaning of paragraph (e)(1) of this section) if any of the events specified in paragraphs (e)(2)(i) through (iii) of this section occur during the period of the taxpayer's ownership and use of the residence as the taxpayer's principal residence:

(i) The involuntary conversion of the residence.

(ii) Natural or man-made disasters or acts of war or terrorism resulting in a casualty to the residence (without regard to deductibility under section 165(h)).

(iii) In the case of a qualified individual described in paragraph (f) of this section—

(A) Death;

(B) The cessation of employment as a result of which the qualified individual is eligible for unemployment compensation (as defined in section 85(b));

(C) A change in employment or self-employment status that results in the taxpayer's inability to pay housing costs and reasonable basic living expenses for the taxpayer's household (including amounts for food, clothing, medical expenses, taxes, transportation, court-ordered payments, and expenses reasonably necessary to the production of income, but not for the maintenance of an affluent or luxurious standard of living);

(D) Divorce or legal separation under a decree of divorce or separate maintenance; or

(E) Multiple births resulting from the same pregnancy.

(3) ***Designation of additional events as unforeseen circumstances.*** The Commissioner may designate other events or situations as unforeseen circumstances in published guidance of general applicability and may issue rulings addressed to specific taxpayers identifying other events or situations as unforeseen circumstances with regard to those taxpayers (see § 601.601(d)(2) of this chapter).

(4) ***Examples.*** The following examples illustrate the rules of this paragraph (e):

Example 1. In 2003 A buys a house in California. After A begins to use the house as her principal residence, an earthquake causes damage to A's house. A sells the house in 2004. The sale is within the safe harbor of paragraph (e)(2)(ii) of this section and A is entitled to claim a reduced maximum exclusion under section 121(c)(2).

Example 2. H works as a teacher and W works as a pilot. In 2003 H and W buy a house that they use as their principal residence. Later that year W is furloughed from her job for six months. H and W are unable to pay their mortgage and reasonable basic living expenses for their household during the period W is furloughed. H and W sell their house in 2004. The sale is within the safe harbor of paragraph (e)(2)(iii)(C) of this section and H and W are entitled to claim a reduced maximum exclusion under section 121(c)(2).

Example 3. In 2003 H and W buy a two-bedroom condominium that they use as their principal residence. In 2004 W gives birth to twins and H and W sell their condominium and buy a four-bedroom house. The sale is within the safe harbor of paragraph (e)(2)(iii)(E) of this section, and H and W are entitled to claim a reduced maximum exclusion under section 121(c)(2).

Example 4. In 2003 B buys a condominium in a high-rise building and uses it as his principal residence. B's monthly condominium fee is $X. Three months after B moves into the condominium, the condominium association replaces the building's roof and heating system. Six months later, B's monthly condominium fee doubles in order to pay for the repairs. B sells the condominium in 2004 because he is unable to afford the new condominium fee along with a monthly mortgage payment. The safe harbors of paragraph (e)(2) of this section do not apply. However, under the facts and circumstances, the primary reason for the sale, the doubling of the condominium fee, is an unforeseen circumstance because B could not reasonably have

anticipated that the condominium fee would double at the time he purchased and occupied the property. Consequently, the sale of the condominium is by reason of unforeseen circumstances and B is entitled to claim a reduced maximum exclusion under section 121(c)(2).

Example 5. In 2003 C buys a house that he uses as his principal residence. The property is located on a heavily traveled road. C sells the property in 2004 because C is disturbed by the traffic. The safe harbors of paragraph (e)(2) of this section do not apply. Under the facts and circumstances, the primary reason for the sale, the traffic, is not an unforeseen circumstance because C could reasonably have anticipated the traffic at the time he purchased and occupied the house. Consequently, the sale of the house is not by reason of unforeseen circumstances and C is not entitled to claim a reduced maximum exclusion under section 121(c)(2).

Example 6. In 2003 D and her fiance E buy a house and live in it as their principal residence. In 2004 D and E cancel their wedding plans and E moves out of the house. Because D cannot afford to make the monthly mortgage payments alone, D and E sell the house in 2004. The safe harbors of paragraph (e)(2) of this section do not apply. However, under the facts and circumstances, the primary reason for the sale, the broken engagement, is an unforeseen circumstance because D and E could not reasonably have anticipated the broken engagement at the time they purchased and occupied the house. Consequently, the sale is by reason of unforeseen circumstances and D and E are each entitled to claim a reduced maximum exclusion under section 121(c)(2).

Example 7. In 2003 F buys a small condominium that she uses as her principal residence. In 2005 F receives a promotion and a large increase in her salary. F sells the condominium in 2004 and purchases a house because she can now afford the house. The safe harbors of paragraph (e)(2) of this section do not apply. Under the facts and circumstances, the primary reason for the sale of the house, F's salary increase, is an improvement in F's financial circumstances. Under paragraph (e)(1) of this section, an improvement in financial circumstances, even if the result of unforeseen circumstances, does not qualify for the reduced maximum exclusion by reason of unforeseen circumstances under section 121(c)(2).

Example 8. In April 2003 G buys a house that he uses as his principal residence. G sells his house in October 2004 because the house has greatly appreciated in value, mortgage rates have substantially decreased, and G can afford a bigger house. The safe harbors of paragraph (e)(2) of this section do not apply. Under the facts and circumstances, the primary reasons for the sale of the house, the changes in G's house value and in the mortgage rates, are an improvement in G's financial circumstances. Under paragraph (e)(1) of this section, an improvement in financial circumstances, even if the result of unforeseen circumstances, does not qualify for the reduced maximum exclusion by reason of unforeseen circumstances under section 121(c)(2).

Example 9. H works as a police officer for City X. In 2003 H buys a condominium that he uses as his principal residence. In 2004 H is assigned to City X's K-9 unit and is required to care for the police service dog at his home. Because H's condominium association does not permit H to have a dog in his condominium, in 2004 he sells the condominium and buys a house. The safe harbors of paragraph (e)(2) of this section do not apply. However, under the facts and circumstances, the primary reason for the sale, H's assignment to the K-9 unit, is an unforeseen circumstance because H could not reasonably have anticipated his assignment to the K-9 unit

at the time he purchased and occupied the condominium. Consequently, the sale of the condominium is by reason of unforeseen circumstances and H is entitled to claim a reduced maximum exclusion under section 121(c)(2).

Example 10. In 2003, J buys a small house that she uses as her principal residence. After J wins the lottery, she sells the small house in 2004 and buys a bigger, more expensive house. The safe harbors of paragraph (e)(2) of this section do not apply. Under the facts and circumstances, the primary reason for the sale of the house, winning the lottery, is an improvement in J's financial circumstances. Under paragraph (e)(1) of this section, an improvement in financial circumstances, even if the result of unforeseen circumstances, does not qualify for the reduced maximum exclusion under section 121(c)(2).

(f) ***Qualified individual.*** For purposes of this section, *qualified individual* means—

(1) The taxpayer;

(2) The taxpayer's spouse;

(3) A co-owner of the residence;

(4) A person whose principal place of abode is in the same household as the taxpayer; or

(5) For purposes of paragraph (d) of this section, a person bearing a relationship specified in sections 152(a)(1) through 152(a)(8) (without regard to qualification as a dependent) to a qualified individual described in paragraphs (f)(1) through (4) of this section, or a descendant of the taxpayer's grandparent.

(g) ***Computation of reduced maximum exclusion.***

(1) The reduced maximum exclusion is computed by multiplying the maximum dollar limitation of $250,000 ($500,000 for certain joint filers) by a fraction. The numerator of the fraction is the shortest of the period of time that the taxpayer owned the property during the 5-year period ending on the date of the sale or exchange; the period of time that the taxpayer used the property as the taxpayer's principal residence during the 5-year period ending on the date of the sale or exchange; or the period of time between the date of a prior sale or exchange of property for which the taxpayer excluded gain under section 121 and the date of the current sale or exchange. The numerator of the fraction may be expressed in days or months. The denominator of the fraction is 730 days or 24 months (depending on the measure of time used in the numerator).

(2) ***Examples.*** The following examples illustrate the rules of this paragraph (g):

Example 1. Taxpayer A purchases a house that she uses as her principal residence. Twelve months after the purchase, A sells the house due to a change in place of her employment. A has not excluded gain under section 121 on a prior sale or exchange of property within the last 2 years. A is eligible to exclude up to $125,000 of the gain from the sale of her house (12/24 × $250,000).

> *Example 2.* (i) Taxpayer H owns a house that he has used as his principal residence since 1996. On January 15, 1999, H and W marry and W begins to use H's house as her principal residence. On January 15, 2000, H sells the house due to a change in W's place of employment. Neither H nor W has excluded gain under section 121 on a prior sale or exchange of property within the last 2 years.

(ii) Because H and W have not each used the house as their principal residence for at least 2 years during the 5-year period preceding its sale, the maximum dollar limitation amount that may be claimed by H and W will not be $500,000, but the sum of each spouse's limitation amount determined on a separate basis as if they had not been married. (*See* § 1.121-2(a)(3)(ii).)

(iii) H is eligible to exclude up to $250,000 of gain because he meets the requirements of section 121. W is not eligible to exclude the maximum dollar limitation amount. Instead, because the sale of the house is due to a change in place of employment, W is eligible to claim a reduced maximum exclusion of up to $125,000 of the gain (365/730 × $250,000). Therefore, H and W are eligible to exclude up to $375,000 of gain ($250,000 + $125,000) from the sale of the house.

(h) ***Effective dates.*** Paragraphs (a) and (g) of this section are applicable for sales and exchanges on or after December 24, 2002. Paragraphs (b) through (f) of this section are applicable for sales and exchanges on or after August 13, 2004.

[T.D. 9030, 67 FR 78361, Dec. 24, 2002, as amended by T.D. 9152, 69 FR 50304, Aug. 16, 2004]

§ 1.121-4 Special rules.

(a) ***Property of deceased spouse*** —

(1) ***In general.*** For purposes of satisfying the ownership and use requirements of section 121, a taxpayer is treated as owning and using property as the taxpayer's principal residence during any period that the taxpayer's deceased spouse owned and used the property as a principal residence before death if—

(i) The taxpayer's spouse is deceased on the date of the sale or exchange of the property; and

(ii) The taxpayer has not remarried at the time of the sale or exchange of the property.

(2) ***Example.*** The provisions of this paragraph (a) are illustrated by the following example. The example assumes that § 1.121-3 (relating to the reduced maximum exclusion) does not apply to the sale of the property. The example is as follows:

Example. Taxpayer H has owned and used a house as his principal residence since 1987. H and W marry on July 1, 1999 and from that date they use H's house as their principal residence. H dies on August 15, 2000, and W inherits the property. W sells the property on September 1, 2000, at which time she has not remarried. Although W has owned and used the house for less than 2 years, W will be considered to have satisfied the ownership and use requirements of section 121 because W's period of ownership and use includes the period that H owned and used the property before death.

(b) ***Property owned by spouse or former spouse*** —

(1) ***Property transferred to individual from spouse or former spouse.*** If a taxpayer obtains property from a spouse or former spouse in a transaction described in section 1041(a), the period that the taxpayer owns the property will include the period that the spouse or former spouse owned the property.

(2) ***Property used by spouse or former spouse.*** A taxpayer is treated as using property as the taxpayer's principal residence for any period that the taxpayer has an ownership interest in the property and the taxpayer's spouse or former spouse is granted use of the property under a divorce or separation instrument (as defined in section 71(b)(2)), provided that the spouse or former spouse uses the property as his or her principal residence.

(c) ***Tenant-stockholder in cooperative housing corporation.*** A taxpayer who holds stock as a tenant-stockholder in a cooperative housing corporation (as those terms are defined in section 216(b)(1) and (2)) may be eligible to exclude gain under section 121 on the sale or exchange of the stock. In determining whether the taxpayer meets the requirements of section 121, the ownership requirements are applied to the holding of the stock and the use requirements are applied to the house or apartment that the taxpayer is entitled to occupy by reason of the taxpayer's stock ownership.

(d) ***Involuntary conversions*** —

(1) ***In general.*** For purposes of section 121, the destruction, theft, seizure, requisition, or condemnation of property is treated as a sale of the property.

(2) ***Application of section 1033.*** In applying section 1033 (relating to involuntary conversions), the amount realized from the sale or exchange of property used as the taxpayer's principal residence is treated as being the amount determined without regard to section 121, reduced by the amount of gain excluded from the taxpayer's gross income under section 121.

(3) ***Property acquired after involuntary conversion.*** If the basis of the property acquired as a result of an involuntary conversion is determined (in whole or in part) under section 1033(b) (relating to the basis of property acquired through an involuntary conversion), then for purposes of satisfying the requirements of section 121, the taxpayer will be treated as owning and using the acquired property as the taxpayer's principal residence during any period of time that the taxpayer owned and used the converted property as the taxpayer's principal residence.

(4) ***Example.*** The provisions of this paragraph (d) are illustrated by the following example:

> *Example.* (i) On February 18, 1999, fire destroys Taxpayer A's house which has an adjusted basis of $80,000. A had owned and used this property as her principal residence for 20 years prior to its destruction. A's insurance company pays A $400,000 for the house. A realizes a gain of $320,000 ($400,000—$80,000). On August 27, 1999, A purchases a new house at a cost of $100,000.
> (ii) Because the destruction of the house is treated as a sale for purposes of section 121, A will exclude $250,000 of the realized gain from A's gross income. For purposes of section 1033, the amount realized is then treated as being $150,000 ($400,000—$250,000) and the gain realized is $70,000 ($150,000 amount realized—$80,000 basis). A elects under section 1033 to recognize only $50,000 of the gain ($150,000 amount realized—$100,000 cost of new house). The remaining $20,000 of gain is deferred and A's basis in the new house is $80,000 ($100,000 cost—$20,000 gain not recognized).
>
> (iii) A will be treated as owning and using the new house as A's principal residence during the 20-year period that A owned and used the destroyed house.

(e) *Sales or exchanges of partial interests* —

(1) *Partial interests other than remainder interests* —

(i) ***In general.*** Except as provided in paragraph (e)(2) of this section (relating to sales or exchanges of remainder interests), a taxpayer may apply the section 121 exclusion to gain from the sale or exchange of an interest in the taxpayer's principal residence that is less than the taxpayer's entire interest if the interest sold or exchanged includes an interest in the dwelling unit. For rules relating to the sale or exchange of vacant land, *see* § 1.121-1(b)(3).

(ii) *Limitations* —

(A) ***Maximum limitation amount.*** For purposes of section 121(b)(1) and (2) (relating to the maximum limitation amount of the section 121 exclusion), sales or exchanges of partial interests in the same principal residence are treated as one sale or exchange. Therefore, only one maximum limitation amount of $250,000 ($500,000 for certain joint returns) applies to the combined sales or exchanges of the partial interests. In applying the maximum limitation amount to sales or exchanges that occur in different taxable years, a taxpayer may exclude gain from the first sale or exchange of a partial interest up to the taxpayer's full maximum limitation amount and may exclude gain from the sale or exchange of any other partial interest in the same principal residence to the extent of any remaining maximum limitation amount, and each spouse is treated as excluding one-half of the gain from a sale or exchange to which section 121(b)(2)(A) and § 1.121-2(a)(3)(i)(relating to the limitation for certain joint returns) apply.

(B) ***Sale or exchange of more than one principal residence in 2-year period.*** For purposes of applying section 121(b)(3) (restricting the application of section 121 to only 1 sale or exchange every 2 years), each sale or exchange of a partial interest is disregarded with respect to other sales or exchanges of partial interests in the same principal residence, but is taken into account as of the date of the sale or exchange in applying section 121(b)(3) to that sale or exchange and the sale or exchange of any other principal residence.

(2) *Sales or exchanges of remainder interests* —

(i) ***In general.*** A taxpayer may elect to apply the section 121 exclusion to gain from the sale or exchange of a remainder interest in the taxpayer's principal residence.

(ii) *Limitations* —

(A) ***Sale or exchange of any other interest.*** If a taxpayer elects to exclude gain from the sale or exchange of a remainder interest in the taxpayer's principal residence, the section 121 exclusion will not apply to a sale or exchange of any other interest in the residence that is sold or exchanged separately.

(B) ***Sales or exchanges to related parties.*** This paragraph (e)(2) will not apply to a sale or exchange to any person that bears a relationship to the taxpayer that is described in section 267(b) or 707(b).

(iii) ***Election.*** The taxpayer makes the election under this paragraph (e)(2) by filing a return for the taxable year of the sale or exchange that does not include the gain from the sale or exchange of the remainder interest in the taxpayer's gross income. A taxpayer may make or revoke the

election at any time before the expiration of a 3-year period beginning on the last date prescribed by law (determined without regard to extensions) for the filing of the return for the taxable year in which the sale or exchange occurred.

(3) ***Example.*** The provisions of this paragraph (e) are illustrated by the following example:

Example. In 1991 Taxpayer A buys a house that A uses as his principal residence. In 2004 A's friend B moves into A's house and A sells B a 50% interest in the house realizing a gain of $136,000. A may exclude the $136,000 of gain. In 2005 A sells his remaining 50% interest in the home to B realizing a gain of $138,000. A may exclude $114,000 ($250,000—$136,000 gain previously excluded) of the $138,000 gain from the sale of the remaining interest.

(f) ***No exclusion for expatriates.*** The section 121 exclusion will not apply to any sale or exchange by an individual if the provisions of section 877(a) (relating to the treatment of expatriates) applies to the individual.

(g) ***Election to have section not apply.*** A taxpayer may elect to have the section 121 exclusion not apply to a sale or exchange of property. The taxpayer makes the election by filing a return for the taxable year of the sale or exchange that includes the gain from the sale or exchange of the taxpayer's principal residence in the taxpayer's gross income. A taxpayer may make an election under this paragraph (g) to have section 121 not apply (or revoke an election to have section 121 not apply) at any time before the expiration of a 3-year period beginning on the last date prescribed by law (determined without regard to extensions) for the filing of the return for the taxable year in which the sale or exchange occurred.

(h) ***Residences acquired in rollovers under section 1034.*** If a taxpayer acquires property in a transaction that qualifies under section 1034 (section 1034 property) for the nonrecognition of gain realized on the sale or exchange of another property and later sells or exchanges such property, in determining the period of the taxpayer's ownership and use of the property under section 121 the taxpayer may include the periods that the taxpayer owned and used the section 1034 property as the taxpayer's principal residence (and each prior residence taken into account under section 1223(7) in determining the holding period of the section 1034 property).

(i) [Reserved]

(j) ***Election to apply regulations retroactively.*** Taxpayers who would otherwise qualify under §§ 1.121-1 through 1.121-4 to exclude gain from a sale or exchange of a principal residence before December 24, 2002 but on or after May 7, 1997, may elect to apply §§ 1.121-1 through 1.121-4 for any years for which the period of limitation under section 6511 has not expired. The taxpayer makes the election under this paragraph (j) by filing a return for the taxable year of the sale or exchange that does not include the gain from the sale or exchange of the taxpayer's principal residence in the taxpayer's gross income. Taxpayers who have filed a return for the taxable year of the sale or exchange may elect to apply the provisions of these regulations for any years for which the period of limitation under section 6511 has not expired by filing an amended return.

(k) ***Audit protection.*** The Internal Revenue Service will not challenge a taxpayer's position that a sale or exchange of a principal residence occurring before December 24, 2002 but on or after May 7, 1997, qualifies for the section 121 exclusion if the taxpayer has made a reasonable, good faith effort to comply with the requirements of section 121. Compliance with the provisions of the regulations project under section 121 (REG-105235-99 (2000-2 C.B. 447)) generally will be considered a reasonable, good faith effort to comply with the requirements of section 121.

(l) ***Effective date.*** This section is applicable for sales and exchanges on or after December 24, 2002. For rules on electing to apply the provisions retroactively, see paragraph (j) of this section.

[T.D. 9030, 67 FR 78361, Dec. 24, 2002; 68 FR 6350, Feb. 7, 2003]

§ 1.121-5 Suspension of 5-year period for certain members of the uniformed services and Foreign Service.

(a) ***In general.*** Under section 121(d)(9), a taxpayer who is serving (or whose spouse is serving) on qualified official extended duty as a member of the uniformed services or Foreign Service of the United States may elect to suspend the running of the 5-year period of ownership and use during such service but for not more than 10 years. The election does not suspend the running of the 5-year period for any period during which the running of the 5-year period with respect to any other property of the taxpayer is suspended by an election under section 121(d)(9).

(b) ***Manner of making election.*** The taxpayer makes the election under section 121(d)(9) and this section by filing a return for the taxable year of the sale or exchange of the taxpayer's principal residence that does not include the gain in the taxpayer's gross income.

(c) ***Application of election to closed years.*** A taxpayer who would otherwise qualify under §§ 1.121-1 through 1.121-4 to exclude gain from a sale or exchange of a principal residence on or after May 7, 1997, may elect to apply section 121(d)(9) and this section for any years for which a claim for refund is barred by operation of any law or rule of law by filing an amended return before November 11, 2004.

(d) ***Example.*** The provisions of this section are illustrated by the following example:

Example. B purchases a house in Virginia in 2003 that he uses as his principal residence for 3 years. For 8 years, from 2006 through 2014, B serves on qualified official extended duty as a member of the Foreign Service of the United States in Brazil. In 2015 B sells the house. B did not use the house as his principal residence for 2 of the 5 years preceding the sale. Under section 121(d)(9)and this section, however, B may elect to suspend the running of the 5-year period of ownership and use during his 8-year period of service with the Foreign Service in Brazil. If B makes the election, the 8-year period is not counted in determining whether B used the house for 2 of the 5 years preceding the sale. Therefore, B may exclude the gain from the sale of the house under section 121.

(e) ***Effective date.*** This section is applicable for sales and exchanges on or after May 7, 1997.

[T.D. 9152, 69 FR 50306, Aug. 16, 2004]

§ 1.122-1 Applicable rules relating to certain reduced uniformed services retirement pay.

(a) ***Rule applicable prior to January 1, 1966.*** In the case of a member or former member of the uniformed services of the United States (as defined in 37 U.S.C. 101(3)) who has made an election under Subchapter I of Chapter 73 of title 10 of the U.S. Code (also referred to in this section as the Retired Serviceman's Family Protection Plan (10 U.S.C. 1431)) to receive a reduced amount of retired or retainer pay, gross income shall include the amount of any reduction made in his retired or retainer pay before January 1, 1966, by reason of such election, unless such reduction, or portion thereof, is otherwise excluded from gross income under Part III of Subchapter B of Chapter 1 of the Internal Revenue Code of 1954 or any other provision of law.

(b) ***Rule applicable after December 31, 1965 —***

(1) In a case of a member or former member of the uniformed services of the United States (as defined in 37 U.S.C. 101(3)), gross income shall not include the amount of any reduction made in his or her retired or retainer pay after December 31, 1965, by reason of—

(i) An election made under the Retired Serviceman's Family Protection Plan (10 U.S.C. 1431), or

(ii) The provisions of Subchapter II of Chapter 73 of title 10 of the U.S. Code (also referred to in this section as the Survivor Benefit Plan (10 U.S.C. 1447)).

(2)

(i) In a case where a member or former member of the uniformed services has, pursuant to the election described in paragraph (a) of this section, received before January 1, 1966, a reduced amount of retired or retainer pay, he shall, after December 31, 1965, exclude from gross income under section 122(b) and this subdivision all amounts received as uniformed services retired or retainer pay until there has been so excluded an amount of retired or retainer pay equal to the "consideration for the contract" (as described in subdivision (iii) of this subparagraph).

(ii) Upon the death of a member or former member of the uniformed services, where the "consideration for the contract" (as described in subdivision (iii) of this subparagraph) has not been excluded in whole or in part from gross income under section 122(b) and subdivision (i) of this subparagraph, the survivor of such member who is receiving an annuity under Chapter 73 of title 10 of the U.S. Code shall, after December 31, 1965, exclude from gross income under section 72(o) and this subdivision such annuity payments received after December 31, 1965, until there has been so excluded annuity payments equalling the portion of the "consideration for the contract" not previously excluded under subdivision (i) of this subparagraph.

(iii) The term "consideration for the contract" as used in this subparagraph means—

(*a*) The total amount of the reductions, if any, before January 1, 1966, in retired or retainer pay by reason of an election under Subchapter I of Chapter 73 of title 10 of the United States Code, plus

(*b*) The total amount, if any, deposited by the serviceman at any time pursuant to the provisions of sections 1438 or 1452(d) of title 10 of the United States Code, plus

(*c*) The total amount, if any, excludable from income under section 101(b)(2)(D) and paragraph (a)(2) of § 1.101-2 with respect to a survivor annuity provided by such retired or retainer pay, minus

(*d*) The total amount, if any, excluded from income before January 1, 1966, pursuant to the provisions of section 72 (b) and (d) with respect to a survivor annuity provided by such retired or retainer pay.

(iv) In determining whether there has been a recovery of the "consideration for the contract" under subdivision (i) of this subparagraph, the exclusion of retired pay from income after December 31, 1965, under sections 104(a)(4) and 105(d) shall not be considered as recovery of all or part of the "consideration for the contract."

(c) ***Special rules.*** In any of the following situations, the computation of the excludable portion of disability retired pay received by the member or former member of the uniformed services shall be governed by the following rules:

(1) An exclusion under section 122(a) and paragraph (b)(1) of this section is applicable only in the taxable year in which a reduction in retired pay is made under the Retired Serviceman's Family Protection Plan (10 U.S.C. 1431) or the Survivor Benefit Plan (10 U.S.C. 1447).

(2) Where the member or former member of the uniformed services is entitled to exclude the whole or a portion of his retired pay under the provisions of section 104(a)(4) or section 105(d) and under section 122(a) and paragraph (b)(1) of this section, the exclusion under section 122(a) and paragraph (b)(1) of this section shall be applied prior to the exclusions under sections 104(a)(4) and 105(d).

(3) Where the member or former member of the uniformed services waives a portion of his disability retired pay, or such retired pay reduced under the Retired Serviceman's Family Protection Plan (10 U.S.C. 1431),or the Survivor Benefit Plan (10 U.S.C. 1447) in favor of a nontaxable pension or compensation receivable under laws administered by the Veterans Administration (38 U.S.C. 3105), the waived amount of such disability retired pay, or reduced amount thereof, shall first be subtracted from any amounts which are excludable under the provisions of sections 104(a)(4) or 105(d) so as to reduce the amounts otherwise excludable under those sections.

(4) Where the member or former member of the uniformed services receives (before any forfeiture) disability retired pay (whether or not reduced under the Retired Serviceman's Family Protection Plan) or the Survivor Benefit Plan which is partially excludable under section 104(a)(4), and also forfeits a portion of such disability retired pay under the Dual Compensation Act of 1964 (5 U.S.C. 5531 or any former corresponding provision of law), the amount of the forfeiture under such Act shall be applied against disability retired pay (before any forfeiture) in the same proportion that the excludable portion of such pay under section 104(a)(4) bears to the total amount of such pay after subtraction of any reduction under the Retired Serviceman's Family Protection Plan (10 U.S.C. 1431) or the Survivor Benefit Plan (10 U.S.C. 1447).

(5) The exclusion provided by section 122(b) and paragraph (b)(2)(i) of this section shall be available with respect to repayments made upon removal from the temporary disability retired list even though such repayments were previously excluded from gross income under section 104(a)(4) or 105(d).

However, the exclusion permitted by the prior sentence will apply only to the extent the repaid amount has not been previously excluded under section 122(b) and paragraph (b)(2)(i) of this section.

(d) ***Examples with respect to the Retired Serviceman's Family Protection Plan.*** The rules discussed in this section relating to the Retired Serviceman's Family Protection Plan (10 U.S.C. 1431) may be illustrated by the following examples:

Example 1. A, a member of the uniformed services, retires on January 1, 1963, and receives nondisability retired pay computed to be 60 percent of his active duty pay of $10,000 per year, or $6,000 per year, based upon 24 years of service. He elects, under the Retired Serviceman's Family Protection Plan (10 U.S.C. 1431), to provide his survivor with an annuity equal to one-fourth of his reduced retired pay. His retired pay of $6,000 is reduced by $600, to $5,400, in order to provide a survivor annuity of $1,350 per year or $112.50 per month. For 1963, 1964, and 1965, A must include in gross income the unreduced amount of retired pay, or $6,000. For 1966 and subsequent years, he may exclude under section 122(a) and paragraph (b)(1) of this section the $600 total annual reductions to provide the survivor annuity, and may, for 1966, further exclude from gross income under section 122(b) and paragraph (b)(2)(i) of this section the $1,800 “consideration for the contract” *i.e.,* the total reductions which were made in 1963, 1964, and 1965, to provide the survivor annuity. Accordingly, A will include $3,600 of retired pay in gross income for 1966 ($6,000 minus the sum of $600 and $1,800).

Example 2. Assume the facts in Example (1) except that A retires on disability resulting from active service and his disability is rated at 40 percent. The entire amount of disability retirement pay, prior to and including 1966, is excludable from gross income under sections 104(a)(4) and 105(d), and in 1966, section 122(a). Assume further that A attains retirement age on December 31, 1966, dies on January 1, 1967, and his widow then begins receiving a survivor annuity under the Retired Serviceman's Family Protection Plan (10 U.S.C. 1431). A's widow may exclude from gross income in 1967 and 1968 under section 72(o) and paragraph (b)(2)(ii) of this section, the $1,800 of "consideration for the contract" *i.e.,* the reductions in 1963, 1964, and 1965 to provide the survivor annuity. Thus, A's widow will exclude all of the survivor annuity she receives in 1967 ($1,350) and $450 of the $1,350 annuity received in 1968. In addition, if A had not attained retirement age at the time of his death, his widow would, under section 101 and paragraph (a)(2) of § 1.101-2, exclude up to $5,000 subject to the limitations of paragraph (b)(2)(ii) of this section.

Example 3. Assume, in the previous example, that A dies on January 1, 1965, and his widow then begins receiving a survivor annuity. Assume further that A's widow is entitled to exclude under section 72(b) $1,000 of the $1,350 she received in 1965. Under section 72(o) and paragraph (b)(2)(ii) of this section, A's widow for 1966 will exclude the $200 remaining consideration for the contract ($1,200−$1,000) and will include $1,150 of the survivor annuity in gross income.

Example 4. B, a member of the uniformed services, retires on January 1, 1966, after 32 years of active military service, and receives disability retirement pay under section 1401 of title 10, limited to 75 percent of his active duty pay of $15,000 per year, or $11,250. His disability rating is 30 percent. B has not reached retirement age (as defined in § 1.79-2(b)(3)). He elects under the Retired Serviceman's Family Protection Plan (10 U.S.C. 1431) to provide his survivor with an annuity equal to one-half of his reduced retired pay and, for that purpose, his retired pay of $11,250 is reduced by $1,250 to provide an annuity of $5,000 per year. B also elects to waive retired pay in the amount of $1,000 in order to receive disability compensation in like amount under laws administered by the Veterans Administration. In addition, B is required to forfeit $4,088 of his retired pay under the Dual Compensation Act of 1964 (5 U.S.C. 5532) ($11,250−$1,000 = $10,250 less one-half of excess thereof over $2,074) and by reason of his Federal employment is not entitled to an exclusion of his retired pay under section 105(d). B's taxable retired pay for 1966 is $3,002, computed as follows:

Gross retired pay	$11,250
Less: Section 122(a) exclusion	(1,250)
Reduced retired pay	10,000
Less: Retired pay waived to receive V.A. compensation	(1,000)
Adjusted retired pay—	9,000
Less:	
(i) Excludable retired pay computed under section 104(a)(4) as limited by 10 U.S.C. 1403	$4,500

(ii) Less: Retired pay, not to exceed (i), waived to receive V.A. compensation	(1,000)
(iii) Net disability exclusion	(3,500)
Taxable retired pay before adjustment for Dual Compensation forfeiture	5,500
Less:	
Adjustment for Dual Compensation forfeiture of $4,088	
5500 ÷ 9000 × $4,088 = $2,498 (rounded)	(2,498)
Net taxable retired pay	3,002

Example 5. C, a member of the uniformed services retires on January 1, 1966, and receives disability retirement pay of $11,250 per year, which is reduced by $1,250 to provide a survivor annuity, and $1,000 of which is waived in order to receive disability compensation in like amount under laws administered by the Veterans Administration. C has not reached retirement age for purposes of section 105(d) and is not employed by the Federal Government. C's taxable disability retirement pay for 1966 is $300 computed as follows:

Adjusted retired pay	$9,000	
Less:		
(i) Excludable retired pay under section (a)(4) as limited by 10 U.S.C. 1403	$4,500	
(ii) Excludable retired pay under section 105(d)	5,200	
(iii) Total	9,700	
(iv) Less: Retired pay, not to exceed (iii), waived to receive V.A. compensation "sick pay" exclusion	(1,000)	
(v) Net disability and "sick pay" exclusion		(8,700)
Net taxable retired pay	800	

Example 6. D, a member of the uniformed services, retires for physical disability resulting from active service on January 1, 1966, after 35 years of service and with a disability rated at 20 percent. His active duty pay is $4,000 per year and he attained retirement age prior to retirement. He had an election in effect under the Retired Serviceman's Family Protection Plan to provide his survivor with an annuity and his retired pay is reduced therefor by $500 per year. He waives $1,300 of his retired pay in order to receive compensation from the Veterans Administration in like amount. His taxable retired pay for 1966 is $1,200 computed as

follows:

Gross retired pay (75% × $4,000)	$3,000	
Less: Section 122(a) exclusion	(500)	
Reduced retired pay	2,500	
Less: V.A. waiver	(1,300)	
Adjusted retired pay	1,200	
Less:		
(i) Section 104(a)(4) exclusion	$800	
(ii) Less: Retired pay, not to exceed (i), waived to receive V.A. compensation	(800)	
(iii) Net disability exclusion	0	
Net taxable retired pay		1,200

(e) ***Principles applicable to the Survivor Benefit Plan.*** The principles illustrated by the examples set forth in paragraph (d) of this section apply to an annuity under the Survivor Benefit Plan (10 U.S.C. 1447).

[T.D. 7043, 35 FR 8478, June 2, 1970, as amended by T.D. 7562, 43 FR 38819, Aug. 31, 1978]

§ 1.123-1 Exclusion of insurance proceeds for reimbursement of certain living expenses.

(a) ***In general.***

(1) Gross income does not include insurance proceeds received by an individual on or after January 1, 1969, pursuant to the terms of an insurance contract for indemnification of the temporary increase in living expenses resulting from the loss of use or occupancy of his principal residence, or a part thereof, due to damage or destruction by fire, storm, or other casualty. The term “other casualty” has the same meaning assigned to such term under section 165(c)(3). The exclusion also applies in the case of an individual who is denied access to his principal residence by governmental authorities because of the occurrence (or threat of occurrence) of such a casualty. The amount excludable under this section is subject to the limitation set forth in paragraph (b) of this section.

(2) This exclusion applies to amounts received as reimbursement or compensation for the reasonable and necessary increase in living expenses incurred by the insured and members of his household to maintain their customary standard of living during the loss period.

(3) This exclusion does not apply to an insurance recovery for the loss of rental income. Nor does the exclusion apply to any insurance recovery which compensates for the loss of, or damage to, real or personal property. See section 165(c)(3) relating to casualty losses; section 1231 relating to gain on an involuntary conversion of a capital asset held for more than 1 year (6 months for taxable years beginning before 1977; 9 months for taxable years beginning in 1977); and section 1033 relating to recognition of gain on an involuntary conversion. In the case of property used by an insured partially as a principal residence and partially for other purposes, the exclusion does not apply to the amount of insurance proceeds which compensates for the portion of increased expenses attributable to the nonresidential use of temporary replacement property during the loss period. In the case of denial of access to a principal residence by governmental authority, the exclusion provided by this section

does not apply to an insurance recovery received by an individual as reimbursement for living expenses incurred by reason of a governmental condemnation or order not related to a casualty or the threat of a casualty.

(4)

(i) Subject to the limitation set forth in paragraph (b), the amount excludable is the amount which is identified by the insurer as being paid exclusively for increased living expenses resulting from the loss of use or occupancy of the principal residence and pursuant to the terms of the insurance contract.

(ii) When a lump-sum insurance settlement includes, but does not specifically identify, compensation for property damage, loss of rental income, and increased living expenses, the amount of such settlement allocable to living expenses shall, in the case of uncontested claims, be that portion of the settlement which bears the same ratio to the total recovery as the amount of claimed increased living expense bears to the total amount of claimed losses and expenses, to the extent not in excess of the coverage limitations specified in the contract for such losses and expenses.

(iii) In the case of a lump-sum settlement involving contested claims, the insured shall establish the amount reasonably allocable to increased living expenses, consistent with the terms of the contract and other facts of the particular case.

(iv) In no event may the amount of a lump-sum settlement which is allocable to increased living expenses exceed the coverage limitation specified in the contract for increased living expenses. Where, however, a coverage limitation is applicable to the total amount payable for increased living expenses and, for example, loss of rental income, the amount of an unitemized settlement which is allocable to increased living expenses may not exceed the portion of the applicable coverage limitation which bears the same ratio to such limitation as the amount of increased living expenses bears to the sum of the amount of such increased living expenses and the amount, if any, of lost rental income.

(5) The portion of any insurance recovery for increased living expenses which exceeds the limitation set forth in paragraph (b) shall be included in gross income under section 61 of the Code.

(b) *Limitation* —

(1) ***Amount excludable.*** The amount excludable under this section is limited to amounts received which are not in excess of the amount by which

(i) total actual living expenses incurred by the insured and members of his household which result from the loss of use or occupancy of their residence exceed

(ii) the total normal living expenses which would have been incurred during the loss period but are not incurred as a result of the loss of use or occupancy of the principal residence. Generally, the excludable amount represents such excess expenses actually incurred by reason of a casualty, or threat thereof, for renting suitable housing and for extraordinary expenses for transportation, food, utilities, and miscellaneous services during the period of repair or replacement of the damaged principal residence or denial of access by governmental authority.

(2) ***Actual living expenses.*** For purposes of this section, actual living expenses are the reasonable and necessary expenses incurred as a result of the loss of use or occupancy of the principal residence to maintain the insured and members of his household in accordance with their customary standard of

living. Actual living expenses must be of such a nature as to qualify as a reimbursable expense under the terms of the applicable insurance contract without regard to monetary limitations upon coverage. Generally, actual living expenses include the cost during the loss period of temporary housing, utilities furnished at the place of temporary housing, meals obtained at restaurants which customarily would have been prepared in the residence, transportation, and other miscellaneous services. To the extent that the loss of use or occupancy of the principal residence results merely in an increase in the amount expended for items of living expenses normally incurred, such as food and transportation, only the increase in such costs shall be considered as actual living expenses in computing the limitation.

(3) ***Normal living expenses not incurred.*** Normal living expenses consist of the same categories of expenses comprising actual living expenses which would have been incurred but are not incurred as a result of the casualty or threat thereof. If the loss of use of the residence results in a decrease in the amount normally expended for a living expense item during the loss period, the item of normal living expense is considered not to have been incurred to the extent of the decrease for purposes of computing the limitation.

(4) ***Examples.*** The application of this paragraph (b) may be illustrated by the following examples:

> *Example 1.* On March 1, 1970, A's principal residence, a dwelling owned by A no part of which was rented to others or used for nonresidential purposes, was extensively damaged by fire. The damaged residence was under repair during the entire month of March making it necessary for A and his spouse to obtain temporary lodging and to take their meals at a restaurant. A and his spouse incur expenses of $200 for lodging at a motel, $180 for meals which customarily would have been prepared in his residence, and $25 for commercial laundry service which customarily would have been done by A's wife. A makes (directly or through mortgage insurance), or remains liable for, the required March payment of $190 on the mortgage note on his residence. The mortgage payment results from a contractual obligation having no causal relationship to the occurrence of the casualty and is not considered as an actual living expense resulting from the loss of use of the residence. A's customary commuting expense of $40 for bus fares to and from work is decreased by $20 for the month because of the motel's closer proximity to his place of employment. Other transportation expenses remain stable. Since there has been a decrease in the amount of A's customary bus fares, normal transportation expenses are considered not to have been incurred to the extent of the decrease. Finally, A does not incur customary expenses of $150 for food obtained for home preparation, $75 for utilities expenses, and $10 for laundry cleansers. The limitation upon the excludable amount of an insurance recovery for excess

living expenses is $150, computed as follows:

LIVING EXPENSES

	Actual resulting from casualty	Normal not incurred	Increase (decrease)
Housing	$200.00		$200.00
Utilities		$75.00	(75.00)
Meals	180.00	150.00	30.00
Transportation		20.00	(20.00)
Laundry	25.00	10.00	150.00
Total	405.00	255.00	15.00

Example 2. Assume the same facts as in example (1) except that the damaged residence is not owned by A but is rented to him for $100 per month and that the risk of loss is upon the lessor. Since A would not have incurred the normal rental of $100 for March, the excludable amount is limited to $50 ($150 as in previous example less $100 normal rent not incurred).

(c) ***Principal residence.*** Whether or not property is used by the insured taxpayer and members of his household as their principal residence depends upon all the facts and circumstances in each case. For purposes of this section, a principal residence may be a dwelling or an apartment leased to the insured as well as a dwelling or apartment owned by the insured.

[T.D. 7118, 36 FR 10729, June 2, 1971, as amended by T.D. 7728, 45 FR 72650, Nov. 3, 1980]

§ 1.125-3 Effect of the Family and Medical Leave Act (FMLA) on the operation of cafeteria plans.

The following questions and answers provide guidance on the effect of the Family and Medical Leave Act (FMLA), 29 U.S.C. 2601 *et seq.*, on the operation of cafeteria plans:

Q-1: May an employee revoke coverage or cease payment of his or her share of group health plan premiums when taking unpaid FMLA, 29 U.S.C. 2601 *et seq.*, leave?

A-1: Yes. An employer must either allow an employee on unpaid FMLA leave to revoke coverage, or continue coverage but allow the employee to discontinue payment of his or her share of the premium for group health plan coverage (including a health flexible spending arrangement (FSA)) under a cafeteria plan for the period of the FMLA leave. See 29 CFR 825.209(e). FMLA does not require that an employer allow an employee to revoke coverage if the employer pays the employee's share of premiums. As discussed in Q&A-3, if the employer continues coverage during an FMLA leave, the employer may recover the employee's share of the premiums when the employee returns to work. FMLA also provides the employee a right to be reinstated in the group health plan coverage (including a health FSA) provided under a cafeteria plan upon returning from FMLA leave if the employee's group health plan coverage terminated while on FMLA leave (either by revocation or due to nonpayment of premiums). Such an employee is entitled, to the extent required under FMLA, to be reinstated on the same terms as prior to taking FMLA

leave (including family or dependent coverage), subject to any changes in benefit levels that may have taken place during the period of FMLA leave as provided in 29 CFR 825.215(d)(1). See 29 CFR 825.209(e) and 825.215(d). In addition, such an employee has the right to revoke or change elections under § 1.125-4 (e.g., because of changes in status or cost or coverage changes as provided under § 1.125-4) under the same terms and conditions as are available to employees participating in the cafeteria plan who are working and not on FMLA leave.

Q-2: Who is responsible for making premium payments under a cafeteria plan when an employee on FMLA leave continues group health plan coverage?

A-2: FMLA provides that an employee is entitled to continue group health plan coverage during FMLA leave whether or not that coverage is provided under a health FSA or other component of a cafeteria plan. See 29 CFR 825.209(b). FMLA permits an employer to require an employee who chooses to continue group health plan coverage while on FMLA leave to be responsible for the share of group health premiums that would be allocable to the employee if the employee were working, and, for this purpose, treats amounts paid pursuant to a pre-tax salary reduction agreement as amounts allocable to the employee. However, FMLA requires the employer to continue to contribute the share of the cost of the employee's coverage that the employer was paying before the employee commenced FMLA leave. See 29 CFR 825.100(b) and 825.210(a).

Q-3: What payment options are required or permitted to be offered under a cafeteria plan to an employee who continues group health plan coverage while on unpaid FMLA leave, and what is the tax treatment of these payments?

A-3:

(a) ***In general.*** Subject to the limitations described in paragraph (b) of this Q&A-3, a cafeteria plan may offer one or more of the following payment options, or a combination of these options, to an employee who continues group health plan coverage (including a health FSA) while on unpaid FMLA leave; provided that the payment options for employees on FMLA leave are offered on terms at least as favorable as those offered to employees not on FMLA leave. These options are referred to in this section as pre-pay, pay-as-you-go, and catch-up. See also the FMLA notice requirements at 29 CFR 825.301(b)(1)(iv).

(1) ***Pre-pay.***

(i) Under the pre-pay option, a cafeteria plan may permit an employee to pay, prior to commencement of the FMLA leave period, the amounts due for the FMLA leave period. However, FMLA provides that the employer may not mandate that an employee pre-pay the amounts due for the leave period. See 29 CFR 825.210(c)(3) and (4).

(ii) Contributions under the pre-pay option may be made on a pre-tax salary reduction basis from any taxable compensation (including from unused sick days or vacation days). However, see Q&A-5 of this section regarding additional restrictions on pre-tax salary reduction contributions when an employee's FMLA leave spans two cafeteria plan years.

(iii) Contributions under the pre-pay option may also be made on an after-tax basis.

(2) ***Pay-as-you-go.***

(i) Under the pay-as-you-go option, employees may pay their share of the premium payments on the same schedule as payments would have been made if the employee were not on leave or under any other payment schedule permitted by the Labor Regulations at 29 CFR

825.210(c) (e.g., on the same schedule as payments are made under section 4980B (relating to coverage under the Consolidated Omnibus Budget Reconciliation Act (COBRA), 26 U.S.C. 4980B), under the employer's existing rules for payment by employees on leave without pay, or under any other system voluntarily agreed to between the employer and the employee that is not inconsistent with this section or with 29 CFR 825.210(c)).

(ii) Contributions under the pay-as-you-go option are generally made by the employee on an after-tax basis. However, contributions may be made on a pre-tax basis to the extent that the contributions are made from taxable compensation (e.g., from unused sick days or vacation days) that is due the employee during the leave period.

(iii) An employer is not required to continue the group health coverage of an employee who fails to make required premium payments while on FMLA leave, provided that the employer follows the notice procedures required under FMLA. See 29 CFR 825.212. However, if the employer chooses to continue the health coverage of an employee who fails to pay his or her share of the premium payments while on FMLA leave, FMLA permits the employer to recoup the premiums (to the extent of the employee's share). See 29 CFR 825.212(b). Such recoupment may be made as set forth in paragraphs (a)(3)(i) and (ii) of this Q&A-3. See also Q&A-6 of this section regarding coverage under a health FSA when an employee fails to make the required premium payments while on FMLA leave.

(3) ***Catch-up.***

(i) Under the catch-up option, the employer and the employee may agree in advance that the group coverage will continue during the period of unpaid FMLA leave, and that the employee will not pay premiums until the employee returns from the FMLA leave. Where an employee is electing to use the catch-up option, the employer and the employee must agree in advance of the coverage period that: the employee elects to continue health coverage while on unpaid FMLA leave; the employer assumes responsibility for advancing payment of the premiums on the employee's behalf during the FMLA leave; and these advance amounts are to be paid by the employee when the employee returns from FMLA leave.

(ii) When an employee fails to make required premium payments while on FMLA leave, an employer is permitted to utilize the catch-up option to recoup the employee's share of premium payments when the employee returns from FMLA leave. See, e.g., 29 CFR 825.212(b). If the employer chooses to continue group coverage under these circumstances, the prior agreement of the employee, as set forth in paragraph (a)(3)(i) of this Q&A-3, is not required.

(iii) Contributions under the catch-up option may be made on a pre-tax salary reduction basis from any available taxable compensation (including from unused sick days and vacation days) after the employee returns from FMLA leave. The cafeteria plan may provide for the catch-up option to apply on a pre-tax salary reduction basis if premiums have not been paid on any other basis (*i.e.*, have not been paid under the pre-pay or pay-as-you-go options or on a catch-up after-tax basis).

(iv) Contributions under the catch-up option may also be made on an after-tax basis.

(b) ***Exceptions.*** Whatever payment options are offered to employees on non-FMLA leave must be offered to employees on FMLA leave. In accordance with 29 CFR 825.210(c), cafeteria plans may offer one or more of the payment options described in paragraph (a) of this Q&A-3, with the following exceptions:

(1) FMLA does not permit the pre-pay option to be the sole option offered to employees on FMLA leave. However, the cafeteria plan may include pre-payment as an option for employees on FMLA leave, even if such option is not offered to employees on non-FMLA leave-without-pay.

(2) FMLA allows the catch-up option to be the sole option offered to employees on FMLA leave if and only if the catch-up option is the sole option offered to employees on non-FMLA leave-without-pay.

(3) If the pay-as-you-go option is offered to employees on non-FMLA leave-without-pay, the option must also be offered to employees on FMLA leave. The employer may also offer employees on FMLA leave the pre-pay option and/or the catch-up option.

(c) ***Voluntary waiver of employee payments.*** In addition to the foregoing payment options, an employer may voluntarily waive, on a nondiscriminatory basis, the requirement that employees who elect to continue group health coverage while on FMLA leave pay the amounts the employees would otherwise be required to pay for the leave period.

(d) ***Example.*** The following example illustrates this Q&A-3:

> *Example.* (i) Employer Y allows employees to pay premiums for group health coverage during an FMLA leave on an after-tax basis while the employee is on unpaid FMLA leave. Under the terms of Y's cafeteria plan, if an employee elects to continue health coverage during an unpaid FMLA leave and fails to pay one or more of the after-tax premium payments due for that coverage, the employee's salary after the employee returns from FMLA leave is reduced to cover unpaid premiums (*i.e.* the premiums that were to be paid by the employee on an after-tax basis during the FMLA leave, but were paid by the employer instead).
> (ii) In this *Example,* Y's cafeteria plan satisfies the conditions in this Q&A-3. Y's cafeteria plan would also satisfy the conditions in this Q&A-3 if the plan provided for coverage to cease in the event the employee fails to make a premium payment when due during an unpaid FMLA leave.

Q-4: Do the special FMLA requirements concerning payment of premiums by an employee who continues group health plan coverage under a cafeteria plan apply if the employee is on paid FMLA leave?

A-4: No. The Labor Regulations provide that, if an employee's FMLA leave is paid leave as described at 29 CFR 825.207 and the employer mandates that the employee continue group health plan coverage while on FMLA leave, the employee's share of the premiums must be paid by the method normally used during any paid leave (e.g., by pre-tax salary reduction if the employee's share of premiums were paid by pre-tax salary reduction before the FMLA leave began). See 29 CFR 825.210(b).

Q-5: What restrictions apply to contributions when an employee's FMLA leave spans two cafeteria plan years?

A-5:

(a) No amount will be included in an employee's gross income due to participation in a cafeteria plan during FMLA leave, provided that the plan complies with other generally applicable cafeteria plan requirements. Among other requirements, a plan may not operate in a manner that enables employees on FMLA leave to defer compensation from one cafeteria plan year to a subsequent cafeteria plan year. See section 125(d)(2).

(b) The following example illustrates this Q&A-5:

> *Example.* (i) Employee A elects group health coverage under a calendar year cafeteria plan maintained by Employer X. Employee A's premium for health coverage is $100 per month throughout the 12-month period of coverage. Employee A takes FMLA leave for 12 weeks beginning on October 31 after making 10 months of premium payments totaling $1,000 (10 months × $100 = $1,000). Employee A elects to continue health coverage while on FMLA leave and utilizes the pre-pay option by applying his or her unused sick days in order to make the required premium payments due while he or she is on FMLA leave.
> (ii) Because A cannot defer compensation from one plan year to a subsequent plan year, A may pre-pay the premiums due in November and December (*i.e.*, $100 per month) on a pre-tax basis, but A cannot pre-pay the premium payment due in January on a pre-tax basis. If A participates in the cafeteria plan in the subsequent plan year, A must either pre-pay for January on an after-tax basis or use another option (e.g., pay-as-you-go, catch-up, reduction in unused sick days, etc.) to make the premium payment due in January.

Q-6: Are there special rules concerning employees taking FMLA leave who participate in health FSAs offered under a cafeteria plan?

A-6:

(a) ***In general.***

(1) A group health plan that is a flexible spending arrangement (FSA) offered under a cafeteria plan must conform to the generally applicable rules in this section concerning employees who take FMLA leave. Thus, to the extent required by FMLA (see 29 CFR 825.209(b)), an employer must—

(i) Permit an employee taking FMLA leave to continue coverage under a health FSA while on FMLA leave; and

(ii) If an employee is on unpaid FMLA leave, either—

(A) Allow the employee to revoke coverage; or

(B) Continue coverage, but allow the employee to discontinue payment of his or her share of the premium for the health FSA under the cafeteria plan during the unpaid FMLA leave period.

(2) Under FMLA, the plan must permit the employee to be reinstated in health coverage upon return from FMLA leave on the same terms as if the employee had been working throughout the leave period, without a break in coverage. See 29 CFR 825.214(a) and 825.215(d)(1) and paragraph (b)(2) of this Q&A-6. In addition, under FMLA, a plan may require an employee to be reinstated

in health coverage upon return from a period of unpaid FMLA leave, provided that employees who return from a period of unpaid leave not covered by the FMLA are also required to resume participation upon return from leave.

(b) ***Coverage.***

(1) Regardless of the payment option selected under Q&A-3 of this section, for so long as the employee continues health FSA coverage (or for so long as the employer continues the health FSA coverage of an employee who fails to make the required contributions as described in Q&A-3(a)(2)(iii) of this section), the full amount of the elected health FSA coverage, less any prior reimbursements, must be available to the employee at all times, including the FMLA leave period.

(2)

(i) If an employee's coverage under the health FSA terminates while the employee is on FMLA leave, the employee is not entitled to receive reimbursements for claims incurred during the period when the coverage is terminated. If an employee subsequently elects or the employer requires the employee to be reinstated in the health FSA upon return from FMLA leave for the remainder of the plan year, the employee may not retroactively elect health FSA coverage for claims incurred during the period when the coverage was terminated. Upon reinstatement into a health FSA upon return from FMLA leave (either because the employee elects reinstatement or because the employer requires reinstatement), the employee has the right under FMLA: to resume coverage at the level in effect before the FMLA leave and make up the unpaid premium payments, or to resume coverage at a level that is reduced and resume premium payments at the level in effect before the FMLA leave. If an employee chooses to resume health FSA coverage at a level that is reduced, the coverage is prorated for the period during the FMLA leave for which no premiums were paid. In both cases, the coverage level is reduced by prior reimbursements.

(ii) FMLA requires that an employee on FMLA leave have the right to revoke or change elections (because of events described in § 1.125-4) under the same terms and conditions that apply to employees participating in the cafeteria plan who are not on FMLA leave. Thus, for example, if a group health plan offers an annual open enrollment period to active employees, then, under FMLA, an employee on FMLA leave when the open enrollment is offered must be offered the right to make election changes on the same basis as other employees. Similarly, if a group health plan decides to offer a new benefit package option and allows active employees to elect the new option, then, under FMLA, an employee on FMLA leave must be allowed to elect the new option on the same basis as other employees.

(3) The following examples illustrate the rules in this Q&A-6:

> *Example 1.* (i) Employee B elects $1,200 worth of coverage under a calendar year health FSA provided under a cafeteria plan, with an annual premium of $1,200. Employee B is permitted to pay the $1,200 through pre-tax salary reduction amounts of $100 per month throughout the 12-month period of coverage. Employee B incurs no medical expenses prior to April 1. On April 1, B takes FMLA leave after making three months of contributions totaling $300 (3 months × $100 = $300). Employee B's coverage ceases

during the FMLA leave. Consequently, B makes no premium payments for the months of April, May, and June, and B is not entitled to submit claims or receive reimbursements for expenses incurred during this period. Employee B returns from FMLA leave and elects to be reinstated in the health FSA on July 1.
(ii) Employee B must be given a choice of resuming coverage at the level in effect before the FMLA leave (*i.e.*, $1,200) and making up the unpaid premium payments ($300), or resuming health FSA coverage at a level that is reduced on a prorata basis for the period during the FMLA leave for which no premiums were paid (*i.e.*, reduced for 3 months or $^1/_4$ of the plan year) less prior reimbursements (*i.e.*, $0) with premium payments due in the same monthly amount payable before the leave (*i.e.*, $100 per month). Consequently, if B chooses to resume coverage at the level in effect before the FMLA leave, B's coverage for the remainder of the plan year would equal $1,200 and B's monthly premiums would be increased to $150 per month for the remainder of the plan year, to make up the $300 in premiums missed ($100 per month plus $50 per month ($300 divided by the remaining 6 months)). If B chooses prorated coverage, B's coverage for the remainder of the plan year would equal $900, and B would resume making premium payments of $100 per month for the remainder of the plan year.

Example 2. (i) Assume the same facts as *Example 1* except that B incurred medical expenses totaling $200 in February and obtained reimbursement of these expenses.
(ii) The results are the same as in *Example 1,* except that if B chooses to resume coverage at the level in effect before the FMLA leave, B's coverage for the remainder of the year would equal $1,000 ($1,200 reduced by $200) and the monthly payments for the remainder of the year would still equal $150. If instead B chooses prorated coverage, B's coverage for the remainder of the plan year would equal $700 ($1,200 prorated for 3 months, and then reduced by $200) and the monthly payments for the remainder of the year would still equal $100.

Example 3. (i) Assume the same facts as *Example 1* except that, prior to taking FMLA leave, B elects to continue health FSA coverage during the FMLA leave. The plan permits B (and B elects) to use the catch-up payment option described in Q&A-3 of this section, and as further permitted under the plan, B chooses to repay the $300 in missed payments on a ratable basis over the remaining 6-month period of coverage (*i.e.*, $50 per month).
(ii) Thus, B's monthly premium payments for the remainder of the plan year will be $150 ($100 + $50).

Q-7: Are employees entitled to non-health benefits while taking FMLA leave?

A-7: FMLA does not require an employer to maintain an employee's non-health benefits (e.g., life insurance) during FMLA leave. An employee's entitlement to benefits other than group health benefits under a cafeteria plan during a period of FMLA leave is to be determined by the employer's established policy for providing such benefits when the employee is on non-FMLA leave (paid or unpaid). See 29 CFR 825.209(h). Therefore, an employee who takes FMLA leave is entitled to revoke an election of non-health benefits under a cafeteria plan to the same extent as employees taking non-FMLA leave are permitted to revoke elections of non-health benefits under a cafeteria plan. For example, election changes are permitted due to changes of status or upon enrollment for a new plan year. See § 1.125-4. However, FMLA provides that, in certain cases, an employer may continue an employee's non-health benefits under the employer's cafeteria plan while the employee is on FMLA leave in order to ensure that the employer can meet its responsibility to provide equivalent benefits to the employee upon return from unpaid FMLA. If the employer continues an employee's non-health benefits during FMLA leave, the employer is entitled to recoup the costs incurred for paying the employee's share of the premiums during the FMLA leave period. See 29 CFR 825.213(b). Such recoupment may be on a pre-tax basis. A cafeteria plan must, as required by FMLA, permit an employee whose coverage terminated while on FMLA leave (either by revocation or nonpayment of premiums) to be reinstated in the cafeteria plan on return from FMLA leave. See 29 CFR 825.214(a) and 825.215(d).

Q-8: What is the applicability date of the regulations in this section?

A-8: This section is applicable for cafeteria plan years beginning on or after January 1, 2002.

[T.D. 8966, 66 FR 52677, Oct. 17, 2001; 66 FR 63920, Dec. 11, 2001]

§ 1.125-4 Permitted election changes.

(a) ***Election changes.*** A cafeteria plan may permit an employee to revoke an election during a period of coverage and to make a new election only as provided in paragraphs (b) through (g) of this section. Section 125 does not require a cafeteria plan to permit any of these changes. See paragraph (h) of this section for special provisions relating to qualified cash or deferred arrangements, and paragraph (i) of this section for special definitions used in this section.

(b) ***Special enrollment rights*** —

(1) ***In general.*** A cafeteria plan may permit an employee to revoke an election for coverage under a group health plan during a period of coverage and make a new election that corresponds with the special enrollment rights provided in section 9801(f).

(2) ***Examples.*** The following examples illustrate the application of this paragraph (b):

> *Example 1.* (i) Employer *M* provides health coverage for its employees pursuant to a plan that is subject to section 9801(f). Under the plan, employees may elect either employee-only coverage or family coverage. *M* also maintains a calendar year cafeteria plan under which qualified benefits, including health coverage, are funded through salary reduction. *M*'s employee, *A,* is married to *B* and they have a child, *C.* In accordance with *M*'s cafeteria plan, Employee *A* elects employee-only health coverage before the beginning of the calendar year. During the year, *A* and *B* adopt a child, *D.* Within 30 days thereafter, *A* wants to revoke *A*'s election for employee-only health coverage and obtain

family health coverage for *A*'s spouse, *C,* and *D* as of the date of *D*'s adoption. Employee *A* satisfies the conditions for special enrollment of an employee with a new dependent under section 9801(f)(2), so that *A* may enroll in family coverage under *M*'s accident or health plan in order to provide coverage effective as of the date of *D*'s adoption.
(ii) *M*'s cafeteria plan may permit *A* to change *A*'s salary reduction election to family coverage for salary not yet currently available. The increased salary reduction is permitted to reflect the cost of family coverage from the date of adoption. (*A*'s adoption of *D* is also a change in status, and the election of family coverage is consistent with that change in status. Thus, under paragraph (c) of this section, *M*'s cafeteria plan could permit *A* to elect family coverage prospectively in order to cover *B, C,* and *D* for the remaining portion of the period of coverage.)

Example 2. (i) The employer plans and permissible coverage are the same as in *Example 1*. Before the beginning of the calendar year, Employee *E* elects employee-only health coverage under *M*'s cafeteria plan. Employee *E* marries *F* during the plan year. *F*'s employer, *N,* offers health coverage to *N*'s employees, and, prior to the marriage, *F* had elected employee-only coverage. Employee *E* wants to revoke the election for employee-only coverage under *M*'s cafeteria plan, and is considering electing family health coverage under *M*'s plan or obtaining family health coverage under *N*'s plan.
(ii) *M*'s cafeteria plan may permit *E* to change *E*'s salary reduction election to reflect the change to family coverage under *M*'s accident or health plan because the marriage would result in special enrollment rights under section 9801(f), pursuant to which an election of family coverage under *M*'s accident or health plan would be required to be effective no later than the first day of the first calendar month beginning after the completed request for enrollment is received by the plan. Since no retroactive coverage is required in the event of marriage under section 9801(f), *E*'s salary reduction election may only be changed on a prospective basis. (*E*'s marriage to *F* is also a change in status under paragraph (c) of this section, as illustrated in Example 1 of paragraph (c)(4) of this section.)

(c) ***Changes in status*** —

(1) ***Change in status rule.*** A cafeteria plan may permit an employee to revoke an election during a period of coverage with respect to a qualified benefits plan (defined in paragraph (i)(8) of this section) to which this paragraph (c) applies and make a new election for the remaining portion of the period (referred to in this section as an election change) if, under the facts and circumstances—

(i) A change in status described in paragraph (c)(2) of this section occurs; and

(ii) The election change satisfies the consistency rule of paragraph (c)(3) of this section.

(2) ***Change in status events.*** The following events are changes in status for purposes of this paragraph (c):

(i) ***Legal marital status.*** Events that change an employee's legal marital status, including the following: marriage; death of spouse; divorce; legal separation; and annulment.

(ii) ***Number of dependents.*** Events that change an employee's number of dependents, including the following: birth; death; adoption; and placement for adoption.

(iii) ***Employment status.*** Any of the following events that change the employment status of the employee, the employee's spouse, or the employee's dependent: a termination or commencement of employment; a strike or lockout; a commencement of or return from an unpaid leave of absence; and a change in worksite. In addition, if the eligibility conditions of the cafeteria plan or other employee benefit plan of the employer of the employee, spouse, or dependent depend on the employment status of that individual and there is a change in that individual's employment status with the consequence that the individual becomes (or ceases to be) eligible under the plan, then that change constitutes a change in employment under this paragraph (c) (e.g., if a plan only applies to salaried employees and an employee switches from salaried to hourly-paid with the consequence that the employee ceases to be eligible for the plan, then that change constitutes a change in employment status under this paragraph (c)(2)(iii)).

(iv) ***Dependent satisfies or ceases to satisfy eligibility requirements.*** Events that cause an employee's dependent to satisfy or cease to satisfy eligibility requirements for coverage on account of attainment of age, student status, or any similar circumstance.

(v) ***Residence.*** A change in the place of residence of the employee, spouse, or dependent.

(vi) ***Adoption assistance.*** For purposes of adoption assistance provided through a cafeteria plan, the commencement or termination of an adoption proceeding.

(3) ***Consistency rule*** —

(i) ***Application to accident or health coverage and group-term life insurance.*** An election change satisfies the requirements of this paragraph (c)(3) with respect to accident or health coverage or group-term life insurance only if the election change is on account of and corresponds with a change in status that affects eligibility for coverage under an employer's plan. A change in status that affects eligibility under an employer's plan includes a change in status that results in an increase or decrease in the number of an employee's family members or dependents who may benefit from coverage under the plan.

(ii) ***Application to other qualified benefits.*** An election change satisfies the requirements of this paragraph (c)(3) with respect to other qualified benefits if the election change is on account of and corresponds with a change in status that affects eligibility for coverage under an employer's plan. An election change also satisfies the requirements of this paragraph (c)(3) if the election change is on account of and corresponds with a change in status that effects expenses described in section 129 (including employment-related expenses as defined in section 21(b)(2)) with respect to dependent care assistance, or expenses described in section 137 (including qualified adoption expenses as defined in section 137(d)) with respect to adoption assistance.

(iii) ***Application of consistency rule.*** If the change in status is the employee's divorce, annulment or legal separation from a spouse, the death of a spouse or dependent, or a dependent ceasing to satisfy the eligibility requirements for coverage, an employee's

election under the cafeteria plan to cancel accident or health insurance coverage for any individual other than the spouse involved in the divorce, annulment or legal separation, the deceased spouse or dependent, or the dependent that ceased to satisfy the eligibility requirements for coverage, respectively, fails to correspond with that change in status. Thus, if a dependent dies or ceases to satisfy the eligibility requirements for coverage, the employee's election to cancel accident or health coverage for any other dependent, for the employee, or for the employee's spouse fails to correspond with that change in status. In addition, if an employee, spouse, or dependent gains eligibility for coverage under a family member plan (as defined in paragraph (i)(5) of this section) as a result of a change in marital status under paragraph (c)(2)(i) of this section or a change in employment status under paragraph (c)(2)(iii) of this section, an employee's election under the cafeteria plan to cease or decrease coverage for that individual under the cafeteria plan corresponds with that change in status only if coverage for that individual becomes applicable or is increased under the family member plan. With respect to group-term life insurance and disability coverage (as defined in paragraph (i)(4) of this section), an election under a cafeteria plan to increase coverage (or an election to decrease coverage) in response to a change in status described in paragraph (c)(2) of this section is deemed to correspond with that change in status as required by paragraph (c)(3)(i) of this section.

(iv) ***Exception for COBRA.*** If the employee, spouse, or dependent becomes eligible for continuation coverage under the group health plan of the employee's employer as provided in section 4980B or any similar state law, a cafeteria plan may permit the employee to elect to increase payments under the employer's cafeteria plan in order to pay for the continuation coverage.

(4) ***Examples.*** The following examples illustrate the application of this paragraph (c):

> *Example 1.* (i) Employer *M* provides health coverage (including a health FSA) for its employees through its cafeteria plan. Before the beginning of the calendar year, Employee *A* elects employee-only health coverage under *M*'s cafeteria plan and elects salary reduction contributions to fund coverage under the health FSA. Employee *A* marries *B* during the year. Employee *B*'s employer, *N,* offers health coverage to *N*'s employees (but not including any health FSA), and, prior to the marriage, *B* had elected employee-only coverage. Employee *A* wants to revoke the election for employee-only coverage, and is considering electing family health coverage under *M*'s plan or obtaining family health coverage under *N*'s plan.
> (ii) Employee *A*'s marriage to *B* is a change in status under paragraph (c)(2)(i) of this section, pursuant to which *B* has become eligible for coverage under *M*'s health plan under paragraph (c)(3)(i) of this section. Two possible election changes by *A* correspond with the change in status: Employee *A* may elect family health coverage under *M*'s plan to cover *A* and *B*; or *A* may cancel coverage under *M*'s plan, if *B* elects family health coverage under *N*'s plan to cover *A* and *B.* Thus, *M*'s cafeteria plan may permit *A* to make either election change.

(iii) Employee *A* may also increase salary reduction contributions to fund coverage for *B* under the health FSA.

Example 2. (i) Employee *C,* a single parent, elects family health coverage under a calendar year cafeteria plan maintained by Employer *O.* Employee *C* and *C*'s 21-year old child, *D,* are covered under *O*'s health plan. During the year, *D* graduates from college. Under the terms of the health plan, dependents over the age of 19 must be full-time students to receive coverage. Employee *C* wants to revoke *C*'s election for family health coverage and obtain employee-only coverage under *O*'s cafeteria plan.
(ii) *D*'s loss of eligibility for coverage under the terms of the health plan is a change in status under paragraph (c)(2)(iv) of this section. A revocation of *C*'s election for family coverage and new election for employee-only coverage corresponds with the change in status. Thus, *O*'s cafeteria plan may permit *C* to elect employee-only coverage.

Example 3. (i) Employee *E* is married to *F* and they have one child, *G.* Employee *E* is employed by Employer *P,* and *P* maintains a calendar year cafeteria plan that allows employees to elect no health coverage, employee-only coverage, employee-plus-one-dependent coverage, or family coverage. Under the plan, before the beginning of the calendar year, *E* elects family health coverage for *E, F,* and *G. E* and *F* divorce during the year and *F* loses eligibility for coverage under *P*'s plan. *G* does not lose eligibility for health coverage under *P*'s plan upon the divorce. *E* now wants to revoke *E*'s election under the cafeteria plan and elect no coverage.
(ii) The divorce is a change in status under paragraph (c)(2)(i). A change in the cafeteria plan election to cancel health coverage for *F* is consistent with that change in status. However, an election change to cancel *E*'s or *G*'s health coverage does not satisfy the consistency rule under paragraph (c)(3)(iii) of this section regarding cancellation of coverage for an employee's other dependents in the event of divorce. Therefore, the cafeteria plan may not permit *E* to elect no coverage. However, an election to change to employee-plus-one-dependent health coverage would correspond with the change in status, and thus the cafeteria plan may permit *E* to elect employee-plus-one-dependent health coverage.

(iii) In addition, under paragraph (f)(4) of this section, if *F* makes an election change to cover *G* under *F*'s employer's plan, then *E* may make a corresponding change to elect employee-only coverage under *P*'s cafeteria plan.

Example 4. (i) Employer *R* maintains a calendar year cafeteria plan under which full-time employees may elect coverage under one of three benefit package options provided under an accident or health plan: an indemnity option or either of two HMO options for employees who work in the respective service areas of the two HMOs. Employee *A,* who

works in the service area of HMO #1, elects the HMO #1 option. During the year, *A* is transferred to another work location which is outside the HMO #1 service area and inside the HMO #2 service area.
(ii) The transfer is a change in status under paragraph (c)(2)(iii) of this section (relating to a change in worksite), and, under the consistency rule in paragraph (c)(3) of this section, the cafeteria plan may permit *A* to make an election change to elect the indemnity option or HMO #2 or to cancel accident or health coverage.

(iii) The change in work location has no effect on *A*'s eligibility under R's health FSA, so no change in *A's* health FSA is authorized under this paragraph (c).

Example 5. (i) Employer *S* maintains a calendar year cafeteria plan that allows employees to elect coverage under an accident or health plan providing indemnity coverage and coverage under a health FSA. Prior to the beginning of the calendar year, Employee *B* elects employee-only indemnity coverage, and elects salary reduction contributions of $600 during the year to fund coverage under the health FSA for up to $600 of reimbursements for the year. Employee *B*'s spouse, *C,* has employee-only coverage under an accident or health plan maintained by *C*'s employer. During the year, *C* terminates employment and loses coverage under that plan. *B* now wants to elect family coverage under *S*'s accident or health plan and increase *B*'s FSA election.
(ii) *C*'s termination of employment is a change in status under paragraph (c)(2)(iii) of this section, and the election change satisfies the consistency rule of paragraph (c)(3) of this section. Therefore, the cafeteria plan may permit *B* to elect family coverage under *S*'s accident or health plan and to increase *B*'s FSA coverage.

Example 6. (i) Employer *T* provides group-term life insurance coverage as described under section 79. Under *T*'s plan, an employee may elect life insurance coverage in an amount up to $50,000. *T* also maintains a calendar year cafeteria plan under which qualified benefits, including the group-term life insurance coverage, are funded through salary reduction. Employee *D* has a spouse and a child. Before the beginning of the year, *D* elects $10,000 of group-term life insurance coverage. During the year, *D* is divorced.
(ii) The divorce is a change in status under paragraph (c)(2)(i) of this section. Under paragraph (c)(3)(iii) of this section, either an increase or a decrease in coverage is consistent with this change in status. Thus, *T*'s cafeteria plan may permit *D* to increase or to decrease *D*'s group-term life insurance coverage.

Example 7. (i) Employee *E* is married to F and they have one child, *G.* Employee *E*'s employer, *U,* maintains a cafeteria plan under which employees may elect no coverage, employee-only coverage, or family coverage under a group health plan maintained by *U,* and may make a separate vision coverage election under the plan. Before the beginning

of the calendar year, *E* elects family health coverage and no vision coverage under *U*'s cafeteria plan. Employee *F*'s employer, *V,* maintains a cafeteria plan under which employees may elect no coverage, employee-only coverage, or family coverage under a group health plan maintained by *V,* and may make a separate vision coverage election under the plan. Before the beginning of the calendar year, *F* elects no health coverage and employee-only vision coverage under *V*'s plan. During the year, *F* terminates employment with *V* and loses vision coverage under *V*'s plan. Employee *E* now wants to elect family vision coverage under *U*'s group health plan.
(ii) *F*'s termination of employment is a change in status under paragraph (c)(2)(iii) of this section, and the election change satisfies the consistency rule of paragraph (c)(3) of this section. Therefore, *U*'s cafeteria plan may permit *E* to elect family vision coverage (covering *E* and *G* as well as *F*) under *U*'s group health plan.

Example 8. (i) Before the beginning of the year, Employee *H* elects to participate in a cafeteria plan maintained by *H*'s employer, *W.* However, in order to change the election during the year so as to cancel coverage, and by prior understanding with *W, H* terminates employment and resumes employment one week later.
(ii) In this *Example 8,* under the facts and circumstances, a principal purpose of the termination of employment was to alter the election, and reinstatement of employment was understood at the time of termination. Accordingly, *H* does not have a change in status under paragraph (c)(2)(iii) of this section.

(iii) However, *H*'s termination of employment would constitute a change in status, permitting a cancellation of coverage during the period of unemployment, if *H*'s original cafeteria plan election for the period of coverage was reinstated upon resumption of employment (for example, if *W*'s cafeteria plan contains a provision requiring an employee who resumes employment within 30 days, without any other intervening event that would permit a change in election, to return to the election in effect prior to termination of employment).

(iv) If, instead, *H* terminates employment and cancels coverage during a period of unemployment, and then returns to work more than 30 days following termination of employment, the cafeteria plan may permit *H* the option of returning to the election in effect prior to termination of employment or making a new election under the plan. Alternatively, the cafeteria plan may prohibit *H* from returning to the plan during that plan year.

Example 9. (i) Employee *A* has one child, *B.* Employee *A*'s employer, *X,* maintains a calendar year cafeteria plan that allows employees to elect coverage under a dependent care FSA. Prior to the beginning of the calendar year, *A* elects salary reduction contributions of $4,000 during the year to fund coverage under the dependent care FSA

for up to $4,000 of reimbursements for the year. During the year, *B* reaches the age of 13, and *A* wants to cancel coverage under the dependent care FSA.
(ii) When *B* turns 13, *B* ceases to satisfy the definition of qualifying individual under section 21(b)(1) of the Internal Revenue Code. Accordingly, *B*'s attainment of age 13 is a change in status under paragraph (c)(2)(iv) of this section that affects *A*'s employment-related expenses as defined in section 21(b)(2). Therefore, *A* may make a corresponding change under *X*'s cafeteria plan to cancel coverage under the dependent care FSA.

Example 10. (i) Employer *Y* maintains a calendar year cafeteria plan under which full-time employees may elect coverage under either an indemnity option or an HMO. Employee *C* elects the employee-only indemnity option. During the year, *C* marries *D. D* has two children from a previous marriage, and has family group health coverage in a cafeteria plan sponsored by *D*'s employer, *Z. C* wishes to change from employee-only indemnity coverage to HMO coverage for the family. *D* wishes to cease coverage in *Z*'s group health plan and certifies to *Z* that *D* will have family coverage under *C*'s plan (and *Z* has no reason to believe the certification is incorrect).
(ii) The marriage is a change in status under paragraph (c)(2)(i) of this section. Under the consistency rule in paragraph (c)(3) of this section, *Y*'s cafeteria plan may permit *C* to change his or her salary reduction contributions to reflect the change from employee-only indemnity to HMO family coverage, and *Z* may permit *D* to revoke coverage under *Z*'s cafeteria plan.

(d) ***Judgment, decree, or order*** —

(1) ***Conforming election change.*** This paragraph (d) applies to a judgment, decree, or order (order) resulting from a divorce, legal separation, annulment, or change in legal custody (including a qualified medical child support order as defined in section 609 of the Employee Retirement Income Security Act of 1974 (Public Law 93-406 (88 Stat. 829))) that requires accident or health coverage for an employee's child or for a foster child who is a dependent of the employee. A cafeteria plan will not fail to satisfy section 125 if it—

(i) Changes the employee's election to provide coverage for the child if the order requires coverage for the child under the employee's plan; or

(ii) Permits the employee to make an election change to cancel coverage for the child if:

(A) The order requires the spouse, former spouse, or other individual to provide coverage for the child; and

(B) That coverage is, in fact, provided.

(2) ***Example.*** The following example illustrates the application of this paragraph (d):

Example. (i) Employer *M* maintains a calendar year cafeteria plan that allows employees to elect no health coverage, employee-only coverage, employee-plus-one-dependent coverage, or family coverage. *M*'s employee, *A,* is married to *B* and they have one child, *C.* Before the beginning of the year, *A* elects employee-only health coverage. Employee *A* divorces *B* during the year and, pursuant to *A*'s divorce agreement with *B,*

> *M*'s health plan receives a qualified medical child support order (as defined in section 609 of the Employee Retirement Income Security Act of 1974) during the plan year. The order requires *M*'s health plan to cover *C*.
> (ii) Under this paragraph (d), *M*'s cafeteria plan may change *A*'s election from employee-only health coverage to employee-plus-one-dependent coverage in order to cover *C*.

(e) ***Entitlement to Medicare or Medicaid.*** If an employee, spouse, or dependent who is enrolled in an accident or health plan of the employer becomes entitled to coverage (*i.e.*, becomes enrolled) under Part A or Part B of title XVIII of the Social Security Act (Medicare) (Public Law 89-97 (79 Stat. 291)) or title XIX of the Social Security Act (Medicaid) (Public Law 89-97 (79 Stat. 343)), other than coverage consisting solely of benefits under section 1928 of the Social Security Act (the program for distribution of pediatric vaccines), a cafeteria plan may permit the employee to make a prospective election change to cancel or reduce coverage of that employee, spouse, or dependent under the accident or health plan. In addition, if an employee, spouse, or dependent who has been entitled to such coverage under Medicare or Medicaid loses eligibility for such coverage, the cafeteria plan may permit the employee to make a prospective election to commence or increase coverage of that employee, spouse, or dependent under the accident or health plan.

(f) ***Significant cost or coverage changes*** —

(1) ***In general.*** Paragraphs (f)(2) through (5) of this section set forth rules for election changes as a result of changes in cost or coverage. This paragraph (f) does not apply to an election change with respect to a health FSA (or on account of a change in cost or coverage under a health FSA).

(2) ***Cost changes*** —

(i) ***Automatic changes.*** If the cost of a qualified benefits plan increases (or decreases) during a period of coverage and, under the terms of the plan, employees are required to make a corresponding change in their payments, the cafeteria plan may, on a reasonable and consistent basis, automatically make a prospective increase (or decrease) in affected employees' elective contributions for the plan.

(ii) ***Significant cost changes.*** If the cost charged to an employee for a benefit package option (as defined in paragraph (i)(2) of this section) significantly increases or significantly decreases during a period of coverage, the cafeteria plan may permit the employee to make a corresponding change in election under the cafeteria plan. Changes that may be made include commencing participation in the cafeteria plan for the option with a decrease in cost, or, in the case of an increase in cost, revoking an election for that coverage and, in lieu thereof, either receiving on a prospective basis coverage under another benefit package option providing similar coverage or dropping coverage if no other benefit package option providing similar coverage is available. For example, if the cost of an indemnity option under an accident or health plan significantly increases during a period of coverage, employees who are covered by the indemnity option may make a corresponding prospective increase in their payments or may instead elect to revoke their election for the indemnity option and, in lieu thereof, elect coverage under another benefit package option including an HMO option (or drop coverage under the accident or health plan if no other benefit package option is offered).

(iii) ***Application of cost changes.*** For purposes of paragraphs (f)(2)(i) and (ii) of this section, a cost increase or decrease refers to an increase or decrease in the amount of the elective contributions under the cafeteria plan, whether that increase or decrease results from an action taken by the employee (such as switching between full-time and part-time status) or from an action taken by an employer (such as reducing the amount of employer contributions for a class of employees).

(iv) ***Application to dependent care.*** This paragraph (f)(2) applies in the case of a dependent care assistance plan only if the cost change is imposed by a dependent care provider who is not a relative of the employee. For this purpose, a relative is an individual who is related as described in section 152(a)(1) through (8), incorporating the rules of section 152(b)(1) and (2).

(3) ***Coverage changes*** —

(i) ***Significant curtailment without loss of coverage.*** If an employee (or an employee's spouse or dependent) has a significant curtailment of coverage under a plan during a period of coverage that is not a loss of coverage as described in paragraph (f)(3)(ii) of this section (for example, there is a significant increase in the deductible, the copay, or the out-of-pocket cost sharing limit under an accident or health plan), the cafeteria plan may permit any employee who had been participating in the plan and receiving that coverage to revoke his or her election for that coverage and, in lieu thereof, to elect to receive on a prospective basis coverage under another benefit package option providing similar coverage. Coverage under a plan is significantly curtailed only if there is an overall reduction in coverage provided under the plan so as to constitute reduced coverage generally. Thus, in most cases, the loss of one particular physician in a network does not constitute a significant curtailment.

(ii) ***Significant curtailment with loss of coverage.*** If an employee (or the employee's spouse or dependent) has a significant curtailment that is a loss of coverage, the plan may permit that employee to revoke his or her election under the cafeteria plan and, in lieu thereof, to elect either to receive on a prospective basis coverage under another benefit package option providing similar coverage or to drop coverage if no similar benefit package option is available. For purposes of this paragraph (f)(3)(ii), a loss of coverage means a complete loss of coverage under the benefit package option or other coverage option (including the elimination of a benefits package option, an HMO ceasing to be available in the area where the individual resides, or the individual losing all coverage under the option by reason of an overall lifetime or annual limitation). In addition, the cafeteria plan may, in its discretion, treat the following as a loss of coverage—

(A) A substantial decrease in the medical care providers available under the option (such as a major hospital ceasing to be a member of a preferred provider network or a substantial decrease in the physicians participating in a preferred provider network or an HMO);

(B) A reduction in the benefits for a specific type of medical condition or treatment with respect to which the employee or the employee's spouse or dependent is currently in a course of treatment; or

(C) Any other similar fundamental loss of coverage.

(iii) ***Addition or improvement of a benefit package option.*** If a plan adds a new benefit package option or other coverage option, or if coverage under an existing benefit package option or other coverage option is significantly improved during a period of coverage, the cafeteria plan may permit eligible employees (whether or not they have previously made an election under the cafeteria plan or have previously elected the benefit package option) to revoke their election under the cafeteria plan and, in lieu thereof, to make an election on a prospective basis for coverage under the new or improved benefit package option.

(4) ***Change in coverage under another employer plan.*** A cafeteria plan may permit an employee to make a prospective election change that is on account of and corresponds with a change made under another employer plan (including a plan of the same employer or of another employer) if—

(i) The other cafeteria plan or qualified benefits plan permits participants to make an election change that would be permitted under paragraphs (b) through (g) of this section (disregarding this paragraph (f)(4)); or

(ii) The cafeteria plan permits participants to make an election for a period of coverage that is different from the period of coverage under the other cafeteria plan or qualified benefits plan.

(5) ***Loss of coverage under other group health coverage.*** A cafeteria plan may permit an employee to make an election on a prospective basis to add coverage under a cafeteria plan for the employee, spouse, or dependent if the employee, spouse, or dependent loses coverage under any group health coverage sponsored by a governmental or educational institution, including the following—

(i) A State's children's health insurance program (SCHIP) under title XXI of the Social Security Act;

(ii) A medical care program of an Indian Tribal government (as defined in section 7701(a)(40)), the Indian Health Service, or a tribal organization;

(iii) A State health benefits risk pool; or

(iv) A Foreign government group health plan.

(6) ***Examples.*** The following examples illustrate the application of this paragraph (f):

> *Example 1.* (i) A calendar year cafeteria plan is maintained pursuant to a collective bargaining agreement for the benefit of Employer *M*'s employees. The cafeteria plan offers various benefits, including indemnity health insurance and a health FSA. As a result of mid-year negotiations, premiums for the indemnity health insurance are reduced in the middle of the year, insurance co-payments for office visits are reduced under the indemnity plan by an amount which constitutes a significant benefit improvement, and an HMO option is added.
> (ii) Under these facts, the reduction in health insurance premiums is a reduction in cost. Accordingly, under paragraph (f)(2)(i) of this section, the cafeteria plan may automatically decrease the amount of salary reduction contributions of affected

participants by an amount that corresponds to the premium change. However, the plan may not permit employees to change their health FSA elections to reflect the mid-year change in copayments under the indemnity plan.

(iii) Also, the decrease in co-payments is a significant benefit improvement and the addition of the HMO option is an addition of a benefit package option. Accordingly, under paragraph (f)(3)(ii) of this section, the cafeteria plan may permit eligible employees to make an election change to elect the indemnity plan or the new HMO option. However, the plan may not permit employees to change their health FSA elections to reflect differences in co-payments under the HMO option.

Example 2. (i) Employer *N* sponsors an accident or health plan under which employees may elect either employee-only coverage or family health coverage. The 12-month period of coverage under *N*'s cafeteria plan begins January 1, 2001. *N*'s employee, *A,* is married to *B.* Employee *A* elects employee-only coverage under *N*'s plan. *B*'s employer, *O,* offers health coverage to *O*'s employees under its accident or health plan under which employees may elect either employee-only coverage or family coverage. *O*'s plan has a 12-month period of coverage beginning September 1, 2001. *B* maintains individual coverage under *O*'s plan at the time *A* elects coverage under *N*'s plan, and wants to elect no coverage for the plan year beginning on September 1, 2001, which is the next period of coverage under *O*'s accident or health plan. *A* certifies to *N* that *B* will elect no coverage under *O*'s accident or health plan for the plan year beginning on September 1, 2001 and *N* has no reason to believe that *A*'s certification is incorrect.
(ii) Under paragraph (f)(4)(ii) of this section, *N*'s cafeteria plan may permit *A* to change *A*'s election prospectively to family coverage under that plan effective September 1, 2001.

Example 3. (i) Employer *P* sponsors a calendar year cafeteria plan under which employees may elect either employee-only or family health coverage. Before the beginning of the year, *P*'s employee, *C,* elects family coverage under *P*'s cafeteria plan. *C* also elects coverage under the health FSA for up to $200 of reimbursements for the year to be funded by salary reduction contributions of $200 during the year. *C* is married to *D,* who is employed by Employer *Q*. *Q* does not maintain a cafeteria plan, but does maintain an accident or health plan providing its employees with employee-only coverage. During the calendar year, *Q* adds family coverage as an option under its health plan. *D* elects family coverage under *Q*'s plan, and *C* wants to revoke *C*'s election for health coverage and elect no health coverage under *P*'s cafeteria plan for the remainder of the year.

(ii) *Q*'s addition of family coverage as an option under its health plan constitutes a new coverage option described in paragraph (f)(3)(ii) of this section. Accordingly, pursuant to paragraph (f)(4)(i) of this section, *P*'s cafeteria plan may permit *C* to revoke *C*'s health coverage election if *D* actually elects family health coverage under *Q*'s accident or health plan. Employer *P*'s plan may not permit *C* to change *C*'s health FSA election.

Example 4. (i) Employer *R* maintains a cafeteria plan under which employees may elect accident or health coverage under either an indemnity plan or an HMO. Before the beginning of the year, *R*'s employee, *E* elects coverage under the HMO at a premium cost of $100 per month. During the year, *E* decides to switch to the indemnity plan, which charges a premium of $140 per month.
(ii) *E*'s change from the HMO to indemnity plan is not a change in cost or coverage under this paragraph (f), and none of the other election change rules under paragraphs (b) through (e) of this section apply.

(iii) Although *R*'s health plan may permit *E* to make the change from the HMO to the indemnity plan, *R*'s cafeteria plan may not permit *E* to make an election change to reflect the increased premium. Accordingly, if *E* switches from the HMO to the indemnity plan, *E* may pay the $40 per month additional cost on an after-tax basis.

Example 5. (i) Employee *A* is married to Employee *B* and they have one child, *C.* Employee *A*'s employer, *M,* maintains a calendar year cafeteria plan that allows employees to elect coverage under a dependent care FSA. Child *C* attends *X*'s on site child care center at an annual cost of $3,000. Prior to the beginning of the year, *A* elects salary reduction contributions of $3,000 during the year to fund coverage under the dependent care FSA for up to $3,000 of reimbursements for the year. Employee *A* now wants to revoke *A*'s election of coverage under the dependent care FSA, because *A* has found a new child care provider.
(ii) The availability of dependent care services from the new child care provider (whether the new provider is a household employee or family member of *A* or *B* or a person who is independent of *A* and *B*) is a significant change in coverage similar to a benefit package option becoming available. Because the FSA is a dependent care FSA rather than a health FSA, the coverage rules of this section apply and *M*'s cafeteria plan may permit *A* to elect to revoke *A*'s previous election of coverage under the dependent care FSA, and make a corresponding new election to reflect the cost of the new child care provider.

Example 6. (i) Employee *D* is married to Employee *E* and they have one child, *F.* Employee *D*'s employer, *N,* maintains a calendar year cafeteria plan that allows employees to elect coverage under a dependent care FSA. Child *F* is cared for by *Y, D*'s household employee, who provides child care services five days a week from 9 a.m. to 6 p.m. at an annual cost in excess of $5,000. Prior to the beginning of the year, *D* elects

salary reduction contributions of $5,000 during the year to fund coverage under the dependent care FSA for up to $5,000 of reimbursements for the year. During the year, *F* begins school and, as a result, *Y*'s regular hours of work are changed to five days a week from 3 p.m. to 6 p.m. Employee *D* now wants to revoke *D*'s election under the dependent care FSA, and make a new election under the dependent care FSA to an annual cost of $4,000 to reflect a reduced cost of child care due to *Y*'s reduced hours.
(ii) The change in the number of hours of work performed by *Y* is a change in coverage. Thus, *N*'s cafeteria plan may permit *D* to reduce *D*'s previous election under the dependent care FSA to $4,000.

Example 7. (i) Employee *G* is married to Employee *H* and they have one child, *J.* Employee *G*'s employer, *O,* maintains a calendar year cafeteria plan that allows employees to elect coverage under a dependent care FSA. Child *J* is cared for by *Z, G*'s household employee, who is not a relative of *G* and who provides child care services at an annual cost of $4,000. Prior to the beginning of the year, *G* elects salary reduction contributions of $4,000 during the year to fund coverage under the dependent care FSA for up to $4,000 of reimbursements for the year. During the year, *G* raises *Z*'s salary. Employee *G* now wants to revoke *G*'s election under the dependent care FSA, and make a new election under the dependent care FSA to an annual amount of $4,500 to reflect the raise.
(ii) The raise in *Z*'s salary is a significant increase in cost under paragraph (f)(2)(ii) of this section, and an increase in election to reflect the raise corresponds with that change in status. Thus, *O*'s cafeteria plan may permit *G* to elect to increase *G*'s election under the dependent care FSA.

Example 8. (i) Employer *P* maintains a calendar year cafeteria plan that allows employees to elect employee-only, employee plus one dependent, or family coverage under an indemnity plan. During the middle of the year, Employer *P* gives its employees the option to select employee-only or family coverage from an HMO plan. *P*'s employee, *J,* who had elected employee plus one dependent coverage under the indemnity plan, decides to switch to family coverage under the HMO plan.
(ii) Employer *P*'s midyear addition of the HMO option is an addition of a benefit package option. Under paragraph (f) of this section, Employee *J* may change his or her salary reduction contributions to reflect the change from indemnity to HMO coverage, and also to reflect the change from employee plus one dependent to family coverage (however, an election of employee-only coverage under the new option would not correspond with the addition of a new option). Employer *P* may not permit *J* to change *J*'s health FSA election.

(g) ***Special requirements relating to the Family and Medical Leave Act.*** An employee taking leave under the Family and Medical Leave Act (FMLA) (Public Law 103-3 (107 Stat. 6)) may revoke an existing election of accident or health plan coverage and make such other election for the remaining portion of the period of coverage as may be provided for under the FMLA. See § 1.125-3 for additional rules.

(h) ***Elective contributions under a qualified cash or deferred arrangement.*** The provisions of this section do not apply with respect to elective contributions under a qualified cash or deferred arrangement (within the meaning of section 401(k)) or employee contributions subject to section 401(m). Thus, a cafeteria plan may permit an employee to modify or revoke elections in accordance with section 401(k) and (m) and the regulations thereunder.

(i) ***Definitions.*** Unless otherwise provided, the definitions in paragraphs (i)(1) though (8) of this section apply for purposes of this section.

(1) ***Accident or health coverage.*** Accident or health coverage means coverage under an accident or health plan as defined in regulations under section 105.

(2) ***Benefit package option.*** A benefit package option means a qualified benefit under section 125(f) that is offered under a cafeteria plan, or an option for coverage under an underlying accident or health plan (such as an indemnity option, an HMO option, or a PPO option under an accident or health plan).

(3) ***Dependent.*** A dependent means a dependent as defined in section 152, except that, for purposes of accident or health coverage, any child to whom section 152(e) applies is treated as a dependent of both parents, and, for purposes of dependent care assistance provided through a cafeteria plan, a dependent means a qualifying individual (as defined in section 21(b)(1)) with respect to the employee.

(4) ***Disability coverage.*** Disability coverage means coverage under an accident or health plan that provides benefits due to personal injury or sickness, but does not reimburse expenses incurred for medical care (as defined in section 213(d)) of the employee or the employee's spouse and dependents. For purposes of this section, disability coverage includes payments described in section 105(c).

(5) ***Family member plan.*** A family member plan means a cafeteria plan or qualified benefit plan sponsored by the employer of the employee's spouse or the employee's dependent.

(6) ***FSA, health FSA.*** An FSA means a qualified benefits plan that is a flexible spending arrangement as defined in section 106(c)(2) . A health FSA means a health or accident plan that is an FSA.

(7) ***Placement for adoption.*** Placement for adoption means placement for adoption as defined in regulations under section 9801.

(8) ***Qualified benefits plan.*** A qualified benefits plan means an employee benefit plan governing the provision of one or more benefits that are qualified benefits under section 125(f). A plan does not fail to be a qualified benefits plan merely because it includes an FSA, assuming that the FSA meets the requirements of section 125 and the regulations thereunder.

(9) ***Similar coverage.*** Coverage for the same category of benefits for the same individuals (e.g., family to family or single to single). For example, two plans that provide coverage for major medical are considered to be similar coverage. For purposes of this definition, a health FSA is

not similar coverage with respect to an accident or health plan that is not a health FSA. A plan may treat coverage by another employer, such as a spouse's or dependent's employer, as similar coverage.

(j) ***Effective date*** —

(1) ***General rule.*** Except as provided in paragraph (j)(2) of this section, this section is applicable for cafeteria plan years beginning on or after January 1, 2001.

(2) ***Delayed effective date for certain provisions.*** The following provisions are applicable for cafeteria plan years beginning on or after January 1, 2002: paragraph (c) of this section to the extent applicable to qualified benefits other than an accident or health plan or a group-term life insurance plan; paragraph (d)(1)(ii)(B) of this section (relating to a spouse, former spouse, or other individual obtaining accident or health coverage for an employee's child in response to a judgment, decree, or order); paragraph (f) of this section (rules for election changes as a result of cost or coverage changes); and paragraph (i)(9) of this section (defining similar coverage).

[T.D. 8878, 65 FR 15550, Mar. 23, 2000, as amended by T.D. 8921, 66 FR 1840, Jan. 10, 2001; 66 FR 13013, Mar. 2, 2001; T.D. 8966, 66 FR 52680, Oct. 17, 2001]

§ 1.127-1 Amounts received under a qualified educational assistance program.

(a) ***Exclusion from gross income.*** The gross income of an employee does not include—

(1) Amounts paid to, or on behalf of the employee under a qualified educational assistance program described in § 1.127-2, or

(2) The value of education provided to the employee under such a program.

(b) ***Disallowance of excluded amounts as credit or deduction.*** Any amount excluded from the gross income of an employee under paragraph (a) of this section shall not be allowed as a credit or deduction to such employee under any other provision of this part.

(c) ***Amounts received under a nonqualified program.*** Any amount received under an educational assistance program that is not a “qualified program” described in § 1.127-2 will not be excluded from gross income under paragraph (a) of this section. All or part of the amounts received under such a nonqualified program may, however, be excluded under section 117 or deducted under section 162 or section 212 (as the case may be), if the requirements of such section are satisfied.

(d) ***Definitions.*** For rules relating to the meaning of the terms “employee” and “employer”, see paragraph (h) of § 1.127-2.

(e) ***Effective date.*** This section is effective for taxable years of the employee beginning after December 31, 1978, and before January 1, 1984.

[T.D. 7898, 48 FR 31017, July 6, 1983]

§ 1.127-2 Qualified educational assistance program.

(a) ***In general.*** A qualified educational assistance program is a plan established and maintained by an employer under which the employer provides educational assistance to employees. To be a qualified program, the requirements described in paragraphs (b) through (g) of this section must be satisfied. It is not required that a program be funded or that the employer apply to the Internal Revenue Service for a

determination that the plan is a qualified program. However, under § 601.201 (relating to rulings and determination letters), an employer may request that the Service determine whether a plan is a qualified program.

(b) ***Separate written plan.*** The program must be a separate written plan of the employer. This requirement means that the terms of the program must be set forth in a separate document or documents providing only educational assistance within the meaning of paragraph (c) of this section. The requirement for a separate plan does not, however, preclude an educational assistance program from being part of a more comprehensive employer plan that provides a choice of nontaxable benefits to employees.

(c) ***Educational assistance*** —

(1) ***In general.*** The benefits provided under the program must consist solely of educational assistance. The term "educational assistance" means—

(i) The employer's payment of expenses incurred by or on behalf of an employee for education, or

(ii) The employer's provision of education to an employee.

(2) ***Alternative benefits.*** Benefits will not be considered to consist solely of educational assistance if the program, in form or in actual operation, provides employees with a choice between educational assistance and other remuneration includible in the employee's gross income.

(3) ***Certain benefits not considered educational assistance.*** The term "educational assistance" does not include the employer's payment for, or provision of—

(i) Tools or supplies (other than textbooks) that the employee may retain after completing a course of instruction,

(ii) Meals, lodging, or transportation, or

(iii) Education involving sports, games, or hobbies, unless such education involves the business of the employer or is required as part of a degree program. The phrase "sports, games, or hobbies" does not include education that instructs employees how to maintain and improve health so long as such education does not involve the use of athletic facilities or equipment and is not recreational in nature.

(4) ***Education defined.*** As used in section 127, § 1.127-1, and this section, the term "education" includes any form of instruction or training that improves or develops the capabilities of an individual. Education paid for or provided under a qualified program may be furnished directly by the employer, either alone or in conjunction with other employers, or through a third party such as an educational institution. Education is not limited to courses that are job related or part of a degree program.

(d) ***Exclusive benefit.*** The program may benefit only the employees of the employer, including, at the employer's option, individuals who are employees within the meaning of paragraph (h)(1) of this section. A program that provides benefits to spouses or dependents of employees is not a qualified program within the meaning of this section.

(e) ***Prohibited discrimination*** —

(1) ***Eligibility for benefits.*** The program must benefit the employer's employees generally. Among those benefited may be employees who are officers, shareholders, self-employed or highly compensated. A program is not for the benefit of employees generally, however, if the program discriminates in favor of employees described in the preceding sentence (or in favor of their spouses and dependents who

are themselves employees) in requirements relating to eligibility for benefits. Thus, although a program need not provide benefits for all employees, it must benefit those employees who qualify under a classification of employees that does not discriminate in favor of the employees with respect to whom discrimination is prohibited. The classification of employees to be considered benefited will consist of that group of employees who are actually eligible for educational assistance under the program, taking into account the eligibility requirements set forth in the written plan, the eligibility requirements reflected in the types of educational assistance available under the program, and any other conditions that may affect the availability of benefits under the program. Thus, for example, if an employer's plan provides that all employees are eligible for educational assistance, yet limits that assistance to courses of study leading to postgraduate degrees in fields relating to the employer's business, then only those employees able to pursue such a course of study are considered actually eligible for educational assistance under the program. Whether any classification of employees discriminates in favor of employees with respect to whom discrimination is prohibited will generally be determined by applying the same standards as are applied under section 410(b)(1)(B) (relating to qualified pension, profit-sharing and stock bonus plans), without regard to section 401(a)(5). For purposes of making this determination, there shall be excluded from consideration employees not covered by the program who are included in a unit of employees covered by an agreement which the Secretary of Labor finds to be a collective bargaining agreement between employee representatives and one or more employers, if the Internal Revenue Service finds that educational assistance benefits were the subject of good faith bargaining between the employee representatives and the employer or employers. For purposes of determining whether such bargaining occurred, it is not material that the employees are not covered by another educational assistance program or that the employer's present program was not considered in the bargaining.

(2) ***Factors not considered in determining the existence of prohibited discrimination.*** A program shall not be considered discriminatory under this paragraph (e) merely because—

(i) Different types of educational assistance available under the program are utilized to a greater degree by employees with respect to whom discrimination is prohibited than by other employees, or

(ii) With respect to a course of study for which benefits are otherwise available, successful completion of the course, attaining a particular course grade, or satisfying a reasonable condition subsequent (such as remaining employed for one year after completing the course) are required or considered in determining the availability of benefits.

(f) ***Benefit limitation*** —

(1) ***In general.*** Under section 127(b)(3), a program is a qualified program for a program year only if no more than 5% of the amounts paid or incurred by the employer for educational assistance benefits during the year are provided to the limitation class described in subparagraph (2). For purposes of this paragraph (f), the program year must be specified in the written plan as either the calendar year or the taxable year of the employer.

(2) ***Limitation class.*** The limitation class consists of—

(i) ***Shareholders.*** Individuals who, on any day of the program year, own more than 5% of the total number of shares of outstanding stock of the employer, or

(ii) ***Owners.*** In the case of an employer's trade or business which is not incorporated, individuals who, on any day of the program year, own more than 5% of the capital or profits interest in the employer, and

(iii) ***Spouses or dependents.*** Individuals who are spouses or dependents of shareholders or owners described in subdivision (i) or (ii). For purposes of determining stock ownership, the attribution rules described in paragraph (h)(4) of this section apply. The regulations prescribed under section 414(c) are applicable in determining an individual's interest in the capital or profits of an unincorporated trade or business.

(g) ***Notification of employees.*** A program is not a qualified program unless employees eligible to participate in the program are given reasonable notice of the terms and availability of the program.

(h) ***Definitions.*** For purposes of this section and § 1.127-1—

(1) ***Employee.*** The term “employee” includes—

(i) A retired, disabled or laid-off employee,

(ii) A present employee who is on leave, as, for example, in the Armed Forces of the United States, or

(iii) An individual who is self-employed within the meaning of section 401(c)(1).

(2) ***Employer.*** An individual who owns the entire interest in an unincorporated trade or business shall be treated as his or her own employer. A partnership is treated as the employer of each partner who is an employee within the meaning of section 401(c)(1).

(3) ***Officer.*** An officer is an individual who is an officer within the meaning of regulations prescribed under section 414(c).

(4) ***Shareholder.*** The term “shareholder” includes an individual who is a shareholder as determined by the attribution rules under section 1563 (d) and (e), without regard to section 1563(e)(3)(C).

(5) ***Highly compensated.*** The term “highly compensated” has the same meaning as it does for purposes of section 410(b)(1)(B).

(i) ***Substantiation.*** An employee receiving payments under a qualified educational assistance program must be prepared to provide substantiation to the employer such that it is reasonable to believe that payments or reimbursements made under the program constitute educational assistance within the meaning of paragraph (c) of this section.

[T.D. 7898, 48 FR 31017, July 6, 1983]

§ 1.132-0 Outline of regulations under section 132.

The following is an outline of regulations in this section relating to exclusions from gross income for certain fringe benefits:

§ 1.132-0 Outline of regulations under section 132.

§ 1.132-1 Exclusion from gross income for certain fringe benefits.

§ 1.132-1 (a) In general.

§ 1.132-1 (b) Definition of employee.

(1) No-additional-cost services and qualified employee discounts.

(2) Working condition fringes.

(3) On-premises athletic facilities.

(4) De minimis fringes.

(5) Dependent child.

§ 1.132-1 (c) Special rules for employers—Effect of section 414.

§ 1.132-1 (d) Customers not to include employees.

§ 1.132-1 (e) Treatment of on-premises athletic facilities.

(1) In general.

(2) Premises of the employer.

(3) Application of rules to membership in an athletic facility.

(4) Operation by the employer.

(5) Nonapplicability of nondiscrimination rules.

§ 1.132-1 (f) Nonapplicability of section 132 in certain cases.

(1) Tax treatment provided for in another section.

(2) Limited statutory exclusions.

§ 1.132-1 (g) Effective date.

§ 1.132-2 No-additional-cost services.

§ 1.132-2 (a) In general.

(1) Definition.

(2) Excess capacity services.

(3) Cash rebates.

(4) Applicability of nondiscrimination rules.

(5) No substantial additional cost.

(6) Payments for telephone service.

§ 1.132-2 (b) Reciprocal agreements.

§ 1.132-2 (c) Example.

§ 1.132-3 Qualified employee discounts.

§ 1.132-3 (a) In general.

(1) Definition.

(2) Qualified property or services.

(3) No reciprocal agreement exception.

(4) Property of services provided without charge, at a reduced price, or by rebates.

(5) Property or services provided directly by the employer or indirectly through a third party.

(6) Applicability of nondiscrimination rules.

§ 1.132-3 (b) Employee discount.

(1) Definition.

(2) Price to customers.

(3) Damaged, distressed, or returned goods.

§ 1.132-3 (c) Gross profit percentage.

(1) In general.

(2) Line of business.

(3) Generally accepted accounting principles.

§ 1.132-3 (d) Treatment of leased sections of department stores.

(1) In general.

(2) Employees of the leased section.

§ 1.132-3 (e) Excess discounts.

§ 1.132-4 Line of business limitation.

§ 1.132-4 (a) In general.

(1) Applicability.

(2) Definition.

(3) Aggregation of two-digit classifications.

§ 1.132-4 (b) Grandfather rule for certain retail stores.

(1) In general.

(2) Taxable year of affiliated group.

(3) Definition of “sales”.

(4) Retired and disabled employees.

(5) Increase of employee discount.

§ 1.132-4 (c) Grandfather rule for telephone service provided to pre-divestiture retirees.

§ 1.132-4 (d) Special rule for certain affiliates of commercial airlines.

(1) General rule.

(2) “Airline affiliated group” defined.

(3) “Qualified affiliate” defined.

§ 1.132-4 (e) Grandfather rule for affiliated groups operating airlines.

§ 1.132-4 (f) Special rule for qualified air transportation organizations.

§ 1.132-4 (g) Relaxation of line of business requirement.

§ 1.132-4 (h) Line of business requirement does not expand benefits eligible for exclusion.

§ 1.132-5 Working condition fringes.

§ 1.132-5 (a) In general.

(1) Definition.

(2) Trade or business of the employee.

§ 1.132-5 (b) Vehicle allocation rules.

(1) In general.

(2) Use of different employer-provided vehicles.

(3) Provision of a vehicle and chauffeur services.

§ 1.132-5 (c) Applicability of substantiation requirements of sections 162 and 274(d).

(1) In general.

(2) Section 274(d) requirements.

§ 1.132-5 (d) Safe harbor substantiation rules.

(1) In general.

(2) Period for use of safe harbor rules.

§ 1.132-5 (e) Safe harbor substantiation rule for vehicles not used for personal purposes.

§ 1.132-5 (f) Safe harbor substantiation rule for vehicles not available to employees for personal use other than commuting.

§ 1.132-5 (g) Safe harbor substantiation rule for vehicles used in connection with the business of farming that are available to employees for personal use.

(1) In general.

(2) Vehicles available to more than one individual.

(3) Examples.

§ 1.132-5 (h) Qualified nonpersonal use vehicles.

(1) In general.

(2) Shared usage of qualified nonpersonal use vehicles.

§ 1.132-5 (i) [Reserved]

§ 1.132-5 (j) Application of section 280F.

§ 1.132-5 (k) Aircraft allocation rule.

§ 1.132-5 (l) [Reserved]

§ 1.132-5 (m) Employer-provided transportation for security concerns.

(1) In general.

(2) Demonstration of bona fide business-oriented security concerns.

(3) Application of security rules to spouses and dependents.

(4) Working condition safe harbor for travel on employer-provided aircraft.

(5) Bodyguard/chauffeur provided for a bona fide business-oriented security concern.

(6) Special valuation rule for government employees.

(7) Government employer and employee defined.

(8) Examples.

§ 1.132-5 (n) Product testing.

(1) In general.

(2) Employer-imposed limits.

(3) Discriminating classifications.

(4) Factors that negate the existence of a product testing program.

(5) Failure to meet the requirements of this paragraph (n).

(6) Example.

§ 1.132-5 (o) Qualified automobile demonstration use.

(1) In general.

(2) Full-time automobile salesman.

(3) Demonstration automobile.

(4) Substantial restrictions on personal use.

(5) Sales area.

(6) Applicability of substantiation requirements of sections 162 and 274(d).

(7) Special valuation rules.

§ 1.132-5 (p) Parking.

(1) In general.

(2) Reimbursement of parking expenses.

(3) Parking on residential property.

(4) Dates of applicability.

§ 1.132-5 (q) Nonapplicability of nondiscrimination rules.

§ 1.132-5 (r) Volunteers.

(1) In general.

(2) Limit on application of this paragraph.

(3) Definitions.

(4) Example.

§ 1.132-6 De minimis fringes.

§ 1.132-6 (a) In general.

§ 1.132-6 (b) Frequency.

(1) Employee-measured frequency.

(2) Employer-measured frequency.

§ 1.132-6 (c) Administrability.

§ 1.132-6 (d) Special rules.

(1) Transit passes.

(2) Occasional meal money or local transportation fare.

(3) Use of special rules or examples to establish a general rule.

(4) Benefits exceeding value and frequency limits.

§ 1.132-6 (e) Examples.

(1) Benefits excludable from income.

(2) Benefits not excludable as de minimis fringes.

§ 1.132-6 (f) Nonapplicability of nondiscrimination rules.

§ 1.132-7 Employer-operated eating facilities.

§ 1.132-7 (a) In general.

(1) Conditions for exclusion.

(2) Employer-operated eating facility for employees.

(3) Operation by the employer.

(4) Example.

§ 1.132-7 (b) Direct operating costs.

(1) In general.

(2) Multiple dining rooms or cafeterias.

(3) Payment to operator of facility.

§ 1.132-7 (c) Valuation of non-excluded meals provided at an employer-operated eating facility for employees.

§ 1.132-8 Fringe benefit nondiscrimination rules.

§ 1.132-8 (a) Application of nondiscrimination rules.

(1) General rule.

(2) Consequences of discrimination.

(3) Scope of the nondiscrimination rules provided in this section.

§ 1.132-8 (b) Aggregation of Employees.

(1) Section 132(a) (1) and (2).

(2) Section 132(e)(2).

(3) Classes of employees who may be excluded.

§ 1.132-8 (c) Availability on substantially the same terms.

(1) General rule.

(2) Certain terms relating to priority.

§ 1.132-8 (d) Testing for discrimination.

(1) Classification test.

(2) Classifications that are per se discriminatory.

(3) Former employees.

(4) Restructuring of benefits.

(5) Employer-operated eating facilities for employees.

§ 1.132-8 (e) Cash bonuses or rebates.

§ 1.132-8 (f) Highly compensated employee.

(1) Government and non-government employees.

(2) Former employees.

§ 1.132-9 Qualified transportation fringes.

§ 1.132-9 (a) Table of contents.

§ 1.132-9 (b) Questions and answers.

[T.D. 8256, 54 FR 28600, July 6, 1989, as amended by T.D. 8457, 57 FR 62196, Dec. 30, 1992]

§ 1.132-1 Exclusion from gross income for certain fringe benefits.

(a) ***In general.*** Gross income does not include any fringe benefit which qualifies as a—

(1) No-additional-cost service,

(2) Qualified employee discount,

(3) Working condition fringe, or

(4) De minimis fringe.

Special rules apply with respect to certain on-premises gyms and other athletic facilities (§ 1.132-1(e)), demonstration use of employer-provided automobiles by full-time automobile salesmen (§ 1.132-5(o)), parking provided to an employee on or near the business premises of the employer (§ 1.132-5(p)), and on-premises eating facilities (§ 1.132-7).

(b) ***Definition of employee*** —

(1) ***No-additional-cost services and qualified employee discounts.*** For purposes of section 132(a)(1) (relating to no-additional-cost services) and section 132(a)(2) (relating to qualified employee discounts), the term "employee" (with respect to a line of business of an employer means—

(i) Any individual who is currently employed by the employer in the line of business,

(ii) Any individual who was formerly employed by the employer in the line of business and who separated from service with the employer in the line of business by reason of retirement or disability, and

(iii) Any widow or widower of an individual who died while employed by the employer in the line of business or who separated from service with the employer in the line of business by reason of retirement or disability.

For purposes of this paragraph (b)(1), any partner who performs services for a partnership is considered employed by the partnership. In addition, any use by the spouse or dependent child (as defined in paragraph (b)(5) of this section) of the employee will be treated as use by the employee. For purposes of section 132(a)(1) (relating to no-additional-cost services), any use of air transportation by a parent of an employee (determined without regard to section 132(f)(1)(B) and paragraph (b)(1)(iii) of this section) will be treated as use by the employee.

(2) ***Working condition fringes.*** For purposes of section 132(a)(3) (relating to working condition fringes), the term "employee" means—

(i) Any individual who is currently employed by the employer,

(ii) Any partner who performs services for the partnership,

(iii) Any director of the employer, and

(iv) Any independent contractor who performs services for the employer.

Notwithstanding anything in this paragraph (b)(2) to the contrary, an independent contractor who performs services for the employer cannot exclude the value of parking or the use of consumer goods provided pursuant to a product testing program under § 1.132-5(n); in addition, any director of the employer cannot exclude the value of the use of consumer goods provided pursuant to a product testing program under § 1.132-5(n).

(3) ***On-premises athletic facilities.*** For purposes of section 132(h)(5) (relating to on-premises athletic facilities), the term "employee" means—

(i) Any individual who is currently employed by the employer,

(ii) Any individual who was formerly employed by the employer and who separated from service with the employer by reason of retirement or disability, and

(iii) Any widow or widower of an individual who died while employed by the employer or who separated from service with the employer by reason of retirement or disability.

For purposes of this paragraph (b)(3), any partner who performs services for a partnership is considered employed by the partnership. In addition, any use by the spouse or dependent child (as defined in paragraph (b)(5) of this section) of the employee will be treated as use by the employee.

(4) ***De minimis fringes.*** For purposes of section 132(a)(4) (relating to de minimis fringes), the term "employee" means any recipient of a fringe benefit.

(5) ***Dependent child.*** The term "dependent child" means any son, stepson, daughter, or stepdaughter of the employee who is a dependent of the employee, or both of whose parents are deceased and who has not attained age 25. Any child to whom section 152(e) applies will be treated as the dependent of both parents.

(c) ***Special rules for employers—Effect of section 414.*** All employees treated as employed by a single employer under section 414 (b), (c), (m), or (o) will be treated as employed by a single employer for purposes of this section. Thus, employees of one corporation that is part of a controlled group of corporations may under certain circumstances be eligible to receive section 132 benefits from the other corporations that comprise the controlled group. However, the aggregation of employers described in this paragraph (c) does not change the other requirements for an exclusion, such as the line of business requirement. Thus, for example, if a controlled group of corporations consists of two corporations that operate in different lines of business, the corporations are not treated as operating in the same line of business even though the corporations are treated as one employer.

(d) ***Customers not to include employees.*** For purposes of section 132 and the regulations thereunder, the term "customer" means any customer who is not an employee. However, the preceding sentence does not apply to section 132(c)(2) (relating to the gross profit percentage for determining a qualified employee discount). Thus, an employer that provides employee discounts cannot exclude sales made to employees in determining the aggregate sales to customers.

(e) ***Treatment of on-premises athletic facilities*** —

(1) ***In general.*** Gross income does not include the value of any on-premises athletic facility provided by an employer to its employees. For purposes of section 132(h)(5) and this paragraph (e), the term "on-premises athletic facility" means any gym or other athletic facility (such as a pool, tennis court, or golf course)—

(i) Which is located on the premises of the employer,

(ii) Which is operated by the employer, and

(iii) Substantially all of the use of which during the calendar year is by employees of the employer, their spouses, and their dependent children.

For purposes of paragraph (e) (1) (iii) of this section, the term "dependent children" has the same meaning as the plural of the term "dependent child" in paragraph (b)(5) of this section. The exclusion of this paragraph (e) does not apply to any athletic facility if access to the facility is made available to the general public through the sale of memberships, the rental of the facility, or a similar arrangement.

(2) ***Premises of the employer.*** The athletic facility need not be located on the employer's business premises. However, the athletic facility must be located on premises of the employer. The exclusion provided in this paragraph (e) applies whether the premises are owned or leased by the employer; in addition, the exclusion is available even if the employer is not a named lessee on the lease so long as the employer pays reasonable rent. The exclusion provided in this paragraph (e) does not apply to any athletic facility that is a facility for residential use. Thus, for example, a resort with accompanying athletic facilities (such as tennis courts, pool, and gym) would not qualify for the exclusion provided in this paragraph (e). An athletic facility is considered to be located on the employer's premises if the facility is located on the premises of a voluntary employees' beneficiary association funded by the employer.

(3) ***Application of rules to membership in an athletic facility.*** The exclusion provided in this paragraph (e) does not apply to any membership in an athletic facility (including health clubs or country clubs) unless the facility is owned (or leased) and operated by the employer and substantially all the use of the facility is by employees of the employer, their spouses, and their dependent children. Therefore, membership in a health club or country club not meeting the rules provided in this paragraph (e) would not qualify for the exclusion.

(4) ***Operation by the employer.*** An employer is considered to operate the athletic facility if the employer operates the facility through its own employees, or if the employer contracts out to another to operate the athletic facility. For example, if an employer hires an independent contractor to operate the athletic facility for the employer's employees, the facility is considered to be operated by the employer. In addition, if an athletic facility is operated by more than one employer, it is considered to be operated by each employer. For purposes of paragraph (e) (1) (iii) of this section, substantially all of the use of a facility that is operated by more than one employer must be by employees of the various employers, their spouses, and their dependent children. Where the facility is operated by more than one employer, an employer that pays rent either directly to the owner of the premises or to a sublessor of the premises is eligible for the exclusion. If an athletic facility is operated by a voluntary employees' beneficiary association funded by an employer, the employer is considered to operate the facility.

(5) ***Nonapplicability of nondiscrimination rules.*** The nondiscrimination rules of section 132 and § 1.132-8 do not apply to on-premises athletic facilities.

(f) ***Nonapplicability of section 132 in certain cases*** —

(1) ***Tax treatment provided for in another section.*** If the tax treatment or a particular fringe benefit is expressly provided for in another section of Chapter 1 of the Internal Revenue Code of 1986, section 132 and the applicable regulations (except for section 132 (e) and the regulations thereunder) do not apply to such fringe benefit. For example, because section 129 provides an exclusion from gross income for amounts paid or incurred by an employer for dependent care assistance for an employee, the exclusions under section 132 and this section do not apply to the provision by an employer to an employee of dependent care assistance. Similarly, because section 117 (d) applies to tuition reductions, the exclusions under section 132 do not apply to free or discounted tuition provided to an employee by an organization operated by the employer, whether the tuition is for study at or below the graduate level. Of course, if the amounts paid by the employer are for education relating to the employee's trade or business of being an employee of the employer so that, if the employee paid for the education, the amount paid could be deducted under section 162, the costs of the education may be eligible for exclusion as a working condition fringe.

(2) ***Limited statutory exclusions.*** If another section of Chapter 1 of the Internal Revenue Code of 1986 provides an exclusion from gross income based on the cost of the benefit provided to the employee and such exclusion is a limited amount, section 132 and the regulations thereunder may apply to the extent the cost of the benefit exceeds the statutory exclusion.

(g) ***Effective date.*** Sections 1.132-0, 1.132-1, 1.132-2, 1.132-3, 1.132-4, 1.132-5, 1.132-6, 1.132-7 and 1.132-8 are effective as of January 1, 1989, except that §§ 1.132-1(b)(1) with respect to the use of air transportation by a parent of an employee and 1.132-4(d) are effective as of January 1, 1985. Furthermore, in § 1.132-5, the eleventh sentence of paragraph (m)(1), *Examples 6* and *7* in paragraph (m)(8), and paragraphs (m)(2)(i), (m)(2)(v), (m)(3)(iv), (m)(6), (m)(7), and (r) are effective December 30, 1992; however, taxpayers may treat the rules as applicable to benefits provided on or after January 1, 1989. For the applicable rules relating to employer-provided transportation for security concerns prior to December 30, 1992, see § 1.132-5(m) (as contained in 26 CFR part 1 (§§ 1.61 to 1.169) revised April 1, 1992). In addition, references to § 1.274-5(k)(9) in § 1.132-5(h) are applicable as of March 20, 2026.

[T.D. 8256, 54 FR 28601, July 6, 1989, as amended by T.D. 8457, 57 FR 62196, Dec. 30, 1992; 58 FR 7296, Feb. 5, 1993; T.D. 9849, 84 FR 9233, Mar. 14, 2019; T.D. 10043, 91 FR 13502, Mar. 20, 2026]

§ 1.132-2 No-additional-cost services.

(a) ***In general*** —

(1) ***Definition.*** Gross income does not include the value of a no-additional-cost service. A “no-additional-cost service” is any service provided by an employer to an employee for the employee's personal use if—

(i) The service is offered for sale by the employer to its customers in the ordinary course of the line of business of the employer in which the employee performs substantial services, and

(ii) The employer incurs no substantial additional cost in providing the service to the employee (including foregone revenue and excluding any amount paid by or on behalf of the employee for the service).

For rules relating to the line of business limitation, see § 1.132-4. For purposes of this section, a service will not be considered to be offered for sale by the employer to its customers if that service is primarily provided to employees and not to the employer's customers.

(2) ***Excess capacity services.*** Services that are eligible for treatment as no-additional-cost services include excess capacity services such as hotel accommodations; transportation by aircraft, train, bus, subway, or cruise line; and telephone services. Services that are not eligible for treatment as no-additional-cost services are non-excess capacity services such as the facilitation by a stock brokerage firm of the purchase of stock. Employees who receive non-excess capacity services may, however, be eligible for a qualified employee discount of up to 20 percent of the value of the service provided. See § 1.132-3.

(3) ***Cash rebates.*** The exclusion for a no-additional-cost service applies whether the service is provided at no charge or at a reduced price. The exclusion also applies if the benefit is provided through a partial or total cash rebate of an amount paid for the service.

(4) ***Applicability of nondiscrimination rules.*** The exclusion for a no-additional-cost service applies to highly compensated employees only if the service is available on substantially the same terms to each member of a group of employees that is defined under a reasonable classification set up by the employer that does not discriminate in favor of highly compensated employees. See § 1.132-8.

(5) ***No substantial additional cost*** —

(i) ***In general.*** The exclusion for a no-additional-cost service applies only if the employer does not incur substantial additional cost in providing the service to the employee. For purposes of the preceding sentence, the term "cost" includes revenue that is forgone because the service is provided to an employee rather than a nonemployee. (For purposes of determining whether any revenue is forgone, it is assumed that the employee would not have purchased the service unless it were available to the employee at the actual price charged to the employee.) Whether an employer incurs substantial additional cost must be determined without regard to any amount paid by the employee for the service. Thus, any reimbursement by the employee for the cost of providing the service does not affect the determination of whether the employer incurs substantial additional cost.

(ii) ***Labor intensive services.*** An employer must include the cost of labor incurred in providing services to employees when determining whether the employer has incurred substantial additional cost. An employer incurs substantial additional cost, whether non-labor costs are incurred, if a substantial amount of time is spent by the employer or its employees in providing the service to employees. This would be the result whether the time spent by the employer or its employees in providing the services would have been "idle," or if the services were provided outside normal business hours. An employer generally incurs no substantial additional cost, however, if the services provided to the employee are merely incidental to the primary service being provided by the employer. For example, the in-flight services of a flight attendant and the cost of in-flight meals provided to airline employees traveling on a space-available basis are merely incidental to the primary service being provided (*i.e.*, air transportation). Similarly, maid service provided to hotel employees renting hotel rooms on a space-available basis is merely incidental to the primary service being provided (*i.e.*, hotel accommodations).

(6) ***Payments for telephone service.*** Payment made by an entity subject to the modified final judgment (as defined in section 559(c)(5) of the Tax Reform Act of 1984) of all or part of the cost of local telephone service provided to an employee by a person other than an entity subject to the modified final judgment shall be treated as telephone service provided to the employee by the entity making the payment for purposes of this section. The preceding sentence also applies to a rebate of the amount paid by the employee for the service and a payment to the person providing the service. This paragraph (a)(6) applies only to services and employees described in § 1.132-4 (c). For a special line of business rule relating to such services and employees, see § 1.132-4 (c).

(b) ***Reciprocal agreements.*** For purposes of the exclusion from gross income for a no-additional-cost service, an exclusion is available to an employee of one employer for a no-additional-cost service provided by an unrelated employer only if all of the following requirements are satisfied—

(1) The service provided to such employee by the unrelated employer is the same type of service generally provided to nonemployee customers by both the line of business in which the employee works and the line of business in which the service is provided to such employee (so that the employee would be permitted to exclude from gross income the value of the service if such service were provided directly by the employee's employer);

(2) Both employers are parties to a written reciprocal agreement under which a group of employees of each employer, all of whom perform substantial services in the same line of business, may receive no-additional-cost services from the other employer; and

(3) Neither employer incurs any substantial additional cost (including forgone revenue) in providing such service to the employees of the other employer, or pursuant to such agreement. If one employer receives a substantial payment from the other employer with respect to the reciprocal agreement, the paying employer will be considered to have incurred a substantial additional cost pursuant to the agreement, and consequently services performed under the reciprocal agreement will not qualify for exclusion as no-additional-cost services.

(c) ***Example.*** The rules of this section are illustrated by the following example:

Example. Assume that a commercial airline permits its employees to take personal flights on the airline at no charge and receive reserved seating. Because the employer forgoes potential revenue by permitting the employees to reserve seats, employees receiving such free flights are not eligible for the no-additional-cost exclusion.

[T.D. 8256, 54 FR 28602, July 6, 1989]

§ 1.132-3 Qualified employee discounts.

(a) ***In general*** —

(1) ***Definition.*** Gross income does not include the value of a qualified employee discount. A "qualified employee discount" is any employee discount with respect to qualified property or services provided by an employer to an employee for use by the employee to the extent the discount does not exceed—

(i) The gross profit percentage multiplied by the price at which the property is offered to customers in the ordinary course of the employer's line of business, for discounts on property, or

(ii) Twenty percent of the price at which the service is offered to customers, for discounts on services.

(2) ***Qualified property or services*** —

(i) ***In general.*** The term "qualified property or services" means any property or services that are offered for sale to customers in the ordinary course of the line of business of the employer in which the employee performs substantial services. For rules relating to the line of business limitation, see § 1.132-4.

(ii) ***Exception for certain property.*** The term "qualified property" does not include real property and it does not include personal property (whether tangible or intangible) of a kind commonly held for investment. Thus, an employee may not exclude from gross income the amount of an employee discount provided on the purchase of securities, commodities, or currency, or of either residential or commercial real estate, whether or not the particular purchase is made for investment purposes.

(iii) ***Property and services not offered in ordinary course of business.*** The term "qualified property or services" does not include any property or services of a kind that is not offered for sale to customers in the ordinary course of the line of business of the employer. For example, employee discounts provided on property or services that are offered for sale primarily to

employees and their families (such as merchandise sold at an employee store or through an employer-provided catalog service) may not be excluded from gross income. For rules relating to employer-operated eating facilities, see § 1.132-7, and for rules relating to employer-operated on-premises athletic facilities, see § 1.132-1(e).

(3) ***No reciprocal agreement exception.*** The exclusion for a qualified employee discount does not apply to property or services provided by another employer pursuant to a written reciprocal agreement that exists between employers to provide discounts on property and services to employees of the other employer.

(4) ***Property or services provided without charge, at a reduced price, or by rebates.*** The exclusion for a qualified employee discount applies whether the property or service is provided at no charge (in which case only part of the discount may be excludable as a qualified employee discount) or at a reduced price. The exclusion also applies if the benefit is provided through a partial or total cash rebate of an amount paid for the property or service.

(5) ***Property or services provided directly by the employer or indirectly through a third party.*** A qualified employee discount may be provided either directly by the employer or indirectly through a third party. For example, an employee of an appliance manufacturer may receive a qualified employee discount on the manufacturer's appliances purchased at a retail store that offers such appliances for sale to customers. The employee may exclude the amount of the qualified employee discount whether the employee is provided the appliance at no charge or purchases it at a reduced price, or whether the employee receives a partial or total cash rebate from either the employer-manufacturer or the retailer. If an employee receives additional rights associated with the property that are not provided by the employee's employer to customers in the ordinary course of the line of business in which the employee performs substantial services (such as the right to return or exchange the property or special warranty rights), the employee may only receive a qualified employee discount with respect to the property and not the additional rights. Receipt of such additional rights may occur, for example, when an employee of a manufacturer purchases property manufactured by the employee's employer at a retail outlet.

(6) ***Applicability of nondiscrimination rules.*** The exclusion for a qualified employee discount applies to highly compensated employees only if the discount is available on substantially the same terms to each member of a group of employees that is defined under a reasonable classification set up by the employer that does not discriminate in favor of highly compensated employees. See § 1.132-8.

(b) ***Employee discount*** —

(1) ***Definition.*** The term “employee discount” means the excess of—

(i) The price at which the property or service is being offered by the employer for sale to customers, over

(ii) The price at which the property or service is provided by the employer to an employee for use by the employee. A transfer of property by an employee without consideration is treated as use by the employee for purposes of this section. Thus, for example, if an employee receives a discount on property offered for sale by his employer to customers and the employee makes a gift of the property to his parent, the property will be considered to be provided for use by the employee; thus, the discount will be eligible for exclusion as a qualified employee discount.

(2) ***Price to customers*** —

(i) ***Determined at time of sale.*** In determining the amount of an employee discount, the price at which the property or service is being offered to customers at the time of the employee's purchase is controlling. For example, assume that an employer offers a product to customers for $20 during the first six months of a calendar year, but at the time the employee purchases the product at a discount, the price at which the product is being offered to customers is $25. In this case, the price from which the employee discount is measured is $25. Assume instead that, at the time the employee purchases the product at a discount, the price at which the product is being offered to customers is $15 and the price charged the employee is $12. The employee discount is measured from $15, the price at which the product is offered for sale to customers at the time of the employee purchase. Thus, the employee discount is $15 −$12, or $3.

(ii) ***Quantity discount not reflected.*** The price at which a property or service is being offered to customers cannot reflect any quantity discount unless the employee actually purchases the requisite quantity of the property or service.

(iii) ***Price to employer's customers controls.*** In determining the amount of an employee discount, the price at which a property or service is offered to customers of the employee's employer is controlling. Thus, the price at which the property is sold to the wholesale customers of a manufacturer will generally be lower than the price at which the same property is sold to the customers of a retailer. However, see paragraph (a)(5) of this section regarding the effect of a wholesaler providing to its employees additional rights not provided to customers of the wholesaler in the ordinary course of its business.

(iv) ***Discounts to discrete customer or consumer groups.*** Subject to paragraph (2)(ii) of this section, if an employer offers for sale property or services at one or more discounted prices to discrete customer or consumer groups, and sales at all such discounted prices comprise at least 35 percent of the employer's gross sales for a representative period, then in determining the amount of an employee discount, the price at which such property or service is being offered to customers for purposes of this section is a discounted price. The applicable discounted price is the current undiscounted price, reduced by the percentage discount at which the greatest percentage of the employer's discounted gross sales are made for such representative period. If sales at different percentage discounts equal the same percentage of the employer's gross sales, the price at which the property or service is being provided to customers may be reduced by the average of the discounts offered to each of the two groups. For purposes of this section, a representative period is the taxable year of the employer immediately preceding the taxable year in which the property or service is provided to the employee at a discount. If more than one employer would be aggregated under section 414 (b), (c), (m), or (o), and not all of the employers have the same taxable year, the employers required to be aggregated must designate the 12-month period to be used in determining gross sales for a representative period. The 12-month period designated, however, must be used on a consistent basis.

(v) ***Examples.*** The rules provided in this paragraph (b)(2) are illustrated by the following examples:

Example 1. Assume that a wholesale employer offers property for sale to two discrete customer groups at differing prices. Assume further that during the prior taxable year of the employer, 70 percent of the employer's gross sales are made at a 15 percent discount and 30 percent at no discount. For purposes of this paragraph (b)(2), the current undiscounted price at which the property or service is being offered by the employer for sale to customers may be reduced by the 15 percent discount.

Example 2. Assume that a retail employer offers a 20 percent discount to members of the American Bar Association, a 15 percent discount to members of the American Medical Association, and a ten percent discount to employees of the Federal Government. Assume further that during the prior taxable year of the employer, sales to American Bar Association members equal 15 percent of the employer's gross sales, sales to American Medical Association members equal 20 percent of the employer's gross sales, and sales to Federal Government employees equal 25 percent of the employer's gross sales. For purposes of this paragraph (b)(2), the current undiscounted price at which the property or service is being offered by the employer for sale to customers may be reduced by the ten percent Federal Government discount.

(3) ***Damaged, distressed, or returned goods.*** If an employee pays at least fair market value for damaged, distressed, or returned property, such employee will not have income attributable to such purchase.

(c) ***Gross profit percentage*** —

(1) ***In general*** —

(i) ***General rule.*** An exclusion from gross income for an employee discount on qualified property is limited to the price at which the property is being offered to customers in the ordinary course of the employer's line of business, multiplied by the employer's gross profit percentage. The term "gross profit percentage" means the excess of the aggregate sales price of the property sold by the employer to customers (including employees) over the employer's aggregate cost of the property, then divided by the aggregate sales price.

(ii) ***Calculation of gross profit percentage.*** The gross profit percentage must be calculated separately for each line of business based on the aggregate sales price and aggregate cost of property in that line of business for a representative period. For purposes of this section, a representative period is the taxable year of the employer immediately preceding the taxable year in which the discount is available. For example, if the aggregate amount of sales of property in an employer's line of business for the prior taxable year was $800,000, and the aggregate cost of the property for the year was $600,000, the gross profit percentage would be 25 percent ($800,000 minus $600,000, then divided by $800,000). If two or more employers are required to aggregate under section 414 (b), (c), (m), or (o) (aggregated employer), and if all of the aggregated employers do not share the same taxable year, then the aggregated employers must designate the 12-month period to be used in determining the gross profit percentage. The 12-month period designated, however, must be used on a consistent basis. If an employee performs substantial services in more than one line of business, the gross profit percentage of the line of business in which the property is sold determines the amount of the excludable employee discount.

(iii) ***Special rule for employers in their first year of existence.*** An employer in its first year of existence may estimate the gross profit percentage of a line of business based on its mark-up from cost. Alternatively, an employer in its first year of existence may determine the gross profit percentage by reference to an appropriate industry average.

(iv) ***Redetermination of gross profit percentage.*** If substantial changes in an employer's business indicate at any time that it is inappropriate for the prior year's gross profit percentage to be used for the current year, the employer must, within a reasonable period, redetermine the gross profit percentage for the remaining portion of the current year as if such portion of the year were the first year of the employer's existence.

(2) ***Line of business.*** In general, an employer must determine the gross profit percentage on the basis of all property offered to customers (including employees) in each separate line of business. An employer may instead select a classification of property that is narrower than the applicable line of business. However, the classification must be reasonable. For example, if an employer computes gross profit percentage according to the department in which products are sold, such classification is reasonable. Similarly, it is reasonable to compute gross profit percentage on the basis of the type of merchandise sold (such as high mark-up and low mark-up classifications). It is not reasonable, however, for an employer to classify certain low mark-up products preferred by certain employees (such as highly compensated employees) with high mark-up products or to classify certain high mark-up products preferred by other employees with low mark-up products.

(3) ***Generally accepted accounting principles.*** In general, the aggregate sales price of property must be determined in accordance with generally accepted accounting principles. An employer must compute the aggregate cost of property in the same manner in which it is computed for the employer's Federal income tax liability; thus, for example, section 263A and the regulations thereunder apply in determining the cost of property.

(d) ***Treatment of leased sections of department stores*** —

(1) ***In general*** —

(i) ***General rule.*** For purposes of determining whether employees of a leased section of a department store may receive qualified employee discounts at the department store and whether employees of the department store may receive qualified employee discounts at the leased section of the department store, the leased section is treated as part of the line of business of the person operating the department store, and employees of the leased section are treated as employees of the person operating the department store as well as employees of their employer. The term “leased section of a department store” means a section of a department store where substantially all of the gross receipts of the leased section are from over-the-counter sales of property made under a lease, license, or similar arrangement where it appears to the general public that individuals making such sales are employed by the department store. A leased section of a department store which, in connection with the offering of beautician services, customarily makes sales of beauty aids in the ordinary course of business is deemed to derive substantially all of its gross receipts from over-the-counter sales of property.

(ii) ***Calculation of gross profit percentage.*** For purposes of paragraph (d) of this section, when calculating the gross profit percentage of property and services sold at a department store, sales of property and services sold at the department store, as well as sales of property and services sold at the leased section, are considered. The rule provided in the preceding sentence does not apply, however, if it is more reasonable to calculate the gross profit percentage for the department store and leased section separately, or if it would be inappropriate to combine them (such as where either the department store or the leased section but not both provides employee discounts).

(2) ***Employees of the leased section*** —

(i) ***Definition.*** For purposes of this paragraph (d), “employees of the leased section” means all employees who perform substantial services at the leased section of the department store regardless of whether the employees engage in over-the-counter sales of property or services. The term “employee” has the same meaning as in section 132(f) and § 1.132-1(b)(1).

(ii) ***Discounts offered to either department store employees or employees of the leased section.*** If the requrements of this paragraph (d) are satisfied, employees of the leased section may receive qualified employee discounts at the department store whether or not employees of the department store are offered discounts at the leased section. Similarly, employees of the department store may receive a qualified employee discount at the leased section whether or not employees of the leased section are offered discounts at the department store.

(e) ***Excess discounts.*** Unless excludable under a provision of the Internal Revenue Code of 1986 other than section 132(a)(2), an employee discount provided on property is excludable to the extent of the gross profit percentage multiplied by the price at which the property is being offered for sale to customers. If an employee discount exceeds the gross profit percentage, the excess discount is includible in the employee's income. For example, if the discount on employer-purchased property is 30 percent and the employer's gross profit percentage for the period in the relevant line of business is 25 percent, then 5 percent of the price at which the property is being offered for sale to customers is includible in the empoyee's income. With respect to services, an employee discount of up to 20 percent may be excludable. If an employee discount exceeds 20 percent, the excess discount is includible in the employee's income. For example, assume that a commercial airline provides a pass to each of its employees permitting the employees to obtain a free round-trip coach ticket with a confirmed seat to any destination the airline services. Neither the exclusion of section 132(a)(1) (relating to no-additional-cost services) nor any other statutory exclusion applies to a flight taken primarily for personal purposes by an employee under this program. However, an employee discount of up to 20 percent may be excluded as a qualified employee discount. Thus, if the price charged to customers for the flight taken is $300 (under restrictions comparable to those actually placed on travel associated with the employee airline ticket), $60 is excludible from gross income as a qualified employee discount and $240 is includible in gross income.

[T.D. 8256, 54 FR 28603, July 6, 1989]

§ 1.132-4 Line of business limitation.

(a) ***In general*** —

(1) ***Applicability*** —

(i) ***General rule.*** A no-additional-cost service or a qualified employee discount provided to an employee is only available with respect to property or services that are offered for sale to customers in the ordinary course of the same line of business in which the employee receiving the property or service performs substantial services. Thus, an employee who does not perform substantial services in a particular line of business of the employer may not exclude from income under section 132 (a)(1) or (a)(2) the value of services or employee discounts received on property or services in that line of business. For rules that relax the line of business requirement, see paragraphs (b) through (g) of this section.

(ii) ***Property and services sold to employees rather than customers.*** Because the property or services must be offered for sale to customers in the ordinary course of the same line of business in which the employee performs substantial services, the line of business limitation is not satisfied if the employer's products or services are sold primarily to employees of the employer, rather than to customers. Thus, for example, an employer in the banking line of business is not considered in the variety store line of business if the employer establishes an

employee store that offers variety store items for sale to the employer's employees. See § 1.132-7 for rules relating to employer-operated eating facilities, and see § 1.132-1(e) for rules relating to employer-operated on-premises athletic facilities.

(iii) ***Performance of substantial services in more than one line of business.*** An employee who performs services in more than one of the employer's lines of business may only exclude no-additional-cost services and qualified employee discounts in the lines of business in which the employee performs substantial services.

(iv) ***Performance of services that directly benefit more than one line of business*** —

(A) ***In general.*** An employee who performs substantial services that directly benefit more than one line of business of an employer is treated as performing substantial services in all such line of business. For example, an employee who maintains accounting records for an employer's three lines of business may receive qualified employee discounts in all three lines of business. Similarly, if an employee of a minor line of business of an employer that is significantly interrelated with a major line of business of the employer performs substantial services that directly benefit both the major and the minor lines of business, the employee is treated as performing substantial services for both the major and the minor lines of business.

(B) ***Examples.*** The rules provided in this paragraph (a)(1)(iv) are illustrated by the following examples:

Example 1. Assume that employees of units of an employer provide repair or financing services, or sell by catalog, with respect to retail merchandise sold by the employer. Such employees may be considered to perform substantial services for the retail merchandise line of business under paragraph (a)(1)(iv)(A) of this section.

Example 2. Assume that an employer operates a hospital and a laundry service. Assume further that some of the gross receipts of the laundry service line of business are from laundry services sold to customers other than the hospital employer. Only the employees of the laundry service who perform substantial services which directly benefit the hospital line of business (through the provision of laundry services to the hospital) will be treated as performing substantial services for the hospital line of business. Other employees of the laundry service line of business will not be treated as employees of the hospital line of business.

Example 3. Assume the same facts as in example (2), except that the employer also operates a chain of dry cleaning stores. Employees who perform substantial services which directly benefit the dry cleaning stores but who do not perform substantial services that directly benefit the hospital line of business will not be treated as performing substantial services for the hospital line of business.

(2) ***Definition*** —

(i) ***In general.*** An employer's line of business is determined by reference to the Enterprise Standard Industrial Classification Manual (ESIC Manual) prepared by the Statistical Policy Division of the U.S. Office of Management and Budget. An employer is considered to have more than one line of business if the employer offers for sale to customers property or services in more than one two-digit code classification referred to in the ESIC Manual.

(ii) ***Examples.*** Examples of two-digit classifications are general retail merchandise stores; hotels and other lodging places; auto repair, services, and garages; and food stores.

(3) ***Aggregation of two-digit classifications.*** If, pursuant to paragraph (a)(2) of this section, an employer has more than one line of business, such lines of business will be treated as a single line of business where and to the extent that one or more of the following aggregation rules apply:

(i) If it is uncommon in the industry of the employer for any of the separate lines of business of the employer to be operated without the others, the separate lines of business are treated as one line of business.

(ii) If it is common for a substantial number of employees (other than those employees who work at the headquarters or main office of the employer) to perform substantial services for more than one line of business of the employer, so that determination of which employees perform substantial services for which line or lines of business would be difficult, then the separate lines of business of the employer in which such employees perform substantial services are treated as one line of business. For example, assume that an employer operates a delicatessen with an attached service counter at which food is sold for consumption on the premises. Assume further that most but not all employees work both at the delicatessen and at the service counter. Under the aggregation rule of this paragraph (a)(3)(ii), the delicatessen and the service counter are treated as one line of business.

(iii) If the retail operations of an employer that are located on the same premises are in separate lines of business but would be considered to be within one line of business under paragraph (a)(2) of this section if the merchandise offered for sale in such lines of business were offered for sale at a department store, then the operations are treated as one line of business. For example, assume that on the same premises an employer sells both women's apparel and jewelry. Because, if sold together at a department store, the operations would be part of the same line of business, the operations are treated as one line of business.

(b) ***Grandfather rule for certain retail stores*** —

(1) ***In general.*** The line of business limitation may be relaxed under the special grandfather rule of this paragraph (b). Under this special grandfather rule, if—

(i) On October 5, 1983, at least 85 percent of the employees of one member of an affiliated group (as defined in section 1504 without regard to subsections (b)(2) and (b)(4) thereof) (“first member”) were entitled to receive employee discounts at retail department stores operated by another member of the affiliated group (“second member”), and

(ii) More than 50 percent of the previous year's sales of the affiliated group are attributable to the operation of retail department stores, then, for purposes of the exclusion from gross income of a qualified employee discount, the first member is treated as engaged in the same line of business as the second member (the opeator of the retail department stores). Therefore, employees of the first member of the affiliated group may exclude from income qualified employee discounts received at the retail department stores operated by the second member. However, employees of the second member of the affiliated group may not under this paragraph (b)(1) exclude any discounts received on property or services offered for sale to customers by the first member of the affiliated group.

(2) ***Taxable year of affiliated group.*** If not all of the members of an affiliated group have the same taxable year, the affiliated group must designate the 12-month period to be used in determining the "previous year's sales" (as referred to in the grandfather rule of this paragraph (b)). The 12-month period designated, however, must be used on a consistent basis.

(3) ***Definition of "sales."*** For purposes of this paragraph (b), the term "sales" means the gross receipts of an affiliated group, based upon the accounting methods used by its members.

(4) ***Retired and disabled employees.*** For purposes of this paragraph (b), an employee includes any individual who was, or whose spouse was, formerly employed by the first member of an affiliated group and who separated from service with the member by reason of retirement or disability if the second member of the group provided employee discounts to that individual on October 5, 1983.

(5) ***Increase of employee discount.*** If, after October 5, 1983, the employee discount described in this paragraph (b) is increased, the grandfather rule of this paragraph (b) does not apply to the amount of the increase. For example, if on January 1, 1989, the employee discount is increased from 10 percent to 15 percent, the grandfather rule will not apply to the additional 5 percent discount.

(c) ***Grandfather rule for telephone service provided to predivestiture retirees.*** All entities subject to the modified final judgment (as defined in section 559(c)(5) of the Tax Reform Act of 1984) shall be treated as a single employer engaged in the same line of business for purposes of determining whether telephone service provided to certain employees is a no-additional-cost service. The preceding sentence applies only in the case of an employee who by reason of retirement or disability separated before January 1, 1984, from the service of an entity subject to the modified final judgment. This paragraph (c) only applies to services provided to such employees as of January 1, 1984. For a special no-additional-cost service rule relating to such employees and such services, see § 1.132-2(a)(6).

(d) ***Special rule for certain affiliates of commercial airlines*** —

(1) ***General rule.*** If a qualified affiliate is a member of an airline affiliated group and employees of the qualified affiliate who are directly engaged in providing airline-related services are entitled to no-additional-cost service with respect to air transportation provided by such other member, then, for purposes of applying § 1.132-2 (relating to no-additional-cost services with respect to such air transportation), such qualified affiliate shall be treated as engaged in the same line of business as such other member.

(2) ***"Airline affiliated group" defined.*** An "airline affiliated group" is an affiliated group (as defined in section 1504 (a)) one of whose members operates a commercial airline that provides air transportation to customers on a per-seat basis.

(3) ***"Qualified affiliate" defined.*** A "qualified affiliate" is any corporation that is predominantly engaged in providing airline-related services. The term "airline-related services" means any of the following services provided in connection with air transportation:

(i) Catering,

(ii) Baggage handling,

(iii) Ticketing and reservations,

(iv) Flight planning and weather analysis, and

(v) Restaurants and gift shops located at an airport.

(e) ***Grandfather rule for affiliated groups operating airlines.*** The line of business limitation may be relaxed under the special grandfather rule of this paragraph (e). Under this special grandfather rule, if, as of September 12, 1984—

(1) An individual—

(i) Was an employee (within the meaning of § 1.132-1 (b)) of one member of an affiliated group (as defined in section 1504(a)) ("first corporation"), and

(ii) Was eligible for no-additional-cost services in the form of air transportation provided by another member of such affiliated group ("second corporation"),

(2) At least 50 percent of the individuals performing services for the first corporation were, or had been employees of, or had previously performed services for, the second corporation, and

(3) The primary business of the affiliated group was air transportation of passengers, then, for purposes of applying sections 132(a) (1) and (2), with respect to no-additional-cost services and qualified employee discounts provided after December 31, 1984, for that individual by the second corporation, the first corporation is treated as engaged in the same air transporation line of business as the second corporation. For purposes of the preceding sentence, an employee of the second corporation who is performing services for the first corporation is also treated as an employee of the first corporation.

(f) ***Special rule for qualified air transportation organizations.*** A qualified air transportation organization is treated as engaged in the line of business of providing air transportation with respect to any individual who performs services for the organization if those services are peformed primarily for persons engaged in providing air transportation, and are of a kind which (if performed on September 12, 1984) would qualify the individual for no-additional-cost services in the form of air transportation. The term "qualified air transportation organization" means any organization—

(1) If such organization (or a predecessor) was in existence on September 12, 1984,

(2) If such organization is—

(i) A tax-exempt organization under section(c)(6) whose membership is limited to entities engaged in the transportation by air of individuals or property for compensation or hire, or

(ii) Is a corporation all the stock of which is owned entirely by entities described in paragraph (f)(2)(i) of this section, and

(3) If such organization is operated in furtherance of the activities of its members or owners.

(g) ***Relaxation of line of business requirement.*** The line of business requirement may be relaxed under an elective grandfather rule provided in section 4977. For rules relating to the section 4977 election, see § 54.4977-1T.

(h) ***Line of business requirement does not expand benefits eligible for exclusion.*** The line of business requirement limits the benefits eligible for the no-additional-cost service and qualified employee discount exclusions to property or services provided by an employer to its customers in the ordinary course of the line of business of the employer in which the employee performs substantial services. The requirement is intended to ensure that employers do not offer, on a tax-free or reduced basis, property or services to employees that are not offered to the employer's customers, even if the property or services offered to the customers and the employees are within the same line of business (as defined in this section).

[T.D. 8256, 54 FR 28606, July 6, 1989]

§ 1.132-5 Working condition fringes.

(a) ***In general*** —

(1) ***Definition.*** Gross income does not include the value of a working condition fringe. A "working condition fringe" is any property or service provided to an employee of an employer to the extent that, if the employee paid for the property or service, the amount paid would be allowable as a deduction under section 162 or 167.

(i) A service or property offered by an employer in connection with a flexible spending account is not excludable from gross income as a working condition fringe. For purposes of the preceding sentence, a flexible spending account is an agreement (whether or not written) entered into between an employer and an employee that makes available to the employee over a time period a certain level of unspecified non-cash benefits with a pre-determined cash value.

(ii) If, under section 274 or any other section, certain substantiation requirements must be met in order for a deduction under section 162 or 167 to be allowable, then those substantiation requirements apply when determining whether a property or service is excludable as a working condition fringe.

(iii) An amount that would be deductible by the employee under a section other than section 162 or 167, such as section 212, is not a working condition fringe.

(iv) A physical examination program provided by the employer is not excludable as a working condition fringe even if the value of such program might be deductible to the employee under section 213. The previous sentence applies without regard to whether the employer makes the program mandatory to some or all employees.

(v) A cash payment made by an employer to an employee will not qualify as a working condition fringe unless the employer requires the employee to—

(A) Use the payment for expenses in connection with a specific or pre-arranged activity or undertaking for which a deduction is allowable under section 162 or 167,

(B) Verify that the payment is actually used for such expenses, and

(C) Return to the employer any part of the payment not so used.

(vi) The limitation of section 67(a) (relating to the two-percent floor on miscellaneous itemized deductions) is not considered when determining the amount of a working condition fringe. For example, assume that an employer provides a $1,000 cash advance to Employee A and that the conditions of paragraph (a)(1)(v) of this section are not satisfied. Even to the extent A uses the allowance for expenses for which a deduction is allowable under section 162 and 167, because such cash payment is not a working condition fringe, section 67(a) applies. The $1,000 payment is includible in A's gross income and subject to income and employment tax withholding. If, however, the conditions of paragraph (a)(1)(v) of this section are satisfied with respect to the payment, then the amount of A's working condition fringe is determined without regard to section 67(a). The $1,000 payment is excludible from A's gross income and not subject to income and employment tax reporting and withholding.

(2) ***Trade or business of the employee*** —

(i) ***General.*** If the hypothetical payment for a property or service would be allowable as a deduction with respect to a trade or business of an employee other than the employee's trade or business of being an employee of the employer, it cannot be taken into account for purposes of determining the amount, if any, of the working condition fringe.

(ii) ***Examples.*** The rule of paragraph (a)(2)(i) of this section may be illustrated by the following examples:

Example 1. Assume that, unrelated to company X's trade or business and unrelated to employee A's trade or business of being an employee of company X, A is a member of the board of directors of company Y. Assume further that company X provides A with air transportation to a company Y board of director's meeting. A may not exclude from gross income the value of the air transportation to the meeting as a working condition fringe. A may, however, deduct such amount under section 162 if the section 162 requirements are satisfied. The result would be the same whether the air transportation was provided in the form of a flight on a commercial airline or a seat on a company X airplane.

Example 2. Assume the same facts as in example (1) except that A serves on the board of directors of company Z and company Z regularly purchases a significant amount of goods and services from company X. Because of the relationship between Company Z and A's employer, A's membership on Company Z's board of directors is related to A's trade or business of being an employee of Company X. Thus, A may exclude from gross income the value of air transportation to board meetings as a working condition fringe.

Example 3. Assume the same facts as in example (1) except that A serves on the board of directors of a charitable organization. Assume further that the service by A on the charity's board is substantially related to company X's trade or business. In this case, A may exclude from gross income the value of air transportation to board meetings as a working condition fringe.

Example 4. Assume the same facts as in example (3) except that company X also provides A with the use of a company X conference room which A uses for monthly meetings relating to the charitable organization. Also assume that A uses company X's copy machine and word processor each month in connection with functions of the charitable organization. Because of the substantial business benefit that company X derives from A's service on the board of the charity, A may exclude as a working condition fringe the value of the use of company X property in connection with the charitable organization.

(b) ***Vehicle allocation rules —***

(1) ***In general —***

(i) ***General rule.*** In general, with respect to an employer-provided vehicle, the amount excludable as a working condition fringe is the amount that would be allowable as a deduction under section 162 or 167 if the employee paid for the availability of the vehicle. For example, assume that the value of the availability of an employer-provided vehicle for a full year is $2,000, without regard to any working condition fringe (*i.e.*, assuming all personal use). Assume Further that the employee drives the vehicle 6,000 miles for his employer's business and 2,000 miles for reasons other than the employer's business. In this situation, the value of the working condition fringe is $2,000 multiplied by a fraction, the numerator of which is the business-use mileage (6,000 miles) and the denominator of which is the total mileage (8,000 miles). Thus, the value of the working condition fringe is $1,500. The total amount includible in the employee's gross

income on account of the availability of the vehicle is $500 ($2,000−$1,500). For purposes of this section, the term "vehicle" has the meaning given the term in § 1.61-21(e)(2). Generally, when determining the amount of an employee's working condition fringe, miles accumulated on the vehicle by all employees of the employer during the period in which the vehicle is available to the employee are considered. For example, assume that during the year in which the vehicle is available to the employee in the above example, other employees accumulate 2,000 additional miles on the vehicle (while the employee is not in the automobile). In this case, the value of the working condition fringe is $2,000 multiplied by a fraction, the numerator of which is the business-use mileage by the employee (including all mileage (business and personal) accumulated by other employees) (8,000 miles) and the denominator of which is the total mileage (including all mileage accumulated by other employees) (10,000 miles). Thus, the value of the working condition fringe is $1,600; the total amount includible in the employee's gross income on account of the availability of the vehicle is $400 ($2,000−$1,600). If, however, substantially all of the use of the automobile by other employees in the employer's business is limited to a certain period, such as the last three months of the year, the miles driven by the other employees during that period would not be considered when determining the employee's working condition fringe exclusion. Similarly, miles driven by other employees are not considered if the pattern of use of the employer-provided automobiles is designed to reduce Federal taxes. For example, assume that an employer provides employees A and B each with the availability of an employer-provided automobile and that A uses the automobile assigned to him 80 percent for the employer's business and that B uses the automobile assigned to him 30 percent for the employer's business. If A and B alternate the use of their assigned automobiles each week in such a way as to achieve a reduction in federal taxes, then the employer may count only miles placed on the automobile by the employee to whom the automobile is assigned when determining each employee's working condition fringe.

(ii) ***Use by an individual other than the employee.*** For purposes of this section, if the availability of a vehicle to an individual would be taxed to an employee, use of the vehicle by the individual is included in references to use by the employee.

(iii) ***Provision of an expensive vehicle for personal use.*** If an employer provides an employee with a vehicle that an employee may use in part for personal purposes, there is no working condition fringe exclusion with respect to the personal miles driven by the employee; if the employee paid for the availability of the vehicle, he would not be entitled to deduct under section 162 or 167 any part of the payment attributable to personal miles. The amount of the inclusion is not affected by the fact that the employee would have chosen the availability of a less expensive vehicle. Moreover, the result is the same even though the decision to provide an expensive rather than an inexpensive vehicle is made by the employer for bona fide noncompensatory business reasons.

(iv) ***Total value inclusion.*** In lieu of excluding the value of a working condition fringe with respect of an automobile, an employer using the automobile lease valuation rule of § 1.61-21(d) may include in an employee's gross income the entire Annual Lease Value of the automobile. Any deduction allowable to the employee under section 162 or 167 with respect to the automobile may be taken on the employee's income tax return. The total inclusion rule of this paragraph (b)(1)(iv) is not available if the employer is valuing the use or availability of a vehicle under general valuation principles or a special valuation rule other than the automobile lease valuation rule. See §§ 1.162-25 and 1.162-25T for rules relating to the employee's deduction.

(v) ***Shared usage.*** In calculating the working condition fringe benefit exclusion with respect to a vehicle provided for use by more than one employee, an employer shall compute the working condition fringe in a manner consistent with the allocation of the value of the vehicle under section 1.61-21(c)(2)(ii)(B).

(2) ***Use of different employer-provided vehicles.*** The working condition fringe exclusion must be applied on a vehicle-by-vehicle basis. For example, assume that automobile Y is available to employee D for 3 days in January and for 5 days in March, and automobile Z is available to D for a week in July. Assume further that the Daily Lease Value, as defined in § 1.61-21(d)(4)(ii), of each automobile is $50. For the eight days of availability of Y in January and March, D uses Y 90 percent for business (by mileage). During July, D uses Z 60 percent for business (by mileage). The value of the working condition fringe is determined separately for each automobile. Therefore, the working condition fringe for Y is $360 ($400 × .90) leaving an income inclusion of $40. The working condition fringe for Z is $210 ($350 × .60), leaving an income inclusion of $140. If the value of the availability of an automobile is determined under the Annual Lease Value rule for one period and Daily Lease Value rule for a second period (see § 1.61-21(d)), the working condition fringe exclusion must be calculated separately for the two periods.

(3) ***Provision of a vehicle and chauffeur services*** —

(i) ***General rule.*** In general, with respect to the value of chauffeur services provided by an employer, the amount excludable as a working condition fringe is the amount that would be allowable as a deduction under section 162 and 167 if the employee paid for the chauffeur services. The working condition fringe with respect to a chauffeur is determined separately from the working condition fringe with respect to the vehicle. An employee may exclude from gross income the excess of the value of the chauffeur services over the value of the chauffeur services for personal purposes (such as commuting) as determined under § 1.61-21(b)(5). See § 1.61-21(b)(5) for additional rules and examples concerning the valuation of chauffeur services. See § 1.132-5(m)(5) for rules relating to an exclusion from gross income for the value of bodyguard/chauffeur services. When determining whether miles placed on the vehicle are for the employer's business, miles placed on the vehicle by a chauffeur between the chauffeur's residence and the place at which the chauffeur picks up (or drops off) the employee are with respect to the employee (but not the chauffeur) considered to be miles placed on the vehicle for the employer's business and thus eligible for the working condition fringe exclusion. Thus, because miles placed on the vehicle by a chauffeur between the chauffeur's residence and the place at which the chauffeur picks up (or drops off) the employee are not considered business miles with respect to the chauffeur, the value of the availability of the vehicle for commuting is includible in the gross income of the chauffeur. For general and special rules concerning the valuation of the use of employer-provided vehicles, see paragraphs (b) through (f) of § 1.61-21.

(ii) ***Examples.*** The rules of paragraph (b)(3)(i) of this section are illustrated by the following examples:

Example 1. Assume that an employer makes available to an employee an automobile and a chauffeur. Assume further that the value of the chauffeur services determined in accordance with § 1.61-21 is $30,000 and that the chauffeur spends 30 percent of each workday driving the employee for personal purposes. There may be excluded from the employee's income 70 percent of $30,000, or $21,000, leaving an income inclusion with respect to the chauffeur services of $9,000.

Example 2. Assume that the value of the availability of an employer-provided vehicle for a year is $4,850 and that the value of employer-provided chauffeur services with respect to the vehicle for the year is $20,000. Assume further that 40 percent of the miles placed on the vehicle are for the employer's business and that 60 percent are for other purposes. In addition, assume that the chauffeur spends 25 percent of each workday driving the employee for personal purposes (*i.e.*, 2 hours). The value of the chauffeur services includible in the employee's income is 25 percent of $20,000, or $5,000. The excess of $20,000 over $5,000 or $15,000 is excluded from the employee's income as a working condition fringe. The amount excludable as a working condition fringe with respect to the vehicle is 40 percent of $4,850, or $1,940 and the amount includible is $4,850−$1,940, or $2,910.

(c) ***Applicability of substantiation requirements of sections 162 and 274***

(d) —

(1) ***In general.*** The value of property or services provided to an employee may not be excluded from the employee's gross income as a working condition fringe, by either the employer or the employee, unless the applicable substantiation requirements of either section 274(d) or section 162 (whichever is applicable) and the regulations thereunder are satisfied. The substantiation requirements of section 274(d) apply to an employee even if the requirements of section 274 do not apply to the employee's employer for deduction purposes (such as when the employer is a tax-exempt organization or a governmental unit).

(2) ***Section 274(d) requirements.*** The substantiation requirements of section 274(d) are satisfied by "adequate records or sufficient evidence corroborating the [employee's] own statement". Therefore, such records or evidence provided by the employee, and relied upon by the employer to the extent permitted by the regulations promulgated under section 274(d), will be sufficient to substantiate a working condition fringe exclusion.

(d) ***Safe harbor substantiation rules*** —

(1) ***In general.*** Section 1.274-6T provides that the substantiation requirements of section 274(d) and the regulations thereunder may be satisfied, in certain circumstances, by using one or more of the safe harbor rules prescribed in § 1.274-6T. If the employer uses one of the safe harbor rules prescribed in § 1.274-6T during a period with respect to a vehicle (as defined in § 1.61-21(e)(2)), that rule must be used by the employer to substantiate a working condition fringe exclusion with respect to that vehicle during the period. An employer that is exempt from Federal income tax may still use one of the safe harbor rules (if the requirements of that section are otherwise met during a period) to substantiate a working condition fringe exclusion with respect to a vehicle during the period. If the employer uses one of the methods prescribed in § 1.274-6T during a period with respect to an employer-provided vehicle, that method may be used by an employee to substantiate a working condition fringe exclusion with respect to the same vehicle during the period, as long as the employee includes in gross income the amount allocated to the employee pursuant to § 1.274-6T and this section. (See § 1.61-21(c)(2) for other rules concerning when an employee must include in income the amount determined by the employer.) If, however, the employer uses the safe harbor rule prescribed in § 1.274-6T(a) (2) or (3) and the employee without the employer's knowledge uses the vehicle for purposes other than de minimis personal use (in the case of the rule prescribed in § 1.274-6T(a)(2)), or for purposes other than de minimis personal use and commuting (in the case of the rule prescribed in § 1.274-6T(a)(3)), then the employees must include an additional amount in income for the unauthorized use of the vehicle.

(2) ***Period for use of safe harbor rules.*** The rules prescribed in this paragraph (d) assume that the safe harbor rules prescribed in § 1.274-6T are used for a one-year period. Accordingly, references to the value of the availability of a vehicle, amounts excluded as a working condition fringe, etc., are based on a one-year period. If the safe harbor rules prescribed in § 1.274-6T are used for a period of less than a year, the amounts referred to in the previous sentence must be adjusted accordingly. For purposes of this section, the term "personal use" has the same meaning as prescribed in § 1.274-6T (e)(5).

(e) ***Safe harbor substantiation rule for vehicles not used for personal purposes.*** For a vehicle described in § 1.274-6T(a)(2) (relating to certain vehicles not used for personal purposes), the working condition fringe exclusion is equal to the value of the availability of the vehicle if the employer uses the method prescribed in § 1.274-6T(a)(2).

(f) ***Safe harbor substantiation rule for vehicles not available to employees for personal use other than commuting.*** For a vehicle described in § 1.274-6T(a)(3) (relating to certain vehicles not used for personal purposes other than commuting), the working condition fringe exclusion is equal to the value of the availability of the vehicle for purposes other than commuting if the employer uses the method prescribed in § 1.274-6T(a)(3). This rule applies only if the special rule for valuing commuting use, as prescribed in § 1.61-21(f), is used and the amount determined under the special rule is either included in the employee's income or reimbursed by the employee.

(g) ***Safe harbor substantiation rule for vehicles used in connection with the business of farming that are available to employees for personal use*** —

(1) ***In general.*** For a vehicle described in § 1.274-6T(b) (relating to certain vehicles used in connection with the business of farming), the working condition fringe exclusion is calculated by multiplying the value of the availability of the vehicle by 75 percent.

(2) ***Vehicles available to more than one individual.*** If the vehicle is available to more than one individual, the employer must allocate the gross income inclusion attributable to the vehicle (25 percent of the value of the availability of the vehicle) among the employees (and other individuals whose use would not be attributed to an employee) to whom the vehicle was available. This allocation must be done in a reasonable manner to reflect the personal use of the vehicle by the individuals. An amount that would be allocated to a sole proprietor reduces the amounts that may be allocated to employees but is otherwise to be disregarded for purposes of this paragraph (g). For purposes of this paragraph (g), the value of the availability of a vehicle may be calculated as if the vehicle were available to only one employee continuously and without regard to any working condition fringe exclusion.

(3) ***Examples.*** The following examples illustrate a reasonable allocation of gross income with respect to an employer-provided vehicle between two employees:

Example 1. Assume that two farm employees share the use of a vehicle that for a calendar year is regularly used directly in connection with the business of farming and qualifies for use of the rule in § 1.274-6T(b). Employee A uses the vehicle in the morning directly in connection with the business of farming and employee B uses the vehicle in the afternoon directly in connection with the business of farming. Assume further that employee B takes the vehicle home in the evenings and on weekends. The employer should allocate all the income attributable to the availability of the vehicle to employee B.

Example 2. Assume that for a calendar year, farm employees C and D share the use of a vehicle that is regularly used directly in connection with the business of farming and qualifies for use of the rule in § 1.2.4-6T(b). Assume further that the employees alternate taking the vehicle home in

the evening and alternate the availability of the vehicle for personal purposes on weekends. The employer should allocate the income attributable to the availability of the vehicle for personal use (25 percent of the value of the availability of the vehicle) equally between the two employees.

Example 3. Assume the same facts as in example (2) except that C is the sole proprietor of the farm. Based on these facts, C should allocate the same amount of income to D as was allocated to D in example (2). No other income attributable to the availability of the vehicle for personal use should be allocated.

(h) ***Qualified nonpersonal use vehicles*** —

(1) ***In general.*** Except as provided in paragraph (h)(2) of this section, 100 percent of the value of the use of a qualified nonpersonal use vehicle (as described in § 1.274-5(k)) is excluded from gross income as a working condition fringe, provided that, in the case of a vehicle described in § 1.274-5(k)(3) through (9), the use of the vehicle conforms to the requirements of 1.274-5(k)(3) through (9).

(2) ***Shared usage of qualified nonpersonal use vehicles.*** In general, a working condition fringe under this paragraph (h) is available to the driver and all passengers of a qualified nonpersonal use vehicle. However, a working condition fringe under this paragraph (h) is available only with respect to the driver and not with respect to any passengers of a qualified nonpersonal use vehicle described in § 1.274-5(k)(2)(ii)(L) or (P).

(i) [Reserved]

(j) ***Application of section 280F.*** In determining the amount, if any, of an employee's working condition fringe, section 280F and the regulations thereunder do not apply. For example, assume that an employee has available for a calendar year an employer-provided automobile with a fair market value of $28,000. Assume further that the special rule provided in § 1.61-21(d) is used yielding an Annual Lease Value, as defined in § 1.61-21(d), of $7,750, and that all of the employee's use of the automobile is for the employer's business. The employee would be entitled to exclude as a working condition fringe the entire Annual Lease Value, despite the fact that if the employee paid for the availability of the automobile, an income inclusion would be required under § 1.280F-6(d)(1). This paragraph (j) does not affect the applicability of section 280F to the employer with respect to such employer-provided automobile, nor does it affect the applicability of section 274 to either the employer or the employee. For rules concerning substantiation of an employee's working condition fringe, see paragraph (c) of this section.

(k) ***Aircraft allocation rule.*** In general, with respect to a flight on an employer-provided aircraft, the amount excludable as a working condition fringe is the amount that would be allowable as a deduction under section 162 or 167 if the employee paid for the flight on the aircraft. For example, if employee P and P's spouse fly on P's employer's airplane primarily for business reasons of P's employer so that P could deduct the expenses relating to the trip to the extent of P's payments, the value of the flights is excludable from gross income as a working condition fringe. However, if P's children accompany P on the trip primarily for personal reasons, the value of the flights by P's children are includible in P's gross income. See § 1.61-21 (g) for special rules for valuing personal flights on employer-provided aircraft.

(l) [Reserved]

(m) ***Employer-provided transportation for security concerns*** —

(1) ***In general.*** The amount of a working condition fringe exclusion with respect to employer-provided transportation is the amount that would be allowable as a deduction under section 162 or 167 if the employee paid for the transportation. Generally, if an employee pays for transportation taken for primarily personal purposes, the employee may not deduct any part of the amount paid. Thus, the employee may not generally exclude the value of employer-provided transportation as a working condition fringe if such transportation is primarily personal. If, however, for bona fide business-oriented security concerns, the employee purchases transportation that provides him or her with additional security, the employee may generally deduct the excess of the amount actually paid for the transportation over the amount the employee would have paid for the same mode of transportation absent the bona fide business-oriented security concerns. This is the case whether or not the employee would have taken the same mode of transportation absent the bona fide business-oriented security concerns. With respect to a vehicle, the phrase "the same mode of transportation" means use of the same vehicle without the additional security aspects, such as bulletproof glass. With respect to air transportation, the phrase "the same mode of transportation" means comparable air transportation. These same rules apply to the determination of an employee's working condition fringe exclusion. For example, if an employer provides an employee with a vehicle for commuting and, because of bona fide business-oriented security concerns, the vehicle is specially designed for security, then the employee may exclude from gross income the value of the special security design as a working condition fringe. The employee may not exclude the value of the commuting from income as a working condition fringe because commuting is a nondeductible personal expense. However, if an independent security study meeting the requirements of paragraph (m)(2)(v) of this section has been performed with respect to a government employee, the government employee may exclude the value of the personal use (other than commuting) of the employer-provided vehicle that the security study determines to be reasonable and necessary for local transportation. Similarly, if an employee travels on a personal trip in an employer-provided aircraft for bona fide business-oriented security concerns, the employee may exclude the excess, if any, of the value of the flight over the amount the employee would have paid for the same mode of transportation, but for the bona fide business-oriented security concerns. Because personal travel is a nondeductible expense, the employee may not exclude the total value of the trip as a working condition fringe.

(2) ***Demonstration of bona fide business-oriented security concerns*** —

(i) ***In general.*** For purposes of this paragraph (m), a bona fide business-oriented security concern exists only if the facts and circumstances establish a specific basis for concern regarding the safety of the employee. A generalized concern for an employee's safety is not a bona fide business-oriented security concern. Once a bona fide business-oriented security concern is determined to exist with respect to a particular employee, the employer must periodically evaluate the situation for purposes of determining whether the bona fide business-oriented security concern still exists. Example of factors indicating a specific basis for concern regarding the safety of an employee are—

(A) A threat of death or kidnapping of, or serious bodily harm to, the employee or a similarly situated employee because of either employee's status as an employee of the employer; or

(B) A recent history of violent terrorist activity (such as bombings) in the geographic area in which the transportation is provided, unless that activity is focused on a group of individuals which does not include the employee (or a similarly situated employee of an employer), or occurs to a significant degree only in a location within the geographic area where the employee does not travel.

(ii) ***Establishment of overall security program.*** Notwithstanding anything in paragraph (m)(2)(i) of this section to the contrary, no bona fide business-oriented security concern will be deemed to exist unless the employee's employer establishes to the satisfaction of the Commissioner that an overall security program has been provided with respect to the employee involved. An overall security program is deemed to exist if the requirements of paragraph (m)(2)(iv) of this section are satisfied (relating to an independent security study).

(iii) ***Overall security program*** —

(A) ***Defined.*** An overall security program is one in which security is provided to protect the employee on a 24-hour basis. The employee must be protected while at the employee's residence, while commuting to and from the employee's workplace, and while at the employee's workplace. In addition, the employee must be protected while traveling both at home and away from home, whether for business or personal purposes. An overall security program must include the provision of a bodyguard/chauffeur who is trained in evasive driving techniques; an automobile specially equipped for security; guards, metal detectors, alarms, or similar methods of controlling access to the employee's workplace and residence; and, in appropriate cases, flights on the employer's aircraft for business and personal reasons.

(B) ***Application.*** There is no overall security program when, for example, security is provided at the employee's workplace but not at the employee's residence. In addition, the fact that an employer requires an employee to travel on the employer's aircraft, or in an employer-provided vehicle that contains special security features, does not alone constitute an overall security program. The preceding sentence applies regardless of the existence of a corporate or other resolution requiring the employee to travel in the employer's aircraft or vehicle for personal as well as business reasons.

(iv) ***Effect of an independent security study.*** An overall security program with respect to an employee is deemed to exist if the conditions of this paragraph (m)(2)(iv) are satisfied:

(A) A security study is performed with respect to the employer and the employee (or a similarly situated employee of the employer) by an independent security consultant;

(B) The security study is based on an objective assessment of all facts and circumstances;

(C) The recommendation of the security study is that an overall security program (as defined in paragraph (m)(2)(iii) of this section) is not necessary and the recommendation is reasonable under the circumstances; and

(D) The employer applies the specific security recommendations contained in the security study to the employee on a consistent basis.

The value of transportation-related security provided pursuant to a security study that meets the requirements of this paragraph (m)(2)(iv) may be excluded from income if the security study conclusions are reasonable and, but for the bona fide business-oriented security concerns, the employee would not have had such security. No exclusion from income applies to security provided by the employer that is not recommended in the security study. Security study conclusions may be reasonable even if, for example, it is recommended that security be limited to certain geographic areas, as in the case in which air travel security is provided only in certain foreign countries.

(v) ***Independent security study with respect to government employees.*** For purposes of establishing the existence of an overall security program under paragraph (m)(2)(ii) of this section with respect to a particular government employee, a security study conducted by the government employer (including an agency or instrumentality thereof) will be treated as a security study pursuant to paragraph (m)(2)(iv) of this section if, in lieu of the conditions of paragraphs (m)(2)(iv)(A) through (D) of this section, the following conditions are satisfied:

(A) The security study is conducted by a person expressly designated by the government employer as having the responsibility and independent authority to determine both the need for employer-provided security and the appropriate protective services in response to that determination;

(B) The security study is conducted in accordance with written internal procedures that require an independent and objective assessment of the facts and circumstances, such as the nature of the threat to the employee, the appropriate security response to that threat, an estimate of the length of time protective services will be necessary, and the extent to which employer-provided transportation may be necessary during the period of protection;

(C) With respect to employer-provided transportation, the security study evaluates the extent to which personal use, including commuting, by the employee and the employee's spouse and dependents may be necessary during the period of protection and makes a recommendation as to what would be considered reasonable personal use during that period; and

(D) The employer applies the specific security recommendations contained in the study to the employee on a consistent basis.

(3) ***Application of security rules to spouses and dependents*** —

(i) ***In general.*** If a bona fide business-oriented security concern exists with respect to an employee (because, for example, threats are made on the life of an employee), the bona fide business-oriented security concern is deemed to exist with respect to the employee's spouse and dependents to the extent provided in this paragraph (m)(3).

(ii) ***Certain transportation.*** If a working condition fringe exclusion is available under this paragraph (m) for transportation in a vehicle or aircraft provided for a bona fide business-oriented security concern with respect to an employee, the requirements of this paragraph (m) are deemed to be satisfied with respect to transportation in the same vehicle or aircraft provided at the same time to the employee's spouse and dependent children.

(iii) ***Other.*** Except as provided in paragraph (m)(3)(ii) of this section, a bona fide business oriented security concern is deemed to exist for the spouse and dependent children of the employer only if the requirements of paragraph (m)(2) (iii) or (iv) of this section are applied independently to such spouse and dependent children.

(iv) ***Spouses and dependents of government employees.*** The security rules of this paragraph (m)(3) apply to the spouse and dependents of a government employee. However, the value of local vehicle transportation provided to the government employee's spouse and dependents for personal purposes, other than commuting, during the period that a bona fide business-oriented security concern exists with respect to the government employee will not be included in the government employee's gross income if the personal use is determined to be reasonable and necessary by the security study described in paragraph (m)(2)(v) of this section.

(4) ***Working condition safe harbor for travel on employer-provided aircraft.*** Under the safe harbor rule of this paragraph (m)(4), if, for a bona fide business-oriented security concern, the employer requires that an employee travel on an employer-provided aircraft for a personal trip, the employer and the employee may exclude from the employee's gross income, as a working condition fringe, the excess value of the aircraft trip over the safe harbor airfare without having to show what method of transportation the employee would have flown but for the bona fide business-oriented security concern. For purposes of the safe harbor rule of this paragraph (m)(4), the value of the safe harbor airfare is determined under the non-commercial flight valuation rule of § 1.61-21(g) (regardless of whether the employer or employee elects to use such valuation rule) by multiplying an aircraft multiple of 200-percent by the applicable cents-per-mile rates and the number of miles in the flight and then adding the applicable terminal charge. The value of the safe harbor airfare determined under this paragraph (m)(4) must be included in the employee's income (to the extent not reimbursed by the employee) regardless of whether the employee or the employer uses the special valuation rule of § 1.61-21(g). The excess of the value of the aircraft trip over this amount may be excluded from gross income as a working condition fringe. If, for a bona fide business-oriented security concern, the employer requires that an employee's spouse and dependents travel on an employer-provided aircraft for a personal trip, the special rule of this paragraph (m)(4) is available to exclude the excess value of the aircraft trips over the safe harbor airfares.

(5) ***Bodyguard/chauffeur provided for a bona fide business-oriented security concern.*** If an employer provides an employee with vehicle transportation and a bodyguard/chauffeur for a bona fide business-oriented security concern, and but for the bona fide business-oriented security concern the employee would not have had a bodyguard or a chauffeur, then the entire value of the services of the bodyguard/chauffeur is excludable from gross income as a working condition fringe. For purposes of this section, a bodyguard/chauffeur must be trained in evasive driving techniques. An individual who performs services as a driver for an employee is not a bodyguard/chauffeur if the individual is not trained in evasive driving techniques. Thus, no part of the value of the services of such an individual is excludable from gross income under this paragraph (m)(5). (See paragraph (b)(3) of this section for rules relating to the determination of the working condition fringe exclusion for chauffeur services.)

(6) ***Special valuation rule for government employees.*** If transportation is provided to a government employee for commuting during the period that a bona fide business-oriented security concern under § 1.132-5(m) exists, the commuting use may be valued by reference to the values set forth in § 1.61-21(e)(1)(i) or (f)(3) (vehicle cents-per-mile or commuting valuation of $1.50 per one-way commute, respectively) without regard to the additional requirements contained in § 1.61-21 (e) or (f) and is deemed to have met the requirements of § 1.61-21(c).

(7) ***Government employer and employee defined.*** For purposes of this paragraph (m), “government employer” includes any Federal, State, or local government unit, and any agency or instrumentality thereof. A “government employee” is any individual who is employed by the government employer.

(8) ***Examples.*** The provisions of this paragraph (m) may be illustrated by the following examples:

> ***Example 1.*** Assume that in response to several death threats on the life of A, the president of X a multinational company, X establishes an overall security program for A, including an alarm system at A's home and guards at A's workplace, the use of a vehicle that is specially equipped with alarms, bulletproof glass, and armor plating, and a bodyguard/chauffeur. Assume further that A is driven for both personal and business reasons in the vehicle. Also, assume that but for the bona fide business-oriented security concerns, no part of the overall security program would have been

provided to A. With respect to the transportation provided for security reasons, A may exclude as a working condition fringe the value of the special security features of the vehicle and the value attributable to the bodyguard/chauffeur. Thus, if the value of the specially equipped vehicle is $40,000, and the value of the vehicle without the security features is $25,000, A may determine A's inclusion in income attributable to the vehicle as if the vehicle were worth $25,000. A must include in income the value of the availability of the vehicle for personal use.

Example 2. Assume that B is the chief executive officer of Y, a multinational corporation. Assume further that there have been kidnapping attempts and other terrorist activities in the foreign countries in which B performs services and that at least some of such activities have been directed against B or similarly situated employees. In response to these activities, Y provides B with an overall security program, including an alarm system at B's home and bodyguards at B's workplace, a bodyguard/chauffeur, and a vehicle specially designed for security during B's overseas travels. In addition, assume that Y requires B to travel in Y's airplane for business and personal trips taken to, from, and within these foreign countries. Also, assume that but for bona fide business-oriented security concerns, no part of the overall security program would have been provided to B. B may exclude as a working condition fringe the value of the special security features of the automobile and the value attributable to the bodyguards and the bodyguard/chauffeur. B may also exclude the excess, if any, of the value of the flights over the amount A would have paid for the same mode of transportation but for the security concerns. As an alternative to the preceding sentence, B may use the working condition safe harbor described in paragraph (m)(4) of this section and exclude as a working condition fringe the excess, if any, of the value of personal flights in the Y airplane over the safe harbor airfare determined under the method described in paragraph (m)(4) of this section. If this alternative is used, B must include in income the value of the availability of the vehicle for personal use and the value of the safe harbor.

Example 3. Assume the same facts as in example (2) except that Y also requires B to travel in Y's airplane within the United States, and provides B with a chauffeur-driven limousine for business and personal travel in the United States. Assume further that Y also requires B's spouse and dependents to travel in Y's airplane for personal flights in the United States. If no bona fide business-oriented security concern exists with respect to travel in the United States, B may not exclude from income any portion of the value of the availability of the chauffeur or limousine for personal use in the United States. Thus, B must include in income the value of the availability of the vehicle and chauffeur for personal use. In addition, B may not exclude any portion of the value attributable to personal flights by B or B's spouse and dependents on Y's airplane. Thus, B must include in income the value attributable to the personal use of Y's airplane. See § 1.61-21 for rules relating to the valuation of an employer-provided vehicle and chauffeur, and personal flights on employer-provided airplanes.

Example 4. Assume that company Z retains an independent security consultant to perform a security study with respect to its chief executive officer. Assume further that, based on an objective assessment of the facts and circumstances, the security consultant reasonably recommends that 24-hour protection is not necessary but that the employee be provided security at his workplace and for ground transportation, but not for air transportation. If company Z follows the recommendations on a consistent basis, an overall security program will be deemed to exist with respect to the workplace and ground transportation security only.

Example 5. Assume the same facts as in example (4) except that company Z only provides the employee security while commuting to and from work, but not for any other ground transportation. Because the recommendations of the independent security study are not applied on a consistent basis, an overall security program will not be deemed to exist. Thus, the value of commuting to and from work is not excludable from income. However, the value of a bodyguard with professional security training who does not provide chauffeur or other personal services to the employee or any member of the employee's family may be excludable as a working condition fringe if such expense would be otherwise allowable as a deduction by the employee under section 162 or 167.

Example 6. J is a United States District Judge. At the beginning of a 3-month criminal trial in J's court, a member of J's family receives death threats. M, the division (within government agency W) responsible for evaluating threats and providing protective services to the Federal judiciary, directs its threat analysis unit to conduct a security study with respect to J and J's family. The study is conducted pursuant to internal written procedures that require an independent and objective assessment of any threats to members of the Federal judiciary and their families, a statement of the requisite security response, if any, to a particular threat (including the form of transportation to be furnished to the employee as part of the security program), and a description of the circumstances under which local transportation for the employee and the employee's spouse and dependents may be necessary for personal reasons during the time protective services are provided. M's study concludes that a bona fide business-oriented security concern exists with respect to J and J's family and determines that 24-hour protection of J and J's family is not necessary, but that protection is necessary during the course of the criminal trial whenever J or J's family is away from home. Consistent with that recommendation, J is transported every day in a government vehicle for both personal and business reasons and is accompanied by two bodyguard/chauffeurs who have been trained in evasive driving techniques. In addition, J's spouse is driven to and from work and J's children are driven to and from school and occasional school activities. Shortly after the trial is concluded, M's threat analysis unit determines that J and J's family no longer need special protection because the danger posed by the threat no longer exists and, accordingly, vehicle transportation is no longer provided. Because the security study conducted by M complies with the conditions of § 1.132-5(m)(2)(v), M has satisfied the requirement for an independent security study and an overall security program with respect to J is deemed to exist. Thus, with respect to the transportation provided for security concerns, J may exclude as a working condition fringe the value of any special security features of the government vehicle and the value attributable to the two bodyguard/chauffeurs. See *Example (1)* of this paragraph (m)(8). The value of vehicle transportation provided to J and J's family for personal reasons, other than commuting, may also be excluded during the period of protection, because its provision was consistent with the recommendation of the security study.

Example 7. Assume the same facts as in *Example (6)* and that J's one-way commute between home and work is 10 miles. Under paragraph (m)(6) of this section, the Federal Government may value transportation provided to J for commuting purposes pursuant to the value set forth in either the vehicle cents-per-mile rule of § 1.61-21(e) or the commuting valuation rule of § 1.61-21(f). Because the commuting valuation rule yields the least amount of taxable income to J under the circumstances, W values the transportation provided to J for commuting at $1.50 per one-way commute, even though J is a control employee within the meaning of § 1.61-21(f)(6).

(n) *Product testing* —

(1) ***In general.*** The fair market value of the use of consumer goods, which are manufactured for sale to nonemployees, for product testing and evaluation by an employee of the manufacturer outside the employer's workplace, is excludible from gross income as a working condition fringe if—

(i) Consumer testing and evaluation of the product is an ordinary and necessary business expense of the employer;

(ii) Business reasons necessitate that the testing and evaluation of the product be performed off the employer's business premises by employees (*i.e.*, the testing and evaluation cannot be carried out adequately in the employer's office or in laboratory testing facilities);

(iii) The product is furnished to the employee for purposes of testing and evaluation;

(iv) The product is made available to the employee for no longer than necessary to test and evaluate its performance and (to the extent not exhausted) must be returned to the employer at completion of the testing and evaluation period;

(v) The employer imposes limits on the employee's use of the product that significantly reduce the value of any personal benefit to the employee; and

(vi) The employee must submit detailed reports to the employer on the testing and evaluation. The length of the testing and evaluation period must be reasonable in relation to the product being tested.

(2) ***Employer-imposed limits.*** The requirement of paragraph (n)(1)(v) of this section is satisfied if—

(i) The employer places limits on the employee's ability to select among different models or varieties of the consumer product that is furnished for testing and evaluation purposes; and

(ii) The employer generally prohibits use of the product by persons other than the employee and, in appropriate cases, requires the employee, to purchase or lease at the employee's own expense the same type of product as that being tested (so that personal use by the employee's family will be limited). In addition, any charge by the employer for the personal use by an employee of a product being tested shall be taken into account in determining whether the requirement of paragraph (n)(1)(v) of this section is satisfied.

(3) ***Discriminating classifications.*** If an employer furnishes products under a testing and evaluation program only, or presumably, to certain classes of employees (such as highly compensated employees, as defined in § 1.132-8(g)), this fact may be relevant when determining whether the products are furnished for testing and evaluation purposes or for compensation purposes, unless the employer can show a business reason for the classification of employees to whom the products are furnished (e.g., that automobiles are furnished for testing and evaluation by an automobile manufacturer to its design engineers and supervisory mechanics).

(4) ***Factors that negate the existence of a product testing program.*** If an employer fails to tabulate and examine the results of the detailed reports submitted by employees within a reasonable period of time after expiration of the testing period, the program will not be considered a product testing program for purposes of the exclusion of this paragraph (n). Existence of one or more of the following factors may also establish that the program is not a bona fide product testing program for purposes of the exclusion of this paragraph (n):

(i) The program is in essence a leasing program under which employees lease the consumer goods from the employer for a fee;

(ii) The nature of the product and other considerations are insufficient to justify the testing program; or

(iii) The expense of the program outweighs the benefits to be gained from testing and evaluation.

(5) ***Failure to meet the requirements of this paragraph (n).*** The fair market value of the use of property for product testing and evaluation by an employee outside the employee's workplace, under a product testing program that does not meet all of the requirements of this paragraph (n), is not excludable from gross income as a working condition fringe under this paragraph (n).

(6) ***Example.*** The rules of this paragraph (n) may be illustrated by the following example:

Example. Assume that an employer that manufactures automobiles establishes a product testing program under which 50 of its 5,000 employees test and evaluate the automobiles for 30 days. Assume further that the 50 employees represent a fair cross-section of all of the employees of the employer, such employees submit detailed reports to the employer on the testing and evaluation, the employer tabulates and examines the test results within a reasonable time, and the use of the automobiles is restricted to the employees. If the employer imposes the limits described in paragraph (n)(2) of this section, the employees may exclude the value of the use of the automobile during the testing and evaluation period.

(o) ***Qualified automobile demonstration use*** —

(1) ***In general.*** The value of qualified automobile demonstration use is excludable from gross income as a working condition fringe. “Qualified automobile demonstration use” is any use of a demonstration automobile by a full-time automobile salesman in the sales area in which the automobile dealer's sales office is located if—

(i) Such use is provided primarily to facilitate the salesman's performance of services for the employer; and

(ii) There are substantial restrictions on the personal use of the automobile by the salesman.

(2) ***Full-time automobile salesman*** —

(i) ***Defined.*** The term “full-time automobile salesman” means any individual who—

(A) Is employed by an automobile dealer;

(B) Customarily spends at least half of a normal business day performing the functions of a floor salesperson or sales manager;

(C) Directly engages in substantial promotion and negotiation of sales to customers;

(D) Customarily works a number of hours considered full-time in the industry (but at a rate not less than 1,000 hours per year); and

(E) Derives at least 25 percent of his or her gross income from the automobi1e dealership directly as a result of the activities described in paragraphs (o)(2)(i) (B) and (C) of this section.

For purposes of paragraph (o)(2)(i) (E) of this section, income is not considered to be derived directly as a result of activities described in paragraphs (o)(2)(i) (B) and (C) of this section to the extent that the income is attributable to an individual's ownership interest in the dealership. An individual will not be considered to engage in direct sales activities if the individual's sales-related activities are substantially limited to review of sales price offers from customers. An individual, such as the general manager of an automobi1e dealership, who receives a sales commission on the sale of an automobile is not a full-time automobile salesman unless the requirements of this paragraph (o)(2)(i) are met. The exclusion provided in this paragraph (o) is available to an individual who meets the definition of this paragraph (o)(2)(i) whether the individual performs services in addition to those described in this paragraph (o)(2)(i). For example, an individual who is an owner of the automobile dealership but who otherwise meets the requirements of this paragraph (o)(2)(i) may exclude from gross income the value of qualified automobile demonstration use. However, the exclusion of this paragraph (o) is not available to owners of large automobile dealerships who do not customarily engage in significant sales activities.

(ii) ***Use by an individual other than a full-time automobile salesman.*** Personal use of a demonstration automobile by an individual other than a full-time automobile salesman is not treated as a working condition fringe. Therefore, any personal use, including commuting use, of a demonstration automobile by a part-time salesman, automobile mechanic, or other individual who is not a full-time automobile salesman is not “qualified automobile demonstration use” and thus not excludable from gross income. This is the case whether or not the personal use is within the sales area (as defined in paragraph (o)(5) of this section).

(3) ***Demonstration automobile.*** The exclusion provided in this paragraph (o) applies only to qualified use of a demonstration automobile. A demonstration automobile is an automobile that is—

(i) Currently in the inventory of the automobile dealership; and

(ii) Available for test drives by customers during the normal business hours of the employee.

(4) ***Substantial restrictions on personal use.*** Substantial restrictions on the personal use of a demonstration automobile exist when all of the following conditions are satisfied:

(i) Use by individuals other than the full-time automobile salesmen (e.g., the salesman's family) is prohibited;

(ii) Use for personal vacation trips is prohibited;

(iii) The storage of personal possessions in the automobile is prohibited; and

(iv) The total use by mileage of the automobile by the salesman outside the salesman's normal working hours is limited.

(5) ***Sales area*** —

(i) ***In general.*** Qualified automobile demonstration use consists of use in the sales area in which the automobile dealer's sales office is located. The sales area is the geographic area surrounding the automobile dealer's sales office from which the office regularly derives customers.

(ii) ***Sales area safe harbor.*** With respect to a particular full-time salesman, the automobile dealer's sales area may be treated as the area within a radius of the larger of—

(A) 75 miles or

(B) The one-way commuting distance (in miles) of the particular salesman from the dealer's sales office.

(6) ***Applicability of substantiation requirements of sections 162 and 274(d).*** Notwithstanding anything in this section to the contrary, the value of the use of a demonstration automobile may not be excluded from gross income as a working condition fringe, by either the employer or the employee, unless, with respect to the restrictions of paragraph (o)(4) of this section, the substantiation requirements of section 274(d) and the regulations thereunder are satisfied. See § 1.132-5(c) for general and safe harbor rules relating to the applicability of the substantiation requirements of section 274(d).

(7) ***Special valuation rules.*** See § 1.61-21(d)(6)(ii) for special rules that may be used to value the availability of demonstration automobiles.

(p) ***Parking*** —

(1) ***In general.*** The value of parking provided to an employee on or near the business premises of the employer is excludable from gross income as a working condition fringe under the special rule of this paragraph (p). If the rules of this paragraph (p) are satisfied, the value of parking is excludable from gross income whether the amount paid by the employee for parking would be deductible under section 162. The working condition fringe exclusion applies whether the employer owns or rents the parking facility or parking space.

(2) ***Reimbursement of parking expenses.*** A reimbursement to the employee of the ordinary and necessary expenses of renting a parking space on or near the business premises of the employer is excludable from gross income as a working condition fringe, if, but for the parking expense, the employee would not have been entitled to receive and retain such amount from the employer. If, however an employee is entitled to retain a general transportation allowance or a similar benefit whether or not the employee has parking expenses, no portion of that allowance is excludable from gross income under this paragraph (p) even if it is used for parking expenses.

(3) ***Parking on residential property.*** With respect to an employee, this paragraph (p) does not apply to any parking facility or space located on property owned or leased by the employee for residential purposes.

(4) ***Dates of applicability.*** This paragraph (p) applies to benefits provided before January 1, 1993. For benefits provided after December 31, 1992, see § 1.132-9.

(q) ***Nonapplicability of nondiscrimination rules.*** Except to the extent provided in paragraph (n)(3) of this section (relating to discriminating classifications of a product testing program), the nondiscrimination rules of section 132 (h)(1) and § 1.132-8 do not apply in determining the amount, if any, of a working condition fringe.

(r) ***Volunteers*** —

(1) ***In general.*** Solely for purposes of section 132(d) and paragraph (a)(1) of this section, a bona fide volunteer (including a director or officer) who performs services for an organization exempt from tax under section 501(a), or for a government employer (as defined in paragraph (m)(7) of this section), is deemed to have a profit motive under section 162.

(2) ***Limit on application of this paragraph.*** This paragraph (r) shall not be used to support treatment of the bona fide volunteer as having a profit motive for purposes of any provision of the Internal Revenue Code of 1986 (Code) other than section 132(d). Nothing in this paragraph (r) shall be interpreted as determining the employment status of a bona fide volunteer for purposes of any section of the Code other than section 132(d).

(3) ***Definitions*** —

(i) ***Bona fide volunteer.*** For purposes of this paragraph (r), an individual is considered a "bona fide volunteer" if the individual does not have a profit motive for purposes of section 162. For example, an individual is considered a "bona fide volunteer" if the total value of the benefits provided with respect to the volunteer services is substantially less than the total value of the volunteer services the individual provides to an exempt organization or government employer.

(ii) ***Liability insurance coverage for a bona fide volunteer.*** For purposes of this paragraph (r), the receipt of liability insurance coverage by a volunteer, or an exempt organization or government employer's undertaking to indemnify the volunteer for liability, does not by itself confer a profit motive on the volunteer, provided the insurance coverage or indemnification relates to acts performed by the volunteer in the discharge of duties, or the performance of services, on behalf of the exempt organization or government employer.

(4) ***Example.*** The following example illustrates the provisions of paragraph (r) of this section.

Example. A is a manager and full-time employee of P, a tax-exempt organization described in section 501(c)(3). B is a member of P's board of directors. Other than $25 to defray expenses for attending board meetings, B receives no compensation for serving as a director and does not have a profit motive. Therefore, B is a bona fide volunteer by application of paragraph (r)(3)(i) of this section and is deemed to have a profit motive under paragraph (r)(1) of this section for purposes of section 132(d). In order to provide liability insurance coverage, P purchases a policy that covers actions arising from A's and B's activities performed as part of their duties to P. The value of the policy and payments made to or on behalf of A under the policy are excludable for A's gross income as a working condition fringe, because A has a profit motive under section 162 and would be able to deduct payments for liability insurance coverage had he paid for it himself. The receipt of liability insurance coverage by B does not confer a profit motive on B by application of paragraph (r)(3)(ii) of this section. Thus, the value of the policy and payments made to or on behalf of B under the policy are excludable from B's income as a working condition fringe. For the year in which the liability insurance coverage is provided to A and B, P may exclude the value of the benefit on the Form W-2 it issues to A or on any Form 1099 it might otherwise issue to B.

(s) ***Application of section 274(a)(3)*** —

(1) ***In general.*** If an employer's deduction under section 162(a) for dues paid or incurred for membership in any club organized for business, pleasure, recreation, or other social purpose is disallowed by section 274(a)(3), the amount, if any, of an employee's working condition fringe benefit relating to an employer-provided membership in the club is determined without regard to the application of section 274(a) to the employee. To be excludible as a working condition fringe benefit, however, the amount must otherwise qualify for deduction by the employee under section 162(a). If an employer treats the amount paid or incurred for membership in any club organized for business, pleasure, recreation, or

other social purpose as compensation under section 274(e)(2), then the expense is deductible by the employer as compensation and no amount may be excluded from the employee's gross income as a working condition fringe benefit. See § 1.274-2(f)(2)(iii)(A).

(2) ***Treatment of tax-exempt employers.*** In the case of an employer exempt from taxation under subtitle A of the Internal Revenue Code, any reference in this paragraph (s) to a deduction disallowed by section 274(a)(3) shall be treated as a reference to the amount which would be disallowed as a deduction by section 274(a)(3) to the employer if the employer were not exempt from taxation under subtitle A of the Internal Revenue Code.

(3) ***Examples.*** The following examples illustrate this paragraph (s):

Example 1. Assume that Company *X* provides Employee *B* with a country club membership for which it paid $20,000. B substantiates, within the meaning of paragraph (c) of this section, that the club was used 40 percent for business purposes. The business use of the club (40 percent) may be considered a working condition fringe benefit, notwithstanding that the employer's deduction for the dues allocable to the business use is disallowed by section 274(a)(3), if *X* does not treat the club membership as compensation under section 274(e)(2). Thus, *B* may exclude from gross income $8,000 (40 percent of the club dues, which reflects *B*'s business use). *X* must report $12,000 as wages subject to withholding and payment of employment taxes (60 percent of the value of the club dues, which reflects *B*'s personal use). *B* must include $12,000 in gross income. *X* may deduct as compensation the amount it paid for the club dues which reflects *B*'s personal use provided the amount satisfies the other requirements for a salary or compensation deduction under section 162.

Example 2. Assume the same facts as *Example 1* except that Company *X* treats the $20,000 as compensation to *B* under section 274(e)(2). No portion of the $20,000 will be considered a working condition fringe benefit because the section 274(a)(3) disallowance will apply to *B*. Therefore, *B* must include $20,000 in gross income.

(t) ***Application of section 274(m)(3)*** —

(1) ***In general.*** If an employer's deduction under section 162(a) for amounts paid or incurred for the travel expenses of a spouse, dependent, or other individual accompanying an employee is disallowed by section 274(m)(3), the amount, if any, of the employee's working condition fringe benefit relating to the employer-provided travel is determined without regard to the application of section 274(m)(3). To be excludible as a working condition fringe benefit, however, the amount must otherwise qualify for deduction by the employee under section 162(a). The amount will qualify for deduction and for exclusion as a working condition fringe benefit if it can be adequately shown that the spouse's, dependent's, or other accompanying individual's presence on the employee's business trip has a bona fide business purpose and if the employee substantiates the travel within the meaning of paragraph (c) of this section. If the travel does not qualify as a working condition fringe benefit, the employee must include in gross income as a fringe benefit the value of the employer's payment of travel expenses with respect to a spouse, dependent, or other individual accompanying the employee on business travel. See §§ 1.61-21(a)(4) and 1.162-2(c). If an employer treats as compensation under section 274(e)(2) the amount paid or incurred for the travel expenses of a spouse, dependent, or other individual accompanying an employee, then the expense is deductible by the employer as compensation and no amount may be excluded from the employee's gross income as a working condition fringe benefit. See § 1.274-2(f)(2)(iii)(A).

(2) ***Treatment of tax-exempt employers.*** In the case of an employer exempt from taxation under subtitle A of the Internal Revenue Code, any reference in this paragraph (t) to a deduction disallowed by section 274(m)(3) shall be treated as a reference to the amount which would be disallowed as a deduction by section 274(m)(3) to the employer if the employer were not exempt from taxation under subtitle A of the Internal Revenue Code.

[T.D. 8256, 54 FR 28608, July 6, 1989, as amended by T.D. 8451, 57 FR 57669, Dec. 7, 1992; T.D. 8457, 57 FR 62196, Dec. 30, 1992; T.D. 8666, 61 FR 27006, May 30, 1996; T.D. 8933, 66 FR 2244, Jan. 11, 2001; T.D. 9483, 75 FR 27936, May 19, 2010; T.D. 10043, 91 FR 13502, Mar. 20, 2026]

§ 1.132-6 De minimis fringes.

(a) ***In general.*** Gross income does not include the value of a de minimis fringe provided to an employee. The term "de minimis fringe" means any property or service the value of which is (after taking into account the frequency with which similar fringes are provided by the employer to the employer's employees) so small as to make accounting for it unreasonable or administratively impracticable.

(b) ***Frequency*** —

(1) ***Employee-measured frequency.*** Generally, the frequency with which similar fringes are provided by the employer to the employer's employees is determined by reference to the frequency with which the employer provides the fringes to each individual employee. For example, if an employer provides a free meal in kind to one employee on a daily basis, but not to any other employee, the value of the meals is not de minimis with respect to that one employee even though with respect to the employer's entire workforce the meals are provided "infrequently."

(2) ***Employer-measured frequency.*** Notwithstanding the rule of paragraph (b)(1) of this section, except for purposes of applying the special rules of paragraph (d)(2) of this section, where it would be administratively difficult to determine frequency with respect to individual employees, the frequency with which similar fringes are provided by the employer to the employer's employees is determined by reference to the frequency with which the employer provides the fringes to the workforce as a whole. Therefore, under this rule, the frequency with which any individual employee receives such a fringe benefit is not relevant and in some circumstances, the de minimis fringe exclusion may apply with respect to a benefit even though a particular employee receives the benefit frequently. For example, if an employer exercises sufficient control and imposes significant restrictions on the personal use of a company copying machine so that at least 85 percent of the use of the machine is for business purposes, any personal use of the copying machine by particular employees is considered to be a de minimis fringe.

(c) ***Administrability.*** Unless excluded by a provision of chapter 1 of the Internal Revenue Code of 1986 other than section 132(a)(4), the value of any fringe benefit that would not be unreasonable or administratively impracticable to account for is includible in the employee's gross income. Thus, except as provided in paragraph (d)(2) of this section, the provision of any cash fringe benefit is never excludable under section 132(a) as a de minimis fringe benefit. Similarly except as otherwise provided in paragraph (d) of this section, a cash equivalent fringe benefit (such as a fringe benefit provided to an employee through the use of a gift certificate or charge or credit card) is generally not excludable under section 132(a) even if the same property or service acquired (if provided in kind) would be excludable as a de minimis fringe benefit. For example, the provision of cash to an employee for a theatre ticket that would itself be excludable as a de minimis fringe (see paragraph (e)(1) of this section) is not excludable as a de minimis fringe.

(d) ***Special rules*** —

(1) ***Transit passes.*** A public transit pass provided at a discount to defray an employee's commuting costs may be excluded from the employee's gross income as a de minimis fringe if such discount does not exceed $21 in any month. The exclusion provided in this paragraph (d)(1) also applies to the provision of tokens or fare cards that enable an individual to travel on the public transit system if the value of such tokens and fare cards in any month does not exceed by more than $21 the amount the employee paid for the tokens and fare cards for such month. Similarly, the exclusion of this paragraph (d)(1) applies to the provision of a voucher or similar instrument that is exchangeable solely for tokens, fare cards, or other instruments that enable the employee to use the public transit system if the value of such vouchers and other instruments in any month does not exceed $21. The exclusion of this paragraph (d)(1) also applies to reimbursements made by an employer to an employee after December 31, 1988, to cover the cost of commuting on a public transit system, provided the employee does not receive more than $21 in such reimbursements for commuting costs in any given month. The reimbursement must be made under a bona fide reimbursement arrangement. A reimbursement arrangement will be treated as bona fide if the employer establishes appropriate procedures for verifying on a periodic basis that the employee's use of public transportation for commuting is consistent with the value of the benefit provided by the employer for that purpose. The amount of in-kind public transit commuting benefits and reimbursements provided during any month that are excludible under this paragraph (d)(1) is limited to $21. For months ending before July 1, 1991, the amount is $15 per month. The exclusion provided in this paragraph (d)(1) does not apply to the provision of any benefit to defray public transit expenses incurred for personal travel other than commuting.

(2) ***Occasional meal money or local transportation fare*** —

(i) ***General rule.*** Meals, meal money or local transportation fare provided to an employee is excluded as a de minimis fringe benefit if the benefit provided is reasonable and is provided in a manner that satisfies the following three conditions:

(A) ***Occasional basis.*** The meals, meal money or local transportation fare is provided to the employee on an occasional basis. Whether meal money or local transportation fare is provided to an employee on an occasional basis will depend upon the frequency *i.e.*, the availability of the benefit and regularity with which the benefit is provided by the employer to the employee. Thus, meals, meal money, or local transportation fare or a combination of such benefits provided to an employee on a regular or routine basis is not provided on an occasional basis.

(B) ***Overtime.*** The meals, meal money or local transportation fare is provided to an employee because overtime work necessitates an extension of the employee's normal work schedule. This condition does not fail to be satisifed merely because the circumstances giving rise to the need for overtime work are reasonably foreseeable.

(C) ***Meal money.*** In the case of a meal or meal money, the meal or meal money is provided to enable the employee to work overtime. Thus, for example, meals provided on the employer's premises that are consumed during the period that the employee works overtime or meal money provided for meals consumed during such period satisfy this condition.

In no event shall meal money or local transportation fare calculated on the basis of the number of hours worked (e.g., $1.00 per hour for each hour over eight hours) be considered a de minimis fringe benefit.

(ii) ***Applicability of other exclusions for certain meals and for transportation provided for security concerns.*** The value of meals furnished to an employee, an employee's spouse, or any of the employee's dependents by or on behalf of the employee's employer for the convenience of the employer is excluded from the employee's gross income if the meals are furnished on the business premises of the employer (see section 119). (For purposes of the exclusion under section 119, the definitions of an employee under § 1.132-1(b) do not apply.) If, for a bona fide business-oriented security concern, an employer provides an employee vehicle transportation that is specially designed for security (for example, the vehicle is equipped with bulletproof glass and armor plating), and the conditions of § 1.132-5(m) are satisfied, the value of the special security design is excludable from gross income as a working condition fringe if the employee would not have had such special security design but for the bona fide business-oriented security concern.

(iii) ***Special rule for employer-provided transportation provided in certain circumstances.***

(A) ***Partial exclusion of value.*** If an employer provides transportation (such as taxi fare to an employee for use in commuting to and/or from work because or unusual circumstances and because, based on the facts and circumstances, it is unsafe for the employee to use other available means of transportation, the excess of the value of each one-way trip over $1.50 per one-way commute is excluded from gross income. The rule of this paragraph (d)(2)(iii) is not available to a control employee as defined in § 1.61-21(f) (5) and (6).

(B) ***"Unusual circumstances".*** Unusual circumstances are determined with respect to the employee receiving the transportation and are based on all facts and circumstances. An example of unusual circumstances would be when an employee is asked to work outside of his normal work hours (such as being called to the workplace at 1:00 am when the employee normally works from 8:00 am to 4:00 pm). Another example of unusual circumstances is a temporary change in the employee's work schedule (such as working from 12 midnight to 8:00 am rather than from 8:00 am to 4:00 pm for a two-week period).

(C) ***"Unsafe conditions".*** Factors indicating whether it is unsafe for an employee to use other available means of transportation are the history of crime in the geographic area surrounding the employee's workplace or residence and the time of day during which the employee must commute.

(3) ***Use of special rules or examples to establish a general rule.*** The special rules provided in this paragraph (d) or examples provided in paragraph (e) of this section may not be used to establish any general rule permitting exclusion as a de minimis fringe. For example, the fact that $252 (*i.e.*, $21 per month for 12 months) worth of public transit passes can be excluded from gross income as a de minimis fringe in 1992 does not mean that any fringe benefit with a value equal to or less than $252 may be excluded as a de minimis fringe. As another example, the fact that the commuting use of an employer-provided vehicle more than one day a month is an example of a benefit not excludable as a de minimis fringe (see paragraph (e)(2) of this section) does not mean that the commuting use of a vehicle up to 12 times per year is excludable from gross income as a de minimis fringe.

(4) ***Benefits exceeding value and frequency limits.*** If a benefit provided to an employee is not de minimis because either the value or frequency exceeds a limit provided in this paragraph (d), no amount of the benefit is considered to be a de minimis fringe. For example, if, in 1992, an employer provides a $50 monthly public transit pass, the entire $50 must be included in income, not just the excess value over $21.

(e) *Examples* —

(1) ***Benefits excludable from income.*** Examples of de minimis fringe benefits are occasional typing of personal letters by a company secretary; occasional personal use of an employer's copying machine, provided that the employer exercises sufficient control and imposes significant restrictions on the personal use of the machine so that at least 85 percent of the use of the machine is for business purposes; occasional cocktail parties, group meals, or picnics for employees and their guests; traditional birthday or holiday gifts of property (not cash) with a low fair market value; occasional theater or sporting event tickets; coffee, doughnuts, and soft drinks; local telephone calls; and flowers, fruit, books, or similar property provided to employees under special circumstances (e.g., on account of illness, outstanding performance, or family crisis).

(2) ***Benefits not excludable as de minimis fringes.*** Examples of fringe benefits that are not excludable from gross income as de minimis fringes are: season tickets to sporting or theatrical events; the commuting use of an employer-provided automobile or other vehicle more than one day a month; membership in a private country club or athletic facility, regardless of the frequency with which the employee uses the facility; employer-provided group-term life insurance on the life of the spouse or child of an employee; and use of employer-owned or leased facilities (such as an apartment, hunting lodge, boat, etc.) for a weekend. Some amount of the value of certain of these fringe benefits may be excluded from income under other statutory provisions, such as the exclusion for working condition fringes. See § 1.132-5.

(f) ***Nonapplicability of nondiscrimination rules.*** Except to the extent provided in § 1.132-7, the nondiscrimination rules of section 132(h)(1) and § 1.132-8 do not apply in determining the amount, if any, of a de minimis fringe. Thus, a fringe benefit may be excludable as a de minimis fringe even if the benefit is provided exclusively to highly compensated employees of the employer.

[T.D. 8256, 54 FR 28615, July 6, 1989, as amended by T.D. 8389, 57 FR 1871, Jan. 16, 1992; 57 FR 5982, Feb. 19, 1992]

§ 1.132-7 Employer-operated eating facilities.

(a) *In general* —

(1) *Condition for exclusion* —

(i) ***General rule.*** The value of meals provided to employees at an employer-operated eating facility for employees is excludable from gross income as a de minimis fringe only if on an annual basis, the revenue from the facility equals or exceeds the direct operating costs of the facility.

(ii) ***Additional condition for highly compensated employees.*** With respect to any highly compensated employee, an exclusion is available under this section only if the condition set out in paragraph (a)(1)(i) of this section is satisfied and access to the facility is available on substantially the same terms to each member of a group of employees that is defined under a reasonable classification set up by the employer that does not discriminate in favor of highly compensated employees. See § 1.132-8. For purposes of this paragraph (a)(1)(ii), each dining room or cafeteria in which meals are served is treated as a separate eating facility, whether each such dining room or cafeteria has its own kitchen or other food-preparation area.

(2) ***Employer-operated eating facility for employees.*** An employer-operated eating facility for employees is a facility that meets all of the following conditions—

(i) The facility is owned or leased by the employer,

(ii) The facility is operated by the employer,

(iii) The facility is located on or near the business premises of the employer, and

(iv) The meals furnished at the facility are provided during, or immediately before or after, the employee's workday.

For purposes of this section, the term “meals” means food, beverages, and related services provided at the facility. If an employer can reasonably determine the number of meals that are excludable from income by the recipient employees under section 119, the employer may, in determining whether the requirement of paragraph (a)(1)(i) of this section is satisfied, disregard all costs and revenues attributable to such meals provided to such employees. If an employer can reasonably determine the number of meals received by volunteers who receive food and beverages at a hospital, free or at a discount, the employer may, in determining whether the requirement of paragraph (a)(1)(i) of this section is satisfied, disregard all costs and revenues attributable to such meals provided to such volunteers. If an employer charges nonemployees a greater amount than employees, in determining whether the requirement of paragraph (a)(1)(i) of this section is satisfied, the employer must disregard all costs and revenues attributable to such meals provided to such nonemployees.

(3) ***Operation by the employer.*** If an employer contracts with another to operate an eating facility for its employees, the facility is considered to be operated by the employer for purposes of this section. If an eating facility is operated by more than one employer, it is considered to be operated by each employer.

(4) ***Example.*** The provisions of this paragraph (a)(2) may be illustrated by the following example:

Example 1. Assume that a not-for-profit hospital system maintains cafeterias for the use of its employees and volunteers. Only the employees are charged for food service at the cafeteria and the policy of the hospital is to charge the employees only for the costs of food, beverage and labor directly attributable to the meal. Most of the cafeterias within the system furnish more free meals to volunteers than they serve paid meals to employees. For purposes of this paragraph, as long as the employer can accurately determine the number of meals received free or at a discount by volunteers, the employer may disregard all the costs and revenues attributable to such meals provided to volunteers. Therefore, for purposes of this paragraph, the costs of the hospital system for furnishing meals to employees who pay for them are the costs to be compared to determine if the revenues from the facility equal or exceed direct operating costs of the facility's service to employees.

(b) ***Direct operating costs*** —

(1) ***In general.*** For purposes of this section, the direct operating costs of an eating facility are—

(i) The cost of food and beverages, and

(ii) The cost of labor for personnel whose services relating to the facility are performed primarily on the premises of the eating facility. Direct operating costs do not include the labor cost attributable to personnel whose services relating to the facility are not performed primarily on the premises of the eating facility. Thus, for example, the labor costs attributable to cooks, waiters, and waitresses are included in direct operating costs, but the labor cost attributable to a manager of an eating facility whose services relating to the facility are not primarily performed on the premises of the eating facility is not included in direct operating costs. If an

employee performs services relating to the facility both on and off the premises of the eating facility, only the portion of the total labor cost of the employee relating to the facility that bears the same proportion to such total labor cost as time spent on the premises bears to total time spent performing services relating to the facility is included in direct operating costs. For example, assume that 60 percent of the services of a cook in the above example are not related to the eating facility. Only 40 percent of the total labor cost of the cook is includible in direct operating costs. For purposes of this section, labor costs include all compensation required to be reported on a Form W-2 for income tax purposes and related employment taxes paid by the employer. In determining the direct operating costs of an eating facility, the employer may include as part of the facility, vending machines that are provided by the employer and located on the same premises as the other eating facilities operated by the employer.

(2) ***Multiple dining rooms or cafeterias.*** The direct operating costs test may be applied separately for each dining room or cafeteria. Alternatively, the direct operating costs test may be applied with respect to all the eating facilities operated by the employer.

(3) ***Payment to operator of facility.*** If an employer contracts with another to operate an eating facility for its employees, the direct operating costs of the facility consist both of direct operating costs, if any, incurred by the employer and the amount paid to the operator of the facility to the extent that such amount is attributable to what would be direct operating costs if the employer operated the facility directly.

(c) ***Valuation of non-excluded meals provided at an employer-operated eating facility for employees.*** If the exclusion for meals provided at an employer-operated eating facility for employees is not available, the recipient of meals provided at such facility must include in income the amount by which the fair market value of the meals provided exceeds the sum of—

(1) The amount, if any, paid for the meals, and

(2) The amount, if any, specifically excluded by another section of chapter 1 of this subtitle.

For special valuation rules relating to such meals, see § 1.61-21(j).

[T.D. 8256, 54 FR 28617, July 6, 1989]

§ 1.132-8 Fringe benefit nondiscrimination rules.

(a) ***Application of nondiscrimination rules*** —

(1) ***General rule.*** A highly compensated employee who receives a no-additional cost service, a qualified employee discount or a meal provided at an employer-operated eating facility for employees shall not be permitted to exclude such benefit from his or her income unless the benefit is available on substantially the same terms to:

(i) All employees of the employer; or

(ii) A group of employees of the employer which is defined under a reasonable classification set up by the employer that does not discriminate in favor of highly compensated employees. See paragraph (f) of this section for the definition of a highly compensated employee.

(2) ***Consequences of discrimination*** —

(i) ***In general.*** If an employer maintains more than one fringe benefit program, *i.e.*, either different fringe benefits being provided to the same group of employees, or different classifications of employees or the same fringe benefit being provided to two or more classifications of employees, the nondiscrimination requirements of section 132 will generally be applied separately to each such program. Thus, a determination that one fringe benefit program discriminates in favor of highly compensated employees generally will not cause other fringe benefit programs covering the same highly compensated employees to be treated as discriminatory. If the fringe benefits provided to a highly compensated individual do not satisfy the nondiscrimination rules provided in this section, such individual shall be unable to exclude from gross income any portion of the benefit. For example, if an employer offers a 20 percent discount (which otherwise satisfies the requirements for a qualified employee discount) to all non-highly compensated employees and a 35 percent discount to all highly compensated employees, the entire value of the 35 percent discount (not just the excess over 20 percent) is includible in the gross income and wages of the highly compensated employees who make purchases at a discount.

(ii) ***Exception*** —

(A) ***Related fringe benefit programs.*** If one of a group of fringe benefit programs discriminates in favor of highly compensated employees, no related fringe benefit provided to such highly compensated employees under any other fringe benefit program may be excluded from the gross income of such highly compensated employees. For example, assume a department store provides a 20 percent merchandise discount to all employees under one fringe benefit program. Assume further that under a second fringe benefit program, the department store provides an additional 15 percent merchandise discount to a group of employees defined under a classification which discriminates in favor of highly compensated employees. Because the second fringe benefit program is discriminatory, the 15 percent merchandise discount provided to the highly compensated employees is not a qualified employee discount. In addition, because the 20 percent merchandise discount provided under the first fringe benefit program is related to the fringe benefit provided under the second fringe benefit program, the 20 percent merchandise discount provided the highly compensated employees is not a qualified employee discount. Thus, the entire 35 percent merchandise discount provided to the highly compensated employees is includible in such employees' gross incomes.

(B) ***Employer operated eating facilities for employees.*** For purposes of paragraph (a)(2)(ii)(A) of this section, meals at different employer-operated eating facilities for employees are not related fringe benefits, so that a highly compensated employee may exclude from gross income the value of a meal at a nondiscriminatory facility even though any meals provided to him or her at a discriminatory facility cannot be excluded.

(3) ***Scope of the nondiscrimination rules provided in this section.*** The nondiscrimination rules provided in this section apply only to fringe benefits provided pursuant to section 132 (a)(1), (a)(2), and (e)(2). These rules have no application to any other employee benefit that may be subject to nondiscrimination requirements under any other section of the Code.

(b) ***Aggregation of employees*** —

(1) ***Section 132(a) (1) and (2).*** For purposes of determining whether the exclusions for no-additional-cost services and qualified employee discounts are available to highly compensated employees, the nondiscrimination rules of this section are applied by aggregating the employees of all related

employers (as defined in § 1.132-1(c)), except that employees in different lines of business (as defined in § 1.132-4) are not to be aggregated. Thus, in general, for purposes of this section, the term "employees of the employer" refers to all employees of the employer and any other entity that is a member of a group described in sections 414 (b), (c), (m), or (o) and that performs services within the same line of business as the employer which provides the particular fringe benefit. Employees in different lines of business will be aggregated, however, if the line of business limitation has been relaxed pursuant to paragraphs (b) through (g) of § 1.132-4.

(2) ***Section 132 (e) (2).*** For purposes of determining whether the exclusions for meals provided at employer-operated eating facilities are available to highly compensated, the nondiscrimination rules of this section are applied by aggregating the employees of all related employers (as defined in section § 1.132-1(c)) who regularly work at or near the premises on which the eating facility is located, except that employees in different lines of business (as defined in § 1.132-4) are not to be aggregated. The nondiscrimination rules of this section are applied separately to each eating facility. Each dining room or cafeteria in which meals are served is treated as a separate eating facility, regardless of whether each such dining room or cafeteria has its own kitchen or other food-preparation area.

(3) ***Classes of employees who may be excluded.*** For purposes of applying the nondiscrimination rules of this section to a particular fringe benefit program, there may be excluded from consideration employees who may be excluded from consideration under section 89(h), as enacted by the Tax Reform Act of 1986, Pub. L. 99-514, 100 Stat. 2085 (1986) and amended by the Technical and Miscellaneous Revenue Act of 1988, Pub. L. 100-647, 102 Stat. 3342 (1988).

(c) ***Availability on substantially the same terms —***

(1) ***General rule.*** The determination of whether a benefit is available on substantially the same terms shall be made upon the basis of the facts and circumstances of each situation. In general, however, if any one of the terms or conditions governing the availability of a particular benefit to one or more employees varies from any one of the terms or conditions governing the availability of a benefit made available to one or more other employees, such benefit shall not be considered to be available on substantially the same terms except to the extent otherwise provided in paragraph (c)(2) of this section. For example, if a department store provides a 20 percent qualified employee discount to all of its employees on all merchandise, the substantially the same terms requirement will be satisfied. Similarly, if the discount provided to all employees is 30 percent on certain merchandise (such as apparel), and 20 percent on all other merchandise, the substantially the same terms requirement will be satisfied. However, if a department store provides a 20 percent qualified employee discount to all employees, but as to the employees in certain departments, the discount is available upon hire, and as to the remaining departments, the discount is only available when an employee has completed a specified term of services, the 20 percent discount is not available on substantially the same terms to all of the employees of the employer. Similarly, if a greater discount is given to employees with more seniority, full-time work status, or a particular job description, such benefit (*i.e.*, the discount) would not be available to all employees eligible for the discount on substantially the same terms, except to the extent otherwise provided in paragraph (c)(2) of this section. These examples also apply to no-additional-cost-services. Thus, if an employer charges non-highly compensated employees for a no-additional-cost service and does not charge highly compensated employees (or charges highly compensated employees a lesser amount), the substantially the same terms requirement will not be satisfied.

(2) ***Certain terms relating to priority.*** Certain fringe benefits made available to employees are available only in limited quantities that may be insufficient to meet employee demand. This situation may occur either because of employer policy (such as where an employer determines that only a certain number of units of a specific product will be made available to employees each year) or because of the nature of the fringe benefit (such as where an employer provides a no-additional-cost transportation service that is limited to the number of seats available just before departure). Under these circumstances, an employer may find it necessary to establish some method of allocating the limited fringe benefits among the employees eligible to receive the fringe benefits. The employer may establish the priorities described below.

(i) ***Priority on a first come, first served, or similar basis.*** A benefit shall not fail to be treated as available to a group of employees on substantially the same terms merely because the employer allocates the benefit among such employees on a "first come, first served" or lottery basis, provided that the same notice of the terms of availability is given to all employees in the group and the terms under which the benefit is provided to employees within the group are otherwise the same with respect to all employees. For purposes of the preceding sentence, a program that gives priority to employees who are the first to submit written requests for the benefit will constitute priority on a "first come, first served" basis. Similarly, if the employer regularly engages in the practice of allocating benefits on a priority basis to employees demonstrating a critical need, such benefit shall not fail to be treated as available on substantially the same terms to all of the employees with respect to whom such priority status is available as long as the determination is based upon uniform and objective criteria which have been communicated to all employees in the group of eligible employees. An example of a critical need would be priority transportation given to an employee in the event of a medical emergency involving the employee (or a member of the employee's immediate family) or a recent death in the employee's immediate family. Frustrated vacation plans or forfeited deposits would not be treated as giving rise to particularly critical needs.

(ii) ***Priority on the basis of seniority.*** Solely for purposes of § 1.132-8, a benefit shall not fail to be treated as available to a group of employees of the employer on substantially the same terms merely because the employer allocates the benefit among such employees on a seniority basis provided that:

(A) The same notice of the terms of availability is given to all employees in the group; and

(B) The average value of the benefit provided for each nonhighly compensated employee is at least 75% of that provided for each highly compensated employee. For purposes of this test, the average value of the benefit provided for each nonhighly compensated (highly compensated) employee is determined by taking the sum of the fair market values of such benefit provided to all the nonhighly compensated (highly compensated) employees, determined in accordance with § 1.61-21, and then dividing that sum by the total number of nonhighly compensated (highly compensated) employees of the employer. For purposes of determining the average value of the benefit provided for each employee, all employee's of the employer are counted, including those who are not eligible to receive the benefit from the employer.

(d) ***Testing for discrimination*** —

(1) ***Classification test.*** In the event that a benefit described in section 132 (a)(1), (a)(2) or (e)(2) is not available on substantially the same terms to all of the employees of the employer, no exclusion shall be available to a highly compensated employee for such benefit unless the program under which the

benefit is provided satisfies the nondiscrimination standards set forth in this section. The nondiscrimination standard of this section will be satisfied only if the benefit is available on substantially the same terms to a group of employees of the employer which is defined under a reasonable classification established by the employer that does not discriminate in favor of highly compensated employees. The determination of whether a particular classification is discriminatory will generally depend upon the facts and circumstances involved, based upon principles similar to those applied for purposes of section 410(b)(2)(A)(i) or, for years commencing prior to January 1, 1988, section 410(b)(1)(B). Thus, in general, except as otherwise provided in this section, if a benefit is available on substantially the same terms to a group of employees which, when compared with all of the other employees of the employer, constitutes a nondiscriminatory classification under section 410(b)(2)(A)(i) (or, if applicable, section 410(b)(1)(B)), it shall be deemed to be nondiscriminatory.

(2) ***Classifications that are per se discriminatory.*** A classification that, on its face, makes fringe benefits available principally to highly compensated employees is per se discriminatory. In addition, a classification that is based on either an amount or rate of compensation is per se discriminatory if it favors those with the higher amount or rate of compensation. On the other hand, a classification that is based on factors such as seniority, full-time vs. part-time employment, or job description is not per se discriminatory but may be discriminatory as applied to the workforce of a particular employer.

(3) ***Former employees.*** When determining whether a classification is discriminatory, former employees shall be tested separately from other employees of the employer. Therefore, a classification is not discriminatory solely because the employer does not make fringe benefits available to any former employee. Whether a classification of former employees discriminates in favor of highly compensated employees will depend upon the particular facts and circumstances.

(4) ***Restructuring of benefits.*** For purposes of testing whether a particular group of employees would constitute a discriminatory classification for purposes of this section, an employer may restructure its fringe benefit program as described in this paragraph. If a fringe benefit is provided to more than one group of employees, and one or more such groups would constitute a discriminatory classification if considered by itself, then for purposes of this section, the employer may restructure its fringe benefit program so that all or some of the members of such group may be aggregated with another group, provided that each member of the restructured group will have available to him or her the same benefit upon the same terms and conditions. For example, assume that all highly compensated employees of an employer have fewer than five years of service and all nonhighly compensated employees have over five years of service. If the employer provided a five percent discount to employees with under five years of service and a ten percent discount to employees with over five years of service, the discount program available to the highly compensated employees would not satisfy the nondiscriminatory classification test; however, as a result of the rule described in this paragraph (d)(4), the employer could structure the program to consist of a five percent discount for all employees and a five percent additional discount for nonhighly compensated employees.

(5) ***Employer-operated eating facilities for employees*** —

(i) ***General rule.*** If access to an employer-operated eating facility for employees is available to a classification of employees that discriminates in favor of highly compensated employees, then the classification will not be treated as discriminating in favor of highly compensated employees unless the facility is used by one or more executive group employees more than a de minimis amount.

(ii) ***Executive group employee.*** For purposes of this paragraph (d)(5), an employee is an "executive group employee" if the definition of paragraph (f)(1) of this section is satisfied. For purposes of identifying such employees, the phrase "top one percent of the employees" is substituted for the phrase "top ten percent of the employees" in section 414(q)(4) (relating to the definition of "top-paid group").

(e) ***Cash bonuses or rebates.*** A cash bonus or rebate provided to an employee by an employer that is determined with reference to the value of employer-provided property or services purchased by the employee, is treated as an equivalent employee discount. For example, assume a department store provides a 20 percent merchandise discount to all employees under a fringe benefit program. In addition, assume that the department store provides cash bonuses to a group of employees defined under a classification which discriminates in favor of highly compensated employees. Assume further that such cash bonuses equal 15 percent of the value of merchandise purchased by each employee. This arrangement is substantively identical to the example described in paragraph (e)(2)(i) of this section concerning related fringe benefit programs. Thus, both the 20 percent merchandise discount and the 15 percent cash bonus provided to the highly compensated employees are includible in such employees' gross incomes.

(f) ***Highly compensated employee*** —

(1) ***Government and nongovernment employees.*** A highly compensated employee of any employer is any employee who, during the year or the preceding year—

(i) Was a 5-percent owner,

(ii) Received compensation from the employer in excess of $75,000,

(iii) Received compensation from the employer in excess of $50,000 and was in the top-paid group of employees for such year, or

(iv) Was at any time an officer and received compensation greater than 150 percent of the amount in effect under section 415(c)(1)(A) for such year.

For purposes of determining whether an employee is a highly compensated employee, the rules of sections 414 (q), (s), and (t) apply.

(2) ***Former employees.*** A former employee shall be treated as a highly compensated employee if—

(i) The employee was a highly compensated employee when the employee separated from service, or

(ii) The employee was a highly compensated employee at any time after attaining age 55.

[T.D. 8256, 54 FR 28618, July 6, 1989]

§ 1.132-9 Qualified transportation fringes.

(a) ***Table of contents.*** This section contains a list of the questions and answers in § 1.132-9.

(1) *General rules.*

Q-1. What is a qualified transportation fringe?

Q-2. What is transportation in a commuter highway vehicle?

Q-3. What are transit passes?

Q-4. What is qualified parking?

Q-5. May qualified transportation fringes be provided to individuals who are not employees?

Q-6. Must a qualified transportation fringe benefit plan be in writing?

(2) *Dollar limitations.*

Q-7. Is there a limit on the value of qualified transportation fringes that may be excluded from an employee's gross income?

Q-8. What amount is includible in an employee's wages for income and employment tax purposes if the value of the qualified transportation fringe exceeds the applicable statutory monthly limit?

Q-9. Are excludable qualified transportation fringes calculated on a monthly basis?

Q-10. May an employee receive qualified transportation fringes from more than one employer?

(3) *Compensation reduction.*

Q-11. May qualified transportation fringes be provided to employees pursuant to a compensation reduction agreement?

Q-12. What is a compensation reduction election for purposes of section 132(f)?

Q-13. Is there a limit to the amount of the compensation reduction?

Q-14. When must the employee have made a compensation reduction election and under what circumstances may the amount be paid in cash to the employee?

Q-15. May an employee whose qualified transportation fringe costs are less than the employee's compensation reduction carry over this excess amount to subsequent periods?

(4) *Expense reimbursements.*

Q-16. How does section 132(f) apply to expense reimbursements?

Q-17. May an employer provide nontaxable cash reimbursement under section 132(f) for periods longer than one month?

Q-18. What are the substantiation requirements if an employer distributes transit passes?

Q-19. May an employer choose to impose substantiation requirements in addition to those described in this regulation?

(5) *Special rules for parking and vanpools.*

Q-20. How is the value of parking determined?

Q-21. How do the qualified transportation fringe rules apply to van pools?

(6) *Reporting and employment taxes.*

Q-22. What are the reporting and employment tax requirements for qualified transportation fringes?

(7) *Interaction with other fringe benefits.*

Q-23. How does section 132(f) interact with other fringe benefit rules?

(8) *Application to individuals who are not employees.*

Q-24. May qualified transportation fringes be provided to individuals who are partners, 2-percent shareholders of S-corporations, or independent contractors?

(9) *Effective date.*

Q-25. What is the effective date of this section?

(b) ***Questions and answers.***

Q-1. What is a qualified transportation fringe?

A-1.

(a) The following benefits are qualified transportation fringe benefits:

(1) Transportation in a commuter highway vehicle.

(2) Transit passes.

(3) Qualified parking.

(b) An employer may simultaneously provide an employee with any one or more of these three benefits.

Q-2. What is transportation in a commuter highway vehicle?

A-2. Transportation in a commuter highway vehicle is transportation provided by an employer to an employee in connection with travel between the employee's residence and place of employment. A commuter highway vehicle is a highway vehicle with a seating capacity of at least 6 adults (excluding the driver) and with respect to which at least 80 percent of the vehicle's mileage for a year is reasonably expected to be—

(a) For transporting employees in connection with travel between their residences and their place of employment; and

(b) On trips during which the number of employees transported for commuting is at least one-half of the adult seating capacity of the vehicle (excluding the driver).

Q-3. What are transit passes?

A-3. A transit pass is any pass, token, farecard, voucher, or similar item (including an item exchangeable for fare media) that entitles a person to transportation—

(a) On mass transit facilities (whether or not publicly owned); or

(b) Provided by any person in the business of transporting persons for compensation or hire in a highway vehicle with a seating capacity of at least 6 adults (excluding the driver).

Q-4. What is qualified parking?

A-4.

(a) Qualified parking is parking provided to an employee by an employer—

(1) On or near the employer's business premises; or

(2) At a location from which the employee commutes to work (including commuting by carpool, commuter highway vehicle, mass transit facilities, or transportation provided by any person in the business of transporting persons for compensation or hire).

(b) For purposes of section 132(f), parking on or near the employer's business premises includes parking on or near a work location at which the employee provides services for the employer. However, qualified parking does not include—

(1) The value of parking provided to an employee that is excludable from gross income under section 132(a)(3) (as a working condition fringe), or

(2) Reimbursement paid to an employee for parking costs that is excludable from gross income as an amount treated as paid under an accountable plan. See § 1.62-2.

(c) However, parking on or near property used by the employee for residential purposes is not qualified parking.

(d) Parking is provided by an employer if—

(1) The parking is on property that the employer owns or leases;

(2) The employer pays for the parking; or

(3) The employer reimburses the employee for parking expenses (see Q/A-16 of this section for rules relating to cash reimbursements).

Q-5. May qualified transportation fringes be provided to individuals who are not employees?

A-5. An employer may provide qualified transportation fringes only to individuals who are currently employees of the employer at the time the qualified transportation fringe is provided. The term employee for purposes of qualified transportation fringes is defined in § 1.132-1(b)(2)(i). This term includes only common law employees and other statutory employees, such as officers of corporations. See Q/A-24 of this section for rules regarding partners, 2-percent shareholders, and independent contractors.

Q-6. Must a qualified transportation fringe benefit plan be in writing?

A-6. No. Section 132(f) does not require that a qualified transportation fringe benefit plan be in writing.

Q-7. Is there a limit on the value of qualified transportation fringes that may be excluded from an employee's gross income?

A-7.

(a) ***Transportation in a commuter highway vehicle and transit passes.*** Before January 1, 2002, up to $65 per month is excludable from the gross income of an employee for transportation in a commuter highway vehicle and transit passes provided by an employer. On January 1, 2002, this amount is increased to $100 per month.

(b) ***Parking.*** Up to $175 per month is excludable from the gross income of an employee for qualified parking.

(c) ***Combination.*** An employer may provide qualified parking benefits in addition to transportation in a commuter highway vehicle and transit passes.

(d) ***Cost-of-living adjustments.*** The amounts in paragraphs (a) and (b) of this Q/A-7 are adjusted annually, beginning with 2000, to reflect cost-of-living. The adjusted figures are announced by the Service before the beginning of the year.

Q-8. What amount is includible in an employee's wages for income and employment tax purposes if the value of the qualified transportation fringe exceeds the applicable statutory monthly limit?

A-8.

(a) Generally, an employee must include in gross income the amount by which the fair market value of the benefit exceeds the sum of the amount, if any, paid by the employee and any amount excluded from gross income under section 132(a)(5). Thus, assuming no other statutory exclusion applies, if an employer provides an employee with a qualified transportation fringe that exceeds the applicable statutory monthly limit and the employee does not make any payment, the value of the benefits provided in excess of the applicable statutory monthly limit is included in the employee's wages for income and employment tax purposes. See § 1.61-21(b)(1).

(b) The following examples illustrate the principles of this Q/A-8:

> *Example 1.* (i) For each month in a year in which the statutory monthly transit pass limit is $100 (*i.e.*, a year after 2001), Employer M provides a transit pass valued at $110 to Employee D, who does not pay any amount to Employer M for the transit pass.
> (ii) In this *Example 1,* because the value of the monthly transit pass exceeds the statutory monthly limit by $10, $120 ($110—$100, times 12 months) must be included in D's wages for income and employment tax purposes for the year with respect to the transit passes.

> *Example 2.* (i) For each month in a year in which the statutory monthly qualified parking limit is $175, Employer M provides qualified parking valued at $195 to Employee E, who does not pay any amount to M for the parking.
> (ii) In this *Example 2,* because the fair market value of the qualified parking exceeds the statutory monthly limit by $20, $240 ($195—$175, times 12 months) must be included in Employee E's wages for income and employment tax purposes for the year with respect to the qualified parking.

> *Example 3.* (i) For each month in a year in which the statutory monthly qualified parking limit is $175, Employer P provides qualified parking with a fair market value of $220 per month to its employees, but charges each employee $45 per month.

(ii) In this *Example 3,* because the sum of the amount paid by an employee ($45) plus the amount excludable for qualified parking ($175) is not less than the fair market value of the monthly benefit, no amount is includible in the employee's wages for income and employment tax purposes with respect to the qualified parking.

Q-9. Are excludable qualified transportation fringes calculated on a monthly basis?

A-9.

(a) ***In general.*** Yes. The value of transportation in a commuter highway vehicle, transit passes, and qualified parking is calculated on a monthly basis to determine whether the value of the benefit has exceeded the applicable statutory monthly limit on qualified transportation fringes. Except in the case of a transit pass provided to an employee, the applicable statutory monthly limit applies to qualified transportation fringes used by the employee in a month. Monthly exclusion amounts are not combined to provide a qualified transportation fringe for any month exceeding the statutory limit. A month is a calendar month or a substantially equivalent period applied consistently.

(b) ***Transit passes.*** In the case of transit passes provided to an employee, the applicable statutory monthly limit applies to the transit passes provided by the employer to the employee in a month for that month or for any previous month in the calendar year. In addition, transit passes distributed in advance for more than one month, but not for more than twelve months, are qualified transportation fringes if the requirements in paragraph (c) of this Q/A-9 are met (relating to the income tax and employment tax treatment of advance transit passes). The applicable statutory monthly limit under section 132(f)(2) on the combined amount of transportation in a commuter highway vehicle and transit passes may be calculated by taking into account the monthly limits for all months for which the transit passes are distributed. In the case of a pass that is valid for more than one month, such as an annual pass, the value of the pass may be divided by the number of months for which it is valid for purposes of determining whether the value of the pass exceeds the statutory monthly limit.

(c) ***Rule if employee's employment terminates*** —

(1) ***Income tax treatment.*** The value of transit passes provided in advance to an employee with respect to a month in which the individual is not an employee is included in the employee's wages for income tax purposes.

(2) ***Reporting and employment tax treatment.*** Transit passes distributed in advance to an employee are excludable from wages for employment tax purposes under sections 3121, 3306, and 3401 (FICA, FUTA, and income tax withholding) if the employer distributes transit passes to the employee in advance for not more than three months and, at the time the transit passes are distributed, there is not an established date that the employee's employment will terminate (for example, if the employee has given notice of retirement) which will occur before the beginning of the last month of the period for which the transit passes are provided. If the employer distributes transit passes to an employee in advance for not more than three months and at the time the transit passes are distributed there is an established date that the employee's employment will terminate, and the employee's employment does terminate before the beginning of the last month of the period for which the transit passes are provided, the value of transit passes provided for months beginning after the date of termination during which the employee is not employed by the employer is included in the employee's wages for employment tax purposes. If transit passes are distributed in advance for more than three months, the value of transit passes provided for the months during which the employee is not employed by the

employer is includible in the employee's wages for employment tax purposes regardless of whether at the time the transit passes were distributed there was an established date of termination of the employee's employment.

(d) ***Examples.*** The following examples illustrate the principles of this Q/A-9:

Example 1. (i) Employee E incurs $150 for qualified parking used during the month of June of a year in which the statutory monthly parking limit is $175, for which E is reimbursed $150 by Employer R. Employee E incurs $180 in expenses for qualified parking used during the month of July of that year, for which E is reimbursed $180 by Employer R.
(ii) In this *Example 1,* because monthly exclusion amounts may not be combined to provide a benefit in any month greater than the applicable statutory limit, the amount by which the amount reimbursed for July exceeds the applicable statutory monthly limit ($180 minus $175 equals $5) is includible in Employee E's wages for income and employment tax purposes.

Example 2. (i) Employee F receives transit passes from Employer G with a value of $195 in March of a year (for which the statutory monthly transit pass limit is $65) for January, February, and March of that year. F was hired during January and has not received any transit passes from G.
(ii) In this *Example 2,* the value of the transit passes (three months times $65 equals $195) is excludable from F's wages for income and employment tax purposes.

Example 3. (i) Employer S has a qualified transportation fringe benefit plan under which its employees receive transit passes near the beginning of each calendar quarter for that calendar quarter. All employees of Employer S receive transit passes from Employer S with a value of $195 on March 31 for the second calendar quarter covering the months April, May, and June (of a year in which the statutory monthly transit pass limit is $65).
(ii) In this *Example 3,* because the value of the transit passes may be calculated by taking into account the monthly limits for all months for which the transit passes are distributed, the value of the transit passes (three months times $65 equals $195) is excludable from the employees' wages for income and employment tax purposes.

Example 4. (i) Same facts as in *Example 3,* except that Employee T, an employee of Employer S, terminates employment with S on May 31. There was not an established date of termination for Employee T at the time the transit passes were distributed.
(ii) In this *Example 4,* because at the time the transit passes were distributed there was not an established date of termination for Employee T, the value of the transit passes provided for June ($65) is excludable from T's wages for employment tax purposes. However, the value of the transit passes distributed to Employee T for June ($65) is not excludable from T's wages for income tax purposes.

(iii) If Employee T's May 31 termination date was established at the time the transit passes were provided, the value of the transit passes provided for June ($65) is included in T's wages for both income and employment tax purposes.

Example 5. (i) Employer F has a qualified transportation fringe benefit plan under which its employees receive transit passes semi-annually in advance of the months for which the transit passes are provided. All employees of Employer F, including Employee X, receive transit passes from F with a value of $390 on June 30 for the 6 months of July through December (of a year in which the statutory monthly transit pass limit is $65). Employee X's employment terminates and his last day of work is August 1. Employer F's other employees remain employed throughout the remainder of the year.
(ii) In this *Example 5*, the value of the transit passes provided to Employee X for the months September, October, November, and December ($65 times 4 months equals $260) of the year is included in X's wages for income and employment tax purposes. The value of the transit passes provided to Employer F's other employees is excludable from the employees' wages for income and employment tax purposes.

Example 6. (i) Each month during a year in which the statutory monthly transit pass limit is $65, Employer R distributes transit passes with a face amount of $70 to each of its employees. Transit passes with a face amount of $70 can be purchased from the transit system by any individual for $65.
(ii) In this *Example 6*, because the value of the transit passes distributed by Employer R does not exceed the applicable statutory monthly limit ($65), no portion of the value of the transit passes is included as wages for income and employment tax purposes.

Q-10. May an employee receive qualified transportation fringes from more than one employer?

A-10.

(a) ***General rule.*** Yes. The statutory monthly limits described in Q/A-7 of this section apply to benefits provided by an employer to its employees. For this purpose, all employees treated as employed by a single employer under section 414(b), (c), (m), or (o) are treated as employed by a single employer. See section 414(t) and § 1.132-1(c). Thus, qualified transportation fringes paid by entities under common control under section 414(b), (c), (m), or (o) are combined for purposes of applying the applicable statutory monthly limit. In addition, an individual who is treated as a leased employee of the employer under section 414(n) is treated as an employee of that employer for purposes of section 132. See section 414(n)(3)(C).

(b) ***Examples.*** The following examples illustrate the principles of this Q/A-10:

Example 1. (i) During a year in which the statutory monthly qualified parking limit is $175, Employee E works for Employers M and N, who are unrelated and not treated as a single employer under section 414(b), (c), (m), or (o). Each month, M and N each provide qualified parking benefits to E with a value of $100.

(ii) In this *Example 1,* because M and N are unrelated employers, and the value of the monthly parking benefit provided by each is not more than the applicable statutory monthly limit, the parking benefits provided by each employer are excludable as qualified transportation fringes assuming that the other requirements of this section are satisfied.

Example 2. (i) Same facts as in Example 1, except that Employers M and N are treated as a single employer under section 414(b).
(ii) In this *Example 2,* because M and N are treated as a single employer, the value of the monthly parking benefit provided by M and N must be combined for purposes of determining whether the applicable statutory monthly limit has been exceeded. Thus, the amount by which the value of the parking benefit exceeds the monthly limit ($200 minus the monthly limit amount of $175 equals $25) for each month in the year is includible in E's wages for income and employment tax purposes.

Q-11. May qualified transportation fringes be provided to employees pursuant to a compensation reduction agreement?

A-11. Yes. An employer may offer employees a choice between cash compensation and any qualified transportation fringe. An employee who is offered this choice and who elects qualified transportation fringes is not required to include the cash compensation in income if—

(a) The election is pursuant to an arrangement described in Q/A-12 of this section;

(b) The amount of the reduction in cash compensation does not exceed the limitation in Q/A-13 of this section;

(c) The arrangement satisfies the timing and reimbursement rules in Q/A-14 and 16 of this section; and

(d) The related fringe benefit arrangement otherwise satisfies the requirements set forth elsewhere in this section.

Q-12. What is a compensation reduction election for purposes of section 132(f)?

A-12.

(a) ***Election requirements generally.*** A compensation reduction arrangement is an arrangement under which the employer provides the employee with the right to elect whether the employee will receive either a fixed amount of cash compensation at a specified future date or a fixed amount of qualified transportation fringes to be provided for a specified future period (such as qualified parking to be used during a future calendar month). The employee's election must be in writing or another form, such as electronic, that includes, in a permanent and verifiable form, the information required to be in the election. The election must contain the date of the election, the amount of the compensation to be reduced, and the period for which the benefit will be provided. The election must relate to a fixed dollar amount or fixed percentage of compensation reduction. An election to reduce compensation for a period by a set amount for such period may be automatically renewed for subsequent periods.

(b) ***Automatic election permitted.*** An employer may provide under its qualified transportation fringe benefit plan that a compensation reduction election will be deemed to have been made if the employee does not elect to receive cash compensation in lieu of the qualified transportation fringe,

provided that the employee receives adequate notice that a compensation reduction will be made and is given adequate opportunity to choose to receive the cash compensation instead of the qualified transportation fringe. See § 1.401(a)-21 of this chapter for rules permitting the use of electronic media to make participant elections with respect to employee benefit arrangements.

Q-13. Is there a limit to the amount of the compensation reduction?

A-13. Yes. Each month, the amount of the compensation reduction may not exceed the combined applicable statutory monthly limits for transportation in a commuter highway vehicle, transit passes, and qualified parking. For example, for a year in which the statutory monthly limit is $65 for transportation in a commuter highway vehicle and transit passes, and $175 for qualified parking, an employee could elect to reduce compensation for any month by no more than $240 ($65 plus $175) with respect to qualified transportation fringes. If an employee were to elect to reduce compensation by $250 for a month, the excess $10 ($250 minus $240) would be includible in the employee's wages for income and employment tax purposes.

Q-14. When must the employee have made a compensation reduction election and under what circumstances may the amount be paid in cash to the employee?

A-14.

(a) The compensation reduction election must satisfy the requirements set forth under paragraphs (b), (c), and (d) of this Q/A-14.

(b) ***Timing of election.*** The compensation reduction election must be made before the employee is able currently to receive the cash or other taxable amount at the employee's discretion. The determination of whether the employee is able currently to receive the cash does not depend on whether it has been constructively received for purposes of section 451. The election must specify that the period (such as a calendar month) for which the qualified transportation fringe will be provided must not begin before the election is made. Thus, a compensation reduction election must relate to qualified transportation fringes to be provided after the election. For this purpose, the date a qualified transportation fringe is provided is—

(1) The date the employee receives a voucher or similar item; or

(2) In any other case, the date the employee uses the qualified transportation fringe.

(c) ***Revocability of elections.*** The employee may not revoke a compensation reduction election after the employee is able currently to receive the cash or other taxable amount at the employee's discretion. In addition, the election may not be revoked after the beginning of the period for which the qualified transportation fringe will be provided.

(d) ***Compensation reduction amounts not refundable.*** Unless an election is revoked in a manner consistent with paragraph (c) of this Q/A-14, an employee may not subsequently receive the compensation (in cash or any form other than by payment of a qualified transportation fringe under the employer's plan). Thus, an employer's qualified transportation fringe benefit plan may not provide that an employee who ceases to participate in the employer's qualified transportation fringe benefit plan (such as in the case of termination of employment) is entitled to receive a refund of the amount by which the employee's compensation reductions exceed the actual qualified transportation fringes provided to the employee by the employer.

(e) ***Examples.*** The following examples illustrate the principles of this Q/A-14:

Example 1. (i) Employer P maintains a qualified transportation fringe benefit arrangement during a year in which the statutory monthly limit is $100 for transportation in a commuter highway vehicle and transit passes (2002 or later) and $180 for qualified parking. Employees of P are paid cash compensation twice per month, with the payroll dates being the first and the fifteenth day of the month. Under P's arrangement, an employee is permitted to elect at any time before the first day of a month to reduce his or her compensation payable during that month in an amount up to the applicable statutory monthly limit ($100 if the employee elects coverage for transportation in a commuter highway vehicle or a mass transit pass, or $180 if the employee chooses qualified parking) in return for the right to receive qualified transportation fringes up to the amount of the election. If such an election is made, P will provide a mass transit pass for that month with a value not exceeding the compensation reduction amount elected by the employee or will reimburse the cost of other qualified transportation fringes used by the employee on or after the first day of that month up to the compensation reduction amount elected by the employee. Any compensation reduction amount elected by the employee for the month that is not used for qualified transportation fringes is not refunded to the employee at any future date.
(ii) In this *Example 1,* the arrangement satisfies the requirements of this Q/A-14 because the election is made before the employee is able currently to receive the cash and the election specifies the future period for which the qualified transportation fringes will be provided. The arrangement would also satisfy the requirements of this Q/A-14 and Q/A-13 of this section if employees are allowed to elect to reduce compensation up to $280 per month ($100 plus $180).

(iii) The arrangement would also satisfy the requirements of this Q/A-14 (and Q/A-13 of this section) if employees are allowed to make an election at any time before the first or the fifteenth day of the month to reduce their compensation payable on that payroll date by an amount not in excess of one-half of the applicable statutory monthly limit (depending on the type of qualified transportation fringe elected by the employee) and P provides a mass transit pass on or after the applicable payroll date for the compensation reduction amount elected by the employee for the payroll date or reimburses the cost of other qualified transportation fringes used by the employee on or after the payroll date up to the compensation reduction amount elected by the employee for that payroll date.

Example 2. (i) Employee Q elects to reduce his compensation payable on March 1 of a year (for which the statutory monthly mass transit limit is $65) by $195 in exchange for a mass transit voucher to be provided in March. The election is made on the preceding February 27. Employee Q was hired in January of the year. On March 10 of the year, the employer of Employee Q delivers to Employee Q a mass transit voucher worth $195 for the months of January, February, and March.

(ii) In this *Example 2,* $65 is included in Employee Q's wages for income and employment tax purposes because the compensation reduction election fails to satisfy the requirement in this Q/A-14 and Q/A-12 of this section that the period for which the qualified transportation fringe will be provided not begin before the election is made to the extent the election relates to $65 worth of transit passes for January of the year. The $65 for February is not taxable because the election was for a future period that includes at least one day in February.

(iii) However, no amount would be included in Employee Q's wages as a result of the election if $195 worth of mass transit passes were instead provided to Q for the months of February, March, and April (because the compensation reduction would relate solely to fringes to be provided for a period not beginning before the date of the election and the amount provided does not exceed the aggregate limit for the period, *i.e.,* the sum of $65 for each of February, March, and April). See Q/A-9 of this section for rules governing transit passes distributed in advance for more than one month.

Example 3. (i) Employee R elects to reduce his compensation payable on March 1 of a year (for which the statutory monthly parking limit is $175) by $185 in exchange for reimbursement by Employer T of parking expenses incurred by Employee R for parking on or near Employer T's business premises during the period beginning after the date of the election through March. The election is made on the preceding February 27. Employee R incurs $10 in parking expenses on February 28 of the year, and $175 in parking expenses during the month of March. On April 5 of the year, Employer T reimburses Employee R $185 for the parking expenses incurred on February 28, and during March, of the year.
(ii) In this *Example 3,* no amount would be includible in Employee R's wages for income and employment tax purposes because the compensation reduction related solely to parking on or near Employer R's business premises used during a period not beginning before the date of the election and the amount reimbursed for parking used in any one month does not exceed the statutory monthly limitation.

Q-15. May an employee whose qualified transportation fringe costs are less than the employee's compensation reduction carry over this excess amount to subsequent periods?

A-15.

(a) Yes. An employee may carry over unused compensation reduction amounts to subsequent periods under the plan of the employee's employer.

(b) The following example illustrates the principles of this Q/A-15:

Example. (i) By an election made before November 1 of a year for which the statutory monthly mass transit limit is $65, Employee E elects to reduce compensation in the amount of $65 for the month of November. E incurs $50 in employee-operated commuter highway vehicle expenses during November for which E is reimbursed $50 by Employer R, E's

employer. By an election made before December, E elects to reduce compensation by $65 for the month of December. E incurs $65 in employee-operated commuter highway vehicle expenses during December for which E is reimbursed $65 by R. Before the following January, E elects to reduce compensation by $50 for the month of January. E incurs $65 in employee-operated commuter highway vehicle expenses during January for which E is reimbursed $65 by R because R allows E to carry over to the next year the $15 amount by which the compensation reductions for November and December exceeded the employee-operated commuter highway vehicle expenses incurred during those months.
(ii) In this *Example,* because Employee E is reimbursed in an amount not exceeding the applicable statutory monthly limit, and the reimbursement does not exceed the amount of employee-operated commuter highway vehicle expenses incurred during the month of January, the amount reimbursed ($65) is excludable from E's wages for income and employment tax purposes.

Q-16. How does section 132(f) apply to expense reimbursements?

A-16.

(a) ***In general.*** The term qualified transportation fringe includes cash reimbursement by an employer to an employee for expenses incurred or paid by an employee for transportation in a commuter highway vehicle or qualified parking. The term qualified transportation fringe also includes cash reimbursement for transit passes made under a bona fide reimbursement arrangement, but, in accordance with section 132(f)(3), only if permitted under paragraph (b) of this Q/A-16. The reimbursement must be made under a bona fide reimbursement arrangement which meets the rules of paragraph (c) of this Q/A-16. A payment made before the date an expense has been incurred or paid is not a reimbursement. In addition, a bona fide reimbursement arrangement does not include an arrangement that is dependent solely upon an employee certifying in advance that the employee will incur expenses at some future date.

(b) ***Special rule for transit passes*** —

(1) ***In general.*** The term *qualified transportation fringe* includes cash reimbursement for transit passes made under a bona fide reimbursement arrangement, but, in accordance with section 132(f)(3), only if no voucher or similar item that may be exchanged only for a transit pass is readily available for direct distribution by the employer to employees. If a voucher is readily available, the requirement that a voucher be distributed in-kind by the employer is satisfied if the voucher is distributed by the employer or by another person on behalf of the employer (for example, if a transit operator credits amounts to the employee's fare card as a result of payments made to the operator by the employer).

(2) ***Voucher or similar item.*** For purposes of the special rule in paragraph (b) of this Q/A-16, a transit system voucher is an instrument that may be purchased by employers from a voucher provider that is accepted by one or more mass transit operators (e.g., train, subway, and bus) in an area as fare media or in exchange for fare media. Thus, for example, a transit pass that may be purchased by employers directly from a voucher provider is a transit system voucher.

(3) ***Voucher provider.*** The term voucher provider means any person in the trade or business of selling transit system vouchers to employers, or any transit system or transit operator that sells vouchers to employers for the purpose of direct distribution to employees. Thus, a transit operator might or might not be a voucher provider. A voucher provider is not, for example, a third-party employee benefits administrator that administers a transit pass benefit program for an employer using vouchers that the employer could obtain directly.

(4) ***Readily available.*** For purposes of this paragraph (b), a voucher or similar item is readily available for direct distribution by the employer to employees if and only if an employer can obtain it from a voucher provider that—

(i) does not impose fare media charges that cause vouchers to not be readily available as described in paragraph (b)(5) of this section; and

(ii) does not impose other restrictions that cause vouchers to not be readily available as described in paragraph (b)(6) of this section.

(5) ***Fare media charges.*** For purposes of paragraph (b)(4) of this section, fare media charges relate only to fees paid by the employer to voucher providers for vouchers. The determination of whether obtaining a voucher would result in fare media charges that cause vouchers to not be readily available as described in this paragraph (b) is made with respect to each transit system voucher. If more than one transit system voucher is available for direct distribution to employees, the employer must consider the fees imposed for the lowest cost monthly voucher for purposes of determining whether the fees imposed by the voucher provider satisfy this paragraph. However, if transit system vouchers for multiple transit systems are required in an area to meet the transit needs of the individual employees in that area, the employer has the option of averaging the costs applied to each transit system voucher for purposes of determining whether the fare media charges for transit system vouchers satisfy this paragraph. Fare media charges are described in this paragraph (b)(5), and therefore cause vouchers to not be readily available, if and only if the average annual fare media charges that the employer reasonably expects to incur for transit system vouchers purchased from the voucher provider (disregarding reasonable and customary delivery charges imposed by the voucher provider, e.g., not in excess of $15) are more than 1 percent of the average annual value of the vouchers for a transit system.

(6) ***Other restrictions.*** For purposes of paragraph (b)(4) of this section, restrictions that cause vouchers to not be readily available are restrictions imposed by the voucher provider other than fare media charges that effectively prevent the employer from obtaining vouchers appropriate for distribution to employees. Examples of such restrictions include—

(i) ***Advance purchase requirements.*** Advance purchase requirements cause vouchers to not be readily available only if the voucher provider does not offer vouchers at regular intervals or fails to provide the voucher within a reasonable period after receiving payment for the voucher. For example, a requirement that vouchers may be purchased only once per year may effectively prevent an employer from obtaining vouchers for distribution to employees. An advance purchase requirement that vouchers be purchased not more frequently than monthly does not effectively prevent the employer from obtaining vouchers for distribution to employees.

(ii) ***Purchase quantity requirements.*** Purchase quantity requirements cause vouchers to not be readily available if the voucher provider does not offer vouchers in quantities that are reasonably appropriate to the number of the employer's employees who use mass transportation (for example, the voucher provider requires a $1,000 minimum purchase and the employer seeks to purchase only $200 of vouchers).

(iii) ***Limitations on denominations of vouchers that are available.*** If the voucher provider does not offer vouchers in denominations appropriate for distribution to the employer's employees, vouchers are not readily available. For example, vouchers provided in $5 increments up to the monthly limit are appropriate for distribution to employees, while vouchers available only in a denomination equal to the monthly limit are not appropriate for distribution to employees if the amount of the benefit provided to the employer's employees each month is normally less than the monthly limit.

(7) ***Example.*** The following example illustrates the principles of this paragraph (b):

> *Example.* (i) Company C in City X sells mass transit vouchers to employers in the metropolitan area of X in various denominations appropriate for distribution to employees. Employers can purchase vouchers monthly in reasonably appropriate quantities. Several different bus, rail, van pool, and ferry operators service X, and a number of the operators accept the vouchers either as fare media or in exchange for fare media. To cover its operating expenses, C imposes on each voucher a 50 cents charge, plus a reasonable and customary $15 charge for delivery of each order of vouchers. Employer M disburses vouchers purchased from C to its employees who use operators that accept the vouchers and M reasonably expects that $55 is the average value of the voucher it will purchase from C for the next calendar year.
> (ii) In this *Example,* vouchers for X are readily available for direct distribution by the employer to employees because the expected cost of the vouchers disbursed to M's employees for the next calendar year is not more than 1 percent of the value of the vouchers (50 cents divided by $55 equals 0.91 percent), the delivery charges are disregarded because they are reasonable and customary, and there are no other restrictions that cause the vouchers to not be readily available. Thus, any reimbursement of mass transportation costs in X would not be a qualified transportation fringe.

(c) ***Substantiation requirements.*** Employers that make cash reimbursements must establish a bona fide reimbursement arrangement to establish that their employees have, in fact, incurred expenses for transportation in a commuter highway vehicle, transit passes, or qualified parking. For purposes of section 132(f), whether cash reimbursements are made under a bona fide reimbursement arrangement may vary depending on the facts and circumstances, including the method or methods of payment utilized within the mass transit system. The employer must implement reasonable procedures to ensure that an amount equal to the reimbursement was incurred for transportation in a commuter highway vehicle, transit passes, or qualified parking. The expense must be substantiated within a reasonable period of time. An expense substantiated to the payor within 180 days after it has been paid will be treated as having been substantiated within a reasonable period of

time. An employee certification at the time of reimbursement in either written or electronic form may be a reasonable reimbursement procedure depending on the facts and circumstances. Examples of reasonable reimbursement procedures are set forth in paragraph (d) of this Q/A-16.

(d) ***Illustrations of reasonable reimbursement procedures.*** The following are examples of reasonable reimbursement procedures for purposes of paragraph (c) of this Q/A-16. In each case, the reimbursement is made at or within a reasonable period after the end of the events described in paragraphs (d)(1) through (d)(3) of this section.

(1) An employee presents to the employer a parking expense receipt for parking on or near the employer's business premises, the employee certifies that the parking was used by the employee, and the employer has no reason to doubt the employee's certification.

(2) An employee either submits a used time-sensitive transit pass (such as a monthly pass) to the employer and certifies that he or she purchased it or presents an unused or used transit pass to the employer and certifies that he or she purchased it and the employee certifies that he or she has not previously been reimbursed for the transit pass. In both cases, the employer has no reason to doubt the employee's certification.

(3) If a receipt is not provided in the ordinary course of business (e.g., if the employee uses metered parking or if used transit passes cannot be returned to the user), the employee certifies to the employer the type and the amount of expenses incurred, and the employer has no reason to doubt the employee's certification.

Q-17. May an employer provide nontaxable cash reimbursement under section 132(f) for periods longer than one month?

A-17.

(a) ***General rule.*** Yes. Qualified transportation fringes include reimbursement to employees for costs incurred for transportation in more than one month, provided the reimbursement for each month in the period is calculated separately and does not exceed the applicable statutory monthly limit for any month in the period. See Q/A-8 and 9 of this section if the limit for a month is exceeded.

(b) ***Example.*** The following example illustrates the principles of this Q/A-17:

> *Example.* (i) Employee R pays $100 per month for qualified parking used during the period from April 1 through June 30 of a year in which the statutory monthly qualified parking limit is $175. After receiving adequate substantiation from Employee R, R's employer reimburses R $300 in cash on June 30 of that year.
> (ii) In this *Example,* because the value of the reimbursed expenses for each month did not exceed the applicable statutory monthly limit, the $300 reimbursement is excludable from R's wages for income and employment tax purposes as a qualified transportation fringe.

Q-18. What are the substantiation requirements if an employer distributes transit passes?

A-18. There are no substantiation requirements if the employer distributes transit passes. Thus, an employer may distribute a transit pass for each month with a value not more than the statutory monthly limit without requiring any certification from the employee regarding the use of the transit pass.

Q-19. May an employer choose to impose substantiation requirements in addition to those described in this regulation?

A-19. Yes.

Q-20. How is the value of parking determined?

A-20. Section 1.61-21(b)(2) applies for purposes of determining the value of parking.

Q-21. How do the qualified transportation fringe rules apply to van pools?

A-21.

(a) ***Van pools generally.*** Employer and employee-operated van pools, as well as private or public transit-operated van pools, may qualify as qualified transportation fringes. The value of van pool benefits which are qualified transportation fringes may be excluded up to the applicable statutory monthly limit for transportation in a commuter highway vehicle and transit passes, less the value of any transit passes provided by the employer for the month.

(b) ***Employer-operated van pools.*** The value of van pool transportation provided by or for an employer to its employees is excludable as a qualified transportation fringe, provided the van qualifies as a commuter highway vehicle as defined in section 132(f)(5)(B) and Q/A-2 of this section. A van pool is operated by or for the employer if the employer purchases or leases vans to enable employees to commute together or the employer contracts with and pays a third party to provide the vans and some or all of the costs of operating the vans, including maintenance, liability insurance and other operating expenses.

(c) ***Employee-operated van pools.*** Cash reimbursement by an employer to employees for expenses incurred for transportation in a van pool operated by employees independent of their employer are excludable as qualified transportation fringes, provided that the van qualifies as a commuter highway vehicle as defined in section 132(f)(5)(B) and Q/A-2 of this section. See Q/A-16 of this section for the rules governing cash reimbursements.

(d) ***Private or public transit-operated van pool transit passes.*** The qualified transportation fringe exclusion for transit passes is available for travel in van pools owned and operated either by public transit authorities or by any person in the business of transporting persons for compensation or hire. In accordance with paragraph (b) of Q/A-3 of this section, the van must seat at least 6 adults (excluding the driver). See Q/A-16(b) and (c) of this section for a special rule for cash reimbursement for transit passes and the substantiation requirements for cash reimbursement.

(e) ***Value of van pool transportation benefits.*** Section 1.61-21(b)(2) provides that the fair market value of a fringe benefit is based on all the facts and circumstances. Alternatively, transportation in an employer-provided commuter highway vehicle may be valued under the automobile lease valuation rule in § 1.61-21(d), the vehicle cents-per-mile rule in § 1.61-21(e), or the commuting valuation rule in § 1.61-21(f). If one of these special valuation rules is used, the employer must use the same valuation rule to value the use of the commuter highway vehicle by each employee who share the use. See § 1.61-21(c)(2)(i)(B).

(f) ***Qualified parking prime member.*** If an employee obtains a qualified parking space as a result of membership in a car or van pool, the applicable statutory monthly limit for qualified parking applies to the individual to whom the parking space is assigned. This individual is the prime member. In determining the tax consequences to the prime member, the statutory monthly limit amounts of each car pool member may not be combined. If the employer provides access to the space and the

space is not assigned to a particular individual, then the employer must designate one of its employees as the prime member who will bear the tax consequences. The employer may not designate more than one prime member for a car or van pool during a month. The employer of the prime member is responsible for including the value of the qualified parking in excess of the statutory monthly limit in the prime member's wages for income and employment tax purposes.

Q-22. What are the reporting and employment tax requirements for qualified transportation fringes?

A-22.

(a) ***Employment tax treatment generally.*** Qualified transportation fringes not exceeding the applicable statutory monthly limit described in Q/A-7 of this section are not wages for purposes of the Federal Insurance Contributions Act (FICA), the Federal Unemployment Tax Act (FUTA), and federal income tax withholding. Any amount by which an employee elects to reduce compensation as provided in Q/A-11 of this section is not subject to the FICA, the FUTA, and federal income tax withholding. Qualified transportation fringes exceeding the applicable statutory monthly limit described in Q/A-7 of this section are wages for purposes of the FICA, the FUTA, and federal income tax withholding and are reported on the employee's Form W-2, Wage and Tax Statement.

(b) ***Employment tax treatment of cash reimbursement exceeding monthly limits.*** Cash reimbursement to employees (for example, cash reimbursement for qualified parking) in excess of the applicable statutory monthly limit under section 132(f) is treated as paid for employment tax purposes when actually or constructively paid. See §§ 31.3121(a)-2(a), 31.3301-4, 31.3402(a)-1(b) of this chapter. Employers must report and deposit the amounts withheld in addition to reporting and depositing other employment taxes. See Q/A-16 of this section for rules governing cash reimbursements.

(c) ***Noncash fringe benefits exceeding monthly limits.*** If the value of noncash qualified transportation fringes exceeds the applicable statutory monthly limit, the employer may elect, for purposes of the FICA, the FUTA, and federal income tax withholding, to treat the noncash taxable fringe benefits as paid on a pay period, quarterly, semi-annual, annual, or other basis, provided that the benefits are treated as paid no less frequently than annually.

Q-23. How does section 132(f) interact with other fringe benefit rules?

A-23. For purposes of section 132, the terms working condition fringe and de minimis fringe do not include any qualified transportation fringe under section 132(f). If, however, an employer provides local transportation other than transit passes (without any direct or indirect compensation reduction election), the value of the benefit may be excludable, either totally or partially, under fringe benefit rules other than the qualified transportation fringe rules under section 132(f). See §§ 1.132-6(d)(2)(i) (occasional local transportation fare), 1.132-6(d)(2)(iii) (transportation provided under unusual circumstances), and 1.61-21(k) (valuation of local transportation provided to qualified employees). See also Q/A-4(b) of this section.

Q-24. May qualified transportation fringes be provided to individuals who are partners, 2-percent shareholders of S-corporations, or independent contractors?

A-24.

(a) ***General rule.*** Section 132(f)(5)(E) states that self-employed individuals who are employees within the meaning of section 401(c)(1) are not employees for purposes of section 132(f). Therefore, individuals who are partners, sole proprietors, or other independent contractors are not employees for purposes of section 132(f). In addition, under section 1372(a), 2-percent shareholders of S corporations are treated as partners for fringe benefit purposes. Thus, an individual who is both a

2-percent shareholder of an S corporation and a common law employee of that S corporation is not considered an employee for purposes of section 132(f). However, while section 132(f) does not apply to individuals who are partners, 2-percent shareholders of S corporations, or independent contractors, other exclusions for working condition and de minimis fringes may be available as described in paragraphs (b) and (c) of this Q/A-24. See §§ 1.132-1(b)(2) and 1.132-1(b)(4).

(b) ***Transit passes.*** The working condition and de minimis fringe exclusions under section 132(a)(3) and (4) are available for transit passes provided to individuals who are partners, 2-percent shareholders, and independent contractors. For example, tokens or farecards provided by a partnership to an individual who is a partner that enable the partner to commute on a public transit system (not including privately-operated van pools) are excludable from the partner's gross income if the value of the tokens and farecards in any month does not exceed the dollar amount specified in § 1.132-6(d)(1). However, if the value of a pass provided in a month exceeds the dollar amount specified in § 1.132-6(d)(1), the full value of the benefit provided (not merely the amount in excess of the dollar amount specified in § 1.132-6(d)(1)) is includible in gross income.

(c) ***Parking.*** The working condition fringe rules under section 132(d) do not apply to commuter parking. See § 1.132-5(a)(1). However, the de minimis fringe rules under section 132(e) are available for parking provided to individuals who are partners, 2-percent shareholders, or independent contractors that qualifies under the de minimis rules. See § 1.132-6(a) and (b).

(d) ***Example.*** The following example illustrates the principles of this Q/A-24:

> *Example.* (i) Individual G is a partner in partnership P. Individual G commutes to and from G's office every day and parks free of charge in P's lot.
> (ii) In this *Example,* the value of the parking is not excluded under section 132(f), but may be excluded under section 132(e) if the parking is a de minimis fringe under § 1.132-6.

Q-25. What is the effective date of this section?

A-25.

(a) Except as provided in paragraph (b) of this Q/A-25, this section is applicable for employee taxable years beginning after December 31, 2001. For this purpose, an employer may assume that the employee taxable year is the calendar year.

(b) The last sentence of paragraph (b)(5) of Q/A-16 of this section (relating to whether transit system vouchers for transit passes are readily available) is applicable for employee taxable years beginning after December 31, 2003. For this purpose, an employer may assume that the employee taxable year is the calendar year.

[T.D. 8933, 66 FR 2244, Jan. 11, 2001; 66 FR 18190, Apr. 6, 2001, as amended by T.D. 9294, 71 FR 61883, Oct. 20, 2006]

§ 1.133-1T Questions and answers relating to interest on certain loans used to acquire employer securities (temporary).

Q-1: What does section 133 provide?

A-1: In general, section 133 provides that certain commercial lenders may exclude from gross income fifty percent of the interest received with respect to securities acquisition loans. A securities acquisition loan is any loan to an employee stock ownership plan (ESOP) (as defined in section 4975(e)(7)) that qualifies as an exempt loan under §§ 54.4975-7 and -11 to the extent that the proceeds are used to acquire employer securities (within the meaning of section 409(l)) for the ESOP. A loan made to a corporation sponsoring an ESOP (or to a person related to such corporation under section 133(b)(2)) may also qualify as a securities acquisition loan to the extent and for the period that the proceeds are

(a) loaned to the corporation's ESOP under a loan that qualifies as an exempt loan under §§ 54.4975-7 and -11 and that has substantially similar terms as the loan from the commercial lender to the sponsoring corporation, and

(b) used to acquire employer securities for the ESOP. The terms of the loan between the commercial lender and the sponsoring corporation (or a related corporation) and the loan between such corporation and the ESOP shall be treated as substantially similar only if the timing and rate at which employer securities would be released from encumbrance if the loan from the commercial lender were the exempt loan under the applicable rule of § 54.4975-7(b)(8) are substantially similar to the timing and rate at which employer securities will actually be released from encumbrance in accordance with such rule. For this purpose, if the loan from the commercial lender to the sponsoring corporation states a variable rate of interest and the loan between the corporation and the ESOP states a fixed rate of interest, whether the terms of the loans are substantially similar shall be determined at the time the obligations are initially issued by taking into account the adjustment interval on the variable rate loan and the maturity of the fixed rate loan. For example, if the rate on the loan from the commercial lender to the sponsoring corporation adjusts each six months and the loan from the corporation to the ESOP has a ten year term, the initial interest rate on the variable rate loan could be compared to the rate on the fixed rate loan by comparing the yields on 6 month and ten year Treasury obligations. Similarly, if the rates on the two loans are based on different compounding assumptions, whether the terms of the loans are substantially similar shall be determined by taking into account the different compounding assumptions. A securities acquisition loan may be evidenced by any note, bond, debenture, or certificate. Also, section 133(b)(2) provides that certain loans between related persons are not securities acquisition loans. In addition, a loan from a commercial lender to an ESOP or sponsoring corporation to purchase employer securities will not be treated as a securities acquisition loan to the extent that such loan is used, either directly or indirectly, to purchase employer securities from any other qualified plan, including any other ESOP, maintained by the employer or any other corporation which is a member of the same controlled group (as defined in section 409(l)(4)).

Q-2: What lenders are eligible to receive the fifty percent interest exclusion?

A-2: Under section 133(a), a bank (within the meaning of section 581), an insurance company to which subchapter L applies, or a corporation (other than a subchapter S corporation) actively engaged in the business of lending money may exclude from gross income fifty percent of the interest received with respect to a securities acquisition loan (as defined in Q&A-1 of § 1.133-1T). For purposes of section 133(a)(3), a corporation is actively engaged in the business of lending money if it lends money to the public on a regular and continuing basis (other than in connection with the purchase by the public of goods and services from the lender or a related party). A corporation is not actively engaged in the business of lending money if a predominant share of the original value of the loans it makes to unrelated parties (other than in connection with the purchase by the public of goods and services from the lender or a related party) are securities acquisition loans.

Q-3: May loans which qualify for the fifty percent interest exclusion under section 133 be syndicated to other lending institutions?

A-3: Securities acquisition loans under section 133 may be syndicated to other lending institutions provided that such lending institutions are described in section 133(a) (1), (2) or (3) and the loan was originated by a qualified holder. Subsequent holders of the debt instrument may qualify for the partial interest exclusion of section 133 if such holders satisfy the requirements of section 133 and such loan does not fail to be a securities acquisition loan under section 133(b)(2).

Q-4: When is section 133 effective?

A-4: Section 133 applies to securities acquisition loans made after July 18, 1984, and used to acquire employer securities after July 18, 1984. The provision does not apply to loans made after July 18, 1984, to the extent that such loans are renegotiations, directly or indirectly, of loans outstanding on such date. A loan extended to an ESOP or sponsoring corporation after July 18, 1984, will be treated as a renegotiation of an outstanding loan if the loan proceeds are used to refinance acquisitions of employer securities made prior to July 19, 1984. For example, if an ESOP borrowed money prior to July 19, 1984, to purchase employer securities and after July 18, 1984, borrows other funds from the same or a different commercial lender to repay the first loan, the second loan will be treated as a renegotiation of an outstanding loan to the extent of the repaid amount. Similarly, if, after July 18, 1984, an ESOP sells employer securities, uses the proceeds to retire a pre-July 19, 1984, loan and obtains a second loan to acquire replacement employer securities, the second loan will be treated as a renegotiation of an outstanding loan.

[T.D. 8073, 51 FR 4319, Feb. 4, 1986]

§ 1.139E-0 Table of contents.

This section lists the major captions for §§ 1.139E-1 and 1.139E-2.

§ 1.139E-1 Tribal general welfare benefits.

(a) Overview.

(b) Definitions.

(1) Act.

(2) Benefit.

(3) Code.

(4) Indian Tribal Government.

(5) Indian Tribal Government Program.

(6) Tribal General Welfare Benefit.

(7) Tribe.

(8) Tribal Program Participant.

(9) Tribal Member.

(10) Dependent.

(c) Indian Tribal Government Program.

(1) In general.

(2) Program must be established.

(3) Program must be administered under specified guidelines.

(4) Program cannot discriminate in favor of members of the governing body of the Tribe.

(5) No limitation on source of funds.

(d) Tribal General Welfare Benefits.

(1) In general.

(2) Benefits must be for the promotion of general welfare.

(3) Benefits must be available.

(4) Benefits cannot be lavish or extravagant.

(5) Benefits cannot be compensation for services.

(6) Loans from an Indian Tribal Government to a Tribal Program Participant.

(e) Cultural or ceremonial activities.

(1) In general.

(2) Application.

(3) Examples.

(f) Section 2(c) of the Act.

(g) Audit suspension.

(h) Applicability date.

§ 1.139E-2 Alaska Native regional or village corporations.

[TD 10040, 90 FR 58400, Dec. 16, 2025]

§ 1.139E-1 Tribal general welfare benefits.

(a) ***Overview.*** Under section 139E of the Code and this section, the gross income of a Tribal Program Participant for the taxable year does not include the value of any Tribal General Welfare Benefit provided by an Indian Tribal Government Program during the year to or on behalf of the Tribal Program Participant. Paragraph (b) of this section provides definitions that apply for purposes of this section. Paragraph (c) of this section provides the requirements that any program must satisfy to qualify as an Indian Tribal Government Program for purposes of this section. Paragraph (d) of this section provides the requirements that any benefit provided to or on behalf of a Tribal Program Participant must satisfy to qualify as a Tribal General Welfare Benefit for purposes of this section. Paragraph (e) of this section provides special rules related to cultural or ceremonial activities solely for purposes of this section. Paragraph (f) of this section restates the deference provided to Indian Tribal governments under section 2(c) of the Act. Paragraph (g) of this section describes the audit suspension provisions in section 4(a) of the Act. Paragraph (h) of this section provides the date of applicability of this section.

(b) ***Definitions.*** The following definitions apply for purposes of this section:

(1) ***Act.*** The term *Act* means the Tribal General Welfare Exclusion Act of 2014, Public Law 113-168, 128 Stat. 1883 (2014).

(2) ***Benefit.*** The term *benefit* means any money, property, services, or other item of value provided to or on behalf of an individual.

(3) ***Code.*** The term *Code* means the Internal Revenue Code.

(4) ***Indian Tribal Government.*** The term *Indian Tribal Government* means an Indian Tribal Government as defined by section 7701(a)(40) of the Code and includes any agencies or instrumentalities of such an Indian Tribal Government.

(5) ***Indian Tribal Government Program.*** The term *Indian Tribal Government Program* means a program that satisfies the requirements of paragraph (c) of this section.

(6) ***Tribal General Welfare Benefit.*** The term *Tribal General Welfare Benefit* means any benefit provided to or on behalf of a Tribal Program Participant that satisfies the requirements of paragraph (d) of this section for exclusion from gross income as an “Indian general welfare benefit” under section 139E of the Code.

(7) ***Tribe.*** The term *Tribe* means any Indian Tribe, band, nation, pueblo, or other organized group or community, including any Alaska Native village as defined in 43 U.S.C. 1602(c), that is recognized as eligible for the special programs and services provided by the United States to Indians because of their status as Indians.

(8) ***Tribal Program Participant*** —

(i) ***In general.*** The term *Tribal Program Participant* means a Tribal Member, spouse of a Tribal Member within the meaning of § 301.7701-18 of this chapter, spouse of a Tribal Member under applicable Tribal law, dependent of a Tribal Member, or other individual who has been determined by the Indian Tribal Government to be eligible for a Tribal General Welfare Benefit

because such individual is, with respect to a Tribal Member, an ancestor, descendant, former spouse, widow or widower, legally recognized domestic partner or former domestic partner, or an individual for whom a Tribal Member is a caregiver authorized under Tribal or State law.

(ii) ***Special rule for ceremonial or cultural activities.*** Solely for purposes of paragraph (e) of this section, the term *Tribal Program Participant* may include a member or citizen of a Tribe that is different from the Tribe that establishes or maintains the Indian Tribal Government Program that provides the Tribal General Welfare Benefit, and other individuals described in paragraph (b)(8)(i) of this section. For purposes of this paragraph (b)(8)(ii), in applying paragraph (b)(8)(i) of this section, such member or citizen of another Tribe will be treated as a Tribal Member.

(9) ***Tribal Member.*** The term *Tribal Member* means an individual who is a member or citizen of the Tribe that establishes or maintains the Indian Tribal Government Program because the individual meets the requirements established by applicable Tribal law for enrollment in the Tribe, and:

(i) Is listed on the Tribal rolls of the Tribe if such rolls are kept;

(ii) Is recognized as a member by the Tribe if Tribal rolls are not kept; or

(iii) Is an Indian child as defined in 25 U.S.C. 1903.

(10) ***Dependent.*** The term *dependent* means an individual who is a qualifying child or a qualifying relative, as defined in section 152 of the Code, of a Tribal Member for the taxable year determined:

(i) Without regard to whether the Tribal Member was a qualifying child or qualifying relative, each as defined in section 152, of another taxpayer for a taxable year of the other taxpayer beginning in that calendar year.

(ii) Without regard to whether the individual filed a joint return with the individual's spouse (as defined in section 6013 of the Code) for the taxable year beginning in that calendar year; and

(iii) Without regard to the individual's gross income for the calendar year in which the individual's taxable year begins.

(c) ***Indian Tribal Government Program*** —

(1) ***In general.*** A program is an Indian Tribal Government Program only if the program:

(i) Is established by the Indian Tribal Government, as described in paragraph (c)(2) of this section;

(ii) Is administered under specified guidelines, as described in paragraph (c)(3) of this section; and

(iii) Does not discriminate in favor of members of the governing body of the Tribe, as described in paragraph (c)(4) of this section.

(2) ***Program must be established*** —

(i) ***In general.*** A program must be established by an Indian Tribal Government. A program established by Tribal custom or government practice, or by formal action of the Indian Tribal Government, is a program established by the Indian Tribal Government. Formal action means authorization of the program pursuant to applicable Tribal law. The formal action must be in writing to the extent such writing is required under applicable Tribal law. For example, written documentation that evidences the formal action of the Indian Tribal Government to establish the program is required if such written documentation is required under applicable Tribal law. Similarly, no written documentation of the formal action of the Indian Tribal Government to

establish the program is required if, under applicable Tribal law, no written documentation of such action is required. As an additional example, a program may be established by a voice vote if such voice vote would otherwise constitute formal action of the Indian Tribal Government under applicable Tribal law. To the extent permitted under applicable Tribal law, an Indian Tribal Government may delegate the authority for establishing a program to a designated individual or entity of the Indian Tribal Government.

(ii) ***Examples.*** The requirements of this paragraph (c)(2) are illustrated by the following examples, which are not intended to be an exhaustive or exclusive illustration of the rules provided in this paragraph (c)(2):

(A) ***Example 1.*** A, a Tribe, operates under the direction of its Indian Tribal Government (the Council). According to the laws of A, all expenditures of A must be approved by a majority of the Council at the Council's annual meeting or by written unanimous consent if the action is taken without a meeting. During the annual meeting of A's Council, a majority of the Council vote to approve establishing a program. A's Council has established the program under paragraph (c)(2)(i) of this section.

(B) ***Example 2*** —

(*1*) ***Facts.*** The facts are the same as in paragraph (c)(2)(ii)(A) of this section (*Example 1*), except that, based on a recommendation from the Tribal Education office, A's Council determines to provide funding for a scholarship program to pay 100% of education related expenses for any Tribal Member who graduates from high school or receives a GED during the calendar year. Because the next Council meeting is scheduled in December 2024, and to avoid potential impact on eligible students, in February 2024, Council adopts by unanimous written consent the following education program:

(*i*) Approving $X of funding for the 2024 year for the scholarship program; and

(*ii*) Authorizing the director of the Tribal Education office to use the approved funds for the scholarship program.

(*2*) ***Analysis.*** A's Council has established the education program under paragraph (c)(2)(i) of this section.

(C) ***Example 3.*** The facts are the same as in paragraph (c)(2)(ii)(B) of this section (*Example 2*) except that A's Council approves $X of annual funding to be provided for the education program, and delegates to the Tribal Education office authority to establish a scholarship program. A's Council has established the education program under paragraph (c)(2)(i) of this section.

(3) ***Program must be administered under specified guidelines.*** A program must be administered under specified guidelines. The specified guidelines must include, at a minimum, a description of the program to provide Tribal General Welfare Benefits, the eligibility requirements for the program, a description of the type of benefits authorized by the program, and the process for receiving benefits under the program. A program is administered under specified guidelines if the program is operated in accordance with such guidelines. Indian Tribal Governments may choose to, but are not required to, set forth the specified guidelines of the program in writing.

(4) ***Program cannot discriminate in favor of members of the governing body of the Tribe*** —

(i) ***In general.*** Except in the case of a program described in paragraph (c)(4)(ii) of this section, a program cannot discriminate in favor of members of the governing body of the Tribe. For the purposes of this paragraph (c)(4), a governing body means the legislative body of the Tribe, such as the Tribal Council, or the representative equivalent of the legislative body of the Tribe.

(ii) ***General council Tribes.*** A program is treated as being in compliance with this paragraph (c)(4) if the governing body of a Tribe consists of the entire adult membership of the Tribe.

(iii) ***Facts and circumstances test.*** Except in the case of a program described in paragraph (c)(4)(ii) of this section, a program fails to satisfy the requirements of this paragraph (c)(4) if, based on all the facts and circumstances, the program, either by its terms or in its administration, discriminates in favor of members of the governing body of the Tribe. A program discriminates in favor of the members of the governing body of the Tribe if the program by its terms is available only to members of the governing body. Thus, for example, a program established to provide benefits solely to the children of members of the governing body of the Tribe (unless the Tribe is a general council Tribe) and thus defrays costs otherwise borne by members of the governing body fails to satisfy the requirements of this paragraph (c)(4). Additionally, the administration of a program discriminates in favor of members of the governing body of the Tribe if, based on the totality of the facts and circumstances, the benefits provided during the year disproportionately favor members of the governing body of the Tribe because of their status as members of the governing body.

(5) ***No limitation on source of funds*** —

(i) ***In general.*** Benefits under the Indian Tribal Government Program may be funded by any source of revenue or funds. For example, an Indian Tribal Government may use funds derived from levies, taxes, and service fees; settlements; revenues from Tribally owned businesses, including casino revenues; funds from Federal, State, or local governments; and funds from other sources, including grants and loans, to provide benefits under an Indian Tribal Government Program.

(ii) ***Benefits funded by net gaming revenues.*** Benefits under the Indian Tribal Government Program may be funded by net gaming revenues as permitted under the Indian Gaming Regulatory Act, 25 U.S.C. 2701-2721 (IGRA). However, per capita payments, as defined under IGRA, are subject to Federal taxation under IGRA and are not excludable from gross income under section 139E or this section. For purposes of section 139E and this section, a payment is a per capita payment if it is identified by the Indian Tribal Government as a per capita payment in a Revenue Allocation Plan that is approved by the Department of the Interior (*see* 25 U.S.C. 2710(b)(3) and 25 CFR 290.11) and in effect at the time of the payment.

(iii) ***Benefits paid as distributions from certain trusts.*** Benefits under the Indian Tribal Government Program may be provided to Tribal Program Participants as distributions from the portion of a trust of which the Indian Tribal Government is treated as owner under sections 671 through 677. For purposes of section 139E and this section, the determination of whether a benefit is a Tribal General Welfare Benefit is made at the time the benefit is distributed from the trust to the Tribal Program Participant. A benefit, or a portion thereof, that an Indian Tribal Government Program distributes from a trust is a Tribal General Welfare Benefit under section 139E if it otherwise satisfies the requirements of section 139E and this section.

(d) ***Tribal General Welfare Benefits*** —

(1) ***In general.*** A benefit does not qualify as a Tribal General Welfare Benefit unless the benefit is:

(i) Provided pursuant to an Indian Tribal Government Program, as described in paragraph (c) of this section;

(ii) Provided for the promotion of general welfare, as described in paragraph (d)(2) of this section;

(iii) Available to any eligible Tribal Program Participant, as described in paragraph (d)(3) of this section;

(iv) Not lavish or extravagant, as described in paragraph (d)(4) of this section; and

(v) Not compensation for services, as described in paragraph (d)(5) of this section.

(2) ***Benefits must be for the promotion of general welfare*** —

(i) ***In general.*** Tribal General Welfare Benefits must be for the promotion of general welfare. For purposes of section 139E and this paragraph (d)(2), the Indian Tribal Government determines that a benefit is for the promotion of general welfare at the time it establishes the Tribal General Welfare Program meeting the requirements of paragraph (c) of this section. An Indian Tribal Government has sole discretion to determine whether a benefit is for the promotion of general welfare and the Internal Revenue Service will defer to the Indian Tribal Government's determination that a benefit is for the promotion of general welfare. Benefits may be provided without regard to the financial or other need of Tribal Program Participants and may be provided on a uniform or pro-rata basis to Tribal Program Participants. Thus, for example, an Indian Tribal Government determines whether benefits are for the promotion of general welfare under programs such as cultural programs, housing assistance programs, programs to provide education benefits, programs for training or retraining to acquire new skills or to obtain better employment opportunities, programs to provide assistance for disasters or emergency situations, funeral or burial assistance programs, legal aid programs, wellness and health-related programs, or any programs that provide benefits to specific categories of individuals, such as elderly individuals or minors. Moreover, an Indian Tribal Government may also determine that providing a benefit to a Tribal Program Participant to support, develop, operate, expand or start a trade or business is a benefit for the promotion of general welfare. However, a benefit paid to or on behalf of a Tribal Program Participant for a trade or business must be paid to or on behalf of the Tribal Program Participant in the Tribal Program Participant's capacity as an individual (for example, the benefit cannot be paid to or on behalf of the Tribal Program Participant's corporation or partnership).

(ii) ***Examples.*** The requirements of paragraph (d)(2)(i) of this section are illustrated by the following examples. Items listed in these examples following the term “including” are not intended to be an exhaustive or exclusive illustration of the application of the rules in paragraph (d)(2)(i) of this section. For the examples in this paragraph (d)(2)(ii), assume the Indian Tribal Government has determined that the benefits provided are for the promotion of general welfare.

(A) ***Example 1: Housing programs.*** Indian Tribal Government A administers a program, B, pursuant to which the following benefits are provided in connection with A's Tribal Members' principal residences and ancillary structures: payments for Tribal Members to use to make mortgage payments, down payments, and rent payments (including security deposits); payments for Tribal Members to enhance habitability of housing, such as by remedying water, sewage, sanitation service, safety (including mold remediation), and heating or cooling issues; payments for Tribal Members to provide for basic housing repairs or rehabilitation (including roof repair and replacement); and payments to Tribal

Members to pay utility bills and charges (including water, electricity, gas, and basic communications services such as phone, internet, and cable). The payments made by A under B are for the promotion of general welfare as described in paragraph (d)(2)(i) of this section.

(B) ***Example 2: Educational programs.*** Indian Tribal Government C administers a program, D, pursuant to which the following benefits are provided: provision to students (including post-secondary students) of transportation to and from school, tutors, and supplies (including clothing, backpacks, laptop computers, textbooks, musical instruments, and sports equipment) for use in school activities and extracurricular activities; tuition payments for students (as well as allowances for room and board on or off campus for the student, spouse, domestic partner, and dependents) to attend preschool, school, college or university, online school, educational seminars, vocational education, technical education, adult education, continuing education, or alternative education; provision of care of children away from their homes to help their parents or other relatives responsible for their care to be gainfully employed or to pursue education; and provision of job counseling and programs for which the primary objective is job placement or training, including allowances for expenses for interviewing or training away from home (including travel, auto expenses, lodging, and food), tutoring, and appropriate clothing for a job interview or training (including an interview suit or a uniform required during a period of training). The payments made by C under D are for the promotion of general welfare as described in paragraph (d)(2)(i) of this section.

(C) ***Example 3: Elder and disabled programs.*** Indian Tribal Government E administers a program, F, pursuant to which the following benefits are provided to Tribal Members who have attained age 55 or are mentally or physically disabled (as defined under applicable law, including an Indian Tribal Government's disability laws): meals through home-delivered meals programs or at a community center or similar facility; home care such as assistance with preparing meals or doing chores, or day care outside the home; local transportation assistance; and improvements to adapt housing to special needs (including but not limited to grab bars and ramps). The payments made by E under F are for the promotion of general welfare as described in paragraph (d)(2)(i) of this section.

(D) ***Example 4: Transportation programs.*** Indian Tribal Government G administers a program, H, pursuant to which the following benefits are provided: payment of transportation costs, including for rental cars, mileage, and fares for taxis, ride-sharing or ride-hailing services, buses, and other public transportation. The payments made by G under H are for the promotion of general welfare as described in paragraph (d)(2)(i) of this section.

(E) ***Example 5: Medical programs.*** Indian Tribal Government J administers a program, K, pursuant to which the following benefits are provided: payments for the cost of transportation, temporary meals, and lodging of a Tribal Program Participant while the individual is receiving medical care away from home, or to pay the cost of nonprescription drugs (including traditional Tribal medicines). The payments made by J under K are for the promotion of general welfare as described in paragraph (d)(2)(i) of this section.

(F) ***Example 6: Emergency programs.*** Indian Tribal Government L administers a program, M, pursuant to which the following benefits are provided to individuals in exigent circumstances (including victims of abuse): assistance to cover costs, including the costs of food, clothing, shelter, transportation, auto repair bills, and similar expenses; payment

of costs for temporary relocation and shelter for individuals involuntarily displaced from their homes (including situations in which a home is destroyed by a fire or natural disaster); and assistance for transportation emergencies (for example, when stranded away from home) in the form of transportation costs, a hotel room, and meals. The payments made by L under M are for the promotion of general welfare as described in paragraph (d)(2)(i) of this section.

(G) ***Example 7: Cultural and religious programs.*** Indian Tribal Government N administers a program, P, pursuant to which the following benefits are provided: payment of expenses (including admission fees, transportation, food, and lodging) to attend or participate in a Tribe's cultural, social, religious, or community activities, including powwows, potlatches, ceremonies, and traditional dances; payment of expenses (including admission fees, transportation, food, and lodging) to visit sites that are culturally or historically significant for the Tribe, including other Indian reservations; payment of the costs of receiving instruction about a Tribe's culture, history, and traditions (including traditional language, music, and dances); payment of funeral and burial expenses and expenses of hosting or attending wakes, funerals, burials, other bereavement events, and subsequent honoring events; payment of transportation costs and admission fees to attend educational, social, or cultural programs offered or supported by the Tribe or another Tribe; and cash or property provided as prizes or awards in connection with cultural, social, religious, or community activities (including powwows, potlatches, ceremonies, and traditional dances). In addition, the benefits provided by program P include the payment of expenses to assist in the preparation and clean-up activities related to the Tribe's cultural, social, religious, or community activities. The payments made by N under P are for the promotion of general welfare as described in paragraph (d)(2)(i) of this section.

(H) ***Example 8: Economic development benefits.*** Indian Tribal Government Q administers a program, R, pursuant to which Q provides benefits to Tribal Program Participants to support, develop, operate, expand or start a trade or business. Q provides benefits under program R, which include: a nonreimbursable grant paid directly to a Tribal Program Participant; an interest-free or other below-market loan to a Tribal Program Participant; and a cash benefit to a Tribal Program Participant to pay rent on a commercial lease. The benefits provided by Q to Tribal Program Participants under R, are for the promotion of general welfare as described in paragraph (d)(2)(i) of this section.

(3) ***Benefits must be available.*** The benefits provided under an Indian Tribal Government Program must be available to any Tribal Program Participant who meets the specified guidelines of the program required under paragraph (c)(3) of this section, subject to budgetary constraints. However, the Indian Tribal Government has discretion to determine the category of individuals who are Tribal Program Participants under the Indian Tribal Government Program, provided that such determination is consistent with the specified guidelines described in paragraph (c)(3) of this section and subject to the prohibition on discrimination under paragraph (c)(4) of this section. Thus, for example, an Indian Tribal Government is permitted to limit eligibility for an Indian Tribal Government Program to dependents of Tribal Members who have attained a specified age, or, as another example, to a Tribal Member's household.

(4) ***Benefits cannot be lavish or extravagant*** —

(i) ***Facts and circumstances test.*** The benefit provided by an Indian Tribal Government Program cannot be lavish or extravagant. Whether a benefit is lavish or extravagant for purposes of this section is based on the facts and circumstances at the time the benefit is provided. Relevant facts and circumstances include a Tribe's culture and cultural practices, history, geographic area, traditions, resources, and economic conditions or factors. For purposes of this paragraph (d)(4)(i), the Internal Revenue Service will defer to an Indian Tribal Government's attestations of the fact and circumstances but may also consider other facts and circumstances that are not attested to by the Indian Tribal government at the time that the benefit is provided to the Tribal Program Participant.

(ii) ***Presumption for written specified guidelines.*** A benefit will be presumed to not be lavish or extravagant if it is described in, and provided in accordance with, the written specified guidelines of an Indian Tribal Government Program that exist at the time that the benefit is provided to the Tribal Program Participant.

(5) ***Benefits cannot be compensation for services.*** Except as provided in paragraph (e) of this section, a Tribal General Welfare Benefit does not include benefits that are provided as compensation for services to any person. Under section 61(a) of the Code, compensation for services includes fees, commissions, fringe benefits, and similar items, whether paid in money or property.

(6) ***Loans from an Indian Tribal Government to a Tribal Program Participant.*** Except as provided in § 1.7872-5(a)(2), section 7872 of the Code does not apply to a loan from an Indian Tribal Government to a Tribal Program Participant pursuant to an Indian Tribal Government Program.

(e) ***Cultural or ceremonial activities*** —

(1) ***In general.*** For purposes of section 139E and paragraph (d)(5) of this section, a benefit is not compensation for services if:

(i) The benefit is provided to a Tribal Program Participant for the Tribal Program Participant's participation in cultural or ceremonial activities for the transmission of Tribal culture as determined by the Indian Tribal Government (including but not limited to: powwows; rite of passage ceremonies; funerals; wakes; burials; other bereavement events; honoring events; Tribal community service events, such as a neighborhood clean-up or a youth woodcutting program to benefit elders; participation in training in traditional construction techniques; Tribal language education; and other activities, including, for example, those described in paragraph (d)(2)(ii)(G) of this section); and

(ii) The benefit consists of an item of cultural significance as determined by the Indian Tribal Government, the reimbursement of costs, or a cash honorarium.

(2) ***Application.*** Except as otherwise provided in this paragraph (e)(2), an Indian Tribal Government has sole discretion to determine whether an item is an item of cultural significance and whether an activity is a cultural or ceremonial activity, and the Internal Revenue Service will defer to these determinations by the Indian Tribal Government. A benefit provided under this paragraph (e) can be a prize or award given to a Tribal Program Participant for the Tribal Program Participant's participation in cultural or ceremonial activities for the transmission of Tribal culture. However, cash, gift cards, or vehicles are generally not items of cultural significance.

(3) ***Examples.*** The application of this paragraph (e) is illustrated by the following examples, which are not intended to be an exhaustive or exclusive illustration of the rules provided in this paragraph (e):

(i) ***Example 1: Benefits for cultural or ceremonial activities not compensation for services.*** Tribe B regularly holds a gathering during the fall season to celebrate its cultural traditions. During the gathering, Tribal Members of B, as well as Tribal members of other Tribes from around the region, are invited to participate. The Indian Tribal Government of B (ITG-B) allocates funds for the gathering, some of which are used for the following payments:

(A) ***Tribal Member of B.*** Individual 1, a Tribal Member of B, provides traditional blessings on the first and final days of the gathering. ITG-B gives Individual 1 a cash honorarium in recognition of providing the blessings. The cash honorarium that Individual 1 receives from ITG-B is not compensation for services under this paragraph (e).

(B) ***Tribal Member of different Tribe.*** Individual 2, a Tribal Member of Tribe C, participates as a drummer for a ceremonial dance on the second day of the gathering. ITG-B gives Individual 2 a piece of culturally significant jewelry. Under paragraph (b)(8)(ii) of this section, Individual 2 is a Tribal Program Participant solely for purposes of this paragraph (e). The jewelry that Individual 2 receives from ITG-B is not compensation for services under this paragraph (e).

(ii) ***Example 2: Benefits for cultural or ceremonial activities not compensation for services.*** Tribe C operates a language preservation center in which Individual 3, a Tribal Member of C, who speaks the traditional language that is common to C and other regional Tribes, volunteers to come in every Saturday to discuss and teach the traditional language of C to other Tribal Members of C. The Indian Tribal Government of C (ITG-C), reimburses Individual 3 for travel expenses and teaching supplies used in Individual 3's language lessons. The reimbursement of costs that Individual 3 receives from ITG-C is not compensation for services under this paragraph (e).

(f) ***Section 2(c) of the Act.*** Section 2(c) of the Act provides that ambiguities in section 139E of the Internal Revenue Code, as added by the Act, shall be resolved in favor of Indian Tribal governments and deference shall be given to Indian Tribal governments for the programs administered and authorized by the Tribe to benefit the general welfare of the Tribal community.

(g) ***Audit suspension.*** After December 16, 2025, the Department of the Treasury and the Internal Revenue Service will, in consultation with the Treasury Tribal Advisory Committee, establish and require the education and training prescribed in section 3(b)(2) of the Act. The temporary suspension of audits and examinations (see sections 7602 and 7605 of the Code) described in section 4(a) of the Act applies to Indian Tribal governments and Tribal Program Participants and will not be lifted until after the education and training prescribed by section 3(b)(2) of the Act is completed. An inquiry into a taxpayer's eligibility for the audit suspension does not constitute an audit or examination for purposes of the audit suspension described in section 4(a) of the Act.

(h) ***Applicability date.*** This section applies to taxable years of Tribal Program Participants that begin on or after January 1, 2027. Indian Tribal Governments and Tribal Program Participants may choose to apply the provisions of this section, in their entirety, to taxable years that begin before January 1, 2027.

[TD 10040, 90 FR 58400, Dec. 16, 2025]

§ 1.139E-2 Alaska Native regional or village corporations.

An Alaska Native regional or village corporation, as defined in, or established pursuant to, the Alaska Native Claims Settlement Act (43 U.S.C. 1601 *et seq.*), may choose to apply the rules in § 1.139E-1 until rules that specifically address the application of the requirements of section 139E of the Internal Revenue Code to Alaska Native regional or village corporations are published under this section. However, an Alaska Native regional or village corporation that chooses to apply the rules in § 1.139E-1 must apply all of the rules of § 1.139E-1 with respect to any general welfare benefits provided to a shareholder of the Alaska Native regional or village corporation (and the shareholder's spouse and dependents) and other Tribal Program Participants (as defined in § 1.139E-1(b)).

[TD 10040, 90 FR 58400, Dec. 16, 2025]

§ 1.141-0 Table of contents.

This section lists the captioned paragraphs contained in §§ 1.141-1 through 1.141-16.

§ 1.141-1 Definitions and rules of general application.

(a) In general.

(b) Certain general definitions.

(c) Elections.

(d) Related parties.

(e) Partnerships.

§ 1.141-2 Private activity bond tests.

(a) Overview.

(b) Scope.

(c) General definition of private activity bond.

(d) Reasonable expectations and deliberate actions.

(1) In general.

(2) Reasonable expectations test.

(3) Deliberate action defined.

(4) Special rule for dispositions of personal property in the ordinary course of an established governmental program.

(5) Special rule for general obligation bond programs that finance a large number of separate purposes.

(e) When a deliberate action occurs.

(f) Certain remedial actions.

(g) Examples.

§ 1.141-3 Definition of private business use.

(a) General rule.

(1) In general.

(2) Indirect use.

(3) Aggregation of private business use.

(b) Types of private business use arrangements.

(1) In general.

(2) Ownership.

(3) Leases.

(4) Management contracts.

(5) Output contracts.

(6) Research agreements.

(7) Other actual or beneficial use.

(c) Exception for general public use.

(1) In general.

(2) Use on the same basis.

(3) Long-term arrangements not treated as general public use.

(4) Relation to other use.

(d) Other exceptions.

(1) Agents.

(2) Use incidental to financing arrangements.

(3) Exceptions for arrangements other than arrangements resulting in ownership of financed property by a nongovernmental person.

(4) Temporary use by developers.

(5) Incidental use.

(6) Qualified improvements.

(e) Special rule for tax assessment bonds.

(f) Examples.

(g) Measurement of private business use.

(1) In general.

(2) Measurement period.

(3) Determining average percentage of private business use.

(4) Determining the average amount of private business use for a 1-year period.

(5) Common areas.

(6) Allocation of neutral costs.

(7) Commencement of measurement of private business use.

(8) Examples.

§ 1.141-4 Private security or payment test.

(a) General rule.

(1) Private security or payment.

(2) Aggregation of private payments and security.

(3) Underlying arrangement.

(b) Measurement of private payments and security.

(1) Scope.

(2) Present value measurement.

(c) Private payments.

(1) In general.

(2) Payments taken into account.

(3) Allocation of payments.

(d) Private security.

(1) In general.

(2) Security taken into account.

(3) Pledge of unexpended proceeds.

(4) Secured by any interest in property or payments.

(5) Payments in respect of property.

(6) Allocation of security among issues.

(e) Generally applicable taxes.

(1) General rule.

(2) Definition of generally applicable taxes.

(3) Special charges.

(4) Manner of determination and collection.

(5) Payments in lieu of taxes.

(f) Certain waste remediation bonds.

(1) Scope.

(2) Persons that are not private users.

(3) Persons that are private users.

(g) Examples.

§ 1.141-5 Private loan financing test.

(a) In general.

(b) Measurement of test.

(c) Definition of private loan.

(1) In general.

(2) Application only to purpose investments.

(3) Grants.

(4) Hazardous waste remediation bonds.

(d) Tax assessment loan exception.

(1) General rule.

(2) Tax assessment loan defined.

(3) Mandatory tax or other assessment.

(4) Specific essential governmental function.

(5) Equal basis requirement.

(6) Coordination with private business tests.

(e) Examples.

§ 1.141-6 Allocation and accounting rules.

(a) Allocation of proceeds to expenditures, projects, and uses in general.

(1) Allocations to expenditures.

(2) Allocations of sources to a project and its uses.

(3) Definition of project.

(b) Special allocation rules for eligible mixed-use projects.

(1) In general.

(2) Definition of eligible mixed-use project.

(3) Definition of qualified equity.

(4) Same plan of financing.

(c) Allocations of private payments.

(d) Allocations of proceeds to common costs of an issue.

(e) Allocations of proceeds to bonds.

(f) Examples.

§ 1.141-7 Special rules for output facilities.

(a) Overview.

(b) Definitions.

(1) Available output.

(2) Measurement period.

(3) Sale at wholesale.

(4) Take contract and take or pay contract.

(5) Requirements contract.

(6) Nonqualified amount.

(c) Output contracts.

(1) General rule.

(2) Take contract or take or pay contract.

(3) Requirements contract.

(4) Output contract properly characterized as a lease.

(d) Measurement of private business use.

(e) Measurement of private security or payment.

(f) Exceptions for certain contracts.

(1) Small purchases of output.

(2) Swapping and pooling arrangements.

(3) Short-term output contracts.

(4) Certain conduit parties disregarded.

(g) Special rules for electric output facilities used to provide open access.

(1) Operation of transmission facilities by nongovernmental persons.

(2) Certain use by nongovernmental persons under output contracts.

(3) Ancillary services.

(4) Exceptions to deliberate action rules.

(5) Additional transactions as permitted by the Commissioner.

(h) Allocations of output facilities and systems.

(1) Facts and circumstances analysis.

(2) Illustrations.

(3) Transmission and distribution contracts.

(4) Allocation of payments.

(i) Examples.

§ 1.141-8 $15 million limitation for output facilities.

(a) In general.

(1) General rule.

(2) Reduction in $15 million output limitation for outstanding issues.

(3) Benefits and burdens test applicable.

(b) Definition of project.

(1) General rule.

(2) Separate ownership.

(3) Generating property.

(4) Transmission and distribution.

(5) Subsequent improvements.

(6) Replacement property.

(c) Examples.

§ 1.141-9 Unrelated or disproportionate use test.

(a) General rules.

(1) Description of test.

(2) Application of unrelated or disproportionate use test.

(b) Unrelated use.

(1) In general.

(2) Use for the same purpose as government use.

(c) Disproportionate use.

(1) Definition of disproportionate use.

(2) Aggregation of related uses.

(3) Allocation rule.

(d) Maximum use taken into account.

(e) Examples.

§ 1.141-10 Coordination with volume cap. [Reserved]

§ 1.141-11 Acquisition of nongovernmental output property. [Reserved]

§ 1.141-12 Remedial actions.

(a) Conditions to taking remedial action.

(1) Reasonable expectations test met.

(2) Maturity not unreasonably long.

(3) Fair market value consideration.

(4) Disposition proceeds treated as gross proceeds for arbitrage purposes.

(5) Proceeds expended on a governmental purpose.

(b) Effect of a remedial action.

(1) In general.

(2) Effect on bonds that have been advance refunded.

(c) Disposition proceeds.

(1) Definition.

(2) Allocating disposition proceeds to an issue.

(3) Allocating disposition proceeds to different sources of funding.

(d) Redemption or defeasance of nonqualified bonds.

(1) In general.

(2) Special rule for dispositions for cash.

(3) Anticipatory remedial action.

(4) Notice of defeasance.

(5) Special limitation.

(6) Defeasance escrow defined.

(e) Alternative use of disposition proceeds.

(1) In general.

(2) Special rule for use by 501(c)(3) organizations.

(f) Alternative use of facility.

(g) Rules for deemed reissuance.

(h) Authority of Commissioner to provide for additional remedial actions.

(i) Effect of remedial action on continuing compliance.

(j) Nonqualified bonds.

(1) Amount of nonqualified bonds.

(2) Allocation of nonqualified bonds.

(k) Examples.

§ 1.141-13 Refunding issues.

(a) In general.

(b) Application of private business use test and private loan financing test.

(1) Allocation of proceeds.

(2) Determination of amount of private business use.

(c) Application of private security or payment test.

(1) Separate issue treatment.

(2) Combined issue treatment.

(3) Special rule for arrangements not entered into in contemplation of the refunding issue.

(d) Multipurpose issue allocations.

(1) In general.

(2) Exceptions.

(e) Application of reasonable expectations test to certain refunding bonds.

(f) Special rule for refundings of certain general obligation bonds.

(g) Examples.

§ 1.141-14 Anti-abuse rules.

(a) Authority of Commissioner to reflect substance of transactions.

(b) Examples.

§ 1.141-15 Effective/applicability dates.

(a) Scope.

(b) Effective dates.

(1) In general.

(2) Certain short-term arrangements.

(3) Certain prepayments.

(4) Certain remedial actions.

(c) Refunding bonds.

(d) Permissive application of regulations.

(e) Permissive retroactive application of certain sections.

(1) In general.

(2) Transition rule for pre-effective date bonds.

(f) Effective dates for certain regulations relating to output facilities.

(1) General rule.

(2) Transition rule for requirements contracts.

(g) Refunding bonds for output facilities.

(h) Permissive retroactive application.

(i) Permissive application of certain regulations relating to output facilities.

(j) Effective dates for certain regulations relating to refundings.

(k) Effective/applicability dates for certain regulations relating to generally applicable taxes and payments in lieu of tax.

(l) Applicability date for certain regulations related to allocation and accounting.

(1) In general.

(2) Refunding bonds.

(3) Permissive application.

(m) Permissive retroactive application of certain regulations.

(n) Effective/applicability dates for certain regulations relating to certain definitions.

§ 1.141-16 Effective dates for qualified private activity bond provisions.

(a) Scope.

(b) Effective dates.

(c) Permissive application.

(d) Certain remedial actions.

(1) General rule.

(2) Special rule for allocations of nonqualified bonds.

[T.D. 8712, 62 FR 2283, Jan. 16, 1997, as amended by T.D. 8757, 63 FR 3259, Jan. 22, 1998; T.D. 8941, 66 FR 4664, Jan. 18, 2001; T.D. 9016, 67 FR 59759, Sept. 23, 2002; T.D. 9085, 68 FR 45775, Aug. 4, 2003; T.D. 9150, 69 FR 50066, Aug. 13, 2004; T.D. 9234, 70 FR 75031, Dec. 19, 2005; T.D. 9429, 73 FR 63374, Oct. 24, 2008; T.D. 9741, 80 FR 65642, Oct. 27, 2015; T.D. 9777, 81 FR 46591, July 18, 2016]

TAX EXEMPTION REQUIREMENTS FOR STATE AND LOCAL BONDS

§ 1.141-1 Definitions and rules of general application.

(a) ***In general.*** For purposes of §§ 1.141-0 through 1.141-16, the following definitions and rules apply: The definitions in this section, the definitions in § 1.150-1, the definition of placed in service in § 1.150-2(c), the definition of reasonably required reserve or replacement fund in § 1.148-2(f), and the definitions in § 1.148-1 of bond year, commingled fund, fixed yield issue, higher yielding investments, investment, investment proceeds, issue price, issuer, nonpurpose investment, purpose investment, qualified guarantee, qualified hedge, reasonable expectations or reasonableness, rebate amount, replacement proceeds, sale proceeds, variable yield issue and yield.

(b) ***Certain general definitions.***

Common areas means portions of a facility that are equally available to all users of a facility on the same basis for uses that are incidental to the primary use of the facility. For example, hallways and elevators generally are treated as common areas if they are used by the different lessees of a facility in connection with the primary use of that facility.

Consistently applied means applied uniformly to account for proceeds and other amounts.

Deliberate action is defined in § 1.141-2(d)(3).

Discrete portion means a portion of a facility that consists of any separate and discrete portion of a facility to which use is limited, other than common areas. A floor of a building and a portion of a building separated by walls, partitions, or other physical barriers are examples of a discrete portion.

Disposition is defined in § 1.141-12(c)(1).

Disposition proceeds is defined in § 1.141-12(c)(1).

Essential governmental function is defined in § 1.141-5(d)(4)(ii).

Financed means constructed, reconstructed, or acquired with proceeds of an issue.

Governmental bond has the same meaning as in § 1.150-1(b), except that, for purposes of § 1.141-13, governmental bond is defined in § 1.141-13(b)(2)(iv).

Governmental person means a state or local governmental unit as defined in § 1.103-1 or any instrumentality thereof. It does not include the United States or any agency or instrumentality thereof.

Hazardous waste remediation bonds is defined in § 1.141-4(f)(1).

Measurement period is defined in § 1.141-3(g)(2).

Nongovernmental person means a person other than a governmental person.

Output facility means electric and gas generation, transmission, distribution, and related facilities, and water collection, storage, and distribution facilities.

Private business tests means the private business use test and the private security or payment test of section 141(b).

Proceeds means the sale proceeds of an issue (other than those sale proceeds used to retire bonds of the issue that are not deposited in a reasonably required reserve or replacement fund). Proceeds also include any investment proceeds from investments that accrue during the project period (net of rebate amounts attributable to the project period). Disposition proceeds of an issue are treated as proceeds to the extent provided in § 1.141-12. The Commissioner may treat any replaced amounts as proceeds.

Project period means the period beginning on the issue date and ending on the date that the project is placed in service. In the case of a multipurpose issue, the issuer may elect to treat the project period for the entire issue as ending on either the expiration of the temporary period described in § 1.148-2(e)(2) or the end of the fifth bond year after the issue date.

Public utility property means public utility property as defined in section 168(i)(10).

Qualified bond means a qualified bond as defined in section 141(e).

Renewal option means a provision under which either party has a legally enforceable right to renew the contract. Thus, for example, a provision under which a contract is automatically renewed for 1-year periods absent cancellation by either party is not a renewal option (even if it is expected to be renewed).

Replaced amounts means replacement proceeds other than amounts that are treated as replacement proceeds solely because they are sinking funds or pledged funds.

Weighted average maturity is determined under section 147(b).

Weighted average reasonably expected economic life is determined under section 147(b). The reasonably expected economic life of property may be determined by reference to the class life of the property under section 168.

(c) ***Elections.*** Elections must be made in writing on or before the issue date and retained as part of the bond documents, and, once made, may not be revoked without the permission of the Commissioner.

(d) ***Related parties.*** Except as otherwise provided, all related parties are treated as one person and any reference to "person" includes any related party.

(e) ***Partnerships.*** A partnership (as defined in section 7701(a)(2)) is treated as an aggregate of its partners, rather than as an entity.

[T.D. 8712, 62 FR 2284, Jan. 16, 1997, as amended by T.D. 9234, 70 FR 75032, Dec. 19, 2005; T.D. 9741, 80 FR 65643, Oct. 27, 2015; T.D. 9777, 81 FR 46592, July 18, 2016]

§ 1.141-2 Private activity bond tests.

(a) ***Overview.*** Interest on a private activity bond is not excludable from gross income under section 103(a) unless the bond is a qualified bond. The purpose of the private activity bond tests of section 141 is to limit the volume of tax-exempt bonds that finance the activities of nongovernmental persons, without regard to whether a financing actually transfers benefits of tax-exempt financing to a nongovernmental person. The private activity bond tests serve to identify arrangements that have the potential to transfer the benefits of tax-exempt financing, as well as arrangements that actually transfer these benefits. The regulations under section 141 may not be applied in a manner that is inconsistent with these purposes.

(b) ***Scope.*** Sections 1.141-0 through 1.141-16 apply generally for purposes of the private activity bond limitations under section 141.

(c) ***General definition of private activity bond.*** Under section 141, bonds are private activity bonds if they meet either the private business use test and private security or payment test of section 141(b) or the private loan financing test of section 141(c). The private business use and private security or payment tests are described in §§ 1.141-3 and 1.141-4. The private loan financing test is described in § 1.141-5.

(d) ***Reasonable expectations and deliberate actions*** —

(1) ***In general.*** An issue is an issue of private activity bonds if the issuer reasonably expects, as of the issue date, that the issue will meet either the private business tests or the private loan financing test. An issue is also an issue of private activity bonds if the issuer takes a deliberate action, subsequent to the issue date, that causes the conditions of either the private business tests or the private loan financing test to be met.

(2) ***Reasonable expectations test*** —

(i) ***In general.*** In general, the reasonable expectations test must take into account reasonable expectations about events and actions over the entire stated term of an issue.

(ii) ***Special rule for issues with mandatory redemption provisions.*** An action that is reasonably expected, as of the issue date, to occur after the issue date and to cause either the private business tests or the private loan financing test to be met may be disregarded for purposes of those tests if—

(A) The issuer reasonably expects, as of the issue date, that the financed property will be used for a governmental purpose for a substantial period before the action;

(B) The issuer is required to redeem all nonqualifying bonds (regardless of the amount of disposition proceeds actually received) within 6 months of the date of the action;

(C) The issuer does not enter into any arrangement with a nongovernmental person, as of the issue date, with respect to that specific action; and

(D) The mandatory redemption of bonds meets all of the conditions for remedial action under § 1.141-12(a).

(3) ***Deliberate action defined*** —

(i) ***In general.*** Except as otherwise provided in this paragraph (d)(3), a deliberate action is any action taken by the issuer that is within its control. An intent to violate the requirements of section 141 is not necessary for an action to be deliberate.

(ii) ***Safe harbor exceptions.*** An action is not treated as a deliberate action if—

(A) It would be treated as an involuntary or compulsory conversion under section 1033; or

(B) It is taken in response to a regulatory directive made by the federal government. See § 1.141-7(g)(4).

(4) ***Special rule for dispositions of personal property in the ordinary course of an established governmental program*** —

(i) ***In general.*** Dispositions of personal property in the ordinary course of an established governmental program are not treated as deliberate actions if—

(A) The weighted average maturity of the bonds financing that personal property is not greater than 120 percent of the reasonably expected actual use of that property for governmental purposes;

(B) The issuer reasonably expects on the issue date that the fair market value of that property on the date of disposition will be not greater than 25 percent of its cost; and

(C) The property is no longer suitable for its governmental purposes on the date of disposition.

(ii) ***Reasonable expectations test.*** The reasonable expectation that a disposition described in paragraph (d)(4)(i) of this section may occur in the ordinary course while the bonds are outstanding will not cause the issue to meet the private activity bond tests if the issuer is required to deposit amounts received from the disposition in a commingled fund with substantial tax or other governmental revenues and the issuer reasonably expects to spend the amounts on governmental programs within 6 months from the date of commingling.

(iii) ***Separate issue treatment.*** An issuer may treat the bonds properly allocable to the personal property eligible for this exception as a separate issue under § 1.150-1(c)(3).

(5) ***Special rule for general obligation bond programs that finance a large number of separate purposes.*** The determination of whether bonds of an issue are private activity bonds may be based solely on the issuer's reasonable expectations as of the issue date if all of the requirements of paragraphs (d)(5)(i) through (vii) of this section are met.

(i) The issue is an issue of general obligation bonds of a general purpose governmental unit that finances at least 25 separate purposes (as defined in § 1.150-1(c)(3)) and does not predominantly finance fewer than 4 separate purposes.

(ii) The issuer has adopted a fund method of accounting for its general governmental purposes that makes tracing the bond proceeds to specific expenditures unreasonably burdensome.

(iii) The issuer reasonably expects on the issue date to allocate all of the net proceeds of the issue to capital expenditures within 6 months of the issue date and adopts reasonable procedures to verify that net proceeds are in fact so expended. A program to randomly spot check that 10 percent of the net proceeds were so expended generally is a reasonable verification procedure for this purpose.

(iv) The issuer reasonably expects on the issue date to expend all of the net proceeds of the issue before expending proceeds of a subsequent issue of similar general obligation bonds.

(v) The issuer reasonably expects on the issue date that it will not make any loans to nongovernmental persons with the proceeds of the issue.

(vi) The issuer reasonably expects on the issue date that the capital expenditures that it could make during the 6-month period beginning on the issue date with the net proceeds of the issue that would not meet the private business tests are not less than 125 percent of the capital expenditures to be financed with the net proceeds of the issue.

(vii) The issuer reasonably expects on the issue date that the weighted average maturity of the issue is not greater than 120 percent of the weighted average reasonably expected economic life of the capital expenditures financed with the issue. To determine reasonably expected economic life for this purpose an issuer may use reasonable estimates based on the type of expenditures made from a fund.

(e) ***When a deliberate action occurs.*** A deliberate action occurs on the date the issuer enters into a binding contract with a nongovernmental person for use of the financed property that is not subject to any material contingencies.

(f) ***Certain remedial actions.*** See § 1.141-12 for certain remedial actions that prevent a deliberate action with respect to property financed by an issue from causing that issue to meet the private business use test or the private loan financing test.

(g) ***Examples.*** The following examples illustrate the application of this section:

Example 1 Involuntary action. City B issues bonds to finance the purchase of land. On the issue date, B reasonably expects that it will be the sole user of the land for the entire term of the bonds. Subsequently, the federal government acquires the land in a condemnation action. B sets aside the condemnation proceeds to pay debt service on the bonds but does not redeem them on their first call date. The bonds are not private activity bonds because B has not taken a deliberate action after the issue date. See, however, § 1.141-14(b), *Example 2.*

Example 2 Reasonable expectations test—involuntary action. The facts are the same as in *Example 1,* except that, on the issue date, B reasonably expects that the federal government will acquire the land in a condemnation action during the term of the bonds. On the issue date, the present value of the amount that B reasonably expects to receive from the federal government is greater than 10 percent of the present value of the debt service on the bonds. The terms of the bonds do not require that the bonds be redeemed within 6 months of the acquisition by the federal government. The bonds are private activity bonds because the issuer expects as of the issue date that the private business tests will be met.

Example 3 Reasonable expectations test—mandatory redemption. City C issues bonds to rehabilitate an existing hospital that it currently owns. On the issue date of the bonds, C reasonably expects that the hospital will be used for a governmental purpose for a substantial period. On the issue date, C also

plans to construct a new hospital, but the placed in service date of that new hospital is uncertain. C reasonably expects that, when the new hospital is placed in service, it will sell or lease the rehabilitated hospital to a private hospital corporation. The bond documents require that the bonds must be redeemed within 6 months of the sale or lease of the rehabilitated hospital (regardless of the amount actually received from the sale). The bonds meet the reasonable expectations requirement of the private activity bond tests if the mandatory redemption of bonds meets all of the conditions for a remedial action under § 1.141-12(a).

Example 4 Dispositions in the ordinary course of an established governmental program. City D issues bonds with a weighted average maturity of 6 years for the acquisition of police cars. D reasonably expects on the issue date that the police cars will be used solely by its police department, except that, in the ordinary course of its police operations, D sells its police cars to a taxicab corporation after 5 years of use because they are no longer suitable for police use. Further, D reasonably expects that the value of the police cars when they are no longer suitable for police use will be no more than 25 percent of cost. D subsequently sells 20 percent of the police cars after only 3 years of actual use. At that time, D deposits the proceeds from the sale of the police cars in a commingled fund with substantial tax revenues and reasonably expects to spend the proceeds on governmental programs within 6 months of the date of deposit. D does not trace the actual use of these commingled amounts. The sale of the police cars does not cause the private activity bond tests to be met because the requirements of paragraph (d)(4) of this section are met.

[T.D. 8712, 62 FR 2284, Jan. 16, 1997, as amended by T.D. 8757, 63 FR 3260, Jan. 22, 1998; T.D. 9016, 67 FR 59759, Sept. 23, 2002]

§ 1.141-3 Definition of private business use.

(a) ***General rule*** —

(1) ***In general.*** The private business use test relates to the use of the proceeds of an issue. The 10 percent private business use test of section 141(b)(1) is met if more than 10 percent of the proceeds of an issue is used in a trade or business of a nongovernmental person. For this purpose, the use of financed property is treated as the direct use of proceeds. Any activity carried on by a person other than a natural person is treated as a trade or business. Unless the context or a provision clearly requires otherwise, this section also applies to the private business use test under sections 141(b)(3) (unrelated or disproportionate use), 141(b)(4) ($15 million limitation for certain output facilities), and 141(b)(5) (the coordination with the volume cap where the nonqualified amount exceeds $15 million).

(2) ***Indirect use.*** In determining whether an issue meets the private business use test, it is necessary to look to both the indirect and direct uses of proceeds. For example, a facility is treated as being used for a private business use if it is leased to a nongovernmental person and subleased to a governmental person or if it is leased to a governmental person and then subleased to a nongovernmental person, provided that in each case the nongovernmental person's use is in a trade or business. Similarly, the issuer's use of the proceeds to engage in a series of financing transactions for property to be used by nongovernmental persons in their trades or businesses may cause the private business use test to be met. In addition, proceeds are treated as used in the trade or business of a nongovernmental person if a nongovernmental person, as a result of a single transaction or a series of related transactions, uses property acquired with the proceeds of an issue.

(3) ***Aggregation of private business use.*** The use of proceeds by all nongovernmental persons is aggregated to determine whether the private business use test is met.

(b) *Types of private business use arrangements* —

(1) ***In general.*** Both actual and beneficial use by a nongovernmental person may be treated as private business use. In most cases, the private business use test is met only if a nongovernmental person has special legal entitlements to use the financed property under an arrangement with the issuer. In general, a nongovernmental person is treated as a private business user of proceeds and financed property as a result of ownership; actual or beneficial use of property pursuant to a lease, or a management or incentive payment contract; or certain other arrangements such as a take or pay or other output-type contract.

(2) ***Ownership.*** Except as provided in paragraph (d)(1) or (d)(2) of this section, ownership by a nongovernmental person of financed property is private business use of that property. For this purpose, ownership refers to ownership for federal income tax purposes.

(3) ***Leases.*** Except as provided in paragraph (d) of this section, the lease of financed property to a nongovernmental person is private business use of that property. For this purpose, any arrangement that is properly characterized as a lease for federal income tax purposes is treated as a lease. In determining whether a management contract is properly characterized as a lease, it is necessary to consider all of the facts and circumstances, including the following factors—

(i) The degree of control over the property that is exercised by a nongovernmental person; and

(ii) Whether a nongovernmental person bears risk of loss of the financed property.

(4) *Management contracts* —

(i) ***Facts and circumstances test.*** Except as provided in paragraph (d) of this section, a management contract (within the meaning of paragraph (b)(4)(ii) of this section) with respect to financed property may result in private business use of that property, based on all of the facts and circumstances. A management contract with respect to financed property generally results in private business use of that property if the contract provides for compensation for services rendered with compensation based, in whole or in part, on a share of net profits from the operation of the facility.

(ii) ***Management contract defined.*** For purposes of this section, a management contract is a management, service, or incentive payment contract between a governmental person and a service provider under which the service provider provides services involving all, a portion of, or any function of, a facility. For example, a contract for the provision of management services for an entire hospital, a contract for management services for a specific department of a hospital, and an incentive payment contract for physician services to patients of a hospital are each treated as a management contract.

(iii) ***Arrangements generally not treated as management contracts.*** The arrangements described in paragraphs (b)(4)(iii)(A) through (D) of this section generally are not treated as management contracts that give rise to private business use.

(A) Contracts for services that are solely incidental to the primary governmental function or functions of a financed facility (for example, contracts for janitorial, office equipment repair, hospital billing, or similar services).

(B) The mere granting of admitting privileges by a hospital to a doctor, even if those privileges are conditioned on the provision of de minimis services, if those privileges are available to all qualified physicians in the area, consistent with the size and nature of its facilities.

(C) A contract to provide for the operation of a facility or system of facilities that consists predominantly of public utility property, if the only compensation is the reimbursement of actual and direct expenses of the service provider and reasonable administrative overhead expenses of the service provider.

(D) A contract to provide for services, if the only compensation is the reimbursement of the service provider for actual and direct expenses paid by the service provider to unrelated parties.

(iv) ***Management contracts that are properly treated as other types of private business use.*** A management contract with respect to financed property results in private business use of that property if the service provider is treated as the lessee or owner of financed property for federal income tax purposes, unless an exception under paragraph (d) of this section applies to the arrangement.

(5) ***Output contracts.*** See § 1.141-7 for special rules for contracts for the purchase of output of output facilities.

(6) ***Research agreements*** —

(i) ***Facts and circumstances test.*** Except as provided in paragraph (d) of this section, an agreement by a nongovernmental person to sponsor research performed by a governmental person may result in private business use of the property used for the research, based on all of the facts and circumstances.

(ii) ***Research agreements that are properly treated as other types of private business use.*** A research agreement with respect to financed property results in private business use of that property if the sponsor is treated as the lessee or owner of financed property for federal income tax purposes, unless an exception under paragraph (d) of this section applies to the arrangement.

(7) ***Other actual or beneficial use*** —

(i) ***In general.*** Any other arrangement that conveys special legal entitlements for beneficial use of bond proceeds or of financed property that are comparable to special legal entitlements described in paragraphs (b)(2), (3), (4), (5), or (6) of this section results in private business use. For example, an arrangement that conveys priority rights to the use or capacity of a facility generally results in private business use.

(ii) ***Special rule for facilities not used by the general public.*** In the case of financed property that is not available for use by the general public (within the meaning of paragraph (c) of this section), private business use may be established solely on the basis of a special economic benefit to one or more nongovernmental persons, even if those nongovernmental persons have no special legal entitlements to use of the property. In determining whether special economic benefit gives rise to private business use it is necessary to consider all of the facts and circumstances, including one or more of the following factors—

(A) Whether the financed property is functionally related or physically proximate to property used in the trade or business of a nongovernmental person;

(B) Whether only a small number of nongovernmental persons receive the special economic benefit; and

(C) Whether the cost of the financed property is treated as depreciable by any nongovernmental person.

(c) *Exception for general public use* —

(1) ***In general.*** Use as a member of the general public (general public use) is not private business use. Use of financed property by nongovernmental persons in their trades or businesses is treated as general public use only if the property is intended to be available and in fact is reasonably available for use on the same basis by natural persons not engaged in a trade or business.

(2) ***Use on the same basis.*** In general, use under an arrangement that conveys priority rights or other preferential benefits is not use on the same basis as the general public. Arrangements providing for use that is available to the general public at no charge or on the basis of rates that are generally applicable and uniformly applied do not convey priority rights or other preferential benefits. For this purpose, rates may be treated as generally applicable and uniformly applied even if—

(i) Different rates apply to different classes of users, such as volume purchasers, if the differences in rates are customary and reasonable; or

(ii) A specially negotiated rate arrangement is entered into, but only if the user is prohibited by federal law from paying the generally applicable rates, and the rates established are as comparable as reasonably possible to the generally applicable rates.

(3) ***Long-term arrangements not treated as general public use.*** An arrangement is not treated as general public use if the term of the use under the arrangement, including all renewal options, is greater than 200 days. For this purpose, a right of first refusal to renew use under the arrangement is not treated as a renewal option if—

(i) The compensation for the use under the arrangement is redetermined at generally applicable, fair market value rates that are in effect at the time of renewal; and

(ii) The use of the financed property under the same or similar arrangements is predominantly by natural persons who are not engaged in a trade or business.

(4) ***Relation to other use.*** Use of financed property by the general public does not prevent the proceeds from being used for a private business use because of other use under this section.

(d) *Other exceptions* —

(1) ***Agents.*** Use of proceeds by nongovernmental persons solely in their capacity as agents of a governmental person is not private business use. For example, use by a nongovernmental person that issues obligations on behalf of a governmental person is not private business use to the extent the nongovernmental person's use of proceeds is in its capacity as an agent of the governmental person.

(2) ***Use incidental to financing arrangements.*** Use by a nongovernmental person that is solely incidental to a financing arrangement is not private business use. A use is solely incidental to a financing arrangement only if the nongovernmental person has no substantial rights to use bond proceeds or financed property other than as an agent of the bondholders. For example, a nongovernmental person that acts solely as an owner of title in a sale and leaseback financing transaction with a city generally is not a private business user of the property leased to the city, provided that the

nongovernmental person has assigned all of its rights to use the leased facility to the trustee for the bondholders upon default by the city. Similarly, bond trustees, servicers, and guarantors are generally not treated as private business users.

(3) ***Exceptions for arrangements other than arrangements resulting in ownership of financed property by a nongovernmental person*** —

(i) ***Arrangements not available for use on the same basis by natural persons not engaged in a trade or business.*** Use by a nongovernmental person pursuant to an arrangement, other than an arrangement resulting in ownership of financed property by a nongovernmental person, is not private business use if—

(A) The term of the use under the arrangement, including all renewal options, is not longer than 100 days;

(B) The arrangement would be treated as general public use, except that it is not available for use on the same basis by natural persons not engaged in a trade or business because generally applicable and uniformly applied rates are not reasonably available to natural persons not engaged in a trade or business; and

(C) The property is not financed for a principal purpose of providing that property for use by that nongovernmental person.

(ii) ***Negotiated arm's-length arrangements.*** Use by a nongovernmental person pursuant to an arrangement, other than an arrangement resulting in ownership of financed property by a nongovernmental person, is not private business use if—

(A) The term of the use under the arrangement, including all renewal options, is not longer than 50 days;

(B) The arrangement is a negotiated arm's-length arrangement, and compensation under the arrangement is at fair market value; and

(C) The property is not financed for a principal purpose of providing that property for use by that nongovernmental person.

(4) ***Temporary use by developers.*** Use during an initial development period by a developer of an improvement that carries out an essential governmental function is not private business use if the issuer and the developer reasonably expect on the issue date to proceed with all reasonable speed to develop the improvement and property benefited by that improvement and to transfer the improvement to a governmental person, and if the improvement is in fact transferred to a governmental person promptly after the property benefited by the improvement is developed.

(5) ***Incidental use*** —

(i) ***General rule.*** Incidental uses of a financed facility are disregarded, to the extent that those uses do not exceed 2.5 percent of the proceeds of the issue used to finance the facility. A use of a facility by a nongovernmental person is incidental if—

(A) Except for vending machines, pay telephones, kiosks, and similar uses, the use does not involve the transfer to the nongovernmental person of possession and control of space that is separated from other areas of the facility by walls, partitions, or other physical barriers, such as a night gate affixed to a structural component of a building (a nonpossessory use);

(B) The nonpossessory use is not functionally related to any other use of the facility by the same person (other than a different nonpossessory use); and

(C) All nonpossessory uses of the facility do not, in the aggregate, involve the use of more than 2.5 percent of the facility.

(ii) ***Illustrations.*** Incidental uses may include pay telephones, vending machines, advertising displays, and use for television cameras, but incidental uses may not include output purchases.

(6) ***Qualified improvements.*** Proceeds that provide a governmentally owned improvement to a governmentally owned building (including its structural components and land functionally related and subordinate to the building) are not used for a private business use if—

(i) The building was placed in service more than 1 year before the construction or acquisition of the improvement is begun;

(ii) The improvement is not an enlargement of the building or an improvement of interior space occupied exclusively for any private business use;

(iii) No portion of the improved building or any payments in respect of the improved building are taken into account under section 141(b)(2)(A) (the private security test); and

(iv) No more than 15 percent of the improved building is used for a private business use.

(e) ***Special rule for tax assessment bonds.*** In the case of a tax assessment bond that satisfies the requirements of § 1.141-5(d), the loan (or deemed loan) of the proceeds to the borrower paying the assessment is disregarded in determining whether the private business use test is met. However, the use of the loan proceeds is not disregarded in determining whether the private business use test is met.

(f) ***Examples.*** The following examples illustrate the application of paragraphs (a) through (e) of this section. In each example, assume that the arrangements described are the only arrangements with nongovernmental persons for use of the financed property.

Example 1. Nongovernmental ownership. State A issues 20-year bonds to purchase land and equip and construct a factory. A then enters into an arrangement with Corporation X to sell the factory to X on an installment basis while the bonds are outstanding. The issue meets the private business use test because a nongovernmental person owns the financed facility. See also § 1.141-2 (relating to the private activity bond tests), and § 1.141-5 (relating to the private loan financing test).

Example 2 Lease to a nongovernmental person. (i) The facts are the same as in *Example 1,* except that A enters into an arrangement with X to lease the factory to X for 3 years rather than to sell it to X. The lease payments will be made annually and will be based on the tax-exempt interest rate on the bonds. The issue meets the private business use test because a nongovernmental person leases the financed facility. See also § 1.141-14 (relating to anti-abuse rules).

(ii) The facts are the same as in *Example 2(i),* except that the annual payments made by X will equal fair rental value of the facility and exceed the amount necessary to pay debt service on the bonds for the 3 years of the lease. The issue meets the private business use test because a nongovernmental person leases the financed facility and the test does not require that the benefits of tax-exempt financing be passed through to the nongovernmental person.

Example 3. Management contract in substance a lease. City L issues 30-year bonds to finance the construction of a city hospital. L enters into a 15-year contract with M, a nongovernmental person that operates a health maintenance organization relating to the treatment of M's members at L's hospital. The contract provides for reasonable fixed compensation to M for services rendered with no compensation based, in whole or in part, on a share of net profits from the operation of the hospital. However, the contract also provides that 30 percent of the capacity of the hospital will be exclusively available to M's members and M will bear the risk of loss of that portion of the capacity of the hospital so that, under all of the facts and circumstances, the contract is properly characterized as a lease for federal income tax purposes. The issue meets the private business use test because a nongovernmental person leases the financed facility.

Example 4. Ownership of title in substance a leasehold interest. Nonprofit Corporation R issues bonds on behalf of City P to finance the construction of a hospital. R will own legal title to the hospital. In addition, R will operate the hospital, but R is not treated as an agent of P in its capacity as operator of the hospital. P has certain rights to the hospital that establish that it is properly treated as the owner of the property for federal income tax purposes. P does not have rights, however, to directly control operation of the hospital while R owns legal title to it and operates it. The issue meets the private business use test because the arrangement provides a nongovernmental person an interest in the financed facility that is comparable to a leasehold interest. See paragraphs (a)(2) and (b)(7)(i) of this section.

Example 5. Rights to control use of property treated as private business use—parking lot. Corporation C and City D enter into a plan to finance the construction of a parking lot adjacent to C's factory. Pursuant to the plan, C conveys the site for the parking lot to D for a nominal amount, subject to a covenant running with the land that the property be used only for a parking lot. In addition, D agrees that C will have the right to approve rates charged by D for use of the parking lot. D issues bonds to finance construction of the parking lot on the site. The parking lot will be available for use by the general public on the basis of rates that are generally applicable and uniformly applied. The issue meets the private business use test because a nongovernmental person has special legal entitlements for beneficial use of the financed facility that are comparable to an ownership interest. See paragraph (b)(7)(i) of this section.

Example 6. Other actual or beneficial use—hydroelectric enhancements. J, a political subdivision, owns and operates a hydroelectric generation plant and related facilities. Pursuant to a take or pay contract, J sells 15 percent of the output of the plant to Corporation K, an investor-owned utility. K is treated as a private business user of the plant. Under the license issued to J for operation of the plant, J is required by federal regulations to construct and operate various facilities for the preservation of fish and for public recreation. J issues its obligations to finance the fish preservation and public recreation facilities. K has no special legal entitlements for beneficial use of the financed facilities. The fish preservation facilities are functionally related to the operation of the plant. The recreation facilities are available to natural persons on a short-term basis according to generally applicable and uniformly applied rates. Under paragraph (c) of this section, the recreation facilities are treated as used by the general public. Under paragraph (b)(7) of this section, K's use is not treated as private business use of the recreation facilities because K has no special legal entitlements for beneficial use of the recreation facilities. The fish preservation facilities are not of a type reasonably available for use on the same basis by natural persons not engaged in a trade or business. Under all of the facts and circumstances (including the functional relationship of the fish preservation facilities to property used in K's trade or business) under paragraph (b)(7)(ii) of this section, K derives a special

economic benefit from the fish preservation facilities. Therefore, K's private business use may be established solely on the basis of that special economic benefit, and K's use of the fish preservation facilities is treated as private business use.

Example 7. Other actual or beneficial use—pollution control facilities. City B issues obligations to finance construction of a specialized pollution control facility on land that it owns adjacent to a factory owned by Corporation N. B will own and operate the pollution control facility, and N will have no special legal entitlements to use the facility. B, however, reasonably expects that N will be the only user of the facility. The facility will not be reasonably available for use on the same basis by natural persons not engaged in a trade or business. Under paragraph (b)(7)(ii) of this section, because under all of the facts and circumstances the facility is functionally related and is physically proximate to property used in N's trade or business, N derives a special economic benefit from the facility. Therefore, N's private business use may be established solely on the basis of that special economic benefit, and N's use is treated as private business use of the facility. See paragraph (b)(7)(ii) of this section.

Example 8. General public use—airport runway. (i) City I issues bonds and uses all of the proceeds to finance construction of a runway at a new city-owned airport. The runway will be available for take-off and landing by any operator of an aircraft desiring to use the airport, including general aviation operators who are natural persons not engaged in a trade or business. It is reasonably expected that most of the actual use of the runway will be by private air carriers (both charter airlines and commercial airlines) in connection with their use of the airport terminals leased by those carriers. These leases for the use of terminal space provide no priority rights or other preferential benefits to the air carriers for use of the runway. Moreover, under the leases the lease payments are determined without taking into account the revenues generated by runway landing fees (that is, the lease payments are not determined on a "residual" basis). Although the lessee air carriers receive a special economic benefit from the use of the runway, this economic benefit is not sufficient to cause the air carriers to be private business users, because the runway is available for general public use. The issue does not meet the private business use test. See paragraphs (b)(7)(ii) and (c) of this section.

(ii) The facts are the same as in *Example 8(i),* except that the runway will be available for use only by private air carriers. The use by these private air carriers is not for general public use, because the runway is not reasonably available for use on the same basis by natural persons not engaged in a trade or business. Depending on all of the facts and circumstances, including whether there are only a small number of lessee private air carriers, the issue may meet the private business use test solely because the private air carriers receive a special economic benefit from the runway. See paragraph (b)(7)(ii) of this section.

(iii) The facts are the same as in *Example 8(i),* except that the lease payments under the leases with the private air carriers are determined on a residual basis by taking into account the net revenues generated by runway landing fees. These leases cause the private business

> use test to be met with respect to the runway because they are arrangements that convey special legal entitlements to the financed facility to nongovernmental persons. See paragraph (b)(7)(i) of this section.

Example 9. General public use—airport parking garage. City S issues bonds and uses all of the proceeds to finance construction of a city-owned parking garage at the city-owned airport. S reasonably expects that more than 10 percent of the actual use of the parking garage will be by employees of private air carriers (both charter airlines and commercial airlines) in connection with their use of the airport terminals leased by those carriers. The air carriers' use of the parking garage, however, will be on the same basis as passengers and other members of the general public using the airport. The leases for the use of the terminal space provide no priority rights to the air carriers for use of the parking garage, and the lease payments are determined without taking into account the revenues generated by the parking garage. Although the lessee air carriers receive a special economic benefit from the use of the parking garage, this economic benefit is not sufficient to cause the air carriers to be private business users, because the parking garage is available for general public use. The issue does not meet the private business use test. See paragraphs (b)(7)(ii) and (c) of this section.

Example 10. Long-term arrangements not treated as general public use—insurance fund. Authority T deposits all of the proceeds of its bonds in its insurance fund and invests all of those proceeds in tax-exempt bonds. The insurance fund provides insurance to a large number of businesses and natural persons not engaged in a trade or business. Each participant receives insurance for a term of 1 year. The use by the participants, other than participants that are natural persons not engaged in a trade or business, is treated as private business use of the proceeds of the bonds because the participants have special legal entitlements to the use of bond proceeds, even though the contractual rights are not necessarily properly characterized as ownership, leasehold, or similar interests listed in paragraph (b) of this section. Use of the bond proceeds is not treated as general public use because the term of the insurance is greater than 200 days. See paragraphs (b)(7)(i) and (c)(3) of this section.

Example 11. General public use—port road. Highway Authority W uses all of the proceeds of its bonds to construct a 25-mile road to connect an industrial port owned by Corporation Y with existing roads owned and operated by W. Other than the port, the nearest residential or commercial development to the new road is 12 miles away. There is no reasonable expectation that development will occur in the area surrounding the new road. W and Y enter into no arrangement (either by contract or ordinance) that conveys special legal entitlements to Y for the use of the road. Use of the road will be available without restriction to all users, including natural persons who are not engaged in a trade or business. The issue does not meet the private business use test because the road is treated as used only by the general public.

Example 12. General public use of governmentally owned hotel. State Q issues bonds to purchase land and construct a hotel for use by the general public (that is, tourists, visitors, and business travelers). The bond documents provide that Q will own and operate the project for the term of the bonds. Q will not enter into a lease or license with any user for use of rooms for a period longer than 200 days (although users may actually use rooms for consecutive periods in excess of 200 days). Use of the hotel by hotel guests who are travelling in connection with trades or businesses of nongovernmental persons is not a private business use of the hotel by these persons because the hotel is intended to be available and in fact is reasonably available for use on the same basis by natural persons not engaged in a trade or business. See paragraph (c)(1) of this section.

Example 13. General public use with rights of first refusal. Authority V uses all of the proceeds of its bonds to construct a parking garage. At least 90 percent of the spaces in the garage will be available to the general public on a monthly first-come, first-served basis. V reasonably expects that the spaces will be predominantly leased to natural persons not engaged in a trade or business who have priority rights to renew their spaces at then current fair market value rates. More than 10 percent of the spaces will be leased to nongovernmental persons acting in a trade or business. These leases are not treated as arrangements with a term of use greater than 200 days. The rights to renew are not treated as renewal options because the compensation for the spaces is redetermined at generally applicable, fair market value rates that will be in effect at the time of renewal and the use of the spaces under similar arrangements is predominantly by natural persons who are not engaged in a trade or business. The issue does not meet the private business use test because at least 90 percent of the use of the parking garage is general public use. See paragraph (c)(3) of this section.

Example 14. General public use with a specially negotiated rate agreement with agency of United States. G, a sewage collection and treatment district, operates facilities that were financed with its bonds. F, an agency of the United States, has a base located within G. Approximately 20 percent of G's facilities are used to treat sewage produced by F under a specially negotiated rate agreement. Under the specially negotiated rate agreement, G uses its best efforts to charge F as closely as possible the same amount for its use of G's services as its other customers pay for the same amount of services, although those other customers pay for services based on standard district charges and tax levies. F is prohibited by federal law from paying for the services based on those standard district charges and tax levies. The use of G's facilities by F is on the same basis as the general public. See paragraph (c)(2)(ii) of this section.

Example 15. Arrangements not available for use by natural persons not engaged in a trade or business—federal use of prisons. Authority E uses all of the proceeds of its bonds to construct a prison. E contracts with federal agency F to house federal prisoners on a space-available, first-come, first-served basis, pursuant to which F will be charged approximately the same amount for each prisoner as other persons that enter into similar transfer agreements. It is reasonably expected that other persons will enter into similar agreements. The term of the use under the contract is not longer than 100 days, and F has no right to renew, although E reasonably expects to renew the contract indefinitely. The prison is not financed for a principal purpose of providing the prison for use by F. It is reasonably expected that during the term of the bonds, more than 10 percent of the prisoners at the prison will be federal prisoners. F's use of the facility is not general public use because this type of use (leasing space for prisoners) is not available for use on the same basis by natural persons not engaged in a trade or business. The issue does not meet the private business use test, however, because the leases satisfy the exception of paragraph (d)(3)(i) of this section.

Example 16. Negotiated arm's-length arrangements—auditorium reserved in advance. (i) City Z issues obligations to finance the construction of a municipal auditorium that it will own and operate. The use of the auditorium will be open to anyone who wishes to use it for a short period of time on a rate-scale basis. Z reasonably expects that the auditorium will be used by schools, church groups, sororities, and numerous commercial organizations. Corporation H, a nongovernmental person, enters into an arm's-length arrangement with Z to use the auditorium for 1 week for each year for a 10-year period (a total of 70 days), pursuant

to which H will be charged a specific price reflecting fair market value. On the date the contract is entered into, Z has not established generally applicable rates for future years. Even though the auditorium is not financed for a principal purpose of providing use of the auditorium to H, H is not treated as using the auditorium as a member of the general public because its use is not on the same basis as the general public. Because the term of H's use of the auditorium is longer than 50 days, the arrangement does not meet the exception under paragraph (d)(3)(ii) of this section.
(ii) The facts are the same as in *Example 16(i),* except that H will enter into an arm's-length arrangement with Z to use the auditorium for 1 week for each year for a 4-year period (a total of 28 days), pursuant to which H will be charged a specific price reflecting fair market value. H is not treated as a private business user of the auditorium because its contract satisfies the exception of paragraph (d)(3)(ii) of this section for negotiated arm's-length arrangements.

(g) ***Measurement of private business use*** —

(1) ***In general.*** In general, the private business use of proceeds is allocated to property under § 1.141-6. The amount of private business use of that property is determined according to the average percentage of private business use of that property during the measurement period.

(2) ***Measurement period*** —

(i) ***General rule.*** Except as provided in this paragraph (g)(2), the measurement period of property financed by an issue begins on the later of the issue date of that issue or the date the property is placed in service and ends on the earlier of the last date of the reasonably expected economic life of the property or the latest maturity date of any bond of the issue financing the property (determined without regard to any optional redemption dates). In general, the period of reasonably expected economic life of the property for this purpose is based on reasonable expectations as of the issue date.

(ii) ***Special rule for refundings of short-term obligations.*** For an issue of short-term obligations that the issuer reasonably expects to refund with a long-term financing (such as bond anticipation notes), the measurement period is based on the latest maturity date of any bond of the last refunding issue with respect to the financed property (determined without regard to any optional redemption dates).

(iii) ***Special rule for reasonably expected mandatory redemptions.*** If an issuer reasonably expects on the issue date that an action will occur during the term of the bonds to cause either the private business tests or the private loan financing test to be met and is required to redeem bonds to meet the reasonable expectations test of § 1.141-2(d)(2), the measurement period ends on the reasonably expected redemption date.

(iv) ***Special rule for ownership by a nongovernmental person.*** The amount of private business use resulting from ownership by a nongovernmental person is the greatest percentage of private business use in any 1-year period.

(v) ***Special rule for partners that are nongovernmental persons*** —

(A) The amount of private business use by a nongovernmental person resulting from the use of property by a partnership in which that nongovernmental person is a partner is that nongovernmental partner's share of the amount of use of the property by the partnership. For this purpose, except as otherwise provided in paragraph (g)(2)(v)(B) of this section, a nongovernmental partner's share of the partnership's use of the property is the nongovernmental partner's greatest percentage share under section 704(b) of any partnership item of income, gain, loss, deduction, or credit attributable to the period that the partnership uses the property during the measurement period. For example, if a partnership has a nongovernmental partner and that partner's share of partnership items varies, with the greatest share being 25 percent, then that nongovernmental partner's share of the partnership's use of property is 25 percent.

(B) An issuer may determine a nongovernmental partner's share of the partnership's use of the property under guidance published in the Internal Revenue Bulletin (see § 601.601(d)(2)(ii)(*b*) of this chapter).

(vi) ***Anti-abuse rule.*** If an issuer establishes the term of an issue for a period that is longer than is reasonably necessary for the governmental purposes of the issue for a principal purpose of increasing the permitted amount of private business use, the Commissioner may determine the amount of private business use according to the greatest percentage of private business use in any 1-year period.

(3) ***Determining average percentage of private business use.*** The average percentage of private business use is the average of the percentages of private business use during the 1-year periods within the measurement period. Appropriate adjustments must be made for beginning and ending periods of less than 1 year.

(4) ***Determining the average amount of private business use for a 1-year period*** —

(i) ***In general.*** The percentage of private business use of property for any 1-year period is the average private business use during that year. This average is determined by comparing the amount of private business use during the year to the total amount of private business use and use that is not private business use (government use) during that year. Paragraphs (g)(4) (ii) through (v) of this section apply to determine the average amount of private business use for a 1-year period.

(ii) ***Uses at different times.*** For a facility in which actual government use and private business use occur at different times (for example, different days), the average amount of private business use generally is based on the amount of time that the facility is used for private business use as a percentage of the total time for all actual use. In determining the total amount of actual use, periods during which the facility is not in use are disregarded.

(iii) ***Simultaneous use.*** In general, for a facility in which government use and private business use occur simultaneously, the entire facility is treated as having private business use. For example, a governmentally owned facility that is leased or managed by a nongovernmental person in a manner that results in private business use is treated as entirely used for a private business use. If, however, there is also private business use and actual government use on the same basis, the average amount of private business use may be determined on a reasonable basis that properly reflects the proportionate benefit to be derived by the various users of the facility (for example, reasonably expected fair market value of use). For example, the average amount

of private business use of a garage with unassigned spaces that is used for government use and private business use is generally based on the number of spaces used for private business use as a percentage of the total number of spaces.

(iv) ***Discrete portion.*** For purposes of this paragraph (g), measurement of the use of proceeds allocated to a discrete portion of a facility is determined by treating that discrete portion as a separate facility.

(v) ***Relationship to fair market value.*** For purposes of paragraphs (g)(4) (ii) through (iv) of this section, if private business use is reasonably expected as of the issue date to have a significantly greater fair market value than government use, the average amount of private business use must be determined according to the relative reasonably expected fair market values of use rather than another measure, such as average time of use. This determination of relative fair market value may be made as of the date the property is acquired or placed in service if making this determination as of the issue date is not reasonably possible (for example, if the financed property is not identified on the issue date). In general, the relative reasonably expected fair market value for a period must be determined by taking into account the amount of reasonably expected payments for private business use for the period in a manner that properly reflects the proportionate benefit to be derived from the private business use.

(5) ***Common areas.*** The amount of private business use of common areas within a facility is based on a reasonable method that properly reflects the proportionate benefit to be derived by the users of the facility. For example, in general, a method that is based on the average amount of private business use of the remainder of the entire facility reflects proportionate benefit.

(6) ***Allocation of neutral costs.*** Proceeds that are used to pay costs of issuance, invested in a reserve or replacement fund, or paid as fees for a qualified guarantee or a qualified hedge must be allocated ratably among the other purposes for which the proceeds are used.

(7) ***Commencement of measurement of private business use.*** Generally, private business use commences on the first date on which there is a right to actual use by the nongovernmental person. However, if an issuer enters into an arrangement for private business use a substantial period before the right to actual private business use commences and the arrangement transfers ownership or is an arrangement for other long-term use (such as a lease for a significant portion of the remaining economic life of financed property), private business use commences on the date the arrangement is entered into, even if the right to actual use commences after the measurement period. For this purpose, 10 percent of the measurement period is generally treated as a substantial period.

(8) ***Examples.*** The following examples illustrate the application of this paragraph (g):

Example 1. Research facility. University U, a state owned and operated university, owns and operates a research facility. U proposes to finance general improvements to the facility with the proceeds of an issue of bonds. U enters into sponsored research agreements with nongovernmental persons that result in private business use because the sponsors will own title to any patents resulting from the research. The governmental research conducted by U and the research U conducts for the sponsors take place simultaneously in all laboratories within the research facility. All laboratory equipment is available continuously for use by workers who perform both types of research. Because it is not possible to predict which research projects will be successful, it is not reasonably practicable to estimate the relative revenues expected to result from the governmental and nongovernmental research. U contributed 90 percent of the cost of

the facility and the nongovernmental persons contributed 10 percent of the cost. Under this section, the nongovernmental persons are using the facility for a private business use on the same basis as the government use of the facility. The portions of the costs contributed by the various users of the facility provide a reasonable basis that properly reflects the proportionate benefit to be derived by the users of the facility. The nongovernmental persons are treated as using 10 percent of the proceeds of the issue.

> *Example 2. Stadium.* (i) City L issues bonds and uses all of the proceeds to construct a stadium. L enters into a long-term contract with a professional sports team T under which T will use the stadium 20 times during each year. These uses will occur on nights and weekends. L reasonably expects that the stadium will be used more than 180 other times each year, none of which will give rise to private business use. This expectation is based on a feasibility study and historical use of the old stadium that is being replaced by the new stadium. There is no significant difference in the value of T's uses when compared to the other uses of the stadium, taking into account the payments that T is reasonably expected to make for its use. Assuming no other private business use, the issue does not meet the private business use test because not more than 10 percent of the use of the facility is for a private business use.
> (ii) The facts are the same as in *Example 2(i),* except that L reasonably expects that the stadium will be used not more than 60 other times each year, none of which will give rise to private business use. The issue meets the private business use test because 25 percent of the proceeds are used for a private business use.

Example 3. Airport terminal areas treated as common areas. City N issues bonds to finance the construction of an airport terminal. Eighty percent of the leasable space of the terminal will be leased to private air carriers. The remaining 20 percent of the leasable space will be used for the term of the bonds by N for its administrative purposes. The common areas of the terminal, including waiting areas, lobbies, and hallways are treated as 80 percent used by the air carriers for purposes of the private business use test.

[T.D. 8712, 62 FR 2286, Jan. 16, 1997, as amended by T.D. 8967, 66 FR 58062, Nov. 20, 2001; T.D. 9741, 80 FR 65643, Oct. 27, 2015]

§ 1.141-4 Private security or payment test.

(a) ***General rule*** —

(1) ***Private security or payment.*** The private security or payment test relates to the nature of the security for, and the source of, the payment of debt service on an issue. The private payment portion of the test takes into account the payment of the debt service on the issue that is directly or indirectly to be derived from payments (whether or not to the issuer or any related party) in respect of property, or borrowed money, used or to be used for a private business use. The private security portion of the test takes into account the payment of the debt service on the issue that is directly or indirectly secured by any interest in property used or to be used for a private business use or payments in respect of property used or to be used for a private business use. For additional rules for output facilities, see § 1.141-7.

(2) ***Aggregation of private payments and security.*** For purposes of the private security or payment test, payments taken into account as private payments and payments or property taken into account as private security are aggregated. However, the same payments are not taken into account as both private security and private payments.

(3) ***Underlying arrangement.*** The security for, and payment of debt service on, an issue is determined from both the terms of the bond documents and on the basis of any underlying arrangement. An underlying arrangement may result from separate agreements between the parties or may be determined on the basis of all of the facts and circumstances surrounding the issuance of the bonds. For example, if the payment of debt service on an issue is secured by both a pledge of the full faith and credit of a state or local governmental unit and any interest in property used or to be used in a private business use, the issue meets the private security or payment test.

(b) ***Measurement of private payments and security*** —

(1) ***Scope.*** This paragraph (b) contains rules that apply to both private security and private payments.

(2) ***Present value measurement*** —

(i) ***Use of present value.*** In determining whether an issue meets the private security or payment test, the present value of the payments or property taken into account is compared to the present value of the debt service to be paid over the term of the issue.

(ii) ***Debt service*** —

(A) ***Debt service paid from proceeds.*** Debt service does not include any amount paid or to be paid from sale proceeds or investment proceeds. For example, debt service does not include payments of capitalized interest funded with proceeds.

(B) ***Adjustments to debt service.*** Debt service is adjusted to take into account payments and receipts that adjust the yield on an issue for purposes of section 148(f). For example, debt service includes fees paid for qualified guarantees under § 1.148-4(f) and is adjusted to take into account payments and receipts on qualified hedges under § 1.148-4(h).

(iii) ***Computation of present value*** —

(A) ***In general.*** Present values are determined by using the yield on the issue as the discount rate and by discounting all amounts to the issue date. See, however, § 1.141-13 for special rules for refunding bonds.

(B) ***Fixed yield issues.*** For a fixed yield issue, yield is determined on the issue date and is not adjusted to take into account subsequent events.

(C) ***Variable yield issues.*** The yield on a variable yield issue is determined over the term of the issue. To determine the reasonably expected yield as of any date, the issuer may assume that the future interest rate on a variable yield bond will be the then-current interest rate on the bonds determined under the formula prescribed in the bond documents. A deliberate action requires a recomputation of the yield on the variable yield issue to determine the present value of payments under that arrangement. In that case, the issuer must use the yield determined as of the date of the deliberate action for purposes of determining the present value of payments under the arrangement causing the deliberate action. See paragraph (g) of this section, *Example 3*.

(iv) ***Application to private security.*** For purposes of determining the present value of debt service that is secured by property, the property is valued at fair market value as of the first date on which the property secures bonds of the issue.

(c) ***Private payments*** —

(1) ***In general.*** This paragraph (c) contains rules that apply to private payments.

(2) ***Payments taken into account*** —

(i) ***Payments for use*** —

(A) ***In general.*** Both direct and indirect payments made by any nongovernmental person that is treated as using proceeds of the issue are taken into account as private payments to the extent allocable to the proceeds used by that person. Payments are taken into account as private payments only to the extent that they are made for the period of time that proceeds are used for a private business use. Payments for a use of proceeds include payments (whether or not to the issuer) in respect of property financed (directly or indirectly) with those proceeds, even if not made by a private business user. Payments are not made in respect of financed property if those payments are directly allocable to other property being directly used by the person making the payment and those payments represent fair market value compensation for that other use. See paragraph (g) of this section, *Example 4* and *Example 5.* See also paragraph (c)(3) of this section for rules relating to allocation of payments to the source or sources of funding of property.

(B) ***Payments not to exceed use.*** Payments with respect to proceeds that are used for a private business use are not taken into account to the extent that the present value of those payments exceeds the present value of debt service on those proceeds. Payments need not be directly derived from a private business user, however, to be taken into account. Thus, if 7 percent of the proceeds of an issue is used by a person over the measurement period, payments with respect to the property financed with those proceeds are taken into account as private payments only to the extent that the present value of those payments does not exceed the present value of 7 percent of the debt service on the issue.

(C) ***Payments for operating expenses.*** Payments by a person for a use of proceeds do not include the portion of any payment that is properly allocable to the payment of ordinary and necessary expenses (as defined under section 162) directly attributable to the operation and maintenance of the financed property used by that person. For this purpose, general overhead and administrative expenses are not directly attributable to those operations and maintenance. For example, if an issuer receives $5,000 rent during the year for use of space in a financed facility and during the year pays $500 for ordinary and necessary expenses properly allocable to the operation and maintenance of that space and $400 for general overhead and general administrative expenses properly allocable to that space, $500 of the $5,000 received would not be considered a payment for the use of the proceeds allocable to that space (regardless of the manner in which that $500 is actually used).

(ii) ***Refinanced debt service.*** Payments of debt service on an issue to be made from proceeds of a refunding issue are taken into account as private payments in the same proportion that the present value of the payments taken into account as private payments for the refunding issue bears to the present value of the debt service to be paid on the refunding issue. For example, if all the debt service on a note is paid with proceeds of a refunding issue, the note meets the

private security or payment test if (and to the same extent that) the refunding issue meets the private security or payment test. This paragraph (c)(2)(ii) does not apply to payments that arise from deliberate actions that occur more than 3 years after the retirement of the prior issue that are not reasonably expected on the issue date of the refunding issue. For purposes of this paragraph (c)(2)(ii), whether an issue is a refunding issue is determined without regard to § 1.150-1(d)(2)(i) (relating to certain payments of interest).

(3) ***Allocation of payments*** —

(i) ***In general.*** Private payments for the use of property are allocated to the source or different sources of funding of property. The allocation to the source or different sources of funding is based on all of the facts and circumstances, including whether an allocation is consistent with the purposes of section 141. In general, a private payment for the use of property is allocated to a source of funding based upon the nexus between the payment and both the financed property and the source of funding. For this purpose, different sources of funding may include different tax-exempt issues, taxable issues, and amounts that are not derived from a borrowing, such as revenues of an issuer (equity).

(ii) ***Payments for use of discrete property.*** Payments for the use of a discrete facility (or a discrete portion of a facility) are allocated to the source or different sources of funding of that discrete property.

(iii) ***Allocations among two or more sources of funding.*** In general, except as provided in paragraphs (c)(3)(iv) and (v) of this section, if a payment is made for the use of property financed with two or more sources of funding (for example, equity and a tax-exempt issue), that payment must be allocated to those sources of funding in a manner that reasonably corresponds to the relative amounts of those sources of funding that are expended on that property. If an issuer has not retained records of amounts expended on the property (for example, records of costs of a building that was built 30 years before the allocation), an issuer may use reasonable estimates of those expenditures. For this purpose, costs of issuance and other similar neutral costs are allocated ratably among expenditures in the same manner as in § 1.141-3(g)(6). A payment for the use of property may be allocated to two or more issues that finance property according to the relative amounts of debt service (both paid and accrued) on the issues during the annual period for which the payment is made, if that allocation reasonably reflects the economic substance of the arrangement. In general, allocations of payments according to relative debt service reasonably reflect the economic substance of the arrangement if the maturity of the bonds reasonably corresponds to the reasonably expected economic life of the property and debt service payments on the bonds are approximately level from year to year.

(iv) ***Payments made under an arrangement entered into in connection with issuance of bonds.*** A private payment for the use of property made under an arrangement that is entered into in connection with the issuance of the issue that finances that property generally is allocated to that issue. Whether an arrangement is entered into in connection with the issuance of an issue is determined on the basis of all of the facts and circumstances. An arrangement is ordinarily treated as entered into in connection with the issuance of an issue if—

(A) The issuer enters into the arrangement during the 3-year period beginning 18 months before the issue date; and

(B) The amount of payments reflects all or a portion of debt service on the issue.

(v) ***Allocations to equity.*** A private payment for the use of property may be allocated to equity before payments are allocated to an issue only if—

(A) Not later than 60 days after the date of the expenditure of those amounts, the issuer adopts an official intent (in a manner comparable to § 1.150-2(e)) indicating that the issuer reasonably expects to be repaid for the expenditure from a specific arrangement; and

(B) The private payment is made not later than 18 months after the later of the date the expenditure is made or the date the project is placed in service.

(d) ***Private security*** —

(1) ***In general.*** This paragraph (d) contains rules that relate to private security.

(2) ***Security taken into account.*** The property that is the security for, or the source of, the payment of debt service on an issue need not be property financed with proceeds. For example, unimproved land or investment securities used, directly or indirectly, in a private business use that secures an issue provides private security. Private security (other than financed property and private payments) for an issue is taken into account under section 141(b), however, only to the extent it is provided, directly or indirectly, by a user of proceeds of the issue.

(3) ***Pledge of unexpended proceeds.*** Proceeds qualifying for an initial temporary period under § 1.148-2(e)(2) or (3) or deposited in a reasonably required reserve or replacement fund (as defined in § 1.148-2(f)(2)(i)) are not taken into account under this paragraph (d) before the date on which those amounts are either expended or loaned by the issuer to an unrelated party.

(4) ***Secured by any interest in property or payments.*** Property used or to be used for a private business use and payments in respect of that property are treated as private security if any interest in that property or payments secures the payment of debt service on the bonds. For this purpose, the phrase any interest in is to be interpreted broadly and includes, for example, any right, claim, title, or legal share in property or payments.

(5) ***Payments in respect of property.*** The payments taken into account as private security are payments in respect of property used or to be used for a private business use. Except as otherwise provided in this paragraph (d)(5) and paragraph (d)(6) of this section, the rules in paragraphs (c)(2)(i)(A) and (B) and (c)(2)(ii) of this section apply to determine the amount of payments treated as payments in respect of property used or to be used for a private business use. Thus, payments made by members of the general public for use of a facility used for a private business use (for example, a facility that is the subject of a management contract that results in private business use) are taken into account as private security to the extent that they are made for the period of time that property is used by a private business user.

(6) ***Allocation of security among issues.*** In general, property or payments from the disposition of that property that are taken into account as private security are allocated to each issue secured by the property or payments on a reasonable basis that takes into account bondholders' rights to the payments or property upon default.

(e) ***Generally applicable taxes*** —

(1) ***General rule.*** For purposes of the private security or payment test, generally applicable taxes are not taken into account (that is, are not payments from a nongovernmental person and are not payments in respect of property used for a private business use).

(2) ***Definition of generally applicable taxes.*** A generally applicable tax is an enforced contribution exacted pursuant to legislative authority in the exercise of the taxing power that is imposed and collected for the purpose of raising revenue to be used for governmental or public purposes. A generally applicable tax must have a uniform tax rate that is applied to all persons of the same classification in the appropriate jurisdiction and a generally applicable manner of determination and collection.

(3) ***Special charges.*** A special charge (as defined in this paragraph (e)(3)) is not a generally applicable tax. For this purpose, a special charge means a payment for a special privilege granted or regulatory function (for example, a license fee), a service rendered (for example, a sanitation services fee), a use of property (for example, rent), or a payment in the nature of a special assessment to finance capital improvements that is imposed on a limited class of persons based on benefits received from the capital improvements financed with the assessment. Thus, a special assessment to finance infrastructure improvements in a new industrial park (such as sidewalks, streets, streetlights, and utility infrastructure improvements) that is imposed on a limited class of persons composed of property owners within the industrial park who benefit from those improvements is a special charge. By contrast, an otherwise qualified generally applicable tax (such as a generally applicable ad valorem tax on all real property within a governmental taxing jurisdiction) or an eligible PILOT under paragraph (e)(5) of this section that is based on such a generally applicable tax is not treated as a special charge merely because the taxes or PILOTs received are used for governmental or public purposes in a manner which benefits particular property owners.

(4) ***Manner of determination and collection*** —

(i) ***In general.*** A tax does not have a generally applicable manner of determination and collection to the extent that one or more taxpayers make any impermissible agreements relating to payment of those taxes. An impermissible agreement relating to the payment of a tax is taken into account whether or not it is reasonably expected to result in any payments that would not otherwise have been made. For example, if an issuer uses proceeds to make a grant to a taxpayer to improve property, agreements that impose reasonable conditions on the use of the grant do not cause a tax on that property to fail to be a generally applicable tax. If an agreement by a taxpayer causes the tax imposed on that taxpayer not to be treated as a generally applicable tax, the entire tax paid by that taxpayer is treated as a special charge, unless the agreement is limited to a specific portion of the tax.

(ii) ***Impermissible agreements.*** The following are examples of agreements that cause a tax to fail to have a generally applicable manner of determination and collection: an agreement to be personally liable on a tax that does not generally impose personal liability, to provide additional credit support such as a third party guarantee, or to pay unanticipated shortfalls; an agreement regarding the minimum market value of property subject to property tax; and an agreement not to challenge or seek deferral of the tax.

(iii) ***Permissible agreements.*** The following are examples of agreements that do not cause a tax to fail to have a generally applicable manner of determination and collection: an agreement to use a grant for specified purposes (whether or not that agreement is secured); a representation regarding the expected value of the property following the improvement; an agreement to insure the property and, if damaged, to restore the property; a right of a grantor to rescind the grant if property taxes are not paid; and an agreement to reduce or limit the amount of taxes collected to further a bona fide governmental purpose. For example, an agreement to abate taxes to encourage a property owner to rehabilitate property in a distressed area is a permissible agreement.

(5) ***Payments in lieu of taxes.*** A tax equivalency payment or other payment in lieu of a tax ("PILOT") is treated as a generally applicable tax if it meets the requirements of paragraphs (e)(5)(i) through (iv) of this section—

(i) ***Maximum amount limited by underlying generally applicable tax.*** The PILOT is not greater than the amount imposed by a statute for a generally applicable tax in each year.

(ii) ***Commensurate with a generally applicable tax.*** The PILOT is commensurate with the amount imposed by a statute for a generally applicable tax in each year under the commensurate standard set forth in this paragraph (e)(5)(ii). For this purpose, except as otherwise provided in this paragraph (e)(5)(ii), a PILOT is commensurate with a generally applicable tax only if it is equal to a fixed percentage of the generally applicable tax that would otherwise apply in each year or it reflects a fixed adjustment to the generally applicable tax that would otherwise apply in each year. A PILOT based on a property tax does not fail to be commensurate with the property tax as a result of changes in the level of the percentage of or adjustment to that property tax for a reasonable phase-in period ending when the subject property is placed in service (as defined in § 1.150-2(c)). A PILOT based on a property tax must take into account the current assessed value of the property for property tax purposes for each year in which the PILOT is paid and that assessed value must be determined in the same manner and with the same frequency as property subject to the property tax. A PILOT is not commensurate with a generally applicable tax, however, if the PILOT is set at a fixed dollar amount (for example, fixed debt service on a bond issue) that cannot vary with changes in the level of the generally applicable tax on which it is based.

(iii) ***Use of PILOTs for governmental or public purposes.*** The PILOT is to be used for governmental or public purposes for which the generally applicable tax on which it is based may be used.

(iv) ***No special charges.*** The PILOT is not a special charge under paragraph (e)(3) of this section.

(f) ***Certain waste remediation bonds*** —

(1) ***Scope.*** This paragraph (f) applies to bonds issued to finance hazardous waste clean-up activities on privately owned land (hazardous waste remediation bonds).

(2) ***Persons that are not private users.*** Payments from nongovernmental persons who are not (other than coincidentally) either users of the site being remediated or persons potentially responsible for disposing of hazardous waste on that site are not taken into account as private security. This paragraph (f)(2) applies to payments that secure (directly or indirectly) the payment of principal of, or interest on, the bonds under the terms of the bonds. This paragraph (f)(2) applies only if the payments are made pursuant to either a generally applicable state or local taxing statute or a state or local statute that regulates or restrains activities on an industry-wide basis of persons who are engaged in generating or handling hazardous waste, or in refining, producing, or transporting petroleum, provided that those payments do not represent, in substance, payment for the use of proceeds. For this purpose, a state or local statute that imposes payments that have substantially the same character as those described in Chapter 38 of the Code are treated as generally applicable taxes.

(3) ***Persons that are private users.*** If payments from nongovernmental persons who are either users of the site being remediated or persons potentially responsible for disposing of hazardous waste on that site do not secure (directly or indirectly) the payment of principal of, or interest on, the bonds under the terms of the bonds, the payments are not taken into account as private payments. This

paragraph (f)(3) applies only if at the time the bonds are issued the payments from those nongovernmental persons are not material to the security for the bonds. For this purpose, payments are not material to the security for the bonds if—

(i) The payments are not required for the payment of debt service on the bonds;

(ii) The amount and timing of the payments are not structured or designed to reflect the payment of debt service on the bonds;

(iii) The receipt or the amount of the payment is uncertain (for example, as of the issue date, no final judgment has been entered into against the nongovernmental person);

(iv) The payments from those nongovernmental persons, when and if received, are used either to redeem bonds of the issuer or to pay for costs of any hazardous waste remediation project; and

(v) In the case when a judgment (but not a final judgment) has been entered by the issue date against a nongovernmental person, there are, as of the issue date, costs of hazardous waste remediation other than those financed with the bonds that may be financed with the payments.

(g) ***Examples.*** The following examples illustrate the application of this section:

Example 1. Aggregation of payments. State B issues bonds with proceeds of $10 million. B uses $9.7 million of the proceeds to construct a 10-story office building. B uses the remaining $300,000 of proceeds to make a loan to Corporation Y. In addition, Corporation X leases 1 floor of the building for the term of the bonds. Under all of the facts and circumstances, it is reasonable to allocate 10 percent of the proceeds to that 1 floor. As a percentage of the present value of the debt service on the bonds, the present value of Y's loan repayments is 3 percent and the present value of X's lease payments is 8 percent. The bonds meet the private security or payment test because the private payments taken into account are more than 10 percent of the present value of the debt service on the bonds.

Example 2. Indirect private payments. J, a political subdivision of a state, will issue several series of bonds from time to time and will use the proceeds to rehabilitate urban areas. Under all of the facts and circumstances, the private business use test will be met with respect to each issue that will be used for the rehabilitation and construction of buildings that will be leased or sold to nongovernmental persons for use in their trades or businesses. Nongovernmental persons will make payments for these sales and leases. There is no limitation either on the number of issues or the aggregate amount of bonds that may be outstanding. No group of bondholders has any legal claim prior to any other bondholders or creditors with respect to specific revenues of J, and there is no arrangement whereby revenues from a particular project are paid into a trust or constructive trust, or sinking fund, or are otherwise segregated or restricted for the benefit of any group of bondholders. There is, however, an unconditional obligation by J to pay the principal of, and the interest on, each issue. Although not directly pledged under the terms of the bond documents, the leases and sales are underlying arrangements. The payments relating to these leases and sales are taken into account as private payments to determine whether each issue of bonds meets the private security or payment test.

Example 3. Computation of payment in variable yield issues. (i) City M issues general obligation bonds with proceeds of $10 million to finance a 5-story office building. The bonds bear interest at a variable rate that is recomputed monthly according to an index that reflects current market yields. The yield that the interest index would produce on the issue date is 6

percent. M leases 1 floor of the office building to Corporation T, a nongovernmental person, for the term of the bonds. Under all of the facts and circumstances, T is treated as using more than 10 percent of the proceeds. Using the 6 percent yield as the discount rate, M reasonably expects on the issue date that the present value of lease payments to be made by T will be 8 percent of the present value of the total debt service on the bonds. After the issue date of the bonds, interest rates decline significantly, so that the yield on the bonds over their entire term is 4 percent. Using this actual 4 percent yield as the discount rate, the present value of lease payments made by T is 12 percent of the present value of the actual total debt service on the bonds. The bonds are not private activity bonds because M reasonably expected on the issue date that the bonds would not meet the private security or payment test and because M did not take any subsequent deliberate action to meet the private security or payment test.

(ii) The facts are the same as *Example 3(i),* except that 5 years after the issue date M leases a second floor to Corporation S, a nongovernmental person, under a long-term lease. Because M has taken a deliberate action, the present value of the lease payments must be computed. On the date this lease is entered into, M reasonably expects that the yield on the bonds over their entire term will be 5.5 percent, based on actual interest rates to date and the then-current rate on the variable yield bonds. M uses this 5.5 percent yield as the discount rate. Using this 5.5 percent yield as the discount rate, as a percentage of the present value of the debt service on the bonds, the present value of the lease payments made by S is 3 percent. The bonds are private activity bonds because the present value of the aggregate private payments is greater than 10 percent of the present value of debt service.

Example 4. Payments not in respect of financed property. In order to further public safety, City Y issues tax assessment bonds the proceeds of which are used to move existing electric utility lines underground. Although the utility lines are owned by a nongovernmental utility company, that company is under no obligation to move the lines. The debt service on the bonds will be paid using assessments levied by City Y on the customers of the utility. Although the utility lines are privately owned and the utility customers make payments to the utility company for the use of those lines, the assessments are payments in respect of the cost of relocating the utility line. Thus, the assessment payments are not made in respect of property used for a private business use. Any direct or indirect payments to Y by the utility company for the undergrounding are, however, taken into account as private payments.

Example 5. Payments from users of proceeds that are not private business users taken into account. City P issues general obligation bonds to finance the renovation of a hospital that it owns. The hospital is operated for P by D, a nongovernmental person, under a management contract that results in private business use under § 1.141-3. P will use the revenues from the hospital (after the required payments to D and the payment of operation and maintenance expenses) to pay the debt service on the bonds. The bonds meet the private security or payment test because the revenues from the hospital are payments in respect of property used for a private business use.

Example 6. Limitation of amount of payments to amount of private business use not determined annually. City Q issues bonds with a term of 15 years and uses the proceeds to construct an office building. The debt service on the bonds is level throughout the 15-year term. Q enters into a 5-year lease with Corporation R under which R is treated as a user of 11 percent of the proceeds. R will make lease payments equal to 20 percent of the annual debt service on the bonds for each year of the lease. The present value of R's lease payments is equal to 12 percent of the present value of the debt service over the entire 15-year term of the bonds. If, however, the lease payments taken into account as private payments were limited to 11 percent of debt service paid in each year of the lease, the present value of these payments would be only 8 percent of the debt service on the bonds over the entire term of the bonds. The bonds meet the private security or payment test, because R's lease payments are taken into account as private payments in an amount not to exceed 11 percent of the debt service of the bonds.

Example 7. Allocation of payments to funds not derived from a borrowing. City Z purchases property for $1,250,000 using $1,000,000 of proceeds of its tax increment bonds and $250,000 of other revenues that are in its redevelopment fund. Within 60 days of the date of purchase, Z declared its intent to sell the property pursuant to a redevelopment plan and to use that amount to reimburse its redevelopment fund. The bonds are secured only by the incremental property taxes attributable to the increase in value of the property from the planned redevelopment of the property. Within 18 months after the issue date, Z sells the financed property to Developer M for $250,000, which Z uses to reimburse the redevelopment fund. The property that M uses is financed both with the proceeds of the bonds and Z's redevelopment fund. The payments by M are properly allocable to the costs of property financed with the amounts in Z's redevelopment fund. See paragraphs (c)(3) (i) and (v) of this section.

Example 8. Allocation of payments to different sources of funding—improvements. In 1997, City L issues bonds with proceeds of $8 million to finance the acquisition of a building. In 2002, L spends $2 million of its general revenues to improve the heating system and roof of the building. At that time, L enters into a 10-year lease with Corporation M for the building providing for annual payments of $1 million to L. The lease payments are at fair market value, and the lease payments do not otherwise have a significant nexus to either the issue or to the expenditure of general revenues. Eighty percent of each lease payment is allocated to the issue and is taken into account under the private payment test because each lease payment is properly allocated to the sources of funding in a manner that reasonably corresponds to the relative amounts of the sources of funding that are expended on the building.

Example 9. Security not provided by users of proceeds not taken into account. County W issues certificates of participation in a lease of a building that W owns and covenants to appropriate annual payments for the lease. A portion of each payment is specified as interest. More than 10 percent of the building is used for private business use. None of the proceeds of the obligations are used with respect to the building. W uses the proceeds of the obligations to make a grant to Corporation Y for the construction of a factory that Y will own. Y makes no payments to W, directly or indirectly, for its use of proceeds, and Y has no relationship to the users of the leased building. If W defaults under the lease, the trustee for the holders of the certificates of participation has a limited right of repossession under which the trustee may not foreclose but may lease the property to a new tenant at fair market value. The obligations are secured by an interest in property used for a private business use. However, because the property is not provided by a private business user and is not financed property, the obligations do not meet the private security or payment test.

Example 10. Allocation of payments among issues. University L, a political subdivision, issued three separate series of revenue bonds during 1989, 1991, and 1993 under the same bond resolution. L used the proceeds to construct facilities exclusively for its own use. Bonds issued under the resolution are equally and ratably secured and payable solely from the income derived by L from rates, fees, and charges imposed by L for the use of the facilities. The bonds issued in 1989, 1991, and 1993 are not private activity bonds. In 1997, L issues another series of bonds under the resolution to finance additional facilities. L leases 20 percent of the new facilities for the term of the 1997 bonds to nongovernmental persons who will use the facilities in their trades or businesses. The present value of the lease payments from the nongovernmental users will equal 15 percent of the present value of the debt service on the 1997 bonds. L will commingle all of the revenues from all its bond-financed facilities in its revenue fund. The present value of the portion of the lease payments from nongovernmental lessees of the new facilities allocable to the 1997 bonds under paragraph (d) of this section is less than 10 percent of the present value of the debt service on the 1997 bonds because the bond documents provide that the bonds are equally and ratably secured. Accordingly, the 1997 bonds do not meet the private security test. The 1997 bonds meet the private payment test, however, because the private lease payments for the new facility are properly allocated to those bonds (that is, because none of the proceeds of the prior issues were used for the new facilities). See paragraph (c) of this section.

Example 11. Generally applicable tax. (i) Authority N issues bonds to finance the construction of a stadium. Under a long-term lease, Corporation X, a professional sports team, will use more than 10 percent of the stadium. X will not, however, make any payments for this private business use. The security for the bonds will be a ticket tax imposed on each person purchasing a ticket for an event at the stadium. The portion of the ticket tax attributable to tickets purchased by persons attending X's events will, on a present value basis, exceed 10 percent of the present value of the debt service on N's bonds. The bonds meet the private security or payment test. The ticket tax is not a generally applicable tax and, to the extent that the tax receipts relate to X's events, the taxes are payments in respect of property used for a private business use.

(ii) The facts are the same as *Example 11(i),* except that the ticket tax is imposed by N on tickets purchased for events at a number of large entertainment facilities within the N's jurisdiction (for example, other stadiums, arenas, and concert halls), some of which were not financed with tax-exempt bonds. The ticket tax is a generally applicable tax and therefore the revenues from this tax are not payments in respect of property used for a private business use. The receipt of the ticket tax does not cause the bonds to meet the private security or payment test.

[T.D. 8712, 62 FR 2291, Jan. 16, 1997, as amended by T.D. 9429, 73 FR 63374, Oct. 24, 2008]

§ 1.141-5 Private loan financing test.

(a) ***In general.*** Bonds of an issue are private activity bonds if more than the lesser of 5 percent or $5 million of the proceeds of the issue is to be used (directly or indirectly) to make or finance loans to persons other than governmental persons. Section 1.141-2(d) applies in determining whether the private loan financing test is met. In determining whether the proceeds of an issue are used to make or finance loans, indirect, as well as direct, use of the proceeds is taken into account.

(b) ***Measurement of test.*** In determining whether the private loan financing test is met, the amount actually loaned to a nongovernmental person is not discounted to reflect the present value of the loan repayments.

(c) ***Definition of private loan*** —

(1) ***In general.*** Any transaction that is generally characterized as a loan for federal income tax purposes is a loan for purposes of this section. In addition, a loan may arise from the direct lending of bond proceeds or may arise from transactions in which indirect benefits that are the economic equivalent of a loan are conveyed. Thus, the determination of whether a loan is made depends on the substance of a transaction rather than its form. For example, a lease or other contractual arrangement (for example, a management contract or an output contract) may in substance constitute a loan if the arrangement transfers tax ownership of the facility to a nongovernmental person. Similarly, an output contract or a management contract with respect to a financed facility generally is not treated as a loan of proceeds unless the agreement in substance shifts significant burdens and benefits of ownership to the nongovernmental purchaser or manager of the facility.

(2) ***Application only to purpose investments*** —

(i) ***In general.*** A loan may be either a purpose investment or a nonpurpose investment. A loan that is a nonpurpose investment does not cause the private loan financing test to be met. For example, proceeds invested in loans, such as obligations of the United States, during a temporary period, as part of a reasonably required reserve or replacement fund, as part of a refunding escrow, or as part of a minor portion (as each of those terms are defined in § 1.148-1 or § 1.148-2) are generally not treated as loans under the private loan financing test.

(ii) ***Certain prepayments treated as loans.*** Except as otherwise provided, a prepayment for property or services, including a prepayment for property or services that is made after the date that the contract to buy the property or services is entered into, is treated as a loan for purposes of the private loan financing test if a principal purpose for prepaying is to provide a benefit of tax-exempt financing to the seller. A prepayment is not treated as a loan for purposes of the private loan financing test if—

(A) Prepayments on substantially the same terms are made by a substantial percentage of persons who are similarly situated to the issuer but who are not beneficiaries of tax-exempt financing;

(B) The prepayment is made within 90 days of the reasonably expected date of delivery to the issuer of all of the property or services for which the prepayment is made; or

(C) The prepayment meets the requirements of § 1.148-1(e)(2)(iii)(A) or (B) (relating to certain prepayments to acquire a supply of natural gas or electricity).

(iii) ***Customary prepayments.*** The determination of whether a prepayment satisfies paragraph (c)(2)(ii)(A) of this section is generally made based on all the facts and circumstances. In addition, a prepayment is deemed to satisfy paragraph (c)(2)(ii)(A) of this section if—

(A) The prepayment is made for—

(*1*) Maintenance, repair, or an extended warranty with respect to personal property (for example, automobiles or electronic equipment); or

(*2*) Updates or maintenance or support services with respect to computer software; and

(B) The same maintenance, repair, extended warranty, updates or maintenance or support services, as applicable, are regularly provided to nongovernmental persons on the same terms.

(iv) ***Additional prepayments as permitted by the Commissioner.*** The Commissioner may, by published guidance, set forth additional circumstances in which a prepayment is not treated as a loan for purposes of the private loan financing test.

(3) ***Grants*** —

(i) ***In general.*** A grant of proceeds is not a loan. Whether a transaction may be treated as a grant or a loan depends on all of the facts and circumstances.

(ii) ***Tax increment financing*** —

(A) ***In general.*** Generally, a grant using proceeds of an issue that is secured by generally applicable taxes attributable to the improvements to be made with the grant is not treated as a loan, unless the grantee makes any impermissible agreements relating to the payment that results in the taxes imposed on that taxpayer not to be treated as generally applicable taxes under § 1.141-4(e).

(B) ***Amount of loan.*** If a grant is treated as a loan under this paragraph (c)(3), the entire grant is treated as a loan unless the impermissible agreement is limited to a specific portion of the tax. For this purpose, an arrangement with each unrelated grantee is treated as a separate grant.

(4) ***Hazardous waste remediation bonds.*** In the case of an issue of hazardous waste remediation bonds, payments from nongovernmental persons that are either users of the site being remediated or persons potentially responsible for disposing of hazardous waste on that site do not establish that the transaction is a loan for purposes of this section. This paragraph (c)(4) applies only if those payments do not secure the payment of principal of, or interest on, the bonds (directly or indirectly), under the terms of the bonds and those payments are not taken into account under the private payment test pursuant to § 1.141-4(f)(3).

(d) ***Tax assessment loan exception*** —

(1) ***General rule.*** For purposes of this section, a tax assessment loan that satisfies the requirements of this paragraph (d) is not a loan for purposes of the private loan financing test.

(2) ***Tax assessment loan defined.*** A tax assessment loan is a loan that arises when a governmental person permits or requires property owners to finance any governmental tax or assessment of general application for an essential governmental function that satisfies each of the requirements of paragraphs (d) (3) through (5) of this section.

(3) ***Mandatory tax or other assessment.*** The tax or assessment must be an enforced contribution that is imposed and collected for the purpose of raising revenue to be used for a specific purpose (that is, to defray the capital cost of an improvement). Taxes and assessments do not include fees for services. The tax or assessment must be imposed pursuant to a state law of general application that can be applied equally to natural persons not acting in a trade or business and persons acting in a trade or business. For this purpose, taxes and assessments that are imposed subject to protest procedures are treated as enforced contributions.

(4) ***Specific essential governmental function*** —

(i) ***In general.*** A mandatory tax or assessment that gives rise to a tax assessment loan must be imposed for one or more specific, essential governmental functions.

(ii) ***Essential governmental functions.*** For purposes of paragraph (d) of this section, improvements to utilities and systems that are owned by a governmental person and that are available for use by the general public (such as sidewalks, streets and street-lights; electric, telephone, and cable television systems; sewage treatment and disposal systems; and municipal water facilities) serve essential governmental functions. For other types of facilities, the extent to which the service provided by the facility is customarily performed (and financed with governmental bonds) by governments with general taxing powers is a primary factor in determining whether the facility serves an essential governmental function. For example, parks that are owned by a governmental person and that are available for use by the general public serve an essential governmental function. Except as otherwise provided in this paragraph (d)(4)(ii), commercial or industrial facilities and improvements to property owned by a nongovernmental person do not serve an essential governmental

function. Permitting installment payments of property taxes or other taxes is not an essential governmental function.

(5) ***Equal basis requirement*** —

(i) ***In general.*** Owners of both business and nonbusiness property benefiting from the financed improvements must be eligible, or required, to make deferred payments of the tax or assessment giving rise to a tax assessment loan on an equal basis (the equal basis requirement). A tax or assessment does not satisfy the equal basis requirement if the terms for payment of the tax or assessment are not the same for all taxed or assessed persons. For example, the equal basis requirement is not met if certain property owners are permitted to pay the tax or assessment over a period of years while others must pay the entire tax or assessment immediately or if only certain property owners are required to prepay the tax or assessment when the property is sold.

(ii) ***General rule for guarantees.*** A guarantee of debt service on bonds, or of taxes or assessments, by a person that is treated as a borrower of bond proceeds violates the equal basis requirement if it is reasonable to expect on the date the guarantee is entered into that payments will be made under the guarantee.

(6) ***Coordination with private business tests.*** See §§ 1.141-3 and 1.141-4 for rules for determining whether tax assessment loans cause the bonds financing those loans to be private activity bonds under the private business use and the private security or payment tests.

(e) ***Examples.*** The following examples illustrate the application of this section:

Example 1. Turnkey contract not treated as a loan. State agency Z and federal agency H will each contribute to rehabilitate a project owned by Z. H can only provide its funds through a contribution to Z to be used to acquire the rehabilitated project on a turnkey basis from an approved developer. Under H's turnkey program, the developer must own the project while it is rehabilitated. Z issues its notes to provide funds for construction. A portion of the notes will be retired using the H contribution, and the balance of the notes will be retired through the issuance by Z of long-term bonds. Z lends the proceeds of its notes to Developer B as construction financing and transfers title to B for a nominal amount. The conveyance is made on condition that B rehabilitate the property and reconvey it upon completion, with Z retaining the right to force reconveyance if these conditions are not satisfied. B must name Z as an additional insured on all insurance. Upon completion, B must

transfer title to the project back to Z at a set price, which price reflects B's costs and profit, not fair market value. Further, this price is adjusted downward to reflect any cost-underruns. For purposes of section 141(c), this transaction does not involve a private loan.

Example 2. Essential government function requirement not met. City D creates a special taxing district consisting of property owned by nongovernmental persons that requires environmental clean-up. D imposes a special tax on each parcel within the district in an amount that is related to the expected environmental clean-up costs of that parcel. The payment of the tax over a 20-year period is treated as a loan by the property owners for purposes of the private loan financing test. The special district issues bonds, acting on behalf of D, that are payable from the special tax levied within the district, and uses the proceeds to pay for the costs of environmental clean-up on the property within the district. The bonds meet the private loan financing test because more than 5 percent of the proceeds of the issue are loaned to nongovernmental persons. The issue does not meet the tax assessment loan exception because the improvements to property owned by a nongovernmental person are not an essential governmental function under section 141(c)(2). The issue also meets the private business tests of section 141(b).

[T.D. 8712, 62 FR 2296, Jan. 16, 1997, as amended by T.D. 9085, 68 FR 45775, Aug. 4, 2003]

§ 1.141-6 Allocation and accounting rules.

(a) ***Allocations of proceeds to expenditures, projects, and uses in general*** —

(1) ***Allocations to expenditures.*** The allocations of proceeds and other sources of funds to expenditures under § 1.148-6(d) apply for purposes of §§ 1.141-1 through 1.141-15.

(2) ***Allocations of sources to a project and its uses.*** Except as provided in paragraph (b) of this section (regarding an eligible mixed-use project), if two or more sources of funding (including two or more tax-exempt issues) are allocated to capital expenditures (as defined in § 1.150-1(b)) for a project (as defined in paragraph (a)(3) of this section), those sources are allocated throughout that project to the governmental use and private business use of the project in proportion to the relative amounts of those sources of funding spent on the project.

(3) ***Definition of project*** —

(i) ***In general.*** For purposes of this section, *project* means one or more facilities or capital projects, including land, buildings, equipment, or other property, financed in whole or in part with proceeds of the issue.

(ii) ***Output facilities.*** If an output facility has multiple undivided ownership interests (respectively owned by governmental persons or by both governmental and nongovernmental persons), each owner's interest in the facility is treated as a separate facility for purposes of this section, provided that all owners of the undivided ownership interests share the ownership and output in proportion to their contributions to the capital costs of the output facility.

(b) ***Special allocation rules for eligible mixed-use projects*** —

(1) ***In general.*** The sources of funding allocated to capital expenditures for an eligible mixed-use project (as defined in paragraph (b)(2) of this section) are allocated to undivided portions of the eligible mixed-use project and the governmental use and private business use of the eligible mixed-use project in accordance with this paragraph (b). Qualified equity (as defined in paragraph (b)(3) of this section) is allocated first to the private business use of the eligible mixed-use project and then to

governmental use, and proceeds are allocated first to the governmental use and then to private business use, using the percentages of the eligible mixed-use project financed with the respective sources and the percentages of the respective uses. Thus, if the percentage of the eligible mixed-use project financed with qualified equity is less than the percentage of private business use of the project, all of the qualified equity is allocated to the private business use. Proceeds are allocated to the balance of the private business use of the project. Similarly, if the percentage of the eligible mixed-use project financed with proceeds is less than the percentage of governmental use of the project, all of the proceeds are allocated to the governmental use, and qualified equity is allocated to the balance of the governmental use of the project. Further, if proceeds of more than one issue finance the eligible mixed-use project, proceeds of each issue are allocated ratably to the uses to which proceeds are allocated in proportion to the relative amounts of the proceeds of such issues allocated to the eligible mixed-use project. For private business use measured under § 1.141-3(g), qualified equity and proceeds are allocated to the uses of the eligible mixed-use project in each one-year period under § 1.141-3(g)(4). *See Example 1* of paragraph (f) of this section.

(2) ***Definition of eligible mixed-use project. Eligible mixed-use project*** means a project (as defined in paragraph (a)(3) of this section) that is financed with proceeds of bonds that, when issued, purported to be governmental bonds (as defined in § 1.150-1(b)) (the applicable bonds) and with qualified equity pursuant to the same plan of financing (within the meaning of § 1.150-1(c)(1)(ii)). An eligible mixed-use project must be wholly owned by one or more governmental persons or by a partnership in which at least one governmental person is a partner.

(3) ***Definition of qualified equity.*** For purposes of this section, *qualified equity* means proceeds of bonds that are not tax-advantaged bonds and funds that are not derived from proceeds of a borrowing that are spent on the same eligible mixed-use project as the proceeds of the applicable bonds. Qualified equity does not include equity interests in real property or tangible personal property. Further, qualified equity does not include funds used to redeem or repay governmental bonds. *See* §§ 1.141-2(d)(2)(ii) and 1.141-12(i) (regarding the effects of certain redemptions as remedial actions).

(4) ***Same plan of financing.*** Qualified equity finances a project under the same plan of financing that includes the applicable bonds if the qualified equity pays for capital expenditures of the project on a date that is no earlier than a date on which such expenditures would be eligible for reimbursement by proceeds of the applicable bonds under § 1.150-2(d)(2) (regardless of whether the applicable bonds are reimbursement bonds) and, except for a reasonable retainage (within the meaning of § 1.148-7(h)), no later than the date on which the measurement period begins.

(c) ***Allocations of private payments.*** Except as provided in this paragraph (c), private payments for a project are allocated in accordance with § 1.141-4. Payments under an output contract that result in private business use of an eligible mixed-use project are allocated to the same source of funding (notwithstanding § 1.141-4(c)(3)(v) (regarding certain allocations of private payments to equity)) allocated to the private business use from such contract under paragraph (b) of this section.

(d) ***Allocations of proceeds to common costs of an issue.*** Proceeds used for expenditures for common costs (for example, issuance costs, qualified guarantee fees, or reasonably required reserve or replacement funds) are allocated in accordance with § 1.141-3(g)(6). Proceeds, as allocated under § 1.141-3(g)(6) to an eligible mixed-use project, are allocated to the uses of the project in the same proportions as the proceeds allocated to the uses under paragraph (b) of this section.

(e) ***Allocations of proceeds to bonds.*** In general, proceeds are allocated to bonds in accordance with the rules for allocations of proceeds to bonds for separate purposes of multipurpose issues in § 1.141-13(d). For an issue that is not a multipurpose issue (or is a multipurpose issue for which the issuer has not made a multipurpose allocation), proceeds are allocated to bonds ratably in a manner similar to the allocation of proceeds to projects under paragraph (a)(2) of this section.

(f) ***Examples.*** The following examples illustrate the application of this section:

Example 1. Mixed-use project. City A issues $70x of bonds (the Bonds) and finances the construction of a 10-story office building costing $100x (the Project) with proceeds of the Bonds and $30x of qualified equity (the Qualified Equity). To the extent that the private business use of the Project does not exceed 30 percent in any particular year, the Qualified Equity is allocated to the private business use. If private business use of the Project were, for example, 44 percent in a year, the Qualified Equity would be allocated to 30 percent ($30x) private business use and proceeds of the Bonds would be allocated to the excess (that is, 14 percent or $14x), resulting in private business use of the Bonds in that year of 20 percent ($14x/$70x). Conversely, if private business use of the Project were 20 percent, Qualified Equity would be allocated to that 20 percent. The remaining Qualified Equity (that is, 10 percent or $10x) would be allocated to the governmental use in excess of the 70 percent to which the proceeds of the Bonds would be allocated.

Example 2. Mixed-use output facility. Authority A is a governmental person that owns and operates an electric transmission facility. Several years ago, Authority A used its equity to pay capital expenditures of $1000x for the facility. Authority A wants to make capital improvements to the facility in the amount of $100x (the Project). Authority A reasonably expects that, after completion of the Project, it will sell 46 percent of the available output of the facility, as determined under § 1.141-7, under output contracts that result in private business use and it will sell 54 percent of the available output of the facility for governmental use. On January 1, 2017, Authority A issues $60x of bonds (the Bonds) and uses the proceeds of the Bonds and $40x of qualified equity (the Qualified Equity) to finance the Project. The Qualified Equity is allocated to 40 of the 46 percent private business use resulting from the output contracts. Proceeds of the Bonds are allocated to the 54 percent governmental use and thereafter to the remaining 6 percent private business use.

Example 3. Subsequent improvements and replacements. County A owns a hospital, which opened in 2001, that it financed entirely with proceeds of bonds it issued in 1998 (the 1998 Bonds). In 2017, County A finances the cost of an addition to the hospital with proceeds of bonds (the 2017 Bonds) and qualified equity (the 2017 Qualified Equity). The original hospital is a project (the 1998 Project) and the addition is a project (the 2017 Project). Proceeds of the 2017 Bonds and the 2017 Qualified Equity are allocated to the 2017 Project. The 2017 Qualified Equity is allocated first to the private business use of the 2017 Project and then to the governmental use of the 2017 Project. Proceeds of the 2017 Bonds are allocated first to the governmental use of the 2017 Project and then to the private business use of that project. Neither proceeds of the 2017 Bonds nor 2017 Qualified Equity is allocated to the uses of the 1998 Project. Proceeds of the 1998 Bonds are not allocated to uses of the 2017 Project.

[T.D. 9741, 80 FR 65643, Oct. 27, 2015]

§ 1.141-7 Special rules for output facilities.

(a) ***Overview.*** This section provides special rules to determine whether arrangements for the purchase of output from an output facility cause an issue of bonds to meet the private business tests. For this purpose, unless otherwise stated, water facilities are treated as output facilities. Sections 1.141-3 and 1.141-4 generally apply to determine whether other types of arrangements for use of an output facility cause an issue to meet the private business tests.

(b) ***Definitions.*** For purposes of this section and § 1.141-8, the following definitions and rules apply:

(1) ***Available output.*** The available output of a facility financed by an issue is determined by multiplying the number of units produced or to be produced by the facility in one year by the number of years in the measurement period of that facility for that issue.

(i) ***Generating facilities.*** The number of units produced or to be produced by a generating facility in one year is determined by reference to its nameplate capacity or the equivalent (or where there is no nameplate capacity or the equivalent, its maximum capacity), which is not reduced for reserves, maintenance or other unutilized capacity.

(ii) ***Transmission and other output facilities*** —

(A) ***In general.*** For transmission, distribution, cogeneration, and other output facilities, available output must be measured in a reasonable manner to reflect capacity.

(B) ***Electric transmission facilities.*** Measurement of the available output of all or a portion of electric transmission facilities may be determined in a manner consistent with the reporting rules and requirements for transmission networks promulgated by the Federal Energy Regulatory Commission (FERC). For example, for a transmission network, the use of aggregate load and load share ratios in a manner consistent with the requirements of the FERC may be reasonable. In addition, depending on the facts and circumstances, measurement of the available output of transmission facilities using thermal capacity or transfer capacity may be reasonable.

(iii) ***Special rule for facilities with significant unutilized capacity.*** If an issuer reasonably expects on the issue date that persons that are treated as private business users will purchase more than 30 percent of the actual output of the facility financed with the issue, the Commissioner may determine the number of units produced or to be produced by the facility in one year on a reasonable basis other than by reference to nameplate or other capacity, such as the average expected annual output of the facility. For example, the Commissioner may determine the available output of a financed peaking electric generating unit by reference to the reasonably expected annual output of that unit if the issuer reasonably expects, on the issue date of bonds that finance the unit, that an investor-owned utility will purchase more than 30 percent of the actual output of the facility during the measurement period under a take or pay contract, even if the amount of output purchased is less than 10 percent of the available output determined by reference to nameplate capacity. The reasonably expected annual output of the generating facility must be consistent with the capacity reported for prudent reliability purposes.

(iv) ***Special rule for facilities with a limited source of supply.*** If a limited source of supply constrains the output of an output facility, the number of units produced or to be produced by the facility must be determined by reasonably taking into account those constraints. For this purpose, a limited source of supply shall include a physical limitation (for example, flow of water), but not

an economic limitation (for example, cost of coal or gas). For example, the available output of a hydroelectric unit must be determined by reference to the reasonably expected annual flow of water through the unit.

(2) ***Measurement period.*** The measurement period of an output facility financed by an issue is determined under § 1.141-3(g).

(3) ***Sale at wholesale.*** A sale at wholesale means a sale of output to any person for resale.

(4) ***Take contract and take or pay contract.*** A *take contract* is an output contract under which a purchaser agrees to pay for the output under the contract if the output facility is capable of providing the output. A *take or pay contract* is an output contract under which a purchaser agrees to pay for the output under the contract, whether or not the output facility is capable of providing the output.

(5) ***Requirements contract.*** A *requirements contract* is an output contract, other than a take contract or a take or pay contract, under which a nongovernmental person agrees to purchase all or part of its output requirements.

(6) ***Nonqualified amount.*** The nonqualified amount with respect to an issue is determined under section 141(b)(8).

(c) ***Output contracts*** —

(1) ***General rule.*** The purchase pursuant to a contract by a nongovernmental person of available output of an output facility (output contract) financed with proceeds of an issue is taken into account under the private business tests if the purchase has the effect of transferring the benefits of owning the facility and the burdens of paying the debt service on bonds used (directly or indirectly) to finance the facility (the benefits and burdens test). See paragraph (c)(4) of this section for the treatment of an output contract that is properly characterized as a lease for Federal income tax purposes. See paragraphs (d) and (e) of this section for rules regarding measuring the use of, and payments of debt service for, an output facility for determining whether the private business tests are met. See also § 1.141-8 for rules for when an issue that finances an output facility (other than a water facility) meets the private business tests because the nonqualified amount of the issue exceeds $15 million.

(2) ***Take contract or take or pay contract.*** The benefits and burdens test is met if a nongovernmental person agrees pursuant to a take contract or a take or pay contract to purchase available output of a facility.

(3) ***Requirements contract*** —

(i) ***In general.*** A requirements contract may satisfy the benefits and burdens test under paragraph (c)(3)(ii) or (iii) of this section. See § 1.141-15(f)(2) for special effective dates for the application of this paragraph (c)(3) to issues financing facilities subject to requirements contracts.

(ii) ***Requirements contract similar to take contract or take or pay contract.*** A requirements contract generally meets the benefits and burdens test to the extent that it contains contractual terms that obligate the purchaser to make payments that are not contingent on the output requirements of the purchaser or that obligate the purchaser to have output requirements. For example, a requirements contract with an industrial purchaser meets the benefits and burdens test if the purchaser enters into additional contractual obligations with the issuer or another governmental unit not to cease operations. A requirements contract does not meet the benefits and burdens test, however, by reason of a provision that requires the purchaser to pay

reasonable and customary damages (including liquidated damages) in the event of a default, or a provision that permits the purchaser to pay a specified amount to terminate the contract while the purchaser has requirements, in each case if the amount of the payment is reasonably related to the purchaser's obligation to buy requirements that is discharged by the payment.

(iii) ***Wholesale requirements contract*** —

(A) ***In general.*** A requirements contract that is a sale at wholesale (a *wholesale requirements contract*) may satisfy the benefits and burdens test, depending on all the facts and circumstances.

(B) ***Significant factors.*** Significant factors that tend to establish that a wholesale requirements contract meets the benefits and burdens test include, but are not limited to—

(*1*) The term of the contract is substantial relative to the term of the issue or issues that finance the facility; and

(*2*) The amount of output to be purchased under the contract represents a substantial portion of the available output of the facility.

(C) ***Safe harbors.*** A wholesale requirements contract does not meet the benefits and burdens test if—

(*1*) The term of the contract, including all renewal options, does not exceed the lesser of 5 years or 30 percent of the term of the issue; or

(*2*) The amount of output to be purchased under the contract (and any other requirements contract with the same purchaser or a related party with respect to the facility) does not exceed 5 percent of the available output of the facility.

(iv) ***Retail requirements contract.*** Except as otherwise provided in this paragraph (c)(3), a requirements contract that is not a sale at wholesale does not meet the benefits and burdens test.

(4) ***Output contract properly characterized as a lease.*** Notwithstanding any other provision of this section, an output contract that is properly characterized as a lease for Federal income tax purposes shall be tested under the rules contained in §§ 1.141-3 and 1.141-4 to determine whether it is taken into account under the private business tests.

(d) ***Measurement of private business use.*** If an output contract results in private business use under this section, the amount of private business use generally is the amount of output purchased under the contract.

(e) ***Measurement of private security or payment.*** The measurement of payments made or to be made by nongovernmental persons under output contracts as a percent of the debt service of an issue is determined under the rules provided in § 1.141-4.

(f) ***Exceptions for certain contracts*** —

(1) ***Small purchases of output.*** An output contract for the use of a facility is not taken into account under the private business tests if the average annual payments to be made under the contract do not exceed 1 percent of the average annual debt service on all outstanding tax-exempt bonds issued to finance the facility, determined as of the effective date of the contract.

(2) ***Swapping and pooling arrangements.*** An agreement that provides for swapping or pooling of output by one or more governmental persons and one or more nongovernmental persons does not result in private business use of the output facility owned by the governmental person to the extent that—

(i) The swapped output is reasonably expected to be approximately equal in value (determined over periods of three years or less); and

(ii) The purpose of the agreement is to enable each of the parties to satisfy different peak load demands, to accommodate temporary outages, to diversify supply, or to enhance reliability in accordance with prudent reliability standards.

(3) ***Short-term output contracts.*** An output contract with a nongovernmental person is not taken into account under the private business tests if—

(i) The term of the contract, including all renewal options, is not longer than 3 years;

(ii) The contract either is a negotiated, arm's-length arrangement that provides for compensation at fair market value, or is based on generally applicable and uniformly applied rates; and

(iii) The output facility is not financed for a principal purpose of providing that facility for use by that nongovernmental person.

(4) ***Certain conduit parties disregarded.*** A nongovernmental person acting solely as a conduit for the exchange of output among governmentally owned and operated utilities is disregarded in determining whether the private business tests are met with respect to financed facilities owned by a governmental person.

(g) ***Special rules for electric output facilities used to provide open access*** —

(1) ***Operation of transmission facilities by nongovernmental persons*** —

(i) ***In general.*** The operation of an electric transmission facility by a nongovernmental person may result in private business use of the facility under § 1.141-3 and this section based on all the facts and circumstances. For example, a transmission facility is generally used for a private business use if a nongovernmental person enters into a contract to operate the facility and receives compensation based, in whole or in part, on a share of net profits from the operation of the facility.

(ii) ***Certain use by independent transmission operators.*** A contract for the operation of an electric transmission facility by an independent entity, such as a regional transmission organization or an independent system operator (*independent transmission operator*), does not constitute private business use of the facility if—

(A) The facility is owned by a governmental person;

(B) The operation of the facility by the independent transmission operator is approved by the FERC under one or more provisions of the Federal Power Act (16 U.S.C. 791a through 825r) (or by a state authority under comparable provisions of state law);

(C) No portion of the compensation of the independent transmission operator is based on a share of net profits from the operation of the facility; and

(D) The independent transmission operator does not bear risk of loss of the facility.

(2) ***Certain use by nongovernmental persons under output contracts*** —

(i) ***Transmission facilities.*** The use of an electric transmission facility by a nongovernmental person pursuant to an output contract does not constitute private business use of the facility if—

(A) The facility is owned by a governmental person;

(B) The facility is operated by an independent transmission operator in a manner that satisfies paragraph (g)(1)(ii) of this section; and

(C) The facility is not financed for a principal purpose of providing that facility for use by that nongovernmental person.

(ii) ***Distribution facilities.*** The use of an electric distribution facility by a nongovernmental person pursuant to an output contract does not constitute private business use of the facility if—

(A) The facility is owned by a governmental person;

(B) The facility is available for use on a nondiscriminatory, open access basis by buyers and sellers of electricity in accordance with rates that are generally applicable and uniformly applied within the meaning of § 1.141-3(c)(2); and

(C) The facility is not financed for a principal purpose of providing that facility for use by that nongovernmental person (other than a retail end-user).

(3) ***Ancillary services.*** The use of an electric output facility to provide ancillary services required to be offered as part of an open access transmission tariff under rules promulgated by the FERC under the Federal Power Act (16 U.S.C. 791a through 825r) (or by a state regulatory authority under comparable provisions of state law) does not result in private business use.

(4) ***Exceptions to deliberate action rules*** —

(i) ***Mandated wheeling.*** Entering into a contract for the use of electric transmission or distribution facilities is not treated as a deliberate action under § 1.141-2(d) if—

(A) The contract is entered into in response to (or in anticipation of) an order by the United States under sections 211 and 212 of the Federal Power Act (16 U.S.C. 824j and 824k) (or a state regulatory authority under comparable provisions of state law); and

(B) The terms of the contract are bona fide and arm's-length, and the consideration paid is consistent with the provisions of section 212(a) of the Federal Power Act.

(ii) ***Actions taken to implement non-discriminatory, open access.*** An action is not treated as a deliberate action under § 1.141-2(d) if it is taken to implement the offering of non-discriminatory, open access tariffs for the use of electric transmission or distribution facilities in a manner consistent with rules promulgated by the FERC under sections 205 and 206 of the Federal Power Act (16 U.S.C. 824d and 824e) (or comparable provisions of state law). This paragraph (g)(4)(ii) does not apply, however, to the sale, exchange, or other disposition (within the meaning of section 1001(a)) of transmission or distribution facilities to a nongovernmental person.

(iii) ***Application of reasonable expectations test to certain current refunding bonds.*** An action taken or to be taken with respect to electric transmission or distribution facilities refinanced by an issue is not taken into account under the reasonable expectations test of § 1.141-2(d) if—

(A) The action is described in paragraph (g)(4)(i) or (ii) of this section;

(B) The bonds of the issue are current refunding bonds that refund bonds originally issued before February 23, 1998; and

(C) The weighted average maturity of the refunding bonds is not greater than the remaining weighted average maturity of the prior bonds.

(5) ***Additional transactions as permitted by the Commissioner.*** The Commissioner may, by published guidance, set forth additional circumstances in which the use of electric output facilities in a restructured electric industry does not constitute private business use.

(h) ***Allocations of output facilities and systems*** —

(1) ***Facts and circumstances analysis.*** Whether output sold under an output contract is allocated to a particular facility (for example, a generating unit), to the entire system of the seller of that output (net of any uses of that system output allocated to a particular facility), or to a portion of a facility is based on all the facts and circumstances. Significant factors to be considered in determining the allocation of an output contract to financed property are the following:

(i) The extent to which it is physically possible to deliver output to or from a particular facility or system.

(ii) The terms of a contract relating to the delivery of output (such as delivery limitations and options or obligations to deliver power from additional sources).

(iii) Whether a contract is entered into as part of a common plan of financing for a facility.

(iv) The method of pricing output under the contract, such as the use of market rates rather than rates designed to pay debt service of tax-exempt bonds used to finance a particular facility.

(2) ***Illustrations.*** The following illustrate the factors set forth in paragraph (h)(1) of this section:

(i) ***Physical possibility.*** Output from a generating unit that is fed directly into a low voltage distribution system of the owner of that unit and that cannot physically leave that distribution system generally must be allocated to those receiving electricity through that distribution system. Output may be allocated without regard to physical limitations, however, if exchange or similar agreements provide output to a purchaser where, but for the exchange agreements, it would not be possible for the seller to provide output to that purchaser.

(ii) ***Contract terms relating to performance.*** A contract to provide a specified amount of electricity from a system, but only when at least that amount of electricity is being generated by a particular unit, is allocated to that unit. For example, a contract to buy 20 MW of system power with a right to take up to 40 percent of the actual output of a specific 50 MW facility whenever total system output is insufficient to meet all of the seller's obligations generally is allocated to the specific facility rather than to the system.

(iii) ***Common plan of financing.*** A contract entered into as part of a common plan of financing for a facility generally is allocated to the facility if debt service for the issue of bonds is reasonably expected to be paid, directly or indirectly, from payments under the contract.

(iv) ***Pricing method.*** Pricing based on the capital and generating costs of a particular turbine tends to indicate that output under the contract is properly allocated to that turbine.

(3) ***Transmission and distribution contracts.*** Whether use under an output contract for transmission or distribution is allocated to a particular facility or to a transmission or distribution network is based on all the facts and circumstances, in a manner similar to paragraphs (h)(1) and (2) of this section. In general, the method used to determine payments under a contract is a more significant contract term for this purpose than nominal contract path. In general, if reasonable and consistently applied, the determination of use of transmission or distribution facilities under an output contract may be based on a method used by third parties, such as reliability councils.

(4) ***Allocation of payments.*** Payments for output provided by an output facility financed with two or more sources of funding are generally allocated under the rules in § 1.141-4(c).

(i) ***Examples.*** The following examples illustrate the application of this section:

Example 1 Joint ownership. Z, an investor-owned electric utility, and City H agree to construct an electric generating facility of a size sufficient to take advantage of the economies of scale. H will issue $50 million of its 24-year bonds, and Z will use $100 million of its funds for construction of a facility they will jointly own as tenants in common. Each of the participants will share in the ownership, output, and operating expenses of the facility in proportion to its contribution to the cost of the facility, that is, one-third by H and two-thirds by Z. H's bonds will be secured by H's ownership interest in the facility and by revenues to be derived from its share of the annual output of the facility. H will need only 50 percent of its share of the annual output of the facility during the first 20 years of operations. It agrees to sell 10 percent of its share of the annual output to Z for a period of 20 years pursuant to a contract under which Z agrees to take that power if available. The facility will begin operation, and Z will begin to receive power, 4 years after the H bonds are issued. The measurement period for the property financed by the issue is 20 years. H also will sell the remaining 40 percent of its share of the annual output to numerous other private utilities under contracts of three years or less that satisfy the exception under paragraph (f)(3) of this section. No other contracts will be executed obligating any person to purchase any specified amount of the power for any specified period of time. No person (other than Z) will make payments that will result in a transfer of the burdens of paying debt service on bonds used directly or indirectly to provide H's share of the facilities. The bonds are not private activity bonds, because H's one-third interest in the facility is not treated as used by the other owners of the facility. Although 10 percent of H's share of the annual output of the facility will be used in the trade or business of Z, a nongovernmental person, under this section, that portion constitutes not more than 10 percent of the available output of H's ownership interest in the facility.

Example 2 Wholesale requirements contract. (i) City J issues 20-year bonds to acquire an electric generating facility having a reasonably expected economic life substantially greater than 20 years and a nameplate capacity of 100 MW. The available output of the facility under paragraph (b)(1) of this section is approximately 17,520,000 MWh (100 MW × 24 hours × 365 days × 20 years). On the issue date, J enters into a contract with T, an investor-owned utility, to provide T with all of its power requirements for a period of 10 years, commencing on the issue date. J reasonably expects that T will actually purchase an average of 30 MW over the 10-year period. The contract is taken into account under the private business tests pursuant to paragraph (c)(3) of this section because the term of the contract is substantial relative to the term of the issue and the amount of output to be purchased is a substantial portion of the available output.

(ii) Under paragraph (d) of this section, the amount of reasonably expected private business use under this contract is approximately 15 percent (30 MW × 24 hours × 365 days × 10 years, or 2,628,000 MWh) of the available output. Accordingly, the issue meets the private business use test. J reasonably expects that the amount to be paid for an average of 30 MW of power (less the operation and maintenance costs directly attributable to generating that 30 MW of power), will be more than 10 percent of debt service on the issue on a present-value basis. Accordingly, the issue meets the private security or payment test because J reasonably expects that payment of more than 10 percent of the debt service will be indirectly derived from payments by T. The bonds are private activity bonds under paragraph (c) of this section. Further, if 15 percent of the sale proceeds of the issue is greater than $15 million and the issue meets the private security or payment test with respect to the $15 million output limitation, the bonds are also private activity bonds under section 141(b)(4). See § 1.141-8.

Example 3 Retail contracts. (i) State Agency M, a political subdivision, issues bonds in 2003 to finance the construction of a generating facility that will be used to furnish electricity to M's retail customers. In 2007, M enters into a 10-year contract with industrial corporation I. Under the contract, M agrees to supply I with all of its power requirements during the contract term, and I agrees to pay for that power at a negotiated price as it is delivered. The contract does not require I to pay for any power except to the extent I has requirements. In addition, the contract requires I to pay reasonable and customary liquidated damages in the event of a default by I, and permits I to terminate the contract while it has requirements by paying M a specified amount that is a reasonable and customary amount for terminating the contract. Any damages or termination payment by I will be reasonably related to I's obligation to buy requirements that is discharged by the payment. Under paragraph (c)(3) of this section, the contract does not meet the benefits and burdens test. Thus, it is not taken into account under the private business tests.
(ii) The facts are the same as in paragraph (i) of this *Example 3,* except that the contract requires I to make guaranteed minimum payments, regardless of I's requirements, in an amount such that the contract does not meet the exception for small purchases in paragraph (f)(1) of this section. Under paragraph (c)(3)(ii) of this section, the contract meets the benefits and burdens test because it obligates I to make payments that are not contingent on its output requirements. Thus, it is taken into account under the private business tests.

Example 4 Allocation of existing contracts to new facilities. Power Authority K, a political subdivision created by the legislature in State X to own and operate certain power generating facilities, sells all of the power from its existing facilities to four private utility systems under contracts executed in 1999, under which the four systems are required to take or pay for specified portions of the total power output until the year 2029. Existing facilities supply all of the present needs of the four utility systems, but their future power requirements are expected to increase substantially beyond the capacity of K's current generating system. K issues 20-year bonds in 2004 to construct a large generating facility. As part of the financing plan for the bonds, a fifth private utility system contracts with K to take or pay for 15 percent of the available output of the new facility. The balance of the

output of the new facility will be available for sale as required, but initially it is not anticipated that there will be any need for that power. The revenues from the contract with the fifth private utility system will be sufficient to pay less than 10 percent of the debt service on the bonds (determined on a present value basis). The balance, which will exceed 10 percent of the debt service on the bonds, will be paid from revenues derived from the contracts with the four systems initially from sale of power produced by the old facilities. The output contracts with all the private utilities are allocated to K's entire generating system. See paragraphs (h)(1) and (2) of this section. Thus, the bonds meet the private business use test because more than 10 percent of the proceeds will be used in the trade or business of a nongovernmental person. In addition, the bonds meet the private security or payment test because payment of more than 10 percent of the debt service, pursuant to underlying arrangements, will be derived from payments in respect of property used for a private business use.

Example 5 Allocation to displaced resource. Municipal utility MU, a political subdivision, purchases all of the electricity required to meet the needs of its customers (1,000 MW) from B, an investor-owned utility that operates its own electric generating facilities, under a 50-year take or pay contract. MU does not anticipate that it will require additional electric resources, and any new resources would produce electricity at a higher cost to MU than its cost under its contract with B. Nevertheless, B encourages MU to construct a new generating plant sufficient to meet MU's requirements. MU issues obligations to construct facilities that will produce 1,000 MW of electricity. MU, B, and I, another investor-owned utility, enter into an agreement under which MU assigns to I its rights under MU's take or pay contract with B. Under this arrangement, I will pay MU, and MU will continue to pay B, for the 1,000 MW. I's payments to MU will at least equal the amounts required to pay debt service on MU's bonds. In addition, under paragraph (h)(1)(iii) of this section, the contract among MU, B, and I is entered into as part of a common plan of financing of the MU facilities. Under all the facts and circumstances, MU's assignment to I of its rights under the original take or pay contract is allocable to MU's new facilities under paragraph (h) of this section. Because I is a nongovernmental person, MU's bonds are private activity bonds.

Example 6 Operation of transmission facilities by regional transmission organization. (i) Public Power Agency D is a political subdivision that owns and operates electric generation, transmission and distribution facilities. In 2003, D transfers operating control of its transmission system to a regional transmission organization (RTO), a nongovernmental person, pursuant to an operating agreement that is approved by the FERC under sections 205 and 206 of the Federal Power Act. D retains ownership of its facilities. No portion of the RTO's compensation is based on a share of net profits from the operation of D's facilities, and the RTO does not bear any risk of loss of those facilities. Under paragraph (g)(1)(ii) of this section, the RTO's use of D's facilities does not constitute a private business use.
(ii) Company A is located in D's service territory. In 2004, Power Supplier E, a nongovernmental person, enters into a 10-year contract with A to supply A's electricity requirements. The electricity supplied by E to A will be transmitted over D's transmission and distribution facilities. D's distribution facilities are available for use on a nondiscriminatory, open access basis by buyers and sellers of electricity in accordance with rates that are generally applicable and uniformly applied within the meaning of § 1.141-3(c)(2). D's facilities

> are not financed for a principal purpose of providing the facilities for use by E. Under paragraph (g)(2) of this section, the contract between A and E does not result in private business use of D's facilities.

Example 7 Certain actions not treated as deliberate actions. The facts are the same as in *Example 6* of this paragraph (i), except that the RTO's compensation is based on a share of net profits from operating D's facilities. In addition, D had issued bonds in 1994 to finance improvements to its transmission system. At the time D transfers operating control of its transmission system to the RTO, D chooses to apply the private activity bond regulations of §§ 1.141-1 through 1.141-15 to the 1994 bonds. The operation of D's facilities by the RTO results in private business use under § 1.141-3 and paragraph (g)(1)(i) of this section. Under the special exception in paragraph (g)(4)(ii) of this section, however, the transfer of control is not treated as a deliberate action. Accordingly, the transfer of control does not cause the 1994 bonds to meet the private activity bond tests.

Example 8 Current refunding. The facts are the same as in *Example 7* of this paragraph (i), and in addition D issues bonds in 2004 to currently refund the 1994 bonds. The weighted average maturity of the 2004 bonds is not greater than the remaining weighted average maturity of the 1994 bonds. D chooses to apply the private activity bond regulations of §§ 1.141-1 through 1.141-15 to the refunding bonds. In general, reasonable expectations must be separately tested on the date that refunding bonds are issued under § 1.141-2(d). Under the special exception in paragraph (g)(4)(iii) of this section, however, the transfer of the financed facilities to the RTO need not be taken into account in applying the reasonable expectations test to the refunding bonds.

[T.D. 9016, 67 FR 59759, Sept. 23, 2002; 67 FR 70845, Nov. 27, 2002]

§ 1.141-8 $15 million limitation for output facilities.

(a) ***In general*** —

(1) ***General rule.*** Section 141(b)(4) provides a special private activity bond limitation (the $15 million output limitation) for issues 5 percent or more of the proceeds of which are to be used to finance output facilities (other than a facility for the furnishing of water). Under this rule, an issue consists of private activity bonds under the private business tests of section 141(b)(1) and (2) if the nonqualified amount with respect to output facilities financed by the proceeds of the issue exceeds $15 million. The $15 million output limitation applies in addition to the private business tests of section 141(b)(1) and (2). Under section 141(b)(4) and paragraph (a)(2) of this section, the $15 million output limitation is reduced in certain cases. Specifically, an issue meets the test in section 141(b)(4) if both of the following tests are met:

(i) More than $15 million of the proceeds of the issue to be used with respect to an output facility are to be used for a private business use. Investment proceeds are disregarded for this purpose if they are not allocated disproportionately to the private business use portion of the issue.

(ii) The payment of the principal of, or the interest on, more than $15 million of the sale proceeds of the portion of the issue used with respect to an output facility is (under the terms of the issue or any underlying arrangement) directly or indirectly—

(A) Secured by any interest in an output facility used or to be used for a private business use (or payments in respect of such an output facility); or

(B) To be derived from payments (whether or not to the issuer) in respect of an output facility used or to be used for a private business use.

(2) ***Reduction in $15 million output limitation for outstanding issues*** —

(i) ***General rule.*** In determining whether an issue 5 percent or more of the proceeds of which are to be used with respect to an output facility consists of private activity bonds under the $15 million output limitation, the $15 million limitation on private business use and private security or payments is applied by taking into account the aggregate nonqualified amounts of any outstanding bonds of other issues 5 percent or more of the proceeds of which are or will be used with respect to that output facility or any other output facility that is part of the same project.

(ii) ***Bonds taken into account.*** For purposes of this paragraph (a)(2), in applying the $15 million output limitation to an issue (the later issue), a tax-exempt bond of another issue (the earlier issue) is taken into account if—

(A) That bond is outstanding on the issue date of the later issue;

(B) That bond will not be redeemed within 90 days of the issue date of the later issue in connection with the refunding of that bond by the later issue; and

(C) 5 percent or more of the sale proceeds of the earlier issue financed an output facility that is part of the same project as the output facility that is financed by 5 percent or more of the sale proceeds of the later issue.

(3) ***Benefits and burdens test applicable*** —

(i) ***In general.*** In applying the $15 million output limitation, the benefits and burdens test of § 1.141-7 applies, except that "$15 million" is applied in place of "10 percent", or "5 percent" as appropriate.

(ii) ***Earlier issues for the project.*** If bonds of an earlier issue are outstanding and must be taken into account under paragraph (a)(2) of this section, the nonqualified amount for that earlier issue is multiplied by a fraction, the numerator of which is the adjusted issue price of the earlier issue as of the issue date of the later issue, and the denominator of which is the issue price of the earlier issue. Pre-issuance accrued interest as defined in § 1.148-1(b) is disregarded for this purpose.

(b) ***Definition of project*** —

(1) ***General rule.*** For purposes of paragraph (a)(2) of this section, *project* has the meaning provided in this paragraph. Facilities that are functionally related and subordinate to a project are treated as part of that same project. Facilities having different purposes or serving different customer bases are not ordinarily part of the same project. For example, the following are generally not part of the same project—

(i) Generation, transmission and distribution facilities;

(ii) Separate facilities designed to serve wholesale customers and retail customers; and

(iii) A peaking unit and a baseload unit (regardless of the location of the units).

(2) ***Separate ownership.*** Except as otherwise provided in this paragraph (b)(2), facilities that are not owned by the same person are not part of the same project. If different governmental persons act in concert to finance a project, however (for example as participants in a joint powers authority), their interests are aggregated with respect to that project to determine whether the $15 million output limitation is met. In the case of undivided ownership interests in a single output facility, property that is not owned by different persons is treated as separate projects only if the separate interests are financed—

(i) With bonds of different issuers; and

(ii) Without a principal purpose of avoiding the limitation in this section.

(3) ***Generating property*** —

(i) ***Property on same site.*** In the case of generation and related facilities, *project* means property located at the same site.

(ii) ***Special rule for generating units.*** Separate generating units are not part of the same project if one unit is reasonably expected, on the issue date of each issue that finances the units, to be placed in service more than 3 years before the other. Common facilities or property that will be functionally related to more than one generating unit must be allocated on a reasonable basis. If a generating unit already is constructed or is under construction (the first unit) and bonds are to be issued to finance an additional generating unit (the second unit), all costs for any common facilities paid or incurred before the earlier of the issue date of bonds to finance the second unit or the commencement of construction of the second unit are allocated to the first unit. At the time that bonds are issued to finance the second unit (or, if earlier, upon commencement of construction of that unit), any remaining costs of the common facilities may be allocated between the first and second units so that in the aggregate the allocation is reasonable.

(4) ***Transmission and distribution.*** In the case of transmission or distribution facilities, *project* means functionally related or contiguous property. Separate transmission or distribution facilities are not part of the same project if one facility is reasonably expected, on the issue date of each issue that finances the facilities, to be placed in service more than 2 years before the other.

(5) ***Subsequent improvements*** —

(i) In general. An improvement to generation, transmission or distribution facilities that is not part of the original design of those facilities (the original project) is not part of the same project as the original project if the construction, reconstruction, or acquisition of that improvement commences more than 3 years after the original project was placed in service and the bonds issued to finance that improvement are issued more than 3 years after the original project was placed in service.

(ii) ***Special rule for transmission and distribution facilities.*** An improvement to transmission or distribution facilities that is not part of the original design of that property is not part of the same project as the original project if the issuer did not reasonably expect the need to make that improvement when it commenced construction of the original project and the construction, reconstruction, or acquisition of that improvement is mandated by the federal government or a state regulatory authority to accommodate requests for wheeling.

(6) ***Replacement property.*** For purposes of this section, property that replaces existing property of an output facility is treated as part of the same project as the replaced property unless—

(i) The need to replace the property was not reasonably expected on the issue date or the need to replace the property occurred more than 3 years before the issuer reasonably expected (determined on the issue date of the bonds financing the property) that it would need to replace the property; and

(ii) The bonds that finance (and refinance) the output facility have a weighted average maturity that is not greater than 120 percent of the reasonably expected economic life of the facility.

(c) ***Example.*** The application of the provisions of this section is illustrated by the following example:

> *Example.* (i) Power Authority K, a political subdivision, intends to issue a single issue of tax-exempt bonds at par with a stated principal amount and sale proceeds of $500 million to finance the acquisition of an electric generating facility. No portion of the facility will be used for a private business use, except that L, an investor-owned utility, will purchase 10 percent of the output of the facility under a take contract and will pay 10 percent of the debt service on the bonds. The nonqualified amount with respect to the bonds is $50 million.
> (ii) The maximum amount of tax-exempt bonds that may be issued for the acquisition of an interest in the facility in paragraph (i) of this *Example* is $465 million (that is, $450 million for the 90 percent of the facility that is governmentally owned and used plus a nonqualified amount of $15 million).

[T.D. 9016, 67 FR 59763, Sept. 23, 2002]

§ 1.141-9 Unrelated or disproportionate use test.

(a) ***General rules*** —

(1) ***Description of test.*** Under section 141(b)(3) (the unrelated or disproportionate use test), an issue meets the private business tests if the amount of private business use and private security or payments attributable to unrelated or disproportionate private business use exceeds 5 percent of the proceeds of the issue. For this purpose, the private business use test is applied by taking into account only use that is not related to any government use of proceeds of the issue (unrelated use) and use that is related but disproportionate to any government use of those proceeds (disproportionate use).

(2) ***Application of unrelated or disproportionate use test*** —

(i) ***Order of application.*** The unrelated or disproportionate use test is applied by first determining whether a private business use is related to a government use. Next, private business use that relates to a government use is examined to determine whether it is disproportionate to that government use.

(ii) ***Aggregation of unrelated and disproportionate use.*** All the unrelated use and disproportionate use financed with the proceeds of an issue are aggregated to determine compliance with the unrelated or disproportionate use test. The amount of permissible unrelated and disproportionate private business use is not reduced by the amount of private business use financed with the proceeds of an issue that is neither unrelated use nor disproportionate use.

(iii) ***Deliberate actions.*** A deliberate action that occurs after the issue date does not result in unrelated or disproportionate use if the issue meets the conditions of § 1.141-12(a).

(b) ***Unrelated use*** —

(1) ***In general.*** Whether a private business use is related to a government use financed with the proceeds of an issue is determined on a case-by-case basis, emphasizing the operational relationship between the government use and the private business use. In general, a facility that is used for a related private business use must be located within, or adjacent to, the governmentally used facility.

(2) ***Use for the same purpose as government use.*** Use of a facility by a nongovernmental person for the same purpose as use by a governmental person is not treated as unrelated use if the government use is not insignificant. Similarly, a use of a facility in the same manner both for private business use that is related use and private business use that is unrelated use does not result in unrelated use if the related use is not insignificant. For example, a privately owned pharmacy in a governmentally owned hospital does not ordinarily result in unrelated use solely because the pharmacy also serves individuals not using the hospital. In addition, use of parking spaces in a garage by a nongovernmental person is not treated as unrelated use if more than an insignificant portion of the parking spaces are used for a government use (or a private business use that is related to a government use), even though the use by the nongovernmental person is not directly related to that other use.

(c) ***Disproportionate use*** —

(1) ***Definition of disproportionate use.*** A private business use is disproportionate to a related government use only to the extent that the amount of proceeds used for that private business use exceeds the amount of proceeds used for the related government use. For example, a private use of $100 of proceeds that is related to a government use of $70 of proceeds results in $30 of disproportionate use.

(2) ***Aggregation of related uses.*** If two or more private business uses of the proceeds of an issue relate to a single government use of those proceeds, those private business uses are aggregated to apply the disproportionate use test.

(3) ***Allocation rule.*** If a private business use relates to more than a single use of the proceeds of the issue (for example, two or more government uses of the proceeds of the issue or a government use and a private use), the amount of any disproportionate use may be determined by—

(i) Reasonably allocating the proceeds used for the private business use among the related uses;

(ii) Aggregating government uses that are directly related to each other; or

(iii) Allocating the private business use to the government use to which it is primarily related.

(d) ***Maximum use taken into account.*** The determination of the amount of unrelated use or disproportionate use of a facility is based on the maximum amount of reasonably expected government use of a facility during the measurement period. Thus, no unrelated use or disproportionate use arises solely because a facility initially has excess capacity that is to be used by a nongovernmental person if the facility will be completely used by the issuer during the term of the issue for more than an insignificant period.

(e) ***Examples.*** The following examples illustrate the application of this section:

Example 1. School and remote cafeteria. County X issues bonds with proceeds of $20 million and uses $18.1 million of the proceeds for construction of a new school building and $1.9 million of the proceeds for construction of a privately operated cafeteria in its administrative office building, which is located at a remote site. The bonds are secured, in part, by the cafeteria. The $1.9 million of proceeds is unrelated to the government use (that is, school construction) financed with the bonds and exceeds 5 percent of $20 million. Thus, the issue meets the private business tests.

Example 2. Public safety building and courthouse. City Y issues bonds with proceeds of $50 million for construction of a new public safety building ($32 million) and for improvements to an existing courthouse ($15 million). Y uses $3 million of the bond proceeds for renovations to an existing privately operated cafeteria located in the courthouse. The bonds are secured, in part, by the cafeteria. Y's use of the $3 million for the privately operated cafeteria does not meet the unrelated or disproportionate use test because these expenditures are neither unrelated use nor disproportionate use.

Example 3. Unrelated garage. City Y issues bonds with proceeds of $50 million for construction of a new public safety building ($30.5 million) and for improvements to an existing courthouse ($15 million). Y uses $3 million of the bond proceeds for renovations to an existing privately operated cafeteria located in the courthouse. The bonds are secured, in part, by the cafeteria. Y also uses $1.5 million of the proceeds to construct a privately operated parking garage adjacent to a private office building. The private business use of the parking garage is unrelated to any government use of proceeds of the issue. Since the proceeds used for unrelated uses and disproportionate uses do not exceed 5 percent of the proceeds, the unrelated or disproportionate use test is not met.

Example 4. Disproportionate use of garage. County Z issues bonds with proceeds of $20 million for construction of a hospital with no private business use ($17 million); renovation of an office building with no private business use ($1 million); and construction of a garage that is entirely used for a private business use ($2 million). The use of the garage is related to the use of the office building but not to the use of the hospital. The private business use of the garage results in $1 million of disproportionate use because the proceeds used for the garage ($2 million) exceed the proceeds used for the related government use ($1 million). The bonds are not private activity bonds, however, because the disproportionate use does not exceed 5 percent of the proceeds of the issue.

Example 5. Bonds for multiple projects. (i) County W issues bonds with proceeds of $80 million for the following purposes: (1) $72 million to construct a County-owned and operated waste incinerator; (2) $1 million for a County-owned and operated facility for the temporary storage of hazardous waste prior to final disposal; (3) $1 million to construct a privately owned recycling facility located at a remote site; and (4) $6 million to build a garage adjacent to the County-owned incinerator that will be leased to Company T to store and repair trucks that it owns and uses to haul County W refuse. Company T uses 75 percent of its trucks to haul materials to the incinerator and the remaining 25 percent of its trucks to haul materials to the temporary storage facility.
(ii) The $1 million of proceeds used for the recycling facility is used for an unrelated use. The garage is related use. In addition, 75 percent of the use of the $6 million of proceeds used for the garage is allocable to the government use of proceeds at the incinerator. The remaining 25 percent of the proceeds used for the garage ($1.5 million) relates to the government use of proceeds at the temporary storage facility. Thus, this portion of the proceeds used for the garage exceeds the proceeds used for the temporary storage

> facility by $0.5 million and this excess is disproportionate use (but not unrelated use). Thus, the aggregate amount of unrelated use and disproportionate use financed with the proceeds of the issue is $1.5 million. Alternatively, under paragraph (c)(3)(iii) of this section, the entire garage may be treated as related to the government use of the incinerator and, under that allocation, the garage is not disproportionate use. In either event, section 141(b)(3) limits the aggregate unrelated use and disproportionate use to $4 million. Therefore, the bonds are not private activity bonds under this section.

[T.D. 8712, 62 FR 2297, Jan. 16, 1997]

§ 1.141-10 Coordination with volume cap. [Reserved]

§ 1.141-11 Acquisition of nongovernmental output property. [Reserved]

§ 1.141-12 Remedial actions.

(a) ***Conditions to taking remedial action.*** An action that causes an issue to meet the private business tests or the private loan financing test is not treated as a deliberate action if the issuer takes a remedial action described in paragraph (d), (e), or (f) of this section with respect to the nonqualified bonds and if all of the requirements in paragraphs (a) (1) through (5) of this section are met.

(1) ***Reasonable expectations test met.*** The issuer reasonably expected on the issue date that the issue would meet neither the private business tests nor the private loan financing test for the entire term of the bonds. For this purpose, if the issuer reasonably expected on the issue date to take a deliberate action prior to the final maturity date of the issue that would cause either the private business tests or the private loan financing test to be met, the term of the bonds for this purpose may be determined by taking into account a redemption provision if the provisions of § 1.141-2(d)(2)(ii) (A) through (C) are met.

(2) ***Maturity not unreasonably long.*** The term of the issue must not be longer than is reasonably necessary for the governmental purposes of the issue (within the meaning of § 1.148-1(c)(4)). Thus, this requirement is met if the weighted average maturity of the bonds of the issue is not greater than 120 percent of the average reasonably expected economic life of the property financed with the proceeds of the issue as of the issue date.

(3) ***Fair market value consideration.*** Except as provided in paragraph (f) of this section, the terms of any arrangement that results in satisfaction of either the private business tests or the private loan financing test are bona fide and arm's-length, and the new user pays fair market value for the use of the financed property. Thus, for example, fair market value may be determined in a manner that takes into account restrictions on the use of the financed property that serve a bona fide governmental purpose.

(4) ***Disposition proceeds treated as gross proceeds for arbitrage purposes.*** The issuer must treat any disposition proceeds as gross proceeds for purposes of section 148. For purposes of eligibility for temporary periods under section 148(c) and exemptions from the requirement of section 148(f) the issuer may treat the date of receipt of the disposition proceeds as the issue date of the bonds and disregard the receipt of disposition proceeds for exemptions based on expenditure of proceeds under § 1.148-7 that were met before the receipt of the disposition proceeds.

(5) ***Proceeds expended on a governmental purpose.*** Except for a remedial action under paragraph (d) of this section, the proceeds of the issue that are affected by the deliberate action must have been expended on a governmental purpose before the date of the deliberate action.

(b) ***Effect of a remedial action*** —

(1) ***In general.*** The effect of a remedial action is to cure use of proceeds that causes the private business use test or the private loan financing test to be met. A remedial action does not affect application of the private security or payment test.

(2) ***Effect on bonds that have been advance refunded.*** If proceeds of an issue were used to advance refund another bond, a remedial action taken with respect to the refunding bond proportionately reduces the amount of proceeds of the advance refunded bond that is taken into account under the private business use test or the private loan financing test.

(c) ***Disposition proceeds*** —

(1) ***Definition. Disposition proceeds*** are any amounts (including property, such as an agreement to provide services) derived from the sale, exchange, or other disposition (disposition) of property (other than investments) financed with the proceeds of an issue.

(2) ***Allocating disposition proceeds to an issue.*** In general, if the requirements of paragraph (a) of this section are met, after the date of the disposition, the proceeds of the issue allocable to the transferred property are treated as financing the disposition proceeds rather than the transferred property. If a disposition is made pursuant to an installment sale, the proceeds of the issue continue to be allocated to the transferred property. If an issue does not meet the requirements for remedial action in paragraph (a) of this section or the issuer does not take an appropriate remedial action, the proceeds of the issue are allocable to either the transferred property or the disposition proceeds, whichever allocation produces the greater amount of private business use and private security or payments.

(3) ***Allocating disposition proceeds to different sources of funding.*** If property has been financed by different sources of funding, for purposes of this section, the disposition proceeds from that property are first allocated to the outstanding bonds that financed that property in proportion to the principal amounts of those outstanding bonds. In no event may disposition proceeds be allocated to bonds that are no longer outstanding or to a source of funding not derived from a borrowing (such as revenues of the issuer) if the disposition proceeds are not greater than the total principal amounts of the outstanding bonds that are allocable to that property. For purposes of this paragraph (c)(3), principal amount has the same meaning as in § 1.148-9(b)(2) and outstanding bonds do not include advance refunded bonds.

(d) ***Redemption or defeasance of nonqualified bonds*** —

(1) ***In general.*** The requirements of this paragraph (d) are met if all of the nonqualified bonds of the issue are redeemed. Proceeds of tax-exempt bonds must not be used for this purpose, unless the tax-exempt bonds are qualified bonds, taking into account the purchaser's use of the facility. Except as provided in paragraph (d)(3) of this section, if the bonds are not redeemed within 90 days of the date of the deliberate action, a defeasance escrow must be established for those bonds within 90 days of the deliberate action.

(2) ***Special rule for dispositions for cash.*** If the consideration for the disposition of financed property is exclusively cash, the requirements of this paragraph (d) are met if the disposition proceeds are used to redeem a pro rata portion of the nonqualified bonds at the earliest call date after the deliberate action. If the bonds are not redeemed within 90 days of the date of the deliberate action, the disposition proceeds must be used to establish a defeasance escrow for those bonds within 90 days of the deliberate action.

(3) ***Anticipatory remedial action.*** The requirements of paragraphs (d)(1) and (2) of this section for redemption or defeasance of the nonqualified bonds within 90 days of the deliberate action are met if the issuer declares its official intent to redeem or defease all of the bonds that would become nonqualified bonds in the event of a subsequent deliberate action that would cause the private business tests or the private loan financing test to be met and redeems or defeases such bonds prior to that deliberate action. The issuer must declare its official intent on or before the date on which it redeems or defeases such bonds, and the declaration of intent must identify the financed property or loan with respect to which the anticipatory remedial action is being taken and describe the deliberate action that potentially may result in the private business tests being met (for example, sale of financed property that the buyer may then lease to a nongovernmental person). Rules similar to those in § 1.150-2(e) (regarding official intent for reimbursement bonds) apply to declarations of intent under this paragraph (d)(3), including deviations in the descriptions of the project or loan and deliberate action and the reasonableness of the official intent.

(4) ***Notice of defeasance.*** The issuer must provide written notice to the Commissioner of the establishment of the defeasance escrow within 90 days of the date the defeasance escrow is established.

(5) ***Special limitation.*** The establishment of a defeasance escrow does not satisfy the requirements of this paragraph (d) if the period between the issue date and the first call date of the bonds is more than $10^{1}/_{2}$ years.

(6) ***Defeasance escrow defined.*** A defeasance escrow is an irrevocable escrow established to redeem bonds on their earliest call date in an amount that, together with investment earnings, is sufficient to pay all the principal of, and interest and call premium on, bonds from the date the escrow is established to the earliest call date. The escrow may not be invested in higher yielding investments or in any investment under which the obligor is a user of the proceeds of the bonds.

(e) ***Alternative use of disposition proceeds*** —

(1) ***In general.*** The requirements of this paragraph (e) are met if—

(i) The deliberate action is a disposition for which the consideration is exclusively cash;

(ii) The issuer reasonably expects to expend the disposition proceeds within two years of the date of the deliberate action;

(iii) The disposition proceeds are treated as proceeds for purposes of section 141 and are used in a manner that does not cause the issue to meet either the private business tests or the private loan financing test, and the issuer does not take any action subsequent to the date of the deliberate action to cause either of these tests to be met; and

(iv) If the issuer does not use all of the disposition proceeds for an alternative use described in paragraph (e)(1)(iii) of this section, the issuer uses those remaining disposition proceeds for a remedial action that meets paragraph (d) of this section.

(2) ***Special rule for use by 501(c)(3) organizations.*** If the disposition proceeds are to be used by a 501(c)(3) organization, the nonqualified bonds must in addition be treated as reissued for purposes of sections 141, 145, 147, 149, and 150 and, under this treatment, satisfy all of the applicable requirements for qualified 501(c)(3) bonds. Thus, beginning on the date of the deliberate action, nonqualified bonds that satisfy these requirements must be treated as qualified 501(c)(3) bonds for all purposes, including sections 145(b) and 150(b).

(f) ***Alternative use of facility.*** The requirements of this paragraph (f) are met if—

(1) The facility with respect to which the deliberate action occurs is used in an alternative manner (for example, used for a qualifying purpose by a nongovernmental person or used by a 501(c)(3) organization rather than a governmental person);

(2) The nonqualified bonds are treated as reissued, as of the date of the deliberate action, for purposes of sections 55 through 59 and 141, 142, 144, 145, 146, 147, 149 and 150, and under this treatment, the nonqualified bonds satisfy all the applicable requirements for qualified bonds throughout the remaining term of the nonqualified bonds;

(3) The deliberate action does not involve a disposition to a purchaser that finances the acquisition with proceeds of another issue of tax-exempt bonds; and

(4) Any disposition proceeds other than those arising from an agreement to provide services (including disposition proceeds from an installment sale) resulting from the deliberate action are used to pay the debt service on the bonds on the next available payment date or, within 90 days of receipt, are deposited into an escrow that is restricted to the yield on the bonds to pay the debt service on the bonds on the next available payment date.

(g) ***Rules for deemed reissuance.*** For purposes of determining whether bonds that are treated as reissued under paragraphs (e) and (f) of this section are qualified bonds—

(1) The provisions of the Code and regulations thereunder in effect as of the date of the deliberate action apply; and

(2) For purposes of paragraph (f) of this section, section 147(d) (relating to the acquisition of existing property) does not apply.

(h) ***Authority of Commissioner to provide for additional remedial actions.*** The Commissioner may, by publication in the FEDERAL REGISTER or the Internal Revenue Bulletin, provide additional remedial actions, including making a remedial payment to the United States, under which a subsequent action will not be treated as a deliberate action for purposes of § 1.141-2.

(i) ***Effect of remedial action on continuing compliance.*** Solely for purposes of determining whether deliberate actions that are taken after a remedial action cause an issue to meet the private business tests or the private loan financing test—

(1) If a remedial action is taken under paragraph (d) of this section, the amount of private business use or private loans resulting from the deliberate action that is taken into account for purposes of determining whether the bonds are private activity bonds is that portion of the remaining bonds that is used for private business use or private loans (as calculated under paragraph (j) of this section);

(2) If a remedial action is taken under paragraph (e) or (f) of this section, the amount of private business use or private loans resulting from the deliberate action is not taken into account for purposes of determining whether the bonds are private activity bonds; and

(3) After a remedial action is taken, the amount of disposition proceeds is treated as equal to the proceeds of the issue that had been allocable to the transferred property immediately prior to the disposition. See paragraph (k) of this section, *Example 5.*

(j) ***Nonqualified bonds*** —

(1) ***Amount of nonqualified bonds.*** The nonqualified bonds are a portion of the outstanding bonds in an amount that, if the remaining bonds were issued on the date on which the deliberate action occurs, the remaining bonds would not meet the private business use test or private loan financing test, as applicable. For this purpose, the amount of private business use is the greatest percentage of private business use in any one-year period commencing with the one-year period in which the deliberate action occurs.

(2) ***Allocation of nonqualified bonds.*** Allocations of nonqualified bonds must be made on a pro rata basis, except that, for purposes of paragraph (d) of this section (relating to redemption or defeasance), an issuer may treat any bonds of an issue as the nonqualified bonds so long as—

(i) The remaining weighted average maturity of the issue, determined as of the date on which the nonqualified bonds are redeemed or defeased (determination date), and excluding from the determination the nonqualified bonds redeemed or defeased by the issuer in accordance with this section, is not greater than

(ii) The remaining weighted average maturity of the issue, determined as of the determination date, but without regard to the redemption or defeasance of any bonds (including the nonqualified bonds) occurring on the determination date.

(k) ***Examples.*** The following examples illustrate the application of this section:

Example 1 Disposition proceeds less than outstanding bonds used to retire bonds. On June 1, 1997, City C issues 30-year bonds with an issue price of $10 million to finance the construction of a hospital building. The bonds have a weighted average maturity that does not exceed 120 percent of the reasonably expected economic life of the building. On the issue date, C reasonably expects that it will be the only user of the building for the entire term of the bonds. Six years after the issue date, C sells the building to Corporation P for $5 million. The sale price is the fair market value of the building, as verified by an independent appraiser. C uses all of the $5 million disposition proceeds to immediately retire a pro rata portion of the bonds. The sale does not cause the bonds to be private activity bonds because C has taken a remedial action described in paragraph (d) of this section so that P is not treated as a private business user of bond proceeds.

Example 2. Lease to nongovernmental person. The facts are the same as in *Example 1,* except that instead of selling the building, C, 6 years after the issue date, leases the building to P for 7 years and uses other funds to redeem all of the $10 million outstanding bonds within 90 days of the deliberate act. The bonds are not treated as private activity bonds because C has taken the remedial action described in paragraph (d) of this section.

Example 3. Sale for less than fair market value. The facts are the same as in *Example 1,* except that the fair market value of the building at the time of the sale to P is $6 million. Because the transfer was for less than fair market value, the bonds are ineligible for the remedial actions under this section. The bonds are private activity bonds because P is treated as a user of all of the proceeds and P makes a payment ($6 million) for this use that is greater than 10 percent of the debt service on the bonds, on a present value basis.

Example 4. Fair market value determined taking into account governmental restrictions. The facts are the same as in *Example 1,* except that the building was used by C only for hospital purposes and C determines to sell the building subject to a restriction that it be used only for hospital purposes. After conducting a public bidding procedure as required by state law, the best price that C is able to obtain for the building subject to this restriction is $4.5 million from P. C uses all of the $4.5 million disposition proceeds to immediately retire a pro rata portion of the bonds. The sale does not cause the bonds to be private activity bonds because C has taken a remedial action described in paragraph (d) of this section so that P is not treated as a private business user of bond proceeds.

Example 5. Alternative use of disposition proceeds. The facts are the same as in *Example 1,* except that C reasonably expects on the date of the deliberate action to use the $5 million disposition proceeds for another governmental purpose (construction of governmentally owned roads) within two years of receipt, rather than using the $5 million to redeem outstanding bonds. C treats these disposition proceeds as gross proceeds for purposes of section 148. The bonds are not private activity bonds because C has taken a remedial action described in paragraph (e) of this section. After the date of the deliberate action, the proceeds of all of the outstanding bonds are treated as used for the construction of the roads, even though only $5 million of disposition proceeds was actually used for the roads.

Example 6. Alternative use of financed property. The facts are the same as in *Example 1,* except that C determines to lease the hospital building to Q, an organization described in section 501(c)(3), for a term of 10 years rather than to sell the building to P. In order to induce Q to provide hospital services, C agrees to lease payments that are less than fair market value. Before entering into the lease, an applicable elected representative of C approves the lease after a noticed public hearing. As of the date of the deliberate action, the issue meets all the requirements for qualified 501(c)(3) bonds, treating the bonds as reissued on that date. For example, the issue meets the two percent restriction on use of proceeds of finance issuance costs of section 147(g) because the issue pays no costs of issuance from disposition proceeds in connection with the deemed reissuance. C and Q treat the bonds as qualified 501(c)(3) bonds for all purposes commencing with the date of the deliberate action. The bonds are treated as qualified 501(c)(3) bonds commencing with the date of the deliberate action.

Example 7. Deliberate action before proceeds are expended on a governmental purpose. County J issues bonds with proceeds of $10 million that can be used only to finance a correctional facility. On the issue date of the bonds, J reasonably expects that it will be the sole user of the bonds for the useful life of the facility. The bonds have a weighted average maturity that does not exceed 120 percent of the reasonably expected economic life of the facility. After the issue date of the bonds, but before the facility is placed in service, J enters into a contract with the federal government pursuant to which the federal government will make a fair market value, lump sum payment equal to 25 percent of the cost of the facility. In exchange for this payment, J provides the federal government with priority rights to use of 25 percent of the facility. J uses the payment received from the federal government to defease the nonqualified bonds. The agreement does not cause the bonds to be private activity bonds because J has taken a remedial action described in paragraph (d) of this section. See paragraph (a)(5) of this section.

Example 8. Compliance after remedial action. In 2007, City G issues bonds with proceeds of $10 million to finance a courthouse. The bonds have a weighted average maturity that does not exceed 120 percent of the reasonably expected economic life of the courthouse. City G enters into contracts with nongovernmental persons that result in private business use of 10 percent of the courthouse per year. More than 10 percent of the debt service on the issue is secured by private security or

payments. In 2019, in a bona fide and arm's length arrangement, City G enters into a management contract with a nongovernmental person that results in private business use of an additional 40 percent of the courthouse per year during the remaining term of the bonds. City G immediately redeems the nonqualified bonds, or 44.44 percent of the outstanding bonds. This is the portion of the outstanding bonds that, if the remaining bonds were issued on the date on which the deliberate action occurs, the remaining bonds would not meet the private business use test, treating the amount of private business use as the greatest percentage of private business use in any one-year period commencing with the one-year period in which the deliberate action occurs (50 percent). This percentage is computed by dividing the percentage of the facility used for a government use (50 percent) by the minimum amount of government use required (90 percent), and subtracting the resulting percentage (55.56 percent) from 100 percent (44.44 percent). For purposes of subsequently applying section 141 to the issue, City G may continue to use all of the proceeds of the outstanding bonds in the same manner (that is, for the courthouse and the private business use) without causing the issue to meet the private business use test. The issue continues to meet the private security or payment test. The result would be the same if City G, instead of redeeming the bonds, established a defeasance escrow for those bonds, provided that the requirement of paragraph (d)(5) of this section is met. If City G takes a subsequent deliberate action that results in further private business use, it must take into account 10 percent of private business use in addition to that caused by the second deliberate act.

[T.D. 8712, 62 FR 2298, Jan. 16, 1997, as amended by T.D. 9741, 80 FR 65644, Oct. 27, 2015]

§ 1.141-13 Refunding issues.

(a) ***In general.*** Except as provided in this section, a refunding issue and a prior issue are tested separately under section 141. Thus, the determination of whether a refunding issue consists of private activity bonds generally does not depend on whether the prior issue consists of private activity bonds.

(b) ***Application of private business use test and private loan financing test*** —

(1) ***Allocation of proceeds.*** In applying the private business use test and the private loan financing test to a refunding issue, the proceeds of the refunding issue are allocated to the same expenditures and purpose investments as the proceeds of the prior issue.

(2) ***Determination of amount of private business use*** —

(i) ***In general.*** Except as provided in paragraph (b)(2)(ii) of this section, the amount of private business use of a refunding issue is determined under § 1.141-3(g), based on the measurement period for that issue (for example, without regard to any private business use that occurred prior to the issue date of the refunding issue).

(ii) ***Refundings of governmental bonds.*** In applying the private business use test to a refunding issue that refunds a prior issue of governmental bonds, the amount of private business use of the refunding issue is the amount of private business use—

(A) During the combined measurement period; or

(B) At the option of the issuer, during the period described in paragraph (b)(2)(i) of this section, but only if, without regard to the reasonable expectations test of § 1.141-2(d), the prior issue does not satisfy the private business use test, based on a measurement period that begins on the first day of the combined measurement period and ends on the issue date of the refunding issue.

(iii) *Combined measurement period* —

(A) ***In general.*** Except as provided in paragraph (b)(2)(iii)(B) of this section, the *combined measurement period* is the period that begins on the first day of the measurement period (as defined in § 1.141-3(g)) for the prior issue (or, in the case of a series of refundings of governmental bonds, the first issue of governmental bonds in the series) and ends on the last day of the measurement period for the refunding issue.

(B) ***Transition rule for refundings of bonds originally issued before May 16, 1997.*** If the prior issue (or, in the case of a series of refundings of governmental bonds, the first issue of governmental bonds in the series) was issued before May 16, 1997, then the issuer, at its option, may treat the combined measurement period as beginning on the date (the transition date) that is the earlier of December 19, 2005 or the first date on which the prior issue (or an earlier issue in the case of a series of refundings of governmental bonds) became subject to the 1997 regulations (as defined in § 1.141-15(b)). If the issuer treats the combined measurement period as beginning on the transition date in accordance with this paragraph (b)(2)(iii)(B), then paragraph (c)(2) of this section shall be applied by treating the transition date as the issue date of the earliest issue, by treating the bonds as reissued on the transition date at an issue price equal to the value of the bonds (as determined under § 1.148-4(e)) on that date, and by disregarding any private security or private payments before the transition date.

(iv) ***Governmental bond.*** For purposes of this section, the term *governmental bond* means any bond that, when issued, purported to be a governmental bond, as defined in § 1.150-1(b), or a qualified 501(c)(3) bond, as defined in section 145(a).

(v) ***Special rule for refundings of qualified 501(c)(3) bonds with governmental bonds.*** For purposes of applying this paragraph (b)(2) to a refunding issue that refunds a qualified 501(c)(3) bond, any use of the property refinanced by the refunding issue before the issue date of the refunding issue by a 501(c)(3) organization with respect to its activities that do not constitute an unrelated trade or business under section 513(a) is treated as government use.

(c) *Application of private security or payment test—*

(1) ***Separate issue treatment.*** If the amount of private business use of a refunding issue is determined based on the measurement period for that issue in accordance with paragraph (b)(2)(i) or (b)(2)(ii)(B) of this section, then the amount of private security and private payments allocable to the refunding issue is determined under § 1.141-4 by treating the refunding issue as a separate issue.

(2) ***Combined issue treatment.*** If the amount of private business use of a refunding issue is determined based on the combined measurement period for that issue in accordance with paragraph (b)(2)(ii)(A) of this section, then the amount of private security and private payments allocable to the refunding issue is determined under § 1.141-4 by treating the refunding issue and all earlier issues taken into account in determining the combined measurement period as a combined issue. For this purpose, the present value of the private security and private payments is compared to the present value of the debt service on the combined issue (other than debt service paid with proceeds of any

refunding bond). Present values are computed as of the issue date of the earliest issue taken into account in determining the combined measurement period (the earliest issue). Except as provided in paragraph (c)(3) of this section, present values are determined by using the yield on the combined issue as the discount rate. The yield on the combined issue is determined by taking into account payments on the refunding issue and all earlier issues taken into account in determining the combined measurement period (other than payments made with proceeds of any refunding bond), and based on the issue price of the earliest issue. In the case of a refunding of only a portion of the original principal amount of a prior issue, the refunded portion of the prior issue is treated as a separate issue and any private security or private payments with respect to the prior issue are allocated ratably between the combined issue and the unrefunded portion of the prior issue in a consistent manner based on relative debt service. See paragraph (b)(2)(iii)(B) of this section for special rules relating to certain refundings of governmental bonds originally issued before May 16, 1997.

(3) ***Special rule for arrangements not entered into in contemplation of the refunding issue.*** In applying the private security or payment test to a refunding issue that refunds a prior issue of governmental bonds, the issuer may use the yield on the prior issue to determine the present value of private security and private payments under arrangements that were not entered into in contemplation of the refunding issue. For this purpose, any arrangement that was entered into more than 1 year before the issue date of the refunding issue is treated as not entered into in contemplation of the refunding issue.

(d) ***Multipurpose issue allocations*** —

(1) ***In general.*** For purposes of section 141, unless the context clearly requires otherwise, § 1.148-9(h) applies to allocations of multipurpose issues (as defined in § 1.148-1(b)), including allocations involving the refunding purposes of the issue. An allocation under this paragraph (d) may be made at any time, but once made, may not be changed. An allocation is not reasonable under this paragraph (d) if it achieves more favorable results under section 141 than could be achieved with actual separate issues. Each of the separate issues under the allocation must consist of one or more tax-exempt bonds. Allocations made under this paragraph (d) and § 1.148-9(h) must be consistent for purposes of sections 141 and 148.

(2) ***Exceptions.*** This paragraph (d) does not apply for purposes of sections 141(c)(1) and 141(d)(1).

(e) ***Application of reasonable expectations test to certain refunding bonds.*** An action that would otherwise cause a refunding issue to satisfy the private business tests or the private loan financing test is not taken into account under the reasonable expectations test of § 1.141-2(d) if—

(1) The action is not a deliberate action within the meaning of § 1.141-2(d)(3); and

(2) The weighted average maturity of the refunding bonds is not greater than the weighted average reasonably expected economic life of the property financed by the prior bonds.

(f) ***Special rule for refundings of certain general obligation bonds.*** Notwithstanding any other provision of this section, a refunding issue does not consist of private activity bonds if—

(1) The prior issue meets the requirements of § 1.141-2(d)(5) (relating to certain general obligation bond programs that finance a large number of separate purposes); or

(2) The refunded portion of the prior issue is part of a series of refundings of all or a portion of an issue that meets the requirements of § 1.141-2(d)(5).

(g) ***Examples.*** The following examples illustrate the application of this section:

Example 1. Measuring private business use. In 2002, Authority A issues tax-exempt bonds that mature in 2032 to acquire an office building. The measurement period for the 2002 bonds under § 1.141-3(g) is 30 years. At the time A acquires the building, it enters into a 10-year lease with a nongovernmental person under which the nongovernmental person will use 5 percent of the building in its trade or business during each year of the lease term. In 2007, A issues bonds to refund the 2002 bonds. The 2007 bonds mature on the same date as the 2002 bonds and have a measurement period of 25 years under § 1.141-3(g). Under paragraph (b)(2)(ii)(A) of this section, the amount of private business use of the proceeds of the 2007 bonds is 1.67 percent, which equals the amount of private business use during the combined measurement period (5 percent of $^{1}/_{3}$ of the 30-year combined measurement period). In addition, the 2002 bonds do not satisfy the private business use test, based on a measurement period beginning on the first day of the measurement period for the 2002 bonds and ending on the issue date of the 2007 bonds, because only 5 percent of the proceeds of the 2002 bonds are used for a private business use during that period. Thus, under paragraph (b)(2)(ii)(B) of this section, A may treat the amount of private business use of the 2007 bonds as 1 percent (5 percent of $^{1}/_{5}$ of the 25-year measurement period for the 2007 bonds). The 2007 bonds do not satisfy the private business use test.

Example 2. Combined issue yield computation. (i) On January 1, 2000, County B issues 20-year bonds to finance the acquisition of a municipal auditorium. The 2000 bonds have a yield of 7.7500 percent, compounded annually, and an issue price and par amount of $100 million. The debt service payments on the 2000 bonds are as follows:

Date	Debt service
1/1/01	$9,996,470
1/1/02	9,996,470
1/1/03	9,996,470
1/1/04	9,996,470
1/1/05	9,996,470
1/1/06	9,996,470
1/1/07	9,996,470
1/1/08	9,996,470
1/1/09	9,996,470
1/1/10	9,996,470
1/1/11	9,996,470
1/1/12	9,996,470
1/1/13	9,996,470
1/1/14	9,996,470
1/1/15	9,996,470
1/1/16	9,996,470
1/1/17	9,996,470

Date	Debt service
1/1/18	9,996,470
1/1/19	9,996,470
1/1/20	9,996,470
	199,929,400

(ii) On January 1, 2005, B issues 15-year bonds to refund all of the outstanding 2000 bonds maturing after January 1, 2005 (in the aggregate principal amount of $86,500,000). The 2005 bonds have a yield of 6.0000 percent, compounded annually, and an issue price and par amount of $89,500,000. The debt service payments on the 2005 bonds are as follows:

Date	Debt service
1/1/06	$9,215,167
1/1/07	9,215,167
1/1/08	9,215,167
1/1/09	9,215,167
1/1/10	9,215,167
1/1/11	9,215,167
1/1/12	9,215,167
1/1/13	9,215,167
1/1/14	9,215,167
1/1/15	9,215,167
1/1/16	9,215,167
1/1/17	9,215,167
1/1/18	9,215,167
1/1/19	9,215,167
1/1/20	9,215,167
	138,227,511

(iii) In accordance with § 1.141-15(h), B chooses to apply § 1.141-13 (together with the other provisions set forth in § 1.141-15(h)), to the 2005 bonds. For purposes of determining the amount of private security and private payments with respect to the 2005 bonds, the 2005 bonds and the refunded portion of the 2000 bonds are treated as a combined issue under paragraph (c)(2) of this section. The yield on the combined issue is determined in accordance with §§ 1.148-4, 1.141-4(b)(2)(iii) and 1.141-13(c)(2). Under this methodology, the yield on

the combined issue is 7.1062 percent per year compounded annually, illustrated as follows:

Date	Previous debt service on refunded portion of prior issue	Refunding debt service	Total debt service	Present value on 1/1/00
1/1/00				($86,500,000.00)
1/1/01	6,689,793		6,689,793	6,245,945.33
1/1/02	6,689,793		6,689,793	5,831,545.62
1/1/03	6,689,793		6,689,793	5,444,640.09
1/1/04	6,689,793		6,689,793	5,083,404.58
1/1/05	6,689,793		6,689,793	4,746,135.95
1/1/06		9,215,167	9,215,167	6,104,023.84
1/1/07		9,215,167	9,215,167	5,699,040.20
1/1/08		9,215,167	9,215,167	5,320,926.00
1/1/09		9,215,167	9,215,167	4,967,898.55
1/1/10		9,215,167	9,215,167	4,638,293.40
1/1/11		9,215,167	9,215,167	4,330,556.57
1/1/12		9,215,167	9,215,167	4,043,237.15
1/1/13		9,215,167	9,215,167	3,774,980.51
1/1/14		9,215,167	9,215,167	3,524,521.90
1/1/15		9,215,167	9,215,167	3,290,680.46
1/1/16		9,215,167	9,215,167	3,072,353.70
1/1/17		9,215,167	9,215,167	2,868,512.26
1/1/18		9,215,167	9,215,167	2,678,195.09

Date	Previous debt service on refunded portion of prior issue	Refunding debt service	Total debt service	Present value on 1/1/00
1/1/19		9,215,167	9,215,167	2,500,504.89
1/1/20		9,215,167	9,215,167	2,334,603.90
	33,448,965	138,227,511	171,676,4760.00	0.00

Example 3. Determination of private payments allocable to combined issue. The facts are the same as in *Example 2.* In addition, on January 1, 2001, B enters into a contract with a nongovernmental person for the use of the auditorium. The contract results in a private payment in the amount of $500,000 on each January 1 beginning on January 1, 2001, and ending on January 1, 2020. Under paragraph (c)(2) of this section, the amount of the private payments allocable to the combined issue is determined by treating the refunded portion of the 2000 bonds ($86,500,000 principal amount) as a separate issue, and by allocating the total private payments ratably between the combined issue and the unrefunded portion of the 2000 bonds ($13,500,000 principal amount) based on relative debt service, as follows:

Date	Private payments	Debt service on unrefunded portion of prior issue	Debt service on combined issue	Percentage of private payments allocable to combined issue	Amount of private payments allocable to combined issue
1/1/01	$500,000	$3,306,677	$6,689,793	66.92	$334,608
1/1/02	500,000	3,306,677	6,689,793	66.92	334,608
1/1/03	500,000	3,306,677	6,689,793	66.92	334,608
1/1/04	500,000	3,306,677	6,689,793	66.92	334,608
1/1/05	500,000	3,306,677	6,689,793	66.92	334,608
1/1/06	500,000		9,215,167	100.00	500,000
1/1/07	500,000		9,215,167	100.00	500,000
1/1/08	500,000		9,215,167	100.00	500,000
1/1/	500,000		9,215,167	100.00	500,000

Date	Private payments	Debt service on unrefunded portion of prior issue	Debt service on combined issue	Percentage of private payments allocable to combined issue	Amount of private payments allocable to combined issue
09					
1/1/10	500,000		9,215,167	100.00	500,000
1/1/11	500,000		9,215,167	100.00	500,000
1/1/12	500,000		9,215,167	100.00	500,000
1/1/13	500,000		9,215,167	100.00	500,000
1/1/14	500,000		9,215,167	100.00	500,000
1/1/15	500,000		9,215,167	100.00	500,000
1/1/16	500,000		9,215,167	100.00	500,000
1/1/17	500,000		9,215,167	100.00	500,000
1/1/18	500,000		9,215,167	100.00	500,000
1/1/19	500,000		9,215,167	100.00	500,000
1/1/20	500,000		9,215,167	100.00	500,000
	$10,000,000	$16,533,385	$171,676,476		$9,173,039

Example 4. Refunding taxable bonds and qualified bonds. (i) In 1999, City C issues taxable bonds to finance the construction of a facility for the furnishing of water. The bonds are secured by revenues from the facility. The facility is managed pursuant to a management contract with a nongovernmental person that gives rise to private business use. In 2007, C terminates the management contract and takes over the operation of the facility. In 2009, C issues bonds to refund the 1999 bonds. On the issue date of the 2009 bonds, C reasonably expects that the facility will not be used for a private business use during the term of the 2009 bonds. In addition, during the term of the 2009 bonds, the facility is not used for a private business use. Under paragraph (b)(2)(i) of this section, the 2009 bonds do not satisfy the private business use test because the amount of private business use is based on the measurement period for those bonds and therefore does not take into account any private business use that occurred pursuant to the management contract.

(ii) The facts are the same as in paragraph (i) of this *Example 4,* except that the 1999 bonds are issued as exempt facility bonds under section 142(a)(4). The 2009 bonds do not satisfy the private business use test.

Example 5. Multipurpose issue. (i) In 2017, State D issues bonds to finance the construction of two office buildings, Building 1 and Building 2. D expends an equal amount of the proceeds on each building. D enters into arrangements that result in private business use of 8 percent of Building 1 and 12 percent of Building 2 during the measurement period under § 1.141-3(g) and private payments of 4 percent of the 2017 bonds in respect of Building 1 and 6 percent of the 2017 bonds in respect of Building 2. These arrangements result in a total of 10 percent of the proceeds of the 2017 bonds being used for a private business use and total private payments of 10 percent. In 2022, D purports to make a multipurpose issue allocation under paragraph (d) of this section of the outstanding 2017 bonds, allocating the issue into two separate issues of equal amounts with one issue allocable to Building 1 and the second allocable to Building 2. An allocation is unreasonable under paragraph (d) of this section if it achieves more favorable results under section 141 than could be achieved with actual separate issues. D's allocation is unreasonable because, if permitted, it would allow more favorable results under section 141 for the 2017 bonds (that is, private business use and private payments that exceed 10 percent for the 2017 bonds allocable to Building 2) than could be achieved with actual separate issues. In addition, if D's purported allocation was intended to result in two separate issues of tax-exempt governmental bonds (versus tax-exempt private activity bonds), the allocation would violate paragraph (d) of this section in the first instance because the allocation to the separate issue for Building 2 would fail to qualify separately as an issue of tax-exempt governmental bonds as a result of its 12 percent of private business use and private payments.
(ii) The facts are the same as in paragraph (i) of this *Example 5,* except that D enters into arrangements only for Building 1, and it expects no private business use of Building 2. In 2022, D allocates an equal amount of the outstanding 2017 bonds to Building 1 and Building 2. D selects particular bonds for each separate issue such that the allocation does not achieve a more favorable result than could have been achieved by issuing actual separate issues. D uses the same allocation for purposes of both sections 141 and 148. D's allocation is reasonable.

(iii) The facts are the same as in paragraph (ii) of this *Example 5,* except that as part of the same issue, D issues bonds for a privately used airport. The airport bonds, if issued as a separate issue, would be qualified private activity bonds. The remaining bonds, if issued separately from the airport bonds, would be governmental bonds. Treated as one issue, however, the bonds are taxable private activity bonds. Therefore, D makes its allocation of the bonds under paragraph (d) of this section and § 1.150-1(c)(3) into 3 separate issues on or before the issue date. Assuming all other applicable requirements are met, the bonds of the respective issues will be tax-exempt qualified private activity bonds or governmental bonds.

Example 6. Non-deliberate action. In 1998, City E issues bonds to finance the purchase of land and construction of a building (the prior bonds). On the issue date of the prior bonds, E reasonably expects that it will be the sole user of the financed property for the entire term of the bonds. In 2003, the federal government acquires the financed property in a condemnation action. In 2006, E issues

bonds to refund the prior bonds (the refunding bonds). The weighted average maturity of the refunding bonds is not greater than the reasonably expected economic life of the financed property. In general, under § 1.141-2(d) and this section, reasonable expectations must be separately tested on the issue date of a refunding issue. Under paragraph (e) of this section, however, the condemnation action is not taken into account in applying the reasonable expectations test to the refunding bonds because the condemnation action is not a deliberate action within the meaning of § 1.141-2(d)(3) and the weighted average maturity of the refunding bonds is not greater than the weighted average reasonably expected economic life of the property financed by the prior bonds. Thus, the condemnation action does not cause the refunding bonds to be private activity bonds.

Example 7. Non-transitioned refunding of bonds subject to 1954 Code. In 1985, County F issues bonds to finance a court house. The 1985 bonds are subject to the provisions of the Internal Revenue Code of 1954. In 2006, F issues bonds to refund all of the outstanding 1985 bonds. The weighted average maturity of the 2006 bonds is longer than the remaining weighted average maturity of the 1985 bonds. In addition, the 2006 bonds do not satisfy any transitional rule for refundings in the Tax Reform Act of 1986, 100 Stat. 2085 (1986). Section 141 and this section apply to determine whether the 2006 bonds are private activity bonds including whether, for purposes of § 1.141-13(b)(2)(ii)(B), the 1985 bonds satisfy the private business use test based on a measurement period that begins on the first day of the combined measurement period for the 2006 bonds and ends on the issue date of the 2006 bonds.

[T.D. 9234, 70 FR 75032, Dec. 19, 2006, as amended by T.D. 9741, 80 FR 65645, Oct. 27, 2015]

§ 1.141-14 Anti-abuse rules.

(a) ***Authority of Commissioner to reflect substance of transactions.*** If an issuer enters into a transaction or series of transactions with respect to one or more issues with a principal purpose of transferring to nongovernmental persons (other than as members of the general public) significant benefits of tax-exempt financing in a manner that is inconsistent with the purposes of section 141, the Commissioner may take any action to reflect the substance of the transaction or series of transactions, including—

(1) Treating separate issues as a single issue for purposes of the private activity bond tests;

(2) Reallocating proceeds to expenditures, property, use, or bonds;

(3) Reallocating payments to use or proceeds;

(4) Measuring private business use on a basis that reasonably reflects the economic benefit in a manner different than as provided in § 1.141-3(g); and

(5) Measuring private payments or security on a basis that reasonably reflects the economic substance in a manner different than as provided in § 1.141-4.

(b) ***Examples.*** The following examples illustrate the application of this section:

Example 1. Reallocating proceeds to indirect use. City C issues bonds with proceeds of $20 million for the stated purpose of financing improvements to roads that it owns. As a part of the same plan of financing, however, C also agrees to make a loan of $7 million to Corporation M from its general revenues that it otherwise would have used for the road improvements. The interest rate of the loan corresponds to the interest rate on a portion of the issue. A principal purpose of the financing arrangement is to transfer to M significant benefits of the tax-exempt financing. Although C actually allocates all of the proceeds of the bonds to the road improvements, the Commissioner may

reallocate a portion of the proceeds of the bonds to the loan to M because a principal purpose of the financing arrangement is to transfer to M significant benefits of tax-exempt financing in a manner that is inconsistent with the purposes of section 141. The bonds are private activity bonds because the issue meets the private loan financing test. The bonds also meet the private business tests. See also §§ 1.141-3(a)(2), 1.141-4(a)(1), and 1.141-5(a), under which indirect use of proceeds and payments are taken into account.

Example 2. Taking into account use of amounts derived from proceeds that would be otherwise disregarded.

County B issues bonds with proceeds of $10 million to finance the purchase of land. On the issue date, B reasonably expects that it will be the sole user of the land. Subsequently, the federal government acquires the land for $3 million in a condemnation action. B uses this amount to make a loan to Corporation M. In addition, the interest rate on the loan reflects the tax-exempt interest rate on the bonds and thus is substantially less than a current market rate. A principal purpose of the arrangement is to transfer to M significant benefits of the tax-exempt financing. Although the condemnation action is not a deliberate action, the Commissioner may treat the condemnation proceeds as proceeds of the issue because a principal purpose of the arrangement is to transfer to M significant benefits of tax-exempt financing in a manner inconsistent with the purposes of section 141. The bonds are private activity bonds.

Example 3. Measuring private business use on an alternative basis. City F issues bonds with a 30-year term to finance the acquisition of an industrial building having a remaining reasonably expected useful economic life of more than 30 years. On the issue date, F leases the building to Corporation G for 3 years. F reasonably expects that it will be the sole user of the building for the remaining term of the bonds. Because of the local market conditions, it is reasonably expected that the fair rental value of the industrial building will be significantly greater during the early years of the term of the bonds than in the later years. The annual rental payments are significantly less than fair market value, reflecting the interest rate on the bonds. The present value of these rental payments (net of operation and maintenance expenses) as of the issue date, however, is approximately 25 percent of the present value of debt service on the issue. Under § 1.141-3, the issue does not meet the private business tests, because only 10 percent of the proceeds are used in a trade or business by a nongovernmental person. A principal purpose of the issue is to transfer to G significant benefits of tax-exempt financing in a manner inconsistent with the purposes of section 141. The method of measuring private business use over the reasonably expected useful economic life of financed property is for the administrative convenience of issuers of state and local bonds. In cases where this method is used in a manner inconsistent with the purposes of section 141, the Commissioner may measure private business use on another basis that reasonably reflects economic benefit, such as in this case on an annual basis. If the Commissioner measures private business use on an annual basis, the bonds are private activity bonds because the private payment test is met and more than 10 percent of the proceeds are used in a trade or business by a nongovernmental person.

Example 4. Treating separate issues as a single issue. City D enters into a development agreement with Corporation T to induce T to locate its headquarters within D's city limits. Pursuant to the development agreement, in 1997 D will issue $20 million of its general obligation bonds (the 1997 bonds) to purchase land that it will grant to T. The development agreement also provides that, in 1998, D will issue $20 million of its tax increment bonds (the 1998 bonds), secured solely by the increase in property taxes in a special taxing district. Substantially all of the property within the special taxing district is owned by T or D. T will separately enter into an agreement to guarantee the payment of tax increment to D in an amount sufficient to retire the 1998 bonds. The proceeds of the

1998 bonds will be used to finance improvements owned and operated by D that will not give rise to private business use. Treated separately, the 1997 issue meets the private business use test, but not the private security or payment test; the 1998 issue meets the private security or payment test, but not the private business use test. A principal purpose of the financing plan, including the two issues, is to transfer significant benefits of tax-exempt financing to T for its headquarters. Thus, the 1997 issue and the 1998 issue may be treated by the Commissioner as a single issue for purposes of applying the private activity bond tests. Accordingly, the bonds of both the 1997 issue and the 1998 issue may be treated as private activity bonds.

Example 5. Reallocating proceeds. City E acquires an electric generating facility with a useful economic life of more than 40 years and enters into a 30-year take or pay contract to sell 30 percent of the available output to investor-owned utility M. E plans to use the remaining 70 percent of available output for its own governmental purposes. To finance the entire cost of the facility, E issues $30 million of its series A taxable bonds at taxable interest rates and $70 million series B bonds, which purport to be tax-exempt bonds, at tax-exempt interest rates. E allocates all of M's private business use to the proceeds of the series A bonds and all of its own government use to the proceeds of the series B bonds. The series A bonds have a weighted average maturity of 15 years, while the series B bonds have a weighted average maturity of 26 years. M's payments under the take or pay contract are expressly determined by reference to 30 percent of M's total costs (that is, the sum of the debt service required to be paid on both the series A and the series B bonds and all other operating costs). The allocation of all of M's private business use to the series A bonds does not reflect economic substance because the series of transactions transfers to M significant benefits of the tax-exempt interest rates paid on the series B bonds. A principal purpose of the financing arrangement is to transfer to M significant benefits of the tax-exempt financing. Accordingly, the Commissioner may allocate M's private business use on a pro rata basis to both the series B bonds as well as the series A bonds, in which case the series B bonds are private activity bonds.

Example 6. Allocations respected. The facts are the same as in *Example 5,* except that the debt service component of M's payments under the take or pay contract is based exclusively on the amounts necessary to pay the debt service on the taxable series A bonds. E's allocation of all of M's private business use to the series A bonds is respected because the series of transactions does not actually transfer benefits of tax-exempt interest rates to M. Accordingly, the series B bonds are not private activity bonds. The result would be the same if M's payments under the take or pay contract were based exclusively on fair market value pricing, rather than the tax-exempt interest rates on E's bonds. The result also would be the same if the series A bonds and the series B bonds had substantially equivalent weighted average maturities and E and M had entered into a customary contract providing for payments based on a ratable share of total debt service. E would not be treated by the Commissioner in any of these cases as entering into the contract with a principal purpose of transferring the benefits of tax-exempt financing to M in a manner inconsistent with the purposes of section 141.

[T.D. 8712, 62 FR 2301, Jan. 16, 1997]

§ 1.141-15 Effective/applicability dates.

(a) ***Scope.*** The effective dates of this section apply for purposes of §§ 1.141-1 through 1.141-14, 1.145-1 through 1.145-2, and 1.150-1(a)(3) and the definition of bond documents contained in § 1.150-1(b).

(b) ***Effective dates*** —

(1) ***In general.*** Except as otherwise provided in this section, §§ 1.141-0 through 1.141-6(a), 1.141-9 through 1.141-12, 1.141-14, 1.145-1 through 1.145-2(c), and the definition of bond documents contained in § 1.150-1(b) (the 1997 regulations) apply to bonds issued on or after May 16, 1997, that are subject to section 1301 of the Tax Reform Act of 1986 (100 Stat. 2602).

(2) ***Certain short-term arrangements.*** The provisions of § 1.141-3 that refer to arrangements for 200 days, 100 days, or 50 days apply to any bond sold on or after November 20, 2001 and may be applied to any bond outstanding on November 20, 2001 to which § 1.141-3 applies.

(3) ***Certain prepayments.*** Except as provided in paragraph (c) of this section, paragraphs (c)(2)(ii), (c)(2)(iii) and (c)(2)(iv) of § 1.141-5 apply to bonds sold on or after October 3, 2003. Issuers may apply paragraphs (c)(2)(ii), (c)(2)(iii) and (c)(2)(iv) of § 1.141-5, in whole but not in part, to bonds sold before October 3, 2003 that are subject to § 1.141-5.

(4) ***Certain remedial actions*** —

(i) ***General rule.*** For bonds subject to § 1.141-12, the provisions of § 1.141-12(d)(3), (i), (j), and (k), *Example 8,* apply to deliberate actions that occur on or after January 25, 2016.

(ii) ***Special rule for allocations of nonqualified bonds.*** For purposes of § 1.141-12(j)(2), in addition to the allocation methods permitted in § 1.141-12(j)(2), an issuer may treat bonds with the longest maturities (determined on a bond-by-bond basis) as the nonqualified bonds, but only for bonds sold before January 25, 2016.

(c) ***Refunding bonds.*** Except as otherwise provided in this section, the 1997 regulations (defined in paragraph (b)(1) of this section) do not apply to any bonds issued on or after May 16, 1997, to refund a bond to which those regulations do not apply unless—

(1) The refunding bonds are subject to section 1301 of the Tax Reform Act of 1986 (100 Stat. 2602); and

(2)

(i) The weighted average maturity of the refunding bonds is longer than—

(A) The weighted average maturity of the refunded bonds; or

(B) In the case of a short-term obligation that the issuer reasonably expects to refund with a long-term financing (such as a bond anticipation note), 120 percent of the weighted average reasonably expected economic life of the facilities financed; or

(ii) A principal purpose for the issuance of the refunding bonds is to make one or more new conduit loans.

(d) ***Permissive application of regulations.*** Except as provided in paragraph (e) of this section, the 1997 regulations (defined in paragraph (b)(1) of this section) may be applied in whole, but not in part, to actions taken before February 23, 1998, with respect to—

(1) Bonds that are outstanding on May 16, 1997, and subject to section 141; or

(2) Refunding bonds issued on or after May 16, 1997, that are subject to 141.

(e) ***Permissive application of certain sections*** —

(1) ***In general.*** The following sections may each be applied by issuers to any bonds:

(i) Section 1.141-3(b)(4);

(ii) Section 1.141-3(b)(6); and

(iii) Section 1.141-12.

(2) ***Transition rule for pre-effective date bonds.*** For purposes of paragraphs (e)(1) and (h) of this section, issuers may apply § 1.141-12 to bonds issued before May 16, 1997, without regard to paragraph (d)(5) thereof with respect to deliberate actions that occur on or after April 21, 2003.

(f) ***Effective dates for certain regulations relating to output facilities*** —

(1) ***General rule.*** Except as otherwise provided in this section, §§ 1.141-7 and 1.141-8 apply to bonds sold on or after November 22, 2002, that are subject to section 1301 of the Tax Reform Act of 1986 (100 Stat. 2602).

(2) ***Transition rule for requirements contracts.*** For bonds otherwise subject to §§ 1.141-7 and 1.141-8, § 1.141-7(c)(3) applies to output contracts entered into on or after September 19, 2002. An output contract is treated as entered into on or after that date if it is amended on or after that date, but only if the amendment results in a change in the parties to the contract or increases the amount of requirements covered by the contract by reason of an extension of the contract term or a change in the method for determining such requirements. For purposes of this paragraph (f)(2)—

(i) The extension of the term of a contract causes the contract to be treated as entered into on the first day of the additional term;

(ii) The exercise by a party of a legally enforceable right that was provided under a contract before September 19, 2002, on terms that were fixed and determinable before such date, is not treated as an amendment of the contract. For example, the exercise by a purchaser after September 19, 2002 of a renewal option that was provided under a contract before that date, on terms identical to the original contract, is not treated as an amendment of the contract; and

(iii) An amendment that increases the amount of requirements covered by the contract by reason of a change in the method for determining such requirements is treated as a separate contract that is entered into as of the effective date of the amendment, but only with respect to the increased output to be provided under the contract.

(g) ***Refunding bonds for output facilities.*** Except as otherwise provided in paragraph (h) or (i) of this section, §§ 1.141-7 and 1.141-8 do not apply to any bonds sold on or after November 22, 2002, to refund a bond to which §§ 1.141-7 and 1.141-8 do not apply unless—

(1) The refunding bonds are subject to section 1301 of the Tax Reform Act of 1986 (100 Stat. 2602); and

(2)

(i) The weighted average maturity of the refunding bonds is longer than—

(A) The weighted average maturity of the refunded bonds; or

(B) In the case of a short-term obligation that the issuer reasonably expects to refund with a long-term financing (such as a bond anticipation note), 120 percent of the weighted average reasonably expected economic life of the facilities financed; or

(ii) A principal purpose for the issuance of the refunding bonds is to make one or more new conduit loans.

(h) ***Permissive retroactive application.*** Except as provided in paragraphs (d), (e) or (i) of this section, §§ 1.141-1 through 1.141-6(a), 1.141-7 through 1.141-14, 1.145-1 through 1.145-2, 1.149(d)-1(g), 1.150-1(a)(3), the definition of bond documents contained in § 1.150-1(b) and § 1.150-1(c)(3)(ii) may be applied by issuers in whole, but not in part, to—

(1) Outstanding bonds that are sold before February 17, 2006, and subject to section 141; or

(2) Refunding bonds that are sold on or after February 17, 2006, and subject to section 141.

(i) ***Permissive application of certain regulations relating to output facilities.*** Issuers may apply each of the following sections to any bonds used to finance output facilities:

(1) Section 1.141-6;

(2) Section 1.141-7(f)(3); and

(3) Section 1.141-7(g).

(j) ***Effective dates for certain regulations relating to refundings.*** Except as otherwise provided in this section, §§ 1.141-13, 1.145-2(d), 1.149(d)-1(g), 1.150-1(a)(3) and 1.150-1(c)(3)(ii) apply to bonds that are sold on or after February 17, 2006, and that are subject to the 1997 regulations (defined in paragraph (b)(1) of this section).

(k) ***Effective/applicability dates for certain regulations relating to generally applicable taxes and payments in lieu of tax*** —

(1) ***In general.*** Except as otherwise provided in paragraphs (k)(2) and (k)(3) of this section, revised §§ 1.141-4(e)(2), 1.141-4(e)(3) and 1.141-4(e)(5) apply to bonds sold on or after October 24, 2008 that are otherwise subject to the 1997 Regulations (defined in paragraph (b)(1) of this section).

(2) ***Transitional rule for certain refundings.*** Paragraph (k)(1) does not apply to bonds that are issued to refund bonds if—

(i) Either—

(A) The refunded bonds (or the original bonds in a series of refundings) were sold before October 24, 2008, or

(B) The refunded bonds (or the original bonds in a series of refundings) satisfied the transitional rule for projects substantially in progress under paragraph (k)(3) of this section; and

(ii) The weighted average maturity of the refunding bonds does not exceed the remaining weighted average maturity of the refunded bonds.

(3) ***Transitional rule for certain projects substantially in progress.*** Paragraph (k)(1) of this section does not apply to bonds issued for projects for which all of the following requirements are met:

(i) A governmental person (as defined in § 1.141-1) took official action evidencing its preliminary approval of the project before October 19, 2006, and the plan of finance for the project in place at that time contemplated financing the project with tax-exempt bonds to be paid or secured by PILOTs.

(ii) Before October 19, 2006, significant expenditures were paid or incurred with respect to the project or a contract was entered into to pay or incur significant expenditures with respect to the project.

(iii) The bonds for the project (excluding refunding bonds) are issued on or before December 31, 2009.

(l) ***Applicability date for certain regulations relating to allocation and accounting*** —

(1) ***In general.*** Except as otherwise provided in this section, §§ 1.141-1(e), 1.141-3(g)(2)(v), 1.141-6, 1.141-13(d), and 1.145-2(b)(4), (b)(5), and (c)(2) apply to bonds that are sold on or after January 25, 2016, and to which the 1997 regulations (as defined in paragraph (b)(1) of this section) apply.

(2) ***Refunding bonds.*** Except as otherwise provided in this section, §§ 1.141-1(e), 1.141-3(g)(2)(v), 1.141-6, and 1.145-2(b)(4), (5), and (c)(2) do not apply to any bonds sold on or after January 25, 2016, to refund a bond to which these sections do not apply, provided that the weighted average maturity of the refunding bonds is no longer than—

(i) The remaining weighted average maturity of the refunded bonds; or

(ii) In the case of a short-term obligation that the issuer reasonably expects to refund with a long-term financing (such as a bond anticipation note), 120 percent of the weighted average reasonably expected economic life of the facilities financed.

(3) ***Permissive application.*** Except as otherwise provided in this section, issuers may apply §§ 1.141-1(e), 1.141-3(g)(2)(v), 1.141-6, and 1.145-2(b)(4), (b)(5), and (c)(2), in whole but not in part, to bonds to which the 1997 regulations apply.

(m) ***Permissive retroactive application of certain regulations.*** Issuers may apply § 1.141-13(d) to bonds to which § 1.141-13 applies.

(n) ***Effective/applicability dates for certain regulations relating to certain definitions.*** § 1.141-1(a) applies to bonds that are sold on or after October 17, 2016.

[T.D. 8757, 63 FR 3265, Jan. 22, 1998, as amended by T.D. 8941, 66 FR 4670, Jan. 18, 2001; T.D. 8967, 66 FR 58062, Nov. 20, 2001; T.D. 9016, 67 FR 59765, Sept. 23, 2002; T.D. 9085, 68 FR 45775, Aug. 4, 2003; T.D. 9234, 70 FR 75035, Dec. 19, 2005; 71 FR 1971, Jan. 12, 2006; T.D. 9429, 73 FR 63375, Oct. 24, 2008; T.D. 9741, 80 FR 65645, Oct. 27, 2015; 80 FR 74678, Nov. 30, 2015; T.D. 9777, 81 FR 46592, July 18, 2016]

§ 1.141-16 Effective dates for qualified private activity bond provisions.

(a) ***Scope.*** The effective dates of this section apply for purposes of §§ 1.142-0 through 1.142-2, 1.144-0 through 1.144-2, 1.147-0 through 1.147-2, and 1.150-4.

(b) ***Effective dates.*** Except as otherwise provided in this section, the regulations designated in paragraph (a) of this section apply to bonds issued on or after May 16, 1997 (the effective date).

(c) ***Permissive application.*** The regulations designated in paragraph (a) of this section may be applied by issuers in whole, but not in part, to bonds outstanding on the effective date. For this purpose, issuers may apply § 1.142-2 without regard to paragraph (c)(3) thereof to failures to properly use proceeds that occur on or after April 21, 2003.

(d) ***Certain remedial actions*** —

(1) ***General rule.*** The provisions of § 1.142-2(e) apply to failures to properly use proceeds that occur on or after August 13, 2004 and may be applied by issuers to failures to properly use proceeds that occur on or after May 14, 2004, provided that the bonds are subject to § 1.142-2.

(2) ***Special rule for allocations of nonqualified bonds.*** For purposes of § 1.142-2(e)(2), in addition to the allocation methods permitted in § 1.142-2(e)(2), an issuer may treat bonds with the longest maturities (determined on a bond-by-bond basis) as the nonqualified bonds, but only with respect to failures to properly use proceeds that occur on or after May 14, 2004, with respect to bonds sold before August 13, 2004.

[T.D. 8712, 62 FR 2302, Jan. 16, 1997, as amended by T.D. 9150, 69 FR 50066, Aug. 13, 2004]

§ 1.142-0 Table of contents.

This section lists the captioned paragraphs contained in §§ 1.142-1 through 1.142-3.

§ 1.142-1 Exempt facility bonds.

(a) Overview.

(b) Scope.

(c) Effective dates.

§ 1.142-2 Remedial actions.

(a) General rule.

(b) Reasonable expectations requirement.

(c) Redemption or defeasance.

(1) In general.

(2) Notice of defeasance.

(3) Special limitation.

(4) Special rule for dispositions of personal property.

(5) Definitions.

(d) When a failure to properly use proceeds occurs.

(1) Proceeds not spent.

(2) Proceeds spent.

(e) Nonqualified bonds.

(1) Amount of nonqualified bonds.

(2) Allocation of nonqualified bonds.

§ 1.142-3 Refunding issues. [Reserved]

[T.D. 8712, 62 FR 2302, Jan. 16, 1997, as amended by T.D. 9150, 69 FR 50066, Aug. 13, 2004]

§ 1.142-1 Exempt facility bonds.

(a) ***Overview.*** Interest on a private activity bond is not excludable from gross income under section 103(a) unless the bond is a qualified bond. Under section 141(e)(1)(A), an exempt facility bond issued under section 142 may be a qualified bond.

Under section 142(a), an exempt facility bond is any bond issued as a part of an issue using 95 percent or more of the proceeds for certain exempt facilities.

(b) ***Scope.*** Sections 1.142-0 through 1.142-3 apply for purposes of the rules for exempt facility bonds under section 142, except that, with respect to net proceeds that have been spent, § 1.142-2 does not apply to bonds issued under section 142(d) (relating to bonds issued to provide qualified residential rental projects) and section 142(f) (2) and (4) (relating to bonds issued to provide local furnishing of electric energy or gas).

(c) ***Effective dates.*** For effective dates of §§ 1.142-0 through 1.142-2, see § 1.141-16.

[T.D. 8712, 62 FR 2302, Jan. 16, 1997]

§ 1.142-2 Remedial actions.

(a) ***General rule.*** If less than 95 percent of the net proceeds of an exempt facility bond are actually used to provide an exempt facility, and for no other purpose, the issue will be treated as meeting the use of proceeds requirement of section 142(a) if the issue meets the condition of paragraph (b) of this section and the issuer takes the remedial action described in paragraph (c) of this section.

(b) ***Reasonable expectations requirement.*** The issuer must have reasonably expected on the issue date that 95 percent of the net proceeds of the issue would be used to provide an exempt facility and for no other purpose for the entire term of the bonds (disregarding any redemption provisions). To meet this condition the amount of the issue must have been based on reasonable estimates about the cost of the facility.

(c) ***Redemption or defeasance*** —

(1) ***In general.*** The requirements of this paragraph (c) are met if all of the nonqualified bonds of the issue are redeemed on the earliest call date after the date on which the failure to properly use the proceeds occurs under paragraph (d) of this section. Proceeds of tax-exempt bonds (other than those described in paragraph (d)(1) of this section) must not be used for this purpose. If the bonds are not redeemed within 90 days of the date on which the failure to properly use proceeds occurs, a defeasance escrow must be established for those bonds within 90 days of that date.

(2) ***Notice of defeasance.*** The issuer must provide written notice to the Commissioner of the establishment of the defeasance escrow within 90 days of the date the escrow is established.

(3) ***Special limitation.*** The establishment of a defeasance escrow does not satisfy the requirements of this paragraph (c) if the period between the issue date and the first call date is more than $10^{1}/_{2}$ years.

(4) ***Special rule for dispositions of personal property.*** For dispositions of personal property exclusively for cash, the requirements of this paragraph (c) are met if the issuer expends the disposition proceeds within 6 months of the date of the disposition to acquire replacement property for the same qualifying purpose of the issue under section 142.

(5) ***Definitions.*** For purposes of paragraph (c)(4) of this section, *disposition proceeds* means disposition proceeds as defined in § 1.141-12(c).

(d) ***When a failure to properly use proceeds occurs*** —

(1) ***Proceeds not spent.*** For net proceeds that are not spent, a failure to properly use proceeds occurs on the earlier of the date on which the issuer reasonably determines that the financed facility will not be completed or the date on which the financed facility is placed in service.

(2) ***Proceeds spent.*** For net proceeds that are spent, a failure to properly use proceeds occurs on the date on which an action is taken that causes the bonds not to be used for the qualifying purpose for which the bonds were issued.

(e) ***Nonqualified bonds*** —

(1) ***Amount of nonqualified bonds.*** For purposes of this section, the nonqualified bonds are a portion of the outstanding bonds in an amount that, if the remaining bonds were issued on the date on which the failure to properly use the proceeds occurs, at least 95 percent of the net proceeds of the remaining bonds would be used to provide an exempt facility. If no proceeds have been spent to provide an exempt facility, all of the outstanding bonds are nonqualified bonds.

(2) ***Allocation of nonqualified bonds.*** Allocations of nonqualified bonds must be made on a pro rata basis, except that an issuer may treat any bonds of an issue as the nonqualified bonds so long as—

(i) The remaining weighted average maturity of the issue, determined as of the date on which the nonqualified bonds are redeemed or defeased (determination date), and excluding from the determination the nonqualified bonds redeemed or defeased by the issuer to meet the requirements of paragraph (c) of this section, is not greater than

(ii) The remaining weighted average maturity of the issue, determined as of the determination date, but without regard to the redemption or defeasance of any bonds (including the nonqualified bonds) occurring on the determination date.

[T.D. 8712, 62 FR 2302, Jan. 16, 1997, as amended by T.D. 9150, 69 FR 50067, Aug. 13, 2004]

§ 1.142-3 Refunding Issues. [Reserved]

§ 1.142-4 Use of proceeds to provide a facility.

(a) ***In general.*** [Reserved]

(b) ***Reimbursement allocations.*** If an expenditure for a facility is paid before the issue date of the bonds to provide that facility, the facility is described in section 142(a) only if the expenditure meets the requirements of § 1.150-2 (relating to reimbursement allocations). For purposes of this paragraph (b), if the proceeds of an issue are used to pay principal of or interest on an obligation other than a State or local bond (for example, temporary construction financing of the conduit borrower), that issue is not a refunding issue, and, thus, § 1.150-2(g) does not apply.

(c) ***Limitation on use of facilities by substantial users*** —

(1) ***In general.*** If the original use of a facility begins before the issue date of the bonds to provide the facility, the facility is not described in section 142(a) if any person that was a substantial user of the facility at any time during the 5-year period before the issue date or any related person to that user receives (directly or indirectly) 5 percent or more of the proceeds of the issue for the user's interest in the facility and is a substantial user of the facility at any time during the 5-year period after the issue date, unless—

(i) An official intent for the facility is adopted under § 1.150-2 within 60 days after the date on which acquisition, construction, or reconstruction of that facility commenced; and

(ii) For an acquisition, no person that is a substantial user or related person after the acquisition date was also a substantial user more than 60 days before the date on which the official intent was adopted.

(2) ***Definitions.*** For purposes of paragraph (c)(1) of this section, *substantial user* has the meaning used in section 147(a)(1), *related person* has the meaning used in section 144(a)(3), and a user that is a governmental unit within the meaning of § 1.103-1 is disregarded.

(d) ***Effective date*** —

(1) ***In general.*** This section applies to bonds sold on or after July 8, 1997. See § 1.103-8(a)(5) for rules applicable to bonds sold before that date.

(2) ***Elective retroactive application.*** An issuer may apply this section to any bond sold before July 8, 1997.

[T.D. 8718, 62 FR 25506, May 9, 1997]

§ 1.142(a)(5)-1 Exempt facility bonds: Sewage facilities.

(a) ***In general.*** Under section 103(a), a private activity bond is a tax-exempt bond only if it is a qualified bond. A qualified bond includes an exempt facility bond, defined as any bond issued as part of an issue 95 percent or more of the net proceeds of which are used to provide a facility specified in section 142. One type of facility specified in section 142(a) is a sewage facility. This section defines the term *sewage facility* for purposes of section 142(a).

(b) ***Definitions*** —

(1) ***Sewage facility defined.*** A sewage facility is property—

(i) Except as provided in paragraphs (b)(2) and (d) of this section, used for the secondary treatment of wastewater; however, for property treating wastewater reasonably expected to have an average daily raw wasteload concentration of biochemical oxygen demand (BOD) that exceeds 350 milligrams per liter as oxygen (measured at the time the influent enters the facility) (the *BOD limit*), this paragraph (b)(1)(i) applies only to the extent the treatment is for wastewater having an average daily raw wasteload concentration of BOD that does not exceed the BOD limit;

(ii) Used for the preliminary and/or primary treatment of wastewater but only to the extent used in connection with secondary treatment (without regard to the BOD limit described in paragraph (b)(1)(i) of this section);

(iii) Used for the advanced or tertiary treatment of wastewater but only to the extent used in connection with and after secondary treatment;

(iv) Used for the collection, storage, use, processing, or final disposal of—

(A) Wastewater, which property is necessary for such preliminary, primary, secondary, advanced, or tertiary treatment; or

(B) Sewage sludge removed during such preliminary, primary, secondary, advanced, or tertiary treatment (without regard to the BOD limit described in paragraph (b)(1)(i) of this section);

(v) Used for the treatment, collection, storage, use, processing, or final disposal of septage (without regard to the BOD limit described in paragraph (b)(1)(i) of this section); and

(vi) Functionally related and subordinate to property described in this paragraph (b)(1), such as sewage disinfection property.

(2) *Special rules and exceptions* —

(i) ***Exception to BOD limit.*** A facility treating wastewater with an average daily raw wasteload concentration of BOD exceeding the BOD limit will not fail to qualify as a sewage facility described in paragraph (b)(1) of this section to the extent that the failure to satisfy the BOD limit results from the implementation of a federal, state, or local water conservation program (for example, a program designed to promote water use efficiency that results in BOD concentrations beyond the BOD limit).

(ii) ***Anti-abuse rule for BOD limit.*** A facility does not satisfy the BOD limit if there is any intentional manipulation of the BOD level to circumvent the BOD limit (for example, increasing the volume of water in the wastewater before the influent enters the facility with the intention of reducing the BOD level).

(iii) ***Authority of Commissioner.*** In appropriate cases upon application to the Commissioner, the Commissioner may determine that facilities employing technologically advanced or innovative treatment processes qualify as sewage facilities if it is demonstrated that these facilities perform functions that are consistent with the definition of sewage facilities described in paragraph (b)(1) of this section.

(3) *Other applicable definitions* —

(i) ***Advanced or tertiary treatment*** means the treatment of wastewater after secondary treatment. Advanced or tertiary treatment ranges from biological treatment extensions to physical-chemical separation techniques such as denitrification, ammonia stripping, carbon adsorption, and chemical precipitation.

(ii) ***Nonconventional pollutants*** are any pollutants that are not listed in 40 CFR 401.15, 401.16, or appendix A to part 423.

(iii) ***Preliminary treatment*** means treatment that removes large extraneous matter from incoming wastewater and renders the incoming wastewater more amenable to subsequent treatment and handling.

(iv) ***Pretreatment*** means a process that preconditions wastewater to neutralize or remove toxic, priority, or nonconventional pollutants that could adversely affect sewers or inhibit a preliminary, primary, secondary, advanced, or tertiary treatment operation.

(v) ***Primary treatment*** means treatment that removes material that floats or will settle, usually by screens or settling tanks.

(vi) ***Priority pollutants*** are those pollutants listed in appendix A to 40 CFR part 423.

(vii) ***Secondary treatment*** means the stage in sewage treatment in which a bacterial process (or an equivalent process) consumes the organic parts of wastes, usually by trickling filters or an activated sludge process.

(viii) ***Sewage sludge*** is defined in 40 CFR 122.2 and includes septage.

(ix) ***Toxic pollutants*** are those pollutants listed in 40 CFR 401.15.

(c) ***Other property not included in the definition of a sewage facility.*** Property other than property described in paragraph (b)(1) of this section is not a sewage facility. Thus, for example, property is not a sewage facility, or functionally related and subordinate property, if the property is used for pretreatment of wastewater (whether or not this treatment is necessary to perform preliminary, primary, secondary, advanced, or tertiary treatment), or the related collection, storage, use, processing, or final disposal of the wastewater. In addition, property used to treat, process, or use wastewater subsequent to the time the wastewater can be discharged into navigable waters, as defined in 33 U.S.C. 1362, is not a sewage facility.

(d) ***Allocation of costs.*** In the case of property that has both a use described in paragraph (b)(1) of this section (a sewage treatment function) and a use other than sewage treatment, only the portion of the cost of the property allocable to the sewage treatment function is taken into account as an expenditure to provide sewage facilities. The portion of the cost of property allocable to the sewage treatment function is determined by allocating the cost of that property between the property's sewage treatment function and any other uses by any method which, based on all the facts and circumstances, reasonably reflects a separation of costs for each use of the property.

(e) ***Effective date*** —

(1) ***In general.*** This section applies to issues of bonds issued after February 21, 1995.

(2) ***Refundings.*** In the case of a refunding bond issued to refund a bond to which this section does not apply, the issuer need not apply this section to that refunding bond. This paragraph (e)(2) applies only if the weighted average maturity of the refunding bonds, as described in section 147(b), is not greater than the remaining weighted average maturity of the refunded bonds.

[T.D. 8576, 59 FR 66163, Dec. 23, 1994, as amended by T.D. 9546, Aug. 19, 2011]

§ 1.142(a)(6)-1 Exempt facility bonds: solid waste disposal facilities.

(a) ***In general.*** This section defines the term solid waste disposal facility for purposes of section 142(a)(6).

(b) ***Solid waste disposal facility.*** The term *solid waste disposal facility* means a facility to the extent that the facility—

(1) Processes solid waste (as defined in paragraph (c) of this section) in a qualified solid waste disposal process (as defined in paragraph (d) of this section);

(2) Performs a preliminary function (as defined in paragraph (f) of this section); or

(3) Is functionally related and subordinate (within the meaning of § 1.103-8(a)(3)) to a facility described in paragraph (b)(1) or (b)(2) of this section.

(c) *Solid waste* —

(1) ***In general.*** Except to the extent excluded under paragraph (c)(2) of this section, for purposes of section 142(a)(6), the term *solid waste* means garbage, refuse, and other solid material derived from any agricultural, commercial, consumer, governmental, or industrial operation or activity if the material meets the requirements of both paragraph (c)(1)(i) and paragraph (c)(1)(ii) of this section. For purposes of this section, material is solid if it is solid at ambient temperature and pressure.

(i) ***Used material or residual material.*** Material meets the requirements of this paragraph (c)(1)(i) if it is either used material (as defined in paragraph (c)(1)(i)(A)) of this section or residual material (as defined in paragraph (c)(1)(i)(B) of this section).

(A) ***Used material.*** The term *used material* means any material that is a product of any agricultural, commercial, consumer, governmental, or industrial operation or activity, or a component of any such product or activity, and that has been used previously. Used material also includes animal waste produced by animals from a biological process.

(B) ***Residual material.*** The term *residual material* means material that meets the requirements of this paragraph (c)(1)(i)(B). The material must be a residual byproduct or excess raw material that results from or remains after the completion of any agricultural, commercial, consumer, governmental, or industrial production process or activity or from the provision of any service. In the case of multiple processes constituting an integrated manufacturing or industrial process, the material must result from or remain after the completion of such integrated process. As of the issue date of the bonds used to finance the solid waste disposal facility, the material must be reasonably expected to have a fair market value that is lower than the value of all of the products made in that production process or lower than the value of the service that produces such residual material.

(ii) ***Reasonably expected introduction into a qualified solid waste disposal process.*** Material meets the requirements of this paragraph (c)(1)(ii) if it is reasonably expected by the person who generates, purchases, or otherwise acquires it to be introduced within a reasonable time after such generation, purchase or acquisition into a qualified solid waste disposal process described in paragraph (d) of this section.

(2) ***Exclusions from solid waste.*** The following materials do not constitute solid waste:

(i) ***Virgin material.*** Except to the extent that virgin material constitutes an input to a final disposal process or residual material, solid waste excludes any virgin material. The term *virgin material* means material that has not been processed into an agricultural, commercial, consumer, governmental, or industrial product, or a component of any such product. Further, for this purpose, material continues to be virgin material after it has been grown, harvested, mined, or otherwise extracted from its naturally occurring location and cleaned, divided into component elements, modified, or enhanced, as long as further processing is required before it becomes an agricultural, commercial, consumer, or industrial product, or a component of any such product.

(ii) ***Solids within liquids and liquid waste.*** Solid waste excludes any solid or dissolved material in domestic sewage or other significant pollutant in water resources, such as silt, dissolved or suspended solids in industrial waste water effluents, dissolved materials in irrigation return flows or other common water pollutants, and liquid or gaseous waste.

(iii) ***Precious metals.*** Except to the extent that a precious metal constitutes an input to a final disposal process and/or an unrecoverable trace of the particular precious metal, solid waste excludes gold, silver, ruthenium, rhodium, palladium, osmium, iridium, platinum, gallium, rhenium, and any other precious metal material as may be identified by the Internal Revenue Service in future public administrative guidance.

(iv) ***Hazardous material.*** Solid waste excludes any hazardous material that must be disposed of at a facility that is subject to final permit requirements under subtitle C of title II of the Solid Waste Disposal Act as in effect on the date of the enactment of the Tax Reform Act of 1986 (which is October 22, 1986). See section 142(h)(1) of the Internal Revenue Code for the definition of qualified hazardous waste facilities.

(v) ***Radioactive material.*** Solid waste excludes any radioactive material subject to regulation under the Nuclear Regulatory Act (10 CFR 1.1 *et seq.*), as in effect on the issue date of the bonds.

(d) ***Qualified solid waste disposal process.*** The term *qualified solid waste disposal process* means the processing of solid waste in a final disposal process (as defined in paragraph (d)(1) of this section), an energy conversion process (as defined in paragraph (d)(2) of this section), or a recycling process (as defined in paragraph (d)(3) of this section). Absent an express restriction to the contrary in this section, a qualified solid waste disposal process may employ any biological, engineering, industrial, or technological method.

(1) ***Final disposal process.*** The term *final disposal process* means the placement of solid waste in a landfill (including, for this purpose, the spreading of solid waste over land in an environmentally compliant and safe manner with no intent to remove such solid waste), the incineration of solid waste without capturing any useful energy, or the containment of solid waste with a reasonable expectation as of the date of issue of the bonds that the containment will continue indefinitely and that the solid waste has no current or future beneficial use.

(2) ***Energy conversion process.*** The term *energy conversion process* means a thermal, chemical, or other process that is applied to solid waste to create and capture synthesis gas, heat, hot water, steam, or other useful energy. The energy conversion process begins at the point of the first application of such process. The energy conversion process ends at the point at which the useful energy is first created, captured, or incorporated into the form of synthesis gas, heat, hot water, or other useful energy and before any transfer or distribution of such synthesis gas, heat, hot water or other useful energy, regardless of whether such synthesis gas, heat, hot water, or other useful energy constitutes a first useful product within the meaning of paragraph (e) of this section.

(3) ***Recycling process*** —

(i) ***In general.*** The term *recycling process* means reconstituting, transforming, or otherwise processing solid waste into a useful product. The recycling process begins at the point of the first application of a process to reconstitute or transform the solid waste into a useful product, such as decontamination, melting, re-pulping, shredding, or other processing of the solid waste to accomplish this purpose. The recycling process ends at the point of completion of production of the first useful product from the solid waste.

(ii) ***Refurbishment, repair, or similar activities.*** The term *recycling process* does not include refurbishment, repair, or similar activities. The term *refurbishment* means the breakdown and reassembly of a product if such activity is done on a product-by-product basis and if the finished product contains more than 30 percent of its original materials or components.

(e) ***First useful product.*** The term *first useful product* means the first product produced from the processing of solid waste in a solid waste disposal process that is useful for consumption in agricultural, consumer, commercial, governmental, or industrial operation or activity and that could be sold for such use, whether or not actually sold. A useful product includes both a product useful to an individual consumer as an ultimate end-use consumer product and a product useful to an industrial user as a material or input for processing in some stage of a manufacturing or production process to produce a different end-use consumer product. The determination of whether a useful product has been produced may take into account operational constraints that affect the point in production when a useful product reasonably can be extracted or isolated and sold independently. For this purpose, the costs of extracting, isolating, storing, and transporting the product to a market may only be taken into account as operational constraints if the product is not to be used as part of an integrated manufacturing or industrial process in the same location as that in which the product is produced.

(f) ***Preliminary function.*** A *preliminary function* is a function to collect, separate, sort, store, treat, process, disassemble, or handle solid waste that is preliminary to and directly related to a qualified solid waste disposal process.

(g) ***Mixed-use facilities*** —

(1) ***In general.*** If a facility is used for both a qualified solid waste disposal function (including a qualified solid waste disposal process or a preliminary function) and a nonqualified function (a mixed-use facility), then the costs of the facility allocable to the qualified solid waste disposal function are determined using any reasonable method, based on all the facts and circumstances. See § 1.103-8(a)(1) for allocation rules on amounts properly allocable to an exempt facility. Facilities qualify as functionally related and subordinate to a qualified solid waste disposal function only to the extent that they are functionally related and subordinate to the portion of the mixed-use facility that is used for one or more qualified solid waste disposal functions (including a qualified solid waste disposal process or a preliminary function).

(2) ***Mixed inputs*** —

(i) ***In general.*** Except as otherwise provided in paragraph (g)(2)(ii) of this section, for each facility (or a portion of a mixed-use facility) performing a qualified solid waste disposal process or a preliminary function, the percentage of the costs of the property used for such process that are allocable to a qualified solid waste disposal process or a preliminary function cannot exceed the average annual percentage of solid waste processed in that qualified solid waste disposal process or that preliminary function while the issue is outstanding. The annual percentage of solid waste processed in that qualified solid waste disposal process or preliminary function for any year is the percentage, by weight or volume, of the total materials processed in that qualified solid waste disposal process or preliminary function that constitute solid waste for that year.

(ii) ***Special rule for mixed-input processes if at least 65 percent of the materials processed are solid waste*** —

(A) ***In general.*** Except as otherwise provided in paragraph (g)(2)(ii)(B) of this section, for each facility (or a portion of a mixed-use facility) performing a qualified solid waste disposal process or preliminary function, if the annual percentage of solid waste processed in that qualified solid waste disposal process or preliminary function for each year that the issue is outstanding (beginning with the date such facility is placed in service within the meaning of § 1.150-2(c)) equals at least 65 percent of the materials processed in that qualified solid waste disposal process or preliminary function, then all of the costs of the property used for such process are treated as allocable to a qualified solid waste disposal process. The annual percentage of solid waste processed in such qualified solid waste disposal process or preliminary function for any year is the percentage, by weight or volume, of the total materials processed in that qualified solid waste disposal process or preliminary function that constitute solid waste for that year.

(B) ***Special rule for extraordinary events.*** In the case of an extraordinary event that is beyond the control of the operator of a solid waste disposal facility (such as a natural disaster, strike, major utility disruption, or governmental intervention) and that causes a solid waste disposal facility to be unable to meet the 65 percent test under paragraph (g)(2)(ii)(A) of this section for a particular year, the percentage of solid waste processed for that year equals—

(*1*) The sum of the amount of solid waste processed in the solid waste disposal facility for the year affected by the extraordinary event and the amount of solid waste processed in the solid waste disposal facility during the following two years in excess of the amount required to meet the general 65 percent threshold for the facility during each of such two years; divided by

(*2*) The total materials processed in the solid waste disposal facility during the year affected by the extraordinary event. If the resulting measure of solid waste processed for the year affected by the extraordinary event equals at least 65 percent, then the facility is treated as meeting the requirements of the 65 percent test under paragraph (g)(2)(ii)(A) of this section for such year.

(iii) ***Facilities functionally related and subordinate to mixed-input facilities.*** Except to the extent that facilities are functionally related and subordinate to a mixed-input facility that meets the 65 percent test under paragraph (g)(2)(ii) of this section, facilities qualify as functionally related and subordinate to a mixed-input facility only to the extent that they are functionally related and subordinate to the qualified portion of the mixed-input facility that is used for one or more qualified solid waste disposal functions (including a qualified solid waste disposal process or a preliminary function).

(h) ***Examples.*** The following examples illustrate the application of this section:

Example 1. Nonqualified Unused Material—Cloth. Company A takes wool and weaves it into cloth and then sells the cloth to a manufacturer to manufacture clothing. The cloth is material that has not been used previously as a product of or otherwise used in an agricultural, commercial, consumer, governmental, or industrial operation or activity, or as a component of any such product or activity. Accordingly, the cloth is not solid waste.

Example 2. Residual Material—Waste Coal. Company B mines coal. Some of the ore mined is a low quality byproduct of coal mining commonly known as waste coal, which cannot be converted to energy under a normal energy-production process because the BTU content is too low. Waste coal has the

lowest fair market value of any product produced in Company B's coal mining process. Waste coal is solid waste because it is residual material within the meaning of paragraph (c)(1)(i)(B) of this section and Company B reasonably expects to introduce the waste coal into a solid waste disposal process.

Example 3. Virgin Material—Logs. Company C cuts down trees and sells the logs to another company, which further processes the logs into lumber. In order to facilitate shipping, Company C cuts the trees into uniform logs. The trees are not solid waste because they are virgin material within the meaning of paragraph (c)(2)(i) of this section that are not being introduced into a final disposal process within the meaning of paragraph (d)(1) of this section. The division of such trees into uniform logs does not change the status of the trees as virgin material.

Example 4. Qualified Solid Waste Disposal Process—Landfill. Company D plans to construct a landfill. The landfill will not be subject to the final permit requirements under subtitle C of title II of the Solid Waste Disposal Act (as in effect on the date of enactment of the Tax Reform Act of 1986). As of the issue date, Company D expects that the landfill will be filled entirely with material that will qualify as solid waste within the meaning of paragraph (c) of this section. Placing solid waste into a landfill is a qualified solid waste disposal process. The landfill is a qualified solid waste disposal facility.

Example 5. Qualified Solid Waste Disposal Process—Recycling Tires. Company E owns a facility that converts used tires into roadbed material. The used tires are used material within the meaning of paragraph (c)(1)(i)(A) of this section that qualifies as solid waste. Between the introduction of the old tires into the roadbed manufacturing process and the completion of the roadbed material, the facility does not create any interim useful products. The process for the manufacturing of the roadbed material from the old tires is a qualified solid waste disposal process as a recycling process and the facility that converts the tires into roadbed material is a qualified solid waste disposal facility. This conclusion would be the same if the recycling process took place at more than one plant.

Example 6. Qualified Solid Waste Disposal Process—Energy Conversion Process. Company F receives solid waste from a municipal garbage collector. Company F burns that solid waste in an incinerator to remove exhaust gas and to produce heat. Company F further processes the heat in a heat exchanger to produce steam. Company F further processes the steam to generate electricity. The energy conversion process ends with the production of steam. The facilities used to burn the solid waste and to capture the steam as useful energy are qualified solid waste disposal facilities because they process solid waste in an energy conversion process. The generating facilities used to process the steam further to generate electricity are not engaged in the energy conversion process and are not qualified solid waste disposal facilities.

Example 7. Nonqualified Refurbishment. Company G purchases used cars and restores them. This restoration process includes disassembly, cleaning, and repairing of the cars. Parts that cannot be repaired are replaced. The restored cars contain at least 30 percent of the original parts. While the cars are used material, the refurbishing process is not a qualified solid waste disposal process. Accordingly, Company G's facility is not a qualified solid waste disposal facility.

> *Example 8. Qualified Solid Waste Disposal Facility—First Useful Product Rule—Paper Recycling.* (i) Company H employs an integrated process to re-pulp discarded magazines, clean the pulp, and produce retail paper towel products. Operational constraints on Company H's process do not allow for reasonable extraction, isolation, and sale of the cleaned paper

pulp independently without degradation of the pulp. Company H further processes the paper pulp into large industrial-sized rolls of paper which are approximately 12 feet in diameter. At this point in the process, Company H could either sell such industrial-sized rolls of paper to another company for further processing to produce retail paper products or it could produce those retail products itself. In general, paper pulp is a useful product that is bought and sold on the market as a material for input into manufacturing or production processes. The discarded magazines are used material within the meaning of paragraph (c)(1)(i)(A) of this section. Company H's facility is engaged in a recycling process within the meaning of paragraph (d)(3) of this section to the extent that it repulps and cleans the discarded magazines generally and further to the extent that it produces industrial-sized rolls of paper under the particular circumstances here. Specifically, taking into account the operational constraints on Company H's facility that limit its ability reasonably to extract, isolate, and sell the paper pulp independently, the first useful products within the meaning of paragraph (e) of this section from Company H's recycling process are the industrial-sized rolls of paper. The portion of Company H's facility that processes the discarded magazines and produces industrial-sized rolls of paper is a qualified solid waste disposal facility, and the portion of Company H's facility that further processes the industrial-sized rolls of paper into retail paper towels is not a qualified solid waste facility.

(ii) The facts are the same as in paragraph (i) of this *Example 8*, except that Company H is able reasonably to extract the cleaned paper pulp from the process without degradation of the pulp and to sell the cleaned paper pulp at its dock for a price that exceeds its costs of extracting the pulp from the process. Therefore, the paper pulp is the first useful product within the meaning of paragraph (e) of this section. As a result, the portion of Company H's facility that processes the discarded magazines is a qualified solid waste disposal facility, and the portion of Company H's facility that produces industrial-sized rolls of paper is not a qualified solid waste disposal facility. If, however, the only reasonable way Company H could sell the pulp was to transport the pulp to a distant market, then the costs of storing and transporting the pulp to the market may be taken into account in determining whether the pulp is the first useful product.

Example 9. Preliminary Function—Energy Conversion Process. (i) Company I owns a paper mill. At the mill, logs from nearby timber operations are processed through a machine that removes bark. The stripped logs are used to manufacture paper. The stripped bark has the lowest fair market value of any product produced from the paper mill. The stripped bark falls onto a conveyor belt that transports the bark to a storage bin that is used to store the bark briefly until Company I feeds the bark into a boiler. The conveyor belt and storage bin are used only for these purposes. The boiler is used only to create steam by burning the bark, and the steam is used to generate electricity. The stripped bark is solid waste because it is residual material within the meaning of paragraph (c)(1)(i)(B) of this section and Company I expects to introduce the bark into an energy conversion process within a reasonable period of time.

> The creation of steam from the stripped bark is an energy conversion process that starts with the incineration of the stripped bark. The energy conversion process is a qualified solid waste disposal process. The conveyor belt performs a collection activity that is preliminary and that is directly related to the solid waste disposal function. The storage bin performs a storage function that is preliminary and that is directly related to the solid waste disposal function. Thus, the conveyor belt and storage bin are solid waste disposal facilities. The bark removal process is not a preliminary function because it is not directly related to the energy conversion process and it does not become so related merely because it results in material that is solid waste.
> (ii) The facts are the same as in paragraph (i) of this *Example 9,* except that the stripped bark represents only 55 percent by weight and volume of the materials that are transported by the conveyor belt. The remaining 45 percent of the materials transported by the conveyor belt are not solid waste and these other materials are sorted from the conveyor belt by a sorting machine immediately before the stripped bark arrives at the storage bin. Fifty-five percent of the costs of the conveyor belt and the sorting machine are allocable to solid waste disposal functions.

Example 10. Preliminary Function—Final Disposal Process. Company J owns a waste transfer station and uses it to collect, sort, and process solid waste. Company J uses its trucks to haul the solid waste to the nearest landfill. At least 65 percent by weight and volume of the material brought to the transfer station is solid waste. The waste transfer station and the trucks perform functions that are preliminary and directly related to the solid waste disposal function of the landfill. Thus, the waste transfer station and the trucks qualify as solid waste disposal facilities.

Example 11. Mixed-Input Facility. Company K owns an incinerator financed by an issue and uses the incinerator exclusively to burn coal and other solid material to create steam. Each year while the issue is outstanding, 40 percent by volume and 45 percent by weight of the solid material that Company K processes in the conversion process is coal. The remainder of the solid material is either used material or residual material within the meaning of paragraph (c)(1)(i) of this section. Sixty percent of the costs of the property used to perform the energy conversion process are allocable to a solid waste disposal function.

(i) ***Effective/Applicability Dates*** —

(1) ***In general.*** Except as otherwise provided in this paragraph (i), this section applies to bonds to which section 142 applies that are sold on or after October 18, 2011.

(2) ***Elective retroactive application.*** Issuers may apply this section, in whole, but not in part, to outstanding bonds to which section 142 applies and which were sold before October 18, 2011.

(3) ***Certain refunding bonds.*** An issuer need not apply this section to bonds that are issued in a current refunding to refund bonds to which this section does not apply if the weighted average maturity of the refunding bonds is no longer than the remaining weighted average maturity of the refunded bonds.

[T.D. 9546, 76 FR 51881, Aug. 19, 2011; 76 FR 55255, Sept. 7, 2011]

§ 1.142(f)(4)-1 Manner of making election to terminate tax-exempt bond financing.

(a) ***Overview.*** Section 142(f)(4) permits a person engaged in the local furnishing of electric energy or gas (a local furnisher) that uses facilities financed with exempt facility bonds under section 142(a)(8) and that expands its service area in a manner inconsistent with the requirements of sections 142(a)(8) and (f) to make an election to ensure that those bonds will continue to be treated as exempt facility bonds. The election must meet the requirements of paragraphs (b) and (c) of this section.

(b) ***Time for making election*** —

(1) ***In general.*** An election under section 142(f)(4)(B) must be filed with the Internal Revenue Service on or before 90 days after the date of the service area expansion that causes bonds to cease to meet the requirements of sections 142(a)(8) and (f).

(2) ***Date of service area expansion.*** For the purposes of this section, the date of the service area expansion is the first date on which the local furnisher is authorized to collect revenue for the provision of service in the expanded area.

(c) ***Manner of making election.*** An election under section 142(f)(4)(B) must be captioned "ELECTION TO TERMINATE TAX-EXEMPT BOND FINANCING", must be signed under penalties of perjury by a person who has authority to sign on behalf of the local furnisher, and must contain the following information—

(1) The name of the local furnisher;

(2) The tax identification number of the local furnisher;

(3) The complete address of the local furnisher;

(4) The date of the service area expansion;

(5) Identification of each bond issue subject to the election, including the complete name of each issue, the tax identification number of each issuer, the report number of the information return filed under section 149(e) for each issue, the issue date of each issue, the CUSIP number (if any) of the bond with the latest maturity of each issue, the issue price of each issue, the adjusted issue price of each issue as of the date of the election, the earliest date on which the bonds of each issue may be redeemed, and the principal amount of bonds of each issue to be redeemed on the earliest redemption date;

(6) A statement that the local furnisher making the election agrees to the conditions stated in section 142(f)(4)(B); and

(7) A statement that each issuer of the bonds subject to the election has received written notice of the election.

(d) ***Effect on section 150(b).*** Except as provided in paragraph (e) of this section, if a local furnisher files an election within the period specified in paragraph (b) of this section, section 150(b) does not apply to bonds identified in the election during and after that period.

(e) ***Effect of failure to meet agreements.*** If a local furnisher fails to meet any of the conditions stated in an election pursuant to paragraph (c)(6) of this section, the election is invalid.

(f) ***Corresponding provisions of the Internal Revenue Code of 1954.*** Section 103(b)(4)(E) of the Internal Revenue Code of 1954 set forth corresponding requirements for the exclusion from gross income of the interest on bonds issued for facilities for the local furnishing of electric energy or gas. For the purposes of this section any reference to sections 142(a)(8) and (f) of the Internal Revenue Code of 1986 includes a reference to the corresponding portion of section 103(b)(4)(E) of the Internal Revenue Code of 1954.

(g) ***Effective dates.*** This section applies to elections made on or after January 19, 2001.

[T.D. 8941, 66 FR 4671, Jan. 18, 2001]

§ 1.143(g)-1 Requirements related to arbitrage.

(a) ***In general.*** Under section 143, for an issue to be an issue of qualified mortgage bonds or qualified veterans' mortgage bonds (together, mortgage revenue bonds), the requirements of section 143(g) must be satisfied. An issue satisfies the requirements of section 143(g) only if such issue meets the requirements of paragraph (b) of this section and, in the case of an issue 95 percent or more of the net proceeds of which are to be used to provide residences for veterans, such issue also meets the requirements of paragraph (c) of this section. The requirements of section 143(g) and this section are applicable in addition to the requirements of section 148 and §§ 1.148-0 through 1.148-11.

(b) ***Effective rate of mortgage interest not to exceed bond yield by more than 1.125 percentage points*** —

(1) ***Maximum yield.*** An issue shall be treated as meeting the requirements of this paragraph (b) only if the excess of the effective rate of interest on the mortgages financed by the issue, over the yield on the issue, is not greater over the term of the issue than 1.125 percentage points.

(2) ***Effective rate of interest.***

(i) In determining the effective rate of interest on any mortgage for purposes of this paragraph (b), there shall be taken into account all fees, charges, and other amounts borne by the mortgagor that are attributable to the mortgage or to the bond issue. Such amounts include points, commitment fees, origination fees, servicing fees, and prepayment penalties paid by the mortgagor.

(ii) Items that shall be treated as borne by the mortgagor and shall be taken into account in calculating the effective rate of interest also include—

(A) All points, commitment fees, origination fees, or similar charges borne by the seller of the property; and

(B) The excess of any amounts received from any person other than the mortgagor by any person in connection with the acquisition of the mortgagor's interest in the property over the usual and reasonable acquisition costs of a person acquiring like property when owner-financing is not provided through the use of mortgage revenue bonds.

(iii) The following items shall not be treated as borne by the mortgagor and shall not be taken into account in calculating the effective rate of interest—

(A) Any expected rebate of arbitrage profit under paragraph (c) of this section; and

(B) Any application fee, survey fee, credit report fee, insurance charge or similar settlement or financing cost to the extent such amount does not exceed amounts charged in the area in cases when owner-financing is not provided through the use of mortgage revenue bonds.

For example, amounts paid for Federal Housing Administration, Veterans' Administration, or similar private mortgage insurance on an individual's mortgage, or amounts paid for pool mortgage insurance on a pool of mortgages, are not taken into account so long as such amounts do not exceed the amounts charged in the area with respect to a similar mortgage, or pool of mortgages, that is not financed with mortgage revenue bonds. For this purpose, amounts paid for pool mortgage insurance include amounts paid to an entity (for example, the Government National Mortgage Association, the Federal National Mortgage Association (FNMA), the Federal Home Loan Mortgage Corporation, or other mortgage insurer) to directly guarantee the pool of mortgages financed with the bonds, or to guarantee a pass-through security backed by the pool of mortgages financed with the bonds.

(C) The following example illustrates the provisions of this paragraph (b)(2)(iii):

Example. Housing Authority X issues bonds intended to be qualified mortgage bonds under section 143(a). At the time the bonds are issued, X enters into an agreement with a group of mortgage lending institutions (lenders) under which the lenders agree to originate and service mortgages that meet certain specified requirements. After originating a specified amount of mortgages, each lender issues a “pass-though security” (each, a PTS) backed by the mortgages and sells the PTS to X. Under the terms of the PTS, the lender pays X an amount equal to the regular monthly payments on the mortgages (less certain fees), whether or not received by the lender (plus any prepayments and liquidation proceeds in the event of a foreclosure or other disposition of any mortgages). FNMA guarantees the timely payment of principal and interest on each PTS. From the payments received from each mortgagor, the lender pays a fee to FNMA for its guarantee of the PTS. The amounts paid to FNMA do not exceed the amounts charged in the area with respect to a similar pool of mortgages that is not financed with mortgage revenue bonds. Under this paragraph (b)(2)(iii), the fees for the guarantee provided by FNMA are an insurance charge because the guarantee is pool mortgage insurance. Because the amounts charged for the guarantee do not exceed the amounts charged in the area with respect to a similar pool of mortgages that is not financed with mortgage revenue bonds, the amounts charged for the guarantee are not taken into account in computing the effective rate of interest on the mortgages financed with X's bonds.

(3) ***Additional rules.*** To the extent not inconsistent with the Tax Reform Act of 1986, Public Law 99-514 (the 1986 Act), or subsequent law, § 6a.103A-2(i)(2) (other than paragraphs (i)(2)(i) and (i)(2)(ii)(A) through (C)) of this chapter applies to provide additional rules relating to compliance with the requirement that the effective rate of mortgage interest not exceed the bond yield by more than 1.125 percentage points.

(c) ***Arbitrage and investment gains to be used to reduce costs of owner-financing.*** As provided in section 143(g)(3), certain earnings on nonpurpose investments must either be paid or credited to mortgagors, or paid to the United States, in certain circumstances. To the extent not inconsistent with the 1986 Act or subsequent law, § 6a.103A-2(i)(4) of this chapter applies to provide guidance relating to compliance with this requirement.

(d) ***Effective dates*** —

(1) ***In general.*** Except as otherwise provided in this section, § 1.143(g)-1 applies to bonds sold on or after May 23, 2005, that are subject to section 143.

(2) ***Permissive retroactive application in whole.*** Except as provided in paragraph (d)(4) of this section, issuers may apply § 1.143(g)-1, in whole, but not in part, to bonds sold before May 23, 2005, that are subject to section 143.

(3) ***Bonds subject to the Internal Revenue Code of 1954.*** Except as provided in paragraph (d)(4) of this section and subject to the applicable effective dates for the corresponding statutory provisions, an issuer may apply § 1.143(g)-1, in whole, but not in part, to bonds that are subject to section 103A(i) of the Internal Revenue Code of 1954.

(4) ***Special rule for pre-July 1, 1993 bonds.*** To the extent that an issuer applies this section to bonds issued before July 1, 1993, § 6a.103A-2(i)(3) of this chapter also applies to the bonds.

[T.D. 9204, 70 FR 29449, May 23, 2005]

§ 1.144-0 Table of contents.

This section lists the captioned paragraphs contained in §§ 1.144-1 and 1.144-2.

§ 1.144-1 Qualified small issue bonds, qualified student loan bonds, and qualified redevelopment bonds.

(a) Overview.

(b) Scope.

(c) Effective dates.

§ 1.144-2 Remedial actions.

[T.D. 8712, 62 FR 2303, Jan. 16, 1997]

§ 1.144-1 Qualified small issue bonds, qualified student loan bonds, and qualified redevelopment bonds.

(a) ***Overview.*** Interest on a private activity bond is not excludable from gross income under section 103(a) unless the bond is a qualified bond. Under section 141(e)(1)(D), a qualified small issue bond issued under section 144(a) may be a qualified bond. Under section 144(a), any qualified small issue bond is any bond issued as a part of an issue 95 percent or more of the proceeds of which are to be used to provide certain manufacturing facilities or certain depreciable farm property and which meets other requirements. Under section 141(e)(1)(F) a qualified redevelopment bond issued under section 144(c) is a qualified bond. Under section 144(c), a qualified redevelopment bond is any bond issued as a part of an issue 95 percent or more of the net proceeds of which are to be used for one or more redevelopment purposes and which meets certain other requirements.

(b) ***Scope.*** Sections 1.144-0 through 1.144-2 apply for purposes of the rules for small issue bonds under section 144(a) and qualified redevelopment bonds under section 144(c), except that § 1.144-2 does not apply to the requirements for qualified small issue bonds under section 144(a)(4) (relating to the limitation on capital expenditures) or under section 144(a)(10) (relating to the aggregate limit of tax-exempt bonds per taxpayer).

(c) ***Effective dates.*** For effective dates of §§ 1.144-0 through 1.144-2, see § 1.141-16.

[T.D. 8712, 62 FR 2303, Jan. 16, 1997]

§ 1.144-2 Remedial actions.

The remedial action rules of § 1.142-2 apply to qualified small issue bonds issued under section 144(a) and to qualified redevelopment bonds issued under section 144(c), for this purpose treating those bonds as exempt facility bonds and the qualifying purposes for those bonds as exempt facilities.

[T.D. 8712, 62 FR 2303, Jan. 16, 1997]

§ 1.145-0 Table of contents.

This section lists the captioned paragraphs contained in §§ 1.145-1 and 1.145-2.

§ 1.145-1 Qualified 501(c)(3) bonds.

(a) Overview.

(b) Scope.

(c) Effective dates.

§ 1.145-2 Application of private activity bond regulations.

(a) In general.

(b) Modification of private business tests.

(c) Exceptions.

(1) Certain provisions relating to governmental programs.

(2) Costs of issuance.

(d) Issuance costs financed by prior issue.

[T.D. 8712, 62 FR 2303, Jan. 16, 1997, as amended by T.D. 9234, 70 FR 75035, Dec. 19, 2005]

§ 1.145-1 Qualified 501(c)(3) bonds.

(a) ***Overview.*** Interest on a private activity bond is not excludable from gross income under section 103(a) unless the bond is a qualified bond. Under section 141(e)(1)(G), a qualified 501(c)(3) bond issued under section 145 is a qualified bond. Under section 145, a qualified 501(c)(3) bond is any bond issued as a part of an issue that satisfies the requirements of sections 145(a) through (d).

(b) ***Scope.*** Sections 1.145-0 through 1.145-2 apply for purposes of section 145(a).

(c) ***Effective dates.*** For effective dates of §§ 1.145-0 through 1.145-2, see § 1.141-15.

[T.D. 8712, 62 FR 2303, Jan. 16, 1997]

§ 1.145-2 Application of private activity bond regulations.

(a) ***In general.*** Except as provided in this section, §§ 1.141-0 through 1.141-15 apply to section 145(a). For example, under this section, § 1.141-1, and § 1.141-2, an issue ceases to be an issue of qualified 501(c)(3) bonds if the issuer or a conduit borrower 501(c)(3) organization takes a deliberate action, subsequent to the issue date, that causes the issue to fail to comply with the requirements of sections 141(e) and 145 (such as an action that results in revocation of exempt status of the 501(c)(3) organization).

(b) ***Modification of private business tests.*** In applying §§ 1.141-0 through 1.141-15 to section 145(a)—

(1) References to governmental persons include 501(c)(3) organizations with respect to their activities that do not constitute unrelated trades or businesses under section 513(a);

(2) References to "10 percent" and "proceeds" in the context of the private business use test and the private security or payment test mean "5 percent" and "net proceeds"; and

(3) References to the private business use test in §§ 1.141-2 and 1.141-12 include the ownership test of section 145(a)(1).

(4) References to *governmental bonds* in § 1.141-6 mean qualified 501(c)(3) bonds.

(5) References to *ownership by governmental persons* in § 1.141-6 mean ownership by governmental persons or 501(c)(3) organizations.

(c) ***Exceptions*** —

(1) ***Certain provisions relating to governmental programs.*** The following provisions do not apply to section 145: § 1.141-2(d)(4) (relating to the special rule for dispositions of personal property in the ordinary course of an established governmental program) and § 1.141-2(d)(5) (relating to the special rule for general obligation bond programs that finance a large number of separate purposes).

(2) ***Costs of issuance.*** Sections 1.141-3(g)(6) and 1.141-6(d) do not apply to the extent costs of issuance are allocated among the other purposes for which the proceeds are used or to portions of a project. For purposes of section 145(a)(2), costs of issuance are treated as private business use.

(d) ***Issuance costs financed by prior issue.*** Solely for purposes of applying the private business use test to a refunding issue under § 1.141-13, the use of proceeds of the prior issue (or any earlier issue in a series of refundings) to pay issuance costs of the prior issue (or the earlier issue) is treated as a government use.

[T.D. 8712, 62 FR 2303, Jan. 16, 1997, as amended by T.D. 9234, 70 FR 75035, Dec. 19, 2005; T.D. 9741, 80 FR 65646, Oct. 27, 2015]

§ 1.147-0 Table of contents.

This section lists the captioned paragraphs contained in §§ 1.147-1 and 1.147-2.

§ 1.147-1 Other requirements applicable to certain private activity bonds.

(a) Overview.

(b) Scope.

(c) Effective dates.

§ 1.147-2 Remedial actions.

[T.D. 8712, 62 FR 2304, Jan. 16, 1997]

§ 1.147-1 Other requirements applicable to certain private activity bonds.

(a) ***Overview.*** Interest on a private activity bond is not excludable from gross income under section 103(a) unless the bond is a qualified bond. Under section 147, certain requirements must be met for a private activity bond to qualify as a qualified bond.

(b) ***Scope.*** Sections 1.147-0 through 1.147-2 apply for purposes of the rules in section 147 for qualified private activity bonds that permit use of proceeds to acquire land for environmental purposes (section 147(c)(3)), permit use of proceeds for certain rehabilitations (section 147(d) (2) and (3)), prohibit use of proceeds to finance skyboxes, airplanes, gambling establishments and similar facilities (section 147(e)), and require public approval (section 147(f)), but not for the rules limiting use of proceeds to acquire land or existing property under sections 147(c) (1) and (2), and (d)(1).

(c) ***Effective dates.*** For effective dates of §§ 1.147-0 through 1.147-2, see § 1.141-16.

[T.D. 8712, 62 FR 2304, Jan. 16, 1997]

§ 1.147-2 Remedial actions.

The remedial action rules of § 1.142-2 apply to the rules in section 147 for qualified private activity bonds that permit use of proceeds to acquire land for environmental purposes (section 147(c)(3)), permit use of proceeds for certain rehabilitations (section 147(d) (2) and (3)), prohibit use of proceeds to finance skyboxes, airplanes, gambling establishments and similar facilities (section 147(e)), and require public approval (section 147(f)), for this purpose treating those private activity bonds subject to the rules under section 147 as exempt facility bonds and the qualifying purposes for those bonds as exempt facilities.

[T.D. 8712, 62 FR 2304, Jan. 16, 1997]

§ 1.147(b)-1 Bond maturity limitation-treatment of working capital.

Section 147(b) does not apply to proceeds of a private activity bond issue used to finance working capital expenditures.

[T.D. 8476, 58 FR 33515, June 18, 1993]

§ 1.147(f)-1 Public approval of private activity bonds.

(a) ***In general.*** Interest on a private activity bond is excludable from gross income under section 103(a) only if the bond meets the requirements for a qualified bond as defined in section 141(e) and other applicable requirements provided in section 103. In order to be a qualified bond as defined in section 141(e), among other requirements, a private activity bond must meet the requirements of section 147(f). A private

activity bond meets the requirements of section 147(f) only if the bond is publicly approved pursuant to paragraph (b) of this section or the bond qualifies for the exception for refunding bonds in section 147(f)(2)(D).

(b) ***Public approval requirement*** —

(1) ***In general.*** Except as otherwise provided in this section, a bond meets the requirements of section 147(f) if, before the issue date, the issue of which the bond is a part receives issuer approval and host approval (each a *public approval*) as defined in paragraphs (b)(2) and (3) of this section in accordance with the method and process set forth in paragraphs (c) through (f) of this section.

(2) ***Issuer approval.*** Except as otherwise provided in this section, *issuer approval* means an approval that meets the requirements of this paragraph (b)(2). Either the governmental unit that issues the issue or the governmental unit on behalf of which the issue is issued must approve the issue. For this purpose, § 1.103-1 applies to the determination of whether an issuer issues bonds on behalf of another governmental unit. If an issuer issues bonds on behalf of more than one governmental unit (for example, in the case of an authority that acts for two counties), any one of those governmental units may provide the issuer approval.

(3) ***Host approval.*** Except as otherwise provided in this section, *host approval* means an approval that meets the requirements of this paragraph (b)(3). Each governmental unit the geographic jurisdiction of which contains the site of a project to be financed by the issue must approve the issue. If, however, the entire site of a project to be financed by the issue is within the geographic jurisdiction of more than one governmental unit within a State (counting the State as a governmental unit within such State), then any one of those governmental units may provide host approval for the issue for that project. For purposes of the host approval, if a project to be financed by the issue is located within the geographic jurisdiction of two or more governmental units but not entirely within any one of those governmental units, each portion of the project that is located entirely within the geographic jurisdiction of the respective governmental units may be treated as a separate project. The issuer approval provided pursuant to paragraph (b)(2) of this section may be treated as a host approval if the governmental unit providing the issuer approval is also a governmental unit eligible to provide the host approval pursuant to this section.

(4) ***Special rule for host approval of airports or high-speed intercity rail facilities.*** Pursuant to a special rule in section 147(f)(3), if the proceeds of an issue are to be used to finance a project that consists of either facilities located at an airport (within the meaning of section 142(a)(1)) or high-speed intercity rail facilities (within the meaning of section 142(a)(11)) and the issuer of that issue is the owner or operator of the airport or high-speed intercity rail facilities, the issuer is the only governmental unit that is required to provide the host approval for that project.

(5) ***Special rule for issuer approval of scholarship funding bond issues and volunteer fire department bond issues.*** In the case of a qualified scholarship funding bond as defined in section 150(d)(2), the governmental unit that made a request described in section 150(d)(2)(B) with respect to the issuer of the bond is the governmental unit on behalf of which the bond was issued for purposes of the issuer approval. If more than one governmental unit within a State made a request described in section 150(d)(2)(B), the State or any such requesting governmental unit may be treated as the governmental unit on behalf of which the bond was issued for purposes of the issuer approval. In the case of a bond of a volunteer fire department treated as a bond of a political subdivision of a State under section 150(e), the political subdivision described in section 150(e)(2)(B) with respect to that volunteer fire department is the governmental unit on behalf of which the bond is issued for purposes of the issuer approval.

(6) ***Special rules for host approval of mortgage revenue bonds, student loan bonds, and certain qualified 501(c)(3) bonds.*** In the case of a mortgage revenue bond (as defined in paragraph (g)(5) of this section), a qualified student loan bond as defined in section 144(b), and the portion of an issue of qualified 501(c)(3) bonds as defined in section 145 that finances working capital expenditures, the issue or portion of the issue must receive an issuer approval but no host approval is necessary. See also paragraph (f)(5) of this section, providing certain optional alternative special rules for certain qualified 501(c)(3) bonds for pooled loan financings described in section 147(b)(4)(B).

(c) ***Method of public approval.*** The method of public approval of an issue must satisfy either paragraph (c)(1) or (2) of this section. An approval may satisfy the requirements of this paragraph (c) without regard to the authority under State or local law for the acts constituting that approval.

(1) ***Applicable elected representative.*** An applicable elected representative of the approving governmental unit approves the issue following a public hearing for which there was reasonable public notice.

(2) ***Voter referendum.*** A voter referendum of the approving governmental unit approves the issue.

(d) ***Public hearing and reasonable public notice*** —

(1) ***Public hearing. Public hearing*** means a forum providing a reasonable opportunity for interested individuals to express their views, orally or in writing, on the proposed issue of bonds and the location and nature of the proposed project to be financed.

(2) ***Location of the public hearing.*** The public hearing must be held in a location that, based on the facts and circumstances, is convenient for residents of the approving governmental unit. The location of the public hearing is presumed convenient for residents of the unit if the public hearing is located in the approving governmental unit's capital or seat of government. If more than one governmental unit is required to hold a public hearing, the hearings may be combined as long as the combined hearing affords the residents of all of the participating governmental units a reasonable opportunity to be heard. The location of any combined hearing is presumed convenient for residents of each participating governmental unit if it is no farther than 100 miles from the seat of government of each participating governmental unit beyond whose geographic jurisdiction the hearing is conducted.

(3) ***Procedures for conducting the public hearing.*** In general, a governmental unit may select its own procedure for a public hearing, provided that interested individuals have a reasonable opportunity to express their views. Thus, a governmental unit may impose reasonable requirements on persons who wish to participate in the hearing, such as a requirement that persons desiring to speak at the hearing make a written request to speak at least 24 hours before the hearing or that they limit their oral remarks to a prescribed time. For this purpose, it is unnecessary, for example, that the applicable elected representative of the approving governmental unit be present at the hearing, that a report on the hearing be submitted to that applicable elected representative, or that State administrative procedural requirements for public hearings be observed. Except to the extent State procedural requirements for public hearings are in conflict with a specific requirement of this section, a public hearing performed in compliance with State procedural requirements satisfies the requirements for a public hearing in this paragraph (d). A public hearing may be conducted by an individual appointed or employed to perform such function by the governmental unit or its agencies, or by the issuer. Thus, for example, for bonds to be issued by an authority that acts on behalf of a county, the hearing may be conducted by the authority, the county, or an appointee of either.

(4) ***Reasonable public notice. Reasonable public notice*** means notice that is reasonably designed to inform residents of an approving governmental unit, including the issuing governmental unit and the governmental unit in whose geographic jurisdiction a project is to be located, of the proposed issue. The notice must state the time and place for the public hearing and contain the information required by paragraph (f)(2) of this section. Notice is presumed to be reasonably designed to inform residents of an approving governmental unit if it satisfies the requirements of this paragraph (d)(4) and is given no fewer than seven (7) calendar days before the public hearing in one or more of the ways set forth in paragraphs (d)(4)(i) through (iv) of this section.

(i) ***Newspaper publication.*** Public notice may be given by publication in one or more newspapers of general circulation available to the residents of the governmental unit.

(ii) ***Radio or television broadcast.*** Public notice may be given by radio or television broadcast to the residents of the governmental unit.

(iii) ***Governmental unit website posting.*** Public notice may be given by electronic posting on the approving governmental unit's primary public website in an area of that website used to inform its residents about events affecting the residents (for example, notice of public meetings of the governmental unit). In the case of an issuer approval of an issue issued by an on-behalf-of issuer that acts on behalf of a governmental unit, such notice may be posted on the public website of the on-behalf-of issuer as an alternative to the public website of the approving governmental unit.

(iv) ***Alternative State law public notice procedures.*** Public notice may be given in a way that is permitted under a general State law for public notices for public hearings for the approving governmental unit, provided that the public notice is reasonably accessible.

(e) ***Applicable elected representative*** —

(1) ***In general*** —

(i) ***Definition of applicable elected representative.*** The *applicable elected representative* of a governmental unit means—

(A) The governmental unit's elected legislative body;

(B) The governmental unit's chief elected executive officer;

(C) In the case of a State, the chief elected legal officer of the State's executive branch of government; or

(D) Any official elected by the voters of the governmental unit and designated for purposes of this section by the governmental unit's chief elected executive officer or by State or local law to approve issues for the governmental unit.

(ii) ***Elected officials.*** For purposes of paragraphs (e)(1)(i)(B), (C), and (D) of this section, an official is considered elected only if that official is popularly elected at-large by the voters of the governmental unit. If an official popularly elected at-large by the voters of a governmental unit is appointed or selected pursuant to State or local law to be the chief executive officer of the unit, that official is deemed to be an elected chief executive officer for purposes of this section but for no longer than the official's tenure as an official popularly elected at-large.

(iii) ***Legislative bodies.*** In the case of a bicameral legislature that is popularly elected, both chambers together constitute an applicable elected representative. Absent designation under paragraph (e)(1)(i)(D) of this section, however, neither such chamber independently constitutes an applicable elected representative. If multiple elected legislative bodies of a governmental unit have independent legislative authority, the body with the more specific authority relating to the issue is the only legislative body that is treated as an elected legislative body under paragraph (e)(1)(i)(A) of this section.

(2) ***Governmental unit with no applicable elected representative*** —

(i) ***In general.*** The applicable elected representatives of a governmental unit with no applicable elected representative (but for this paragraph (e)(2) and section 147(f)(2)(E)(ii)) are the applicable elected representatives of the next higher governmental unit (with an applicable elected representative) from which the governmental unit derives its authority. Except as otherwise provided in this section, any governmental unit from which the governmental unit with no applicable elected representative derives its authority may be treated as the next higher governmental unit without regard to the relative status of such higher governmental unit under State law. A governmental unit derives its authority from another governmental unit that—

(A) Enacts a specific law (for example, a provision in a State constitution, charter, or statute) by or under which the governmental unit is created;

(B) Otherwise empowers or approves the creation of the governmental unit; or

(C) Appoints members to the governing body of the governmental unit.

(ii) ***Host approval.*** For purposes of a host approval, a governmental unit may be treated as the next higher governmental unit only if the project is located within its geographic jurisdiction and eligible residents of the unit are entitled to vote for its applicable elected representatives.

(3) ***On behalf of issuers.*** In the case of an issuer that issues bonds on behalf of a governmental unit, the applicable elected representative is any applicable elected representative of the governmental unit on behalf of which the bonds are issued.

(f) ***Public approval process*** —

(1) ***In general.*** The public approval process for an issue, including scope, content, and timing of the public approval, must meet the requirements of this paragraph (f). A governmental unit must timely approve either each project to be financed with proceeds of the issue or a plan of financing for each project to be financed with proceeds of the issue.

(2) ***General rule on information required for a reasonable public notice and public approval.*** Except as otherwise provided in this section, a project to be financed with proceeds of an issue is within the scope of a public approval under section 147(f) if the reasonable public notice of the public hearing, if applicable, and the public approval (together the notice and approval) include the information set forth in paragraphs (f)(2)(i) through (iv) of this section.

(i) ***The project.*** The notice and approval must include a general functional description of the type and use of the project to be financed with the issue. For this purpose, a project description is sufficient if it identifies the project by reference to a particular category of exempt facility bond to be issued (for example, an exempt facility bond for an airport pursuant to section 142(a)(1)) or by reference to another general category of private activity bond together with information

on the type and use of the project to be financed with the issue (for example, a qualified small issue bond as defined in section 144(a) for a manufacturing facility or a qualified 501(c)(3) bond as defined in section 145 for a hospital facility and working capital expenditures).

(ii) ***The maximum stated principal amount of the issue.*** The notice and approval must include the maximum stated principal amount of the issue of private activity bonds to be issued to finance the project or projects. If an issue finances multiple projects (for example, facilities at different locations on non-proximate sites that are not treated as part of the same project), the notice and approval must specify separately the maximum stated principal amount of bonds to be issued to finance each separate project to be financed as part of the issue. The maximum stated principal amount of bonds to be issued to finance a project may be determined on any reasonable basis and may take into account contingencies, without regard to whether the occurrence of any such contingency is reasonably expected at the time of the notice.

(iii) ***The name of the initial legal owner or principal user of the project.*** The notice and approval must include the name of either the expected initial legal owner or principal user (within the meaning of section 144(a)) of the project or, alternatively, the name of a significant true beneficial party of interest for such legal owner or user (for example, the name of a section 501(c)(3) organization that is the sole member of a limited liability company that is the legal owner or the name of a general partner of a partnership that owns the project).

(iv) ***The location of the project.*** The notice and approval must include a general description of the prospective location of the project by street address, reference to boundary streets or other geographic boundaries, or other description of the specific geographic location that is reasonably designed to inform readers of the location. For a project involving multiple capital projects or facilities located on the same site, or on adjacent or reasonably proximate sites with similar uses, a consolidated description of the location of those capital projects or facilities provides a sufficient description of the location of the project. For example, a project for a section 501(c)(3) educational entity involving multiple buildings on the entity's main urban college campus may describe the location of the project by reference to the outside street boundaries of that campus with a reference to any noncontiguous features of that campus.

(3) ***Special rule for mortgage revenue bonds.*** Mortgage loans financed by mortgage revenue bonds are within the scope of a public approval if the notice and approval state that the bonds are to be issued to finance residential mortgages, provide the maximum stated principal amount of mortgage revenue bonds expected to be issued, and provide a general description of the geographic jurisdiction in which the residences to be financed with the proceeds of the mortgage revenue bonds are expected to be located (for example, residences located throughout a State for an issuer with a statewide jurisdiction or residences within a particular local geographic jurisdiction, such as within a city or county, for a local issuer). For this purpose, in the case of mortgage revenue bonds, no information is required on specific names of mortgage loan borrowers or specific locations of individual residences to be financed.

(4) ***Special rule for qualified student loan bonds.*** Qualified student loans financed by qualified student loan bonds as defined in section 144(b) are within the scope of a public approval if the notice and approval state that the bonds will be issued to finance student loans and state the maximum stated principal amount of qualified student loan bonds expected to be issued for qualified student loans. For this purpose, in the case of qualified student loan bonds, no information is required with respect to names of specific student loan borrowers.

(5) ***Special rule for certain qualified 501(c)(3) bonds.*** Qualified 501(c)(3) bonds issued pursuant to section 145 for pooled loan financings that are described in section 147(b)(4)(B) (without regard to any election under section 147(b)(4)(A)) are within the scope of a public approval if the public approval either meets the general requirements of paragraph (b) of this section or, alternatively, at the issuer's option, meets the special requirements of paragraphs (f)(5)(i) and (ii) of this section.

(i) ***Pre-issuance issuer approval.*** Within the time period required by paragraph (f)(7) of this section, an issuer approval is obtained after reasonable public notice of a public hearing is provided and a public hearing is held. For this purpose, a project is treated as described in the notice and approval if the notice and approval provide that the bonds will be qualified 501(c)(3) bonds to be used to finance loans described in section 147(b)(4)(B), state the maximum stated principal amount of bonds expected to be issued to finance loans to section 501(c)(3) organizations or governmental units as described in section 147(b)(4)(B), provide a general description of the type of project to be financed with such loans (for example, loans for hospital facilities or college facilities), and state that an additional public approval that includes specific project information will be obtained before any such loans are originated.

(ii) ***Post-issuance public approval for specific loans.*** Before a loan described in section 147(b)(4)(B) is originated, a supplemental public approval, including issuer approval and host approval, for the bonds to be used to finance that loan is obtained that meets all the requirements of section 147(f) and the requirements for a public approval in paragraph (b) of this section. This post-issuance supplemental public approval requirement applies by treating the bonds to be used to finance such loan as if they were reissued for purposes of section 147(f) (without regard to paragraph (f)(5) of this section). For this purpose, proceeds to be used to finance such loan do not include the portion of the issue used to finance a common reserve fund or common costs of issuance.

(6) ***Deviations in public approval information —***

(i) ***In general.*** Except as otherwise provided in this section, a substantial deviation between the stated use or amount of proceeds of an issue included in the information required to be provided in the notice and approval (*public approval information*) and the actual use or amount of proceeds of the issue causes that issue to fail to meet the public approval requirement. Conversely, insubstantial deviations between the stated use or amount of proceeds of an issue included in the public approval information and the actual use or amount of proceeds of the issue do not cause such a failure. In general, the determination of whether a deviation is substantial is based on all the facts and circumstances. In all events, however, a change in the fundamental nature or type of a project is a substantial deviation.

(ii) ***Certain insubstantial deviations in public approval information.*** The following deviations from the public approval information in the notice and approval are treated as insubstantial deviations:

(A) ***Size of bond issue and use of proceeds.*** A deviation between the maximum stated principal amount of a proposed issuance of bonds to finance a project that is specified in public approval information and the actual stated principal amount of bonds issued and used to finance that project is an insubstantial deviation if that actual stated principal amount is no more than ten percent (10%) greater than that maximum stated principal amount or is any amount less than that maximum stated principal amount. In addition, the use of proceeds to pay working capital expenditures directly associated with any project specified in the public approval information is an insubstantial deviation.

(B) ***Initial legal owner or principal user.*** A deviation between the initial legal owner or principal user of the project named in the notice and approval and the actual initial legal owner or principal user of the project is an insubstantial deviation if such parties are related parties on the issue date of the issue.

(iii) ***Supplemental public approval to cure certain substantial deviations in public approval information.*** A substantial deviation between the stated use or amount of proceeds of an issue included in the public approval information and the actual use or amount of the proceeds of the issue does not cause that issue to fail to meet the public approval requirement if all of the following requirements are met:

(A) ***Original public approval and reasonable expectations.*** The issue met the requirements for a public approval in paragraph (b) of this section. In addition, on the issue date of the issue, the issuer reasonably expected there would be no substantial deviations between the stated use or amount of proceeds of an issue included in the public approval information and the actual use or amount of the proceeds of the issue.

(B) ***Unexpected events or unforeseen changes in circumstances.*** As a result of unexpected events or unforeseen changes in circumstances that occur after the issue date of the issue, the issuer determines to use proceeds of the issue in a manner or amount not provided in a public approval.

(C) ***Supplemental public approval.*** Before using proceeds of the bonds in a manner or amount not provided in a public approval, the issuer obtains a supplemental public approval for those bonds that meets the public approval requirement in paragraph (b) of this section. This supplemental public approval requirement applies by treating those bonds as if they were reissued for purposes of section 147(f).

(7) ***Certain timing requirements.*** Public approval of an issue is timely only if the issuer obtains the public approval within one year before the issue date of the issue. Public approval of a plan of financing is timely only if the issuer obtains public approval for the plan of financing within one year before the issue date of the first issue issued under the plan of financing and the issuer issues all issues under the plan of financing within three years after the issue date of such first issue.

(g) ***Definitions.*** The definitions in this paragraph (g) apply for purposes of this section. In addition, the general definitions in § 1.150-1 apply for purposes of this section.

(1) ***Geographic jurisdiction*** means the area encompassed by the boundaries prescribed by State or local law for a governmental unit or, if there are no such boundaries, the area in which a unit may exercise such sovereign powers that make that unit a governmental unit for purposes of § 1.103-1 and this section.

(2) ***Governmental unit*** has the meaning of "State or local governmental unit" as defined in § 1.103-1. Thus, a governmental unit is a State, territory, a possession of the United States, the District of Columbia, or any political subdivision thereof.

(3) ***Host approval*** is defined in paragraph (b)(3) of this section.

(4) ***Issuer approval*** is defined in paragraph (b)(2) of this section.

(5) ***Mortgage revenue bonds*** mean qualified mortgage bonds as defined in section 143(a), qualified veterans' mortgage bonds as defined in section 143(b), or refunding bonds issued to finance mortgages of owner-occupied residences pursuant to applicable law in effect prior to enactment of section 143(a) or section 143(b).

(6) ***Proceeds*** means "proceeds" as defined in § 1.141-1(b), except that it does not include disposition proceeds.

(7) ***Project*** generally means one or more capital projects or facilities, including land, buildings, equipment, and other property, to be financed with an issue, that are located on the same site, or adjacent or proximate sites used for similar purposes, and that are subject to the public approval requirement of section 147(f). Capital projects or facilities that are not located on the same site or adjacent or proximate sites may be treated as one project if those capital projects or facilities are used in an integrated operation. For an issue of mortgage revenue bonds or an issue of qualified student loan bonds as defined in section 144(b), the term project means the mortgage loans or qualified student loans to be financed with the proceeds of the issue. For an issue of qualified 501(c)(3) bonds as defined in section 145, the term project means a project as defined in the first sentence of this definition, and also is deemed to include working capital expenditures to be financed with proceeds of the issue.

(8) ***Public approval information*** is defined in paragraph (f)(6)(i) of this section.

(9) ***Public hearing*** is defined in paragraph (d)(1) of this section.

(10) ***Reasonable public notice*** is defined in paragraph (d)(4) of this section.

(11) ***Voter referendum*** means a vote by the voters of the affected governmental unit conducted in the same manner and time as voter referenda on matters relating to governmental spending or bond issuances by the governmental unit under applicable State and local law.

(h) ***Applicability date.*** This section applies to bonds issued pursuant to a public approval occurring on or after April 1, 2019. For bonds issued pursuant to a public approval occurring before April 1, 2019, see § 5f.103-2 as contained in 26 CFR part 5f, revised as of April 1, 2018. In addition, an issuer may apply the provisions of paragraph (f)(6) of this section in whole, but not in part, to bonds issued pursuant to a public approval occurring before April 1, 2019.

[T.D. 9845, 83 FR 67690, Dec. 31, 2018]

§ 1.148-0 Scope and table of contents.

(a) ***Overview.*** Under section 103(a), interest on certain obligations issued by States and local governments is excludable from the gross income of the owners. Section 148 was enacted to minimize the arbitrage benefits from investing gross proceeds of tax-exempt bonds in higher yielding investments and to remove the arbitrage incentives to issue more bonds, to issue bonds earlier, or to leave bonds outstanding longer than is otherwise reasonably necessary to accomplish the governmental purposes for which the bonds were issued. To accomplish these purposes, section 148 restricts the direct and indirect investment of bond proceeds in higher yielding investments and requires that certain earnings on higher yielding investments be rebated to the United States. Violation of these provisions causes the bonds in the issue to become *arbitrage bonds,* the interest on which is not excludable from the gross income of the owners under section 103(a). The regulations in §§ 1.148-1 through 1.148-11 apply in a manner consistent with these purposes.

(b) ***Scope.*** Sections 1.148-1 through 1.148-11 apply generally for purposes of the arbitrage restrictions on State and local bonds under section 148.

(c) ***Table of contents.*** This paragraph (c) lists the table of contents for §§ 1.148-1, 1.148-2, 1.148-3, 1.148-4, 1.148-5, 1.148-6, 1.148-7, 1.148-8, 1.148-9, 1.148-10 and 1.148-11.

§ 1.148-1 Definitions and elections.

(a) In general.

(b) Certain definitions.

(c) Definition of replacement proceeds.

(1) In general.

(2) Sinking fund.

(3) Pledged fund.

(4) Other replacement proceeds.

(d) Elections.

(e) Investment-type property.

(1) In general.

(2) Prepayments.

(3) Certain hedges.

(4) Exception for certain capital projects.

(f) Definition of issue price.

(1) In general.

(2) Bonds issued for money.

(3) Definitions.

(4) Other special rules.

§ 1.148-2 General arbitrage yield restriction rules.

(a) In general.

(b) Reasonable expectations.

(1) In general.

(2) Certification of expectations.

(c) Intentional acts.

(d) Materially higher yielding investments.

(1) In general.

(2) Definitions of materially higher yield.

(3) Mortgage loans.

(e) Temporary periods.

(1) In general.

(2) General 3-year temporary period for capital projects and qualified mortgage loans.

(3) Temporary period for working capital expenditures.

(4) Temporary period for pooled financings.

(5) Temporary period for replacement proceeds.

(6) Temporary period for investment proceeds.

(7) Other amounts.

(f) Reserve or replacement funds.

(1) General 10 percent limitation on funding with sale proceeds.

(2) Exception from yield restriction for reasonably required reserve or replacement funds.

(3) Certain parity reserve funds.

(g) Minor portion.

(h) Certain waivers permitted.

§ 1.148-3 General arbitrage rebate rules.

(a) In general.

(b) Definition of rebate amount.

(c) Computation of future value of a payment or receipt.

(d) Payments and receipts.

(1) Definition of payments.

(2) Definition of receipts.

(3) Special rules for commingled funds.

(4) Cost-of-living adjustment.

(e) Computation dates.

(1) In general.

(2) Final computation date.

(f) Amount of required rebate installment payment.

(1) Amount of interim rebate payments.

(2) Amount of final rebate payment.

(3) Future value of rebate payments.

(g) Time and manner of payment.

(h) Penalty in lieu of loss of tax exemption.

(1) In general.

(2) Interest on underpayments.

(3) Waivers of the penalty.

(4) Application to alternative penalty under § 1.148-7.

(i) Recovery of overpayment of rebate.

(1) In general.

(2) Limitations on recovery.

(3) Time and manner for requesting refund.

(j) Examples.

(k) Bona fide debt service fund exception.

§ 1.148-4 Yield on an issue of bonds.

(a) In general.

(b) Computing yield on a fixed yield issue.

(1) In general.

(2) Yield on certain fixed yield bonds subject to mandatory or contingent early redemption.

(3) Yield on certain fixed yield bonds subject to optional early redemption.

(4) Yield recomputed upon transfer of certain rights associated with the bond.

(5) Special aggregation rule treating certain bonds as a single fixed yield bond.

(6) Examples.

(c) Computing yield on a variable yield issue.

(1) In general.

(2) Payments on bonds included in yield for a computation period.

(3) Example.

(d) Conversion from variable yield issue to fixed yield issue.

(e) Value of bonds.

(1) Plain par bonds.

(2) Other bonds.

(f) Qualified guarantees.

(1) In general.

(2) Interest savings.

(3) Guarantee in substance.

(4) Reasonable charge.

(5) Guarantee of purpose investments.

(6) Allocation of qualified guarantee payments.

(7) Refund or reduction of guarantee payments.

(g) Yield on certain mortgage revenue and student loan bonds.

(h) Qualified hedging transactions.

(1) In general.

(2) Qualified hedge defined.

(3) Accounting for qualified hedges.

(4) Certain variable yield bonds treated as fixed yield bonds.

(5) Contracts entered into before issue date of hedged bond.

(6) Authority of the Commissioner.

§ 1.148-5 Yield and valuation of investments.

(a) In general.

(b) Yield on an investment.

(1) In general.

(2) Yield on a separate class of investments.

(3) Investments to be held beyond issue's maturity or beyond temporary period.

(4) Consistent redemption assumptions on purpose investments.

(5) Student loan special allowance payments included in yield.

(c) Yield reduction payments to the United States.

(1) In general.

(2) Manner of payment.

(3) Applicability of special yield reduction rule.

(d) Value of investments.

(1) In general.

(2) Mandatory valuation of certain yield restricted investments at present value.

(3) Mandatory valuation of certain investments at fair market value.

(4) Special transition rule for transferred proceeds.

(5) Definition of present value of an investment.

(6) Definition of fair market value.

(e) Administrative costs of investments.

(1) In general.

(2) Qualified administrative costs on nonpurpose investments.

(3) Qualified administrative costs on purpose investments.

§ 1.148-6 General allocation and accounting rules.

(a) In general.

(1) Reasonable accounting methods required.

(2) Bona fide deviations from accounting method.

(b) Allocation of gross proceeds to an issue.

(1) One-issue rule and general ordering rules.

(2) Universal cap on value of nonpurpose investments allocated to an issue.

(c) Fair market value limit on allocations to nonpurpose investments.

(d) Allocation of gross proceeds to expenditures.

(1) Expenditures in general.

(2) Treatment of gross proceeds invested in purpose investments.

(3) Expenditures for working capital purposes.

(4) Expenditures for grants.

(5) Expenditures for reimbursement purposes.

(6) Expenditures of certain commingled investment proceeds of governmental issues.

(7) Payments to related parties.

(e) Special rules for commingled funds.

(1) In general.

(2) Investments held by a commingled fund.

(3) Certain expenditures involving a commingled fund.

(4) Fiscal periods.

(5) Unrealized gains and losses on investments of a commingled fund.

(6) Allocations of commingled funds serving as common reserve funds or sinking funds.

§ 1.148-7 Spending exceptions to the rebate requirement.

(a) Scope of section.

(1) In general.

(2) Relationship of spending exceptions.

(3) Spending exceptions not mandatory.

(b) Rules applicable for all spending exceptions.

(1) Special transferred proceeds rules.

(2) Application of multipurpose issue rules.

(3) Expenditures for governmental purposes of the issue.

(4) De minimis rule.

(5) Special definition of reasonably required reserve or replacement fund.

(6) Pooled financing issue.

(c) 6-month exception.

(1) General rule.

(2) Additional period for certain bonds.

(3) Amounts not included in gross proceeds.

(4) Series of refundings.

(d) 18-month exception.

(1) General rule.

(2) Extension for reasonable retainage.

(3) Gross proceeds.

(4) Application to multipurpose issues.

(e) 2-year exception.

(1) General rule.

(2) Extension for reasonable retainage.

(3) Definitions.

(f) Construction issue.

(1) Definition.

(2) Use of actual facts.

(3) Ownership requirement.

(g) Construction expenditures.

(1) Definition.

(2) Certain acquisitions under turnkey contracts treated as construction expenditures.

(3) Constructed personal property.

(4) Specially developed computer software.

(5) Examples.

(h) Reasonable retainage definition.

(i) Available construction proceeds.

(1) Definition in general.

(2) Earnings on a reasonably required reserve or replacement fund.

(3) Reasonable expectations test for future earnings.

(4) Issuance costs.

(5) One and one-half percent penalty in lieu of arbitrage rebate.

(6) Payments on purpose investments and repayments of grants.

(7) Examples.

(j) Election to treat portion of issue used for construction as separate issue.

(1) In general.

(2) Example.

(k) One and one-half percent penalty in lieu of arbitrage rebate.

(1) In general.

(2) Application to reasonable retainage.

(3) Coordination with rebate requirement.

(l) Termination of $1^1/_2$ percent penalty.

(1) Termination after initial temporary period.

(2) Termination before end of initial temporary period.

(3) Application to reasonable retainage.

(4) Example.

(m) Payment of penalties.

§ 1.148-8 Small issuer exception to rebate requirement.

(a) Scope.

(b) General taxing powers.

(c) Size limitation.

(1) In general.

(2) Aggregation rules.

(3) Certain refunding bonds not taken into account.

(d) Pooled financings—treatment of conduit borrowers.

(e) Refunding issues.

(1) In general.

(2) Multipurpose issues.

§ 1.148-9 Arbitrage rules for refunding issues.

(a) Scope of application.

(b) Transferred proceeds allocation rule.

(1) In general.

(2) Special definition of principal amount.

(3) Relation of transferred proceeds rule to universal cap rule.

(4) Limitation on multi-generational transfers.

(c) Special allocation rules for refunding issues.

(1) Allocations of investments.

(2) Allocations of mixed escrows to expenditures for principal, interest, and redemption prices on a prior issue.

(d) Temporary periods in refundings.

(1) In general.

(2) Types of temporary periods in refundings.

(e) Reasonably required reserve or replacement funds in refundings.

(f) Minor portions in refundings.

(g) Certain waivers permitted.

(h) Multipurpose issue allocations.

(1) Application of multipurpose issue allocation rules.

(2) Rules on allocations of multipurpose issues.

(3) Separate purposes of a multipurpose issue.

(4) Allocations of bonds of a multipurpose issue.

(5) Limitation on multi-generation allocations.

(i) Operating rules for separation of prior issues into refunded and unrefunded portions.

(1) In general.

(2) Allocations of proceeds and investments in a partial refunding.

(3) References to prior issue.

§ 1.148-10 Anti-abuse rules and authority of Commissioner.

(a) Abusive arbitrage device.

(1) In general.

(2) Abusive arbitrage device defined.

(3) Exploitation of tax-exempt interest rates.

(4) Overburdening the tax-exempt market.

(b) Consequences of overburdening the tax-exempt bond market.

(1) In general.

(2) Application.

(c) Anti-abuse rules on excess gross proceeds of advance refunding issues.

(1) In general.

(2) Definition of excess gross proceeds.

(3) Special treatment of transferred proceeds.

(4) Special rule for crossover refundings.

(5) Special rule for gross refundings.

(d) Examples.

(e) Authority of the Commissioner to prevent transactions that are inconsistent with the purpose of the arbitrage investment restrictions.

(f) Authority of the Commissioner to require an earlier date for payment of rebate.

(g) Authority of the Commissioner to waive regulatory limitations.

§ 1.148-11 Effective/applicability dates.

(a) In general.

(b) Elective retroactive application in whole.

(1) In general.

(2) No elective retroactive application for 18-month spending exception.

(3) No elective retroactive application for hedges of fixed rate issues.

(4) No elective retroactive application for safe harbor for establishing fair market value for guaranteed investment contracts and investments purchased for a yield restricted defeasance escrow.

(c) Elective retroactive application of certain provisions.

(1) Retroactive application of overpayment recovery provisions.

(2) Certain allocations of multipurpose issues.

(3) Special limitation.

(d) Transition rule excepting certain state guarantee funds from the definition of replacement proceeds.

(1) Certain perpetual trust funds.

(2) Permanent University Fund.

(e) Transition rule regarding special allowance payments.

(f) Transition rule regarding applicability of yield reduction rule.

(g) Provisions applicable to certain bonds sold before effective date.

(h) Safe harbor for establishing fair market value for guaranteed investment contracts and investments purchased for a yield restricted defeasance escrow.

(i) Special rule for certain broker's commissions and similar fees.

(j) Certain prepayments.

(k) Certain arbitrage guidance updates.

(1) In general.

(2) Valuation of investments in refunding transactions.

(3) Rebate overpayment recovery.

(4) Hedge identification.

(5) Hedge modifications and termination.

(6) Small issuer exception to rebate requirement for conduit borrowers of pooled financings.

(l) Permissive application of certain arbitrage updates.

(1) In general.

(2) Computation credit.

(3) Yield reduction payments.

(4) External commingled funds.

(m) Definition of issue price.

(n) Investment-type property.

[T.D. 8476, 58 FR 33515, June 18, 1993, as amended by T.D. 8538, 59 FR 24041, May 10, 1994; T.D. 8718, 62 FR 25506, May 9, 1997; T.D. 9085, 68 FR 45775, Aug. 4, 2003; T.D. 9097, 68 FR 69022, Dec. 11, 2003; T.D. 9701, 79 FR 67351, Nov. 13, 2014; T.D. 9777, 81 FR 46592, July 18, 2016; T.D. 9801, 81 FR 89003, Dec. 9, 2016; T.D. 9854, 84 FR 14007, Apr. 9, 2019]

§ 1.148-1 Definitions and elections.

(a) ***In general.*** The definitions in this section and the definitions under section 150 apply for purposes of section 148 and §§ 1.148-1 through 1.148-11.

(b) ***Certain definitions.*** The following definitions apply:

Accounting method means both the overall method used to account for gross proceeds of an issue (e.g., the cash method or a modified accrual method) and the method used to account for or allocate any particular item within that overall accounting method (e.g., accounting for investments, expenditures, allocations to and from different sources, and particular items of the foregoing).

Annuity contract means annuity contract as defined in section 72.

Available amount means available amount as defined in § 1.148-6(d)(3)(iii).

Bona fide debt service fund means a fund, which may include proceeds of an issue, that—

(1) Is used primarily to achieve a proper matching of revenues with principal and interest payments within each bond year; and

(2) Is depleted at least once each bond year, except for a reasonable carryover amount not to exceed the greater of:

(i) the earnings on the fund for the immediately preceding bond year; or

(ii) one-twelfth of the principal and interest payments on the issue for the immediately preceding bond year.

Bond year means, in reference to an issue, each 1-year period that ends on the day selected by the issuer. The first and last bond years may be short periods. If no day is selected by the issuer before the earlier of the final maturity date of the issue or the date that is 5 years after the issue date, bond years end on each anniversary of the issue date and on the final maturity date.

Capital project or capital projects means all capital expenditures, plus related working capital expenditures to which the de minimis rule under § 1.148-6(d)(3)(ii)(A) applies, that carry out the governmental purposes of an issue. For example, a capital project may include capital expenditures for one or more buildings, plus related start-up operating costs.

Commingled fund means any fund or account containing both gross proceeds of an issue and amounts in excess of $25,000 that are not gross proceeds of that issue if the amounts in the fund or account are invested and accounted for collectively, without regard to the source of funds deposited in the fund or account. An open-end regulated investment company under section 851, however, is not a commingled fund.

Computation date means each date on which the rebate amount for an issue is computed under § 1.148-3(e).

Computation period means the period between computation dates. The first computation period begins on the issue date and ends on the first computation date. Each succeeding computation period begins on the date immediately following the computation date and ends on the next computation date.

Consistently applied means applied uniformly within a fiscal period and between fiscal periods to account for gross proceeds of an issue and any amounts that are in a commingled fund.

De minimis amount means—

(1) In reference to original issue discount (as defined in section 1273(a)(1)) or premium on an obligation—

(i) An amount that does not exceed 2 percent multiplied by the stated redemption price at maturity; plus

(ii) Any original issue premium that is attributable exclusively to reasonable underwriters' compensation; and

(2) In reference to market discount (as defined in section 1278(a)(2)(A)) or premium on an obligation, an amount that does not exceed 2 percent multiplied by the stated redemption price at maturity.

Economic accrual method (also known as the *constant interest method* or *actuarial method*) means the method of computing yield that is based on the compounding of interest at the end of each compounding period.

Fair market value means fair market value as defined in § 1.148-5(d)(6).

Fixed rate investment means any investment whose yield is fixed and determinable on the issue date.

Fixed yield bond means any bond whose yield is fixed and determinable on the issue date using the assumptions and rules provided in § 1.148-4(b).

Fixed yield issue means any issue if each bond that is part of the issue is a fixed yield bond.

Gross proceeds means any proceeds and replacement proceeds of an issue.

Guaranteed investment contract includes any nonpurpose investment that has specifically negotiated withdrawal or reinvestment provisions and a specifically negotiated interest rate, and also includes any agreement to supply investments on two or more future dates (e.g., a forward supply contract).

Higher yielding investments means higher yielding investments as defined in section 148(b)(1).

Investment means any investment property as defined in sections 148(b)(2) and 148(b)(3), and any other tax-exempt bond.

Investment proceeds means any amounts actually or constructively received from investing proceeds of an issue.

Investment-type property is defined in paragraph (e) of this section.

Issue price means issue price as defined in paragraph (f) of this section.

Issuer generally means the entity that actually issues the issue, and, unless the context or a provision clearly requires otherwise, each conduit borrower of the issue. For example, rules imposed on issuers to account for gross proceeds of an issue apply to a conduit borrower to account for any gross proceeds received under a purpose investment. Provisions regarding elections, filings, liability for the rebate amount, and certifications of reasonable expectations apply only to the actual issuer.

Multipurpose issue means an issue the proceeds of which are used for two or more separate purposes determined in accordance with § 1.148-9(h).

Net sale proceeds means sale proceeds, less the portion of those sale proceeds invested in a reasonably required reserve or replacement fund under section 148(d) and as part of a minor portion under section 148(e).

Nonpurpose investment means any investment property, as defined in section 148(b), that is not a purpose investment.

Payment means a payment as defined in § 1.148-3(d) for purposes of computing the rebate amount, and a payment as defined in § 1.148-5(b) for purposes of computing the yield on an investment.

Plain par bond means a qualified tender bond or a bond—

(1) Issued with not more than a de minimis amount of original issue discount or premium;

(2) Issued for a price that does not include accrued interest other than pre-issuance accrued interest;

(3) That bears interest from the issue date at a single, stated, fixed rate or that is a variable rate debt instrument under section 1275, in each case with interest unconditionally payable at least annually; and

(4) That has a lowest stated redemption price that is not less than its outstanding stated principal amount.

Plain par investment means an investment that is an obligation—

(1) Issued with not more than a de minimis amount of original issue discount or premium, or, if acquired on a date other than the issue date, acquired with not more than a de minimis amount of market discount or premium;

(2) Issued for a price that does not include accrued interest other than pre-issuance accrued interest;

(3) That bears interest from the issue date at a single, stated, fixed rate or that is a variable rate debt instrument under section 1275, in each case with interest unconditionally payable at least annually; and

(4) That has a lowest stated redemption price that is not less than its outstanding stated principal amount.

Pre-issuance accrued interest means amounts representing interest that accrued on an obligation for a period not greater than one year before its issue date but only if those amounts are paid within one year after the issue date.

Proceeds means any sale proceeds, investment proceeds, and transferred proceeds of an issue. Proceeds do not include, however, amounts actually or constructively received with respect to a purpose investment that are properly allocable to the immaterially higher yield under § 1.148-2(d) or section 143(g) or to qualified administrative costs recoverable under § 1.148-5(e).

Program investment means a purpose investment that is part of a governmental program in which—

(1) The program involves the origination or acquisition of purpose investments;

(2) At least 95 percent (90 percent for qualified student loans under section 144(b)(1)(A)) of the cost of the purpose investments acquired under the program represents one or more loans to a substantial number of persons representing the general public, States or political subdivisions, 501(c)(3) organizations, persons who provide housing and related facilities, or any combination of the foregoing;

(3) At least 95 percent of the receipts from the purpose investments are used to pay principal, interest, or redemption prices on issues that financed the program, to pay or reimburse administrative costs of those issues or of the program, to pay or reimburse anticipated future losses directly related to the program, to finance additional purpose investments for the same general purposes of the program, or to redeem and retire governmental obligations at the next earliest possible date of redemption;

(4) The program documents prohibit any obligor on a purpose investment financed by the program or any related party to that obligor from purchasing bonds of an issue that finance the program in an amount related to the amount of the purpose investment acquired from that obligor; and

(5) The issuer has not waived the right to treat the investment as a program investment.

Purpose investment means an investment that is acquired to carry out the governmental purpose of an issue.

Qualified administrative costs means qualified administrative costs as defined in § 1.148-5(e).

Qualified guarantee means a qualified guarantee as defined in § 1.148-4(f).

Qualified hedge means a qualified hedge as defined in § 1.148-4(h)(2).

Reasonable expectations or reasonableness. An issuer's expectations or actions are reasonable only if a prudent person in the same circumstances as the issuer would have those same expectations or take those same actions, based on all the objective facts and circumstances. Factors relevant to a determination of reasonableness include the issuer's history of conduct concerning stated expectations made in connection with the issuance of obligations, the level of inquiry by the issuer into factual matters, and the existence of covenants, enforceable by bondholders, that require implementation of specific expectations. For a conduit financing issue, factors relevant to a determination of reasonableness include the reasonable expectations of the conduit borrower, but only if, under the circumstances, it is reasonable and prudent for the issuer to rely on those expectations.

Rebate amount means 100 percent of the amount owed to the United States under section 148(f)(2), as further described in § 1.148-3.

Receipt means a receipt as defined in § 1.148-3(d) for purposes of computing the rebate amount, and a receipt as defined in § 1.148-5(b) for purposes of computing yield on an investment.

Refunding escrow means one or more funds established as part of a single transaction or a series of related transactions, containing proceeds of a refunding issue and any other amounts to provide for payment of principal or interest on one or more prior issues. For this purpose, funds are generally not so established solely because of—

(1) The deposit of proceeds of an issue and replacement proceeds of the prior issue in an escrow more than 6 months apart, or

(2) The deposit of proceeds of completely separate issues in an escrow.

Replacement proceeds is defined in paragraph (c) of this section.

Restricted working capital expenditures means working capital expenditures that are subject to the proceeds-spent-last rule in § 1.148-6(d)(3)(i) and are ineligible for any exception to that rule.

Sale proceeds means any amounts actually or constructively received from the sale of the issue, including amounts used to pay underwriters' discount or compensation and accrued interest other than pre-issuance accrued interest. Sale proceeds also include, but are not limited to, amounts derived from the sale of a right that is associated with a bond, and that is described in § 1.148-4(b)(4). See also § 1.148-4(h)(5) treating amounts received upon the termination of certain hedges as sale proceeds.

Stated redemption price means the redemption price of an obligation under the terms of that obligation, including any call premium.

Transferred proceeds means transferred proceeds as defined in § 1.148-9 (or the applicable corresponding provision of prior law).

Unconditionally payable means payable under terms in which—

(1) Late payment or nonpayment results in a significant penalty to the borrower or reasonable remedies to the lender, and

(2) It is reasonably certain on the issue date that the payment will actually be made.

Value means value determined under § 1.148-4(e) for a bond, and value determined under § 1.148-5(d) for an investment.

Variable yield bond means any bond that is not a fixed yield bond.

Variable yield issue means any issue that is not a fixed yield issue.

Yield means yield computed under § 1.148-4 for an issue, and yield computed under § 1.148-5 for an investment.

Yield restricted means required to be invested at a yield that is not materially higher than the yield on the issue under section 148(a) and § 1.148-2.

(c) ***Definition of replacement proceeds*** —

(1) ***In general.*** Amounts are replacement proceeds of an issue if the amounts have a sufficiently direct nexus to the issue or to the governmental purpose of the issue to conclude that the amounts would have been used for that governmental purpose if the proceeds of the issue were not used or to be used for that governmental purpose. For this purpose, governmental purposes include the expected use of amounts for the payment of debt service on a particular date. The mere availability or preliminary earmarking of amounts for a governmental purpose, however, does not in itself establish a sufficient nexus to cause those amounts to be replacement proceeds. Replacement proceeds include, but are not limited to, sinking funds, pledged funds, and other replacement proceeds described in paragraph (c)(4) of this section, to the extent that those funds or amounts are held by or derived from a substantial beneficiary of the issue. A substantial beneficiary of an issue includes the issuer and any related party to the issuer, and, if the issuer is not a state, the state in which the issuer is located. A person is not a substantial beneficiary of an issue solely because it is a guarantor under a qualified guarantee.

(2) ***Sinking fund. Sinking fund*** includes a debt service fund, redemption fund, reserve fund, replacement fund, or any similar fund, to the extent reasonably expected to be used directly or indirectly to pay principal or interest on the issue.

(3) ***Pledged fund*** —

(i) ***In general.*** A *pledged fund* is any amount that is directly or indirectly pledged to pay principal or interest on the issue. A pledge need not be cast in any particular form but, in substance, must provide reasonable assurance that the amount will be available to pay principal or interest on the issue, even if the issuer encounters financial difficulties. A pledge to a guarantor of an issue is an indirect pledge to secure payment of principal or interest on the issue. A pledge of more than 50 percent of the outstanding stock of a corporation that is a conduit borrower of the issue is not treated as a pledge for this purpose, unless the corporation is formed or availed of to avoid the creation of replacement proceeds.

(ii) ***Negative pledges.*** An amount is treated as pledged to pay principal or interest on an issue if it is held under an agreement to maintain the amount at a particular level for the direct or indirect benefit of the bondholders or a guarantor of the bonds. An amount is not treated as pledged under this paragraph (c)(3)(ii), however, if—

(A) The issuer or a substantial beneficiary may grant rights in the amount that are superior to the rights of the bondholders or the guarantor; or

(B) The amount does not exceed reasonable needs for which it is maintained, the required level is tested no more frequently than every 6 months, and the amount may be spent without any substantial restriction other than a requirement to replenish the amount by the next testing date.

(4) ***Other replacement proceeds*** —

(i) ***Bonds outstanding longer than necessary*** —

(A) ***In general.*** Replacement proceeds arise to the extent that the issuer reasonably expects as of the issue date that—

(*1*) The term of an issue will be longer than is reasonably necessary for the governmental purposes of the issue, and

(*2*) There will be available amounts during the period that the issue remains outstanding longer than necessary. Whether an issue is outstanding longer than necessary is determined under § 1.148-10. Replacement proceeds are created under this paragraph (c)(4)(i)(A) at the beginning of each fiscal year during which an issue remains outstanding longer than necessary in an amount equal to available amounts of the issuer as of that date.

(B) ***Safe harbor against creation of replacement proceeds.*** As a safe harbor, replacement proceeds do not arise under paragraph (c)(4)(i)(A) of this section—

(*1*) For the portion of an issue that is to be used to finance working capital expenditures, if that portion is not outstanding longer than the temporary period under § 1.148-2(e)(3) for which the proceeds qualify;

(*2*) For the portion of an issue (including a refunding issue) that is to be used to finance or refinance capital projects, if that portion has a weighted average maturity that does not exceed 120 percent of the average reasonably expected economic life of the financed capital projects, determined in the same manner as under section 147(b);

(*3*) For the portion of an issue that is a refunding issue, if that portion has a weighted average maturity that does not exceed the remaining weighted average maturity of the prior issue, and the issue of which the prior issue is a part satisfies paragraph (c)(4)(i)(B) (*1*) or (*2*) of this section; or

(*4*) For the portion of an issue (including a refunding issue) that is to be used to finance working capital expenditures, if that portion satisfies paragraph (c)(4)(ii) of this section.

(ii) ***Safe harbor for longer-term working capital financings.*** A portion of an issue used to finance working capital expenditures satisfies this paragraph (c)(4)(ii) if the issuer meets the requirements of paragraphs (c)(4)(ii)(A) through (E) of this section.

(A) ***Determine first testing year.*** On the issue date, the issuer must determine the first fiscal year following the applicable temporary period under § 1.148-2(e) in which it reasonably expects to have available amounts (first testing year), but in no event can the first day of the first testing year be later than five years after the issue date.

(B) ***Application of available amount to reduce burden on tax-exempt bond market.*** Beginning with the first testing year and for each subsequent fiscal year for which the portion of the issue that is the subject of this safe harbor remains outstanding, the issuer must determine the available amount as of the first day of each fiscal year. Then, except as provided in paragraph (c)(4)(ii)(D) of this section, within the first 90 days of that fiscal year, the issuer must apply that amount (or if less, the available amount on the date of the required redemption or investment) to redeem or to invest in eligible tax-exempt bonds (as defined in paragraph (c)(4)(ii)(E) of this section). For this purpose, available amounts in a bona fide debt service fund are not treated as available amounts.

(C) ***Continuous investment requirement.*** Except as provided in this paragraph (c)(4)(ii)(C), any amounts invested in eligible tax-exempt bonds under paragraph (c)(4)(ii)(B) of this section must be invested continuously in such tax-exempt bonds to the extent provided in paragraph (c)(4)(ii)(D) of this section.

(*1*) ***Exception for reinvestment period.*** Amounts previously invested in eligible tax-exempt bonds under paragraph (c)(4)(ii)(B) of this section that are held for not more than 30 days in a fiscal year pending reinvestment in eligible tax-exempt bonds are treated as invested in eligible tax-exempt bonds.

(*2*) ***Limited use of invested amounts.*** An issuer may spend amounts previously invested in eligible tax-exempt bonds under paragraph (c)(4)(ii)(B) of this section within 30 days of the date on which they cease to be so invested to make expenditures for a governmental purpose on any date on which the issuer has no other available amounts for such purpose, or to redeem eligible tax-exempt bonds.

(D) ***Cap on applied or invested amounts.*** The maximum amount that an issuer is required to apply under paragraph (c)(4)(ii)(B) of this section or to invest continuously under paragraph (c)(4)(ii)(C) of this section with respect to the portion of an issue that is the subject of this safe harbor is the outstanding principal amount of such portion. For purposes of this cap, an issuer receives credit towards its requirement to invest available amounts in eligible tax-exempt bonds for amounts previously invested under paragraph (c)(4)(ii)(B) of this section that remain continuously invested under paragraph (c)(4)(ii)(C) of this section.

(E) ***Definition of eligible tax-exempt bonds.*** For purposes of paragraph (c)(4)(ii) of this section, *eligible tax-exempt bonds* means any of the following:

(*1*) A bond the interest on which is excludable from gross income under section 103 and that is not a specified private activity bond (as defined in section 57(a)(5)(C)) subject to the alternative minimum tax;

(2) An interest in a regulated investment company to the extent that at least 95 percent of the income to the holder of the interest is interest on a bond that is excludable from gross income under section 103 and that is not interest on a specified private activity bond (as defined in section 57(a)(5)(C)) subject to the alternative minimum tax; or

(3) A certificate of indebtedness issued by the United States Treasury pursuant to the Demand Deposit State and Local Government Series program described in 31 CFR part 344.

(d) ***Elections.*** Except as otherwise provided, any required elections must be made in writing, and, once made, may not be revoked without the permission of the Commissioner.

(e) ***Investment-type property*** —

(1) ***In general.*** Except as otherwise provided in this paragraph (e), investment-type property includes any property, other than property described in section 148(b)(2)(A), (B), (C), or (E), that is held principally as a passive vehicle for the production of income. For this purpose, production of income includes any benefit based on the time value of money.

(2) ***Prepayments*** —

(i) ***In general*** —

(A) ***Generally.*** Except as otherwise provided in this paragraph (e)(2), a prepayment for property or services, including a prepayment for property or services that is made after the date that the contract to buy the property or services is entered into, also gives rise to investment-type property if a principal purpose for prepaying is to receive an investment return from the time the prepayment is made until the time payment otherwise would be made. A prepayment does not give rise to investment-type property if—

(1) Prepayments on substantially the same terms are made by a substantial percentage of persons who are similarly situated to the issuer but who are not beneficiaries of tax-exempt financing;

(2) The prepayment is made within 90 days of the reasonably expected date of delivery to the issuer of all of the property or services for which the prepayment is made; or

(3) The prepayment meets the requirements of paragraph (e)(2)(iii)(A) or (B) of this section.

(B) ***Example.*** The following example illustrates an application of this paragraph (e)(2)(i):

Example. Prepayment after contract is executed. In 1998, City A enters into a ten-year contract with Company Y. Under the contract, Company Y is to provide services to City A over the term of the contract and in return City A will pay Company Y for its services as they are provided. In 2004, City A issues bonds to finance a lump sum payment to Company Y in satisfaction of City A's obligation to pay for Company Y's services to be provided over the remaining term of the contract. The use of bond proceeds to make the lump sum payment constitutes a prepayment for services under paragraph (e)(2)(i) of this section, even though the payment is made after the date that the contract is executed.

(ii) ***Customary prepayments.*** The determination of whether a prepayment satisfies paragraph (e)(2)(i)(A)(*1*) of this section is generally made based on all the facts and circumstances. In addition, a prepayment is deemed to satisfy paragraph (e)(2)(i)(A)(*1*) of this section if—

(A) The prepayment is made for—

(*1*) Maintenance, repair, or an extended warranty with respect to personal property (for example, automobiles or electronic equipment); or

(*2*) Updates or maintenance or support services with respect to computer software; and

(B) The same maintenance, repair, extended warranty, updates or maintenance or support services, as applicable, are regularly provided to nongovernmental persons on the same terms.

(iii) ***Certain prepayments to acquire a supply of natural gas or electricity*** —

(A) ***Natural gas prepayments.*** A prepayment meets the requirements of this paragraph (e)(2)(iii)(A) if—

(*1*) It is made by or for one or more utilities that are owned by a governmental person, as defined in § 1.141-1(b) (each of which is referred to in this paragraph (e)(2)(iii)(A) as the issuing municipal utility), to purchase a supply of natural gas; and

(*2*) At least 90 percent of the prepaid natural gas financed by the issue is used for a qualifying use. Natural gas is used for a qualifying use if it is to be—

(*i*) Furnished to retail gas customers of the issuing municipal utility who are located in the natural gas service area of the issuing municipal utility, provided, however, that gas used to produce electricity for sale shall not be included under this paragraph (e)(2)(iii)(A)(*2*)(*i*);

(*ii*) Used by the issuing municipal utility to produce electricity that will be furnished to retail electric customers of the issuing municipal utility who are located in the electricity service area of the issuing municipal utility;

(*iii*) Used by the issuing municipal utility to produce electricity that will be sold to a utility that is owned by a governmental person and furnished to retail electric customers of the purchaser who are located in the electricity service area of the purchaser;

(*iv*) Sold to a utility that is owned by a governmental person if the requirements of paragraph (e)(2)(iii)(A)(*2*)(*i*), (*ii*) or (*iii*) of this section are satisfied by the purchaser (treating the purchaser as the issuing municipal utility); or

(*v*) Used to fuel the pipeline transportation of the prepaid gas supply acquired in accordance with this paragraph (e)(2)(iii)(A).

(B) ***Electricity prepayments.*** A prepayment meets the requirements of this paragraph (e)(2)(iii)(B) if—

(*1*) It is made by or for one or more utilities that are owned by a governmental person (each of which is referred to in this paragraph (e)(2)(iii)(B) as the issuing municipal utility) to purchase a supply of electricity; and

(2) At least 90 percent of the prepaid electricity financed by the issue is used for a qualifying use. Electricity is used for a qualifying use if it is to be—

(*i*) Furnished to retail electric customers of the issuing municipal utility who are located in the electricity service area of the issuing municipal utility; or

(*ii*) Sold to a utility that is owned by a governmental person and furnished to retail electric customers of the purchaser who are located in the electricity service area of the purchaser.

(C) ***Service area.*** For purposes of this paragraph (e)(2)(iii), the service area of a utility owned by a governmental person consists of—

(*1*) Any area throughout which the utility provided, at all times during the 5-year period ending on the issue date—

(*i*) In the case of a natural gas utility, natural gas transmission or distribution service; and

(*ii*) In the case of an electric utility, electricity distribution service; and

(*2*) Any area recognized as the service area of the utility under state or Federal law.

(D) ***Retail customer.*** For purposes of this paragraph (e)(2)(iii), a retail customer is a customer that purchases natural gas or electricity, as applicable, other than for resale.

(E) ***Commodity swaps.*** A prepayment does not fail to meet the requirements of this paragraph (e)(2)(iii) by reason of any commodity swap contract that may be entered into between the issuer and an unrelated party (other than the gas or electricity supplier), or between the gas or electricity supplier and an unrelated party (other than the issuer), so long as each swap contract is an independent contract. A swap contract is an independent contract if the obligation of each party to perform under the swap contract is not dependent on performance by any person (other than the other party to the swap contract) under another contract (for example, a gas or electricity supply contract or another swap contract); provided, however, that a commodity swap contract will not fail to be an independent contract solely because the swap contract may terminate in the event of a failure of a gas or electricity supplier to deliver gas or electricity for which the swap contract is a hedge.

(F) ***Remedial action.*** Issuers may apply principles similar to the rules of § 1.141-12, including § 1.141-12(d) (relating to redemption or defeasance of nonqualified bonds) and § 1.141-12(e) (relating to alternative use of disposition proceeds), to cure a violation of paragraph (e)(2)(iii)(A)(*2*) or (e)(2)(iii)(B)(*2*) of this section. For this purpose, the amount of nonqualified bonds is determined in the same manner as for output contracts taken into account under the private business tests, including the principles of § 1.141-7(d), treating nonqualified sales of gas or electricity under this paragraph (e)(2)(iii) as satisfying the benefits and burdens test under § 1.141-7(c)(1).

(iv) ***Additional prepayments as permitted by the Commissioner.*** The Commissioner may, by published guidance, set forth additional circumstances in which a prepayment does not give rise to investment-type property.

(3) ***Certain hedges.*** Investment-type property also includes the investment element of a contract that is a hedge (within the meaning of § 1.148-4(h)(2)(i)(A)) and that contains a significant investment element because a payment by the issuer relates to a conditional or unconditional obligation by the hedge provider to make a payment on a later date. See § 1.148-4(h)(2)(ii) relating to hedges with a significant investment element.

(4) ***Exception for certain capital projects.*** Investment-type property does not include real property or tangible personal property (for example, land, buildings, and equipment) that is used in furtherance of the public purposes for which the tax-exempt bonds are issued. For example, investment-type property does not include a courthouse financed with governmental bonds or an eligible exempt facility under section 142, such as a public road, financed with private activity bonds.

(f) ***Definition of issue price*** —

(1) ***In general.*** Except as otherwise provided in this paragraph (f), "issue price" is defined in sections 1273 and 1274 and the regulations under those sections.

(2) ***Bonds issued for money*** —

(i) ***General rule.*** Except as otherwise provided in this paragraph (f)(2), the issue price of bonds issued for money is the first price at which a substantial amount of the bonds is sold to the public. If a bond is issued for money in a private placement to a single buyer that is not an underwriter or a related party (as defined in § 1.150-1(b)) to an underwriter, the issue price of the bond is the price paid by that buyer. Issue price is not reduced by any issuance costs (as defined in § 1.150-1(b)).

(ii) ***Special rule for use of initial offering price to the public.*** The issuer may treat the initial offering price to the public as of the sale date as the issue price of the bonds if the requirements of paragraphs (f)(2)(ii)(A) and (B) of this section are met.

(A) The underwriters offered the bonds to the public for purchase at a specified initial offering price on or before the sale date, and the lead underwriter in the underwriting syndicate or selling group (or, if applicable, the sole underwriter) provides, on or before the issue date, a certification to that effect to the issuer, together with reasonable supporting documentation for that certification, such as a copy of the pricing wire or equivalent communication.

(B) Each underwriter agrees in writing that it will neither offer nor sell the bonds to any person at a price that is higher than the initial offering price to the public during the period starting on the sale date and ending on the earlier of the following:

(*1*) The close of the fifth (5th) business day after the sale date; or

(*2*) The date on which the underwriters have sold a substantial amount of the bonds to the public at a price that is no higher than the initial offering price to the public.

(iii) ***Special rule for competitive sales.*** For bonds issued for money in a competitive sale, an issuer may treat the reasonably expected initial offering price to the public as of the sale date as the issue price of the bonds if the issuer obtains from the winning bidder a certification of the bonds' reasonably expected initial offering price to the public as of the sale date upon which the price in the winning bid is based.

(iv) ***Choice of rule for determining issue price.*** If more than one rule for determining the issue price of the bonds is available under this paragraph (f)(2), at any time on or before the issue date, the issuer may select the rule it will use to determine the issue price of the bonds. On or before the issue date of the bonds, the issuer must identify the rule selected in its books and records maintained for the bonds.

(3) ***Definitions.*** For purposes of this paragraph (f), the following definitions apply:

(i) ***Competitive sale*** means a sale of bonds by an issuer to an underwriter that is the winning bidder in a bidding process in which the issuer offers the bonds for sale to underwriters at specified written terms, if that process meets the following requirements:

(A) The issuer disseminates the notice of sale to potential underwriters in a manner that is reasonably designed to reach potential underwriters (for example, through electronic communication that is widely circulated to potential underwriters by a recognized publisher of municipal bond offering documents or by posting on an Internet-based Web site or other electronic medium that is regularly used for such purpose and is widely available to potential underwriters);

(B) All bidders have an equal opportunity to bid (within the meaning of § 1.148-5(d)(6)(iii)(A)(*6*));

(C) The issuer receives bids from at least three underwriters of municipal bonds who have established industry reputations for underwriting new issuances of municipal bonds; and

(D) The issuer awards the sale to the bidder who submits a firm offer to purchase the bonds at the highest price (or lowest interest cost).

(ii) ***Public*** means any person (as defined in section 7701(a)(1)) other than an underwriter or a related party (as defined in § 1.150-1(b)) to an underwriter.

(iii) ***Underwriter*** means:

(A) Any person (as defined in section 7701(a)(1)) that agrees pursuant to a written contract with the issuer (or with the lead underwriter to form an underwriting syndicate) to participate in the initial sale of the bonds to the public; and

(B) Any person that agrees pursuant to a written contract directly or indirectly with a person described in paragraph (f)(3)(iii)(A) of this section to participate in the initial sale of the bonds to the public (for example, a retail distribution agreement between a national lead underwriter and a regional firm under which the regional firm participates in the initial sale of the bonds to the public).

(4) ***Other special rules.*** For purposes of this paragraph (f), the following special rules apply:

(i) ***Separate determinations.*** The issue price of bonds in an issue that do not have the same credit and payment terms is determined separately. The issuer need not apply the same rule to determine issue price for all of the bonds in the issue.

(ii) ***Substantial amount.*** Ten percent is a substantial amount.

(iii) ***Bonds issued for property.*** If a bond is issued for property, the adjusted applicable Federal rate, as determined under section 1288 and § 1.1288-1, is used in lieu of the applicable Federal rate to determine the bond's issue price under section 1274.

[T.D. 8476, 58 FR 33517, June 18, 1993; 58 FR 44452, Aug. 23, 1993, as amended by T.D. 8538, 59 FR 24041, May 10, 1994; T.D. 8718, 62 FR 25507, May 9, 1997; T.D. 9085, 68 FR 45775, Aug. 4, 2003; T.D. 9777, 81 FR 46592, July 18, 2016; T.D. 9801, 81 FR 89003, Dec. 9, 2016; T.D. 9854, 84 FR 14007, Apr. 9, 2019]

§ 1.148-2 General arbitrage yield restriction rules.

(a) ***In general.*** Under section 148(a), the direct or indirect investment of the gross proceeds of an issue in higher yielding investments causes the bonds of the issue to be arbitrage bonds. The investment of proceeds in higher yielding investments, however, during a temporary period described in paragraph (e) of this section, as part of a reasonably required reserve or replacement fund described in paragraph (f) of this section, or as part of a minor portion described in paragraph (g) of this section does not cause the bonds of the issue to be arbitrage bonds. Bonds are not arbitrage bonds under this section as a result of an inadvertent, insubstantial error.

(b) ***Reasonable expectations*** —

(1) ***In general.*** Except as provided in paragraph (c) of this section, the determination of whether an issue consists of arbitrage bonds under section 148(a) is based on the issuer's reasonable expectations as of the issue date regarding the amount and use of the gross proceeds of the issue.

(2) ***Certification of expectations*** —

(i) ***In general.*** An officer of the issuer responsible for issuing the bonds must, in good faith, certify the issuer's expectations as of the issue date. The certification must state the facts and estimates that form the basis for the issuer's expectations. The certification is evidence of the issuer's expectations, but does not establish any conclusions of law or any presumptions regarding either the issuer's actual expectations or their reasonableness.

(ii) ***Exceptions to certification requirement.*** An issuer is not required to make a certification for an issue under paragraph (b)(2)(i) of this section if—

(A) The issuer reasonably expects as of the issue date that there will be no unspent gross proceeds after the issue date, other than gross proceeds in a bona fide debt service fund (e.g., equipment lease financings in which the issuer purchases equipment in exchange for an installment payment note); or

(B) The issue price of the issue does not exceed $1,000,000.

(c) ***Intentional acts.*** The taking of any deliberate, intentional action by the issuer or person acting on its behalf after the issue date in order to earn arbitrage causes the bonds of the issue to be arbitrage bonds if that action, had it been expected on the issue date, would have caused the bonds to be arbitrage bonds. An intent to violate the requirements of section 148 is not necessary for an action to be intentional.

(d) ***Materially higher yielding investments*** —

(1) ***In general.*** The yield on investments is materially higher than the yield on the issue to which the investments are allocated if the yield on the investments over the term of the issue exceeds the yield on the issue by an amount in excess of the applicable definition of *materially higher* set forth in paragraph (d)(2) of this section. If yield restricted investments in the same class are subject to different definitions of *materially higher,* the applicable definition of *materially higher* that produces the lowest permitted yield applies to all the investments in the class. The yield on the issue is determined under § 1.148-4. The yield on investments is determined under § 1.148-5.

(2) *Definitions of materially higher yield* —

(i) ***General rule for purpose and nonpurpose investments.*** For investments that are not otherwise described in this paragraph (d)(2), materially higher means one-eighth of 1 percentage point.

(ii) ***Refunding escrows and replacement proceeds.*** For investments in a refunding escrow or for investments allocable to replacement proceeds, materially higher means one-thousandth of 1 percentage point.

(iii) ***Program investments.*** For program investments that are not described in paragraph (d)(2)(iv) of this section, materially higher means 1 and one-half percentage points.

(iv) ***Student loans.*** For qualified student loans that are program investments, materially higher means 2 percentage points.

(v) ***Tax-exempt investments.*** For investments that are tax-exempt bonds and are not investment property under section 148(b)(3), no yield limitation applies.

(3) ***Mortgage loans.*** Qualified mortgage loans that satisfy the requirements of section 143(g) are treated as meeting the requirements of this paragraph (d).

(e) *Temporary periods* —

(1) ***In general.*** During the temporary periods set forth in this paragraph (e), the proceeds and replacement proceeds of an issue may be invested in higher yielding investments without causing bonds in the issue to be arbitrage bonds. This paragraph (e) does not apply to refunding issues (see § 1.148-9).

(2) *General 3-year temporary period for capital projects and qualified mortgage loans* —

(i) ***In general.*** The net sale proceeds and investment proceeds of an issue reasonably expected to be allocated to expenditures for capital projects qualify for a temporary period of 3 years beginning on the issue date (the *3-year temporary period).* The 3-year temporary period also applies to the proceeds of qualified mortgage bonds and qualified veterans' mortgage bonds by substituting *qualified mortgage loans* in each place that *capital projects* appears in this paragraph (e)(2). The 3-year temporary period applies only if the issuer reasonably expects to satisfy the expenditure test, the time test, and the due diligence test. These rules apply separately to each conduit loan financed by an issue (other than qualified mortgage loans), with the expenditure and time tests measured from the issue date of the issue.

(A) ***Expenditure test.*** The expenditure test is met if at least 85 percent of the net sale proceeds of the issue are allocated to expenditures on the capital projects by the end of the 3-year temporary period.

(B) ***Time test.*** The time test is met if the issuer incurs within 6 months of the issue date a substantial binding obligation to a third party to expend at least 5 percent of the net sale proceeds of the issue on the capital projects. An obligation is not binding if it is subject to contingencies within the issuer's or a related party's control.

(C) ***Due diligence test.*** The due diligence test is met if completion of the capital projects and the allocation of the net sale proceeds of the issue to expenditures proceed with due diligence.

(ii) ***5-year temporary period.*** In the case of proceeds expected to be allocated to a capital project involving a substantial amount of construction expenditures (as defined in § 1.148-7), a 5-year temporary period applies in lieu of the 3-year temporary period if the issuer satisfies the requirements of paragraph (e)(2)(i) of this section applied by substituting "5 years" in each place that "3 years" appears, and both the issuer and a licensed architect or engineer certify that the longer period is necessary to complete the capital project.

(3) ***Temporary period for working capital expenditures*** —

(i) ***General rule.*** The proceeds of an issue that are reasonably expected to be allocated to working capital expenditures within 13 months after the issue date qualify for a temporary period of 13 months beginning on the issue date. Paragraph (e)(2) of this section contains additional temporary period rules for certain working capital expenditures that are treated as part of a capital project.

(ii) ***Longer temporary period for certain tax anticipation issues.*** If an issuer reasonably expects to use tax revenues arising from tax levies for a single fiscal year to redeem or retire an issue, and the issue matures by the earlier of 2 years after the issue date or 60 days after the last date for payment of those taxes without interest or penalty, the temporary period under paragraph (e)(3)(i) of this section is extended until the maturity date of the issue.

(4) ***Temporary period for pooled financings*** —

(i) ***In general.*** Proceeds of a pooled financing issue reasonably expected to be used to finance purpose investments qualify for a temporary period of 6 months while held by the issuer before being loaned to a conduit borrower. Any otherwise available temporary period for proceeds held by a conduit borrower, however, is reduced by the period of time during which those proceeds were held by the issuer before being loaned. For example, if the proceeds of a pooled financing issue loaned to a conduit borrower would qualify for a 3-year temporary period, and the proceeds are held by the issuer for 5 months before being loaned to the conduit borrower, the proceeds qualify for only an additional 31-month temporary period after being loaned to the conduit borrower. Except as provided in paragraph (e)(4)(iv) of this section, this paragraph (e)(4) does not apply to any qualified mortgage bond or qualified veterans' mortgage bond under section 143.

(ii) ***Loan repayments*** —

(A) ***Amount held by the issuer.*** The temporary period under this paragraph (e)(4) for proceeds from the sale or repayment of any loan that are reasonably expected to be used to make or finance new loans is 3 months.

(B) ***Amounts re-loaned to conduit borrowers.*** Any temporary period for proceeds held by a conduit borrower under a new loan from amounts described in paragraph (e)(4)(ii)(A) of this section is determined by treating the date the new loan is made as the issue date and by reducing the temporary period by the period the amounts were held by the issuer following the last repayment.

(iii) ***Construction issues.*** If all or a portion of a pooled financing issue qualifies as a construction issue under § 1.148-7(b)(6), paragraph (e)(4)(i) of this section is applied by substituting "2 years" for "6 months."

(iv) ***Amounts re-loaned for qualified mortgage loans.*** The temporary period under this paragraph (e)(4) for proceeds from the sale, prepayment, or repayment of any qualified mortgage loan that are reasonably expected to be used to make or finance new qualified mortgage loans is 3 years.

(5) ***Temporary period for replacement proceeds*** —

(i) ***In general.*** Except as otherwise provided, replacement proceeds qualify for a temporary period of 30 days beginning on the date that the amounts are first treated as replacement proceeds.

(ii) ***Temporary period for bona fide debt service funds.*** Amounts in a bona fide debt service fund for an issue qualify for a temporary period of 13 months. If only a portion of a fund qualifies as a bona fide debt service fund, only that portion qualifies for this temporary period.

(6) ***Temporary period for investment proceeds.*** Except as otherwise provided in this paragraph (e), investment proceeds qualify for a temporary period of 1 year beginning on the date of receipt.

(7) ***Other amounts.*** Gross proceeds not otherwise eligible for a temporary period described in this paragraph (e) qualify for a temporary period of 30 days beginning on the date of receipt.

(f) ***Reserve or replacement funds*** —

(1) ***General 10 percent limitation on funding with sale proceeds.*** An issue consists of arbitrage bonds if sale proceeds of the issue in excess of 10 percent of the stated principal amount of the issue are used to finance any reserve or replacement fund, without regard to whether those sale proceeds are invested in higher yielding investments. If an issue has more than a de minimis amount of original issue discount or premium, the issue price (net of pre-issuance accrued interest) is used to measure the 10-percent limitation in lieu of stated principal amount. This rule does not limit the use of amounts other than sale proceeds of an issue to fund a reserve or replacement fund.

(2) ***Exception from yield restriction for reasonably required reserve or replacement funds*** —

(i) ***In general.*** The investment of amounts that are part of a reasonably required reserve or replacement fund in higher yielding investments will not cause an issue to consist of arbitrage bonds. A reasonably required reserve or replacement fund may consist of all or a portion of one or more funds, however labelled, derived from one or more sources. Amounts in a reserve or replacement fund in excess of the amount that is reasonably required are not part of a reasonably required reserve or replacement fund.

(ii) ***Size limitation.*** The amount of gross proceeds of an issue that qualifies as a reasonably required reserve or replacement fund may not exceed an amount equal to the least of 10 percent of the stated principal amount of the issue, the maximum annual principal and interest requirements on the issue, or 125 percent of the average annual principal and interest requirements on the issue. If an issue has more than a de minimis amount of original issue discount or premium, the issue price of the issue (net of pre-issuance accrued interest) is used to measure the 10 percent limitation in lieu of its stated principal amount. For a reserve or replacement fund that secures more than one issue (e.g. a parity reserve fund), the size limitation may be measured on an aggregate basis.

(iii) ***Valuation of investments.*** Investments in a reasonably required reserve or replacement fund may be valued in any reasonable, consistently applied manner that is permitted under § 1.148-5.

(iv) ***150 percent debt service limitation on investment in nonpurpose investments for certain private activity bonds.*** Section 148(d)(3) contains additional limits on the amount of gross proceeds of an issue of private activity bonds, other than qualified 501(c)(3) bonds, that may be invested in higher yielding nonpurpose investments without causing the bonds to be arbitrage bonds. For purposes of these rules, *initial temporary period* means the temporary periods under paragraphs (e)(2), (e)(3), and (e)(4) of this section and under § 1.148-9(d)(2)(i), (ii), and (iii).

(3) ***Certain parity reserve funds.*** The limitation contained in paragraph (f)(1) of this section does not apply to an issue if the master legal document authorizing the issuance of the bonds (e.g., a master indenture) was adopted before August 16, 1986, and that document—

(i) Requires a reserve or replacement fund in excess of 10 percent of the sale proceeds, but not more than maximum annual principal and interest requirements;

(ii) Is not amended after August 31, 1986 (other than to permit the issuance of additional bonds as contemplated in the master legal document); and

(iii) Provides that bonds having a parity of security may not be issued by or on behalf of the issuer for the purposes provided under the document without satisfying the reserve fund requirements of the indenture.

(g) ***Minor portion.*** Under section 148(e), a bond of an issue is not an arbitrage bond solely because of the investment in higher yielding investments of gross proceeds of the issue in an amount not exceeding the lesser of—

(1) 5 percent of the sale proceeds of the issue; or

(2) $100,000.

(h) ***Certain waivers permitted.*** On or before the issue date, an issuer may elect to waive the right to invest in higher yielding investments during any temporary period under paragraph (e) of this section or as part of a reasonably required reserve or replacement fund under paragraph (f) of this section. At any time, an issuer may waive the right to invest in higher yielding investments as part of a minor portion under paragraph (g) of this section.

[T.D. 8476, 58 FR 33520, June 18, 1993; 58 FR 44452, Aug. 23, 1993, as amended by T.D. 8538, 59 FR 24042, May 10, 1994; T.D. 8718, 62 FR 25507, May 9, 1997; T.D. 9777, 81 FR 46593, July 18, 2016]

§ 1.148-3 General arbitrage rebate rules.

(a) ***In general.*** Section 148(f) requires that certain earnings on nonpurpose investments allocable to the gross proceeds of an issue be paid to the United States to prevent the bonds in the issue from being arbitrage bonds. The arbitrage that must be rebated is based on the difference between the amount actually earned on nonpurpose investments and the amount that would have been earned if those investments had a yield equal to the yield on the issue.

(b) ***Definition of rebate amount.*** As of any date, the rebate amount for an issue is the excess of the future value, as of that date, of all receipts on nonpurpose investments over the future value, as of that date, of all payments on nonpurpose investments.

(c) ***Computation of future value of a payment or receipt.*** The future value of a payment or receipt at the end of any period is determined using the economic accrual method and equals the value of that payment or receipt when it is paid or received (or treated as paid or received), plus interest assumed to be earned and compounded over the period at a rate equal to the yield on the issue, using the same compounding interval and financial conventions used to compute that yield.

(d) ***Payments and receipts*** —

(1) ***Definition of payments.*** For purposes of this section, payments are—

(i) Amounts actually or constructively paid to acquire a nonpurpose investment (or treated as paid to a commingled fund);

(ii) For a nonpurpose investment that is first allocated to an issue on a date after it is actually acquired (e.g., an investment that becomes allocable to transferred proceeds or to replacement proceeds) or that becomes subject to the rebate requirement on a date after it is actually acquired (e.g., an investment allocated to a reasonably required reserve or replacement fund for a construction issue at the end of the 2-year spending period), the value of that investment on that date;

(iii) For a nonpurpose investment that was allocated to an issue at the end of the preceding computation period, the value of that investment at the beginning of the computation period;

(iv) On the last day of each bond year during which there are amounts allocated to gross proceeds of an issue that are subject to the rebate requirement, and on the final maturity date, a computation credit of $1,400 for any bond year ending in 2007 and, for bond years ending after 2007, a computation credit in the amount determined under paragraph (d)(4) of this section; and

(v) Yield reduction payments on nonpurpose investments made pursuant to § 1.148-5(c).

(2) ***Definition of receipts.*** For purposes of this section, receipts are—

(i) Amounts actually or constructively received from a nonpurpose investment (including amounts treated as received from a commingled fund), such as earnings and return of principal;

(ii) For a nonpurpose investment that ceases to be allocated to an issue before its disposition or redemption date (e.g., an investment that becomes allocable to transferred proceeds of another issue or that ceases to be allocable to the issue pursuant to the universal cap under § 1.148-6) or that ceases to be subject to the rebate requirement on a date earlier than its disposition or redemption date (e.g., an investment allocated to a fund initially subject to the rebate requirement but that subsequently qualifies as a bona fide debt service fund), the value of that nonpurpose investment on that date; and

(iii) For a nonpurpose investment that is held at the end of a computation period, the value of that investment at the end of that period.

(3) ***Special rules for commingled funds.*** Section 1.148-6(e) provides special rules to limit certain of the required determinations of payments and receipts for investments of a commingled fund.

(4) ***Cost-of-living adjustment.*** For any calendar year after 2007, the $1,400 computation credit set forth in paragraph (d)(1)(iv) of this section shall be increased by an amount equal to such dollar amount multiplied by the cost-of-living adjustment determined under section 1(f)(3) for such year, as modified by this paragraph (d)(4). In applying section 1(f)(3) to determine this cost-of-living

adjustment, the reference to "calendar year 1992" in section 1(f)(3)(B) shall be changed to "calendar year 2006." If any such increase determined under this paragraph (d)(4) is not a multiple of $10, such increase shall be rounded to the nearest multiple thereof.

(e) *Computation dates* —

(1) ***In general.*** For a fixed yield issue, an issuer may treat any date as a computation date. For a variable yield issue, an issuer:

(i) May treat the last day of any bond year ending on or before the latest date on which the first rebate amount is required to be paid under paragraph (f) of this section (the *first required payment date*) as a computation date but may not change that treatment after the first payment date; and

(ii) After the first required payment date, must consistently treat either the end of each bond year or the end of each fifth bond year as computation dates and may not change these computation dates after the first required payment date.

(2) ***Final computation date.*** The date that an issue is discharged is the final computation date. For an issue retired within 3 years of the issue date, however, the final computation date need not occur before the end of 8 months after the issue date or during the period in which the issuer reasonably expects that any of the spending exceptions under § 1.148-7 will apply to the issue.

(f) *Amount of required rebate installment payment* —

(1) ***Amount of interim rebate payments.*** The first rebate installment payment must be made for a computation date that is not later than 5 years after the issue date. Subsequent rebate installment payments must be made for a computation date that is not later than 5 years after the previous computation date for which an installment payment was made. A rebate installment payment must be in an amount that, when added to the future value, as of the computation date, of previous rebate payments made for the issue, equals at least 90 percent of the rebate amount as of that date.

(2) ***Amount of final rebate payment.*** For the final computation date, a final rebate payment must be paid in an amount that, when added to the future value of previous rebate payments made for the issue, equals 100 percent of the rebate amount as of that date.

(3) ***Future value of rebate payments.*** The future value of a rebate payment is determined under paragraph (c) of this section. This value is computed by taking into account recoveries of overpayments.

(g) ***Time and manner of payment.*** Each rebate payment must be paid no later than 60 days after the computation date to which the payment relates. Any rebate payment paid within this 60-day period may be treated as paid on the computation date to which it relates. A rebate payment is paid when it is filed with the Internal Revenue Service at the place or places designated by the Commissioner. A payment must be accompanied by the form provided by the Commissioner for this purpose.

(h) *Penalty in lieu of loss of tax exemption* —

(1) ***In general.*** The failure to pay the correct rebate amount when required will cause the bonds of the issue to be arbitrage bonds, unless the Commissioner determines that the failure was not caused by willful neglect and the issuer promptly pays a penalty to the United States. If no bond of the issue is a private activity bond (other than a qualified 501(c)(3) bond), the penalty equals 50 percent of the

rebate amount not paid when required to be paid, plus interest on that amount. Otherwise, the penalty equals 100 percent of the rebate amount not paid when required to be paid, plus interest on that amount.

(2) ***Interest on underpayments.*** Interest accrues at the underpayment rate under section 6621, beginning on the date the correct rebate amount is due and ending on the date 10 days before it is paid.

(3) ***Waivers of the penalty.*** The penalty is automatically waived if the rebate amount that the issuer failed to pay plus interest is paid within 180 days after discovery of the failure, unless, the Commissioner determines that the failure was due to willful neglect, or the issue is under examination by the Commissioner at any time during the period beginning on the date the failure first occurred and ending on the date 90 days after the receipt of the rebate amount. Generally, extensions of this 180-day period and waivers of the penalty in other cases will be granted by the Commissioner only in unusual circumstances. For purposes of this paragraph (h)(3), willful neglect does not include a failure that is attributable solely to the permissible retroactive selection of a short first bond year if the rebate amount that the issuer failed to pay is paid within 60 days of the selection of that bond year.

(4) ***Application to alternative penalty under § 1.148-7.*** Paragraphs (h) (1), (2), and (3) of this section apply to failures to pay penalty payments under § 1.148-7 (*alternative penalty amounts*) by substituting *alternative penalty amounts* for *rebate amount* and *the last day of each spending period* for *computation date.*

(i) ***Recovery of overpayment of rebate —***

(1) ***In general.*** An issuer may recover an overpayment for an issue of tax-exempt bonds by establishing to the satisfaction of the Commissioner that the overpayment occurred. An overpayment is the excess of the amount paid to the United States for an issue under section 148 over the sum of the rebate amount for the issue as of the most recent computation date and all amounts that are otherwise required to be paid under section 148 as of the date the recovery is requested.

(2) ***Limitations on recovery.***

(i) An overpayment may be recovered only to the extent that a recovery on the date that it is first requested would not result in an additional rebate amount if that date were treated as a computation date.

(ii) Except for overpayments of penalty in lieu of rebate under section 148(f)(4)(C)(vii) and § 1.148-7(k), an overpayment of less than $5,000 may not be recovered before the final computation date.

(3) ***Time and manner for requesting refund.***

(i) An issuer must request a refund of an overpayment (claim) no later than the date that is two years after the final computation date for the issue to which the overpayment relates (the filing deadline). The claim must be made using the form provided by the Commissioner for this purpose.

(ii) The Commissioner may request additional information to support a claim. The issuer must file the additional information by the date specified in the Commissioner's request, which date may be extended by the Commissioner if unusual circumstances warrant. An issuer will be given at least 21 calendar days to respond to a request for additional information.

(iii) A claim described in either paragraph (i)(3)(iii)(A) or (B) of this section that has been denied by the Commissioner may be appealed to the Office of Appeals under this paragraph (i)(3)(iii). Upon a determination in favor of the issuer, the Office of Appeals must return the undeveloped case to the Commissioner for further consideration of the substance of the claim.

(A) A claim is described in this paragraph (i)(3)(iii)(A) if the Commissioner asserts that the claim was filed after the filing deadline.

(B) A claim is described in this paragraph (i)(3)(iii)(B) if the Commissioner asserts that additional information to support the claim was not submitted within the time specified in the request for information or in any extension of such specified time period.

(j) ***Examples.*** The provisions of this section may be illustrated by the following examples.

Example 1. Calculation and payment of rebate for a fixed yield issue. (i) *Facts.* On January 1, 1994, City *A* issues a fixed yield issue and invests all the sale proceeds of the issue ($49 million). There are no other gross proceeds. The issue has a yield of 7.0000 percent per year compounded semiannually (computed on a 30 day month/360 day year basis). City *A* receives amounts from the investment and immediately expends them for the governmental purpose of the issue as follows:

Date	Amount
2/1/94	$3,000,000
5/1/94	5,000,000
1/1/95	5,000,000
9/1/95	20,000,000
3/1/96	22,000,000

(ii) *First computation date.* (A) City *A* chooses January 1, 1999, as its first computation date. This date is the latest date that may be used to compute the first required rebate installment payment. The rebate amount as of this date is computed by determining the future value of the receipts and the payments for the investment. The compounding interval is each 6-month (or shorter) period and the 30 day month/360 day year basis is used because these conventions were used to compute yield on the issue. The future value of these amounts, plus the computation credit, as of January 1, 1999, is:

Date	Receipts (payments)	FV (7.0000 percent)
1/1/94	($49,000,000)	($69,119,339)

Date	Receipts (payments)	FV (7.0000 percent)
2/1/94	3,000,000	4,207,602
5/1/94	5,000,000	6,893,079
1/1/95	5,000,000	6,584,045
1/1/95	(1,000)	(1,317)
9/1/95	20,000,000	25,155,464
1/1/96	(1,000)	1,229)
3/1/96	22,000,000	26,735,275
1/1/97	(1,000)	(1,148)
Rebate amount (1/01/99)		452,432

(B) City *A* pays 90 percent of the rebate amount ($407,189) to the United States within 60 days of January 1, 1999.

(iii) *Second computation date.* (A) On the next required computation date, January 1, 2004, the future value of the payments and receipts is:

Date	Receipts (payments)	FV (7.0000 percent)
1/1/99	$452,432	$638,200
Rebate amount (1/01/04)		638,200

(B) As of this computation date, the future value of the payment treated as made on January 1, 1999, is $574,380, which equals at least 90 percent of the rebate amount as of this computation date ($638,200 × 0.9), and thus no additional rebate payment is due as of this date.

(iv) *Final computation date.* (A) On January 1, 2009, City *A* redeems all the bonds, and thus this date is the final computation date. The future value of the receipts and payments as of this date is:

Date	Receipts (payments)	FV (7.0000 percent)
1/1/04	$638,200	$900,244
1/1/09	(1,000)	(1,000)
Rebate amount (1/01/09)		899,244

(B) As of this computation date, the future value of the payment made on January 1, 1999, is

$810,220 and thus an additional rebate payment of $89,024 is due. This payment reflects the future value of the 10 percent unpaid portion, and thus would not be owed had the issuer paid the full rebate amount as of any prior computation date.

Example 2. Calculation and payment of rebate for a variable yield issue. (i) *Facts.* On July 1, 1994, City *B* issues a variable yield issue and invests all of the sale proceeds of the issue ($30 million). There are no other gross proceeds. As of July 1, 1999, there are nonpurpose investments allocated to the issue. Prior to July 1, 1999, City *B* receives amounts from nonpurpose investments and immediately expends them for the governmental purpose of the issue as follows:

Date	Amount
8/1/1994	$5,000,000
7/1/1995	8,000,000
12/1/1995	17,000,000
7/1/1999	650,000

(ii) *First computation date.* (A) City *B* treats the last day of the fifth bond year (July 1, 1999) as a computation date. The yield on the variable yield issue during the first computation period (the period beginning on the issue date and ending on the first computation date) is 6.0000 percent per year compounded semiannually. The value of the nonpurpose investments allocated to the issue as of July 1, 1999, is $3 million. The rebate amount as of July 1, 1999, is computed by determining the future value of the receipts and the payments for the nonpurpose investments. The compounding interval is each 6-month (or shorter) period and the 30 day month/360 day year basis is used because these conventions were used to compute yield on the issue. The future value of these amounts and of the computation date credits as of July 1, 1999, is:

Date	Receipts (payments)	FV (6.0000 percent)
7/1/1994	($30,000,000)	($40,317,491)
8/1/1994	5,000,000	6,686,560
7/1/1995	(1,000)	(1,267)
7/1/1995	8,000,000	10,134,161
12/1/1995	17,000,000	21,011,112
7/1/1996	(1,000)	(1,194)
7/1/1997	(1,000)	(1,126)
7/1/1998	(1,000)	(1,061)
7/1/1999	3,000,000	3,000,000

Date	Receipts (payments)	FV (6.0000 percent)
7/1/1999	650,000	650,000
7/1/1999	(1,000)	(1,000)
Rebate amount (7/01/1999)		1,158,694

(B) City *B* pays 90 percent of the rebate amount ($1,042,824.60) to the United States within 60 days of July 1, 1999.

(iii) *Next computation date.* (A) On July 1, 2004, City *B* redeems all of the bonds. Thus, the next computation date is July 1, 2004. On July 30, 1999, City *B* chose to compute rebate for periods following the first computation period by treating the end of each fifth bond year as a computation date. The yield during the second computation period is 5.0000 percent per year compounded semiannually. The computation of the rebate amount as of this date reflects the value of the nonpurpose investments allocated to the issue at the end of the prior computation period. On July 1, 2004, City *B* sells those nonpurpose investments for $3,925,000 and expends that amount for the governmental purpose of the issue.

(B) As of July 1, 2004, the future value of the rebate amount computed as of July 1, 1999, and of all other payments and receipts is:

Date	Receipts (payments)	FV (5.0000 percent)
7/1/1999	$1,158,694	$1,483,226
7/1/1999	(3,000,000)	(3,840,254)
7/1/2000	(1,000)	(1,218)
7/1/2001	(1,000)	(1,160)
7/1/2002	(1,000)	(1,104)
7/1/2003	(1,000)	(1,051)
7/1/2004	(2,000)	(2,000)
7/1/2004	3,925,000	3,925,000
		1,561,439

(C) As of this computation date, the future value of the payment made on July 1, 1999, is $1,334,904 and thus an additional rebate payment of $226,535 is due.

(D) If the yield during the second computation period were, instead, 7.0000 percent, the rebate amount computed as of July 1, 2004, would be $1,320,891. The future value of the payment made on July 1, 1999, would be $1,471,007. Although the future value of the payment made on July 1, 1999 ($1,471,007), exceeds the rebate amount computed as of July 1, 2004 ($1,320,891), §

> 1.148-3(i) limits the amount recoverable as a defined overpayment of rebate under section 148 to the excess of the total "amount paid" over the sum of the amount determined under the future value method to be the "rebate amount" as of the most recent computation date and all other amounts that are otherwise required to be paid under section 148 as of the date the recovery is requested. Because the total amount that the issuer paid on July 1, 1999 ($1,042,824.60), does not exceed the rebate amount as of July 1, 2004 ($1,320,891), the issuer would not be entitled to recover any overpayment of rebate in this case.

(k) ***Bona fide debt service fund exception.*** Under section 148(f)(4)(A), the rebate requirement does not apply to amounts in certain bona fide debt service funds. An issue with an average annual debt service that is not in excess of $2,500,000 may be treated as satisfying the $100,000 limitation in section 148(f)(4)(A)(ii).

[T.D. 8476, 58 FR 33522, June 18, 1993; 58 FR 44452, Aug. 23, 1993, as amended by T.D. 8538, 59 FR 24042, May 10, 1994; T.D. 8476, 59 FR 24350, May 11, 1994; T.D. 8718, 62 FR 25507, May 9, 1997; T.D. 9701, 79 FR 67351, Nov. 13, 2014; T.D. 9777, 81 FR 46593, July 18, 2016]

§ 1.148-4 Yield on an issue of bonds.

(a) ***In general.*** The yield on an issue of bonds is used to apply investment yield restrictions under section 148(a) and to compute rebate liability under section 148(f). Yield is computed under the economic accrual method using any consistently applied compounding interval of not more than one year. A short first compounding interval and a short last compounding interval may be used. Yield is expressed as an annual percentage rate that is calculated to at least four decimal places (for example, 5.2525 percent). Other reasonable, standard financial conventions, such as the 30 days per month/360 days per year convention, may be used in computing yield but must be consistently applied. The yield on an issue that would be a purpose investment (absent section 148(b)(3)(A)) is equal to the yield on the conduit financing issue that financed that purpose investment.

(b) ***Computing yield on a fixed yield issue —***

(1) ***In general —***

(i) ***Yield on an issue.*** The yield on a fixed yield issue is the discount rate that, when used in computing the present value as of the issue date of all unconditionally payable payments of principal, interest, and fees for qualified guarantees on the issue and amounts reasonably expected to be paid as fees for qualified guarantees on the issue, produces an amount equal to the present value, using the same discount rate, of the aggregate issue price of bonds of the issue as of the issue date. Further, payments include certain amounts properly allocable to a qualified hedge. Yield on a fixed yield issue is computed as of the issue date and is not affected by subsequent unexpected events, except to the extent provided in paragraphs (b)(4) and (h)(3) of this section.

(ii) ***Yield on a bond.*** Yield on a fixed yield bond is computed in the same manner as yield on a fixed yield issue.

(2) ***Yield on certain fixed yield bonds subject to mandatory or contingent early redemption —***

(i) ***In general.*** The yield on a fixed yield issue that includes a bond subject to mandatory early redemption or expected contingent redemption is computed by treating that bond as redeemed on its reasonably expected early redemption date for an amount equal to its value on that date. Reasonable expectations are determined on the issue date. A bond is subject to mandatory early redemption if it is unconditionally payable in full before its final maturity date. A bond is subject to a contingent redemption if it must be, or is reasonably expected to be, redeemed prior to final maturity upon the occurrence of a contingency. A contingent redemption is taken into account only if the contingency is reasonably expected to occur, in which case the date of occurrence of the contingency must be reasonably estimated. For example, if bonds are reasonably expected to be redeemed early using excess revenues from general or special property taxes or benefit assessments or similar amounts, the reasonably expected redemption schedule is used to determine yield. For purposes of this paragraph (b)(2)(i), excess proceeds calls for issues for which the requirements of § 1.148-2(e) (2) or (3) are satisfied, calamity calls, and refundings do not cause a bond to be subject to early redemption. The value of a bond is determined under paragraph (e) of this section.

(ii) ***Substantially identical bonds subject to mandatory early redemption.*** If substantially identical bonds of an issue are subject to specified mandatory redemptions prior to final maturity (e.g., a mandatory sinking fund redemption requirement), yield on that issue is computed by treating those bonds as redeemed in accordance with the redemption schedule for an amount equal to their value. Generally, bonds are substantially identical if the stated interest rate, maturity, and payment dates are the same. In computing the yield on an issue containing bonds described in this paragraph (b)(2)(ii), each of those bonds must be treated as redeemed at its present value, unless the stated redemption price at maturity of the bond does not exceed the issue price of the bond by more than one-fourth of one percent multiplied by the product of the stated redemption price at maturity and the number of years to the weighted average maturity date of the substantially identical bonds, in which case each of those bonds must be treated as redeemed at its outstanding stated principal amount, plus accrued, unpaid interest. Weighted average maturity is determined by taking into account the mandatory redemption schedule.

(3) ***Yield on certain fixed yield bonds subject to optional early redemption*** —

(i) ***In general.*** If a fixed yield bond is subject to optional early redemption and is described in paragraph (b)(3)(ii) of this section, the yield on the issue containing the bond is computed by treating the bond as redeemed at its stated redemption price on the optional redemption date that would produce the lowest yield on that bond.

(ii) ***Fixed yield bonds subject to special yield calculation rule.*** A fixed yield bond is described in this paragraph (b)(3)(ii) only if it—

(A) Is subject to optional redemption within five years of the issue date, but only if the yield on the issue computed by assuming all bonds in the issue subject to redemption within 5 years of the issue date are redeemed at maturity is more than one-eighth of one percentage point higher than the yield on that issue computed by assuming all bonds subject to optional redemption within 5 years of the issue date are redeemed at the earliest date for their redemption;

(B) Is issued at an issue price that exceeds the stated redemption price at maturity by more than one-fourth of one percent multiplied by the product of the stated redemption price at maturity and the number of complete years to the first optional redemption date for the bond; or

(C) Bears interest at increasing interest rates (*i.e.*, a *stepped coupon bond*).

(4) ***Yield recomputed upon transfer of certain rights associated with the bond.*** For purposes of § 1.148-3, as of the date of any transfer, waiver, modification, or similar transaction (collectively, a *transfer*) of any right that is part of the terms of a bond or is otherwise associated with a bond (e.g., a redemption right), in a transaction that is separate and apart from the original sale of the bond, the issue is treated as if it were retired and a new issue issued on the date of the transfer (*reissued*). The redemption price of the retired issue and the issue price of the new issue equal the aggregate values of all the bonds of the issue on the date of the transfer. In computing yield on the new issue, any amounts received by the issuer as consideration for the transfer are taken into account.

(5) ***Special aggregation rule treating certain bonds as a single fixed yield bond.*** Two variable yield bonds of an issue are treated in the aggregate as a single fixed yield bond if—

(i) Aggregate treatment would result in the single bond being a fixed yield bond; and

(ii) The terms of the bonds do not contain any features that could distort the aggregate fixed yield from what the yield would be if a single fixed yield bond were issued. For example, if an issue contains a bond bearing interest at a floating rate and a related bond bearing interest at a rate equal to a fixed rate minus that floating rate, those two bonds are treated as a single fixed yield bond only if neither bond may be redeemed unless the other bond is also redeemed at the same time.

(6) ***Examples.*** The provisions of this paragraph (b) may be illustrated by the following examples.

Example 1. No early call—(i) *Facts.* On January 1, 1994, City *A* issues an issue consisting of four identical fixed yield bonds. The stated final maturity date of each bond is January 1, 2004, and no bond is subject to redemption before this date. Interest is payable on January 1 of each year at a rate of 6.0000 percent per year on the outstanding principal amount. The total stated principal amount of the bonds is $20 million. The issue price of the bonds $20,060,000.

(ii) *Computation.* The yield on the issue is computed by treating the bonds as retired at the stated maturity under the general rule of § 1.148-4(b)(1). The bonds are treated as redeemed for their stated redemption prices. The yield on the issue is 5.8731 percent per year compounded semiannually, computed as follows:

Date	Payments	PV (5.8731 percent)
1/1/1995	$1,200,000	$1,132,510
1/1/1996	1,200,000	1,068,816
1/1/1997	1,200,000	1,008,704
1/1/1998	1,200,000	951,973
1/1/1999	1,200,000	898,433
1/1/2000	1,200,000	847,903
1/1/2001	1,200,000	800,216

Date	Payments	PV (5.8731 percent)
1/1/2002	1,200,000	755,210
1/1/2003	1,200,000	712,736
1/1/2004	21,200,000	11,883,498
		20,060,000

Example 2. Mandatory calls. (i) *Facts.* The facts are the same as in *Example 1.* In this case, however, the bonds are subject to mandatory sinking fund redemption on January 1 of each year, beginning January 1, 2001. On each sinking fund redemption date, one of the bonds is chosen by lottery and is required to be redeemed at par plus accrued interest.
(ii) *Computation.* Because the bonds are subject to specified redemptions, yield on the issue is computed by treating the bonds as redeemed in accordance with the redemption schedule under § 1.148-4(b)(2)(ii). Because the bonds are not sold at a discount, the bonds are treated as retired at their stated redemption prices. The yield on the issue is 5.8678 percent per year compounded semiannually, computed as follows:

Date	Payments	PV (5.8678 percent)
1/1/1995	$1,200,000	$1,132,569
1/1/1996	1,200,000	1,068,926
1/1/1997	1,200,000	1,008,860
1/1/1998	1,200,000	952,169
1/1/1999	1,200,000	898,664
1/1/2000	1,200,000	848,166
1/1/2001	6,200,000	4,135,942
1/1/2002	5,900,000	3,714,650
1/1/2003	5,600,000	3,327,647
1/1/2004	5,300,000	2,972,407
		$20,060,000

Example 3. Optional early call. (i) *Facts.* On January 1, 1994, City *C* issues an issue consisting of three bonds. Each bond has a stated principal amount of $10 million dollars and is issued for par. Bond *X* bears interest at 5 percent per year and matures on January 1, 1999. Bond*Y* bears interest at 6 percent per year and matures on January 1, 2002. Bond *Z* bears interest at 7 percent per year and matures on January 1, 2004. Bonds *Y* and *Z* are callable by the issuer at par plus accrued interest after December 31, 1998.

(ii) *Computation.* (A) The yield on the issue computed as if each bond is outstanding to its maturity is 6.0834 percent per year compounded semiannually, computed as follows:

Date	Payments	PV (6.0834 percent)
1/1/1995	$1,800,000	$1,695,299
1/1/1996	1,800,000	1,596,689
1/1/1997	1,800,000	1,503,814
1/1/1998	1,800,000	1,416,342
1/1/1999	11,800,000	8,744,830
1/1/2000	1,300,000	907,374
1/1/2001	1,300,000	854,595
1/1/2002	11,300,000	6,996,316
1/1/2003	700,000	408,190
1/1/2004	10,700,000	5,876,551
		30,000,000

(B) The yield on the issue computed as if all bonds are called at the earliest date for redemption is 5.9126 percent per year compounded semiannually, computed as follows:

Date	Payments	PV (5.9126 percent)
1/1/1995	$1,800,000	$1,698,113
1/1/1996	1,800,000	1,601,994
1/1/1997	1,800,000	1,511,315
1/1/1998	1,800,000	1,425,769
1/1/1999	31,800,000	23,762,809
		30,000,000

(C) Because the yield on the issue computed by assuming all bonds in the issue subject to redemption within 5 years of the issue date are redeemed at maturity is more than one-eighth of one percentage point higher than the yield on the issue computed by assuming all bonds subject to optional redemption within 5 years of the issue date are redeemed at the earliest date for their redemption, each bond is treated as redeemed on the date that would produce the lowest yield for the issue. The lowest yield on the issue would result from a redemption of all the bonds on January 1, 1999. Thus, the yield on the issue is 5.9126 percent per year compounded semiannually.

(c) *Computing yield on a variable yield issue* —

(1) ***In general.*** The yield on a variable yield issue is computed separately for each computation period. The yield for each computation period is the discount rate that, when used in computing the present value as of the first day of the computation period of all the payments of principal and interest and fees for qualified guarantees that are attributable to the computation period, produces an amount equal to the present value, using the same discount rate, of the aggregate issue price (or deemed issue price, as determined in paragraph (c)(2)(iv) of this section) of the bonds of the issue as of the first day of the computation period. The yield on a variable yield bond is computed in the same manner as the yield on a variable yield issue. Except as provided in paragraph (c)(2) of this section, yield on any fixed yield bond in a variable yield issue is computed in the same manner as the yield on a fixed yield issue as provided in paragraph (b) of this section.

(2) *Payments on bonds included in yield for a computation period* —

(i) ***Payments in general.*** The payments on a bond that are attributable to a computation period include any amounts actually paid during the period for principal on the bond. Payments also include any amounts paid during the current period both for interest accruing on the bond during the current period and for interest accruing during the prior period that was included in the deemed issue price of the bond as accrued unpaid interest at the start of the current period under this paragraph (c)(2). Further, payments include any amounts properly allocable to fees for a qualified guarantee of the bond for the period and to any amounts properly allocable to a qualified hedge for the period.

(ii) ***Payments at actual redemption.*** If a bond is actually redeemed during a computation period, an amount equal to the greater of its value on the redemption date or the actual redemption price is a payment on the actual redemption date.

(iii) ***Payments for bonds outstanding at end of computation period.*** If a bond is outstanding at the end of a computation period, a payment equal to the bond's value is taken into account on the last day of that period.

(iv) ***Issue price for bonds outstanding at beginning of next computation period.*** A bond outstanding at the end of a computation period is treated as if it were immediately reissued on the next day for a deemed issue price equal to the value from the day before as determined under paragraph (c)(2)(iii) of this section.

(3) ***Example.*** The provisions of this paragraph (c) may be illustrated by the following example.

Example. On January 1, 1994, City *A* issues an issue of identical plain par bonds in an aggregate principal amount of $1,000,000. The bonds pay interest at a variable rate on each June 1 throughout the term of the issue. The entire principal amount of the bonds plus accrued, unpaid interest is payable on the final maturity date of January 1, 2000. No bond year is selected. On June 1, 1994, 1995, 1996, 1997, and 1998, interest in the amounts of $30,000, $55,000, $57,000, $56,000, and $45,000 is paid on the bonds. From June 1, 1998, to January 1, 1999, $30,000 of interest accrues on the bonds. From January 1, 1999, to June 1, 1999, another $35,000 of interest accrues. On June 1, 1999, the issuer actually pays $65,000 of interest. On January 1, 2000, $1,000,000 of principal and $38,000 of accrued interest are paid. The payments for the computation period starting on the issue date and ending on January 1, 1999, include all annual interest payments paid from the issue date to June 1, 1998. Because the issue is outstanding on January 1, 1999, it is treated as redeemed on that date for amount equal to its value ($1,000,000 plus accrued, unpaid interest of $30,000 under paragraph (e)(1) of this section).

Thus, $1,030,000 is treated as paid on January 1, 1999. The issue is then treated as reissued on January 1, 1999, for $1,030,000. The payments for the next computation period starting on January 1, 1999, and ending on January 1, 2000, include the interest actually paid on the bonds during that period ($65,000 on June 1, 1999, plus $38,000 paid on January 1, 2000). Because the issue was actually redeemed on January 1, 2000, an amount equal to its stated redemption price is also treated as paid on January 1, 2000.

(d) ***Conversion from variable yield issue to fixed yield issue.*** For purposes of determining yield under this section, as of the first day on which a variable yield issue would qualify as a fixed yield issue if it were newly issued on that date (a *conversion date*), that issue is treated as if it were reissued as a fixed yield issue on the conversion date. The redemption price of the variable yield issue and the issue price of the fixed yield issue equal the aggregate values of all the bonds on the conversion date. Thus, for example, for plain par bonds (e.g., tender bonds), the deemed issue price would be the outstanding principal amount, plus accrued unpaid interest. If the conversion date occurs on a date other than a computation date, the issuer may continue to treat the issue as a variable yield issue until the next computation date, at which time it must be treated as converted to a fixed yield issue.

(e) ***Value of bonds*** —

(1) ***Plain par bonds.*** Except as otherwise provided, the value of a plain par bond is its outstanding stated principal amount, plus accrued unpaid interest. The value of a plain par bond that is actually redeemed or treated as redeemed is its stated redemption price on the redemption date, plus accrued, unpaid interest.

(2) ***Other bonds.*** The value of a bond other than a plain par bond on a date is its present value on that date. The present value of a bond is computed under the economic accrual method taking into account all the unconditionally payable payments of principal, interest, and fees for a qualified guarantee to be paid on or after that date and using the yield on the bond as the discount rate, except that for purposes of § 1.148-6(b)(2) (relating to the universal cap), these values may be determined by consistently using the yield on the issue of which the bonds are a part. To determine yield on fixed yield bonds, see paragraph (b)(1) of this section. The rules contained in paragraphs (b)(2) and (b)(3) of this section apply for this purpose. In the case of bonds described in paragraph (b)(2)(ii) of this section, the present value of those bonds on any date is computed using the yield to the final maturity date of those bonds as the discount rate. In determining the present value of a variable yield bond under this paragraph (e)(2), the initial interest rate on the bond established by the interest index or other interest rate setting mechanism is used to determine the interest payments on that bond.

(f) ***Qualified guarantees*** —

(1) ***In general.*** Fees properly allocable to payments for a qualified guarantee for an issue (as determined under paragraph (f)(6) of this section) are treated as additional interest on that issue under section 148. A guarantee is a qualified guarantee if it satisfies each of the requirements of paragraphs (f)(2) through (f)(4) of this section.

(2) ***Interest savings.*** As of the date the guarantee is obtained, the issuer must reasonably expect that the present value of the fees for the guarantee will be less than the present value of the expected interest savings on the issue as a result of the guarantee. For this purpose, present value is computed using the yield on the issue, determined with regard to guarantee payments, as the discount rate.

(3) ***Guarantee in substance.*** The arrangement must create a guarantee in substance. The arrangement must impose a secondary liability that unconditionally shifts substantially all of the credit risk for all or part of the payments, such as payments for principal and interest, redemption prices, or tender prices, on the guaranteed bonds. Reasonable procedural or administrative requirements of the guarantee do not cause the guarantee to be conditional. In the case of a guarantee against failure to remarket a qualified tender bond, commercially reasonable limitations based on credit risk, such as limitations on payment in the event of default by the primary obligor or the bankruptcy of a long-term credit guarantor, do not cause the guarantee to be conditional. The guarantee may be in any form. The guarantor may not be a co-obligor. Thus, the guarantor must not expect to make any payments other than under a direct-pay letter of credit or similar arrangement for which the guarantor will be reimbursed immediately. The guarantor and any related parties together must not use more than 10 percent of the proceeds of the portion of the issue allocable to the guaranteed bonds.

(4) ***Reasonable charge*** —

(i) ***In general.*** Fees for a guarantee must not exceed a reasonable, arm's-length charge for the transfer of credit risk. In complying with this requirement, the issuer may not rely on the representations of the guarantor.

(ii) ***Fees for services other than transfer of credit risk must be separately stated.*** A fee for a guarantee must not include any payment for any direct or indirect services other than the transfer of credit risk, unless the compensation for those other services is separately stated, reasonable, and excluded from the guarantee fee. Fees for the transfer of credit risk include fees for the guarantor's overhead and other costs relating to the transfer of credit risk. For example, a fee includes payment for services other than transfer of credit risk if—

(A) It includes payment for the cost of underwriting or remarketing bonds or for the cost of insurance for casualty to bond-financed property;

(B) It is refundable upon redemption of the guaranteed bond before the final maturity date and the amount of the refund would exceed the portion of the fee that had not been earned; or

(C) The requirements of § 1.148-2(e)(2) (relating to temporary periods for capital projects) are not satisfied, and the guarantor is not reasonably assured that the bonds will be repaid if the project to be financed is not completed.

(5) ***Guarantee of purpose investments.*** Except for guarantees of qualified mortgage loans and qualified student loans, a guarantee of payments on a purpose investment is a qualified guarantee of the issue if all payments on the purpose investment reasonably coincide with payments on the related bonds and the payments on the purpose investment are unconditionally payable no more than 6 months before the corresponding interest payment and 12 months before the corresponding principal payments on the bonds. This paragraph (f)(5) only applies if, in addition to satisfying the other requirements of this paragraph (f), the guarantee is, in substance, a guarantee of the bonds allocable to that purpose investment and to no other bonds except for bonds that are equally and ratably secured by purpose investments of the same conduit borrower.

(6) ***Allocation of qualified guarantee payments*** —

(i) ***In general.*** Payments for a qualified guarantee must be allocated to bonds and to computation periods in a manner that properly reflects the proportionate credit risk for which the guarantor is compensated. Proportionate credit risk for bonds that are not substantially identical may be determined using any reasonable, consistently applied method. For example, this risk may be

based on the ratio of the total principal and interest paid and to be paid on a guaranteed bond to the total principal and interest paid and to be paid on all bonds of the guaranteed issue. An allocation method generally is not reasonable, for example, if a substantial portion of the fee is allocated to the construction portion of the issue and a correspondingly insubstantial portion is allocated to the later years covered by the guarantee. Reasonable letter of credit *set up* fees may be allocated ratably during the initial term of the letter of credit. Upon an early redemption of a variable yield bond, fees otherwise allocable to the period after the redemption are allocated to remaining outstanding bonds of the issue or, if none remain outstanding, to the period before the redemption.

(ii) ***Safe harbor for allocation of qualified guarantee fees for variable yield issues.*** An allocation of non-level payments for a qualified guarantee for variable yield bonds is treated as meeting the requirements of paragraph (f)(6)(i) of this section if, for each bond year for which the guarantee is in effect, an equal amount (or for any short bond year, a proportionate amount of the equal amount) is treated as paid as of the beginning of that bond year. The present value of the annual amounts must equal the fee for the guarantee allocated to that bond, with present value computed as of the first day the guarantee is in effect by using as the discount rate the yield on the variable yield bonds covered by the guarantee, determined without regard to any fee allocated under this paragraph (f)(6)(ii).

(7) ***Refund or reduction of guarantee payments.*** If as a result of an investment of proceeds of a refunding issue in a refunding escrow, there will be a reduction in, or refund of, payments for a guarantee (*savings*), the savings must be treated as a reduction in the payments on the refunding issue.

(g) ***Yield on certain mortgage revenue and student loan bonds.*** For purposes of section 148 and this section, section 143(g)(2)(C)(ii) applies to the computation of yield on an issue of qualified mortgage bonds or qualified veterans' mortgage bonds. For purposes of applying section 148 and section 143(g) with respect to purpose investments allocable to a variable yield issue of qualified mortgage bonds, qualified veterans' mortgage bonds, or qualified student loan bonds that is reasonably expected as of the issue date to convert to a fixed yield issue, the yield may be computed over the term of the issue, and, if the yield is so computed, paragraph (d) of this section does not apply to the issue. As of any date, the yield over the term of the issue is based on—

(1) With respect to any bond of the issue that has not converted to a fixed and determinable yield on or before that date, the actual amounts paid or received to that date and the amounts that are reasonably expected (as of that date) to be paid or received with respect to that bond over the remaining term of the issue (taking into account prepayment assumptions under section 143(g)(2)(B)(iv), if applicable); and

(2) With respect to any bond of the issue that has converted to a fixed and determinable yield on or before that date, the actual amounts paid or received before that bond converted, if any, and the amount that was reasonably expected (on the date that bond converted) to be paid or received with respect to that bond over the remaining term of the issue (taking into account prepayment assumptions under section 143(g)(2)(B)(iv), if applicable).

(h) ***Qualified hedging transactions*** —

(1) ***In general.*** Payments made or received by an issuer under a qualified hedge (as defined in paragraph (h)(2) of this section) relating to bonds of an issue are taken into account (as provided in paragraph (h)(3) of this section) to determine the yield on the issue. Except as provided in paragraphs (h)(4)

and (h)(5)(ii)(E) of this section, the bonds to which a qualified hedge relates are treated as variable yield bonds from the issue date of the bonds. This paragraph (h) applies solely for purposes of sections 143(g), 148, and 149(d).

(2) ***Qualified hedge defined.*** Except as provided in paragraph (h)(5) of this section, the term *qualified hedge* means a contract that satisfies each of the following requirements:

(i) ***Hedge*** —

(A) ***In general.*** The contract is entered into primarily to modify the issuer's risk of interest rate changes with respect to a bond (a hedge). For example, the contract may be an interest rate swap, an interest rate cap, a futures contract, a forward contract, or an option.

(B) ***Special rule for fixed rate issues.*** If the contract modifies the issuer's risk of interest rate changes with respect to a bond that is part of an issue that, absent the contract, would be a fixed rate issue, the contract must be entered into—

(*1*) No later than 15 days after the issue date (or the deemed issue date under paragraph (d) of this section) of the issue; or

(*2*) No later than the expiration of a qualified hedge with respect to bonds of that issue that satisfies paragraph (h)(2)(i)(B)(*1*) of this section; or

(*3*) No later than the expiration of a qualified hedge with respect to bonds of that issue that satisfies either paragraph (h)(2)(i)(B)(*2*) of this section or this paragraph (h)(2)(i)(B)(*3*).

(C) ***Contracts with certain acquisition payments.*** If a hedge provider makes a single payment to the issuer (e.g., a payment for an off-market swap) in connection with the acquisition of a contract, the issuer may treat a portion of that contract as a hedge provided—

(*1*) The hedge provider's payment to the issuer and the issuer's payments under the contract in excess of those that it would make if the contract bore rates equal to the on-market rates for the contract (determined as of the date the parties enter into the contract) are separately identified in a certification of the hedge provider; and

(*2*) The payments described in paragraph (h)(2)(i)(C)(*1*) of this section are not treated as payments on the hedge.

(ii) ***No significant investment element*** —

(A) ***In general.*** The contract does not contain a significant investment element. Except as provided in paragraph (h)(2)(ii)(B) of this section, a contract contains a significant investment element if a significant portion of any payment by one party relates to a conditional or unconditional obligation by the other party to make a payment on a different date. Examples of contracts that contain a significant investment element are a debt instrument held by the issuer; an interest rate swap requiring any payments other than periodic payments, within the meaning of § 1.446-3 (periodic payments) (e.g., a payment for an off-market swap or prepayment of part or all of one leg of a swap); and an interest rate cap requiring the issuer's premium for the cap to be paid in a single, up-front payment. Solely for purposes of determining if a hedge is a qualified hedge under this section, payments that an issuer receives pursuant to the terms of a hedge that are equal to the issuer's cost of funds are treated as periodic payments under § 1.446-3 without regard to

whether the payments are calculated by reference to a "specified index" described in § 1.446-3(c)(2). Accordingly, a hedge does not have a significant investment element under this paragraph (h)(2)(ii)(A) solely because an issuer receives payments pursuant to the terms of a hedge that are computed to be equal to the issuer's cost of funds, such as the issuer's actual market-based tax-exempt variable interest rate on its bonds.

(B) ***Special level payment rule for interest rate caps.*** An interest rate cap does not contain a significant investment element if—

(*1*) All payments to the issuer by the hedge provider are periodic payments;

(*2*) The issuer makes payments for the cap at the same time as periodic payments by the hedge provider must be made if the specified index (within the meaning of § 1.446-3) of the cap is above the strike price of the cap; and

(*3*) Each payment by the issuer bears the same ratio to the notional principal amount (within the meaning of § 1.446-3) that is used to compute the hedge provider's payment, if any, on that date.

(iii) ***Parties.*** The contract is entered into between the issuer or the political subdivision on behalf of which the issuer issues the bonds (collectively referred to in this paragraph (h) as the *issuer*) and a provider that is not a related party (the *hedge provider*).

(iv) ***Hedged bonds.*** The contract covers, in whole or in part, all of one or more groups of substantially identical bonds in the issue (*i.e.*, all of the bonds having the same interest rate, maturity, and terms). Thus, for example, a qualified hedge may include a hedge of all or a pro rata portion of each interest payment on the variable rate bonds in an issue for the first 5 years following their issuance. For purposes of this paragraph (h), unless the context clearly requires otherwise, *hedged bonds* means the specific bonds or portions thereof covered by a hedge.

(v) ***Interest-based contract and size and scope of hedge.*** The contract is primarily interest-based (for example, a hedge based on a debt index, including a tax-exempt debt index or a taxable debt index, rather than an equity index). In addition, the size and scope of the hedge under the contract is limited to that which is reasonably necessary to hedge the issuer's risk with respect to interest rate changes on the hedged bonds. For example, a contract is limited to hedging an issuer's risk with respect to interest rate changes on the hedged bonds if the hedge is based on the principal amount and the reasonably expected interest payments of the hedged bonds. For anticipatory hedges under paragraph (h)(5) of this section, the size and scope limitation applies based on the reasonably expected terms of the hedged bonds to be issued. A contract is not primarily interest based unless—

(A) The hedged bond, without regard to the contract, is either a fixed rate bond, a variable rate debt instrument within the meaning of § 1.1275-5 provided the rate is not based on an objective rate other than a qualified inverse floating rate or a qualified inflation rate, a tax-exempt obligation described in § 1.1275-4(d)(2), or an inflation-indexed debt instrument within the meaning of § 1.1275-7; and

(B) As a result of treating all payments on (and receipts from) the contract as additional payments on (and receipts from) the hedged bond, the resulting bond would be substantially similar to either a fixed rate bond, a variable rate debt instrument within the meaning of § 1.1275-5 provided the rate is not based on an objective rate other than a qualified inverse floating rate or a qualified inflation rate, a tax-exempt obligation

described in § 1.1275-4(d)(2), or an inflation-indexed debt instrument within the meaning of § 1.1275-7. For this purpose, differences that would not prevent the resulting bond from being substantially similar to another type of bond include: a difference between the interest rate used to compute payments on the hedged bond and the interest rate used to compute payments on the hedge where one interest rate is substantially similar to the other; the difference resulting from the payment of a fixed premium for a cap (for example, payments for a cap that are made in other than level installments); and the difference resulting from the allocation of a termination payment where the termination was not expected as of the date the contract was entered into.

(vi) ***Payments closely correspond.*** The payments received by the issuer from the hedge provider under the contract correspond closely in time to either the specific payments being hedged on the hedged bonds or specific payments required to be made pursuant to the bond documents, regardless of the hedge, to a sinking fund, debt service fund, or similar fund maintained for the issue of which the hedged bond is a part. For this purpose, such payments will be treated as corresponding closely in time under this paragraph (h)(2)(vi) if they are made within 90 calendar days of each other.

(vii) ***Source of payments.*** Payments to the hedge provider are reasonably expected to be made from the same source of funds that, absent the hedge, would be reasonably expected to be used to pay principal and interest on the hedged bonds.

(viii) ***Identification*** —

(A) ***In general.*** The actual issuer must identify the contract on its books and records maintained for the hedged bonds not later than 15 calendar days after the date on which there is a binding agreement to enter into a hedge contract (for example, the date of a hedge pricing confirmation, as distinguished from the closing date for the hedge or start date for payments on the hedge, if different). The identification must specify the name of the hedge provider, the terms of the contract, the hedged bonds, and include a hedge provider's certification as described in paragraph (h)(2)(viii)(B) of this section. The identification must contain sufficient detail to establish that the requirements of this paragraph (h)(2) and, if applicable, paragraph (h)(4) of this section are satisfied. In addition, the existence of the hedge must be noted on the first form relating to the issue of which the hedged bonds are a part that is filed with the Internal Revenue Service on or after the date on which the contract is identified pursuant to this paragraph (h)(2)(viii).

(B) ***Hedge provider's certification.*** The hedge provider's certification must—

(*1*) Provide that the terms of the hedge were agreed to between a willing buyer and willing seller in a bona fide, arm's-length transaction;

(*2*) Provide that the hedge provider has not made, and does not expect to make, any payment to any third party for the benefit of the issuer in connection with the hedge, except for any such third-party payment that the hedge provider expressly identifies in the documents for the hedge;

(*3*) Provide that the amounts payable to the hedge provider pursuant to the hedge do not include any payments for underwriting or other services unrelated to the hedge provider's obligations under the hedge, except for any such payment that the hedge provider expressly identifies in the documents for the hedge; and

(4) Contain any other statements that the Commissioner may provide in guidance published in the Internal Revenue Bulletin. See § 601.601(d)(2)(ii) of this chapter.

(3) *Accounting for qualified hedges* —

(i) ***In general.*** Except as otherwise provided in paragraph (h)(4) of this section, payments made or received by the issuer under a qualified hedge are treated as payments made or received, as appropriate, on the hedged bonds that are taken into account in determining the yield on those bonds. These payments are reasonably allocated to the hedged bonds in the period to which the payments relate, as determined under paragraph (h)(3)(iii) of this section. Payments made or received by the issuer include payments deemed made or received when a contract is terminated or deemed terminated under this paragraph (h)(3). Payments reasonably allocable to the modification of risk of interest rate changes and to the hedge provider's overhead under this paragraph (h) are included as payments made or received under a qualified hedge.

(ii) ***Exclusions from hedge.*** If any payment for services or other items under the contract is not expressly treated by paragraph (h)(3)(i) of this section as a payment under the qualified hedge, the payment is not a payment with respect to a qualified hedge.

(iii) ***Timing and allocation of payments.*** Except as provided in paragraphs (h)(3)(iv) and (h)(5) of this section, payments made or received by the issuer under a qualified hedge are taken into account in the same period in which those amounts would be treated as income or deductions under § 1.446-4 (without regard to § 1.446-4(a)(2)(iv)) and are adjusted as necessary to reflect the end of a computation period and the start of a new computation period.

(iv) *Accounting for modifications and terminations* —

(A) ***Modification defined.*** A modification of a qualified hedge includes, without limitation, a change in the terms of the hedge or an issuer's acquisition of another hedge with terms that have the effect of modifying an issuer's risk of interest rate changes or other terms of an existing qualified hedge. For example, if the issuer enters into a qualified hedge that is an interest rate swap under which it receives payments based on the Securities Industry and Financial Market Association (SIFMA) Municipal Swap Index and subsequently enters a second hedge (with the same or different provider) that limits the issuer's exposure under the existing qualified hedge to variations in the SIFMA Municipal Swap Index, the new hedge modifies the qualified hedge.

(B) ***Termination defined.*** A termination means either an actual termination or a deemed termination of a qualified hedge. Except as otherwise provided, an actual termination of a qualified hedge occurs to the extent that the issuer sells, disposes of, or otherwise actually terminates all or a portion of the hedge. A deemed termination of a qualified hedge occurs if the hedge ceases to meet the requirements for a qualified hedge; the issuer makes a modification (as defined in paragraph (h)(3)(iv)(A) of this section) that is material either in kind or in extent and, therefore, results in a deemed exchange of the hedge and a realization event to the issuer under section 1001; or the issuer redeems all or a portion of the hedged bonds.

(C) ***Special rules for certain modifications when the hedge remains qualified.*** A modification of a qualified hedge that otherwise would result in a deemed termination under paragraph (h)(3)(iv)(B) of this section does not result in such a termination if the modified hedge is re-tested for qualification as a qualified hedge as of the date of the modification, the modified hedge meets the requirements for a qualified hedge as of such date, and the

modified hedge is treated as a qualified hedge prospectively in determining the yield on the hedged bonds. For purposes of this paragraph (h)(3)(iv)(C), when determining whether the modified hedge is qualified, the fact that the existing qualified hedge is off-market as of the date of the modification is disregarded and the identification requirement in paragraph (h)(2)(viii) of this section applies by measuring the time period for identification from the date of the modification and without regard to the requirement for a hedge provider's certification.

(D) ***Continuations of certain qualified hedges in refundings.*** If hedged bonds are redeemed using proceeds of a refunding issue, the qualified hedge for the refunded bonds is not actually terminated, and the hedge meets the requirements for a qualified hedge for the refunding bonds as of the issue date of the refunding bonds, then no termination of the hedge occurs and the hedge instead is treated as a qualified hedge for the refunding bonds. For purposes of this paragraph (h)(3)(iv)(D), when determining whether the hedge is a qualified hedge for the refunding bonds, the fact that the hedge is off-market with respect to the refunding bonds as of the issue date of the refunding bonds is disregarded and the identification requirement in paragraph (h)(2)(viii) of this section applies by measuring the time period for identification from the issue date of the refunding bonds and without regard to the requirement for a hedge provider's certification.

(E) ***General allocation rules for hedge termination payments.*** Except as otherwise provided in paragraphs (h)(3)(iv)(F), (G), and (H) of this section, a payment made or received by an issuer to terminate a qualified hedge, or a payment deemed made or received for a deemed termination, is treated as a payment made or received, as appropriate, on the hedged bonds. Upon an actual termination or a deemed termination of a qualified hedge, the amount that an issuer may treat as a termination payment made or received on the hedged bonds is the fair market value of the qualified hedge on its termination date, based on all of the facts and circumstances. Except as otherwise provided, a termination payment is reasonably allocated to the remaining periods originally covered by the terminated hedge in a manner that reflects the economic substance of the hedge.

(F) ***Special rule for terminations when bonds are redeemed.*** Except as otherwise provided in this paragraph (h)(3)(iv)(F) and in paragraph (h)(3)(iv)(G) of this section, when a qualified hedge is deemed terminated because the hedged bonds are redeemed, the termination payment as determined under paragraph (h)(3)(iv)(E) of this section is treated as made or received on that date. When hedged bonds are redeemed, any payment received by the issuer on termination of a hedge, including a termination payment or a deemed termination payment, reduces, but not below zero, the interest payments made by the issuer on the hedged bonds in the computation period ending on the termination date. The remainder of the payment, if any, is reasonably allocated over the bond years in the immediately preceding computation period or periods to the extent necessary to eliminate the excess.

(G) ***Special rules for refundings.*** When there is a termination of a qualified hedge because there is a refunding of the hedged bonds, to the extent that the hedged bonds are redeemed using the proceeds of a refunding issue, the termination payment is accounted for under paragraph (h)(3)(iv)(E) of this section by treating it as a payment on the refunding issue, rather than the hedged bonds. In addition, to the extent that the refunding

issue is redeemed during the period to which the termination payment has been allocated to that issue, paragraph (h)(3)(iv)(F) of this section applies to the termination payment by treating it as a payment on the redeemed refunding issue.

(H) ***Safe harbor for allocation of certain termination payments.*** A payment to terminate a qualified hedge does not result in that hedge failing to satisfy the applicable provisions of paragraph (h)(3)(iv)(E) of this section if that payment is allocated in accordance with this paragraph (h)(3)(iv)(H). For an issue that is a variable yield issue after termination of a qualified hedge, an amount must be allocated to each date on which the hedge provider's payment, if any, would have been made had the hedge not been terminated. The amounts allocated to each date must bear the same ratio to the notional principal amount (within the meaning of § 1.446-3) that would have been used to compute the hedge provider's payment, if any, on that date, and the sum of the present values of those amounts must equal the present value of the termination payment. Present value is computed as of the day the qualified hedge is terminated, using the yield on the hedged bonds, determined without regard to the termination payment. The yield used for this purpose is computed for the period beginning on the first date the qualified hedge is in effect and ending on the date the qualified hedge is terminated. On the other hand, for an issue that is a fixed yield issue after termination of a qualified hedge, the termination payment is taken into account as a single payment on the date it is paid.

(4) ***Certain variable yield bonds treated as fixed yield bonds*** —

(i) ***In general.*** Except as otherwise provided in this paragraph (h)(4), if the issuer of variable yield bonds enters into a qualified hedge, the hedged bonds are treated as fixed yield bonds paying a fixed interest rate if:

(A) ***Maturity.*** The term of the hedge is equal to the entire period during which the hedged bonds bear interest at variable interest rates, and the issuer does not reasonably expect that the hedge will be terminated before the end of that period.

(B) ***Payments closely correspond.*** Payments to be received under the hedge correspond closely in time to the hedged portion of payments on the hedged bonds. Hedge payments received within 15 days of the related payments on the hedged bonds generally so correspond.

(C) ***Aggregate payments fixed.*** Taking into account all payments made and received under the hedge and all payments on the hedged bonds (*i.e.*, after netting all payments), the issuer's aggregate payments are fixed and determinable as of a date not later than 15 days after the issue date of the hedged bonds. Payments on bonds are treated as fixed for purposes of this paragraph (h)(4)(i)(C) if payments on the bonds are based, in whole or in part, on one interest rate, payments on the hedge are based, in whole or in part, on a second interest rate that is substantially the same as, but not identical to, the first interest rate and payments on the bonds would be fixed if the two rates were identical. Rates are treated as substantially the same if they are reasonably expected to be substantially the same throughout the term of the hedge. For example, an objective 30-day tax-exempt variable rate index or other objective index may be substantially the same as an issuer's individual 30-day interest rate. A hedge based on a taxable interest rate or taxable interest index cannot meet the requirements of this paragraph (h)(4)(i)(C) unless either—

(1) The hedge is an anticipatory hedge that is terminated or otherwise closed substantially contemporaneously with the issuance of the hedged bond in accordance with paragraph (h)(5)(ii) or (iii) of this section; or

(2) The issuer's payments on the hedged bonds and the hedge provider's payments on the hedge are based on identical interest rates.

(ii) ***Accounting.*** Except as otherwise provided in this paragraph (h)(4)(ii), in determining yield on the hedged bonds, all the issuer's payments on the hedged bonds and all payments made and received on a hedge described in paragraph (h)(4)(i) of this section are taken into account. If payments on the bonds and payments on the hedge are based, in whole or in part, on variable interest rates that are substantially the same within the meaning of paragraph (h)(4)(i)(C) of this section (but not identical), yield on the issue is determined by treating the variable interest rates as identical. For example, if variable rate bonds bearing interest at a weekly rate equal to the rate necessary to remarket the bonds at par are hedged with an interest rate swap under which the issuer receives payments based on a short-term floating rate index that is substantially the same as, but not identical to, the weekly rate on the bonds, the interest payments on the bonds are treated as equal to the payments received by the issuer under the swap for purposes of computing the yield on the bonds.

(iii) ***Effect of termination*** —

(A) ***In general.*** Except as otherwise provided in this paragraph (h)(4)(iii) and paragraph (h)(5) of this section, the issue of which the hedged bonds are a part is treated as if it were reissued as of the termination date of the qualified hedge covered by paragraph (h)(4)(i) of this section in determining yield on the hedged bonds for purposes of § 1.148-3. The redemption price of the retired issue and the issue price of the new issue equal the aggregate values of all the bonds of the issue on the termination date. In computing the yield on the new issue for this purpose, any termination payment is accounted for under paragraph (h)(3)(iv) of this section, applied by treating the termination payment as made or received on the new issue under this paragraph (h)(4)(iii).

(B) ***Effect of early termination.*** Except as otherwise provided in this paragraph (h)(4)(iii), the general rules of paragraph (h)(4)(i) of this section do not apply in determining the yield on the hedged bonds for purposes of § 1.148-3 if the hedge is terminated or deemed terminated within 5 years after the issue date of the issue of which the hedged bonds are a part. Thus, the hedged bonds are treated as variable yield bonds for purposes of § 1.148-3 from the issue date.

(C) ***Certain terminations disregarded.*** This paragraph (h)(4)(iii) does not apply to a termination if, based on the facts and circumstances (e.g., taking into account both the termination and any qualified hedge that immediately replaces the terminated hedge), there is no change in the yield.

(iv) ***Consequences of certain modifications.*** The special rules under paragraph (h)(4)(iii) of this section regarding the effects of termination of a qualified hedge of fixed yield hedged bonds apply to a modification described in paragraph (h)(3)(iv)(C) of this section. Thus, such a modification is treated as a termination for purposes of paragraph (h)(4)(iii) of this section unless the rule in paragraph (h)(4)(iii)(C) applies.

(5) ***Contracts entered into before issue date of hedged bond*** —

(i) ***In general.*** A contract does not fail to be a hedge under paragraph (h)(2)(i) of this section solely because it is entered into before the issue date of the hedged bond. However, that contract must be one to which either paragraph (h)(5)(ii) or (h)(5)(iii) of this section applies.

(ii) ***Contracts expected to be closed substantially contemporaneously with the issue date of hedged bond —***

(A) ***Application.*** This paragraph (h)(5)(ii) applies to a contract if, on the date the contract is identified, the issuer reasonably expects to terminate or otherwise close (terminate) the contract substantially contemporaneously with the issue date of the hedged bond.

(B) ***Contract terminated.*** If a contract to which this paragraph (h)(5)(ii) applies is terminated substantially contemporaneously with the issue date of the hedged bond, the amount paid or received, or deemed to be paid or received, by the issuer in connection with the issuance of the hedged bond to terminate the contract is treated as an adjustment to the issue price of the hedged bond and as an adjustment to the sale proceeds of the hedged bond for purposes of section 148. Amounts paid or received, or deemed to be paid or received, before the issue date of the hedged bond are treated as paid or received on the issue date in an amount equal to the future value of the payment or receipt on that date. For this purpose, future value is computed using yield on the hedged bond without taking into account amounts paid or received (or deemed paid or received) on the contract.

(C) ***Contract not terminated.*** If a contract to which this paragraph (h)(5)(ii) applies is not terminated substantially contemporaneously with the issue date of the hedged bond, the contract is deemed terminated for its fair market value as of the issue date of the hedged bond. Once a contract has been deemed terminated pursuant to this paragraph (h)(5)(ii)(C), payments on and receipts from the contract are no longer taken into account under this paragraph (h) for purposes of determining yield on the hedged bond.

(D) ***Relation to other requirements of a qualified hedge.*** Payments made in connection with the issuance of a bond to terminate a contract to which this paragraph (h)(5)(ii) applies do not prevent the contract from satisfying the requirements of paragraph (h)(2)(vi) of this section.

(E) ***Fixed yield treatment.*** A bond that is hedged with a contract to which this paragraph (h)(5)(ii) applies does not fail to be a fixed yield bond if, taking into account payments on the contract and the payments to be made on the bond, the bond satisfies the definition of fixed yield bond. See also paragraph (h)(4) of this section.

(iii) ***Contracts expected not to be closed substantially contemporaneously with the issue date of hedged bond —***

(A) ***Application.*** This paragraph (h)(5)(iii) applies to a contract if, on the date the contract is identified, the issuer does not reasonably expect to terminate the contract substantially contemporaneously with the issue date of the hedge bond.

(B) ***Contract terminated.*** If a contract to which this paragraph (h)(5)(iii) applies is terminated in connection with the issuance of the hedged bond, the amount paid or received, or deemed to be paid or received, by the issuer to terminate the contract is treated as an adjustment to the issue price of the hedged bond and as an adjustment to the sale proceeds of the hedged bond for purposes of section 148.

(C) ***Contract not terminated.*** If a contract to which this paragraph (h)(5)(iii) applies is not terminated substantially contemporaneously with the issue date of the hedged bond, no payments with respect to the hedge made by the issuer before the issue date of the hedged bond are taken into account under this section.

(iv) ***Identification.*** The identification required under paragraph (h)(2)(viii) of this section must specify the reasonably expected governmental purpose, issue price, maturity, and issue date of the hedged bond, the manner in which interest is reasonably expected to be computed, and whether paragraph (h)(5)(ii) or (h)(5)(iii) of this section applies to the contract. If an issuer identifies a contract under this paragraph (h)(5)(iv) that would be a qualified hedge with respect to the anticipated bond, but does not issue the anticipated bond on the identified issue date, the contract is taken into account as a qualified hedge of any bond of the issuer that is issued for the identified governmental purpose within a reasonable interval around the identified issue date of the anticipated bond.

(6) ***Authority of the Commissioner.*** The Commissioner, by publication of a revenue ruling or revenue procedure (see § 601.601(d)(2) of this chapter), may specify contracts that, although they do not meet the requirements of paragraph (h)(2) of this section, are qualified hedges or, although they do not meet the requirements of paragraph (h)(4) of this section, cause the hedged bonds to be treated as fixed yield bonds.

[T.D. 8476, 58 FR 33524, June 18, 1993; 58 FR 44452, Aug. 23, 1993, as amended by T.D. 8538, 59 FR 24042, May 10, 1994; T.D. 8718, 62 FR 25507, May 9, 1997; T.D. 8838, 64 FR 48547, Sept. 7, 1999; T.D. 9777, 81 FR 46593, July 18, 2016; 83 FR 14175, Apr. 3, 2018]

§ 1.148-5 Yield and valuation of investments.

(a) ***In general.*** This section provides rules for computing the yield and value of investments allocated to an issue for various purposes under section 148.

(b) ***Yield on an investment*** —

(1) ***In general.*** Except as otherwise provided, the yield on an investment allocated to an issue is computed under the economic accrual method, using the same compounding interval and financial conventions used to compute the yield on the issue. The yield on an investment allocated to an issue is the discount rate that, when used in computing the present value as of the date the investment is first allocated to the issue of all unconditionally payable receipts from the investment, produces an amount equal to the present value of all unconditionally payable payments for the investment. For this purpose, *payments* means amounts to be actually or constructively paid to acquire the investment, and *receipts* means amounts to be actually or constructively received from the investment, such as earnings and return of principal. The yield on a variable rate investment is determined in a manner comparable to the determination of the yield on a variable rate issue. For an issue of qualified mortgage bonds, qualified veterans' mortgage bonds, or qualified student loan bonds on which interest is paid semiannually, all regular monthly loan payments to be received during a semiannual debt service period may be treated as received at the end of that period. In addition, for any conduit financing issue, payments made by the conduit borrower are not treated as paid until the conduit borrower ceases to receive the benefit of earnings on those amounts.

(2) ***Yield on a separate class of investments*** —

(i) ***In general.*** For purposes of the yield restriction rules of section 148(a) and § 1.148-2, yield is computed separately for each class of investments. For this purpose, in determining the yield on a separate class of investments, the yield on each individual investment within the class is blended with the yield on other individual investments within the class, whether or not held concurrently, by treating those investments as a single investment. The yields on investments that are not within the same class are not blended.

(ii) ***Separate classes of investments.*** Each of the following is a separate class of investments—

(A) Each category of yield restricted purpose investment and program investment that is subject to a different definition of *materially higher* under § 1.148-2(d)(2);

(B) Yield-restricted nonpurpose investments; and

(C) All other nonpurpose investments;

(iii) ***Permissive application of single investment rules to certain yield restricted investments for all purposes of section 148.*** For all purposes of section 148, if an issuer reasonably expects as of the issue date to establish and maintain a sinking fund solely to reduce the yield on the investments in a refunding escrow, then the issuer may treat all of the yield restricted nonpurpose investments in the refunding escrow and that sinking fund as a single investment having a single yield, determined under this paragraph (b)(2). Thus, an issuer may not treat the nonpurpose investments in a reasonably required reserve fund and a refunding escrow as a single investment having a single yield under this paragraph (b)(2)(iii).

(iv) ***Mandatory application of single investment rules for refunding escrows for all purposes of section 148.*** For all purposes of section 148, in computing the yield on yield restricted investments allocable to proceeds (*i.e.*, sale proceeds, investment proceeds, and transferred proceeds) of a refunding issue that are held in one or more refunding escrows, the individual investments are treated as a single investment having a single yield, whether or not held concurrently. For example, this single investment includes both the individual investments allocable to sale and investment proceeds of a refunding issue that are held in one refunding escrow for a prior issue and the investments allocable to transferred proceeds of that refunding issue that are held in another refunding escrow.

(3) ***Investments to be held beyond issue's maturity or beyond temporary period.*** In computing the yield on investments allocable to an issue that are to be held beyond the reasonably expected redemption date of the issue, those investments are treated as sold for an amount equal to their value on that date. In computing the yield on investments that are held beyond an applicable temporary period under § 1.148-2, for purposes of § 1.148-2 those investments may be treated as purchased for an amount equal to their fair market value as of the end of the temporary period.

(4) ***Consistent redemption assumptions on purpose investments.*** The yield on purpose investments allocable to an issue is computed using the same redemption assumptions used to compute the yield on the issue. Yield on purpose investments allocable to an issue of qualified mortgage bonds and qualified veterans' mortgage bonds must be determined in a manner that is consistent with, and using the assumptions required by, section 143(g)(2)(B).

(5) ***Student loan special allowance payments included in yield.*** Except as provided in § 1.148-11(e), the yield on qualified student loans is computed by including as receipts any special allowance payments made by the Secretary of Education pursuant to section 438 of the Higher Education Act of 1965.

(c) *Yield reduction payments to the United States* —

(1) ***In general.*** In determining the yield on an investment to which this paragraph (c) applies, any amount paid to the United States in accordance with this paragraph (c), including a rebate amount, is treated as a payment for that investment that reduces the yield on that investment.

(2) *Manner of payment* —

(i) ***In general.*** Except as otherwise provided in paragraph (c)(2)(ii) of this section, an amount is paid under this paragraph (c) if it is paid to the United States at the same time and in the same manner as rebate amounts are required to be paid or at such other time or in such manner as the Commissioner may prescribe. For example, yield reduction payments must be made on or before the date of required rebate installment payments as described in §§ 1.148-3(f), (g), and (h). The provisions of § 1.148-3(i) apply to payments made under this paragraph (c).

(ii) ***Special rule for purpose investments.*** For purpose investments allocable to an issue—

(A) No amounts are required to be paid to satisfy this paragraph (c) until the earlier of the end of the tenth bond year after the issue date of the issue or 60 days after the date on which the issue is no longer outstanding; and

(B) For payments made prior to the date on which the issue is retired, the issuer need not pay more than 75 percent of the amount otherwise required to be paid as of the date to which the payment relates.

(3) ***Applicability of special yield reduction rule.*** Paragraph (c) applies only to investments that are described in at least one of paragraphs (c)(3)(i) through (ix) of this section and, except as otherwise expressly provided in paragraphs (c)(3)(i) through (ix) of this section, that are allocated to proceeds of an issue other than gross proceeds of an advance refunding issue.

(i) ***Nonpurpose investments allocated to proceeds of an issue that qualified for certain temporary periods.*** Nonpurpose investments allocable to proceeds of an issue that qualified for one of the temporary periods available for capital projects, working capital expenditures, pooled financings, or investment proceeds under § 1.148-2(e)(2), (3), (4), or (6), respectively.

(ii) ***Investments allocable to certain variable yield issues.*** Investments allocable to a variable yield issue during any computation period in which at least 5 percent of the value of the issue is represented by variable yield bonds, unless the issue is an issue of hedge bonds (as defined in section 149(g)(3)(A)).

(iii) ***Nonpurpose investments allocable to certain transferred proceeds.*** Nonpurpose investments allocable to transferred proceeds of—

(A) A current refunding issue to the extent necessary to reduce the yield on those investments to satisfy yield restrictions under section 148(a); or

(B) An advance refunding issue to the extent that investment of the refunding escrows allocable to the proceeds, other than transferred proceeds, of the refunding issue in zero-yielding nonpurpose investments is insufficient to satisfy yield restrictions under section 148(a).

(iv) ***Purpose investments allocable to qualified student loans and qualified mortgage loans.*** Purpose investments allocable to qualified student loans and qualified mortgage loans.

(v) ***Nonpurpose investments allocable to gross proceeds in certain reserve funds.*** Nonpurpose investments allocable to gross proceeds of an issue in a reasonably required reserve or replacement fund or a fund that, except for its failure to satisfy the size limitation in § 1.148-2(f)(2)(ii), would qualify as a reasonably required reserve or replacement fund, but only to the extent the requirements in paragraphs (c)(3)(v)(A) or (B) of this section are met. This paragraph (c)(3)(v) includes nonpurpose investments described in this paragraph that are allocable to transferred proceeds of an advance refunding issue, but only to the extent necessary to satisfy yield restriction under section 148(a) on those proceeds treating all investments allocable to those proceeds as a separate class.

(A) The value of the nonpurpose investments in the fund is not greater than 15 percent of the stated principal amount of the issue, as computed under § 1.148-2(f)(2)(ii).

(B) The amounts in the fund (other than investment earnings) are not reasonably expected to be used to pay debt service on the issue other than in connection with reductions in the amount required to be in that fund (for example, a reserve fund for a revolving fund loan program).

(vi) ***Nonpurpose investments allocable to certain replacement proceeds of refunded issues.*** Nonpurpose investments allocated to replacement proceeds of a refunded issue, including a refunded issue that is an advance refunding issue, as a result of the application of the universal cap to amounts in a refunding escrow.

(vii) ***Investments allocable to replacement proceeds under a certain transition rule.*** Investments described in § 1.148-11(f).

(viii) ***Nonpurpose investments allocable to proceeds when State and Local Government Series Securities are unavailable.*** Nonpurpose investments allocable to proceeds of an issue, including an advance refunding issue, that an issuer purchases if, on the date the issuer enters into the agreement to purchase such investments, the issuer is unable to subscribe for State and Local Government Series Securities because the U.S. Department of the Treasury, Bureau of the Fiscal Service, has suspended sales of those securities.

(ix) ***Nonpurpose investments allocable to proceeds of certain variable yield advance refunding issues.*** Nonpurpose investments allocable to proceeds of the portion of a variable yield issue used for advance refunding purposes that are deposited in a yield restricted defeasance escrow if—

(A) The issuer has entered into a qualified hedge under § 1.148-4(h)(2) with respect to all of the variable yield bonds of the issue allocable to the yield restricted defeasance escrow and that hedge is in the form of a variable-to-fixed interest rate swap under which the issuer pays the hedge provider a fixed interest rate and receives from the hedge provider a floating interest rate;

(B) Such qualified hedge covers a period beginning on the issue date of the hedged bonds and ending on or after the date on which the final payment is to be made from the yield restricted defeasance escrow; and

(C) The issuer restricts the yield on the yield restricted defeasance escrow to a yield that is not greater than the yield on the issue, determined by taking into account the issuer's fixed payments to be made under the hedge and by assuming that the issuer's variable yield payments to be paid on the hedged bonds are equal to the floating payments to be received by the issuer under the qualified hedge and are paid on the same dates (that is,

such yield reduction payments can only be made to address basis risk differences between the variable yield payments on the hedged bonds and the floating payments received on the hedge).

(d) *Value of investments* —

(1) ***In general.*** Except as otherwise provided, the value of an investment (including a payment or receipt on the investment) on a date must be determined using one of the following valuation methods consistently for all purposes of section 148 to that investment on that date:

(i) ***Plain par investment—outstanding principal amount.*** A plain par investment may be valued at its outstanding stated principal amount, plus any accrued unpaid interest on that date.

(ii) ***Fixed rate investment—present value.*** A fixed rate investment may be valued at its present value on that date.

(iii) ***Any investment—fair market value.*** An investment may be valued at its fair market value on that date.

(2) ***Mandatory valuation of certain yield restricted investments at present value.*** A purpose investment must be valued at present value, and except as otherwise provided in paragraphs (b)(3) and (d)(3) of this section, a yield restricted nonpurpose investment must be valued at present value.

(3) ***Mandatory valuation of certain investments at fair market value*** —

(i) ***In general.*** Except as otherwise provided in paragraphs (d)(3)(ii) and (d)(4) of this section, a nonpurpose investment must be valued at fair market value on the date that it is first allocated to an issue or first ceases to be allocated to an issue as a consequence of a deemed acquisition or deemed disposition. For example, if an issuer deposits existing nonpurpose investments into a sinking fund for an issue, those investments must be valued at fair market value as of the date first deposited into the fund.

(ii) ***Exception to fair market value requirement for transferred proceeds allocations, certain universal cap allocations, and commingled funds.*** Paragraph (d)(3)(i) of this section does not apply if the investment is allocated from one issue to another as a result of the transferred proceeds allocation rule under § 1.148-9(b) or is deallocated from one issue as a result of the universal cap rule under § 1.148-6(b)(2) and reallocated to another issue as a result of a preexisting pledge of the investment to secure that other issue, provided that, in either circumstance (that is, transferred proceeds allocations or universal cap deallocations), the issue from which the investment is allocated (that is, the first issue in an allocation from one issue to another issue) consists of tax-exempt bonds. In addition, paragraph (d)(3)(i) of this section does not apply to investments in a commingled fund (other than a bona fide debt service fund) unless it is an investment being initially deposited in or withdrawn from a commingled fund described in § 1.148-6(e)(5)(iii).

(4) ***Special transition rule for transferred proceeds.*** The value of a nonpurpose investment that is allocated to transferred proceeds of a refunding issue on a transfer date may not exceed the value of that investment on the transfer date used for purposes of applying the arbitrage restrictions to the refunded issue.

(5) ***Definition of present value of an investment.*** Except as otherwise provided, present value of an investment is computed under the economic accrual method, using the same compounding interval and financial conventions used to compute the yield on the issue. The present value of an

investment on a date is equal to the present value of all unconditionally payable receipts to be received from and payments to be paid for the investment after that date, using the yield on the investment as the discount rate.

(6) ***Definition of fair market value*** —

(i) ***In general.*** The fair market value of an investment is the price at which a willing buyer would purchase the investment from a willing seller in a bona fide, arm's-length transaction. Fair market value generally is determined on the date on which a contract to purchase or sell the nonpurpose investment becomes binding (*i.e.*, the trade date rather than the settlement date). Except as otherwise provided in this paragraph (d)(6), an investment that is not of a type traded on an established securities market, within the meaning of section 1273, is rebuttably presumed to be acquired or disposed of for a price that is not equal to its fair market value. On the purchase date, the fair market value of a United States Treasury obligation that is purchased directly from the United States Treasury, including a State and Local Government Series Security, is its purchase price. The fair market value of a State and Local Government Series Security on any date other than the purchase date is the redemption price for redemption on that date.

(ii) ***Safe harbor for establishing fair market value for certificates of deposit.*** This paragraph (d)(6)(ii) applies to a certificate of deposit that has a fixed interest rate, a fixed payment schedule, and a substantial penalty for early withdrawal. The purchase price of such a certificate of deposit is treated as its fair market value on the purchase date if the yield on the certificate of deposit is not less than—

(A) The yield on reasonably comparable direct obligations of the United States; and

(B) The highest yield that is published or posted by the provider to be currently available from the provider on reasonably comparable certificates of deposit offered to the public.

(iii) ***Safe harbor for establishing fair market value for guaranteed investment contracts and investments purchased for a yield restricted defeasance escrow.*** The purchase price of a guaranteed investment contract and the purchase price of an investment purchased for a yield restricted defeasance escrow will be treated as the fair market value of the investment on the purchase date if all of the following requirements are satisfied:

(A) The issuer makes a bona fide solicitation for the purchase of the investment. A bona fide solicitation is a solicitation that satisfies all of the following requirements:

(*1*) The bid specifications are in writing and are timely disseminated to potential providers. For purposes of this paragraph (d)(6)(iii)(A)(*1*), a writing may be in electronic form and may be disseminated by fax, email, an internet-based Web site, or other electronic medium that is similar to an internet-based Web site and regularly used to post bid specifications.

(*2*) The bid specifications include all material terms of the bid. A term is material if it may directly or indirectly affect the yield or the cost of the investment.

(*3*) The bid specifications include a statement notifying potential providers that submission of a bid is a representation that the potential provider did not consult with any other potential provider about its bid, that the bid was determined without regard to any other formal or informal agreement that the potential provider has with

the issuer or any other person (whether or not in connection with the bond issue), and that the bid is not being submitted solely as a courtesy to the issuer or any other person for purposes of satisfying the requirements of paragraph (d)(6)(iii)(B)(*1*) or (*2*) of this section.

(*4*) The terms of the bid specifications are commercially reasonable. A term is commercially reasonable if there is a legitimate business purpose for the term other than to increase the purchase price or reduce the yield of the investment. For example, for solicitations of investments for a yield restricted defeasance escrow, the hold firm period must be no longer than the issuer reasonably requires.

(*5*) For purchases of guaranteed investment contracts only, the terms of the solicitation take into account the issuer's reasonably expected deposit and drawdown schedule for the amounts to be invested.

(*6*) All potential providers have an equal opportunity to bid. If the bidding process affords any opportunity for a potential provider to review other bids before providing a bid, then providers have an equal opportunity to bid only if all potential providers have an equal opportunity to review other bids. Thus, no potential provider may be given an opportunity to review other bids that is not equally given to all potential providers (that is, no exclusive “last look”).

(*7*) At least three reasonably competitive providers are solicited for bids. A reasonably competitive provider is a provider that has an established industry reputation as a competitive provider of the type of investments being purchased.

(B) The bids received by the issuer meet all of the following requirements:

(*1*) The issuer receives at least three bids from providers that the issuer solicited under a bona fide solicitation meeting the requirements of paragraph (d)(6)(iii)(A) of this section and that do not have a material financial interest in the issue. A lead underwriter in a negotiated underwriting transaction is deemed to have a material financial interest in the issue until 15 days after the issue date of the issue. In addition, any entity acting as a financial advisor with respect to the purchase of the investment at the time the bid specifications are forwarded to potential providers has a material financial interest in the issue. A provider that is a related party to a provider that has a material financial interest in the issue is deemed to have a material financial interest in the issue.

(*2*) At least one of the three bids described in paragraph (d)(6)(iii)(B)(*1*) of this section is from a reasonably competitive provider, within the meaning of paragraph (d)(6)(iii)(A)(*7*) of this section.

(*3*) If the issuer uses an agent to conduct the bidding process, the agent did not bid to provide the investment.

(C) The winning bid meets the following requirements:

(*1*) ***Guaranteed investment contracts.*** If the investment is a guaranteed investment contract, the winning bid is the highest yielding bona fide bid (determined net of any broker's fees).

(2) ***Other investments.*** If the investment is not a guaranteed investment contract, the following requirements are met:

(*i*) The winning bid is the lowest cost bona fide bid (including any broker's fees). The lowest cost bid is either the lowest cost bid for the portfolio or, if the issuer compares the bids on an investment-by-investment basis, the aggregate cost of a portfolio comprised of the lowest cost bid for each investment. Any payment received by the issuer from a provider at the time a guaranteed investment contract is purchased (e.g., an escrow float contract) for a yield restricted defeasance escrow under a bidding procedure meeting the requirements of this paragraph (d)(6)(iii) is taken into account in determining the lowest cost bid.

(*ii*) The lowest cost bona fide bid (including any broker's fees) is not greater than the cost of the most efficient portfolio comprised exclusively of State and Local Government Series Securities from the United States Department of the Treasury, Bureau of Public Debt. The cost of the most efficient portfolio of State and Local Government Series Securities is to be determined at the time that bids are required to be submitted pursuant to the terms of the bid specifications.

(*iii*) If State and Local Government Series Securities from the United States Department of the Treasury, Bureau of Public Debt are not available for purchase on the day that bids are required to be submitted pursuant to terms of the bid specifications because sales of those securities have been suspended, the cost comparison of paragraph (d)(6)(iii) (C)(*2*)(*ii*) of this section is not required.

(D) The provider of the investments or the obligor on the guaranteed investment contract certifies the administrative costs that it pays (or expects to pay, if any) to third parties in connection with supplying the investment.

(E) The issuer retains the following records with the bond documents until three years after the last outstanding bond is redeemed:

(*1*) For purchases of guaranteed investment contracts, a copy of the contract, and for purchases of investments other than guaranteed investment contracts, the purchase agreement or confirmation.

(*2*) The receipt or other record of the amount actually paid by the issuer for the investments, including a record of any administrative costs paid by the issuer, and the certification under paragraph (d)(6)(iii)(D) of this section.

(*3*) For each bid that is submitted, the name of the person and entity submitting the bid, the time and date of the bid, and the bid results.

(*4*) The bid solicitation form and, if the terms of the purchase agreement or the guaranteed investment contract deviated from the bid solicitation form or a submitted bid is modified, a brief statement explaining the deviation and stating the purpose for the deviation. For example, if the issuer purchases a portfolio of investments for a yield restricted defeasance escrow and, in order to satisfy the yield restriction requirements of section 148, an investment in the winning bid is replaced with an investment with a lower yield, the issuer must retain a record of the

substitution and how the price of the substitute investment was determined. If the issuer replaces an investment in the winning bid portfolio with another investment, the purchase price of the new investment is not covered by the safe harbor unless the investment is bid under a bidding procedure meeting the requirements of this paragraph (d)(6)(iii).

(5) For purchases of investments other than guaranteed investment contracts, the cost of the most efficient portfolio of State and Local Government Series Securities, determined at the time that the bids were required to be submitted pursuant to the terms of the bid specifications.

(e) *Administrative costs of investments* —

(1) ***In general.*** Except as otherwise provided in this paragraph (e), an allocation of gross proceeds of an issue to a payment or a receipt on an investment is not adjusted to take into account any costs or expenses paid, directly or indirectly, to purchase, carry, sell, or retire the investment (administrative costs). Thus, these administrative costs generally do not increase the payments for, or reduce the receipts from, investments.

(2) ***Qualified administrative costs on nonpurpose investments*** —

(i) ***In general.*** In determining payments and receipts on nonpurpose investments, qualified administrative costs are taken into account. Thus, qualified administrative costs increase the payments for, or decrease the receipts from, the investments. Qualified administrative costs are reasonable, direct administrative costs, other than carrying costs, such as separately stated brokerage or selling commissions, but not legal and accounting fees, recordkeeping, custody, and similar costs. General overhead costs and similar indirect costs of the issuer such as employee salaries and office expenses and costs associated with computing the rebate amount under section 148(f) are not qualified administrative costs. In general, administrative costs are not reasonable unless they are comparable to administrative costs that would be charged for the same investment or a reasonably comparable investment if acquired with a source of funds other than gross proceeds of tax-exempt bonds.

(ii) ***Special rule for administrative costs of nonpurpose investments in certain regulated investment companies and commingled funds.*** Qualified administrative costs include all reasonable administrative costs, without regard to the limitation on indirect costs under paragraph (e)(2)(i) of this section, incurred by:

(A) ***Regulated investment companies.*** A publicly offered regulated investment company (as defined in section 67(c)(2)(B)); and

(B) ***External commingled funds.*** A widely held commingled fund in which no investor in the fund owns more than 10 percent of the beneficial interest in the fund. For purposes of this paragraph (e)(2)(ii)(B), a fund is treated as widely held only if, during the immediately preceding fixed, semiannual period chosen by the fund (for example, semiannual periods ending June 30 and December 31), the fund had a daily average of more than 15 investors that were not related parties, and at least 16 of the unrelated investors each maintained a daily average amount invested in the fund that was not less than the lesser of $500,000 and one percent (1%) of the daily average of the total amount invested in the fund (with it being understood that additional smaller investors will not disqualify the fund). For purposes of this paragraph (e)(2)(ii)(B), an investor will be treated as owning not more than 10 percent of the beneficial interest in the fund if, on the date of each deposit by the

investor into the fund, the total amount the investor and any related parties have on deposit in the fund is not more than 10 percent of the total amount that all investors have on deposit in the fund. For purposes of the preceding sentence, the total amount that all investors have on deposit in the fund is equal to the sum of all deposits made by the investor and any related parties on the date of those deposits and the closing balance in the fund on the day before those deposits. If any investor in the fund owns more than 10 percent of the beneficial interest in the fund, the fund does not qualify under this paragraph (e)(2)(ii)(B) until that investor makes sufficient withdrawals from the fund to reduce its beneficial interest in the fund to 10 percent or less.

(iii) ***Special rule for guaranteed investment contracts and investments purchased for a yield restricted defeasance escrow*** —

(A) ***In general.*** An amount paid for a broker's commission or similar fee with respect to a guaranteed investment contract or investments purchased for a yield restricted defeasance escrow is a qualified administrative cost if the fee is reasonable within the meaning of paragraph (e)(2)(i) of this section.

(B) ***Safe harbor*** —

(*1*) ***In general.*** A broker's commission or similar fee with respect to the acquisition of a guaranteed investment contract or investments purchased for a yield restricted defeasance escrow is reasonable within the meaning of paragraph (e)(2)(i) of this section to the extent that—

(*i*) The amount of the fee that the issuer treats as a qualified administrative cost does not exceed the lesser of:

(*A*) $30,000 and

(*B*) 0.2% of the computational base or, if more, $3,000; and

(*ii*) For any issue, the issuer does not treat as qualified administrative costs more than $85,000 in brokers' commissions or similar fees with respect to all guaranteed investment contracts and investments for yield restricted defeasance escrows purchased with gross proceeds of the issue.

(*2*) ***Computational base.*** For purposes of paragraph (e)(2)(iii)(B)(*1*) of this section, computational base shall mean—

(*i*) For a guaranteed investment contract, the amount of gross proceeds the issuer reasonably expects, as of the date the contract is acquired, to be deposited in the guaranteed investment contract over the term of the contract, and

(*ii*) For investments (other than guaranteed investment contracts) to be deposited in a yield restricted defeasance escrow, the amount of gross proceeds initially invested in those investments.

(*3*) ***Cost-of-living adjustment.*** In the case of a calendar year after 2004, each of the dollar amounts in paragraph (e)(2)(iii)(B)(*1*) of this section shall be increased by an amount equal to—

(*i*) Such dollar amount; multiplied by

(*ii*) The cost-of-living adjustment determined under section 1(f)(3) for such calendar year by using the language "calendar year 2003" instead of "calendar year 1992" in section 1(f)(3)(B).

(*4*) ***Rounding.*** If any increase determined under paragraph (e)(2)(iii)(B)(*3*) of this section is not a multiple of $1,000, such increase shall be rounded to the nearest multiple thereof.

(*5*) ***Applicable year for cost-of-living adjustment.*** The cost-of-living adjustments under paragraph (e)(2)(iii)(B)(*3*) of this section shall apply to the safe harbor amounts under paragraph (e)(2)(iii)(B)(*1*) of this section based on the year the guaranteed investment contract or the investments for the yield restricted defeasance escrow, as applicable, are acquired.

(*6*) ***Cost-of-living adjustment to determine remaining amount of per-issue safe harbor*** —

(i) ***In general.*** This paragraph (e)(2)(iii)(B)(*6*) applies to determine the portion of the safe harbor amount under paragraph (e)(2)(iii)(B)(1)(*ii*) of this section, as modified by paragraph (e)(2)(iii)(B)(*3*) of this section (the per-issue safe harbor), that is available (the remaining amount) for any year (the determination year) if the per-issue safe harbor was partially used in one or more prior years.

(*ii*) ***Remaining amount of per-issue safe harbor.*** The remaining amount of the per-issue safe harbor for any determination year is equal to the per-issue safe harbor for that year, reduced by the portion of the per-issue safe harbor used in one or more prior years.

(*iii*) ***Portion of per-issue safe harbor used in prior years.*** The portion of the per-issue safe harbor used in any prior year (the prior year) is equal to the total amount of broker's commissions or similar fees paid in connection with guaranteed investment contracts or investments for a yield restricted defeasance escrow acquired in the prior year that the issuer treated as qualified administrative costs for the issue, multiplied by a fraction the numerator of which is the per-issue safe harbor for the determination year and the denominator of which is the per-issue safe harbor for the prior year. See paragraph (e)(2)(iii)(C) *Example 2* of this section.

(C) ***Examples.*** The following examples illustrate the application of the safe harbor in paragraph (e)(2)(iii)(B) of this section:

Example 1. Multipurpose issue. In 2003, the issuer of a multipurpose issue uses brokers to acquire the following investments with gross proceeds of the issue: a guaranteed investment contract for amounts to be deposited in a construction fund (construction GIC), Treasury securities to be deposited in a yield restricted defeasance escrow (Treasury investments) and a guaranteed investment contract that will be used to earn a return on what otherwise would be idle cash balances from maturing investments in the yield restricted defeasance escrow (the float GIC). The issuer deposits $22,000,000 into the construction GIC and reasonably expects that no further deposits will be made over its term. The issuer uses $8,040,000 of the proceeds to purchase the Treasury investments. The issuer reasonably expects that it will make aggregate deposits of $600,000 to the float GIC over its term. The brokers' fees are $30,000 for the construction GIC, $16,080 for the Treasury

investments and $3,000 for the float GIC. The issuer has not previously treated any brokers' commissions or similar fees as qualified administrative costs. The issuer may claim all $49,080 in brokers' fees for these investments as qualified administrative costs because the fees do not exceed the safe harbors in paragraph (e)(2)(iii)(B) of this section. Specifically, each of the brokers' fees equals the lesser of $30,000 and 0.2% of the computational base (or, if more, $3,000) (*i.e.,* lesser of $30,000 and 0.2% × $22,000,000 for the construction GIC; lesser of $30,000 and 0.2% × $8,040,000 for the Treasury investments; and lesser of $30,000 and $3,000 for the float GIC). In addition, the total amount of brokers' fees claimed by the issuer as qualified administrative costs ($49,080) does not exceed the per-issue safe harbor of $85,000.

Example 2. Cost-of-living adjustment. In 2003, an issuer issues bonds and uses gross proceeds of the issue to acquire two guaranteed investment contracts. The issuer pays a total of $50,000 in brokers' fees for the two guaranteed investment contracts and treats these fees as qualified administrative costs. In a year subsequent to 2003 (Year Y), the issuer uses gross proceeds of the issue to acquire two additional guaranteed investment contracts, paying a total of $20,000 in broker's fees for the two guaranteed investment contracts, and treats those fees as qualified administrative costs. For Year Y, applying the cost-of-living adjustment under paragraph (e)(2)(iii)(B)(*3*) of this section, the safe harbor dollar limits under paragraph (e)(2)(iii)(B)(*1*) of this section are $3,000, $32,000 and $90,000. The remaining amount of the per-issue safe harbor for Year Y is $37,059 ($90,000-[$50,000 × $90,000/$85,000]). The broker's fees in Year Y do not exceed the per-issue safe harbor under paragraph (e)(2)(iii)(B)(*1*)(*ii*) (as modified by paragraph (e)(2)(iii)(B)(*3*)) of this section because the broker's fees do not exceed the remaining amount of the per-issue safe harbor determined under paragraph (e)(2)(iii)(B)(*6*) of this section for Year Y. In a year subsequent to Year Y (Year Z), the issuer uses gross proceeds of the issue to acquire an additional guaranteed investment contract, pays a broker's fee of $15,000 for the guaranteed investment contract, and treats the broker's fee as a qualified administrative cost. For Year Z, applying the cost-of-living adjustment under paragraph (e)(2)(iii)(B)(*3*) of this section, the safe harbor dollar limits under paragraph (e)(2)(iii)(B)(*1*) of this section are $3,000, $33,000 and $93,000. The remaining amount of the per-issue safe harbor for Year Z is $17,627 ($93,000—[($50,000 × $93,000/$85,000) + ($20,000 × $93,000/$90,000)]). The broker's fee incurred in Year Z does not exceed the per-issue safe harbor under paragraph (e)(2)(iii)(B)(*1*)(*ii*) (as modified by paragraph (e)(2)(iii)(B)(*3*)) of this section because the broker's fee does not exceed the remaining amount of the per-issue safe harbor determined under paragraph (e)(2)(iii)(B)(*6*) of this section for Year Z. See paragraph (e)(2)(iii)(B)(*6*) of this section.

(3) ***Qualified administrative costs on purpose investments*** —

(i) ***In general.*** In determining payments and receipts on purpose investments, qualified administrative costs described in this paragraph (e)(3) paid by the conduit borrower are taken into account. Thus, these costs increase the payments for, or decrease the receipts from, the purpose investments. This rule applies even if those payments merely reimburse the issuer. Although the actual payments by the conduit borrower may be made at any time, for this

purpose, a pro rata portion of each payment made by a conduit borrower is treated as a reimbursement of reasonable administrative costs, if the present value of those payments does not exceed the present value of the reasonable administrative costs paid by the issuer, using the yield on the issue as the discount rate.

(ii) ***Definition of qualified administrative costs of purpose investments*** —

(A) ***In general.*** Except as otherwise provided in this paragraph (e)(3)(ii), qualified administrative costs of a purpose investment means—

(*1*) Costs or expenses paid, directly or indirectly, to purchase, carry, sell, or retire the investment; and

(*2*) Costs of issuing, carrying, or repaying the issue, and any underwriters' discount.

(B) ***Limitation on program investments.*** For a program investment, qualified administrative costs include only those costs described in paragraph (e)(3)(ii)(A)(*2*) of this section.

[T.D. 8476, 58 FR 33529, June 18, 1993; 58 FR 44452, Aug. 23, 1993, as amended by T.D. 8538, 59 FR 24044, May 10, 1994; T.D. 8718, 62 FR 25511, May 9, 1997; T.D. 8801, 63 FR 71751, Dec. 30, 1998; T.D. 9097, 68 FR 69022, Dec. 11, 2003; T.D. 9777, 81 FR 46595, July 17, 2016]

§ 1.148-6 General allocation and accounting rules.

(a) ***In general*** —

(1) ***Reasonable accounting methods required.*** An issuer may use any reasonable, consistently applied accounting method to account for gross proceeds, investments, and expenditures of an issue.

(2) ***Bona fide deviations from accounting method.*** An accounting method does not fail to be reasonable and consistently applied solely because a different accounting method is used for a bona fide governmental purpose to consistently account for a particular item. Bona fide governmental purposes may include special State law restrictions imposed on specific funds or actions to avoid grant forfeitures.

(3) ***Absence of allocation and accounting methods.*** If an issuer fails to maintain books and records sufficient to establish the accounting method for an issue and the allocation of the proceeds of that issue, the rules of this section are applied using the specific tracing method. This paragraph (a)(3) applies to bonds issued on or after May 16, 1997.

(b) ***Allocation of gross proceeds to an issue*** —

(1) ***One-issue rule and general ordering rules.*** Except as otherwise provided, amounts are allocable to only one issue at a time as gross proceeds, and if amounts simultaneously are proceeds of one issue and replacement proceeds of another issue, those amounts are allocable to the issue of which they are proceeds. Amounts cease to be allocated to an issue as proceeds only when those amounts are allocated to an expenditure for a governmental purpose, are allocated to transferred proceeds of another issue, or cease to be allocated to that issue at retirement of the issue or under the universal cap of paragraph (b)(2) of this section. Amounts cease to be allocated to an issue as replacement proceeds only when those amounts are allocated to an expenditure for a governmental purpose, are no longer used in a manner that causes those amounts to be replacement proceeds of that issue, or cease to be allocated to that issue because of the retirement of the issue or the application of the universal cap under paragraph (b)(2) of this section. Amounts that cease to be

allocated to an issue as gross proceeds are eligible for allocation to another issue. Under § 1.148-10(a), however, the rules in this paragraph (b)(1) do not apply in certain cases involving abusive arbitrage devices.

(2) ***Universal cap on value of nonpurpose investments allocated to an issue*** —

(i) ***Application.*** The rules in this paragraph (b)(2) provide an overall limitation on the amount of gross proceeds allocable to an issue. Although the universal cap generally may be applied at any time in the manner described in this paragraph (b)(2), it need not be applied on any otherwise required date of application if its application on that date would not result in a reduction or reallocation of gross proceeds of an issue. For this purpose, if an issuer reasonably expects as of the issue date that the universal cap will not reduce the amount of gross proceeds allocable to the issue during the term of the issue, the universal cap need not be applied on any date on which an issue actually has all of the following characteristics—

(A) No replacement proceeds are allocable to the issue, other than replacement proceeds in a bona fide debt service fund or a reasonably required reserve or replacement fund;

(B) The net sale proceeds of the issue—

(*1*) Qualified for one of the temporary periods available for capital projects, restricted working capital expenditures, or pooled financings under § 1.148-2 (e)(2), (e)(3), or (e)(4), and those net sales proceeds were in fact allocated to expenditures prior to the expiration of the longest applicable temporary period; or

(*2*) were deposited in a refunding escrow and expended as originally expected;

(C) The issue does not refund a prior issue that, on any transfer date, has unspent proceeds allocable to it;

(D) None of the bonds are retired prior to the date on which those bonds are treated as retired in computing the yield on the issue; and

(E) No proceeds of the issue are invested in qualified student loans or qualified mortgage loans.

(ii) ***General rule.*** Except as otherwise provided below, amounts that would otherwise be gross proceeds allocable to an issue are allocated (and remain allocated) to the issue only to the extent that the value of the nonpurpose investments allocable to those gross proceeds does not exceed the value of all outstanding bonds of the issue. For this purpose, gross proceeds allocable to cash, tax-exempt bonds that would be nonpurpose investments (absent section 148(b)(3)(A)), qualified student loans, and qualified mortgage loans are treated as nonpurpose investments. The values of bonds and investments are determined under § 1.148-4(e) and § 1.148-5(d), respectively. The value of all outstanding bonds of the issue is referred to as the *universal cap.* Thus, for example, the universal cap for an issue of plain par bonds is equal to the outstanding stated principal amount of those bonds plus accrued interest.

(iii) ***Determination and application of the universal cap.*** Except as otherwise provided, beginning with the first bond year that commences after the second anniversary of the issue date, the amount of the universal cap and the value of the nonpurpose investments must be determined as of the first day of each bond year. For refunding and refunded issues, the cap and values must be determined as of each date that, but for this paragraph (b)(2), proceeds of the refunded issue would become transferred proceeds of the refunding issue, and need not otherwise be

determined in the bond year in which that date occurs. All values are determined as of the close of business on each determination date, after giving effect to all payments on bonds and payments for and receipts on investments on that date.

(iv) ***General ordering rule for allocations of amounts in excess of the universal cap*** —

(A) ***In general.*** If the value of all nonpurpose investments allocated to the gross proceeds of an issue exceeds the universal cap for that issue on a date as of which the cap is determined under paragraph (b)(2)(iii) of this section, nonpurpose investments allocable to gross proceeds necessary to eliminate that excess cease to be allocated to the issue, in the following order of priority—

(*1*) First, nonpurpose investments allocable to replacement proceeds;

(*2*) Second, nonpurpose investments allocable to transferred proceeds; and

(*3*) Third, nonpurpose investments allocable to sale proceeds and investment proceeds.

(B) ***Re-allocation of certain amounts.*** Except as provided in § 1.148-9(b)(3), amounts that cease to be allocated to an issue as a result of the application of the universal cap may only be allocated to another issue as replacement proceeds.

(C) ***Allocations of portions of investments.*** Portions of investments to which this paragraph (b)(2)(iv) applies are allocated under either the ratable method or the representative method in the same manner as allocations of portions of investments to transferred proceeds under § 1.148-9(c).

(v) ***Nonpurpose investments in a bona fide debt service fund not counted.*** For purposes of this paragraph (b)(2), nonpurpose investments allocated to gross proceeds in a bona fide debt service fund for an issue are not taken into account in determining the value of the nonpurpose investments, and those nonpurpose investments remain allocated to the issue.

(c) ***Fair market value limit on allocations to nonpurpose investments.*** Upon a purchase or sale of a nonpurpose investment, gross proceeds of an issue are not allocated to a payment for that nonpurpose investment in an amount greater than, or to a receipt from that nonpurpose investment in an amount less than, the fair market value of the nonpurpose investment as of the purchase or sale date. For purposes of this paragraph (c) only, the fair market value of a nonpurpose investment is adjusted to take into account qualified administrative costs allocable to the investment.

(d) ***Allocation of gross proceeds to expenditures*** —

(1) ***Expenditures in general*** —

(i) ***General rule.*** Reasonable accounting methods for allocating funds from different sources to expenditures for the same governmental purpose include any of the following methods if consistently applied: a specific tracing method; a gross proceeds spent first method; a first-in, first-out method; or a ratable allocation method.

(ii) ***General limitation.*** An allocation of gross proceeds of an issue to an expenditure must involve a current outlay of cash for a governmental purpose of the issue. A *current outlay of cash* means an outlay reasonably expected to occur not later than 5 banking days after the date as of which the allocation of gross proceeds to the expenditure is made.

(iii) ***Timing.*** An issuer must account for the allocation of proceeds to expenditures not later than 18 months after the later of the date the expenditure is paid or the date the project, if any, that is financed by the issue is placed in service. This allocation must be made in any event by the date 60 days after the fifth anniversary of the issue date or the date 60 days after the retirement of the issue, if earlier. This paragraph (d)(1)(iii) applies to bonds issued on or after May 16, 1997.

(2) ***Treatment of gross proceeds invested in purpose investments*** —

(i) ***In general.*** Gross proceeds of an issue invested in a purpose investment are allocated to an expenditure on the date on which the conduit borrower under the purpose investment allocates the gross proceeds to an expenditure in accordance with this paragraph (d).

(ii) ***Exception for qualified mortgage loans and qualified student loans.*** If gross proceeds of an issue are allocated to a purpose investment that is a qualified mortgage loan or a qualified student loan, those gross proceeds are allocated to an expenditure for the governmental purpose of the issue on the date on which the issuer allocates gross proceeds to that purpose investment.

(iii) ***Continuing allocation of gross proceeds to purpose investments.*** Regardless of whether gross proceeds of a conduit financing issue invested in a purpose investment have been allocated to an expenditure under paragraph (d)(2) (i) or (ii) of this section, with respect to the actual issuer those gross proceeds continue to be allocated to the purpose investment until the sale, discharge, or other disposition of the purpose investment.

(3) ***Expenditures for working capital purposes*** —

(i) ***In general.*** Except as otherwise provided in this paragraph (d)(3) or paragraph (d)(4) of this section, proceeds of an issue may only be allocated to working capital expenditures as of any date to the extent that those working capital expenditures exceed available amounts (as defined in paragraph (d)(3)(iii) of this section) as of that date (*i.e.,* a "proceeds-spent-last" method). For this purpose, proceeds include replacement proceeds described in § 1.148-1(c)(4).

(ii) ***Exceptions*** —

(A) ***General de minimis exception.*** Paragraph (d)(3)(i) of this section does not apply to expenditures to pay—

(*1*) Any issuance costs of the issue or any qualified administrative costs within the meaning of §§ 1.148-5(e)(2) (i) or (ii), or § 1.148-5(e)(3)(ii)(A);

(*2*) Fees for qualified guarantees of the issue or payments for a qualified hedge for the issue;

(*3*) Interest on the issue for a period commencing on the issue date and ending on the date that is the later of three years from the issue date or one year after the date on which the project is placed in service;

(*4*) Amounts paid to the United States under §§ 1.148-3, 1.148-5(c), or 1.148-7 for the issue;

(*5*) Costs, other than those described in paragraphs (d)(3)(ii)(A) (*1*) through (*4*) of this section, that do not exceed 5 percent of the sale proceeds of an issue and that are directly related to capital expenditures financed by the issue (e.g., initial operating expenses for a new capital project);

(*6*) Principal or interest on an issue paid from unexpected excess sale or investment proceeds; and

(*7*) Principal or interest on an issue paid from investment earnings on a reserve or replacement fund that are deposited in a bona fide debt service fund.

(B) ***Exception for extraordinary items.*** Paragraph (d)(3)(i) of this section does not apply to expenditures for extraordinary, nonrecurring items that are not customarily payable from current revenues, such as casualty losses or extraordinary legal judgments in amounts in excess of reasonable insurance coverage. If, however, an issuer or a related party maintains a reserve for such items (e.g., a self-insurance fund) or has set aside other available amounts for such expenses, gross proceeds within that reserve must be allocated to expenditures only after all other available amounts in that reserve are expended.

(C) ***Exception for payment of principal and interest on prior issues.*** Paragraph (d)(3)(i) of this section does not apply to expenditures for payment of principal, interest, or redemption prices on a prior issue and, for a crossover refunding issue, interest on that issue.

(D) ***No exceptions if replacement proceeds created.*** The exceptions provided in this paragraph (d)(3)(ii) do not apply if the allocation merely substitutes gross proceeds for other amounts that would have been used to make those expenditures in a manner that gives rise to replacement proceeds. For example, if a purported reimbursement allocation of proceeds of a reimbursement bond does not result in an expenditure under § 1.150-2, those proceeds may not be allocated to pay interest on an issue that, absent this allocation, would have been paid from the issuer's current revenues.

(iii) ***Definition of available amount*** —

(A) ***In general.*** For purposes of this paragraph (d)(3), *available amount* means any amount that is available to an issuer for working capital expenditure purposes of the type financed by an issue. Except as otherwise provided, available amount excludes proceeds of any issue but includes cash, investments, and other amounts held in accounts or otherwise by the issuer or a related party if those amounts may be used by the issuer for working capital expenditures of the type being financed by an issue without legislative or judicial action and without a legislative, judicial, or contractual requirement that those amounts be reimbursed.

(B) ***Reasonable working capital reserve treated as unavailable.*** A reasonable working capital reserve is treated as unavailable. Any working capital reserve is reasonable if it does not exceed 5 percent of the actual working capital expenditures of the issuer in the fiscal year before the year in which the determination of available amounts is made. For this purpose only, in determining the working capital expenditures of an issuer for a prior fiscal year, any expenditures (whether capital or working capital expenditures) that are paid out of current revenues may be treated as working capital expenditures.

(C) ***Qualified endowment funds treated as unavailable.*** For a 501(c)(3) organization, a qualified endowment fund is treated as unavailable. A fund is a qualified endowment fund if—

(*1*) The fund is derived from gifts or bequests, or the income thereon, that were neither made nor reasonably expected to be used to pay working capital expenditures;

(*2*) Pursuant to reasonable, established practices of the organization, the governing body of the 501(c)(3) organization designates and consistently operates the fund as a permanent endowment fund or quasi-endowment fund restricted as to use; and

(*3*) There is an independent verification that the fund is reasonably necessary as part of the organization's permanent capital.

(D) ***Application to statutory safe harbor for tax and revenue anticipation bonds.*** For purposes of section 148(f)(4)(B)(iii)(II), *available amount* has the same meaning as in paragraph (d)(3)(iii) of this section, except that the otherwise-permitted reasonable working capital reserve is treated as part of the available amount.

(4) ***Expenditures for grants*** —

(i) ***In general.*** Gross proceeds of an issue that are used to make a grant are allocated to an expenditure on the date on which the grant is made.

(ii) ***Characterization of repayments of grants.*** If any amount of a grant financed by gross proceeds of an issue is repaid to the grantor, the repaid amount is treated as unspent proceeds of the issue as of the repayment date unless expended within 60 days of repayment.

(5) ***Expenditures for reimbursement purposes.*** In allocating gross proceeds of issues of reimbursement bonds (as defined in § 1.150-2)) to certain expenditures, § 1.150-2 applies. In allocating gross proceeds to an expenditure to reimburse a previously paid working capital expenditure, paragraph (d)(3) of this section applies. Thus, if the expenditure is described in paragraph (d)(3)(ii) of this section or there are no available amounts on the date a working capital expenditure is made and there are no other available amounts on the date of the reimbursement of that expenditure, gross proceeds are allocated to the working capital expenditure as of the date of the reimbursement.

(6) ***Expenditures of certain commingled investment proceeds of governmental issues.*** This paragraph (d)(6) applies to any issue of governmental bonds, any issue of private activity bonds issued to finance a facility that is required by section 142 to be owned by a governmental unit, and any portion of an issue that is not treated as consisting of private activity bonds under section 141(b)(9). Investment proceeds of the issue (other than investment proceeds held in a refunding escrow) are treated as allocated to expenditures for a governmental purpose when the amounts are deposited in a commingled fund with substantial tax or other revenues from governmental operations of the issuer and the amounts are reasonably expected to be spent for governmental purposes within 6 months from the date of the commingling. In establishing these reasonable expectations, an issuer may use any reasonable accounting assumption and is not bound by the *proceeds-spent-last* assumption generally required for working capital expenditures under paragraph (d)(3) of this section.

(7) ***Payments to related parties.*** Any payment of gross proceeds of the issue to a related party of the payor is not an expenditure of those gross proceeds.

(e) ***Special rules for commingled funds*** —

(1) ***In general.*** An accounting method for gross proceeds of an issue in a commingled fund, other than a bona fide debt service fund, is reasonable only if it satisfies the requirements of paragraphs (e)(2) through (6) of this section in addition to the other requirements of this section.

(2) ***Investments held by a commingled fund*** —

(i) ***Required ratable allocations.*** Not less frequently than as of the close of each fiscal period, all payments and receipts (including deemed payments and receipts) on investments held by a commingled fund must be allocated (but not necessarily distributed) among the different investors in the fund. This allocation must be based on a consistently applied, reasonable ratable allocation method.

(ii) ***Safe harbors for ratable allocation methods.*** Reasonable ratable allocation methods include, without limitation, methods that allocate these items in proportion to either—

(A) The average daily balances of the amounts in the commingled fund from different investors during a fiscal period (as described in paragraph (e)(4) of this section); or

(B) The average of the beginning and ending balances of the amounts in the commingled fund from different investors for a fiscal period that does not exceed one month.

(iii) ***Definition of investor.*** For purposes of this paragraph (e), the term *investor* means each different source of funds invested in a commingled fund. For example, if a city invests gross proceeds of an issue and tax revenues in a commingled fund, it is treated as two different investors.

(3) ***Certain expenditures involving a commingled fund.*** If a ratable allocation method is used under paragraph (d) of this section to allocate expenditures from the commingled fund, the same ratable allocation method must be used to allocate payments and receipts on investments in the commingled fund under paragraph (e)(2) of this section.

(4) ***Fiscal periods.*** The fiscal year of a commingled fund is the calendar year unless the fund adopts another fiscal year. A commingled fund may use any consistent fiscal period that does not exceed three months (e.g., a daily, weekly, monthly, or quarterly fiscal period).

(5) ***Unrealized gains and losses on investments of a commingled fund*** —

(i) ***Mark-to-market requirement for internal commingled funds with longer-term investment portfolios.*** Except as otherwise provided in this paragraph (e), in the case of a commingled fund in which the issuer and any related party own more than 25 percent of the beneficial interests in the fund (an *internal commingled fund*), the fund must treat all its investments as if sold at fair market value either on the last day of the fiscal year or the last day of each fiscal period. The net gains or losses from these deemed sales of investments must be allocated to all investors of the commingled fund during the period since the last allocation.

(ii) ***Exception for internal commingled funds with shorter-term investment portfolios.*** If the remaining weighted average maturity of all investments held by a commingled fund during a particular fiscal year does not exceed 18 months, and the investments held by the commingled fund during that fiscal year consist exclusively of obligations, the mark-to-market requirement of paragraph (e)(5)(i) of this section does not apply.

(iii) ***Exception for commingled reserve funds and sinking funds.*** The mark-to-market requirement of paragraph (e)(5)(i) of this section does not apply to a commingled fund that operates exclusively as a reserve fund, sinking fund, or replacement fund for two or more issues of the same issuer.

(6) ***Allocations of commingled funds serving as common reserve funds or sinking funds*** —

(i) ***Permitted ratable allocation methods.*** If a commingled fund serves as a common reserve fund, replacement fund, or sinking fund for two or more issues (a *commingled reserve*), after making reasonable adjustments to account for proceeds allocated under paragraph (b)(1) or (b)(2) of this section, investments held by that commingled fund must be allocated ratably among the issues served by the commingled fund in accordance with one of the following methods—

(A) The relative values of the bonds of those issues under § 1.148-4(e);

(B) The relative amounts of the remaining maximum annual debt service requirements on the outstanding principal amounts of those issues; or

(C) The relative original stated principal amounts of the outstanding issues.

(ii) ***Frequency of allocations.*** An issuer must make any allocations required by this paragraph (e)(6) as of a date at least every 3 years and as of each date that an issue first becomes secured by the commingled reserve. If relative original principal amounts are used to allocate, allocations must also be made on the retirement of any issue secured by the commingled reserve.

[T.D. 8476, 58 FR 33532, June 18, 1993; 58 FR 44452, Aug. 23, 1993, as amended by T.D. 8538, 59 FR 24045, May 10, 1994; T.D. 8712, 62 FR 2304, Jan. 16, 1997; T.D. 8718, 62 FR 25512, May 9, 1997; T.D. 9777, 81 FR 46597, July 18, 2016]

§ 1.148-7 Spending exceptions to the rebate requirement.

(a) ***Scope of section*** —

(1) ***In general.*** This section provides guidance on the spending exceptions to the arbitrage rebate requirement of section 148(f)(2). These exceptions are the 6-month exception in section 148(f)(4)(B) (the *6-month exception*), the 18-month exception under paragraph (d) of this section (the *18-month exception*), and the 2-year construction exception under section 148(f)(4)(C) (the *2-year exception*) (collectively, the *spending exceptions*).

(2) ***Relationship of spending exceptions.*** Each of the spending exceptions is an independent exception to arbitrage rebate. For example, a construction issue may qualify for the 6-month exception or the 18-month exception even though the issuer makes one or more elections under the 2-year exception with respect to the issue.

(3) ***Spending exceptions not mandatory.*** Use of the spending exceptions is not mandatory. An issuer may apply the arbitrage rebate requirement to an issue that otherwise satisfies a spending exception. If an issuer elects to pay penalty in lieu of rebate under the 2-year exception, however, the issuer must apply those penalty provisions.

(b) ***Rules applicable for all spending exceptions.*** The provisions of this paragraph (b) apply for purposes of applying each of the spending exceptions.

(1) ***Special transferred proceeds rules*** —

(i) ***Application to prior issues.*** For purposes of applying the spending exceptions to a prior issue only, proceeds of the prior issue that become transferred proceeds of the refunding issue continue to be treated as unspent proceeds of the prior issue. If the prior issue satisfies one of the spending exceptions, the proceeds of the prior issue that are excepted from rebate under that spending exception are not subject to rebate either as proceeds of the prior issue or as transferred proceeds of the refunding issue.

(ii) ***Application to refunding issues*** —

(A) ***In general.*** The only spending exception applicable to refunding issues is the 6-month exception. For purposes of applying the 6-month exception to a refunding issue only, proceeds of the prior issue that become transferred proceeds of the refunding issue generally are not treated as proceeds of the refunding issue and need not be spent for the refunding issue to satisfy that spending exception. Even if the refunding issue qualifies for that spending exception, those transferred proceeds are subject to rebate as proceeds of the refunding issue unless an exception to rebate applied to those proceeds as proceeds of the prior issue.

(B) ***Exception.*** For purposes of applying the 6-month exception to refunding issues, those transferred proceeds of the refunding issue excluded from the gross proceeds of the prior issue under the special definition of gross proceeds in paragraph (c)(3) of this section, and those that transferred from a prior taxable issue, are generally treated as gross proceeds of the refunding issue. Thus, for the refunding issue to qualify for the 6-month exception, those proceeds must be spent within 6 months of the issue date of the refunding issue, unless those amounts continue to be used in a manner that does not cause those amounts to be gross proceeds under paragraph (c)(3) of this section.

(2) ***Application of multipurpose issue rules.*** Except as otherwise provided, if any portion of an issue is treated as a separate issue allocable to refunding purposes under § 1.148-9(h) (relating to multipurpose issues), for purposes of this section, that portion is treated as a separate issue.

(3) ***Expenditures for governmental purposes of the issue.*** For purposes of this section, expenditures for the governmental purpose of an issue include payments for interest, but not principal, on the issue, and for principal or interest on another issue of obligations. The preceding sentence does not apply for purposes of the 18-month and 2-year exceptions if those payments cause the issue to be a refunding issue.

(4) ***De minimis rule.*** Any failure to satisfy the final spending requirement of the 18-month exception or the 2-year exception is disregarded if the issuer exercises due diligence to complete the project financed and the amount of the failure does not exceed the lesser of 3 percent of the issue price of the issue or $250,000.

(5) ***Special definition of reasonably required reserve or replacement fund.*** For purposes of this section only, a reasonably required reserve or replacement fund also includes any fund to the extent described in § 1.148-5(c)(3)(i)(E) or (G).

(6) ***Pooled financing issue*** —

(i) ***In general.*** Except as otherwise provided in this paragraph (b)(6), the spending exceptions apply to a pooled financing issue as a whole, rather than to each loan separately.

(ii) ***Election to apply spending exceptions separately to each loan*** —

(A) ***In general.*** At the election (made on or before the issue date) of the issuer of a pooled financing issue, the spending exceptions are applied separately to each conduit loan, and the applicable spending requirements for a loan begin on the earlier of the date the loan is made, or the first day following the 1-year period beginning on the issue date of the pooled financing issue. If this election is made, the rebate requirement applies to, and none of the spending exceptions are available for, gross proceeds of the pooled financing bonds before the date on which the spending requirements for those proceeds begin.

(B) ***Application of spending exceptions.*** If the issuer makes the election under this paragraph (b)(6)(ii), the rebate requirement is satisfied for proceeds used to finance a particular conduit loan to the extent that the loan satisfies a spending exception or the small issuer exception under § 1.148-8, regardless of whether any other conduit loans allocable to the issue satisfy such an exception. A pooled financing issue is an issue of arbitrage bonds, however, unless the entire issue satisfies the requirements of section 148. An issuer may pay rebate for some conduit loans and $1^1/_2$ percent penalty for other conduit loans from the same pooled financing issue. The $1^1/_2$ percent penalty is computed separately for each conduit loan.

(C) ***Elections under 2-year exception.*** If the issuer makes the election under this paragraph (b)(6)(ii), the issuer may make all elections under the 2-year exception separately for each loan. Elections regarding a loan that otherwise must be made by the issuer on or before the issue date instead may be made on or before the date the loan is made (but not later than 1 year after the issue date).

(D) ***Example.*** The operation of this paragraph (b)(6) is illustrated by the following example:

Example. Pooled financing issue. On January 1, 1994, Authority *J* issues bonds. As of the issue date, *J* reasonably expects to use the proceeds of the issue to make loans to City *K,* County *L,* and City *M. J* does not reasonably expect to use more than 75 percent of the available construction proceeds of the issue for construction expenditures. On or before the issue date, *J* elects to apply the spending exceptions separately for each loan, with spending requirements beginning on the earlier of the date the loan is made or the first day following the 1-year period beginning on the issue date. On February 1, 1994, *J* loans a portion of the proceeds to *K,* and *K* reasonably expects that 45 percent of those amounts will be used for construction expenditures. On the date this loan is made, *J* elects under paragraph (j) of this section to treat 60 percent of the amount loaned to *K* as a separate construction issue, and also elects the $1^1/_2$ percent penalty under paragraph (k) of this section for the separate construction issue. On March 1, 1994, *J* loans a portion of the proceeds to *L,* and *L* reasonably expects that more than 75 percent of those amounts will be used for construction expenditures. On March 1, 1995, *J* loans the remainder of the proceeds to *M,* and none of those amounts will be used for construction expenditures. *J* must satisfy the rebate requirement for all gross proceeds before those amounts are loaned. For the loan to *K,* the spending periods begin on February 1, 1994, and the $1^1/_2$ percent penalty must be paid for any failure to meet a spending requirement for the portion of the loan to *K* that is treated as a separate construction issue. Rebate must be paid on the remaining portion of the loan to *K,* unless that portion qualifies for the 6-month exception. For the loan to *L,* the spending periods begin on March 1, 1994, and the rebate requirement must be satisfied unless the 6-month, 18-month, or the 2-year exception is satisfied with respect to those

amounts. For the loan to *M,* the spending periods begin on January 2, 1995, and the rebate requirement must be satisfied for those amounts unless the 6-month or 18-month exception is satisfied.

(c) ***6-month exception*** —

(1) ***General rule.*** An issue is treated as meeting the rebate requirement if—

(i) The gross proceeds (as modified by paragraph (c)(3) of this section) of the issue are allocated to expenditures for the governmental purposes of the issue within the 6-month period beginning on the issue date (the *6-month spending period*); and

(ii) The rebate requirement is met for amounts not required to be spent within the 6-month spending period (excluding earnings on a bona fide debt service fund).

(2) ***Additional period for certain bonds.*** The 6-month spending period is extended for an additional 6 months in certain circumstances specified under section 148(f)(4)(B)(ii).

(3) ***Amounts not included in gross proceeds.*** For purposes of paragraph (c)(1)(i) of this section only, gross proceeds has the meaning used in § 1.148-1, except it does not include amounts—

(i) In a bona fide debt service fund;

(ii) In a reasonably required reserve or replacement fund (see § 1.148-7(b)(5));

(iii) That, as of the issue date, are not reasonably expected to be gross proceeds but that become gross proceeds after the end of the 6-month spending period;

(iv) Representing sale or investment proceeds derived from payments under any purpose investment of the issue; and

(v) Representing repayments of grants (as defined in § 1.150-1(f)) financed by the issue.

(4) ***Series of refundings.*** If a principal purpose of a series of refunding issues is to exploit the difference between taxable and tax-exempt interest rates by investing proceeds during the temporary periods provided in § 1.148-9(d), the 6-month spending period for all issues in the series begins on the issue date of the first issue in the series.

(d) ***18-month exception*** —

(1) ***General rule.*** An issue is treated as meeting the rebate requirement if all of the following requirements are satisfied—

(i) ***18-month expenditure schedule met.*** The gross proceeds (as defined in paragraph (d)(3) of this section) are allocated to expenditures for a governmental purpose of the issue in accordance with the following schedule (the *18-month expenditure schedule*) measured from the issue date—

(A) At least 15 percent within 6 months (the *first spending period*);

(B) At least 60 percent within 12 months (the *second spending period*); and

(C) 100 percent within 18 months (the *third spending period*).

(ii) ***Rebate requirement met for amounts not required to be spent.*** The rebate requirement is met for all amounts not required to be spent in accordance with the 18-month expenditure schedule (other than earnings on a bona fide debt service fund).

(iii) ***Issue qualifies for initial temporary period.*** All of the gross proceeds (as defined in paragraph (d)(3)(i) of this section) of the issue qualify for the initial temporary period under § 1.148-2(e)(2).

(2) ***Extension for reasonable retainage.*** An issue does not fail to satisfy the spending requirement for the third spending period as a result of a reasonable retainage if the reasonable retainage is allocated to expenditures within 30 months of the issue date. Reasonable retainage has the meaning under paragraph (h) of this section, as modified to refer to net sale proceeds on the date 18 months after the issue date.

(3) ***Gross proceeds*** —

(i) ***Definition of gross proceeds.*** For purposes of paragraph (d)(1) of this section only, *gross proceeds* means gross proceeds as defined in paragraph (c)(3) of this section, as modified to refer to "18 months" in paragraph (c)(3)(iii) of this section in lieu of "6 months."

(ii) ***Estimated earnings.*** For purposes of determining compliance with the first two spending periods under paragraph (d)(1)(i) of this section, the amount of investment proceeds included in gross proceeds of the issue is determined based on the issuer's reasonable expectations on the issue date.

(4) ***Application to multipurpose issues.*** This paragraph (d) does not apply to an issue any portion of which is treated as meeting the rebate requirement under paragraph (e) of this section (relating to the 2-year exception).

(e) ***2-year exception*** —

(1) ***General rule.*** A construction issue is treated as meeting the rebate requirement for available construction proceeds if those proceeds are allocated to expenditures for governmental purposes of the issue in accordance with the following schedule (the *2-year expenditure schedule*), measured from the issue date—

(i) At least 10 percent within 6 months (the *first spending period*);

(ii) At least 45 percent within 1 year (the *second spending period*);

(iii) At least 75 percent within 18 months (the *third spending period*); and

(iv) 100 percent within 2 years (the *fourth spending period*).

(2) ***Extension for reasonable retainage.*** An issue does not fail to satisfy the spending requirement for the fourth spending period as a result of unspent amounts for reasonable retainage (as defined in paragraph (h) of this section) if those amounts are allocated to expenditures within 3 years of the issue date.

(3) ***Definitions.*** For purposes of the 2-year exception, the following definitions apply:

(i) ***Real property*** means land and improvements to land, such as buildings or other inherently permanent structures, including interests in real property. For example, real property includes wiring in a building, plumbing systems, central heating or air-conditioning systems, pipes or ducts, elevators, escalators installed in a building, paved parking areas, roads, wharves and docks, bridges, and sewage lines.

(ii) ***Tangible personal property*** means any tangible property other than real property, including interests in tangible personal property. For example, tangible personal property includes machinery that is not a structural component of a building, subway cars, fire trucks, automobiles, office equipment, testing equipment, and furnishings.

(iii) ***Substantially completed.*** Construction may be treated as substantially completed when the issuer abandons construction or when at least 90 percent of the total costs of the construction reasonably expected, as of that date, to be financed with the available construction proceeds have been allocated to expenditures.

(f) ***Construction issue*** —

(1) ***Definition. Construction issue*** means any issue that is not a refunding issue if—

(i) The issuer reasonably expects, as of the issue date, that at least 75 percent of the available construction proceeds of the issue will be allocated to construction expenditures (as defined in paragraph (g) of this section) for property owned by a governmental unit or a 501(c)(3) organization; and

(ii) Any private activity bonds that are part of the issue are qualified 501(c)(3) bonds or private activity bonds issued to finance property to be owned by a governmental unit or a 501(c)(3) organization.

(2) ***Use of actual facts.*** For the provisions of paragraphs (e) through (m) of this section that apply based on the issuer's reasonable expectations, an issuer may elect on or before the issue date to apply all of those provisions based on actual facts, except that this election does not apply for purposes of determining whether an issue is a construction issue under paragraph (f)(1) of this section if the $1^1/_2$ percent penalty election is made under paragraph (k) of this section.

(3) ***Ownership requirement*** —

(i) ***In general.*** A governmental unit or 501(c)(3) organization is treated as the owner of property if it would be treated as the owner for Federal income tax purposes. For obligations issued on behalf of a State or local governmental unit, the entity that actually issues the bonds is treated as a governmental unit.

(ii) ***Safe harbor for leases and management contracts.*** Property leased by a governmental unit or a 501(c)(3) organization is treated as owned by the governmental unit or 501(c)(3) organization if the lessee complies with the requirements of section 142(b)(1)(B). For a bond described in section 142(a)(6), the requirements of section 142(b)(1)(B) apply as modified by section 146(h)(2).

(g) ***Construction expenditures*** —

(1) ***Definition.*** Except as otherwise provided, *construction expenditures* means capital expenditures (as defined in § 1.150-1) that are allocable to the cost of real property or constructed personal property (as defined in paragraph (g)(3) of this section). Except as provided in paragraph (g)(2) of this section, construction expenditures do not include expenditures for acquisitions of interests in land or other existing real property.

(2) ***Certain acquisitions under turnkey contracts treated as construction expenditures.*** Expenditures are not for the acquisition of an interest in existing real property other than land if the contract between the seller and the issuer requires the seller to build or install the property (e.g., a *turnkey contract*), but only to the extent that the property has not been built or installed at the time the parties enter into the contract.

(3) ***Constructed personal property. Constructed personal property*** means tangible personal property (or, if acquired pursuant to a single acquisition contract, properties) or specially developed computer software if—

(i) A substantial portion of the property or properties is completed more than 6 months after the earlier of the date construction or rehabilitation commenced and the date the issuer entered into an acquisition contract;

(ii) Based on the reasonable expectations of the issuer, if any, or representations of the person constructing the property, with the exercise of due diligence, completion of construction or rehabilitation (and delivery to the issuer) could not have occurred within that 6-month period; and

(iii) If the issuer itself builds or rehabilitates the property, not more than 75 percent of the capitalizable cost is attributable to property acquired by the issuer (e.g., components, raw materials, and other supplies).

(4) ***Specially developed computer software. Specially developed computer software*** means any programs or routines used to cause a computer to perform a desired task or set of tasks, and the documentation required to describe and maintain those programs, provided that the software is specially developed and is functionally related and subordinate to real property or other constructed personal property.

(5) ***Examples.*** The operation of this paragraph (g) is illustrated by the following examples:

Example 1. Purchase of construction materials. City A issues bonds to finance a new office building. *A* uses proceeds of the bonds to purchase materials to be used in constructing the building, such as bricks, pipes, wires, lighting, carpeting, heating equipment, and similar materials. Expenditures by *A* for the construction materials are construction expenditures because those expenditures will be capitalizable to the cost of the building upon completion, even though they are not initially capitalizable to the cost of existing real property. This result would be the same if *A* hires a third-party to perform the construction, unless the office building is partially constructed at the time that *A* contracts to purchase the building.

Example 2. Turnkey contract. City *B* issues bonds to finance a new office building. *B* enters into a turnkey contract with developer *D* under which *D* agrees to provide *B* with a completed building on a specified completion date on land currently owned by *D.* Under the agreement, *D* holds title to the land and building and assumes any risk of loss until the completion date, at which time title to the land and the building will be transferred to *B.* No construction has been performed by the date that *B* and *D* enter into the agreement. All payments by *B* to *D* for construction of the building are construction expenditures because all the payments are properly capitalized to the cost of the building, but payments by *B* to *D* allocable to the acquisition of the land are not construction expenditures.

Example 3. Right-of-way. P, a public agency, issues bonds to finance the acquisition of a right-of-way and the construction of sewage lines through numerous parcels of land. The right-of-way is acquired primarily through *P'* s exercise of its powers of eminent domain. As of the issue date, *P* reasonably expects that it will take approximately 2 years to acquire the entire right-of-way because of the time normally required for condemnation proceedings. No expenditures for the acquisition of the right-of-way are construction expenditures because they are costs incurred to acquire an interest in existing real property.

Example 4. Subway cars. City *C* issues bonds to finance new subway cars. *C* reasonably expects that it will take more than 6 months for the subway cars to be constructed to *C*'s specifications. The subway cars are constructed personal property. Alternatively, if the builder of the subway cars informs *C* that it will only take 3 months to build the subway cars to *C*'s specifications, no payments for the subway cars are construction expenditures.

Example 5. Fractional interest in property. U, a public agency, issues bonds to finance an undivided fractional interest in a newly constructed power-generating facility. *U* contributes its ratable share of the cost of building the new facility to the project manager for the facility. *U*'s contributions are construction expenditures in the same proportion that the total expenditures for the facility qualify as construction expenditures.

Example 6. Park land. City *D* issues bonds to finance the purchase of unimproved land and the cost of subsequent improvements to the land, such as grading and landscaping, necessary to transform it into a park. The costs of the improvements are properly capitalizable to the cost of the land, and therefore, are construction expenditures, but expenditures for the acquisition of the land are not.

(h) ***Reasonable retainage definition. Reasonable retainage*** means an amount, not to exceed 5 percent of available construction proceeds as of the end of the fourth spending period, that is retained for reasonable business purposes relating to the property financed with the proceeds of the issue. For example, a reasonable retainage may include a retention to ensure or promote compliance with a construction contract in circumstances in which the retained amount is not yet payable, or in which the issuer reasonably determines that a dispute exists regarding completion or payment.

(i) ***Available construction proceeds*** —

(1) ***Definition in general. Available construction proceeds*** has the meaning used in section 148(f)(4)(C)(vi). For purposes of this definition, earnings include earnings on any tax-exempt bond. Pre-issuance accrued interest and earnings thereon may be disregarded. Amounts that are not gross proceeds as a result of the application of the universal cap under § 1.148-6(b)(2) are not available construction proceeds.

(2) ***Earnings on a reasonably required reserve or replacement fund.*** Earnings on any reasonably required reserve or replacement fund are available construction proceeds only to the extent that those earnings accrue before the earlier of the date construction is substantially completed or the date that is 2 years after the issue date. An issuer may elect on or before the issue date to exclude from available construction proceeds the earnings on such a fund. If the election is made, the rebate requirement applies to the excluded amounts from the issue date.

(3) ***Reasonable expectations test for future earnings.*** For purposes of determining compliance with the spending requirements as of the end of each of the first three spending periods, available construction proceeds include the amount of future earnings that the issuer reasonably expected as of the issue date.

(4) ***Issuance costs.*** Available construction proceeds do not include gross proceeds used to pay issuance costs financed by an issue, but do include earnings on such proceeds. Thus, an expenditure of gross proceeds of an issue for issuance costs does not count toward meeting the spending requirements. The expenditure of earnings on gross proceeds used to pay issuance costs does count toward meeting those requirements. If the spending requirements are met and the proceeds used to pay issuance costs are expended by the end of the fourth spending period, those proceeds and the earnings thereon are treated as having satisfied the rebate requirement.

(5) ***One and one-half percent penalty in lieu of arbitrage rebate.*** For purposes of the spending requirements of paragraph (e) of this section, available construction proceeds as of the end of any spending period are reduced by the amount of penalty in lieu of arbitrage rebate (under paragraph (k) of this section) that the issuer has paid from available construction proceeds before the last day of the spending period.

(6) ***Payments on purpose investments and repayments of grants.*** Available construction proceeds do not include—

(i) Sale or investment proceeds derived from payments under any purpose investment of the issue; or

(ii) Repayments of grants (as defined in § 1.150-1(f)) financed by the issue.

(7) ***Examples.*** The operation of this paragraph (i) is illustrated by the following examples:

Example 1. Treatment of investment earnings. City *F* issues bonds having an issue price of $10,000,000. *F* deposits all of the proceeds of the issue into a construction fund to be used for expenditures other than costs of issuance. *F* estimates on the issue date that, based on reasonably expected expenditures and rates of investment, earnings on the construction fund will be $800,000. As of the issue date and the end of each of the first three spending periods, the amount of available construction proceeds is $10,800,000. To qualify as a construction issue, *F* must reasonably expect on the issue date that at least $8,100,000 (75 percent of $10,800,000) will be used for construction expenditures. In order to meet the 10 percent spending requirement at the end of the first spending period, *F* must spend at least $1,080,000. As of the end of the fourth spending period, *F* has received $1,100,000 in earnings. In order to meet the spending requirement at the end of the fourth spending period, however, *F* must spend all of the $11,100,000 of actual available construction proceeds (except for reasonable retainage not exceeding $555,000).

Example 2. Treatment of investment earnings without a reserve fund. City *G* issues bonds having an issue price of $11,200,000. *G* does not elect to exclude earnings on the reserve fund from available construction proceeds. *G* uses $200,000 of proceeds to pay issuance costs and deposits $1,000,000 of proceeds into a reasonably required reserve fund. *G* deposits the remaining $10,000,000 of proceeds into a construction fund to be used for construction expenditures. On the issue date, *G* reasonably expects that, based on the reasonably expected date of substantial completion and rates of investment, total earnings on the construction fund will be $800,000, and total earnings on the reserve fund to the date of substantial completion will be $150,000. *G* reasonably expects that substantial completion will occur during the fourth spending period. As of the issue date, the amount of available construction proceeds is $10,950,000 ($10,000,000 originally deposited into the construction fund plus $800,000

expected earnings on the construction fund and $150,000 expected earnings on the reserve fund). To qualify as a construction issue, *G* must reasonably expect on the issue date that at least $8,212,500 will be used for construction expenditures.

Example 3. Election to exclude earnings on a reserve fund. The facts are the same as *Example 2,* except that *G* elects on the issue date to exclude earnings on the reserve fund from available construction proceeds. The amount of available construction proceeds as of the issue date is $10,800,000.

(j) ***Election to treat portion of issue used for construction as separate issue*** —

(1) ***In general.*** For purposes of paragraph (e) of this section, if any proceeds of an issue are to be used for construction expenditures, the issuer may elect on or before the issue date to treat the portion of the issue that is not a refunding issue as two, and only two, separate issues, if—

(i) One of the separate issues is a construction issue as defined in paragraph (f) of this section;

(ii) The issuer reasonably expects, as of the issue date, that this construction issue will finance all of the construction expenditures to be financed by the issue; and

(iii) The issuer makes an election to apportion the issue under this paragraph (j)(1) in which it identifies the amount of the issue price of the issue allocable to the construction issue.

(2) ***Example.*** The operation of this paragraph (j) is illustrated by the following example.

Example. City *D* issues bonds having an issue price of $19,000,000. On the issue date, *D* reasonably expects to use $10,800,000 of bond proceeds (including investment earnings) for construction expenditures for the project being financed. *D* deposits $10,000,000 in a construction fund to be used for construction expenditures and $9,000,000 in an acquisition fund to be used for acquisition of equipment not qualifying as construction expenditures. *D* estimates on the issue date, based on reasonably expected expenditures and rates of investment, that total earnings on the construction fund will be $800,000 and total earnings on the acquisition fund will be $200,000. Because the total construction expenditures to be financed by the issue are expected to be $10,800,000, the maximum available construction proceeds for a construction issue is $14,400,000 ($10,800,000 divided by 0.75). To determine the maximum amount of the issue price allocable to a construction issue, the estimated investment earnings allocable to the construction issue are subtracted. The entire $800,000 of earnings on the construction fund are allocable to the construction issue. Only a portion of the $200,000 of earnings on the acquisition fund, however, are allocable to the construction issue. The total amount of the available construction proceeds that is expected to be used for acquisition is $3,600,000 ($14,400,000−$10,800,000). The portion of earnings on the acquisition fund that is allocable to the construction issue is $78,261 ($200,000 × $3,600,000/$9,200,000). Accordingly, *D* may elect on or before the issue date to treat up to $13,521,739 of the issue price as a construction issue ($14,400,000−$800,000−$78,261). *D*'s election must specify the amount of the issue price treated as a construction issue. The balance of the issue price is treated as a separate nonconstruction issue that is subject to the rebate requirement unless it meets another exception to arbitrage rebate. Because the financing of a construction issue is a separate governmental purpose under § 1.148-9(h), the election causes the issue to be a multipurpose issue under that section.

(k) ***One and one-half percent penalty in lieu of arbitrage rebate*** —

(1) ***In general.*** Under section 148(f)(4)(C)(vii), an issuer of a construction issue may elect on or before the issue date to pay a penalty (the *$1^1/_2$ percent penalty*) to the United States in lieu of the obligation to pay the rebate amount on available construction proceeds upon failure to satisfy the spending requirements of paragraph (e) of this section. The $1^1/_2$ percent penalty is calculated separately for each spending period, including each semiannual period after the end of the fourth spending period, and is equal to 1.5 percent times the underexpended proceeds as of the end of the spending period. For each spending period, underexpended proceeds equal the amount of available construction proceeds required to be spent by the end of the spending period, less the amount actually allocated to expenditures for the governmental purposes of the issue by that date. The $1^1/_2$ percent penalty must be paid to the United States no later than 90 days after the end of the spending period to which it relates. The $1^1/_2$ percent penalty continues to apply at the end of each spending period and each semiannual period thereafter until the earliest of the following—

(i) The termination of the penalty under paragraph (l) of this section;

(ii) The expenditure of all of the available construction proceeds; or

(iii) The last stated final maturity date of bonds that are part of the issue and any bonds that refund those bonds.

(2) ***Application to reasonable retainage.*** If an issue meets the exception for reasonable retainage except that all retainage is not spent within 3 years of the issue date, the issuer must pay the $1^1/_2$ percent penalty to the United States for any reasonable retainage that was not so spent as of the close of the 3-year period and each later spending period.

(3) ***Coordination with rebate requirement.*** The rebate requirement is treated as met with respect to available construction proceeds for a period if the $1^1/_2$ percent penalty is paid in accordance with this section.

(l) ***Termination of $1^1/_2$ percent penalty*** —

(1) ***Termination after initial temporary period.*** The issuer may terminate the $1^1/_2$ percent penalty after the initial temporary period (a *section 148(f)(4)(C)(viii) penalty termination*) if—

(i) Not later than 90 days after the earlier of the end of the initial temporary period or the date construction is substantially completed, the issuer elects to terminate the $1^1/_2$ percent penalty; provided that solely for this purpose, the initial temporary period may be extended by the issuer to a date ending 5 years after the issue date;

(ii) Within 90 days after the end of the initial temporary period, the issuer pays a penalty equal to 3 percent of the unexpended available construction proceeds determined as of the end of the initial temporary period, multiplied by the number of years (including fractions of years computed to 2 decimal places) in the initial temporary period;

(iii) For the period beginning as of the close of the initial temporary period, the unexpended available construction proceeds are not invested in higher yielding investments; and

(iv) On the earliest date on which the bonds may be called or otherwise redeemed, with or without a call premium, the unexpended available construction proceeds as of that date (not including any amount earned after the date on which notice of the redemption was required to be given) must be used to redeem the bonds. Amounts used to pay any call premium are treated as used to redeem bonds. This redemption requirement may be met by purchases of bonds by the issuer on the open market at prices not exceeding fair market value. A portion of the annual

principal payment due on serial bonds of a construction issue may be paid from the unexpended amount, but only in an amount no greater than the amount that bears the same ratio to the annual principal due that the total unexpended amount bears to the issue price of the construction issue.

(2) ***Termination before end of initial temporary period.*** If the construction to be financed by the construction issue is substantially completed before the end of the initial temporary period, the issuer may elect to terminate the $1^1/_2$ percent penalty before the end of the initial temporary period (a *section 148(f)(4)(C)(ix) penalty termination*) if—

(i) Before the close of the initial temporary period and not later than 90 days after the date the construction is substantially completed, the issuer elects to terminate the $1^1/_2$ percent penalty;

(ii) The election identifies the amount of available construction proceeds that will not be spent for the governmental purposes of the issue; and

(iii) The issuer has met all of the conditions for a section 148(f)(4)(C)(viii) penalty termination, applied as if the initial temporary period ended as of the date the required election for a section 148(f)(4)(C)(ix) penalty termination is made. That penalty termination election satisfies the required election for a section 148(f)(4)(C)(viii) termination.

(3) ***Application to reasonable retainage.*** Solely for purposes of determining whether the conditions for terminating the $1^1/_2$ percent penalty are met, reasonable retainage may be treated as spent for a governmental purpose of the construction issue. Reasonable retainage that is so treated continues to be subject to the $1^1/_2$ percent penalty.

(4) ***Example.*** The operation of this paragraph (l) is illustrated by the following example.

Example. City *I* issues a construction issue having a 20-year maturity and qualifying for a 3-year initial temporary period. The bonds are first subject to optional redemption 10 years after the issue date at a premium of 3 percent. *I* elects, on or before the issue date, to pay the $1^1/_2$ percent penalty in lieu of arbitrage rebate. At the end of the 3-year temporary period, the project is not substantially completed, and $1,500,000 of available construction proceeds of the issue are unspent. At that time, *I* reasonably expects to need $500,000 to complete the project. *I* may terminate the $1^1/_2$ percent penalty in lieu of arbitrage rebate with respect to the excess $1,500,000 by electing to terminate within 90 days of the end of the initial temporary period; paying a penalty to the United States of $135,000 (3 percent of $1,500,000 multiplied by 3 years); restricting the yield on the investment of unspent available construction proceeds for 7 years until the first call date, although any portion of these proceeds may still be spent on the project prior to that call date; and using the available construction proceeds that, as of the first call date, have not been allocated to expenditures for the governmental purposes of the issue to redeem bonds on that call date. If *I* fails to make the termination election, *I* is required to pay the $1^1/_2$ percent penalty on unspent available construction proceeds every 6 months until the latest maturity date of bonds of the issue (or any bonds of another issue that refund such bonds).

(m) ***Payment of penalties.*** Each penalty payment under this section must be paid in the manner provided in § 1.148-3(g). See § 1.148-3(h) for rules on failures to pay penalties under this section.

[T.D. 8476, 58 FR 33535, June 18, 1993; 58 FR 44452, Aug. 23, 1993; T.D. 9777, 81 FR 46597, July 18, 2016]

§ 1.148-8 Small issuer exception to rebate requirement.

(a) ***Scope.*** Under section 148(f)(4)(D), bonds issued to finance governmental activities of certain small issuers are treated as meeting the arbitrage rebate requirement of section 148(f)(2) (the "small issuer exception"). This section provides guidance on the small issuer exception.

(b) ***General taxing powers.*** The small issuer exception generally applies only to bonds issued by governmental units with general taxing powers. A governmental unit has general taxing powers if it has the power to impose taxes (or to cause another entity to impose taxes) of general applicability which, when collected, may be used for the general purposes of the issuer. The taxing power may be limited to a specific type of tax, provided that the applicability of the tax is not limited to a small number of persons. The governmental unit's exercise of its taxing power may be subject to procedural limitations, such as voter approval requirements, but may not be contingent on approval by another governmental unit. See, also, section 148(f)(4)(D)(iv).

(c) ***Size limitation*** —

(1) ***In general.*** An issue (other than a refunding issue) qualifies for the small issuer exception only if the issuer reasonably expects, as of the issue date, that the aggregate face amount of all tax-exempt bonds (other than private activity bonds) issued by it during that calendar year will not exceed $5,000,000; or the aggregate face amount of all tax-exempt bonds of the issuer (other than private activity bonds) actually issued during that calendar year does not exceed $5,000,000. For this purpose, if an issue has more than a de minimis amount of original issue discount or premium, *aggregate face amount* means the aggregate issue price of that issue (determined without regard to pre-issuance accrued interest).

(2) ***Aggregation rules.*** The following aggregation rules apply for purposes of applying the $5,000,000 size limitation under paragraph (c)(1) of this section.

(i) ***On-behalf-of issuers.*** An issuer and all entities (other than political subdivisions) that issue bonds on behalf of that issuer are treated as one issuer.

(ii) ***Subordinate entities*** —

(A) ***In general.*** Except as otherwise provided in paragraph (d) of this section and section 148(f)(4)(D)(iv), all bonds issued by a subordinate entity are also treated as issued by each entity to which it is subordinate. An issuer is subordinate to another governmental entity if it is directly or indirectly controlled by the other entity within the meaning of § 1.150-1(e).

(B) ***Exception for allocations of size limitation.*** If an entity properly makes an allocation of a portion of its $5,000,000 size limitation to a subordinate entity (including an on behalf of issuer) under section 148(f)(4)(D)(iv), the portion of bonds issued by the subordinate entity under the allocation is treated as issued only by the allocating entity and not by any other entity to which the issuing entity is subordinate. These allocations are irrevocable and must bear a reasonable relationship to the benefits received by the allocating unit from issues issued by the subordinate entity. The benefits to be considered include the manner in which—

(*1*) Proceeds are to be distributed;

(*2*) The debt service is to be paid;

(3) The facility financed is to be owned;

(4) The use or output of the facility is to be shared; and

(5) Costs of operation and maintenance are to be shared.

(iii) ***Avoidance of size limitation.*** An entity formed or availed of to avoid the purposes of the $5,000,000 size limitation and all entities that would benefit from the avoidance are treated as one issuer. Situations in which an entity is formed or availed of to avoid the purposes of the $5,000,000 size limitation include those in which the issuer—

(A) Issues bonds which, but for the $5,000,000 size limitation, would have been issued by another entity; and

(B) Does not receive a substantial benefit from the project financed by the bonds.

(3) ***Certain refunding bonds not taken into account.*** In applying the $5,000,000 size limitation, there is not taken into account the portion of an issue that is a current refunding issue to the extent that the stated principal amount of the refunding bond does not exceed the portion of the outstanding stated principal amount of the refunded bond paid with proceeds of the refunding bond. For this purpose, *principal amount* means, in reference to a plain par bond, its stated principal amount plus accrued unpaid interest, and in reference to any other bond, its present value.

(d) ***Pooled financings—treatment of conduit borrowers.*** A loan to a conduit borrower in a pooled financing qualifies for the small issuer exception, regardless of the size of either the pooled financing or of any loan to other conduit borrowers, only if—

(1) The bonds of the pooled financing are not private activity bonds;

(2) None of the loans to conduit borrowers are private activity bonds; and

(3) The loan to the conduit borrower meets all the requirements of the small issuer exception.

(e) ***Refunding issues*** —

(1) ***In general.*** Sections 148(f)(4)(D) (v) and (vi) provide restrictions on application of the small issuer exception to refunding issues.

(2) ***Multipurpose issues.*** The multipurpose issue allocation rules of § 1.148-9(h) apply for purposes of determining whether refunding bonds meet the requirements of section 148(f)(4)(D)(v).

[T.D. 8476, 58 FR 33540, June 18, 1993, as amended by T.D. 9777, 81 FR 46597, July 18, 2016]

§ 1.148-9 Arbitrage rules for refunding issues.

(a) ***Scope of application.*** This section contains special arbitrage rules for refunding issues. These rules apply for all purposes of section 148 and govern allocations of proceeds, bonds, and investments to determine transferred proceeds, temporary periods, reasonably required reserve or replacement funds, minor portions, and separate issue treatment of certain multipurpose issues.

(b) ***Transferred proceeds allocation rule*** —

(1) ***In general.*** When proceeds of the refunding issue discharge any of the outstanding principal amount of the prior issue, proceeds of the prior issue become transferred proceeds of the refunding issue and cease to be proceeds of the prior issue. The amount of proceeds of the prior issue that becomes transferred proceeds of the refunding issue is an amount equal to the proceeds of the prior issue on the date of that discharge multiplied by a fraction—

(i) The numerator of which is the principal amount of the prior issue discharged with proceeds of the refunding issue on the date of that discharge; and

(ii) The denominator of which is the total outstanding principal amount of the prior issue on the date immediately before the date of that discharge.

(2) ***Special definition of principal amount.*** For purposes of this section, *principal amount* means, in reference to a plain par bond, its stated principal amount, and in reference to any other bond, its present value.

(3) ***Relation of transferred proceeds rule to universal cap rule*** —

(i) ***In general.*** Paragraphs (b)(1) and (c) of this section apply to allocate transferred proceeds and corresponding investments to a refunding issue on any date required by those paragraphs before the application of the universal cap rule of § 1.148-6(b)(2) to reallocate any of those amounts. To the extent nonpurpose investments allocable to proceeds of a refunding issue exceed the universal cap for the issue on the date that amounts become transferred proceeds of the refunding issue, those transferred proceeds and corresponding investments are reallocated back to the issue from which they transferred on that same date to the extent of the unused universal cap on that prior issue.

(ii) ***Example.*** The following example illustrates the application of this paragraph of (b)(3):

Example. On January 1, 1995, $100,000 of nonpurpose investments allocable to proceeds of issue *A* become transferred proceeds of issue *B* under § 1.148-9, but the unused portion of issue *B*' s universal cap is $75,000 as of that date. On January 1, 1995, issue *A* has unused universal cap in excess of $25,000. Thus, $25,000 of nonpurpose investments representing the transferred proceeds are immediately reallocated back to issue *A* on January 1, 1995, and are proceeds of issue *A*. On the next transfer date under § 1.148-9, the $25,000 receives no priority in determining transferred proceeds as of that date but is treated the same as all other proceeds of issue *A* subject to transfer.

(4) ***Limitation on multi-generational transfers.*** This paragraph (b)(4) contains limitations on the manner in which proceeds of a first generation issue that is refunded by a refunding issue (a *second generation issue*) become transferred proceeds of a refunding issue (a *third generation issue*) that refunds the second generation issue. Proceeds of the first generation issue that become transferred proceeds of the third generation issue are treated as having a yield equal to the yield on the refunding escrow allocated to the second generation issue (*i.e.*, as determined under § 1.148-5(b)(2)(iv)). The determination of the transferred proceeds of the third generation issue does not affect compliance with the requirements of section 148, including the determination of the amount of arbitrage rebate with respect to or the yield on the refunding escrow, of the second generation issue.

(c) ***Special allocation rules for refunding issues*** —

(1) ***Allocations of investments*** —

(i) ***In general.*** Except as otherwise provided in this paragraph (c), investments purchased with sale proceeds or investment proceeds of a refunding issue must be allocated to those proceeds, and investments not purchased with those proceeds may not be allocated to those proceeds (*i.e.*, a *specific tracing method*).

(ii) ***Allocations to transferred proceeds.*** When proceeds of a prior issue become transferred proceeds of a refunding issue, investments (and the related payments and receipts) of proceeds of the prior issue that are held in a refunding escrow for another issue are allocated to the transferred proceeds under the ratable allocation method described in paragraph (c)(1)(iii) of this section. Investments of proceeds of the prior issue that are not held in a refunding escrow for another issue are allocated to the transferred proceeds by application of the allocation methods described in paragraph (c)(1) (iii) or (iv) of this section, consistently applied to all investments on a transfer date.

(iii) ***Ratable allocation method.*** Under the ratable allocation method, a ratable portion of each nonpurpose and purpose investment of proceeds of the prior issue is allocated to transferred proceeds of the refunding issue.

(iv) ***Representative allocation method*** —

(A) ***In general.*** Under the representative allocation method, representative portions of the portfolio of nonpurpose investments and the portfolio of purpose investments of proceeds of the prior issue are allocated to transferred proceeds of the refunding issue. Unlike the ratable allocation method, this representative allocation method permits an allocation of particular whole investments. Whether a portion is representative is based on all the facts and circumstances, including, without limitation, whether the current yields, maturities, and current unrealized gains or losses on the particular allocated investments are reasonably comparable to those of the unallocated investments in the aggregate. In addition, if a portion of nonpurpose investments is otherwise representative, it is within the issuer's discretion to allocate the portion from whichever source of funds it deems appropriate, such as a reserve fund or a construction fund for a prior issue.

(B) ***Mark-to-market safe harbor for representative allocation method.*** In addition to other representative allocations, a specific allocation of a particular nonpurpose investment to transferred proceeds (e.g., of lower yielding investments) is treated as satisfying the representative allocation method if that investment is valued at fair market value on the transfer date in determining the payments and receipts on that date, but only if the portion of the nonpurpose investments that transfers is based on the relative fair market value of all nonpurpose investments.

(2) ***Allocations of mixed escrows to expenditures for principal, interest, and redemption prices on a prior issue*** —

(i) ***In general.*** Except for amounts required or permitted to be accounted for under paragraph (c)(2)(ii) of this section, proceeds of a refunding issue and other amounts that are not proceeds of a refunding issue that are deposited in a refunding escrow (a *mixed escrow*) must be accounted for under this paragraph (c)(2)(i). Those proceeds and other amounts must be allocated to expenditures for principal, interest, or stated redemption prices on the prior issue so that the expenditures of those proceeds do not occur faster than ratably with expenditures of the other amounts in the mixed escrow. During the period that the prior issue has unspent

proceeds, however, these allocations must be ratable (with reasonable adjustments for rounding) both between sources for expenditures (*i.e.*, proceeds and other amounts) and between uses (*i.e.*, principal, interest, and stated redemption prices on the prior issue).

(ii) *Exceptions* —

(A) ***Mandatory allocation of certain non-proceeds to earliest expenditures.*** If amounts other than proceeds of the refunding issue are deposited in a mixed escrow, but before the issue date of the refunding issue those amounts had been held in a bona fide debt service fund or a fund to carry out the governmental purpose of the prior issue (e.g., a construction fund), those amounts must be allocated to the earliest maturing investments in the mixed escrow.

(B) ***Permissive allocation of non-proceeds to earliest expenditures.*** Excluding amounts covered by paragraph (c)(2)(ii)(A) of this section and subject to any required earlier expenditure of those amounts, any amounts in a mixed escrow that are not proceeds of a refunding issue may be allocated to the earliest maturing investments in the mixed escrow, provided that those investments mature and the proceeds thereof are expended before the date of any expenditure from the mixed escrow to pay any principal of the prior issue.

(d) *Temporary periods in refundings* —

(1) ***In general.*** Proceeds of a refunding issue may be invested in higher yielding investments under section 148(c) only during the temporary periods described in paragraph (d)(2) of this section.

(2) ***Types of temporary periods in refundings.*** The available temporary periods for proceeds of a refunding issue are as follows:

(i) ***General temporary period for refunding issues.*** Except as otherwise provided in this paragraph (d)(2), the temporary period for proceeds (other than transferred proceeds) of a refunding issue is the period ending 30 days after the issue date of the refunding issue.

(ii) *Temporary periods for current refunding issues* —

(A) ***In general.*** Except as otherwise provided in paragraph (d)(2)(ii)(B) of this section, the temporary period for proceeds (other than transferred proceeds) of a current refunding issue is 90 days.

(B) ***Temporary period for short-term current refunding issues.*** The temporary period for proceeds (other than transferred proceeds) of a current refunding issue that has an original term to maturity of 270 days or less may not exceed 30 days. The aggregate temporary periods for proceeds (other than transferred proceeds) of all current refunding issues described in the preceding sentence that are part of the same series of refundings is 90 days. An issue is part of a series of refundings if it finances or refinances the same expenditures for a particular governmental purpose as another issue.

(iii) *Temporary periods for transferred proceeds* —

(A) ***In general.*** Except as otherwise provided in paragraph (d)(2)(iii)(B) of this section, each available temporary period for transferred proceeds of a refunding issue begins on the date those amounts become transferred proceeds of the refunding issue and ends on the

date that, without regard to the discharge of the prior issue, the available temporary period for those proceeds would have ended had those proceeds remained proceeds of the prior issue.

(B) ***Termination of initial temporary period for prior issue in an advance refunding.*** The initial temporary period under § 1.148-2(e) (2) and (3) for the proceeds of a prior issue that is refunded by an advance refunding issue (including transferred proceeds) terminates on the issue date of the advance refunding issue.

(iv) ***Certain short-term gross proceeds.*** Except for proceeds of a refunding issue held in a refunding escrow, proceeds otherwise reasonably expected to be used to pay principal or interest on the prior issue, replacement proceeds not held in a bona fide debt service fund, and transferred proceeds, the temporary period for gross proceeds of a refunding issue is the 13-month period beginning on the date of receipt.

(e) ***Reasonably required reserve or replacement funds in refundings.*** In addition to the requirements of § 1.148-2(f), beginning on the issue date of a refunding issue, a reserve or replacement fund for a refunding issue or a prior issue is a reasonably required reserve or replacement fund under section 148(d) that may be invested in higher yielding investments only if the aggregate amount invested in higher yielding investments under this paragraph (e) for both the refunding issue and the prior issue does not exceed the size limitations under § 1.148-2 (f)(2) and (f)(3), measured by reference to the refunding issue only (regardless of whether proceeds of the prior issue have become transferred proceeds of the refunding issue).

(f) ***Minor portions in refundings.*** Beginning on the issue date of the refunding issue, gross proceeds not in excess of a minor portion of the refunding issue qualify for investment in higher yielding investments under section 148(e), and gross proceeds not in excess of a minor portion of the prior issue qualify for investment in higher yielding investments under either section 148(e) or section 149(d)(3)(A)(v), whichever is applicable. *Minor portion* is defined in § 1.148-2(g).

(g) ***Certain waivers permitted.*** On or before the issue date, an issuer may waive the right to invest in higher yielding investments during any temporary period or as part of a reasonably required reserve or replacement fund. At any time, an issuer may waive the right to invest in higher yielding investments as part of a minor portion.

(h) ***Multipurpose issue allocations*** —

(1) ***Application of multipurpose issue allocation rules.*** The portion of the bonds of a multipurpose issue reasonably allocated to any separate purpose under this paragraph (h) is treated as a separate issue for all purposes of section 148 except the following—

(i) ***Arbitrage yield.*** Except to the extent that the proceeds of an issue are allocable to two or more conduit loans that are tax-exempt bonds, determining the yield on a multipurpose issue and the yield on investments for purposes of the arbitrage yield restrictions of section 148 and the arbitrage rebate requirement of section 148(f);

(ii) ***Rebate amount.*** Except as provided in paragraph (h)(1)(i) of this section, determining the rebate amount for a multipurpose issue, including subsidiary matters with respect to that determination, such as the computation date credit under § 1.148-3(d)(1), the due date for payments, and the $100,000 bona fide debt service fund exception under section 148(f)(4)(A)(ii);

(iii) ***Minor portion.*** Determining the *minor portion* of an issue under section 148(e);

(iv) ***Reasonably required reserve or replacement fund.*** Determining the portion of an issue eligible for investment in higher yielding investments as part of a reasonably required reserve or replacement fund under section 148(d); and

(v) ***Effective date.*** Applying the provisions of § 1.148-11(b) (relating to elective retroactive application of §§ 1.148-1 through 1.148-10 to certain issues).

(2) ***Rules on allocations of multipurpose issues*** —

(i) ***In general.*** This paragraph (h) applies to allocations of multipurpose issues, including allocations involving the refunding purposes of the issue. Except as otherwise provided in this paragraph (h), proceeds, investments, and bonds of a multipurpose issue may be allocated among the various separate purposes of the issue using any reasonable, consistently applied allocation method. An allocation is not reasonable if it achieves more favorable results under section 148 or 149(d) than could be achieved with actual separate issues. An allocation under this paragraph (h) may be made at any time, but once made may not be changed.

(ii) ***Allocations involving certain common costs.*** A ratable allocation of common costs (as described in paragraph (h)(3)(ii) of this section) among the separate purposes of the multipurpose issue is generally reasonable. If another allocation method more accurately reflects the extent to which any separate purpose of a multipurpose issue enjoys the economic benefit or bears the economic burden of certain common costs, that allocation method may be used.

(3) ***Separate purposes of a multipurpose issue*** —

(i) ***In general.*** Separate purposes of a multipurpose issue include refunding a separate prior issue, financing a separate purpose investment, financing a construction issue (as defined in § 1.148-7(f)), and any clearly discrete governmental purpose reasonably expected to be financed by that issue. In general, all integrated or functionally related capital projects that qualify for the same initial temporary period under § 1.148-2(e)(2) are treated as having a single governmental purpose. The separate purposes of a refunding issue include the separate purposes of the prior issue, if any. Separate purposes may be treated as a single purpose if the proceeds used to finance those purposes are eligible for the same initial temporary period under section 148(c). For example, the use of proceeds of a multipurpose issue to finance separate qualified mortgage loans may be treated as a single purpose.

(ii) ***Financing common costs.*** Common costs of a multipurpose issue are not separate purposes. Common costs include issuance costs, accrued interest, capitalized interest on the issue, a reserve or replacement fund, qualified guarantee fees, and similar costs properly allocable to the separate purposes of the issue.

(iii) ***Example.*** The following example illustrates the application of this paragraph (h)(3).

Example. On January 1, 1994, Housing Authority of State *A* issues a $10 million issue (the *1994 issue*) at an interest rate of 10 percent to finance qualified mortgage loans for owner-occupied residences under section 143. During 1994, *A* originates $5 million in qualified mortgage loans at an interest rate of 10 percent. In 1995, the market interest rates for housing loans falls to 8 percent and *A* is unable to originate further loans from the 1994 issue. On January 1, 1996, *A* issues a $5 million issue (the *1996 issue*) at an interest rate

of 8 percent to refund partially the 1994 issue. Under paragraph (h) of this section, *A* treats the portion of the 1994 issue used to originate $5 million in loans as a separate issue comprised of that group of purpose investments. *A* allocates those purpose investments representing those loans to that separate unrefunded portion of the issue. In addition, *A* treats the unoriginated portion of the 1994 issue as a separate issue and allocates the nonpurpose investments representing the unoriginated proceeds of the 1994 issue to the refunded portion of the issue. Thus, when proceeds of the 1996 issue are used to pay principal on the refunded portion of the 1994 issue that is treated as a separate issue under paragraph (h) of this section, only the portion of the 1994 issue representing unoriginated loan funds invested in nonpurpose investments transfer to become transferred proceeds of the 1996 issue.

(4) ***Allocations of bonds of a multipurpose issue*** —

(i) ***Reasonable allocation of bonds to portions of issue.*** After reasonable adjustment of the issue price of a multipurpose issue to account for common costs, the portion of the bonds of a multipurpose issue allocated to a separate purpose must have an issue price that bears the same ratio to the aggregate issue price of the multipurpose issue as the portion of the sale proceeds of the multipurpose issue used for that separate purpose bears to the aggregate sale proceeds of the multipurpose issue. For a refunding issue used to refund two or more prior issues, the portion of the sales proceeds allocated to the refunding of a separate prior issue is based on the present value of the refunded debt service on that prior issue, using the yield on investments in the refunding escrow allocable to the entire refunding issue as the discount rate.

(ii) ***Safe harbor for pro rata allocation method for bonds.*** The use of the relative amount of sales proceeds used for each separate purpose to ratably allocate each bond or a ratable number of substantially identical whole bonds is a reasonable method for allocating bonds of a multipurpose issue.

(iii) ***Safe harbor for allocations of bonds used to finance separate purpose investments.*** An allocation of a portion of the bonds of a multipurpose issue to a particular purpose investment is generally reasonable if that purpose investment has principal and interest payments that reasonably coincide in time and amount to principal and interest payments on the bonds allocated to that purpose investment.

(iv) ***Rounding of bond allocations to next whole bond denomination permitted.*** An allocation that rounds each resulting fractional bond up or down to the next integral multiple of a permitted denomination of bonds of that issue not in excess of $100,000 does not prevent the allocation from satisfying this paragraph (h)(4).

(v) ***Restrictions on allocations of bonds to refunding purposes.*** For each portion of a multipurpose issue that is used to refund a separate prior issue, a method of allocating bonds of that issue is reasonable under this paragraph (h) only if, in addition to the requirements of paragraphs (h)(1) and (h)(2) of this section, the portion of the bonds allocated to the refunding of that prior issue—

(A) Results from a pro rata allocation under paragraph (h)(4)(ii) of this section;

(B) Reflects aggregate principal and interest payable in each bond year that is less than, equal to, or proportionate to, the aggregate principal and interest payable on the prior issue in each bond year;

(C) Results from an allocation of all the bonds of the entire multipurpose issue in proportion to the remaining weighted average economic life of the capital projects financed or refinanced by the issue, determined in the same manner as under section 147(b); or

(D) Results from another reasonable allocation method, but only to the extent that the application of the allocation methods provided in this paragraph (h)(4)(v) is not permitted under state law restrictions applicable to the bonds, reasonable terms of bonds issued before, or subject to a master indenture that became effective prior to, July 1, 1993, or other similar restrictions or circumstances. This paragraph (h)(4)(v)(D) shall be strictly construed and is available only if it does not result in a greater burden on the market for tax-exempt bonds than would occur using one of the other allocation methods provided in this paragraph (h)(4)(v). (See also § 1.148-11(c)(2).)

(vi) ***Exception for refundings of interim notes.*** Paragraph (h)(4)(v) of this section need not be applied to refunding bonds issued to provide permanent financing for one or more projects if the prior issue had a term of less than 3 years and was sold in anticipation of permanent financing, but only if the aggregate term of all prior issues sold in anticipation of permanent financing was less than 3 years.

(5) ***Limitation on multi-generation allocations.*** This paragraph (h) does not apply to allocations of a multipurpose refunded issue unless that refunded issue is refunded directly by an issue to which this paragraph (h) applies. For example, if a 1994 issue refunds a 1984 multipurpose issue, which in turn refunded a 1980 multipurpose issue, this paragraph (h) applies to allocations of the 1984 issue for purposes of allocating the refunding purposes of the 1994 issue, but does not permit allocations of the 1980 issue.

(i) ***Operating rules for separation of prior issue into refunded and unrefunded portions*** —

(1) ***In general.*** For purposes of paragraph (h)(3)(i) of this section, the separate purposes of a prior issue include the refunded and unrefunded portions of the prior issue. Thus, the refunded and unrefunded portions are treated as separate issues under paragraph (h)(1) of this section. Those separate issues must satisfy the requirements of paragraphs (h) and (i) of this section. The refunded portion of the bonds of a prior issue is based on a fraction the numerator of which is the principal amount of the prior issue to be paid with proceeds of the refunding issue and the denominator of which is the outstanding principal amount of the bonds of the prior issue, each determined as of the issue date of the refunding issue. (See also paragraph (b)(2) of this section.)

(2) ***Allocations of proceeds and investments in a partial refunding.*** As of the issue date of a partial refunding issue under this paragraph (i), unspent proceeds of the prior issue are allocated ratably between the refunded and unrefunded portions of the prior issue and the investments allocable to those unspent proceeds are allocated in the manner required for the allocation of investments to transferred proceeds under paragraph (c)(1)(ii) of this section.

(3) ***References to prior issue.*** If the refunded and unrefunded portions of a prior issue are treated as separate issues under this paragraph (i), then, except to the extent that the context clearly requires otherwise (e.g., references to the aggregate prior issue in the mixed escrow rule in paragraph (c)(2) of this section), all references in this section to a prior issue refer only to the refunded portion of that prior issue.

[T.D. 8476, 58 FR 33541, June 18, 1993; 58 FR 44453, Aug. 23, 1993, as amended by T.D. 8538, 59 FR 24045, May 10, 1994; T.D. 8718, 62 FR 25512, May 9, 1997]

§ 1.148-10 Anti-abuse rules and authority of Commissioner.

(a) *Abusive arbitrage device* —

(1) *In general.* Bonds of an issue are arbitrage bonds under section 148 if an abusive arbitrage device under paragraph (a)(2) of this section is used in connection with the issue. This paragraph (a) is to be applied and interpreted broadly to carry out the purposes of section 148, as further described in § 1.148-0. Except as otherwise provided in paragraph (c) of this section, any action that is expressly permitted by section 148 or §§ 1.148-1 through 1.148-11 is not an abusive arbitrage device (e.g., investment in higher yielding investments during a permitted temporary period under section 148(c)).

(2) *Abusive arbitrage device defined.* Any action is an abusive arbitrage device if the action has the effect of—

(i) Enabling the issuer to exploit the difference between tax-exempt and taxable interest rates to obtain a material financial advantage; and

(ii) Overburdening the tax-exempt bond market.

(3) *Exploitation of tax-exempt interest rates.* An action may exploit tax-exempt interest rates under paragraph (a)(2) of this section as a result of an investment of any portion of the gross proceeds of an issue over any period of time, notwithstanding that, in the aggregate, the gross proceeds of the issue are not invested in higher yielding investments over the term of the issue.

(4) *Overburdening the tax-exempt market.* An action overburdens the tax-exempt bond market under paragraph (a)(2)(ii) of this section if it results in issuing more bonds, issuing bonds earlier, or allowing bonds to remain outstanding longer than is otherwise reasonably necessary to accomplish the governmental purposes of the bonds, based on all the facts and circumstances. Whether an action is reasonably necessary to accomplish the governmental purposes of the bonds depends on whether the primary purpose of the transaction is a bona fide governmental purpose (e.g., an issue of refunding bonds to achieve a debt service restructuring that would be issued independent of any arbitrage benefit). An important factor bearing on this determination is whether the action would reasonably be taken to accomplish the governmental purpose of the issue if the interest on the issue were not excludable from gross income under section 103(a) (assuming that the hypothetical taxable interest rate would be the same as the actual tax-exempt interest rate). Factors evidencing an overissuance include the issuance of an issue the proceeds of which are reasonably expected to exceed by more than a minor portion the amount necessary to accomplish the governmental purposes of the issue, or an issue the proceeds of which are, in fact, substantially in excess of the amount of sale proceeds allocated to expenditures for the governmental purposes of the issue. One factor evidencing an early issuance is the issuance of bonds that do not qualify for a temporary period under § 1.148-2(e)(2), (e)(3), or (e)(4). One factor evidencing that bonds may remain outstanding longer than necessary is a term that exceeds the safe harbors against the creation of replacement proceeds under § 1.148-1(c)(4)(i)(B). These factors may be outweighed by other factors, such as bona fide cost underruns, an issuer's bona fide need to finance extraordinary working capital items, or an issuer's long-term financial distress.

(b) *Consequences of overburdening the tax-exempt bond market* —

(1) *In general.* An issue that overburdens the tax-exempt bond market (within the meaning of paragraph (a)(4) of this section) is subject to the following special limitations—

(i) ***Special yield restriction.*** Investments are subject to the definition of *materially higher* yield under § 1.148-2(d) that is equal to one-thousandth of 1 percent. In addition, each investment is treated as a separate class of investments under § 1.148-5(b)(2)(ii), the yield on which may not be blended with that of other investments.

(ii) ***Certain regulatory provisions inapplicable.*** The provisions of § 1.148-5(c) (relating to yield reduction payments) and § 1.148-5(e) (2) and (3) (relating to recovery of qualified administrative costs) do not apply.

(iii) ***Restrictive expenditure rule.*** Proceeds are not allocated to expenditures unless the proceeds-spent-last rule under § 1.148-6(d)(3)(i) is satisfied, applied by treating those proceeds as proceeds to be used for restricted working capital expenditures. For this purpose, available amount includes a reasonable working capital reserve as defined in § 1.148-6(d)(3)(iii)(B).

(2) ***Application.*** The provisions of this paragraph (b) only apply to the portion of an issue that, as a result of actions taken (or actions not taken) after the issue date, overburdens the market for tax-exempt bonds, except that for an issue that is reasonably expected as of the issue date to overburden the market, those provisions apply to all of the gross proceeds of the issue.

(c) ***Anti-abuse rules on excess gross proceeds of advance refunding issues*** —

(1) ***In general.*** Except as otherwise provided in this paragraph (c), an abusive arbitrage device is used and bonds of an advance refunding issue are arbitrage bonds if the issue has excess gross proceeds.

(2) ***Definition of excess gross proceeds.*** Excess gross proceeds means all gross proceeds of an advance refunding issue that exceed an amount equal to 1 percent of sale proceeds of the issue, other than gross proceeds allocable to—

(i) Payment of principal, interest, or call premium on the prior issue;

(ii) Payment of pre-issuance accrued interest on the refunding issue, and interest on the refunding issue that accrues for a period up to the completion date of any capital project for which the prior issue was issued, plus one year;

(iii) A reasonably required reserve or replacement fund for the refunding issue or investment proceeds of such a fund;

(iv) Payment of costs of issuance of the refunding issue;

(v) Payment of administrative costs allocable to repaying the prior issue, carrying and repaying the refunding issue, or investments of the refunding issue;

(vi) Transferred proceeds that will be used or maintained for the governmental purpose of the prior issue;

(vii) Interest on purpose investments;

(viii) Replacement proceeds in a sinking fund for the refunding issue;

(ix) Qualified guarantee fees for the refunding issue or the prior issue; and

(x) Fees for a qualified hedge for the refunding issue.

(3) ***Special treatment of transferred proceeds.*** For purposes of this paragraph (c), all unspent proceeds of the prior issue as of the issue date of the refunding issue are treated as transferred proceeds of the advance refunding issue.

(4) ***Special rule for crossover refundings.*** An advance refunding issue is not an issue of arbitrage bonds under this paragraph (c) if all excess gross proceeds of the refunding issue are used to pay interest that accrues on the refunding issue before the prior issue is discharged, and no gross proceeds of any refunding issue are used to pay interest on the prior issue or to replace funds used directly or indirectly to pay such interest (other than transferred proceeds used to pay interest on the prior issue that accrues for a period up to the completion date of the project for which the prior issue was issued, plus one year, or proceeds used to pay principal that is attributable to accrued original issue discount).

(5) ***Special rule for gross refundings.*** This paragraph (c)(5) applies if an advance refunding issue (the *series B issue*) is used together with one or more other advance refunding issues (the *series A issues*) in a gross refunding of a prior issue, but only if the use of a gross refunding method is required under bond documents that were effective prior to November 6, 1992. These advance refunding issues are not arbitrage bonds under this paragraph (c) if—

(i) All excess gross proceeds of the series B issue and each series A issue are investment proceeds used to pay principal and interest on the series B issue;

(ii) At least 99 percent of all principal and interest on the series B issue is paid with proceeds of the series B and series A issues or with the earnings on other amounts in the refunding escrow for the prior issue;

(iii) The series B issue is discharged not later than the prior issue; and

(iv) As of any date, the amount of gross proceeds of the series B issue allocated to expenditures does not exceed the aggregate amount of expenditures before that date for principal and interest on the series B issue, and administrative costs of carrying and repaying the series B issue, or of investments of the series B issue.

(d) ***Examples.*** The provisions of this section are illustrated by the following examples:

Example 1. Mortgage sale. In 1982, City issued its revenue issue (the *1982 issue*) and lent the proceeds to Developer to finance a low-income housing project under former section 103(b)(4)(A) of the 1954 Code. In 1994, Developer encounters financial difficulties and negotiates with City to refund the 1982 issue. City issues $10 million in principal amount of its 8 percent bonds (the *1994 issue*). City lends the proceeds of the 1994 issue to Developer. To evidence Developer's obligation to repay that loan, Developer, as obligor, issues a note to City (the *City note*). Bank agrees to provide Developer with a direct-pay letter of credit pursuant to which Bank will make all payments to the trustee for the 1994 issue necessary to meet Developer's obligations under the City note. Developer pays Bank a fee for the issuance of the letter of credit and issues a note to Bank (the *Bank note*). The Bank note is secured by a mortgage on the housing project and is guaranteed by FHA. The Bank note and the 1994 issue have different prepayment terms. The City does not reasonably expect to treat prepayments of the Bank note as gross proceeds of the 1994 issue. At the same time or pursuant to a series of related transactions, Bank sells the Bank note to Investor for $9.5 million. Bank invests these monies together with its other funds. In substance, the transaction is a loan by City to Bank, under which Bank enters into a series of transactions that, in effect, result in Bank retaining $9.5 million in amounts treated as proceeds of the 1994 issue. Those amounts are invested in materially higher yielding investments that provide funds sufficient to equal or exceed the Bank's liability under

the letter of credit. Alternatively, the letter of credit is investment property in a sinking fund for the 1994 issue provided by Developer, a substantial beneficiary of the financing. Because, in substance, Developer acquires the $10 million principal amount letter of credit for a fair market value purchase price of $9.5 million, the letter of credit is a materially higher yielding investment. Neither result would change if Developer's obligation under the Bank note is contingent on Bank performing its obligation under the letter of credit. Each characterization causes the bonds to be arbitrage bonds.

Example 2. Bonds outstanding longer than necessary for yield-blending device. (i) *Longer bond maturity to create sinking fund.* In 1994, Authority issues an advance refunding issue (the *refunding issue*) to refund a 1982 prior issue (the *prior issue*). Under current market conditions, Authority will have to invest the refunding escrow at a yield significantly below the yield on the refunding issue. Authority issues its refunding issue with a longer weighted average maturity than otherwise necessary primarily for the purpose of creating a sinking fund for the refunding issue that will be invested in a guaranteed investment contract. The weighted average maturity of the refunding issue is less than 120 percent of the remaining average economic life of the facilities financed with the proceeds of the prior issue. The guaranteed investment contract has a yield that is higher than the yield on the refunding issue. The yield on the refunding escrow blended with the yield on the guaranteed investment contract does not exceed the yield on the issue. The refunding issue uses an abusive arbitrage device and the bonds of the issue are arbitrage bonds under section 148(a).
(ii) *Refunding of noncallable bonds.* The facts are the same as in paragraph (i) of this *Example 2* except that instead of structuring the refunding issue to enable it to take advantage of sinking fund investments, Authority will also refund other long-term, non-callable bonds in the same refunding issue. There are no savings attributable to the refunding of the non-callable bonds (e.g., a *low-to-high* refunding). The Authority invests the portion of the proceeds of the refunding issue allocable to the refunding of the non-callable bonds in the refunding escrow at a yield that is higher than the yield on the refunding issue, based on the relatively long escrow period for this portion of the refunding. The Authority invests the other portion of the proceeds of the refunding issue in the refunding escrow at a yield lower than the yield on the refunding issue. The blended yield on all the investments in the refunding escrow for the prior issues does not exceed the yield on the refunding issue. The portion of the refunding issue used to refund the noncallable bonds, however, was not otherwise necessary and was issued primarily to exploit the difference between taxable and tax-exempt rates for that long portion of the refunding escrow to minimize the effect of lower yielding investments in the other portion of the escrow. The refunding issue uses an abusive arbitrage device and the bonds of the issue are arbitrage bonds.

(iii) *Governmental purpose.* In paragraphs (i) and (ii) of this *Example 2,* the existence of a governmental purpose for the described financing structures would not change the conclusions unless Authority clearly established that the primary purpose for the use of the particular structure was a bona fide governmental purpose. The fact that each financing

structure had the effect of eliminating significant amounts of negative arbitrage is strong evidence of a primary purpose that is not a bona fide governmental purpose. Moreover, in paragraph (i) of this *Example 2,* the structure of the refunding issue coupled with the acquisition of the guaranteed investment contract to lock in the investment yield associated with the structure is strong evidence of a primary purpose that is not a bona fide governmental purpose.

Example 3. Window refunding. (i) Authority issues its 1994 refunding issue to refund a portion of the principal and interest on its outstanding 1985 issue. The 1994 refunding issue is structured using zero-coupon bonds that pay no interest or principal for the 5-year period following the issue date. The proceeds of the 1994 refunding issue are deposited in a refunding escrow to be used to pay only the interest requirements of the refunded portion of the 1985 issue. Authority enters into a guaranteed investment contract with a financial institution, *G,* under which *G* agrees to provide a guaranteed yield on revenues invested by Authority during the 5-year period following the issue date. The guaranteed investment contract has a yield that is no higher than the yield on the refunding issue. The revenues to be invested under this guaranteed investment contract consist of the amounts that Authority otherwise would have used to pay principal and interest on the 1994 refunding issue. The guaranteed investment contract is structured to generate receipts at times and in amounts sufficient to pay the principal and redemption requirements of the refunded portion of the 1985 issue. A principal purpose of these transactions is to avoid transferred proceeds. Authority will continue to invest the unspent proceeds of the 1985 issue that are on deposit in a refunding escrow for its 1982 issue at a yield equal to the yield on the 1985 issue and will not otherwise treat those unspent proceeds as transferred proceeds of the 1994 refunding issue. The 1994 refunding issue is an issue of arbitrage bonds since those bonds involve a transaction or series of transactions that overburdens the market by leaving bonds outstanding longer than is necessary to obtain a material financial advantage based on arbitrage. Specifically, Authority has structured the 1994 refunding issue to make available for the refunding of the 1985 issue replacement proceeds rather than proceeds so that the unspent proceeds of the 1985 issue will not become transferred proceeds of the 1994 refunding issue.
(ii) The result would be the same in each of the following circumstances:

(A) The facts are the same as in paragraph (i) of this *Example 3* except that Authority does not enter into the guaranteed investment contract but instead, as of the issue date of the 1994 refunding issue, reasonably expects that the released revenues will be available for investment until used to pay principal and interest on the 1985 issue.

(B) The facts are the same as in paragraph (i) of this *Example 3* except that there are no unspent proceeds of the 1985 issue and Authority invests the released revenues at a yield materially higher than the yield on the 1994 issue.

(C) The facts are the same as in paragraph (i) of this *Example 3* except that Authority uses the proceeds of the 1994 issue for capital projects instead of to refund a portion of the 1985 issue.

Example 4. Sale of conduit loan. On January 1, 1994, Authority issues a conduit financing issue (the *1994 conduit financing issue*) and uses the proceeds to purchase from City, an unrelated party, a tax-exempt bond of City (the *City note*). The proceeds of the 1994 conduit financing issue are to be used to advance refund a prior conduit financing issue that was issued in 1988 and used to make a loan to City. The 1994 conduit financing issue and the City note each have a yield of 8 percent on January 1, 1994. On June 30, 1996, interest rates have decreased and Authority sells the City note to D, a person unrelated to either City or Authority. Based on the sale price of the City note and treating June 30, 1996 as the issue date of the City note, the City note has a 6 percent yield. Authority deposits the proceeds of the sale of the City note into an escrow to redeem the bonds of the 1994 conduit financing issue on January 1, 2001. The escrow is invested in nonpurpose investments having a yield of 8 percent. For purposes of section 149(d), City and Authority are related parties and, therefore, the issue date of the City note is treated as being June 30, 1996. Thus, the City note is an advance refunding of Authority's 1994 conduit financing issue. Interest on the City note is not exempt from Federal income tax from the date it is sold to D under section 149(d), because, by investing the escrow investments at a yield of 8 percent instead of a yield not materially higher than 6 percent, the sale of the City note employs a device to obtain a material financial advantage, based on arbitrage, apart from the savings attributable to lower interest rates. In addition, the City note is not a tax-exempt bond because the note is the second advance refunding of the original bond under section 149(d)(3). The City note also employs an abusive arbitrage device and is an arbitrage bond under section 148.

Example 5. Re-refunding. (i) On January 1, 1984, City issues a tax-exempt issue (the *1984 issue*) to finance the cost of constructing a prison. The 1984 issue has a 7 percent yield and a 30-year maturity. The 1984 issue is callable at any time on or after January 1, 1994. On January 1, 1990, City issues a refunding issue (the *1990 issue*) to advance refund the 1984 issue. The 1990 issue has an 8 percent yield and a 30-year maturity. The 1990 issue is callable at any time on or after January 1, 2000. The proceeds of the 1990 issue are invested at an 8 percent yield in a refunding escrow for the 1984 issue (the *original 1984 escrow*) in a manner sufficient to pay debt service on the 1984 issue until maturity (*i.e.*, an escrow to maturity). On January 1, 1994, City issues a refunding issue (the *1994 issue*). The 1994 issue has a 6 percent yield and a 30-year maturity. City does not invest the proceeds of the 1994 issue in a refunding escrow for the 1990 issue in a manner sufficient to pay a portion of the debt service until, and redeem a portion of that issue on, January 1, 2000. Instead, City invests those proceeds at a 6 percent yield in a new refunding escrow for a portion of the 1984 issue (the *new 1984 escrow*) in a manner sufficient to pay debt service on a portion of

the 1984 issue until maturity. City also liquidates the investments allocable to the proceeds of the 1990 issue held in the original 1984 escrow and reinvests those proceeds in an escrow to pay a portion of the debt service on the 1990 issue itself until, and redeem a portion of that issue on, January 1, 2000 (the *1990 escrow*). The 1994 bonds are arbitrage bonds and employ an abusive device under section 149(d)(4). Although, in form, the proceeds of the 1994 issue are used to pay principal on the 1984 issue, this accounting for the use of the proceeds of the 1994 issue is an unreasonable, inconsistent accounting method under § 1.148-6(a). Moreover, since the proceeds of the 1990 issue were set aside in an escrow to be used to retire the 1984 issue, the use of proceeds of the 1994 issue for that same purpose involves a replacement of funds invested in higher yielding investments under section 148(a)(2). Thus, using a reasonable, consistent accounting method and giving effect to the substance of the transaction, the proceeds of the 1994 issue are treated as used to refund the 1990 issue and are allocable to the 1990 escrow. The proceeds of the 1990 issue are treated as used to refund the 1984 issue and are allocable to the investments in the new 1984 escrow. The proceeds of the 1990 issue allocable to the nonpurpose investments in the new 1984 escrow become transferred proceeds of the 1994 issue as principal is paid on the 1990 issue from amounts on deposit in the 1990 escrow. As a result, the yield on nonpurpose investments allocable to the 1994 issue is materially higher than the yield on the 1994 issue, causing the bonds of the 1994 issue to be arbitrage bonds. In addition, the transaction employs a device under section 149(d)(4) to obtain a material financial advantage based on arbitrage, other than savings attributable to lower interest rates.
(ii) The following changes in the facts do not affect the conclusion that the 1994 issue consists of arbitrage bonds—

(1) The 1990 issue is a taxable issue;

(2) The original 1984 escrow is used to pay the 1994 issue (rather than the 1990 issue); or

(3) The 1994 issue is used to retire the 1984 issue within 90 days of January 1, 1994.

(e) ***Authority of the Commissioner to prevent transactions that are inconsistent with the purpose of the arbitrage investment restrictions.*** If an issuer enters into a transaction for a principal purpose of obtaining a material financial advantage based on the difference between tax-exempt and taxable interest rates in a manner that is inconsistent with the purposes of section 148, the Commissioner may exercise the Commissioner's discretion to depart from the rules of § 1.148-1 through § 1.148-11 as necessary to reflect the economics of the transaction to prevent such financial advantage. For this purpose, the Commissioner may recompute yield on an issue or on investments, reallocate payments and receipts on investments, recompute the rebate amount on an issue, treat a hedge as either a qualified hedge or not a qualified hedge, or otherwise adjust any item whatsoever bearing upon the investments and expenditures of gross proceeds of an issue. For example, if the amount paid for a hedge is specifically based on the

amount of arbitrage earned or expected to be earned on the hedged bonds, a principal purpose of entering into the contract is to obtain a material financial advantage based on the difference between tax-exempt and taxable interest rates in a manner that is inconsistent with the purposes of section 148.

(f) ***Authority of the Commissioner to require an earlier date for payment of rebate.*** If the Commissioner determines that an issue is likely to fail to meet the requirements of § 1.148-3 and that a failure to serve a notice of demand for payment on the issuer will jeopardize the assessment or collection of tax on interest paid or to be paid on the issue, the date that the Commissioner serves notice on the issuer is treated as a required computation date for payment of rebate for that issue.

(g) ***Authority of the Commissioner to waive regulatory limitations.*** Notwithstanding any specific provision in §§ 1.148-1 through 1.148-11, the Commissioner may prescribe extensions of temporary periods, larger reasonably required reserve or replacement funds, or consequences of failures or remedial action under section 148 in lieu of or in addition to other consequences of those failures, or take other action, if the Commissioner finds that good faith or other similar circumstances so warrant, consistent with the purposes of section 148.

[T.D. 8476, 58 FR 33544, June 18, 1993; 58 FR 44453, Aug. 23, 1993, as amended by T.D. 8538, 59 FR 24046, May 10, 1994; T.D. 8476, 59 FR 24351, May 11, 1994; T.D. 8718, 62 FR 25512, May 9, 1997; T.D. 9777, 81 FR 46597, July 18, 2016]

§ 1.148-11 Effective/applicability dates.

(a) ***In general.*** Except as otherwise provided in this section, §§ 1.148-1 through 1.148-11 apply to bonds sold on or after July 8, 1997.

(b) ***Elective retroactive application in whole*** —

(1) ***In general.*** Except as otherwise provided in this section, and subject to the applicable effective dates for the corresponding statutory provisions, an issuer may apply the provisions of §§ 1.148-1 through 1.148-11 in whole, but not in part, to any issue that is outstanding on July 8, 1997, and is subject to section 148(f) or to sections 103(c)(6) or 103A(i) of the Internal Revenue Code of 1954, in lieu of otherwise applicable regulations under those sections.

(2) ***No elective retroactive application for 18-month spending exception.*** The provisions of § 1.148-7(d) (relating to the 18-month spending exception) may not be applied to any issue issued on or before June 30, 1993.

(3) ***No elective retroactive application for hedges of fixed rate issues.*** The provisions of § 1.148-4(h)(2)(i)(B) (relating to hedges of fixed rate issues) may not be applied to any bond sold on or before July 8, 1997.

(4) ***No elective retroactive application for safe harbor for establishing fair market value for guaranteed investment contracts and investments purchased for a yield restricted defeasance escrow.*** The provisions of §§ 1.148-5(d)(6)(iii) (relating to the safe harbor for establishing fair market value of guaranteed investment contracts and yield restricted defeasance escrow investments) and 1.148-5(e)(2)(iv) (relating to a special rule for yield restricted defeasance escrow investments) may not be applied to any bond sold before December 30, 1998.

(c) ***Elective retroactive application of certain provisions and special rules*** —

(1) ***Retroactive application of overpayment recovery provisions.*** An issuer may apply the provisions of § 1.148-3(i) to any issue that is subject to section 148(f) or to sections 103(c)(6) or 103A(i) of the Internal Revenue Code of 1954.

(2) ***Certain allocations of multipurpose issues.*** An allocation of bonds to a refunding purpose under § 1.148-9(h) may be adjusted as necessary to reflect allocations made between May 18, 1992, and August 15, 1993, if the allocations satisfied the corresponding prior provision of § 1.148-11(j)(4) under applicable prior regulations.

(3) ***Special limitation.*** The provisions of § 1.148-9 apply to issues issued before August 15, 1993, only if the issuer in good faith estimates the present value savings, if any, associated with the effect of the application of that section on refunding escrows, using any reasonable accounting method, and applies those savings, if any, to redeem outstanding tax-exempt bonds of the applicable issue at the earliest possible date on which those bonds may be redeemed or otherwise retired. These savings are not reduced to take into account any administrative costs associated with applying these provisions retroactively.

(d) ***Transition rule excepting certain state guarantee funds from the definition of replacement proceeds*** —

(1) ***Certain perpetual trust funds.***

(i) A guarantee by a fund created and controlled by a State and established pursuant to its constitution does not cause the amounts in the fund to be pledged funds treated as replacement proceeds if—

(A) Substantially all of the corpus of the fund consists of nonfinancial assets, revenues derived from these assets, gifts, and bequests;

(B) The corpus of the guarantee fund may be invaded only to support specifically designated essential governmental functions (designated functions) carried on by political subdivisions with general taxing powers or public elementary and public secondary schools;

(C) Substantially all of the available income of the fund is required to be applied annually to support designated functions;

(D) The issue guaranteed consists of obligations that are not private activity bonds (other than qualified 501(c)(3) bonds) substantially all of the proceeds of which are to be used for designated functions;

(E) The fund satisfied each of the requirements of paragraphs (d)(1)(i) through (d)(1)(iii) of this section on August 16, 1986; and

(F) As of the sale date of the bonds to be guaranteed, the amount of the bonds to be guaranteed by the fund plus the then-outstanding amount of bonds previously guaranteed by the fund does not exceed a total amount equal to 500 percent of the total costs of the assets held by the fund as of December 16, 2009.

(ii) The Commissioner may, by published guidance, set forth additional circumstances under which guarantees by certain perpetual trust funds will not cause amounts in the fund to be treated as replacement proceeds.

(2) ***Permanent University Fund.*** Replacement proceeds do not include amounts allocable to investments of the fund described in section 648 of Public Law 98-369.

(e) ***Transition rule regarding special allowance payments.*** Section 1.148-5(b)(5) applies to any bond issued after January 5, 1990, except a bond issued exclusively to refund a bond issued before January 6, 1990, if the amount of the refunding bond does not exceed 101 percent of the amount of the refunded bond, and the maturity date of the refunding bond is not later than the date that is 17 years after the date on which the refunded bond was issued (or, in the case of a series of refundings, the date on which the original bond was issued), but only if § 1.148-2(d)(2)(iv) is applied by substituting *1 and one-half percentage points* for *2 percentage points.*

(f) ***Transition rule regarding applicability of yield reduction rule.*** Section 1.148-5(c) applies to nonpurpose investments allocable to replacement proceeds of an issue that are held in a reserve or replacement fund to the extent that—

(1) Amounts must be paid into the fund under a constitutional provision, statute, or ordinance adopted before May 3, 1978;

(2) Under that provision, amounts paid into the fund (and investment earnings thereon) can be used only to pay debt service on the issues; and

(3) The size of the payments made into the fund is independent of the size of the outstanding issues or the debt service thereon.

(g) ***Provisions applicable to certain bonds sold before effective date.*** Except for bonds to which paragraph (b)(1) of this section applies—

(1) Section 1.148-11A provides rules applicable to bonds sold after June 6, 1994, and before July 8, 1997; and

(2) Sections 1.148-1 through 1.148-11 as in effect on July 1, 1993 (see 26 CFR part 1 as revised April 1, 1994), and § 1.148-11A(i) (relating to elective retroactive application of certain provisions) provide rules applicable to certain issues issued before June 7, 1994.

(h) ***Safe harbor for establishing fair market value for guaranteed investment contracts and investments purchased for a yield restricted defeasance escrow.*** The provisions of § 1.148-5(d)(6)(iii) are applicable to bonds sold on or after March 1, 1999. Issuers may apply these provisions to bonds sold on or after December 30, 1998, and before March 1, 1999.

(i) ***Special rule for certain broker's commissions and similar fees.*** Section 1.148-5(e)(2)(iii) applies to bonds sold on or after February 9, 2004. In the case of bonds sold before February 9, 2004, that are subject to § 1.148-5 (pre-effective date bonds), issuers may apply § 1.148-5(e)(2)(iii), in whole but not in part, with respect to transactions entered into on or after December 11, 2003. If an issuer applies § 1.148-5(e)(2)(iii) to pre-effective date bonds, the per-issue safe harbor in § 1.148-5(e)(2)(iii)(B)(*1*)(*ii*) is applied by taking into account all brokers' commissions or similar fees with respect to guaranteed investment contracts and investments for yield restricted defeasance escrows that the issuer treats as qualified administrative costs for the issue, including all such commissions or fees paid before February 9, 2004. For purposes of §§ 1.148-5(e)(2)(iii)(B)(*3*) and 1.148-5(e)(2)(iii)(B)(*6*) (relating to cost-of-living adjustments), transactions entered into before 2003 are treated as entered into in 2003.

(j) ***Certain prepayments.*** Section 1.148-1(e)(1) and (2) apply to bonds sold on or after October 3, 2003. Issuers may apply § 1.148-1(e)(1) and (2), in whole but not in part, to bonds sold before October 3, 2003, that are subject to § 1.148-1.

(k) ***Certain arbitrage guidance updates*** —

(1) ***In general.*** Sections 1.148-1(c)(4)(i)(B)(1); 1.148-1(c)(4)(i)(B)(4); 1.148-1(c)(4)(ii); 1.148-2(e)(3)(i); 1.148-3(d)(1)(iv); 1.148-3(d)(4); 1.148-4(a); 1.148-4(b)(3)(i); 1.148-4(h)(2)(ii)(A); 1.148-4(h)(2)(v); 1.148-4(h)(2)(vi); 1.148(h)(4)(i)(C); 1.148-5(c)(3); 1.148-5(d)(2); 1.148-5(d)(3); 1.148-5(d)(6)(i); 1.148-5(d)(6)(iii)(A); 1.148-5(e)(2)(ii)(B); 1.148-6(d)(3)(iii)(A); 1.148-6(d)(4); 1.148-7(c)(3)(v); 1.148-7(i)(6)(ii); 1.148-10(a)(4); 1.148-10(e); 1.148-11(d)(1)(i)(B); 1.148-11(d)(1)(i)(D); 1.148-11(d)(1)(i)(F); and 1.148-11(d)(1)(ii) apply to bonds sold on or after October 17, 2016.

(2) ***Valuation of investments in refunding transactions.*** Section 1.148-5(d)(3) also applies to bonds refunded by bonds sold on or after October 17, 2016.

(3) ***Rebate overpayment recovery.***

(i) Section 1.148-3(i)(3)(i) applies to claims arising from an issue of bonds to which § 1.148-3(i) applies and for which the final computation date is after June 24, 2008. For purposes of this paragraph (k)(3)(i), issues for which the actual final computation date is on or before June 24, 2008, are deemed to have a final computation date of July 1, 2008, for purposes of applying § 1.148-3(i)(3)(i).

(ii) Section 1.148-3(i)(3)(ii) and (iii) apply to claims arising from an issue of bonds to which § 1.148-3(i) applies and for which the final computation date is after September 16, 2013.

(iii) Section 1.148-3(j) applies to bonds subject to § 1.148-3(i).

(4) ***Hedge identification.*** Section 1.148-4(h)(2)(viii) applies to hedges that are entered into on or after October 17, 2016.

(5) ***Hedge modifications and termination.*** Section 1.148-4(h)(3)(iv)(A) through (H) and (h)(4)(iv) apply to—

(i) Hedges that are entered into on or after *October 17, 2016;*

(ii) Qualified hedges that are modified on or after October 17, 2016 with respect to modifications on or after such date; and

(iii) Qualified hedges on bonds that are refunded on or after October 17, 2016 with respect to the refunding on or after such date.

(6) ***Small issuer exception to rebate requirement for conduit borrowers of pooled financings.*** Section 1.148-8(d) applies to bonds issued after May 17, 2006.

(l) ***Permissive application of certain arbitrage updates*** —

(1) ***In general.*** Except as otherwise provided in this paragraph (l), issuers may apply the provisions described in paragraph (k)(1), (2), and (5) in whole, but not in part, to bonds sold before October 17, 2016.

(2) ***Computation credit.*** Issuers may apply § 1.148-3(d)(1)(iv) and (d)(4) for bond years ending on or after July 18, 2016.

(3) ***Yield reduction payments.*** Issuers may apply § 1.148-5(c)(3) for investments purchased on or after July 18, 2016.

(4) ***External commingled funds.*** Issuers may apply § 1.148-5(e)(2)(ii)(B) with respect to costs incurred on or after July 18, 2016.

(m) ***Definition of issue price.*** The definition of issue price in § 1.148-1(b) and (f) applies to bonds that are sold on or after June 7, 2017.

(n) ***Investment-type property.*** Section 1.148-1(e)(1) and (4) apply to bonds sold on or after July 8, 2019. An issuer may apply the provisions of § 1.148-1(e)(1) and (4) to bonds sold before July 8, 2019.

[T.D. 8476, 58 FR 33547, June 18, 1993]

Editorial Note: For FEDERAL REGISTER citations affecting § 1.148-11, see the List of CFR Sections Affected, which appears in the Finding Aids section of the printed volume and at *www.govinfo.gov.*

§ 1.149(b)-1 Federally guaranteed bonds.

(a) ***General rule.*** Under section 149(b) and this section, nothing in section 103(a) or in any other provision of law shall be construed to provide an exemption from Federal income tax for interest on any bond issued as part of an issue that is federally guaranteed.

(b) ***Exceptions.*** Pursuant to section 149(b)(3)(B), section 149(b)(1) and paragraph (a) of this section do not apply to—

(1) Investments in obligations issued pursuant to § 21B(d)(3) of the Federal Home Loan Bank Act, as amended by § 511 of the Financial Institutions Reform, Recovery, and Enforcement Act of 1989, or any successor provision; or

(2) Any investments that are held in a refunding escrow (as defined in § 1.148-1).

(c) ***Effective date.*** This section applies to investments made after June 30, 1993.

[T.D. 8476, 58 FR 33548, June 18, 1993]

§ 1.149(d)-1 Limitations on advance refundings.

(a) ***General rule.*** Under section 149(d) and this section, nothing in section 103(a) or in any other provision of law shall be construed to provide an exemption from Federal income tax for interest on any bond issued as part of an issue described in paragraphs (2), (3), or (4) of section 149(d).

(b) ***Advance refunding issues that employ abusive devices*** —

(1) ***In general.*** An advance refunding issue employs an abusive device and is described in section 149(d)(4) if the issue violates any of the anti-abuse rules under § 1.148-10.

(2) ***Failure to pay required rebate.*** An advance refunding issue is described in section 149(d)(4) if the issue fails to meet the requirements of § 1.148-3. This paragraph (b)(2) applies to any advance refunding issue issued after August 31, 1986.

(3) ***Mixed escrows invested in tax-exempt bonds.*** An advance refunding issue is described in section 149(d)(4) if—

(i) Any of the proceeds of the issue are invested in a refunding escrow in which a portion of the proceeds are invested in tax-exempt bonds and a portion of the proceeds are invested in nonpurpose investments;

(ii) The yield on the tax-exempt bonds in the refunding escrow exceeds the yield on the issue;

(iii) The yield on all the investments (including investment property and tax-exempt bonds) in the refunding escrow exceeds the yield on the issue; and

(iv) The weighted average maturity of the tax-exempt bonds in the refunding escrow is more than 25 percent greater or less than the weighted average maturity of the nonpurpose investments in the refunding escrow, and the weighted average maturity of nonpurpose investments in the refunding escrow is greater than 60 days.

(4) ***Tax-exempt conduit loans.*** For purposes of applying section 149(d) to a conduit financing issue that finances any conduit loan that is a tax-exempt bond, the actual issuer of a conduit financing issue and the conduit borrower of that conduit financing issue are treated as related parties. Thus, the issue date of the conduit loan does not occur prior to the date on which the actual issuer of the conduit financing issue sells, exchanges, or otherwise disposes of that conduit loan, and the use of the proceeds of the disposition to pay debt service on the conduit financing issue causes the conduit loan to be a refunding issue. See § 1.148-10(d), *Example 4.*

(c) ***Unrefunded debt service remains eligible for future advance refunding.*** For purposes of section 149(d)(3)(A)(i), any principal or interest on a prior issue that has not been paid or provided for by any advance refunding issue is treated as not having been advance refunded.

(d) ***Application of arbitrage regulations*** —

(1) ***Application of multipurpose issue rules.*** For purposes of sections 149(d)(2) and (3)(A)(i), (ii), and (iii), the provisions of the multipurpose issue rule in § 1.148-9(h) apply, except that the limitation in § 1.148-9(h)(5) is disregarded.

(2) ***General mixed escrow rules.*** For purposes of section 149(d), the provisions of § 1.148-9(c) (relating to mixed escrows) apply, except that those provisions do not apply for purposes of section 149(d)(2) and (d)(3)(A) (i) and (ii) to amounts that were not gross proceeds of the prior issue before the issue date of the refunding issue.

(3) ***Temporary periods and minor portions.*** Section 1.148-9(d) and (f) contains rules applicable to temporary periods and minor portions for advance refunding issues.

(4) ***Definitions.*** Section 1.148-1 applies for purposes of section 149(d).

(e) ***Taxable refundings*** —

(1) ***In general.*** Except as provided in paragraph (e)(2) of this section, for purposes of section 149(d)(3)(A)(i), an advance refunding issue the interest on which is not excludable from gross income under section 103(a) (*i.e.*, a taxable advance refunding issue) is not taken into account. In addition, for this purpose, an advance refunding of a taxable issue is not taken into account unless the taxable issue is a conduit loan of a tax-exempt conduit financing issue.

(2) ***Use to avoid section 149(d)(3)(A)(i).*** A taxable issue is taken into account under section 149(d)(3)(A)(i) if it is issued to avoid the limitations of that section. For example, in the case of a refunding of a tax-exempt issue with a taxable advance refunding issue that is, in turn, currently refunded with a tax-exempt issue, the taxable advance refunding issue is taken into account under section 149(d)(3)(A)(i) if the two tax-exempt issues are outstanding concurrently for more than 90 days.

(f) ***Redemption at first call date*** —

(1) ***General rule.*** Under sections 149(d)(3)(A) (ii) and (iii) (the *first call requirement*), bonds refunded by an advance refunding must be redeemed on their first call date if the savings test under section 149(d)(3)(B)(i) (the *savings test*) is satisfied. The savings test is satisfied if the issuer may realize present value debt service savings (determined without regard to administrative expenses) in connection with the issue of which the refunding bond is a part.

(2) ***First call date. First call date*** means the earliest date on which a bond may be redeemed (or, if issued before 1986, on the earliest date on which that bond may be redeemed at a redemption price not in excess of 103 percent of par). If, however, the savings test is not met with respect to the date described in the preceding sentence (*i.e.*, there are no present value savings if the refunded bonds are retired on that date), the first call date is the first date thereafter on which the bonds can be redeemed and on which the savings test is met.

(3) ***Application of savings test to multipurpose issues.*** Except as otherwise provided in this paragraph (f)(3), the multipurpose issue rules in § 1.148-9(h) apply for purposes of the savings test. If any separate issue in a multipurpose issue increases the aggregate present value debt service savings on the entire multipurpose issue or reduces the present value debt service losses on that entire multipurpose issue, that separate issue satisfies the savings test.

(g) ***Limitation on advance refundings of private activity bonds.*** Under section 149(d)(2) and this section, interest on a bond is not excluded from gross income if any portion of the issue of which the bond is a part is issued to advance refund a private activity bond (other than a qualified 501(c)(3) bond). For this purpose, the term private activity bond—

(1) Includes a qualified bond described in section 141(e) (other than a qualified 501(c)(3) bond), regardless of whether the refunding issue consists of private activity bonds under § 1.141-13; and

(2) Does not include a taxable bond.

(h) ***Effective dates*** —

(1) ***In general.*** Except as provided in this paragraph (h), this section applies to bonds issued after June 30, 1993, to which §§ 1.148-1 through 1.148-11 apply, including conduit loans that are treated as issued after June 30, 1993, under paragraph (b)(4) of this section. In addition, this section applies to any issue to which the election described in § 1.148-11(b)(1) is made.

(2) ***Special effective date for paragraph (b)(3).*** Paragraph (b)(3) of this section applies to any advance refunding issue issued after May 28, 1991.

(3) ***Special effective date for paragraph (f)(3).*** Paragraph (f)(3) of this section applies to bonds sold on or after July 8, 1997 and to any issue to which the election described in § 1.148-11(b)(1) is made. See § 1.148-11A(i) for rules relating to certain bonds sold before July 8, 1997.

(4) ***Special effective date for paragraph (g).*** See § 1.141-15 for the applicability date of paragraph (g) of this section.

[T.D. 8476, 58 FR 33548, June 18, 1993; 58 FR 44453, Aug. 23, 1993, as amended by T.D. 8538, 59 FR 24046, May 10, 1994; T.D. 8718, 62 FR 25513, May 9, 1997; T.D. 9234, 70 FR 75035, Dec. 19, 2005]

§ 1.149(e)-1 Information reporting requirements for tax-exempt bonds.

(a) ***General rule.*** Interest on a bond is included in gross income unless certain information with respect to the issue of which the bond is a part is reported to the Internal Revenue Service in accordance with the requirements of this section. This section applies to any bond if the issue of which the bond is a part is issued after December 31, 1986 (including any bond issued to refund a bond issued on or before December 31, 1986).

(b) ***Requirements for private activity bonds*** —

(1) ***In general.*** If the issue of which the bond is a part is an issue of private activity bonds, the issuer must comply with the following requirements—

(i) Not later than the 15th day of the second calendar month after the close of the calendar quarter in which the issue is issued, the issuer must file with the Internal Revenue Service a completed information reporting form prescribed for this purpose;

(ii) If any bond that is part of the issue is taken into account under section 146 (relating to volume cap on private activity bonds), the state certification requirement of paragraph (b)(2) of this section must be satisfied; and

(iii) If any bond that is part of the issue is a qualified mortgage bond or qualified veterans' mortgage bond (within the meaning of section 143 (a) or (b) or section 103A(c) (1) or (3) as in effect on the day before enactment of the Tax Reform Act of 1986), the issuer must submit the annual report containing information on the borrowers of the original proceeds of the issue as required under § 1.103A-2 (k)(2)(ii) and (k)(3) through (k)(6).

(2) ***State certification with respect to volume cap*** —

(i) ***In general.*** If an issue is subject to the volume cap under section 146, a state official designated by state law (if there is no such official, then the governor or the governor's delegate) must certify that the issue meets the requirements of section 146, and a copy of this certification must be attached to the information reporting form filed with respect to the issue. In the case of any constitutional home rule city (as defined in section 146(d)(3)(C)), the preceding sentence is applied by substituting “city” for “state” and “chief executive officer” for “governor.”

(ii) ***Certification.*** The certifying official need not perform an independent investigation in order to certify that the issue meets the requirements of section 146. For example, if the certifying official receives an affidavit that was executed by an officer of the issuer who is responsible for issuing the bonds and that sets forth, in brief and summary terms, the facts necessary to determine that the issue meets the requirements of section 146 and if the certifying official has compared the information in that affidavit to other readily available information with respect to that issuer (e.g., previous affidavits and certifications for other private activity bonds issued by that issuer), the certifying official may rely on the affidavit.

(c) ***Requirements for governmental bonds*** —

(1) ***Issue price of $100,000 or more.*** If the issue of which the bond is a part has an issue price of $100,000 or more and is not an issue of private activity bonds, then, not later than the 15th day of the second calendar month after the close of the calendar quarter in which the issue is issued, the issuer must file with the Internal Revenue Service a completed information reporting form prescribed for this purpose.

(2) *Issue price of less than $100,000* —

(i) ***In general.*** If the issue of which the bond is a part has an issue price of less than $100,000 and is not an issue of private activity bonds, the issuer must file with the Internal Revenue Service one of the following information reporting forms within the prescribed period—

(A) ***Separate return.*** Not later than the 15th day of the second calendar month after the close of the calendar quarter in which the issue is issued, a completed information reporting form prescribed for this purpose with respect to that issue; or

(B) ***Consolidated return.*** Not later than February 15 of the calendar year following the calendar year in which the issue is issued, a completed information form prescribed for this purpose with respect to all issues to which this paragraph (c)(2) applies that were issued by the issuer during the calendar year and for which information was not reported on a separate information return pursuant to paragraph (c)(2)(i)(A) of this section.

(ii) ***Bond issues issued before January 1, 1992.*** Paragraph (c)(2)(i)(A) of this section does not apply if the issue of which the bond is a part is issued before January 1, 1992.

(iii) ***Extended filing date for first and second calendar quarters of 1992.*** If the issue of which the bond is a part is issued during the first or second calendar quarter of 1992, the prescribed period for filing an information reporting form with respect to that issue pursuant to paragraph (c)(2)(i)(A) of this section is extended until November 16, 1992.

(d) *Filing of forms and special rules* —

(1) ***Completed form.*** For purposes of this section—

(i) ***Good faith effort.*** An information reporting form is treated as completed if the issuer (or a person acting on behalf of the issuer) has made a good faith effort to complete the form (taking into account the instructions to the form).

(ii) ***Information.*** In general, information reporting forms filed pursuant to this section must be completed on the basis of available information and reasonable expectations as of the date the issue is issued. Forms that are filed on a consolidated basis pursuant to paragraph (c)(2)(i)(B) of this section, however, may be completed on the basis of information readily available to the issuer at the close of the calendar year to which the form relates, supplemented by estimates made in good faith.

(iii) ***Certain information not required.*** An issuer need not report to the Internal Revenue Service any information specified in the first sentence of section 149(e)(2) that is not required to be reported to the Internal Revenue Service pursuant to the information reporting forms prescribed under that section and the instructions to those forms.

(2) *Manner of filing* —

(i) ***Place for filing.*** The information reporting form must be filed with the Internal Revenue Service at the address specified on the form or in the instructions to the form.

(ii) ***Extension of time.*** The Commissioner may grant an extension of time to file any form or attachment required under this section if the Commissioner determines that the failure to file in a timely manner was not due to willful neglect. The Commissioner may make this determination with respect to an issue or to a class of issues.

(e) ***Definitions.*** For purposes of this section only—

(1) ***Private activity bond.*** The term "private activity bond" has the meaning given that term in section 141(a) of the Internal Revenue Code, except that the term does not include any bond described in section 1312(c) of the Tax Reform Act of 1986 to which section 1312 or 1313 of the Tax Reform Act of 1986 applies.

(2) ***Issue*** —

(i) ***In general.*** Except as otherwise provided in this paragraph (e)(2), bonds are treated as part of the same issue only if the bonds are issued—

(A) By the same issuer;

(B) On the same date; and

(C) Pursuant to a single transaction or to a series of related transactions.

(ii) ***Draw-down loans, commercial paper, etc.***

(A) Bonds issued during the same calendar year may be treated as part of the same tissue if the bonds are issued—

(*1*) Pursuant to a loan agreement under which amounts are to be advanced periodically ("draw-down loan"); or

(*2*) With a term not exceeding 270 days.

(B) In addition, the bonds must be equally and ratably secured under a single indenture or loan agreement and issued pursuant to a common financing arrangement (e.g., pursuant to the same official statement that is periodically updated to reflect changing factual circumstances). In the case of bonds issued pursuant to a draw-down loan that meets the requirements of the preceding sentence, bonds issued during different calendar years may be treated as part of the same issue if all the amounts to be advanced pursuant to the draw-down loan are reasonably expected to be advanced within three years of the date of issue of the first bond.

(iii) ***Leases and installment sales.*** Bonds other than private activity bonds may be treated as part of the same issue if—

(A) The bonds are issued pursuant to a single agreement that is in the form of a lease or installment sales agreement; and

(B) All of the property covered by that agreement is reasonably expected to be delivered within three years of the date of issue of the first bond.

(iv) ***Qualified 501(c)(3) bonds.*** If an issuer elects under section 141(b)(9) to treat a portion of an issue as a qualified 501(c)(3) bond, that portion is treated as a separate issue.

(3) ***Date of issue*** —

(i) ***Bond.*** The date of issue of a bond is determined under § 1.150-1.

(ii) ***Issue.*** The date of issue of an issue of bonds is the date of issue of the first bond that is part of the issue. See paragraphs (e)(2) (ii) and (iii) of this section for rules relating to draw-down loans, commercial paper, etc., and leases and installment sales.

(iii) ***Bonds to which prior law applied.*** Notwithstanding the provisions of this paragraph (e)(3), an issue for which an information report was required to be filed under section 103(l) or section 103A(j)(3) is treated as issued prior to January 1, 1987.

(4) ***Issue price.*** The term "issue price" has the same meaning given the term under § 1.148-1(b).

[T.D. 8425, 57 FR 36002, Aug. 12, 1992, as amended at 59 FR 24351, May 11, 1994]

§ 1.149(g)-1 Hedge bonds.

(a) ***Certain definitions.*** Except as otherwise provided, the definitions set forth in § 1.148-1 apply for purposes of section 149(g) and this section. In addition, the following terms have the following meanings:

Reasonable expectations means reasonable expectations (as defined in § 1.148-1), as modified to take into account the provisions of section 149(f)(2)(B).

Spendable proceeds means net sale proceeds (as defined in § 1.148-1).

(b) ***Applicability of arbitrage allocation and accounting rules.*** Section 1.148-6 applies for purposes of section 149(g), except that an expenditure that results in the creation of replacement proceeds (other than amounts in a bona fide debt service fund or a reasonably required reserve or replacement fund) is not an expenditure for purposes of section 149(g).

(c) ***Refundings*** —

(1) ***Investment in tax-exempt bonds.*** A bond issued to refund a bond that is a tax-exempt bond by virtue of the rule in section 149(g)(3)(B) is not a tax-exempt bond unless the gross proceeds of that refunding bond (other than proceeds in a refunding escrow for the refunded bond) satisfy the requirements of section 149(g)(3)(B).

(2) ***Anti-abuse rule.*** A refunding bond is treated as a hedge bond unless there is a significant governmental purpose for the issuance of that bond (e.g., an advance refunding bond issued to realize debt service savings or to relieve the issuer of significantly burdensome document provisions, but not to otherwise hedge against future increases in interest rates).

(d) ***Effective date.*** This section applies to bonds issued after June 30, 1993 to which §§ 1.148-1 through 1.148-11 apply. In addition, this section applies to any issue to which the election described in § 1.148-11(b)(1) is made.

[T.D. 8476, 58 FR 33549, June 18, 1993]

§ 1.150-1 Definitions.

(a) ***Scope and effective date*** —

(1) ***In general.*** Except as otherwise provided, the definitions in this section apply for all purposes of sections 103 and 141 through 150.

(2) ***Effective/applicability date*** —

(i) ***In general.*** Except as otherwise provided in this paragraph (a)(2), this section applies to issues issued after June 30, 1993 to which §§ 1.148-1 through 1.148-11 apply. In addition, this section (other than paragraph (c)(3) of this section) applies to any issue to which the election described in § 1.148-11(b)(1) is made.

(ii) ***Special effective date for paragraphs (c)(1), (c)(4)(iii), and (c)(6).*** Paragraphs (c)(1), (c)(4)(iii), and (c)(6) of this section apply to bonds sold on or after July 8, 1997 and to any issue to which the election described in § 1.148-11(b)(1) is made. See § 1.148-11A(i) for rules relating to certain bonds sold before July 8, 1997.

(iii) ***Special effective date for definitions of tax-advantaged bond, issue, and grant.*** The definition of tax-advantaged bond in paragraph (b) of this section, the revisions to the definition of issue in paragraph (c)(2) of this section, and the definition and rules regarding the treatment of grants in paragraph (f) of this section apply to bonds that are sold on or after October 17, 2016.

(3) ***Exceptions to general effective date.*** See § 1.141-15 for the applicability date of the definition of bond documents contained in paragraph (b) of this section and the effective date of paragraph (c)(3)(ii) of this section.

(4) ***Additional exception to the general applicability date.*** Section 1.150-1(b), *Issuance costs,* applies on and after July 6, 2011.

(b) ***Certain general definitions.*** The following definitions apply:

Bond means any obligation of a State or political subdivision thereof under section 103(c)(1).

Bond documents means the bond indenture or resolution, transcript of proceedings, and any related documents.

Capital expenditure means any cost of a type that is properly chargeable to capital account (or would be so chargeable with a proper election or with the application of the definition of placed in service under § 1.150-2(c)) under general Federal income tax principles. For example, costs incurred to acquire, construct, or improve land, buildings, and equipment generally are capital expenditures. Whether an expenditure is a capital expenditure is determined at the time the expenditure is paid with respect to the property. Future changes in law do not affect whether an expenditure is a capital expenditure.

Conduit borrower means the obligor on a purpose investment (as defined in § 1.148-1). For example, if an issuer invests proceeds in a purpose investment in the form of a loan, lease, installment sale obligation, or similar obligation to another entity and the obligor uses the proceeds to carry out the governmental purpose of the issue, the obligor is a conduit borrower.

Conduit financing issue means an issue the proceeds of which are used or are reasonably expected to be used to finance at least one purpose investment representing at least one conduit loan to one conduit borrower.

Conduit loan means a purpose investment (as defined in § 1.148-1).

Governmental bond means any bond of an issue of tax-exempt bonds in which none of the bonds are private activity bonds.

Issuance costs means costs to the extent incurred in connection with, and allocable to, the issuance of an issue within the meaning of section 147(g). For example, issuance costs include the following costs but only to the extent incurred in connection with, and allocable to, the borrowing: underwriters' spread; counsel fees; financial advisory fees; fees paid to an organization to evaluate the credit quality of an issue; trustee fees; paying agent fees; bond registrar, certification, and authentication fees; accounting fees; printing costs for bonds and offering documents; public approval process costs; engineering and feasibility study costs; guarantee fees, other than for qualified guarantees (as defined in § 1.148-4(f)); and similar costs.

Issue date means, in reference to an issue, the first date on which the issuer receives the purchase price in exchange for delivery of the evidence of indebtedness representing any bond included in the issue. Issue date means, in reference to a bond, the date on which the issuer receives the purchase price in exchange for that bond. In no event is the issue date earlier than the first day on which interest begins to accrue on the bond or bonds for Federal income tax purposes.

Obligation means any valid evidence of indebtedness under general Federal income tax principles.

Pooled financing issue means an issue the proceeds of which are to be used to finance purpose investments representing conduit loans to two or more conduit borrowers, unless those conduit loans are to be used to finance a single capital project.

Private activity bond means a private activity bond (as defined in section 141).

Qualified mortgage loan means a mortgage loan with respect to an owner-occupied residence acquired with the proceeds of an obligation described in section 143(a)(1) or 143(b) (or applicable prior law).

Qualified student loan means a student loan acquired with the proceeds of an obligation described in section 144(b)(1).

Related party means, in reference to a governmental unit or a 501(c)(3) organization, any member of the same controlled group, and, in reference to any person that is not a governmental unit or 501(c)(3) organization, a related person (as defined in section 144(a)(3)).

Taxable bond means any obligation the interest on which is not excludable from gross income under section 103.

Tax-advantaged bond means a tax-exempt bond, a taxable bond that provides a federal tax credit to the investor with respect to the issuer's borrowing costs, a taxable bond that provides a refundable federal tax credit payable directly to the issuer of the bond for its borrowing costs under section 6431, or any future similar bond that provides a federal tax benefit that reduces an issuer's borrowing costs. Examples of tax-advantaged bonds include qualified tax credit bonds under section 54A(d)(1) and build America bonds under section 54AA.

Tax-exempt bond means any bond the interest on which is excludable from gross income under section 103(a). For purposes of section 148, tax-exempt bond includes:

(1) An interest in a regulated investment company to the extent that at least 95 percent of the income to the holder of the interest is interest that is excludable from gross income under section 103; and

(2) A certificate of indebtedness issued by the United States Treasury pursuant to the Demand Deposit State and Local Government Series program described in 31 CFR part 344.

Working capital expenditure means any cost that is not a capital expenditure. Generally, current operating expenses are working capital expenditures.

(c) ***Definition of issue*** —

(1) ***In general.*** Except as otherwise provided in this paragraph (c), the term *issue* means two or more bonds that meet all of the following requirements:

(i) ***Sold at substantially the same time.*** The bonds are sold at substantially the same time. Bonds are treated as sold at substantially the same time if they are sold less than 15 days apart.

(ii) ***Sold pursuant to the same plan of financing.*** The bonds are sold pursuant to the same plan of financing. Factors material to the plan of financing include the purposes for the bonds and the structure of the financing. For example, generally—

(A) Bonds to finance a single facility or related facilities are part of the same plan of financing;

(B) Short-term bonds to finance working capital expenditures and long-term bonds to finance capital projects are not part of the same plan of financing; and

(C) Certificates of participation in a lease and general obligation bonds secured by tax revenues are not part of the same plan of financing.

(iii) ***Payable from same source of funds.*** The bonds are reasonably expected to be paid from substantially the same source of funds, determined without regard to guarantees from parties unrelated to the obligor.

(2) ***Exceptions for different types of tax-advantaged bonds and taxable bonds.*** Each type of tax-advantaged bond that has a different structure for delivery of the tax benefit that reduces the issuer's borrowing costs or different program eligibility requirements is treated as part of a different issue under this paragraph (c). Further, tax-advantaged bonds and bonds that are not tax-advantaged bonds are treated as part of different issues under this paragraph (c). The issuance of tax-advantaged bonds in a transaction with other bonds that are not tax-advantaged bonds must be tested under the arbitrage anti-abuse rules under § 1.148-10(a) and other applicable anti-abuse rules (for example, limitations against window maturity structures or unreasonable allocations of bonds).

(3) ***Exception for certain bonds financing separate purposes*** —

(i) ***In general.*** Bonds may be treated as part of separate issues if the requirements of this paragraph (c)(3) are satisfied. Each of these separate issues must finance a separate purpose (e.g., refunding a separate prior issue, financing a separate purpose investment, financing integrated or functionally related capital projects, and financing any clearly discrete governmental purpose). Each of these separate issues independently must be a tax-exempt bond (e.g., a governmental bond or a qualified mortgage bond). The aggregate proceeds, investments, and bonds in such a transaction must be allocated between each of the separate issues using a reasonable, consistently applied allocation method. If any separate issue consists of refunding bonds, the allocation rules in § 1.148-9(h) must be satisfied. An allocation is not reasonable if it achieves more favorable results under sections 103 and 141 to 150 than could be achieved with actual separate issues. All allocations under this paragraph (c)(3) must be made in writing on or before the issue date.

(ii) ***Exceptions.*** This paragraph (c)(3) does not apply for purposes of sections 141, 144(a), 148, 149(d) and 149(g).

(4) ***Special rules for certain financings*** —

(i) ***Draw-down loans.*** Bonds issued pursuant to a draw-down loan are treated as part of a single issue. The issue date of that issue is the first date on which the aggregate draws under the loan exceed the lesser of $50,000 or 5 percent of the issue price.

(ii) ***Commercial paper*** —

(A) ***In general.*** Short-term bonds having a maturity of 270 days or less (*commercial paper*) issued pursuant to the same commercial paper program may be treated as part of a single issue, the issue date of which is the first date the aggregate amount of commercial paper issued under the program exceeds the lesser of $50,000 or 5 percent of the aggregate issue price of the commercial paper in the program. A commercial paper program is a program to issue commercial paper to finance or refinance the same governmental purpose pursuant to a single master legal document. Commercial paper is not part of the same commercial paper program unless issued during an 18-month period, beginning on the deemed issue date. In addition, commercial paper issued after the end of this 18-month period may be treated as part of the program to the extent issued to refund commercial paper that is part of the program, but only to the extent that—

(*1*) There is no increase in the principal amount outstanding; and

(*2*) The program does not have a term in excess of—

(*i*) 30 years; or

(*ii*) The period reasonably necessary for the governmental purposes of the program.

(B) ***Safe harbor.*** The requirement of paragraph (c)(4)(ii)(A)(*2*) of this section is treated as satisfied if the weighted average maturity of the issue does not exceed 120 percent of the weighted average expected economic life of the property financed by the issue.

(iii) ***Certain general obligation bonds.*** Except as otherwise provided in paragraph (c)(2) of this section, bonds that are secured by a pledge of the issuer's full faith and credit (or a substantially similar pledge) and sold and issued on the same dates pursuant to a single offering document may be treated as part of the same issue if the issuer so elects on or before the issue date.

(5) ***Anti-abuse rule.*** In order to prevent the avoidance of sections 103 and 141 through 150 and the general purposes thereof, the Commissioner may treat bonds as part of the same issue or as part of separate issues to clearly reflect the economic substance of a transaction.

(6) ***Sale date.*** The sale date of a bond is the first day on which there is a binding contract in writing for the sale or exchange of the bond.

(d) ***Definition of refunding issue and related definitions*** —

(1) ***General definition of refunding issue. Refunding issue*** means an issue of obligations the proceeds of which are used to pay principal, interest, or redemption price on another issue (a *prior issue,* as more particularly defined in paragraph (d)(5) of this section), including the issuance costs, accrued interest, capitalized interest on the refunding issue, a reserve or replacement fund, or similar costs, if any, properly allocable to that refunding issue.

(2) ***Exceptions and special rules.*** For purposes of paragraph (d)(1) of this section, the following exceptions and special rules apply—

(i) ***Payment of certain interest.*** An issue is not a refunding issue if the only principal and interest that is paid with proceeds of the issue (determined without regard to the multipurpose issue rules of § 1.148-9(h)) is interest on another issue that—

(A) Accrues on the other issue during a one-year period including the issue date of the issue that finances the interest;

(B) Is a capital expenditure; or

(C) Is a working capital expenditure to which the de minimis rule of § 1.148-6(d)(3)(ii)(A) applies.

(ii) ***Certain issues with different obligors*** —

(A) ***In general.*** An issue is not a refunding issue to the extent that the obligor (as defined in paragraph (d)(2)(ii)(B) of this section) of one issue is neither the obligor of the other issue nor a related party with respect to the obligor of the other issue.

(B) ***Definition of obligor.*** The *obligor* of an issue means the actual issuer of the issue, except that the obligor of the portion of an issue properly allocable to an investment in a purpose investment means the conduit borrower under that purpose investment. The obligor of an issue used to finance qualified mortgage loans, qualified student loans, or similar program investments (as defined in § 1.148-1) does not include the ultimate recipient of the loan (e.g., the homeowner, the student).

(iii) ***Certain special rules for purpose investments.*** For purposes of this paragraph (d), the following special rules apply:

(A) ***Refunding of a conduit financing issue by a conduit loan refunding issue.*** Except as provided in paragraph (d)(2)(iii)(B) of this section, the use of the proceeds of an issue that is used to refund an obligation that is a purpose investment (a *conduit refunding issue*) by the actual issuer of the conduit financing issue determines whether the conduit refunding issue is a refunding of the conduit financing issue (in addition to a refunding of the obligation that is the purpose investment).

(B) ***Recycling of certain payments under purpose investments.*** A conduit refunding issue is not a refunding of a conduit financing issue to the extent that the actual issuer of the conduit financing issue reasonably expects as of the date of receipt of the proceeds of the conduit refunding issue to use those amounts within 6 months (or, if greater, during the applicable temporary period for those amounts under section 148(c) or under applicable prior law) to acquire a new purpose investment. Any new purpose investment is treated as made from the proceeds of the conduit financing issue.

(C) ***Application to tax-exempt loans.*** For purposes of this paragraph (d), obligations that would be purpose investments (absent section 148(b)(3)(A)) are treated as purpose investments.

(iv) ***Substance of transaction controls.*** In the absence of other applicable controlling rules under this paragraph (d), the determination of whether an issue is a refunding issue is based on the substance of the transaction in light of all the facts and circumstances.

(v) ***Certain integrated transactions in connection with asset acquisition not treated as refunding issues.*** If, within six months before or after a person assumes (including taking subject to) obligations of an unrelated party in connection with an asset acquisition (other than a transaction to which section 381(a) applies if the person assuming the obligation is the acquiring corporation within the meaning of section 381(a)), the assumed issue is refinanced, the refinancing issue is not treated as a refunding issue.

(3) ***Current refunding issue. Current refunding issue*** means:

(i) Except as provided in paragraph (d)(3)(ii) of this section, a refunding issue that is issued not more than 90 days before the last expenditure of any proceeds of the refunding issue for the payment of principal or interest on the prior issue; and

(ii) In the case of a refunding issue issued before 1986—

(A) A refunding issue that is issued not more than 180 days before the last expenditure of any proceeds of the refunding issue for the payment of principal or interest on the prior issue; or

(B) A refunding issue if the prior issue had a term of less than 3 years and was sold in anticipation of permanent financing, but only if the aggregate term of all prior issues sold in anticipation of permanent financing was less than 3 years.

(4) ***Advance refunding issue. Advance refunding issue*** means a refunding issue that is not a current refunding issue.

(5) ***Prior issue. Prior issue*** means an issue of obligations all or a portion of the principal, interest, or call premium on which is paid or provided for with proceeds of a refunding issue. A prior issue may be issued before, at the same time as, or after a refunding issue. If the refunded and unrefunded portions of a prior issue are treated as separate issues under § 1.148-9(i), for the purposes for which that section applies, except to the extent that the context clearly requires otherwise, references to a prior issue refer only to the refunded portion of that prior issue.

(e) ***Controlled group*** means a group of entities controlled directly or indirectly by the same entity or group of entities within the meaning of this paragraph (e).

(1) ***Direct control.*** The determination of direct control is made on the basis of all the relevant facts and circumstances. One entity or group of entities (the *controlling entity*) generally controls another entity or group of entities (the *controlled entity*) for purposes of this paragraph if the controlling entity possesses either of the following rights or powers and the rights or powers are discretionary and non-ministerial—

(i) The right or power both to approve and to remove without cause a controlling portion of the governing body of the controlled entity; or

(ii) The right or power to require the use of funds or assets of the controlled entity for any purpose of the controlling entity.

(2) ***Indirect control.*** If a controlling entity controls a controlled entity under the test in paragraph (e)(1) of this section, then the controlling entity also controls all entities controlled, directly or indirectly, by the controlled entity or entities.

(3) ***Exception for general purpose governmental entities.*** An entity is not a controlled entity under this paragraph (e) if the entity possesses substantial taxing, eminent domain, and police powers. For example, a city possessing substantial amounts of each of these sovereign powers is not a controlled entity of the state.

(f) ***Definition and treatment of grants*** —

(1) ***Definition.*** Grant means a transfer for a governmental purpose of money or property to a transferee that is not a related party to or an agent of the transferor. The transfer must not impose any obligation or condition to directly or indirectly repay any amount to the transferor or a related party. Obligations or conditions intended solely to assure expenditure of the transferred moneys in accordance with the governmental purpose of the transfer do not prevent a transfer from being a grant.

(2) ***Treatment.*** Except as otherwise provided (for example, § 1.148-6(d)(4), which treats proceeds used for grants as spent for arbitrage purposes when the grant is made), the character and nature of a grantee's use of proceeds are taken into account in determining which rules are applicable to the bond issue and whether the applicable requirements for the bond issue are met. For example, a grantee's use of proceeds generally determines whether the proceeds are used for capital projects or working capital expenditures under section 148 and whether the qualified purposes for the specific type of bond issue are met.

[T.D. 8476, 58 FR 33549, June 18, 1993; 58 FR 44453, Aug. 23, 1993, as amended by T.D. 8538, 59 FR 24046, May 10, 1994; T.D. 8712, 62 FR 2304, Jan. 16, 1997; T.D. 8718, 62 FR 25513, May 9, 1997; T.D. 9234, 70 FR 75036, Dec. 19, 2005; T.D. 9533, 76 FR 39280, July 6, 2011; T.D. 9637, 78 FR 54759, Sept. 6, 2013; T.D. 9777, 81 FR 46598, July 18, 2016]

§ 1.150-2 Proceeds of bonds used for reimbursement.

(a) ***Table of contents.*** This table of contents contains a listing of the headings contained in § 1.150-2.

(a) Table of contents.

(b) Scope.

(c) Definitions.

(d) General operating rules for reimbursement expenditures.

(1) Official intent.

(2) Reimbursement period.

(3) Nature of expenditure.

(e) Official intent rules.

(1) Form of official intent.

(2) Project description in official intent.

(3) Reasonableness of official intent.

(f) Exceptions to general operating rules.

(1) De minimis exception.

(2) Preliminary expenditures exception.

(g) Special rules on refundings.

(1) In general—once financed, not reimbursed.

(2) Certain proceeds of prior issue used for reimbursement treated as unspent.

(h) Anti-abuse rules.

(1) General rule.

(2) One-year step transaction rule.

(i) Authority of the Commissioner to prescribe rules.

(j) Effective date.

(1) In general.

(2) Transitional rules.

(3) Nature of expenditure.

(b) ***Scope.*** This section applies to reimbursement bonds (as defined in paragraph (c) of this section) for all purposes of sections 103 and 141 to 150.

(c) ***Definitions.*** The following definitions apply:

Issuer means—

(1) For any private activity bond (excluding a qualified 501(c)(3) bond, qualified student loan bond, qualified mortgage bond, or qualified veterans' mortgage bond), the entity that actually issues the reimbursement bond; and

(2) For any bond not described in paragraph (1) of this definition, either the entity that actually issues the reimbursement bond or, to the extent that the reimbursement bond proceeds are to be loaned to a conduit borrower, that conduit borrower.

Official intent means an issuer's declaration of intent to reimburse an original expenditure with proceeds of an obligation.

Original expenditure means an expenditure for a governmental purpose that is originally paid from a source other than a reimbursement bond.

Placed in service means, with respect to a facility, the date on which, based on all the facts and circumstances—

(1) The facility has reached a degree of completion which would permit its operation at substantially its design level; and

(2) The facility is, in fact, in operation at such level.

Reimbursement allocation means an allocation in writing that evidences an issuer's use of proceeds of a reimbursement bond to reimburse an original expenditure. An allocation made within 30 days after the issue date of a reimbursement bond may be treated as made on the issue date.

Reimbursement bond means the portion of an issue allocated to reimburse an original expenditure that was paid before the issue date.

(d) ***General operating rules for reimbursement expenditures.*** Except as otherwise provided, a reimbursement allocation is treated as an expenditure of proceeds of a reimbursement bond for the governmental purpose of the original expenditure on the date of the reimbursement allocation only if:

(1) ***Official intent.*** Not later than 60 days after payment of the original expenditure, the issuer adopts an official intent for the original expenditure that satisfies paragraph (e) of this section.

(2) ***Reimbursement period*** —

(i) ***In general.*** The reimbursement allocation is made not later than 18 months after the later of—

(A) The date the original expenditure is paid; or

(B) The date the project is placed in service or abandoned, but in no event more than 3 years after the original expenditure is paid.

(ii) ***Special rule for small issuers.*** In applying paragraph (d)(2)(i) of this section to an issue that satisfies section 148(f)(4)(D)(i) (I) through (IV), the "18 month" limitation is changed to "3 years" and the "3-year" maximum reimbursement period is disregarded.

(iii) ***Special rule for long-term construction projects.*** In applying paragraph (d)(2)(i) to a construction project for which both the issuer and a licensed architect or engineer certify that at least 5 years is necessary to complete construction of the project, the maximum reimbursement period is changed from "3 years" to "5 years."

(3) ***Nature of expenditure.*** The original expenditure is a capital expenditure, a cost of issuance for a bond, an expenditure described in § 1.148-6(d)(3)(ii)(B) (relating to certain extraordinary working capital items), a grant (as defined in § 1.150-1(f)), a qualified student loan, a qualified mortgage loan, or a qualified veterans' mortgage loan.

(e) ***Official intent rules.*** An official intent satisfies this paragraph (e) if:

(1) ***Form of official intent.*** The official intent is made in any reasonable form, including issuer resolution, action by an appropriate representative of the issuer (e.g., a person authorized or designated to declare official intent on behalf of the issuer), or specific legislative authorization for the issuance of obligations for a particular project.

(2) ***Project description in official intent*** —

(i) ***In general.*** The official intent generally describes the project for which the original expenditure is paid and states the maximum principal amount of obligations expected to be issued for the project. A project includes any property, project, or program (e.g., *highway capital improvement program, hospital equipment acquisition,* or *school building renovation*).

(ii) ***Fund accounting.*** A project description is sufficient if it identifies, by name and functional purpose, the fund or account from which the original expenditure is paid (e.g., *parks and recreation fund—recreational facility capital improvement program*).

(iii) ***Reasonable deviations in project description.*** Deviations between a project described in an official intent and the actual project financed with reimbursement bonds do not invalidate the official intent to the extent that the actual project is reasonably related in function to the described project. For example, *hospital equipment* is a reasonable deviation from *hospital building improvements.* In contrast, a *city office building rehabilitation* is not a reasonable deviation from *highway improvements.*

(3) ***Reasonableness of official intent.*** On the date of the declaration, the issuer must have a reasonable expectation (as defined in § 1.148-1(b)) that it will reimburse the original expenditure with proceeds of an obligation. Official intents declared as a matter of course or in amounts substantially in excess of the amounts expected to be necessary for the project (e.g., *blanket declarations*) are not reasonable. Similarly, a pattern of failure to reimburse actual original expenditures covered by official intents (other than in extraordinary circumstances) is evidence of unreasonableness. An official intent declared pursuant to a specific legislative authorization is rebuttably presumed to satisfy this paragraph (e)(3).

(f) ***Exceptions to general operating rules*** —

(1) ***De minimis exception.*** Paragraphs (d)(1) and (d)(2) of this section do not apply to costs of issuance of any bond or to an amount not in excess of the lesser of $100,000 or 5 percent of the proceeds of the issue.

(2) ***Preliminary expenditures exception.*** Paragraphs (d)(1) and (d)(2) of this section do not apply to any preliminary expenditures, up to an amount not in excess of 20 percent of the aggregate issue price of the issue or issues that finance or are reasonably expected by the issuer to finance the project for which the preliminary expenditures were incurred. Preliminary expenditures include architectural, engineering, surveying, soil testing, reimbursement bond issuance, and similar costs that are incurred prior to commencement of acquisition, construction, or rehabilitation of a project, other than land acquisition, site preparation, and similar costs incident to commencement of construction.

(g) ***Special rules on refundings*** —

(1) ***In general—once financed, not reimbursed.*** Except as provided in paragraph (g)(2) of this section, paragraph (d) of this section does not apply to an allocation to pay principal or interest on an obligation or to reimburse an original expenditure paid by another obligation. Instead, such an allocation is analyzed under rules on refunding issues. See § 1.148-9.

(2) ***Certain proceeds of prior issue used for reimbursement treated as unspent.*** In the case of a refunding issue (or series of refunding issues), proceeds of a prior issue purportedly used to reimburse original expenditures are treated as unspent proceeds of the prior issue unless the purported reimbursement was a valid expenditure under applicable law on reimbursement expenditures on the issue date of the prior issue.

(h) ***Anti-abuse rules*** —

(1) ***General rule.*** A reimbursement allocation is not an expenditure of proceeds of an issue under this section if the allocation employs an abusive arbitrage device under § 1.148-10 to avoid the arbitrage restrictions or to avoid the restrictions under sections 142 through 147.

(2) ***One-year step transaction rule*** —

(i) ***Creation of replacement proceeds.*** A purported reimbursement allocation is invalid and thus is not an expenditure of proceeds of an issue if, within 1 year after the allocation, funds corresponding to the proceeds of a reimbursement bond for which a reimbursement allocation was made are used in a manner that results in the creation of replacement proceeds (as defined in § 1.148-1) of that issue or another issue. The preceding sentence does not apply to amounts deposited in a bona fide debt service fund (as defined in § 1.148-1).

(ii) ***Example.*** The provisions of paragraph (h)(2)(i) of this section are illustrated by the following example.

Example. On January 1, 1994, County *A* issues an issue of 7 percent tax-exempt bonds (the *1994 issue*) and makes a purported reimbursement allocation to reimburse an original expenditure for specified capital improvements. *A* immediately deposits funds corresponding to the proceeds subject to the reimbursement allocation in an escrow fund to provide for payment of principal and interest on its outstanding 1991 issue of 9 percent tax-exempt bonds (the *prior issue*). The use of amounts corresponding to the proceeds of the reimbursement bonds to create a sinking fund for another issue within 1 year after the purported reimbursement allocation invalidates the reimbursement allocation. The proceeds retain their character as unspent proceeds of the 7 percent issue upon deposit in the escrow fund. Accordingly, the proceeds are subject to the 7 percent yield restriction of the 1994 issue instead of the 9 percent yield restriction of the prior issue.

(i) ***Authority of the Commissioner to prescribe rules.*** The Commissioner may by revenue ruling or revenue procedure (see § 601.601(d)(2)(ii)(*b*) of this chapter) prescribe rules for the expenditure of proceeds of reimbursement bonds in circumstances that do not otherwise satisfy this section.

(j) ***Effective date*** —

(1) ***In general.*** Except as otherwise provided, the provisions of this section apply to all allocations of proceeds of reimbursement bonds issued after June 30, 1993.

(2) ***Transitional rules*** —

(i) ***Official intent.*** An official intent is treated as satisfying the official intent requirement of paragraph (d)(1) of this section if it—

(A) Satisfied the applicable provisions of § 1.103-8(a)(5) as in effect prior to July 1, 1993, (as contained in 26 CFR part 1 revised as of April 1, 1993) and was made prior to that date, or

(B) Satisfied the applicable provisions of § 1.103-18 as in effect between January 27, 1992, and June 30, 1993, (as contained in 26 CFR part 1 revised as of April 1, 1993) and was made during that period.

(ii) ***Certain expenditures of private activity bonds.*** For any expenditure that was originally paid prior to August 15, 1993, and that would have qualified for expenditure by reimbursement from the proceeds of a private activity bond under T.D. 7199, section 1.103-8(a)(5), 1972-2 C.B. 45 (see § 601.601(d)(2)(ii)(*b*)) of this chapter, the requirements of that section may be applied in lieu of this section.

(3) ***Nature of expenditure.*** Paragraph (d)(3) of this section applies to bonds that are sold on or after October 17, 2016.

[T.D. 8476, 58 FR 33551, June 18, 1993; 58 FR 44453, Aug. 23, 1993; T.D. 9777, 81 FR 46598, July 18, 2016]

§ 1.150-3 Retirement standards for state and local bonds.

(a) ***General purpose and scope.*** This section provides rules to determine when a tax-exempt bond is retired solely for purposes of sections 103 and 141 through 150 of the Internal Revenue Code (Code).

(b) ***Retirement of a tax-exempt bond*** —

(1) ***General rules.*** Except as otherwise provided in paragraph (c) of this section, a tax-exempt bond is retired when:

(i) A significant modification of the bond occurs under § 1.1001-3;

(ii) The issuer or its agent acquires the bond in a manner that extinguishes the bond; or

(iii) The bond is otherwise redeemed (for example, redeemed at maturity).

(2) ***Elective retirement.*** In guidance published in the Internal Revenue Bulletin (*see* § 601.601(d)(2)(ii)(*a*) of this chapter), the Commissioner may set forth specific circumstances under which an issuer may elect to treat a tax-exempt bond as retired for purposes of sections 103 and 141 through 150 of the Code.

(c) ***Exceptions to general rules for retirement of a tax-exempt bond*** —

(1) ***Qualified tender right disregarded for certain purposes.*** In applying § 1.1001-3 to a qualified tender bond for purposes of paragraph (b)(1)(i) of this section, both the existence and exercise of a qualified tender right are disregarded for purposes of determining whether an alteration of the interest rate or interest rate mode that occurs pursuant to the terms of the bond is a modification. Thus, an issuer's exercise of an option to alter the interest rate or interest rate mode on a qualified tender bond generally is not a modification under § 1.1001-3 because the alteration occurs by operation of the terms of the bond and the holder's resulting right to put the bond to the issuer or the issuer's agent pursuant to the disregarded qualified tender right does not prevent the issuer's option from qualifying as a unilateral option under § 1.1001-3(c)(3) that would not give rise to a modification.

(2) ***Acquisition pursuant to a qualified tender right.*** An acquisition of a qualified tender bond by the issuer or its agent does not result in the retirement of the bond under paragraph (b)(1)(ii) of this section if the acquisition is pursuant to the operation of a qualified tender right and neither the issuer nor its agent continues to hold the bond after the close of the 90-day period beginning on the date of the tender.

(3) ***Acquisition of a tax-exempt bond by a guarantor or liquidity facility provider.*** An acquisition of a tax-exempt bond by a guarantor or liquidity facility provider acting on the issuer's behalf does not result in the retirement of the bond under paragraph (b)(1)(ii) of this section if the acquisition is pursuant to the terms of the guarantee or liquidity facility and the guarantor or liquidity facility provider is not a related party (as defined in § 1.150-1(b)) to the issuer.

(d) ***Effect of retirement.*** If a bond is retired pursuant to paragraph (b)(1)(i) of this section (that is, in a transaction treated as an exchange of the bond for a bond with modified terms), the bond is treated as a new bond issued at the time of the modification as determined under § 1.1001-3. If the issuer or its agent

resells a bond retired pursuant to paragraph (b)(1)(ii) of this section, the bond is treated as a new bond issued on the date of resale. The rules of § 1.150-1(d) apply to determine if the new bond is part of a refunding issue.

(e) ***Definitions.*** For purposes of this section, the following definitions apply:

(1) ***Issuer*** means the State or local governmental unit (as defined in § 1.103-1) that actually issues the tax-exempt bond and any related party (as defined in § 1.150-1(b)) to the actual issuer (as distinguished, for example, from a conduit borrower that is not a related party to the actual issuer).

(2) ***Qualified tender bond*** means a tax-exempt bond that, pursuant to the terms of the bond, has all of the following features:

(i) During each authorized interest rate mode, the bond bears interest at a fixed interest rate, a qualified floating rate under § 1.1275-5(b), or an objective rate for a tax-exempt bond under § 1.1275-5(c)(5);

(ii) Interest on the bond is unconditionally payable (as defined in § 1.1273-1(c)(1)(ii)) at periodic intervals of no more than one year;

(iii) The bond has a stated maturity date that is not later than 40 years after the issue date of the bond; and

(iv) The bond includes a qualified tender right.

(3) ***Qualified tender right*** means a right or obligation of a holder of a tax-exempt bond pursuant to the terms of the bond to tender the bond for purchase as described in this paragraph (e)(3). The purchaser under the tender may be the issuer, its agent, or another party. The tender right is available on at least one date before the stated maturity date. For each such tender, the purchase price of the bond is equal to par (plus any accrued interest). Following each such tender, the issuer, its agent, or another party either redeems the bond or uses reasonable best efforts to resell the bond within the 90-day period beginning on the date of the tender. Upon any such resale, the resale price of the bond is equal to the par amount of the bond (plus any accrued interest), except that, if the tender right is exercised in connection with a conversion of the interest rate mode on the bond to a fixed rate for the remaining term of the bond, the bond may be resold at any price, including a premium price above the par amount of the bond or a discount price below the par amount of the bond (plus any accrued interest). Any premium received by the issuer pursuant to such a resale is treated solely for purposes of the arbitrage investment restrictions under section 148 of the Code as additional sale proceeds of the bonds.

(f) ***Applicability date*** —

(1) ***General applicability.*** This section applies to events occurring and actions taken with respect to bonds on or after December 30, 2025.

(2) ***Permissive applicability.*** An issuer may choose to apply this section to events occurring and actions taken with respect to bonds on or after December 30, 2024.

[T.D. 10020, 89 FR 106319, Dec. 30, 2024]

§ 1.150-4 Change in use of facilities financed with tax-exempt private activity bonds.

(a) ***Scope.*** This section applies for purposes of the rules for change of use of facilities financed with private activity bonds under sections 150(b)(3) (relating to qualified 501(c)(3) bonds), 150(b)(4) (relating to certain exempt facility bonds and small issue bonds), 150(b)(5) (relating to facilities required to be owned by governmental units or 501(c)(3) organizations), and 150(c).

(b) ***Effect of remedial actions*** —

(1) ***In general.*** Except as provided in this section, the change of use provisions of sections 150(b) (3) through (5), and 150(c) apply even if the issuer takes a remedial action described in §§ 1.142-2, 1.144-2, or 1.145-2.

(2) ***Exceptions*** —

(i) ***Redemption.*** If nonqualified bonds are redeemed within 90 days of a deliberate action under § 1.145-2(a) or within 90 days of the date on which a failure to properly use proceeds occurs under § 1.142-2 or § 1.144-2, sections 150(b) (3) through (5) do not apply during the period between that date and the date on which the nonqualified bonds are redeemed.

(ii) ***Alternative qualifying use of facility.*** If a bond-financed facility is used for an alternative qualifying use under §§ 1.145-2 and 1.141-12(f), sections 150(b) (3) and (5) do not apply because of the alternative use.

(iii) ***Alternative use of disposition proceeds.*** If disposition proceeds are used for a qualifying purpose under §§ 1.145-2 and 1.141-12(e), 1.142-2(c)(4), or 1.144-2, sections 150(b) (3) through (5) do not apply because of the deliberate action that gave rise to the disposition proceeds after the date on which all of the disposition proceeds have been expended on the qualifying purpose. If all of the disposition proceeds are so expended within 90 days of the date of the deliberate action, however, sections 150(b) (3) through (5) do not apply because of the deliberate action.

(c) ***Allocation rules*** —

(1) ***In general.*** If a change in use of a portion of the property financed with an issue of qualified private activity bonds causes section 150 (b)(3), (b)(4), or (b)(5) to apply to an issue, the bonds of the issue allocable to that portion under section 150(c)(3) are the same as the nonqualified bonds determined for purposes of §§ 1.142-1, 1.144-1, and 1.145-1, except that bonds allocable to all common areas are also allocated to that portion.

(2) ***Special rule when remedial action is taken.*** If an issuer takes a remedial action with respect to an issue of private activity bonds under §§ 1.142-2, 1.144-2, or 1.145-2, the bonds of the issue allocable to a portion of property are the same as the nonqualified bonds determined for purposes of those sections.

(d) ***Effective dates.*** For effective dates of this section, see § 1.141-16.

[T.D. 8712, 62 FR 2304, Jan. 16, 1997]

§ 1.150-5 Filing notices and elections.

(a) ***In general.*** Notices and elections under the following sections must be filed with the Internal Revenue Service, 1111 Constitution Avenue, NW, Attention: T:GE:TEB:O, Washington, DC 20224 or such other place designated by publication of a notice in the Internal Revenue Bulletin—

(1) Section 1.141-12(d)(4);

(2) Section 1.142(f)(4)-1; and

(3) Section 1.142-2(c)(2).

(b) ***Effective dates.*** This section applies to notices and elections filed on or after January 19, 2001.

[T.D. 8941, 66 FR 4671, Jan. 18, 2001, as amended by T.D. 9741, 80 FR 65646, Oct. 27, 2015]

REGULATIONS APPLICABLE TO CERTAIN BONDS SOLD PRIOR TO JULY 8, 1997

Editorial Note: IRS redesignated the following sections to appear below the undesignated center heading "Regulations Applicable to Certain Bonds Sold Prior to July 8, 1997" and preceding the undesignated center heading "Deductions for Personal Exemptions." See 62 FR 25507 and 25513, May 9, 1997 for the specific sections involved in the redesignation.

§§ 1.148-1A-1.148-6A [Reserved]

§§ 1.148-9A-1.148-10A [Reserved]

§ 1.148-11A Effective dates.

(a) through (c) (3) [Reserved]. For guidance see § 1.148-11.

(c) (4) *Retroactive application of overpayment recovery provisions.* An issuer may apply the provisions of § 1.148-3(i) to any issue that is subject to section 148(f) or to sections 103(c)(6) or 103A(i) of the Internal Revenue Code of 1954.

(d) through (h) [Reserved]. For guidance see § 1.148-11.

(i) ***Transition rules for certain amendments*** —

(1) ***In general.*** Section 1.103-8(a)(5), §§ 1.148-1, 1.148-2, 1.148-3, 1.148-4, .148-5, 1.148-6, 1.148-7, 1.148-8, 1.148-9, 1.148-10, 1.148-11, 1.149(d)-1, and 1.150-1 as in effect on June 7, 1994 (see 26 CFR part 1 as revised April 1, 1997), and §§ 1.148-1A through 1.148-11A, 1.149(d)-1A, and 1.150-1A apply, in whole, but not in part—

(i) To bonds sold after June 6, 1994, and before July 8, 1997;

(ii) To bonds issued before July 1, 1993, that are outstanding on June 7, 1994, if the first time the issuer applies §§ 1.148-1 through 1.148-11 as in effect on June 7, 1994 (see 26 CFR part 1 as revised April 1, 1997), to the bonds under § 1.148-11 (b) or (c) is after June 6, 1994, and before July 8, 1997;

(iii) At the option of the issuer, to bonds to which §§ 1.148-1 through 1.148-11, as in effect on July 1, 1993 (see 26 CFR part 1 as revised April 1, 1994), apply, if the bonds are outstanding on June 7, 1994, and the issuer applies § 1.103-8(a)(5), §§ 1.148-1, 1.148-2, 1.148-3, 1.148-4, 1.148-5, 1.148-6, 1.148-7, 1.148-8, 1.148-9, 1.148-10, 1.148-11, 1.149(d)-1, and 1.150-1 as in effect on June 7, 1994 (see 26 CFR part 1 as revised April 1, 1997), and §§ 1.148-1A through 1.148-11A, 1.149(d)-1A, and 1.150-1A to the bonds before July 8, 1997.

(2) ***Special rule.*** For purposes of paragraph (i)(1) of this section, any reference to a particular paragraph of §§ 1.148-1T, 1.148-2T, 1.148-3T, 1.148-4T, 1.148-5T, 1.148-6T, 1.148-9T, 1.148-10T, 1.148-11T, 1.149(d)-1T, or 1.150-1T shall be applied as a reference to the corresponding paragraph of §§ 1.148-1A, 1.148-2A, 1.148-3A, 1.148-4A, 1.148-5A, 1.148-6A, 1.148-9A, 1.148-10A, 1.148-11A, 1.149(d)-1A, or 1.150-1A, respectively.

(3) ***Identification of certain hedges.*** For any hedge entered into after June 18, 1993, and on or before June 6, 1994, that would be a qualified hedge within the meaning of § 1.148-4(h)(2), as in effect on June 7, 1994 (see 26 CFR part 1 as revised April 1, 1997), except that the hedge does not meet the requirements of § 1.148-4A(h)(2)(ix) because the issuer failed to identify the hedge not later than 3 days after which the issuer and the provider entered into the contract, the requirements of § 1.148-4A(h)(2)(ix) are treated as met if the contract is identified by the actual issuer on its books and records maintained for the hedged bonds not later than July 8, 1997.

[T.D. 8538, 59 FR 24046, May 10, 1994. Redesignated and amended by T.D. 8718, 62 FR 25507, 25513, May 9, 1997]

DEDUCTIONS FOR PERSONAL EXEMPTIONS

§ 1.151-1 Deductions for personal exemptions.

(a) ***In general.***

(1) In computing taxable income, an individual is allowed a deduction for the exemptions specified in section 151. Such exemptions are:

(i) The exemptions for an individual taxpayer and spouse (the so-called personal exemptions);

(ii) the additional exemptions for a taxpayer attaining the age of 65 years and spouse attaining the age of 65 years (the so-called old-age exemptions);

(iii) the additional exemptions for a blind taxpayer and a blind spouse; and

(iv) the exemptions for dependents of the taxpayer.

(2) A nonresident alien individual who is a bona fide resident of Puerto Rico during the entire taxable year and subject to tax under section 1 or 1201(b) is allowed as deductions the exemptions specified in section 151, even though as to the United States such individual is a nonresident alien. See section 876 and the regulations thereunder, relating to alien residents of Puerto Rico.

(b) ***Exemptions for individual taxpayer and spouse (so-called personal exemptions).*** Section 151(b) allows an exemption for the taxpayer and an additional exemption for the spouse of the taxpayer if a joint return is not made by the taxpayer and his spouse, and if the spouse, for the calendar year in which the taxable year of the taxpayer begins, has no gross income and is not the dependent of another taxpayer. Thus, a husband is not entitled to an exemption for his wife on his separate return for the taxable year beginning in a calendar year during which she has any gross income (though insufficient to require her to file a

return). Since, in the case of a joint return, there are two taxpayers (although under section 6013 there is only one income for the two taxpayers on such return, *i.e.*, their aggregate income), two exemptions are allowed on such return, one for each taxpayer spouse. If in any case a joint return is made by the taxpayer and his spouse, no other person is allowed an exemption for such spouse even though such other person would have been entitled to claim an exemption for such spouse as a dependent if such joint return had not been made.

(c) ***Exemptions for taxpayer attaining the age of 65 and spouse attaining the age of 65 (so-called old-age exemptions).***

(1) Section 151(c) provides an additional exemption for the taxpayer if he has attained the age of 65 before the close of his taxable year. An additional exemption is also allowed to the taxpayer for his spouse if a joint return is not made by the taxpayer and his spouse and if the spouse has attained the age of 65 before the close of the taxable year of the taxpayer and, for the calendar year in which the taxable year of the taxpayer begins, the spouse has no gross income and is not the dependent of another taxpayer. If a husband and wife make a joint return, an old-age exemption will be allowed as to each taxpayer spouse who has attained the age of 65 before the close of the taxable year for which the joint return is made. The exemptions under section 151(c) are in addition to the exemptions for the taxpayer and spouse under section 151(b).

(2) In determining the age of an individual for the purposes of the exemption for old age, the last day of the taxable year of the taxpayer is the controlling date. Thus, in the event of a separate return by a husband, no additional exemption for old age may be claimed for his spouse unless such spouse has attained the age of 65 on or before the close of the taxable year of the husband. In no event shall the additional exemption for old age be allowed with respect to a spouse who dies before attaining the age of 65 even though such spouse would have attained the age of 65 before the close of the taxable year of the taxpayer. For the purposes of the old-age exemption, an individual attains the age of 65 on the first moment of the day preceding his sixty-fifth birthday. Accordingly, an individual whose sixty-fifth birthday falls on January 1 in a given year attains the age of 65 on the last day of the calendar year immediately preceding.

(d) ***Exemptions for the blind.***

(1) Section 151(d) provides an additional exemption for the taxpayer if he is blind at the close of his taxable year. An additional exemption is also allowed to the taxpayer for his spouse if the spouse is blind and, for the calendar year in which the taxable year of the taxpayer begins, has no gross income and is not the dependent of another taxpayer. The determination of whether the spouse is blind shall be made as of the close of the taxable year of the taxpayer, unless the spouse dies during such taxable year, in which case such determination shall be made as of the time of such death.

(2) The exemptions for the blind are in addition to the exemptions for the taxpayer and spouse under section 151(b) and are also in addition to the exemptions under section 151(c) for taxpayers and spouses attaining the age of 65 years. Thus, a single individual who has attained the age of 65 before the close of his taxable year and who is blind at the close of his taxable year is entitled, in addition to the so-called personal exemption, to two further exemptions, one by reason of his age and the other by reason of his blindness. If a husband and wife make a joint return, an exemption for the blind will be allowed as to each taxpayer spouse who is blind at the close of the taxable year for which the joint return is made.

(3) A taxpayer claiming an exemption allowed by section 151(d) for a blind taxpayer and a blind spouse shall, if the individual for whom the exemption is claimed is not totally blind as of the last day of the taxable year of the taxpayer (or, in the case of a spouse who dies during such taxable year, as of the time of such death), attach to his return a certificate from a physician skilled in the diseases of the eye or a registered optometrist stating that as of the applicable status determination date in the opinion of such physician or optometrist

(i) the central visual acuity of the individual for whom the exemption is claimed did not exceed 20/200 in the better eye with correcting lenses or

(ii) such individual's visual acuity was accompanied by a limitation in the fields of vision such that the widest diameter of the visual field subtends an angle no greater than 20 degrees. If such individual is totally blind as of the status determination date there shall be attached to the return a statement by the person or persons making the return setting forth such fact.

(4) Notwithstanding subparagraph (3) of this paragraph, this subparagraph may be applied where the individual for whom an exemption under section 151(d) is claimed is not totally blind, and in the certified opinion of an examining physician skilled in the diseases of the eye there is no reasonable probability that the individual's visual acuity will ever improve beyond the minimum standards described in subparagraph (3) of this paragraph. In this event, if the examination occurs during a taxable year for which the exemption is claimed, and the examining physician certifies that, in his opinion, the condition is irreversible, and a copy of this certification is filed with the return for that taxable year, then a statement described in subparagraph (3) of this paragraph need not be attached to such individual's return for subsequent taxable years so long as the condition remains irreversible. The taxpayer shall retain a copy of the certified opinion in his records, and a statement referring to such opinion shall be attached to future returns claiming the section 151(d) exemption.

[T.D. 6500, 25 FR 11402, Nov. 26, 1960, as amended by T.D. 7114, 36 FR 9018, May 18, 1971; T.D. 7230, 37 FR 28288, Dec. 22, 1972]

§ 1.151-2 Additional exemptions for dependents.

(a) Section 151(e) allows to a taxpayer an exemption for each dependent (as defined in section 152) whose gross income (as defined in section 61) for the calendar year in which the taxable year of the taxpayer begins is less than the amount provided in section 151(e)(1)(A) applicable to the taxable year of the taxpayer, or who is a child of the taxpayer and who—

(1) The taxable year of the taxpayer begins, or

(2) Is a student, as defined in paragraph (b) of § 1.151-3.

No exemption shall be allowed under section 151(e) for any dependent who has made a joint return with his spouse under section 6013 for the taxable year beginning in the calendar year in which the taxable year of the taxpayer begins. The amount provided in section 151(e)(1)(A) is $750 in the case of a taxable year beginning after December 31, 1972; $700 in the case of a taxable year beginning after December 31, 1971, and before January 1, 1973; $650 in the case of a taxable year beginning after December 31, 1970, and before January 1, 1972; $625 in the case of a taxable year beginning after December 31, 1969, and before January 1, 1971; and $600 in the case of a taxable year beginning before January 1, 1970. For special rules in the case of a taxpayer whose taxable year is a fiscal year ending after December 31, 1969, and beginning before January 1, 1973, see section 21(d) and the regulations thereunder.

(b) The only exemption allowed for a dependent of the taxpayer is that provided by section 151(e). The exemptions provided by section 151(c) (old-age exemptions) and section 151(d) (exemptions for the blind) are allowed only for the taxpayer or his spouse. For example, where a taxpayer provides the entire support for his father who meets all the requirements of a dependent, he is entitled to only one exemption for his father (section 151(e)), even though his father is over the age of 65.

[T.D. 7114, 36 FR 9019, May 18, 1971]

§ 1.151-3 Definitions.

(a) ***Child.*** For purposes of sections 151(e), 152, and the regulations thereunder, the term "child" means a son, stepson, daughter, stepdaughter, adopted son, adopted daughter, or for taxable years beginning after December 31, 1958, a child who is a member of an individual's household if the child was placed with the individual by an authorized placement agency for legal adoption pursuant to a formal application filed by the individual with the agency (see paragraph (c)(2) of § 1.152-2), or, for taxable years beginning after December 31, 1969, a foster child (if such foster child satisfies the requirements set forth in paragraph (b) of § 1.152-1 with respect to the taxpayer) of the taxpayer.

(b) ***Student.*** For purposes of section 151(e) and section 152(d), and the regulations thereunder, the term "student" means an individual who during each of 5 calendar months during the calendar year in which the taxable year of the taxpayer begins is a full-time student at an educational institution or is pursuing a full-time course of institutional on-farm training under the supervision of an accredited agent of an educational institution or of a State or political subdivision of a State. An example of "institutional on-farm training" is that authorized by 38 U.S.C. 1652 (formerly section 252 of the Veterans' Readjustment Assistance Act of 1952), as described in section 252 of such act. A full-time student is one who is enrolled for some part of 5 calendar months for the number of hours or courses which is considered to be full-time attendance. The 5 calendar months need not be consecutive. School attendance exclusively at night does not constitute full-time attendance. However, full-time attendance at an educational institution may include some attendance at night in connection with a full-time course of study.

(c) ***Educational institution.*** For purposes of sections 151(e) and 152, and the regulations thereunder, the term "educational institution" means a school maintaining a regular faculty and established curriculum, and having an organized body of students in attendance. It includes primary and secondary schools, colleges, universities, normal schools, technical schools, mechanical schools, and similar institutions, but does not include noneducational institutions, on-the-job training, correspondence schools, night schools, and so forth.

[T.D. 6500, 25 FR 11402, Nov. 26, 1960, as amended by T.D. 7051, 35 FR 11020, July 9, 1970]

§ 1.151-4 Amount of deduction for each exemption under section 151.

The amount allowed as a deduction for each exemption under section 151 is (a) $750 in the case of a taxable year beginning after December 31, 1972; (b) $700 in the case of a taxable year beginning after December 31, 1971, and before January 1, 1973; (c) $650 in the case of a taxable year beginning after December 31, 1970, and before January 1, 1972; (d) $625 in the case of a taxable year beginning after December 31, 1969, and before January 1, 1971; and (e) $600 in the case of a taxable year beginning before January 1, 1970. For special rules in the case of a fiscal year ending after December 31, 1969, and beginning before January 1, 1973, see section 21(d) and the regulations thereunder.

[T.D. 7114, 36 FR 9019, May 18, 1971]

§ 1.152-1 General definition of a dependent.

(a)

(1) For purposes of the income taxes imposed on individuals by chapter 1 of the Code, the term "dependent" means any individual described in paragraphs (1) through (10) of section 152(a) over half of whose support, for the calendar year in which the taxable year of the taxpayer begins, was received from the taxpayer.

(2)

(i) For purposes of determining whether or not an individual received, for a given calendar year, over half of his support from the taxpayer, there shall be taken into account the amount of support received from the taxpayer as compared to the entire amount of support which the individual received from all sources, including support which the individual himself supplied. The term "support" includes food, shelter, clothing, medical and dental care, education, and the like. Generally, the amount of an item of support will be the amount of expense incurred by the one furnishing such item. If the item of support furnished an individual is in the form of property or lodging, it will be necessary to measure the amount of such item of support in terms of its fair market value.

(ii) In computing the amount which is contributed for the support of an individual, there must be included any amount which is contributed by such individual for his own support, including income which is ordinarily excludable from gross income, such as benefits received under the Social Security Act (42 U.S.C. ch. 7). For example, a father receives $800 social security benefits, $400 interest, and $1,000 from his son during 1955, all of which sums represent his sole support during that year. The fact that the social security benefits of $800 are not includible in the father's gross income does not prevent such amount from entering into the computation of the total amount contributed for the father's support. Consequently, since the son's contribution of $1,000 was less than one-half of the father's support ($2,200) he may not claim his father as a dependent.

(iii)

(*a*) For purposes of determining the amount of support furnished for a child (or children) by a taxpayer for a given calendar year, an arrearage payment made in a year subsequent to a calendar year for which there is an unpaid liability shall not be treated as paid either during that calendar year or in the year of payment, but no amount shall be treated as an arrearage payment to the extent that there is an unpaid liability (determined without regard to such payment) with respect to the support of a child for the taxable year of payment; and

(*b*) Similarly, payments made prior to any calendar year (whether or not made in the form of a lump sum payment in settlement of the parent's liability for support) shall not be treated as made during such calendar year, but payments made during any calendar year from amounts set aside in trust by a parent in a prior year, shall be treated as made during the calendar year in which paid.

(b) Section 152(a)(9) applies to any individual (other than an individual who at any time during the taxable year was the spouse, determined without regard to section 153, of the taxpayer) who lives with the taxpayer and is a member of the taxpayer's household during the entire taxable year of the taxpayer. An individual is not a member of the taxpayer's household if at any time during the taxable year of the taxpayer the relationship between such individual and the taxpayer is in violation of local law. It is not necessary under section 152(a)(9) that the dependent be related to the taxpayer. For example, foster children may qualify as dependents. It is necessary, however, that the taxpayer both maintain and occupy the household. The taxpayer and dependent will be considered as occupying the household for such entire taxable year notwithstanding temporary absences from the household due to special circumstances. A nonpermanent failure to occupy the common abode by reason of illness, education, business, vacation, military service, or a custody agreement under which the dependent is absent for less than six months in the taxable year of the taxpayer, shall be considered temporary absence due to special circumstances. The fact that the dependent dies during the year shall not deprive the taxpayer of the deduction if the dependent lived in the household for the entire part of the year preceding his death. Likewise, the period during the taxable year preceding the birth of an individual shall not prevent such individual from qualifying as a dependent under section 152(a)(9). Moreover, a child who actually becomes a member of the taxpayer's household during the taxable year shall not be prevented from being considered a member of such household for the entire taxable year, if the child is required to remain in a hospital for a period following its birth, and if such child would otherwise have been a member of the taxpayer's household during such period.

(c) In the case of a child of the taxpayer who is under 19 or who is a student, the taxpayer may claim the dependency exemption for such child provided he has furnished more than one-half of the support of such child for the calendar year in which the taxable year of the taxpayer begins, even though the income of the child for such calendar year may be equal to or in excess of the amount determined pursuant to § 1.151-2 applicable to such calendar year. In such a case, there may be two exemptions claimed for the child: One on the parent's (or stepparent's) return, and one on the child's return. In determining whether the taxpayer does in fact furnish more than one-half of the support of an individual who is a child, as defined in paragraph (a) of § 1.151-3, of the taxpayer and who is a student, as defined in paragraph (b) of § 1.151-3, a special rule regarding scholarships applies. Amounts received as scholarships, as defined in paragraph (a) of § 1.117-3, for study at an educational institution shall not be considered in determining whether the taxpayer furnishes more than one-half the support of such individual. For example, A has a child who receives a $1,000 scholarship to the X college for 1 year. A contributes $500, which constitutes the balance of the child's support for that year. A may claim the child as a dependent, as the $1,000 scholarship is not counted in determining the support of the child. For purposes of this paragraph, amounts received for tuition payments and allowances by a veteran under the provisions of the Servicemen's Readjustment Act of 1944 (58 Stat. 284) or the Veterans' Readjustment Assistance Act of 1952 (38 U.S.C. ch. 38) are not amounts received as scholarships. See also § 1.117-4. For definition of the terms “child”, “student”, and “educational institution”, as used in this paragraph, see § 1.151-3.

[T.D. 6500, 25 FR 11402, Nov. 26, 1960, as amended by T.D. 6603, 28 FR 7094, July 11, 1963; T.D. 7099, 36 FR 5337, Mar. 20, 1971; T.D. 7114, 36 FR 9019, May 18, 1971]

§ 1.152-2 Rules relating to general definition of dependent.

(a)

(1) Except as provided in subparagraph (2) of this paragraph, to qualify as a dependent an individual must be a citizen or resident of the United States or be a resident of the Canal Zone, the Republic of Panama, Canada, or Mexico, or, for taxable years beginning after December 31, 1971, a national of the United States, at some time during the calendar year in which the taxable year of the taxpayer begins. A resident of the Republic of the Philippines who was born to or legally adopted by the taxpayer in the Philippine Islands before January 1, 1956, at a time when the taxpayer was a member of the Armed Forces of the United States, may also be claimed as a dependent if such resident otherwise qualifies as a dependent. For definition of "Armed Forces of the United States," see section 7701(a)(15).

(2)

(i) For any taxable year beginning after December 31, 1957, a taxpayer who is a citizen, or, for any taxable year beginning after December 31, 1971, a national, of the United States is permitted under section 152(b)(3)(B) to treat as a dependent his legally adopted child who lives with him, as a member of his household, for the entire taxable year and who, but for the citizenship, nationality, or residence requirements of section 152(b)(3) and subparagraph (1) of this paragraph, would qualify as a dependent of the taxpayer for such taxable year.

(ii) Under section 152(b)(3)(B) and this subparagraph, it is necessary that the taxpayer both maintain and occupy the household. The taxpayer and his legally adopted child will be considered as occupying the household for the entire taxable year of the taxpayer notwithstanding temporary absences from the household due to special circumstances. A nonpermanent failure to occupy the common abode by reason of illness, education, business, vacation, military service, or a custody agreement under which the legally adopted child is absent for less than six months in the taxable year of the taxpayer shall be considered temporary absence due to special circumstances. The fact that a legally adopted child dies during the year shall not deprive the taxpayer of the deduction if the child lived in the household for the entire part of the year preceding his death. The period during the taxable year preceding the birth of a child shall not prevent such child from qualifying as a dependent under this subparagraph. Moreover, a legally adopted child who actually becomes a member of the taxpayer's household during the taxable year shall not be prevented from being considered a member of such household for the entire taxable year, if the child is required to remain in a hospital for a period following its birth and if such child would otherwise have been a member of the taxpayer's household during such period.

(iii) For purposes of section 152(b)(3)(B) and this subparagraph, any child whose legal adoption by the taxpayer (a citizen or national of the United States) becomes final at any time before the end of the taxable year of the taxpayer shall not be disqualified as a dependent of such taxpayer by reason of his citizenship, nationality, or residence, provided the child lived with the taxpayer and was a member of the taxpayer's household for the entire taxable year in which the legal adoption became final. For example, A, a citizen of the United States who makes his income tax returns on the basis of the calendar year, is employed in Brazil by an agency of the United States Government. In October 1958 he takes into his household C, a resident of Brazil who is not a citizen of the United States, for the purpose of initiating adoption proceedings. C lives with A and is a member of his household for the remainder of 1958 and for the entire calendar year 1959. On July 1, 1959, the adoption proceedings were completed and C became the legally adopted child of A. If C otherwise qualifies as a dependent, he may be claimed as a dependent by A for 1959.

(b)

(1) A payment to a spouse (payee spouse) of alimony or separate maintenance is not treated as a payment by the payor spouse for the support of any dependent. Similarly, the distribution of income of an estate or trust to a divorced or legally separated payee spouse is not treated as a payment by the payor spouse for the support of any dependent. The preceding sentence will not apply, however, to the extent that such a distribution is in satisfaction of the amount or portion of income that, by the terms of a divorce decree, a written separation agreement, or the trust instrument is fixed as payable for the support of the minor children of the payor spouse.

(2) Paragraph (b)(1) of this section applies to taxable years beginning on or after October 13, 2020.

(c)

(1) For purposes of determining the existence of any of the relationships specified in section 152 (a) or (b)(1), a legally adopted child of an individual shall be treated as a child of such individual by blood.

(2) For any taxable year beginning after December 31, 1958, a child who is a member of an individual's household also shall be treated as a child of such individual by blood if the child was placed with the individual by an authorized placement agency for legal adoption pursuant to a formal application filed by the individual with the agency. For purposes of this subparagraph an authorized placement agency is any agency which is authorized by a State, the District of Columbia, a possession of the United States, a foreign country, or a political subdivision of any of the foregoing to place children for adoption. A taxpayer who claims as a dependent a child placed with him for adoption shall attach to his income tax return a statement setting forth the name of the child for whom the dependency deduction is claimed, the name and address of the authorized placement agency, and the date the formal application was filed with the agency.

(3) The application of this paragraph may be illustrated by the following example:

Example. On March 1, 1959, D, a resident of the United States, made formal application to an authorized child placement agency for the placement of E, a resident of the United States, with him for legal adoption. On June 1, 1959, E was placed with D for legal adoption. During the year 1959 E received over one-half of his support from D. D may claim E as a dependent for 1959. Since E was a resident of the United States, his qualification as a dependent is in no way based on the provisions of section 152(b)(3)(B). Therefore, it is immaterial that E was not a member of D's household during the entire taxable year.

(4) For purposes of determining the existence of any of the relationships specified in section 152 (a) or (b)(1), a foster child of an individual (if such foster child satisfies the requirements set forth in paragraph (b) of § 1.152-1 with respect to such individual) shall, for taxable years beginning after December 31, 1969, be treated as a child of such individual by blood. For purposes of this subparagraph, a foster child is a child who is in the care of a person or persons (other than the parents or adopted parents of the child) who care for the child as their own child. Status as a foster child is not dependent upon or affected by the circumstances under which the child became a member of the household.

(d) In the case of a joint return it is not necessary that the prescribed relationship exist between the person claimed as a dependent and the spouse who furnishes the support; it is sufficient if the prescribed relationship exists with respect to either spouse. Thus, a husband and wife making a joint return may claim as a dependent a daughter of the wife's brother (wife's niece) even though the husband is the one

who furnishes the chief support. The relationship of affinity once existing will not terminate by divorce or the death of a spouse. For example, a widower may continue to claim his deceased wife's father (his father-in-law) as a dependent provided he meets the other requirements of section 151.

(e)

(1) In defining a qualifying relative for taxable year 2018, the exemption amount in section 152(d)(1)(B) is $4,150. For taxable years 2019 through 2025, the exemption amount, as adjusted for inflation, is set forth in annual guidance published in the Internal Revenue Bulletin. *See* § 601.601(d)(2) of this chapter.

(2) Paragraph (e)(1) of this section applies to taxable years ending after August 28, 2018.

[T.D. 6500, 25 FR 11402, Nov. 26, 1960, as amended by T.D. 6603, 28 FR 7094, July 11, 1963; T.D. 7051, 35 FR 11020, July 9, 1970; T.D. 7291, 38 FR 33396, Dec. 4, 1973; T.D. 9913, 85 FR 64386, Oct. 13, 2020]

§ 1.152-3 Multiple support agreements.

(a) Section 152(c) provides that a taxpayer shall be treated as having contributed over half of the support of an individual for the calendar year (in cases where two or more taxpayers contributed to the support of such individual) if—

(1) No one person contributed over half of the individual's support,

(2) Each member of the group which collectively contributed more than half of the support of the individual would have been entitled to claim the individual as a dependent but for the fact that he did not contribute more than one-half of such support.

(3) The member of the group claiming the individual as a dependent contributed more than 10 percent of the individual's support, and

(4) Each other person in the group who contributed more than 10 percent of such support furnishes to the taxpayer claiming the dependent a written declaration that such other person will not claim the individual as a dependent for any taxable year beginning in such calendar year.

(b) ***Examples.*** Application of the rule contained in paragraph (a) of this section may be illustrated by the following examples:

Example 1. During the taxable year, brothers A, B, C, and D contributed the entire support of their mother in the following percentages: A, 30 percent; B, 20 percent; C, 29 percent; and D, 21 percent. Any one of the brothers, except for the fact that he did not contribute more than half of her support, would have been entitled to claim his mother as a dependent. Consequently, any one of the brothers could claim a deduction for the exemption of the mother if he obtained a written declaration (as provided in paragraph (a)(4) of this section) from each of the other brothers. Even though A and D together contributed more than one-half the support of the mother, A, if he wished to claim his mother as a dependent, would be required to obtain written declarations from B, C, and D, since each of those three contributed more than 10 percent of the support and, but for the failure to contribute more than half of the mother's support, would have been entitled to claim his mother as a dependent.

Example 2. During the taxable year, E, an individual who resides with his son, S, received his

entire support for that year as follows:

Source	Percentage of total
Social Security	25
N, an unrelated neighbor	11
B, a brother	14
D, a daughter	10
S, a son	40
Total received by E	100

B, D, and S are persons each of whom, but for the fact that none contributed more than half of E's support, could claim E as a dependent for the taxable year. The three together contributed 64 percent of E's support, and, thus, each is a member of the group to be considered for the purpose of section 152(c). B and S are the only members of such group who can meet all the requirements of section 152(c), and either one could claim E as a dependent for his taxable year if he obtained a written declaration (as provided in paragraph (a)(4) of this section) signed by the other, and furnished the other information required by the return with respect to all the contributions to E. Inasmuch as D did not contribute more than 10 percent of E's support, she is not entitled to claim E as a dependent for the taxable year nor is she required to furnish a written declaration with respect to her contributions to E. N contributed over 10 percent of the support of E, but, since he is an unrelated neighbor, he does not qualify as a member of the group for the purpose of the multiple support agreement under section 152(c).

(c)

(1) The member of a group of contributors who claims an individual as a dependent for a taxable year beginning before January 1, 2002, under the multiple support agreement provisions of section 152(c) must attach to the member's income tax return for the year of the deduction a written declaration from each of the other persons who contributed more than 10 percent of the support of such individual and who, but for the failure to contribute more than half of the support of the individual, would have been entitled to claim the individual as a dependent.

(2) The taxpayer claiming an individual as a dependent for a taxable year beginning after December 31, 2001, under the multiple support agreement provisions of section 152(c) must provide with the income tax return for the year of the deduction—

(i) A statement identifying each of the other persons who contributed more than 10 percent of the support of the individual and who, but for the failure to contribute more than half of the support of the individual, would have been entitled to claim the individual as a dependent; and

(ii) A statement indicating that the taxpayer obtained a written declaration from each of the persons described in section 152(c)(2) waiving the right to claim the individual as a dependent.

(3) The taxpayer claiming the individual as a dependent for a taxable year beginning after December 31, 2001, must retain the waiver declarations and should be prepared to furnish the waiver declarations and any other information necessary to substantiate the claim, which may include a statement showing the names of all contributors (whether or not members of the group described in section 152(c)(2)) and the amount contributed by each to the support of the claimed dependent.

[T.D. 6500, 25 FR 11402, Nov. 26, 1960, as amended by T.D. 6603, 28 FR 7094, July 11, 1963; T.D. 8989, 67 FR 20031, Apr. 24, 2002; T.D. 9040, 68 FR 4920, Jan. 31, 2003]

§ 1.152-4 Special rule for a child of divorced or separated parents or parents who live apart.

(a) ***In general.*** A taxpayer may claim a dependency deduction for a child (as defined in section 152(f)(1)) only if the child is the qualifying child of the taxpayer under section 152(c) or the qualifying relative of the taxpayer under section 152(d). Section 152(c)(4)(B) provides that a child who is claimed as a qualifying child by parents who do not file a joint return together is treated as the qualifying child of the parent with whom the child resides for a longer period of time during the taxable year or, if the child resides with both parents for an equal period of time, of the parent with the higher adjusted gross income. However, a child is treated as the qualifying child or qualifying relative of the noncustodial parent if the custodial parent releases a claim to the exemption under section 152(e) and this section.

(b) ***Release of claim by custodial parent*** —

(1) ***In general.*** Under section 152(e)(1), notwithstanding section 152(c)(1)(B), (c)(4), or (d)(1)(C), a child is treated as the qualifying child or qualifying relative of the noncustodial parent (as defined in paragraph (d) of this section) if the requirements of paragraphs (b)(2) and (b)(3) of this section are met.

(2) ***Support, custody, and parental status*** —

(i) ***In general.*** The requirements of this paragraph (b)(2) are met if the parents of the child provide over one-half of the child's support for the calendar year, the child is in the custody of one or both parents for more than one-half of the calendar year, and the parents—

(A) Are divorced or legally separated under a decree of divorce or separate maintenance;

(B) Are separated under a written separation agreement; or

(C) Live apart at all times during the last 6 months of the calendar year whether or not they are or were married.

(ii) ***Multiple support agreement.*** The requirements of this paragraph (b)(2) are not met if over one-half of the support of the child is treated as having been received from a taxpayer under section 152(d)(3).

(3) ***Release of claim to child.*** The requirements of this paragraph (b)(3) are met for a calendar year if—

(i) The custodial parent signs a written declaration that the custodial parent will not claim the child as a dependent for any taxable year beginning in that calendar year and the noncustodial parent attaches the declaration to the noncustodial parent's return for the taxable year; or

(ii) A qualified pre-1985 instrument, as defined in section 152(e)(3)(B), applicable to the taxable year beginning in that calendar year, provides that the noncustodial parent is entitled to the dependency exemption for the child and the noncustodial parent provides at least $600 for the support of the child during the calendar year.

(c) ***Custody.*** A child is in the custody of one or both parents for more than one-half of the calendar year if one or both parents have the right under state law to physical custody of the child for more than one-half of the calendar year.

(d) ***Custodial parent*** —

(1) ***In general.*** The *custodial parent* is the parent with whom the child resides for the greater number of nights during the calendar year, and the *noncustodial parent* is the parent who is not the custodial parent. A child is treated as residing with neither parent if the child is emancipated under state law. For purposes of this section, a child resides with a parent for a night if the child sleeps—

(i) At the residence of that parent (whether or not the parent is present); or

(ii) In the company of the parent, when the child does not sleep at a parent's residence (for example, the parent and child are on vacation together).

(2) ***Night straddling taxable years.*** A night that extends over two taxable years is allocated to the taxable year in which the night begins.

(3) ***Absences.***

(i) Except as provided in paragraph (d)(3)(ii) of this section, for purposes of this paragraph (d), a child who does not reside (within the meaning of paragraph (d)(1) of this section) with a parent for a night is treated as residing with the parent with whom the child would have resided for the night but for the absence.

(ii) A child who does not reside (within the meaning of paragraph (d)(1) of this section) with a parent for a night is treated as not residing with either parent for that night if it cannot be determined with which parent the child would have resided or if the child would not have resided with either parent for the night.

(4) ***Special rule for equal number of nights.*** If a child is in the custody of one or both parents for more than one-half of the calendar year and the child resides with each parent for an equal number of nights during the calendar year, the parent with the higher adjusted gross income for the calendar year is treated as the custodial parent.

(5) ***Exception for a parent who works at night.*** If, in a calendar year, due to a parent's nighttime work schedule, a child resides for a greater number of days but not nights with the parent who works at night, that parent is treated as the custodial parent. On a school day, the child is treated as residing at the primary residence registered with the school.

(e) ***Written declaration*** —

(1) ***Form of declaration*** —

(i) ***In general.*** The written declaration under paragraph (b)(3)(i) of this section must be an unconditional release of the custodial parent's claim to the child as a dependent for the year or years for which the declaration is effective. A declaration is not unconditional if the custodial parent's release of the right to claim the child as a dependent requires the satisfaction of any

condition, including the noncustodial parent's meeting of an obligation such as the payment of support. A written declaration must name the noncustodial parent to whom the exemption is released. A written declaration must specify the year or years for which it is effective. A written declaration that specifies all future years is treated as specifying the first taxable year after the taxable year of execution and all subsequent taxable years.

(ii) ***Form designated by IRS.*** A written declaration may be made on Form 8332, Release/Revocation of Release of Claim to Exemption for Child by Custodial Parent, or successor form designated by the IRS. A written declaration not on the form designated by the IRS must conform to the substance of that form and must be a document executed for the sole purpose of serving as a written declaration under this section. A court order or decree or a separation agreement may not serve as a written declaration.

(2) ***Attachment to return.*** A noncustodial parent must attach a copy of the written declaration to the parent's return for each taxable year in which the child is claimed as a dependent.

(3) ***Revocation of written declaration*** —

(i) ***In general.*** A parent may revoke a written declaration described in paragraph (e)(1) of this section by providing written notice of the revocation to the other parent. The parent revoking the written declaration must make reasonable efforts to provide actual notice to the other parent. The revocation may be effective no earlier than the taxable year that begins in the first calendar year after the calendar year in which the parent revoking the written declaration provides, or makes reasonable efforts to provide, the written notice.

(ii) ***Form of revocation.*** The revocation may be made on Form 8332, Release/Revocation of Release of Claim to Exemption for Child by Custodial Parent, or successor form designated by the IRS whether or not the written declaration was made on a form designated by the IRS. A revocation not on that form must conform to the substance of the form and must be a document executed for the sole purpose of serving as a revocation under this section. The revocation must specify the year or years for which the revocation is effective. A revocation that specifies all future years is treated as specifying the first taxable year after the taxable year the revocation is executed and all subsequent taxable years.

(iii) ***Attachment to return.*** The parent revoking the written declaration must attach a copy of the revocation to the parent's return for each taxable year for which the parent claims a child as a dependent as a result of the revocation. The parent revoking the written declaration must keep a copy of the revocation and evidence of delivery of the notice to the other parent, or of the reasonable efforts to provide actual notice.

(4) ***Ineffective declaration or revocation.*** A written declaration or revocation that fails to satisfy the requirements of this paragraph (e) has no effect.

(5) ***Written declaration executed in a taxable year beginning on or before July 2, 2008.*** A written declaration executed in a taxable year beginning on or before July 2, 2008, that satisfies the requirements for the form of a written declaration in effect at the time the written declaration is executed, will be treated as meeting the requirements of paragraph (e)(1) of this section. Paragraph (e)(3) of this section applies without regard to whether a custodial parent executed the written declaration in a taxable year beginning on or before July 2, 2008.

(f) ***Coordination with other sections.*** If section 152(e) and this section apply, a child is treated as the dependent of both parents for purposes of sections 105(b), 132(h)(2)(B), and 213(d)(5).

(g) ***Examples.*** The provisions of this section are illustrated by the following examples that assume, unless otherwise provided, that each taxpayer's taxable year is the calendar year, one or both of the child's parents provide over one-half of the child's support for the calendar year, one or both parents have the right under state law to physical custody of the child for more than one-half of the calendar year, and the child otherwise meets the requirements of a qualifying child under section 152(c) or a qualifying relative under section 152(d). In addition, in each of the examples, no qualified pre-1985 instrument or multiple support agreement is in effect. The examples are as follows:

Example 1. (i) B and C are the divorced parents of Child. In 2009, Child resides with B for 210 nights and with C for 155 nights. B executes a Form 8332 for 2009 releasing B's right to claim Child as a dependent for that year, which C attaches to C's 2009 return.
(ii) Under paragraph (d) of this section, B is the custodial parent of Child in 2009 because B is the parent with whom Child resides for the greater number of nights in 2009. Because the requirements of paragraphs (b)(2) and (3) of this section are met, C may claim Child as a dependent.

Example 2. The facts are the same as in *Example 1* except that B does not execute a Form 8332 or similar declaration for 2009. Therefore, section 152(e) and this section do not apply. Whether Child is the qualifying child or qualifying relative of B or C is determined under section 152(c) or (d).

Example 3. (i) D and E are the divorced parents of Child. Under a custody decree, Grandmother has the right under state law to physical custody of Child from January 1 to July 31, 2009.
(ii) Because D and E do not have the right under state law to physical custody of Child for over one-half of the 2009 calendar year, under paragraph (c) of this section, Child is not in the custody of one or both parents for over one-half of the calendar year. Therefore, section 152(e) and this section do not apply, and whether Child is the qualifying child or qualifying relative of D, E, or Grandmother is determined under section 152(c) or (d).

Example 4. (i) The facts are the same as in *Example 3,* except that Grandmother has the right to physical custody of Child from January 1 to March 31, 2009, and, as a result, Child resides with Grandmother during this period. D and E jointly have the right to physical custody of Child from April 1 to December 31, 2009. During this period, Child resides with D for 180 nights and with E for 95 nights. D executes a Form 8332 for 2009 releasing D's right to claim Child as a dependent for that year, which E attaches to E's 2009 return.
(ii) Under paragraph (c) of this section, Child is in the custody of D and E for over one-half of the calendar year, because D and E have the right under state law to physical custody of Child for over one-half of the calendar year.

(iii) Under paragraph (d)(3)(ii) of this section, the nights that Child resides with Grandmother are not allocated to either parent. Child resides with D for a greater number of nights than with E during the calendar year and, under paragraph (d)(1) of this section, D is the custodial parent.

(iv) Because the requirements of paragraphs (b)(2) and (3) of this section are met, section 152(e) and this section apply, and E may claim Child as a dependent.

Example 5. (i) The facts are the same as in *Example 4,* except that D is away on military service from April 10 to June 15, 2009, and September 6 to October 20, 2009. During these periods Child resides with Grandmother in Grandmother's residence. Child would have resided with D if D had not been away on military service. Grandmother claims Child as a dependent on Grandmother's 2009 return.
(ii) Under paragraph (d)(3)(i) of this section, Child is treated as residing with D for the nights that D is away on military service. Because the requirements of paragraphs (b)(2) and (3) of this section are met, section 152(e) and this section apply, and E, not Grandmother, may claim Child as a dependent.

Example 6. F and G are the divorced parents of Child. In May of 2009, Child turns age 18 and is emancipated under the law of the state where Child resides. Therefore, in 2009 and later years, F and G do not have the right under state law to physical custody of Child for over one-half of the calendar year, and Child is not in the custody of F and G for over one-half of the calendar year. Section 152(e) and this section do not apply, and whether Child is the qualifying child or qualifying relative of F or G is determined under section 152(c) or (d).

Example 7. (i) The facts are the same as in *Example 6,* except that Child turns age 18 and is emancipated under state law on August 1, 2009, resides with F from January 1, 2009, through May 31, 2009, and resides with G from June 1, 2009, through December 31, 2009. F executes a Form 8332 releasing F's right to claim Child as a dependent for 2009, which G attaches to G's 2009 return.
(ii) Under paragraph (c) of this section, Child is in the custody of F and G for over one-half of the calendar year.

(iii) Under paragraph (d)(1) of this section, Child is treated as not residing with either parent after Child's emancipation. Therefore, Child resides with F for 151 nights and with G for 61 nights. Because the requirements of paragraphs (b)(2) and (3) of this section are met, section 152(e) and this section apply, and G may claim Child as a dependent.

Example 8. H and J are the divorced parents of Child. Child generally resides with H during the week and with J every other weekend. Child resides with J in H's residence for 10 consecutive nights while H is hospitalized. Under paragraph (d)(1)(i) of this section, Child resides with H for the 10 nights.

Example 9. K and L, who are separated under a written separation agreement, are the parents of Child. In August 2009, K and Child spend 10 nights together in a hotel while on vacation. Under paragraph (d)(1)(ii) of this section, Child resides with K for the 10 nights that K and Child are on vacation.

Example 10. M and N are the divorced parents of Child. On December 31, 2009, Child attends a party at M's residence. After midnight on January 1, 2010, Child travels to N's residence, where Child sleeps. Under paragraph (d)(1) of this section, Child resides with N for the night of December 31, 2009, to January 1, 2010, because Child sleeps at N's residence that night. However, under paragraph (d)(2) of this section, the night of December 31, 2009, to January 1, 2010, is allocated to taxable year 2009 for purposes of determining whether Child resides with M or N for a greater number of nights in 2009.

Example 11. O and P, who never married, are the parents of Child. In 2009, Child spends alternate weeks residing with O and P. During a week that Child is residing with O, O gives Child permission to spend a night at the home of a friend. Under paragraph (d)(3)(i) of this section, the night Child spends at the friend's home is treated as a night that Child resides with O.

Example 12. The facts are the same as in *Example 11,* except that Child also resides at summer camp for 6 weeks. Because Child resides with each parent for alternate weeks, Child would have resided with O for 3 weeks and with P for 3 weeks of the period that Child is at camp. Under paragraph (d)(3)(i) of this section, Child is treated as residing with O for 3 weeks and with P for 3 weeks.

Example 13. The facts are the same as in *Example 12,* except that Child does not spend alternate weeks residing with O and P, and it cannot be determined whether Child would have resided with O or P for the period that Child is at camp. Under paragraph (d)(3)(ii) of this section, Child is treated as residing with neither parent for the 6 weeks.

> *Example 14.* (i) Q and R are the divorced parents of Child. Q works from 11 PM to 7 AM Sunday through Thursday nights. Because of Q's nighttime work schedule, Child resides with R Sunday through Thursday nights and with Q Friday and Saturday nights. Therefore, in 2009, Child resides with R for 261 nights and with Q for 104 nights. Child spends all daytime hours when Child is not in school with Q and Q's address is registered with Child's school as Child's primary residence. Q executes a Form 8332 for 2009 releasing Q's right to claim Child as a dependent for that year, which R attaches to R's 2009 return.
> (ii) Under paragraph (d) of this section, Q is the custodial parent of Child in 2009. Child resides with R for a greater number of nights than with Q due to Q's nighttime work schedule, and Child spends a greater number of days with Q. Therefore, paragraph (d)(5) of this section applies rather than paragraph (d)(1) of this section. Because the requirements of paragraphs (b)(2) and (3) of this section are met, R may claim Child as a dependent.

> *Example 15.* (i) In 2009, S and T, the parents of Child, execute a written separation agreement. The agreement provides that Child will live with S and that T will make monthly child support payments to S. In 2009, Child resides with S for 335 nights and with T for 30 nights. S executes a letter declaring that S will not claim Child as a dependent in 2009 and in subsequent alternate years. The letter contains all the information requested on Form 8332, does not require the satisfaction of any condition such as T's payment of support, and has no

purpose other than to serve as a written declaration under section 152(e) and this section. T attaches the letter to T's return for 2009 and 2011.
(ii) In 2010, T fails to provide support for Child, and S executes a Form 8332 revoking the release of S's right to claim Child as a dependent for 2011. S delivers a copy of the Form 8332 to T, attaches a copy of the Form 8332 to S's tax return for 2011, and keeps a copy of the Form 8332 and evidence of delivery of the written notice to T.

(iii) T may claim Child as a dependent for 2009 because S releases the right to claim Child as a dependent under paragraph (b)(3) of this section by executing the letter, which conforms to the requirements of paragraph (e)(1) of this section, and T attaches the letter to T's return in accordance with paragraph (e)(2) of this section. In 2010, S revokes the release of the claim in accordance with paragraph (e)(3) of this section, and the revocation takes effect in 2011, the taxable year that begins in the first calendar year after S provides written notice of the revocation to T. Therefore, in 2011, section 152(e) and this section do not apply, and whether Child is the qualifying child or qualifying relative of S or T is determined under section 152(c) or (d).

Example 16. The facts are the same as *Example 15,* except that the letter expressly states that S releases the right to claim Child as a dependent only if T is current in the payment of support for Child at the end of the calendar year. The letter does not qualify as a written declaration under paragraph (b)(3) of this section because S's agreement not to claim Child as a dependent is conditioned on T's payment of support and, under paragraph (e)(1)(i) of this section, a written declaration must be unconditional. Therefore, section 152(e) and this section do not apply, and whether Child is the qualifying child or qualifying relative of S or T for 2009 as well as 2011 is determined under section 152(c) or (d).

Example 17. (i) U and V are the divorced parents of Child. Child resides with U for more nights than with V in 2009 through 2011. In 2009, U provides a written statement to V declaring that U will not claim Child as a dependent, but the statement does not specify the year or years it is effective. V attaches the statement to V's returns for 2009 through 2011.
(ii) Because the written statement does not specify a year or years, under paragraph (e)(1) of this section, it is not a written declaration that conforms to the substance of Form 8332. Under paragraph (e)(4) of this section, the statement has no effect. Section 152(e) and this section do not apply, and whether Child is the qualifying child or qualifying relative of U or V is determined under section 152(c) or (d).

Example 18. (i) W and X are the divorced parents of Child. In 2009, Child resides solely with W. The divorce decree requires X to pay child support to W and requires W to execute a Form 8332 releasing W's right to claim Child as a dependent. W fails to sign a Form 8332 for 2009, and X attaches an unsigned Form 8332 to X's return for 2009.

(ii) The order in the divorce decree requiring W to execute a Form 8332 is ineffective to allocate the right to claim Child as a dependent to X. Furthermore, under paragraph (e)(1) of this section, the unsigned Form 8332 does not conform to the substance of Form 8332, and under paragraph (e)(4) of this section, the Form 8332 has no effect. Therefore, section 152(e) and this section do not apply, and whether Child is the qualifying child or qualifying relative of W or X is determined under section 152(c) or (d).

(iii) If, however, W executes a Form 8332 for 2009, and X attaches the Form 8332 to X's return, then X may claim Child as a dependent in 2009.

Example 19. (i) Y and Z are the divorced parents of Child. In 2003, Y and Z enter into a separation agreement, which is incorporated into a divorce decree, under which Y, the custodial parent, releases Y's right to claim Child as a dependent for all future years. The separation agreement satisfies the requirements for the form of a written declaration in effect at the time it is executed. Z attaches a copy of the separation agreement to Z's returns for 2003 through 2009.
(ii) Under paragraph (e)(1)(ii) of this section, a separation agreement may not serve as a written declaration. However, under paragraph (e)(5) of this section, a written declaration executed in a taxable year beginning on or before July 2, 2008, that satisfies the requirements for the form of a written declaration in effect at the time the written declaration is executed, will be treated as meeting the requirements of paragraph (e)(1) of this section. Therefore, the separation agreement may serve as the written declaration required by paragraph (b)(3)(i) of this section for 2009, and Z may claim Child as a dependent in 2009 and later years.

Example 20. (i) The facts are the same as in *Example 19,* except that in 2009 Y executes a Form 8332 revoking the release of Y's right to claim Child as a dependent for 2010. Y complies with all the requirements of paragraph (e)(3) of this section.
(ii) Although Y executes the separation agreement releasing Y's right to claim Child as a dependent in a taxable year beginning on or before July 2, 2008, under paragraph (e)(5) of this section, Y's execution of the Form 8332 in 2009 is effective to revoke the release. Therefore, section 152(e) and this section do not apply in 2010, and whether Child is the qualifying child or qualifying relative of Y or Z is determined under section 152(c) or (d).

(h) ***Effective/applicability date.*** This section applies to taxable years beginning after July 2, 2008.

[T.D. 9408, 73 FR 37801, July 2, 2008]

§ 1.153-1 Determination of marital status.

For the purpose of determining the right of an individual to claim an exemption for his spouse under section 151(b), the determination of whether such individual is married shall be made as of the close of his taxable year, unless his spouse dies during such year, in which case the determination shall be made as of the time of such death. An individual legally separated from his spouse under a decree of divorce or separate maintenance shall not be considered as married. The provisions of this section may be illustrated by the following examples:

Example 1. A, who files his returns on the basis of a calendar year, married B on December 31, 1956. B, who had never previously married, had no gross income for the calendar year 1956 nor was she the dependent of another taxpayer for such year. A may claim an exemption for B for 1956.

Example 2. C and his wife, D, were married in 1940. They remained married until July 1956 at which time D was granted a decree of divorce. C, who files his income tax returns on a calendar year basis, cannot claim an exemption for D on his 1956 return as C and D were not married on the last day of C's taxable year. Had D died instead of being divorced, C could have claimed an exemption for D for 1956 as their marital status would have been determined as of the date of D's death.

§ 1.154 Statutory provisions; cross references.

> SEC. 154. *Cross references.* (1) For definitions of “husband” and “wife”, as used in section 152(b)(4), see section 7701(a)(17).
>
> (2) For deductions of estates and trusts, in lieu of the exemptions under section 151, see section 642(b).
>
> (3) For exemptions of nonresident aliens, see section 873(b)(3).
>
> (4) For exemptions of citizens deriving income mainly from sources within possessions of the United States, see section 931(e).

(Sec. 154 as amended by sec. 103(c)(2), Foreign Investors Tax Act 1966 (80 Stat. 1551))

[T.D. 6500, 25 FR 11402, Nov. 26, 1960; 25 FR 14021, Dec. 21, 1960, as amended by T.D. 7332, 39 FR 44216, Dec. 23, 1974]

ITEMIZED DEDUCTIONS FOR INDIVIDUALS AND CORPORATIONS

§ 1.161-1 Allowance of deductions.

Section 161 provides for the allowance as deductions, in computing taxable income under section 63(a), of the items specified in Part VI (section 161 and following), Subchapter B, Chapter 1 of the Code, subject to the exceptions provided in Part IX (section 261 and following), of such Subchapter B, relating to items not deductible. Double deductions are not permitted. Amounts deducted under one provision of the Internal Revenue Code of 1954 cannot again be deducted under any other provision thereof. See also section 7852(c), relating to the taking into account, both in computing a tax under Subtitle A of the Internal Revenue Code of 1954 and a tax under Chapter 1 or 2 of the Internal Revenue Code of 1939, of the same item of deduction.

§ 1.162-1 Business expenses.

(a) ***In general.*** Business expenses deductible from gross income include the ordinary and necessary expenditures directly connected with or pertaining to the taxpayer's trade or business, except items which are used as the basis for a deduction or a credit under provisions of law other than section 162. The cost of goods purchased for resale, with proper adjustment for opening and closing inventories, is deducted from gross sales in computing gross income. See paragraph (a) of § 1.161-3. Among the items included in business expenses are management expenses, commissions (but see section 263 and the regulations thereunder), labor, supplies, incidental repairs, operating expenses of automobiles used in the trade or business, traveling expenses while away from home solely in the pursuit of a trade or business (see § 1.162-2), advertising and other selling expenses, together with insurance premiums against fire, storm, theft, accident, or other similar losses in the case of a business, and rental for the use of business property. No such item shall be included in business expenses, however, to the extent that it is used by the taxpayer in computing the cost of property included in its inventory or used in determining the gain or loss basis of its plant, equipment, or other property. See section 1054 and the regulations thereunder. A deduction for an expense paid or incurred after December 30, 1969, which would otherwise be allowable under section 162 shall not be denied on the grounds that allowance of such deduction would frustrate a sharply defined public policy. See section 162(c), (f), and (g) and the regulations thereunder. The full amount of the allowable deduction for ordinary and necessary expenses in carrying on a business is deductible, even though such expenses exceed the gross income derived during the taxable year from such business. In the case of any sports program to which section 114 (relating to sports programs conducted for the American National Red Cross) applies, expenses described in section 114(a)(2) shall be allowable as deductions under section 162(a) only to the extent that such expenses exceed the amount excluded from gross income under section 114(a).

(b) ***Cross references.***

(1) For charitable contributions by individuals and corporations not deductible under section 162, see § 1.162-15.

(2) For items not deductible, see sections 261-276, inclusive, and the regulations thereunder.

(3) For research and experimental expenditures, see section 174 and regulations thereunder.

(4) For soil and water conservation expenditures, see section 175 and regulations thereunder.

(5) For expenditures attributable to grant or loan by United States for encouragement of exploration for, or development or mining of, critical and strategic minerals or metals, see section 621 and regulations thereunder.

(6) For treatment of certain rental payments with respect to public utility property, see section 167(1) and § 1.167(1)-3.

(7) For limitations on the deductibility of miscellaneous itemized deductions, see section 67 and §§ 1.67-1T through 1.67-4T.

(8) For the timing of deductions with respect to notional principal contracts. see § 1.446-3.

[T.D. 6500, 25 FR 11402, Nov. 26, 1960, as amended by T.D. 6690, 28 FR 12253, Nov. 19, 1963; T.D. 6996, 34 FR 835, Jan. 18, 1969; T.D. 7315, 39 FR 20203, June 7, 1974; T.D. 7345, 40 FR 7437, Feb. 20, 1975; T.D. 8189, 53 FR 9881, Mar. 28, 1988; T.D. 8491, 58 FR 53128, Oct. 14, 1993]

§ 1.162-2 Traveling expenses.

(a) Traveling expenses include travel fares, meals and lodging, and expenses incident to travel such as expenses for sample rooms, telephone and telegraph, public stenographers, etc. Only such traveling expenses as are reasonable and necessary in the conduct of the taxpayer's business and directly attributable to it may be deducted. If the trip is undertaken for other than business purposes, the travel fares and expenses incident to travel are personal expenses and the meals and lodging are living expenses. If the trip is solely on business, the reasonable and necessary traveling expenses, including travel fares, meals and lodging, and expenses incident to travel, are business expenses. For the allowance of traveling expenses as deductions in determining adjusted gross income, see section 62(2)(B) and the regulations thereunder.

(b)

(1) If a taxpayer travels to a destination and while at such destination engages in both business and personal activities, traveling expenses to and from such destination are deductible only if the trip is related primarily to the taxpayer's trade or business. If the trip is primarily personal in nature, the traveling expenses to and from the destination are not deductible even though the taxpayer engages in business activities while at such destination. However, expenses while at the destination which are properly allocable to the taxpayer's trade or business are deductible even though the traveling expenses to and from the destination are not deductible.

(2) Whether a trip is related primarily to the taxpayer's trade or business or is primarily personal in nature depends on the facts and circumstances in each case. The amount of time during the period of the trip which is spent on personal activity compared to the amount of time spent on activities directly relating to the taxpayer's trade or business is an important factor in determining whether the trip is primarily personal. If, for example, a taxpayer spends one week while at a destination on activities which are directly related to his trade or business and subsequently spends an additional five weeks for vacation or other personal activities, the trip will be considered primarily personal in nature in the absence of a clear showing to the contrary.

(c) Where a taxpayer's wife accompanies him on a business trip, expenses attributable to her travel are not deductible unless it can be adequately shown that the wife's presence on the trip has a bona fide business purpose. The wife's performance of some incidental service does not cause her expenses to qualify as deductible business expenses. The same rules apply to any other members of the taxpayer's family who accompany him on such a trip.

(d) Expenses paid or incurred by a taxpayer in attending a convention or other meeting may constitute an ordinary and necessary business expense under section 162 depending upon the facts and circumstances of each case. No distinction will be made between self-employed persons and employees. The fact that an employee uses vacation or leave time or that his attendance at the convention is voluntary will not necessarily prohibit the allowance of the deduction. The allowance of deductions for such expenses will depend upon whether there is a sufficient relationship between the taxpayer's trade of business and his attendance at the convention or other meeting so that he is benefiting or advancing the interests of his trade or business by such attendance. If the convention is for political, social or other purposes unrelated to the taxpayer's trade or business, the expenses are not deductible.

(e) Commuters' fares are not considered as business expenses and are not deductible.

(f) For rules with respect to the reporting and substantiation of traveling and other business expenses of employees for taxable years beginning after December 31, 1957, see § 1.162-17.

§ 1.162-3 Materials and supplies.

(a) *In general* —

(1) ***Non-incidental materials and supplies.*** Except as provided in paragraphs (d), (e), and (f) of this section, amounts paid to acquire or produce materials and supplies (as defined in paragraph (c) of this section) are deductible in the taxable year in which the materials and supplies are first used in the taxpayer's operations or are consumed in the taxpayer's operations.

(2) ***Incidental materials and supplies.*** Amounts paid to acquire or produce incidental materials and supplies (as defined in paragraph (c) of this section) that are carried on hand and for which no record of consumption is kept or of which physical inventories at the beginning and end of the taxable year are not taken, are deductible in the taxable year in which these amounts are paid, provided taxable income is clearly reflected.

(3) ***Use or consumption of rotable and temporary spare parts.*** Except as provided in paragraphs (d), (e), and (f) of this section, for purposes of paragraph (a)(1) of this section, rotable and temporary spare parts (defined under paragraph (c)(2) of this section) are first used in the taxpayer's operations or are consumed in the taxpayer's operations in the taxable year in which the taxpayer disposes of the parts.

(b) ***Coordination with other provisions of the Internal Revenue Code.*** Nothing in this section changes the treatment of any amount that is specifically provided for under any provision of the Internal Revenue Code (Code) or regulations other than section 162(a) or section 212 and the regulations under those sections. For example, see § 1.263(a)-3, which requires taxpayers to capitalize amounts paid to improve tangible property and section 263A and the regulations under section 263A, which require taxpayers to capitalize the direct and allocable indirect costs, including the cost of materials and supplies, of property produced by the taxpayer and property acquired for resale. See also § 1.471-1, which requires taxpayers to include in inventory certain materials and supplies.

(c) *Definitions* —

(1) ***Materials and supplies.*** For purposes of this section, *materials and supplies* means tangible property that is used or consumed in the taxpayer's operations that is not inventory and that—

(i) Is a component acquired to maintain, repair, or improve a unit of tangible property (as determined under § 1.263(a)-3(e)) owned, leased, or serviced by the taxpayer and that is not acquired as part of any single unit of tangible property;

(ii) Consists of fuel, lubricants, water, and similar items, reasonably expected to be consumed in 12 months or less, beginning when used in the taxpayer's operations;

(iii) Is a unit of property as determined under § 1.263(a)-3(e) that has an economic useful life of 12 months or less, beginning when the property is used or consumed in the taxpayer's operations;

(iv) Is a unit of property as determined under § 1.263(a)-3(e) that has an acquisition cost or production cost (as determined under section 263A) of $200 or less (or other amount as identified in published guidance in the FEDERAL REGISTER or in the Internal Revenue Bulletin (see § 601.601(d)(2)(ii)(*b*) of this chapter); or

(v) Is identified in published guidance in the FEDERAL REGISTER or in the Internal Revenue Bulletin (see § 601.601(d)(2)(ii)(*b*) of this chapter) as materials and supplies for which treatment is permitted under this section.

(2) ***Rotable and temporary spare parts.*** For purposes of this section, rotable spare parts are materials and supplies under paragraph (c)(1)(i) of this section that are acquired for installation on a unit of property, removable from that unit of property, generally repaired or improved, and either reinstalled on the same or other property or stored for later installation. Temporary spare parts are materials and supplies under paragraph (c)(1)(i) of this section that are used temporarily until a new or repaired part can be installed and then are removed and stored for later installation.

(3) ***Standby emergency spare parts.*** Standby emergency spare parts are materials and supplies under paragraph (c)(1)(i) of this section that are—

(i) Acquired when particular machinery or equipment is acquired (or later acquired and set aside for use in particular machinery or equipment);

(ii) Set aside for use as replacements to avoid substantial operational time loss caused by emergencies due to particular machinery or equipment failure;

(iii) Located at or near the site of the installed related machinery or equipment so as to be readily available when needed;

(iv) Directly related to the particular machinery or piece of equipment they serve;

(v) Normally expensive;

(vi) Only available on special order and not readily available from a vendor or manufacturer;

(vii) Not subject to normal periodic replacement;

(viii) Not interchangeable in other machines or equipment;

(ix) [Reserved]

(x) Not acquired in quantity (generally only one is on hand for each piece of machinery or equipment); and

(xi) Not repaired and reused.

(4) ***Economic useful life*** —

(i) ***General rule.*** The economic useful life of a unit of property is not necessarily the useful life inherent in the property but is the period over which the property may reasonably be expected to be useful to the taxpayer or, if the taxpayer is engaged in a trade or business or an activity for the production of income, the period over which the property may reasonably be expected to be useful to the taxpayer in its trade or business or for the production of income, as applicable. The factors that must be considered in determining this period are provided under § 1.167(a)-1(b).

(ii) ***Taxpayers with an applicable financial statement.*** For taxpayers with an applicable financial statement (as defined in paragraph (c)(4)(iii) of this section), the economic useful life of a unit of property, solely for the purposes of applying the provisions of this paragraph (c), is the useful life initially used by the taxpayer for purposes of determining depreciation in its applicable financial statement, regardless of any salvage value of the property. If a taxpayer does not have an applicable financial statement for the taxable year in which a unit of property was originally acquired or produced, the economic useful life of the unit of property must be determined under paragraph (c)(4)(i) of this section. Further, if a taxpayer treats amounts paid for a unit of property as an expense in its applicable financial statement on a basis other than the useful life

of the property or if a taxpayer does not depreciate the unit of property on its applicable financial statement, the economic useful life of the unit of property must be determined under paragraph (c)(4)(i) of this section. For example, if a taxpayer has a policy of treating as an expense on its applicable financial statement amounts paid for a unit of property costing less than a certain dollar amount, notwithstanding that the unit of property has a useful life of more than one year, the economic useful life of the unit of property must be determined under paragraph (c)(4)(i) of this section.

(iii) ***Definition of applicable financial statement.*** The taxpayer's applicable financial statement is the taxpayer's financial statement listed in paragraphs (c)(4)(iii)(A) through (C) of this section that has the highest priority (including within paragraph (c)(4)(iii)(B) of this section). The financial statements are, in descending priority—

(A) A financial statement required to be filed with the Securities and Exchange Commission (SEC) (the 10-K or the Annual Statement to Shareholders);

(B) A certified audited financial statement that is accompanied by the report of an independent certified public accountant (or in the case of a foreign entity, by the report of a similarly qualified independent professional), that is used for—

(*1*) Credit purposes;

(*2*) Reporting to shareholders, partners, or similar persons; or

(*3*) Any other substantial non-tax purpose; or

(C) A financial statement (other than a tax return) required to be provided to the federal or a state government or any federal or state agency (other than the SEC or the Internal Revenue Service).

(5) ***Amount paid.*** For purposes of this section, in the case of a taxpayer using an accrual method of accounting, the terms *amount paid* and *payment* mean a liability incurred (within the meaning of § 1.446-1(c)(1)(ii)). A liability may not be taken into account under this section prior to the taxable year during which the liability is incurred.

(6) ***Produce.*** For purposes of this section, *produce* means construct, build, install, manufacture, develop, create, raise, or grow. This definition is intended to have the same meaning as the definition used for purposes of section 263A(g)(1) and § 1.263A-2(a)(1)(i), except that improvements are excluded from the definition in this paragraph (c)(6) and are separately defined and addressed in § 1.263(a)-3. Amounts paid to produce materials and supplies are subject to section 263A.

(d) ***Election to capitalize and depreciate certain materials and supplies*** —

(1) ***In general.*** A taxpayer may elect to treat as a capital expenditure and to treat as an asset subject to the allowance for depreciation the cost of any rotable spare part, temporary spare part, or standby emergency spare part as defined in paragraph (c)(2) or (c)(3) of this section. Except as specified in paragraph (d)(2) of this section, an election made under this paragraph (d) applies to amounts paid during the taxable year to acquire or produce any rotable, temporary, or standby emergency spare part to which paragraph (a) of this section would apply (but for the election under this paragraph (d)). Any property for which this election is made shall not be treated as a material or a supply.

(2) ***Exceptions.*** A taxpayer may not elect to capitalize and depreciate under this paragraph (d) any amount paid to acquire or produce a rotable, temporary, or standby emergency spare part defined in paragraph (c)(2) or (c)(3) of this section if—

(i) The rotable, temporary, or standby emergency spare part is intended to be used as a component of a unit of property under paragraph (c)(1)(iii), (iv), or (v) of this section;

(ii) The rotable, temporary, or standby emergency spare part is intended to be used as a component of a property described in paragraph (c)(1)(i) and the taxpayer cannot or has not elected to capitalize and depreciate that property under this paragraph (d); or

(iii) The amount is paid to acquire or produce a rotable or temporary spare part and the taxpayer uses the optional method of accounting for rotable and temporary spare parts under paragraph (e) to of this section.

(3) ***Manner of electing.*** A taxpayer makes the election under this paragraph (d) by capitalizing the amounts paid to acquire or produce a rotable, temporary, or standby emergency spare part in the taxable year the amounts are paid and by beginning to depreciate the costs when the asset is placed in service by the taxpayer for purposes of determining depreciation under the applicable provisions of the Internal Revenue Code and the Treasury Regulations. Section 1.263(a)-2 provides for the treatment of amounts paid to acquire or produce real or personal tangible property. A taxpayer must make the election under this paragraph (d) in its timely filed original Federal tax return (including extensions) for the taxable year the asset is placed in service by the taxpayer for purposes of determining depreciation. Sections 301.9100-1 through 301.9100-3 of this chapter provide the rules governing extensions of the time to make regulatory elections. In the case of an S corporation or a partnership, the election is made by the S corporation or partnership, and not by the shareholders or partners. A taxpayer may make an election for each rotable, temporary, or standby emergency spare part that qualifies for the election under this paragraph (d). This election does not apply to an asset or a portion thereof placed in service and disposed of in the same taxable year. A taxpayer may revoke an election made under this paragraph (d) or made under § 1.162-3T(d), as contained in 26 CFR part 1, revised as of April 1, 2013, only by filing a request for a private letter ruling and obtaining the Commissioner's consent to revoke the election. The Commissioner may grant a request to revoke this election if the taxpayer acted reasonably and in good faith and the revocation will not prejudice the interests of the Government. See generally § 301.9100-3 of this chapter. The manner of electing and revoking the election to capitalize under this paragraph (d) or under § 1.162-3T(d), as contained in 26 CFR part 1, revised as of April 1, 2013, may be modified through guidance of general applicability (see §§ 601.601(d)(2) and 601.602 of this chapter). An election may not be made or revoked through the filing of an application for change in accounting method or, before obtaining the Commissioner's consent to make the late election or to revoke the election, by filing an amended Federal tax return.

(e) ***Optional method of accounting for rotable and temporary spare parts*** —

(1) ***In general.*** This paragraph (e) provides an optional method of accounting for rotable and temporary spare parts (the optional method for rotable parts). A taxpayer may use the optional method for rotable parts, instead of the general rule under paragraph (a)(3) of this section, to account for its rotable and temporary spare parts as defined in paragraph (c)(2) of this section. A taxpayer that uses the optional method for rotable parts must use this method for all of its pools of rotable and temporary spare parts used in the same trade or business and for which it uses this method for its books and records. If a taxpayer uses the optional method for rotable parts for pools of rotable and temporary spare parts for which the taxpayer does not use the optional method for its books and

records, then the taxpayer must use the optional method for all its pools in the same trade or business, whether rotable or temporary. The optional method for rotable parts is a method of accounting under section 446(a). Under the optional method for rotable parts, the taxpayer must apply the rules in this paragraph (e) to each rotable or temporary spare part (part) upon the taxpayer's initial installation, removal, repair, maintenance or improvement, reinstallation, and disposal of each part.

(2) ***Description of optional method for rotable parts*** —

(i) ***Initial installation.*** The taxpayer must deduct the amount paid to acquire or produce the part in the taxable year that the part is first installed on a unit of property for use in the taxpayer's operations.

(ii) ***Removal from unit of property.*** In each taxable year in which the part is removed from a unit of property to which it was initially or subsequently installed, the taxpayer must—

(A) Include in gross income the fair market value of the part; and

(B) Include in the basis of the part the fair market value of the part included in income under paragraph (e)(2)(ii)(A) of this section and the amount paid to remove the part from the unit of property.

(iii) ***Repair, maintenance, or improvement of part.*** The taxpayer may not currently deduct and must include in the basis of the part any amounts paid to maintain, repair, or improve the part in the taxable year these amounts are paid.

(iv) ***Reinstallation of part.*** The taxpayer must deduct the amounts paid to reinstall the part and those amounts included in the basis of the part under paragraphs (e)(2)(ii)(B) and (e)(2)(iii) of this section, to the extent that those amounts have not been previously deducted under this paragraph (e)(2)(iv), in the taxable year that the part is reinstalled on a unit of property.

(v) ***Disposal of the part.*** The taxpayer must deduct the amounts included in the basis of the part under paragraphs (e)(2)(ii)(B) and (e)(2)(iii) of this section, to the extent that those amounts have not been previously deducted under paragraph (e)(2)(iv) of this section, in the taxable year in which the part is disposed of by the taxpayer.

(f) ***Application of de minimis safe harbor.*** If a taxpayer elects to apply the de minimis safe harbor under § 1.263(a)-1(f) to amounts paid for the production or acquisition of tangible property, then the taxpayer must apply the de minimis safe harbor to amounts paid for all materials and supplies that meet the requirements of § 1.263(a)-1(f), except for those materials and supplies that the taxpayer elects to capitalize and depreciate under paragraph (d) of this section or for which the taxpayer properly uses the optional method of accounting for rotable and temporary spare parts under paragraph (e) of this section. If the taxpayer properly applies the de minimis safe harbor under § 1.263(a)-1(f) to amounts paid for materials and supplies, then these amounts are not treated as amounts paid for materials and supplies under this section. See § 1.263(a)-1(f)(5) for the time and manner of electing the de minimis safe harbor and § 1.263(a)-1(f)(3)(iv) for the treatment of safe harbor amounts.

(g) ***Sale or disposition of materials and supplies.*** Upon sale or other disposition, materials and supplies as defined in this section are not treated as a capital asset under section 1221 or as property used in the trade or business under section 1231. Any asset for which the taxpayer makes the election to capitalize

and depreciate under paragraph (d) of this section shall not be treated as a material or supply, and the recognition and character of the gain or loss for such depreciable asset are determined under other applicable provisions of the Code.

(h) ***Examples.*** The rules of this section are illustrated by the following examples, in which it is assumed, unless otherwise stated, that the property is not an incidental material or supply, that the taxpayer computes its income on a calendar year basis, that the taxpayer does not make the election to apply paragraph (d) of this section, or use the method of accounting described in paragraph (e) of this section, and that the taxpayer has not elected to apply the de minimis safe harbor under § 1.263(a)-1(f). The following examples illustrate only the application of this section and, unless otherwise stated, do not address the treatment under other provisions of the Code (for example, section 263A).

Example 1 Non-rotable components. A owns a fleet of aircraft that it operates in its business. In Year 1, A purchases a stock of spare parts, which it uses to maintain and repair its aircraft. A keeps a record of consumption of these spare parts. In Year 2, A uses the spare parts for the repair and maintenance of one of its aircraft. Assume each aircraft is a unit of property under § 1.263(a)-3(e) and that spare parts are not rotable or temporary spare parts under paragraph (c)(2) of this section. Assume these repair and maintenance activities do not improve the aircraft under § 1.263(a)-3. These parts are materials and supplies under paragraph (c)(1)(i) of this section because they are components acquired and used to maintain and repair A's aircraft. Under paragraph (a)(1) of this section, the amounts that A paid for the spare parts in Year 1 are deductible in Year 2, the taxable year in which the spare parts are first used to repair and maintain the aircraft.

Example 2 Rotable spare parts; disposal method. B operates a fleet of specialized vehicles that it uses in its service business. Assume that each vehicle is a unit of property under § 1.263(a)-3(e). At the time that it acquires a new type of vehicle, B also acquires a substantial number of rotable spare parts that it will keep on hand to quickly replace similar parts in B's vehicles as those parts break down or wear out. These rotable parts are removable from the vehicles and are repaired so that they can be reinstalled on the same or similar vehicles. In Year 1, B acquires several vehicles and a number of rotable spare parts to be used as replacement parts in these vehicles. In Year 2, B repairs several vehicles by using these rotable spare parts to replace worn or damaged parts. In Year 3, B removes these rotable spare parts from its vehicles, repairs the parts, and reinstalls them on other similar vehicles. In Year 5, B can no longer use the rotable parts it acquired in Year 1 and disposes of them as scrap. Assume that B does not improve any of the rotable spare parts under § 1.263(a)-3. Under paragraph (c)(1)(i) of this section, the rotable spare parts acquired in Year 1 are materials and supplies. Under paragraph (a)(3) of this section, rotable spare parts are generally used or consumed in the taxable year in which the taxpayer disposes of the parts. Therefore, under paragraph (a)(1) of this section, the amounts that B paid for the rotable spare parts in Year 1 are deductible in Year 5, the taxable year in which B disposes of the parts.

Example 3 Rotable spare parts; application of optional method of accounting. C operates a fleet of specialized vehicles that it uses in its service business. Assume that each vehicle is a unit of property under § 1.263(a)-3(e). At the time that it acquires a new type of vehicle, C also acquires a substantial number of rotable spare parts that it will keep on hand to replace similar parts in C's vehicles as those parts break down or wear out. These rotable parts are removable from the vehicles and are repaired so that they can be reinstalled on the same or similar vehicles. C uses the optional method of accounting for all its rotable and temporary spare parts under paragraph (e) of this section. In Year 1, C acquires several vehicles and a number of rotable spare parts (the “Year 1 rotable parts”) to be used as replacement parts in these vehicles. In Year 2, C repairs several vehicles and uses the Year 1 rotable parts to replace worn or damaged parts. In Year 3, C pays

amounts to remove these Year 1 rotable parts from its vehicles. In Year 4, C pays amounts to maintain, repair, or improve the Year 1 rotable parts. In Year 5, C pays amounts to reinstall the Year 1 rotable parts on other similar vehicles. In Year 8, C removes the Year 1 rotable parts from these vehicles and stores these parts for possible later use. In Year 9, C disposes of the Year 1 rotable parts. Under paragraph (e) of this section, C must deduct the amounts paid to acquire and install the Year 1 rotable parts in Year 2, the taxable year in which the rotable parts are first installed by C in C's vehicles. In Year 3, when C removes the Year 1 rotable parts from its vehicles, C must include in its gross income the fair market value of each part. Also, in Year 3, C must include in the basis of each Year 1 rotable part the fair market value of the rotable part and the amount paid to remove the rotable part from the vehicle. In Year 4, C must include in the basis of each Year 1 rotable part the amounts paid to maintain, repair, or improve each rotable part. In Year 5, the year that C reinstalls the Year 1 rotable parts (as repaired or improved) in other vehicles, C must deduct the reinstallation costs and the amounts previously included in the basis of each part. In Year 8, the year that C removes the Year 1 rotable parts from the vehicles, C must include in income the fair market value of each rotable part removed. In addition, in Year 8, C must include in the basis of each part the fair market value of that part and the amount paid to remove each rotable part from the vehicle. In Year 9, the year that C disposes of the Year 1 rotable parts, C may deduct the amounts remaining in the basis of each rotable part.

Example 4 Rotable part acquired as part of a single unit of property; not material or supply. D operates a fleet of aircraft. In Year 1, D acquires a new aircraft, which includes two new aircraft engines. The aircraft costs $500,000 and has an economic useful life of more than 12 months, beginning when it is placed in service. In Year 5, after the aircraft is operated for several years in D's business, D removes the engines from the aircraft, repairs or improves the engines, and either reinstalls the engines on a similar aircraft or stores the engines for later reinstallation. Assume the aircraft purchased in Year 1, including its two engines, is a unit of property under § 1.263(a)-3(e). Because the engines were acquired as part of the aircraft, a single unit of property, the engines are not materials or supplies under paragraph (c)(1)(i) of this section nor rotable or temporary spare parts under paragraph (c)(2) of this section. Accordingly, D may not apply the rules of this section to the aircraft engines upon the original acquisition of the aircraft nor after the removal of the engines from the aircraft for use in the same or similar aircraft. Rather, D must apply the rules under §§ 1.263(a)-2 and 1.263(a)-3 to the aircraft, including its engines, to determine the treatment of amounts paid to acquire, produce, or improve the unit of property.

Example 5 Consumable property. E operates a fleet of aircraft that carries freight for its customers. E has several storage tanks on its premises, which hold jet fuel for its aircraft. Assume that once the jet fuel is placed in E's aircraft, the jet fuel is reasonably expected to be consumed within 12 months or less. On December 31, Year 1, E purchases a two-year supply of jet fuel. In Year 2, E uses a portion of the jet fuel purchased on December 31, Year 1, to fuel the aircraft used in its business. The jet fuel that E purchased in Year 1 is a material or supply under paragraph (c)(1)(ii) of this section because it is reasonably expected to be consumed within 12 months or less from the time it is placed in E's aircraft. Under paragraph (a)(1) of this section, E may deduct in Year 2 the amounts paid for the portion of jet fuel used in the operation of E's aircraft in Year 2.

Example 6 Unit of property that costs $200 or less. F operates a business that rents out a variety of small individual items to customers (rental items). F maintains a supply of rental items on hand. In Year 1, F purchases a large quantity of rental items to use in its rental business. Assume that each rental item is a unit of property under § 1.263(a)-3(e) and costs $200 or less. In Year 2, F begins using all the rental items purchased in Year 1 by providing them to customers of its rental business. F does

not sell or exchange these items on established retail markets at any time after the items are used in the rental business. The rental items are materials and supplies under paragraph (c)(1)(iv) of this section. Under paragraph (a)(1) of this section, the amounts that F paid for the rental items in Year 1 are deductible in Year 2, the taxable year in which the rental items are first used in F's business.

Example 7 Unit of property that costs $200 or less. G provides billing services to its customers. In Year 1, G pays amounts to purchase 50 scanners to be used by its employees. Assume each scanner is a unit of property under § 1.263(a)-3(e) and costs less than $200. In Year 1, G's employees begin using 35 of the scanners, and F stores the remaining 15 scanners for use in a later taxable year. The scanners are materials and supplies under paragraph (c)(1)(iv) of this section. Under paragraph (a)(1) of this section, the amounts G paid for 35 of the scanners are deductible in Year 1, the taxable year in which G first uses each of those scanners. The amounts that G paid for each of the remaining 15 scanners are deductible in the taxable year in which each machine is first used in G's business.

Example 8 Materials and supplies that cost less than $200; de minimis safe harbor. Assume the same facts as in *Example 7* except that G's scanners qualify for the de minimis safe harbor under § 1.263(a)-1(f), and G properly elects to apply the de minimis safe harbor under § 1.263(a)-1(f) to amounts paid in Year 1. G must apply the de minimis safe harbor under § 1.263(a)-1(f) to amounts paid for the scanners, rather than treat these amounts as costs of materials and supplies under this section. In accordance with § 1.263(a)-1(f)(3)(iv), G may deduct the amounts paid for all 50 scanners under § 1.162-1 in the taxable year the amounts are paid.

Example 9 Unit of property that costs $200 or less; bulk purchase. H provides consulting services to its customers. In Year 1, H pays $500 to purchase one box of 10 toner cartridges to use as needed for H's printers. Assume each toner cartridge is a unit of property under § 1.263(a)-3(e). In Year 1, H's employees place 8 of the toner cartridges in printers in H's office, and store the remaining 2 cartridges for use in a later taxable year. The toner cartridges are materials and supplies under paragraph (c)(1)(iv) of this section because even though purchased in one box costing more than $200, the allocable cost of each unit of property equals $50. Therefore, under paragraph (a)(1) of this section, the $400 paid by H for 8 of the cartridges is deductible in Year 1, the taxable year in which H first uses each of those cartridges. The amounts paid by H for each of the remaining 2 cartridges ($50 each) are deductible in the taxable year in which each cartridge is first used in H's business.

Example 10 Materials and supplies used in improvements; coordination with § 1.263(a)-3. J owns various machines that are used in its business. Assume that each machine is a unit of property under § 1.263(a)-3(e). In Year 1, J purchases a supply of spare parts for its machines. J acquired the parts to use in the repair or maintenance of the machines under § 1.162-4 or in the improvement of the machines under § 1.263(a)-3. The spare parts are not rotable or temporary spare parts under paragraph (c)(2) of this section. In Year 2, J uses all of these spare parts in an activity that improves a machine under § 1.263(a)-3. Under paragraph (c)(1)(i) of this section, the spare parts purchased by J in Year 1 are materials and supplies. Under paragraph (a)(1) of this section, the amounts paid for the spare parts are otherwise deductible as materials and supplies in Year 2, the taxable year in which J uses those parts. However, because these materials and supplies are used to improve J's machine, J is required to capitalize the amounts paid for those spare parts under § 1.263(a)-3.

Example 11 Cost of producing materials and supplies; coordination with section 263A. K is a manufacturer that produces liquid waste as part of its operations. K determines that its current liquid waste disposal process is inadequate. To remedy the problem, in Year 1, K constructs a leaching pit to provide a draining area for the liquid waste. Assume the leaching pit is a unit of property under §

1.263(a)-3(e) and has an economic useful life of 12 months or less, starting on the date that K begins to use the leaching pit as a draining area. At the end of this period, K's factory will be connected to the local sewer system. In Year 2, K starts using the leaching pit in its operations. The amounts paid to construct the leaching pit (including the direct and allocable indirect costs of property produced under section 263A) are amounts paid for a material or supply under paragraph (c)(1)(iii) of this section. However, the amounts paid to construct the leaching pit may be subject to capitalization under section 263A if these amounts comprise the direct or allocable indirect costs of property produced by K.

Example 12 Costs of acquiring materials and supplies for production of property; coordination with section 263A. In Year 1, L purchases jigs, dies, molds, and patterns for use in the manufacture of L's products. Assume each jig, die, mold, and pattern is a unit of property under § 1.263(a)-3(e). The economic useful life of each jig, die, mold, and pattern is 12 months or less, beginning when each item is used in the manufacturing process. The jigs, dies, molds, and patterns are not components acquired to maintain, repair, or improve any of L's equipment under paragraph (c)(1)(i) of this section. L begins using the jigs, dies, molds and patterns in Year 2 to manufacture its products. These items are materials and supplies under paragraph (c)(1)(iii) of this section. Under paragraph (a)(1) of this section, the amounts paid for the items are otherwise deductible in Year 2, the taxable year in which L first uses those items. However, the amounts paid for these materials and supplies may be subject to capitalization under section 263A if these amounts comprise the direct or allocable indirect costs of property produced by L.

Example 13 Election to capitalize and depreciate. M is in the mining business. M acquires certain temporary spare parts, which it keeps on hand to avoid operational time loss in the event it must make temporary repairs to a unit of property that is subject to depreciation. These parts are not used to improve property under § 1.263(a)-3(d). These temporary spare parts are used until a new or repaired part can be installed and then are removed and stored for later temporary installation. M does not use the optional method of accounting for rotable and temporary spare parts in paragraph (e) of this section for any of its rotable or temporary spare parts. The temporary spare parts are materials and supplies under paragraph (c)(1)(i) of this section. Under paragraphs (a)(1) and (a)(3) of this section, the amounts paid for the temporary spare parts are deductible in the taxable year in which they are disposed of by M. However, because it is unlikely that the temporary spare parts will be disposed of in the near future, M would prefer to treat the amounts paid for the spare parts as capital expenditures subject to depreciation. M may elect under paragraph (d) of this section to treat the cost of each temporary spare part as a capital expenditure and as an asset subject to an allowance for depreciation. M makes this election by capitalizing the amounts paid for each spare part in the taxable year that M acquires the spare parts and by beginning to recover the costs of each part on its timely filed Federal tax return for the taxable year in which the part is placed in service for purposes of determining depreciation under the applicable provisions of the Internal Revenue Code and the Treasury Regulations. See § 1.263(a)-2(g) for the treatment of capital expenditures.

Example 14 Election to apply de minimis safe harbor. (i) N provides consulting services to its customers. In Year 1, N pays amounts to purchase 50 laptop computers. Each laptop computer is a unit of property under § 1.263(a)-3(e), costs $400, and has an economic useful life of more than 12 months. Also in Year 1, N purchases 50 office chairs to be used by its employees. Each office chair is a unit of property that costs $100. N has an applicable

financial statement (as defined in § 1.263(a)-1(f)(4)) and N has a written accounting policy at the beginning Year 1 to expense amounts paid for units of property costing $500 or less. N treats amounts paid for property costing $500 or less as an expense on its applicable financial statement in Year 1.
(ii) The laptop computers are not materials or supplies under paragraph (c) of this section. Therefore, the amounts N pays for the computers must generally be capitalized under § 1.263(a)-2(d) as amounts paid for the acquisition of tangible property. The office chairs are materials and supplies under paragraph (c)(1)(iv) of this section. Thus, under paragraph (a)(1) of this section, the amounts paid for the office chairs are deductible in the taxable year in which they are first used in N's business. However, under paragraph (f) of this section, if N properly elects to apply the de minimis safe harbor under § 1.263(a)-1(f) to amounts paid in Year 1, then N must apply the de minimis safe harbor under § 1.263(a)-1(f) to amounts paid for the computers and the office chairs, rather than treat the office chairs as the costs of materials and supplies under § 1.162-3. Under the de minimis safe harbor, N may not capitalize the amounts paid for the computers under § 1.263(a)-2 nor treat the office chairs as materials and supplies under § 1.162-3. Instead, in accordance with § 1.263(a)-1(f)(3)(iv), under § 1.162-1, N may deduct the amounts paid for the computers and the office chairs in the taxable year paid.

(i) ***Accounting method changes.*** Except as otherwise provided in this section, a change to comply with this section is a change in method of accounting to which the provisions of sections 446 and 481 and the accompanying regulations apply. A taxpayer seeking to change to a method of accounting permitted in this section must secure the consent of the Commissioner in accordance with § 1.446-1(e) and follow the administrative procedures issued under § 1.446-1(e)(3)(ii) for obtaining the Commissioner's consent to change its accounting method.

(j) ***Effective/applicability date*** —

(1) ***In general.*** This section generally applies to amounts paid or incurred in taxable years beginning on or after January 1, 2014. However, a taxpayer may apply paragraph (e) of this section (the optional method of accounting for rotable and temporary spare parts) to taxable years beginning on or after January 1, 2014. Except as provided in paragraphs (j)(2) and (j)(3) of this section, § 1.162-3 as contained in 26 CFR part 1 edition revised as of April 1, 2011, applies to taxable years beginning before January 1, 2014.

(2) ***Early application of this section*** —

(i) ***In general.*** Except for paragraph (e) of this section, a taxpayer may choose to apply this section to amounts paid or incurred in taxable years beginning on or after January 1, 2012. A taxpayer may choose to apply paragraph (e) of this section (the optional method of accounting for rotable and temporary spare parts) to taxable years beginning on or after January 1, 2012.

(ii) ***Transition rule for election to capitalize materials and supplies on 2012 and 2013 returns.*** If under paragraph (j)(2)(i) of this section, a taxpayer chooses to make the election to capitalize and depreciate certain materials and supplies under paragraph (d) of this section for its taxable year beginning on or after January 1, 2012, and ending on or before September 19, 2013 (applicable taxable year), and the taxpayer did not make the election specified in paragraph

(d)(3) of this section on its timely filed original Federal tax return for the applicable taxable year, the taxpayer must make the election specified in paragraph (d)(3) of this section for the applicable taxable year by filing an amended Federal tax return for the applicable taxable year on or before 180 days from the due date including extensions of the taxpayer's Federal tax return for the applicable taxable year, notwithstanding that the taxpayer may not have extended the due date.

(3) ***Optional application of TD 9564.*** Except for § 1.162-3T(e), a taxpayer may choose to apply § 1.162-3T as contained in TD 9564 (76 FR 81060) December 27, 2011, to amounts paid or incurred (to acquire or produce property) in taxable years beginning on or after January 1, 2012, and before January 1, 2014. In applying § 1.162-3T(d)(3), as contained in 26 CFR part 1, revised as of April 1, 2013, a taxpayer makes the election under § 1.162-3T(d) by capitalizing the amounts paid to acquire or produce a material or supply in the taxable year the amounts are paid and by beginning to depreciate the costs when the asset is placed in service by the taxpayer for purposes of determining depreciation under the applicable provisions of the Internal Revenue Code and the Treasury Regulations. The election under § 1.162-3T(d), as contained in 26 CFR part 1, revised as of April 1, 2013, does not apply to an asset or a portion thereof placed in service and disposed of in the same taxable year. A taxpayer may choose to apply § 1.162-3T(e) (the optional method of accounting for rotable and temporary spare parts) as contained in TD 9564 (76 FR 81060) December 27, 2011, to taxable years beginning on or after January 1, 2012, and before January 1, 2014.

[T.D. 9636, 78 FR 57701, Sept. 19, 2013, as amended at 79 FR 42190, July 21, 2014]

§ 1.162-4 Repairs.

(a) ***In general.*** A taxpayer may deduct amounts paid for repairs and maintenance to tangible property if the amounts paid are not otherwise required to be capitalized. Optionally, § 1.263(a)-3(n) provides an election to capitalize amounts paid for repair and maintenance consistent with the taxpayer's books and records.

(b) ***Accounting method changes.*** A change to comply with this section is a change in method of accounting to which the provisions of sections 446 and 481 and the accompanying regulations apply. A taxpayer seeking to change to a method of accounting permitted in this section must secure the consent of the Commissioner in accordance with § 1.446-1(e) and follow the administrative procedures issued under § 1.446-1(e)(3)(ii) for obtaining the Commissioner's consent to change its accounting method.

(c) ***Effective/applicability date*** —

(1) ***In general.*** This section applies to taxable years beginning on or after January 1, 2014. Except as provided in paragraphs (c)(2) and (c)(3) of this section, § 1.162-4 as contained in 26 CFR part 1 edition revised as of April 1, 2011, applies to taxable years beginning before January 1, 2014.

(2) ***Early application of this section.*** A taxpayer may choose to apply this section to taxable years beginning on or after January 1, 2012.

(3) ***Optional application of TD 9564.*** A taxpayer may choose to apply § 1.162-4T as contained in TD 9564 (76 FR 81060), December 27, 2011, to taxable years beginning on or after January 1, 2012, and before January 1, 2014.

[T.D. 9636, 78 FR 57705, Sept. 19, 2013, as amended at 79 FR 42191, July 21, 2014]

§ 1.162-5 Expenses for education.

(a) ***General rule.*** Expenditures made by an individual for education (including research undertaken as part of his educational program) which are not expenditures of a type described in paragraph (b) (2) or (3) of this section are deductible as ordinary and necessary business expenses (even though the education may lead to a degree) if the education—

(1) Maintains or improves skills required by the individual in his employment or other trade or business, or

(2) Meets the express requirements of the individual's employer, or the requirements of applicable law or regulations, imposed as a condition to the retention by the individual of an established employment relationship, status, or rate of compensation.

(b) ***Nondeductible educational expenditures*** —

(1) ***In general.*** Educational expenditures described in subparagraphs (2) and (3) of this paragraph are personal expenditures or constitute an inseparable aggregate of personal and capital expenditures and, therefore, are not deductible as ordinary and necessary business expenses even though the education may maintain or improve skills required by the individual in his employment or other trade or business or may meet the express requirements of the individual's employer or of applicable law or regulations.

(2) ***Minimum educational requirements.***

(i) The first category of nondeductible educational expenses within the scope of subparagraph (1) of this paragraph are expenditures made by an individual for education which is required of him in order to meet the minimum educational requirements for qualification in his employment or other trade or business. The minimum education necessary to qualify for a position or other trade or business must be determined from a consideration of such factors as the requirements of the employer, the applicable law and regulations, and the standards of the profession, trade, or business involved. The fact that an individual is already performing service in an employment status does not establish that he has met the minimum educational requirements for qualification in that employment. Once an individual has met the minimum educational requirements for qualification in his employment or other trade or business (as in effect when he enters the employment or trade or business), he shall be treated as continuing to meet those requirements even though they are changed.

(ii) The minimum educational requirements for qualification of a particular individual in a position in an educational institution is the minimum level of education (in terms of aggregate college hours or degree) which under the applicable laws or regulations, in effect at the time this individual is first employed in such position, is normally required of an individual initially being employed in such a position. If there are no normal requirements as to the minimum level of education required for a position in an educational institution, then an individual in such a position shall be considered to have met the minimum educational requirements for qualification in that position when he becomes a member of the faculty of the educational institution. The determination of whether an individual is a member of the faculty of an educational institution must be made on the basis of the particular practices of the institution. However, an individual will ordinarily be considered to be a member of the faculty of an institution if

(*a*) he has tenure or his years of service are being counted toward obtaining tenure;

(*b*) the institution is making contributions to a retirement plan (other than Social Security or a similar program) in respect of his employment; or

(*c*) he has a vote in faculty affairs.

(iii) The application of this subparagraph may be illustrated by the following examples:

Example 1. General facts:State X requires a bachelor's degree for beginning secondary school teachers which must include 30 credit hours of professional educational courses. In addition, in order to retain his position, a secondary school teacher must complete a fifth year of preparation within 10 years after beginning his employment. If an employing school official certifies to the State Department of Education that applicants having a bachelor's degree and the required courses in professional education cannot be found, he may hire individuals as secondary school teachers if they have completed a minimum of 90 semester hours of college work. However, to be retained in his position, such an individual must obtain his bachelor's degree and complete the required professional educational courses within 3 years after his employment commences. Under these facts, a bachelor's degree, without regard to whether it includes 30 credit hours of professional educational courses, is considered to be the minimum educational requirement for qualification as a secondary school teacher in State X. This is the case notwithstanding the number of teachers who are actually hired without such a degree. The following are examples of the application of these facts in particular situations: *Situation 1.* A, at the time he is employed as a secondary school teacher in State X, has a bachelor's degree including 30 credit hours of professional educational courses. After his employment, A completes a fifth college year of education and, as a result, is issued a standard certificate. The fifth college year of education undertaken by A is not education required to meet the minimum educational requirements for qualification as a secondary school teacher. Accordingly, the expenditures for such education are deductible unless the expenditures are for education which is part of a program of study being pursued by A which will lead to qualifying him in a new trade or business.*Situation 2.* Because of a shortage of applicants meeting the stated requirements, B, who has a bachelor's degree, is employed as a secondary school teacher in State X even though he has only 20 credit hours of professional educational courses. After his employment, B takes an additional 10 credit hours of professional educational courses. Since these courses do not constitute education required to meet the minimum educational requirements for qualification as a secondary school teacher which is a bachelor's degree and will not lead to qualifying B in a new trade or business, the expenditures for such courses are deductible.*Situation 3.* Because of a shortage of applicants meeting the stated requirements, C is employed as a secondary school teacher in State X although he has only 90 semester hours of college work toward his bachelor's degree. After his employment, C undertakes courses leading to a bachelor's degree. These courses (including any courses in professional education) constitute education required to meet the minimum educational requirements for qualification as a secondary school teacher. Accordingly, the expenditures for such education are not deductible.*Situation 4.* Subsequent to the employment of A, B, and C, but before they have completed a fifth college year of education, State X changes its requirements affecting secondary school teachers to provide that beginning teachers must have completed 5 college years of preparation. In the cases of A, B, and C, a fifth college year of education is not considered to be education undertaken to meet the minimum educational requirements for qualifications as a secondary school teacher. Accordingly, expenditures for a fifth year of college will be deductible unless the expenditures are for education which is part of a program being pursued by A, B, or C which will lead to qualifying him in a new trade or business.

Example 2. D, who holds a bachelor's degree, obtains temporary employment as an instructor at University Y and undertakes graduate courses as a candidate for a graduate degree. D may become a faculty member only if he obtains a graduate degree and may continue to hold a position as instructor only so long as he shows satisfactory progress towards obtaining this graduate degree. The graduate courses taken by D constitute education required to meet the minimum educational requirements for qualification in D's trade or business and, thus, the expenditures for such courses are not deductible.

Example 3. E, who has completed 2 years of a normal 3-year law school course leading to a bachelor of laws degree (LL.B.), is hired by a law firm to do legal research and perform other functions on a full-time basis. As a condition to continued employment, E is required to obtain an LL.B. and pass the State bar examination. E completes his law school education by attending night law school, and he takes a bar review course in order to prepare for the State bar examination. The law courses and bar review course constitute education required to meet the minimum educational requirements for qualification in E's trade or business and, thus, the expenditures for such courses are not deductible.

(3) ***Qualification for new trade or business.***

(i) The second category of nondeductible educational expenses within the scope of subparagraph (1) of this paragraph are expenditures made by an individual for education which is part of a program of study being pursued by him which will lead to qualifying him in a new trade or business. In the case of an employee, a change of duties does not constitute a new trade or business if the new duties involve the same general type of work as is involved in the individual's present employment. For this purpose, all teaching and related duties shall be considered to involve the same general type of work. The following are examples of changes in duties which do not constitute new trades or businesses:

(*a*) Elementary to secondary school classroom teacher.

(*b*) Classroom teacher in one subject (such as mathematics) to classroom teacher in another subject (such as science).

(*c*) Classroom teacher to guidance counselor.

(*d*) Classroom teacher to principal.

(ii) The application of this subparagraph to individuals other than teachers may be illustrated by the following examples:

> ***Example 1.*** A, a self-employed individual practicing a profession other than law, for example, engineering, accounting, etc., attends law school at night and after completing his law school studies receives a bachelor of laws degree. The expenditures made by A in attending law school are nondeductible because this course of study qualifies him for a new trade or business.

> ***Example 2.*** Assume the same facts as in example (1) except that A has the status of an employee rather than a self-employed individual, and that his employer requires him to obtain a bachelor of laws degree. A intends to continue practicing his nonlegal profession as an

> employee of such employer. Nevertheless, the expenditures made by A in attending law school are not deductible since this course of study qualifies him for a new trade or business.

> ***Example 3.*** B, a general practitioner of medicine, takes a 2-week course reviewing new developments in several specialized fields of medicine. B's expenses for the course are deductible because the course maintains or improves skills required by him in his trade or business and does not qualify him for a new trade or business.

> ***Example 4.*** C, while engaged in the private practice of psychiatry, undertakes a program of study and training at an accredited psychoanalytic institute which will lead to qualifying him to practice psychoanalysis. C's expenditures for such study and training are deductible because the study and training maintains or improves skills required by him in his trade or business and does not qualify him for a new trade or business.

(c) ***Deductible educational expenditures*** —

(1) ***Maintaining or improving skills.*** The deduction under the category of expenditures for education which maintains or improves skills required by the individual in his employment or other trade or business includes refresher courses or courses dealing with current developments as well as academic or vocational courses provided the expenditures for the courses are not within either category of nondeductible expenditures described in paragraph (b) (2) or (3) of this section.

(2) ***Meeting requirements of employer.*** An individual is considered to have undertaken education in order to meet the express requirements of his employer, or the requirements of applicable law or regulations, imposed as a condition to the retention by the taxpayer of his established employment relationship, status, or rate of compensation only if such requirements are imposed for a bona fide business purpose of the individual's employer. Only the minimum education necessary to the retention by the individual of his established employment relationship, status, or rate of compensation may be considered as undertaken to meet the express requirements of the taxpayer's employer. However, education in excess of such minimum education may qualify as education undertaken in order to maintain or improve the skills required by the taxpayer in his employment or other trade or business (see subparagraph (1) of this paragraph). In no event, however, is a deduction allowable for expenditures for education which, even though for education required by the employer or applicable law or regulations, are within one of the categories of nondeductible expenditures described in paragraph (b) (2) and (3) of this section.

(d) ***Travel as a form of education.*** Subject to the provisions of paragraph (b) and (e) of this section, expenditures for travel (including travel while on sabbatical leave) as a form of education are deductible only to the extent such expenditures are attributable to a period of travel that is directly related to the duties of the individual in his employment or other trade or business. For this purpose, a period of travel shall be considered directly related to the duties of an individual in his employment or other trade or business only if the major portion of the activities during such period is of a nature which directly maintains or improves skills required by the individual in such employment or other trade or business. The approval of a travel program by an employer or the fact that travel is accepted by an employer in the fulfillment of its requirements for retention of rate of compensation, status or employment, is not determinative that the required relationship exists between the travel involved and the duties of the individual in his particular position.

(e) *Travel away from home.*

(1) If an individual travels away from home primarily to obtain education the expenses of which are deductible under this section, his expenditures for travel, meals, and lodging while away from home are deductible. However, if as an incident of such trip the individual engages in some personal activity such as sightseeing, social visiting, or entertaining, or other recreation, the portion of the expenses attributable to such personal activity constitutes nondeductible personal or living expenses and is not allowable as a deduction. If the individual's travel away from home is primarily personal, the individual's expenditures for travel, meals and lodging (other than meals and lodging during the time spent in participating in deductible education pursuits) are not deductible. Whether a particular trip is primarily person or primarily to obtain education the expenses of which are deductible under this section depends upon all the facts and circumstances of each case. An important factor to be taken into consideration in making the determination is the relative amount of time devoted to personal activity as compared with the time devoted to educational pursuits. The rules set forth in this paragraph are subject to the provisions of section 162(a)(2), relating to deductibility of certain traveling expenses, and section 274 (c) and (d), relating to allocation of certain foreign travel expenses and substantiation required, respectively, and the regulations thereunder.

(2) ***Examples.*** The application of this subsection may be illustrated by the following examples:

Example 1. A, a self-employed tax practitioner, decides to take a 1-week course in new developments in taxation, which is offered in City X, 500 miles away from his home. His primary purpose in going to X is to take the course, but he also takes a side trip to City Y (50 miles from X) for 1 day, takes a sightseeing trip while in X, and entertains some personal friends. A's transportation expenses to City X and return to his home are deductible but his transportation expenses to City Y are not deductible. A's expenses for meals and lodging while away from home will be allocated between his educational pursuits and his personal activities. Those expenses which are entirely personal, such as sightseeing and entertaining friends, are not deductible to any extent.

Example 2. The facts are the same as in example (1) except that A's primary purpose in going to City X is to take a vacation. This purpose is indicated by several factors, one of which is the fact that he spends only 1 week attending the tax course and devotes 5 weeks entirely to personal activities. None of A's transportation expenses are deductible and his expenses for meals and lodging while away from home are not deductible to the extent attributable to personal activities. His expenses for meals and lodging allocable to the week attending the tax course are, however, deductible.

Example 3. B, a high school mathematics teacher in New York City, in the summertime travels to a university in California in order to take a mathematics course the expense of which is deductible under this section. B pursues only one-fourth of a full course of study and the remainder of her time is devoted to personal activities the expense of which is not deductible. Absent a showing by B of a substantial nonpersonal reason for taking the course in the university in California, the trip is considered taken primarily for personal reasons and the cost of traveling from New York City to California and return would not be deductible. However, one-fourth of the cost of B's meals and lodging while attending the university in California may be considered properly allocable to deductible educational pursuits and, therefore, is deductible.

[T.D. 6918, 32 FR 6679, May 2, 1967]

§ 1.162-7 Compensation for personal services.

(a) There may be included among the ordinary and necessary expenses paid or incurred in carrying on any trade or business a reasonable allowance for salaries or other compensation for personal services actually rendered. The test of deductibility in the case of compensation payments is whether they are reasonable and are in fact payments purely for services.

(b) The test set forth in paragraph (a) of this section and its practical application may be further stated and illustrated as follows:

(1) Any amount paid in the form of compensation, but not in fact as the purchase price of services, is not deductible. An ostensible salary paid by a corporation may be a distribution of a dividend on stock. This is likely to occur in the case of a corporation having few shareholders, practically all of whom draw salaries. If in such a case the salaries are in excess of those ordinarily paid for similar services and the excessive payments correspond or bear a close relationship to the stockholdings of the officers or employees, it would seem likely that the salaries are not paid wholly for services rendered, but that the excessive payments are a distribution of earnings upon the stock. An ostensible salary may be in part payment for property. This may occur, for example, where a partnership sells out to a corporation, the former partners agreeing to continue in the service of the corporation. In such a case it may be found that the salaries of the former partners are not merely for services, but in part constitute payment for the transfer of their business.

(2) The form or method of fixing compensation is not decisive as to deductibility. While any form of contingent compensation invites scrutiny as a possible distribution of earnings of the enterprise, it does not follow that payments on a contingent basis are to be treated fundamentally on any basis different from that applying to compensation at a flat rate. Generally speaking, if contingent compensation is paid pursuant to a free bargain between the employer and the individual made before the services are rendered, not influenced by any consideration on the part of the employer other than that of securing on fair and advantageous terms the services of the individual, it should be allowed as a deduction even though in the actual working out of the contract it may prove to be greater than the amount which would ordinarily be paid.

(3) In any event the allowance for the compensation paid may not exceed what is reasonable under all the circumstances. It is, in general, just to assume that reasonable and true compensation is only such amount as would ordinarily be paid for like services by like enterprises under like circumstances. The circumstances to be taken into consideration are those existing at the date when the contract for services was made, not those existing at the date when the contract is questioned.

(4) For disallowance of deduction in the case of certain transfers of stock pursuant to employees stock options, see section 421 and the regulations thereunder.

§ 1.162-8 Treatment of excessive compensation.

The income tax liability of the recipient in respect of an amount ostensibly paid to him as compensation, but not allowed to be deducted as such by the payor, will depend upon the circumstances of each case. Thus, in the case of excessive payments by corporations, if such payments correspond or bear a close relationship to stockholdings, and are found to be a distribution of earnings or profits, the excessive payments will be treated as a dividend. If such payments constitute payment for property, they should be treated by the payor as a capital expenditure and by the recipient as part of the purchase price. In the absence of evidence to justify other treatment, excessive payments for salaries or other compensation for personal services will be included in gross income of the recipient.

§ 1.162-9 Bonuses to employees.

Bonuses to employees will constitute allowable deductions from gross income when such payments are made in good faith and as additional compensation for the services actually rendered by the employees, provided such payments, when added to the stipulated salaries, do not exceed a reasonable compensation for the services rendered. It is immaterial whether such bonuses are paid in cash or in kind or partly in cash and partly in kind. Donations made to employees and others, which do not have in them the element of compensation or which are in excess of reasonable compensation for services, are not deductible from gross income.

§ 1.162-10 Certain employee benefits.

(a) ***In general.*** Amounts paid or accrued by a taxpayer on account of injuries received by employees and lump sum amounts paid or accrued as compensation for injuries, are proper deductions as ordinary and necessary expenses. Such deductions are limited to the amount not compensated for by insurance or otherwise. Amounts paid or accrued within the taxable year for dismissal wages, unemployment benefits, guaranteed annual wages, vacations, or a sickness, accident, hospitalization, medical expense, recreational, welfare, or similar benefit plan, are deductible under section 162(a) if they are ordinary and necessary expenses of the trade or business. However, except as provided in paragraph (b) of this section, such amounts shall not be deductible under section 162(a) if, under any circumstances, they may be used to provide benefits under a stock bonus, pension, annuity, profit-sharing, or other deferred compensation plan of the type referred to in section 404(a). In such an event, the extent to which these amounts are deductible from gross income shall be governed by the provisions of section 404 and the regulations issued thereunder.

(b) ***Certain negotiated plans.***

(1) Subject to the limitations set forth in subparagraphs (2) and (3) of this paragraph, contributions paid by an employer under a plan under which such contributions are held in a welfare trust for the purpose of paying (either from principal or income or both) for the benefit of employees, their families, and dependents, at least medical or hospital care, and pensions on retirement or death of employees, are deductible when paid as business expenses under section 162(a).

(2) For the purpose of subparagraph (1) of this paragraph, the word “plan” means any plan established prior to January 1, 1954, as a result of an agreement between employee representatives and the Government of the United States, during a period of Government operation, under seizure powers, of a major part of the productive facilities of the industry in which the employer claiming the deduction is engaged. The phrase “plan established prior to January 1, 1954, as a result of an agreement” is intended primarily to cover a trust established under the terms of such an agreement. It also includes a trust established under a plan of an employer, or group of employers, who, by reason of producing the same commodity, are in competition with the employers whose facilities were seized and who would therefore be expected to establish such a trust as a reasonable measure to maintain a sound position in the labor market producing the commodity. For example, if a trust was established under such an agreement in the bituminous coal industry, a similar trust established in the anthracite coal industry within a reasonable time, but before January 1, 1954, would qualify under subparagraph (1) of this paragraph.

(3) If any trust described in subparagraph (2) of this paragraph becomes qualified for exemption from tax under the provisions of section 501(a), the deductibility of contributions by an employer to such trust on or after any date of such qualification shall no longer be governed by the provisions of section 162, even though the trust may later lose its exemption from tax under section 501(a).

(c) ***Other plans providing deferred compensation.*** For rules relating to the deduction of amounts paid to or under a stock bonus, pension, annuity, or profit-sharing plan or amounts paid or accrued under any other plan deferring the receipt of compensation, see section 404 and the regulations thereunder.

§ 1.162-10T Questions and answers relating to the deduction of employee benefits under the Tax Reform Act of 1984; certain limits on amounts deductible (temporary).

Q-1: How does the amendment of section 404(b) by the Tax Reform Act of 1984 affect the deduction of employee benefits under section 162 of the Internal Revenue Code?

A-1: As amended by the Tax Reform Act of 1984, section 404(b) clarifies that section 404(a) and (d) (in the case of employees and nonemployees, respectively) shall govern the deduction of contributions paid or compensation paid or incurred under a plan, or method or arrangement, deferring the receipt of compensation or providing for deferred benefits. Section 404(a) and (d) requires that such a contribution or compensation be paid or incurred for purposes of section 162 or 212 and satisfy the requirements for deductibility under either of these sections. However, notwithstanding the above, section 404 does not apply to contributions paid or accrued with respect to a "welfare benefit fund" (as defined in section 419(e)) after July 18, 1984, in taxable years of employers (and payors) ending after that date.

Also, section 463 shall govern the deduction of vacation pay by a taxpayer that has elected the application of such section. Section 404(b), as amended, generally applies to contributions paid and compensation paid or incurred after July 18, 1984, in taxable years of employers (and payors) ending after that date. See Q&A-3 of § 1.404(b)-1T. For rules relating to the deduction of contributions attributable to the provision of deferred benefits, see section 404 (a), (b) and (d) and § 1.404(a)-1T, § 1.404(b)-1T and § 1.404(d)-1T. For rules relating to the deduction of contributions paid or accrued with respect to a welfare benefit fund, see section 419, § 1.419-1T and § 1.419A-2T. For rules relating to the deduction of vacation pay for which an election is made under section 463, see § 301.9100-16T of this chapter and § 1.463-1T.

Q-2: How does the enactment of section 419 by the Tax Reform Act of 1984 affect the deduction of employee benefits under section 162?

A-2: As enacted by the Tax Reform Act of 1984, section 419 shall govern the deduction of contributions paid or accrued by an employer (or a person receiving services under section 419(g)) with respect to a "welfare benefit fund" (within the meaning of section 419(e)) after December 31, 1985, in taxable years of the employer (or person receiving the services) ending after that date. Section 419(a) requires that such a contribution be paid or accrued for purposes of section 162 or 212 and satisfy the requirements for deductibility under either of those sections. Generally, subject to a binding contract exception (as described in section 511(e)(5) of the Tax Reform Act of 1984), section 419 shall also govern the deduction of the contribution of a facility (or other contribution used to acquire or improve a facility) to a welfare benefit fund after June 22, 1984. See Q&A-11 of § 1.419-1T. In the case of a welfare benefit fund maintained pursuant to a collective bargaining agreement, section 419 applies to the extent provided under the special effective date rule described in Q&A-2 of § 1.419-1T and the special rules of § 1.419A-2T. For rules relating to the deduction of contributions paid or accrued with respect to a welfare benefit fund, see section 419 and § 1.419-1T.

[T.D. 8073, 51 FR 4319, Feb. 4, 1986, as amended by T.D. 8435, 57 FR 43896, Sept. 23, 1992]

§ 1.162-11 Rentals.

(a) ***Acquisition of a leasehold.*** If a leasehold is acquired for business purposes for a specified sum, the purchaser may take as a deduction in his return an aliquot part of such sum each year, based on the number of years the lease has to run. Taxes paid by a tenant to or for a landlord for business property are additional rent and constitute a deductible item to the tenant and taxable income to the landlord, the amount of the tax being deductible by the latter. For disallowance of deduction for income taxes paid by a lessee corporation pursuant to a lease arrangement with the lessor corporation, see section 110 and the regulations thereunder. See section 178 and the regulations thereunder for rules governing the effect to be given renewal options in amortizing the costs incurred after July 28, 1958 of acquiring a lease. See § 1.197-2 for rules governing the amortization of costs to acquire limited interests in section 197 intangibles.

(b) ***Improvements by lessee on lessor's property*** —

(1) In general. The cost to a taxpayer of erecting buildings or making permanent improvements on property of which the taxpayer is a lessee is a capital expenditure. For the rules regarding improvements to leased property when the improvements are tangible property, see § 1.263(a)-3(f). For the rules regarding depreciation or amortization deductions for leasehold improvements, see § 1.167(a)-4.

(2) ***Effective/applicability date*** —

(i) ***In general.*** This paragraph (b) applies to taxable years beginning on or after January 1, 2014. Except as provided in paragraphs (b)(2)(ii) and (b)(2)(iii) of this section, § 1.162-11(b) as contained in 26 CFR part 1 edition revised as of April 1, 2011, applies to taxable years beginning before January 1, 2014.

(ii) ***Early application of this paragraph.*** A taxpayer may choose to apply this paragraph (b) to taxable years beginning on or after January 1, 2012.

(iii) ***Optional application of TD 9564.*** A taxpayer may choose to apply § 1.162-11T(b) as contained in TD 9564 (76 FR 81060) December 27, 2011, to taxable years beginning on or after January 1, 2012, and before January 1, 2014.

[T.D. 6520, 25 FR 13692, Dec. 24, 1960, as amended by T.D. 8865, 65 FR 3825, Jan. 25, 2000; T.D. 9564, 76 FR 81084, Dec. 27, 2011; T.D. 9636, 78 FR 57706, Sept. 19, 2013]

§ 1.162-12 Expenses of farmers.

(a) ***Farms engaged in for profit.*** A farmer who operates a farm for profit is entitled to deduct from gross income as necessary expenses all amounts actually expended in the carrying on of the business of farming. The cost of ordinary tools of short life or small cost, such as hand tools, including shovels, rakes, etc., may be deducted. The purchase of feed and other costs connected with raising livestock may be treated as expense deductions insofar as such costs represent actual outlay, but not including the value of farm produce grown upon the farm or the labor of the taxpayer. For rules regarding the capitalization of expenses of producing property in the trade or business of farming, see section 263A and the regulations thereunder. For taxable years beginning after July 12, 1972, where a farmer is engaged in producing crops and the process of gathering and disposal of such crops is not completed within the taxable year in which such crops were planted, expenses deducted may, with the consent of the Commissioner (see section 446 and the regulations thereunder), be determined upon the crop method, and such deductions must be

taken in the taxable year in which the gross income from the crop has been realized. For taxable years beginning on or before July 12, 1972, where a farmer is engaged in producing crops which take more than a year from the time of planting to the process of gathering and disposal, expenses deducted may, with the consent of the Commissioner (see section 446 and the regulations thereunder), be determined upon the crop method, and such deductions must be taken in the taxable year in which the gross income from the crop has been realized. If a farmer does not compute income upon the crop method, the cost of seeds and young plants which are purchased for further development and cultivation prior to sale in later years may be deducted as an expense for the year of purchase, provided the farmer follows a consistent practice of deducting such costs as an expense from year to year. The preceding sentence does not apply to the cost of seeds and young plants connected with the planting of timber (see section 611 and the regulations thereunder). For rules regarding the capitalization of expenses of producing property in the trade or business of farming, see section 263A of the Internal Revenue Code and § 1.263A-4. The cost of farm machinery, equipment, and farm buildings represents a capital investment and is not an allowable deduction as an item of expense. Amounts expended in the development of farms, orchards, and ranches prior to the time when the productive state is reached may, at the election of the taxpayer, be regarded as investments of capital. For the treatment of soil and water conservation expenditures as expenses which are not chargeable to capital account, see section 175 and the regulations thereunder. For taxable years beginning after December 31, 1959, in the case of expenditures paid or incurred by farmers for fertilizer, lime, etc., see section 180 and the regulations thereunder. Amounts expended in purchasing work, breeding, dairy, or sporting animals are regarded as investments of capital, and shall be depreciated unless such animals are included in an inventory in accordance with § 1.61-4. The purchase price of an automobile, even when wholly used in carrying on farming operations, is not deductible, but is regarded as an investment of capital. The cost of gasoline, repairs, and upkeep of an automobile if used wholly in the business of farming is deductible as an expense; if used partly for business purposes and partly for the pleasure or convenience of the taxpayer or his family, such cost may be apportioned according to the extent of the use for purposes of business and pleasure or convenience, and only the proportion of such cost justly attributable to business purposes is deductible as a necessary expense.

(b) ***Farms not engaged in for profit; taxable years beginning before January 1, 1970*** —

(1) ***In general.*** If a farm is operated for recreation or pleasure and not on a commercial basis, and if the expenses incurred in connection with the farm are in excess of the receipts therefrom, the entire receipts from the sale of farm products may be ignored in rendering a return of income, and the expenses incurred, being regarded as personal expenses, will not constitute allowable deductions.

(2) ***Effective date.*** The provisions of this paragraph shall apply with respect to taxable years beginning before January 1, 1970.

(3) ***Cross reference.*** For provisions relating to activities not engaged in for profit, applicable to taxable years beginning after December 31, 1969, see section 183 and the regulations thereunder.

[T.D. 7198, 37 FR 13679, July 13, 1972, as amended by T.D. 8729, 62 FR 44546, Aug. 22, 1997; T.D. 8897, 65 FR 50643, Aug. 21, 2000]

§ 1.162-13 Depositors' guaranty fund.

Banking corporations which pursuant to the laws of the State in which they are doing business are required to set apart, keep, and maintain in their banks the amount levied and assessed against them by the State authorities as a “Depositors' guaranty fund,” may deduct from their gross income the amount so set apart each year to this fund provided that such fund, when set aside and carried to the credit of the State banking board or duly authorized State

officer, ceases to be an asset of the bank and may be withdrawn in whole or in part upon demand by such board or State officer to meet the needs of these officers in reimbursing depositors in insolvent banks, and provided further that no portion of the amount thus set aside and credited is returnable under the laws of the State to the assets of the banking corporation. If, however, such amount is simply set up on the books of the bank as a reserve to meet a contingent liability and remains an asset of the bank, it will not be deductible except as it is actually paid out as required by law and upon demand of the proper State officers.

§ 1.162-14 Expenditures for advertising or promotion of good will.

A corporation which has, for the purpose of computing its excess profits tax credit under Subchapter E, Chapter 2, or Subchapter D, Chapter 1 of the Internal Revenue Code of 1939, elected under section 733 or section 451 (applicable to the excess profits tax imposed by Subchapter E of Chapter 2, and Subchapter D of Chapter 1, respectively) to charge to capital account for taxable years in its base period expenditures for advertising or the promotion of good will which may be regarded as capital investments, may not deduct similar expenditures for the taxable year. See section 263(b). Such a taxpayer has the burden of proving that expenditures for advertising or the promotion of good will which it seeks to deduct in the taxable year may not be regarded as capital investments under the provisions of the regulations prescribed under section 733 or section 451 of the Internal Revenue Code of 1939. See 26 CFR, 1938 ed., 35.733-2 (Regulations 112) and 26 CFR (1939) 40.451-2 (Regulations 130). For the disallowance of deductions for the cost of advertising in programs of certain conventions of political parties, or in publications part of the proceeds of which directly or indirectly inures (or is intended to inure) to or for the use of a political party or political candidate, see § 1.276-1.

[T.D. 6996, 34 FR 835, Jan. 18, 1969]

§ 1.162-15 Contributions, dues, etc.

(a) ***Payments and transfers to entities described in section 170(c)*** —

(1) ***In general.*** A payment or transfer to or for the use of an entity described in section 170(c) that bears a direct relationship to the taxpayer's trade or business and that is made with a reasonable expectation of financial return commensurate with the amount of the payment or transfer may constitute an allowable deduction as a trade or business expense rather than a charitable contribution deduction under section 170. For payments or transfers in excess of the amount deductible under section 162(a), see § 1.170A-1(h).

(2) ***Examples.*** The following examples illustrate the rules of paragraph (a)(1) of this section:

(i) ***Example 1. A,*** an individual, is a sole proprietor who manufactures musical instruments and sells them through a website. *A* makes a $1,000 payment to a local church (which is a charitable organization described in section 170(c)) for a half-page advertisement in the church's program for a concert. In the program, the church thanks its concert supporters, including *A*. *A*'s advertisement includes the URL for the website through which *A* sells its instruments. *A* reasonably expects that the advertisement will attract new customers to *A*'s website and will help *A* to sell more musical instruments. *A* may treat the $1,000 payment as an expense of carrying on a trade or business under section 162.

(ii) ***Example 2. P,*** a partnership, operates a chain of supermarkets, some of which are located in State N. *P* operates a promotional program in which it sets aside the proceeds from one percent of its sales each year, which it pays to one or more charities described in section 170(c). The funds are earmarked for use in projects that improve conditions in State N. *P*

makes the final determination on which charities receive payments. *P* advertises the program. *P* reasonably believes the program will generate a significant degree of name recognition and goodwill in the communities where it operates and thereby increase its revenue. As part of the program, *P* makes a $1,000 payment to a charity described in section 170(c). *P* may treat the $1,000 payment as an expense of carrying on a trade or business under section 162. This result is unchanged if, under State N's tax credit program, *P* expects to receive a $1,000 income tax credit on account of *P*'s payment, and under State N law, the credit can be passed through to *P*'s partners.

(3) ***Safe harbors for C corporations and specified passthrough entities making payments in exchange for State or local tax credits*** —

(i) ***Safe harbor for C corporations.*** If a C corporation makes a payment to or for the use of an entity described in section 170(c) and receives or expects to receive in return a State or local tax credit that reduces a State or local tax imposed on the C corporation, the C corporation may treat such payment as meeting the requirements of an ordinary and necessary business expense for purposes of section 162(a) to the extent of the amount of the credit received or expected to be received.

(ii) ***Safe harbor for specified passthrough entities*** —

(A) ***Definition of specified passthrough entity.*** For purposes of this paragraph (a)(3)(ii), an entity is a specified passthrough entity if each of the following requirements is satisfied—

(*1*) The entity is a business entity other than a C corporation and is regarded for all Federal income tax purposes as separate from its owners under § 301.7701-3 of this chapter;

(*2*) The entity operates a trade or business within the meaning of section 162;

(*3*) The entity is subject to a State or local tax incurred in carrying on its trade or business that is imposed directly on the entity; and

(*4*) In return for a payment to an entity described in section 170(c), the entity described in paragraph (a)(3)(ii)(A)(*1*) of this section receives or expects to receive a State or local tax credit that the entity applies or expects to apply to offset a State or local tax described in paragraph (a)(3)(ii)(A)(*3*) of this section.

(B) ***Safe harbor.*** Except as provided in paragraph (a)(3)(ii)(C) of this section, if a specified passthrough entity makes a payment to or for the use of an entity described in section 170(c), and receives or expects to receive in return a State or local tax credit that reduces a State or local tax described in paragraph (a)(3)(ii)(A)(*3*) of this section, the specified passthrough entity may treat such payment as an ordinary and necessary business expense for purposes of section 162(a) to the extent of the amount of credit received or expected to be received.

(C) ***Exception.*** The safe harbor described in this paragraph (a)(3)(ii) does not apply if the credit received or expected to be received reduces a State or local income tax.

(iii) ***Definition of payment.*** For purposes of this paragraph (a)(3), payment is defined as a payment of cash or cash equivalent.

(iv) ***Examples.*** The following examples illustrate the rules of paragraph (a)(3) of this section.

(A) ***Example 1. C corporation that receives or expects to receive dollar-for-dollar State or local tax credit. A,*** a C corporation engaged in a trade or business, makes a payment of $1,000 to an entity described in section 170(c). In return for the payment, *A* expects to receive a dollar-for-dollar State tax credit to be applied to *A*'s State corporate income tax liability. Under paragraph (a)(3)(i) of this section, *A* may treat the $1,000 payment as an expense of carrying on a trade or business under section 162.

(B) ***Example 2. C corporation that receives or expects to receive percentage-based State or local tax credit. B,*** a C corporation engaged in a trade or business, makes a payment of $1,000 to an entity described in section 170(c). In return for the payment, *B* expects to receive a local tax credit equal to 80 percent of the amount of this payment ($800) to be applied to *B*'s local real property tax liability. Under paragraph (a)(3)(i) of this section, *B* may treat $800 as an expense of carrying on a trade or business under section 162. The treatment of the remaining $200 will depend upon the facts and circumstances and is not affected by paragraph (a)(3)(i) of this section.

(C) ***Example 3. Partnership that receives or expects to receive dollar-for-dollar State or local tax credit. P*** is a limited liability company classified as a partnership for Federal income tax purposes under § 301.7701-3 of this chapter. *P* is engaged in a trade or business and makes a payment of $1,000 to an entity described in section 170(c). In return for the payment, *P* expects to receive a dollar-for-dollar State tax credit to be applied to *P*'s State excise tax liability incurred by *P* in carrying on its trade or business. Under applicable State law, the State's excise tax is imposed at the entity level (not the owner level). Under paragraph (a)(3)(ii) of this section, *P* may treat the $1,000 as an expense of carrying on a trade or business under section 162.

(D) ***Example 4. S corporation that receives or expects to receive percentage-based State or local tax credit. S*** is an S corporation engaged in a trade or business and is owned by individuals *C* and *D*. *S* makes a payment of $1,000 to an entity described in section 170(c). In return for the payment, *S* expects to receive a local tax credit equal to 80 percent of the amount of this payment ($800) to be applied to *S*'s local real property tax liability incurred by *S* in carrying on its trade or business. Under applicable local law, the real property tax is imposed at the entity level (not the owner level). Under paragraph (a)(3)(ii) of this section, *S* may treat $800 of the payment as an expense of carrying on a trade or business under section 162. The treatment of the remaining $200 will depend upon the facts and circumstances and is not affected by paragraph (a)(3)(ii) of this section.

(v) ***Applicability of section 170 to payments in exchange for State or local tax benefits.*** For rules regarding the availability of a charitable contribution deduction under section 170 where a taxpayer makes a payment or transfers property to or for the use of an entity described in section 170(c) and receives or expects to receive a State or local tax benefit in return for such payment, see § 1.170A-1(h)(3).

(4) ***Applicability dates.*** Paragraphs (a)(1) and (2) of this section, regarding the application of section 162 to taxpayers making payments or transfers to entities described in section 170(c), apply to payments or transfers made on or after December 17, 2019. Section 1.162-15(a), as it appeared in the April 1, 2020 edition of 26 CFR part 1, generally applies to payments or transfers made prior to December 17, 2019. However, taxpayers may choose to apply paragraphs (a)(1) and (2) of this section to payments and transfers made on or after January 1, 2018. Paragraph (a)(3) of this section, regarding the safe harbors for C corporations and specified passthrough entities making payments to section

170(c) entities in exchange for State or local tax credits, applies to payments made by these entities on or after December 17, 2019. However, taxpayers may choose to apply the safe harbors of paragraph (a)(3) to payments made on or after January 1, 2018.

(b) ***Other contributions.*** Donations to organizations other than those described in section 170 which bear a direct relationship to the taxpayer's business and are made with a reasonable expectation of a financial return commensurate with the amount of the donation may constitute allowable deductions as business expenses, provided the donation is not made for a purpose for which a deduction is not allowable by reason of the provisions of paragraph (b)(1)(i) or (c) of § 1.162-20. For example, a transit company may donate a sum of money to an organization (of a class not referred to in section 170) intending to hold a convention in the city in which it operates, with a reasonable expectation that the holding of such convention will augment its income through a greater number of people using its transportation facilities.

(c) ***Dues.*** Dues and other payments to an organization, such as a labor union or a trade association, which otherwise meet the requirements of the regulations under section 162, are deductible in full. For limitations on the deductibility of dues and other payments, see paragraph (b) and (c) of § 1.162-20.

(d) ***Cross reference.*** —For provisions dealing with expenditures for institutional or “good will” advertising, see § 1.162-20(a)(2).

[T.D. 6819, 30 FR 5580, Apr. 20, 1965, as amended by T.D. 9907, 85 FR 48472, Aug. 11, 2020]

§ 1.162-16 Cross reference.

For special rules relating to expenses in connection with subdividing real property for sale, see section 1237 and the regulations thereunder.

§ 1.162-17 Reporting and substantiation of certain business expenses of employees.

(a) ***Introductory.*** The purpose of the regulations in this section is to provide rules for the reporting of information on income tax returns by taxpayers who pay or incur ordinary and necessary business expenses in connection with the performance of services as an employee and to furnish guidance as to the type of records which will be useful in compiling such information and in its substantiation, if required. The rules prescribed in this section do not apply to expenses paid or incurred for incidentals, such as office supplies for the employer or local transportation in connection with an errand. Employees incurring such incidental expenses are not required to provide substantiation for such amounts. The term “ordinary and necessary business expenses” means only those expenses which are ordinary and necessary in the conduct of the taxpayer's business and are directly attributable to such business. The term does not include nondeductible personal, living or family expenses.

(b) ***Expenses for which the employee is required to account to his employer*** —

(1) ***Reimbursements equal to expenses.*** The employee need not report on his tax return (either itemized or in total amount) expenses for travel, transportation, entertainment, and similar purposes paid or incurred by him solely for the benefit of his employer for which he is required to account and does account to his employer and which are charged directly or indirectly to the employer (for example, through credit cards) or for which the employee is paid through advances, reimbursements, or otherwise, provided the total amount of such advances, reimbursements, and charges is equal to such expenses. In such a case the taxpayer need only state in his return that the total of amounts

charged directly or indirectly to his employer through credit cards or otherwise and received from the employer as advances or reimbursements did not exceed the ordinary and necessary business expenses paid or incurred by the employee.

(2) ***Reimbursements in excess of expenses.*** In case the total of amounts charged directly or indirectly to the employer and received from the employer as advances, reimbursements, or otherwise, exceeds the ordinary and necessary business expenses paid or incurred by the employee and the employee is required to and does account to his employer for such expenses, the taxpayer must include such excess in income and state on his return that he has done so.

(3) ***Expenses in excess of reimbursements.*** If the employee's ordinary and necessary business expenses exceed the total of the amounts charged directly or indirectly to the employer and received from the employer as advances, reimbursements, or otherwise, and the employee is required to and does account to his employer for such expenses, the taxpayer may make the statement in his return required by subparagraph (1) of this paragraph unless he wishes to claim a deduction for such excess. If, however, he wishes to secure a deduction for such excess, he must submit a statement showing the following information as part of his tax return:

(i) The total of any charges paid or borne by the employer and of any other amounts received from the employer for payment of expenses whether by means of advances, reimbursements or otherwise; and

(ii) The nature of his occupation, the number of days away from home on business, and the total amount of ordinary and necessary business expenses paid or incurred by him (including those charged directly or indirectly to the employer through credit cards or otherwise) broken down into such broad categories as transportation, meals and lodging while away from home overnight, entertainment expenses, and other business expenses.

(4) To “account” to his employer as used in this section means to submit an expense account or other required written statement to the employer showing the business nature and the amount of all the employee's expenses (including those charged directly or indirectly to the employer through credit cards or otherwise) broken down into such broad categories as transportation, meals and lodging while away from home overnight, entertainment expenses, and other business expenses. For this purpose, the Commissioner in his discretion may approve reasonable business practices under which mileage, per diem in lieu of subsistence, and similar allowances providing for ordinary and necessary business expenses in accordance with a fixed scale may be regarded as equivalent to an accounting to the employer.

(c) ***Expenses for which the employee is not required to account to his employer.*** If the employee is not required to account to his employer for his ordinary and necessary business expenses, e.g., travel, transportation, entertainment, and similar items, or, though required, fails to account for such expenses, he must submit, as a part of his tax return, a statement showing the following information:

(1) The total of all amounts received as advances or reimbursements from his employer in connection with the ordinary and necessary business expenses of the employee, including amounts charged directly or indirectly to the employer through credit cards or otherwise; and

(2) The nature of his occupation, the number of days away from home on business, and the total amount of ordinary and necessary business expenses paid or incurred by him (including those charged directly or indirectly to the employer through credit cards or otherwise) broken down into such broad categories as transportation, meals and lodging while away from home overnight, entertainment expenses, and other business expenses.

(d) *Substantiation of items of expense.*

(1) Although the Commissioner may require any taxpayer to substantiate such information concerning expense accounts as may appear to be pertinent in determining tax liability, taxpayers ordinarily will not be called upon to substantiate expense account information except those in the following categories:

(i) A taxpayer who is not required to account to his employer, or who does not account;

(ii) A taxpayer whose expenses exceed the total of amounts charged to his employer and amounts received through advances, reimbursements or otherwise and who claims a deduction on his return for such excess;

(iii) A taxpayer who is related to his employer within the meaning of section 267(b); and

(iv) Other taxpayers in cases where it is determined that the accounting procedures used by the employer for the reporting and substantiation of expenses by employees are not adequate.

(2) The Code contemplates that taxpayers keep such records as will be sufficient to enable the Commissioner to correctly determine income tax liability. Accordingly, it is to the advantage of taxpayers who may be called upon to substantiate expense account information to maintain as adequate and detailed records of travel, transportation, entertainment, and similar business expenses as practical since the burden of proof is upon the taxpayer to show that such expenses were not only paid or incurred but also that they constitute ordinary and necessary business expenses. One method for substantiating expenses incurred by an employee in connection with his employment is through the preparation of a daily diary or record of expenditures, maintained in sufficient detail to enable him to readily identify the amount and nature of any expenditure, and the preservation of supporting documents, especially in connection with large or exceptional expenditures. Nevertheless, it is recognized that by reason of the nature of certain expenses or the circumstances under which they are incurred, it is often difficult for an employee to maintain detailed records or to preserve supporting documents for all his expenses. Detailed records of small expenditures incurred in traveling or for transportation, as for example, tips, will not be required.

(3) Where records are incomplete or documentary proof is unavailable, it may be possible to establish the amount of the expenditures by approximations based upon reliable secondary sources of information and collateral evidence. For example, in connection with an item of traveling expense a taxpayer might establish that he was in a travel status a certain number of days but that it was impracticable for him to establish the details of all his various items of travel expense. In such a case rail fares or plane fares can usually be ascertained with exactness and automobile costs approximated on the basis of mileage covered. A reasonable approximation of meals and lodging might be based upon receipted hotel bills or upon average daily rates for such accommodations and meals prevailing in the particular community for comparable accommodations. Since detailed records of incidental items are not required, deductions for these items may be based upon a reasonable approximation. In cases where a taxpayer is called upon to substantiate expense account information, the burden is on the taxpayer to establish that the amounts claimed as a deduction are reasonably accurate and constitute ordinary and necessary business expenses paid or incurred by him in connection with his trade or business. In connection with the determination of factual matters of this type, due consideration will be given to the reasonableness of the stated expenditures for the claimed purposes in relation to the taxpayer's circumstances (such as his

income and the nature of his occupation), to the reliability and accuracy of records in connection with other items more readily lending themselves to detailed recordkeeping, and to all of the facts and circumstances in the particular case.

(e) ***Applicability.***

(1) Except as provided in subparagraph (2) of this paragraph, the provisions of the regulations in this section are supplemental to existing regulations relating to information required to be submitted with income tax returns, and shall be applicable with respect to taxable years beginning after December 31, 1957, notwithstanding any existing regulation to the contrary.

(2) With respect to taxable years ending after December 31, 1962, but only in respect of periods after such date, the provisions of the regulations in this section are superseded by the regulations under section 274(d) to the extent inconsistent therewith. See § 1.274-5.

(3) For taxable years beginning on or after January 1, 1989, the provisions of this section are superseded by the regulations under section 62(c) to the extent this section is inconsistent with those regulations. See § 1.62-2.

[T.D. 6500, 25 FR 11402, Nov. 26, 1960, as amended by T.D. 6630, 27 FR 12935, Dec. 29, 1962; T.D. 8276, 54 FR 51026, Dec. 12, 1989; T.D. 8324, 55 FR 51695, Dec. 17, 1990]

§ 1.162-18 Illegal bribes and kickbacks.

(a) ***Illegal payments to government officials or employees*** —

(1) ***In general.*** No deduction shall be allowed under section 162(a) for any amount paid or incurred, directly or indirectly, to an official or employee of any government, or of any agency or other instrumentality of any government, if—

(i) In the case of a payment made to an official or employee of a government other than a foreign government described in subparagraph (3) (ii) or (iii) of this paragraph, the payment constitutes an illegal bribe or kickback, or

(ii) In the case of a payment made to an official or employee of a foreign government described in subparagraph (3) (ii) or (iii) of this paragraph, the making of the payment would be unlawful under the laws of the United States (if such laws were applicable to the payment and to the official or employee at the time the expenses were paid or incurred).

No deduction shall be allowed for an accrued expense if the eventual payment thereof would fall within the prohibition of this section. The place where the expenses are paid or incurred is immaterial. For purposes of subdivision (ii) of this subparagraph, lawfulness, or unlawfulness of the payment under the laws of the foreign country is immaterial.

(2) ***Indirect payment.*** For purposes of this paragraph, an indirect payment to an individual shall include any payment which inures to his benefit or promotes his interests, regardless of the medium in which the payment is made and regardless of the identity of the immediate recipient or payor. Thus, for example, payment made to an agent, relative, or independent contractor of an official or employee, or even directly into the general treasury of a foreign country of which the beneficiary is an official or employee, may be treated as an indirect payment to the official or employee, if in fact such

payment inures or will inure to his benefit or promotes or will promote his financial or other interests. A payment made by an agent or independent contractor of the taxpayer which benefits the taxpayer shall be treated as an indirect payment by the taxpayer to the official or employee.

(3) ***Official or employee of a government.*** Any individual officially connected with—

(i) The Government of the United States, a State, a territory or possession of the United States, the District of Columbia, or the Commonwealth of Puerto Rico,

(ii) The government of a foreign country, or

(iii) A political subdivision of, or a corporation or other entity serving as an agency or instrumentality of, any of the above,

in whatever capacity, whether on a permanent or temporary basis, and whether or not serving for compensation, shall be included within the term "official or employee of a government", regardless of the place of residence or post of duty of such individual. An independent contractor would not ordinarily be considered to be an official or employee. For purposes of section 162(c) and this paragraph, the term "foreign country" shall include any foreign nation, whether or not such nation has been accorded diplomatic recognition by the United States. Individuals who purport to act on behalf of or as the government of a foreign nation, or an agency or instrumentality thereof, shall be treated under this section as officials or employees of a foreign government, whether or not such individuals in fact control such foreign nation, agency, or instrumentality, and whether or not such individuals are accorded diplomatic recognition. Accordingly, a group in rebellion against an established government shall be treated as officials or employees of a foreign government, as shall officials or employees of the government against which the group is in rebellion.

(4) ***Laws of the United States.*** The term "laws of the United States", to which reference is made in paragraph (a)(1)(ii) of this section, shall be deemed to include only Federal statutes, including State laws which are assimilated into Federal law by Federal statute, and legislative and interpretative regulations thereunder. The term shall also be limited to statutes which prohibit some act or acts, for the violation of which there is a civil or criminal penalty.

(5) ***Burden of proof.*** In any proceeding involving the issue of whether, for purposes of section 162(c)(1), a payment made to a government official or employee constitutes an illegal bribe or kickback (or would be unlawful under the laws of the United States) the burden of proof in respect of such issue shall be upon the Commissioner to the same extent as he bears the burden of proof in civil fraud cases under section 7454 (*i.e.*, he must prove the illegality of the payment by clear and convincing evidence).

(6) ***Example.*** The application of this paragraph may be illustrated by the following example:

Example. X Corp. is in the business of selling hospital equipment in State Y. During 1970, X Corp. employed A who at the time was employed full time by State Y as Superintendent of Hospitals. The purpose of A's employment by X Corp. was to procure for it an improper advantage over other concerns in the making of sales to hospitals in respect of which A, as Superintendent, had authority. X Corp. paid A $5,000 during 1970. The making of this payment was illegal under the laws of State Y. Under section 162(c)(1), X Corp. is precluded from deducting as a trade or business expense the $5,000 paid to A.

(b) ***Other illegal payments*** —

(1) ***In general.*** No deduction shall be allowed under section 162(a) for any payment (other than a payment described in paragraph (a) of this section) made, directly or indirectly, to any person, if the payment constitutes an illegal bribe, illegal kickback, or other illegal payment under the laws of the United States (as defined in paragraph (a)(4) of this section), or under any State law (but only if such State law is generally enforced), which subjects the payor to a criminal penalty or the loss (including a suspension) of license or privilege to engage in a trade or business (whether or not such penalty or loss is actually imposed upon the taxpayer). For purposes of this paragraph, a kickback includes a payment in consideration of the referral of a client, patient, or customer. This paragraph applies only to payments made after December 30, 1969.

(2) ***State law.*** For purposes of this paragraph, State law means a statute of a State or the District of Columbia.

(3) ***Generally enforced.*** For purposes of this paragraph, a State law shall be considered to be generally enforced unless it is never enforced or the only persons normally charged with violations thereof in the State (or the District of Columbia) enacting the law are infamous or those whose violations are extraordinarily flagrant. For example, a criminal statute of a State shall be considered to be generally enforced unless violations of the statute which are brought to the attention of appropriate enforcement authorities do not result in any enforcement action in the absence of unusual circumstances.

(4) ***Burden of proof.*** In any proceeding involving the issue of whether, for purposes of section 162(c)(2), a payment constitutes an illegal bribe, illegal kickback, or other illegal payment the burden of proof in respect of such issue shall be upon the Commissioner to the same extent as he bears the burden of proof in civil fraud cases under section 7454 (*i.e.*, he must prove the illegality of the payment by clear and convincing evidence).

(5) ***Example.*** The application of this paragraph may be illustrated by the following example:

Example. X Corp., a calendar-year taxpayer, is engaged in the ship repair business in State Y. During 1970, repairs on foreign ships accounted for a substantial part of its total business. It was X Corp.'s practice to kick back approximately 10 percent of the repair bill to the captain and chief engineer of all foreign-owned vessels, which kickbacks are illegal under a law of State Y (which is generally enforced) and potentially subject X Corp. to fines. During 1970, X Corp. paid $50,000 in such kickbacks. On X Corp.'s return for 1970, a deduction under section 162 was taken for the $50,000. The deduction of the $50,000 of illegal kickbacks during 1970 is disallowed under section 162(c)(2), whether or not X Corp. is prosecuted with respect to the kickbacks.

(c) ***Kickbacks, rebates, and bribes under medicare and medicaid.*** No deduction shall be allowed under section 162(a) for any kickback, rebate, or bribe (whether or not illegal) made on or after December 10, 1971, by any provider of services, supplier, physician, or other person who furnishes items or services for which payment is or may be made under the Social Security Act, as amended, or in whole or in part out of Federal funds under a State plan approved under such Act, if such kickback, rebate, or bribe is made in connection with the furnishing of such items or services or the making or receipt of such payments. For purposes of this paragraph, a kickback includes a payment in consideration of the referral of a client, patient, or customer.

[T.D. 7345, 40 FR 7437, Feb. 20, 1975; 40 FR 8948, Mar. 4, 1975]

§ 1.162-19 Capital contributions to Federal National Mortgage Association.

(a) ***In general.*** The initial holder of stock of the Federal National Mortgage Association (FNMA) which is issued pursuant to section 303(c) of the Federal National Mortgage Association Charter Act (12 U.S.C., section 1718) in a taxable year beginning after December 31, 1959, shall treat the excess, if any, of the issuance price (the amount of capital contributions evidenced by a share of stock) over the fair market value of the stock as of the issue date of such stock as an ordinary and necessary business expense paid or incurred during the year in which occurs the date of issuance of the stock. To the extent that a sale to FNMA of mortgage paper gives rise to the issuance of a share of FNMA stock during a taxable year beginning after December 31, 1959, such sale is to be treated in a manner consistent with the purpose for, and the legislative intent underlying the enactment of, the provisions of section 8, Act of September 14, 1960 (Pub. L. 86-779, 74 Stat. 1003). Thus, for the purpose of determining an initial holder's gain or loss from the sale to FNMA of mortgage paper, with respect to which a share of FNMA stock is issued in a taxable year beginning after December 31, 1959 (irrespective of when the sale is made), the amount realized by the initial holder from the sale of the mortgage paper is the amount of the "FNMA purchase price". The "FNMA purchase price" is the gross amount of the consideration agreed upon between FNMA and the initial holder for the purchase of the mortgage paper, without regard to any deduction therefrom as, for example, a deduction representing a capital contribution or a purchase or marketing fee. The date of issuance of the stock is the date which appears on the stock certificates of the initial holder as the date of issue. The initial holder is the original purchaser who is issued stock of the Federal National Mortgage Association pursuant to section 303(c) of the Act, and who appears on the books of FNMA as the initial holder. In determining the period for which the initial holder has held such stock, such period shall begin with the date of issuance.

(b) ***Examples.*** The provisions of paragraph (a) of this section may be illustrated by the following examples:

> *Example 1.* A, a banking institution which reports its income on a calendar year basis, sold mortgage paper with an outstanding principal balance of $12,500 to FNMA on October 17, 1960. The FNMA purchase price was $11,500. A's basis for the mortgage paper was $10,500. In accordance with the terms of the contract, FNMA deducted $375 ($250 representing capital contribution and $125 representing purchase and marketing fee) from the amount of the purchase price. FNMA credited A's account with the amount of the capital contribution. A stock certificate evidencing two shares of FNMA common stock of $100 par value was mailed to A and FNMA deducted $200 from A's account, leaving a net balance of $50 in such account. The stock certificate, bearing an issue date of November 1, 1960, was received by A on November 7, 1960. The fair market value of a share of FNMA stock on October 17, 1960, was $65, on November 1, 1960, was $67, and on November 7, 1960, was $68. A may deduct $66 the difference between the issuance price ($200) and the fair market value ($134) of the two shares of stock on the date of issuance (November 1, 1960), as a business expense for the taxable year 1960. The basis of each share of stock issued as of November 1, 1960 will be $67. See section 1054 and § 1.1054-1. A's

gain from the sale of the mortgage paper is $875 computed as follows:

Amount realized in FNMA purchase price		$11,500
A's basis in mortgage paper	$10,500	
Purchase and marketing fee	125	
		10,625
Gain on sale		875

Example 2. Assume the same facts as in Example (1), and, in addition, that A sold to FNMA on December 15, 1960, additional mortgage paper having an outstanding principal balance of $12,500. FNMA deducted from the FNMA purchase price $250 representing capital contribution and credited A's account with this amount. A then had a total credit of $300 to his account consisting of the $50 balance from the transaction described in Example (1) and $250 from the December 15th transaction. A stock certificate evidencing three shares of FNMA common stock of $100 par value was mailed to A and FNMA deducted $300 from A's account. The stock certificate, bearing an issue date of January 1, 1961, was received by A on January 9, 1961. The fair market value of a share of FNMA stock on January 1, 1961, was $69. A may deduct $93, the difference between the issuance price ($300) and the fair market value ($207) of the three shares of stock on the date of issuance (January 1, 1961), as a business expense for the taxable year 1961. The gain or loss on the sale of mortgage paper on December 15, 1960, is reportable for the taxable year 1960.

[T.D. 6690, 28 FR 12253, Nov. 19, 1963]

§ 1.162-20 Expenditures attributable to lobbying, political campaigns, attempts to influence legislation, etc., and certain advertising.

(a) ***In general*** —

(1) ***Scope of section.*** This section contains rules governing the deductibility or nondeductibility of expenditures for lobbying purposes, for the promotion or defeat of legislation, for political campaign purposes (including the support of or opposition to any candidate for public office) or for carrying on propaganda (including advertising) related to any of the foregoing purposes. For rules applicable to such expenditures in respect of taxable years beginning before January 1, 1963, and for taxable years beginning after December 31, 1962, see paragraphs (b) and (c), respectively, of this section. This section also deals with expenditures for institutional or "good will" advertising.

(2) ***Institutional or "good will" advertising.*** Expenditures for institutional or "good will" advertising which keeps the taxpayer's name before the public are generally deductible as ordinary and necessary business expenses provided the expenditures are related to the patronage the taxpayer might reasonably expect in the future. For example, a deduction will ordinarily be allowed for the cost of advertising which keeps the taxpayer's name before the public in connection with encouraging contributions to such organizations as the Red Cross, the purchase of United States Savings Bonds, or participation in similar causes. In like fashion, expenditures for advertising which presents views

on economic, financial, social, or other subjects of a general nature, but which does not involve any of the activities specified in paragraph (b) or (c) of this section for which a deduction is not allowable, are deductible if they otherwise meet the requirements of the regulations under section 162.

(b) *Taxable years beginning before January 1, 1963* —

(1) *In general.*

(i) For taxable years beginning before January 1, 1963, expenditures for lobbying purposes, for the promotion or defeat of legislation, for political campaign purposes (including the support of or opposition to any candidate for public office), or for carrying on propaganda (including advertising) related to any of the foregoing purposes are not deductible from gross income. For example, the cost of advertising to promote or defeat legislation or to influence the public with respect to the desirability or undesirability of proposed legislation is not deductible as a business expense, even though the legislation may directly affect the taxpayer's business.

(ii) If a substantial part of the activities of an organization, such as a labor union or a trade association, consists of one or more of the activities specified in the first sentence of this subparagraph, deduction will be allowed only for such portion of the dues or other payments to the organization as the taxpayer can clearly establish is attributable to activities other than those so specified. The determination of whether such specified activities constitute a substantial part of an organization's activities shall be based on all the facts and circumstances. In no event shall special assessments or similar payments (including an increase in dues) made to any organization for any of such specified purposes be deductible. For other provisions relating to the deductibility of dues and other payments to an organization, such as a labor union or a trade association, see paragraph (c) of § 1.162-15.

(2) *Expenditures for promotion or defeat of legislation.* For purposes of this paragraph, expenditures for the promotion or the defeat of legislation include, but shall not be limited to, expenditures for the purpose of attempting to—

(i) Influence members of a legislative body directly, or indirectly by urging or encouraging the public to contact such members for the purpose of proposing, supporting, or opposing legislation, or

(ii) Influence the public to approve or reject a measure in a referendum, initiative, vote on a constitutional amendment, or similar procedure.

(c) *Taxable years beginning after December 31, 1962* —

(1) *In general.* For taxable years beginning after December 31, 1962, certain types of expenses incurred with respect to legislative matters are deductible under section 162(a) if they otherwise meet the requirements of the regulations under section 162. These deductible expenses are described in subparagraph (2) of this paragraph. All other expenditures for lobbying purposes, for the promotion or defeat of legislation (see paragraph (b)(2) of this section), for political campaign purposes (including the support of or opposition to any candidate for public office), or for carrying on propaganda (including advertising) relating to any of the foregoing purposes are not deductible from gross income for such taxable years. For the disallowance of deductions for bad debts and worthless securities of a political party, see § 1.271-1. For the disallowance of deductions for certain indirect political contributions, such as the cost of certain advertising and the cost of admission to certain dinners, programs, and inaugural events, see § 1.276-1.

(2) ***Appearances, etc., with respect to legislation*** —

(i) ***General rule.*** Pursuant to the provisions of section 162(e), expenses incurred with respect to legislative matters which may be deductible are those ordinary and necessary expenses (including, but not limited to, traveling expenses described in section 162(a)(2) and the cost of preparing testimony) paid or incurred by the taxpayer during a taxable year beginning after December 31, 1962, in carrying on any trade or business which are in direct connection with—

(*a*) Appearances before, submission of statements to, or sending communications to, the committees, or individual members of Congress or of any legislative body of a State, a possession of the United States, or a political subdivision of any of the foregoing with respect to legislation or proposed legislation of direct interest to the taxpayer, or

(*b*) Communication of information between the taxpayer and an organization of which he is a member with respect to legislation or proposed legislation of direct interest to the taxpayer and to such organization.

For provisions relating to dues paid or incurred with respect to an organization of which the taxpayer is a member, see subparagraph (3) of this paragraph.

(ii) ***Legislation or proposed legislation of direct interest to the taxpayer—***

(a) ***Legislation or proposed legislation.*** The term “legislation or proposed legislation” includes bills and resolutions introduced by a member of Congress or other legislative body referred to in subdivision (i)(*a*) of this subparagraph for consideration by such body as well as oral or written proposals for legislative action submitted to the legislative body or to a committee or member of such body.

(*b*) ***Direct interest*** —

(*1*) ***In general.***

(*i*) Legislation or proposed legislation is of direct interest to a taxpayer if the legislation or proposed legislation is of such a nature that it will, or may reasonably be expected to, affect the trade or business of the taxpayer. It is immaterial whether the effect, or expected effect, on the trade or business will be beneficial or detrimental to the trade or business or whether it will be immediate. If legislation or proposed legislation has such a relationship to a trade or business that the expenses of any appearance or communication in connection with the legislation meets the ordinary and necessary test of section 162(a), then such legislation ordinarily meets the direct interest test of section 162(e). However, if the nature of the legislation or proposed legislation is such that the likelihood of its having an effect on the trade or business of the taxpayer is remote or speculative, the legislation or proposed legislation is not of direct interest to the taxpayer. Legislation or proposed legislation which will not affect the trade or business of the taxpayer is not of direct interest to the taxpayer even though such legislation will affect the personal, living, or family activities or expenses of the taxpayer. Legislation or proposed legislation is not of direct interest to a taxpayer merely because it may affect business in general; however, if the legislation or proposed legislation will, or may reasonably be expected to, affect the taxpayer's trade or business it will be of direct interest to the taxpayer even though it also will affect the trade or business of other

taxpayers or business in general. To meet the direct interest test, it is not necessary that all provisions of the legislation or proposed legislation have an effect, or expected effect, on the taxpayer's trade or business. The test will be met if one of the provisions of the legislation has the specified effect. Legislation or proposed legislation will be considered to be of direct interest to a membership organization if it is of direct interest to the organization, as such, or if it is of direct interest to one or more of its members.

(*ii*) Legislation which would increase or decrease the taxes applicable to the trade or business, increase or decrease the operating costs or earnings of the trade or business, or increase or decrease the administrative burdens connected with the trade or business meets the direct interest test. Legislation which would increase the social security benefits or liberalize the right to such benefits meets the direct interest test because such changes in the social security benefits may reasonably be expected to affect the retirement benefits which the employer will be asked to provide his employees or to increase his taxes. Legislation which would impose a retailer's sales tax is of direct interest to a retailer because, although the tax may be passed on to his customers, collection of the tax will impose additional burdens on the retailer, and because the increased cost of his products to the consumer may reduce the demand for them. Legislation which would provide an income tax credit or exclusion for shareholders is of direct interest to a corporation, because those tax benefits may increase the sources of capital available to the corporation. Legislation which would favorably or adversely affect the business of a competitor so as to affect the taxpayer's competitive position is of direct interest to the taxpayer. Legislation which would improve the school system of a community is of direct interest to a membership organization comprised of employers in the community because the improved school system is likely to make the community more attractive to prospective employees of such employers. On the other hand, proposed legislation relating to Presidential succession in the event of the death of the President has only a remote and speculative effect on any trade or business and therefore does not meet the direct interest test. Similarly, if a corporation is represented before a congressional committee to oppose an appropriation bill merely because of a desire to bring increased Government economy with the hope that such economy will eventually cause a reduction in the Federal income tax, the legislation does not meet the direct interest test because any effect it may have upon the corporation's trade or business is highly speculative.

(2) ***Appearances, etc., by expert witnesses.***

(*i*) An appearance or communication (of a type described in paragraph (c)(2)(i)(*a*) of this section) by an individual in connection with legislation or proposed legislation shall be considered to be with respect to legislation of direct interest to such individual if the legislation is in a field in which he specializes as an employee, if the appearance or communication is not on behalf of his employer, and if it is customary for individuals in his type of employment to publicly express their views in respect of matters in their field of competence. Expenses incurred by such an individual in connection with such an appearance of

communication, including traveling expenses properly allocable thereto, represent ordinary and necessary business expenses and are, therefore, deductible under section 162. For example, if a university professor who teaches in the field of money and banking appears, on his own behalf, before a legislative committee to testify on proposed legislation regarding the banking system, his expenses incurred in connection with such appearance are deductible under section 162 since university professors customarily take an active part in the development of the law in their field of competence and publicly communicate the results of their work.

(*ii*) An appearance or communication (of a type described in paragraph (c)(2)(i)(*a*) of this section) by an employee or self-employed individual in connection with legislation or proposed legislation shall be considered to be with respect to legislation of direct interest to such person if the legislation is in the field in which he specializes in his business (or as an employee) and if the appearance or communication is made pursuant to an invitation extended to him individually for the purpose of receiving his expert testimony. Expenses incurred by an employee or self-employed individual in connection with such an appearance or communication, including traveling expenses properly allocable thereto, represent ordinary and necessary business expenses and are, therefore, deductible under section 162. For example, if a self-employed individual is personally invited by a congressional committee to testify on proposed legislation in the field in which he specializes in his business, his expenses incurred in connection with such appearance are deductible under section 162. If a self-employed individual makes an appearance, on his own behalf, before a legislative committee without having been extended an invitation his expenses will be deductible to the extent otherwise provided in this paragraph.

(*3*) ***Nominations, etc.*** A taxpayer does not have a direct interest in matters such as nominations, appointments, or the operation of the legislative body.

(iii) ***Allowable expenses.*** To be deductible under section 162(a), expenditures which meet the tests of deductibility under the provisions of this paragraph must also qualify as ordinary and necessary business expenses under section 162(a) and, in addition, be in direct connection with the carrying on of the activities specified in subdivision (i)(*a*) or (i)(*b*) of this subparagraph. For example, a taxpayer appearing before a committee of the Congress to present testimony concerning legislation or proposed legislation in which he has a direct interest may deduct the ordinary and necessary expenses directly connected with his appearance, such as traveling expenses described in section 162(a)(2), and the cost of preparing testimony.

(3) ***Deductibility of dues and other payments to an organization.*** If a substantial part of the activities of an organization, such as a labor union or a trade association, consists of one or more of the activities to which this paragraph relates (legislative matters, political campaigns, etc.), exclusive of any activity constituting an appearance or communication with respect to legislation or proposed legislation of direct interest to the organization (see subparagraph (c)(2)(ii)(*b*)(*1*)), a deduction will be allowed only for such portion of the dues or other payments to the organization as the taxpayer can clearly establish is attributable to activities to which this paragraph does not relate and to any activity constituting an appearance or communication with respect to legislation or proposed legislation of direct interest to the organization. The determination of whether a substantial part of an organization's activities consists of one or more of the activities to which this paragraph relates

(exclusive of appearances or communications with respect to legislation or proposed legislation of direct interest to the organization) shall be based on all the facts and circumstances. In no event shall a deduction be allowed for that portion of a special assessment or similar payment (including an increase in dues) made to any organization for any activity to which this paragraph relates if the activity does not constitute an appearance or communication with respect to legislation or proposed legislation of direct interest to the organization. If an organization pays or incurs expenses allocable to legislative activities which meet the tests of subdivisions (i) and (ii) of subparagraph (2) of this paragraph (appearances or communications with respect to legislation or proposed legislation of direct interest to the organization), on behalf of its members, the dues paid by a taxpayer are deductible to the extent used for such activities. Dues paid by a taxpayer will be considered to be used for such an activity, and thus deductible, although the legislation or proposed legislation involved is not of direct interest to the taxpayer, if, pursuant to the provisions of subparagraph (2)(ii)(*b*)(*1*) of this paragraph, the legislation or proposed legislation is of direct interest to the organization, as such, or is of direct interest to one or more members of the organization. For other provisions relating to the deductibility of dues and other payments to an organization, such as a labor union or a trade association, see paragraph (c) of § 1.162-15.

(4) ***Limitations.*** No deduction shall be allowed under section 162(a) for any amount paid or incurred (whether by way of contribution, gift, or otherwise) in connection with any attempt to influence the general public, or segments thereof, with respect to legislative matters, elections, or referendums. For example, no deduction shall be allowed for any expenses incurred in connection with "grassroot" campaigns or any other attempts to urge or encourage the public to contact members of a legislative body for the purpose of proposing, supporting, or opposing legislation.

(5) ***Expenses paid or incurred after December 31, 1993, in connection with influencing legislation other than certain local legislation.*** The provisions of paragraphs (c)(1) through (3) of this section are superseded for expenses paid or incurred after December 31, 1993, in connection with influencing legislation (other than certain local legislation) to the extent inconsistent with section 162(e)(1)(A) (as limited by section 162(e)(2)) and §§ 1.162-20(d) and 1.162-29.

(d) ***Dues allocable to expenditures after 1993.*** No deduction is allowed under section 162(a) for the portion of dues or other similar amounts paid by the taxpayer to an organization exempt from tax (other than an organization described in section 501(c)(3)) which the organization notifies the taxpayer under section 6033(e)(1)(A)(ii) is allocable to expenditures to which section 162(e)(1) applies. The first sentence of this paragraph (d) applies to dues or other similar amounts whether or not paid on or before December 31, 1993. Section 1.162-20(c)(3) is superseded to the extent inconsistent with this paragraph (d).

[T.D. 6819, 30 FR 5581, Apr. 20, 1965, as amended by T.D. 6996, 34 FR 835, Jan. 18, 1969; T.D. 8602, 60 FR 37573, July 21, 1995]

§ 1.162-21 Denial of deduction for certain fines, penalties, and other amounts.

(a) ***Deduction Disallowed.*** Except as otherwise provided in this section, no deduction is allowed under chapter 1 of the Internal Revenue Code (Code) for any amount that is paid or incurred—

(1) By suit, settlement agreement (agreement), or otherwise, as defined in paragraph (e)(5) of this section;

(2) To, or at the direction of, a government, as defined in paragraph (e)(1) of this section, or a governmental entity, as defined in paragraph (e)(2) of this section; and

(3) In relation to the violation, or investigation or inquiry by such government or governmental entity into the potential violation, of any civil or criminal law.

(i) An amount that is paid or incurred in relation to the violation of any civil or criminal law includes a fine or penalty.

(ii) An investigation or inquiry into the potential violation of any law does not include routine investigations or inquiries, such as audits or inspections, of regulated businesses that are not related to any evidence of wrongdoing or suspected wrongdoing, but are conducted to ensure compliance with the rules and regulations applicable to those businesses.

(b) ***Exception for restitution, remediation, and amounts paid to come into compliance with a law*** —

(1) ***In general.*** Paragraph (a) of this section does not apply to amounts paid or incurred for restitution (including remediation) or to come into compliance with a law, as defined in paragraphs (e)(4) of this section, provided that both the identification and the establishment requirements of paragraphs (b)(2) and (b)(3) of this section are met.

(2) ***Identification requirement*** —

(i) ***In general.*** A court order (order) or an agreement, as defined in paragraph (e)(5) of this section, identifies a payment by stating the nature of, or purpose for, each payment each taxpayer is obligated to pay and the amount of each payment identified.

(ii) ***Meeting the identification requirement.*** The identification requirement is met if an order or agreement specifically states the amount of the payment described in paragraph (b)(2)(i) of this section and that the payment constitutes restitution, remediation, or an amount paid to come into compliance with a law. If the order or agreement uses a different form of the required words (such as “remediate” or “comply with a law”) and describes the purpose for which restitution or remediation will be paid or the law with which the taxpayer must comply, the order or agreement will be treated as stating that the payment constitutes restitution, remediation, or an amount paid to come into compliance with a law. Similarly, if an order or agreement specifically describes the damage done, harm suffered, or manner of noncompliance with a law and describes the action required of the taxpayer to provide restitution, remediation, or to come into compliance with any law, as defined in paragraph (e)(4) of this section, the order or agreement will be treated as stating that the payment constitutes restitution, remediation, or an amount paid to come into compliance with any law. Meeting the establishment requirement of paragraph (b)(3) of this section alone is not sufficient to meet the identification requirement of paragraph (b)(2) of this section.

(iii) ***Payment amount not identified.***

(A) If the order or agreement identifies a payment as restitution, remediation, or to come into compliance with a law but does not identify some or all of the amount the taxpayer must pay or incur, the identification requirement may be met for any payment amount not identified if the order or agreement describes the damage done, harm suffered, or manner of noncompliance with a law, and describes the action required of the taxpayer, such as paying or incurring costs to provide services or to provide property.

(B) If the order or agreement identifies a lump-sum payment or multiple damages award as restitution, remediation, or to come into compliance with a law but does not allocate some or all of the amount the taxpayer must pay or incur among restitution, remediation, or to

come into compliance with a law, or does not allocate the total payment amount among multiple taxpayers, the identification requirement may be met for any payment amount not specifically allocated if the order or agreement describes the damage done, harm suffered, or manner of noncompliance with a law, and describes the action required of the taxpayer, such as paying or incurring costs to provide services or to provide property.

(3) *Establishment requirement* —

(i) ***Meeting the establishment requirement.*** The establishment requirement is met if the taxpayer, using documentary evidence, proves the taxpayer's legal obligation, pursuant to the order or agreement, to pay the amount identified as restitution, remediation, or to come into compliance with a law; the amount paid or incurred; the date the amount was paid or incurred; and that, based on the origin of the liability and the nature and purpose of the amount paid or incurred, the amount the taxpayer paid or incurred was for restitution or remediation, as defined in paragraph (e)(4)(i) of this section or to come into compliance with any law, as defined in paragraph (e)(4)(ii) of this section. If the amount is paid or incurred to a segregated fund or account, as described in paragraphs (e)(4)(i)(A)(*2*) and (*3*), (e)(4)(i)(B), or (e)(4)(i)(C) of this section, the taxpayer may meet the establishment requirement even if each ultimate recipient, or each ultimate use, of the payment is not designated or is unknown. A taxpayer will not meet the establishment requirement if the taxpayer fails to prove that the taxpayer paid or incurred the amount identified as restitution, remediation, or to come into compliance with a law; the amount paid; the date the amount was paid or incurred; or that the amount the taxpayer paid or incurred was for the nature and purpose identified in the order or agreement as required by paragraph (b)(2)(i) of this section, or was made for the damage done, harm suffered, noncompliance, or to provide property or services as described in (b)(2)(iii) of this section. Meeting the identification requirement of paragraph (b)(2) of this section is not sufficient to meet the establishment requirement of paragraph (b)(3) of this section.

(ii) ***Substantiating the establishment requirement.*** The documentary evidence described in paragraph (b)(3)(i) of this section includes, but is not limited to, receipts; the legal or regulatory provision related to the violation or potential violation of any law; documents issued by the government or governmental entity relating to the investigation or inquiry, including court pleadings filed by the government or governmental entity requesting restitution, remediation, or demanding that defendant take action to come into compliance with the law; judgment; decree; documents describing how the amount to be paid was determined; and correspondence exchanged between the taxpayer and the government or governmental entity before the order or agreement became binding under applicable law, determined without regard to whether all appeals have been exhausted or the time for filing an appeal has expired.

(c) *Other exceptions* —

(1) ***Suits between private parties.*** Paragraph (a) of this section does not apply to any amount paid or incurred by reason of any order or agreement in a suit in which no government or governmental entity is a party or any order or agreement in a suit pursuant to which a government or governmental entity enforces its rights as a private party.

(2) ***Taxes and related interest.*** Paragraph (a) of this section does not apply to amounts paid or incurred as otherwise deductible taxes or related interest. However, if penalties are imposed relating to such taxes, paragraph (a) of this section applies to disallow a deduction for such penalties and interest payments related to such penalties.

(3) ***Failure to pay title 26 tax.*** In the case of any amount paid or incurred as restitution for failure to pay tax imposed under title 26 of the United States Code, paragraph (a) of this section does not disallow a deduction for title 26 taxes, such as excise and employment taxes, which are equal to or less than the deduction otherwise allowed under chapter 1 of the Code if the tax had been timely paid.

(d) ***Application of general principles of Federal income tax law*** —

(1) ***Taxable year of deduction.*** If, under paragraph (b) or (c) of this section, the taxpayer is allowed a deduction for the amount paid or incurred pursuant to an order or agreement, the deduction is taken into account under the rules of section 461 and the related regulations, or under a provision specifically applicable to the allowed deduction, such as § 1.468B-3(c).

(2) ***Tax benefit rule applies.*** If the deduction allowed under paragraphs (b) or (c) of this section results in a tax benefit to the taxpayer, the taxpayer must include in income, under sections 61 and 111, the recovery of any amount deducted in a prior taxable year to the extent the prior year's deduction reduced the taxpayer's tax liability.

(i) A tax benefit to the taxpayer includes a reduction in the taxpayer's tax liability for a prior taxable year or the creation of a net operating loss carryback or carryover.

(ii) A taxpayer's recovery of any amount deducted in a prior taxable year includes, but is not limited to—

(A) Receiving a refund, recoupment, rebate, reimbursement, or otherwise recovering some or all of the amount the taxpayer paid or incurred, or

(B) Being relieved of some or all of the payment liability under the order or agreement.

(e) ***Definitions.*** For section 162(f) and § 1.162-21, the following definitions apply:

(1) ***Government.*** A *government* means—

(i) The government of the United States, a State, or the District of Columbia;

(ii) The government of a territory of the United States, including American Samoa, Guam, the Northern Mariana Islands, Puerto Rico, or the U.S. Virgin Islands;

(iii) The government of a foreign country;

(iv) An Indian tribal government, as defined in section 7701(a)(40), or a subdivision of an Indian tribal government, as determined in accordance with section 7871(d); or

(v) A political subdivision (such as a local government unit) of a government described in paragraph (e)(1)(i), (ii), or (iii) of this section.

(2) ***Governmental entity.*** A *governmental entity* means—

(i) A corporation or other entity serving as an agency or instrumentality of a government (as defined in paragraph (e)(1) of this section), or

(ii) A nongovernmental entity treated as a governmental entity as described in paragraph (e)(3) of this section.

(3) ***Nongovernmental entity treated as a governmental entity.*** A *nongovernmental entity treated as a governmental entity* is an entity that—

(i) Exercises self-regulatory powers (including imposing sanctions) in connection with a qualified board or exchange, as defined in section 1256(g)(7); or

(ii) Exercises self-regulatory powers, including adopting, administering, or enforcing rules and imposing sanctions, as part of performing an essential governmental function.

(4) ***Restitution, remediation of property, and amounts paid to come into compliance with a law*** —

(i) ***Amounts for restitution or remediation.*** An amount is paid or incurred for restitution or remediation pursuant to paragraph (b)(1) of this section if it is paid or incurred to restore, in whole or in part, the person, as defined in section 7701(a)(1); government; governmental entity; property; environment; wildlife; or natural resources harmed, injured, or damaged by the violation or potential violation of any law described in paragraph (a)(3) of this section to the same or substantially similar position or condition as existed prior to such harm, injury or damage.

(A) ***Environment, wildlife, or natural resources.*** Restitution or remediation of the environment, wildlife, or natural resources includes amounts paid or incurred for the purpose of conserving soil, air, or water resources, protecting or restoring the environment or an ecosystem, improving forests, or providing a habitat for fish, wildlife, or plants. The amounts must be paid or incurred—

(*1*) To, or at the direction of, a government or governmental entity to be used exclusively for the restitution or remediation of a harm to the environment, wildlife, or natural resources;

(*2*) To a segregated fund or account established by a government or governmental entity and, pursuant to the order or agreement, the amounts are not disbursed to the general account of the government or governmental entity for general enforcement efforts or other discretionary purposes; or

(*3*) To a segregated fund or account established at the direction of a government or governmental entity.

(*4*) Paragraph (e)(4)(i)(A) of this section applies only if there is a strong nexus or connection between the purpose of the payment and the harm to the environment, natural resources, or wildlife that the taxpayer has caused or is alleged to have caused.

(B) ***Disgorgement or forfeiture.*** Provided the identification and establishment requirements of paragraphs (b)(2) and (b)(3) of this section are met, restitution may include amounts paid or incurred as disgorgement or forfeiture, if paid or incurred at the direction of a government or governmental entity directly to the person, as defined in section 7701(a)(1), harmed by the violation or potential violation of any law or to, or at the direction of, the government or governmental entity, to establish a segregated fund or account for the benefit of such harmed person. This paragraph (e)(4)(i)(B) does not apply if the order or agreement identifies the payment amount as in excess of the taxpayer's net profits or, pursuant to the order or agreement, the amounts are disbursed to the general account of the government or governmental entity for general enforcement efforts or other discretionary purposes.

(C) ***Segregated funds or accounts.*** Provided the identification and establishment requirements of paragraphs (b)(2) and (b)(3) of this section are met, restitution or remediation may include amounts paid or incurred, pursuant to an order or agreement, to a segregated fund or account to restore, in whole or in part, the person, as defined in section 7701(a)(1); government; governmental entity; property; environment; wildlife; or natural resources harmed, injured, or damaged by the violation or potential violation of any law described in paragraph (a)(3) of this section. This paragraph (e)(4)(i)(C) does not apply if, pursuant to the order or agreement, the amounts are disbursed to the general account of the government or governmental entity for general enforcement efforts or other discretionary purposes.

(ii) ***Amounts to come into compliance with a law.*** An amount is paid or incurred to come into compliance with a law that the taxpayer has violated, or is alleged to have violated, by performing services; taking action, such as modifying equipment; providing property; or doing any combination thereof to come into compliance with that law.

(iii) ***Amounts not included.*** Regardless of whether the order or agreement identifies them as such, restitution, remediation, and amounts paid to come into compliance with a law do not include any amount paid or incurred—

(A) As reimbursement to a government or governmental entity for investigation costs or litigation costs incurred in such government or governmental entity's investigation into, or litigation concerning, the violation or potential violation of any law; or

(B) At the taxpayer's election, in lieu of a fine or penalty.

(5) ***Suit, agreement, or otherwise.*** A suit, agreement, or otherwise includes, but is not limited to, suits; settlement agreements; orders; non-prosecution agreements; deferred prosecution agreements; judicial proceedings; administrative adjudications; decisions issued by officials, committees, commissions, or boards of a government or governmental entity; and any legal actions or hearings which impose a liability on the taxpayer or pursuant to which the taxpayer assumes liability.

(f) ***Examples.*** The application of this section is illustrated by the following examples.

(1) ***Example 1.***

(i) ***Facts.*** Corp. A enters into an agreement with State Y's environmental enforcement agency (Agency) for violating state environmental laws. Pursuant to the agreement, Corp. A pays $40X to the Agency in civil penalties, $80X in restitution for the environmental harm that the taxpayer has caused, $50X for remediation of contaminated sites, and $60X to conduct comprehensive upgrades to Corp. A's operations to come into compliance with the state environmental laws.

(ii) ***Analysis.*** The identification requirement is satisfied for those amounts the agreement identifies as restitution, remediation, or to come into compliance with a law. If Corp. A meets the establishment requirement, as provided in paragraph (b)(3), paragraph (a) of this section will not disallow Corp. A's deduction for $80X in restitution and $50X for remediation. Under paragraph (a) of this section, Corp. A may not deduct the $40X in civil penalties. Paragraph (a) of this section will not disallow Corp. A's deduction for the $60X paid to come into compliance with the state environmental laws. See section 161, concerning items allowed as deductions, and section 261, concerning items for which no deduction is allowed, and the regulations related to sections 161 and 261.

(2) *Example 2.*

(i) ***Facts.*** Corp. A enters into an agreement with State T's securities agency (Agency) for violating a securities law by inducing B to make a $100X investment in Corp. C stock, which B lost when the Corp. C stock became worthless. As part of the agreement, Corp. A agrees to pay $100X to B as restitution for B's investment loss, incurred as a result of Corp. A's actions. The agreement specifically states that the $100X payment by Corp. A to B is restitution. The agreement also requires Corp. A to pay a $40X penalty for violating Agency law. Corp. A pays the $140X.

(ii) ***Analysis.*** Corp. A's $100X payment to B is identified in the agreement as restitution. If Corp. A establishes, as provided in paragraph (b)(3) of this section, that the amount paid was for that purpose, paragraph (a) of this section will not disallow Corp. A's deduction for the $100X payment. Under paragraph (a) of this section, Corp. A may not deduct its $40X payment to the Agency because it was paid for Corp. A's violation of Agency law.

(3) *Example 3.*

(i) ***Facts.*** Corp. B is under investigation by State X's environmental enforcement agency for a potential violation of State X's law governing emissions standards. Corp. B enters into an agreement with State X under which it agrees to upgrade the engines in a fleet of vehicles that Corp. B operates to come into compliance with State X's law. Although the agreement does not provide the specific amount Corp. B will incur to upgrade the engines to come into compliance with State X's law, it identifies that Corp. B must upgrade existing engines to lower certain emissions. Under the agreement, Corp. B also agrees to construct a nature center in a local park for the benefit of the community. Instead of paying $12X, to come into compliance with State X's law, Corp. B pays $15X to upgrade the engines to a standard higher than that which the law requires. Corp. B presents evidence to establish that it would cost $12X to upgrade the engines to come into compliance with State X's law.

(ii) ***Analysis.*** Because the agreement describes the specific action Corp. B must take to come into compliance with State X's law, and Corp. B provides evidence, as described in paragraph (b)(3)(ii) of this section, to establish that the agreement obligates it to incur costs to come into compliance with a law, paragraph (a) of this section will not disallow Corp. B's deduction for the $12X Corp. B incurs to come into compliance. Corp. B may also deduct the $3X if it is otherwise deductible under chapter 1 of the Code. However, Corp. B may not deduct the amounts paid to construct the nature center because no facts exist to establish that the amount was paid either to come into compliance with a law or as restitution or remediation.

(4) *Example 4.*

(i) ***Facts.*** Corp. D enters into an agreement with governmental entity, Trade Agency, for engaging in unfair trade practices in violation of Trade Agency laws. The agreement requires Corp. D to pay $80X to a Trade Agency fund, through disgorgement of net profits, to be used exclusively to pay restitution to the consumers harmed by Corp. D's violation of Trade Agency law. Corp. D pays $80X to Trade Agency fund and Trade Agency disburses all amounts in the restitution fund to the harmed consumers.

(ii) ***Analysis.*** The agreement identifies the $80X payment to the fund as restitution. Trade Agency uses the funds exclusively to provide restitution to the harmed consumers and does not use it for discretionary or general enforcement purposes. If Corp. D establishes, as provided in paragraph (b)(3) of this section, that the $80X constitutes restitution under paragraph (e)(4)(i)(B) of this section, paragraph (a) of this section does not apply.

(5) *Example 5.*

(i) ***Facts.*** B, a regulated banking institution, is subject to the supervision of, and annual examinations by governmental entity, R. In the ordinary course of its business, B is required to pay annual assessment fees to R, which fees are used to support R in supervising and examining banking institutions to ensure a safe and sound banking system. Following an annual examination conducted in the ordinary course of B's business, R issues a letter to B identifying concerns with B's internal compliance functions. B takes corrective action to address R's concerns by investing in its internal compliance functions. R does not conduct an investigation or inquiry into B's potential violation of any law.

(ii) ***Analysis.*** The payment of annual assessment fees by B to R in the ordinary course of business is not related to the violation of any law or the investigation or inquiry into the potential violation of any law. In addition, B's costs of taking the corrective action are not related to the violation of any law or the investigation or inquiry into the potential violation of any law as described in section 162(f)(1). Paragraph (a) of this section will not disallow the deduction of the annual assessment fees and the cost of the corrective actions.

(6) *Example 6.*

(i) ***Facts.*** B, a regulated banking institution, is subject to the supervision of, and annual examinations by governmental entity, R. Following an annual examination conducted in the ordinary course of B's business, R pursues an enforcement action against B for violation of banking laws. B and R enter a settlement agreement, pursuant to which B agrees to undertake certain improvements to come into compliance with banking laws and to pay R $20X for violation of banking laws. B pays the $20X.

(ii) ***Analysis.*** If the agreement meets the identification requirement of paragraph (b)(2) of this section and B meets the establishment requirement of paragraph (b)(3) of this section, paragraph (a) of this section will not disallow the deduction of the costs of the corrective actions to come into compliance with banking laws. However, B may not deduct the $20X paid to R because the amount was not paid to come into compliance with a law or as restitution or remediation.

(7) *Example 7.*

(i) ***Facts.*** Corp. C contracts with governmental entity, Q, to design and build a rail project within five years. Corp. C does not complete the project. Q sues Corp. C for breach of contract and damages of $10X. A jury finds Corp. C breached the contract and Corp. C pays $10X to Q.

(ii) ***Analysis.*** The suit arose out of a proprietary contract, wherein Q enforced its rights as a private party. Paragraph (a) of this section will not disallow Corp. C's deduction of the payment of $10X pursuant to this suit.

(8) *Example 8.*

(i) ***Facts.*** Corp. C contracts with governmental entity, Q, to design and build a rail project within five years. Site conditions cause construction delays and Corp. C asks Q to pay $50X in excess of the contracted amount to complete the project. After Q pays for the work, it learns that, at the time it entered the contract with Corp. C, Corp. C knew that certain conditions at the project site would make it challenging to complete the project within five years. Q sues Corp. C for

withholding critical information during contract negotiations in violation of the False Claims Act (FCA). The court enters a judgment in favor of Q pursuant to which Corp. C will pay Q $50X in restitution and $150X in treble damages. Corp. C pays the $200X.

(ii) ***Analysis.*** The suit pertains to Corp. C's violation of the FCA. The order identifies the $50X Corp. C is required to pay as restitution, as described in paragraph (b)(2) of this section. If Corp. C establishes, as provided in paragraph (b)(3) of this section, that the amount paid was for restitution, paragraph (a) of this section will not disallow Corp. C's deduction for the $50X payment. Under paragraph (a) of this section, Corp. C may not deduct the $150X paid for the treble damages imposed for violation of the FCA because the order did not identify all or part of the payment as restitution.

(9) ***Example 9.***

(i) ***Facts.*** Corp. T operates a truck fleet company incorporated in State A. State A requires that all vehicles registered in State A have a vehicle emissions test every two years. Corp. T's 40 trucks take the emissions test on March 1 for which it pays the $15 per vehicle. Under State A law, if a vehicle fails the emissions test, the vehicle owner has 30 days to certify to State A that the vehicle has been repaired and has passed the emissions test. State A imposes a $1X penalty per vehicle for failure to comply with this 30-day rule. Twenty trucks pass; twenty trucks fail. Corp. T does not submit the required certification to State A for the twenty trucks that failed the emissions test. State A imposes a $40X penalty against Corp. T. Corp. T pays the $40X.

(ii) ***Analysis.*** Emissions tests are conducted in the ordinary course of operating a truck fleet company and, therefore, paragraph (a) of this section does not apply to the $600 Corp. T pays for the emissions tests. However, Corp. T may not deduct the $40X penalty for failure to comply with State A requirements because the amount is required to be paid to a government in relation to the violation of a law.

(10) ***Example 10.***

(i) ***Facts.*** Corp. G operates a chain of 20 grocery stores in County X. Under County X health and food safety code and regulations, Corp. G is subject to annual inspections for which Corp. G is required to pay an inspection fee of $40 per store. Pursuant to the annual inspection, the County X health inspector finds violations of County X's health and food safety code and regulations in three of Corp. G's 20 stores. County X bills Corp. G $800 for the annual inspection fees for the 20 stores and a $1,000 fine for each of the three stores, for a total fine of $3,000, for violations of the health and food safety code. Corp. G pays the fees and fines.

(ii) ***Analysis.*** Paragraph (a) of this section will not disallow Corp. G's deduction for the $800 inspection fees paid in the ordinary course of a regulated business. Under paragraph (a) of this section, Corp. G may not deduct the $3,000 fine for violation of the County X health code and food safety ordinances because it was paid to a government in relation to the violation of a law.

(11) ***Example 11.***

(i) ***Facts.*** Corp. G operates a chain of grocery stores in County X. Under County X health and food safety code and regulations, Corp. G is subject to annual inspections. Pursuant to an annual inspection, the County X health inspector finds that the refrigeration system in one of Corp. G's stores does not keep food at the temperature required by the health and food safety code and regulations. The County X health inspector issues a warning letter instructing Corp. G to correct

the violation and bring the refrigeration system into compliance with the law before a reinspection in 60 days or face the imposition of fines if it fails to comply. Corp. G pays $10,000 to bring its refrigeration system into compliance with the law.

(ii) ***Analysis.*** Provided the identification and establishment requirements of paragraphs (b)(2) and (b)(3), respectively, of this section are met, paragraph (a) of this section will not disallow Corp. G's deduction for the $10,000 it pays to bring its refrigeration system into compliance with the law.

(12) ***Example 12.***

(i) ***Facts.*** Corp. G operates a chain of grocery stores in County X. Under County X health and food safety code and regulations, Corp. G is subject to annual inspections. Pursuant to an annual inspection, the County X health inspector finds that the refrigeration system in one of Corp. G's stores does not keep food at the temperature required by the health and food safety code and regulations. The County X health inspector issues a warning letter instructing Corp. G to correct the violation and bring the refrigeration system into compliance with the law before a reinspection in 60 days or face the imposition of fines if it fails to comply. The County X health inspector later reinspects the refrigeration system. Corp. G pays a reinspection fee of $80. During the reinspection, the health inspector finds that Corp. G did not bring its refrigeration system into compliance with the law. The health inspector issues a citation imposing a $250 fine on Corp. G. Corp. G pays the $250 fine.

(ii) ***Analysis.*** Paragraph (a) of this section will disallow Corp. G's deduction for the $80 inspection fee because it is paid in relation to the investigation or inquiry by County X into the potential violation of a law. Paragraph (a) of this section will also disallow Corp. G's deduction for the $250 fine paid for violation of the law.

(13) ***Example 13.***

(i) ***Facts.*** Accounting Firm was convicted of embezzling $500X from Bank in violation of State X law. The court issued an order requiring Accounting Firm to pay $100X in restitution to Bank. The court also issued an order of forfeiture and restitution for $400X, which was seized by the State X officials. Accounting Firm paid $100X to Bank. The $400X seized was deposited with Fund within the State X treasury and, at the discretion of the State X Attorney General, was used to support law enforcement programs.

(ii) ***Analysis.*** Although the order identified the amount forfeited as restitution, paragraph (a) of this section will disallow Accounting Firm's deduction for the $400X forfeited because, under paragraph (e)(4)(i)(B)(I) of this section, it does not constitute restitution. If Accounting Firm establishes, as provided in paragraph (b)(3) of this section, that the $100X constitutes restitution under paragraph (e)(4)(i), paragraph (a) of this section will not disallow Accounting Firm's deduction for the $100X paid, provided the $100X is otherwise deductible under chapter 1.

(g) ***Applicability date.*** The rules of this section apply to taxable years beginning on or after January 19, 2021, except that such rules do not apply to amounts paid or incurred under any order or agreement pursuant to a suit, agreement, or otherwise, which became binding under applicable law before such date, determined without regard to whether all appeals have been exhausted or the time for filing appeals has expired.

[T.D. 9946, 86 FR 4984, Jan. 19, 2021]

§ 1.162-22 Treble damage payments under the antitrust laws.

(a) ***In general.*** In the case of a taxpayer who after December 31, 1969, either is convicted in a criminal action of a violation of the Federal antitrust laws or enters a plea of guilty or *nolo contendere* to an indictment or information charging such a violation, and whose conviction or plea does not occur in a new trial following an appeal of a conviction on or before such date, no deduction shall be allowed under section 162(a) for two-thirds of any amount paid or incurred after December 31, 1969, with respect to—

(1) Any judgment for damages entered against the taxpayer under section 4 of the Clayton Act (15 U.S.C. 15), as amended, on account of such violation or any related violation of the Federal antitrust laws, provided such related violation occurred prior to the date of the final judgment of such conviction, or

(2) Settlement of any action brought under such section 4 on account of such violation or related violation.

For the purposes of this section, where a civil judgment has been entered or a settlement made with respect to a violation of the antitrust laws and a criminal proceeding is based upon the same violation, the criminal proceeding need not have been brought prior to the civil judgment or settlement. If, in his return for any taxable year, a taxpayer claims a deduction for an amount paid or incurred with respect to a judgment or settlement described in the first sentence of this paragraph and is subsequently convicted of a violation of the antitrust laws which makes a portion of such amount unallowable, then the taxpayer shall file an amended return for such taxable year on which the amount of the deduction is appropriately reduced. Attorney's fees, court costs, and other amounts paid or incurred in connection with a controversy under such section 4 which meet the requirements of section 162 are deductible under that section. For purposes of subparagraph (2) of this paragraph, the amount paid or incurred in settlement shall not include amounts attributable to the plaintiff's costs of suit and attorney's fees, to the extent that such costs or fees have actually been paid.

(b) ***Conviction.*** For purposes of paragraph (a) of this section, a taxpayer is convicted of a violation of the antitrust laws if a judgment of conviction (whether or not a final judgment) with respect to such violation has been entered against him, provided a subsequent final judgment of acquittal has not been entered or criminal prosecution with respect to such violation terminated without a final judgment of conviction. During the pendency of an appeal or other action directly contesting a judgment of conviction, the taxpayer should file a protective claim for credit or refund to avoid being barred by the period of limitations on credit or refund under section 6511.

(c) ***Related violation.*** For purposes of this section, a violation of the Federal antitrust laws is related to a subsequent violation if

(1) with respect to the subsequent violation the United States obtains both a judgment in a criminal proceeding and an injunction against the taxpayer, and

(2) the taxpayer's actions which constituted the prior violation would have contravened such injunction if such injunction were applicable at the time of the prior violation.

(d) ***Settlement following a dismissal of an action or amendment of the complaint.*** For purposes of paragraph (a)(2) of this section, an amount may be considered as paid in settlement of an action even though the action is dismissed or otherwise disposed of prior to such settlement or the complaint is amended to eliminate the claim with respect to the violation or related violation.

(e) ***Antitrust laws.*** The term "antitrust laws" as used in section 162(g) and this section shall include the Federal acts enumerated in paragraph (1) of section 1 of the Clayton Act (15 U.S.C. 12), as amended.

(f) ***Examples.*** The application of this section may be illustrated by the following examples:

Example 1. In 1970, the United States instituted a criminal prosecution against X Co., Y Co., A, the president of X Co., and B, the president of Y Co., under section 1 of the Sherman Anti-Trust Act, 15 U.S.C. 1. In the indictment, the defendants were charged with conspiring to fix and maintain prices of electrical transformers from 1965 to 1970. All defendants entered pleas of nolo contendere to these charges. These pleas were accepted and judgments of conviction entered. In a companion civil suit, the United States obtained an injunction prohibiting the defendants from conspiring to fix and maintain prices in the electrical transformer market. Thereafter, Z Co. sued X Co. and Y Co. for $300,000 in treble damages under section 4 of the Clayton Act. Z Co.'s complaint alleged that the criminal conspiracy between X Co. and Y Co. forced Z Co. to pay excessive prices for electrical transformers. X Co. and Y Co. each paid Z Co. $85,000 in full settlement of Z Co.'s action. Of each $85,000 paid, $10,000 was attributable to court costs and attorney's fees actually paid by Z Co. Under section 162(g), X Co. and Y Co. are each precluded from deducting as a trade or business expense more than $35,000 of the $85,000 paid to Z Co. in settlement— $10,000 + [($85,000−$10,000) ÷ 3]

Example 2. Assume the same facts as in example (1) except that Z Co.'s claim for treble damages was based on a conspiracy to fix and maintain prices in the sale of electrical transformers during 1963. Although the criminal prosecution of the defendants did not involve 1963 (a year barred by the applicable criminal statute of limitations when the prosecution was instituted), Z Co.'s pleadings alleged that the civil statute of limitations had been tolled by the defendants' fraudulent concealment of their conspiracy. Since the United States has obtained both a judgment in a criminal proceeding and an injunction against the defendants in connection with their activities from 1965 to 1970, and the alleged actions of the defendants in 1963 would have contravened such injunction if it were applicable in 1963, the alleged violation in 1963 is related to the violation from 1965 to 1970. Accordingly, the tax consequences to X Co. and Y Co. of the payments of $85,000 in settlement of Z Co.'s claim against X Co. and Y Co. are the same as in example (1).

Example 3. Assume the same facts as in example (1) except that Z Co.'s claim for treble damages was based on a conspiracy to fix and maintain prices with respect to electrical insulators for high-tension power poles. Since the civil action was not based on the same violation of the Federal antitrust laws as the criminal action, or on a related violation (a violation which would have contravened the injunction if it were applicable), X Co. and Y Co. are not precluded by section 162(g) from deducting as a trade or business expense the entire $85,000 paid by each in settlement of the civil action.

[T.D. 7217, 37 FR 23916, Nov. 10, 1972]

§ 1.162-24 Travel expenses of state legislators.

(a) ***In general.*** For purposes of section 162(a), in the case of any taxpayer who is a state legislator at any time during the taxable year and who makes an election under section 162(h) for the taxable year—

(1) The taxpayer's place of residence within the legislative district represented by the taxpayer is the taxpayer's home for that taxable year;

(2) The taxpayer is deemed to have expended for living expenses (in connection with the taxpayer's trade or business as a legislator) an amount determined by multiplying the number of legislative days of the taxpayer during the taxable year by the greater of—

(i) The amount generally allowable with respect to those days to employees of the state of which the taxpayer is a legislator for per diem while away from home, to the extent the amount does not exceed 110 percent of the amount described in paragraph (a)(2)(ii) of this section; or

(ii) The Federal per diem with respect to those days for the taxpayer's state capital; and

(3) The taxpayer is deemed to be away from home in the pursuit of a trade or business on each legislative day.

(b) ***Legislative day.*** For purposes of section 162(h)(1) and this section, for any taxpayer who makes an election under section 162(h), a legislative day is any day on which the taxpayer is a state legislator and—

(1) The legislature is in session;

(2) The legislature is not in session for a period that is not longer than 4 consecutive days, without extension for Saturdays, Sundays, or holidays;

(3) The taxpayer's attendance at a meeting of a committee of the legislature is formally recorded; or

(4) The taxpayer's attendance at any session of the legislature that only a limited number of members are expected to attend (such as a *pro forma* session), on any day not described in paragraph (b)(1) or (b)(2) of this section, is formally recorded.

(c) ***Fifty mile rule.*** Section 162(h) and this section do not apply to any taxpayer who is a state legislator and whose place of residence within the legislative district represented by the taxpayer is 50 or fewer miles from the capitol building of the state. For purposes of this paragraph (c), the distance between the taxpayer's place of residence within the legislative district represented by the taxpayer and the capitol building of the state is the shortest of the more commonly traveled routes between the two points.

(d) ***Definitions and special rules.*** The following definitions apply for purposes of section 162(h) and this section.

(1) ***State legislator.*** A taxpayer becomes a state legislator on the day the taxpayer is sworn into office and ceases to be a state legislator on the day following the day on which the taxpayer's term in office ends.

(2) ***Living expenses.*** Living expenses include lodging, meals, and incidental expenses. *Incidental expenses* has the same meaning as in 41 CFR 300-3.1.

(3) ***In session*** —

(i) ***In general.*** For purposes of this section, the legislature of which a taxpayer is a member is in session on any day if, at any time during that day, the members of the legislature are expected to attend and participate as an assembled body of the legislature.

(ii) ***Examples.*** The following examples illustrate the rules of this paragraph (d)(3):

Example 1. B is a member of the legislature of State X. On Day 1, the State X legislature is convened and the members of the legislature are expected to attend and participate. On Day 1, the State X legislature is in session within the meaning of paragraph (d)(3)(i) of this section. B does not attend the session of the State X legislature on Day 1. However, Day 1 is a legislative day for B for purposes of section 162(h)(2)(A) and paragraph (b)(1) of this section.

Example 2. C, D, and E are members of the legislature of State X. On Day 2, the State X legislature is convened for a limited session in which not all members of the legislature are expected to attend and participate. Thus, on Day 2 the legislature is not in session within the meaning of paragraph (d)(3)(i) of this section, and Day 2 is not a legislative day under paragraph (b)(1) of this section. In addition, Day 2 is not a day described in paragraph (b)(2) of this section. C and D are the only members who are called to, and do, attend the limited session on Day 2, and their attendance at the session is formally recorded. E is not called and does not attend. Therefore, Day 2 is a legislative day as to C and D under section 162(h)(2)(B) and paragraph (b)(4) of this section. Day 2 is not a legislative day as to E.

(4) ***Committee of the legislature.*** A committee of the legislature is any group that includes one or more legislators and that is charged with conducting business of the legislature. Committees of the legislature include, but are not limited to, committees to which the legislature refers bills for consideration, committees that the legislature has authorized to conduct inquiries into matters of public concern, and committees charged with the internal administration of the legislature. For purposes of this section, groups that are not considered committees of the legislature include, but are not limited to, groups that promote particular issues, raise campaign funds, or are caucuses of members of a political party.

(5) ***Federal per diem.*** The Federal per diem for any city and day is the maximum amount allowable to employees of the executive branch of the Federal government for living expenses while away from home in pursuit of a trade or business in that city on that day. See 5 U.S.C. 5702 and the regulations under that section.

(e) ***Election*** —

(1) ***Time for making election.*** A taxpayer's election under section 162(h) must be made for each taxable year for which the election is to be in effect and must be made no later than the due date (including extensions) of the taxpayer's Federal income tax return for the taxable year.

(2) ***Manner of making election.*** A taxpayer makes an election under section 162(h) by attaching a statement to the taxpayer's income tax return for the taxable year for which the election is made. The statement must include—

(i) The taxpayer's name, address, and taxpayer identification number;

(ii) A statement that the taxpayer is making an election under section 162(h); and

(iii) Information establishing that the taxpayer is a state legislator entitled to make the election, for example, a statement identifying the taxpayer's state and legislative district and representing that the taxpayer's place of residence in the legislative district is not 50 or fewer miles from the state capitol building.

(3) ***Revocation of election.*** An election under section 162(h) may be revoked only with the consent of the Commissioner. An application for consent to revoke an election must be signed by the taxpayer and filed with the submission processing center with which the election was filed, and must include—

(i) The taxpayer's name, address, and taxpayer identification number;

(ii) A statement that the taxpayer is revoking an election under section 162(h) for a specified year; and

(iii) A statement explaining why the taxpayer seeks to revoke the election.

(f) ***Effect of election on otherwise deductible expenses for travel away from home*** —

(1) ***Legislative days*** —

(i) ***Living expenses.*** For any legislative day for which an election under section 162(h) and this section is in effect, the amount of an electing taxpayer's living expenses while away from home is the greater of the amount of the living expenses—

(A) Specified in paragraph (a)(2) of this section in connection with the trade or business of being a legislator; or

(B) Otherwise allowable under section 162(a)(2) in the pursuit of any trade or business of the taxpayer.

(ii) ***Other expenses.*** For any legislative day for which an election under section 162(h) and this section is in effect, the amount of an electing taxpayer's expenses (other than living expenses) for travel away from home is the sum of the substantiated expenses, such as expenses for travel fares, telephone calls, and local transportation, that are otherwise deductible under section 162(a)(2) in the pursuit of any trade or business of the taxpayer.

(2) ***Non-legislative days.*** For any day that is not a legislative day, the amount of an electing taxpayer's expenses (including amounts for living expenses) for travel away from home is the sum of the substantiated expenses that are otherwise deductible under section 162(a)(2) in the pursuit of any trade or business of the taxpayer.

(g) ***Cross references.*** See § 1.62-1T(e)(4) for rules regarding allocation of unreimbursed expenses of state legislators and section 274(n) for limitations on the amount allowable as a deduction for expenses for or allocable to meals.

(h) ***Effective/applicability date.*** This section applies to expenses paid or incurred, or deemed expended under section 162(h), in taxable years beginning after *April 8, 2010*.

[T.D. 9481, 75 FR 17856, Apr. 8, 2010]

§ 1.162-25 Deductions with respect to noncash fringe benefits.

(a) [Reserved]

(b) ***Employee.*** If an employer provides the use of a vehicle (as defined in § 1.61-21(e)(2)) to an employee as a noncash fringe benefit and includes the entire value of the benefit in the employee's gross income without taking into account any exclusion for a working condition fringe allowable under section 132 and the regulations thereunder, the employee may deduct that value multiplied by the percentage of the total use of the vehicle that is in connection with the employer's trade or business (business value). For taxable years beginning before January 1, 1990, the employee may deduct the business value from gross income in determining adjusted gross income. For taxable years beginning on or after January 1, 1990, the employee may deduct the business value only as a miscellaneous itemized deduction in determining taxable income, subject to the 2-percent floor provided in section 67. If the employer determines the value of the noncash fringe benefit under a special accounting rule that allows the employer to treat the value of benefits provided during the last two months of the calendar year or any shorter period as paid during the subsequent calendar year, then the employee must determine the deduction allowable under this

paragraph (b) without regard to any use of the benefit during those last two months or any shorter period. The employee may not use a cents-per-mile valuation method to determine the deduction allowable under this paragraph (b).

[T.D. 8451, 57 FR 57669, Dec. 7, 1992; 57 FR 60568, Dec. 21, 1992]

§ 1.162-25T Deductions with respect to noncash fringe benefits (temporary).

(a) ***Employer.*** If an employer includes the value of a noncash fringe benefit in an employee's gross income, the employer may not deduct this amount as compensation for services, but rather may deduct only the costs incurred by the employer in providing the benefit to the employee. The employer may be allowed a cost recovery deduction under section 168 or a deduction under section 179 for an expense not chargeable to capital account, or, if the noncash fringe benefit is property leased by the employer, a deduction for the ordinary and necessary business expense of leasing the property.

(b) [Reserved]

(c) ***Examples.*** The following examples illustrate the provisions of this section.

(1) On January 1, 1986, X Company owns and provides the use of an automobile with a fair market value of $20,000 to E, an employee, for the entire calendar year. Both X and E compute taxable income on the basis of the calendar year. Seventy percent of the use of the automobile by E is in connection with X's trade or business. If X uses the special rule provided in § 1.61-21(d) for valuing the availability of the automobile and takes into account the amount excludable as a working condition fringe, X would include $1,680 ($5,600, the Annual Lease Value, less 70 percent of $5,600) in E's gross income for 1986. X may not deduct the amount included in E's income as compensation for services. X may, however, determine a cost recovery deduction under section 168, subject to the limitations under section 280F, for taxable year 1986.

(2) **The facts are the same as in *Example (1)*** of paragraph (c)(1) of this section, except that X includes $5,600 in E's gross income, the value of the noncash fringe benefit without taking into account the amount excludable as a working condition fringe. X may not deduct that amount as compensation for services, but may determine a cost recovery deduction under section 168, subject to the limitations under section 280F. For purposes of determining adjusted gross income, E may deduct $3,920 ($5,600 multiplied by the percent of business use).

[T.D. 8061, 50 FR 46013, Nov. 6, 1985, as amended by T.D. 8063, 50 FR 52312, Dec. 23, 1985; T.D. 8276, 54 FR 51026, Dec. 12, 1989; T.D. 8451, 57 FR 57669, Dec. 7, 1992; T.D. 9849, 84 FR 9233, Mar. 14, 2019]

§ 1.162-27 Certain employee remuneration in excess of $1,000,000 not deductible for taxable years beginning on or after January 1, 1994, and for taxable years beginning prior to January 1, 2018.

(a) ***Scope.*** This section provides rules for the application of the $1 million deduction limitation under section 162(m)(1) for taxable years beginning on or after January 1, 1994, and beginning prior to January 1, 2018, and, as provided in paragraph (j) of this section, for taxable years beginning after December 31, 2017. For rules concerning the applicability of section 162(m)(1) to taxable years beginning after December 31, 2017, see § 1.162-33. Paragraph (b) of this section provides the general rule limiting deductions under section 162(m)(1). Paragraph (c) of this section provides definitions of generally applicable terms. Paragraph (d) of this section provides an exception from the deduction limitation for compensation

payable on a commission basis. Paragraph (e) of this section provides an exception for qualified performance-based compensation. Paragraphs (f) and (g) of this section provide special rules for corporations that become publicly held corporations and payments that are subject to section 280G, respectively. Paragraph (h) of this section provides transition rules, including the rules for contracts that are grandfathered and not subject to section 162(m)(1). Paragraph (j) of this section contains the effective date provisions, which also specify when these rules apply to the deduction for compensation otherwise deductible in a taxable year beginning after December 31, 2017. For rules concerning the deductibility of compensation for services that are not covered by section 162(m)(1) and this section, see section 162(a)(1) and § 1.162-7. This section is not determinative as to whether compensation meets the requirements of section 162(a)(1). For rules concerning the deduction limitation under section 162(m)(6) applicable to certain health insurance providers, see § 1.162-31.

(b) ***Limitation on deduction.*** Section 162(m) precludes a deduction under chapter 1 of the Internal Revenue Code by any publicly held corporation for compensation paid to any covered employee to the extent that the compensation for the taxable year exceeds $1,000,000.

(c) ***Definitions*** —

(1) ***Publicly held corporation*** —

(i) ***General rule.*** A *publicly held corporation* means any corporation issuing any class of common equity securities required to be registered under section 12 of the Exchange Act. A corporation is not considered publicly held if the registration of its equity securities is voluntary. For purposes of this section, whether a corporation is publicly held is determined based solely on whether, as of the last day of its taxable year, the corporation is subject to the reporting obligations of section 12 of the Exchange Act.

(ii) ***Affiliated groups.*** A publicly held corporation includes an affiliated group of corporations, as defined in section 1504 (determined without regard to section 1504(b)). For purposes of this section, however, an affiliated group of corporations does not include any subsidiary that is itself a publicly held corporation. Such a publicly held subsidiary, and its subsidiaries (if any), are separately subject to this section. If a covered employee is paid compensation in a taxable year by more than one member of an affiliated group, compensation paid by each member of the affiliated group is aggregated with compensation paid to the covered employee by all other members of the group. Any amount disallowed as a deduction by this section must be prorated among the payor corporations in proportion to the amount of compensation paid to the covered employee by each such corporation in the taxable year.

(2) ***Covered employee*** —

(i) ***General rule.*** A *covered employee* means any individual who, on the last day of the taxable year, is—

(A) The chief executive officer of the corporation or is acting in such capacity; or

(B) Among the four highest compensated officers (other than the chief executive officer).

(ii) ***Application of rules of the Securities and Exchange Commission.*** Whether an individual is the chief executive officer described in paragraph (c)(2)(i)(A) of this section or an officer described in paragraph (c)(2)(i)(B) of this section is determined pursuant to the executive compensation disclosure rules under the Exchange Act.

(3) ***Compensation*** —

(i) ***In general.*** For purposes of the deduction limitation described in paragraph (b) of this section, *compensation* means the aggregate amount allowable as a deduction under chapter 1 of the Internal Revenue Code for the taxable year (determined without regard to section 162(m)) for remuneration for services performed by a covered employee, whether or not the services were performed during the taxable year.

(ii) ***Exceptions. Compensation*** does not include—

(A) Remuneration covered in section 3121(a)(5)(A) through section 3121(a)(5)(D) (concerning remuneration that is not treated as *wages* for purposes of the Federal Insurance Contributions Act); and

(B) Remuneration consisting of any benefit provided to or on behalf of an employee if, at the time the benefit is provided, it is reasonable to believe that the employee will be able to exclude it from gross income. In addition, compensation does not include salary reduction contributions described in section 3121(v)(1).

(4) ***Compensation Committee.*** The *compensation committee* means the committee of directors (including any subcommittee of directors) of the publicly held corporation that has the authority to establish and administer performance goals described in paragraph (e)(2) of this section, and to certify that performance goals are attained, as described in paragraph (e)(5) of this section. A committee of directors is not treated as failing to have the authority to establish performance goals merely because the goals are ratified by the board of directors of the publicly held corporation or, if applicable, any other committee of the board of directors. See paragraph (e)(3) of this section for rules concerning the composition of the compensation committee.

(5) ***Exchange Act.*** The *Exchange Act* means the Securities Exchange Act of 1934.

(6) ***Examples.*** This paragraph (c) may be illustrated by the following examples:

Example 1. Corporation X is a publicly held corporation with a July 1 to June 30 fiscal year. For Corporation X's taxable year ending on June 30, 1995, Corporation X pays compensation of $2,000,000 to A, an employee. However, A's compensation is not required to be reported to shareholders under the executive compensation disclosure rules of the Exchange Act because A is neither the chief executive officer nor one of the four highest compensated officers employed on the last day of the taxable year. A's compensation is not subject to the deduction limitation of paragraph (b) of this section.

Example 2. C, a covered employee, performs services and receives compensation from Corporations X, Y, and Z, members of an affiliated group of corporations. Corporation X, the parent corporation, is a publicly held corporation. The total compensation paid to C from all affiliated group members is $3,000,000 for the taxable year, of which Corporation X pays $1,500,000; Corporation Y pays $900,000; and Corporation Z pays $600,000. Because the compensation paid by all affiliated group members is aggregated for purposes of section 162(m), $2,000,000 of the aggregate compensation paid is nondeductible. Corporations X, Y, and Z each are treated as paying a ratable portion of the nondeductible compensation. Thus, two thirds of each corporation's payment will be nondeductible. Corporation X has a nondeductible compensation expense of $1,000,000 ($1,500,000 × $2,000,000/$3,000,000). Corporation Y has a nondeductible compensation expense of $600,000 ($900,000 × $2,000,000/$3,000,000). Corporation Z has a nondeductible compensation expense of $400,000 ($600,000 × $2,000,000/$3,000,000).

Example 3. Corporation W, a calendar year taxpayer, has total assets equal to or exceeding $5 million and a class of equity security held of record by 500 or more persons on December 31, 1994. However, under the Exchange Act, Corporation W is not required to file a registration statement with respect to that security until April 30, 1995. Thus, Corporation W is not a publicly held corporation on December 31, 1994, but is a publicly held corporation on December 31, 1995.

Example 4. The facts are the same as in *Example 3,* except that on December 15, 1996, Corporation W files with the Securities and Exchange Commission to disclose that Corporation W is no longer required to be registered under section 12 of the Exchange Act and to terminate its registration of securities under that provision. Because Corporation W is no longer subject to Exchange Act reporting obligations as of December 31, 1996, Corporation W is not a publicly held corporation for taxable year 1996, even though the registration of Corporation W's securities does not terminate until 90 days after Corporation W files with the Securities and Exchange Commission.

(d) ***Exception for compensation paid on a commission basis.*** The deduction limit in paragraph (b) of this section shall not apply to any compensation paid on a commission basis. For this purpose, compensation is paid on a commission basis if the facts and circumstances show that it is paid solely on account of income generated directly by the individual performance of the individual to whom the compensation is paid. Compensation does not fail to be attributable directly to the individual merely because support services, such as secretarial or research services, are utilized in generating the income. However, if compensation is paid on account of broader performance standards, such as income produced by a business unit of the corporation, the compensation does not qualify for the exception provided under this paragraph (d).

(e) ***Exception for qualified performance-based compensation*** —

(1) ***In general.*** The deduction limit in paragraph (b) of this section does not apply to qualified performance-based compensation. Qualified performance-based compensation is compensation that meets all of the requirements of paragraphs (e)(2) through (e)(5) of this section.

(2) ***Performance goal requirement*** —

(i) ***Preestablished goal.*** Qualified performance-based compensation must be paid solely on account of the attainment of one or more preestablished, objective performance goals. A performance goal is considered preestablished if it is established in writing by the compensation committee not later than 90 days after the commencement of the period of service to which the performance goal relates, provided that the outcome is substantially uncertain at the time the compensation committee actually establishes the goal. However, in no event will a performance goal be considered to be preestablished if it is established after 25 percent of the period of service (as scheduled in good faith at the time the goal is established) has elapsed. A performance goal is objective if a third party having knowledge of the relevant facts could determine whether the goal is met. Performance goals can be based on one or more business criteria that apply to the individual, a business unit, or the corporation as a whole. Such business criteria could include, for example, stock price, market share, sales, earnings per share, return on equity, or costs. A performance goal need not, however, be based upon an increase or positive result under a business criterion and could include, for example, maintaining the status quo or limiting economic losses (measured, in each case, by reference to a specific business criterion). A performance goal does not include the mere continued employment of the covered employee. Thus, a vesting provision based solely on continued employment would not constitute a performance goal. See paragraph (e)(2)(vi) of this section for rules on compensation that is based on an increase in the price of stock.

(ii) ***Objective compensation formula.*** A preestablished performance goal must state, in terms of an objective formula or standard, the method for computing the amount of compensation payable to the employee if the goal is attained. A formula or standard is objective if a third party having knowledge of the relevant performance results could calculate the amount to be paid to the employee. In addition, a formula or standard must specify the individual employees or class of employees to which it applies.

(iii) ***Discretion.***

(A) The terms of an objective formula or standard must preclude discretion to increase the amount of compensation payable that would otherwise be due upon attainment of the goal. A performance goal is not discretionary for purposes of this paragraph (e)(2)(iii) merely because the compensation committee reduces or eliminates the compensation or other economic benefit that was due upon attainment of the goal. However, the exercise of negative discretion with respect to one employee is not permitted to result in an increase in the amount payable to another employee. Thus, for example, in the case of a bonus pool, if the amount payable to each employee is stated in terms of a percentage of the pool, the sum of these individual percentages of the pool is not permitted to exceed 100 percent. If the terms of an objective formula or standard fail to preclude discretion to increase the amount of compensation merely because the amount of compensation to be paid upon attainment of the performance goal is based, in whole or in part, on a percentage of salary or base pay and the dollar amount of the salary or base pay is not fixed at the time the performance goal is established, then the objective formula or standard will not be considered discretionary for purposes of this paragraph (e)(2)(iii) if the maximum dollar amount to be paid is fixed at that time.

(B) If compensation is payable upon or after the attainment of a performance goal, and a change is made to accelerate the payment of compensation to an earlier date after the attainment of the goal, the change will be treated as an increase in the amount of compensation, unless the amount of compensation paid is discounted to reasonably reflect the time value of money. If compensation is payable upon or after the attainment of a performance goal, and a change is made to defer the payment of compensation to a later date, any amount paid in excess of the amount that was originally owed to the employee will not be treated as an increase in the amount of compensation if the additional amount is based either on a reasonable rate of interest or on one or more predetermined actual investments (whether or not assets associated with the amount originally owed are actually invested therein) such that the amount payable by the employer at the later date will be based on the actual rate of return of a specific investment (including any decrease as well as any increase in the value of an investment). If compensation is payable in the form of property, a change in the timing of the transfer of that property after the attainment of the goal will not be treated as an increase in the amount of compensation for purposes of this paragraph (e)(2)(iii). Thus, for example, if the terms of a stock grant provide for stock to be transferred after the attainment of a performance goal and the transfer of the stock also is subject to a vesting schedule, a change in the vesting schedule that either accelerates or defers the transfer of stock will not be treated as an increase in the amount of compensation payable under the performance goal.

(C) Compensation attributable to a stock option, stock appreciation right, or other stock-based compensation does not fail to satisfy the requirements of this paragraph (e)(2) to the extent that a change in the grant or award is made to reflect a change in corporate capitalization, such as a stock split or dividend, or a corporate transaction, such as any merger of a corporation into another corporation, any consolidation of two or more corporations into another corporation, any separation of a corporation (including a spinoff or other distribution of stock or property by a corporation), any reorganization of a corporation (whether or not such reorganization comes within the definition of such term in section 368), or any partial or complete liquidation by a corporation.

(iv) ***Grant-by-grant determination.*** The determination of whether compensation satisfies the requirements of this paragraph (e)(2) generally shall be made on a grant-by-grant basis. Thus, for example, whether compensation attributable to a stock option grant satisfies the requirements of this paragraph (e)(2) generally is determined on the basis of the particular grant made and without regard to the terms of any other option grant, or other grant of compensation, to the same or another employee. As a further example, except as provided in paragraph (e)(2)(vi), whether a grant of restricted stock or other stock-based compensation satisfies the requirements of this paragraph (e)(2) is determined without regard to whether dividends, dividend equivalents, or other similar distributions with respect to stock, on such stock-based compensation are payable prior to the attainment of the performance goal. Dividends, dividend equivalents, or other similar distributions with respect to stock that are treated as separate grants under this paragraph (e)(2)(iv) are not performance-based compensation unless they separately satisfy the requirements of this paragraph (e)(2).

(v) ***Compensation contingent upon attainment of performance goal.*** Compensation does not satisfy the requirements of this paragraph (e)(2) if the facts and circumstances indicate that the employee would receive all or part of the compensation regardless of whether the performance goal is attained. Thus, if the payment of compensation under a grant or award is only nominally or partially contingent on attaining a performance goal, none of the compensation payable under the grant or award will be considered performance-based. For example, if an employee is entitled to a bonus under either of two arrangements, where payment under a nonperformance-based arrangement is contingent upon the failure to attain the performance goals under an otherwise performance-based arrangement, then neither arrangement provides for compensation that satisfies the requirements of this paragraph (e)(2). Compensation does not fail to be qualified performance-based compensation merely because the plan allows the compensation to be payable upon death, disability, or change of ownership or control, although compensation actually paid on account of those events prior to the attainment of the performance goal would not satisfy the requirements of this paragraph (e)(2). As an exception to the general rule set forth in the first sentence of paragraph (e)(2)(iv) of this section, the facts-and-circumstances determination referred to in the first sentence of this paragraph (e)(2)(v) is made taking into account all plans, arrangements, and agreements that provide for compensation to the employee.

(vi) ***Application of requirements to stock options and stock appreciation rights*** —

(A) ***In general.*** Compensation attributable to a stock option or a stock appreciation right is deemed to satisfy the requirements of this paragraph (e)(2) if the grant or award is made by the compensation committee; the plan under which the option or right is granted states the maximum number of shares with respect to which options or rights may be granted during a specified period to any individual employee; and, under the terms of the option or

right, the amount of compensation the employee may receive is based solely on an increase in the value of the stock after the date of the grant or award. A plan may satisfy the requirement to provide a maximum number of shares with respect to which stock options and stock appreciation rights may be granted to any individual employee during a specified period if the plan specifies an aggregate maximum number of shares with respect to which stock options, stock appreciation rights, restricted stock, restricted stock units and other equity-based awards that may be granted to any individual employee during a specified period under a plan approved by shareholders in accordance with § 1.162-27(e)(4). If the amount of compensation the employee may receive under the grant or award is not based solely on an increase in the value of the stock after the date of grant or award (for example, in the case of restricted stock, or an option that is granted with an exercise price that is less than the fair market value of the stock as of the date of grant), none of the compensation attributable to the grant or award is qualified performance-based compensation under this paragraph (e)(2)(vi)(A). Whether a stock option grant is based solely on an increase in the value of the stock after the date of grant is determined without regard to any dividend equivalent that may be payable, provided that payment of the dividend equivalent is not made contingent on the exercise of the option. The rule that the compensation attributable to a stock option or stock appreciation right must be based solely on an increase in the value of the stock after the date of grant or award does not apply if the grant or award is made on account of, or if the vesting or exercisability of the grant or award is contingent on, the attainment of a performance goal that satisfies the requirements of this paragraph (e)(2).

(B) ***Cancellation and repricing.*** Compensation attributable to a stock option or stock appreciation right does not satisfy the requirements of this paragraph (e)(2) to the extent that the number of options granted exceeds the maximum number of shares for which options may be granted to the employee as specified in the plan. If an option is canceled, the canceled option continues to be counted against the maximum number of shares for which options may be granted to the employee under the plan. If, after grant, the exercise price of an option is reduced, the transaction is treated as a cancellation of the option and a grant of a new option. In such case, both the option that is deemed to be canceled and the option that is deemed to be granted reduce the maximum number of shares for which options may be granted to the employee under the plan. This paragraph (e)(2)(vi)(B) also applies in the case of a stock appreciation right where, after the award is made, the base amount on which stock appreciation is calculated is reduced to reflect a reduction in the fair market value of stock.

(vii) ***Examples.*** This paragraph (e)(2) may be illustrated by the following examples:

Example 1. No later than 90 days after the start of a fiscal year, but while the outcome is substantially uncertain, Corporation S establishes a bonus plan under which A, the chief executive officer, will receive a cash bonus of $500,000, if year-end corporate sales are increased by at least 5 percent. The compensation committee retains the right, if the performance goal is met, to reduce the bonus payment to A if, in its judgment, other subjective factors warrant a reduction. The bonus will meet the requirements of this paragraph (e)(2).

Example 2. The facts are the same as in *Example 1,* except that the bonus is based on a percentage of Corporation S's total sales for the fiscal year. Because Corporation S is virtually certain to have some sales for the fiscal year, the outcome of the performance goal is not substantially uncertain, and therefore the bonus does not meet the requirements of this paragraph (e)(2).

Example 3. The facts are the same as in *Example 1,* except that the bonus is based on a percentage of Corporation S's total profits for the fiscal year. Although some sales are virtually certain for virtually all public companies, it is substantially uncertain whether a company will have profits for a specified future period even if the company has a history of profitability. Therefore, the bonus will meet the requirements of this paragraph (e)(2).

Example 4. B is the general counsel of Corporation R, which is engaged in patent litigation with Corporation S. Representatives of Corporation S have informally indicated to Corporation R a willingness to settle the litigation for $50,000,000. Subsequently, the compensation committee of Corporation R agrees to pay B a bonus if B obtains a formal settlement for at least $50,000,000. The bonus to B does not meet the requirement of this paragraph (e)(2) because the performance goal was not established at a time when the outcome was substantially uncertain.

Example 5. Corporation S, a public utility, adopts a bonus plan for selected salaried employees that will pay a bonus at the end of a 3-year period of $750,000 each if, at the end of the 3 years, the price of S stock has increased by 10 percent. The plan also provides that the 10-percent goal will automatically adjust upward or downward by the percentage change in a published utilities index. Thus, for example, if the published utilities index shows a net increase of 5 percent over a 3-year period, then the salaried employees would receive a bonus only if Corporation S stock has increased by 15 percent. Conversely, if the published utilities index shows a net decrease of 5 percent over a 3-year period, then the salaried employees would receive a bonus if Corporation S stock has increased by 5 percent. Because these automatic adjustments in the performance goal are preestablished, the bonus meets the requirement of this paragraph (e)(2), notwithstanding the potential changes in the performance goal.

Example 6. The facts are the same as in *Example 5,* except that the bonus plan provides that, at the end of the 3-year period, a bonus of $750,000 will be paid to each salaried employee if either the price of Corporation S stock has increased by 10 percent or the earnings per share on Corporation S stock have increased by 5 percent. If both the earnings-per-share goal and the stock-price goal are preestablished, the compensation committee's discretion to choose to pay a bonus under either of the two goals does not cause any bonus paid under the plan to fail to meet the requirement of this paragraph (e)(2) because each goal independently meets the requirements of this paragraph (e)(2). The choice to pay under either of the two goals is tantamount to the discretion to choose not to pay under one of the goals, as provided in paragraph (e)(2)(iii) of this section.

Example 7. Corporation U establishes a bonus plan under which a specified class of employees will participate in a bonus pool if certain preestablished performance goals are attained. The amount of the bonus pool is determined under an objective formula. Under the terms of the bonus plan, the compensation committee retains the discretion to determine the fraction of the bonus pool that each employee may receive. The bonus plan does not

satisfy the requirements of this paragraph (e)(2). Although the aggregate amount of the bonus plan is determined under an objective formula, a third party could not determine the amount that any individual could receive under the plan.

Example 8. The facts are the same as in *Example 7,* except that the bonus plan provides that a specified share of the bonus pool is payable to each employee, and the total of these shares does not exceed 100% of the pool. The bonus plan satisfies the requirements of this paragraph (e)(2). In addition, the bonus plan will satisfy the requirements of this paragraph (e)(2) even if the compensation committee retains the discretion to reduce the compensation payable to any individual employee, provided that a reduction in the amount of one employee's bonus does not result in an increase in the amount of any other employee's bonus.

Example 9. Corporation V establishes a stock option plan for salaried employees. The terms of the stock option plan specify that no individual salaried employee shall receive options for more than 100,000 shares over any 3-year period. The compensation committee grants options for 50,000 shares to each of several salaried employees. The exercise price of each option is equal to or greater than the fair market value of a share of V stock at the time of each grant. Compensation attributable to the exercise of the options satisfies the requirements of paragraph (e)(2)(vi) of this section. If, however, the terms of the options provide that the exercise price is less than fair market value of a share of V stock at the date of grant, no compensation attributable to the exercise of those options satisfies the requirements of this paragraph (e)(2) unless issuance or exercise of the options was contingent upon the attainment of a preestablished performance goal that satisfies this paragraph (e)(2). If, however, the terms of the plan also provide that Corporation V could grant options to purchase no more than 900,000 shares over any 3-year period, but did not provide a limitation on the number of shares that any individual employee could purchase, then no compensation attributable to the exercise of those options satisfies the requirements of paragraph (e)(2)(vi) of this section.

Example 10. The facts are the same as in *Example 9,* except that, within the same 3-year grant period, the fair market value of Corporation V stock is significantly less than the exercise price of the options. The compensation committee reprices those options to that lower current fair market value of Corporation V stock. The repricing of the options for 50,000 shares held by each salaried employee is treated as the grant of new options for an additional 50,000 shares to each employee. Thus, each of the salaried employees is treated as having received grants for 100,000 shares. Consequently, if any additional options are granted to those employees during the 3-year period, compensation attributable to the exercise of those additional options would not satisfy the requirements of this paragraph (e)(2). The results would be the same if the compensation committee canceled the outstanding options and issued new options to the same employees that were exercisable at the fair market value of Corporation V stock on the date of reissue.

Example 11. Corporation W maintains a plan under which each participating employee may receive incentive stock options, nonqualified stock options, stock appreciation rights, or grants of restricted Corporation W stock. The plan specifies that each participating employee may receive options, stock appreciation rights, restricted stock, or any combination of each, for no more than 20,000 shares over the life of the plan. The plan provides that stock options may be granted with an exercise price of less than, equal to, or greater than fair market value on the date of grant. Options granted with an exercise price

equal to, or greater than, fair market value on the date of grant do not fail to meet the requirements of this paragraph (e)(2) merely because the compensation committee has the discretion to determine the types of awards (*i.e.*, options, rights, or restricted stock) to be granted to each employee or the discretion to issue options or make other compensation awards under the plan that would not meet the requirements of this paragraph (e)(2). Whether an option granted under the plan satisfies the requirements of this paragraph (e)(2) is determined on the basis of the specific terms of the option and without regard to other options or awards under the plan.

Example 12. Corporation X maintains a plan under which stock appreciation rights may be awarded to key employees. The plan permits the compensation committee to make awards under which the amount of compensation payable to the employee is equal to the increase in the stock price plus a percentage "gross up" intended to offset the tax liability of the employee. In addition, the plan permits the compensation committee to make awards under which the amount of compensation payable to the employee is equal to the increase in the stock price, based on the highest price, which is defined as the highest price paid for Corporation X stock (or offered in a tender offer or other arms-length offer) during the 90 days preceding exercise. Compensation attributable to awards under the plan satisfies the requirements of paragraph (e)(2)(vi) of this section, provided that the terms of the plan specify the maximum number of shares for which awards may be made.

Example 13. Corporation W adopts a plan under which a bonus will be paid to the CEO only if there is a 10% increase in earnings per share during the performance period. The plan provides that earnings per share will be calculated without regard to any change in accounting standards that may be required by the Financial Accounting Standards Board after the goal is established. After the goal is established, such a change in accounting standards occurs. Corporation W's reported earnings, for purposes of determining earnings per share under the plan, are adjusted pursuant to this plan provision to factor out this change in standards. This adjustment will not be considered an exercise of impermissible discretion because it is made pursuant to the plan provision.

Example 14. Corporation X adopts a performance-based incentive pay plan with a four-year performance period. Bonuses under the plan are scheduled to be paid in the first year after the end of the performance period (year 5). However, in the second year of the performance period, the compensation committee determines that any bonuses payable in year 5 will instead, for bona fide business reasons, be paid in year 10. The compensation committee also determines that any compensation that would have been payable in year 5 will be adjusted to reflect the delay in payment. The adjustment will be based on the greater of the future rate of return of a specified mutual fund that invests in blue chip stocks or of a specified venture capital investment over the five-year deferral period. Each of these investments, considered by itself, is a predetermined actual investment because it is based on the future rate of return of an actual investment. However, the adjustment in this case is not based on predetermined actual investments within the meaning of paragraph (e)(2)(iii)(B) of this section because the amount payable by Corporation X in year 10 will be based on the greater of the two investment returns and, thus, will not be based on the actual rate of return on either specific investment.

Example 15. The facts are the same as in *Example 14,* except that the increase will be based on Moody's Average Corporate Bond Yield over the five-year deferral period. Because this index reflects a reasonable rate of interest, the increase in the compensation payable that is based on the index's rate of return is not considered an impermissible increase in the amount of compensation payable under the formula.

Example 16. The facts are the same as in *Example 14,* except that the increase will be based on the rate of return for the Standard & Poor's 500 Index. This index does not measure interest rates and thus does not represent a reasonable rate of interest. In addition, this index does not represent an actual investment. Therefore, any additional compensation payable based on the rate of return of this index will result in an impermissible increase in the amount payable under the formula. If, in contrast, the increase were based on the rate of return of an existing mutual fund that is invested in a manner that seeks to approximate the Standard & Poor's 500 Index, the increase would be based on a predetermined actual investment within the meaning of paragraph (e)(2)(iii)(B) of this section and thus would not result in an impermissible increase in the amount payable under the formula.

(3) ***Outside directors*** —

(i) ***General rule.*** The performance goal under which compensation is paid must be established by a compensation committee comprised solely of two or more outside directors. A director is an outside director if the director—

(A) Is not a current employee of the publicly held corporation;

(B) Is not a former employee of the publicly held corporation who receives compensation for prior services (other than benefits under a tax-qualified retirement plan) during the taxable year;

(C) Has not been an officer of the publicly held corporation; and

(D) Does not receive remuneration from the publicly held corporation, either directly or indirectly, in any capacity other than as a director. For this purpose, remuneration includes any payment in exchange for goods or services.

(ii) ***Remuneration received.*** For purposes of this paragraph (e)(3), remuneration is received, directly or indirectly, by a director in each of the following circumstances:

(A) If remuneration is paid, directly or indirectly, to the director personally or to an entity in which the director has a beneficial ownership interest of greater than 50 percent. For this purpose, remuneration is considered paid when actually paid (and throughout the remainder of that taxable year of the corporation) and, if earlier, throughout the period when a contract or agreement to pay remuneration is outstanding.

(B) If remuneration, other than de minimis remuneration, was paid by the publicly held corporation in its preceding taxable year to an entity in which the director has a beneficial ownership interest of at least 5 percent but not more than 50 percent. For this purpose, remuneration is considered paid when actually paid or, if earlier, when the publicly held corporation becomes liable to pay it.

(C) If remuneration, other than de minimis remuneration, was paid by the publicly held corporation in its preceding taxable year to an entity by which the director is employed or self-employed other than as a director. For this purpose, remuneration is considered paid when actually paid or, if earlier, when the publicly held corporation becomes liable to pay it.

(iii) ***De minimis remuneration*** —

(A) ***In general.*** For purposes of paragraphs (e)(3)(ii)(B) and (C) of this section, remuneration that was paid by the publicly held corporation in its preceding taxable year to an entity is de minimis if payments to the entity did not exceed 5 percent of the gross revenue of the entity for its taxable year ending with or within that preceding taxable year of the publicly held corporation.

(B) ***Remuneration for personal services and substantial owners.*** Notwithstanding paragraph (e)(3)(iii)(A) of this section, remuneration in excess of $60,000 is not de minimis if the remuneration is paid to an entity described in paragraph (e)(3)(ii)(B) of this section, or is paid for personal services to an entity described in paragraph (e)(3)(ii)(C) of this section.

(iv) ***Remuneration for personal services.*** For purposes of paragraph (e)(3)(iii)(B) of this section, remuneration from a publicly held corporation is for personal services if—

(A) The remuneration is paid to an entity for personal or professional services, consisting of legal, accounting, investment banking, and management consulting services (and other similar services that may be specified by the Commissioner in revenue rulings, notices, or other guidance published in the Internal Revenue Bulletin), performed for the publicly held corporation, and the remuneration is not for services that are incidental to the purchase of goods or to the purchase of services that are not personal services; and

(B) The director performs significant services (whether or not as an employee) for the corporation, division, or similar organization (within the entity) that actually provides the services described in paragraph (e)(3)(iv)(A) of this section to the publicly held corporation, or more than 50 percent of the entity's gross revenues (for the entity's preceding taxable year) are derived from that corporation, subsidiary, or similar organization.

(v) ***Entity defined.*** For purposes of this paragraph (e)(3), entity means an organization that is a sole proprietorship, trust, estate, partnership, or corporation. The term also includes an affiliated group of corporations as defined in section 1504 (determined without regard to section 1504(b)) and a group of organizations that would be an affiliated group but for the fact that one or more of the organizations are not incorporated. However, the aggregation rules referred to in the preceding sentence do not apply for purposes of determining whether a director has a beneficial ownership interest of at least 5 percent or greater than 50 percent.

(vi) ***Employees and former officers.*** Whether a director is an employee or a former officer is determined on the basis of the facts at the time that the individual is serving as a director on the compensation committee. Thus, a director is not precluded from being an outside director solely because the director is a former officer of a corporation that previously was an affiliated corporation of the publicly held corporation. For example, a director of a parent corporation of an affiliated group is not precluded from being an outside director solely because that director is a former officer of an affiliated subsidiary that was spun off or liquidated. However, an outside director would no longer be an outside director if a corporation in which the director was previously an officer became an affiliated corporation of the publicly held corporation.

(vii) ***Officer.*** Solely for purposes of this paragraph (e)(3), *officer* means an administrative executive who is or was in regular and continued service. The term implies continuity of service and excludes those employed for a special and single transaction. An individual who merely has (or had) the title of officer but not the authority of an officer is not considered an officer. The determination of whether an individual is or was an officer is based on all of the facts and circumstances in the particular case, including without limitation the source of the individual's authority, the term for which the individual is elected or appointed, and the nature and extent of the individual's duties.

(viii) ***Members of affiliated groups.*** For purposes of this paragraph (e)(3), the outside directors of the publicly held member of an affiliated group are treated as the outside directors of all members of the affiliated group.

(ix) ***Examples.*** This paragraph (e)(3) may be illustrated by the following examples:

Example 1. Corporations X and Y are members of an affiliated group of corporations as defined in section 1504, until July 1, 1994, when Y is sold to another group. Prior to the sale, A served as an officer of Corporation Y. After July 1, 1994, A is not treated as a former officer of Corporation X by reason of having been an officer of Y.

Example 2. Corporation Z, a calendar-year taxpayer, uses the services of a law firm by which B is employed, but in which B has a less-than-5-percent ownership interest. The law firm reports income on a July 1 to June 30 basis. Corporation Z appoints B to serve on its compensation committee for calendar year 1998 after determining that, in calendar year 1997, it did not become liable to the law firm for remuneration exceeding the lesser of $60,000 or five percent of the law firm's gross revenue (calculated for the year ending June 30, 1997). On October 1, 1998, Corporation Z becomes liable to pay remuneration of $50,000 to the law firm on June 30, 1999. For the year ending June 30, 1998, the law firm's gross revenue was less than $1 million. Thus, in calendar year 1999, B is not an outside director. However, B may satisfy the requirements for an outside director in calendar year 2000, if, in calendar year 1999, Corporation Z does not become liable to the law firm for additional remuneration. This is because the remuneration actually paid on June 30, 1999 was considered paid on October 1, 1998 under paragraph (e)(3)(ii)(C) of this section.

Example 3. Corporation Z, a publicly held corporation, purchases goods from Corporation A. D, an executive and less- than-5-percent owner of Corporation A, sits on the board of directors of Corporation Z and on its compensation committee. For 1997, Corporation Z obtains representations to the effect that D is not eligible for any commission for D's sales to Corporation Z and that, for purposes of determining D's compensation for 1997, Corporation A's sales to Corporation Z are not otherwise treated differently than sales to other customers of Corporation A (including its affiliates, if any) or are irrelevant. In addition, Corporation Z has no reason to believe that these representations are inaccurate or that it is otherwise paying remuneration indirectly to D personally. Thus, in 1997, no remuneration is considered paid by Corporation Z indirectly to D personally under paragraph (e)(3)(ii)(A) of this section.

Example 4. (i) Corporation W, a publicly held corporation, purchases goods from Corporation T. C, an executive and less- than-5-percent owner of Corporation T, sits on the board of directors of Corporation W and on its compensation committee.

> Corporation T develops a new product and agrees on January 1, 1998 to pay C a bonus of $500,000 if Corporation W contracts to purchase the product. Even if Corporation W purchases the new product, sales to Corporation W will represent less than 5 percent of Corporation T's gross revenues. In 1999, Corporation W contracts to purchase the new product and, in 2000, C receives the $500,000 bonus from Corporation T. In 1998, 1999, and 2000, Corporation W does not obtain any representations relating to indirect remuneration to C personally (such as the representations described in *Example 3*).
> (ii) Thus, in 1998, 1999, and 2000, remuneration is considered paid by Corporation W indirectly to C personally under paragraph (e)(3)(ii)(A) of this section. Accordingly, in 1998, 1999, and 2000, C is not an outside director of Corporation W. The result would have been the same if Corporation W had obtained appropriate representations but nevertheless had reason to believe that it was paying remuneration indirectly to C personally.

Example 5. Corporation R, a publicly held corporation, purchases utility service from Corporation Q, a public utility. The chief executive officer, and less-than-5-percent owner, of Corporation Q is a director of Corporation R. Corporation R pays Corporation Q more than $60,000 per year for the utility service, but less than 5 percent of Corporation Q's gross revenues. Because utility services are not personal services, the fees paid are not subject to the $60,000 de minimis rule for remuneration for personal services within the meaning of paragraph (e)(3)(iii)(B) of this section. Thus, the chief executive officer qualifies as an outside director of Corporation R, unless disqualified on some other basis.

Example 6. Corporation A, a publicly held corporation, purchases management consulting services from Division S of Conglomerate P. The chief financial officer of Division S is a director of Corporation A. Corporation A pays more than $60,000 per year for the management consulting services, but less than 5 percent of Conglomerate P's gross revenues. Because management consulting services are personal services within the meaning of paragraph (e)(3)(iv)(A) of this section, and the chief financial officer performs significant services for Division S, the fees paid are subject to the $60,000 de minimis rule as remuneration for personal services. Thus, the chief financial officer does not qualify as an outside director of Corporation A.

Example 7. The facts are the same as in *Example 6,* except that the chief executive officer, and less-than-5-percent owner, of the parent company of Conglomerate P is a director of Corporation A and does not perform significant services for Division S. If the gross revenues of Division S do not constitute more than 50 percent of the gross revenues of Conglomerate P for P's preceding taxable year, the chief executive officer will qualify as an outside director of Corporation A, unless disqualified on some other basis.

(4) ***Shareholder approval requirement*** —

(i) ***General rule.*** The material terms of the performance goal under which the compensation is to be paid must be disclosed to and subsequently approved by the shareholders of the publicly held corporation before the compensation is paid. The requirements of this paragraph (e)(4) are not satisfied if the compensation would be paid regardless of whether the material terms

are approved by shareholders. The material terms include the employees eligible to receive compensation; a description of the business criteria on which the performance goal is based; and either the maximum amount of compensation that could be paid to any employee or the formula used to calculate the amount of compensation to be paid to the employee if the performance goal is attained (except that, in the case of a formula based, in whole or in part, on a percentage of salary or base pay, the maximum dollar amount of compensation that could be paid to the employee must be disclosed).

(ii) ***Eligible employees.*** Disclosure of the employees eligible to receive compensation need not be so specific as to identify the particular individuals by name. A general description of the class of eligible employees by title or class is sufficient, such as the chief executive officer and vice presidents, or all salaried employees, all executive officers, or all key employees.

(iii) ***Description of business criteria*** —

(A) ***In general.*** Disclosure of the business criteria on which the performance goal is based need not include the specific targets that must be satisfied under the performance goal. For example, if a bonus plan provides that a bonus will be paid if earnings per share increase by 10 percent, the 10-percent figure is a target that need not be disclosed to shareholders. However, in that case, disclosure must be made that the bonus plan is based on an earnings-per-share business criterion. In the case of a plan under which employees may be granted stock options or stock appreciation rights, no specific description of the business criteria is required if the grants or awards are based on a stock price that is no less than current fair market value.

(B) ***Disclosure of confidential information.*** The requirements of this paragraph (e)(4) may be satisfied even though information that otherwise would be a material term of a performance goal is not disclosed to shareholders, provided that the compensation committee determines that the information is confidential commercial or business information, the disclosure of which would have an adverse effect on the publicly held corporation. Whether disclosure would adversely affect the corporation is determined on the basis of the facts and circumstances. If the compensation committee makes such a determination, the disclosure to shareholders must state the compensation committee's belief that the information is confidential commercial or business information, the disclosure of which would adversely affect the company. In addition, the ability not to disclose confidential information does not eliminate the requirement that disclosure be made of the maximum amount of compensation that is payable to an individual under a performance goal. Confidential information does not include the identity of an executive or the class of executives to which a performance goal applies or the amount of compensation that is payable if the goal is satisfied.

(iv) ***Description of compensation.*** Disclosure as to the compensation payable under a performance goal must be specific enough so that shareholders can determine the maximum amount of compensation that could be paid to any individual employee during a specified period. If the terms of the performance goal do not provide for a maximum dollar amount, the disclosure must include the formula under which the compensation would be calculated. Thus, if compensation attributable to the exercise of stock options is equal to the difference between the exercise price and the current value of the stock, then disclosure of the maximum number of shares for which grants may be made to any individual employee during a specified period and the exercise price of those options (for example, fair market value on date of grant) would

satisfy the requirements of this paragraph (e)(4)(iv). In that case, shareholders could calculate the maximum amount of compensation that would be attributable to the exercise of options on the basis of their assumptions as to the future stock price.

(v) ***Disclosure requirements of the Securities and Exchange Commission.*** To the extent not otherwise specifically provided in this paragraph (e)(4), whether the material terms of a performance goal are adequately disclosed to shareholders is determined under the same standards as apply under the Exchange Act.

(vi) ***Frequency of disclosure.*** Once the material terms of a performance goal are disclosed to and approved by shareholders, no additional disclosure or approval is required unless the compensation committee changes the material terms of the performance goal. If, however, the compensation committee has authority to change the targets under a performance goal after shareholder approval of the goal, material terms of the performance goal must be disclosed to and reapproved by shareholders no later than the first shareholder meeting that occurs in the fifth year following the year in which shareholders previously approved the performance goal.

(vii) ***Shareholder vote.*** For purposes of this paragraph (e)(4), the material terms of a performance goal are approved by shareholders if, in a separate vote, a majority of the votes cast on the issue (including abstentions to the extent abstentions are counted as voting under applicable state law) are cast in favor of approval.

(viii) ***Members of affiliated group.*** For purposes of this paragraph (e)(4), the shareholders of the publicly held member of the affiliated group are treated as the shareholders of all members of the affiliated group.

(ix) ***Examples.*** This paragraph (e)(4) may be illustrated by the following examples:

Example 1. Corporation X adopts a plan that will pay a specified class of its executives an annual cash bonus based on the overall increase in corporate sales during the year. Under the terms of the plan, the cash bonus of each executive equals $100,000 multiplied by the number of percentage points by which sales increase in the current year when compared to the prior year. Corporation X discloses to its shareholders prior to the vote both the class of executives eligible to receive awards and the annual formula of $100,000 multiplied by the percentage increase in sales. This disclosure meets the requirements of this paragraph (e)(4). Because the compensation committee does not have the authority to establish a different target under the plan, Corporation X need not redisclose to its shareholders and obtain their reapproval of the material terms of the plan until those material terms are changed.

Example 2. The facts are the same as in *Example 1* except that Corporation X discloses only that bonuses will be paid on the basis of the annual increase in sales. This disclosure does not meet the requirements of this paragraph (e)(4) because it does not include the formula for calculating the compensation or a maximum amount of compensation to be paid if the performance goal is satisfied.

Example 3. Corporation Y adopts an incentive compensation plan in 1995 that will pay a specified class of its executives a bonus every 3 years based on the following 3 factors: increases in earnings per share, reduction in costs for specified divisions, and increases in sales by specified divisions. The bonus is payable in cash or in Corporation Y stock, at the option of the executive. Under the terms of the plan, prior to the beginning of each 3-year period, the compensation committee determines the specific targets under each of the

three factors (*i.e.*, the amount of the increase in earnings per share, the reduction in costs, and the amount of sales) that must be met in order for the executives to receive a bonus. Under the terms of the plan, the compensation committee retains the discretion to determine whether a bonus will be paid under any one of the goals. The terms of the plan also specify that no executive may receive a bonus in excess of $1,500,000 for any 3-year period. To satisfy the requirements of this paragraph (e)(4), Corporation Y obtains shareholder approval of the plan at its 1995 annual shareholder meeting. In the proxy statement issued to shareholders, Corporation Y need not disclose to shareholders the specific targets that are set by the compensation committee. However, Corporation Y must disclose that bonuses are paid on the basis of earnings per share, reductions in costs, and increases in sales of specified divisions. Corporation Y also must disclose the maximum amount of compensation that any executive may receive under the plan is $1,500,000 per 3-year period. Unless changes in the material terms of the plan are made earlier, Corporation Y need not disclose the material terms of the plan to the shareholders and obtain their reapproval until the first shareholders' meeting held in 2000.

Example 4. The same facts as in *Example 3,* except that prior to the beginning of the second 3-year period, the compensation committee determines that different targets will be set under the plan for that period with regard to all three of the performance criteria (*i.e.*, earnings per share, reductions in costs, and increases in sales). In addition, the compensation committee raises the maximum dollar amount that can be paid under the plan for a 3-year period to $2,000,000. The increase in the maximum dollar amount of compensation under the plan is a changed material term. Thus, to satisfy the requirements of this paragraph (e)(4), Corporation Y must disclose to and obtain approval by the shareholders of the plan as amended.

Example 5. In 1998, Corporation Z establishes a plan under which a specified group of executives will receive a cash bonus not to exceed $750,000 each if a new product that has been in development is completed and ready for sale to customers by January 1, 2000. Although the completion of the new product is a material term of the performance goal under this paragraph (e)(4), the compensation committee determines that the disclosure to shareholders of the performance goal would adversely affect Corporation Z because its competitors would be made aware of the existence and timing of its new product. In this case, the requirements of this paragraph (e)(4) are satisfied if all other material terms, including the maximum amount of compensation, are disclosed and the disclosure affirmatively states that the terms of the performance goal are not being disclosed because the compensation committee has determined that those terms include confidential information, the disclosure of which would adversely affect Corporation Z.

(5) ***Compensation committee certification.*** The compensation committee must certify in writing prior to payment of the compensation that the performance goals and any other material terms were in fact satisfied. For this purpose, approved minutes of the compensation committee meeting in which the certification is made are treated as a written certification. Certification by the compensation committee is not required for compensation that is attributable solely to the increase in the value of the stock of the publicly held corporation.

(f) ***Companies that become publicly held, spinoffs, and similar transactions*** —

(1) ***In general.*** In the case of a corporation that was not a publicly held corporation and then becomes a publicly held corporation, the deduction limit of paragraph (b) of this section does not apply to any remuneration paid pursuant to a compensation plan or agreement that existed during the period in which the corporation was not publicly held. However, in the case of such a corporation that becomes publicly held in connection with an initial public offering, this relief applies only to the extent that the prospectus accompanying the initial public offering disclosed information concerning those plans or agreements that satisfied all applicable securities laws then in effect. In accordance with paragraph (c)(1)(ii) of this section, a corporation that is a member of an affiliated group that includes a publicly held corporation is considered publicly held and, therefore, cannot rely on this paragraph (f)(1).

(2) ***Reliance period.*** Paragraph (f)(1) of this section may be relied upon until the earliest of—

(i) The expiration of the plan or agreement;

(ii) The material modification of the plan or agreement, within the meaning of paragraph (h)(1)(iii) of this section;

(iii) The issuance of all employer stock and other compensation that has been allocated under the plan; or

(iv) The first meeting of shareholders at which directors are to be elected that occurs after the close of the third calendar year following the calendar year in which the initial public offering occurs or, in the case of a privately held corporation that becomes publicly held without an initial public offering, the first calendar year following the calendar year in which the corporation becomes publicly held.

(3) ***Stock-based compensation.*** Paragraph (f)(1) of this section will apply to any compensation received pursuant to the exercise of a stock option or stock appreciation right, or the substantial vesting of restricted property, granted under a plan or agreement described in paragraph (f)(1) of this section if the grant occurs on or before the earliest of the events specified in paragraph (f)(2) of this section. This paragraph does not apply to any form of stock-based compensation other than the forms listed in the immediately preceding sentence. Thus, for example, compensation payable under a restricted stock unit arrangement or a phantom stock arrangement must be paid, rather than merely granted, on or before the occurrence of the earliest of the events specified in paragraph (f)(2) of this section in order for paragraph (f)(1) of this section to apply.

(4) ***Subsidiaries that become separate publicly held corporations*** —

(i) ***In general.*** If a subsidiary that is a member of the affiliated group described in paragraph (c)(1)(ii) of this section becomes a separate publicly held corporation (whether by spinoff or otherwise), any remuneration paid to covered employees of the new publicly held corporation will satisfy the exception for performance-based compensation described in paragraph (e) of this section if the conditions in either paragraph (f)(4)(ii) or (f)(4)(iii) of this section are satisfied.

(ii) ***Prior establishment and approval.*** Remuneration satisfies the requirements of this paragraph (f)(4)(ii) if the remuneration satisfies the requirements for performance-based compensation set forth in paragraphs (e)(2), (e)(3), and (e)(4) of this section (by application of paragraphs (e)(3)(viii) and (e)(4)(viii) of this section) before the corporation becomes a separate publicly held corporation, and the certification required by paragraph (e)(5) of this section is made by the compensation committee of the new publicly held corporation (but if the performance

goals are attained before the corporation becomes a separate publicly held corporation, the certification may be made by the compensation committee referred to in paragraph (e)(3)(viii) of this section before it becomes a separate publicly held corporation). Thus, this paragraph (f)(4)(ii) requires that the outside directors and shareholders (within the meaning of paragraphs (e)(3)(viii) and (e)(4)(viii) of this section) of the corporation before it becomes a separate publicly held corporation establish and approve, respectively, the performance-based compensation for the covered employees of the new publicly held corporation in accordance with paragraphs (e)(3) and (e)(4) of this section.

(iii) ***Transition period.*** Remuneration satisfies the requirements of this paragraph (f)(4)(iii) if the remuneration satisfies all of the requirements of paragraphs (e)(2), (e)(3), and (e)(5) of this section. The outside directors (within the meaning of paragraph (e)(3)(viii) of this section) of the corporation before it becomes a separate publicly held corporation, or the outside directors of the new publicly held corporation, may establish and administer the performance goals for the covered employees of the new publicly held corporation for purposes of satisfying the requirements of paragraphs (e)(2) and (e)(3) of this section. The certification required by paragraph (e)(5) of this section must be made by the compensation committee of the new publicly held corporation. However, a taxpayer may rely on this paragraph (f)(4)(iii) to satisfy the requirements of paragraph (e) of this section only for compensation paid, or stock options, stock appreciation rights, or restricted property granted, prior to the first regularly scheduled meeting of the shareholders of the new publicly held corporation that occurs more than 12 months after the date the corporation becomes a separate publicly held corporation. Compensation paid, or stock options, stock appreciation rights, or restricted property granted, on or after the date of that meeting of shareholders must satisfy all requirements of paragraph (e) of this section, including the shareholder approval requirement of paragraph (e)(4) of this section, in order to satisfy the requirements for performance-based compensation.

(5) ***Example.*** The following example illustrates the application of paragraph (f)(4)(ii) of this section:

Example. Corporation P, which is publicly held, decides to spin off Corporation S, a wholly owned subsidiary of Corporation P. After the spinoff, Corporation S will be a separate publicly held corporation. Before the spinoff, the compensation committee of Corporation P, pursuant to paragraph (e)(3)(viii) of this section, establishes a bonus plan for the executives of Corporation S that provides for bonuses payable after the spinoff and that satisfies the requirements of paragraph (e)(2) of this section. If, pursuant to paragraph (e)(4)(viii) of this section, the shareholders of Corporation P approve the plan prior to the spinoff, that approval will satisfy the requirements of paragraph (e)(4) of this section with respect to compensation paid pursuant to the bonus plan after the spinoff. However, the compensation committee of Corporation S will be required to certify that the goals are satisfied prior to the payment of the bonuses in order for the bonuses to be considered performance-based compensation.

(g) ***Coordination with disallowed excess parachute payments.*** The $1,000,000 limitation in paragraph (b) of this section is reduced (but not below zero) by the amount (if any) that would have been included in the compensation of the covered employee for the taxable year but for being disallowed by reason of section 280G. For example, assume that during a taxable year a corporation pays $1,500,000 to a covered employee and no portion satisfies the exception in paragraph (d) of this section for commissions or paragraph (e) of this section for qualified performance-based compensation. Of the $1,500,000, $600,000 is an excess parachute payment, as defined in section 280G(b)(1) and is disallowed by reason of that

section. Because the excess parachute payment reduces the limitation of paragraph (b) of this section, the corporation can deduct $400,000, and $500,000 of the otherwise deductible amount is nondeductible by reason of section 162(m).

(h) *Transition rules* —

(1) *Compensation payable under a written binding contract which was in effect on February 17, 1993* —

(i) ***General rule.*** The deduction limit of paragraph (b) of this section does not apply to any compensation payable under a written binding contract that was in effect on February 17, 1993. The preceding sentence does not apply unless, under applicable state law, the corporation is obligated to pay the compensation if the employee performs services. However, the deduction limit of paragraph (b) of this section does apply to a contract that is renewed after February 17, 1993. A written binding contract that is terminable or cancelable by the corporation after February 17, 1993, without the employee's consent is treated as a new contract as of the date that any such termination or cancellation, if made, would be effective. Thus, for example, if the terms of a contract provide that it will be automatically renewed as of a certain date unless either the corporation or the employee gives notice of termination of the contract at least 30 days before that date, the contract is treated as a new contract as of the date that termination would be effective if that notice were given. Similarly, for example, if the terms of a contract provide that the contract will be terminated or canceled as of a certain date unless either the corporation or the employee elects to renew within 30 days of that date, the contract is treated as renewed by the corporation as of that date. Alternatively, if the corporation will remain legally obligated by the terms of a contract beyond a certain date at the sole discretion of the employee, the contract will not be treated as a new contract as of that date if the employee exercises the discretion to keep the corporation bound to the contract. A contract is not treated as terminable or cancelable if it can be terminated or canceled only by terminating the employment relationship of the employee.

(ii) ***Compensation payable under a plan or arrangement.*** If a compensation plan or arrangement meets the requirements of paragraph (h)(1)(i) of this section, the compensation paid to an employee pursuant to the plan or arrangement will not be subject to the deduction limit of paragraph (b) of this section even though the employee was not eligible to participate in the plan as of February 17, 1993. However, the preceding sentence does not apply unless the employee was employed on February 17, 1993, by the corporation that maintained the plan or arrangement, or the employee had the right to participate in the plan or arrangement under a written binding contract as of that date.

(iii) ***Material modifications.***

(A) Paragraph (h)(1)(i) of this section will not apply to any written binding contract that is materially modified. A material modification occurs when the contract is amended to increase the amount of compensation payable to the employee. If a binding written contract is materially modified, it is treated as a new contract entered into as of the date of the material modification. Thus, amounts received by an employee under the contract prior to a material modification are not affected, but amounts received subsequent to the material modification are not treated as paid under a binding, written contract described in paragraph (h)(1)(i) of this section.

(B) A modification of the contract that accelerates the payment of compensation will be treated as a material modification unless the amount of compensation paid is discounted to reasonably reflect the time value of money. If the contract is modified to defer the payment of compensation, any compensation paid in excess of the amount that was originally payable to the employee under the contract will not be treated as a material modification if the additional amount is based on either a reasonable rate of interest or one or more predetermined actual investments (whether or not assets associated with the amount originally owed are actually invested therein) such that the amount payable by the employer at the later date will be based on the actual rate of return of the specific investment (including any decrease as well as any increase in the value of the investment).

(C) The adoption of a supplemental contract or agreement that provides for increased compensation, or the payment of additional compensation, is a material modification of a binding, written contract where the facts and circumstances show that the additional compensation is paid on the basis of substantially the same elements or conditions as the compensation that is otherwise paid under the written binding contract. However, a material modification of a written binding contract does not include a supplemental payment that is equal to or less than a reasonable cost-of-living increase over the payment made in the preceding year under that written binding contract. In addition, a supplemental payment of compensation that satisfies the requirements of qualified performance-based compensation in paragraph (e) of this section will not be treated as a material modification.

(iv) Examples. The following examples illustrate the exception of this paragraph (h)(1):

Example 1. Corporation X executed a 3-year compensation arrangement with C on February 15, 1993, that constitutes a written binding contract under applicable state law. The terms of the arrangement provide for automatic extension after the 3-year term for additional 1-year periods, unless the corporation exercises its option to terminate the arrangement within 30 days of the end of the 3-year term or, thereafter, within 30 days before each anniversary date. Termination of the compensation arrangement does not require the termination of C's employment relationship with Corporation X. Unless terminated, the arrangement is treated as renewed on February 15, 1996, and the deduction limit of paragraph (b) of this section applies to payments under the arrangement after that date.

Example 2. Corporation Y executed a 5-year employment agreement with B on January 1, 1992, providing for a salary of $900,000 per year. Assume that this agreement constitutes a written binding contract under applicable state law. In 1992 and 1993, B receives the salary of $900,000 per year. In 1994, Corporation Y increases B's salary with a payment of $20,000. The $20,000 supplemental payment does not constitute a material modification of the written binding contract because the $20,000 payment is less than or equal to a reasonable cost-of-living increase from 1993. However, the $20,000 supplemental payment is subject to the limitation in paragraph (b) of this section. On January 1, 1995, Corporation Y increases B's salary to $1,200,000. The $280,000 supplemental payment is a material modification of the written binding contract because the additional compensation is paid on the basis of substantially the same elements or conditions as the compensation that is otherwise paid under the written binding contract and it is greater than a reasonable, annual cost-of-living

increase. Because the written binding contract is materially modified as of January 1, 1995, all compensation paid to B in 1995 and thereafter is subject to the deduction limitation of section 162(m).

Example 3. Assume the same facts as in *Example 2,* except that instead of an increase in salary, B receives a restricted stock grant subject to B's continued employment for the balance of the contract. The restricted stock grant is not a material modification of the binding written contract because any additional compensation paid to B under the grant is not paid on the basis of substantially the same elements and conditions as B's salary because it is based both on the stock price and B's continued service. However, compensation attributable to the restricted stock grant is subject to the deduction limitation of section 162(m).

(2) ***Special transition rule for outside directors.*** A director who is a disinterested director is treated as satisfying the requirements of an outside director under paragraph (e)(3) of this section until the first meeting of shareholders at which directors are to be elected that occurs on or after January 1, 1996. For purposes of this paragraph (h)(2) and paragraph (h)(3) of this section, a director is a disinterested director if the director is disinterested within the meaning of Rule 16b-3(c)(2)(i), 17 CFR 240.16b-3(c)(2)(i), under the Exchange Act (including the provisions of Rule 16b-3(d)(3), as in effect on April 30, 1991).

(3) ***Special transition rule for previously-approved plans—***

(i) ***In general.*** Any compensation paid under a plan or agreement approved by shareholders before December 20, 1993, is treated as satisfying the requirements of paragraphs (e)(3) and (e)(4) of this section, provided that the directors administering the plan or agreement are disinterested directors and the plan was approved by shareholders in a manner consistent with Rule 16b-3(b), 17 CFR 240.16b-3(b), under the Exchange Act or Rule 16b-3(a), 17 CFR 240.16b-3(a) (as contained in 17 CFR part 240 revised April 1, 1990). In addition, for purposes of satisfying the requirements of paragraph (e)(2)(vi) of this section, a plan or agreement is treated as stating a maximum number of shares with respect to which an option or right may be granted to any employee if the plan or agreement that was approved by the shareholders provided for an aggregate limit, consistent with Rule 16b-3(b), 17 CFR 250.16b-3(b), on the shares of employer stock with respect to which awards may be made under the plan or agreement.

(ii) ***Reliance period.*** The transition rule provided in this paragraph (h)(3) shall continue and may be relied upon until the earliest of—

(A) The expiration or material modification of the plan or agreement;

(B) The issuance of all employer stock and other compensation that has been allocated under the plan; or

(C) The first meeting of shareholders at which directors are to be elected that occurs after December 31, 1996.

(iii) ***Stock-based compensation.*** This paragraph (h)(3) will apply to any compensation received pursuant to the exercise of a stock option or stock appreciation right, or the substantial vesting of restricted property, granted under a plan or agreement described in paragraph (h)(3)(i) of this section if the grant occurs on or before the earliest of the events specified in paragraph (h)(3)(ii) of this section.

(iv) ***Example.*** The following example illustrates the application of this paragraph (h)(3):

Example. Corporation Z adopted a stock option plan in 1991. Pursuant to Rule 16b-3 under the Exchange Act, the stock option plan has been administered by disinterested directors and was approved by Corporation Z shareholders. Under the terms of the plan, shareholder approval is not required again until 2001. In addition, the terms of the stock option plan include an aggregate limit on the number of shares available under the plan. Option grants under the Corporation Z plan are made with an exercise price equal to or greater than the fair market value of Corporation Z stock. Compensation attributable to the exercise of options that are granted under the plan before the earliest of the dates specified in paragraph (h)(3)(ii) of this section will be treated as satisfying the requirements of paragraph (e) of this section for qualified performance-based compensation, regardless of when the options are exercised.

(i) [Reserved]

(j) ***Effective date*** —

(1) ***In general.*** Section 162(m) and this section apply to the deduction for compensation that is otherwise deductible by the corporation in taxable years beginning on or after January 1, 1994, and beginning prior to January 1, 2018. Section 162(m) and this section also apply to compensation that is a grandfathered amount (as defined in § 1.162-33(g)) at the time it is paid to the covered employee or otherwise deductible. For examples of the application of the rules of this section to grandfathered amounts paid during or otherwise deductible for taxable years beginning after December 31, 2017, see § 1.162-33(g).

(2) ***Delayed effective date for certain provisions*** —

(i) ***Date on which remuneration is considered paid.*** Notwithstanding paragraph (j)(1) of this section, the rules in the second sentence of each of paragraphs (e)(3)(ii)(A), (e)(3)(ii)(B), and (e)(3)(ii)(C) of this section for determining the date or dates on which remuneration is considered paid to a director are effective for taxable years beginning on or after January 1, 1995. Prior to those taxable years, taxpayers must follow the rules in paragraphs (e)(3)(ii)(A), (e)(3)(ii)(B), and (e)(3)(ii)(C) of this section or another reasonable, good faith interpretation of section 162(m) with respect to the date or dates on which remuneration is considered paid to a director.

(ii) ***Separate treatment of publicly held subsidiaries.*** Notwithstanding paragraph (j)(1) of this section, the rule in paragraph (c)(1)(ii) of this section that treats publicly held subsidiaries as separately subject to section 162(m) is effective as of the first regularly scheduled meeting of the shareholders of the publicly held subsidiary that occurs more than 12 months after December 2, 1994. The rule for stock-based compensation set forth in paragraph (f)(3) of this section will apply for this purpose, except that the grant must occur before the shareholder meeting specified in this paragraph (j)(2)(ii). Taxpayers may choose to rely on the rule referred to in the first sentence of this paragraph (j)(2)(ii) for the period prior to the effective date of the rule.

(iii) ***Subsidiaries that become separate publicly held corporations.*** Notwithstanding paragraph (j)(1) of this section, if a subsidiary of a publicly held corporation becomes a separate publicly held corporation as described in paragraph (f)(4)(i) of this section, then, for the duration of the reliance period described in paragraph (f)(2) of this section, the rules of paragraph (f)(1) of this section are treated as applying (and the rules of paragraph (f)(4) of this section do not apply) to remuneration paid to covered employees of that new publicly held corporation pursuant to a

plan or agreement that existed prior to December 2, 1994, provided that the treatment of that remuneration as performance-based is in accordance with a reasonable, good faith interpretation of section 162(m). However, if remuneration is paid to covered employees of that new publicly held corporation pursuant to a plan or agreement that existed prior to December 2, 1994, but that remuneration is not performance-based under a reasonable, good faith interpretation of section 162(m), the rules of paragraph (f)(1) of this section will be treated as applying only until the first regularly scheduled meeting of shareholders that occurs more than 12 months after December 2, 1994. The rules of paragraph (f)(4) of this section will apply as of that first regularly scheduled meeting. The rule for stock-based compensation set forth in paragraph (f)(3) of this section will apply for purposes of this paragraph (j)(2)(iii), except that the grant must occur before the shareholder meeting specified in the preceding sentence if the remuneration is not performance-based under a reasonable, good faith interpretation of section 162(m). Taxpayers may choose to rely on the rules of paragraph (f)(4) of this section for the period prior to the applicable effective date referred to in the first or second sentence of this paragraph (j)(2)(iii).

(iv) ***Bonus pools.*** Notwithstanding paragraph (j)(1) of this section, the rules in paragraph (e)(2)(iii)(A) that limit the sum of individual percentages of a bonus pool to 100 percent will not apply to remuneration paid before January 1, 2001, based on performance in any performance period that began prior to December 20, 1995.

(v) ***Compensation based on a percentage of salary or base pay.*** Notwithstanding paragraph (j)(1) of this section, the requirement in paragraph (e)(4)(i) of this section that, in the case of certain formulas based on a percentage of salary or base pay, a corporation disclose to shareholders the maximum dollar amount of compensation that could be paid to the employee, will apply only to plans approved by shareholders after April 30, 1995.

(vi) The modifications to paragraphs (e)(2)(vi)(A), (e)(2)(vii) *Example 9,* and (e)(4)(iv) of this section concerning the maximum number of shares with respect to which a stock option or stock appreciation right that may be granted and the amount of compensation that may be paid to any individual employee apply to compensation attributable to stock options and stock appreciation rights that are granted on or after June 24, 2011. The last two sentences of § 1.162-27(f)(3) apply to remuneration that is otherwise deductible resulting from a stock option, stock appreciation right, restricted stock (or other property), restricted stock unit, or any other form of equity-based remuneration that is granted on or after April 1, 2015.

[T.D. 8650, 60 FR 65537, Dec. 20, 1995, as amended at 61 FR 4350, Feb. 6, 1996; T.D. 9716, 80 FR 16972, Mar. 31, 2015; T.D. 9932, 85 FR 86492, Dec. 30, 2020]

§ 1.162-28 Allocation of costs to lobbying activities.

(a) ***Introduction*** —

(1) ***In general.*** Section 162(e)(1) denies a deduction for certain amounts paid or incurred in connection with activities described in section 162(e)(1) (A) and (D) (*lobbying activities*). To determine the nondeductible amount, a taxpayer must allocate costs to lobbying activities. This section describes costs that must be allocated to lobbying activities and prescribes rules permitting a taxpayer to use a reasonable method to allocate those costs. This section does not apply to taxpayers subject to section 162(e)(5)(A). In addition, this section does not apply for purposes of sections 4911 and 4945 and the regulations thereunder.

(2) ***Recordkeeping.*** For recordkeeping requirements, see section 6001 and the regulations thereunder.

(b) ***Reasonable method of allocating costs*** —

(1) ***In general.*** A taxpayer must use a reasonable method to allocate the costs described in paragraph (c) of this section to lobbying activities. A method is not reasonable unless it is applied consistently and is consistent with the special rules in paragraph (g) of this section. Except as provided in paragraph (b)(2) of this section, reasonable methods of allocating costs to lobbying activities include (but are not limited to)—

(i) The ratio method described in paragraph (d) of this section;

(ii) The gross-up method described in paragraph (e) of this section; and

(iii) A method that applies the principles of section 263A and the regulations thereunder (see paragraph (f) of this section).

(2) ***Taxpayers not permitted to use certain methods.*** A taxpayer (other than one subject to section 6033(e)) that does not pay or incur reasonable labor costs for persons engaged in lobbying activities may not use the gross-up method. For example, a partnership or sole proprietorship in which the lobbying activities are performed by the owners who do not receive a salary or guaranteed payment for services does not pay or incur reasonable labor costs for persons engaged in those activities and may not use the gross-up method.

(c) ***Costs allocable to lobbying activities*** —

(1) ***In general.*** Costs properly allocable to lobbying activities include labor costs and general and administrative costs.

(2) ***Labor costs.*** For each taxable year, labor costs include costs attributable to full-time, part-time, and contract employees. Labor costs include all elements of compensation, such as basic compensation, overtime pay, vacation pay, holiday pay, sick leave pay, payroll taxes, pension costs, employee benefits, and payments to a supplemental unemployment benefit plan.

(3) ***General and administrative costs.*** For each taxable year, general and administrative costs include depreciation, rent, utilities, insurance, maintenance costs, security costs, and other administrative department costs (for example, payroll, personnel, and accounting).

(d) ***Ratio method*** —

(1) ***In general.*** Under the ratio method described in this paragraph (d), a taxpayer allocates to lobbying activities the sum of its third-party costs (as defined in paragraph (d)(5) of this section) allocable to lobbying activities and the costs determined by using the following formula:

$$\frac{\text{Lobbying labor hours}}{\text{Total labor hours}} \times \text{Total costs of operations.}$$

(2) ***Lobbying labor hours.*** Lobbying labor hours are the hours that a taxpayer's personnel spend on lobbying activities during the taxable year. A taxpayer may use any reasonable method to determine the number of labor hours spent on lobbying activities and may use the de minimis rule of paragraph (g)(1) of this section. A taxpayer may treat as zero the lobbying labor hours of personnel engaged in secretarial, clerical, support, and other administrative activities (as opposed to activities involving significant judgment with respect to lobbying activities). Thus, for example, the hours spent on lobbying activities by para-professionals and analysts may not be treated as zero.

(3) ***Total labor hours.*** Total labor hours means the total number of hours that a taxpayer's personnel spend on a taxpayer's trade or business during the taxable year. A taxpayer may make reasonable assumptions concerning total hours spent by personnel on the taxpayer's trade or business. For example, it may be reasonable, based on all the facts and circumstances, to assume that all full-time personnel spend 1,800 hours per year on a taxpayer's trade or business. If, under paragraph (d)(2) of this section, a taxpayer treats as zero the lobbying labor hours of personnel engaged in secretarial, clerical, support, and other administrative activities, the taxpayer must also treat as zero the total labor hours of all personnel engaged in those activities.

(4) ***Total costs of operations.*** A taxpayer's total costs of operations means the total costs of the taxpayer's trade or business for a taxable year, excluding third-party costs (as defined in paragraph (d)(5) of this section).

(5) ***Third-party costs.*** Third-party costs are amounts paid or incurred in whole or in part for lobbying activities conducted by third parties (such as amounts paid to taxpayers subject to section 162(e)(5)(A) or dues or other similar amounts that are not deductible in whole or in part under section 162(e)(3)) and amounts paid or incurred for travel (including meals and lodging while away from home) and entertainment relating in whole or in part to lobbying activities.

(6) ***Example.*** The provisions of this paragraph (d) are illustrated by the following example.

> *Example.* (i) In 1996, three full-time employees, A, B, and C, of Taxpayer W engage in both lobbying activities and nonlobbying activities. A spends 300 hours, B spends 1,700 hours, and C spends 1,000 hours on lobbying activities, for a total of 3,000 hours spent on lobbying activities for W. W reasonably assumes that each of its three employees spends 2,000 hours a year on W's business.
> (ii) W's total costs of operations are $300,000. W has no third-party costs.
>
> (iii) Under the ratio method, X allocates $150,000 to its lobbying activities for 1996, as follows:
>
> $$\frac{\text{Lobbying labor hours}}{\text{Total labor hours}} \times \text{Total costs of operations} + \text{Allocable third-party costs} - = \text{Costs allocable to lobbying activities}$$
>
> $$\left[\frac{300+1{,}700+1{,}000}{6{,}000} \times \$300{,}000\right] + [0] \qquad = \$150{,}000.$$

(e) ***Gross-up method*** —

(1) ***In general.*** Under the gross-up method described in this paragraph (e)(1), the taxpayer allocates to lobbying activities the sum of its third-party costs (as defined in paragraph (d)(5) of this section) allocable to lobbying activities and 175 percent of its basic lobbying labor costs (as defined in paragraph (e)(3) of this section) of all personnel.

(2) ***Alternative gross-up method.*** Under the alternative gross-up method described in this paragraph (e)(2), the taxpayer allocates to lobbying activities the sum of its third-party costs (as defined in paragraph (d)(5) of this section) allocable to lobbying activities and 225 percent of its basic lobbying

labor costs (as defined in paragraph (e)(3)), excluding the costs of personnel who engage in secretarial, clerical, support, and other administrative activities (as opposed to activities involving significant judgment with respect to lobbying activities).

(3) ***Basic lobbying labor costs.*** For purposes of this paragraph (e), basic lobbying labor costs are the basic costs of lobbying labor hours (as defined in paragraph (d)(2) of this section) determined for the appropriate personnel. For purposes of this paragraph (e), basic costs of lobbying labor hours are wages or other similar costs of labor, including, for example, guaranteed payments for services. Basic costs do not include pension, profit-sharing, employee benefits, and supplemental unemployment benefit plan costs, or other similar costs.

(4) ***Example.*** The provisions of this paragraph (e) are illustrated by the following example.

> *Example.* (i) In 1996, three employees, A, B, and C, of Taxpayer X engage in both lobbying activities and nonlobbying activities. A spends 300 hours, B spends 1,700 hours, and C spends 1,000 hours on lobbying activities.
> (ii) X has no third-party costs.
>
> (iii) For purposes of the gross-up method, X determines that its basic labor costs are $20 per hour for A, $30 per hour for B, and $25 per hour for C. Thus, its basic lobbying labor costs are ($20 × 300) + ($30 × 1,700) + ($25 × 1,000), or ($6,000 + $51,000 + $25,000), for total basic lobbying labor costs for 1996 of $82,000.
>
> (iv) Under the gross-up method, X allocates $143,500 to its lobbying activities for 1996, as follows:

175% ×	Basic lobbying labor costs of all personnel	+	Allocable third-party costs	=	Costs allocable to lobbying activities
[175% × $82,000]		+	[0]	=	$143,500.

(f) ***Section 263A cost allocation methods*** —

(1) ***In general.*** A taxpayer may allocate its costs to lobbying activities under the principles set forth in section 263A and the regulations thereunder, except to the extent inconsistent with paragraph (g) of this section. For this purpose, lobbying activities are considered a service department or function. Therefore, a taxpayer may allocate costs to lobbying activities by applying the methods provided in §§ 1.263A-1 through 1.263A-3. See § 1.263A-1(e)(4), which describes service costs generally; § 1.263A-1(f), which sets forth cost allocation methods available under section 263A; and § 1.263A-1(g)(4), which provides methods of allocating service costs.

(2) ***Example.*** The provisions of this paragraph (f) are illustrated by the following example.

> *Example.* (i) Three full-time employees, A, B, and C, work in the Washington office of Taxpayer Y, a manufacturing concern. They each engage in lobbying activities and nonlobbying activities. In 1996, A spends 75 hours, B spends 1,750 hours, and C spends

2,000 hours on lobbying activities. A's hours are not spent on direct contact lobbying as defined in paragraph (g)(2) of this section. All three work 2,000 hours during 1996. The Washington office also employs one secretary, D, who works exclusively for A, B, and C.
(ii) In addition, three departments in the corporate headquarters in Chicago benefit the Washington office: Public affairs, human resources, and insurance.

(iii) Y is subject to section 263A and uses the step-allocation method to allocate its service costs. Prior to the amendments to section 162(e), the Washington office was treated as an overall management function for purposes of section 263A. As such, its costs were fully deductible and no further allocations were made under Y's step allocation. Following the amendments to section 162(e), Y adopts its 263A step-allocation methodology to allocate costs to lobbying activities. Y adds a lobbying department to its step-allocation program, which results in an allocation of costs to the lobbying department from both the Washington office and the Chicago office.

(iv) Y develops a labor ratio to allocate its Washington office costs between the newly defined lobbying department and the overall management department. To determine the hours allocable to lobbying activities, Y uses the de minimis rule of paragraph (g)(1) of this section. Under this rule, A's hours spent on lobbying activities are treated as zero because less than 5 percent of A's time is spent on lobbying (75/2,000 = 3.75%). In addition, because D works exclusively for personnel engaged in lobbying activities, D's hours are not used to develop the allocation ratio. Y assumes that D's allocation of time follows the average time of all the personnel engaged in lobbying activities. Thus, Y's labor ratio is determined as follows:

Employee	Departments		
	Lobbying hours	Overall management hours	Total hours
A	0	2,000	2,000
B	1,750	250	2,000
C	2,000	0	2,000

Employee	Departments		
	Lobbying hours	Overall management hours	Total hours
Totals	3,750	2,250	6,000

$$\text{Lobbying Department Ratio} = \frac{3{,}750}{6{,}000} = 62.5\%$$

$$\text{Overall Management Department Ratio} = \frac{2{,}250}{6{,}000} = 37.5\%$$

(v) In 1996, the Washington office has the following costs:

Account	Amount
Professional Salaries and Benefits	$660,000
Clerical Salaries and Benefits	50,000
Rent Expense	100,000
Depreciation on Furniture and Equip	40,000
Utilities	15,000
Outside Payroll Service	5,000
Miscellaneous	10,000
Third-Party Lobbying (Law Firm)	90,000
Total Washington Costs	$970,000

(vi) In addition, $233,800 of costs from the public affairs department, $30,000 of costs from the insurance department, and $5,000 of costs from the human resources department are allocable to the Washington office from departments in Chicago. Therefore, the Washington office costs are allocated to the Lobbying and Overall Management departments as follows:

Total Washington department costs from above	$970,000
Plus Costs Allocated From Other Departments	268,800
Less third-party costs directly allocable to lobbying	(90,000)

Total Washington office costs	1,148,800

	Lobbying department	Overall management department
Department Allocation Ratios	62.5%	37.5%
× Washington Office Costs	$1,148,800	$1,148,800
= Costs Allocated to Departments	$718,000	$430,800

(vii) Y's step-allocation for its Lobbying Department is determined as follows:

Y's step-allocation	Lobbying department
Washington costs allocated to lobbying department	$718,000
Plus third-party costs	90,000
Total costs of lobbying activities	808,000

(g) ***Special rules.*** The following rules apply to any reasonable method of allocating costs to lobbying activities.

(1) ***De minimis rule for labor hours.*** Subject to the exception provided in paragraph (g)(2) of this section, a taxpayer may treat time spent by an individual on lobbying activities as zero if less than five percent of the person's time is spent on lobbying activities. Reasonable methods must be used to determine if less than five percent of a person's time is spent on lobbying activities.

(2) ***Direct contact lobbying labor hours.*** Notwithstanding paragraph (g)(1) of this section, a taxpayer must treat all hours spent by a person on direct contact lobbying (as well as the hours that person spends in connection with direct contact lobbying, including time spent traveling that is allocable to the direct contact lobbying) as labor hours allocable to lobbying activities. An activity is direct contact lobbying if it is a meeting, telephone conversation, letter, or other similar means of communication with a legislator (other than a local legislator) or covered executive branch official (as defined in section 162(e)(6)) and otherwise qualifies as a lobbying activity. A person who engages in research, preparation, and other background activities related to direct contact lobbying but who does not make direct contact with a legislator or covered executive branch official is not engaged in direct contact lobbying.

(3) ***Taxpayer defined.*** For purposes of this section, a taxpayer includes a tax-exempt organization subject to section 6033(e).

(h) ***Effective date.*** This section is effective for amounts paid or incurred on or after July 21, 1995. Taxpayers must adopt a reasonable interpretation of sections 162(e)(1)(A) and (D) for amounts paid or incurred before this date.

[T.D. 8602, 60 FR 37573, July 21, 1995]

§ 1.162-29 Influencing legislation.

(a) ***Scope.*** This section provides rules for determining whether an activity is influencing legislation for purposes of section 162(e)(1)(A). This section does not apply for purposes of sections 4911 and 4945 and the regulations thereunder.

(b) ***Definitions.*** For purposes of this section—

(1) ***Influencing legislation.*** Influencing legislation means—

(i) Any attempt to influence any legislation through a lobbying communication; and

(ii) All activities, such as research, preparation, planning, and coordination, including deciding whether to make a lobbying communication, engaged in for a purpose of making or supporting a lobbying communication, even if not yet made. See paragraph (c) of this section for rules for determining the purposes for engaging in an activity.

(2) ***Attempt to influence legislation.*** An attempt to influence any legislation through a lobbying communication is making the lobbying communication.

(3) ***Lobbying communication.*** A lobbying communication is any communication (other than any communication compelled by subpoena, or otherwise compelled by Federal or State law) with any member or employee of a legislative body or any other government official or employee who may participate in the formulation of the legislation that—

(i) Refers to specific legislation and reflects a view on that legislation; or

(ii) Clarifies, amplifies, modifies, or provides support for views reflected in a prior lobbying communication.

(4) ***Legislation.*** Legislation includes any action with respect to Acts, bills, resolutions, or other similar items by a legislative body. Legislation includes a proposed treaty required to be submitted by the President to the Senate for its advice and consent from the time the President's representative begins to negotiate its position with the prospective parties to the proposed treaty.

(5) ***Specific legislation.*** Specific legislation includes a specific legislative proposal that has not been introduced in a legislative body.

(6) ***Legislative bodies.*** Legislative bodies are Congress, state legislatures, and other similar governing bodies, excluding local councils (and similar governing bodies), and executive, judicial, or administrative bodies. For this purpose, administrative bodies include school boards, housing authorities, sewer and water districts, zoning boards, and other similar Federal, State, or local special purpose bodies, whether elective or appointive.

(7) ***Examples.*** The provisions of this paragraph (b) are illustrated by the following examples.

Example 1. Taxpayer P's employee, A, is assigned to approach members of Congress to gain their support for a pending bill. A drafts and P prints a position letter on the bill. P distributes the letter to members of Congress. Additionally, A personally contacts several members of Congress or their staffs to seek support for P's position on the bill. The letter and the personal contacts are lobbying communications. Therefore, P is influencing legislation.

Example 2. Taxpayer R is invited to provide testimony at a congressional oversight hearing concerning the implementation of The Financial Institutions Reform, Recovery, and Enforcement Act of 1989. Specifically, the hearing concerns a proposed regulation increasing the threshold value of commercial and residential real estate transactions for which an appraisal by a state licensed or certified appraiser is required. In its testimony, R states that it is in favor of the proposed regulation. Because R does not refer to any specific legislation or reflect a view on any such legislation, R has not made a lobbying communication. Therefore, R is not influencing legislation.

Example 3. State X enacts a statute that requires the licensing of all day-care providers. Agency B in State X is charged with writing rules to implement the statute. After the enactment of the statute, Taxpayer S sends a letter to Agency B providing detailed proposed rules that S recommends Agency B adopt to implement the statute on licensing of day-care providers. Because the letter to Agency B neither refers to nor reflects a view on any specific legislation, it is not a lobbying communication. Therefore, S is not influencing legislation.

Example 4. Taxpayer T proposes to a State Park Authority that it purchase a particular tract of land for a new park. Even if T's proposal would necessarily require the State Park Authority eventually to seek appropriations to acquire the land and develop the new park, T has not made a lobbying communication because there has been no reference to, nor any view reflected on, any specific legislation. Therefore, T's proposal is not influencing legislation.

Example 5. (i) Taxpayer U prepares a paper that asserts that lack of new capital is hurting State X's economy. The paper indicates that State X residents either should invest more in local businesses or increase their savings so that funds will be available to others interested in making investments. U forwards a summary of the unpublished paper to legislators in State X with a cover letter that states in part:
You must take action to improve the availability of new capital in the state.

(ii) Because neither the summary nor the cover letter refers to any specific legislative proposal and no other facts or circumstances indicate that they refer to an existing legislative proposal, forwarding the summary to legislators in State X is not a lobbying communication. Therefore, U is not influencing legislation.

(iii) Q, a member of the legislature of State X, calls U to request a copy of the unpublished paper from which the summary was prepared. U forwards the paper with a cover letter that simply refers to the enclosed materials. Because U's letter to Q and the unpublished paper do not refer to any specific legislation or reflect a view on any such legislation, the letter is not a lobbying communication. Therefore, U is not influencing legislation.

Example 6. (i) Taxpayer V prepares a paper that asserts that lack of new capital is hurting the national economy. The paper indicates that lowering the capital gains rate would increase the availability of capital and increase tax receipts from the capital gains tax. V forwards the paper to its representatives in Congress with a cover letter that says, in part:
I urge you to support a reduction in the capital gains tax rate.

(ii) V's communication is a lobbying communication because it refers to and reflects a view on a specific legislative proposal (*i.e.*, lowering the capital gains rate). Therefore, V is influencing legislation.

Example 7. Taxpayer W, based in State A, notes in a letter to a legislator of State A that State X has passed a bill that accomplishes a stated purpose and then says that State A should pass such a bill. No such bill has been introduced into the State A legislature. The communication is a lobbying communication because it refers to and reflects a view on a specific legislative proposal. Therefore, W is influencing legislation.

Example 8. (i) Taxpayer Y represents citrus fruit growers. Y writes a letter to a United States senator discussing how pesticide O has benefited citrus fruit growers and disputing problems linked to its use. The letter discusses a bill pending in Congress and states in part:
This bill would prohibit the use of pesticide O. If citrus growers are unable to use this pesticide, their crop yields will be severely reduced, leading to higher prices for consumers and lower profits, even bankruptcy, for growers.

(ii) Y's views on the bill are reflected in this statement. Thus, the communication is a lobbying communication, and Y is influencing legislation.

Example 9. (i) B, the president of Taxpayer Z, an insurance company, meets with Q, who chairs the X state legislature's committee with jurisdiction over laws regulating insurance companies, to discuss the possibility of legislation to address current problems with surplus-line companies. B recommends that legislation be introduced that would create minimum capital and surplus requirements for surplus-line companies and create clearer guidelines concerning the risks that surplus-line companies can insure. B's discussion with Q is a lobbying communication because B refers to and reflects a view on a specific legislative proposal. Therefore, Z is influencing legislation.
(ii) Q is not convinced that the market for surplus-line companies is substantial enough to warrant such legislation and requests that B provide information on the amount and types of risks covered by surplus-line companies. After the meeting, B has employees of Z prepare estimates of the percentage of property and casualty insurance risks handled by surplus-line companies. B sends the estimates with a cover letter that simply refers to

> the enclosed materials. Although B's follow-up letter to Q does not refer to specific legislation or reflect a view on such legislation, B's letter supports the views reflected in the earlier communication. Therefore, the letter is a lobbying communication and Z is influencing legislation.

(c) ***Purpose for engaging in an activity*** —

(1) ***In general.*** The purposes for engaging in an activity are determined based on all the facts and circumstances. Facts and circumstances include, but are not limited to—

(i) Whether the activity and the lobbying communication are proximate in time;

(ii) Whether the activity and the lobbying communication relate to similar subject matter;

(iii) Whether the activity is performed at the request of, under the direction of, or on behalf of a person making the lobbying communication;

(iv) Whether the results of the activity are also used for a nonlobbying purpose; and

(v) Whether, at the time the taxpayer engages in the activity, there is specific legislation to which the activity relates.

(2) ***Multiple purposes.*** If a taxpayer engages in an activity both for the purpose of making or supporting a lobbying communication and for some nonlobbying purpose, the taxpayer must treat the activity as engaged in partially for a lobbying purpose and partially for a nonlobbying purpose. This division of the activity must result in a reasonable allocation of costs to influencing legislation. See § 1.162-28 (allocation rules for certain expenditures to which section 162(e)(1) applies). A taxpayer's treatment of these multiple-purpose activities will, in general, not result in a reasonable allocation if it allocates to influencing legislation—

(i) Only the incremental amount of costs that would not have been incurred but for the lobbying purpose; or

(ii) An amount based solely on the number of purposes for engaging in that activity without regard to the relative importance of those purposes.

(3) ***Activities treated as having no purpose to influence legislation.*** A taxpayer that engages in any of the following activities is treated as having done so without a purpose of making or supporting a lobbying communication—

(i) Before evidencing a purpose to influence any specific legislation referred to in paragraph (c)(3)(i)(A) or (B) of this section (or similar legislation)—

(A) Determining the existence or procedural status of specific legislation, or the time, place, and subject of any hearing to be held by a legislative body with respect to specific legislation; or

(B) Preparing routine, brief summaries of the provisions of specific legislation;

(ii) Performing an activity for purposes of complying with the requirements of any law (for example, satisfying state or federal securities law filing requirements);

(iii) Reading any publications available to the general public or viewing or listening to other mass media communications; and

(iv) Merely attending a widely attended speech.

(4) ***Examples.*** The provisions of this paragraph (c) are illustrated by the following examples.

> *Example 1.* (i) *Facts.* In 1997, Agency F issues proposed regulations relating to the business of Taxpayer W. There is no specific legislation during 1997 that is similar to the regulatory proposal. W undertakes a study of the impact of the proposed regulations on its business. W incorporates the results of that study in comments sent to Agency F in 1997. In 1998, legislation is introduced in Congress that is similar to the regulatory proposal. Also in 1998, W writes a letter to Senator P stating that it opposes the proposed legislation. W encloses with the letter a copy of the comments it sent to Agency F.
> (ii) *Analysis.* W's letter to Senator P refers to and reflects a view on specific legislation and therefore is a lobbying communication. Although W's study of the impact of the proposed regulations is proximate in time and similar in subject matter to its lobbying communication, W performed the study and incorporated the results in comments sent to Agency F when no legislation with a similar subject matter was pending (a nonlobbying use). On these facts, W engaged in the study solely for a nonlobbying purpose.

> *Example 2.* (i) *Facts.* The governor of State Q proposes a budget that includes a proposed sales tax on electricity. Using its records of electricity consumption, Taxpayer Y estimates the additional costs that the budget proposal would impose upon its business. In the same year, Y writes to members of the state legislature and explains that it opposes the proposed sales tax. In its letter, Y includes its estimate of the costs that the sales tax would impose on its business. Y does not demonstrate any other use of its estimates.
> (ii) *Analysis.* The letter is a lobbying communication (because it refers to and reflects a view on specific legislation, the governor's proposed budget). Y's estimate of additional costs under the proposal supports the lobbying communication, is proximate in time and similar in subject matter to a specific legislative proposal then in existence, and is not used for a nonlobbying purpose. Based on these facts, Y estimated its additional costs under the budget proposal solely to support the lobbying communication.

> *Example 3.* (i) *Facts.* A senator in the State Q legislature announces her intention to introduce legislation to require health insurers to cover a particular medical procedure in all policies sold in the state. Taxpayer Y has different policies for two groups of employees, one of which covers the procedure and one of which does not. After the bill is introduced, Y's legislative affairs staff asks Y's human resources staff to estimate the additional cost to cover the procedure for both groups of employees. Y's human resources staff prepares a study estimating Y's increased costs and forwards it to the legislative affairs staff. Y's legislative staff then writes to members of the state legislature and explains that it opposes the proposed change in insurance coverage based on the study. Y's legislative affairs staff thereafter forwards the study, prepared for its use in opposing the statutory proposal, to its

labor relations staff for use in negotiations with employees scheduled to begin later in the year.
(ii) *Analysis.* The letter to legislators is a lobbying communication (because it refers to and reflects a view on specific legislation). The activity of estimating Y's additional costs under the proposed legislation relates to the same subject as the lobbying communication, occurs close in time to the lobbying communication, is conducted at the request of a person making a lobbying communication, and relates to specific legislation then in existence. Although Y used the study in its labor negotiations, mere use for that purpose does not establish that Y estimated its additional costs under the proposed legislation in part for a nonlobbying purpose. Thus, based on all the facts and circumstances, Y estimated the additional costs it would incur under the proposal solely to make or support the lobbying communication.

Example 4. (i) *Facts.* After several years of developmental work under various contracts, in 1996, Taxpayer A contracts with the Department of Defense (DOD) to produce a prototype of a new generation military aircraft. A is aware that DOD will be able to fund the contract only if Congress appropriates an amount for that purpose in the upcoming appropriations process. In 1997, A conducts simulation tests of the aircraft and revises the specifications of the aircraft's expected performance capabilities, as required under the contract. A submits the results of the tests and the revised specifications to DOD. In 1998, Congress considers legislation to appropriate funds for the contract. In that connection, A summarizes the results of the simulation tests and of the aircraft's expected performance capabilities, and submits the summary to interested members of Congress with a cover letter that encourages them to support appropriations of funds for the contract.
(ii) *Analysis.* The letter is a lobbying communication (because it refers to specific legislation (*i.e.*, appropriations) and requests passage). The described activities in 1996, 1997, and 1998 relate to the same subject as the lobbying communication. The summary was prepared specifically for, and close in time to, that communication. Based on these facts, the summary was prepared solely for a lobbying purpose. In contrast, A conducted the tests and revised the specifications to comply with its production contract with DOD. A conducted the tests and revised the specifications solely for a nonlobbying purpose.

Example 5. (i) *Facts.* C, president of Taxpayer W, travels to the state capital to attend a two-day conference on new manufacturing processes. C plans to spend a third day in the capital meeting with state legislators to explain why W opposes a pending bill unrelated to the subject of the conference. At the meetings with the legislators, C makes lobbying communications by referring to and reflecting a view on the pending bill.
(ii) *Analysis.* C's traveling expenses (transportation and meals and lodging) are partially for the purpose of making or supporting the lobbying communications and partially for a nonlobbying purpose. As a result, under paragraph (c)(2) of this section, W must reasonably

allocate C's traveling expenses between these two purposes. Allocating to influencing legislation only C's incremental transportation expenses (*i.e.*, the taxi fare to meet with the state legislators) does not result in a reasonable allocation of traveling expenses.

Example 6. (i) *Facts.* On February 1, 1997, a bill is introduced in Congress that would affect Company E. Employees in E's legislative affairs department, as is customary, prepare a brief summary of the bill and periodically confirm the procedural status of the bill through conversations with employees and members of Congress. On March 31, 1997, the head of E's legislative affairs department meets with E's President to request that B, a chemist, temporarily help the legislative affairs department analyze the bill. The President agrees, and suggests that B also be assigned to draft a position letter in opposition to the bill. Employees of the legislative affairs department continue to confirm periodically the procedural status of the bill. On October 31, 1997, B's position letter in opposition to the bill is delivered to members of Congress.
(ii) *Analysis.* B's letter is a lobbying communication because it refers to and reflects a view on specific legislation. Under paragraph (c)(3)(i) of this section, the assignment of B to assist the legislative affairs department in analyzing the bill and in drafting a position letter in opposition to the bill evidences a purpose to influence legislation. Neither the activity of periodically confirming the procedural status of the bill nor the activity of preparing the routine, brief summary of the bill before March 31 constitutes influencing legislation. In contrast, periodically confirming the procedural status of the bill on or after March 31 relates to the same subject as, and is close in time to, the lobbying communication and is used for no nonlobbying purpose. Consequently, after March 31, E determined the procedural status of the bill for the purpose of supporting the lobbying communication by B.

(d) ***Lobbying communication made by another.*** If a taxpayer engages in activities for a purpose of supporting a lobbying communication to be made by another person (or by a group of persons), the taxpayer's activities are treated under paragraph (b) of this section as influencing legislation. For example, if a taxpayer or an employee of the taxpayer (as a volunteer or otherwise) engages in an activity to assist a trade association in preparing its lobbying communication, the taxpayer's activities are influencing legislation even if the lobbying communication is made by the trade association and not the taxpayer. If, however, the taxpayer's employee, acting outside the employee's scope of employment, volunteers to engage in those activities, then the taxpayer is not influencing legislation.

(e) ***No lobbying communication.*** Paragraph (e) of this section applies if a taxpayer engages in an activity for a purpose of making or supporting a lobbying communication, but no lobbying communication that the activity supports has yet been made.

(1) ***Before the filing date.*** Under this paragraph (e)(1), if on the filing date of the return for any taxable year the taxpayer no longer expects, under any reasonably foreseeable circumstances, that a lobbying communication will be made that is supported by the activity, then the taxpayer will be treated as if it did not engage in the activity for a purpose of making or supporting a lobbying communication. Thus, the taxpayer need not treat any amount allocated to that activity for that year

under § 1.162-28 as an amount to which section 162(e)(1)(A) applies. The filing date for purposes of paragraph (e) of this section is the earlier of the time the taxpayer files its timely return for the year or the due date of the timely return.

(2) ***After the filing date*** —

(i) ***In general.*** If, at any time after the filing date, the taxpayer no longer expects, under any reasonably foreseeable circumstances, that a lobbying communication will be made that is supported by the activity, then any amount previously allocated under § 1.162-28 to the activity and disallowed under section 162(e)(1)(A) is treated as an amount that is not subject to section 162(e)(1)(A) and that is paid or incurred only at the time the taxpayer no longer expects that a lobbying communication will be made.

(ii) ***Special rule for certain tax-exempt organizations.*** For a tax-exempt organization subject to section 6033(e), the amounts described in paragraph (e)(2)(i) of this section are treated as reducing (but not below zero) its expenditures to which section 162(e)(1) applies beginning with that year and continuing for subsequent years to the extent not treated in prior years as reducing those expenditures.

(f) ***Anti-avoidance rule.*** If a taxpayer, alone or with others, structures its activities with a principal purpose of achieving results that are unreasonable in light of the purposes of section 162(e)(1)(A) and section 6033(e), the Commissioner can recast the taxpayer's activities for federal tax purposes as appropriate to achieve tax results that are consistent with the intent of section 162(e)(1)(A), section 6033(e) (if applicable), and this section, and the pertinent facts and circumstances.

(g) ***Taxpayer defined.*** For purposes of this section, a taxpayer includes a tax-exempt organization subject to section 6033(e).

(h) ***Effective date.*** This section is effective for amounts paid or incurred on or after July 21, 1995. Taxpayers must adopt a reasonable interpretation of section 162(e)(1)(A) for amounts paid or incurred before this date.

[T.D. 8602, 60 FR 37575, July 21, 1995]

§ 1.162-31 The $500,000 deduction limitation for remuneration provided by certain health insurance providers.

(a) ***Scope.*** This section sets forth rules regarding the deduction limitation under section 162(m)(6), which provides that a covered health insurance provider's deduction for applicable individual remuneration (AIR) and deferred deduction remuneration (DDR) attributable to services performed by an applicable individual in a disqualified taxable year is limited to $500,000. Paragraph (b) of this section sets forth definitions of the terms used in this section. Paragraph (c) of this section explains the general limitation on deductions under section 162(m)(6). Paragraph (d) of this section sets forth the methods that must be used to attribute AIR and DDR to services performed in one or more taxable years of a covered health insurance provider. Paragraph (e) of this section sets forth rules on how the deduction limit applies to AIR and DDR that is otherwise deductible under chapter 1 of the Internal Revenue Code (Code) but for the deduction limitation under section 162(m)(6) (referred to in this section as remuneration that is otherwise deductible). Paragraph (f) of this section sets forth additional rules for persons participating in certain corporate transactions. Paragraph (g) of this section explains the interaction of section 162(m)(6) with sections 162(m)(1) and 280G. Paragraph (h) of this section sets forth rules for determining the amounts of remuneration that are not subject to the deduction limitation under section 162(m)(6) due to the

statutory effective date (referred to in this section as grandfathered amounts). Paragraph (i) of this section sets forth transition rules for DDR that is attributable to services performed in taxable years beginning after December 31, 2009 and before January 1, 2013. Paragraph (j) of this section sets forth the effective and applicability dates of the rules in this section.

(b) ***Definitions*** —

(1) ***Health insurance issuer.*** For purposes of this section, a *health insurance issuer* is a health insurance issuer as defined in section 9832(b)(2).

(2) ***Aggregated group.*** For purposes of this section, an *aggregated group* is a health insurance issuer and each other person that is treated as a single employer with the health insurance issuer at any time during the taxable year of the health insurance issuer under sections 414(b) (controlled groups of corporations), 414(c) (partnerships, proprietorships, etc. under common control), 414(m) (affiliated service groups), or 414(o), except that the rules in section 1563(a)(2) and (3) (with respect to corporations) and § 1.414(c)-2(c) and (d) (with respect to trades or businesses under common control) for brother-sister groups and combined groups are disregarded.

(3) ***Parent entity*** —

(i) ***In general.*** For purposes of this section, a *parent entity* is either—

(A) The common parent of a parent-subsidiary controlled group of corporations (within the meaning of section 414(b)) or a parent-subsidiary group of trades or businesses under common control (within the meaning of section 414(c)) that includes a health insurance issuer, or

(B) the health insurance issuer in an aggregated group that is an affiliated service group (within the meaning of section 414(m)) or a group described in section 414(o).

(ii) ***Certain aggregated groups with multiple health insurance issuers*** —

(A) ***In general.*** If two or more health insurance issuers are members of an aggregated group that is an affiliated service group (within the meaning of section 414(m)) or group described in section 414(o), the parent entity is the health insurance issuer in the aggregated group that is designated in writing by the other members of the aggregated group to act as the parent entity.

(B) ***Successor parent entities.*** If a health insurance issuer that is the parent entity of an aggregated group pursuant to paragraph (b)(3)(ii)(A) of this section (a predecessor parent entity) ceases to be a member of the aggregated group (for example, as a result of a corporate transaction) and, after the predecessor parent entity ceases to be a member of the aggregated group, two or more health insurance issuers are members of the aggregated group, the new parent entity (the successor parent entity) is another member of the aggregated group designated in writing by the remaining members of the aggregated group. The successor parent entity must be a health insurance issuer in the aggregated group that has the same taxable year as the predecessor parent entity; provided, however, that if no health insurance issuer in the aggregated group has the same taxable year as the predecessor parent entity, the members of the aggregated group may designate in writing any other health insurance issuer in the aggregated group to be the parent entity.

(C) ***Failure to designate a parent entity.*** If the members of an aggregated group that includes two or more health insurance issuers and that is an affiliated service group (within the meaning of section 414(m)) or a group described in section 414(o) fail to designate in writing a health insurance issuer to act as the parent entity of the aggregated group, the parent entity of the aggregated group for all taxable years is deemed to be an entity with a taxable year that is the calendar year (without regard to whether the aggregated group includes or has ever included an entity with a calendar year taxable year) for all purposes under this section for which a parent entity's taxable year is relevant.

(4) ***Covered health insurance provider*** —

(i) ***In general.*** For purposes of this section and except as otherwise provided in this paragraph (b)(4), a *covered health insurance provider* is—

(A) A health insurance issuer for any of its taxable years beginning after December 31, 2012 in which at least 25 percent of the gross premiums it receives from providing health insurance coverage (as defined in section 9832(b)(1)) are from providing minimum essential coverage (as defined in section 5000A(f)),

(B) a health insurance issuer for any of its taxable years beginning after December 31, 2009 and before January 1, 2013 in which it receives premiums from providing health insurance coverage (as defined in section 9832(b)(1)),

(C) the parent entity of an aggregated group of which one or more health insurance issuers described in paragraphs (b)(4)(i)(A) or (B) of this section are members for the taxable year of the parent entity with which, or in which, ends the taxable year of any such health insurance issuer; however, if the parent entity of an aggregated group is a health insurance issuer described in paragraphs (b)(4)(i)(A) or (B) of this section, that health insurance issuer is a covered health insurance provider for any taxable year that it is otherwise a covered health insurance provider, without regard to whether the taxable year of any other health insurance issuer described in paragraphs (b)(4)(i)(A) or (B) of this section ends with or within its taxable year, and

(D) each other member of an aggregated group of which one or more health insurance issuers described in paragraphs (b)(4)(i)(A) or (B) of this section are members for the taxable year of the other member ending with, or within, the parent entity's taxable year.

(ii) ***Parent entities with short taxable years.*** If for any reason a parent entity has a taxable year that is less than 12 months (for example, because the taxable year of a predecessor parent entity ends when it ceases to be a member of an aggregated group), then, for purposes of determining whether the parent entity and each other member of the aggregated group is a covered health insurance provider with respect to the parent entity's short taxable year (that is, for purposes of determining whether the taxable year of a health insurance issuer described in paragraph (b)(4)(i)(A) or (B) of this section ends with or within the short taxable year of the parent entity and for purposes of determining whether another member of the aggregated group has a taxable year ending with or within the short taxable year of the parent entity), the taxable year of the parent entity is treated as the 12-month period ending on the last day of the short taxable year. Accordingly, a parent entity is a covered health insurance provider for its short taxable year if it is a health insurance issuer described in paragraph (b)(4)(i)(A) or (B) of this section or if the taxable year of a health insurance issuer described in paragraph (b)(4)(i)(A) or (B) of this section in an aggregated group with the parent entity ends with or

within the 12-month period ending on the last day of the parent entity's short taxable year. Similarly, each other member of the parent entity's aggregated group is a covered health insurance provider for its taxable year ending with or within the 12-month period ending on the last day of the parent entity's short taxable year.

(iii) ***Predecessor and successor parent entities.*** If the parent entity of an aggregated group changes, the members of the aggregated group may be covered health insurance providers based on their relationship to either or both parent entities with respect to the taxable years of the parent entities in which the change occurs.

(iv) ***Self-insured plans.*** For purposes of this section, a person is not a covered health insurance provider solely because it maintains a self-insured medical reimbursement plan. For this purpose, a self-insured medical reimbursement plan is a separate written plan for the benefit of employees (including former employees) that provides for reimbursement of medical expenses referred to in section 105(b) and does not provide for reimbursement under an individual or group policy of accident or health insurance issued by a licensed insurance company or under an arrangement in the nature of a prepaid health care plan that is regulated under federal or state law in a manner similar to the regulation of insurance companies, and may include a plan maintained by an employee organization described in section 501(c)(9).

(v) ***De minimis exception*** —

(A) ***In general.*** A health insurance issuer and any member of its aggregated group that would otherwise be a covered health insurance provider under paragraph (b)(4)(i), (ii), or (iii) of this section for a taxable year beginning after December 31, 2012 is not a covered health insurance provider under this section for that taxable year if the premiums received by the health insurance issuer and any other health insurance issuers in its aggregated group from providing health insurance coverage (as defined in section 9832(b)(1)) that constitutes minimum essential coverage (as defined in section 5000A(f)) are less than two percent of the gross revenues of the health insurance issuer and all other members of its aggregated group for that taxable year. A health insurance issuer and any member of its aggregated group that would otherwise be a covered health insurance provider under paragraph (b)(4)(i), (ii), or (iii) of this section for a taxable year beginning after December 31, 2009 and before January 1, 2013 is not a covered health insurance provider for purposes of this section for that taxable year if the premiums received by the health insurance issuer and any other health insurance issuers in its aggregated group from providing health insurance coverage (as defined in section 9832(b)(1)) are less than two percent of the gross revenues of the health insurance issuer and all other members of its aggregated group for that taxable year. In determining whether premiums constitute less than two percent of gross revenues, the amount of gross revenues must be determined in accordance with generally accepted accounting principles. For the definition of the term *premiums,* see paragraph (b)(5) of this section. A person that would be a covered health insurance provider for a taxable year in an aggregated group with a predecessor parent entity and that would also be a covered health insurance provider for that taxable year in an aggregated group with a successor parent entity is not a covered health insurance provider under the *de minimis* exception only if the aggregated groups of which the person is a member meet the requirements of the *de minimis* exception based on both the taxable year of the predecessor parent entity and the taxable year of the successor parent entity.

(B) ***One-year de minimis exception transition period.*** If a health insurance issuer or a member of an aggregated group is not a covered health insurance provider for a taxable year solely by reason of the *de minimis* exception described in paragraph (b)(4)(v)(A) of this section, but fails to meet the requirements of the *de minimis* exception described in paragraph (b)(4)(v)(A) of this section for the immediately following taxable year, that health insurance issuer or member of an aggregated group will not be a covered health insurance provider for that immediately following taxable year.

(vi) ***Examples.*** The following examples illustrate the principles of this paragraph (b)(4). For purposes of these examples, each corporation has a taxable year that is the calendar year, unless the example provides otherwise.

Example 1. (i) Corporations Y and Z are members of an aggregated group under paragraph (b)(2) of this section. Y is a health insurance issuer that is a covered health insurance provider pursuant to paragraph (b)(4)(i)(A) of this section and receives premiums from providing health insurance coverage that is minimum essential coverage during its 2015 taxable year in an amount that is less than two percent of the combined gross revenues of Y and Z for their 2015 taxable years. Z is not a health insurance issuer.
(ii) Y and Z are not covered health insurance providers under paragraph (b)(4) of this section for their 2015 taxable years because they meet the requirements of the *de minimis* exception under paragraph (b)(4)(v)(A) of this section.

Example 2. (i) Corporations V, W, and X are members of an aggregated group under paragraph (b)(2) of this section. V is a health insurance issuer that is a covered health insurance provider pursuant to paragraph (b)(4)(i)(A) of this section, but neither W nor X is a health insurance issuer. W is the parent entity of the aggregated group. V's taxable year ends on December 31, W's taxable year ends on June 30, and X's taxable year ends on September 30. For its taxable year ending December 31, 2016, V receives $3x of premiums from providing minimum essential coverage and has no other revenue. For its taxable year ending June 30, 2017, W has $100x in gross revenue. For its taxable year ending September 30, 2016, X has $60x in gross revenue.
(ii) But for the *de minimis* exception, V (the health insurance issuer) would be a covered health insurance provider for its taxable year ending December 31, 2016; W (the parent entity) would be a covered health insurance provider for its taxable year ending June 30, 2017 (its taxable year with which, or within which, ends the taxable year of the health insurance issuer); and X (the other member of the aggregated group) would be a covered health insurance provider for its taxable year ending on September 30, 2016 (its taxable year ending with, or within, the taxable year of the parent entity). However, the premiums received by V (the health insurance issuer) from providing minimum essential coverage during the taxable year that it would otherwise be a covered health insurance provider under paragraph (b)(4)(i)(A) of this section are less than two percent of the combined gross revenues of V, W, and X for the related taxable years that they would otherwise be

covered health insurance providers under paragraph (b)(4)(i) of this section ($3x is less than $3.26x (two percent of $163x)). Therefore, the *de minimis* exception of paragraph (b)(4)(v)(A) of this section applies, and V, W, and X are not covered health insurance providers for these taxable years.

Example 3. (i) The facts are the same as *Example 2,* except that V receives $4x of premiums for providing minimum essential coverage for its taxable year ending December 31, 2016. In addition, the members of the VWX aggregated group were not covered health insurance providers for their taxable years ending December 31, 2015, June 30, 2016, and September 30, 2015, respectively (their immediately preceding taxable years) solely by reason of the *de minimis* exception of paragraph (b)(4)(v)(A) of this section.
(ii) Although the premiums received by the members of the aggregated group from providing minimum essential coverage are more than two percent of the gross revenues of the aggregated group for the taxable years during which the members would otherwise be treated as covered health insurance providers under paragraph (b)(4)(i) of this section ($4x is greater than $3.28x (two percent of $164x)), they were not covered health insurance providers for their immediately preceding taxable years solely because of the *de minimis* exception of paragraph (b)(4)(v)(A) of this section. Therefore, V, W, and X are not covered health insurance providers for their taxable years ending on December 31, 2016, June 30, 2017, and September 30, 2016, respectively, because of the one-year transition period under paragraph (b)(4)(v)(B) of this section. However, the members of the VWX aggregated group will be covered health insurance providers for their subsequent taxable years if they would otherwise be covered health insurance providers for those taxable years under paragraph (b)(4) of this section.

Example 4. (i) Corporations W, X, Y, and Z are members of a controlled group described in section 414(b)) that is an aggregated group under paragraph (b)(2) of this section. W and X are health insurance issuers. Y and Z are not health insurance issuers. W is the parent entity of the aggregated group. W's and Y's taxable years end on December 31; X's taxable year ends on March 31; and Z's taxable year ends on June 30. As a result of a corporate transaction, W is no longer a member of the WXYZ aggregated group as of September 30, 2016, and W's taxable year ends on that date. Following the corporate transaction, X becomes the parent entity of the XYZ aggregated group.
(ii) Because W's taxable year is treated as the 12-month period ending on September 30, 2016, W is the parent entity for X's taxable year ending March 31, 2016, Z's taxable year ending June 30, 2016, and Y's taxable year ending December 31, 2015. Because X's taxable year begins on April 1, 2016 and ends on March 31, 2017, for purposes of

paragraph (b)(4) of this section, X is the parent entity for Z's taxable year ending June 30, 2016, Y's taxable year ending December 31, 2016, and W's taxable year ending September 30, 2016.

Example 5. (i) The facts are the same as *Example 4.* In addition, W receives $4x of premiums for providing minimum essential coverage and no other revenue for its taxable year beginning January 1, 2016 and ending September 30, 2016. X receives $2x of premiums for providing minimum essential coverage and has no other revenue for its taxable year ending March 31, 2016. X receives $1x of premiums for providing minimum essential coverage and no other revenue for its taxable year ending March 31, 2017. For its taxable year ending December 31, 2015, Y has $100x in gross revenue. For its taxable year ending December 31, 2016, Y has $200x in gross revenue. For its taxable year ending June 30, 2016, Z has $120x in gross revenue (none of which constitute premiums for providing health insurance coverage that constitutes minimum essential coverage (as defined in section 5000A(f)). W, X, Y, and Z did not qualify for the *de minimis* exception in any prior taxable years.
(ii) For its taxable year ending June 30, 2016, Z does not meet the requirements for the *de minimis* exception described in paragraph (b)(4)(v)(A). Even though Z meets the requirements for the *de minimis* exception with respect to the taxable year of parent entity X ending March 31, 2017 ($5x is less than two percent of $325x), Z does not meet the requirements for the *de minimis* exception based on the premiums and gross revenues of the taxable years of its aggregated group members ending with or within the deemed 12-month taxable year of parent entity W ending September 30, 2016 ($6x is more than two percent of $226x). Therefore, Z is a covered health insurance provider for its June 30, 2016 taxable year.

(iii) For its taxable year ending December 31, 2015, Y does not meet the requirements for the *de minimis* exception described in paragraph (b)(4)(v)(A) ($6x is more than two percent of $226x). For its taxable year ending December 31, 2016, Y meets the requirements for the *de minimis* exception described in paragraph (b)(4)(v)(A) ($5x is less than two percent of $325x). Therefore, Y is a covered health insurance provider for its December 31, 2015 taxable year, but is not a covered health insurance provider for its December 31, 2016 taxable year.

(iv) For its taxable year ending September 30, 2016, W does not meet the requirements for the *de minimis* exception described in paragraph (b)(4)(v)(A). Even though W meets the requirements for the *de minimis* exception with respect to X's taxable year ending March 31, 2017 ($5x is less than two percent of $325x), W does not meet the requirements for the *de minimis* exception with respect its taxable year ending September 30, 2016 ($6x is more than two percent of $226x). Therefore, W is a covered health insurance provider for its September 30, 2016 taxable year.

> (v) For its taxable year ending March 31, 2016, X does not meet the requirements for the *de minimis* exception ($6x is more than two percent of $226x). For its taxable year ending March, 31 2017, X meets the requirements for the *de minimis* exception ($5x is less than two percent of $325x). Therefore, X is a covered health insurance provider for its March 31, 2016 taxable year, but is not a covered health insurance provider for its March 31, 2017 taxable year.

(5) ***Premiums*** —

(i) For purposes of this section, the term *premiums* means premiums written (including premiums written for assumption reinsurance, but reduced by assumption reinsurance ceded (as described in paragraph (b)(5)(ii) of this section), excluding indemnity reinsurance written (as described in paragraph (b)(5)(iii) of this section) and direct service payments (as described in paragraph (b)(5)(iv) of this section), but without reduction for ceding commissions or medical loss ratio rebates, determined in a manner consistent with the requirements for reporting under the Supplemental Health Care Exhibit published by the National Association of Insurance Commissioners or the MLR Annual Reporting Form filed with the Center for Medicare & Medicaid Services' Center for Consumer Information and Insurance Oversight of the U.S. Department of Health and Human Services (or any successor or replacement exhibits or forms).

(ii) ***Assumption reinsurance.*** For purposes of this paragraph (b)(5), the term *assumption reinsurance* means reinsurance for which there is a novation and the reinsurer takes over the entire risk of loss pursuant to a new contract.

(iii) ***Indemnity reinsurance.*** For purposes of this paragraph (b)(5), the term *indemnity reinsurance* means reinsurance provided pursuant to an agreement between a health insurance issuer and a reinsuring company under which the reinsuring company agrees to indemnify the health insurance issuer for all or part of the risk of loss under policies specified in the agreement, and the health insurance issuer retains its liability to provide health insurance coverage (as defined in section 9832(b)(1)) to, and its contractual relationship with, the insured.

(iv) ***Direct service payments.*** For purposes of this paragraph (b)(5), the term *direct service payment* means a capitated, prepaid, periodic, or other payment made by a health insurance issuer or another entity that receives premiums from providing health insurance coverage (as defined in section 9832(b)(1)) to another organization as compensation for providing, managing, or arranging for the provision of healthcare services by physicians, hospitals, or other healthcare providers, regardless of whether the organization that receives the compensation is subject to healthcare provider, health insurance, health plan licensing, financial solvency, or other similar regulatory requirements under state insurance law.

(6) ***Disqualified taxable year.*** For purposes of this section, the term *disqualified taxable year* means, with respect to any person, any taxable year for which the person is a covered health insurance provider.

(7) ***Applicable individual*** —

(i) ***In general.*** For purposes of this section, except as provided in paragraph (b)(7)(ii) of this section, the term *applicable individual* means, with respect to any covered health insurance provider for any disqualified taxable year, any individual (or any other person described in guidance of general applicability published in the Internal Revenue Bulletin)—

(A) who is an officer, director, or employee in that taxable year, or

(B) who provides services for or on behalf of the covered health insurance provider during that taxable year.

(ii) ***Independent contractors*** —Remuneration for services performed by an independent contractor for a covered health insurance provider is subject to the deduction limitation under section 162(m)(6). However, an independent contractor is not an applicable individual with respect to a covered health insurance provider for a disqualified taxable year if each of the following requirements is satisfied:

(A) The independent contractor is actively engaged in the trade or business of providing services to recipients, other than as an employee or as a member of the board of directors of a corporation (or similar position with respect to an entity that is not a corporation);

(B) The independent contractor provides significant services (as defined in § 1.409A-1(f)(2)(iii)) to two or more persons to which the independent contractor is not related and that are not related to one another (as defined in § 1.409A-1(f)(2)(ii)); and

(C) The independent contractor is not related to the covered health insurance provider or any member of its aggregated group, applying the definition of related person contained in § 1.409A-1(f)(2)(ii), subject to the modification that for purposes of applying the references to sections 267(b) and 707(b)(1), the language “20 percent” is not used instead of “50 percent” each place “50 percent” appears in sections 267(b) and 707(b)(1).

(8) ***Service provider.*** For purposes of this section, the term *service provider* means, with respect to a covered health insurance provider for any period, an individual who is an officer, director, or employee, or who provides services for, or on behalf of, the covered health insurance provider or any member of its aggregated group.

(9) ***Remuneration*** —

(i) ***In general.*** For purposes of this section, except as provided in paragraph (b)(9)(ii) of this section, the term *remuneration* has the same meaning as the term *applicable employee remuneration,* as defined in section 162(m)(4), but without regard to the exceptions under section 162(m)(4)(B) (remuneration payable on a commission basis), section 162(m)(4)(C) (performance-based compensation), and section 162(m)(4)(D) (existing binding contracts), and the regulations under those sections.

(ii) ***Exceptions.*** For purposes of this section, remuneration does not include—

(A) A payment made to, or for the benefit of, an applicable individual from or to a trust described in section 401(a) within the meaning of section 3121(a)(5)(A),

(B) A payment made under an annuity plan described in section 403(a) within the meaning of section 3121(a)(5)(B),

(C) A payment made under a simplified employee pension plan described in section 408(k)(1) within the meaning of section 3121(a)(5)(C),

(D) A payment made under an annuity contract described in section 403(b) within the meaning of section 3121(a)(5)(D),

(E) Salary reduction contributions described in section 3121(v)(1), and

(F) Remuneration consisting of any benefit provided to, or on behalf of, an employee if, at the time the benefit is provided, it is reasonable to believe that the employee will be able to exclude the value of the benefit from gross income.

(10) ***Applicable Individual Remuneration or AIR.*** For purposes of this section, the term *applicable individual remuneration* or *AIR* means, with respect to any applicable individual for any disqualified taxable year, the aggregate amount allowable as a deduction under this chapter for that taxable year (determined without regard to section 162(m)) for remuneration for services performed by that applicable individual (whether or not in that taxable year). AIR does not include any DDR with respect to services performed during any taxable year. AIR for a disqualified taxable year may include remuneration for services performed in a taxable year before the taxable year in which the deduction for the remuneration is allowable. For example, a discretionary bonus granted and paid to an applicable individual in a disqualified taxable year in recognition of services performed in prior taxable years is AIR for the disqualified taxable year in which the bonus is granted and paid. In addition, a grant of restricted stock in a disqualified taxable year with respect to which an applicable individual makes an election under section 83(b) is AIR for the disqualified taxable year of the covered health insurance provider in which the grant of the restricted stock is made. See paragraph (b)(9)(ii) of this section for certain remuneration that is not treated as AIR for purposes of this section.

(11) ***Deferred Deduction Remuneration or DDR.*** For purposes of this section, the term *deferred deduction remuneration* or *DDR* means remuneration that would be AIR for services performed in a disqualified taxable year but for the fact that the deduction (determined without regard to section 162(m)(6)) for the remuneration is allowable in a subsequent taxable year. Whether remuneration is DDR is determined without regard to when the remuneration is paid, except to the extent that the timing of the payment affects the taxable year in which the remuneration is otherwise deductible. For example, payments that are otherwise deductible by a covered health insurance provider in an initial taxable year, but are paid to an applicable individual by the 15th day of the third month of the immediately subsequent taxable year of the covered health insurance provider (as described in § 1.404(b)-1T, Q&A-2(b)(1)), are AIR for the initial taxable year (and not DDR) because the deduction for the payments is allowable in the initial taxable year, and not a subsequent taxable year. Except as otherwise provided in paragraph (i) of this section (regarding transition rules for certain DDR attributable to services performed in taxable years beginning before January 1, 2013), DDR that is attributable to services performed in a disqualified taxable year of a covered health insurance provider is subject to the section 162(m)(6) deduction limitation even if the taxable year in which the remuneration is otherwise deductible is not a disqualified taxable year. Similarly, DDR is subject to the section 162(m)(6) deduction limitation regardless of whether an applicable individual is a service provider of the covered health insurance provider in the taxable year in which the DDR is otherwise deductible. However, remuneration that is attributable to services performed in a taxable year that is not a disqualified taxable year is not DDR even if the remuneration is otherwise deductible in a disqualified taxable year. See also paragraph (b)(9)(ii) of this section for certain remuneration that is not treated as DDR for purposes of this section.

(12) ***Substantial risk of forfeiture.*** For purposes of this section, the term *substantial risk of forfeiture* has the same meaning as provided in § 1.409A-1(d).

(13) ***In-service payment.*** An *in-service payment* is any amount that is paid with respect to an applicable individual from an account balance plan described in § 1.409A-1(c)(2)(i)(A) or (B) or a nonaccount balance plan described in § 1.409A-1(c)(2)(i)(C) in a taxable year of a covered health insurance provider during which at any time the applicable individual is a service provider (including amounts

that became otherwise deductible, but were not paid, in a previous taxable year of a covered health insurance provider). Amounts that are paid in the last year that an applicable individual is a service provider (for example, amounts paid at separation from service) are in-service payments if the applicable individual is a service provider at any time during the taxable year of the covered health insurance provider in which the payment is made.

(14) ***Payment year.*** For purposes of this section, the term *payment year* means the taxable year of a covered health insurance provider for which remuneration becomes otherwise deductible.

(15) ***Measurement date.*** For purposes of this section, the term *measurement date* means the last day of the taxable year of a covered health insurance provider.

(c) ***Deduction Limitation*** —

(1) ***AIR.*** For any disqualified taxable year beginning after December 31, 2012, no deduction is allowed under this chapter for AIR that is attributable to services performed by an applicable individual in that taxable year to the extent that the amount of that remuneration exceeds $500,000.

(2) ***DDR.*** For any taxable year beginning after December 31, 2012, no deduction is allowed under this chapter for DDR that is attributable to services performed by an applicable individual in any disqualified taxable year beginning after December 31, 2009, to the extent that the amount of such remuneration exceeds $500,000 reduced (but not below zero) by the sum of:

(i) The AIR for that applicable individual for that disqualified taxable year; and

(ii) The portion of the DDR for those services that was subject to the deduction limitation under section 162(m)(6)(A)(ii) and this paragraph (c)(2) in a preceding taxable year, or would have been subject to the deduction limitation under section 162(m)(6)(A)(ii) and this paragraph (c)(2) in a preceding taxable year if section 162(m)(6) was effective for taxable years beginning after December 31, 2009 and before January 1, 2013.

(d) ***Services to which remuneration is attributable*** —

(1) ***Attribution to a taxable year*** —

(i) ***In general.*** The deduction limitation under section 162(m)(6) applies to AIR and DDR attributable to services performed by an applicable individual in a disqualified taxable year of a covered health insurance provider. When an amount of AIR or DDR becomes otherwise deductible (and not before that time), that remuneration must be attributed to services performed by an applicable individual in a taxable year of the covered health insurance provider in accordance with the rules of this paragraph (d). After the remuneration has been attributed to services performed by an applicable individual in a taxable year of a covered health insurance provider, the rules of paragraph (e) of this section are then applied to determine whether the deduction with respect to the remuneration is limited by section 162(m)(6).

(ii) ***Overview.*** Paragraphs (d)(1)(iii) through (v) of this section, and paragraph (d)(2) of this section, set forth rules of general applicability for attributing remuneration to services performed by an applicable individual in a taxable year of a covered health insurance provider. Paragraph (d)(3) sets forth two methods for attributing remuneration provided under an account balance plan—the account balance ratio method (described in paragraph (d)(3)(ii) of this section) and the principal additions method (described in paragraph (d)(3)(iii) of this section). Paragraph (d)(4) of this section sets forth two methods for attributing remuneration provided under a nonaccount balance plan—the present value ratio method (described in paragraph (d)(4)(ii) of

this section) and the formula benefit ratio method (described in paragraph (d)(4)(iii) of this section). Paragraph (d)(5) of this section sets forth rules for attributing remuneration resulting from equity-based remuneration (such as stock options, stock appreciation rights, restricted stock, and restricted stock units). Paragraph (d)(6) of this section sets forth rules for attributing remuneration that is involuntary separation pay. Paragraph (d)(7) of this section sets forth rules for attributing remuneration that is received under a reimbursement arrangement, and paragraph (d)(8) of this section sets forth rules for attributing remuneration that results from a split-dollar life insurance arrangement.

(iii) ***No attribution to taxable years during which no services are performed or before a legally binding right arises*** —

(A) ***In general.*** For purposes of this section, remuneration is not attributable—

(*1*) To a taxable year of a covered health insurance provider ending before the later of the date the applicable individual begins providing services to the covered health insurance provider (or any member of its aggregated group) and the date the applicable individual obtains a legally binding right to the remuneration, or

(*2*) To any other taxable year of a covered health insurance provider during which the applicable individual is not a service provider.

(B) ***Attribution of remuneration before the commencement of services or a legally binding right arises.*** To the extent that remuneration would otherwise be attributable in accordance with paragraphs (d)(2) through (11) of this section to a taxable year ending before the later of the date an applicable individual begins providing services to a covered health insurance provider (or any member of its aggregated group) and the date the applicable individual obtains a legally binding right to the remuneration, the remuneration is attributed to services performed in the taxable year in which the later of these dates occurs. For example, if an applicable individual obtains a contractual right to remuneration in a taxable year of a covered health insurance provider and the remuneration would otherwise be attributable to that taxable year pursuant to paragraph (d)(2) of this section, but the applicable individual does not begin providing services to the covered health insurance provider until the next taxable year, the remuneration is attributable to the taxable year in which the applicable individual begins providing services.

(iv) ***Attribution to 12-month periods.*** To the extent that a covered health insurance provider is required to attribute remuneration on a daily *pro rata* basis under this paragraph (d), it may treat any 12-month period as having 365 days (and so may ignore the extra day in leap years).

(v) ***Remuneration subject to nonlapse restriction or similar formula.*** For purposes of this section, if stock or other property is subject to a nonlapse restriction (as defined in § 1.83-3(h)), or if the remuneration payable to an applicable individual is determined under a formula that, if applied to stock or other property, would be a nonlapse restriction, the amount of the remuneration and the attribution of that remuneration to taxable years must be determined based upon application of the nonlapse restriction or formula. For example, if the earnings or losses on an account under an account balance plan are determined based upon the performance of company stock, the valuation of which is based on a formula that if applied to the stock would be a nonlapse restriction, then that formula must be used consistently for purposes of determining the amount of the remuneration credited to that account balance in taxable years and the attribution of that remuneration to taxable years.

(2) ***Legally binding right.*** Unless attributable to services performed in a different taxable year pursuant to paragraphs (d)(3) through (11) of this section, remuneration is attributable to services performed in the taxable year of a covered health insurance provider in which an applicable individual obtains a legally binding right to the remuneration. An applicable individual does not have a legally binding right to remuneration if the remuneration may be reduced unilaterally or eliminated by a covered health insurance provider or other person after the services creating the right to the remuneration have been performed. However, if the facts and circumstances indicate that the discretion to reduce or eliminate the remuneration is available or exercisable only upon a condition, or the discretion to reduce or eliminate the remuneration lacks substantive significance, an applicable individual will be considered to have a legally binding right to the remuneration. For this purpose, remuneration is not considered to be subject to unilateral reduction or elimination merely because it may be reduced or eliminated by operation of the objective terms of a plan, such as the application of a nondiscretionary, objective provision creating a substantial risk of forfeiture.

(3) ***Account balance plans*** —

(i) ***In general.*** When remuneration for services performed by an applicable individual for a covered health insurance provider becomes otherwise deductible (for example, because the amount was paid or made available during that taxable year) from a plan described in § 1.409A-1(c)(2)(i)(A) or (B) (an *account balance plan*), that remuneration must be attributed to services performed by the applicable individual in a taxable year of the covered health insurance provider in accordance with an attribution method described in either paragraph (d)(3)(ii) or (d)(3)(iii) of this section. However, except as provided in paragraphs (d)(3)(ii)(D) and (f)(3) of this section, the covered health insurance provider and all members of its aggregated group must apply the same attribution method under this paragraph (d)(3) consistently for all taxable years beginning after September 23, 2014 for all amounts that become otherwise deductible under all account balance plans.

(ii) ***Account balance ratio method*** —

(A) ***In general.*** Under this method, remuneration for services performed by an applicable individual for a covered health insurance provider that becomes otherwise deductible under an account balance plan must be attributed to services performed by the applicable individual in each taxable year of the covered health insurance provider ending with or before the payment year during which the applicable individual was a service provider and for which the account balance of the applicable individual increased (determined in accordance with paragraph (d)(3)(ii)(B) and (C) of this section). The amount attributed to each such taxable year is equal to the amount of remuneration that becomes otherwise deductible multiplied by a fraction, the numerator of which is the increase in the applicable individual's account balance under the plan for the taxable year, and the denominator of which is the sum of all such increases for all taxable years during which the applicable individual was a service provider. Thus, remuneration that becomes otherwise deductible under a plan is attributed to a taxable year of the covered health insurance provider in proportion to the increase in the applicable individual's account balance for that taxable year.

(B) ***Increase in the account balance.*** For purposes of this paragraph (d)(3)(ii), an increase in an account balance under an account balance plan occurs for a taxable year if the account balance as of the measurement date in that taxable year is greater than the account balance as of the measurement date in every earlier taxable year. In that case, the amount

of the increase for that taxable year is equal to the excess of the applicable individual's account balance as of the measurement date for that taxable year over the greatest of the applicable individual's account balances under the plan as of the measurement date in every earlier taxable year. If the applicable individual's account balance as of the measurement date in a taxable year is less than or equal to the applicable individual's account balance as of the measurement date in any earlier taxable year, there is no increase in the account balance for that later taxable year.

(C) ***Certain account balance adjustments.*** For purposes of determining the account balance on a measurement date under paragraph (d)(3)(ii)(B) of this section, the account balance is adjusted as provided in this paragraph (d)(3)(ii)(C).

(*1*) ***In-service payments.*** If an in-service payment is made from the account of an applicable individual under an account balance plan in any taxable year of a covered health insurance provider, then the rules of this paragraph (d)(3)(ii)(C)(*1*) apply.

(*i*) Solely for purposes of determining the increase in the applicable individual's account balance as of the measurement date in the payment year (and not for purposes of attributing any amount that becomes otherwise deductible in any later taxable year), the account balance as of the measurement date for that taxable year is increased by the amount of all in-service payments made from the plan during that taxable year.

(*ii*) For purposes of attributing any amount that becomes otherwise deductible under the plan in any taxable year after the payment year of the in-service payment—

(*A*) the account balance as of the measurement date in each taxable year that ends before the taxable year to which the in-service payment is attributed pursuant to this paragraph (d)(3)(ii) is reduced by the sum of the amount of the in-service payment that is attributed to that taxable year and the amount of the in-service payment that is attributed to each taxable year that ends before that taxable year, if any, and

(B) to the extent that the in-service payment includes an amount that was deductible by the covered health insurance provider in a previous taxable year and, therefore, was previously attributable to services performed by the applicable individual in one or more taxable years of the covered health insurance provider (for example, because the amount was made available in a previous taxable year but was not paid at that time), the account balance as of the measurement date for each taxable year that ends before the taxable year to which the in-service payment is attributed pursuant to this paragraph (d)(3)(ii) is reduced by the sum of the amount of the in-service payment previously attributable to that taxable year and the amount of the in-service payment previously attributable to each taxable year that ends before that taxable year, if any.

(*2*) ***Certain increases after ceasing to be a service provider.*** Any addition (other than income or earnings) to an account balance plan made in a taxable year that begins after an applicable individual ceases to be a service provider (and that ends before

the applicable individual becomes a service provider again, if applicable) is added to the account balance of the applicable individual as of the measurement date of the first preceding taxable year in which the applicable individual was a service provider.

(3) ***Account balance adjustments for grandfathered amounts.*** If a covered health insurance provider uses the principal additions method for determining grandfathered amounts for an applicable individual under paragraph (h) of this section, then, for purposes of determining the increase in the applicable individual's account balance, the account balance as of any measurement date is reduced by the amount of any grandfathered amounts otherwise included in the account balance.

(D) ***Transition rule for amounts attributed before the applicability date of the final regulations.*** Amounts that become otherwise deductible in taxable years beginning before September 23, 2014 may be attributed to services performed in taxable years of a covered health insurance provider under the rules set forth in the proposed regulations. If a covered health insurance provider attributes an amount paid to an applicable individual pursuant to a method permitted under the proposed regulations and then chooses to use the account balance ratio method to attribute amounts that subsequently become otherwise deductible with respect to that applicable individual, then, for purposes of applying the account balance ratio method to attribute any amount that becomes otherwise deductible under the plan after the taxable year in which the last payment was made that was attributed pursuant to the proposed regulations, the account balance as of the measurement date for each taxable year that ends before the taxable year in which the last payment that was attributed pursuant to the proposed regulations is reduced by the sum of the amount previously attributed to that taxable year under the proposed regulations and the amount previously attributable to each taxable year that ends prior to that taxable year under the proposed regulations, if any.

(iii) ***Principal additions method*** —

(A) ***In general.*** Under this method, remuneration that becomes otherwise deductible under an account balance plan during a payment year must be attributed to services performed by the applicable individual in the taxable year of the covered health insurance provider during which the applicable individual was a service provider and in which the principal addition to which the amount relates is credited under the plan (determined in accordance with paragraph (d)(3)(iii)(B) and (C) of this section). An amount relates to a principal addition if the amount is a payment of the principal addition or earnings on the principal addition, based on a separate accounting of these amounts. The principal additions method described in this paragraph may be used to attribute amounts that become otherwise deductible under an account balance plan only if the covered health insurance provider separately accounts for each principal addition to the plan (and any earnings thereon) and traces each amount that becomes otherwise deductible under the plan to a principal addition made in a taxable year of the covered health insurance provider.

(B) ***Principal addition.***

(1) For purposes of this paragraph (d)(3)(iii), the excess (if any) of the sum of the account balance of an applicable individual in an account balance plan as of the last day of a taxable year and any payments made during the taxable year over the account balance as of the last day of the immediately preceding taxable year, that is not due to earnings or losses (as described in paragraph (d)(3)(iii)(C) of this section),

is treated as a principal addition that is credited to the plan in that taxable year if the applicable individual was a service provider during that taxable year. If the applicable individual was not a service provider during that taxable year, the excess described in the preceding sentence is treated as a principal addition that is credited to the plan in accordance with paragraph (d)(3)(iii)(B)(2) of this section.

(2) ***Principal additions after termination of employment.*** Any principal addition to an account balance plan made in a taxable year that begins after an applicable individual ceases to be a service provider (and that ends before the applicable individual becomes a service provider again, if applicable) is treated as a principal addition that is credited in the first preceding taxable year in which the applicable individual was a service provider.

(C) ***Earnings.*** Whether remuneration constitutes earnings on a principal addition is determined under the principles defining income attributable to an amount taken into account under § 31.3121(v)(2)-1(d)(2). Therefore, for an account balance plan, earnings on an amount deferred generally include an amount credited on behalf of an applicable individual under the terms of the arrangement that reflects a rate of return that does not exceed either the rate of return on a predetermined actual investment (as defined in § 31.3121(v)(2)-1(d)(2)(i)(B)), or, if the income does not reflect the rate of return on a predetermined actual investment, a rate of return that reflects a reasonable rate of interest (as defined in § 31.3121(v)(2)-1(d)(2)(i)(C)). For purposes of this paragraph (d)(3)(iii), the use of a rate of return that is not based on a predetermined actual investment or a reasonable rate of interest generally will result in the treatment of some or all of the remuneration as a principal addition that is attributable to services performed by an applicable individual in a taxable year of a covered health insurance provider in accordance with this paragraph (d)(3)(iii) of this section.

(4) ***Nonaccount balance plans*** —

(i) ***In general.*** When remuneration for services performed by an applicable individual for a covered health insurance provider becomes otherwise deductible under a plan described in § 1.409A-1(c)(2)(i)(C) (a nonaccount balance plan), that remuneration must be attributed to services performed by the applicable individual in a taxable year of the covered health insurance provider in accordance with the attribution method described in either paragraph (d)(4)(ii) or (d)(4)(iii) of this section. However, except as provided in paragraphs (d)(4)(ii)(D) and (d)(4)(iii)(D) and (f)(3) of this section, the covered health insurance provider and all members of its aggregated group must apply the same attribution method under this paragraph (d)(4) consistently for all taxable years beginning after September 23, 2014 for all amounts that become deductible under all nonaccount balance plans.

(ii) ***Present value ratio attribution method*** —

(A) ***In general.*** Under this method, remuneration for services performed by an applicable individual for a covered health insurance provider that becomes otherwise deductible under a nonaccount balance plan must be attributed to services performed by the applicable individual in each taxable year of the covered health insurance provider ending with or before the payment year during which the applicable individual was a service provider for which the present value of the future payment(s) to be made to or on behalf of the applicable individual under the plan increased (determined in accordance with paragraph (d)(3)(ii)(B) and (C) of this section). The amount attributed to each such taxable

year is equal to the amount of remuneration that becomes otherwise deductible under the plan multiplied by a fraction, the numerator of which is the increase in the present value of the future payment(s) to which the applicable individual has a legally binding right under the plan for the taxable year, and the denominator of which is the sum of all such increases for all taxable years during which the applicable individual was a service provider. Thus, remuneration that becomes otherwise deductible under a plan is attributed to a taxable year of the covered health insurance provider in proportion to the increase in the present value of the future payment(s) under the plan for that taxable year.

(B) ***Increase in present value of future payments.*** For purposes of this paragraph (d)(4)(ii), for a taxable year of a covered health insurance provider, an increase in the present value of the future payment(s) to which an applicable individual has a legally binding right under a nonaccount balance plan occurs if the present value of the future payment(s) as of the measurement date in the taxable year is greater than the present value of the future payment(s) as of the measurement date in every earlier taxable year. In that case, the amount of the increase for that taxable year is equal to the excess of the present value of the future payment(s) to which the applicable individual has a legally binding right under the plan as of the measurement date for that taxable year over the greatest present value of the future payment(s) to which the applicable individual had a legally binding right under the plan as of the measurement date in every earlier taxable year. If the present value of the future payment(s) as of a measurement date in a taxable year is less than or equal to the present value of the future payment(s) as of the measurement date in any earlier taxable year, then there is no increase in the present value of the future payment(s) to which the applicable individual has a legally binding right under the plan for that later taxable year. For purposes of determining the increase (or decrease) in the present value of a future payment(s) under a nonaccount balance plan, the rules of § 31.3121(v)(2)-1(c)(2) apply (including the requirement that reasonable actuarial assumptions and methods be used).

(C) ***Certain present value adjustments.*** For purposes of determining the present value of the future payment(s) to which an applicable individual has a legally binding right to receive as of a measurement date under paragraph (d)(4)(ii)(B) of this section, the present value is adjusted as provided in this paragraph (d)(3)(iii)(C).

(*1*) ***In-service payments.*** If an in-service payment is made to or on behalf of an applicable individual under a nonaccount balance plan in any taxable year of a covered health insurance provider, then the rules of this paragraph (d)(3)(iii)(C)(*1*) apply.

(*i*) Solely for purposes of determining the increase in the present value of the future payment(s) under the plan for the payment year (and not for purposes of attributing any amount that becomes otherwise deductible in any later taxable year), the present value of the future payment(s) under the plan as of the measurement date in the payment year is increased by the amount of any reduction in the present value of the future payment(s) resulting from the in-service payment made from the plan during that taxable year.

(*ii*) For purposes of attributing any amount that becomes otherwise deductible under the plan in any taxable year after the payment year of the in-service payment, the present value of the future payment(s) as of the measurement date for each taxable year that ends before the payment year is reduced by the

present value of the future payment to which the applicable individual had a legally binding right to be paid on the date of the in-service payment (determined as of the measurement date based upon all of the applicable factors under the plan as of the measurement date, such as compensation and years of service on that date).

(2) ***Increases in the present value of future payments after ceasing to be a service provider.*** Any increase in the present value of the future payment(s) under a plan in a taxable year that begins after an applicable individual ceases to be a service provider (and that ends before the applicable individual becomes a service provider again, if applicable) that is not due merely to the passage of time or a change in the reasonable actuarial assumptions used to determine the present value of the future payment(s) is added to the present value of the future payment(s) for the applicable individual as of the measurement date of the most recent preceding taxable year in which the applicable individual was a service provider.

(D) ***Transition rule for amounts attributed before the effective date of the final regulations.*** Amounts that become otherwise deductible in taxable years beginning before September 23, 2014 may be attributed under the rules set forth in the proposed regulations. If a covered health insurance provider attributes an amount paid to an applicable individual pursuant to the proposed regulations and then chooses to use the present value ratio method to attribute amounts that subsequently become otherwise deductible with respect to that applicable individual, then, for purposes of applying the present value ratio method to attribute any amount that becomes otherwise deductible under the plan in any taxable year after the taxable year in which the last payment was made that was attributed pursuant to the proposed regulations, the present value of the future payment(s) as of the measurement date for each taxable year that ends before the taxable year in which the last payment that was attributed pursuant to the proposed regulations is reduced by the present value of each future payment to which the applicable individual had a legally binding right to be paid that was attributed pursuant to the proposed regulations (determined as of the measurement date based upon all of the applicable factors under the plan as of the measurement date, such as compensation and years of service on that date), with no adjustment for an amount that became otherwise deductible, but was not paid.

(iii) ***Formula benefit ratio method*** —

(A) ***In general.*** Under this method, remuneration that becomes otherwise deductible under a nonaccount balance plan on a date (referred to for these purposes as the *date of payment*) must be attributed to services performed by the applicable individual in each taxable year of the covered health insurance provider ending with or before the payment year during which the applicable individual was a service provider and for which the formula benefit of the applicable individual under the plan increased (determined in accordance with paragraph (d)(3)(iii)(B), (C) and (D) of this section). The amount attributed to each such taxable year is equal to the amount of remuneration that becomes otherwise deductible under the plan on the date of payment multiplied by a fraction, the numerator of which is the increase in the applicable individual's formula benefit under the plan for the taxable year and the denominator of which is the sum of all such increases for all taxable years during which the applicable individual was a service provider (which will generally be the amount that becomes otherwise deductible under the plan on the date of payment). Thus,

remuneration that becomes otherwise deductible under a plan is attributed to a taxable year of the covered health insurance provider in proportion to the increase in the applicable individual's formula benefit under the plan in that taxable year.

(B) ***Formula benefit.*** For purposes of this paragraph (d)(4)(iii), an applicable individual's formula benefit as of any date is the benefit (or portion thereof) to which the applicable individual has a legally binding right under a nonaccount balance plan as of that date determined based upon all of the applicable factors under the plan (for example, compensation and years of service as of that date), disregarding any substantial risk of forfeiture and assuming that the applicable individual meets any applicable eligibility requirements for the benefit as of that date. For this purpose, the formula benefit is expressed in the form that it has become otherwise deductible. For example, if an applicable individual's benefit under a plan is paid in the form of a single lump sum, then the applicable individual's formula benefit under the plan is expressed in the form of a single lump sum for all purposes under this paragraph (d)(4)(iii). If the amount that becomes otherwise deductible is payable in more than one form of payment (for example, 50 percent of the benefit is paid in the form of a lump sum and 50 percent is paid in the form of a life annuity), then each separate form of payment is treated as a separate formula benefit to which this paragraph (d)(4)(iii) is applied separately.

(C) ***Increase in formula benefit.*** For purposes of this paragraph (d)(4)(iii), an increase in an applicable individual's formula benefit under a nonaccount balance plan occurs for a taxable year of a covered health insurance provider if the formula benefit as of the measurement date in that taxable year is greater than the formula benefit as of the measurement date in every earlier taxable year. In that case, the amount of the increase for that taxable year is equal to excess of the formula benefit as of the measurement date in that taxable year over the greatest formula benefit as of any measurement date in any earlier taxable year. If the applicable individual's formula benefit as of a measurement date in a taxable year is less than or equal to the applicable individual's formula benefit as of the measurement date in any earlier taxable year, there is no increase in the formula benefit to which the applicable individual has a legally binding right under the plan for that later taxable year.

(D) ***Certain adjustments.*** For purposes of determining the increase in the formula benefit as of a date of payment under paragraph (d)(4)(iii)(C) of this section, the rules of this paragraph (d)(3)(iii)(D) apply—

(*1*) ***Attribution to payment year.*** Solely for purposes of attributing a payment under this paragraph (d)(4)(iii) (including an in-service payment), the date of payment is substituted for the measurement date in the payment year to determine whether an increase in the formula benefit occurs in the payment year and the amount of any such increase.

(*2*) ***Amounts not paid.*** If an amount becomes otherwise deductible under a nonaccount balance plan, but is not paid, the formula benefit for that amount must be determined using the form in which it will be paid, if that form is known, or any form in which it may be paid, if the actual form of payment is unknown.

(*3*) ***Increases in the formula benefit after ceasing to be a service provider.*** Any increase in the formula benefit with respect to an applicable individual resulting from a legally binding right arising in a taxable year that begins after the applicable individual

ceases to be a service provider (and that ends before the applicable individual becomes a service provider again, if applicable) is added to the formula benefit with respect to the applicable individual as of the measurement date of the first preceding taxable year in which the applicable individual was a service provider. However, any increase in the formula benefit resulting from a legally binding right arising in a taxable year that begins before the applicable individual ceases to be a service provider is added to the formula benefit with respect to the applicable individual as of the measurement date of the taxable year in which the legally binding right arises, even if the increase is not reflected until after the applicable individual ceases to be a service provider (such as in the case of a cost of living adjustment).

(5) *Equity-based remuneration* —

(i) *Stock options and stock appreciation rights* —

(A) ***In general.*** Except as provided in paragraph (d)(5)(i)(B) of this section, remuneration resulting from the exercise of a stock option (including compensation income arising at the time of a disqualifying disposition of an incentive stock option described in section 422 or an option under an employee stock purchase plan described in section 423) or a stock appreciation right (SAR) is attributable to services performed by an applicable individual for a covered health insurance provider on a daily *pro rata* basis over the period beginning on the date of grant (within the meaning of § 1.409A-1(b)(5)(vi)(B)) of the stock option or SAR and ending on the date that the stock option or SAR is exercised, excluding any days on which the applicable individual is not a service provider.

(B) ***Stock options or SARs subject to a substantial risk of forfeiture.*** If a stock option or SAR is subject to a substantial risk of forfeiture, a covered health insurance provider may attribute remuneration resulting from the exercise of the stock option or SAR to services performed by an applicable individual in a taxable year on a daily *pro rata* basis over the period beginning on the date of grant (within the meaning of § 1.409A-1(b)(5)(vi)(B)) of the stock option or SAR and ending on the first date that the stock option or SAR is no longer subject to a substantial risk of forfeiture, but only if the covered health insurance provider uses this attribution method consistently for all stock options or SARs exercised in taxable years of a covered health insurance provider beginning after September 23, 2014, except as provided in paragraph (f)(3) of this section.

(ii) ***Restricted stock.*** Remuneration resulting from restricted stock, for which an election under section 83(b) has not been made, that becomes substantially vested or transferred is attributed on a daily *pro rata* basis to services performed by an applicable individual for a covered health insurance provider over the period, excluding any days on which the applicable individual is not a service provider, beginning on the date the applicable individual obtains a legally binding right to the restricted stock and ending on the earliest of—

(A) The date the restricted stock becomes substantially vested, or

(B) The date the restricted stock is transferred by the applicable individual.

(iii) ***Restricted stock units.*** Remuneration resulting from a restricted stock unit (*RSU*) is attributed on a daily pro rata basis to services performed by an applicable individual for a covered health insurance provider over the period beginning on the date the applicable individual obtains a legally binding right to the RSU and ending on the date the remuneration is paid or made available, excluding any days on which the applicable individual is not a service provider.

(iv) ***Partnership interests and other equity.*** [Reserved]

(6) ***Involuntary separation pay.*** Involuntary separation pay is attributable to services performed by an applicable individual for a covered health insurance provider in the taxable year in which the involuntary separation from service occurs. Alternatively, the covered health insurance provider may attribute involuntary separation pay to services performed by an applicable individual on a daily *pro rata* basis beginning on the date that the applicable individual obtains a legally binding right to the involuntary separation pay and ending on the date of the involuntary separation from service. Involuntary separation pay to different individuals may be attributed using different methods; however, if involuntary separation payments are made to the same individual over multiple taxable years, all the payments must be attributed using the same method. For purposes of this section, the term *involuntary separation pay* means remuneration to which an applicable individual has a right to payment solely as a result of the individual's involuntary separation from service (within the meaning of § 1.409A-1(n)). To the extent that involuntary separation pay is attributed to services performed in two or more taxable years of a covered health insurance provider as permitted under this paragraph, any amount of involuntary separation pay that is paid or made available must be attributed to services performed in all of those taxable years in the same proportion that the total involuntary separation pay is attributed to taxable years of the covered health insurance provider.

(7) ***Reimbursements.*** Remuneration that is provided in the form of a reimbursement or benefit provided in-kind (other than cash) is attributable to services performed by an applicable individual in the taxable year of a covered health insurance provider in which the applicable individual makes a payment for which the applicable individual has a right to reimbursement or receives an in-kind benefit, except that remuneration provided in the form of a reimbursement or in-kind benefit during a taxable year of a covered health insurance provider in which an applicable individual is not a service provider is attributable to services performed in the most recent preceding taxable year of the covered health insurance provider in which the applicable individual is a service provider.

(8) ***Split-dollar life insurance.*** Remuneration resulting from a split-dollar life insurance arrangement (as defined in § 1.61-22(b)) under which an applicable individual has a legally binding right to economic benefits described in § 1.61-22(d)(2)(ii) (policy cash value to which the non-owner has current access within the meaning of § 1.61-22(d)(4)(ii)) or § 1.61-22(d)(2)(iii) (any other economic benefits provided to the non-owner) is attributable to services performed in the taxable year of the covered health insurance provider in which the legally binding right arises. Split-dollar life insurance arrangements under which payments are treated as split-dollar loans under § 1.7872-15 generally will not give rise to DDR within the meaning of paragraph (b)(11) of this section, although they may give rise to AIR. However, in certain situations, this type of arrangement may give rise to DDR for purposes of section 162(m)(6), for example, if amounts due on a split-dollar loan are waived, cancelled, or forgiven.

(9) ***Examples.*** The following examples illustrate the principles of paragraphs (d)(1) through (8) of this section. For purposes of these examples, each corporation has a taxable year that is the calendar year and is a covered health insurance provider for all relevant taxable years, DDR is otherwise deductible in the taxable year in which it is paid, and amounts payable under nonaccount balance plans are not forfeitable upon the death of the applicable individual. For purposes of these examples, the interest rates used in these examples are assumed to be reasonable.

> *Example 1 (Account balance plan—account balance ratio method with earnings and a single payment).* (i) B is an applicable individual of corporation Y for all relevant taxable years. On

January 1, 2016, B begins participating in a nonqualified deferred compensation plan of Y that is an account balance plan. Under the terms of the plan, all amounts are fully vested at all times, and Y will pay B's entire account balance on January 1, 2019. B's account earns five percent interest per year, compounded annually. Y credits $10,000 to B under the plan annually on January 1 for three years beginning on January 1, 2016. Thus, B's account balance is $10,500 ($10,000 + ($10,000 × 5%)) on December 31, 2016; $21,525 ($10,500 + $10,000 + ($20,500 × 5%)) on December 31, 2017; and $33,101 ($21,525 + $10,000 + ($31,525 × 5%)) on December 31, 2018. On January 1, 2019, Y pays B $33,101, the entire account balance. Y attributes payments under its account balance plans using the account balance ratio method described in paragraph (d)(3)(i) of this section.
(ii) The increase in B's account balance during 2016 is $10,500 ($10,500 − zero); the increase in B's account balance for 2017 is $11,025 ($21,525 − $10,500); and the increase in B's account balance for 2018 is $11,576 ($33,101 − $21,525). The sum of all the increases is $33,101 ($10,500 + $11,025 + $11,576). Accordingly, for Y's 2016 taxable year, the attribution fraction is .3172 ($10,500/$33,101); for Y's 2017 taxable year, the attribution fraction is .3331 ($11,025/$33,101); and for Y's 2018 taxable year, the attribution fraction is .3497 ($11,576/$33,101).

(iii) With respect to the $33,301 payment made on January 1, 2019, $10,500 ($33,101 × .3172) of DDR is attributable to services performed by B in Y's 2016 taxable year; $11,026 ($33,101 × .3331) of DDR is attributable to services performed by B in Y's 2017 taxable year; and $11,575 ($33,101 × .3497) of DDR is attributable to services performed by B in Y's 2018 taxable year.

Example 2 (Account balance plan—principal additions method with earnings and a single payment. (i) The facts are the same as in *Example 1,* except that Y attributes remuneration using the principal additions method described in paragraph (d)(3)(ii) of this section.
(ii) The $10,000 principal addition made on January 1, 2016 and $1,576 of earnings thereon (interest on the 2016 $10,000 principal addition at five percent for three years compounded annually) are attributable to services performed by B in Y's 2016 taxable year; the principal addition of $10,000 on January 1, 2017 and $1,025 of earnings thereon (interest on the 2017 $10,000 principal addition at five percent for two years compounded annually) are attributable to services performed by B in Y's 2017 taxable year; and the principal addition of $10,000 to B's account on January 1, 2018 and $500 of earnings thereon (interest on the 2018 $10,000 principal addition at five percent for one year compounded annually) are attributable to services performed by B in Y's 2018 taxable year. Accordingly, with respect to the $33,301 payment made on January 1, 2019, $11,576 ($10,000 + $1,576) is attributable to services performed by B in Y's 2016 taxable year; $11,025 ($10,000 + $1,025) is attributable to services performed in Y's 2017 taxable year; and $10,500 ($10,000 + $500) is attributable to services performed by B in Y's 2018 taxable year.

Example 3 (Account balance plan—account balance ratio method with earnings and losses). (i) J is an applicable individual of corporation Z for all relevant taxable years. On January 1, 2016, J begins participating in a nonqualified deferred compensation plan of Z that is an account balance plan. Under the terms of the plan, all amounts are fully vested at all times, and Z will pay J's entire account balance on January 1, 2019. Z credits $10,000 to J under the plan on January 1, 2016 and January 1, 2018. Earnings under the terms of the plan are based on a predetermined actual investment (as defined in § 31.3121(v)(2)-1(e)(2)(i)(B)), which results in J's account balance increasing by five percent in the 2016 taxable year, decreasing by five percent in the 2017 taxable year, and increasing again by five percent in the 2018 taxable year. Therefore, on December 31, 2016, J's account balance is $10,500 ($10,000 + ($10,000 × 5%)); on December 31, 2017, J's account balance is $9,975 ($10,500 − ($10,500 × 5%)); and on December 31, 2018, J's account balance is $20,974 ($9,975 + $10,000 + ($19,975 × 5%)). On January 1, 2019, Z pays J the entire account balance of $20,974.
(ii) The increase in J's account balance for 2016 is $10,500 ($10,500 − zero); the increase in J's account balance for 2017 is zero (because J's account balance decreased by $525 ($9,975 − $10,500)); the increase in J's account balance for 2018 is $10,474 ($20,974 − $10,500, which is the highest account balance in any prior taxable year). The sum of all the increases is $20,974 ($10,500 + $10,474). Thus, for Z's 2016 taxable year the attribution fraction is .5006 ($10,500/$20,974); for Z's 2017 taxable year the attribution fraction is zero because there was a decrease in the account balance for the year; and for Z's 2018 taxable year the attribution fraction is .4994 ($10,474/$20,974).

(iii) Accordingly, with respect to the $20,974 payment made on January 1, 2019, $10,499 ($20,974 × .5006) of DDR is attributable to services performed by J in Z's 2016 taxable year, and $10,474 ($20,973.75 × .4994) of DDR is attributable to services performed by J in Z's 2018 taxable year. No amount is attributable to services performed by J in Z's 2017 taxable year because there was no increase in the account balance for that taxable year.

Example 4 (Account balance plan—principal additions method with earnings and losses). (i) The facts are the same as in *Example 3,* except that Z attributes remuneration using the principal additions method described in paragraph (d)(3)(ii) of this section.
(ii) The $10,000 principal addition made on January 1, 2016 and the $474 of net earnings thereon ($500 of earnings for 2016, $525 of losses for 2017, and $499 of earnings for 2018) are attributable to services performed by J in Z's 2016 taxable year; and the $10,000 principal addition made on January 1, 2018 and the $500 of earnings thereon are attributable to services performed by J in Z's 2018 taxable year. Accordingly, with respect to the $20,974 payment made on January 1, 2019, $10,474 ($10,000 + $474) of DDR is attributable to services performed by J in Z's 2016 taxable year, and $10,500 ($10,000 + $500) of DDR is attributable to services performed by J in Z's 2018 taxable year.

Example 5 (Account balance plan—account balance ratio method with losses and an in-service payment). (i) N is an applicable individual of corporation M for all relevant taxable years. On January 1, 2016, N begins participating in a nonqualified deferred compensation plan sponsored by M that is an account balance plan. Under the plan, all amounts are fully vested at all times. The balances in N's account are $110,000 on December 31, 2016; $90,000 on December 31, 2017; $250,000 on December 31, 2018; and $240,000 on December 31, 2019. N ceases providing services to N on December 31, 2019. In accordance with the plan terms, M pays to N $10,000 on September 30, 2017, $150,000 on January 1, 2021, and $100,000 on January 1, 2022. M attributes payments under its account balance plans using the account balance ratio method described in paragraph (d)(3)(i) of this section.
(ii) For purposes of attributing the $10,000 payment made on September 30, 2017 to taxable years, the increase in N's account balance for 2016 is $110,000 ($110,000 − zero). N's account balance for 2017 is treated as $100,000 ($90,000 + $10,000 payment on September 30, 2017), but, because the account balance of $100,000 is less than the account balance in an earlier year, the increase in N's account balance for 2017 is zero. The sum of all the increases in N's account balance is $110,000 ($110,000 + $0). Thus, the attribution fraction for 2016 is 1 ($110,000/$110,000), and the attribution fraction for 2017 is zero ($0/$110,000). Accordingly, with respect to the $10,000 payment made on September 30, 2017, the entire $10,000 is attributable to services performed by N in M's 2016 taxable year, and no amount is attributable to services performed by N in M's 2017 taxable year.

(iii) After attributing the September 30, 2017 payment of $10,000 to 2016, N's account balance for 2016 is treated as being $100,000 ($110,000 − $10,000), and the increase for 2016 is likewise treated as $100,000; N's account balance for 2017 decreased; the increase in N's account balance for 2018 is $150,000 ($250,000 − $100,000); and N's account balance for 2018 decreased. The sum of all the increases is $250,000 ($100,000 + $150,000). Thus, the attribution fraction for 2016 is .40 ($100,000/$250,000); the attribution fraction for 2017 is zero ($0/$250,000); the attribution fraction for 2018 is .60 ($150,000/$250,000); and the attribution fraction for 2019 is zero ($0/$250,000).

(iv) Accordingly, with respect to the $150,000 payment made on January 1, 2021, $60,000 ($150,000 × .40) is attributable to services performed by N in M's 2016 taxable year, and $90,000 ($150,000 × .60) is attributable to services performed by N in M's 2018 taxable year. With respect to the $100,000 payment made on January 1, 2022, $40,000 ($100,000 × .40) is attributable to services performed by N in M's 2016 taxable year, and $60,000 ($100,000 × .60) is attributable to services performed by N in M's 2018 taxable year. No amount is attributable to services performed by N in M's 2017 and 2019 taxable years.

Example 6 (Account balance plan—principal additions method with multiple payments). (i) O is an applicable individual of corporation L for all relevant taxable years. On January 1, 2016, O begins participating in a nonqualified deferred compensation plan sponsored by L

that is an account balance plan. Under the plan, all amounts are fully vested at all times. L credits principal additions to O's account each year, and credits earnings based on a predetermined actual investment within the meaning of § 31.3121(v)(2)-1(d)(2)(i)(B). L makes principal additions of $90,000 on June 30, 2016; $140,000 on June 30, 2017; and $180,000 on June 30, 2018. The predetermined actual investment earns five percent for 2016, seven percent for 2017; eight percent for 2018; and nine percent for 2019. Thus, as of December 31, 2018, the earnings with respect to the $90,000 principal addition made on June 30, 2016 are $16,605, for a total of $106,605; and the earnings with respect to the $140,000 principal addition made on June 30, 2017 are $16,492, for a total of $156,492. As of January 1, 2020, the earnings with respect to the $180,000 principal addition made on June 30, 2018 are $24,048, for a total of $204,048. Under the terms of the plan, the principal addition (and earnings thereon) made on June 30, 2016 and June 30, 2017 are payable on December 31, 2018, and the principal addition (and earnings thereon) made on June 30, 2018 is payable on January 1, 2020. On December 31, 2018, L pays O $263,097 in accordance with the plan terms. On January 1, 2020, L pays O the remaining account balance of $204,048 in accordance with the plan terms.
(ii) The $263,097 payment made on December 31, 2018 is attributed to services performed by O in the 2016 and 2017 taxable years. Of the $263,097 payment, $106,605 is attributable to services performed by O in L's 2016 taxable year because this amount represents the $90,000 principal addition made on June 30, 2016 and earnings thereon. The remaining $156,492 is attributable to services performed by O in L's 2017 taxable year because this amount represents the $140,000 principal addition made on June 30, 2017 and earnings thereon. The $204,048 payment made on January 1, 2020 is attributable to services performed by O in L's 2018 taxable year because this amount represents the $180,000 principal addition made on June 30, 2018 and earnings thereon.

Example 7 (Account balance plan—account balance ratio method with an employer contribution after the applicable individual ceases to be a service provider). (i) A is an applicable individual of corporation Z for all relevant taxable years. On January 1, 2016, A begins participating in a nonqualified deferred compensation plan of Z that is an account balance plan. Under the terms of the plan, all amounts are fully vested at all times. The balances in A's account (including employer contributions and earnings) are $20,000 on December 31, 2016, and $60,000 on December 31, 2017. On December 31, 2017, A ceases providing services to Z. On January 1, 2019, Z makes a discretionary contribution of $30,000 to A's account balance plan. On December 31, 2019, in accordance with the plan terms, Z pays $120,000 to A, which is N's entire account balance. Z attributes payments under its account balance plans using the account balance ratio method described in paragraph (d)(3)(i) of this section.

(ii) The increase in A's account balance for 2016 is $20,000; the increase in A's account balance for 2017 is $40,000. The discretionary contribution made on January 1, 2019 of $30,000 is added to the account balance for 2017. Thus, the discretionary contribution of $30,000 on January 1, 2019, is treated as increasing A's account balance for 2017 by $30,000. The increase in A's account balance for 2016 is $20,000, and the increase in A's account balance for 2017 is $70,000 ($40,000 + $30,000). The sum of all the increases is $90,000 ($20,000 + $70,000).

(iii) Thus, the attribution fraction for 2016 is .2222 ($20,000/$90,000); and the attribution fraction for 2017 is .7778 ($70,000/$90,000). Accordingly, with respect to the $120,000 payment made on January 1, 2019, $26,664 ($120,000 × .2222) is attributable to services performed by A in Z's 2016 taxable year, and $93,336 ($120,000 × .7778) is attributable to services performed by A in Z's 2017 taxable year.

Example 8 (Account balance plan—principal additions method with a principal addition after the applicable individual ceases to be a service provider). (i) C is an applicable individual of corporation X for all relevant taxable years. On January 1, 2016, C begins participating in a nonqualified deferred compensation plan of X that is an account balance plan. Earnings under the terms of the plan are based on a predetermined actual investment (as defined in § 31.3121(v)(2)-1(e)(2)(i)(B)). Under the terms of the plan, all amounts are fully vested at all times. X credits a $10,000 principal addition to C under the plan on April 1, 2016, and a $20,000 principal addition to C on April 1, 2017. C ceases providing services to X on December 31, 2017. On January 1, 2019, X credits $30,000 to C's account in recognition of C's past services. The $10,000 principal addition made on April 1, 2016 increases to $15,000 as of December 31, 2019, as a result of earnings. The $20,000 principal addition made on April 1, 2017, increases to $28,000 as of December 31, 2019 as a result of earnings. The January 1, 2019, contribution of $30,000 increases to $33,000 as of December 31, 2019, as a result of earnings. On December 31, 2019, in accordance with the plan terms, X pays C's entire account balance of $76,000. X attributes payments under its account balance plans using the principal additions method described in paragraph (d)(3)(ii) of this section.
(ii) When the $76,000 payment is made to C on December 31, 2019, the remuneration becomes attributable to service performed by C in prior taxable years. The $10,000 principal addition in 2016 plus earnings thereon of $5,000 are attributable to services performed by C in X's 2016 taxable year, and the $20,000 principal addition in 2017 (plus earnings thereon of $8,000) are attributable to services performed by C in X's 2017 taxable year. The principal addition of $30,000 plus earnings thereon of $3,000 ($33,000) are also attributable to services performed by C in X's 2017 taxable year. Thus, $16,500 of the $33,000 is attributed to services performed by C in X's 2017 taxable year.

(iii) Accordingly, with respect to the $76,000 payment by X to C on December 31, 2019, $15,000 ($10,000 + $5,000) is attributed to services performed by C in X's 2016 taxable year, and $61,000 ($20,000 + $8,000 + $33,000) is attributed to services performed by C in X's 2017 taxable year.

Example 9 (Nonaccount balance plan—present value ratio method with a single payment). (i) C is an applicable individual of corporation X for all relevant taxable years. On January 1, 2015, X grants C a vested right to a $100,000 payment on January 1, 2020. C ceases providing services on December 31, 2019. The payment of $100,000 is made on January 1, 2020. X determines the present value of the payment using an interest rate of five percent for all years.

(ii) The present value of $100,000 payable on January 1, 2020, determined using a five percent interest rate, is $82,270 as of December 31, 2015; $86,384 as of December 31, 2016; $90,703 as of December 31, 2017; $95,238 as of December 31, 2018, and $100,000 as of December 31, 2019. Accordingly, $82,270 is the amount of the increase in the present value of the future payment of $100,000 for X's 2015 taxable year ($82,270 − $0); $4,114 ($86,384 − $82,270) is the increase in the present value of the future payment for X's 2016 taxable year; $4,319 ($90,703 − $86,384) is the increase in the present value of the future payment for X's 2017 taxable year; $4,535 ($95,238 − $90,703) is the increase in the present value of the future payment for X's 2018 taxable year; and $4,762 ($100,000 − $95,238) is the increase in the present value of the future payment for X's 2019 taxable year. The sum of all the increases is $100,000 ($82,270 + $4,114 + $4,319 + $4,535 + $4,762). Thus, the attribution fraction for 2015 is .8227 ($82,270/$100,000); the attribution fraction for 2016 is .0411 ($4,114/$100,000); the attribution fraction for 2017 is .0432 ($4,319/$100,000); the attribution fraction for 2018 is .0454 ($4,535/$100,000); and the attribution fraction for 2019 is .0476 ($4,762/$100,000).

(iii) The $100,000 payment made on January 1, 2020 is multiplied by the attribution fraction for each taxable year, and the result is the amount that is attributable to service performed by C for that taxable year. Accordingly, $82,270 ($100,000 × .8227) is attributable to services performed by C in X's 2015 taxable year; $4,114 ($100,000 × .0411) is attributable to services performed by C in X's 2016 taxable year; $4,319 ($100,000 × .0432) is attributable to services performed by C in X's 2017 taxable year; $4,535 ($100,000 × .0454) is attributable to services performed by C in X's 2018 taxable year; and $4,762 ($100,000 × .0476) is attributable to services performed by C in X's 2019 taxable year.

Example 10. (Nonaccount balance plan—present value ratio method with an in-service payment). (i) The facts are the same as *Example 9,* except that X grants C a vested right to a $40,000 payment on June 30, 2018 and a vested right to a $60,000 payment on January 1, 2020.

(ii) The present value of the future payments ($40,000 payable on June 30, 2018 and $60,000 payable on January 1, 2020), determined using a five percent interest rate, is $84,758 as of December 31, 2015; $88,996 as of December 31, 2016; $93,446 as of December 31, 2017; and $57,143 as of December 31, 2018. However, for purposes of determining the increase in the present value of the future payments during 2018 (the year of the in-service payment), $57,143 must be increased by $40,000, the amount of the in-service payment, resulting in a present value of future payments as of December 31, 2018, of $97,143 solely for purposes of attributing the $40,000 in-service payment. Accordingly, $84,758 is the amount of the increase in the present value of the future payments for X's 2015 taxable year, $4,238 ($88,896 − $84,758) is the increase in the present value of the future payments for X's 2016 taxable year, $4,450 ($93,446 − $88,996) is the increase in the present value of the future payments for X's 2017 taxable year, and $3,697 ($97,143 − $93,446) is the increase in the present value of the future payments for X's 2018 taxable year. The sum of all the increases is $97,143 ($84,758 + $4,238 + $4,450 + $3,697). Thus, the attribution fraction for 2015 is .8725 ($84,758/$97,143); the attribution fraction for 2016 is .0436 ($4,238/$97,143); the attribution fraction for 2017 is .0458 ($4,450/$97,143); and the attribution fraction for 2018 is .0381 ($3,697/$97,143).

(iii) Accordingly, with respect to the $40,000 payment made on June 30, 2018, $34,900 ($40,000 × .8725) is attributable to services performed by C in X's 2015 taxable year; $1,744 ($40,000 × .0436) is attributable to services performed by C in X's 2016 taxable year; $1,832 ($40,000 × .0458) is attributable to services performed by C in X's 2017 taxable year; and $1,524 ($40,000 × .0381) is attributable to services performed by C in X's 2018 taxable year.

(iv) For purposes of attributing the $60,000 payment made on January 1, 2020, the present value of the future payments for each taxable year that ends prior to the taxable year in which the $40,000 in-service payment is paid is reduced by the present value of the future payment to which the applicable individual had a legally binding right to be paid on the date the $40,000 in-service is paid (based on the applicable factors and plan provisions as of the measurement date in each such taxable year). The present value of that future payment is $35,396 as of December 31, 2015; $37,166 as of December 31, 2016; and $39,024 as of December 31, 2017. Therefore, for purposes of attributing the $60,000 payment on January 1, 2020, the present value of future payments as of December 31, 2015, is $49,362 ($84,758 − $35,396); the present value of future payments as of December 31, 2016, is $51,830 ($88,996 − $37,166); the present value of future payments as of December 31, 2017, is $54,422 ($93,446 − $39,024). The present value of future payments as of December 31, 2018, is $57,143. Accordingly, $49,362 is the increase in the present value of the future payment of $60,000 for X's 2015 taxable year; $2,468 ($51,830 − $49,362) is the increase in the present value of the future payment for X's 2016 taxable year; $2,592 ($54,422 − $51,830) is the increase in the future value of the payment for X's 2017 taxable year; $2,721 ($57,143 − $54,422) is the increase in the future value of the payments for X's 2018 taxable year; and $2,857 ($60,000 − $57,143) is the increase in the future value of the payment for X's 2019 taxable year. The sum of all the increases is $60,000 ($49,362 + $2,468 + $2,592 + $2,721 + $2,857). Thus, the attribution fraction for 2015 is .8227 ($49,362/$60,000);

the attribution fraction for 2016 is .0411 ($2,468/$60,000); the attribution fraction for 2017 is .0432 ($2,592/$60,000); the attribution fraction for 2018 is .0454 ($2,721/$60,000); and the attribution fraction for 2019 is .0476 ($2,857/$60,000).

(v) Accordingly, with respect to the $60,000 payment made on January 1, 2020, $49,362 ($60,000 × .8227) is attributable to services performed by C in X's 2015 taxable year; $2,468 ($60,000 × .0411) is attributable to services performed by C in X's 2016 taxable year; $2,592($60,000 × .0432) is attributable to services performed by C in X's 2017 taxable year; $2,721 ($60,000 × .0454) is attributable to services performed by C in X's 2018 taxable year; and $2,857 ($60,000 × .0476) is attributable to services performed by C in X's 2019 taxable year.

Example 11 (Nonaccount balance plan—formula benefit ratio method with losses and multiple payments). (i) D is an applicable individual of W for all relevant taxable years. D becomes a participant in a nonaccount balance plan sponsored by R on January 1, 2018. The plan provides W with the vested right to receive a five annual installments each equal to $20,000 times the full years of service that D completes. The first payment is to be made on the later of December 31, 2027, or on the December 31 of the first year in which D is no longer a service provider. D has a break in service in 2020 and does not accrue an additional benefit during 2020. D ceases to be a service provider on December 31, 2022, after having completed four years of service, entitling D to five annual payments equal to $80,000 per year commencing on December 31, 2027. W determines the present value of amounts to be paid under the plan using an interest rate of five percent for 2018 and 2019, and seven percent for 2021, 2022, and 2023. W uses the formula benefit ratio method described in paragraph (d)(4)(ii) of this section.
(ii) Under the plan formula, in 2018, E accrued the right to a $20,000 annual payment for five years, and E accrued an additional $20,000 in annual payments in 2019, 2021, and 2022, resulting in the right to receive an annual payment of $80,000 commencing on December 31, 2027. Thus, the attribution fraction is .25 for 2018 ($20,000/$80,000), .25 for 2019 ($20,000/$80,000), .25 for 2021 ($20,000/$80,000), and .25 for 2022 ($20,000/$80,000). The attribution fraction for 2020 is zero because no additional formula benefit accrued during that year.

(iii) The attribution fraction for each disqualified taxable year is multiplied by each payment and the result is attributed to that taxable year. Accordingly, with respect to each $80,000 payment, $20,000 ($80,000 × .25) is attributable to services performed by D in W's 2018 taxable year; $20,000 ($80,000 × .25) is attributable to services performed by D in W's 2019 taxable year; $20,000 ($80,000 × .25) is attributable to services performed by D in W's 2021 taxable year; and $20,000 ($80,000 × .25) is attributable to services performed by D in W's 2022 taxable year. No amount is attributable to services performed by D in W's 2020 taxable year.

Example 12 (Stock option). (i) E is an applicable individual of corporation V for all relevant taxable years. On January 1, 2016, V grants E an option to purchase 100 shares of V common stock at an exercise price of $50 per share (the fair market value of V common stock on the date of grant). The stock option is not subject to a substantial risk of forfeiture. On December 31, 2017, E ceases to be a service provider of V or

any member of V's aggregated group. On January 1, 2019, E resumes providing services for V and again becomes both a service provider and an applicable individual of V. On December 31, 2020, when the fair market value of V common stock is $196 per share, E exercises the stock option. The remuneration resulting from the stock option exercise is $14,600 (($196 — $50) × 100).
(ii) The $14,600 is attributed *pro rata* over the 1,460 days from January 1, 2016 to December 31, 2017 and from January 1, 2019 to December 31, 2020 (365 days per year for the 2016, 2017, 2019, and 2020 taxable years), so that $10 ($14,600 divided by 1,460) is attributed to each calendar day in this period, and $3,650 (365 days × $10) of remuneration is attributed to services performed by E in each of V's 2016, 2017, 2019, and 2020 taxable years.

Example 13 (Stock option subject to a substantial risk of forfeiture). (i) The facts are the same as *Example 14,* except that the stock option is subject to a substantial risk of forfeiture that lapses on December 31, 2017, and is not transferable until that date, and V chooses to attribute remuneration resulting from the exercise of stock options that are subject to a substantial risk of forfeiture over the period beginning on the date of grant and ending on the date the substantial risk of forfeiture lapses, as permitted under paragraph (d)(5)(i)(B) of this section.
(ii) The $14,600 is attributed *pro rata* over the 730 days from January 1, 2016 to December 31, 2017 (365 days per year for the 2016 and 2017 taxable years), so that $20 ($14,600 divided by 730) is attributed to each calendar day in this period, and $7,300 (365 days × $20) is attributed to services performed by E in each of V's 2016 and 2017 taxable years.

Example 14 (Restricted stock). (i) F is an applicable individual of corporation U for all relevant taxable years. On January 1, 2017, U grants to F 1000 shares of restricted U common stock. Under the terms of the grant, the shares will be forfeited if F voluntarily terminates employment before December 31, 2019 (so that the shares are subject to a substantial risk of forfeiture through that date) and are nontransferable until the substantial risk of forfeiture lapses. F does not make an election under section 83(b) and continues in employment with U through December 31, 2019, at which time F's rights in the stock become substantially vested within the meaning of § 1.83-3(b) and the fair market value of a share of the stock is $109.50. The remuneration resulting from the vesting of the restricted stock is $109,500 ($109.50 × 1000).
(ii) The $109,500 of remuneration is attributed to services performed by F over the 1,095 days between January 1, 2017 and December 31, 2019 (365 days per year for the 2017, 2018, and 2019 taxable years), so that $100 ($109,500 divided by 1,095) is attributed to each calendar day in this period, and remuneration of $36,500 (365 days × $100) is attributed to services performed by F in each of U's 2017, 2018, and 2019 taxable years.

Example 15 (RSUs). (i) G is an applicable individual of corporation T for all relevant taxable years. On January 1, 2018, T grants to G 1000 RSUs. Under the terms of the grant, T will pay G an amount on December 31, 2020 equal to the fair market value of 1000 shares of T common stock on that date, but only if G continues to provide substantial services to T (so that the RSU is subject to a substantial risk of forfeiture) through December 31, 2020. G remains employed by T through December 31, 2020, at which

time the fair market value of a share of the stock is $219, and T pays G $219,000 ($219 × 1000).
(ii) The $219,000 in remuneration is attributed to services performed by G over the 1,095 days beginning on January 1, 2018 and ending on December 31, 2020 (365 days per year for the 2018, 2019, and 2020 taxable years), so that $200 ($219,000/1,095) is attributed to each calendar day in this period, and $73,000 (365 days × $200) is attributed to service performed by G in each of T's 2018, 2019, and 2020 taxable years.

Example 16 (Involuntary separation pay). (i) H is an applicable individual of corporation S. On January 1, 2015, H and S enter into an employment contract providing that S will make two payments of $150,000 each to H if H has an involuntary separation from service. Under the terms of the contract, the first payment is due on January 1 following the involuntary separation from service, and the second payment is due on January 1 of the following year. On December 31, 2016, H has an involuntary separation from service. S pays H $150,000 on January 1, 2017 and $150,000 on January 1, 2018.
(ii) Pursuant to paragraph (d)(6) of this section, involuntary separation pay may be attributed to services performed by H in the taxable year of S in which the involuntary separation from service occurs. Alternatively, involuntary separation pay may be attributed to services performed by H on a daily *pro rata* basis beginning on the date H obtains a legally binding right to the involuntary separation pay and ending on the date of the involuntary separation from service. The entire $300,000 amount, including both $150,000 payments, must be attributed using the same method. Therefore, the entire $300,000 amount (comprised of two $150,000 payments) may be attributed to services performed by H in S's 2016 taxable year, which is the taxable year in which the involuntary separation from service occurs. Alternatively, each $150,000 payment may be attributed on a daily *pro rata* basis to the period beginning on January 1, 2015 and ending December 31, 2016, so that $410.96 (($150,000 × 2)/(365 × 2)) is attributed to each day of S's 2015 and 2016 taxable years. Accordingly, $150,000 is attributed to services performed by H in each of S's 2015 and 2016 taxable years.

Example 17 (Reimbursement after termination of services). (i) I is an applicable individual of corporation R. On January 1, 2018, I enters into an agreement with R under which R will reimburse I's country club dues for two years following I's separation from service. On December 31, 2020, I ceases to be a service provider of R. I pays $50,000 in country club dues on January 1, 2021 and $50,000 on January 2, 2022. Pursuant to the agreement, R reimburses I $50,000 for the country club dues in 2021 and $50,000 in 2022.
(ii) $100,000 is attributed to services performed in R's 2020 taxable year, the taxable year in which I ceases to be a service provider.

(10) ***Certain remuneration subject to a substantial risk of forfeiture.*** If remuneration is attributable in accordance with paragraphs (d)(2) (legally binding right), (d)(3) (account balance plan), or (d)(4) (nonaccount balance plan) of this section to services performed in a period that includes two or more taxable years of a covered health insurance provider during which the remuneration is subject to a substantial risk of forfeiture, that remuneration must be attributed using a two-step process. First, the remuneration must be attributed to the taxable years of the covered health insurance provider in accordance with paragraph (d)(2), (3), or (4) of this section, as applicable. Second, the remuneration attributed to the period during which the remuneration is subject to a substantial risk

of forfeiture (the vesting period) must be reattributed on a daily *pro rata* basis over that period beginning on the date that the applicable individual obtains a legally binding right to the remuneration and ending on the date that the substantial risk of forfeiture lapses. If a vesting period begins on a day other than the first day of a covered health insurance provider's taxable year or ends on a day other than the last day of the covered health insurance provider's taxable year, the remuneration attributable to that taxable year under the first step of the attribution process is divided between the portion of the taxable year that includes the vesting period and the portion of the taxable year that does not include the vesting period. The amount attributed to the portion of the taxable year that includes the vesting period is equal to the total amount of remuneration that would be attributable to the taxable year under the first step of the attribution process, multiplied by a fraction, the numerator of which is the number of days during the taxable year that the amount is subject to a substantial risk of forfeiture and the denominator of which is the number of days in such taxable year. The remaining amount is attributed to the portion of the taxable year that does not include the vesting period and, therefore, is not reattributed under the second step of the attribution process.

(11) ***Example.*** The following example illustrates the principles of paragraph (d)(10) of this section. For purposes of this example, the corporation has a taxable year that is the calendar year and is a covered health insurance provider for all relevant taxable years, DDR is otherwise deductible in the taxable year in which it is paid, and amounts payable under nonaccount balance plans are not forfeitable upon the death of the applicable individual.

> *Example (Account balance plan subject to a substantial risk of forfeiture using the principal additions method).* (i) J is an applicable individual of corporation Q for all relevant taxable years. On January 1, 2016, J begins participating in a nonqualified deferred compensation plan that is an account balance plan. Under the terms of the plan, Q will pay J's account balance on January 1, 2021, but only if J continues to provide substantial services to Q through December 31, 2018 (so that the amount credited to J's account is subject to a substantial risk of forfeiture through that date). Q credits $10,000 to J's account annually for five years on January 1 of each year beginning on January 1, 2016. The account earns interest at a fixed rate of five percent per year, compounded annually, which solely for the purposes of this example, is assumed to be a reasonable rate of interest. Q attributes increases in account balances under the plan using the principal additions method described in paragraph (d)(3)(ii) of this section.
> (ii) Earnings on a principal addition are attributed to the same disqualified taxable year of Q to which the principal addition is attributed; therefore, the amount initially attributable to Q's 2016 taxable year is $12,763 (the $10,000 principal addition in 2016 at five percent interest for five years); the amount initially attributable to Q's 2017 taxable year is $12,155 (the $10,000 principal addition in 2017 at five percent interest for four years); the amount initially attributable to Q's 2018 taxable year is $11,576 (the $10,000 principal addition in 2018 at five percent interest for three years); the amount attributable to Q's 2019 taxable year is $11,025 (the $10,000 principal addition in 2019 at five percent interest for two years); and the amount attributable to Q's 2020 taxable year is $10,500 (the $10,000 principal addition in 2020 at five percent interest for one year).

(iii) Remuneration that is attributable to two or more taxable years of Q during which it is subject to a substantial risk of forfeiture must be reattributed on a daily *pro rata* basis to the period beginning on the date that J obtains a legally binding right to the remuneration and ending on the date that the substantial risk of forfeiture lapses. Therefore, $36,494 ($12,763 + $12,155 + $11,576) is reattributed on a daily *pro rata* basis over the period beginning on January 1, 2016, and ending on December 31, 2018. Thus, $12,165 is attributed to services performed by J in each of Q's 2016, 2017, and 2018 taxable years.

(e) ***Application of the deduction limitation*** —

(1) ***Application to aggregate amounts.*** The $500,000 deduction limitation is applied to the aggregate amount of AIR and DDR attributable to services performed by an applicable individual in a disqualified taxable year. The aggregate amount of AIR and DDR attributable to services performed by an applicable individual in a disqualified taxable year that exceeds the $500,000 deduction limit is not allowed as a deduction in any taxable year. Therefore, for example, if an applicable individual has more than $500,000 of AIR attributable to services performed for a covered health insurance provider in a disqualified taxable year, the amount of that AIR that exceeds $500,000 is not deductible in any taxable year, and no DDR attributable to services performed by the applicable individual in that disqualified taxable year is deductible in any taxable year. However, if an applicable individual has AIR for a disqualified taxable year that is $500,000 or less and DDR attributable to services performed in the same disqualified taxable year that, when combined with the AIR for the year, exceeds $500,000, all of the AIR is deductible in that disqualified taxable year, but the amount of DDR attributable to that taxable year that is deductible in future taxable years is limited to an amount equal to $500,000 less the amount of the AIR for that taxable year.

(2) ***Order of application and calculation of deduction limitation*** —

(i) ***In general.*** The deduction limitation with respect to any applicable individual for any disqualified taxable year is applied to AIR and DDR attributable to services performed by that applicable individual in that disqualified taxable year at the time that the remuneration becomes otherwise deductible, and each time the deduction limitation is applied to an amount that is otherwise deductible, the deduction limit is reduced (but not below zero) by the amount against which it is applied. Accordingly, the deduction limitation is applied first to an applicable individual's AIR attributable to services performed in a disqualified taxable year and is reduced (but not below zero) by the amount of the AIR to which the deduction limit is applied. If the applicable individual also has an amount of DDR attributable to services performed in that disqualified taxable year that becomes otherwise deductible in a subsequent taxable year, the deduction limit, as reduced, is applied to that amount of DDR in the first taxable in which the DDR becomes otherwise deductible. The deduction limit is then further reduced (but not below zero) by the amount of the DDR to which the deduction limit is applied. If the applicable individual has an additional amount of DDR attributable to services performed in the original disqualified taxable year that becomes otherwise deductible in a subsequent taxable year, the deduction limit, as further reduced, is applied to that amount of DDR in the taxable year in which it is otherwise deductible. This process continues for future taxable years in which DDR attributable to services performed by the applicable individual in the original disqualified taxable year is otherwise deductible. No deduction is allowed in any taxable year for any AIR or DDR

attributable to services performed by an applicable individual in a disqualified taxable year for the excess of those amounts over the deduction limit (as reduced, if applicable) for that disqualified taxable year at the time the deduction limitation is applied to the remuneration.

(ii) ***Application to payments*** —(A) *In general.* Any payment of remuneration may include amounts that are attributable to services performed by an applicable individual in one or more taxable years of a covered health insurance provider pursuant to paragraphs (d)(2) through (11) of this section. In that case, a separate deduction limitation applies to each portion of the payment that is attributed to services performed in a different disqualified taxable year. Any portion of a payment that is attributed to a taxable year that is a disqualified taxable year is deductible only to the extent that it does not exceed the deduction limit that applies with respect to the applicable individual for that disqualified taxable year, as reduced by the amount, if any, of AIR and DDR attributable to services performed in that disqualified taxable year that was deductible in an earlier taxable year.

(3) ***Examples.*** The following examples illustrate the rules of paragraphs (e)(1) and (2) of this section. For purposes of these examples, each corporation has a taxable year that is the calendar year and is a covered health insurance provider for all relevant taxable years; DDR is otherwise deductible in the taxable year in which it is paid; and amounts payable under nonaccount balance plans are not forfeitable upon the death of the applicable individual.

> *Example 1 (Lump-sum payment of DDR attributable to a single taxable year).* (i) L is an applicable individual of corporation O. During O's 2015 taxable year, O pays L $550,000 in salary, which is AIR, and grants L a right to $50,000 of DDR payable upon L's separation from service from O. L has a separation from service in 2020, at which time O pays L the $50,000 of DDR attributable to services performed by L in O's 2015 taxable year.
> (ii) The $500,000 deduction limitation for 2015 is applied first to L's $550,000 of AIR for 2015. Because the $550,000 of AIR in 2015 is greater than the deduction limit, O may deduct only $500,000 of the AIR for 2015, and $50,000 of the $550,000 of AIR is not deductible for any taxable year. The deduction limit for remuneration attributable to services provided by L in O's 2015 taxable year is then reduced to zero. Because the $50,000 in DDR attributable to services performed by L in 2015 exceeds the reduced deduction limit of zero, that $50,000 is not deductible for any taxable year.

> *Example 2 (Installment payments of DDR attributable to a single taxable year).* (i) M is an applicable individual of corporation N. During N's 2016 taxable year, N pays M $300,000 in salary, which is AIR, and grants M a right to $220,000 of DDR payable on a fixed schedule beginning upon M's separation from service. The $220,000 is attributable to services provided by M in N's 2016 taxable year. M ceases providing services on December 31, 2016. In 2020, N pays M $120,000 of DDR that is attributable to services performed in N's 2016 taxable year. In 2021, N pays M the remaining $100,000 of DDR attributable to services performed by M in N's 2016 taxable year.

(ii) The $500,000 deduction limitation for 2016 is applied first to M's $300,000 of AIR for 2016. Because the deduction limit is greater than the AIR, N may deduct the entire $300,000 of AIR paid in 2016. The $500,000 deduction limit is then reduced to $200,000 because the limitation is reduced by the amount of AIR ($500,000 − $300,000). The reduced deduction limit is then applied to M's $120,000 of DDR attributable to services performed by M in N's 2016 taxable year that is paid in 2020. Because the reduced deduction limit of $200,000 is greater than the $120,000 of DDR, N may deduct the entire $120,000 of DDR paid in 2020. The $200,000 deduction limit is reduced to $80,000 by the $120,000 in DDR because the limit is reduced by the amount of DDR to which the deduction limit applied ($200,000 − $120,000). The reduced deduction limit of $80,000 is then applied to the remaining $100,000 payment of DDR attributable to services performed by M in N's 2016 taxable year. Because the $100,000 payment by N for 2021 exceeds the reduced deduction limit of $80,000, N may deduct only $80,000 of the payment for the 2021 taxable year, and $20,000 of the $100,000 payment is not deductible by N for any taxable year.

Example 3 (Lump-sum payment attributable to multiple years from an account balance plan using the account balance ratio method). (i) N is an applicable individual of corporation M for all relevant taxable years. On January 1, 2015, N begins participating in a nonqualified deferred compensation plan sponsored by M that is an account balance plan. Under the plan, all amounts are fully vested at all times. The balances in N's account (including earnings) are $50,000 on December 31, 2015, $100,000 on December 31, 2016, and $200,000 on December 31, 2017. N's AIR from M is $425,000 for 2015, $450,000 for 2016, and $500,000 for 2017. On January 1, 2018, in accordance with the plan terms, M pays $200,000 to N, which is a payment of N's entire account balance under the plan. M uses the account balance ratio method to attribute amounts to services performed in taxable years.
(ii) To determine the extent to which M is entitled to a deduction for any portion of the $200,000 payment under the plan, the payment must first be attributed to services performed by N in M's taxable years in accordance with the attribution rules set forth in paragraph (d) of this section. The increase in N's account balance during 2015 is $50,000 ($50,000 − zero); the increase in N's account balance for 2016 is $50,000 ($100,000 − $50,000); and the increase in N's account balance for 2017 is $100,000 ($200,000 − $100,000). The sum of all the increases is $200,000 ($50,000 + $50,000 + $100,000). Accordingly, for N's 2015 taxable year, the attribution fraction is .25 ($50,000/$200,000); for N's 2016, taxable year, the attribution fraction is .25 ($50,000/$200,000); and for N's 2017 taxable year, the attribution fraction is .50 ($100,000/$200,000).

(iii) With respect to the $200,000 payment made on January 1, 2018, $50,000 ($200,000 × .25) of DDR is attributable to services performed by N in M's 2015 taxable year; $50,000 ($200,000 × .25) of DDR is attributable to services performed by N in M's 2016 taxable year; and $100,000 ($200,000 × .50) of DDR is attributable to services performed by N in M's 2017 taxable year.

(iv) The $500,000 deduction limitation for 2015 is applied first to N's $425,000 of AIR for 2015. Because the deduction limit is greater than the AIR, M may deduct the entire $425,000 of AIR paid in 2015. The $500,000 deduction limit is then reduced to $75,000 by the amount of AIR against which it is applied ($500,000 − $425,000). The reduced deduction limit is then applied to N's $50,000 of DDR attributable to services performed by N in M's 2015 taxable year that is paid in 2018. Because $50,000 does not exceed the reduced deduction limit of $75,000, all $50,000 of the DDR attributable to services performed by N in M's 2015 taxable year is deductible for 2018, the year of payment. The deduction limit for remuneration attributable to services performed by N in 2015 is then reduced to $25,000 ($75,000 − $50,000), and this reduced limit is applied to any future payment of DDR attributable to services performed by N in 2015. With respect to M's 2016 taxable year, the $500,000 deduction limit for 2016 is applied first to N's $450,000 of AIR for 2016. Because the deduction limit is greater than the AIR, M may deduct the entire $450,000 of AIR paid in 2016. The $500,000 deduction limit is then reduced to $50,000 by the AIR ($500,000 − $450,000). The reduced deduction limit is then applied to N's $50,000 of DDR attributable to services performed by N in M's 2016 taxable year that is paid in 2018. Because $50,000 does not exceed the reduced deduction limit of $50,000, all $50,000 of the DDR attributed to M's 2016 taxable year is deductible for 2018, the year of payment. The deduction limit for remuneration attributable to services performed by N in 2016 is then reduced to zero, and this reduced limit is applied to any future payment of DDR attributable to services performed by N in 2016. With respect to M's 2017 taxable year, the $500,000 deduction limit for 2017 is applied first to N's $500,000 of AIR for 2017. Because the deduction limit is not greater than the AIR, M may deduct the entire $500,000 of AIR paid in 2017. The $500,000 deduction limit is then reduced to zero by the amount of the AIR against which it is applied ($500,000 − $500,000). The reduced deduction limit is applied to N's $100,000 of DDR attributable to services performed by N in M's 2017 taxable year that is paid in 2018. Because $100,000 exceeds the reduced deduction limit of zero, the $100,000 of the DDR attributed to services performed by N in M's 2017 taxable year is not deductible for the year of payment (or any other taxable year). As a result, $100,000 of the $200,000 payment ($50,000 + $50,000 + $0) is deductible by M for M's 2018 taxable year, and the remaining $100,000 is not deductible by M for any taxable year.

Example 4 (Installment payments and in-service payment attributable to multiple taxable years from an account balance plan using the account balance ratio method). (i) O is an applicable individual of corporation L for all relevant taxable years. On January 1, 2016, O begins participating in a nonqualified deferred compensation plan sponsored by L that is an account balance plan. Under the plan, all amounts are fully vested at all times. L makes contributions to O's account each year and credits earnings based on a predetermined actual investment within the meaning of § 31.3121(v)(2)-1(d)(2)(i)(B). The closing balances in O's account (including contributions, earnings, and distributions made during the year) are $100,000 on December 31, 2016, $250,000 on December 31, 2017, and $50,000 on December 31, 2018. O's AIR from L is $500,000 for 2016, $300,000 for 2017, and $450,000 for 2018. On

December 31, 2018, L pays O $400,000 in accordance with the plan terms. On December 31, 2019, O's account balance is $200,000, reflecting additional credits of $125,000 made during the year and earnings on the account. O's AIR from L is $200,000 for 2019. O ceases providing services to L on December 31, 2019. On January 1, 2020, L pays O $200,000 in accordance with the plan terms. L uses the account balance ratio method to attribute amounts to services performed in taxable years.

(ii) To determine the extent to which L is entitled to a deduction for any portion of either of the payments under the plan, O's payments under the plan must first be attributed to services performed by O in L's taxable years in accordance with the attribution rules set forth in paragraph (d) of this section. For purposes of attributing the $400,000 payment made on December 31, 2018 to a taxable year, the increase in O's account balance during 2016 is $100,000 ($100,000 − zero); the increase in O's account balance for 2017 is $150,000 ($250,000 − $100,000); and the increase in O's account balance for 2018 is $200,000 ($50,000 − $250,000 + $400,000 (payment on December 31, 2018)). The sum of all the increases is $450,000 ($100,000 + $150,000 + $200,000). Thus, for L's 2016 taxable year, the attribution fraction is .2222 ($100,000/$450,000); for L's 2017 taxable year, the attribution fraction is .3333 ($150,000/$450,000); and for L's 2018 taxable year, the attribution fraction is .4444 ($200,000/$450,000). Accordingly, with respect to the $400,000 payment made on December 31, 2019, $88,889 ($400,000 × .2222) is attributable to services performed by O in L's 2016 taxable year; $133,333 ($400,000 × .3333) is attributable to services performed by O in L's 2017 taxable year; and $177,778 ($400,000 × .4444) is attributable to services performed by O in L's 2018 taxable year.

(iii) The portion of the $400,000 payment attributed to services performed in a disqualified taxable year under paragraph (d) of this section that exceeds the deduction limit for that disqualified taxable year, as reduced through the date of payment, is not deductible in any taxable year. The $500,000 deduction limit for 2016 is applied first to O's $500,000 of AIR for 2016. Because the deduction limit is equal to the $500,000 of AIR, L may deduct the entire $500,000 of AIR paid in 2016. The $500,000 deduction limit is then reduced to zero by the amount of the AIR ($500,000 − $500,000). The reduced deduction limit is applied to O's $88,889 of DDR attributable to services performed by O in L's 2016 taxable year that is paid in 2018. Because $88,889 exceeds the reduced deduction limit of zero, the $88,889 of DDR attributed to 2016 is not deductible for L's 2018 taxable year or any other taxable year. With respect to L's 2017 taxable year, the $500,000 deduction limitation for 2017 is applied first to O's $300,000 of AIR for 2017. Because the $500,000 deduction limit is greater than the $300,000 of AIR, L may deduct the entire $300,000 of AIR paid in 2017. The $500,000 deduction limit is reduced to $200,000 by the amount of the AIR ($500,000 − $300,000). The reduced deduction limit is then applied to O's $133,333 of DDR attributable to services performed by O in L's 2017 taxable year that is paid in 2018. Because $133,333 does not exceed that reduced deduction limit of $200,000, the $133,333 is deductible for 2018. The deduction limit for remuneration attributable to services performed by O in 2017 is then

reduced to $66,667 ($200,000 − $133,333), and this reduced limit is applied to any future payment of DDR attributable to services performed by O in 2017. With respect to L's 2018 taxable year, the $500,000 deduction limit for 2018 is applied first to O's $450,000 of AIR for 2018. Because the deduction limit is greater than the AIR, L may deduct the entire $450,000 of AIR paid in 2017. The $500,000 deduction limit is reduced to $50,000 by the amount of the AIR ($500,000 − $450,000). The reduced deduction limit is applied to O's $177,778 attributable to services performed by O in L's 2018 taxable year that is paid in 2018. Because the $177,778 exceeds the reduced deduction limit of $50,000, $50,000 of DDR is deductible for L's 2018 taxable year, and $127,778 of the $177,778 is not deductible for L's 2018 taxable year or any other taxable year. As a result, $183,333 of the $400,000 payment ($0 + $133,333 + $50,000) is deductible by L for L's 2018 taxable year, and the remaining $216,667 is not deductible by L for any taxable year.

(iv) For purposes of attributing amounts paid or made available from the plan in future taxable years, the following adjustments are made to O's account balances to reflect the in-service payment of $400,000 in 2018. O's account balance as of December 31, 2016 is reduced by the $88,889 attributable to 2016; and for 2017 is reduced by the sum of the $133,333 attributable to 2017 and the $88,889 attributable to 2016. Therefore, after attributing the $400,000 payment, O's adjusted closing account balance as of December 31, 2016, is $11,111 ($100,000 − $88,889), and as of December 31, 2017, is $27,778 ($250,000 − $133,333 − $88,889).

(v) For purposes of attributing the $200,000 payment made on January 1, 2020, to services performed in the taxable years of S, the increase in O's account balance during 2016 is $11,111 ($11,111 − $0); the increase in O's account balance for 2017 is $16,667 ($27,778 − $11,111); the increase in O's account balance for 2018 is $22,222 ($50,000 − $27,778), and the increase in O's account balance for 2019 is $150,000 ($200,000 − $50,000). The sum of all such increases is $200,000 ($11,111 + $16,667 + $22,222 + $150,000). Thus, for O's 2016 taxable year, the attribution fraction is .0556 ($11,111/$200,000); for O's 2017, taxable year, the attribution fraction is .0833 ($16,667/$200,000); for O's 2018 taxable year, the attribution fraction is .1111 ($22,222/$200,000); for O's 2019 taxable year, the attribution fraction is .7500 ($150,000/$200,000). Accordingly, with respect to the $200,000 payment made on January 1, 2020, $11,111 ($200,000 × .0556) of DDR is attributable to services performed by O in L's 2016 taxable year; $16,667 ($200,000 × .0833) of DDR is attributable to services performed by O in L's 2017 taxable year; $22,222 ($200,000 × .1111) of DDR is attributable to services performed by O in L's 2018 taxable year; and $150,000 ($200,000 × .7500) of DDR is attributable to services performed by O in L's 2019 taxable year.

(vi) The portion of the DDR attributed to a disqualified taxable year under paragraph (d) of this section that exceeds the deduction limit for that disqualified taxable year, as reduced, is not deductible for any taxable year. For L's 2016 taxable year, the deduction limit is reduced to

zero by the $500,000 of AIR for that year. Because $11,111 exceeds the reduced deduction limit of zero, $11,111 of the DDR is not deductible for L's 2020 taxable year or any other taxable year. For L's 2017 taxable year, the deduction limit is reduced to $200,000 by the $300,000 of AIR for that year and further reduced to $66,667 by the $133,333 of DDR previously attributed to 2017. Because $16,667 does not exceed the $66,667 deduction limit, the $16,667 of DDR is deductible for L's 2020 taxable year, the year of payment. The deduction limit for remuneration attributable to services performed by O in 2017 is then reduced to $50,000 ($66,667 − $16,667), and this reduced limit is applied to any future payment attributable to services performed by O in 2017. For L's 2018 taxable year, the deduction limit is reduced to zero by the $450,000 of AIR for that year and the $50,000 of DDR previously attributed to 2018. Because $22,222 exceeds the reduced deduction limit of zero for 2018, the $22,222 of DDR is not deductible for L's 2020 taxable year or any other taxable year. For L's 2019 taxable year, the $500,000 deduction limit for 2019 is applied first to O's $200,000 of AIR for 2019. Because the deduction limit is greater than the AIR, L may deduct the entire $200,000 of AIR paid in 2019. The $500,000 deduction limit is reduced to $300,000 by the amount of the AIR ($500,000 − $200,000). The reduced deduction limit is applied to O's $150,000 of DDR attributable to services performed by O in L's 2019 taxable year that is paid in 2020. Because $150,000 does not exceed the $300,000 limit, the $150,000 of DDR is deductible for L's 2020 taxable year, the year of payment. The deduction limit for remuneration attributable to services performed by O in 2019 is then reduced to $150,000 ($500,000 − $200,000 − $150,000), and this reduced limit is applied to any future payment attributable to services performed by O in 2019. As a result, $166,667 of the $200,000 payment ($0 + $16,667 + $0 + $150,000) is deductible by L for L's 2020 taxable year, the year of payment, and the remaining $33,333 is not deductible by L for any taxable year.

Example 5 (Installment payments and in-service payment attributable to multiple taxable years from an account balance plan using the principal additions method). (i) The facts are the same as set forth in *Example 4,* paragraph (i), except that L uses the principal additions method for attributing remuneration from an account balance plan; principal additions under the plan are $100,000 in 2016, $125,000 in 2017, $150,000 in 2018, and $125,000 in 2019; as of the December 31, 2018 initial date of payment, earnings on the 2016, 2017, and 2018 principal additions are $40,000, $30,000, and $5,000 respectively. Under the terms of the plan, the $400,000 payment made on December 31, 2018, is from principal additions in 2016, 2017, and 2018, and earnings thereon, and the $200,000 payment made on January 1, 2020, is from principal additions in 2018 and 2019, and earnings thereon.
(ii) To determine the extent to which L is entitled to a deduction for any portion of either payment under the plan, the payments to O under the plan must first be attributed to services performed by O in F's taxable years in accordance with the attribution rules set forth in paragraph (d) of this section. Under the rules in paragraph (d)(3)(ii) of this section, the $400,000 payment on January 1, 2019, is attributed to services performed by O in the taxable year to which the payment relates under the terms of the plan. DDR including principal

additions and earnings thereon are attributed to services performed by O in a taxable year of L when the $400,000 payment is made to O on December 31, 2018. Under the terms of the plan, the $400,000 payment made on December 31, 2018 is attributed to services performed by O in L's 2016 taxable year in the amount of $140,000, and is attributed to services performed by O in L's 2017 taxable year in the amount of $155,000, and the remaining $105,000 ($400,000 − $140,000 − $155,000) is attributed to services performed by O in L's 2018 taxable year.

(iii) The portion of the DDR attributable to services performed in a disqualified taxable year under paragraph (d) of this section that exceeds the deduction limit for that disqualified taxable year, as reduced, is not deductible for any taxable year. The $500,000 deduction limitation for 2016 is applied first to O's $500,000 of AIR for 2016. Because the deduction limit is equal to the $500,000 of AIR, L may deduct the entire $500,000 of AIR paid in 2016. The $500,000 deduction limit is then reduced to zero by the amount of the AIR ($500,000 − $500,000). The reduced deduction limit is applied to O's $140,000 of DDR attributable to services performed by O in L's 2016 taxable year that is paid in 2018. Because $140,000 exceeds the reduced deduction limit of zero, the $140,000 is not deductible for L's 2018 taxable year (the year of payment), or any other taxable year. For L's 2017 taxable year, the $500,000 deduction limit for 2017 is applied first to O's $300,000 of AIR for 2017. Because the deduction limit is greater than the AIR, L may deduct the entire $300,000 of AIR paid in 2017. The $500,000 deduction limit is then reduced to $200,000 by the amount of the AIR ($500,000 − $300,000). The reduced deduction limit is applied to O's $155,000 of DDR attributable to services performed by O in L's 2017 taxable year that is paid in 2018. Because $155,000 does not exceed the reduced deduction limit of $200,000, the $155,000 payment is deductible for 2018. For L's 2018 taxable year, the $500,000 deduction limitation for 2018 is applied first to O's $450,000 of AIR for 2018. Because the deduction limit is greater than the AIR, L may deduct the entire $450,000 of AIR paid in 2018. The $500,000 deduction limit is then reduced to $50,000 by the amount of the AIR ($500,000 − $450,000). The reduced deduction limit is applied to O's $105,000 of DDR attributable to services performed by O in L's 2018 taxable year that is paid in 2018. Because $105,000 exceeds the reduced deduction limit of $50,000, $55,000 of the $105,000 attributable to L's 2018 taxable year is not deductible for 2018 (the year of payment), or any other taxable year. As a result, $205,000 of the $400,000 payment ($0 + $155,000 + $50,000) is deductible by L for L's 2018 taxable year (the year of payment) and the remaining $195,000 is not deductible by L for any taxable year.

(iv) Earnings through January 1, 2020 on the principal addition for L's 2018 taxable year ($50,000) that was not paid as part of the December 31, 2018 payment are $5,000. Earnings through January 1, 2020 on the $125,000 credited to O's account on January 1, 2019 are $20,000. On December 31, 2018, after the $400,000 payment is applied to 2016, 2017, and 2018, the account balance for 2016 and 2017 is reduced to zero, and the account balance for 2018 is reduced to $50,000 ($150,000 + $5,000 (earnings) − $105,000). Under the terms of

the plan, the $200,000 payment made on January 1, 2020, is attributable to services performed by O in L's 2018 and 2019 taxable years. Therefore, the $200,000 payment on January 1, 2020 is attributed to services performed by O in L's taxable years as follows: $55,000 ($50,000 + $5,000) to 2018 and $145,000 ($125,000 + $20,000) to 2019.

(v) The portion of the DDR attributed to a disqualified taxable year under paragraph (d) of this section that exceeds the deduction limit for that disqualified taxable year, as reduced, is not deductible for any taxable year. For L's 2018 taxable year, the deduction limit is reduced to zero by the $450,000 of AIR for that year and the payment of $50,000 of DDR attributable to that year. Because $55,000 exceeds the reduced deduction limit of zero, the $55,000 is not deductible for 2020, the year of payment (or any other taxable year). With respect to L's 2019 taxable year, the $500,000 deduction limit for 2019 is applied first to O's $200,000 of AIR for 2019. Because the deduction limit is greater than the AIR, L may deduct the entire $200,000 of AIR paid in 2019. The $500,000 deduction limit is then reduced to $300,000 by the amount of the AIR ($500,000 − $200,000). The reduced deduction limit is applied to O's $145,000 of DDR attributable to services performed by O in L's 2019 taxable year that is paid in 2020. Because $145,000 does not exceed the $300,000 reduced limit, the $145,000 is deductible for 2020 (the year of payment). As a result, $145,000 of the $200,000 payment ($0 + $145,000) is deductible for L's 2020 taxable year, and the remaining $55,000 is not deductible by L for any taxable year.

(4) ***Application of deduction limitation to aggregated groups of covered health insurance providers*** —

(i) ***In general.*** The total combined deduction for AIR and DDR attributable to services performed by an applicable individual in a disqualified taxable year allowed for all members of an aggregated group that are covered health insurance providers for any taxable year is limited to $500,000. Therefore, if two or more members of an aggregated group that are covered health insurance providers may otherwise deduct AIR or DDR attributable to services performed by an applicable individual in a disqualified taxable year, the AIR and DDR otherwise deductible by all members of the aggregated group is combined, and the deduction limitation is applied to the total amount.

(ii) ***Proration of deduction limitation.*** If the total amount of AIR or DDR attributable to services performed by an applicable individual in a disqualified taxable year that is otherwise deductible by two or more members of an aggregated group in any taxable year exceeds the $500,000 deduction limit (as reduced by previously deductible AIR or DDR, if applicable), the deduction limit is prorated based on the AIR or DDR otherwise deductible by the members of the aggregated group in the taxable year and allocated to each member of the aggregated group. The deduction limit allocated to each member of the aggregated group is determined by multiplying the deduction limit for the disqualified taxable year (as previously reduced, if applicable) by a fraction, the numerator of which is the AIR or DDR otherwise deductible by that member in that taxable year that is attributable to services performed by the applicable individual in the disqualified taxable year, and the denominator of which is the total AIR or DDR otherwise deductible by all members of the aggregated group in that taxable year that is attributable to services performed by the applicable individual in the disqualified taxable year.

The amount of AIR or DDR otherwise deductible by a member of the aggregated group in excess of the portion of the deduction limit allocated to that member is not deductible in any taxable year. If a covered health insurance provider is a member of more than one aggregated group, the deduction limit for that covered health insurance provider under section 162(m)(6) may in no event exceed $500,000 for AIR and DDR attributable to services performed by an applicable individual in a disqualified taxable year.

(5) ***Examples.*** The following examples illustrate the rules of paragraph (e)(4) of this section. For purposes of these examples, each corporation has a taxable year that is the calendar year and is a covered health insurance provider for all relevant taxable years, and DDR is otherwise deductible by the covered health insurance provider in the taxable year in which it is paid.

Example 1. (i) Corporations I, J, and K are members of the same aggregated group under paragraph (b)(3) of this section. At separate times during 2016, C is an employee of, and performs services for, I, J, and K. C's total AIR for 2016 is $1,500,000, which consists of $750,000 of AIR for services performed to K; $450,000 of AIR for services provided to J; and $300,000 of AIR for services to I.
(ii) Because I, J, and K are members of the same aggregated group, the AIR otherwise deductible by them is aggregated for purposes of applying the deduction limitation. Further, because the aggregate AIR otherwise deductible by I, J, and K for 2016 exceeds the deduction limitation for C for that taxable year, the deduction limit is prorated and allocated to the members of the aggregated group in proportion to the AIR otherwise deductible by each member of the aggregated group for that taxable year. Therefore, the deduction limit that applies to the AIR otherwise deductible by K is $250,000 ($500,000 × ($750,000/$1,500,000)); the deduction limit that applies to the AIR otherwise deductible by J is $150,000 ($500,000 × ($450,000/$1,500,000)); and the deduction limit that applies to AIR otherwise deductible by I is $100,000 ($500,000 × ($300,000/$1,500,000)). For the 2016 taxable year, K may not deduct $500,000 of the $750,000 of AIR paid to C ($750,000 − $250,000); J may not deduct $300,000 of the $450,000 of AIR paid to C ($450,000 − $150,000); and I may not deduct $200,000 of the $300,000 of AIR paid to C ($300,000 − $100,000).

Example 2. (i) The facts are the same as *Example 1,* except that C's total AIR for 2016 is $400,000, which consists of $75,000 for services provided to K; $150,000 for services provided to J; and $175,000 for services provided to I. In addition, C becomes entitled to $60,000 of DDR attributable to services provided to K in 2016, which is payable (and paid) on April 1, 2018, and $75,000 of DDR attributable to services provided to J in 2016, which is payable (and paid) on April 1, 2019.
(ii) Because C's total AIR of $400,000 for 2016 for services provided to K, J, and I do not exceed the $500,000 limitation, K, J, and I may deduct $75,000, $150,000, and $175,000, respectively, for 2016. The deduction limit is then reduced to $100,000 by the total AIR deductible by all members of the aggregated group ($500,000 − $400,000). The deduction limit, as reduced, is then applied to any DDR attributable to services provided by C in 2016 in the first subsequent taxable year that DDR becomes deductible. The first year that DDR for

2016 becomes deductible is 2018, due to the $60,000 payment made on April 1, 2018. Because the $60,000 of DDR otherwise deductible by K does not exceed the 2016 $100,000 deduction limit, K may deduct the entire $60,000 for its 2018 taxable year. The $100,000 deduction limit is then reduced by the $60,000 of DDR deductible by K for 2018, and the reduced deduction limit of $40,000 ($100,000 − $60,000) is applied to the $75,000 of DDR that is otherwise deductible for 2019. Because the DDR of $75,000 otherwise deductible by J exceeds the reduced deduction limit of $40,000, J may deduct only $40,000, and the remaining $35,000 ($75,000 − $40,000) is not deductible by J for that taxable year or any other taxable year.

Example 3. (i) The facts are the same as *Example 2,* except that C's DDR of $75,000 attributable to services performed by C in J's 2016 taxable year is payable (and paid) on July 1, 2018.
(ii) The results are the same as *Example 2,* except that the reduced deduction limit of $100,000 is prorated between K and J in proportion to the DDR otherwise deductible by them for 2018. Accordingly, $44,444 of the remaining deduction limit is allocated to K ($100,000 × ($60,000/$135,000)), and $55,556 of the remaining deduction limit is allocated to J ($100,000 × ($75,000/$135,000)). Because the $60,000 of DDR otherwise deductible by K exceeds the $44,444 deduction limit applied to that remuneration, K may deduct only $44,444 of the $60,000 payment, and $15,556 may not be deducted by K for the 2018 taxable year or any other taxable year. Similarly, because the $75,000 of DDR otherwise deductible by J exceeds the $55,556 deduction limit applied to that remuneration, J may deduct only $55,556 of the $75,000 payment, and $19,444 may not be deducted by J for that taxable year or any other taxable year.

(f) ***Corporate transactions*** —

(1) ***Treatment as a covered health insurance provider in connection with a corporate transaction.*** Except as otherwise provided in this paragraph (f), a person that participates in a corporate transaction is a covered health insurance provider for the taxable year in which the corporate transaction occurs (and any other taxable year) if it would otherwise be a covered health insurance provider under paragraph (b)(4) of this section for that taxable year. For example, if a member of an aggregated group that did not previously include a health insurance issuer purchases a health insurance issuer that is a covered health insurance provider (so that the health insurance issuer becomes a member of the aggregated group), each member of the acquiring aggregated group will be a covered health insurance provider for its full taxable year in which the corporate transaction occurs and each subsequent taxable year in which the health insurance issuer continues to be a member of the group, if it would otherwise be a covered health insurance provider under paragraph (b)(4), except as otherwise provided in this paragraph (f). For purposes of this section, the term *corporate transaction* means a merger, acquisition or disposition of assets or stock, reorganization, consolidation, separation, or any other transaction resulting in a change in the composition of an aggregated group.

(2) ***Transition period relief for a person becoming a covered health insurance provider solely as a result of a corporate transaction*** —

(i) ***In general.*** Except as provided in paragraph (f)(2)(ii) of this section, a person that is not a covered health insurance provider before a corporate transaction, but would (except for application of this paragraph (f)(2)(i)) become a covered health insurance provider solely because it becomes a member of an aggregated group with another person that is a health insurance issuer as a result of the corporate transaction, is not a covered health insurance provider subject to the deduction limitation of section 162(m)(6) for the taxable year of that person in which the corporate transaction occurs (the *transition period relief*).

(ii) ***Certain applicable individuals.*** The transition period relief described in paragraph (f)(2)(i) of this section does not apply with respect to the remuneration of any individual who is an applicable individual of a person that would have been a covered health insurance provider for the taxable year in which the corporate transaction occurred without regard to the occurrence of the corporate transaction (for example, the applicable individuals of a health insurance issuer and the members of its affiliated group that were covered health insurance issuers before the occurrence of a corporate transaction). This exception to the transition period relief applies even with respect to remuneration attributable to services performed by the applicable individual for a person that is eligible for the transition period relief described in paragraph (f)(1)(ii)(A) of this section. Accordingly, each member of an acquiring aggregated group that would become a covered health insurance provider solely as a result of a corporate transaction, but is not a covered health insurance provider under the transition period relief described in paragraph (f)(1)(ii)(A) of this section, is subject to the deduction limitation of section 162(m)(6) for its taxable year in which the corporate transaction occurs with respect to AIR and DDR attributable to services performed by any individual who is an applicable individual of the acquired health insurance issuer and any member of its aggregated group that would have been a covered health insurance provider in the taxable year in which the corporate transaction occurred, even if the corporate transaction had not occurred.

(3) ***Transition relief from the attribution consistency requirements*** —

(i) ***In general.*** Paragraphs (d)(3)(i), (d)(4)(i) and (d)(5)(i)(B) of this section require a covered health insurance provider and all members of its aggregated group to use the same method for attributing remuneration to services performed by applicable individuals consistently for all taxable years (*attribution consistency requirements*). As a result of a corporate transaction, however, a covered health insurance provider that uses an attribution method for its account balance plans, nonaccount balance plans, or stock options or SARs may become a member of an aggregated group with another covered health insurance provider that uses a different attribution method for those types of plans or arrangements. In that case, neither member of the aggregated group will be treated as violating the attribution consistency requirements merely because it uses an attribution method that is different from the attribution method used by another member of its aggregated group to attribute remuneration that becomes otherwise deductible in the taxable year in which the corporate transaction occurs. However, the attribution consistency requirements apply with respect to remuneration that becomes otherwise deductible in all subsequent taxable years. Following the date of the corporate transaction, any member of the aggregated group may change the attribution method that it used before the date of the corporate transaction to attribute remuneration under its account balance plans, nonaccount balance plans, or stock options or SARs to make its method consistent with the method used by any other member of the aggregated group. Notwithstanding the foregoing, the Secretary may subject this change in attribution method to

limitations, or may otherwise modify the attribution consistency requirements, pursuant to a notice, revenue ruling, or other guidance of general applicability published in the Internal Revenue Bulletin.

(ii) ***Exception for certain applicable individuals.*** Notwithstanding the transition relief described in paragraphs (f)(2)(A) of this section, if a covered health insurance provider has attributed remuneration under a method described in paragraphs (d)(3), (d)(4), or (d)(5) of this section with respect to an applicable individual before a corporate transaction, the covered health insurance provider must continue at all times to use that attribution method for all other remuneration that becomes otherwise deductible under the same type of plan (that is, an account balance plan, a nonaccount balance plan, or a stock option or SAR) to which the applicable individual has a legally binding right as of the corporate transaction.

(4) ***Deduction limitation not prorated for short taxable years.*** If a corporate transaction results in a short taxable year for a covered health insurance provider, the $500,000 deduction limit for the short taxable year is neither prorated nor reduced. For example, if a corporate transaction results in a short taxable year of three months, the deduction limit under section 162(m)(6) for that short taxable year is $500,000 (and is not reduced to $125,000).

(5) ***Effect of a corporate transaction on the application of the de minimis exception.*** If a person becomes or ceases to be a member of an aggregated group, only the premiums and gross revenues of that person for the portion of its taxable year during which it is a member of the aggregated group are taken into account for purposes of determining whether the *de minimis* exception applies.

(6) ***Examples.*** The following examples illustrate the principles of this paragraph (f). For purposes of these examples, each corporation has a taxable year that is the calendar year unless stated otherwise, and none of the corporations qualify for the *de minimis* exception under paragraph (b)(4)(v) of this section.

> *Example 1.* (i) Corporation J merges with and into corporation H on June 30, 2015, such that H is the surviving entity. As a result of the merger, J's taxable year ends on June 30, 2015. For its taxable year ending June 30, 2015, J is a health insurance issuer that is a covered health insurance provider. For all taxable years before the taxable year of the merger, H is not a covered health insurance provider.
> (ii) Corporation J is a covered health insurance provider for its short taxable year ending June 30, 2015. As a result of the merger, H becomes a covered health insurance provider for its 2015 taxable year, but Corporation H is not a covered health insurance provider for its 2015 taxable year by reason of the transition period relief in paragraph (f)(1)(ii)(A) of this section. However, applicable individuals of J continue to be subject to the deduction limit under section 162(m)(6) for amounts that become otherwise deductible in the 2015 taxable year and DDR that is attributable to services performed by applicable individuals of J, and H is a covered health insurance provider for all subsequent taxable years for which it is a covered health insurance provider under paragraph (b)(4) of this section.

> *Example 2.* (i) On January 1, 2016, corporations D, E, and F are members of a controlled group within the meaning of section 414(b). F is a health insurance issuer that is a covered

health insurance provider under paragraph (b)(4)(i)(A) of this section. D and E are not health insurance issuers (but are covered health insurance providers pursuant to paragraphs (b)(4)(i)(C) and (D) of this section). D is the parent entity of the DEF aggregated group. F's taxable year ends on September 30. P is an applicable individual of F for all taxable years. On May 1, 2016, a controlled group within the meaning of section 414(b) consisting of corporations C and B purchases all of the stock of corporation F, resulting in a controlled group within the meaning of section 414(b) consisting of corporations C, B, and F. The amount of premiums received by F from providing minimum essential coverage during the portion of its taxable year when it was a member of the DEF aggregated group constitute more than two percent of the gross revenues of the aggregated group for the taxable year of D (the parent entity) ending on December 31, 2016, and the taxable years of E and F ending with or within D's taxable year (December 31, 2016 and May 1, 2016 respectively). C and B are not health insurance issuers. C is the parent entity of the CBF aggregated group. The CBF aggregated group is also a consolidated group within the meaning of § 1.1502-1(h). Thus, F's taxable year ends on May 1, 2016 by reason of § 1.1502-76(b)(1)(ii)(A)(*1*), and F becomes part of the CBF consolidated group for the taxable year ending December 31, 2016.
(ii) D and E are covered health insurance providers for the taxable year ending December 31, 2016, and the de minimis exception does not apply because the amount of premiums received by F from providing minimum essential coverage during the short taxable year that it was a member of the DEF aggregated group are more than two percent of the gross revenues of the aggregated group for the taxable years during which the members would otherwise be a covered health insurance providers under paragraph (b)(4)(i) of this section. Accordingly, D and E are subject to the deduction limitation under section 162(m)(6) for their taxable years ending December 31, 2016. C and B are not covered health insurance providers for their taxable year ending December 31, 2016, by reason of the transition period relief of paragraph (f)(1)(ii)(A) of this section.

(iii) As a result of leaving the aggregated group, F has a new taxable year beginning on May 2, 2016 and ending on December 31, 2016. F is a covered health insurance provider within the meaning of paragraph (b)(4) of this section for its new taxable year ending on December 31, 2016 (even though C and B are not covered health insurance providers for their taxable years ending December 31, 2016) unless the CBF aggregated group qualifies for the *de minimis* exception for that taxable year.

(iv) P is an applicable individual whose remuneration from F is subject to the deduction limitation under section 162(m)(6) for F's short taxable year ending May 1, 2016 and F's taxable year ending December 31, 2016. In addition, any remuneration provided to P by C or B at any time for services provided by P from May 1, 2016 to December 31, 2016 is also subject to the deduction limitation under section 162(m)(6), even though C and B are not covered health insurance providers for their taxable years ending December 31, 2016 by reason of the

transition period relief of paragraph (f)(1)(ii)(A) of this section. Remuneration to which P had the legally binding right on or before the date of the transaction is subject to the deduction limitation when that remuneration becomes otherwise deductible.

Example 3. (i) The same facts as *Example 2,* except that E is a health insurance issuer that is a covered health insurance provider under paragraph (b)(4) of this section and thus receives premiums from providing minimum essential coverage (instead of F), and F is not a health insurance issuer.
(ii) F is a covered health insurance provider for its short taxable year ending May 1, 2016. However, because F is not a health insurance issuer that is a covered health insurance provider and there are no other health insurance issuers in the BCF aggregated group, F is not a covered health insurance provider for its short, post-acquisition taxable year ending December 31, 2016.

(iii) With respect to P, remuneration to which P had the legally binding right on or before the date of the transaction is subject to the deduction limitation. However, remuneration to which P obtains the legally binding right after the date of the corporate transaction is not subject to the deduction limitation.

Example 4. (i) Corporations N, O, and P are members of an aggregated group as described in paragraph (b)(2) of this section. N is a health insurance issuer that is a covered health insurance provider pursuant to paragraph (b)(4)(i)(A) of this section, but neither O nor P is a health insurance issuer. P is the parent entity of the aggregated group. On April 1, 2016, O ceases to be a member of the NOP aggregated group as the result of a corporate transaction. O's taxable year does not end as a result of the corporate transaction.
(ii) Because O was a member of the NOP aggregated group during a portion of its taxable year, O is a covered health insurance provider for its taxable year ending December 31, 2016.

Example 5. (i) Corporations V, W, and X are members of an aggregated group as described in paragraph (b)(2) of this section. V is a health insurance issuer that is a covered health insurance provider pursuant to paragraph (b)(4)(i)(A) of this section, but neither W nor X is a health insurance issuer. W is the parent entity of the aggregated group. V's taxable year ends on December 31; W's taxable year ends on June 30; and X's taxable year ends on September 30. For its taxable year ending June 30, 2017, W has $100x in gross revenue. For its taxable year ending September 30, 2016, X has $60x in gross revenue. For its taxable year ending December 31, 2016, V receives $4x of premiums from providing minimum essential coverage and has no other revenue. As of September 30, 2016, V ceases to be a member of the VWX aggregated group. V's taxable year does not end on September 30, 2016 as a result of the transaction. Of the $4x that that V receives for providing minimum essential coverage during its taxable year ending December 31, 2016, $3x is received during the period from January 1,

2016 through September 30, 2016. As a result of the corporate transaction, V's taxable year ends on September 30, 2016. The *de minimis* exception of paragraph (b)(4)(v)(A) of this section did not apply to the members of the VWX aggregated group for their immediately preceding taxable years ending December 31, 2015, June 30, 2016, and September 30, 2015, respectively.
(ii) For purposes of applying the *de minimis* exception to an aggregated group for a taxable year during which a person leaves or joins the aggregated group, only the premiums and revenues of the person for the portion of its taxable year during which it was a member of the aggregated group are taken into account. The premiums from providing minimum essential coverage received by the VWX aggregated group for W's taxable year ending June 30, 2017 are $3x. The revenues of the V, W, and X aggregated group for W's taxable year ending June 30, 2017 are $163x. Accordingly, the premiums received by the members of the aggregated group from providing minimum essential coverage are less than two percent of the gross revenues of the aggregated group ($3x is less than $3.26x (two percent of $163x)). Therefore, V, W and X are not covered health insurance providers for their taxable years ending December 31, 2016, June 30, 2017, and September 30, 2016, respectively.

Example 6. (i) The facts are the same as *Example 5,* except that F received $4x of premiums during the period from January 1, 2016 to September 30, 2016, and the members of the VWX aggregated group were not covered health insurance providers for their taxable years ending December 31, 2015, June 30, 2016, and September 30, 2015, respectively (their immediately preceding taxable years) solely by reason of the *de minimis* exception of paragraph (b)(4)(v)(A) of this section.
(ii) The premiums from providing minimum essential coverage received by the VWX aggregated group for W's taxable year ending June 30, 2017 are $4x. The revenues of the VWX aggregated group for W's taxable year ending June 30, 2017 are $164x. Accordingly, the premiums received by the members of the aggregated group from providing minimum essential coverage are greater than two percent of the gross revenues of the aggregated group ($4x is greater than $3.28x (two percent of $164x)). Therefore, V, W, and X do not qualify for the *de minimis* exception for their taxable years ending December 31, 2016, June 30, 2017, and September 30, 2016, respectively. However, V, W, and X are not covered health insurance providers for these taxable years by reason of the *de minimis* exception one year transition period described in paragraph (b)(4)(v)(B) of this section.

Example 7. (i) Corporation N is a health insurance issuer that is a covered health insurance provider. Corporation O is also a health insurance issuer that is a covered health insurance provider. Both N and O have taxable years ending December 31. N uses the account balance ratio method to attribute remuneration that becomes otherwise deductible under its account balance plans. O uses the principal additions method to attribute amounts that become otherwise deductible under its account balance plans. On June 30, 2016, O purchases all of

the stock of N.
(ii) For the taxable year of N and O ending December 31, 2016, N may continue to attribute amounts that become deductible under its account balance plans using the account balance ratio method, and O can continue to attribute amounts that become otherwise deductible under its account balance plan using the principal additions method, even though they are members of the same aggregated group, pursuant to the transition period relief described in paragraph (f)(2) of this section. In all subsequent taxable years, N and O must use the same method to attribute amounts that become otherwise deductible under their account balance plans. Either N or O may change the method that it uses to attribute amounts under its account balance plans to be consistent with the attribution method used by the other.

Example 8. (i) The facts are the same as *Example 7.* In addition, B is an applicable individual of N before the corporate transaction and is a participant in an account balance plan of N. On December 31, 2015, N made a payment to B, and N used the account balance ratio method described in paragraph (d)(3)(ii) of this section to attribute the payment to services performed by B in taxable years of N.
(ii) Because N used the account balance ratio method described in paragraph (d)(3)(ii) of this section to attribute an amount that became otherwise deductible under the plan before the corporate transaction, N must continue to use the account balance ratio method for attributing amounts to which B had a legally binding right as of the corporate transaction, whenever those amounts become otherwise deductible.

(g) ***Coordination*** —

(1) ***Coordination with section 162(m)(1).*** If section 162(m)(1) and section 162(m)(6) both otherwise would apply with respect to the remuneration of an applicable individual, the deduction limitation under section 162(m)(6) applies without regard to section 162(m)(1). For example, if an applicable individual is both a covered employee of a publicly held corporation (see sections 162(m)(2) and (3); § 1.162-27) and an applicable individual within the meaning of paragraph (b)(7) of this section, remuneration earned by the applicable individual that is attributable to a disqualified taxable year of a covered health insurance provider is subject to the $500,000 deduction limitation under section 162(m)(6) with respect to such disqualified taxable year, without regard to section 162(m)(1).

(2) ***Coordination with disallowed excess parachute payments*** —

(i) ***In general.*** The $500,000 deduction limitation of section 162(m)(6) is reduced (but not below zero) by the amount (if any) that would have been included in the AIR or DDR of the applicable individual for a taxable year but for the deduction for the AIR or DDR being disallowed by reason of section 280G.

(ii) ***Example.*** The following example illustrates the rule of this paragraph (g)(2).

Example. Corporation A, a covered health insurance provider, pays $750,000 of AIR to P, an applicable individual, during A's disqualified taxable year ending December 31, 2016. Of the $750,000, $300,000 is an excess parachute payment as defined in section 280G(b)(1), the deduction for which is disallowed by reason of that section. The excess parachute

payment reduces the $500,000 deduction limit to $200,000 ($500,000 − $300,000). Therefore, A may deduct only $200,000 of the $750,000 in AIR, and $250,000 of the payment is not deductible by reason of section 162(m)(6).

(h) ***Grandfathered amounts attributable to services performed in taxable years beginning before January 1, 2010 —***

(1) ***In general.*** The section 162(m)(6) deduction limitation does not apply to remuneration attributable to services performed in taxable years of a covered health insurance provider beginning before January 1, 2010 (*grandfathered amounts*). For purposes of this paragraph (h), whether remuneration is attributable to services performed in a taxable year beginning before January 1, 2010, is determined by applying an attribution method described in paragraph (h)(2) of this section.

(2) ***Identification of services performed in taxable years beginning before January 1, 2010 —***

(i) ***In general.*** DDR described in paragraphs (d)(2) (legally binding right), (d)(3) (account balance plans), (d)(4) (nonaccount balance plans), (d)(6) (involuntary separation pay), (d)(7) (reimbursements), and (d)(8) (split dollar life insurance) of this section is attributable to services performed in a taxable year beginning before January 1, 2010 if it is attributable to services performed before that date under the rules of these paragraphs, without regard to whether that remuneration is subject to a substantial risk of forfeiture on or after that date. Notwithstanding the requirement under paragraph (d)(3)(i) of this section that a covered health insurance provider must use the same attribution method for its account balance plans for all taxable years, a covered health insurance provider that uses the account balance ratio method described in paragraph (d)(3)(i) of this section to attribute remuneration to services performed in taxable years beginning after December 31, 2009 may use the principal additions method described in paragraph (d)(3)(ii) of this section to attribute remuneration under an account balance plan to services performed in a taxable year beginning before January 1, 2010 for purposes of determining grandfathered amounts under the plan. (See paragraph (d)(3)(ii)(C)(*3*) of this section for required account balance adjustments if a covered health insurance provider generally uses the account balance ratio method to attribute amounts otherwise deductible under its account balance plans but uses the principal additions method to attribute remuneration to services performed in taxable years beginning before January 1, 2010.)

(ii) ***Equity-based remuneration.*** For purposes of this section, all remuneration resulting from a stock option, stock appreciation right, restricted stock, or restricted stock unit and the right to any associated dividends or dividend equivalents (together, referred to as *equity-based remuneration*) granted before the first day of the taxable year of the covered health insurance provider beginning on or after January 1, 2010, is attributable to services performed in taxable years beginning before January 1, 2010, regardless of the date on which the equity-based remuneration is exercised (in the case of a stock option or SAR), the date on which the amounts due under the equity-based remuneration are paid or includible in income, or whether the equity-based remuneration is subject to a substantial risk of forfeiture on or after the first day of the taxable year of the covered health insurance provider beginning on or after January 1, 2010. For example, appreciation in the value of restricted shares granted before the first day of the taxable year beginning on or after January 1, 2010 is treated as remuneration that is attributable to services performed in taxable years beginning before January 1, 2010, regardless of whether the shares are vested at that time.

(i) ***Transition rules for certain DDR —***

(1) ***Transition rule for DDR attributable to services performed in taxable years of the covered health insurance provider beginning after December 31, 2009 and before January 1, 2013.*** The deduction limitation under section 162(m)(6) applies to DDR attributable to services performed in a disqualified taxable year of a covered health insurance provider beginning after December 31, 2009 and before January 1, 2013, only if that remuneration is otherwise deductible in a disqualified taxable year of the covered health insurance provider beginning after December 31, 2012. However, if the deduction limitation applies to DDR attributable to services performed by an applicable individual in a disqualified taxable year of a covered health insurance provider beginning after December 31, 2009 and before January 1, 2013, the deduction limitation is calculated as if it had been applied to the applicable individual's AIR and DDR deductible in those taxable years.

(2) ***Examples.*** The following examples illustrate the principles of this paragraph (i). For purposes of these examples, each corporation has a taxable year that is the calendar year, and DDR is otherwise deductible by the covered health insurance provider in the taxable year in which it is paid.

> *Example 1.* (i) Q is an applicable individual of corporation Z. Z's 2010, 2011, and 2012 taxable years are disqualified taxable years. Z's 2013, 2014, and 2015 taxable years are not disqualified taxable years. However, Z's 2016 taxable year and all subsequent taxable years are disqualified taxable years. Q receives $200,000 of AIR from Z for 2012, and becomes entitled to $800,000 of DDR that is attributable to services performed by Q in 2012. Z pays Q $350,000 of the DDR in 2015, and the remaining $450,000 of the DDR in 2016. These payments are otherwise deductible by Z in 2015 and 2016, respectively.
> (ii) DDR attributable to services performed by Q in Z's 2010, 2011, and 2012 taxable years that is otherwise deductible in Z's 2013, 2014, or 2015 taxable years is not subject to the deduction limitation under section 162(m)(6) by reason of the transition rule under paragraph (i)(1) of this section. However, DDR attributable to services performed in Z's 2010, 2011, and 2012 taxable years that is otherwise deductible in a later taxable year that is a disqualified taxable year (in this case, Z's 2016 and subsequent taxable years) is subject to the deduction limitation under section 162(m)(6). Accordingly, the deduction limitation with respect to AIR and DDR attributable to services performed by Q in 2012 is determined by reducing the $500,000 deduction limit by the $200,000 of AIR paid to Q by Z for 2012 ($500,000 − $200,000). Under the transition rule of paragraph (i)(1) of this section, no portion of the reduced deduction limit of $300,000 for the 2012 taxable year is applied against the $350,000 payment made in 2015, and accordingly, the deduction limit is not reduced by the amount of that payment. The reduced deduction limit is then applied to Q's $450,000 of DDR attributable to services performed by Q in 2012 that is paid to Q and becomes otherwise deductible in 2016. Because the reduced deduction limit of $300,000 is less than the $450,000 otherwise deductible by Z in 2016, Z may deduct only $300,000 of the DDR, and $150,000 of the $450,000 payment is not deductible by Z in that taxable year or any taxable year.

> *Example 2.* (i) R is an applicable individual of corporation Y, which is a covered health insurance provider for all relevant taxable years. During 2010, Y pays R $400,000 in salary and grants R a right to $200,000 in DDR payable on a fixed schedule in 2011, 2012, and 2013.

Pursuant to the fixed schedule, Y pays R $50,000 of DDR in 2011, $50,000 of DDR in 2012, and the remaining $100,000 of DDR in 2013.
(ii) Because the deduction limitation for DDR under section 162(m)(6)(A)(ii) is effective for DDR that is attributable to services performed by an applicable individual during any disqualified taxable year beginning after December 31, 2009 that would otherwise be deductible in a taxable year beginning after December 31, 2012, only the DDR paid by Y in 2013 is subject to the deduction limitation. However, the limitation is applied as if section 162(m)(6) and paragraph (c)(2) of this section were effective for taxable years beginning after December 31, 2009 and before January 1, 2013. Accordingly, the deduction limitation with respect to remuneration for services performed by R in 2010 is determined by reducing the $500,000 deduction limit by the $400,000 of AIR paid to R for 2010 ($500,000 −$400,000). The reduced deduction limit of $100,000 is further reduced to zero by the $50,000 of DDR attributable to services performed by R in Y's 2010 taxable year that is deductible in each of 2011 and 2012 (($100,000 − $50,000 − $50,000). Because the deduction limit is reduced to zero, none of the $100,000 of DDR attributable to services performed by R in Y's 2010 taxable year and paid to R in 2013 is deductible.

(j) ***Effective/applicability dates.*** These regulations are effective on September 23, 2014. The regulations apply to taxable years beginning on or after September 23, 2014.

[T.D, 9694, 79 FR 56904, Sept. 23, 2014]

§ 1.162-32 Expenses paid or incurred for lodging when not traveling away from home.

(a) ***In general.*** Expenses paid or incurred for lodging of an individual who is not traveling away from home (local lodging) generally are personal, living, or family expenses that are nondeductible by the individual under section 262(a). Under certain circumstances, however, local lodging expenses may be deductible under section 162(a) as ordinary and necessary expenses paid or incurred in connection with carrying on a taxpayer's trade or business, including a trade or business as an employee. Whether local lodging expenses are paid or incurred in carrying on a taxpayer's trade or business is determined under all the facts and circumstances. One factor is whether the taxpayer incurs an expense because of a bona fide condition or requirement of employment imposed by the taxpayer's employer. Expenses paid or incurred for local lodging that is lavish or extravagant under the circumstances or that primarily provides an individual with a social or personal benefit are not incurred in carrying on a taxpayer's trade or business.

(b) ***Safe harbor for local lodging at business meetings and conferences.*** An individual's local lodging expenses will be treated as ordinary and necessary business expenses if—

(1) The lodging is necessary for the individual to participate fully in or be available for a bona fide business meeting, conference, training activity, or other business function;

(2) The lodging is for a period that does not exceed five calendar days and does not recur more frequently than once per calendar quarter;

(3) If the individual is an employee, the employee's employer requires the employee to remain at the activity or function overnight; and

(4) The lodging is not lavish or extravagant under the circumstances and does not provide any significant element of personal pleasure, recreation, or benefit.

(c) ***Examples.*** The provisions of the facts and circumstances test of paragraph (a) of this section are illustrated by the following examples. In each example the employer and the employees meet all other requirements (such as substantiation) for deductibility of the expense and for exclusion from income of the value of the lodging as a working condition fringe or of reimbursements under an accountable plan.

Example 1. (i) Employer conducts a seven-day training session for its employees at a hotel near Employer's main office. The training is directly connected with Employer's trade or business. Some employees attending the training are traveling away from home and some employees are not traveling away from home. Employer requires all employees attending the training to remain at the hotel overnight for the bona fide purpose of facilitating the training. Employer pays the costs of the lodging at the hotel directly to the hotel and does not treat the value as compensation to the employees.
(ii) Because the training is longer than five calendar days, the safe harbor in paragraph (b) of this section does not apply. However, the value of the lodging may be excluded from income if the facts and circumstances test in paragraph (a) of this section is satisfied.

(iii) The training is a bona fide condition or requirement of employment and Employer has a noncompensatory business purpose for paying the lodging expenses. Employer is not paying the expenses primarily to provide a social or personal benefit to the employees, and the lodging Employer provides is not lavish or extravagant. If the employees who are not traveling away from home had paid for their own lodging, the expenses would have been deductible by the employees under section 162(a) as ordinary and necessary business expenses. Therefore, the value of the lodging is excluded from the employees' income as a working condition fringe under section 132(a) and (d).

(iv) Employer may deduct the lodging expenses, including lodging for employees who are not traveling away from home, as ordinary and necessary business expenses under section a162(a).

Example 2. (i) The facts are the same as in *Example 1,* except that the employees pay the cost of their lodging at the hotel directly to the hotel, Employer reimburses the employees for the cost of the lodging, and Employer does not treat the reimbursement as compensation to the employees.
(ii) Because the training is longer than five calendar days, the safe harbor in paragraph (b) of this section does not apply. However, the reimbursement of the expenses for the lodging may be excluded from income if the facts and circumstances test in paragraph (a) of this section is satisfied.

(iii) The training is a bona fide condition or requirement of employment and Employer is reimbursing the lodging expenses for a noncompensatory business purpose and not primarily to provide a social or personal benefit to the employees and the lodging Employer provides is not

lavish or extravagant. The employees incur the expenses in performing services for the employer. If Employer had not reimbursed the employees who are not traveling away from home for the cost of the lodging, the expenses would have been deductible by the employees under section 162(a) as ordinary and necessary business expenses. Therefore, the reimbursements to the employees are made under an accountable plan and are excluded from the employees' gross income.

(iv) Employer may deduct the lodging expense reimbursements, including reimbursements for employees who are not traveling away from home, as ordinary and necessary business expenses under section 162(a).

Example 3. (i) Employer is a professional sports team. Employer requires its employees (for example, players and coaches) to stay at a local hotel the night before a home game to conduct last minute training and ensure the physical preparedness of the players. Employer pays the lodging expenses directly to the hotel and does not treat the value as compensation to the employees.
(ii) Because the overnight stays occur more than once per calendar quarter, the safe harbor in paragraph (b) of this section does not apply. However, the value of the lodging may be excluded from income if the facts and circumstances test in paragraph (a) of this section is satisfied.

(iii) The overnight stays are a bona fide condition or requirement of employment and Employer has a noncompensatory business purpose for paying the lodging expenses. Employer is not paying the lodging expenses primarily to provide a social or personal benefit to the employees and the lodging Employer provides is not lavish or extravagant. If the employees had paid for their own lodging, the expenses would have been deductible by the employees under section 162(a) as ordinary and necessary business expenses. Therefore, the value of the lodging is excluded from the employees' income as a working condition fringe.

(iv) Employer may deduct the expenses for lodging the employees at the hotel as ordinary and necessary business expenses under section 162(a).

Example 4. (i) Employer hires Employee, who currently resides 500 miles from Employer's business premises. Employer pays for temporary lodging for Employee near Employer's business premises while Employee searches for a residence.
(ii) Employer is paying the temporary lodging expense primarily to provide a personal benefit to Employee by providing housing while Employee searches for a residence. Employer incurs the expense only as additional compensation and not for a noncompensatory business purpose. If Employee paid the temporary lodging expense, the expense would not be an ordinary and necessary employee business expense under section 162(a) because the lodging primarily provides a personal benefit to Employee. Therefore, the value of the lodging is includible in Employee's gross income as additional compensation.

(iii) Employer may deduct the lodging expenses as ordinary and necessary business expenses under section 162(a) and § 1.162-25T.

Example 5. (i) Employee normally travels two hours each way between her home and her office. Employee is working on a project that requires Employee to work late hours. Employer provides Employee with lodging at a hotel near the office.
(ii) Employer is paying the temporary lodging expense primarily to provide a personal benefit to Employee by relieving her of the daily commute to her residence. Employer incurs the expense only as additional compensation and not for a noncompensatory business purpose. If Employee paid the temporary lodging expense, the expense would not be an ordinary and necessary business expense under section 162(a) because the lodging primarily provides a personal benefit to Employee. Therefore, the value of the lodging is includible in Employee's gross income as additional compensation.

(iii) Employer may deduct the lodging expenses as ordinary and necessary business expenses under section 162(a) and § 1.162-25T.

Example 6. (i) Employer requires an employee to be “on duty” each night to respond quickly to emergencies that may occur outside of normal working hours. Employees who work daytime hours each serve a “duty shift” once each month in addition to their normal work schedule. Emergencies that require the duty shift employee to respond occur regularly. Employer has no sleeping facilities on its business premises and pays for a hotel room nearby where the duty shift employee stays until called to respond to an emergency.
(ii) Because an employee's expenses for lodging while on the duty shift occur more frequently than once per calendar quarter, the safe harbor in paragraph (b) of this section does not apply. However, the value of the lodging may be excluded from income if the facts and circumstances test in paragraph (a) of this section is satisfied.

(iii) The duty shift is a bona fide condition or requirement of employment and Employer has a noncompensatory business purpose for paying the lodging expenses. Employer is not providing the lodging to duty shift employees primarily to provide a social or personal benefit to the employees and the lodging Employer provides is not lavish or extravagant. If the employees had paid for their lodging, the expenses would have been deductible by the employees under section 162(a) as ordinary and necessary business expenses. Therefore, the value of the lodging is excluded from the employees' income as a working condition fringe.

(iv) Employer may deduct the lodging expenses as ordinary and necessary business expenses under section 162(a).

(d) ***Effective/applicability date.*** This section applies to expenses paid or incurred on or after October 1, 2014. However, taxpayers may apply these regulations to local lodging expenses that are paid or incurred in taxable years for which the period of limitation on credit or refund under section 6511 has not expired.

[T.D. 9696, 79 FR 59113, Oct. 1, 2014]

§ 1.162-33 Certain employee remuneration in excess of $1,000,000 not deductible for taxable years beginning after December 31, 2017.

(a) ***Scope.*** This section provides rules for the application of the $1 million deduction limitation under section 162(m)(1) for taxable years beginning after December 31, 2017. For rules concerning the applicability of section 162(m)(1) to taxable years beginning on or after January 1, 1994, and prior to January 1, 2018, see § 1.162-27. Paragraph (b) of this section provides the general rule limiting deductions under section 162(m)(1). Paragraph (c) of this section provides definitions of generally applicable terms. Paragraph (d) of this section provides rules for determining when a corporation becomes a publicly held corporation. Paragraph (e) of this section provides rules for payments that are subject to section 280G (golden parachute payments). Paragraph (f) of this section provides a special rule for coordination with section 4985 (stock compensation of insiders in expatriated corporations). Paragraph (g) of this section provides transition rules addressing the amendments made by Public Law 115-97, including the rules for contracts that are grandfathered. Paragraph (h) of this section sets forth the effective date provisions. For rules concerning the deductibility of compensation for services that are not covered by section 162(m)(1) and this section, see section 162(a)(1) and § 1.162-7. This section is not determinative as to whether compensation meets the requirements of section 162(a)(1). For rules concerning the deduction limitation under section 162(m)(6) applicable to certain health insurance providers, see § 1.162-31. For purposes of this section, references to an amount being paid to an employee refer to the event that otherwise would result in the availability of a deduction to the employer with respect to such amount, whether that results from an actual payment in cash, transfer of property, or other event.

(b) ***Limitation on deduction.*** Section 162(m)(1) precludes a deduction under chapter 1 of the Internal Revenue Code by any publicly held corporation for compensation paid to any covered employee to the extent that the compensation for the taxable year exceeds $1,000,000.

(c) ***Definitions*** —

(1) ***Publicly held corporation*** —

(i) ***General rule.*** A publicly held corporation means any corporation that issues securities required to be registered under section 12 of the Exchange Act or that is required to file reports under section 15(d) of the Exchange Act. In addition, a publicly held corporation means any S corporation (as defined in section 1361(a)(1)) that issues securities that are required to be registered under section 12(b) of the Exchange Act, or that is required to file reports under section 15(d) of the Exchange Act. For purposes of this section, whether a corporation is publicly held is determined based solely on whether, as of the last day of its taxable year, the securities issued by the corporation are required to be registered under section 12 of the Exchange Act or the corporation is required to file reports under section 15(d) of the Exchange Act. Whether registration under the Exchange Act is required by rules other than those of the Exchange Act is irrelevant to this determination. A publicly traded partnership that is treated as a corporation under section 7704 (or otherwise) is a publicly held corporation if, as of the last day of its taxable year, its securities are required to be registered under section 12 of the Exchange Act or it is required to file reports under section 15(d) of the Exchange Act.

(ii) *Affiliated groups* —

(A) ***In general.*** A publicly held corporation includes an affiliated group of corporations (affiliated group), as defined in section 1504 (determined without regard to section 1504(b)), that includes one or more publicly held corporations (as defined in paragraph (c)(1)(i) of this section). In the case of an affiliated group that includes two or more publicly held corporations as defined in paragraph (c)(1)(i) of this section, each member of the affiliated group that is a publicly held corporation as defined in paragraph (c)(1)(i) of this section is separately subject to this section, and, due to having at least one member that is a publicly held corporation, the affiliated group as a whole is subject to this section. Thus, for example, assume that a publicly held corporation (as defined in paragraph (c)(1)(i) of this section) is a wholly-owned subsidiary of another publicly held corporation (as defined in paragraph (c)(1)(i) of this section), which is a wholly-owned subsidiary of a privately held corporation. In this case, the two subsidiaries are separately subject to this section, and all three corporations are members of an affiliated group that is subject to this section. If an individual is a covered employee of both subsidiaries, each subsidiary has its own $1 million deduction limitation with respect to that covered employee. Furthermore, each subsidiary has its own set of covered employees as defined in paragraphs (c)(2)(i) through (iv) of this section (although the same individual may be a covered employee of both subsidiaries).

(B) ***Proration of amount disallowed as a deduction.*** If, in a taxable year, a covered employee (as defined in paragraphs (c)(2)(i) through (v) of this section) of one member of an affiliated group is paid compensation by more than one member of the affiliated group, compensation paid by each member of the affiliated group is aggregated with compensation paid to the covered employee by all other members of the affiliated group (excluding compensation paid by any other publicly held corporation in the affiliated group, as defined in paragraph (c)(1)(i) of this section, of which the individual is also a covered employee as defined in paragraphs (c)(2)(i) through (v) of this section). In the event that, in a taxable year, a covered employee (as defined in paragraphs (c)(2)(i) through (v) of this section) is paid compensation by more than one publicly held corporation in an affiliated group and is also a covered employee of more than one publicly held payor corporation (as defined in paragraph (c)(1)(i) of this section) in the affiliated group, the amount disallowed as a deduction is determined separately with respect to each publicly held corporation of which the individual is a covered employee. Any amount disallowed as a deduction by this section must be prorated among the payor corporations (excluding any other publicly held payor corporation of which the individual is also a covered employee) in proportion to the amount of compensation paid to the covered employee (as defined in paragraphs (c)(2)(i) through (v) of this section) by each such corporation in the taxable year. For purposes of this paragraph (c)(1)(ii)(B), the amount of compensation treated as paid by a payor corporation that is not a publicly held corporation (as defined in paragraph (c)(1)(i) of this section) is determined by prorating the amount actually paid by that payor corporation in proportion to the total amount paid by all of the publicly held corporations of which the individual is a covered employee (as defined in paragraph (c)(2)(i) through (v) of this section). This process is repeated for each publicly held payor corporation of which the individual is a covered employee.

(iii) ***Disregarded entities.*** For purposes of paragraph (c)(1) of this section, a publicly held corporation includes a corporation that owns an entity that is disregarded as an entity separate from its owner within the meaning of § 301.7701-2(c)(2)(i) of this chapter if the disregarded entity issues securities required to be registered under section 12(b) of the Exchange Act, or is required to file reports under section 15(d) of the Exchange Act.

(iv) ***Qualified subchapter S subsidiaries.*** For purposes of paragraph (c)(1) of this section, a publicly held corporation includes an S corporation that owns a qualified subchapter S subsidiary as defined in section 1361(b)(3)(B) (QSub) if the QSub issues securities required to be registered under section 12(b) of the Exchange Act, or is required to file reports under section 15(d) of the Exchange Act.

(v) ***Qualified real estate investment trust subsidiaries.*** For purposes of paragraph (c)(1) of this section, a publicly held corporation includes a real estate investment trust as defined in section 856(a) that owns a qualified real estate investment trust subsidiary as defined in section 856(i)(2) (QRS), if the QRS issues securities required to be registered under section 12(b) of the Exchange Act or is required to file reports under section 15(d) of the Exchange Act.

(vi) ***Examples.*** The following examples illustrate the provisions of this paragraph (c)(1). For each example, assume that no corporation is a predecessor of a publicly held corporation within the meaning of paragraph (c)(2)(ii) of this section. Furthermore, for each example, unless provided otherwise, a reference to a publicly held corporation means a publicly held corporation as defined in paragraph (c)(1)(i) of this section. Additionally, for each example, assume that the corporation is a calendar-year taxpayer and has a fiscal year ending December 31 for reporting purposes under the Exchange Act. The examples in this paragraph (c)(1)(vi) are not intended to provide guidance on the legal requirements of the Securities Act and Exchange Act and the rules thereunder (17 CFR part 240).

(A) ***Example 1 (Corporation required to file reports under section 15(d) of the Exchange Act)*** —

(*1*) ***Facts.*** Corporation Z plans to issue debt securities in a public offering registered under the Securities Act. Corporation Z is not required to file reports under section 15(d) of the Exchange Act for any other class of securities and does not have another class of securities required to be registered under section 12 of the Exchange Act. On April 1, 2021, the SEC declares effective the Securities Act registration statement for Corporation Z's debt securities. As a result, Corporation Z is required to file reports under section 15(d) of the Exchange Act, and this requirement continues to apply as of December 31, 2021.

(*2*) ***Conclusion.*** Corporation Z is a publicly held corporation for its 2021 taxable year because it is required to file reports under section 15(d) of the Exchange Act as of the last day of its taxable year.

(B) ***Example 2 (Corporation not required to file reports under section 15(d) of the Exchange Act)*** —

(*1*) ***Facts.*** The facts are the same as in paragraph (c)(1)(vi)(A) of this section (*Example 1*), except that, on January 1, 2022, pursuant to section 15(d) of the Exchange Act, Corporation Z's obligation to file reports under section 15(d) is automatically

suspended for the fiscal year ending December 31, 2022, because Corporation Z meets the statutory requirements for an automatic suspension. As of December 31, 2022, Corporation Z is not required to file reports under section 15(d) of the Exchange Act.

(2) ***Conclusion.*** Corporation Z is not a publicly held corporation for its 2022 taxable year because it is not required to file reports under section 15(d) of the Exchange Act as of as of the last day of its taxable year.

(C) ***Example 3 (Corporation not required to file reports under section 15(d) of the Exchange Act)*** —

(1) ***Facts.*** The facts are the same as in paragraph (c)(1)(vi)(B) of this section (*Example 2*), except that, on January 1, 2022, pursuant to section 15(d) of the Exchange Act, Corporation Z's obligation to file reports under section 15(d) is not automatically suspended for the fiscal year ending December 31, 2022. Instead, on May 2, 2022, Corporation Z is eligible to suspend its section 15(d) reporting obligation under 17 CFR 240.12h-3 (Rule 12h-3 under the Exchange Act) and files Form 15, Certification and Notice of Termination of Registration under Section 12(g) of the Securities Exchange Act of 1934 or Suspension of Duty to File Reports under Sections 13 and 15(d) of the Securities Exchange Act of 1934, (or its successor) to suspend its section 15(d) reporting obligation for its fiscal year ending December 31, 2022. As of December 31, 2022, Corporation Z is not required to file reports under section 15(d) of the Exchange Act.

(2) ***Conclusion.*** Corporation Z is not a publicly held corporation for its 2022 taxable year because it is not required to file reports under section 15(d) of the Exchange Act as of the last day of its taxable year. If Corporation Z had not utilized Rule 12h-3 to suspend its section 15(d) reporting obligation, Corporation Z would be a publicly held corporation for its 2022 taxable year because it would have been required to file reports under section 15(d) of the Exchange Act as of the last day of its taxable year.

(D) ***Example 4 (Corporation required to file reports under section 15(d) of the Exchange Act)*** —

(1) ***Facts.*** Corporation Y is a wholly-owned subsidiary of Corporation X, which is required to file reports under the Exchange Act. Corporation Y issued a class of debt securities in a public offering registered under the Securities Act, and therefore is required to file reports under section 15(d) of the Exchange Act for its fiscal year ending December 31, 2020. Corporation Y has no other class of securities registered under the Exchange Act. In its Form 10-K, Annual Report Pursuant to section 13 or section 15(d) of the Securities Exchange Act of 1934, (or its successor) for the 2020 fiscal year, Corporation Y may omit Item 11, Executive Compensation (required by Part III of Form 10-K), which requires disclosure of compensation of certain executive officers, because it is wholly-owned by Corporation X and the other conditions of General Instruction I to Form 10-K are satisfied.

(2) ***Conclusion.*** Corporation Y is a publicly held corporation for its 2020 taxable year because it is required to file reports under section 15(d) of the Exchange Act as of the last day of its taxable year.

(E) ***Example 5 (Corporation not required to file reports under section 15(d) of the Exchange Act and not required to register securities under section 12 of the Exchange Act)*** —

(1) ***Facts.*** Corporation A has a class of securities registered under section 12(g) of the Exchange Act. For its 2020 taxable year, Corporation A is a publicly held corporation. On September 30, 2021, Corporation A is eligible to terminate the registration of its securities under section 12(g) of the Exchange Act pursuant to 17 CFR 240.12g-4(a)(2) (Rule 12g-4(a)(2) under the Exchange Act), but does not terminate the registration of its securities prior to December 31, 2021. Because Corporation A did not issue securities in a public offering registered under the Securities Act, Corporation A is not required to file reports under section 15(d) of the Exchange Act.

(2) ***Conclusion.*** Corporation A is not a publicly held corporation for its 2021 taxable year because, as of the last day of its taxable year, the securities issued by Corporation A are not required to be registered under section 12 of the Exchange Act and Corporation A is not required to file reports under section 15(d) of the Exchange Act.

(F) ***Example 6 (Corporation required to file reports under section 15(d) of the Exchange Act)*** —

(1) ***Facts.*** The facts are the same as in paragraph (c)(1)(vi)(E) of this section (*Example 5*), except that Corporation A previously issued a class of securities in a public offering registered under the Securities Act. Furthermore, on October 1, 2021, Corporation A terminates the registration of its securities under section 12(g) of the Exchange Act. Because Corporation A issued a class of securities in a public offering registered under the Securities Act and is not eligible to suspend its reporting obligation under section 15(d) of the Exchange Act, as of December 31, 2021, Corporation A is required to file reports under section 15(d) of the Exchange Act.

(2) ***Conclusion.*** Corporation A is a publicly held corporation for its 2021 taxable year because it is required to file reports under section 15(d) of the Exchange Act as of the last day of its taxable year.

(G) ***Example 7 (Corporation not required to file reports under section 15(d) of the Exchange Act and not required to register securities under section 12 of the Exchange Act)*** —

(1) ***Facts.*** On November 1, 2021, Corporation B is an issuer with only one class of equity securities. On November 5, 2021, Corporation B files a registration statement for its equity securities under section 12(g) of the Exchange Act. Corporation B's filing of its registration statement is voluntary because the Exchange Act does not require Corporation B to register its class of securities under section 12(g) of the Exchange Act based on the number and composition of its record holders. On December 1, 2021, the SEC declares effective the Exchange Act registration statement for Corporation B's securities. As of December 31, 2021, Corporation B continues to have its class of equity securities registered voluntarily under section 12 of the Exchange Act. Corporation B is not required to file reports under section 15(d) of the Exchange Act because it did not register any class of securities in a public offering under the Securities Act.

(2) ***Conclusion.*** Corporation B is not a publicly held corporation for its 2021 taxable year because, as of the last day of that taxable year, the securities issued by Corporation B are not required to be registered under section 12 of the Exchange Act and Corporation B is not required to file reports under section 15(d) of the Exchange Act.

(H) ***Example 8 (Corporation not required to file reports under section 15(d) of the Exchange Act and not required to register securities under section 12 of the Exchange Act)*** —

(1) ***Facts.*** The facts are the same as in paragraph (c)(1)(vi)(G) of this section (*Example 7*), except that, on December 31, 2022, because of a change in circumstances, Corporation B must register its class of equity securities under section 12(g) of the Exchange Act within 120 days of December 31, 2022. On February 1, 2023, the SEC declares effective the Exchange Act registration statement for Corporation B's securities.

(2) ***Conclusion.*** Corporation B is not a publicly held corporation for its 2022 taxable year because, as of the last day of that taxable year, Corporation B is not required to file reports under section 15(d) of the Exchange Act and the class of equity securities issued by Corporation B is not yet required to be registered under section 12 of the Exchange Act.

(I) ***Example 9 (Securities of foreign private issuer in the form of ADRs traded in the over-the-counter market)*** —

(1) ***Facts.*** For its fiscal and taxable years ending December 31, 2021, Corporation W is a foreign private issuer. Because Corporation W has not registered an offer or sale of securities under the Securities Act, it is not required to file reports under section 15(d) of the Exchange Act. Corporation W qualifies for an exemption from registration of its securities under section 12(g) of the Exchange Act pursuant to 17 CFR 240.12g3-2(b) (Rule 12g3-2(b) under the Exchange Act). Corporation W wishes to have its securities traded in the U.S. in the over-the-counter market in the form of ADRs. Because Corporation W qualifies for an exemption pursuant to Rule 12g3-2(b), Corporation W is not required to register its securities underlying the ADRs under section 12 of the Exchange Act; however, the depositary bank is required to register the ADRs under the Securities Act. Even though the depositary bank is required to register the ADRs under the Securities Act, the registration of the ADRs does not result in either the depositary bank or Corporation W being required to file reports under section 15(d) of the Exchange Act. On February 3, 2021, the SEC declares effective the Securities Act registration statement for the ADRs. On February 4, 2021, Corporation W's ADRs begin trading in the over-the-counter market. On December 31, 2021, the securities of Corporation W are not required to be registered under section 12 of the Exchange Act because Corporation W qualifies for an exemption pursuant to Rule 240.12g3-2(b). Furthermore, on December 31, 2021, Corporation W is not required to file reports under section 15(d) of the Exchange Act.

(2) ***Conclusion.*** Corporation W is not a publicly held corporation for its 2021 taxable year because, as of the last day of that taxable year, the securities underlying the ADRs are not required to be registered under section 12 of the Exchange Act and Corporation W is not required to file reports under section 15(d) of the Exchange Act. The result would be the same if Corporation W had its securities traded in the over-the-counter market other than in the form of ADRs.

(J) ***Example 10 (Securities of foreign private issuer in the form of ADRs quoted on Over the Counter Bulletin Board)*** —

(1) ***Facts.*** The facts are the same as in paragraph (c)(1)(vi)(I) of this section (*Example 9*), except that Corporation W has its securities quoted on the Over the Counter Bulletin Board (OTCBB) in the form of ADRs. Because Corporation W qualifies for an exemption pursuant to 17 CFR 240.12g3-2(b) (Rule 12g3-2(b) under the Exchange

Act), Corporation W is not required to register its securities underlying the ADRs under section 12 of the Exchange Act. However, the depositary bank is required to register the ADRs under the Securities Act. In addition, section 6530(b)(1) of the OTCBB Rules requires that a foreign equity security may be quoted on the OTCBB only if the security is registered with the SEC pursuant to section 12 of the Exchange Act and the issuer of the security is current in its reporting obligations. To comply with the OTCBB Rules, on February 5, 2021, Corporation W files a registration statement for its class of securities underlying the ADRs under section 12(g) of the Exchange Act. On February 26, 2021, the SEC declares effective the Exchange Act registration statement for Corporation W's securities. As of December 31, 2021, Corporation W is subject to the reporting obligations under section 12 of the Exchange Act as a result of the section 12 registration.

(2) ***Conclusion.*** Corporation W is not a publicly held corporation for its 2021 taxable year because, as of the last day of that taxable year, its ADRs and the securities underlying the ADRs are not required by the Exchange Act to be registered under section 12 and Corporation W is not required to file reports under section 15(d) of the Exchange Act. The Securities Act requirement applicable to the bank pursuant to the OTCBB rules is irrelevant. The result would be the same if Corporation W had its securities traded on the OTCBB other than in the form of ADRs.

(K) ***Example 11 (Securities of foreign private issuer in the form of ADRs listed on a national securities exchange without a capital raising transaction)*** —

(1) ***Facts.*** For its fiscal and taxable years ending December 31, 2021, Corporation V is a foreign private issuer. Corporation V wishes to list its securities on the New York Stock Exchange (NYSE) in the form of ADRs without a capital raising transaction. Under the Exchange Act, Corporation V is required to register its securities underlying the ADRs under section 12(b) of the Exchange Act. Because the ADRs and the deposited securities are separate securities, the depositary bank is required to register the ADRs under the Securities Act. On February 2, 2021, the SEC declares effective Corporation V's registration statement under section 12(b) of the Exchange Act in connection with the underlying securities, and the depositary bank's registration statement under the Securities Act in connection with the ADRs. On March 1, 2021, Corporation V's securities begin trading on the NYSE in the form of ADRs. As of December 31, 2021, Corporation V is not required to file reports under section 15(d) of the Exchange Act; however, the securities underlying the ADRs are required to be registered under section 12(b) of the Exchange Act.

(2) ***Conclusion.*** Corporation V is a publicly held corporation for its 2021 taxable year because, as of the last day of that taxable year, the securities underlying the ADRs are required to be registered under section 12 of the Exchange Act. The result would be the same if Corporation V had its securities listed on the NYSE other than in the form of ADRs. The result also would be the same if Corporation V had wished to raised capital during its 2021 taxable year and been required to register the offer of securities underlying the ADRs under the Securities Act and to register the class of those securities under section 12(b) of the Exchange Act, and the depositary bank was required to register the ADRs under the Securities Act.

(L) ***Example 12 (Foreign private issuer incorporates subsidiary in the United States to issue debt securities and subsequently issues a guarantee)*** —

(1) ***Facts.*** For its fiscal and taxable years ending December 31, 2021, Corporation T is a foreign private issuer. Corporation T wishes to access the U.S. capital markets. Corporation T incorporates Corporation U, a wholly-owned subsidiary, in the U.S. to issue debt securities. On January 15, 2021, the SEC declares effective Corporation U's Securities Act registration statement. To enhance Corporation U's credit and the marketability of Corporation U's debt securities, Corporation T issues a guarantee of Corporation U's securities and, as required, registers the guarantee under the Securities Act on Corporation U's registration statement. On December 31, 2021, Corporations T and U are required to file reports under section 15(d) of the Exchange Act.

(2) ***Conclusion.*** Corporations T and U are publicly held corporations for their 2021 taxable years because they are required to file reports under section 15(d) of the Exchange Act as of the last day of their taxable years.

(M) ***Example 13 (Affiliated group comprised of two corporations, one of which is a publicly held corporation)*** —

(1) ***Facts.*** Employee D, a covered employee of Corporation N, receives compensation from, Corporations N and O, members of an affiliated group. Corporation N, the parent corporation, is a publicly held corporation. Corporation O is a direct subsidiary of Corporation N and is a privately held corporation. The total compensation paid to Employee D from the affiliated group members is $3,000,000 for the taxable year, of which Corporation N pays $2,100,000 and Corporation O pays $900,000.

(2) ***Conclusion.*** Because the compensation paid by all affiliated group members is aggregated for purposes of section 162(m)(1), $2,000,000 of the aggregate compensation paid is nondeductible. Corporations N and O each are treated as paying a ratable portion of the nondeductible compensation. Thus, two thirds of each corporation's payment will be nondeductible. Corporation N has a nondeductible compensation expense of $1,400,000 ($2,100,000 × $2,000,000/$3,000,000). Corporation O has a nondeductible compensation expense of $600,000 ($900,000 × $2,000,000/$3,000,000).

(N) ***Example 14 (Affiliated group comprised of two corporations, one of which is a publicly held corporation)*** —

(1) ***Facts.*** The facts are the same as in paragraph (c)(1)(vi)(M) of this section (*Example 13*), except that Corporation O is a publicly held corporation, Corporation N is a privately held corporation, and Employee D is a covered employee of Corporation O (instead of Corporation N).

(2) ***Conclusion.*** The result is the same as in paragraph (c)(1)(vi)(M) of this section (*Example 13*). Even though subsidiary Corporation O is the publicly held corporation, Corporations N and O still comprise an affiliated group. Accordingly, $2,000,000 of the aggregate compensation paid is nondeductible, and Corporations N and O each are treated as paying a ratable portion of the nondeductible compensation.

(O) ***Example 15 (Affiliated group comprised of two publicly held corporations)*** —

(1) ***Facts.*** The facts are the same as in paragraph (c)(1)(vi)(M) of this section (*Example 13*), except that Corporation O is a publicly held corporation. As in paragraph (c)(1)(vi)(M) of this section (*Example 13*), Employee D is not a covered employee of Corporation O.

(2) ***Conclusion.*** The result is the same as in paragraph (c)(1)(vi)(M) of this section (*Example 13*). Even though Corporations N and O each are publicly held corporations, Corporations N and O comprise an affiliated group for purposes of prorating the amount disallowed as a deduction. Accordingly, $2,000,000 of the aggregate compensation paid is nondeductible, and Corporations N and O each are treated as paying a ratable portion of the nondeductible compensation.

(P) ***Example 16 (Affiliated group comprised of two publicly held corporations)*** —

(1) ***Facts.*** The facts are the same as in paragraph (c)(1)(vi)(O) of this section (*Example 15*), except that Employee D also is a covered employee of Corporation O.

(2) ***Conclusion.*** Corporations N and O each are publicly held corporations and separately subject to this section, but also comprise an affiliated group. Because Employee D is a covered employee of both Corporations N and O, each of which is a separate publicly held corporation, the determination of the amount disallowed as a deduction is made separately for each publicly held corporation. Corporation N has a nondeductible compensation expense of $1,100,000 (the excess of $2,100,000 over $1,000,000), and Corporation O has no nondeductible compensation expense because the amount it paid to Employee D did not exceed $1,000,000.

(Q) ***Example 17 (Affiliated group comprised of three corporations, one of which is a publicly held corporation)*** —

(1) ***Facts.*** Employee C, a covered employee of publicly held parent Corporation P, receives compensation from Corporations P, Q, and R, members of an affiliated group. Corporation Q is a direct subsidiary of Corporation P, and Corporation R is a direct subsidiary of Corporation Q. Corporations Q and R both are privately held. The total compensation paid to Employee C from the affiliated group members is $3,000,000 for the taxable year, of which Corporation P pays $1,500,000, Corporation Q pays $900,000, and Corporation R pays $600,000.

(2) ***Conclusion.*** Because the compensation paid by affiliated group members is aggregated for purposes of section 162(m)(1), $2,000,000 of the aggregate compensation paid is nondeductible. Corporations P, Q, and R each are treated as paying a ratable portion of the nondeductible compensation. Thus, two thirds of each corporation's payment will be nondeductible. The nondeductible compensation expense for Corporation P is $1,000,000 ($1,500,000 × $2,000,000/$3,000,000); for Corporation Q is $600,000 ($900,000 × $2,000,000/$3,000,000); and for Corporation R is $400,000 ($600,000 × $2,000,000/$3,000,000).

(R) ***Example 18 (Affiliated group comprised of three corporations, one of which is a publicly held corporation)*** —

(1) ***Facts.*** The facts are the same as in paragraph (c)(1)(vi)(Q) of this section (*Example 17*), except that Corporation Q is a publicly held corporation and Corporation P is a privately held corporation, and Employee C is a covered employee of Corporation Q (instead of Corporation P).

(2) ***Conclusion.*** The result is the same as in paragraph (c)(1)(vi)(Q) of this section (*Example 17*). Even though Corporation Q, the subsidiary, is the publicly held corporation, Corporations P, Q, and R comprise an affiliated group. Accordingly, $2,000,000 of the aggregate compensation paid is nondeductible, and Corporations P, Q, and R each are treated as paying a ratable portion of the nondeductible compensation.

(S) ***Example 19 (Affiliated group comprised of three corporations, two of which are publicly held corporations)*** —

(1) ***Facts.*** The facts are the same as in paragraph (c)(1)(vi)(R) of this section (*Example 18*), except that Corporation R also is a publicly held corporation. As in paragraph (c)(1)(vi)(R) of this section (*Example 18*), Corporation Q is a publicly held corporation, Corporation P is a privately held corporation, and Employee C is a covered employee of Corporation Q but not a covered employee of Corporation R.

(2) ***Conclusion.*** The result is the same as in paragraph (c)(1)(vi)(R) of this section (*Example 18*). Even though Corporation R also is a publicly held corporation, Corporations P, Q, and R comprise an affiliated group. Accordingly, $2,000,000 of the aggregate compensation paid is nondeductible, and Corporations P, Q, and R each are treated as paying a ratable portion of the nondeductible compensation.

(T) ***Example 20 (Affiliated group comprised of three publicly held corporations)*** —

(1) ***Facts.*** The facts are the same as in paragraph (c)(1)(vi)(Q) of this section (*Example 17*), except that Corporations Q and R also are publicly held corporations, and Employee C is a covered employee of both Corporations P and Q but is not a covered employee of Corporation R.

(2) ***Conclusion.*** Even though Corporations P, Q, and R each are publicly held corporations, they comprise an affiliated group. Because Employee C is a covered employee of both Corporations P and Q, the determination of the amount disallowed as a deduction is separately prorated among Corporations P and R and among Corporations Q and R. For each separate calculation of the total amount of the disallowed deduction and the proration of the disallowed deduction, the amount paid by Corporation R is taken into account in proportion to the total compensation paid by Corporations P and Q. With respect to Corporations P and R, $875,000 of the aggregate compensation is nondeductible (the excess of $1,875,000 (the sum of the compensation paid by Corporation P ($1,500,000) and the portion of compensation paid by Corporation R that is treated as allocable to Employee C being a covered employee of Corporation P ($600,000 × $1,500,000/($1,500,000 + $900,000) = $375,000) over the $1,000,000 deduction limitation). Corporations P and R each are treated as paying a ratable portion of the nondeductible compensation. Corporation P has a nondeductible compensation expense of $700,000 ($1,500,000 × $875,000/$1,875,000), and Corporation R has a nondeductible compensation expense of $175,000 ($375,000 × $875,000/$1,875,000). For Corporations Q and R,

$125,000 of the aggregate compensation is nondeductible (the excess of $1,125,000 (the sum of the compensation paid by Corporation Q ($900,000) and the portion of compensation paid by Corporation R that is treated as allocable to Employee C being a covered employee of Corporation Q ($600,000 × $900,000/($1,500,000 + $900,000) = $225,000) over the $1,000,000 deduction limitation). Corporation Q has a nondeductible compensation expense of $100,000 ($900,000 × $125,000/$1,125,000), and Corporation R has a nondeductible compensation expense of $25,000 ($225,000 × $125,000/$1,125,000). The total nondeductible compensation expense for Corporation R is $200,000.

(U) ***Example 21 (Affiliated group comprised of three publicly held corporations)*** —

(1) ***Facts.*** The facts are the same as in paragraph (c)(1)(vi)(T) of this section (*Example 20*), except that Employee C does not receive any compensation from Corporation R.

(2) ***Conclusion.*** Even though Corporations P, Q, and R each are publicly held corporations and separately subject to this section, they comprise an affiliated group. Because Employee C is a covered employee of, and receives compensation from, both Corporations P and Q, each of which is a separate publicly held corporation, the determination of the amount disallowed as a deduction is made separately for Corporations P and Q. Corporation P has a nondeductible compensation expense of $500,000 (the excess of $1,500,000 over $1,000,000), and Corporation Q has no nondeductible compensation expense because the amount it paid to Employee C was below $1,000,000.

(V) ***Example 22 (Affiliated group comprised of three corporations, one of which is a publicly held corporation)*** —

(1) ***Facts.*** The facts are the same as in paragraph (c)(1)(vi)(Q) of this section (*Example 17*), except that Corporation R is a direct subsidiary of Corporation P (and not a direct subsidiary of Corporation Q).

(2) ***Conclusion.*** The result is the same as in paragraph (c)(1)(vi)(Q) of this section (*Example 17*). Corporations P, Q, and R comprise an affiliated group. Accordingly, $2,000,000 of the aggregate compensation paid is nondeductible, and Corporations P, Q, and R each are treated as paying a ratable portion of the nondeductible compensation.

(W) ***Example 23 (Affiliated group comprised of three publicly held corporations)*** —

(1) ***Facts.*** The facts are the same as in paragraph (c)(1)(vi)(V) of this section (*Example 22*), except that Corporations Q and R also are publicly held corporations, and Employee C is a covered employee of both Corporations P and Q but not of Corporation R.

(2) ***Conclusion.*** The result is the same as in paragraph (c)(1)(vi)(V) of this section (*Example 22*). Even though Corporations P, Q, and R each are publicly held corporations, they comprise an affiliated group. Because Employee C is a covered employee of both Corporations P and Q, the amount disallowed as a deduction is prorated separately among Corporations P and R and among Corporations Q and R.

(X) ***Example 24 (Disregarded entity)*** —

(1) ***Facts.*** Corporation G is privately held for its 2020 taxable year. Entity H, a limited liability company, is wholly-owned by Corporation G and is disregarded as an entity separate from its owner under § 301.7701-2(c)(2)(i) of this chapter. As of December 31, 2020, Entity H is required to file reports under section 15(d) of the Exchange Act.

(2) ***Conclusion.*** Because Entity H is required to file reports under section 15(d) of the Exchange Act and is disregarded as an entity separate from its owner, Corporation G is a publicly held corporation for its 2020 taxable year. The result would be the same if Corporation G was a REIT under section 856(a) and Entity H was a QRS under section 856(i)(2).

(2) ***Covered employee*** —

(i) ***General rule.*** Except as provided in paragraph (c)(2)(vi) of this section, with respect to a publicly held corporation as defined in paragraph (c)(1) of this section (without regard to paragraph (c)(1)(ii) of this section), for the publicly held corporation's taxable year, a covered employee means any of the following—

(A) The principal executive officer (PEO) or principal financial officer (PFO) of the publicly held corporation serving at any time during the taxable year, including individuals acting in either such capacity.

(B) The three highest compensated executive officers of the publicly held corporation for the taxable year (other than the principal executive officer or principal financial officer, or an individual acting in such capacity), regardless of whether the executive officer is serving at the end of the publicly held corporation's taxable year, and regardless of whether the executive officer's compensation is subject to disclosure for the last completed fiscal year under the executive compensation disclosure rules under the Exchange Act. For purposes of this paragraph (c)(2)(i)(B), the term “executive officer” means an executive officer as defined in 17 CFR 240.3b-7. The amount of compensation used to identify the three most highly compensated executive officers for the taxable year is determined pursuant to the executive compensation disclosure rules under the Exchange Act (using the taxable year as the fiscal year for purposes of making the determination), regardless of whether the corporation's fiscal year and taxable year end on the same date.

(C) Any individual who was a covered employee of the publicly held corporation (or any predecessor of a publicly held corporation, within the meaning of paragraph (c)(2)(ii) of this section) for any preceding taxable year beginning after December 31, 2016. For taxable years beginning prior to January 1, 2018, covered employees are identified in accordance with the rules in § 1.162-27(c)(2).

(ii) ***Predecessor of a publicly held corporation*** —

(A) ***Publicly held corporations that become privately held.*** For purposes of this paragraph (c)(2)(ii), a predecessor of a publicly held corporation includes a publicly held corporation that, after becoming a privately held corporation, again becomes a publicly held corporation for a taxable year ending before the 36-month anniversary of the due date for the corporation's U.S. Federal income tax return (disregarding any extensions) for the last taxable year for which the corporation was previously publicly held.

(B) ***Corporate reorganizations.*** A predecessor of a publicly held corporation includes a publicly held corporation the stock or assets of which are acquired in a corporate reorganization (as defined in section 368(a)(1)).

(C) ***Corporate divisions.*** A predecessor of a publicly held corporation includes a publicly held corporation that is a distributing corporation (within the meaning of section 355(a)(1)(A)) that distributes the stock of a controlled corporation (within the meaning of section 355(a)(1)(A)) to its shareholders in a distribution or exchange qualifying under section 355(a)(1) (corporate division). The rule of this paragraph (c)(2)(ii)(C) applies only with respect to covered employees of the distributing corporation who begin performing services for the controlled corporation (or for a corporation affiliated with the controlled corporation that receives stock of the controlled corporation in the corporate division) within the period beginning 12 months before and ending 12 months after the distribution.

(D) ***Affiliated groups.*** A predecessor of a publicly held corporation includes any other publicly held corporation that becomes a member of its affiliated group (as defined in paragraph (c)(1)(ii) of this section).

(E) ***Asset acquisitions.*** If a publicly held corporation, including one or more members of an affiliated group as defined in paragraph (c)(1)(ii) of this section (acquiror), acquires at least 80% of the gross operating assets (determined by fair market value on the date of acquisition) of another publicly held corporation (target), then the target is a predecessor of the acquiror. For an acquisition of assets that occurs over time, only assets acquired within a 12-month period are taken into account to determine whether at least 80% of the target's gross operating assets were acquired. However, this 12-month period is extended to include any continuous period that ends on, or begins on, any day during which the acquiror has an arrangement to purchase, directly or indirectly, assets of the target. A shareholder's additions to the assets of target made as part of a plan or arrangement to avoid the application of this subsection to acquiror's purchase of target's assets are disregarded in applying this paragraph (c)(2)(ii)(E). This paragraph (c)(2)(ii)(E) applies only with respect to the target's covered employees who begin performing services for the acquiror (or a corporation affiliated with the acquiror) within the period beginning 12 months before and ending 12 months after the date of the transaction as defined in paragraph (c)(2)(ii)(I) of this section (incorporating any extensions to the 12-month period made pursuant to this paragraph).

(F) ***Predecessor of a predecessor.*** For purposes of this paragraph (c)(2)(ii), a predecessor of a corporation includes each predecessor of the corporation and the predecessor or predecessors of any prior predecessor or predecessors.

(G) ***Corporations that are not publicly held at the time of the transaction and sequential transactions*** —

(*1*) ***Predecessor corporation is not publicly held at the time of the transaction.*** This paragraph (c)(2)(ii)(G)(*1*) applies if a corporation that was previously publicly held (the first corporation) would be a predecessor to another corporation (the second corporation) under the rules of this paragraph (c)(2)(ii) but for the fact that the first corporation is not a publicly held corporation at the time of the relevant transaction (or transactions). If this paragraph (c)(2)(ii)(G)(*1*) applies, the first corporation is a predecessor of a publicly held corporation if the second corporation is a publicly held corporation at the time of the relevant transaction (or transactions) and the relevant

transaction (or transactions) take place during a taxable year ending before the 36-month anniversary of the due date for the first corporation's U.S. Federal income tax return (excluding any extensions) for the last taxable year for which the first corporation was previously publicly held.

(2) ***Second corporation is not publicly held at the time of the transaction.*** This paragraph (c)(2)(ii)(G)(*2*) applies if a corporation that is publicly held (the first corporation) at the time of the relevant transaction (or transactions) would be a predecessor to another corporation (the second corporation) under the rules of this paragraph (c)(2)(ii) but for the fact that the second corporation is not a publicly held corporation at the time of the relevant transaction (or transactions). If this paragraph (c)(2)(ii)(G)(*2*) applies, the first corporation is a predecessor of a publicly held corporation if the second corporation becomes a publicly held corporation for a taxable year ending before the 36-month anniversary of the due date for the first corporation's U.S. Federal income tax return (excluding any extensions) for the first corporation's last taxable year in which the transaction is taken into account.

(3) ***Neither corporation is publicly held at the time of the transaction.*** This paragraph (c)(2)(ii)(G)(*3*) applies if a corporation that was previously publicly held (the first corporation) would be a predecessor to another corporation (the second corporation) under the rules of this paragraph (c)(2)(ii) but for the fact that neither the first corporation nor the second corporation is a publicly held corporation at the time of the relevant transaction (or transactions). If this paragraph (c)(2)(ii)(G)(*3*) applies, the first corporation is a predecessor of a publicly held corporation if the second corporation becomes a publicly held corporation for a taxable year ending before the 36-month anniversary of the due date for the first corporation's U.S. Federal income tax return (excluding any extensions) for the last taxable year for which the first corporation was previously publicly held.

(4) ***Sequential transactions.*** If a corporation that was previously publicly held (the first corporation) would be a predecessor to another corporation (the second corporation) under the rules of this paragraph (c)(2)(ii) but for the fact that the first corporation is (or its assets are) transferred to one or more intervening corporations prior to being transferred to the second corporation, and if each intervening corporation would be a predecessor of a publicly held corporation with respect to the second corporation if the intervening corporation or corporations were publicly held corporations, then paragraphs (c)(2)(ii)(G)(*1*) through (*3*) of this section also apply without regard to the intervening corporations.

(H) ***Elections under sections 336(e) and 338.*** For purposes of this paragraph (c)(2), if a corporation makes an election to treat as an asset purchase either the sale, exchange, or distribution of stock pursuant to regulations under section 336(e) (§§ 1.336-1 through 1.336-5) or the purchase of stock pursuant to regulations under section 338 (§§ 1.338-1 through 1.338-11, 1.338(h)(10)-1, and 1.338(i)-1), the corporation that issued the stock is treated as the same corporation both before and after such transaction.

(I) ***Date of transaction.*** For purposes of this paragraph (c)(2)(ii), the date that a transaction is treated as having occurred is the date on which all events necessary for the transaction to be described in the relevant provision in this paragraph (c)(2)(ii) have occurred.

(J) ***Publicly traded partnership.*** For purposes of applying this paragraph (c)(2)(ii), a publicly traded partnership is a predecessor of a publicly held corporation if under the same facts and circumstances a corporation substituted for the publicly traded partnership would be a predecessor of the publicly held corporation, and at the time of the transaction the publicly traded partnership is treated as a publicly held corporation as defined in paragraph (c)(1)(i) of this section. In making this determination, the rules in paragraphs (c)(2)(ii)(A) through (I) of this section apply by analogy to publicly traded partnerships.

(iii) ***Disregarded entities.*** If a publicly held corporation under paragraph (c)(1) of this section owns an entity that is disregarded as an entity separate from its owner under § 301.7701-2(c)(2)(i) of this chapter, then the covered employees of the publicly held corporation are determined pursuant to paragraphs (c)(2)(i) and (ii) of this section. The executive officers of the entity that is disregarded as an entity separate from its corporate owner under § 301.7701-2(c)(2)(i) of this chapter are neither covered employees of the entity nor of the publicly held corporation unless they meet the definition of covered employee in paragraphs (c)(2)(i) and (ii) of this section with respect to the publicly held corporation, in which case they are covered employees for its taxable year.

(iv) ***Qualified subchapter S subsidiaries.*** If a publicly held corporation under paragraph (c)(1) of this section owns an entity that is a QSub under section 1361(b)(3)(B), then the covered employees of the publicly held corporation are determined pursuant to paragraphs (c)(2)(i) and (ii) of this section. The executive officers of the QSub are neither covered employees of the QSub nor of the publicly held corporation unless they meet the definition of covered employee in paragraphs (c)(2)(i) and (ii) of this section with respect to the publicly held corporation, in which case they are covered employees for the taxable year of the publicly held corporation.

(v) ***Qualified real estate investment trust subsidiaries.*** If a publicly held corporation under paragraph (c)(1) of this section owns an entity that is a QRS under section 856(i)(2), then the covered employees of the publicly held corporation are determined pursuant to paragraphs (c)(2)(i) and (ii) of this section. The executive officers of the QRS are neither covered employees of the QRS nor of the publicly held corporation unless they meet the definition of covered employee in paragraphs (c)(2)(i) and (ii) of this section with respect to the publicly held corporation, in which case they are covered employees for the taxable year of the publicly held corporation.

(vi) ***Covered employee of an affiliated group.*** A person who is identified as a covered employee in paragraphs (c)(2)(i) through (v) of this section for a publicly held corporation's taxable year is also a covered employee for the taxable year of an affiliated group treated as a publicly held corporation pursuant to paragraph (c)(1)(ii) of this section (treatment of an affiliated group).

(vii) ***Examples.*** The following examples illustrate the provisions of this paragraph (c)(2). For each example, assume that the corporation has a taxable year that is a calendar year and has a fiscal year ending December 31 for reporting purposes under the Exchange Act. Also, for each example, unless provided otherwise, assume that none of the employees were covered employees for any taxable year preceding the first taxable year set forth in that example (since being a covered employee for a preceding taxable year would provide a separate, independent basis for classifying that employee as a covered employee for a subsequent taxable year).

(A) ***Example 1 (Covered employees of members of an affiliated group)*** —

(1) ***Facts.*** Corporations A, B, and C are direct wholly-owned subsidiaries of Corporation D. Corporations D and A are each publicly held corporations as of December 31, 2020. Corporations B and C are not publicly held corporations for their 2020 taxable years. Employee E served as the PEO of Corporation D from January 1, 2020, to March 31, 2020. Employee F served as the PEO of Corporation D from April 1, 2020, to December 31, 2020. Employee G served as the PEO of Corporation A for its entire 2020 taxable year. Employee H served as the PEO of Corporation B for its entire 2020 taxable year. Employee I served as the PEO of Corporation C for its entire 2020 taxable year. From April 1, 2020, through September 30, 2020, Employee E served as an advisor (not as a PEO) to Employee I and received compensation from Corporation C for these services. In 2020, all four corporations paid compensation to their respective PEOs.

(2) ***Conclusion (Employees E and F).*** Because both Employees E and F served as the PEO of Corporation D during its 2020 taxable year, both Employees E and F are covered employees of Corporation D for its 2020 and subsequent taxable years.

(3) ***Conclusion (Employee G).*** Because Employee G served as the PEO of Corporation A, Employee G is a covered employee of Corporation A for its 2020 and subsequent taxable years.

(4) ***Conclusion (Employee H).*** Even though Employee H served as the PEO of Corporation B, Employee H is not a covered employee of Corporation B for its 2020 taxable year, because Corporation B is considered a publicly held corporation solely by reason of being a member of an affiliated group as defined in paragraph (c)(1)(ii) of this section.

(5) ***Conclusion (Employee I).*** Even though Employee I served as the PEO of Corporation C, Employee I is not a covered employee of Corporation C for its 2020 taxable year, because Corporation C is considered a publicly held corporation solely by reason of being a member of an affiliated group as defined in paragraph (c)(1)(ii) of this section.

(B) ***Example 2 (Covered employees of a publicly held corporation)*** —

(1) ***Facts.*** Corporation J is a publicly held corporation. Corporation J is not a smaller reporting company or emerging growth company for purposes of reporting under the Exchange Act. For 2020, Employee K served as the sole PEO of Corporation J and Employees L and M both served as the PFO of Corporation J at separate times during the year. Employees N, O, and P were, respectively, the first, second, and third highest compensated executive officers of Corporation J for 2020 other than the PEO and PFO, and all three retired before December 31, 2020. Employees Q, R, and S were, respectively, Corporation J's fourth, fifth, and sixth highest compensated executive officers other than the PEO and PFO for 2020, and all three were serving as of December 31, 2020. On March 1, 2021, Corporation J filed its Form 10-K, Annual Report Pursuant to Section 13 or 15(d) of the Securities Exchange Act of 1934 with the SEC. With respect to Item 11, Executive Compensation (as required by Part III of Form 10-K, or its successor), Corporation J disclosed the compensation of Employee K for serving as the PEO, Employees L and M for serving as the PFO, and Employees

Q, R, and S pursuant to 17 CFR 229.402(a)(3)(iii) (Item 402 of Regulation S-K). Corporation J also disclosed the compensation of Employees N and O pursuant to 17 CFR 229.402(a)(3)(iv) (Item 402 of Regulation S-K).

(2) ***Conclusion (Employee K).*** Because Employee K served as the PEO during 2020, Employee K is a covered employee for Corporation J's 2020 taxable year.

(3) ***Conclusion (Employees L and M).*** Because Employees L and M served as the PFO during 2020, Employees L and M are covered employees for Corporation J's 2020 taxable year.

(4) ***Conclusion (Employees N, O, P, Q, R, and S).*** Even though the executive compensation disclosure rules under the Exchange Act require Corporation J to disclose the compensation of Employees N, O, Q, R, and S for 2020, Corporation J's three highest compensated executive officers who are covered employees for its 2020 taxable year are Employees N, O, and P, because these are the three highest compensated executive officers other than the PEO and PFO for 2020.

(C) ***Example 3 (Covered employees of a smaller reporting company)*** —

(1) ***Facts.*** The facts are the same as in paragraph (c)(2)(vii)(B) of this section (*Example 2*), except that Corporation J is a smaller reporting company or emerging growth company for purposes of reporting under the Exchange Act. With respect to Item 11, Executive Compensation, Corporation J disclosed the compensation of Employee K for serving as the PEO, Employees Q and R pursuant to 17 CFR 229.402(m)(2)(ii) (Item 402(m) of Regulation S-K), and Employees N and O pursuant to 17 CFR 229.402(m)(2)(iii) (Item 402(m) of Regulation S-K).

(2) ***Conclusion.*** The result is the same as in paragraph (c)(2)(vii)(L) of this section (*Example 2*). For purposes of identifying a corporation's covered employees, it is irrelevant whether the reporting obligation under the Exchange Act for smaller reporting companies and emerging growth companies apply to the corporation, and it is irrelevant whether the specific executive officers' compensation must be disclosed pursuant to the disclosure rules under the Exchange Act applicable to the corporation.

(D) ***Example 4 (Covered employees of a publicly held corporation that is not required to file a Form 10-K)*** —

(1) ***Facts.*** The facts are the same as in paragraph (c)(2)(vii)(B) of this section (*Example 2*), except that on February 4, 2021, Corporation J files Form 15, Certification and Notice of Termination of Registration under Section 12(g) of the Securities Exchange Act of 1934 or Suspension of Duty to File Reports under Sections 13 and 15(d) of the Securities Exchange Act of 1934, (or its successor) to terminate the registration of its securities. Corporation J's duty to file reports under Section 13(a) of the Exchange Act is suspended upon the filing of the Form 15 and, as a result, Corporation J is not required to file a Form 10-K and disclose the compensation of its executive officers for 2020.

(2) ***Conclusion.*** The result is the same as in paragraph (c)(2)(vii)(B) of this section (*Example 2*). Covered employees include executive officers of a publicly held corporation even if the corporation is not required to disclose the compensation of

its executive officers under the Exchange Act. Therefore, Employees K, L, M, N, O, and P are covered employees for 2020. The result would be different if Corporation J filed Form 15 to terminate the registration of its securities prior to December 31, 2020. In that case, Corporation J would not be a publicly held corporation for its 2020 taxable year, and, therefore, Employees K, L, M, N, O, and P would not be covered employees for Corporation J's 2020 taxable year.

(E) ***Example 5 (Covered employees of two publicly held corporations after a corporate transaction)*** —

(1) ***Facts.*** Corporation T is a publicly held corporation for its 2019 taxable year. Corporation U is a privately held corporation for its 2019 and 2020 taxable years. On July 31, 2020, Corporation U acquires for cash 80% of the only class of outstanding stock of Corporation T. The affiliated group (comprised of Corporations U and T) elects to file a consolidated Federal income tax return. As a result of this election, Corporation T has a short taxable year ending on July 31, 2020. Corporation T does not change its fiscal year for reporting purposes under the Exchange Act to correspond to the short taxable year. Corporation T remains a publicly held corporation for its short taxable year ending on July 31, 2020, and its subsequent taxable year ending on December 31, 2020, for which it files a consolidated Federal income tax return with Corporation U. For Corporation T's taxable year ending July 31, 2020, Employee V serves as the only PEO, and Employee W serves as the only PFO. Employees X, Y, and Z are the three most highly compensated executive officers of Corporation T for the taxable year ending July 31, 2020, other than the PEO and PFO. As a result of the acquisition, effective July 31, 2020, Employee V ceases to serve as the PEO of Corporation T. Instead, Employee AA starts serving as the PEO of Corporation T on August 1, 2020. Employee V continues to provide services for Corporation T but never serves as PEO again (or as an individual acting in such capacity). For Corporation T's taxable year ending December 31, 2020, Employee AA serves as the only PEO, and Employee W serves as the only PFO. Employees X, Y, and Z continue to serve as executive officers of Corporation T during the taxable year ending December 31, 2020. Employees BB, CC, and DD are the three most highly compensated executive officers of Corporation T, other than the PEO and PFO, for the taxable year ending December 31, 2020.

(2) ***Conclusion (Employee V).*** Because Employee V served as the PEO during Corporation T's short taxable year ending July 31, 2020, Employee V is a covered employee for Corporation T's short taxable year ending July 31, 2020, even though Employee V's compensation is required to be disclosed pursuant to the executive compensation disclosure rules under the Exchange Act only for the fiscal year ending December 31, 2020. Because Employee V was a covered employee for Corporation T's short taxable year ending July 31, 2020, Employee V is also a covered employee for Corporation T's short taxable year ending December 31, 2020.

(3) ***Conclusion (Employee W).*** Because Employee W served as the PFO during Corporation T's short taxable years ending July 31, 2020, and December 31, 2020, Employee W is a covered employee for both taxable years, even though Employee W's compensation is required to be disclosed pursuant to the executive compensation disclosure rules under the Exchange Act only for the fiscal year ending December 31, 2020. Because Employee W was a covered employee for Corporation

T's short taxable year ending July 31, 2020, Employee W would be a covered employee for Corporation T's short taxable year ending December 31, 2020, even if Employee W did not serve as the PFO during this taxable year.

(4) ***Conclusion (Employee AA).*** Because Employee AA served as the PEO during Corporation T's short taxable year ending December 31, 2020, Employee AA is a covered employee for that short taxable year.

(5) ***Conclusion (Employees X, Y, and Z).*** Employees X, Y, and Z are covered employees for Corporation T's short taxable years ending July 31, 2020, and December 31, 2020. Employees X, Y, and Z are covered employees for Corporation T's short taxable year ending July 31, 2020, because those employees are the three highest compensated executive officers for that short taxable year. Because they were covered employees for Corporation T's short taxable year ending July 31, 2020, Employees X, Y, and Z are covered employees for Corporation T's short taxable year ending December 31, 2020 and would be covered employees for that later short taxable year even if their compensation would not be required to be disclosed pursuant to the executive compensation disclosure rules under the Exchange Act.

(6) ***Conclusion (Employees BB, CC, and DD).*** Employees BB, CC, and DD are covered employees for Corporation T's short taxable year ending December 31, 2020, because those employees are the three highest compensated executive officers for that short taxable year.

(F) ***Example 6 (Predecessor of a publicly held corporation)*** —

(1) ***Facts.*** Corporation EE is a publicly held corporation for its 2021 taxable year. Corporation EE is a privately held corporation for its 2022 and 2023 taxable years. For its 2024 taxable year, Corporation EE is a publicly held corporation.

(2) ***Conclusion.*** For its 2024 taxable year, Corporation EE is a predecessor of a publicly held corporation within the meaning of paragraph (c)(2)(ii)(A) of this section because, after ceasing to be a publicly held corporation, it again became a publicly held corporation for a taxable year ending prior to April 15, 2025. Therefore, for Corporation EE's 2024 taxable year, the covered employees of Corporation EE include the covered employees of Corporation EE for its 2021 taxable year and any additional covered employees determined pursuant to this paragraph (c)(2).

(G) ***Example 7 (Predecessor of a publicly held corporation)*** —

(1) ***Facts.*** The facts are the same as in paragraph (c)(2)(vii)(F) of this section (*Example 6*), except that Corporation EE remains a privately held corporation until it becomes a publicly held corporation for its 2027 taxable year.

(2) ***Conclusion.*** Corporation EE is not a predecessor of a publicly held corporation within the meaning of paragraph (c)(2)(ii)(A) of this section because it became a publicly held corporation for a taxable year ending after April 15, 2025. Therefore, any covered employee of Corporation EE for its 2021 taxable year is not a covered employee of Corporation EE for its 2027 taxable year due to that individual's status as a covered employee of Corporation EE for a preceding taxable year (beginning after December 31, 2016) but may be a covered employee due to that individual's status during the 2027 taxable year.

(H) ***Example 8 (Predecessor of a publicly held corporation that is party to a merger)*** —

(*1*) ***Facts.*** On June 30, 2021, Corporation FF (a publicly held corporation) merged into Corporation GG (a publicly held corporation) in a transaction that qualifies as a reorganization under section 368(a)(1)(A), with Corporation GG as the surviving corporation. As a result of the merger, Corporation FF has a short taxable year ending June 30, 2021. Corporation FF is a publicly held corporation for this short taxable year. Corporation GG does not have a short taxable year and is a publicly held corporation for its 2021 taxable year.

(*2*) ***Conclusion.*** Corporation FF is a predecessor of a publicly held corporation within the meaning of paragraph (c)(2)(ii)(B) of this section. Therefore, any covered employee of Corporation FF for its short taxable year ending June 30, 2021, is a covered employee of Corporation GG for its 2021 taxable year. For Corporation GG's 2021 and subsequent taxable years, the covered employees of Corporation GG include the covered employees of Corporation FF (for a preceding taxable year beginning after December 31, 2016) and any additional covered employees determined pursuant to this paragraph (c)(2).

(I) ***Example 9 (Predecessor of a publicly held corporation that is party to a merger)*** —

(*1*) ***Facts.*** The facts are the same as in paragraph (c)(2)(vii)(H) of this section (*Example 8*), except that, after the merger, Corporation GG is a privately held corporation for its 2021 taxable year.

(*2*) ***Conclusion.*** Because Corporation GG is a privately held corporation for its 2021 taxable year, it is not subject to section 162(m)(1) for this taxable year.

(J) ***Example 10 (Predecessor of a publicly held corporation that is party to a merger)*** —

(*1*) ***Facts.*** The facts are the same as in paragraph (c)(2)(vii)(I) of this section (*Example 9*), except that Corporation GG, becomes a publicly held corporation (as defined in paragraph (c)(1)(i) of this section) on June 30, 2023, and is a publicly held corporation for its 2023 taxable year.

(*2*) ***Conclusion.*** Because Corporation GG became a publicly held corporation for a taxable year ending prior to April 15, 2025, Corporation FF is a predecessor of a publicly held corporation within the meaning of paragraph (c)(2)(ii)(G) of this section. For Corporation GG's 2023 and subsequent taxable years, the covered employees of Corporation GG include the covered employees of Corporation FF (for a preceding taxable year beginning after December 31, 2016) and any additional covered employees determined pursuant to this paragraph (c)(2).

(K) ***Example 11 (Predecessor of a publicly held corporation that is party to a merger)*** —

(*1*) ***Facts.*** The facts are the same as in paragraph (c)(2)(vii)(J) of this section (*Example 10*), except that Corporation FF is a privately held corporation for its taxable year ending June 30, 2021, but was a publicly held corporation for its 2020 taxable year.

(*2*) ***Conclusion.*** Even though Corporation FF was a privately held corporation when it merged with Corporation GG on June 30, 2021, Corporation FF will be a predecessor corporation if Corporation GG becomes a publicly held corporation within a taxable year ending prior to April 15, 2024. Because Corporation GG became a publicly held

corporation for its taxable year ending December 31, 2023, Corporation FF is a predecessor of a publicly held corporation within the meaning of paragraph (c)(2)(ii)(G) of this section. For Corporation GG's 2023 and subsequent taxable years, the covered employees of Corporation GG include the covered employees of Corporation FF (for a preceding taxable year beginning after December 31, 2016) and any additional covered employees determined pursuant to this paragraph (c)(2).

(L) ***Example 12 (Predecessor of a publicly held corporation that is party to a merger and subsequently becomes member of an affiliated group)*** —

(*1*) ***Facts.*** The facts are the same as in paragraph (c)(2)(vii)(J) of this section (*Example 10*), except that, on June 30, 2022, Corporation GG becomes a publicly held corporation by becoming a member of an affiliated group (as defined in paragraph (c)(1)(ii) of this section). Corporation II is the parent corporation of the group and is a publicly held corporation. Employee HH was a covered employee of Corporation FF for its taxable year ending June 30, 2021. On July 1, 2022, Employee HH becomes an employee of Corporation II.

(*2*) ***Conclusion.*** By becoming a member of an affiliated group (as defined in paragraph (c)(1)(ii) of this section) on June 30, 2022, Corporation GG became a publicly held corporation for a taxable year ending prior to April 15, 2025. Therefore, Corporation FF is a predecessor of a publicly held corporation (Corporation GG) within the meaning of paragraph (c)(2)(ii)(G) of this section. Furthermore, Corporation FF is also a predecessor of Corporation II, a publicly held corporation within the meaning of paragraph (c)(2)(ii)(G) of this section. For Corporation II's 2022 and subsequent taxable years, Employee HH is a covered employee of the affiliated group that includes Corporation II because Employee HH was a covered employee of Corporation FF for its taxable year ending June 30, 2021.

(M) ***Example 13 (Predecessor of a publicly held corporation that is party to a merger and subsequently becomes member of an affiliated group)*** —

(*1*) ***Facts.*** The facts are the same as in paragraph (c)(2)(vii)(L) of this section (*Example 12*), except that Corporation FF was a privately held corporation for its taxable year ending June 30, 2021, and Employee HH was a covered employee of Corporation FF for its taxable year ending December 31, 2020.

(*2*) ***Conclusion.*** Even though Corporation FF was a privately held corporation when it merged with Corporation GG on June 30, 2021, Corporation FF will be a predecessor corporation if Corporation GG becomes a publicly held corporation for a taxable year ending prior to April 15, 2024. Because Corporation GG became a publicly held corporation for its 2022 taxable year by becoming a member of an affiliated group (as defined in paragraph (c)(1)(ii) of this section), Corporation FF is a predecessor of a publicly held corporation (Corporation GG) within the meaning of paragraph (c)(2)(ii)(G) of this section. Furthermore, Corporation FF is also a predecessor of Corporation II, a publicly held corporation within the meaning of paragraph (c)(2)(ii)(G) of this section. Therefore, any covered employee of Corporation FF for its 2020 taxable year is a covered employee of the affiliated group that includes Corporation II for its 2022 and subsequent taxable years. For Corporation II's 2022

taxable year, Employee HH is a covered employee of the affiliated group that includes Corporation II because Employee HH was a covered employee of Corporation FF for its 2020 taxable year.

(N) ***Example 14 (Predecessor of a publicly held corporation that is a party to a merger)*** —

(*1*) ***Facts.*** Corporation JJ is a publicly held corporation for its 2019 taxable year and is incorporated in State KK. On June 1, 2019, Corporation JJ formed a wholly-owned subsidiary, Corporation LL. Corporation LL is a publicly held corporation incorporated in State MM. On June 30, 2021, Corporation JJ merged into Corporation LL under State MM law in a transaction that qualifies as a reorganization under section 368(a)(1)(A), with Corporation LL as the surviving corporation. As a result of the merger, Corporation JJ has a short taxable year ending June 30, 2021. Corporation JJ is a publicly held corporation for this short taxable year.

(*2*) ***Conclusion.*** Corporation JJ is a predecessor of a publicly held corporation within the meaning of paragraph (c)(2)(ii)(B) of this section. For Corporation LL's taxable years ending after June 30, 2021, the covered employees of Corporation LL include the covered employees of Corporation JJ for its short taxable year ending June 30, 2021 (as well as preceding taxable years beginning after December 31, 2016) and any additional covered employees determined pursuant to this paragraph (c)(2).

(O) ***Example 15 (Predecessor of a publicly held corporation becomes member of an affiliated group)*** —

(*1*) ***Facts.*** On June 30, 2021, Corporation OO acquires for cash 100% of the only class of outstanding stock of Corporation NN. The affiliated group (comprised of Corporations NN and OO) elects to file a consolidated Federal income tax return. As a result of this election, Corporation NN has a short taxable year ending on June 30, 2021. Corporation NN is a publicly held corporation for its taxable year ending June 30, 2021, and a privately held corporation for subsequent taxable years. On June 30, 2022, Corporation OO completely liquidates Corporation NN. Corporation OO is a publicly held corporation for its 2021 and 2022 taxable years.

(*2*) ***Conclusion.*** After Corporation OO acquired Corporation NN, Corporations NN and OO comprise an affiliated group as defined in paragraph (c)(1)(ii) of this section. Thus, Corporation NN is a predecessor of a publicly held corporation within the meaning of paragraph (c)(2)(ii)(D) of this section. For Corporation OO's taxable years ending after June 30, 2021, the covered employees of Corporation OO include the covered employees of Corporation NN for its short taxable year ending June 30, 2021 (as well as preceding taxable years beginning after December 31, 2016) and any additional covered employees determined pursuant to this paragraph (c)(2).

(P) ***Example 16 (Predecessor of a publicly held corporation becomes member of an affiliated group)*** —

(*1*) ***Facts.*** The facts are the same as in paragraph (c)(2)(vii)(O) of this section (*Example 15*), except that Corporation OO is a privately held corporation on June 30, 2021, and for its 2021 and 2022 taxable years.

(*2*) ***Conclusion.*** Because Corporation OO is a privately held corporation for its 2021 and 2022 taxable years, it is not subject to section 162(m)(1) for these taxable years.

(Q) ***Example 17 (Predecessor of a publicly held corporation becomes member of an affiliated group)*** —

(1) ***Facts.*** The facts are the same as in paragraph (c)(2)(vii)(P) of this section (*Example 16*), except that, on October 1, 2022, the SEC declares effective Corporation OO's Securities Act registration statement in connection with its initial public offering, and Corporation OO is a publicly held corporation for its 2022 taxable year.

(2) ***Conclusion (Taxable Year Ending December 31, 2021).*** Because Corporation OO is a privately held corporation for its 2021 taxable year, it is not subject to section 162(m)(1) for this taxable year.

(3) ***Conclusion (Taxable Year Ending December 31, 2022).*** For the 2022 taxable year, Corporations NN and OO comprise an affiliated group as defined in paragraph (c)(1)(ii) of this section. Corporation NN is a predecessor of a publicly held corporation within the meaning of paragraph (c)(2)(ii)(D) and (G) of this section because Corporation OO became a publicly held corporation for a taxable year ending prior to April 15, 2025. For Corporation OO's 2022 and subsequent taxable years, the covered employees of Corporation OO include the covered employees of Corporation NN for its short taxable year ending June 30, 2021 (as well as preceding taxable years beginning after December 31, 2016) and any additional covered employees determined pursuant to this paragraph (c)(2).

(R) ***Example 18 (Predecessor of a publicly held corporation and asset acquisition)*** —

(1) ***Facts.*** Corporations VV, WW, and XX are publicly held corporations for their 2020 and 2021 taxable years. Corporations VV and WW are members of an affiliated group. Corporation WW is a direct subsidiary of Corporation VV. On June 30, 2021, Corporation VV acquires for cash 40% of the gross operating assets (determined by fair market value as of January 31, 2022) of Corporation XX. On January 31, 2022, Corporation WW acquires an additional 40% of the gross operating assets (determined by fair market value as of January 31, 2022) of Corporation XX. Employees EB, EC, and EA are covered employees for Corporation XX's 2020 taxable year. Employees ED and EF are also covered employees for Corporation XX's 2021 taxable year. On January 15, 2021, Employee EA started performing services as an employee of Corporation WW. On July 1, 2021, Employee EB started performing services as an employee of Corporation WW. On February 1, 2022, Employees EC and ED started performing services as employees of Corporation WW. On June 30, 2023, Employee EF started performing services as an employee of Corporation WW.

(2) ***Conclusion.*** Because an affiliated group, comprised of Corporations VV and WW, acquired 80% of Corporation XX's gross operating assets (determined by fair market value) within a twelve-month period, Corporation XX is a predecessor of a publicly held corporation within the meaning of paragraph (c)(2)(ii)(E) of this section. Therefore, any covered employee of Corporation XX for its 2020 and 2021 taxable years (who started performing services as an employee of Corporation WW within the period beginning 12 months before and ending 12 months after the date of the January 31, 2022, acquisition (determined under paragraph (c)(2)(ii)(I) of this section) is a covered employee of Corporation WW for its 2021, 2022, and subsequent taxable years. For Corporation WW's 2021 and subsequent taxable years, the covered employees of Corporation WW include Employee EB and any additional

covered employees determined pursuant to paragraph (c)(2)(i) of this section. For Corporation WW's 2022 and subsequent taxable years, the covered employees of Corporation WW include Employees EB, EC, and ED, and any additional covered employees determined pursuant to this paragraph (c)(2). Because Employee EA started performing services as an employee of Corporation WW before January 31, 2021, Employee EA is not a covered employee of Corporation WW for its 2021 taxable year and subsequent taxable years by reason of paragraph (c)(2)(ii)(E) of this section, but may be a covered employee of Corporation WW by application of other rules in this paragraph (c)(2). Because Employee EF started performing services as an employee of Corporation WW after January 31, 2023, Employee EF is not a covered employee of Corporation WW for its 2023 taxable year by reason of paragraph (c)(2)(ii)(E) of this section, but may be a covered employee of Corporation WW by application of other rules in this paragraph (c)(2).

(S) ***Example 19 (Predecessor of a publicly held corporation and asset acquisition)*** —

(*1*) ***Facts.*** The facts are the same as in paragraph (c)(2)(vii)(R) of this section (*Example 18*), except that Corporations VV and WW are not publicly held corporations on June 30, 2021, or for their 2021 taxable years.

(*2*) ***Conclusion.*** Because Corporations VV and WW are not publicly held corporations for their 2021 taxable years, they are not subject to section 162(m)(1) for their 2021 taxable years.

(T) ***Example 20 (Predecessor of a publicly held corporation and asset acquisition)*** —

(*1*) ***Facts.*** The facts are the same as in paragraph (c)(2)(vii)(R) of this section (*Example 18*), except that, on October 1, 2022, the SEC declares effective Corporation VV's Securities Act registration statement in connection with its initial public offering, and Corporation VV is a publicly held corporation for its 2022 taxable year.

(*2*) ***Conclusion (2021 taxable year).*** Because Corporations VV and WW are not publicly held corporations for their 2021 taxable years, they are not subject to section 162(m)(1) for their 2021 taxable years.

(*3*) ***Conclusion (2022 taxable year).*** Corporation XX is a predecessor of a publicly held corporation within the meaning of paragraphs (c)(2)(ii)(E) and (G) of this section because a member of the affiliated group comprised of Corporations VV and WW acquired 80% of Corporation XX's gross operating assets (determined by fair market value) within a twelve-month period ending on January 31, 2022, and the parent of the affiliated group, Corporation VV, subsequently became a publicly held corporation for a taxable year ending prior to April 15, 2024. Therefore, any covered employee of Corporation XX for its 2020 and 2021 taxable years (who started performing services as an employee of Corporation WW within the period beginning 12 months before and ending 12 months after the acquisition) is a covered employee of the affiliated group comprised of Corporations VV and WW for its 2022 and subsequent taxable years. For Corporation WW's 2022 and subsequent taxable years, the covered employees of Corporation WW include Employees EB, EC, and ED, and any additional covered employees determined pursuant to this paragraph (c)(2).

(U) ***Example 21 (Predecessor of a publicly held corporation and a division)*** —

(1) ***Facts.*** Corporation CA is a publicly held corporation for its 2021 and 2022 taxable years. On March 2, 2021, Corporation DDD forms a wholly-owned subsidiary, Corporation CB, and transfers assets to it. On April 1, 2022, Corporation CA distributes all shares of Corporation CB to its shareholders in a transaction described in section 355(a)(1). On April 1, 2022, the SEC declares effective Corporation CB's Securities Act registration statement in connection with its initial public offering. Corporation CB is a publicly held corporation for its 2022 taxable year. Employee EG serves as the PFO of Corporation CA from January 1, 2022, to March 31, 2022. On April 2, 2022, Employee EG starts performing services as an employee of Corporation CB advising the PFO of Corporation CB. After March 31, 2022, Employee EG ceases to provide services for Corporation CA.

(2) ***Conclusion.*** Because the distribution of the stock of Corporation CB is a transaction described under section 355(a)(1), Corporation CA is a predecessor of Corporation CB within the meaning of paragraph (c)(2)(ii)(C) of this section. Because Employee EG was a covered employee of Corporation CA for its 2022 taxable year, Employee ED is a covered employee of Corporation CB for its 2022 taxable year. The result is the same whether Employee EG performs services as an advisor for Corporation CB as an employee or an independent contractor.

(V) ***Example 22 (Predecessor of a publicly held corporation and a division)*** —

(1) ***Facts.*** The facts are the same as in paragraph (c)(2)(vii)(U) of this section (*Example 21*), except that Corporation CA distributes 100% of the shares of Corporation CB to Corporation CD in exchange for all of Corporation CD's stock in Corporation CA in a transaction described in section 355(a)(1) and Corporation CB does not register any class of securities with the SEC. Also, Employee EG performs services as an employee of Corporation CD instead of as an employee of Corporation CB. Corporation CD is a privately held corporation for its 2022 taxable year. On October 1, 2023, the SEC declares effective Corporation CD's Securities Act registration statement in connection with its initial public offering. Corporation CD is a publicly held corporation for its 2023 taxable year. On January 1, 2028, Employee EG starts performing services as an employee of Corporation CA. Corporation CA is a publicly held corporation for its 2028 taxable year.

(2) ***Conclusion (2022 taxable year).*** Because Corporation CD is a privately held corporation for its 2022 taxable year, it is not subject to section 162(m)(1) for this taxable year.

(3) ***Conclusion (2023 taxable year).*** Because the exchange of the stock of Corporation CB for the stock of Corporation CA is a transaction described in section 355(a)(1), Corporations CB and CD are an affiliated group, and Corporation CD became a publicly held corporation for a taxable year ending prior to April 15, 2026, Corporation CA is a predecessor of Corporation CD within the meaning of paragraphs (c)(2)(ii)(D) and (G) of this section. Employee EG was a covered employee of Corporation CA for its 2022 taxable year, and started performing services as an employee of Corporation CD following April 1, 2021, and before April 1, 2023. Therefore, Employee ED is a covered employee of Corporation CD for its 2023 taxable year.

(4) ***Conclusion (2028 taxable year).*** Because Employee EG served as the PFO of Corporation CA from January 1, 2022, to March 31, 2022, Employee EG was a covered employee of Corporation CA for its 2022 taxable year. Because an individual who is a covered employee for a taxable year remains a covered employee for all subsequent taxable years (even after the individual has separated from service), Employee EG is a covered employee of Corporation CA for its 2028 taxable year.

(W) ***Example 23 (Predecessor of a publicly held corporation and a division)*** —

(1) ***Facts.*** The facts are the same as in paragraph (c)(2)(vii)(V) of this section (*Example 22*), except that Employee EG starts performing services as an employee of Corporation CD on June 30, 2023, instead of on April 2, 2022, and never performs services for Corporation CA after June 30, 2023. Furthermore, on June 30, 2023, Employee EH, a covered employee of Corporation CB for all of its taxable years, starts performing services for Corporation EF as an independent contractor advising its PEO but not serving as a PEO.

(2) ***Conclusion (2023 taxable year).*** Because the exchange of the stock of Corporation CB for the stock of Corporation CA is a transaction described in section 355(a)(1) and Corporation CD became a publicly held corporation for a taxable year ending before April 15, 2026, Corporation CA is a predecessor of Corporation CD within the meaning of paragraphs (c)(2)(ii)(D) and (G) of this section. Even though Employee EG was a covered employee of Corporation CA for its 2022 taxable year, because Employee EG started performing services as an employee of Corporation CD after April 1, 2023, Employee EG is not a covered employee of Corporation CD for its 2023 taxable year under paragraph (c)(2)(ii)(C) of this section. However, Employee EG may be a covered employee of Corporation CD by application of other rules in this paragraph (c)(2). Because Employee EH was a covered employee of Corporation CB for its 2022 taxable year, Employee EH is a covered employee of Corporation CD for its 2023 taxable year.

(X) ***Example 24 (Predecessor of a publicly held corporation and election under section 338(h)(10))*** —

(1) ***Facts.*** Corporation CE is the common parent of a group of corporations filing consolidated returns that includes Corporation CF as a member. Corporation CE wholly-owns Corporation CF, a publicly held corporation within the meaning of paragraph (c)(1)(i) of this section. On June 30, 2021, Corporation CG purchases Corporation CF from Corporation CE. Corporation CE and Corporation CG make a timely election under section 338(h)(10) with respect to the purchase of Corporation CF stock. For its taxable year ending December 31, 2021, Corporation CF continues to be a publicly held corporation within the meaning of paragraph (c)(1)(i) of this section.

(2) ***Conclusion.*** As provided in paragraph (c)(2)(ii)(H) of this section, Corporation CF is treated as the same corporation after the section 338(h)(10) transaction as before the transaction for purposes for purposes of this paragraph (c)(2). Any covered employee of Corporation CF for its short taxable year ending June 30, 2021, is a covered employee of Corporation CF for its short taxable year ending on December 31, 2021, and subsequent taxable years.

(Y) *Example 25 (Disregarded entity)* —

(1) ***Facts.*** Corporation CH is a privately held corporation for its 2020 taxable year. Entity CI is a wholly-owned limited liability company and is disregarded as an entity separate from its owner, Corporation CH, under § 301.7701-2(c)(2)(i) of this chapter. As of December 31, 2020, Entity CI is required to file reports under section 15(d) of the Exchange Act. For the 2020 taxable year, Employee EI is the PEO and Employee EJ is the PFO of Corporation CH. Employees EK, EL, and EM, are the three most highly compensated executive officers of Corporation CH (other than Employees EI and EJ). Employee EN is the PFO of Entity CI and does not perform any policy making functions for Corporation CH. Entity CI has no other executive officers.

(2) ***Conclusion.*** Because Entity CI is disregarded as an entity separate from its owner, Corporation CH, and is required to file reports under section 15(d) of the Exchange Act, Corporation CH is a publicly held corporation under paragraph (c)(1)(iii) of this section for its 2020 taxable year. Even though Employee EN is a PFO of Entity CI, Employee EN is not considered a PFO of Corporation CH under paragraph (c)(2)(iii) of this section. As PEO and PFO, Employees EI and EJ are covered employees of Corporation CH under paragraph (c)(2)(i) of this section. Additionally, as the three most highly compensated executive officers of Corporation CH (other than Employees EI and EJ), Employees EK, EL, and EM also are covered employees of Corporation CH under paragraph (c)(2)(i) of this section for Corporation CH's 2020 taxable year. The result would be the same if Entity CI was not required to file reports under section 15(d) of the Exchange Act and Corporation CH was a publicly held corporation pursuant to paragraph (c)(1)(i) instead of paragraph (c)(1)(iii) of this section.

(Z) *Example 26 (Disregarded entity)* —

(1) ***Facts.*** The facts are the same as in paragraph (c)(2)(vii)(Y) of this section (*Example 25*), except that Employee EN performs a policy making function for Corporation CH. If Corporation CH were subject to the SEC executive compensation disclosure rules, then Employee EN would be treated as an executive officer of Corporation CH pursuant to 17 CFR 240.3b-7 for purposes of determining the three highest compensated executive officers for Corporation CH's 2020 taxable year. Employee EN is compensated more than Employee EK, but less than Employees EL and EM.

(2) ***Conclusion.*** Because Entity CI is disregarded as an entity separate from its owner, Corporation CH, and is required to file reports under section 15(d) of the Exchange Act, Corporation CH is a publicly held corporation under paragraph (c)(1)(iii) of this section for its 2020 taxable year. As PEO and PFO, Employees EI and EJ are covered employees of Corporation CH under paragraph (c)(2)(i) of this section. Employee EN is one of the three highest compensated executive officers for Corporation CH's taxable year. Because Employees EN, EL, and EM are the three most highly compensated executive officers of Corporation CH (other than Employees EI and EJ), they are covered employees of Corporation CH under paragraph (c)(2)(i) of this section for Corporation CH's 2020 taxable year. The result would be the same if Entity CI was not required to file reports under section 15(d) of the Exchange Act and Corporation CH was a publicly held corporation pursuant to paragraph (c)(1)(i) instead of paragraph (c)(1)(iii) of this section.

(AA) ***Example 27 (Individual as covered employee of a publicly held corporation that includes the affiliated group)*** —

(1) ***Facts.*** Corporations CJ and CK are publicly held corporations for their 2020, 2021, and 2022 taxable years. Corporation CK is a direct subsidiary of Corporation CJ. Employee EO is an employee, but not a covered employee (as defined in paragraph (c)(2)(i) of this section), of Corporation CJ for its 2020, 2021, and 2022 taxable years. From April 1, 2020, to September 30, 2020, Employee EO serves as the PFO of Corporation CK. Employee EO does not perform any services for Corporation CK for its 2021 and 2022 taxable years, however, employee EO is a covered employee (as defined in paragraph (c)(2)(i) of this section) of Corporation CK for its 2020, 2021, and 2022 taxable years. For the 2020 taxable year, Employee EO receives compensation of $1,500,000 for services provided to Corporations CJ and CK. Employee EO receives $2,000,000 from Corporation CJ for performing services for Corporation CJ during each of its 2021 and 2022 taxable years. On June 30, 2022, Corporation CK pays $500,000 to Employee EO from a nonqualified deferred compensation plan that complies with section 409A.

(2) ***Conclusion (2020 taxable year).*** Because Employee EO is a covered employee of Corporation CK and because the affiliated group (comprised of Corporations CJ and CK) is a publicly held corporation, Employee EO is a covered employee of the publicly held corporation that is the affiliated group pursuant to paragraph (c)(2)(vi) of this section. Compensation paid by Corporations CJ and CK is aggregated for purposes of section 162(m)(1) and, as a result, $500,000 of the aggregate compensation paid is nondeductible. The result would be the same if Corporation CJ was a privately held corporation for its 2020 taxable year.

(3) ***Conclusion (2021 taxable year).*** Because Employee EO is a covered employee of Corporation CK pursuant to paragraph (c)(2)(i)(C) of this section and because the affiliated group (comprised of Corporations CJ and CK) is a publicly held corporation, Employee EO is a covered employee of the publicly held corporation that is the affiliated group pursuant to paragraph (c)(2)(vi) of this section. Compensation paid by Corporations CJ and CK is aggregated for purposes of section 162(m)(1) and, as a result, $1,000,000 of the aggregate compensation paid is nondeductible. The result would be the same if Corporation CJ was a privately held corporation for its 2021 taxable year.

(4) ***Conclusion (2022 taxable year).*** Because Employee EO is a covered employee of Corporation CK pursuant to paragraph (c)(2)(i)(C) of this section and because the affiliated group (comprised of Corporations CJ and CK) is a publicly held corporation, Employee EO is a covered employee of the publicly held corporation that is the affiliated group pursuant to paragraph (c)(2)(vi) of this section. Compensation paid by Corporations CJ and CK is aggregated for purposes of section 162(m)(1) and, as a result, $1,500,000 of the aggregate compensation paid is nondeductible. The result would be the same if Corporation CJ was a privately held corporation for its 2022 taxable year.

(BB) ***Example 28 (Individual as covered employee of a publicly held corporation that includes the affiliated group)*** —

(1) ***Facts.*** Corporation CL is a publicly held corporation for its 2020 through 2023 taxable years. Corporations CM and CN are direct subsidiaries of Corporation CL and are privately held corporations for their 2020 through 2022 taxable years. Employee EP serves as the PFO of Corporation CL from January 1, 2020 to December 31, 2020, when Employee EP terminates employment from Corporation CL. On January 1, 2021, Employee EP starts performing services as an employee of Corporation CM. In 2021, Employee EP receives compensation from Corporation CM in excess of $1,000,000. On April 1, 2022, Employee EP starts performing services as an employee of Corporation CN. On September 30, 2022, Employee EP terminates employment from Corporations CM and CN. In 2022, Employee EP receives compensation from Corporations CM and CN in excess of $1,000,000. For the 2021 and 2022 taxable years, Employee EP does not serve as either the PEO or PFO of Corporations CM and CN, and is not one of the three highest compensated executive officers (other than the PEO or PFO) of Corporations CM and CN. On April 1, 2023, Corporation CL distributes all the shares of Corporation CM to its shareholders in a transaction described in section 355(a)(1). On April 1, 2023, the SEC declares effective Corporation CM's Securities Act registration statement in connection with its initial public offering. Corporation CM is a publicly held corporation for its 2023 taxable year. On April 2, 2023, Employee EP starts performing services as an employee of Corporation CM but is not an executive officer of Corporation CM.

(2) ***Conclusion (2021 taxable year).*** Employee EP is a covered employee of Corporation CL for the 2020 and subsequent taxable years. Because Employee EP is a covered employee of Corporation CL and because the affiliated group (comprised of Corporations CL, CM, and CN) is a publicly held corporation, Employee EP is a covered employee of the publicly held corporation that is the affiliated group pursuant to paragraph (c)(2)(vi) of this section for the 2020 and subsequent taxable years. Therefore, Corporation CM's deduction for compensation paid to Employee EP for the 2021 taxable year is subject to section 162(m)(1). The result would be the same if Corporation CM was a publicly held corporation as defined in paragraph (c)(1)(i) of this section.

(3) ***Conclusion (2022 taxable year).*** Because Employee EP is a covered employee of Corporation CL and because the affiliated group (comprised of Corporations CL, CM, and CN) is a publicly held corporation, Employee EP is a covered employee of the publicly held corporation that is the affiliated group pursuant to paragraph (c)(2)(vi) of this section. Therefore, Corporation CM's and CN's deduction for compensation paid to Employee EP for the 2022 taxable year is subject to section 162(m)(1). Because the compensation paid by all affiliated group members is aggregated for purposes of section 162(m)(1), $1,000,000 of the aggregate compensation paid is nondeductible. Corporations CM and CN are each treated as paying a ratable portion of the nondeductible compensation. The result would be the same if either Corporation CM or CN (or both) was a publicly held corporation as defined in paragraph (c)(1)(i) of this section.

(4) ***Conclusion (2023 taxable year).*** Because the distribution of the stock of Corporation CM is a transaction described in section 355(a)(1), Corporation CL is a predecessor of Corporation CM within the meaning of paragraph (c)(2)(ii)(C) of this section. However, because Employee EP started performing services as an employee of

Corporation CM on January 1, 2021, and the distribution of stock of Corporation CM did not occur until April 1, 2023, Employee EP is not a covered employee of Corporation CM for its 2023 taxable year.

(3) *Compensation* —

(i) ***In general.*** For purposes of the deduction limitation described in paragraph (b) of this section, compensation means the aggregate amount allowable as a deduction to the publicly held corporation under chapter 1 of the Internal Revenue Code for the taxable year (determined without regard to section 162(m)(1)) for remuneration for services performed by a covered employee in any capacity, whether or not the services were performed during the taxable year. Compensation includes an amount that is includible in the income of, or paid to, a person other than the covered employee (including a beneficiary after the death of the covered employee) for services performed by the covered employee.

(ii) ***Compensation paid by a partnership.*** For purposes of paragraph (c)(3)(i) of this section, compensation includes an amount equal to a publicly held corporation's distributive share of a partnership's deduction for compensation expense attributable to the remuneration paid by the partnership to a covered employee of the publicly held corporation for services performed by the covered employee, including a payment for services under section 707(a) or under section 707(c).

(iii) ***Exceptions.*** Compensation does not include—

(A) Remuneration covered in section 3121(a)(5)(A) through (D) (concerning remuneration that is not treated as wages for purposes of the Federal Insurance Contributions Act);

(B) Remuneration consisting of any benefit provided to or on behalf of an employee if, at the time the benefit is provided, it is reasonable to believe that the employee will be able to exclude it from gross income; or

(C) Salary reduction contributions described in section 3121(v)(1).

(iv) ***Examples.*** The following examples illustrate the provisions of this paragraph (c)(3). For each example, assume that the corporation is a calendar year taxpayer.

(A) *Example 1* —

(*1*) ***Facts.*** Corporation Z is a publicly held corporation for its 2020 taxable year, during which Employee A serves as the PEO of Corporation Z and also serves on the board of directors of Corporation Z. In 2020, Corporation Z paid $1,200,000 to Employee A plus a $50,000 fee for serving as a director of Corporation Z. These amounts are otherwise deductible for Corporation Z's 2020 taxable year.

(*2*) ***Conclusion.*** The $1,200,000 paid to Employee A in 2020 plus the $50,000 director's fee paid to Employee A in 2020 are compensation within the meaning of this paragraph (c)(3). Therefore, Corporation Z's $1,250,000 deduction for the 2020 taxable year is subject to the section 162(m)(1) limit.

(B) *Example 2* —

(*1*) ***Facts.*** Corporation X is a publicly held corporation for its 2020 and all subsequent taxable years. Employee B serves as the PEO of Corporation X for its 2020 taxable year and is a participant in the Corporation X nonqualified retirement plan that meets

the requirements of section 409A. The plan provides for the distribution of benefits over a three-year period beginning after a participant separates from service. Employee B terminates employment in 2021. In 2022, Employee B receives a $75,000 fee for services as a director and $1,500,000 as the first payment under the retirement plan. Employee B continues to serve on the board of directors until 2023 when Employee B dies before receiving the retirement benefit for 2023 and before becoming entitled to any director's fees for 2023. In 2023 and 2024, Corporation X pays the $1,500,000 annual retirement benefits to Person C, a beneficiary of Employee B.

(2) ***Conclusion (2022 Taxable Year).*** In 2022, Corporation X paid Employee B $1,575,000, including $1,500,000 under the retirement plan and $75,000 in director's fees. The retirement benefit and the director's fees are compensation within the meaning of this paragraph (c)(3). Therefore, Corporation X's $1,575,000 deduction for the 2022 taxable year is subject to the section 162(m)(1) limit.

(3) ***Conclusion (2023 and 2024 Taxable Years).*** In 2023 and 2024, Corporation X made payments to Person C of $1,500,000 under the retirement plan. The retirement benefits are compensation within the meaning of this paragraph (c)(3). Therefore, Corporation X's deduction for each annual payment of $1,500,000 for the 2023 and 2024 taxable years is subject to the section 162(m)(1) limit.

(C) ***Example 3*** —

(1) ***Facts.*** Corporation T is a publicly held corporation for its 2021 taxable year. Corporation S is a privately held corporation for its 2021 taxable year. On January 2, 2021, Corporations S and T form a general partnership. Under the partnership agreement, Corporations S and T each have a 50% distributive share of the partnership's income, gain, loss, and deductions. For the taxable year ending December 31, 2021, Employee D, a covered employee of Corporation T, performs services for the partnership, and the partnership pays $800,000 to Employee D for these services, the deduction of $400,000 of which is allocated to Corporation T. Corporation T's $400,000 distributive share of the partnership's deduction is reported separately to Corporation T pursuant to § 1.702-1(a)(8)(iii).

(2) ***Conclusion.*** Because Corporation T's $400,000 distributive share of the partnership's deduction is attributable to the compensation paid by the partnership for services performed by Employee D, a covered employee of Corporation T, the $400,000 is compensation within the meaning of this paragraph (c)(3) and Corporation T's deduction for this expense for its 2021 taxable year is subject to the section 162(m)(1) limit. Corporation T's $400,000 allocation of the partnership's deduction is aggregated with Corporation T's deduction for compensation paid to Employee D, if any, in determining the amount allowable as a deduction to Corporation T for compensation paid to Employee D for Corporation T's 2021 taxable year. The result is the same whether Employee D performs services for the partnership as a common law employee, an independent contractor, or a partner, and whether the payment to Employee D is a payment under section 707(a) or section 707(c).

(4) ***Securities Act.*** The Securities Act means the Securities Act of 1933.

(5) ***Exchange Act.*** The Exchange Act means the Securities Exchange Act of 1934.

(6) ***SEC.*** The SEC means the United States Securities and Exchange Commission.

(7) ***Foreign Private Issuer.*** A foreign private issuer means an issuer as defined in 17 CFR 240.3b-4(c).

(8) ***American Depositary Receipt (ADR).*** An American Depositary Receipt or ADR means a negotiable certificate that evidences ownership of a specified number (or fraction) of a foreign private issuer's securities held by a depositary (typically, a U.S. bank).

(9) ***Privately held corporation.*** A privately held corporation is a corporation that is not a publicly held corporation as defined in paragraph (c)(1) of this section (without regard to paragraph (c)(1)(ii) of this section).

(d) ***Corporations that become publicly held*** —

(1) ***In general.*** In the case of a corporation that was a privately held corporation and then becomes a publicly held corporation, the deduction limitation of paragraph (b) of this section applies to any compensation that is otherwise deductible for the taxable year ending on or after the date that the corporation becomes a publicly held corporation. A corporation is considered to become publicly held on the date that its registration statement becomes effective either under the Securities Act or the Exchange Act. The rules in this section apply to a partnership that becomes a publicly traded partnership that is a publicly held corporation within the meaning of paragraph (c)(1)(i) of this section.

(2) ***Example.*** The following example illustrates the provision of this paragraph (d).

(i) ***Facts.*** In 2021, Corporation E plans to issue debt securities in a public offering registered under the Securities Act. Corporation E is not required to file reports under section 15(d) of the Exchange Act with respect to any other class of securities and does not have another class of securities required to be registered under section 12 of the Exchange Act. On December 18, 2021, the SEC declares effective the Securities Act registration statement for Corporation E's debt securities.

(ii) ***Conclusion.*** Corporation E becomes a publicly held corporation on December 18, 2021 because it is then required to file reports under section 15(d) of the Exchange Act. The deduction limitation of paragraph (b) of this section applies to any compensation that is otherwise deductible for Corporation E's taxable year ending on or after December 18, 2021.

(e) ***Coordination with disallowed excess parachute payments under section 280G.*** The $1,000,000 limitation in paragraph (b) of this section is reduced (but not below zero) by the amount (if any) that would have been included in the compensation of the covered employee for the taxable year but for being disallowed by reason of section 280G. For example, assume that during a taxable year a corporation pays $1,500,000 to a covered employee, of which $600,000 is an excess parachute payment, as defined in section 280G(b)(1), and a deduction for that excess parachute payment is disallowed by reason of section 280G(a). Because the $1,000,000 limitation in paragraph (b) of this section is reduced by the amount of the excess parachute payment, the corporation may deduct $400,000 ($1,000,000−$600,000), and $500,000 of the otherwise deductible amount is nondeductible by reason of section 162(m)(1). Thus $1,100,000 (of the total $1,500,000 payment) is non-deductible, reflecting the disallowance related to the excess parachute payment under section 280G and the application of section 162(m)(1).

(f) ***Coordination with excise tax on specified stock compensation.*** The $1,000,000 limitation in paragraph (b) of this section is reduced (but not below zero) by the amount (if any) of any payment (with respect to such employee) of the tax imposed by section 4985 directly or indirectly by the expatriated corporation (as defined in section 4985(e)(2)) or by any member of the expanded affiliated group (as defined in section 4985(e)(4)) that includes such corporation.

(g) ***Transition rules*** —

(1) ***Amount of compensation payable under a written binding contract that was in effect on November 2, 2017*** —

(i) ***General rule.*** This section does not apply to the deduction for compensation payable under a written binding contract that was in effect on November 2, 2017, and that is not modified in any material respect on or after that date (a grandfathered amount). Instead, section 162(m), as in effect prior to its amendment by Public Law 115-97, applies to limit the deduction for that compensation. Because § 1.162-27 implemented section 162(m) as in effect prior to its amendment by Public Law 115-97, the rules of § 1.162-27 determine the applicability of the deduction limitation under section 162(m) with respect to the payment of a grandfathered amount (including the potential application of the separate grandfathering rules contained in § 1.162-27(h)). Compensation is a grandfathered amount only to the extent that as of November 2, 2017, the corporation was and remains obligated under applicable law (for example, state contract law) to pay the compensation under the contract if the employee performs services or satisfies the applicable vesting conditions. This section applies to the deduction for any amount of compensation that exceeds the grandfathered amount. If a grandfathered amount and non-grandfathered amount are otherwise deductible for the same taxable year and, under the rules of § 1.162-27, the deduction of some or all of the grandfathered amount may be limited (for example, the grandfathered amount does not satisfy the requirements of § 1.162-27(e)(2) through (5) as qualified performance-based compensation), then the grandfathered amount is aggregated with the non-grandfathered amount to determine the deduction disallowance for the taxable year under section 162(m)(1) (so that the deduction limit applies to the excess of the aggregated amount over $1 million).

(ii) ***Contracts that are terminable or cancelable.*** If a written binding contract is renewed after November 2, 2017, this section (and not § 1.162-27) applies to any payments made after the renewal. A written binding contract that is terminable or cancelable by the corporation without the employee's consent after November 2, 2017, is treated as renewed as of the earliest date that any such termination or cancellation, if made, would be effective. Thus, for example, if the terms of a contract provide that it will be automatically renewed or extended as of a certain date unless either the corporation or the employee provides notice of termination of the contract at least 30 days before that date, the contract is treated as renewed as of the date that termination would be effective if that notice were given. Similarly, for example, if the terms of a contract provide that the contract will be terminated or canceled as of a certain date unless either the corporation or the employee elects to renew within 30 days of that date, the contract is treated as renewed by the corporation as of that date (unless the contract is renewed before that date, in which case, it is treated as renewed on the earlier date). Alternatively, if the corporation will remain legally obligated by the terms of a contract beyond a certain date at the sole discretion of the employee, the contract will not be treated as renewed as of that date if the employee exercises the discretion to keep the corporation bound to the contract. A contract is not treated as terminable or cancelable if it can be terminated or canceled only by terminating the employment relationship of the employee. A contract is not treated as renewed

if upon termination or cancellation of the contract the employment relationship continues but would no longer be covered by the contract. However, if the employment continues after the termination or cancellation, payments with respect to the post-termination or post-cancellation employment are not made pursuant to the contract (and, therefore, are not grandfathered amounts).

(iii) ***Compensation payable under a plan or arrangement.*** If a compensation plan or arrangement is a written binding contract in effect on November 2, 2017, the deduction for the amount that the corporation is obligated to pay to an employee pursuant to the plan or arrangement is not subject to this section solely because the employee was not eligible to participate in the plan or arrangement as of November 2, 2017, provided the employee was employed on November 2, 2017, by the corporation that maintained the plan or arrangement, or the employee had the right to participate in the plan or arrangement under a written binding contract as of that date.

(iv) ***Compensation subject to recovery by corporation.*** If the corporation is obligated or has discretion to recover compensation paid in a taxable year only upon the future occurrence of a condition that is objectively outside of the corporation's control, then the corporation's right to recovery is disregarded for purposes of determining the grandfathered amount for the taxable year. Whether or not the corporation exercises its discretion to recover any compensation does not affect the amount of compensation that the corporation remains obligated to pay under applicable law.

(v) ***Compensation payable from an account balance plan*** —

(A) ***In general.*** Except as otherwise provided in this paragraph (g), the grandfathered amount of payments from an account balance plan (as defined in § 1.409A-1(c)(2)(i)(A)) that is a written binding contract in effect as of November 2, 2017, is the amount that the corporation is obligated to pay pursuant to the terms of the account balance plan in effect as of that date, as determined under applicable law. If under the terms of the plan, the corporation is obligated to pay the employee the account balance that is credited with earnings and losses and has no right to terminate or materially amend the plan, then the grandfathered amount would be the account balance as of November 2, 2017, plus any additional contributions and earnings and losses that the corporation is obligated to credit to the account balance in accordance with the terms of the plan as of November 2, 2017, through the date of payment.

(B) ***Account balance plan providing right to terminate.*** If under the terms of the account balance plan in effect as of November 2, 2017, the corporation may terminate the contract and distribute the account balance to the employee, then the grandfathered amount would be the account balance determined as if the corporation had terminated the plan on November 2, 2017 or, if later, the earliest possible date the plan could be terminated in accordance with the terms of the plan (termination date). Whether additional contributions and earnings and losses credited to the account balance after the termination date, through the earliest possible date the account balance could have been distributed to the employee in accordance with the terms of the plan, are grandfathered depends on whether the terms of the plan require the corporation to make those contributions or credit those earnings and losses through that distribution date. Notwithstanding the foregoing, the corporation may treat the account balance as of the

termination date as the grandfathered amount regardless of when the amount is paid and regardless of whether it has been credited with additional contributions or earnings or losses prior to payment.

(C) ***Account balance plan providing right to discontinue future contributions.*** If under the terms of the account balance plan in effect as of November 2, 2017, the corporation has no right to terminate the plan, but may discontinue future contributions and distribute the account balance in accordance with the terms of the plan, then the grandfathered amount would be the account balance determined as if the corporation had exercised the right to discontinue contributions on November 2, 2017, or, if later, the earliest permissible date the corporation could exercise that right in accordance with the terms of the plan (the freeze date). If, after the freeze date, the plan requires the crediting of earnings and losses on the account balance through the payment date, then the earnings and losses credited to the grandfathered account balance would also be grandfathered. Notwithstanding the foregoing, the corporation may treat the account balance as of the freeze date as the grandfathered amount regardless of when the amount is paid and regardless of whether it has been credited with earnings or losses prior to payment.

(vi) ***Compensation payable from a nonaccount balance plan*** —

(A) ***In general.*** Except as otherwise provided in this paragraph (g), the grandfathered amount of payments from a nonaccount balance plan (as defined in § 1.409A-1(c)(2)(i)(C)) that is a written binding contract in effect as of November 2, 2017, is the amount that the corporation is obligated to pay pursuant to the terms of the nonaccount balance plan in effect as of that date, as determined under applicable law. If under the terms of the plan, the corporation is obligated to pay the employee the benefit under the plan and has no right to terminate or materially amend the plan, then the grandfathered amount would be the benefit under the plan as of November 2, 2017, plus any additional accrued benefits that the corporation is obligated to pay in accordance with the terms of the plan as of November 2, 2017, through the date of payment.

(B) ***Nonaccount balance plan providing right to terminate.*** If under the terms of the nonaccount balance plan in effect as of November 2, 2017, the corporation may terminate the plan and distribute the total benefit to the employee, then the grandfathered amount would be the present value of the total benefit (lump sum value) determined as if the corporation had terminated the plan on November 2, 2017 or, if later, the earliest possible date the plan could be terminated in accordance with the terms of the plan (termination date). Whether an increase or decrease in the lump sum value after the termination date, through the earliest possible date the lump sum value could have been distributed to the employee, is grandfathered depends on whether the terms of the plan require the corporation to increase or decrease the lump sum value through the distribution date. For example, if the plan did not require the corporation to make further service or compensation credits, then any increase in the lump sum value for these credits after the termination date is not grandfathered. Notwithstanding the foregoing, the corporation may treat the lump sum value as of the termination date as the grandfathered amount regardless of when the amount is paid and regardless of whether it has increased or decreased prior to payment. For purposes of this paragraph (g)(1)(vi)(B), the lump sum value is determined based on the actuarial methods and assumptions provided in the plan in effect on November 2, 2017, if the assumptions are reasonable, or any reasonable actuarial assumptions if the plan does not provide for applicable actuarial methods and assumptions or the terms of

the plan were not reasonable. The determination of the lump sum value may not take into account the likelihood that payments will not be made (or will be reduced) because of the unfunded status of the plan, the risk that the employer, the trustee, or another party will be unwilling or unable to pay, the possibility of future plan amendments, the possibility of a future change in the law, or similar risks or contingencies. If the benefit provided under the plan in effect on November 2, 2017, is paid as a life annuity or other form of benefit that is not a single lump sum payment, the application of the grandfathered amount to the payments of the benefit is determined in accordance with the ordering rule of paragraph (g)(1)(viii) of this section.

(C) ***Nonaccount balance plan providing right to discontinue future accrual of benefits.*** If under the terms of the nonaccount balance plan in effect as of November 2, 2017, the corporation has no right to terminate the plan, but may discontinue future accruals of benefits and distribute the benefit in accordance with the terms of the plan, then the grandfathered amount would be the lump sum value of the total benefit (lump sum value) determined as if the corporation had exercised the right to discontinue the future accrual of benefits on November 2, 2017, or, if later, the earliest permissible date the corporation could exercise such right in accordance with the terms of the plan (the freeze date). If, after the freeze date, the plan required the corporation to increase or decrease the lump sum value through the payment date, then any increase to the grandfathered lump sum would also be grandfathered. Notwithstanding the foregoing, the corporation may treat the lump sum value determined as of the freeze date as the grandfathered amount regardless of when the amount is paid and regardless of whether it has been increased or decreased prior to payment. For purposes of this paragraph (g)(1)(vi)(C), the lump sum value is determined based on the actuarial methods and assumptions provided in the plan in effect on November 2, 2017, if the assumptions are reasonable, or any reasonable actuarial assumptions if the plan does not provide for applicable actuarial methods and assumptions or the terms of the plan were not reasonable. The determination of the lump sum value may not take into account the likelihood that payments will not be made (or will be reduced) because of the unfunded status of the plan, the risk that the employer, the trustee, or another party will be unwilling or unable to pay, the possibility of future plan amendments, the possibility of a future change in the law, or similar risks or contingencies. If the benefit paid under the plan in effect on November 2, 2017, is paid as a life annuity or other form of benefit that is not a single lump sum payment, the application of the grandfathered amount to the payments of the benefit is determined in accordance with the ordering rule of paragraph (g)(1)(viii) of this section.

(vii) ***Grandfathered amount limited to a particular plan or arrangement.*** The grandfathered amount under a plan or arrangement applies solely to the amounts paid under that plan or arrangement, so that regardless of whether all of the grandfathered amount is paid to the participant (for example, regardless of whether some or all of the grandfathered amount under the plan is forfeited under the terms of the plan), no portion of that grandfathered amount may be treated as a grandfathered amount under any other separate plan or arrangement in which the employee is a participant.

(viii) ***Ordering rule.*** If a portion of the amount payable under a plan or arrangement is a grandfathered amount and a portion is subject to this section, and payment under the plan or arrangement is made in a series of payments (including payments as a life annuity), the grandfathered amount is allocated to the first payment of an amount under the plan or arrangement that is otherwise

deductible. If the grandfathered amount exceeds the initial payment, the excess is allocated to the next payment of an amount under the plan or arrangement that is otherwise deductible, and this process is repeated until the entire grandfathered amount has been paid. Notwithstanding the foregoing, for amounts otherwise deductible for taxable years ending before December 20, 2019, the grandfathered amount may be allocated to each payment on a pro rata basis or to the last otherwise deductible payment. If one of these two methods was used for taxable years ending before December 20, 2019, then, for taxable years ending on or after December 20, 2019, the method must be changed to allocate any remaining grandfathered amount to the first payment for the remaining payments (treating as the first payment the first otherwise deductible amount for taxable years ending on or after December 20, 2019).

(2) ***Material modifications.***

(i) If a written binding contract is modified on or after November 2, 2017, this section (and not § 1.162-27) applies to any payments made after the modification. A material modification occurs when the contract is amended to increase the amount of compensation payable to the employee. If a written binding contract is materially modified, it is treated as a new contract entered into as of the date of the material modification. Thus, amounts received by an employee under the contract before a material modification are not affected, but amounts received subsequent to the material modification are treated as paid pursuant to a new contract, rather than as paid pursuant to a written binding contract in effect on November 2, 2017.

(ii) A modification of the contract that accelerates the payment of compensation is a material modification unless the amount of compensation paid is discounted to reasonably reflect the time value of money. If the contract is modified to defer the payment of compensation, any compensation paid or to be paid that is in excess of the amount that was originally payable to the employee under the contract will not be treated as resulting in a material modification if the additional amount is based on applying to the amount originally payable either a reasonable rate of interest or the rate of return on a predetermined actual investment as defined in § 31.3121(v)(2)-1(d)(2)(i)(B) of this chapter (whether or not assets associated with the amount originally owed are actually invested therein) such that the amount payable by the employer at the later date will be based on the reasonable rate of interest or the actual rate of return on the predetermined actual investment (including any decrease, as well as any increase, in the value of the investment). For an arrangement under which the grandfathered amounts are subject to increase or decrease based on the performance of a predetermined actual investment, the addition or substitution of a predetermined actual investment or reasonable interest rate as an investment alternative for amounts deferred is not treated as a material modification. However, a modification of a contract to defer payment of a grandfathered amount that results in payment of additional amounts (such as additional earnings) does not necessarily mean that the additional amounts are grandfathered amounts; for rules concerning the determination of grandfathered amounts see paragraph (g) of this section. Notwithstanding the foregoing, if compensation attributable to an option to purchase stock (other than an incentive stock option described in section 422 or a stock option granted under an employee stock purchase plan described in section 423) or a stock appreciation right is grandfathered, an extension of the exercise period that is extended in compliance with § 1.409A-1(b)(5)(v)(C)(*1*) will not be treated as a material modification and the amount of compensation paid upon the exercise of the stock option or stock appreciation right will be grandfathered.

(iii) The adoption of a supplemental contract or agreement that provides for increased compensation, or the payment of additional compensation, is a material modification of a written binding contract if the facts and circumstances demonstrate that the additional compensation to be paid is based on substantially the same elements or conditions as the compensation that is otherwise paid pursuant to the written binding contract. However, a material modification of a written binding contract does not include a supplemental payment that is equal to or less than a reasonable cost-of-living increase over the payment made in the preceding year under that written binding contract. In addition, the failure, in whole or in part, to exercise negative discretion under a contract does not result in the material modification of that contract (although the existence of the negative discretion under the contract may impact the initial determination of whether amounts under the contract are grandfathered amounts).

(iv) If a grandfathered amount is subject to a substantial risk of forfeiture (as defined in § 1.409A-1(d)), then a modification of the contract that results in a lapse of the substantial risk of forfeiture is not considered a material modification. Furthermore, for compensation received pursuant to the substantial vesting of restricted property, or the exercise of a stock option or stock appreciation right that does not provide for a deferral of compensation (as defined in § 1.409A-1(b)(5)(i) and (ii)), a modification of a written binding contract in effect on November 2, 2017, that results in a lapse of the substantial risk of forfeiture (as defined § 1.83-3(c)) is not considered a material modification.

(3) ***Examples.*** The following examples illustrate the provisions of this paragraph (g). For each example, assume for all relevant years that the corporation is a publicly held corporation within the meaning of paragraph (c)(1) of this section and is a calendar year taxpayer, and is not a “smaller reporting company” or “emerging growth company” for purposes of reporting under the Exchange Act. Furthermore, assume that, for each example, if any arrangement is subject to section 409A, then the arrangement complies with section 409A, and that no arrangement is subject to section 457A.

(i) ***Example 1 (Multi-year agreement for annual salary)*** —

(A) ***Facts.*** On October 2, 2017, Corporation X executed a three-year employment agreement with Employee A for an annual salary of $2,000,000 beginning on January 1, 2018. Employee A serves as the PFO of Corporation X for the 2017 through 2020 taxable years. The agreement provides for automatic extensions after the three-year term for additional one-year periods, unless the corporation exercises its option to terminate the agreement within 30 days before the end of the three-year term or, thereafter, within 30 days before each anniversary date. Termination of the employment agreement does not require the termination of Employee A's employment with Corporation X. Under applicable law, the agreement for annual salary constitutes a written binding contract in effect on November 2, 2017, to pay $2,000,000 of annual salary to Employee A for three years through December 31, 2020.

(B) ***Conclusion.*** If this section applies, Employee A is a covered employee for Corporation X's 2018 through 2020 taxable years. Because the October 2, 2017, employment agreement is a written binding contract to pay Employee A an annual salary of $2,000,000, this section does not apply (and § 1.162-27 does apply) to the deduction for Employee A's annual salary. Pursuant to § 1.162-27(c)(2), Employee A is not a covered employee for Corporation X's 2018 through 2020 taxable years. The deduction for Employee A's annual salary for the 2018 through 2020 taxable years is not subject to section 162(m)(1). However, the employment agreement is treated as renewed on January 1, 2021, unless it

is previously terminated, and the deduction limit of this § 1.162-33 (and not § 1.162-27) will apply to the deduction for any payments made under the employment agreement on or after that date.

(ii) ***Example 2 (Agreement for severance based on annual salary and discretionary bonus)*** —

(A) ***Facts.*** The facts are the same as in paragraph (g)(3)(i) of this section (*Example 1*), except that the employment agreement also requires Corporation X to pay Employee A severance if Corporation X terminates the employment relationship without cause during the term of the agreement. The amount of severance is equal to the sum of two times Employee A's annual salary plus two times Employee A's discretionary bonus (if any) paid within 24 months preceding termination. Under applicable law, the agreement for severance constitutes a written binding contract in effect on November 2, 2017, to pay $4,000,000 (two times Employee A's $2,000,000 annual salary) if Corporation X terminates Employee A's employment without cause during the term of the agreement.

(B) ***Conclusion.*** If this section applies, Employee A is a covered employee for Corporation X's 2018 through 2020 taxable years. Because the October 2, 2017, employment agreement is a written binding contract to pay Employee A $4,000,000 if Employee A is terminated without cause prior to December 31, 2020, this section does not apply (and § 1.162-27 does apply) to the deduction for $4,000,000 of Employee A's severance. Pursuant to § 1.162-27(c)(2), Employee A is not a covered employee for Corporation X's 2018 through 2020 taxable years. The deduction for $4,000,000 of Employee A's severance is not subject to section 162(m)(1). However, the employment agreement is treated as renewed on January 1, 2021, unless it is previously terminated, and this § 1.162-33 (and not § 1.162-27) will apply to the deduction for any payments made under the employment agreement, including for severance, on or after that date.

(iii) ***Example 3 (Effect of discretionary bonus payment on agreement for severance based on annual salary and discretionary bonus)*** —

(A) ***Facts.*** The facts are the same as in paragraph (g)(3)(ii) of this section (*Example 2*), except that, on October 31, 2017, Corporation X paid Employee A a discretionary bonus of $100,000, on May 14, 2018, Corporation X paid Employee A a discretionary bonus of $600,000, and on April 30, 2019, terminated Employee A's employment without cause. Pursuant to the terms of the employment agreement for severance, on May 1, 2019, Corporation X paid to Employee A a $5,400,000 severance payment (the sum of two times the $2,000,000 annual salary, two times the $100,000 discretionary bonus, and two times the $600,000 discretionary bonus).

(B) ***Conclusion.*** If this section applies, Employee A is a covered employee for Corporation X's 2019 taxable year. Because the October 2, 2017, agreement is a written binding contract to pay Employee A $4,000,000 if Employee A is terminated without cause prior to December 31, 2020, and $200,000 if Corporation X terminates Employee A's employment without cause prior to October 31, 2019, this section does not apply (and § 1.162-27 does apply) to the deduction for $4,200,000 of Employee A's severance payment. The deduction for $4,200,000 of Employee A's severance payment is not subject to section 162(m)(1). Because the October 2, 2017, agreement is not a written binding contract to pay Employee A's $600,000 discretionary bonus (since, as of November 2, 2017, Corporation X was not obligated under applicable law to make the bonus payment), the deduction for $1,200,000 of the $5,400,000 payment is subject to this section (and not § 1.162-27).

(iv) *Example 4 (Effect of adjustment to annual salary on severance)* —

(A) ***Facts.*** The facts are the same as in paragraph (g)(3)(ii) of this section (*Example 2*), except that the employment agreement provides for discretionary increases in salary and, on January 1, 2019, Corporation X increased Employee A's annual salary from $2,000,000 to $2,050,000, an increase that was less than a reasonable, cost-of-living adjustment.

(B) ***Conclusion (Annual salary).*** If this section applies, Employee A is a covered employee for Corporation X's 2018 through 2020 taxable years. Because the October 2, 2017, agreement is a written binding contract to pay Employee A an annual salary of $2,000,000, this section does not apply (and § 1.162-27 does apply) to the deduction for Employee A's annual salary unless the change in the salary is a material modification. Even though the $50,000 increase is paid on the basis of substantially the same elements or conditions as the salary that is otherwise paid under the contract, the $50,000 increase does not constitute a material modification because it is less than or equal to a reasonable cost-of-living increase to the $2,000,000 annual salary Corporation X is required to pay under applicable law as of November 2, 2017. However, the deduction for the $50,000 increase is subject to this section (and not § 1.162-27).

(C) ***Conclusion (Severance payment).*** Because the October 2, 2017, agreement is a written binding contract to pay Employee A severance of $4,000,000, this section would not apply (and § 1.162-27 would apply) to the deduction for this amount of severance unless the change in the employment agreement is a material modification. Even though the $100,000 increase in severance (two times the $50,000 increase in salary) would be paid on the basis of substantially the same elements or conditions as the severance that would otherwise be paid pursuant to the written binding contract, the $50,000 increase in salary on which it is based does not constitute a material modification of the written binding contract since it is less than or equal to a reasonable cost-of-living increase. However, the deduction for the $100,000 increase in severance is subject to this section (and not § 1.162-27).

(v) *Example 5 (Effect of adjustment to annual salary on severance)* —

(A) ***Facts.*** The facts are the same as in paragraph (g)(3)(iv) of this section (*Example 4*), except that, on January 1, 2019, Corporation X increased Employee A's annual salary from $2,000,000 to $3,000,000, an increase that exceeds a reasonable, cost-of-living adjustment.

(B) ***Conclusion (Annual salary).*** If this section applies, Employee A is a covered employee for Corporation X's 2018 through 2020 taxable years. Because the October 2, 2017, agreement is a written binding contract to pay Employee A an annual salary of $2,000,000, this section does not apply (and § 1.162-27 does apply) to the deduction for Employee A's annual salary unless the change in the employment agreement is a material modification. The $1,000,000 increase is a material modification of the written binding contract because the additional compensation is paid on the basis of substantially the same elements or conditions as the compensation that is otherwise paid pursuant to the written binding contract, and it exceeds a reasonable, annual cost-of-living increase from the $2,000,000 annual salary for 2018 that Corporation X is required to pay under applicable law as of November 2, 2017. Because the written binding contract is materially modified as of January 1, 2019, the deduction for all annual salary paid to Employee A in 2019 and thereafter is subject to this section (and not § 1.162-27).

(C) ***Conclusion (Severance payment).*** Because the October 2, 2017, agreement is a written binding contract to pay Employee A severance of $4,000,000, this section would not apply (and § 1.162-27 would apply) to the deduction for this amount of severance unless the change in the employment agreement is a material modification. The additional $2,000,000 severance payment (two times the $1,000,000 increase in annual salary) constitutes a material modification of the written binding contract because the $1,000,000 increase in salary on which it is based constitutes a material modification of the written binding contract since it exceeds a reasonable cost-of-living increase from the $2,000,000 annual salary for 2018 that Corporation X is required to pay under applicable law as of November 2, 2017. Because the agreement is materially modified as of January 1, 2019, the deduction for any amount of severance paid to Employee A under the agreement is subject to this section (and not § 1.162-27).

(vi) ***Example 6 (Elective deferral of an amount that corporation was obligated to pay under applicable law)*** —

(A) ***Facts.*** The facts are the same as in paragraph (g)(3)(i) of this section (*Example 1*), except that, on December 15, 2018, Employee A makes a deferral election under a nonqualified deferred compensation (NQDC) plan to defer $200,000 of annual salary earned and payable in 2019. Pursuant to the NQDC plan, the $200,000, including earnings, is to be paid in a lump sum on the date six months following Employee A's separation from service. The earnings are based on the Standard & Poor's 500 Index. Under applicable law, pursuant to the written binding contract in effect on November 2, 2017, (and absent the deferral agreement) Corporation X would have been obligated to pay $200,000 to Employee A in 2019, but is not obligated to pay any earnings on the $200,000 deferred pursuant to the deferral election Employee A makes on December 15, 2018. Employee A separates from service on December 15, 2020. On June 15, 2021, Corporation X pays $250,000 (the deferred $200,000 of salary plus $50,000 in earnings).

(B) ***Conclusion.*** If this section applies, Employee A is a covered employee for Corporation X's 2021 taxable year. Employee A's NQDC plan is not a material modification of the written binding contract in effect on November 2, 2017, because the earnings to be paid under the NQDC plan are based on a predetermined actual investment (as defined in § 31.3121(v)(2)-1(d)(2)(i)(B) of this chapter). The deduction for the $50,000 of earnings to be paid that exceed the amount originally payable to Employee A under the written binding contract ($200,000 of salary) are subject to this section (and not § 1.162-27). This section does not apply (and § 1.162-27 does apply) to the deduction for the $200,000 portion of the $250,000 payment that Corporation X was obligated under applicable law to pay as of November 2, 2017. Pursuant to § 1.162-27(c)(2), Employee A is not a covered employee for Corporation X's 2021 taxable year; thus, the deduction for the $200,000 payment is not subject to section 162(m)(1).

(vii) ***Example 7 (Compensation subject to discretionary recovery by corporation)*** —

(A) ***Facts.*** Employee B serves as the PFO of Corporation Z for its 2017 through 2019 taxable years. On October 2, 2017, Corporation Z executed a bonus agreement with Employee B that requires Corporation Z to pay Employee B a performance bonus of $3,000,000 on May 1, 2019, if Corporation Z's net earnings increase by at least 10% for its 2018 taxable year based on the financial statements filed with the SEC. The agreement does not permit Corporation Z to reduce the amount of the bonus payment for any reason if the

Corporation Z attains the net earnings performance target. However, the agreement provides that, if the bonus is paid and subsequently the financial statements are restated to show that the net earnings did not increase by at least 10%, then Corporation Z may, in its discretion, recover the $3,000,000 from Employee B within six months of the restatement. Under applicable law, the agreement for the performance bonus constitutes a written binding contract in effect on November 2, 2017, to pay $3,000,000 to Employee B if Corporation Z's net earnings increase by at least 10% for its 2018 taxable year based on the financial statements filed with the SEC. On May 1, 2019, Corporation Z pays $3,000,000 to Employee B because its net earnings increased by at least 10% of its 2018 taxable year.

(B) ***Conclusion.*** If this section applies, Employee B is a covered employee for Corporation Z's 2019 taxable year. Because the October 2, 2017, agreement is a written binding contract to pay Employee B $3,000,000 if the applicable conditions are met, this section does not apply (and § 1.162-27 does apply) to the deduction for the $3,000,000 regardless of whether Corporation Z's financial statements are restated to show that its net earnings did not increase by at least 10%, and regardless of whether Corporation Z exercises its discretion to recover the bonus if Corporation Z's financial statements are restated to show that its net earnings did not increase by at least 10%.

(viii) ***Example 8 (Performance bonus plan with negative discretion)*** —

(A) ***Facts.*** Employee E serves as the PEO of Corporation V for the 2017 and 2018 taxable years. On February 1, 2017, Corporation V establishes a bonus plan, under which Employee E will receive a cash bonus of $1,500,000 if a specified performance goal is satisfied. The compensation committee retains the right, if the performance goal is met, to reduce the bonus payment to no less than $400,000 if, in its judgment, other subjective factors warrant a reduction. On November 2, 2017, under applicable law, which takes into account the employer's ability to exercise negative discretion, the bonus plan established on February 1, 2017, constitutes a written binding contract to pay $400,000. On March 1, 2018, the compensation committee certifies that the performance goal was satisfied, but exercises its discretion to reduce the award to $500,000. On April 1, 2018, Corporation V pays $500,000 to Employee E. The payment satisfies the requirements of § 1.162-27(e)(2) through (5) as qualified performance-based compensation.

(B) ***Conclusion.*** If this section applies, Employee E is a covered employee for Corporation V's 2018 taxable year. Because the February 1, 2017, plan is a written binding contract to pay Employee E $400,000 if the performance goal is satisfied, this section does not apply (and § 1.162-27 does apply) to the deduction for the $400,000 portion of the $500,000 payment. Furthermore, pursuant to paragraph (g)(2)(iii) of this section, the failure of the compensation committee to exercise its discretion to reduce the award further to $400,000, instead of $500,000, does not result in a material modification of the contract. Pursuant to § 1.162-27(e)(1), the deduction for the $400,000 payment is not subject to section 162(m)(1) because the payment satisfies the requirements of § 1.162-27(e)(2) through (5) as qualified performance-based compensation. The deduction for the remaining $100,000 of the $500,000 payment is subject to this section (and not § 1.162-27) and therefore the status as qualified performance-based compensation is irrelevant to the application of section 162(m)(1) to this remaining amount.

(ix) *Example 9 (Equity-based compensation with underlying grants made prior to November 2, 2017)* —

(A) ***Facts.*** On January 2, 2017, Corporation T executed a 4-year employment agreement with Employee G to serve as its PEO, and Employee G serves as the PEO for the four-year term. Pursuant to the employment agreement, on January 2, 2017, Corporation T executed a grant agreement and granted to Employee G nonqualified stock options to purchase 1,000 shares of Corporation T stock, stock appreciation rights (SARs) on 1,000 shares, and 1,000 shares of Corporation T restricted stock. On the date of grant, the stock options had no readily ascertainable fair market value as defined in § 1.83-7(b), and neither the stock options nor the SARs provided for a deferral of compensation under § 1.409A-1(b)(5)(i)(A) and (B). The stock options, SARs, and shares of restricted stock are subject to a substantial risk of forfeiture and all substantially vest on January 2, 2020. Employee G may exercise the stock options and the SARs at any time from January 2, 2020, through January 2, 2027. On January 2, 2020, Employee G exercises the stock options and the SARs, and the 1,000 shares of restricted stock become substantially vested (as defined in § 1.83-3(b)). The grant agreement pursuant to which grants of the stock options, SARs, and shares of restricted stock are made constitutes a written binding contract under applicable law. The compensation attributable to the stock options and the SARs satisfy the requirements of § 1.162-27(e)(2) through (5) as qualified performance-based compensation.

(B) ***Conclusion.*** If this section applies, Employee G is a covered employee for Corporation T's 2020 taxable year. Because the January 2, 2017, grant agreement constitutes a written binding contract, this section does not apply (and § 1.162-27 does apply) to the deduction for compensation received pursuant to the exercise of the stock options and the SARs, or the restricted stock becoming substantially vested (as defined in § 1.83-3(b)). Pursuant to § 1.162-27(e)(1), the deduction attributable to the stock options and the SARs is not subject to section 162(m)(1) because the compensation satisfies the requirements of § 1.162-27(e)(2) through (5) as qualified performance-based compensation. However, the deduction attributable to the restricted stock is subject to section 162(m)(1) because the compensation does not satisfy the requirements of § 1.162-27(e)(2) through (5) as qualified performance-based compensation.

(x) *Example 10 (Plan in which an employee is not a participant on November 2, 2017)* —

(A) ***Facts.*** On October 2, 2017, Employee H executes an employment agreement with Corporation Y to serve as its PFO, and begins employment with Corporation Y. The employment agreement, which is a written binding contract under applicable law, provides that if Employee H continues in his position through April 1, 2018, Employee H will become a participant in the NQDC plan of Corporation Y and that Employee H's benefit accumulated on that date will be $3,000,000. On April 1, 2021, Employee H receives a payment of $4,500,000 (the increase from $3,000,000 to $4,500,000 is not a result of a material modification as defined in paragraph (g)(2) of this section), which is the entire benefit accumulated under the plan through the date of payment.

(B) ***Conclusion.*** If this section applies, Employee H is a covered employee for Corporation Y's 2021 taxable year. Even though Employee H was not eligible to participate in the NQDC plan on November 2, 2017, Employee H had the right to participate in the plan under a written binding contract as of that date. Because the amount required to be paid pursuant

to the written binding contract is $3,000,000, this section does not apply (and § 1.162-27 does apply) to the deduction for the $3,000,000 portion of the $4,500,000. Pursuant to § 1.162-27(c)(2), Employee H is not a covered employee of Corporation Y for the 2021 taxable year. The deduction for the $3,000,000 portion of the $4,500,000 is not subject to section 162(m)(1). The deduction for the remaining $1,500,000 portion of the payment is subject to this section (and not § 1.162-27).

(xi) *Example 11 (Material modification of annual salary)* —

(A) ***Facts.*** On January 2, 2017, Corporation R executed a 5-year employment agreement with Employee I to serve as Corporation R's PFO, providing for an annual salary of $1,800,000. The agreement constitutes a written binding contract under applicable law. In 2017 and 2018, Employee I receives the salary of $1,800,000 per year. In 2019, Corporation R increases Employee I's salary by $40,000, which is less than a reasonable cost-of-living increase from $1,800,000. On January 1, 2020, Corporation R increases Employee I's salary to $2,400,000. The $560,000 increase exceeds a reasonable, annual cost-of-living increase from $1,840,000.

(B) ***Conclusion ($1,840,000 Payment in 2019).*** If this section applies, Employee I is a covered employee for Corporation R's 2018 through 2020 taxable years. Because the January 1, 2017, agreement is a written binding contract to pay Employee I an annual salary of $1,800,000, this section does not apply (and § 1.162-27 does apply) to the deduction for Employee I's annual salary unless the change in the employment agreement is a material modification. Pursuant to § 1.162-27(c)(2), Employee I is not a covered employee of Corporation R for the 2019 taxable year, so the deduction for the $1,800,000 salary is not subject to section 162(m)(1). Even though the $40,000 increase is made on the basis of substantially the same elements or conditions as the salary, the $40,000 increase does not constitute a material modification of the written binding contract because the $40,000 is less than or equal to a reasonable cost-of-living increase. However, the deduction for the $40,000 increase is subject to this section (and not § 1.162-27).

(C) ***Conclusion (Salary increase to $2,400,000 in 2020).*** The $560,000 increase in salary in 2020 is a material modification of the written binding contract because the additional compensation is paid on the basis of substantially the same elements or conditions as the salary, and it exceeds a reasonable, annual cost-of-living increase from $1,840,000. Because the written binding contract is materially modified as of January 1, 2020, the deduction for all salary paid to Employee I on and after January 1, 2020, is subject is subject to this section (and not § 1.162-27).

(xii) *Example 12 (Additional payment not considered a material modification)* —

(A) ***Facts.*** The facts are the same as in paragraph (g)(3)(xi) of this section (*Example 11*), except that instead of an increase in salary, in 2020 Employee I receives a restricted stock grant subject to Employee I's continued employment for the balance of the contract.

(B) ***Conclusion.*** The restricted stock grant is not a material modification of the written binding contract because any additional compensation paid to Employee I under the grant is not paid on the basis of substantially the same elements and conditions as Employee I's salary. However, the deduction attributable to the restricted stock grant is subject to this section (and not § 1.162-27).

(h) *Effective/Applicability dates* —

(1) ***Effective date.*** This section is effective on December 30, 2020.

(2) ***Applicability dates*** —

(i) ***General applicability date.*** Except as otherwise provided in paragraph (h)(2)(ii) of this section, this section applies to taxable years beginning on or after December 30, 2020. Taxpayers may choose to apply this section for taxable years beginning after December 31, 2017, and before December 30, 2020 provided the taxpayer applies this section in its entirety and in a consistent manner.

(ii) ***Special applicability dates*** —

(A) ***Definition of covered employee.*** The definition of covered employee in paragraph (c)(2)(i) of this section applies to taxable years ending on or after September 10, 2018. However, for a corporation whose fiscal year and taxable year do not end on the same date, the rule in paragraph (c)(2)(i)(B) of this section requiring the determination of the three most highly compensated executive officers to be made pursuant to the rules under the Exchange Act applies to taxable years ending on or after December 20, 2019.

(B) ***Definition of predecessor of a publicly held corporation*** —

(*1*) ***Publicly held corporations that become privately held.*** The definition of predecessor of a publicly held corporation in paragraph (c)(2)(ii)(A) of this section applies to any publicly held corporation that becomes a privately held corporation for a taxable year beginning after December 31, 2017, and, subsequently, again becomes a publicly held corporation on or after December 30, 2020. The definition of predecessor of a publicly held corporation in paragraph (c)(2)(ii)(A) of this section does not apply to any publicly held corporation that became a privately held corporation for a taxable year beginning before January 1, 2018, with respect to the earlier period as a publicly held corporation; or a publicly held corporation that becomes a privately held corporation for a taxable year beginning after December 31, 2017, and, subsequently, again becomes a publicly held corporation before December 30, 2020.

(*2*) ***Corporate transactions.*** The definition of predecessor of a publicly held corporation in paragraphs (c)(2)(ii)(B) through (H) of this section applies to corporate transactions that occur (as provided in the transaction timing rule of paragraph (c)(2)(ii)(I) of this section) on or after December 30, 2020. With respect to any of the following corporate transactions occurring after December 20, 2019, and before December 30, 2020, excluding target corporations from the definition of the term “predecessor” is not a reasonable good faith interpretation of the statute:

(*i*) A publicly held target corporation the stock or assets of which are acquired by another publicly held corporation in a transaction to which section 381(a) applies.

(*ii*) A publicly held target corporation, at least 80% of the total voting power of the stock of which, and at least 80% of the total value of the stock of which, are acquired by a publicly held acquiring corporation (including an affiliated group).

(C) ***Definition of compensation.*** The definition of compensation provided in paragraph (c)(3)(ii) of this section (relating to distributive share of partnership deductions for compensation paid) applies to any deduction for compensation that is paid after December 18, 2020.

The definition of compensation in paragraph (c)(3)(ii) does not apply to compensation paid pursuant to a written binding contract that is in effect on December 20, 2019, and that is not materially modified after that date. For purposes of this paragraph (h)(3), written binding contract and material modification have the same meanings as provided in paragraphs (g)(1) and (2) of this section.

(D) ***Corporations that become publicly held.*** The rule in paragraph (d) of this section (providing that the deduction limitation of paragraph (b) of this section applies to a deduction for any compensation that is otherwise deductible for the taxable year ending on or after the date that a privately held corporation becomes a publicly held corporation) applies to corporations that become publicly held after December 20, 2019. A privately held corporation that becomes a publicly held corporation on or before December 20, 2019, may rely on the transition rules provided in § 1.162-27(f)(1) until the earliest of the events provided in § 1.162-27(f)(2). A subsidiary that is a member of an affiliated group (as defined in § 1.162-27(c)(1)(ii)) may rely on transition relief provided in § 1.162-27(f)(4) if it becomes a separate publicly held corporation (whether in a spin-off transaction or otherwise) on or before December 20, 2019.

(E) ***Transition rules.*** Except for the transition rules in paragraphs (g)(1)(v) through (vii) of this section, the transition rules in paragraphs (g)(1) and (2) of this section (providing that this section does not apply to compensation payable under a written binding contract which was in effect on November 2, 2017, and which is not modified in any material respect on or after such date) apply to taxable years ending on or after September 10, 2018.

[T.D. 9932, 85 FR 86492, Dec. 30, 2020]

§ 1.162(k)-1 Disallowance of deduction for reacquisition payments.

(a) ***In general.*** Except as provided in paragraph (b) of this section, no deduction otherwise allowable is allowed under Chapter 1 of the Internal Revenue Code for any amount paid or incurred by a corporation in connection with the reacquisition of its stock or the stock of any related person (as defined in section 465(b)(3)(C)). Amounts paid or incurred in connection with the reacquisition of stock include amounts paid by a corporation to reacquire its stock from an ESOP that are used in a manner described in section 404(k)(2)(A). See § 1.404(k)-3.

(b) ***Exceptions.*** Paragraph (a) of this section does not apply to any—

(1) Deduction allowable under section 163 (relating to interest);

(2) Deduction for amounts that are properly allocable to indebtedness and amortized over the term of such indebtedness;

(3) Deduction for dividends paid (within the meaning of section 561); or

(4) Amount paid or incurred in connection with the redemption of any stock in a regulated investment company that issues only stock which is redeemable upon the demand of the shareholder.

(c) ***Effective date.*** This section applies with respect to amounts paid or incurred on or after August 30, 2006.

[T.D. 9282, 71 FR 51473, Aug. 30, 2006]

§ 1.162(l)-0 Table of Contents.

This section lists the table of contents for § 1.162(l)-1.

§ 1.162(l)-1 Deduction for health insurance costs of self-employed individuals.

(a) Coordination of section 162(l) deduction for taxpayers subject to section 36B.

(1) In general.

(2) Specified premiums.

(3) Specified premiums not paid through advance credit payments.

(b) Additional guidance.

(c) Applicability date.

[T.D. 9822, 82 FR 34610, July 26, 2017]

§ 1.162(l)-1 Deduction for health insurance costs of self-employed individuals.

(a) ***Coordination of section 162(l) deduction for taxpayers subject to section 36B*** —

(1) ***In general.*** A taxpayer is allowed a deduction under section 162(l) for specified premiums, as defined in paragraph (a)(2) of this section, not to exceed an amount equal to the lesser of—

(i) The specified premiums less the premium tax credit attributable to the specified premiums; and

(ii) The sum of the specified premiums not paid through advance credit payments, as described in paragraph (a)(3) of this section, and the additional tax (if any) imposed under section 36B(f)(2)(A) and § 1.36B-4(a)(1) with respect to the specified premiums after application of the limitation on additional tax in section 36B(f)(2)(B) and § 1.36B-4(a)(3).

(2) ***Specified premiums.*** For purposes of paragraph (a)(1) of this section, specified premiums means premiums for a specified qualified health plan or plans for which the taxpayer may otherwise claim a deduction under section 162(l). For purposes of this paragraph (a)(2), a specified qualified health plan is a qualified health plan, as defined in § 1.36B-1(c), covering the taxpayer, the taxpayer's spouse, or a dependent of the taxpayer (enrolled family member) for a month that is a coverage month within the meaning of § 1.36B-3(c) for the enrolled family member. If a specified qualified health plan covers individuals other than enrolled family members, the specified premiums include only the portion of the premiums for the specified qualified health plan that is allocable to the enrolled family members under rules similar to § 1.36B-3(h), which provides rules for determining the amount under § 1.36B-3(d)(1) when two families are enrolled in the same qualified health plan.

(3) ***Specified premiums not paid through advance credit payments.*** For purposes of paragraph (a)(1)(ii) of this section, specified premiums not paid through advance credit payments equal the amount of the specified premiums minus the advance credit payments attributable to the specified premiums.

(b) ***Additional guidance.*** The Secretary may provide by publication in the FEDERAL REGISTER or in the Internal Revenue Bulletin (see § 601.601(d)(2) of this chapter) additional guidance on coordinating the deduction allowed under section 162(l) and the credit provided under section 36B.

(c) ***Applicability date.*** This section applies for taxable years beginning after December 31, 2013.

[T.D. 9822, 82 FR 34610, July 26, 2017]

§ 1.163-1 Interest deduction in general.

(a) Except as otherwise provided in sections 264 to 267, inclusive, interest paid or accrued within the taxable year on indebtedness shall be allowed as a deduction in computing taxable income. For rules relating to interest on certain deferred payments, see section 483 and the regulations thereunder.

(b) Interest paid by the taxpayer on a mortgage upon real estate of which he is the legal or equitable owner, even though the taxpayer is not directly liable upon the bond or note secured by such mortgage, may be deducted as interest on his indebtedness. Pursuant to the provisions of section 163(c), any annual or periodic rental payment made by a taxpayer on or after January 1, 1962, under a redeemable ground rent, as defined in section 1055(c) and paragraph (b) of § 1.1055-1, is required to be treated as interest on an indebtedness secured by a mortgage and, accordingly, may be deducted by the taxpayer as interest on his indebtedness. Section 163(c) has no application in respect of any annual or periodic rental payment made prior to January 1, 1962, or pursuant to an arrangement which does not constitute a "redeemable ground rent" as defined in section 1055(c) and paragraph (b) of § 1.1055-1. Accordingly, annual or periodic payments of Pennsylvania ground rents made before, on, or after January 1, 1962, are deductible as interest if the ground rent is redeemable. An annual or periodic rental payment under a Maryland redeemable ground rent made prior to January 1, 1962, is deductible in accordance with the rules and regulations applicable at the time such payment was made. Any annual or periodic rental payment under a Maryland redeemable ground rent made by the taxpayer on or after January 1, 1962, is, pursuant to the provisions of section 163(c), treated as interest on an indebtedness secured by a mortgage and, accordingly, is deductible by the taxpayer as interest on his indebtedness. In any case where the ground rent is irredeemable, any annual or periodic ground rent payment shall be treated as rent and shall be deductible only to the extent that the payment constitutes a proper business expense. Amounts paid in redemption of a ground rent shall not be treated as interest. For treatment of redeemable ground rents and real property held subject to liabilities under redeemable ground rents, see section 1055 and the regulations thereunder.

(c) Interest calculated for costkeeping or other purposes on account of capital or surplus invested in the business which does not represent a charge arising under an interest-bearing obligation, is not an allowable deduction from gross income. Interest paid by a corporation on scrip dividends is an allowable deduction. So-called interest on preferred stock, which is in reality a dividend thereon, cannot be deducted in computing taxable income. (See, however, section 583.) In the case of banks and loan or trust companies, interest paid within the year on deposits, such as interest paid on moneys received for investment and secured by interest-bearing certificates of indebtedness issued by such bank or loan or trust company, may be deducted from gross income.

(d) To the extent of assistance payments made in respect of an indebtedness of the taxpayer during the taxable year by the Department of Housing and Urban Development under section 235 of the National Housing Act (12 U.S.C. 1715z), as amended, no deduction shall be allowed under section 163 and this

section for interest paid or accrued with respect to such indebtedness. However, such payments shall not affect the amount of any deduction under any section of the Code other than section 163. The provisions of this paragraph shall apply to taxable years beginning after December 31, 1974.

[T.D. 6500, 25 FR 11402, Nov. 26, 1960, as amended by T.D. 6821, 30 FR 6216, May 4, 1965; T.D. 6873, 31 FR 941, Jan. 25, 1966; T.D. 7408, 41 FR 9547, Mar. 5, 1976]

§ 1.163-2 Installment purchases where interest charge is not separately stated.

(a) ***In general.***

(1) Whenever there is a contract with a seller for the purchase of personal property providing for payment of part or all of the purchase price in installments and there is a separately stated carrying charge (including a finance charge, service charge, and the like) but the actual interest charge cannot be ascertained, a portion of the payments made during the taxable year under the contract shall be treated as interest and is deductible under section 163 and this section. Section 163(b) contains a formula, described in paragraph (b) of this section, in accordance with which the amount of interest deductible in the taxable year must be computed. This formula is designed to operate automatically in the case of any installment purchase, without regard to whether payments under the contract are made when due or are in default. For applicable limitations when an obligation to pay is terminated, see paragraph (c) of this section.

(2) Whenever there is a contract with an educational institution for the purchase of educational services providing for payment of part or all of the purchase price in installments and there is a separately stated carrying charge (including a finance charge, service charge, and the like) but the actual interest charge cannot be ascertained, a portion of the payments made during the taxable year under the contract shall be treated as interest and is deductible under section 163 and this section. See paragraphs (b) and (c) of this section for the applicable computation and limitations rules. For purposes of section 163(b) and this section, the term “educational services” means any service (including lodging) which is purchased from an educational institution (as defined in section 151(e)(4) and paragraph (c) of § 1.151-3) and which is provided for a student of such institution.

(3) Section 163(b) and this section do not apply to a contract for the loan of money, even if the loan is to be repaid in installments and even if the borrowed amount is used to purchase personal property or educational services. In cases to which the preceding sentence applies, the portion of the installment payment which constitutes interest (as distinguished from payments of principal and charges such as payments for credit life insurance) is deductible under section 163(a) and § 1.163-1.

(b) ***Computation.*** The portion of any such payments to be treated as interest shall be equal to 6 percent of the average unpaid balance under the contract during the taxable year. For purposes of this computation, the average unpaid balance under the contract is the sum of the unpaid balance outstanding on the first day of each month beginning during the taxable year, divided by 12.

(c) ***Limitations.*** The amount treated as interest under section 163(b) and this section for any taxable year shall not exceed the amount of the payments made under the contract during the taxable year nor the aggregate carrying charges properly attributable to each contract for such taxable year. In computing the amount to be treated as interest if the obligation to pay is terminated as, for example, in the case of a repossession of the property, the unpaid balance on the first day of the month during which the obligation is terminated shall be zero.

(d) ***Illustrations.*** The provisions of this section may be illustrated by the following examples:

Example 1. On January 20, 1955, A purchased a television set for $400, including a stated carrying charge of $25. The down payment was $50, and the balance was paid in 14 monthly installments of $25 each, on the 20th day of each month commencing with February. Assuming that A is a cash method, calendar year taxpayer and that no other installment purchases were made, the amount to be treated as interest in 1955 is $12.38, computed as follows:

YEAR 1955

First day of	Unpaid balance outstanding
January	0
February	$350
March	325
April	300
May	275
June	250
July	225
August	200
September	175
October	150
November	125
December	100
	2,475

Sum of unpaid balances $2,475 ÷ 12 = $206.25; 6 percent thereof = $12.38.

Example 2. On November 20, 1955, B purchased a furniture set for $1,250, including a stated carrying charge of $48. The down payment was $50 and the balance was payable in 12 monthly installments of $100 each, on the first day of each month commencing with December 1955. Assume that B is a cash method, calendar year taxpayer and that no other installment purchases were made. Assume further that B made the first payment when due, but made only one other payment on June 1, 1956. The amount to be treated as interest in 1955 is $4, and the amount to

be treated as interest in 1956 is $33, computed as follows:

YEAR 1955

First day of	Unpaid balance outstanding
December	$1,200

Sum of unpaid balances $1,200 ÷ 12 = $100; 6 percent thereof = $6.
Carrying charges attributable to 1955 = $4.

YEAR 1956

First day of	Unpaid balance outstanding
January	$1,100
February	1,000
March	900
April	800
May	700
June	600
July	500
August	400
September	300
October	200
November	100
	6,600

Sum of unpaid balances $6,600 ÷ 12 = $550; 6 percent thereof = $33.
Carrying charges attributable to 1956 = $44 ($4 × 11).

Example 3. Assume the same facts as in example (2), except that the furniture was repossessed and B's obligation to pay terminated as of July 15, 1956. The amount to be treated as interest in 1955 is $4, computed as in example (2) above. The amount to be treated as interest in 1956 is

$25.50, computed as follows:

YEAR 1956

First day of	Unpaid balance outstanding
January	$1,100
February	1,000
March	900
April	800
May	700
June	600
July-November	0
	5,100

Sum of unpaid balances $5,100 ÷ 12 = $425. 6 percent thereof = $25.50.
Carrying charges attributable to 1956 = $44 ($4 × 11).

Example 4. (i) On September 15, 1968, C registered at X University for the 1968-69 academic year. C entered into an agreement with the X University for the purchase during such academic year of educational services (including lodging and tuition) for a total fee of $1,000, including a separately stated carrying charge of $50. Under the terms of the agreement, an initial payment of $200 was to be made by C on September 15, 1968, and the balance was to be paid in 8 monthly installments of $100 each, on the 15th day of each month commencing with October 1968. C made all of the required 1968 payments. Assuming that C is a cash method, calendar year taxpayer and that no other installment purchases of services or property were made, the amount to be treated as interest in 1968 is $10.50, computed as follows:

YEAR 1968

First day of	Unpaid balance outstanding
January-September	0
October	$800
November	700
December	600

First day of	Unpaid balance outstanding
Total	2,100

The sum of unpaid balances ($2,100) divided by 12 is $175; 6 percent thereof is $10.50. The carrying charges attributable to 1968 are $18.75 (*i.e.*, the total carrying charges ($50), divided by the total number of payments (8), multiplied by the number of payments made in 1968 (3)). Since the amount to be treated as interest in 1968 ($10.50) does not exceed the carrying charges attributable to 1968 ($18.75), the limitation set forth in paragraph (c) of this section is not applicable.

(ii) The result in this example would be the same even if the X University assigned the agreement to a bank or other financial institution and C made his payments directly to the bank or other financial institution.

Example 5. On September 15, 1968, D registered at Y University for the 1968-69 academic year. The tuition for such year was $1,500. In order to pay his tuition, D borrowed $1,500 from the M Corporation, a lending institution, and remitted that sum to the Y University. The loan agreement between M Corporation and D provided that D was to repay the loan, plus a service charge, in 10 equal monthly installments, on the first day of each month commencing with October 1968. The service charge consisted of interest and the cost of credit life insurance on D's life. Since section 163(b) and this section do not apply to a contract for the loan of money, D is not entitled to compute his interest deduction with respect to his loan from M Corporation under such sections. D may deduct that portion of each installment payment which constitutes interest (as distinguished from payments of principal and the charge for credit life insurance) under section 163(a) and § 1.163-1, provided that the amount of such interest can be ascertained.

(e) ***Effective date.*** Except in the case of payments made under a contract for educational services, the rule provided in section 163(b) and this section applies to payments made during taxable years beginning after December 31, 1953, and ending after August 16, 1954, regardless of when the contract of sale was made. In the case of payments made under a contract for educational services, the rule provided in section 163(b) and this section applies to payments made during taxable years beginning after December 31, 1963, regardless of when the contract for educational services was made.

[T.D. 6500, 25 FR 11402, Nov. 26, 1960, as amended by T.D. 6991, 34 FR 742, Jan. 17, 1969]

§ 1.163-3 Deduction for discount on bond issued on or before May 27, 1969.

(a) ***Discount upon issuance.***

(1) If bonds are issued by a corporation at a discount, the net amount of such discount is deductible and should be prorated or amortized over the life of the bonds. For purposes of this section, the amortizable bond discount equals the excess of the amount payable at maturity (or, in the case of a callable bond, at the earlier call date) over the issue price of the bond (as defined in paragraph (b)(2) of § 1.1232-3).

(2) In the case of a bond issued by a corporation after December 31, 1954, as part of an investment unit consisting of an obligation and an option, the issue price of the bond is determined by allocating the amount received for the investment unit to the individual elements of the unit in the manner set forth in subdivision (ii)(*a*) of § 1.1232-3(b)(2). Discount with respect to bonds issued by a corporation as part of investment units consisting of obligations and options after December 31, 1954, and before Dec. 24, 1968—

(i) Increased by any amount treated as bond premium which has been included in gross income with respect to such bonds prior to Dec. 24, 1968, or

(ii) Decreased by any amount which has been deducted by the issuer as discount attributable to such bonds prior to Dec. 24, 1968, and

(iii) Decreased by any amount which has been deducted by the issuer prior to Dec. 24, 1968 upon the exercise or sale by investors of options issued in investment units with such bonds,

should be amortized, starting with the first taxable year ending on or after Dec. 24, 1968 over the remaining life of such bonds.

(b) ***Examples.*** The rules in paragraph (a) of this section are illustrated by the following examples:

Example 1. M Corporation, on January 1, 1960, the beginning of its taxable year issued for $95,000, 3 percent bonds, maturing 10 years from the date of issue, with a stated redemption price at maturity of $100,000. M Corporation should treat $5,000 ($100,000-$95,000) as the total amount to be amortized over the life of the bonds.

Example 2. Assume the same facts as example (1), except that the bonds are convertible into common stock of M Corporation. Since the issue price of the bonds includes any amount attributable to the conversion privilege, the result is the same as in example (1).

Example 3. Assume the same facts as example (1), except that the bonds are issued as part of an investment unit consisting of an obligation and an option. Assume further that the issue price of the bonds as determined under the rules of allocation set forth in subdivision (ii)(*a*) of § 1.1232-3(b)(2) is $94,000. Accordingly, M Corporation should treat $6,000 ($100,000-$94,000) as the total amount to be amortized over the life of the bonds.

Example 4. Assume in example (3), that prior to Dec. 24, 1968, M Corporation had only treated $5,000 as the bond discount to be amortized and deducted only $4,000 of this amount. Starting with the first taxable year ending on or after Dec. 24, 1968, M Corporation should amortize $2,000 ($6,000 discount, less $4,000 previously deducted) over the remaining life of the bonds.

Example 5. N Corporation, on January 1, 1956, for a consideration of $102,000, issued 20-year bonds in the face amount of $100,000, together with options to purchase stock of N Corporation. The issue price of the bonds as determined under the rules of allocation set forth in subdivision (ii)(*a*) of § 1.1232-3(b)(2) is $99,000. Until Dec. 24, 1968, N Corporation has treated as bond premium, $2,000, representing the excess of the consideration received for the bond-option investment units over the maturity value of the bonds, and has accordingly prorated and included in income $1,200 of such amount. Starting with the first taxable year beginning on or after Dec. 24, 1968, N Corporation may amortize as a deduction over the remaining life of the bonds the amount of $2,200 ($1,000 discount, plus $1,200 previously included in income).

Example 6. O Corporation, on January 1, 1956, for a consideration of $100,000, issued 20-year bonds with a $100,000 face value, together with options to purchase stock of O Corporation, which could be exercised at any time up to 5 years from the date of issue. The issue price of the bonds as determined under the rules of allocation set forth in subdivision (ii)(*a*) of § 1.1232-3(b)(2) is $98,000. O Corporation, upon the exercise of the options prior to Dec. 24, 1968, had deducted from income their fair market value at the time of exercise, which is assumed for purposes of this example to have been $3,000. Even though the bonds are considered to have been issued at a discount under paragraph (a)(1) of this section, O Corporation would have no deduction over the remaining life of the bonds, inasmuch as O Corporation, in computing the amount of such deduction, is required under paragraph (a)(2)(iii) of this section to reduce the amount which would otherwise be treated as bond discount, $2,000 ($100,000-$98,000), by the amount deducted from income upon the exercise of the options, in this case, $3,000.

(c) ***Deduction upon repurchase.***

(1) Except as provided in subparagraphs (2) and (3) of this paragraph, if bonds are issued by a corporation and are subsequently repurchased by the corporation at a price in excess of the issue price plus any amount of discount deducted prior to repurchase, or (in the case of bonds issued subsequent to Feb. 28, 1913) minus any amount of premium returned as income prior to repurchase, the excess of the purchase price over the issue price adjusted for amortized premium or discount is a deductible expense for the taxable year.

(2) In the case of a convertible bond (except a bond which the corporation, before Sept. 5, 1968, has obligated itself to repurchase at a specified price), the deduction allowable under subparagraph (1) of this paragraph may not exceed an amount equal to 1 year's interest at the rate specified in the bond, except to the extent that the corporation can demonstrate to the satisfaction of the Commissioner or his delegate that an amount in excess of 1 year's interest does not include any amount attributable to the conversion feature.

(3) No deduction shall be allowed under subparagraph (1) of this paragraph to the extent a deduction is disallowed under subparagraph (2) of this paragraph or to the extent a deduction is disallowed by section 249 (relating to limitation on deduction of bond premium on repurchase of convertible obligation) and the regulations thereunder. See paragraph (f) of § 1.249-1 for effective date limitation on section 249.

(d) ***Definition.*** For purposes of this section, a debenture, note, certificate other evidence of indebtedness, issued by a corporation and bearing interest shall be given the same treatment as a bond.

(e) ***Effective date.*** The provisions of this section shall not apply in respect of a bond issued after May 27, 1969, unless issued pursuant to a written commitment which was binding on that date and at all times thereafter.

[T.D. 6984, 33 FR 19175, Dec. 24, 1968, as amended by T.D. 7154, 36 FR 24996, Dec. 28, 1971; T.D. 7259, 38 FR 4253, Feb. 12, 1973]

§ 1.163-4 Deduction for original issue discount on certain obligations issued after May 27, 1969.

(a) ***In general.***

(1) If an obligation is issued by a corporation with original issue discount, the amount of such discount is deductible as interest and shall be prorated or amortized over the life of the obligation. For purposes of this section the term "obligation" shall have the same meaning as in § 1.1232-1 (without regard to whether the obligation is a capital asset in the hands of the holder) and the term "original issue discount" shall have the same meaning as in section 1232(b)(1) (without regard to the one-fourth of 1 percent limitation in the second sentence thereof). Thus, in general, the amount of original issue discount equals the excess of the amount payable at maturity over the issue price of the bond (as defined in paragraph (b)(2) of § 1.1232-3), regardless of whether that amount is less than one-fourth of 1 percent of the redemption price at maturity multiplied by the number of complete years to maturity. For the rule as to whether there is original issue discount in the case of an obligation issued in an exchange for property other than money, and the amount thereof, see paragraph (b)(2)(iii) of § 1.1232-3. In any case in which original issue discount is carried over from one corporation to another corporation under section 381(c)(9) or from an obligation exchanged to an obligation received in any exchange under paragraph (b)(1)(iv) of § 1.1232-3, such discount shall be carried over for purposes of this section. The amount of original issue discount carried over in an exchange of obligations under the preceding sentence shall be prorated or amortized over the life of the obligation issued in such exchange. For computation of issue price and the amount of original issue discount in the case of serial obligations, see paragraph (b)(2)(iv) of § 1.1232-3.

(2) In the case of an obligation issued by a corporation as part of an investment unit (as defined in paragraph (b)(2)(ii)(*a*) of § 1.1232-3) consisting of an obligation and other property, the issue price of the obligation is determined by allocating the amount received for the investment unit to the individual elements of the unit in the manner set forth in paragraph (b)(2)(ii) of § 1.1232-3.

(3) ***Recovery or retention of amounts previously deducted.*** In any taxable year in which an amount of original issue discount which was deducted as interest under this section is retained or recovered by the taxpayer, such as, for example, by reason of a fine, penalty, forfeiture, or other withdrawal fee, such amount shall be includible in the gross income of such taxpayer for such taxable year.

(b) ***Examples.*** The rules in paragraph (a) of this section are illustrated by the following examples:

Example 1. N Corporation, which uses the calendar year as its taxable year, on January 1, 1970, issued for $99,000, 9 percent bonds maturing 10 years from the date of issue, with a stated redemption price at maturity of $100,000. The original issue discount on each bond (as determined under section 1232(b)(1) without regard to the one-fourth-of-1-percent limitation in the second sentence thereof) is $1,000, *i.e.*, redemption price, $100,000, minus issue price, $99,000. N shall treat $1,000 as the total amount to be amortized over the life of the bonds.

Example 2. Assume the same facts as example (1), except that the bonds are convertible into common stock of N Corporation. Since the issue price of the bonds includes any amount attributable to the conversion privilege, the result is the same as in example (1).

Example 3. Assume the same facts as example (1), except that the bonds are issued as part of an investment unit consisting of an obligation and an option. Assume further that the issue price of the bonds as determined under the rules of allocation set forth in paragraph (b)(2)(ii) of § 1.1232-3 is $94,000. The original issue discount on the bond (as determined under section 1232(b)(1) without regard to the one-fourth-of-1-percent limitation in the second sentence thereof) is $6,000, *i.e.*, redemption price, $100,000, minus issue price, $94,000. N shall treat $6,000 as the total amount to be amortized over the life of the bonds.

Example 4. On January 1, 1971, a commercial bank which uses the calendar year as its taxable year, issued a certificate of deposit for $10,000. The certificate of deposit is not redeemable until December 31, 1975, except in an emergency as defined in, and subject to the qualifications provided by Regulations Q of the Board of Governors of the Federal Reserve. See 12 CFR § 217.4(d). The stated redemption price at maturity is $13,382.26. The certificate is an obligation to which section 1232(a)(3)(A) applies (see paragraph (d) of § 1.1232-1), and the original issue discount with respect to the certificate (as determined under section 1232(b)(1) without regard to the one-fourth-of-1-percent limitation in the second sentence thereof) is $3,382.26 (*i.e.*, redemption price, $13,382.26, minus issued price, $10,000). Y shall treat $3,382.26 as the total amount to be amortized over the life of the certificate.

(c) ***Deduction upon repurchase.***

(1) Except as provided in subparagraph (2) of this paragraph, if bonds are issued by a corporation and are subsequently repurchased by the corporation at a price in excess of the issue price plus any amount of original issue discount deducted prior to repurchase, or minus any amount of premium returned as income prior to repurchase, the excess of the repurchase price over the issue price adjusted for amortized premium or deducted discount is deductible as interest for the taxable year.

(2) The provisions of subparagraph (1) of this paragraph shall not apply to the extent a deduction is disallowed by section 249 (relating to limitation on deduction of bond premium or repurchase of convertible obligation) and the regulations thereunder.

(d) ***Effective date.*** The provisions of this section shall apply in respect of obligations issued after May 27, 1969, other than—

(1) Obligations issued pursuant to a written commitment which was binding on May 27, 1969, and at all times thereafter, and

(2) Deposits made before January 1, 1971, in the case of certificates of deposit, time deposits, bonus plans, and other deposit arrangements with banks, domestic building and loan associations, and similar financial institutions.

[36 FR 24996, Dec. 28, 1971, as amended by T.D. 7213, 37 FR 21991, Oct. 18, 1972; T.D. 7259, 38 FR 4253, Feb. 12, 1973]

§ 1.163-5 Denial of interest deduction on certain obligations issued after December 31, 1982, unless issued in registered form.

(a)-(b) [Reserved]

(c) ***Obligations issued to foreign persons after September 21, 1984*** —

(1) ***In general.*** A determination of whether an obligation satisfies each of the requirements of this paragraph shall be made on an obligation-by-obligation basis. An obligation issued directly (or through affiliated entities) in bearer form by, or guaranteed by, a United States Government-owned agency or a United States Government-sponsored enterprise, such as the Federal National Mortgage Association, the Federal Home Loan Banks, the Federal Loan Mortgage Corporation, the Farm Credit Administration, and the Student Loan Marketing Association, may not satisfy this paragraph (c). An obligation issued after September 21, 1984 is described in this paragraph if—

(i) There are arrangements reasonably designed to ensure that such obligation will be sold (or resold in connection with its original issuance) only to a person who is not a United States person or who is a United States person that is a financial institution (as defined in § 1.165-12(c)(1)(v)) purchasing for its own account or for the account of a customer and that agrees to comply with the requirements of section 165(j)(3) (A), (B), or (C) and the regulations thereunder, and

(ii) In the case of an obligation which is not in registered form—

(A) Interest on such obligation is payable only outside the United States and its possessions, and

(B) Unless the obligation is described in subparagraph (2)(i)(C) of this paragraph or is a temporary global security, the following statement in English either appears on the face of the obligation and on any interest coupons which may be detached therefrom or, if the obligation is evidenced by a book entry, appears in the book or record in which the book entry is made: "Any United States person who holds this obligation will be subject to limitations under the United States income tax laws, including the limitations provided in sections 165(j) and 1287(a) of the Internal Revenue Code." For purposes of this paragraph, the term "temporary global security" means a security which is held for the benefit of the purchasers of the obligations of the issuer and interests in which are exchangeable for securities in definitive registered or bearer form prior to its stated maturity.

(2) ***Rules for the application of this paragraph*** —

(i) ***Arrangements reasonably designed to ensure sale to non-United States persons.*** An obligation will be considered to satisfy paragraph (c)(1)(i) of this section if the conditions of paragraph (c)(2)(i) (A), (B), (C), or (D) of this section are met in connection with the original issuance of the obligation. An exchange of one obligation for another is considered an original issuance if and only if the exchange constitutes a disposition of property for purposes of section 1001 of the Code. However, an exchange of one obligation for another will not be considered a new issuance if the obligation received is identical in all respects to the obligation surrendered in exchange therefor, except that the obligor of the obligation received need not be the same obligor as the obligor of the obligation surrendered. Obligations that meet the conditions of paragraph (c)(2)(i) (A), (B), (C) or (D) of this section may be issued in a single public offering. The preceding sentence does not apply to certificates of deposit issued under the conditions of paragraph (c)(2)(i)(C) of this section by a United States person or by a controlled foreign corporation within the meaning of section 957(a) that is engaged in the active conduct of a banking business within the meaning of section 954(c)(3)(B) as in effect prior to the Tax Reform Act of 1986, and the regulations thereunder. A temporary global security need not satisfy the conditions of paragraph (c)(2)(i) (A), (B) or (C) of this section, but must satisfy the applicable requirements of paragraph (c)(2)(i)(D) of this section.

(A) In connection with the original issuance of an obligation, the obligation is offered for sale or resale only outside of the United States and its possessions, is delivered only outside the United States and its possessions and is not registered under the Securities Act of 1933 because it is intended for distribution to persons who are not United States persons. An obligation will not be considered to be required to be registered under the Securities Act of 1933 if the issuer, in reliance on the written opinion of counsel received prior to the issuance thereof, determines in good faith that the obligation need not be registered under the Securities Act of 1933 for the reason that it is intended for distribution to persons who

are not United States persons. Solely for purposes of this subdivision (i)(A), the term "United States person" has the same meaning as it has for purposes of determining whether an obligation is intended for distribution to persons under the Securities Act of 1933. Except as provided in paragraph (c)(3) of this section, this paragraph (c)(2)(i)(A) applies only to obligations issued on or before September 7, 1990.

(B) The obligation is registered under the Securities Act of 1933, is exempt from registration by reason of section 3 or section 4 of such Act, or does not qualify as a security under the Securities Act of 1933; all of the conditions set forth in paragraph (c)(2)(i)(B) (*1*), (*2*), (*3*), (*4*), and (*5*) of this section are met with respect to such obligations; and, except as provided in paragraph (c)(3) of this section, the obligation is issued on or before September 7, 1990.

(*1*) In connection with the original issuance of an obligation in bearer form, the obligation is offered for sale or resale only outside the United States and its possessions.

(*2*) The issuer does not, and each underwriter and each member of the selling group, if any, covenants that it will not, in connection with the original issuance of the obligation, offer to sell or resell the obligation in bearer form to any person inside the United States or to a United States person unless such United States person is a financial institution as defined in § 1.165-12(c)(v) purchasing for its own account or for the account of a customer, which financial institution, as a condition of the purchase, agrees to provide on delivery of the obligation (or on issuance, if the obligation is not in definitive form) the certificate required under paragraph (c)(2)(i)(B)(4).

(*3*) In connection with its sale or resale during the original issuance of the obligation in bearer form, each underwriter and each member of the selling group, if any, or the issuer, if there is no underwriter or selling group, sends a confirmation to the purchaser of the bearer obligation stating that the purchaser represents that it is not a United States person or, if it is a United States person, it is a financial institution as defined in § 1.165-12(c)(v) purchasing for its own account or for the account of a customer and that the financial institution will comply with the requirements of section 165(j)(3) (A), (B), or (C) and the regulations thereunder. The confirmation must also state that, if the purchaser is a dealer, it will send similar confirmations to whomever purchases from it.

(*4*) In connection with the original issuance of the obligation in bearer form it is delivered in definitive form (or issued, if the obligation is not in definitive form) to the person entitled to physical delivery thereof only outside the United States and its possessions and only upon presentation of a certificate signed by such person to the issuer, underwriter, or member of the selling group, which certificate states that the obligation is not being acquired by or on behalf of a United States person, or for offer to resell or for resale to a United States person or any person inside the United States, or, if a beneficial interest in the obligation is being acquired by a United States person, that such person is a financial institution as defined in § 1.165.12(c)(1)(v) or is acquiring through a financial institution and that the obligation is held by a financial institution that has agreed to comply with the requirements of section 165(j)(3) (A), (B), or (C) and the regulations thereunder and that is not purchasing for offer to resell or for resale inside the United States. When a certificate is provided by

a clearing organization, it must be based on statements provided to it by its member organizations. A clearing organization is an entity which is in the business of holding obligations for member organizations and transferring obligations among such members by credit or debit to the account of a member without the necessity of physical delivery of the obligation. For purposes of paragraph (c)(2)(i)(B), the term "delivery" does not include the delivery of an obligation to an underwriter or member of the selling group, if any.

(*5*) The issuer, underwriter, or member of the selling group does not have actual knowledge that the certificate described in paragraph (c)(2)(i)(B)(*4*) of this section is false. The issuer, underwriter, or member of the selling group shall be deemed to have actual knowledge that the certificate described in paragraph (c)(2)(i)(B)(*4*) of this section is false if the issuer, underwriter, or member of the selling group has a United States address for the beneficial owner (other than a financial institution as defined in § 1.165-12(c)(v) that represents that it will comply with the requirements of section 165(j)(3) (A), (B), or (C) and the regulations thereunder) and does not have documentary evidence as described in § 1.6049-5(c)(1) that the beneficial owner is not a United States person.

(C) The obligation is issued only outside the United States and its possessions by an issuer that does not significantly engage in interstate commerce with respect to the issuance of such obligation either directly or through its agent, an underwriter, or a member of the selling group. In the case of an issuer that is a United States person, such issuer may only satisfy the test set forth in this paragraph (c)(2)(i)(C) if—

(*1*) It is engaged through a branch in the active conduct of a banking business, within the meaning of section 954(c)(3)(B) as in effect before the Tax Reform Act of 1986, and the regulations thereunder, outside the United States;

(*2*) The obligation is issued outside of the United States by the branch in connection with that trade or business;

(*3*) The obligation that is so issued is sold directly to the public and is not issued as a part of a larger issuance made by means of a public offering; and

(*4*) The issuer either maintains documentary evidence as described in subdivision (iii) of A-5 of § 35a.9999-4T that the purchaser is not a United States person (provided that the issuer has no actual knowledge that the documentary evidence is false) or on delivery of the obligation the issuer receives a statement signed by the person entitled to physical delivery thereof and stating either that the obligation is not being acquired by or on behalf of a United States person or that, if a beneficial interest in the obligation is being acquired by a United States person, such person is a financial institution as defined in § 1.165-12(c)(v) or is acquiring through a financial institution and the obligation is held by a financial institution that has agreed to comply with the requirements of 165(j)(3) (A), (B) or (C) and the regulations thereunder and that it is not purchasing for offer to resell or for resale inside the United States (provided that the issuer has no actual knowledge that the statement is false).

In addition, an issuer that is a controlled foreign corporation within the meaning of section 957 (a) that is engaged in the active conduct of a banking business outside the United States within the meaning of section 954(c)(3)(B) as in effect before the Tax Reform Act of 1986, and the regulations thereunder, can only satisfy the provisions of this paragraph (c)(2)(i)(C), if it meets the requirements of this paragraph (c)(2)(i)(C)(2), (3) and (4).

(D) The obligation is issued after September 7, 1990, and all of the conditions set forth in this paragraph (c)(2)(i)(D) are met with respect to such obligation.

(*1*) ***Offers and sales*** —

(*i*) ***Issuer.*** The issuer does not offer or sell the obligation during the restricted period to a person who is within the United States or its possessions or to a United States person.

(*ii*) ***Distributors.***

(*A*) The distributor of the obligation does not offer or sell the obligation during the restricted period to a person who is within the United States or its possessions or to a United States person.

(*B*) The distributor of the obligation will be deemed to satisfy the requirements of paragraph (c)(2)(i)(D)(*1*)(*ii*)(*A*) of this section if the distributor of the obligation convenants that it will not offer or sell the obligation during the restricted period to a person who is within the United States or its possessions or to a United States person; and the distributor of the obligation has in effect, in connection with the offer and sale of the obligation during the restricted period, procedures reasonably designed to ensure that its employees or agents who are directly engaged in selling the obligation are aware that the obligation cannot be offered or sold during the restricted period to a person who is within the United States or its possessions or is a United States person.

(*iii*) ***Certain rules.*** For purposes of paragraph (c)(2)(i)(D)(*1*) (*i*) and (*ii*) of this section:

(*A*) An offer or sale will be considered to be made to a person who is within the United States or its possessions if the offeror or seller of the obligation has an address within the United States or its possessions for the offeree or buyer of the obligation with respect to the offer or sale.

(*B*) An offer or sale of an obligation will not be treated as made to a person within the United States or its possessions or to a United States person if the person to whom the offer or sale is made is: An exempt distributor, as defined in paragraph (c)(2)(i)(D)(*5*) of this section; An international organization as defined in section 7701(a)(18) and the regulations thereunder, or a foreign central bank as defined in section 895 and the regulations thereunder; or The foreign branch of a United States financial institution as described in paragraph (c)(2)(i)(D)(*6*)(*i*) of this section.

Paragraph (c)(2)(i)(D)(*1*)(*iii*)(*B*) regarding an exempt distributor will only apply to an offer to the United States office of an exempt distributor, and paragraph (c)(2)(i)(D)(*1*)(*iii*)(*B*) regarding an international organization or foreign central

bank will only apply to an offer to an international organization or foreign central bank, if such offer is made directly and specifically to the United States office, organization or bank.

(*C*) A sale of an obligation will not be treated as made to a person within the United States or its possessions or to a United States person if the person to whom the sale is made is a person described in paragraph (c)(2)(i)(D)(*6*)(*ii*) of this section.

(*2*) ***Delivery.*** In connection with the sale of the obligation during the restricted period, neither the issuer nor any distributor delivers the obligation in definitive form within the United States or it possessions.

(*3*) ***Certification*** —

(*i*) ***In general.*** On the earlier of the date of the first actual payment of interest by the issuer on the obligation or the date of delivery by the issuer of the obligation in definitive form, a certificate is provided to the issuer of the obligation stating that on such date:

(*A*) The obligation is owned by a person that is not a United States person:

(*B*) The obligation is owned by a United States person described in paragraph (c)(2)(i)(D)(*6*) of this section; or

(*C*) The obligation is owned by a financial institution for purposes of resale during the restricted period, and such financial institution certifies in addition that it has not acquired the obligation for purposes of resale directly or indirectly to a United States person or to a person within the United States or its possessions.

A certificate described in paragraph (c)(2)(i)(D)(*3*)(*i*) (*A*) or (*B*) of this section may not be given with respect to an obligation that is owned by a financial institution for purposes of resale during the restricted period. For purposes of paragraph (c)(2)(i)(D) (*2*) and (*3*) of this section, a temporary global security (as defined in § 1.163-5 (c)(1)(ii)(B)) is not considered to be an obligation in definitive form. If the issuer does not make the obligation available for delivery in definitive form within a reasonable period of time after the end of the restricted period, then the obligation shall be treated as not satisfying the requirements of this paragraph (c)(2)(i)(D)(*3*). The certificate must be signed (or sent, as provided in paragraph (c)(2)(i)(D)(*3*)(*ii*) of this section) either by the owner of the obligation or by a financial institution or clearing organization through which the owner holds the obligation, directly or indirectly. For purposes of this paragraph (c)(2)(i)(D)(*3*), the term “financial institution” means a financial institution described in § 1.165-12(c)(i)(v). When a certificate is provided by a clearing organization, the certificate must be based on statements provided to it by its member organizations. The requirement of this paragraph (c)(1)(D)(*3*) shall be deemed not to be satisfied with respect to an obligation if the issuer knows or has reason to know that the certificate with respect to such obligation is false. The certificate must be retained by the issuer (and statements by

member organizations must be retained by the clearing organization, in the case of certificates based on such statements) for a period of four calendar years following the year in which the certificate is received.

(*ii*) ***Electronic certification.*** The certificate required by paragraph (c)(2)(i)(D)(*3*)(*i*) of this section (including a statement provided to a clearing organization by a member organization) may be provided electronically, but only if the person receiving such electronic certificate maintains adequate records, for the retention period described in paragraph (c)(2)(i)(D)(*3*)(*i*) of this section, establishing that such certificate was received in respect of the subject obligation, and only if there is a written agreement entered into prior to the time of certification (including the written membership rules of a clearing organization) to which the sender and recipient are subject, providing that the electronic certificate shall have the effect of a signed certificate described in paragraph (c)(2)(i)(D)(*3*)(*i*) of this section.

(*iii*) ***Exception for certain obligations.*** This paragraph (c)(2)(i)(D)(*3*) shall not apply, and no certificate shall be required, in the case of an obligation that is sold during the restricted period and that satisfies all of the following requirements:

(*A*) The interest and principal with respect to the obligation are denominated only in the currency of a single foreign country.

(*B*) The interest and principal with respect to the obligation are payable only within that foreign country (according to rules similar to those set forth in § 1.163-5(c)(2)(v)).

(*C*) The obligation is offered and sold in accordance with practices and documentation customary in that foreign country.

(*D*) The distributor covenants to use reasonable efforts to sell the obligation within that foreign country.

(*E*) The obligation is not listed, or the subject of an application for listing, on an exchange located outside that foreign country.

(*F*) The Commissioner has designated that foreign country as a foreign country in which certification under paragraph (c)(2)(i)(D)(*3*)(*i*) of this section is not permissible.

(*G*) The issuance of the obligation is subject to guidelines or restrictions imposed by governmental, banking or securities authorities in that foreign country.

(*H*) More than 80 percent by value of the obligations included in the offering of which the obligation is a part are offered and sold to non-distributors by distributors maintaining an office located in that foreign country. Foreign currency denominated obligations that are convertible into U.S. dollar denominated obligations or that by their terms are linked to the U.S. dollar in a way which effectively converts the obligations to U.S. dollar denominated obligations do not satisfy the requirements of this paragraph

(c)(2)(i)(D)(*3*)(*iii*). A foreign currency denominated obligation will not be treated as linked, by its terms, to the U.S. dollar solely because the obligation is the subject of a swap transaction.

(*4*) ***Distributor.*** For purposes of this paragraph (c)(2)(i)(D), the term "distributor" means:

(*i*) A person that offers or sells the obligation during the restricted period pursuant to a written contract with the issuer;

(*ii*) Any person that offers or sells the obligation during the restricted period pursuant to a written contract with a person described in paragraph (c)(2)(i)(D)(*4*) (*i*); and

(*iii*) Any affiliate that acquires the obligation from another member of its affiliated group for the purpose of offering or selling the obligation during the restricted period, but only if the transferor member of the group is the issuer or a person described in paragraph (c)(2)(i)(D) (*4*)(*i*) or (*ii*) of this section. The terms "affiliate" and "affiliated group" have the same meanings as in section 1504(a) of the Code, but without regard to the exceptions contained in section 1504(b) and substituting "50 percent" for "80 percent" each time it appears.

For purposes of this paragraph (c)(2)(i)(D)(*4*), a written contract does not include a confirmation or other notice of the transaction.

(*5*) ***Exempt distributor.*** For purposes of this paragraph (c)(2)(i)(D), the term "exempt distributor" means a distributor that convenants in its contract with the issuer or with a distributor described in paragraph (c)(2)(i)(D)(*4*)(*i*) that it is buying the obligation for the purpose of resale in connection with the original issuance of the obligation, and that if it retains the obligation for its own account, it will only do so in accordance with the requirements of paragraph (c)(2)(i)(D)(*6*) of this section. In the latter case, the convenant will constitute the certificate required under paragraph (c)(2)(i)(D)(*6*). The provisions of paragraph (c)(2)(i)(D)(*7*) governing the restricted period for unsold allotments or subscriptions shall apply to any obligation retained for investment by an exempt distributor.

(*6*) ***Certain United States persons.*** A person is described in this paragraph (c)(2)(i)(D)(*6*) if the requirements of this paragraph are satisfied and the person is:

(*i*) The foreign branch of a United States financial institution purchasing for its own account or for resale, or

(*ii*) A United States person who acquired the obligation through the foreign branch of a United States financial institution and who, for purposes of the certification required in paragraph (c)(2)(i)(D)(*3*) of this section, holds the obligation through such financial institution on the date of certification.

For purposes of paragraph (c)(2)(i)(D)(*6*)(*ii*) of this section, a United States person will be considered to acquire and hold an obligation through the foreign branch of a United States financial institution if the United States person has an account with the United States office of a financial institution, and the transaction is executed by a foreign office of that financial institution, or by the foreign office of another financial institution acting on behalf of that financial institution. This paragraph (c)(2)(i)(D)(*6*)

will apply, however, only if the United States financial institution (or the United States office of a foreign financial institution) holding the obligation provides a certificate to the issuer or distributor selling the obligation within a reasonable time stating that it agrees to comply with the requirements of section 165(j)(3)(A), (B), or (C) and the regulations thereunder. For purposes of this paragraph (c)(2)(i)(D)(6), the term "financial institution" means a financial institution as defined in § 1.165-12(c)(1)(v). As an alternative to the certification required above, a financial institution may provide a blanket certificate to the issuer or distributor selling the obligation stating that the financial institution will comply with the requirements of section 165(j)(3)(A), (B) or (C) and the regulations thereunder. A blanket certificate must be received by the issuer or the distributor in the year of the issuance of the obligation or in either of the preceding two calendar years, and must be retained by the issuer or distributor for at least four years after the end of the last calendar year to which it relates.

(7) ***Restricted period.*** For purposes of this paragraph (c)(2)(i)(D), the restricted period with respect to an obligation begins on the earlier of the closing date (or the date on which the issuer receives the loan proceeds, if there is no closing with respect to the obligation), or the first date on which the obligation is offered to persons other than a distributor. The restricted period with respect to an obligation ends on the expiration of the forty day period beginning on the closing date (or the date on which the issuer receives the loan proceeds, if there is no closing with respect to the obligation). Notwithstanding the preceding sentence, any offer or sale of the obligation by the issuer or a distributor shall be deemed to be during the restricted period if the issuer or distributor holds the obligation as part of an unsold allotment or subscription.

(8) ***Clearing organization.*** For purposes of this paragraph (c)(2)(i)(D), a "clearing organization" is an entity which is in the business of holding obligations for member organizations and transferring obligations among such members by credit or debit to the account of a member without the necessity of physical delivery of the obligation.

(ii) ***Special rules.*** An obligation shall not be considered to be described in paragraph (c)(2)(i)(C) of this section if it is—

(A) Guaranteed by a United States shareholder of the issuer;

(B) Convertible into a debt or equity interest in a United States shareholder of the issuer; or

(C) Substantially identical to an obligation issued by a United States shareholder of the issuer.

For purposes of this paragraph (c)(2)(ii), the term "United States shareholder" is defined as it is defined in section 951 (b) and the regulations thereunder. For purposes of this paragraph (c)(2)(ii)(C), obligations are substantially identical if the face amount, interest rate, term of the issue, due dates for payments, and maturity date of each is substantially identical to the other.

(iii) ***Interstate commerce.*** For purposes of this paragraph, the term "interstate commerce" means trade or commerce in obligations or any transportation or communication relating thereto between any foreign country and the United States or its possessions.

(A) An issuer will not be considered to engage significantly in interstate commerce with respect to the issuance of an obligation if the only activities with respect to which the issuer uses the means or instrumentalities of interstate commerce are activities of a preparatory or auxiliary character that do not involve communication between a

prospective purchaser and an issuer, its agent, an underwriter, or member of the selling group if either is inside the United States or its possessions. Activities of a preparatory or auxiliary character include, but are not limited to, the following activities:

(*1*) Establishment or participation in establishment of policies concerning the issuance of obligations and the allocation of funding by a United States shareholder with respect to obligations issued by a foreign corporation or by a United States office with respect to obligations issued by a foreign branch;

(*2*) Negotiation between the issuer and underwriters as to the terms and pricing of an issue;

(*3*) Transfer of funds to an office of an issuer in the United States or its possessions by a foreign branch or to a United States shareholder by a foreign corporation;

(*4*) Consultation by an issuer with accountants and lawyers or other financial advisors in the United States or its possessions regarding the issuance of an obligation;

(*5*) Document drafting and printing; and

(*6*) Provision of payment or delivery instructions to members of the selling group by an issuer's office or agent that is located in the United States or its possessions.

(B) Activities that will not be considered to be of a preparatory or auxiliary character include, but are not limited to, any of the following activities:

(*1*) Negotiation or communication between a prospective purchaser and an issuer, its agent, an underwriter, or a member of the selling group concerning the sale of an obligation if either is inside the United States or its possessions;

(*2*) Involvement of an issuer's office, its agent, an underwriter, or a member of the selling group in the United States or its possessions in the offer or sale of a particular obligation, either directly with the prospective purchaser, or through the issuer in a foreign country;

(*3*) Delivery of an obligation in the United States or its possessions; or

(*4*) Advertising or otherwise promoting an obligation in the United States or its possessions.

(C) The following examples illustrate the application of this subdivision (iii) of § 1.163-5(c)(2).

Example 1. Foreign corporation A, a corporation organized in and doing business in foreign country Z, and not a controlled foreign corporation within the meaning of section 957(a) that is engaged in the conduct of a banking business within the meaning of section 954(c)(3)(B) as in effect before the Tax Reform Act of 1986, issues its debentures outside the United States. The debentures are not guaranteed by a United States shareholder of A, nor are they convertible into a debt or equity interest of a United States shareholder of A, nor are they substantially identical to an obligation issued by a United States shareholder of A. A consults its accountants and lawyers in the United States for certain securities and tax advice regarding the debt offering. The underwriting and selling group in respect to A's offering is composed entirely of foreign securities firms, some of which are foreign subsidiaries of United States securities firms. A U.S. affiliate of the foreign underwriter communicates payment and delivery instructions to the selling group. All offering

circulars for the offering are mailed and delivered outside the United States and its possessions. All debentures are delivered and paid for outside the United States and its possessions. No office located in the United States or in a United States possession is involved in the sale of debentures. Interest on the debentures is payable only outside the United States and its possessions. A is not significantly engaged in interstate commerce with respect to the offering.

Example 2. B, a United States bank, does business in foreign country X through a branch located in X. The branch is a staffed and operating unit engaged in the active conduct of a banking business consisting of one or more of the activities set forth in § 1.954-2(d)(2)(ii). As part of its ongoing business, the branch in X issues negotiable certificates of deposit with a maturity in excess of one year to customers upon request. The certificates of deposit are not guaranteed by a United States shareholder of B, nor are they convertible into a debt or equity interest of a United States shareholder of B, nor are they substantially identical to an obligation issued by a United States shareholder of B. Policies regarding the issuance of negotiable certificates of deposit and funding allocations for foreign branches are set in the United States at B's main office. Branch personnel decide whether to issue a negotiable certificate of deposit based on the guidelines established by the United States offices of B, but without communicating with the United States offices of B with respect to the issuance of a particular obligation. Negotiable certificates of deposits are delivered and paid for outside the United States and its possessions. Interest on the negotiable certificates of deposit is payable only outside the United States and its possessions. B maintains documentary evidence described in § 1.163-5(c)(2)(i)(C)(*4*). After the issuance of negotiable certificates of deposit by the foreign branch of B, the foreign branch sends the funds to a United States branch of B for use in domestic operations. B is not significantly engaged in interstate commerce with respect to the issuance of such obligation.

Example 3. The facts in Example (2) apply except that the foreign branch of B consulted, by telephone, the main office in the United States to request approval of the issuance of the certificate of deposit at a particular rate of interest. The main office granted permission to issue the negotiable certificate of deposit to the customer by a telex sent from the main office of B to the branch in X. B is significantly engaged in interstate commerce with respect to the issuance of the obligation as a result of involvement of B's United States office in the issuance of the obligation.

Example 4. The facts in Example (2) apply with the additional fact that a customer contacted the foreign branch of B through a telex originating in the United States or its possessions. Subsequent to the telex, the foreign branch issued the negotiable certificate of deposit and recorded it on the books. B is significantly engaged in interstate commerce with respect to the issuance of the obligation as a result of its communication by telex with a customer in the United States.

(iv) ***Possessions.*** For purposes of this section, the term "possessions" includes Puerto Rico, the U.S. Virgin Islands, Guam, American Samoa, Wake Island, and Northern Mariana Islands.

(v) ***Interest payable outside of the United States.*** Interest will be considered payable only outside the United States and its possessions if payment of such interest can be made only upon presentation of a coupon, or upon making of any other demand for payment, outside of the United States and its possessions to the issuer or a paying agent. The fact that payment is

made by a draft drawn on a United States bank account or by a wire or other electronic transfer from a United States account does not affect this result. Interest payments will be considered to be made within the United States if the payments are made by a transfer of funds into an account maintained by the payee in the United States or mailed to an address in the United States, if—

(A) The interest is paid on an obligation issued by either a United States person, a controlled foreign corporation as defined in section 957 (a), or a foreign corporation if 50 percent or more of the gross income of the foreign corporation from all sources of the 3-year period ending with the close of its taxable year preceding the original issuance of the obligation (or for such part of the period that the foreign corporation has been in existence) was effectively connected with the conduct of a trade or business within the United States; and

(B) The interest is paid to a person other than—

(*1*) A person who may satisfy the requirements of section 165 (j)(3) (A), (B), or (C) and the regulations thereunder; and

(*2*) A financial institution as a step in the clearance of funds and such interest is promptly credited to an account maintained outside the United States for such financial institution or for persons for which the financial institution has collected such interest.

Interest is considered to be paid within the United States and its possessions if a coupon is presented, or a demand for payment is otherwise made, to the issuer or a paying agent (whether a United States or foreign person) in the United States and its possessions even if the funds paid are credited to an account maintained by the payee outside the United States and its possessions. Interest will be considered payable only outside the United States and its possessions notwithstanding that such interest may become payable at the office of the issuer or its United States paying agent under the following conditions: the issuer has appointed paying agents located outside the United States and its possessions with the reasonable expectation that such paying agents will be able to pay the interest in United States dollars, and the full amount of such payment at the offices of all such paying agents is illegal or effectively precluded because of the imposition of exchange controls or other similar restrictions on the full payment or receipt of interest in United States dollars. A lawsuit brought in the United States or its possessions for payment of the obligation or interest thereon as a result of a default shall not be considered to be a demand for payment. For purposes of this subdivision (v), interest includes original issue discount as defined in section 1273(a). Therefore, an amount equal to the original issue discount as defined in section 1273(a) is payable only outside the United States and its possessions. The amount of market discount as defined in section 1278(a) does not affect the amount of interest to be considered payable only outside the United States and its possessions.

(vi) ***Rules relating to obligations issued after December 31, 1982 and on or before September 21, 1984.*** Whether an obligation originally issued after December 31, 1982 and on or before September 21, 1984, or an obligation originally issued after September 21, 1984 pursuant to the exercise of a warrant or the conversion of a convertible obligation, which warrant or obligation (including conversion privilege) was issued after December 31, 1982 and on or before September 21, 1984, is described in section 163(f)(2)(B) shall be determined under the rules provided in § 5f.163-1(c) as in effect prior to its removal. Notwithstanding the preceding

sentence, an issuer will be considered to satisfy the requirements of section 163(f)(2)(B) with respect to an obligation issued after December 31, 1982 and on or before September 21, 1984 or after September 21, 1984 pursuant to the exercise of a warrant or the conversion of a convertible obligation, which warrant or obligation (including conversion privilege) was issued after December 31, 1982 and on or before September 21, 1984, if the issuer substantially complied with the proposed regulations provided in § 1.163-5(c), which were published in the FEDERAL REGISTER on September 2, 1983 (48 FR 39953) and superseded by temporary regulations published in the FEDERAL REGISTER on August 22, 1984 (49 FR 33228).

(3) ***Effective date*** —

(i) ***In general.*** These regulations apply generally to obligations issued after January 20, 1987. A taxpayer may choose to apply the rules of § 1.163-5(c) with respect to an obligation issued after December 31, 1982 and on or before January 20, 1987. If this choice is made, the rules of § 1.163-5(c) will apply in lieu of § 1.163-5T(c) except that the legend requirement under § 1.163-5(c)(l)(ii)(B) does not apply with respect to a bearer obligation evidenced exclusively by a book entry and that the certification requirement under § 1.163-5T(c)(2)(B)(*4*) applies in lieu of the certification under § 1.163-5(c)(2)(i)(B)(4).

(ii) ***Special rules.*** If an obligation is originally issued after September 7, 1990 pursuant to the exercise of a warrant or the conversion of a convertible obligation, which warrant or obligation (including conversion privilege) was issued on or before May 10, 1990, then the issuer may choose to apply either the rules of § 1.163-5(c)(2)(i)(A) or § 1.163-5(c)(2)(i)(B), or the rules of § 1.163-5(c)(2)(i)(D). The issuer of an obligation may choose to apply either the rules of § 1.163-5(c)(2)(i) (A) or (B), or the rules of § 1.163-5(c)(2)(i)(D), to an obligation that is originally issued after May 10, 1990, and on or before September 7, 1990. However, any issuer choosing to apply the rules of § 1.163-5(c)(2)(i)(A) must apply the definition of United States person used for such purposes on December 31, 1989, and must obtain any certificates that would have been required under applicable law on December 31, 1989.

[T.D. 8110, 51 FR 45456, Dec. 19, 1986, as amended by T.D. 8203, 53 FR 17926, May 19, 1988; T.D. 8300, 55 FR 19624, May 10, 1990; T.D. 8734, 62 FR 53416, Oct. 14, 1997]

§ 1.163-5T Denial of interest deduction on certain obligations issued after December 31, 1982, unless issued in registered form (temporary).

(a)-(c) [Reserved]

(d) ***Pass-through certificates.***

(1) A pass-through or participation certificate evidencing an interest in a pool of mortgage loans which under subpart E of subchapter J of the Code is treated as a trust of which the grantor is the owner (or similar evidence of interest in a similar pooled fund or pooled trust treated as a grantor trust) ("pass-through certificate") is considered to be a "registration-required obligation" under section 163(f)(2)(A) and § 1.163-5(c) if the pass-through certificate is described in section 163(f)(2)(A) and § 1.163-5(c) without regard to whether any obligation held by the fund or trust to which the pass-through certificate relates is described in section 163(f)(2)(A) and § 1.163-5(c). A pass-through certificate is considered to be described in section 163(f)(2)(B) and § 1.163-5(c) if the pass-through

certificate is described in section 163(f)(2)(B) and § 1.163-5(c) without regard to whether any obligation held by the fund or trust to which the pass-through certificate relates is described in section 163(f)(2)(B) and § 1.163-5(c).

(2) An obligation held by a fund or trust in which ownership interests are represented by pass-through certificates is considered to be in registered form under section 149(a) and the regulations thereunder or to be described in section 163(f)(2) (A) or (B), if the obligation held by the fund or trust is in registered form under section 149(a) and the regulations thereunder or is described in section 163(f)(2) (A) or (B), respectively, without regard to whether the pass-through certificates are so considered.

(3) For purposes of section 4701, a pass-through certificate is considered to be issued solely by the recipient of the proceeds from the issuance of the pass-through certificate (hereinafter the "sponsor"). The sponsor is therefore liable for any excise tax under section 4701 that may be imposed with reference to the principal amount of the pass-through certificate.

(4) In order to implement the purpose of section 163, § 1.163-5(c) and this section, the Commissioner may characterize a certificate or other evidence of interest in a fund or trust which under subpart E of subchapter J of the Code is treated as a trust of which the grantor is the owner and any obligation held by such fund or trust in accordance with the substance of the arrangement they represent and may impose the penalties provided under sections 163(f)(1) and 4701 in the appropriate amounts and on the appropriate persons. This provision may be applied, for example, where a corporation issues obligations purportedly in registered form, contributes them to a grantor trust as its only assets, and arranges for the sale to investors of bearer certificates of interest in the trust which do not meet the requirements of section 163(f)(2)(B). If this provision is applied, the obligations held by the fund or trust will not be considered to be issued in registered form or to meet the requirements of section 163(f)(2)(B). The corporation will not be allowed a deduction for the payment of interest on the obligations held by the trust, and the excise tax under section 4701, calculated with reference to the principal amount of the obligations held by the trust will be imposed on the corporation may be collected from the corporation and its agents. This paragraph (d)(4) will not be applied so as to alter the tax consequences of transactions as to which rulings have been issued by the Internal Revenue Service prior to September 19, 1985.

(5) The rules set forth in this paragraph (d) apply solely for purposes of sections 4701, 163(f)(2)(A), 163(f)(2)(B), § 1.163-5(c), and any other section that refers to this section for the definition of the term "registration-required obligation" (such as the regulations under sections 871(h) and 881(c)). The treatment of obligations described in this paragraph (d) for purposes of section 163(f)(2) (A) and (B) does not affect the determination of whether bearer obligations that are issued or guaranteed by the United States Government, a United States Government-owned agency, a United States Government sponsored enterprise (within the meaning of § 1.163-5(c)(1)) or that are backed (as described in the Treasury Department News Release R-2835 of September 10, 1984 and Treasury Department News Release R-2847 of September 14, 1984) by obligations issued by the United States Government, a United States Government-owned agency, or a United States Government sponsored enterprise comply with the requirements of section 163(f)(2)(B) and the regulations thereunder.

(6) The provisions of paragraphs (d) (1) through (5) may be illustrated by the following example:

> Commercial Bank K forms a pool of 1000 residential mortgage loans, each made to a different individual homeowner, by assigning them to Commercial Bank L, an unrelated entity serving as trustee of the pool. Commercial Bank L immediately sells in a public offering certificates of interest in the trust of a maturity

of 10 years in registered form. Commercial Bank L transfers the cash proceeds of the offering to Commercial Bank K. The certificates of interest in the trust are of a type offered to the public and are not described in section 163(f)(2)(B). Pursuant to paragraph (d)(1), the certificates of interest in the pool are registration-required obligations without regard to the fact that the obligations held by the trust are not registration-required obligations.

(e) ***Regular interests in REMICS.***

(1) A regular interest in a REMIC, as defined in sections 860D and 860G and the regulations thereunder, is considered to be a "registration-required obligation" under section 163(f)(2)(A) and § 1.163-5(c) if the regular interest is described in section 163(f)(2)(A) and § 1.163-5(c), without regard to whether any obligation held by the REMIC to which the regular interest relates is described in section 163(f)(2)(A) and § 1.163-5(c). A regular interest in a REMIC is considered to be described in section 163(f)(2)(B) and § 1.163-5(c), if the regular interest is described in section 163(f)(2)(B) and § 1.163(c), without regard to whether any obligation held by the REMIC to which the regular interest relates is described in section 163(f)(2)(B) and § 1.163-5(c).

(2) An obligation held by a REMIC is considered to be described in section 163(f)(2) (A) or (B) if such obligation is described in section 163(f)(2) (A) or (B), respectively, without regard to whether the regular interests in the REMIC are so considered.

(3) For purposes of section 4701, a regular interest is considered to be issued solely by the recipient of the proceeds from the issuance of the regular interest (hereinafter the "sponsor"). The sponsor is therefore liable for any excise tax under section 4701 that may be imposed with reference to the principal amount of the regular interest.

(4) In order to implement the purpose of section 163, § 1.163-5(c), and this section, the Commissioner may characterize a regular interest in a REMIC and any obligation held by such REMIC in accordance with the substance of the arrangement they represent and may impose the penalties provided under sections 163(f)(1) and 4701 in the appropriate amounts and on the appropriate persons. This provision may be applied, for example, where a corporation issues an obligation that is purportedly in registered form and that will qualify as a "qualified mortgage" within the meaning of section 860G(a)(3) in the hands of a REMIC, contributes the obligation to a REMIC as its only asset, and arranges for the sale to investors of regular interests in the REMIC in bearer form that do not meet the requirements of section 163(f)(2)(B). If this provision is applied, the obligation held by the REMIC will not be considered to be issued in registered form or to meet the requirements of section 163(f)(2)(B). The corporation will not be allowed a deduction for the payment of interest on the obligation held by the REMIC, and the excise tax under section 4701, calculated with reference to the principal amount of the obligation held by the REMIC, will be imposed on the corporation and may be collected from the corporation and its agents.

[T.D. 8202, 53 FR 17928, May 19, 1988, as amended by T.D. 8300, 55 FR 19626, May 10, 1990]

§ 1.163-6T Reduction of deduction where section 25 credit taken (temporary).

(a) ***In general.*** The amount of the deduction under section 163 for interest paid or accrued during any taxable year on a certified indebtedness amount with respect to a mortgage credit certificate which has been issued under section 25 shall be reduced by the amount of the credit allowable with respect to such interest under section 25 (determined without regard to section 26).

(b) ***Cross reference.*** See §§ 1.25-1T through 1.25-8T with respect to rules relating to mortgage credit certificates.

[T.D. 8023, 50 FR 19355, May 8, 1985]

§ 1.163-7 Deduction for OID on certain debt instruments.

(a) ***General rule.*** Except as otherwise provided in paragraph (b) of this section, an issuer (including a transferee) determines the amount of OID that is deductible each year under section 163(e)(1) by using the constant yield method described in § 1.1272-1(b). This determination, however, is made without regard to section 1272(a)(7) (relating to acquisition premium) and § 1.1273-1(d) (relating to de minimis OID). An issuer is permitted a deduction under section 163(e)(1) only to the extent the issuer is primarily liable on the debt instrument. For certain limitations on the deductibility of OID, see sections 163(e) and 1275(b)(2). To determine the amount of interest (OID) that is deductible each year on a debt instrument that provides for contingent payments, see § 1.1275-4.

(b) ***Special rules for de minimis OID*** —

(1) ***Stated interest.*** If a debt instrument has a de minimis amount of OID (within the meaning of § 1.1273-1(d)), the issuer treats all stated interest on the debt instrument as qualified stated interest. See §§ 1.446-2(b) and 1.461-1 for the treatment of qualified stated interest.

(2) ***Deduction of de minimis OID on other than a constant yield basis.*** In lieu of deducting de minimis OID under the general rule of paragraph (a) of this section, an issuer of a debt instrument with a de minimis amount of OID (other than a de minimis amount treated as qualified stated interest under paragraph (b)(1) of this section) may choose to deduct the OID at maturity, on a straight-line basis over the term of the debt instrument, or in proportion to stated interest payments. The issuer makes this choice by reporting the de minimis OID in a manner consistent with the method chosen on the issuer's timely filed Federal income tax return for the taxable year in which the debt instrument is issued.

(c) ***Deduction upon repurchase.*** Except to the extent disallowed by any other section of the Internal Revenue Code (e.g., section 249) or this paragraph (c), if a debt instrument is repurchased by the issuer for a price in excess of its adjusted issue price (as defined in § 1.1275-1(b)), the excess (repurchase premium) is deductible as interest for the taxable year in which the repurchase occurs. If the issuer repurchases a debt instrument in a debt-for-debt exchange, the repurchase price is the issue price of the newly issued debt instrument (reduced by any unstated interest within the meaning of section 483). However, if the issue price of the newly issued debt instrument is determined under either section 1273(b)(4) or section 1274, any repurchase premium is not deductible in the year of the repurchase, but is amortized over the term of the newly issued debt instrument in the same manner as if it were OID.

(d) ***Choice of accrual periods to determine whether a debt instrument is an applicable high yield discount obligation (AHYDO).*** Section 163(e)(5) affects an issuer's OID deductions for certain high yield debt instruments that have significant OID. For purposes of section 163(i)(2), which defines significant OID, the issuer's choice of accrual periods to determine OID accruals is used to determine whether a debt instrument has significant OID. See § 1.1275-2(e) for rules relating to the issuer's obligation to disclose certain information to holders.

(e) ***Qualified reopening*** —

(1) ***In general.*** In a qualified reopening of an issue of debt instruments, if a holder pays more or less than the adjusted issue price of the original debt instruments to acquire an additional debt instrument, the issuer treats this difference as an adjustment to the issuer's interest expense for the original and additional debt instruments. As provided by paragraphs (e)(2) through (5) of this section, the adjustment is taken into account over the term of the instrument using constant yield principles.

(2) ***Positive adjustment.*** If the difference is positive (that is, the holder pays more than the adjusted issue price of the original debt instrument), then, with respect to the issuer but not the holder, the difference increases the aggregate adjusted issue prices of all of the debt instruments in the issue, both original and additional.

(3) ***Negative adjustment.*** If the difference is negative (that is, the holder pays less than the adjusted issue price of the original debt instrument), then, with respect to the issuer but not the holder, the difference reduces the aggregate adjusted issue prices of all of the debt instruments in the issue, both original and additional.

(4) ***Determination of issuer's interest accruals.*** As of the reopening date, the issuer must redetermine the yield of the debt instruments in the issue for purposes of applying the constant yield method described in § 1.1272-1(b) to determine the issuer's accruals of interest expense over the remaining term of the debt instruments in the issue. This redetermined yield is based on the aggregate adjusted issue prices of the debt instruments in the issue (as determined under this paragraph (e)) and the remaining payment schedule of the debt instruments in the issue. If the aggregate adjusted issue prices of the debt instruments in the issue (as determined under this paragraph (e)) are less than the aggregate stated redemption price at maturity of the instruments (determined as of the reopening date) by a *de minimis* amount (within the meaning of § 1.1273-1(d)), the issuer may use the rules in paragraph (b) of this section to determine the issuer's accruals of interest expense.

(5) ***Effect of adjustments on issuer's adjusted issue price.*** The adjustments made under this paragraph (e) are taken into account for purposes of determining the issuer's adjusted issue price under § 1.1275-1(b).

(6) ***Definitions.*** The terms *additional debt instrument, original debt instrument, qualified reopening,* and *reopening date* have the same meanings as in § 1.1275-2(k).

(f) ***Effective dates.*** This section (other than paragraph (e) of this section) applies to debt instruments issued on or after April 4, 1994. Taxpayers, however, may rely on this section (other than paragraph (e) of this section) for debt instruments issued after December 21, 1992, and before April 4, 1994. Paragraph (e) of this section applies to qualified reopenings where the reopening date is on or after March 13, 2001.

[T.D. 8517, 59 FR 4804, Feb. 2, 1994, as amended by T.D. 8674, 61 FR 30138, June 14, 1996; T.D. 8934, 66 FR 2815, Jan. 12, 2001]

§ 1.163-8T Allocation of interest expense among expenditures (temporary).

(a) ***In general*** —

(1) ***Application.*** This section prescribes rules for allocating interest expense for purposes of applying sections 469 (the “passive loss limitation”) and 163 (d) and (h) (the “nonbusiness interest limitations”).

(2) ***Cross-references.*** This paragraph provides an overview of the manner in which interest expense is allocated for the purposes of applying the passive loss limitation and nonbusiness interest limitations and the manner in which interest expense allocated under this section is treated. See

paragraph (b) of this section for definitions of certain terms, paragraph (c) for the rules for allocating debt and interest expense among expenditures, paragraphs (d) and (e) for the treatment of debt repayments and refinancings, paragraph (j) for the rules for reallocating debt upon the occurrence of certain events, paragraph (m) for the coordination of the rules in this section with other limitations on the deductibility of interest expense, and paragraph (n) of this section for effective date and transitional rules.

(3) ***Manner of allocation.*** In general, interest expense on a debt is allocated in the same manner as the debt to which such interest expense relates is allocated. Debt is allocated by tracing disbursements of the debt proceeds to specific expenditures. This section prescribes rules for tracing debt proceeds to specific expenditures.

(4) ***Treatment of interest expenses*** —

(i) ***General rule.*** Except as otherwise provided in paragraph (m) of this section (relating to limitations on interest expense other than the passive loss and nonbusiness interest limitations), interest expense allocated under the rules of this section is treated in the following manner:

(A) Interest expense allocated to a trade or business expenditure (as defined in paragraph (b)(7) of this section) is taken into account under section 163 (h)(2)(A);

(B) Interest expense allocated to a passive activity expenditure (as defined in paragraph (b)(4) of this section) or a former passive activity expenditure (as defined in paragraph (b)(2) of this section) is taken into account for purposes of section 469 in determining the income or loss from the activity to which such expenditure relates;

(C) Interest expense allocated to an investment expenditure (as defined in paragraph (b)(3) of this section) is treated for purposes of section 163(d) as investment interest;

(D) Interest expense allocated to a personal expenditure (as defined in paragraph (b)(5) of this section) is treated for purposes of section 163(h) as personal interest; and

(E) Interest expense allocated to a portfolio expenditure (as defined in paragraph (b)(6) of this section) is treated for purposes of section 469(e)(2)(B)(ii) as interest expense described in section 469(e)(1)(A)(i)(III).

(ii) ***Examples.*** The following examples illustrate the application of this paragraph (a)(4):

Example 1. Taxpayer A, an individual, incurs interest expense allocated under the rules of this section to the following expenditures: $6,000 Passive activity expenditure. $4,000 Personal expenditure. The $6,000 interest expense allocated to the passive activity expenditure is taken into account for purposes of section 469 in computing A's income or loss from the activity to which such interest relates. Pursuant to section 163(h), A may not deduct the $4,000 interest expense allocated to the personal expenditure (except to the extent such interest is qualified residence interest, within the meaning of section 163(h)(3)).

Example 2. (i) Corporation M, a closely held C corporation (within the meaning of section 469 (j)(1)) has $10,000 of interest expense for a taxable year. Under the rules of this section, M's interest expense is allocated to the following expenditures: $2,000 Passive activity expenditure.

$3,000 Portfolio expenditure.

$5,000 Other expenditures.

(ii) Under section 163(d)(3)(D) and this paragraph (a)(4), the $2,000 interest expense allocated to the passive activity expenditure is taken into account in computing M's passive activity loss for the taxable year, but, pursuant to section 469(e)(1) and this paragraph (a)(4), the interest expense allocated to the portfolio expenditure and the other expenditures is not taken into account for such purposes.
(iii) Since M is a closely held C corporation, its passive activity loss is allowable under section 469(e)(2)(A) as a deduction from net active income. Under section 469(e)(2)(B) and this paragraph (a)(4), the $5,000 interest expense allocated to other expenditures is taken into account in computing M's net active income, but the interest expense allocated to the passive activity expenditure and the portfolio expenditure is not taken into account for such purposes.

(iv) Since M is a corporation, the $3,000 interest expense allocated to the portfolio expenditure is allowable without regard to section 163(d). If M were an individual, however, the interest expense allocated to the portfolio expenditure would be treated as investment interest for purposes of applying the limitation of section 163(d).

(b) ***Definitions.*** For purposes of this section—

(1) "Former passive activity" means an activity described in section 469(f)(3), but only if an unused deduction or credit (within the meaning of section 469(f)(1) (A) or (B)) is allocable to the activity under section 469(b) for the taxable year.

(2) "Former passive activity expenditure" means an expenditure that is taken into account under section 469 in computing the income or loss from a former passive activity of the taxpayer or an expenditure (including an expenditure properly chargeable to capital account) that would be so taken into account if such expenditure were otherwise deductible.

(3) "Investment expenditure" means an expenditure (other than a passive activity expenditure) properly chargeable to capital account with respect to property held for investment (within the meaning of section 163(d)(5)(A)) or an expenditure in connection with the holding of such property.

(4) "Passive activity expenditure" means an expenditure that is taken into account under section 469 in computing income or loss from a passive activity of the taxpayer or an expenditure (including an expenditure properly chargeable to capital account) that would be so taken into account if such expenditure were otherwise deductible. For purposes of this section, the term "passive activity expenditure" does not include any expenditure with respect to any low-income housing project in any taxable year in which any benefit is allowed with respect to such project under section 502 of the Tax Reform Act of 1986.

(5) "Personal expenditure" means an expenditure that is not a trade or business expenditure, a passive activity expenditure, or an investment expenditure.

(6) "Portfolio expenditure" means an investment expenditure properly chargeable to capital account with respect to property producing income of a type described in section 469(e)(1)(A) or an investment expenditure for an expense clearly and directly allocable to such income.

(7) "Trade or business expenditure" means an expenditure (other than a passive activity expenditure or an investment expenditure) in connection with the conduct of any trade or business other than the trade or business of performing services as an employee.

(c) ***Allocation of debt and interest expense*** —

(1) ***Allocation in accordance with use of proceeds.*** Debt is allocated to expenditures in accordance with the use of the debt proceeds and, except as provided in paragraph (m) of this section, interest expense accruing on a debt during any period is allocated to expenditures in the same manner as the debt is allocated from time to time during such period. Except as provided in paragraph (m) of this section, debt proceeds and related interest expense are allocated solely by reference to the use of such proceeds, and the allocation is not affected by the use of an interest in any property to secure the repayment of such debt or interest. The following example illustrates the principles of this paragraph (c)(1):

Example. Taxpayer A, an individual, pledges corporate stock held for investment as security for a loan and uses the debt proceeds to purchase an automobile for personal use. Interest expense accruing on the debt is allocated to the personal expenditure to purchase the automobile even though the debt is secured by investment property.

(2) ***Allocation period*** —

(i) ***Allocation of debt.*** Debt is allocated to an expenditure for the period beginning on the date the proceeds of the debt are used or treated as used under the rules of this section to make the expenditure and ending on the earlier of—

(A) The date the debt is repaid; or

(B) The date the debt is reallocated in accordance with the rules in paragraphs (c)(4) and (j) of this section.

(ii) ***Allocation of interest expense*** —

(A) ***In general.*** Except as otherwise provided in paragraph (m) of this section, interest expense accruing on a debt for any period is allocated in the same manner as the debt is allocated from time to time, regardless of when the interest is paid.

(B) ***Effect of compounding.*** Accrued interest is treated as a debt until it is paid and any interest accruing on unpaid interest is allocated in the same manner as the unpaid interest is allocated. For the taxable year in which a debt is reallocated under the rules in paragraphs (c)(4) and (j) of this section, however, compound interest accruing on such debt (other than compound interest accruing on interest that accrued before the beginning of the year) may be allocated between the original expenditure and the new expenditure on a straight-line basis (*i.e.*, by allocating an equal amount of such interest expense to each day during the taxable year). In addition, a taxpayer may treat a year as consisting of 12 30-day months for purposes of allocating interest on a straight-line basis.

(C) ***Accrual of interest expense.*** For purposes of this paragraph (c)(2)(ii), the amount of interest expense that accrues during any period is determined by taking into account relevant provisions of the loan agreement and any applicable law such as sections 163(e), 483, and 1271 through 1275.

(iii) ***Examples.*** The following examples illustrate the principles of this paragraph (c)(2):

Example 1. (i) On January 1, taxpayer B, a calendar year taxpayer, borrows $1,000 at an interest rate of 11 percent, compounded semiannually. B immediately uses the debt proceeds to purchase an investment security. On July 1, B sells the investment security for $1,000 and uses the sales proceeds to make a passive activity expenditure. On December 31, B pays accrued interest on the $1,000 debt for the entire year.
(ii) Under this paragraph (c)(2) and paragraph (j) of this section, the $1,000 debt is allocated to the investment expenditure for the period from January 1 through June 30, and to the passive activity expenditure from July 1 through December 31. Interest expense accruing on the $1,000 debt is allocated in accordance with the allocation of the debt from time to time during the year even though the debt was allocated to the passive activity expenditure on the date the interest was paid. Thus, the $55 interest expense for the period from January 1 through June 30 is allocated to the investment expenditure. In addition, during the period from July 1 through December 31, the interest expense allocated to the investment expenditure is a debt, the proceeds of which are treated as used to make an investment expenditure. Accordingly, an additional $3 of interest expense for the period from July 1 through December 31 ($55 × .055) is allocated to the investment expenditure. The remaining $55 of interest expense for the period from July 1 through December 31 ($1,000 × .055) is allocated to the passive activity expenditure.

(iii) Alternatively, under the rule in paragraph (c)(2)(ii)(B) of this section, B may allocate the interest expense on a straight-line basis and may also treat the year as consisting of 12 30-day months for this purpose. In that case, $56.50 of interest expense (180/360 × $113) would be allocated to the investment expenditure and the remaining $56.50 of interest expense would be allocated to the passive activity expenditure.

Example 2. On January 1, 1988, taxpayer C borrows $10,000 at an interest rate of 11 percent, compounded annually. All interest and principal on the debt is payable in a lump sum on December 31, 1992. C immediately uses the debt proceeds to make a passive activity expenditure. C materially participates in the activity in 1990, 1991, and 1992. Therefore, under paragraphs (c)(2) (i) and (j) of this section, the debt is allocated to a passive activity expenditure from January 1, 1988, through December 31, 1989, and to a former passive activity expenditure from January 1, 1990, through December 31, 1992. In accordance with the loan agreement (and consistent with § 1.1272-1(d)(1) of the proposed regulations, 51 FR 12022, April 8, 1986), interest expense accruing during any

period is determined on the basis of annual compounding. Accordingly, the interest expense on the debt is allocated as follows:

Year	Amount		Expenditure
1988	$10,000 × .11	$1,100	Passive activity.
1989	11,100 × .11	1,221	Passive activity.
1990	12,321 × .11 = 1,355		
	1,355 × 2,321/12,321	255	Passive activity.
	1,355 × 10,000/12,321	1,100	Former passive activity.
		1,355	
1991	13,676 × .11 = 1,504		
	1,504 × 2,576/13,676	283	Passive activity.
	1,504 × 11,100/13,676	1,221	Former passive activity.
		1,504	
1992	15,180 × .11 = 1,670		
	1,670 × 2,859/15,180	315	Passive activity.
	1,670 × 12,321/15,180	1,355	Former passive activity.
		1,670	

(3) ***Allocation of debt; proceeds not disbursed to borrower*** —

(i) ***Third-party financing.*** If a lender disburses debt proceeds to a person other than the borrower in consideration for the sale or use of property, for services, or for any other purpose, the debt is treated for purposes of this section as if the borrower used an amount of the debt proceeds equal to such disbursement to make an expenditure for such property, services, or other purpose.

(ii) ***Debt assumptions not involving cash disbursements.*** If a taxpayer incurs or assumes a debt in consideration for the sale or use of property, for services, or for any other purpose, or takes property subject to a debt, and no debt proceeds are disbursed to the taxpayer, the debt is treated for purposes of this section as if the taxpayer used an amount of the debt proceeds equal to the balance of the debt outstanding at such time to make an expenditure for such property, services, or other purpose.

(4) ***Allocation of debt; proceeds deposited in borrower's account*** —

(i) ***Treatment of deposit.*** For purposes of this section, a deposit of debt proceeds in an account is treated as an investment expenditure, and amounts held in an account (whether or not interest bearing) are treated as property held for investment. Debt allocated to an account under this paragraph (c)(4)(i) must be reallocated as required by paragraph (j) of this section whenever debt proceeds held in the account are used for another expenditure. This paragraph (c)(4) provides rules for determining when debt proceeds are expended from the account. The following example illustrates the principles of this paragraph (c)(4)(i):

Example. Taxpayer C, a calendar year taxpayer, borrows $100,000 on January 1 and immediately uses the proceeds to open a noninterest-bearing checking account. No other amounts are deposited in the account during the year, and no portion of the principal amount of the debt is repaid during the year. On April 1, C uses $20,000 of the debt proceeds held in the account for a passive activity expenditure. On September 1, C uses an additional $40,000 of the debt proceeds held in the account for a personal expenditure. Under this paragraph (c)(4)(i), from January 1 through March 31 the entire $100,000 debt is allocated to an investment expenditure for the account. From April 1 through August 31, $20,000 of the debt is allocated to the passive activity expenditure, and $80,000 of the debt is allocated to the investment expenditure for the account. From September 1 through December 31, $40,000 of the debt is allocated to the personal expenditure, $20,000 is allocated to the passive activity expenditure, and $40,000 is allocated to an investment expenditure for the account.

(ii) ***Expenditures from account; general ordering rule.*** Except as provided in paragraph (c)(4)(iii) (B) or (C) of this section, debt proceeds deposited in an account are treated as expended before—

(A) Any unborrowed amounts held in the account at the time such debt proceeds are deposited; and

(B) Any amounts (borrowed or unborrowed) that are deposited in the account after such debt proceeds are deposited.

The following example illustrates the application of this paragraph (c)(4)(ii):

Example. On January 10, taxpayer E opens a checking account, depositing $500 of proceeds of Debt A and $1,000 of unborrowed funds. The following chart summarizes the transactions which occur during the year with respect to the account:

Date	Transaction
Jan. 10	$500 proceeds of Debt A and $1,000 unborowed funds deposited.
Jan. 11	$500 proceeds of Debt B deposited.
Feb. 17	$800 personal expenditure.
Feb. 26	$700 passive activity expenditure.
June 21	$1,000 proceeds of Debt C deposited.
Nov. 24	$800 investment expenditure.
Dec. 20	$600 personal expenditure.

The $800 personal expenditure is treated as made from the $500 proceeds of Debt A and $300 of the proceeds of Debt B. The $700 passive activity expenditure is treated as made from the remaining $200 proceeds of Debt B and $500 of unborrowed funds. The $800 investment expenditure is treated as made entirely from the proceeds of Debt C. The $600 personal expenditure is treated as made

from the remaining $200 proceeds of Debt C and $400 of unborrowed funds. Under paragraph (c)(4)(i) of this section, debt is allocated to an investment expenditure for periods during which debt proceeds are held in the account.

(iii) ***Expenditures from account; supplemental ordering rules*** —

(A) ***Checking or similar accounts.*** Except as otherwise provided in this paragraph (c)(4)(iii), an expenditure from a checking or similar account is treated as made at the time the check is written on the account, provided the check is delivered or mailed to the payee within a reasonable period after the writing of the check. For this purpose, the taxpayer may treat checks written on the same day as written in any order. In the absence of evidence to the contrary, a check is presumed to be written on the date appearing on the check and to be delivered or mailed to the payee within a reasonable period thereafter. Evidence to the contrary may include the fact that a check does not clear within a reasonable period after the date appearing on the check.

(B) ***Expenditures within 15 days after deposit of borrowed funds.*** The taxpayer may treat any expenditure made from an account within 15 days after debt proceeds are deposited in such account as made from such proceeds to the extent thereof even if under paragraph (c)(4)(ii) of this section the debt proceeds would be treated as used to make one or more other expenditures. Any such expenditures and the debt proceeds from which such expenditures are treated as made are disregarded in applying paragraph (c)(4)(ii) of this section. The following examples illustrate the application of this paragraph (c)(4)(iii)(B):

Example 1. Taxpayer D incurs a $1,000 debt on June 5 and immediately deposits the proceeds in an account (“Account A”). On June 17, D transfers $2,000 from Account A to another account (“Account B”). On June 30, D writes a $1,500 check on Account B for a passive activity expenditure. In addition, numerous deposits of borrowed and unborrowed amounts and expenditures occur with respect to both accounts throughout the month of June. Notwithstanding these other transactions, D may treat $1,000 of the deposit to Account B on June 17 as an expenditure from the debt proceeds deposited in Account A on June 5. In addition, D may similarly treat $1,000 of the passive activity expenditure on June 30 as made from debt proceeds treated as deposited in Account B on June 17.

Example 2. The facts are the same as in the example in paragraph (c)(4)(ii) of this section, except that the proceeds of Debt B are deposited on February 11 rather than on January 11. Since the $700 passive activity expenditure occurs within 15 days after the proceeds of Debt B are deposited in the account, E may treat such expenditure as being made from the proceeds of Debt B to the extent thereof. If E treats the passive activity expenditure in this manner, the expenditures from the account are treated as follows: The $800 personal expenditure is treated as made from the $500 proceeds of Debt A and $300 of unborrowed funds. The $700 passive activity expenditure is treated as made from the $500 proceeds of Debt B and $200 of unborrowed funds. The remaining expenditures are treated as in the example in paragraph (c)(4)(ii) of this section.

(C) ***Interest on segregated account.*** In the case of an account consisting solely of the proceeds of a debt and interest earned on such account, the taxpayer may treat any expenditure from such account as made first from amounts constituting interest (rather

than debt proceeds) to the extent of the balance of such interest in the account at the time of the expenditure, determined by applying the rules in this paragraph (c)(4). To the extent any expenditure is treated as made from interest under this paragraph (c)(4)(iii)(C), the expenditure is disregarded in applying paragraph (c)(4)(ii) of this section.

(iv) ***Optional method for determining date of reallocation.*** Solely for the purpose of determining the date on which debt allocated to an account under paragraph (c)(4)(i) of this section is reallocated, the taxpayer may treat all expenditures made during any calendar month from debt proceeds in the account as occurring on the later of the first day of such month or the date on which such debt proceeds are deposited in the account. This paragraph (c)(4)(iv) applies only if all expenditures from an account during the same calendar month are similarly treated. The following example illustrates the application of this paragraph (c)(4)(iv):

Example. On January 10, taxpayer G opens a checking account, depositing $500 of proceeds of Debt A and $1,000 of unborrowed funds. The following chart summarizes the transactions which occur during the year with respect to the account (note that these facts are the same as the facts of the example in paragraph (c)(4)(ii) of this section):

Date	Transaction
Jan. 10	$500 proceeds of Debt A and $1,000 unborrowed funds deposited.
Jan. 11	$500 proceeds of Debt B deposited.
Feb. 17	$800 personal expenditure.
Feb. 26	$700 passive activity expenditure.
June 21	$1,000 proceeds of Debt C deposited.
Nov. 24	$800 investment expenditure.
Dec. 20	$600 personal expenditure.

Assume that G chooses to apply the optional rule of this paragraph (c)(4)(iv) to all expenditures. For purposes of determining the date on which debt is allocated to the $800 personal expenditure made on February 17, the $500 treated as made from the proceeds of Debt A and the $300 treated as made from the proceeds of Debt B are treated as expenditures occurring on February 1. Accordingly, Debt A is allocated to an investment expenditure for the account from January 10 through January 31 and to the personal expenditure from February 1 through December 31, and $300 of Debt B is allocated to an investment expenditure for the account from January 11 through January 31 and to the personal expenditure from February 1 through December 31. The remaining $200 of Debt B is allocated to an investment expenditure for the account from January 11 through January 31 and to the passive activity expenditure from February 1 through December 31. The $800 of Debt C used to make the investment expenditure on November 24 is allocated to an investment expenditure for the account from June 21 through October 31 and to an investment expenditure from November 1 through

> December 31. The remaining $200 of Debt C is allocated to an investment expenditure for the account from June 21 through November 30 and to a personal expenditure from December 1 through December 31.

(v) ***Simultaneous deposits*** —

(A) ***In general.*** If the proceeds of two or more debts are deposited in an account simultaneously, such proceeds are treated for purposes of this paragraph (c)(4) as deposited in the order in which the debts were incurred.

(B) ***Order in which debts incurred.*** If two or more debts are incurred simultaneously or are treated under applicable law as incurred simultaneously, the debts are treated for purposes of this paragraph (c)(4)(v) as incurred in any order the taxpayer selects.

(C) ***Borrowings on which interest accrues at different rates.*** If interest does not accrue at the same fixed or variable rate on the entire amount of a borrowing, each portion of the borrowing on which interest accrues at a different fixed or variable rate is treated as a separate debt for purposes of this paragraph (c)(4)(v).

(vi) ***Multiple accounts.*** The rules in this paragraph (c)(4) apply separately to each account of a taxpayer.

(5) ***Allocation of debt; proceeds received in cash*** —

(i) ***Expenditure within 15 days of receiving debt proceeds.*** If a taxpayer receives the proceeds of a debt in cash, the taxpayer may treat any cash expenditure made within 15 days after receiving the cash as made from such debt proceeds to the extent thereof and may treat such expenditure as made on the date the taxpayer received the cash. The following example illustrates the rule in this paragraph (c)(5)(i):

Example. Taxpayer F incurs a $1,000 debt on August 4 and receives the debt proceeds in cash. F deposits $1,500 cash in an account on August 15 and on August 27 writes a check on the account for a passive activity expenditure. In addition, F engages in numerous other cash transactions throughout the month of August, and numerous deposits of borrowed and unborrowed amounts and expenditures occur with respect to the account during the same period. Notwithstanding these other transactions, F may treat $1,000 of the deposit on August 15 as an expenditure made from the debt proceeds on August 4. In addition, under the rule in paragraph (c)(4)(v)(B) of this section, F may treat the passive activity expenditure on August 27 as made from the $1,000 debt proceeds treated as deposited in the account.

(ii) ***Other expenditures.*** Except as provided in paragraphs (c)(5) (i) and (iii) of this section, any debt proceeds a taxpayer (other than a corporation) receives in cash are treated as used to make personal expenditures. For purposes of this paragraph (c)(5), debt proceeds are received in cash if, for example, a withdrawal of cash from an account is treated under the rules of this section as an expenditure of debt proceeds.

(iii) ***Special rules for certain taxpayers.*** [Reserved]

(6) ***Special rules*** —

(i) ***Qualified residence debt.*** [Reserved]

(ii) ***Debt used to pay interest.*** To the extent proceeds of a debt are used to pay interest, such debt is allocated in the same manner as the debt on which such interest accrued is allocated from time to time. The following example illustrates the application of this paragraph (c)(6)(ii):

Example. On January 1, taxpayer H incurs a debt of $1,000, bearing interest at an annual rate of 10 percent, compounded annually, payable at the end of each year ("Debt A"). H immediately opens a checking account, in which H deposits the proceeds of Debt A. No other amounts are deposited in the account during the year. On April 1, H writes a check for a personal expenditure in the amount of $1,000. On December 31, H borrows $100 ("Debt B") and immediately uses the proceeds of Debt B to pay the accrued interest of $100 on Debt A. From January 1 through March 31, Debt A is allocated, under the rule in paragraph (c)(4)(i) of this section, to the investment expenditure for the account. From April 1 through December 31, Debt A is allocated to the personal expenditure. Under the rule in paragraph (c)(2)(ii) of this section, $25 of the interest on Debt A for the year is allocated to the investment expenditure, and $75 of the interest on Debt A for the year is allocated to the personal expenditure. Accordingly, for the purpose of allocating the interest on Debt B for all periods until Debt B is repaid, $25 of Debt B is allocated to the investment expenditure, and $75 of Debt B is allocated to the personal expenditure.

(iii) ***Debt used to pay borrowing costs*** —

(A) ***Borrowing costs with respect to different debt.*** To the extent the proceeds of a debt (the "ancillary debt") are used to pay borrowing costs (other than interest) with respect to another debt (the "primary debt"), the ancillary debt is allocated in the same manner as the primary debt is allocated from time to time. To the extent the primary debt is repaid, the ancillary debt will continue to be allocated in the same manner as the primary debt was allocated immediately before its repayment. The following example illustrates the rule in this paragraph (c)(6)(iii)(A):

Example. Taxpayer I incurs debts of $60,000 ("Debt A") and $10,000 ("Debt B"). I immediately uses $30,000 of the proceeds of Debt A to make a trade or business expenditure, $20,000 to make a passive activity expenditure, and $10,000 to make an investment expenditure. I immediately use $3,000 of the proceeds of Debt B to pay borrowing costs (other than interest) with respect to Debt A (such as loan origination, loan commitment, abstract, and recording fees) and deposits the remaining $7,000 in an account. Under the rule in this paragraph (c)(6)(iii)(A), the $3,000 of Debt B used to pay expenses of incurring Debt A is allocated $1,500 to the trade or business expenditure ($3,000 × $30,000/$60,000), $1,000 to the passive activity expenditure ($3,000 × $20,000/$60,000), and $500 ($3,000 × $10,000/$60,000) to the investment expenditure. The manner in which the $3,000 of Debt B used to pay expenses of incurring Debt A is allocated may change if the allocation of Debt A changes, but such allocation will be unaffected by any repayment of Debt A. The remaining $7,000 of Debt B is allocated to an investment expenditure for the account until such time, if any, as this amount is used for a different expenditure.

(B) ***Borrowing costs with respect to same debt.*** To the extent the proceeds of a debt are used to pay borrowing costs (other than interest) with respect to such debt, such debt is allocated in the same manner as the remaining debt is allocated from time to time. The remaining debt for this purpose is the portion of the debt that is not used to pay borrowing costs (other than interst) with respect to such debt. Any repayment of the debt is treated

as a repayment of the debt allocated under this paragraph (c)(6)(iii)(B) and the remaining debt is the same proportion as such amount bear to each other. The following example illustrates the application of this paragraph (c)(6)(iii)(B):

> *Example.* (i) Taxpayer J borrows $85,000. The lender disburses $80,000 of this amount to J, retaining $5,000 for borrowing costs (other than interest) with respect to the loan. J immediately uses $40,000 of the debt proceeds to make a personal expenditure, $20,000 to make a passive activity expenditure, and $20,000 to make an investment expenditure. Under the rule in this paragraph (c)(6)(iii)(B), the $5,000 used to pay borrowing costs is allocated $2,500 ($5,000 × $40,000/$80,000) to the personal expenditure, $1,250 ($5,000 × $20,000/$80,000) to the investment expenditure. The manner in which this $5,000 is allocated may change if the allocation of the remaining $80,000 of debt is changed.
> (ii) Assume that J repays $50,000 of the debt. The repayment is treated as a repayment of $2,941 ($50,000 × $5,000/$85,000) of the debt used to pay borrowing costs and a repayment of $47,059 ($50,000 × $80,000/$85,000) of the remaining debt. Under paragraph (d) of this section, J is treated as repaying the $42,500 of debt allocated to the personal expenditure ($2,500 of debt used to pay borrowing costs and $40,000 of remaining debt). In addition, assuming that under paragraph (d)(2) J chooses to treat the allocation to the passive activity expenditure as having occurred before the allocation to the investment expenditure, J is treated as repaying $7,500 of debt allocated to the passive activity expenditure ($441 of debt used to pay borrowing costs and $7,059 of remaining debt).

(iv) ***Allocation of debt before actual receipt of debt proceeds.*** If interest properly accrues on a debt during any period before the debt proceeds are actually received or used to make an expenditure, the debt is allocated to an investment expenditure for such period.

(7) ***Antiabuse rules.*** [Reserved]

(d) ***Debt repayments*** —

(1) ***General ordering rule.*** If, at the time any portion of a debt is repaid, such debt is allocated to more than one expenditure, the debt is treated for purposes of this section as repaid in the following order:

(i) Amounts allocated to personal expenditures;

(ii) Amounts allocated to investment expenditures and passive activity expenditures (other than passive activity expenditures described in paragraph (d)(1)(iii) of this section);

(iii) Amounts allocated to passive activity expenditures in connection with a rental real estate activity with respect to which the taxpayer actively participates (within the meaning of section 469(i));

(iv) Amounts allocated to former passive activity expenditures; and

(v) Amounts allocated to trade or business expenditures and to expenditures described in the last sentence of paragraph (b)(4) of this section.

(2) ***Supplemental ordering rules for expenditures in same class.*** Amounts allocated to two or more expenditures that are described in the subdivision of paragraph (d)(1) of this section (e.g., amounts allocated to different personal expenditures) are treated as repaid in the order in which the amounts were allocated (or reallocated) to such expenditures. For purposes of this paragraph (d)(2), the taxpayer may treat allocations and reallocations that occur on the same day as occurring in any order (without regard to the order in which expenditures are treated as made under paragraph (c)(4)(iii)(A) of this section).

(3) ***Continuous borrowings.*** In the case of borrowings pursuant to a line of credit or similar account or arrangement that allows a taxpayer to borrow funds periodically under a single loan agreement—

(i) All borrowings on which interest accrues at the same fixed or variable rate are treated as a single debt; and

(ii) Borrowings or portions of borrowings on which interest accrues at different fixed or variable rates are treated as different debts, and such debts are treated as repaid for purposes of this paragraph (d) in the order in which such borrowings are treated as repaid under the loan agreement.

(4) ***Examples.*** The following examples illustrate the application of this paragraph (d):

Example 1. Taxpayer B borrows $100,000 ("Debt A") on July 12, immediately deposits the proceeds in an account, and uses the debt proceeds to make the following expenditures on the following dates: August 31—$40,000 passive activity expenditure #1. October 5—$20,000 passive activity expenditure #2. December 24—$40,000 personal expenditure. On January 19 of the following year, B repays $90,000 of Debt A (leaving $10,000 of Debt A outstanding). The $40,000 of Debt A allocated to the personal expenditure, the $40,000 allocated to passive activity expenditure #1, and $10,000 of the $20,000 allocated to passive activity expenditure #2 are treated as repaid.

Example 2. (i) Taxpayer A obtains a line of credit. Interest on any borrowing on the line of credit accrues at the lender's "prime lending rate" on the date of the borrowing plus two percentage points. The loan documents provide that borrowings on the line of credit are treated as repaid in the order the borrowings were made. A borrows $30,000 ("Borrowing #1") on the line of credit and immediately uses $20,000 of the debt proceeds to make a personal expenditure ("personal expenditure #1") and $10,000 to make a trade or business expenditure ("trade or business expenditure #1"). A subsequently borrows another $20,000 ("Borrowing #2") on the line of credit and immediately uses $15,000 of the debt proceeds to make a personal expenditure ("personal expenditure #2") and $5,000 to make a trade or business expenditure ("trade or business expenditure #2"). A then repays $40,000 of the borrowings.
(ii) If the prime lending rate plus two percentage points was the same on both the date of Borrowing #1 and the date of Borrowing #2, the borrowings are treated for purposes of this paragraph (d) as a single debt, and A is treated as having repaid $35,000 of debt allocated to personal expenditure #1 and personal expenditure #2, and $5,000 of debt allocated to trade or business expenditure #1.

(iii) If the prime lending rate plus two percentage points was different on the date of Borrowing #1 and Borrowing #2, the borrowings are treated as two debts, and, in accordance with the loan agreement, the $40,000 repaid amount is treated as a repayment of Borrowing #1 and $10,000 of Borrowing #2. Accordingly, A is treated as having repaid $20,000 of debt allocated to personal expenditure #1, $10,000 of debt allocated to trade or business expenditure #1, and $10,000 of debt allocated to personal expenditure #2.

(e) ***Debt refinancings*** —

(1) ***In general.*** To the extent proceeds of any debt (the "replacement debt") are used to repay any portion of a debt, the replacement debt is allocated to the expenditures to which the repaid debt was allocated. The amount of replacement debt allocated to any such expenditure is equal to the amount of debt allocated to such expenditure that was repaid with proceeds of the replacement debt. To the extent proceeds of the replacement debt are used for expenditures other than repayment of a debt, the replacement debt is allocated to expenditures in accordance with the rules of this section.

(2) ***Example.*** The following example illustrates the application of this paragraph (e):

Example. Taxpayer C borrows $100,000 ("Debt A") on July 12, immediately deposits the debt proceeds in an account, and uses the proceeds to make the following expenditures on the following dates (note that the facts of this example are the same as the facts of example (1) in paragraph (d)(4) of this section): August 31—$40,000 passive activity expenditure #1. October 5—$20,000 passive activity expenditure #2. December 24—$40,000 personal expenditure #1. On January 19 of the following year, C borrows $120,000 ("Debt B") and uses $90,000 of the proceeds of repay $90,000 of Debt A (leaving $10,000 of Debt A outstanding). In addition, C uses $30,000 of the proceeds of Debt B to make a personal expenditure ("personal expenditure #2"). Debt B is allocated $40,000 to personal expenditure #1, $40,000 to passive activity expenditure #1, $10,000 to passive activity expenditure #2, and $30,000 to personal expenditure #2. Under paragraph (d)(1) of this section, Debt B will be treated as repaid in the following order: (1) amounts allocated to personal expenditure #1, (2) amounts allocated to personal expenditure #2, (3) amounts allocated to passive activity expenditure #1, and (4) amounts allocated to passive activity expenditure #2.

(f) ***Debt allocated to distributions by passthrough entities.*** [Reserved]

(g) ***Repayment of passthrough entity debt.*** [Reserved]

(h) ***Debt allocated to expenditures for interests in passthrough entities.*** [Reserved]

(i) ***Allocation of debt to loans between passthrough entities and interest holders.*** [Reserved]

(j) ***Reallocation of debt*** —

(1) ***Debt allocated to capital expenditures*** —

(i) ***Time of reallocation.*** Except as provided in paragraph (j)(2) of this section, debt allocated to an expenditure properly chargeable to capital account with respect to an asset (the "first expenditure") is reallocated to another expenditure on the earlier of—

(A) The date on which proceeds from a disposition of such asset are used for another expenditure; or

(B) The date on which the character of the first expenditure changes (e.g., from a passive activity expenditure to an expenditure that is not a passive activity expenditure) by reason of a change in the use of the asset with respect to which the first expenditure was capitalized.

(ii) ***Limitation on amount reallocated.*** The amount of debt reallocated under paragraph (j)(1)(i)(A) of this section may not exceed the proceeds from the disposition of the asset. The amount of debt reallocated under paragraph (j)(1)(i)(B) of this section may not exceed the fair market value of the asset on the date of the change in use. In applying this paragraph (j)(1)(ii) with respect to a debt in any case in which two or more debts are allocable to expenditures properly chargeable to capital account with respect to the same asset, only a ratable portion (determined with respect to any such debt by dividing the amount of such debt by the aggregate amount of all such debts) of the fair market value or proceeds from the disposition of such asset shall be taken into account.

(iii) ***Treatment of loans made by the taxpayer.*** Except as provided in paragraph (j)(1)(iv) of this section, an expenditure to make a loan is treated as an expenditure properly chargeable to capital account with respect to an asset, and for purposes of paragraph (j)(1)(i)(A) of this section any repayment of the loan is treated as a disposition of the asset. Paragraph (j)(3) of this section applies to any repayment of a loan in installments.

(iv) ***Treatment of accounts.*** Debt allocated to an account under paragraph (c)(4)(i) of this section is treated as allocated to an expenditure properly chargeable to capital account with respect to an asset, and any expenditure from the account is treated as a disposition of the asset. See paragraph (c)(4) of this section for rules under which debt proceeds allocated to an account are treated as used for another expenditure.

(2) ***Disposition proceeds in excess of debt.*** If the proceeds from the disposition of an asset exceed the amount of debt reallocated by reason of such disposition, or two or more debts are reallocated by reason of the disposition of an asset, the proceeds of the disposition are treated as an account to which the rules in paragraph (c)(4) of this section apply.

(3) ***Special rule for deferred payment sales.*** If any portion of the proceeds of a disposition of an asset are received subsequent to the disposition—

(i) The portion of the proceeds to be received subsequent to the disposition is treated for periods prior to the receipt as used to make an investment expenditure; and

(ii) Debt reallocated by reason of the disposition is allocated to such investment expenditure to the extent such debt exceeds the proceeds of the disposition previously received (other than proceeds used to repay such debt).

(4) ***Examples.*** The following examples illustrate the application of this paragraph (j):

Example 1. On January 1, 1988, taxpayer D sells an asset for $25,000. Immediately before the sale, the amount of debt allocated to expenditures properly chargeable to capital account with respect to the asset was $15,000. The proceeds of the disposition are treated as an account consisting of $15,000 of debt proceeds and $10,000 of unborrowed funds to which paragraph (c)(4) of this section applies. Thus, if D immediately makes a $10,000 personal expenditure from the proceeds and within 15 days deposits the remaining proceeds in an account, D may, pursuant to paragraph (c)(4)(iii)(B) of this section, treat the entire $15,000 deposited in the account as proceeds of a debt.

Example 2. The facts are the same as in example (1) except that, instead of receiving all $25,000 of the sale proceeds on January 1, 1988, D receives 5,000 on that date, $10,000 on January 1, 1989, and $10,000 on January 1, 1990. D does not use any portion of the sale proceeds to repay the debt. Between January 1, 1988, and December 31, 1988, D is treated under paragraph (j)(3) of this section as making an investment expenditure of $20,000 to which $10,000 of debt is allocated. In addition, the remaining $5,000 of debt is reallocated on January 1, 1988, in accordance with D's use of the sales proceeds received on that date. Between January 1, 1989, and December 31, 1989, D is treated as making an investment expenditure of $10,000 to which no debt is allocated. In addition, as of January 1, 1989, $10,000 of debt is reallocated in accordance with D's use of the sales proceeds received on that date.

Example 3. The facts are the same as in example (2), except that D immediately uses the $5,000 sale proceeds received on January 1, 1988, to repay $5,000 of the $15,000 debt. Between January 1, 1988, and December 31, 1988, D is treated as making an investment expenditure of $20,000 to which the remaining balance ($10,000) of the debt is reallocated. The results in 1989 are as described in example (2).

(k) ***Modification of rules in the case of interest expense allocated to foreign source income.*** [Reserved]

(l) [Reserved]

(m) ***Coordination with other provisions*** —

(1) ***Effect of other limitations*** —

(i) ***In general.*** All debt is allocated among expenditures pursuant to the rules in this section, without regard to any limitations on the deductibility of interest expense on such debt. The applicability of the passive loss and nonbusiness interest limitations to interest on such debt, however, may be affected by other limitations on the deductibility of interest expense.

(ii) ***Disallowance provisions.*** (Interest expense that is not allowable as a deduction by reason of a disallowance provision (within the meaning of paragraph (m)(7)(ii) of this section) is not taken into account for any taxable year for purposes of applying the passive loss and nonbusiness interest limitations.

(iii) ***Deferral provisions.*** Interest expense that is not allowable as a deduction for the taxable year in which paid or accrued by reason of a deferral provision (within the meaning of paragraph (m)(7)(iii) of this section) is allocated in the same manner as the debt giving rise to the interest expense is allocated for such taxable year. Such interest expense is taken into account for purposes of applying the passive loss and nonbusiness interest limitations for the taxable year in which such interest expense is allowable under such deferral provision.

(iv) ***Capitalization provisions.*** Interest expense that is capitalized pursuant to a capitalization provision (within the meaning of paragraph (m)(7)(i) of this section) is not taken into account as interest for any taxable year for purposes of applying the passive loss and nonbusiness interest limitations.

(2) ***Effect on other limitations*** —

(i) ***General rule.*** Except as provided in paragraph (m)(2)(ii) of this section, any limitation on the deductibility of an item (other than the passive loss and nonbusiness interest limitations) applies without regard to the manner in which debt is allocated under this section. Thus, for example, interest expense treated under section 265(a)(2) as interest on indebtedness incurred

or continued to purchase or carry obligations the interest on which is wholly exempt from Federal income tax is not deductible regardless of the expenditure to which the underlying debt is allocated under this section.

(ii) ***Exception.*** Capitalization provisions (within the meaning of paragraph (m)(7)(i) of this section) do not apply to interest expense allocated to any personal expenditure under the rules of this section.

(3) ***Qualified residence interest.*** Qualified residence interest (within the meaning of section 163(h)(3)) is allowable as a deduction without regard to the manner in which such interest expense is allocated under the rules of this section. In addition, qualified residence interest is not taken into account in determining the income or loss from any activity for purposes of section 469 or in determining the amount of investment interest for purposes of section 163(d). The following example illustrates the rule in this paragraph (m)(3):

Example. Taxpayer E, an individual, incurs a $20,000 debt secured by a residence and immediately uses the proceeds to purchase an automobile exclusively for E's personal use. Under the rules in this section, the debt and interest expense on the debt are allocated to a personal expenditure. If, however, the interest on the debt is qualified residence interest within the meaning of section 163(h)(3), the interest is not treated as personal interest for purposes of section 163(h).

(4) ***Interest described in section 163(h)(2)(E).*** Interest described in section 163(h)(2)(E) is allowable as a deduction without regard to the rules of this section.

(5) ***Interest on deemed distributee debt.*** [Reserved]

(6) ***Examples.*** The following examples illustrate the relationship between the passive loss and nonbusiness interest limitations and other limitations on the deductibility of interest expense:

Example 1. Debt is allocated pursuant to the rules in this section to an investment expenditure for the purchase of taxable investment securities. Pursuant to section 265(a)(2), the debt is treated as indebtedness incurred or continued to purchase or carry obligations the interest on which is wholly exempt from Federal income tax, and, accordingly, interest on the debt is disallowed. If section 265(a)(2) subsequently ceases to apply (because, for example, the taxpayer ceases to hold any tax-exempt obligations), and the debt at such time continues to be allocated to an investment expenditure, interest on the debt that accrues after such time is subject to section 163(d).

Example 2. An accrual method taxpayer incurs a debt payable to a cash method lender who is related to the taxpayer within the meaning of section 267(b). During the period in which interest on the debt is not deductible by reason of section 267(a)(2), the debt is allocated to a passive activity expenditure. Thus, interest that accrues on the debt for such period is also allocated to the passive activity expenditure. When such interest expense becomes deductible under section 267(a)(2), it will be allocated to the passive activity expenditure, regardless of how the debt is allocated at such time.

Example 3. A taxpayer incurs debt that is allocated under the rules of this section to an investment expenditure. Under section 263A(f), however, interest expense on such debt is capitalized during the production period (within the meaning of section 263A(f)(4)(B)) of property used in a passive activity of the taxpayer. The capitalized interest expense is not allocated to the investment expenditure, and depreciation deductions attributable to the capitalized interest

expense are subject to the passive loss limitation as long as the property is used in a passive activity. However, interest expense on the debt for periods after the production period is allocated to the investment expenditure as long as the debt remains allocated to the investment expenditure.

(7) ***Other limitations on interest expense*** —

(i) ***Capitalization provisions.*** A capitalization provision is any provision that requires or allows interest expense to be capitalized. Capitalization provisions include sections 263(g), 263A(f), and 266.

(ii) ***Disallowance provisions.*** A disallowance provision is any provision (other than the passive loss and nonbusiness interest limitations) that disallows a deduction for interest expense for all taxable years and is not a capitalization provision. Disallowance provisions include sections 163(f)(2), 264(a)(2), 264(a)(4), 265(a)(2), 265(b)(2), 279(a), 291(e)(1)(B)(ii), 805(b)(1), and 834(c)(5).

(iii) ***Deferral provisions.*** A deferral provision is any provision (other than the passive loss and nonbusiness interest limitations) that disallows a deduction for interest expense for any taxable year and is not a capitalization or disallowance provision. Deferral provisions include sections 267(a)(2), 465, 1277, and 1282.

(n) ***Effective date*** —

(1) ***In general.*** This section applies to interest expense paid or accrued in taxable years beginning after December 31, 1986.

(2) ***Transitional rule for certain expenditures.*** For purposes of determining whether debt is allocated to expenditures made on or before August 3, 1987, paragraphs (c)(4)(iii)(B) and (c)(5)(i) of this section are applied by substituting “90 days” for “15 days.”

(3) ***Transitional rule for certain debt*** —

(i) ***General rule.*** Except as provided in paragraph (n)(3)(ii) of this section, any debt outstanding on December 31, 1986, that is properly attributable to a business or rental activity is treated for purposes of this section as debt allocated to expenditures properly chargeable to capital account with respect to the assets held for use or for sale to customers in such business or rental activity. Debt is properly attributable to a business or rental activity for purposes of this section (regardless of whether such debt otherwise would be allocable under this section to expenditures in connection with such activity) if the taxpayer has properly and consistently deducted interest expense (including interest subject to limitation under section 163(d) as in effect prior to the Tax Reform Act of 1986) on such debt on Schedule C, E, or F of Form 1040 in computing income or loss from such business or rental activity for taxable years beginning before January 1, 1987. For purposes of this paragraph (n)(3), amended returns filed after July 2, 1987 are disregarded in determining whether a taxpayer has consistently deducted interest expense on Schedule C, E, or F of Form 1040 in computing income or loss from a business or rental activity.

(ii) ***Exceptions*** —

(A) ***Debt financed distributions by passthrough entities.*** [Reserved]

(B) ***Election out.*** This paragraph (n)(3) does not apply with respect to debt of a taxpayer who elects under paragraph (n)(3) (viii) of this section to allocate debt outstanding on December 31, 1986, in accordance with the provisions of this section other than this paragraph (n)(3) (*i.e.*, in accordance with the use of the debt proceeds).

(iii) ***Business or rental activity.*** For purposes of this paragraph (n)(3), a business or rental activity is any trade or business or rental activity of the taxpayer. For this purpose—

(A) A trade or business includes a business or profession the income and deductions of which (or, in the case of a partner or S corporation shareholder, the taxpayer's share thereof) are properly reported on Schedule C, E, or F of Form 1040; and

(B) A rental activity includes an activity of renting property the income and deductions of which (or, in the case of a partner or S corporation shareholder, the taxpayer's share thereof) are properly reported on Schedule E of Form 1040.

(iv) ***Example.*** The following example illustrates the circumstances in which debt is properly attributable to a business or rental activity:

Example. Taxpayer H incurred a debt in 1979 and properly deducted the interest expense on the debt on Schedule C of Form 1040 for each year from 1979 through 1986. Under this paragraph (n) (3), the debt is properly attributable to the business the results of which are reported on Schedule C.

(v) ***Allocation requirement*** —

(A) ***In general.*** Debt outstanding on December 31, 1986, that is properly attributable (within the meaning of paragraph (n)(3)(i) of this section) to a business or rental activity must be allocated in a reasonable and consistent manner among the assets held for use or for sale to customers in such activity on the last day of the taxable year that includes December 31, 1986. The taxpayer shall specify the manner in which such debt is allocated by filing a statement in accordance with paragraph (n)(3)(vii) of this section. If the taxpayer does not file such a statement or fails to allocate such debt in a reasonable and consistent manner, the Commissioner shall allocate the debt.

(B) ***Reasonable and consistent manner—examples of improper allocation.*** For purposes of this paragraph (n)(3)(v), debt is not treated as allocated in a reasonable and consistent manner if—

(*1*) The amount of debt allocated to goodwill exceeds the basis of the goodwill; or

(*2*) The amount of debt allocated to an asset exceeds the fair market value of the asset, and the amount of debt allocated to any other asset is less than the fair market value (lesser of basis or fair market value in the case of goodwill) of such other asset.

(vi) ***Coordination with other provisions.*** The effect of any events occurring after the last day of the taxable year that includes December 31, 1986, shall be determined under the rules of this section, applied by treating the debt allocated to an asset under paragraph (n)(3)(v) of this section as if proceeds of such debt were used to make an expenditure properly chargeable to capital account with respect to such asset on the last day of the taxable year that includes December 31, 1986. Thus, debt that is allocated to an asset in accordance with this paragraph (n)(3) must be reallocated in accordance with paragraph (j) of this section upon the occurrence

with respect to such asset of any event described in such paragraph (j). Similarly, such debt is treated as repaid in the order prescribed in paragraph (d) of this section. In addition, a replacement debt (within the meaning of paragraph (e) of this section) is allocated to an expenditure properly chargeable to capital account with respect to an asset to the extent the proceeds of such debt are used to repay the portion of a debt allocated to such asset under this paragraph (n)(3).

(vii) ***Form for allocation of debt.*** A taxpayer shall allocate debt for purposes of this paragraph (n)(3) by attaching to the taxpayer's return for the first taxable year beginning after December 31, 1986, a statement that is prominently identified as a transitional allocation statement under § 1.163-8T(n)(3) and includes the following information:

(A) A description of the business or rental activity to which the debt is properly attributable;

(B) The amount of debt allocated;

(C) The assets among which the debt is allocated;

(D) The manner in which the debt is allocated;

(E) The amount of debt allocated to each asset; and

(F) Such other information as the Commissioner may require.

(viii) ***Form for election out.*** A taxpayer shall elect to allocate debt outstanding on December 31, 1986, in accordance with the provisions of this section other than this paragraph (n)(3) by attaching to the taxpayer's return (or amended return) for the first taxable year beginning after December 31, 1986, a statement to that effect, prominently identified as as election out under § 1.163-8T(n)(3).

(ix) ***Special rule for partnerships and S corporations.*** For purposes of paragraph (n)(3)(ii)(B), (v), (vii) and (viii) of this section (relating to the allocation of debt and election out), a partnership or S corporation shall be treated as the taxpayer with respect to the debt of the partnership or S corporation.

(x) ***Irrevocability.*** An allocation or election filed in accordance with paragraph (n)(3) (vii) or (viii) of this section may not be revoked or modified except with the consent of the Commissioner.

[T.D. 8145, 52 FR 24999, July 2, 1987, as amended by T.D. 8145, 62 FR 40270, July 28, 1997]

§ 1.163-9T Personal interest (temporary).

(a) ***In general.*** No deduction under any provision of Chapter 1 of the Internal Revenue Code shall be allowed for personal interest paid or accrued during the taxable year by a taxpayer other than a corporation.

(b) ***Personal interest*** —

(1) ***Definition.*** For purposes of this section, personal interest is any interest expense other than—

(i) Interest paid or accrued on indebtedness properly allocable (within the meaning of § 1.163-8T) to the conduct of trade or business (other than the trade or business of performing services as an employee),

(ii) Any investment interest (within the meaning of section 163(d)(3)),

(iii) Any interest that is taken into account under section 469 in computing income or loss from a passive activity of the taxpayer,

(iv) Any qualified residence interest (within the meaning of section 163(h)(3) and § 1.163-10T), and

(v) Any interest payable under section 6601 with respect to the unpaid portion of the tax imposed by section 2001 for the period during which an extension of time for payment of such tax is in effect under section 6163, 6166, or 6166A (as in effect before its repeal by the Economic Recovery Tax Act of 1981).

(2) ***Interest relating to taxes*** —

(i) ***In general.*** Except as provided in paragraph (b)(2)(iii) of this section, personal interest includes interest—

(A) Paid on underpayments of individual Federal, State or local income taxes and on indebtedness used to pay such taxes (within the meaning of § 1.163-8T), regardless of the source of the income generating the tax liability;

(B) Paid under section 453(e)(4)(B) (interest on deferred tax resulting from certain installment sales) and section 1291(c) (interest on deferred tax attributable to passive foreign investment companies); or

(C) Paid by a trust, S corporation, or other pass-through entity on underpayments of State or local income taxes and on indebtedness used to pay such taxes.

(ii) ***Example.*** A, an individual, owns stock of an S corporation. On its return for 1987, the corporation underreports its taxable income. Consequently, A underreports A's share of that income on A's tax return. In 1989, A pays the resulting deficiency plus interest to the Internal Revenue Service. The interest paid by A in 1989 on the tax deficiency is personal interest, notwithstanding the fact that the additional tax liability may have arisen out of income from a trade or business. The result would be the same if A's business had been operated as a sole proprietorship.

(iii) ***Certain other taxes.*** Personal interest does not include interest—

(A) Paid with respect to sales, excise and similar taxes that are incurred in connection with a trade or business or an investment activity;

(B) Paid by an S corporation with respect to an underpayment of income tax from a year in which the S corporation was a C corporation or with respect to an underpayment of the taxes imposed by sections 1374 or 1375, or similar provision of State law; or

(C) Paid by a transferee under section 6901 (tax liability resulting from transferred assets), or a similar provision of State law, with respect to a C corporation's underpayment of income tax.

(3) ***Cross references.*** See § 1.163-8T for rules for determining the allocation of interest expense to various activities. See § 1.163-10T for rules concerning qualified residence interest.

(c) ***Effective date*** —

(1) ***In general.*** The provisions of this section are effective for taxable years beginning after December 31, 1986. In the case of any taxable year beginning in calendar years 1987 through 1990, the amount of personal interest that is nondeductible under this section is limited to the applicable percentage of such amount.

(2) ***Applicable percentages.*** The applicable percentage for taxable years beginning in 1987 through 1990 are as follows:

1987: 35 percent

1988: 60 percent

1989: 80 percent

1990: 90 percent

[T.D. 8168, 52 FR 48409, Dec. 22, 1987; 68 FR 13226, Mar. 19, 2003]

§ 1.163-10T Qualified residence interest (temporary).

(a) ***Table of contents.*** This paragraph (a) lists the major paragraphs that appear in this § 1.163-10T.

(a) Table of contents.

(b) Treatment of qualified residence interest.

(c) Determination of qualified residence interest when secured debt does not exceed the adjusted purchase price.

(1) In general.

(2) Examples.

(d) Determination of qualified residence interest when secured debt exceeds adjusted purchase price—Simplified method.

(1) In general.

(2) Treatment of interest paid or accrued on secured debt that is not qualified residence interest.

(3) Example.

(e) Determination of qualified residence interest when secured debt exceeds adjusted purchase price—Exact method.

(1) In general.

(2) Determination of applicable debt limit.

(3) Example.

(4) Treatment of interest paid or accrued with respect to secured debt that is not qualified residence interest.

(i) In general.

(ii) Example.

(iii) Special rule of debt is allocated to more than one expenditure.

(iv) Example.

(f) Special rules.

(1) Special rules for personal property.

(i) In general.

(ii) Example.

(2) Special rule for real property.

(i) In general.

(ii) Example.

(g) Selection of method.

(h) Average balance.

(1) Average balance defined.

(2) Average balance reported by lender.

(3) Average balance computed on a daily basis.

(i) In general.

(ii) Example.

(4) Average balance computed using the interest rate.

(i) In general.

(ii) Points and prepaid interest.

(iii) Examples.

(5) Average balance computed using average of beginning and ending balance.

(i) In general.

(ii) Example.

(6) Highest principal balance.

(7) Other methods provided by the Commissioner.

(8) Anti-abuse rule.

(i) [Reserved]

(j) Determination of interest paid or accrued during the taxable year.

(1) In general.

(2) Special rules for cash-basis taxpayers.

(i) Points deductible in year paid under section 461(g)(2).

(ii) Points and other prepaid interest described in section 461(g)(1).

(3) Examples.

(k) Determination of adjusted purchase price and fair market value.

(1) Adjusted purchase price.

(i) In general.

(ii) Adjusted purchase price of a qualified residence acquired incident to divorce.

(iii) Examples.

(2) Fair market value.

(i) In general.

(ii) Examples.

(3) Allocation of adjusted purchase price and fair market value.

(l) [Reserved]

(m) Grandfathered amount.

(1) Substitution for adjusted purchase price.

(2) Determination of grandfathered amount.

(i) In general.

(ii) Special rule for lines of credit and certain other debt.

(iii) Fair market value limitation.

(iv) Examples.

(3) Refinancing of grandfathered debt.

(i) In general.

(ii) Determination of grandfathered amount.

(4) Limitation on terms of grandfathered debt.

(i) In general.

(ii) Special rule for nonamortizing debt.

(iii) Example.

(n) Qualified indebtedness (secured debt used for medical and educational purposes).

(1) In general.

(i) Treatment of qualified indebtedness.

(ii) Determination of amount of qualified indebtedness.

(iii) Determination of amount of qualified indebtedness for mixed-use debt.

(iv) Example.

(v) Prevention of double counting in year of refinancing.

(vi) Special rule for principal payments in excess of qualified expenses.

(2) Debt used to pay for qualified medical or educational expenses.

(i) In general.

(ii) Special rule for refinancing.

(iii) Other special rules.

(iv) Examples.

(3) Qualified medical expenses.

(4) Qualified educational expenses.

(o) Secured debt.

(1) In general.

(2) Special rule for debt in certain States.

(3) Time at which debt is treated as secured.

(4) Partially secured debt.

(i) In general.

(ii) Example.

(5) Election to treat debt as not secured by a qualified residence.

(i) In general.

(ii) Example.

(iii) Allocation of debt secured by two qualified residences.

(p) Definition of qualified residence.

(1) In general.

(2) Principal residence.

(3) Second residence.

(i) In general.

(ii) Definition of residence.

(iii) Use as a residence.

(iv) Election of second residence.

(4) Allocations between residence and other property.

(i) In general.

(ii) Special rule for rental of residence.

(iii) Examples.

(5) Residence under construction.

(i) In general.

(ii) Example.

(6) Special rule for the time-sharing arrangements.

(q) Special rules for tenant-stockholders in cooperative housing corporations.

(1) In general.

(2) Special rule where stock may not be used to secure debt.

(3) Treatment of interest expense of the cooperative described in section 216(a)(2).

(4) Special rule to prevent tax avoidance.

(5) Other definitions.

(r) Effective date.

(b) ***Treatment of qualified residence interest.*** Except as provided below, qualified residence interest is deductible under section 163(a). Qualified residence interest is not subject to limitation or otherwise taken into account under section 163(d) (limitation on investment interest), section 163(h)(1) (disallowance of deduction for personal interest), section 263A (capitalization and inclusion in inventory costs of certain expenses) or section 469 (limitations on losses from passive activities). Qualified residence interest is subject to the limitation imposed by section 263(g) (certain interest in the case of straddles), section 264(a) (2) and (4) (interest paid in connection with certain insurance), section 265(a)(2) (interest relating to tax-exempt income), section 266 (carrying charges), section 267(a)(2) (interest with respect to transactions between related taxpayers) section 465 (deductions limited to amount at risk), section 1277 (deferral of interest deduction allocable to accrued market discount), and section 1282 (deferral of interest deduction allocable to accrued discount).

(c) ***Determination of qualified residence interest when secured debt does not exceed adjusted purchase price*** —

(1) ***In general.*** If the sum of the average balances for the taxable year of all secured debts on a qualified residence does not exceed the adjusted purchase price (determined as of the end of the taxable year) of the qualified residence, all of the interest paid or accrued during the taxable year with respect to the secured debts is qualified residence interest. If the sum of the average balances for the taxable year of all secured debts exceeds the adjusted purchase price of the qualified residences (determined as of the end of the taxable year), the taxpayer must use either the simplified method (see paragraph (d) of this section) or the exact method (see paragraph (e) of this section) to determine the amount of interest that is qualified residence interest.

(2) ***Examples.***

Example 1. T purchases a qualified residence in 1987 for $65,000. T pays $6,500 in cash and finances the remainder of the purchase with a mortgage of $58,500. In 1988, the average balance of the mortgage is $58,000. Because the average balance of the mortgage is less than the adjusted purchase price of the residence ($65,000), all of the interest paid or accrued during 1988 on the mortgage is qualified residence interest.

Example 2. The facts are the same as in example (1), except that T incurs a second mortgage on January 1, 1988, with an initial principal balance of $2,000. The average balance of the second mortgage in 1988 is $1,900. Because the sum of the average balance of the first and second mortgages ($59,900) is less than the adjusted purchase price of the residence ($65,000), all of the interest paid or accrued during 1988 on both the first and second mortgages is qualified residence interest.

Example 3. P borrows $50,000 on January 1, 1988 and secures the debt by a qualified residence. P pays the interest on the debt monthly, but makes no principal payments in 1988. There are no other debts secured by the residence during 1988. On December 31, 1988, the adjusted purchase price of the residence is $40,000. The average balance of the debt in 1988 is $50,000. Because the average balance of the debt exceeds the adjusted purchase price ($10,000), some of the interest on the debt is not qualified residence interest. The portion of the total interest that is qualified residence interest must be determined in accordance with the rules of paragraph (d) or paragraph (e) of this section.

(d) ***Determination of qualified residence interest when secured debt exceeds adjusted purchase price—Simplified method —***

(1) ***In general.*** Under the simplified method, the amount of qualified residence interest for the taxable year is equal to the total interest paid or accrued during the taxable year with respect to all secured debts multiplied by a fraction (not in excess of one), the numerator of which is the adjusted purchase price (determined as of the end of the taxable year) of the qualified residence and the denominator of which is the sum of the average balances of all secured debts.

(2) ***Treatment of interest paid or accrued on secured debt that is not qualified residence interest.*** Under the simplified method, the excess of the total interest paid or accrued during the taxable year with respect to all secured debts over the amount of qualified residence interest is personal interest.

(3) ***Example.***

> *Example.* R's principal residence has an adjusted purchase price on December 31, 1988, of $105,000. R has two debts secured by the residence, with the following average balances and

interest payments:

Debt	Date secured	Average balance	Interest
Debt 1	June 1983	$80,000	$8,000
Debt 2	May 1987	40,000	4,800
Total		120,000	12,800

The amount of qualified residence interest is determined under the simplified method by multiplying the total interest ($12,800) by a fraction (expressed as a decimal amount) equal to the adjusted purchase price ($105,000) of the residence divided by the combined average balances ($120,000). For 1988, this fraction is equal to 0.875 ($105,000/$120,000). Therefore, $11,200 ($12,800 × 0.875) of the total interest is qualified residence interest. The remaining $1,600 in interest ($12,800 − $11,200) is personal interest, even if (under the rules of § 1.163-8T) such remaining interest would be allocated to some other category of interest.

(e) ***Determination of qualified residence interest when secured debt exceeds adjusted purchase price—Exact method*** —

(1) ***In general.*** Under the exact method, the amount of qualified residence interest for the taxable year is determined on a debt-by-debt basis by computing the applicable debt limit for each secured debt and comparing each such applicable debt limit to the average balance of the corresponding debt. If, for the taxable year, the average balance of a secured debt does not exceed the applicable debt limit for that debt, all of the interest paid or accrued during the taxable year with respect to the debt is qualified residence interest. If the average balance of the secured debt exceeds the applicable debt limit for that debt, the amount of qualified residence interest with respect to the debt is determined by multiplying the interest paid or accrued with respect to the debt by a fraction, the numerator of which is the applicable debt limit for that debt and the denominator of which is the average balance of the debt.

(2) ***Determination of applicable debt limit.*** For each secured debt, the applicable debt limit for the taxable year is equal to

(i) The lesser of—

(A) The fair market value of the qualified residence as of the date the debt is first secured, and

(B) The adjusted purchase price of the qualified residence as of the end of the taxable year,

(ii) Reduced by the average balance of each debt previously secured by the qualified residence.

For purposes of paragraph (e)(2)(ii) of this section, the average balance of a debt shall be treated as not exceeding the applicable debt limit of such debt. See paragraph (n)(1)(i) of this section for the rule that increases the adjusted purchase price in paragraph (e)(2)(i)(B) of this section by the amount of any qualified indebtedness (certain medical and educational debt). See paragraph (f) of this section for special rules relating to the determination of the fair market value of the qualified residence.

(3) *Example.*

(i) R's principal residence has an adjusted purchase price on December 31, 1988, of $105,000. R has two debts secured by the residence. The average balances and interest payments on each debt during 1988 and fair market value of the residence on the date each debt was secured are as follows:

Debt	Date secured	Fair market value	Average balance	Interest
Debt 1	June 1983	$100,000	$80,000	$8,000
Debt 2	May 1987	140,000	40,000	4,800
Total			120,000	12,800

(ii) The amount of qualified residence interest for 1988 under the exact method is determined as follows. Because there are no debts previously secured by the residence, the applicable debt limit for Debt 1 is $100,000 (the lesser of the adjusted purchase price as of the end of the taxable year and the fair market value of the residence at the time the debt was secured). Because the average balance of Debt 1 ($80,000) does not exceed its applicable debt limit ($100,000), all of the interest paid on the debt during 1988 ($8,000) is qualified residence interest.

(iii) The applicable debt limit for Debt 2 is $25,000 ($105,000 (the lesser of $140,000 fair market value and $105,000 adjusted purchase price) reduced by $80,000 (the average balance of Debt 1)). Because the average balance of Debt 2 ($40,000) exceeds its applicable debt limit, the amount of qualified residence interest on Debt 2 is determined by multiplying the amount of interest paid on the debt during the year ($4,800) by a fraction equal to its applicable debt limit divided by its average balance ($25,000/$40,000 = 0.625). Accordingly, $3,000 ($4,800 × 0.625) of the interest paid in 1988 on Debt 2 is qualified residence interest. The character of the remaining $1,800 of interest paid on Debt 2 is determined under the rules of paragraph (e)(4) of this section.

(4) ***Treatment of interest paid or accrued with respect to secured debt that is not qualified residence interest —***

(i) ***In general.*** Under the exact method, the excess of the interest paid or accrued during the taxable year with respect to a secured debt over the amount of qualified residence interest with respect to the debt is allocated under the rules of § 1.163-8T.

(ii) ***Example.*** T borrows $20,000 and the entire proceeds of the debt are disbursed by the lender to T's broker to purchase securities held for investment. T secures the debt with T's principal residence. In 1990, T pays $2,000 of interest on the debt. Assume that under the rules of paragraph (e) of this section, $1,500 of the interest is qualified residence interest. The remaining $500 in interest expense would be allocated under the rules of § 1.163-8T. Section 1.163-8T generally allocates debt (and the associated interest expense) by tracing disbursements of the debt proceeds to specific expenditures. Accordingly, the $500 interest expense on the debt that is not qualified residence interest is investment interest subject to section 163(d).

(iii) ***Special rule if debt is allocated to more than one expenditure.*** If—

(A) The average balance of a secured debt exceeds the applicable debt limit for that debt, and

(B) Under the rules of § 1.163-8T, interest paid or accrued with respect to such debt is allocated to more than one expenditure,

the interest expense that is not qualified residence interest may be allocated among such expenditures, to the extent of such expenditures, in any manner selected by the taxpayer.

(iv) ***Example.*** (*i*) C borrows $60,000 secured by a qualified residence. C uses (within the meaning of § 1.163-8T) $20,000 of the proceeds in C's trade or business, $20,000 to purchase stock held for investment and $20,000 for personal purposes. In 1990, C pays $6,000 in interest on the debt and, under the rules of § 1.163-8T, $2,000 in interest is allocable to trade or business expenses, $2,000 to investment expenses and $2,000 to personal expenses. Assume that under paragraph (e) of this section, $2,500 of the interest is qualified residence interest and $3,500 of the interest is not qualified residence interest.

(*ii*) Under paragraph (e)(4)(iii) of this section, C may allocate up to $2,000 of the interest that is not qualified residence interest to any of the three categories of expenditures up to a total of $3,500 for all three categories. Therefore, for example, C may allocate $2,000 of such interest to C's trade or business and $1,500 of such interest to the purchase of stock.

(f) ***Special rules*** —

(1) ***Special rules for personal property*** —

(i) ***In general.*** If a qualified residence is personal property under State law (e.g., a boat or motorized vehicle)—

(A) For purposes of paragraphs (c)(1) and (d)(1) of this section, if the fair market value of the residence as of the date that any secured debt (outstanding during the taxable year) is first secured by the residence is less than the adjusted purchase price as of the end of the taxable year, the lowest such fair market value shall be substituted for the adjusted purchase price.

(B) For purposes of paragraphs (e)(2)(i)(A) and (f)(1)(i)(A) of this section, the fair market value of the residence as of the date the debt is first secured by the residence shall not exceed the fair market value as of any date on which the taxpayer borrows any additional amount with respect to the debt.

(ii) ***Example.*** D owns a recreational vehicle that is a qualified residence under paragraph (p)(4) of this section. The adjusted purchase price and fair market value of the recreational vehicle is $20,000 in 1989. In 1989, D establishes a line of credit secured by the recreational vehicle. As of June 1, 1992, the fair market value of the vehicle has decreased to $10,000. On that day, D borrows an additional amount on the debt by using the line of credit. Although under paragraphs (e)(2)(i) and (f)(1)(i)(A) of this section, fair market value is determined at the time the debt is first secured, under paragraph (f)(1)(i)(B) of this section, the fair market value is the lesser of that amount or the fair market value on the most recent date that D borrows any additional amount with respect to the line of credit. Therefore, the fair market value with respect to the debt is $10,000.

(2) ***Special rule for real property*** —

(i) ***In general.*** For purposes of paragraph (e)(2)(i)(A) of this section, the fair market value of a qualified residence that is real property under State law is presumed irrebuttably to be not less than the adjusted purchase price of the residence as of the last day of the taxable year.

(ii) *Example.* (*i*) C purchases a residence on August 11, 1987, for $50,000, incurring a first mortgage. The residence is real property under State law. During 1987, C makes $10,000 in home improvements. Accordingly, the adjusted purchase price of the residence as of December 31, 1988, is $60,000. C incurs a second mortgage on May 19, 1988, as of which time the fair market value of the residence is $55,000.

(*ii*) For purposes of determining the applicable debt limit for each debt, the fair market value of the residence is generally determined as of the time the debt is first secured. Accordingly, the fair market value would be $50,000 and $55,000 with respect to the first and second mortgage, respectively. Under the special rule of paragraph (f)(2)(i) of this section, however, the fair market value with respect to both debts in 1988 is $60,000, the adjusted purchase price on December 31, 1988.

(g) ***Selection of method.*** For any taxable year, a taxpayer may use the simplified method (described in paragraph (d) of this section) or the exact method (described in paragraph (e) of this section) by completing the appropriate portion of Form 8598. A taxpayer with two qualified residences may use the simplified method for one residence and the exact method for the other residence.

(h) ***Average balance*** —

(1) ***Average balance defined.*** For purposes of this section, the term “average balance” means the amount determined under this paragraph (h). A taxpayer is not required to use the same method to determine the average balance of all secured debts during a taxable year or of any particular secured debt from one year to the next.

(2) ***Average balance reported by lender.*** If a lender that is subject to section 6050H (returns relating to mortgage interest received in trade or business from individuals) reports the average balance of a secured debt on Form 1098, the taxpayer may use the average balance so reported.

(3) ***Average balance computed on a daily basis*** —

(i) ***In general.*** The average balance may be determined by—

(A) Adding the outstanding balance of a debt on each day during the taxable year that the debt is secured by a qualified residence, and

(B) Dividing the sum by the number of days during the taxable year that the residence is a qualified residence.

(ii) ***Example.*** Taxpayer A incurs a debt of $10,000 on September 1, 1989, securing the debt with A's principal residence. The residence is A's principal residence during the entire taxable year. A pays current interest on the debt monthly, but makes no principal payments. The debt is, therefore, outstanding for 122 days with a balance each day of $10,000. The residence is a qualified residence for 365 days. The average balance of the debt for 1989 is $3,342 (122 × $10,000/365).

(4) ***Average balance computed using the interest rate*** —

(i) ***In general.*** If all accrued interest on a secured debt is paid at least monthly, the average balance of the secured debt may be determined by dividing the interest paid or accrued during the taxable year while the debt is secured by a qualified residence by the annual interest rate on the debt. If the interest rate on a debt varies during the taxable year, the lowest annual interest rate that applies to the debt during the taxable year must be used for purposes of this paragraph (h)(4). If the residence securing the debt is a qualified residence for less than the entire taxable year, the average balance of any secured debt may be determined by dividing the average balance determined under the preceding sentence by the percentage of the taxable year that the debt is secured by a qualified residence.

(ii) ***Points and prepaid interest.*** For purposes of paragraph (h)(4)(i) of this section, the amount of interest paid during the taxable year does not include any amount paid as points and includes prepaid interest only in the year accrued.

(iii) ***Examples.***

Example 1. B has a line of credit secured by a qualified residence for the entire taxable year. The interest rate on the debt is 10 percent throughout the taxable year. The principal balance on the debt changes throughout the year. B pays the accrued interest on the debt monthly. B pays $2,500 in interest on the debt during the taxable year. The average balance of the debt ($25,000) may be computed by dividing the total interest paid by the interest rate ($25,000 = $2,500/0.10).

Example 2. Assume the same facts as in example 1, except that the residence is a qualified residence, and the debt is outstanding, for only one-half of the taxable year and B pays only $1,250 in interest on the debt during the taxable year. The average balance of the debt may be computed by first dividing the total interest paid by the interest rate ($12,500 = $1,250/0.10). Second, because the residence is not a qualified residence for the entire taxable year, the average balance must be determined by dividing this amount ($12,500) by the portion of the year that the residence is qualified (0.50). The average balance is therefore $25,000 ($12,500/0.50).

(5) ***Average balance computed using average of beginning and ending balances*** —

(i) ***In general.*** If—

(A) A debt requires level payments at fixed equal intervals (e.g., monthly, quarterly) no less often than semi-annually during the taxable year,

(B) The taxpayer prepays no more than one month's principal on the debt during the taxable year, and

(C) No new amounts are borrowed on the debt during the taxable year,

the average balance of the debt may be determined by adding the principal balance as of the first day of the taxable year that the debt is secured by the qualified residence and the principal balance as of the last day of the taxable year that the debt is secured by the qualified residence and dividing the sum by 2. If the debt is secured by a qualified residence for less than the entire period during the taxable year that the residence is a qualified residence, the average balance may be determined by multiplying the average balance determined under the preceding sentence by a fraction, the numerator of which is the number of days during the taxable year that the debt is secured by the qualified residence and the denominator of which is the number

of days during the taxable year that the residence is a qualified residence. For purposes of this paragraph (h)(5)(i), the determination of whether payments are level shall disregard the fact that the amount of the payments may be adjusted from time to time to take into account changes in the applicable interest rate.

(ii) ***Example.*** C borrows $10,000 in 1988, securing the debt with a second mortgage on a principal residence. The terms of the loan require C to make equal monthly payments of principal and interest so as to amortize the entire loan balance over 20 years. The balance of the debt is $9,652 on January 1, 1990, and is $9,450 on December 31, 1990. The average balance of the debt during 1990 may be computed as follows:

Balance on first day of the year: $9,652

Balance on last day of the year: $9,450

$$\text{Average balance: } \frac{\$9{,}652 + \$9{,}450}{2} = \$9{,}551$$

(6) ***Highest principal balance.*** The average balance of a debt may be determined by taking the highest principal balance of the debt during the taxable year.

(7) ***Other methods provided by the Commissioner.*** The average balance may be determined using any other method provided by the Commissioner by form, publication, revenue ruling, or revenue procedure. Such methods may include methods similar to (but with restrictions different from) those provided in paragraph (h) of this section.

(8) ***Anti-abuse rule.*** If, as a result of the determination of the average balance of a debt using any of the methods specified in paragraphs (h) (4), (5), or (6) of this section, there is a significant overstatement of the amount of qualified residence interest and a principal purpose of the pattern of payments and borrowing on the debt is to cause the amount of such qualified residence interest to be overstated, the district director may redetermine the average balance using the method specified under paragraph (h)(3) of this section.

(i) [Reserved]

(j) ***Determination of interest paid or accrued during the taxable year —***

(1) ***In general.*** For purposes of determining the amount of qualified residence interest with respect to a secured debt, the amount of interest paid or accrued during the taxable year includes only interest paid or accrued while the debt is secured by a qualified residence.

(2) ***Special rules for cash-basis taxpayers —***

(i) ***Points deductible in year paid under section 461(g)(2).*** If points described in section 461(g)(2) (certain points paid in respect of debt incurred in connection with the purchase or improvement of a principal residence) are paid with respect to a debt, the amount of such points is qualified residence interest.

(ii) ***Points and other prepaid interest described in section 461(g)(1).*** The amount of points or other prepaid interest charged to capital account under section 461(g)(1) (prepaid interest) that is qualified residence interest shall be determined under the rules of paragraphs (c) through (e) of this section in the same manner as any other interest paid with respect to the debt in the taxable year to which such payments are allocable under section 461(g)(1).

(3) ***Examples.***

Example 1. T designates a vacation home as a qualified residence as of October 1, 1987. The home is encumbered by a mortgage during the entire taxable year. For purposes of determining the amount of qualified residence interest for 1987, T may take into account the interest paid or accrued on the secured debt from October 1, 1987, through December 31, 1987.

Example 2. R purchases a principal residence on June 17, 1987. As part of the purchase price, R obtains a conventional 30-year mortgage, secured by the residence. At closing, R pays $2^1/_2$ points on the mortgage and interest on the mortgage for the period June 17, 1987 through June 30, 1987. The points are actually paid by R and are not merely withheld from the loan proceeds. R incurs no additional secured debt during 1987. Assuming that the points satisfy the requirements of section 461(g) (2), the entire amount of points and the interest paid at closing are qualified residence interest.

Example 3. (*i*) On July 1, 1987, W borrows $120,000 to purchase a residence to use as a vacation home. W secures the debt with the residence. W pays 2 points, or $2,400. The debt has a term of 10 years and requires monthly payments of principal and interest. W is permitted to amortize the points at the rate of $20 per month over 120 months. W elects to treat the residence as a second residence. W has no other debt secured by the residence. The average balance of the debt in each taxable year is less than the adjusted purchase price of the residence. W sells the residence on June 30, 1990, and pays off the remaining balance of the debt.
(*ii*) W is entitled to treat the following amounts of the points as interest paid on a debt secured by a qualified residence—

1987	$120 = $20 × 6 months;
1988	$240 = $20 × 12 months;
1989	$120 = $20 × 6 months.
Total	$480

All of the interest paid on the debt, including the allocable points, is qualified residence interest. Upon repaying the debt, the remaining $1,920 ($2,400−$480) in unamortized points is treated as interest paid in 1990 and, because the average balance of the secured debt in 1990 is less than the adjusted purchase price, is also qualified residence interest.

(k) ***Determination of adjusted purchase price and fair market value —***

(1) ***Adjusted purchase price —***

(i) ***In general.*** For purposes of this section, the adjusted purchase price of a qualified residence is equal to the taxpayer's basis in the residence as initially determined under section 1012 or other applicable sections of the Internal Revenue Code, increased by the cost of any improvements to the residence that have been added to the taxpayer's basis in the residence under section 1016(a)(1). Any other adjustments to basis, including those required under section 1033(b) (involuntary conversions), and 1034(e) (rollover of gain or sale of principal residence) are disregarded in determining the taxpayer's adjusted purchase price. If, for example, a taxpayer's second residence is rented for a portion of the year and its basis is reduced by depreciation allowed in connection with the rental use of the property, the amount of the taxpayer's adjusted purchase price in the residence is not reduced. See paragraph (m) of this section for a rule that treats the sum of the grandfathered amounts of all secured debts as the adjusted purchase price of the residence.

(ii) ***Adjusted purchase price of a qualified residence acquired incident to divorce.*** [Reserved]

(iii) ***Examples.***

Example 1. X purchases a residence for $120,000. X's basis, as determined under section 1012, is the cost of the property, or $120,000. Accordingly, the adjusted purchase price of the residence is initially $120,000.

Example 2. Y owns a principal residence that has a basis of $30,000. Y sells the residence for $100,000 and purchases a new principal residence for $120,000. Under section 1034, Y does not recognize gain on the sale of the former residence. Under section 1034(e), Y's basis in the new residence is reduced by the amount of gain not recognized. Therefore, under section 1034(e), Y's basis in the new residence is $50,000 ($120,000−$70,000). For purposes of section 163(h), however, the adjusted purchase price of the residence is not adjusted under section 1034(e). Therefore, the adjusted purchase price of the residence is initially $120,000.

Example 3. Z acquires a residence by gift. The donor's basis in the residence was $30,000. Z's basis in the residence, determined under section 1015, is $30,000. Accordingly, the adjusted purchase price of the residence is initially $30,000.

(2) ***Fair market value —***

(i) ***In general.*** For purposes of this section, the fair market value of a qualified residence on any date is the fair market value of the taxpayer's interest in the residence on such date. In addition, the fair market value determined under this paragraph (k)(2)(i) shall be determined by taking into account the cost of improvements to the residence reasonably expected to be made with the proceeds of the debt.

(ii) ***Example.*** In 1988, the adjusted purchase price of P's second residence is $65,000 and the fair market value of the residence is $70,000. At that time, P incurs an additional debt of $10,000, the proceeds of which P reasonably expects to use to add two bedrooms to the residence.

Because the fair market value is determined by taking into account the cost of improvements to the residence that are reasonably expected to be made with the proceeds of the debt, the fair market value of the residence with respect to the debt incurred in 1988 is $80,000 ($70,000 + $10,000).

(3) ***Allocation of adjusted purchase price and fair market value.*** If a property includes both a qualified residence and other property, the adjusted purchase price and the fair market value of such property must be allocated between the qualified residence and the other property. See paragraph (p)(4) of this section for rules governing such an allocation.

(l) [Reserved]

(m) ***Grandfathered amount*** —

(1) ***Substitution for adjusted purchase price.*** If, for the taxable year, the sum of the grandfathered amounts, if any, of all secured debts exceeds the adjusted purchase price of the qualified residence, such sum may be treated as the adjusted purchase price of the residence under paragraphs (c), (d) and (e) of this section.

(2) ***Determination of grandfathered amount*** —

(i) ***In general.*** For any taxable year, the grandfathered amount of any secured debt that was incurred on or before August 16, 1986, and was secured by the residence continuously from August 16, 1986, through the end of the taxable year, is the average balance of the debt for the taxable year. A secured debt that was not incurred and secured on or before August 16, 1986, has no grandfathered amount.

(ii) ***Special rule for lines of credit and certain other debt.*** If, with respect to a debt described in paragraph (m)(2)(i) of this section, a taxpayer has borrowed any additional amounts after August 16, 1986, the grandfathered amount of such debt is equal to the lesser of—

(A) The average balance of the debt for the taxable year, or

(B) The principal balance of the debt as of August 16, 1986, reduced (but not below zero) by all principal payments after August 16, 1986, and before the first day of the current taxable year.

For purposes of this paragraph (m)(2)(ii), a taxpayer shall not be considered to have borrowed any additional amount with respect to a debt merely because accrued interest is added to the principal balance of the debt, so long as such accrued interest is paid by the taxpayer no less often than quarterly.

(iii) ***Fair market value limitation.*** The grandfathered amount of any debt for any taxable year may not exceed the fair market value of the residence on August 16, 1986, reduced by the principal balance on that day of all previously secured debt.

(iv) ***Examples.***

Example 1. As of August 16, 1986, T has one debt secured by T's principal residence. The debt is a conventional self-amortizing mortgage and, on August 16, 1986, it has an outstanding principal balance of $75,000. In 1987, the average balance of the mortgage is $73,000. The adjusted purchase price of the residence as of the end of 1987 is $50,000. Because the mortgage was incurred and secured on or before August 16, 1986 and T has not borrowed any additional amounts with respect to the mortgage, the grandfathered amount

is the average balance, $73,000. Because the grandfathered amount exceeds the adjusted purchase price ($50,000), T may treat the grandfathered amount as the adjusted purchase price in determining the amount of qualified residence interest.

> *Example 2.* (i) The facts are the same as in example (1), except that in May 1986, T also obtains a home equity line of credit that, on August 16, 1986, has a principal balance of $40,000. In November 1986, T borrows an additional $10,000 on the home equity line, increasing the balance to $50,000. In December 1986, T repays $5,000 of principal on the home equity line. The average balance of the home equity line in 1987 is $45,000.
> (ii) Because T has borrowed additional amounts on the line of credit after August 16, 1986, the grandfathered amount for that debt must be determined under the rules of paragraph (m)(2)(ii) of this section. Accordingly, the grandfathered amount for the line of credit is equal to the lesser of $45,000, the average balance of the debt in 1987, and $35,000, the principal balance on August 16, 1986, reduced by all principal payments between August 17, 1986, and December 31, 1986 ($40,000-$5,000). The sum of the grandfathered amounts with respect to the residence is $108,000 ($73,000 + $35,000). Because the sum of the grandfathered amounts exceeds the adjusted purchase price ($50,000), T may treat the sum as the adjusted purchase price in determining the qualified residence interest for 1987.

(3) ***Refinancing of grandfathered debt*** —

(i) ***In general.*** A debt incurred and secured on or before August 16, 1986, is refinanced if some or all of the outstanding balance of such a debt (the "original debt") is repaid out of the proceeds of a second debt secured by the same qualified residence (the "replacement debt"). In the case of a refinancing, the replacement debt is treated as a debt incurred and secured on or before August 16, 1986, and the grandfathered amount of such debt is the amount (but not less than zero) determined pursuant to paragraph (m)(3)(ii) of this section.

(ii) ***Determination of grandfathered amount*** —

(A) ***Exact refinancing.*** If—

(*1*) The entire proceeds of a replacement debt are used to refinance one or more original debts, and

(*2*) The taxpayer has not borrowed any additional amounts after August 16, 1986, with respect to the original debt or debts,

the grandfathered amount of the replacement debt is the average balance of the replacement debt. For purposes of the preceding sentence, the fact that proceeds of a replacement debt are used to pay costs of obtaining the replacement debt (including points or other closing costs) shall be disregarded in determining whether the entire proceeds of the replacement debt have been used to refinance one or more original debts.

(B) ***Refinancing other than exact refinancings*** —

(1) ***Year of refinancing.*** In the taxable year in which an original debt is refinanced, the grandfathered amount of the original and replacement debts is equal to the lesser of—

(*i*) The sum of the average balances of the original debt and the replacement debt, and

(*ii*) The principal balance of the original debt as of August 16, 1986, reduced by all principal payments on the original debt after August 16, 1986, and before the first day of the current taxable year.

(2) ***In subsequent years.*** In any taxable year after the taxable year in which an original debt is refinanced, the grandfathered amount of the replacement debt is equal to the least of—

(*i*) The average balance of the replacement debt for the taxable year,

(*ii*) The amount of the replacement debt used to repay the principal balance of the original debt, reduced by all principal payments on the replacement debt after the date of the refinancing and before the first day of the current taxable year, or

(*iii*) The principal balance of the original debt on August 16, 1986, reduced by all principal payments on the original debt after August 16, 1986, and before the date of the refinancing, and further reduced by all principal payments on the replacement debt after the date of the refinancing and before the first day of the current taxable year.

(C) ***Example.*** (*i*) *Facts.* On August 16, 1986, T has a single debt secured by a principal residence with a balance of $150,000. On July 1, 1988, T refinances the debt, which still has a principal balance of $150,000, with a new secured debt. The principal balance of the replacement debt throughout 1988 and 1989 is $150,000. The adjusted purchase price of the residence is $100,000 throughout 1987, 1988 and 1989. The average balance of the original debt was $150,000 in 1987 and $75,000 in 1988. The average balance of the replacement debt is $75,000 in 1988 and $150,000 in 1989.

(*ii*) *Grandfathered amount in 1987.* The original debt was incurred and secured on or before August 16, 1986 and T has not borrowed any additional amounts with respect to the debt. Therefore, its grandfathered amount in 1987 is its average balance ($150,000). This amount is treated as the adjusted purchase price for 1987 and all of the interest paid on the debt is qualified residence interest.

(*iii*) ***Grandfathered amount in 1988.*** Because the replacement debt was used to refinance a debt incurred and secured on or before August 16, 1986, the replacement debt is treated as a grandfathered debt. Because all of the proceeds of the replacement debt were used in the refinancing and because no amounts have been borrowed after August 16, 1986, on the original debt, the grandfathered amount for the original debt is its average balance ($75,000) and the grandfathered amount for the replacement debt is its average balance ($75,000). Since the sum of the grandfathered amounts ($150,000) exceeds the adjusted purchase price of the residence, the sum of the grandfathered amounts may be substituted for the adjusted purchase price for 1988 and all of the interest paid on the debt is qualified residence interest.

(*iv*) ***Grandfathered amount in 1989.*** The grandfathered amount for the placement debt is its average balance ($150,000). This amount is treated as the adjusted purchase price for 1989 and all of the interest paid on the mortgage is qualified residence interest.

(4) ***Limitation on term of grandfathered debt*** —

(i) ***In general.*** An original debt or replacement debt shall not have any grandfathered amount in any taxable year that begins after the date, as determined on August 16, 1986, that the original debt was required to be repaid in full (the "maturity date"). If a replacement debt is used to refinance more than one original debt, the maturity date is determined by reference to the original debt that, as of August 16, 1986, had the latest maturity date.

(ii) ***Special rule for nonamortizing debt.*** If an original debt was actually incurred and secured on or before August 16, 1986, and if as of such date the terms of such debt did not require the amortization of its principal over its original term, the maturity date of the replacement debt is the earlier of the maturity date of the replacement debt or the date 30 years after the date the original debt is first refinanced.

(iii) ***Example.*** C incurs a debt on May 10, 1986, the final payment of which is due May 1, 2006. C incurs a second debt on August 11, 1990, with a term of 20 years and uses the proceeds of the second debt to refinance the first debt. Because, under paragraph (m)(4)(i) of this section, a replacement debt will not have any grandfathered amount in any taxable year that begins after the maturity date of the original debt (May 1, 2006), the second debt has no grandfathered amount in any taxable year after 2006.

(n) ***Qualified indebtedness (secured debt used for medical and educational purposes)*** —

(1) ***In general*** —

(i) ***Treatment of qualified indebtedness.*** The amount of any qualified indebtedness resulting from a secured debt may be added to the adjusted purchase price under paragraph (e)(2)(i)(B) of this section to determine the applicable debt limit for that secured debt and any other debt subsequently secured by the qualified residence.

(ii) ***Determination of amount of qualified indebtedness.*** If, as of the end of the taxable year (or the last day in the taxable year that the debt is secured), at least 90 percent of the proceeds of a secured debt are used (within the meaning of paragraph (n)(2) of this section) to pay for qualified medical and educational expenses (within the meaning of paragraphs (n)(3) and (n)(4) of this section), the amount of qualified indebtedness resulting from that debt for the taxable year is equal to the average balance of such debt for the taxable year.

(iii) ***Determination of amount of qualified indebtedness for mixed-use debt.*** If, as of the end of the taxable year (or the last day in the taxable year that the debt is secured), more than ten percent of the proceeds of a secured debt are used to pay for expenses other than qualified medical and educational expenses, the amount of qualified indebtedness resulting from that debt for the taxable year shall equal the lesser of—

(A) The average balance of the debt, or

(B) The amount of the proceeds of the debt used to pay for qualified medical and educational expenses through the end of the taxable year, reduced by any principal payments on the debt before the first day of the current taxable year.

(iv) ***Example.*** (*i*) C incurs a $10,000 debt on April 20, 1987, which is secured on that date by C's principal residence. C immediately uses (within the meaning of paragraph (n)(2) of this section) $4,000 of the proceeds of the debt to pay for a qualified medical expense. C makes no principal payments on the debt during 1987. During 1988 and 1989, C makes principal payments of $1,000 per year. The average balance of the debt during 1988 is $9,500 and the average balance during 1989 is $8,500.

(*ii*) Under paragraph (n)(1)(iii) of this section, C determines the amount of qualified indebtedness for 1988 as follows:

Average balance		$9,500
Amount of debt used to pay for qualified medical expenses	$4,000	
Less payments of principal before 1988	$0	
Net qualified expenses		$4,000

The amount of qualified indebtedness for 1988 is, therefore, $4,000 (lesser of $9,500 average balance or $4,000 net qualified expenses). This amount may be added to the adjusted purchase price of C's principal residence under paragraph (e)(2)(i)(B) of this section for purposes of computing the applicable debt limit for this debt and any other debt subsequently secured by the principal residence.

(*iii*) C determines the amount of qualified indebtedness for 1989 as follows:

Average balance		$8,500
Amount of debt used to pay for qualified medical expenses	$4,000	
Less payments of principal before 1988	$1,000	
Net qualified expenses		$3,000

The amount of qualified indebtedness for 1989 is, therefore, $3,000 (lesser of $8,500 average balance or $3,000 net qualified expenses).

(v) ***Prevention of double counting in year of refinancing*** —

(A) ***In general.*** A debt used to pay for qualified medical or educational expenses is refinanced if some or all of the outstanding balance of the debt (the “original debt”) is repaid out of the proceeds of a second debt (the “replacement debt”). If, in the year of a refinancing, the combined qualified indebtedness of the original debt and the replacement debt exceeds the combined qualified expenses of such debts, the amount of qualified indebtedness for each such debt shall be determined by multiplying the amount of qualified indebtedness for each such debt by a fraction, the numerator of which is the combined qualified expenses and the denominator of which is the combined qualified indebtedness.

(B) ***Definitions.*** For purposes of paragraph (n)(1)(v)(A) of this section—

(*1*) The term "combined qualified indebtedness" means the sum of the qualified indebtedness (determined without regard to paragraph (n)(1)(v) of this section) for the original debt and the replacement debt.

(*2*) The term "combined qualified expenses" means the amount of the proceeds of the original debt used to pay for qualified medical and educational expenses through the end of the current taxable year, reduced by any principal payments on the debt before the first day of the current taxable year, and increased by the amount, if any, of the proceeds of the replacement debt used to pay such expenses through the end of the current taxable year other than as part of the refinancing.

(C) ***Example.*** (*i*) On August 11, 1987, C incurs a $8,000 debt secured by a principal residence. C uses (within the meaning of paragraph (n)(2)(i) of this section) $5,000 of the proceeds of the debt to pay for qualified educational expenses. C makes no principal payments on the debt. On July 1, 1988, C incurs a new debt in the amount of $8,000 secured by C's principal residence and uses all of the proceeds of the new debt to repay the original debt. Under paragraph (n)(2)(ii) of this section $5,000 of the new debt is treated as being used to pay for qualified educational expenses. C makes no principal payments (other than the refinancing) during 1987 or 1988 on either debt and pays all accrued interest monthly. The average balance of each debt in 1988 is $4,000.

(*ii*) Under paragraph (n)(1)(iii) of this section, the amount of qualified indebtedness for 1988 with respect to the original debt is $4,000 (the lesser of its average balance ($4,000) and the amount of the debt used to pay for qualified medical and educational expenses ($5,000)). Similarly, the amount of qualified indebtedness for 1988 with respect to the replacement debt is also $4,000. Both debts, however, are subject in 1988 to the limitation in paragraph (n)(1)(v)(A) of this section. The combined qualified indebtedness, determined without regard to the limitation, is $8,000 ($4,000 of qualified indebtedness from each debt). The combined qualified expenses are $5,000 ($5,000 from the original debt and $0 from the replacement debt). The amount of qualified indebtedness from each debt must, therefore, be reduced by a fraction, the numerator of which is $5,000 (the combined qualified expenses) and the denominator of which is $8,000 (the combined qualified indebtedness). After application of the limitation, the amount of qualified indebtedness for the original debt is $2,500 ($4,000 × × $^{5}/_{8}$). Similarly, the amount of qualified indebtedness for the replacement debt is $2,500. Note that the total qualified indebtedness for both the original and the replacement debt is $5,000 ($2,500 + $2,500). Therefore, C is entitled to the same amount of qualified indebtedness as C would have been entitled to if C had not refinanced the debt.

(vi) ***Special rule for principal payments in excess of qualified expenses.*** For purposes of paragraph (n)(1)(iii)(B), (n)(1)(v)(B)(*2*) and (n)(2)(ii) of this section, a principal payment is taken into account only to the extent that the payment, when added to all prior payments, does not exceed the amount used on or before the date of the payment to pay for qualified medical and educational expenses.

(2) ***Debt used to pay for qualified medical or educational expenses*** —

(i) ***In general.*** For purposes of this section, the proceeds of a debt are used to pay for qualified medical or educational expenses to the extent that—

(A) The taxpayer pays qualified medical or educational expenses within 90 days before or after the date that amounts are actually borrowed with respect to the debt, the proceeds of the debt are not directly allocable to another expense under § 1.163-8T(c)(3) (allocation of debt; proceeds not disbursed to borrower) and the proceeds of any other debt are not allocable to the medical or educational expenses under § 1.163-8T(c)(3), or

(B) The proceeds of the debt are otherwise allocated to such expenditures under § 1.163-8T.

(ii) ***Special rule for refinancings.*** For purposes of this section, the proceeds of a debt are used to pay for qualified medical and educational expenses to the extent that the proceeds of the debt are allocated under § 1.163-8T to the repayment of another debt (the "original debt"), but only to the extent of the amount of the original debt used to pay for qualified medical and educational expenses, reduced by any principal payments on such debt up to the time of the refinancing.

(iii) ***Other special rules.*** The following special rules apply for purposes of this section.

(A) Proceeds of a debt are used to pay for qualified medical or educational expenses as of the later of the taxable year in which such proceeds are borrowed or the taxable year in which such expenses are paid.

(B) The amount of debt which may be treated as being used to pay for qualified medical or educational expenses may not exceed the amount of such expenses.

(C) Proceeds of a debt may not be treated as being used to pay for qualified medical or educational expenses to the extent that:

(*1*) The proceeds have been repaid as of the time the expense is paid;

(*2*) The proceeds are actually borrowed before August 17, 1986; or

(*3*) The medical or educational expenses are paid before August 17, 1986.

(iv) ***Examples*** —

Example 1. A pays a $5,000 qualified educational expense from a checking account that A maintains at Bank 1 on November 9, 1987. On January 1, 1988, A incurs a $20,000 debt that is secured by A's residence and places the proceeds of the debt in a savings account that A also maintains at Bank 1. A pays another $5,000 qualified educations expense on March 15 from a checking account that A maintains at Bank 2. Under paragraph (n)(2) of this section, the debt proceeds are used to pay for both educational expenses, regardless of other deposits to, or expenditures from, the accounts, because both expenditures are made within 90 days before or after the debt was incurred.

Example 2. B pays a $5,000 qualified educational expense from a checking account on November 1, 1987. On November 30, 1987, B incurs a debt secured by B's residence, and the lender disburses the debt proceeds directly to a person who sells B a new car. Although the educational expense is paid within 90 days of the date the debt is incurred, the proceeds of the debt are not used to pay for the educational expense because the proceeds are directly allocable to the purchase of the new car under § 1.163-8T(c)(3).

Example 3. On November 1, 1987, C borrows $5,000 from C's college. The proceeds of this debt are not disbursed to C, but rather are used to pay tuition fees for C's attendance at the college. On November 30, 1987, C incurs a second debt and secures the debt by C's

residence. Although the $5,000 educational expense is paid within 90 days before the second debt is incurred, the proceeds of the second debt are not used to pay for the educational expense, because the proceeds of the first debt are directly allocable to the educational expense under § 1.163-8T(c)(3).

Example 4. On January 1, 1988, D incurs a $20,000 debt secured by a qualified residence. D places the proceeds of the debt in a separate account (*i.e.,* the proceeds of the debt are the only deposit in the account). D makes payments of $5,000 each for qualified educational expenses on September 1, 1988, September 1, 1989, September 1, 1990, and September 1, 1991. Because the debt proceeds are allocated to educational expenses as of the date the expenses are paid, under the rules of § 1.163-8T(c)(4), the following amounts of the debt proceeds are used to pay for qualified educational expenses as of the end of each year: 1988: $5,000 1989: $10,000 1990: $15,000 1991: $20,000

Example 5. During 1987 E incurs a $10,000 debt secured by a principal residence. E uses (within the meaning of paragraph (n)(2)(i) of this section) all of the proceeds of the debt to pay for qualified educational expenses. On August 20, 1988, at which time the balance of the debt is $9,500, E incurs a new debt in the amount of $9,500 secured by E's principal residence and uses all of the proceeds of the new debt to repay the original debt. Under paragraph (n)(2)(ii) of this section, all of the proceeds of the new debt are used to pay for qualified educational expenses.

(3) ***Qualified medical expenses.*** Qualified medical expenses are amounts that are paid for medical care (within the meaning of section 213(d)(1) (A) and (B)) for the taxpayer, the taxpayer's spouse, or a dependent of the taxpayer (within the meaning of section 152), and that are not compensated for by insurance or otherwise.

(4) ***Qualified educational expenses.*** Qualified educational expenses are amounts that are paid for tuition, fees, books, supplies and equipment required for enrollment, attendance or courses of instruction at an educational organization described in section 170(b) (1)(A)(ii) and for any reasonable living expenses while away from home while in attendance at such an institution, for the taxpayer, the taxpayer's spouse or a dependent of the taxpayer (within the meaning of section 152) and that are not reimbursed by scholarship or otherwise.

(o) ***Secured debt*** —

(1) ***In general.*** For purposes of this section, the term "secured debt" means a debt that is on the security of any instrument (such as a mortgage, deed of trust, or land contract)—

(i) That makes the interest of the debtor in the qualified residence specific security for the payment of the debt,

(ii) Under which, in the event of default, the residence could be subjected to the satisfaction of the debt with the same priority as a mortgage or deed of trust in the jurisdiction in which the property is situated, and

(iii) That is recorded, where permitted, or is otherwise perfected in accordance with applicable State law.

A debt will not be considered to be secured by a qualified residence if it is secured solely by virtue of a lien upon the general assets of the taxpayer or by a security interest, such as a mechanic's lien or judgment lien, that attaches to the property without the consent of the debtor.

(2) ***Special rule for debt in certain States.*** Debt will not fail to be treated as secured solely because, under an applicable State or local homestead law or other debtor protection law in effect on August 16, 1986, the security interest is ineffective or the enforceability of the security interest is restricted.

(3) ***Times at which debt is treated as secured.*** For purposes of this section, a debt is treated as secured as of the date on which each of the requirements of paragraph (o)(1) of this section are satisfied, regardless of when amounts are actually borrowed with respect to the debt. For purposes of this paragraph (o)(3), if the instrument is recorded within a commercially reasonable time after the security interest is granted, the instrument will be treated as recorded on the date that the security interest was granted.

(4) ***Partially secured debt*** —

(i) ***In general.*** If the security interest is limited to a prescribed maximum amount or portion of the residence, and the average balance of the debt exceeds such amount or the value of such portion, such excess shall not be treated as secured debt for purposes of this section.

(ii) ***Example.*** T borrows $80,000 on January 1, 1991. T secures the debt with a principal residence. The security in the residence for the debt, however, is limited to $20,000. T pays $8,000 in interest on the debt in 1991 and the average balance of the debt in that year is $80,000. Because the average balance of the debt exceeds the maximum amount of the security interest, such excess is not treated as secured debt. Therefore, for purposes of applying the limitation on qualified residence interest, the average balance of the secured debt is $20,000 (the maximum amount of the security interest) and the interest paid or accrued on the secured debt is $2,000 (the total interest paid on the debt multiplied by the ratio of the average balance of the secured debt ($20,000) and the average balance of the total debt ($80,000)).

(5) ***Election to treat debt as not secured by a qualified residence*** —

(i) ***In general.*** For purposes of this section, a taxpayer may elect to treat any debt that is secured by a qualified residence as not secured by the qualified residence. An election made under this paragraph shall be effective for the taxable year for which the election is made and for all subsequent taxable years unless revoked with the consent of the Commissioner.

(ii) ***Example.*** T owns a principal residence with a fair market value of $75,000 and an adjusted purchase price of $40,000. In 1988, debt A, the proceeds of which were used to purchase the residence, has an average balance of $15,000. The proceeds of debt B, which is secured by a second mortgage on the property, are allocable to T's trade or business under § 1.163-8T and has an average balance of $25,000. In 1988, T incurs debt C, which is also secured by T's principal residence and which has an average balance in 1988 of $5,000. In the absence of an election to treat debt B as unsecured, the applicable debt limit for debt C in 1988 under paragraph (e) of this section would be zero dollars ($40,000−$15,000−$25,000) and none of the interest paid on debt C would be qualified residence interest. If, however, T makes or has previously made an election pursuant to paragraph (o)(5)(i) of this section to treat debt B as not secured by the residence, the applicable debt limit for debt C would be $25,000 ($40,000−$15,000), and all of the interest paid on debt C during the taxable year would be qualified residence interest. Since the proceeds of debt B are allocable to T's trade or business under § 1.163-8T, interest on debt B may be deductible under other sections of the Internal Revenue Code.

(iii) ***Allocation of debt secured by two qualified residences.*** [Reserved]

(p) ***Definition of qualified residence*** —

(1) ***In general.*** The term "qualified residence" means the taxpayer's principal residence (as defined in paragraph (p)(2) of this section), or the taxpayer's second residence (as defined in paragraph (p)(3) of this section).

(2) ***Principal residence.*** The term "principal residence" means the taxpayer's principal residence within the meaning of section 1034. For purposes of this section, a taxpayer cannot have more than one principal residence at any one time.

(3) ***Second residence*** —

(i) ***In general.*** The term "second residence" means—

(A) A residence within the meaning of paragraph (p)(3)(ii) of this section,

(B) That the taxpayer uses as a residence within the meaning of paragraph (p)(3)(iii) of this section, and

(C) That the taxpayer elects to treat as a second residence pursuant to paragraph (p)(3)(iv) of this section.

A taxpayer cannot have more than one second residence at any time.

(ii) ***Definition of residence.*** Whether property is a residence shall be determined based on all the facts and circumstances, including the good faith of the taxpayer. A residence generally includes a house, condominium, mobile home, boat, or house trailer, that contains sleeping space and toilet and cooking facilities. A residence does not include personal property, such as furniture or a television, that, in accordance with the applicable local law, is not a fixture.

(iii) ***Use as a residence.*** If a residence is rented at any time during the taxable year, it is considered to be used as a residence only if the taxpayer uses it during the taxable year as a residence within the meaning of section 280A(d). If a residence is not rented at any time during the taxable year, it shall be considered to be used as a residence. For purposes of the preceding sentence, a residence will be deemed to be rented during any period that the taxpayer holds the residence out for rental or resale or repairs or renovates the residence with the intention of holding it out for rental or resale.

(iv) ***Election of second residence.*** A taxpayer may elect a different residence (other than the taxpayer's principal residence) to be the taxpayer's second residence for each taxable year. A taxpayer may not elect different residences as second residences at different times of the same taxable year except as provided below—

(A) If the taxpayer acquires a new residence during the taxable year, the taxpayer may elect the new residence as a taxpayer's second residence as of the date acquired;

(B) If property that was the taxpayer's principal residence during the taxable year ceases to qualify as the taxpayer's principal residence, the taxpayer may elect that property as the taxpayer's second residence as of the date that the property ceases to be the taxpayer's principal residence; or

(C) If property that was the taxpayer's second residence is sold during the taxable year or becomes the taxpayer's principal residence, the taxpayer may elect a new second residence as of such day.

(4) ***Allocations between residence and other property*** —

(i) ***In general.*** For purposes of this section, the adjusted purchase price and fair market value of property must be allocated between the portion of the property that is a qualified residence and the portion that is not a qualified residence. Neither the average balance of the secured debt nor the interest paid or accrued on secured debt is so allocated. Property that is not used for residential purposes does not qualify as a residence. For example, if a portion of the property is used as an office in the taxpayer's trade or business, that portion of the property does not qualify as a residence.

(ii) ***Special rule for rental of residence.*** If a taxpayer rents a portion of his or her principal or second residence to another person (a "tenant"), such portion may be treated as used by the taxpayer for residential purposes if, but only if—

(A) Such rented portion is used by the tenant primarily for residential purposes,

(B) The rented portion is not a self-contained residential unit containing separate sleeping space and toilet and cooking facilities, and

(C) The total number of tenants renting (directly or by sublease) the same or different portions of the residence at any time during the taxable year does not exceed two. For this purpose, if two persons (and the dependents, as defined by section 152, of either of them) share the same sleeping quarters, they shall be treated as a single tenant.

(iii) ***Examples.***

Example 1. D, a dentist, uses a room in D's principal residence as an office which qualifies under section 280A(c)(1)(B) as a portion of the dwelling unit used exclusively on a regular basis as a place of business for meeting with patients in the normal course of D's trade or business. D's adjusted purchase price of the property is $65,000; $10,000 of which is allocable under paragraph (o)(4)(i) of this section to the room used as an office. For purposes of this section, D's residence does not include the room used as an office. The adjusted purchase price of the residence is, accordingly, $55,000. Similarly, the fair market value of D's residence must be allocated between the office and the remainder of the property.

Example 2. J rents out the basement of property that is otherwise used as J's principal residence. The basement is a self-contained residential unit, with sleeping space and toilet and cooking facilities. The adjusted purchase price of the property is $100,000; $15,000 of which is allocable under paragraph (o)(4)(i) of this section to the basement. For purposes of this section, J's residence does not include the basement and the adjusted purchase price of the residence is $85,000. Similarly, the fair market value of the residence must be allocated between the basement unit and the remainder of the property.

(5) ***Residence under construction*** —

(i) ***In general.*** A taxpayer may treat a residence under construction as a qualified residence for a period of up to 24 months, but only if the residence becomes a qualified residence, without regard to this paragraph (p)(5)(i), as of the time that the residence is ready for occupancy.

(ii) ***Example.*** X owns a residential lot suitable for the construction of a vacation home. On April 20, 1987, X obtains a mortgage secured by the lot and any property to be constructed on the lot. On August 9, 1987, X begins construction of a residence on the lot. The residence is ready for

occupancy on November 9, 1989. The residence is used as a residence within the meaning of paragraph (p)(3)(iii) of this section during 1989 and X elects to treat the residence as his second residence for the period November 9, 1989, through December 31, 1989. Since the residence under construction is a qualified residence as of the first day that the residence is ready for occupancy (November 9, 1987), X may treat the residence as his second residence under paragraph (p)(5)(i) of this section for up to 24 months of the period during which the residence is under construction, commencing on or after the date that construction is begun (August 9, 1987). If X treats the residence under construction as X's second residence beginning on August 9, 1987, the residence under construction would cease to qualify as a qualified residence under paragraph (p)(5)(i) on August 8, 1989. The residence's status as a qualified residence for future periods would be determined without regard to paragraph (p)(5)(i) of this section.

(6) ***Special rule for time-sharing arrangements.*** Property that is otherwise a qualified residence will not fail to qualify as such solely because the taxpayer's interest in or right to use the property is restricted by an arrangement whereby two or more persons with interests in the property agree to exercise control over the property for different periods during the taxable year. For purposes of determining the use of a residence under paragraph (p)(3)(iii) of this section, a taxpayer will not be considered to have used or rented a residence during any period that the taxpayer does not have the right to use the property or to receive any benefits from the rental of the property.

(q) ***Special rules for tenant-stockholders in cooperative housing corporations*** —

(1) ***In general.*** For purposes of this section, a residence includes stock in a cooperative housing corporation owned by a tenant-stockholder if the house or apartment which the tenant-stockholder is entitled to occupy by virtue of owning such stock is a residence within the meaning of paragraph (p)(3)(ii) of this section.

(2) ***Special rule where stock may not be used to secure debt.*** For purposes of this section, if stock described in paragraph (q)(1) of this section may not be used to secure debt because of restrictions under local or State law or because of restrictions in the cooperative agreement (other than restrictions the principal purpose of which is to permit the tenant-stockholder to treat unsecured debt as secured debt under this paragraph (q)(2)), debt may be treated as secured by such stock to the extent that the proceeds of the debt are allocated to the purchase of the stock under the rules of § 1.163-8T. For purposes of this paragraph (q)(2), proceeds of debt incurred prior to January 1, 1987, may be treated as allocated to the purchase of such stock to the extent that the tenant-stockholder has properly and consistently deducted interest expense on such debt as home mortgage interest attributable to such stock on Schedule A of Form 1040 in determining his taxable income for taxable years beginning before January 1, 1987. For purposes of this paragraph (q)(2), amended returns filed after December 22, 1987, are disregarded.

(3) ***Treatment of interest expense of the cooperative described in section 216(a)(2).*** For purposes of section 163(h) and § 1.163-9T (disallowance of deduction for personal interest) and section 163(d) (limitation on investment interest), any amount allowable as a deduction to a tenant-stockholder under section 216(a)(2) shall be treated as interest paid or accrued by the tenant-stockholder. If a tenant-stockholder's stock in a cooperative housing corporation is a qualified residence of the tenant-shareholder, any amount allowable as a deduction to the tenant-stockholder under section 216(a)(2) is qualified residence interest.

(4) ***Special rule to prevent tax avoidance.*** If the amount treated as qualified residence interest under this section exceeds the amount which would be so treated if the tenant-stockholder were treated as directly owning his proportionate share of the assets and liabilities of the cooperative and one of the principal purposes of the cooperative arrangement is to permit the tenant-stockholder to increase the amount of qualified residence interest, the district director may determine that such excess is not qualified residence interest.

(5) ***Other definitions.*** For purposes of this section, the terms "tenant-stockholder," "cooperative housing corporation" and "proportionate share" shall have the meaning given by section 216 and the regulations thereunder.

(r) ***Effective date.*** The provisions of this section are effective for taxable years beginning after December 31, 1986.

[T.D. 8168, 52 FR 48410, Dec. 22, 1987]

§ 1.163-11 Allocation of certain prepaid qualified mortgage insurance premiums.

(a) ***Allocation*** —

(1) ***In general.*** As provided in section 163(h)(3)(E), premiums paid or accrued for qualified mortgage insurance during the taxable year in connection with acquisition indebtedness with respect to a qualified residence (as defined in section 163(h)(4)(A)) of the taxpayer shall be treated as qualified residence interest (as defined in section 163(h)(3)(A)). If an individual taxpayer pays such a premium that is properly allocable to a mortgage the payment of which extends to periods beyond the close of the taxable year in which the premium is paid, the taxpayer must allocate the premium to determine the amount treated as qualified residence interest for each taxable year. The premium must be allocated ratably over the shorter of—

(i) The stated term of the mortgage; or

(ii) A period of 84 months, beginning with the month in which the insurance was obtained.

(2) ***Limitation.*** If a mortgage is satisfied before the end of its stated term, no deduction as qualified residence interest shall be allowed for any amount of the premium that is allocable to periods after the mortgage is satisfied.

(b) ***Scope.*** The allocation requirement in paragraph (a) of this section applies only to mortgage insurance provided by the Federal Housing Administration or private mortgage insurance (as defined by section 2 of the Homeowners Protection Act of 1998 (12 U.S.C. 4901) as in effect on December 20, 2006). It does not apply to mortgage insurance provided by the Department of Veterans Affairs or the Rural Housing Service. Paragraph (a) of this section applies whether the qualified mortgage insurance premiums are paid in cash or are financed, without regard to source.

(c) ***Limitation on the treatment of mortgage insurance premiums as interest.*** This section applies to prepaid qualified mortgage insurance premiums described in paragraph (a) of this section that are paid or accrued on or after January 1, 2011, and during periods to which section 163(h)(3)(E) is applicable. This section does not apply to any amount of prepaid qualified mortgage insurance premiums that are allocable to any periods to which section 163(h)(3)(E) is not applicable.

(d) ***Effective/applicability date.*** This section is applicable on and after January 1, 2011. For regulations applicable before January 1, 2011, see § 1.163-11T in effect prior to January 1, 2011 (§ 1.163-11T as contained in 26 CFR part 1 edition revised as of April 1, 2011).

[T.D. 9588, 77 FR 26699, May 7, 2012]

§ 1.163-12 Deduction of original issue discount on instrument held by related foreign person.

(a) ***General rules*** —

(1) ***Deferral of deduction.*** Except as provided in paragraph (b) of this section, section 163(e)(3) requires a taxpayer to use the cash method of accounting with respect to the deduction of original issue discount owed to a related foreign person. A deduction for an otherwise deductible portion of original issue discount with respect to a debt instrument will not be allowable as a deduction to the issuer until paid if, at the close of the issuer's taxable year in which such amount would otherwise be deductible, the person holding the debt instrument is a related foreign person. For purposes of this section, a related foreign person is any person that is not a United States person within the meaning of section 7701(a)(30), and that is related (within the meaning of section 267(b)) to the issuer at the close of the taxable year in which the amount incurred by the taxpayer would otherwise be deductible. Section 267(f) defines “controlled group” for purposes of section 267(b) without regard to the limitations of section 1563(b). An amount is treated as paid for purposes of this section if the amount is considered paid for purposes of section 1441 or section 1442 (including an amount taken into account pursuant to section 871(a)(1)(C), section 881(a)(3), or section 884(f)). The rules of this paragraph (a) apply even if the original issue discount is not subject to United States tax, or is subject to a reduced rate of tax, pursuant to a provision of the Internal Revenue Code or a treaty obligation of the United States. For purposes of this section, original issue discount is an amount described in section 1273, whether from sources inside or outside the United States.

(2) ***Change in method of accounting.*** A taxpayer that uses a method of accounting other than that required by the rules of this section must change its method of accounting to conform its method to the rules of this section. The taxpayer's change in method must be made pursuant to the rules of section 446(e), the regulations thereunder, and any applicable administrative procedures prescribed by the Commissioner. Because the rules of this section prescribe a method of accounting, these rules apply in the determination of a taxpayer's earnings and profits pursuant to § 1.312-6(a).

(b) ***Exceptions and special rules*** —

(1) ***Effectively connected income.*** The provisions of section 267(a)(2) and the regulations thereunder, and not the provisions of paragraph (a) of this section, apply to an amount of original issue discount that is income of the related foreign person that is effectively connected with the conduct of a United States trade or business of such related foreign person. An amount described in this paragraph (b)(1) thus is allowable as a deduction as of the day on which the amount is includible in the gross income of the related foreign person as effectively connected income under sections 872(a)(2) or 882(b) (or, if later, as of the day on which the deduction would be so allowable but for section 267(a)(2)). However, this paragraph (b)(1) does not apply if the related foreign person is exempt from United States income tax on the amount owed, or is subject to a reduced rate of tax, pursuant to a treaty obligation of the United States (such as under an article relating to the taxation of business profits).

(2) ***Certain obligations issued by natural persons.*** This section does not apply to any debt instrument described in section 163(e)(4) (relating to obligations issued by natural persons before March 2, 1984, and to loans between natural persons).

(3) ***Amounts owed to a foreign personal holding company, controlled foreign corporation, or passive foreign investment company —***

(i) ***Foreign personal holding companies.*** If an amount to which paragraph (a) of this section otherwise applies is owed to a related foreign person that is a foreign personal holding company within the meaning of section 552, then the amount is allowable as a deduction as of the day on which the amount is includible in the income of the foreign personal holding company. The day on which the amount is includible in income is determined with reference to the method of accounting under which the foreign personal holding company computes its taxable income and earnings and profits for purposes of sections 551 through 558. See section 551(c) and the regulations thereunder for the reporting requirements of the foreign personal holding company provisions (sections 551 through 558).

(ii) ***Controlled foreign corporations.*** If an amount to which paragraph (a) of this section otherwise applies is owed to a related foreign person that is a controlled foreign corporation within the meaning of section 957, then the amount is allowable as a deduction as of the day on which the amount is includible in the income of the controlled foreign corporation. The day on which the amount is includible in income is determined with reference to the method of accounting under which the controlled foreign corporation computes its taxable income and earnings and profits for purposes of sections 951 through 964. See section 6038 and the regulations thereunder for the reporting requirements of the controlled foreign corporation provisions (sections 951 through 964).

(iii) ***Passive foreign investment companies.*** If an amount to which paragraph (a) of this section otherwise applies is owed to a related foreign person that is a passive foreign investment company within the meaning of section 1296, then the amount is allowable as a deduction as of the day on which amount is includible in the income of the passive foreign investment company. The day on which the amount is includible in income is determined with reference to the method of accounting under which the earnings and profits of the passive foreign investment company are computed for purposes of sections 1291 through 1297. See sections 1291 through 1297 and the regulations thereunder for the reporting requirements of the passive foreign investment company provisions. This exception shall apply, however, only if the person that owes the amount at issue has made and has in effect an election pursuant to section 1295 with respect to the passive foreign investment company to which the amount at issue is owed.

(c) ***Application of section 267.*** Except as limited in paragraph (b)(1) of this section, the provisions of section 267 and the regulations thereunder shall apply to any amount of original issue discount to which the provisions of this section do not apply.

(d) ***Effective date.*** The rules of this section are effective with respect to all original issue discount on debt instruments issued after June 9, 1984.

[T.D. 8465, 58 FR 236, Jan. 5, 1993; 58 FR 8098, Feb. 11, 1993]

§ 1.163-13 Treatment of bond issuance premium.

(a) ***General rule.*** If a debt instrument is issued with bond issuance premium, this section limits the amount of the issuer's interest deduction otherwise allowable under section 163(a). In general, the issuer determines its interest deduction by offsetting the interest allocable to an accrual period with the bond issuance premium allocable to that period. Bond issuance premium is allocable to an accrual period based on a constant yield. The use of a constant yield to amortize bond issuance premium is intended to generally conform the treatment of debt instruments having bond issuance premium with those having original issue discount. Unless otherwise provided, the terms used in this section have the same meaning as those terms in section 163(e), sections 1271 through 1275, and the corresponding regulations. Moreover, unless otherwise provided, the provisions of this section apply in a manner consistent with those of section 163(e), sections 1271 through 1275, and the corresponding regulations. In addition, the anti-abuse rule in § 1.1275-2(g) applies for purposes of this section. For rules dealing with the treatment of bond premium by a holder, see §§ 1.171-1 through 1.171-5.

(b) ***Exceptions.*** This section does not apply to—

(1) A debt instrument described in section 1272(a)(6)(C) (regular interests in a REMIC, qualified mortgages held by a REMIC, and certain other debt instruments, or pools of debt instruments, with payments subject to acceleration); or

(2) A debt instrument to which § 1.1275-4 applies (relating to certain debt instruments that provide for contingent payments).

(c) ***Bond issuance premium.*** Bond issuance premium is the excess, if any, of the issue price of a debt instrument over its stated redemption price at maturity. For purposes of this section, the issue price of a convertible bond (as defined in § 1.171-1(e)(1)(iii)(C)) does not include an amount equal to the value of the conversion option (as determined under § 1.171-1(e)(1)(iii)(A)).

(d) ***Offsetting qualified stated interest with bond issuance premium*** —

(1) ***In general.*** An issuer amortizes bond issuance premium by offsetting the qualified stated interest allocable to an accrual period with the bond issuance premium allocable to the accrual period. This offset occurs when the issuer takes the qualified stated interest into account under its regular method of accounting.

(2) ***Qualified stated interest allocable to an accrual period.*** See § 1.446-2(b) to determine the accrual period to which qualified stated interest is allocable and to determine the accrual of qualified stated interest within an accrual period.

(3) ***Bond issuance premium allocable to an accrual period.*** The bond issuance premium allocable to an accrual period is determined under this paragraph (d)(3). Within an accrual period, the bond issuance premium allocable to the period accrues ratably.

(i) ***Step one: Determine the debt instrument's yield to maturity.*** The yield to maturity of a debt instrument is determined under the rules of § 1.1272-1(b)(1)(i).

(ii) ***Step two: Determine the accrual periods.*** The accrual periods are determined under the rules of § 1.1272-1(b)(1)(ii).

(iii) ***Step three: Determine the bond issuance premium allocable to the accrual period.*** The bond issuance premium allocable to an accrual period is the excess of the qualified stated interest allocable to the accrual period over the product of the adjusted issue price at the beginning of

the accrual period and the yield. In performing this calculation, the yield must be stated appropriately taking into account the length of the particular accrual period. Principles similar to those in § 1.1272-1(b)(4) apply in determining the bond issuance premium allocable to an accrual period.

(4) *Bond issuance premium in excess of qualified stated interest* —

(i) ***Ordinary income.*** If the bond issuance premium allocable to an accrual period exceeds the qualified stated interest allocable to the accrual period, the excess is treated as ordinary income by the issuer for the accrual period. However, the amount treated as ordinary income is limited to the amount by which the issuer's total interest deductions on the debt instrument in prior accrual periods exceed the total amount treated by the issuer as ordinary income on the debt instrument in prior accrual periods.

(ii) ***Carryforward.*** If the bond issuance premium allocable to an accrual period exceeds the sum of the qualified stated interest allocable to the accrual period and the amount treated as ordinary income for the accrual period under paragraph (d)(4)(i) of this section, the excess is carried forward to the next accrual period and is treated as bond issuance premium allocable to that period. If a carryforward exists on the date the debt instrument is retired, the carryforward is treated as ordinary income on that date.

(e) *Special rules* —

(1) ***Variable rate debt instruments.*** An issuer determines bond issuance premium on a variable rate debt instrument by reference to the stated redemption price at maturity of the equivalent fixed rate debt instrument constructed for the variable rate debt instrument. The issuer also allocates any bond issuance premium among the accrual periods by reference to the equivalent fixed rate debt instrument. The issuer constructs the equivalent fixed rate debt instrument, as of the issue date, by using the principles of § 1.1275-5(e).

(2) ***Inflation-indexed debt instruments.*** An issuer determines bond issuance premium on an inflation-indexed debt instrument by assuming that there will be no inflation or deflation over the term of the instrument. The issuer also allocates any bond issuance premium among the accrual periods by assuming that there will be no inflation or deflation over the term of the instrument. The bond issuance premium allocable to an accrual period offsets qualified stated interest allocable to the period. Notwithstanding paragraph (d)(4) of this section, if the bond issuance premium allocable to an accrual period exceeds the qualified stated interest allocable to the period, the excess is treated as a deflation adjustment under § 1.1275-7(f)(1)(ii). See § 1.1275-7 for other rules relating to inflation-indexed debt instruments.

(3) *Certain debt instruments subject to contingencies* —

(i) ***In general.*** Except as provided in paragraph (e)(3)(ii) of this section, the rules of § 1.1272-1(c) apply to determine a debt instrument's payment schedule for purposes of this section. For example, an issuer uses the payment schedule determined under § 1.1272-1(c) to determine the amount, if any, of bond issuance premium on the debt instrument, the yield and maturity of the debt instrument, and the allocation of bond issuance premium to an accrual period.

(ii) ***Mandatory sinking fund provision.*** Notwithstanding paragraph (e)(3)(i) of this section, if a debt instrument is subject to a mandatory sinking fund provision described in § 1.1272-1(c)(3), the issuer must determine the payment schedule by assuming that a pro rata portion of the debt instrument will be called under the sinking fund provision.

(4) ***Remote and incidental contingencies.*** For purposes of determining the amount of bond issuance premium and allocating bond issuance premium among accrual periods, if a bond provides for a contingency that is remote or incidental (within the meaning of § 1.1275-2(h)), the issuer takes the contingency into account under the rules for remote and incidental contingencies in § 1.1275-2(h).

(f) ***Example.*** The following example illustrates the rules of this section:

Example. (i) *Facts.* On February 1, 1999, X issues for $110,000 a debt instrument maturing on February 1, 2006, with a stated principal amount of $100,000, payable at maturity. The debt instrument provides for unconditional payments of interest of $10,000, payable on February 1 of each year. X uses the calendar year as its taxable year, X uses the cash receipts and disbursements method of accounting, and X decides to use annual accrual periods ending on February 1 of each year. X's calculations assume a 30-day month and 360-day year.
(ii) *Amount of bond issuance premium.* The issue price of the debt instrument is $110,000. Because the interest payments on the debt instrument are qualified stated interest, the stated redemption price at maturity of the debt instrument is $100,000. Therefore, the amount of bond issuance premium is $10,000 ($110,000−$100,000).

(iii) *Bond issuance premium allocable to the first accrual period.* Based on the payment schedule and the issue price of the debt instrument, the yield of the debt instrument is 8.07 percent, compounded annually. (Although, for purposes of simplicity, the yield as stated is rounded to two decimal places, the computations do not reflect this rounding convention.) The bond issuance premium allocable to the accrual period ending on February 1, 2000, is the excess of the qualified stated interest allocable to the period ($10,000) over the product of the adjusted issue price at the beginning of the period ($110,000) and the yield (8.07 percent, compounded annually). Therefore, the bond issuance premium allocable to the accrual period is $1,118.17 ($10,000−$8,881.83).

(iv) *Premium used to offset interest.* Although X makes an interest payment of $10,000 on February 1, 2000, X only deducts interest of $8,881.83, the qualified stated interest allocable to the period ($10,000) offset with the bond issuance premium allocable to the period ($1,118.17).

(g) ***Effective date.*** This section applies to debt instruments issued on or after March 2, 1998.

(h) ***Accounting method changes*** —

(1) ***Consent to change.*** An issuer required to change its method of accounting for bond issuance premium to comply with this section must secure the consent of the Commissioner in accordance with the requirements of § 1.446-1(e). Paragraph (h)(2) of this section provides the Commissioner's automatic consent for certain changes.

(2) ***Automatic consent.*** The Commissioner grants consent for an issuer to change its method of accounting for bond issuance premium on debt instruments issued on or after March 2, 1998. Because this change is made on a cut-off basis, no items of income or deduction are omitted or duplicated and, therefore, no adjustment under section 481 is allowed. The consent granted by this paragraph (h)(2) applies provided—

(i) The change is made to comply with this section;

(ii) The change is made for the first taxable year for which the issuer must account for a debt instrument under this section; and

(iii) The issuer attaches to its federal income tax return for the taxable year containing the change a statement that it has changed its method of accounting under this section.

[T.D. 8746, 62 FR 68176, Dec. 31, 1997, as amended by T.D. 8838, 64 FR 48547, Sept. 7, 1999]

§ 1.163-15 Debt proceeds distributed from any taxpayer account or from cash.

(a) ***In general.*** Regardless of paragraphs (c)(4) and (5) of § 1.163-8T, in the case of debt proceeds deposited in an account, a taxpayer that is applying § 1.163-8T or § 1.163-14 may treat any expenditure made from any account of the taxpayer, or from cash, within 30 days before or 30 days after debt proceeds are deposited in any account of the taxpayer as made from such proceeds to the extent thereof. Similarly, in the case of debt proceeds received in cash, a taxpayer that is applying § 1.163-8T or § 1.163-14 may treat any expenditure made from any account of the taxpayer, or from cash, within 30 days before or 30 days after debt proceeds are received in cash as made from such proceeds to the extent thereof. For purposes of this section, terms used have the same meaning as in § 1.163-8T(c)(4) and (5).

(b) ***Applicability date.*** This section applies to taxable years beginning on or after March 22, 2021. However, taxpayers and their related parties, within the meaning of sections 267(b) (determined without regard to section 267(c)(3)) and 707(b)(1), may choose to apply the rules in this section to a taxable year beginning after December 31, 2017, and before March 22, 2021, provided that those taxpayers and their related parties consistently apply all of the rules in this section to that taxable year and each subsequent taxable year.

[T.D. 9943, 86 FR 5521, Jan. 19, 2021]

§ 1.163(d)-1 Time and manner for making elections under the Omnibus Budget Reconciliation Act of 1993 and the Jobs and Growth Tax Relief Reconciliation Act of 2003.

(a) ***Description.*** Section 163(d)(4)(B)(iii), as added by section 13206(d) of the Omnibus Budget Reconciliation Act of 1993 (Pub. L. 103-66, 107 Stat. 467), allows an electing taxpayer to take all or a portion of certain net capital gain attributable to dispositions of property held for investment into account as investment income. Section 163(d)(4)(B), as amended by section 302(b) of the Jobs and Growth Tax Relief Reconciliation Act of 2003 (Pub. L. 108-27, 117 Stat. 762), allows an electing taxpayer to take all or a portion of qualified dividend income, as defined in section 1(h)(11)(B), into account as investment income. As a consequence, the net capital gain and qualified dividend income taken into account as investment income under these elections are not eligible to be taxed at the capital gains rates. An election may be made for net capital gain recognized by noncorporate taxpayers during any taxable year beginning after December 31, 1992. An election may be made for qualified dividend income received by noncorporate taxpayers during any taxable year beginning after December 31, 2002, but before January 1, 2009.

(b) ***Time and manner for making the elections.*** The elections for net capital gain and qualified dividend income must be made on or before the due date (including extensions) of the income tax return for the taxable year in which the net capital gain is recognized or the qualified dividend income is received. The elections are to be made on Form 4952, "Investment Interest Expense Deduction," in accordance with the form and its instructions.

(c) ***Revocability of elections.*** The elections described in this section are revocable with the consent of the Commissioner.

(d) ***Effective date.*** The rules set forth in this section regarding the net capital gain election apply beginning December 12, 1996. The rules set forth in this section regarding the qualified dividend income election apply to any taxable year beginning after December 31, 2002, but before January 1, 2009.

[T.D. 9191, 70 FR 13100, Mar. 18, 2005]

§ 1.163(j)-0 Table of contents.

This section lists the table of contents for §§ 1.163(j)-1 through 1.163(j)-11.

§ 1.163(j)-1 Definitions.

(a) In general.

(b) Definitions.

(1) Adjusted taxable income.

(i) Additions.

(ii) Subtractions.

(iii) Depreciation, amortization, or depletion capitalized under section 263A.

(iv) Application of § 1.163(j)-1(b)(1)(ii)(C), (D), and (E).

(A) Sale or other disposition.

(*1*) In general.

(*2*) Intercompany transactions.

(*3*) Deconsolidations.

(*4*) Nonrecognition transactions.

(B) Deductions by members of a consolidated group.

(*1*) In general.

(*2*) Application of the alternative computation method.

(C) Successor rules.

(*1*) Successor assets.

(*2*) Successor entities.

(D) Anti-duplication rule.

(*1*) In general.

(*2*) Adjustments following deconsolidation.

(E) Alternative computation method.

(*1*) Alternative computation method for property dispositions.

(*2*) Alternative computation method for dispositions of member stock.

(*3*) Alternative computation method for dispositions of partnership interests.

(F) Cap on negative adjustments.

(*1*) In general.

(*2*) Example.

(G) Treatment of depreciation, amortization, or depletion capitalized under section 263A.

(v) Other adjustments.

(vi) Additional rules relating to adjusted taxable income in other sections.

(vii) ATI cannot be less than zero.

(viii) Examples.

(2) Applicable CFC.

(3) Business interest expense.

(i) In general.

(ii) Special rules.

(4) Business interest income.

(i) In general.

(ii) Special rules.

(5) C corporation.

(6) Cleared swap.

(7) Consolidated group.

(8) Consolidated return year.

(9) Current-year business interest expense.

(10) Disallowed business interest expense.

(11) Disallowed business interest expense carryforward.

(12) Disallowed disqualified interest.

(13) Electing farming business.

(14) Electing real property trade or business.

(15) Excepted regulated utility trade or business.

(i) In general.

(A) Automatically excepted regulated utility trades or businesses.

(B) Electing regulated utility trades or businesses.

(C) Designated excepted regulated utility trades or businesses.

(ii) Depreciation and excepted and non-excepted utility trades or businesses.

(A) Depreciation.

(B) Allocation of items.

(iii) Election to be an excepted regulated utility trade or business.

(A) In general.

(B) Scope and effect of election.

(*1*) In general.

(*2*) Irrevocability.

(C) Time and manner of making election.

(*1*) In general.

(*2*) Election statement contents.

(*3*) Consolidated group's or partnership's trade or business.

(*4*) Termination of election.

(*5*) Additional guidance.

(16) Excess business interest expense.

(17) Excess taxable income.

(18) Floor plan financing indebtedness.

(19) Floor plan financing interest expense.

(20) Group.

(21) Intercompany transaction.

(22) Interest.

(i) In general.

(ii) Swaps with significant nonperiodic payments.

(A) In general.

(B) Exception for cleared swaps.

(C) Exception for non-cleared swaps subject to margin or collateral requirements.

(iii) Other amounts treated as interest.

(A) Treatment of premium.

(*1*) Issuer.

(*2*) Holder.

(B) Treatment of ordinary income or loss on certain debt instruments.

(C) Substitute interest payments.

(D) Section 1258 gain.

(E) Factoring income.

(F) Section 163(j) interest dividends.

(*1*) In general.

(*2*) Limitation on amount treated as interest income.

(*3*) Conduit amounts.

(*4*) Holding period.

(*5*) Exception to holding period requirement for money market funds and certain regularly declared dividends.

(iv) Anti-avoidance rules.

(A) Principal purpose to reduce interest expense.

(*1*) Treatment as interest expense.

(*2*) Corresponding treatment of amounts as interest income.

(B) Interest income artificially increased.

(C) Principal purpose.

(D) Coordination with anti-avoidance rule in § 1.163(j)-2(j).

(v) Examples.

(23) Interest expense.

(24) Interest income.

(25) Member.

(26) Motor vehicle.

(27) Old section 163(j).

(28) Ownership change.

(29) Ownership date.

(30) Real estate investment trust.

(31) Real property.

(32) Regulated investment company.

(33) Relevant foreign corporation.

(34) S corporation.

(35) Section 163(j) interest dividend.

(i) In general.

(ii) Reduction in the case of excess reported amounts.

(iii) Allocation of excess reported amount.

(A) In general.

(B) Special rule for noncalendar year RICs.

(iv) Definitions.

(A) Reported section 163(j) interest dividend amount.

(B) Excess reported amount.

(C) Aggregate reported amount.

(D) Post-December reported amount.

(E) Excess section 163(j) interest income.

(v) Example.

(36) Section 163(j) limitation.

(37) Section 163(j) regulations.

(38) Separate return limitation year.

(39) Separate return year.

(40) Separate tentative taxable income.

(41) Tax-exempt corporation.

(42) Tax-exempt organization.

(43) Tentative taxable income.

(i) In general.

(ii) [Reserved]

(iii) Special rules for defining tentative taxable income.

(44) Trade or business.

(i) In general.

(ii) Excepted trade or business.

(iii) Non-excepted trade or business.

(45) Unadjusted basis.

(46) United States shareholder.

(c) Applicability date.

(1) In general.

(2) Anti-avoidance rules.

(3) Swaps with significant nonperiodic payments.

(i) In general.

(ii) Anti-avoidance rule.

(4) Paragraphs (b)(1)(iv)(A)(*2*) through (*4*), (B) through (G), (b)(22)(iii)(F), and (b)(35).

§ 1.163(j)-2 Deduction for business interest expense limited.

(a) Overview.

(b) General rule.

(1) In general.

(2) 50 percent ATI limitation for taxable years beginning in 2019 or 2020.

(3) Election to use 2019 ATI in 2020.

(i) In general.

(ii) Short taxable years.

(iii) Transactions to which section 381 applies.

(iv) Consolidated groups.

(4) Time and manner of making or revoking the elections.

(c) Disallowed business interest expense carryforward.

(1) In general.

(2) Coordination with small business exemption.

(3) Cross-references.

(d) Small business exemption.

(1) Exemption.

(2) Application of the gross receipts test.

(i) In general.

(ii) Gross receipts of individuals.

(iii) Partners and S corporation shareholders.

(iv) Tax-exempt organizations.

(3) Determining a syndicate's loss amount.

(e) REMICs.

(f) Trusts.

(i) Calculation of ATI with respect to certain trusts and estates.

(ii) Calculation of ATI with respect to certain beneficiaries.

(g) Tax-exempt organizations.

(h) Examples.

(i) [Reserved]

(j) Anti-avoidance rule.

(1) In general.

(2) Examples.

(k) Applicability dates.

(1) In general.

(2) Paragraphs (b)(3)(iii), (b)(3)(iv), and (d)(3).

§ 1.163(j)-3 Relationship of the section 163(j) limitation to other provisions affecting interest.

(a) Overview.

(b) Coordination of section 163(j) with certain other provisions.

(1) In general.

(2) Disallowed interest provisions.

(3) Deferred interest provisions.

(4) At risk rules, passive activity loss provisions, and limitation on excess business losses of noncorporate taxpayers.

(5) Capitalized interest expenses.

(6) Reductions under section 246A.

(7) Section 381.

(8) Section 382.

(c) Examples.

(d) Applicability date.

§ 1.163(j)-4 General rules applicable to C corporations (including REITs, RICs, and members of consolidated groups) and tax-exempt corporations.

(a) Scope.

(b) Characterization of items of income, gain, deduction, or loss.

(1) Interest expense and interest income.

(2) Adjusted taxable income.

(3) Investment interest, investment income, investment expenses, and certain other tax items of a partnership with a C corporation partner.

(i) Characterization as expense or income properly allocable to a trade or business.

(ii) Effect of characterization on partnership.

(iii) Separately stated interest expense and interest income of a partnership not treated as excess business interest expense or excess taxable income of a C corporation partner.

(iv) Treatment of deemed inclusions of a domestic partnership that are not allocable to any trade or business.

(4) Application to RICs and REITs.

(i) In general.

(ii) Tentative taxable income of RICs and REITs.

(iii) Other adjustments to adjusted taxable income for RICs and REITs.

(5) Application to tax-exempt corporations.

(6) Adjusted taxable income of cooperatives.

(7) Examples.

(c) Effect on earnings and profits.

(1) In general.

(2) Special rule for RICs and REITs.

(3) Special rule for partners that are C corporations.

(4) Examples.

(d) Special rules for consolidated groups.

(1) Scope.

(2) Calculation of the section 163(j) limitation for members of a consolidated group.

(i) In general.

(ii) Interest.

(iii) Calculation of business interest expense and business interest income for a consolidated group.

(iv) Calculation of adjusted taxable income.

(v) Treatment of intercompany obligations.

(A) In general.

(B) Repurchase premium.

(3) Investment adjustments.

(4) Examples.

(e) Ownership of partnership interests by members of a consolidated group.

(1) [Reserved]

(2) Change in status of a member.

(3) Basis adjustments under § 1.1502-32.

(4) Excess business interest expense and § 1.1502-36.

(f) Cross-references.

(g) Applicability date.

(1) In general.

(2) [Reserved]

§ 1.163(j)-5 General rules governing disallowed business interest expense carryforwards for C corporations.

(a) Scope and definitions.

(1) Scope.

(2) Definitions.

(i) Allocable share of the consolidated group's remaining section 163(j) limitation.

(ii) Consolidated group's remaining section 163(j) limitation.

(iii) Remaining current-year interest ratio.

(b) Treatment of disallowed business interest expense carryforwards.

(1) In general.

(2) Deduction of business interest expense.

(3) Consolidated groups.

(i) In general.

(ii) Deduction of business interest expense.

(A) General rule.

(B) Section 163(j) limitation equals or exceeds the current-year business interest expense and disallowed business interest expense carryforwards from prior taxable years.

(C) Current-year business interest expense and disallowed business interest expense carryforwards exceed section 163(j) limitation.

(iii) Departure from group.

(iv) Example: Deduction of interest expense.

(c) Disallowed business interest expense carryforwards in transactions to which section 381(a) applies.

(d) Limitations on disallowed business interest expense carryforwards from separate return limitation years.

(1) General rule.

(A) Cumulative section 163(j) SRLY limitation.

(B) Subgrouping.

(2) Deduction of disallowed business interest expense carryforwards arising in a SRLY.

(3) Examples.

(e) Application of section 382.

(1) Pre-change loss.

(2) Loss corporation.

(3) Ordering rules for utilization of pre-change losses and for absorption of the section 382 limitation.

(4) Disallowed business interest expense from the pre-change period in the year of a testing date.

(5) Recognized built-in loss.

(f) Overlap of SRLY limitation with section 382.

(g) Additional limitations.

(h) Applicability date.

§ 1.163(j)-6 Application of the business interest deduction limitation to partnerships and subchapter S Corporations.

(a) Overview.

(b) Definitions.

(1) Section 163(j) items.

(2) Partner basis items.

(3) Remedial items.

(4) Excess business interest income.

(5) Deductible business interest expense.

(6) Section 163(j) excess items.

(7) Non-excepted assets.

(8) Excepted assets.

(c) Business interest income and business interest expense of the partnership.

(1) Modification of business interest income for partnerships.

(2) Modification of business interest expense for partnerships.

(3) Transition rule.

(4) Character of business interest expense.

(d) Adjusted taxable income of a partnership.

(1) Tentative taxable income of a partnership.

(2) Section 734(b), partner basis items, and remedial items.

(3) Section 743(b) adjustments and publicly traded partnerships.

(4) Modification of adjusted taxable income for partnerships.

(5) Election to use 2019 adjusted taxable income for taxable years beginning in 2020.

(e) Adjusted taxable income and business interest income of partners.

(1) Modification of adjusted taxable income for partners.

(2) Partner basis items and remedial items.

(3) Disposition of partnership interests.

(4) Double counting of business interest income and floor plan financing interest expense prohibited.

(5) Partner basis items, remedial items, and publicly traded partnerships.

(6) [Reserved]

(f) Allocation and determination of section 163(j) excess items made in the same manner as nonseparately stated taxable income or loss of the partnership.

(1) Overview.

(i) In general.

(ii) Relevance solely for purposes of section 163(j).

(iii) Exception applicable to publicly traded partnerships.

(2) Steps for allocating deductible business interest expense and section 163(j) excess items.

(i) Partnership-level calculation required by section 163(j)(4)(A).

(ii) Determination of each partner's relevant section 163(j) items.

(iii) Partner-level comparison of business interest income and business interest expense.

(iv) Matching partnership and aggregate partner excess business interest income.

(v) Remaining business interest expense determination.

(vi) Determination of final allocable ATI.

(A) Positive allocable ATI.

(B) Negative allocable ATI.

(C) Final allocable ATI.

(vii) Partner-level comparison of 30 percent of adjusted taxable income and remaining business interest expense.

(viii) Partner priority right to ATI capacity excess determination.

(ix) Matching partnership and aggregate partner excess taxable income.

(x) Matching partnership and aggregate partner excess business interest expense.

(xi) Final section 163(j) excess item and deductible business interest expense allocation.

(g) Carryforwards.

(1) In general.

(2) Treatment of excess business interest expense allocated to partners.

(3) Excess taxable income and excess business interest income ordering rule.

(4) Special rule for taxable years beginning in 2019 and 2020.

(h) Basis adjustments.

(1) Section 704(d) ordering.

(2) Excess business interest expense basis adjustments.

(3) Partner basis adjustment upon disposition of partnership interest.

(4)-(5) [Reserved]

(i)-(j) [Reserved]

(k) Investment items and certain other items.

(l) S corporations.

(1) In general.

(i) Corporate level limitation.

(ii) Short taxable periods.

(2) Character of deductible business interest expense.

(3) Adjusted taxable income of an S corporation.

(4) Adjusted taxable income and business interest income of S corporation shareholders.

(i) Adjusted taxable income of S corporation shareholders.

(ii) Disposition of S corporation stock.

(iii) Double counting of business interest income and floor plan financing interest expense prohibited.

(iv) [Reserved]

(5) Carryforwards.

(6) Basis adjustments and disallowed business interest expense carryforwards.

(7) Accumulated adjustment accounts.

(8) Termination of qualified subchapter S subsidiary election.

(9) Investment items.

(10) Application of section 382.

(m) Partnerships and S corporations not subject to section 163(j).

(1) Exempt partnerships and S corporations.

(2) Partnerships and S corporations engaged in excepted trades or businesses.

(3) Treatment of excess business interest expense from partnerships that are exempt entities in a succeeding taxable year.

(4) S corporations with disallowed business interest expense carryforwards prior to becoming exempt entities.

(n) Treatment of self-charged lending transactions between partnerships and partners.

(o) Examples.

(p) Applicability dates.

(1) In general.

(2) Paragraphs (c)(1) and (2), (d)(3) through (5), (e)(5), (f)(1)(iii), (g)(4), (n), and (o)(24) through (29), and (34) through (36).

§ 1.163(j)-7 Application of the section 163(j) limitation to foreign corporations and United States shareholders.

(a) Overview.

(b) General rule regarding the application of section 163(j) to relevant foreign corporations.

(c) Application of section 163(j) to CFC group members of a CFC group.

(1) Scope.

(2) Calculation of section 163(j) limitation for a CFC group for a specified period.

(i) In general.

(ii) Certain transactions between CFC group members disregarded.

(iii) [Reserved]

(iv) [Reserved]

(3) Deduction of business interest expense.

(i) CFC group business interest expense.

(A) In general.

(B) Modifications to relevant terms.

(ii) Carryforwards treated as attributable to the same taxable year.

(iii) Multiple specified taxable years of a CFC group member with respect to a specified period.

(iv) Limitation on pre-group disallowed business interest expense carryforward.

(A) General rule.

(*1*) CFC group member pre-group disallowed business interest expense carryforward.

(*2*) Subgrouping.

(*3*) Transition rule.

(B) Deduction of pre-group disallowed business interest expense carryforwards.

(4) Currency translation.

(5) Special rule for specified periods beginning in 2019 or 2020.

(i) 50 percent ATI limitation applies to a specified period of a CFC group.

(ii) Election to use 2019 ATI applies to a specified period of a CFC group.

(A) In general.

(B) Specified taxable years that do not begin in 2020.

(d) Determination of a specified group and specified group members.

(1) Scope.

(2) Rules for determining a specified group.

(i) Definition of a specified group.

(ii) Indirect ownership.

(iii) Specified group parent.

(iv) Qualified U.S. person.

(v) Stock.

(vi) Options treated as exercised.

(vii) When a specified group ceases to exist.

(3) Rules for determining a specified group member.

(e) Rules and procedures for treating a specified group as a CFC group.

(1) Scope.

(2) CFC group and CFC group member.

(i) CFC group.

(ii) CFC group member.

(3) Duration of a CFC group.

(4) Joining or leaving a CFC group.

(5) Manner of making or revoking a CFC group election.

(i) In general.

(ii) Revocation by election.

(iii) Timing.

(iv) Election statement.

(v) Effect of prior CFC group election.

(6) Annual information reporting.

(f) Treatment of a CFC group member that has ECI.

(1) In general.

(2) [Reserved]

(g) Rules concerning the computation of adjusted taxable income of a relevant foreign corporation.

(1) Tentative taxable income.

(2) Treatment of certain dividends.

(3) Treatment of certain foreign income taxes.

(4) Anti-abuse rule.

(i) In general.

(ii) ATI adjustment amount.

(A) In general.

(B) Special rule for taxable years or specified periods beginning in 2019 or 2020.

(iii) Applicable partnership.

(h) Election to apply safe-harbor.

(1) In general.

(2) Eligibility for safe-harbor election.

(i) Stand-alone applicable CFC.

(ii) CFC group.

(iii) Currency translation.

(3) Eligible amount.

(i) Stand-alone applicable CFC.

(ii) CFC group.

(iii) Additional rules for determining an eligible amount.

(4) Qualified tentative taxable income.

(5) Manner of making a safe-harbor election.

(i) In general.

(ii) Election statement.

(6) Special rule for taxable years or specified periods beginning in 2019 or 2020.

(i)-(j) [Reserved]

(k) Definitions.

(1) Applicable partnership.

(2) Applicable specified taxable year.

(3) ATI adjustment amount.

(4) [Reserved]

(5) [Reserved]

(6) CFC group.

(7) CFC group election.

(8) CFC group member.

(9) [Reserved]

(10) Cumulative section 163(j) pre-group carryforward limitation.

(11) Current group.

(12) Designated U.S. person.

(13) ECI deemed corporation.

(14) Effectively connected income.

(15) Eligible amount.

(16) Former group.

(17) Loss member.

(18) Payment amount.

(19) Pre-group disallowed business interest expense carryforward.

(20) Qualified tentative taxable income.

(21) Qualified U.S. person.

(22) Relevant period.

(23) Safe-harbor election.

(24) Specified borrower.

(25) Specified group.

(26) Specified group member.

(27) Specified group parent.

(28) Specified lender.

(29) Specified period.

(i) In general.

(ii) Short specified period.

(30) Specified taxable year.

(31) Stand-alone applicable CFC.

(32) Stock.

(l) Examples.

(m) Applicability dates.

(1) General applicability date.

(2) Exception.

(3) Early application.

(i) Rules for paragraphs (b) and (g)(1) and (2) of this section.

(ii) Rules for certain other paragraphs in this section.

(4) Additional rules that must be applied consistently.

(5) Election for prior taxable years.

§ 1.163(j)-8 [Reserved]

§ 1.163(j)-9 Elections for excepted trades or businesses; safe harbor for certain REITs.

(a) Overview.

(b) Availability of election.

(1) In general.

(2) Special rules.

(i) Exempt small businesses.

(ii) Section 162 trade or business not required for electing real property trade or business.

(c) Scope and effect of election.

(1) In general.

(2) Irrevocability.

(3) Depreciation.

(d) Time and manner of making election.

(1) In general.

(2) Election statement contents.

(3) Consolidated group's trade or business.

(4) Partnership's trade or business.

(e) Termination of election.

(1) In general.

(2) Taxable asset transfer defined.

(3) Related party defined.

(4) Anti-abuse rule.

(f) Additional guidance.

(g) Examples.

(h) Safe harbor for REITs.

(1) In general.

(2) REITs that do not significantly invest in real property financing assets.

(3) REITs that significantly invest in real property financing assets.

(4) REIT real property assets, interests in partnerships, and shares in other REITs.

(i) Real property assets.

(ii) Partnership interests.

(iii) Shares in other REITs.

(A) In general.

(B) Information necessary.

(iv) Tiered entities.

(5) Value of shares in other REITs.

(i) In general.

(ii) Information necessary.

(iii) Tiered REITs.

(6) Real property financing assets.

(7) Application of safe harbor for partnerships controlled by REITS.

(8) REITs or partnerships controlled by REITs that do not apply the safe harbor.

(i) [Reserved]

(j) Special anti-abuse rule for certain real property trades or businesses.

(1) In general.

(2) Exceptions.

(i) De minimis exception.

(ii) Look-through exception.

(iii) Inapplicability of exceptions to consolidated groups.

(iv) Exception for certain REITs.

(3) Allocations.

(4) Examples.

(k) Applicability date.

§ 1.163(j)-10 Allocation of interest expense, interest income, and other items of expense and gross income to an excepted trade or business.

(a) Overview.

(1) In general.

(i) Purposes.

(ii) Application of section.

(2) Coordination with other rules.

(i) In general.

(ii) Treatment of investment interest, investment income, investment expenses, and certain other tax items of a partnership with a C corporation or tax-exempt corporation as a partner.

(3) Application of allocation rules to foreign corporations and foreign partnerships.

(4) Application of allocation rules to members of a consolidated group.

(i) In general.

(ii) Application of excepted business percentage to members of a consolidated group.

(iii) Basis in assets transferred in an intercompany transaction.

(5) Tax-exempt organizations.

(6) Application of allocation rules to disallowed disqualified interest.

(7) Examples.

(b) Allocation of tax items other than interest expense and interest income.

(1) In general.

(2) Gross income other than dividends and interest income.

(3) Dividends.

(i) Look-through rule.

(ii) Inapplicability of the look-through rule.

(4) Gain or loss from the disposition of non-consolidated C corporation stock, partnership interests, or S corporation stock.

(i) Non-consolidated C corporations.

(ii) Partnerships and S corporations.

(5) Expenses, losses, and other deductions.

(i) Expenses, losses, and other deductions that are definitely related to a trade or business.

(ii) Other deductions.

(6) Treatment of investment items and certain other items of a partnership with a C corporation partner.

(7) Examples: Allocation of income and expense.

(c) Allocating interest expense and interest income that is properly allocable to a trade or business.

(1) General rule.

(i) In general.

(ii) De minimis exception.

(2) Example.

(3) Asset used in more than one trade or business.

(i) General rule.

(ii) Permissible methodologies for allocating asset basis between or among two or more trades or businesses.

(iii) Special rules.

(A) Consistent allocation methodologies.

(*1*) In general.

(*2*) Consent to change allocation methodology.

(B) De minimis exception.

(C) Allocations of excepted regulated utility trades or businesses.

(*1*) In general.

(*2*) Permissible method for allocating asset basis for utility trades or businesses.

(*3*) De minimis rule for excepted utility trades or businesses.

(*4*) Example.

(D) Special allocation rule for real property trades or business subject to special anti-abuse rule.

(*1*) In general.

(*2*) Allocation methodology for real property.

(*3*) Example.

(4) Disallowed business interest expense carryforwards; floor plan financing interest expense.

(5) Additional rules relating to basis.

(i) Calculation of adjusted basis.

(A) Non-depreciable property other than land.

(B) Depreciable property other than inherently permanent structures.

(C) Special rule for land and inherently permanent structures.

(D) Depreciable or amortizable intangible property and depreciable income forecast method property.

(E) Assets not yet used in a trade or business.

(F) Trusts established to fund specific liabilities.

(G) Inherently permanent structure.

(ii) Partnership interests; stock in non-consolidated C corporations.

(A) Partnership interests.

(*1*) Calculation of asset basis.

(*2*) Allocation of asset basis.

(*i*) In general.

(*ii*) De minimis rule.

(*iii*) Partnership assets not properly allocable to a trade or business.

(*iv*) Inapplicability of partnership look-through rule.

(B) Stock in domestic non-consolidated corporations.

(*1*) In general.

(*2*) Domestic non-consolidated C corporations.

(*i*) Allocation of asset basis.

(*ii*) De minimis rule.

(*iii*) Inapplicability of corporate look-through rule.

(*iv*) Use of inside basis for purposes of C corporation look-through rule.

(*3*) S corporations.

(*i*) Calculation of asset basis.

(*ii*) Allocation of asset basis.

(*iii*) De minimis rule.

(*iv*) Inapplicability of S corporation look-through rule.

(C) Stock in relevant foreign corporations.

(*1*) In general.

(*2*) Special rule for CFC utilities.

(D) Limitations on application of look-through rules.

(*1*) Inapplicability of look-through rule to partnerships or non-consolidated C corporations to which the small business exemption applies.

(*2*) Limitation on application of look-through rule to C corporations.

(D) Inapplicability of look-through rule to partnerships or non-consolidated C corporations to which the small business exemption applies.

(E) Tiered entities.

(iii) Cash and cash equivalents and customer receivables.

(iv) Deemed asset sale.

(v) Other adjustments.

(6) Determination dates; determination periods; reporting requirements.

(i) Determination dates and determination periods.

(A) Quarterly determination periods.

(B) Annual determination periods.

(ii) Application of look-through rules.

(iii) Reporting requirements.

(A) Books and records.

(B) Information statement.

(iv) Failure to file statement.

(7) Ownership threshold for look-through rules.

(i) Corporations.

(A) Asset basis.

(B) Dividends.

(ii) Partnerships.

(iii) Inapplicability of look-through rule.

(8) Anti-abuse rule.

(d) Direct allocations.

(1) In general.

(2) Qualified nonrecourse indebtedness.

(3) Assets used in more than one trade or business.

(4) Adjustments to basis of assets to account for direct allocations.

(5) Example: Direct allocation of interest expense.

(e) Examples.

(f) Applicability dates.

(1) In general.

(2) Paragraph (c)(5)(ii)(D)(*2*).

§ 1.163(j)-11 Transition rules.

(a) Overview.

(b) Application of section 163(j) limitation if a corporation joins a consolidated group during a taxable year of the group beginning before January 1, 2018.

(1) In general.

(2) Example

(c) Treatment of disallowed disqualified interest.

(1) In general.

(2) Earnings and profits.

(3) Disallowed disqualified interest of members of an affiliated group.

(i) Scope.

(ii) Allocation of disallowed disqualified interest to members of the affiliated group.

(A) In general.

(B) Definitions.

(*1*) Allocable share of the affiliated group's disallowed disqualified interest.

(*2*) Disallowed disqualified interest ratio.

(*3*) Exempt related person interest expense.

(iii) Treatment of carryforwards.

(4) Application of section 382.

(i) Ownership change occurring before November 13, 2020.

(A) Pre-change loss.

(B) Loss corporation.

(ii) Ownership change occurring on or after November 13, 2020.

(A) Pre-change loss.

(B) Loss corporation.

(5) Treatment of excess limitation from taxable years beginning before January 1, 2018.

(6) Example: Members of an affiliated group.

(d) Applicability date.

[T.D. 9905, 85 FR 56760, Sept, 14, 2020, as amended by T.D. 9943, 86 FR 5522, Jan. 19, 2021]

§ 1.163(j)-1 Definitions.

§ 1.163(j)-1 Definitions.

(a) ***In general.*** The definitions provided in this section apply for purposes of the section 163(j) regulations. For purposes of the rules set forth in §§ 1.163(j)-2 through 1.163(j)-11, additional definitions for certain terms are provided in those sections.

(b) ***Definitions*** —

(1) ***Adjusted taxable income.*** The term *adjusted taxable income* (ATI) means the tentative taxable income of the taxpayer for the taxable year, with the adjustments in this paragraph (b)(1).

(i) ***Additions.*** The amounts of the following items that were included in the computation of the taxpayer's tentative taxable income (if any) are added to tentative taxable income to determine ATI—

(A) Any business interest expense, other than disallowed business interest expense carryforwards;

(B) Any net operating loss deduction under section 172;

(C) Any deduction under section 199A;

(D) Subject to paragraph (b)(1)(iii) of this section, for taxable years beginning before January 1, 2022, any depreciation under section 167, section 168, or section 168 of the Internal Revenue Code (Code) of 1954 (former section 168);

(E) Subject to paragraph (b)(1)(iii) of this section, for taxable years beginning before January 1, 2022, any amortization of intangibles (for example, under section 167 or 197) and other amortized expenditures (for example, under section 174(b), 195(b)(1)(B), 248, or 1245(a)(2)(C));

(F) Subject to paragraph (b)(1)(iii) of this section, for taxable years beginning before January 1, 2022, any depletion under section 611;

(G) Any deduction for a capital loss carryback or carryover; and

(H) Any deduction or loss that is not properly allocable to a non-excepted trade or business (for rules governing the allocation of items to an excepted trade or business, see §§ 1.163(j)-1(b)(44) and 1.163(j)-10).

(ii) ***Subtractions.*** The amounts of the following items (if any) are subtracted from the taxpayer's tentative taxable income to determine ATI —

(A) Any business interest income that was included in the computation of the taxpayer's tentative taxable income;

(B) Any floor plan financing interest expense for the taxable year that was included in the computation of the taxpayer's tentative taxable income;

(C) With respect to the sale or other disposition of property, the greater of the allowed or allowable depreciation, amortization, or depletion of the property, as provided under section 1016(a)(2), for the taxpayer (or, if the taxpayer is a member of a consolidated group, the consolidated group) for the taxable years beginning after December 31, 2017, and before January 1, 2022, with respect to such property;

(D) With respect to the sale or other disposition of stock of a member of a consolidated group by another member, the investment adjustments under § 1.1502-32 with respect to such stock that are attributable to deductions described in paragraph (b)(1)(ii)(C) of this section;

(E) With respect to the sale or other disposition of an interest in a partnership, the taxpayer's distributive share of deductions described in paragraph (b)(1)(ii)(C) of this section with respect to property held by the partnership at the time of such sale or other disposition to the extent such deductions were allowable under section 704(d);

(F) Any income or gain that is not properly allocable to a non-excepted trade or business (for rules governing the allocation of items to an excepted trade or business, see §§ 1.163(j)-1(b)(44) and 1.163(j)-10)) and that was included in the computation of the taxpayer's tentative taxable income; and

(G) An amount equal to the sum of any specified deemed inclusions that were included in the computation of the taxpayer's tentative taxable income, reduced by the portion of the deduction allowed under section 250(a) by reason of the specified deemed inclusions. For this purpose, a *specified deemed inclusion* is the inclusion of an amount by a United States shareholder (as defined in section 951(b)) in gross income under section 78, 951(a), or 951A(a) with respect to an applicable CFC (as defined in § 1.163(j)-1(b)(2)) that is properly allocable to a non-excepted trade or business. Furthermore, a specified deemed inclusion includes any amounts included in a domestic partnership's gross income under section 951(a) or 951A(a) with respect to an applicable CFC to the extent such amounts are attributable to investment income of the partnership and are allocated to a domestic C corporation that is a direct (or indirect partner) and treated as properly allocable to a non-excepted trade or business of the domestic C corporation under §§ 1.163(j)-4(b)(3) and 1.163(j)-10. To determine the amount of a specified deemed inclusion described in this paragraph (b)(1)(ii)(G), the portion of a United States shareholder's inclusion under section 951A(a) treated as being with respect to an applicable CFC is determined under section 951A(f)(2) and § 1.951A-6(b)(2).

(iii) ***Depreciation, amortization, or depletion capitalized under section 263A.*** For purposes of paragraph (b)(1)(i) of this section, amounts of depreciation, amortization, or depletion that are capitalized under section 263A during the taxable year are deemed to be included in the computation of the taxpayer's tentative taxable income for such taxable year, regardless of the period in which the capitalized amount is recovered. See *Example 3* in § 1.163(j)-2(h)(3).

(iv) ***Application of § 1.163(j)-1(b)(1)(ii)(C), (D), and (E)*** —

(A) ***Sale or other disposition*** —

(*1*) ***In general.*** For purposes of paragraphs (b)(1)(ii)(C), (D), and (E) and paragraphs (b)(1)(iv)(B) and (E) of this section, except as otherwise provided in this paragraph (b)(1)(iv)(A), the term *sale or other disposition* does not include a transfer of an asset to an acquiring corporation in a transaction to which section 381(a) applies.

(*2*) ***Intercompany transactions.*** For purposes of paragraphs (b)(1)(ii)(C) and (D) and paragraphs (b)(1)(iv)(B) and (b)(1)(iv)(E)(*1*) and (*2*) of this section, the term *sale or other disposition* excludes all intercompany transactions, within the meaning of § 1.1502-13(b)(1)(i), to the extent necessary to achieve single-entity taxation of the consolidated group.

(*3*) ***Deconsolidations.*** Notwithstanding any other rule in this paragraph (b)(1)(iv)(A), any transaction in which a member (S) leaves a consolidated group (selling group), including a section 381(a) transaction described in paragraph (b)(1)(iv)(A)(*1*) of this section, is treated as a taxable disposition of all S stock held by any member of the selling group for purposes of paragraphs (b)(1)(ii)(C)

and (D) and paragraphs (b)(1)(iv)(B) and (b)(1)(iv)(E)(*1*) and (*2*) of this section, unless the transaction is described in § 1.1502-13(j)(5)(i). Following S's deconsolidation, any subsequent sales or dispositions of S stock by the selling group do not trigger further adjustments under paragraphs (b)(1)(ii)(C) and (D) and paragraphs (b)(1)(iv)(B) and (b)(1)(iv)(E)(*1*) and (*2*) of this section. If a transaction is described in § 1.1502-13(j)(5)(i), the transaction is not treated as a sale or other disposition for purposes of paragraphs (b)(1)(ii)(C) and (D) and paragraphs (b)(1)(iv)(B) and (b)(1)(iv)(E)(*1*) and (*2*) of this section. See also the successor rules in paragraph (b)(1)(iv)(C) of this section.

(*4*) ***Nonrecognition transactions.*** The disposition of property, member stock (other than in a deconsolidation described in paragraph (b)(1)(iv)(A)(*3*) of this section), or partnership interests in a nonrecognition transaction, other than a section 381(a) transaction described in paragraph (b)(1)(iv)(A)(*1*) of this section, is treated as a taxable disposition of the property, member stock, or partnership interest disposed of for purposes of paragraph (b)(1)(iv)(E)(*1*)(*i*), (b)(1)(iv)(E)(*2*)(*i*), and (b)(1)(iv)(E)(*3*)(*i*) of this section, respectively. For example, if a taxpayer transfers property to a wholly owned, non-consolidated subsidiary, the transfer of the property is treated as a taxable disposition for purposes of paragraph (b)(1)(iv)(E)(*1*)(*i*) of this section notwithstanding the application of section 351.

(B) ***Deductions by members of a consolidated group*** —

(*1*) ***In general.*** If paragraph (b)(1)(ii)(C), (D), or (E) of this section applies to adjust the tentative taxable income of a consolidated group, and if the consolidated group does not use the alternative computation method in paragraph (b)(1)(iv)(E) of this section, the amount of the adjustment under paragraph (b)(1)(ii)(C) of this section equals the greater of the allowed or allowable depreciation, amortization, or depletion of the property, as provided under section 1016(a)(2), for the consolidated group for the taxable years beginning after December 31, 2017, and before January 1, 2022, with respect to such property.

(*2*) ***Application of the alternative computation method.*** If paragraph (b)(1)(ii)(C), paragraph (b)(1)(ii)(D), or paragraph (b)(1)(ii)(E) of this section applies to adjust the tentative taxable income of a consolidated group, and if the consolidated group uses the alternative computation method in paragraph (b)(1)(iv)(E) of this section, the amount of the adjustment computed under paragraph (b)(1)(iv)(E)(*1*)(*i*), paragraph (b)(1)(iv)(E)(*2*)(*i*), or paragraph (b)(1)(iv)(E)(*3*)(*i*) of this section must take into account the net gain that would be taken into account by the consolidated group, including from intercompany transactions, determined by treating the sale or other disposition as a taxable transaction (see paragraphs (b)(1)(iv)(A)(*3*) and (*4*) of this section regarding deconsolidations and certain nonrecognition transactions, respectively).

(C) ***Successor rules*** —

(*1*) ***Successor assets.*** This paragraph (b)(1)(iv)(C)(*1*) applies if deductions described in paragraph (b)(1)(ii)(C) of this section are allowed or allowable to a consolidated group member (S) and either the depreciable property or S's stock

is subsequently transferred to another member (S1) in an intercompany transaction in which the transferor receives S1 stock. If this paragraph (b)(1)(iv)(C)(*1*) applies, and if the transferor's basis in the S1 stock received in the intercompany transaction is determined, in whole or in part, by reference to its basis in the depreciable property or the S stock, the S1 stock received in the intercompany transaction is treated as a successor asset for purposes of paragraph (b)(1)(ii)(D) and (b)(1)(iv)(E)(*2*) of this section. Thus, except as otherwise provided in paragraph (b)(1)(iv)(D) of this section, the subsequent disposition of either the S1 stock or the S stock (or both) may require the application of the adjustment rules of paragraph (b)(1)(ii)(D) or paragraph (b)(1)(iv)(E)(*2*) of this section.

(*2*) ***Successor entities.*** The acquiring corporation in a section 381(a) transaction to which the exception in paragraph (b)(1)(iv)(A)(*1*) of this section applies is treated as a successor to the distributor or transferor corporation for purposes of paragraphs (b)(1)(ii)(C) through (E) and (b)(1)(iv)(B) and (E) of this section. Therefore, for example, in applying paragraphs (b)(1)(ii)(C) through (E) and (b)(1)(iv)(B) and (E) of this section, the acquiring corporation is treated as succeeding to the allowed or allowable items of the distributor or transferor corporation. Similarly, the surviving group in a transaction described in § 1.1502-13(j)(5)(i) to which the exception in paragraph (b)(1)(iv)(A)(*3*) of this section applies is treated as a successor to the terminating group for purposes of paragraphs (b)(1)(ii)(C) through (E) and (b)(1)(iv)(B) and (E) of this section.

(D) ***Anti-duplication rule*** —

(*1*) ***In general.*** The aggregate of the subtractions from tentative taxable income of a consolidated group under paragraphs (b)(1)(ii)(C) through (E) or paragraphs (b)(1)(iv)(E)(*1*) through (*3*) of this section with respect to an item of property (including with regard to dispositions of successor assets described in paragraph (b)(1)(iv)(C)(*1*) of this section) cannot exceed the aggregate amount of the consolidated group members' deductions described in paragraph (b)(1)(ii)(C) of this section with respect to such item of property. In addition, once an item of property is no longer held by any member of a consolidated group (whether or not an adjustment to the tentative taxable income of the group is made under paragraph (b)(1)(ii)(C) of this section with respect to the direct or indirect disposition of that property), no further adjustment to the group's tentative taxable income is made under paragraph (b)(1)(ii)(D) or paragraph (b)(1)(iv)(E)(*2*) of this section in relation to the same property with respect to any subsequent stock disposition.

(*2*) ***Adjustments following deconsolidation.*** If a corporation (S) leaves a consolidated group (Group 1) in a transaction that requires an adjustment under paragraph (b)(1)(ii)(D) or paragraph (b)(1)(iv)(E)(*2*) of this section, no further adjustment is required under paragraph (b)(1)(ii)(C) or (E) or paragraph (b)(1)(iv)(E) of this section in a separate return year (as defined in § 1.1502-1(e)) of S with respect to depreciation, amortization, or depletion deductions allowed or allowable to Group 1. See paragraph (b)(1)(iv)(A) of this section for special rules regarding the meaning of the term "sale or other disposition" for purposes of the adjustments required under paragraphs

(b)(1)(ii)(C) through (E) and paragraphs (b)(1)(iv)(B) and (E) of this section. For example, assume that S deconsolidates from Group 1 in a transaction not described in § 1.1502-13(j)(5)(i) after holding property for which depreciation, amortization, or depletion deductions were allowed or allowable in Group 1. On the deconsolidation, S and Group 1 would adjust tentative taxable income with regard to that property. See paragraphs (b)(1)(iv)(A)(*3*), (b)(1)(ii)(D), and (b)(1)(iv)(E)(*2*) of this section. If, following the deconsolidation, S sells the property referred to in the previous sentence, no subtraction from tentative taxable income is made under paragraph (b)(1)(ii)(C) or paragraph (b)(1)(iv)(E)(*1*) of this section during S's separate return year with regard to the amounts included in Group 1. See paragraphs (b)(1)(iv)(A)(*3*), (b)(1)(ii)(D), and (b)(1)(iv)(E)(*2*) of this section.

(E) ***Alternative computation method.*** If paragraph (b)(1)(ii)(C), (D), or (E) of this section applies to adjust the tentative taxable income of a taxpayer, the taxpayer may compute the amount of the adjustments required by such paragraph using the formulas in paragraph (b)(1)(iv)(E)(*1*), (*2*), and (*3*) of this section, respectively, provided that the taxpayer applies such formulas to all dispositions for which an adjustment is required under paragraph (b)(1)(ii)(C), (D), or (E) of this section. For special rules regarding the treatment of deconsolidating transactions and nonrecognition transactions, see paragraph (b)(1)(iv)(A)(*3*) and (*4*) of this section, respectively. For special rules regarding the application of the formulas in paragraph (b)(1)(iv)(E)(*1*), (*2*), and (*3*) of this section by consolidated groups, see paragraph (b)(1)(iv)(B)(*2*) of this section.

(*1*) ***Alternative computation method for property dispositions.*** With respect to the sale or other disposition of property, the lesser of:

(*i*) Any gain recognized on the sale or other disposition of such property by the taxpayer (or, if the taxpayer is a member of a consolidated group, the consolidated group); and

(*ii*) The greater of the allowed or allowable depreciation, amortization, or depletion of the property, as provided under section 1016(a)(2), for the taxpayer (or, if the taxpayer is a member of a consolidated group, the consolidated group) for the taxable years beginning after December 31, 2017, and before January 1, 2022, with respect to such property.

(*2*) ***Alternative computation method for dispositions of member stock.*** With respect to the sale or other disposition by a member of a consolidated group of stock of another member for whom depreciation, amortization, or depletion was allowed or allowable with regard to an item of property (or stock of any successor to that member), the lesser of:

(*i*) Any gain recognized on the sale or other disposition of such stock; and

(*ii*) The investment adjustments under § 1.1502-32 with respect to such stock that are attributable to deductions described in paragraph (b)(1)(ii)(C) of this section. The investment adjustments referred to in this paragraph (b)(1)(iv)(E)(*2*)(*ii*) include investment adjustments replicated in stock of members that are successor entities.

(*3*) ***Alternative computation method for dispositions of partnership interests.*** With respect to the sale or other disposition of an interest in a partnership, the lesser of:

(*i*) Any gain recognized on the sale or other disposition of such interest; and

(*ii*) The taxpayer's (or, if the taxpayer is a consolidated group, the consolidated group's) distributive share of deductions described in paragraph (b)(1)(ii)(C) of this section with respect to property held by the partnership at the time of such sale or other disposition to the extent such deductions were allowable under section 704(d).

(F) ***Cap on negative adjustments*** —

(*1*) ***In general.*** A subtraction from (or negative adjustment to) tentative taxable income that is required under paragraph (b)(1)(ii)(C), (D), or (E) or paragraph (b)(1)(iv)(B) or (E) of this section is reduced to the extent the taxpayer establishes that the positive adjustments to tentative taxable income under paragraphs (b)(1)(i)(D) through (F) of this section in a prior taxable year did not result in an increase in the amount allowed as a deduction for business interest expense for such year. The extent to which the positive adjustments under paragraphs (b)(1)(i)(D) through (F) of this section resulted in an increase in the amount allowed as a deduction for business interest expense in a prior taxable year (such amount of positive adjustments, the *negative adjustment cap*) is determined after taking into account all other adjustments to tentative taxable income under paragraph (b)(1)(i) and (ii) of this section for that year, as established through books and records. The amount of the negative adjustment cap for a prior taxable year is reduced in future taxable years to the extent of negative adjustments under paragraphs (b)(1)(ii)(C) through (E) and paragraphs (b)(1)(iv)(B) and (E) of this section with respect to the prior taxable year.

(*2*) ***Example.*** A is a calendar-year individual taxpayer engaged in a trade or business that is neither an excepted trade or business nor eligible for the small business exemption. A has no disallowed business interest expense carryforwards. In 2021, A has $100x of business interest expense, no business interest income or floor plan financing interest expense, and $400x of tentative taxable income. After taking into account the adjustments to tentative taxable income under paragraph (b)(1)(i) and (ii) of this section other than positive adjustments under paragraphs (b)(1)(i)(D) through (F) of this section, A has tentative taxable income of $450x. A increases its tentative taxable income by $30x (from $450x to $480x) under paragraph (b)(1)(i)(D) of this section to reflect $30x of depreciation deductions with respect to Asset Y in 2021. Thus, for 2021, A would have a section 163(j) limitation of $135x ($450x × 30 percent) without regard to adjustments under paragraphs (b)(1)(i)(D) through (F) of this section. After the application of paragraph (b)(1)(i)(D) of this section, A has a section 163(j) limitation of $144x ($480x × 30 percent). In 2022, A sells Asset Y at a gain of $50x. Under paragraph (b)(1)(iv)(F)(*1*) of this section, A is not required to reduce its tentative taxable income in 2022 under paragraph (b)(1)(ii)(C) through (E) or paragraph (b)(1)(iv)(E) of this section. As established by A, the

$30x addition to tentative taxable income under paragraph (b)(1)(i)(D) of this section resulted in no increase in the amount allowed as a deduction for business interest expense in 2021.

(G) ***Treatment of depreciation, amortization, or depletion capitalized under section 263A.*** Paragraphs (b)(1)(ii)(C) through (E) of this section and this paragraph (b)(1)(iv) apply with respect to the sale or other disposition of property to which paragraph (b)(1)(iii) of this section applies. For example, if a taxpayer with depreciable machinery capitalizes the depreciation into inventory under section 263A, paragraph (b)(1)(ii)(C) or paragraph (b)(1)(iv)(E) of this section (and, if the taxpayer is a consolidated group, paragraph (b)(1)(iv)(B) of this section) applies upon the disposition of the machinery, subject to the cap in paragraph (b)(1)(iv)(F) of this section. Similarly, the successor asset rules in paragraph (b)(1)(iv)(C)(*1*) of this section would apply if the depreciable machinery subsequently were transferred to another member (S1) in an intercompany transaction in which the transferor received S1 stock.

(v) ***Other adjustments.*** ATI is computed with the other adjustments provided in §§ 1.163(j)-2 through 1.163(j)-11.

(vi) ***Additional rules relating to adjusted taxable income in other sections.***

(A) For rules governing the ATI of C corporations, see §§ 1.163(j)-4(b)(2) and (3) and 1.163(j)-10(a)(2)(ii).

(B) For rules governing the ATI of RICs and REITs, see § 1.163(j)-4(b)(4).

(C) For rules governing the ATI of tax-exempt corporations, see § 1.163(j)-4(b)(5).

(D) For rules governing the ATI of consolidated groups, see § 1.163(j)-4(d)(2)(iv) and (v).

(E) For rules governing the ATI of partnerships, see § 1.163(j)-6(d).

(F) For rules governing the ATI of partners, see §§ 1.163(j)-6(e) and 1.163(j)-6(m)(1) and (2).

(G) For rules governing partnership basis adjustments affecting ATI, see § 1.163(j)-6(h)(2).

(H) For rules governing the ATI of S corporations, see § 1.163(j)-6(l)(3).

(I) For rules governing the ATI of S corporation shareholders, see § 1.163(j)-6(l)(4).

(J) For rules governing the ATI of certain beneficiaries of trusts and estates, see § 1.163(j)-2(f).

(vii) ***ATI cannot be less than zero.*** If the ATI of a taxpayer would be less than zero, the ATI of the taxpayer is zero.

(viii) ***Examples.*** The examples in this paragraph (b)(1)(viii) illustrate the application of paragraphs (b)(1)(ii), (iii), and (iv) of this section. Unless otherwise indicated, A, B, P, S, and T are calendar-year domestic C corporations; P is the parent of a consolidated group of which S and T are members; the exemption for certain small businesses in § 1.163(j)-2(d) does not apply; no entity is engaged in an excepted trade or business; no entity has business interest income or floor plan financing interest expense; and all amounts of interest expense are deductible except for the potential application of section 163(j).

(A) *Example 1* —

(*1*) ***Facts.*** In 2021, A purchases a depreciable asset (Asset X) for $30x and fully depreciates Asset X under section 168(k). For the 2021 taxable year, A establishes that its ATI before adding back depreciation deductions with respect to Asset X under paragraph (b)(1)(i)(D) of this section is $130x, and that its ATI after adding back depreciation deductions with respect to Asset X under paragraph (b)(1)(i)(D) of this section is $160x. A incurs $45x of business interest expense in 2021. In 2024, A sells Asset X to an unrelated third party for $25x.

(*2*) ***Analysis.*** A's section 163(j) limitation for 2021 is $48x ($160x × 30 percent). Thus, all $45x of A's business interest expense incurred in 2021 is deductible in that year. Under paragraph (b)(1)(ii)(C) of this section, A must subtract $30x from its tentative taxable income in computing its ATI for its 2024 taxable year. Alternatively, under paragraph (b)(1)(iv)(E)(*1*) of this section, A must subtract $25x (the lesser of $30x or $25x ($25x−$0x)) from its tentative taxable income in computing its ATI for its 2024 taxable year. However, the negative adjustments under paragraphs (b)(1)(ii)(C) and (b)(1)(iv)(E)(*1*) of this section are both subject to the negative adjustment cap in paragraph (b)(1)(iv)(F) of this section. Under that paragraph, A's negative adjustment under either paragraph (b)(1)(ii)(C) or paragraph (b)(1)(iv)(E)(*1*) of this section is capped at $20x, or $150x (the amount of ATI that A needed in order to deduct all $45x of business interest expense in 2021) minus $130x (the amount of A's tentative taxable income in 2021 before adding back any amounts under paragraph (b)(1)(i)(D) through (F) of this section). As established by A, the additional $10x ($30x−$20x) of depreciation deductions that were added back to tentative taxable income in 2021 under paragraph (b)(1)(i)(D) of this section did not increase A's business interest expense deduction for that year.

(*3*) ***Transfer of assets in a nonrecognition transaction to which section 381 applies.*** The facts are the same as in paragraph (b)(1)(viii)(A)(*1*) of this section, except that, rather than sell Asset X to an unrelated third party in 2024, A merges with and into an unrelated third party in 2024 in a transaction described in section 368(a)(1)(A) in which no gain is recognized. As provided in paragraph (b)(1)(iv)(A)(*1*) of this section, the merger transaction is not treated as a "sale or other disposition" for purposes of paragraph (b)(1)(ii)(C) or paragraph (b)(1)(iv)(E)(*1*) of this section. Thus, no adjustment to tentative taxable income is required in 2024 under paragraph (b)(1)(ii)(C) or paragraph (b)(1)(iv)(E)(*1*) of this section.

(*4*) ***Transfer of assets in a nonrecognition transaction to which section 351 applies.*** The facts are the same as in paragraph (b)(1)(viii)(A)(*1*) of this section, except that, rather than sell Asset X to an unrelated third party in 2024, A transfers Asset X to B (A's wholly owned subsidiary) in 2024 in a transaction to which section 351 applies. The section 351 transaction is treated as a "sale or other disposition" for purposes of paragraphs (b)(1)(ii)(C) and (b)(1)(iv)(E)(*1*) of this section, and it is treated as a taxable disposition for purposes of paragraph (b)(1)(iv)(E)(*1*) of this section. See paragraph (b)(1)(iv)(A)(*1*) and (*4*) of this section. However, the negative adjustments under paragraphs (b)(1)(ii)(C) and

(b)(1)(iv)(E)(*1*) of this section are both subject to the negative adjustment cap in paragraph (b)(1)(iv)(F) of this section. Thus, A must subtract $20x from its tentative taxable income in computing its ATI for its 2024 taxable year.

(B) *Example 2* —

(*1*) ***Facts.*** In 2021, S purchases a depreciable asset (Asset Y) for $30x and fully depreciates Asset Y under section 168(k). P reduces its basis in its S stock by $30x under § 1.1502-32 to reflect S's depreciation deductions with respect to Asset Y. For the 2021 taxable year, the P group establishes that its ATI before adding back S's depreciation deductions with respect to Asset Y under paragraph (b)(1)(i)(D) of this section is $130x, and that its ATI after adding back S's depreciation deductions with respect to Asset Y under paragraph (b)(1)(i)(D) of this section is $160x. The P group incurs $45x of business interest expense in 2021. In 2024, P sells all of its S stock to an unrelated third party at a gain of $25x.

(*2*) ***Analysis.*** The P group's section 163(j) limitation for 2021 is $48x ($160x × 30 percent). Thus, all $45x of the P group's business interest expense incurred in 2021 is deductible in that year. Under paragraph (b)(1)(ii)(D) of this section, the P group must subtract $30x from its tentative taxable income in computing its ATI for its 2024 taxable year. Alternatively, under paragraph (b)(1)(iv)(E)(*2*) of this section, the P group must subtract $25x (the lesser of $30x or $25x) from its tentative taxable income in computing its ATI for its 2024 taxable year. However, the negative adjustments under paragraphs (b)(1)(ii)(D) and (b)(1)(iv)(E)(*2*) of this section are both subject to the negative adjustment cap in paragraph (b)(1)(iv)(F) of this section. Under that paragraph, the P group's negative adjustment under either paragraph (b)(1)(ii)(D) or paragraph (b)(1)(iv)(E)(*2*) of this section is capped at $20x, or $150x (the amount of ATI the P group needed in order to deduct all $45x of business interest expense in 2021) minus $130x (the amount of the P group's tentative taxable income in 2021 before adding back any amounts under paragraph (b)(1)(i)(D) through (F) of this section). As established by the P group, the additional $10x ($30x−$20x) of depreciation deductions that were added back to tentative taxable income in 2021 under paragraph (b)(1)(i)(D) of this section did not increase the P group's business interest expense deduction for that year.

(*3*) ***Disposition of less than all member stock.*** The facts are the same as in paragraph (b)(1)(viii)(B)(*1*) of this section, except that, in 2024, P sells half of its S stock to an unrelated third party. The results are the same as in paragraph (b)(1)(viii)(B)(*2*) of this section. See paragraph (b)(1)(iv)(A)(*3*) of this section. Thus, the P group must subtract $20x from its tentative taxable income in computing its ATI for its 2024 taxable year. No further adjustment under paragraphs (b)(1)(ii)(C) and (D) or paragraphs (b)(1)(iv)(E)(*1*) and (*2*) of this section is required if P subsequently sells its remaining S stock or if S subsequently disposes of Asset Y. See paragraphs (b)(1)(iv)(A)(*3*) and (b)(1)(iv)(D) of this section.

(*4*) *Intercompany transfer; disposition of successor assets* —

(*i*) ***Adjustments in 2024.*** The facts are the same as in paragraph (b)(1)(viii)(B)(*1*) of this section, except that, rather than sell all of its S stock to an unrelated third party in 2024, P transfers all of its S stock to T in 2024 in a transaction to which section 351 applies and, in 2025, P sells all of its T stock to an unrelated third party at a gain of $40x. As provided in paragraph (b)(1)(iv)(A)(*2*) of this section, P's intercompany transfer of its S stock to T is not a "sale or other disposition" for purposes of paragraph (b)(1)(ii)(D) or paragraph (b)(1)(iv)(E)(*2*) of this section. Thus, no adjustment to tentative taxable income is required in 2024 under paragraph (b)(1)(ii)(D) or paragraph (b)(1)(iv)(E)(*2*) of this section.

(*ii*) ***Adjustments in 2025.*** Pursuant to paragraph (b)(1)(iv)(C)(*1*) of this section, P's stock in T is treated as a successor asset for purposes of paragraph (b)(1)(ii)(D) and (b)(1)(iv)(E)(*2*) of this section. Moreover, P's sale of its T stock causes both T and S to deconsolidate. Thus, under paragraph (b)(1)(iv)(A)(*3*) of this section, the transaction is treated as a taxable disposition of all of the T stock and all of the S stock held by all members of the P group. Under the anti-duplication rule in paragraph (b)(1)(iv)(D) of this section, the total amount of gain recognized for purposes of paragraph (b)(1)(iv)(E)(*2*)(*i*) of this section is $40x, the greater of the gain on the disposition of the T stock ($40x) or on the disposition of the S stock ($25x). However, the negative adjustments under paragraph (b)(1)(iv)(E)(*2*) of this section are subject to the negative adjustment cap in paragraph (b)(1)(iv)(F) of this section. Thus, the P group must subtract $20x from its tentative taxable income in computing its ATI for its 2025 taxable year.

(*5*) ***Alternative computation and non-deconsolidating disposition of member stock.*** The facts are the same as in paragraph (b)(1)(viii)(B)(*1*) of this section, except that, in 2024, P sells just ten percent of its S stock to an unrelated third party at a gain of $2.5x. Under paragraph (b)(1)(iv)(E)(*2*) of this section, the lesser of P's gain recognized on the sale of the S stock ($2.5x) and the investment adjustments under § 1.1502-32 with respect to the S stock P sold ($3x) is $2.5x, an amount less than the $20x limitation under paragraph (b)(1)(iv)(F) of this section. Thus, the P group must subtract $2.5x from its tentative taxable income in computing its ATI for its 2024 taxable year.

(*6*) ***Non-deconsolidating disposition of member stock followed by asset disposition.*** The facts are the same as in paragraph (b)(1)(viii)(B)(*5*) of this section, except that, in 2025, S sells Asset Y to an unrelated third party for a gain of $20x. Under paragraph (b)(1)(iv)(E)(*1*) of this section, the amount of the adjustment in 2025 is the lesser of two amounts. The first amount is the amount of S's gain recognized on the sale of Asset Y ($20x). See paragraph (b)(1)(iv)(E)(*1*)(*i*) of this section. The second amount is the amount of depreciation with respect to Asset Y (see paragraph (b)(1)(iv)(E)(*1*)(*ii*) of this section), reduced by the amount of depreciation previously taken into account in the computation under paragraph (b)(1)(iv)(E)(*2*)(*ii*) of this section ($30x−$3x, or $27x). See paragraph (b)(1)(iv)(D)(*1*) of this section. Thus, the amount of the adjustment under paragraphs (b)(1)(iv)(D) and (b)(1)(iv)(E)(*1*) of this section is $20x. In turn, this amount is subject to the negative adjustment cap under paragraph (b)(1)(iv)(F),

which, after accounting for the negative adjustment on the earlier sale of S stock in 2024, is $17.5x ($20x−$2.5x). Accordingly, the P group must subtract $17.5x from its tentative taxable income in computing its ATI for its 2025 taxable year.

(C) ***Example 3*** —(*1*) *Facts.* The facts are the same as in paragraph (b)(1)(viii)(B)(*1*) of this section, except that, in 2024, S sells Asset Y to an unrelated third party for $25x and, in 2025, P sells all of its S stock to an unrelated third party at a gain of $25x.

(2) ***Analysis.*** The results are the same as in paragraph (b)(1)(viii)(B)(*2*) of this section. Thus, the P group must subtract $20x from its tentative taxable income in computing its ATI for its 2024 taxable year. P's sale of all of its S stock in 2025 is a "sale or other disposition" for purposes of paragraph (b)(1)(ii)(D) and (b)(1)(iv)(E)(*2*) of this section. However, pursuant to paragraph (b)(1)(iv)(D)(*1*) of this section, no further adjustment to the P group's tentative taxable income is required in 2025 under paragraph (b)(1)(ii)(D) or paragraph (b)(1)(iv)(E)(*2*) of this section.

(*3*) ***Disposition of S stock prior to S's asset disposition.*** The facts are the same as in paragraph (b)(1)(viii)(C)(*1*) of this section, except that, in 2024, P sells all of its S stock to an unrelated third party at a gain of $25x and, in 2025, S sells Asset Y to an unrelated third party for $25x. The results are the same as in paragraph (b)(1)(viii)(B)(*2*) of this section. Thus, the P group must subtract $20x from its tentative taxable income in computing its ATI for its 2024 taxable year. Pursuant to paragraph (b)(1)(iv)(D)(*2*) of this section, no adjustment to the acquiring group's tentative taxable income is required in 2025 under paragraph (b)(1)(ii)(C) or paragraph (b)(1)(iv)(E)(*1*) of this section.

(*4*) ***Deconsolidation of S in nonrecognition transaction.*** The facts are the same as in paragraph (b)(1)(viii)(C)(*3*) of this section, except that, rather than sell all of its S stock to an unrelated third party, P causes S to merge with and into an unrelated third party in a transaction described in section 368(a)(1)(A). As provided in paragraph (b)(1)(iv)(A)(*3*) of this section, the merger transaction is treated as a taxable disposition of all of P's stock in S for purposes of paragraphs (b)(1)(ii)(D) and (b)(1)(iv)(E)(*2*) of this section because S leaves the P group. Thus, the results are the same as in paragraph (b)(1)(viii)(C)(*3*) of this section.

(D) *Example 4*—(*1*) *Facts.* P wholly owns T, which wholly owns S. In 2021, S purchases a depreciable asset (Asset Z) for $30x and fully depreciates Asset Z under section 168(k). T reduces its basis in its S stock, and P reduces its basis in its T stock, by $30x under § 1.1502-32 to reflect S's depreciation deductions with respect to Asset Z. For the 2021 taxable year, the P group establishes that its ATI before adding back S's depreciation deductions with respect to Asset Z under paragraph (b)(1)(i)(D) of this section is $130x, and that its ATI after adding back S's depreciation deductions with respect to Asset Z under paragraph (b)(1)(i)(D) of this section is $160x. The P group incurs $45x of business interest expense in 2021. In 2024, T sells all of its S stock to an unrelated third party at a gain of $25x. In 2025, P sells all of its T stock to an unrelated third party at a gain of $40x.

(*2*) *Analysis.* The results are the same as in paragraph (b)(1)(viii)(B)(*2*) of this section. Thus, the P group must subtract $20x from its tentative taxable income in computing its ATI for its 2024 taxable year. Pursuant to paragraph (b)(1)(iv)(D)(*1*) of this section, no negative adjustment to the P group's tentative taxable income is required in 2025 under paragraph (b)(1)(ii)(D) or paragraph (b)(1)(iv)(E)(*2*) of this section.

(*3*) *Disposition of T stock in 2024.* The facts are the same as in paragraph (b)(1)(viii)(D)(*1*) of this section, except that, in 2024, P sells all of its T stock to another consolidated group at a gain of $40x and, in 2025, T sells all of its S stock to an unrelated party at a gain of $25x. Whereas the transaction described in paragraph (b)(1)(viii)(B)(*4*) of this section is treated as a taxable disposition of both the T stock and the S stock, only the actual disposition of the T stock in the transaction described in this paragraph (b)(1)(viii)(D)(*3*) is treated as a taxable disposition for purposes of paragraphs (b)(1)(ii)(D) and (b)(1)(iv)(E)(*2*) of this section. See paragraph (b)(1)(iv)(A)(*3*) of this section. However, the results are the same as in paragraph (b)(1)(viii)(B)(*2*) and (b)(1)(viii)(B)(*4*) of this section because of the negative adjustment cap in paragraph (b)(1)(iv)(F) of this section. Thus, the P group must subtract $20x from its tentative taxable income in computing its ATI for its 2024 taxable year. Pursuant to paragraph (b)(1)(iv)(D) of this section, no negative adjustment to the acquiring group's tentative taxable income is required in 2025 under paragraph (b)(1)(ii)(D) or paragraph (b)(1)(iv)(E)(*2*) of this section.

(E) *Example 5*—(*1*) *Facts.* In 2021, A purchases Assets X and Y for $30x and $80x, respectively, and fully depreciates each asset under section 168(k). For the 2021 taxable year, A establishes that its ATI before adding back depreciation deductions with respect to Assets X and Y under paragraph (b)(1)(i)(D) of this section is $150x, and that its ATI after adding back depreciation deductions with respect to Assets X and Y under paragraph (b)(1)(i)(D) of this section is $260x. A incurs $75x of business interest expense in 2021. In 2024, A sells Assets X and Y to an unrelated third party for $40x and $90x, respectively.

(*2*) *Analysis.* A's section 163(j) limitation for 2021 is $78x ($260x × 30 percent). Thus, all $75x of A's business interest expense incurred in 2021 is deductible in that year. Under paragraph (b)(1)(ii)(C) of this section, A must subtract $110x ($30x + $80x) from its tentative taxable income in computing its ATI for its 2024 taxable year. Alternatively, under paragraph (b)(1)(iv)(E)(*1*) of this section, A must subtract $30x with respect to Asset X (the lesser of $30x or $40x ($40x−$0x)), and $80x with respect to Asset Y (the lesser of $80x or $90x ($90x−$0x)), from its tentative taxable income in computing its ATI for its 2024 taxable year. However, the negative adjustments under paragraphs (b)(1)(ii)(C) and (b)(1)(iv)(E)(*1*) of this section are both subject to the negative adjustment cap in paragraph (b)(1)(iv)(F) of this section. Under that paragraph, A's negative adjustment in 2024 under either paragraph (b)(1)(ii)(C) ($110x) or paragraph (b)(1)(iv)(E)(*1*) (also $110x) of this section is limited to $100x. This amount equals $250x (the amount of ATI that A needed in order to deduct all $75x of business interest expense in 2021) minus $150x (the amount of A's tentative taxable income in 2021 before adding back any amounts under paragraph (b)(1)(i)(D) through (F) of this section). As established by A, the additional $10x ($110x−$100x) of depreciation deductions that were added back to tentative taxable income in 2021 under paragraph (b)(1)(i)(D) of this section did not increase A's business interest expense deduction for that year.

(*3*) *Sale of assets in different taxable years.* The facts are the same as in paragraph (b)(1)(viii)(E)(*1*) of this section, except that A sells Asset Y to an unrelated third party for $90x in 2025. Under paragraph (b)(1)(ii)(C) of this section, A must subtract $30x from its tentative taxable income in computing its ATI for its 2024 taxable year. Alternatively, under paragraph (b)(1)(iv)(E)(*1*) of this section, A must subtract $30x (the lesser of $30x or $40x ($40x−$0x)) from its tentative taxable income in computing its ATI for its 2024 taxable year. Because A's negative adjustment cap for its 2021 taxable year is $100x (see paragraph (b)(1)(viii)(E)(*2*) of this section), A's negative adjustment in 2024 of $30x is not reduced under paragraph

(b)(1)(iv)(F) of this section. In 2025, A must subtract $80x from its tentative taxable income under paragraph (b)(1)(ii)(C) of this section in computing its ATI. Alternatively, under paragraph (b)(1)(iv)(E)(*1*) of this section, A must subtract $80x (the lesser of $80x or $90x ($90x−$0x)) from its tentative taxable income in computing its ATI for its 2025 taxable year. However, the negative adjustments under paragraphs (b)(1)(ii)(C) and (b)(1)(iv)(E)(*1*) of this section are both subject to the negative adjustment cap in paragraph (b)(1)(iv)(F) of this section. Moreover, A's negative adjustment cap for its 2021 taxable year is reduced from $100x to $70x to reflect A's $30x negative adjustment in 2024. See paragraph (b)(1)(iv)(F) of this section. Thus, A's negative adjustment for 2025 under either paragraph (b)(1)(ii)(C) or paragraph (b)(1)(iv)(E)(*1*) of this section is reduced from $80x to $70x. As established by A, the additional $10x ($110x−$100x) of depreciation deductions that were added back to tentative taxable income in 2021 under paragraph (b)(1)(i)(D) of this section did not increase A's business interest expense deduction for that year.

(2) *Applicable CFC.* The term *applicable CFC* means a foreign corporation described in section 957, but only if the foreign corporation has at least one United States shareholder that owns, within the meaning of section 958(a), stock of the foreign corporation.

(3) *Business interest expense*—(i) *In general.* The term *business interest expense* means interest expense that is properly allocable to a non-excepted trade or business or that is floor plan financing interest expense. Business interest expense also includes disallowed business interest expense carryforwards (as defined in paragraph (b)(11) of this section). However, business interest expense does not include amounts of interest expense carried forward to the taxable year from a prior taxable year due to the application of section 465 or section 469, which apply after the application of section 163(j). For the treatment of investment interest, see section 163(d); and for the treatment of personal interest, see section 163(h).

(ii) *Special rules.* For special rules for defining business interest expense in certain circumstances, see §§ 1.163(j)-3(b)(2) (regarding disallowed interest expense), 1.163(j)-4(b) (regarding C corporations) and 1.163(j)-4(d)(2)(iii) (regarding consolidated groups), 1.163(j)-1(b)(9) (regarding current-year business interest expense), and 1.163(j)-6(c) (regarding partnerships and S corporations).

(4) ***Business interest income*** —

(i) ***In general.*** The term *business interest income* means interest income includible in the gross income of a taxpayer for the taxable year which is properly allocable to a non-excepted trade or business. For the treatment of investment income, see section 163(d).

(ii) ***Special rules.*** For special rules defining business interest income in certain circumstances, see §§ 1.163(j)-4(b) (regarding C corporations), 1.163(j)-4(d)(2)(iii) (regarding consolidated groups), and 1.163(j)-6(c) (regarding partnerships and S corporations).

(5) ***C corporation.*** The term *C corporation* has the meaning provided in section 1361(a)(2).

(6) ***Cleared swap.*** The term *cleared swap* means a swap that is cleared by a derivatives clearing organization, as such term is defined in section 1a of the Commodity Exchange Act (7 U.S.C. 1a), or by a clearing agency, as such term is defined in section 3 of the Securities Exchange Act of 1934 (15 U.S.C. 78c), that is registered as a derivatives clearing organization under the Commodity Exchange Act or as a clearing agency under the Securities Exchange Act of 1934, respectively, if the derivatives clearing organization or clearing agency requires the parties to the swap to post and collect margin or collateral.

(7) ***Consolidated group.*** The term *consolidated group* has the meaning provided in § 1.1502-1(h).

(8) ***Consolidated return year.*** The term *consolidated return year* has the meaning provided in § 1.1502-1(d).

(9) ***Current-year business interest expense.*** The term *current-year business interest expense* means business interest expense that would be deductible in the current taxable year without regard to section 163(j) and that is not a disallowed business interest expense carryforward from a prior taxable year.

(10) ***Disallowed business interest expense.*** The term *disallowed business interest expense* means the amount of business interest expense for a taxable year in excess of the amount allowed as a deduction for the taxable year under section 163(j)(1) and § 1.163(j)-2(b). For purposes of section 163(j) and the regulations in this part under section 163(j) of the Internal Revenue Code (Code) disallowed business interest expense is treated as "paid or accrued" in the taxable year in which the expense is deductible for Federal income tax purposes (without regard to section 163(j)) or in the taxable year in which a deduction for the business interest expense is permitted under section 163(j), as the context may require.

(11) ***Disallowed business interest expense carryforward.*** The term *disallowed business interest expense carryforward* means any business interest expense described in § 1.163(j)-2(c).

(12) ***Disallowed disqualified interest.*** The term *disallowed disqualified interest* means interest expense, including carryforwards, for which a deduction was disallowed under old section 163(j) (as defined in paragraph (b)(27) of this section) in the taxpayer's last taxable year beginning before January 1, 2018, and that was carried forward pursuant to old section 163(j).

(13) ***Electing farming business.*** The term *electing farming business* means a trade or business that makes an election as provided in § 1.163(j)-9 or other published guidance and that is—

(i) A farming business, as defined in section 263A(e)(4) or § 1.263A-4(a)(4);

(ii) Any trade or business of a specified agricultural or horticultural cooperative, as defined in section 199A(g)(4); or

(iii) Specifically designated by the Secretary in guidance published in the FEDERAL REGISTER or the Internal Revenue Bulletin (see § 601.601(d) of this chapter) as a farming business for purposes of section 163(j).

(14) ***Electing real property trade or business.*** The term *electing real property trade or business* means a trade or business that makes an election as provided in § 1.163(j)-9 or other published guidance and that is—

(i) A real property trade or business described in section 469(c)(7)(C) and § 1.469-9(b)(2); or

(ii) A REIT that qualifies for the safe harbor described in § 1.163(j)-9(h); or

(iii) A trade or business specifically designated by the Secretary in guidance published in the FEDERAL REGISTER or the Internal Revenue Bulletin (see § 601.601(d) of this chapter) as a real property trade or business for purposes of section 163(j).

(15) ***Excepted regulated utility trade or business*** —

(i) ***In general.*** The term *excepted regulated utility trade or business* means:

(A) ***Automatically excepted regulated utility trades or businesses.*** A trade or business—

(*1*) That furnishes or sells—

(*i*) Electrical energy, water, or sewage disposal services;

(*ii*) Gas or steam through a local distribution system; or

(*iii*) Transportation of gas or steam by pipeline; but only

(*2*) To the extent that the rates for the furnishing or sale of the items in paragraph (b)(15)(i)(A)(*1*) of this section—

(*i*) Have been established or approved by a State or political subdivision thereof, by any agency or instrumentality of the United States, or by a public service or public utility commission or other similar body of any State or political subdivision thereof and are determined on a cost of service and rate of return basis; or

(*ii*) Have been established or approved by the governing or ratemaking body of an electric cooperative; or

(B) ***Electing regulated utility trades or businesses.*** A trade or business that makes a valid election under paragraph (b)(15)(iii) of this section; or

(C) ***Designated excepted regulated utility trades or businesses.*** A trade or business that is specifically designated by the Secretary in guidance published in the FEDERAL REGISTER or the Internal Revenue Bulletin as an excepted regulated utility trade or business (see § 601.601(d) of this chapter) for section 163(j) purposes.

(ii) ***Depreciation and excepted and non-excepted utility trades or businesses.***

(A) ***Depreciation.*** Taxpayers engaged in an excepted trade or business described in paragraph (b)(15)(i) of this section cannot claim the additional first-year depreciation deduction under section 168(k) for any property that is primarily used in the excepted regulated utility trade or business.

(B) ***Allocation of items.*** If a taxpayer is engaged in one or more excepted trades or businesses, as described in paragraph (b)(15)(i) of this section, and one or more non-excepted trades or businesses, the taxpayer must allocate items between the excepted and non-excepted utility trades or businesses. See §§ 1.163(j)-1(b)(44) and 1.163(j)-10(c)(3)(iii)(C). Some trades or businesses with de minimis furnishing or sales of items described in paragraph (b)(15)(i)(A)(*1*) of this section that are not sold pursuant to rates that are determined on a cost of service and rate of return basis or established or approved by the governing or ratemaking body of an electric cooperative, and are not subject to an election in paragraph (b)(15)(iii), are treated as excepted trades or businesses. See § 1.163(j)-10(c)(3)(iii)(C)(*3*). For look-through rules applicable to certain CFCs that furnish or sell items described in paragraph (b)(15)(i)(A)(*1*) of this section that are not sold pursuant to rates that are determined on a cost of service and rate of return basis or established or approved by the governing or ratemaking body of an electric cooperative as described in paragraph (b)(15)(i)(A)(*2*) of this section, see § 1.163(j)-10(c)(5)(ii)(C).

(iii) ***Election to be an excepted regulated utility trade or business.***

(A) ***In general.*** A trade or business that is not an excepted regulated utility trade or business described in paragraph (b)(15)(i)(A) or (C) of this section and that furnishes or sells items described in paragraph (b)(15)(i)(A)(*1*) of this section is eligible to make an election to be an excepted regulated utility trade or business to the extent that the rates for furnishing or selling the items described in paragraph (b)(15)(i)(A)(*1*) of this section have been established or approved by a regulatory body described in paragraph (b)(15)(i)(A)(*2*)(i) of this section.

(B) ***Scope and effect of election*** —

(*1*) ***In general.*** An election under paragraph (b)(15)(iii) of this section is made with respect to each eligible trade or business of the taxpayer and applies only to the trade or business for which the election is made. An election under paragraph (b)(15)(iii) of this section applies to the taxable year in which the election is made and to all subsequent taxable years.

(*2*) ***Irrevocability.*** An election under paragraph (b)(15)(iii) of this section is irrevocable.

(C) ***Time and manner of making election*** —

(*1*) ***In general.*** Subject to paragraph (b)(15)(iii)(C)(*5*) of this section, a taxpayer makes an election under paragraph (b)(15)(iii) by attaching an election statement to the taxpayer's timely filed original Federal income tax return, including extensions. A taxpayer may make elections for multiple trades or businesses on a single election statement.

(*2*) ***Election statement contents.*** The election statement should be titled “Section 1.163(j)-1(b)(15)(iii) Election” and must contain the following information for each trade or business:

(*i*) The taxpayer's name;

(*ii*) The taxpayer's address;

(*iii*) The taxpayer's social security number (SSN) or employer identification number (EIN);

(*iv*) A description of the taxpayer's electing trade or business sufficient to demonstrate qualification for an election under this section, including the principal business activity code; and

(*v*) A statement that the taxpayer is making an election under section 1.163(j)-1(b)(15)(iii).

(*3*) ***Consolidated group's or partnership's trade or business.*** The rules in § 1.163(j)-9(d)(3) and (4) apply with respect to an election under paragraph (b)(15)(iii) of this section for a consolidated group's or partnership's trade or business.

(*4*) ***Termination of election.*** The rules in § 1.163(j)-9(e) apply to determine when an election under paragraph (b)(15)(iii) of this section terminates.

(5) ***Additional guidance.*** The rules and procedures regarding the time and manner of making an election under paragraph (b)(15)(iii) of this section and the election statement contents in paragraph (b)(15)(iii)(C)(*2*) of this section may be modified through other guidance (see §§ 601.601(d) and 601.602 of this chapter). Additional situations in which an election may terminate under paragraph (b)(15)(iii)(C)(*4*) of this section may be provided through guidance published in the FEDERAL REGISTER or in the Internal Revenue Bulletin (see § 601.601(d) of this chapter).

(16) ***Excess business interest expense.*** For any partnership, the term *excess business interest expense* means the amount of disallowed business interest expense of the partnership for a taxable year under section § 1.163(j)-2(b). With respect to a partner, see § 1.163(j)-6(g) and (h).

(17) ***Excess taxable income.*** With respect to any partnership or S corporation, the term *excess taxable income* means the amount which bears the same ratio to the partnership's ATI as—

(i) The excess (if any) of—

(A) The amount determined for the partnership or S corporation under section 163(j)(1)(B); over

(B) The amount (if any) by which the business interest expense of the partnership, reduced by the floor plan financing interest expense, exceeds the business interest income of the partnership or S corporation; bears to

(ii) The amount determined for the partnership or S corporation under section 163(j)(1)(B).

(18) ***Floor plan financing indebtedness.*** The term floor plan financing indebtedness means indebtedness—

(i) Used to finance the acquisition of motor vehicles held for sale or lease; and

(ii) Secured by the motor vehicles so acquired.

(19) ***Floor plan financing interest expense.*** The term *floor plan financing interest expense* means interest paid or accrued on floor plan financing indebtedness. For purposes of the section 163(j) regulations, all floor plan financing interest expense is treated as business interest expense. See paragraph (b)(3) of this section.

(20) ***Group.*** The term *group* has the meaning provided in § 1.1502-1(a).

(21) ***Intercompany transaction.*** The term *intercompany transaction* has the meaning provided in § 1.1502-13(b)(1)(i).

(22) ***Interest.*** The term *interest* means any amount described in paragraph (b)(22)(i), (ii), (iii), or (iv) of this section.

(i) ***In general.*** Interest is an amount paid, received, or accrued as compensation for the use or forbearance of money under the terms of an instrument or contractual arrangement, including a series of transactions, that is treated as a debt instrument for purposes of section 1275(a) and § 1.1275-1(d), and not treated as stock under § 1.385-3, or an amount that is treated as interest under other provisions of the Code or the Income Tax Regulations. Thus, interest includes, but is not limited to, the following:

(A) Original issue discount (OID), as adjusted by the holder for any acquisition premium or amortizable bond premium;

(B) Qualified stated interest, as adjusted by the holder for any amortizable bond premium or by the issuer for any bond issuance premium;

(C) Acquisition discount;

(D) Amounts treated as taxable OID under section 1286 (relating to stripped bonds and stripped coupons);

(E) Accrued market discount on a market discount bond to the extent includible in income by the holder under either section 1276(a) or 1278(b);

(F) OID includible in income by a holder that has made an election under § 1.1272-3 to treat all interest on a debt instrument as OID;

(G) OID on a synthetic debt instrument arising from an integrated transaction under § 1.1275-6;

(H) Repurchase premium to the extent deductible by the issuer under § 1.163-7(c) (determined without regard to section 163(j));

(I) Deferred payments treated as interest under section 483;

(J) Amounts treated as interest under a section 467 rental agreement;

(K) Amounts treated as interest under section 988;

(L) Forgone interest under section 7872;

(M) De minimis OID taken into account by the issuer;

(N) Amounts paid or received in connection with a sale-repurchase agreement treated as indebtedness under Federal tax principles; however, in the case of a sale-repurchase agreement relating to tax-exempt bonds, the amount is not tax-exempt interest;

(O) Redeemable ground rent treated as interest under section 163(c); and

(P) Amounts treated as interest under section 636.

(ii) *Swaps with significant nonperiodic payments* —

(A) ***In general.*** Except as provided in paragraphs (b)(22)(ii)(B) and (C) of this section, a swap with significant nonperiodic payments is treated as two separate transactions consisting of an on-market, level payment swap and a loan. The loan must be accounted for by the parties to the contract independently of the swap. The time value component associated with the loan, determined in accordance with § 1.446-3(f)(2)(iii)(A), is recognized as interest expense to the payor and interest income to the recipient.

(B) ***Exception for cleared swaps.*** Paragraph (b)(22)(ii)(A) of this section does not apply to a cleared swap (as defined in paragraph (b)(6) of this section).

(C) ***Exception for non-cleared swaps subject to margin or collateral requirements.*** Paragraph (b)(22)(ii)(A) of this section does not apply to a non-cleared swap that requires the parties to meet the margin or collateral requirements of a federal

regulator or that provides for margin or collateral requirements that are substantially similar to a cleared swap or a non-cleared swap subject to the margin or collateral requirements of a federal regulator. For purposes of this paragraph (b)(22)(ii)(C), the term *federal regulator* means the Securities and Exchange Commission (SEC), the Commodity Futures Trading Commission (CFTC), or a prudential regulator, as defined in section 1a(39) of the Commodity Exchange Act (7 U.S.C. 1a), as amended by section 721 of the Dodd-Frank Wall Street Reform and Consumer Protection Act of 2010, Public Law 111-203, 124 Stat. 1376, Title VII.

(iii) ***Other amounts treated as interest*** —

(A) ***Treatment of premium*** —

(*1*) ***Issuer.*** If a debt instrument is issued at a premium within the meaning of § 1.163-13, any ordinary income under § 1.163-13(d)(4) is treated as interest income of the issuer.

(*2*) ***Holder.*** If a taxable debt instrument is acquired at a premium within the meaning of § 1.171-1 and the holder elects to amortize the premium, any amount deductible as a bond premium deduction under section 171(a)(1) and § 1.171-2(a)(4)(i)(A) or (C) is treated as interest expense of the holder.

(B) ***Treatment of ordinary income or loss on certain debt instruments.*** If an issuer of a contingent payment debt instrument subject to § 1.1275-4(b), a nonfunctional currency contingent payment debt instrument subject to § 1.988-6, or an inflation-indexed debt instrument subject to § 1.1275-7 recognizes ordinary income on the debt instrument in accordance with the rules in § 1.1275-4(b), § 1.988-6(b)(2), or § 1.1275-7(f), whichever is applicable, the ordinary income is treated as interest income of the issuer. If a holder of a contingent payment debt instrument subject to § 1.1275-4(b), a nonfunctional currency contingent payment debt instrument subject to § 1.988-6, or an inflation-indexed debt instrument subject to § 1.1275-7 recognizes an ordinary loss on the debt instrument in accordance with the rules in § 1.1275-4(b), § 1.988-6(b)(2), or § 1.1275-7(f), whichever is applicable, the ordinary loss is treated as interest expense of the holder.

(C) ***Substitute interest payments.*** A substitute interest payment described in § 1.861-2(a)(7) is treated as interest expense to the payor only if the payment relates to a sale-repurchase agreement or a securities lending transaction that is not entered into by the payor in the ordinary course of the payor's business. A substitute interest payment described in § 1.861-2(a)(7) is treated as interest income to the recipient only if the payment relates to a sale-repurchase agreement or a securities lending transaction that is not entered into by the recipient in the ordinary course of the recipient's business; however, in the case of a sale-repurchase agreement or a securities lending transaction relating to tax-exempt bonds, the recipient of a substitute payment does not receive tax-exempt interest income. This paragraph (b)(22)(iii)(C) does not apply to an amount described in paragraph (b)(22)(i)(N) of this section.

(D) ***Section 1258 gain.*** Any gain treated as ordinary gain under section 1258 is treated as interest income.

(E) ***Factoring income.*** The excess of the amount that a taxpayer collects on a factored receivable (or realizes upon the sale or other disposition of the factored receivable) over the amount paid for the factored receivable by the taxpayer is treated as interest income. For purposes of this paragraph (b)(22)(iii)(E), the term *factored receivable* includes any account receivable or other evidence of indebtedness, whether or not issued at a discount and whether or not bearing stated interest, arising out of the disposition of property or the performance of services by any person, if such account receivable or evidence of indebtedness is acquired by a person other than the person who disposed of the property or provided the services that gave rise to the account receivable or evidence of indebtedness. This paragraph (b)(22)(iii)(E) does not apply to an amount described in paragraph (b)(22)(i)(C) or (E) of this section.

(F) ***Section 163(j) interest dividends*** —

(*1*) ***In general.*** Except as otherwise provided in this paragraph (b)(22)(iii)(F), a section 163(j) interest dividend is treated as interest income.

(*2*) ***Limitation on amount treated as interest income.*** A shareholder may not treat any part of a section 163(j) interest dividend as interest income to the extent the amount of the section 163(j) interest dividend exceeds the excess of the amount of the entire dividend that includes the section 163(j) interest dividend over the sum of the conduit amounts other than interest-related dividends under section 871(k)(1)(C) and section 163(j) interest dividends that affect the shareholder's treatment of that dividend.

(*3*) ***Conduit amounts.*** For purposes of paragraph (b)(22)(iii)(F)(*2*) of this section, the term *conduit amounts* means, with respect to any category of income (including tax-exempt interest) earned by a RIC for a taxable year, the amounts identified by the RIC (generally in a designation or written report) in connection with dividends of the RIC for that taxable year that are subject to a limit determined by reference to that category of income. For example, a RIC's conduit amount with respect to its net capital gain is the amount of the RIC's capital gain dividends under section 852(b)(3)(C).

(*4*) ***Holding period.*** Except as provided in paragraph (b)(22)(iii)(F)(*5*) of this section, no dividend is treated as interest income under paragraph (b)(22)(iii)(F)(*1*) of this section if the dividend is received with respect to a share of RIC stock—

(*i*) That is held by the shareholder for 180 days or less (taking into account the principles of section 246(c)(3) and (4)) during the 361-day period beginning on the date which is 180 days before the date on which the share becomes ex-dividend with respect to such dividend; or

(*ii*) To the extent that the shareholder is under an obligation (whether pursuant to a short sale or otherwise) to make related payments with respect to positions in substantially similar or related property.

(*5*) ***Exception to holding period requirement for money market funds and certain regularly declared dividends.*** Paragraph (b)(22)(iii)(F)(*4*)(*i*) of this section does not apply to dividends distributed by any RIC regulated as a money market fund under 17 CFR 270.2a-7 (Rule 2a-7 under the 1940 Act) or to regular dividends paid by a RIC that declares section 163(j) interest dividends on a daily basis in

an amount equal to at least 90 percent of its excess section 163(j) interest income, as defined in paragraph (b)(35)(iv)(E) of this section, and distributes such dividends on a monthly or more frequent basis.

(iv) ***Anti-avoidance rules*** —

(A) ***Principal purpose to reduce interest expense*** —

(*1*) ***Treatment as interest expense.*** Any expense or loss economically equivalent to interest is treated as interest expense if a principal purpose of structuring the transaction(s) is to reduce an amount incurred by the taxpayer that otherwise would have been described in paragraph (b)(22)(i), (ii), or (iii) of this section. For this purpose, the fact that the taxpayer has a business purpose for obtaining the use of funds does not affect the determination of whether the manner in which the taxpayer structures the transaction(s) is with a principal purpose of reducing the taxpayer's interest expense. In addition, the fact that the taxpayer has obtained funds at a lower pre-tax cost based on the structure of the transaction(s) does not affect the determination of whether the manner in which the taxpayer structures the transaction(s) is with a principal purpose of reducing the taxpayer's interest expense. For purposes of this paragraph (b)(22)(iv)(A)(*1*), any expense or loss is economically equivalent to interest to the extent that the expense or loss is—

(*i*) Deductible by the taxpayer;

(*ii*) Incurred by the taxpayer in a transaction or series of integrated or related transactions in which the taxpayer secures the use of funds for a period of time;

(*iii*) Substantially incurred in consideration of the time value of money; and

(*iv*) Not described in paragraph (b)(22)(i), (ii), or (iii) of this section.

(*2*) ***Corresponding treatment of amounts as interest income.*** If a taxpayer knows that an expense or loss is treated by the payor as interest expense under paragraph (b)(22)(iv)(A)(*1*) of this section, the taxpayer provides the use of funds for a period of time in the transaction(s) subject to paragraph (b)(22)(iv)(A)(*1*) of this section, the taxpayer earns income or gain with respect to the transaction(s), and such income or gain is substantially earned in consideration of the time value of money provided by the taxpayer, such income or gain is treated as interest income to the extent of the expense or loss treated by the payor as interest expense under paragraph (b)(22)(iv)(A)(*1*) of this section.

(B) ***Interest income artificially increased.*** Notwithstanding paragraphs (b)(22)(i) through (iii) of this section, any income realized by a taxpayer in a transaction or series of integrated or related transactions is not treated as interest income of the taxpayer if and to the extent that a principal purpose for structuring the transaction(s) is to artificially increase the taxpayer's business interest income. For this purpose, the fact that the taxpayer has a business purpose for holding interest generating assets does not affect the determination of whether the manner in which the taxpayer structures the transaction(s) is with a principal purpose of artificially increasing the taxpayer's business interest income.

(C) ***Principal purpose.*** Whether a transaction or a series of integrated or related transactions is entered into with a principal purpose described in paragraph (b)(22)(iv)(A) or (B) of this section depends on all the facts and circumstances related to the transaction(s), except for those facts described in paragraph (b)(22)(iv)(A) or (B) of this section. A purpose may be a principal purpose even though it is outweighed by other purposes (taken together or separately). Factors to be taken into account in determining whether one of the taxpayer's principal purposes for entering into the transaction(s) include the taxpayer's normal borrowing rate in the taxpayer's functional currency, whether the taxpayer would enter into the transaction(s) in the ordinary course of the taxpayer's trade or business, whether the parties to the transaction(s) are related persons (within the meaning of section 267(b) or section 707(b)), whether there is a significant and bona fide business purpose for the structure of the transaction(s), whether the transactions are transitory, for example, due to a circular flow of cash or other property, and the substance of the transaction(s).

(D) ***Coordination with anti-avoidance rule in § 1.163(j)-2(j).*** The anti-avoidance rules in paragraphs (b)(22)(iv)(A) through (C) of this section, rather than the anti-avoidance rules in § 1.163(j)-2(j), apply to determine whether an item is treated as interest expense or interest income.

(v) ***Examples.*** The examples in this paragraph (b)(22)(v) illustrate the application of paragraph (b)(22)(iv) of this section. Unless otherwise indicated, A, B, C, D, and Bank are domestic C corporations that are publicly traded; the exemption for certain small businesses in § 1.163(j)-2(d) does not apply; A is not engaged in an excepted trade or business; and all amounts of interest expense are deductible except for the potential application of section 163(j).

(A) ***Example 1*** —

(*1*) ***Facts.*** A is engaged in a manufacturing business and uses the calendar year as its annual accounting period. A's functional currency is the U.S. dollar and A conducts virtually all of its business in the U.S. dollar. A has no connection to Japan or the Japanese yen in the ordinary course of business. A projects that it will have business interest expense of $100x on an existing loan obligation with a stated principal amount of $2,000x (Loan 1) and no business interest income in its taxable year ending December 31, 2021. In early 2021, A enters into the following transactions, which A would not have entered into in the ordinary course of A's trade or business:

(*i*) A enters into a loan obligation in which A borrows Japanese yen from Bank in an amount equivalent to $2,000x with an interest rate of 1 percent (Loan 2) (at the time of the loan, the U.S. dollar equivalent interest rate on a loan of $2,000x is 5 percent);

(*ii*) A enters into a foreign currency swap transaction (FX Swap) with Bank with a notional principal amount of $2,000x under which A receives Japanese yen at 1 percent multiplied by the amount of Japanese yen borrowed from Bank (which for 2021 equals $20x) and pays U.S. dollars at 5 percent multiplied by a notional amount of $2,000x ($100x per year);

(*iii*) The FX Swap is not integrated with Loan 2 under § 1.988-5; and

(*iv*) A enters into a spot transaction with Bank to convert the proceeds of Loan 2 into $2,000x U.S. dollars and A uses the U.S. dollars to repay Loan 1.

(*2*) ***Analysis.*** A principal purpose of A entering into the transactions with Bank was to try to reduce the amount incurred by A that otherwise would be interest expense; in effect, A sought to alter A's cost of borrowing by converting a substantial portion of its interest expense deductions on Loan 1 into section 165 deductions on the FX Swap ($100x interest expense related to Loan 1 compared to $20x interest expense related to Loan 2 and $80x section 165 deduction). A's functional currency is the U.S. dollar and A conducts virtually all of its business in the U.S. dollar. A has no connection to Japan or the Japanese yen and would not have entered into the transactions in the ordinary course of A's trade or business. The section 165 deductions related to the FX Swap were incurred by A in a series of transactions in which A secured the use of funds for a period of time and were substantially incurred in consideration of the time value of money. As a result, under paragraph (b)(22)(iv)(A)(*1*) of this section, for purposes of section 163(j), the $80x paid by A to Bank on the FX Swap is treated by A as interest expense.

(B) ***Example 2*** —

(*1*) ***Facts.*** A is engaged in a manufacturing business and uses the calendar year as its annual accounting period. A does not use gold in its manufacturing business. In 2021, A expects to borrow $1,000x for six months. In January 2021, A borrows from B two ounces of gold at a time when the spot price for gold is $500x per ounce. A agrees to return the two ounces of gold in six months. A sells the two ounces of gold to C for $1,000x. A then enters into a contract with D to purchase two ounces of gold six months in the future for $1,013x. In exchange for the use of $1,000x in cash for six months, A has sustained a loss of $13x in connection with these related transactions. A would not have entered into the gold transactions in the ordinary course of A's trade or business.

(*2*) ***Analysis.*** In a series of related transactions, A has obtained the use of $1,000x for six months and created a loss of $13x substantially incurred in consideration of the time value of money. A would not have entered into the gold transactions in the ordinary course of A's trade or business. A entered into the transactions with a principal purpose of structuring the transactions to reduce its interest expense (in effect, A sought to convert what otherwise would be interest expense into a loss through the transactions). As a result, under paragraph (b)(22)(iv)(A)(*1*) of this section, for purposes of section 163(j), the loss of $13x is treated by A as interest expense.

(C) ***Example 3*** —

(*1*) ***Facts.*** A is engaged in a manufacturing business and uses the calendar year as its annual accounting period. A's functional currency is the U.S. dollar and A conducts virtually all of its business in the U.S. dollar. A has no connection to Argentina or the Argentine peso as part of its ordinary course of business. As of January 1, 2021, A expects to have adjusted taxable income (as defined in

paragraph (b)(1) of this section) of $200x in the taxable year ending December 31, 2021. A also projects that it will have business interest expense of $70x on an existing loan in 2021. A has cash equivalents of $100x on which A expects to earn $5x of business interest income. In early 2021, A enters into the following transactions, which A would not have entered into in the ordinary course of A's trade or business:

(*i*) A enters into a spot transaction with Bank to convert the $100x of cash equivalents into an amount in Argentine pesos equivalent to $100x and A uses the Argentine pesos to purchase an Argentine peso note (Note) issued by a subsidiary of Bank for the Argentine peso equivalent of $100x; the Note pays interest at a 10 percent rate; and

(*ii*) A enters into a foreign currency swap transaction (FX Swap) with Bank with a notional principal amount of $100x under which A pays Argentine pesos at 10 percent multiplied by the amount of Argentine peso principal amount on the Note (which for 2021 equals $10x) and receives U.S. dollars at 5 percent multiplied by a notional amount of $100x ($5x per year).

(*2*) ***Analysis.*** A principal purpose of A entering into the transactions was to increase the amount of business interest income received by A; in effect, A increased its business interest income by separately accounting for its net deduction of $5x per year on the FX Swap. A's functional currency is the U.S. dollar and A conducts virtually all of its business in the U.S. dollar. A has no connection to Argentina or the Argentine peso and would not have entered into the transactions in the ordinary course of A's trade or business. The FX Swap was incurred by A as a part of a transaction that A entered into with a principal purpose of artificially increasing its business interest income. As a result, under paragraph (b)(22)(iv)(B) of this section, for purposes of section 163(j), the $10x business interest income earned on the Note by A is reduced by $5x (the net $5x paid by A on the FX Swap).

(D) ***Example 4*** —

(*1*) ***Facts.*** A is wholly owned by FC, a foreign corporation organized in foreign country X. A uses the calendar year for its annual accounting period. FC has a better credit rating than A. A needs to borrow $2,000x in the taxable year ending December 31, 2021, to fund its business operations. A also projects that, if it borrows $2,000x on January 1, 2021, and pays a market rate of interest, it will have business interest expense of $100x in its taxable year ending December 31, 2021. In early 2021, A enters into the following transactions:

(*i*) A enters into a loan obligation in which A borrows $2,000x from Bank with an interest rate of 3 percent (Loan 1);

(*ii*) FC and Bank enter into a guarantee arrangement (Guarantee) under which FC agrees to guarantee Bank that Bank will be timely paid all of the amounts due on Loan 1; and

(*iii*) A enters into a guarantee fee agreement with FC (Guarantee Fee Agreement) under which A agrees to pay FC $40x in return for FC entering into the Guarantee, which was not an agreement that A would have entered into in the ordinary course of A's trade or business.

(*2*) ***Analysis.*** A principal purpose of A entering into the transactions was to reduce the amount incurred by A that otherwise would be interest expense; in effect, A sought to convert a substantial portion of its interest expense deductions on Loan 1 into section 162 deductions on the Guarantee Fee Agreement ($100x interest expense had A borrowed without the Guarantee compared to $60x interest expense related to Loan 1 and $40x section 162 deduction). A would not have entered into the Guarantee Fee Agreement in the ordinary course of A's trade or business. The $40x section 162 deductions related to the Guarantee Fee Agreement were incurred by A in a series of transactions in which A secured the use of funds for a period of time and were substantially incurred in consideration of the time value of money. As a result, under paragraph (b)(22)(iv)(A)(*1*) of this section, for purposes of section 163(j), the $40x paid by A to FC on the Guarantee Fee Agreement is treated by A as interest expense.

(E) ***Example 5*** —

(*1*) ***Facts.*** A, B, and C are equal partners in ABC partnership. ABC is considering acquiring an additional loan from a third-party lender to expand its business operations. However, ABC already has significant debt and interest expense. For the purpose of reducing the amount of additional interest expense ABC would have otherwise incurred by borrowing, A agrees to make an additional contribution to ABC for use in its business operations in exchange for a guaranteed payment for the use of capital under section 707(c).

(*2*) ***Analysis.*** The guaranteed payment is deductible by ABC, incurred by ABC in a transaction in which ABC secures the use of funds for a period of time, substantially incurred in consideration of the time value of money, and not described in paragraph (b)(22)(i), (ii), or (iii) of this section. As a result, the guaranteed payment to A is economically equivalent to the interest that ABC would have incurred on an additional loan from a third-party lender. A principal purpose of A making a contribution in exchange for a guaranteed payment for the use of capital was to reduce the amount incurred by ABC that otherwise would be interest expense. As a result, under paragraph (b)(22)(iv)(A)(*1*) of this section, for purposes of section 163(j), such guaranteed payment is treated as interest expense of ABC for purposes of section 163(j). In addition, under paragraph (b)(22)(iv)(A)(*2*) of this section, if A knows that the guaranteed payment is treated as interest expense of ABC, because A provides the use of funds for a period of time in a transaction subject to paragraph (b)(22)(iv)(A)(*1*) of this section, A earns income or gain with respect to the transaction, and such income or gain is substantially earned in consideration of the time value of money provided by A, the guaranteed payment is treated as interest income of A for purposes of section 163(j).

(23) ***Interest expense.*** The term *interest expense* means interest that is paid or accrued, or treated as paid or accrued, for the taxable year.

(24) ***Interest income.*** The term *interest income* means interest that is included in gross income for the taxable year.

(25) ***Member.*** The term *member* has the meaning provided in § 1.1502-1(b).

(26) ***Motor vehicle.*** The term *motor vehicle* means a motor vehicle as defined in section 163(j)(9)(C).

(27) ***Old section 163(j).*** The term *old section 163(j)* means section 163(j) immediately prior to its amendment by Public Law 115-97, 131 Stat. 2054 (2017).

(28) ***Ownership change.*** The term *ownership change* has the meaning provided in section 382 and the regulations in this part under section 382 of the Code.

(29) ***Ownership date.*** The term *ownership date* has the meaning provided in section 382 and the regulations in this part under section 382 of the Code.

(30) ***Real estate investment trust.*** The term *real estate investment trust* (REIT) has the meaning provided in section 856.

(31) ***Real property.*** The term *real property* includes—

(i) Real property as defined in § 1.469-9(b)(2); and

(ii) Any direct or indirect right, including a license or other contractual right, to share in the appreciation in value of, or the gross or net proceeds or profits generated by, an interest in real property, including net proceeds or profits associated with tolls, rents or other similar fees.

(32) ***Regulated investment company.*** The term *regulated investment company* (RIC) has the meaning provided in section 851.

(33) ***Relevant foreign corporation.*** The term *relevant foreign corporation* means any foreign corporation whose classification is relevant under § 301.7701-3(d)(1) for a taxable year, other than solely pursuant to section 881 or 882.

(34) ***S corporation.*** The term *S corporation* has the meaning provided in section 1361(a)(1).

(35) ***Section 163(j) interest dividend.*** The term *section 163(j) interest dividend* means a dividend paid by a RIC for a taxable year for which section 852(b) applies to the RIC, to the extent described in paragraph (b)(35)(i) or (ii) of this section, as applicable.

(i) ***In general.*** Except as provided in paragraph (b)(35)(ii) of this section, a section 163(j) interest dividend is any dividend, or part of a dividend, that is reported by the RIC as a section 163(j) interest dividend in written statements furnished to its shareholders.

(ii) ***Reduction in the case of excess reported amounts.*** If the aggregate reported amount with respect to the RIC for the taxable year exceeds the excess section 163(j) interest income of the RIC for such taxable year, the section 163(j) interest dividend is—

(A) The reported section 163(j) interest dividend amount; reduced by

(B) The excess reported amount that is allocable to that reported section 163(j) interest dividend amount.

(iii) ***Allocation of excess reported amount*** —

(A) ***In general.*** Except as provided in paragraph (b)(35)(iii)(B) of this section, the excess reported amount, if any, that is allocable to the reported section 163(j) interest dividend amount is that portion of the excess reported amount that bears the same ratio to the excess reported amount as the reported section 163(j) interest dividend amount bears to the aggregate reported amount.

(B) ***Special rule for noncalendar year RICs.*** In the case of any taxable year that does not begin and end in the same calendar year, if the post-December reported amount equals or exceeds the excess reported amount for that taxable year, paragraph (b)(35)(iii)(A) of this section is applied by substituting "post-December reported amount" for "aggregate reported amount," and no excess reported amount is allocated to any dividend paid on or before December 31 of such taxable year.

(iv) ***Definitions.*** The following definitions apply for purposes of this paragraph (b)(35):

(A) ***Reported section 163(j) interest dividend amount.*** The term *reported section 163(j) interest dividend amount* means the amount of a dividend distribution reported to the RIC's shareholders under paragraph (b)(35)(i) of this section as a section 163(j) interest dividend.

(B) ***Excess reported amount.*** The term *excess reported amount* means the excess of the aggregate reported amount over the RIC's excess section 163(j) interest income for the taxable year.

(C) ***Aggregate reported amount.*** The term *aggregate reported amount* means the aggregate amount of dividends reported by the RIC under paragraph (b)(35)(i) of this section as section 163(j) interest dividends for the taxable year (including section 163(j) interest dividends paid after the close of the taxable year described in section 855).

(D) ***Post-December reported amount.*** The term *post-December reported amount* means the aggregate reported amount determined by taking into account only dividends paid after December 31 of the taxable year.

(E) ***Excess section 163(j) interest income.*** The term *excess section 163(j) interest income* means, with respect to a taxable year of a RIC, the excess of the RIC's business interest income for the taxable year over the sum of the RIC's business interest expense for the taxable year and the RIC's other deductions for the taxable year that are properly allocable to the RIC's business interest income.

(v) ***Example —***

(A) ***Facts.*** X is a domestic C corporation that has elected to be a RIC. For its taxable year ending December 31, 2021, X has $100x of business interest income (all of which is qualified interest income for purposes of section 871(k)(1)(E)) and $10x of dividend income (all of which is qualified dividend income within the meaning of section 1(h)(11) and would be eligible for the dividends received deduction under section 243, determined as described in section 854(b)(3)). X has $10x of business interest expense and $20x of other deductions. X has no other items for the taxable year. On December 31, 2021, X pays a dividend of $80x to its shareholders, and reports, in written statements to its shareholders, $71.82x as a section 163(j) interest dividend; $10x as dividends that may be treated as qualified dividend income or as dividends

eligible for the dividends received deduction; and $72.73x as interest-related dividends under section 871(k)(1)(C). Shareholder A, a domestic C corporation, meets the holding period requirements in paragraph (b)(22)(iii)(F)(*4*) of this section with respect to the stock of X, and receives a dividend of $8x from X on December 31, 2021.

(B) ***Analysis.*** X determines that $18.18x of other deductions are properly allocable to X's business interest income. X's excess section 163(j) interest income under paragraph (b)(35)(iv)(E) of this section is $71.82x ($100x business interest income—($10x business interest expense + $18.18x other deductions allocated) = $71.82x). Thus, X may report up to $71.82x of its dividends paid on December 31, 2021, as section 163(j) interest dividends to its shareholders. X may also report up to $10x of its dividends paid on December 31, 2021, as dividends that may be treated as qualified dividend income or as dividends that are eligible for the dividends received deduction. X determines that $9.09x of interest expense and $18.18x of other deductions are properly allocable to X's qualified interest income. Therefore, X may report up to $72.73x of its dividends paid on December 31, 2021, as interest-related dividends under section 871(k)(1)(C) ($100x qualified interest income—$27.27x deductions allocated = $72.73x). A treats $1x of its $8x dividend as a dividend eligible for the dividends received deduction and no part of the dividend as an interest-related dividend under section 871(k)(1)(C). Therefore, under paragraph (b)(22)(iii)(F)(*2*) of this section, A may treat $7x of the section 163(j) interest dividend as interest income for purposes of section 163(j) ($8x dividend—$1x conduit amount = $7x limitation).

(36) ***Section 163(j) limitation.*** The term *section 163(j) limitation* means the limit on the amount of business interest expense that a taxpayer may deduct in a taxable year under section 163(j) and § 1.163(j)-2(b).

(37) ***Section 163(j) regulations.*** The term *section 163(j) regulations* means this section and §§ 1.163(j)-2 through 1.163(j)-11.

(38) ***Separate return limitation year.*** The term *separate return limitation year* (SRLY) has the meaning provided in § 1.1502-1(f).

(39) ***Separate return year.*** The term *separate return year* has the meaning provided in § 1.1502-1(e).

(40) ***Separate tentative taxable income.*** The term *separate tentative taxable income* with respect to a taxpayer and a taxable year has the meaning provided in § 1.1502-12, but for this purpose computed without regard to the application of the section 163(j) limitation and with the addition of the adjustments made in paragraph (b)(43)(ii) of this section and § 1.163(j)-4(d)(2)(iv).

(41) ***Tax-exempt corporation.*** The term *tax-exempt corporation* means any tax-exempt organization that is organized as a corporation.

(42) ***Tax-exempt organization.*** The term *tax-exempt organization* means any entity subject to tax under section 511.

(43) ***Tentative taxable income*** —

(i) ***In general.*** The term *tentative taxable income,* with respect to a taxpayer and a taxable year, generally is determined in the same manner as taxable income under section 63 but for this purpose computed without regard to the application of the section 163(j) limitation. Tentative taxable income is computed without regard to any disallowed business interest expense carryforwards.

(ii) [Reserved]

(iii) ***Special rules for defining tentative taxable income.***

(A) For special rules defining the tentative taxable income of a RIC or REIT, see § 1.163(j)-4(b)(4)(ii).

(B) For special rules defining the tentative taxable income of consolidated groups, see § 1.163(j)-4(d)(2)(iv).

(C) For special rules defining the tentative taxable income of a partnership, see § 1.163(j)-6(d)(1).

(D) For special rules defining the tentative taxable income of an S corporation, see § 1.163(j)-6(l)(3).

(E) For special rules clarifying that tentative taxable income takes sections 461(l), 465, and 469 into account, see § 1.163(j)-3(b)(4).

(F) For special rules clarifying that tentative taxable income takes sections 461(l), 465, and 469 into account, see § 1.163(j)-3(b)(4).

(G) For special rules clarifying that tentative taxable income takes sections 461(l), 465, and 469 into account, see § 1.163(j)-3(b)(4).

(44) ***Trade or business*** —

(i) ***In general.*** The term *trade or business* means a trade or business within the meaning of section 162.

(ii) ***Excepted trade or business.*** The term *excepted trade or business* means the trade or business of performing services as an employee, an electing real property trade or business, an electing farming business, or an excepted regulated utility trade or business. For additional rules related to excepted trades or businesses, including elections made under section 163(j)(7)(B) and (C), see § 1.163(j)-9.

(iii) ***Non-excepted trade or business.*** The term *non-excepted trade or business* means any trade or business that is not an excepted trade or business.

(45) ***Unadjusted basis.*** The term *unadjusted basis* means the basis as determined under section 1012 or other applicable sections of chapter 1 of subtitle A of the Code, including subchapters O (relating to gain or loss on dispositions of property), C (relating to corporate distributions and adjustments), K (relating to partners and partnerships), and P (relating to capital gains and losses) of the Code. Unadjusted basis is determined without regard to any adjustments described in section 1016(a)(2) or (3), any adjustments for tax credits claimed by the taxpayer (for example, under section 50(c)), or any adjustments for any portion of the basis that the taxpayer has elected to treat as an expense (for example, under section 179, 179B, or 179C).

(46) ***United States shareholder.*** The term *United States shareholder* has the meaning provided in section 951(b).

(c) ***Applicability date*** —

(1) ***In general.*** Except as provided in paragraphs (c)(2), (3), and (4) of this section, this section applies to taxable years beginning on or after November 13, 2020. However, taxpayers and their related parties, within the meaning of sections 267(b) and 707(b)(1), may choose to apply the rules of this section to a taxable year beginning after December 31, 2017, and before November 13, 2020 so long as the taxpayers and their related parties consistently apply the rules of the section 163(j) regulations, and, if applicable, §§ 1.263A-9, 1.263A-15, 1.381(c)(20)-1, 1.382-1, 1.382-2, 1.382-5, 1.382-6, 1.383-0, 1.383-1, 1.469-9, 1.469-11, 1.704-1, 1.882-5, 1.1362-3, 1.1368-1, 1.1377-1, 1.1502-13, 1.1502-21, 1.1502-36, 1.1502-79, 1.1502-91 through 1.1502-99 (to the extent they effectuate the rules of §§ 1.382-2, 1.382-5, 1.382-6, and 1.383-1), and 1.1504-4, to that taxable year. Additionally, taxpayers and their related parties within the meaning of sections 267(b) and 707(b)(1), otherwise relying on the notice of proposed rulemaking that was published on December 28, 2018, in the FEDERAL REGISTER (83 FR 67490) in its entirety under § 1.163(j)-1(c), may alternatively choose to follow § 1.163(j)-1(b)(1)(iii), rather than proposed § 1.163(j)-1(b)(1)(iii).

(2) ***Anti-avoidance rules.*** The anti-avoidance rules in paragraph (b)(22)(iv) of this section apply to transactions entered into on or after September 14, 2020.

(3) ***Swaps with significant nonperiodic payments*** —

(i) ***In general.*** Except as provided in paragraph (c)(3)(ii) of this section, the rules provided in paragraph (b)(22)(ii) of this section apply to notional principal contracts entered into on or after September 14, 2021. However, taxpayers may choose to apply the rules provided in paragraph (b)(22)(ii) of this section to notional principal contracts entered into before September 14, 2021.

(ii) ***Anti-avoidance rule.*** The anti-avoidance rules in paragraph (b)(22)(iv) of this section (applied without regard to the references to paragraph (b)(22)(ii) of this section) apply to a notional principal contract entered into on or after September 14, 2020.

(4) ***Paragraphs (b)(1)(iv)(A)(2) through (4), (B) through (G), (b)(22)(iii)(F), and (b)(35).*** Paragraphs (b)(1)(iv)(A)(*2*) through (*4*), (b)(1)(iv)(B) through (G), (b)(22)(iii)(F), and (b)(35) of this section apply to taxable years beginning on or after March 22, 2021. Taxpayers and their related parties, within the meaning of sections 267(b) (determined without regard to section 267(c)(3)) and 707(b)(1), may choose to apply the rules in paragraphs (b)(1)(iv)(A)(*2*) through (*4*), (b)(1)(iv) (B) through (G), (b)(22)(iii)(F), and (b)(35) of this section to a taxable year beginning after December 31, 2017, and before March 22, 2021, provided that those taxpayers and their related parties consistently apply all of the rules in the section 163(j) regulations contained in T.D. 9905 (§§ 1.163(j)-0 through 1.163(j)-11, effective November 13, 2020) as modified by T.D. 9943 (effective January 13, 2021), and, if applicable, §§ 1.263A-9, 1.263A-15, 1.381(c)(20)-1, 1.382-1, 1.382-2, 1.382-5, 1.382-6, 1.382-7, 1.383-0, 1.383-1, 1.469-9, 1.469-11, 1.704-1, 1.882-5, 1.1362-3, 1.1368-1, 1.1377-1, 1.1502-13, 1.1502-21, 1.1502-36, 1.1502-79, 1.1502-91 through 1.1502-99 (to the extent they effectuate the rules of §§ 1.382-2, 1.382-5, 1.382-6, and 1.383-1), and 1.1504-4 contained in T.D. 9905, as modified by T.D. 9943, to that taxable year and all subsequent taxable years.

[T.D. 9905, 85 FR 56760, Sept. 14, 2020, as amended by T.D. 9943, 86 FR 5523, Jan. 19, 2021]

§ 1.163(j)-2 Deduction for business interest expense limited.

(a) ***Overview.*** This section provides general rules regarding the section 163(j) limitation. Paragraph (b) of this section provides rules regarding the basic computation of the section 163(j) limitation. Paragraph (c) of this section provides rules for disallowed business interest expense carryforwards. Paragraph (d) of this section provides rules regarding the small business exemption from the section 163(j) limitation. Paragraph (e) of this section that is part of provides rules regarding real estate mortgage investment conduits (REMICs). Paragraph (f) of this section provides rules regarding the calculation of ATI with respect to certain beneficiaries. Paragraph (g) of this section provides rules regarding tax-exempt organizations. Paragraph (h) of this section provides examples illustrating the application of this section. Paragraph (i) of this section is reserved. Paragraph (j) of this section provides an anti-avoidance rule.

(b) ***General rule*** —

(1) ***In general.*** Except as otherwise provided in this section or in §§ 1.163(j)-3 through 1.163(j)-11, the amount allowed as a deduction for business interest expense for the taxable year cannot exceed the sum of—

(i) The taxpayer's business interest income for the taxable year;

(ii) 30 percent of the taxpayer's ATI for the taxable year, or zero if the taxpayer's ATI for the taxable year is less than zero; and

(iii) The taxpayer's floor plan financing interest expense for the taxable year.

(2) ***50 percent ATI limitation for taxable years beginning in 2019 or 2020*** —

(i) ***In general.*** Except as otherwise provided in section 163(j)(10) and paragraph (b)(2) of this section, for any taxable year beginning in 2019 or 2020, paragraph (b)(1)(ii) of this section is applied by substituting 50 percent for 30 percent. The 50 percent ATI limitation does not apply to partnerships for taxable years beginning in 2019. Further, for a partnership taxable year beginning in 2020 for which an election out of section 163(j)(10)(A)(i) has not been made, § 1.163(j)-6(f)(2)(xi) is applied by substituting two for ten-thirds when grossing up each partner's final ATI capacity excess amount.

(ii) ***Election out of the 50 percent ATI limitation.*** A taxpayer may elect to not have paragraph (b)(2)(i) of this section apply for any taxable year beginning in 2019 or 2020. In the case of a partnership, the election must be made by the partnership and may be made only for taxable years beginning in 2020.

(3) ***Election to use 2019 ATI in 2020*** —

(i) ***In general.*** Subject to paragraph (b)(3)(ii), a taxpayer may elect to use the taxpayer's ATI for the last taxable year beginning in 2019 (2019 ATI) as the ATI for any taxable year beginning in 2020.

(ii) ***Short taxable years.*** If an election is made under paragraph (b)(3)(i) of this section for a taxable year beginning in 2020 that is a short taxable year, the ATI for such taxable year is equal to the amount that bears the same ratio to 2019 ATI as the number of months in the short taxable year bears to 12.

(iii) ***Transactions to which section 381 applies.*** For purposes of the election described in paragraph (b)(3)(i) of this section, and subject to the limitation in paragraph (b)(3)(ii) of this section, the 2019 ATI of the acquiring corporation in a transaction to which section 381 applies equals the amount of the acquiring corporation's ATI for its last taxable year beginning in 2019.

(iv) ***Consolidated groups.*** For purposes of the election described in paragraph (b)(3)(i) of this section, and subject to the limitation in paragraph (b)(3)(ii) of this section, the 2019 ATI of a consolidated group equals the amount of the consolidated group's ATI for its last taxable year beginning in 2019.

(4) ***Time and manner of making or revoking the elections.*** The rules and procedures regarding the time and manner of making, or revoking, an election under paragraphs (b)(2) and (3) of this section are provided in Revenue Procedure 2020-22, 2020-18 I.R.B. 745, or in other guidance that may be issued (see §§ 601.601(d) and 601.602 of this chapter).

(c) ***Disallowed business interest expense carryforward*** —

(1) ***In general.*** Any business interest expense disallowed under paragraph (b) of this section, or any disallowed disqualified interest that is properly allocable to a non-excepted trade or business under § 1.163(j)-10, is carried forward to the succeeding taxable year as a disallowed business interest expense carryforward, and is therefore business interest expense that is subject to paragraph (b) of this section in such succeeding taxable year. Disallowed business interest expense carryforwards are not re-allocated between non-excepted and excepted trades or businesses in a succeeding taxable year. Instead, the carryforwards continue to be treated as allocable to a non-excepted trade or business. See § 1.163(j)-10(c)(4).

(2) ***Coordination with small business exemption.*** If disallowed business interest expense is carried forward under the rules of paragraph (c)(1) of this section to a taxable year in which the small business exemption in paragraph (d) of this section applies to the taxpayer, then the general rule in paragraph (b) of this section does not apply to limit the deduction of the disallowed business interest expense carryforward of the taxpayer in that taxable year. See § 1.163(j)-6(m)(3) for rules applicable to the treatment of excess business interest expense from a partnership that is not subject to section 163(j) in a succeeding taxable year, and see § 1.163(j)-6(m)(4) for rules applicable to S corporations with disallowed business interest expense carryforwards that are not subject to section 163(j) in a succeeding taxable year.

(3) ***Cross-references*** —

(i) For special rules regarding disallowed business interest expense carryforwards for taxpayers that are C corporations, including members of a consolidated group, see § 1.163(j)-5.

(ii) For special rules regarding disallowed business interest expense carryforwards of S corporations, see §§ 1.163(j)-5(b)(2) and 1.163(j)-6(l)(5).

(iii) For special rules regarding disallowed business interest expense carryforwards from partnerships, see § 1.163(j)-6.

(iv)-(v) [Reserved]

(d) ***Small business exemption*** —

(1) ***Exemption.*** The general rule in paragraph (b) of this section does not apply to any taxpayer, other than a tax shelter as defined in section 448(d)(3), in any taxable year in which the taxpayer meets the gross receipts test of section 448(c) and the regulations in this part under section 448 of the Code for the taxable year. See § 1.163(j)-9(b) for elections available under section 163(j)(7)(B) and 163(j)(7)(C) for real property trades or businesses or farming businesses that also may be exempt small businesses. See § 1.163(j)-6(m) for rules applicable to partnerships and S corporations not subject to section 163(j).

(2) ***Application of the gross receipts test*** —

(i) ***In general.*** In the case of any taxpayer that is not a corporation or a partnership, and except as provided in paragraphs (d)(2)(ii), (iii), and (iv) of this section, the gross receipts test of section 448(c) and the regulations in this part under section 448 of the Code are applied in the same manner as if such taxpayer were a corporation or partnership.

(ii) ***Gross receipts of individuals.*** Except as provided in paragraph (d)(2)(iii) of this section (regarding partnership and S corporation interests), an individual taxpayer's gross receipts include all items specified as gross receipts in regulations under section 448(c), whether or not derived in the ordinary course of the taxpayer's trade or business. For purposes of section 163(j), an individual taxpayer's gross receipts do not include inherently personal amounts, including, but not limited to, personal injury awards or settlements with respect to an injury of the individual taxpayer, disability benefits, Social Security benefits received by the taxpayer during the taxable year, and wages received as an employee that are reported on Form W-2.

(iii) ***Partners and S corporation shareholders.*** Except when the aggregation rules of section 448(c) apply, each partner in a partnership includes a share of partnership gross receipts in proportion to such partner's distributive share (as determined under section 704) of items of gross income that were taken into account by the partnership under section 703. Additionally, each shareholder in an S corporation includes a pro rata share of S corporation gross receipts.

(iv) ***Tax-exempt organizations.*** For purposes of section 163(j), the gross receipts of a tax-exempt organization include only gross receipts taken into account in determining its unrelated business taxable income.

(3) ***Determining a syndicate's loss amount.*** For purposes of section 163(j), losses allocated under section 1256(e)(3)(B) and § 1.448-1T(b)(3) are determined without regard to section 163(j). See also § 1.1256(e)-2(b).

(e) ***REMICs.*** For the treatment of interest expense by a REMIC as defined in section 860D, see § 1.860C-2(b)(2)(ii).

(f) ***Trusts*** —

(i) ***Calculation of ATI with respect to certain trusts and estates.*** The ATI of a trust or a decedent's estate taxable under section 641 is computed without regard to deductions under sections 642(c), 651, and 661.

(ii) ***Calculation of ATI with respect to certain beneficiaries.*** The ATI of a beneficiary (including a tax-exempt beneficiary) of a trust or a decedent's estate is reduced by any income (including any distributable net income) received from the trust or estate by the beneficiary to the extent such

income was necessary to permit a deduction under section 163(j)(1)(B) and § 1.163(j)-2(b) for any business interest expense of the trust or estate that was in excess of any business interest income of the trust or estate.

(g) ***Tax-exempt organizations.*** Except as provided in paragraph (d) of this section, the section 163(j) limitation applies to tax-exempt organizations for purposes of computing their unrelated business taxable income under section 512. For rules on determining the gross receipts of a tax-exempt organization for purposes of the small business exemption, see paragraph (d)(2)(iv) of this section. For special rules applicable to tax-exempt beneficiaries of a trust or a decedent's estate, see § 1.163(j)-2(f). For special rules applicable to tax-exempt corporations, see § 1.163(j)-4. For special allocation rules applicable to tax-exempt organizations, see § 1.163(j)-10(a)(5).

(h) ***Examples.*** The examples in this paragraph (h) illustrate the application of section 163(j) and the provisions of this section. Unless otherwise indicated, X and Y are domestic C corporations; C and D are U.S. resident individuals not subject to any foreign income tax; PRS is a domestic partnership with partners who are all individuals; all taxpayers use a calendar taxable year; the exemption for certain small businesses in section 163(j)(3) and paragraph (d) of this section does not apply; and the interest expense would be deductible but for section 163(j).

(1) ***Example 1: Limitation on business interest expense deduction*** —

(i) ***Facts.*** During its taxable year ending December 31, 2021, X has ATI of $100x. X has business interest expense of $50x, which includes $10x of floor plan financing interest expense, and business interest income of $20x.

(ii) ***Analysis.*** For the 2021 taxable year, X's section 163(j) limitation is $60x, which is the sum of its business interest income ($20x), plus 30 percent of its ATI ($100x × 30 percent = $30x), plus its floor plan financing interest expense ($10x). See § 1.163(j)-2(b). Because X's business interest expense ($50x) does not exceed X's section 163(j) limitation ($60x), X can deduct all $50x of its business interest expense for the 2021 taxable year.

(2) ***Example 2: Carryforward of business interest expense*** —

(i) ***Facts.*** The facts are the same as in *Example 1* in paragraph (h)(1)(i) of this section, except that X has $80x of business interest expense, which includes $10x of floor plan financing interest expense.

(ii) ***Analysis.*** As in *Example 1* in paragraph (h)(1)(ii) of this section, X's section 163(j) limitation is $60x. Because X's business interest expense ($80x) exceeds X's section 163(j) limitation ($60x), X may only deduct $60x of its business interest expense for the 2021 taxable year, and the remaining $20x of its business interest expense will be carried forward to the succeeding taxable year as a disallowed business interest expense carryforward. See § 1.163(j)-2(c).

(3) ***Example 3: ATI computation*** —

(i) ***Facts.*** During the 2020 taxable year, Y has tentative taxable income of $30x, which is determined without regard to the application of the section 163(j) limitation on business interest expense. Y's tentative taxable income includes the following: $20x of business interest income; $50x of business interest expense, which includes $10x of floor plan financing interest expense; $25x of net operating loss deduction under section 172; and $15x of depreciation under section 167, of which $10x is capitalized to inventory under section 263A. Of the $10x capitalized to inventory, only $7x is recovered through cost of goods sold during the 2020

taxable year and $3x remains in ending inventory at the end of the 2020 taxable year. The $3x of ending inventory is recovered through cost of goods sold during the 2021 taxable year. Y also has a disallowed business interest expense carryforward from the prior year of $8x.

(ii) ***Analysis.***

(A) For purposes of determining the section 163(j) limitation for 2020, Y's disallowed business interest expense carryforward is not taken into account in determining tentative taxable income or ATI. Y's ATI is $90x, calculated as follows:

TABLE 1 TO PARAGRAPH (h)(3)(ii)(A)

Tentative taxable income	$30x
Less:	
Floor plan financing interest	10x
Business interest income	20x
	0x

(B) Plus:

TABLE 2 TO PARAGRAPH (h)(3)(ii)(B)

Business interest expense	$50x
Net operating loss deduction	25x
Depreciation	15x
ATI	90x

(C) For Y's 2021 taxable year, the $3x of ending inventory that is recovered through cost of goods sold in 2021 is not added back to tentative taxable income (TTI) in determining ATI because it was already included as an addback in ATI in Y's 2020 taxable year. See § 1.163(j)-1(b)(1)(iii).

(4) ***Example 4: Floor plan financing interest expense*** —

(i) ***Facts.*** C is the sole proprietor of an automobile dealership that uses a cash method of accounting. In the 2021 taxable year, C paid $30x of interest on a loan that was obtained to purchase sedans for sale by the dealership. The indebtedness is secured by the sedans purchased with the loan proceeds. In addition, C paid $20x of interest on a loan, secured by the dealership's office equipment, which C obtained to purchase convertibles for sale by the dealership.

(ii) ***Analysis.*** For the purpose of calculating C's section 163(j) limitation, only the $30x of interest paid on the loan to purchase the sedans is floor plan financing interest expense. The $20x paid on the loan to purchase the convertibles is not floor plan financing interest expense for purposes of section 163(j) because the indebtedness was not secured by the inventory of convertibles. However, because under § 1.163(j)-10 the interest paid on the loan to purchase the convertibles is properly allocable to C's dealership trade or business, and because floor plan financing interest expense is also business interest expense, C has $50x of business interest expense for the 2021 taxable year.

(5) ***Example 5: Interest not properly allocable to non-excepted trade or business*** —

(i) ***Facts.*** The facts are the same as in *Example 4* in paragraph (h)(4)(i) of this section, except that the $20x of interest C pays is on acquisition indebtedness obtained to purchase C's personal residence and not to purchase convertibles for C's dealership trade or business.

(ii) ***Analysis.*** Because the $20x of interest expense is not properly allocable to a non-excepted trade or business, and therefore is not business interest expense, C's only business interest expense is the $30x that C pays on the loan used to purchase sedans for sale in C's dealership trade or business. C deducts the $20x of interest related to his residence under the rules of section 163(h), without regard to section 163(j).

(6) ***Example 6: Small business exemption*** —

(i) ***Facts.*** During the 2021 taxable year, D, the sole proprietor of a trade or business reported on Schedule C, has interest expense properly allocable to that trade or business. D does not conduct an electing real property trade or business or an electing farming business. D also earns gross income from providing services as an employee that is reported on a Form W-2. Under section 448(c) and the regulations in this part under section 448, D has average annual gross receipts of $21 million, including $1 million of wages in each of the three prior taxable years and $2 million of income from investments not related to a trade or business in each of the three prior taxable years. Also, in each of the three prior taxable years, D received $5 million in periodic payments of compensatory damages awarded in a personal injury lawsuit.

(ii) ***Analysis.*** Section 163(j) does not apply to D for the taxable year, because D qualifies for the small business exemption under § 1.163(j)-2(d). The wages that D receives as an employee and the compensatory damages that D received from D's personal injury lawsuit are not gross receipts, as provided in § 1.163(j)-2(d)(2)(ii). D may deduct all of its business interest expense for the 2021 taxable year without regard to section 163(j).

(7) ***Example 7: Partnership with excess business interest expense qualifies for the small business exemption in a succeeding taxable year*** —

(i) ***Facts.*** X and Y are equal partners in partnership PRS. In addition to being partners in PRS, X and Y each operate their own sole proprietorships. For the taxable year ending December 31, 2021, PRS is subject to section 163(j) and has excess business interest expense of $10x. For the taxable year ending December 31, 2022, PRS has $40x of business interest expense, and X and Y have $20x of business interest expense from their respective sole proprietorships. For the taxable year ending December 31, 2022, PRS and Y qualify for the small business exemption under § 1.163(j)-2(d), while X is subject to section 163(j) and has a section 163(j) limitation of $22x.

(ii) ***Partnership-level analysis.*** For the 2021 taxable year, PRS allocates the $10x of excess business interest expense equally to X and Y ($5x each). See § 1.163(j)-6(f)(2). For the 2022 taxable year, section 163(j) does not apply to PRS because PRS qualifies for the small business exemption. As a result, none of PRS's $40x of business interest expense for the 2022 taxable year is subject to the section 163(j) limitation at the partnership level.

(iii) ***Partner-level analysis.*** For the 2022 taxable year, each partner treats its $5x of excess business interest expense from PRS as paid or accrued in that year. See § 1.163(j)-6(m)(3). This amount becomes business interest expense that each partner must subject to its own section 163(j) limitation, if any. With this $5x, each partner has $25x of business interest expense for the 2022 taxable year ($20x from its sole proprietorship, plus $5x of excess business interest expense treated as paid or accrued in the 2020 taxable year). X deducts $22x of its business interest expense pursuant to its section 163(j) limitation and carries forward the remainder ($3x) as a disallowed business interest expense carryforward to the taxable year ending December 31, 2023. Y is not subject to section 163(j) because Y qualifies for the small business exemption. Y therefore deducts all $25x of its business interest expense for the 2022 taxable year.

(8) ***Example 8: Aggregation of gross receipts*** —

(i) ***Facts.*** X and Y are domestic C corporations under common control, within the meaning of section 52(a) and § 1.52-1(b). X's only trade or business is a farming business described in § 1.263A-4(a)(4). During the taxable year ending December 31, 2020, X has average annual gross receipts under section 448(c) of $6 million. During the same taxable year, Y has average annual gross receipts under section 448(c) of $21 million.

(ii) ***Analysis.*** Because X and Y are under common control, they must aggregate gross receipts for purposes of section 448(c) and the small business exemption in § 1.163(j)-2(d). See section 448(c)(2). Therefore, X and Y are both considered to have $27 million in average annual gross receipts for 2020. X and Y must separately apply section 163(j) to determine any limitation on the deduction for business interest expense. Assuming X otherwise meets the requirements in § 1.163(j)-9 in 2020, X may elect for its farming business to be an excepted trade or business.

(i) [Reserved]

(j) ***Anti-avoidance rule*** —

(1) ***In general.*** Arrangements entered into with a principal purpose of avoiding the rules of section 163(j) or the section 163(j) regulations, including the use of multiple entities to avoid the gross receipts test of section 448(c), may be disregarded or recharacterized by the Commissioner of the IRS to the extent necessary to carry out the purposes of section 163(j).

(2) ***Examples.*** The examples in this paragraph (j)(2) illustrate the application of this section.

(i) ***Example 1*** —

(A) ***Facts.*** Individual A operates an excepted trade or business (Business X) and a non-excepted trade or business (Business Y). With a principal purpose of avoiding the rules of section 163(j) or the regulations in this part under section 163(j) of the Code, A contributes Business X to newly-formed C corporation B in exchange for stock; A then causes B to borrow funds from a third party and distributes a portion of the borrowed

funds to A for use in Business Y. B takes the position that its interest payments on the debt are not subject to the section 163(j) limitation because B is engaged solely in an excepted trade or business.

(B) ***Analysis.*** A has entered into an arrangement with a principal purpose of avoiding the rules of section 163(j) or the regulations in this part under section 163(j). Thus, under paragraph (j)(1) of this section, the Commissioner of the IRS may disregard or recharacterize this transaction to the extent necessary to carry out the purposes of section 163(j). In this case, payments of interest on the debt may be recharacterized as payments of interest properly allocable to a non-excepted trade or business subject to the section 163(j) limitation.

(ii) ***Example 2*** —

(A) ***Facts.*** Partnership UTP has two non-excepted trades or businesses. Business A has gross income of $1000x and gross deductions of $200x. Business B has gross income of $100x and gross deductions of $600x. With a principal purpose of avoiding the rules in section 163(j) or the regulations in this part under section 163(j), UTP and a partner of UTP form partnership LTP and UTP contributes Business B to LTP prior to borrowing funds. UTP takes the position that it does not take its share of LTP gross deductions into account when computing its ATI.

(B) ***Analysis.*** UTP has entered into an arrangement with a principal purpose of avoiding the rules of section 163(j) or the regulations in this part under section 163(j). Thus, under paragraph (j)(1) of this section, the Commissioner of the IRS may disregard or recharacterize this transaction to the extent necessary to carry out the purposes of section 163(j). In this case, UTP's share of gross deductions from LTP may be recharacterized as gross deductions incurred directly by UTP solely for purposes of computing UTP's ATI.

(k) ***Applicability dates*** —

(1) ***In general.*** This section applies to taxable years beginning on or after November 13, 2020. However, taxpayers and their related parties, within the meaning of sections 267(b) and 707(b)(1), may choose to apply the rules of this section to a taxable year beginning after December 31, 2017, so long as the taxpayers and their related parties consistently apply the rules of the section 163(j) regulations, and, if applicable, §§ 1.263A-9, 1.263A-15, 1.381(c)(20)-1, 1.382-1, 1.382-2, 1.382-5, 1.382-6, 1.382-7, 1.383-0, 1.383-1, 1.469-9, 1.469-11, 1.704-1, 1.882-5, 1.1362-3, 1.1368-1, 1.1377-1, 1.1502-13, 1.1502-21, 1.1502-36, 1.1502-79, 1.1502-91 through 1.1502-99 (to the extent they effectuate the rules of §§ 1.382-2, 1.382-5, 1.382-6, and 1.383-1), and 1.1504-4, to that taxable year.

(2) ***Paragraphs (b)(3)(iii), (b)(3)(iv), and (d)(3).*** Paragraphs (b)(3)(iii) and (iv) and (d)(3) of this section apply to taxable years beginning on or after March 22, 2021. However, taxpayers and their related parties, within the meaning of sections 267(b) (determined without regard to section 267(c)(3)) and 707(b)(1), may choose to apply the rules in paragraphs (b)(3)(iii), (b)(3)(iv), and (d)(3) of this section to a taxable year beginning after December 31, 2017, and before March 22, 2021, provided that those taxpayers and their related parties consistently apply all of the rules in paragraphs (b)(3)(iii) and (iv) of this section and the rules in the section 163(j) regulations contained in T.D. 9905 (§§ 1.163(j)-0 through 1.163(j)-11, effective November 13, 2020) as modified by T.D. 9943 (effective January 13, 2021), and, if applicable, §§ 1.263A-9, 1.263A-15, 1.381(c)(20)-1, 1.382-1, 1.382-2, 1.382-5, 1.382-6, 1.382-7, 1.383-0, 1.383-1, 1.469-9, 1.469-11, 1.704-1, 1.882-5, 1.1362-3, 1.1368-1, 1.1377-1,

1.1502-13, 1.1502-21, 1.1502-36, 1.1502-79, 1.1502-91 through 1.1502-99 (to the extent they effectuate the rules of §§ 1.382-2, 1.382-5, 1.382-6, and 1.383-1), and 1.1504-4 contained in T.D. 9905 as modified by T.D. 9943, for that taxable year and for each subsequent taxable year.

[T.D. 9905, 85 FR 56760, Sept. 14, 2020, as amended by T.D. 9943, 86 FR 5529, Jan. 19, 2021]

§ 1.163(j)-3 Relationship of the section 163(j) limitation to other provisions affecting interest.

(a) ***Overview.*** This section contains rules regarding the relationship between section 163(j) and certain other provisions of the Code. Paragraph (b) of this section provides the general rules concerning the relationship between section 163(j) and certain other provisions of the Code. Paragraph (c) of this section provides examples illustrating the application of this section. For rules regarding the relationship between sections 163(j) and 704(d), see § 1.163(j)-6(h)(1) and (2).

(b) ***Coordination of section 163(j) with certain other provisions*** —

(1) ***In general.*** Section 163(j) and the regulations in this part under section 163(j) of the Code generally apply only to business interest expense that would be deductible in the current taxable year without regard to section 163(j). Thus, for example, a taxpayer must apply § 1.163-8T, if applicable, to determine which items of interest expense are investment interest under section 163(d) before applying the rules in this section to interest expense. Except as otherwise provided in this section, section 163(j) applies after the application of provisions that subject interest expense to disallowance, deferral, capitalization, or other limitation. For the rules that must be applied in determining whether excess business interest is paid or accrued by a partner, see section 163(j)(4)(B)(ii) and § 1.163(j)-6.

(2) ***Disallowed interest provisions.*** For purposes of section 163(j), business interest expense does not include interest expense that is permanently disallowed as a deduction under another provision of the Code, such as in section 163(e)(5)(A)(i), (f), (l), or (m), or section 264(a), 265, 267A, or 279.

(3) ***Deferred interest provisions.*** Other than sections 461(l), 465, and 469, Code provisions that defer the deductibility of interest expense, such as section 163(e)(3) and (e)(5)(A)(ii), 267(a)(2) and (3), 1277, or 1282, apply before the application of section 163(j).

(4) ***At risk rules, passive activity loss provisions, and limitation on excess business losses of noncorporate taxpayers.*** Section 163(j) generally applies to limit the deduction for business interest expense before the application of sections 461(l), 465, and 469. However, in determining tentative taxable income for purposes of computing ATI, sections 461(l), 465, and 469 are taken into account.

(5) ***Capitalized interest expenses.*** Section 163(j) applies after the application of provisions that require the capitalization of interest, such as sections 263A and 263(g). Capitalized interest expense under those sections is not treated as business interest expense for purposes of section 163(j). For ordering rules that determine whether interest expense is capitalized under section 263A(f), see the regulations under section 263A(f), including § 1.263A-9(g).

(6) ***Reductions under section 246A.*** Section 246A applies before section 163(j). Any reduction in the dividends received deduction under section 246A reduces the amount of interest expense taken into account under section 163(j).

(7) ***Section 381.*** Disallowed business interest expense carryforwards are items to which an acquiring corporation succeeds under section 381(a). See section 381(c)(20) and §§ 1.163(j)-5(c) and 1.381(c)(20)-1.

(8) ***Section 382.*** For rules governing the interaction of sections 163(j) and 382, see section 382(d)(3) and (k)(1), §§ 1.163(j)-5(e) and 1.163(j)-11(c), the regulations in this part under sections 382 and 383 of the Code, and §§ 1.1502-91 through 1.1502-99.

(c) ***Examples.*** The examples in this paragraph (c) illustrate the application of section 163(j) and the provisions of this section. Unless otherwise indicated, X and Y are calendar-year domestic C corporations; D is a U.S. resident individual not subject to any foreign income tax; none of the taxpayers have floor plan financing interest expense; and the exemption for certain small businesses in § 1.163(j)-2(d) does not apply.

(1) ***Example 1: Disallowed interest expense*** —

(i) ***Facts.*** In 2021, X has $30x of interest expense. Of X's interest expense, $10x is permanently disallowed under section 265. X's business interest income is $3x and X's ATI is $90x.

(ii) ***Analysis.*** Under paragraph (b)(2) of this section, the $10x interest expense that is permanently disallowed under section 265 cannot be taken into consideration for purposes of section 163(j) in the 2021 taxable year. X's section 163(j) limitation, or the amount of business interest expense that X may deduct is limited to $30x under § 1.163(j)-2(b), determined by adding X's business interest income ($3x) and 30 percent of X's 2019 ATI ($27x). Therefore, in the 2021 taxable year, none of the $20x of X's deduction for its business interest expense is disallowed under section 163(j).

(2) ***Example 2: Deferred interest expense*** —

(i) ***Facts.*** In 2021, Y has no business interest income, $120x of ATI, and $70x of interest expense. Of Y's interest expense, $30x is not currently deductible under section 267(a)(2). The $30x expense is allowed as a deduction under section 267(a)(2) in 2022.

(ii) ***Analysis.*** Under paragraph (b)(3) of this section, section 267(a)(2) is applied before section 163(j). Accordingly, $30x of Y's interest expense cannot be taken into consideration for purposes of section 163(j) in 2021 because it is not currently deductible under section 267(a)(2). Accordingly, in 2021, if the interest expense is properly allocable to a non-excepted trade or business, Y will have $4x of disallowed business interest expense because the $40x of business interest expense in 2021 ($70x−$30x) exceeds 30 percent of its ATI for the taxable year ($36x). The $30x of interest expense not allowed as a deduction in the 2021 taxable year under section 267(a)(2) will be taken into account in determining the business interest expense deduction under section 163(j) in 2022, the taxable year in which it is allowed as a deduction under section 267(a)(2), if it is allocable to a trade or business. Additionally, the $4x of disallowed business interest expense in 2021 will be carried forward to 2022 as a disallowed business interest expense carryforward. See § 1.163(j)-2(c).

(3) ***Example 3: Passive activity loss*** —

(i) ***Facts.*** D is engaged in a rental activity treated as a passive activity within the meaning of section 469. For the 2021 taxable year, D receives $200x of rental income and incurs $300x of expenses all properly allocable to the rental activity, consisting of $150x of interest expense, $60x of maintenance expenses, and $90x of depreciation expense. D's ATI is $400x.

(ii) ***Analysis.*** Under paragraph (b)(4) of this section, section 163(j) is applied before the section 469 passive loss rules apply, except that section 469 is taken into account in the determination of tentative taxable income for purposes of computing ATI. D's section 163(j) limitation is $120x, determined by adding to D's business interest income ($0), floor plan financing ($0), and 30

percent of D's ATI ($120x). See § 1.163(j)-2(b). Because D's business interest expense of $150x exceeds D's section 163(j) limitation for 2021, $30x of D's business interest expense is disallowed under section 163(j) and will be carried forward as a disallowed business interest expense carryforward. See § 1.163(j)-2(c). Because the section 163(j) limitation is applied before the limitation under section 469, only $120x of the business interest expense allowable under section 163(j) is included in determining D's passive activity loss limitation for the 2021 tax year under section 469. The $30x of disallowed business interest expense is not an allowable deduction under section 163(j) and, therefore, is not a deduction under section 469 in the current taxable year. See § 1.469-2(d)(8).

(4) ***Example 4: Passive activity loss by taxpayer that also participates in a non-passive activity*** —

(i) ***Facts.*** For 2021, D has no business interest income and ATI of $1,000x, entirely attributable to a passive activity within the meaning of section 469. D has business interest expense of $1,000x, $900x of which is properly allocable to a passive activity and $100x of which is properly allocable to a non-passive activity in which D materially participates. D has other business deductions that are not subject to section 469 of $600x, and a section 469 passive loss from the previous year of $250x.

(ii) ***Analysis.*** Under paragraph (b)(4) of this section, section 163(j) is applied before the section 469 passive loss rules apply. D's section 163(j) limitation is $300x, determined by adding D's business interest income ($0), floor plan financing ($0), and 30 percent of D's ATI ($300x)). Next, applying the limitation under section 469 to the $300x business interest expense deduction allowable under section 163(a) and (j), $270x (a proportionate amount of the $300x (0.90 × $300x)) is business interest expense included in determining D's passive activity loss limitation under section 469, and $30x (a proportionate amount of the $300x (0.10 × $300)) is business interest expense not included in determining D's passive activity loss limitation under section 469. Because D's interest expense of $1,000x exceeds 30 percent of its ATI for 2021, $700x of D's interest expense is disallowed under section 163(j) and will be carried forward as a disallowed business interest expense carryforward. Section 469 does not apply to any portion of the $700x disallowed business interest expense because that business interest expense is not an allowable deduction under section 163(j) and, therefore, is not an allowable deduction under section 469 in the current taxable year. See § 1.469-2(d)(8).

(5) ***Example 5: ATI calculation with passive activity loss*** —

(i) ***Facts.*** D is an individual who engages in a trade or business, V, as a sole proprietorship. D relies on employees to perform most of the work and, as a result, D does not materially participate in V. Therefore, V is a passive activity of D. V is not an excepted trade or business. In Year 1, V generates $500x of passive income, $400x of business interest expense, and $600x of ordinary and necessary expenses deductible under section 162 (not including any interest described in § 1.163(j)-1(b)(22)). No disallowed business interest expense carryforward has been carried to Year 1 from a prior year, and no amounts have been carried over to Year 1 from a prior year under either section 465(a)(2) or section 469(b).

(ii) ***Tentative taxable income.*** Under § 1.163(j)-1(b)(43), tentative taxable income is determined as though all business interest expense was not subject to the section 163(j) limitation. Sections 461(l), 465, and 469 apply in the determination of tentative taxable income. For year 1, D has $500x of allowable deductions and a $500x tentative passive activity loss under section 469, because D's $1000x of passive expenses exceeds D's $500x of passive income from V. The tentative disallowance of $500x is generally allocated pro rata between D's passive expenses

under § 1.469-1T(f)(2)(ii)(A). In this case, fifty percent ($500x of passive activity loss divided by $1000x of total passive expenses) of each category of passive expense is tentatively disallowed: $200x of business interest expense and $300x of section 162 expense. D's tentative taxable income is $0 (zero), which is determined by reducing $500x of gross income by the remaining $200x of business interest expense and $300x of section 162 expense ($500x−$200x−$300x).

(iii) ***ATI.*** Under section § 1.163(j)-1(b)(1), to determine ATI, D must add business interest expense to tentative taxable income, but only to the extent that the business interest expense reduced tentative taxable income, or $200x. The $200x of business interest expense that was tentatively disallowed under section 469 is not added to tentative taxable income to determine ATI. D's ATI is $200x, which is determined by adding the $200x of business interest expense that reduced tentative taxable income to D's tentative taxable income, or $0 (0 + $200x).

(iv) ***Section 163(j) limitation.*** D's section 163(j) limitation in Year 1 is D's business interest income, or $0, plus 30 percent of ATI, or $60x (30 percent × $200x ATI), plus D's floor plan financing, or $0, for a total of $60x ($0 + $60x + $0). Before the application of section 469, D has $60x of deductible business interest expense and $340x of disallowed business interest expense carryforward under § 1.163(j)-2(c).

(v) ***Passive activity loss.*** Because D's passive deductions exceed the passive income from V, and D does not have any passive income from other sources, section 469 applies to limit D's passive loss from V. Having first applied section 163(j), D has $660x of passive expenses, determined by adding D's $60x of business interest expense that is allowed by section 163(j) as a deduction and $600x of section 162 expense ($60x + $600x). D offsets $500x of the passive expenses against $500x of passive income; therefore, D has a passive activity loss of $160x in Year 1, determined as the excess of D's total passive expenses over D's passive income ($660x−$500x). The amount of D's loss from the passive activity that is disallowed under section 469 ($160x) is generally ratably allocated to each of D's passive activity deductions under § 1.469-1T(f)(2)(ii)(A). As a general rule, each deduction is multiplied by the ratio of the total passive loss to total passive expenses (160x/660x). Of D's $60x business interest expense, $14.55x (($160x/$660x) × $60x) is disallowed in Year 1. Additionally, of D's $600x section 162 expense, $145.45x (($160x/$660x) × $600x) is disallowed. The amounts disallowed under section 469(a)(1) and § 1.469-2T(f)(2) are carried over to the succeeding taxable year under section 469(b) and § 1.469-1(f)(4).

(6) ***Example 6: Effect of passive activity loss carryforwards*** —

(i) ***Facts.*** The facts are the same as in *Example 5* in paragraph (c)(5)(i) of this section. In Year 2, V generates $500x of passive income, $100x of business interest expense, and $0 (zero) of other deductible expenses. D is not engaged in any other trade or business activities. A disallowed business interest expense carryforward of $340x has been carried to Year 2 from Year 1. Under section 469, D has a suspended loss from Year 1 that includes $14.55x of business interest expense and $145.45x of section 162 expense. These amounts are treated as passive activity deductions in Year 2.

(ii) ***Tentative taxable income.*** To determine D's tentative taxable income, D must first determine D's allowable deductions. In year 2, D has $260x of allowable deductions, which includes $100x of business interest expense generated Year 2, $14.55x of business interest expense disallowed in Year 1 by section 469, and $145.45x of section 162 expense disallowed in Year 1 by section 469 ($100x + $14.55x + $145.45x)). D's disallowed business interest expense carryforward

from Year 1 is not taken into account in determining tentative taxable income. See § 1.163(j)-1(b)(43). Additionally, the $14.55x of business interest expense disallowed in Year 1 by section 469 is not business interest expense in Year 2 because it was deductible after the application of section 163(j) (but before the application of section 469) in Year 1. D does not have a tentative passive activity loss in Year 2, because D's $500x of passive income from V exceeds D's $260x of tentative passive expenses. Therefore, D's tentative taxable income in Year 2 is $240x, which is determined by subtracting D's allowable deductions other than disallowed business interest expense carryforwards, or $260x, from D's gross income, or $500x ($500x−$260x).

(iii) ***ATI.*** D's ATI in Year 2 is $340x, which is determined by adding D's business interest expense, or $100x, to D's tentative taxable income, or $240x ($240x + $100x). Because disallowed business interest expense carryforwards are not taken into account in determining tentative taxable income, there is no corresponding adjustment for disallowed business interest expense carryforwards in calculating ATI. Therefore, there is no adjustment for D's $340x of disallowed business interest expense carryforward in calculating D's ATI. D has no other adjustments to determine ATI.

(iv) ***Section 163(j) limitation.*** D's section 163(j) limitation in Year 2 is $102x, which is determined by adding D's business interest income, or $0, 30 percent of D's ATI for year 2, $102 ($340x × 30 percent), and D's floor plan financing for Year 2, or $0 ($0 + ($102x) + $0). Accordingly, before the application of section 469 in Year 2, $102x of D's $440x of total business interest expense (determined by adding $340x of disallowed business interest expense carryforward from Year 1 and $100x of business interest expense in Year 2) is deductible. D has $338x of disallowed business interest expense carryforward that will carry forward to subsequent taxable years under § 1.163(j)-2(c), determined by subtracting D's deductible business interest expense in Year 2, or $102x, from D's total business interest expense in Year 2, or $440x ($440x−$102x).

(v) ***Section 469.*** After applying the section 163(j) limitation, D applies section 469 to determine if any amount of D's expense is a disallowed passive activity loss. For Year 2, D has $262x of passive expenses, determined by adding D's business interest expense deduction allowed by section 163(j) ($102x), D's section 162 expense carried forward from Year 1 under section 469 ($145.45x), and D's interest expense carried forward from Year 1 under section 469 which is not business interest expense in Year 2, or $14.55x ($102x + $145.45x + $14.55x). Therefore, D has $238x of net passive income in Year 2, determined by reducing D's total passive income in Year 2 ($500x), by D's disallowed passive activity loss, or $262x ($500x−$262x). D does not have a passive activity loss in Year 2, and no part of D's $262x of passive expenses is disallowed in Year 2 under section 469.

(7) ***Example 7: Capitalized interest expense*** —

(i) ***Facts.*** In 2020, X has $50x of interest expense. Of X's interest expense, $10x is required to be capitalized under section 263A. X capitalizes this interest expense to a depreciable asset. X's business interest income is $9x and X's ATI is $80x. X makes the election in § 1.163(j)-2(b)(2)(ii) to use 30 percent, rather than 50 percent, of ATI in determining X's section 163(j) limitation for the 2020 taxable year.

(ii) ***Analysis.*** Under paragraph (b)(5) of this section, section 263A is applied before section 163(j). Accordingly, $10x of X's interest expense cannot be taken into consideration for purposes of section 163(j) in 2020. Additionally, under paragraph (b)(5) of this section, X's $10 of capitalized interest expense is not business interest expense for purposes of section 163(j). As a result,

when X recovers its capitalized interest expense through depreciation deductions, such capitalized interest expense will not be taken into account as business interest expense in determining X's section 163(j) limitation. X's section 163(j) limitation in 2020, or the amount of business interest expense that X may deduct, is limited to $33x under § 1.163(j)-2(b), determined by adding X's business interest income ($9x) and 30 percent of X's 2020 ATI ($24x). X therefore has $7x of disallowed business interest expense in 2020 that will be carried forward to 2021 as a disallowed business interest expense carryforward.

(d) ***Applicability date.*** This section applies to taxable years beginning on or after November 13, 2020. However, taxpayers and their related parties, within the meaning of sections 267(b) and 707(b)(1), may choose to apply the rules of this section to a taxable year beginning after December 31, 2017, so long as the taxpayers and their related parties consistently apply the rules of the section 163(j) regulations, and, if applicable, §§ 1.263A-9, 1.263A-15, 1.381(c)(20)-1, 1.382-1, 1.382-2, 1.382-5, 1.382-6, 1.382-7, 1.383-0, 1.383-1, 1.469-9, 1.469-11, 1.704-1, 1.882-5, 1.1362-3, 1.1368-1, 1.1377-1, 1.1502-13, 1.1502-21, 1.1502-36, 1.1502-79, 1.1502-91 through 1.1502-99 (to the extent they effectuate the rules of §§ 1.382-2, 1.382-5, 1.382-6, and 1.383-1), and 1.1504-4, to that taxable year.

[T.D. 9905, 85 FR 56760, Sept. 14, 2020]

§ 1.163(j)-4 General rules applicable to C corporations (including REITs, RICs, and members of consolidated groups) and tax-exempt corporations.

(a) ***Scope.*** This section provides rules regarding the computation of items of income and expense under section 163(j) for taxpayers that are C corporations, including, for example, members of a consolidated group, REITs, RICs, tax-exempt corporations, and cooperatives. Paragraph (b) of this section provides rules regarding the characterization of items of income, gain, deduction, or loss. Paragraph (c) of this section provides rules regarding adjustments to earnings and profits. Paragraph (d) of this section provides rules applicable to members of a consolidated group. Paragraph (e) of this section provides rules governing the ownership of partnership interests by members of a consolidated group. Paragraph (f) of this section provides cross-references to other rules within the 163(j) regulations that may be applicable to C corporations.

(b) ***Characterization of items of income, gain, deduction, or loss —***

(1) ***Interest expense and interest income.*** Solely for purposes of section 163(j), all interest expense of a taxpayer that is a C corporation is treated as properly allocable to a trade or business. Similarly, solely for purposes of section 163(j), all interest income of a taxpayer that is a C corporation is treated as properly allocable to a trade or business. For rules governing the allocation of interest expense and interest income between excepted and non-excepted trades or businesses, see § 1.163(j)-10.

(2) ***Adjusted taxable income.*** Solely for purposes of section 163(j), all items of income, gain, deduction, or loss of a taxpayer that is a C corporation are treated as properly allocable to a trade or business. For rules governing the allocation of tax items between excepted and non-excepted trades or businesses, see § 1.163(j)-10.

(3) ***Investment interest, investment income, investment expenses, and certain other tax items of a partnership with a C corporation partner —***

(i) ***Characterization as expense or income properly allocable to a trade or business.*** For purposes of section 163(j), any investment interest, investment income, or investment expense (within the meaning of section 163(d)) that a partnership pays, receives, or accrues and that is allocated to a C corporation partner as a separately stated item is treated by the C corporation partner as properly allocable to a trade or business of that partner. Similarly, for purposes of section 163(j), any other tax items of a partnership that are neither properly allocable to a trade or business of the partnership nor described in section 163(d) and that are allocated to a C corporation partner as separately stated items are treated as properly allocable to a trade or business of that partner.

(ii) ***Effect of characterization on partnership.*** The characterization of a partner's tax items pursuant to paragraph (b)(3)(i) of this section does not affect the characterization of these items at the partnership level.

(iii) ***Separately stated interest expense and interest income of a partnership not treated as excess business interest expense or excess taxable income of a C corporation partner.*** Investment interest expense and other interest expense of a partnership that is treated as business interest expense by a C corporation partner under paragraph (b)(3)(i) of this section is not treated as excess business interest expense of the partnership. Investment interest income and other interest income of a partnership that is treated as business interest income by a C corporation partner under paragraph (b)(3)(i) of this section is not treated as excess taxable income of the partnership. For rules governing excess business interest expense and excess taxable income, see § 1.163(j)-6.

(iv) ***Treatment of deemed inclusions of a domestic partnership that are not allocable to any trade or business.*** If a United States shareholder that is a domestic partnership includes amounts in gross income under sections 951(a) or 951A(a) that are not properly allocable to a trade or business of the domestic partnership, then, notwithstanding paragraph (b)(3)(i) of this section, to the extent a C corporation partner, including an indirect partner in the case of tiered partnerships, takes such amounts into account as a distributive share in accordance with section 702 and § 1.702-1(a)(8)(ii), the C corporation partner may not treat such amounts as properly allocable to a trade or business of the C corporation partner.

(4) ***Application to RICs and REITs —***

(i) ***In general.*** Except as otherwise provided in paragraphs (b)(4)(ii) and (iii) of this section, the rules in this paragraph (b) apply to RICs and REITs.

(ii) ***Tentative taxable income of RICs and REITs.*** The tentative taxable income of a RIC or REIT for purposes of calculating ATI is the tentative taxable income of the corporation, without any adjustment that would be made under section 852(b)(2) or 857(b)(2) to compute investment company taxable income or real estate investment trust taxable income, respectively. For example, the tentative taxable income of a RIC or REIT is not reduced by the deduction for dividends paid, but is reduced by the dividends received deduction (DRD) and the other deductions described in sections 852(b)(2)(C) and 857(b)(2)(A). See paragraph (b)(4)(iii) of this section for an adjustment to ATI in respect of these items.

(iii) ***Other adjustments to adjusted taxable income for RICs and REITs.*** In the case of a taxpayer that, for a taxable year, is a RIC to which section 852(b) applies or a REIT to which section 857(b) applies, the taxpayer's ATI for the taxable year is increased by the amounts of any deductions described in section 852(b)(2)(C) or 857(b)(2)(A).

(5) ***Application to tax-exempt corporations.*** The rules in this paragraph (b) apply to a tax-exempt corporation only with respect to that corporation's items of income, gain, deduction, or loss that are taken into account in computing the corporation's unrelated business taxable income, as defined in section 512.

(6) ***Adjusted taxable income of cooperatives.*** Solely for purposes of computing the ATI of a cooperative under § 1.163(j)-1(b)(1), tentative taxable income is not reduced by the amount of any patronage dividend under section 1382(b)(1) or by any amount paid in redemption of nonqualified written notices of allocation distributed as patronage dividends under section 1382(b)(2) (for cooperatives subject to taxation under sections 1381 through 1388), any amount described in section 1382(c) (for cooperatives described in section 1381(a)(1) and section 521), or any equivalent amount deducted by an organization that operates on a cooperative basis but is not subject to taxation under sections 1381 through 1388.

(7) ***Examples.*** The principles of this paragraph (b) are illustrated by the following examples. For purposes of the examples in this paragraph (b)(7) of this section, T is a taxable domestic C corporation whose taxable year ends on December 31; T is neither a consolidated group member nor a RIC or a REIT; neither T nor PS1, a domestic partnership, owns at least 80 percent of the stock of any corporation; neither T nor PS1 qualifies for the small business exemption in § 1.163(j)-2(d) or is engaged in an excepted trade or business; T has no floor plan financing expense; all interest expense is deductible except for the potential application of section 163(j); and the facts set forth the only corporate or partnership activity.

(i) ***Example 1: C corporation items properly allocable to a trade or business*** —

(A) ***Facts.*** In taxable year 2021, T's tentative taxable income (without regard to the application of section 163(j)) is $320x. This amount is comprised of the following tax items: $1,000x of revenue from inventory sales; $500x of ordinary and necessary business expenses (excluding interest and depreciation); $200x of interest expense; $50x of interest income; $50x of depreciation deductions under section 168; and a $20x gain on the sale of stock.

(B) ***Analysis.*** For purposes of section 163(j), each of T's tax items is treated as properly allocable to a trade or business. Thus, T's ATI for the 2021 taxable year is $520x ($320x of tentative taxable income + $200x business interest expense−$50x business interest income + $50x depreciation deductions = $520x), and its section 163(j) limitation for the 2021 taxable year is $206x ($50x of business interest income + 30 percent of its ATI (30 percent × $520x) = $206x). As a result, all $200x of T's interest expense is deductible in the 2021 taxable year under section 163(j).

(C) ***Taxable year beginning in 2022.*** The facts are the same as in *Example 1* in paragraph (b)(7)(i)(A) of this section, except that the taxable year begins in 2022 and therefore depreciation deductions are not added back to ATI under § 1.163(j)-1(b)(1)(i)(E). As a result, T's ATI for 2022 is $470x ($320x of tentative taxable income + $200x business interest expense−$50x business interest income = $470x), and its section 163(j) limitation for the 2022 taxable year is $191x ($50x of business interest income + 30 percent of its ATI (30 percent × $470x) = $191x). As a result, T may only deduct $191x of its business interest expense for the taxable year, and the remaining $9x is carried forward to the 2023 taxable year as a disallowed business interest expense carryforward. See § 1.163(j)-2(c).

(ii) ***Example 2: C corporation partner*** —

(A) ***Facts.*** T and individual A each own a 50 percent interest in PS1, a general partnership. PS1 borrows funds from a third party (Loan 1) and uses those funds to buy stock in publicly-traded corporation X. PS1's only activities are holding X stock (and receiving dividends) and making payments on Loan 1. In the 2021 taxable year, PS1 receives $150x in dividends and pays $100x in interest on Loan 1.

(B) ***Analysis.*** For purposes of section 163(d) and (j), PS1 has investment interest expense of $100x and investment income of $150x, and PS1 has no interest expense or interest income that is properly allocable to a trade or business. PS1 allocates its investment interest expense and investment income equally to its two partners pursuant to § 1.163(j)-6(k). Pursuant to paragraph (b)(3) of this section, T's allocable share of PS1's investment interest expense is treated as a business interest expense of T, and T's allocable share of PS1's investment income is treated as properly allocable to a trade or business of T. This business interest expense is not treated as excess business interest expense, and this income is not treated as excess taxable income. See paragraph (b)(3)(iii) of this section. T's treatment of its allocable share of PS1's investment interest expense and investment income as business interest expense and income properly allocable to a trade or business, respectively, does not affect the character of these items at the PS1 level and does not affect the character of A's allocable share of PS1's investment interest and investment income.

(C) ***Partnership engaged in a trade or business.*** The facts are the same as in *Example 2* in paragraph (b)(7)(ii)(A) of this section, except that PS1 also is engaged in Business 1, and PS1 borrows funds from a third party to finance Business 1 (Loan 2). In 2021, Business 1 earns $150x of net income (excluding interest expense and depreciation), and PS1 pays $100x of interest on Loan 2. For purposes of section 163(d) and (j), PS1 treats the interest paid on Loan 2 as properly allocable to a trade or business. As a result, PS1 has investment interest expense of $100x (attributable to Loan 1), business interest expense of $100x (attributable to Loan 2), $150x of investment income, and $150x of income from Business 1. PS1's ATI is $150x (its net income from Business 1 excluding interest and depreciation), and its section 163(j) limitation is $45x (30 percent × $150x). Pursuant to § 1.163(j)-6, PS1 has $55x of excess business interest expense ($100x−$45x), half of which ($27.5x) is allocable to T. Additionally, pursuant to paragraph (b)(3)(i) of this section, T's allocable share of PS1's investment interest expense ($50x) is treated as a business interest expense of T for purposes of section 163(j), and T's allocable share of PS1's investment income ($75x) is treated as properly allocable to a trade or business of T. Therefore, with respect to T's interest in PS1, T is treated as having $50x of business interest expense that is not treated as excess business interest expense, $75x of income that is properly allocable to a trade or business, and $27.5x of excess business interest expense.

(c) ***Effect on earnings and profits*** —

(1) ***In general.*** In the case of a taxpayer that is a domestic C corporation, except as otherwise provided in paragraph (c)(2) of this section, the disallowance and carryforward under § 1.163(j)-2 (and § 1.163(j)-5, in the case of a taxpayer that is a consolidated group member) of a deduction for business interest expense of the taxpayer or of a partnership in which the taxpayer is a partner does not affect whether or when the business interest expense reduces the taxpayer's earnings and profits. In the case of a foreign corporation, the disallowance and carryforward of a deduction for the corporation's business interest expense under § 1.163(j)-2 does not affect whether and when such

business interest expense reduces the corporation's earnings and profits. Thus, for example, if a United States person has elected under section 1295 to treat a passive foreign investment company (as defined in section 1297) (PFIC) as a qualified electing fund, then the disallowance and carryforward of a deduction for the PFIC's business interest expense under § 1.163(j)-2 does not affect whether or when such business interest expense reduces the PFIC's earnings and profits.

(2) ***Special rule for RICs and REITs.*** In the case of a taxpayer that is a RIC or a REIT for the taxable year in which a deduction for the taxpayer's business interest expense is disallowed under § 1.163(j)-2(b), or in which the RIC or REIT is allocated any excess business interest expense from a partnership under section 163(j)(4)(B)(i) and § 1.163(j)-6, the taxpayer's earnings and profits are adjusted in the taxable year or years in which the business interest expense is deductible or, if earlier, in the first taxable year for which the taxpayer no longer is a RIC or a REIT.

(3) ***Special rule for partners that are C corporations.*** If a taxpayer that is a C corporation is allocated any excess business interest expense from a partnership, and if all or a portion of the excess business interest expense has not yet been treated as business interest expense by the taxpayer at the time of the taxpayer's disposition of all or a portion of its interest in the partnership, the taxpayer must increase its earnings and profits immediately prior to the disposition by an amount equal to the amount of the basis adjustment required under section 163(j)(4)(B)(iii)(II) and § 1.163(j)-6(h)(3).

(4) ***Examples.*** The principles of this paragraph (c) are illustrated by the following examples. For purposes of the examples in this paragraph (c)(4), except as otherwise provided in the examples, X is a taxable domestic C corporation whose taxable year ends on December 31; X is not a member of a consolidated group; X does not qualify for the small business exemption under § 1.163(j)-2(d); X is not engaged in an excepted trade or business; X has no floor plan financing indebtedness; all interest expense is deductible except for the potential application of section 163(j); X has no accumulated earnings and profits at the beginning of the 2021 taxable year; and the facts set forth the only corporate activity.

(i) ***Example 1: Earnings and profits of a taxable domestic C corporation other than a RIC or a REIT*** —

(A) ***Facts.*** X is a corporation that does not intend to qualify as a RIC or a REIT for its 2021 taxable year. In that year, X has tentative taxable income (without regard to the application of section 163(j)) of $0, which includes $100x of gross income and $100x of interest expense on a loan from an unrelated third party. X also makes a $100x distribution to its shareholders that year.

(B) ***Analysis.*** The $100x of interest expense is business interest expense for purposes of section 163(j) (see paragraph (b)(1) of this section). X's ATI in the 2021 taxable year is $100x ($0 of tentative taxable income computed without regard to $100x of business interest expense). Thus, X may deduct $30x of its $100x of business interest expense in the 2021 taxable year under § 1.163(j)-2(b) (30 percent × $100x), and X may carry forward the remainder ($70x) to X's 2022 taxable year as a disallowed business interest expense carryforward under § 1.163(j)-2(c). Although X may not currently deduct all $100x of its business interest expense in the 2021 taxable year, X must reduce its earnings and profits in that taxable year by the full amount of its business interest expense ($100x) in that taxable year. As a result, no portion of X's distribution of $100x to its shareholders in the 2021 taxable year is a dividend within the meaning of section 316(a).

(ii) ***Example 2: RIC adjusted taxable income and earnings and profits*** —

(A) ***Facts.*** X is a corporation that intends to qualify as a RIC for its 2021 taxable year. In that taxable year, X's only items are $100x of interest income, $50x of dividend income from C corporations that only issue common stock and in which X has less than a twenty percent interest (by vote and value), $10x of net capital gain, and $125x of interest expense. None of the dividends are received on debt financed portfolio stock under section 246A. The DRD determined under section 243(a) with respect to X's $50x of dividend income is $25x. X pays $42x in dividends to its shareholders, meeting the requirements of section 562 during X's 2021 taxable year, including $10x that X reports as capital gain dividends in written statements furnished to X's shareholders.

(B) ***Analysis.***

(*1*) Under paragraph (b) of this section, all of X's interest expense is considered business interest expense, all of X's interest income is considered business interest income, and all of X's other income is considered to be properly allocable to a trade or business. Under paragraph (b)(4)(ii) of this section, prior to the application of section 163(j), X's tentative taxable income is $10x ($100x business interest income + $50x dividend income + $10x net capital gain−$125x business interest expense−$25x DRD = $10x). Under paragraph (b)(4)(iii) of this section, X's ATI is increased by the DRD. As such, X's ATI for the 2021 taxable year is $60x ($10x tentative taxable income + $125x business interest expense−$100x business interest income + $25x DRD = $60x).

(*2*) X may deduct $118x of its $125x of business interest expense in the 2021 taxable year under section 163(j)(1) ($100x business interest income + (30 percent × $60x of ATI) = $118x), and X may carry forward the remainder ($7x) to X's 2022 taxable year. See § 1.163(j)-2(b) and (c).

(*3*) After the application of section 163(j), X has taxable income of $17x ($100x interest income + $50x dividend income + $10x capital gain−$25x DRD−$118x allowable interest expense = $17x) for the 2021 taxable year. X will have investment company taxable income (ICTI) in the amount of $0 ($17x taxable income−$10x capital gain + $25x DRD−$32x dividends paid deduction for ordinary dividends = $0). The excess of X's net capital gain ($10x) over X's dividends paid deduction determined with reference to capital gain dividends ($10x) is also $0.

(*4*) Under paragraph (c)(2) of this section, X will not reduce its earnings and profits by the amount of interest expense disallowed as a deduction in the 2021 taxable year under section 163(j). Thus, X has current earnings and profits in the amount of $42x ($100x interest income + $50x dividend income + $10x capital gain−$118x allowable business interest expense = $42x) before giving effect to dividends paid during the 2021 taxable year.

(iii) ***Example 3: Carryforward of disallowed interest expense*** —

(A) ***Facts.*** The facts are the same as the facts in *Example 2* in paragraph (c)(4)(ii)(A) of this section for the 2021 taxable year. In addition, X has $50x of interest income and $20x of interest expense for the 2022 taxable year.

(B) ***Analysis.*** Under paragraph (b) of this section, all of X's interest expense is considered business interest expense, all of X's interest income is considered business interest income, and all of X's other income is considered to be properly allocable to a trade or

business. Because X's $50x of business interest income exceeds the $20x of business interest expense from the 2022 taxable year and the $7x of disallowed business interest expense carryforward from the 2021 taxable year, X may deduct $27x of business interest expense in the 2022 taxable year. Under paragraph (c)(2) of this section, X must reduce its current earnings and profits for the 2022 taxable year by the full amount of the deductible business interest expense ($27x).

(iv) *Example 4: REIT adjusted taxable income and earnings and profits* —

(A) ***Facts.*** X is a corporation that intends to qualify as a REIT for its 2021 taxable year. X is not engaged in an excepted trade or business and is not engaged in a trade or business that is eligible to make any election under section 163(j)(7). In that year, X's only items are $100x of mortgage interest income, $30x of dividend income from C corporations that only issue common stock and in which X has less than a ten percent interest (by vote and value), $10x of net capital gain from the sale of mortgages on real property that is not property described in section 1221(a)(1), and $125x of interest expense. None of the dividends are received on debt financed portfolio stock under section 246A. The DRD determined under section 243(a) with respect to X's $30x of dividend income is $15x. X pays $28x in dividends meeting the requirements of section 562 during X's 2021 taxable year, including $10x that X properly designates as capital gain dividends under section 857(b)(3)(B).

(B) ***Analysis.***

(*1*) Under paragraph (b) of this section, all of X's interest expense is considered business interest expense, all of X's interest income is considered business interest income, and all of X's other income is considered to be properly allocable to a trade or business. Under paragraph (b)(4)(ii) of this section, prior to the application of section 163(j), X's tentative taxable income is $0 ($100x business interest income + $30x dividend income + $10x net capital gain−$125x business interest expense−$15x DRD = $0). Under paragraph (b)(4)(iii) of this section, X's ATI is increased by the DRD. As such, X's ATI for the 2021 taxable year is $40x ($0 tentative taxable income + $125x business interest expense−$100x business interest income + $15x DRD = $40x).

(*2*) X may deduct $112x of its $125x of business interest expense in the 2021 taxable year under section 163(j)(1) ($100x business interest income + (30 percent × $40x of ATI) = $112x), and X may carry forward the remainder of its business interest expense ($13x) to X's 2022 taxable year.

(*3*) After the application of section 163(j), X has taxable income of $13x ($100x business interest income + $30x dividend income + $10x capital gain−$15x DRD−$112x allowable business interest expense = $13x) for the 2021 taxable year. X will have real estate investment trust taxable income (REITTI) in the amount of $0 ($13x taxable income + $15x of DRD−$28x dividends paid deduction = $0).

(*4*) Under paragraph (c)(2) of this section, X will not reduce earnings and profits by the amount of business interest expense disallowed as a deduction in the 2021 taxable year. Thus, X has current earnings and profits in the amount of $28x ($100x business interest income + $30x dividend income + $10x capital gain−$112x allowable business interest expense = $28x) before giving effect to dividends paid during X's 2021 taxable year.

(v) *Example 5: Carryforward of disallowed interest expense* —

(A) ***Facts.*** The facts are the same as in *Example 4* in paragraph (c)(4)(iv)(A) of this section for the 2021 taxable year. In addition, X has $50x of mortgage interest income and $20x of interest expense for the 2022 taxable year. X has no other tax items for the 2022 taxable year.

(B) ***Analysis.*** Because X's $50x of business interest income exceeds the $20x of business interest expense from the 2022 taxable year and the $13x of disallowed business interest expense carryforwards from the 2021 taxable year, X may deduct $33x of business interest expense in 2022. Under paragraph (c)(2) of this section, X must reduce its current earnings and profits for 2022 by the full amount of the deductible interest expense ($33x).

(d) ***Special rules for consolidated groups*** —

(1) ***Scope.*** This paragraph (d) provides rules applicable to members of a consolidated group. For all members of a consolidated group for a consolidated return year, the computations required by section 163(j) and the regulations in this part under section 163(j) are made in accordance with the rules of this paragraph (d) unless otherwise provided elsewhere in the section 163(j) regulations. For rules governing the ownership of partnership interests by members of a consolidated group, see paragraph (e) of this section.

(2) ***Calculation of the section 163(j) limitation for members of a consolidated group*** —

(i) ***In general.*** A consolidated group has a single section 163(j) limitation, the absorption of which is governed by § 1.163(j)-5(b)(3)(ii).

(ii) ***Interest.*** For purposes of determining whether amounts, other than amounts in respect of intercompany obligations (as defined in § 1.1502-13(g)(2)(ii)), intercompany items (as defined in § 1.1502-13(b)(2)), or corresponding items (as defined in § 1.1502-13(b)(3)), are treated as interest within the meaning of § 1.163(j)-1(b)(22), all members of a consolidated group are treated as a single taxpayer.

(iii) ***Calculation of business interest expense and business interest income for a consolidated group.*** For purposes of calculating the section 163(j) limitation for a consolidated group, the consolidated group's current-year business interest expense and business interest income, respectively, are the sum of each member's current-year business interest expense and business interest income, including amounts treated as business interest expense and business interest income under paragraph (b)(3) of this section.

(iv) ***Calculation of adjusted taxable income.*** For purposes of calculating the ATI for a consolidated group, the tentative taxable income is the consolidated group's consolidated taxable income, determined under § 1.1502-11 but without regard to any carryforwards or disallowances under section 163(j). Further, for purposes of calculating the ATI of the group, intercompany items and corresponding items are disregarded to the extent that they offset in amount. Thus, for example, certain portions of the intercompany items and corresponding items of a group member engaged in a non-excepted trade or business will not be included in ATI to the extent that the counterparties to the relevant intercompany transactions are engaged in one or more excepted trades or businesses.

(v) ***Treatment of intercompany obligations*** —

(A) ***In general.*** Except as otherwise provided in paragraph (d)(2)(v)(B) of this section, for purposes of determining a member's business interest expense and business interest income, and for purposes of calculating the consolidated group's ATI, all intercompany obligations, as defined in § 1.1502-13(g)(2)(ii), are disregarded. Therefore, except as otherwise provided in paragraph (d)(2)(v)(B) of this section, interest expense and interest income from intercompany obligations are not treated as business interest expense and business interest income.

(B) ***Repurchase premium.*** This paragraph (d)(2)(v)(B) applies if a member of a consolidated group purchases an obligation of another member of the same consolidated group in a transaction to which § 1.1502-13(g)(5) applies. Notwithstanding the general rule of paragraph (d)(2)(v)(A) of this section, if, as a result of the deemed satisfaction of the obligation under § 1.1502-13(g)(5)(ii), the debtor member has repurchase premium that is deductible under § 1.163-7(c), such repurchase premium is treated as interest that is subject to the section 163(j) limitation. See § 1.163(j)-1(b)(22)(i)(H).

(3) ***Investment adjustments.*** For rules governing investment adjustments within a consolidated group, see § 1.1502-32(b).

(4) ***Examples.*** The principles in this paragraph (d) are illustrated by the following examples. For purposes of the examples in this paragraph (d)(4), S is a member of the calendar-year consolidated group of which P is the common parent; the P group does not qualify for the small business exemption in § 1.163(j)-2(d); no member of the P group is engaged in an excepted trade or business; all interest expense is deductible except for the potential application of section 163(j); and the facts set forth the only corporate activity.

(i) ***Example 1: Calculation of the section 163(j) limitation*** —

(A) ***Facts.*** In the 2021 taxable year, P has $50x of separate tentative taxable income after taking into account $65x of interest paid on a loan from a third party (without regard to any disallowance under section 163(j)) and $35x of depreciation deductions under section 168. In turn, S has $40x of separate tentative taxable income in the 2021 taxable year after taking into account $10x of depreciation deductions under section 168. S has no interest expense in the 2021 taxable year. The P group's tentative taxable income the 2021 taxable year is $90x, determined under § 1.1502-11 without regard to any disallowance under section 163(j).

(B) ***Analysis.*** As provided in paragraph (b)(1) of this section, P's interest expense is treated as business interest expense for purposes of section 163(j). If P and S were to apply the section 163(j) limitation on a separate-entity basis, then P's ATI would be $150x ($50x + $65x + $35x = $150x), its section 163(j) limitation would be $45x (30 percent × $150x = $45x), and a deduction for $20x of its $65x of business interest expense would be disallowed in the 2021 taxable year under section 163(j). However, as provided in paragraph (d)(2) of this section, the P group computes a single section 163(j) limitation, and that computation begins with the P group's tentative taxable income (as determined prior to the application of section 163(j)), or $90x. The P group's ATI is $200x ($50x + $40x + $65x + $35x + $10x = $200x). Thus, the P group's section 163(j) limitation for the 2021 taxable year is $60x (30 percent × $200x = $60x). As a result, all but $5x of the P group's business interest expense is deductible in the 2021 taxable year. P carries over the $5x of disallowed business interest expense to the succeeding taxable year.

(ii) *Example 2: Intercompany obligations* —

(A) ***Facts.*** On January 1, 2021, G, a corporation unrelated to P and S, lends P $100x in exchange for a note that accrues interest at a 10 percent annual rate. A month later, P lends $100x to S in exchange for a note that accrues interest at a 12 percent annual rate. In 2021, P accrues and pays $10x of interest to G on P's note, and S accrues and pays $12x of interest to P on S's note. For that year, the P group's only other items of income, gain, deduction, and loss are $40x of income earned by S from the sale of inventory, and a $30x deductible expense arising from P's payment of tort liability claims.

(B) ***Analysis.*** As provided in paragraph (d)(2)(v) of this section, the intercompany obligation between P and S is disregarded in determining P and S's business interest expense and business interest income and in determining the P group's ATI. For purposes of section 163(j), P has $10x of business interest expense and a $30x deduction for the payment of tort liability claims, and S has $40x of income. The P group's ATI is $10x ($40x−$30x = $10x), and its section 163(j) limitation is $3x (30 percent × $10x = $3x). The P group may deduct $3x of its business interest expense in the 2021 taxable year. A deduction for P's remaining $7x of business interest expense is disallowed in the 2021 taxable year, and this amount is carried forward to the 2022 taxable year.

(e) ***Ownership of partnership interests by members of a consolidated group.***

(1) [Reserved]

(2) ***Change in status of a member.*** A change in status of a member (that is, becoming or ceasing to be a member of the group) is not treated as a disposition for purposes of section 163(j)(4)(B)(iii)(II) and § 1.163(j)-6(h)(3).

(3) ***Basis adjustments under § 1.1502-32.*** A member's allocation of excess business interest expense from a partnership and the resulting decrease in basis in the partnership interest under section 163(j)(4)(B)(iii)(I) is not a noncapital, nondeductible expense for purposes of § 1.1502-32(b)(3)(iii). Additionally, an increase in a member's basis in a partnership interest under section 163(j)(4)(B)(iii)(II) to reflect excess business interest expense not deducted by the consolidated group is not tax-exempt income for purposes of § 1.1502-32(b)(3)(ii). Investment adjustments are made under § 1.1502-32(b)(3)(i) when the excess business interest expense from the partnership is converted into business interest expense, deducted, and absorbed by the consolidated group. See § 1.1502-32(b).

(4) ***Excess business interest expense and § 1.1502-36.*** Excess business interest expense is a Category D asset within the meaning of § 1.1502-36(d)(4)(i).

(f) ***Cross-references.*** For rules governing the treatment of disallowed business interest expense carryforwards for C corporations, including rules governing the treatment of disallowed business interest expense carryforwards when members enter or leave a consolidated group, see § 1.163(j)-5. For rules governing the application of section 163(j) to a C corporation or a consolidated group engaged in both excepted and non-excepted trades or businesses, see § 1.163(j)-10.

(g) *Applicability date* —

(1) ***In general.*** This section applies to taxable years beginning on or after November 13, 2020. However, taxpayers and their related parties, within the meaning of sections 267(b) and 707(b)(1), may choose to apply the rules of this section to a taxable year beginning after December 31, 2017, so long as the

taxpayers and their related parties consistently apply the rules of the section 163(j) regulations, and, if applicable, §§ 1.263A-9, 1.263A-15, 1.381(c)(20)-1, 1.382-1, 1.382-2, 1.382-5, 1.382-6, 1.382-7, 1.383-0, 1.383-1, 1.469-9, 1.469-11, 1.704-1, 1.882-5, 1.1362-3, 1.1368-1, 1.1377-1, 1.1502-13, 1.1502-21, 1.1502-36, 1.1502-79, 1.1502-91 through 1.1502-99 (to the extent they effectuate the rules of §§ 1.382-2, 1.382-5, 1.382-6, and 1.383-1), and 1.1504-4, to that taxable year.

(2) [Reserved]

[T.D. 9905, 85 FR 56760, Sept. 14, 2020]

§ 1.163(j)-5 General rules governing disallowed business interest expense carryforwards for C corporations.

(a) *Scope and definitions* —

(1) ***Scope.*** This section provides rules regarding disallowed business interest expense carryforwards for taxpayers that are C corporations, including members of a consolidated group. Paragraph (b) of this section provides rules regarding the treatment of disallowed business interest expense carryforwards. Paragraph (c) of this section provides a cross-reference to other rules regarding disallowed business interest expense carryforwards in transactions to which section 381(a) applies. Paragraph (d) of this section provides rules regarding limitations on disallowed business interest expense carryforwards from separate return limitation years (SRLYs). Paragraph (e) of this section provides cross-references to other rules regarding the application of section 382 to disallowed business interest expense carryforwards. Paragraph (f) of this section provides a cross-reference to other rules regarding the overlap of the SRLY limitation with section 382. Paragraph (g) of this section references additional rules that may limit the deductibility of interest or the use of disallowed business interest expense carryforwards.

(2) *Definitions* —

(i) ***Allocable share of the consolidated group's remaining section 163(j) limitation.*** The term *allocable share of the consolidated group's remaining section 163(j) limitation* means, with respect to any member of a consolidated group, the product of the consolidated group's remaining section 163(j) limitation and the member's remaining current-year interest ratio.

(ii) ***Consolidated group's remaining section 163(j) limitation.*** The term *consolidated group's remaining section 163(j) limitation* means the amount of the consolidated group's section 163(j) limitation calculated pursuant to § 1.163(j)-4(d)(2), reduced by the amount of interest deducted by members of the consolidated group pursuant to paragraph (b)(3)(ii)(C)(*2*) of this section.

(iii) ***Remaining current-year interest ratio.*** The term *remaining current-year interest ratio* means, with respect to any member of a consolidated group for a particular taxable year, the ratio of the remaining current-year business interest expense of the member after applying the rule in paragraph (b)(3)(ii)(C)(*2*) of this section, to the sum of the amounts of remaining current-year business interest expense for all members of the consolidated group after applying the rule in paragraph (b)(3)(ii)(C)(*2*) of this section.

(b) *Treatment of disallowed business interest expense carryforwards* —

(1) ***In general.*** The amount of any business interest expense of a C corporation not allowed as a deduction for any taxable year as a result of the section 163(j) limitation is carried forward to the succeeding taxable year as a disallowed business interest expense carryforward under section 163(j)(2) and § 1.163(j)-2(c).

(2) ***Deduction of business interest expense.*** For a taxpayer that is a C corporation, current-year business interest expense is deducted in the current taxable year before any disallowed business interest expense carryforwards from a prior taxable year are deducted in that year. Disallowed business interest expense carryforwards are deducted in the order of the taxable years in which they arose, beginning with the earliest taxable year, subject to certain limitations (for example, the limitation under section 382). For purposes of section 163(j), disallowed disqualified interest is treated as carried forward from the taxable year in which a deduction was disallowed under old section 163(j).

(3) ***Consolidated groups*** —

(i) ***In general.*** A consolidated group's disallowed business interest expense carryforwards for the current consolidated return year (the current year) are the carryforwards from the group's prior consolidated return years plus any carryforwards from separate return years.

(ii) ***Deduction of business interest expense*** —

(A) ***General rule.*** All current-year business interest expense of members of a consolidated group is deducted in the current year before any disallowed business interest expense carryforwards from prior taxable years are deducted in the current year. Disallowed business interest expense carryforwards from prior taxable years are deducted in the order of the taxable years in which they arose, beginning with the earliest taxable year, subject to the limitations described in this section.

(B) ***Section 163(j) limitation equals or exceeds the current-year business interest expense and disallowed business interest expense carryforwards from prior taxable years.*** If a consolidated group's section 163(j) limitation for the current year equals or exceeds the aggregate amount of its members' current-year business interest expense and disallowed business interest expense carryforwards from prior taxable years that are available for deduction, then none of the current-year business interest expense or disallowed business interest expense carryforwards is subject to disallowance in the current year under section 163(j). However, a deduction for the members' business interest expense may be subject to limitation under other provisions of the Code or the Income Tax Regulations (see, for example, paragraphs (c), (d), (e), and (f) of this section).

(C) ***Current-year business interest expense and disallowed business interest expense carryforwards exceed section 163(j) limitation.*** If the aggregate amount of members' current-year business interest expense and disallowed business interest expense carryforwards from prior taxable years exceeds the consolidated group's section 163(j) limitation for the current year, then the following rules apply in the order provided:

(*1*) The group first determines whether its section 163(j) limitation for the current year equals or exceeds the aggregate amount of the members' current-year business interest expense.

(*i*) If the group's section 163(j) limitation for the current year equals or exceeds the aggregate amount of the members' current-year business interest expense, then no amount of the group's current-year business interest expense is subject to

disallowance in the current year under section 163(j). Once the group has taken into account its members' current-year business interest expense, the group applies the rules of paragraph (b)(3)(ii)(C)(*4*) of this section.

(*ii*) If the aggregate amount of members' current-year business interest expense exceeds the group's section 163(j) limitation for the current year, then the group applies the rule in paragraph (b)(3)(ii)(C)(*2*) of this section.

(*2*) If this paragraph (b)(3)(ii)(C)(*2*) applies (see paragraph (b)(3)(ii)(C)(*1*)(*ii*) of this section), then each member with current-year business interest expense and with current-year business interest income or floor plan financing interest expense deducts current-year business interest expense in an amount that does not exceed the sum of the member's business interest income and floor plan financing interest expense for the current year.

(*3*) After applying the rule in paragraph (b)(3)(ii)(C)(*2*) of this section, if the group has any section 163(j) limitation remaining for the current year, then each member with remaining current-year business interest expense deducts a portion of its expense based on its allocable share of the consolidated group's remaining section 163(j) limitation.

(*4*) If this paragraph (b)(3)(ii)(C)(*4*) applies (see paragraph (b)(3)(ii)(C)(*1*)(*i*) of this section), and if the group has any section 163(j) limitation remaining for the current year after applying the rules in paragraph (b)(3)(ii)(C)(*1*) of this section, then disallowed business interest expense carryforwards permitted to be deducted (including under paragraph (d)(1)(A) of this section) in the current year are to be deducted in the order of the taxable years in which they arose, beginning with the earliest taxable year. Disallowed business interest expense carryforwards from taxable years ending on the same date that are available to offset tentative taxable income for the current year generally are to be deducted on a pro rata basis under the principles of paragraph (b)(3)(ii)(C)(*3*) of this section. For example, assume that P and S are the only members of a consolidated group with a section 163(j) limitation for the current year (Year 2) of $200x; the amount of current-year business interest expense deducted in Year 2 is $100x; and P and S, respectively, have $140x and $60x of disallowed business interest expense carryforwards from Year 1 that are not subject to limitation under paragraph (c), (d), or (e) of this section. Under these facts, P would be allowed to deduct $70x of its carryforwards from Year 1 ($100x × ($140x/($60x + $140x)) = $70x), and S would be allowed to deduct $30x of its carryforwards from Year 1 ($100x × ($60x/($60x + $140x)) = $30x). But see § 1.383-1(d)(1)(ii), providing that, if losses subject to and not subject to the section 382 limitation are carried from the same taxable year, losses subject to the limitation are deducted before losses not subject to the limitation.

(*5*) Each member with remaining business interest expense after applying the rules of this paragraph (b)(3)(ii), taking into account the limitations in paragraphs (c), (d), (e), and (f) of this section, carries the expense forward to the succeeding taxable year as a disallowed business interest expense carryforward under section 163(j)(2) and § 1.163(j)-2(c).

(iii) ***Departure from group.*** If a corporation ceases to be a member during a consolidated return year, the corporation's current-year business interest expense from the taxable period ending on the day of the corporation's change in status as a member, as well as the corporation's disallowed business interest expense carryforwards from prior taxable years that are available to offset tentative taxable income in the consolidated return year, are first made available for deduction during that consolidated return year. See § 1.1502-76(b)(1)(i); see also § 1.1502-36(d) (regarding reductions of deferred deductions on the transfer of loss shares of subsidiary stock). Only the amount that is neither deducted by the group in that consolidated return year nor otherwise reduced under the Code or regulations may be carried to the corporation's first separate return year after its change in status.

(iv) ***Example: Deduction of interest expense*** —

(A) ***Facts.***

(*1*) P wholly owns A, which is a member of the consolidated group of which P is the common parent. P and A each borrow money from Z, an unrelated third party. The business interest expense of P and A in Years 1, 2, and 3, and the P group's section 163(j) limitation for those years, are as follows:

TABLE 1 TO PARAGRAPH (b)(3)(iv)(A)(*1*)

Year	P's business interest expense	A's business interest expense	P group's section 163(j) limitation
1	$150x	$50x	$100x
2	60x	90x	120x
3	25x	50x	185x

(*2*) P and A have neither business interest income nor floor plan financing interest expense in Years 1, 2, and 3. Additionally, the P group is neither eligible for the small business exemption in § 1.163(j)-2(d) nor engaged in an excepted trade or business.

(B) ***Analysis*** —

(*1*) ***Year 1.*** In Year 1, the aggregate amount of the P group members' current-year business interest expense ($150x + $50x) exceeds the P group's section 163(j) limitation ($100x). As a result, the rules of paragraph (b)(3)(ii)(C) of this section apply. Because the P group members' current-year business interest expense exceeds the group's section 163(j) limitation for Year 1, P and A must apply the rule in paragraph (b)(3)(ii)(C)(*2*) of this section. Pursuant to paragraph (b)(3)(ii)(C)(*2*) of this section, each of P and A must deduct its current-year business interest expense to the extent of its business interest income and floor plan financing interest expense. Neither P nor A has business interest income or floor plan financing interest expense in Year 1. Next, pursuant to paragraph (b)(3)(ii)(C)(*3*) of this section, each of P and A must deduct a portion of its current-year business interest expense

based on its allocable share of the consolidated group's remaining section 163(j) limitation ($100x). P's allocable share is $75x ($100x × ($150x/$200x) = $75x), and A's allocable share is $25x ($100x × ($50x/$200x) = $25x). Accordingly, in Year 1, P deducts $75x of its current-year business interest expense, and A deducts $25x of its current-year business interest expense. P has a disallowed business interest expense carryforward from Year 1 of $75x ($150x−$75x = $75x), and A has a disallowed business interest expense carryforward from Year 1 of $25x ($50x−$25x = $25x).

(2) *Year 2.* In Year 2, the aggregate amount of the P group members' current-year business interest expense ($60x + $90x) and disallowed business interest expense carryforwards ($75x + $25x) exceeds the P group's section 163(j) limitation ($120x). As a result, the rules of paragraph (b)(3)(ii)(C) of this section apply. Because the P group members' current-year business interest expense exceeds the group's section 163(j) limitation for Year 2, P and A must apply the rule in paragraph (b)(3)(ii)(C)(*2*) of this section. Pursuant to paragraph (b)(3)(ii)(C)(*2*) of this section, each of P and A must deduct its current-year business interest expense to the extent of its business interest income and floor plan financing interest expense. Neither P nor A has business interest income or floor plan financing interest expense in Year 2. Next, pursuant to paragraph (b)(3)(ii)(C)(*3*) of this section, each of P and A must deduct a portion of its current-year business interest expense based on its allocable share of the consolidated group's remaining section 163(j) limitation ($120x). P's allocable share is $48x (($120x × ($60x/$150x)) = $48x), and A's allocable share is $72x (($120x × ($90x/$150x)) = $72x). Accordingly, in Year 2, P deducts $48x of current-year business interest expense, and A deducts $72x of current-year business interest expense. P has a disallowed business interest expense carryforward from Year 2 of $12x ($60x−$48x = $12x), and A has a disallowed business interest expense carryforward from Year 2 of $18x ($90x−$72x = $18x). Additionally, because the P group has no section 163(j) limitation remaining after deducting current-year business interest expense in Year 2, the full amount of P and A's disallowed business interest expense carryforwards from Year 1 ($75x and $25x, respectively) also are carried forward to Year 3. As a result, at the beginning of Year 3, P and A's respective disallowed business interest expense carryforwards are as follows:

TABLE 2 TO PARAGRAPH (b)(3)(iv)(B)(2)

	Year 1 disallowed business interest expense carryforwards	Year 2 disallowed business interest expense carryforwards	Total disallowed business interest expense carryforwards
P	$75x	$12x	$87x
A	25x	18x	43x

	Year 1 disallowed business interest expense carryforwards	Year 2 disallowed business interest expense carryforwards	Total disallowed business interest expense carryforwards
Total	100x	30x	130x

(3) ***Year 3.*** In Year 3, the aggregate amount of the P group members' current-year business interest expense ($25x + $50x = $75x) and disallowed business interest expense carryforwards ($130x) exceeds the P group's section 163(j) limitation ($185x). As a result, the rules of paragraph (b)(3)(ii)(C) of this section apply. Because the P group's section 163(j) limitation for Year 3 equals or exceeds the P group members' current-year business interest expense, no amount of the members' current-year business interest expense is subject to disallowance under section 163(j) (see paragraph (b)(3)(ii)(C)(*1*) of this section). After each of P and A deducts its current-year business interest expense, the P group has $110x of section 163(j) limitation remaining for Year 3 ($185x−$25x−$50x = $110x). Next, pursuant to paragraph (b)(3)(ii)(C)(*4*) of this section, $110x of disallowed business interest expense carryforwards are deducted on a pro rata basis, beginning with carryforwards from Year 1. Because the total amount of carryforwards from Year 1 ($100x) is less than the section 163(j) limitation remaining after the deduction of Year 3 business interest expense ($110x), all of the Year 1 carryforwards are deducted in Year 3. After current-year business interest expense and Year 1 carryforwards are deducted, the P group's remaining section 163(j) limitation in Year 3 is $10x. Because the Year 2 carryforwards ($30x) exceed the remaining section 163(j) limitation ($10x), under paragraph (b)(3)(ii)(C)(*4*) of this section, each of P and A will deduct a portion of its Year 2 carryforwards based on its allocable share of the consolidated group's remaining section 163(j) limitation. P's allocable share is $4x (($10x × ($12x/$30x)) = $4x), and A's allocable share is $6x (($10x × ($18x/$30x)) = $6x). Accordingly, P and A may deduct $4x and $6x, respectively, of their Year 2 carryforwards. For Year 4, P and A have $8x and $12x of disallowed business interest expense carryforwards from Year 2, respectively.

(c) ***Disallowed business interest expense carryforwards in transactions to which section 381(a) applies.*** For rules governing the application of section 381(c)(20) to disallowed business interest expense carryforwards, including limitations on an acquiring corporation's use of the disallowed business interest expense carryforwards of the transferor or distributor corporation in the acquiring corporation's first taxable year ending after the date of distribution or transfer, see § 1.381(c)(20)-1.

(d) ***Limitations on disallowed business interest expense carryforwards from separate return limitation years*** —

(1) ***General rule*** —(A) *Cumulative section 163(j) SRLY limitation.* This paragraph (d) applies to disallowed business interest expense carryforwards of a member arising in a SRLY (see § 1.1502-1(f))) or treated as arising in a SRLY under the principles of § 1.1502-21(c) and (g). The amount of the carryforwards described in the preceding sentence that are included in the consolidated group's business interest expense deduction for any taxable year under paragraph (b) of this section may

not exceed the aggregate section 163(j) limitation for all consolidated return years of the group, determined by reference only to the member's items of income, gain, deduction, and loss, and reduced (including below zero) by the member's business interest expense (including disallowed business interest expense carryforwards) absorbed by the group in all consolidated return years (cumulative section 163(j) SRLY limitation). For purposes of computing the member's cumulative section 163(j) SRLY limitation, intercompany items referred to in § 1.163(j)-4(d)(2)(iv) are included, with the exception of interest items with regard to intercompany obligations. See § 1.163(j)-4(d)(2)(v). Thus, for purposes of this paragraph (d), income and expense items arising from intercompany transactions (other than interest income and expense with regard to intercompany obligations) are included in the calculation of the cumulative section 163(j) SRLY limitation. In addition, items of interest expense with regard to intercompany obligations are not characterized as business interest expense for purposes of the reduction described in the second sentence of this paragraph (d)(1)(A).

(B) *Subgrouping.* For purposes of this paragraph (d), the SRLY subgroup principles of § 1.1502-21(c)(2)(i) (with regard to carryovers of SRLY losses) apply with appropriate adjustments.

(2) ***Deduction of disallowed business interest expense carryforwards arising in a SRLY.*** Notwithstanding paragraph (d)(1) of this section, disallowed business interest expense carryforwards of a member arising in a SRLY are available for deduction by the consolidated group in the current year only to the extent the group has remaining section 163(j) limitation for the current year after the deduction of current-year business interest expense and disallowed business interest expense carryforwards from earlier taxable years that are permitted to be deducted in the current year (see paragraph (b)(3)(ii)(A) of this section). SRLY-limited disallowed business interest expense carryforwards are deducted on a pro rata basis (under the principles of paragraph (b)(3)(ii)(C)(*3*) of this section) with non-SRLY limited disallowed business interest expense carryforwards from taxable years ending on the same date. See also § 1.1502-21(b)(1).

(3) ***Examples.*** The principles of this paragraph (d) are illustrated by the following examples. For purposes of the examples in this paragraph (d)(3), unless otherwise stated, P, R, S, and T are taxable domestic C corporations that are not RICs or REITs and that file their tax returns on a calendar-year basis; none of P, R, S, or T qualifies for the small business exemption under section 163(j)(3) or is engaged in an excepted trade or business; all interest expense is deductible except for the potential application of section 163(j); and the facts set forth the only corporate activity.

(i) ***Example 1: Determination of SRLY limitation*** —

(A) ***Facts.*** Individual A owns P. In 2021, A forms T, which pays or accrues a $100x business interest expense for which a deduction is disallowed under section 163(j) and that is carried forward to 2022. P does not pay or accrue business interest expense in 2021, and P has no disallowed business interest expense carryforwards from prior taxable years. At the close of 2021, P acquires all of the stock of T, which joins with P in filing a consolidated return beginning in 2022. Neither P nor T pays or accrues business interest expense in 2022, and the P group has a section 163(j) limitation of $300x in that year. This limitation would be $70x if determined by reference solely to T's items for all consolidated return years of the P group.

(B) ***Analysis.*** T's $100x of disallowed business interest expense carryforwards from 2021 arose in a SRLY. P's acquisition of T was not an ownership change as defined by section 382(g); thus, T's disallowed business interest expense carryforwards are subject to the SRLY limitation in paragraph (d)(1) of this section. T's cumulative section 163(j) SRLY

limitation for 2022 is the P group's section 163(j) limitation, determined by reference solely to T's items for all consolidated return years of the P group ($70x). See paragraph (d)(1) of this section. Thus, $70x of T's disallowed business interest expense carryforwards are available to be deducted by the P group in 2022, and the remaining $30x of T's disallowed business interest expense carryforwards are carried forward to 2023. After the P group deducts $70x of T's disallowed business interest expense carryforwards, T's cumulative section 163(j) SRLY limitation is reduced by $70x to $0.

(C) ***Cumulative section 163(j) SRLY limitation of $0.*** The facts are the same as in *Example 1* in paragraph (d)(3)(i)(A) of this section, except that T's cumulative section 163(j) SRLY limitation for 2022 is $0. Because the amount of T's disallowed business interest expense carryforwards that may be deducted by the P group in 2022 may not exceed T's cumulative section 163(j) SRLY limitation, none of T's carryforwards from 2021 may be deducted by the P group in 2022. Because none of T's disallowed business interest expense carryforwards are absorbed by the P group in 2022, T's cumulative section 163(j) SRLY limitation remains at $0 entering 2023.

(ii) ***Example 2: Cumulative section 163(j) SRLY limitation less than zero —***

(A) ***Facts.*** P and S are the only members of a consolidated group. P has neither current-year business interest expense nor disallowed business interest expense carryforwards. For the current year, the P group has a section 163(j) limitation of $150x, $25x of which is attributable to P, and $125x of which is attributable to S. S has $100x of disallowed business interest expense carryforwards that arose in a SRLY and $150x of current-year business interest expense. S's cumulative section 163(j) SRLY limitation entering the current year (computed by reference solely to S's items for all consolidated return years of the P group) is $0.

(B) ***Analysis.*** Under paragraph (d)(1) of this section, S's cumulative section 163(j) SRLY limitation is increased by $125x to reflect S's tax items for the current year. The P group's section 163(j) limitation permits the P group to deduct all $150x of S's current-year business interest expense. S's cumulative section 163(j) SRLY limitation is reduced by the $150x of S's business interest expense absorbed by the P group in the current year, which results in a −$25x balance. Thus, none of S's SRLY'd disallowed business interest expense carryforwards may be deducted by the P group in the current year. Entering the subsequent year, S's cumulative section 163(j) SRLY limitation remains −$25x.

(iii) ***Example 3: Pro rata absorption of SRLY-limited disallowed business interest expense carryforwards —***

(A) ***Facts.*** P, R, and S are the only members of a consolidated group, and no member has floor plan financing or business interest income. P has $60x of current-year business interest expense and $40x of disallowed business interest expense carryforwards from the previous year, which was not a separate return year. R has $120x of current-year business interest expense and $80x of disallowed business interest expense carryforwards from the previous year, which was not a separate return year. S has $70x of current-year business interest expense and $30x of disallowed business interest expense carryforwards from the previous year, which was a separate return year. The P group has a

section 163(j) limitation of $300x, $50x of which is attributable to P, $90x to R, and $160x to S. S's cumulative section 163(j) SRLY limitation entering the current year (computed by reference solely to S's items for all consolidated return years of the P group) is $0.

TABLE 3 TO PARAGRAPH (d)(3)(iii)(A)

	Current-year business interest expense	Disallowed business interest expense carryforwards from prior taxable year	Section 163(j) limitation
P	$60x	$40x	$50x
R	120x	80x	90x
S	70x	(SRLY) 30x	160x
Total	250x	150x	300x

(B) ***Analysis.*** Under paragraph (d)(1) of this section, S's cumulative section 163(j) SRLY limitation is increased in the current year by $160x. The P group's section 163(j) limitation permits the P group to deduct all $70x of S's current-year business interest expense (and all $180x of P and R's current-year business interest expense). S's cumulative section 163(j) SRLY limitation is reduced by the $70x of S's business interest expense absorbed by the P group in the current year, resulting in a $90x balance. Because the P group has $50x of section 163(j) limitation remaining after the absorption of current-year business interest expense, the P group can absorb $50x of its members' disallowed business interest expense carryforwards. Under paragraph (d)(2) of this section, SRLY-limited disallowed business interest expense carryforwards are deducted on a pro rata basis with other disallowed business interest expense carryforwards from the same taxable year. Accordingly, the P group can deduct $10x ($50x × ($30x/$150x)) of S's SRLY-limited disallowed business interest expense carryforwards. S's cumulative section 163(j) SRLY limitation is reduced (to $80x) by the $10x of SRLY-limited disallowed business interest carryforwards absorbed by the P group in the current year.

(C) ***Cumulative section 163(j) SRLY limitation of −$75x.*** The facts are the same as in *Example 3* in paragraph (d)(3)(iii)(A) of this section, except that S's cumulative section 163(j) SRLY limitation entering the current year is −$75x. After adjusting for S's tax items for the current year ($160x) and the P group's absorption of S's current-year business interest expense ($70x), S's cumulative section 163(j) SRLY limitation is $15x (−$75x + $160x−$70x). Because S's cumulative section 163(j) SRLY limitation ($15x) is less than the amount of S's SRLY-limited disallowed business interest expense carryforwards ($30x), the pro rata calculation under paragraph (d)(2) of this section is applied to $15x (rather than $30x) of S's carryforwards. Accordingly, the P group can deduct $5.56x ($50x

× ($15x/$135x)) of S's SRLY-limited disallowed business interest expense carryforwards. S's cumulative section 163(j) SRLY limitation is reduced (to $9.44x) by the $5.56x of SRLY-limited disallowed business interest carryforwards absorbed by the P group in the current year.

(e) *Application of section 382* —

(1) ***Pre-change loss.*** For rules governing the treatment of a disallowed business interest expense as a pre-change loss for purposes of section 382, see §§ 1.382-2(a) and 1.382-6. For rules governing the application of section 382 to disallowed disqualified interest carryforwards, see § 1.163(j)-11(c)(4).

(2) ***Loss corporation.*** For rules governing when a disallowed business interest expense causes a corporation to be a loss corporation within the meaning of section 382(k)(1), see § 1.382-2(a). For the application of section 382 to disallowed disqualified interest carryforwards, see § 1.163(j)-11(c)(4).

(3) ***Ordering rules for utilization of pre-change losses and for absorption of the section 382 limitation.*** For ordering rules for the utilization of disallowed business interest expense, net operating losses, and other pre-change losses, and for the absorption of the section 382 limitation, see § 1.383-1(d).

(4) ***Disallowed business interest expense from the pre-change period in the year of a testing date.*** For rules governing the treatment of disallowed business interest expense from the pre-change period (within the meaning of § 1.382-6(g)(2)) in the year of a testing date, see § 1.382-2.

(5) ***Recognized built-in loss.*** For a rule providing that a section 382 disallowed business interest carryforward (as defined in § 1.382-2(a)(7)) is not treated as a recognized built-in loss for purposes of section 382, see § 1.382-7(d)(5).

(f) ***Overlap of SRLY limitation with section 382.*** For rules governing the overlap of the application of section 382 and the application of the SRLY rules, see § 1.1502-21(g).

(g) ***Additional limitations.*** Additional rules provided under the Code or regulations also apply to limit the use of disallowed business interest expense carryforwards. For rules governing the relationship between section 163(j) and other provisions affecting the deductibility of interest, see § 1.163(j)-3.

(h) ***Applicability date.*** This section applies to taxable years beginning on or after November 13, 2020. However, taxpayers and their related parties, within the meaning of sections 267(b) and 707(b)(1), may choose to apply the rules of this section to a taxable year beginning after December 31, 2017, so long as the taxpayers and their related parties consistently apply the rules of the section 163(j) regulations, and, if applicable, §§ 1.263A-9, 1.263A-15, 1.381(c)(20)-1, 1.382-1, 1.382-2, 1.382-5, 1.382-6, 1.382-7, 1.383-0, 1.383-1, 1.469-9, 1.469-11, 1.704-1, 1.882-5, 1.1362-3, 1.1368-1, 1.1377-1, 1.1502-13, 1.1502-21, 1.1502-36, 1.1502-79, 1.1502-91 through 1.1502-99 (to the extent they effectuate the rules of §§ 1.382-2, 1.382-5, 1.382-6, and 1.383-1), and 1.1504-4, to that taxable year.

[T.D. 9905, 85 FR 56760, Sept. 14, 2020]

§ 1.163(j)-6 Application of the section 163(j) limitation to partnerships and subchapter S corporations.

(a) ***Overview.*** If a deduction for business interest expense of a partnership or an S corporation is subject to the section 163(j) limitation, section 163(j)(4) provides that the section 163(j) limitation applies at the partnership or S corporation level and any deduction for business interest expense is taken into account

in determining the nonseparately stated taxable income or loss of the partnership or S corporation. Once a partnership or an S corporation determines its business interest expense, business interest income, ATI, and floor plan financing interest expense, the partnership or S corporation calculates its section 163(j) limitation by applying the rules of § 1.163(j)-2(b) and this section. Paragraph (b) of this section provides definitions used in this section. Paragraph (c) of this section provides rules regarding the character of a partnership's deductible business interest expense and excess business interest expense. Paragraph (d) of this section provides rules regarding the calculation of a partnership's ATI and floor plan financing interest expense. Paragraph (e) of this section provides rules regarding a partner's ATI and business interest income. Paragraph (f) of this section provides an eleven-step computation necessary for properly allocating a partnership's deductible business interest expense and section 163(j) excess items to its partners. Paragraph (g) of this section applies carryforward rules at the partner level if a partnership has excess business interest expense. Paragraph (h) of this section provides basis adjustment rules, and paragraph (k) of this section provides rules regarding investment items of a partnership. Paragraph (l) of this section provides rules regarding S corporations. Paragraph (m) of this section provides rules for partnerships and S corporations not subject to section 163(j). Paragraph (o) of this section provides examples illustrating the rules of this section.

(b) ***Definitions.*** In addition to the definitions contained in § 1.163(j)-1, the following definitions apply for purposes of this section.

(1) ***Section 163(j) items.*** The term *section 163(j) items* means the partnership or S corporation's business interest expense, business interest income, and items comprising ATI.

(2) ***Partner basis items.*** The term *partner basis items* means any items of income, gain, loss, or deduction resulting from either an adjustment to the basis of partnership property used in a non-excepted trade or business made pursuant to section 743(b) or the operation of section 704(c)(1)(C)(i) with respect to such property. Partner basis items also include section 743(b) basis adjustments used to increase or decrease a partner's share of partnership gain or loss on the sale of partnership property used in a non-excepted trade or business (as described in § 1.743-1(j)(3)(i)) and amounts resulting from the operation of section 704(c)(1)(C)(i) used to decrease a partner's share of partnership gain or increase a partner's share of partnership loss on the sale of such property.

(3) ***Remedial items.*** The term *remedial items* means any allocation to a partner of remedial items of income, gain, loss, or deduction pursuant to section 704(c) and § 1.704-3(d).

(4) ***Excess business interest income.*** The term *excess business interest income* means the amount by which a partnership's or S corporation's business interest income exceeds its business interest expense in a taxable year.

(5) ***Deductible business interest expense.*** The term *deductible business interest expense* means the amount of a partnership's or S corporation's business interest expense that is deductible under section 163(j) in the current taxable year following the application of the limitation contained in § 1.163(j)-2(b).

(6) ***Section 163(j) excess items.*** The term *section 163(j) excess items* means the partnership's excess business interest expense, excess taxable income, and excess business interest income.

(7) ***Non-excepted assets.*** The term *non-excepted assets* means assets from a non-excepted trade or business.

(8) ***Excepted assets.*** The term *excepted assets* means assets from an excepted trade or business.

(c) *Business interest income and business interest expense of a partnership* —

(1) ***Modification of business interest income for partnerships.*** The business interest income of a partnership generally is determined in accordance with § 1.163(j)-1(b)(4). However, to the extent that interest income of a partnership that is properly allocable to trades or businesses that are per se non-passive activities is allocated to partners that do not materially participate (within the meaning of section 469), as described in § 1.469-1T(e)(6) and subject to section 163(d)(5)(A)(ii), such interest income shall not be considered business interest income for purposes of determining the section 163(j) limitation of a partnership pursuant to § 1.163(j)-2(b). A per se non-passive activity is an activity that is not treated as a passive activity for purposes of section 469 regardless of whether the owners of the activity materially participate in the activity.

(2) ***Modification of business interest expense for partnerships.*** The business interest expense of a partnership generally is determined in accordance with § 1.163(j)-1(b)(3). However, to the extent that interest expense of a partnership that is properly allocable to trades or businesses that are per se non-passive activities is allocated to partners that do not materially participate (within the meaning of section 469), as described in § 1.469-1T(e)(6) and subject to section 163(d)(5)(A)(ii), such interest expense shall not be considered business interest expense for purposes of determining the section 163(j) limitation of a partnership pursuant to § 1.163(j)-2(b).

(3) ***Transition rule.*** With respect to a partner in a partnership engaged in a trade or business described in § 1.469-1T(e)(6) and subject to section 163(d)(5)(A)(ii), if such partner had been allocated EBIE from the partnership with respect to the trade or business described in § 1.469-1T(e)(6) and subject to section 163(d)(5)(A)(ii) in any prior taxable year in which the partner did not materially participate, such partner may treat such excess business interest expense not previously treated as paid or accrued under § 1.163(j)-6(g)(2) as paid or accrued by the partner in the first taxable year ending on or after the effective date of the final regulations and not subject to further limitation under section 163(j) or 163(d).

(4) ***Character of business interest expense.*** If a partnership has deductible business interest expense, such deductible business interest expense is not subject to any additional application of section 163(j) at the partner-level because it is taken into account in determining the nonseparately stated taxable income or loss of the partnership. However, for all other purposes of the Code, deductible business interest expense and excess business interest expense retain their character as business interest expense at the partner-level. For example, for purposes of section 469, such business interest expense retains its character as either passive or non-passive in the hands of the partner. Additionally, for purposes of section 469, deductible business interest expense and excess business interest expense from a partnership remain interest derived from a trade or business in the hands of a partner even if the partner does not materially participate in the partnership's trade or business activity. For additional rules regarding the interaction between sections 465, 469, and 163(j), see § 1.163(j)-3.

(d) *Adjusted taxable income of a partnership* —

(1) ***Tentative taxable income of a partnership.*** For purposes of computing a partnership's ATI under § 1.163(j)-1(b)(1), the tentative taxable income of a partnership is the partnership's taxable income determined under section 703(a), but computed without regard to the application of the section 163(j) limitation.

(2) ***Section 734(b), partner basis items, and remedial items.*** A partnership takes into account items resulting from adjustments made to the basis of its property pursuant to section 734(b) for purposes of calculating its ATI pursuant to § 1.163(j)-1(b)(1). However, partner basis items and remedial items are not taken into account in determining a partnership's ATI under § 1.163(j)-1(b)(1). Instead, partner basis items and remedial items are taken into account by the partner in determining the partner's ATI pursuant to § 1.163(j)-1(b)(1). See *Example 6* in paragraph (o)(6) of this section.

(3) ***Section 743(b) adjustments and publicly traded partnerships.*** Solely for purposes of § 1.163(j)-6, a publicly traded partnership, as defined in § 1.7704-1, shall treat the amount of any section 743(b) adjustment of a purchaser of a partnership unit that relates to a remedial item that the purchaser inherits from the seller as an offset to the related section 704(c) remedial item. For this purpose, § 1.163(j)-6(e)(2)(ii) applies. See *Example 25* in paragraph (o)(25) of this section.

(4) ***Modification of adjusted taxable income for partnerships.*** The adjusted taxable income of a partnership generally is determined in accordance with § 1.163(j)-1(b)(1). However, to the extent that the items comprising the adjusted taxable income of a partnership that are properly allocable to trades or businesses that are per se non-passive activities are allocated to partners that do not materially participate (within the meaning of section 469), as described in section 163(d)(5)(A)(ii), such partnership items shall not be considered adjusted taxable income for purposes of determining the section 163(j) limitation of a partnership pursuant to § 1.163(j)-2(b).

(5) ***Election to use 2019 adjusted taxable income for taxable years beginning in 2020.*** In the case of any taxable year beginning in 2020, a partnership may elect to apply this section by substituting its adjusted taxable income for the last taxable year beginning in 2019 for the adjusted taxable income for such taxable year (post-election ATI or 2019 ATI). See § 1.163(j)-2(b)(4) for the time and manner of making or revoking this election. An electing partnership determines each partner's allocable ATI (as defined in paragraph (f)(2)(ii) of this section) by using the partnership's 2019 section 704 income, gain, loss, and deduction as though such amounts were recognized by the partnership in 2020. See *Example 34* in paragraph (o)(34) of this section.

(e) ***Adjusted taxable income and business interest income of partners*** —

(1) ***Modification of adjusted taxable income for partners.*** The ATI of a partner in a partnership generally is determined in accordance with § 1.163(j)-1(b)(1), without regard to such partner's distributive share of any items of income, gain, deduction, or loss of such partnership, except as provided for in paragraph (m) of this section, and is increased by such partner's distributive share of such partnership's excess taxable income determined under paragraph (f) of this section. For rules regarding corporate partners, see § 1.163(j)-4(b)(3).

(2) ***Partner basis items and remedial items.*** Partner basis items and remedial items are taken into account as items derived directly by the partner in determining the partner's ATI for purposes of the partner's section 163(j) limitation. If a partner is allocated remedial items, such partner's ATI is increased or decreased by the amount of such items. Additionally, to the extent a partner is allocated partner basis items, such partner's ATI is increased or decreased by the amount of such items. See *Example 6* in paragraph (o)(6) of this section.

(3) ***Disposition of partnership interests.*** If a partner recognizes gain or loss upon the disposition of interests in a partnership, and the partnership in which the interest is being disposed owns only non-excepted trade or business assets, the gain or loss on the disposition of the partnership interest is included in the partner's ATI. See § 1.163(j)-10(b)(4)(ii) for dispositions of interests in partnerships that own—

(i) Non-excepted assets and excepted assets; or

(ii) Investment assets; or

(iii) Both.

(4) ***Double counting of business interest income and floor plan financing interest expense prohibited.*** For purposes of calculating a partner's section 163(j) limitation, the partner does not include—

(i) Business interest income from a partnership that is subject to section 163(j), except to the extent the partner is allocated excess business interest income from that partnership pursuant to paragraph (f)(2) of this section; and

(ii) The partner's allocable share of the partnership's floor plan financing interest expense, because such floor plan financing interest expense already has been taken into account by the partnership in determining its nonseparately stated taxable income or loss for purposes of section 163(j).

(5) ***Partner basis items, remedial items, and publicly traded partnerships.*** Solely for purposes of § 1.163(j)-6, a publicly traded partnership, as defined in § 1.7704-1, shall either allocate gain that would otherwise be allocated under section 704(c) based on a partner's section 704(b) sharing ratios, or, for purposes of allocating cost recovery deductions under section 704(c), determine a partner's remedial items, as defined in § 1.163(j)-6(b)(3), based on an allocation of the partnership's asset basis (inside basis) items among its partners in proportion to their share of corresponding section 704(b) items (rather than applying the traditional method, described in § 1.704-3(b)). See *Example 24* in paragraph (o)(24) of this section.

(f) ***Allocation and determination of section 163(j) excess items made in the same manner as nonseparately stated taxable income or loss of the partnership*** —

(1) ***Overview*** —

(i) ***In general.*** The purpose of this paragraph is to provide guidance regarding how a partnership must allocate its deductible business interest expense and section 163(j) excess items, if any, among its partners. For purposes of section 163(j)(4) and this section, allocations and determinations of deductible business interest expense and section 163(j) excess items are considered made in the same manner as the nonseparately stated taxable income or loss of the partnership if, and only if, such allocations and determinations are made in accordance with the eleven-step computation set forth in paragraphs (f)(2)(i) through (xi) of this section. A partnership first determines its section 163(j) limitation, total amount of deductible business interest expense, and section 163(j) excess items under paragraph (f)(2)(i) of this section. The partnership then applies paragraphs (f)(2)(ii) through (xi) of this section, in that order, to determine how those items of the partnership are allocated among its partners. At the conclusion of the eleven-step computation set forth in paragraphs (f)(2)(i) through (xi) of this section, the total amount of deductible business interest expense and section 163(j) excess items allocated to each partner will equal the partnership's total amount of deductible business interest expense and section 163(j) excess items.

(ii) ***Relevance solely for purposes of section 163(j).*** No rule set forth in paragraph (f)(2) of this section prohibits a partnership from making an allocation to a partner of any item of partnership income, gain, loss, or deduction that is otherwise permitted under section 704 and the regulations under section 704 of the Code. Accordingly, any calculations in paragraphs

(f)(2)(i) through (xi) of this section are solely for the purpose of determining each partner's deductible business interest expense and section 163(j) excess items and do not otherwise affect any other provision under the Code, such as section 704(b). Additionally, floor plan financing interest expense is not allocated in accordance with paragraph (f)(2) of this section. Instead, floor plan financing interest expense of a partnership is allocated to its partners under section 704(b) and is taken into account as a nonseparately stated item of loss for purposes of section 163(j).

(iii) ***Exception applicable to publicly traded partnerships.*** Publicly traded partnerships, as defined in § 1.7704-1, do not apply the rules in paragraph (f)(2) of this section to determine a partner's share of section 163(j) excess items. Rather, publicly traded partnerships determine a partner's share of section 163(j) excess items by applying the same percentage used to determine the partner's share of the corresponding section 704(b) items that comprise ATI.

(2) ***Steps for allocating deductible business interest expense and section 163(j) excess items*** —

(i) ***Partnership-level calculation required by section 163(j)(4)(A).*** First, a partnership must determine its section 163(j) limitation pursuant to § 1.163(j)-2(b). This calculation determines a partnership's total amounts of excess business interest income, excess taxable income, excess business interest expense (that is, the partnership's section 163(j) excess items), and deductible business interest expense under section 163(j) for a taxable year.

(ii) ***Determination of each partner's relevant section 163(j) items.*** Second, a partnership must determine each partner's allocable share of each section 163(j) item under section 704(b) and the regulations under section 704 of the Code, including any allocations under section 704(c), other than remedial items. Only section 163(j) items that were actually taken into account in the partnership's section 163(j) calculation under paragraph (f)(2)(i) of this section are taken into account for purposes of this paragraph (f)(2)(ii). Partner basis items, allocations of investment income and expense, remedial items, and amounts determined for the partner under § 1.163-8T are not taken into account for purposes of this paragraph (f)(2)(ii). For purposes of paragraphs (f)(2)(ii) through (xi) of this section, the term *allocable ATI* means a partner's distributive share of the partnership's ATI (that is, a partner's distributive share of gross income and gain items comprising ATI less such partner's distributive share of gross loss and deduction items comprising ATI), the term *allocable business interest income* means a partner's distributive share of the partnership's business interest income, and the term *allocable business interest expense* means a partner's distributive share of the partnership's business interest expense that is not floor plan financing interest expense. If the partnership determines that each partner has a pro rata share of allocable ATI, allocable business interest income, and allocable business interest expense, then the partnership may bypass paragraphs (f)(2)(iii) through (xi) of this section and allocate its section 163(j) excess items in the same proportion. See *Example 1* through *Example 16* in paragraphs (o)(1) through (16), respectively. This pro-rata exception does not result in allocations of section 163(j) excess items that vary from the array of allocations of section 163(j) excess items that would have resulted had paragraphs (f)(2)(iii) through (xi) been applied.

(iii) ***Partner-level comparison of business interest income and business interest expense.*** Third, a partnership must compare each partner's allocable business interest income to such partner's allocable business interest expense. Paragraphs (f)(2)(iii) through (v) of this section determine how a partnership must allocate its excess business interest income among its partners, as well as the amount of each partner's allocable business interest expense that is not deductible

business interest expense after taking the partnership's business interest income into account. To the extent a partner's allocable business interest income exceeds its allocable business interest expense, the partner has an *allocable business interest income excess.* The aggregate of all the partners' allocable business interest income excess amounts is the *total allocable business interest income excess.* To the extent a partner's allocable business interest expense exceeds its allocable business interest income, the partner has an *allocable business interest income deficit.* The aggregate of all the partners' allocable business interest income deficit amounts is the *total allocable business interest income deficit.* These amounts are required to perform calculations in paragraphs (f)(2)(iv) and (v) of this section, which appropriately reallocate allocable business interest income excess to partners with allocable business interest income deficits in order to reconcile the partner-level calculation under paragraph (f)(2)(iii) of this section with the partnership-level result under paragraph (f)(2)(i) of this section.

(iv) ***Matching partnership and aggregate partner excess business interest income.*** Fourth, a partnership must determine each partner's final allocable business interest income excess. A partner's *final allocable business interest income excess* is determined by reducing, but not below zero, such partner's allocable business interest income excess (if any) by the partner's step four adjustment amount. A partner's *step four adjustment amount* is the product of the total allocable business interest income deficit and the ratio of such partner's allocable business interest income excess to the total allocable business interest income excess. The rules of this paragraph (f)(2)(iv) ensure that, following the application of paragraph (f)(2)(xi) of this section, the aggregate of all the partners' allocations of excess business interest income equals the total amount of the partnership's excess business interest income as determined in paragraph (f)(2)(i) of this section.

(v) ***Remaining business interest expense determination.*** Fifth, a partnership must determine each partner's remaining business interest expense. A partner's *remaining business interest expense* is determined by reducing, but not below zero, such partner's allocable business interest income deficit (if any) by such partner's step five adjustment amount. A partner's *step five adjustment amount* is the product of the total allocable business interest income excess and the ratio of such partner's allocable business interest income deficit to the total allocable business interest income deficit. Generally, a partner's remaining business interest expense is a partner's allocable business interest income deficit adjusted to reflect a reallocation of allocable business interest income excess from other partners. Determining a partner's remaining business interest expense is necessary to perform an ATI calculation that begins in paragraph (f)(2)(vii) of this section.

(vi) ***Determination of final allocable ATI.*** Sixth, a partnership must determine each partner's final allocable ATI. Paragraphs (f)(2)(vi) through (x) of this section determine how a partnership must allocate its excess taxable income and excess business interest expense among its partners.

(A) ***Positive allocable ATI.*** To the extent a partner's income and gain items comprising its allocable ATI exceed its deduction and loss items comprising its allocable ATI, the partner has *positive allocable ATI.* The aggregate of all the partners' positive allocable ATI amounts is the *total positive allocable ATI.*

(B) ***Negative allocable ATI.*** To the extent a partner's deduction and loss items comprising its allocable ATI exceed its income and gain items comprising its allocable ATI, the partner has negative allocable ATI. The aggregate of all the partners' negative allocable ATI amounts is the *total negative allocable ATI.*

(C) ***Final allocable ATI.*** Any partner with a negative allocable ATI, or an allocable ATI of $0, has a positive allocable ATI of $0. Any partner with a positive allocable ATI of $0 has a final allocable ATI of $0. The final allocable ATI of any partner with a positive allocable ATI greater than $0 is such partner's positive allocable ATI reduced, but not below zero, by the partner's step six adjustment amount. A partner's *step six adjustment amount* is the product of the total negative allocable ATI and the ratio of such partner's positive allocable ATI to the total positive allocable ATI. The total of the partners' final allocable ATI amounts must equal the partnership's ATI amount used to compute its section 163(j) limitation pursuant to § 1.163(j)-2(b).

(vii) ***Partner-level comparison of 30 percent of adjusted taxable income and remaining business interest expense.*** Seventh, a partnership must compare each partner's ATI capacity to such partner's remaining business interest expense as determined under paragraph (f)(2)(v) of this section. A partner's *ATI capacity* is the amount that is 30 percent of such partner's final allocable ATI as determined under paragraph (f)(2)(vi) of this section. A partner's final allocable ATI is grossed down to 30 percent prior to being compared to its remaining business interest expense in this calculation to parallel the partnership's adjustment to its ATI under section 163(j)(1)(B). To the extent a partner's ATI capacity exceeds its remaining business interest expense, the partner has an *ATI capacity excess.* The aggregate of all the partners' ATI capacity excess amounts is the *total ATI capacity excess.* To the extent a partner's remaining business interest expense exceeds its ATI capacity, the partner has an *ATI capacity deficit.* The aggregate of all the partners' ATI capacity deficit amounts is the *total ATI capacity deficit.* These amounts (which may be subject to adjustment under paragraph (f)(2)(viii) of this section) are required to perform calculations in paragraphs (f)(2)(ix) and (x) of this section, which appropriately reallocate ATI capacity excess to partners with ATI capacity deficits in order to reconcile the partner-level calculation under paragraph (f)(2)(vii) of this section with the partnership-level result under paragraph (f)(2)(i) of this section.

(viii) ***Partner priority right to ATI capacity excess determination.***

(A) Eighth, the partnership must determine whether it is required to make any adjustments described in this paragraph (f)(2)(viii) and, if it is, make such adjustments. The rules of this paragraph (f)(2)(viii) are necessary to account for adjustments made to a partner's allocable ATI in paragraph (f)(2)(vi) of this section to ensure that the partners who had a negative allocable ATI do not inappropriately benefit under the rules of paragraphs (f)(2)(ix) through (xi) of this section to the detriment of the partners who had positive allocable ATI. The partnership must perform the calculations and make the necessary adjustments described under paragraphs (f)(2)(viii)(B) and (C) or paragraph (f)(2)(viii)(D) of this section if, and only if, there is—

(*1*) An excess business interest expense amount greater than $0 under paragraph (f)(2)(i) of this section;

(*2*) A total negative allocable ATI amount greater than $0 under paragraph (f)(2)(vi) of this section; and

(3) A total ATI capacity excess amount greater than $0 under paragraph (f)(2)(vii) of this section.

(B) A partnership must determine each partner's priority amount and usable priority amount. A partner's *priority amount* is 30 percent of the amount by which a partner's positive allocable ATI under paragraph (f)(2)(vi)(A) of this section exceeds such partner's final allocable ATI under paragraph (f)(2)(vi)(C) of this section. However, only partners with an ATI capacity deficit as determined under paragraph (f)(2)(vii) of this section can have a priority amount greater than $0. The aggregate of all the partners' priority amounts is the *total priority amount.* A partner's *usable priority amount* is the lesser of such partner's priority amount or such partner's ATI capacity deficit as determined under paragraph (f)(2)(vii) of this section. The aggregate of all the partners' usable priority amounts is the *total usable priority amount.* If the total ATI capacity excess amount, as determined under paragraph (f)(2)(vii) of this section, is greater than or equal to the total usable priority amount, then the partnership must perform the adjustments described in paragraph (f)(2)(viii)(C) of this section. If the total usable priority amount is greater than the total ATI capacity excess amount, as determined under paragraph (f)(2)(vii) of this section, then the partnership must perform the adjustments described in paragraph (f)(2)(viii)(D) of this section.

(C) For purposes of paragraph (f)(2)(ix) of this section, each partner's final ATI capacity excess amount is $0. For purposes of paragraph (f)(2)(x) of this section, the following terms have the following meanings for each partner:

(1) Each partner's *ATI capacity deficit* is such partner's ATI capacity deficit as determined under paragraph (f)(2)(vii) of this section, reduced by such partner's usable priority amount.

(2) The *total ATI capacity deficit* is the total ATI capacity deficit as determined under paragraph (f)(2)(vii) of this section, reduced by the total usable priority amount.

(3) The *total ATI capacity excess* is the total ATI capacity excess as determined under paragraph (f)(2)(vii) of this section, reduced by the total usable priority amount.

(D) Any partner with a priority amount greater than $0 is a *priority partner.* Any partner that is not a priority partner is a *non-priority partner.* For purposes of paragraph (f)(2)(ix) of this section, each partner's final ATI capacity excess amount is $0. For purposes of paragraph (f)(2)(x) of this section, each non-priority partner's final ATI capacity deficit amount is such partner's ATI capacity deficit as determined under paragraph (f)(2)(vii) of this section. For purposes of paragraph (f)(2)(x) of this section, the following terms have the following meanings for priority partners.

(1) Each priority partner must determine its step eight excess share. A partner's *step eight excess share* is the product of the total ATI capacity excess as determined under paragraph (f)(2)(vii) of this section and the ratio of the partner's priority amount to the total priority amount.

(2) To the extent a priority partner's step eight excess share exceeds its ATI capacity deficit as determined under paragraph (f)(2)(vii) of this section, such excess amount is the priority partner's *ATI capacity excess* for purposes of paragraph (f)(2)(x) of this section. The *total ATI capacity excess* is the aggregate of the priority partners' ATI capacity excess amounts as determined under this paragraph (f)(2)(viii)(D)(2).

(3) To the extent a priority partner's ATI capacity deficit as determined under paragraph (f)(2)(vii) of this section exceeds its step eight excess share, such excess amount is the priority partner's *ATI capacity deficit* for purposes of paragraph (f)(2)(x) of this section. The *total ATI capacity deficit* is the aggregate of the priority partners' ATI capacity deficit amounts as determined under this paragraph (f)(2)(viii)(D)(3).

(ix) ***Matching partnership and aggregate partner excess taxable income.*** Ninth, a partnership must determine each partner's final ATI capacity excess. A partner's *final ATI capacity excess* amount is determined by reducing, but not below zero, such partner's ATI capacity excess (if any) by the partner's step nine adjustment amount. A partner's *step nine adjustment amount* is the product of the total ATI capacity deficit and the ratio of such partner's ATI capacity excess to the total ATI capacity excess. The rules of this paragraph (f)(2)(ix) ensure that, following the application of paragraph (f)(2)(xi) of this section, the aggregate of all the partners' allocations of excess taxable income equals the total amount of the partnership's excess taxable income as determined in paragraph (f)(2)(i) of this section.

(x) ***Matching partnership and aggregate partner excess business interest expense.*** Tenth, a partnership must determine each partner's final ATI capacity deficit. A partner's *final ATI capacity deficit* amount is determined by reducing, but not below zero, such partner's ATI capacity deficit (if any) by the partner's step ten adjustment amount. A partner's *step ten adjustment amount* is the product of the total ATI capacity excess and the ratio of such partner's ATI capacity deficit to the total ATI capacity deficit. Generally, a partner's final ATI capacity deficit is a partner's ATI capacity deficit adjusted to reflect a reallocation of ATI capacity excess from other partners. The rules of this paragraph (f)(2)(x) ensure that, following the application of paragraph (f)(2)(xi) of this section, the aggregate of all the partners' allocations of excess business interest expense equals the total amount of the partnership's excess business interest expense as determined in paragraph (f)(2)(i) of this section.

(xi) ***Final section 163(j) excess item and deductible business interest expense allocation.*** Eleventh, a partnership must allocate section 163(j) excess items and deductible business interest expense to its partners. Excess business interest income calculated under paragraph (f)(2)(i) of this section, if any, is allocated dollar for dollar by the partnership to its partners with final allocable business interest income excess amounts. Excess business interest expense calculated under paragraph (f)(2)(i) of this section, if any, is allocated dollar for dollar to partners with final ATI capacity deficit amounts. After grossing up each partner's final ATI capacity excess amount by ten-thirds, excess taxable income calculated under paragraph (f)(2)(i) of this section, if any, is allocated dollar for dollar to partners with final ATI capacity excess amounts. A partner's allocable business interest expense is deductible business interest expense to the extent it exceeds such partner's share of excess business interest expense. See *Example 17* through *Example 21* in paragraphs (o)(17) through (21) of this section, respectively.

(g) ***Carryforwards*** —

(1) ***In general.*** The amount of any business interest expense not allowed as a deduction to a partnership by reason of § 1.163(j)-2(b) and paragraph (f)(2) of this section for any taxable year is—

(i) Not treated as business interest expense of the partnership in the succeeding taxable year; and

(ii) Subject to paragraph (g)(2) of this section, treated as excess business interest expense, which is allocated to each partner pursuant to paragraph (f)(2) of this section.

(2) ***Treatment of excess business interest expense allocated to partners.*** If a partner is allocated excess business interest expense from a partnership under paragraph (f)(2) of this section for any taxable year and the excess business interest expense is treated as such under paragraph (h)(2) of this section—

(i) Solely for purposes of section 163(j), such excess business interest expense is treated as business interest expense paid or accrued by the partner in the next succeeding taxable year in which the partner is allocated excess taxable income or excess business interest income from such partnership, but only to the extent of such excess taxable income or excess business interest income; and

(ii) Any portion of such excess business interest expense remaining after the application of paragraph (g)(2)(i) of this section is excess business interest expense that is subject to the limitations of paragraph (g)(2)(i) of this section in succeeding taxable years, unless paragraph (m)(3) of this section applies. See *Example 1* through *Example 16* in paragraphs (o)(1) through (16) of this section, respectively.

(3) ***Excess taxable income and excess business interest income ordering rule.*** In the event a partner has excess business interest expense from a prior taxable year and is allocated excess taxable income or excess business interest income from the same partnership in a succeeding taxable year, the partner must treat, for purposes of section 163(j), the excess business interest expense as business interest expense paid or accrued by the partner in an amount equal to the partner's share of the partnership's excess taxable income or excess business interest income in such succeeding taxable year. See *Example 2* through *Example 16* in paragraphs (o)(2) through (16) of this section, respectively.

(4) ***Special rule for taxable years beginning in 2019 and 2020.*** In the case of any excess business interest expense of a partnership for any taxable year beginning in 2019 that is allocated to a partner under paragraph (f)(2) of this section, 50 percent of such excess business interest expense (§ 1.163(j)-6(g)(4) business interest expense) is treated as business interest expense that, notwithstanding paragraph (g)(2) of this section, is paid or accrued by the partner in the partner's first taxable year beginning in 2020. Additionally, § 1.163(j)-6(g)(4) business interest expense is not subject to the section 163(j) limitation at the level of the partner. For purposes of paragraph (h)(1) of this section, any § 1.163(j)-6(g)(4) business interest expense is, similar to deductible business interest expense, taken into account before any excess business interest expense. This paragraph applies after paragraph (n) of this section. If a partner disposes of a partnership interest in the partnership's 2019 or 2020 taxable year, § 1.163(j)-6(g)(4) business interest expense is deductible by the partner (except to the extent that the business interest expense is negative section 163(j) expense as defined in § 1.163(j)-6(h)(1) immediately prior to the disposition) and thus does not result in a basis increase under paragraph (h)(3) of this section. See *Example 35* and *Example 36* in paragraphs (o)(35) and (o)(36), respectively, of this section. A partner may elect to not have this provision apply with respect to each partnership interest held by the partner on an interest by interest basis. The rules and procedures regarding the time and manner of making, or revoking, such an election are provided in Revenue Procedure 2020-22, 2020-18 I.R.B. 745, and may be further modified through other guidance (see §§ 601.601(d) and 601.602 of this chapter).

(h) ***Basis adjustments*** —

(1) ***Section 704(d) ordering.*** Deductible business interest expense and excess business interest expense are subject to section 704(d). If a partner is subject to a limitation on loss under section 704(d) and a partner is allocated losses from a partnership in a taxable year, § 1.704-1(d)(2) requires that the

limitation on losses under section 704(d) be apportioned amongst these losses based on the character of each loss (each grouping of losses based on character being a *section 704(d) loss class*). If there are multiple section 704(d) loss classes in a given year, § 1.704-1(d)(2) requires the partner to apportion the limitation on losses under section 704(d) to each section 704(d) loss class proportionately. For purposes of applying this proportionate rule, any deductible business interest expense and business interest expense of an exempt entity (whether allocated to the partner in the current taxable year or suspended under section 704(d) in a prior taxable year), any excess business interest expense allocated to the partner in the current taxable year, and any excess business interest expense from a prior taxable year that was suspended under section 704(d) (negative section 163(j) expense) shall comprise the same section 704(d) loss class. Once the partner determines the amount of limitation on losses apportioned to this section 704(d) loss class, any deductible business interest expense is taken into account before any excess business interest expense or negative section 163(j) expense. See *Example 7* in paragraph (o)(7) of this section.

(2) ***Excess business interest expense basis adjustments.*** The adjusted basis of a partner in a partnership interest is reduced, but not below zero, by the amount of excess business interest expense allocated to the partner pursuant to paragraph (f)(2) of this section. Negative section 163(j) expense is not treated as excess business interest expense in any subsequent year until such negative section 163(j) expense is no longer suspended under section 704(d). Therefore, negative section 163(j) expense does not affect, and is not affected by, any allocation of excess taxable income to the partner. Accordingly, any excess taxable income allocated to a partner from a partnership while the partner still has negative section 163(j) expense will be included in the partner's ATI. However, once the negative section 163(j) expense is no longer suspended under section 704(d), it becomes excess business interest expense, which is subject to the general rules in paragraph (g) of this section. See *Example 8* in paragraph (o)(8) of this section.

(3) ***Partner basis adjustment upon disposition of partnership interest.*** If a partner (transferor) disposes of an interest in a partnership, the adjusted basis of the partnership interest being disposed of (transferred interest) is increased immediately before the disposition by the amount of the excess (if any) of the amount of the basis reduction under paragraph (h)(2) of this section over the portion of any excess business interest expense allocated to the transferor under paragraph (f)(2) of this section which has previously been treated under paragraph (g) of this section as business interest expense paid or accrued by the transferor, multiplied by the ratio of the fair market value of the transferred interest to the total fair market value of the transferor's partnership interest immediately prior to the disposition. Therefore, the adjusted basis of the transferred interest is not increased immediately before the disposition by any allocation of excess business interest expense from the partnership that did not reduce the transferor's adjusted basis in its partnership interest pursuant to paragraph (h) of this section prior to the disposition, or by any excess business interest expense that was treated under paragraph (g) of this section as business interest expense paid or accrued by the transferor prior to the disposition. If the transferor disposes of all of its partnership interest, no deduction under section 163(j) is allowed to the transferor or transferee under chapter 1 of subtitle A of the Code for any excess business interest expense or negative section 163(j) expense. If the transferor disposes of a portion of its partnership interest, no deduction under section 163(j) is allowed to the transferor or transferee under chapter 1 of subtitle A of the Code for the amount of excess business interest expense proportionate to the transferred interest. The amount of excess business interest expense proportionate to the partnership interest retained by the transferor shall remain as excess business interest expense of the transferor until such time as such excess business interest expense is treated as business interest expense paid or accrued by the transferor pursuant to paragraph (g) of this section. Further, if the transferor disposes of a portion of its

partnership interest, any negative section 163(j) expense shall remain negative section 163(j) expense of the transferor partner until such negative section 163(j) expense is no longer suspended under section 704(d). For purposes of this paragraph, a disposition includes a distribution of money or other property by the partnership to a partner in complete liquidation of its interest in the partnership. Further, solely for purposes of this section, each partner is considered to have disposed of its partnership interest if the partnership terminates under section 708(b)(1). See *Example 9* and *Example 10* in paragraphs (o)(9) and (o)(10) of this section, respectively.

(i)-(j) [Reserved]

(k) ***Investment items and certain other items.*** Any item of a partnership's income, gain, deduction, or loss that is investment interest income or expense pursuant to § 1.163-8T, and any other tax item of a partnership that is neither properly allocable to a trade or business of the partnership nor described in section 163(d), is allocated to each partner in accordance with section 704(b) and the regulations under section 704 of the Code, and the effect of such allocation for purposes of section 163 is determined at the partner-level. See § 1.163(j)-4(b)(3), section 163(d), and § 1.163-8T.

(l) ***S corporations*** —

(1) ***In general—***

(i) ***Corporate level limitation.*** In the case of any S corporation, the section 163(j) limitation is applied at the S corporation level, and any deduction allowed for business interest expense is taken into account in determining the nonseparately stated taxable income or loss of the S corporation. An S corporation determines its section 163(j) limitation in the same manner as set forth in § 1.163(j)-2(b). Allocations of excess taxable income and excess business interest income are made in accordance with the shareholders' pro rata interests in the S corporation pursuant to section 1366(a)(1) after determining the S corporation's section 163(j) limitation pursuant to § 1.163(j)-2(b). See *Example 22* and *Example 23* in paragraphs (o)(22) and (23) of this section, respectively.

(ii) ***Short taxable periods.*** For rules on applying the section 163(j) limitation where an S corporation has a two short taxable periods or where its taxable year consists of two separate taxable years see §§ 1.1362-3(c), 1.1368-1(g), and 1.1377-1(b).

(2) ***Character of deductible business interest expense.*** If an S corporation has deductible business interest expense, such deductible business interest expense is not subject to any additional application of section 163(j) at the shareholder-level because such deductible business interest expense is taken into account in determining the nonseparately stated taxable income or loss of the S corporation. However, for all other purposes of the Code, deductible business interest expense retains its character as business interest expense at the shareholder-level. For example, for purposes of section 469, such deductible business interest expense retains its character as either passive or non-passive in the hands of the shareholder. Additionally, for purposes of section 469, deductible business interest expense from an S corporation remains interest derived from a trade or business in the hands of a shareholder even if the shareholder does not materially participate in the S corporation's trade or business activity. For additional rules regarding the interaction between sections 465, 469, and 163(j), see § 1.163(j)-3.

(3) ***Adjusted taxable income of an S corporation.*** The ATI of an S corporation generally is determined in accordance with § 1.163(j)-1(b)(1). For purposes of computing the S corporation's ATI, the tentative taxable income of the S corporation is determined under section 1363(b) and includes—

(i) Any item described in section 1363(b)(1); and

(ii) Any item described in § 1.163(j)-1(b)(1), to the extent such item is consistent with subchapter S of the Code.

(4) ***Adjusted taxable income and business interest income of S corporation shareholders*** —

(i) ***Adjusted taxable income of S corporation shareholders.*** The ATI of an S corporation shareholder is determined in accordance with § 1.163(j)-1(b)(1) without regard to such shareholder's distributive share of any items of income, gain, deduction, or loss of such S corporation, except as provided in paragraph (m), and is increased by such shareholder's distributive share of such S corporation's excess taxable income.

(ii) ***Disposition of S corporation stock.*** If a shareholder of an S corporation recognizes gain or loss upon the disposition of stock of the S corporation, and the corporation the stock of which is being disposed of only owns non-excepted trade or business assets, the gain or loss on the disposition of the stock is included in the shareholder's ATI. See § 1.163(j)-10(b)(4)(ii) for dispositions of stock of S corporations that own—

(A) Non-excepted assets and excepted assets; or

(B) Investment assets; or

(C) Both.

(iii) ***Double counting of business interest income and floor plan financing interest expense prohibited.*** For purposes of calculating an S corporation shareholder's section 163(j) limitation, the shareholder does not include—

(A) Business interest income from an S corporation that is subject to section 163(j), except to the extent the shareholder is allocated excess business interest income from that S corporation pursuant to paragraph (l)(1) of this section; and

(B) The shareholder's share of the S corporation's floor plan financing interest expense, because such floor plan financing interest expense already has been taken into account by the S corporation in determining its nonseparately stated taxable income or loss for purposes of section 163(j).

(5) ***Carryforwards.*** The amount of any business interest expense not allowed as a deduction for any taxable year by reason of the limitation contained in § 1.163(j)-2(b) is carried forward in the succeeding taxable year as a disallowed business interest expense carryforward under the rules set forth in § 1.163(j)-2(c) (whether to an S corporation taxable year or a C corporation taxable year). For purposes of applying section 163(j), S corporations are subject to the same ordering rules as a C corporation that is not a member of a consolidated group. See § 1.163(j)-5(b)(2).

(6) ***Basis adjustments and disallowed business interest expense carryforwards.*** An S corporation shareholder's adjusted basis in its S corporation stock is reduced, but not below zero, when a disallowed business interest expense carryforward becomes deductible under section 163(j).

(7) ***Accumulated adjustment accounts.*** The accumulated adjustment account of an S corporation is adjusted to take into account business interest expense in the year in which the S corporation treats such business interest expense as deductible under the section 163(j) limitation. See section 1368(e)(1).

(8) ***Termination of qualified subchapter S subsidiary election.*** If a corporation's qualified subchapter S subsidiary election terminates and any disallowed business interest expense carryforward is attributable to the activities of the qualified subchapter S subsidiary at the time of termination, such disallowed business interest expense carryforward remains with the parent S corporation, and no portion of these items is allocable to the former qualified subchapter S subsidiary.

(9) ***Investment items.*** Any item of an S corporation's income, gain, deduction, or loss that is investment interest income or expense pursuant to § 1.163-8T is allocated to each shareholder in accordance with the shareholders' pro rata interests in the S corporation pursuant to section 1366(a)(1). See section 163(d) and § 1.163-8T.

(10) ***Application of section 382.*** In the event of an ownership change, within the meaning of section 382(g), the S corporation's business interest expense is subject to section 382. Therefore, the allocation of the S corporation's business interest expense between the pre-change period (as defined in § 1.382-6(g)(2)) and the post-change period (as defined in § 1.382-6(g)(3)), and the determination of the amount that is deducted and carried forward, is determined pursuant to § 1.382-6. If the date of the ownership change is also the date of a qualifying disposition (as defined in § 1.1368-1(g)(2)) or the date for a termination of shareholder interest (as defined in § 1.1377-1(b)(4)), then—

(i) The rules of this paragraph govern the S corporation's business interest expense;

(ii) The S corporation must make an election under § 1.382-6(b) with respect to such date if it also makes an election under § 1.1368-1(g)(2) or a shareholder termination election to apply normal tax accounting rules, as applicable, with respect to such date; and

(iii) The S corporation may not make an election under § 1.382-6(b) with respect to such date if it does not make an election under § 1.1368-1(g)(2) or a termination election under § 1.1377-1(b)(1), as applicable, with respect to such date.

(m) ***Partnerships and S corporations not subject to section 163(j)*** —

(1) ***Exempt partnerships and S corporations.*** If the small business exemption in § 1.163(j)-2(d) applies to a partnership or an S corporation in a taxable year (exempt entity), the general rule in § 1.163(j)-2 and this section does not apply to limit the deduction for business interest expense of the exempt entity in that taxable year. Additionally, if a partner or S corporation shareholder is allocated business interest expense from an exempt entity, such business interest expense is not subject to the section 163(j) limitation at the partner's or S corporation shareholder's level. However, see paragraph (h)(1) of this section. Further, a partner or S corporation shareholder of an exempt entity includes its share of non-excepted trade or business items of income, gain, loss, and deduction (including business interest expense and business interest income) of such exempt entity when calculating its ATI. However, if a partner's or S corporation shareholder's allocations of non-excepted trade or business items of loss and deduction from an exempt entity exceed its allocations of non-excepted trade or business items of income and gain from such exempt entity (net loss allocation), then such net loss allocation will not reduce a partner's or S corporation shareholder's ATI. See *Example 11* and *Example 12* in paragraphs (o)(11) and (12) of this section, respectively.

(2) ***Partnerships and S corporations engaged in excepted trades or businesses.*** To the extent a partnership or an S corporation is engaged in an excepted trade or business, the general rule in § 1.163(j)-2 and this section does not apply to limit the deduction for business interest expense that is allocable to such excepted trade or business. If a partner or S corporation shareholder is allocated any section 163(j) item that is allocable to an excepted trade or business of the partnership or S

corporation (excepted 163(j) items), such excepted 163(j) items are excluded from the partner's or shareholder's section 163(j) deduction calculation. See § 1.163(j)-10(c) (regarding the allocation of items between excepted and non-excepted trades or businesses). See also *Example 13* in paragraph (o)(13) of this section.

(3) ***Treatment of excess business interest expense from partnerships that are exempt entities in a succeeding taxable year.*** If a partner is allocated excess business interest expense from a partnership and, in a succeeding taxable year, such partnership is an exempt entity, then the partner shall treat any of its excess business interest expense that was previously allocated from such partnership as business interest expense paid or accrued by the partner in such succeeding taxable year, which is potentially subject to limitation at the partner level under section 163(j). However, if a partner is allocated excess business interest expense from a partnership and, in a succeeding taxable year, such partnership engages in excepted trades or businesses, then the partner shall not treat any of its excess business interest expense that was previously allocated from such partnership as business interest expense paid or accrued by the partner in such succeeding taxable year by reason of the partnership engaging in excepted trades or businesses. See *Example 14* through *Example 16* in paragraphs (o)(14) through (o)(16) of this section, respectively. For rules regarding the treatment of excess business interest expense from a partnership that terminates under section 708(b)(1), see paragraph (h)(3) of this section.

(4) ***S corporations with disallowed business interest expense carryforwards prior to becoming exempt entities.*** If an S corporation has a disallowed business interest expense carryforward for a taxable year and, in a succeeding taxable year, such S corporation is an exempt entity, then such disallowed business interest expense carryforward—

(i) Continues to be carried forward at the S corporation level;

(ii) Is no longer subject to the section 163(j) limitation; and

(iii) Is taken into account in determining the nonseparately stated taxable income or loss of the S corporation.

(n) ***Treatment of self-charged lending transactions between partnerships and partners.*** In the case of a lending transaction between a partner (lending partner) and partnership (borrowing partnership) in which the lending partner owns a direct interest (self-charged lending transaction), any business interest expense of the borrowing partnership attributable to the self-charged lending transaction is business interest expense of the borrowing partnership for purposes of this section. If in a given taxable year the lending partner is allocated excess business interest expense from the borrowing partnership and has interest income attributable to the self-charged lending transaction (interest income), the lending partner is deemed to receive an allocation of excess business interest income from the borrowing partnership in such taxable year. The amount of the lending partner's deemed allocation of excess business interest income is the lesser of such lending partner's allocation of excess business interest expense from the borrowing partnership in such taxable year or the interest income attributable to the self-charged lending transaction in such taxable year. To prevent the double counting of business interest income, the lending partner includes interest income that was treated as excess business interest income pursuant to this paragraph (n) only once when calculating its own section 163(j) limitation. To the extent an amount of interest income received by a lending partner is attributable to a self-charged lending transaction, and is deemed to be an allocation of excess business interest income from the borrowing partnership pursuant to this paragraph (n), such an amount of interest income will not be treated as investment income for purposes of section 163(d). In cases where the lending partner is not a C corporation, to the extent that any interest income exceeds the lending partner's allocation of excess business interest expense from

the borrowing partnership for the taxable year, and such interest income otherwise would be properly treated as investment income of the lending partner for purposes of section 163(d) for that year, such excess amount of interest income will continue to be treated as investment income of the lending partner for that year for purposes of section 163(d). See *Example 26* in paragraph (o)(26) of this section.

(o) ***Examples.*** The examples in this paragraph illustrate the provisions of section 163(j) as applied to partnerships and subchapter S corporations. For purposes of these examples, unless stated otherwise, each partnership and S corporation is subject to the provisions of section 163(j), is only engaged in non-excepted trades or businesses, was created or organized in the United States, and uses the calendar year for its annual accounting period. Unless stated otherwise, all partners and shareholders are subject to the provisions of section 163(j), are not subject to a limitation under section 704(d) or 1366(d), have no tax items other than those listed in the example, are U.S. citizens, and use the calendar year for their annual accounting period. The phrase "section 163(j) limit" shall equal the maximum potential deduction allowed under section 163(j)(1). Unless stated otherwise, business interest expense means business interest expense that is not floor plan financing interest expense. With respect to partnerships, all allocations are in accordance with section 704(b) and the regulations in this part under section 704 of the Code.

(1) ***Example 1*** —

(i) ***Facts.*** X and Y are equal partners in partnership PRS. In Year 1, PRS has $100 of ATI and $40 of business interest expense. PRS allocates the items comprising its $100 of ATI $50 to X and $50 to Y. PRS allocates its $40 of business interest expense $20 to X and $20 to Y. X has $100 of ATI and $20 of business interest expense from its sole proprietorship. Y has $0 of ATI and $20 of business interest expense from its sole proprietorship.

(ii) ***Partnership-level.*** In Year 1, PRS's section 163(j) limit is 30 percent of its ATI, or $30 ($100 × 30 percent). Thus, PRS has $30 of deductible business interest expense and $10 of excess business interest expense. Such $30 of deductible business interest expense is includable in PRS's nonseparately stated income or loss, and is not subject to further limitation under section 163(j) at the partners' level.

(iii) ***Partner-level allocations.*** Pursuant to § 1.163(j)-6(f)(2), X and Y are each allocated $15 of deductible business interest expense and $5 of excess business interest expense. At the end of Year 1, X and Y each have $5 of excess business interest expense from PRS, which is not treated as paid or accrued by the partner until such partner is allocated excess taxable income or excess business interest income from PRS in a succeeding taxable year. Pursuant to § 1.163(j)-6(e)(1), X and Y, in computing their limit under section 163(j), do not increase any of their section 163(j) items by any of PRS's section 163(j) items. X and Y each increase their outside basis in PRS by $30 ($50−$20).

(iv) ***Partner-level computations.*** X, in computing its limit under section 163(j), has $100 of ATI and $20 of business interest expense from its sole proprietorship. X's section 163(j) limit is $30 ($100 × 30 percent). Thus, X's $20 of business interest expense is deductible business interest expense. Y, in computing its limit under section 163(j), has $20 of business interest expense from its sole proprietorship. Y's section 163(j) limit is $0 ($0 × 30 percent). Thus, Y's $20 of business interest expense is not allowed as a deduction and is treated as business interest expense paid or accrued by Y in Year 2.

(2) ***Example 2*** —

(i) ***Facts.*** The facts are the same as in *Example 1* in paragraph (o)(1)(i) of this section. In Year 2, PRS has $200 of ATI, $0 of business interest income, and $30 of business interest expense. PRS allocates the items comprising its $200 of ATI $100 to X and $100 to Y. PRS allocates its $30 of business interest expense $15 to X and $15 to Y. X has $100 of ATI and $20 of business interest expense from its sole proprietorship. Y has $0 of ATI and $20 of business interest expense from its sole proprietorship.

(ii) ***Partnership-level.*** In Year 2, PRS's section 163(j) limit is 30 percent of its ATI plus its business interest income, or $60 ($200 × 30 percent). Thus, PRS has $100 of excess taxable income, $30 of deductible business interest expense, and $0 of excess business interest expense. Such $30 of deductible business interest expense is includable in PRS's nonseparately stated income or loss, and is not subject to further limitation under section 163(j) at the partners' level.

(iii) ***Partner-level allocations.*** Pursuant to § 1.163(j)-6(f)(2), X and Y are each allocated $50 of excess taxable income, $15 of deductible business interest expense, and $0 of excess business interest expense. As a result, X and Y each increase their ATI by $50. Because X and Y are each allocated $50 of excess taxable income from PRS, and excess business interest expense from a partnership is treated as paid or accrued by a partner to the extent excess taxable income and excess business interest income are allocated from such partnership to a partner, X and Y each treat $5 of excess business interest expense (the carryforward from Year 1) as paid or accrued in Year 2. X and Y each increase their outside basis in PRS by $85 ($100−$15).

(iv) ***Partner-level computations.*** X, in computing its limit under section 163(j), has $150 of ATI ($100 from its sole proprietorship, plus $50 excess taxable income) and $25 of business interest expense ($20 from its sole proprietorship, plus $5 excess business interest expense treated as paid or accrued in Year 2). X's section 163(j) limit is $45 ($150 × 30 percent). Thus, X's $25 of business interest expense is deductible business interest expense. At the end of Year 2, X has $0 of excess business interest expense from PRS ($5 from Year 1, less $5 treated as paid or accrued in Year 2). Y, in computing its limit under section 163(j), has $50 of ATI ($0 from its sole proprietorship, plus $50 excess taxable income) and $45 of business interest expense ($20 from its sole proprietorship, plus $20 disallowed business interest expense from Year 1, plus $5 excess business interest expense treated as paid or accrued in Year 2). Y's section 163(j) limit is $15 ($50 × 30 percent). Thus, $15 of Y's business interest expense is deductible business interest expense. The $30 of Y's business interest expense not allowed as a deduction ($45 business interest expense, less $15 section 163(j) limit) is treated as business interest expense paid or accrued by Y in Year 3. At the end of Year 2, Y has $0 of excess business interest expense from PRS ($5 from Year 1, less $5 treated as paid or accrued in Year 2).

(3) ***Example 3*** —

(i) ***Facts.*** The facts are the same as in *Example 1* in paragraph (o)(1)(i) of this section. In Year 2, PRS has $0 of ATI, $60 of business interest income, and $40 of business interest expense. PRS allocates its $60 of business interest income $30 to X and $30 to Y. PRS allocates its $40 of business interest expense $20 to X and $20 to Y. X has $100 of ATI and $20 of business interest expense from its sole proprietorship. Y has $0 of ATI and $20 of business interest expense from its sole proprietorship.

(ii) ***Partnership-level.*** In Year 2, PRS's section 163(j) limit is 30 percent of its ATI plus its business interest income, or $60 (($0 × 30 percent) + $60). Thus, PRS has $20 of excess business interest income, $0 of excess taxable income, $40 of deductible business interest expense, and $0 of excess business interest expense. Such $40 of deductible business interest expense is includable in PRS's nonseparately stated income or loss, and is not subject to further limitation under section 163(j) at the partners' level.

(iii) ***Partner-level allocations.*** Pursuant to § 1.163(j)-6(f)(2), X and Y are each allocated $10 of excess business interest income, and $20 of deductible business interest expense. As a result, X and Y each increase their business interest income by $10. Because X and Y are each allocated $10 of excess business interest income from PRS, and excess business interest expense from a partnership is treated as paid or accrued by a partner to the extent excess taxable income and excess business interest income are allocated from such partnership to a partner, X and Y each treat $5 of excess business interest expense (the carryforward from Year 1) as paid or accrued in Year 2. X and Y each increase their outside basis in PRS by $10 ($30−$20).

(iv) ***Partner-level computations.*** X, in computing its limit under section 163(j), has $100 of ATI (from its sole proprietorship), $10 of business interest income (from the allocation of $10 of excess business interest income from PRS), and $25 of business interest expense ($20 from its sole proprietorship, plus $5 excess business interest expense treated as paid or accrued in Year 2). X's section 163(j) limit is $40 (($100 × 30 percent) + $10). Thus, X's $25 of business interest expense is deductible business interest expense. At the end of Year 2, X has $0 of excess business interest expense from PRS ($5 from Year 1, less $5 treated as paid or accrued in Year 2). Y, in computing its limit under section 163(j), has $0 of ATI (from its sole proprietorship), $10 of business interest income, and $45 of business interest expense ($20 from its sole proprietorship, plus $20 disallowed business interest expense from Year 1, plus $5 excess business interest expense treated as paid or accrued in Year 2). Y's section 163(j) limit is $10 (($0 × 30 percent) + $10). Thus, $10 of Y's business interest expense is deductible business interest expense. The $35 of Y's business interest expense not allowed as a deduction ($45 business interest expense, less $10 section 163(j) limit) is treated as business interest expense paid or accrued by Y in Year 3. At the end of Year 2, Y has $0 of excess business interest expense from PRS ($5 from Year 1, less $5 treated as paid or accrued in Year 2).

(4) ***Example 4*** —

(i) ***Facts.*** The facts are the same as in *Example 1* in paragraph (o)(1)(i) of this section. In Year 2, PRS has $100 of ATI, $60 of business interest income, and $40 of business interest expense. PRS allocates the items comprising its $100 of ATI $50 to X and $50 to Y. PRS allocates its $60 of business interest income $30 to X and $30 to Y. PRS allocates its $40 of business interest expense $20 to X and $20 to Y. X has $100 of ATI and $20 of business interest expense from its sole proprietorship. Y has $0 of ATI and $20 of business interest expense from its sole proprietorship.

(ii) ***Partnership-level.*** In Year 2, PRS's section 163(j) limit is 30 percent of its ATI plus its business interest income, or $90 (($100 × 30 percent)) + $60). Thus, PRS has $20 of excess business interest income, $100 of excess taxable income, $40 of deductible business interest expense, and $0 of excess business interest expense. Such $40 of deductible business interest expense is includable in PRS's nonseparately stated income or loss, and is not subject to further limitation under section 163(j) at the partners' level.

(iii) ***Partner-level allocations.*** Pursuant to § 1.163(j)-6(f)(2), X and Y are each allocated $10 of excess business interest income, $50 of excess taxable income, and $20 of deductible business interest expense. As a result, X and Y each increase their business interest income by $10 and ATI by $50. Because X and Y are each allocated $10 of excess business interest income and $50 of excess taxable income from PRS, and excess business interest expense from a partnership is treated as paid or accrued by a partner to the extent excess taxable income and excess business interest income are allocated from such partnership to a partner, X and Y each treat $5 of excess business interest expense (the carryforward from Year 1) as paid or accrued in Year 2. X and Y each increase their outside basis in PRS by $60 ($80−$20).

(iv) ***Partner-level computations.*** X, in computing its limit under section 163(j), has $150 of ATI ($100 from its sole proprietorship, plus $50 excess taxable income), $10 of business interest income, and $25 of business interest expense ($20 from its sole proprietorship, plus $5 excess business interest expense treated as paid or accrued in Year 2). X's section 163(j) limit is $55 (($150 × 30 percent) + $10). Thus, $25 of X's business interest expense is deductible business interest expense. At the end of Year 2, X has $0 of excess business interest expense from PRS ($5 from Year 1, less $5 treated as paid or accrued in Year 2). Y, in computing its limit under section 163(j), has $50 of ATI ($0 from its sole proprietorship, plus $50 excess taxable income), $10 of business interest income, and $45 of business interest expense ($20 from its sole proprietorship, plus $20 disallowed business interest expense from Year 1, plus $5 excess business interest expense treated as paid or accrued in Year 2). Y's section 163(j) limit is $25 (($50 × 30 percent) + $10). Thus, $25 of Y's business interest expense is deductible business interest expense. Y's $20 of business interest expense not allowed as a deduction ($45 business interest expense, less $25 section 163(j) limit) is treated as business interest expense paid or accrued by Y in Year 3. At the end of Year 2, Y has $0 of excess business interest expense from PRS ($5 from Year 1, less $5 treated as paid or accrued in Year 2).

(5) ***Example 5*** —

(i) ***Facts.*** The facts are the same as in *Example 1* in paragraph (o)(1)(i) of this section. In Year 2, PRS has $100 of ATI, $11.20 of business interest income, and $40 of business interest expense. PRS allocates the items comprising its $100 of ATI $50 to X and $50 to Y. PRS allocates its $11.20 of business interest income $5.60 to X and $5.60 to Y. PRS allocates its $40 of business interest expense $20 to X and $20 to Y. X has $100 of ATI and $20 of business interest expense from its sole proprietorship. Y has $0 of ATI and $20 of business interest expense from its sole proprietorship.

(ii) ***Partnership-level.*** In Year 2, PRS's section 163(j) limit is 30 percent of its ATI plus its business interest income, or $41.20 (($100 × 30 percent) + $11.20). Thus, PRS has $0 of excess business interest income, $4 of excess taxable income, and $40 of deductible business interest expense. Such $40 of deductible business interest expense is includable in PRS's nonseparately stated income or loss, and is not subject to further limitation under section 163(j) at the partners' level.

(iii) ***Partner-level allocations.*** Pursuant to § 1.163(j)-6(f)(2), X and Y are each allocated $2 of excess taxable income, $20 of deductible business interest expense, and $0 of excess business interest expense. As a result, X and Y each increase their ATI by $2. Because X and Y are each allocated $2 of excess taxable income from PRS, and excess business interest expense from a partnership is treated as paid or accrued by a partner to the extent excess taxable income and

excess business interest income are allocated from such partnership to a partner, X and Y each treat $2 of excess business interest expense (a portion of the carryforward from Year 1) as paid or accrued in Year 2. X and Y each increase their outside basis in PRS by $35.60 ($55.60−$20).

(iv) ***Partner-level computations.*** X, in computing its limit under section 163(j), has $102 of ATI ($100 from its sole proprietorship, plus $2 excess taxable income), $0 of business interest income, and $22 of business interest expense ($20 from its sole proprietorship, plus $2 excess business interest expense treated as paid or accrued). X's section 163(j) limit is $30.60 ($102 × 30 percent). Thus, X's $22 of business interest expense is deductible business interest expense. At the end of Year 2, X has $3 of excess business interest expense from PRS ($5 from Year 1, less $2 treated as paid or accrued in Year 2). Y, in computing its limit under section 163(j), has $2 of ATI ($0 from its sole proprietorship, plus $2 excess taxable income), $0 of business interest income, and $42 of business interest expense ($20 from its sole proprietorship, plus $20 disallowed business interest expense from Year 1, plus $2 excess business interest expense treated as paid or accrued in Year 2). Y's section 163(j) limit is $0.60 ($2 × 30 percent). Thus, $0.60 of Y's business interest expense is deductible business interest expense. Y's $41.40 of business interest expense not allowed as a deduction ($42 business interest expense, less $0.60 section 163(j) limit) is treated as business interest expense paid or accrued by Y in Year 3. At the end of Year 2, Y has $3 of excess business interest expense from PRS ($5 from Year 1, less $2 treated as paid or accrued in Year 2).

(6) ***Example 6*** —

(i) ***Facts.*** In Year 1, X, Y, and Z formed partnership PRS. Upon formation, X and Y each contributed $100, and Z contributed non-excepted and non-depreciable trade or business property with a basis of $0 and fair market value of $100 (Blackacre). PRS allocates all items pro rata between its partners. Immediately after the formation of PRS, Z sold all of its interest in PRS to A for $100 (assume the interest sale is respected for U.S. Federal income tax purposes). In connection with the interest transfer, PRS made a valid election under section 754. Therefore, after the interest sale, A had a $100 positive section 743(b) adjustment in Blackacre. In Year 1, PRS had $0 of ATI, $15 of business interest expense, and $0 of business interest income. Pursuant to § 1.163(j)-6(f)(2), PRS allocated each of the partners $5 of excess business interest expense. In Year 2, PRS sells Blackacre for $100 which generated $100 of ATI. The sale of Blackacre was PRS's only item of income in Year 2. In accordance with section 704(c), PRS allocates all $100 of gain resulting from the sale of Blackacre to A. Additionally, PRS has $15 of business interest expense, all of which it allocates to X. A has $50 of ATI and $20 of business interest expense from its sole proprietorship.

(ii) ***Partnership-level.*** In Year 2, PRS's section 163(j) limit is 30 percent of its ATI, or $30 ($100 × 30 percent). Thus, PRS has $15 of deductible business interest expense and $50 of excess taxable income. Such $15 of deductible business interest expense is includable in PRS's nonseparately stated income or loss, and is not subject to further limitation under section 163(j) at X's level.

(iii) ***Partner-level allocations.*** Pursuant to § 1.163(j)-6(f)(2), X is allocated $15 of deductible business interest expense and X's outside basis in PRS is reduced by $15. A is allocated $50 of excess taxable income and, as a result, A increases its ATI by $50. Because A is allocated $50 of excess taxable income, and excess business interest expense from a partnership is treated as paid or accrued by a partner to the extent excess taxable income and excess business interest income are allocated from such partnership to a partner, A treats $5 of excess

business interest expense (the carryforward from Year 1) as paid or accrued in Year 2. PRS's $100 of gain allocated to A in Year 2 is fully reduced by A's $100 section 743(b) adjustment. Therefore, at the end of Year 2, there is no change to A's outside basis in PRS.

(iv) ***Partner-level.*** A, in computing its limit under section 163(j), has $0 of ATI ($50 from its sole proprietorship, plus $50 excess taxable income, less $100 ATI reduction as a result of A's section 743(b) adjustment under § 1.163(j)-6(e)(2)) and $25 of business interest expense ($20 from its sole proprietorship, plus $5 excess business interest expense treated as paid or accrued in Year 2). A's section 163(j) limit is $0 ($0 × 30 percent). Thus, all $25 of A's business interest expense is not allowed as a deduction and is treated as business interest expense paid or accrued by A in Year 3.

(7) ***Example 7*** —

(i) ***Facts.*** X and Y are equal partners in partnership PRS. At the beginning of Year 1, X and Y each have an outside basis in PRS of $5. In Year 1, PRS has $0 of ATI, $20 of business interest income, and $40 of business interest expense. PRS allocates its $20 of business interest income $10 to X and $10 to Y. PRS allocates $40 of business interest expense $20 to X and $20 to Y. X has $100 of ATI and $20 of business interest expense from its sole proprietorship. Y has $0 of ATI and $20 of business interest expense from its sole proprietorship.

(ii) ***Partnership-level.*** In Year 1, PRS's section 163(j) limit is 30 percent of its ATI plus its business interest income, or $20 (($0 × 30 percent) + $20). Thus, PRS has $0 of excess business interest income, $0 of excess taxable income, $20 of deductible business interest expense, and $20 of excess business interest expense. Such $20 of deductible business interest expense is includable in nonseparately stated income or loss of PRS, and not subject to further limitation under section 163(j) by the partners.

(iii) ***Partner-level allocations.*** Pursuant to § 1.163(j)-6(f)(2), X and Y are each allocated $10 of deductible business interest expense and $10 of excess business interest expense. After adjusting each partner's respective basis for business interest income under section 705(a)(1)(A), pursuant to § 1.163(j)-6(h)(1), X and Y each take their $10 of deductible business interest expense into account when reducing their outside basis in PRS before taking the $10 of excess business interest expense into account. Following each partner's reduction in outside basis due to the $10 of deductible business interest expense, each partner has $5 of outside basis remaining in PRS. Pursuant to § 1.163(j)-6(h)(2), each partner has $5 of excess business interest expense and $5 of negative section 163(j) expense. In sum, at the end of Year 1, X and Y each have $5 of excess business interest expense from PRS which reduces each partner's outside basis to $0 (and is not treated as paid or accrued by the partners until such partner is allocated excess taxable income or excess business interest income from PRS in a succeeding taxable year), and $5 of negative section 163(j) expense (which is suspended under section 704(d) and not treated as excess business interest expense of the partners until such time as the negative section 163(j) expense is no longer subject to a limitation under section 704(d)).

(iv) ***Partner-level computations.*** X, in computing its limit under section 163(j), has $100 of ATI (from its sole proprietorship) and $20 of business interest expense (from its sole proprietorship). X's section 163(j) limit is $30 ($100 × 30 percent). Thus, $20 of X's business interest expense is deductible business interest expense. Y, in computing its limit under section 163(j), has $20 of business interest expense (from its sole proprietorship). Y's section 163(j) limit is $0 ($0 × 30 percent). Thus, $20 of Y's business interest expense is not allowed as a deduction in Year 1, and is treated as business interest expense paid or accrued by Y in Year 2.

(8) *Example 8* —

(i) ***Facts.*** The facts are the same as in *Example 7* in paragraph (o)(7)(i) of this section. In Year 2, PRS has $20 of gross income that is taken into account in determining PRS's ATI (in other words, properly allocable to a trade or business), $30 of gross deductions from an investment activity, and $0 of business interest expense. PRS allocates the items comprising its $20 of ATI $10 to X and $10 to Y. PRS allocates the items comprising its $30 of gross deductions $15 to X and $15 to Y. X has $100 of ATI and $20 of business interest expense from its sole proprietorship. Y has $0 of ATI and $20 of business interest expense from its sole proprietorship.

(ii) ***Partnership-level.*** In Year 2, PRS's section 163(j) limit is 30 percent of its ATI plus its business interest income, or $6 ($20 × 30 percent). Because PRS has no business interest expense, all $20 of its ATI is excess taxable income.

(iii) ***Partner-level allocations.*** Pursuant to § 1.163(j)-6(f)(2), X and Y are each allocated $10 of excess taxable income. Because X and Y are each allocated $10 of excess taxable income from PRS, X and Y each increase their ATI by $10. Pursuant to § 1.704-(1)(d)(2), each partner's limitation on losses under section 704(d) must be allocated to its distributive share of each such loss. Thus, each partner reduces its adjusted basis of $10 (attributable to the allocation of items comprising PRS's ATI in Year 2) by $7.50 of gross deductions from Year 2 ($10 × ($15 of total gross deductions from Year 2/$20 of total losses disallowed)), and $2.50 of excess business interest expense that was carried over as negative section 163(j) expense from Year 1 ($10 × ($5 of negative section 163(j) expense treated as excess business interest expense solely for the purposes of section 704(d)/$20 of total losses disallowed)). Following the application of section 704(d), each partner has $7.50 of excess business interest expense from PRS ($5 excess business interest expense from Year 1, plus $2.50 of excess business interest expense that was formerly negative section 163(j) expense carried over from Year 1). Excess business interest expense from a partnership is treated as paid or accrued by a partner to the extent excess taxable income and excess business interest income are allocated from such partnership to the partner. As a result, X and Y each treat $7.50 of excess business interest expense as paid or accrued in Year 2.

(iv) ***Partner-level computations.*** X, in computing its limit under section 163(j), has $110 of ATI ($100 from its sole proprietorship, plus $10 excess taxable income) and $27.50 of business interest expense ($20 from its sole proprietorship, plus $7.50 excess business interest expense treated as paid or accrued in Year 2). X's section 163(j) limit is $33 ($110 × 30 percent). Thus, $27.50 of X's business interest expense is deductible business interest expense. At the end of Year 2, X has $0 of excess business interest expense from PRS ($5 from Year 1, plus $2.50 treated as excess business interest expense in Year 2, less $7.50 treated as paid or accrued in Year 2), and $2.50 of negative section 163(j) expense from PRS. Y, in computing its limit under section 163(j), has $10 of ATI ($0 from its sole proprietorship, plus $10 excess taxable income) and $47.50 of business interest expense ($20 from its sole proprietorship, plus $20 disallowed business interest expense from Year 1, plus $7.50 excess business interest expense treated as paid or accrued in Year 2). Y's section 163(j) limit is $3 ($10 × 30 percent). Thus, $3 of Y's business interest expense is deductible business interest expense. The $44.50 of Y's business interest expense not allowed as a deduction ($47.50 business interest expense, less $3 section 163(j) limit) is treated as business interest expense paid or accrued by Y in Year 3. At the end of

Year 2, Y has $0 of excess business interest expense from PRS ($5 from Year 1, plus $2.50 treated as excess business interest expense in Year 2, less $7.50 treated as paid or accrued in Year 2), and $2.50 of negative section 163(j) expense from PRS.

(9) *Example 9* —

(i) ***Facts.*** X and Y are equal partners in partnership PRS, and are not members of a consolidated group. At the beginning of Year 1, X and Y each have $120 of outside basis in PRS. Neither X nor Y's share of partnership liabilities exceeds the adjusted basis of its entire interest. In Year 1, X is allocated $20 of excess business interest expense, which reduces its outside basis from $120 to $100. In Year 2, X sells 80 percent of its interest in PRS to Z for $160. Immediately prior to the sale, X's entire PRS interest had a fair market value of $200 and the transferred portion of the interest had a fair market value of $160.

(ii) ***Basis adjustment.*** Immediately before the sale to Z, X increases its basis in the portion of the interest sold by 80 percent of the amount of the excess of the amount of the basis reduction under paragraph (h)(2) of this section ($20) over the portion of any excess business interest expense allocated the partner under paragraph (f)(2) of this section that has previously been treated under paragraph (g) of this section as business interest expense paid or accrued by X ($0). Therefore, X's basis in the portion of its interest sold is $96 (($100 × 80%) + ($20 × 80%)), and X's gain is $64 ($160−$96). Following the sale, X has $20 of outside basis in its remaining partnership interest and $4 of excess business interest expense.

(10) *Example 10* —

(i) ***Facts.*** X and Y are equal partners in partnership PRS, and are not members of a consolidated group. At the beginning of Year 1, X and Y each have an outside basis in PRS of $10. Neither X nor Y's share of partnership liabilities exceeds the adjusted basis of its entire interest. In Year 1, X is allocated $8 of excess business interest expense and $12 of loss from PRS. As a result, X has $4 of excess business interest expense, $4 of negative section 163(j) expense, $6 of allowable loss, $6 of loss suspended under section 704(d), and $0 of outside basis in PRS at the end of Year 1. In Year 2, X sells 50 percent of its interest in PRS to Z for $20. Immediately prior to the sale, X's entire partnership interest had a fair market value of $40 and the transferred portion of the interest had a fair market value of $20.

(ii) ***Basis adjustment.*** Immediately before the sale to Z, X increases its basis in the portion of the interest sold by 50 percent of the amount of the excess of the amount of the basis reduction under paragraph (h)(2) of this section ($4) over the portion of any excess business interest expense allocated the partner under paragraph (f)(2) of this section that has previously been treated under paragraph (g) of this section as business interest expense paid or accrued by X ($0). Therefore, X's basis in the portion of its interest sold is $2 (($0 × 50%) + $2), and X's gain is $18 ($20−$2). Following the sale, X has $0 of outside basis in its remaining partnership interest, $2 of excess business interest expense, $4 of negative section 163(j) expense, and $6 of loss suspended under section 704(d).

(11) *Example 11* —

(i) ***Facts.*** X (a corporation), Y (an individual), and Z (an individual) are equal partners in partnership PRS. X, Y, and Z are subject to section 163(j). PRS is not subject to section 163(j) under section 163(j)(3). In 2021, PRS has $150 of trade or business income (not taking into account business interest income or business interest expense), $30 of business interest income, and $45 of business interest expense. PRS also has $75 of investment income and $60 of investment

interest expense. PRS allocates its items of income, gain, loss, and deduction equally among its partners. X, Y, and Z each have $10 of business interest expense from their respective businesses.

(ii) ***Partnership-level.*** PRS is not subject to section 163(j) by reason of section 163(j)(3). As a result, none of PRS's $45 of business interest expense is subject to the section 163(j) limitation.

(iii) ***Partner-level allocations.*** Because PRS is not subject to section 163(j) by reason of section 163(j)(3), PRS's $45 of business interest expense does not retain its character as business interest expense for purposes of section 163(j). As a result, such business interest expense is not subject to the section 163(j) limitation at the level of either the partnership or partner. Additionally, pursuant to § 1.163(j)-6(m)(1), each partner includes its share of non-excepted trade or business items of income, gain, loss, and deduction (including business interest expense and business interest income) of PRS when calculating its ATI. As a result, each partner increases its ATI by $45 (one third of $150 + $30−$45). Also, X increases its ATI by an additional $25 because its items of investment income and loss from PRS are recharacterized as non-excepted trade or business income and loss at its level pursuant to §§ 1.163(j)-4(b)(3)(i) and 1.163(j)-10(b)(6). Further, X increases its business interest expense by its $20 allocation of investment interest expense from PRS pursuant to §§ 1.163(j)-4(b)(3)(i) and 1.163(j)-10(b)(6).

(iv) ***Partner-level computations.*** X, in computing its limit under section 163(j), has $70 of ATI and $30 of business interest expense. X's section 163(j) limit is $21 ($70 × 30 percent). Thus, X has $21 of deductible business interest expense. X's $9 of business interest expense not allowed as a deduction is treated as business interest expense paid or accrued by X in 2020. Y and Z, in computing their respective limits under section 163(j), each have $45 of ATI and $10 of business interest expense. Y and Z each have a section 163(j) limit of $13.50 ($45−30 percent). Thus, Y and Z each have $10 of deductible business interest expense.

(12) *Example 12* —

(i) ***Facts.*** The facts are the same as in *Example 11* in paragraph (o)(11)(i) of this section, except PRS has $200 of depreciation deductions in addition to its other items of income, gain, loss, and deduction.

(ii) ***Partnership-level.*** Same analysis as *Example 11* in paragraph (o)(11)(ii) of this section.

(iii) ***Partner-level allocations.*** Because PRS is not subject to section 163(j) by reason of section 163(j)(3), PRS's $45 of business interest expense does not retain its character as business interest expense for purposes of section 163(j). As a result, such business interest expense is not subject to the section 163(j) limitation at the level of either the partnership or partner. Additionally, pursuant to § 1.163(j)-6(m)(1), each partner includes its share of non-excepted trade or business items of income, gain, loss, and deduction (including business interest expense and business interest income) of PRS when calculating its ATI; however, a net loss allocation of trade or business items from an exempt entity does not reduce a partner's ATI. Because each of the partners has a net loss allocation of trade or business items from PRS, none of the partners adjust their ATI for the trade or business items of PRS. X, the corporate partner, increases its ATI by $25 because its items of investment income and loss from PRS are recharacterized as trade or business income and loss at its level pursuant to §§ 1.163(j)-4(b)(3)(i) and 1.163(j)-10(b)(6). Further, X increases its business interest expense by its $20 allocation of investment interest expense from PRS pursuant to §§ 1.163(j)-4(b)(3)(i) and 1.163(j)-10(b)(6).

(iv) ***Partner-level computations.*** In computing its limit under section 163(j), each partner has $0 of ATI and $10 of business interest expense. Each partner's section 163(j) limit is $0 ($0 × 30 percent). Thus, each partner's $10 of business interest expense is not allowed as a deduction and is treated as business interest expense paid or accrued by the partner in 2020. X, in computing its limit under section 163(j), has $25 of ATI and $30 of business interest expense. X's section 163(j) limit is $7.50 ($25 × 30 percent). Thus, X has $7.50 of deductible business interest expense. X's $22.50 of business interest expense not allowed as a deduction is treated as business interest expense paid or accrued by X in 2020. Y and Z, in computing their respective limits under section 163(j), each have $0 of ATI and $10 of business interest expense. Thus, Y and Z each have $10 of business interest expense not allowed as a deduction that is treated as business interest expense paid or accrued in 2020.

(13) ***Example 13*** —

(i) ***Facts.*** X, Y, and Z are equal partners in partnership PRS. X, Y, and Z are each individuals subject to section 163(j). PRS is not subject to section 163(j) under section 163(j)(3). PRS has one excepted and one non-excepted trade or business. In Year 1, PRS has $200 of income and $10 of business interest expense from its excepted trade or business, and $60 of business interest income and $30 of business interest expense from its non-excepted trade or business. PRS allocates its items of income, gain, loss, and deduction equally among its partners. X, Y, and Z each have $10 of business interest expense from their respective businesses.

(ii) ***Partnership-level.*** PRS is not subject to section 163(j) by reason of section 163(j)(3). As a result, none of PRS's business interest expense is subject to the section 163(j) limitation.

(iii) ***Partner-level allocations.*** Because PRS's business interest expense is not subject to the section 163(j) limitation, such business interest expense is not subject to the section 163(j) limitation at the level of either the partnership or partner. Additionally, pursuant to § 1.163(j)-6(m)(1), each partner includes its share of non-excepted trade or business items of income, gain, loss, and deduction (including business interest expense and business interest income) of PRS when calculating its ATI. Therefore, each partner increases its ATI by $10 (each partner's share of $20 of non-excepted income less each partner's share of $10 of non-excepted loss).

(iv) ***Partner-level computations.*** In computing its limit under section 163(j), each partner has $10 of ATI and $10 of business interest expense. Each partner's section 163(j) limit is $3 ($10 × 30 percent). Thus, each partner has $3 of deductible business interest expense. Each partner has $7 of business interest expense not allowed as a deduction that is treated as business interest expense paid or accrued by the partner in Year 2.

(14) ***Example 14*** —

(i) ***Facts.*** The facts are the same as in *Example 5* in paragraph (o)(5)(i) of this section, except in Year 2 Y is not subject to section 163(j) under section 163(j)(3).

(ii) ***Partnership-level.*** Same analysis as *Example 5* in paragraph (o)(5)(ii) of this section.

(iii) ***Partner-level allocations.*** Same analysis as *Example 5* in paragraph (o)(5)(iii) of this section.

(iv) ***Partner-level computations.*** For X, same analysis as *Example 5* in paragraph (o)(5)(iv) of this section. Y is not subject to section 163(j) under section 163(j)(3). Thus, all $42 of business interest expense ($20 from its sole proprietorship, plus $20 disallowed business interest expense from Year 1, plus $2 excess business interest expense treated as paid or accrued in

Year 2) is not subject to limitation under § 1.163(j)-2(d). At the end of Year 2, Y has $3 of excess business interest expense from PRS ($5 from Year 1, less $2 treated as paid or accrued in Year 2).

(15) *Example 15* —

(i) ***Facts.*** The facts are the same as in *Example 5* in paragraph (o)(5)(i) of this section, except in Year 2 PRS and Y become not subject to section 163(j) by reason of section 163(j)(3).

(ii) ***Partnership-level.*** In Year 2, PRS is not subject to section 163(j) by reason of section 163(j)(3). As a result, none of PRS's $40 of business interest expense is subject to the section 163(j) limitation at the level of either the partnership or partner.

(iii) ***Partner-level allocations.*** Because PRS is not subject to section 163(j) by reason of section 163(j)(3), PRS's $40 of business interest expense does not retain its character as business interest expense for purposes of section 163(j). As a result, such business interest expense is not subject to the section 163(j) limitation at the level of either the partnership or partner. Additionally, pursuant to § 1.163(j)-6(m)(1), each partner includes its share of non-excepted trade or business items of income, gain, loss, and deduction (including business interest expense and business interest income) of PRS when calculating its ATI. As a result, X and Y each increase their ATI by $35.60. Further, because PRS is not subject to section 163(j) by reason of section 163(j)(3), the excess business interest expense from Year 1 is treated as paid or accrued by the partners pursuant to § 1.163(j)-6(m)(3). As a result, X and Y each treat their $5 of excess business interest expense from Year 1 as paid or accrued in Year 2, and increase their business interest expense by $5.

(iv) ***Partner-level computations.*** X, in computing its limit under section 163(j), has $135.60 of ATI ($100 from its sole proprietorship, plus $35.60 ATI from PRS) and $25 of business interest expense ($20 from its sole proprietorship, plus $5 of excess business interest expense treated as paid or accrued in Year 2). X's section 163(j) limit is $40.68 ($135.60 × 30 percent). Thus, $25 of X's business interest expense is deductible business interest expense. Y is not subject to section 163(j) under section 163(j)(3). As a result, Y's business interest expense is not subject to the section 163(j) limitation. Thus, all $45 of Y's business interest expense ($20 from its sole proprietorship, plus $20 disallowed from year 1, plus $5 of excess business interest expense treated as paid or accrued in Year 2) is not subject to the section 163(j) limitation.

(16) *Example 16* —

(i) ***Facts.*** The facts are the same as in *Example 1* in paragraph (o)(1)(i) of this section, except that PRS's only trade or business is a real property trade or business for which PRS does not make the election provided for in section 163(j)(7)(B). In Year 2, when PRS's only trade or business is still its real property trade or business, PRS makes the election provided for in section 163(j)(7)(B). Further, in Year 2, PRS has $100 of income and $40 of business interest expense. PRS allocates its items of income, gain, deduction, and loss equally between X and Y. X has $100 of ATI and $20 of business interest expense from its sole proprietorship. Y has $0 of ATI and $20 of business interest expense from its sole proprietorship.

(ii) ***Partnership-level.*** In Year 2, PRS is not subject to section 163(j) because its only trade or business is an excepted trade or business. As a result, none of PRS's $40 of business interest expense is subject to the section 163(j) limitation at the level of either the partnership or partner.

(iii) ***Partner-level allocations.*** Because PRS is not subject to section 163(j), PRS's $40 of business interest expense does not retain its character as business interest expense for purposes of section 163(j). As a result, such business interest expense is not subject to the section 163(j) limitation at the partners' level. Pursuant to § 1.163(j)-6(m)(1), the partners do not include their respective $50 shares of income from PRS when calculating their own ATI because such $50 is excepted trade or business income.

(iv) ***Partner-level computations.*** X, in computing its limit under section 163(j), has $100 of ATI ($100 from its sole proprietorship) and $20 of business interest expense ($20 from its sole proprietorship). X's section 163(j) limit is $30 ($100 × 30 percent). Thus, $20 of X's business interest expense is deductible business interest expense. At the end of Year 2, X has $5 of excess business interest expense from PRS ($5 from Year 1). Y, in computing its limit under section 163(j), has $0 of ATI and $40 of business interest expense ($20 from its sole proprietorship, plus $20 disallowed business interest expense from Year 1). Y's section 163(j) limit is $0. Thus, Y's $40 of business interest expense not allowed as a deduction is treated as business interest expense paid or accrued by Y in Year 3. At the end of Year 2, Y has $5 of excess business interest expense from PRS ($5 from Year 1).

(17) ***Example 17: Facts.*** A (an individual) and B (a corporation) own all of the interests in partnership PRS. At the beginning of Year 1, A and B each have $100 section 704(b) capital account and $100 of basis in PRS. In Year 1, PRS has $100 of ATI, $10 of investment interest income, $20 of business interest income (BII), $60 of business interest expense (BIE), and $10 of floor plan financing interest expense. PRS's ATI consists of $100 of gross income and $0 of gross deductions. PRS allocates its items comprising ATI $100 to A and $0 to B. PRS allocates its business interest income $10 to A and $10 to B. PRS allocates its business interest expense $30 to A and $30 to B. PRS allocates all $10 of its investment interest income and all $10 of its floor plan financing interest expense to B. A has ATI from a sole proprietorship, unrelated to PRS, in the amount of $300.

(i) First, PRS determines its limitation pursuant to § 1.163(j)-2. PRS's section 163(j) limit is 30 percent of its ATI plus its business interest income, or $50 (($100 × 30 percent) + $20). Thus, PRS has $0 of excess business interest income (EBII), $0 of excess taxable income, $50 of deductible business interest expense, and $10 of excess business interest expense. PRS takes its $10 of floor plan financing into account in determining its nonseparately stated taxable income or loss.

(ii) Second, PRS determines each partner's allocable share of section 163(j) items used in its own section 163(j) calculation. B's $10 of investment interest income is not included in B's allocable business interest income amount because the $10 of investment interest income was not taken into account in PRS's section 163(j) calculation. B's $10 of floor plan financing interest

expense is not included in B's allocable business interest expense. The $300 of ATI from A's sole proprietorship is not included in A's allocable ATI amount because the $300 was not taken into account in PRS's section 163(j) calculation.

TABLE 1 TO PARAGRAPH (o)(17)(ii)

	A	B	Total
Allocable ATI	$100	$0	$100
Allocable BII	10	10	20
Allocable BIE	30	30	60

(iii) Third, PRS compares each partner's allocable business interest income to such partner's allocable business interest expense. Because each partner's allocable business interest expense exceeds its allocable business interest income by $20 ($30−$10), each partner has an allocable business interest income deficit of $20. Thus, the total allocable business interest income deficit is $40 ($20 + $20). No partner has allocable business interest income excess because no partner has allocable business interest income in excess of its allocable business interest expense. Thus, the total allocable business interest income excess is $0.

TABLE 2 TO PARAGRAPH (o)(17)(iii)

	A	B	Total
Allocable BII	$10	$10	N/A
Allocable BIE	30	30	N/A
If allocable BII exceeds allocable BIE, then such amount = Allocable BII excess	0	0	$0
If allocable BIE exceeds allocable BII, then such amount = Allocable BII deficit	20	20	40

(iv) Fourth, PRS determines each partner's final allocable business interest income excess. Because no partner had any allocable business interest income excess, each partner has final allocable business interest income excess of $0.

(v) Fifth, PRS determines each partner's remaining business interest expense. PRS determines A's remaining business interest expense by reducing, but not below $0, A's allocable business interest income deficit ($20) by the product of the total allocable business interest income excess ($0) and the ratio of A's allocable business interest income deficit to the total business interest income deficit ($20/$40). Therefore, A's allocable business interest income deficit of $20 is reduced by $0 ($0 × 50 percent). As a result, A's remaining business interest expense is $20. PRS determines B's remaining business interest expense by reducing, but not below $0, B's allocable business interest income deficit ($20) by the product of the total allocable business

interest income excess ($0) and the ratio of B's allocable business interest income deficit to the total business interest income deficit ($20/$40). Therefore, B's allocable business interest income deficit of $20 is reduced by $0 ($0 × 50 percent). As a result, B's remaining business interest expense is $20.

TABLE 3 TO PARAGRAPH (o)(17)(v)

	A	B	Total
Allocable BII deficit	$20	$20	$40
Less: (Total allocable BII excess) × (Allocable BII deficit/Total allocable BII deficit)	0	0	N/A
= Remaining BIE	20	20	40

(vi) Sixth, PRS determines each partner's final allocable ATI. Any partner with a negative allocable ATI, or an allocable ATI of $0, has a positive allocable ATI of $0. Therefore, B has a positive allocable ATI of $0. Because A's allocable ATI is comprised of $100 of income and gain and $0 of deduction and loss, A has positive allocable ATI of $100. Thus, the total positive allocable ATI is $100 ($100 + $0). PRS determines A's final allocable ATI by reducing, but not below $0, A's positive allocable ATI ($100) by the product of total negative allocable ATI ($0) and the ratio of A's positive allocable ATI to the total positive allocable ATI ($100/$100). Therefore, A's positive allocable ATI is reduced by $0 ($0 × 100 percent). As a result, A's final allocable ATI is $100. Because B has a positive allocable ATI of $0, B's final allocable ATI is $0.

TABLE 4 TO PARAGRAPH (o)(17)(vi)

	A	B	Total
Allocable ATI	$100	$0	$100
If deduction and loss items comprising allocable ATI exceed income and gain items comprising allocable ATI, then such excess amount = Negative allocable ATI	0	0	0
If income and gain items comprising allocable ATI equal or exceed deduction and loss items comprising allocable ATI, then such amount = Positive allocable	100	0	100

	A	B	Total
ATI			

TABLE 5 TO PARAGRAPH (o)(17)(vi)

	A	B	Total
Positive allocable ATI	$100	$0	$100
Less: (Total negative allocable ATI) × (Positive allocable ATI/Total positive allocable ATI)	0	0	N/A
= Final allocable ATI	100	0	100

(vii) Seventh, PRS compares each partner's ATI capacity (ATIC) amount to such partner's remaining business interest expense. A's ATIC amount is $30 ($100 × 30 percent) and B's ATIC amount is $0 ($0 × 30 percent). Because A's ATIC amount exceeds its remaining business interest expense by $10 ($30−$20), A has an ATIC excess of $10. B does not have any ATIC excess. Thus, the total ATIC excess is $10 ($10 + $0). A does not have any ATIC deficit. Because B's remaining business interest expense exceeds its ATIC amount by $20 ($20−$0), B has an ATIC deficit of $20. Thus, the total ATIC deficit is $20 ($0 + $20).

TABLE 6 TO PARAGRAPH (o)(17)(vii)

	A	B	Total
ATIC (Final allocable ATI × 30 percent)	$30	$0	N/A
Remaining BIE	20	20	N/A
If ATIC exceeds remaining BIE, then such excess = ATIC excess	10	0	$10
If remaining BIE exceeds ATIC, then such excess = ATIC deficit	0	20	20

(viii)

(A) Eighth, PRS must perform the calculations and make the necessary adjustments described under paragraph (f)(2)(viii) of this section if, and only if, PRS has—

(*1*) An excess business interest expense greater than $0 under paragraph (f)(2)(i) of this section;

(*2*) A total negative allocable ATI greater than $0 under paragraph (f)(2)(vi) of this section; and

(3) A total ATIC excess amount greater than $0 under paragraph (f)(2)(vii) of this section.

(B) Because PRS does not meet all three requirements in paragraph (o)(17)(viii)(A) of this section, PRS does not perform the calculations or adjustments described in paragraph (f)(2)(viii) of this section. In sum, the correct amounts to be used in paragraphs (o)(17)(ix) and (x) of this section are as follows.

TABLE 7 TO PARAGRAPH (o)(17)(viii)(B)

	A	B	Total
ATIC excess	$10	$0	$10
ATIC deficit	0	20	20

(ix) Ninth, PRS determines each partner's final ATIC excess amount. Because A has an ATIC excess, PRS must determine A's final ATIC excess amount. A's final ATIC excess amount is A's ATIC excess ($10), reduced, but not below $0, by the product of the total ATIC deficit ($20) and the ratio of A's ATIC excess to the total ATIC excess ($10/$10). Therefore, A has $0 of final ATIC excess ($10−($20 × 100 percent)).

TABLE 8 TO PARAGRAPH (o)(17)(ix)

	A	B	Total
ATIC excess	$10	$0	N/A
Less: (Total ATIC deficit) × (ATIC excess/Total ATIC excess)	20	0	N/A

	A	B	Total
= Final ATIC excess	0	0	$0

(x) Tenth, PRS determines each partner's final ATIC deficit amount. Because B has an ATIC deficit, PRS must determine B's final ATIC deficit amount. B's final ATIC deficit amount is B's ATIC deficit ($20), reduced, but not below $0, by the product of the total ATIC excess ($10) and the ratio of B's ATIC deficit to the total ATIC deficit ($20/$20). Therefore, B has $10 of final ATIC deficit ($20−($10 × 100 percent)).

TABLE 9 TO PARAGRAPH (o)(17)(x)

	A	B	Total
ATIC deficit	$0	$20	N/A
Less: (Total ATIC excess) × (ATIC deficit/Total ATIC deficit)	0	10	N/A
= Final ATIC deficit	0	10	$10

(xi) Eleventh, PRS allocates deductible business interest expense and section 163(j) excess items to the partners. Pursuant to paragraph (f)(2)(i) of this section, PRS has $10 of excess business interest expense. PRS allocates the excess business interest expense dollar for dollar to the partners with final ATIC deficits amounts. Thus, PRS allocates all $10 of its excess business interest expense to B. A partner's allocable business interest expense is deductible business interest expense to the extent it exceeds such partner's share of excess business interest expense. Therefore, A has deductible business interest expense of $30 ($30−$0) and B has deductible business interest expense of $20 ($30−$10). As a result of its allocations from PRS, A increases its section 704(b) capital account and basis in PRS by $80 to $180. As a result of its allocations from PRS, B decreases its capital account and basis in PRS by $20 to $80.

TABLE 10 TO PARAGRAPH (o)(17)(xi)

	A	B	Total
Deductible BIE	$30	$20	$50
EBIE allocated	0	10	10
ETI allocated	0	0	0

	A	B	Total
EBII allocated	0	0	0

(18) ***Example 18: Facts.*** A, B, and C own all of the interests in partnership PRS. In Year 1, PRS has $150 of ATI, $10 of business interest income, and $40 of business interest expense. PRS's ATI consists of $200 of gross income and $50 of gross deductions. PRS allocates its items comprising ATI ($50) to A, $200 to B, and $0 to C. PRS allocates its business interest income $0 to A, $0 to B, and $10 to C. PRS allocates its business interest expense $30 to A, $10 to B, and $0 to C.

(i) First, PRS determines its limitation pursuant to § 1.163(j)-2. PRS's section 163(j) limit is 30 percent of its ATI plus its business interest income, or $55 (($150 × 30 percent) + $10). Thus, PRS has $0 of excess business interest income, $50 of excess taxable income, $40 of deductible business interest expense, and $0 of excess business interest expense.

(ii) Second, PRS determines each partner's allocable share of section 163(j) items used in its own section 163(j) calculation.

TABLE 11 TO PARAGRAPH (o)(18)(ii)

	A	B	C	Total
Allocable ATI	($50)	$200	$0	$150
Allocable BII	0	0	10	10
Allocable BIE	30	10	0	40

(iii) Third, PRS compares each partner's allocable business interest income to such partner's allocable business interest expense. Because A's allocable business interest expense exceeds its allocable business interest income by $30 ($30−$0), A has an allocable business interest income deficit of $30. Because B's allocable business interest expense exceeds its allocable business interest income by $10 ($10−$0), B has an allocable business interest income deficit of $10. C does not have any allocable business interest income deficit. Thus, the total allocable business interest income deficit is $40 ($30 + $10 + $0). A and B do not have any allocable

business interest income excess. Because C's allocable business interest income exceeds its allocable business interest expense by $10 ($10−$0), C has an allocable business interest income excess of $10. Thus, the total allocable business interest income excess is $10 ($0 + $0 + $10).

TABLE 12 TO PARAGRAPH (o)(18)(iii)

	A	B	C	Total
Allocable BII	$0	$0	$10	N/A
Allocable BIE	30	10	0	N/A
If allocable BII exceeds allocable BIE, then such amount = Allocable BII excess	0	0	10	$10
If allocable BIE exceeds allocable BII, then such amount = Allocable BII deficit	30	10	0	40

(iv) Fourth, PRS determines each partner's final allocable business interest income excess. Because A and B do not have any allocable business interest income excess, each partner has final allocable business interest income excess of $0. PRS determines C's final allocable business interest income excess by reducing, but not below $0, C's allocable business interest income excess ($10) by the product of the total allocable business interest income deficit ($40) and the ratio of C's allocable business interest income excess to the total allocable business interest income excess ($10/$10). Therefore, C's allocable business interest income excess of $10 is reduced by $10 ($40 × 100 percent). As a result, C's allocable business interest income excess is $0.

TABLE 13 TO PARAGRAPH (o)(18)(iv)

	A	B	C	Total
Allocable BII excess	$0	$0	$10	N/A
Less: (Total allocable BII deficit) × (Allocable BII excess/Total allocable BII excess)	0	0	40	N/A
= Final Allocable BII Excess	0	0	0	$10

(v) Fifth, PRS determines each partner's remaining business interest expense. PRS determines A's remaining business interest expense by reducing, but not below $0, A's allocable business interest income deficit ($30) by the product of the total allocable business interest income excess ($10) and the ratio of A's allocable business interest income deficit to the total business interest income deficit ($30/$40). Therefore, A's allocable business interest income deficit of $30 is reduced by $7.50 ($10 × 75 percent). As a result, A's remaining business interest expense is $22.50. PRS determines B's remaining business interest expense by reducing, but

not below $0, B's allocable business interest income deficit ($10) by the product of the total allocable business interest income excess ($10) and the ratio of B's allocable business interest income deficit to the total business interest income deficit ($10/$40). Therefore, B's allocable business interest income deficit of $10 is reduced by $2.50 ($10 × 25 percent). As a result, B's remaining business interest expense is $7.50. Because C does not have any allocable business interest income deficit, C's remaining business interest expense is $0.

TABLE 14 TO PARAGRAPH (o)(18)(v)

	A	B	C	Total
Allocable BII deficit	$30	$10	$0	$40
Less: (Total allocable BII excess) × (Allocable BII deficit/Total allocable BII deficit)	7.50	2.50	0	N/A
= Remaining BIE	22.50	7.50	0	N/A

(vi) Sixth, PRS determines each partner's final allocable ATI. Because A's allocable ATI is comprised of $50 of items of deduction and loss and $0 of income and gain, A has negative allocable ATI of $50. A is the only partner with negative allocable ATI. Thus, the total negative allocable ATI amount is $50. Any partner with a negative allocable ATI, or an allocable ATI of $0, has a positive allocable ATI of $0. Therefore, A and C have a positive allocable ATI of $0. Because B's allocable ATI is comprised of $200 of items of income and gain and $0 of deduction and loss, B has positive allocable ATI of $200. Thus, the total positive allocable ATI is $200 ($0 + $200 + $0). PRS determines B's final allocable ATI by reducing, but not below $0, B's positive allocable ATI ($200) by the product of total negative allocable ATI ($50) and the ratio of B's positive allocable ATI to the total positive allocable ATI ($200/$200). Therefore, B's positive allocable ATI is reduced by $50 ($50 × 100 percent). As a result, B's final allocable ATI is $150.

TABLE 15 TO PARAGRAPH (o)(18)(vi)

	A	B	C	Total
Allocable ATI	($50)	$200	$0	$150
If deduction and loss items comprising allocable ATI exceed income and gain items comprising allocable ATI, then such excess amount = Negative allocable ATI	50	0	0	50
If income and gain items comprising allocable ATI equal or exceed deduction and loss items comprising allocable ATI, then such amount =	0	200	0	200

	A	B	C	Total
Positive allocable ATI				

TABLE 16 TO PARAGRAPH (o)(18)(vi)

	A	B	C	Total
Positive allocable ATI	$0	$200	$0	$200
Less: (Total negative allocable ATI) × (Positive allocable ATI/Total positive allocable ATI)	0	50	0	N/A
= Final allocable ATI	0	150	0	150

(vii) Seventh, PRS compares each partner's ATI capacity (ATIC) amount to such partner's remaining business interest expense. A's ATIC amount is $0 ($0 × 30 percent), B's ATIC amount is $45 ($150 × 30 percent), and C's ATIC amount is $0 ($0 × 30 percent). A does not have any ATIC excess. Because B's ATIC amount exceeds its remaining business interest expense by $37.50 ($45−$7.50), B has an ATIC excess amount of $37.50. C does not have any ATIC excess. Thus, the total ATIC excess amount is $37.50 ($0 + $37.50 + $0). Because A's remaining business interest expense exceeds its ATIC amount by $22.50 ($22.50−$0), A has an ATIC deficit of $22.50. B and C do not have any ATIC deficit. Thus, the total ATIC deficit is $22.50 ($22.50 + $0 + $0).

TABLE 17 TO PARAGRAPH (o)(18)(vii)

	A	B	C	Total
ATIC (Final allocable ATI × 30 percent)	$0	$45	$0	N/A
Remaining BIE	22.50	7.50	0	N/A
If ATIC exceeds remaining BIE, then such excess = ATIC excess	0	37.50	0	$37.50
If remaining BIE exceeds ATIC, then such excess = ATIC deficit	22.50	0	0	22.50

(viii)

(A) Eighth, PRS must perform the calculations and make the necessary adjustments described under paragraph (f)(2)(viii) of this section if, and only if, PRS has—

(*1*) An excess business interest expense greater than $0 under paragraph (f)(2)(i) of this section;

(2) A total negative allocable ATI greater than $0 under paragraph (f)(2)(vi) of this section; and

(3) A total ATIC excess amount greater than $0 under paragraph (f)(2)(vii) of this section.

(B) Because PRS does not meet all three requirements in paragraph (o)(18)(viii)(A) of this section, PRS does not perform the calculations or adjustments described in paragraph (f)(2)(viii) of this section. In sum, the correct amounts to be used in paragraphs (o)(18)(ix) and (x) of this section are as follows.

TABLE 18 TO PARAGRAPH (o)(18)(viii)(B)

	A	B	C	Total
ATIC excess	$0	$37.50	$0	$37.50
ATIC deficit	22.50	0	0	22.50

(ix) Ninth, PRS determines each partner's final ATIC excess amount. Because B has ATIC excess, PRS must determine B's final ATIC excess amount. B's final ATIC excess amount is B's ATIC excess ($37.50), reduced, but not below $0, by the product of the total ATIC deficit ($22.50) and the ratio of B's ATIC excess to the total ATIC excess ($37.50/$37.50). Therefore, B has $15 of final ATIC excess ($37.50−($22.50 × 100 percent)).

TABLE 19 TO PARAGRAPH (o)(18)(ix)

	A	B	C	Total
ATIC excess	$0	$37.50	$0	N/A
Less: (Total ATIC deficit) × (ATIC excess/Total ATIC excess)	0	22.50	0	N/A

	A	B	C	Total
= Final ATIC excess	0	15	0	$15

(x) Tenth, PRS determines each partner's final ATIC deficit amount. Because A has an ATIC deficit, PRS must determine A's final ATIC deficit amount. A's final ATIC deficit amount is A's ATIC deficit ($22.50), reduced, but not below $0, by the product of the total ATIC excess ($37.50) and the ratio of A's ATIC deficit to the total ATIC deficit ($22.50/$22.50). Therefore, A has $0 of final ATIC deficit ($22.50−($37.50 × 100 percent)).

TABLE 20 TO PARAGRAPH (o)(18)(x)

	A	B	C	Total
ATIC deficit	$22.50	$0	$0	N/A
Less: (Total ATIC excess) × (ATIC deficit/Total ATIC deficit)	37.50	0	0	N/A
= Final ATIC deficit	0	0	0	0

(xi) Eleventh, PRS allocates deductible business interest expense and section 163(j) excess items to the partners. Pursuant to paragraph (f)(2)(i) of this section, PRS has $50 of excess taxable income and $40 of deductible business interest expense. After grossing up each partner's final ATIC excess amounts by ten-thirds, excess taxable income is allocated dollar for dollar to partners with final ATIC excess amounts. Thus, PRS allocates its excess taxable income $50 to B. A partner's allocable business interest expense is deductible business interest expense to the extent it exceeds such partner's share of excess business interest expense. Therefore, A has deductible business interest expense of $30 ($30−$0), B has deductible business interest expense of $10 ($10−$0), and C has deductible business interest expense of $0 ($0−$0).

TABLE 21 TO PARAGRAPH (o)(18)(xi)

	A	B	C	Total
Deductible BIE	$30	$10	$0	$40
EBIE allocated	0	0	0	0
ETI allocated	0	50	0	50

	A	B	C	Total
EBII allocated	0	0	0	0

(19) ***Example 19: Facts.*** A, B, and C own all of the interests in partnership PRS. In Year 1, PRS has $100 of ATI, $0 of business interest income, and $50 of business interest expense. PRS's ATI consists of $200 of gross income and $100 of gross deductions. PRS allocates its items comprising ATI $100 to A, $100 to B, and ($100) to C. PRS allocates its business interest expense $0 to A, $25 to B, and $25 to C.

(i) First, PRS determines its limitation pursuant to § 1.163(j)-2. PRS's section 163(j) limit is 30 percent of its ATI plus its business interest income, or $30 ($100 × 30 percent). Thus, PRS has $30 of deductible business interest expense and $20 of excess business interest expense.

(ii) Second, PRS determines each partner's allocable share of section 163(j) items used in its own section 163(j) calculation.

TABLE 22 TO PARAGRAPH (o)(19)(ii)

	A	B	C	Total
Allocable ATI	$100	$100	($100)	$100
Allocable BII	0	0	0	0
Allocable BIE	0	25	25	50

(iii) Third, PRS compares each partner's allocable business interest income to such partner's allocable business interest expense. No partner has allocable business interest income. Consequently, each partner's allocable business interest income deficit is equal to such partner's allocable business interest expense. Thus, A's allocable business interest income deficit is $0, B's allocable business interest income deficit is $25, and C's allocable business interest income deficit is $25. The total allocable business interest income deficit is $50 ($0 +

$25 + $25). No partner has allocable business interest income excess because no partner has allocable business interest income in excess of its allocable business interest expense. Thus, the total allocable business interest income excess is $0.

TABLE 23 TO PARAGRAPH (o)(19)(iii)

	A	B	C	Total
Allocable BII	$0	$0	$0	N/A
Allocable BIE	0	25	25	N/A
If allocable BII exceeds allocable BIE, then such amount = Allocable BII excess	0	0	0	$0
If allocable BIE exceeds allocable BII, then such amount = Allocable BII deficit	0	25	25	50

(iv) Fourth, PRS determines each partner's final allocable business interest income excess. Because no partner had any allocable business interest income excess, each partner has final allocable business interest income excess of $0.

(v) Fifth, PRS determines each partner's remaining business interest expense. Because no partner has any allocable business interest income excess, each partner's remaining business interest expense equals its allocable business interest income deficit. Thus, A's remaining business interest expense is $0, B's remaining business interest expense is $25, and C's remaining business interest expense is $25.

TABLE 24 TO PARAGRAPH (o)(19)(v)

	A	B	C	Total
Allocable BII deficit	$0	$25	$25	$50
Less: (Total allocable BII excess) × (Allocable BII deficit/Total allocable BII deficit)	0	0	0	N/A
= Remaining BIE	0	25	25	N/A

(vi) Sixth, PRS determines each partner's final allocable ATI. Because C's allocable ATI is comprised of $100 of items of deduction and loss and $0 of income and gain, C has negative allocable ATI of $100. C is the only partner with negative allocable ATI. Thus, the total negative allocable ATI amount is $100. Any partner with a negative allocable ATI, or an allocable ATI of $0, has a positive allocable ATI of $0. Therefore, C has a positive allocable ATI of $0. Because A's allocable ATI is comprised of $100 of items of income and gain and $0 of deduction and loss, A has positive allocable ATI of $100. Because B's allocable ATI is comprised of $100 of items of income and gain and $0 of deduction and loss, B has positive allocable ATI of $100. Thus, the total positive allocable ATI is $200 ($100 + $100 + $0). PRS determines A's final allocable ATI

by reducing, but not below $0, A's positive allocable ATI ($100) by the product of total negative allocable ATI ($100) and the ratio of A's positive allocable ATI to the total positive allocable ATI ($100/$200). Therefore, A's positive allocable ATI is reduced by $50 ($100 × 50 percent). As a result, A's final allocable ATI is $50. PRS determines B's final allocable ATI by reducing, but not below $0, B's positive allocable ATI ($100) by the product of total negative allocable ATI ($100) and the ratio of B's positive allocable ATI to the total positive allocable ATI ($100/$200). Therefore, B's positive allocable ATI is reduced by $50 ($100 × 50 percent). As a result, B's final allocable ATI is $50. Because C has a positive allocable ATI of $0, C's final allocable ATI is $0.

TABLE 25 TO PARAGRAPH (o)(19)(vi)

	A	B	C	Total
Allocable ATI	$100	$100	($100)	$100
If deduction and loss items comprising allocable ATI exceed income and gain items comprising allocable ATI, then such excess amount = Negative allocable ATI	0	0	100	100
If income and gain items comprising allocable ATI equal or exceed deduction and loss items comprising allocable ATI, then such amount = Positive allocable ATI	100	100	0	200

TABLE 26 TO PARAGRAPH (o)(19)(vi)

	A	B	C	Total
Positive allocable ATI	$100	$100	$0	$200
Less: (Total negative allocable ATI) × (Positive allocable ATI/Total positive allocable ATI)	50	50	0	N/A
= Final allocable ATI	50	50	0	100

(vii) Seventh, PRS compares each partner's ATI capacity (ATIC) amount to such partner's remaining business interest expense. A's ATIC amount is $15 ($50 × 30 percent), B's ATIC amount is $15 ($50 × 30 percent), and C's ATIC amount is $0 ($0 × 30 percent). Because A's ATIC amount exceeds its remaining business interest expense by $15 ($15−$0), A has an ATIC excess of $15. B and C do not have any ATIC excess. Thus, the total ATIC excess is $15 ($15 + $0 + $0). A does not have any ATIC deficit. Because B's remaining business interest expense exceeds its

ATIC amount by $10 ($25−$15), B has an ATIC deficit of $10. Because C's remaining business interest expense exceeds its ATIC amount by $25 ($25−$0), C has an ATIC deficit of $25. Thus, the total ATIC deficit is $35 ($0 + $10 + $25).

TABLE 27 TO PARAGRAPH (o)(19)(vii)

	A	B	C	Total
ATIC (Final allocable ATI × 30 percent)	$15	$15	$0	N/A
Remaining BIE	0	25	25	N/A
If ATIC exceeds remaining BIE, then such excess = ATIC excess	15	0	0	$15
If remaining BIE exceeds ATIC, then such excess = ATIC deficit	0	10	25	35

(viii)

(A) Eighth, PRS must perform the calculations and make the necessary adjustments described under paragraph (f)(2)(viii) of this section if, and only if, PRS has—

(*1*) An excess business interest expense greater than $0 under paragraph (f)(2)(i) of this section;

(*2*) A total negative allocable ATI greater than $0 under paragraph (f)(2)(vi) of this section; and

(*3*) A total ATIC excess greater than $0 under paragraph (f)(2)(vii) of this section. Because PRS satisfies each of these three requirements, PRS must perform the calculations and make the necessary adjustments described under paragraphs (f)(2)(viii)(B) and (C) or (D) of this section.

(B) PRS must determine each partner's priority amount and usable priority amount. Only partners with an ATIC deficit under paragraph (f)(2)(vii) of this section can have a priority amount greater than $0. Thus, only partners B and C can have a priority amount greater than $0. PRS determines a partner's priority amount as 30 percent of the amount by which such partner's allocable positive ATI exceeds its final allocable ATI. Therefore, A's priority amount is $0, B's priority amount is $15 (($100−$50) × 30 percent), and C's priority amount is $0 (($0−$0) × 30 percent). Thus, the total priority amount is $15 ($0 + $15 + $0). Next, PRS must determine each partner's usable priority amount. Each partner's usable priority amount is the lesser of such partner's priority amount or ATIC deficit. Thus, A has a usable priority amount of $0, B has a usable priority amount of $10, and C has a usable priority amount of $0. As a result, the total usable priority amount is $10 ($0 + $10

+ $0). Because the total ATIC excess under paragraph (f)(2)(vii) of this section ($15) is greater than the total usable priority amount ($10), PRS must perform the adjustments described in paragraph (f)(2)(viii)(C) of this section.

TABLE 28 TO PARAGRAPH (o)(19)(viii)(B)

	A	B	C	Total
(Positive allocable ATI—Final allocable ATI)	$0	$50	$0	N/A
Multiplied by 30 percent	30%	30%	30%	N/A
= Priority amount	$0	$15	$0	$15

TABLE 29 TO PARAGRAPH (o)(19)(viii)(B)

	A	B	C	Total
Priority amount	$0	$15	$0	N/A
ATIC deficit	0	10	25	N/A
Lesser of priority amount or ATIC deficit = Usable priority amount	0	10	0	$10

(C) For purposes of paragraph (f)(2)(ix) of this section, each partner's final ATIC excess is $0. For purposes of paragraph (f)(2)(x) of this section, the following terms have the following meanings. Each partner's ATIC deficit is such partner's ATIC deficit as determined pursuant to paragraph (f)(2)(vii) of this section reduced by such partner's usable priority amount. Thus, A's ATIC deficit is $0 ($0−$0), B's ATIC deficit is $0 ($10−$10), and C's ATIC deficit is $25 ($25−$0). The total ATIC deficit is the total ATIC deficit determined pursuant to paragraph (f)(2)(vii) ($35) reduced by the total usable priority amount ($10). Thus, the total ATIC deficit is $25 ($35−$10). The total ATIC excess is the total ATIC excess determined pursuant to paragraph (f)(2)(vii) of this section ($15) reduced by the total usable priority amount ($10). Thus, the total ATIC excess is $5 ($15−$5).

TABLE 30 TO PARAGRAPH (o)(19)(viii)(C)

	A	B	C	Total
ATIC deficit	$0	$10	$25	N/A
Less: Usable priority amount	0	10	0	N/A

	A	B	C	Total
= ATIC deficit for purposes of paragraph (f)(2)(x) of this section	0	0	25	$25

(D)

(1) In light of the fact that the total ATIC excess was greater than the total usable priority amount under paragraph (f)(2)(viii)(B) of this section, paragraph (f)(2)(viii)(D) of this section does not apply.

(2) In sum, the correct amounts to be used in paragraphs (o)(19)(ix) and (x) of this section are as follows.

TABLE 31 TO PARAGRAPH (o)(19)(viii)(D)(2)

	A	B	C	Total
ATIC excess	$5	$0	$0	$5
ATIC deficit	0	0	25	25

(ix) Ninth, PRS determines each partner's final ATIC excess amount. Pursuant to paragraph (f)(2)(viii)(C) of this section, each partner's final ATIC excess amount is $0.

(x) Tenth, PRS determines each partner's final ATIC deficit amount. Because C has an ATIC deficit, PRS must determine C's final ATIC deficit amount. C's final ATIC deficit amount is C's ATIC deficit ($25), reduced, but not below $0, by the product of the total ATIC excess ($5) and the ratio of C's ATIC deficit to the total ATIC deficit ($25/$25). Therefore, C has $20 of final ATIC deficit ($25−($5 × 100 percent)).

TABLE 32 TO PARAGRAPH (o)(19)(x)

	A	B	C	Total
ATIC deficit	$0	$0	$25	N/A
Less: (Total ATIC excess) × (ATIC deficit/Total ATIC deficit)	0	0	5	N/A
= Final ATIC deficit	0	0	20	$20

(xi) Eleventh, PRS allocates deductible business interest expense and section 163(j) excess items to the partners. Pursuant to paragraph (f)(2)(i) of this section, PRS has $20 of excess business interest expense. PRS allocates the excess business interest expense dollar for dollar to the

partners with final ATIC deficits. Thus, PRS allocates its excess business interest expense $20 to C. A partner's allocable business interest expense is deductible business interest expense to the extent it exceeds such partner's share of excess business interest expense. Therefore, A has deductible business interest expense of $0 ($0−$0), B has deductible business interest expense of $25 ($25−$0), and C has deductible business interest expense of $5 ($25−$20).

TABLE 33 TO PARAGRAPH (o)(19)(xi)

	A	B	C	Total
Deductible BIE	$0	$25	$5	$30
EBIE allocated	0	0	20	20
ETI allocated	0	0	0	0
EBII allocated	0	0	0	0

(20) ***Example 20: Facts.*** A, B, C, and D own all of the interests in partnership PRS. In Year 1, PRS has $200 of ATI, $0 of business interest income, and $140 of business interest expense. PRS's ATI consists of $600 of gross income and $400 of gross deductions. PRS allocates its items comprising ATI $100 to A, $100 to B, $400 to C, and ($400) to D. PRS allocates its business interest expense $0 to A, $40 to B, $60 to C, and $40 to D.

(i) First, PRS determines its limitation pursuant to § 1.163(j)-2. PRS's section 163(j) limit is 30 percent of its ATI plus its business interest income, or $60 ($200 × 30 percent). Thus, PRS has $60 of deductible business interest expense and $80 of excess business interest expense.

(ii) Second, PRS determines each partner's allocable share of section 163(j) items used in its own section 163(j) calculation.

TABLE 34 TO PARAGRAPH (o)(20)(ii)

	A	B	C	D	Total
Allocable ATI	$100	$100	$400	($400)	$200
Allocable BII	0	0	0	0	0
Allocable BIE	0	40	60	40	140

(iii) Third, PRS compares each partner's allocable business interest income to such partner's allocable business interest expense. No partner has allocable business interest income. Consequently, each partner's allocable business interest income deficit is equal to such partner's allocable business interest expense. Thus, A's allocable business interest income deficit is $0, B's allocable business interest income deficit is $40, C's allocable business interest income deficit is $60, and D's allocable business interest income deficit is $40. The total

allocable business interest income deficit is $140 ($0 + $40 + $60 + $40). No partner has allocable business interest income excess because no partner has allocable business interest income in excess of its allocable business interest expense. Thus, the total allocable business interest income excess is $0.

TABLE 35 TO PARAGRAPH (o)(20)(iii)

	A	B	C	D	Total
Allocable BII	$0	$0	$0	$0	N/A
Allocable BIE	0	40	60	40	N/A
If allocable BII exceeds allocable BIE, then such amount = Allocable BII excess	0	0	0	0	$0
If allocable BIE exceeds allocable BII, then such amount = Allocable BII deficit	0	40	60	40	140

(iv) Fourth, PRS determines each partner's final allocable business interest income excess. Because no partner has any allocable business interest income excess, each partner has final allocable business interest income excess of $0.

(v) Fifth, PRS determines each partner's remaining business interest expense. Because no partner has any allocable business interest income excess, each partner's remaining business interest expense equals its allocable business interest income deficit. Thus, A's remaining business interest expense is $0, B's remaining business interest expense is $40, C's remaining business interest expense is $60, and D's remaining business interest expense is $40.

TABLE 36 TO PARAGRAPH (o)(20)(v)

	A	B	C	D	Total
Allocable BII deficit	$0	$40	$60	$40	$140
Less: (Total allocable BII excess) × (Allocable BII deficit/Total allocable BII deficit)	0	0	0	0	N/A
= Remaining BIE	0	40	60	40	N/A

(vi) Sixth, PRS determines each partner's final allocable ATI. Because D's allocable ATI is comprised of $400 of items of deduction and loss and $0 of income and gain, D has negative allocable ATI of $400. D is the only partner with negative allocable ATI. Thus, the total negative allocable ATI amount is $400. Any partner with a negative allocable ATI, or an allocable ATI of $0, has a positive allocable ATI of $0. Therefore, D has a positive allocable ATI of $0. PRS determines A's final allocable ATI by reducing, but not below $0, A's positive allocable ATI ($100) by the product

of total negative allocable ATI ($400) and the ratio of A's positive allocable ATI to the total positive allocable ATI ($100/$600). Therefore, A's positive allocable ATI is reduced by $66.67 ($400 × 16.67 percent). As a result, A's final allocable ATI is $33.33. PRS determines B's final allocable ATI by reducing, but not below $0, B's positive allocable ATI ($100) by the product of total negative allocable ATI ($400) and the ratio of B's positive allocable ATI to the total positive allocable ATI ($100/$600). Therefore, B's positive allocable ATI is reduced by $66.67 ($400 × 16.67 percent). As a result, B's final allocable ATI is $33.33. PRS determines C's final allocable ATI by reducing, but not below $0, C's positive allocable ATI ($400) by the product of total negative allocable ATI ($400) and the ratio of C's positive allocable ATI to the total positive allocable ATI ($400/$600). Therefore, C's positive allocable ATI is reduced by $266.67 ($400 × 66.67 percent). As a result, C's final allocable ATI is $133.33. Because D has a positive allocable ATI of $0, D's final allocable ATI is $0.

TABLE 37 TO PARAGRAPH (o)(20)(vi)

	A	B	C	D	Total
Allocable ATI	$100	$100	$400	($400)	$200
If deduction and loss items comprising allocable ATI exceed income and gain items comprising allocable ATI, then such excess amount = Negative allocable ATI	0	0	0	400	400
If income and gain items comprising allocable ATI equal or exceed deduction and loss items comprising allocable ATI, then such amount = Positive allocable ATI	100	100	400	0	600

TABLE 38 TO PARAGRAPH (o)(20)(vi)

	A	B	C	D	Total
Positive allocable ATI	$100	$100	$400	$0	$600
Less: (Total negative allocable ATI) × (Positive allocable ATI/ Total positive allocable ATI)	66.67	66.67	266.67	0	N/A
= Final allocable ATI	33.33	33.33	133.33	0	200

(vii) Seventh, PRS compares each partner's ATI capacity (ATIC) amount to such partner's remaining business interest expense. A's ATIC amount is $10 ($33.33 × 30 percent), B's ATIC amount is $10 ($33.33 × 30 percent), C's ATIC amount is $40 ($133.33 × 30 percent), and D's ATIC amount is $0 ($0 × 30 percent). Because A's ATIC amount exceeds its remaining business interest expense by $10 ($10−$0), A has an ATIC excess of $10. B, C, and D do not have any ATIC excess. Thus, the total ATIC excess is $10 ($10 + $0 + $0 + $0). A does not have any ATIC deficit. Because B's remaining business interest expense exceeds its ATIC amount by $30

($40−$10), B has an ATIC deficit of $30. Because C's remaining business interest expense exceeds its ATIC amount by $20 ($60−$40), C has an ATIC deficit of $20. Because D's remaining business interest expense exceeds its ATIC amount by $40 ($40−$0), D has an ATIC deficit of $40. Thus, the total ATIC deficit is $90 ($0 + $30 + $20 + $40).

TABLE 39 TO PARAGRAPH (o)(20)(vii)

—	A	B	C	D	Total
ATIC (Final allocable ATI × 30 percent)	$10	$10	$40	$0	N/A
Remaining BIE	0	40	60	40	N/A
If ATIC exceeds remaining BIE, then such excess = ATIC excess	10	0	0	0	$10
If remaining BIE exceeds ATIC, then such excess = ATIC deficit	0	30	20	40	90

(viii)

(A) Eighth, PRS must perform the calculations and make the necessary adjustments described under paragraph (f)(2)(viii) of this section if, and only if, PRS has (1) an excess business interest expense greater than $0 under paragraph (f)(2)(i) of this section, (2) a total negative allocable ATI greater than $0 under paragraph (f)(2)(vi) of this section, and (3) a total ATIC excess amount greater than $0 under paragraph (f)(2)(vii) of this section. Because PRS satisfies each of these three requirements, PRS must perform the calculations and make the necessary adjustments described under paragraphs (f)(2)(viii)(B) and (C) or paragraph (f)(2)(viii)(D) of this section.

(B) PRS must determine each partner's priority amount and usable priority amount. Only partners with an ATIC deficit under paragraph (f)(2)(vii) of this section can have a priority amount greater than $0. Thus, only partners B, C, and D can have a priority amount greater than $0. PRS determines a partner's priority amount as 30 percent of the amount by which such partner's allocable positive ATI exceeds its final allocable ATI. Therefore, B's priority amount is $20 (($100−$33.33) × 30 percent), C's priority amount is $80 (($400−$133.33) × 30 percent), and D's priority amount is $0 (($0−$0) × 30 percent). Thus, the total priority amount is $100 ($0 + $20 + $80 + $0). Next, PRS must determine each partner's usable priority amount. Each partner's usable priority amount is the lesser of such partner's priority amount or ATIC deficit. Thus, A has a usable priority amount of $0, B has a usable priority amount of $20, C has a usable priority amount of $20, and D has a usable priority amount of $0. As a result, the total usable priority amount is $40 ($0 + $20 + $20 + $0).

Because the total usable priority amount ($40) is greater than the total ATIC excess under paragraph (f)(2)(vii) of this section ($10), PRS must perform the adjustments described in paragraph (f)(2)(viii)(D) of this section.

TABLE 40 TO PARAGRAPH (o)(20)(viii)(B)

	A	B	C	D	Total
(Positive allocable ATI—Final allocable ATI)	$0	$66.67	$266.67	$0	N/A
Multiplied by 30 percent	30%	30%	30%	30%	N/A
= Priority amount	0	20	80	0	$100

TABLE 41 TO PARAGRAPH (o)(20)(viii)(B)

	A	B	C	D	Total
Priority amount	$0	$20	$80	$0	N/A
ATIC deficit	0	30	20	40	N/A
Lesser of priority amount or ATIC deficit = Usable priority amount	0	20	20	0	$40

(C) In light of the fact that the total usable priority amount is greater than the total ATIC excess under paragraph (f)(2)(viii)(B) of this section, paragraph (f)(2)(viii)(C) of this section does not apply.

(D)

(*1*) Because B and C are the only partners with priority amounts greater than $0, B and C are priority partners, while A and D are non-priority partners. For purposes of paragraph (f)(2)(ix) of this section, each partner's final ATIC excess amount is $0. For purposes of paragraph (f)(2)(x) of this section, each non-priority partner's final ATIC deficit amount is such partner's ATIC deficit determined pursuant to paragraph (f)(2)(vii) of this section. Therefore, A has a final ATIC deficit of $0 and D has a final ATIC deficit of $40. Additionally, for purposes of paragraph (f)(2)(x) of this section, PRS must determine each priority partner's step eight excess share. A priority partner's step eight excess share is the product of the total ATIC excess and the ratio of the partner's priority amount to the total priority amount. Thus, B's step eight excess share is $2 ($10 × ($20/$100)) and C's step eight excess share is $8 ($10 × ($80/$100)). To the extent a priority partner's step eight excess share exceeds its ATIC deficit, the excess will be the partner's ATIC excess for purposes of paragraph (f)(2)(x) of this section. Thus, B and C each have an ATIC excess of $0, resulting in a total ATIC excess is $0. To the extent a priority partner's ATIC deficit exceeds its step eight excess share, the excess will be the partner's ATIC deficit for purposes of

paragraph (f)(2)(x) of this section. Because B's ATIC deficit ($30) exceeds its step eight excess share ($2), B's ATIC deficit for purposes of paragraph (f)(2)(x) of this section is $28 ($30−$2). Because C's ATIC deficit ($20) exceeds its step eight excess share ($8), C's ATIC deficit for purposes of paragraph (f)(2)(x) of this section is $12 ($20−$8). Thus, the total ATIC deficit is $40 ($28 + $12).

TABLE 42 TO PARAGRAPH (o)(20)(viii)(D)(*1*)

	A	B	C	D	Total
Non-priority partners ATIC deficit in paragraph (f)(2)(vii) = Final ATIC deficit for purposes of paragraph (f)(2)(x) of this section	$0	N/A	N/A	$40	N/A

TABLE 43 TO PARAGRAPH (o)(20)(viii)(D)(*1*)

	A	B	C	D	Total
Priority partners step eight excess share = (Total ATIC excess) × (Priority/Total priority)	N/A	$2	$8	N/A	N/A
ATIC deficit	N/A	30	20	N/A	N/A
If step eight excess share exceeds ATIC deficit, then such excess = ATIC excess for purposes of paragraph (f)(2)(x) of this section	N/A	0	0	N/A	0
If ATIC deficit exceeds step eight excess share, then such excess = ATIC deficit for purposes of paragraph (f)(2)(x) of this section	N/A	28	12	N/A	40

(*2*) In sum, the correct amounts to be used in paragraphs (o)(20)(ix) and (x) of this section are as follows.

TABLE 44 TO PARAGRAPH (o)(20)(viii)(D)(2)

	A	B	C	D	Total
ATIC excess	$0	$0	$0	$0	$0
ATIC deficit	0	28	12	0	40

	A	B	C	D	Total
Non-priority partner final ATIC deficit	0	0	0	0	N/A

(ix) Ninth, PRS determines each partner's final ATIC excess amount. Pursuant to paragraph (f)(2)(viii)(D) of this section, each priority and non-priority partner's final ATIC excess amount is $0.

(x) Tenth, PRS determines each partner's final ATIC deficit amount. Because B has an ATIC deficit, PRS must determine B's final ATIC deficit amount. B's final ATIC deficit amount is B's ATIC deficit ($28), reduced, but not below $0, by the product of the total ATIC excess ($0) and the ratio of B's ATIC deficit to the total ATIC deficit ($28/$40). Therefore, B has $28 of final ATIC deficit ($28−($0 × 70 percent)). Because C has an ATIC deficit, PRS must determine C's final ATIC deficit amount. C's final ATIC deficit amount is C's ATIC deficit ($12), reduced, but not below $0, by the product of the total ATIC excess ($0) and the ratio of C's ATIC deficit to the total ATIC deficit ($12/$40). Therefore, C has $12 of final ATIC deficit ($12−($0 × 30 percent)). Pursuant to paragraph (f)(2)(viii)(D) of this section, D's final ATIC deficit amount is $40.

TABLE 45 TO PARAGRAPH (o)(20)(x)

	A	B	C	D	Total
ATIC deficit	N/A	$28	$12	N/A	N/A
Less: (Total ATIC excess) × (ATIC deficit/Total ATIC deficit)	N/A	0	0	N/A	N/A
= Final ATIC deficit	$0	28	12	$40	$80

(xi) Eleventh, PRS allocates deductible business interest expense and section 163(j) excess items to the partners. Pursuant to paragraph (f)(2)(i) of this section, PRS has $80 of excess business interest expense. PRS allocates the excess business interest expense dollar for dollar to the partners with final ATIC deficits. Thus, PRS allocates its excess business interest expense $28 to B, $12 to C, and $40 to D. A partner's allocable business interest expense is deductible business interest expense to the extent it exceeds such partner's share of excess business

interest expense. Therefore, A has deductible business interest expense of $0 ($0−$0), B has deductible business interest expense of $12 ($40−$28), C has deductible business interest expense of $48 ($60−$12), and D has deductible business interest expense of $0 ($40−$40).

TABLE 46 TO PARAGRAPH (o)(20)(xi)

	A	B	C	D	Total
Deductible BIE	$0	$12	$48	$0	$60
EBIE allocated	0	28	12	40	80
ETI allocated	0	0	0	0	0
EBII allocated	0	0	0	0	0

(21) ***Example 21: Facts.*** A, B, C, and D own all of the interests in partnership PRS. In Year 1, PRS has $200 of ATI, $0 of business interest income, and $150 of business interest expense. PRS's ATI consists of $500 of gross income and $300 of gross deductions. PRS allocates its items comprising ATI $50 to A, $50 to B, $400 to C, and ($300) to D. PRS allocates its business interest expense $0 to A, $50 to B, $50 to C, and $50 to D.

(i) First, PRS determines its limitation pursuant to § 1.163(j)-2. PRS's section 163(j) limit is 30 percent of its ATI plus its business interest income, or $60 ($200 × 30 percent). Thus, PRS has $60 of deductible business interest expense, and $90 of excess business interest expense.

(ii) Second, PRS determines each partner's allocable share of section 163(j) items used in its own section 163(j) calculation.

TABLE 47 TO PARAGRAPH (o)(21)(ii)

	A	B	C	D	Total
Allocable ATI	$50	$50	$400	($300)	$200
Allocable BII	0	0	0	0	0
Allocable BIE	0	50	50	50	150

(iii) Third, PRS compares each partner's allocable business interest income to such partner's allocable business interest expense. No partner has allocable business interest income. Consequently, each partner's allocable business interest income deficit is equal to such partner's allocable business interest expense. Thus, A's allocable business interest income deficit is $0, B's allocable business interest income deficit is $50, C's allocable business interest income deficit is $50, and D's allocable business interest income deficit is $50. The total allocable business interest income deficit is $150 ($0 + $50 + $50 + $50). No partner has

allocable business interest income excess because no partner has allocable business interest income in excess of its allocable business interest expense. Thus, the total allocable business interest income excess is $0.

TABLE 48 TO PARAGRAPH (o)(21)(iii)

	A	B	C	D	Total
Allocable BII	$0	$0	$0	$0	N/A
Allocable BIE	0	50	50	50	N/A
If allocable BII exceeds allocable BIE, then such amount = Allocable BII excess	0	0	0	0	0
If allocable BIE exceeds allocable BII, then such amount = Allocable BII deficit	0	50	50	50	150

(iv) Fourth, PRS determines each partner's final allocable business interest income excess. Because no partner has any allocable business interest income excess, each partner has final allocable business interest income excess of $0.

(v) Fifth, PRS determines each partner's remaining business interest expense. Because no partner has any allocable business interest income excess, each partner's remaining business interest expense equals its allocable business interest income deficit. Thus, A's remaining business interest expense is $0, B's remaining business interest expense is $50, C's remaining business interest expense is $50, and D's remaining business interest expense is $50.

TABLE 49 TO PARAGRAPH (o)(21)(v)

	A	B	C	D	Total
Allocable BII deficit	$0	$50	$50	$50	$150
Less: (Total allocable BII excess) × (Allocable BII deficit/Total allocable BII deficit)	0	0	0	0	N/A
= Remaining BIE	0	50	50	50	N/A

(vi) Sixth, PRS determines each partner's final allocable ATI. Because D's allocable ATI is comprised of $300 of items of deduction and loss and $0 of income and gain, D has negative allocable ATI of $300. D is the only partner with negative allocable ATI. Thus, the total negative allocable ATI amount is $300. Any partner with a negative allocable ATI, or an allocable ATI of $0, has a positive allocable ATI of $0. Therefore, D has a positive allocable ATI of $0. PRS determines A's final allocable ATI by reducing, but not below $0, A's positive allocable ATI ($50) by the product of total negative allocable ATI ($300) and the ratio of A's positive allocable ATI to the total

positive allocable ATI ($50/$500). Therefore, A's positive allocable ATI is reduced by $30 ($300 × 10 percent). As a result, A's final allocable ATI is $20. PRS determines B's final allocable ATI by reducing, but not below $0, B's positive allocable ATI ($50) by the product of total negative allocable ATI ($300) and the ratio of B's positive allocable ATI to the total positive allocable ATI ($50/$500). Therefore, B's positive allocable ATI is reduced by $30 ($300 × 10 percent). As a result, B's final allocable ATI is $20. PRS determines C's final allocable ATI by reducing, but not below $0, C's positive allocable ATI ($400) by the product of total negative allocable ATI ($300) and the ratio of C's positive allocable ATI to the total positive allocable ATI ($400/$500). Therefore, C's positive allocable ATI is reduced by $240 ($300 × 80 percent). As a result, C's final allocable ATI is $160. Because D has a positive allocable ATI of $0, D's final allocable ATI is $0.

TABLE 50 TO PARAGRAPH (o)(21)(vi)

	A	B	C	D	Total
Allocable ATI	$50	$50	$400	($300)	$200
If deduction and loss items comprising allocable ATI exceed income and gain items comprising allocable ATI, then such excess amount = Negative allocable ATI	0	0	0	300	300
If income and gain items comprising allocable ATI equal or exceed deduction and loss items comprising allocable ATI, then such amount = Positive allocable ATI	50	50	400	0	500

TABLE 51 TO PARAGRAPH (o)(21)(vi)

	A	B	C	D	Total
Positive allocable ATI	$50	$50	$400	$0	$500
Less: (Total negative allocable ATI) × (Positive allocable ATI/Total positive allocable ATI)	30	30	240	0	N/A
= Final allocable ATI	20	20	160	0	200

(vii) Seventh, PRS compares each partner's ATI capacity (ATIC) amount to such partner's remaining business interest expense. A's ATIC amount is $6 ($20 × 30 percent), B's ATIC amount is $6 ($20 × 30 percent), C's ATIC amount is $48 ($160 × 30 percent), and D's ATIC amount is $0 ($0 × 30 percent). Because A's ATIC amount exceeds its remaining business interest expense by $6 ($6−$0), A has an ATIC excess of $6. B, C, and D do not have any ATIC excess. Thus, the total ATIC excess amount is $6 ($6 + $0 + $0 + $0). A does not have any ATIC deficit. Because B's remaining business interest expense exceeds its ATIC amount by $44 ($50−$6), B has an ATIC deficit of $44. Because C's remaining business interest expense exceeds its ATIC amount by $2

($50−$48), C has an ATIC deficit of $2. Because D's remaining business interest expense exceeds its ATIC amount by $50 ($50−$0), D has an ATIC deficit of $50. Thus, the total ATIC deficit is $96 ($0 + $44 + $2 + $50).

TABLE 52 TO PARAGRAPH (o)(21)(vii)

	A	B	C	D	Total
ATIC (Final allocable ATI × 30 percent)	$6	$6	$48	$0	N/A
Remaining BIE	0	50	50	50	N/A
If ATIC exceeds remaining BIE, then such excess = ATIC excess	6	0	0	0	$6
If remaining BIE exceeds ATIC, then such excess = ATIC deficit	0	44	2	50	96

(viii)

(A) Eighth, PRS must perform the calculations and make the necessary adjustments described under paragraph (f)(2)(viii) of this section if, and only if, PRS has—

(*1*) An excess business interest expense greater than $0 under paragraph (f)(2)(i) of this section;

(*2*) A total negative allocable ATI greater than $0 under paragraph (f)(2)(vi) of this section; and

(*3*) A total ATIC excess amount greater than $0 under paragraph (f)(2)(vii) of this section. Because PRS satisfies each of these three requirements, PRS must perform the calculations and make the necessary adjustments described under paragraph (f)(2)(viii) of this section.

(B) PRS must determine each partner's priority amount and usable priority amount. Only partners with an ATIC deficit under paragraph (f)(2)(vii) of this section of this section can have a priority amount greater than $0. Thus, only partners B, C, and D can have a priority amount greater than $0. PRS determines a partner's priority amount as 30 percent of the amount by which such partner's allocable positive ATI exceeds its final allocable ATI. Therefore, B's priority amount is $9 (($50−$20) × 30 percent), C's priority amount is $72 (($400−$160) × 30 percent), and D's priority amount is $0 (($0−$0) × 30 percent). Thus, the total priority amount is $81 ($0 + $9 + $72 + $0). Next, PRS must determine each partner's usable priority amount. Each partner's usable priority amount is the lesser of such partner's priority amount or ATIC deficit. Thus, B has a usable priority amount of $9, C has a usable priority amount of $2, and D has a usable priority amount of $0. As a result, the total usable priority amount is $11 ($0 + $9 + $2 + $0). Because the total usable

priority amount ($11) is greater than the total ATIC excess ($6) under paragraph (f)(2)(vii) of this section, PRS must perform the adjustments described in paragraph (f)(2)(viii)(D) of this section.

TABLE 53 TO PARAGRAPH (o)(21)(viii)(B)

	A	B	C	D	Total
(Positive allocable ATI−Final allocable ATI)	$0	$30	$240	$0	N/A
Multiplied by 30 percent	30%	30%	30%	30%	N/A
= Priority amount	$0	$9	$72	$0	$81

TABLE 54 TO PARAGRAPH (o)(21)(viii)(B)

	A	B	C	D	Total
Priority amount	$0	$9	$72	$0	N/A
ATIC deficit	0	44	2	50	N/A
Lesser of priority amount or ATIC deficit = Usable priority amount	0	9	2	0	$11

(C) In light of the fact that the total usable priority amount is greater than the total ATIC excess under paragraph (f)(2)(viii)(B) of this section, paragraph (f)(2)(viii)(C) of this section does not apply.

(D)

(*1*) Because B and C are the only partners with priority amounts greater than $0, B and C are priority partners, while A and D are non-priority partners. For purposes of paragraph (f)(2)(ix) of this section, each partner's final ATIC excess amount is $0. For purposes of paragraph (f)(2)(x) of this section, each non-priority partner's final ATIC deficit amount is such partner's ATIC deficit determined pursuant to paragraph (f)(2)(vii) of this section. Therefore, A has a final ATIC deficit of $0 and D has a final ATIC deficit of $50. Additionally, for purposes of paragraph (f)(2)(x) of this section, PRS must determine each priority partner's step eight excess share. A priority partner's step eight excess share is the product of the total ATIC excess and the ratio of the partner's priority amount to the total priority amount. Thus, B's step eight excess share is $0.67 ($6 × ($9/$81)) and C's step eight excess share is $5.33 ($6 × ($72/$81)). To the extent a priority partner's step eight excess share exceeds its ATIC deficit, the excess will be the partner's ATIC excess for purposes of paragraph (f)(2)(x) of this section. B's step eight excess share does not exceed its ATIC deficit. Because C's step eight excess share ($5.33) exceeds its ATIC deficit ($2), C's ATIC excess for purposes of paragraph (f)(2)(x) of this section is $3.33 ($5.33−$2). Thus,

the total ATIC excess for purposes of paragraph (f)(2)(x) of this section is $3.33 ($0 + $3.33). To the extent a priority partner's ATIC deficit exceeds its step eight excess share, the excess will be the partner's ATIC deficit for purposes of paragraph (f)(2)(x) of this section. Because B's ATIC deficit ($44) exceeds its step eight excess share ($0.67), B's ATIC deficit for purposes of paragraph (f)(2)(x) of this section is $43.33 ($44−$0.67). C's ATIC deficit does not exceed its step eight excess share. Thus, the total ATIC deficit for purposes of paragraph (f)(2)(x) of this section is $43.33 ($43.33 + $0).

TABLE 55 TO PARAGRAPH (o)(21)(viii)(D)(1)

	A	B	C	D	Total
Non-priority partners ATIC deficit in paragraph (f)(2)(vii) = Final ATIC deficit for purposes of paragraph (f)(2)(x) of this section	$0	N/A	N/A	$50	N/A

TABLE 56 TO PARAGRAPH (o)(21)(viii)(D)(1)

	A	B	C	D	Total
Priority partners step eight excess share = (Total ATIC excess) × (Priority/Total priority)	N/A	$0.67	$5.33	N/A	N/A
ATIC deficit	N/A	44	2	N/A	N/A
If step eight excess share exceeds ATIC deficit, then such excess = ATIC excess for purposes of paragraph (f)(2)(x) of this section	N/A	0	3.33	N/A	$3.33
If ATIC deficit exceeds step eight excess share, then such excess = ATIC deficit for purposes of paragraph (f)(2)(x) of this section	N/A	43.33	0	N/A	43.33

(2) In sum, the correct amounts to be used in paragraphs (o)(21)(ix) and (x) of this section are as follows.

TABLE 57 TO PARAGRAPH (o)(21)(viii)(D)(2)

	A	B	C	D	Total
ATIC excess	$0	$0	$3.33	$0	$3.33

	A	B	C	D	Total
ATIC deficit	0	43.33	0	0	43.33
Non-priority partner final ATIC deficit	0	0	0	50	N/A

(ix) Ninth, PRS determines each partner's final ATIC excess amount. Pursuant to paragraph (f)(2)(viii)(D) of this section, each priority and non-priority partner's final ATIC excess amount is $0.

(x) Tenth, PRS determines each partner's final ATIC deficit amount. Because B has an ATIC deficit, PRS must determine B's final ATIC deficit amount. B's final ATIC deficit amount is B's ATIC deficit ($43.33), reduced, but not below $0, by the product of the total ATIC excess ($3.33) and the ratio of B's ATIC deficit to the total ATIC deficit ($43.33/$43.33). Therefore, B has $40 of final ATIC deficit ($43.33−($3.33 × 100 percent)). Pursuant to paragraph (f)(2)(viii)(D) of this section, D's final ATIC deficit amount is $40.

TABLE 58 TO PARAGRAPH (o)(21)(x)

	A	B	C	D	Total
ATIC deficit	$0	$43.33	$0	N/A	N/A
Less: (Total ATIC excess) × (ATIC deficit/Total ATIC deficit)	0	3.33	0	N/A	N/A
= Final ATIC deficit	0	40	0	$50	$90

(xi) Eleventh, PRS allocates deductible business interest expense and section 163(j) excess items to the partners. Pursuant to paragraph (f)(2)(i) of this section, PRS has $90 of excess business interest expense. PRS allocates the excess business interest expense dollar for dollar to the partners with final ATIC deficits. Thus, PRS allocates its excess business interest expense $40 to B and $50 to D. A partner's allocable business interest expense is deductible business interest expense to the extent it exceeds such partner's share of excess business interest expense. Therefore, A has deductible business interest expense of $0 ($0−$0), B has deductible business interest expense of $10 ($50−$40), C has deductible business interest expense of $50 ($50−$0), and D has deductible business interest expense of $0 ($50−$50).

TABLE 59 TO PARAGRAPH (o)(21)(xi)

	A	B	C	D	Total
Deductible BIE	$0	$10	$50	$0	$60

	A	B	C	D	Total
EBIE allocated	0	40	0	50	90
ETI allocated	0	0	0	0	0
EBII allocated	0	0	0	0	0

(22) *Example 22* —

(i) ***Facts.*** A and B are equal shareholders in X, a subchapter S corporation. In Year 1, X has $100 of ATI and $40 of business interest expense. A has $100 of ATI and $20 of business interest expense from its sole proprietorship. B has $0 of ATI and $20 of business interest expense from its sole proprietorship.

(ii) ***S corporation-level.*** In Year 1, X's section 163(j) limit is 30 percent of its ATI, or $30 ($100 × 30 percent). Thus, X has $30 of deductible business interest expense and $10 of disallowed business interest expense. Such $30 of deductible business interest expense is includable in X's nonseparately stated income or loss, and is not subject to further limitation under section 163(j). X carries forward the $10 of disallowed business interest expense to Year 2 as a disallowed business interest expense carryforward under § 1.163(j)-2(c). X may not currently deduct all $40 of its business interest expense in Year 1. X only reduces its accumulated adjustments account in Year 1 by the $30 of deductible business interest expense in Year 1 under § 1.163(j)-6(l)(7).

(iii) ***Shareholder allocations.*** A and B are each allocated $35 of nonseparately stated taxable income ($50 items of income or gain, less $15 of deductible business interest expense) from X. A and B do not reduce their basis in X by the $10 of disallowed business interest expense.

(iv) ***Shareholder-level computations.*** A, in computing its limit under section 163(j), has $100 of ATI and $20 of business interest expense from its sole proprietorship. A's section 163(j) limit is $30 ($100 × 30 percent). Thus, A's $20 of business interest expense is deductible business interest expense. B, in computing its limit under section 163(j), has $20 of business interest expense from its sole proprietorship. B's section 163(j) limit is $0 ($0 × 30 percent). Thus, B's $20 of business interest expense is not allowed as a deduction and is treated as business interest expense paid or accrued by B in Year 2.

(23) *Example 23* —

(i) ***Facts.*** The facts are the same as in *Example 22* in paragraph (o)(22)(i) of this section. In Year 2, X has $233.33 of ATI, $0 of business interest income, and $30 of business interest expense. A has $100 of ATI and $20 of business interest expense from its sole proprietorship. B has $0 of ATI and $20 of business interest expense from its sole proprietorship.

(ii) ***S corporation-level.*** In Year 2, X's section 163(j) limit is 30 percent of its ATI plus its business interest income, or $70 ($233.33 × 30 percent). Because X's section 163(j) limit exceeds X's $40 of business interest expense ($30 from Year 2, plus the $10 disallowed business interest expense carryforwards from Year 1), X may deduct all $40 of business interest expense in Year 2. Such $40 of deductible business interest expense is includable in X's nonseparately stated

income or loss, and is not subject to further limitation under section 163(j). Pursuant to § 1.163(j)-6(l)(7), X must reduce its accumulated adjustments account by $40. Additionally, X has $100 of excess taxable income under § 1.163(j)-1(b)(17).

(iii) ***Shareholder allocations.*** A and B are each allocated $96.67 of nonseparately stated taxable income ($116.67 items of income or gain, less $20 of deductible business interest expense) from X. Additionally, A and B are each allocated $50 of excess taxable income under § 1.163(j)-6(l)(4). As a result, A and B each increase their ATI by $50.

(iv) ***Shareholder-level computations.*** A, in computing its limit under section 163(j), has $150 of ATI ($100 from its sole proprietorship, plus $50 excess taxable income) and $20 of business interest expense (from its sole proprietorship). A's section 163(j) limit is $45 ($150 × 30 percent). Thus, A's $20 of business interest expense is deductible business interest expense. B, in computing its limit under section 163(j), has $50 of ATI ($0 from its sole proprietorship, plus $50 excess taxable income) and $40 of business interest expense ($20 from its sole proprietorship, plus $20 disallowed business interest expense from its sole proprietorship in Year 1). B's section 163(j) limit is $15 ($50 × 30 percent). Thus, $15 of B's business interest expense is deductible business interest expense. The $25 of B's business interest expense not allowed as a deduction ($40 business interest expense, less $15 section 163(j) limit) is treated as business interest expense paid or accrued by B in Year 3.

(24) ***Example 24*** —

(i) ***Facts.*** On January 1, 2020, L and M form LM, a publicly traded partnership (as defined in § 1.7704-1), and agree that each will be allocated a 50 percent share of all LM items. The partnership agreement provides that LM will make allocations under section 704(c) using the remedial allocation method under § 1.704-3(d). L contributes depreciable property with an adjusted tax basis of $4,000 and a fair market value of $10,000. The property is depreciated using the straight-line method with a 10-year recovery period and has 4 years remaining on its recovery period. M contributes $10,000 in cash, which LM uses to purchase land. Except for the depreciation deductions, LM's expenses equal its income in each year of the 10 years commencing with the year LM is formed. LM has a valid section 754 election in effect.

(ii) ***Section 163(j) remedial items and partner basis items.*** LM sells the asset contributed by L in a fully taxable transaction at a time when the adjusted basis of the property is $4,000. Under § 1.163(j)-6(e)(2)(ii), solely for purposes of § 1.163(j)-6, the tax gain of $6,000 is allocated equally between L and M ($3,000 each). To avoid shifting built-in gain to the non-contributing partner (M) in a manner consistent with the rule in section 704(c), a remedial deduction of $3,000 is allocated to M (leaving M with no net tax gain), and remedial income of $3,000 is allocated to L (leaving L with total tax gain of $6,000).

(25) ***Example 25*** —

(i) ***Facts.*** The facts are the same as *Example 24* in paragraph (o)(24) of this section except the property contributed by L had an adjusted tax basis of zero. For each of the 10 years following the contribution, there would be $500 of section 704(c) remedial income allocated to L and $500 of remedial deductions allocated to M with respect to the contributed asset. A buyer of M's units would step into M's shoes with respect to the $500 of annual remedial deductions. A buyer of L's units would step into L's shoes with respect to the $500 of annual remedial income and would have an annual section 743(b) deduction of $1,000 (net $500 of deductions).

(ii) ***Analysis.*** Pursuant to § 1.163(j)-6(d)(2)(ii), solely for purposes of § 1.163(j)-6, a buyer of L's units immediately after formation of LM would offset its $500 annual section 704(c) remedial income allocation with $500 of annual section 743(b) adjustment (leaving the buyer with net $500 of section 743(b) deduction). As a result, such buyer would be in the same position as a buyer of M's units. Each buyer would have net deductions of $500 per year, which would not affect ATI before 2022.

(26) ***Example 26*** —

(i) ***Facts.*** X and Y are partners in partnership PRS. In Year 1, PRS had $200 of excess business interest expense. Pursuant to § 1.163(j)-6(f)(2), PRS allocated $100 of such excess business interest expense to each of its partners. In Year 2, X lends $10,000 to PRS and receives $1,000 of interest income for the taxable year (self-charged lending transaction). X is not in the trade or business of lending money. The $1,000 of interest expense resulting from this loan is allocable to PRS's trade or business assets. As a result, such $1,000 of interest expense is business interest expense of PRS. X and Y are each allocated $500 of such business interest expense as their distributive share of PRS's business interest expense for the taxable year. Additionally, in Year 2, PRS has $3,000 of ATI. PRS allocates the items comprising its $3,000 of ATI $0 to X and $3,000 to Y.

(ii) ***Partnership-level.*** In Year 2, PRS's section 163(j) limit is 30 percent of its ATI plus its business interest income, or $900 ($3,000 × 30 percent). Thus, PRS has $900 of deductible business interest expense, $100 of excess business interest expense, $0 of excess taxable income, and $0 of excess business interest income. Pursuant to § 1.163(j)-6(f)(2), $400 of X's allocation of business interest expense is treated as deductible business interest expense, $100 of X's allocation of business interest expense is treated as excess business interest expense, and $500 of Y's allocation of business interest expense is treated as deductible business interest expense.

(iii) ***Lending partner.*** Pursuant to § 1.163(j)-6(n), X treats $100 of its $1,000 of interest income as excess business interest income allocated from PRS in Year 2. Because X is deemed to have been allocated $100 of excess business interest income from PRS, and excess business interest expense from a partnership is treated as paid or accrued by a partner to the extent excess business interest income is allocated from such partnership to a partner, X treats its $100 allocation of excess business interest expense from PRS in Year 2 as business interest expense paid or accrued in Year 2. X, in computing its limit under section 163(j), has $100 of business interest income ($100 deemed allocation of excess business interest income from PRS in Year 2) and $100 of business interest expense ($100 allocation of excess business interest expense treated as paid or accrued in Year 2). Thus, X's $100 of business interest expense is deductible business interest expense. At the end of Year 2, X has $100 of excess business interest expense from PRS ($100 from Year 1). X treats $900 of its $1,000 of interest income as investment income for purposes of section 163(d).

(27)-(33) [Reserved]

(34) ***Example 34*** —

(i) ***Facts.*** X and Y are equal partners in partnership PRS. Further, X and Y share the profits of PRS equally. In 2019, PRS had ATI of $100. Additionally, in 2019, PRS had $100 of section 704(b) income which was allocated $50 to X and $50 to Y (PRS did not have any section 704(c) income in 2019). In 2020, PRS's only items of income, gain, loss or deduction was $1 of trade or business income, which it allocated to X pursuant to section 704(c).

(ii) ***Partnership-level.*** In 2020, PRS makes the election described in § 1.163(j)-6(d)(5) to use its 2019 ATI in 2020. As a result, PRS has $100 of ATI in 2020. PRS does not have any business interest expense. Therefore, PRS has $100 of excess taxable income in 2020.

(iii) ***Partner-level allocations.*** PRS allocates its $100 of excess taxable income to X and Y pursuant to § 1.163(j)-6(f)(2). To determine each partner's share of the $100 of excess taxable income, PRS must determine each partner's allocable ATI (as defined in § 1.163(j)-6(f)(2)(ii)). Because PRS made the election described in § 1.163(j)-6(d)(5), PRS must determine the allocable ATI of each of its partners pursuant to paragraph (d)(5). Specifically, PRS determines each partner's share of allocable ATI based on PRS's 2019 section 704 income, gain, loss, and deduction. PRS had $100 of section 704(b) income in 2019 which was allocated $50 to X and $50 to Y. Therefore, in 2020, X and Y are both allocated $50 of excess taxable income (50% × $100).

(35) ***Example 35*** —

(i) ***Facts.*** X, a partner in partnership PRS, was allocated $20 of excess business interest expense from PRS in 2018 and $10 of excess business interest expense from PRS in 2019. In 2020, PRS allocated $16 of excess taxable income to X.

(ii) ***Analysis.*** X treats 50 percent of its $10 of excess business interest expense allocated from PRS in 2019 as § 1.163(j)-6(g)(4) business interest expense. Thus, $5 of § 1.163(j)-6(g)(4) business interest expense is treated as paid or accrued by X in 2020 and is not subject to the section 163(j) limitation at X's level. Because X was allocated $16 of excess taxable income from PRS in 2020, X treats $16 of its $25 of excess business interest expense as business interest expense paid or accrued pursuant to § 1.163(j)-6(g)(2). X, in computing its limit under section 163(j) in 2020, has $16 of ATI (as a result of its allocation of $16 of excess taxable income from PRS), $0 of business interest income, and $16 of business interest expense ($16 of excess business interest expense treated as paid or accrued in 2020). Pursuant to § 1.163(j)-2(b)(2)(i), X's section 163(j) limit in 2020 is $8 ($16 × 50 percent). Thus, X has $8 of business interest expense that is deductible under section 163(j). The $8 of X's business interest expense not allowed as a deduction ($16 business interest expense subject to section 163(j), less $8 section 163(j) limit) is treated as business interest expense paid or accrued by X in 2021. At the end of 2020, X has $9 of excess business interest expense from PRS ($20 from 2018, plus $10 from 2019, less $5 treated as paid or accrued pursuant to § 1.163(j)-6(g)(4), less $16 treated as paid or accrued pursuant to § 1.163(j)-6(g)(2)).

(36) ***Example 36*** —

(i) ***Facts.*** X is a partner in partnership PRS. At the beginning of 2018, X's outside basis in PRS was $100. X was allocated $20 of excess business interest expense from PRS in 2018 and $10 of excess business interest expense from PRS in 2019. X sold its PRS interest in 2019 for $70.

(ii) ***Analysis.*** X treats 50 percent of its $10 of excess business interest expense allocated from PRS in 2019 as § 1.163(j)-6(g)(4) business interest expense. Thus, $5 of § 1.163(j)-6(g)(4) business interest expense is treated as paid or accrued by X in 2020 and is not subject to the section 163(j) limitation at X's level. Pursuant to paragraph (h)(3) of this section, immediately before

the disposition, X increases the basis of its PRS interest from $70 to $95 (add back of $20 of EBIE from 2018 and $5 of remaining EBIE from 2019). Thus, X has a $25 section 741 loss recognized on the sale ($70−$95).

(p) ***Applicability dates.***

(1) ***In general.*** This section applies to taxable years beginning on or after November 13, 2020. However, taxpayers and their related parties, within the meaning of sections 267(b) and 707(b)(1), may choose to apply the rules of this section to a taxable year beginning after December 31, 2017, so long as the taxpayers and their related parties consistently apply the rules of the section 163(j) regulations, and, if applicable, §§ 1.263A-9, 1.263A-15, 1.381(c)(20)-1, 1.382-1, 1.382-2, 1.382-5, 1.382-6, 1.382-7, 1.383-0, 1.383-1, 1.469-9, 1.469-11, 1.704-1, 1.882-5, 1.1362-3, 1.1368-1, 1.1377-1, 1.1502-13, 1.1502-21, 1.1502-36, 1.1502-79, 1.1502-91 through 1.1502-99 (to the extent they effectuate the rules of §§ 1.382-2, 1.382-5, 1.382-6, and 1.383-1), and 1.1504-4, to that taxable year.

(2) ***Paragraphs (c)(1) and (2), (d)(3) through (5), (e)(5), (f)(1)(iii), (g)(4), (n), and (o)(24) through (29), and (34) through (36).*** Paragraphs (c)(1) and (2), (d)(3) through (5), (e)(5), (f)(1)(iii), (g)(4), (n), and (o)(24) through (29), and (34) through (36) of this section apply to taxable years beginning on or after March 22, 2021. However, taxpayers and their related parties, within the meaning of sections 267(b) (determined without regard to section 267(c)(3)) and 707(b)(1), may choose to apply the rules in paragraphs (c)(1) and (2), (d)(3) through (5), (e)(5), (f)(1)(iii), (g)(4), (n), and (o)(24) through (29), and (34) through (36) to a taxable year beginning after December 31, 2017, and before March 22, 2021, provided that those taxpayers and their related parties consistently apply all of the rules in T.D. 9905 (§§ 1.163(j)-0 through 1.163(j)-11, effective November 13, 2020) as modified by T.D. 9943 (effective January 13, 2021), and, if applicable, §§ 1.263A-9, 1.263A-15, 1.381(c)(20)-1, 1.382-1, 1.382-2, 1.382-5, 1.382-6, 1.382-7, 1.383-0, 1.383-1, 1.469-9, 1.469-11, 1.704-1, 1.882-5, 1.1362-3, 1.1368-1, 1.1377-1, 1.1502-13, 1.1502-21, 1.1502-36, 1.1502-79, 1.1502-91 through 1.1502-99 (to the extent they effectuate the rules of §§ 1.382-2, 1.382-5, 1.382-6, and 1.383-1), and 1.1504-4 contained in T.D. 9905 as modified by T.D. 9943, for that taxable year and for each subsequent taxable year.

[T.D. 9905, 85 FR 56760, Sept. 14, 2020, as amended by T.D. 9943, 86 FR 5529, Jan. 19, 2021]

§ 1.163(j)-7 Application of the section 163(j) limitation to foreign corporations and United States shareholders.

(a) ***Overview.*** This section provides rules for the application of section 163(j) to relevant foreign corporations and United States shareholders of relevant foreign corporations. Paragraph (b) of this section provides the general rule regarding the application of section 163(j) to a relevant foreign corporation. Paragraph (c) of this section provides rules for applying section 163(j) to CFC group members of a CFC group. Paragraph (d) of this section provides rules for determining a specified group and specified group members. Paragraph (e) of this section provides rules and procedures for treating a specified group member as a CFC group member and for determining a CFC group. Paragraph (f) of this section provides rules regarding the treatment of a CFC group member that has ECI. Paragraph (g) of this section provides rules concerning the computation of ATI of an applicable CFC. Paragraph (h) of this section provides a safe harbor that exempts certain stand-alone applicable CFCs and CFC groups from the application of section 163(j) for a taxable year. Paragraphs (i) and (j) of this section are reserved. Paragraph (k) of this section provides definitions that apply for purposes of this section (see also § 1.163(j)-1 for additional definitions). Paragraph (l) of this section provides examples illustrating the application of this section.

(b) ***General rule regarding the application of section 163(j) to relevant foreign corporations.*** Except as otherwise provided in this section, section 163(j) and the section 163(j) regulations apply to determine the deductibility of a relevant foreign corporation's business interest expense for purposes of computing its taxable income for U.S. income tax purposes (if any) in the same manner as those provisions apply to determine the deductibility of a domestic C corporation's business interest expense for purposes of computing its taxable income. See also § 1.952-2. If a relevant foreign corporation is a direct or indirect partner in a partnership, see § 1.163(j)-6 (concerning the application of section 163(j) to partnerships).

(c) ***Application of section 163(j) to CFC group members of a CFC group*** —

(1) ***Scope.*** This paragraph (c) provides rules for applying section 163(j) to a CFC group and a CFC group member. Paragraph (c)(2) of this section provides rules for computing a single section 163(j) limitation for a specified period of a CFC group. Paragraph (c)(3) of this section provides rules for allocating a CFC group's section 163(j) limitation to CFC group members for specified taxable years. Paragraph (c)(4) of this section provides currency translation rules. Paragraph (c)(5) of this section provides special rules for specified periods beginning in 2019 or 2020.

(2) ***Calculation of section 163(j) limitation for a CFC group for a specified period*** —

(i) ***In general.*** A single section 163(j) limitation is computed for a specified period of a CFC group. For purposes of applying section 163(j) and the section 163(j) regulations, the current-year business interest expense, disallowed business interest expense carryforwards, business interest income, floor plan financing interest expense, and ATI of a CFC group for a specified period equal the sums of each CFC group member's respective amounts for its specified taxable year with respect to the specified period. A CFC group member's current-year business interest expense, business interest income, floor plan financing interest expense, and ATI for a specified taxable year are generally determined on a separate-company basis. For purposes of determining the ATI of a CFC group, § 1.163(j)-1(b)(1)(vii) (providing that ATI cannot be less than zero) applies with respect to the ATI of the CFC group but not the ATI of any CFC group member.

(ii) ***Certain transactions between CFC group members disregarded.*** Any transaction between CFC group members of a CFC group that is entered into with a principal purpose of affecting a CFC group or a CFC group member's section 163(j) limitation by increasing or decreasing a CFC group or a CFC group member's ATI or business interest income for a specified taxable year is disregarded for purposes of applying section 163(j) and the section 163(j) regulations.

(3) ***Deduction of business interest expense*** —

(i) ***CFC group business interest expense*** —

(A) ***In general.*** The extent to which a CFC group member's current-year business interest expense and disallowed business interest expense carryforwards for a specified taxable year that ends with or within a specified period may be deducted under section 163(j) is determined under the rules and principles of § 1.163(j)-5(a)(2) and (b)(3)(ii), subject to the modifications described in paragraph (c)(3)(i)(B) of this section.

(B) ***Modifications to relevant terms.*** For purposes of paragraph (c)(3)(i)(A) of this section, the rules and principles of § 1.163(j)-5(b)(3)(ii) are applied by—

(*1*) Replacing "§ 1.163(j)-4(d)(2)" in § 1.163(j)-5(a)(2)(ii) with "§ 1.163(j)-7(c)(2)(i)";

(2) Replacing the term “allocable share of the consolidated group's remaining section 163(j) limitation” with “allocable share of the CFC group's remaining section 163(j) limitation”;

(3) Replacing the terms “consolidated group” and “group” with “CFC group”;

(4) Replacing the term “consolidated group's remaining section 163(j) limitation” with “CFC group's remaining section 163(j) limitation”;

(5) Replacing the term “consolidated return year” with “specified period”;

(6) Replacing the term “current year” or “current-year” with “current specified period” or “specified taxable year with respect to the current specified period,” as the context requires;

(7) Replacing the term “member” with “CFC group member”; and

(8) Replacing the term “taxable year” with “specified taxable year with respect to a specified period.”

(ii) ***Carryforwards treated as attributable to the same taxable year.*** For purposes of applying the principles of § 1.163(j)-5(b)(3)(ii), as required under paragraph (c)(3)(i) of this section, CFC group members' disallowed business interest expense carryforwards that arose in specified taxable years with respect to the same specified period are treated as disallowed business interest expense carryforwards from taxable years ending on the same date and are deducted on a pro rata basis, under the principles of § 1.163(j)-5(b)(3)(ii)(C)(3), pursuant to paragraph (c)(3)(i) of this section.

(iii) ***Multiple specified taxable years of a CFC group member with respect to a specified period.*** If a CFC group member has more than one specified taxable year (each year, an *applicable specified taxable year*) with respect to a single specified period of a CFC group, then all the applicable specified taxable years are taken into account for purposes of applying the principles of § 1.163(j)-5(b)(3)(ii), as required under paragraph (c)(3)(i) of this section, with respect to the specified period. The portion of the section 163(j) limitation allocable to disallowed business interest expense carryforwards of the CFC group member that arose in taxable years before the first applicable specified taxable year is prorated among the applicable specified taxable years in proportion to the number of days in each applicable specified taxable year.

(iv) ***Limitation on pre-group disallowed business interest expense carryforward*** —

(A) ***General rule*** —

(1) ***CFC group member pre-group disallowed business interest expense carryforward.*** This paragraph (c)(3)(iv) applies to pre-group disallowed business interest expense carryforwards of a CFC group member. The amount of the pre-group disallowed business interest expense carryforwards described in the preceding sentence that may be included in any CFC group member's business interest expense deduction for any specified taxable year under this paragraph (c)(3) may not exceed the aggregate section 163(j) limitation for all specified periods of the CFC group, determined by reference only to the CFC group member's items of income, gain, deduction, and loss, and reduced (including below zero) by the CFC group member's business interest expense (including disallowed business interest expense carryforwards) taken into

account as a deduction by the CFC group member in all specified taxable years in which the CFC group member has continuously been a CFC group member of the CFC group (*cumulative section 163(j) pre-group carryforward limitation*).

(*2*) ***Subgrouping.*** In the case of a pre-group disallowed business interest expense carryforward, a pre-group subgroup is composed of the CFC group member with the pre-group disallowed business interest expense carryforward (the *loss member*) and each other CFC group member of the loss member's CFC group (the *current group*) that was a member of the CFC group in which the pre-group disallowed business interest expense carryforward arose and joined the specified group of the current group at the same time as the loss member. A CFC group member that is a member of a pre-group subgroup remains a member of the pre-group subgroup until its first taxable year during which it ceases to be a member of the same specified group as the loss member. For purposes of this paragraph (c), the rules and principles of § 1.163(j)-5(d)(1)(B) apply to a pre-group subgroup as if the pre-group subgroup were a SRLY subgroup.

(*3*) ***Transition rule.*** Solely for purposes of paragraph (c)(3)(iv)(A)(*2*) of this section, a CFC group includes a group of applicable CFCs for which a CFC group election was made under guidance under section 163(j) published on December 28, 2018. Therefore, if the requirements of paragraph (c)(3)(iv)(A)(*2*) of this section are satisfied, a group of applicable CFCs described in the preceding sentence may be treated as a pre-group subgroup.

(B) ***Deduction of pre-group disallowed business interest expense carryforwards.*** Notwithstanding paragraph (c)(3)(iv)(A)(*1*) of this section, pre-group disallowed business interest expense carryforwards are available for deduction by a CFC group member in its specified taxable year only to the extent the CFC group has remaining section 163(j) limitation for the specified period after the deduction of current-year business interest expense and disallowed business interest expense carryforwards from earlier taxable years that are permitted to be deducted in specified taxable years of CFC group members with respect to the specified period. See paragraph (c)(3)(i) of this section and § 1.163(j)-5(b)(3)(ii)(A). Pre-group disallowed business interest expense carryforwards are deducted on a pro rata basis (under the principles of paragraph (c)(3)(i) of this section and § 1.163(j)-5(b)(3)(ii)(C)(*4*)) with other disallowed business interest expense carryforwards from taxable years ending on the same date.

(4) ***Currency translation.*** For purposes of applying this paragraph (c), items of a CFC group member are translated into a single currency for the CFC group and back to the functional currency of the CFC group member using the average exchange rate for the CFC group member's specified taxable year. The single currency for the CFC group may be the U.S. dollar or the functional currency of a plurality of the CFC group members.

(5) ***Special rule for specified periods beginning in 2019 or 2020*** —

(i) ***50 percent ATI limitation applies to a specified period of a CFC group.*** In the case of a CFC group, § 1.163(j)-2(b)(2) (including the election under § 1.163(j)-2(b)(2)(ii)) applies to a specified period of the CFC group beginning in 2019 or 2020, rather than to a specified taxable year of a CFC group member. An election under § 1.163(j)-2(b)(2)(ii) for a specified period of a CFC group is not effective unless made by each designated U.S. person. Except as otherwise

provided in this paragraph (c)(5)(i), the election is made in accordance with Revenue Procedure 2020-22, 2020-18 I.R.B. 745. For purposes of applying § 1.964-1(c), the election is treated as if made for each CFC group member.

(ii) ***Election to use 2019 ATI applies to a specified period of a CFC group*** —

(A) ***In general.*** In the case of a CFC group, for purposes of applying paragraph (c)(2) of this section, an election under § 1.163(j)-2(b)(3)(i) is made for a specified period of a CFC group beginning in 2020 and applies to the specified taxable years of each CFC group member with respect to such specified period, taking into account the application of paragraph (c)(5)(ii)(B) of this section. The election under § 1.163(j)-2(b)(3)(i) does not apply to any specified taxable year of a CFC group member other than those described in the preceding sentence. An election under § 1.163(j)-2(b)(3)(i) for a specified period of a CFC group is not effective unless made by each designated U.S. person. Except as otherwise provided in this paragraph (c)(5)(ii)(A), the election is made in accordance with Revenue Procedure 2020-22, 2020-18 I.R.B. 745. For purposes of applying § 1.964-1(c), the election is treated as if made for each CFC group member.

(B) ***Specified taxable years that do not begin in 2020.*** If a specified taxable year of a CFC group member with respect to the specified period described in paragraph (c)(5)(ii)(A) of this section begins in 2019, then, for purposes of applying paragraph (c)(2) of this section, § 1.163(j)-2(b)(3) is applied to such specified taxable year by substituting “2018” for “2019” and “2019” for “2020.” If a specified taxable year of a CFC group member with respect to the specified period described in paragraph (c)(5)(ii)(A) of this section begins in 2021, then, for purposes of applying paragraph (c)(2) of this section, § 1.163(j)-2(b)(3) is applied to such specified taxable year by substituting “2020” for “2019” and “2021” for “2020.”

(d) ***Determination of a specified group and specified group members*** —

(1) ***Scope.*** This paragraph (d) provides rules for determining a specified group and specified group members. Paragraph (d)(2) of this section provides rules for determining a specified group. Paragraph (d)(3) of this section provides rules for determining specified group members.

(2) ***Rules for determining a specified group*** —

(i) ***Definition of a specified group.*** Subject to paragraph (d)(2)(ii) of this section, the term *specified group* means one or more applicable CFCs or chains of applicable CFCs connected through stock ownership with a specified group parent (which is included in the specified group only if it is an applicable CFC), but only if—

(A) The specified group parent owns directly or indirectly stock meeting the requirements of section 1504(a)(2)(B) in at least one applicable CFC; and

(B) Stock meeting the requirements of section 1504(a)(2)(B) in each of the applicable CFCs (except the specified group parent) is owned directly or indirectly by one or more of the other applicable CFCs or the specified group parent.

(ii) ***Indirect ownership.*** For purposes of applying paragraph (d)(2)(i) of this section, stock is owned indirectly only if it is owned under section 318(a)(2)(A) through a partnership or under section 318(a)(2)(A) or (B) through an estate or trust not described in section 7701(a)(30).

(iii) ***Specified group parent.*** The term *specified group parent* means a qualified U.S. person or an applicable CFC.

(iv) ***Qualified U.S. person.*** The term *qualified U.S. person* means a United States person described in section 7701(a)(30)(A) or (C). For purposes of this paragraph (d), members of a consolidated group that file (or that are required to file) a consolidated U.S. Federal income tax return are treated as a single qualified U.S person and individuals described in section 7701(a)(30)(A) whose filing status is married filing jointly are treated as a single qualified U.S. person.

(v) ***Stock.*** For purposes of this paragraph (d)(2), the term *stock* has the same meaning as "stock" in section 1504 (without regard to § 1.1504-4, except as provided in paragraph (d)(2)(vi) of this section) and all shares of stock within a single class are considered to have the same value. Thus, control premiums and minority and blockage discounts within a single class are not taken into account.

(vi) ***Options treated as exercised.*** For purposes of this paragraph (d)(2), options that are reasonably certain to be exercised, as determined under § 1.1504-4(g), are treated as exercised. For purposes of this paragraph (d)(2)(vi), options include call options, warrants, convertible obligations, put options, and any other instrument treated as an option under § 1.1504-4(d), determined by replacing the term "a principal purpose of avoiding the application of section 1504 and this section" with "a principal purpose of avoiding the application of section 163(j)."

(vii) ***When a specified group ceases to exist.*** The principles of § 1.1502-75(d)(1), (d)(2)(i) and (ii), and (d)(3)(i) through (iv) apply for purposes of determining when a specified group ceases to exist. Solely for purposes of applying these principles, references to the common parent are treated as references to the specified group parent and each applicable CFC that is treated as a specified group member for a taxable year with respect to a specified period is treated as affiliated with the specified group parent from the beginning to the end of the specified period, without regard to the beginning or end of its taxable year.

(3) ***Rules for determining a specified group member.*** If two or more applicable CFCs are included in a specified group on the last day of a taxable year of each applicable CFC that ends with or within a specified period, then each applicable CFC is a *specified group member* with respect to the specified period for its entire taxable year ending with or within the specified period. If only one applicable CFC is included in a specified group on the last day of its taxable year that ends with or within the specified period, it is not a specified group member. If an applicable CFC has multiple taxable years that end with or within a specified period, this paragraph (d)(3) is applied separately to each taxable year to determine if the applicable CFC is a specified group member for such taxable year.

(e) ***Rules and procedures for treating a specified group as a CFC group*** —

(1) ***Scope.*** This paragraph (e) provides rules and procedures for treating a specified group member as a CFC group member and for determining a CFC group for purposes of applying section 163(j) and the section 163(j) regulations.

(2) ***CFC group and CFC group member*** —

(i) ***CFC group.*** The term *CFC group* means, with respect to a specified period, all CFC group members for their specified taxable years.

(ii) ***CFC group member.*** The term *CFC group member* means, with respect to a specified taxable year and a specified period, a specified group member of a specified group for which a CFC group election is in effect. However, notwithstanding the prior sentence, a specified group member is not treated as a CFC group member for a taxable year of the specified group member beginning before January 1, 2018.

(3) ***Duration of a CFC group.*** A CFC group continues until the CFC group election is revoked, or there is no longer a specified period with respect to the specified group. A failure to provide the information described in paragraph (e)(6) of this section does not terminate a CFC group election.

(4) ***Joining or leaving a CFC group.*** If an applicable CFC becomes a specified group member for a specified taxable year with respect to a specified period of a specified group for which a CFC group election is in effect, the CFC group election applies to the applicable CFC and the applicable CFC becomes a CFC group member. If an applicable CFC ceases to be a specified group member for a specified taxable year with respect to a specified period of a specified group for which a CFC group election is in effect, the CFC group election terminates solely with respect to the applicable CFC.

(5) ***Manner of making or revoking a CFC group election*** —

(i) ***In general.*** An election is made or revoked under this paragraph (e)(5) (*CFC group election*) with respect to a specified period of a specified group. A CFC group election remains in effect for each specified period of the specified group until revoked. A CFC group election that is in effect with respect to a specified period of a specified group applies to each specified group member for its specified taxable year that ends with or within the specified period. The making or revoking of a CFC group election is not effective unless made or revoked by each designated U.S. person.

(ii) ***Revocation by election.*** A CFC group election cannot be revoked with respect to any specified period beginning before 60 months following the last day of the specified period for which the election was made. Once a CFC group election has been revoked, a new CFC group election cannot be made with respect to any specified period beginning before 60 months following the last day of the specified period for which the election was revoked.

(iii) ***Timing.*** A CFC group election must be made or revoked with respect to a specified period of a specified group no later than the due date (taking into account extensions, if any) of the original Federal income tax return for the taxable year of each designated U.S. person in which or with which the specified period ends.

(iv) ***Election statement.*** To make or revoke a CFC group election for a specified period of a specified group, each designated U.S. person must attach a statement to its relevant Federal income tax or information return in accordance with publications, forms, instructions, or other guidance. The statement must include the name and taxpayer identification number of all designated U.S. persons, a statement that the CFC group election is being made or revoked, as applicable, the specified period for which the CFC group election is being made or revoked, and the name of each CFC group member and its specified taxable year with respect to the specified period. The statement must be filed in the manner prescribed in publications, forms, instructions, or other guidance.

(v) ***Effect of prior CFC group election.*** A CFC group election is made solely pursuant to the provisions of this paragraph (e)(5), without regard to whether a CFC group election described in guidance under section 163(j) published on December 28, 2018, was in effect.

(6) ***Annual information reporting.*** Each designated U.S. person must attach a statement to its relevant Federal income tax or information return for each taxable year in which a CFC group election is in effect that contains information concerning the computation of the CFC group's section 163(j) limitation and the application of paragraph (c)(3) of this section to the CFC group in accordance with publications, forms, instructions, or other guidance.

(f) ***Treatment of a CFC group member that has ECI*** —

(1) ***In general.*** If a CFC group member has ECI in its specified taxable year, then for purposes of section 163(j) and the section 163(j) regulations—

(i) The items, disallowed business interest expense carryforwards, and other attributes of the CFC group member that are ECI are treated as items, disallowed business interest expense carryforwards, and attributes of a separate applicable CFC (such deemed corporation, an *ECI deemed corporation*) that has the same taxable year and shareholders as the applicable CFC; and

(ii) The ECI deemed corporation is not treated as a specified group member for the specified taxable year.

(2) [Reserved]

(g) ***Rules concerning the computation of adjusted taxable income of a relevant foreign corporation*** —

(1) ***Tentative taxable income.*** For purposes of computing the tentative taxable income of a relevant foreign corporation for a taxable year, the relevant foreign corporation's gross income and allowable deductions are determined under the principles of § 1.952-2 or under the rules of section 882 for determining income that is, or deductions that are allocable to, effectively connected income, as applicable.

(2) ***Treatment of certain dividends.*** For purposes of computing the ATI of a relevant foreign corporation for a taxable year, any dividend included in gross income that is received from a related person, within the meaning of section 954(d)(3), with respect to the distributee is subtracted from tentative taxable income.

(3) ***Treatment of certain foreign income taxes.*** For purposes of computing the ATI of a relevant foreign corporation for a taxable year, no deduction is taken into account for any foreign income tax (as defined in § 1.960-1(b), but substituting the phrase “relevant foreign corporation” for the phrase “controlled foreign corporation”).

(4) ***Anti-abuse rule*** —

(i) ***In general.*** If a specified group member of a specified group or an applicable partnership (*specified lender*) includes an amount (*payment amount*) in income and such amount is attributable to business interest expense incurred by another specified group member or an applicable partnership of the specified group (*specified borrower*) during its taxable year, then the ATI of the specified borrower for the taxable year is increased by the ATI adjustment amount if—

(A) The business interest expense is incurred with a principal purpose of reducing the Federal income tax liability of any United States shareholder of a specified group member (including over other taxable years);

(B) Absent the application of this paragraph (g)(4), the effect of the specified borrower treating all or part of the payment amount as disallowed business interest expense would be to reduce the Federal income tax liability of any United States shareholder of a specified group member; and

(C) Either no CFC group election is in effect with respect to the specified group or the specified borrower is an applicable partnership.

(ii) *ATI adjustment amount* —

(A) ***In general.*** For purposes of this paragraph (g)(4), the term *ATI adjustment amount* means, with respect to a specified borrower and a taxable year, the product of $3^{1}/_{3}$ and the lesser of the payment amount or the disallowed business interest expense, computed without regard to this paragraph (g)(4).

(B) ***Special rule for taxable years or specified periods beginning in 2019 or 2020.*** For any taxable year of an applicable CFC or specified taxable year of a CFC group member with respect to a specified period for which the section 163(j) limitation is determined based, in part, on 50 percent of ATI, in accordance with § 1.163(j)-2(b)(2), paragraph (g)(4)(ii)(A) of this section is applied by substituting "2" for "$3^{1}/_{3}$."

(iii) ***Applicable partnership.*** For purposes of this paragraph (g)(4), the term *applicable partnership* means, with respect to a specified group, a partnership in which at least 80 percent of the interests in profits or capital is owned, directly or indirectly through one or more other partnerships, by specified group members of the specified group. For purposes of this paragraph (g)(4)(iii), a partner's interest in the profits of a partnership is determined in accordance with the rules and principles of § 1.706-1(b)(4)(ii) and a partner's interest in the capital of a partnership is determined in accordance with the rules and principles of § 1.706-1(b)(4)(iii).

(h) *Election to apply safe-harbor* —

(1) ***In general.*** If an election to apply this paragraph (h)(1) (*safe-harbor election*) is in effect with respect to a taxable year of a stand-alone applicable CFC or a specified taxable year of a CFC group member, as applicable, then, for such year, no portion of the applicable CFC's business interest expense is disallowed under the section 163(j) limitation. This paragraph (h) does not apply to excess business interest expense, as described in § 1.163(j)-6(f)(2), until the taxable year in which it is treated as paid or accrued by an applicable CFC under § 1.163(j)-6(g)(2)(i). Furthermore, excess business interest expense is not taken into account for purposes of determining whether the safe-harbor election is available for a stand-alone applicable CFC or a CFC group until the taxable year in which it is treated as paid or accrued by an applicable CFC under § 1.163(j)-6(g)(2)(i).

(2) *Eligibility for safe-harbor election* —

(i) ***Stand-alone applicable CFC.*** The safe-harbor election may be made for the taxable year of a stand-alone applicable CFC only if, for the taxable year, the business interest expense of the applicable CFC is less than or equal to either—

(A) The business interest income of the applicable CFC; or

(B) 30 percent of the lesser of the eligible amount or the qualified tentative taxable income of the applicable CFC.

(ii) ***CFC group.*** The safe-harbor election may be made for the specified period of a CFC group only if, for the specified period, no CFC group member has any pre-group disallowed business interest expense carryforward and the business interest expense of the CFC group for the specified period is less than or equal to either—

(A) The business interest income of the CFC group; or

(B) 30 percent of the lesser of the eligible amount or the qualified tentative taxable income of the CFC group.

(iii) ***Currency translation.*** For purposes of applying this paragraph (h), BII, BIE, and qualified tentative taxable income of a stand-alone applicable CFC or a CFC group must be determined using the U.S. dollar. If BII, BIE, or any items of income, gain, deduction, or loss that are taken into account in computing qualified tentative taxable income are maintained in a currency other than the U.S. dollar, then those items must be translated into the U.S. dollar using the average exchange rate for the taxable year or the specified taxable year, as applicable.

(3) ***Eligible amount*** —

(i) ***Stand-alone applicable CFC.*** The *eligible amount* of a stand-alone applicable CFC for a taxable year is the sum of the amounts a domestic corporation would include in gross income under sections 951(a)(1)(A) and 951A(a), reduced by any deductions that would be allowed under section 245A (by reason of section 964(e)(4)) or section 250(a)(1)(B)(i), determined as if the domestic corporation has a taxable year that ends on the last date of the taxable year of the stand-alone applicable CFC, it wholly owns the stand-alone applicable CFC throughout the CFC's taxable year, it does not own any assets other than stock in the stand-alone applicable CFC, and it has no other items of income, gain, deduction, or loss.

(ii) ***CFC group.*** The *eligible amount* of a CFC group for a specified period is the sum of the amounts a domestic corporation would include in gross income under sections 951(a)(1)(A) and 951A(a), reduced by any deductions that would be allowed under section 245A (by reason of section 964(e)(4)) or section 250(a)(1)(B)(i), determined as if the domestic corporation has a taxable year that is the specified period, it wholly owns each CFC group member throughout the CFC group member's specified taxable year, it does not own any assets other than stock in the CFC group members, and it has no other items of income, gain, deduction, or loss.

(iii) ***Additional rules for determining an eligible amount.*** For purposes of paragraphs (h)(3)(i) and (ii) of this section, the amounts that would be included in gross income of a United States shareholder under sections 951(a)(1)(A) and 951A(a), and any corresponding deductions that would be allowed under section 245A (by reason of section 964(e)(4)) or section 250(a)(1)(B)(i), are determined by taking into account any elections that are made with respect to the applicable CFC(s), including under § 1.954-1(d)(5) (relating to the subpart F high-tax exception) and § 1.951A-2(c)(7)(viii) (relating to the GILTI high-tax exclusion). These amounts are also determined without regard to any section 163(j) limitation on business interest expense and without regard to any disallowed business interest expense carryovers. In addition, those amounts are determined by only taking in account items of the applicable CFC(s) that are properly allocable to a non-excepted trade or business under § 1.163(j)-10.

(4) ***Qualified tentative taxable income.*** The term *qualified tentative taxable income* means, with respect to a taxable year of a stand-alone applicable CFC, the applicable CFC's tentative taxable income, and with respect to a specified period of a CFC group, the sum of each CFC group member's tentative taxable income for the specified taxable year; provided that for purposes of this paragraph (h)(4), tentative taxable income is determined by taking into account only items properly allocable to a non-excepted trade or business under § 1.163(j)-10.

(5) ***Manner of making a safe-harbor election*** —

(i) ***In general.*** A safe-harbor election is an annual election made under this paragraph (h)(5) with respect to a taxable year of a stand-alone applicable CFC or with respect to a specified period of a CFC group. A safe-harbor election that is made with respect to a specified period of a CFC group is effective with respect to each CFC group member for its specified taxable year. A safe-harbor election is only effective if made by each designated U.S. person with respect to a stand-alone applicable CFC or a CFC group. A safe-harbor election is made with respect to a taxable year of a stand-alone applicable CFC, or a specified period of a CFC group, no later than the due date (taking into account extensions, if any) of the original Federal income tax return for the taxable year of each designated U.S. person, respectively, in which or with which the taxable year of the stand-alone applicable CFC ends or the specified period of the CFC group ends.

(ii) ***Election statement.*** To make a safe-harbor election, each designated U.S. person must attach to its relevant Federal income tax return or information return a statement that includes the name and taxpayer identification number of all designated U.S. persons, a statement that a safe-harbor election is being made pursuant to § 1.163(j)-7(h) and a calculation that substantiates that the requirements for making the election are satisfied, and the taxable year of the stand-alone applicable CFC or the specified period of the CFC group, as applicable, for which the safe-harbor election is being made in accordance with publications, forms, instructions, or other guidance. In the case of a CFC group, the statement must also include the name of each CFC group member and its specified taxable year that ends with or within the specified period for which the safe-harbor election is being made. The statement must be filed in the manner prescribed in publications, forms, instructions, or other guidance.

(6) ***Special rule for taxable years or specified periods beginning in 2019 or 2020.*** In the case of a stand-alone applicable CFC, for any taxable year beginning in 2019 or 2020, paragraph (h)(2)(i) of this section is applied by substituting “50 percent” for “30 percent.” In the case of a CFC group, for any specified period beginning in 2019 or 2020, paragraph (h)(2)(ii)(A) of this section is applied by substituting “50 percent” for “30 percent.”

(k) ***Definitions.*** The following definitions apply for purposes of this section.

(1) ***Applicable partnership.*** The term *applicable partnership* has the meaning provided in paragraph (g)(4)(iii) of this section.

(2) ***Applicable specified taxable year.*** The term *applicable specified taxable year* has the meaning provided in paragraph (c)(3)(iii) of this section.

(3) ***ATI adjustment amount.*** The term *ATI adjustment amount* has the meaning provided in paragraph (g)(4)(ii) of this section.

(4) -

(5) [Reserved].

(6) ***CFC group.*** The term *CFC group* has the meaning provided in paragraph (e)(2)(i) of this section.

(7) ***CFC group election.*** The term *CFC group election* means the election described in paragraph (e)(5) of this section.

(8) ***CFC group member.*** The term *CFC group member* has the meaning provided in paragraph (e)(2)(ii) of this section.

(9) [Reserved].

(10) ***Cumulative section 163(j) pre-group carryforward limitation.*** The term *cumulative section 163(j) pre-group carryforward limitation* has the meaning provided in paragraph (c)(3)(iv)(A)(*1*) of this section.

(11) ***Current group.*** The term *current group* has the meaning provided in paragraph (c)(3)(iv)(A)(*2*) of this section.

(12) ***Designated U.S. person.*** The term *designated U.S. person* means—

(i) With respect to a stand-alone applicable CFC, each controlling domestic shareholder, as defined in § 1.964-1(c)(5)(i) of the applicable CFC; or

(ii) With respect to a specified group, the specified group parent, if the specified group parent is a qualified U.S. person, or each controlling domestic shareholder, as defined in § 1.964-1(c)(5)(i), of the specified group parent, if the specified group parent is an applicable CFC.

(13) ***ECI deemed corporation.*** The term *ECI deemed corporation* has the meaning provided in paragraph (f)(1)(i) of this section.

(14) ***Effectively connected income.*** The term *effectively connected income* (or *ECI*) means income or gain that is ECI, as defined in § 1.884-1(d)(1)(iii), and deduction or loss that is allocable to, ECI, as defined in § 1.884-1(d)(1)(iii).

(15) ***Eligible amount.*** The term *eligible amount* has the meaning provided in paragraph (h)(3)(i) of this section.

(16) ***Former group.*** The term *former group* has the meaning provided in paragraph (c)(3)(iv)(A)(*2*) of this section.

(17) ***Loss member.*** The term *loss member* has the meaning provided in paragraph (c)(3)(iv)(A)(*2*) of this section.

(18) ***Payment amount.*** The term *payment amount* has the meaning provided in paragraph (g)(4)(i) of this section.

(19) ***Pre-group disallowed business interest expense carryforward.*** The term *pre-group disallowed business interest expense carryforward* means, with respect to a CFC group member and a specified taxable year, any disallowed business interest expense carryforward of the CFC group member that arose in a taxable year during which the CFC group member (or its predecessor) was not a CFC group member of the CFC group.

(20) ***Qualified tentative taxable income.*** The term *qualified tentative taxable income* has the meaning provided in paragraph (h)(4) of this section.

(21) ***Qualified U.S. person.*** The term *qualified U.S. person* has the meaning provided in paragraph (d)(2)(iv) of this section.

(22) ***Relevant period.*** The term *relevant period* has the meaning provided in paragraph (c)(3)(iv)(A)(*2*) of this section.

(23) ***Safe-harbor election.*** The term *safe-harbor election* has the meaning provided in paragraph (h)(1) of this section.

(24) ***Specified borrower.*** The term *specified borrower* has the meaning provided in paragraph (g)(4)(i) of this section.

(25) ***Specified group.*** The term *specified group* has the meaning provided in paragraph (d)(2)(i) of this section.

(26) ***Specified group member.*** The term *specified group member* has the meaning provided in paragraph (d)(3) of this section.

(27) ***Specified group parent.*** The term *specified group parent* has the meaning provided in paragraph (d)(2)(iii) of this section.

(28) ***Specified lender.*** The term *specified lender* has the meaning provided in paragraph (g)(4)(i) of this section.

(29) ***Specified period*** —

(i) ***In general.*** Except as otherwise provided in paragraph (k)(29)(ii) of this section, the term *specified period* means, with respect to a specified group—

(A) If the specified group parent is a qualified U.S. person, the period ending on the last day of the taxable year of the specified group parent and beginning on the first day after the last day of the specified group's immediately preceding specified period; or

(B) If the specified group parent is an applicable CFC, the period ending on the last day of the specified group parent's required year described in section 898(c)(1), without regard to section 898(c)(2), and beginning on the first day after the last day of the specified group's immediately preceding specified period.

(ii) ***Short specified period.*** A specified period begins no earlier than the first date on which a specified group exists. A specified period ends on the date a specified group ceases to exist under paragraph (d)(2)(vii) of this section. If the last day of a specified period, as determined under paragraph (k)(29)(i) of this section, changes, and, but for this paragraph (k)(29)(ii), the change in the last day of the specified period would result in the specified period being longer than 12 months, the specified period ends on the date on which the specified period would have ended had the change not occurred.

(30) ***Specified taxable year.*** The term *specified taxable year* means, with respect to an applicable CFC that is a specified group member of a specified group and a specified period, a taxable year of the applicable CFC that ends with or within the specified period.

(31) ***Stand-alone applicable CFC.*** The term *stand-alone applicable CFC* means any applicable CFC that is not a specified group member.

(32) ***Stock.*** The term *stock* has the meaning provided in paragraph (d)(2)(v) of this section.

(l) ***Examples.*** The following examples illustrate the application of this section. For each example, unless otherwise stated, no exemptions from the application of section 163(j) are available, no foreign corporation has ECI, and all relevant taxable years and specified periods begin after December 31, 2020.

(1) ***Example 1. Specified taxable years included in specified period of a specified group*** —

(i) ***Facts.*** As of June 30, Year 1, USP, a domestic corporation, owns 60 percent of the common stock of FP, which owns all of the stock of FC1, FC2, and FC3. The remaining 40 percent of the common stock of FP is owned by an unrelated foreign corporation. FP has a single class of stock. FP acquired the stock of FC3 from an unrelated person on March 22, Year 1. The acquisition did not result in a change in FC3's taxable year or a close of its taxable year. USP's

interest in FP and FP's interest in FC1 and FC2 has been the same for several years. USP has a taxable year ending June 30, Year 1, which is not a short taxable year. Each of FP, FC1, FC2, and FC3 are applicable CFCs. Pursuant to section 898(c)(2), FP and FC1 have taxable years ending May 31, Year 1. Pursuant to section 898(c)(1), FC2 and FC3 have taxable years ending June 30, Year 1.

(ii) *Analysis* —

(A) ***Determining a specified group and specified period of the specified group.*** Pursuant to paragraph (d) of this section, FP, FC1, FC2, and FC3 are members of a specified group, and FP is the specified group parent. Because the specified group parent, FP, is an applicable CFC, the specified period of the specified group is the period ending on June 30, Year 1, which is the last day of FP's required year described in section 898(c)(1), without regard to section 898(c)(2), and beginning on July 1, Year 0, which is the first day following the last day of the specified group's immediately preceding specified period (June 30, Year 0). See paragraph (k)(29)(i)(B) of this section.

(B) ***Determining the specified taxable years with respect to the specified period.*** Pursuant to paragraph (d)(3) of this section, because each of FP and FC1 are included in the specified group on the last day of their taxable years ending May 31, Year 1, and such taxable years end with or within the specified period ending June 30, Year 1, FP and FC1 are specified group members with respect to the specified period ending June 30, Year 1, for their entire taxable years ending May 31, Year 1, and those taxable years are specified taxable years. Similarly, because each of FC2 and FC3 are included in the specified group on the last day of their taxable years ending June 30, Year 1, and such taxable years end with or within the specified period ending June 30, Year 1, FC2 and FC3 are specified group members with respect to the specified period ending June 30, Year 1, for their entire taxable years ending June 30, Year 1, and those taxable years are specified taxable years. The fact that FC3 was acquired on March 22, Year 1, does not prevent FC3 from being a specified group member with respect to the specified period for the portion of its specified taxable year before March 22, Year 1.

(2) *Example 2. CFC groups* —

(i) ***Facts.*** The facts are the same as in *Example 1* in paragraph (l)(1)(i) of this section except that, in addition, a CFC group election is in place with respect to the specified period ending June 30, Year 1.

(ii) ***Analysis.*** Because a CFC group election is in place for the specified period ending June 30, Year 1, pursuant to paragraph (e)(2)(ii) of this section, each specified group member is a CFC group member with respect to its specified taxable year ending with or within the specified period. Accordingly, FP, FC1, FC2, and FC3 are CFC group members with respect to the specified period ending June 30, Year 1, for their specified taxable years ending May 31, Year 1, and June 30, Year 1, respectively. Pursuant to paragraph (e)(2)(i) of this section, the CFC group for the specified period ending June 30, Year 1, consists of FP, FC1, FC2, and FC3 for their specified taxable years ending May 31, Year 1, and June 30, Year 1, respectively. Pursuant to paragraph (c)(2) of this section, a single section 163(j) limitation is computed for the specified period ending June 30, Year 1. That section 163(j) calculation will include FP and FC1's specified taxable years ending May 31, Year 1, and FC2 and FC3's specified taxable years ending June 30, Year 1.

(3) *Example 3. Application of anti-abuse rule* —

(i) ***Facts.*** USP, a domestic corporation, owns all of the stock of CFC1 and CFC2. Thus, USP is the specified group parent of a specified group, the specified group members of which are CFC1 and CFC2. USP has a calendar year taxable year. All specified group members also have a calendar year taxable year and a functional currency of the U.S. dollar. CFC1 is organized in, and a tax resident of, a jurisdiction that imposes no tax on certain types of income, including interest income. With respect to Year 1, USP expects to pay no residual U.S. tax on its income inclusion under section 951A(a) (GILTI inclusion amount) and expects to have unused foreign tax credits in the category described in section 904(d)(1)(A). A CFC group election is not in effect for Year 1. With a principal purpose of reducing USP's Federal income tax liability in subsequent taxable years, on January 1, Year 1, CFC1 loans $100x to CFC2. On December 31, Year 1, CFC2 pays interest of $10x to CFC1 and repays the principal of $100x. Absent the application of paragraph (g)(4)(i) of this section, all $10x of CFC2's interest expense would be disallowed business interest expense and, therefore, CFC2 would have $10x of disallowed business interest expense carryforward to Year 2. In Year 2, CFC2 disposes of one of its businesses at a substantial gain that gives rise to tested income (within the meaning of section 951A(c)(2)(A) and § 1.951A-2(b)(1)). As a result of the gain being included in the ATI of CFC2, absent the application of paragraph (g)(4)(i) of this section, CFC2 would be allowed to deduct the entire $10x of disallowed business interest expense carryforward and therefore reduce the amount of its tested income. Also, USP would pay residual U.S. tax on its GILTI inclusion amount in Year 2, without regard to the application of paragraph (g)(4)(i) of this section.

(ii) ***Analysis.*** The $10x of business interest expense paid in Year 1 is a payment amount described in paragraph (g)(4)(i) of this section because it is between specified group members, CFC1 and CFC2. Furthermore, the requirements of paragraphs (g)(4)(i)(A), (B), and (C) of this section are satisfied because the $10x of business interest expense is incurred with a principal purpose of reducing USP's Federal income tax liability; absent the application of paragraph (g)(4)(i) of this section, the effect of CFC2 treating the $10x of business interest expense as disallowed business interest expense in Year 1 would be to reduce USP's Federal income tax liability in Year 2; and no CFC group election is in effect with respect to the specified group in Year 1. Because the requirements of paragraphs (g)(4)(i)(A), (B), and (C) of this section are satisfied, CFC2's ATI for Year 1 is increased by the ATI adjustment amount, or $33.33x, which is the amount equal to $3^1/_3$ multiplied by $10x (the lesser of the payment amount of $10x and the disallowed business interest expense of $10x). As a result, the $10x of business interest expense is not disallowed business interest expense of CFC2 in Year 1, and therefore does not give rise to a disallowed business interest expense carryforward to Year 2.

(m) *Applicability dates* —

(1) ***General applicability date.*** Except as provided in paragraph (m)(2) of this section, this section applies for a taxable year of a foreign corporation beginning on or after November 13, 2020.

(2) ***Exception.*** Paragraphs (a), (c)(1), (c)(2)(i) and (ii), and (c)(3) through (5), (d), (e), (f)(1), (g)(3) and (4), (h), and (k)(1) through (3), (6) through (8), and (10) through (32) of this section apply for a taxable year of a foreign corporation beginning on or after March 22, 2021.

(3) *Early application* —

(i) ***Rules for paragraphs (b) and (g)(1) and (2) of this section.*** Taxpayers and their related parties, within the meaning of sections 267(b) (determined without regard to section 267(c)(3)) and 707(b)(1), may choose to apply the rules in paragraphs (b) and (g)(1) and (2) of this section for a taxable year beginning after December 31, 2017, and before November 13, 2020, provided that those taxpayers and their related parties consistently apply all of those rules and the rules described in paragraph (m)(4) of this section for that taxable year. If a taxpayer and its related parties apply the rules described in paragraph (m)(4) of this section, as contained in T.D. 9905 (§§ 1.163(j)-0 through 1.163(j)-11, effective November 13, 2020), they will be considered as applying the rules described in paragraph (m)(4) of this section for purposes of this paragraph (m)(3)(i).

(ii) ***Rules for certain other paragraphs in this section.*** Taxpayers and their related parties, within the meaning of sections 267(b) (determined without regard to section 267(c)(3)) and 707(b)(1), may choose to apply the rules in paragraphs (a), (c)(1), (c)(2)(i) and (ii), and (c)(3) through (5), (d), (e), (f)(1), (g)(3) and (4), (h), and (k)(1) through (3), (6) through (8), and (10) through (32) of this section for a taxable year beginning after December 31, 2017, and before March 22, 2021, provided that those taxpayers and their related parties consistently apply all of those rules and the rules described in paragraph (m)(4) of this section for that taxable year and for each subsequent taxable year. If a taxpayer and its related parties apply the rules described in paragraph (m)(4) of this section, as contained in T.D. 9905 (§§ 1.163(j)-0 through 1.163(j)-11, effective November 13, 2020) as modified by T.D. 9943 (effective January 13, 2021),they will be considered as applying the rules described in paragraph (m)(4) of this section for purposes of this paragraph (m)(3)(ii).

(4) ***Additional rules that must be applied consistently.*** The rules described in this paragraph (m)(4) are the section 163(j) regulations and, if applicable, §§ 1.263A-9, 1.263A-15, 1.381(c)(20)-1, 1.382-1, 1.382-2, 1.382-5, 1.382-6, 1.382-7, 1.383-0, 1.383-1, 1.469-9, 1.469-11, 1.704-1, 1.882-5, 1.1362-3, 1.1368-1, 1.1377-1, 1.1502-13, 1.1502-21, 1.1502-36, 1.1502-79, 1.1502-91 through 1.1502-99 (to the extent they effectuate the rules of §§ 1.382-2, 1.382-5, 1.382-6, and 1.383-1) and 1.1504-4.

(5) ***Election for prior taxable years and specified periods.*** Notwithstanding paragraph (e)(5)(iii) or (h)(5)(i) of this section, in the case of a specified period of a specified group or a taxable year of a stand-alone applicable CFC that ends with or within a taxable year of a designated U.S. person ending before November 13, 2020, a CFC group election or a safe-harbor election may be made on an amended Federal income tax return filed on or before the due date (taking into account extensions, if any) of the original Federal income tax return for the first taxable year of each designated U.S. person ending on or after November 13, 2020.

[T.D. 9905, 85 FR 56760, Sept. 14, 2020, as amended by T.D. 9943, 86 FR 5532, Jan. 19, 2021]

§ 1.163(j)-8 [Reserved]

§ 1.163(j)-9 Elections for excepted trades or businesses; safe harbor for certain REITs.

(a) ***Overview.*** The limitation in section 163(j) applies to business interest, which is defined under section 163(j)(5) as interest properly allocable to a trade or business. The term trade or business does not include any electing real property trade or business or any electing farming business. See section 163(j)(7). This section provides the rules and procedures for taxpayers to follow in making an election under section 163(j)(7)(B) for a trade or business to be an electing real property trade or business and an election under section 163(j)(7)(C) for a trade or business to be an electing farming business.

(b) *Availability of election* —

(1) ***In general.*** An election under section 163(j)(7)(B) for a real property trade or business to be an electing real property trade or business is available to any trade or business that is described in § 1.163(j)-1(b)(14)(i), (ii), or (iii), and an election under section 163(j)(7)(C) for a farming business to be an electing farming business is available to any trade or business that is described in § 1.163(j)-1(b)(13)(i), (ii), or (iii).

(2) *Special rules* —

(i) ***Exempt small businesses.*** An election described in paragraph (b)(1) of this section is available regardless of whether the real property trade or business or farming business making the election also meets the requirements of the small business exemption in section 163(j)(3) and § 1.163(j)-2(d). See paragraph (c)(2) of this section for the effect of the election relating to depreciation.

(ii) ***Section 162 trade or business not required for electing real property trade or business.*** An election described in paragraph (b)(1) of this section to be an electing real property trade or business is available regardless of whether the trade or business with respect to which the election is made is a trade or business under section 162. For example, a taxpayer engaged in activities described in section 469(c)(7)(C) and § 1.469-9(b)(2), as required in § 1.163(j)-1(b)(14)(i), may make an election for a trade or business to be an electing real property trade or business, regardless of whether its activities rise to the level of a section 162 trade or business.

(c) *Scope and effect of election* —

(1) ***In general.*** An election under this section is made with respect to each eligible trade or business of the taxpayer and applies only to such trade or business for which the election is made. An election under this section applies to the taxable year in which the election is made and to all subsequent taxable years. See paragraph (e) of this section for terminations of elections.

(2) ***Irrevocability.*** An election under this section is irrevocable.

(3) ***Depreciation.*** Taxpayers making an election under this section are required to use the alternative depreciation system for certain types of property under section 163(j)(11) and cannot claim the additional first-year depreciation deduction under section 168(k) for those types of property.

(d) *Time and manner of making election* —

(1) ***In general.*** Subject to paragraph (f) of this section, a taxpayer makes an election under this section by attaching an election statement to the taxpayer's timely filed original Federal income tax return, including extensions. A taxpayer may make elections for multiple trades or businesses on a single election statement.

(2) ***Election statement contents.*** The election statement should be titled “Section 1.163(j)-9 Election” and must contain the following information for each trade or business:

(i) The taxpayer's name;

(ii) The taxpayer's address;

(iii) The taxpayer's social security number (SSN) or employer identification number (EIN);

(iv) A description of the taxpayer's electing trade or business sufficient to demonstrate qualification for an election under this section, including the principal business activity code; and

(v) A statement that the taxpayer is making an election under section 163(j)(7)(B) or (C), as applicable.

(3) ***Consolidated group's trade or business.*** For a consolidated group's trade or business, the election under this section is made by the agent for the group, as defined in § 1.1502-77, on behalf of itself and members of the consolidated group. Only the name and taxpayer identification number (TIN) of the agent for the group, as defined in § 1.1502-77, must be provided on the election statement.

(4) ***Partnership's trade or business.*** An election for a partnership must be made on the partnership's return for a trade or business that the partnership conducts. An election by a partnership does not apply to a trade or business conducted by a partner outside the partnership.

(e) ***Termination of election*** —

(1) ***In general.*** An election under this section automatically terminates if a taxpayer ceases to engage in the electing trade or business. A taxpayer is considered to cease to engage in an electing trade or business if the taxpayer sells or transfers substantially all of the assets of the electing trade or business to an acquirer that is not a related party in a taxable asset transfer. A taxpayer is also considered to cease to engage in an electing trade or business if the taxpayer terminates its existence for Federal income tax purposes or ceases operation of the electing trade or business, except to the extent that such termination or cessation results in the sale or transfer of substantially all of the assets of the electing trade or business to an acquirer that is a related party, or in a transaction that is not a taxable asset transfer.

(2) ***Taxable asset transfer defined.*** For purposes of this paragraph (e), the term *taxable asset transfer* means a transfer in which the acquirer's basis or adjusted basis in the assets is not determined, directly or indirectly, in whole or in part, by reference to the transferor's basis in the assets.

(3) ***Related party defined.*** For purposes of this paragraph (e), the term *related party* means any person who bears a relationship to the taxpayer which is described in section 267(b) or 707(b)(1).

(4) ***Anti-abuse rule.*** If, within 60 months of a sale or transfer of assets described in paragraph (e)(1) of this section, the taxpayer or a related party reacquires substantially all of the assets that were used in the taxpayer's prior electing trade or business, or substantially similar assets, and resumes conducting such prior electing trade or business, the taxpayer's previously terminated election under this section is reinstated and is effective on the date the prior electing trade or business is reacquired.

(f) ***Additional guidance.*** The rules and procedures regarding the time and manner of making an election under this section and the election statement contents in paragraph (d) of this section may be modified through other guidance (see §§ 601.601(d) and 601.602 of this chapter). Additional situations in which an election may terminate under paragraph (e) of this section may be provided through guidance published in the FEDERAL REGISTER or in the Internal Revenue Bulletin (see § 601.601(d) of this chapter).

(g) ***Examples.*** The examples in this paragraph (g) illustrate the application of this section. Unless otherwise indicated, X and Y are domestic C corporations; D and E are U.S. resident individuals not subject to any foreign income tax; and the exemption for certain small businesses in § 1.163(j)-2(d) does not apply.

(1) ***Example 1: Scope of election*** —

(i) ***Facts.*** For the taxable year ending December 31, 2021, D, a sole proprietor, owned and operated a dairy farm and an orchard as separate farming businesses described in section 263A(e)(4). D filed an original Federal income tax return for the 2021 taxable year on August 1, 2022, and included with the return an election statement meeting the requirements of paragraph (d)(2) of this section. The election statement identified D's dairy farm business as an electing trade or business under this section. On March 1, 2023, D sold some but not all or substantially all of the assets from D's dairy farm business to D's neighbor, E, who is unrelated to D. After the sale, D continued to operate the dairy farm trade or business.

(ii) ***Analysis.*** D's election under this section was properly made and is effective for the 2021 taxable year and subsequent years. D's dairy farm business is an excepted trade or business because D made the election with D's timely filed Federal income tax return. D's orchard business is a non-excepted trade or business, because D did not make an election for the orchard business to be an excepted trade or business. The sale of some but not all or substantially all of the assets from D's dairy farm business does not affect D's election under this section.

(2) ***Example 2: Availability of election*** —

(i) ***Facts.*** E, an individual, operates a dairy business that is a farming business under section 263A and also owns real property that is not part of E's dairy business that E leases to an unrelated party through a triple net lease. E's average gross receipts, excluding inherently personal amounts, for the three years prior to 2021 are approximately $25 million, but E is unsure of the exact amount.

(ii) ***Analysis.*** Under paragraph (b)(2)(i) of this section, E may make an election under this section for the dairy business to be an electing farming business, even though E is unsure whether the small business exemption of § 1.163(j)-2(d) applies. Additionally, under paragraph (b)(2)(ii) of this section, assuming the requirements of section 163(j)(7)(C) and this section are otherwise satisfied, E may make an election under this section for its triple net lease property to be an electing real property trade or business, even though E may not be engaged in a trade or business under section 162 with respect to the real property.

(3) ***Example 3: Cessation of entire trade or business*** —

(i) ***Facts.*** X has a real property trade or business for which X made an election under this section by attaching an election statement to A's 2021 Federal income tax return. On March 1, 2022, X sold all of the assets used in its real property trade or business to Y, an unrelated party, and ceased to engage in the electing trade or business. On June 1, 2027, X started a new real property trade or business that was substantially similar to X's prior electing trade or business.

(ii) ***Analysis.*** X's election under this section terminated on March 1, 2022, under paragraph (e)(1) of this section. X may choose whether to make an election under this section for X's new real property trade or business that A started in 2027.

(4) ***Example 4: Anti-abuse rule*** —

(i) ***Facts.*** The facts are the same as in *Example 3* in paragraph (g)(3)(i) of this section, except that X re-started its previous real property trade or business on February 1, 2023, when X reacquired substantially all of the assets that X had sold on March 1, 2022.

(ii) ***Analysis.*** X's election under this section terminated on March, 1, 2022, under paragraph (e)(1) of this section. On February 1, 2023, X's election was reinstated under paragraph (e)(4) of this section. X's new real property trade or business is treated as a resumption of X's prior electing trade or business and is therefore treated as an electing real property trade or business.

(5) ***Example 5: Trade or business continuing after acquisition*** —

(i) ***Facts.*** X has a farming business for which X made an election under this section by attaching an election statement to X's timely filed 2021 Federal income tax return. Y, unrelated to X, also has a farming business, but Y has not made an election under this section. On July 1, 2022, X transferred all of its assets to Y in a transaction described in section 368(a)(1)(D). After the transfer, Y continues to operate the farming trade or business acquired from X.

(ii) ***Analysis.*** Under paragraph (e)(1) of this section, Y is subject to X's election under this section for the trade or business that uses X's assets because the sale or transfer was not in a taxable transaction. Y cannot revoke X's election, but X's election has no effect on Y's existing farming business for which Y has not made an election under this section.

(6) ***Example 6: Trade or business merged after acquisition*** —

(i) ***Facts.*** The facts are the same as in *Example 5* in paragraph (g)(5)(i) of this section, except that Y uses the assets acquired from X in a trade or business that is neither a farming business (as defined in section 263A(e)(4) or § 1.263A-4(a)(4)) nor a trade or business of a specified agricultural or horticultural cooperative (as defined in section 199A(g)(4)).

(ii) ***Analysis.*** Y is not subject to X's election for Y's farming business because the farming trade or business ceased to exist after the acquisition.

(h) ***Safe harbor for REITs*** —

(1) ***In general.*** If a REIT holds real property, as defined in § 1.856-10, interests in one or more partnerships directly or indirectly holding real property (through interests in other partnerships or shares in other REITs), as defined in § 1.856-10, or shares in one or more other REITs directly or indirectly holding real property (through interests in partnerships or shares in other REITs), as defined in § 1.856-10, the REIT is eligible to make the election described in paragraph (b)(1) of this section to be an electing real property trade or business for purposes of sections 163(j)(7)(B) and 168(g)(1)(F) for all or part of its assets. The portion of the REIT's assets eligible for this election is determined under paragraph (h)(2) or (3) of this section.

(2) ***REITs that do not significantly invest in real property financing assets.*** If a REIT makes the election under paragraph (h)(1) of this section and the value of the REIT's real property financing assets, as defined in paragraphs (h)(5) and (6) of this section, at the close of the taxable year is 10 percent or less of the value of the REIT's total assets at the close of the taxable year, as determined under section 856(c)(4)(A), then all of the REIT's assets are treated as assets of an excepted trade or business.

(3) ***REITs that significantly invest in real property financing assets.*** If a REIT makes the election under paragraph (h)(1) of this section and the value of the REIT's real property financing assets, as defined in paragraphs (h)(5) and (6) of this section, at the close of the taxable year is more than 10 percent of the value of the REIT's total assets at the close of the taxable year, as determined under section

856(c)(4)(A), then for the allocation of interest expense, interest income, and other items of expense and gross income to excepted and non-excepted trades or businesses, the REIT must apply the rules set forth in § 1.163(j)-10 as modified by paragraph (h)(4) of this section.

(4) ***REIT real property assets, interests in partnerships, and shares in other REITs*** —

(i) ***Real property assets.*** Assets held by a REIT described in paragraph (h)(3) of this section that meet the definition of real property under § 1.856-10 are treated as assets of an excepted trade or business.

(ii) ***Partnership interests.*** If a REIT described in paragraph (h)(3) of this section holds an interest in a partnership, in applying the partnership look-through rule described in § 1.163(j)-10(c)(5)(ii)(A)(2), the REIT treats assets of the partnership that meet the definition of real property under § 1.856-10 as assets of an excepted trade or business. This application of the definition of real property under § 1.856-10 does not affect the characterization of the partnership's assets at the partnership level or for any non-REIT partner. However, no portion of the adjusted basis of the REIT's interest in the partnership is allocated to a non-excepted trade or business if the partnership makes an election under paragraph (h)(7) of this section and if all of the partnership's assets are treated as assets of an excepted trade or business under paragraph (h)(2) of this section.

(iii) ***Shares in other REITs*** —

(A) ***In general.*** If a REIT (shareholder REIT) described in paragraph (h)(3) of this section holds an interest in another REIT, then for purposes of applying the allocation rules in § 1.163(j)-10, the partnership look-through rule described in § 1.163(j)-10(c)(5)(ii)(A)(2), as modified by paragraph (h)(4)(ii) of this section, applies to the assets of the other REIT (as if the other REIT were a partnership) in determining the portion of shareholder REIT's adjusted basis in the shares of the other REIT that is allocable to an excepted or non-excepted trade or business of shareholder REIT. However, no portion of the adjusted basis of shareholder REIT's shares in the other REIT is allocated to a non-excepted trade or business if all of the other REIT's assets are treated as assets of an excepted trade or business under paragraph (h)(2) of this section.

(B) ***Information necessary.*** If shareholder REIT does not receive, either directly from the other REIT or indirectly through the analysis of an applicable financial statement (within the meaning of section 451(b)(3)) of the other REIT, the information necessary to determine whether and to what extent the assets of the other REIT are investments in real property financing assets, then shareholder REIT's shares in the other REIT are treated as assets of a non-excepted trade or business under § 1.163(j)-10(c).

(iv) ***Tiered entities.*** In applying § 1.163(j)-10(c)(5)(ii)(E), the rules in paragraphs (h)(4)(ii) and (h)(4)(iii)(A) and (B) of this section apply to any partnerships and other REITs within the tier.

(5) ***Value of shares in other REITs*** —

(i) ***In general.*** If a REIT (shareholder REIT) holds shares in another REIT, then solely for purposes of applying the value tests under paragraphs (h)(2) and (3) of this section, the value of shareholder REIT's real property financing assets includes the portion of the value of shareholder REIT's shares in the other REIT that is attributable to the other REIT's investments in real property financing assets. However, no portion of the value of shareholder REIT's shares

in the other REIT is included in the value of shareholder REIT's real property financing assets if all of the other REIT's assets are treated as assets of an excepted trade or business under paragraph (h)(2) of this section.

(ii) ***Information necessary.*** If shareholder REIT does not receive, either directly from the other REIT or indirectly through the analysis of an applicable financial statement (within the meaning of section 451(b)(3)) of the other REIT, the information necessary to determine whether and to what extent the assets of the other REIT are investments in real property financing assets, then shareholder REIT's shares in the other REIT are treated as real property financing assets for purposes of paragraphs (h)(2) and (3) of this section.

(iii) ***Tiered REITs.*** The rules in paragraphs (h)(5)(i) and (ii) of this section apply successively to the extent that the other REIT, and any other REIT in the tier, holds shares in another REIT.

(6) ***Real property financing assets.*** For purposes of this paragraph (h), *real property financing assets* include interests, including participation interests, in the following: Mortgages, deeds of trust, and installment land contracts; mortgage pass-through certificates guaranteed by Government National Mortgage Association (GNMA), Federal National Mortgage Association (FNMA), Federal Home Loan Mortgage Corporation (FHLMC), or Canada Mortgage and Housing Corporation (CMHC); REMIC regular interests; other interests in investment trusts classified as trusts under § 301.7701-4(c) of this chapter that represent undivided beneficial ownership in a pool of obligations principally secured by interests in real property and related assets that would be permitted investments if the investment trust were a REMIC; obligations secured by manufactured housing treated as single family residences under section 25(e)(10), without regard to the treatment of the obligations or the properties under state law; and debt instruments issued by publicly offered REITs.

(7) ***Application of safe harbor for partnerships controlled by REITs.*** A partnership is eligible to make the election under paragraph (h)(1) of this section if one or more REITs own directly or indirectly at least 50 percent of the partnership's capital and profits, the partnership meets the requirements of section 856(c)(2), (3), and (4) as if the partnership were a REIT, and the partnership satisfies the requirements described in paragraph (h)(1) of this section as if the partnership were a REIT. The portion of the partnership's assets eligible for this election is determined under paragraph (h)(2) or (3) of this section, treating the partnership as if it were a REIT.

(8) ***REITs or partnerships controlled by REITs that do not apply the safe harbor.*** A REIT or a partnership that is eligible but chooses not to apply the safe harbor provisions of paragraph (h)(1) or (7) of this section, respectively, may still elect, under paragraph (b)(1) of this section, for one or more of its trades or businesses to be an electing real property trade or business, provided that such trade or business is otherwise eligible to elect under paragraph (b)(1) of this section. A REIT or partnership that makes the election under paragraph (b)(1) of this section without utilizing the safe harbor provisions of paragraph (h) of this section may not rely on any portion of paragraphs (h)(1) through (7) of this section.

(i) [Reserved]

(j) ***Special anti-abuse rule for certain real property trades or businesses*** —

(1) ***In general.*** Except as provided in paragraph (j)(2) of this section, a trade or business (lessor) does not constitute a trade or business eligible for an election described in paragraph (b)(1) of this section to be an electing real property trade or business if at least 80 percent, determined by fair market rental value, of the real property used in the business is leased to a trade or business (lessee) under common control with the lessor, regardless of whether the arrangement is pursuant to a written

lease or pursuant to a service contract or another agreement that is not denominated as a lease. For purposes of this paragraph (j), fair market rental value is the amount of rent that a prospective lessee that is unrelated to the lessor would be willing to pay for a rental interest in real property, taking into account the geographic location, size, and type of the real property. For purposes of this paragraph (j), two trades or businesses are under common control if 50 percent of the direct and indirect ownership of both businesses are held by related parties within the meaning of sections 267(b) and 707(b).

(2) *Exceptions* —

(i) ***De minimis exception.*** The limitation in paragraph (j)(1) of this section does not apply, and the lessor is eligible to make an election under paragraph (b)(1) of this section, if the lessor leases, regardless of whether the arrangement is pursuant to a written lease or pursuant to a service contract or another agreement that is not denominated as a lease, at least 90 percent of the lessor's real property, determined by fair market rental value, to one or more of the following:

(A) A party not under common control with the lessor or lessee;

(B) A party under common control with the lessor or lessee that has made an election described in paragraph (b)(1) of this section for a trade or business to be an electing real property trade or business or electing farming business, but only to the extent that the real property is used as part of its electing real property trade or business or electing farming business; or

(C) A party under common control with the lessor or lessee that is an excepted regulated utility trade or business, but only to the extent that the real property is used as part of its excepted regulated utility trade or business.

(ii) ***Look-through exception.*** If the de minimis exception in paragraph (j)(2)(i) of this section does not apply because less than 90 percent of the lessor's real property is leased to parties described in paragraphs (j)(2)(i)(A), (B), and (C), the lessor is eligible to make the election under paragraph (b)(1) of this section to the extent that the lessor leases the real property to parties described in paragraph (j)(2)(A), (B), or (C), and to the extent that the lessee subleases (or lessees ultimately sublease) the real property to:

(A) A party not under common control with the lessor or lessee;

(B) A party under common control with the lessor or lessee that has made an election described in paragraph (b)(1) of this section for a trade or business to be an electing real property trade or business or electing farming business to the extent that the real property is used as part of its electing real property trade or business or electing farming business; or

(C) A party under common control with the lessor or lessee that is an excepted regulated utility trade or business to the extent that the real property is used as part of its excepted regulated utility trade or business.

(iii) ***Inapplicability of exceptions to consolidated groups.*** The exceptions in paragraphs (j)(2)(i) and (ii) of this section do not apply when the lessor and lessee are members of the same consolidated group.

(iv) ***Exception for certain REITs.*** The special anti-abuse rule in paragraph (j)(1) of this section does not apply to REITs or to partnerships making an election under paragraph (h)(7) of this section that lease qualified lodging facilities, as defined in section 856(d)(9)(D), and qualified health care properties, as defined in section 856(e)(6)(D).

(3) ***Allocations.*** See § 1.163(j)-10(c)(3)(iii)(D) for rules related to the allocation of the basis of assets used in lessor trades or businesses described in paragraphs (j)(1) and (j)(2)(i) of this section.

(4) ***Examples.*** The examples in this paragraph (j)(4) illustrate the application of paragraphs (j)(1), (2), and (3) of this section. Unless otherwise indicated, the parties are all domestic entities and are not members of a single consolidated group within the meaning of § 1.1502-1(h).

(i) ***Example 1: Related party lease of hotel*** —

(A) ***Facts.*** X and Y are under common control, as defined in paragraph (j)(1) of this section. X owns one piece of real property, a hotel, that X leases to Y. Y operates the hotel and provides hotel rooms and associated amenities to third party guests of the hotel. The form of the arrangement with third party hotel guests is a license to use rooms in the hotel and associated amenities. Y is a real property trade or business that has made an election under paragraph (b)(1) of this section.

(B) ***Analysis.*** Because X leases at least 80 percent of X's real property to a party under common control, X is subject to the anti-abuse rule in paragraph (j)(1) of this section. However, under the de minimis exception under paragraph (j)(2)(i) of this section, 100 percent of the fair market rental value of the building is leased to a party under common control that has made an election to be an electing real property trade or business. Accordingly, X is eligible to make the election described in paragraph (b)(1) of this section for its entire trade or business.

(ii) ***Example 2*** —

(A) ***Facts.*** The facts are the same as in *Example 1* in paragraph (j)(4)(i)(A) of this section, except that Y has not made an election under paragraph (b)(1) of this section, and is not otherwise using the real property in an excepted trade or business.

(B) ***Analysis.*** Because X leases at least 80 percent of X's real property, determined by fair market rental value, to Y, a party under common control, X is subject to the anti-abuse rule in paragraph (j)(1) of this section. X is not eligible for the de minimis exception under paragraph (j)(2)(i) of this section because X does not lease at least 90 percent of its real property to a party under common control, as defined in paragraph (j)(1) of this section, such as Y, and Y is not using the property in an otherwise excepted trade or business. However, X is eligible for the look-through exception under paragraph (j)(2)(ii) of this section because X leases 100 percent of its real property to Y, a party that is under common control, and Y subleases 100 percent of the real property to parties that are not under common control with X or Y. The fact that the license provided to hotel guests is not denominated as a lease does not prevent these licenses from being treated as a lease for purposes of paragraph (j) of this section. Accordingly, under the look-through exception under paragraph (j)(2)(ii) of this section, X is eligible to make the election described in paragraph (b)(1) of this section with regard to its entire trade or business.

(iii) ***Example 3: Sublease to related party and unrelated third party*** —

(A) *Facts.* X owns one piece of real property that X leases to Y, a party under common control, as defined in paragraph (j)(1) of this section. Y does not operate an excepted trade or business. Y subleases 80 percent of the real property, determined by the fair market rental value, to a party under common control with Y that does not operate an excepted trade or business and 20 percent of the real property, determined by the fair market rental value, to an unrelated third party.

(B) *Analysis.* Because X leases at least 80 percent of X's real property, determined by fair market rental value, to a party under common control, X is subject to the anti-abuse rule in paragraph (j)(1) of this section. X is not eligible for the de minimis exception in paragraph (j)(2)(i) of this section because X is not leasing at least 90 percent of the real property, determined by fair market rental value, to a party under common control that operates an excepted trade or business and/or unrelated parties. Under the look-through exception under paragraph (j)(2)(ii) of this section, X is eligible to make the election described in paragraph (b)(1) of this section with respect to the 20 percent of the fair market rental value of the real property subleased to an unrelated party because X is treated as directly leasing this portion to an unrelated party. X is not eligible to make the election described in paragraph (b)(1) of this section with respect to the 80 percent of the building subleased to a party under common control because X is still treated as directly leasing this portion to a related party. Under § 1.163(j)-10(c)(3)(iii)(D), X must allocate 80 percent of the basis in the real property as a non-excepted trade or business and 20 percent of the basis in the real property as an excepted trade or business.

(iv) *Example 4: Multiple subleases* —

(A) *Facts.* X owns a building that X leases to Y, a party under common control as defined in paragraph (j)(1) of this section. Y does not operate an excepted trade or business. Y subleases 80 percent of the building, determined by fair market rental value, to Z, a party under common control with both X and Y. Y subleases the remaining 20 percent of the building, determined by fair market rental value, to unrelated parties. Z subleases 50 percent of its leasehold interest, determined by fair market rental value, to parties unrelated to X, Y and Z, and uses the remaining leasehold interest in its retail business. Z does not operate an excepted trade or business.

(B) *Analysis.* Because X leases at least 80 percent of X's real property, determined by fair market rental value, to a party under common control, X is subject to the anti-abuse rule in paragraph (j)(1) of this section. X is not eligible for the de minimis exception in paragraph (j)(2)(i) because X is not leasing at least 90 percent of the building, determined by fair market rental value, to a party under common control that operates an excepted trade or business and/or unrelated parties. Under the look-through exception under paragraph (j)(2)(ii) of this section, X is eligible to make the election described in paragraph (b)(1) of this section with respect to the 60 percent of the building that is subleased to unrelated parties, determined by adding 40 percent (50 percent of the 80 percent leasehold interest) from Z's sublease to an unrelated party and 20 percent from Y's sublease to unrelated parties (40 + 20). X is not eligible to make the election described in paragraph (b)(1) of this section with respect to the 40 percent of the building subleased to Z, because Z is a related party that does not operate an excepted trade or business.

(v) *Example 5: Lessee's Trade or Business* —

(A) *Facts.* X owns a building that X leases to W, a party under common control as defined in paragraph (j)(1) of this section. W operates the building as a widget manufacturing plant and does not sublease any portion of the building.

(B) *Analysis.* X is not eligible to make the election described in paragraph (b)(1) of this section because X leases the entire building to a party under common control. X is not eligible for the de minimis exception in paragraph (j)(2)(i) of this section because X is not leasing at least 90 percent of the real property to a party under common control that operates an excepted trade or business and/or unrelated parties. W's trade or business cannot be an electing real property trade or business. X is not eligible for the look-through exception under paragraph (j)(2)(ii) of this section because W is not subleasing any part of the building.

(k) *Applicability date.* This section applies to taxable years beginning on or after November 13, 2020. However, taxpayers and their related parties, within the meaning of sections 267(b) and 707(b)(1), may choose to apply the rules of this section to a taxable year beginning after December 31, 2017, so long as the taxpayers and their related parties consistently apply the rules of the section 163(j) regulations, and, if applicable, §§ 1.263A-9, 1.263A-15, 1.381(c)(20)-1, 1.382-1, 1.382-2, 1.382-5, 1.382-6, 1.382-7, 1.383-0, 1.383-1, 1.469-9, 1.469-11, 1.704-1, 1.882-5, 1.1362-3, 1.1368-1, 1.1377-1, 1.1502-13, 1.1502-21, 1.1502-36, 1.1502-79, 1.1502-91 through 1.1502-99 (to the extent they effectuate the rules of §§ 1.382-2, 1.382-5, 1.382-6, and 1.383-1), and 1.1504-4, to that taxable year.

[T.D. 9905, 85 FR 56760, Sept. 14, 2020]

§ 1.163(j)-10 Allocation of interest expense, interest income, and other items of expense and gross income to an excepted trade or business.

(a) *Overview* —

(1) *In general* —

(i) *Purposes.* Except as provided in § 1.163(j)-6(m) or § 1.163(j)-9(h), this section provides the exclusive rules for allocating tax items that are properly allocable to a trade or business between excepted trades or businesses and non-excepted trades or businesses for purposes of section 163(j). The amount of a taxpayer's interest expense that is properly allocable to excepted trades or businesses is not subject to the section 163(j) limitation. The amount of a taxpayer's other items of income, gain, deduction, or loss, including interest income, that is properly allocable to excepted trades or businesses is excluded from the calculation of the taxpayer's section 163(j) limitation. See section 163(j)(6) and (j)(8)(A)(i); see also § 1.163(j)-1(b)(1)(i)(H), (b)(1)(ii)(F), and (b)(3). The general method of allocation set forth in paragraph (c) of this section is based on the approach that money is fungible and that interest expense is attributable to all activities and property, regardless of any specific purpose for incurring an obligation on which interest is paid. In no event may the amount of interest expense allocated under this section exceed the amount of interest paid or accrued, or treated as paid or accrued, by the taxpayer within the taxable year.

(ii) *Application of section.* The amount of a taxpayer's tax items properly allocable to a trade or business, other than interest expense and interest income, that is properly allocable to excepted trades or businesses for purposes of section 163(j) is determined as set forth in paragraph (b) of this section. The amount of a taxpayer's interest expense and interest income

that is properly allocable to excepted trades or businesses for purposes of section 163(j) generally is determined as set forth in paragraph (c) of this section, except as otherwise provided in paragraph (d) of this section. For purposes of this section, a taxpayer's activities are not treated as a separate trade or business to the extent those activities involve the provision of real property, goods, or services to a trade or business of the taxpayer (or, if the taxpayer is a member of a consolidated group, the consolidated group). For example, if a taxpayer engaged in a manufacturing trade or business has in-house legal personnel that provide legal services solely with respect to the taxpayer's manufacturing business, the taxpayer is not treated as also engaged in the trade or business of providing legal services. Similarly, if the taxpayer described in the previous sentence constructs or acquires real property solely for use by the taxpayer's manufacturing business, the taxpayer is not treated as also engaged in a real property trade or business.

(2) ***Coordination with other rules*** —

(i) ***In general.*** The rules of this section apply after a taxpayer has determined whether any interest expense or interest income paid, received, or accrued is properly allocable to a trade or business. Similarly, the rules of this section apply to other tax items after a taxpayer has determined whether those items are properly allocable to a trade or business. For instance, a taxpayer must apply § 1.163-8T, if applicable, to determine which items of interest expense are investment interest under section 163(d) before applying the rules in paragraph (c) of this section to allocate interest expense between excepted and non-excepted trades or businesses. After determining whether its tax items are properly allocable to a trade or business, a taxpayer that is engaged in both excepted and non-excepted trades or businesses must apply the rules of this section to determine the amount of interest expense that is business interest expense subject to the section 163(j) limitation and to determine which items are included or excluded in computing its section 163(j) limitation.

(ii) ***Treatment of investment interest, investment income, investment expenses, and certain other tax items of a partnership with a C corporation or tax-exempt corporation as a partner.*** For rules governing the treatment of investment interest, investment income, investment expenses, and certain other separately stated tax items of a partnership with a C corporation or tax-exempt corporation as a partner, see §§ 1.163(j)-4(b)(3) and 1.163(j)-6(k).

(3) ***Application of allocation rules to foreign corporations and foreign partnerships.*** The rules of this section apply to foreign corporations and foreign partnerships.

(4) ***Application of allocation rules to members of a consolidated group*** —

(i) ***In general.*** As provided in § 1.163(j)-4(d), the computations required by section 163(j) and the regulations in this part under section 163(j) of the Code generally are made for a consolidated group on a consolidated basis. In this regard, for purposes of applying the allocation rules of this section, all members of a consolidated group are treated as one corporation. Therefore, the rules of this section apply to the activities conducted by the group as if those activities were conducted by a single corporation. For example, the group (rather than a particular member) is treated as engaged in excepted or non-excepted trades or businesses. In the case of intercompany obligations, within the meaning of § 1.1502-13(g)(2)(ii), for purposes of allocating asset basis between excepted and non-excepted trades or businesses, the obligation of the member borrower is not considered an asset of the creditor member. Similarly, intercompany transactions, within the meaning of § 1.1502-13(b)(1)(i), are disregarded for purposes of this section, as are the resulting offsetting items, and property is allocated to a

trade or business based on the activities of the group as if the members of the group were divisions of a single corporation. Further, stock of a group member that is owned by another member of the same group is not treated as an asset for purposes of this section, and the transfer of any amount of member stock to a non-member is treated by the group as a transfer of the member's assets proportionate to the amount of member stock transferred. Additionally, stock of a corporation that is not a group member is treated as owned by the group.

(ii) ***Application of excepted business percentage to members of a consolidated group.*** After a consolidated group has determined the percentage of the group's interest expense allocable to excepted trades or businesses for the taxable year (and thus not subject to the section 163(j) limitation), this exempt percentage is applied to the interest paid or accrued by each member during the taxable year to any lender that is not a group member. Therefore, except to the extent paragraph (d) of this section (providing rules for certain qualified nonrecourse indebtedness) applies, an identical percentage of the interest paid or accrued by each member of the group to any lender that is not a group member is treated as allocable to excepted trades or businesses, regardless of whether any particular member actually engaged in an excepted trade or business.

(iii) ***Basis in assets transferred in an intercompany transaction.*** For purposes of allocating interest expense and interest income under paragraph (c) of this section, the basis of property does not include any gain or loss realized with respect to the property by another member in an intercompany transaction, as defined in § 1.1502-13(b), whether or not the gain or loss is deferred.

(5) ***Tax-exempt organizations.*** For tax-exempt organizations, section 512 and the regulations in this part under section 512 of the Code determine the rules for allocating all income and expenses among multiple trades or businesses.

(6) ***Application of allocation rules to disallowed disqualified interest.*** A taxpayer may apply the allocation rules of this section to disallowed disqualified interest by either:

(i) Applying the allocation rules of this section to all of the taxpayer's disallowed disqualified interest in the taxable year(s) in which the disallowed disqualified interest was paid or accrued (the historical approach); or

(ii) Treating all of the taxpayer's disallowed disqualified interest as if it were paid or accrued in the taxpayer's first taxable year beginning after December 31, 2017 (the effective date approach).

(7) ***Examples.*** The following examples illustrate the principles of this paragraph (a).

(i) ***Example 1: Items properly allocable to a trade or business*** —

(A) ***Facts.*** Individual T operates Business X, a non-excepted trade or business, as a sole proprietor. In Year 1, T pays or accrues $40x of interest expense and receives $100x of gross income with respect to Business X that is not eligible for a section 199A deduction. T borrows money to buy a car for personal use, and T pays or accrues $20x of interest expense with respect to the car loan. T also invests in corporate bonds, and, in Year 1, T receives $50x of interest income on those bonds.

(B) ***Analysis.*** Under paragraphs (a)(1) and (2) of this section, T must determine which items of income and expense, including items of interest income and interest expense, are properly allocable to a trade or business. T's $100x of gross income and T's $40x of interest

expense with respect to Business X are properly allocable to a trade or business. However, the interest expense on T's car loan is personal interest within the meaning of section 163(h)(2) rather than interest properly allocable to a trade or business. Similarly, T's interest income from corporate bonds is not properly allocable to a trade or business because it is interest from investment activity. See section 163(d)(4)(B).

(ii) *Example 2: Intercompany transaction* —

(A) ***Facts.*** S is a member of a consolidated group of which P is the common parent. P conducts an electing real property trade or business (Business X), and S conducts a non-excepted trade or business (Business Y). P leases Building V (which P owns) to S for use in Business Y.

(B) ***Analysis.*** Under paragraph (a)(4)(i) of this section, a consolidated group is treated as a single corporation for purposes of applying the allocation rules of this section, and the consolidated group (rather than a particular member of the group) is treated as engaged in excepted and non-excepted trades or businesses. Thus, intercompany transactions are disregarded for purposes of this section. As a result, the lease of Building V by P to S is disregarded. Moreover, because Building V is used in Business Y, basis in this asset is allocated to Business Y rather than Business X for purposes of these allocation rules, regardless of which member (P or S) owns the building.

(iii) *Example 3: Intercompany sale of natural gas* —

(A) ***Facts.*** S is a member of a consolidated group of which P is the common parent. S drills for natural gas and is not an excepted regulated utility trade or business. S sells most of its natural gas production to P, which produces electricity at its natural gas-fired power plants, and S sells the rest of its natural gas production to third parties at market rates. P is an excepted regulated utility trade or business to the extent that it is engaged in a trade or business described in § 1.163(j)-1(b)(15)(i).

(B) ***Analysis.*** Intercompany transactions are disregarded for purposes of this section. As a result, the intercompany sales of natural gas by S to P are disregarded. Moreover, the assets of S and P are allocated between the excepted and non-excepted trades or businesses of the P group based on the assets used in each trade or business. Assets of S may be allocated to the P group's excepted trade or business to the extent those assets are used in the trade or business of the furnishing or sale of electrical energy. Likewise, assets of P may be allocated to the P group's non-excepted trade or business to the extent those assets are used in the trade or business of natural gas production.

(iv) *Example 4: Disallowed disqualified interest* —

(A) ***Facts.*** S is a member of a consolidated group of which P is the common parent. P and S are the only members of an affiliated group under old section 163(j)(6)(C). S operates a farm equipment leasing business (Business X) that is not an excepted trade or business. P is engaged in an electing farming business (Business Y). Entering its first taxable year beginning after December 31, 2017, the P group has disallowed disqualified interest of $120x, all of which the P group paid or accrued in earlier taxable years in which it only operated Business X. The P group also incurs $100x of interest expense during its 2018 taxable year, of which $25x (25 percent of $100x) is business interest expense properly allocable to Business X and $75x (75 percent of $100x) is properly allocable to Business Y under paragraph (c) of this section.

(B) ***Analysis.*** Under paragraph (a)(6) of this section, the P group may allocate disallowed disqualified interest to Business X and Business Y by either applying the allocation rules of this section in the taxable years in which the disallowed disqualified interest was paid or accrued (the historical approach) or by treating such interest as though it were paid or accrued in the P group's first taxable year beginning after December 31, 2017 (the effective date approach). Accordingly, if the P group chooses to rely on the historical approach, it allocates all $120x of disallowed disqualified interest to Business X (a non-excepted trade or business), and all $120x of disallowed disqualified interest is subject to the section 163(j) limitation. If, instead, the P group chooses to rely on the effective date approach, it allocates its $120x of disallowed disqualified interest in the same proportion as its $100x of business interest expense that was paid or accrued in its 2018 taxable year. Of the $120x of disallowed disqualified interest, $30x (25 percent of $120x) is allocated to Business X and $90x (75 percent of $120x) is allocated to Business Y. The $90x of disallowed disqualified interest that is properly allocable to Business Y (an excepted trade or business) is not subject to the section 163(j) limitation.

(b) ***Allocation of tax items other than interest expense and interest income*** —

(1) ***In general.*** Except as otherwise provided in § 1.163(j)-6(m) or § 1.163(j)-9(h), for purposes of calculating ATI, tax items other than interest expense and interest income are allocated to a particular trade or business in the manner described in this paragraph (b). It is not necessary to allocate items under this paragraph (b) for purposes of calculating ATI if all of the taxpayer's items subject to allocation under this paragraph (b) are allocable to excepted trades or businesses, or if all of those items are allocable to non-excepted trades or businesses.

(2) ***Gross income other than dividends and interest income.*** A taxpayer's gross income other than dividends and interest income is allocated to the trade or business that generated the gross income.

(3) ***Dividends*** —

(i) ***Look-through rule.*** If a taxpayer receives a dividend, within the meaning of section 316, that is not investment income, within the meaning of section 163(d), and if the taxpayer satisfies the minimum ownership threshold in paragraph (c)(7) of this section, then, solely for purposes of allocating amounts received as a dividend during the taxable year to excepted or non-excepted trades or businesses under this paragraph (b), the dividend income is treated as allocable to excepted or non-excepted trades or businesses based upon the relative amounts of the payor corporation's adjusted basis in the assets used in its trades or businesses, determined pursuant to paragraph (c) of this section. If at least 90 percent of the payor corporation's adjusted basis in its assets during the taxable year, determined pursuant to paragraph (c) of this section, is allocable to either excepted trades or businesses or to non-excepted trades or businesses, all of the taxpayer's dividend income from the payor corporation for the taxable year is treated as allocable to either excepted or non-excepted trades or businesses, respectively.

(ii) ***Inapplicability of the look-through rule.*** If a taxpayer receives a dividend that is not investment income, within the meaning of section 163(d), and if the taxpayer does not satisfy the minimum ownership threshold in paragraph (c)(7) of this section, then the taxpayer must treat the dividend as allocable to a non-excepted trade or business.

(4) ***Gain or loss from the disposition of non-consolidated C corporation stock, partnership interests, or S corporation stock*** —

(i) *Non-consolidated C corporations.*

(A) If a taxpayer recognizes gain or loss upon the disposition of stock in a non-consolidated C corporation that is not property held for investment, within the meaning of section 163(d)(5), and if the taxpayer looks through to the assets of the C corporation under paragraph (c)(5)(ii) of this section for the taxable year, then the taxpayer must allocate gain or loss from the disposition of stock to excepted or non-excepted trades or businesses based upon the relative amounts of the C corporation's adjusted basis in the assets used in its trades or businesses, determined pursuant to paragraph (c) of this section. If at least 90 percent of the C corporation's adjusted basis in its assets during the taxable year, determined pursuant to paragraph (c) of this section, is allocable to either excepted trades or businesses or to non-excepted trades or businesses, all of the taxpayer's gain or loss from the disposition is treated as allocable to either excepted or non-excepted trades or businesses, respectively.

(B) If a taxpayer recognizes gain or loss upon the disposition of stock in a non-consolidated C corporation that is not property held for investment, within the meaning of section 163(d)(5), and if the taxpayer does not look through to the assets of the C corporation under paragraph (c)(5)(ii) of this section for the taxable year, then the taxpayer must treat the gain or loss from the disposition of stock as allocable to a non-excepted trade or business.

(C) For rules governing the transfer of stock of a member of a consolidated group, see paragraph (a)(4)(i) of this section.

(ii) *Partnerships and S corporations.*

(A) If a taxpayer recognizes gain or loss upon the disposition of interests in a partnership or stock in an S corporation that owns—

(*1*) Non-excepted assets and excepted assets;

(*2*) Investment assets; or

(*3*) Both;

(B) The taxpayer determines a proportionate share of the amount properly allocable to a non-excepted trade or business in accordance with the allocation rules set forth in paragraph (c)(5)(ii)(A) or (c)(5)(ii)(B)(*3*) of this section, as appropriate, and includes such proportionate share of gain or loss in the taxpayer's ATI. However, if at least 90 percent of the partnership's or S corporation's adjusted basis in its assets during the taxable year, determined pursuant to paragraph (c) of this section, is allocable to either excepted trades or businesses or to non-excepted trades or businesses, all of the taxpayer's gain or loss from the disposition is treated as allocable to either excepted or non-excepted trades or businesses, respectively. This rule also applies to tiered passthrough entities by looking through each passthrough entity tier (for example, an S corporation that is the partner of the highest-tier partnership would look through each lower-tier partnership), subject to paragraph (c)(5)(ii)(D) of this section. With respect to a partner that is a C corporation or tax-exempt corporation, a partnership's investment assets are taken into account and treated as non-excepted trade or business assets. For purposes of this paragraph, a

passthrough entity means a partnership, S corporation, or any other entity (domestic or foreign) that is not a corporation if all items of income and deduction of the entity are included in the income of its owners or beneficiaries.

(5) ***Expenses, losses, and other deductions*** —

(i) ***Expenses, losses, and other deductions that are definitely related to a trade or business.*** Expenses (other than interest expense), losses, and other deductions (collectively, *deductions* for purposes of this paragraph (b)(5)) that are definitely related to a trade or business are allocable to the trade or business to which they relate. A deduction is considered definitely related to a trade or business if the item giving rise to the deduction is incurred as a result of, or incident to, an activity of the trade or business or in connection with property used in the trade or business (see § 1.861-8(b)(2)). If a deduction is definitely related to one or more excepted trades or businesses and one or more non-excepted trades or businesses, the deduction is apportioned between the excepted and non-excepted trades or businesses based upon the relative amounts of the taxpayer's adjusted basis in the assets used in those trades or businesses, as determined under paragraph (c) of this section.

(ii) ***Other deductions.*** Deductions that are not described in paragraph (b)(5)(i) of this section are ratably apportioned based on the gross income of each trade or business.

(6) ***Treatment of investment items and certain other items of a partnership with a C corporation partner.*** Any investment income, investment expense, or other item that a partnership receives, pays, or accrues and that is treated as properly allocable to a trade or business of a C corporation partner under § 1.163(j)-4(b)(3)(i) is treated as properly allocable to a non-excepted trade or business of the C corporation partner, except that any item with respect to property or activities for which an election has been made by the partnership under § 1.163(j)-9(b) is treated as properly allocable to an excepted trade or business. See, for example, an election for activities described in § 1.163(j)-9(b)(2)(ii) or an election under § 1.163(j)-9(h).

(7) ***Examples: Allocation of income and expense.*** The following examples illustrate the principles of this paragraph (b):

(i) ***Example 1: Allocation of income and expense between excepted and non-excepted trades or businesses*** —

(A) ***Facts.*** T conducts an electing real property trade or business (Business Y), which is an excepted trade or business. T also operates a lumber yard (Business Z), which is a non-excepted trade or business. In Year 1, T receives $100x of gross rental income from real property leasing activities. T also pays or accrues $60x of expenses in connection with its real property leasing activities and $20x of legal services performed on behalf of both Business Y and Business Z. T receives $60x of gross income from lumber yard customers and pays or accrues $50x of expenses related to the lumber yard business. For purposes of expense allocations under paragraphs (b) and (c) of this section, T has $240x of adjusted basis in its Business Y assets and $80x of adjusted basis in its Business Z assets.

(B) ***Analysis.*** Under paragraph (b)(2) of this section, for Year 1, $100x of rental income is allocated to Business Y, and $60x of income from lumber yard customers is allocated to Business Z. Under paragraph (b)(5)(i) of this section, $60x of expenses paid or accrued in connection with real property leasing activities are allocated to Business Y, and $50x of expenses related to the lumber yard are allocated to Business Z. The $20x of remaining

expenses for legal services performed on behalf of both Business Y and Business Z are allocated according to the relative amounts of T's basis in the assets used in each business. The total amount of T's basis in the assets used in Businesses Y and Z is $320x, of which 75 percent ($240x/$320x) is used in Business Y and 25 percent ($80x/$320x) is used in Business Z. Accordingly, $15x of the expenses for legal services are allocated to Business Y and $5x are allocated to Business Z.

(ii) *Example 2: Allocation of partnership items from investment activity* —

(A) ***Facts.*** U, a domestic C corporation, directly conducts an electing real property trade or business. U also has an interest in PRS, a partnership that holds real property for investment. PRS's investment in real property is not a trade or business under section 162 or a real property trade or business under section 469. During the taxable year, PRS sells some of its real property to third parties and allocates $80x of income to U from these sales. In addition, PRS incurs deductible expenses related to its investment in real property and allocates $9x of these deductible expenses to U.

(B) ***Analysis.*** Under paragraph (b)(6) of this section, any investment income or investment expense that a partnership receives, pays, or accrues and that is treated as properly allocable to a trade or business of a C corporation partner is treated as properly allocable to a non-excepted trade or business of the C corporation partner. Because PRS generates its income and expense from investment activity that is not a trade or business under section 162 or a real property trade or business under section 469, U's allocation of $80x of income and $9x of deductible expense from PRS is treated as properly allocable to a non-excepted trade or business.

(c) *Allocating interest expense and interest income that is properly allocable to a trade or business* —

(1) *General rule* —

(i) ***In general.*** Except as otherwise provided in this section, § 1.163(j)-6(m), or § 1.163(j)-9(h), the amount of a taxpayer's interest expense and interest income that is properly allocable to a trade or business is allocated to the taxpayer's excepted or non-excepted trades or businesses for purposes of section 163(j) based upon the relative amounts of the taxpayer's adjusted basis in the assets, as determined under paragraph (c)(5) of this section, used in its excepted or non-excepted trades or businesses. The taxpayer must determine the adjusted basis in its assets as of the close of each determination date, as defined in paragraph (c)(6) of this section, in the taxable year and average those amounts to determine the relative amounts of asset basis for its excepted and non-excepted trades or businesses for that year. It is not necessary to allocate interest expense or interest income under this paragraph (c) for purposes of determining a taxpayer's business interest expense and business interest income if all of the taxpayer's interest income and expense is allocable to excepted trades or businesses (in which case the taxpayer is not subject to the section 163(j) limitation) or if all of the taxpayer's interest income and expense is allocable to non-excepted trades or businesses.

(ii) ***De minimis exception.*** If at least 90 percent of the taxpayer's basis in its assets for the taxable year is allocable to either excepted or non-excepted trades or businesses pursuant to this paragraph (c), then all of the taxpayer's interest expense and interest income for that year that is properly allocable to a trade or business is treated as allocable to either excepted or non-excepted trades or businesses, respectively.

(2) ***Example.*** The following example illustrates the principles of paragraph (c)(1) of this section:

(i) ***Facts.*** T is a calendar-year C corporation engaged in an electing real property trade or business, the business of selling wine, and the business of selling hand-carved wooden furniture. In Year 1, T has $100x of interest expense that is deductible except for the potential application of section 163(j). Based upon determinations made on the determination dates in Year 1, T's average adjusted basis in the assets used in the electing real property trade or business (an excepted trade or business) in Year 1 is $800x, and T's total average adjusted basis in the assets used in the other two businesses (which are non-excepted trades or businesses) in Year 1 is $200x.

(ii) ***Analysis.*** $80x (($800x/($800x + $200x)) × $100x) of T's interest expense for Year 1 is allocable to T's electing real property trade or business and is not business interest expense subject to the section 163(j) limitation. The remaining $20x of T's interest expense is business interest expense for Year 1 that is subject to the section 163(j) limitation.

(3) ***Asset used in more than one trade or business*** —

(i) ***General rule.*** If an asset is used in more than one trade or business during a determination period, as defined in paragraph (c)(6) of this section, the taxpayer's adjusted basis in the asset is allocated to each trade or business using the permissible methodology under this paragraph (c)(3) that most reasonably reflects the use of the asset in each trade or business during that determination period. An allocation methodology most reasonably reflects the use of the asset in each trade or business if it most properly reflects the proportionate benefit derived from the use of the asset in each trade or business. A taxpayer is not required to use the same allocation methodology for each type of asset used in a trade a business. Instead, a taxpayer may use different allocation methodologies for different types of assets used in a trade or business. If none of the permissible methodologies set forth in paragraph (c)(3)(ii) of this section reasonably reflects the use of the asset in each trade or business, the taxpayer's basis in the asset is not taken into account for purposes of this paragraph (c).

(ii) ***Permissible methodologies for allocating asset basis between or among two or more trades or businesses.*** Subject to the special rules in paragraphs (c)(3)(iii) and (c)(5) of this section, a taxpayer's basis in an asset used in two or more trades or businesses during a determination period may be allocated to those trades or businesses based upon—

(A) The relative amounts of gross income that an asset generates, has generated, or may reasonably be expected to generate, within the meaning of § 1.861-9T(g)(3), with respect to the trades or businesses;

(B) If the asset is land or an inherently permanent structure, the relative amounts of physical space used by the trades or businesses; or

(C) If the trades or businesses generate the same unit of output, the relative amounts of output of those trades or businesses (for example, if an asset is used in two trades or businesses, one of which is an excepted regulated utility trade or business, and the other of which is a non-excepted regulated utility trade or business, the taxpayer may allocate basis in the asset based upon the relative amounts of kilowatt-hours generated by each trade or business).

(iii) ***Special rules*** —

(A) ***Consistent allocation methodologies*** —

(*1*) ***In general.*** Except as otherwise provided in paragraph (c)(3)(iii)(A)(*2*) of this section, a taxpayer must maintain the same allocation methodology for a period of at least five taxable years.

(*2*) ***Consent to change allocation methodology.*** If a taxpayer has used the same allocation methodology for at least five taxable years, the taxpayers may change its method of allocation under paragraphs (c)(3)(i) and (ii) of this section without the consent of the Commissioner. If a taxpayer has used the same allocation methodology for less than five taxable years, and if the taxpayer determines that a different allocation methodology properly reflects the proportionate benefit derived from the use of assets in its trades or businesses, the taxpayer may change its method of allocation under paragraphs (c)(3)(i) and (ii) of this section only with the consent of the Commissioner. To obtain consent, a taxpayer must submit a request for a letter ruling under the applicable administrative procedures, and consent will be granted only in extraordinary circumstances.

(B) ***De minimis exception.*** If at least 90 percent of the taxpayer's basis in an asset would be allocated to either excepted trades or businesses or non-excepted trades or businesses during a determination period pursuant to this paragraph (c)(3), the taxpayer's entire basis in the asset for the determination period must be allocated to either excepted or non-excepted trades or businesses, respectively. This rule applies before the application of paragraph (c)(1)(ii) of this section.

(C) ***Allocations of excepted regulated utility trades or businesses*** —

(*1*) ***In general.*** Except as provided in the de minimis rule in paragraph (c)(3)(iii)(C)(*3*) of this section, a taxpayer is engaged in an excepted regulated utility trade or business only to the extent that the taxpayer is engaged in an excepted regulated utility trade or business described in § 1.163(j)-1(b)(15)(i)(A), (B), or (C), and any remaining utility trade or business is a non-excepted trade or business. Thus, for example, electricity sold by a utility trade or business at rates not established or approved by an entity described in § 1.163(j)-1(b)(15)(i)(A)(*2*) and not subject to an election under § 1.163(j)-1(b)(15)(iii) must be treated as electricity sold by a non-excepted regulated utility trade or business. The taxpayer must allocate under this paragraph (c) the basis of assets used in the utility trade or business between its excepted and non-excepted trades or businesses.

(*2*) ***Permissible method for allocating asset basis for utility trades or businesses.*** In the case of a utility trade or business described in paragraph (c)(3)(iii)(C)(*1*) of this section, and except as provided in the de minimis rule in paragraph (c)(3)(iii)(C)(*3*) of this section, the method described in paragraph (c)(3)(ii)(C) of this section is the only permissible method under this paragraph (c)(3) for allocating the taxpayer's basis in assets used in both the excepted and non-excepted trades or businesses of selling or furnishing the items described in § 1.163(j)-1(b)(15)(i)(A)(*1*).

(*3*) ***De minimis rule for excepted utility trades or businesses.*** If a taxpayer is engaged in a utility trade or business described in paragraph (c)(3)(iii)(C)(*1*) of this section, and if at least 90 percent of the items described in § 1.163(j)-1(b)(15)(i)(A)(*1*) are furnished or sold by trades or businesses described in § 1.163(j)-1(b)(15)(i)(A), (B) or (C), the

taxpayer's entire trade or business is an excepted regulated utility trade or business, and paragraph (c)(3)(iii)(C)(*2*) of this section does not apply. This rule applies before the application of paragraph (c)(3)(iii)(B) of this section.

(*4*) ***Example.*** The following example illustrates the principles of this paragraph (c)(3)(iii)(C):

(*i*) ***Facts.*** X, a C corporation, is engaged in the trade or business of generating electrical energy. During each determination period in the taxable year, 80 percent of the megawatt-hours generated in the electricity generation trade or business is sold at rates negotiated with the purchaser, and with respect to which X filed a schedule of rates with a public utility commission. The public utility commission has the authority to take action on the filed schedule of rates, but if no action is taken, the rules governing the public utility commission explicitly state that the public utility commission is deemed to have approved the rates. The public utility has taken no action with respect to the negotiated rate. The remaining 20 percent of the megawatt-hours is sold on the wholesale market at rates not established or subject to approval by a regulator described in § 1.163(j)-1(b)(15)(i)(A)(*2*). X has not made an election under § 1.163(j)-1(b)(15)(iii). None of the assets used in X's utility generation trade or business are used in any other trade or business.

(*ii*) ***Analysis.*** For purposes of section 163(j), under paragraph (c)(3)(iii)(C)(*1*) of this section, 80 percent of X's electricity generation business is an excepted regulated utility trade or business, because the rate for the sale of the electricity was subject to approval by a regulator described in § 1.163(j)-1(b)(15)(i)(A)(*2*). The remaining 20 percent of X's business is a non-excepted utility trade or business. Under paragraph (c)(3)(iii)(C)(*2*) of this section, X must allocate 80 percent of the basis of the assets used in its utility business to excepted trades or business and the remaining 20 percent of the basis in the assets to non-excepted trades or businesses.

(D) ***Special allocation rule for real property trades or businesses subject to special anti-abuse rule —***

(*1*) ***In general.*** In the case of a trade or business that leases real property subject to an arrangement described in § 1.163(j)-9(j)(1), including trades or businesses to which the look-through exception in § 1.163(j)-9(j)(2)(ii) applies, the taxpayer must allocate under this paragraph (c)(3) the basis of property used in both the excepted and non-excepted portions of its trade or business, as determined under § 1.163(j)-9(j)(3).

(*2*) ***Allocation methodology for real property.*** For purposes of this paragraph (c)(3)(iii)(D), a taxpayer must allocate the basis of real property leased under an arrangement described in § 1.163(j)-9(j)(1) or (j)(2)(i) between the excepted and non-excepted portions of the real property trade or business based on the relative fair market rental value of the real property that is attributable to the excepted and non-excepted portions of the trade or business, respectively.

(*3*) ***Example.*** The following example illustrates the principles of this paragraph (c)(3)(iii)(D):

(*i*) ***Facts.*** X and Y are domestic C corporations under common control within the meaning of section 267(b), but neither X nor Y are members of a consolidated group. The small business exemption in § 1.163(j)-2(d) does not apply to X or Y. X owns an office building and leases the entire building to Y. Y subleases 80 percent of the office building, measured by fair market rental value, to a related party. Y subleases the remaining 20 percent of the building to unrelated third parties. X also owns depreciable scaffolding equipment, which it uses to clean all of the building's windows as part of its leasing arrangement with Y.

(*ii*) ***Analysis.*** Under § 1.163(j)-9(j)(2)(ii), X is eligible to make an election for 20 percent of its business of leasing the office building to be an electing real property trade or business. Assuming X makes such an election, X must allocate the basis of assets used in both the excepted and non-excepted portions of its leasing trade or business under this paragraph (c). Under paragraph (c)(3)(iii)(D)(*2*) of this section, X must allocate the basis of the office building based on the relative fair market value attributable to the excepted and non-excepted portions of its leasing business. Therefore, X must allocate 20 percent of the basis of the building to the excepted portion of its leasing business, and it must allocate the remaining 80 percent of the building to the non-excepted portion of its leasing business. Under paragraph (c)(3)(iii)(D)(*2*) of this section, X may use one of the allocation methods described in paragraph (c)(3)(ii) of this section to allocate the basis of its scaffolding equipment between the excepted and non-excepted portions of its leasing trade or business.

(4) ***Disallowed business interest expense carryforwards; floor plan financing interest expense.*** Disallowed business interest expense carryforwards (which were treated as allocable to a non-excepted trade or business in a prior taxable year) are not re-allocated between non-excepted and excepted trades or businesses in a succeeding taxable year. Instead, the carryforwards continue to be treated as allocable to a non-excepted trade or business. Floor plan financing interest expense also is not subject to allocation between excepted and non-excepted trades or businesses (see § 1.163(j)-1(b)(19)) and is always treated as allocable to non-excepted trades or businesses.

(5) ***Additional rules relating to basis*** —

(i) ***Calculation of adjusted basis*** —

(A) ***Non-depreciable property other than land.*** Except as otherwise provided in paragraph (c)(5)(i)(E) of this section, for purposes of this section, the adjusted basis of an asset other than land with respect to which no deduction is allowable under section 167, former section 168, or section 197, as applicable, is the adjusted basis of the asset for determining gain or loss from the sale or other disposition of that asset as provided in § 1.1011-1. Self-created intangible assets are not taken into account for purposes of this paragraph (c).

(B) ***Depreciable property other than inherently permanent structures.*** For purposes of this section, the adjusted basis of any tangible asset with respect to which a deduction is allowable under section 167, other than inherently permanent structures, is determined by using the alternative depreciation system under section 168(g) before any application of the additional first-year depreciation deduction (for example, under section 168(k) or (m)), and the adjusted basis of any tangible asset with respect to which a deduction is

allowable under former section 168, other than inherently permanent structures, is determined by using the taxpayer's method of computing depreciation for the asset under former section 168. The depreciation deduction with respect to the property described in this paragraph (c)(5)(i)(B) is allocated ratably to each day during the period in the taxable year to which the depreciation relates. A change to the alternative depreciation system should be determined in a manner similar to that in § 1.168(i)-4(d)(4) or (d)(5)(ii)(B), as applicable.

(C) ***Special rule for land and inherently permanent structures.*** Except as otherwise provided in paragraph (c)(5)(i)(E) of this section, for purposes of this section, the adjusted basis of any asset that is land, including nondepreciable improvements to land, or an inherently permanent structure is its unadjusted basis.

(D) ***Depreciable or amortizable intangible property and depreciable income forecast method property.*** For purposes of this section, the adjusted basis of any intangible asset with respect to which a deduction is allowable under section 167 or 197, as applicable, is determined in accordance with section 167 or 197, as applicable, and the adjusted basis of any asset described in section 167(g)(6) for which a deduction is allowable under section 167 is determined in accordance with section 167(g). The adjusted basis of any intangible asset under this paragraph (c)(5)(i)(D) is determined before any application of the additional first-year depreciation deduction. The depreciation or amortization deduction with respect to the property described in this paragraph (c)(5)(i)(D) is allocated ratably to each day during the period in the taxable year to which the depreciation or amortization relates.

(E) ***Assets not yet used in a trade or business.*** Assets that have been acquired or that are under development but that are not yet used in a trade or business are not taken into account for purposes of this paragraph (c). For example, construction works in progress (such as buildings, airplanes, or ships) are not taken into account for purposes of this paragraph (c). Similarly, land acquired by a taxpayer for construction of a building by the taxpayer to be used in a trade or business is not taken into account for purposes of under this paragraph (c) until the building is placed in service. This rule does not apply to interests in a partnership or stock in a corporation.

(F) ***Trusts established to fund specific liabilities.*** Trusts required to fund specific liabilities (for example, pension trusts, and nuclear decommissioning funds (including, but not limited to, those funds for which an election is made under section 468A)) are not taken into account for purposes of this paragraph (c).

(G) ***Inherently permanent structure.*** For purposes of this section, the term *inherently permanent structure* has the meaning provided in § 1.856-10(d)(2).

(ii) ***Partnership interests; stock in non-consolidated C corporations*** —

(A) ***Partnership interests*** —

(*1*) ***Calculation of asset basis.*** For purposes of this section, a partner's interest in a partnership is treated as an asset of the partner. For these purposes, the partner's adjusted basis in a partnership interest is reduced, but not below zero, by the partner's share of partnership liabilities, as determined under section 752, and is further reduced as provided in paragraph (c)(5)(ii)(A)(*2*)(*iii*) of this section. If a partner elects or is required to apply the rules in this paragraph (c)(5)(ii)(A) to look

through to a partnership's basis in the partnership's assets, the partner's basis in the partnership interest is adjusted to the extent of the partner's share of any adjustments to the basis of the partnership's assets required pursuant to the rules in paragraph (c)(5)(i) of this section.

(2) ***Allocation of asset basis*** —

(*i*) ***In general.*** For purposes of determining the extent to which a partner's adjusted basis in its partnership interest is allocable to an excepted or non-excepted trade or business, the partner may look through to such partner's share of the partnership's basis in the partnership's assets, taking into account any adjustments under sections 734(b) and 743(b), and adjusted to the extent required under paragraph (d)(4) of this section, except as otherwise provided in paragraph (c)(5)(ii)(D) of this section. For purposes of the preceding sentence, such partner's share of partnership assets is determined using a reasonable method taking into account special allocations under section 704(b). Notwithstanding paragraph (c)(7) of this section, if a partner's direct and indirect interest in a partnership is greater than or equal to 80 percent of the partnership's capital or profits, the partner must apply the rules in this paragraph (c)(5)(ii)(A)(*2*) to look through to the partnership's basis in the partnership's assets. If a partner elects or is required to apply the rules in this paragraph (c)(5)(ii)(A)(*2*) to look through to a partnership's basis in the partnership's assets, the partner allocates the basis of its partnership interest between excepted and non-excepted trades or businesses based on the ratio in which the partner's share of the partnership's adjusted tax basis in its trade or business assets is allocated between excepted and non-excepted trade or business assets.

(*ii*) ***De minimis rule.*** If, after applying paragraph (c)(5)(ii)(A)(*2*)(*iii*) of this section, at least 90 percent of a partner's share of a partnership's basis in its assets (including adjustments under sections 734(b) and 743(b)) is allocable to either excepted trades or businesses or non-excepted trades or businesses, without regard to assets not properly allocable to a trade or business, the partner's entire basis in its partnership interest is treated as allocable to either excepted or non-excepted trades or businesses, respectively. For purposes of the preceding sentence, such partner's share of partnership assets is determined using a reasonable method taking into account special allocations under section 704(b).

(*iii*) ***Partnership assets not properly allocable to a trade or business.*** For purposes of applying paragraphs (c)(5)(ii)(A)(*2*)(*i*) and (*ii*) of this section to a partner that is a C corporation or tax-exempt corporation, such partner's share of a partnership's assets that are not properly allocable to a trade or business is treated as properly allocable to a non-excepted trade or business of such partner. However, if the partnership made an election under § 1.163(j)-9(b) or § 1.163(j)-9(h) with respect to an asset or activity, the assets (or assets related to such activities) are treated as properly allocable to an excepted trade or business of such partner. See, for example, an election under § 1.163(j)-9(h) for an asset or an election under § 1.163(j)-9(b) with respect to activities described in § 1.163(j)-9(b)(2)(ii). For a partner other than a C corporation or tax-exempt

corporation, a partnership's assets that are not properly allocable to a trade or business are treated as neither excepted nor non-excepted trade or business assets; instead, such partner's adjusted basis in its partnership interest is decreased by that partner's share of the excess of the partnership's basis in those assets over the partnership's debt that is traced to such assets in accordance with § 1.163-8T, and it is increased by that partner's share of the excess of the partnership's debt that is traced to such assets in accordance with § 1.163-8T over the partnership's basis in those assets. For purposes of the preceding sentence, the partnership's asset basis in property not allocable to a trade or business is adjusted pursuant to the rules in paragraph (c)(5)(i) of this section. For purposes of this paragraph (c)(5)(ii)(A)(*2*)(*iii*), such partner's share of a partnership's assets is determined under a reasonable method taking into account special allocations under section 704(b).

(*iv*) ***Inapplicability of partnership look-through rule.*** If a partner, other than a C corporation or a tax-exempt corporation, chooses not to look through to the partnership's basis in the partnership's assets under paragraph (c)(5)(ii)(A)(*2*)(*i*) of this section or is precluded by paragraph (c)(5)(ii)(D) of this section from applying such partnership look-through rule, the partner generally will treat its basis in the partnership interest as either an asset held for investment or a non-excepted trade or business asset as determined under section 163(d). If a partner that is a C corporation or a tax-exempt corporation chooses not to look through to the partnership's basis in the partnership's assets under paragraph (c)(5)(ii)(A)(*2*)(*i*) of this section or is precluded by paragraph (c)(5)(ii)(D) of this section from applying such partnership look-through rule, the taxpayer must treat its entire basis in the partnership interest as allocable to a non-excepted trade or business.

(B) ***Stock in domestic non-consolidated corporations*** —

(*1*) ***In general.*** For purposes of this section, if a taxpayer owns stock in a domestic C corporation that is not a member of the taxpayer's consolidated group, or if the taxpayer owns stock in an S corporation, the stock is treated as an asset of the taxpayer.

(*2*) ***Domestic non-consolidated C corporations*** —

(*i*) ***Allocation of asset basis.*** If a shareholder satisfies the minimum ownership threshold in paragraph (c)(7) of this section for stock in a domestic non-consolidated C corporation, and if dividends paid on such stock would not be included in the shareholder's investment income under section 163(d)(4)(B), then, for purposes of determining the extent to which the shareholder's basis in the stock is allocable to an excepted or non-excepted trade or business, the shareholder must look through to the corporation's basis in the corporation's assets, adjusted to the extent required under paragraph (d)(4) of this section, except as otherwise provided in paragraph (c)(5)(ii)(D) of this section. If a shareholder does not satisfy the minimum ownership threshold in paragraph (c)(7) of this section for stock in a domestic non-consolidated C corporation, but the shareholder's direct and indirect interest in such corporation is greater than or equal to 80 percent by value, and if dividends paid on such stock would

not be included in the shareholder's investment income under section 163(d)(4)(B), then, for purposes of determining the extent to which the shareholder's basis in the stock is allocable to an excepted or non-excepted trade or business, the shareholder may look through to the corporation's basis in the corporation's assets, adjusted to the extent required under paragraph (d)(4) of this section, except as otherwise provided in paragraph (c)(5)(ii)(D) of this section. For purposes of the preceding sentence, indirect stock ownership is determined by applying the constructive ownership rules of section 318(a).

(*ii*) ***De minimis rule.*** If at least 90 percent of the domestic non-consolidated C corporation's basis in the corporation's assets is allocable to either excepted trades or businesses or non-excepted trades or businesses, the shareholder's entire interest in the corporation's stock is treated as allocable to either excepted or non-excepted trades or businesses, respectively.

(*iii*) ***Inapplicability of corporate look-through rule.*** If a shareholder other than a C corporation or a tax-exempt corporation is ineligible to look through or chooses not to look through to a corporation's basis in its assets under paragraph (c)(5)(ii)(B)(*2*)(*i*) of this section, the shareholder generally will treat its entire basis in the corporation's stock as an asset held for investment. If a shareholder that is a C corporation or a tax-exempt corporation is ineligible to look through or chooses not to look through to a corporation's basis in its assets under paragraph (c)(5)(ii)(B)(*2*)(*i*) of this section, the shareholder must treat its entire basis in the corporation's stock as allocable to a non-excepted trade or business.

(*iv*) ***Use of inside basis for purposes of C corporation look-through rule.*** This paragraph (c)(5)(ii)(B)(*2*)(*iv*) applies if a shareholder meets the requirements to look through the stock of a domestic non-consolidated C corporation under paragraph (c)(5)(ii)(B)(*2*)(*i*) of this section, determined without applying the constructive ownership rules of section 318(a). If this paragraph (c)(5)(ii)(B)(*2*)(*iv*) applies, then solely for purposes of allocating asset basis under paragraph (c)(5)(ii)(B)(*2*)(*i*) of this section, and except as otherwise provided in paragraph (c)(5)(ii)(D) of this section, the shareholder may look through to such shareholder's pro rata share of the C corporation's basis in its assets, taking into account the modifications in paragraph (c)(5)(i) of this section with respect to the C corporation's assets, and adjusted to the extent required under paragraph (d)(4) of this section (asset basis look-through approach). If a shareholder applies the asset basis look-through approach, it must do so for all domestic non-consolidated C corporations for which the shareholder is eligible to use this approach, and it must report its use of this approach on the information statement described in paragraph (c)(6)(iii) of this section. The shareholder also must continue to use the asset basis look-through approach in all future taxable years in which the shareholder is eligible to use this approach.

(*3*) ***S corporations —***

(*i*) ***Calculation of asset basis.*** For purposes of this section, a shareholder's share of stock in an S corporation is treated as an asset of the shareholder. Additionally, for these purposes, the shareholder's adjusted basis in a share of S corporation stock is adjusted to take into account the modifications in paragraph (c)(5)(i) of this section with respect to the assets of the S corporation (for example, a shareholder's adjusted basis in its S corporation stock is increased by the shareholder's share of depreciation with respect to an inherently permanent structure owned by the S corporation).

(*ii*) ***Allocation of asset basis.*** For purposes of determining the extent to which a shareholder's basis in its stock of an S corporation is allocable to an excepted or non-excepted trade or business, the shareholder may look through to such shareholder's share of the S corporation's basis in the S corporation's assets, allocated on a pro rata basis, adjusted to the extent required under paragraph (d)(4) of this section, except as otherwise provided in paragraph (c)(5)(ii)(D) of this section. Notwithstanding paragraph (c)(7) of this section, if a shareholder's direct and indirect interest in an S corporation is greater than or equal to 80 percent of the S corporation's stock by vote and value, the shareholder must apply the rules in this paragraph (c)(5)(ii)(B)(*3*) to look through to the S corporation's basis in the S corporation's assets. For these purposes, indirect stock ownership is determined by applying the constructive ownership rules of section 318(a).

(*iii*) ***De minimis rule.*** If at least 90 percent of a shareholder's share of an S corporation's basis in its assets is allocable to either excepted trades or businesses or non-excepted trades or businesses, the shareholder's entire basis in its S corporation stock is treated as allocable to either excepted or non-excepted trades or businesses, respectively.

(*iv*) ***Inapplicability of S corporation look-through rule.*** If a shareholder chooses not to look through to the S corporation's basis in the S corporation's assets under paragraph (c)(5)(ii)(B)(*3*)(*ii*) of this section or is precluded by paragraph (c)(5)(ii)(D) of this section from applying such S corporation look-through rule, the shareholder will treat its basis in the S corporation stock as either an asset held for investment or a non-excepted trade or business asset as determined under section 163(d).

(C) ***Stock in relevant foreign corporations*** —

(*1*) ***In general.*** The rules applicable to domestic non-consolidated C corporations in paragraph (c)(5)(ii)(B) of this section also apply to relevant foreign corporations (as defined in § 1.163(j)-1(b)(33)).

(*2*) ***Special rule for CFC utilities.*** Solely for purposes of applying the rules in paragraph (c)(5)(ii)(B) of this section, a utility trade or business conducted by an applicable CFC is treated as an excepted regulated utility trade or business, but only to the extent that the applicable CFC sells or furnishes the items described in § 1.163(j)-1(b)(15)(i)(A)(*1*) pursuant to rates established or approved by an entity described in § 1.163(j)-1(b)(15)(i)(A)(*2*), a foreign government, a public service or public utility commission or other similar body of any foreign government, or the governing or ratemaking body of a foreign electric cooperative. For purposes of this

paragraph (c)(5)(ii)(C)(*2*), the term *foreign government* means any foreign government, any political subdivision of a foreign government, or any wholly owned agency or instrumentality of any one of the foregoing within the meaning of § 1.1471-6(b).

(D) ***Limitations on application of look-through rules*** —(*1*) *Inapplicability of look-through rule to partnerships or non-consolidated C corporations to which the small business exemption applies.* A taxpayer may not apply the look-through rules in paragraphs (b)(3) and (c)(5)(ii)(A), (B), and (C) of this section to a partnership, S corporation, or non-consolidated C corporation that is eligible for the small business exemption under section 163(j)(3) and § 1.163(j)-2(d)(1), unless the partnership, S corporation, or non-consolidated C corporation elects under § 1.163(j)-9 for a trade or business to be an electing real property trade or business or an electing farming business.

(E) ***Tiered entities.*** If a taxpayer applies the look-through rules of this paragraph (c)(5)(ii), the taxpayer must do so for all lower-tier entities with respect to which the taxpayer satisfies, directly or indirectly, the minimum ownership threshold in paragraph (c)(7) of this section, subject to the limitation in paragraph (c)(5)(ii)(D) of this section, beginning with the lowest-tier entity.

(*2*) ***Limitation on application of look-through rule to C corporations.*** Except as provided in § 1.163(j)-9(h)(4)(iii) and (iv) (for a REIT or a partnership making the election under § 1.163(j)-9(h)(1) or (7), respectively), for purposes of applying the look-through rules in paragraph (c)(5)(ii)(B) and (C) of this section to a non-consolidated C corporation (upper-tier entity), that upper-tier entity may not apply these look-through rules to a lower-tier non-consolidated C corporation if a principal purpose for borrowing funds at the upper-tier entity level or adding an upper-tier or lower-tier entity to the ownership structure is increasing the amount of the taxpayer's basis allocable to excepted trades or businesses. For example, P wholly and directly owns S1 (the upper-tier entity), which wholly and directly owns S2. Each of S1 and S2 is a non-consolidated C corporation to which the small business exemption does not apply, and S2 is engaged in an excepted trade or business. With a principal purpose of increasing the amount of basis allocable to its excepted trades or businesses, P has S1 (rather than S2) borrow funds from a third party. S1 may not look through the stock of S2 (and may not apply the asset basis look-through rule described in paragraph (c)(5)(ii)(B)(*2*)(*iv*) of this section) for purposes of P's allocation of its basis in its S1 stock between excepted and non-excepted trades or businesses; instead, S1 must treat its stock in S2 as an asset used in a non-excepted trade or business for that purpose. However, S1 may look through the stock of S2 for purposes of S1's allocation of its basis in its S2 stock between excepted and non-excepted trades or businesses.

(iii) ***Cash and cash equivalents and customer receivables.*** Except as otherwise provided in the last sentence of this paragraph (c)(5)(iii), a taxpayer's basis in its cash and cash equivalents and customer receivables is not taken into account for purposes of this paragraph (c). This rule also applies to a lower-tier entity if a taxpayer looks through to the assets of that entity under paragraph (c)(5)(ii) of this section. For purposes of this paragraph (c)(5)(iii), the term *cash and cash equivalents* includes cash, foreign currency, commercial paper, any interest in an investment company registered under the Investment Company Act of 1940 (1940 Act) and regulated as a money market fund under 17 CFR 270.2a-7 (Rule 2a-7 under the 1940 Act), any

obligation of a government, and any derivative that is substantially secured by an obligation of a government, or any similar asset. For purposes of this paragraph (c)(5)(iii), a *derivative* is a derivative described in section 59A(h)(4)(A), without regard to section 59A(h)(4)(C). For purposes of this paragraph (c)(5)(iii), the term *government* means the United States or any agency or instrumentality of the United States; a State, a territory, a possession of the United States, the District of Columbia, or any political subdivision thereof within the meaning of section 103 and § 1.103-1; or any foreign government, any political subdivision of a foreign government, or any wholly owned agency or instrumentality of any one of the foregoing within the meaning of § 1.1471-6(b). This paragraph (c)(5)(iii) does not apply to an entity that qualifies as a financial services entity as described in § 1.904-4(e)(3).

(iv) ***Deemed asset sale.*** Solely for purposes of determining the amount of basis allocable to excepted and non-excepted trades or businesses under this section, an election under section 336, 338, or 754, as applicable, is deemed to have been made for any acquisition of corporate stock or partnership interests with respect to which the taxpayer demonstrates, in the information statement required by paragraph (c)(6)(iii)(B) of this section, that the acquisition qualified for such an election and that, immediately before the acquisition, the acquired entity had a regulatory liability for deferred taxes recorded on its books with respect to property predominantly used in an excepted regulated utility trade or business. Any additional basis taken into account under this rule is reduced ratably over a 15-year period beginning with the month of the acquisition and is not subject to the anti-abuse rule in paragraph (c)(8) of this section.

(v) ***Other adjustments.*** The Commissioner may make appropriate adjustments to prevent a taxpayer from intentionally and artificially increasing its basis in assets attributable to an excepted trade or business.

(6) ***Determination dates; determination periods; reporting requirements*** —

(i) ***Determination dates and determination periods*** —

(A) ***Quarterly determination periods.*** For purposes of this section, and except as otherwise provided in paragraph (c)(6)(i)(B) of this section, the term *determination date* means the last day of each quarter of the taxpayer's taxable year (and the last day of the taxpayer's taxable year, if the taxpayer has a short taxable year), and the term *determination period* means the period beginning the day after one determination date and ending on the next determination date.

(B) ***Annual determination periods.*** If a taxpayer satisfies the requirements of the last sentence of this paragraph (c)(6)(i)(B), the taxpayer may allocate asset basis for a taxable year based on the average of adjusted asset basis at the beginning of the year and the end of the year (annual determination method). For these purposes, the term *determination date* means the last day of the taxpayer's taxable year, and the term *determination period* has the same meaning as provided in paragraph (c)(6)(i)(A) of this section. A taxpayer may use the annual determination method for a taxable year only if the taxpayer demonstrates that its total adjusted basis (as determined under paragraph (c)(5) of this section) at the end of the year in its assets used in its excepted trades or businesses, as a percentage of the taxpayer's total adjusted basis at the end of such year in all of its assets used in a trade or business, does not differ by more than 20 percent from such percentage at the beginning of the year.

(ii) ***Application of look-through rules.*** If a taxpayer that applies the look-through rules of paragraph (c)(5)(ii) of this section has a different taxable year than the partnership or non-consolidated C corporation to which the taxpayer is applying those rules, then, for purposes of this paragraph (c)(6), the taxpayer must use the most recent asset basis figures from the partnership or non-consolidated C corporation. For example, assume that PS1 is a partnership with a May 31 taxable year, and that C (a calendar-year C corporation that is ineligible to use the annual determination method for the taxable year) is a partner in PS1. PS1's determination dates are February 28, May 31, August 31, and November 30. In turn, C's determination dates are March 31, June 30, September 30, and December 31. If C looks through to PS1's basis in its assets under paragraph (c)(5)(ii) of this section, then, for purposes of determining the amount of C's asset basis that is attributable to its excepted and non-excepted businesses on March 31, C must use PS1's asset basis calculations for February 28.

(iii) ***Reporting requirements*** —

(A) ***Books and records.*** A taxpayer must maintain books of account and other records and data as necessary to substantiate the taxpayer's use of an asset in an excepted trade or business and to substantiate any adjustments to asset basis for purposes of applying this paragraph (c). One indication that a particular asset is used in a particular trade or business is if the taxpayer maintains separate books and records for all of its excepted and non-excepted trades or businesses and can show the asset in the books and records of a particular excepted or non-excepted trade or business. For rules governing record retention, see § 1.6001-1.

(B) ***Information statement.*** Except as otherwise provided in publications, forms, instructions, or other guidance, each taxpayer that is making an allocation under this paragraph (c), including any taxpayer that satisfies the de minimis rule in paragraph (c)(1)(ii) of this section, must prepare a statement titled “Section 163(j) Asset Basis Calculations” containing the information described in paragraphs (c)(6)(iii)(B)(*1*) through (*7*) of this section and must attach the statement to its timely filed Federal income tax return for the taxable year:

(*1*) The taxpayer's adjusted basis in the assets used in its excepted and non-excepted businesses, determined as set forth in this section, including detailed information for the different groups of assets identified in paragraphs (c)(5)(i) and (ii) and (d) of this section;

(*2*) The determination dates on which asset basis was measured during the taxable year;

(*3*) The names and taxpayer identification numbers (TINs) of all entities for which basis information is being provided, including partnerships and corporations if the taxpayer that owns an interest in a partnership or corporation looks through to the partnership's or corporation's basis in the partnership's or corporation's assets under paragraph (c)(5)(ii) of this section. If the taxpayer is a member of a consolidated group, the name and TIN of the agent for the group, as defined in § 1.1502-77, must be provided, but the taxpayer need not provide the names and TINs of all other consolidated group members;

(*4*) Asset basis information for corporations or partnerships if the taxpayer looks through to the corporation's or partnership's basis in the corporation's or partnership's assets under paragraph (c)(5)(ii) of this section;

(5) A summary of the method or methods used to determine asset basis in property used in both excepted and non-excepted businesses, as well as information regarding any deemed sale under paragraph (c)(5)(iv) of this section;

(6) Whether the taxpayer used the historical approach or the effective date approach for all of its disallowed disqualified interest; and

(7) If the taxpayer changed its methodology for allocating asset basis between or among two or more trades or businesses under paragraph (c)(3)(ii) of this section, a statement that the taxpayer has changed the allocation methodology and a description of the new methodology or, if the taxpayer is required to request consent for the allocation methodology change under paragraph (c)(3)(iii)(A)(2) of this section, a statement that the request has been or will be filed and a description of the methodology change.

(iv) ***Failure to file statement.*** If a taxpayer fails to file the statement described in paragraph (c)(6)(iii) of this section or files a statement that does not comply with the requirements of paragraph (c)(6)(iii) of this section, the Commissioner may treat the taxpayer as if all of its interest expense is properly allocable to a non-excepted trade or business, unless the taxpayer shows that there was reasonable cause for failing to comply with, and the taxpayer acted in good faith with respect to, the requirements of paragraph (c)(6)(iii) of this section, taking into account all pertinent facts and circumstances.

(7) ***Ownership threshold for look-through rules*** —

(i) ***Corporations*** —

(A) ***Asset basis.*** For purposes of this section, a shareholder must look through to the assets of a domestic non-consolidated C corporation or a relevant foreign corporation under paragraph (c)(5)(ii) of this section if the shareholder's direct and indirect interest in the corporation satisfies the ownership requirements of section 1504(a)(2). For purposes of this paragraph (c)(7)(i)(A), indirect stock ownership is determined by applying the constructive ownership rules of section 318(a). A shareholder may look through to the assets of an S corporation under paragraph (c)(5)(ii) of this section for purposes of allocating the shareholder's basis in its stock in the S corporation between excepted and non-excepted trades or businesses regardless of the shareholder's direct and indirect interest in the S corporation.

(B) ***Dividends.*** A shareholder must look through to the activities of a domestic non-consolidated C corporation or a relevant foreign corporation under paragraph (b)(3) of this section if the shareholder's direct interest in the corporation satisfies the ownership requirements of section 1504(a)(2). A shareholder may look through to the activities of a domestic non-consolidated C corporation or an applicable CFC under paragraph (b)(3) of this section if the shareholder's direct interest in the corporation is greater than or equal to 80 percent by value. A shareholder may look through to the activities of an S corporation under paragraph (b)(3) of this section regardless of the shareholder's direct interest in the S corporation.

(ii) ***Partnerships.*** A partner may look through to the assets of a partnership under paragraph (c)(5)(ii) of this section for purposes of allocating the partner's basis in its partnership interest between excepted and non-excepted trades or businesses regardless of the partner's direct and indirect interest in the partnership.

(iii) ***Inapplicability of look-through rule.*** For circumstances in which a taxpayer that satisfies the ownership threshold in this paragraph (c)(7) may not apply the look-through rules in paragraphs (b)(3) and (c)(5)(ii) of this section, see paragraph (c)(5)(ii)(D) of this section.

(8) ***Anti-abuse rule.*** If a principal purpose for the acquisition, disposition, or change in use of an asset was to artificially shift the amount of basis allocable to excepted or non-excepted trades or businesses on a determination date, the additional basis or change in use will not be taken into account for purposes of this section. For example, if an asset is used in a non-excepted trade or business for most of the taxable year, and if the taxpayer begins using the asset in an excepted trade or business towards the end of the year with a principal purpose of shifting the amount of basis in the asset that is allocable to the excepted trade or business, the change in use is disregarded for purposes of this section. A purpose may be a principal purpose even though it is outweighed by other purposes (taken together or separately). In determining whether a taxpayer has a principal purpose described in this paragraph (c)(8), factors to be considered include, for example, the following: The business purpose for the acquisition, disposition, or change in use; the length of time the asset was used in a trade or business; whether the asset was acquired from a related person; and whether the taxpayer's aggregate basis in its assets increased or decreased temporarily on or around a determination date. A principal purpose is presumed to be present in any case in which the acquisition, disposition, or change in use lacks a substantial business purpose and increases the taxpayer's basis in assets used in its excepted trades or businesses by more than 10 percent during the taxable year.

(d) ***Direct allocations*** —

(1) ***In general.*** It is not necessary to allocate interest expense under this paragraph (d) if all of the taxpayer's interest expense is allocable to excepted trades or businesses or if all of the taxpayer's interest expense is allocable to non-excepted trades or businesses.

(2) ***Qualified nonrecourse indebtedness.*** For purposes of this section, a taxpayer with qualified nonrecourse indebtedness must directly allocate interest expense from the indebtedness to the taxpayer's assets in the manner and to the extent provided in § 1.861-10T(b). For purposes of this paragraph (d)(2), the term *qualified nonrecourse indebtedness* has the meaning provided in § 1.861-10T(b), except that the term *cash flow from the property* (within the meaning of § 1.861-10T(b)(3)(i)) includes revenue derived from the sale or lease of inventory or similar property with respect to an excepted regulated utility trade or business or a non-excepted regulated utility trade or business.

(3) ***Assets used in more than one trade or business.*** If an asset is used in more than one trade or business, the taxpayer must apply the rules in paragraph (c)(3) of this section to determine the extent to which interest that is directly allocated under this paragraph (d) is allocable to excepted or non-excepted trades or businesses.

(4) ***Adjustments to basis of assets to account for direct allocations.*** In determining the amount of a taxpayer's basis in the assets used in its excepted and non-excepted trades or businesses for purposes of paragraph (c) of this section, adjustments must be made to reflect direct allocations under this paragraph (d). These adjustments consist of reductions in the taxpayer's basis in its assets for purposes of paragraph (c) of this section to reflect assets to which interest expense is directly allocated under this paragraph (d). The amount of the taxpayer's basis in these assets must be reduced, but not below zero, by the amount of qualified nonrecourse indebtedness secured by these assets. These adjustments must be made before the taxpayer averages the adjusted basis in its assets as determined on each determination date during the taxable year.

(5) *Example: Direct allocation of interest expense* —

(i) ***Facts.*** T conducts an electing real property trade or business (Business X) and operates a retail store that is a non-excepted trade or business (Business Y). In Year 1, T issues Note A to a third party in exchange for $1,000x for the purpose of acquiring Building B. Note A is qualified nonrecourse indebtedness (within the meaning of § 1.861-10T(b)) secured by Building B. T then uses those funds to acquire Building B for $1,200x, and T uses Building B in Business X. During Year 1, T pays $500x of interest, of which $100x is interest payments on Note A. For Year 1, T's basis in its assets used in Business X (as determined under paragraph (c) of this section) is $3,600x (excluding cash and cash equivalents), and T's basis in its assets used in Business Y (as determined under paragraph (c) of this section) is $800x (excluding cash and cash equivalents). Each of Business X and Business Y also has $100x of cash and cash equivalents.

(ii) ***Analysis.*** Because Note A is qualified nonrecourse indebtedness that is secured by Building B, in allocating interest expense between Businesses X and Y, T first must directly allocate the $100x of interest expense it paid with respect to Note A to Business X in accordance with paragraph (d)(2) of this section. Thereafter, T must allocate the remaining $400x of interest expense between Businesses X and Y under paragraph (c) of this section. After excluding $1,000x of T's basis in Building B to reflect the amount of Note A (see paragraph (d)(4) of this section), and without regard to T's $200x of cash and cash equivalents (see paragraph (c)(5)(iii) of this section), T's basis in its assets used in Businesses X and Y is $2,600x and $800x (76.5 percent and 23.5 percent), respectively. Thus, $306x of the remaining $400x of interest expense would be allocated to Business X, and $94x would be allocated to Business Y.

(e) ***Examples.*** The examples in this paragraph (e) illustrate the principles of this section. For purposes of these examples, no taxpayer is eligible for the small business exemption under section 163(j)(3) and § 1.163(j)-2(d), no taxpayer has floor plan financing interest expense, and no taxpayer has qualified nonrecourse indebtedness within the meaning of § 1.861-10T(b).

(1) *Example 1: Interest allocation within a consolidated group* —

(i) ***Facts.*** S is a member of a consolidated group of which P is the common parent. P conducts an electing real property trade or business (Business X), and S conducts a non-excepted trade or business (Business Y). In Year 1, P pays or accrues (without regard to section 163(j)) $35x of interest expense and receives $10x of interest income, and S pays or accrues (without regard to section 163(j)) $115x of interest expense and receives $5x of interest income (for a total of $150x of interest expense and $15x of interest income). For purposes of this example, assume that, pursuant to paragraph (c) of this section, $30x of the P group's interest expense and $3x of the P group's interest income is allocable to Business X, and the remaining $120x of interest expense and $12x of interest income is allocable to Business Y.

(ii) ***Analysis.*** Under paragraph (a)(4) of this section, 20 percent of the P group's Year 1 interest expense ($30x/$150x) and interest income ($3x/$15x) is allocable to an excepted trade or business. Thus, $7x ($35x × 20 percent) of P's interest expense and $2x ($10x × 20 percent) of P's interest income is allocable to an excepted trade or business. The remaining $28x of P's interest expense is business interest expense subject to the section 163(j) limitation, and the remaining $8x of P's interest income is business interest income that increases the group's section 163(j) limitation. In turn, $23x ($115x × 20 percent) of S's interest expense and $1x ($5x × 20 percent) of S's interest income is allocable to an excepted trade or business. The

remaining $92x of S's interest expense is business interest expense subject to the section 163(j) limitation, and the remaining $4x of S's interest income is business interest income that increases the group's section 163(j) limitation.

(2) ***Example 2: Interest allocation within a consolidated group with assets used in more than one trade or business*** —

(i) ***Facts.*** S is a member of a consolidated group of which P is the common parent. P conducts an electing real property trade or business (Business X), and S conducts a non-excepted trade or business (Business Y). In Year 1, P pays or accrues (without regard to section 163(j)) $50x of interest expense, and S pays or accrues $100x of interest expense (without regard to section 163(j)). P leases 40 percent of space in Building V (which P owns) to S for use in Business Y, and P leases the remaining 60 percent of space in Building V to third parties. For purposes of allocating interest expense under paragraph (c) of this section, the P group's basis in its assets (excluding Building V) used in Businesses X and Y is $180x and $620x, respectively. The P group's basis in Building V for purposes of allocating interest expense under paragraph (c) of this section is $200x.

(ii) ***Analysis.*** Under paragraph (c)(3)(ii) of this section, the P group's basis in Building V ($200x) is allocated to excepted and non-excepted trades or businesses in accordance with the use of space by Business Y (40 percent) and Business X (the remainder, or 60 percent). Accordingly, $120x of the basis in Building V is allocated to excepted trades or businesses (60 percent × $200x), and $80x is allocated to non-excepted trades or businesses (40 percent × $200x). After allocating the basis in Building V, the P group's total basis in the assets used in excepted and non-excepted trades or businesses is $300x and $700x, respectively. Under paragraphs (a)(4) and (c) of this section, 30 percent ($300x/$1,000x) of the P group's Year 1 interest expense is properly allocable to an excepted trade or business. Thus, $15x ($50x × 30 percent) of P's interest expense is properly allocable to an excepted trade or business, and the remaining $35x of P's interest expense is business interest expense subject to the section 163(j) limitation. In turn, $30x ($100x × 30 percent) of S's interest expense is properly allocable to an excepted trade or business, and the remaining $70x of S's interest expense is business interest expense subject to the section 163(j) limitation.

(3) ***Example 3: Application of look-through rules*** —

(i) ***Facts.***

(A) Each of Corp A, Corp B, Corp C, and Corp D is a domestic calendar-year corporation that is not a member of a consolidated group. Corp A owns 100 percent of the stock of Corp C; the basis of Corp A's stock in Corp C is $500x. Corp C owns 10 percent of the interests in PS1 (a domestic partnership), and Corp B owns the remaining 90 percent. Corp C's basis in its PS1 interests is $25x; Corp B's basis in its PS1 interests is $225x. PS1 owns 100 percent of the stock of Corp D; the basis of PS1's stock in Corp D is $1,000x. Corp A and Corp B are owned by unrelated, non-overlapping shareholders.

(B) In 2021, Corp C was engaged solely in a non-excepted trade or business. That same year, PS1's only activity was holding Corp D stock. In turn, Corp D was engaged in both an electing farming business and a non-excepted trade or business. Under the allocation rules in paragraph (c) of this section, 50 percent of Corp D's asset basis in 2021 was allocable to the electing farming business, and the remaining 50 percent was allocable to the non-excepted trade or business.

(C) Corp A and Corp B each paid or accrued (without regard to section 163(j)) $150x of interest expense allocable to a trade or business. Corp A's trade or business was an excepted trade or business, and Corp B's trade or business was a non-excepted trade or business. Corp A's basis in the assets used in its trade or business was $100x, and Corp B's basis in the assets used in its trade or business was $112.5x.

(ii) *Analysis.*

(A) As provided in paragraph (c)(5)(ii)(E) of this section, if a taxpayer applies the look-through rules of paragraph (c)(5)(ii) of this section, the taxpayer must begin with the lowest-tier entity to which it is eligible to apply the look-through rules. Corp A directly owns 100 percent of the stock of Corp C; thus, Corp A satisfies the 80 percent minimum ownership threshold with respect to Corp C. Corp A also owns 10 percent of the interests in PS1. There is no minimum ownership threshold for partnerships; thus, Corp A may apply the look-through rules to PS1. However, Corp A does not directly or indirectly own at least 80 percent of the stock of Corp D; thus, Corp A cannot look through its indirect interest in Corp D. In turn, Corp B directly owns 90 percent of the interests in PS1, and Corp B indirectly owns at least 80 percent of the stock of Corp D. Thus, Corp B must apply the look-through rules to PS1 and Corp D.

(B) From Corp A's perspective, PS1 is not engaged in a trade or business for purposes of section 163(j); instead, PS1 is merely holding its Corp D stock as an investment. Under paragraph (c)(5)(ii)(A)(2) of this section, if a partnership is not engaged in a trade or business, then its C corporation partner must treat its entire basis in the partnership interest as allocable to a non-excepted trade or business. Thus, for purposes of Corp A's application of the look-through rules, Corp C's entire basis in its PS1 interest ($25x) is allocable to a non-excepted trade or business. Corp C's basis in its other assets also is allocable to a non-excepted trade or business (the only trade or business in which Corp C is engaged). Thus, under paragraph (c) of this section, Corp A's $500x basis in its Corp C stock is allocable entirely to a non-excepted trade or business. Corp A's $100x basis in its other business assets is allocable to an excepted trade or business. Thus, $^{5}/_{6}$ (or $125x) of Corp A's $150x of interest expense is properly allocable to a non-excepted trade or business and is business interest expense subject to the section 163(j) limitation, and the remaining $25x of Corp A's $150x of interest expense is allocable to an excepted trade or business and is not subject to the section 163(j) limitation.

(C) From Corp B's perspective, PS1 must look through its stock in Corp D to determine the extent to which PS1's basis in the stock is allocable to an excepted or non-excepted trade or business. Half of Corp D's basis in its assets is allocable to an excepted trade or business, and the other half is allocable to a non-excepted trade or business. Thus, from Corp B's perspective, $500x of PS1's basis in its Corp D stock (PS1's only asset) is allocable to an excepted trade or business, and the other half is allocable to a non-excepted trade or business. Corp B's basis in its PS1 interests is $225x. Applying the look-through rules to Corp B's PS1 interests, $112.5x of Corp B's basis in its PS1 interests is allocable to an excepted trade or business, and $112.5x of Corp B's basis in its PS1 interests is allocable to a non-excepted trade or business. Since Corp B's basis in the assets used in its non-excepted trade or business also was $112.5x, two-thirds of Corp B's interest expense ($100x) is properly allocable to a non-excepted trade or business and is

business interest expense subject to the section 163(j) limitation, and one-third of Corp B's interest expense ($50x) is allocable to an excepted trade or business and is not subject to the section 163(j) limitation.

(4) *Example 4: Excepted and non-excepted trades or businesses in a consolidated group* —

(i) ***Facts.*** P is the common parent of a consolidated group of which A and B are the only other members. A conducts an electing real property trade or business (Business X), and B conducts a non-excepted trade or business (Business Y). In Year 1, A pays or accrues (without regard to section 163(j)) $50x of interest expense and earns $70x of gross income in the conduct of Business X, and B pays or accrues (without regard to section 163(j)) $100x of interest expense and earns $150x of gross income in the conduct of Business Y. B owns Building V, which it uses in Business Y. For purposes of allocating the P group's Year 1 business interest expense between excepted and non-excepted trades or businesses under paragraph (c) of this section, the P group's basis in its assets (other than Building V) used in Businesses X and Y is $180x and $620x, respectively, and the P group's basis in Building V is $200x. At the end of Year 1, B sells Building V to a third party and realizes a gain of $60x in addition to the $150x of gross income B earned that year from the conduct of Business Y.

(ii) ***Analysis.***

(A) Under paragraphs (a)(4) and (c) of this section, the P group's basis in its assets used in its trades or businesses is allocated between the P group's excepted trade or business (Business X) and its non-excepted trade or business (Business Y) as though these trades or businesses were conducted by a single corporation. Under paragraph (c) of this section, the P group's basis in its assets used in Businesses X and Y is $180x and $820x, respectively. Accordingly, 18 percent ($180x/$1,000x) of the P group's total interest expense ($150x) is properly allocable to an excepted trade or business ($27x), and the remaining 82 percent of the P group's total interest expense is business interest expense properly allocable to a non-excepted trade or business ($123x).

(B) To determine the P group's section 163(j) limitation, paragraph (a) of this section requires that certain items of income and deduction be allocated to the excepted and non-excepted trades or businesses of the P group as though these trades or businesses were conducted by a single corporation. In Year 1, the P group's excepted trade or business (Business X) has gross income of $70x, and the P group's non-excepted trade or business (Business Y) has gross income of $150x. Because Building V was used exclusively in Business Y, the $60x of gain from the sale of Building V in Year 1 is attributed to Business Y under paragraph (b)(2) of this section. The P group's section 163(j) limitation is $63x (30 percent × $210x), which allows the P group to deduct $63x of its $123x of business interest expense allocated to the P group's non-excepted trades or businesses. The group's $27x of interest expense that is allocable to excepted trades or businesses may be deducted without limitation under section 163(j).

(iii) ***Intercompany transaction.*** The facts are the same as in *Example 4* in paragraph (e)(4)(i) of this section, except that A owns Building V and leases it to B in Year 1 for $20x for use in Business Y, and A sells Building V to a third party for a $60 gain at the end of Year 1. Under paragraphs (a)(4) and (c) of this section, all members of the P group are treated as a single corporation. As a result, the P group's basis in its assets used in its trades or businesses is allocated between the P group's excepted trade or business (Business X) and its non-excepted trade or business (Business Y) as though these trades or businesses were conducted by a single corporation. A

lease between two divisions of a single corporation would produce no rental income or expense. Thus, the $20x of rent paid by B to A does not affect the P group's ATI. Moreover, under paragraph (c) of this section, Building V is an asset used in the P group's non-excepted trade or business (Business Y). Accordingly, although A owns Building V, the basis in Building V is added to the P group's basis in assets used in Business Y for purposes of allocating interest expense under paragraph (c) of this section. In the same vein, when A sells Building V to a third party at a gain of $60x, the gain is included in the P group's ATI because Building V was used in a non-excepted trade or business of the P group (Business Y) prior to its sale.

(5) *Example 5: Captive activities* —

(i) ***Facts.*** S and T are members of a consolidated group of which P is the common parent. P conducts an electing real property trade or business (Business X), S conducts a non-excepted trade or business (Business Y), and T provides transportation services to Businesses X and Y but does not have any customers outside of the P group. For Year 1, T provides transportation services using a single bus with a basis of $120x.

(ii) ***Analysis.*** Under paragraph (a)(4) of this section, activities conducted by a consolidated group are treated as though those activities were conducted by a single corporation. Because the activities of T are limited to providing intercompany transportation services, T does not conduct a trade or business for purposes of section 163(j). Under paragraph (c)(3) of this section, business interest expense is allocated to excepted and non-excepted trades or businesses based on the relative basis of the assets used in those businesses. The basis in T's only asset, a bus, is therefore allocated between Business X and Business Y according to the use of T's bus by these businesses. Business X uses one-third of T's services, and Business Y uses two-thirds of T's services. Thus, $40x of the basis of T's bus is allocated to Business X, and $80x of the basis of T's bus is allocated to Business Y.

(6) *Example 6: Constructive ownership* —

(i) ***Facts.*** P, S, T, and U are domestic C corporations that are not members of a consolidated group. P directly owns 80 percent of the stock of each of S and T as measured by total voting power and value; an unrelated third party, X, owns the remaining 20 percent. In turn, S and T directly own 15 percent and 80 percent, respectively, of the stock of U as measured by total voting power and value; P directly owns the remaining 5 percent. P conducts both excepted and non-excepted trades or businesses. S and T conduct only non-excepted trades or businesses, and U conducts both excepted and non-excepted trades or businesses.

(ii) ***Analysis.*** Under paragraph (c)(7)(i)(A) of this section, a shareholder must look through to the assets of a domestic non-consolidated C corporation for purposes of allocating the shareholder's basis in its stock in the corporation between excepted and non-excepted trades or businesses if the shareholder's direct and indirect interest in the corporation satisfies the ownership requirements of section 1504(a)(2). For purposes of paragraph (c)(7)(i)(A) of this section, a shareholder's stock ownership is determined by applying the constructive ownership rules of section 318(a). P directly owns 80 percent of each of S and T as measured by total voting power and value; thus, P must look through to the assets of S and T when allocating the basis in its stock of S and T. P directly owns 5 percent of the stock of U as measured by total voting power and value, and P constructively owns the other 95 percent; thus, P also must look through to U's assets when allocating the basis in its U stock. S directly owns 15 percent of the stock of U, and S constructively owns only 5 percent through P; thus, S cannot look through to

U's assets when allocating the basis in its U stock. T directly owns 80 percent of the stock of U, and T constructively owns an additional 5 percent; thus, T must look through to U's assets when allocating the basis in its U stock.

(iii) ***Dividend.*** The facts are the same as in paragraph (e)(6)(i) of this section, except that U distributes a $160x dividend pro rata to its shareholders. Thus, P receives $8x (5 percent of $160x) of the U dividend, S receives $24x (15 percent of $160x), and T receives $128x (80 percent of $160x). Under paragraph (c)(7)(i)(B) of this section, if a shareholder's direct interest in a corporation satisfies the ownership requirements of section 1504(a)(2), the shareholder must look through to the activities of a domestic non-consolidated C corporation in determining whether dividend income is from an excepted or non-excepted trade or business. The constructive ownership rules do not apply in allocating dividends under paragraph (c)(7)(i)(B) of this section. P directly owns 5 percent of the stock of U as measured by vote and value, and S directly owns 15 percent of the stock of U as measured by vote and value; thus, neither P nor S is required to apply the look-through rules in allocating its dividend income from U, and all such income is allocable to non-excepted trades or businesses. T directly owns 80 percent of the stock of U as measured by vote and value; thus, T must allocate its U dividend in accordance with the activities of U's excepted and non-excepted trades or businesses.

(7) ***Example 7: Dispositions with a principal purpose of shifting basis*** —

(i) ***Facts.*** U and V are members of a consolidated group of which P is the common parent. U conducts an electing farming business (Business F), and V conducts a farm equipment leasing business (Business L) that is a non-excepted trade or business. After the end of a farming season, the P group, with a principal purpose of shifting basis from Business L to Business F, has V sell to U all off-lease farming equipment that previously was leased out as part of Business L. Immediately before the start of the next season, U sells the farming equipment back to V for use in Business L.

(ii) ***Analysis.*** Under paragraph (c)(8) of this section, in the case of a disposition of assets undertaken with a principal purpose of artificially shifting the amount of basis allocable to excepted or non-excepted trades or businesses on a determination date, the additional basis or change in use will not be taken into account. Because V's sale of farming equipment to U for storage in Business F's facilities is undertaken with a principal purpose of shifting basis from Business L to Business F, the additional basis Business F receives from these transactions will not be taken into account for purposes of this section. Instead, the basis of the farming equipment will be allocated as though the farming equipment continued to be used in Business L.

(f) ***Applicability dates*** —

(1) ***In general.*** This section applies to taxable years beginning on or after November 13, 2020. However, taxpayers and their related parties, within the meaning of sections 267(b) and 707(b)(1), may choose to apply the rules of this section to a taxable year beginning after December 31, 2017, so long as the taxpayers and their related parties consistently apply the rules of the section 163(j) regulations, and, if applicable, §§ 1.263A-9, 1.263A-15, 1.381(c)(20)-1, 1.382-1, 1.382-2, 1.382-5, 1.382-6, 1.382-7, 1.383-0, 1.383-1, 1.469-9, 1.469-11, 1.704-1, 1.882-5, 1.1362-3, 1.1368-1, 1.1377-1, 1.1502-13, 1.1502-21, 1.1502-36, 1.1502-79, 1.1502-91 through 1.1502-99 (to the extent they effectuate the rules of §§ 1.382-2, 1.382-5, 1.382-6, and 1.383-1), and 1.1504-4, to that taxable year. Accordingly,

for purposes of § 1.163(j)-10(c)(5), taxpayers make any change to the alternative depreciation system as of November 13, 2020, or if relying on the provisions of § 1.163(j)-10 in regulation project REG-106089-18 (83 FR 67490), as of December 28, 2018.

(2) ***Paragraph (c)(5)(ii)(D)(2).*** The rules contained in paragraph (c)(5)(ii)(D)(*2*) of this section apply for taxable years beginning on or after March 22, 2021. However, taxpayers may choose to apply the rules in paragraph (c)(5)(ii)(D)(*2*) of this section to a taxable year beginning after December 31, 2017, and before March 22, 2021, provided that those taxpayers and their related parties consistently apply all of the rules in the section 163(j) regulations as contained in T.D. 9905 (§§ 1.163(j)-0 through 1.163(j)-11, effective November 13, 2020) as modified by T.D. 9943 (effective January 13, 2021), and, if applicable, §§ 1.263A-9, 1.263A-15, 1.381(c)(20)-1, 1.382-1, 1.382-2, 1.382-5, 1.382-6, 1.383-0, 1.383-1, 1.469-9, 1.704-1, 1.882-5, 1.1362-3, 1.1368-1, 1.1377-1, 1.1502-13, 1.1502-21, 1.1502-79, 1.1502-91 through 1.1502-99 (to the extent they effectuate the rules of §§ 1.382-2, 1.382-5, 1.382-6, and 1.383-1), and 1.1504-4 contained in T.D. 9905 as modified by T.D. 9943, to that taxable year and each subsequent taxable year.

[T.D. 9905, 85 FR 56760, Sept. 14, 2020, as amended at T.D. 9943, 86 FR 5539, Jan. 19, 2021]

§ 1.163(j)-11 Transition rules.

(a) ***Overview.*** This section provides transition rules regarding the section 163(j) limitation. Paragraph (b) of this section provides rules regarding the application of the section 163(j) limitation to a corporation that joins a consolidated group during a taxable year of the group beginning before January 1, 2018 and is subject to the section 163(j) limitation at the time of its change in status. Paragraph (c) of this section provides rules regarding the treatment of carryforwards of disallowed disqualified interest.

(b) ***Application of section 163(j) limitation if a corporation joins a consolidated group during a taxable year of the group beginning before January 1, 2018*** —

(1) ***In general.*** If a corporation (S) joins a consolidated group during a taxable year of the group beginning before January 1, 2018, and if S is subject to the section 163(j) limitation at the time of its change in status, then section 163(j) will apply to S's short taxable year that ends on the day of S's change in status, but section 163(j) will not apply to S's short taxable year that begins the next day (when S is a member of the acquiring consolidated group). Any business interest expense paid or accrued (without regard to section 163(j)) by S in its short taxable year ending on the day of S's change in status for which a deduction is disallowed under section 163(j) will be carried forward to the acquiring group's first taxable year beginning after December 31, 2017. Those disallowed business interest expense carryforwards may be subject to limitation under other provisions of these regulations (see, for example, § 1.163(j)-5(c), (d), (e), and (f)).

(2) ***Example.*** Acquiring Group is a consolidated group with a fiscal year end of November 30; Target is a stand-alone calendar-year C corporation. On May 31, 2018, Acquiring Group acquires Target in a transaction that is not an ownership change for purposes of section 382. Acquiring Group is not subject to the section 163(j) limitation during its taxable year beginning December 1, 2017. As a result of the acquisition, Target has a short taxable year beginning January 1, 2018 and ending May 31, 2018. Target is subject to the section 163(j) limitation during this short taxable year. However, Target (as a member of Acquiring Group) is not subject to the section 163(j) limitation during Acquiring Group's taxable year ending November 30, 2018. Any disallowed business interest expense carryforwards from Target's taxable year ending May 31, 2018, will not be available for use in Acquiring Group's taxable year ending November 30, 2018. However, that disallowed business

interest expense is carried forward to Acquiring Group's taxable year beginning December 1, 2018, and can be deducted by the group, subject to the separate return limitation year (SRLY) limitation. See § 1.163(j)-5(d).

(c) ***Treatment of disallowed disqualified interest*** —

(1) ***In general.*** Disallowed disqualified interest is carried forward to the taxpayer's first taxable year beginning after December 31, 2017. Disallowed disqualified interest is subject to disallowance as a disallowed business interest expense carryforward under section 163(j) and § 1.163(j)-2 to the extent the interest is properly allocable to a non-excepted trade or business under § 1.163(j)-10. Disallowed disqualified interest that is properly allocable to an excepted trade or business is not subject to the section 163(j) limitation. See § 1.163(j)-10(a)(6) for rules governing the allocation of disallowed disqualified interest between excepted and non-excepted trades or businesses.

(2) ***Earnings and profits.*** A taxpayer may not reduce its earnings and profits in a taxable year beginning after December 31, 2017, to reflect any disallowed disqualified interest carryforwards to the extent the payment or accrual of the disallowed disqualified interest reduced the earnings and profits of the taxpayer in a prior taxable year.

(3) ***Disallowed disqualified interest of members of an affiliated group*** —

(i) ***Scope.*** This paragraph (c)(3)(i) applies to corporations that were treated as a single taxpayer under old section 163(j)(6)(C) and that had disallowed disqualified interest.

(ii) ***Allocation of disallowed disqualified interest to members of the affiliated group*** —

(A) ***In general.*** Each member of the affiliated group is allocated its allocable share of the affiliated group's disallowed disqualified interest as provided in paragraph (c)(3)(ii)(B) of this section.

(B) ***Definitions.*** The following definitions apply for purposes of paragraph (c)(3)(ii) of this section.

(*1*) ***Allocable share of the affiliated group's disallowed disqualified interest.*** The term *allocable share of the affiliated group's disallowed disqualified interest* means, with respect to any member of an affiliated group for the member's last taxable year beginning before January 1, 2018, the product of the total amount of the disallowed disqualified interest of all members of the affiliated group under old section 163(j)(6)(C) and the member's disallowed disqualified interest ratio.

(*2*) ***Disallowed disqualified interest ratio.*** The term *disallowed disqualified interest ratio* means, with respect to any member of an affiliated group for the member's last taxable year beginning before January 1, 2018, the ratio of the exempt related person interest expense of the member for the last taxable year beginning before January 1, 2018, to the sum of the amounts of exempt related person interest expense for all members of the affiliated group.

(*3*) ***Exempt related person interest expense.*** The term *exempt related person interest expense* means interest expense that is, or is treated as, paid or accrued by a domestic C corporation, or by a foreign corporation with income, gain, or loss that is effectively connected, or treated as effectively connected, with the conduct of a trade or business in the United States, to—

(*i*) Any person related to the taxpayer, within the meaning of sections 267(b) or 707(b)(1), applying the constructive ownership and attribution rules of section 267(c), if no U.S. tax is imposed with respect to the interest under subtitle A of the Code, determined without regard to net operating losses or net operating loss carryovers, and taking into account any applicable treaty obligation of the United States. For this purpose, interest that is subject to a reduced rate of tax under any treaty obligation of the United States applicable to the recipient is treated as, in part, subject to the statutory tax rate under sections 871 or 881 and, in part, not subject to tax, based on the proportion that the rate of tax under the treaty bears to the statutory tax rate. Thus, for purposes of section 163(j), if the statutory tax rate is 30 percent, and pursuant to a treaty U.S. tax is instead limited to a rate of 10 percent, two-thirds of the interest is considered interest not subject to U.S. tax under subtitle A of the Code;

(*ii*) A person that is not related to the taxpayer, within the meaning of section 267(b) or 707(b)(1), applying the constructive ownership and attribution rules of section 267(c), with respect to indebtedness on which there is a disqualified guarantee, within the meaning of paragraph (6)(D) of old section 163(j), of such indebtedness, and no gross basis U.S. tax is imposed with respect to the interest. For purposes of this paragraph (c)(3)(ii)(B)(*3*)(*ii*), a *gross basis U.S. tax* means any tax imposed by this subtitle A of the Code that is determined by reference to the gross amount of any item of income without any reduction for any deduction allowed by subtitle A of the Code. Interest that is subject to a gross basis U.S. tax that is eligible for a reduced rate of tax under any treaty obligation of the United States applicable to the recipient is treated as, in part, subject to the statutory tax rate under section 871 or 881 and, in part, not subject to a gross basis U.S. tax, based on the proportion that the rate of tax under the treaty bears to the statutory tax rate. Thus, for purposes of section 163(j), if the statutory tax rate is 30 percent, and pursuant to a treaty U.S. tax is instead limited to a rate of 10 percent, two-thirds of the interest is considered interest not subject to a gross basis U.S. tax under subtitle A of the Code; or

(*iii*) A REIT, directly or indirectly, to the extent that the domestic C corporation, or a foreign corporation with income, gain, or loss that is effectively connected, or treated as effectively connected, with the conduct of a trade or business in the United States, is a taxable REIT subsidiary, as defined in section 856(l), with respect to the REIT.

(iii) ***Treatment of carryforwards.*** The amount of disallowed disqualified interest allocated to a taxpayer pursuant to paragraph (c)(3)(ii) of this section is treated in the same manner as described in paragraph (c)(1) of this section.

(4) ***Application of section 382*** —

(i) ***Ownership change occurring before*** November 13, 2020—

(A) ***Pre-change loss.*** For purposes of section 382(d)(3), unless the rules of § 1.382-2(a)(7) apply, disallowed disqualified interest is not a pre-change loss under § 1.382-2(a) subject to a section 382 limitation with regard to an ownership change on a change date occurring before November 13, 2020. But see section 382(h)(6)(B) (regarding built-in deduction items).

(B) ***Loss corporation.*** For purposes of section 382(k)(1), unless the rules of § 1.382-2(a)(7) apply, disallowed disqualified interest is not a carryforward of disallowed interest described in section 381(c)(20) with regard to an ownership change on a change date occurring before November 13, 2020. But see section 382(h)(6) (regarding built-in deductions).

(ii) ***Ownership change occurring on or after*** November 13, 2020—

(A) ***Pre-change loss.*** For rules governing the treatment of disallowed disqualified interest as a pre-change loss for purposes of section 382 with regard to an ownership change on a change date occurring on or after November 13, 2020, see §§ 1.382-2(a)(2) and 1.382-6(c)(3).

(B) ***Loss corporation.*** For rules governing when disallowed disqualified interest causes a corporation to be a loss corporation with regard to an ownership change occurring on or after November 13, 2020, see § 1.382-2(a)(1)(i)(A).

(5) ***Treatment of excess limitation from taxable years beginning before January 1, 2018.*** No amount of excess limitation under old section 163(j)(2)(B) may be carried forward to taxable years beginning after December 31, 2017.

(6) ***Example: Members of an affiliated group*** —

(i) ***Facts.*** A, B, and C are calendar-year domestic C corporations that are members of an affiliated group (within the meaning of section 1504(a)) that was treated as a single taxpayer under old section 163(j)(6)(C) and the proposed regulations in this part under old section 163(j) (see formerly proposed § 1.163(j)-5). For the taxable year ending December 31, 2017, the separately determined amounts of exempt related person interest expense of A, B, and C were $0, $600x, and $150x, respectively (for a total of $750x). The affiliated group has $200x of disallowed disqualified interest in that year.

(ii) ***Analysis.*** The affiliated group's disallowed disqualified interest expense for the 2017 taxable year ($200x) is allocated among A, B, and C based on the ratio of each member's exempt related person interest expense to the group's exempt related person interest expense. Because A has no exempt related person interest expense, no disallowed disqualified interest is allocated to A. Disallowed disqualified interest of $160x is allocated to B (($600x/$750x) × $200x), and disallowed disqualified interest of $40x is allocated to C (($150x/$750x) × $200x). Thus, B and C have $160x and $40x, respectively, of disallowed disqualified interest that is carried forward to the first taxable year beginning after December 31, 2017. No excess limitation that was allocated to A, B, or C under old section 163(j) will carry forward to a taxable year beginning after December 31, 2017.

(iii) ***Carryforward of disallowed disqualified interest to 2018 taxable year.*** The facts are the same as in the *Example* in paragraph (c)(7)(i) of this section, except that, for the taxable year ending December 31, 2018, A, B, and C are members of a consolidated group that has a section 163(j) limitation of $140x, current-year business interest expense (as defined in § 1.163(j)-1(b)(9)) of $80x, and no excepted trade or business. Under paragraph (c)(1) of this section, disallowed disqualified interest is carried to the taxpayer's first taxable year beginning after December 31, 2017, and is subject to disallowance under section 163(j) and § 1.163(j)-2. Under § 1.163(j)-5(b)(3)(ii)(D)(*1*), a consolidated group that has section 163(j) limitation remaining for the current year after deducting all current-year business interest expense deducts each member's disallowed disqualified interest carryforwards from prior taxable years, starting with

the earliest taxable year, on a pro rata basis (subject to certain limitations). In accordance with paragraph (c)(1) of this section, the rule in § 1.163(j)-5(b)(3)(ii)(D)(*1*) applies to disallowed disqualified interest carried forward to the taxpayer's first taxable year beginning after December 31, 2017. Accordingly, after deducting $80x of current-year business interest expense in 2018, the group may deduct $60x of its $200x disallowed disqualified interest carryforwards. Under paragraph (c)(3) of this section, B has $160x of disallowed disqualified interest carryforwards, and C has $40x of disallowed disqualified interest carryforwards. Thus, $48x (($160x/$200x) × $60x) of B's disallowed disqualified interest carryforwards, and $12x (($40x/$200x) × $60x) of C's disallowed disqualified interest carryforwards, are deducted by the consolidated group in the 2018 taxable year.

(d) ***Applicability date.*** This section applies to taxable years beginning on or after November 13, 2020. However, taxpayers and their related parties, within the meaning of sections 267(b) and 707(b)(1), may choose to apply the rules of this section to a taxable year beginning after December 31, 2017, so long as the taxpayers and their related parties consistently apply the rules of the section 163(j) regulations, and, if applicable, §§ 1.263A-9, 1.263A-15, 1.381(c)(20)-1, 1.382-1, 1.382-2, 1.382-5, 1.382-6, 1.382-7, 1.383-0, 1.383-1, 1.469-9, 1.469-11, 1.704-1, 1.882-5, 1.1362-3, 1.1368-1, 1.1377-1, 1.1502-13, 1.1502-21, 1.1502-36, 1.1502-79, 1.1502-91 through 1.1502-99 (to the extent they effectuate the rules of §§ 1.382-2, 1.382-5, 1.382-6, and 1.383-1), and 1.1504-4, to that taxable year.

[T.D. 9905, 85 FR 56760, Sept. 14, 2020]

§ 1.164-1 Deduction for taxes.

(a) ***In general.*** Only the following taxes shall be allowed as a deduction under this section for the taxable year within which paid or accrued, according to the method of accounting used in computing taxable income:

(1) State and local, and foreign, real property taxes.

(2) State and local personal property taxes.

(3) State and local, and foreign, income, war profits, and excess profits taxes.

(4) State and local general sales taxes.

(5) State and local taxes on the sale of gasoline, diesel fuel, and other motor fuels.

In addition, there shall be allowed as a deduction under this section State and local and foreign taxes not described in subparagraphs (1) through (5) of this paragraph which are paid or accrued within the taxable year in carrying on a trade or business or an activity described in section 212 (relating to expenses for production of income). For example, dealers or investors in securities and dealers or investors in real estate may deduct State stock transfer and real estate transfer taxes, respectively, under section 164, to the extent they are expenses incurred in carrying on a trade or business or an activity for the production of income. In general, taxes are deductible only by the person upon whom they are imposed. However, see § 1.164-5 in the case of certain taxes paid by the consumer. Also, in the case of a qualified State individual income tax (as defined in section 6362 and the regulations thereunder) which is determined by reference to a percentage of the Federal income tax (pursuant to section 6362 (c)), an accrual method taxpayer shall use the cash receipts and disbursements method to compute the amount of his deduction therefor. Thus, the deduction under section 164 is in the amount actually paid with respect to the qualified tax, rather than the amount accrued with respect thereto, during the taxable year even though the taxpayer uses the accrual method of accounting for other purposes. In addition, see paragraph (f)(1) of §

301.6361-1 of this chapter (Regulations on Procedure and Administration) with respect to rules relating to allocation and reallocation of amounts collected on account of the Federal income tax and qualified taxes.

(b) ***Taxable years beginning before January 1, 1964.*** For taxable years beginning before January 1, 1964, except as otherwise provided in §§ 1.164-2 through 1.164-8, inclusive, taxes imposed by the United States, any State, territory, possession of the United States, or a political subdivision of any of the foregoing, or by any foreign country, are deductible from gross income for the taxable year in which paid or accrued, according to the method of accounting used in computing taxable income. For this purpose, postage is not a tax and automobile license or registration fees are ordinarily taxes.

(c) ***Cross references.*** For the definition of the term "real property taxes", see paragraph (d) of § 1.164-3. For the definition of the term "foreign taxes", see paragraph (d) of § 1.164-3. For the definition of the term "general sales taxes", see paragraph (f) of § 1.164-3. For the treatment of gasoline, diesel fuel, and other motor fuel taxes, see § 1.164-5. For apportionment of taxes on real property between seller and purchaser, see section 164(d) and § 1.164-6. For the general rule for taxable year of deduction, see section 461. For provisions disallowing any deduction for the tax paid at the source on interest from tax-free covenant bonds, see section 1451(f).

[T.D. 6780, 29 FR 18145, Dec. 22, 1964, as amended by T.D. 7577, 43 FR 59357, Dec. 20, 1978]

§ 1.164-2 Deduction denied in case of certain taxes.

This section and § 1.275 describe certain taxes for which no deduction is allowed. In the case of taxable years beginning before January 1, 1964, the denial is provided for by section 164(b) (prior to being amended by section 207 of the Revenue Act of 1964 (78 Stat. 40)). In the case of taxable years beginning after December 31, 1963, the denial is governed by sections 164 and 275. No deduction is allowed for the following taxes:

(a) ***Federal income taxes.*** Federal income taxes, including the taxes imposed by section 3101, relating to the tax on employees under the Federal Insurance Contributions Act (chapter 21 of the Code); sections 3201 and 3211, relating to the taxes on railroad employees and railroad employee representatives; section 3402, relating to the tax withheld at source on wages; and by corresponding provisions of prior internal revenue laws.

(b) ***Federal war profits and excess profits taxes.*** Federal war profits and excess profits taxes including those imposed by title II of the Revenue Act of 1917 (39 Stat. 1000), title III of the Revenue Act of 1918 (40 Stat. 1088), title III of the Revenue Act of 1921 (42 Stat. 271), section 216 of the National Industrial Recovery Act (48 Stat. 208), section 702 of the Revenue Act of 1934 (48 Stat. 770), Subchapter D, Chapter 1 of the Internal Revenue Code of 1939, and Subchapter E, Chapter 2 of the Internal Revenue Code of 1939.

(c) ***Estate and gift taxes.*** Estate, inheritance, legacy, succession, and gift taxes.

(d) ***Foreign income taxes.*** Except as provided in § 1.901-1(c)(2) and (3), foreign income taxes, as defined in § 1.901-2(a), paid or accrued (as the case may be, depending on the taxpayer's method of accounting for such taxes) in a taxable year, if the taxpayer chooses to take to any extent the benefits of section 901, relating to the credit for taxes of foreign countries and possessions of the United States, for taxes that are paid or accrued (according to the taxpayer's method of accounting for such taxes) in such taxable year.

(e) ***Real property taxes.*** Taxes on real property, to the extent that section 164(d) and § 1.164-6 require such taxes to be treated as imposed on another taxpayer.

(f) ***Federal duties and excise taxes.*** Federal import or tariff duties, business, license, privilege, excise, and stamp taxes (not described in paragraphs (a), (b), (c), or (h) of this section, or § 1.164-4) paid or accrued within the taxable year. The fact that any such tax is not deductible as a tax under section 164 does not prevent

(1) its deduction under section 162 or section 212, provided it represents an ordinary and necessary expense paid or incurred during the taxable year by a corporation or an individual in the conduct of any trade or business or, in the case of an individual for the production or collection of income, for the management, conservation, or maintenance of property held for the production of income, or in connection with the determination, collection, or refund of any tax, or

(2) its being taken into account during the taxable year by a corporation or an individual as a part of the cost of acquiring or producing property in the trade or business or, in the case of an individual, as a part of the cost of property held for the production of income with respect to which it relates.

(g) ***Taxes for local benefits.*** Except as provided in § 1.164-4, taxes assessed against local benefits of a kind tending to increase the value of the property assessed.

(h) ***Excise tax on real estate investment trusts.*** The excise tax imposed on certain real estate investment trusts by section 4981.

(i) ***Applicability dates.*** Paragraph (d) of this section applies to foreign taxes paid or accrued in taxable years beginning on or after December 28, 2021.

[T.D. 6780, 29 FR 18145, Dec. 22, 1964, as amended by T.D. 7767, 46 FR 11263, Feb. 6, 1981; T.D. 9959, 87 FR 317, Jan. 4, 2022]

§ 1.164-3 Definitions and special rules.

For purposes of section 164 and § 1.164-1 to § 1.164-8, inclusive—

(a) ***State or local taxes.*** A State or local tax includes only a tax imposed by a State, a possession of the United States, or a political subdivision of any of the foregoing, or by the District of Columbia.

(b) ***Real property taxes.*** The term “real property taxes” means taxes imposed on interests in real property and levied for the general public welfare, but it does not include taxes assessed against local benefits. See § 1.164-4.

(c) ***Personal property taxes.*** The term “personal property tax” means an ad valorem tax which is imposed on an annual basis in respect of personal property. To qualify as a personal property tax, a tax must meet the following three tests:

(1) The tax must be ad valorem—that is, substantially in proportion to the value of the personal property. A tax which is based on criteria other than value does not qualify as ad valorem. For example, a motor vehicle tax based on weight, model year, and horsepower, or any of these characteristics is not an ad valorem tax. However, a tax which is partly based on value and partly based on other criteria may qualify in part. For example, in the case of a motor vehicle tax of 1 percent of value plus 40 cents per hundredweight, the part of the tax equal to 1 percent of value qualifies as an ad valorem tax and the balance does not qualify.

(2) The tax must be imposed on an annual basis, even if collected more frequently or less frequently.

(3) The tax must be imposed in respect of personal property. A tax may be considered to be imposed in respect of personal property even if in form it is imposed on the exercise of a privilege. Thus, for taxable years beginning after December 31, 1963, State and local taxes on the registration or licensing of highway motor vehicles are not deductible as personal property taxes unless and to the extent that the tests prescribed in this subparagraph are met. For example, an annual ad valorem tax qualifies as a personal property tax although it is denominated a registration fee imposed for the privilege of registering motor vehicles or of using them on the highways.

(d) ***Foreign taxes.*** The term "foreign tax" includes only a tax imposed by the authority of a foreign country. A tax-imposed by a political subdivision of a foreign country is considered to be imposed by the authority of that foreign country.

(e) ***Sales tax.***

(1) The term "sales tax" means a tax imposed upon persons engaged in selling tangible personal property, or upon the consumers of such property, including persons selling gasoline or other motor vehicle fuels at wholesale or retail, which is a stated sum per unit of property sold or which is measured by the gross sales price or the gross receipts from the sale. The term also includes a tax imposed upon persons engaged in furnishing services which is measured by the gross receipts for furnishing such services.

(2) In general, the term "consumer" means the ultimate user or purchaser; it does not include a purchaser such as a retailer, who acquires the property for resale.

(f) ***General sales tax.*** A "general sales tax" is a sales tax which is imposed at one rate in respect of the sale at retail of a broad range of classes of items. No foreign sales tax is deductible under section 164(a) and paragraph (a)(4) of § 1.164-1. To qualify as a general sales tax, a tax must meet the following two tests:

(1) The tax must be a tax in respect of sales at retail. This may include a tax imposed on persons engaged in selling property at retail or furnishing services at retail, for example, if the tax is measured by gross sales price or by gross receipts from sales or services. Rentals qualify as sales at retail if so treated under applicable State sales tax laws.

(2) The tax must be general—that is, it must be imposed at one rate in respect of the retail sales of a broad range of classes of items. A sales tax is considered to be general although imposed on sales of various classes of items at more than one rate provided that one rate applies to the retail sales of a broad range of classes of items. The term "items" includes both commodities and services.

(g) ***Special rules relating to general sales taxes.***

(1) A sales tax which is general is usually imposed at one rate in respect of the retail sales of all tangible personal property (with exceptions and additions). However, a sales tax which is selective—that is, a tax which applies at one rate with respect to retail sales of specified classes of items also qualifies as general if the specified classes represent a broad range of classes of items. A selective sales tax which does not apply at one rate to the retail sales of a broad range of classes of items is not general. For example, a tax which applies only to sales of alcoholic beverages, tobacco, admissions, luxury items, and a few other items is not general. Similarly, a tax imposed solely on services is not general. However, a selective sales tax may be deemed to be part of the general sales tax and hence may be deductible, even if imposed by a separate title, etc., of the State or local law, if imposed at the same rate as the general rate of tax (as defined in subparagraph (4) of this paragraph) which

qualifies a tax in the taxing jurisdiction as a general sales tax. For example, if a State has a 5 percent general sales tax and a separate selective sales tax of 5 percent on transient accommodations, the tax on transient accommodations is deductible.

(2) A tax is imposed at one rate only if it is imposed at that rate on generally the same base for all items subject to tax. For example, a sales tax imposed at a 3 percent rate on 100 percent of the sales price of some classes of items and at a 3 percent rate on 50 percent of the sales price of other classes of items would not be imposed at one rate with respect to all such classes. However, a tax is considered to be imposed at one rate although it allows dollar exemptions, if the exemptions are designed to exclude all sales under a certain dollar amount. For example, a tax may be imposed at one rate although it applies to all sales of tangible personal property but applies only to sales amounting to more than 10 cents.

(3) The fact that a sales tax exempts food, clothing, medical supplies, and motor vehicles, or any of them, shall not be taken into account in determining whether the tax applies to a broad range of classes of items. The fact that a sales tax applies to food, clothing, medical supplies, and motor vehicles, or any of them, at a rate which is lower than the general rate of tax (as defined in subparagraph (4) of this paragraph) is not taken into account in determining whether the tax is imposed at one rate on the retail sales of a broad range of classes of items. For purposes of this section, the term “food” means food for human consumption off the premises where sold, and the term “medical supplies” includes drugs, medicines, and medical devices.

(4) Except in the case of a lower rate of tax applicable in respect of food, clothing, medical supplies, and motor vehicles, or any of them, no deduction is allowed for a general sales tax in respect of any item if the tax is imposed on such item at a rate other than the general rate of tax. The general rate of tax is the one rate which qualifies a tax in a taxing jurisdiction as a general sales tax because the tax is imposed at such one rate on a broad range of classes of items. There can be only one general rate of tax in any one taxing jurisdiction. However, a general sales tax imposed at a lower rate or rates on food, clothing, motor vehicles, and medical supplies, or any of them, may nonetheless be deductible with respect to such items. For example, a sales tax which is imposed at 1 percent with respect to food, imposed at 3 percent with respect to a broad range of classes of tangible personal property, and imposed at 4 percent with respect to transient accommodations would qualify as a general sales tax. Taxes paid at the 1 percent and the 3 percent rates are deductible, but tax paid at the 4 percent rate is not deductible. The fact that a sales tax provides for the adjustment of the general rate of tax to reflect the sales tax rate in another taxing jurisdiction shall not be taken into account in determining whether the tax is imposed at one rate on the retail sales of a broad range of classes of items. Moreover, a general sales tax imposed at a lower rate with respect to an item in order to reflect the tax rate in another jurisdiction is also deductible at such lower rate. For example, State E imposes a general sales tax whose general rate is 3 percent. The State E sales tax law provides that in areas bordering on States with general sales taxes, selective sales taxes, or special excise taxes, the rate applied in the adjoining State will be used if such rate is under 3 percent. State F imposes a 2 percent sales tax. The 2 percent sales tax paid by residents of State E in areas bordering on State F is deductible.

(h) ***Compensating use taxes.*** A compensating use tax in respect of any item is treated as a general sales tax. The term “compensating use tax” means, in respect of any item, a tax which is imposed on the use, storage, or consumption of such item and which is complementary to a general sales tax which is deductible with respect to sales of similar items.

(i) ***Special rules relating to compensating use taxes.***

(1) In general, a use tax on an item is complementary to a general sales tax on similar items if the use tax is imposed on an item which was not subject to such general sales tax but which would have been subject to such general sales tax if the sale of the item had taken place within the jurisdiction imposing the use tax. For example, a tax imposed by State A on the use of a motor vehicle purchased in State B is complementary to the general sales tax of State A on similar items, if the latter tax applies to motor vehicles sold in State A.

(2) Since a compensating use tax is treated as a general sales tax, it is subject to the rule of subparagraph (C) of section 164(b)(2) and paragraph (g)(4) of this section that no deduction is allowed for a general sales tax imposed in respect of an item at a rate other than the general rate of tax (except in the case of lower rates on the sale of food, clothing, medical supplies, and motor vehicles). The fact that a compensating use tax in respect of any item provides for an adjustment in the rate of the compensating use tax or the amount of such tax to be paid on account of a sales tax on such item imposed by another taxing jurisdiction is not taken into account in determining whether the compensating use tax is imposed in respect of the item at a rate other than the general rate of tax. For example, a compensating use tax imposed by State C on the use of an item purchased in State D is considered to be imposed at the general rate of tax even though the tax imposed by State C allows a credit for any sales tax paid on such item in State D, or the rate of such compensating use tax is adjusted to reflect the rate of sales tax imposed by State D.

(j) *Safe harbor for payments made by individuals in exchange for State or local tax credits* —

(1) ***In general.*** An individual who itemizes deductions and who makes a payment to or for the use of an entity described in section 170(c) in consideration for a State or local tax credit may treat as a payment of State or local tax for purposes of section 164 the portion of such payment for which a charitable contribution deduction under section 170 is disallowed under § 1.170A-1(h)(3). This treatment as payment of a State or local tax is allowed in the taxable year in which the payment is made to the extent that the resulting credit is applied, consistent with applicable State or local law, to offset the individual's State or local tax liability for such taxable year or the preceding taxable year.

(2) ***Credits carried forward.*** To the extent that a State or local tax credit described in paragraph (j)(1) of this section is not applied to offset the individual's applicable State or local tax liability for the taxable year of the payment or the preceding taxable year, any excess State or local tax credit permitted to be carried forward may be treated as a payment of State or local tax under section 164(a) in the taxable year or years for which the carryover credit is applied in accordance with State or local law.

(3) ***Limitation on individual deductions.*** Nothing in this paragraph (j) may be construed as permitting a taxpayer who applies this safe harbor to avoid the limitation of section 164(b)(6) for any amount paid as a tax or treated under this paragraph (j) as a payment of tax.

(4) ***No safe harbor for transfers of property.*** The safe harbor provided in this paragraph (j) applies only to a payment of cash or cash equivalent.

(5) ***Coordination with other deductions.*** An individual who deducts a payment under section 164 may not also deduct the same payment under any other Code section.

(6) ***Examples.*** In the following examples, the taxpayer is an individual who itemizes deductions for Federal income tax purposes.

(i) ***Example 1.*** In year 1, Taxpayer *A* makes a payment of $500 to an entity described in section 170(c). In return for the payment, *A* receives a dollar-for-dollar State income tax credit. Prior to application of the credit, *A*'s State income tax liability for year 1 was more than $500. *A* applies the $500 credit to *A*'s year 1 State income tax liability. Under paragraph (j)(1) of this section, *A* treats the $500 payment as a payment of State income tax in year 1. To determine *A*'s deduction amount, *A* must apply the provisions of section 164 applicable to payments of State and local taxes, including the limitation in section 164(b)(6). See paragraph (j)(3) of this section.

(ii) ***Example 2.*** In year 1, Taxpayer *B* makes a payment of $7,000 to an entity described in section 170(c). In return for the payment, *B* receives a dollar-for-dollar State income tax credit, which under State law may be carried forward for three taxable years. Prior to application of the credit, *B*'s State income tax liability for year 1 was $5,000; *B* applies $5,000 of the $7,000 credit to *B*'s year 1 State income tax liability. Under paragraph (j)(1) of this section, *B* treats $5,000 of the $7,000 payment as a payment of State income tax in year 1. Prior to application of the remaining credit, *B*'s State income tax liability for year 2 exceeds $2,000. *B* applies the excess credit of $2,000 to *B*'s year 2 State income tax liability. For year 2, under paragraph (j)(2) of this section, *B* treats the $2,000 as a payment of State income tax under section 164. To determine *B*'s deduction amounts in years 1 and 2, *B* must apply the provisions of section 164 applicable to payments of State and local taxes, including the limitation under section 164(b)(6). See paragraph (j)(3) of this section.

(iii) ***Example 3.*** In year 1, Taxpayer *C* makes a payment of $7,000 to an entity described in section 170(c). In return for the payment, *C* receives a local real property tax credit equal to 25 percent of the amount of this payment ($1,750). Prior to application of the credit, *C*'s local real property tax liability in year 1 was more than $1,750. *C* applies the $1,750 credit to *C*'s year 1 local real property tax liability. Under paragraph (j)(1) of this section, for year 1, *C* treats $1,750 of the $7,000 payment as a payment of local real property tax for purposes of section 164. To determine *C*'s deduction amount, *C* must apply the provisions of section 164 applicable to payments of State and local taxes, including the limitation under section 164(b)(6). See paragraph (j)(3) of this section.

(7) ***Applicability date.*** This paragraph (j) applies to payments made to section 170(c) entities on or after June 11, 2019. However, a taxpayer may choose to apply this paragraph (j) to payments made to section 170(c) entities after August 27, 2018.

[T.D. 6780, 29 FR 18146, Dec. 22, 1964, as amended by T.D. 9907, 85 FR 48473, Aug. 11, 2020]

§ 1.164-4 Taxes for local benefits.

(a) So-called taxes for local benefits referred to in paragraph (g) of § 1.164-2, more properly assessments, paid for local benefits such as street, sidewalk, and other like improvements, imposed because of and measured by some benefit inuring directly to the property against which the assessment is levied are not deductible as taxes. A tax is considered assessed against local benefits when the property subject to the tax is limited to property benefited. Special assessments are not deductible, even though an incidental benefit may inure to the public welfare. The real property taxes deductible are those levied for the general public welfare by the proper taxing authorities at a like rate against all property in the territory over which such authorities have jurisdiction. Assessments under the statutes of California relating to irrigation, and of Iowa relating to drainage, and under certain statutes of Tennessee relating to levees, are limited to

property benefited, and if the assessments are so limited, the amounts paid thereunder are not deductible as taxes. For treatment of assessments for local benefits as adjustments to the basis of property, see section 1016(a)(1) and the regulations thereunder.

(b)

(1) Insofar as assessments against local benefits are made for the purpose of maintenance or repair or for the purpose of meeting interest charges with respect to such benefits, they are deductible. In such cases, the burden is on the taxpayer to show the allocation of the amounts assessed to the different purposes. If the allocation cannot be made, none of the amount so paid is deductible.

(2) Taxes levied by a special taxing district which was in existence on December 31, 1963, for the purpose of retiring indebtedness existing on such date, are deductible, to the extent levied for such purpose, if

(i) the district covers the whole of at least one county,

(ii) if at least 1,000 persons are subject to the taxes levied by the district, and

(iii) if the district levies its assessments annually at a uniform rate on the same assessed value of real property, including improvements, as is used for purposes of the real property tax generally.

[T.D. 6780, 29 FR 18147, Dec. 22, 1964]

§ 1.164-5 Certain retail sales taxes and gasoline taxes.

For taxable years beginning before January 1, 1964, any amount representing a State or local sales tax paid by a consumer of services or tangible personal property is deductible by such consumer as a tax, provided it is separately stated and not paid in connection with his trade or business. For taxable years beginning after December 31, 1963, only the amount of any separately stated State and local general sales tax (as defined in paragraph (g) of § 1.164-3) and tax on the sale of gasoline, diesel fuel or other motor fuel paid by the consumer (other than in connection with his trade or business) is deductible by the consumer as tax. The fact that, under the law imposing it, the incidence of such State or local tax does not fall on the consumer is immaterial. The requirement that the amount of tax must be separately stated will be deemed complied with where it clearly appears that at the time of sale to the consumer, the tax was added to the sales price and collected or charged as a separate item. It is not necessary, for the purpose of this section, that the consumer be furnished with a sales slip, bill, invoice, or other statement on which the tax is separately stated. For example, where the law imposing the State or local tax for which the taxpayer seeks a deduction contains a prohibition against the seller absorbing the tax, or a provision requiring a posted notice stating that the tax will be added to the quoted price, or a requirement that the tax be separately shown in advertisements or separately stated on all bills and invoices, it is presumed that the amount of the State or local tax was separately stated at the time paid by the consumer; except that such presumption shall have no application to a tax on the sale of gasoline, diesel fuel or other motor fuel imposed upon a wholesaler unless such provisions of law apply with respect to both the sale at wholesale and the sale at retail.

[T.D. 6780, 29 FR 18147, Dec. 22, 1964]

§ 1.164-6 Apportionment of taxes on real property between seller and purchaser.

(a) ***Scope.*** Except as provided otherwise in section 164(f) and § 1.164-8, when real property is sold, section 164(d)(1) governs the deduction by the seller and the purchaser of current real property taxes. Section 164(d)(1) performs two functions:

(1) It provides a method by which a portion of the taxes for the real property tax year in which the property is sold may be deducted by the seller and a portion by the purchaser; and

(2) it limits the deduction of the seller and the purchaser to the portion of the taxes corresponding to the part of the real property tax year during which each was the owner of the property. These functions are accomplished by treating a portion of the taxes for the real property tax year in which the property is sold as imposed on the seller and a portion as imposed on the purchaser. To the extent that the taxes are treated as imposed on the seller and the purchaser, each shall be allowed a deduction, under section 164(a), in the taxable year such tax is paid or accrued, or treated as paid or accrued under section 164(d)(2) (A) or (D) and this section. No deduction is allowed for taxes on real property to the extent that they are imposed on another taxpayer, or are treated as imposed on another taxpayer under section 164(d). For the election to accrue real property taxes ratably see section 461(c) and the regulations thereunder.

(b) ***Application of rule of apportionment.***

(1)

(i) For purposes of the deduction provided by section 164(a), if real property is sold during any real property tax year, the portion of the real property tax properly allocable to that part of the real property tax year which ends on the day before the date of the sale shall be treated as a tax imposed on the seller, and the portion of such tax properly allocable to that part of such real property tax year which begins on the date of the sale shall be treated as a tax imposed on the purchased. For definition of "real property tax year" see paragraph (c) of this section. This rule shall apply whether or not the seller and the purchaser apportion such tax. The rule of apportionment contained in section 164(d)(1) applies even though the same real property is sold more than once during the real property tax year. (See paragraph (d)(5) of this section for rule requiring inclusion in gross income of excess deductions.)

(ii) Where the real property tax becomes a personal liability or a lien before the beginning of the real property tax year to which it relates and the real property is sold subsequent to the time the tax becomes a personal liability or a lien but prior to the beginning of the related real property tax year—

(*a*) The seller may not deduct any amount for real property taxes for the related real property tax year, and

(*b*) To the extent that he holds the property for such real property tax year, the purchaser may deduct the amount of such taxes for the taxable year they are paid (or amounts representing such taxes are paid to the seller, mortgagee, trustee or other person having an interest in the property as security) or accrued by him according to his method of accounting.

(iii) Similarly, where the real property tax becomes a personal liability or a lien after the end of the real property tax year to which it relates and the real property is sold prior to the time the tax becomes a personal liability or a lien but after the end of the related real property tax year—

(*a*) The purchaser may not deduct any amount for real property taxes for the related real property tax year, and

(*b*) To the extent that he holds the property for such real property tax year, the seller may deduct the amount of such taxes for the taxable year they are paid (or amounts representing such taxes are paid to the purchaser, mortgagee, trustee, or other person having an interest in the property as security) or accrued by him according to his method of accounting.

(iv) Where the real property is sold (or purchased) during the related real property tax year the real property taxes for such year are apportioned between the parties to such sale and may be deducted by such parties in accordance with the provisions of paragraph (d) of this section.

(2) Section 164(d) does not apply to delinquent real property taxes for any real property tax year prior to the real property tax year in which the property is sold.

(3) The provisions of this paragraph may be illustrated by the following examples:

Example 1. The real property tax year in County R is April 1 to March 31. A, the owner on April 1, 1954, of real property located in County R sells the real property to B on June 30, 1954. B owns the real property from June 30, 1954, through March 31, 1955. The real property tax for the real property tax year April 1, 1954-March 31, 1955 is $365. For purposes of section 164(a), $90 (90/365 × $365, April 1, 1954-June 29, 1954) of the real property tax is treated as imposed on A, the seller, and $275 (275/365 × $365, June 30, 1954-March 31, 1955) of such real property tax is treated as imposed on B, the purchaser.

Example 2. In County S the real property tax year is the calendar year. The real property tax becomes a lien on June 1 and is payable on July 1 of the current real property tax year, but there is no personal liability for such tax. On April 30, 1955, C, the owner of real property in County S on January 1, 1955, sells the real property to D. On July 1, 1955, D pays the 1955 real property tax. On August 31, 1955, D sells the same real property to E. C, D, and E use the cash receipts and disbursements method of accounting. Under the provisions of section 164(d)(1), 119/365 (January 1-April 29, 1955) of the real property tax payable on July 1, 1955, for the 1955 real property tax year is treated as imposed on C, and, under the provisions of section 164(d)(2)(A), such portion is treated as having been paid by him on the date of sale. Under the provisions of section 164(d)(1), 123/365 (April 30-August 30, 1955) of the real property tax paid July 1, 1955, for the 1955 real property tax year is treated as imposed on D and may be deducted by him. Under the provisions of section 164(d)(1), 123/365 (August 31-December 31, 1955) of the real property tax due and paid on July 1, 1955, for the 1955 real property tax year is treated as imposed on E and, under the provisions of section 164(d)(2)(A) such portion is treated as having been paid by him on the date of sale.

Example 3. In State X the real property tax year is the calendar year. The real property tax becomes a lien on November 1 of the preceding calendar year. On November 15, 1955, F sells real property in State X to G. G owns the real property through December 31, 1956. Under section 164(d)(1), the real property tax (which became a lien on November 1, 1954) for the 1955 real property tax year is apportioned between F and G. No part of the real property tax for the 1956 real property tax year may be deducted by F. The entire real property tax for the 1956 real property tax year may be deducted by G when paid or accrued, depending upon the method of accounting used by him. See subparagraph (6) of paragraph (d) and section 461(c) and the regulations thereunder.

(c) ***Real property tax year.*** As used in section 164(d), the term “real property tax year” refers to the period which, under the law imposing the tax, is regarded as the period to which the tax imposed relates. Where the State and one or more local governmental units each imposes a tax on real property, the real property tax year for each tax must be determined for purposes of applying the rule of apportionment of section

164(d)(1) to each tax. The time when the tax rate is determined, the time when the assessment is made, the time when the tax becomes a lien, or the time when the tax becomes due or delinquent does not necessarily determine the real property tax year. The real property tax year may or may not correspond to the fiscal year of the governmental unit imposing the tax. In each case the State or local law determines what constitutes the real property tax year. Although the seller and the purchaser may or may not make an allocation of real property taxes, the meaning of "real property tax year" in section 164(d) and the application of section 164(d) do not depend upon what real property taxes were allocated nor the method of allocation used by the parties.

(d) *Special rules* —

(1) ***Seller using cash receipts and disbursements method of accounting.*** Under the provisions of section 164(d), if the seller by reason of his method of accounting may not deduct any amount for taxes unless paid, and—

(i) The purchaser (under the law imposing the real property tax) is liable for the real property tax for the real property tax year, or

(ii) The seller (under the law imposing the real property tax) is liable for the real property tax for the real property tax year and the tax is not payable until after the date of sale, then the portion of the tax treated under section 164(d)(1) as imposed upon the seller (whether or not actually paid by him in the taxable year in which the sale occurs) shall be considered as having been paid by him in such taxable year. Such portion may be deducted by him for the taxable year in which the sale occurs, or, if at a later time, for the taxable year (which would be proper under the taxpayer's method of accounting) in which the tax is actually paid, or an amount representing such tax is paid to the purchaser, mortgagee, trustee, or other person having an interest in the property as security.

(2) ***Purchasers using the cash receipts and disbursements method of accounting.*** Under the provisions of section 164(d), if the purchaser by reason of his method of accounting may not deduct any amount for taxes unless paid and the seller (under the law imposing the real property tax) is liable for the real property tax for the real property tax year, the portion of the tax treated under section 164(d)(1) as imposed upon the purchaser (whether or not actually paid by him in the taxable year in which the sale occurs) shall be considered as having been paid by him in such taxable year. Such portion may be deducted by him for the taxable year in which the sale occurs, or, if at a later time, for the taxable year (which would be proper under the taxpayer's method of accounting) in which the tax is actually paid, or an amount representing such tax is paid to the seller, mortgagee, trustee, or other person having an interest in the property as security.

(3) ***Persons considered liable for tax.*** Where the tax is not a liability of any person, the person who holds the property at the time the tax becomes a lien on the property shall be considered liable for the tax. As to a particular sale, in determining:

(i) Whether the other party to the sale is liable for the tax or,

(ii) The person who holds the property at the time the tax becomes a lien on the property (where the tax is not a liability of any person),

prior or subsequent sales of the property during the real property tax year shall be disregarded.

(4) ***Examples.*** The provisions of subparagraphs (1), (2), and (3) of this paragraph may be illustrated as follows:

Example 1. In County X the real property tax year is the calendar year. The real property tax is a personal liability of the owner of the real property on June 30 of the current real property tax year, but is not payable until February 28 of the following real property tax year. A, the owner of real property in County X on January 1, 1955, uses the cash receipts and disbursements method of accounting. On May 30, 1955, A sells the real property to B, who also uses the cash receipts and disbursements method of accounting. B retains ownership of the real property for the balance of the 1955 calendar year. Under the provisions of section 164(d)(1), 149/365 (January 1-May 29, 1955) of the real property tax payable on February 28, 1956, for the 1955 real property tax year is treated as imposed on A, the seller, and under the provisions of section 164(d)(2)(A) such portion is treated as having been paid by him on the date of sale and may be deducted by him for his taxable year in which the sale occurs (whether or not such portion is actually paid by him in that year) or for his taxable year in which the tax is actually paid or an amount representing such tax is paid. Under the provisions of section 164(d)(1), 216/365 (May 30-December 31, 1955) of the real property tax payable on February 28, 1956, for the 1955 real property tax year is treated as imposed on B, the purchaser, and may be deducted by him for his taxable year in which the tax is actually paid, or an amount representing such tax is paid.

Example 2. In County Y, the real property tax year is the calendar year. The real property tax becomes a lien on January 1, 1955, and is payable on April 30, 1955. There is no personal liability for the real property tax imposed by County Y. On April 30, 1955, C, the owner of real property in County Y on January 1, 1955, pays the real property tax for the 1955 real property tax year. On May 1, 1955, C sells the real property to D. On September 1, 1955, D sells the real property to E. C, D, and E use the cash receipts and disbursements method of accounting. Under the provisions of section 164(d)(1), 120/365 (January 1-April 30, 1955) of the real property tax is treated as imposed upon C and may be deducted by him for his taxable year in which the tax is actually paid. Under section 164(d)(1), 123/365 (May 1-August 31, 1955) of the real property tax is treated as imposed upon D and, under the provisions of section 164(d)(2)(A), is treated as having been paid by him on May 1, 1955, and may be deducted by D for his taxable year in which the sale from C to him occurs (whether or not such portion is actually paid by him in that year), or for his taxable year in which an amount representing such tax is paid. Since, according to paragraph (d)(3) of this section, the prior sale by C to D is disregarded, under the provisions of section 164(d)(1), 122/365 (September 1-December 31, 1955) of the real property tax is treated as imposed on E and, under the provisions of section 164(d)(2)(A), is treated as having been paid by him on September 1, 1955, and may be deducted by E for his taxable year in which the sale from D to him occurs (whether or not such portion is actually paid by him in that year), or for his taxable year in which an amount representing such tax is paid.

Example 3. In County X the real property tax year is the calendar year and the real property taxes are assessed and become a lien on June 30 of the current real property tax year, but are not payable until September 1 of that year. There is no personal liability for the real property tax imposed by County X. A, the owner on January 1, 1955, of real property in County X, uses the cash receipts and disbursements method of accounting. On July 15, 1955, A sells the real property to B. Under the provisions of section 164(d)(1), 195/365 (January 1-July 14, 1955) of the real property tax payable on September 1, 1955, for the 1955 real property tax year is treated as imposed on A, and may be deducted by him for his taxable year in which the sale occurs (whether or not such portion is actually paid by him in that year) or for his taxable year in which the tax is actually paid or an amount representing such tax is paid. Under the provisions of section 164(d)(1), 170/365 (July 15-December 31, 1955) of the real property tax is

treated as imposed on B and may be deducted by him for his taxable year in which the sale occurs (whether or not such portion is actually paid by him in that year), or for his taxable year in which the tax is actually paid or an amount representing such tax is paid.

(5) ***Treatment of excess deduction.*** If, for a taxable year prior to the taxable year of sale of real property, a taxpayer has deducted an amount for real property tax in excess of the portion of such real property tax treated as imposed on him under the provisions of section 164(d), the excess of the amount deducted over the portion treated as imposed on him shall be included in his gross income for the taxable year of the sale, subject to the provisions of section 111, relating to the recovery of bad debts, prior taxes, and delinquency amounts. The provisions of this subparagraph may be illustrated as follows:

Example 1. In Borough Y the real property tax is due and payable on November 30 for the succeeding calendar year, which is also the real property tax year. On November 30, 1954, taxpayer A, who reports his income on a calendar year under the cash receipts and disbursements method of accounting, pays the real property tax on real property owned by him in Borough Y for the 1955 real property tax year. On June 30, 1955, A sells the real property. Under the provisions of section 164(d), only 180/365 (January 1-June 29, 1955) of the real property tax for the 1955 real property tax year is treated as imposed on A, and the excess of the amount of real property tax for 1955 deducted by A, on his 1954 income tax return, over the 180/365 portion of such tax treated as imposed on him under section 164(d), must be included in gross income in A's 1955 income tax return, subject to the provisions of section 111.

Example 2. In County Z the real property tax year is the calendar year. The real property tax becomes a personal liability of the owner of real property on January 1 of the current real property tax year, and is payable on July 1 of the current real property tax year. On May 1, 1955, A, the owner of real property in County Z on January 1, 1955, sells the real property to B. On November 1, 1955, B sells the same real property to C. B uses the cash receipts and disbursements method of accounting and reports his income on the basis of a fiscal year ending July 31. B, on July 1, 1955, pays the entire real property tax for the real property tax year ending December 31, 1955. Under the provisions of section 164(d), only 184/365 (May 1-October 31, 1955) of the real property tax for the 1955 real property tax year is treated as imposed on B, and the excess of the amount of real property tax for 1955 deducted by B on his income tax return for the fiscal year ending July 31, 1955, over the 184/365 portion of such tax treated as imposed on him under section 164(d), must be included in gross income in B's income tax return for his fiscal year ending July 31, 1956, subject to the provisions of section 111.

(6) ***Persons using an accrual method of accounting.*** Where real property is sold and the seller or the purchaser computes his taxable income (for the taxable year during which the sale occurs) on an accrual method of accounting then, if the seller or the purchaser has not made the election provided in section 461(c) (relating to the accrual of real property taxes), the portion of any real property tax which is treated as imposed on him and which may not be deducted by him for any taxable year by reason of his method of accounting shall be treated as having accrued on the date of sale. The provisions of this subparagraph may be illustrated as follows:

Example. In County X the real property tax becomes a lien on property and is assessed on November 30 for the current calendar year, which is also the real property tax year. There is no personal liability for the real property tax imposed by County X. A owns, on January 1, 1955, real property in County X. A uses an accrual method of accounting and has not made any election under section 461(c) to accrue ratably real property taxes. A sells real property on June 30, 1955. By

reason of A's method of accounting, he could not deduct any part of the real property tax for 1955 on the real property since he sold the real property prior to November 30, 1955, the accrual date. Under section 164(d)(1), 180/365 (January 1-June 29, 1955) of the real property tax for the 1955 real property tax year is treated as imposed on A, and under section 164(d)(2)(D) that portion is treated as having accrued on June 30, 1955, and may be deducted by A for his taxable year in which such date falls. B, the purchaser from A, who uses an accrual method of accounting, has likewise not made an election under section 461(c) to accrue real property taxes ratably. Under section 164(d)(1), 185/365 of the real property taxes may be accrued by B on November 30, 1955, and deducted for his taxable year in which such date falls.

(7) ***Cross references.*** For determination of amount realized on a sale of real property, see section 1001(b) and the regulations thereunder. For determination of basis of real property acquired by purchase, see section 1012 and the regulations thereunder.

(8) ***Effective dates.*** Section 164(d) applies to taxable years ending after December 31, 1953, but only in the case of sales made after December 31, 1953. However, section 164(d) does not apply to any real property tax to the extent that such tax was allowable as a deduction under the Internal Revenue Code of 1939 to the seller for any taxable year which ended before January 1, 1954.

§ 1.164-7 Taxes of shareholder paid by corporation.

Banks and other corporations paying taxes assessed against their shareholders on account of their ownership of the shares of stock issued by such corporations without reimbursement from such shareholders may deduct the amount of taxes so paid. In such cases no deduction shall be allowed to the shareholders for such taxes. The amount so paid should not be included in the gross income of the shareholder.

§ 1.164-8 Payments for municipal services in atomic energy communities.

(a) ***General.*** For taxable years beginning after December 31, 1957, amounts paid or accrued by any owner of real property within any community (as defined in section 21b of the Atomic Energy Community Act of 1955 (42 U.S.C. 2304)) to compensate the Atomic Energy Commission for municipal-type services (or any agent or contractor authorized by the Atomic Energy Commission to charge for such services) shall be treated as State real property taxes paid or accrued for purposes of section 164. Such amounts shall be deductible as taxes to the extent provided in section 164, §§ 1.164-1 through 1.164-7, and this section. See paragraph (b) of this section for definition of the term “Atomic Energy Commission”; paragraph (c) of this section for the definition of the term “municipal-type services”; and paragraph (d) of this section for the definition of the term “owner”.

(b) ***Atomic Energy Commission.*** For purposes of paragraph (a) of this section, the term “Atomic Energy Commission” shall mean—

(1) The Atomic Energy Commission, and

(2) Any other agency of the United States Government to which the duties and responsibilities of providing municipal-type services are delegated under the authority of section 101 of the Atomic Energy Community Act of 1955 (42 U.S.C. 2313).

(c) ***Municipal-type services.*** For purposes of paragraph (a) of this section, the term “municipal-type services” includes services usually rendered by a municipality and usually paid for by taxes. Examples of municipal-type services are police protection, fire protection, public recreational facilities, public libraries, public schools, public health, public welfare, and the maintenance of roads and streets. The term shall include sewage and refuse disposal which are maintained out of revenues derived from a general charge for

municipal-type services; however, the term shall not include sewage and refuse disposal if a separate charge for such services is made. Charges assessed against local benefits of a kind tending to increase the value of the property assessed are not charges for municipal-type services. See section 164(c)(1) and § 1.164-4.

(d) ***Owner.*** For purposes of paragraph (a) of this section, the term "owner" includes a person who holds the real property under a leasehold of 40 or more years from the Atomic Energy Commission (or any agency of the United States Government to which the duties and responsibilities of leasing real property are delegated under section 101 of the Atomic Energy Community Act of 1955), and a person who has entered into a contract to purchase under section 61 of the Atomic Energy Community Act of 1955 (42 U.S.C. 2361). An assignee (either immediate or more remote) of a lessee referred to in the preceding sentence will also qualify as an owner for purposes of paragraph (a) of this section.

(e) ***Nonapplication of section 164(d).*** Section 164(d) and § 1.164-6, relating to apportionment of taxes on real property between seller and purchaser, do not apply to a sale by the United States or any of its agencies of real property to which section 164(f) and this section apply. Thus, amounts paid or accrued which qualify under paragraph (a) of this section will continue to be deductible as taxes to the extent provided in this section, even in the taxable year in which the owner actually purchases the real property from the United States or any of its agencies. However, the provisions of section 164(d) and § 1.164-6 shall apply to a sale of real property to which section 164(f) and this section apply, if the seller is other than the United States or any of its agencies.

[T.D. 6500, 25 FR 11402, Nov. 26, 1960, as amended by T.D. 6789, 29 FR 18147, Dec. 22, 1964]

§ 1.165-1 Losses.

(a) ***Allowance of deduction.*** Section 165(a) provides that, in computing taxable income under section 63, any loss actually sustained during the taxable year and not made good by insurance or some other form of compensation shall be allowed as a deduction subject to any provision of the internal revenue laws which prohibits or limits the amount of the deduction. This deduction for losses sustained shall be taken in accordance with section 165 and the regulations thereunder. For the disallowance of deductions for worthless securities issued by a political party, see § 1.271-1.

(b) ***Nature of loss allowable.*** To be allowable as a deduction under section 165(a), a loss must be evidenced by closed and completed transactions, fixed by identifiable events, and, except as otherwise provided in section 165(h) and § 1.165-11, relating to disaster losses, actually sustained during the taxable year. Only a bona fide loss is allowable. Substance and not mere form shall govern in determining a deductible loss.

(c) ***Amount deductible.***

(1) The amount of loss allowable as a deduction under section 165(a) shall not exceed the amount prescribed by § 1.1011-1 as the adjusted basis for determining the loss from the sale or other disposition of the property involved. In the case of each such deduction claimed, therefore, the basis of the property must be properly adjusted as prescribed by § 1.1011-1 for such items as expenditures, receipts, or losses, properly chargeable to capital account, and for such items as depreciation, obsolescence, amortization, and depletion, in order to determine the amount of loss allowable as a deduction. To determine the allowable loss in the case of property acquired before March 1, 1913, see also paragraph (b) of § 1.1053-1.

(2) The amount of loss recognized upon the sale or exchange of property shall be determined for purposes of section 165(a) in accordance with § 1.1002-1.

(3) A loss from the sale or exchange of a capital asset shall be allowed as a deduction under section 165(a) but only to the extent allowed in section 1211 (relating to limitation on capital losses) and section 1212 (relating to capital loss carrybacks and carryovers), and in the regulations under those sections.

(4) In determining the amount of loss actually sustained for purposes of section 165(a), proper adjustment shall be made for any salvage value and for any insurance or other compensation received.

(d) ***Year of deduction.***

(1) A loss shall be allowed as a deduction under section 165(a) only for the taxable year in which the loss is sustained. For this purpose, a loss shall be treated as sustained during the taxable year in which the loss occurs as evidenced by closed and completed transactions and as fixed by identifiable events occurring in such taxable year. For provisions relating to situations where a loss attributable to a disaster will be treated as sustained in the taxable year immediately preceding the taxable year in which the disaster actually occurred, see section 165(h) and § 1.165-11.

(2)

(i) If a casualty or other event occurs which may result in a loss and, in the year of such casualty or event, there exists a claim for reimbursement with respect to which there is a reasonable prospect of recovery, no portion of the loss with respect to which reimbursement may be received is sustained, for purposes of section 165, until it can be ascertained with reasonable certainty whether or not such reimbursement will be received. Whether a reasonable prospect of recovery exists with respect to a claim for reimbursement of a loss is a question of fact to be determined upon an examination of all facts and circumstances. Whether or not such reimbursement will be received may be ascertained with reasonable certainty, for example, by a settlement of the claim, by an adjudication of the claim, or by an abandonment of the claim. When a taxpayer claims that the taxable year in which a loss is sustained is fixed by his abandonment of the claim for reimbursement, he must be able to produce objective evidence of his having abandoned the claim, such as the execution of a release.

(ii) If in the year of the casualty or other event a portion of the loss is not covered by a claim for reimbursement with respect to which there is a reasonable prospect of recovery, then such portion of the loss is sustained during the taxable year in which the casualty or other event occurs. For example, if property having an adjusted basis of $10,000 is completely destroyed by fire in 1961, and if the taxpayer's only claim for reimbursement consists of an insurance claim for $8,000 which is settled in 1962, the taxpayer sustains a loss of $2,000 in 1961. However, if the taxpayer's automobile is completely destroyed in 1961 as a result of the negligence of another person and there exists a reasonable prospect of recovery on a claim for the full value of the automobile against such person, the taxpayer does not sustain any loss until the taxable year in which the claim is adjudicated or otherwise settled. If the automobile had an adjusted basis of $5,000 and the taxpayer secures a judgment of $4,000 in 1962, $1,000 is deductible for the taxable year 1962. If in 1963 it becomes reasonably certain that only $3,500 can ever be collected on such judgment, $500 is deductible for the taxable year 1963.

(iii) If the taxpayer deducted a loss in accordance with the provisions of this paragraph and in a subsequent taxable year receives reimbursement for such loss, he does not recompute the tax for the taxable year in which the deduction was taken but includes the amount of such reimbursement in his gross income for the taxable year in which received, subject to the provisions of section 111, relating to recovery of amounts previously deducted.

(3) Any loss arising from theft shall be treated as sustained during the taxable year in which the taxpayer discovers the loss (see § 1.165-8, relating to theft losses). However, if in the year of discovery there exists a claim for reimbursement with respect to which there is a reasonable prospect of recovery, no portion of the loss with respect to which reimbursement may be received is sustained, for purposes of section 165, until the taxable year in which it can be ascertained with reasonable certainty whether or not such reimbursement will be received.

(4) The rules of this paragraph are applicable with respect to a casualty or other event which may result in a loss and which occurs after January 16, 1960. If the casualty or other event occurs on or before such date, a taxpayer may treat any loss resulting therefrom in accordance with the rules then applicable, or, if he so desires, in accordance with the provisions of this paragraph; but no provision of this paragraph shall be construed to permit a deduction of the same loss or any part thereof in more than one taxable year or to extend the period of limitations within which a claim for credit or refund may be filed under section 6511.

(e) ***Limitation on losses of individuals.*** In the case of an individual, the deduction for losses granted by section 165(a) shall, subject to the provisions of section 165(c) and paragraph (a) of this section, be limited to:

(1) Losses incurred in a trade or business;

(2) Losses incurred in any transaction entered into for profit, though not connected with a trade or business; and

(3) Losses of property not connected with a trade or business and not incurred in any transaction entered into for profit, if such losses arise from fire, storm, shipwreck, or other causalty, or from theft, and if the loss involved has not been allowed for estate tax purposes in the estate tax return. For additional provisions pertaining to the allowance of casualty and theft losses, see §§ 1.165-7 and 1.165-8, respectively.

For special rules relating to an election by a taxpayer to deduct disaster losses in the taxable year immediately preceding the taxable year in which the disaster occurred, see section 165(h) and § 1.165-11.

[T.D. 6500, 25 FR 11402, Nov. 26, 1960, as amended by T.D. 6735, 29 FR 6493, May 19, 1964; T.D. 6996, 34 FR 835, Jan. 18, 1969; T.D. 7301, 39 FR 963, Jan. 4, 1974; T.D. 7522, 42 FR 63411, Dec. 16, 1977]

§ 1.165-2 Obsolescence of nondepreciable property.

(a) ***Allowance of deduction.*** A loss incurred in a business or in a transaction entered into for profit and arising from the sudden termination of the usefulness in such business or transaction of any nondepreciable property, in a case where such business or transaction is discontinued or where such property is permanently discarded from use therein, shall be allowed as a deduction under section 165(a) for the taxable year in which the loss is actually sustained. For this purpose, the taxable year in which the loss is sustained is not necessarily the taxable year in which the overt act of abandonment, or the loss of title to the property, occurs.

(b) ***Exceptions.*** This section does not apply to losses sustained upon the sale or exchange of property, losses sustained upon the obsolescence or worthlessness of depreciable property, casualty losses, or losses reflected in inventories required to be taken under section 471. The limitations contained in sections 1211 and 1212 upon losses from the sale or exchange of capital assets do not apply to losses allowable under this section.

(c) ***Cross references.*** For the allowance under section 165(a) of losses arising from the permanent withdrawal of depreciable property from use in the trade or business or in the production of income, see § 1.167(a)-8, § 1.168(i)-1, or § 1.168(i)-8, as applicable. For provisions respecting the obsolescence of depreciable property for which depreciation is determined under section 167 (but not under section 168, section 1400I, section 1400L(c), section 168 prior to its amendment by the Tax Reform Act of 1986, Public Law 99-514 (100 Stat. 2121 (1986)), or under an additional first year depreciation deduction provision of the Internal Revenue Code (for example, section 168(k) through (n), 1400L(b), or 1400N(d))), see § 1.167(a)-9. For the allowance of casualty losses, see § 1.165-7.

(d) ***Effective/applicability date*** —

(1) ***In general.*** This section applies to taxable years beginning on or after January 1, 2014. Except as provided in paragraphs (d)(2) and (d)(3) of this section, § 1.165-2 as contained in 26 CFR part 1 edition revised as of April 1, 2011, applies to taxable years beginning before January 1, 2014.

(2) ***Early application of § 1.165-2(c).*** A taxpayer may choose to apply paragraph (c) of this section to taxable years beginning on or after January 1, 2012.

(3) ***Optional application of TD 9564.*** A taxpayer may choose to apply § 1.165-2T as contained in TD 9564 (76 FR 81060) December 27, 2011, to taxable years beginning on or after January 1, 2012, and before January 1, 2014.

[T.D. 6500, 25 FR 11402, Nov. 26, 1960; 25 FR 14021, Dec. 21, 1960, as amended by T.D. 9564, 76 FR 81084, Dec. 27, 2011; T.D. 9636, 78 FR 57706, Sept. 19, 2013; T.D. 9689, 79 FR 48667, Aug. 18, 2014]

§ 1.165-3 Demolition of buildings.

(a) ***Intent to demolish formed at time of purchase.***

(1) Except as provided in subparagraph (2) of this paragraph, the following rule shall apply when, in the course of a trade or business or in a transaction entered into for profit, real property is purchased with the intention of demolishing either immediately or subsequently the buildings situated thereon: No deduction shall be allowed under section 165(a) on account of the demolition of the old buildings even though any demolition originally planned is subsequently deferred or abandoned. The entire basis of the property so purchased shall, notwithstanding the provisions of § 1.167(a)-5, be allocated to the land only. Such basis shall be increased by the net cost of demolition or decreased by the net proceeds from demolition.

(2)

(i) If the property is purchased with the intention of demolishing the buildings and the buildings are used in a trade or business or held for the production of income before their demolition, a portion of the basis of the property may be allocated to such buildings and depreciated over the period during which they are so used or held. The fact that the taxpayer intends to demolish the buildings shall be taken into account in making the apportionment of basis between the land and buildings under § 1.167(a)-5. In any event, the portion of the purchase price which may be

allocated to the buildings shall not exceed the present value of the right to receive rentals from the buildings over the period of their intended use. The present value of such right shall be determined at the time that the buildings are first used in the trade or business or first held for the production of income. If the taxpayer does not rent the buildings, but uses them in his own trade or business or in the production of his income, the present value of such right shall be determined by reference to the rentals which could be realized during such period of intended use. The fact that the taxpayer intends to rent or use the buildings for a limited period before their demolition shall also be taken into account in computing the useful life in accordance with paragraph (b) of § 1.167(a)-1.

(ii) Any portion of the purchase price which is allocated to the buildings in accordance with this subparagraph shall not be included in the basis of the land computed under subparagraph (1) of this paragraph, and any portion of the basis of the buildings which has not been recovered through depreciation or otherwise at the time of the demolition of the buildings is allowable as a deduction under section 165.

(iii) The application of this subparagraph may be illustrated by the following example:

Example. In January 1958, A purchased land and a building for $60,000 with the intention of demolishing the building. In the following April, A concludes that he will be unable to commence the construction of a proposed new building for a period of more than 3 years. Accordingly, on June 1, 1958, he leased the building for a period of 3 years at an annual rental of $1,200. A intends to demolish the building upon expiration of the lease. A may allocate a portion of the $60,000 basis of the property to the building to be depreciated over the 3-year period. That portion is equal to the present value of the right to receive $3,600 (3 times $1,200). Assuming that the present value of that right determined as of June 1, 1958, is $2,850, A may allocate that amount to the building and, if A files his return on the basis of a taxable year ending May 31, 1959, A may take a depreciation deduction with respect to such building of $950 for such taxable year. The basis of the land to A as determined under subparagraph (1) of this paragraph is reduced by $2,850. If on June 1, 1960, A ceases to rent the building and demolishes it, the balance of the undepreciated portion allocated to the buildings, $950, may be deducted from gross income under section 165.

(3) The basis of any building acquired in replacement of the old buildings shall not include any part of the basis of the property originally purchased even though such part was, at the time of purchase, allocated to the buildings to be demolished for purposes of determining allowable depreciation for the period before demolition.

(b) ***Intent to demolish formed subsequent to the time of acquisition.***

(1) Except as provided in subparagraph (2) of this paragraph, the loss incurred in a trade or business or in a transaction entered into for profit and arising from a demolition of old buildings shall be allowed as a deduction under section 165(a) if the demolition occurs as a result of a plan formed subsequent to the acquisition of the buildings demolished. The amount of the loss shall be the adjusted basis of the buildings demolished increased by the net cost of demolition or decreased by the net proceeds from demolition. See paragraph (c) of § 1.165-1 relating to amount deductible under section 165. The basis of any building acquired in replacement of the old buildings shall not include any part of the basis of the property demolished.

(2) If a lessor or lessee of real property demolishes the buildings situated thereon pursuant to a lease or an agreement which resulted in a lease, under which either the lessor was required or the lessee was required or permitted to demolish such buildings, no deduction shall be allowed to the lessor under section 165(a) on account of the demolition of the old buildings. However, the adjusted basis of the demolished buildings, increased by the net cost of demolition or decreased by the net proceeds from demolition, shall be considered as a part of the cost of the lease to be amortized over the remaining term thereof.

(c) *Evidence of intention.*

(1) Whether real property has been purchased with the intention of demolishing the buildings thereon or whether the demolition of the buildings occurs as a result of a plan formed subsequent to their acquisition is a question of fact, and the answer depends upon an examination of all the surrounding facts and circumstances. The answer to the question does not depend solely upon the statements of the taxpayer at the time he acquired the property or demolished the buildings, but such statements, if made, are relevant and will be considered. Certain other relevant facts and circumstances that exist in some cases and the inferences that might reasonably be drawn from them are described in subparagraphs (2) and (3) of this paragraph. The question as to the taxpayer's intention is not answered by any inference that is drawn from any one fact or circumstance but can be answered only by a consideration of all relevant facts and circumstances and the reasonable inferences to be drawn therefrom.

(2) An intention at the time of acquisition to demolish may be suggested by:

(i) A short delay between the date of acquisition and the date of demolition;

(ii) Evidence of prohibitive remodeling costs determined at the time of acquisition;

(iii) Existence of municipal regulations at the time of acquisition which would prohibit the continued use of the buildings for profit purposes;

(iv) Unsuitability of the buildings for the taxpayer's trade or business at the time of acquisition; or

(v) Inability at the time of acquisition to realize a reasonable income from the buildings.

(3) The fact that the demolition occurred pursuant to a plan formed subsequent to the acquisition of the property may be suggested by:

(i) Substantial improvement of the buildings immediately after their acquisition;

(ii) Prolonged use of the buildings for business purposes after their acquisition;

(iii) Suitability of the buildings for investment purposes at the time of acquisition;

(iv) Substantial change in economic or business conditions after the date of acquisition;

(v) Loss of useful value occurring after the date of acquisition;

(vi) Substantial damage to the buildings occurring after their acquisition;

(vii) Discovery of latent structural defects in the buildings after their acquisition;

(viii) Decline in the taxpayer's business after the date of acquisition;

(ix) Condemnation of the property by municipal authorities after the date of acquisition; or

(x) Inability after acquisition to obtain building material necessary for the improvement of the property.

[T.D. 6500, 25 FR 11402, Nov. 26, 1960, as amended by T.D. 74474, 41 FR 55710, Dec. 22, 1976]

§ 1.165-4 Decline in value of stock.

(a) ***Deduction disallowed.*** No deduction shall be allowed under section 165(a) solely on account of a decline in the value of stock owned by the taxpayer when the decline is due to a fluctuation in the market price of the stock or to other similar cause. A mere shrinkage in the value of stock owned by the taxpayer, even though extensive, does not give rise to a deduction under section 165(a) if the stock has any recognizable value on the date claimed as the date of loss. No loss for a decline in the value of stock owned by the taxpayer shall be allowed as a deduction under section 165(a) except insofar as the loss is recognized under § 1.1002-1 upon the sale or exchange of the stock and except as otherwise provided in § 1.165-5 with respect to stock which becomes worthless during the taxable year.

(b) ***Stock owned by banks.***

(1) In the regulation of banks and certain other corporations, Federal and State authorities may require that stock owned by such organizations be charged off as worthless or written down to a nominal value. If, in any such case, this requirement is premised upon the worthlessness of the stock, the charging off or writing down will be considered prima facie evidence of worthlessness for purposes of section 165(a); but, if the charging off or writing down is due to a fluctuation in the market price of the stock or if no reasonable attempt to determine the worthlessness of the stock has been made, then no deduction shall be allowed under section 165(a) for the amount so charged off or written down.

(2) This paragraph shall not be construed, however, to permit a deduction under section 165(a) unless the stock owned by the bank or other corporation actually becomes worthless in the taxable year. Such a taxpayer owning stock which becomes worthless during the taxable year is not precluded from deducting the loss under section 165(a) merely because, in obedience to the specific orders or general policy of such supervisory authorities, the value of the stock is written down to a nominal amount instead of being charged off completely.

(c) ***Application to inventories.*** This section does not apply to a decline in the value of corporate stock reflected in inventories required to be taken by a dealer in securities under section 471. See § 1.471-5.

(d) ***Definition.*** As used in this section, the term “stock” means a share of stock in a corporation or a right to subscribe for, or to receive, a share of stock in a corporation.

§ 1.165-5 Worthless securities.

(a) ***Definition of security.*** As used in section 165(g) and this section, the term “security” means:

(1) A share of stock in a corporation;

(2) A right to subscribe for, or to receive, a share of stock in a corporation; or

(3) A bond, debenture, note, or certificate, or other evidence of indebtedness to pay a fixed or determinable sum of money, which has been issued with interest coupons or in registered form by a domestic or foreign corporation or by any government or political subdivision thereof.

(b) ***Ordinary loss.*** If any security which is not a capital asset becomes wholly worthless during the taxable year, the loss resulting therefrom may be deducted under section 165(a) as an ordinary loss.

(c) ***Capital loss.*** If any security which is a capital asset becomes wholly worthless at any time during the taxable year, the loss resulting therefrom may be deducted under section 165(a) but only as though it were a loss from a sale or exchange, on the last day of the taxable year, of a capital asset. See section 165(g)(1). The amount so allowed as a deduction shall be subject to the limitations upon capital losses described in paragraph (c)(3) of § 1.165-1.

(d) ***Loss on worthless securities of an affiliated corporation*** —

(1) ***Deductible as an ordinary loss.*** If a taxpayer which is a domestic corporation owns any security of a domestic or foreign corporation which is affiliated with the taxpayer within the meaning of subparagraph (2) of this paragraph and such security becomes wholly worthless during the taxable year, the loss resulting therefrom may be deducted under section 165(a) as an ordinary loss in accordance with paragraph (b) of this section. The fact that the security is in fact a capital asset of the taxpayer is immaterial for this purpose, since section 165(g)(3) provides that such security shall be treated as though it were not a capital asset for the purposes of section 165(g)(1). A debt which becomes wholly worthless during the taxable year shall be as an ordinary loss in accordance with the provisions of this subparagraph, to the extent that such debt is a security within the meaning of paragraph (a)(3) of this section.

(2) ***Affiliated corporation defined.*** For purposes of this paragraph, a corporation shall be treated as affiliated with the taxpayer owning the security if—

(i)

(*a*) In the case of a taxable year beginning on or after January 1, 1970, the taxpayer owns directly—

(*1*) Stock possessing at least 80 percent of the voting power of all classes of such corporation's stock, and

(*2*) At least 80 percent of each class of such corporation's nonvoting stock excluding for purposes of this subdivision (i)(*a*) nonvoting stock which is limited and preferred as to dividends (see section 1504(a)), or

(*b*) In the case of a taxable year beginning before January 1, 1970, the taxpayer owns directly at least 95 percent of each class of the stock of such corporation;

(ii) None of the stock of such corporation was acquired by the taxpayer solely for the purpose of converting a capital loss sustained by reason of the worthlessness of any such stock into an ordinary loss under section 165(g)(3), and

(iii) More than 90 percent of the aggregate of the gross receipts of such corporation for all the taxable years during which it has been in existence has been from sources other than royalties, rents (except rents derived from rental of properties to employees of such corporation in the ordinary course of its operating business), dividends, interest (except interest received on the deferred purchase price of operating assets sold), annuities, and gains from sales or exchanges of stocks and securities. For this purpose, the term “gross receipts” means total receipts determined without any deduction for cost of goods sold, and gross receipts from sales or exchanges of stocks and securities shall be taken into account only to the extent of gains from such sales or exchanges.

(e) ***Bonds issued by an insolvent corporation.*** A bond of an insolvent corporation secured only by a mortgage from which nothing is realized for the bondholders on foreclosure shall be regarded as having become worthless not later than the year of the foreclosure sale, and no deduction in respect of the loss shall be allowed under section 165(a) in computing a bondholder's taxable income for a subsequent year. See also paragraph (d) of § 1.165-1.

(f) ***Decline in market value.*** A taxpayer possessing a security to which this section relates shall not be allowed any deduction under section 165(a) on account of mere market fluctuation in the value of such security. See also § 1.165-4.

(g) ***Application to inventories.*** This section does not apply to any loss upon the worthlessness of any security reflected in inventories required to be taken by a dealer in securities under section 471. See § 1.471-5.

(h) ***Special rules for banks.*** For special rules applicable under this section to worthless securities of a bank, including securities issued by an affiliated bank, see § 1.582-1.

(i) ***Abandonment of securities*** —

(1) ***In general.*** For purposes of section 165 and this section, a security that becomes wholly worthless includes a security described in paragraph (a) of this section that is abandoned and otherwise satisfies the requirements for a deductible loss under section 165. If the abandoned security is a capital asset and is not described in section 165(g)(3) and paragraph (d) of this section (concerning worthless securities of certain affiliated corporations), the resulting loss is treated as a loss from the sale or exchange, on the last day of the taxable year, of a capital asset. See section 165(g)(1) and paragraph (c) of this section. To abandon a security, a taxpayer must permanently surrender and relinquish all rights in the security and receive no consideration in exchange for the security. For purposes of this section, all the facts and circumstances determine whether the transaction is properly characterized as an abandonment or other type of transaction, such as an actual sale or exchange, contribution to capital, dividend, or gift.

(2) ***Effective/applicability date.*** This paragraph (i) applies to any abandonment of stock or other securities after March 12, 2008.

(j) ***Examples.*** The provisions of this section may be illustrated by the following examples:

> *Example 1.* (i) X Corporation, a domestic manufacturing corporation which makes its return on the basis of the calendar year, owns 100 percent of each class of the stock of Y Corporation; and, in addition, 19 percent of the common stock (the only class of stock) of Z Corporation, which it acquired in 1948. Y Corporation, a domestic manufacturing corporation which makes its return on the basis of the calendar year, owns 81 percent of the common stock of Z Corporation, which it acquired in 1946. It is established that the stock of Z Corporation, which has from its inception derived all of its gross receipts from manufacturing operations, became worthless during 1971.
> (ii) Since the stock of Z Corporation which is owned by X Corporation is a capital asset and since X Corporation does not directly own at least 80 percent of the stock of Z Corporation, any loss sustained by X Corporation upon the worthlessness of such stock shall be deducted under section 165(g)(1) and paragraph (c) of this section as a loss from a sale or exchange on December 31, 1971, of a capital asset. The loss so sustained by X Corporation shall be considered a long-term capital loss under the provisions of section 1222(4), since the stock was held by that corporation for more than 6 months.

(iii) Since Z Corporation is considered to be affiliated with Y Corporation under the provisions of paragraph (d)(2) of this section, any loss sustained by Y Corporation upon the worthlessness of the stock of Z Corporation shall be deducted in 1971 under section 165(g)(3) and paragraph (d)(1) of this section as an ordinary loss.

Example 2. (i) On January 1, 1971, X Corporation, a domestic manufacturing corporation which makes its return on the basis of the calendar year, owns 60 percent of each class of the stock of Y Corporation, a foreign corporation, which it acquired in 1950. Y Corporation has, from the date of its incorporation, derived all of its gross receipts from manufacturing operations. It is established that the stock of Y Corporation became worthless on June 30, 1971. On August 1, 1971, X Corporation acquires the balance of the stock of Y Corporation for the purpose of obtaining the benefit of section 165(g)(3) with respect to the loss it has sustained on the worthlessness of the stock of Y Corporation.
(ii) Since the stock of Y Corporation which is owned by X Corporation is a capital asset and since Y Corporation is not to be treated as affiliated with X Corporation under the provisions of paragraph (d)(2) of this section, notwithstanding the fact that, at the close of 1971, X Corporation owns 100 percent of each class of stock of Y Corporation, any loss sustained by X Corporation upon the worthlessness of such stock shall be deducted under the provisions of section 165(g)(1) and paragraph (c) of this section as a loss from a sale or exchange on December 31, 1971, of a capital asset.

Example 3. (i) X Corporation, a domestic manufacturing corporation which makes its return on the basis of the calendar year, owns 80 percent of each class of the stock of Y Corporation, which from its inception has derived all of its gross receipts from manufacturing operations. As one of its capital assets, X Corporation owns $100,000 in registered bonds issued by Y Corporation payable at maturity on December 31, 1974. It is established that these bonds became worthless during 1971.
(ii) Since Y Corporation is considered to be affiliated with X Corporation under the provisions of paragraph (d)(2) of this section, any loss sustained by X Corporation upon the worthlessness of these bonds may be deducted in 1971 under section 165(g)(3) and paragraph (d)(1) of this section as an ordinary loss. The loss may not be deducted under section 166 as a bad debt. See section 166(e).

[T.D. 6500, 25 FR 11402, Nov. 26, 1960; 25 FR 14021, Dec. 31, 1960, as amended by T.D. 7224, 37 FR 25928, Dec. 6, 1972; T.D. 9386, 73 FR 13124, Mar. 12, 2008]

§ 1.165-6 Farming losses.

(a) ***Allowance of losses.***

(1) Except as otherwise provided in this section, any loss incurred in the operation of a farm as a trade or business shall be allowed as a deduction under section 165(a) or as a net operating loss deduction in accordance with the provisions of section 172. See § 1.172-1.

(2) If the taxpayer owns and operates a farm for profit in addition to being engaged in another trade or business, but sustains a loss from the operation of the farming business, then the amount of loss sustained in the operation of the farm may be deducted from gross income, if any, from all other sources.

(3) Loss incurred in the operation of a farm for recreation or pleasure shall not be allowed as a deduction from gross income. See § 1.162-12.

(b) ***Loss from shrinkage.*** If, in the course of the business of farming, farm products are held for a favorable market, no deduction shall be allowed under section 165(a) in respect of such products merely because of shrinkage in weight, decline in value, or deterioration in storage.

(c) ***Loss of prospective crop.*** The total loss by frost, storm, flood, or fire of a prospective crop being grown in the business of farming shall not be allowed as a deduction under section 165(a).

(d) ***Loss of livestock*** —

(1) ***Raised stock.*** A taxpayer engaged in the business of raising and selling livestock, such as cattle, sheep, or horses, may not deduct as a loss under section 165(a) the value of animals that perish from among those which were raised on the farm.

(2) ***Purchased stock.*** The loss sustained upon the death by disease, exposure, or injury of any livestock purchased and used in the trade or business of farming shall be allowed as a deduction under section 165(a). See, also, paragraph (e) of this section.

(e) ***Loss due to compliance with orders of governmental authority.*** The loss sustained upon the destruction by order of the United States, a State, or any other governmental authority, of any livestock, or other property, purchased and used in the trade or business of farming shall be allowed as a deduction under section 165(a).

(f) ***Amount deductible*** —

(1) ***Expenses of operation.*** The cost of any feed, pasture, or care which is allowed under section 162 as an expense of operating a farm for profit shall not be included as a part of the cost of livestock for purposes of determining the amount of loss deductible under section 165(a) and this section. For the deduction of farming expenses, see § 1.162-12.

(2) ***Losses reflected in inventories.*** If inventories are taken into account in determining the income from the trade or business of farming, no deduction shall be allowed under this section for losses sustained during the taxable year upon livestock or other products, whether purchased for resale or produced on the farm, to the extent such losses are reflected in the inventory on hand at the close of the taxable year. Nothing in this section shall be construed to disallow the deduction of any loss reflected in the inventories of the taxpayer. For provisions relating to inventories of farmers, see section 471 and the regulations thereunder.

(3) ***Other limitations.*** For other provisions relating to the amount deductible under this section, see paragraph (c) of § 1.165-1, relating to the amount deductible under section 165(a); § 1.165-7, relating to casualty losses; and § 1.1231-1, relating to gains and losses from the sale or exchange of certain property used in the trade or business.

(g) ***Other provisions applicable to farmers.*** For other provisions relating to farmers, see § 1.61-4, relating to gross income of farmers; paragraph (b) of § 1.167(a)-6, relating to depreciation in the case of farmers; and § 1.175-1, relating to soil and water conservation expenditures.

§ 1.165-7 Casualty losses.

(a) ***In general*** —

(1) ***Allowance of deduction.*** Except as otherwise provided in paragraphs (b)(4) and (c) of this section, any loss arising from fire, storm, shipwreck, or other casualty is allowable as a deduction under section 165(a) for the taxable year in which the loss is sustained. However, see § 1.165-6, relating to farming losses, and § 1.165-11, relating to an election by a taxpayer to deduct disaster losses in the taxable year immediately preceding the taxable year in which the disaster occurred. The manner of determining the amount of a casualty loss allowable as a deduction in computing taxable income under section 63 is the same whether the loss has been incurred in a trade or business or in any transaction entered into for profit, or whether it has been a loss of property not connected with a trade or business and not incurred in any transaction entered into for profit. The amount of a casualty loss shall be determined in accordance with paragraph (b) of this section. For other rules relating to the treatment of deductible casualty losses, see § 1.1231-1, relating to the involuntary conversion of property.

(2) ***Method of valuation.***

(i) In determining the amount of loss deductible under this section, the fair market value of the property immediately before and immediately after the casualty shall generally be ascertained by competent appraisal. This appraisal must recognize the effects of any general market decline affecting undamaged as well as damaged property which may occur simultaneously with the casualty, in order that any deduction under this section shall be limited to the actual loss resulting from damage to the property.

(ii) The cost of repairs to the property damaged is acceptable as evidence of the loss of value if the taxpayer shows that

(*a*) the repairs are necessary to restore the property to its condition immediately before the casualty,

(*b*) the amount spent for such repairs is not excessive,

(*c*) the repairs do not care for more than the damage suffered, and

(*d*) the value of the property after the repairs does not as a result of the repairs exceed the value of the property immediately before the casualty.

(3) ***Damage to automobiles.*** An automobile owned by the taxpayer, whether used for business purposes or maintained for recreation or pleasure, may be the subject of a casualty loss, including those losses specifically referred to in subparagraph (1) of this paragraph. In addition, a casualty loss occurs when an automobile owned by the taxpayer is damaged and when:

(i) The damage results from the faulty driving of the taxpayer or other person operating the automobile but is not due to the willful act or willful negligence of the taxpayer or of one acting in his behalf or

(ii) The damage results from the faulty driving of the operator of the vehicle with which the automobile of the taxpayer collides.

(4) ***Application to inventories.*** This section does not apply to a casualty loss reflected in the inventories of the taxpayer. For provisions relating to inventories, see section 471 and the regulations thereunder.

(5) ***Property converted from personal use.*** In the case of property which originally was not used in the trade or business or for income-producing purposes and which is thereafter converted to either of such uses, the fair market value of the property on the date of conversion, if less than the adjusted basis of the property at such time, shall be used, after making proper adjustments in respect of basis, as the basis for determining the amount of loss under paragraph (b)(1) of this section. See paragraph (b) of § 1.165-9, and § 1.167(g)-1.

(6) ***Theft losses.*** A loss which arises from theft is not considered a casualty loss for purposes of this section. See § 1.165-8, relating to theft losses.

(b) ***Amount deductible*** —

(1) ***General rule.*** In the case of any casualty loss whether or not incurred in a trade or business or in any transaction entered into for profit, the amount of loss to be taken into account for purposes of section 165(a) shall be the lesser of either—

(i) The amount which is equal to the fair market value of the property immediately before the casualty reduced by the fair market value of the property immediately after the casualty; or

(ii) The amount of the adjusted basis prescribed in § 1.1011-1 for determining the loss from the sale or other disposition of the property involved.

However, if property used in a trade or business or held for the production of income is totally destroyed by casualty, and if the fair market value of such property immediately before the casualty is less than the adjusted basis of such property, the amount of the adjusted basis of such property shall be treated as the amount of the loss for purposes of section 165(a).

(2) ***Aggregation of property for computing loss.***

(i) A loss incurred in a trade or business or in any transaction entered into for profit shall be determined under subparagraph (1) of this paragraph by reference to the single, identifiable property damaged or destroyed. Thus, for example, in determining the fair market value of the property before and after the casualty in a case where damage by casualty has occurred to a building and ornamental or fruit trees used in a trade or business, the decrease in value shall be measured by taking the building and trees into account separately, and not together as an integral part of the realty, and separate losses shall be determined for such building and trees.

(ii) In determining a casualty loss involving real property and improvements thereon not used in a trade or business or in any transaction entered into for profit, the improvements (such as buildings and ornamental trees and shrubbery) to the property damaged or destroyed shall be considered an integral part of the property, for purposes of subparagraph (1) of this paragraph, and no separate basis need be apportioned to such improvements.

(3) ***Examples.*** The application of this paragraph may be illustrated by the following examples:

> *Example 1.* In 1956 B purchases for $3,600 an automobile which he uses for nonbusiness purposes. In 1959 the automobile is damaged in an accidental collision with another automobile. The fair market value of B's automobile is $2,000 immediately before the collision and $1,500 immediately after the collision. B receives insurance proceeds of $300 to cover the loss. The amount of the deduction allowable under section 165(a) for the taxable

year 1959 is $200, computed as follows:

Value of automobile immediately before casualty	$2,000
Less: Value of automobile immediately after casualty	1,500
Value of property actually destroyed	500
Loss to be taken into account for purposes of section 165(a): Lesser amount of property actually destroyed ($500) or adjusted basis of property ($3,600)	500
Less: Insurance received	300
Deduction allowable	200

Example 2. In 1958 A purchases land containing an office building for the lump sum of $90,000. The purchase price is allocated between the land ($18,000) and the building ($72,000) for purposes of determining basis. After the purchase A planted trees and ornamental shrubs on the grounds surrounding the building. In 1961 the land, building, trees, and shrubs are damaged by hurricane. At the time of the casualty the adjusted basis of the land is $18,000 and the adjusted basis of the building is $66,000. At that time the trees and shrubs have an adjusted basis of $1,200. The fair market value of the land and building immediately before the casualty is $18,000 and $70,000, respectively, and immediately after the casualty is $18,000 and $52,000, respectively. The fair market value of the trees and shrubs immediately before the casualty is $2,000 and immediately after the casualty is $400. In 1961 insurance of $5,000 is received to cover the loss to the building. A has no other gains or losses in 1961 subject to section 1231 and § 1.1231-1. The amount of the deduction allowable under section 165(a) with respect to the building for the taxable year 1961 is $13,000, computed as follows:

Value of property immediately before casualty	$70,000
Less: Value of property immediately after casualty	52,000
Value of property actually destroyed	18,000
Less: Insurance received	5,000
Loss to be taken into account for purposes of section 165(a): Lesser amount of property actually destroyed ($18,000) or adjusted basis of property ($66,000)	18,000
Less: Insurance received	5,000

Deduction allowable	13,000

The amount of the deduction allowable under section 165(a) with respect to the trees and shrubs for the taxable year 1961 is $1,200, computed as follows:

Value of property immediately before casualty	$2,000
Less: Value of property immediately after casualty	$400
Value of property actually destroyed	1,600
Loss to be taken into account for purposes of section 165(a): Lesser amount of property actually destroyed ($1,600) or adjusted basis of property ($1,200)	1,200

Example 3. Assume the same facts as in example (2) except that A purchases land containing a house instead of an office building. The house is used as his private residence. Since the property is used for personal purposes, no allocation of the purchase price is necessary for the land and house. Likewise, no individual determination of the fair market values of the land, house, trees, and shrubs is necessary. The amount of the deduction allowable under section 165(a) with respect to the land, house, trees, and shrubs for the taxable year 1961 is $14,600, computed as follows:

Value of property immediately before casualty	$90,000
Less: Value of property immediately after casualty	70,400
Value of property actually destroyed	19,600
Loss to be taken into account for purposes of section 165(a): Lesser amount of property actually destroyed ($19,600) or adjusted basis of property ($91,200)	19,600
Less: Insurance received	5,000
Deduction allowable	14,600

(4) ***Limitation on certain losses sustained by individuals after December 31, 1963.***

(i) Pursuant to section 165(c)(3), the deduction allowable under section 165(a) in respect of a loss sustained—

(*a*) After December 31, 1963, in a taxable year ending after such date,

(*b*) In respect of property not used in a trade or business or for income producing purposes, and

(c) From a single casualty

shall be limited to that portion of the loss which is in excess of $100. The nondeductibility of the first $100 of loss applies to a loss sustained after December 31, 1963, without regard to when the casualty occurred. Thus, if property not used in a trade or business or for income producing purposes is damaged or destroyed by a casualty which occurred prior to January 1, 1964, and loss resulting therefrom is sustained after December 31, 1963, the $100 limitation applies.

(ii) The $100 limitation applies separately in respect of each casualty and applies to the entire loss sustained from each casualty. Thus, if as a result of a particular casualty occurring in 1964, a taxpayer sustains in 1964 a loss of $40 and in 1965 a loss of $250, no deduction is allowable for the loss sustained in 1964 and the loss sustained in 1965 must be reduced by $60 ($100−$40). The determination of whether damage to, or destruction of, property resulted from a single casualty or from two or more separate casualties will be made upon the basis of the particular facts of each case. However, events which are closely related in origin generally give rise to a single casualty. For example, if a storm damages a taxpayer's residence and his automobile parked in his driveway, any loss sustained results from a single casualty. Similarly, if a hurricane causes high waves, all wind and flood damage to a taxpayer's property caused by the hurricane and the waves results from a single casualty.

(iii) Except as otherwise provided in this subdivision, the $100 limitation applies separately to each individual taxpayer who sustains a loss even though the property damaged or destroyed is owned by two or more individuals. Thus, if a house occupied by two sisters and jointly owned by them is damaged or destroyed, the $100 limitation applies separately to each sister in respect of any loss sustained by her. However, for purposes of applying the $100 limitation, a husband and wife who file a joint return for the first taxable year in which the loss is allowable as a deduction are treated as one individual taxpayer. Accordingly, if property jointly owned by a husband and wife, or property separately owned by the husband or by the wife, is damaged or destroyed by a single casualty in 1964, and a loss is sustained in that year by either or both the husband or wife, only one $100 limitation applies if a joint return is filed for 1964. If, however, the husband and wife file separate returns for 1964, the $100 limitation applies separately in respect of any loss sustained by the husband and in respect of any loss sustained by the wife. Where losses from a single casualty are sustained in two or more separate tax years, the husband and wife shall, for purposes of applying the $100 limitation to such losses, be treated as one individual for all such years if they file a joint return for the first year in which a loss is sustained from the casualty; they shall be treated as separate individuals for all such years if they file separate returns for the first such year. If a joint return is filed in the first loss year but separate returns are filed in a subsequent year, any unused portion of the $100 limitation shall be allocated equally between the husband and wife in the latter year.

(iv) If a loss is sustained in respect of property used partially for business and partially for nonbusiness purposes, the $100 limitation applies only to that portion of the loss properly attributable to the nonbusiness use. For example, if a taxpayer sustains a $1,000 loss in respect of an automobile which he uses 60 percent for business and 40 percent for nonbusiness, the loss is allocated 60 percent to business use and 40 percent to nonbusiness use. The $100 limitation applies to the portion of the loss allocable to the nonbusiness loss.

(c) ***Loss sustained by an estate.*** A casualty loss of property not connected with a trade or business and not incurred in any transaction entered into for profit which is sustained during the settlement of an estate shall be allowed as a deduction under sections 165(a) and 641(b) in computing the taxable income of the estate if the loss has not been allowed under section 2054 in computing the taxable estate of the decedent and if the statement has been filed in accordance with § 1.642(g)-1. See section 165(c)(3).

(d) ***Loss treated as though attributable to a trade or business.*** For the rule treating a casualty loss not connected with a trade or business as though it were a deduction attributable to a trade or business for purposes of computing a net operating loss, see paragraph (a)(3)(iii) of § 1.172-3.

(e) ***Effective date.*** The rules of this section are applicable to any taxable year beginning after January 16, 1960. If, for any taxable year beginning on or before such date, a taxpayer computed the amount of any casualty loss in accordance with the rules then applicable, such taxpayer is not required to change the amount of the casualty loss allowable for any such prior taxable year. On the other hand, the taxpayer may, if he so desires, amend his income tax return for such year to compute the amount of a casualty loss in accordance with the provisions of this section, but no provision in this section shall be construed as extending the period of limitations within which a claim for credit or refund may be filed under section 6511.

[T.D. 6500, 25 FR 11402, Nov. 26, 1960, as amended by T.D. 6712, 29 FR 3652, Mar. 24, 1964; T.D. 6786, 29 FR 18501, Dec. 29, 1964; T.D. 7522, 42 FR 63411, Dec. 16, 1977]

§ 1.165-8 Theft losses.

(a) ***Allowance of deduction.***

(1) Except as otherwise provided in paragraphs (b) and (c) of this section, any loss arising from theft is allowable as a deduction under section 165(a) for the taxable year in which the loss is sustained. See section 165(c)(3).

(2) A loss arising from theft shall be treated under section 165(a) as sustained during the taxable year in which the taxpayer discovers the loss. See section 165(e). Thus, a theft loss is not deductible under section 165(a) for the taxable year in which the theft actually occurs unless that is also the year in which the taxpayer discovers the loss. However, if in the year of discovery there exists a claim for reimbursement with respect to which there is a reasonable prospect of recovery, see paragraph (d) of § 1.165-1.

(3) The same theft loss shall not be taken into account both in computing a tax under chapter 1, relating to the income tax, or chapter 2, relating to additional income taxes, of the Internal Revenue Code of 1939 and in computing the income tax under the Internal Revenue Code of 1954. See section 7852(c), relating to items not to be twice deducted from income.

(b) ***Loss sustained by an estate.*** A theft loss of property not connected with a trade or business and not incurred in any transaction entered into for profit which is discovered during the settlement of an estate, even though the theft actually occurred during a taxable year of the decedent, shall be allowed as a deduction under sections 165(a) and 641(b) in computing the taxable income of the estate if the loss has not been allowed under section 2054 in computing the taxable estate of the decedent and if the statement has been filed in accordance with § 1.642(g)-1. See section 165(c)(3). For purposes of determining the year of deduction, see paragraph (a)(2) of this section.

(c) ***Amount deductible.*** The amount deductible under this section in respect of a theft loss shall be determined consistently with the manner prescribed in § 1.165-7 for determining the amount of casualty loss allowable as a deduction under section 165(a). In applying the provisions of paragraph (b) of § 1.165-7 for this purpose, the fair market value of the property immediately after the theft shall be considered to be zero. In the case of a loss sustained after December 31, 1963, in a taxable year ending after such date, in respect of property not used in a trade or business or for income producing purposes, the amount deductible shall be limited to that portion of the loss which is in excess of $100. For rules applicable in applying the $100 limitation, see paragraph (b)(4) of § 1.165-7. For other rules relating to the treatment of deductible theft losses, see § 1.1231-1, relating to the involuntary conversion of property.

(d) ***Definition.*** For purposes of this section the term "theft" shall be deemed to include, but shall not necessarily be limited to, larceny, embezzlement, and robbery.

(e) ***Application to inventories.*** This section does not apply to a theft loss reflected in the inventories of the taxpayer. For provisions relating to inventories, see section 471 and the regulations thereunder.

(f) ***Example.*** The application of this section may be illustrated by the following example:

Example. In 1955 B, who makes her return on the basis of the calendar year, purchases for personal use a diamond brooch costing $4,000. On November 30, 1961, at which time it has a fair market value of $3,500, the brooch is stolen; but B does not discover the loss until January 1962. The brooch was fully insured against theft. A controversy develops with the insurance company over its liability in respect of the loss. However, in 1962, B has a reasonable prospect of recovery of the fair market value of the brooch from the insurance company. The controversy is settled in March 1963, at which time B receives $2,000 in insurance proceeds to cover the loss from theft. No deduction for the loss is allowable for 1961 or 1962; but the amount of the deduction allowable under section 165(a) for the taxable year 1963 is $1,500, computed as follows:

Value of property immediately before theft	$3,500
Less: Value of property immediately after the theft	0
Balance	3,500
Loss to be taken into account for purposes of section 165(a): ($3,500 but not to exceed adjusted basis of $4,000 at time of theft)	$3,500
Less: Insurance received in 1963	2,000
Deduction allowable for 1963	1,500

[T.D. 6500, 25 FR 11402, Nov. 26, 1960, as amended by T.D. 6786, 29 FR 18502, Dec. 29, 1964]

§ 1.165-9 Sale of residential property.

(a) ***Losses not allowed.*** A loss sustained on the sale of residential property purchased or constructed by the taxpayer for use as his personal residence and so used by him up to the time of the sale is not deductible under section 165(a).

(b) ***Property converted from personal use.***

(1) If property purchased or constructed by the taxpayer for use as his personal residence is, prior to its sale, rented or otherwise appropriated to income-producing purposes and is used for such purposes up to the time of its sale, a loss sustained on the sale of the property shall be allowed as a deduction under section 165(a).

(2) The loss allowed under this paragraph upon the sale of the property shall be the excess of the adjusted basis prescribed in § 1.1011-1 for determining loss over the amount realized from the sale. For this purpose, the adjusted basis for determining loss shall be the lesser of either of the following amounts, adjusted as prescribed in § 1.1011-1 for the period subsequent to the conversion of the property to income-producing purposes:

(i) The fair market value of the property at the time of conversion, or

(ii) The adjusted basis for loss, at the time of conversion, determined under § 1.1011-1 but without reference to the fair market value.

(3) For rules relating to casualty losses of property converted from personal use, see paragraph (a)(5) of § 1.165-7. To determine the basis for depreciation in the case of such property, see § 1.167(g)-1. For limitations on the loss from the sale of a capital asset, see paragraph (c)(3) of § 1.165-1.

(c) ***Examples.*** The application of paragraph (b) of this section may be illustrated by the following examples:

Example 1. Residential property is purchased by the taxpayer in 1943 for use as his personal residence at a cost of $25,000, of which $15,000 is allocable to the building. The taxpayer uses the property as his personal residence until January 1, 1952, at which time its fair market value is $22,000, of which $12,000 is allocable to the building. The taxpayer rents the property from January 1, 1952, until January 1, 1955, at which time it is sold for $16,000. On January 1, 1952, the building has an estimated useful life of 20 years. It is assumed that the building has no estimated salvage value and that there are no adjustments in respect of basis other than depreciation, which is computed on the straight-line method. The loss to be taken into account for purposes of section 165(a) for the taxable year 1955 is $4,200, computed as follows:

Basis of property at time of conversion for purposes of this section (that is, the lesser of $25,000 cost or $22,000 fair market value)	$22,000
Less: Depreciation allowable from January 1, 1952, to January 1, 1955 (3 years at 5 percent based on $12,000, the value of the building at time of conversion, as prescribed by § 1.167(g)-1)	1,800
Adjusted basis prescribed in § 1.1011-1 for determining loss on sale of the property	20,200
Less: Amount realized on sale	16,000

Loss to be taken into account for purposes of section 165(a)	4,200

In this example the value of the building at the time of conversion is used as the basis for computing depreciation. See example (2) of this paragraph wherein the adjusted basis of the building is required to be used for such purpose.

Example 2. Residential property is purchased by the taxpayer in 1940 for use as his personal residence at a cost of $23,000, of which $10,000 is allocable to the building. The taxpayer uses the property as his personal residence until January 1, 1953, at which time its fair market value is $20,000, of which $12,000 is allocable to the building. The taxpayer rents the property from January 1, 1953, until January 1, 1957, at which time it is sold for $17,000. On January 1, 1953, the building has an estimated useful life of 20 years. It is assumed that the building has no estimated salvage value and that there are no adjustments in respect of basis other than depreciation, which is computed on the straight-line method. The loss to be taken into account for purposes of section 165(a) for the taxable year 1957 is $1,000, computed as follows:

Basis of property at time of conversion for purposes of this section (that is, the lesser of $23,000 cost or $20,000 fair market value)	$20,000
Less: Depreciation allowable from January 1, 1953, to January 1, 1957 (4 years at 5 percent based on $10,000, the cost of the building, as prescribed by § 1.167(g)-1	2,000
Adjusted basis prescribed in § 1.1011-1 for determining loss on sale of the property	$18,000
Less: Amount realized on sale	17,000
Loss to be taken into account for purposes of section 165(a)	1,000

[T.D. 6500, 25 FR 11402, Nov. 26, 1960, as amended by T.D. 6712, 29 FR 3652, Mar. 24, 1964]

§ 1.165-10 Wagering losses.

Losses sustained during the taxable year on wagering transactions shall be allowed as a deduction but only to the extent of the gains during the taxable year from such transactions. In the case of a husband and wife making a joint return for the taxable year, the combined losses of the spouses from wagering transactions shall be allowed to the extent of the combined gains of the spouses from wagering transactions.

§ 1.165-11 Election to take disaster loss deduction for preceding year.

(a) ***In general.*** Section 165(i) allows a taxpayer who has sustained a loss attributable to a federally declared disaster in a taxable year to elect to deduct that disaster loss in the preceding year. This section provides rules and procedures for making and revoking an election to claim a disaster loss in the preceding year.

(b) ***Definitions.*** The following definitions apply for purposes of this section:

(1) A *federally declared disaster* means any disaster subsequently determined by the President of the United States to warrant assistance by the Federal Government under the Robert T. Stafford Disaster Relief and Emergency Assistance Act (Stafford Act). A federally declared disaster includes both a major disaster declared under section 401 of the Stafford Act and an emergency declared under section 501 of the Stafford Act.

(2) A *federally declared disaster area* is the area determined to be eligible for assistance pursuant to the Presidential declaration in paragraph (b)(1) of this section.

(3) A *disaster loss* is a loss occurring in a federally declared disaster area that is attributable to a federally declared disaster and that is otherwise allowable as a deduction for the disaster year under section 165(a) and §§ 1.165-1 through 1.165-10.

(4) The *disaster year* is the taxable year in which a taxpayer sustains a loss attributable to a federally declared disaster.

(5) The *preceding year* is the taxable year immediately prior to the disaster year.

(c) ***Scope and effect of election.*** An election made pursuant to section 165(i) for a disaster loss attributable to a particular disaster applies to the entire loss sustained by the taxpayer from that disaster during the disaster year. If the taxpayer makes a section 165(i) election with respect to a particular disaster occurring during the disaster year, the disaster to which the election relates is deemed to have occurred, and the disaster loss to which the election applies is deemed to have been sustained, in the preceding year.

(d) ***Requirement to file consistent returns.*** A taxpayer may not make a section 165(i) election for a disaster loss if the taxpayer claims a deduction (as a loss, as cost of goods sold, or otherwise) for the same loss for the disaster year. If a taxpayer has claimed a deduction for a disaster loss for the disaster year and the taxpayer wants to make a section 165(i) election with respect to that loss, the taxpayer must file an amended Federal income tax return to remove the previously deducted loss on or before the date that the taxpayer makes the section 165(i) election for the loss. Similarly, if a taxpayer has claimed a deduction for a disaster loss for the preceding year based on a section 165(i) election and the taxpayer wants to revoke that election, the taxpayer must file an amended Federal income tax return to remove the loss for the preceding year on or before the date the taxpayer files the Federal income tax return or amended Federal income tax return for the disaster year that includes the loss.

(e) ***Manner of making election.*** An election under section 165(i) to deduct a disaster loss for the preceding year is made either on an original Federal income tax return for the preceding year or an amended Federal income tax return for the preceding year in the manner specified by guidance issued pursuant to this section.

(f) ***Due date for making election.*** The due date for making the section 165(i) election is six months after the due date for filing the taxpayer's Federal income tax return for the disaster year (determined without regard to any extension of time to file).

(g) ***Revocation.*** Subject to the requirements in paragraph (d) of this section, a section 165(i) election may be revoked on or before the date that is ninety (90) days after the due date for making the election.

(h) ***Applicability dates*** —

(1) ***In general.*** Except as provided in paragraph (h)(2) of this section, this section applies to elections and revocations that are made on or after October 16, 2019.

(2) ***Paragraph (b)(1) of this section.*** The second sentence of paragraph (b)(1) of this section applies to elections and revocations that are made on or after June 11, 2021.

[T.D. 9878, 84 FR 55245, Oct. 16, 2019, as amended by T.D. 9950, 86 FR 31150, June 11, 2021]

§ 1.165-12 Denial of deduction for losses on registration-required obligations not in registered form.

(a) ***In general.*** Except as provided in paragraph (c) of this section, nothing in section 165(a) and the regulations thereunder, or in any other provision of law, shall be construed to provide a deduction for any loss sustained on any registration-required obligation held after December 31, 1982, unless the obligation is in registered form or the issuance of the obligation was subject to tax under section 4701. The term "registration-required obligation" has the meaning given to that term in section 163(f)(2), except that clause (iv) of subparagraph (A) thereof shall not apply. Therefore, although an obligation that is not in registered form is described in § 1.163-5(c)(1), the holder of such an obligation shall not be allowed a deduction for any loss sustained on such obligation unless paragraph (c) of this section applies. The term "holder" means the person that would be denied a loss deduction under section 165(j)(1) or denied capital gain treatment under section 1287(a). For purposes of this section, the term *United States* means the United States and its possessions within the meaning of § 1.163-5(c)(2)(iv).

(b) ***Registered form*** —

(1) ***Obligations issued after September 21, 1984.*** With respect to any obligation originally issued after September 21, 1984, the term "registered form" has the meaning given that term in section 103(j)(3) and the regulations thereunder. Therefore, an obligation that would otherwise be in registered form is not considered to be in registered form if it can be transferred at that time or at any time until its maturity by any means not described in § 5f.103-1(c). An obligation that, as of a particular time, is not considered to be in registered form because it can be transferred by any means not described in § 5f.103-1(c) is considered to be in registered form at all times during the period beginning with a later time and ending with the maturity of the obligation in which the obligation can be transferred only by a means described in § 5f.103-1(c).

(2) ***Obligations issued after December 31, 1982 and on or before September 21, 1984.*** With respect to any obligation originally issued after December 31, 1982 and on or before September 21, 1984 or an obligation originally issued after September 21, 1984 pursuant to the exercise of a warrant or the conversion of a convertible obligation, which warrant or obligation (including conversion privilege) was issued after December 31, 1982 and on or before September 21, 1984, that obligation will be considered in registered form if it satisfied § 5f.163-1 or the proposed regulations provided in § 1.163-5(c) and published in the FEDERAL REGISTER on September 2, 1983 (48 FR 39953).

(c) ***Registration-required obligations not in registered form which are not subject to section 165(j)(1).*** Notwithstanding the fact that an obligation is a registration-required obligation that is not in registered form, the holder will not be subject to section 165(j)(1) if the holder meets the conditions of any one of the following subparagraphs (1), (2), (3), or (4) of this paragraph (c).

(1) ***Persons permitted to hold in connection with the conduct of a trade or business.***

(i) The holder is an underwriter, broker, dealer, bank, or other financial institution (defined in paragraph (c)(1)(iv)) that holds such obligation in connection with its trade or business conducted outside the United States; or the holder is a broker-dealer (registered under Federal or State law or exempted from registration by the provisions of such law because it is a bank) that holds such obligation for sale to customers in the ordinary course of its trade or business.

(ii) The holder must offer to sell, sell and deliver the obligation in bearer form only outside of the United States except that a holder that is a registered broker-dealer as described in paragraph (c)(1)(i) of this section may offer to sell and sell the obligation in bearer form inside the United States to a financial institution as defined in paragraph (c)(1)(iv) of this section for its own account or for the account of another financial institution or of an exempt organization as defined in section 501(c)(3).

(iii) The holder may deliver an obligation in bearer form that is offered or sold inside the United States only if the holder delivers it to a financial institution that is purchasing for its own account, or for the account of another financial institution or of an exempt organization, and the financial institution or organization that purchases the obligation for its own account or for whose account the obligation is purchased represents that it will comply with the requirements of section 165(j)(3) (A), (B), or (C). Absent actual knowledge that the representation is false, the holder may rely on a written statement provided by the financial institution or exempt organization, including a statement that is delivered in electronic form. The holder may deliver a registration-required obligation in bearer form that is offered and sold outside the United States to a person other than a financial institution only if the holder has evidence in its records that such person is not a U.S. citizen or resident and does not have actual knowledge that such evidence is false. Such evidence may include a written statement by that person, including a statement that is delivered electronically. For purposes of this paragraph (c), the term *deliver* includes a transfer of an obligation evidenced by a book entry including a book entry notation by a clearing organization evidencing transfer of the obligation from one member of the organization to another member. For purposes of this paragraph (c), the term *deliver* does not include a transfer of an obligation to the issuer or its agent for cancellation or extinguishment. The record-retention provisions in § 1.1441-1(e)(4)(iii) shall apply to any statement that a holder receives pursuant to this paragraph (c)(1)(iii).

(iv) For purposes of paragraph (c) of this section, the term “financial institution” means a person which itself is, or more than 50 percent of the total combined voting power of all classes of whose stock entitled to vote is owned by a person which is—

(A) Engaged in the conduct of a banking, financing, or similar business within the meaning of section 954(c)(3)(B) as in effect before the Tax Reform Act of 1986, and the regulations thereunder;

(B) Engaged in business as a broker or dealer in securities;

(C) An insurance company;

(D) A person that provides pensions or other similar benefits to retired employees;

(E) Primarily engaged in the business of rendering investment advice;

(F) A regulated investment company or other mutual fund; or

(G) A finance corporation a substantial part of the business of which consists of making loans (including the acquisition of obligations under a lease which is entered into primarily as a financing transaction), acquiring accounts receivable, notes or installment obligations arising out of the sale of tangible personal property or the performing of services, or servicing debt obligations.

(2) ***Persons permitted to hold obligations for their own investment account.*** The holder is a financial institution holding the obligation for its own investment account that satisfies the conditions set forth in subdivisions (i), (ii), (iii), and (iv) of his paragraph (c) (2).

(i) The holder reports on its Federal income tax return for the taxable year any interest payments received (including original issue discount includable in gross income for such taxable year) with respect to such obligation and gain or loss on the sale or other disposition of such obligation;

(ii) The holder indicates on its Federal income tax return that income, gain or loss described in paragraph (c)(2)(i) is attributable to registration-required obligations held in bearer form for its own account;

(iii) The holder of a bearer obligation that resells the obligation inside the United States resells the obligation only to another financial institution for its own account or for the account of another financial institution or exempt organization; and

(iv) The holder delivers such obligation in bearer form to any other person in accordance with paragraph (c)(1) (ii) and (iii) of this section.

(3) ***Persons permitted to hold through financial institutions.*** The holder is any person that purchases and holds a registration-required obligation in bearer form through a financial institution with which the holder maintains a customer, custodial or nominee relationship and such institution agrees to satisfy, and does in fact satisfy, the conditions set forth in subdivisions (i), (ii), (iii), (iv) and (v) of this paragraph (c)(3).

(i) The financial institution makes a return of information to the Internal Revenue Service with respect to any interest payments received. The financial institution must report original issue discount includable in the holder's gross income for the taxable year on any obligation so held, but only if the obligation appears in an Internal Revenue Service publication of obligations issued at an original issue discount and only in an amount determined in accordance with information contained in that publication. An information return for any interest payment shall be made on a Form 1099 for the calendar year. It shall indicate the aggregate amount of the payment received, the name, address and taxpayer identification number of the holder, and such other information as is required by the form. No return of information is required under this subdivision if the financial institution reports payments under section 6041 or 6049.

(ii) The financial institution makes a return of information on Form 1099B with respect to any disposition by the holder of such obligation. The return shall show the name, address, and taxpayer identification number of the holder of the obligation, Committee on Uniform Security Information Procedures (CUSIP), gross proceeds, sale date, and such other information as may be required by the form. No return of information is required under this subdivision if such financial institution reports with respect to the disposition under section 6045.

(iii) In the case of a bearer obligation offered for resale or resold in the United States, the financial institution may resell the obligation only to another financial institution for its own account or for the account of an exempt organization.

(iv) The financial institution covenants with the holder that the financial institution will deliver the obligation in bearer form in accordance with the requirements set forth in paragraph (c)(1) (ii) and (iii).

(v) The financial institution delivers the obligation in bearer form in accordance with paragraph (c)(1) (ii) and (iv) as if the financial institution delivering the obligation were the holder referred to in such paragraph.

(4) ***Conversion of obligations into registered form.*** The holder is not a person described in paragraph (c)(1), (2), or (3) of this section, and within thirty days of the date when the seller or other transferor is reasonably able to make the bearer obligation available to the holder, the holder surrenders the obligation to a transfer agent or the issuer for conversion of the obligation into registered form. If such obligation is not registered within such 30 day period, the holder shall be subject to sections 165(j) and 1287(a).

(d) ***Effective date.*** These regulations apply generally to obligations issued after January 20, 1987. However, a taxpayer may choose to apply the rules of § 1.165-12 with respect to an obligation issued after December 31, 1982 and on or before January 20, 1987, which obligation is held after January 20, 1987.

[T.D. 8110, 51 FR 45459, Dec. 19, 1986, as amended by T.D. 8734, 62 FR 53416, Oct. 14, 1997]

§ 1.166-1 Bad debts.

(a) ***Allowance of deduction.*** Section 166 provides that, in computing taxable income under section 63, a deduction shall be allowed in respect of bad debts owed to the taxpayer. For this purpose, bad debts shall, subject to the provisions of section 166 and the regulations thereunder, be taken into account either as—

(1) A deduction in respect of debts which become worthless in whole or in part; or as

(2) A deduction for a reasonable addition to a reserve for bad debts.

(b) ***Manner of selecting method.***

(1) A taxpayer filing a return of income for the first taxable year for which he is entitled to a bad debt deduction may select either of the two methods prescribed by paragraph (a) of this section for treating bad debts, but such selection is subject to the approval of the district director upon examination of the return. If the method so selected is approved, it shall be used in returns for all subsequent taxable years unless the Commissioner grants permission to use the other method. A statement of facts substantiating any deduction claimed under section 166 on account of bad debts shall accompany each return of income.

(2) Taxpayers who have properly selected one of the two methods for treating bad debts under provisions of prior law corresponding to section 166 shall continue to use that method for all subsequent taxable years unless the Commissioner grants permission to use the other method.

(3)

(i) For taxable years beginning after December 31, 1959, application for permission to change the method of treating bad debts shall be made in accordance with section 446(e) and paragraph (e)(3) of § 1.446-1.

(ii) For taxable years beginning before January 1, 1960, application for permission to change the method of treating bad debts shall be made at least 30 days before the close of the taxable year for which the change is effective.

(4) Nothwithstanding paragraphs (b) (1), (2), and (3) of this section, a dealer in property currently employing the accrual method of accounting and currently maintaining a reserve for bad debts under section 166(c) (which may have included guaranteed debt obligations described in section 166(f)(1)(A)) may establish a reserve for section 166(f)(1)(A) guaranteed debt obligations for a taxable year ending after October 21, 1965 under section 166(f) and § 1.166-10 by filing on or before April 17, 1986 an amended return indicating that such a reserve has been established. The establishment of such a reserve will not be considered a change in method of accounting for purposes of section 446(e). However, an election by a taxpayer to establish a reserve for bad debts under section 166(c) shall be treated as a change in method of accounting. See also § 1.166-4, relating to reserve for bad debts, and § 1.166-10, relating to reserve for guaranteed debt obligations.

(c) ***Bona fide debt required.*** Only a bona fide debt qualifies for purposes of section 166. A bona fide debt is a debt which arises from a debtor-creditor relationship based upon a valid and enforceable obligation to pay a fixed or determinable sum of money. A debt arising out of the receivables of an accrual method taxpayer is deemed to be an enforceable obligation for purposes of the preceding sentence to the extent that the income such debt represents have been included in the return of income for the year for which the deduction as a bad debt is claimed or for a prior taxable year. For example, a debt arising out of gambling receivables that are unenforceable under state or local law, which an accrual method taxpayer includes in income under section 61, is an enforceable obligation for purposes of this pargarph. A gift or contribution to capital shall not be considered a debt for purposes of section 166. The fact that a bad debt its not due at the time of deduction shall not of itself prevent is allowance under section 166. For the disallowance of deductions for bad debts owed by a political party, see § 1.271-1.

(d) ***Amount deductible*** —

(1) ***General rule.*** Except in the case of a deduction for a reasonable addition to a reserve for bad debts, the basis for determining the amount of deduction under section 166 in respect of a bad debt shall be the same as the adjusted basis prescribed by § 1.1011-1 for determining the loss from the sale or other disposition of property. To determine the allowable deduction in the case of obligations acquired before March 1, 1913, see also paragraph (b) of § 1.1053-1.

(2) ***Specific cases.*** Subject to any provision of section 166 and the regulations thereunder which provides to the contrary, the following amounts are deductible as bad debts:

(i) ***Notes or accounts receivable.***

(*a*) If, in computing taxable income, a taxpayer values his notes or accounts receivable at their fair market value when received, the amount deductible as a bad debt under section 166 in respect of such receivables shall be limited to such fair market value even though it is less than their face value.

(*b*) A purchaser of accounts receivable which become worthless during the taxable year shall be entitled under section 166 to a deduction which is based upon the price he paid for such receivables but not upon their face value.

(ii) ***Bankruptcy claim.*** Only the difference between the amount received in distribution of the assets of a bankrupt and the amount of the claim may be deducted under section 166 as a bad debt.

(iii) ***Claim against decedent's estate.*** The excess of the amount of the claim over the amount received by a creditor of a decedent in distribution of the assets of the decedent's estate may be considered a worthless debt under section 166.

(e) ***Prior inclusion in income required.*** Worthless debts arising from unpaid wages, salaries, fees, rents, and similar items of taxable income shall not be allowed as a deduction under section 166 unless the income such items represent has been included in the return of income for the year for which the deduction as a bad debt is claimed or for a prior taxable year.

(f) ***Recovery of bad debts.*** Any amount attributable to the recovery during the taxable year of a bad debt, or of a part of a bad debt, which was allowed as a deduction from gross income in a prior taxable year shall be included in gross income for the taxable year of recovery, except to the extent that the recovery is excluded from gross income under the provisions of § 1.111-1, relating to the recovery of certain items previously deducted or credited. This paragraph shall not apply, however, to a bad debt which was previously charged against a reserve by a taxpayer on the reserve method of treating bad debts.

(g) ***Worthless securities.***

(1) Section 166 and the regulations thereunder do not apply to a debt which is evidenced by a bond, debenture, note, or certificate, or other evidence of indebtedness, issued by a corporation or by a government or political subdivision thereof, with interest coupons or in registered form. See section 166(e). For provisions allowing the deduction of a loss resulting from the worthlessness of such a debt, see § 1.165-5.

(2) The provisions of subparagraph (1) of this paragraph do not apply to any loss sustained by a bank and resulting from the worthlessness of a security described in section 165(g)(2)(C). See paragraph (a) of § 1.582-1.

[T.D. 6500, 25 FR 11402, Nov. 26, 1960, as amended by T.D. 6996, 34 FR 835, Jan. 18, 1969; T.D. 7902, 48 FR 33260, July 21, 1983; T.D. 8071, 51 FR 2479, Jan. 17, 1986]

§ 1.166-2 Evidence of worthlessness.

(a) ***General rule.*** In determining whether a debt is worthless in whole or in part the district director will consider all pertinent evidence, including the value of the collateral, if any, securing the debt and the financial condition of the debtor.

(b) ***Legal action not required.*** Where the surrounding circumstances indicate that a debt is worthless and uncollectible and that legal action to enforce payment would in all probability not result in the satisfaction of execution on a judgment, a showing of these facts will be sufficient evidence of the worthlessness of the debt for purposes of the deduction under section 166.

(c) ***Bankruptcy*** —

(1) ***General rule.*** Bankruptcy is generally an indication of the worthlessness of at least a part of an unsecured and unpreferred debt.

(2) ***Year of deduction.*** In bankruptcy cases a debt may become worthless before settlement in some instances; and in others, only when a settlement in bankruptcy has been reached. In either case, the mere fact that bankruptcy proceedings instituted against the debtor are terminated in a later year, thereby confirming the conclusion that the debt is worthless, shall not authorize the shifting of the deduction under section 166 to such later year.

(d) ***Banks and other regulated corporations*** —

(1) ***Worthlessness presumed in year of charge-off.*** If a bank or other corporation which is subject to supervision by Federal authorities, or by State authorities maintaining substantially equivalent standards, charges off a debt in whole or in part, either—

(i) In obedience to the specific orders of such authorities, or

(ii) In accordance with established policies of such authorities, and, upon their first audit of the bank or other corporation subsequent to the charge-off, such authorities confirm in writing that the charge-off would have been subject to such specific orders if the audit had been made on the date of the charge-off,

then the debt shall, to the extent charged off during the taxable year, be conclusively presumed to have become worthless, or worthless only in part, as the case may be, during such taxable year. But no such debt shall be so conclusively presumed to be worthless, or worthless only in part, as the case may be, if the amount so charged off is not claimed as a deduction by the taxpayer at the time of filing the return for the taxable year in which the charge-off takes place.

(2) ***Evidence of worthlessness in later taxable year.*** If such a bank or other corporation does not claim a deduction for such a totally or partially worthless debt in its return for the taxable year in which the charge-off takes place, but claims the deduction for a later taxable year, then the charge-off in the prior taxable year shall be deemed to have been involuntary and the deduction under section 166 shall be allowed for the taxable year for which claimed, provided that the taxpayer produces sufficient evidence to show that—

(i) The debt became wholly worthless in the later taxable year, or became recoverable only in part subsequent to the taxable year of the involuntary charge-off, as the case may be; and,

(ii) To the extent that the deduction claimed in the later taxable year for a debt partially worthless was not involuntarily charged off in prior taxable years, it was charged off in the later taxable year.

(3) ***Conformity election*** —

(i) ***Eligibility for election.*** In lieu of applying paragraphs (d)(1) and (2) of this section, a bank (as defined in paragraph (d)(4)(i) of this section) that is subject to supervision by Federal authorities, or by state authorities maintaining substantially equivalent standards, may elect under this paragraph (d)(3) to use a method of accounting that establishes a conclusive presumption of worthlessness for debts, provided that the bank meets the express determination requirement of paragraph (d)(3)(iii)(D) of this section for the taxable year of the election.

(ii) ***Conclusive presumption*** —

(A) ***In general.*** If a bank satisfies the express determination requirement of paragraph (d)(3)(iii)(D) of this section and elects to use the method of accounting under this paragraph (d)(3)—

(*1*) Debts charged off, in whole or in part, for regulatory purposes during a taxable year are conclusively presumed to have become worthless, or worthless only in part, as the case may be, during that year, but only if the charge-off results from a specific order of the bank's supervisory authority or corresponds to the bank's classification of the debt, in whole or in part, as a loss asset, as described in paragraph (d)(3)(ii)(C) of this section; and

(*2*) A bad debt deduction for a debt that is subject to regulatory loss classification standards is allowed for a taxable year only to the extent that the debt is conclusively presumed to have become worthless under paragraph (d)(3)(ii)(A)(*1*) of this section during that year.

(B) ***Charge-off should have been made in earlier year.*** The conclusive presumption that a debt is worthless in the year that it is charged off for regulatory purposes applies even if the bank's supervisory authority determines in a subsequent year that the charge-off should have been made in an earlier year. A pattern of charge-offs in the wrong year, however, may result in revocation of the bank's election by the Commissioner pursuant to paragraph (d)(3)(iv)(D) of this section.

(C) ***Loss asset defined.*** A debt is classified as a loss asset by a bank if the bank assigns the debt to a class that corresponds to a loss asset classification under the standards set forth in the "Uniform Agreement on the Classification of Assets and Securities Held by Banks" (See Attachment to Comptroller of the Currency Banking Circular No. 127, Rev. 4-26-91, Comptroller of the Currency, Communications Department, Washington, DC 20219) or similar guidance issued by the Office of the Comptroller of the Currency, the Federal Deposit Insurance Corporation, the Board of Governors of the Federal Reserve, or the Farm Credit Administration; or for institutions under the supervision of the Office of Thrift Supervision, 12 CFR 563.160(b)(3).

(iii) ***Election*** —

(A) ***In general.*** An election under this paragraph (d)(3) is to be made on bank-by-bank basis and constitutes either the adoption of or a change in method of accounting, depending on the particular bank's facts. A change in method of accounting that results from the making of an election under this paragraph (d)(3) has the effects described in paragraph (d)(3)(iii)(B) of this section.

(B) ***Effect of change in method of accounting.*** A change in method of accounting resulting from an election under this paragraph (d)(3) does not require or permit an adjustment under section 481(a). Under this cut-off approach—

(*1*) There is no change in the § 1.1011-1 adjusted basis of the bank's existing debts (as determined under the bank's former method of accounting for bad debts) as a result of the change in method of accounting;

(*2*) With respect to debts that are subject to regulatory loss classification standards and are held by the bank at the beginning of the year of change (to the extent that they have not been charged off for regulatory purposes), and with respect to debts

subject to regulatory loss classification standards that are originated or acquired subsequent to the beginning of the year of change, bad debt deductions in the year of change and thereafter are determined under the method of accounting for bad debts prescribed by this paragraph (d)(3);

(*3*) With respect to debts that are not subject to regulatory loss classification standards or that have been totally charged off prior to the year of change, bad debt deductions are determined under the general rules of section 166; and

(*4*) If there was any partial charge-off of a debt in a prechange year, any portion of which was not claimed as a deduction, the deduction reflecting that partial charge-off must be taken in the first year in which there is any further charge-off of the debt for regulatory purposes.

(C) ***Procedures*** —

(*1*) ***In general.*** A new bank adopts the method of accounting under this paragraph (d)(3) for any taxable year ending on or after December 31, 1991 (and for all subsequent taxable years) when it adopts its overall method of accounting for bad debts, by attaching a statement to this effect to its income tax return for that year. Any other bank makes an election for any taxable year ending on or after December 31, 1991 (and for all subsequent taxable years) by filing a completed Form 3115 (Application for Change in Accounting Method) in accordance with the rules of paragraph (d)(3)(iii)(C)(*2*) or (*3*) of this section. The statement or Form 3115 must include the name, address, and taxpayer identification number of the electing bank and contain a declaration that the express determination requirement of paragraph (d)(3)(iii)(D) of this section is satisfied for the taxable year of the election. When a Form 3115 is used, the declaration must be made in the space provided on the form for "Other changes in method of accounting." The words "ELECTION UNDER § 1.166-2(d)(3)" must be typed or legibly printed at the top of the statement or page 1 of the Form 3115.

(*2*) ***First election.*** The first time a bank makes this election, the statement or Form 3115 must be attached to the bank's timely filed return (taking into account extensions of time to file) for the first taxable year covered by the election. The consent of the Commissioner to make a change in method of accounting under this paragraph (d)(3) is granted, pursuant to section 446(e), to any bank that makes the election in accordance with this paragraph (d)(3)(iii)(C), provided the bank has not made a prior election under this paragraph (d)(3).

(*3*) ***Subsequent elections.*** The advance consent of the Commissioner is required to make any election under this paragraph (d)(3) after a previous election has been revoked pursuant to paragraph (d)(3)(iv) of this section. This consent must be requested under the procedures, terms, and conditions prescribed under the authority of section 446(e) and § 1.446-1(e) for requesting a change in method of accounting.

(D) ***Express determination requirement.*** In connection with its most recent examination involving the bank's loan review process, the bank's supervisory authority must have made an express determination (in accordance with any applicable administrative procedure prescribed hereunder) that the bank maintains and applies loan loss classification standards that are consistent with the regulatory standards of that supervisory authority.

For purposes of this paragraph (d)(3)(iii)(D), the supervisory authority of a bank is the *appropriate Federal banking agency* for the bank, as that term is defined in 12 U.S.C. 1813(q), or, in the case of an institution in the Farm Credit System, the Farm Credit Administration.

(E) ***Transition period election.*** For taxable years ending before completion of the first examination of the bank by its supervisory authority (as defined in paragraph (d)(3)(iii)(D) of this section) that is after October 1, 1992, and that involves the bank's loan review process, the statement or Form 3115 filed by the bank must include a declaration that the bank maintains and applies loan loss classification standards that are consistent with the regulatory standards of that supervisory authority. A bank that makes this declaration is deemed to satisfy the express determination requirement of paragraph (d)(3)(iii)(D) of this section for those years, even though an express determination has not yet been made.

(iv) ***Revocation of Election*** —

(A) ***In general.*** Revocation of an election under this paragraph (d)(3) constitutes a change in method of accounting that has the effects described in paragraph (d)(3)(iv)(B) of this section. If an election under this paragraph (d)(3) has been revoked, a bank may make a subsequent election only under the provisions of paragraph (d)(3)(iii)(C)(*3*) of this section.

(B) ***Effect of change in method of accounting.*** A change in method of accounting resulting from revocation of an election under this paragraph (d)(3) does not require or permit an adjustment under section 481(a). Under this cut-off approach—

(*1*) There is no change in the § 1.1011-1 adjusted basis of the bank's existing debts (as determined under this paragraph (d)(3) method or any other former method of accounting used by the bank with respect to its bad debts) as a result of the change in method of accounting; and

(*2*) Bad debt deductions in the year of change and thereafter with respect to all debts held by the bank, whether in existence at the beginning of the year of change or subsequently originated or acquired, are determined under the new method of accounting.

(C) ***Automatic revocation*** —

(*1*) ***In general*** —A bank's election under this paragraph (d)(3) is revoked automatically if, in connection with any examination involving the bank's loan review process by the bank's supervisory authority as defined in paragraph (d)(3)(iii)(D) of this section, the bank does not obtain the express determination required by that paragraph.

(*2*) ***Year of revocation.*** If a bank makes the conformity election under the transition rules of paragraph (d)(3)(iii)(E) of this section and does not obtain the express determination in connection with the first examination involving the bank's loan review process that is after October 1, 1992, the election is revoked as of the beginning of the taxable year of the election or, if later, the earliest taxable year for which tax may be assessed. In other cases in which a bank does not obtain an express determination in connection with an examination of its loan review process, the election is revoked as of the beginning of the taxable year that includes the date as of which the supervisory authority conducts the examination even if the examination is completed in the following taxable year.

(3) ***Consent granted.*** Under the Commissioner's authority in section 446(e) and § 1.446-1(e), the bank is directed to and is granted consent to change from this paragraph (3)(1) method as of the year of revocation (year of change) prescribed by paragraph (d)(3)(iv)(C)(2) of this section.

(4) ***Requirements.*** A bank changing its method of accounting under the automatic revocation rules of this paragraph (d)(3)(iv)(C) must attach a completed Form 3115 to its income tax return for the year of revocation prescribed by paragraph (d)(3)(iv)(C)(2) of this section. The words "REVOCATION OF § 1.166-2(d)(3) ELECTION" must be typed or legibly printed at the top of page 1 of the Form 3115. If the year of revocation is a year for which the bank has already filed its income tax return, the bank must file an amended return for that year reflecting its change in method of accounting and must attach the completed Form 3115 to that amended return. The bank also must file amended returns reflecting the new method of accounting for all subsequent taxable years for which returns have been filed and tax may be assessed.

(D) ***Revocation by Commissioner.*** An election under this paragraph (d)(3) may be revoked by the Commissioner as of the beginning of any taxable year for which a bank fails to follow the method of accounting prescribed by this paragraph. In addition, the Commissioner may revoke an election as of the beginning of any taxable year for which the Commissioner determines that a bank has taken charge-offs and deductions that, under all facts and circumstances existing at the time, were substantially in excess of those warranted by the exercise of reasonable business judgment in applying the regulatory standards of the bank's supervisory authority as defined in paragraph (d)(3)(III)(D) of this section.

(E) ***Voluntary revocation.*** A bank may apply for revocation of its election made under this paragraph (d)(3) by timely filing a completed Form 3115 for the appropriate year and obtaining the consent of the Commissioner in accordance with section 446(e) and § 1.446-1(e) (including any applicable administrative procedures prescribed thereunder). The words "REVOCATION OF § 1.166-2(d)(3) ELECTION" must be typed or legibly printed at the top of page 1 of the Form 3115. If any bank has had its election automatically revoked pursuant to paragraph (d)(3)(iv)(C) of this section and has not changed its method of accounting in accordance with the requirements of that paragraph, the Commissioner will require that any voluntary change in method of accounting under this paragraph (d)(3)(iv)(E) be implemented retroactively pursuant to the same amended return terms and conditions as are prescribed by paragraph (d)(3)(iv)(C) of this section.

(4) ***Definitions.*** For purposes of this paragraph (d)—

(i) ***Bank.*** The term *bank* has the meaning assigned to it by section 581. The term *bank* also includes any corporation that would be a bank within the meaning of section 581 except for the fact that it is a foreign corporation, but this paragraph (d) applies only with respect to loans the interest on which is effectively connected with the conduct of a banking business within the United States. In addition, the term *bank* includes a Farm Credit System institution that is subject to supervision by the Farm Credit Administration.

(ii) ***Charge-off.*** For banks regulated by the Office of Thrift Supervision, the term *charge-off* includes the establishment of specific allowances for loan losses in the amount of 100 percent of the portion of the debt classified as loss.

[T.D. 6500, 25 FR 11402, Nov. 26, 1960; 25 FR 14021, Dec. 31, 1960, as amended by T.D. 7254, 38 FR 2418, Jan. 26, 1973; T.D. 8396, 57 FR 6294, Feb. 24, 1992; T.D. 8441, 57 FR 45569, Oct. 2, 1992; T.D. 8492, 58 FR 53658, Oct. 18, 1993]

§ 1.166-3 Partial or total worthlessness.

(a) ***Partial worthlessness*** —

(1) ***Applicable to specific debts only.*** A deduction under section 166(a)(2) on account of partially worthless debts shall be allowed with respect to specific debts only.

(2) ***Charge-off required.***

(i) If, from all the surrounding and attending circumstances, the district director is satisfied that a debt is partially worthless, the amount which has become worthless shall be allowed as a deduction under section 166(a)(2) but only to the extent charged off during the taxable year.

(ii) If a taxpayer claims a deduction for a part of a debt for the taxable year within which that part of the debt is charged off and the deduction is disallowed for that taxable year, then, in a case where the debt becomes partially worthless after the close of that taxable year, a deduction under section 166(a)(2) shall be allowed for a subsequent taxable year but not in excess of the amount charged off in the prior taxable year plus any amount charged off in the subsequent taxable year. In such instance, the charge-off in the prior taxable year shall, if consistently maintained as such, be sufficient to that extent to meet the charge-off requirement of section 166(a)(2) with respect to the subsequent taxable year.

(iii) Before a taxpayer may deduct a debt in part, he must be able to demonstrate to the satisfaction of the district director the amount thereof which is worthless and the part thereof which has been charged off.

(3) ***Significantly modified debt*** —

(i) ***Deemed charge-off.*** If a significant modification of a debt instrument (within the meaning of § 1.1001-3) during a taxable year results in the recognition of gain by a taxpayer under § 1.1001-1(a), and if the requirements of paragraph (a)(3)(ii) of this section are met, there is a deemed charge-off of the debt during that taxable year in the amount specified in paragraph (a)(3)(iii) of this section.

(ii) ***Requirements for deemed charge-off.*** A debt is deemed to have been charged off only if—

(A) The taxpayer (or, in the case of a debt that constitutes transferred basis property within the meaning of section 7701(a)(43), a transferor taxpayer) has claimed a deduction for partial worthlessness of the debt in any prior taxable year; and

(B) Each prior charge-off and deduction for partial worthlessness satisfied the requirements of paragraphs (a) (1) and (2) of this section.

(iii) ***Amount of deemed charge-off.*** The amount of the deemed charge-off, if any, is the amount by which the tax basis of the debt exceeds the greater of the fair market value of the debt or the amount of the debt recorded on the taxpayer's books and records reduced as appropriate for a specific allowance for loan losses. The amount of the deemed charge-off, however, may not exceed the amount of recognized gain described in paragraph (a)(3)(i) of this section.

(iv) ***Effective date.*** This paragraph (a)(3) applies to significant modifications of debt instruments occurring on or after September 23, 1996.

(b) ***Total worthlessness.*** If a debt becomes wholly worthless during the taxable year, the amount thereof which has not been allowed as a deduction from gross income for any prior taxable year shall be allowed as a deduction for the current taxable year.

[T.D. 6500, 25 FR 11402, Nov. 29, 1960, as amended by T.D. 8763, 63 FR 4396, Jan. 29, 1998]

§ 1.166-4 Reserve for bad debts.

(a) ***Allowance of deduction.*** A taxpayer who has established the reserve method of treating bad debts and has maintained proper reserve accounts for bad debts or who, in accordance with paragraph (b) of § 1.166-1, adopts the reserve method of treating bad debts may deduct from gross income a reasonable addition to a reserve for bad debts in lieu of deducting specific bad debt items. This paragraph applies both to bad debts owed to the taxpayer and to bad debts arising out of section 166(f)(1)(A) guaranteed debt obligations. If a reserve is maintained for bad debts arising out of section 166(f)(1)(A) guaranteed debt obligations, then a separate reserve must also be maintained for all other debt obligations of the taxpayer in the same trade or business, if any. A taxpayer may not maintain a reserve for bad debts arising out of section 166(f)(1)(A) guaranteed debt obligations if with respect to direct debt obligations in the same trade or business the taxpayer takes deductions when the debts become worthless in whole or in part rather than maintaining a reserve for such obligations. See § 1.166-10 for rules concerning section 166(f)(1)(A) guaranteed debt obligations.

(b) ***Reasonableness of addition to reserve*** —

(1) ***Relevant factors.*** What constitutes a reasonable addition to a reserve for bad debts shall be determined in the light of the facts existing at the close of the taxable year of the proposed addition. The reasonableness of the addition will vary as between classes of business and with conditions of business prosperity. It will depend primarily upon the total amount of debts outstanding as of the close of the taxable year, including those arising currently as well as those arising in prior taxable years, and the total amount of the existing reserve.

(2) ***Correction of errors in prior estimates.*** In the event that subsequent realizations upon outstanding debts prove to be more or less than estimated at the time of the creation of the existing reserve, the amount of the excess or inadequacy in the existing reserve shall be reflected in the determination of the reasonable addition necessary in the current taxable year.

(c) ***Statement required.*** A taxpayer using the reserve method shall file with his return a statement showing—

(1) The volume of his charge sales or other business transactions for the taxable year and the percentage of the reserve to such amount;

(2) The total amount of notes and accounts receivable at the beginning and close of the taxable year;

(3) The amount of the debts which have become wholly or partially worthless and have been charged against the reserve account; and

(4) The computation of the addition to the reserve for bad debts.

(d) ***Special rules applicable to financial institutions.*** For special rules for the addition to the bad debt reserves of certain banks, see §§ 1.585-1 through 1.585-3.

[T.D. 6500, 25 FR 11402, Nov. 26, 1960, as amended by T.D. 6728, 29 FR 5855, May 5, 1964; T.D. 7444, 41 FR 53481, Dec. 7, 1976; T.D. 8071, 51 FR 2479, Jan. 17, 1986; T.D. 9849, 84 FR 9233, Mar. 14, 2019]

§ 1.166-5 Nonbusiness debts.

(a) ***Allowance of deduction as capital loss.***

(1) The loss resulting from any nonbusiness debt's becoming partially or wholly worthless within the taxable year shall not be allowed as a deduction under either section 166(a) or section 166(c) in determining the taxable income of a taxpayer other than a corporation. See section 166(d)(1)(A).

(2) If, in the case of a taxpayer other than a corporation, a nonbusiness debt becomes wholly worthless within the taxable year, the loss resulting therefrom shall be treated as a loss from the sale or exchange, during the taxable year, of a capital asset held for not more than 1 year (6 months for taxable years beginning before 1977; 9 months for taxable years beginning in 1977). Such a loss is subject to the limitations provided in section 1211, relating to the limitation on capital losses, and section 1212, relating to the capital loss carryover, and in the regulations under those sections. A loss on a nonbusiness debt shall be treated as sustained only if and when the debt has become totally worthless, and no deduction shall be allowed for a nonbusiness debt which is recoverable in part during the taxable year.

(b) ***Nonbusiness debt defined.*** For purposes of section 166 and this section, a nonbusiness debt is any debt other than—

(1) A debt which is created, or acquired, in the course of a trade or business of the taxpayer, determined without regard to the relationship of the debt to a trade or business of the taxpayer at the time when the debt becomes worthless; or

(2) A debt the loss from the worthlessness of which is incurred in the taxpayer's trade or business.

The question whether a debt is a nonbusiness debt is a question of fact in each particular case. The determination of whether the loss on a debt's becoming worthless has been incurred in a trade or business of the taxpayer shall, for this purpose, be made in substantially the same manner for determining whether a loss has been incurred in a trade or business for purposes of section 165(c)(1). For purposes of subparagraph (2) of this paragraph, the character of the debt is to be determined by the relation which the loss resulting from the debt's becoming worthless bears to the trade or business of the taxpayer. If that relation is a proximate one in the conduct of the trade or business in which the taxpayer is engaged at the time the debt becomes worthless, the debt comes within the exception provided by that subparagraph. The use to which the borrowed funds are put by the debtor is of no consequence in making a determination under this paragraph. For purposes of section 166 and this section, a nonbusiness debt does not include a debt described in section 165(g)(2)(C). See § 1.165-5, relating to losses on worthless securities.

(c) ***Guaranty of obligations.*** For provisions treating a loss sustained by a guarantor of obligations as a loss resulting from the worthlessness of a debt, see §§ 1.166-8 and 1.166-9.

(d) ***Examples.*** The application of this section may be illustrated by the following examples involving a case where A, an individual who is engaged in the grocery business and who makes his return on the basis of the calendar year, extends credit to B in 1955 on an open account:

Example 1. In 1956 A sells the business but retains the claim against B. The claim becomes worthless in A's hands in 1957. A's loss is not controlled by the nonbusiness debt provisions, since the original consideration has been advanced by A in his trade or business.

Example 2. In 1956 A sells the business to C but sells the claim against B to the taxpayer, D. The claim becomes worthless in D's hands in 1957. During 1956 and 1957, D is not engaged in any trade or business. D's loss is controlled by the nonbusiness debt provisions even though the original consideration has been advanced by A in his trade or business, since the debt has not been created or acquired in connection with a trade or business of D and since in 1957 D is not engaged in a trade or business incident to the conduct of which a loss from the worthlessness of such claim is a proximate result.

Example 3. In 1956 A dies, leaving the business, including the accounts receivable, to his son, C, the taxpayer. The claim against B becomes worthless in C's hands in 1957. C's loss is not controlled by the nonbusiness debt provisions. While C does not advance any consideration for the claim, or create or acquire it in connection with his trade or business, the loss is sustained as a proximate incident to the conduct of the trade or business in which he is engaged at the time the debt becomes worthless.

Example 4. In 1956 A dies, leaving the business to his son, C, but leaving the claim against B to his son, D, the taxpayer. The claim against B becomes worthless in D's hands in 1957. During 1956 and 1957, D is not engaged in any trade or business. D's loss is controlled by the nonbusiness debt provisions even though the original consideration has been advanced by A in his trade or business, since the debt has not been created or acquired in connection with a trade or business of D and since in 1957 D is not engaged in a trade or business incident to the conduct of which a loss from the worthlessness of such claim is a proximate result.

Example 5. In 1956 A dies; and, while his executor, C, is carrying on the business, the claim against B becomes worthless in 1957. The loss sustained by A's estate is not controlled by the nonbusiness debt provisions. While C does not advance any consideration for the claim on behalf of the estate, or create or acquire it in connection with a trade or business in which the estate is engaged, the loss is sustained as a proximate incident to the conduct of the trade or business in which the estate is engaged at the time the debt becomes worthless.

Example 6. In 1956, A, in liquidating the business, attempts to collect the claim against B but finds that it has become worthless. A's loss is not controlled by the nonbusiness debt provisions, since the original consideration has been advanced by A in his trade or business and since a loss incurred in liquidating a trade or business is a proximate incident to the conduct thereof.

[T.D. 6500, 25 FR 11402, Nov. 26, 1960, as amended by T.D. 7657, 44 FR 68464, Nov. 29, 1979; T.D. 7728, 45 FR 72650, Nov. 3, 1980]

§ 1.166-6 Sale of mortgaged or pledged property.

(a) ***Deficiency deductible as bad debt*** —

(1) ***Principal amount.*** If mortgaged or pledged property is lawfully sold (whether to the creditor or another purchaser) for less than the amount of the debt, and the portion of the indebtedness remaining unsatisfied after the sale is wholly or partially uncollectible, the mortgagee or pledgee may deduct such amount under section 166(a) (to the extent that it constitutes capital or represents an item the income from which has been returned by him) as a bad debt for the taxable year in which it becomes wholly worthless or is charged off as partially worthless. See § 1.166-3.

(2) ***Accrued interest.*** Accrued interest may be included as part of the deduction allowable under this paragraph, but only if it has previously been returned as income.

(b) *Realization of gain or loss* —

(1) ***Determination of amount.*** If, in the case of a sale described in paragraph (a) of this section, the creditor buys in the mortgaged or pledged property, loss or gain is also realized, measured by the difference between the amount of those obligations of the debtor which are applied to the purchase or bid price of the property (to the extent that such obligations constitute capital or represent an item the income from which has been returned by the creditor) and the fair market value of the property.

(2) ***Fair market value defined.*** The fair market value of the property for this purpose shall, in the absence of clear and convincing proof to the contrary, be presumed to be the amount for which it is bid in by the taxpayer.

(c) ***Basis of property purchased.*** If the creditor subsequently sells the property so acquired, the basis for determining gain or loss upon the subsequent sale is the fair market value of the property at the date of its acquisition by the creditor.

(d) ***Special rules applicable to certain banking organizations.*** For special rules relating to the treatment of mortgaged or pledged property by certain mutual savings banks, domestic building and loan associations, and cooperative banks, see section 595 and the regulations thereunder.

(e) ***Special rules applicable to certain reacquisitions of real property.*** Notwithstanding this section, special rules apply for taxable years beginning after September 2, 1964 (and for certain taxable years beginning after December 31, 1957), to the gain or loss on certain reacquisitions of real property, to indebtedness remaining unsatisfied as a result of such reacquisitions, and to the basis of the reacquired real property. See §§ 1.1038-1 through 1.1038-3.

[T.D. 6500, 25 FR 11402, Nov. 26, 1960, as amended by T.D. 6814, 30 FR 4472, Apr. 7, 1965, T.D. 6916, 32 FR 5923, Apr. 13, 1967]

§ 1.166-7 Worthless bonds issued by an individual.

(a) ***Allowance of deduction.*** A bond or other similar obligation issued by an individual, if it becomes worthless in whole or in part, is subject to the bad debt provisions of section 166. The loss from the worthlessness of any such bond or obligation is deductible in accordance with section 166(a), unless such bond or obligation is a nonbusiness debt as defined in section 166(d)(2). If the bond or obligation is a nonbusiness debt, it is subject to section 166(d) and § 1.166-5.

(b) ***Decline in market value.*** A taxpayer possessing debts evidenced by bonds or other similar obligations issued by an individual shall not be allowed any deduction under section 166 on account of mere market fluctuation in the value of such obligations.

(c) ***Worthless bonds issued by corporation.*** For provisions allowing the deduction under section 165(a) of the loss sustained upon the worthlessness of any bond or similar obligation issued by a corporation or a government, see § 1.165-5.

(d) ***Application to inventories.*** This section does not apply to any loss upon the worthlessness of any bond or similar obligation reflected in inventories required to be taken by a dealer in securities under section 471. See § 1.471-5.

§ 1.166-8 Losses of guarantors, endorsers, and indemnitors incurred on agreements made before January 1, 1976.

(a) *Noncorporate obligations* —

(1) ***Deductible as bad debt.*** A payment during the taxable year by a taxpayer other than a corporation in discharge of part or all of his obligation as a guarantor, endorser, or indemnitor of an obligation issued by a person other than a corporation shall, for purposes of section 166 and the regulations thereunder, be treated as a debt's becoming worthless within the taxable year, if—

(i) The proceeds of the obligation so issued have been used in the trade or business of the borrower, and

(ii) The borrower's obligation to the person to whom the taxpayer's payment is made is worthless at the time of payment except for the existence of the guaranty, endorsement, or indemnity, whether or not such obligation has in fact become worthless within the taxable year in which payment is made.

(2) ***Nonbusiness debt rule not applicable.*** If a payment is treated as a loss in accordance with the provisions of subparagraph (1) of this paragraph, section 166(d), relating to the special rule for losses sustained on the worthlessness of a nonbusiness debt, shall not apply. Accordingly, in each instance the loss shall be deducted under section 166(a)(1) as a wholly worthless debt even though there has been a discharge of only a part of the taxpayer's obligation. Thus, if the taxpayer makes a payment during the taxable year in discharge of only part of his obligation as a guarantor, endorser, or indemnitor, he may treat such payment under section 166(a)(1) as a debt's becoming wholly worthless within the taxable year, provided that he can establish that such part of the borrower's obligation to the person to whom the taxpayer's payment is made is worthless at the time of payment and the conditions of subparagraph (1) of this paragraph have otherwise been satisfied.

(3) ***Other applicable provisions.*** Other provisions of the internal revenue laws relating to bad debts, such as section 111, relating to the recovery of bad debts, shall be deemed to apply to any payment which, under the provisions of this paragraph, is treated as a bad debt. If the requirements of section 166(f) are not met, any loss sustained by a guarantor, endorser, or indemnitor upon the worthlessness of the debtor's obligation shall be treated under the provisions of law applicable thereto. See, for example, paragraph (b) of this section.

(b) ***Corporate obligations.*** The loss sustained during the taxable year by a taxpayer other than a corporation in discharge of all of his obligation as a guarantor of an obligation issued by a corporation shall be treated, in accordance with section 166(d) and the regulations thereunder, as a loss sustained on the worthlessness of a nonbusiness debt if the debt created in the guarantor's favor as a result of the payment does not come within the exceptions prescribed by section 166(d)(2) (A) or (B). See paragraph (a)(2) of § 1.166-5.

(c) ***Examples.*** The application of this section may be illustrated by the following examples:

Example 1. During 1955, A, an individual who makes his return on the basis of the calendar year, guarantees payment of an obligation of B, an individual, to the X Bank, the proceeds of the obligation being used in B's business. B defaults on his obligation in 1956. A makes payment to the X Bank during 1957 in discharge of his entire obligation as a guarantor, the obligation of B to the X Bank being wholly worthless. For his taxable year 1957, A is entitled to a deduction under section 166(a)(1) as a result of his payment during that year.

Example 2. During 1955, A, an individual who makes his return on the basis of the calendar year, guarantees payment of an obligation of B, an individual, to the X Bank, the proceeds of the obligation being used in B's business. In 1956, B pays a part of his obligation to the X Bank but defaults on the remaining part. In 1957, A makes payment to the X Bank, in discharge of part of his obligation as a guarantor, of the remaining unpaid part of B's obligation to the bank, such part of B's obligation then being worthless. For his taxable year 1957, A is entitled to a deduction under section 166(a) (1) as a result of his payment of the remaining unpaid part of B's obligation.

Example 3. During 1955, A, an individual who makes his return on the basis of the calendar year, guarantees payment of an obligation of B, an individual, to the X Bank, the proceeds of the obligation being used for B's personal use. B defaults on his obligation in 1956. A makes payment to the X Bank during 1957 in discharge of his entire obligation as a guarantor, the obligation of B to X Bank being wholly worthless. A may not apply the benefit of section 166(f) to his loss, since the proceeds of B's obligation have not been used in B's trade or business.

Example 4. During 1955, A, an individual who makes his return on the basis of the calendar year, guarantees payment of an obligation of Y Corporation to the X Bank, the proceeds of the obligation being used in Y Corporation's business. Y Corporation defaults on its obligation in 1956. A makes payment to the X Bank during 1957 in discharge of his entire obligation as a guarantor, the obligation of Y Corporation to the X Bank being wholly worthless. At no time during 1955 or 1957 is A engaged in a trade or business. For his taxable year 1957, A is entitled to deduct a capital loss in accordance with the provisions of section 166(d) and paragraph (a) (2) of § 1.166-5. He may not apply the benefit of section 166(f) to his loss, since his payment is in discharge of an obligation issued by a corporation.

(d) ***Effective date.*** This section applies only to losses, regardless of the taxable year in which incurred, on agreements made before January 1, 1976.

[T.D. 6500, 25 FR 11402, Nov. 26, 1960, as amended by T.D. 7657, 44 FR 68464, Nov. 29, 1979]

§ 1.166-9 Losses of guarantors, endorsers, and indemnitors incurred, on agreements made after December 31, 1975, in taxable years beginning after such date.

(a) ***Payment treated as worthless business debt.*** This paragraph applies to taxpayers who, after December 31, 1975, enter into an agreement in the course of their trade or business to act as (or in a manner essentially equivalent to) a guarantor, endorser, or indemnitor of (or other secondary obligor upon) a debt obligation. Subject to the provisions of paragraphs (c), (d), and (e) of this section, a payment of principal or interest made during a taxable year beginning after December 31, 1975, by the taxpayer in discharge of part or all of the taxpayer's obligation as a guarantor, endorser, or indemnitor is treated as a business debt becoming worthless in the taxable year in which the payment is made or in the taxable year described in paragraph (e)(2) of this section. Neither section 163 (relating to interest) nor section 165 (relating to losses) shall apply with respect to such a payment.

(b) ***Payment treated as worthless nonbusiness debt.*** This paragraph applies to taxpayers (other than corporations) who, after December 31, 1975, enter into a transaction for profit, but not in the course of their trade or business, to act as (or in a manner essentially equivalent to) a guarantor, endorser, or indemnitor of (or other secondary obligor upon) a debt obligation. Subject to the provisions of paragraphs (c), (d), and (e) of this section, a payment of principal or interest made during a taxable year beginning after December 31, 1975, by the taxpayer in discharge of part or all of the taxpayer's obligation as a

guarantor, endorser, or indemnitor is treated as a worthless nonbusiness debt in the taxable year in which the payment is made or in the taxable year described in paragraph (e)(2) of this section. Neither section 163 nor section 165 shall apply with respect to such a payment.

(c) ***Obligations issued by corporations.*** No treatment as a worthless debt is allowed with respect to a payment made by the taxpayer in discharge of part or all of the taxpayer's obligation as a guarantor, endorser, or indemnitor of an obligation issued by a corporation if, on the basis of the facts and circumstances at the time the obligation was entered into, the payment constitutes a contribution to capital by a shareholder. The rule of this paragraph (c) applies to payments whenever made (see paragraph (f) of this section).

(d) ***Certain payments treated as worthless debts.*** A payment in discharge of part or all of taxpayer's agreement to act as guarantor, endorser, or indemnitor of an obligation is to be treated as a worthless debt only if—

(1) The agreement was entered into in the course of the taxpayer's trade or business or a transaction for profit;

(2) There was an enforceable legal duty upon the taxpayer to make the payment (except that legal action need not have been brought against the taxpayer); and

(3) The agreement was entered into before the obligation became worthless (or partially worthless in the case of an agreement entered into in the course of the taxpayer's trade or business). See §§ 1.166-2 and 1.166-3 for rules on worthless and partially worthless debts. For purposes of this paragraph (d)(3), an agreement is considered as entered into before the obligation became worthless (or partially worthless) if there was a reasonable expectation on the part of the taxpayer at the time the agreement was entered into that the taxpayer would not be called upon to pay the debt (subject to such agreement) without full reimbursement from the issuer of the obligation.

(e) ***Special rules*** —

(1) ***Reasonable consideration required.*** Treatment as a worthless debt of a payment made by a taxpayer in discharge of part or all of the taxpayer's agreement to act as a guarantor, endorser, or indemnitor of an obligation is allowed only if the taxpayer demonstrates that reasonable consideration was received for entering into the agreement. For purposes of this paragraph (e)(1), reasonable consideration is not limited to direct consideration in the form of cash or property. Thus, where a taxpayer can demonstrate that the agreement was given without direct consideration in the form of cash or property but in accordance with normal business practice or for a good faith business purpose, worthless debt treatment is allowed with respect to a payment in discharge of part or all of the agreement if the conditions of this section are met. However, consideration received from a taxpayer's spouse or any individual listed in section 152(a) must be direct consideration in the form of cash or property.

(2) ***Right of subrogation.*** With respect to a payment made by a taxpayer in discharge of part or all of the taxpayer's agreement to act as a guarantor, endorser, or indemnitor where the agreement provides for a right of subrogation or other similar right against the issuer, treatment as a worthless debt is not allowed until the taxable year in which the right of subrogation or other similar right becomes totally worthless (or partially worthless in the case of an agreement which arose in the course of the taxpayer's trade or business).

(3) ***Other applicable provisions.*** Unless inconsistent with this section, other Internal Revenue laws concerning worthless debts, such as section 111 relating to the recovery of bad debts, apply to any payment which, under the provisions of this section, is treated as giving rise to a worthless debt.

(4) ***Taxpayer defined.*** For purposes of this section, except as otherwise provided, the term "taxpayer" means any taxpayer and includes individuals, corporations, partnerships, trusts and estates.

(f) ***Effective date.*** This section applies to losses incurred on agreements made after December 31, 1975, in taxable years beginning after such date. However, paragraph (c) of this section also applies to payments, regardless of the taxable year in which made, under agreements made before January 1, 1976.

[T.D. 7657, 44 FR 68465, Nov. 29, 1979, as amended by T.D. 7920, 48 FR 50712, Nov. 3, 1983]

§ 1.166-10 Reserve for guaranteed debt obligations.

(a) ***Definitions.*** The following provisions apply for purposes of this section and section 166(f):

(1) ***Dealer in property.*** A dealer in property is a person who regularly sells property in the ordinary course of the person's trade or business.

(2) ***Guaranteed debt obligation.*** A guaranteed debt obligation is a legal duty of one person as a guarantor, endorser or indemnitor of a second person to pay a third person. It does not include duties based solely on moral or good public relations considerations that are not legally binding. A guaranteed debt obligation typically arises where a seller receives in payment for property or services the debt obligation of a purchaser and sells that obligation to a third party with recourse. However, a guaranteed debt obligation also may arise out of a sale in respect of which there is no direct debtor-creditor relationship between the debtor purchaser and the seller. For example, it arises where a purchaser borrows money from a third party to make payment to the seller and the seller guarantees the payment of the purchaser's debt. Generally, debt obligations which are sold without recourse do not result in any obligation of the seller as a guarantor, endorser, or indemnitor. However, there are certain without-recourse transactions which may give rise to a seller's liability as a guarantor or indemnitor. For example, such a liability may arise where a holder of a debt obligation holds money or other property of a seller which the holder may apply, without seeking permission of the seller, against any uncollectible debt obligations transferred to the holder by the seller without recourse, or where the seller is under a legal obligation to reacquire the real or tangible personal property from the holder of the debt obligation who repossessed property in satisfaction of the debt obligations.

(3) ***Real or tangible personal property.*** Real or tangible personal property generally does not include other forms of property, such as securities. However, if the sale of other property is related to the sale of actual real or tangible personal property, the other property will be considered to be real or tangible personal property. In order for the sale of other property to be related, it must be—

(i) Incidental to the sale of the actual real or tangible personal property; and

(ii) Made under an agreement, entered into at the same time as the sale of actual real or tangible personal property, between the dealer in that property and the customer with respect to that property.

The other property may be charged for as a part of, or in addition to, the sales price of the actual real or tangible personal property. If the value of the other property is not greater than 20 percent of the total sales price, including the value of all related services other than financing services, the sale of the other property is related to the sale of actual real or tangible personal property.

(4) ***Related services.*** In the case of a sale of both property and services a determination must be made as to whether the services are related to the property. Related services include only those services which are—

(i) Incidental to the sale of the real or tangible personal property; and

(ii) To be performed under an agreement, entered into at the same time as the sale of the property, between the dealer in property and the customer with respect to the property.

Delivery, financing installation. maintenance, repair, or instructional services generally qualify as related services. The services may be charged for as a part of, or in addition to, the sales price of the property. Where the value of all services other than financing services is not greater than 20 percent of the total of the sales price of the property, including the value of all the services other than financing services, all of the services are considered to be incidental to the sale of the property. Where the value of the services is greater than 20 percent, the determination as to whether a service is a related service in a particular case is to be made on the basis of all relevant facts and circumstances.

(5) ***Examples.*** The following examples apply to paragraph (a)(4) of this section:

Example 1. A. a dealer in television sets sells a television set to B, his customer. If at the time of the sale A, for a separate charge which is added to the sales price of the set and which is not greater than 20 percent of the total sales price, provides a 3-year service contract on only that television set, the service contract is a related service agreement. However, if A does not sell the service contract to B contemporaneously with the sale of the television set, as would be the case if the service agreement were entered into after the sale of the set were completed, or if the service contract includes services for a television set in addition to the one then sold by A to B, the service contract is not an agreement for a related service.

Example 2. C, an automobile dealer, at the time of the sale by C of an automobile to D, agrees to made available to D driving instructions furnished by the M driving school, the cost of which is included in the sale price of the automobile and is not greater than 20 percent of the total sales price. C also agrees to pay M for the driving instructions furnished to D. Since C's agreement with D to make available driving instructions is incidental to the sale of the automobile, is made contemporaneously with the sale, and is charged for as part of the sales price of the automobile, it is an agreement for a related service. In contrast, however, because M's agreement with C is not an agreement between the dealer in property and the customer, M's agreement with C to provide driving instructions to C's customers is not an agreement for a related service.

(b) ***Incorporation of section 166(c) rules.*** A reserve for section 166(f)(1)(A) guaranteed debt obligations must be established and maintained under the rules applicable to the reserve for bad debts under section 166(c) (with the exception of the statement requirement under § 1.166-4 (c)). For example, the rules in § 1.166-4(b), relating to what constitutes a reasonable addition to a reserve for bad debts and to correction of errors in prior estimates, apply to a reserve for section 166(f)(1)(A) guaranteed debt obligations as well.

(c) ***Special requirements.*** Any reserve for section 166(f)(1)(A) guaranteed debt obligations must be established and maintained separately from any reserve for other debt obligations. In addition, a taxpayer who charges off direct debts when they become worthless in whole or in part rather than maintaining a reserve for such obligations may not maintain a reserve for section 166(f)(1)(A) guaranteed debt obligations in the same trade or business.

(d) ***Requirement of statement.*** A taxpayer who uses the reserve method of treating section 166(f)(1)(A) guaranteed debt obligations must attach to his return for each taxable year, returns for which are filed after April 17, 1986, and for each trade or business for which the reserve is maintained a statement showing—

(1) The total amount of these obligations at the beginning of the taxable year;

(2) The total amount of these obligations incurred during the taxable year;

(3) The amount of the initial balance of the suspense account, if any, established with respect to these obligations;

(4) The balance of the suspense account, if any, at the beginning of the taxable year,

(5) The adjustment, if any, to that account;

(6) The adjusted balance, if any, at the close of the taxable year;

(7) The reconciliation of the beginning and closing balances of the reserve for these obligations and the computation of the addition to the reserve; and

(8) The taxable year for which the reserve for these obligations was established.

(e) ***Computation of opening balance*** —

(1) ***In general.*** The opening balance of a reserve for section 166(f)(1)(A) guaranteed debt obligations established for the first taxable year for which a taxpayer maintains such a reserve shall be determined as if the taxpayer had maintained such a reserve for the taxable years preceding that taxable year. The amount of the opening balance may be determined under the following formula:

$$OB = CG \times \frac{SNL}{SG}$$

where—

OB = the opening balance at the beginning of the first taxable year

CG = the amount of these obligations at the close of the last preceding taxable year

SG = the sum of the amounts of these obligations at the close of the five preceding taxable years

SNL the sum of the amounts of net losses arising from these obligations for the five preceding taxable years

(2) ***Example.*** The following example applies to paragraph (e)(1) of this section.

Example. For 1977, A, a dealer in automobiles who uses the calendar year as the taxable year, adopts in accordance with this section the reserve method of treating section 166(f)(1)(A) guaranteed debt obligations. A's first year in business as an automobile dealer is 1973. For 1972, 1973, 1974, 1975, and 1976, A's records disclose the following information

with respect to these obligations:

Year	Obligations outstanding at close of year	Gross losses from these obligations	Recoveries from these obligations	Net losses from these obligations
1972	$0	$0	$0	$0
1973	780,000	9,700	1,000	8,700
1974	795,000	8,900	1,050	7,850
1975	850,000	8,850	850	8,000
1976	820,000	8,300	1,400	7,900
Total	3,245,000	36,750	4,300	32,450

The opening balance for 1977 of A's reserve for these obligations is $8,200, determined as follows:

$$\$8,200 = \$820,000 \times \frac{\$32,450}{\$3,245,000}$$

(3) ***More appropriate balance.*** A taxpayer may select a balance other than the one produced under paragraph (e)(1) of this section if it is more appropriate, based upon the taxpayer's actual experience, and in the event the taxpayer's return is examined, if the balance is approved by the district director.

(4) ***No losses in the five preceding taxable years.*** If a taxpayer is in the taxpayer's first taxable year of a particular trade or business, or if the taxpayer has no losses arising from section 166(f)(1)(A) guaranteed debt obligations in a particular trade or business for any other reason in the five preceding taxable years, then the taxpayer's opening balance is zero for that particular trade or business.

(5) ***Where reserve method was used before October 22, 1965.*** If for a taxable year ending before October 22, 1965, the taxpayer maintained a reserve for bad debts under section 166(c) which included guaranteed debt obligations described in section 166(f)(1)(A), and if the taxpayer is allowed a deduction referred to in paragraph (g)(2) of this section on account of those obligations, the amount of the opening balance of the reserve for section 166(f)(1)(A) guaranteed debt obligations for the taxpayer's first taxable year ending after October 21, 1965, shall be an amount equal to that portion of the section 166(c) reserve at the close of the last taxable year which is attributable to those debt obligations. The amount of the balance of the section 166(c) reserve for the taxable year shall be reduced by the amount of the opening balance of the reserve for those guaranteed debt obligations.

(f) *Suspense account* —

(1) ***Zero opening balance cases.*** No suspense account shall be maintained if the opening balance of the reserve for section 166(f)(1)(A) guaranteed debt obligations under section 166(f)(3) is zero

(2) ***Example.*** The following example applies to section 166(f)(4)(B), relating to adjustments to the suspense account:

> *Example.* In 1977, A, an individual who operates an appliance store and uses the calendar year as the taxable year, adopts the reserve method of treating section 166(f)(1)(A) guaranteed debt obligations. The initial balance of A's suspense account is $8,200. At the close of 1977, 1978, 1979, and 1980, the balance of A's reserve for these obligations is $8,400, $8,250, $8,150, and $8,175, respectively, after making the addition to the reserve for each year. The adjustments under section 166(f)(4)(B) to the suspense account at the close of each of the years involved are as follows:

(1) Taxable year	1977	1978	1979	1980
(2) Closing reserve account balance	$8,400	$8,250	$8,150	$8,175
(3) Opening suspense account balance	8,200	8,200	8,200	8,150
(4) Line (2) less line (3)	200	50	(50	25
(5) Adjustment to suspense account balance	0	0	(50	25
(6) Closing suspense account balance (line 3 plus line 5)	8,200	8,200	8,150	8,175

(g) ***Effective date*** —

(1) ***In general.*** This section is generally effective for taxable years ending after October 21, 1965.

(2) ***Transitional rule.*** Section 2(b) of the Act of November 2, 1966 (Pub. L. 89-722, 80 Stat. 1151) allows additions to section 166(c) bad debt reserves in earlier taxable years on account of section 166(f)(1)(A) guaranteed debt obligations to be deducted for those earlier taxable years. Paragraphs (c), (d), (e), and (f) of this section do not apply in determining whether a deduction is allowed under section 2(b) of the Act. See Rev. Rul. 68-313 (1968-1C.B. 75) for rules relating to that deduction.

[T.D. 8071, 51 FR 2479, Jan. 17, 1986; 51 FR 9787, Mar. 21, 1986]

§ 1.167(a)-1 Depreciation in general.

(a) ***Reasonable allowance.*** Section 167(a) provides that a reasonable allowance for the exhaustion, wear and tear, and obsolescence of property used in the trade or business or of property held by the taxpayer for the production of income shall be allowed as a depreciation deduction. The allowance is that amount which should be set aside for the taxable year in accordance with a reasonably consistent plan (not necessarily at a uniform rate), so that the aggregate of the amounts set aside, plus the salvage value, will, at the end of the estimated useful life of the depreciable property, equal the cost or other basis of the property as provided in section 167(g) and § 1.167(g)-1. An asset shall not be depreciated below a reasonable salvage value under any method of computing depreciation. However, see section 167(f) and § 1.167(f)-1 for rules which permit a reduction in the amount of salvage value to be taken into account for

certain personal property acquired after October 16, 1962. See also paragraph (c) of this section for definition of salvage. The allowance shall not reflect amounts representing a mere reduction in market value. See section 179 and § 1.179-1 for a further description of the term "reasonable allowance."

(b) ***Useful life.*** For the purpose of section 167 the estimated useful life of an asset is not necessarily the useful life inherent in the asset but is the period over which the asset may reasonably be expected to be useful to the taxpayer in his trade or business or in the production of his income. This period shall be determined by reference to his experience with similar property taking into account present conditions and probable future developments. Some of the factors to be considered in determining this period are

(1) wear and tear and decay or decline from natural causes,

(2) the normal progress of the art, economic changes, inventions, and current developments within the industry and the taxpayer's trade or business,

(3) the climatic and other local conditions peculiar to the taxpayer's trade or business, and

(4) the taxpayer's policy as to repairs, renewals, and replacements. Salvage value is not a factor for the purpose of determining useful life. If the taxpayer's experience is inadequate, the general experience in the industry may be used until such time as the taxpayer's own experience forms an adequate basis for making the determination. The estimated remaining useful life may be subject to modification by reason of conditions known to exist at the end of the taxable year and shall be redetermined when necessary regardless of the method of computing depreciation. However, estimated remaining useful life shall be redetermined only when the change in the useful life is significant and there is a clear and convincing basis for the redetermination. For rules covering agreements with respect to useful life, see section 167(d) and § 1.167(d)-1. If a taxpayer claims an investment credit with respect to an asset for a taxable year preceding the taxable year in which the asset is considered as placed in service under § 1.167(a)-10(b) or § 1.167(a)-11(e), the useful life of the asset under this paragraph shall be the same useful life assigned to the asset under § 1.46-3(e).

(c) ***Salvage.***

(1) Salvage value is the amount (determined at the time of acquisition) which is estimated will be realizable upon sale or other disposition of an asset when it is no longer useful in the taxpayer's trade or business or in the production of his income and is to be retired from service by the taxpayer. Salvage value shall not be changed at any time after the determination made at the time of acquisition merely because of changes in price levels. However, if there is a redetermination of useful life under the rules of paragraph (b) of this section, salvage value may be redetermined based upon facts known at the time of such redetermination of useful life. Salvage, when reduced by the cost of removal, is referred to as net salvage. The time at which an asset is retired from service may vary according to the policy of the taxpayer. If the taxpayer's policy is to dispose of assets which are still in good operating condition, the salvage value may represent a relatively large proportion of the original basis of the asset. However, if the taxpayer customarily uses an asset until its inherent useful life has been substantially exhausted, salvage value may represent no more than junk value. Salvage value must be taken into account in determining the depreciation deduction either by a reduction of the amount subject to depreciation or by a reduction in the rate of depreciation, but in no event shall an asset (or an account) be depreciated below a reasonable salvage value. See, however, paragraph (a) of § 1.167(b)-2 for the treatment of salvage under the declining balance method, and § 1.179-1 for the treatment of salvage in computing the additional first-year depreciation allowance. The taxpayer may use either salvage or net salvage in determining depreciation allowances but such practice must be consistently followed and the treatment of the

costs of removal must be consistent with the practice adopted. For specific treatment of salvage value, see §§ 1.167(b)-1, 1.167(b)-2, and 1.167(b)-3. When an asset is retired or disposed of, appropriate adjustments shall be made in the asset and depreciation reserve accounts. For example, the amount of the salvage adjusted for the costs of removal may be credited to the depreciation reserve.

(2) For taxable years beginning after December 31, 1961, and ending after October 16, 1962, see section 167(f) and § 1.167(f)-1 for rules applicable to the reduction of salvage value taken into account for certain personal property acquired after October 16, 1962.

[T.D. 6500, 25 FR 11402, Nov. 26, 1960, as amended by T.D. 6712, 29 FR 3653, Mar. 24, 1964; T.D. 7203, 37 FR 17133, Aug. 25, 1972]

§ 1.167(a)-2 Tangible property.

The depreciation allowance in the case of tangible property applies only to that part of the property which is subject to wear and tear, to decay or decline from natural causes, to exhaustion, and to obsolescence. The allowance does not apply to inventories or stock in trade, or to land apart from the improvements or physical development added to it. The allowance does not apply to natural resources which are subject to the allowance for depletion provided in section 611. No deduction for depreciation shall be allowed on automobiles or other vehicles used solely for pleasure, on a building used by the taxpayer solely as his residence, or on furniture or furnishings therein, personal effects, or clothing; but properties and costumes used exclusively in a business, such as a theatrical business, may be depreciated.

§ 1.167(a)-3 Intangibles.

(a) ***In general.*** If an intangible asset is known from experience or other factors to be of use in the business or in the production of income for only a limited period, the length of which can be estimated with reasonable accuracy, such an intangible asset may be the subject of a depreciation allowance. Examples are patents and copyrights. An intangible asset, the useful life of which is not limited, is not subject to the allowance for depreciation. No allowance will be permitted merely because, in the unsupported opinion of the taxpayer, the intangible asset has a limited useful life. No deduction for depreciation is allowable with respect to goodwill. For rules with respect to organizational expenditures, see section 248 and the regulations thereunder. For rules with respect to trademark and trade name expenditures, see section 177 and the regulations thereunder. See sections 197 and 167(f) and, to the extent applicable, §§ 1.197-2 and 1.167(a)-14 for amortization of goodwill and certain other intangibles acquired after August 10, 1993, or after July 25, 1991, if a valid retroactive election under § 1.197-1T has been made.

(b) ***Safe harbor amortization for certain intangible assets*** —

(1) ***Useful life.*** Solely for purposes of determining the depreciation allowance referred to in paragraph (a) of this section, a taxpayer may treat an intangible asset as having a useful life equal to 15 years unless—

(i) An amortization period or useful life for the intangible asset is specifically prescribed or prohibited by the Internal Revenue Code, the regulations thereunder (other than by this paragraph (b)), or other published guidance in the Internal Revenue Bulletin (see § 601.601(d)(2) of this chapter);

(ii) The intangible asset is described in § 1.263(a)-4(c) (relating to intangibles acquired from another person) or § 1.263(a)-4(d)(2) (relating to created financial interests);

(iii) The intangible asset has a useful life the length of which can be estimated with reasonable accuracy; or

(iv) The intangible asset is described in § 1.263(a)-4(d)(8) (relating to certain benefits arising from the provision, production, or improvement of real property), in which case the taxpayer may treat the intangible asset as having a useful life equal to 25 years solely for purposes of determining the depreciation allowance referred to in paragraph (a) of this section.

(2) ***Applicability to acquisitions of a trade or business, changes in the capital structure of a business entity, and certain other transactions.*** The safe harbor useful life provided by paragraph (b)(1) of this section does not apply to an amount required to be capitalized by § 1.263(a)-5 (relating to amounts paid to facilitate an acquisition of a trade or business, a change in the capital structure of a business entity, and certain other transactions).

(3) ***Depreciation method.*** A taxpayer that determines its depreciation allowance for an intangible asset using the 15-year useful life prescribed by paragraph (b)(1) of this section (or the 25-year useful life in the case of an intangible asset described in § 1.263(a)-4(d)(8)) must determine the allowance by amortizing the basis of the intangible asset (as determined under section 167(c) and without regard to salvage value) ratably over the useful life beginning on the first day of the month in which the intangible asset is placed in service by the taxpayer. The intangible asset is not eligible for amortization in the month of disposition.

(4) ***Effective date.*** This paragraph (b) applies to intangible assets created on or after December 31, 2003.

[T.D. 6500, 25 FR 11402, Nov. 26, 1960; 25 FR 14021, Dec. 21, 1960, as amended by T.D. 8867, 65 FR 3825, Jan. 25, 2000; T.D. 9107, 69 FR 444, Jan. 5, 2004]

§ 1.167(a)-4 Leased property.

(a) ***In general.*** Capital expenditures made by either a lessee or lessor for the erection of a building or for other permanent improvements on leased property are recovered by the lessee or lessor under the provisions of the Internal Revenue Code (Code) applicable to the cost recovery of the building or improvements, if subject to depreciation or amortization, without regard to the period of the lease. For example, if the building or improvement is property to which section 168 applies, the lessee or lessor determines the depreciation deduction for the building or improvement under section 168. See section 168(i)(8)(A). If the improvement is property to which section 167 or section 197 applies, the lessee or lessor determines the depreciation or amortization deduction for the improvement under section 167 or section 197, as applicable.

(b) ***Effective/applicability date*** —

(1) ***In general.*** Except as provided in paragraph (b)(2) or (b)(3) of this section, this section applies to taxable years beginning on or after January 1, 2014.

(2) ***Application of this section to leasehold improvements placed in service after December 31, 1986, in taxable years beginning before January 1, 2014.*** For leasehold improvements placed in service after December 31, 1986, in taxable years beginning before January 1, 2014, a taxpayer may—

(i) Apply the provisions of this section; or

(ii) Depreciate any leasehold improvement to which section 168 applies under the provisions of section 168 and depreciate or amortize any leasehold improvement to which section 168 does not apply under the provisions of the Code that are applicable to the cost recovery of that leasehold improvement, without regard to the period of the lease.

(3) ***Application of this section to leasehold improvements placed in service before January 1, 1987.*** Section 1.167(a)-4 as contained in 26 CFR part 1 edition revised as of April 1, 2011, applies to leasehold improvements placed in service before January 1, 1987.

(4) ***Change in method of accounting.*** Except as provided in § 1.446-1(e)(2)(ii)(*d*)(*3*)(*i*), a change to comply with this section for depreciable assets placed in service in a taxable year ending on or after December 30, 2003, is a change in method of accounting to which the provisions of section 446(e) and the regulations under section 446(e) apply. Except as provided in § 1.446-1(e)(2)(ii)(*d*)(*3*)(*i*), a taxpayer also may treat a change to comply with this section for depreciable assets placed in service in a taxable year ending before December 30, 2003, as a change in method of accounting to which the provisions of section 446(e) and the regulations under section 446(e) apply.

[T.D. 9636, 78 FR 57706, Sept. 19, 2013]

§ 1.167(a)-5 Apportionment of basis.

In the case of the acquisition on or after March 1, 1913, of a combination of depreciable and nondepreciable property for a lump sum, as for example, buildings and land, the basis for depreciation cannot exceed an amount which bears the same proportion to the lump sum as the value of the depreciable property at the time of acquisition bears to the value of the entire property at that time. In the case of property which is subject to both the allowance for depreciation and amortization, depreciation is allowable only with respect to the portion of the depreciable property which is not subject to the allowance for amortization and may be taken concurrently with the allowance for amortization. After the close of the amortization period or after amortization deductions have been discontinued with respect to any such property, the unrecovered cost or other basis of the depreciable portion of such property will be subject to depreciation. For adjustments to basis, see section 1016 and other applicable provisions of law. For the adjustment to the basis of a structure in the case of a donation of a qualified conservation contribution under section 170(h), see § 1.170A-14(h)(3)(iii).

[T.D. 6500, 25 FR 11402, Nov. 26, 1960; 25 FR 14021, Dec. 21, 1960, as amended by T.D. 8069, 51 FR 1498, Jan. 14, 1986]

§ 1.167(a)-5T Application of section 1060 to section 167 (temporary).

In the case of an acquisition of a combination of depreciable and nondepreciable property for a lump sum in an applicable asset acquisition to which section 1060 applies, the basis for depreciation of the depreciable property cannot exceed the amount of consideration allocated to that property under section 1060 and § 1.1060-1T.

[T.D. 8215, 53 FR 27043, July 18, 1988]

§ 1.167(a)-6 Depreciation in special cases.

(a) ***Depreciation of patents or copyrights.*** The cost or other basis of a patent or copyright shall be depreciated over its remaining useful life. Its cost to the patentee includes the various Government fees, cost of drawings, models, attorneys' fees, and similar expenditures. For rules applicable to research and experimental expenditures, see sections 174 and 1016 and the regulations thereunder. If a patent or copyright becomes valueless in any year before its expiration the unrecovered cost or other basis may be

deducted in that year. See § 1.167(a)-14(c)(4) for depreciation of a separately acquired interest in a patent or copyright described in section 167(f)(2) acquired after January 25, 2000. See § 1.197-2 for amortization of interests in patents and copyrights that constitute amortizable section 197 intangibles.

(b) ***Depreciation in case of farmers.*** A reasonable allowance for depreciation may be claimed on farm buildings (except a dwelling occupied by the owner), farm machinery, and other physical property but not including land. Livestock acquired for work, breeding, or dairy purposes may be depreciated unless included in an inventory used to determine profits in accordance with section 61 and the regulations thereunder. Such depreciation should be determined with reference to the cost or other basis, salvage value, and the estimated useful life of the livestock. See also section 162 and the regulations thereunder relating to trade or business expenses, section 165 and the regulations thereunder relating to losses of farmers, and section 175 and the regulations thereunder relating to soil or water conservation expenditures.

[T.D. 6500, 25 FR 11402, Nov. 26, 1960; 25 FR 14021, Dec. 21, 1960, as amended by T.D. 8867, 65 FR 3825, Jan. 25, 2000]

§ 1.167(a)-7 Accounting for depreciable property.

(a) Depreciable property may be accounted for by treating each individual item as an account, or by combining two or more assets in a single account. Assets may be grouped in an account in a variety of ways. For example, assets similar in kind with approximately the same useful lives may be grouped together. Such an account is commonly known as a group account. Another appropriate grouping might consist of assets segregated according to use without regard to useful life, for example, machinery and equipment, furniture and fixtures, or transportation equipment. Such an account is commonly known as a classified account. A broader grouping, where assets are included in the same account regardless of their character or useful lives, is commonly referred to as a composite account. For example, all the assets used in a business may be included in a single account. Group, classified, or composite accounts may be further broken down on the basis of location, dates of acquisition, cost, character, use, etc.

(b) When group, classified, or composite accounts are used with average useful lives and a normal retirement occurs, the full cost or other basis of the asset retired, unadjusted for depreciation or salvage, shall be removed from the asset account and shall be charged to the depreciation reserve. Amounts representing salvage ordinarily are credited to the depreciation reserve. Where an asset is disposed of for reasons other than normal retirement, the full cost or other basis of the asset shall be removed from the asset account, and the depreciation reserve shall be charged with the depreciation applicable to the retired asset. For rules with respect to losses on normal retirements, see § 1.167 (a)-8.

(c) A taxpayer may establish as many accounts for depreciable property as he desires. Depreciation allowances shall be computed separately for each account. Such depreciation preferably should be recorded in a depreciation reserve account; however, in appropriate cases it may be recorded directly in the asset account. Where depreciation reserves are maintained, a separate reserve account shall be maintained for each asset account. The regular books of account or permanent auxiliary records shall show for each account the basis of the property, including adjustments necessary to conform to the requirements of section 1016 and other provisions of law relating to adjustments to basis, and the depreciation allowances for tax purposes. In the event that reserves for book purposes do not correspond with reserves maintained for tax purposes, permanent auxiliary records shall be maintained with the regular books of accounts reconciling the differences in depreciation for tax and book purposes because

of different methods of depreciation, bases, rates, salvage, or other factors. Depreciation schedules filed with the income tax return shall show the accumulated reserves computed in accordance with the allowances for income tax purposes.

(d) In classified or composite accounts, the average useful life and rate shall be redetermined whenever additions, retirements, or replacements substantially alter the relative proportion of types of assets in the accounts. See example (2) in paragraph (b) of § 1.167(b)-1 for method of determining the depreciation rate for a classified or composite account.

(e) ***Applicability.*** Paragraphs (a), (b), and (d) of this section apply to property for which depreciation is determined under section 167 (but not under section 168, section 1400I, section 1400L(c), section 168 prior to its amendment by the Tax Reform Act of 1986, Public Law 99-514 (100 Stat. 2121 (1986)), or under an additional first year depreciation deduction provision of the Internal Revenue Code (for example, section 168(k) through (n), 1400L(b), or 1400N(d))). Paragraph (c) of this section does not apply to general asset accounts as provided by section 168(i)(4), § 1.168(i)-1, § 1.168(i)-1T and Prop. Reg. § 1.168(i)-1 (September 19, 2013).

(f) ***Effective/applicability date*** —

(1) ***In general.*** This section applies to taxable years beginning on or after January 1, 2014. Except as provided in paragraphs (f)(2) and (f)(3) of this section, § 1.167(a)-7 as contained in 26 CFR part 1 edition revised as of April 1, 2011, applies to taxable years beginning before January 1, 2014.

(2) ***Early application of § 1.167(a)-7(e).*** A taxpayer may choose to apply paragraph (e) of this section to taxable years beginning on or after January 1, 2012.

(3) ***Optional application of TD 9564.*** A taxpayer may choose to apply § 1.167(a)-7T as contained in TD 9564 (76 FR 81060) December 27, 2011, to taxable years beginning on or after January 1, 2012, and before January 1, 2014.

[T.D. 6500, 25 FR 11402, Nov. 26, 1960; 25 FR 14021, Dec. 21, 1960, as amended by T.D. 9564, 76 FR 81085, Dec. 27, 2011; T.D. 9636, 78 FR 57707, Sept. 19, 2013]

§ 1.167(a)-8 Retirements.

(a) ***Gains and losses on retirements.*** For the purposes of this section the term “retirement” means the permanent withdrawal of depreciable property from use in the trade or business or in the production of income. The withdrawal may be made in one of several ways. For example, the withdrawal may be made by selling or exchanging the asset, or by actual abandonment. In addition, the asset may be withdrawn from such productive use without disposition as, for example, by being placed in a supplies or scrap account. The tax consequences of a retirement depend upon the form of the transaction, the reason therefor, the timing of the retirement, the estimated useful life used in computing depreciation, and whether the asset is accounted for in a separate or multiple asset account. Upon the retirement of assets, the rules in this section apply in determining whether gain or loss will be recognized, the amount of such gain or loss, and the basis for determining gain or loss:

(1) Where an asset is retired by sale at arm's length, recognition of gain or loss will be subject to the provisions of sections 1002, 1231, and other applicable provisions of law.

(2) Where an asset is retired by exchange, the recognition of gain or loss will be subject to the provisions of sections 1002, 1031, 1231, and other applicable provisions of law.

(3) Where an asset is permanently retired from use in the trade or business or in the production of income but is not disposed of by the taxpayer or physically abandoned (as, for example, when the asset is transferred to a supplies or scrap account), gain will not be recognized. In such a case loss will be recognized measured by the excess of the adjusted basis of the asset at the time of retirement over the estimated salvage value or over the fair market value at the time of such retirement if greater, but only if—

(i) The retirement is an abnormal retirement, or

(ii) The retirement is a normal retirement from a single asset account (but see paragraph (d) of this section for special rule for item accounts), or

(iii) The retirement is a normal retirement from a multiple asset account in which the depreciation rate was based on the maximum expected life of the longest lived asset contained in the account.

(4) Where an asset is retired by actual physical abandonment (as, for example, in the case of a building condemned as unfit for further occupancy or other use), loss will be recognized measured by the amount of the adjusted basis of the asset abandoned at the time of such abandonment. In order to qualify for the recognition of loss from physical abandonment, the intent of the taxpayer must be irrevocably to discard the asset so that it will neither be used again by him nor retrieved by him for sale, exchange, or other disposition.

Experience with assets which have attained an exceptional or unusual age shall, with respect to similar assets, be disregarded in determining the maximum expected useful life of the longest lived asset in a multiple asset account. For example, if a manufacturer establishes a proper multiple asset account for 50 assets which are expected to have an average life of 30 years but which will remain useful to him for varying periods between 20 and 40 years, the maximum expected useful life will be 40 years, even though an occasional asset of this kind may last 60 years.

(b) ***Definition of normal and abnormal retirements.*** For the purpose of this section the determination of whether a retirement is normal or abnormal shall be made in the light of all the facts and circumstances. In general, a retirement shall be considered a normal retirement unless the taxpayer can show that the withdrawal of the asset was due to a cause not contemplated in setting the applicable depreciation rate. For example, a retirement is considered normal if made within the range of years taken into consideration in fixing the depreciation rate and if the asset has reached a condition at which, in the normal course of events, the taxpayer customarily retires similar assets from use in his business. On the other hand, a retirement may be abnormal if the asset is withdrawn at an earlier time or under other circumstances, as, for example, when the asset has been damaged by casualty or has lost its usefulness suddenly as the result of extraordinary obsolescence.

(c) ***Basis of assets retired.*** The basis of an asset at the time of retirement for computing gain or loss shall be its adjusted basis for determining gain or loss upon a sale or other disposition as determined in accordance with the provisions of section 1011 and the following rules:

(1) In the case of a normal retirement of an asset from a multiple asset account where the depreciation rate is based on average expected useful life, the term “adjusted basis” means the salvage value estimated in determining the depreciation deduction in accordance with the provisions in paragraph (c) of § 1.167(a)-1.

(2) In the case of a normal retirement of an asset from a multiple asset account on which the depreciation rate was based on the maximum expected life of the longest lived asset in the account, the adjustment for depreciation allowed or allowable shall be made at the rate which would have been proper if the asset had been depreciated in a single asset account (under the method of depreciation used for the multiple asset account) using a rate based upon the maximum expected useful life of that asset, and

(3) In the case of an abnormal retirement from a multiple asset account the adjustment for depreciation allowed or allowable shall be made at the rate which would have been proper had the asset been depreciated in a single asset account (under the method of depreciation used for the multiple asset account) and using a rate based upon either the average expected useful life or the maximum expected useful life of the asset, depending upon the method of determining the rate of depreciation used in connection with the multiple asset account.

(d) *Special rule for item accounts.*

(1) As indicated in paragraph (a)(3)(ii) and (iii) of this section, a loss is recognized upon the normal retirement of an asset from a single asset account but a loss on the normal retirement of an asset in a multiple asset account is not allowable where the depreciation rate is based upon the average useful life of the assets in the account. Where a taxpayer with more than one depreciable asset chooses to set up a separate account for each such asset and the depreciation rate is based on the average useful life of such assets (so that he uses the same life for each account), the question arises whether his depreciation deductions in substance are the equivalent of those which would result from the use of multiple asset accounts and, therefore, he should be subject to the rules governing losses on retirements of assets from multiple asset accounts. Where a taxpayer has only a few depreciable assets which he chooses to account for in single asset accounts, particularly where such assets cover a relatively narrow range of lives, it cannot be said in the usual case that the allowance of losses on retirements from such accounts clearly will distort income. This results from the fact that where a taxpayer has only a few depreciable assets it is usually not possible clearly to determine that the depreciation rate is based upon the average useful life of such assets. Accordingly, it cannot be said that the taxpayer is in effect clearly operating with a multiple asset account using an average life rate so that losses should not be allowed on normal retirements. Therefore, losses normally will be allowed upon retirement of assets from single asset accounts where the taxpayer has only a few depreciable assets. On the other hand, when a taxpayer who has only a few depreciable assets chooses to account for them in single asset accounts, using for each account a depreciation rate based on the average useful life of such assets, and the assets cover a wide range of lives, the likelihood that income will be distorted is greater than where the group of assets covers a relatively narrow range of lives. In those cases where the allowance of losses would distort income, the rules with respect to the allowance of losses on normal retirement shall be applied to such assets in the same manner as though the assets had been accounted for in multiple asset accounts using a rate based upon average expected useful life.

(2) Where a taxpayer has a large number of depreciable assets and depreciation is based on the average useful life of such assets, then, whether such assets are similar or dissimilar and regardless of whether they are accounted for in individual asset accounts or multiple asset accounts the allowance of losses on the normal retirement of such assets would distort income. Such distortion would result from the fact that the use of average useful life (and, accordingly, average rate) assumes that while some assets normally will be retired before the expiration of the average life, others normally will be retired after expiration of the average life. Accordingly, if instead of accounting for a large number of similar or dissimilar depreciable assets in multiple asset accounts,

the taxpayer chooses to account separately for such assets, using a rate based upon the average life of such assets, the rules with respect to the allowances of losses on normal retirements will be applied to such assets in the same manner as though the assets were accounted for in multiple asset accounts using a rate based upon average expected useful life.

(3) Where a taxpayer who does not have a large number of depreciable assets (and who therefore is not subject to subparagraph (2) of this paragraph) chooses to set up a separate account for each such asset, and has sought to compute an average life for such assets on which to base his depreciation deductions (so that he uses the same life for each account), the allowance of losses on normal retirements from such accounts may in some situations substantially distort income. Such distortion would result from the fact that the use of average useful life (and, accordingly, average rate) assumes that while some assets normally will be retired before expiration of the average life, others normally will be retired after expiration of the average life. Accordingly, where a taxpayer chooses to account separately for such assets instead of accounting for them in multiple asset accounts, and the result is to substantially distort his income, the rules with respect to the allowance of losses on normal retirements shall be applied to such assets in the same manner as though the assets had been accounted for in multiple asset accounts using a rate based upon average expected useful life.

(4) Whenever a taxpayer is treated under this paragraph as though his assets were accounted for in a multiple asset account using an average life rate, and, therefore, he is denied a loss on retirements, the unrecovered cost less salvage of each asset which was accounted for separately may be amortized in accordance with the regulation stated in paragraph (e)(1)(ii) of this section.

(e) ***Accounting treatment of asset retirements.***

(1) In the case of a normal retirement where under the foregoing rules no loss is recognized and where the asset is retired without disposition or abandonment,

(i) if the asset was contained in a multiple asset account, the full cost of such asset, reduced by estimated salvage, shall be charged to the depreciation reserve, or

(ii) if the asset was accounted for separately, the unrecovered cost or other basis, less salvage, of the asset may be amortized through annual deductions from gross income in amounts equal to the unrecovered cost or other basis of such asset, divided by the average expected useful life (not the remaining useful life) applicable to the asset at the time of retirement. For example, if an asset is retired after six years of use and at the time of retirement depreciation was being claimed on the basis of an average expected useful life of ten years, the unrecovered cost or other basis less salvage would be amortized through equal annual deductions over a period of ten years from the time of retirement.

(2) Where multiple asset accounts are used and acquisitions and retirements are numerous, if a taxpayer, in order to avoid unnecessarily detailed accounting for individual retirements, consistently follows the practice of charging the reserve with the full cost or other basis of assets retired and of crediting it with all receipts from salvage, the practice may be continued so long as, in the opinion of the Commissioner, it clearly reflects income. Conversely, where the taxpayer customarily follows a practice of reporting all receipts from salvage as ordinary taxable income such practice may be continued so long as, in the opinion of the Commissioner, it clearly reflects income.

(f) ***Cross reference.*** For special rules in connection with the retirement of the last assets of a given year's acquisitions under the declining balance method, see example (2) in paragraph (b) of § 1.167 (b)-2.

(g) ***Applicability.*** This section applies to property for which depreciation is determined under section 167 (but not under section 168, section 1400I, section 1400L(c), section 168 prior to its amendment by the Tax Reform Act of 1986, Public Law 99-514 (100 Stat. 2121(1986)), or under an additional first year depreciation deduction provision of the Internal Revenue Code (for example, section 168(k) through (n), 1400L(b), or 1400N(d))).

(h) ***Effective/applicability date*** —

(1) ***In general.*** This section applies to taxable years beginning on or after January 1, 2014. Except as provided in paragraphs (h)(2) and (h)(3) of this section, § 1.167(a)-8 as contained in 26 CFR part 1 edition revised as of April 1, 2011, applies to taxable years beginning before January 1, 2014.

(2) ***Early application of § 1.167(a)-8(g).*** A taxpayer may choose to apply paragraph (g) of this section to taxable years beginning on or after January 1, 2012.

(3) ***Optional application of TD 9564.*** A taxpayer may choose to apply § 1.167(a)-8T as contained in TD 9564 (76 FR 81060) December 27, 2011, to taxable years beginning on or after January 1, 2012, and before January 1, 2014.

[T.D. 6500, 25 FR 11402, Nov. 26, 1960; 25 FR 14021, Dec. 21, 1960, as amended by T.D. 9564, 76 FR 81085, Dec. 27, 2011; T.D. 9636, 78 FR 57707, Sept. 19, 2013]

§ 1.167(a)-9 Obsolescence.

The depreciation allowance includes an allowance for normal obsolescence which should be taken into account to the extent that the expected useful life of property will be shortened by reason thereof. Obsolescence may render an asset economically useless to the taxpayer regardless of its physical condition. Obsolescence is attributable to many causes, including technological improvements and reasonably foreseeable economic changes. Among these causes are normal progress of the arts and sciences, supersession or inadequacy brought about by developments in the industry, products, methods, markets, sources of supply, and other like changes, and legislative or regulatory action. In any case in which the taxpayer shows that the estimated useful life previously used should be shortened by reason of obsolescence greater than had been assumed in computing such estimated useful life, a change to a new and shorter estimated useful life computed in accordance with such showing will be permitted. No such change will be permitted merely because in the unsupported opinion of the taxpayer the property may become obsolete. For rules governing the allowance of a loss when the usefulness of depreciable property is suddenly terminated, see § 1.167(a)-8. If the estimated useful life and the depreciation rates have been the subject of a previous agreement, see section 167(d) and § 1.167(d)-1.

§ 1.167(a)-10 When depreciation deduction is allowable.

(a) A taxpayer should deduct the proper depreciation allowance each year and may not increase his depreciation allowances in later years by reason of his failure to deduct any depreciation allowance or of his action in deducting an allowance plainly inadequate under the known facts in prior years. The inadequacy of the depreciation allowance for property in prior years shall be determined on the basis of the allowable method of depreciation used by the taxpayer for such property or under the straight line method if no allowance has ever been claimed for such property. The preceding sentence shall not be construed as precluding application of any method provided in section 167(b) if taxpayer's failure to claim any allowance for depreciation was due solely to erroneously treating as a deductible expense an item properly chargeable to capital account. For rules relating to adjustments to basis, see section 1016 and the regulations thereunder.

(b) The period for depreciation of an asset shall begin when the asset is placed in service and shall end when the asset is retired from service. A proportionate part of one year's depreciation is allowable for that part of the first and last year during which the asset was in service. However, in the case of a multiple asset account, the amount of depreciation may be determined by using what is commonly described as an "averaging convention", that is, by using an assumed timing of additions and retirements. For example, it might be assumed that all additions and retirements to the asset account occur uniformly throughout the taxable year, in which case depreciation is computed on the average of the beginning and ending balances of the asset account for the taxable year. See example (3) under paragraph (b) of § 1.167(b)-1. Among still other averaging conventions which may be used is the one under which it is assumed that all additions and retirements during the first half of a given year were made on the first day of that year and that all additions and retirements during the second half of the year were made on the first day of the following year. Thus, a full year's depreciation would be taken on additions in the first half of the year and no depreciation would be taken on additions in the second half. Moreover, under this convention, no depreciation would be taken on retirements in the first half of the year and a full year's depreciation would be taken on the retirements in the second half. An averaging convention, if used, must be consistently followed as to the account or accounts for which it is adopted, and must be applied to both additions and retirements. In any year in which an averaging convention substantially distorts the depreciation allowance for the taxable year, it may not be used.

§ 1.167(a)-11 Depreciation based on class lives and asset depreciation ranges for property placed in service after December 31, 1970.

(a) *In general*—(1) *Summary.* This section provides an asset depreciation range and class life system for determining the reasonable allowance for depreciation of designated classes of assets placed in service after December 31, 1970. The system is designed to minimize disputes between taxpayers and the Internal Revenue Service as to the useful life of property, and as to salvage value, repairs, and other matters. The system is optional with the taxpayer. The taxpayer has an annual election. Generally, an election for a taxable year must apply to all additions of eligible property during the taxable year of election, but does not apply to additions of eligible property in any other taxable year. The taxpayer's election, made with the return for the taxable year, may not be revoked or modified for any property included in the election. Generally, the taxpayer must establish vintage accounts for all eligible property included in the election, must determine the allowance for depreciation of such property in the taxable year of election, and in subsequent taxable years, on the basis of the asset depreciation period selected and must apply the first-year convention specified in the election to determine the allowance for depreciation of such property. This section also contains special provisions for the treatment of salvage value, retirements, and the costs of the repair, maintenance, rehabilitation or improvement of property. In general, a taxpayer may not apply any provision of this section unless he makes an election and thereby consents to, and agrees to apply, all the provisions of this section. A taxpayer who elects to apply this section does, however, have certain options as to the application of specified provisions of this section. A taxpayer may elect to apply this section for a taxable year only if for such taxable year he complies with the requirements of paragraph (f)(4) of this section.

(2) *Definitions.* For the meaning of certain terms used in this section, see paragraphs (b)(2) ("eligible property"), (b)(3) ("vintage account" and "vintage"), (b)(4) ("asset depreciation range", "asset guideline class", "asset guideline period", and "asset depreciation period"), (b)(5)(iii)(*c*) ("used property"), (b)(6)(i) ("public utility property"), (c)(1)(iv) ("original use"), (c)(1)(v) ("unadjusted basis" and "adjusted basis"), (c)(2)(ii) ("modified half-year convention"), (c)(2)(iii) ("half-year convention"), (d)(1)(i) ("gross salvage value"), (d)(1)(ii) ("salvage value"), (d)(2)(iii) ("repair allowance", "repair allowance percentage", and "repair allowance property"), (d)(2)(vi) ("excluded addition"), (d)(2)(vii) ("property improvement"), (d)(3)(ii) ("ordinary retirement" and "extraordinary retirement"), (d)(3)(vi) ("special basis vintage account"), and (e)(1) ("first placed in service") of this section.

(b) *Reasonable allowance using asset depreciation ranges*—(1) *In general.* The allowance for depreciation of eligible property (as defined in subparagraph (2) of this paragraph) to which the taxpayer elects to apply this section shall be determined as provided in paragraph (c) of this section and shall constitute the reasonable allowance for depreciation of such property under section 167(a).

(2) *Definition of eligible property.* For purposes of this section, the term "eligible property" means tangible property which is subject to the allowance for depreciation provided by section 167(a) but only if—

(i) An asset guideline class and asset guideline period are in effect for such property for the taxable year of election (see subparagraph (4) of this paragraph);

(ii) The property is first placed in service (as described in paragraph (e) (1) of this section) by the taxpayer after December 31, 1970 (but see subparagraph (7) of this paragraph for special rule where there is a mere change in the form of conducting a trade or business); and

(iii) The property is either—

(*a*) Section 1245 property as defined in section 1245(a) (3), or

(*b*) Section 1250 property as defined in section 1250(c).

See, however, subparagraph (6) of this paragraph for special rule for certain public utility property as defined in section 167(l)(3)(A). Property which meets the requirements of this subparagraph is eligible property even if depreciation with respect to such property, determined in accordance with this section, is allocated to or otherwise required to be reflected in the cost of a capitalized item. The term "eligible property" includes any property which meets the requirements of this subparagraph, whether such property is new property, "used property" (as described in subparagraph (5)(iii)(*c*) of this paragraph), a "property improvement" (as described in paragraph (d)(2)(vii) of this section), or an "excluded addition" (as described in paragraph (d)(2)(vi) of this section). For the treatment of expenditures for the repair, maintenance, rehabilitation or improvement of certain property, see paragraph (d) (2) of this section.

(3) *Requirement of vintage accounts*—(i) *In general.* For purposes of this section, a "vintage account" is a closed-end depreciation account containing eligible property to which the taxpayer elects to apply this section, first placed in service by the taxpayer during the taxable year of election. The "vintage" of an account refers to the taxable year during which the eligible property in the account is first placed in service by the taxpayer. Such an account will consist of an asset, or a group of assets, within a single asset guideline class established pursuant to subparagraph (4) of this paragraph and may contain only eligible property. Each item of eligible property to which the taxpayer elects to apply this section, first placed in service by the taxpayer during the taxable year of election (determined without regard to a convention described in paragraph (c)(2) of this section) shall be placed in a vintage account of the taxable year of election. For rule regarding "special basis vintage accounts" for certain property improvements, see paragraph (d)(2)(viii) and (3)(vi) of this section. Any number of vintage accounts of a taxable year may be established. More than one account of the same vintage may be established for different assets of the same asset guideline class. See paragraph (d)(3)(xi) of this section for special rule for treatment of certain multiple asset and item accounts.

(ii) *Special rule.* Section 1245 property may not be placed in a vintage account with section 1250 property. Property the original use of which does not commence with the taxpayer may not be placed in a vintage account with property the original use of which commences with the taxpayer. Property described in section 167(f)(2) may not be placed in a vintage account with property not described in section 167(f)(2). Property described in section 179(d)(1) for which the taxpayer elects the allowance for the first taxable year in accordance with section 179(c) may not be placed in a vintage account with property not described in section 179(d)(1) or for which the taxpayer does not elect such allowance for the first taxable year. For special rule for property acquired in a transaction to which section 381(a) applies, see paragraph (e)(3)(i) of this section. For additional rules with respect to accounting for eligible property, see paragraph (e) of this section.

(4) *Asset depreciation ranges and periods*—(i) *Selection of asset depreciation period.* The taxpayers books and records must specify for each vintage account of the taxable year of election—

(*a*) In the case of vintage account for property in an asset guideline class for which no asset depreciation range is in effect for the taxable year, the asset depreciation period (which shall be equal to the asset guideline period for the assets in such account), or

(*b*) In the case of a vintage account for property in an asset guideline class for which an asset depreciation range is in effect for the taxable year, the asset depreciation period selected by the taxpayer from the asset depreciation range for the assets in such account.

Unless otherwise expressly provided in the establishment thereof, for purposes of this section, the term “asset guideline class” means a category of assets (including “subsidiary assets”) for which a separate asset guideline period is in effect for the taxable year as provided in subdivision (ii) of this subparagraph. The “asset depreciation range” is a period of years which extends from 80 percent of the asset guideline period to 120 percent of such period, determined in each case by rounding any fractional part of a year to the nearer of the nearest whole or half year. Except as provided in paragraph (e)(3)(iv) of this section, in the case of an asset guideline class for which an asset depreciation range is in effect, any period within the asset depreciation range for the assets in a vintage account which is a whole number of years or a whole number of years plus a half year, may be selected. The term “asset depreciation period” means the period selected from the asset depreciation range, or if no asset depreciation range is in effect for the class, the asset guideline period. The “asset guideline period” is established in accordance with subdivision (ii) of this subparagraph and is the class life under section 167(m). See Revenue Procedure 72-10 for special rules for section 1250 property and property predominately used outside the United States. In general, an asset guideline period, but no asset depreciation range, is in effect for such property.

(ii) *Establishment of asset guideline classes and periods.* The asset guideline classes and the asset guideline periods, and the asset depreciation ranges determined from such periods, in effect for taxable years ending before the effective date of the first supplemental asset guideline classes, asset guideline periods, and asset depreciation ranges, established pursuant to this section are set forth in Revenue Procedure 72-10. Asset guideline classes and periods, and asset depreciation ranges, will from time to time be established, supplemented, and revised with express reference to this section, and will be published in the Internal Revenue Bulletin. The asset guideline classes, the asset guideline periods, and the asset depreciation ranges determined from such periods in effect as of the last day of a taxable year of election shall apply to all vintage accounts of such taxable year, except that neither the asset guideline period nor the lower limit of the asset depreciation range for any such account shall be longer than the asset guideline period or the lower limit of the asset depreciation range, as the case may be, for such account in effect as of the first day of the taxable year (or as of such later time in such year as an asset guideline class first established during such year becomes effective). Generally, the reasonable allowance for depreciation of property

for any taxable year in a vintage account shall not be changed to reflect any supplement or revision of the asset guideline classes or periods, and asset depreciation ranges, for the taxable year in which the account is established, which occurs after the end of such taxable year. However, if expressly provided in such a supplement or revision, the taxpayer may, at his option in the manner specified therein, apply the revised or supplemented asset guideline classes or periods and asset depreciation ranges to such property for such taxable year and succeeding taxable years.

(iii) *Applicable guideline classes and periods in special situations.* (*a*) An electric or gas utility which would in accordance with Revenue Procedure 64-21 be entitled to use a composite guideline class basis for applying Revenue Procedure 62-21 may, solely with respect to property for which an asset depreciation range is in effect for the taxable year, elect to apply this section on the basis of a composite asset guideline class and asset guideline period determined by applying the provisions of Revenue Procedure 64-21 to such property. The asset depreciation range for such a composite asset guideline class shall be determined by reference to the composite asset guideline period at the beginning of the first taxable year to which the taxpayer elects to apply this section and shall not be changed until such time as major variations in the asset mix or the asset guideline classes or periods justify some other composite asset guideline period. Except as provided in paragraph (d)(2)(iii) of this section with respect to buildings and other structures, for the purposes of this section, all property in the composite asset guideline class shall be treated as included in a single asset guideline class. If the taxpayer elects to apply this subdivision, the election shall be made on the tax return filed for the first taxable year for which the taxpayer elects to apply this section. An election to apply this subdivision for any taxable year shall apply to all succeeding taxable years to which the taxpayer elects to apply this section, except to the extent the election to apply this subdivision is with the consent of the Commissioner terminated with respect to a succeeding taxable year and all taxable years thereafter.

(*b*) For purposes of this section, property shall be included in the asset guideline class for the activity in which the property is primarily used. See paragraph (e)(3)(iii) of this section for rule for leased property. Property shall be classified according to primary use even though the activity in which such property is primarily used is insubstantial in relation to all the taxpayer's activities. No change in the classification of property shall be made because of a change in primary use after the end of the taxable year in which property is first placed in service, including a change in use which results in section 1250 property becoming section 1245 property.

(*c*) An incorrect classification or characterization by the taxpayer of property for the purposes of this section (such as under (*b*) of this subdivision or under subparagraph (2) or (3) (ii) of this paragraph) shall not cause or permit a revocation of the election to apply this section for the taxable year in which such property was first placed in service. The classification or characterization of such property shall be corrected. All adjustments necessary to the correction shall be made, including adjustments of unadjusted basis, adjusted basis, salvage value, the reserve for depreciation of all vintage accounts affected, and the amount of depreciation allowable for all taxable years for which the period for assessment of tax prescribed in section 6501 has not expired. If because of incorrect classification or characterization property included in an election to apply this section was not placed in a vintage account and no asset depreciation period was selected for the property or the property was placed in a vintage account but an asset depreciation period was selected from an incorrect asset depreciation range, the taxpayer shall place the property in a vintage account and select an asset depreciation period for the account from the correct asset depreciation range.

(*d*) Generally, except as provided in subparagraph (5)(v)(*a*) of this paragraph, a taxpayer may not compute depreciation for eligible property first placed in service during the taxable year under a method of depreciation not described in section 167(b) (1), (2), or (3). (If the taxpayer computes depreciation with respect to such property under section 167(k), or amortizes such property, the property must be excluded from the election to apply this section.) (See subparagraph (5)(v)(*b*) of this paragraph.) However, if the taxpayer establishes to the satisfaction of

the Commissioner that a method of depreciation not described in section 167(b) (1), (2), (3), or (k) was adopted for property in the asset guideline class on the basis of a good faith mistake as to the proper asset guideline class for the property, then, unless the requirements of subparagraph (5)(v)(*a*) of this paragraph are met, the taxpayer must terminate (as of the beginning of the taxable year) such method of depreciation with respect to all eligible property in the asset guideline class which was first placed in service during the taxable year. In such event, the taxpayer's election to apply this section shall include eligible property in the asset guideline class without regard to subparagraph (5)(v)(*a*) of this paragraph. The provisions of (*c*) of this subdivision shall apply to the correction in the classification of the property.

(*e*) If the provisions of section 167(j) apply to require a change in the method of depreciation with respect to an item of section 1250 property in a multiple asset vintage account, the asset shall be removed from the account and placed in a separate item vintage account. The unadjusted basis of the asset shall be removed from the unadjusted basis of the vintage account as of the first day of the taxable year in which the change in method of depreciation is required and the depreciation reserve established for the account shall be reduced by the depreciation allowable for the property computed in the manner prescribed in paragraph (c)(1)(v)(*b*) of this section for determination of the adjusted basis of property. See paragraph (d)(3)(vii)(*e*) of this section for treatment of salvage value when property is removed from a vintage account.

(iv) *Examples.* The principles of this subparagraph may be illustrated by the following examples:

> *Example 1.* Corporation X purchases a bulldozer for the use in its construction business. The bulldozer is first placed in service in 1972. Since the bulldozer is tangible property for which an asset guideline class and period have been established, the bulldozer is eligible property. The bulldozer is in asset guideline class 15.1 of Revenue Procedure 72-10, and the asset depreciation range is 4-6 years.

> *Example 2.* In 1972, corporation Y first places in service a factory building. Since the factory building is tangible property for which an asset guideline class and period have been established, it is eligible property. The factory building is in asset guideline class 65.11 of Revenue Procedure 72-10. Since no asset depreciation range is in effect for the asset guideline class, the asset depreciation period is the asset guideline period of 45 years. (See subparagraph (5)(vi) of this paragraph for election to exclude certain section 1250 property during transition period.)

> *Example 3.* In January of 1971, corporation Y, a calendar year taxpayer, pays or incurs $2,000 for the rehabilitation and improvement of machine A which was first placed in service in 1969. On January 1, 1971, corporation Y first placed in service machines B and C, each with an unadjusted basis of $10,000. Machines B and C are eligible property. Machine A would be eligible property but for the fact it was first placed in service prior to January 1, 1971 (that is, machine A is eligible property determined without regard to subparagraph (2)(ii) of this paragraph). Corporation Y elects to apply this section for the taxable year, and adopts the modified half-year convention described in paragraph (c)(2)(ii) of this section, but does not elect to apply the asset guideline class repair allowance described in paragraph (d)(2)(iii) of this section. Machines A, B, and C are in asset guideline class 24.4 under Revenue Procedure 72-10 for which the asset depreciation range is 8 to 12 years. The $2,000 expended on machine A substantially increases its capacity and is a capital expenditure under sections 162 and 263. The $2,000 is a property improvement

(as defined in paragraph (d)(2)(vii)(*b*) of this section) which is eligible property. However, corporation Y by mistake treats the property improvement of $2,000 as a deductible repair. Also by mistake, corporation Y includes machine B in asset guideline class 24.3 under Revenue Procedure 72-10 for which the asset depreciation range is 5 to 7 years. Corporation Y establishes vintage accounts for 1971, and computes depreciation for 1971 and 1972 as follows:

	Dec. 31, 1972, reserve for depreciation	Dec. 31, 1972, adjusted basis
Vintage account for machine B, with an asset depreciation period of 5 years and an unadjusted basis of $10,000 for which corporation Y adopts the straight line method	$4,000	$6,000
Vintage account for machine C, with an asset depreciation period of 8 years and an unadjusted basis of $10,000 for which corporation Y adopts the straight line method	2,500	7,500

After audit in 1973 of corporation Y's taxable years 1971 and 1972, it is determined that the $2,000 paid in 1971 for the rehabilitation and improvement of machine A is a capital expenditure and that machine B is in asset guideline class 24.4. The incorrect classification is corrected. Corporation Y places machine B and the property improvement in a vintage account of 1971 and on its tax return filed for 1973 selects an asset depreciation period of 8 years for that account. Giving effect to the correction in classification of the property in accordance with subdivision (iii) (*c*) of this subparagraph, at the end of 1972 the unadjusted basis, reserve for depreciation, and adjusted basis of the vintage account for machine B and the property improvement with respect to machine A are $12,000, $3,000, and $9,000, respectively. Corporation Y's deduction of the $2,000 property improvement in 1971 as a repair expense under section 162 is disallowed. For 1971 and 1972 depreciation deductions are disallowed in the amount of $500 each year (that is, $750 excess annual depreciation on machine B minus $250 annual depreciation on the property improvement).

Example 4. (a) In 1971, Corporation X, a calendar year taxpayer, first places in service machines A through M, all of which are eligible property. All the machines except machine A are in asset guideline class 24.3 under Revenue Procedure 72-10. Machine A is in asset guideline class 24.4 under Revenue Procedure 72-10. Machine B has an unadjusted basis equal to 80 percent of the total unadjusted basis of machines B through M. By good faith mistake as to proper classification, corporation X includes both machine A and machine B in asset guideline class 24.4. Corporation X consistently uses the machine hour method of depreciation on all property in asset guideline class 24.4, and for 1971 computes depreciation for machines A and B under that method. Corporation X elects to apply this section for 1971 on the assumption that the election includes machines C through M which are in asset guideline class 24.3. In

1973, upon audit of corporation X's taxable years 1971 and 1972, it is determined that machine B is included in asset guideline class 24.3 and that since for 1971 corporation X computed depreciation on machine B under the machine hour method, in accordance with subparagraph (5)(v)(*a*) of this paragraph, all property in asset guideline class 24.3 (machines B through M) is excluded from corporation X's election to apply this section for 1971. Although corporation X has consistently used the machine hour method for asset guideline class 24.4, corporation X has not in the past used the machine hour method for machines of the type and function of machines C through M which are in asset guideline class 24.3. Both machine A and machine B are used in connection with the manufacture of wood products. There is reasonable basis for corporation X having assumed that machine B is in asset guideline class 24.4 along with machine A to which it is similar. Corporation X establishes to the satisfaction of the Commissioner that it used the machine hour method for machine B on the basis of a good faith mistake as to the proper classification of the machine. Corporation X may, at its option (see subparagraph (5)(v) of this paragraph), terminate the machine hour method of depreciation for machine B as of the beginning of 1971, and in that event corporation X's election to apply this section for 1971 will apply to machines B through M without regard to subparagraph (5)(v)(*a*) of this paragraph. The adjustments provided in subdivision (iii)(*c*) of this subparagraph will be made as a result of the correction in classification of property. If corporation X does not terminate the machine hour method with respect to machine B, machines B through M must be excluded from the election to apply this section (see subparagraph (5)(v) of this paragraph).
(*b*) The facts are the same as in (*a*) of this example except that machine B has an unadjusted basis equal to only 65 percent of the total unadjusted basis of machines B through M.

In this case, corporation X must either terminate the machine hour method of depreciation with respect to asset B (since the provisions of subparagraph (5)(v) of this paragraph do not permit the exclusion of the property from the election to apply this section) or otherwise comply with the provisions of subparagraph (5)(v) of this paragraph. (See paragraph (c)(1)(iv) for limitation on methods which may be adopted for property included in the election to apply this section.)

(5) *Requirements of election*—(i) *In general.* Except as otherwise provided in paragraph (d)(2) of this section dealing with expenditures for the repair, maintenance, rehabilitation or improvement of certain property, no provision of this section shall apply to any property other than eligible property to which the taxpayer elects in accordance with this section, to apply this section. For the time and manner of election, and certain conditions to an election, see paragraph (f) of this section. Except as otherwise provided in subparagraph (4)(iii) of this paragraph, subdivision (v) of this subparagraph and in subparagraph (6)(iii) of this paragraph, a taxpayer's election to apply this section may not be revoked or modified after the last day prescribed for filing the election. Thus, for example, after such day, a taxpayer may not cease to apply this section to property included in the election, establish different vintage accounts for the taxable year of election, select a different period from the asset depreciation range for any such account, or adopt a different first-year convention for any such account.

(ii) *Property required to be included in election.* Except as otherwise provided in subdivision (iii) of this subparagraph dealing with certain “used property”, in subdivision (iv) of this subparagraph dealing with “section 38 property”, in subdivision (v) of this subparagraph dealing with property subject to special depreciation or amortization, in subdivision (vi) of this subparagraph dealing with certain section 1250 property, in subdivision (vii) of this subparagraph dealing with certain subsidiary assets, and in paragraph (e)(3) (i) and (iv) of this section dealing with

transactions to which section 381(a) applies, if the taxpayer elects to apply this section to any eligible property first placed in service by the taxpayer during the taxable year of election, the election shall apply to all such eligible property, whether placed in service in a trade or business or held for production of income.

(iii) *Special 10 percent used property rule.* (*a*) If (*1*) the unadjusted basis of eligible used section 1245 property (as defined in (*c*) of this subdivision) first placed in service by the taxpayer during the taxable year of election, for which no specific used property asset guideline class (as defined in (*c*) of this subdivision) is in effect for the taxable year, exceeds (*2*) 10 percent of the unadjusted basis of all eligible section 1245 property first placed in service during the taxable year of election, the taxpayer may exclude all (but not less than all) the property described in (*a*)(*1*) of this subdivision from the election to apply this section.

(*b*) If (*1*) the unadjusted basis of eligible used section 1250 property first placed in service by the taxpayer during the taxable year of election, for which no specific used property asset guideline class is in effect for the taxable year, exceeds (*2*) 10 percent of the unadjusted basis of all eligible section 1250 property first placed in service during the taxable year of election, the taxpayer may exclude all (but not less than all) the property described in (*b*)(*1*) of this subdivision from the election to apply this section.

(*c*) For the purposes of this section, the term “used property” means property the original use of which does not commence with the taxpayer. Solely for the purpose of determining whether the 10 percent rule of this subdivision is satisfied, (*1*) eligible used property first placed in service during the taxable year and excluded from the election to apply this section pursuant to subdivision (v)(*a*) of this subparagraph and (*2*) eligible property acquired during the taxable year in a transaction to which section 381(a) applies, shall all be treated as used property regardless of whether such property would be treated as new property under section 167(c) and the regulations thereunder. The term “specific used property asset guideline class” means a class established in accordance with subparagraph (4) of this paragraph solely for used property primarily used in connection with the activity to which the class relates.

(iv) *Property subject to investment tax credit.* The taxpayer may exclude from an election to apply this section all, or less than all, units of eligible property first placed in service during the taxable year which is—

(*a*) “Section 38 property” as defined in section 48(a) which meets the requirements of section 49 and which is not property described in section 50, or

(*b*) Property to which section 47(a)(5)(B) applies which would be section 38 property but for section 49 and which is placed in service to replace section 38 property (other than property described in section 50) disposed of prior to August 15, 1971.

(v) *Property subject to special method of depreciation or authorization.* (*a*) In the case of eligible property first placed in service in a taxable year of election (and not otherwise properly excluded from an election to apply this section) the taxpayer may not compute depreciation for any of such property in the asset guideline class under a method not described in section 167(b) (1), (2), (3), or (k) unless he (*1*) computes depreciation under a method or methods not so described for eligible property first placed in service in the taxable year in the asset guideline class with an unadjusted basis at least equal to 75 percent of the unadjusted basis of all eligible property first placed in service in the taxable year in the asset guideline class and (*2*) agrees to continue to depreciate such property under such method or methods until the consent of the Commissioner is obtained to a change in method. The consent of the Commissioner must be obtained by filing Form 3115 with the Commissioner of Internal Revenue, Washington, D.C. 20224, within the first 180 days of the taxable year for which the change is desired. If for the taxable year of election the taxpayer computes depreciation under any method not described in section 167(b) (1), (2), (3), or (k) for any

eligible property (other than property otherwise properly excluded from an election to apply this section) first placed in service during the taxable year, an election to apply this section for the taxable year shall not include such property or any other eligible property in the same asset guideline class as such property. With respect to a taxable year beginning before January 1, 1973, if the taxpayer has adopted a method of depreciation which is not permitted under this subdivision, the taxpayer may under this section adopt a method of depreciation permitted under this subdivision or otherwise comply with the provisions of this subdivision.

(*b*) An election to apply this section shall not include eligible property for which, for the taxable year of election, the taxpayer computes depreciation under section 167(k), or computes amortization under section 169, 184, 185, 187, 188, or paragraph (b) of § 1.162-11. If the taxpayer has elected to apply this section to eligible property described in section 167(k), 169, 184, 185, or 187 and the taxpayer thereafter computes depreciation or amortization for such property for any taxable year in accordance with section 167(k), 169, 184, 185, or 187, then the election to apply this section to such property shall terminate as of the beginning of the taxable year for which depreciation or amortization is computed under such section. Application of this section to the property for any period prior to the termination date will not be affected by the termination. The unadjusted basis of the property shall be removed as of the termination date from the unadjusted basis of the vintage account. The depreciation reserve established for the account shall be reduced by the depreciation allowable for the property, computed in the manner prescribed in paragraph (c)(1)(v)(*b*) of this section for determination of the adjusted basis of the property. See paragraph (d)(3)(vii)(*e*) of this section for treatment of salvage value when property is removed from a vintage account.

(vi) *Certain section 1250 property.* (*a*) The taxpayer may exclude from an election to apply this section all, or less than all, items of eligible section 1250 property first placed in service during the taxable year of election provided that—

(*1*) The item is first placed in service before the earlier of the effective date of the first supplemental asset guideline class including such property established in accordance with subparagraph (4)(ii) of this paragraph, or January 1, 1974, and

(*2*) The taxpayer establishes that a useful life shorter than the asset guideline period in effect on January 1, 1971, for such item of property is justified for such taxable year.

A useful life shorter than the asset guideline period in effect on January 1, 1971, will be considered justified only if such life is justified in accordance with the provisions of Revenue Procedure 62-21 (including all modifications, amendments or supplements thereto as of January 1, 1971), determined without application of the minimal adjustment rule in section 4, part II, of Revenue Procedure 65-13. If an item of section 1250 property is excluded from an election to apply this section pursuant to this subdivision, any elevator or escalator which is a part of such item shall also be excluded from the election.

(*b*) If the taxpayer excludes an item of section 1250 property from an election to apply this section in accordance with this subdivision, the useful life justified under Revenue Procedure 62-21 in accordance with this subdivision for the taxable year of exclusion will be treated as justified for such item of section 1250 property for the taxable year of the exclusion and all subsequent taxable years.

(vii) *Subsidiary assets.* The taxpayer may exclude from an election to apply this section all (but not less than all) subsidiary assets first placed in service during the taxable year of election in an asset guideline class, provided that—

(*a*) The unadjusted basis of eligible subsidiary assets first placed in service during the taxable year in the class is as much as 3 percent of the unadjusted basis of all eligible property first placed in service during the taxable year in the class, and

(*b*) Such subsidiary assets are first placed in service by the taxpayer before the earlier of (*1*) the effective date of the first supplemental asset guideline class including such subsidiary assets established in accordance with subparagraph (4)(ii) of this paragraph, or (*2*) January 1, 1974.

For purposes of this subdivision the term "subsidiary assets" includes jigs, dies, molds, returnable containers, glassware, silverware, textile mill cam assemblies, and other equipment included in group 1, class 5, of Revenue Procedure 62-21. which is usually and property accounted for separately from other property and under a method of depreciation not expressed in terms of years.

(6) *Special rule for certain public utility property*—(i) *Requirement of normalization in certain cases.* Under section 167(1), in the case of public utility property (as defined in section 167(1)(3)(A)), if the taxpayer—

(*a*) Is entitled to use a method of depreciation other than a "subsection (1) method" of depreciation (as defined in section 167(1)(3)(F)) only if it uses the "normalization method of accounting" (as defined in section 167(1)(3)(G)) with respect to such property, or

(*b*) Is entitled for the taxable year to use only a "subsection (1) method" of depreciation, such property shall be eligible property (as defined in subparagraph (2) of this paragraph) only if the taxpayer normalizes the tax deferral resulting from the election to apply this section.

(ii) *Normalization.* The taxpayer will be considered to normalize the tax deferral resulting from the election to apply this section only if it computes its tax expense for purposes of establishing its cost of service for ratemaking purposes and for reflecting operating results in its regulated books of account using a period for depreciation no less than the lesser of—

(*a*) 100 percent of the asset guideline period in effect in accordance with subparagraph (4)(ii) of this paragraph for the first taxable year to which this section applies, or

(*b*) The period for computing its depreciation expense for ratemaking purposes and for reflecting operating results in its regulated books of account, and makes adjustments to a reserve to reflect the deferral of taxes resulting from the election to apply this section. A determination whether the taxpayer is considered to normalize (within the meaning of the preceding sentence) the tax deferral resulting from the election to apply this section shall be made in a manner consistent with the principles for determining whether a taxpayer is using the "normalization method of accounting" (within the meaning of section 167(1)(3)(G)). [Removed] See § 1.167(1)-1(h).

(iii) *Failure to normalize.* If a taxpayer, which has elected to apply this section to any eligible public utility property and is required under subdivision (i) of this subparagraph to normalize the tax deferral resulting from the election to apply this section to such property, fails to normalize such tax deferral, the election to apply this section to such property shall terminate as of the beginning of the taxable year for which the taxpayer fails to normalize such tax deferral. Application of this section to such property for any period prior to the termination date will not be affected by the termination. The unadjusted basis of the property shall be removed as of the termination date from the unadjusted basis of the vintage account. The depreciation reserve established for the account shall be reduced by

the depreciation allowable for the property, computed in the manner prescribed in paragraph (c)(1)(v)(*b*) of this section for determination of the adjusted basis of the property. See paragraph (d)(3)(vii)(*e*) of this section for treatment of salvage value when property is removed from a vintage account.

(iv) *Examples.* The principles of this subparagraph may be illustrated by the following examples:

> *Example 1.* Corporation A is a gas pipeline company, subject to the jurisdiction of the Federal Power Commission, which is entitled under section 167(1) to use a method of depreciation other than a "subsection (1) method" of depreciation (as defined in section 167(1) (3) (F)) only if it uses the "normalization method of accounting" (as defined in section 167(1)(3)(G)). Corporation A elects to apply this section for 1972 with respect to all eligible property. In 1972, corporation A places in service eligible property with an unadjusted basis of $2 million. One hundred percent of the asset guideline period for such property is 22 years and the asset depreciation range is from 17.5 years to 26.5 years. The taxpayer uses the double declining balance method of depreciation, selects an asset depreciation period of 17.5 years and applies the half-year convention (described in paragraph (c)(2)(iii) of this section). The depreciation allowable under this section with respect to such property in 1972 is $114,285. The taxpayer will be considered to normalize the tax deferral resulting from the election to apply this section and to use the "normalization method of accounting" (within the meaning of section 167(1)(3)(G)) if it computes its tax expense for purposes of determining its cost of service for rate making purposes and for reflecting operating results in its regulated books of account using a "subsection (1) method" of depreciation, such as the straight line method, determined by using a depreciation period of 22 years (that is, 100 percent of the asset guideline period). A depreciation allowance computed in this manner is $45,454. The difference in the amount determined under this section ($114,285) and the amount used in computing its tax expense for purposes of estimating its cost of service for rate making purposes and for reflecting operating results in its regulated books of account ($45,454) is $68,831. Assuming a tax rate of 48 percent, the deferral of taxes resulting from an election to apply this section and using a different method of depreciation for tax purposes from that used for establishing its cost of service for rate making purposes and for reflecting operating results in its regulated books of account is 48 percent of $68,831, or $33,039, which amount should be added to a reserve to reflect the deferral of taxes resulting from the election to apply this section and from the use of a different method of depreciation in computing the allowance for depreciation under section 167 from that used in computing its depreciation expense for purposes of establishing its cost of service for rate making purposes and for reflecting operating results in its regulated books of account.

> *Example 2.* Corporation B, a telephone company subject to the jurisdiction of the Federal Communications Commission used a "flow-through method of accounting" (as defined in section 167(1)(3)(H)) for its "July 1969 accounting period" (as defined in section 167(1)(3)(I)) with respect to all of its pre-1970 public utility property and did not make an election under section 167(1)(4)(A). Thus, corporation B is entitled under section 167(1) to use a method of depreciation other than a "subsection (1) method" with respect to certain property without using the "normalization method of accounting." In 1972,

corporation B makes an election to apply this section with respect to all eligible property. Corporation B is not required to normalize the tax deferral resulting from the election to apply this section in the case of property for which it is not required to use the "normalization method of accounting" under section 167(1).

Example 3. Assume the same facts as in example (2) except that corporation B made a timely election under section 167(1)(4)(A) that section 167(1)(2)(C) not apply with respect to property which increases the productive or operational capacity of the taxpayer. Corporation B must normalize the tax deferral resulting from the election to apply this section with respect to such property.

(7) *Mere change in form of conducting a trade or business.* Property which was first placed in service by the transferor before January 1, 1971, shall not be eligible property if such property is first placed in service by the transferee after December 31, 1970, by reason of a mere change in the form of conducting a trade or business in which such property is used. A mere change in the form of conducting a trade or business in which such property is used will be considered to have occurred if—

(i) The transferor (or in a case where the transferor is a partnership, estate, trust, or corporation, the partners, beneficiaries, or shareholders) of such property retains a substantial interest in such trade or business, or

(ii) The basis of such property in the hands of the transferee is determined in whole or in part by reference to the basis of such property in the hands of the transferor.

For purposes of this subparagraph, a transferor (or in a case where the transferor is a partnership, estate, trust, or corporation, the partners, beneficiaries, or shareholders) shall be considered as having retained a substantial interest in the trade or business only if, after the change in form, his (or their) interest in such trade or business is substantial in relation to the total interest of all persons in such trade or business. This subparagraph shall apply to property first placed in service prior to January 1, 1971, held for the production of income (within the meaning of section 167(a)(2)) as well as to property used in a trade or business. The principles of this subdivision may be illustrated by the following examples:

Example 1. Corporation X and corporation Y are includible corporations in an affiliated group as defined in section 1504(a). In 1971 corporation X sells property to corporation Y for cash. The property would meet the requirements of subparagraph (2) of this paragraph for eligible property except that it was first placed in service by corporation X in 1970. After the transfer, the property is first placed in service by corporation Y in 1971. The property is not eligible property because of the mere change in the form of conducting a trade or business.

Example 2. In 1971, in a transaction to which section 351 applies, taxpayer B transfers to corporation W property which would meet the requirements of subparagraph (2) of this paragraph for eligible property except that the property was first placed in service by B in 1969. Corporation W first places the property in service in 1971. The property is not eligible property because of the mere change in the form of conducting a trade or business.

(c) *Manner of determining allowance*—(1) *In general*—(i) *Computation of allowance.* (*a*) The allowance for depreciation of property in a vintage account shall be determined in the manner specified in this paragraph by using the method of depreciation adopted by the taxpayer for the account and a rate based upon the asset depreciation period for the account. (For limitations on methods of depreciation permitted with respect to property, see section 167 (c) and (j) and subdivision (iv) of this subparagraph.) In applying the method of depreciation adopted by the taxpayer, the annual allowance for depreciation of a vintage account shall be determined without adjustment for the salvage value of the property in such account except that no account may be depreciated below the reasonable salvage value of the account. (For rules regarding estimation and treatment of salvage value, see paragraph (d)(1) and (3) (vii) and (viii) of this section.) Regardless of the method of depreciation adopted by the taxpayer, the depreciation allowable for a taxable year with respect to a vintage account may not exceed the amount by which (as of the beginning of the taxable year) the unadjusted basis of the account exceeds (*1*) the reserve for depreciation established for the account plus (*2*) the salvage value of the account. The unadjusted basis of a vintage account is defined in subdivision (v) of this subparagraph. The adjustments to the depreciation reserve are described in subdivision (ii) of this subparagraph.

(*b*) The annual allowance for depreciation of a vintage account using the straight line method of depreciation shall be determined by dividing the unadjusted basis of the vintage account (without reduction for salvage value) by the number of years in the asset depreciation period selected for the account. See subdivision (iii)(*b*) of this subparagraph for the manner of computing the depreciation allowance following a change from the declining balance method or the sum of the years-digits method to the straight line method.

(*c*) In the case of the sum of the years-digits method, the annual allowance for depreciation of a vintage account shall be computed by multiplying the unadjusted basis of the vintage account (without reduction for salvage value) by a fraction, the numerator of which changes each year to a number which corresponds to the years remaining in the asset depreciation period for the account (including the year for which the allowance is being computed) and the denominator of which is the sum of all the year's digits corresponding to the asset depreciation period for the account. See subdivision (iii)(*c*) of this subparagraph for the manner of computing the depreciation allowance following a change from the declining balance method to the sum of the years-digits method.

(*d*) The annual allowance for depreciation of a vintage account using a declining balance method is determined by applying a uniform rate to the excess of the unadjusted basis of the vintage account over the depreciation reserve established for that account. The rate under the declining balance method may not exceed twice the straight line rate based upon the asset depreciation period for the vintage account.

(*e*) The allowance for depreciation under this paragraph shall constitute the amount of depreciation allowable under section 167. See section 179 for additional first-year allowance for certain property.

(ii) *Establishment of depreciation reserve.* The taxpayer must establish a depreciation reserve for each vintage account. The amount of the reserve for a guideline class must be stated on each income tax return on which depreciation with respect to such class is determined under this section. The depreciation reserve for a vintage account consists of the accumulated depreciation allowable under this section with respect to the vintage account, increased by the adjustments for ordinary retirements prescribed by paragraph (d)(3)(iii) of this section, by the adjustments for reduction of the salvage value of a vintage account prescribed by paragraph (d)(3)(vii)(*d*) of this section, and by the adjustments for transfers to supplies or scrap prescribed by paragraph (d)(3)(viii)(*b*) of this section, and decreased by the adjustments for extraordinary retirements and certain special retirements as prescribed by paragraph (d)(3) (iv) and (v) of this section, by the adjustments for the amount of the reserve in excess of the unadjusted basis of a vintage account prescribed by paragraph (d)(3)(ix)(*a*) of this section, and by the

adjustments for property removed from a vintage account prescribed by paragraphs (b)(4)(iii)(*e*), (5)(v)(*b*) and (6)(iii) of this section. The adjustments to the depreciation reserve for ordinary retirements during the taxable year shall be made as of the beginning of the taxable year. The adjustments to the depreciation reserve for extraordinary retirements shall be made as of the date the retirement is treated as having occurred in accordance with the first-year convention (described in subparagraph (2) of this paragraph) adopted by the taxpayer for the vintage account. The adjustment to the depreciation reserve for reduction of salvage value and for transfers to supplies or scrap shall, in the case of an ordinary retirement, be made as of the beginning of the taxable year, and in the case of an extraordinary retirement the adjustment for reduction of salvage value shall be made as of the date the retirement is treated as having occurred in accordance with the first-year convention (described in subparagraph (2) of this paragraph) adopted by the taxpayer for the vintage account. The adjustment to the depreciation reserve for property removed from a vintage account in accordance with paragraph (b)(4)(iii)(*e*), (5)(v)(*b*) and (6)(iii) of this section shall be made as of the beginning of the taxable year. The depreciation reserve of a vintage account may not be decreased below zero.

(iii) *Consent to change in method of depreciation.* (*a*) During the asset depreciation period for a vintage account, the taxpayer is permitted to change under this section from a declining balance method of depreciation to the sum of the years-digits method of depreciation and from a declining balance method of depreciation or the sum of the years-digits method of depreciation to the straight line method of depreciation with respect to such account. Except as provided in section 167(j)(2)(1), and paragraph (e)(3)(i) of this section, no other changes in the method of depreciation adopted for a vintage account will be permitted. The provisions of § 1.167(e)-1 shall not apply to any change in depreciation method permitted under this section. The change in method applies to all property in the vintage account and must be adhered to for the entire taxable year of the change.

(*b*) When a change is made to the straight line method of depreciation, the annual allowance for depreciation of the vintage account shall be determined by dividing the adjusted basis of the vintage account (without reduction for salvage value) by the number of years remaining (at the time as of which the change is made) in the asset depreciation period selected for the account. However, the depreciation allowable for any taxable year following a change to the straight line method may not exceed an amount determined by dividing the unadjusted basis of the vintage account (without reduction for salvage value) by the number of years in the asset depreciation period selected for the account.

(*c*) When a change is made from the declining balance method of depreciation to the sum of the years-digits method of depreciation, the annual allowance for depreciation of a vintage account shall be determined by multiplying the adjusted basis of the account (without reduction for salvage value) at the time as of which the change is made by a fraction, the numerator of which changes each year to a number which corresponds to the number of years remaining in the asset depreciation period selected for the account (including the year for which the allowance is being computed), and the denominator of which is the sum of all the year's digits corresponding to the number of years remaining in the asset depreciation period at the time as of which the change is made.

(*d*) The number of years remaining in the asset depreciation period selected for an account is equal to the asset depreciation period less the number of years of depreciation previously allowed. For this purpose, regardless of the first year convention adopted by the taxpayer, it will be assumed that depreciation was allowed for one-half of a year in the first year.

(*e*) The taxpayer shall furnish a statement setting forth the vintage accounts for which the change is made with the income tax return filed for the taxable year of the change.

(*f*) The principles of this subdivision may be illustrated by the following examples:

Example 1. A, a calendar year taxpayer, places new section 1245 property in service in a trade or business as follows:

Asset	Placed in service	Unadjusted basis	Estimated salvage
X	Mar. 15, 1971	$400	$20
Y	June 13, 1971	500	50
Z	July 30, 1971	100	0

The property is eligible property and is properly included in a single vintage account. The asset depreciation range for such property is 5 to 7 years and the taxpayer selects an asset depreciation period of 5 1/2 years and adopts the 200-percent declining balance method of depreciation. The taxpayer adopts the half-year convention described in subparagraph (2)(iii) of this paragraph. After 3 years, A changes from the 200-percent declining balance method to the straight line method of depreciation. Depreciation allowances would be as follows:

Year	Unadjusted basis	Rate	Depreciation	Reserve	Adjusted basis
1971	$1,000	0.18182	$181.82	$181.82	$818.18
1972	1,000	.36363	297.52	479.34	520.66
1973	1,000	.36363	189.33	668.67	331.33
1974	1,000	[1] .33333	110.44	779.11	220.89
1975	1,000	.33333	110.44	889.56	110.44
1976	1,000	.33333	[2] 40.44	930.00	70.00

[1] *Rate applied to adjusted basis of the account (without reduction by salvage) at the time as of which the change is made to the straight line method.*

[2] *The allowable depreciation is limited by estimated salvage.*

Example 2. The facts are the same as in example (1) except that A elects to use the modified half-year convention described in subparagraph (2)(ii) of this paragraph. The depreciation allowances would be as

follows:

Year	Unadjusted basis	Rate	Depreciation	Reserve	Adjusted basis
1971	$1,000	[1] 0.36363	$327.27	$327.27	$672.73
1972	1,000	.36363	244.63	571.90	428.10
1973	1,000	.36363	155.67	727.57	272.43
1974	1,000	.33333	90.81	818.38	181.62
1975	1,000	.33333	90.81	909.19	90.81
1976	1,000	.33333	[2] 20.81	930.00	70.00

[1] *Rate applied to $900, the amount of assets placed in service during the first half of the taxable year.*

[2] *The allowable depreciation is limited by estimated salvage.*

Example 3. The facts are the same as in example (1) except that A adopted the sum of the years-digits method of depreciation and does not change to the straight line method of depreciation. The depreciation allowances would be as follows:

Year	Unadjusted basis	Rate	Depreciation	Reserve	Adjusted basis
1971	$1,000	[1] 2.75/18	$152.78	$152.78	$847.22
1972	1,000	5/18	277.78	430.56	569.44
1973	1,000	4/18	222.22	652.78	347.22
1974	1,000	3/18	166.67	819.45	180.55
1975	1,000	2/18	[2] 110.55	930.00	70.00
1976	1,000	1/18	0.00	930.00	70.00
1977	1,000	0.25/18	0.00	930.00	70.00

[1] *Rate is equal to one-half of 5.5/18. The denominator is equal to 5.5 + 4.5 + 3.5 + 2.5 + 1.5 + 0.5.*

[2] *The allowable depreciation is limited by estimated salvage.*

Example 4. The facts are the same as in example (3) except that A elects to use the modified half-year convention described in subparagraph (2) (ii) of this paragraph. The depreciation allowances would be as

follows:

Year	Unadjusted basis	Rate	Depreciation	Reserve	Adjusted basis
1971	$1,000	[1] 5.5/18	$275.00	$275.00	$725.00
1972	1,000	5/18	277.78	552.78	447.22
1973	1,000	4/18	222.22	775.00	225.00
1974	1,000	3/18	[2] 155.00	930.00	70.00
1975	1,000	2/18	0.00	930.00	70.00
1976	1,000	1/18	0.00	930.00	70.00
1977	1,000	0.25/18	0.00	930.00	70.00

[1] *Rate applied to $900, the amount of assets placed in service during the first half of the taxable year.*

[2] *The allowable depreciation is limited by estimated salvage.*

Example 5. The facts are the same as in example (2) except that after 2 years A changes from the 200-percent declining balance method to the sum of the years-digits method of depreciation. The depreciation allowances would be as follows:

Year	Unadjusted basis	Rate	Depreciation	Reserve	Adjusted basis
1971	$1,000	0.36363	$327.27	$327.27	$672.73
1972	1,000	.36363	244.63	571.90	428.10
1973	1,000	4/10	171.24	743.14	256.86
1974	1,000	3/10	128.43	871.57	128.43
1975	1,000	2/10	[1] 58.43	930.00	70.00
1976	1,000	1/10	0.00	930.00	70.00

[1] *The allowable depreciation is limited by estimated salvage.*

(iv) *Limitation on methods.* (*a*) The same method of depreciation must be adopted for all property in a single vintage account. Generally, the method of depreciation which may be adopted is subject to the limitations contained in section 167 (c), (j) and (l).

(*b*) Except as otherwise provided in section 167(j) with respect to certain eligible section 1250 property—

(*1*) In the case of a vintage account for which the taxpayer has selected an asset depreciation period of 3 years or more and which only contains property the original use of which commences with the taxpayer, any method of depreciation described in section 167(b) (1), (2), or (3) may be adopted, but if the vintage account contains property the original use of which does not commence with the taxpayer, or if the asset depreciation period for the account is less than 3 years, a method of depreciation described in section 167(b) (2) or (3) may not be adopted for the account, and

(*2*) The declining balance method using a rate not in excess of 150 percent of the straight line rate based upon the asset depreciation period for the vintage account may be adopted for the account even if the original use of the property does not commence with the taxpayer provided the asset depreciation period for the account is at least 3 years.

(*c*) The term "original use" means the first use to which the property is put, whether or not such use corresponds to the use of such property by the taxpayer. (See § 1.167(c)-1).

(v) *Unadjusted and adjusted basis.* (*a*) For purposes of this section, the unadjusted basis of an asset (including an "excluded addition" and a "property improvement" as described, respectively, in paragraph (d)(2) (vi) and (vii) of this section) is its cost or other basis without any adjustment for depreciation or amortization (other than depreciation under section 179) but with other adjustments required under section 1016 or other applicable provisions of law. The unadjusted basis of a vintage account is the total of the unadjusted bases of all the assets in the account. The unadjusted basis of a "special basis vintage account" as described in paragraph (d)(3)(vi) of this section is the amount of the property improvement determined in paragraph (d)(2)(vii)(*a*) of this section.

(*b*) The adjusted basis of a vintage account is the amount by which the unadjusted basis of the account exceeds the reserve for depreciation for the account. The adjusted basis of an asset in a vintage account is the amount by which the unadjusted basis of the asset exceeds the amount of depreciation allowable for the asset under this section computed by using the method of depreciation and the rate applicable to the account. For purposes of this subdivision, the depreciation allowable for an asset shall include, to the extent identifiable, the amount of proceeds previously added to the depreciation reserve in accordance with paragraph (d)(3)(iii) of this section upon the retirement of any portion of such asset. (See paragraph (d)(3)(vi) of this section for election under certain circumstances to allocate adjusted basis of an amount of property improvement determined under paragraph (d)(2)(vii)(*a*) of this section.)

(2) *Conventions applied to additions and retirements*—(i) *In general.* The allowance for depreciation of a vintage account (whether an item account or a multiple asset account) shall be determined by applying one of the conventions described in subdivisions (ii) and (iii) of this subparagraph. (For the manner of applying a convention in the case of taxable years beginning before and ending after December 31, 1970, see subparagraph (3) of this paragraph.) The same convention must be adopted for all vintage accounts of a taxable year, but the same convention need not be adopted for the vintage accounts of another taxable year. An election to apply this section must specify the convention adopted. (See paragraph (f) of this section for information required in making the election.) The convention adopted by the taxpayer is a method of accounting for purposes of section 446, but the consent of the Commissioner will be deemed granted to make an annual adoption of either of the conventions described in subdivisions (ii) and (iii) of this subparagraph.

(ii) *Modified half-year convention.* The depreciation allowance for a vintage account for which the taxpayer adopts the "modified half-year convention" shall be determined by treating: (*a*) All property in such account which is placed in service during the first half of the taxable year as placed in service on the first day of the taxable year; and (*b*) all property in such account which is placed in service during the second half of the taxable year as placed in service on the first day of the succeeding taxable year. The depreciation allowance for a vintage account for a taxable year in which there is an extraordinary retirement (as defined in paragraph (d) (3) (ii) of this section) of property first placed in service during the first half of the taxable year is determined by treating all such retirements from such account during the first half of the taxable year as occurring on the first day of the taxable year and all such retirements from such account during the second half of the taxable year as occurring on the first day of the second half of the taxable year. The depreciation allowance for a vintage account for a taxable year in which there is an

extraordinary retirement (as defined in paragraph (d)(3)(ii) of this section) of property first placed in service during the second half of the taxable year is determined by treating all such retirements from such account during the first half of the taxable year as occurring on the first day of the second half of the taxable year and all such retirements in the second half of the taxable year as occurring on the first day of the succeeding taxable year.

(iii) *Half-year convention.* The depreciation allowance for a vintage account for which the taxpayer adopts the "half-year convention" shall be determined by treating all property in the account as placed in service on the first day of the second half of the taxable year and by treating all extraordinary retirements (as defined in paragraph (d)(3)(ii) of this section) from the account as occurring on the first day of the second half of the taxable year.

(iv) *Rules of application.* (*a*) The first-year convention adopted for a vintage account must be consistently applied to all additions to and all extraordinary retirements from such account. See paragraph (d)(3) (ii) and (iii) of this section for definition and treatment of ordinary retirements.

(*b*) If the actual number of months in a taxable year is other than 12 full calendar months, depreciation is allowed only for such actual number of months and the term "taxable year", for purposes of this subparagraph, shall mean only such number of months. In such event, the first half of such taxable year shall be deemed to expire at the close of the last day of a calendar month which is the closest such last day to the middle of such taxable year and the second half of such taxable year shall be deemed to begin the day after the expiration of the first half of such taxable year. If a taxable year consists of a period which includes only 1 calendar month, the first half of the taxable year shall be deemed to expire on the first day which is nearest to the midpoint of the month, and the second half of the taxable year shall begin the day after the expiration of the first half of the month.

(*c*) For purposes of this subparagraph, for property placed in service after November 14, 1979, other than depreciable property described in paragraph (c)(2)(iv)(*e*) of this section, the taxable year of the person placing such property in service does not include any month before the month in which the person begins engaging in a trade or business or holding depreciable property for the production of income.

(*d*) For purposes of paragraph (c)(2) (iv)(*c*) of this section—

(*1*) For property placed in service after February 21, 1981, an employee is not considered engaged in a trade or business by virtue of employment.

(*2*) If a person engages in a small amount of trade or business activity after February 21, 1981, for the purpose of obtaining a disproportionately large depreciation deduction for assets for the taxable year in which they are placed in service, and placing those assets in service represents a substantial increase in the person's level of business activity, then for purposes of depreciating those assets the person will not be treated as beginning a trade or business until the increased amount of business activity begins. For property held for the production of income, the principle of the preceding sentence applies.

(*3*) A person may elect to apply the rules of § 1.167(a)-11 (c)(2)(iv)(*d*) as set forth in T.D. 7763 ("(*d*) rules in T.D. 7763"). This election shall be made by reflecting it under paragraph (f)(4) of this section in the books and records. If necessary, amended returns shall be filed.

(*4*) If an averaging convention was adopted in reliance on or in anticipation of the (*d*) rules in T.D. 7763, that convention may be changed without regard to paragraph (f)(3) of this section. Similarly, if an election is made under paragraph (c)(2)(iv)(*d*)(*3*) of this section to apply to the (*d*) rules in T.D. 7763, the averaging convention adopted for

the taxable years for which the election is made may be changed. The change shall be made by filing a timely amended return for the taxable year for which the convention was adopted. Notwithstanding the three preceding sentences, if an averaging convention was adopted in reliance on or in anticipation of the (*d*) rules in T.D. 7763, and if an election is made to apply those rules, the averaging convention adopted cannot be changed except as provided in paragraph (f) of this section.

(*e*) The rules in paragraph (c)(2)(iv)(*c*) of this section do not apply to depreciable property placed in service after November 14, 1979, and the rules in paragraph (c)(2)(iv)(*d*) of this section do not apply to depreciable property placed in service after February 21, 1981, with respect to which substantial expenditures were paid or incurred prior to November 15, 1979. For purposes of the preceding sentence, expenditures will not be considered substantial unless they exceed the lesser of 30 percent of the final cost of the property or $10 million. Expenditures that are not includible in the basis of the depreciable property will be considered expenditures with respect to property if they are directly related to a specific project involving such property. For purposes of determining whether expenditures were paid or incurred prior to November 15, 1979, expenditures made by a person (transferor) other than the person placing the property in service (transferee) will be taken into account only if the basis of the property in the hands of the transferee is determined in whole or in part by reference to the basis in the hands of the transferor. The principle of the preceding sentence also applies if there are multiple transfers.

(v) *Mass assets.* In the case of mass assets, if extraordinary retirements of such assets in a guideline class during the first half of the taxable year are allocated to a particular vintage year for which the taxpayer applied the modified half-year convention, then that portion of the mass assets so allocated which bears the same ratio to the total number of mass assets so allocated as the mass assets in the same vintage and assets guideline class placed in service during the first half of that vintage year bear to the total mass assets in the same vintage and asset guideline class shall be treated as retired on the first day of the taxable year. The remaining mass assets which are subject to extraordinary retirement during the first half of the taxable year and which are allocated to that vintage year and assets guideline class shall be treated as retired on the first days of the second half of the taxable year. If extraordinary retirements of mass assets in a guideline class occur in the second half of the taxable year and are allocated to a particular vintage year for which the taxpayer applied the modified half-year convention, then that portion of the mass assets so allocated which bears the same ratio to the total number of mass assets so allocated as the mass assets in the same vintage and asset guideline class first placed in service during the first half of that vintage year bear to the total mass assets in the same vintage and asset guideline class shall be treated as retired on the first day of the second half of the taxable year. The remaining mass assets which are subject to extraordinary retirements during the second half of the taxable year and which are allocated to that same vintage and asset guideline class shall be treated as retired on the first day of the succeeding taxable year. If the taxpayer has applied the half-year convention for the vintage year to which the extraordinary retirements are allocated, the mass assets shall be treated as retired on the first day of the second half of the taxable year.

(3) *Taxable years beginning before and ending after December 31, 1970.* In the case of a taxable year which begins before January 1, 1971, and ends after December 31, 1970, property first placed in service after December 31, 1970, but treated as first placed in service before January 1, 1971, by application of a convention described in subparagraph (2) of this paragraph shall be treated as provided in this subparagraph. The depreciation allowed (or allowable) for the taxable year shall consist of the depreciation allowed (or allowable) for the period before January 1, 1971, determined without regard to this section plus the amount allowable for the period after December 31, 1970, determined under this section. However, neither the modified half-year convention described in subparagraph (2)(ii) of this paragraph, nor the half-year convention described in subparagraph (2)(iii) of this paragraph may for any such taxable year be applied with respect to property placed in service after December 31, 1970, to allow depreciation for any period prior to January 1, 1971, unless such convention is consistent with the convention applied by the taxpayer with respect to property placed in service in such taxable year prior to January 1, 1971.

(4) *Examples.* The principles of this paragraph may be illustrated by the following examples:

Example 1. Taxpayer A, a calendar year taxpayer, places new property in service in a trade or business as follows:

Asset	Placed in service	Unadjusted basis
W	Apr. 1, 1971	$5,000
X	June 30, 1971	8,000
Y	July 15, 1971	12,000

Taxpayer A adopts the modified half-year convention described in subparagraph (2) (ii) of this paragraph. Assets W, X, and Y are placed in a multiple asset account for which the asset depreciation range is 8 to 12 years. A selects 8 years, the minimum asset depreciation period with respect to such assets, and adopts the declining balance method of depreciation using a rate twice the straight line rate (computed without reduction for salvage). The annual rate under this method using a period of 8 years is 25 percent. The depreciation allowance for assets W and X for 1971 is $3,250, a full year's depreciation under the modified half-year convention (that is, basis of $13,000 (unreduced by salvage) multiplied by 25 percent). The depreciation allowance for asset Y for 1971 is zero under the modified half-year convention.

Example 2. The facts are the same as in example (1), except that the taxpayer adopts the half-year convention described in subparagraph (2) (iii) of this paragraph. The depreciation allowance with respect to asset Y is $1,500 (that is the basis of $12,000 multiplied by 25 percent, then multiplied by $^1/_2$). Assets W and X are also entitled to a depreciation allowance for only a half year. Thus, the depreciation allowance for assets W and X for 1971 is $1,625 (that is, $^1/_2$ of the $3,250 allowance computed in example (1)).

Example 3. Asset Z is placed in service by a calendar year taxpayer on December 1, 1971. The taxpayer places asset Z in an item account and adopts the sum of the years-digits method and the half year convention described in subparagraph (2) (iii) of this paragraph. The asset depreciation range for such asset is 4 to 6 years and the taxpayer selects an asset depreciation period of 5 years. The depreciation allowance for asset Z in 1971 is $10,000 (that is, basis of $60,000 (unreduced by salvage) multiplied by $^5/_{15}$, the appropriate fraction using the sum of the years-digits method then multiplied by $^1/_2$, since only one half year's depreciation is allowable under the convention).

Example 4. A is a calendar year taxpayer. All taxpayer A's assets are placed in service in the first half of 1971. If the taxpayer selects the modified half-year convention described in subparagraph (2) (ii) of this paragraph, a full year's depreciation is allowable for all assets.

Example 5. (i) The taxpayer during his taxable year which begins April 1, 1970, and ends March 31, 1971,

places new property in service in a trade or business as follows:

Asset	Placed in service	Unadjusted basis
A	Apr. 30, 1970	$10,000
B	Dec. 15, 1970	10,000
C	Jan. 1, 1971	10,000

The taxpayer adopted a convention under § 1.167(a)-10(b) with respect to assets placed in service prior to January 1, 1971, which treats assets placed in service during the first half of the year as placed in service on the first day of such year and assets placed in service in the second half of the year as placed in service on the first day of the following year. If the taxpayer selects the half-year convention described in subparagraph (2) (iii) of this paragraph, one year's depreciation is allowable on asset A determined without regard to this section. No depreciation is allowable for asset B. No depreciation is allowable for asset C for the period prior to January 1, 1971. One-fourth year's depreciation is allowable on asset C determined under this section.

(ii) The facts are the same as in (i) of this example except that the taxpayer adopts the modified half-year convention described in subparagraph (2) (ii) of this paragraph for 1971. No depreciation is allowable for assets B and C which were placed in service in the second half of the taxable year.

Example 6. The taxpayer during his taxable year which begins August 1, 1970, and ends July 31, 1971, places new property in service in a trade or business as follows:

Asset	Placed in service
A	Aug. 1, 1970.
B	Jan. 15, 1971.
C	June 30, 1971.

The taxpayer adopted a convention under § 1.167(a)-10(b) with respect to assets placed in service prior to January 1, 1971, which treats all assets as placed in service at the mid-point of the taxable year. If the taxpayer selects the half-year convention described in subparagraph (2) (iii) of this paragraph, one-half year's depreciation is allowable for asset A determined without regard to this section. One-half year's depreciation is allowable for assets B and C determined under this section.

Example 7. X, a calendar year corporation, is incorporated on July 1, 1978, and begins engaging in a trade or business in September 1979. X purchases asset A and places it in service on November 20, 1979.

Substantial expenditures were not paid or incurred by X with respect to asset A prior to November 15, 1979. For purposes of applying the conventions under this section to determine depreciation for asset A, the 1979 taxable year is treated as consisting of 4 months. The first half of the taxable year ends on October 31, 1979, and the second half begins on November 1, 1979. X adopts the half-year convention. Asset A is treated as placed in service on November 1, 1979.

Example 8. On January 20, 1982, A, B, and C enter an agreement to form partnership P for the purpose of purchasing and leasing a ship to a third party, Z. P uses the calendar year as its taxable year. On December 15, 1982, P acquires the ship and leases it to Z. For purposes of applying the conventions, P begins its leasing business in December 1982, and its taxable year begins on December 1, 1982. Assuming that P elects to apply this section and adopts the modified half-year convention, P depreciates the ship placed in service in 1982 for the 1-month period beginning December 1, 1982, and ending December 31, 1982.

Example 9. A and B form partnership P on December 15, 1981, to conduct a business of leasing small aircraft. P uses the calendar year as its taxable year. On January 15, 1982, P acquires and places in service a $25,000 aircraft. P begins engaging in business with only one aircraft for the purpose of obtaining a disproportionately large depreciation deduction for aircraft that P plans to acquire at the end of the year. On December 10, 1982, P acquires and places in service 4 aircraft, the total purchase price of which is $250,000. For purposes of applying the conventions to the aircraft acquired in December, P begins its leasing business in December 1982, and P's taxable year begins December 1, 1982, and ends December 31, 1982. Assuming that P elects to apply this section and adopts the modified half-year convention, P depreciates the aircraft placed in service in December 1982, for the 1-month period beginning December 1, 1982, and ending December 31, 1982. P depreciates the aircraft placed in service in January 1982, for the 12-month period beginning January 1, 1982, and ending December 31, 1982.

(d) *Special rules for salvage, repairs and retirements*—(1) *Salvage value*—(i) *Definition of gross salvage value.* "Gross salvage" value is the amount which is estimated will be realized upon a sale or other disposition of the property in the vintage account when it is no longer useful in the taxpayer's trade or business or in the production of his income and is to be retired from service, without reduction for the cost of removal, dismantling, demolition or similar operations. If a taxpayer customarily sells or otherwise disposes of property at a time when such property is still in good operating condition, the gross salvage value of such property is the amount expected to be realized upon such sale or disposition, and under certain circumstances, as where such property is customarily sold at a time when it is still relatively new, the gross salvage value may constitute a relatively large proportion of the unadjusted basis of such property.

(ii) *Definition of salvage value.* "Salvage value" means gross salvage value less the amount, if any, by which the gross salvage value is reduced by application of section 167(f). Generally, as provided in section 167(f), a taxpayer may reduce the amount of gross salvage value of a vintage account by an amount which does not exceed 10 percent of the unadjusted basis of the personal property (as defined in section 167(f)(2)) in the account. See paragraph (b)(3)(ii) of this section for requirement of separate vintage accounts for personal property described in section 167(f)(2).

(iii) *Estimation of salvage value.* The salvage value of each vintage account of the taxable year shall be estimated by the taxpayer at the time the election to apply this section is made, upon the basis of all the facts and circumstances existing at the close of the taxable year in which the account is established. The taxpayer shall specify the amount, if any, by which gross salvage value taken into account is reduced by application of section 167(f). See paragraph (f)(2) of this section for requirement that the election specify the estimated salvage value for each vintage account of the taxable year of election. The salvage value estimated by the taxpayer will not be redetermined merely as a result of fluctuations in price levels or as a result of other facts and circumstances occurring after the close of the taxable year of election. Salvage value for a vintage account need not be established or increased as a result of a property improvement as described in subparagraph (2) (vii) of this paragraph. The taxpayer shall maintain records reasonably sufficient to determine facts and circumstances taken into account in estimating salvage value.

(iv) *Salvage as limitation on depreciation.* In no case may a vintage account be depreciated below a reasonable salvage value after taking into account any reduction in gross salvage value permitted by section 167(f).

(v) *Limitation on adjustment of reasonable salvage value.* The salvage value established by the taxpayer for a vintage account will not be redetermined if it is reasonable. Since the determination of salvage value is a matter of estimation, minimal adjustments will not be made. The salvage value established by the taxpayer will be deemed to be reasonable unless there is sufficient basis in the facts and circumstances existing at the close of the taxable year in which the account is established for a determination of an amount of salvage value for the account which exceeds the salvage value established by the taxpayer for the account by an amount greater than 10 percent of the unadjusted basis of the account at the close of the taxable year in which the account is established. If the salvage value established by the taxpayer for the account is not within the 10 percent range, or if the taxpayer follows the practice of understating his estimates of gross salvage value to take advantage of this subdivision, and if there is a determination of an amount of salvage value for the account which exceeds the salvage value established by the taxpayer for the account, an adjustment will be made by increasing the salvage value established by the taxpayer for the account by an amount equal to the difference between the salvage value as determined and the salvage value established by the taxpayer for the account. For the purposes of this subdivision, a determination of salvage value shall include all determinations at all levels of audit and appellate proceedings, and as well as all final determinations within the meaning of section 1313(a) (1). This subdivision shall apply to each such determination. (See example (3) of subdivision (vi) of this subparagraph.)

(vi) *Examples.* The principles of this subparagraph may be illustrated by the following examples in which it is assumed that the taxpayer has not followed a practice of understating his estimates of gross salvage value:

> *Example 1.* Taxpayer B elects to apply this section to assets Y and Z, which are placed in a multiple asset vintage account of 1971 for which the taxpayer selects an asset depreciation period of 8 years. The unadjusted basis of asset Y is $50,000 and the unadjusted basis of asset Z is $30,000. B estimates a gross salvage value of $55,000. The property qualifies under section 167(f) (2) and B reduces the amount of salvage taken into account by $8,000 (that is, 10 percent of $80,000 under section 167(f)). Thus, B establishes a salvage value of $47,000 for the account. Assume that there is not sufficient basis for determining a salvage value for the account greater than $52,000 (that is, $60,000 minus the $8,000 reduction under section 167(f)). Since the salvage value of $47,000 established by B for the account is within the 10 percent range, it is reasonable. Salvage value for the account will not be redetermined.

> *Example 2.* The facts are the same as in example (1) except that B estimates a gross salvage value of

$50,000 and establishes a salvage value of $42,000 for the account (that is, $50,000 minus the $8,000 reduction under section 167(f)). There is sufficient basis for determining an amount of salvage value greater than $50,000 (that is, $58,000 minus the $8,000 reduction under section 167(f)). The salvage value of $42,000 established by B for the account can be redetermined without regard to the limitation in subdivision (v) of this subparagraph, since it is not within the 10 percent range. Upon audit of B's tax return for a taxable year for which the redetermination would affect the amount of depreciation allowable for the account, salvage value is determined to be $52,000 after taking into account the reduction under section 167(f). Salvage value for the account will be adjusted to $52,000.

Example 3. The facts are the same as in example (1) except that upon audit of B's tax return for a taxable year the examining officer determines the salvage value to be $58,000 (that is, $66,000 minus the $8,000 reduction under section 167(f)), and proposes to adjust salvage value for the vintage account to $58,000 which will result in disallowing an amount of depreciation for the taxable year. B does not agree with the finding of the examining officer. After receipt of a “30-day letter”, B waives a district conference and initiates proceedings before the Appellate Division. In consideration of the case by the Appellate Division it is concluded that there is not sufficient basis for determining an amount of salvage value for the account in excess of $55,000 (that is $63,000 minus the $8,000 reduction under section 167(f)). Since the salvage of $47,000 established by B for the account is within the 10 percent range, it is reasonable. Salvage value for the account will not be redetermined.

Example 4. Taxpayer C elects to apply this section to factory building X which is placed in an item vintage account of 1971. The unadjusted basis of factory building X is $90,000. C estimates a gross salvage value for the account of $10,000. The property does not qualify under section 167(f)(2). C establishes a salvage value of $10,000 for the account. Assume that there is not sufficient basis for determining a salvage value for the account greater than $18,000. Since the salvage value of $10,000 established by B for the account is within the 10 percent range, it is reasonable. Salvage value for the account will not be redetermined.

(2) *Treatment of repairs*—(i) *In general.* (*a*) Sections 162, 212, and 263 provide general rules for the treatment of certain expenditures for the repair, maintenance, rehabilitation or improvement of property. In general, under those sections, expenditures which substantially prolong the life of an asset, or are made to increase its value or adapt it to a different use are capital expenditures. If an expenditure is treated as a capital expenditure under section 162, 212, or 263, it is subject to the allowance for depreciation. On the other hand, in general, expenditures which do not substantially prolong the life of an asset or materially increase its value or adapt it for a substantially different use may be deducted as an expense in the taxable year in which paid or incurred. Expenditures, or a series of expenditures, may have characteristics both of deductible expenses and capital expenditures. Other expenditures may have the characteristics of capital expenditures, as in the case of an “excluded addition” (as defined in subdivision (vi) of this subparagraph). This subparagraph provides a simplified procedure for determining whether expenditures with respect to certain property are to be treated as deductible expenses or capital expenditures.

(*b*) [Reserved]

(ii) *Election of repair allowance.* In the case of an asset guideline class which consists of "repair allowance property" as defined in subdivision (iii) of this subparagraph, subject to the provisions of subdivision (v) of this subparagraph, the taxpayer may elect to apply the asset guideline class repair allowance described in subdivision (iii) of this subparagraph for any taxable year ending after December 31, 1970, for which the taxpayer elects to apply this section.

(iii) *Repair allowance for an asset guideline class.* For a taxable year for which the taxpayer elects to apply this section, the "repair allowance" for an asset guideline class which consists of "repair allowance property" is an amount equal to—

(*a*) The average of (*1*) the unadjusted basis of all "repair allowance property" in the asset guideline class at the beginning of the taxable year, less in the case of such property in a vintage account the unadjusted basis of all such property retired in an ordinary retirement (as described in subparagraph (3)(ii) of this paragraph) in prior taxable years, and (*2*) the unadjusted basis of all "repair allowance property" in the asset guideline class at the end of the taxable year, less in the case of such property in a vintage account the unadjusted basis of all such property retired in an ordinary retirement (including ordinary retirements during the taxable year), multiplied by—

(*b*) The repair allowance percentage in effect for the asset guideline class for the taxable year.

In applying the assets guideline class repair allowance to buildings which are section 1250 property, for the purpose of this subparagraph each building shall be treated as in a separate asset guideline class. If two or more buildings are in the same asset guideline class determined without regard to the preceding sentence and are operated as an integrated unit (as evidenced by their actual operation, management, financing and accounting), they shall be treated as a single building for this purpose. The "repair allowance percentages" in effect for taxable years ending before the effective date of the first supplemental repair allowance percentages established pursuant to this section are set forth in Revenue Procedure 72-10. Repair allowance percentages will from time to time be established, supplemented and revised with express reference to this section. These repair allowance percentages will be published in the Internal Revenue Bulletin. The repair allowance percentages in effect on the last day of the taxable year shall apply for the taxable year, except that the repair allowance percentage for a particular taxable year shall not be less than the repair allowance percentage in effect on the first day of such taxable year (or as of such later time in such year as a repair allowance percentage first established during such year becomes effective). Generally, the repair allowance percentages for a taxable year shall not be changed to reflect any supplement or revision of the repair allowance percentages after the end of such taxable year. However, if expressly provided in such a supplement or revision of the repair allowance percentages, the taxpayer may, at his option in the manner specified therein, apply the revised or supplemented repair allowance percentages for such taxable year and succeeding taxable years. For the purposes of this section, "repair allowance property" means eligible property determined without regard to paragraph (b)(2)(ii) of this section (that is, without regard to whether such property was first placed in service by the taxpayer before or after December 31, 1970) in an asset guideline class for which a repair allowance percentage is in effect for the taxable year. The determination whether property is repair allowance property shall be made without regard to whether such property is excluded, under paragraph (b)(5) of this section, from an election to apply this section. Property in an asset guideline class for which the taxpayer elects to apply the asset guideline class repair allowance described in this subdivision, which results from expenditures in the taxable year of election for the repair, maintenance, rehabilitation, or improvement of property in an asset guideline class shall not be "repair allowance property" for such taxable year but shall be for each succeeding taxable year provided such property is a property improvement as described in subdivision (vii) (*a*) of this subparagraph and is in an asset guideline class for which a repair allowance percentage is in effect for such succeeding taxable year.

(iv) *Application of asset guideline class repair allowance.* In accordance with the principles of sections 162, 212, and 263, if the taxpayer pays or incurs any expenditures during the taxable year for the repair, maintenance, rehabilitation or improvement of eligible property (determined without regard to paragraph (b)(2)(ii) of this section), the taxpayer must either—

(*a*) If such property is repair allowance property and if the taxpayer elects to apply the repair allowance for the asset guideline class, treat an amount of all such expenditures in such taxable year with respect to all such property in the asset guideline class which does not exceed in total the repair allowance for that asset guideline class as deductible repairs, and treat the excess of all such expenditures with respect to all such property in the asset guideline class in the manner described for a property improvement in subdivision (viii) of this subparagraph, or

(*b*) If such property is not repair allowance property or if the taxpayer does not elect to apply the repair allowance for the asset guideline class, treat each of such expenditures in such taxable year with respect to all such property in the asset guideline class as either a capital expenditure or as a deductible repair in accordance with the principles of sections 162, 212, and 263 (without regard to (*a*) of this subdivision), and treat the expenditures which are required to be capitalized under sections 162, 212, and 263 (without regard to (*a*) of this subdivision) in the manner described for a property improvement in subdivision (viii) of this subparagraph.

For the purposes of (*a*) of this subdivision, expenditures for the repair, maintenance, rehabilitation or improvement of property do not include expenditures for an excluded addition or for which a deduction is allowed under section 167(k). (See subdivision (viii) of this subparagraph for treatment of an excluded addition.) The taxpayer shall elect each taxable year whether to apply the repair allowance and treat expenditures under (*a*) of this subdivision, or to treat expenditures under (*b*) of this subdivision. The treatment of expenditures under this subdivision for a taxable year for all asset guideline classes shall be specified in the books and records of the taxpayer for the taxable year. The taxpayer may treat expenditures under (*a*) of this subdivision with respect to property in one asset guideline class and treat expenditures under (*b*) of this subdivision with respect to property in some other asset guideline class. In addition, the taxpayer may treat expenditures with respect to property in an asset guideline class under (*a*) of this subdivision in one taxable year, and treat expenditures with respect to property in that asset guideline class under (*b*) of this subdivision in another taxable year.

(v) *Special rules for repair allowance.* (*a*) The asset guideline class repair allowance described in subdivision (iii) of this subparagraph shall apply only to expenditures for the repair, maintenance, rehabilitation or improvement of repair allowance property (as described in subdivision (iii) of this subparagraph). The taxpayer may apply the asset guideline class repair allowance for the taxable year only if he maintains books and records reasonably sufficient to determine:

(*1*) The amount of expenditures paid or incurred during the taxable year for the repair, maintenance, rehabilitation or improvement of repair allowance property in the asset guideline class, and

(*2*) The expenditures (and the amount thereof) with respect to such property which are for excluded additions (such as whether the expenditure is for an additional identifiable unit of property, or substantially increases the productivity or capacity of an existing identifiable unit of property or adapts it for a substantially different use).

In general, such books and records shall be sufficient to identify the amount and nature of expenditures with respect to specific items of repair allowance property or groups of similar properties in the same asset guideline class. However, in the case of such expenditures with respect to property, part of which is in one asset guideline class and part in another, or part of which is repair allowance property and part of which is not, and in comparable

circumstances involving property in the same asset guideline class, to the extent books and records are not maintained identifying such expenditures with specific items of property or groups of similar properties and it is not practicable to do so, the total amount of such expenditures which is not specifically identified may be allocated by any reasonable method consistently applied. In any case, the cost of repair, maintenance, rehabilitation or improvement of property performed by production personnel may be allocated by any reasonable method consistently applied and if performed incidental to production and not substantial in amount, no allocation to repair, maintenance, rehabilitation or improvement need be made. The types of expenditures for which specific identification would ordinarily be made include: Substantial expenditures such as for major parts or major structural materials for which a work order is or would customarily be written; expenditures for work performed by an outside contractor; or expenditures under a specific down time program. Types of expenditures for which specific identification would ordinarily be impractical include: General maintenance costs of machinery, equipment, and plant in the case of a taxpayer having assets in more than one class (or different types of assets in the same class) which are located together and generally maintained by the same work crew; small supplies which are used with respect to various classes or types of property; labor costs of personnel who work on property in different classes, or different types of property in the same class, if the work is performed on a routine, as needed, basis and the only identification of the property repaired is by the personnel. Factors which will be taken into account in determining the reasonableness of the taxpayer's allocation of expenditures include prior experience of the taxpayer; relative bases of the assets in the guideline class; types of assets involved; and relationship to specifically identified expenditures.

(*b*) If for the taxable year the taxpayer elects to deduct under section 263(e) expenditures with respect to repair allowance property consisting of railroad rolling stock (other than a locomotive) in a particular asset guideline class, the taxpayer may not, for such taxable year, use the asset guideline class repair allowance described in subdivision (iii) of this subparagraph for any property in such asset guideline class.

(*c*)(*1*) If the taxpayer repairs, rehabilitates or improves property for sale or resale to customers, the asset guideline class repair allowance described in subdivision (iii) of this subparagraph shall not apply to expenditures for the repair, maintenance, rehabilitation or improvement of such property, or (*2*) if a taxpayer follows the practice of acquiring for his own use property (in need of repair, rehabilitation or improvement to be suitable for the use intended by the taxpayer) and of making expenditures to repair, rehabilitate or improve such property in order to take advantage of this subparagraph, the asset guideline class repair allowance described in subdivision (iii) of this subparagraph shall not apply to such expenditures. In either event, such property shall not be “repair allowance property” as described in subdivision (iii) of this subparagraph.

(vi) *Definition of excluded addition.* The term “excluded addition” means—

(*a*) An expenditure which substantially increases the productivity of an existing identifiable unit of property over its productivity when first acquired by the taxpayer;

(*b*) An expenditure which substantially increases the capacity of an existing identifiable unit of property over its capacity when first acquired by the taxpayer;

(*c*) An expenditure which modifies an existing identifiable unit of property for a substantially different use;

(*d*) An expenditure for an identifiable unit of property if (*1*) such expenditure is for an additional identifiable unit of property or (*2*) such expenditure (other than an expenditure described in (*e*) of this subdivision) is for replacement of an identifiable unit of property which was retired;

(*e*) An expenditure for replacement of a part in or a component or portion of an existing identifiable unit of property (whether or not such part, component or portion is also an identifiable unit of property) if such part, component or portion is for replacement of a part, component or portion which was retired in a retirement upon which gain or loss is recognized (or would be recognized but for a special nonrecognition provision of the Code or § 1.1502-13).

(*f*) In the case of a building or other structure (in addition to (*b*), (*c*), (*d*), and (*e*) of this subdivision which also apply to such property), an expenditure for additional cubic or linear space; and

(*g*) In the case of those units of property of pipelines, electric utilities, telephone companies, and telegraph companies consisting of lines, cables and poles (in addition to (*a*) through (*e*) of this subdivision which also apply to such property), an expenditure for replacement of a material portion of the unit of property.

Except as provided in (*d*) and (*e*) of this subdivision, notwithstanding any other provision of this subdivision, the term “excluded addition” does not include any expenditure in connection with the repair, maintenance, rehabilitation or improvement of an identifiable unit of property which does not exceed $100. For this purpose all related expenditures with respect to the unit of property shall be treated as a single expenditure. For the purposes of (*a*), and (*b*) of this subdivision, an increase in productivity or capacity is substantial only if the increase is more than 25 percent. An expenditure which merely extends the productive life of an identifiable unit of property is not an increase in productivity within the meaning of (*a*) of this subdivision. Under (*g*) of this subdivision a replacement is material only if the portion replaced exceeds 5 percent of the unit of property with respect to which the replacement is made. For the purposes of this subdivision, a unit of property generally consists of each operating unit (that is, each separate machine or piece of equipment) which performs a discrete function and which the taxpayer customarily acquires for original installation and retires as a unit. The taxpayer's accounting classification of units of property will generally be accepted for purposes of this subdivision provided the classifications are reasonably consistent with the preceding sentence and are consistently applied. In the case of a building the unit of property generally consists of the building as well as its structural components; except that each building service system (such as an elevator, an escalator, the electrical system, or the heating and cooling system) is an identifiable unit for the purpose of (*a*), (*b*), (*c*), and (*d*) of this subdivision. However, both in the case of machinery and equipment and in the case of a building, for the purpose of applying (*d*)(*1*) of this subdivision a unit of property may consist of a part in or a component or portion of a larger unit of property. In the case of property described in (*g*) of this subdivision (such as a pipeline), a unit of property generally consists of each segment which performs a discrete function either as to capacity, service, transmission or distribution between identifiable points. Thus, for example, under this subdivision in the case of a vintage account of five automobiles each automobile is an identifiable unit of property (which is not merely a part in or a component or portion of larger unit of property within the meaning of (*e*) of this subdivision). Accordingly, the replacement of one of the automobiles (which is retired) with another automobile is an excluded addition under (*d*)(*2*) of this subdivision. Also the purchase of a sixth automobile is an expenditure for an additional identifiable unit of property and is an excluded addition under (*d*)(*1*) of this subdivision. An automobile air conditioner is also an identifiable unit of property for the purposes of (*d)(1)* of this subdivision, but not for the purposes of (*d*)(*2*) of this subdivision. Accordingly, the addition of an air conditioner to an automobile is an excluded addition under (*d*)(*1*) of this subdivision, but the replacement of an existing air conditioner in an automobile is not an excluded addition under (*d*)(*2*) of this subdivision (since it is merely the replacement of a part in an existing identifiable unit of property). The replacement of the air conditioner may, however, be an excluded addition under (*e*) of this subdivision, if the air conditioner replaced was retired in a retirement upon which gain or loss was recognized. The principles of this subdivision may be further illustrated by the following examples in which it is assumed (unless otherwise stated) that (*e*) of this subdivision does not apply:

> *Example 1.* For the taxable year, B pays or incurs only the following expenditures: (*1*) $5,000 for general

maintenance of repair allowance property (as described in subdivision (iii) of this subparagraph) such as inspection, oiling, machine adjustments, cleaning, and painting; (*2*) $175 for replacement of bearings and gears in an existing lathe; (*3*) $125 for replacement of an electric starter (of the same capacity) and certain electrical wiring in an automatic drill press; (*4*) $300 for modification of a metal fabricating machine (including replacement of certain parts) which substantially increases its capacity; (*5*) $175 for repair of the same metal fabricating machine which does not substantially increase its capacity; (*6*) $800 for the replacement of an existing lathe with a new lathe; and (*7*) $65 for the repair of a drill press. Expenditures (*1*) through (*3*) are expenditures for the repair, maintenance, rehabilitation or improvement of property to which B can elect to apply the asset guideline class repair allowance described in subdivision (iii) of this subparagraph. Expenditure (*4*) is an excluded addition under (*b*) of this subdivision. Expenditure (*5*) is not an excluded addition. Expenditure (*6*) is an excluded addition under (*d*)(*2*) of this subdivision. Without regard to (*a*), (*b*), and (*c*) of this subdivision, expenditure (*7*) is not an excluded addition since the expenditure does not exceed $100.

Example 2. Corporation M operates a steel plant which produces rails, blooms, billets, special bar sections, reinforcing bars, and large diameter line pipe. During the taxable year, corporation M: (*1*) relines an openhearth furnace; (*2*) places in service 20 new ingot molds; (*3*) replaces one reversing roll in the blooming mill; (*4*) overhauls the rail and billet mill with no increase in capacity; (*5*) replaces a roll stand in the 20-inch bar mill; and (*6*) overhauls the 11-inch bar mill and reducing stands increasing billet speed from 1,800 feet per minute to 2,300 feet per minute. Assume that each expenditure exceeds $100. Expenditure (*1*) is not an excluded addition. Expenditure (*2*) is an excluded addition under (*d*)(*1*) of this subdivision. Expenditure (*3*) is not an excluded addition since the expenditure for the reversing roll merely replaces a part in an existing identifiable unit of property. Expenditure (*4*) is not an excluded addition. Expenditure (*5*) is an excluded addition under (*d*)(*2*) of this subdivision since the roll stand is not merely a part of an existing identifiable unit of property. Expenditure (*6*) is an excluded addition under (*a*) of this subdivision since it increases the billet speed by more than 25 percent.

Example 3. For the taxable year, corporation X pays or incurs the following expenditures: (*1*) $1,000 for two new temporary partition walls in the company's offices; (*2*) $1,400 for repainting the exterior of a terminal building; (*3*) $300 for repair of the roof of a warehouse; (*4*) $150 for replacement of two window frames and panes in the warehouse; and (*5*) $100 for plumbing repair. Expenditure (*1*) is an excluded addition under (*d*)(*1*) of this subdivision. None of the other expenditures are excluded additions.

Example 4. For the taxable year, corporation Y pays or incurs the following expenditures: (*1*) $10,000 for expansion of a loading dock from 600 square feet to 750 square feet; (*2*) $600 for replacement of two roof girders in a factory building; and (*3*) $9,500 for replacement of columns and girders supporting the floor of a second story loft storage area within the factory building in order to permit storage of supplies with a gross weight 50 percent greater than the previous capacity of the loft. Expenditure (*1*) is an excluded addition under (*f*) of this subdivision. Expenditure (*2*) is not an excluded addition. Expenditure (*3*) is an excluded addition under (*b*) of this subdivision.

Example 5. Corporation A has an office building with an unadjusted basis of $10 million. The building has 10 elevators, five of which are manually operated and five of which are automatic. During 1971, corporation A:
(*1*) Replaces the five manually operated elevators with highspeed automatic elevators at a cost of $400,000;

(*2*) Replaces the cable in one of the existing automatic elevators at a cost of $1,700. The replacements of the elevators are excluded additions under (*d*)(*2*) of this subdivision. The replacement of the cable is not an excluded addition.

Example 6. Taxpayer W, a cement manufacturer, engages in the following modification and maintenance activities during the taxable year: (*1*) Replaces eccentric-bearing, spindle, and wearing surface in a gyratory crusher; (*2*) places in service a new apron feeder and hammer mill; (*3*) replaces four buckets on a chain bucket elevator; (*4*) relines refractory surface in the burning zone of a rotary kiln; (*5*) installs additional new dust collectors; and (*6*) Replaces two 16-inch × 90-foot belts on his conveyer system. Assume that there is no increase in productivity or capacity and that each expenditure exceeds $100. Expenditure (*1*) is not an excluded addition. Expenditure (*2*) an excluded addition under (*d*)(*1*) of this subdivision. Expenditures (*3*) and (*4*) are not excluded additions. Expenditures (*5*) is an excluded addition under (*d*)(*1*) of this subdivision. Expenditure (*6*) is not an excluded addition.

Example 7. Corporation X, a gas pipeline company, has, in addition to others, the following units of property: (*1*) A gathering pipeline for a field consisting of 25 gas wells; (*2*) the main transmission line between compressor stations (that is, in the case of a 500-mile main transmission line with a compressor station every 100 miles, each one hundred miles section between compressor stations is a separate unit of property); (*3*) a lateral transmission line from the main transmission line to a city border station; (*4*) a medium pressure distribution line to the northern portion of the city; and (*5*) a low pressure distribution line serving a group of approximately 200 residential customers off the medium pressure distribution line. In 1971, corporation X pays or incurs the following expenditures in connection with the repair, maintenance, rehabilitation or improvement of repair allowance property: (*1*) replaces a meter on a gas well; (*2*) in connection with the repair and rehabilitation of a unit of property consisting of a 2-mile gathering pipeline, replaces a 3,000-foot section of the gathering line; (*3*) in connection with the repair of leaks in a unit of property consisting of a 100-mile gas transmission line (that is, the 100 miles between compressor stations), replaces a 2,000-foot section of pipeline at one point; and (*4*) at another point replaces a 7-mile section of the same 100-mile gas transmission line. Assume that none of these expenditures substantially increases capacity and that each expenditure exceeds $100. Expenditure (*1*) is an excluded addition under (*d*) of this subdivision. Expenditure (*2*) is an excluded addition under (*g*) of this subdivision since the portion replaced is more than 5 percent of the unit of property. Expenditure (*3*) is not an excluded addition. Expenditure (*4*) is an excluded addition under (*g*) of this subdivision.

Example 8. Taxpayer Y, an electric utility company, has in addition to others, the following units of

property: (*1*) A high voltage transmission circuit from the switching station (at the generating station) to the transmission station; (*2*) a series of 100 poles (fully dressed) supporting the circuit in (*1*); (*3*) a high voltage circuit from the transmission station to the distribution substation; (*4*) a high voltage distribution circuit (either radial or looped) from the distribution substation; (*5*) a transformer on a distribution pole; (*6*) a circuit breaker on a distribution pole; and (*7*) all 220 (and lower) volt circuit (including customer service connections) off the distribution circuit in (*4*). In 1971, taxpayer Y pays or incurs the following expenditures for the repair, maintenance, rehabilitation or improvement of repair allowance property: (*1*) Replaces 25 adjacent poles in a unit of property consisting of the 300 poles supporting a radial distribution circuit from a distribution substation; (*2*) replaces a transformer on one of the poles in (*1*); (*3*) replaces a cross-arm on one of the poles in (*1*); (*4*) replaces a 200-foot section of a 2-mile radial distribution circuit serving 100 residential customers; and (*5*) replaces a 2,000-foot section on a 10-mile high voltage circuit from a transmission station to a distribution substation which was destroyed by a casualty which taxpayer Y treated as an extraordinary retirement under paragraph (d)(3)(ii) of this section. Expenditure (*1*) is an excluded addition under (*g*) of this subdivision. Expenditure (*2*) is an excluded addition under (*d*)(*2*) of this subdivision. Expenditures (*3*) and (*4*) are not excluded additions. Expenditure (*5*) is an excluded addition under (*e*) of this subdivision.

Example 9. Corporation Z, a telephone company, has in addition to others, the following units of property: (*1*) A buried feeder cable 3 miles in length off a local switching station; (*2*) a buried subfeeder cable 1 mile in length off the feeder cable in (*1*); (*3*) all the distribution cable (and customer service drops) off the subfeeder cable in (*2*); (*4*) the 300 poles (fully dressed) supporting the distribution cable in (*3*); (*5*) a 10-mile local trunk cable which interconnects two local tandem switching stations; (*6*) a toll connecting trunk cable from a local tandem switching station to a long distance tandem switching station; (*7*) a toll trunk cable 50 miles in length from the access point at one city to the access point at another city. In 1971, corporation Z pays or incurs the following expenditures in connection with the repair, maintenance, rehabilitation or improvement of repair allowance property: (*1*) replaces 100 feet of distribution cable in a unit of property consisting of 8 miles of local distribution cable (plus customer service drops); (*2*) replaces an amplifier in the distribution system; and (*3*) replaces 10 miles of a unit of property consisting of a toll trunk cable 50 miles in length. Expenditure (*1*) is not an excluded addition. Expenditure (*2*) is an excluded addition under (*d*)(*2*) of this subdivision. Expenditure (*3*) is an excluded addition under (*g*) of this subdivision.

(vii) *Definition of property improvement.* The term “property improvement” means—

(*a*) If the taxpayer treats expenditures for the asset guideline class under subdivision (iv) (*a*) of this subparagraph, the amount of all expenditures paid or incurred during the taxable year for the repair, maintenance, rehabilitation or improvement of repair allowance property in the asset guideline class, which exceeds the asset guideline class repair allowance for the taxable year; and

(*b*) If the taxpayer treats expenditures for the asset guideline class under subdivision (iv) (*b*) of this subparagraph, the amount of each expenditure paid or incurred during the taxable year for the repair, maintenance, rehabilitation or improvement of property which is treated under sections 162, 212, and 263 as a capital expenditure.

The term "property improvement" does not include any expenditure for an excluded addition.

(viii) *Treatment of property improvements and excluded additions.* If for the taxable year there is a property improvement as described in subdivision (vii) of this subparagraph or an excluded addition as described in subdivision (vi) of this subparagraph, the following rules shall apply—

(*a*) The total amount of any property improvement for the asset guideline class determined under subdivision (vii)(*a*) of this subparagraph shall be capitalized in a single "special basis vintage account" of the taxable year in accordance with the taxpayer's election to apply this section for the taxable year (applied without regard to paragraph (b)(5)(v)(*a*) of this section). See subparagraph (3)(vi) of this paragraph for definition and treatment of a "special basis vintage account".

(*b*) Each property improvement determined under subdivision (vii)(*b*) of this subparagraph, if it is eligible property, shall be capitalized in a vintage account of the taxable year in accordance with the taxpayer's election to apply this section for the taxable year (applied without regard to paragraph (b)(5)(v)(*a*) of this section).

(*c*) Each excluded addition, if it is eligible property, shall be capitalized in a vintage account of the taxable year in accordance with the taxpayer's election to apply this section for the taxable year.

For rule as to date on which a property improvement or an excluded addition is first placed in service, see paragraph (e)(1) (iii) and (iv) of this section.

(ix) *Examples.* The principles of this subparagraph may be illustrated by the following examples:

> *Example 1.* For the taxable year 1972, B elects to apply this section. B has repair allowance property (as described in subdivision (iii) of this subparagraph) in asset guideline class 20.2 under Revenue Procedure 72-10 with an average unadjusted basis determined as provided in subdivision (iii) (*a*) of this subparagraph of $100,000 and repair allowance property in asset guideline class 24.4 with an average unadjusted basis of $300,000. The repair allowance percentage for asset guideline class 20.2 is 4.5 percent and for asset guideline class 24.4 is 6.5 percent. The two asset guideline class repair allowances for 1972 are $4,500 and $19,500, respectively, determined as follows:

Asset Guideline Class 20.2	
$100,000 average unadjusted basis multiplied by 4.5 percent	$4,500
Asset Guideline Class 24.4	
$300,000 average unadjusted basis multiplied by 6.5 percent	$19,500

> *Example 2.* The facts are the same as in example (1). During the taxable year 1972, B pays or incurs the

following expenditures for the repair, maintenance, rehabilitation or improvement of repair allowance property in asset guideline class 20.2

General maintenance (including primarily labor costs)	$3,000
Replacement of parts in several machines (including labor costs of $1,650)	4,000
	7,000

In addition, in connection with the rehabilitation and improvement of two other machines B pays or incurs $6,000 (including labor costs of $2,000) which is treated as an excluded addition because the capacity of the machines was substantially increased. For 1972, B elects to apply this section and to apply the asset guideline class repair allowance to asset guideline class 20.2. Since the asset guideline class repair allowance is $4,500, B can deduct $4,500 in accordance with subdivision (iv) (*a*) of this subparagraph. B must capitalize $2,500 in a special basis vintage account in accordance with subdivisions (vii) (*a*) and (viii) (*a*) of this subparagraph. Since the excluded addition is a capital item and is eligible property, B must also capitalize $6,000 in a vintage account in accordance with subdivision (viii) (*c*) of this subparagraph. B selects from the asset depreciation range an asset depreciation period of 17 years for the special basis vintage account. B includes the excluded addition in a vintage account of 1972 for which he also selects an asset depreciation period of 17 years.

(3) *Treatment of retirements*—(i) *In general.* The rules of this subparagraph specify the treatment of all retirements from vintage accounts. The rules of § 1.167(a)-8 shall not apply to any retirement from a vintage account. An asset in a vintage account is retired when such asset is permanently withdrawn from use in a trade or business or in the production of income by the taxpayer. A retirement may occur as a result of a sale or exchange, by other act of the taxpayer amounting to a permanent disposition of an asset, or by physical abandonment of an asset. A retirement may also occur by transfer of an asset to supplies or scrap.

(ii) *Definitions of ordinary and extraordinary retirements.* The term “ordinary retirement” means any retirement of section 1245 property from a vintage account which is not treated as an “extraordinary retirement” under this subparagraph. The retirement of an asset from a vintage account in a taxable year is an “extraordinary retirement” if—

(*a*) The asset is section 1250 property;

(*b*) The asset is section 1245 property which is retired as the direct result of fire, storm, shipwreck, or other casualty and the taxpayer, at his option consistently applied (taking into account type, frequency, and the size of such casualties) treats such retirements as extraordinary; or

(*c*)*(1*) The asset is section 1245 property which is retired (other than by transfer to supplies or scrap) in a taxable year as the direct result of a cessation, termination, curtailment, or disposition of a business, manufacturing, or other income producing process, operation, facility or unit, and (2) the unadjusted basis (determined without regard

to subdivision (vi) of this subparagraph) of all such assets so retired in such taxable year from such account as a direct result of the event described in (*c*)(*1*) of this subdivision exceeds 20 percent of the unadjusted basis of such account immediately prior to such event.

For the purposes of (*c*) of this subdivision, all accounts (other than a special basis vintage account as described in subdivision (vi) of this subparagraph) containing section 1245 property of the same vintage in the same asset guideline class, and from which a retirement as a direct result of such event occurs within the taxable year, shall be treated as a single vintage account. See subdivision (xi) of this subparagraph for special rule for item accounts. The principles of this subdivision may be illustrated by the following examples:

> *Example 1.* Taxpayer A is a processor and distributor of dairy products. Part of taxpayer A's operation is a bottle washing facility consisting of machines X, Y, and Z, each of which is in an item vintage account of 1971. Each item vintage account has an unadjusted basis of $1,000. Taxpayer A also has a 1971 multiple asset vintage account consisting of machines E, S, and C. Machines E and S, used in processing butter, each has an unadjusted basis of $10,000. Machine C used in capping bottles has an unadjusted basis of $1,000. In 1975, taxpayer A changes to the use of paper milk cartons and disposes of all bottle washing machines (X, Y, and Z) as well as machine C which was used in capping bottles. The sales of machine C, X, Y, and Z are the direct result of the termination of a manufacturing process. However, since the total unadjusted basis of the eligible section 1245 property retired as a direct result of such event is only $4,000 (which is less than 20 percent of the total unadjusted basis of machines E, S, C, X, Y, and Z, $24,000) the sales are ordinary retirements. All the assets are in the same asset guideline class and are of the same vintage. Accordingly, machines E, S, C, X, Y, and Z are for this purpose treated as being in a single vintage account.

> *Example 2.* The facts are the same as in example (1) except that in 1976, taxpayer A sells six of his 12 milk delivery trucks as a direct result of eliminating home deliveries to customers in the suburbs. Deliveries within the city require only six trucks. Each of the trucks has an unadjusted basis of $3,000. Six of the taxpayer's delivery trucks are in a multiple asset vintage account of 1974 and six are in a multiple asset vintage account of 1972. Neither account contains any other property. Four trucks are retired from the 1972 vintage account and two trucks are retired from the 1974 vintage account. The sales result from the curtailment of taxpayer A's home delivery operation. The unadjusted basis of the four trucks retired from the 1972 vintage exceeds 20 percent of the total unadjusted basis of the affected account. The same is true for the two trucks retired from the 1974 vintage account. The sales of the trucks are extraordinary retirements.

(*d*) The asset is section 1245 property which is retired after December 30, 1980 by a charitable contribution for which a deduction is allowable under section 170.

(iii) *Treatment of ordinary retirements.* No loss shall be recognized upon an ordinary retirement. Gain shall be recognized only to the extent specified in this subparagraph. All proceeds from ordinary retirements shall be added to the depreciation reserve of the vintage account from which the retirement occurs. See subdivision (vi) of this subparagraph for optional allocation of basis in the case of a special basis vintage account. See subdivision (ix) of this subparagraph for recognition of gain when the depreciation reserve exceeds the unadjusted basis of the

vintage account. The amount of salvage value for a vintage account shall be reduced (but not below zero) as of the beginning of the taxable year by the excess of (*a*) the depreciation reserve for the account, after adjustment for depreciation allowable for such taxable year and all other adjustments prescribed by this section (other than the adjustment prescribed by subdivision (ix) of this subparagraph), over (*b*) the unadjusted basis of the account less the amount of salvage value for the account before such reduction. Thus, in the case of a vintage account with an unadjusted basis of $1,000 and a salvage value of $100, to the extent that proceeds from ordinary retirements increase the depreciation reserve above $900, the salvage value is reduced. If the proceeds increase the depreciation reserve for the account to $1,000, the salvage value is reduced to zero. The unadjusted basis of the asset retired in an ordinary retirement is not removed from the account and the depreciation reserve for the account is not reduced by the depreciation allowable for the retired asset. The previously unrecovered basis of the retired asset will be recovered through the allowance for depreciation with respect to the vintage account. See subdivision (v)(*a*) of this subparagraph for treatment of retirements on which gain or loss is not recognized in whole or in part. See subdivision (v)(*b*) of this subparagraph for treatment of retirements by disposition to a member of an affiliated group as defined in section 1504(a). See subdivision (v)(*c*) of this subparagraph for treatment of transfers between members of an affiliated group of corporations or other related parties as extraordinary retirements.

(iv) *Treatment of extraordinary retirements.* (*a*) Unless the transaction is governed by a special nonrecognition section of the Code such as 1031 or 337 or is one to which subdivision (v)(*b*) of this subparagraph applies, gain or loss shall be recognized upon an extraordinary retirement in the taxable year in which such retirement occurs subject to section 1231, section 165, and all other applicable provisions of law such as sections 1245 and 1250. If the asset which is retired in an extraordinary retirement is the only or last asset in the account, the account shall terminate and no longer be an account to which this section applies. In all other cases, the unadjusted basis of the retired asset shall be removed from the unadjusted basis of the vintage account, and the depreciation reserve established for the account shall be reduced by the depreciation allowable for the retired asset computed in the manner prescribed in paragraph (c) (1)(v)(*b*) of this section for determination of the adjusted basis of the asset. See subdivision (ix) of this subparagraph for recognition of gain in the case of an account containing section 1245 property when the depreciation reserve exceeds the unadjusted basis of the vintage account. See subdivision (iii) of this subparagraph for reduction of salvage value for such an account when the depreciation reserve exceeds the unadjusted basis of the account minus salvage value. See subdivision (v)(*b*) of this subparagraph for treatment of retirements by disposition to a member of an affiliated group as defined in section 1504(a).

(*b*) The principles of this subdivision may be illustrated by the following examples:

> *Example 1.* Corporation X has a multiple asset vintage account of 1971 consisting of assets K, R, A, and P all of which are section 1245 property. The unadjusted basis of the account is $40,000. The unadjusted basis of asset A is $10,000. When the reserve for depreciation for the account is $20,000, asset A is sold in an extraordinary retirement for $8,000 in cash. The $10,000 unadjusted basis of asset A is removed from the account and the $5,000 depreciation allowable for asset A is removed from the reserve for depreciation. Gain in the amount of $3,000 (to which section 1245 applies) is recognized upon the sale of asset A.

> *Example 2.* Corporation X has an item vintage account of 1972 consisting of residential apartment unit A. Unit A is section 1250 property. It is residential rental property and meets the requirements of section 167(j)(2). Corporation X adopts the declining balance method of depreciation using a rate twice the straight line rate. The asset depreciation period is 40 years. Unit A has an unadjusted basis of $200,000.

> On June 30, 1974, when the reserve for depreciation for the account is $19,500, unit A is sold for $220,000. Since unit A is section 1250 property, the sale is an extraordinary retirement in accordance with subdivision (ii)(*a*) of this subparagraph (without regard to subdivision (ii)(*b*) or (*c*) of this subparagraph). The adjusted basis of unit A is $180,500. Gain in the amount of $39,500 is recognized. The "additional depreciation" (as defined in section 1250(b)) for unit A is $9,500. Accordingly, $9,500 is in accordance with section 1250 treated as gain from the sale or exchange of an asset which is neither a capital asset nor property described in section 1231. The $30,000 balance of the gain from the sale of unit A may be gain to which section 1231 applies.

(v) *Special rule for certain retirements.* (*a*) In the case of an ordinary retirement on which gain or loss is in whole or in part not recognized because of a special nonrecognition section of the Code, such as 1031 or 337, no part of the proceeds from such retirement shall be added to the depreciation reserve of the vintage account in accordance with subdivision (iii) of this subparagraph. Instead, such retirement shall for all purposes of this section be treated as an extraordinary retirement.

(*b*) The provisions of § 1.1502-13 shall apply to a retirement. In the case of an ordinary retirement to which the provisions of § 1.1502-13 apply, no part of the proceeds from such retirement shall be added to the depreciation reserve of the vintage account in accordance with subdivision (iii) of this subparagraph. Instead, such retirement shall for all purposes of this section be treated as an extraordinary retirement.

(*c*) In a case in which property is transferred, in a transaction which would without regard to this subdivision be treated as an ordinary retirement, during the taxable year in which first placed in service to a person who bears a relationship described in section 179(d)(2) (A) or (B), such transfer shall for all purposes of this section be treated as an extraordinary retirement.

(*d*)(*1*) If, in the case of mass assets, it is impracticable for the taxpayer to maintain records from which he can establish the vintage of such assets as retirements occur, and if he adopts other reasonable recordkeeping practices, then the vintage of mass asset retirements may be determined by use of an appropriate mortality dispersion table. Such a mortality dispersion table may be based upon an acceptable sampling of the taxpayer's actual experience or other acceptable statistical or engineering techniques. Alternatively, the taxpayer may use a standard mortality dispersion table prescribed by the Commissioner for this purpose. If the taxpayer uses such standard mortality dispersion table for any taxable year of election, it must be used for all subsequent taxable years of election unless the taxpayer obtains the consent of the Commissioner to change to another dispersion table or to actual identification of retirements. For information requirements regarding mass assets, see paragraph (f)(5) of this section.

(*2*) For purposes of this section, the term "mass assets" has the same meaning as when used in paragraph (e)(4) of § 1.47-1.

(*e*) The principles of this subdivision may be illustrated by the following examples:

> *Example 1.* Corporation X has a vintage account of 1971 consisting of machines A, B, and C, each with an unadjusted basis of $1,000. The unadjusted basis of the account is $3,000 and at the end of 1977 the reserve for depreciation is $2,100. On January 1, 1978, machine A is transferred to corporation Y solely for stock in the amount of $1,400 in a transaction to which section 351 applies. Since the adjusted basis of

machine A is $300, a gain of $1,100 is realized, but no gain is recognized under section 351. Even though machine A was transferred in an ordinary retirement in accordance with (*a*) of this subdivision the rules for an extraordinary retirement are applied. The proceeds are not added to the reserve for depreciation for the account. Machine A is removed from the account, the unadjusted basis of the account is reduced by $1,000, and the reserve for depreciation for the account is reduced by $700.

Example 2. The facts are the same as in example (1) except that the consideration received for machine A is stock of corporation Y in the amount of $1,200 and cash in the amount of $200. The result is the same as in example (1) except that gain is recognized in the amount of $200 all of which is gain to which section 1245 applies.

Example 3. The facts are the same as in example (1) except that machine A is sold for $1,400 cash in an ordinary retirement and corporation X and corporation Y are includible corporations in an affiliated group as defined in section 1504(a) which files a consolidated return for 1978. Accordingly, (*b*) of this subdivision applies. The retirement is treated as an extraordinary retirement. Machine A is removed from the account, the unadjusted basis of the account is reduced by $1,000, and the reserve for depreciation for the account is reduced by $700. The gain of $1,100 is deferred gain to which § 1.1502-13 applies.

(vi) *Treatment of special basis vintage accounts.* A “special basis vintage account” is a vintage account for an amount of property improvement determined under subparagraph (2) (vii)(*a*) of this paragraph. In general, reference in this section to a “vintage account” shall include a special basis vintage account. The unadjusted basis of a special basis vintage account shall be recovered through the allowance for depreciation in accordance with this section over the asset depreciation period for the account. Except as provided in this subdivision, the unadjusted basis, adjusted basis and reserve for depreciation of such account shall not be allocated to any specific asset in the asset guideline class, and the provisions of this subparagraph shall not apply to such account. However, in the event of a sale, exchange or other disposition of “repair allowance property” (as described in subparagraph (2)(iii) of this paragraph) in an extraordinary retirement as described in subdivision (ii) of this subparagraph (or if the asset is not in a vintage account, in an abnormal retirement as described in § 1.167(a)-8), the taxpayer may, if consistently applied to all such retirements in the taxable year and adequately identified in the taxpayer's books and records, elect to allocate the adjusted basis (as of the end of the taxable year) of all special basis vintage accounts for the asset guideline class to each such retired asset in the proportion that the adjusted basis of the retired asset (as of the beginning of the taxable year) bears to the adjusted basis of all repair allowance property in the asset guideline class at the beginning of the taxable year. The election to allocate basis in accordance with this subdivision shall be made on the tax return filed for the taxable year. The principles of this subdivision may be illustrated by the following example:

Example. In addition to other property, the taxpayer has machines A, B, and C all in the same asset guideline class and each with an adjusted basis on January 1, 1977, of $10,000. The adjusted basis on January 1, 1977, of all repair allowance property (as described in subparagraph (2)(iii) of this paragraph) in the asset guideline class is $90,000. The machines are sold in an extraordinary retirement in 1977. The taxpayer is entitled to and does elect to allocate basis in accordance with this subdivision. There is also a

1972 special basis vintage account for the asset guideline class, as follows:

	Unadjusted basis	Reserve for depreciation	Dec. 31, 1977, adjusted basis
1972 special basis vintage account, for which the taxpayer selected an asset depreciation period of 10 years, adopted the straight line method, and used the half-year convention	$2,000	$1,100	$900

By application of this subdivision, the adjusted basis of machines A, B, and C is increased to $10,100 each (that is, $10,000 ÷ $90,000 × $900 = $100). The unadjusted basis, reserve for depreciation and adjusted basis of the special basis vintage account are reduced, respectively, by one-third (that is, $300 ÷ $900= $^{1}/_{3}$) in order to reflect the allocation of basis from the special basis vintage account.

(vii) *Reduction in the salvage value of a vintage account.* (*a*) A taxpayer may apply this section without reducing the salvage value for a vintage account in accordance with this subdivision or in accordance with subdivision (viii) of this subparagraph (relating to transfers to supplies or scrap). See subdivision (iii) of this subparagraph for reduction of salvage value in certain circumstances in the amount of proceeds from ordinary retirements.

(*b*) However, the taxpayer may, at his option, follow the consistent practice of reducing, as retirements occur, the salvage value for a vintage account by the amount of salvage value attributable to the retired asset, or the taxpayer may consistently follow the practice of so reducing the salvage value for a vintage account as extraordinary retirements occur while not reducing the salvage value for the account as ordinary retirements occur. If the taxpayer does not reduce the salvage value for a vintage account as ordinary retirements occur, the taxpayer may be entitled to a deduction in the taxable year in which the last asset is retired from the account in accordance with subdivision (ix) (*b*) of this subparagraph.

(*c*) For purposes of this subdivision, the portion of the salvage value for a vintage account attributable to a retired asset may be determined by multiplying the salvage value for the account by a fraction, the numerator of which is the unadjusted basis of the retired asset and the denominator of which is the unadjusted basis of the account, or any other method consistently applied which reasonably reflects that portion of the salvage value for the account originally attributable to the retired asset.

(*d*) In the case of ordinary retirements the taxpayer may—

(*1*) In the case of retirements (other than by transfer to supplies or scrap) follow the consistent practice of reducing the salvage value for the account by the amount of salvage value attributable to the retired asset and not adding the same amount to the depreciation reserve for the account, and

(*2*) In the case of retirements by transfer to supplies or scrap, follow the consistent practice of reducing the salvage value for the account by the amount of salvage value attributable to the retired asset and not adding the same amount to the depreciation reserve for the account (in which case the basis in the supplies or scrap account of the

retired asset will be zero) or follow the consistent practice of reducing the salvage value for the account by the amount of salvage value attributable to the retired asset and adding the same amount to the depreciation reserve for the account (up to an amount which does not increase the depreciation reserve to an amount in excess of the unadjusted basis of the account) in which case the basis in the supplies or scrap account of the retired asset will be the amount added to the depreciation reserve for the account.

Thus, for example, in the case of an ordinary retirement by transfer of an asset to supplies or scrap, the basis of the asset in the supplies or scrap account would either be zero or the amount added to the depreciation reserve of the vintage account from which the retirement occurred. When the depreciation reserve for the account equals the unadjusted basis of the account no further adjustment to salvage value for the account will be made. See subdivision (viii) of this subparagraph for special optional rule for reduction of salvage value in the case of an ordinary retirement by transfer of an asset to supplies or scrap.

(*e*) In the event of a removal of property from a vintage account in accordance with paragraph (b)(4)(iii)(*e*), (5)(v)(*b*) or (6)(iii) of this section the salvage value for the account may be reduced by the amount of salvage value attributable to the asset removed determined as provided in (*c*) of this subdivision.

(viii) *Special optional adjustments for transfers to supplies or scrap.* If the taxpayer does not follow the consistent practice of reducing, as ordinary retirements occur, the salvage value for a vintage account in accordance with subdivision (vii) of this subparagraph, the taxpayer may (in lieu of the method described in subdivision (vii) (*c*) and (*d*) of this subparagraph) follow the consistent practice of reducing salvage value as ordinary retirements occur by transfer of assets to supplies or scrap and of determining the basis (in the supplies or scrap account) as assets retired in an ordinary retirement by transfer to supplies or scrap, in the following manner—

(*a*) The taxpayer may determine the value of the asset (not to exceed its unadjusted basis) by any reasonable method consistently applied (such as average cost, conditioned cost, or fair market value) if such method is adequately identified in the taxpayer's books and records.

(*b*) The value attributable to the asset determined in accordance with (*a*) of this subdivision shall be subtracted from the salvage value for the account (to the extent thereof) and the greater of (*1*) the amount subtracted from the salvage value for the vintage account and (*2*) the value of the asset determined in accordance with (*a*) of this subdivision, shall be added to the reserve for depreciation of this vintage account.

(*c*) The amount added to the reserve for depreciation of the vintage account in accordance with (*b*) of this subdivision shall be treated as the basis of the retired asset in the supplies or scrap account.

If the taxpayer makes the adjustments in accordance with this subdivision, the reserve for depreciation of the vintage account may exceed the unadjusted basis of the account, and in that event gain will be recognized in accordance with subdivision (ix) of this subparagraph.

(ix) *Recognition of gain or loss in certain situations.* (*a*) In the case of a vintage account for section 1245 property, if at the end of any taxable year after adjustment for depreciation allowable for such taxable year and all other adjustments prescribed by this section, the depreciation reserve established for such account exceeds the unadjusted basis of the account, the entire amount of such excess shall be recognized as gain in such taxable year. Such gain—

(*1*) Shall constitute gain to which section 1245 applies to the extent that it does not exceed the total amount of depreciation allowances in the depreciation reserve at the end of such taxable year, reduced by gain recognized pursuant to this subdivision with respect to the account previously treated as gain to which section 1245 applies, and

(*2*) May constitute gain to which section 1231 applies to the extent that it exceeds such total amount as so reduced.

In such event, the depreciation reserve shall be reduced by the amount of gain recognized, so that after such reduction the amount of the depreciation reserve is equal to the unadjusted basis of the account.

(*b*) In the case of an account for section 1245 property, if at the time the last asset in the vintage account is retired the unadjusted basis of the account exceeds the depreciation reserve for the account (after all adjustments prescribed by this section), the entire amount of such excess shall be recognized in such taxable year as a loss under section 165 or as a deduction for depreciation under section 167. If the retirement of such asset occurs by sale or exchange on which gain or loss is recognized, the amount of such excess may constitute a loss subject to section 1231. Upon retirement of the last asset in a vintage account, the account shall terminate and no longer be an account to which this section applies. See subdivision (xi) of this subparagraph for treatment of certain multiple asset and item accounts.

(*c*) The principles of this subdivision may be illustrated by the following example:

> *Example.* The taxpayer has a vintage account for section 1245 property with an unadjusted basis of $1,000 and a depreciation reserve of $700 (of which $600 represents depreciation allowances and $100 represents the proceeds of ordinary retirements from the account). If $500 is realized during the taxable year from ordinary retirements of assets from the account, the reserve is increased to $1,200, gain is recognized to the extent of $200 (the amount by which the depreciation reserve before further adjustment exceeds $1,000) and the depreciation reserve is then decreased to $1,000. The $200 of gain constitutes gain to which section 1245 applies. If the amount realized from ordinary retirements during the year had been $1,100 instead of $500, the gain of $800 would have consisted of $600 of gain to which section 1245 applies and $200 of gain to which section 1231 may apply.

(x) *Dismantling cost.* The cost of dismantling, demolishing, or removing an asset in the process of a retirement from the vintage account shall be treated as an expense deductible in the year paid or incurred, and such cost shall not be subtracted from the depreciation reserve for the account.

(xi) *Special rule for treatment of multiple asset and item accounts.* For the purposes of subdivision (ix)(*b*) of this subparagraph, all accounts (other than a special basis vintage account as described in subdivision (vi) of this subparagraph) of the same vintage in the same asset guideline class for which the taxpayer has selected the same asset depreciation period and adopted the same method of depreciation, and which contain only section 1245 property permitted by paragraph (b)(3)(ii) of this section to be included in the same vintage account, shall be treated as a single multiple asset vintage account.

(4) *Examples.* The principles of this paragraph may be illustrated by the following examples:

Example 1. (*a*)Taxpayer A has a multiple asset vintage account for selection 1245 property with an unadjusted basis of $1,000. All the assets were first placed in service by A on January 15, 1971. This account contains all of A's assets in a single asset guideline class. A elects to apply this section for 1971 and adopts the modified half-year convention. A estimates a salvage value for the account of $100 and this estimate is determined to be reasonable. (See subparagraph (1)(v) of this paragraph for limitation on adjustment of reasonable salvage value.) A adopts the straight line method of depreciation with respect to the account and selects a 10-year asset depreciation period. A does not follow a practice of reducing the salvage value for the account in the amount of salvage value attributable to each retired asset in accordance with subparagraph (3)(vii) of this paragraph. The depreciation allowance for each of the first 4 years is $100, that is $^{1}/_{10}$ multiplied by the unadjusted basis of $1,000, with reduction for salvage.
(*b*) In the fifth year of the asset depreciation period, three assets are sold in an ordinary retirement for $300. Under paragraph (c)(1)(ii) of this section and subparagraph (3)(iii) of this paragraph, the proceeds of the retirement are added to the depreciation reserve as of the beginning of the fifth year. Accordingly, the reserve as of the beginning of the fifth year is $700, that is, $400 of depreciation as of the beginning of the year plus $300 proceeds from ordinary retirements. The depreciation allowance for the fifth year is $100, that is $^{1}/_{10}$ multiplied by the unadjusted basis of $1,000, without reduction for salvage. Accordingly, the depreciation reserve at the end of the fifth year is $800.

(*c*) In the sixth year, asset X is sold in an extraordinary retirement for $30 and gain or loss is recognized. Under the first-year convention used by the taxpayer, the unadjusted basis of X, $300, is removed from the unadjusted basis of the vintage account as of the beginning of the sixth year and the depreciation reserve as of the beginning of such year is reduced to $650 by removing the depreciation applicable to asset X, $150 (see subparagraph (3)(iv) of this paragraph). Since the depreciation reserve ($650) exceeds the unadjusted basis of the account ($700) minus salvage value ($100) by $50, under subparagraph (3)(iii) of this paragraph, salvage value is reduced by $50. No depreciation is allowable for the sixth year.

(*d*) In the seventh year, an asset is sold in an ordinary retirement for $110. This would increase the reserve as of the beginning of the seventh year to $760 and under subparagraph (3)(iii) of this paragraph the salvage value is reduced to zero. Under subparagraph (3)(ix)(*a*) of this paragraph the depreciation reserve is then decreased to $700 (the unadjusted basis of the account) and $60 is reported as gain, without regard to the adjusted basis of the asset. No depreciation is allowable for the seventh year since the depreciation reserve ($700) equals the unadjusted basis of the account ($700).

(*e*)(*1*) In the eighth year, A elects to apply this section and to treat expenditures during the year for repair, maintenance, rehabilitation or improvement under subparagraph (2)(iii) and (iv)(*a*) of this paragraph (the "guideline class repair allowance"). This results in the treatment of $300 as a property improvement for the asset guideline class. (See subparagraph (2)(vii) of this paragraph for definition of a property improvement.) The property improvement is capitalized in a special basis vintage account of the eighth

taxable year (see subparagraph (2)(viii)(*a*) of this paragraph). A selects an asset depreciation period of 10 years and adopts the straight line method for the special basis vintage account. A adopts the modified half-year convention for the eighth year.

(*2*) In the eighth year, A sells asset Y in an ordinary retirement for $175. Under paragraph (c)(1)(ii) of this section and subparagraph (3)(iii) of this paragraph, $175 is added to the depreciation reserve for the account as of the beginning of the taxable year. Since the depreciation reserve for the account ($875) exceeds the unadjusted basis of the account ($700) by $175, that amount of gain is recognized under subparagraph (3)(ix) of this paragraph. Upon recognition of gain in the amount of $175, the depreciation reserve for the account is reduced to $700.

(*3*) No depreciation is allowable in the eighth year for the vintage account since the depreciation reserve ($700) equals the unadjusted basis of the account ($700). The depreciation allowable in the eighth year for the special basis vintage account is $15, that is, unadjusted basis of $300, multiplied by $^{1}/_{10}$, the asset depreciation period selected for the special basis vintage account, but limited to $15 under the modified half-year convention. (See paragraph (e)(1)(iv) of this section for treatment of $150 of the property improvement as first placed in service in the first half of the taxable year and $150 of the property improvement as first placed in service in the last half of the taxable year.)

Example 2. Taxpayer B has a 1971 multiple asset vintage account for section 1245 property with an unadjusted basis of $100,000. B selects from the asset depreciation range an asset depreciation period of 10 years and adopts the straight line method of depreciation and the modified half-year convention. B establishes a salvage value for the account of $10,000. All the assets in the account are first placed in service on January 15, 1971. B follows the practice of reducing salvage value for the account as ordinary retirements occur in accordance with subparagraph (3)(vii) of this paragraph, but does not follow the optional practice of determining the basis of assets transferred to supplies or scrap in accordance with subparagraph (3)(vii) of this paragraph. No retirements occur during the first five years. The depreciation reserve at the beginning of the sixth year is $50,000. In the sixth year an asset with an unadjusted basis of $20,000 is transferred to supplies in an ordinary retirement. By application of subparagraph (3)(vii) (*c*) and (*d*)(*2*) of this paragraph B determines the reduction in salvage value for the account attributable to such asset to be $2,000 (that is, $20,000 ÷ $100,000 × $10,000 = $2,000).
B reduces the salvage value for the account by $2,000 and adds 2,000 to the depreciation reserve for the account. The basis of the retired asset in the supplies account is $2,000. The depreciation allowable for the account for the sixth year is $10,000. The depreciation reserve for the account at the beginning of the seventh year is $62,000. At the mid-point of the seventh year all the remaining assets in the account are sold in an ordinary retirement for $20,000, which is added to the depreciation reserve as of the beginning of the seventh year, thus increasing the reserve to $82,000. The $5,000 depreciation allowable for the account for the seventh year (one-half of a full-year's depreciation of $10,000) increases the depreciation reserve to $87,000. Under subparagraph (3)(ix)(*b*) of this paragraph, a loss of $13,000 subject to section

> 1231 is realized in the seventh year (that is, the excess of the unadjusted basis of $100,000 over the depreciation reserve of $87,000). No depreciation is allowable for the account after the mid-point of the seventh year since all the assets are retired and the account has terminated.

(e) *Accounting for eligible property*—(1) *Definition of first placed in service*—(i) *In general.* The term "first placed in service" refers to the time the property is first placed in service by the taxpayer, not to the first time the property is placed in service. Property is first placed in service when first placed in a condition or state of readiness and availability for a specifically assigned function, whether in a trade or business, in the production of income, in a tax-exempt activity, or in a personal activity. In general, the provisions of paragraph (d)(1)(ii) and (d)(2) of § 1.46-3 shall apply for the purpose of determining the date on which property is placed in service, but see subdivision (ii) of this subparagraph for special rule for certain replacement parts. In the case of a building which is intended to house machinery and equipment and which is constructed, reconstructed, or erected by or for the taxpayer and for the taxpayer's use, the building will ordinarily be placed in service on the date such construction, reconstruction, or erection is substantially complete and the building is in a condition or state of readiness and availability. Thus, for example, in the case of a factory building, such readiness and availability shall be determined without regard to whether the machinery or equipment which the building houses, or is intended to house, has been placed in service. However, in an appropriate case, as for example where the building is essentially an item of machinery or equipment, or the use of the building is so closely related to the use of the machinery or equipment that it clearly can be expected to be replaced or retired when the property it initially houses is replaced or retired, the determination of readiness or availability of the building shall be made by taking into account the readiness and availability of such machinery or equipment. The date on which depreciation begins under a convention used by the taxpayer or under a particular method of depreciation, such as the unit of production method or the retirement method, shall not determine the date on which the property is first placed in service. See paragraph (c)(2) of this section for application of a first-year convention to determine the allowance for depreciation of property in a vintage account.

(ii) *Certain replacement parts.* Property (such as replacement parts) the cost or other basis of which is deducted as a repair expense in accordance with the asset guideline repair allowance described in paragraph (d)(2)(iii) of this section shall not be treated as placed in service.

(iii) *Property improvements and excluded additions.* (*a*) Except as provided in (*b*) of this subdivision, a property improvement determined under paragraph (d)(2)(vii)(*b*) of this section, and an excluded addition (other than an excluded addition referred to in the succeeding sentence) is first placed in service when its cost is paid or incurred. The general rule in subdivision (i) of this subparagraph applies to an excluded addition described in paragraph (d)(2)(vi) (*d*), (*e*), (*f*), or (*g*) of this section.

(*b*) If a property improvement or an excluded addition to which the first sentence of (*a*) of this subdivision applies is paid or incurred in part in one taxable year and in part in the succeeding taxable year (or in part in the first half of a taxable year and in part in the last half of the taxable year) the taxpayer may at his option consistently treat such property improvements and excluded additions under the general rule in subdivision (i) of this subparagraph.

(iv) *Certain property improvements.* In the case of an amount of property improvement determined under paragraph (d)(2)(vii)(*a*) of this section, one-half of such amount is first placed in service in the first half of the taxable year in which the cost is paid or incurred and one-half is first placed in service in the last half of such taxable year.

(v) *Special rules for clearing accounts.* In the case of public utilities which consistently account for certain property through "clearing accounts," the date on which such property is first placed in service shall be determined in accordance with rules to be prescribed by the Commissioner.

(2) *Special rules for transferred property.* If eligible property is first placed in service by the taxpayer during a taxable year of election, and the property is disposed of before the end of the taxable year, the election for such taxable year shall include such property unless such property is excluded in accordance with paragraph (b)(5) (iii), (iv, (v), (vi), or (vii) of this section.

(3) *Special rules in the case of certain transfers*—(i) *Transaction to which section 381(a) applies.* (*a*) In general the acquiring corporation in a transaction to which section 381(a) applies is for the purposes of this section treated as if it were the distributor or transferor corporation.

(*b*) If the distributor or transferor corporation (including any distributor or transferor corporation of any distributor or transferor corporation) has made an election to apply this section to eligible property transferred in a transaction to which section 381(a) applies, the acquiring corporation must segregate such eligible property (to which the distributor or transferor corporation elected to apply this section) into vintage accounts as nearly coextensive as possible with the vintage accounts created by the distributor or transferor corporation identified by reference to the year the property was first placed in service by the distributor or transferor corporation. The asset depreciation period for the vintage account in the hands of the distributor or transferor corporation must be used by the acquiring corporation. The method of depreciation adopted by the distributor or transferor corporation, shall be used by the acquiring corporation unless such corporation obtains the consent of the Commissioner to use another method of depreciation in accordance with paragraph (e) of § 1.446-1 or changes the method of depreciation under paragraph (c)(1)(iii) of this section.

(*c*) The acquiring corporation may apply this section to the property so acquired only if the distributor or transferor corporation elected to apply this section to such property.

(*d*) See paragraph (b)(7) of this section for special rule for certain property where there is a mere change in the form of conducting a trade or business.

(ii) *Partnerships, trusts, estates, donees, and corporations.* Except as provided in subdivision (i) of this subparagraph with respect to transactions to which section 381(a) applies and subdivision (iv) of this subparagraph with respect to certain transfers between members of an affiliated group of corporations or other related parties, if eligible property is placed in service by an individual, trust, estate, partnership or corporation, the election to apply this section shall be made by the individual, trust, estate, partnership or corporation placing such property in service. For example, if a partnership places in service property contributed to the partnership by a partner, the partnership may elect to apply this section to such property. If the partnership does not make the election, this section will not apply to such property. See paragraph (b)(7) of this section for special rule for certain property where there is mere change in the form of conducting a trade or business.

(iii) *Leased property.* The asset depreciation range and the asset depreciation period for eligible property subject to a lease shall be determined without regard to the period for which such property is leased, including any extensions or renewals of such period. See paragraph (b)(5)(v) of this section for exclusion of property amortized under paragraph (b) of § 1.162-11 from an election to apply this section. In the case of a lessor of property, unless there is an asset guideline class in effect for lessors of such property, the asset guideline class for such property shall be determined as if the property were owned by the lessee. However, in the case of an asset guideline class based

upon the type of property (such as trucks or railroad cars) as distinguished from the activity in which used, the property shall be classified without regard to the activity of the lessee. Notwithstanding the preceding sentence, if a lease with respect to property, which would be includible in an asset guideline class based upon the type of property under the preceding sentence (such as trucks or railroad cars), is entered into after March 12, 1971, and before April 23, 1973, or a written contract to execute such a lease is entered into during such period and such contract is binding on April 23, 1973, and at all times thereafter, and if the rent or rate of return is based on a classification of such property as if it were owned by the lessee, then such property shall be classified as if it were owned by the lessee. However, the preceding sentence shall not apply if pursuant to the terms or conditions of the lease or binding contract the rent or rate of return may be adjusted to take account of a change in the period for depreciation with respect to the property resulting from inclusion of the property in an asset guideline class based upon the type of property rather than in an asset guideline class based upon the activity of the lessee. Similarly, where the terms of such a lease or contract provide that the obligation of the taxpayer to enter into the lease is subject to a condition that the property be included in an asset guideline class based upon the activity of the lessee, the contract or lease will not be considered as binding upon the taxpayer, for purposes of this subdivision. See paragraph (b)(4)(iii)(*b*) of this section for general rule for classification of property according to primary use.

(iv) *Treatment of certain transfers between members of affiliated groups or other related persons.* If section 38 property in an asset guideline class (determined without regard to whether the taxpayer elects to apply this section) is transferred by the taxpayer to a person who bears a relationship described in section 179(d)(2) (A) or (B), such property is in the same asset guideline class in the hands of transferee, and the transfer is neither described in section 381(a) nor treated as a disposition or cessation within the meaning of section 47, then the asset guideline period for such property selected by the taxpayer under this section shall not be shorter than the period used for computing the qualified investment with respect to the property under section 46(c). In a case in which the asset depreciation range for the asset guideline class which includes such property does not include the period for depreciation used by the transferor in computing the qualified investment with respect to such property, the transferee will not be permitted to include such property in an election under this section. However, in such a case, the transferor of the property may recompute the qualified investment for the year the property was placed in service using a period for depreciation which falls within the asset depreciation range.

(f) *Election with respect to eligible property*—(1) *Time and manner of election*—(i) *In general.* An election to apply this section to eligible property shall be made with the income tax return filed for the taxable year in which the property is first placed in service (see paragraph (e)(1) of this section) by the taxpayer. In the case of an affiliated group of corporations (as defined in section 1504(a)) which makes a consolidated return with respect to income tax in accordance with section 1502 and the regulations thereunder, each corporation which joins in the making of such return may elect to apply this section for a taxable year. An election to compute the allowance for depreciation under this section is a method of accounting but the consent of the Commissioner will be deemed granted to make an annual election. For election by a partnership see section 703 (b) and paragraph (e)(3)(ii) of this section. If the taxpayer does not file a timely return (taking into account extensions of the time for filing) for the taxable year in which the property is first placed in service, the election shall be filed at the time the taxpayer files his first return for that year. The election may be made with an amended return filed within the time prescribed by law (including extensions) for filing the original return for the taxable year of election. If an election is not made within the time and in the manner prescribed in this paragraph, no election may be made for such taxable year (by the filing of an amended return or in any other manner) with respect to any eligible property placed in service in the taxable year.

(ii) *Other elections under this section.* All other elections under this section may be made only within the time and in the manner prescribed by subdivision (i) of this subparagraph with respect to an election to apply this section.

(iii) *Effective date.* See paragraph (f)(6) of this section for the effective date of this paragraph.

(2) *Information required.* A taxpayer who elects to apply this section must specify in the election:

(i) That the taxpayer makes such election and consents to and agrees to apply, all the provisions of this section;

(ii) The asset guideline class for each vintage account of the taxable year;

(iii) The first-year convention adopted by the taxpayer for the taxable year of election;

(iv) Whether the special 10 percent used property rule described in paragraph (b)(5)(iii) of this section has been applied to exclude used property from the election;

(v) Whether the taxpayer elects to apply the asset guideline class repair allowance described in paragraph (d)(2)(iii) of this section;

(vi) Whether the taxpayer elects for the taxable year to allocate the adjusted basis of a special basis vintage account in accordance with paragraph (d)(3)(vi) of this section;

(vii) Whether any eligible property for which the taxpayer was not required or permitted to make an election was excluded because of the special rules of paragraph (b)(5)(v) or (6), or paragraph (e)(3)(i) or (iv) of this section;

(viii) Whether any "section 38 property" was excluded under paragraph (b)(5)(iv) of this section from the election to apply this section;

(ix) If the taxpayer is an electric or gas utility, whether the taxpayer elects to apply this section on the basis of a composite asset guideline class in accordance with paragraph (b)(4)(iii)(*a*) of this section; and

(x) Such other information as may reasonably be required.

The information required under this subparagraph may be provided in accordance with rules prescribed by the Commissioner for reasonable grouping of assets or accounts. Form 4832 is provided for making an election and for submission of the information required. An election may be made and the information submitted only in accordance with Form 4832. An election to apply this section will not be rendered invalid under this subparagraph so long as there is substantial compliance, in good faith, with the requirements of this subparagraph.

(3) *Irrevocable election.* An election to apply this section to eligible property for any taxable year may not be revoked or changed after the time for filing the election prescribed under subparagraph (1) of this paragraph has expired. No other election under this section may be revoked or changed after such time unless expressly provided for under this section. (See paragraph (b)(5)(v)(*b*) of this section for special rule.)

(4) *Special conditions to election to apply this section*—(i) *Maintenance of books and records.* The taxpayer may not elect to apply this section for a taxable year unless the taxpayer maintains the books and records required under this section. In addition to any other information required under this section, the taxpayer's books and records must specify—

(*a*) The asset depreciation period selected by the taxpayer for each vintage account;

(*b*) If the taxpayer applies the modified half-year convention, the total cost or other basis of all eligible property first placed in service in the first half of the taxable year and the total cost or other basis of all eligible property first placed in service in the last half of the taxable year;

(*c*) The unadjusted basis and salvage value for each vintage account, and the amount, if any, by which gross salvage value was decreased under section 167 (f);

(*d*) Each asset guideline class for which the taxpayer elects to apply the asset guideline class repair allowance described in paragraph (d)(2)(iii) of this section;

(*e*) The amount of property improvement, determined under paragraph (d)(2)(vii)(*a*) of this section, for each asset guideline class for which the taxpayer elects to apply the asset guideline class repair allowance;

(*f*) A reasonable description of property excluded from an election to apply this section and the basis for the exclusion;

(*g*) The total unadjusted basis of all assets retired during the taxable year from each asset guideline class, and the proceeds realized during the taxable year from such retirements; and

(*h*) The vintage (that is, the taxable year in which established) of the assets retired during the year from each asset guideline class.

For purposes of paragraph (f)(4)(i) (*g*) and (*h*) of this section, all accounts of the same vintage and asset guideline class may be treated as a single account. The taxpayer must specify the information required under paragraph (f)(4)(i) (*g*) and (*h*) without regard to the retirement of an asset by transfer to a supplies account for reuse.

(ii) *Response to survey.* Taxpayers who elect to apply this section must respond to infrequent data surveys conducted by the Treasury Department. These periodic surveys, which will be conducted on the basis of scientifically sound sampling methods, are designed to obtain data (including industry asset acquisitions and retirements) used to keep the asset guideline classes and periods up to date.

(iii) *Effect of noncompliance.* An election to apply this section will not be rendered invalid under this subparagraph so long as there is substantial compliance, in good faith, with the requirements of this subparagraph.

(5) *Mass assets.* In the case of mass assets, if the taxpayer assigns retirements to vintage accounts in the manner provided in paragraph (d)(3)(v)(*c*) of this section, the following information must be supplied with form 4832:

(i) Whether the taxpayer used the standard mortality dispersion curve or a curve based upon his own experience, and

(ii) Such other reasonable information as may be required by the Commissioner.

(6) *Effective date.* The rules in this paragraph apply to elections for taxable years ending on or after December 31, 1978. In the case of an election for a taxable year ending before December 31, 1978, the rules in paragraph (f) of this section, in effect before the amendments made by T.D. 7593 approved January 11, 1979, shall apply. See 26 CFR § 1.167(a)-11(f) (1977) for paragraph (f) of this section as it appeared before the amendments made by T.D. 7593.

(g) *Relationship to other provisions*—(1) *Useful life*—(i) *In general.* Except as provided in subdivision (ii) of this subparagraph, an election to apply this section to eligible property constitutes an agreement under section 167(d) and this section to treat the asset depreciation period for each vintage account as the useful life of the property in such account for all purposes of the Code, including sections 46, 47, 48, 57, 163(d), 167(c), 167(f)(2), 179, 312(m), 514(a), and 4940(c). For example, since section 167(c) requires a useful life of at least 3 years and the asset depreciation period selected is treated as the useful life for purposes of section 167(c), the taxpayer may adopt a method of depreciation described in section 167(b) (2) or (3) for an account only if the asset depreciation period selected for the account is at least 3 years.

(ii) *Special rules.* (*a*) For the purposes of paragraph (d) of this section, the anticipated period of use (estimated at the close of the taxable year in which the asset is first placed in service) on the basis of which salvage value is estimated, shall be determined without regard to the asset depreciation period for the property.

(*b*) For the purposes of sections 162 and 263 and the regulations thereunder, whether an expenditure prolongs the life of an asset shall be determined on the basis of the anticipated period of use of the asset (estimated at the close of the taxable year in which the asset is first placed in service) without regard to the asset depreciation period for such asset.

(*c*) The determination whether a transaction with respect to qualified property constitutes a sale or a lease of such property shall be made without regard to the asset depreciation period for the property.

(*d*) The principles of this subdivision may be illustrated by the following example:

> *Example.* Corporation X has assets in asset guideline class 32.3 which are used in the manufacture of stone and clay products. The asset depreciation range for assets in asset guideline class 32.3 is from 12 to 18 years. Assume that corporation X selects 14 years as the asset depreciation period for all assets in asset guideline class 32.3. Under paragraph (d)(1)(i) of this section, corporation X must estimate salvage value on the basis of the anticipated period of use of the property (determined as of the close of the taxable year in which the property is first placed in service). The anticipated period of use must also be used for purposes of sections 162 and 263 in determining whether an expenditure materially prolongs the useful life of an asset. The anticipated period of use of an asset is determined without regard to the asset depreciation period of 14 years. Corporation X has, among other assets in the asset guideline class, machines A, B, and C. Corporation X estimates the anticipated period of use of machines A, B, and C as 8 years, 14 years, and 22 years, respectively. These estimates are reasonable and will be used for estimating salvage value and for purposes of sections 162 and 263.

(2) *Section 167(d) agreements.* If the taxpayer has, prior to January 1, 1971, entered into a section 167(d) agreement which applies to any eligible property, the taxpayer will be permitted to withdraw the eligible property from the agreement provided that an election is made to apply this section to such property. The statement of intent to withdraw eligible property from such an agreement must be made in an election filed for the taxable year in which the property is first placed in service. The withdrawal, in accordance with this subparagraph, of any eligible property from a section 167(d) agreement shall not affect any other property covered by such an agreement.

(3) *Relationship to the straight line method*—(i) *In general.* For purposes of determining the amount of depreciation which would be allowable under the straight line method of depreciation, such amount shall be computed with respect to any property in a vintage account using the straight line method in the manner described in paragraph (c)(1)(i) of this section and a rate based upon the period for the vintage account selected from the asset depreciation range. Thus, for example, section 57(a)(3) requires a taxpayer to compute an amount using the straight line method of depreciation if the taxpayer uses an accelerated method of depreciation. For purposes of section 57(a)(3), the amount for property in a vintage account shall be computed using the asset depreciation period for the vintage account selected from the asset depreciation range. In the case of property to which the taxpayer does not elect to apply this section, such amount computed by using the straight line method shall be determined under § 1.167(b)-1 without regard to this section.

(ii) *Examples.* The principles of this subparagraph may be illustrated by the following example:

> *Example.* (*a*) Corporation X places a new asset in service to which it elects to apply this section. The cost of the asset is $200,000 and the estimated salvage value is zero. The taxpayer selects 9 years from the applicable asset depreciation range of 8 to 12 years. Corporation X adopts the double declining balance method of depreciation and thus the rate of depreciation is 22.2 percent (twice the applicable straight line rate). The depreciation allowance in the first year would be $44,400, that is, 22.2 percent of $200,000.
> (*b*) Assume that the provisions of section 57(a)(3) apply to the property. The amount of the tax preference would be $22,200, that is, the excess of the depreciation allowed under this section ($44,400) over the depreciation which would have been allowable if the taxpayer had used the period selected from the asset depreciation range and the straight line rate ($22,200).

(Secs. 167(m), 85 Stat. 508 (26 U.S.C. 167(m) and 7805, 68A Stat. 917, (26 U.S.C. 7805))

[T.D. 7272, 38 FR 9967, Apr. 23, 1973]

Editorial Note: For FEDERAL REGISTER citations affecting § 1.167(a)-11, see the List of CFR Sections Affected, which appears in the Finding Aids section of the printed volume and at *www.govinfo.gov*.

§ 1.167(a)-12 Depreciation based on class lives for property first placed in service before January 1, 1971.

(a) ***In general*** —

(1) ***Summary.*** This section provides an elective class life system for determining the reasonable allowance for depreciation of certain classes of assets for taxable years ending after December 31, 1970. The system applies only to assets placed in service before January 1, 1971. Depreciation for such assets during periods prior to January 1, 1971, may have been determined in accordance with Revenue Procedure 62-21. Accordingly, rules are provided which permit taxpayers to apply the system in taxable years ending after December 31, 1970, to such assets without the necessity of changing or regrouping their depreciation accounts other than as previously required by Revenue Procedure 62-21. The system is designed to minimize disputes between taxpayers and the Internal Revenue Service as to the useful life of assets, salvage value, and repairs. See § 1.167(a)-11 for a similar system for property placed in service after December 31, 1970. See paragraph (d)(2) of § 1.167(a)-11 for treatment of expenditures for the repair, maintenance, rehabilitation or improvement

of certain property. The system provided by this section is optional with the taxpayer. An election under this section applies only to qualified property in an asset guideline class for which an election is made and only for the taxable year of election. The taxpayer's election is made with the income tax return for the taxable year. This section also revokes the reserve ratio test for taxable years ending after December 31, 1970, and provides transitional rules for taxpayers who after January 11, 1971, adopt Revenue Procedure 62-21 for a taxable year ending prior to January 1, 1971.

(2) ***Revocation of reserve ratio test and other matters.*** Except as otherwise expressly provided in this section and in paragraph (b)(5)(vi) of § 1.167(a)-11, the provisions of Revenue Procedure 62-21 shall not apply to any property for any taxable year ending after December 31, 1970, whether or not the taxpayer elects to apply this section to any property. See paragraph (f) of this section for rules for the adoption of Revenue Procedure 62-21 for taxable years ending prior to January 1, 1971.

(3) ***Definition of qualified property.*** The term "qualified property" means tangible property which is subject to the allowance for depreciation provided by section 167(a), but only if—

(i) An asset guideline class and asset guideline period are in effect for such property for the taxable year, and

(ii) The property is first placed in service by the taxpayer before January 1, 1971,

(iii) The property is placed in service before January 1, 1971, but first placed in service by the taxpayer after December 31, 1970, and is not includible in an election under § 1.167(a)-11 by reason of § 1.167(a)-11(b)(7) (property acquired as a result of a mere change in form) or § 1.167(a)-11(e)(3)(i) (certain property acquired in a transaction to which section 381(a) applies), or

(iv) The property is acquired and first placed in service by the taxpayer after December 31, 1970, pursuant to a binding written contract entered into prior to January 1, 1971, and is excluded in accordance with paragraph (b)(5)(iv) of § 1.167(a)-11 from an election to apply § 1.167(a)-11.

The provisions of paragraph (e)(1) of § 1.167(a)-11 apply in determining whether property is first placed in service before January 1, 1971. See subparagraph (4)(ii) of this paragraph for special rules for the exclusion of property from the definition of qualified property.

(4) ***Requirements of election*** —

(i) ***In general.*** An election to apply this section to qualified property must be made within the time and in the manner specified in paragraph (e) of this section. The election must specify that the taxpayer consents to and agrees to apply all the provisions of this section. The election may be made separately for each asset guideline class. Thus, a taxpayer may for the taxable year elect to apply this section to one, more than one, or all asset guideline classes in which he has qualified property. An election to apply this section for a taxable year must include all qualified property in the asset guideline class for which the election is made.

(ii) ***Special rules for exclusion of property from application of this section.*** (*a*) If for the taxable year of election, the taxpayer computes depreciation under section 167(k) or computes amortization under sections 169, 185, 187, 188, or paragraph (b) of § 1.162-11 with respect to property, such property is not qualified property for such taxable year. If for the taxable year of election, the taxpayer computes depreciation under any method of depreciation (other than a method described in the preceding sentence) not permitted by subparagraph (5)(v) of this paragraph for

any property in an asset guideline class (other than subsidiary assets excluded from an election under (*b*) of this subdivision), no property in such asset guideline class is qualified property for such taxable year.

(*b*) The taxpayer may exclude from an election to apply this section all (but not less than all) subsidiary assets. Subsidiary assets so excluded are not qualified property for such taxable year. For purposes of this subdivision the term "subsidiary assets" includes jigs, dies, molds, returnable containers, glassware, silverware, textile mill cam assemblies, and other equipment includable in Group One, Class 5, of Revenue Procedure 62-21 which is usually and properly accounted for separately from other property and under a method of depreciation not expressed in terms of years.

(iii) ***Special rule for certain public utility property.*** (*a*) In the case of public utility property described in section 167(1)(3)(A)(iii) for which no guideline life was prescribed in Revenue Procedure 62-21 (or for which reference was made in Revenue Procedure 62-21 to lives or rates established by governmental regulatory agencies) of a taxpayer which—

(*1*) Is entitled to use a method of depreciation other than a "subsection (1) method" of depreciation (as defined in section 167(1)(3)(F)) only if it uses the "normalization method of accounting" (as defined in section 167(1)(3)(G)) with respect to such property, or

(*2*) Is entitled for the taxable year to use only a "subsection (1) method" of depreciation, such property shall be qualified property (as defined in subparagraph (3) of this paragraph) only if the taxpayer normalizes the tax deferral resulting from the election to apply this section.

(*b*) The taxpayer will be considered to normalize the tax deferral resulting from the election to apply this section only if it computes its tax expense for purposes of establishing its cost of service for ratemaking purposes and for reflecting operating results in its regulated books of account using a period for depreciation no less than the period used for computing its depreciation expense for ratemaking purposes and for reflecting operating results in its regulated books of account for the taxable year, and the taxpayer makes adjustments to a reserve to reflect the deferral of taxes resulting from the use of a period for depreciation under section 167 in accordance with an election to apply this section different from the period used for computing its depreciation expense for ratemaking purposes and for reflecting operating results in its regulated books of account for the taxable year. A determination whether the taxpayer is considered to normalize under this subdivision the tax deferral resulting from the election to apply this section shall be made in a manner consistent with the principles for determining whether a taxpayer is using the "normalization method of accounting" (within the meaning of section 167(1)(3)(G)). See § 1.167(l)-1(h).

(*c*) If a taxpayer, which has elected to apply this section to any qualified public utility property and is required under (*a*) of this subdivision to normalize the tax deferral resulting from the election to apply this section to such property, fails to normalize such tax deferral, the election to apply this section to such property shall terminate as of the beginning of the taxable year for which the taxpayer fails to normalize such tax deferral. Application of this section to such property for any period prior to the termination date will not be affected by this termination.

(5) ***Determination of reasonable allowance for depreciation*** —

(i) ***In general.*** The allowance for depreciation of qualified property to which the taxpayer elects to apply this section shall be determined in accordance with this section. The annual allowance for depreciation is determined by using the method of depreciation adopted by the taxpayer

and a rate based upon a life permitted by this section. In the case of the straight-line method of depreciation, the rate of depreciation shall be based upon the class life (or individual life if the taxpayer assigns individual depreciable lives in accordance with subdivision (iii) of this subparagraph) used by the taxpayer with respect to the assets in the asset guideline class. Such rate will be applied to the unadjusted basis of the asset guideline class (individual assets or depreciation accounts if the taxpayer assigns individual depreciable lives). In the case of the sum of the years-digits method of depreciation, the rate of depreciation will be determined based upon the remaining life of the class (or individual remaining lives if the taxpayer assigns such lives in accordance with subdivision (iii) of this subparagraph) and is applied to the adjusted basis of the class (or individual accounts or assets) as of the beginning of the taxable year of election. The remaining life of a depreciation account is determined by dividing the unrecovered cost or other basis of the account, as computed by straight-line depreciation, by the gross cost or unadjusted basis of the account, and multiplying the result by the class life used with respect to the account. In the case of the declining balance method of depreciation, the rate of depreciation for the asset guideline class shall be based upon the class life (or individual life if the taxpayer assigns such lives in accordance with subdivision (iii) of this subparagraph). Such rate is applied to the adjusted basis of the class (or individual accounts or assets) as of the beginning of the taxable year of election.

(ii) ***Reasonable allowance by reference to class lives.*** The amount of depreciation for all qualified property in an asset guideline class to which the taxpayer elects to apply this section will constitute the reasonable allowance provided by section 167(a) and the depreciation for the asset guideline class will not be adjusted if—

(*a*) The taxpayer's qualified property is accounted for in one or more depreciation accounts which conform to the asset guideline class, and the depreciation for each such account is determined by using a rate based upon a life not less than the class life, or

(*b*) The taxpayer's qualified property is accounted for in one or more depreciation accounts (whether or not conforming to the asset guideline class) for which depreciation is determined at a rate based upon the taxpayer's estimate of the lives of the assets (instead of the class life) and the total amount of depreciation so determined for the asset guideline class for the taxable year of election is not more than would be permitted under (*a*) of this subdivision for such year using the method of depreciation adopted by the taxpayer for the property.

See subdivision (vii) of this subparagraph for determination of reasonable allowance if depreciation exceeds the amount permitted by this subdivision. See paragraph (b) of this section for rules regarding the determination of “class life”. For rules for regrouping depreciation accounts to conform to the asset guideline class, see subdivision (iv) of this subparagraph.

(iii) ***Consistency when individual lives are used.*** If the taxpayer assigns individual depreciable lives to assets in accordance with subdivision (ii)(*b*) of this subparagraph, even though the total amount of depreciation for the asset guideline class will not be adjusted, the lives assigned to the various assets in the asset guideline class must be reasonably in proportion to their relative expected periods of use in the taxpayer's business. Thus, although the taxpayer who uses individual asset lives normally has latitude in thereby allocating the depreciation for the asset guideline class among the assets, if the lives are grossly disproportionate (as where a short life is assigned to one asset and a long life to another even though the expected periods of use are

the same), the taxpayer's allocation of depreciation to particular assets or depreciation accounts may be adjusted. For example, the taxpayer's allocation may be adjusted for purposes of determining adjusted basis under section 1016(a) or in allocating depreciation to the 50-percent limitation on percentage depletion provided by section 613(a). See paragraph (d) of this section for rules regarding the use of individual asset lives for purposes of classifying retirements as normal or abnormal.

(iv) ***Regrouping depreciation accounts.*** Without the consent of the Commissioner, the taxpayer may for any taxable year for which he elects to apply this section to an asset guideline class, regroup his accounts for that and all succeeding taxable years to conform to the asset guideline class. Other changes in accounting, including a change from item accounts to multiple-asset accounting, may be made with the consent of the Commissioner. No depreciation accounts for which the straight line or sum of the years-digits method of depreciation is adopted may be combined under this section which would not be permitted to be combined under part III of Revenue Procedure 65-13, as in effect on January 1, 1971. Accordingly, whether or not the taxpayer adopted the guideline system of Revenue Procedure 62-21 for a taxable year to which part III of Revenue Procedure 65-13 is applicable, the depreciation allowance for any taxable year of election under this section may not exceed that amount which would have been allowed for such year if the taxpayer had used item accounts or year of acquisition accounts. Thus, for example, if a calendar year taxpayer acquired a $90 asset on the first day of each year from 1966 through 1970, placed such assets in a single multiple asset account, adopted the sum of the years-digits method of depreciation and used a 5-year depreciable life for such assets, and in 1971 uses the 5-year class life determined under paragraph (b) of this section, the depreciation allowance for such assets in 1971 under this section may not exceed $60, that is, the amount which would be allowed if the taxpayer had used year of acquisition accounts for the assets for the years 1966 through 1970.

For purposes of this subparagraph, a taxpayer's depreciation accounts conform to the asset guideline class if each depreciation account includes only assets of the same asset guideline class.

(v) ***Method of depreciation.*** The same method of depreciation must be applied to all property in a single depreciation account. The method of depreciation is subject to the limitations of section 167 (c), (j), and (l). Except as otherwise provided in this subdivision, the taxpayer must apply a method of depreciation described in section 167(b) (1), (2), or (3) for qualified property to which the taxpayer elects to apply this section. A method of depreciation permitted under section 167(b)(4) may be used under this section if the method was used by the taxpayer with respect to the property for his last taxable year ending before January 1, 1971, the method is expressed in terms of years, the taxpayer establishes to the satisfaction of the Commissioner that the method is both a reasonable and consistent method, and if the taxpayer applies paragraph (b)(2) of this section (relating to class lives in special situations) to determine a class life, that the method of determining such class life is consistent with the principles of Revenue Procedure 62-21 as applied to such a method. If the taxpayer has applied a method of depreciation with respect to the property which is not described in section 167(b) (1), (2), (3), or (4) (as permitted under the preceding sentence), he must change under this section to a method of depreciation described in section 167(b) (1), (2), or (3) for the first taxable year for which an election is made under this section. Other changes in depreciation method may be made with the consent of the Commissioner (see sec. 446 and the regulations thereunder). (See also sec. 167(e).)

(vi) ***Salvage value.*** In applying the method of depreciation adopted by the taxpayer, the annual allowance for depreciation is determined without adjustment for the salvage value of the property, except that no depreciation account may be depreciated below a reasonable salvage value for the account. See paragraph (c) of this section for definition and treatment of salvage value.

(vii) ***Reasonable allowance when depreciation exceeds amount based on class life.*** In the event that the total amount of depreciation claimed by the taxpayer on his income tax return, in a claim for refund, or otherwise, for an asset guideline class with respect to which an election is made under this section for the taxable year, exceeds the maximum amount permitted under subdivision (ii)(*a*) of this subparagraph—

(*a*) If the excess is established to the satisfaction of the Commissioner to be the result of a good faith mistake by the taxpayer in determining the maximum amount permitted under subdivision (ii) (*a*) of this subparagraph, the taxpayer's election to apply this section will be treated as valid and only such excess will be disallowed, and

(*b*) In all other cases, the taxpayer's election to apply this section to the asset guideline class for the taxable year is invalid and the reasonable allowance for depreciation will be determined without regard to this section. (See § 1.167(a)-1 (b) for rules regarding the estimated useful life of property.)

(b) *Determination of class lives*—(1) *Class lives in general.* The class life determined under this paragraph (without regard to any range or variance permitted with respect to class lives under § 1.167(a)-11) will be applied for purposes of determining whether the allowance for depreciation for qualified property included in an election under this section is subject to adjustment. The taxpayer is not required to use the class life determined under this paragraph for purposes of determining the allowance for depreciation. Except as provided in subparagraph (2) of this paragraph, the class life of qualified property to which the taxpayer elects to apply this section is the shorter of—

(i) The asset guideline period for the asset guideline class as set forth in Revenue Procedure 72-10 as in effect on March 1, 1972 (applied without regard to any special provision therein with respect to property predominantly used outside the United States), or

(ii) The asset guideline period for the asset guideline class as set forth in any supplement or revision of Revenue Procedure 72-10, but only if and to the extent by express reference in such supplement or revision made applicable for the purpose of changing the asset guideline period or classification of qualified property to which this section applies.

See paragraph (e)(3)(iii) of this section for requirement that the election for the taxable year specify the class life for each asset guideline class. Generally, the applicable asset guideline class and asset guideline period for qualified property to which the taxpayer has elected to apply this section will not be changed for the taxable year of election to reflect any supplement or revision thereof after the taxable year. However, if expressly provided in such a supplement or revision, the taxpayer may, at his option in the manner specified therein, apply the revised or supplemented asset guideline classes or periods to such property for such taxable year and succeeding taxable years. The principles of this subparagraph may be illustrated by the following example:

> *Example.* (i) Corporation X, a calendar year taxpayer, has assets in asset guideline class 20.4 of Revenue Procedure 72-10 which were placed in service by corporation X in 1967, 1968, and 1970. Corporation X

> also has assets in asset guideline class 22.1 of Revenue Procedure 72-10 which were placed in service at various times prior to 1971. Corporation X has no other qualified property. Corporation X elects to apply this section for 1971 to both classes. Assume that the class lives are determined under this subparagraph and not under subparagraph (2) of this paragraph.
> (ii) The class lives for asset guideline classes 20.4 and 22.1 are their respective asset guideline periods of 12 years and 9 years in Revenue Procedure 72-10.
>
> (iii) Accordingly, in the election for the taxable year, in accordance with paragraph (e)(3)(iii) of this section, corporation X specifies a class life of 12 years for asset guideline class 20.4 and a class life of 9 years for asset guideline class 22.1.

(2) *Class lives in special situations.* Notwithstanding subparagraph (1) of this paragraph, for the purposes of this section the class life for the asset guideline class determined under this subparagraph shall be used if such class life is shorter than the class life determined under subparagraph (1) of this paragraph. If property described in paragraph (a)(2)(iii) of this section in an asset guideline class is acquired by the taxpayer in a transaction to which section 381(a) applies, for purposes of this subparagraph such property shall be segregated from other property in the class and treated as in a separate asset guideline class, and the class life for that asset guideline class under this subparagraph shall be the shortest class life the transferor was entitled to use under this section for such property on the date of such transfer. In all other cases, the class life for the asset guideline class for purposes of this subparagraph shall be the shortest class life (within the meaning of sec. 4, part II, of Revenue Procedure 62-21) which can be justified by application of secs. 3.02(a), 3.03(a), or 3.05, part II, of Revenue Procedure 62-21 (other than the portion of such sec. 3.05 dealing with justification of a class life by reference to facts and circumstances) for the taxpayer's last taxable year ending prior to January 1, 1971.

A class life justified by application of section 3.03(a), Part II, of Revenue Procedure 62-21 shall not be shorter than can be justified under the Adjustment Table for Class Lives in Part III of such Revenue Procedure. For purposes of this subparagraph and paragraph (f)(1)(iii) of this section, the reserve ratio test is met only if the taxpayer's reserve ratio does not exceed the upper limit of the appropriate reserve ratio range or in the alternative during the transitional period there provided does not exceed the appropriate "transitional upper limit" in section 3, Part II, of Revenue Procedure 65-13. References to Revenue Procedure 62-21 include all morifications, amendments, and supplements thereto as of January 1, 1971. The guideline form of the reserve ratio test, as described in Revenue Procedure 65-13, may be applied for purposes of this subparagraph in a manner consistent with the rules contained in section 7, Part II, of Revenue Procedure 65-13 and sections 3.02, 3.03, and 3.05, Part II, of Revenue Procedure 62-21. The principles of this subparagraph may be illustrated by the following examples:

Example 1. Corporation X, a calendar year taxpayer, has all its assets in asset guideline class 20.4 of Revenue Procedure 72-10 which were placed in service by corporation X prior to 1971. Corporation X elects to apply this section for 1971. For taxable years 1967 through 1969, corporation X had used a class life (within the meaning of section 4, Part II, of Revenue Procedure 62-21) for asset guideline class 20.4 of 12 years. The asset guideline period in Revenue Procedure 72-10 in effect for 1971 is also 12 years. Assume that for 1969 corporation X's reserve ratio was below the appropriate reserve ratio lower limit. However, corporation X could not justify a class life shorter than the asset guideline period of 12 years for 1970 since corporation X had not used the 12-year class life for a period at least equal to one-half of 12 years. (See section 3.03(a), Part II, of Revenue Procedure 62-21.) Accordingly, the class life for asset guideline class 20.4 in 1971 is the asset guideline period of 12 years in accordance with subparagraph (1) of this paragraph.

Example 2. The facts are the same as in example (1) except that corporation X had used a class life of 10 years for guideline class 20.4 since 1967. Corporation X had not used the class life of 10 years for a period at least equal to one-half of 10 years. However, in 1968 corporation X's 10-year class life was accepted on audit by the Internal Revenue Service and corporation X met the reserve ratio test in 1970 for guideline class 20.4 using a test life of 10 years. (See section 3.05, Part II, of Revenue Procedure 62-21.) Accordingly, the class life of 10 years is justified for 1970 and the class life for 1971 is 10 years in accordance with this subparagraph. If the taxpayer's class life had not been audited and accepted for 1968, and in the absence of other circumstances, the taxpayer could not justify a class life shorter than the asset guideline period of 12 years since it had not used the 10-year class life for a period at least equal to one-half of 10 years. (See section 3.02, Part II, of Revenue Procedure 62-21.)

Example 3. Corporation Y, a calendar year taxpayer, has all its assets in asset guideline class 13.3 of Revenue Procedure 72-10 which were placed in service from 1960 through 1970. Corporation Y elects to apply this section for 1971. The asset guideline period in Revenue Procedure 72-10 in effect for 1971 is 16 years. Since 1963 corporation Y had used a class life of 16 years for asset guideline 13.3. At the end of 1969 corporation Y's reserve ratio for guideline class 13.3 was 36 percent. With a growth rate of 8 percent and a test life of 16 years the appropriate reserve ratio lower limit was 37 percent. Corporation Y's reserve ratio of 36 percent was below the lower limit of the appropriate reserve ratio range. Corporation Y had used the 16-year class life for at least eight years. A class life of 13.5 years for 1970 was justified by application of section 3.03(a), Part II, of Revenue Procedure 62-21 and the Adjustment Table for Class Lives in Part III, of Revenue Procedure 62-21. The class life for 1971 is 13.5 years in accordance with this subparagraph.

(3) *Classification of property*—(i) *In general.* Property to which this section applies shall be included in the asset guideline class for the activity in which the property is primarily used in the taxable year of election. See paragraph (d)(5) of this section for rule regarding the classification of leased property.

(ii) ***Insubstantial activity.*** The provisions of Revenue Produce 62-21 with respect to classification of assets used in an activity which is insubstantial may be applied under this section.

(iii) ***Special rule for certain public utilities.*** An electric or gas utility which in accordance with Revenue Procedure 64-21 used a composite guideline class basis for applying Revenue Procedure 62-21 for its last taxable year prior to January 1, 1971, may apply Revenue Procedure 72-10 and this section on the basis of such composite asset guideline class determined as provided in Revenue Procedure 64-21. For the purposes of this section all property in the composite guideline class shall be treated as included in a single asset guideline class.

(c) ***Salvage value*** —

(1) ***In general*** —

(i) ***Definition of gross salvage value.*** "Gross salvage" value is the amount (determined at or as of the time of acquisition but without regard to the application of Revenue Procedure 62-21) which is estimated will be realized upon a sale or other disposition of qualified property when it is no longer useful in the taxpayer's trade or business or in the production of his income and is to be retired from service, without reduction for the cost of removal, dismantling, demolition, or similar operations. "Net salvage" is gross salvage reduced by the cost of removal, dismantling, demolition, or similar operations. If a taxpayer customarily sells or otherwise disposes of property at a time when such property is still in good operating condition, the gross salvage value of such property is the amount expected to be realized upon such sale or disposition, and

under certain circumstances, as where such property is customarily sold at a time when it is still relatively new, the gross salvage value may constitute a relatively large proportion of the unadjusted basis of such property.

(ii) ***Definition of salvage value.*** "Salvage value" for purposes of this section means gross or net salvage value less the amount, if any, by which reduced by application of section 167(f). Generally, as provided in section 167(f), a taxpayer may reduce the gross or net salvage value for an account by an amount which does not exceed 10 percent of the unadjusted basis of the personal property (as defined in section 167(f)(2)) in the account.

(2) ***Estimation of salvage value*** —

(i) ***In general.*** For the first taxable year for which he elects to apply this section, the taxpayer must (in accordance with paragraph (e)(3)(iv)(*c*) of this section) establish salvage value for all qualified property to which the election applies. The taxpayer may (in accordance with subparagraph (1) of this paragraph) determine either gross or net salvage, but an election under this section does not constitute permission to change the manner of estimating salvage. Permission to change the manner of estimating salvage must be obtained by filing form 3115 with the Commissioner of Internal Revenue, Washington, D.C. 20224, within the time otherwise permitted for the taxable year or before September 6, 1973. Salvage value in succeeding taxable years of election will be determined by adjustments of such initial salvage value for the account, as retirements occur. This salvage value established by the taxpayer for the first taxable year of election will not be redetermined merely as a result of fluctuations in price levels or as a result of other circumstances occurring after the close of such taxable year. See paragraph (e)(3)(iv) of this section for requirements that the taxpayer specify in his election the aggregate amount of salvage value for an asset guideline class and that the taxpayer maintain records reasonably sufficient to identify the salvage value established for each depreciation account in the class.

(ii) ***Salvage as limitation on depreciation.*** In no case may an account be depreciated under this section below a reasonable salvage value, after taking into account any reduction in gross or net salvage value permitted by section 167(f). For example, if the salvage value of an account for 1971 is $75, the unadjusted basis of the account is $500, and the depreciation reserve is $425, no depreciation is allowable for 1971.

(iii) ***Special rule for first taxable year.*** If for a taxable year ending prior to January 1, 1971, the taxpayer had adopted Revenue Procedure 62-21 prior to January 12, 1971 (see paragraph (f)(2) of this section), no adjustment in the amount of depreciation allowable for any taxable year ending prior to January 1, 1971, shall be made solely by reason of establishing salvage value under this paragraph for any taxable year ending after December 31, 1970. The principles of this subdivision may be illustrated by the following example:

Example. Taxpayer A had adopted Revenue Procedure 62-21 prior to January 12, 1971, for taxable years prior to 1971. Taxpayer A had not taken into account any salvage value for account No. 1 which is one of four depreciation accounts A has in the class. The reserve ratio test has been met for all years prior to 1971 and in accordance with Revenue Procedure 62-21 no adjustments in depreciable lives or salvage values were made. At the end of A's taxable year 1970, the unadjusted basis of account No. 1 was $10,000 and the reserve for depreciation was $9,800. Pursuant to this paragraph, A establishes a salvage value of $400 for account No. 1

(determined at or as of the time of acquisition). This salvage value is determined to be correct. No depreciation is allowable for account No. 1 in 1971. No depreciation is disallowed for any taxable year prior to 1971, solely by reason of establishing salvage value under this paragraph.

(3) ***Limitation on adjustment of reasonable salvage value.*** The salvage value established by the taxpayer for a depreciation account will not be redetermined if it is reasonable. Since the determination of salvage value is a matter of estimation, minimal adjustments will not be made. The salvage value established by the taxpayer will be deemed to be reasonable unless there is sufficient basis for a determination of an amount of salvage value for the account which exceeds the salvage value established by the taxpayer for the account by an amount greater than 10 percent of the unadjusted basis of the account at the close of such taxable year. If the salvage value established by the taxpayer for the account is not within the 10-percent range or if the taxpayer follows the practice of understating his estimates of salvage to take advantage of this subdivision, and if there is a determination of an amount of salvage value for the account for the taxable year which exceeds the salvage value established by the taxpayer for the account for such taxable year, an adjustment will be made by increasing the salvage value established by the taxpayer for the account by an amount equal to the difference between the salvage value as determined and the salvage value established by the taxpayer for the account. For the purposes of this subdivision, a determination of salvage value shall include all determinations at all levels of audit and appellate proceedings, and as well as all final determinations within the meaning of section 1313(a)(1). This subparagraph shall apply to each such determination.

(4) ***Examples.*** The principles of this paragraph may be illustrated by the following examples in which it is assumed that the taxpayer has established salvage value in accordance with this paragraph and has not followed a practice of understating his estimates of salvage value:

Example 1. Taxpayer B elects to apply this section for 1971. Assets Y and Z are the only assets in a multiple asset account of 1967, the year in which the assets were acquired. The unadjusted basis of asset Y is $50,000 and the unadjusted basis of asset Z is $30,000. B estimated a gross salvage value of $55,000 at the time of acquisition. The property qualified under section 167(f)(2) and B reduced the amount of salvage taken into account by $8,000 (that is, 10 percent of $80,000, under sec. 167(f)). Thus, in accordance with this paragraph and paragraph (e)(3)(iv)(*c*) of this section, B establishes a salvage value of $47,000 for the account for 1971. Assume that there is not sufficient basis for determining a salvage value for the account greater $52,000 (that is $60,000 minus the $8,000 reduction under sec. 167(f)). Since the salvage value of $47,000 established by B for the account is within the 10 percent range, it is reasonable. Salvage for the account will not be redetermined.

Example 2. The facts are the same as in example (1) except that B estimated a gross salvage value of $50,000 and establishes a salvage value of $42,000 for the account (that is, $50,000 minus the $8,000 reduction under section 167(f)). There is sufficient basis for determining an amount of salvage value greater than $50,000 (that is, $58,000 minus the $8,000 reduction under section 167(f)). The salvage value of $42,000 established by B for the account can be redetermined without regard to the limitation in subparagraph (3) of this paragraph, since it is not within the 10 percent range. Upon audit of B's tax return for 1971 (a year in which the redetermination would affect the amount of depreciation allowable for the account), salvage value is determined to be $52,000 after taking into account the reduction under section 167(f). Salvage value for the account will be adjusted to $52,000.

Example 3. The facts are the same as in example (1) except that upon audit of B's tax return for 1971 the examining officer determines the salvage value to be $58,000 (that is, $66,000 minus the $8,000 reduction under section 167(f)), and proposes to adjust salvage value for the account to $58,000 which will result in disallowing an amount of depreciation for the taxable year. B does not agree with the finding of the examining officer. After receipt of a "30-day letter," B waives a district conference and initiates proceedings before the Appellate Division. In consideration of the case by the Appellate Division it is concluded that there is not sufficient basis for determining an amount of salvage value for the account in excess of $55,000 (that is, $63,000 minus the $8,000 reduction under section 167(f)). Since the salvage value of $47,000 established by B for the account is within the 10 percent range, it is reasonable. Salvage value for the account will not be redetermined.

Example 4. For 1971, taxpayer C elects to apply this section to factory building X which is in an item account of 1965, the year in which the building was acquired. The unadjusted basis of factory building X is $90,000. C estimated a gross salvage value for the account of $10,000. The property did not qualify under section 167(f)(2). Thus, C establishes a salvage value of $10,000 for the account for 1971. Assume that there is not sufficient basis for determining a salvage value for the account greater than $14,000. Since the salvage value of $10,000 established by C for the account is within the 10-percent range, it is reasonable. Salvage value for the account will not be redetermined.

(d) ***Accounting for qualified property*** —

(1) ***In general.*** Qualified property for which the taxpayer elects to apply this section may be accounted for in any number of item or multiple asset accounts.

(2) ***Retirements of qualified property*** —

(i) ***In general.*** The provisions of this subparagraph and § 1.167(a)-8 apply to retirements of qualified property to which the taxpayer elects to apply this section for the taxable year. See subdivision (iii) of this subparagraph for special rule for normal retirements.

(ii) ***Adjusted basis of assets retired.*** In the case of a taxpayer who depreciates qualified property in a multiple-asset account conforming to the asset guideline class at a rate based on the class life in accordance with paragraph (a)(5)(ii)(*a*) of this section, § 1.167(a)-8(c) (relating to basis of assets retired) shall be applied by assuming that the class life is the average expected useful life of the assets in the account. See § 1.167(a)-8, generally, for the basis of assets retired.

(iii) ***Definition of normal retirements.*** Notwithstanding § 1.167(a)-8(b), the determination whether a retirement of qualified property is normal or abnormal shall be made in light of all the facts and circumstances, primarily with reference to the expected period of use of the asset in the taxpayer's business without regard to paragraph (a)(5)(ii) of this section. A retirement is not abnormal unless the taxpayer can show that the withdrawal of the asset was not due to a cause which would customarily be contemplated (in light of the taxpayer's practice and experience) in setting a depreciation rate for the assets without regard to paragraph (a)(5)(ii) of this section. Thus, for example, a retirement is normal if made within the range of years which would customarily be taken into account in setting such depreciation rate and if the asset has reached a condition at which, in the normal course of events, the taxpayer customarily retires

similar assets from use in his business. A retirement may be abnormal if the asset is withdrawn at an earlier time or under other circumstances, as, for example, when the asset has been damaged by casualty or has lost its usefulness suddenly as the result of extraordinary obsolescence.

(3) *Special rules* —

(i) ***In general.*** The provisions of this subparagraph shall apply to qualified property in a taxable year for which an election to apply this section is made.

(ii) ***Repairs.*** For the purpose of sections 162 and 263 and the regulations thereunder, whether an expenditure prolongs the life of an asset shall be determined by reference to the expected period of use of the asset in the taxpayer's business without regard to paragraph (a)(5)(ii) of this section.

(iii) ***Sale and lease.*** For the purpose of comparison with the term of a lease of such property, the remaining life of qualified property shall be determined by reference to the expected period of use of the asset in the taxpayer's business without regard to paragraph (a)(5)(ii) of this section.

(4) ***Expected period of use.*** For the purposes of subparagraphs (2) and (3) of this paragraph, the determination of the expected period of use of an asset shall be made in light of all the facts and circumstances. The expected period of use of a particular asset will not necessarily coincide with the class life used for depreciation (or with the individual asset life for depreciation under the alternative method in paragraph (a)(5)(ii) (*b*) of this section for applying the class life). Thus, for example, if the question is whether an asset has been leased for a period less than, equal to or greater than its remaining life, the determination shall be based on the remaining expected period of use of the individual asset without regard to the fact that the asset is depreciated at a rate based on the class life in accordance with paragraph (a)(5)(ii)(*a*) of this section.

(5) ***Leased property.*** In the case of a lessor of qualified property, unless there is an asset guideline class in effect for such lessors, the asset guideline class for such property shall be determined by reference to the activity in which such property is primarily used by the lessee. See paragraph (b)(3) of this section for general rule for classification of qualified property according to primary use. However, in the case of an asset guideline class based upon the type of property (such as trucks or railroad cars), as distinguished from the activity in which used, the property shall be classified without regard to the activity of the lessee.

(e) *Election under this section* —

(1) ***Consent to change in method of accounting.*** An election to apply this section for a taxable year ending after December 31, 1970, is a method of accounting but the consent of the Commissioner will be deemed granted to make an annual election.

(2) ***Election for taxable years ending after December 31, 1976.*** For taxable years ending after December 31, 1976, the election to apply this section for a taxable year shall be made by attaching to the income tax return a statement that an election under this section is being made. If the taxpayer does not file a timely return (taking into account extensions of time for filing) for the taxable year, the election shall be made at the time the taxpayer files his first return for the taxable year. The election may be made with an amended return only if such amended return is filed no later than the time prescribed by law (including extensions thereof) for filing the return for the taxable year. A taxpayer who makes an election under this subparagraph must maintain books and records reflecting the information described in paragraph (e)(3) (ii) and (iii) of this section.

(3) ***Election for taxable years ending on or before December 31, 1976.***

(i) For taxable years ending on or before December 31, 1976, the election to apply this section for a taxable year may be made by filing Form 5006 with the income tax return for the taxable year. If the taxpayer does not file a timely return (taking into account extensions of time for filing) for the taxable year, the election shall be filed at the time the taxpayer files his first return for the taxable year. The election may be made with an amended return only if such amended return is filed no later than the later of (*a*) the time prescribed by law (including extensions thereof) for filing the return for the taxable year, or (*b*) November 5, 1973.

(ii) The election to apply this section for a taxable year ending on or before December 31, 1976, will be deemed to be made if the tax return (filed within the periods referred to in paragraph (e)(3)(i) of this section) contains information sufficient to establish the following:

(*a*) Each asset guideline class for which the election is intended to apply;

(*b*) The class life for each such asset guideline class and whether the class life is determined under paragraph (b)(1) or (2) of this section;

(*c*) For each asset guideline class, as of the end of the taxable year of election, (*1*) the total unadjusted basis of all qualified property, (*2*) the aggregate of the reserves for depreciation of all accounts in the asset guideline class, and (*3*) the aggregate of the salvage value established for all accounts in the asset guideline class; and

(*d*) Whether the taxpayer is an electric or gas utility using a composite asset guideline class basis in accordance with paragraph (b)(3)(iii) of this section.

If an election is deemed to be made under this subdivision (ii), the taxpayer will be deemed to have consented to apply all the provisions of this section.

(iii) A taxpayer to whom the election applies shall maintain books and records for each asset guideline class reasonably sufficient to identify the unadjusted basis, reserve for depreciation and salvage value established for each depreciation account in such asset guidelines class.

(f) ***Depreciation for taxable years ending before January 1, 1971 —***

(1) ***Adoption of Revenue Procedure 62-21 —***

(i) ***In general.*** Except as provided in subdivision

(ii) of this subparagraph, a taxpayer may elect to be examined under the provisions of Revenue Procedure 62-21 for a taxable year ending before January 1, 1971, only in accordance with the rules of this paragraph. The election must specify:

(*a*) That the taxpayer makes such election and consents to, and agrees to apply, all the provisions of this paragraph;

(*b*) Each guideline class and taxable year for which the taxpayer elects to be examined under Revenue Procedure 62-21;

(*c*) The class life claimed for each such guideline class;

(*d*) The class life and the total amount of the depreciation for the guideline class claimed on the last income tax return for such taxable year filed prior to January 12, 1971 (or in case no income tax return was filed prior to January 12, 1971, on the first income tax return filed for such taxable year);

(*e*) The class life claimed and the total amount of depreciation for the guideline class under the election to apply Revenue Procedure 62-21, in accordance with this paragraph, for the taxable year; and

(*f*) If the class life or total amount of depreciation for the guideline class is different in (*d*) and (*e*) of this subdivision, a reasonable description of the computation of the class life in (*e*) of this subdivision, the amount of difference in tax liability resulting therefrom, and the amount of any refund or reduction in any deficiency in tax. The election shall be made in an amended tax return or claim for refund (or by a supplement to the tax return or claim) for the taxable year, and if the class life or total amount of depreciation for the guideline class is different in accordance with (*f*) of this subdivision, such difference shall be reflected in the amended tax return or claim for refund. Forms may be provided for making the election and submission of the information. In the case of an election made after issuance of such forms and more than 30 days after publication of notice thereof in the Internal Revenue Bulletin, the election may be made and the information submitted only in accordance with such forms. An election will not otherwise be invalid under this paragraph so long as there is substantial compliance, in good faith, with the requirements of this paragraph.

(ii) ***Special rule.*** The provisions of this subparagraph shall not apply to a guideline class in any taxable year for which the taxpayer has prior to January 12, 1971, adopted Revenue Procedure 62-21 for such class. See subparagraph (2) of this paragraph for determination of adoption of Revenue Procedure 62-21 prior to January 12, 1971.

(iii) ***Justification of class life claimed and limitations on refunds.*** If the taxpayer elects for a taxable year to be examined under the provisions of Revenue Procedure 62-21 in accordance with subdivision (i) of this subparagraph, any of the provisions of Revenue Procedure 62-21 may be applied to justify a class life claimed on the income tax return filed for such year or to offset an increase in tax liability for such year. Unless it meets the reserve ratio test, no class life will be accepted on audit which (after all other adjustments in tax liability for such year) results in a reduction (or further reduction) in the amount of tax liability shown on the income tax return (specified in subdivision (i)(*d*) of this subparagraph) for such taxable year, or results in an amount of loss carryback or carryover to any taxable year, but if it is justified under Revenue Procedure 62-21 and meets the reserve ratio test, a class life will be accepted on audit without regard to the foregoing limitations and, for example, may produce a refund or credit against tax. For example, if a class life of 9 years is otherwise justified under Revenue Procedure 62-21 for 1969, but the taxpayer does not meet the reserve ratio test for 1969 using a test life of 9 years, a class life of 9 years (or any class life justified under Revenue Procedure 62-21) will be accepted on audit under Revenue Procedure 62-21 pursuant to an election in accordance with this paragraph provided it does not result in the reduction or further reduction in tax liability or in an amount of loss carryback or carryover as described in the preceding sentence. On the other hand, for example, if a class life of 10 years is justified under Revenue Procedure 62-21 for 1969 and the taxpayer meets the reserve ratio test for 1969 using a test life of 10 years, a class life of 10 years will be accepted on audit under Revenue Procedure 62-21 pursuant to an election in accordance with this paragraph even though it results in a reduction or further

reduction in tax liability or in an amount of loss carryback or carryover as described above and produces a refund of tax. For purposes of this section, the term “audit” includes examination of claims for refund or credit against tax.

(iv) ***Definitions.*** For purposes of this paragraph, the determination whether the reserve ratio test is met shall be made in accordance with that portion of paragraph (b)(2) of this section which is by express reference therein made applicable to this paragraph. In addition, the guideline form of the reserve ratio test, as described in Revenue Procedure 65-13, may be applied. For purposes of this paragraph, references to Revenue Procedure 62-21 include all modifications, amendments, and supplements thereto as of January 11, 1971. The terms “class life” and “guideline class” have the same meaning as in Revenue Procedure 62-21.

(2) ***Determination whether Revenue Procedure 62-21 adopted prior to January 12, 1971*** —

(i) ***In general.*** For the purposes of this paragraph, a taxpayer will be treated as having adopted prior to January 12, 1971, Revenue Procedure 62-21 for a guideline class for a taxable year ending before January 1, 1971, only if—

(*a*) For the guideline class and taxable year, the taxpayer adopted Revenue Procedure 62-21 by expressly so indicating on the income tax return filed for such taxable year prior to January 12, 1971;

(*b*) For the guideline class and taxable year, the taxpayer adopted Revenue Procedure 62-21 prior to January 12, 1971, by expressly so indicating in a proceeding before the Internal Revenue Service (such as upon examination of the income tax return for such taxable year) and there is reasonable evidence to that effect; or

(*c*) There is other reasonable evidence that prior to January 12, 1971, the taxpayer adopted Revenue Procedure 62-21 for the guideline class and taxable year.

If not treated under (*b*) or (*c*) of this subdivision as having done so for the last taxable year ending before January 1, 1971, and if the taxpayer files his first income tax return for such taxable year after January 11, 1971, the taxpayer will be treated as having adopted Revenue Procedure 62-21 prior to January 12, 1971, for a guideline class for such taxable year if he expressly so indicated on that return, or is treated under this subparagraph as having adopted Revenue Procedure 62-21 prior to January 12, 1971, for that guideline class for the immediately preceding taxable year.

(ii) ***Examples.*** The principles of this subparagraph may be illustrated by the following examples:

Example 1. Taxpayer A, an individual who uses the calendar year as his taxable year, has property in Group Three, Class 16(a), of Revenue Procedure 62-21. On A's income tax return for 1968, filed prior to January 12, 1971, he adopted Revenue Procedure 62-21 for the guideline class by so indicating under “Summary of Depreciation” in the appropriate schedule of Form 1040 for 1968. Under subdivision (i) (*a*) of this subparagraph, A is treated as having adopted Revenue Procedure 62-21 for the guideline class for 1968 prior to January 12, 1971.

Example 2. Taxpayer B, an individual who uses the calendar year as his taxable year, has property in Group Two, Class 5, of Revenue Procedure 62-21. B filed timely income tax returns for 1966 through 1968 but did not adopt Revenue Procedures 62-21 on any of such returns. In 1969 upon audit of B's taxable years 1966 through 1968, B exercised his option to be

examined under the provisions of Revenue Procedure 62-21. The Revenue Agent's report shows that B was examined under Revenue Procedure 62-21 for taxable years 1966 through 1968. B will be treated under subdivision (ii)(*b*) of this subparagraph as having adopted Revenue Procedure 62-21 for such years prior to January 12, 1971.

Example 3. The facts are the same as in example (2) except that B did not upon examination by the Revenue Agent in 1969 exercise his option to be examined under Revenue Procedure 62-21. B has six accounts in the guideline class, Nos. 1 through 6. The Revenue Agent proposed to lengthen the depreciable lives on accounts Nos. 2 and 3 from 8 years to 12 years. In proceedings before the Appellate Division in 1970, B exercised his option to be examined under the provisions of Revenue Procedure 62-21. This is shown by correspondence between B and the Appellate Conferee as well as by other documents in the case before the Appellate Division. The case was settled on that basis before the Appellate Division without adjustment of the depreciable lives for B's accounts Nos. 2 and 3. B will be treated under subdivision (ii) (*b*) of this subparagraph as having adopted Revenue Procedure 62-21 for taxable years 1966 through 1968 prior to January 12, 1971.

Example 4. Corporation X uses the calendar year as its taxable year and has assets in Group Two, Class 5, of Revenue Procedure 62-21. Beginning in 1964, corporation X used the guideline life of 10 years as the depreciable life for all assets in the guideline class. In 1967, corporation X's taxable years 1964 through 1966 were examined and corporation X exercised its option to be examined under the provisions of Revenue Procedure 62-21. Corporation X did not adopt Revenue Procedure 62-21 on any of its income tax returns, for the years 1964 through 1970. Corporation X has not been examined since 1967, but has continued to use the guideline life of 10 years for all property in the guideline class including additions since 1966. Corporation X will be treated under subdivision (ii) (*c*) and (*d*) of this subparagraph as having adopted Revenue Procedure 62-21 prior to January 12, 1971, for taxable years 1964 through 1970.

Example 5. Corporation Y uses the calendar year as its taxable year and has asset in Group Two, Class 5, of Revenue Procedure 62-21. Since 1964, corporation Y has used various depreciable lives, based on the facts and circumstances, for different accounts in the guideline class. Corporation Y was examined in 1968 for taxable years 1965 through 1967. Corporation Y was also examined in 1970 for taxable years 1968 and 1969. Corporation Y did not exercise its option to be examined under the provisions of Revenue Procedure 62-21. Corporation Y has not adopted Revenue Procedure 62-21 on any income tax return. For taxable years 1964 through 1970, corporation Y's class life (within the meaning of section 4, Part II, of Revenue Procedure 62-21) was between 12 and 14 years. In August of 1971, corporation Y filed amended income tax returns for 1968 and 1969, and an income tax return for 1970, using a depreciable life of 10 years (equal to the guideline life) for all assets in the guideline class. Corporation Y will not be treated as having adopted Revenue Procedure 62-21 prior to January 12, 1971.

Example 6. Corporation Z uses the calendar year as its taxable year and has assets in group 2, class 5, of Revenue Procedure 62-21. Corporation Z adopted Revenue Procedure 62-21 for this guideline class by expressly so indicating on its tax return for 1966, which was filed before January 12, 1971. Corporation Z computed its allowable depreciation for 1966 as if it adopted Revenue Procedure 62-21 for this guideline class for its taxable years 1962 through 1965, although it had earlier filed its tax returns for those years without regard to Revenue Procedure 62-21. The depreciation thus claimed in 1966 was less than what

would have been allowable if corporation Z first adopted Revenue Procedure 62-21 in 1966. This was the result of certain accounts becoming fully depreciated through use of Revenue Procedure 62-21 in computing depreciation for 1962 through 1965. In addition, in deferred tax accounting procedures employed before January 12, 1971, for financial reporting purposes, corporation Z calculated its tax deferrals on the basis that it had adopted Revenue Procedure 62-21 for the years 1962 through 1965. Corporation Z will be treated under subdivision (i) (*c*) of this subparagraph as having adopted Revenue Procedure 62-21 for taxable years 1962 through 1965 prior to January 12, 1971.

(Sec. 167(m), 85 Stat. 508 (26 U.S.C. 167))

[T.D. 7278, 38 FR 14923, June 7, 1973, as amended by T.D. 7315, 39 FR 20195, June 7, 1974; T.D. 7517, 42 FR 58934, Nov. 14, 1977]

§ 1.167(a)-13T Certain elections for intangible property (temporary).

For rules applying the elections under section 13261(g) (2) and (3) of the Omnibus Budget Reconciliation Act of 1993 to intangible property described in section 167(f), see § 1.197-1T.

[59 FR 11922, Mar. 15, 1994]

§ 1.167(a)-14 Treatment of certain intangible property excluded from section 197.

(a) ***Overview.*** This section provides rules for the amortization of certain intangibles that are excluded from section 197 (relating to the amortization of goodwill and certain other intangibles). These excluded intangibles are specifically described in § 1.197-2(c) (4), (6), (7), (11), and (13) and include certain computer software and certain other separately acquired rights, such as rights to receive tangible property or services, patents and copyrights, certain mortgage servicing rights, and rights of fixed duration or amount. Intangibles for which an amortization amount is determined under section 167(f) and intangibles otherwise excluded from section 197 are amortizable only if they qualify as property subject to the allowance for depreciation under section 167(a).

(b) ***Computer software*** —

(1) ***In general.*** The amount of the deduction for computer software described in section 167(f)(1) and § 1.197-2(c)(4) is determined by amortizing the cost or other basis of the computer software using the straight line method described in § 1.167(b)-1 (except that its salvage value is treated as zero) and an amortization period of 36 months beginning on the first day of the month that the computer software is placed in service. Before determining the amortization deduction allowable under this paragraph (b), the cost or other basis of computer software that is section 179 property, as defined in section 179(d)(1)(A)(ii), must be reduced for any portion of the basis the taxpayer properly elects to treat as an expense under section 179. In addition, the cost or other basis of computer software that is qualified property under section 168(k)(2) and § 1.168(k)-1 or § 1.168(k)-2, as applicable, 50-percent bonus depreciation property under section 168(k)(4) or § 1.168(k)-1 or § , or qualified New York Liberty Zone property under section 1400L(b) or § 1.1400L(b)-1, must be reduced by the amount of the additional first year depreciation deduction allowed or allowable, whichever is greater, under section 168(k) or section 1400L(b) for the computer software. If costs for developing computer software that the taxpayer properly elects to defer under section 174(b) result in the development of property subject to the allowance for depreciation under section 167, the rules of

this paragraph (b) will apply to the unrecovered costs. In addition, this paragraph (b) applies to the cost of separately acquired computer software if the cost to acquire the software is separately stated and the cost is required to be capitalized under section 263(a).

(2) ***Exceptions.*** Paragraph (b)(1) of this section does not apply to the cost of computer software properly and consistently taken into account under § 1.162-11. The cost of acquiring an interest in computer software that is included, without being separately stated, in the cost of the hardware or other tangible property is treated as part of the cost of the hardware or other tangible property that is capitalized and depreciated under other applicable sections of the Internal Revenue Code.

(3) ***Additional rules.*** Rules similar to those in § 1.197-2 (f)(1)(iii), (f)(1)(iv), and (f)(2) (relating to the computation of amortization deductions and the treatment of contingent amounts) apply for purposes of this paragraph (b).

(c) ***Certain interests or rights not acquired as part of a purchase of a trade or business*** —

(1) ***Certain rights to receive tangible property or services.*** The amount of the deduction for a right (other than a right acquired as part of a purchase of a trade or business) to receive tangible property or services under a contract or from a governmental unit (as specified in section 167(f)(2) and § 1.197-2(c)(6)) is determined as follows:

(i) ***Amortization of fixed amounts.*** The basis of a right to receive a fixed amount of tangible property or services is amortized for each taxable year by multiplying the basis of the right by a fraction, the numerator of which is the amount of tangible property or services received during the taxable year and the denominator of which is the total amount of tangible property or services received or to be received under the terms of the contract or governmental grant. For example, if a taxpayer acquires a favorable contract right to receive a fixed amount of raw materials during an unspecified period, the taxpayer must amortize the cost of acquiring the contract right by multiplying the total cost by a fraction, the numerator of which is the amount of raw materials received under the contract during the taxable year and the denominator of which is the total amount of raw materials received or to be received under the contract.

(ii) ***Amortization of unspecified amount over fixed period.*** The cost or other basis of a right to receive an unspecified amount of tangible property or services over a fixed period is amortized ratably over the period of the right. (See paragraph (c)(3) of this section regarding renewals).

(iii) ***Amortization in other cases.*** [Reserved]

(2) ***Rights of fixed duration or amount.*** The amount of the deduction for a right (other than a right acquired as part of a purchase of a trade or business) of fixed duration or amount received under a contract or granted by a governmental unit (specified in section 167(f)(2) and § 1.197-2(c)(13)) and not covered by paragraph (c)(1) of this section is determined as follows:

(i) ***Rights to a fixed amount.*** The basis of a right to a fixed amount is amortized for each taxable year by multiplying the basis by a fraction, the numerator of which is the amount received during the taxable year and the denominator of which is the total amount received or to be received under the terms of the contract or governmental grant.

(ii) ***Rights to an unspecified amount over fixed duration of less than 15 years.*** The basis of a right to an unspecified amount over a fixed duration of less than 15 years is amortized ratably over the period of the right.

(3) ***Application of renewals.***

(i) For purposes of paragraphs (c) (1) and (2) of this section, the duration of a right under a contract (or granted by a governmental unit) includes any renewal period if, based on all of the facts and circumstances in existence at any time during the taxable year in which the right is acquired, the facts clearly indicate a reasonable expectancy of renewal.

(ii) The mere fact that a taxpayer will have the opportunity to renew a contract right or other right on the same terms as are available to others, in a competitive auction or similar process that is designed to reflect fair market value and in which the taxpayer is not contractually advantaged, will generally not be taken into account in determining the duration of such right provided that the bidding produces a fair market value price comparable to the price that would be obtained if the rights were purchased immediately after renewal from a person (other than the person granting the renewal) in an arm's-length transaction.

(iii) The cost of a renewal not included in the terms of the contract or governmental grant is treated as the acquisition of a separate intangible asset.

(4) ***Patents and copyrights.*** If the purchase price of an interest (other than an interest acquired as part of a purchase of a trade or business) in a patent or copyright described in section 167(f)(2) and § 1.197-2(c)(7) is payable on at least an annual basis as either a fixed amount per use or a fixed percentage of the revenue derived from the use of the patent or copyright, the depreciation deduction for a taxable year is equal to the amount of the purchase price paid or incurred during the year. Otherwise, the basis of such patent or copyright (or an interest therein) is depreciated either ratably over its remaining useful life or under section 167(g) (income forecast method). If a patent or copyright becomes valueless in any year before its legal expiration, the adjusted basis may be deducted in that year.

(5) ***Additional rules.*** The period of amortization under paragraphs (c) (1) through (4) of this section begins when the intangible is placed in service, and rules similar to those in § 1.197-2(f)(2) apply for purposes of this paragraph (c).

(d) ***Mortgage servicing rights*** —

(1) ***In general.*** The amount of the deduction for mortgage servicing rights described in section 167(f)(3) and § 1.197-2(c)(11) is determined by using the straight line method described in § 1.167(b)-1 (except that the salvage value is treated as zero) and an amortization period of 108 months beginning on the first day of the month that the rights are placed in service. Mortgage servicing rights are not depreciable to the extent the rights are stripped coupons under section 1286.

(2) ***Treatment of rights acquired as a pool*** —

(i) ***In general.*** Except as provided in paragraph (d)(2)(ii) of this section, all mortgage servicing rights acquired in the same transaction or in a series of related transactions are treated as a single asset (the pool) for purposes of determining the depreciation deduction under this paragraph (d) and any gain or loss from the sale, exchange, or other disposition of the rights. Thus, if some (but not all) of the rights in a pool become worthless as a result of prepayments, no loss is recognized by reason of the prepayment and the adjusted basis of the pool is not affected by the unrecognized loss. Similarly, any amount realized from the sale or exchange of some (but not all) of the mortgage servicing rights is included in income and the adjusted basis of the pool is not affected by the realization.

(ii) ***Multiple accounts.*** If the taxpayer establishes multiple accounts within a pool at the time of its acquisition, gain or loss is recognized on the sale or exchange of all mortgage servicing rights within any such account.

(3) ***Additional rules.*** Rules similar to those in § 1.197-2(f)(1)(iii), (f)(1)(iv), and (f)(2) (relating to the computation of amortization deductions and the treatment of contingent amounts) apply for purposes of this paragraph (d).

(e) ***Effective dates*** —

(1) ***In general.*** This section applies to property acquired after January 25, 2000, except that § 1.167(a)-14(c)(2) (depreciation of the cost of certain separately acquired rights) and so much of § 1.167(a)-14(c)(3) as relates to § 1.167(a)-14(c)(2) apply to property acquired after August 10, 1993 (or July 25, 1991, if a valid retroactive election has been made under § 1.197-1T).

(2) ***Change in method of accounting.*** See § 1.197-2(l)(4) for rules relating to changes in method of accounting for property to which § 1.167(a)-14 applies. However, see § 1.168(k)-1(g)(4) or 1.1400L(b)-1(g)(4) for rules relating to changes in method of accounting for computer software to which the third sentence in § 1.167(a)-14(b)(1) applies.

(3) ***Qualified property, 50-percent bonus depreciation property, qualified New York Liberty Zone property, or section 179 property.*** This section also applies to computer software that is qualified property under section 168(k)(2) or qualified New York Liberty Zone property under section 1400L(b) acquired by a taxpayer after September 10, 2001, and to computer software that is 50-percent bonus depreciation property under section 168(k)(4) acquired by a taxpayer after May 5, 2003. This section also applies to computer software that is section 179 property placed in service by a taxpayer in a taxable year beginning after 2002. The language "or § 1.168(k)-2, as applicable," in the third sentence in paragraph (b)(1) of this section applies to computer software that is qualified property under section 168(k)(2) and placed in service by a taxpayer during or after the taxpayer's taxable year that includes September 24, 2019. However, a taxpayer may choose to apply the language "or § 1.168(k)-2, as applicable," in the third sentence in paragraph (b)(1) of this section for computer software that is qualified property under section 168(k)(2) and acquired and placed in service after September 27, 2017, by the taxpayer during taxable years ending on or after September 28, 2017. A taxpayer may rely on the language "or § 1.168(k)-2, as applicable," in the third sentence in paragraph (b)(1) of this section in regulation project REG-104397-18 (2018-41 I.R.B. 558) (see § 601.601(d)(2)(ii)(b) of this chapter) for computer software that is qualified property under section 168(k)(2) and acquired and placed in service after September 27, 2017, by the taxpayer during taxable years ending on or after September 28, 2017, and ending before the taxpayer's taxable year that includes September 24, 2019. .

[T.D. 8867, 65 FR 3825, Jan. 25, 2000, as amended by T.D. 9091, 68 FR 52990, Sept. 8, 2003; T.D. 9283, 71 FR 51737, Aug. 31, 2006; T.D. 9874, 84 FR 50125, Sept. 24, 2019]

§ 1.167(b)-0 Methods of computing depreciation.

(a) ***In general.*** Any reasonable and consistently applied method of computing depreciation may be used or continued in use under section 167. Regardless of the method used in computing depreciation, deductions for depreciation shall not exceed such amounts as may be necessary to recover the unrecovered cost or other basis less salvage during the remaining useful life of the property. The reasonableness of any claim for depreciation shall be determined upon the basis of conditions known to

exist at the end of the period for which the return is made. It is the responsibility of the taxpayer to establish the reasonableness of the deduction for depreciation claimed. Generally, depreciation deductions so claimed will be changed only where there is a clear and convincing basis for a change.

(b) ***Certain methods.*** Methods previously found adequate to produce a reasonable allowance under the Internal Revenue Code of 1939 or prior revenue laws will, if used consistently by the taxpayer, continue to be acceptable under section 167(a). Examples of such methods which continue to be acceptable are the straight line method, the declining balance method with the rate limited to 150 percent of the applicable straight line rate, and under appropriate circumstances, the unit of production method. The methods described in section 167(b) and §§ 1.167(b)-1, 1.167(b)-2, 1.167(b)-3, and 1.167(b)-4 shall be deemed to produce a reasonable allowance for depreciation except as limited under section 167(c) and § 1.167(c)-1. See also § 1.167(e)-1 for rules relating to change in method of computing depreciation.

(c) ***Application of methods.*** In the case of item accounts, any method which results in a reasonable allowance for depreciation may be selected for each item of property, but such method must thereafter be applied consistently to that particular item. In the case of group, classified, or composite accounts, any method may be selected for each account. Such method must be applied to that particular account consistently thereafter but need not necessarily be applied to acquisitions of similar property in the same or subsequent years, provided such acquisitions are set up in separate accounts. See, however, § 1.167(e)-1 and section 446 and the regulations thereunder, for rules relating to changes in the method of computing depreciation, and § 1.167(c)-1 for restriction on the use of certain methods. See also § 1.167(a)-7 for definition of account.

§ 1.167(b)-1 Straight line method.

(a) ***In general.*** Under the straight line method the cost or other basis of the property less its estimated salvage value is deductible in equal annual amounts over the period of the estimated useful life of the property. The allowance for depreciation for the taxable year is determined by dividing the adjusted basis of the property at the beginning of the taxable year, less salvage value, by the remaining useful life of the property at such time. For convenience, the allowance so determined may be reduced to a percentage or fraction. The straight line method may be used in determining a reasonable allowance for depreciation for any property which is subject to depreciation under section 167 and it shall be used in all cases where the taxpayer has not adopted a different acceptable method with respect to such property.

(b) ***Illustrations.*** The straight line method is illustrated by the following examples:

Example 1. Under the straight line method items may be depreciated separately:

Year and item	Cost or other basis less salaries	Useful life (years)	Depreciation allowable		
			1954	1955	1956
1954:					
Asset A	$1,600	4	[1] $200	$400	$400

[1] *In this example it is assumed that the assets were placed in service on July 1, 1954.*

Year and item	Cost or other basis less salaries	Useful life (years)	Depreciation allowable		
			1954	1955	1956
Asset B	12,000	40	[1] 150	300	300

[1] *In this example it is assumed that the assets were placed in service on July 1, 1954.*

Example 2. In group, classified, or composite accounting, a number of assets with the same or different useful lives may be combined into one account, and a single rate of depreciation, *i.e.*, the group, classified, or composite rate used for the entire account. In the case of group accounts, *i.e.*, accounts containing assets which are similar in kind and which have approximately the same estimated useful lives, the group rate is determined from the average of the useful lives of the assets. In the case of classified or composite accounts, the classified or composite rate is generally computed by determining the amount of one year's depreciation for each item or each group of similar items, and by dividing the total depreciation thus obtained by the total cost or other basis of the assets. The average rate so obtained is to be used as long as subsequent additions, retirements, or replacements do not substantially alter the relative proportions of different types of assets in the account. An example of the computation of a classified or composite rate follows:

Cost or other basis	Estimated useful life (years)	Annual depreciation
$10,000	5	$2,000
10,000	15	667
20,000		2,667

Average rate is 13.33 percent ($2,667 ÷ $20,000) unadjusted for salvage. Assuming the estimated salvage value is 10 percent of the cost or other basis, the rate adjusted for salvage will be 13.33 percent minus 10 percent of 13.33 percent (13.33%−1.33%), or 12 percent.

Example 3. The use of the straight line method for group, classified, or composite accounts is illustrated by the following example: A taxpayer filing his returns on a calendar year basis maintains an asset account for which a group rate of 20 percent has been determined, before adjustment for salvage. Estimated salvage is determined to be $6^{2}/_{3}$ percent, resulting in an adjusted rate of 18.67 percent. During the years illustrated, the initial investment, additions, retirements, and salvage recoveries, which were determined not to change the composition of the group sufficiently to require a change in rate, were assumed to have been made as follows:
1954—Initial investment of $12,000.

> 1957—Retirement $2,000, salvage realized $200.
>
> 1958—Retirement $2,000, salvage realized $200.
>
> 1959—Retirement $4,000, salvage realized $400.
>
> 1959—Additions $10,000.
>
> 1960—Retirement $2,000, no salvage realized.
>
> 1961—Retirement $2,000, no salvage realized.

Depreciable Asset Account and Depreciation Computation on Average Balances

Year	Asset balance Jan. 1	Current additions	Current retirements	Asset balance Dec. 31	Average balance	Rate (percent)	Allowable depreciation
1954		$12,000		$12,000	$6,000	18.67	$1,120
1955	$12,000			12,000	12,000	18.67	2,240
1956	12,000			12,000	12,000	18.67	2,240
1957	12,000		$2,000	10,000	11,000	18.67	2,054
1958	10,000		2,000	8,000	9,000	18.67	1,680
1959	8,000	10,000	4,000	14,000	11,000	18.67	2,054
1960	14,000		2,000	12,000	13,000	18.67	2,427
1961	12,000		2,000	10,000	11,000	18.67	2,054

Corresponding Depreciation Reserve Account

Year	Depreciation reserve Jan. 1	Depreciation allowable	Current retirements	Salvage realized	Depreciation reserve Dec. 31
1954		$1,120			$1,120
1955	$1,120	2,240			3,360
1956	3,360	2,240			5,600
1957	5,600	2,054	$2,000	$200	5,854
1958	5,854	1,680	2,000	200	5,734
1959	5,734	2,054	4,000	400	4,188
1960	4,188	2,427	2,000		4,615
1961	4,615	2,054	2,000		4,669

§ 1.167(b)-2 Declining balance method.

(a) ***Application of method.*** Under the declining balance method a uniform rate is applied each year to the unrecovered cost or other basis of the property. The unrecovered cost or other basis is the basis provided by section 167(g), adjusted for depreciation previously allowed or allowable, and for all other adjustments provided by section 1016 and other applicable provisions of law. The declining balance rate may be determined without resort to formula. Such rate determined under section 167(b)(2) shall not exceed twice the appropriate straight line rate computed without adjustment for salvage. While salvage is not taken into account in determining the annual allowances under this method, in no event shall an asset (or an account) be depreciated below a reasonable salvage value. However, see section 167(f) and § 1.167(f)-1 for rules which permit a reduction in the amount of salvage value to be taken into account for certain personal property acquired after October 16, 1962. Also, see section 167(c) and § 1.167(c)-1 for restrictions on the use of the declining balance method.

(b) ***Illustrations.*** The declining balance method is illustrated by the following examples:

Example 1. A new asset having an estimated useful life of 20 years was purchased on January 1, 1954, for $1,000. The normal straight line rate (without adjustment for salvage) is 5 percent, and the declining balance rate at twice the normal straight line rate is 10 percent. The annual depreciation allowances for 1954, 1955, and 1956 are as follows:

Year	Basis	Declining balance rate (percent)	Depreciation allowance
1954	$1,000	10	$100
1955	900	10	90

Year	Basis	Declining balance rate (percent)	Depreciation allowance
1956	810	10	81

Example 2. A taxpayer filing his returns on a calendar year basis maintains a group account to which a 5 year life and a 40 percent declining balance rate are applicable. Original investment, additions, retirements, and salvage recoveries are the same as those set forth in example (3) of paragraph (b) of § 1.167(b)-1. Although salvage value is not taken into consideration in computing a declining balance rate, it must be recognized and accounted for when assets are retired.

Depreciable Asset Account and Depreciation Computation Using Average Asset and Reserve Balances

Year	Asset balance Jan. 1	Current additions	Current retirements	Asset balance Dec. 31	Average	Average reserve before depreciation	Net depreciable balance	Rate (pct.)	Allowable depreciation
1954		$12,000		$12,000	$6,000		$6,000	40	$2,400
1955	$12,000			12,000	12,000	$2,400	9,600	40	3,840
1956	12,000			12,000	12,000	6,240	5,760	40	2,304
1957	12,000		$2,000	10,000	11,000	7,644	3,356	40	1,342
1958	10,000		2,000	8,000	9,000	7,186	1,814	40	726
1959	8,000	10,000	4,000	14,000	11,000	5,212	5,788	40	2,315
1960	14,000		2,000	12,000	13,000	4,727	8,273	40	3,309
1961	12,000		2,000	10,000	11,000	6,036	4,964	40	1,986

Depreciation Reserve

Year	Reserve Jan. 1	Current retirements	Salvage realized	Reserve Dec. 31, before depreciation	Average reserve before depreciation	Allowable depreciation	Reserve Dec. 31, after depreciation
1954						$2,400	$2,400
1955	$2,400			$2,400	$2,400	3,840	6,240
1956	6,240			6,240	6,240	2,304	8,544
1957	8,544	$2,000	$200	6,744	7,644	1,342	8,086
1958	8,086	2,000	200	6,286	7,186	726	7,012
1959	7,012	4,000	400	3,412	5,212	2,315	5,727
1960	5,727	2,000		3,727	4,727	3,309	7,036
1961	7,036	2,000		5,036	6,036	1,986	7,022

> Where separate depreciation accounts are maintained by year of acquisition and there is an unrecovered balance at the time of the last retirement, such unrecovered balance may be deducted as part of the depreciation allowance for the year of such retirement. Thus, if the taxpayer had kept separate depreciation accounts by year of acquisition and all the retirements shown in the example above were from 1954 acquisitions, depreciation would be computed on the 1954 and 1959 acquisitions as follows:

1954 Acquisitions

Year	Asset balance Jan. 1	Acquisitions	Current retirements	Asset balance Dec. 31	Average balance	Avg. reserve before depreciation	Net depreciable balance	Rate (percent)	Allowable depreciation
1954		$12,000		$12,000	$6,000		$6,000	40	$2,400
1955	$12,000			12,000	12,000	$2,400	9,600	40	3,840
1956	12,000			12,000	12,000	6,240	5,760	40	2,304
1957	12,000		$2,000	10,000	11,000	7,644	3,356	40	1,342
1958	10,000		2,000	8,000	9,000	7,186	1,814	40	726
1959	8,000		4,000	4,000	6,000	5,212	788	40	315
1960	4,000		2,000	2,000	3,000	2,727	273	40	109
1961	2,000		2,000		1,000	836	164		[1] 164

[1] *Balance allowable as depreciation in the year of retirement of the last survivor of the 1954 acquisitions.*

Depreciation Reserve for 1954 Acquisitions

Year	Reserve Jan. 1	Current retirements	Salvage realized	Reserve Dec. 31, before depreciation	Average reserve before depreciation	Allowable depreciation	Reserve Dec. 31, after depreciation
1954						$2,400	$2,400
1955	$2,400			$2,400	$2,400	3,840	6,240
1956	6,240			6,240	6,240	2,304	8,544
1957	8,544	$2,000	$200	6,744	7,644	1,342	8,086
1958	8,086	2,000	200	6,286	7,186	726	7,012
1959	7,012	4,000	400	3,412	5,212	315	3,727
1960	3,727	2,000		1,727	2,727	109	1,836
1961	1,836	2,000		(164)	836	164	

1959 Acquisitions

Year	Asset balance Jan. 1	Acquisition	Asset balance Dec. 31	Avg. balance	Reserve Dec. 31, before depreciation	Net depreciable balance	Rate percent	Allowable depreciation	Reserve Dec. 31, after depreciation
1959		$10,000	$10,000	$5,000	None	$5,000	40	$2,000	$2,000
1960	$10,000		10,000	10,000	$2,000	8,000	40	3,200	5,200
1961	10,000		10,000	10,000	5,200	4,800	40	1,920	7,120

In the above example, the allowable depreciation on the 1954 acquisitions totals $11,200. This amount when increased by salvage realized in the amount of $800, equals the entire cost or other basis of the 1954 acquisitions ($12,000).

(c) ***Change in estimated useful life.*** In the declining balance method when a change is justified in the useful life estimated for an account, subsequent computations shall be made as though the revised useful life had been originally estimated. For example, assume that an account has an estimated useful life of ten years and that a declining balance rate of 20 percent is applicable. If, at the end of the sixth year, it is determined that the remaining useful life of the account is six years, computations shall be made as though the estimated useful life was originally determined as twelve years. Accordingly, the applicable depreciation rate will be $16^{2}/_{3}$ percent. This rate is thereafter applied to the unrecovered cost or other basis.

[T.D. 6500, 25 FR 11402, Nov. 26, 1960, as amended by T.D. 6712, 29 FR 3653, Mar. 24, 1964]

§ 1.167(b)-3 Sum of the years-digits method.

(a) ***Applied to a single asset —***

(1) ***General rule.*** Under the sum of the years-digits method annual allowances for depreciation are computed by applying changing fractions to the cost or other basis of the property reduced by estimated salvage. The numerator of the fraction changes each year to a number which corresponds to the remaining useful life of the asset (including the year for which the allowance is being computed), and the denominator which remains constant is the sum of all the years digits corresponding to the estimated useful life of the asset. See section 167(c) and § 1.167(c)-1 for restrictions on the use of the sum of the years-digits method.

(i) ***Illustrations.*** Computation of depreciation allowances on a single asset under the sum of the years-digits method is illustrated by the following examples:

Example 1. A new asset having an estimated useful life of five years was acquired on January 1, 1954, for $1,750. The estimated salvage is $250. For a taxpayer filing his returns on a calendar year basis, the annual depreciation allowances are as follows:

Year	Cost or other basis less salvage	Fraction[1]	Allowable depreciation	Depreciation reserve
1954	$1,500	$^{5}/_{15}$	$500	$500
1955	1,500	$^{4}/_{15}$	400	900
1956	1,500	$^{3}/_{15}$	300	1,200
1957	1,500	$^{2}/_{15}$	200	1,400
1958	1,500	$^{1}/_{15}$	100	1,500

[1] *The denominator of the fraction is the sum of the digits representing the years of useful life, i.e., 5, 4, 3, 2, and 1, or 15.*

Year	Cost or other basis less salvage	Fraction[1]	Allowable depreciation	Depreciation reserve
Unrecovered value (salvage)				$250

[1] *The denominator of the fraction is the sum of the digits representing the years of useful life, i.e., 5, 4, 3, 2, and 1, or 15.*

Example 2. Assume in connection with an asset acquired in 1954 that three-fourths of a year's depreciation is allowable in that year. The following illustrates a reasonable method of allocating depreciation:

	Depreciation for 12 months	Allowable depreciation		
		1954	1955	1956
1st year	$500	($^3/_4$) $375	($^1/_4$) $125	
2d year	400		($^3/_4$) 300	($^1/_4$) $100
3d year	300			($^3/_4$) 225
Total		375	425	325

(ii) ***Change in useful life.*** Where in the case of a single asset, a change is justified in the useful life, subsequent computations shall be made as though the remaining useful life at the beginning of the taxable year of change were the useful life of a new asset acquired at such time and with a basis equal to the unrecovered cost or other basis of the asset at that time. For example, assume that a new asset with an estimated useful life of ten years is purchased in 1954. At the time of making out his return for 1959, the taxpayer finds that the asset has a remaining useful life of seven years from January 1, 1959. Depreciation for 1959 should then be computed as though 1959 were the first year of the life of an asset estimated to have a useful life of seven years, and the allowance for 1959 would be $^7/_{28}$ of the unrecovered cost or other basis of the asset after adjustment for salvage.

(2) ***Remaining life*** —

(i) ***Application.*** Under the sum of the years-digits method, annual allowances for depreciation may also be computed by applying changing fractions to the unrecovered cost or other basis of the asset reduced by estimated salvage. The numerator of the fraction changes each year to a number which corresponds to the remaining useful life of the asset (including the year for which the allowance is being computed), and the denominator changes each year to a number which represents the sum of the digits corresponding to the years of estimated remaining useful life of the asset. For decimal equivalents of such fractions, see Table I of subdivision (ii) of this subparagraph. For example, a new asset with an estimated useful life of 10 years is purchased January 1, 1954, for $6,000. Assuming a salvage value of $500, the depreciation

allowance for 1954 is $1,000 ($5,500 × 0.1818, the applicable rate from Table I). For 1955, the unrecovered balance is $4,500, and the remaining life is 9 years. The depreciation allowance for 1955 would then be $900 ($4,500 × 0.2000, the applicable rate from Table I).

(ii) ***Table I.*** This table shows decimal equivalents of sum of the years-digits fractions corresponding to remaining lives from 1 to 100 years.

Table I—Decimal Equivalents for Use of Sum of the Years-Digits Method, Based on Remaining Life

Remaining life (years)	Decimal equivalent
100.0	0.0198
99.9	.0198
99.8	.0198
99.7	.0199
99.6	.0199
99.5	.0199
99.4	.0199
99.3	.0199
99.2	.0200
99.1	.0200
99.0	.0200
98.9	.0200
98.8	.0200
98.7	.0201
98.6	.0201
98.5	.0201
98.4	.0201
98.3	.0201
98.2	.0202
98.1	.0202
98.0	.0202
97.9	.0202
97.8	.0202
97.7	.0203
97.6	.0203
97.5	.0203
97.4	.0203
97.3	.0203
97.2	.0204
97.1	.0204

Remaining life (years)	Decimal equivalent
97.0	.0204
96.9	.0204
96.8	.0204
96.7	.0205
96.6	.0205
96.5	.0205
96.4	.0205
96.3	.0206
96.2	.0206
96.1	.0206
96.0	.0206
95.9	.0206
95.8	.0207
95.7	.0207
95.6	.0207
95.5	.0207
95.4	.0207
95.3	.0208
95.2	.0208
95.1	.0208
95.0	.0208
94.9	.0209
94.8	.0209
94.7	.0209
94.6	.0209
94.5	.0209
94.4	.0210
94.3	.0210
94.2	.0210
94.1	.0210
94.0	.0211
93.9	.0211
93.8	.0211
93.7	.0211
93.6	.0211
93.5	.0212
93.4	.0212
93.3	.0212
93.2	.0212

Remaining life (years)	Decimal equivalent
93.1	.0213
93.0	.0213
92.9	.0213
92.8	.0213
92.7	.0213
92.6	.0214
92.5	.0214
92.4	.0214
92.3	.0214
92.2	.0215
92.1	.0215
92.0	.0215
91.9	.0215
91.8	.0216
91.7	.0216
91.6	.0216
91.5	.0216
91.4	.0216
91.3	.0217
91.2	.0217
91.1	.0217
91.0	.0217
90.9	.0218
90.8	.0218
90.7	.0218
90.6	.0218
90.5	.0219
90.4	.0219
90.3	.0219
90.2	.0219
90.1	.0220
90.0	.0220
89.9	.0220
89.8	.0220
89.7	.0221
89.6	.0221
89.5	.0221
89.4	.0221
89.3	.0221

Remaining life (years)	Decimal equivalent
89.2	.0222
89.1	.0222
89.0	.0222
88.9	.0222
88.8	.0223
88.7	.0223
88.6	.0223
88.5	.0223
88.4	.0224
88.3	.0224
88.2	.0224
88.1	.0224
88.0	.0225
87.9	.0225
87.8	.0225
87.7	.0225
87.6	.0226
87.5	.0226
87.4	.0226
87.3	.0226
87.2	.0227
87.1	.0227
87.0	.0227
86.9	.0228
86.8	.0228
86.7	.0228
86.6	.0228
86.5	.0229
86.4	.0229
86.3	.0229
86.2	.0229
86.1	.0230
86.0	.0230
85.9	.0230
85.8	.0230
85.7	.0231
85.6	.0231
85.5	.0231
85.4	.0231

Remaining life (years)	Decimal equivalent
85.3	.0232
85.2	.0232
85.1	.0232
85.0	.0233
84.9	.0233
84.8	.0233
84.7	.0233
84.6	.0234
84.5	.0234
84.4	.0234
84.3	.0234
84.2	.0235
84.1	.0235
84.0	.0235
83.9	.0236
83.8	.0236
83.7	.0236
83.6	.0236
83.5	.0237
83.4	.0237
83.3	.0237
83.2	.0238
83.1	.0238
83.0	.0238
82.9	.0238
82.8	.0239
82.7	.0239
82.6	.0239
82.5	.0240
82.4	.0240
82.3	.0240
82.2	.0240
82.1	.0241
82.0	.0241
81.9	.0241
81.8	.0242
81.7	.0242
81.6	.0242
81.5	.0242

Remaining life (years)	Decimal equivalent
81.4	.0243
81.3	.0243
81.2	.0243
81.1	.0244
81.0	.0244
80.9	.0244
80.8	.0244
80.7	.0245
80.6	.0245
80.5	.0245
80.4	.0246
80.3	.0246
80.2	.0246
80.1	.0247
80.0	.0247
79.9	.0247
79.8	.0248
79.7	.0248
79.6	.0248
79.5	.0248
79.4	.0249
79.3	.0249
79.2	.0249
79.1	.0250
79.0	.0250
78.9	.0250
78.8	.0251
78.7	.0251
78.6	.0251
78.5	.0252
78.4	.0252
78.3	.0252
78.2	.0253
78.1	.0253
78.0	.0253
77.9	.0253
77.8	.0254
77.7	.0254
77.6	.0254

Remaining life (years)	Decimal equivalent
77.5	.0255
77.4	.0255
77.3	.0255
77.2	.0256
77.1	.0256
77.0	.0256
76.9	.0257
76.8	.0257
76.7	.0257
76.6	.0258
76.5	.0258
76.4	.0258
76.3	.0259
76.2	.0259
76.1	.0259
76.0	.0260
75.9	.0260
75.8	.0260
75.7	.0261
75.6	.0261
75.5	.0261
75.4	.0262
75.3	.0262
75.2	.0262
75.1	.0263
75.0	.0263
74.9	.0264
74.8	.0264
74.7	.0264
74.6	.0265
74.5	.0265
74.4	.0265
74.3	.0266
74.2	.0266
74.1	.0266
74.0	.0267
73.9	.0267
73.8	.0267
73.7	.0268

Remaining life (years)	Decimal equivalent
73.6	.0268
73.5	.0268
73.4	.0269
73.3	.0269
73.2	.0270
73.1	.0270
73.0	.0270
72.9	.0271
72.8	.0271
72.7	.0271
72.6	.0272
72.5	.0272
72.4	.0272
72.3	.0273
72.2	.0273
72.1	.0274
72.0	.0274
71.9	.0274
71.8	.0275
71.7	.0275
71.6	.0275
71.5	.0276
71.4	.0276
71.3	.0277
71.2	.0277
71.1	.0277
71.0	.0278
70.9	.0278
70.8	.0279
70.7	.0279
70.6	.0279
70.5	.0280
70.4	.0280
70.3	.0280
70.2	.0281
70.1	.0281
70.0	.0282
69.9	.0282
69.8	.0282

Remaining life (years)	Decimal equivalent
69.7	.0283
69.6	.0283
69.5	.0284
69.4	.0284
69.3	.0284
69.2	.0285
69.1	.0285
69.0	.0286
68.9	.0286
68.8	.0287
68.7	.0287
68.6	.0287
68.5	.0288
68.4	.0288
68.3	.0289
68.2	.0289
68.1	.0289
68.0	.0290
67.9	.0290
67.8	.0291
67.7	.0291
67.6	.0292
67.5	.0292
67.4	.0292
67.3	.0293
67.2	.0293
67.1	.0294
67.0	.0294
66.9	.0295
66.8	.0295
66.7	.0295
66.6	.0296
66.5	.0296
66.4	.0297
66.3	.0297
66.2	.0298
66.1	.0298
66.0	.0299
65.9	.0299

Remaining life (years)	Decimal equivalent
65.8	.0299
65.7	.0300
65.6	.0300
65.5	.0301
65.4	.0301
65.3	.0302
65.2	.0302
65.1	.0303
65.0	.0303
64.9	.0303
64.8	.0304
64.7	.0304
64.6	.0305
64.5	.0305
64.4	.0306
64.3	.0306
64.2	.0307
64.1	.0307
64.0	.0308
63.9	.0308
63.8	.0309
63.7	.0309
63.6	.0310
63.5	.0310
63.4	.0311
63.3	.0311
63.2	.0312
63.1	.0312
63.0	.0313
62.9	.0313
62.8	.0313
62.7	.0314
62.6	.0314
62.5	.0315
62.4	.0315
62.3	.0316
62.2	.0316
62.1	.0317
62.0	.0317

Remaining life (years)	Decimal equivalent
61.9	.0318
61.8	.0318
61.7	.0319
61.6	.0319
61.5	.0320
61.4	.0320
61.3	.0321
61.2	.0322
61.1	.0322
61.0	.0323
60.9	.0323
60.8	.0324
60.7	.0324
60.6	.0325
60.5	.0325
60.4	.0326
60.3	.0326
60.2	.0327
60.1	.0327
60.0	.0328
59.9	.0328
59.8	.0329
59.7	.0329
59.6	.0330
59.5	.0331
59.4	.0331
59.3	.0332
59.2	.0332
59.1	.0333
59.0	.0333
58.9	.0334
58.8	.0334
58.7	.0335
58.6	.0336
58.5	.0336
58.4	.0337
58.3	.0337
58.2	.0338
58.1	.0338

Remaining life (years)	Decimal equivalent
58.0	.0339
57.9	.0340
57.8	.0340
57.7	.0341
57.6	.0341
57.5	.0342
57.4	.0342
57.3	.0343
57.2	.0344
57.1	.0344
57.0	.0345
56.9	.0345
56.8	.0346
56.7	.0347
56.6	.0347
56.5	.0348
56.4	.0348
56.3	.0349
56.2	.0350
56.1	.0350
56.0	.0351
55.9	.0351
55.8	.0352
55.7	.0353
55.6	.0353
55.5	.0354
55.4	.0355
55.3	.0355
55.2	.0356
55.1	.0356
55.0	.0357
54.9	.0358
54.8	.0358
54.7	.0359
54.6	.0360
54.5	.0360
54.4	.0361
54.3	.0362
54.2	.0362

Remaining life (years)	Decimal equivalent
54.1	.0363
54.0	.0364
53.9	.0364
53.8	.0365
53.7	.0366
53.6	.0366
53.5	.0367
53.4	.0368
53.3	.0368
53.2	.0369
53.1	.0370
53.0	.0370
52.9	.0371
52.8	.0372
52.7	.0372
52.6	.0373
52.5	.0374
52.4	.0374
52.3	.0375
52.2	.0376
52.1	.0377
52.0	.0377
51.9	.0378
51.8	.0379
51.7	.0379
51.6	.0380
51.5	.0381
51.4	.0382
51.3	.0382
51.2	.0383
51.1	.0384
51.0	.0385
50.9	.0385
50.8	.0386
50.7	.0387
50.6	.0388
50.5	.0388
50.4	.0389
50.3	.0390

Remaining life (years)	Decimal equivalent
50.2	.0391
50.1	.0391
50.0	.0392
49.9	.0393
49.8	.0394
49.7	.0394
49.6	.0395
49.5	.0396
49.4	.0397
49.3	.0398
49.2	.0398
49.1	.0399
49.0	.0400
48.9	.0401
48.8	.0402
48.7	.0402
48.6	.0403
48.5	.0404
48.4	.0405
48.3	.0406
48.2	.0406
48.1	.0407
48.0	.0408
47.9	.0409
47.8	.0410
47.7	.0411
47.6	.0411
47.5	.0412
47.4	.0413
47.3	.0414
47.2	.0415
47.1	.0416
47.0	.0417
46.9	.0418
46.8	.0418
46.7	.0419
46.6	.0420
46.5	.0421
46.4	.0422

Remaining life (years)	Decimal equivalent
46.3	.0423
46.2	.0424
46.1	.0425
46.0	.0426
45.9	.0426
45.8	.0427
45.7	.0428
45.6	.0429
45.5	.0430
45.4	.0431
45.3	.0432
45.2	.0433
45.1	.0434
45.0	.0435
44.9	.0436
44.8	.0437
44.7	.0438
44.6	.0439
44.5	.0440
44.4	.0440
44.3	.0441
44.2	.0442
44.1	.0443
44.0	.0444
43.9	.0445
43.8	.0446
43.7	.0447
43.6	.0448
43.5	.0449
43.4	.0450
43.3	.0451
43.2	.0452
43.1	.0453
43.0	.0455
42.9	.0456
42.8	.0457
42.7	.0458
42.6	.0459
42.5	.0460

Remaining life (years)	Decimal equivalent
42.4	.0461
42.3	.0462
42.2	.0463
42.1	.0464
42.0	.0465
41.9	.0466
41.8	.0467
41.7	.0468
41.6	.0469
41.5	.0471
41.4	.0472
41.3	.0473
41.2	.0474
41.1	.0475
41.0	.0476
40.9	.0477
40.8	.0478
40.7	.0480
40.6	.0481
40.5	.0482
40.4	.0483
40.3	.0484
40.2	.0485
40.1	.0487
40.0	.0488
39.9	.0489
39.8	.0490
39.7	.0491
39.6	.0493
39.5	.0494
39.4	.0495
39.3	.0496
39.2	.0497
39.1	.0499
39.0	.0500
38.9	.0501
38.8	.0502
38.7	.0504
38.6	.0505

Remaining life (years)	Decimal equivalent
38.5	.0506
38.4	.0508
38.3	.0509
38.2	.0510
38.1	.0511
38.0	.0513
37.9	.0514
37.8	.0515
37.7	.0517
37.6	.0518
37.5	.0519
37.4	.0521
37.3	.0522
37.2	.0524
37.1	.0525
37.0	.0526
36.9	.0528
36.8	.0529
36.7	.0530
36.6	.0532
36.5	.0533
36.4	.0525
36.3	.0536
36.2	.0538
36.1	.0539
36.0	.0541
35.9	.0542
35.8	.0543
35.7	.0545
35.6	.0546
35.5	.0548
35.4	.0549
35.3	.0551
35.2	.0552
35.1	.0554
35.0	.0556
34.9	.0557
34.8	.0559
34.7	.0560

Remaining life (years)	Decimal equivalent
34.6	.0562
34.5	.0563
34.4	.0565
34.3	.0566
34.2	.0566
34.1	.0570
34.0	.0571
33.9	.0573
33.8	.0575
33.7	.0576
33.6	.0578
33.5	.0580
33.4	.0581
33.3	.0583
33.2	.0585
33.1	.0586
33.0	.0588
32.9	.0590
32.8	.0592
32.7	.0593
32.6	.0595
32.5	.0597
32.4	.0599
32.3	.0600
32.2	.0602
32.1	.0604
32.0	.0606
31.9	.0608
31.8	.0610
31.7	.0611
31.6	.0613
31.5	.0615
31.4	.0617
31.3	.0619
31.2	.0621
31.1	.0623
31.0	.0625
30.9	.0627
30.8	.0629

Remaining life (years)	Decimal equivalent
30.7	.0631
30.6	.0633
30.5	.0635
30.4	.0637
30.3	.0639
30.2	.0641
30.1	.0643
30.0	.0645
29.9	.0647
29.8	.0649
29.7	.0651
29.6	.0653
29.5	.0656
29.4	.0658
29.3	.0660
29.2	.0662
29.1	.0664
29.0	.0667
28.9	.0669
28.8	.0671
28.7	.0673
28.6	.0675
28.5	.0678
28.4	.0680
28.3	.0682
28.2	.0685
28.1	.0687
28.0	.0690
27.9	.0692
27.8	.0694
27.7	.0697
27.6	.0699
27.5	.0702
27.4	.0704
27.3	.0707
27.2	.0709
27.1	.0712
27.0	.0714
26.9	.0717

Remaining life (years)	Decimal equivalent
26.8	.0719
26.7	.0722
26.6	.0724
26.5	.0727
26.4	.0730
26.3	.0732
26.2	.0735
26.1	.0738
26.0	.0741
25.9	.0743
25.8	.0746
25.7	.0749
25.6	.0752
25.5	.0754
25.4	.0757
25.3	.0760
25.2	.0763
25.1	.0766
25.0	.0769
24.9	.0772
24.8	.0775
24.7	.0778
24.6	.0781
24.5	.0784
24.4	.0787
24.3	.0790
24.2	.0793
24.1	.0797
24.0	.0800
23.9	.0803
23.8	.0806
23.7	.0809
23.6	.0813
23.5	.0816
23.4	.0819
23.3	.0823
23.2	.0826
23.1	.0830
23.0	.0833

Remaining life (years)	Decimal equivalent
22.9	.0837
22.8	.0840
22.7	.0844
22.6	.0847
22.5	.0851
22.4	.0854
22.3	.0858
22.2	.0862
22.1	.0866
22.0	.0870
21.9	.0873
21.8	.0877
21.7	.0881
21.6	.0885
21.5	.0888
21.4	.0892
21.3	.0896
21.2	.0901
21.1	.0905
21.0	.0909
20.9	.0913
20.8	.0917
20.7	.0921
20.6	.0925
20.5	.0930
20.4	.0934
20.3	.0939
20.2	.0943
20.1	.0948
20.0	.0952
19.9	.0957
19.8	.0961
19.7	.0966
19.6	.0970
19.5	.0975
19.4	.0980
19.3	.0985
19.2	.0990
19.1	.0995

Remaining life (years)	Decimal equivalent
19.0	.1000
18.9	.1005
18.8	.1010
18.7	.1015
18.6	.1020
18.5	.1025
18.4	.1030
18.3	.1036
18.2	.1041
18.1	.1047
18.0	.1053
17.9	.1058
17.8	.1063
17.7	.1069
17.6	.1074
17.5	.1080
17.4	.1086
17.3	.1092
17.2	.1098
17.1	.1105
17.0	.1111
16.9	.1117
16.8	.1123
16.7	.1129
16.6	.1135
16.5	.1142
16.4	.1148
16.3	.1155
16.2	.1162
16.1	.1169
16.0	.1176
15.9	.1183
15.8	.1190
15.7	.1197
15.6	.1204
15.5	.1211
15.4	.1218
15.3	.1226
15.2	.1234

Remaining life (years)	Decimal equivalent
15.1	.1242
15.0	.1250
14.9	.1257
14.8	.1265
14.7	.1273
14.6	.1281
14.5	.1289
14.4	.1297
14.3	.1306
14.2	.1315
14.1	.1324
14.0	.1333
13.9	.1342
13.8	.1350
13.7	.1359
13.6	.1368
13.5	.1378
13.4	.1387
13.3	.1397
13.2	.1407
13.1	.1418
13.0	.1429
12.9	.1438
12.8	.1448
12.7	.1458
12.6	.1469
12.5	.1479
12.4	.1490
12.3	.1502
12.2	.1514
12.1	.1526
12.0	.1538
11.9	.1549
11.8	.1561
11.7	.1573
11.6	.1585
11.5	.1597
11.4	.1610
11.3	.1624

Remaining life (years)	Decimal equivalent
11.2	.1637
11.1	.1652
11.0	.1667
10.9	.1680
10.8	.1693
10.7	.1707
10.6	.1721
10.5	.1736
10.4	.1751
10.3	.1767
10.2	.1783
10.1	.1800
10.0	.1818
9.9	.1833
9.8	.1849
9.7	.1865
9.6	.1882
9.5	.1900
9.4	.1918
9.3	.1938
9.2	.1957
9.1	.1978
9.0	.2000
8.9	.2018
8.8	.2037
8.7	.2057
8.6	.2077
8.5	.2099
8.4	.2121
8.3	.2145
8.2	.2169
8.1	.2195
8.0	.2222
7.9	.2244
7.8	.2267
7.7	.2292
7.6	.2317
7.5	.2344
7.4	.2372

Remaining life (years)	Decimal equivalent
7.3	.2401
7.2	.2432
7.1	.2465
7.0	.2500
6.9	.2527
6.8	.2556
6.7	.2587
6.6	.2619
6.5	.2653
6.4	.2689
6.3	.2727
6.2	.2768
6.1	.2811
6.0	.2857
5.9	.2892
5.8	.2929
5.7	.2969
5.6	.3011
5.5	.3056
5.4	.3103
5.3	.3155
5.2	.3210
5.1	.3269
5.0	.3333
4.9	.3379
4.8	.3429
4.7	.3481
4.6	.3538
4.5	.3600
4.4	.3667
4.3	.3739
4.2	.3818
4.1	.3905
4.0	.4000
3.9	.4063
3.8	.4130
3.7	.4205
3.6	.4286
3.5	.4375

Remaining life (years)	Decimal equivalent
3.4	.4474
3.3	.4583
3.2	.4706
3.1	.4844
3.0	.5000
2.9	.5088
2.8	.5185
2.7	.5294
2.6	.5417
2.5	.5556
2.4	.5714
2.3	.5897
2.2	.6111
2.1	.6364
2.0	.6667
1.9	.6786
1.8	.6923
1.7	.7083
1.6	.7273
1.5	.7500
1.4	.7778
1.3	.8125
1.2	.8571
1.1	.9167
1.0	1.0000

Note: For determination of decimal equivalents of remaining lives falling between those shown in the above table, the taxpayer may use the next longest life shown in the table, interpolate from the table, or use the following formula from which the table was derived.

$$D = 2R / (W + 2F)(W + 1)$$

where:

D = Decimal equivalent.

R = Remaining life.

W = Whole number of years in remaining life.

F = Fractional part of a year in remaining life.

If the taxpayer desires to carry his calculations of decimal equivalents to a greater number of decimal places than is provided in the table, he may use the formula. The procedure adopted must be consistently followed thereafter.

(b) ***Applied to group, classified, or composite accounts*** —

(1) ***General rule.*** The sum of the years-digits method may be applied to group, classified, or composite accounts in accordance with the plan described in subparagraph (2) of this paragraph or in accordance with other plans as explained in subparagraph (3) of this paragraph.

(2) ***Remaining life plan.*** The remaining life plan as applied to a single asset is described in paragraph (a)(2) of this section. This plan may also be applied to group, classified, or composite accounts. Under this plan the allowance for depreciation is computed by applying changing fractions to the unrecovered cost or other basis of the account reduced by estimated salvage. The numerator of the fraction changes each year to a number which corresponds to the remaining useful life of the account (including the year for which the allowance is being computed), and the denominator changes each year to a number which represents the sum of the years digits corresponding to the years of estimated remaining useful life of the account. Decimal equivalents of such fractions can be obtained by use of Table I under paragraph (a)(2)(ii) of this section. The proper application of this method requires that the estimated remaining useful life of the account be determined each year. This determination, of course, may be made each year by analysis, *i.e.*, by determining the remaining lives for each of the components in the account, and averaging them. The estimated remaining life of any account, however, may also be determined arithmetically. For example, it may be computed by dividing the unrecovered cost or other basis of the account, as computed by straight line depreciation, by the gross cost or other basis of the account, and multiplying the result by the average life of the assets in the account. Salvage value is not a factor for the purpose of determining remaining life. Thus, if a group account with an average life of ten years had at January 1, 1958, a gross asset balance of $12,600 and a depreciation reserve computed on the straight line method of $9,450, the remaining life of the account at January 1, 1958, would be computed as follows:

$12,600−$9,450 ÷ $12,600 × 10 years equals 2.50 years.

Example. The use of the sum of the years-digits method with group, classified, or composite accounts under the remaining life plan is illustrated by the following example: A calendar year taxpayer maintains a group account to which a five-year life is applicable. Original investment, additions, retirements, and salvage recoveries are the same as those set forth in example (3) of paragraph (b) of § 1.167(b)-1.

Depreciation Computations on a Group Account Under Remaining Life Plan

	1	2	3	4	5	6	7	8	9	10	11	12	13	14

Year	Asset balance Jan. 1	Current additions	Current retirements	Average asset balance	Straight line amount	Straight line reserve	Remaining life	Asset balance reduced by salvage	Current additions reduced by salvage	Salvage realized	Sum of the years digits depreciation			
					Col. (4) ÷ life	Col. (5)−Col. (3) accumulated Jan. 1	[Col. (1)−Col. (6) ÷ Col. (1)] × average service life	Col. (1) × (100%−6.67%)	Col (2) × (100%−6.67%)		Accumulated reserve Jan. 1	Unrecovered Jan. 1	Rate based on Col. (7) from Table 1	Allowable depreciatio
											Prior reserve + Col. (14) + Col. (10)−Col. (3)	Col. (8)−Col. (11)		Col. (12) × Col. (13) + $^1/_2$ Col. (9 × F [2]
1954		$12,000		$6,000	[1] $1,200		5.00		$11,200				0.3333	$1,86
1955	$12,000			12,000	2,400	$1,200	4.50	$11,200			$1,866	$9,334	.3600	3,36
1956	12,000			12,000	2,400	3,600	3.50	11,200			5,226	5,974	.4375	2,61
1957	12,000		$2,000	11,000	2,200	6,000	2.50	11,200		$200	7,840	3,360	.5556	1,86
1958	10,000		2,000	9,000	1,800	6,200	1.90	9,333		200	7,907	1,426	.6786	96
1959	8,000	10,000	4,000	11,000	2,200	6,000	1.25	7,466	9,333	400	7,075	391	.8125	1,87
1960	14,000		2,000	13,000	2,600	4,200	3.50	13,066			5,349	7,717	.4375	3,37
1961	12,000		2,000	11,000	2,200	4,800	3.00	11,200			6,725	4,475	.5000	2,23
1962						5,000					6,963			

[1] *$^1/_2$ year's amount.*

[2] *F = Rate based on average service life (0.3333 in this example).*

(3) *Other plans for application of the sum of the years-digits method.* Taxpayers who wish to use the sum of the years-digits method in computing depreciation for group, classified, or composite accounts in accordance with a sum of the years digits plan other than the remaining life plan described herein may do so only with the consent of the Commissioner. Request for permission to use plans other than that described shall be addressed to the Commissioner of Internal Revenue, Washington, D.C. 20224.

§ 1.167(b)-4 Other methods.

(a) Under section 167(b)(4) a taxpayer may use any consistent method of computing depreciation, such as the sinking fund method, provided depreciation allowances computed in accordance with such method do not result in accumulated allowances at the end of any taxable year greater than the total of the accumulated allowances which could have resulted from the use of the declining balance method described in section 167(b)(2). This limitation applies only during the first two-thirds of the useful life of the property. For example, an asset costing $1,000 having a useful life of six years may be depreciated under the declining balance method in accordance with § 1.167(b)-2, at a rate of $33^{1}/_{3}$ percent. During the first four years or $^{2}/_{3}$ of its useful life, maximum depreciation allowances under the declining balance method would be as follows:

	Current depreciation	Accumulated depreciation	Balance
Cost of asset			$1,000
First year	$333	$333	667
Second year	222	555	445
Third year	148	703	297
Fourth year	99	802	198

An annual allowance computed by any other method under section 167(b)(4) could not exceed $333 for the first year, and at the end of the second year the total allowances for the two years could not exceed $555. Likewise, the total allowances for the three years could not exceed $703 and for the four years could not exceed $802. This limitation would not apply in the fifth and sixth years. See section 167(c) and § 1.167(c)-1 for restriction on the use of certain methods.

(b) It shall be the responsibility of the taxpayer to establish to the satisfaction of the Commissioner that a method of depreciation under section 167(b)(4) is both a reasonable and consistent method and that it does not produce depreciation allowances in excess of the amount permitted under the limitations provided in such section.

§ 1.167(c)-1 Limitations on methods of computing depreciation under section 167(b) (2), (3), and (4).

(a) *In general.*

(1) Section 167(c) provides limitations on the use of the declining balance method described in section 167(b)(2), the sum of the years-digits method described in section 167(b)(3), and certain other methods authorized by section 167(b)(4). These methods are applicable only to tangible property having a useful life of three years or more. If construction, reconstruction, or erection by the taxpayer

began before January 1, 1954, and was completed after December 31, 1953, these methods apply only to that portion of the basis of the property which is properly attributable to such construction, reconstruction, or erection after December 31, 1953. Property is considered as constructed, reconstructed, or erected by the taxpayer if the work is done for him in accordance with his specifications. The portion of the basis of such property attributable to construction, reconstruction, or erection after December 31, 1953, consists of all costs of the property allocable to the period after December 31, 1953, including the cost or other basis of materials entering into such work. It is not necessary that such materials be acquired after December 31, 1953, or that they be new in use. If construction or erection by the taxpayer began after December 31, 1953, the entire cost or other basis of such construction or erection qualifies for these methods of depreciation. In the case of reconstruction of property, these methods do not apply to any part of the adjusted basis of such property on December 31, 1953. For purposes of this section, construction, reconstruction, or erection by the taxpayer begins when physical work is started on such construction, reconstruction, or erection.

(2) If the property was not constructed, reconstructed, or erected by the taxpayer, these methods apply only if it was acquired after December 31, 1953, and if the original use of the property commences with the taxpayer and commences after December 31, 1953. For the purpose of the preceding sentence, property shall be deemed to be acquired when reduced to physical possession, or control. The term “original use” means the first use to which the property is put, whether or not such use corresponds to the use of such property by the taxpayer. For example, a reconditioned or rebuilt machine acquired after December 31, 1953, will not be treated as being put to original use by the taxpayer even though it is put to a different use, nor will a horse acquired for breeding purposes be treated as being put to original use by the taxpayer if prior to the purchase the horse was used for racing purposes. See §§ 1.167(b)-2, 1.167 (b)-3, and 1.167(b)-4 for application of the various methods.

(3) Assets having an estimated average useful life of less than three years shall not be included in a group, classified, or composite account to which the methods described in §§ 1.167 (b)-2, 1.167(b)-3, and 1.167(b)-4 are applicable. However, an incidental retirement of an asset from such an account prior to the expiration of a useful life of three years will not prevent the application of these methods to such an account.

(4) See section 381(c)(6) and the regulations thereunder for rules covering the use of depreciation methods by acquiring corporations in the case of certain corporate acquisitions.

(5) *See* §§ 1.1502-13 and 1.1502-68 for provisions dealing with depreciation of property received by a member of an affiliated group from another member of the group during a consolidated return period.

(6) Except in the cases described in subparagraphs (4) and (5) of this paragraph, the methods of depreciation described in §§ 1.167(b)-2, 1.167(b-(3), and 1.167(b)-4 are not applicable to property in the hands of a distributee, vendee, transferee, donee, or grantee unless the original use of the property begins with such person and the conditions required by section 167(c) and this section are otherwise met. For example, these methods of depreciation may not be used by a corporation with respect to property which it acquires from an individual or partnership in exchange for its stock. Similarly, if an individual or partnership receives property in a distribution upon dissolution of a corporation, these methods of depreciation may not be used with respect to property so acquired by such individual or partnership. As a further example, these methods of depreciation may not be used

by a partnership with respect to contributed property, nor by a partner with respect to partnership property distributed to him. Moreover, where a partnership is entitled to use these depreciation methods, and the optional adjustment to basis of partnership property provided by section 743 is applicable,

(i) in the case of an increase in the adjusted basis of the partnership property under such section, the transferee partner with respect to whom such adjustment is applicable shall not be entitled to use such methods with respect to such increase, and

(ii) in the case of a decrease in the adjusted basis of the partnership property under such section, the transferee partner with respect to whom such adjustment is applicable shall include in his income an amount equal to the portion of the depreciation deducted by the partnership which is attributable to such decrease.

(b) ***Illustrations.***

(1) The application of these methods to property constructed, reconstructed, or erected by the taxpayer after December 31, 1953, may be illustrated by the following examples:

Example 1. If a building with a total cost of $100,000 is completed after December 31, 1953, and the portion attributable to construction after December 31, 1953, is determined by engineering estimates or by cost accounting records to be $30,000, the methods referred to in paragraph (a)(1) of this section are applicable only to the $30,000 portion of the total.

Example 2. In 1954, a taxpayer has an old machine with an unrecovered cost of $1,000. If he contracts to have it reconditioned, or reconditions it himself, at a cost of an additional $5,000, only the $5,000 may be depreciated under the methods referred to in paragraph (a)(1) of this section, whether or not the materials used for reconditioning are new in use.

Example 3. A taxpayer who acquired a building in 1940 makes major maintenance or repair expenditures in 1954 of a type which must be capitalized. For these expenditures the taxpayer may use a method of depreciation different from that used on the building (for example, the methods referred to in paragraph (a)(1) of this section) only if he accounts for such expenditures separately from the account which contained the original building. In such case, the unadjusted basis on any parts replaced shall be removed from the asset account and shall be charged to the appropriate depreciation reserve account. In the alternative he may capitalize such expenditures by charging them to the depreciation reserve account for the building.

(2) The application of these methods to property which was not constructed, reconstructed, or erected by the taxpayer but which was acquired after December 31, 1953, may be illustrated by the following examples:

Example 1. A taxpayer contracted in 1953 to purchase a new machine which he acquired in 1954 and put into first use in that year. He may use the methods referred to in paragraph (a)(1) of this section, in recovering the cost of the new machine.

Example 2. A taxpayer instead of reconditioning his old machine buys a “factory reconditioned” machine in 1954 to replace it. He cannot apply the methods referred to in paragraph (a)(1) of this section, to any part of the cost of the reconditioned machine since he is not the first user of the machine.

Example 3. In 1954, a taxpayer buys a house for $20,000 which had been used as a personal residence and thus had not been subject to depreciation allowances. He makes a capital addition of $5,000 and rents the property to another. The taxpayer may use the methods referred to in paragraph (a)(1) of this section, only with respect to the $5,000 cost of the addition.

(c) ***Election to use methods.*** Subject to the limitations set forth in paragraph (a) of this section, the methods of computing the allowance for depreciation specified in section 167(b) (2), (3), and (4) may be adopted without permission and no formal election is required. In order for a taxpayer to elect to use these methods for any property described in paragraph (a) of this section, he need only compute depreciation thereon under any of these methods for any taxable year ending after December 31, 1953, in which the property may first be depreciated by him. The election with respect to any property shall not be binding with respect to acquisitions of similar property in the same year or subsequent year which are set up in separate accounts. If a taxpayer has filed his return for a taxable year ending after December 31, 1953, for which the return is required to be filed on or before September 15, 1956, an election to compute the depreciation allowance under any of the methods specified in section 167 (b) or a change in such an election may be made in an amended return or claim for refund filed on or before September 15, 1956.

[T.D. 6500, 25 FR 11402, Nov. 26, 1960; 25 FR 14021, Dec. 31, 1960, as amended by T.D. 7244, 37 FR 28897, Dec. 30, 1972; T.D. 8560, 59 FR 41674, Aug. 15, 1994; T.D. 8597, 60 FR 36679, July 18, 1995; T.D. 10018, 89 FR 106851, Dec. 30, 2024]

§ 1.167(d)-1 Agreement as to useful life and rates of depreciation.

After August 16, 1954, a taxpayer may, for taxable years ending after December 31, 1953, enter into an agreement with respect to the estimated useful life, method and rate of depreciation and treatment of salvage of any property which is subject to the allowance for depreciation. An application for such agreement may be made to the district director for the internal revenue district in which the taxpayer's return is required to be filed. Such application shall be filed in quadruplicate and shall contain in such detail as may be practical the following information:

(a) The character and location of the property.

(b) The original cost or other basis and date of acquisition.

(c) Proper adjustments to the basis including depreciation accumulated to the first taxable year to be covered by the agreement.

(d) Estimated useful life and estimated salvage value.

(e) Method and rate of depreciation.

(f) Any other facts and circumstances pertinent to making a reasonable estimate of the useful life of the property and its salvage value.

The agreement must be in writing and must be signed by the taxpayer and by the district director. The agreement must be signed in quadruplicate, and two of the signed copies will be returned to the taxpayer. The agreement shall set forth its effective date, the estimated remaining useful life, the estimated salvage value, and rate and method of depreciation of the property and the facts and circumstances taken into consideration in adoption of the agreement, and shall relate only to depreciation allowances for such property on and after the effective date of the agreement. Such an agreement shall be binding on both parties until such time as facts and circumstances which were not taken into account in making the agreement are shown to exist. The party wishing to modify or change the agreement shall have the responsibility of establishing the existence of such facts and circumstances. Any change in the useful life or rate specified in such agreement shall be effective only prospectively, that is, it shall be effective

beginning with the taxable year in which notice of the intention to change, including facts and circumstances warranting the adjustment of useful life and rate, is sent by the party proposing the change to the other party and is sent by registered mail, if such notice is mailed before September 3, 1958, or is sent by certified mail or registered mail, if such notice is mailed after September 2, 1958. A copy of the agreement (and any modification thereof) shall be filed with the taxpayer's return for the first taxable year which is affected by the agreement (or any modification thereof). A signed copy should be retained with the permanent records of the taxpayer. For rules relating to changes in method of depreciation, see § 1.167(e)-1 and section 446 and the regulations thereunder.

§ 1.167(e)-1 Change in method.

(a) ***In general.***

(1) Any change in the method of computing the depreciation allowances with respect to a particular account (other than a change in method permitted or required by reason of the operation of former section 167(j)(2) and § 1.167(j)-3(c)) is a change in method of accounting, and such a change will be permitted only with the consent of the Commissioner, except that certain changes to the straight line method of depreciation will be permitted without consent as provided in former section 167(e)(1), (2), and (3). Except as provided in paragraphs (c) and (d) of this section, a change in method of computing depreciation will be permitted only with respect to all the assets contained in a particular account as defined in § 1.167(a)-7. Any change in the percentage of the current straight line rate under the declining balance method, for example, from 200 percent of the straight line rate to any other percent of the straight line rate, or any change in the interest factor used in connection with a compound interest or sinking fund method, will constitute a change in method of depreciation. Any request for a change in method of depreciation shall be made in accordance with section 446(e) and the regulations under section 446(e). For rules covering the use of depreciation methods by acquiring corporations in the case of certain corporate acquisitions, see section 381(c)(6) and the regulations under section 381(c)(6).

(2) Paragraphs (b), (c), and (d) of this section apply to property for which depreciation is determined under section 167 (other than under section 168, section 1400I, section 1400L(c), under section 168 prior to its amendment by the Tax Reform Act of 1986 (100 Stat. 2121), or under an additional first year depreciation deduction provision (for example, section 168(k), 1400L(b), or 1400N(d))) of the Internal Revenue Code.

(b) ***Declining balance to straight line.*** In the case of an account to which the method described in section 167(b)(2) is applicable, a taxpayer may change without the consent of the Commissioner from the declining balance method of depreciation to the straight line method at any time during the useful life of the property under the following conditions. Such a change may not be made if a provision prohibiting such a change is contained in an agreement under section 167(d). When the change is made, the unrecovered cost or other basis (less a reasonable estimate for salvage) shall be recovered through annual allowances over the estimated remaining useful life determined in accordance with the circumstances existing at the time. With respect to any account, this change will be permitted only if applied to all the assets in the account as defined in § 1.167(a)-7. If the method of depreciation described in section 167(b)(2) (the declining balance method of depreciation using a rate not exceeding 200 percent of the straight line rate) is an acceptable method of depreciation with respect to a particular account, the taxpayer may elect under this paragraph to change to the straight line method of depreciation even if with respect to that particular account the declining balance method is permitted under a provision other than section 167(b)(2). Thus, for example, in the case of section 1250 property to which section 167(j)(1) is applicable, section 167(b) does not apply, but the declining balance method of depreciation using 150

percent of the straight line rate is an acceptable method of depreciation under section 167(j)(1)(B). Accordingly, the taxpayer may elect under this paragraph to change to the straight line method of depreciation with respect to such property. Similarly, if the taxpayer acquired used property before July 25, 1969, and adopted the 150 percent declining balance method of depreciation permitted with respect to such property under § 1.167(b)-0(b), the taxpayer may elect under this paragraph to change to the straight line method of depreciation with respect to such property. The taxpayer shall furnish a statement with respect to the property which is the subject of the change showing the date of acquisition, cost or other basis, amounts recovered through depreciation and other allowances, the estimated salvage value, the character of the property, the remaining useful life of the property, and such other information as may be required. The statement shall be attached to the taxpayer's return for the taxable year in which the change is made. A change to the straight line method must be adhered to for the entire taxable year of the change and for all subsequent taxable years unless, with the consent of the Commissioner, a change to another method is permitted.

(c) ***Change with respect to section 1245 property.***

(1) In respect of his first taxable year beginning after December 31, 1962, a taxpayer may elect, without the consent of the Commissioner, to change the method of depreciation of section 1245 property (as defined in section 1245(a)(3)) from any declining balance method or sum of the years-digits method to the straight line method. With respect to any account (as defined in § 1.167(a)-7), this change may be made notwithstanding any provision to the contrary in an agreement under section 167(d), but such change shall constitute (as of the first day of such taxable year) a termination of such agreement as to all property in such account. With respect to any account, this change will be permitted only if applied to all the section 1245 property in the account. The election shall be made by a statement on, or attached to, the return for such taxable year filed on or before the last day prescribed by law, including any extensions thereof, for filing such return.

(2) When an election under this paragraph is made in respect of section 1245 property in an account, the unrecovered cost or other basis (less a reasonable estimate for salvage) of all the section 1245 property in the account shall be recovered through annual allowances over the estimated remaining useful life determined in accordance with the circumstances existing at that time. If there is other property in such account, the other property shall be placed in a separate account and depreciated by using the same method as was used before the change permitted by this paragraph, but the estimated useful life of such property shall be redetermined in accordance with § 1.167(b)-2, or 1.167(b)-3, whichever is applicable. The taxpayer shall maintain records which permit specific identification of the section 1245 property in the account with respect to which the election is made, and any other property in such account. The records shall also show for all the property in the account the date of acquisition, cost or other basis, amounts recovered through depreciation and other allowances, the estimated salvage value, the character of the property, and the remaining useful life of the property. A change to the straight line method under this paragraph must be adhered to for the entire taxable year of the change and for all subsequent taxable years unless, with the consent of the Commissioner, a change to another method is permitted.

(d) ***Change with respect to section 1250 property.***

(1) In respect of his first taxable year beginning after July 24, 1969, a taxpayer may elect, without the consent of the Commissioner, to change the method of depreciation of section 1250 property (as defined in section 1250(c)) from any declining balance method or sum of the years-digits method to the straight line method. With respect to any account (as defined in § 1.167(a)-7) this change may be made notwithstanding any provision to the contrary in an agreement under section 167(d), but such

change will constitute (as of the first day of such taxable year) a termination of such agreement as to all property in such account. With respect to any account, this change will be permitted only if applied to all the section 1250 property in the account. The election shall be made by a statement on, or attached to, the return for such taxable year filed on or before the last day prescribed by law, including extensions thereof, for filing such return.

(2) When an election under this paragraph is made in respect of section 1250 property in an account, the unrecovered cost or other basis (less a reasonable estimate for salvage) of all the section 1250 property in the account shall be recovered through annual allowances over the estimated remaining useful life determined in accordance with the circumstances existing at that time. If there is other property in such account, the other property shall be placed in a separate account and depreciated by using the same method as was used before the change permitted by this paragraph, but the estimated useful life of such property shall be redetermined in accordance with § 1.167(b)-2 or § 1.167(b)-3, whichever is applicable. The taxpayer shall maintain records which permit specific identification of the section 1250 property in the account with respect to which the election is made and any other property in such account. The records shall also show for all the property in the account the date of the acquisition, cost or other basis, amounts recovered through depreciation and other allowances, the estimated salvage value, the character of the property, and the estimated remaining useful life of the property. A change to the straight line method under this paragraph must be adhered to for the entire taxable year of the change and for all subsequent taxable years unless, with the consent of the Commissioner, a change to another method is permitted.

(e) ***Effective date.*** This section applies on or after December 30, 2003. For the applicability of regulations before December 30, 2003, see § 1.167(e)-1 in effect prior to December 30, 2003 (§ 1.167(e)-1 as contained in 26 CFR part 1 edition revised as of April 1, 2003).

[T.D. 6500, 25 FR 11402, Nov. 26, 1960, as amended by T.D. 6832, 30 FR 8573, July 7, 1965; T.D. 7166, 37 FR 5245, Mar. 11, 1972; T.D. 9105, 69 FR 7, Jan. 2, 2004; T.D. 9307, 71 FR 78068, Dec. 28, 2006]

§ 1.167(f)-1 Reduction of salvage value taken into account for certain personal property.

(a) ***In general.*** For taxable years beginning after December 31, 1961, and ending after October 16, 1962, a taxpayer may reduce the amount taken into account as salvage value in computing the allowance for depreciation under section 167(a) with respect to “personal property” as defined in section 167(f)(2) and paragraph (b) of this section. The reduction may be made in an amount which does not exceed 10 percent of the basis of the property for determining depreciation, as of the time as of which salvage value is required to be determined (or when salvage value is redetermined), taking into account all adjustments under section 1016 other than

(1) the adjustment under section 1016(a)(2) for depreciation allowed or allowable to the taxpayer, and

(2) the adjustment under section 1016(a)(19) for a credit earned by the taxpayer under section 38, to the extent such adjustment is reflected in the basis for depreciation. See paragraph (c) of § 1.167(a)-1 for the definition of salvage value, the time for making the determination, the redetermination of salvage value, and the general rules with respect to the treatment of salvage value. See also section 167(g) and § 1.167(g)-1 for basis for depreciation. A reduction of the amount taken into account as salvage value with respect to any property shall not be binding with respect to other property. In no event shall an asset (or an account) be depreciated below a reasonable salvage value after taking into account the reduction in salvage value permitted by section 167(f) and this section.

(b) ***Definitions and special rules.*** The following definitions and special rules apply for purposes of section 167(f) and this section.

(1) ***Personal property.*** The term "personal property" shall include only depreciable—

(i) Tangible personal property (as defined in section 48 and the regulations thereunder) and

(ii) Intangible personal property

which has an estimated useful life (determined at the time of acquisition) of 3 years or more and which is acquired after October 16, 1962. Such term shall not include livestock. The term "livestock" includes horses, cattle, hogs, sheep, goats, and mink and other furbearing animals, irrespective of the use to which they are put or the purpose for which they are held. The original use of the property need not commence with the taxpayer so long as he acquired it after October 16, 1962; thus, the property may be new or used. For purposes of determining the estimated useful life, the provisions of paragraph (b) of § 1.167(a)-1 shall be applied. For rules determining when property is acquired, see subparagraph (2) of this paragraph. For purposes of determining the types of intangible personal property which are subject to the allowance for depreciation, see § 1.167(a)-3.

(2) ***Acquired.*** In determining whether property is acquired after October 16, 1962, property shall be deemed to be acquired when reduced to physical possession, or control. Property which has not been used in the taxpayer's trade or business or held for the production of income and which is thereafter converted by the taxpayer to such use shall be deemed to be acquired on the date of such conversion. In addition, property shall be deemed to be acquired if constructed, reconstructed, or erected by the taxpayer. If construction, reconstruction, or erection by the taxpayer began before October 17, 1962, and was completed after October 16, 1962, section 167(f) and this section apply only to that portion of the basis of the property which is properly attributable to such construction, reconstruction, or erection after October 16, 1962. Property is considered as constructed, reconstructed, or erected by the taxpayer if the work is done for him in accordance with his specifications. The portion of the basis of such property attributable to construction, reconstruction, or erection after October 16, 1962, consists of all costs of the property allocable to the period after October 16, 1962, including the cost or other basis of materials entering into such work. It is not necessary that such materials be acquired after October 16, 1962, or that they be new in use. If construction or erection by the taxpayer began after October 16, 1962, the entire cost or other basis of such construction or erection qualifies for the reduction provided for by section 167(f) and this section. In the case of reconstruction of property, section 167(f) and this section do not apply to any part of the adjusted basis of such property on October 16, 1962. For purposes of this section, construction, reconstruction, or erection by the taxpayer begins when physical work is started on such construction, reconstruction, or erection.

(c) ***Illustrations.*** The provisions of paragraphs (a) and (b) of this section may be illustrated by the following examples:

> *Example 1.* Taxpayer A purchases a new asset for use in his business on January 1, 1963, for $10,000. The asset qualifies for the investment credit under section 38 and for the additional first-year depreciation allowance under section 179. A is entitled to an investment credit of $700 (7% × $10,000) and elects to take an additional first-year depreciation allowance of $2,000 (20% × $10,000). The basis for depreciation (determined in accordance with the provisions of section

167(g) and § 1.167(g)-1) is computed as follows:

Purchase price		$10,000
Less: Adjustment required for taxable years beginning before Jan. 1, 1964, under section 1016(a)(19), for the investment credit	$700	
Adjustment required under section 1016(a)(2) for the additional first-year depreciation allowance	2,000	
	2,700	
Basis for depreciation for the taxable year 1963		7,300

However, the basis of the property for determining depreciation as of the time as of which salvage value is required to be determined is $10,000, the purchase price of the property. A files his income tax returns on a calendar year basis and uses the straight line method of depreciation. A estimates that he will use the asset in his business for 10 years after which it will have a salvage value of $500, which is less than $1,000 (10% × $10,000, the basis of the property for determining depreciation as of the time as of which salvage value is required to be determined). For the taxable year 1963 A may deduct $730 as the depreciation allowance. As of January 1, 1964, the basis of the asset is increased by $700 in accordance with paragraph (d) of § 1.48-7. In computing his total depreciation allowance on the asset, A may reduce the amount taken into account as salvage value to zero and may claim depreciation deductions (including the additional first-year depreciation allowance) totaling $10,000. See paragraph (d) of § 1.48-7 for the computation of depreciation for taxable years beginning after December 31, 1963, where there is an increase in basis of property subject to the investment credit.

Example 2. Assume the same facts as in example (1) except that A in a subsequent taxable year redetermines the estimate of the useful life of the asset and at the same time also redetermines the estimate of salvage value. Assume also that at such time the only reductions reflected in the basis are for depreciation allowed or allowable. Accordingly, the reduction under section 167(f) and this section will be computed with regard to the purchase price and not the unrecovered basis for depreciation at the time of the redetermination.

Example 3. Assume the same facts as in example (1) except that A estimates that the asset will have a salvage value of $1,200 at the end of its useful life. In computing his depreciation for the asset, A may reduce the amount to be taken into account as salvage value to $200 ($1,200−$1,000). Accordingly, A may claim depreciation deductions (including the additional first-year depreciation allowance) totaling $9,800, *i.e.*, the purchase price of the property ($10,000) less the amount taken into account as salvage value ($200).

Example 4. Assume the same facts as in example (1) except that the taxpayer had taken into account salvage value of only $200 but that the estimated salvage value had actually been $700. The amount of salvage value taken into account by the taxpayer is permissible since the reduction of salvage value by $500 ($700−$200) would be within the limit provided for in section 167 (f), *i.e.*, $1,000 (10% × $10,000).

Example 5. On January 1, 1963, taxpayer B, a taxicab operator, traded his old taxicab plus cash for a new one, which had an estimated useful life of three years, in a transaction qualifying as a nontaxable exchange. The old taxicab had an adjusted basis of $2,500. B was allowed $3,000 for his old taxicab and paid $1,000 in cash. The basis of the new taxicab for determining depreciation (as determined under section 167(g) and § 1.167(g)-1) is the adjusted basis of the old taxicab at the time of trade-in ($2,500) plus the additional cash paid out ($1,000), or $3,500. In computing his depreciation allowance on the new taxicab, B may reduce the amount taken into account as salvage value by $350 (10% of $3,500).

Example 6. Taxpayer C purchases a new asset for use in his business on January 1, 1963, for $10,000. At the time of purchase, the asset has an estimated useful life of 10 years and an estimated salvage value of $1,500. C elects to compute his depreciation allowance for the asset by the declining balance method of depreciation, using a rate of 20% which is twice the normal straight line rate of 10% (without adjustment for salvage value). C files his income tax returns on a calendar year basis. In computing his depreciation allowance for the year 1966, C changes his method of determining the depreciation allowance for the asset from the declining balance method to the straight line method (in which salvage value is accounted for in determining the annual depreciation allowances) in accordance with the provisions of section 167(e) and paragraph (b) of § 1.167(e)-1. He also wishes to reduce the amount of salvage value taken into account in accordance with the provisions of section 167(f) and this section. At the close of the year 1966, the only reductions reflected in the basis of the asset are for depreciation allowances. Thus, C may reduce the amount of salvage value taken into account by $1,000 (10% × $10,000, the basis of the asset when it was acquired), and, therefore, will account for salvage value of only $500 in computing his depreciation allowance for the asset in 1966 and subsequent years.

Example 7. Taxpayer D purchases a station wagon for his personal use on January 1, 1962, for $4,500. On January 1, 1963, D converts the use of the station wagon to his business, and at that time it has an estimated useful life of 4 years, an estimated salvage value of $500, and a basis of $3,000 (as determined under section 167 (g) and § 1.167 (g)-1). Thus, for purposes of section 167 (f) and this section, D is deemed to have acquired the station wagon on January 1, 1963. D elects the straight line method of depreciation in computing the depreciation allowance for the station wagon and also wishes to reduce the amount of salvage value taken into account in accordance with the provisions of section 167(f) and this section. Accordingly, D may reduce the amount of salvage value taken into account by $300 (10% of $3,000). D files his income tax returns on a calendar year basis. His depreciation allowance for the year 1963 would be computed as follows:

Basis for depreciation		$3,000
Less:		
Salvage value	$500	
Reduction permitted by section 167(f)	300	
		200

Amount to be depreciated over the useful life	2,800

D's depreciation allowance on the station wagon for the year 1963 would be $700 ($2,800 divided by 4, the remaining useful life).

[T.D. 6712, 29 FR 3654, Mar. 24, 1964, as amended by T.D. 6838, 30 FR 9064, July 20, 1965]

§ 1.167(g)-1 Basis for depreciation.

The basis upon which the allowance for depreciation is to be computed with respect to any property shall be the adjusted basis provided in section 1011 for the purpose of determining gain on the sale or other disposition of such property. In the case of property which has not been used in the trade or business or held for the production of income and which is thereafter converted to such use, the fair market value on the date of such conversion, if less than the adjusted basis of the property at that time, is the basis for computing depreciation.

[T.D. 6500, 25 FR 11402, Nov. 26, 1960. Redesignated, T.D. 6712, 29 FR 3653, Mar. 24, 1964]

§ 1.167(h)-1 Life tenants and beneficiaries of trusts and estates.

(a) ***Life tenants.*** In the case of property held by one person for life with remainder to another person, the deduction for depreciation shall be computed as if the life tenant were the absolute owner of the property so that he will be entitled to the deduction during his life, and thereafter the deduction, if any, shall be allowed to the remainderman.

(b) ***Trusts.*** If property is held in trust, the allowable deduction is to be apportioned between the income beneficiaries and the trustee on the basis of the trust income allocable to each, unless the governing instrument (or local law) requires or permits the trustee to maintain a reserve for depreciation in any amount. In the latter case, the deduction is first allocated to the trustee to the extent that income is set aside for a depreciation reserve, and any part of the deduction in excess of the income set aside for the reserve shall be apportioned between the income beneficiaries and the trustee on the basis of the trust income (in excess of the income set aside for the reserve) allocable to each. For example:

(1) If under the trust instrument or local law the income of a trust computed without regard to depreciation is to be distributed to a named beneficiary, the beneficiary is entitled to the deduction to the exclusion of the trustee.

(2) If under the trust instrument or local law the income of a trust is to be distributed to a named beneficiary, but the trustee is directed to maintain a reserve for depreciation in any amount, the deduction is allowed to the trustee (except to the extent that income set aside for the reserve is less than the allowable deduction). The same result would follow if the trustee sets aside income for a depreciation reserve pursuant to discretionary authority to do so in the governing instrument.

No effect shall be given to any allocation of the depreciation deduction which gives any beneficiary or the trustee a share of such deduction greater than his pro rata share of the trust income, irrespective of any provisions in the trust instrument except as otherwise provided in this paragraph when the trust instrument or local law requires or permits the trustee to maintain a reserve for depreciation.

(c) ***Estates.*** In the case of an estate the allowable deduction shall be apportioned between the estate and the heirs legatees, and devisees on the basis of income of the estate which is allocable to each.

[T.D. 6500, 25 FR 11402, Nov. 26, 1960. Redesignated, T.D. 6712, 29 FR 3653, Mar. 24, 1964]

§ 1.167(i)-1 Depreciation of improvements in the case of mines, etc.

Property used in the trade or business or held for the production of income which is subject to the allowance for depreciation provided in section 611 shall be treated for all purposes of the Code as if it were property subject to the allowance for depreciation under section 167. The preceding sentence shall not limit the allowance for depreciation otherwise allowable under section 611.

[T.D. 6500, 25 FR 11402, Nov. 26, 1960. Redesignated, T.D. 6712, 29 FR 3653, Mar. 24, 1964]

§ 1.167(l)-1 Limitations on reasonable allowance in case of property of certain public utilities.

(a) ***In general*** —

(1) ***Scope.*** Section 167(l) in general provides limitations on the use of certain methods of computing a reasonable allowance for depreciation under section 167(a) with respect to "public utility property" (see paragraph (b) of this section) for all taxable years for which a Federal income tax return was not filed before August 1, 1969. The limitations are set forth in paragraph (c) of this section for "pre-1970 public utility property" and in paragraph (d) of this section for "post-1969 public utility property." Under section 167(l), a taxpayer may always use a straight line method (or other "subsection (l) method" as defined in paragraph (f) of this section). In general, the use of a method of depreciation other than a subsection (l) method is not prohibited by section 167(l) for any taxpayer if the taxpayer uses a "normalization method of regulated accounting" (described in paragraph (h) of this section). In certain cases, the use of a method of depreciation other than a subsection (l) method is not prohibited by section 167(l) if the taxpayer used a "flow-through method of regulated accounting" described in paragraph (i) of this section) for its "July 1969 regulated accounting period" (described in paragraph (g) of this section) whether or not the taxpayer uses either a normalization or a flow-through method of regulated accounting after its July 1969 regulated accounting period. However, in no event may a method of depreciation other than a subsection (l) method be used in the case of pre-1970 public utility property unless such method of depreciation is the "applicable 1968 method" (within the meaning of paragraph (e) of this section). The normalization requirements of section 167(l) with respect to public utility property defined in section 167(l)(3)(A) pertain only to the deferral of Federal income tax liability resulting from the use of an accelerated method of depreciation for computing the allowance for depreciation under section 167 and the use of straight line depreciation for computing tax expense and depreciation expense for purposes of establishing cost of services and for reflecting operating results in regulated books of account. Regulations under section 167(l) do not pertain to other book-tax timing differences with respect to State income taxes, F.I.C.A. taxes, construction costs, or any other taxes and items. The rules provided in paragraph (h)(6) of this section are to insure that the same time period is used to determine the deferred tax reserve amount resulting from the use of an accelerated method of depreciation for cost of service purposes and the reserve amount that may be excluded from the rate base or included in no-cost capital in determining such cost of services. The formula provided in paragraph (h)(6)(ii) of this section is to be used in conjunction with the method of accounting for the reserve for deferred taxes (otherwise proper under paragraph (h)(2) of this section) in accordance with the accounting requirements prescribed or approved, if applicable, by

the regulatory body having jurisdiction over the taxpayer's regulated books of account. The formula provides a method to determine the period of time during which the taxpayer will be treated as having received amounts credited or charged to the reserve account so that the disallowance of earnings with respect to such amounts through rate base exclusion or treatment as no-cost capital will take into account the factor of time for which such amounts are held by the taxpayer. The formula serves to limit the amount of such disallowance.

(2) ***Methods of depreciation.*** For purposes of section 167(l), in the case of a declining balance method each different uniform rate applied to the unrecovered cost or other basis of the property is a different method of depreciation. For purposes of section 167(l), a change in a uniform rate of depreciation due to a change in the useful life of the property or a change in the taxpayer's unrecovered cost or other basis for the property is not a change in the method of depreciation. The use of “guideline lives” or “class lives” for Federal income tax purposes and different lives on the taxpayer's regulated books of account is not treated for purposes of section 167(l) as a different method of depreciation. Further, the use of an unrecovered cost or other basis or salvage value for Federal income tax purposes different from the basis or salvage value used on the taxpayer's regulated books of account is not treated as a different method of depreciation.

(3) ***Application of certain other provisions to public utility property.*** For rules with respect to application of the investment credit to public utility property, see section 46(e). For rules with respect to the application of the class life asset depreciation range system, including the treatment of the use of “class lives” for Federal income tax purposes and different lives on the taxpayer's regulated books of account, see § 1.167(a)-11 and § 1.167(a)-12.

(4) ***Effect on agreements under section 167(d).*** If the taxpayer has entered into an agreement under section 167(d) as to any public utility property and such agreement requires the use of a method of depreciation prohibited by section 167(l), such agreement shall terminate as to such property. The termination, in accordance with this subparagraph, shall not affect any other property (whether or not public utility property) covered by the agreement.

(5) ***Effect of change in method of depreciation.*** If, because the method of depreciation used by the taxpayer with respect to public utility property is prohibited by section 167(l), the taxpayer changes to a method of depreciation not prohibited by section 167(l), then when the change is made the unrecovered cost or other basis shall be recovered through annual allowances over the estimated remaining useful life determined in accordance with the circumstances existing at that time.

(b) ***Public utility property*** —

(1) ***In general.*** Under section 167(l)(3)(A), property is “public utility property” during any period in which it is used predominantly in a “section 167(l) public utility activity”. The term “section 167(l) public utility activity” means the trade or business of the furnishing or sale of—

(i) Electrical energy, water, or sewage disposal services,

(ii) Gas or steam through a local distribution system,

(iii) Telephone services,

(iv) Other communication services (whether or not telephone services) if furnished or sold by the Communications Satellite Corporation for purposes authorized by the Communications Satellite Act of 1962 (47 U.S.C. 701), or

(v) Transportation of gas or steam by pipeline,

if the rates for such furnishing or sale, as the case may be, are regulated, *i.e.*, have been established or approved by a regulatory body described in section 167(l)(3)(A). The term "regulatory body described in section 167(l)(3)(A)" means a State (including the District of Columbia) or political subdivision thereof, any agency or instrumentality of the United States, or a public service or public utility commission or other body of any State or political subdivision thereof similar to such a commission. The term "established or approved" includes the filing of a schedule of rates with a regulatory body which has the power to approve such rates, even though such body has taken no action on the filed schedule or generally leaves undisturbed rates filed by the taxpayer involved.

(2) ***Classification of property.*** If property is not used solely in a section 167(l) public utility activity, such property shall be public utility property if its predominant use is in a section 167(l) public utility activity. The predominant use of property for any period shall be determined by reference to the proper accounts to which expenditures for such property are chargeable under the system of regulated accounts required to be used for the period for which the determination is made and in accordance with the principles of § 1.46-3(g)(4) (relating to credit for investment in certain depreciable property). Thus, for example, for purposes of determining whether property is used predominantly in the trade or business of the furnishing or sale of transportation of gas by pipeline, or furnishing or sale of gas through a local distribution system, or both, the rules prescribed in § 1.46-3(g)(4) apply, except that accounts 365 through 371, inclusive (Transmission Plant), shall be added to the accounts enumerated in subdivision (i) of such paragraph (g)(4).

(c) ***Pre-1970 public utility property*** —

(1) ***Definition.***

(i) Under section 167(l)(3)(B), the term "pre-1970 public utility property" means property which was public utility property at any time before January 1, 1970. If a taxpayer acquires pre-1970 public utility property, such property shall be pre-1970 public utility property in the hands of the taxpayer even though such property may have been acquired by the taxpayer in an arm's-length cash sale at fair market value or in a tax-free exchange. Thus, for example, if corporation X which is a member of the same controlled group of corporations (within the meaning of section 1563(a)) as corporation Y sells pre-1970 public utility property to Y, such property is pre-1970 public utility property in the hands of Y. The result would be the same if X and Y were not members of the same controlled group of corporations.

(ii) If the basis of public utility property acquired by the taxpayer in a transaction is determined in whole or in part by reference to the basis of any of the taxpayer's pre-1970 public utility property by reason of the application of any provision of the code, and if immediately after the transaction the adjusted basis of the property acquired is less than 200 percent of the adjusted basis of such pre-1970 public utility property immediately before the transaction, the property acquired is pre-1970 public utility property.

(2) ***Methods of depreciation not prohibited.*** Under section 167(l)(1), in the case of pre-1970 public utility property, the term "reasonable allowance" as used in section 167(a) means, for a taxable year for which a Federal income tax return was not filed before August 1, 1969, and in which such property is public utility property, an allowance (allowable without regard to section 167(l)) computed under—

(i) A subsection (l) method, or

(ii) The applicable 1968 method (other than a subsection (l) method) used by the taxpayer for such property, but only if—

(*a*) The taxpayer uses in respect of such taxable year a normalization method of regulated accounting for such property,

(*b*) The taxpayer used a flow-through method of regulated accounting for such property for its July 1969 regulated accounting period, or

(*c*) The taxpayer's first regulated accounting period with respect to such property is after the taxpayer's July 1969 regulated accounting period and the taxpayer used a flow-through method of regulated accounting for its July 1969 regulated accounting period for public utility property of the same kind (or if there is no property of the same kind, property of the most similar kind) most recently placed in service. See paragraph (e)(5) of this section for determination of same (or similar) kind.

(3) ***Flow-through method of regulated accounting in certain cases.*** See paragraph (e)(6) of this section for treatment of certain taxpayers with pending applications for change in method of accounting as being deemed to have used a flow-through method of regulated accounting for the July 1969 regulated accounting period.

(4) ***Examples.*** The provisions of this paragraph may be illustrated by the following examples:

Example 1. Corporation X, a calendar-year taxpayer subject to the jurisdiction of a regulatory body described in section 167(l)(3)(A), used the straight line method of depreciation (a subsection (l) method) for all of its public utility property for which depreciation was allowable on its Federal income tax return for 1967 (the latest taxable year for which X, prior to August 1, 1969, filed a return). Assume that under paragraph (e) of this section, X's applicable 1968 method is a subsection (l) method with respect to all of its public utility property. Thus, with respect to its pre-1970 public utility property, X may only use a straight line method (or any other subsection (l) method) of depreciation for all taxable years after 1967.

Example 2. Corporation Y, a calendar-year taxpayer subject to the jurisdiction of the Federal Power Commission, is engaged exclusively in the transportation of gas by pipeline. On its Federal income tax return for 1967 (the latest taxable year for which Y, prior to August 1, 1969, filed a return), Y used the declining balance method of depreciation using a rate of 150 percent of the straightline rate for all of its nonsection 1250 public utility property with respect to which depreciation was allowable. Assume that with respect to all of such property, Y's applicable 1968 method under paragraph (e) of this section is such 150 percent declining balance method. Assume that Y used a normalization method of regulated accounting for all relevant regulated accounting periods. If Y continues to use a normalization method of regulated accounting, Y may compute its reasonable allowance for purposes of section 167(a) using such 150 percent declining balance method for its nonsection 1250 pre-1970 public utility property for all taxable years beginning with 1968, provided the use of such method is allowable without regard to section 167(l). Y may also use a subsection (l) method for any of such pre-1970 public utility property for all taxable years beginning after 1967. However, because each different uniform rate applied to the basis of the property is a different method of depreciation, Y may not use a declining balance method of depreciation using a rate of twice the straight line rate for any of such pre-1970 public utility property for any taxable year beginning after 1967.

Example 3. Assume the same facts as in example (2) except that with respect to all of its nonsection 1250 pre-1970 public utility property accounted for in its July 1969 regulated accounting period Y used a flow-through method of regulated accounting for such period. Assume further that

such property is the property on the basis of which the applicable 1968 method is established for pre-1970 public utility property of the same kind, but having a first regulated accounting period after the taxpayer's July 1969 regulated accounting period. Beginning with 1968, with respect to such property Y may compute its reasonable allowance for purposes of section 167(a) using the declining balance method of depreciation and a rate of 150 percent of the straight line rate, whether it uses a normalization or flow-through method of regulated accounting after its July 1969 regulated accounting period, provided the use of such method is allowable without regard to section 167(l).

(d) ***Post-1969 public utility property*** —

(1) ***In general.*** Under section 167(l)(3)(C), the term "post-1969 public utility property" means any public utility property which is not pre-1970 public utility property.

(2) ***Methods of depreciation not prohibited.*** Under section 167(l)(2), in the case of post-1969 public utility property, the term "reasonable allowance" as used in section 167(a) means, for a taxable year, an allowance (allowable without regard to section 167(l)) computed under—

(i) A subsection (l) method,

(ii) A method of depreciation otherwise allowable under section 167 if, with respect to the property, the taxpayer uses in respect of such taxable year a normalization method of regulated accounting, or

(iii) The taxpayer's applicable 1968 method (other than a subsection (l) method) with respect to the property in question, if the taxpayer used a flow-through method of regulated accounting for its July 1969 regulated accounting period for the property of the same (or similar) kind most recently placed in service, provided that the property in question is not property to which an election under section 167(l)(4)(A) applies. See § 1.167(l)(2) for rules with respect to an election under section 167(l)(4)(A). See paragraph (e)(5) of this section for definition of same (or similar) kind.

(3) ***Examples.*** The provisions of this paragraph may be illustrated by the following examples:

Example 1. Corporation X is engaged exclusively in the trade or business of the transportation of gas by pipeline and is subject to the jurisdiction of the Federal Power Commission. With respect to all its public utility property, X's applicable 1968 method (as determined under paragraph (e) of this section) is the straight line method of depreciation. X may determine its reasonable allowance for depreciation under section 167(a) with respect to its post-1969 public utility property under a straight line method (or other subsection (l) method) or, if X uses a normalization method of regulated accounting, any other method of depreciation, provided that the use of such other method is allowable under section 167 without regard to section 167(l).

Example 2. Assume the same facts as in example (1) except that with respect to all of X's post-1969 public utility property the applicable 1968 method (as determined under paragraph (e) of this section) is the declining balance method using a rate of 150 percent of the straight line rate. Assume further that all of X's pre-1970 public utility property was accounted for in its July 1969 regulated accounting period, and that X used a flow-through method of regulated accounting for such period. X may determine its reasonable allowance for depreciation under section 167 with respect to its post-1969 public utility property by using the straight line method of depreciation (or any other subsection (l) method), by using any method otherwise allowable under section 167 (such as a declining balance method) if X uses a normalization method of

regulated accounting, or, by using the declining balance method using a rate of 150 percent of the straight line rate, whether or not X uses a normalization or a flow-through method of regulated accounting.

(e) *Applicable 1968 method* —

(1) ***In general.*** Under section 167(l)(3)(D), except as provided in subparagraphs (3) and (4) of this paragraph, the term "applicable 1968 method" means with respect to any public utility property—

(i) The method of depreciation properly used by the taxpayer in its Federal income tax return with respect to such property for the latest taxable year for which a return was filed before August 1, 1969,

(ii) If subdivision (i) of this subparagraph does not apply, the method of depreciation properly used by the taxpayer in its Federal income tax return for the latest taxable year for which a return was filed before August 1, 1969, with respect to public utility property of the same kind (or if there is no property of the same kind, property of the most similar kind) most recently placed in service before the end of such latest taxable year, or

(iii) If neither subdivision (i) nor (ii) of this subparagraph applies, a subsection (l) method.

If, on or after August 1, 1969, the taxpayer files an amended return for the taxable year referred to in subdivisions (i) and (ii) of this subparagraph, such amended return shall not be taken into consideration in determining the applicable 1968 method. The term "applicable 1968 method" if such new method results to any public utility property, for the year of change and subsequent years, a method of depreciation otherwise allowable under section 167 to which the taxpayer changes from an applicable 1968 method if such new method results in a lesser allowance for depreciation for such property under section 167 in the year of change and the taxpayer secures the Commissioner's consent to the change in accordance with the procedures of section 446(e) and § 1.446-1.

(2) ***Placed in service.*** For purposes of this section, property is placed in service on the date on which the period for depreciation begins under section 167. See, for example, § 1.167(a)-10(b) and § 1.167(a)-11(c)(2). If under an averaging convention property which is placed in service (as defined in § 1.46-3(d)(ii)) by the taxpayer on different dates is treated as placed in service on the same date, then for purposes of section 167(l) the property shall be treated as having been placed in service on the date the period for depreciation with respect to such property would begin under section 167 absent such averaging convention. Thus, for example, if, except for the fact that the averaging convention used assumes that all additions and retirements made during the first half of the year were made on the first day of the year, the period of depreciation for two items of public utility property would begin on January 10 and March 15, respectively, then for purposes of determining the property of the same (or similar) kind most recently placed in service, such items of property shall be treated as placed in service on January 10 and March 15, respectively.

(3) ***Certain section 1250 property.*** If a taxpayer is required under section 167(j) to use a method of depreciation other than its applicable 1968 method with respect to any section 1250 property, the term "applicable 1968 method" means the method of depreciation allowable under section 167(j) which is the most nearly comparable method to the applicable 1968 method determined under subparagraph (1) of this paragraph. For example, if the applicable 1968 method on new section 1250 property is the declining balance method using 200 percent of the straight line rate, the most nearly comparable method allowable for new section 1250 property under section 167(j) would be the

declining balance method using 150 percent of the straight line rate. If the applicable 1968 method determined under subparagraph (1) of this paragraph is the sum of the years-digits method, the term "most nearly comparable method" refers to any method of depreciation allowable under section 167(j).

(4) *Applicable 1968 method in certain cases.*

(i)

(*a*) Under section 167(l)(3)(E), if the taxpayer evidenced within the time and manner specified in (*b*) of this subdivision (i) the intent to use a method of depreciation under section 167 (other than its applicable 1968 method as determined under subparagraph (1) or (3) of this paragraph or a subsection (l) method) with respect to any public utility property, such method of depreciation shall be deemed to be the taxpayer's applicable 1968 method with respect to such public utility property and public utility property of the same (or most similar) kind subsequently placed in service.

(*b*) Under this subdivision (i), the intent to use a method of depreciation under section 167 is evidenced—

(*1*) By a timely application for permission for a change in method of accounting filed by the taxpayer before August 1, 1969, or

(*2*) By the use of such method of depreciation in the computation by the taxpayer of its tax expense for purposes of reflecting operating results in its regulated books of account for its July 1969 regulated accounting period, as established in the manner prescribed in paragraph (g)(1) (i), (ii), or (iii) of this section.

(ii)

(*a*) If public utility property is acquired in a transaction in which its basis in the hands of the transferee is determined in whole or in part by reference to its basis in the hands of the transferor by reason of the application of any provision of the Code, or in a transfer (including any purchase for cash or in exchange) from a related person, then in the hands of the transferee the applicable 1968 method with respect to such property shall be determined by reference to the treatment in respect of such property in the hands of the transferor.

(*b*) For purposes of this subdivision (ii), the term "related person" means a person who is related to another person if either immediately before or after the transfer—

(*1*) The relationship between such persons would result in a disallowance of losses under section 267 (relating to disallowance of losses, etc., between related taxpayers) or section 707(b) (relating to losses disallowed, etc., between partners and controlled partnerships) and the regulations thereunder, or

(*2*) Such persons are members of the same controlled group of corporations, as defined in section 1563(a) (relating to definition of controlled group of corporations), except that "more than 50 percent" shall be substituted for "at least 80 percent" each place it appears in section 1563(a) and the regulations thereunder.

(5) ***Same or similar.*** The classification of property as being of the same (or similar) kind shall be made by reference to the function of the public utility to which the primary use of the property relates. Property which performs the identical function in the identical manner shall be treated as property of the same kind. The determination that property is of a similar kind shall be made by reference to the proper account to which expenditures for the property are chargeable under the system of regulated accounts required to be used by the taxpayer for the period in which the property in question was acquired. Property, the expenditure for which is chargeable to the same account, is property of the most similar kind. Property, the expenditure for which is chargeable to an account for property which serves the same general function, is property of a similar kind. Thus, for example, if corporation X, a natural gas company, subject to the jurisdiction of the Federal Power Commission, had property properly chargeable to account 366 (relating to transmission plant structures and improvements) acquired an additional structure properly chargeable to account 366, under the uniform system of accounts prescribed for natural gas companies (class A and class B) by the Federal Power Commission, effective September 1, 1968, the addition would constitute property of the same kind if it performed the identical function in the identical manner. If, however, the addition did not perform the identical function in the identical manner, it would be property of the most similar kind.

(6) ***Regulated method of accounting in certain cases.*** Under section 167(l)(4)(B), if with respect to any pre-1970 public utility property the taxpayer filed a timely application for change in method of accounting referred to in subparagraph (4)(i)(*b*)(*1*) of this paragraph and with respect to property of the same (or similar) kind most recently placed in service the taxpayer used a flow-through method of regulated accounting for its July 1969 regulated accounting period, then for purposes of section 167(l)(1)(B) and paragraph (c) of this section the taxpayer shall be deemed to have used a flow-through method of regulated accounting with respect to such pre-1970 public utility property.

(7) ***Examples.*** The provisions of this paragraph may be illustrated by the following examples:

Example 1. Corporation X is a calendar-year taxpayer. On its Federal income tax return for 1967 (the latest taxable year for which X, prior to August 1, 1969, filed a return) X used a straight line method of depreciation with respect to certain public utility property placed in service before 1965 and used the declining balance method of depreciation using 200 percent of the straight line rate (double declining balance) with respect to the same kind of public utility property placed in service after 1964. In 1968 and 1970, X placed in service additional public utility property of the same kind. The applicable 1968 method with respect to the above described public utility property is shown in the following chart:

Property held in 1970	Placed in service	Method on 1967 return	Applicable 1968 method
Group 1	Before 1965	Straight line	Straight line.
Group 2	After 1964 and before 1968	Double declining balance	Double declining balance.
Group 3	After 1967 and before 1969		Do.

Property held in 1970	Placed in service	Method on 1967 return	Applicable 1968 method
Group 4	After 1968		Do.

Example 2. Corporation Y is a calendar-year taxpayer engaged exclusively in the trade or business of the furnishing of electrical energy. In 1954, Y placed in service hydroelectric generators and for all purposes Y has taken straight line depreciation with respect to such generators. In 1960, Y placed in service fossil fuel generators and for all purposes since 1960 has used the declining balance method of depreciation using a rate of 150 percent of the straight line rate (computed without reduction for salvage) with respect to such generators. After 1960 and before 1970 Y did not place in service any generators. In 1970, Y placed in service additional hydroelectric generators. The applicable 1968 method with respect to the hydroelectric generators placed in service in 1970 would be the straight line method because it was the method used by Y on its return for the latest taxable year for which Y filed a return before August 1, 1969, with respect to property of the same kind (*i.e.*, hydroelectric generators) most recently placed in service.

Example 3. Assume the same facts as in example (2), except that the generators placed in service in 1970 were nuclear generators. The applicable 1968 method with respect to such generators is the declining balance method using a rate of 150 percent of the straight line rate because, with respect to property of the most similar kind (fossil fuel generators) most recently placed in service, Y used such declining balance method on its return for the latest taxable year for which it filed a return before August 1, 1969.

(f) ***Subsection (l) method.*** Under section 167(l)(3)(F), the term "subsection (l) method" means a reasonable and consistently applied ratable method of computing depreciation which is allowable under section 167(a), such as, for example, the straight line method or a unit of production method or machine-hour method. The term "subsection (l) method" does not include any declining balance method (regardless of the uniform rate applied), sum of the years-digits method, or method of depreciation which is allowable solely by reason of section 167(b)(4) or (j)(1)(C).

(g) ***July 1969 regulated accounting period*** —

(1) ***In general.*** Under section 167(l)(3)(I), the term "July 1969 regulated accounting period" means the taxpayer's latest accounting period ending before August 1, 1969, for which the taxpayer regularly computed, before January 1, 1970, its tax expense for purposes of reflecting operating results in its regulated books of account. The computation by the taxpayer of such tax expense may be established by reference to the following:

(i) The most recent periodic report of a period ending before August 1, 1969, required by a regulatory body described in section 167(l)(3)(A) having jurisdiction over the taxpayer's regulated books of account which was filed with such body before January 1, 1970 (whether or not such body has jurisdiction over rates).

(ii) If subdivision (i) of this subparagraph does not apply, the taxpayer's most recent report to its shareholders for a period ending before August 1, 1969, but only if such report was distributed to the shareholders before January 1, 1970, and if the taxpayer's stocks or securities are traded in an established securities market during such period. For purposes of this subdivision, the term “established securities market” has the meaning assigned to such term in § 1.453-3(d)(4).

(iii) If subdivisions (i) and (ii) of this subparagraph do not apply, entries made to the satisfaction of the district director before January 1, 1970, in its regulated books of account for its most recent accounting period ending before August 1, 1969.

(2) ***July 1969 method of regulated accounting in certain acquisitions.*** If public utility property is acquired in a transaction in which its basis in the hands of the transferee is determined in whole or in part by reference to its basis in the hands of the transferor by reason of the application of any provision of the Code, or in a transfer (including any purchase for cash or in exchange) from a related person, then in the hands of the transferee the method of regulated accounting for such property's July 1969 regulated accounting period shall be determined by reference to the treatment in respect of such property in the hands of the transferor. See paragraph (e)(4)(ii) of this section for definition of “related person”.

(3) ***Determination date.*** For purposes of section 167(l), any reference to a method of depreciation under section 167(a), or a method of regulated accounting, taken into account by the taxpayer in computing its tax expense for its July 1969 regulated accounting period shall be a reference to such tax expense as shown on the periodic report or report to shareholders to which subparagraph (1) (i) or (ii) of this paragraph applies or the entries made on the taxpayer's regulated books of account to which subparagraph (1)(iii) of this paragraph applies. Thus, for example, assume that regulatory body A having jurisdiction over public utility property with respect to X's regulated books of account requires X to reflect its tax expense in such books using the same method of depreciation which regulatory body B uses for determining X's cost of service for ratemaking purposes. If in 1971, in the course of approving a rate change for X, B retroactively determines X's cost of service for ratemaking purposes for X's July 1969 regulated accounting period using a method of depreciation different from the method reflected in X's regulated books of account as of January 1, 1970, the method of depreciation used by X for its July 1969 regulated accounting period would be determined without reference to the method retroactively used by B in 1971.

(h) ***Normalization method of accounting*** —

(1) ***In general.***

(i) Under section 167(l), a taxpayer uses a normalization method of regulated accounting with respect to public utility property—

(*a*) If the same method of depreciation (whether or not a subsection (l) method) is used to compute both its tax expense and its depreciation expense for purposes of establishing cost of service for ratemaking purposes and for reflecting operating results in its regulated books of account, and

(*b*) If to compute its allowance for depreciation under section 167 it uses a method of depreciation other than the method it used for purposes described in (*a*) of this subdivision, the taxpayer makes adjustments consistent with subparagraph (2) of this paragraph to a reserve to reflect the total amount of the deferral of Federal income tax liability resulting from the use with respect to all of its public utility property of such different methods of depreciation.

(ii) In the case of a taxpayer described in section 167(l) (1) (B) or (2) (C), the reference in subdivision (i) of this subparagraph shall be a reference only to such taxpayer's "qualified public utility property". See § 1.167(l)-2(b) for definition of "qualified public utility property".

(iii) Except as provided in this subparagraph, the amount of Federal income tax liability deferred as a result of the use of different method of depreciation under subdivision (i) of this subparagraph is the excess (computed without regard to credits) of the amount the tax liability would have been had a subsection (l) method been used over the amount of the actual tax liability. Such amount shall be taken into account for the taxable year in which such different methods of depreciation are used. If, however, in respect of any taxable year the use of a method of depreciation other than a subsection (l) method for purposes of determining the taxpayer's reasonable allowance under section 167(a) results in a net operating loss carryover (as determined under section 172) to a year succeeding such taxable year which would not have arisen (or an increase in such carryover which would not have arisen) had the taxpayer determined his reasonable allowance under section 167(a) using a subsection (l) method, then the amount and time of the deferral of tax liability shall be taken into account in such appropriate time and manner as is satisfactory to the district director.

(2) *Adjustments to reserve.*

(i) The taxpayer must credit the amount of deferred Federal income tax determined under subparagraph (1)(i) of this paragraph for any taxable year to a reserve for deferred taxes, a depreciation reserve, or other reserve account. The taxpayer need not establish a separate reserve account for such amount but the amount of deferred tax determined under subparagraph (1) (i) of this paragraph must be accounted for in such a manner so as to be readily identifiable. With respect to any account, the aggregate amount allocable to deferred tax under section 167(l) shall not be reduced except to reflect the amount for any taxable year by which Federal income taxes are greater by reason of the prior use of different methods of depreciation under subparagraph (1)(i) of this paragraph. An additional exception is that the aggregate amount allocable to deferred tax under section 167(l) may be properly adjusted to reflect asset retirements or the expiration of the period for depreciation used in determining the allowance for depreciation under section 167(a).

(ii) The provisions of this subparagraph may be illustrated by the following examples:

Example 1. Corporation X is exclusively engaged in the transportation of gas by pipeline subject to the jurisdiction of the Federal Power Commission. With respect to its post-1969 public utility property, X is entitled under section 167(l)(2)(B) to use a method of depreciation other than a subsection (l) method if it uses a normalization method of regulated accounting. With respect to such property, X has not made any election under § 1.167(a)-11 (relating to depreciation based on class lives and asset depreciation ranges). In 1972, X places in service public utility property with an unadjusted basis of $2 million, and an estimated useful life of 20 years. X uses the declining balance method of depreciation with a rate twice the straight line rate. If X uses a normalization method of regulated accounting, the amount of depreciation allowable under section 167(a) with respect to such property for 1972 computed under the double declining balance method would be $200,000. X computes its tax expense and depreciation expense for purposes of determining its cost of service for rate-making purposes and for reflecting operating results in its regulated books of account using the straight line method of depreciation (a subsection (l) method). A depreciation allowance computed in this manner is $100,000. The excess of the depreciation allowance determined under the double declining

balance method ($200,000) over the depreciation expense computed using the straight line method ($100,000) is $100,000. Thus, assuming a tax rate of 48 percent, X used a normalization method of regulated accounting for 1972 with respect to property placed in service that year if for 1972 it added to a reserve $48,000 as taxes deferred as a result of the use by X of a method of depreciation for Federal income tax purposes different from that used for establishing its cost of service for ratemaking purposes and for reflecting operating results in its regulated books of account.

Example 2. Assume the same facts as in example (1), except that X elects to apply § 1.167(a)-11 with respect to all eligible property placed in service in 1972. Assume further that all property X placed in service in 1972 is eligible property. One hudnred percent of the asset guideline period for such property is 22 years and the asset depreciation range is from 17.5 years to 26.5 years. X uses the double declining balance method of depreciation, selects an asset depreciation period of 17.5 years, and applies the half-year convention (described in § 1.167(a)-11(c)(2)(iii)). In 1972, the depreciation allowable under section 167(a) with respect to property placed in service in 1972 is $114,285 (determined without regard to the normalization requirements in § 1.167(a)-11(b)(6) and in section 167(l)). X computes its tax expense for purposes of determining its cost of service for ratemaking purposes and for reflecting operating results in its regulated books of account using the straight line method of depreciation (a subsection (l) method), an estimated useful life of 22 years (that is, 100 percent of the asset guideline period), and the half-year convention. A depreciation allowance computed in this manner is $45,454. Assuming a tax rate of 48 percent, the amount that X must add to a reserve for 1972 with respect to property placed in service that year in order to qualify as using a normalization method of regulated accounting under section 167(l) (3) (G) is $27,429 and the amount in order to satisfy the normalization requirements of § 1.167(a)-11(b)(6) is $5,610. X determined such amounts as follows:

(1) Depreciation allowance on tax return (determined without regard to section 167(l) and § 1.167(a)-11(b) (6))	$114,285
(2) Line (1), recomputed using a straight line method	57,142
(3) Difference in depreciation allowance attributable to different methods (line (1) minus line (2))	$57,143
(4) Amount to add to reserve under this paragraph (48 percent of line (3))	27,429
(5) Amount in line (2)	$57,142
(6) Line (5), recomputed by using an estimated useful life of 22 years and the half-year convention	45,454
(7) Difference in depreciation allowance attributable to difference in depreciation periods	$11,688

(8) Amount to add to reserve under § 1.167(a)-11(b) (6) (ii) (48 percent of line (7))	5,610

If, for its depreciation expense for purposes of determining its cost of service for ratemaking purposes and for reflecting operating results in its regulated books of account, X had used a period in excess of the asset guideline period of 22 years, the total amount in lines (4) and (8) in this example would not be changed.

Example 3. Corporation Y, a calendar-year taxpayer which is engaged in furnishing electrical energy, made the election provided by section 167(l) (4) (a) with respect to its "qualified public utility property" (as defined in § 1.167(l)-2(b)). In 1971, Y placed in service qualified public utility property which had an adjusted basis of $2 million, estimated useful life of 20 years, and no salvage value. With respect to property of the same kind most recently placed in service, Y used a flow-through method of regulated accounting for its July 1969 regulated accounting period and the applicable 1968 method is the declining balance method of depreciation using 200 percent of the straight line rate. The amount of depreciation allowable under the double declining balance method with respect to the qualified public utility property would be $200,000. Y computes its tax expense and depreciation expense for purposes of determining its cost of service for ratemaking purposes and for reflecting operating results in its regulated books of account using the straight line method of depreciation. A depreciation allowance with respect to the qualified public utility property determined in this manner is $100,000. The excess of the depreciation allowance determined under the double declining balance method ($200,000) over the depreciation expense computed using the straight line method ($100,000) is $100,000. Thus, assuming a tax rate of 48 percent, Y used a normalization method of regulated accounting for 1971 if for 1971 it added to a reserve $48,000 as tax deferred as a result of the use by Y of a method of depreciation for Federal income tax purposes with respect to its qualified public utility property which method was different from that used for establishing its cost of service for ratemaking purposes and for reflecting operating results in its regulated books of account for such property.

Example 4. Corporation Z, exclusively engaged in a public utility activity did not use a flow-through method of regulated accounting for its July 1969 regulated accounting period. In 1971, a regulatory body having jurisdiction over all of Z's property issued an order applicable to all years beginning with 1968 which provided, in effect, that Z use an accelerated method of depreciation for purposes of section 167 and for determining its tax expenses for purposes of reflecting operating results in its regulated books of account. The order further provided that Z normalize 50 percent of the tax deferral resulting from the use of the accelerated method of depreciation and that Z flow-through 50 percent of the tax deferral resulting therefrom. Under section 167(l), the method of accounting provided in the order would not be a normalization method of regulated accounting because Z would not be permitted to normalize 100 percent of the tax deferral resulting from the use of an accelerated method of depreciation. Thus, with respect to its public utility property for purposes of section 167, Z may only use a subsection (l) method of depreciation.

Example 5. Assume the same facts as in example (4) except that the order of the regulatory body provided, in effect, that Z normalize 100 percent of the tax deferral with respect to 50 percent of its public utility property and flow-through the tax savings with respect to the other 50 percent of its property. Because the effect of such an order would allow Z to flow-through a portion of the tax savings resulting from the use of an accelerated method of depreciation, Z would not be using a normalization method of regulated accounting with respect to any of its properties. Thus, with respect to its public utility property for purposes of section 167, Z may only use a subsection (l) method of depreciation.

(3) ***Establishing compliance with normalization requirements in respect of operating books of account.*** The taxpayer may establish compliance with the requirement in subparagraph (l)(i) of this paragraph in respect of reflecting operating results, and adjustments to a reserve, in its operating books of account by reference to the following:

(i) The most recent periodic report for a period beginning before the end of the taxable year, required by a regulatory body described in section 167(l)(3)(A) having jurisdiction over the taxpayer's regulated operating books of account which was filed with such body before the due date (determined with regard to extensions) of the taxpayer's Federal income tax return for such taxable year (whether or not such body has jurisdiction over rates).

(ii) If subdivision (i) of this subparagraph does not apply, the taxpayer's most recent report to its shareholders for the taxable year but only if

(*a*) such report was distributed to the shareholders before the due date (determined with regard to extensions) of the taxpayer's Federal income tax return for the taxable year and

(*b*) the taxpayer's stocks or securities are traded in an established securities market during such taxable year. For purposes of this subdivision, the term "established securities market" has the meaning assigned to such term in § 1.453-3(d)(4).

(iii) If neither subdivision (i) nor (ii) of this subparagraph applies, entries made to the satisfaction of the district director before the due date (determined with regard to extensions) of the taxpayer's Federal income tax return for the taxable year in its regulated books of account for its most recent period beginning before the end of such taxable year.

(4) ***Establishing compliance with normalization requirements in computing cost of service for ratemaking purposes.***

(i) In the case of a taxpayer which used a flow-through method of regulated accounting for its July 1969 regulated accounting period or thereafter, with respect to all or a portion of its pre-1970 public utility property, if a regulatory body having jurisdiction to establish the rates of such taxpayer as to such property (or a court which has jurisdiction over such body) issues an order of general application (or an order of specific application to the taxpayer) which states that such regulatory body (or court) will permit a class of taxpayers of which such taxpayer is a member (or such taxpayer) to use the normalization method of regulated accounting to establish cost of service for ratemaking purposes with respect to all or a portion of its public utility property, the taxpayer will be presumed to be using the same method of depreciation to compute both its tax expense and its depreciation expense for purposes of establishing its cost of service for ratemaking purposes with respect to the public utility property to which such order applies. In the event that such order is in any way conditional, the preceding sentence

shall not apply until all of the conditions contained in such order which are applicable to the taxpayer have been fulfilled. The taxpayer shall establish to the satisfaction of the Commissioner or his delegate that such conditions have been fulfilled.

(ii) In the case of a taxpayer which did not use the flow-through method of regulated accounting for its July 1969 regulated accounting period or thereafter (including a taxpayer which used a subsection (l) method of depreciation to compute its allowance for depreciation under section 167(a) and to compute its tax expense for purposes of reflecting operating results in its regulated books of account), with respect to any of its public utility property, it will be presumed that such taxpayer is using the same method of depreciation to compute both its tax expense and its depreciation expense for purposes of establishing its cost of service for ratemaking purposes with respect to its post-1969 public utility property. The presumption described in the preceding sentence shall not apply in any case where there is

(*a*) an expression of intent (regardless of the manner in which such expression of intent is indicated) by the regulatory body (or bodies), having jurisdiction to establish the rates of such taxpayer, which indicates that the policy of such regulatory body is in any way inconsistent with the use of the normalization method of regulated accounting by such taxpayer or by a class of taxpayers of which such taxpayer is a member, or

(*b*) a decision by a court having jurisdiction over such regulatory body which decision is in any way inconsistent with the use of the normalization method of regulated accounting by such taxpayer or a class of taxpayers of which such taxpayer is a member. The presumption shall be applicable on January 1, 1970, and shall, unless rebutted, be effective until an inconsistent expression of intent is indicated by such regulatory body or by such court. An example of such an inconsistent expression of intent is the case of a regulatory body which has, after the July 1969 regulated accounting period and before January 1, 1970, directed public utilities subject to its ratemaking jurisdiction to use a flow-through method of regulated accounting, or has issued an order of general application which states that such agency will direct a class of public utilities of which the taxpayer is a member to use a flow-through method of regulated accounting. The presumption described in this subdivision may be rebutted by evidence that the flow-through method of regulated accounting is being used by the taxpayer with respect to such property.

(iii) The provisions of this subparagraph may be illustrated by the following examples:

Example 1. Corporation X is a calendar-year taxpayer and its “applicable 1968 method” is a straight line method of depreciation. Effective January 1, 1970, X began collecting rates which were based on a sum of the years-digits method of depreciation and a normalization method of regulated accounting which rates had been approved by a regulatory body having jurisdiction over X. On October 1, 1971, a court of proper jurisdiction annulled the rate order prospectively, which annulment was not appealed, on the basis that the regulatory body had abused its discretion by determining the rates on the basis of a normalization method of regulated accounting. As there was no inconsistent expression of intent during 1970 or prior to the due date of X's return for 1970, X's use of the sum of the years-digits method of depreciation for purposes of section 167 on such return was proper. For 1971, the presumption is in effect through September 30. During 1971, X may use the sum of the years-digits method of

depreciation for purposes of section 167 from January 1 through September 30, 1971. After September 30, 1971, and for taxable years after 1971, X must use a straight line method of depreciation until the inconsistent court decision is no longer in effect.

Example 2. Assume the same facts as in example (1), except that pursuant to the order of annulment, X was required to refund the portion of the rates attributable to the use of the normalization method of regulated accounting. As there was no inconsistent expression of intent during 1970 or prior to the due date of X's return for 1970, X has the benefit of the presumption with respect to its use of the sum of the years-digits method of depreciation for purposes of section 167, but because of the retroactive nature of the rate order X must file an amended return for 1970 using a straight line method of depreciation. As the inconsistent decision by the court was handed down prior to the due date of X's Federal income tax return for 1971, for 1971 and thereafter the presumption of subdivision (ii) of this subparagraph does not apply. X must file its Federal income tax returns for such years using a straight line method of depreciation.

Example 3. Assume the same facts as in example (2), except that the annulment order was stayed pending appeal of the decision to a court of proper appellate jurisdiction, X has the benefit of the presumption as described in example (2) for the year 1970, but for 1971 and thereafter the presumption of subdivision (ii) of this subparagraph does not apply. Further, X must file an amended return for 1970 using a straight line method of depreciation and for 1971 and thereafter X must file its returns using a straight line method of depreciation unless X and the district director have consented in writing to extend the time for assessment of tax for 1970 and thereafter with respect to the issue of normalization method of regulated accounting for as long as may be necessary to allow for resolution of the appeal with respect to the annulment of the rate order.

(5) ***Change in method of regulated accounting.*** The taxpayer shall notify the district director of a change in its method of regulated accounting, an order by a regulatory body or court that such method be changed, or an interim or final rate determination by a regulatory body which determination is inconsistent with the method of regulated accounting used by the taxpayer immediately prior to the effective date of such rate determination. Such notification shall be made within 90 days of the date that the change in method, the order, or the determination is effective. In the case of a change in the method of regulated accounting, the taxpayer shall recompute its tax liability for any affected taxable year and such recomputation shall be made in the form of an amended return where necessary unless the taxpayer and the district director have consented in writing to extend the time for assessment of tax with respect to the issue of normalization method of regulated accounting.

(6) ***Exclusion of normalization reserve from rate base.***

(i) Notwithstanding the provisions of subparagraph (1) of this paragraph, a taxpayer does not use a normalization method of regulated accounting if, for ratemaking purposes, the amount of the reserve for deferred taxes under section 167(l) which is excluded from the base to which the taxpayer's rate of return is applied, or which is treated as no-cost capital in those rate cases in which the rate of return is based upon the cost of capital, exceeds the amount of such reserve for deferred taxes for the period used in determining the taxpayer's tax expense in computing cost of service in such ratemaking.

(ii) For the purpose of determining the maximum amount of the reserve to be excluded from the rate base (or to be included as no-cost capital) under subdivision (i) of this subparagraph, if solely an historical period is used to determine depreciation for Federal income tax expense for ratemaking purposes, then the amount of the reserve account for the period is the amount of

the reserve (determined under subparagraph (2) of this paragraph) at the end of the historical period. If solely a future period is used for such determination, the amount of the reserve account for the period is the amount of the reserve at the beginning of the period and a pro rata portion of the amount of any projected increase to be credited or decrease to be charged to the account during such period. If such determination is made by reference both to an historical portion and to a future portion of a period, the amount of the reserve account for the period is the amount of the reserve at the end of the historical portion of the period and a pro rata portion of the amount of any projected increase to be credited or decrease to be charged to the account during the future portion of the period. The pro rata portion of any increase to be credited or decrease to be charged during a future period (or the future portion of a part-historical and part-future period) shall be determined by multiplying any such increase or decrease by a fraction, the numerator of which is the number of days remaining in the period at the time such increase or decrease is to be accrued, and the denominator of which is the total number of days in the period (or future portion).

(iii) The provisions of subdivision (i) of this subparagraph shall not apply in the case of a final determination of a rate case entered on or before May 31, 1973. For this purpose, a determination is final if all rights to request a review, a rehearing, or a redetermination by the regulatory body which makes such determination have been exhausted or have lapsed. The provisions of subdivision (ii) of this subparagraph shall not apply in the case of a rate case filed prior to June 7, 1974 for which a rate order is entered by a regulatory body having jurisdiction to establish the rates of the taxpayer prior to September 5, 1974, whether or not such order is final, appealable, or subject to further review or reconsideration.

(iv) The provisions of this subparagraph may be illustrated by the following examples:

Example 1. Corporation X is exclusively engaged in the transportation of gas by pipeline subject to the jurisdiction of the Z Power Commission. With respect to its post-1969 public utility property, X is entitled under section 167(l)(2)(B) to use a method of depreciation other than a subsection (l) method if it uses a normalization method of regulated accounting. With respect to X the Z Power Commission for purposes of establishing cost of service uses a recent consecutive 12-month period ending not more than 4 months prior to the date of filing a rate case adjusted for certain known changes occurring within a 9-month period subsequent to the base period. X's rate case is filed on January 1, 1975. The year 1974 is the recorded test period for X's rate case and is the period used in determining X's tax expense in computing cost of service. The rates are contemplated to be in effect for the years 1975, 1976, and 1977. The adjustments for known changes relate only to wages and salaries. X's rate base at the end of 1974 is $145,000,000. The amount of the reserve for deferred taxes under section 167(l) at the end of 1974 is $1,300,000, and the reserve is projected to be $4,400,000 at the end of 1975, $6,500,000 at the end of 1976, and $9,800,000 at the end of 1977. X does not use a normalization method of regulated accounting if the Z Power Commission excludes more than $1,300,000 from the rate base to which X's rate of return is applied. Similarly, X does not use a normalization method of regulated accounting if, instead of the above, the Z Power Commission, in determining X's rate of return which is applied to the rate base, assigns to no-cost capital an amount that represents the reserve account for deferred tax that is greater than $1,300,000.

Example 2. Assume the same facts as in example (1) except that the adjustments for known changes in cost of service made by the Z Power Commission include an additional

depreciation expense that reflects the installation of new equipment put into service on January 1, 1975. Assume further that the reserve for deferred taxes under section 167(1) at the end of 1974 is $1,300,000 and that the monthly net increases for the first 9 months of 1975 are projected to be:

January 1-31	$310,000
February 1-28	300,000
March 1-31	300,000
April 1-30	280,000
May 1-31	270,000
June 1-30	260,000
July 1-31	260,000
August 1-31	250,000
September 1-30	240,000
	$2,470,000

For its regulated books of account X accrues such increases as of the last day of the month but as a matter of convenience credits increases or charges decreases to the reserve account on the 15th day of the month following the whole month for which such increase or decrease is accrued. The maximum amount that may be excluded from the rate base is $2,470,879 (the amount in the reserve at the end of the historical portion of the period ($1,300,000) and a pro rata portion of the amount of any projected increase for the future portion of the period to be credited to the reserve ($1,170,879)). Such pro rata portion is computed (without regard to the date such increase will actually be posted to the account) as follows:

$310,000 × 243/273 =	$275,934
300,000 × 215/273 =	236,264
300,000 × 184/273 =	202,198
280,000 × 154/273 =	157,949
270,000 × 123/273 =	121,648
260,000 × 93/273 =	88,571
260,000 × 62/273 =	59,048
250,000 × 31/273 =	28,388
240,000 × 1/273=	879

	$1,170,879

Example 3. Assume the same facts as in example (1) except that for purposes of establishing cost of service the Z Power Commission uses a future test year (1975). The rates are contemplated to be in effect for 1975, 1976, and 1977. Assume further that plant additions, depreciation expense, and taxes are projected to the end of 1975 and that the reserve for deferred taxes under section 167(l) is $1,300,000 for 1974 and is projected to be $4,400,000 at the end of 1975. Assume also that the Z Power Commission applies the rate of return to X's 1974 rate base of $145,000,000. X and the Z Power Commission through negotiation arrive at the level of approved rates. X uses a normalization method of regulated accounting only if the settlement agreement, the rate order, or record of the proceedings of the Z Power Commission indicates that the Z Power Commission did not exclude an amount representing the reserve for deferred taxes from X's rate base ($145,000,000) greater than $1,300,000 plus a pro rata portion of the projected increases and decreases that are to be credited or charged to the reserve account for 1975. Assume that for 1975 quarterly net increases are projected to be:

1st quarter	$910,000
2nd quarter	810,000
3rd quarter	750,000
4th quarter	630,000
Total	$3,100,000

For its regulated books of account X will accrue such increases as of the last day of the quarter but as a matter of convenience will credit increases or charge decreases to the reserve account on the 15th day of the month following the last month of the quarter for which such increase or decrease will be accrued. The maximum amount that may be excluded from the rate base is $2,591,480 (the amount of the reserve at the beginning of the period ($1,300,000) plus a pro rata portion ($1,291,480) of the $3,100,000 projected increase to be credited to the reserve during the period). Such portion is computed (without regard to the date such increase will actually be posted to the account) as follows:

$910,000 × 276/365=	$688,110

810,000 × 185/365=	410,548
750,000 × 93/365=	191,096
630,000 × 1/365=	1,726
	$1,291,480

(i) ***Flow-through method of regulated accounting.*** Under section 167(l)(3)(H), a taxpayer uses a flow-through method of regulated accounting with respect to public utility property if it uses the same method of depreciation (other than a subsection (l) method) to compute its allowance for depreciation under section 167 and to compute its tax expense for purposes of reflecting operating results in its regulated books of account unless such method is the same method used by the taxpayer to determine its depreciation expense for purposes of reflecting operating results in its regulated books of account. Except as provided in the preceding sentence, the method of depreciation used by a taxpayer with respect to public utility property for purposes of determining cost of service for ratemaking purposes or rate base for ratemaking purposes shall not be considered in determining whether the taxpayer used a flow-through method of regulated accounting. A taxpayer may establish use of a flow-through method of regulated accounting in the same manner that compliance with normalization requirements in respect of operating books of account may be established under paragraph (h)(4) of this section.

[T.D. 7315, 39 FR 20195, June 7, 1974]

§ 1.167(l)-2 Public utility property; election as to post-1969 property representing growth in capacity.

(a) ***In general.*** Section 167(l)(2) prescribes the methods of depreciation which may be used by a taxpayer with respect to its post-1969 public utility property. Under section 167(l)(2) (A) and (B) the taxpayer may use a subsection (l) method of depreciation (as defined in section 167(l)(3)(F)) or any other method of depreciation which is otherwise allowable under section 167 if, in conjunction with the use of such other method, such taxpayer uses the normalization method of accounting (as defined in section 167(l)(3)(G)). Paragraph (2)(C) of section 167(l) permits a taxpayer which used the flow-through method of accounting for its July 1969 accounting period (as these terms are defined in section 167(l)(3) (H) and (I), respectively) to use its applicable 1968 method of depreciation with respect to certain property. Section 167(l)(3)(D) describes the term “applicable 1968 method”. Accordingly, a regulatory agency is not precluded by section 167(l) from requiring such a taxpayer subject to its jurisdiction to continue to use the flow-through method of accounting unless the taxpayer makes the election pursuant to section 167(l)(4)(A) and this section. Whether or not the election is made, if such a regulatory agency permits the taxpayer to change from the flow-through method of accounting, subsection (l)(2) (A) or (B) would apply and such taxpayer could, subject to the provisions of section 167(e) and the regulations thereunder (relating to change in method), use a subsection (l) method of depreciation or, if the taxpayer uses the normalization method of accounting, any other method of depreciation otherwise allowable under section 167.

(1) ***Election.*** Under subparagraph (A) of section 167(l)(4), if the taxpayer so elects, the provisions of paragraph (2)(C) of section 167(l) shall not apply to its qualified public utility property (as such term is described in paragraph (b) of this section). In such case the taxpayer making the election shall use a method of depreciation prescribed by section 167(l)(2) (A) or (B) with respect to such property.

(2) ***Property to which election shall apply.***

(i) Except as provided in subdivision (ii) of this subparagraph the election provided by section 167(l)(4)(A) shall apply to all of the qualified public utility property of the taxpayer.

(ii) In the event that the taxpayer wishes the election provided by section 167(l)(4)(A) to apply to only a portion of its qualified public utility property, it must clearly identify the property to be subject to the election in the statement of election described in paragraph (e) of this section. Where all property which performs a certain function is included within the election, the election shall apply to all future acquisitions of qualified public utility property which perform the same function. Where only certain property within a functional group of property is included within the election, the election shall apply only to property which is of the same kind as the included property.

(iii) The provisions of subdivision (ii) of this subparagraph may be illustrated by the following examples:

Example 1. Corporation *A,* an electric utility company, wishes to have the election provided by section 167(l)(4)(A) apply only with respect to its production plant. A statement that the election shall apply only with respect to production plant will be sufficient to include within the election all of the taxpayer's qualified production plant of any kind. All public utility property of the taxpayer other than production plant will not be subject to the election.

Example 2. Corporation *B,* an electric utility company, wishes to have the election provided by section 167(l)(4)(A) apply only with respect to nuclear production plant. A statement which clearly indicates that only nuclear production plant will be included in the election will be sufficient to exclude from the election all public utility property other than nuclear production plant.

(b) ***Qualified public utility property*** —

(1) ***Definition.*** For purposes of this section the term “qualified public utility property” means post-1969 public utility property to which section 167(l)(2)(C) applies, or would apply if the election described in section 167(l)(4)(A) had not been made, to the extent that such property constitutes property which increases the productive or operational capacity of the taxpayer with respect to the goods or services described in section 167(l)(3)(A) and does not represent the replacement of existing capacity. In the event that particular assets which are post-1969 public utility property both replace existing public utility property and increase the productive or operational capacity of the taxpayer, only that portion of each such asset which is properly allocable, pursuant to the provisions of subparagraph (3)(v) of this paragraph or paragraph (c)(2) of this section (as the case may be), to increasing the productive or operational capacity of the taxpayer shall be qualified public utility property.

(2) ***Limitation on use of formula method.*** A taxpayer which makes the election with respect to all of its post-1969 public utility property may determine the amount of its qualified public utility property by using the formula method described in paragraph (c) of this section or, where the taxpayer so chooses, it may use any other method based on engineering data which is satisfactory to the Commissioner. A taxpayer which chooses to include only a portion of its post-1969 public utility property in the election described in paragraph (a)(1) of this section shall, in a manner satisfactory to the Commissioner and consistent with the provisions of subparagraph (3) of this paragraph, use a method based on engineering data. If a taxpayer uses the formula method described in paragraph (c) of this section, it must continue to use such method with respect to additions made in

subsequent taxable years. The taxpayer may change from an engineering method to the formula method described in paragraph (c) of this section by filing a statement described in paragraph (h) of this section if it could have used such formula method for the prior taxable year.

(3) ***Measuring capacity under an engineering method in the case of a general election.***

(i) The provisions of this subparagraph apply in the case of an election made with respect to all of the post-1969 public utility property of the taxpayer.

(ii) A taxpayer which uses a method based on engineering data to determine the portion of its additions for a taxable year which constitutes qualified public utility property shall make such determination with reference to its "adjusted capacity" as of the first day of the taxable year during which such additions are placed in service. For purposes of this subparagraph, the term "adjusted capacity" means the taxpayer's capacity as of January 1, 1970, adjusted upward in the manner described in subdivision (iii) of this subparagraph for each taxable year ending after December 31, 1969, and before the first day of the taxable year during which the additions described in the preceding sentence are placed in service.

(iii) The adjustment described in this subdivision for each taxable year shall be equal to the number of units of capacity by which additions for the taxable year of public utility property with respect to which the election had been made exceed the number of units of capacity of retirements for such taxable year of public utility property with respect to which the flow-through method of accounting was being used at the time of their retirement. If for any taxable year the computation in the preceding sentence results in a negative amount, such negative amount shall be taken into account as a reduction in the amount of the adjustment (computed without regard to this sentence) in succeeding taxable years.

(iv) The provisions of this subparagraph may be illustrated by the following table which assumes that the taxpayer's adjusted capacity as of January 1, 1970, was 5,000 units:

1	2	3	4	5	6	7
Year	**Additions**	**Flow-through retirements**	**Net additions**	**Adjusted capacity [1]**	**Actual capacity**	**Units of qualified additions [1] [2]**
1970	1000	700	300	5000	5300	300
1971	300	500	(200)	5300	5100	
1972	500	200	300	5300	5400	100
1973	400	800	(400)	5400	5000	
1974	600	400	200	5400	5200	
1975	800	300	500	5400	5700	300

[1] *Capacity as of Jan. 1, 1970, plus amounts in column 7 for years prior to the year for which determination is being made.*

[2] *Column 6 minus column 5.*

(v) The qualified portion of the basis for depreciation (as defined in section 167(g)) of each asset or group of assets (if group or composite accounting is used by the taxpayer) subject to the election shall be determined using the following ratio:

Qualified portion of basis of asset ÷ Total basis of asset = Units of qualified additions computed in column 7 on chart ÷ Units of capacity of additions computed in column 2 on chart.

(c) ***Formula method of determining amount of property subject to election*** —

(1) ***In general.*** The following formula method may be used to determine the amount of qualified public utility property:

Step 1. Find the total cost (within the meaning of section 1012) to the taxpayer of additions during the taxable year of all post-1969 public utility property with respect to which section 167(l)(2)(C) would apply if the election had not been made.

Step 2. Aggregate the cost (within the meaning of section 1012) to the taxpayer of all retirements during the taxable year of public utility property with respect to which the flow-through method of accounting was being used at the time of their retirement.

Step 3. Subtract the figure reached in step 2 from the figure reached in step 1.

In the event that the figure reached in step 2 exceeds the figure reached in step 1 such excess shall be carried forward to the next taxable year and shall be aggregated with the cost (within the meaning of section 1012) to the taxpayer of all retirements referred to in step 2 for such next taxable year.

(2) ***Allocation of bases.*** The amount of qualified public utility property as determined in accordance with the formula method described in subparagraph (1) of this paragraph shall be allocated to the basis for depreciation (as defined in section 167(g)) of each asset or group of assets (if group or composite accounting is used by the taxpayer) subject to the election using the following ratio:

Amount of qualified additions computed in step 3 ÷ Amount of total additions computed in step 1 = Qualified portion of basis of asset ÷ Total basis of asset.

(d) ***Examples.*** The provisions of this section may be illustrated by the following examples:

Example 1. Corporation *A*, a telephone company subject to the jurisdiction of the Federal Communications Commission, elected, pursuant to the provisions of section 167(l)(4)(A) and this section, with respect to all of its qualified post-1969 public utility property to have the provisions of paragraph (2) (C) of section 167(l) not apply. In 1971 the Corporation added new underground cable with a cost (within the meaning of section 1012) to it of $4 million to its underground cable account. In the same year it retired public utility property with a cost (within the meaning of section 1012) to Corporation *A* of $1.5 million. The flow-through method of accounting was being used with respect to all of the retired property at the time of retirement. Using the formula method described in paragraph (c) of this section, the amount of qualified underground cable would be

determined as follows:

	Million
Step 1. Aggregate cost of flow-through additions	$4.0
Step 2. Cost of all flow-through retirements	1.5
Step 3. Figure reached in step 1 less figure reached in step 2	2.5

The amount of qualified public utility property to which section 167(l)(2)(C) will not apply is $2.5 million. Pursuant to the provisions of paragraph (c)(2) of this section, the amount of qualified public utility property would be allocated to the basis for depreciation (as defined in section 167(g)) of an asset with a total basis for depreciation of $2 million as follows:

$2.5 million (figure in step 3)/$4 million (figure in step 1) = Qualified portion of basis of asset/$2 million Qualified portion of basis of asset = $1.25 million.

Example 2. In 1972 Corporation *A* (the corporation described in example (1)) added underground cable with a cost (within the meaning of section 1012) to it of $1 million. In the same year the cost (within the meaning of section 1012) to the corporation of retirements of public utility property with respect to which the flow-through method of accounting was being used was $3 million. There were no other additions or retirements. The amount of qualified public utility property would be determined as follows:

	Million
Step 1. Aggregate cost of flow-through additions	$1.0
Step 2. Cost of all flow-through retirements	3.0
Step 3. Figure reached in step 1 less figure reached in step 2	(2.0)

Since retirements of flow-through public utility property for the year 1972 exceeded additions made during such year, the excess retirements, $2.0 million, must be carried forward to be aggregated with retirements for 1973.

Example 3. Corporation *B,* a gas pipeline company subject to the jurisdiction of the Federal Power Commission, made the election provided by section 167(l)(4)(A) and this section with respect to all of its post-1969 public utility property. Corporation *B* chose to use an engineering data method of determining which property was subject to the election provided by this section. In 1970, the corporation replaced a portion of its pipeline with respect to which the flow-through method of accounting was being used at the time of its retirement which had a peak capacity on January 1,

1970, of 100,000 thousand cubic feet (M c.f.) per day at a pressure of 14.73 pounds per square inch absolute (p.s.i.a.) with pipe with a capacity of 125,000 M c.f. per day at 14.73 p.s.i.a. Assuming that there were no other additions or retirements, using an engineering data method one-fifth of the new pipeline would be property subject to the election of this section effective for its taxable year beginning on January 1, 1971.

Example 4. In 1970 Corporation *C* (with the same characteristics as the corporation described in example (3)) extended its pipeline 5 miles further than it extended on January 1, 1970. Assuming that there were no other additions or retirements, the entire extension would be property subject to the election provided by this section effective for its taxable year beginning on January 1, 1971.

Example 5. As a result of a change of service areas between two corporations, in 1970 Corporation *D* (with the same characteristics as the corporation described in example (3)) retired a pipeline running north and south and replaced it with a pipeline of equal length and capacity running east and west. No part of the pipeline running east and west is property subject to the election.

(e) ***Manner of making election.*** The election described in paragraph (a) of this section shall be made by filing, in duplicate, with the Commissioner of Internal Revenue, Washington, D.C. 20224, Attention, T:I:E, a statement of such election.

(f) ***Content of statement.*** The statement described in paragraph (e) of this section shall indicate that an election is being made under section 167(l) of the Internal Revenue Code of 1954, and it shall contain the following information:

(1) The name, address, and taxpayer identification number of the taxpayer,

(2) Whether the taxpayer will use the formula method of determining the amount of its qualified public utility property described in paragraph (c) of this section, or an engineering method, and

(3) Where the taxpayer wishes to include only a portion of its public utility property in the election pursuant to the provisions of paragraph (a)(2) of this section, a description sufficient to clearly identify the property to be included.

(g) ***Time for making election.*** The election permitted by this section shall be made by filing the statement described in paragraph (e) of this section not later than Monday, June 29, 1970.

(h) ***Change of method of determining amount of qualified property.*** Where a taxpayer which has elected pursuant to the provisions of section 167(l)(4)(A) wishes to change, pursuant to the provisions of paragraph (b)(2) of this section, from an engineering data method of determining which of its property is qualified public utility property to the formula method described in paragraph (c) of this section, it may do so by filing a statement to that effect at the time that it files its income tax return, with the district director or director of the regional service center, with whom the taxpayer's income tax return is required to be filed.

(i) ***Revocability of election.*** An election made under section 167(l) shall be irrevocable.

(j) ***Effective date.*** The election prescribed by section 167(l)(4)(A) and this section shall be effective for taxable years beginning after December 31, 1970.

[T.D. 7045, 35 FR 8933, June 10, 1970. Redesignated by T.D. 7315, 39 FR 20195, June 7, 1974]

§ 1.167(l)-3 Multiple regulation, asset acquisitions, reorganizations, etc.

(a) *Property not entirely subject to jurisdiction of one regulatory body* —

(1) ***In general.*** If a taxpayer which uses a method of depreciation other than a subsection (l) method of depreciation is required by a regulatory body having jurisdiction over less than all of its property to use, or not to use, a method of regulated accounting (*i.e.*, normalization or flow-through), such taxpayer shall be considered as using, or not using, such method of regulated accounting only with respect to property subject to the jurisdiction of such regulatory body. In the case of property which is contained in a multiple asset account, the provisions of § 1.167(a)-7(c) and § 1.167(a)-11(c)(1)(iv) apply to prohibit depreciating a single account by two or more different methods.

(2) ***Jurisdiction of regulatory body.*** For purposes of this paragraph, a regulatory body is considered to have jurisdiction over property of a taxpayer if expenses with respect to the property are included in cost of service as determined by the regulatory body for ratemaking purposes or for reflecting operating results in its regulated books of account. For example, if regulatory body A, having jurisdiction over 60 percent of an item of X corporation's public utility property, required X to use the flow-through method of regulated accounting in circumstances which would bar X from using a method of depreciation under section 167(a) other than a subsection (l) method, and if regulatory body B, having jurisdiction over the remaining 40 percent of such item of property does not so require X to use the flow-through method of regulated accounting (or if the remaining 40 percent is not subject to the jurisdiction of any regulatory body), then with respect to 60 percent of the adjusted basis of the property X is prohibited from using a method of depreciation for purposes of section 167(a) other than a subsection (1) method. If in such example, A, having jurisdiction over 60 percent of X's public utility property, had jurisdiction over 100 percent of a particular generator, then with respect to the generator X would be prohibited from using a method of depreciation other than a subsection (l) method.

(3) ***Public utility property subject to more than one regulatory body.*** If a regulatory body having jurisdiction over public utility property with respect to the taxpayer's regulated books of account requires the taxpayer to reflect its tax expense in such books in the manner used by the regulatory body having jurisdiction over the public utility property for purposes of determining the taxpayer's cost of service for ratemaking purposes, the rules of subparagraphs (1) and (2) of this paragraph shall apply.

(b) *Leasing transactions* —

(1) ***Leased property.*** Public utility property as defined in paragraph (b) of § 1.167(l)-1 includes property which is leased by a taxpayer where the leasing of such property is part of the lessor's section 167(l) public utility activity. Thus, such leased property qualifies as public utility property even though the predominant use of such property by the lessee is in other than a section 167(l) public utility activity. Further, leased property qualifies as public utility property under section 167(l) even though the leasing is not part of the lessor's public utility activity if the predominant use of such property by the lessee or any sublessee is in a section 167(l) public utility activity. However, the limitations of section 167(l) apply to a taxpayer only if such taxpayer is subject to the jurisdiction of a regulatory body described in a section 167(l)(3)(A). For example, if a financial institution purchases property which it then leases to a lessee which uses such property predominantly in a section 167(l) public utility activity, the property qualifies as public utility property. However, because the financial institution's rates for leasing the property are not subject to the jurisdiction of a regulatory body

described in section 167(l)(3)(A), the provisions of section 167(l) do not apply to the depreciation deductions taken with respect to the property by the financial institution. For possible application of section 167(l) to the lessee, see subparagraph (2) of this paragraph.

(2) ***Certain rental payments.*** Under section 167(l)(5), if a taxpayer leases property which is public utility property and the regulatory body having jurisdiction over such property for purposes of determining the taxpayer's operating results in its regulated books of account or for ratemaking purposes allows only an amount of such lessee's expenses with respect to the lease which is less than the amount which the taxpayer deducts for purposes of its Federal income tax liability, then a portion of the difference between such amounts shall not be allowed as a deduction by the taxpayer for purposes of its Federal income tax liability in such manner and time as the Commissioner or his delegate may determine consistent with the principles of § 1.167(l)-1 and this section applicable as to when a method of depreciation other than a subsection (1) method may be used for purposes of section 167(a).

(c) ***Certain partnership arrangements.*** Under section 167(l)(5), if property held by a partnership is not public utility property in the hands of the partnership but would be public utility property if an election was made under section 761 to be excluded from partnership treatment, then section 167(l) shall be applied by treating the partners as directly owning the property in proportion to their partnership interests.

(d) ***Cross reference.*** See § 1.167(l)-1(c)(1) for treatment of certain property as "pre-1970 public utility property" and § 1.167(l)-1(e)(4)(ii) for applicable 1968 method in the case of property acquired in certain transactions.

[T.D. 7315, 39 FR 20202, June 7, 1974]

§ 1.167(l)-4 Public utility property; election to use asset depreciation range system.

(a) ***Application of section 167(l) to certain property subject to asset depreciation range system.*** If the taxpayer elects to compute depreciation under the asset depreciation range system described in § 1.167(a)-11 with respect to certain public utility property placed in service after December 31, 1970, see § 1.167(a)-11(b) (6).

(Sec. 167 of the Internal Revenue Code of 1954 (26 U.S.C. 167) and sec. 7805 of the Internal Revenue Code of 1954 (26 U.S.C. 7805))

[T.D. 7128, 36 FR 11939, June 23, 1971. Redesignated by T.D. 7315, 39 FR 20203, June 7, 1974]

§ 1.167(m)-1 Class lives.

(a) For rules regarding the election to use the class life system authorized by section 167(m), see the provisions of § 1.167(a)-11.

(Sec. 167(m), 85 Stat. 508 (26 U.S.C. 167))

[T.D. 7272, 38 FR 9986, Apr. 23, 1973]

§ 1.168-5 Special rules.

(a) ***Retirement-replacement-betterment (RRB) property*** —

(1) ***RRB replacement property placed in service before January 1, 1985.***

(i) Except as provided in paragraph (a)(1)(ii) of this section, the recovery deduction for the taxable year for retirement-replacement-betterment (RRB) replacement property (as defined in paragraph (a)(3) of this section) placed in service before January 1, 1985, shall be (in lieu of the amount determined under section 168(b)) an amount determined by applying to the unadjusted basis (as defined in section 168(d)(1) and the regulations thereunder) of such property the applicable percentage determined in accordance with the following table:

If the recovery year is:	And the year the property is placed in service is:			
	1981	1982	1983	1984
The applicable percentage is:				
1	100	50	33	25
2		50	45	38
3			22	25
4				12

(ii) The provisions of paragraph (a)(1)(i) of this section do not apply to any taxpayer who did not use the RRB method of depreciation under section 167 as of December 31, 1980. In such case, RRB replacement property placed in service by the taxpayer after December 31, 1980, shall be treated as other 5-year recovery property under section 168.

(2) ***RRB replacement property placed in service after December 31, 1984.*** RRB replacement property placed in service after December 31, 1984, is treated as other 5-year recovery property under section 168.

(3) ***RRB replacement property defined.*** RRB replacement property, for purposes of section 168, means replacement track material (including rail, ties, other track material, and ballast) installed by a railroad (including a railroad switching or terminal company) if—

(i) The replacement is made pursuant to a scheduled program for replacement.

(ii) The replacement is made pursuant to observations by maintenance-of-way personnel of specific track material needing replacement.

(iii) The replacement is made pursuant to the detection by a rail-test car of specific track material needing replacement, or

(iv) The replacement is made as a result of a casualty.

Replacements made as a result of a casualty shall be RRB replacement property only to the extent that, in the case of each casualty, the replacement cost with respect to the replacement track material exceeds $50,000.

(4) ***Recovery of adjusted basis of RRB property as of December 31, 1980.*** The taxpayer shall recover the adjusted basis of RRB property (as defined in section 168(g)(6)) as of December 31, 1980, over a period of not less than 5 years and not more than 50 years, using a rate of recovery consistent with any method described in section 167(b), including the method described in section 167(b)(2),

switching to the method described in section 167(b)(3) at a time to maximize the deduction. For purposes of determining the recovery allowance under this subparagraph, salvage value shall be disregarded and, in the case of a taxpayer that depreciated RRB property placed in service before January 1, 1981, using the RRB method consistently for all periods after February 28, 1913, the adjusted basis of RRB property is the adjusted basis for purposes of determining the deduction for retirements under the RRB method, with no adjustment for depreciation sustained prior to March 1, 1913.

(5) ***RRB property (which is not RRB replacement property) placed in service after December 31, 1980.*** Property placed in service by the taxpayer after December 31, 1980, which is not RRB replacement property and which, under the taxpayer's method of depreciation as of December 31, 1980, would have been depreciated by the taxpayer under the RRB method, is treated as other property under section 168.

(b)-(f) [Reserved]

[T.D. 8116, 51 FR 46619, Dec. 24, 1986]

§ 1.168(a)-1 Modified accelerated cost recovery system.

(a) Section 168 determines the depreciation allowance for tangible property that is of a character subject to the allowance for depreciation provided in section 167(a) and that is placed in service after December 31, 1986 (or after July 31, 1986, if the taxpayer made an election under section 203(a)(1)(B) of the Tax Reform Act of 1986; 100 Stat. 2143). Except for property excluded from the application of section 168 as a result of section 168(f) or as a result of a transitional rule, the provisions of section 168 are mandatory for all eligible property. The allowance for depreciation under section 168 constitutes the amount of depreciation allowable under section 167(a). The determination of whether tangible property is property of a character subject to the allowance for depreciation is made under section 167 and the regulations under section 167.

(b) This section is applicable on and after February 27, 2004.

[T.D. 9314, 72 FR 9248, Mar. 1, 2007]

§ 1.168(b)-1 Definitions.

(a) ***Definitions.*** For purposes of section 168 and the regulations under section 168, the following definitions apply:

(1) ***Depreciable property*** is property that is of a character subject to the allowance for depreciation as determined under section 167 and the regulations under section 167.

(2) ***MACRS property*** is tangible, depreciable property that is placed in service after December 31, 1986 (or after July 31, 1986, if the taxpayer made an election under section 203(a)(1)(B) of the Tax Reform Act of 1986; 100 Stat. 2143) and subject to section 168, except for property excluded from the application of section 168 as a result of section 168(f) or as a result of a transitional rule.

(3) ***Unadjusted depreciable basis*** is the basis of property for purposes of section 1011 without regard to any adjustments described in section 1016(a)(2) and (3). This basis reflects the reduction in basis for the percentage of the taxpayer's use of property for the taxable year other than in the taxpayer's trade or business (or for the production of income), for any portion of the basis the taxpayer properly

elects to treat as an expense under section 179, section 179C, section 181, or any similar provision, and for any adjustments to basis provided by other provisions of the Internal Revenue Code and the regulations under the Code (other than section 1016(a)(2) and (3)) (for example, a reduction in basis by the amount of the disabled access credit pursuant to section 44(d)(7)). For property subject to a lease, see section 167(c)(2).

(4) ***Adjusted depreciable basis*** is the unadjusted depreciable basis of the property, as defined in § 1.168(b)-1(a)(3), less the adjustments described in section 1016(a)(2) and (3).

(5) ***Qualified improvement property.***

(i) Is any improvement that is section 1250 property to an interior portion of a building, as defined in § 1.48-1(e)(1), that is nonresidential real property, as defined in section 168(e)(2)(B), if the improvement is placed in service by the taxpayer after the date the building was first placed in service by any person and if—

(A) For purposes of section 168(e)(6), the improvement is made by the taxpayer and is placed in service by the taxpayer after December 31, 2017;

(B) For purposes of section 168(k)(3) as in effect on the day before amendment by section 13204(a)(4)(B) of the Tax Cuts and Jobs Act, Public Law 115-97 (131 Stat. 2054 (December 22, 2017)) ("Act"), the improvement is acquired by the taxpayer before September 28, 2017, the improvement is placed in service by the taxpayer before January 1, 2018, and the improvement meets the original use requirement in section 168(k)(2)(A)(ii) as in effect on the day before amendment by section 13201(c)(1) of the Act; or

(C) For purposes of section 168(k)(3) as in effect on the day before amendment by section 13204(a)(4)(B) of the Act, the improvement is acquired by the taxpayer after September 27, 2017; the improvement is placed in service by the taxpayer after September 27, 2017, and before January 1, 2018; and the improvement meets the requirements in section 168(k)(2)(A)(ii) as amended by section 13201(c)(1) of the Act; and

(ii) Does not include any qualified improvement for which an expenditure is attributable to—

(A) The enlargement, as defined in § 1.48-12(c)(10), of the building;

(B) Any elevator or escalator, as defined in § 1.48-1(m)(2); or

(C) The internal structural framework, as defined in § 1.48-12(b)(3)(iii), of the building.

(b) ***Applicability date*** —

(1) ***In general.*** Except as provided in paragraph (b)(2) of this section, this section is applicable on or after February 27, 2004.

(2) ***Application of paragraph (a)(5) of this section and addition of "section 181" in paragraph (a)(3) of this section*** —

(i) ***In general.*** Except as provided in paragraphs (b)(2)(ii) through (iv) of this section, paragraph (a)(5) of this section and the language "section 181," in the second sentence in paragraph (a)(3) of this section are applicable on or after September 24, 2019.

(ii) ***Early application of paragraph (a)(5) of this section and addition of "section 181" in paragraph (a)(3) of this section.*** A taxpayer may choose to apply paragraph (a)(5) of this section and the language "section 181," in the second sentence in paragraph (a)(3) of this section for the taxpayer's taxable years ending on or after September 28, 2017.

(iii) ***Early application of regulation project REG-104397-18.*** A taxpayer may rely on the provisions of paragraph (a)(5) of this section in regulation project REG-104397-18 (2018-41 I.R.B 558) (see § 601.601(d)(2)(ii)(b) of this chapter) for the taxpayer's taxable years ending on or after September 28, 2017, and ending before the taxpayer's taxable year that includes September 24, 2019.

(iv) ***Addition of language in paragraph (a)(5)(i)(A) of this section.*** The language "is made by the taxpayer and" in paragraph (a)(5)(i)(A) of this section applies to property placed in service by the taxpayer after December 31, 2017.

[T.D. 9314, 72 FR 9248, Mar. 1, 2007, as amended by T.D. 9874, 84 FR 50126, Sept. 24, 2019; T.D. 9916, 85 FR 71752, Nov. 10, 2020]

§ 1.168(d)-0 Table of contents for the applicable convention rules.

This section lists the major paragraphs in § 1.168(d)-1.

§ 1.168(d)-1 Applicable conventions—Half-year and mid-quarter conventions.

(a) In general.

(b) Additional rules for determining whether the mid-quarter convention applies and for applying the applicable convention.

(1) Property described in section 168(f).

(2) Listed property.

(3) Property placed in service and disposed of in the same taxable year.

(4) Aggregate basis of property.

(5) Special rules for affiliated groups.

(6) Special rule for partnerships and S corporations.

(7) Certain nonrecognition transactions.

(c) Disposition of property subject to the half-year or mid-quarter convention.

(1) In general.

(2) Example.

(d) Effective date.

[T.D. 8444, 57 FR 48981, Oct. 29, 1992]

§ 1.168(d)-1 Applicable conventions—half-year and mid-quarter conventions.

(a) ***In general.*** Under section 168(d), the half-year convention applies to depreciable property (other than certain real property described in section 168(d)(2)) placed in service during a taxable year, unless the mid-quarter convention applies to the property. Under section 168(d)(3)(A), the mid-quarter convention applies to depreciable property (other than certain real property described in section 168(d)(2)) placed in service during a taxable year if the aggregate basis of property placed in service during the last three months of the taxable year exceeds 40 percent of the aggregate basis of property placed in service during the taxable year ("the 40-percent test"). Thus, if the depreciable property is placed in service during a taxable year that consists of three months or less, the mid-quarter convention applies to the property. Under section 168(d)(3)(b)(i), the depreciable basis of nonresidential real property, residential rental property, and any railroad grading or tunnel bore is disregarded in applying the 40-percent test. For rules regarding property that is placed in service and disposed of in the same taxable year, see paragraph (b)(3) of this section. For the definition of "aggregate basis of property," see paragraph (b)(4) if this section.

(b) ***Additional rules for determining whether the mid-quarter convention applies and for applying the applicable convention*** —

(1) ***Property described in section 168(f).*** In determining whether the 40-percent test is testified for a taxable year, the depreciable basis of property described in section 168(f) (property to which section 168 does not apply) is not taken into account.

(2) ***Listed property.*** The depreciable basis of listed property (as defined in section 280F(d)(4) and the regulations thereunder) placed in service during a taxable year is taken into account (unless otherwise excluded) in applying the 40-percent test.

(3) ***Property placed in service and disposed of in the same taxable year.***

(i) Under section 168(d)(3)(B)(ii), the depreciable basis of property placed in service and disposed of in the same taxable year is not taken into account in determining whether the 40-percent test is satisfied. However, the depreciable basis of property placed in service, disposed of, subsequently reacquired, and again placed in service, by the taxpayer in the same taxable year must be taken into account in applying the 40-percent test, but the basis of the property is only taken into account on the later of the dates that the property is placed in service by the taxpayer during the taxable year. Further, see §§ 1.168(i)-6(c)(4)(v)(B) and 1.168(i)-6(f) for rules relating to property placed in service and exchanged or involuntarily converted during the same taxable year.

(ii) The applicable convention, as determined under this section, applies to all depreciable property (except nonresidential real property, residential rental property, and any railroad grading or tunnel bore) placed in service by the taxpayer during the taxable year, excluding property placed in service and disposed of in the same taxable year. However, see §§ 1.168(i)-6(c)(4)(v)(A) and 1.168(i)-6(f) for rules relating to MACRS property that has a basis determined under section 1031(d) or section 1033(b). No depreciation deduction is allowed for property placed in service and disposed of during the same taxable year. However, see § 1.168(k)-1(f)(1) for rules relating to qualified property or 50-percent bonus depreciation property, and § 1.1400L(b)-1(f)(1) for rules relating to qualified New York Liberty Zone property, that is placed in service by the

taxpayer in the same taxable year in which either a partnership is terminated as a result of a technical termination under section 708(b)(1)(B) or the property is transferred in a transaction described in section 168(i)(7). Further, see § 1.168(k)-2(g)(1) for rules relating to qualified property under section 168(k), as amended by the Tax Cuts and Jobs Act, Public Law 115-97 (131 Stat. 2054 (December 22, 2017)), that is placed in service by the taxpayer in the same taxable year in which either a partnership is terminated as a result of a technical termination under section 708(b)(1)(B) or the property is transferred in a transaction described in section 168(i)(7).

(4) ***Aggregate basis of property.*** For purposes of the 40-percent test, the term "aggregate basis of property" means the sum of the depreciable bases of all items of depreciable property that are taken into account in applying the 40-percent test. "Depreciable basis" means the basis of depreciable property for purposes of determining gain under sections 1011 through 1024. The depreciable basis for the taxable year the property is placed in service reflects the reduction in basis for—

(i) Any portion of the basis the taxpayer properly elects to treat as an expense under section 179;

(ii) Any adjustment to basis under section 48(q); and

(iii) The percentage of the taxpayer's use of the property for the taxable year other than in the taxpayer's trade or business (or for the production of income), but is determined before any reduction for depreciation under section 167(a) for that taxable year.

(5) ***Special rules for affiliated groups*** —

(i) In the case of a consolidated group (as defined in § 1.1502-1(h)), all members of the group that are included on the consolidated return are treated as one taxpayer for purposes of applying the 40-percent test. Thus, the depreciable bases of all property placed in service by members of a consolidated group during a consolidated return year are taken into account (unless otherwise excluded) in applying the 40-percent test to determine whether the mid-quarter convention applies to property placed in service by the members during the consolidated return year. The 40-percent test is applied separately to the depreciable bases of property placed in service by any member of an affiliated group that is not included in a consolidated return of the taxable year in which the property is placed in service.

(ii) In the case of a corporation formed by a member or members of a consolidated group and that is itself a member of the consolidated group ("newly-formed subsidiary"), the depreciable bases of property placed in service by the newly-formed subsidiary in the consolidated return year in which it is formed is included with the depreciable bases of property placed in service during the consolidated return year by the other members of the consolidated group in applying the 40-percent test. If depreciable property is placed in service by a newly-formed subsidiary during the consolidated return year in which it was formed, the newly-formed subsidiary is considered as being in existence for the entire consolidated return year for purposes of applying the applicable convention to determine when the recovery period begins.

(iii) The provisions of paragraph (b)(5)(ii) of this section are illustrated by the following example.

Example. Assume a member of a consolidated group that files its return on a calendar-year basis forms a subsidiary on August 1. The subsidiary places depreciable property in service on August 5. If the mid-quarter convention applies to property placed in service by the members of the consolidated group (including the newly-formed subsidiary), the property placed in service by the subsidiary on August 5 is deemed placed in service on

the mid-point of the third quarter of the consolidated return year (*i.e.*, August 15). If the mid-quarter convention does not apply, the property is deemed placed in service on the mid-point of the consolidated return year (*i.e.*, July 1).

(iv) In the case of a corporation that joins or leaves a consolidated group, the depreciable bases of property placed in service by the corporation joining or leaving the group during the portion of the consolidated return year that the corporation is a member of the consolidated group is included with the depreciable bases of property placed in service during the consolidated return year by the other members in applying the 40-percent test. The depreciable bases of property placed in service by the joining or leaving member in the taxable year before it joins or after it leaves the consolidated group is not taken into account by the consolidated group in applying the 40-percent test for the consolidated return year. If a corporation leaves a consolidated group and joins another consolidated group, each consolidated group takes into account, in applying the 40-percent test, the depreciable bases of property placed in service by the corporation while a member of the group.

(v) The provisions of paragraph (b)(5)(iv) of this section are illustrated by the following example.

Example. Assume Corporations A and B file a consolidated return on a calendar-year basis. Corporation C, also a calendar-year taxpayer, enters the consolidated group on July 1 and is included on the consolidated return for that taxable year. The depreciable bases of property placed in service by C during the period of July 1 to December 31 is included with the depreciable bases of property placed in service by A and B during the entire consolidated return year in applying the 40-percent test. The depreciable bases of property placed in service by C from January 1 to June 30 is not taken into account by the consolidated group in applying the 40-percent test. If C was a member of another consolidated group during the period from January 1 to June 30, that consolidated group would include the depreciable bases of property placed in service by C during that period.

(vi) A corporation that joins or leaves a consolidated group during a consolidated year is considered as being a member of the consolidated group for the entire consolidated return year for purposes of applying the applicable convention to determine when the recovery period begins for depreciable property placed in service by the corporation during the portion of the consolidated return year that the corporation is a member of the group.

(vii) If depreciable property is placed in service by a corporation in the taxable year ending immediately before it joins a consolidated group or beginning immediately after it leaves a consolidated group, the applicable convention is applied to the property under either the full taxable year rules or the short taxable year rules, as applicable.

(viii) The provisions of paragraphs (d)(5)(vi) and (vii) of this section are illustrated by the following example.

Example. Assume that on July 1, C, a calendar-return corporation, joins a consolidated group that files a return on a calendar-year basis. The short taxable year rules apply to C for the period of January 1 to June 30. However, in applying the applicable convention to determine when the recovery period begins for depreciable property placed in service for the period of July 1 to December 31, C is considered as being a member of the consolidated group for the entire consolidated return year. Thus, if the half-year convention applies to depreciable property placed in service by the consolidated group

(taking into account the depreciable bases of property placed in service by C after June 30), the property is deemed placed in service on the mid-point of the consolidated return year (*i.e.,* July 1, if the group did not have a short taxable year).

(ix) In the case of a transfer of depreciable property between members of a consolidated group, the following special rules apply for purposes of applying the 40-percent test. Property that is placed in service by one member of a consolidated group and transferred to another member of the same group is considered as placed in service on the date that it is placed in service by the transferor member, and the date it is placed in service by the transferee member is disregarded. In the case of multiple transfers of property between members of a consolidated group, the property is considered as placed in service on the date that the first member places the property in service, and the dates it is placed in service by other members are disregarded. The depreciable basis of the transferred property that is taken into account in applying the 40-percent test is the depreciable basis of the property in the hands of the transferor member (as determined under paragraph (b)(4) of this section), or, in the case of multiple transfers of property between members, the depreciable basis in the hands of the first member that placed the property in service.

(x) The provisions of paragraph (b)(5)(ix) of this section are illustrated by the following example.

Example. Assume the ABC consolidated group files its return on a calendar-year basis. A, a member of the consolidated group, purchases depreciable property costing $50,000 and places the property in service on January 5, 1991. On December 1, 1991, the property is transferred for $75,000 to B, another member of the consolidated group. In applying the 40-percent test to the members of the consolidated group for 1991, the property is considered as placed in service on January 5, the date that A placed the property in service, and the depreciable basis of the property that is taken into account is $50,000.

(6) ***Special rule for partnerships and S corporations.*** In the case of property placed in service by a partnership or an S corporation, the 40-percent test is generally applied at the partnership or corporate level. However, if a partnership or an S corporation is formed or availed of for the principal purpose of either avoiding the application of the mid-quarter convention or having the mid-quarter convention apply where it otherwise would not, the 40-percent test is applied at the partner, shareholder, or other appropriate level.

(7) ***Certain nonrecognition transaction*** —

(i) Except as provided in paragraph (b)(6) of this section, if depreciable property is transferred in a transaction described in section 168(i)(7)(B)(i) (other than in a transaction between members of a consolidated group) in the same taxable year that the property is placed in service by the transferor, the 40-percent test is applied by treating the transferred property as placed in service by the transferee on the date of transfer. Thus, if the aggregate basis of property (including the transferred property) placed in service by the transferee during the last three months of its taxable year exceeds 40 percent of the aggregate basis of property (including the transferred property) placed in service by the transferee during the taxable year, the mid-quarter convention applies to the transferee's depreciable property, including the transferred property. The depreciable basis of the transferred property is not taken into account by the transferor in applying the 40-percent test for the taxable year that the transferor placed the property in service.

(ii) In applying the applicable convention to determine when the recovery period for the transferred property begins, the date on which the transferor placed the property in service must be used. Thus, for example, if the mid-quarter convention applies, the recovery period for the transferred property begins on the mid-point of the quarter of the taxable year that the transferor placed the property in service. If the transferor placed the transferred property in service in a short taxable year, then for purposes of applying the applicable convention and allocating the depreciation deduction between the transferor and the transferee, the transferor is treated as having a full 12-month taxable year commencing on the first day of the short taxable year. The depreciation deduction for the transferor's taxable year in which the property was placed in service is allocated between the transferor and the transferee based on the number of months in the transferor's taxable year that each party held the property in service. For purposes of allocating the depreciation deduction, the transferor takes into account the month in which the property was placed in service but does not take into account the month in which the property was transferred. The transferee is allocated the remaining portion of the depreciation deduction for the transferor's taxable year in which the property was transferred. For the remainder of the transferee's current taxable year (if the transferee has a different taxable year than the transferor) and for subsequent taxable years, the depreciation deduction for the transferee is calculated by allocating to the transferee's taxable year the depreciation attributable to each recovery year, or portion thereof, that falls within the transferee's taxable year. However, see § 1.168(k)-2(g)(1)(iii) for a special rule regarding the allocation of the additional first year depreciation deduction in the case of certain contributions of property to a partnership under section 721.

(iii) If the applicable convention for the transferred property has not been determined by the time the transferor files its income tax return for the year of transfer because the transferee's taxable year has not ended, the transferor may use either the mid-quarter or the half-year convention in determining the depreciation deduction for the property. However, the transferor must specify on the depreciation form filed for the taxable year that the applicable convention has not been determined for the property. If the transferee determines that a different convention applies to the transferred property, the transferor should redetermine the depreciation deduction on the property, and, within the period of limitation, should file an amended income tax return for the taxable year and pay any additional tax due plus interest.

(iv) The provisions of the paragraph (b)(7) are illustrated by the following example.

> *Example.* (i) During 1991, C, a calendar-year taxpayer, purchases satellite equipment costing $100,000, and computer equipment costing $15,000. The satellite equipment is placed in service in January, and the computer equipment in February. On October 1, C transfers the computer equipment to Z Partnership in a transaction described in section 721. During 1991, Z, a calendar-year partnership, purchases 30 office desks for a total of $15,000. The desks are placed in service in June. These are the only items of depreciable property placed in service by C and Z during 1991.
> (ii) In applying the 40-percent test, because C transferred the computer equipment in a transaction described in section 168(i)(7)(B)(i) in the same taxable year that C placed it in service, the computer equipment is treated as placed in service by the transferee, Z, on the date of transfer, October 1. The 40-percent test is satisfied with respect to Z,

because the computer equipment is placed in service during the last three months of Z's taxable year and its basis ($15,000) exceeds 40 percent of the aggregate basis of property placed in service by Z during the taxable year (desks and computer equipment with an aggregate basis of $30,000).

(iii) In applying the mid-quarter convention to determine when the computer equipment is deemed to be placed in service, the date on which C placed the property in service is used. Accordingly, because C placed the computer equipment in service during the first quarter of its taxable year, the computer equipment is deemed placed in service on February 15, 1991, the mid-point of the first quarter of C's taxable year. The depreciation deduction allowable for C's 1991 taxable year, $5,250 ($15,000 × 40 percent × 10. $^{5}/_{12}$), is allocated between C and Z based on the number of months in C's taxable year that C and Z held the property in service. Thus, because the property was in service for 11 months during C's 1991 taxable year and C held it for 8 of those 11 months, C is allocated $3,818 ($^{8}/_{11}$ × $5,250). Z is allocated $1,432, the remaining $^{3}/_{11}$ of the $5,250 depreciation deduction for C's 1991 taxable year. For 1992, Z's depreciation deduction for the computer equipment is $3,900, the sum of the remaining 1.5 months of depreciation deduction for the first recovery year and 10.5 months of depreciation deduction for the second recovery year (($15,000 × 40 percent × 1. $^{5}/_{12}$) + ($9,000 × 40 [percent × 10. $^{5}/_{12}$)).

(c) ***Disposition of property subject to the half-year or mid-quarter convention*** —

(1) ***In general.*** If depreciable property is subject to the half-year (or mid-quarter) convention in the taxable year in which it is placed in service, it also is subject to the half-year (or mid-quarter) convention in the taxable year in which it is disposed of.

(2) ***Example.*** The provisions of paragraph (c)(1) of this section are illustrated by the following example.

Example. In October 1991, B, a calendar-year taxpayer, purchases and places in service a light general purpose truck costing $10,000. B does not elect to expense any part of the cost of the truck, and this is the only item of depreciable property placed in service by B during 1991. The 40-percent test is satisfied and the mid-quarter convention applies, because the truck is placed in service during the last three months of the taxable year and no other assets are placed in service in that year. In April 1993 (prior to the end of the truck's recovery period), B sells the truck. The mid-quarter convention applies in determining the depreciation deduction for the truck in 1993, the year of disposition.

(d) ***Effective dates*** —

(1) ***In general.*** This section applies to depreciable property placed in service in taxable years ending after January 30, 1991. For depreciable property placed in service after December 31, 1986, in taxable years ending on or before January 30, 1991, a taxpayer may use a method other than the method provided in this section in applying the 40-percent test and the applicable convention, provided the method is reasonable and is consistently applied to the taxpayer's property.

(2) ***Qualified property, 50-percent bonus depreciation property, or qualified New York Liberty Zone property.*** This section also applies to qualified property under section 168(k)(2) or qualified New York Liberty Zone property under section 1400L(b) acquired by a taxpayer after September 10, 2001, and to 50-percent bonus depreciation property under section 168(k)(4) acquired by a taxpayer after May 5, 2003. The last sentences in paragraphs (b)(3)(ii) and (b)(7)(ii) of this section apply to qualified property under section 168(k)(2) placed in service by a taxpayer during or after the taxpayer's taxable year that includes September 24, 2019. However, a taxpayer may choose to apply the last sentences in paragraphs (b)(3)(ii) and (b)(7)(ii) of this section to qualified property under section 168(k)(2) acquired and placed in service after September 27, 2017, by the taxpayer during taxable years ending on or after September 28, 2017. A taxpayer may rely on the last sentences in paragraphs (b)(3)(ii) and (b)(7)(ii) of this section in regulation project REG-104397-18 (2018-41 I.R.B. 558) (see § 601.601(d)(2)(ii)(b) of this chapter) for qualified property under section 168(k)(2) acquired and placed in service after September 27, 2017, by the taxpayer during taxable years ending on or after September 28, 2017, and ending before the taxpayer's taxable year that includes September 24, 2019.

(3) ***Like-kind exchanges and involuntary conversions.*** The last sentence in paragraph (b)(3)(i) and the second sentence in paragraph (b)(3)(ii) of this section apply to exchanges to which section 1031 applies, and involuntary conversions to which section 1033 applies, of MACRS property for which the time of disposition and the time of replacement both occur after February 27, 2004.

[T.D. 8444, 57 FR 48981, Oct. 29, 1992, as amended by T.D. 9091, 68 FR 52991, Sept. 8, 2003; T.D. 9115, 69 FR 9533, Mar. 1, 2004; T.D. 9283, 71 FR 51737, Aug. 31, 2006; T.D. 9314, 72 FR 9248, Mar. 1, 2007; T.D. 9874, 84 FR 50127, Sept. 24, 2019]

§ 1.168(h)-1 Like-kind exchanges involving tax-exempt use property.

(a) ***Scope.***

(1) This section applies with respect to a direct or indirect transfer of property among related persons, including transfers made through a qualified intermediary (as defined in § 1.1031(k)-1(g)(4)) or other unrelated person, (a transfer) if—

(i) Section 1031 applies to any party to the transfer or to any related transaction; and

(ii) A principal purpose of the transfer or any related transaction is to avoid or limit the application of the alternative depreciation system (within the meaning of section 168(g)).

(2) For purposes of this section, a person is related to another person if they bear a relationship specified in section 267(b) or section 707(b)(1).

(b) ***Allowable depreciation deduction for property subject to this section*** —

(1) ***In general.*** Property (tainted property) transferred directly or indirectly to a taxpayer by a related person (related party) as part of, or in connection with, a transaction in which the related party receives tax-exempt use property (related tax-exempt use property) will, if the tainted property is subject to an allowance for depreciation, be treated in the same manner as the related tax-exempt use property for purposes of determining the allowable depreciation deduction under section 167(a). Under this paragraph (b), the tainted property is depreciated by the taxpayer over the remaining recovery period of, and using the same depreciation method and convention as that of, the related tax-exempt use property.

(2) ***Limitations*** —

(i) ***Taxpayer's basis in related tax-exempt use property.*** The rules of this paragraph (b) apply only with respect to so much of the taxpayer's basis in the tainted property as does not exceed the taxpayer's adjusted basis in the related tax-exempt use property prior to the transfer. Any excess of the taxpayer's basis in the tainted property over its adjusted basis in the related tax-exempt use property prior to the transfer is treated as property to which this section does not apply. This paragraph (b)(2)(i) does not apply if the related tax-exempt use property is not acquired from the taxpayer (e.g., if the taxpayer acquires the tainted property for cash but section 1031 nevertheless applies to the related party because the transfer involves a qualified intermediary).

(ii) ***Application of section 168(i)(7).*** This section does not apply to so much of the taxpayer's basis in the tainted property as is subject to section 168(i)(7).

(c) ***Related tax-exempt use property.***

(1) For purposes of paragraph (b) of this section, related tax-exempt use property includes—

(i) Property that is tax-exempt use property (as defined in section 168(h)) at the time of the transfer; and

(ii) Property that does not become tax-exempt use property until after the transfer if, at the time of the transfer, it was intended that the property become tax-exempt use property.

(2) For purposes of determining the remaining recovery period of the related tax-exempt use property in the circumstances described in paragraph (c)(1)(ii) of this section, the related tax-exempt use property will be treated as having, prior to the transfer, a lease term equal to the term of any lease that causes such property to become tax-exempt use property.

(d) ***Examples.*** The following examples illustrate the application of this section. The examples do not address common law doctrines or other authorities that may apply to recharacterize or alter the effects of the transactions described therein. Unless otherwise indicated, parties to the transactions are not related to one another.

> *Example 1.* (i) X owns all of the stock of two subsidiaries, B and Z. X, B and Z do not file a consolidated federal income tax return. On May 5, 1995, B purchases an aircraft (*FA*) for $1 million and leases it to a foreign airline whose income is not subject to United States taxation and which is a tax-exempt entity as defined in section 168(h)(2). On the same date, Z owns an aircraft (*DA*) with a fair market value of $1 million, which has been, and continues to be, leased to an airline that is a United States taxpayer. Z's adjusted basis in DA is $0. The next day, at a time when each aircraft is still worth $1 million, B transfers FA to Z (subject to the lease to the foreign airline) in exchange for DA (subject to the lease to the airline that is a United States taxpayer). Z realizes gain of $1 million on the exchange, but that gain is not recognized pursuant to section 1031(a) because the exchange is of like-kind properties. Assume that a principal purpose of the transfer of DA to B or of FA to Z is to avoid the application of the alternative depreciation system. Following the exchange, Z has a $0 basis in FA pursuant to section 1031(d). B has a $1 million basis in DA. (ii) B has acquired property from Z, a related person; Z's gain is not recognized pursuant to section 1031(a); Z has received tax-exempt use property as part of the transaction; and a principal purpose of the transfer of DA to B or of FA to Z is to avoid the application of the alternative

depreciation system. Accordingly, the transaction is within the scope of this section. Pursuant to paragraph (b) of this section, B must recover its $1 million basis in DA over the remaining recovery period of, and using the same depreciation method and convention as that of, FA, the related tax-exempt use property.

(iii) If FA did not become tax-exempt use property until after the exchange, it would still be related tax-exempt use property and paragraph (b) of this section would apply if, at the time of the exchange, it was intended that FA become tax-exempt use property.

Example 2. (i) X owns all of the stock of two subsidiaries, B and Z. X, B and Z do not file a consolidated federal income tax return. B and Z each own identical aircraft. B's aircraft (*FA*) is leased to a tax-exempt entity as defined in section 168(h)(2) and has a fair market value of $1 million and an adjusted basis of $500,000. Z's aircraft (*DA*) is leased to a United States taxpayer and has a fair market value of $1 million and an adjusted basis of $10,000. On May 1, 1995, B and Z exchange aircraft, subject to their respective leases. B realizes gain of $500,000 and Z realizes gain of $990,000, but neither person recognizes gain because of the operation of section 1031(a). Moreover, assume that a principal purpose of the transfer of DA to B or of FA to Z is to avoid the application of the alternative depreciation system.
(ii) As in *Example 1,* B has acquired property from Z, a related person; Z's gain is not recognized pursuant to section 1031(a); Z has received tax-exempt use property as part of the transaction; and a principal purpose of the transfer of DA to B or of FA to Z is to avoid the application of the alternative depreciation system. Thus, the transaction is within the scope of this section even though B has held tax-exempt use property for a period of time and, during that time, has used the alternative depreciation system with respect to such property. Pursuant to paragraph (b) of this section, B, which has a substituted basis determined pursuant to section 1031(d) of $500,000 in DA, must depreciate the aircraft over the remaining recovery period of FA, using the same depreciation method and convention. Z holds tax-exempt use property with a basis of $10,000, which must be depreciated under the alternative depreciation system.

(iii) Assume the same facts as in paragraph (i) of this *Example 2,* except that B and Z are members of an affiliated group that files a consolidated federal income tax return. Of B's $500,000 basis in DA, $10,000 is subject to section 168(i)(7) and therefore not subject to this section. The remaining $490,000 of basis is subject to this section. But see § 1.1502-80(f) making section 1031 inapplicable to intercompany transactions occurring in consolidated return years beginning on or after July 12, 1995.

(e) ***Effective date.*** This section applies to transfers made on or after April 20, 1995.

[T.D. 8667, 61 FR 18676, Apr. 29, 1996]

§ 1.168(i)-0 Table of contents for the general asset account rules.

This section lists the major paragraphs contained in § 1.168(i)-1.

§ 1.168(i)-1 General asset accounts.

(a) Scope.

(b) Definitions.

(1) Unadjusted depreciable basis.

(2) Unadjusted depreciable basis of the general asset account.

(3) Adjusted depreciable basis of the general asset account.

(4) Building.

(5) Expensed cost.

(6) Mass assets.

(7) Portion of an asset.

(8) Remaining adjusted depreciable basis of the general asset account.

(9) Structural component.

(c) Establishment of general asset accounts.

(1) Assets eligible for general asset accounts.

(i) General rules.

(ii) Special rules for assets generating foreign source income.

(2) Grouping assets in general asset accounts.

(i) General rules.

(ii) Special rules.

(3) Examples.

(d) Determination of depreciation allowance.

(1) In general.

(2) Assets in general asset account are eligible for additional first year depreciation deduction.

(3) No assets in general asset account are eligible for additional first year depreciation deduction.

(4) Special rule for passenger automobiles.

(e) Dispositions from a general asset account.

(1) Scope and definition.

(i) In general.

(ii) Disposition of a portion of an asset.

(2) General rules for a disposition.

(i) No immediate recovery of basis.

(ii) Treatment of amount realized.

(iii) Effect of disposition on a general asset account.

(iv) Coordination with nonrecognition provisions.

(v) Manner of disposition.

(vi) Disposition by transfer to a supplies account.

(vii) Leasehold improvements.

(viii) Determination of asset disposed of.

(ix) Examples.

(3) Special rules.

(i) In general.

(ii) Disposition of all assets remaining in a general asset account.

(iii) Disposition of an asset in a qualifying disposition.

(iv) Transactions subject to section 168(i)(7).

(v) Transactions subject to section 1031 or 1033.

(vi) Technical termination of a partnership.

(vii) Anti-abuse rule.

(f) Assets generating foreign source income.

(1) In general.

(2) Source of ordinary income, gain, or loss.

(i) Source determined by allocation and apportionment of depreciation allowed.

(ii) Formula for determining foreign source income, gain, or loss.

(3) Section 904(d) separate categories.

(g) Assets subject to recapture.

(h) Changes in use.

(1) Conversion to any personal use.

(2) Change in use results in a different recovery period and/or depreciation method.

(i) No effect on general asset account election.

(ii) Asset is removed from the general asset account.

(iii) New general asset account is established.

(i) Redetermination of basis.

(j) Identification of disposed or converted asset.

(k) Effect of adjustments on prior dispositions.

(l) Election.

(1) Irrevocable election.

(2) Time for making election.

(3) Manner of making election.

(m) Effective/applicability dates.

[T.D. 8566, 59 FR 51371, Oct. 11, 1994, as amended by T.D. 9115, 69 FR 9534, Mar. 1, 2004; T.D. 9132, 69 FR 33842, June 17, 2004; T.D. 9314, 72 FR 9249, Mar. 1, 2007; T.D. 9564, 76 FR 81085, Dec. 27, 2011; 77 FR 75016, Dec. 19, 2012; T.D. 9689, 79 FR 48667, Aug. 18, 2014]

§ 1.168(i)-1 General asset accounts.

(a) ***Scope.*** This section provides rules for general asset accounts under section 168(i)(4). The provisions of this section apply only to assets for which an election has been made under paragraph (l) of this section.

(b) ***Definitions.*** For purposes of this section, the following definitions apply:

(1) ***Unadjusted depreciable basis*** has the same meaning given such term in § 1.168(b)-1(a)(3).

(2) ***Unadjusted depreciable basis of the general asset account*** is the sum of the unadjusted depreciable bases of all assets included in the general asset account.

(3) ***Adjusted depreciable basis of the general asset account*** is the unadjusted depreciable basis of the general asset account less the adjustments to basis described in section 1016(a)(2) and (3).

(4) ***Building*** has the same meaning as that term is defined in § 1.48-1(e)(1).

(5) ***Expensed cost*** is the amount of any allowable credit or deduction treated as a deduction allowable for depreciation or amortization for purposes of section 1245 (for example, a credit allowable under section 30 or a deduction allowable under section 179, section 179A, or section 190). Expensed cost does not include any additional first year depreciation deduction.

(6) ***Mass assets*** is a mass or group of individual items of depreciable assets—

(i) That are not necessarily homogenous;

(ii) Each of which is minor in value relative to the total value of the mass or group;

(iii) Numerous in quantity;

(iv) Usually accounted for only on a total dollar or quantity basis;

(v) With respect to which separate identification is impracticable; and

(vi) Placed in service in the same taxable year.

(7) ***Portion of an asset*** is any part of an asset that is less than the entire asset as determined under paragraph (e)(2)(viii) of this section.

(8) ***Remaining adjusted depreciable basis of the general asset account*** is the unadjusted depreciable basis of the general asset account less the amount of the additional first year depreciation deduction allowed or allowable, whichever is greater, for the general asset account.

(9) ***Structural component*** has the same meaning as that term is defined in § 1.48-1(e)(2).

(c) ***Establishment of general asset accounts*** —

(1) ***Assets eligible for general asset accounts*** —

(i) ***General rules.*** Assets that are subject to either the general depreciation system of section 168(a) or the alternative depreciation system of section 168(g) may be accounted for in one or more general asset accounts. An asset is included in a general asset account only to the extent of the asset's unadjusted depreciable basis. However, an asset is not to be included in a general

asset account if the asset is used both in a trade or business or for the production of income and in a personal activity at any time during the taxable year in which the asset is placed in service by the taxpayer or if the asset is placed in service and disposed of during the same taxable year.

(ii) ***Special rules for assets generating foreign source income.***

(A) Assets that generate foreign source income, both United States and foreign source income, or combined gross income of a foreign sales corporation (as defined in former section 922), domestic international sales corporation (as defined in section 992(a)), or possession corporation (as defined in section 936) and its related supplier may be included in a general asset account if the requirements of paragraph (c)(2)(i) of this section are satisfied. If, however, the inclusion of these assets in a general asset account results in a substantial distortion of income, the Commissioner may disregard the general asset account election and make any reallocations of income or expense necessary to clearly reflect income.

(B) A general asset account shall be treated as a single asset for purposes of applying the rules in § 1.861-9T(g)(3) (relating to allocation and apportionment of interest expense under the asset method). A general asset account that generates income in more than one grouping of income (statutory and residual) is a multiple category asset (as defined in § 1.861-9T(g)(3)(ii)), and the income yield from the general asset account must be determined by applying the rules for multiple category assets as if the general asset account were a single asset.

(2) ***Grouping assets in general asset accounts*** —

(i) ***General rules.*** If a taxpayer makes the election under paragraph (l) of this section, assets that are subject to the election are grouped into one or more general asset accounts. Assets that are eligible to be grouped into a single general asset account may be divided into more than one general asset account. Each general asset account must include only assets that—

(A) Have the same applicable depreciation method;

(B) Have the same applicable recovery period;

(C) Have the same applicable convention; and

(D) Are placed in service by the taxpayer in the same taxable year.

(ii) ***Special rules.*** In addition to the general rules in paragraph (c)(2)(i) of this section, the following rules apply when establishing general asset accounts—

(A) Assets subject to the mid-quarter convention may only be grouped into a general asset account with assets that are placed in service in the same quarter of the taxable year;

(B) Assets subject to the mid-month convention may only be grouped into a general asset account with assets that are placed in service in the same month of the taxable year;

(C) Passenger automobiles for which the depreciation allowance is limited under section 280F(a) must be grouped into a separate general asset account;

(D) Assets not eligible for any additional first year depreciation deduction, including assets for which the taxpayer elected not to deduct the additional first year depreciation, provided by, for example, section 168(k), section 168(l), section 168(m), section 168(n), section 1400L(b), or section 1400N(d), must be grouped into a separate general asset account;

(E) Assets eligible for the additional first year depreciation deduction may only be grouped into a general asset account with assets for which the taxpayer claimed the same percentage of the additional first year depreciation (for example, 30 percent, 50 percent, or 100 percent);

(F) Except for passenger automobiles described in paragraph (c)(2)(ii)(C) of this section, listed property (as defined in section 280F(d)(4)) must be grouped into a separate general asset account;

(G) Assets for which the depreciation allowance for the placed-in-service year is not determined by using an optional depreciation table (for further guidance, see section 8 of Rev. Proc. 87-57, 1987-2 CB 687, 693 (see § 601.601(d)(2) of this chapter)) must be grouped into a separate general asset account;

(H) Mass assets that are or will be subject to paragraph (j)(2)(i)(D) of this section (disposed of or converted mass asset is identified by a mortality dispersion table) must be grouped into a separate general asset account; and

(I) Assets subject to paragraph (h)(2)(iii)(A) of this section (change in use results in a shorter recovery period or a more accelerated depreciation method) for which the depreciation allowance for the year of change (as defined in § 1.168(i)-4(a)) is not determined by using an optional depreciation table must be grouped into a separate general asset account.

(3) ***Examples.*** The following examples illustrate the application of this paragraph (c):

Example 1. In 2014, J, a proprietorship with a calendar year-end, purchases and places in service one item of equipment that costs $550,000. This equipment is section 179 property and also is 5-year property under section 168(e). On its Federal tax return for 2014, J makes an election under section 179 to expense $25,000 of the equipment's cost and makes an election under paragraph (l) of this section to include the equipment in a general asset account. As a result, the unadjusted depreciable basis of the equipment is $525,000. In accordance with paragraph (c)(1) of this section, J must include only $525,000 of the equipment's cost in the general asset account.

Example 2. In 2014, K, a proprietorship with a calendar year-end, purchases and places in service 100 items of equipment. All of these items are 5-year property under section 168(e), are not listed property, and are not eligible for any additional first year depreciation deduction. On its Federal tax return for 2014, K does not make an election under section 179 to expense the cost of any of the 100 items of equipment and does make an election under paragraph (l) of this section to include the 100 items of equipment in a general asset account. K depreciates its 5-year property placed in service in 2014 using the optional depreciation table that corresponds with the general depreciation system, the 200-percent declining balance method, a 5-year recovery period, and the half-year convention. In accordance with paragraph (c)(2) of this section, K includes all of the 100 items of equipment in one general asset account.

Example 3. The facts are the same as in *Example 2,* except that K decides not to include all of the 100 items of equipment in one general asset account. Instead and in accordance with paragraph (c)(2) of this section, K establishes 100 general asset accounts and includes one item of equipment in each general asset account.

Example 4. L, a calendar-year corporation, is a wholesale distributer. In 2014, L places in service the following properties for use in its wholesale distribution business: Computers, automobiles, and forklifts. On its Federal tax return for 2014, L does not make an election under section 179 to expense the cost of any of these items of equipment and does make an election under paragraph (l) of this section to include all of these items of equipment in a general asset account. All of these items are 5-year property under section 168(e) and are not eligible for any additional first year depreciation deduction. The computers are listed property, and the automobiles are listed property and are subject to section 280F(a). L depreciates its 5-year property placed in service in 2014 using the optional depreciation table that corresponds with the general depreciation system, the 200-percent declining balance method, a 5-year recovery period, and the half-year convention. Although the computers, automobiles, and forklifts are 5-year property, L cannot include all of them in one general asset account because the computers and automobiles are listed property. Further, even though the computers and automobiles are listed property, L cannot include them in one general asset account because the automobiles also are subject to section 280F(a). In accordance with paragraph (c)(2) of this section, L establishes three general asset accounts: One for the computers, one for the automobiles, and one for the forklifts.

Example 5. M, a fiscal-year corporation with a taxable year ending June 30, purchases and places in service ten items of new equipment in October 2014, and purchases and places in service five other items of new equipment in February 2015. On its Federal tax return for the taxable year ending June 30, 2015, M does not make an election under section 179 to expense the cost of any of these items of equipment and does make an election under paragraph (l) of this section to include all of these items of equipment in a general asset account. All of these items of equipment are 7-year property under section 168(e), are not listed property, and are property described in section 168(k)(2)(B). All of the ten items of equipment placed in service in October 2014 are eligible for the 50-percent additional first year depreciation deduction provided by section 168(k)(1). All of the five items of equipment placed in service in February 2015 are not eligible for any additional first year depreciation deduction. M depreciates its 7-year property placed in service for the taxable year ending June 30, 2015, using the optional depreciation table that corresponds with the general depreciation system, the 200-percent declining balance method, a 7-year recovery period, and the half-year convention. Although the 15 items of equipment are depreciated using the same depreciation method, recovery period, and convention, M cannot include all of them in one general asset account because some of items of equipment are not eligible for any additional first year depreciation deduction. In accordance with paragraph (c)(2) of this section, M establishes two general asset accounts: one for the ten items of equipment eligible for the 50-percent additional first year depreciation deduction and one for the five items of equipment not eligible for any additional first year depreciation deduction.

(d) ***Determination of depreciation allowance*** —

(1) ***In general.*** Depreciation allowances are determined for each general asset account. The depreciation allowances must be recorded in a depreciation reserve account for each general asset account. The allowance for depreciation under this section constitutes the amount of depreciation allowable under section 167(a).

(2) ***Assets in general asset account are eligible for additional first year depreciation deduction.*** If all the assets in a general asset account are eligible for the additional first year depreciation deduction, the taxpayer first must determine the allowable additional first year depreciation deduction for the general asset account for the placed-in-service year and then must determine the amount otherwise allowable as a depreciation deduction for the general asset account for the placed-in-service year and any subsequent taxable year. The allowable additional first year depreciation deduction for the general asset account for the placed-in-service year is determined by multiplying the unadjusted depreciable basis of the general asset account by the additional first year depreciation deduction percentage applicable to the assets in the account (for example, 30 percent, 50 percent, or 100 percent). The remaining adjusted depreciable basis of the general asset account then is depreciated using the applicable depreciation method, recovery period, and convention for the assets in the account.

(3) ***No assets in general asset account are eligible for additional first year depreciation deduction.*** If none of the assets in a general asset account are eligible for the additional first year depreciation deduction, the taxpayer must determine the allowable depreciation deduction for the general asset account for the placed-in-service year and any subsequent taxable year by using the applicable depreciation method, recovery period, and convention for the assets in the account.

(4) ***Special rule for passenger automobiles.*** For purposes of applying section 280F(a), the depreciation allowance for a general asset account established for passenger automobiles is limited for each taxable year to the amount prescribed in section 280F(a) multiplied by the excess of the number of automobiles originally included in the account over the number of automobiles disposed of during the taxable year or in any prior taxable year in a transaction described in paragraph (e)(3)(iii) (disposition of an asset in a qualifying disposition), paragraph (e)(3)(iv) (transactions subject to section 168(i)(7)), paragraph (e)(3)(v) (transactions subject to section 1031 or section 1033), paragraph (e)(3)(vi) (technical termination of a partnership), paragraph (e)(3)(vii) (anti-abuse rule), paragraph (g) (assets subject to recapture), or paragraph (h)(1) (conversion to any personal use) of this section.

(e) ***Dispositions from a general asset account —***

(1) ***Scope and definition —***

(i) ***In general.*** This paragraph (e) provides rules applicable to dispositions of assets included in a general asset account. For purposes of this paragraph (e), an asset in a general asset account is disposed of when ownership of the asset is transferred or when the asset is permanently withdrawn from use either in the taxpayer's trade or business or in the production of income. A disposition includes the sale, exchange, retirement, physical abandonment, or destruction of an asset. A disposition also occurs when an asset is transferred to a supplies, scrap, or similar account, or when a portion of an asset is disposed of as described in paragraph (e)(1)(ii) of this section. If a structural component, or a portion thereof, of a building is disposed of in a disposition described in paragraph (e)(1)(ii) of this section, a disposition also includes the disposition of such structural component or such portion thereof.

(ii) ***Disposition of a portion of an asset.*** For purposes of applying paragraph (e) of this section, a disposition includes a disposition of a portion of an asset in a general asset account as a result of a casualty event described in section 165, a disposition of a portion of an asset in a general asset account for which gain, determined without regard to section 1245 or section 1250, is not recognized in whole or in part under section 1031 or section 1033, a transfer of a portion of an asset in a general asset account in a transaction described in section 168(i)(7)(B), a sale of a portion of an asset in a general asset account, or a disposition of a portion of an asset in a general asset account in a transaction described in paragraph (e)(3)(vii)(B) of this section. For other transactions, a disposition includes a disposition of a portion of an asset in a general asset account only if the taxpayer makes the election under paragraph (e)(3)(ii) of this section to terminate the general asset account in which that disposed portion is included or makes the election under paragraph (e)(3)(iii) of this section for that disposed portion.

(2) ***General rules for a disposition*** —

(i) ***No immediate recovery of basis.*** Except as provided in paragraph (e)(3) of this section, immediately before a disposition of any asset in a general asset account or a disposition of a portion of such asset as described in paragraph (e)(1)(ii) of this section, the asset or the portion of the asset, as applicable, is treated as having an adjusted depreciable basis (as defined in § 1.168(b)-1(a)(4)) of zero for purposes of section 1011. Therefore, no loss is realized upon the disposition of an asset from the general asset account or upon the disposition of a portion of such asset as described in paragraph (e)(1)(ii) of this section. Similarly, where an asset or a portion of an asset, as applicable, is disposed of by transfer to a supplies, scrap, or similar account, the basis of the asset or the portion of the asset, as applicable, in the supplies, scrap, or similar account will be zero.

(ii) ***Treatment of amount realized.*** Any amount realized on a disposition is recognized as ordinary income, notwithstanding any other provision of subtitle A of the Internal Revenue Code (Code), to the extent the sum of the unadjusted depreciable basis of the general asset account and any expensed cost (as defined in paragraph (b)(5) of this section) for assets in the account exceeds any amounts previously recognized as ordinary income upon the disposition of other assets in the account or upon the disposition of portions of such assets as described in paragraph (e)(1)(ii) of this section. The recognition and character of any excess amount realized are determined under other applicable provisions of the Code other than sections 1245 and 1250 or provisions of the Code that treat gain on a disposition as subject to section 1245 or section 1250.

(iii) ***Effect of disposition on a general asset account.*** Except as provided in paragraph (e)(3) of this section, the unadjusted depreciable basis and the depreciation reserve of the general asset account are not affected as a result of a disposition of an asset from the general asset account or of a disposition of a portion of such asset as described in paragraph (e)(1)(ii) of this section.

(iv) ***Coordination with nonrecognition provisions.*** For purposes of determining the basis of an asset or a portion of an asset, as applicable, acquired in a transaction, other than a transaction described in paragraph (e)(3)(iv) (pertaining to transactions subject to section 168(i)(7)), paragraph (e)(3)(v) (pertaining to transactions subject to section 1031 or section 1033), and paragraph (e)(3)(vi) (pertaining to technical terminations of partnerships) of this section, to which a nonrecognition section of the Code applies, determined without regard to this section, the amount of ordinary income recognized under this paragraph (e)(2) is treated as the amount of gain recognized on the disposition.

(v) ***Manner of disposition.*** The manner of disposition (for example, normal retirement, abnormal retirement, ordinary retirement, or extraordinary retirement) is not taken into account in determining whether a disposition occurs or gain or loss is recognized.

(vi) ***Disposition by transfer to a supplies account.*** If a taxpayer made an election under § 1.162-3(d) to treat the cost of any rotable spare part, temporary spare part, or standby emergency spare part (as defined in § 1.162-3(c)) as a capital expenditure subject to the allowance for depreciation and also made an election under paragraph (l) of this section to include that rotable, temporary, or standby emergency spare part in a general asset account, the taxpayer can dispose of the rotable, temporary, or standby emergency spare part by transferring it to a supplies account only if the taxpayer has obtained the consent of the Commissioner to revoke the § 1.162-3(d) election. If a taxpayer made an election under § 1.162-3T(d) to treat the cost of any material and supply (as defined in § 1.162-3T(c)(1)) as a capital expenditure subject to the allowance for depreciation and also made an election under paragraph (l) of this section to include that material and supply in a general asset account, the taxpayer can dispose of the material and supply by transferring it to a supplies account only if the taxpayer has obtained the consent of the Commissioner to revoke the § 1.162-3T(d) election. See § 1.162-3(d)(3) for the procedures for revoking a § 1.162-3(d) or a § 1.162-3T(d) election.

(vii) ***Leasehold improvements.*** The rules of paragraph (e) of this section also apply to—

(A) A lessor of leased property that made an improvement to that property for the lessee of the property, has a depreciable basis in the improvement, made an election under paragraph (l) of this section to include the improvement in a general asset account, and disposes of the improvement, or disposes of a portion of the improvement as described in paragraph (e)(1)(ii) of this section, before or upon the termination of the lease with the lessee. See section 168(i)(8)(B); and

(B) A lessee of leased property that made an improvement to that property, has a depreciable basis in the improvement, made an election under paragraph (l) of this section to include the improvement in a general asset account, and disposes of the improvement, or disposes of a portion of the improvement as described in paragraph (e)(1)(ii) of this section, before or upon the termination of the lease.

(viii) ***Determination of asset disposed of*** —

(A) ***General rules.*** For purposes of applying paragraph (e) of this section to the disposition of an asset in a general asset account, instead of the disposition of the general asset account, the facts and circumstances of each disposition are considered in determining what is the appropriate asset disposed of. The asset for disposition purposes may not consist of items placed in service by the taxpayer on different dates, without taking into account the applicable convention. For purposes of determining what is the appropriate asset disposed of, the unit of property determination under § 1.263(a)-3(e) or in published guidance in the Internal Revenue Bulletin under section 263(a) (see § 601.601(d)(2) of this chapter) and the distinct asset determination under § 1.1031(a)-3(a)(4) do not apply.

(B) ***Special rules.*** In addition to the general rules in paragraph (e)(2)(viii)(A) of this section, the following rules apply for purposes of applying paragraph (e) of this section to the disposition of an asset in a general asset account instead of the disposition of the general asset account:

(*1*) Each building, including its structural components, is the asset, except as provided in § 1.1250-1(a)(2)(ii) or in paragraph (e)(2)(viii)(B)(*2*) or (*4*) of this section.

(*2*) If a building has two or more condominium or cooperative units, each condominium or cooperative unit, including its structural components, is the asset, except as provided in § 1.1250-1(a)(2)(ii) or in paragraph (e)(2)(viii)(B)(*4*) of this section.

(*3*) If a taxpayer properly includes an item in one of the asset classes 00.11 through 00.4 of Rev. Proc. 87-56 (1987-2 CB 674) (see § 601.601(d)(2) of this chapter) or properly classifies an item in one of the categories under section 168(e)(3), except for a category that includes buildings or structural components (for example, retail motor fuels outlet, qualified leasehold improvement property, qualified restaurant property, and qualified retail improvement property), each item is the asset, provided that paragraph (e)(2)(viii)(B)(*4*) of this section does not apply to the item. For example, each desk is the asset, each computer is the asset, and each qualified smart electric meter is the asset.

(*4*) If the taxpayer places in service an improvement or addition to an asset after the taxpayer placed the asset in service, the improvement or addition and, if applicable, its structural components are a separate asset.

(ix) ***Examples.*** The following examples illustrate the application of this paragraph (e)(2):

Example 1. A, a calendar-year partnership, maintains one general asset account for one office building that cost $10 million. A discovers a leak in the roof of the building and decides to replace the entire roof. The roof is a structural component of the building. In accordance with paragraph (e)(2)(viii)(B)(*1*) of this section, the office building, including its structural components, is the asset for disposition purposes. The retirement of the replaced roof is not a disposition of a portion of an asset as described in paragraph (e)(1)(ii) of this section. Thus, the retirement of the replaced roof is not a disposition under paragraph (e)(1) of this section. As a result, A continues to depreciate the $10 million cost of the general asset account. If A must capitalize the amount paid for the replacement roof pursuant to § 1.263(a)-3, the replacement roof is a separate asset for disposition purposes pursuant to paragraph (e)(2)(viii)(B)(*4*) of this section and for depreciation purposes pursuant to section 168(i)(6).

Example 2. B, a calendar-year commercial airline company, maintains one general asset account for five aircraft that cost a total of $500 million. These aircraft are described in asset class 45.0 of Rev. Proc. 87-56. B replaces the existing engines on one of the aircraft with new engines. Assume each aircraft is a unit of property as determined under § 1.263(a)-3(e)(3) and each engine of an aircraft is a major component or substantial structural part of the aircraft as determined under § 1.263(a)-3(k)(6). Assume also that B treats each aircraft as the asset for disposition purposes in accordance with paragraph (e)(2)(viii) of this section. The retirement of the replaced engines is not a disposition of a portion of an asset as described in paragraph (e)(1)(ii) of this section. Thus, the retirement of the replaced engines is not a disposition under paragraph (e)(1) of this section. As a result, B continues to depreciate the $500 million cost of the general asset account. If B must capitalize the amount paid for the replacement engines pursuant to § 1.263(a)-3, the replacement engines are a separate asset for disposition purposes pursuant to paragraph (e)(2)(viii)(B)(*4*) of this section and for depreciation purposes pursuant to section 168(i)(6).

Example 3. (i) R, a calendar-year corporation, maintains one general asset account for ten machines. The machines cost a total of $10,000 and are placed in service in June 2014. Of the ten machines, one machine costs $8,200 and nine machines cost a total of $1,800. Assume R depreciates this general asset account using the optional depreciation table that corresponds with the general depreciation system, the 200-percent declining balance method, a 5-year recovery period, and a half-year convention. R does not make a section 179 election for any of the machines, and all of the machines are not eligible for any additional first year depreciation deduction. As of January 1, 2015, the depreciation reserve of the account is $2,000 ($10,000 × 20%).
(ii) On February 8, 2015, R sells the machine that cost $8,200 to an unrelated party for $9,000. Under paragraph (e)(2)(i) of this section, this machine has an adjusted depreciable basis of zero.

(iii) On its 2015 tax return, R recognizes the amount realized of $9,000 as ordinary income because such amount does not exceed the unadjusted depreciable basis of the general asset account ($10,000), plus any expensed cost for assets in the account ($0), less amounts previously recognized as ordinary income ($0). Moreover, the unadjusted depreciable basis and depreciation reserve of the account are not affected by the disposition of the machine. Thus, the depreciation allowance for the account in 2015 is $3,200 ($10,000 × 32%).

Example 4. (i) The facts are the same as in *Example 3.* In addition, on June 4, 2016, R sells seven machines to an unrelated party for a total of $1,100. In accordance with paragraph (e)(2)(i) of this section, these machines have an adjusted depreciable basis of zero.
(ii) On its 2016 tax return, R recognizes $1,000 as ordinary income (the unadjusted depreciable basis of $10,000, plus the expensed cost of $0, less the amount of $9,000 previously recognized as ordinary income). The recognition and character of the excess amount realized of $100 ($1,100−$1,000) are determined under applicable provisions of the Code other than section 1245 (such as section 1231). Moreover, the unadjusted depreciable basis and depreciation reserve of the account are not affected by the disposition of the machines. Thus, the depreciation allowance for the account in 2016 is $1,920 ($10,000 × 19.2%).

(3) ***Special rules*** —

(i) ***In general.*** This paragraph (e)(3) provides the rules for terminating general asset account treatment upon certain dispositions. While the rules under paragraphs (e)(3)(ii) and (iii) of this section are optional rules, the rules under paragraphs (e)(3)(iv), (v), (vi), and (vii) of this section are mandatory rules. A taxpayer elects to apply paragraph (e)(3)(ii) or (iii) of this section by reporting the gain, loss, or other deduction on the taxpayer's timely filed original Federal tax

return, including extensions, for the taxable year in which the disposition occurs. However, if the loss is on account of the demolition of a structure to which section 280B and § 1.280B-1 apply, a taxpayer elects to apply paragraph (e)(3)(ii) or (iii) of this section by ending depreciation for the structure at the time of the disposition of the structure, taking into account the convention applicable to the general asset account in which the demolished structure was included, and reporting the amount of depreciation for that structure for the taxable year in which the disposition occurs on the taxpayer's timely filed original Federal tax return, including extensions, for that taxable year. A taxpayer may revoke the election to apply paragraph (e)(3)(ii) or (iii) of this section only by filing a request for a private letter ruling and obtaining the Commissioner's consent to revoke the election. The Commissioner may grant a request to revoke this election if the taxpayer acted reasonably and in good faith, and the revocation will not prejudice the interests of the Government. See generally § 301.9100-3 of this chapter. The election to apply paragraph (e)(3)(ii) or (iii) of this section may not be made or revoked through the filing of an application for change in accounting method. For purposes of applying paragraphs (e)(3)(iii) through (vii) of this section, see paragraph (j) of this section for identifying an asset disposed of and its unadjusted depreciable basis. Solely for purposes of applying paragraphs (e)(3)(iii), (e)(3)(iv)(C), (e)(3)(v)(B), and (e)(3)(vii) of this section, the term *asset* is:

(A) The asset as determined under paragraph (e)(2)(viii) of this section; or

(B) The portion of such asset that is disposed of in a disposition described in paragraph (e)(1)(ii) of this section.

(ii) ***Disposition of all assets remaining in a general asset account*** —

(A) ***Optional termination of a general asset account.*** Upon the disposition of all of the assets, the last asset, or the remaining portion of the last asset in a general asset account, a taxpayer may apply this paragraph (e)(3)(ii) to recover the adjusted depreciable basis of the general asset account rather than having paragraph (e)(2) of this section apply. Under this paragraph (e)(3)(ii), the general asset account terminates and the amount of gain or loss for the general asset account is determined under section 1001(a) by taking into account the adjusted depreciable basis of the general asset account at the time of the disposition, as determined under the applicable convention for the general asset account. Whether and to what extent gain or loss is recognized is determined under other applicable provisions of the Code, including section 280B and § 1.280B-1. The character of the gain or loss is determined under other applicable provisions of the Code, except that the amount of gain subject to section 1245 is limited to the excess of the depreciation allowed or allowable for the general asset account, including any expensed cost, over any amounts previously recognized as ordinary income under paragraph (e)(2) of this section, and the amount of gain subject to section 1250 is limited to the excess of the additional depreciation allowed or allowable for the general asset account, over any amounts previously recognized as ordinary income under paragraph (e)(2) of this section.

(B) ***Examples.*** The following examples illustrate the application of this paragraph (e)(3)(ii):

> *Example 1.* (i) T, a calendar-year corporation, maintains a general asset account for 1,000 calculators. The calculators cost a total of $60,000 and are placed in service in 2014. Assume T depreciates this general asset account using the optional depreciation table that corresponds with the general depreciation system,

the 200-percent declining balance method, a 5-year recovery period, and a half-year convention. T does not make a section 179 election for any of the calculators, and all of the calculators are not eligible for any additional first year depreciation deduction. In 2015, T sells 200 of the calculators to an unrelated party for a total of $10,000 and recognizes the $10,000 as ordinary income in accordance with paragraph (e)(2) of this section.
(ii) On March 26, 2016, T sells the remaining calculators in the general asset account to an unrelated party for $35,000. T elects to apply paragraph (e)(3)(ii) of this section. As a result, the account terminates and gain or loss is determined for the account.

(iii) On the date of disposition, the adjusted depreciable basis of the account is $23,040 (unadjusted depreciable basis of $60,000 less the depreciation allowed or allowable of $36,960). Thus, in 2016, T recognizes gain of $11,960 (amount realized of $35,000 less the adjusted depreciable basis of $23,040). The gain of $11,960 is subject to section 1245 to the extent of the depreciation allowed or allowable for the account, plus the expensed cost for assets in the account, less the amounts previously recognized as ordinary income ($36,960 + $0 − $10,000 = $26,960). As a result, the entire gain of $11,960 is subject to section 1245.

Example 2. (i) J, a calendar-year corporation, maintains a general asset account for one item of equipment. This equipment costs $2,000 and is placed in service in 2014. Assume J depreciates this general asset account using the optional depreciation table that corresponds with the general depreciation system, the 200-percent declining balance method, a 5-year recovery period, and a half-year convention. J does not make a section 179 election for the equipment, and it is not eligible for any additional first year depreciation deduction. In June 2016, J sells the equipment to an unrelated party for $1,000. J elects to apply paragraph (e)(3)(ii) of this section. As a result, the account terminates and gain or loss is determined for the account.
(ii) On the date of disposition, the adjusted depreciable basis of the account is $768 (unadjusted depreciable basis of $2,000 less the depreciation allowed or allowable of $1,232). Thus, in 2016, J recognizes gain of $232 (amount realized of $1,000 less the adjusted depreciable basis of $768). The gain of $232 is subject to section 1245 to the extent of the depreciation allowed or allowable for the account, plus the expensed cost for assets in the account, less the amounts previously recognized as ordinary income ($1,232 + $0 − $0 = $1,232).As a result, the entire gain of $232 is subject to section 1245.

(iii) ***Disposition of an asset in a qualifying disposition*** —

(A) ***Optional determination of the amount of gain, loss, or other deduction.*** In the case of a qualifying disposition (described in paragraph (e)(3)(iii)(B) of this section) of an asset, a taxpayer may elect to apply this paragraph (e)(3)(iii) rather than having paragraph (e)(2) of this section apply. Under this paragraph (e)(3)(iii), general asset account treatment for the asset terminates as of the first day of the taxable year in which the qualifying disposition occurs, and the amount of gain, loss, or other deduction for the asset is determined under § 1.168(i)-8 by taking into account the asset's adjusted depreciable basis at the time of the disposition. The adjusted depreciable basis of the asset at the time of the disposition, as determined under the applicable convention for the general asset account in which the asset was included, equals the unadjusted depreciable basis of the asset less the greater of the depreciation allowed or allowable for the asset. The allowable depreciation is computed by using the depreciation method, recovery period, and convention applicable to the general asset account in which the asset was included and by including the portion of the additional first year depreciation deduction claimed for the general asset account that is attributable to the asset disposed of. Whether and to what extent gain, loss, or other deduction is recognized is determined under other applicable provisions of the Code, including section 280B and § 1.280B-1. The character of the gain, loss, or other deduction is determined under other applicable provisions of the Code, except that the amount of gain subject to section 1245 or section 1250 is limited to the lesser of—

(*1*) The depreciation allowed or allowable for the asset, including any expensed cost or, in the case of section 1250 property, the additional depreciation allowed or allowable for the asset; or

(*2*) The excess of—

(*i*) The original unadjusted depreciable basis of the general asset account plus, in the case of section 1245 property originally included in the general asset account, any expensed cost; over

(*ii*) The cumulative amounts of gain previously recognized as ordinary income under either paragraph (e)(2) of this section or section 1245 or section 1250.

(B) ***Qualifying dispositions.*** A *qualifying disposition* is a disposition that does not involve all the assets, the last asset, or the remaining portion of the last asset remaining in a general asset account and that is—

(*1*) A direct result of a fire, storm, shipwreck, or other casualty, or from theft;

(*2*) A charitable contribution for which a deduction is allowable under section 170;

(*3*) A direct result of a cessation, termination, or disposition of a business, manufacturing or other income producing process, operation, facility, plant, or other unit, other than by transfer to a supplies, scrap, or similar account; or

(*4*) A transaction, other than a transaction described in paragraph (e)(3)(iv) (pertaining to transactions subject to section 168(i)(7)), paragraph (e)(3)(v) (pertaining to transactions subject to section 1031 or section 1033), paragraph (e)(3)(vi) (pertaining to technical terminations of partnerships), or paragraph (e)(3)(vii) (anti-abuse rule) of this section, to which a nonrecognition section of the Internal Revenue Code applies (determined without regard to this section).

(C) ***Effect of a qualifying disposition on a general asset account.*** If the taxpayer elects to apply this paragraph (e)(3)(iii) to a qualifying disposition of an asset, then—

(*1*) The asset is removed from the general asset account as of the first day of the taxable year in which the qualifying disposition occurs. For that taxable year, the taxpayer accounts for the asset in a single asset account in accordance with the rules under § 1.168(i)-7(b);

(*2*) The unadjusted depreciable basis of the general asset account is reduced by the unadjusted depreciable basis of the asset as of the first day of the taxable year in which the disposition occurs;

(*3*) The depreciation reserve of the general asset account is reduced by the greater of the depreciation allowed or allowable for the asset as of the end of the taxable year immediately preceding the year of disposition. The allowable depreciation is computed by using the depreciation method, recovery period, and convention applicable to the general asset account in which the asset was included and by including the portion of the additional first year depreciation deduction claimed for the general asset account that is attributable to the asset disposed of; and

(*4*) For purposes of determining the amount of gain realized on subsequent dispositions that is subject to ordinary income treatment under paragraph (e)(2)(ii) of this section, the amount of any expensed cost with respect to the asset is disregarded.

(D) ***Examples.*** The following examples illustrate the application of this paragraph (e)(3)(iii):

Example 1. (i) Z, a calendar-year corporation, maintains one general asset account for 12 machines. Each machine costs $15,000 and is placed in service in 2014. Of the 12 machines, nine machines that cost a total of $135,000 are used in Z's Kentucky plant, and three machines that cost a total of $45,000 are used in Z's Ohio plant. Assume Z depreciates this general asset account using the optional depreciation table that corresponds with the general depreciation system, the 200-percent declining balance method, a 5-year recovery period, and the half-year convention. Z does not make a section 179 election for any of the machines, and all of the machines are not eligible for any additional first year depreciation deduction. As of December 31, 2015, the depreciation reserve for the account is $93,600.
(ii) On May 27, 2016, Z sells its entire manufacturing plant in Ohio to an unrelated party. The sales proceeds allocated to each of the three machines at the Ohio plant is $5,000. This transaction is a qualifying disposition under paragraph (e)(3)(iii)(B)(*3*) of this section, and Z elects to apply paragraph (e)(3)(iii) of this section.

(iii) For Z's 2016 return, the depreciation allowance for the account is computed as follows. As of December 31, 2015, the depreciation allowed or allowable for the three machines at the Ohio plant is $23,400. Thus, as of January 1, 2016, the unadjusted depreciable basis of the account is reduced from $180,000 to $135,000

($180,000 less the unadjusted depreciable basis of $45,000 for the three machines), and, as of December 31, 2015, the depreciation reserve of the account is decreased from $93,600 to $70,200 ($93,600 less the depreciation allowed or allowable of $23,400 for the three machines as of December 31, 2015). Consequently, the depreciation allowance for the account in 2016 is $25,920 ($135,000 × 19.2%).

(iv) For Z's 2016 return, gain or loss for each of the three machines at the Ohio plant is determined as follows. The depreciation allowed or allowable in 2016 for each machine is $1,440 (($15,000 × 19.2%)/2). Thus, the adjusted depreciable basis of each machine under section 1011 is $5,760 (the adjusted depreciable basis of $7,200 removed from the account less the depreciation allowed or allowable of $1,440 in 2016). As a result, the loss recognized in 2016 for each machine is $760 ($5,000 − $5,760), which is subject to section 1231.

Example 2. (i) A, a calendar-year partnership, maintains one general asset account for one office building that cost $20 million and was placed in service in July 2011. A depreciates this general asset account using the optional depreciation table that corresponds with the general depreciation system, the straight-line method, a 39-year recovery period, and the mid-month convention. As of January 1, 2014, the depreciation reserve for the account is $1,261,000.
(ii) In May 2014, a tornado occurs where the building is located and damages the roof of the building. A decides to replace the entire roof. The roof is replaced in June 2014. The roof is a structural component of the building. Because the roof was damaged as a result of a casualty event described in section 165, the partial disposition rule provided under paragraph (e)(1)(ii) of this section applies to the roof. Although the office building, including its structural components, is the asset for disposition purposes, the partial disposition rule provides that the retirement of the replaced roof is a disposition under paragraph (e)(1) of this section. This retirement is a qualifying disposition under paragraph (e)(3)(iii)(B)(*1*) of this section, and A elects to apply paragraph (e)(3)(iii) of this section for the retirement of the damaged roof.

(iii) Of the $20 million cost of the office building, assume $1 million is the cost of the retired roof.

(iv) For A's 2014 return, the depreciation allowance for the account is computed as follows. As of December 31, 2013, the depreciation allowed or allowable for the retired roof is $63,050. Thus, as of January 1, 2014, the unadjusted depreciable basis of the account is reduced from $20,000,000 to $19,000,000 ($20,000,000 less the unadjusted depreciable basis of $1,000,000 for the retired roof), and the

depreciation reserve of the account is decreased from $1,261,000 to $1,197,950 ($1,261,000 less the depreciation allowed or allowable of $63,050 for the retired roof as of December 31, 2013). Consequently, the depreciation allowance for the account in 2014 is $487,160 ($19,000,000 × 2.564%).

(v) For A's 2014 return, gain or loss for the retired roof is determined as follows. The depreciation allowed or allowable in 2014 for the retired roof is $11,752 (($1,000,000 × 2.564%) × 5.5/12). Thus, the adjusted depreciable basis of the retired roof under section 1011 is $925,198 (the adjusted depreciable basis of $936,950 removed from the account less the depreciation allowed or allowable of $11,752 in 2014). As a result, the loss recognized in 2014 for the retired roof is $925,198, which is subject to section 1231.

(vi) If A must capitalize the amount paid for the replacement roof under § 1.263(a)-3, the replacement roof is a separate asset for depreciation purposes pursuant to section 168(i)(6). If A includes the replacement roof in a general asset account, the replacement roof is a separate asset for disposition purposes pursuant to paragraph (e)(2)(viii)(B)(*4*) of this section. If A includes the replacement roof in a single asset account or a multiple asset account under § 1.168(i)-7, the replacement roof is a separate asset for disposition purposes pursuant to § 1.168(i)-8(c)(4)(ii)(D).

(iv) ***Transactions subject to section 168(i)(7)*** —

(A) ***In general.*** If a taxpayer transfers one or more assets, or a portion of such asset, in a general asset account in a transaction described in section 168(i)(7)(B) (pertaining to treatment of transferees in certain nonrecognition transactions), the taxpayer (the transferor) and the transferee must apply this paragraph (e)(3)(iv) to the asset or the portion of such asset, instead of applying paragraph (e)(2), (e)(3)(ii), or (e)(3)(iii) of this section. The transferee is bound by the transferor's election under paragraph (l) of this section for the portion of the transferee's basis in the asset or the portion of such asset that does not exceed the transferor's adjusted depreciable basis of the general asset account or the asset or the portion of such asset, as applicable, as determined under paragraph (e)(3)(iv)(B)(*2*) or (C)(*2*) of this section, as applicable.

(B) ***All assets remaining in general asset account are transferred.*** If a taxpayer transfers all the assets, the last asset, or the remaining portion of the last asset in a general asset account in a transaction described in section 168(i)(7)(B)—

(*1*) The taxpayer (the transferor) must terminate the general asset account on the date of the transfer. The allowable depreciation deduction for the general asset account for the transferor's taxable year in which the section 168(i)(7)(B) transaction occurs is computed by using the depreciation method, recovery period, and convention applicable to the general asset account. This allowable depreciation deduction is

allocated between the transferor and the transferee on a monthly basis. This allocation is made in accordance with the rules in § 1.168(d)-1(b)(7)(ii) for allocating the depreciation deduction between the transferor and the transferee;

(*2*) The transferee must establish a new general asset account for all the assets, the last asset, or the remaining portion of the last asset, in the taxable year in which the section 168(i)(7)(B) transaction occurs for the portion of its basis in the assets that does not exceed the transferor's adjusted depreciable basis of the general asset account in which all the assets, the last asset, or the remaining portion of the last asset, were included. The transferor's adjusted depreciable basis of this general asset account is equal to the adjusted depreciable basis of that account as of the beginning of the transferor's taxable year in which the transaction occurs, decreased by the amount of depreciation allocable to the transferor for the year of the transfer, as determined under paragraph (e)(3)(iv)(B)(*1*) of this section. The transferee is treated as the transferor for purposes of computing the allowable depreciation deduction for the new general asset account under section 168. The new general asset account must be established in accordance with the rules in paragraph (c) of this section, except that the unadjusted depreciable bases of all the assets, the last asset, or the remaining portion of the last asset, and the greater of the depreciation allowed or allowable for all the assets, the last asset, or the remaining portion of the last asset, including the amount of depreciation for the transferred assets that is allocable to the transferor for the year of the transfer, are included in the newly established general asset account. Consequently, this general asset account in the year of the transfer will have a beginning balance for both the unadjusted depreciable basis and the depreciation reserve of the general asset account; and

(*3*) For purposes of section 168 and this section, the transferee treats the portion of its basis in the assets that exceeds the transferor's adjusted depreciable basis of the general asset account in which all the assets, the last asset, or the remaining portion of the last asset, were included, as determined under paragraph (e)(3)(iv)(B)(*2*) of this section, as a separate asset that the transferee placed in service on the date of the transfer. The transferee accounts for this asset under § 1.168(i)-7 or may make an election under paragraph (l) of this section to include the asset in a general asset account.

(C) ***Not all assets remaining in general asset account are transferred.*** If a taxpayer transfers an asset in a general asset account in a transaction described in section 168(i)(7)(B) and if paragraph (e)(3)(iv)(B) of this section does not apply to this asset—

(*1*) The taxpayer (the transferor) must remove the transferred asset from the general asset account in which the asset is included, as of the first day of the taxable year in which the section 168(i)(7)(B) transaction occurs. In addition, the adjustments to the general asset account described in paragraphs (e)(3)(iii)(C)(*2*) through (*4*) of this section must be made. The allowable depreciation deduction for the asset for the transferor's taxable year in which the section 168(i)(7)(B) transaction occurs is computed by using the depreciation method, recovery period, and convention applicable to the general asset account in which the asset was included. This allowable depreciation deduction is allocated between the transferor and the

transferee on a monthly basis. This allocation is made in accordance with the rules in § 1.168(d)-1(b)(7)(ii) for allocating the depreciation deduction between the transferor and the transferee;

(*2*) The transferee must establish a new general asset account for the asset in the taxable year in which the section 168(i)(7)(B) transaction occurs for the portion of its basis in the asset that does not exceed the transferor's adjusted depreciable basis of the asset. The transferor's adjusted depreciable basis of this asset is equal to the adjusted depreciable basis of the asset as of the beginning of the transferor's taxable year in which the transaction occurs, decreased by the amount of depreciation allocable to the transferor for the year of the transfer, as determined under paragraph (e)(3)(iv)(C)(*1*) of this section. The transferee is treated as the transferor for purposes of computing the allowable depreciation deduction for the new general asset account under section 168. The new general asset account must be established in accordance with the rules in paragraph (c) of this section, except that the unadjusted depreciable basis of the asset, and the greater of the depreciation allowed or allowable for the asset, including the amount of depreciation for the transferred asset that is allocable to the transferor for the year of the transfer, are included in the newly established general asset account. Consequently, this general asset account in the year of the transfer will have a beginning balance for both the unadjusted depreciable basis and the depreciation reserve of the general asset account; and

(*3*) For purposes of section 168 and this section, the transferee treats the portion of its basis in the asset that exceeds the transferor's adjusted depreciable basis of the asset, as determined under paragraph (e)(3)(iv)(C)(*2*) of this section, as a separate asset that the transferee placed in service on the date of the transfer. The transferee accounts for this asset under § 1.168(i)-7 or may make an election under paragraph (l) of this section to include the asset in a general asset account.

(v) ***Transactions subject to section 1031 or section 1033*** —

(A) ***Like-kind exchange or involuntary conversion of all assets remaining in a general asset account.*** If all the assets, the last asset, or the remaining portion of the last asset in a general asset account are transferred by a taxpayer in a like-kind exchange (as defined under § 1.168-6(b)(11)) or in an involuntary conversion (as defined under § 1.168-6(b)(12)), the taxpayer must apply this paragraph (e)(3)(v)(A) instead of applying paragraph (e)(2), (e)(3)(ii), or (e)(3)(iii) of this section. Under this paragraph (e)(3)(v)(A), the general asset account terminates as of the first day of the year of disposition (as defined in § 1.168(i)-6(b)(5)) and—

(*1*) The amount of gain or loss for the general asset account is determined under section 1001(a) by taking into account the adjusted depreciable basis of the general asset account at the time of disposition (as defined in § 1.168(i)-6(b)(3)). The depreciation allowance for the general asset account in the year of disposition is determined in the same manner as the depreciation allowance for the relinquished MACRS property (as defined in § 1.168(i)-6(b)(2)) in the year of disposition is determined under § 1.168(i)-6. The recognition and character of gain or loss are determined in accordance with paragraph (e)(3)(ii)(A) of this section, notwithstanding that paragraph (e)(3)(ii) of this section is an optional rule; and

(2) The adjusted depreciable basis of the general asset account at the time of disposition is treated as the adjusted depreciable basis of the relinquished MACRS property.

(B) ***Like-kind exchange or involuntary conversion of less than all assets remaining in a general asset account.*** If an asset in a general asset account is transferred by a taxpayer in a like-kind exchange or in an involuntary conversion and if paragraph (e)(3)(v)(A) of this section does not apply to this asset, the taxpayer must apply this paragraph (e)(3)(v)(B) instead of applying paragraph (e)(2), (e)(3)(ii), or (e)(3)(iii) of this section. Under this paragraph (e)(3)(v)(B), general asset account treatment for the asset terminates as of the first day of the year of disposition (as defined in § 1.168(i)-6(b)(5)), and—

(*1*) The amount of gain or loss for the asset is determined by taking into account the asset's adjusted depreciable basis at the time of disposition (as defined in § 1.168(i)-6(b)(3)). The adjusted depreciable basis of the asset at the time of disposition equals the unadjusted depreciable basis of the asset less the greater of the depreciation allowed or allowable for the asset. The allowable depreciation is computed by using the depreciation method, recovery period, and convention applicable to the general asset account in which the asset was included and by including the portion of the additional first year depreciation deduction claimed for the general asset account that is attributable to the relinquished asset. The depreciation allowance for the asset in the year of disposition is determined in the same manner as the depreciation allowance for the relinquished MACRS property (as defined in § 1.168(i)-6(b)(2)) in the year of disposition is determined under § 1.168(i)-6. The recognition and character of the gain or loss are determined in accordance with paragraph (e)(3)(iii)(A) of this section, notwithstanding that paragraph (e)(3)(iii) of this section is an optional rule; and

(*2*) As of the first day of the year of disposition, the taxpayer must remove the relinquished asset from the general asset account and make the adjustments to the general asset account described in paragraphs (e)(3)(iii)(C)(*2*) through (*4*) of this section.

(vi) ***Technical termination of a partnership.*** In the case of a technical termination of a partnership under section 708(b)(1)(B), the terminated partnership must apply this paragraph (e)(3)(vi) instead of applying paragraph (e)(2), (e)(3)(ii), or (e)(3)(iii) of this section. Under this paragraph (e)(3)(vi), all of the terminated partnership's general asset accounts terminate as of the date of its termination under section 708(b)(1)(B). The terminated partnership computes the allowable depreciation deduction for each of its general asset accounts for the taxable year in which the technical termination occurs by using the depreciation method, recovery period, and convention applicable to the general asset account. The new partnership is not bound by the terminated partnership's election under paragraph (l) of this section.

(vii) ***Anti-abuse rule*** —

(A) ***In general.*** If an asset in a general asset account is disposed of by a taxpayer in a transaction described in paragraph (e)(3)(vii)(B) of this section, general asset account treatment for the asset terminates as of the first day of the taxable year in which the disposition occurs. Consequently, the taxpayer must determine the amount of gain, loss, or other deduction attributable to the disposition in the manner described in paragraph

(e)(3)(iii)(A) of this section, notwithstanding that paragraph (e)(3)(iii)(A) of this section is an optional rule, and must make the adjustments to the general asset account described in paragraphs (e)(3)(iii)(C)(*1*) through (*4*) of this section.

(B) ***Abusive transactions.*** A transaction is described in this paragraph (e)(3)(vii)(B) if the transaction is not described in paragraph (e)(3)(iv), (e)(3)(v), or (e)(3)(vi) of this section, and if the transaction is entered into, or made, with a principal purpose of achieving a tax benefit or result that would not be available absent an election under this section. Examples of these types of transactions include—

(*1*) A transaction entered into with a principal purpose of shifting income or deductions among taxpayers in a manner that would not be possible absent an election under this section to take advantage of differing effective tax rates among the taxpayers; or

(*2*) An election made under this section with a principal purpose of disposing of an asset from a general asset account to utilize an expiring net operating loss or credit if the transaction is not a bona fide disposition. The fact that a taxpayer with a net operating loss carryover or a credit carryover transfers an asset to a related person or transfers an asset pursuant to an arrangement where the asset continues to be used or is available for use by the taxpayer pursuant to a lease or otherwise indicates, absent strong evidence to the contrary, that the transaction is described in this paragraph (e)(3)(vii)(B).

(f) ***Assets generating foreign source income*** —

(1) ***In general.*** This paragraph (f) provides the rules for determining the source of any income, gain, or loss recognized, and the appropriate section 904(d) separate limitation category or categories for any foreign source income, gain, or loss recognized on a disposition (within the meaning of paragraph (e)(1) of this section) of an asset in a general asset account that consists of assets generating both United States and foreign source income. These rules apply only to a disposition to which paragraph (e)(2) (general disposition rules), paragraph (e)(3)(ii) (disposition of all assets remaining in a general asset account), paragraph (e)(3)(iii) (disposition of an asset in a qualifying disposition), paragraph (e)(3)(v) (transactions subject to section 1031 or section 1033), or paragraph (e)(3)(vii) (anti-abuse rule) of this section applies. Solely for purposes of applying this paragraph (f), the term *asset* is:

(i) The asset as determined under paragraph (e)(2)(viii) of this section; or

(ii) The portion of such asset that is disposed of in a disposition described in paragraph (e)(1)(ii) of this section.

(2) ***Source of ordinary income, gain, or loss*** —

(i) ***Source determined by allocation and apportionment of depreciation allowed.*** The amount of any ordinary income, gain, or loss that is recognized on the disposition of an asset in a general asset account must be apportioned between United States and foreign sources based on the allocation and apportionment of the—

(A) Depreciation allowed for the general asset account as of the end of the taxable year in which the disposition occurs if paragraph (e)(2) of this section applies to the disposition;

(B) Depreciation allowed for the general asset account as of the time of disposition if the taxpayer applies paragraph (e)(3)(ii) of this section to the disposition of all assets, the last asset, or the remaining portion of the last asset, in the general asset account, or if all the assets, the last asset, or the remaining portion of the last asset, in the general asset account are disposed of in a transaction described in paragraph (e)(3)(v)(A) of this section; or

(C) Depreciation allowed for the asset disposed of for only the taxable year in which the disposition occurs if the taxpayer applies paragraph (e)(3)(iii) of this section to the disposition of the asset in a qualifying disposition, if the asset is disposed of in a transaction described in paragraph (e)(3)(v)(B) of this section (like-kind exchange or involuntary conversion), or if the asset is disposed of in a transaction described in paragraph (e)(3)(vii) of this section (anti-abuse rule).

(ii) ***Formula for determining foreign source income, gain, or loss.*** The amount of ordinary income, gain, or loss recognized on the disposition that shall be treated as foreign source income, gain, or loss must be determined under the formula in this paragraph (f)(2)(ii). For purposes of this formula, the allowed depreciation deductions are determined for the applicable time period provided in paragraph (f)(2)(i) of this section. The formula is:

Foreign Source Income, Gain, or Loss from The Disposition of an Asset	=	Total Ordinary Income, Gain, or Loss from the Disposition of an Asset	X	Allowed Depreciation Deductions Allocated and Apportioned to Foreign Source Income/Total Allowed Depreciation Deductions for the General Asset Account or for the Asset Disposed of (as applicable).

(3) ***Section 904(d) separate categories.*** If the assets in the general asset account generate foreign source income in more than one separate category under section 904(d)(1) or another section of the Code (for example, income treated as foreign source income under section 904(g)(10)), or under a United States income tax treaty that requires the foreign tax credit limitation to be determined separately for specified types of income, the amount of foreign source income, gain, or loss from the disposition of an asset, as determined under the formula in paragraph (f)(2)(ii) of this section, must be allocated and apportioned to the applicable separate category or categories under the formula in this paragraph (f)(3). For purposes of this formula, the allowed depreciation deductions are determined for the applicable time period provided in paragraph (f)(2)(i) of this section. The formula is:

Foreign Source Income, Gain, or Loss in a Separate	=	Foreign Source Income, Gain, or Loss from The Disposition of an	X	Allowed Depreciation Deductions Allocated and Apportioned to a Separate Category/Total Allowed Depreciation Deductions and Apportioned to Foreign Source Income.

Category	Asset

(g) ***Assets subject to recapture.*** If the basis of an asset in a general asset account is increased as a result of the recapture of any allowable credit or deduction (for example, the basis adjustment for the recapture amount under section 30(e)(5), 50(c)(2), 168(l)(6), 168(n)(4), 179(d)(10), 179A(e)(4), or 1400N(d)(5)), general asset account treatment for the asset terminates as of the first day of the taxable year in which the recapture event occurs. Consequently, the taxpayer must remove the asset from the general asset account as of that day and must make the adjustments to the general asset account described in paragraphs (e)(3)(iii)(C)(*2*) through (*4*) of this section.

(h) ***Changes in use*** —

(1) ***Conversion to any personal use.*** An asset in a general asset account becomes ineligible for general asset account treatment if a taxpayer uses the asset in any personal activity during a taxable year. Upon a conversion to any personal use, the taxpayer must remove the asset from the general asset account as of the first day of the taxable year in which the change in use occurs (the year of change) and must make the adjustments to the general asset account described in paragraphs (e)(3)(iii)(C)(*2*) through (*4*) of this section.

(2) ***Change in use results in a different recovery period and/or depreciation method*** —

(i) ***No effect on general asset account election.*** A change in the use described in § 1.168(i)-4(d) (change in use results in a different recovery period or depreciation method) of an asset in a general asset account shall not cause or permit the revocation of the election made under this section.

(ii) ***Asset is removed from the general asset account.*** Upon a change in the use described in § 1.168(i)-4(d), the taxpayer must remove the asset from the general asset account as of the first day of the year of change (as defined in § 1.168(i)-4(a)) and must make the adjustments to the general asset account described in paragraphs (e)(3)(iii)(C)(*2*) through (*4*) of this section. If, however, the result of the change in use is described in § 1.168(i)-4(d)(3) (change in use results in a shorter recovery period or a more accelerated depreciation method) and the taxpayer elects to treat the asset as though the change in use had not occurred pursuant to § 1.168(i)-4(d)(3)(ii), no adjustment is made to the general asset account upon the change in use.

(iii) ***New general asset account is established*** —

(A) ***Change in use results in a shorter recovery period or a more accelerated depreciation method.*** If the result of the change in use is described in § 1.168(i)-4(d)(3) (change in use results in a shorter recovery period or a more accelerated depreciation method) and adjustments to the general asset account are made pursuant to paragraph (h)(2)(ii) of this section, the taxpayer must establish a new general asset account for the asset in the year of change in accordance with the rules in paragraph (c) of this section, except that the adjusted depreciable basis of the asset as of the first day of the year of change is included in the general asset account. For purposes of paragraph (c)(2) of this section, the applicable depreciation method, recovery period, and convention are determined under § 1.168(i)-4(d)(3)(i).

(B) ***Change in use results in a longer recovery period or a slower depreciation method.*** If the result of the change in use is described in § 1.168(i)-4(d)(4) (change in use results in a longer recovery period or a slower depreciation method), the taxpayer must establish a separate general asset account for the asset in the year of change in accordance with the rules in paragraph (c) of this section, except that the unadjusted depreciable basis of the asset, and the greater of the depreciation of the asset allowed or allowable in accordance with section 1016(a)(2), as of the first day of the year of change are included in the newly established general asset account. Consequently, this general asset account as of the first day of the year of change will have a beginning balance for both the unadjusted depreciable basis and the depreciation reserve of the general asset account. For purposes of paragraph (c)(2) of this section, the applicable depreciation method, recovery period, and convention are determined under § 1.168(i)-4(d)(4)(ii).

(i) ***Redetermination of basis.*** If, after the placed-in-service year, the unadjusted depreciable basis of an asset in a general asset account is redetermined due to a transaction other than that described in paragraph (g) of this section (for example, due to contingent purchase price or discharge of indebtedness), the taxpayer's election under paragraph (l) of this section for the asset also applies to the increase or decrease in basis resulting from the redetermination. For the taxable year in which the increase or decrease in basis occurs, the taxpayer must establish a new general asset account for the amount of the increase or decrease in basis in accordance with the rules in paragraph (c) of this section. For purposes of paragraph (c)(2) of this section, the applicable recovery period for the increase or decrease in basis is the recovery period of the asset remaining as of the beginning of the taxable year in which the increase or decrease in basis occurs, the applicable depreciation method and applicable convention for the increase or decrease in basis are the same depreciation method and convention applicable to the asset that applies for the taxable year in which the increase or decrease in basis occurs, and the increase or decrease in basis is deemed to be placed in service in the same taxable year as the asset.

(j) ***Identification of disposed or converted asset*** —

(1) ***In general.*** The rules of this paragraph (j) apply when an asset in a general asset account is disposed of or converted in a transaction described in paragraph (e)(3)(iii) (disposition of an asset in a qualifying disposition), paragraph (e)(3)(iv)(B) (transactions subject to section 168(i)(7)), paragraph (e)(3)(v)(B) (transactions subject to section 1031 or section 1033), paragraph (e)(3)(vii) (anti-abuse rule), paragraph (g) (assets subject to recapture), or paragraph (h)(1) (conversion to any personal use) of this section.

(2) ***Identifying which asset is disposed of or converted*** —

(i) ***In general.*** For purposes of identifying which asset in a general asset account is disposed of or converted, a taxpayer must identify the disposed of or converted asset by using—

(A) The specific identification method of accounting. Under this method of accounting, the taxpayer can determine the particular taxable year in which the disposed of or converted asset was placed in service by the taxpayer;

(B) A first-in, first-out method of accounting if the taxpayer can readily determine from its records the total dispositions of assets with the same recovery period during the taxable year but the taxpayer cannot readily determine from its records the unadjusted depreciable basis of the disposed of or converted asset. Under this method of accounting, the taxpayer identifies the general asset account with the earliest placed-in-service year that has the same recovery period as the disposed of or converted asset and that has

assets at the beginning of the taxable year of the disposition or conversion, and the taxpayer treats the disposed of or converted asset as being from that general asset account. To determine which general asset account has assets at the beginning of the taxable year of the disposition or conversion, the taxpayer reduces the number of assets originally included in the account by the number of assets disposed of or converted in any prior taxable year in a transaction to which this paragraph (j) applies;

(C) A modified first-in, first-out method of accounting if the taxpayer can readily determine from its records the total dispositions of assets with the same recovery period during the taxable year and the unadjusted depreciable basis of the disposed of or converted asset. Under this method of accounting, the taxpayer identifies the general asset account with the earliest placed-in-service year that has the same recovery period as the disposed of or converted asset and that has assets at the beginning of the taxable year of the disposition or conversion with the same unadjusted depreciable basis as the disposed of or converted asset, and the taxpayer treats the disposed of or converted asset as being from that general asset account. To determine which general asset account has assets at the beginning of the taxable year of the disposition or conversion, the taxpayer reduces the number of assets originally included in the account by the number of assets disposed of or converted in any prior taxable year in a transaction to which this paragraph (j) applies;

(D) A mortality dispersion table if the asset is a mass asset accounted for in a separate general asset account in accordance with paragraph (c)(2)(ii)(H) of this section and if the taxpayer can readily determine from its records the total dispositions of assets with the same recovery period during the taxable year. The mortality dispersion table must be based upon an acceptable sampling of the taxpayer's actual disposition and conversion experience for mass assets or other acceptable statistical or engineering techniques. To use a mortality dispersion table, the taxpayer must adopt recordkeeping practices consistent with the taxpayer's prior practices and consonant with good accounting and engineering practices; or

(E) Any other method as the Secretary may designate by publication in the FEDERAL REGISTER or in the Internal Revenue Bulletin (see § 601.601(d)(2) of this chapter) on or after September 19, 2013. See paragraph (j)(2)(iii) of this section regarding the last-in, first-out method of accounting.

(ii) ***Disposition of a portion of an asset.*** If a taxpayer disposes of a portion of an asset and paragraph (e)(1)(ii) of this section applies to that disposition, the taxpayer may identify the asset by using any applicable method provided in paragraph (j)(2)(i) of this section, after taking into account paragraph (j)(2)(iii) of this section.

(iii) ***Last-in, first-out method of accounting.*** For purposes of paragraph (j)(2) of this section, a last-in, first-out method of accounting may not be used. Examples of a last-in, first-out method of accounting include the taxpayer identifying the general asset account with the most recent placed-in-service year that has the same recovery period as the disposed of or converted asset and that has assets at the beginning of the taxable year of the disposition or conversion, and the taxpayer treating the disposed of or converted asset as being from that general asset account, or the taxpayer treating the disposed portion of an asset as being from the general asset account with the most recent placed-in-service year that has assets that are the same as the asset of which the disposed portion is a part.

(3) ***Basis of disposed of or converted asset.***

(i) Solely for purposes of this paragraph (j)(3), the term *asset* is the asset as determined under paragraph (e)(2)(viii) of this section or the portion of such asset that is disposed of in a disposition described in paragraph (e)(1)(ii) of this section. After identifying which asset in a general asset account is disposed of or converted, the taxpayer must determine the unadjusted depreciable basis of, and the depreciation allowed or allowable for, the disposed of or converted asset. If it is impracticable from the taxpayer's records to determine the unadjusted depreciable basis of the disposed of or converted asset, the taxpayer may use any reasonable method that is consistently applied to all assets in the same general asset account for purposes of determining the unadjusted depreciable basis of the disposed of or converted asset in that general asset account. Examples of a reasonable method include, but are not limited to, the following:

(A) If the replacement asset is a restoration (as defined in § 1.263(a)-3(k)), and is not a betterment (as defined in § 1.263(a)-3(j)) or an adaptation to a new or different use (as defined in § 1.263(a)-3(l)), discounting the cost of the replacement asset to its placed-in-service year cost using the Producer Price Index for Finished Goods or its successor, the Producer Price Index for Final Demand, or any other index designated by guidance in the Internal Revenue Bulletin (see § 601.601(d)(2) of this chapter) for purposes of this paragraph (j)(3);

(B) A pro rata allocation of the unadjusted depreciable basis of the general asset account based on the replacement cost of the disposed asset and the replacement cost of all of the assets in the general asset account; and

(C) A study allocating the cost of the asset to its individual components.

(ii) The depreciation allowable for the disposed of or converted asset is computed by using the depreciation method, recovery period, and convention applicable to the general asset account in which the disposed of or converted asset was included and by including the additional first year depreciation deduction claimed for the disposed of or converted asset.

(k) ***Effect of adjustments on prior dispositions.*** The adjustments to a general asset account under paragraph (e)(3)(iii), (e)(3)(iv), (e)(3)(v), (e)(3)(vii), (g), or (h) of this section have no effect on the recognition and character of prior dispositions subject to paragraph (e)(2) of this section.

(l) ***Election*** —

(1) ***Irrevocable election.*** If a taxpayer makes an election under this paragraph (l), the taxpayer consents to, and agrees to apply, all of the provisions of this section to the assets included in a general asset account. Except as provided in paragraph (c)(1)(ii)(A), (e)(3), (g), or (h) of this section or except as otherwise expressly provided by other guidance published in the Internal Revenue Bulletin (see § 601.601(d)(2) of this chapter), an election made under this section is irrevocable and will be binding on the taxpayer for computing taxable income for the taxable year for which the election is made and for all subsequent taxable years. An election under this paragraph (l) is made separately by each person owning an asset to which this section applies (for example, by each member of a consolidated group, at the partnership level and not by the partner separately, or at the S corporation level and not by the shareholder separately).

(l)(2) *Time for making election.* The election to apply this section shall be made on the taxpayer's timely filed (including extensions) income tax return for the taxable year in which the assets included in the general asset account are placed in service by the taxpayer.

(3) ***Manner of making election.*** In the year of election, a taxpayer makes the election under this section by typing or legibly printing at the top of the Form 4562, "GENERAL ASSET ACCOUNT ELECTION MADE UNDER SECTION 168(i)(4)," or in the manner provided for on Form 4562 and its instructions. The taxpayer shall maintain records (for example, "General Asset Account #1—all 1995 additions in asset class 00.11 for Salt Lake City, Utah facility") that identify the assets included in each general asset account, that establish the unadjusted depreciable basis and depreciation reserve of the general asset account, and that reflect the amount realized during the taxable year upon dispositions from each general asset account. (But see section 179(c) and § 1.179-5 for the recordkeeping requirements for section 179 property.) The taxpayer's recordkeeping practices should be consistently applied to the general asset accounts. If Form 4562 is revised or renumbered, any reference in this section to that form shall be treated as a reference to the revised or renumbered form.

(m) ***Effective/applicability dates*** —

(1) ***In general.*** Except as provided in paragraph (m)(5) of this section, this section applies to taxable years beginning on or after January 1, 2014. Except as provided in paragraphs (m)(2), (m)(3), and (m)(4) of this section, § 1.168(i)-1 as contained in 26 CFR part 1 edition revised as of April 1, 2011, applies to taxable years beginning before January 1, 2014.

(2) ***Early application of this section.*** A taxpayer may choose to apply the provisions of this section to taxable years beginning on or after January 1, 2012.

(3) ***Early application of regulation project REG-110732-13.*** A taxpayer may rely on the provisions of this section in regulation project REG-110732-13 (2013-43 IRB 404) (see § 601.601(d)(2) of this chapter) for taxable years beginning on or after January 1, 2012. However, a taxpayer may not rely on the provisions of this section in regulation project REG-110732-13 for taxable years beginning on or after January 1, 2014.

(4) ***Optional application of TD 9564.*** A taxpayer may choose to apply § 1.168(i)-1T as contained in 26 CFR part 1 edition revised as of April 1, 2014, to taxable years beginning on or after January 1, 2012. However, a taxpayer may not apply § 1.168(i)-1T as contained in 26 CFR part 1 edition revised as of April 1, 2014, to taxable years beginning on or after January 1, 2014.

(5) ***Application of paragraph (e)(2)(viii)(A).*** The language "and the distinct asset determination under § 1.1031(a)-3(a)(4) do not apply." in the last sentence of paragraph (e)(2)(viii)(A) of this section applies on or after December 2, 2020. Paragraph (e)(2)(viii)(A) of this section as contained in 26 CFR part 1 edition revised as of April 1, 2020, applies before December 2, 2020.

(6) ***Change in method of accounting.*** A change to comply with this section for depreciable assets placed in service in a taxable year ending on or after December 30, 2003, is a change in method of accounting to which the provisions of section 446(e) and the regulations under section 446(e) apply. A taxpayer also may treat a change to comply with this section for depreciable assets placed in service in a taxable year ending before December 30, 2003, as a change in method of accounting to which the provisions of section 446(e) and the regulations under section 446(e) apply. This paragraph (m)(5) does not apply to a change to comply with paragraph (e)(3)(ii), (e)(3)(iii), or (l) of this section, except as otherwise expressly provided by other guidance published in the Internal Revenue Bulletin (see § 601.601(d)(2) of this chapter).

[T.D. 8566, 59 FR 51371, Oct. 11, 1994; 59 FR 64849, Dec. 16, 1994, as amended by T.D. 9115, 69 FR 9534, Mar. 1, 2004; T.D. 9132, 69 FR 33842, June 17, 2004; T.D. 9314, 72 FR 9249, Mar. 1, 2007; T.D. 9564, 76 FR 81086, Dec. 27, 2011; 77 FR 75016, Dec. 19, 2012; T.D. 9689, 79 FR 48667, Aug. 18, 2014; 79 FR 78697, Dec. 31, 2014; T.D. 9935, 85 FR 77378, Dec. 2, 2020]

§ 1.168(i)-2 Lease term.

(a) ***In general.*** For purposes of section 168, a lease term is determined under all the facts and circumstances. Paragraph (b) of this section and § 1.168(j)-1T, Q&A 17, describe certain circumstances that will result in a period of time not included in the stated duration of an original lease (additional period) nevertheless being included in the lease term. These rules do not prevent the inclusion of an additional period in the lease term in other circumstances.

(b) ***Lessee retains financial obligation*** —

(1) ***In general.*** An additional period of time during which a lessee may not continue to be the lessee will nevertheless be included in the lease term if the lessee (or a related person)—

(i) Has agreed that one or both of them will or could be obligated to make a payment of rent or a payment in the nature of rent with respect to such period; or

(ii) Has assumed or retained any risk of loss with respect to the property for such period (including, for example, by holding a note secured by the property).

(2) ***Payments in the nature of rent.*** For purposes of paragraph (b)(1)(i) of this section, a payment in the nature of rent includes a payment intended to substitute for rent or to fund or supplement the rental payments of another. For example, a payment in the nature of rent includes a payment of any kind (whether denominated as supplemental rent, as liquidated damages, or otherwise) that is required to be made in the event that—

(i) The leased property is not leased for the additional period;

(ii) The leased property is leased for the additional period under terms that do not satisfy specified terms and conditions;

(iii) There is a failure to make a payment of rent with respect to such additional period; or

(iv) Circumstances similar to those described in paragraph (b)(2) (i), (ii), or (iii) of this section occur.

(3) ***De minimis rule.*** For the purposes of this paragraph (b), obligations to make de minimis payments will be disregarded.

(c) ***Multiple leases or subleases.*** If property is subject to more than one lease (including any sublease) entered into as part of a single transaction (or a series of related transactions), the lease term includes all periods described in one or more of such leases. For example, if one taxable corporation leases property to another taxable corporation for a 20-year term and, as part of the same transaction, the lessee subleases the property to a tax-exempt entity for a 10-year term, then the lease term of the property for purposes of section 168 is 20 years. During the period of tax-exempt use, the property must be depreciated under the alternative depreciation system using the straight line method over the greater of its class life or 25 years (125 percent of the 20-year lease term).

(d) ***Related person.*** For purposes of paragraph (b) of this section, a person is related to the lessee if such person is described in section 168(h)(4).

(e) ***Changes in status.*** Section 168(i)(5) (changes in status) applies if an additional period is included in a lease term under this section and the leased property ceases to be tax-exempt use property for such additional period.

(f) ***Example.*** The following example illustrates the principles of this section. The example does not address common law doctrines or other authorities that may apply to cause an additional period to be included in the lease term or to recharacterize a lease as a conditional sale or otherwise for federal income tax purposes. Unless otherwise indicated, parties to the transactions are not related to one another.

> *Example. Financial obligation with respect to an additional period.* (i) *Facts.* X, a taxable corporation, and Y, a foreign airline whose income is not subject to United States taxation, enter into a lease agreement under which X agrees to lease an aircraft to Y for a period of 10 years. The lease agreement provides that, at the end of the lease period, Y is obligated to find a subsequent lessee (replacement lessee) to enter into a subsequent lease (replacement lease) of the aircraft from X for an additional 10-year period. The provisions of the lease agreement require that any replacement lessee be unrelated to Y and that it not be a tax-exempt entity as defined in section 168(h)(2). The provisions of the lease agreement also set forth the basic terms and conditions of the replacement lease, including its duration and the required rental payments. In the event Y fails to secure a replacement lease, the lease agreement requires Y to make a payment to X in an amount determined under the lease agreement.
> (ii) *Application of this section.* The lease agreement between X and Y obligates Y to make a payment in the event the aircraft is not leased for the period commencing after the initial 10-year lease period and ending on the date the replacement lease is scheduled to end. Accordingly, pursuant to paragraph (b) of this section, the term of the lease between X and Y includes such additional period, and the lease term is 20 years for purposes of section 168.
>
> (iii) *Facts modified.* Assume the same facts as in paragraph (i) of this *Example,* except that Y is required to guarantee the payment of rentals under the 10-year replacement lease and to make a payment to X equal to the present value of any excess of the replacement lease rental payments specified in the lease agreement between X and Y, over the rental payments actually agreed to be paid by the replacement lessee. Pursuant to paragraph (b) of this section, the term of the lease between X and Y includes the additional period, and the lease term is 20 years for purposes of section 168.
>
> (iv) *Changes in status.* If, upon the conclusion of the stated duration of the lease between X and Y, the aircraft either is returned to X or leased to a replacement lessee that is not a tax-exempt entity as defined in section 168(h)(2), the subsequent method of depreciation will be determined pursuant to section 168(i)(5).

(g) ***Effective date*** —

(1) ***In general.*** Except as provided in paragraph (g)(2) of this section, this section applies to leases entered into on or after April 20, 1995.

(2) ***Special rules.*** Paragraphs (b)(1)(ii) and (c) of this section apply to leases entered into after April 26, 1996.

[T.D. 8667, 61 FR 18677, Apr. 29, 1996]

§ 1.168(i)-3 Treatment of excess deferred income tax reserve upon disposition of deregulated public utility property.

(a) ***Scope*** —

(1) ***In general.*** This section provides rules for the application of section 203(e) of the Tax Reform Act of 1986, Public Law 99-514 (100 Stat. 2146) to a taxpayer with respect to public utility property (within the meaning of section 168(i)(10)) that ceases, whether by disposition, deregulation, or otherwise, to be public utility property with respect to the taxpayer and that is not described in paragraph (a)(2) of this section (deregulated public utility property).

(2) ***Exceptions.*** This section does not apply to the following property:

(i) Property that ceases to be public utility property with respect to the taxpayer on account of an ordinary retirement within the meaning of § 1.167(a)-11(d)(3)(ii).

(ii) Property transferred by the taxpayer if after the transfer the property is public utility property of the transferee and the taxpayer's excess tax reserve with respect to the property (within the meaning of section 203(e) of the Tax Reform Act of 1986) is treated as an excess tax reserve of the transferee with respect to the property.

(b) ***Amount of reduction.*** If public utility property of a taxpayer becomes deregulated public utility property to which this section applies, the reduction in the taxpayer's excess tax reserve permitted under section 203(e) of the Tax Reform Act of 1986 is equal to the amount by which the reserve could be reduced under that provision if all such property had remained public utility property of the taxpayer and the taxpayer had continued use of its normalization method of accounting with respect to such property.

(c) ***Cross reference.*** See § 1.46-6(k) for rules relating to the treatment of accumulated deferred investment tax credits when utilities dispose of regulated public utility property.

(d) ***Effective/applicability dates*** —

(1) ***In general.*** Except as provided in paragraph (d)(2) of this section, this section applies to public utility property that becomes deregulated public utility property after December 21, 2005.

(2) ***Property that becomes public utility property of the transferee.*** This section does not apply to property that becomes deregulated public utility property with respect to a taxpayer on account of a transfer on or before March 20, 2008 if after the transfer the property is public utility property of the transferee.

(3) ***Application of regulation project (REG-104385-01).*** A reduction in the taxpayer's excess deferred income tax reserve will be treated as ratable if it is consistent with the proposed rules in regulation project (REG-104385-01) (68 FR 10190) March 4, 2003, and occurs during the period beginning on March 5, 2003, and ending on the earlier of—

(i) The last date on which the utility's rates are determined under the rate order in effect on December 21, 2005; or

(ii) December 21, 2007.

[T.D. 9387, 73 FR 14937, Mar. 20, 2008]

§ 1.168(i)-4 Changes in use.

(a) ***Scope.*** This section provides the rules for determining the depreciation allowance for MACRS property (as defined in § 1.168(b)-1T(a)(2)) for which the use changes in the hands of the same taxpayer (change in the use). The allowance for depreciation under this section constitutes the amount of depreciation allowable under section 167(a) for the year of change and any subsequent taxable year. For purposes of this section, the year of change is the taxable year in which a change in the use occurs.

(b) ***Conversion to business or income-producing use*** —

(1) ***Depreciation deduction allowable.*** This paragraph (b) applies to property that is converted from personal use to use in a taxpayer's trade or business, or for the production of income, during a taxable year. This conversion includes property that was previously used by the taxpayer for personal purposes, including real property (other than land) that is acquired before 1987 and converted from personal use to business or income-producing use after 1986, and depreciable property that was previously used by a tax-exempt entity before the entity changed to a taxable entity. Except as otherwise provided by the Internal Revenue Code or regulations under the Internal Revenue Code, upon a conversion to business or income-producing use, the depreciation allowance for the year of change and any subsequent taxable year is determined as though the property is placed in service by the taxpayer on the date on which the conversion occurs. Thus, except as otherwise provided by the Internal Revenue Code or regulations under the Internal Revenue Code, the taxpayer must use any applicable depreciation method, recovery period, and convention prescribed under section 168 for the property in the year of change, consistent with any election made under section 168 by the taxpayer for that year (see, for example, section 168(b)(5)). See §§ 1.168(k)-1(f)(6)(iii) or 1.168(k)-2(g)(6)(iii), as applicable, and 1.1400L(b)-1(f)(6) for the additional first year depreciation deduction rules applicable to a conversion to business or income-producing use. The depreciable basis of the property for the year of change is the lesser of its fair market value or its adjusted depreciable basis (as defined in § 1.168(b)-1T(a)(4)), as applicable, at the time of the conversion to business or income-producing use.

(2) ***Example.*** The application of this paragraph (b) is illustrated by the following example:

Example. A, a calendar-year taxpayer, purchases a house in 1985 that she occupies as her principal residence. In February 2004, *A* ceases to occupy the house and converts it to residential rental property. At the time of the conversion to residential rental property, the house's fair market value (excluding land) is $130,000 and adjusted depreciable basis attributable to the house (excluding land) is $150,000. Pursuant to this paragraph (b), *A* is considered to have placed in service residential rental property in February 2004 with a depreciable basis of $130,000. *A* depreciates the residential rental property under the general depreciation system by using the straight-line method, a 27.5-year recovery period, and the mid-month convention. Pursuant to §§ 1.168(k)-1T(f)(6)(iii)(B) or 1.1400L(b)-1T(f)(6), this property is not eligible for the additional first year depreciation deduction provided by section 168(k) or section 1400L(b). Thus, the depreciation allowance for the house for 2004 is $4,137, after taking into account the mid-month convention (($130,000 adjusted depreciable basis multiplied by the applicable depreciation rate of 3.636% (1/27.5)) multiplied by the mid-month convention fraction of 10.5/12). The amount of depreciation computed under section 168, however, may be limited under other provisions of the Internal Revenue Code, such as, section 280A.

(c) ***Conversion to personal use.*** The conversion of MACRS property from business or income-producing use to personal use during a taxable year is treated as a disposition of the property in that taxable year. The depreciation allowance for MACRS property for the year of change in which the property is treated as being disposed of is determined by first multiplying the adjusted depreciable basis of the property as of the first day of the year of change by the applicable depreciation rate for that taxable year (for further guidance, for example, see section 6 of Rev. Proc. 87-57 (1987-2 C. B. 687, 692) (see § 601.601(d)(2)(ii)(*b*) of this chapter)). This amount is then multiplied by a fraction, the numerator of which is the number of months (including fractions of months) the property is deemed to be placed in service during the year of change (taking into account the applicable convention) and the denominator of which is 12. No depreciation deduction is allowable for MACRS property placed in service and disposed of in the same taxable year. See §§ 1.168(k)-1(f)(6)(ii)or 1.168(k)-2(g)(6)(ii), as applicable, and 1.1400L(b)-1(f)(6) for the additional first year depreciation deduction rules applicable to property placed in service and converted to personal use in the same taxable year. Upon the conversion to personal use, no gain, loss, or depreciation recapture under section 1245 or section 1250 is recognized. However, the provisions of section 1245 or section 1250 apply to any disposition of the converted property by the taxpayer at a later date. For listed property (as defined in section 280F(d)(4)), see section 280F(b)(2) for the recapture of excess depreciation upon the conversion to personal use.

(d) ***Change in the use results in a different recovery period and/or depreciation method*** —

(1) ***In general.*** This paragraph (d) applies to a change in the use of MACRS property during a taxable year subsequent to the placed-in-service year, if the property continues to be MACRS property owned by the same taxpayer and, as a result of the change in the use, has a different recovery period, a different depreciation method, or both. For example, this paragraph (d) applies to MACRS property that—

(i) Begins or ceases to be used predominantly outside the United States;

(ii) Results in a reclassification of the property under section 168(e) due to a change in the use of the property; or

(iii) Begins or ceases to be tax-exempt use property (as defined in section 168(h)).

(2) ***Determination of change in the use*** —

(i) ***In general.*** Except as provided in paragraph (d)(2)(ii) of this section, a change in the use of MACRS property occurs when the primary use of the MACRS property in the taxable year is different from its primary use in the immediately preceding taxable year. The primary use of MACRS property may be determined in any reasonable manner that is consistently applied to the taxpayer's MACRS property.

(ii) ***Alternative depreciation system property*** —

(A) ***Property used within or outside the United States.*** A change in the use of MACRS property occurs when a taxpayer begins or ceases to use MACRS property predominantly outside the United States during the taxable year. The determination of whether MACRS property is used predominantly outside the United States is made in accordance with the test in § 1.48-1(g)(1)(i) for determining predominant use.

(B) ***Tax-exempt bond financed property.*** A change in the use of MACRS property occurs when the property changes to tax-exempt bond financed property, as described in section 168(g)(1)(C) and (g)(5), during the taxable year. For purposes of this paragraph (d),

MACRS property changes to tax-exempt bond financed property when a tax-exempt bond is first issued after the MACRS property is placed in service. MACRS property continues to be tax-exempt bond financed property in the hands of the taxpayer even if the tax-exempt bond (including any refunding issue) is no longer outstanding or is redeemed.

(C) ***Other mandatory alternative depreciation system property.*** A change in the use of MACRS property occurs when the property changes to, or changes from, property described in section 168(g)(1)(B) (tax-exempt use property) or

(D) (imported property covered by an Executive order) during the taxable year.

(iii) ***Change in the use deemed to occur on first day of the year of change.*** If a change in the use of MACRS property occurs under this paragraph (d)(2), the depreciation allowance for that MACRS property for the year of change is determined as though the use of the MACRS property changed on the first day of the year of change.

(3) ***Change in the use results in a shorter recovery period and/or a more accelerated depreciation method*** —

(i) ***Treated as placed in service in the year of change*** —

(A) ***In general.*** If a change in the use results in the MACRS property changing to a shorter recovery period and/or a depreciation method that is more accelerated than the method used for the MACRS property before the change in the use, the depreciation allowances beginning in the year of change are determined as though the MACRS property is placed in service by the taxpayer in the year of change.

(B) ***Computation of depreciation allowance.*** The depreciation allowances for the MACRS property for any 12-month taxable year beginning with the year of change are determined by multiplying the adjusted depreciable basis of the MACRS property as of the first day of each taxable year by the applicable depreciation rate for each taxable year. In determining the applicable depreciation rate for the year of change and subsequent taxable years, the taxpayer must use any applicable depreciation method and recovery period prescribed under section 168 for the MACRS property in the year of change, consistent with any election made under section 168 by the taxpayer for that year (see, for example, section 168(b)(5)). If there is a change in the use of MACRS property, the applicable convention that applies to the MACRS property is the same as the convention that applied before the change in the use of the MACRS property. However, the depreciation allowance for the year of change for the MACRS property is determined without applying the applicable convention, unless the MACRS property is disposed of during the year of change. See paragraph (d)(5) of this section for the rules relating to the computation of the depreciation allowance under the optional depreciation tables. If the year of change or any subsequent taxable year is less than 12 months, the depreciation allowance determined under this paragraph (d)(3)(i) must be adjusted for a short taxable year (for further guidance, for example, see Rev. Proc. 89-15 (1989-1 C.B. 816) (see § 601.601(d)(2)(ii)(*b*) of this chapter)).

(C) ***Special rules.*** MACRS property affected by this paragraph (d)(3)(i) is not eligible in the year of change for the election provided under section 168(f)(1), 179, or 1400L(f), or for the additional first year depreciation deduction provided in section 168(k) or 1400L(b). See §§ 1.168(k)-1(f)(6)(iv) or 1.168(k)-2(g)(6)(iv), as applicable, and 1.1400L(b)-1(f)(6) for other additional first year depreciation deduction rules applicable to a change in the use of

MACRS property subsequent to its placed-in-service year. For purposes of determining whether the mid-quarter convention applies to other MACRS property placed in service during the year of change, the unadjusted depreciable basis (as defined in § 1.168(b)-1T(a)(3)) or the adjusted depreciable basis of MACRS property affected by this paragraph (d)(3)(i) is not taken into account.

(ii) ***Option to disregard the change in the use.*** In lieu of applying paragraph (d)(3)(i) of this section, the taxpayer may elect to determine the depreciation allowance as though the change in the use had not occurred. The taxpayer elects this option by claiming on the taxpayer's timely filed (including extensions) Federal income tax return for the year of change the depreciation allowance for the property as though the change in the use had not occurred. See paragraph (g)(2) of this section for the manner for revoking this election.

(4) ***Change in the use results in a longer recovery period and/or a slower depreciation method*** —

(i) ***Treated as originally placed in service with longer recovery period and/or slower depreciation method.*** If a change in the use results in a longer recovery period and/or a depreciation method for the MACRS property that is less accelerated than the method used for the MACRS property before the change in the use, the depreciation allowances beginning with the year of change are determined as though the MACRS property had been originally placed in service by the taxpayer with the longer recovery period and/or the slower depreciation method. MACRS property affected by this paragraph (d)(4) is not eligible in the year of change for the election provided under section 168(f)(1), 179, or 1400L(f), or for the additional first year depreciation deduction provided in section 168(k) or 1400L(b). See §§ 1.168(k)-1(f)(6)(iv) or 1.168(k)-2(g)(6)(iv), as applicable, and 1.1400L(b)-1(f)(6) for other additional first year depreciation deduction rules applicable to a change in the use of MACRS property subsequent to its placed-in-service year.

(ii) ***Computation of the depreciation allowance.*** The depreciation allowances for the MACRS property for any 12-month taxable year beginning with the year of change are determined by multiplying the adjusted depreciable basis of the MACRS property as of the first day of each taxable year by the applicable depreciation rate for each taxable year. If there is a change in the use of MACRS property, the applicable convention that applies to the MACRS property is the same as the convention that applied before the change in the use of the MACRS property. If the year of change or any subsequent taxable year is less than 12 months, the depreciation allowance determined under this paragraph (d)(4)(ii) must be adjusted for a short taxable year (for further guidance, for example, see Rev. Proc. 89-15 (1989-1 C.B. 816) (see § 601.601(d)(2)(ii)(*b*) of this chapter)). See paragraph (d)(5) of this section for the rules relating to the computation of the depreciation allowance under the optional depreciation tables. In determining the applicable depreciation rate for the year of change and any subsequent taxable year—

(A) The applicable depreciation method is the depreciation method that would apply in the year of change and any subsequent taxable year for the MACRS property had the taxpayer used the longer recovery period and/or the slower depreciation method in the placed-in-service year of the property. If the 200-or 150-percent declining balance method would have applied in the placed-in-service year but the method would have switched to the straight line method in the year of change or any prior taxable year, the applicable depreciation method beginning with the year of change is the straight line method; and

(B) The applicable recovery period is either—

(1) The longer recovery period resulting from the change in the use if the applicable depreciation method is the 200-or 150-percent declining balance method (as determined under paragraph (d)(4)(ii)(A) of this section) unless the recovery period did not change as a result of the change in the use, in which case the applicable recovery period is the same recovery period that applied before the change in the use; or

(2) The number of years remaining as of the beginning of each taxable year (taking into account the applicable convention) had the taxpayer used the longer recovery period in the placed-in-service year of the property if the applicable depreciation method is the straight line method (as determined under paragraph (d)(4)(ii)(A) of this section) unless the recovery period did not change as a result of the change in the use, in which case the applicable recovery period is the number of years remaining as of the beginning of each taxable year (taking into account the applicable convention) based on the recovery period that applied before the change in the use.

(5) *Using optional depreciation tables* —

(i) ***Taxpayer not bound by prior use of table.*** If a taxpayer used an optional depreciation table for the MACRS property before a change in the use, the taxpayer is not bound to use the appropriate new table for that MACRS property beginning in the year of change (for further guidance, for example, see section 8 of Rev. Proc. 87-57 (1987-2 C.B. 687, 693) (see § 601.601(d)(2)(ii)(*b*) of this chapter)). If a taxpayer did not use an optional depreciation table for MACRS property before a change in the use and the change in the use results in a shorter recovery period and/or a more accelerated depreciation method (as described in paragraph (d)(3)(i) of this section), the taxpayer may use the appropriate new table for that MACRS property beginning in the year of change. If a taxpayer chooses not to use the optional depreciation table, the depreciation allowances for the MACRS property beginning in the year of change are determined under paragraph (d)(3)(i) or (4) of this section, as applicable.

(ii) ***Taxpayer chooses to use optional depreciation table after a change in the use.*** If a taxpayer chooses to use an optional depreciation table for the MACRS property after a change in the use, the depreciation allowances for the MACRS property for any 12-month taxable year beginning with the year of change are determined as follows:

(A) ***Change in the use results in a shorter recovery period and/or a more accelerated depreciation method.*** If a change in the use results in a shorter recovery period and/or a more accelerated depreciation method (as described in paragraph (d)(3)(i) of this section), the depreciation allowances for the MACRS property for any 12-month taxable year beginning with the year of change are determined by multiplying the adjusted depreciable basis of the MACRS property as of the first day of the year of change by the annual depreciation rate for each recovery year (expressed as a decimal equivalent) specified in the appropriate optional depreciation table. The appropriate optional depreciation table for the MACRS property is based on the depreciation system, depreciation method, recovery period, and convention applicable to the MACRS property in the year of change as determined under paragraph (d)(3)(i) of this section. The depreciation allowance for the year of change for the MACRS property is determined by taking into account the applicable convention (which is already factored into the optional depreciation tables). If the year of change or any subsequent taxable year is less than 12

months, the depreciation allowance determined under this paragraph (d)(5)(ii)(A) must be adjusted for a short taxable year (for further guidance, for example, see Rev. Proc. 89-15 (1989-1 C.B. 816) (see § 601.601(d)(2)(ii)(*b*) of this chapter)).

(B) ***Change in the use results in a longer recovery period and/or a slower depreciation method*** —

(*1*) ***Determination of the appropriate optional depreciation table.*** If a change in the use results in a longer recovery period and/or a slower depreciation method (as described in paragraph (d)(4)(i) of this section), the depreciation allowances for the MACRS property for any 12-month taxable year beginning with the year of change are determined by choosing the optional depreciation table that corresponds to the depreciation system, depreciation method, recovery period, and convention that would have applied to the MACRS property in the placed-in-service year had that property been originally placed in service by the taxpayer with the longer recovery period and/or the slower depreciation method. If there is a change in the use of MACRS property, the applicable convention that applies to the MACRS property is the same as the convention that applied before the change in the use of the MACRS property. If the year of change or any subsequent taxable year is less than 12 months, the depreciation allowance determined under this paragraph (d)(5)(ii)(B) must be adjusted for a short taxable year (for further guidance, for example, see Rev. Proc. 89-15 (1989-1 C.B. 816) (see § 601.601(d)(2)(ii)(*b*) of this chapter)).

(*2*) ***Computation of the depreciation allowance.*** The depreciation allowances for the MACRS property for any 12-month taxable year beginning with the year of change are computed by first determining the appropriate recovery year in the table identified under paragraph (d)(5)(ii)(B)(*1*) of this section. The appropriate recovery year for the year of change is the year that corresponds to the year of change. For example, if the recovery year for the year of change would have been Year 4 in the table that applied before the change in the use of the MACRS property, then the recovery year for the year of change is Year 4 in the table identified under paragraph (d)(5)(ii)(B)(*1*) of this section. Next, the annual depreciation rate (expressed as a decimal equivalent) for each recovery year is multiplied by a transaction coefficient. The transaction coefficient is the formula (1 / (1−x)) where x equals the sum of the annual depreciation rates from the table identified under paragraph (d)(5)(ii)(B)(*1*) of this section (expressed as a decimal equivalent) for the taxable years beginning with the placed-in-service year of the MACRS property through the taxable year immediately prior to the year of change. The product of the annual depreciation rate and the transaction coefficient is multiplied by the adjusted depreciable basis of the MACRS property as of the beginning of the year of change.

(6) ***Examples.*** The application of this paragraph (d) is illustrated by the following examples:

> *Example 1. Change in the use results in a shorter recovery period and/or a more accelerated depreciation method and optional depreciation table is not used.* (i) *X*, a calendar-year corporation, places in service in 1999 equipment at a cost of $100,000 and uses this equipment from 1999 through 2003 primarily in its *A* business. *X* depreciates the equipment for 1999 through 2003 under the general depreciation system as 7-year property by using the 200-percent declining balance method (which switched to the straight-line method in 2003), a

7-year recovery period, and a half-year convention. Beginning in 2004, *X* primarily uses the equipment in its *B* business. As a result, the classification of the equipment under section 168(e) changes from 7-year property to 5-year property and the recovery period of the equipment under the general depreciation system changes from 7 years to 5 years. The depreciation method does not change. On January 1, 2004, the adjusted depreciable basis of the equipment is $22,311. *X* depreciates its 5-year recovery property placed in service in 2004 under the general depreciation system by using the 200-percent declining balance method and a 5-year recovery period. *X* does not use the optional depreciation tables.
(ii) Under paragraph (d)(3)(i) of this section, *X*'s allowable depreciation deduction for the equipment for 2004 and subsequent taxable years is determined as though *X* placed the equipment in service in 2004 for use primarily in its *B* business. The depreciable basis of the equipment as of January 1, 2004, is $22,311 (the adjusted depreciable basis at January 1, 2004). Because *X* does not use the optional depreciation tables, the depreciation allowance for 2004 (the deemed placed-in-service year) for this equipment only is computed without taking into account the half-year convention. Pursuant to paragraph (d)(3)(i)(C) of this section, this equipment is not eligible for the additional first year depreciation deduction provided by section 168(k) or section 1400L(b). Thus, *X*'s allowable depreciation deduction for the equipment for 2004 is $8,924 ($22,311 adjusted depreciable basis at January 1, 2004, multiplied by the applicable depreciation rate of 40% (200/5)). *X*'s allowable depreciation deduction for the equipment for 2005 is $5,355 ($13,387 adjusted depreciable basis at January 1, 2005, multiplied by the applicable depreciation rate of 40% (200/5)).

(iii) Alternatively, under paragraph (d)(3)(ii) of this section, *X* may elect to disregard the change in the use and, as a result, may continue to treat the equipment as though it is used primarily in its *A* business. If the election is made, *X*'s allowable depreciation deduction for the equipment for 2004 is $8,924 ($22,311 adjusted depreciable basis at January 1, 2004, multiplied by the applicable depreciation rate of 40% (1/2.5 years remaining at January 1, 2004)). *X*'s allowable depreciation deduction for the equipment for 2005 is $8,925 ($13,387 adjusted depreciable basis at January 1, 2005, multiplied by the applicable depreciation rate of 66.67% (1/1.5 years remaining at January 1, 2005)).

Example 2. Change in the use results in a shorter recovery period and/or a more accelerated depreciation method and optional depreciation table is used. (i) Same facts as in *Example 1*, except that *X* used the optional depreciation tables for computing depreciation for 1999 through 2003. Pursuant to paragraph (d)(5) of this section, *X* chooses to continue to use the optional depreciation table for the equipment. *X* does not make the election provided in paragraph (d)(3)(ii) of this section to disregard the change in use.
(ii) In accordance with paragraph (d)(5)(ii)(A) of this section, *X* must first identify the appropriate optional depreciation table for the equipment. This table is table 1 in Rev. Proc. 87-57 because the equipment will be depreciated in the year of change (2004) under the

general depreciation system using the 200-percent declining balance method, a 5-year recovery period, and the half-year convention (which is the convention that applied to the equipment in 1999). Pursuant to paragraph (d)(3)(i)(C) of this section, this equipment is not eligible for the additional first year depreciation deduction provided by section 168(k) or section 1400L(b). For 2004, *X* multiplies its adjusted depreciable basis in the equipment as of January 1, 2004, of $22,311, by the annual depreciation rate in table 1 for recovery year 1 for a 5-year recovery period (.20), to determine the depreciation allowance of $4,462. For 2005, *X* multiplies its adjusted depreciable basis in the equipment as of January 1, 2004, of $22,311, by the annual depreciation rate in table 1 for recovery year 2 for a 5-year recovery period (.32), to determine the depreciation allowance of $7,140.

Example 3. Change in the use results in a longer recovery period and/or a slower depreciation method. (i) *Y*, a calendar-year corporation, places in service in January 2002, equipment at a cost of $100,000 and uses this equipment in 2002 and 2003 only within the United States. *Y* elects not to deduct the additional first year depreciation under section 168(k). *Y* depreciates the equipment for 2002 and 2003 under the general depreciation system by using the 200-percent declining balance method, a 5-year recovery period, and a half-year convention. Beginning in 2004, *Y* uses the equipment predominantly outside the United States. As a result of this change in the use, the equipment is subject to the alternative depreciation system beginning in 2004. Under the alternative depreciation system, the equipment is depreciated by using the straight line method and a 9-year recovery period. The adjusted depreciable basis of the equipment at January 1, 2004, is $48,000.
(ii) Pursuant to paragraph (d)(4) of this section, *Y*'s allowable depreciation deduction for 2004 and subsequent taxable years is determined as though the equipment had been placed in service in January 2002, as property used predominantly outside the United States. Further, pursuant to paragraph (d)(4)(i) of this section, the equipment is not eligible in 2004 for the additional first year depreciation deduction provided by section 168(k) or section 1400L(b). In determining the applicable depreciation rate for 2004, the applicable depreciation method is the straight line method and the applicable recovery period is 7.5 years, which is the number of years remaining at January 1, 2004, for property placed in service in 2002 with a 9-year recovery period (taking into account the half-year convention). Thus, the depreciation allowance for 2004 is $6,398 ($48,000 adjusted depreciable basis at January 1, 2004, multiplied by the applicable depreciation rate of 13.33% (1/7.5 years)). The depreciation allowance for 2005 is $6,398 ($41,602 adjusted depreciable basis at January 1, 2005, multiplied by the applicable depreciation rate of 15.38% (1/6.5 years remaining at January 1, 2005)).

Example 4. Change in the use results in a longer recovery period and/or a slower depreciation method and optional depreciation table is used. (i) Same facts as in *Example 3*, except that *Y* used the optional depreciation tables for computing depreciation in 2002 and

2003. Pursuant to paragraph (d)(5) of this section, *Y* chooses to continue to use the optional depreciation table for the equipment. Further, pursuant to paragraph (d)(4)(i) of this section, the equipment is not eligible in 2004 for the additional first year depreciation deduction provided by section 168(k) or section 1400L(b).
(ii) In accordance with paragraph (d)(5)(ii)(B) of this section, *Y* must first determine the appropriate optional depreciation table for the equipment pursuant to paragraph (d)(5)(ii)(B)(*1*) of this section. This table is table 8 in Rev. Proc. 87-57, which corresponds to the alternative depreciation system, the straight line method, a 9-year recovery period, and the half-year convention (because *Y* depreciated 5-year property in 2002 using a half-year convention). Next, *Y* must determine the appropriate recovery year in table 8. Because the year of change is 2004, the depreciation allowance for the equipment for 2004 is determined using recovery year 3 of table 8. For 2004, *Y* multiplies its adjusted depreciable basis in the equipment as of January 1, 2004, of $48,000, by the product of the annual depreciation rate in table 8 for recovery year 3 for a 9-year recovery period (.1111) and the transaction coefficient of 1.200 [1/(1−(.0556 (table 8 for recovery year 1 for a 9-year recovery period) + .1111 (table 8 for recovery year 2 for a 9-year recovery period)))], to determine the depreciation allowance of $6,399. For 2005, *Y* multiplies its adjusted depreciable basis in the equipment as of January 1, 2004, of $48,000, by the product of the annual depreciation rate in table 8 for recovery year 4 for a 9-year recovery period (.1111) and the transaction coefficient (1.200), to determine the depreciation allowance of $6,399.

(e) ***Change in the use of MACRS property during the placed-in-service year*** —

(1) ***In general.*** Except as provided in paragraph (e)(2) of this section, if a change in the use of MACRS property occurs during the placed-in-service year and the property continues to be MACRS property owned by the same taxpayer, the depreciation allowance for that property for the placed-in-service year is determined by its primary use during that year. The primary use of MACRS property may be determined in any reasonable manner that is consistently applied to the taxpayer's MACRS property. For purposes of this paragraph (e), the determination of whether the mid-quarter convention applies to any MACRS property placed in service during the year of change is made in accordance with § 1.168(d)-1.

(2) ***Alternative depreciation system property*** —

(i) ***Property used within and outside the United States.*** The depreciation allowance for the placed-in-service year for MACRS property that is used within and outside the United States is determined by its predominant use during that year. The determination of whether MACRS property is used predominantly outside the United States during the placed-in-service year shall be made in accordance with the test in § 1.48-1(g)(1)(i) for determining predominant use.

(ii) ***Tax-exempt bond financed property.*** The depreciation allowance for the placed-in-service year for MACRS property that changes to tax-exempt bond financed property, as described in section 168(g)(1)(C) and (g)(5), during that taxable year is determined under the alternative depreciation system. For purposes of this paragraph (e), MACRS property changes to tax-exempt bond financed property when a tax-exempt bond is first issued after the MACRS

property is placed in service. MACRS property continues to be tax-exempt bond financed property in the hands of the taxpayer even if the tax-exempt bond (including any refunding issue) is not outstanding at, or is redeemed by, the end of the placed-in-service year.

(iii) ***Other mandatory alternative depreciation system property.*** The depreciation allowance for the placed-in-service year for MACRS property that changes to, or changes from, property described in section 168(g)(1)(B) (tax-exempt use property) or (D) (imported property covered by an Executive order) during that taxable year is determined under—

(A) The alternative depreciation system if the MACRS property is described in section 168(g)(1)(B) or (D) at the end of the placed-in-service year; or

(B) The general depreciation system if the MACRS property is not described in section 168(g)(1)(B) or (D) at the end of the placed-in-service year, unless other provisions of the Internal Revenue Code or regulations under the Internal Revenue Code require the depreciation allowance for that MACRS property to be determined under the alternative depreciation system (for example, section 168(g)(7)).

(3) ***Examples.*** The application of this paragraph (e) is illustrated by the following examples:

Example 1. (i) *Z,* a utility and calendar-year corporation, acquires and places in service on January 1, 2004, equipment at a cost of $100,000. *Z* uses this equipment in its combustion turbine production plant for 4 months and then uses the equipment in its steam production plant for the remainder of 2004. *Z*'s combustion turbine production plant assets are classified as 15-year property and are depreciated by *Z* under the general depreciation system using a 15-year recovery period and the 150-percent declining balance method of depreciation. *Z*'s steam production plant assets are classified as 20-year property and are depreciated by *Z* under the general depreciation system using a 20-year recovery period and the 150-percent declining balance method of depreciation. *Z* uses the optional depreciation tables. The equipment is 50-percent bonus depreciation property for purposes of section 168(k).
(ii) Pursuant to this paragraph (e), *Z* must determine depreciation based on the primary use of the equipment during the placed-in-service year. *Z* has consistently determined the primary use of all of its MACRS properties by comparing the number of full months in the taxable year during which a MACRS property is used in one manner with the number of full months in that taxable year during which that MACRS property is used in another manner. Applying this approach, *Z* determines the depreciation allowance for the equipment for 2004 is based on the equipment being classified as 20-year property because the equipment was used by *Z* in its steam production plant for 8 months in 2004. If the half-year convention applies in 2004, the appropriate optional depreciation table is table 1 in Rev. Proc. 87-57, which is the table for MACRS property subject to the general depreciation system, the 150-percent declining balance method, a 20-year recovery period, and the half-year convention. Thus, the depreciation allowance for the equipment for 2004 is $51,875, which is the total of $50,000 for the 50-percent additional first year depreciation deduction allowable (the unadjusted depreciable basis of $100,000 multiplied by .50), plus $1,875 for the 2004 depreciation allowance on the remaining adjusted depreciable basis of $50,000 [(the unadjusted

depreciable basis of $100,000 less the additional first year depreciation deduction of $50,000) multiplied by the annual depreciation rate of .0375 in table 1 for recovery year 1 for a 20-year recovery period].

Example 2. T , a calendar year corporation, places in service on January 1, 2004, several computers at a total cost of $100,000. *T* uses these computers within the United States for 3 months in 2004 and then moves and uses the computers outside the United States for the remainder of 2004. Pursuant to § 1.48-1(g)(1)(i), the computers are considered as used predominantly outside the United States in 2004. As a result, for 2004, the computers are required to be depreciated under the alternative depreciation system of section 168(g) with a recovery period of 5 years pursuant to section 168(g)(3)(C). *T* uses the optional depreciation tables. If the half-year convention applies in 2004, the appropriate optional depreciation table is table 8 in Rev. Proc. 87-57, which is the table for MACRS property subject to the alternative depreciation system, the straight line method, a 5-year recovery period, and the half-year convention. Thus, the depreciation allowance for the computers for 2004 is $10,000, which is equal to the unadjusted depreciable basis of $100,000 multiplied by the annual depreciation rate of .10 in table 8 for recovery year 1 for a 5-year recovery period. Because the computers are required to be depreciated under the alternative depreciation system in their placed-in-service year, pursuant to section 168(k)(2)(C)(i) and § 1.168(k)-1T(b)(2)(ii), the computers are not eligible for the additional first year depreciation deduction provided by section 168(k).

(f) ***No change in accounting method.*** A change in computing the depreciation allowance in the year of change for property subject to this section is not a change in method of accounting under section 446(e). *See* § 1.446-1(e)(2)(ii)(*d*)(*3*)(*ii*).

(g) ***Effective dates*** —

(1) ***In general.*** Except as provided in paragraph (g)(2) of this section, this section applies to any change in the use of MACRS property in a taxable year ending on or after June 17, 2004. For any change in the use of MACRS property after December 31, 1986, in a taxable year ending before June 17, 2004, the Internal Revenue Service will allow any reasonable method of depreciating the property under section 168 in the year of change and the subsequent taxable years that is consistently applied to any property for which the use changes in the hands of the same taxpayer or the taxpayer may choose, on a property-by-property basis, to apply the provisions of this section.

(2) ***Qualified property under section 168(k) acquired and placed in service after September 27, 2017*** —

(i) ***In general.*** The language "or § 1.168(k)-2(g)(6)(iii), as applicable" in paragraph (b)(1) of this section, the language "or § 1.168(k)-2(g)(6)(ii), as applicable" in paragraph (c) of this section, and the language "or § 1.168(k)-2(g)(6)(iv), as applicable" in paragraphs (d)(3)(i)(C) and (d)(4)(i) of this section applies to any change in use of MACRS property, which is qualified property under section 168(k)(2), by a taxpayer during or after the taxpayer's taxable year that includes September 24, 2019.

(ii) ***Early application.*** A taxpayer may choose to apply the language "or § 1.168(k)-2(g)(6)(iii), as applicable" in paragraph (b)(1) of this section, the language "or § 1.168(k)-2(g)(6)(ii), as applicable" in paragraph (c) of this section, and the language "or § 1.168(k)-2(g)(6)(iv), as applicable" in paragraphs (d)(3)(i)(C) and (d)(4)(i) of this section for any change in use of

MACRS property, which is qualified property under section 168(k)(2) and acquired and placed in service after September 27, 2017, by the taxpayer during taxable years ending on or after September 28, 2017.

(iii) ***Early application of regulation project REG-104397-18.*** A taxpayer may rely on the language "or § 1.168(k)-2(f)(6)(iii), as applicable" in paragraph (b)(1) of this section, the language "or § 1.168(k)-2(f)(6)(ii), as applicable" in paragraph (c) of this section, and the language "or § 1.168(k)-2(f)(6)(iv), as applicable" in paragraphs (d)(3)(i)(C) and (d)(4)(i) of this section in regulation project REG-104397-18 (2018-41 I.R.B. 558) (see § 601.601(d)(2)(ii)(b) of this chapter) for any change in use of MACRS property, which is qualified property under section 168(k)(2) and acquired and placed in service after September 27, 2017, by the taxpayer during taxable years ending on or after September 28, 2017, and ending before the taxpayer's taxable year that includes September 24, 2019.

(3) ***Change in method of accounting*** —

(i) ***In general.*** If a taxpayer adopted a method of accounting for depreciation due to a change in the use of MACRS property in a taxable year ending on or after December 30, 2003, and the method adopted is not in accordance with the method of accounting for depreciation provided in this section, a change to the method of accounting for depreciation provided in this section is a change in the method of accounting to which the provisions of sections 446(e) and 481 and the regulations under sections 446(e) and 481 apply. Also, a revocation of the election provided in paragraph (d)(3)(ii) of this section to disregard a change in the use is a change in method of accounting to which the provisions of sections 446(e) and 481 and the regulations under sections 446(e) and 481 apply. However, if a taxpayer adopted a method of accounting for depreciation due to a change in the use of MACRS property after December 31, 1986, in a taxable year ending before December 30, 2003, and the method adopted is not in accordance with the method of accounting for depreciation provided in this section, the taxpayer may treat the change to the method of accounting for depreciation provided in this section as a change in method of accounting to which the provisions of sections 446(e) and 481 and the regulations under sections 446(e) and 481 apply.

(ii) ***Automatic consent to change method of accounting.*** A taxpayer changing its method of accounting in accordance with this paragraph (g)(2) must follow the applicable administrative procedures issued under § 1.446-1(e)(3)(ii) for obtaining the Commissioner's automatic consent to a change in method of accounting (for further guidance, for example, *see* Rev. Proc. 2002-9 (2002-1 C.B. 327), (*see* § 601.601(d)(2)(ii)(*b*) of this chapter)). Any change in method of accounting made under this paragraph (g)(2) must be made using an adjustment under section 481(a). For purposes of Form 3115, *Application for Change in Accounting Method,* the designated number for the automatic accounting method change authorized by this paragraph (g)(2) is "88." If Form 3115 is revised or renumbered, any reference in this section to that form is treated as a reference to the revised or renumbered form.

[T.D. 9132, 69 FR 33843, June 17, 2004, as amended by T.D. 9307, 71 FR 78068, Dec. 28, 2006; T.D. 9874, 84 FR 50127, Sept. 24, 2019]

§ 1.168(i)-5 Table of contents.

This section lists the major paragraphs contained in § 1.168(i)-6.

§ 1.168(i)-6 Like-kind exchanges and involuntary conversions.

(a) Scope.

(b) Definitions.

(1) Replacement MACRS property.

(2) Relinquished MACRS property.

(3) Time of disposition.

(4) Time of replacement.

(5) Year of disposition.

(6) Year of replacement.

(7) Exchanged basis.

(8) Excess basis.

(9) Depreciable exchanged basis.

(10) Depreciable excess basis.

(11) Like-kind exchange.

(12) Involuntary conversion.

(c) Determination of depreciation allowance.

(1) Computation of the depreciation allowance for depreciable exchanged basis beginning in the year of replacement.

(i) In general.

(ii) Applicable recovery period, depreciation method, and convention.

(2) Effect of depreciation treatment of the replacement MACRS property by previous owners of the acquired property.

(3) Recovery period and/or depreciation method of the properties are the same, or both are not the same.

(i) In general.

(ii) Both the recovery period and the depreciation method are the same.

(iii) Either the recovery period or the depreciation method is the same, or both are not the same.

(4) Recovery period or depreciation method of the properties is not the same.

(i) Longer recovery period.

(ii) Shorter recovery period.

(iii) Less accelerated depreciation method.

(iv) More accelerated depreciation method.

(v) Convention.

(A) Either the relinquished MACRS property or the replacement MACRS property is mid-month property.

(B) Neither the relinquished MACRS property nor the replacement MACRS property is mid-month property.

(5) Year of disposition and year of replacement.

(i) Relinquished MACRS property.

(A) General rule.

(B) Special rule.

(ii) Replacement MACRS property.

(A) Remaining recovery period of the replacement MACRS property.

(B) Year of replacement is 12 months.

(iii) Year of disposition or year of replacement is less than 12 months.

(iv) Deferred transactions.

(A) In general.

(B) Allowable depreciation for a qualified intermediary.

(v) Remaining recovery period.

(6) Examples.

(d) Special rules for determining depreciation allowances.

(1) Excess basis.

(i) In general.

(ii) Example.

(2) Depreciable and nondepreciable property.

(3) Depreciation limitations for automobiles.

(i) In general.

(ii) Order in which limitations on depreciation under section 280F(a) are applied.

(iii) Examples.

(4) Involuntary conversion for which the replacement MACRS property is acquired and placed in service before disposition of relinquished MACRS property.

(e) Use of optional depreciation tables.

(1) Taxpayer not bound by prior use of table.

(2) Determination of the depreciation deduction.

(i) Relinquished MACRS property.

(ii) Replacement MACRS property.

(A) Determination of the appropriate optional depreciation table.

(B) Calculating the depreciation deduction for the replacement MACRS property.

(iii) Unrecovered basis.

(3) Excess basis.

(4) Examples.

(f) Mid-quarter convention.

(1) Exchanged basis.

(2) Excess basis.

(3) Depreciable property acquired for nondepreciable property.

(g) Section 179 election.

(h) Additional first year depreciation deduction.

(i) Elections.

(1) Election not to apply this section.

(2) Election to treat certain replacement property as MACRS property.

(j) Time and manner of making election under paragraph (i)(1) of this section.

(1) In general.

(2) Time for making election.

(3) Manner of making election.

(4) Revocation.

(k) Effective date.

(1) In general.

(2) Application to pre-effective date like-kind exchanges and involuntary conversions.

(3) Like-kind exchanges and involuntary conversions where the taxpayer made the election under section 168(f)(1) for the relinquished property.

[T.D. 9314, 72 FR 9250, Mar. 1, 2007]

§ 1.168(i)-6 Like-kind exchanges and involuntary conversions.

(a) ***Scope.*** This section provides the rules for determining the depreciation allowance for MACRS property acquired in a like-kind exchange or an involuntary conversion, including a like-kind exchange or an involuntary conversion of MACRS property that is exchanged or replaced with other MACRS property in a transaction between members of the same affiliated group. The allowance for depreciation under this section constitutes the amount of depreciation allowable under section 167(a) for the year of replacement and any subsequent taxable year for the replacement MACRS property and for the year of disposition of the relinquished MACRS property. The provisions of this section apply only to MACRS property to which § 1.168(h)-1 (like-kind exchanges of tax-exempt use property) does not apply. Additionally, paragraphs (c) through (f) of this section apply only to MACRS property for which an election under paragraph (i) of this section has not been made.

(b) ***Definitions.*** For purposes of this section, the following definitions apply:

(1) ***Replacement MACRS property*** is MACRS property (as defined in § 1.168(b)-1(a)(2)) in the hands of the acquiring taxpayer that is acquired for other MACRS property in a like-kind exchange or an involuntary conversion.

(2) ***Relinquished MACRS property*** is MACRS property that is transferred by the taxpayer in a like-kind exchange, or in an involuntary conversion.

(3) ***Time of disposition*** is when the disposition of the relinquished MACRS property takes place under the convention, as determined under § 1.168(d)-1, that applies to the relinquished MACRS property.

(4) ***Time of replacement*** is the later of—

(i) When the replacement MACRS property is placed in service under the convention, as determined under this section, that applies to the replacement MACRS property; or

(ii) The time of disposition of the exchanged or involuntarily converted property.

(5) ***Year of disposition*** is the taxable year that includes the time of disposition.

(6) ***Year of replacement*** is the taxable year that includes the time of replacement.

(7) ***Exchanged basis*** is determined after the depreciation deductions for the year of disposition are determined under paragraph (c)(5)(i) of this section and is the lesser of—

(i) The basis in the replacement MACRS property, as determined under section 1031(d) and the regulations under section 1031(d) or section 1033(b) and the regulations under section 1033(b); or

(ii) The adjusted depreciable basis (as defined in § 1.168(b)-1(a)(4)) of the relinquished MACRS property.

(8) ***Excess basis*** is any excess of the basis in the replacement MACRS property, as determined under section 1031(d) and the regulations under section 1031(d) or section 1033(b) and the regulations under section 1033(b), over the exchanged basis as determined under paragraph (b)(7) of this section.

(9) ***Depreciable exchanged basis*** is the exchanged basis as determined under paragraph (b)(7) of this section reduced by—

(i) The percentage of such basis attributable to the taxpayer's use of property for the taxable year other than in the taxpayer's trade or business (or for the production of income); and

(ii) Any adjustments to basis provided by other provisions of the Internal Revenue Code (Code) and the regulations under the Code (including section 1016(a)(2) and (3), for example, depreciation deductions in the year of replacement allowable under section 168(k) or 1400L(b)).

(10) ***Depreciable excess basis*** is the excess basis as determined under paragraph (b)(8) of this section reduced by—

(i) The percentage of such basis attributable to the taxpayer's use of property for the taxable year other than in the taxpayer's trade or business (or for the production of income);

(ii) Any portion of the basis the taxpayer properly elects to treat as an expense under section 179; and

(iii) Any adjustments to basis provided by other provisions of the Code and the regulations under the Code (including section 1016(a)(2) and (3), for example, depreciation deductions in the year of replacement allowable under section 168(k) or 1400L(b)).

(11) ***Like-kind exchange*** is an exchange of property in a transaction to which section 1031(a)(1), (b), or (c) applies.

(12) ***Involuntary conversion*** is a transaction described in section 1033(a)(1) or (2) that resulted in the nonrecognition of any part of the gain realized as the result of the conversion.

(c) ***Determination of depreciation allowance*** —

(1) ***Computation of the depreciation allowance for depreciable exchanged basis beginning in the year of replacement*** —

(i) ***In general.*** This paragraph (c) provides rules for determining the applicable recovery period, the applicable depreciation method, and the applicable convention used to determine the depreciation allowances for the depreciable exchanged basis beginning in the year of replacement. See paragraph (c)(5) of this section for rules relating to the computation of the depreciation allowance for the year of disposition and for the year of replacement. See paragraph (d)(1) of this section for rules relating to the computation of the depreciation allowance for depreciable excess basis. See paragraph (d)(4) of this section if the replacement MACRS property is acquired before disposition of the relinquished MACRS property in a transaction to which section 1033 applies. See paragraph (e) of this section for rules relating to the computation of the depreciation allowance using the optional depreciation tables.

(ii) ***Applicable recovery period, depreciation method, and convention.*** The recovery period, depreciation method, and convention determined under this paragraph (c) are the only permissible methods of accounting for MACRS property within the scope of this section unless the taxpayer makes the election under paragraph (i) of this section not to apply this section.

(2) ***Effect of depreciation treatment of the replacement MACRS property by previous owners of the acquired property.*** If replacement MACRS property is acquired by a taxpayer in a like-kind exchange or an involuntary conversion, the depreciation treatment of the replacement MACRS property by previous owners has no effect on the determination of depreciation allowances for the replacement MACRS property in the hands of the acquiring taxpayer. For example, a taxpayer exchanging, in a like-kind exchange, MACRS property for property that was depreciated under section 168 of the Internal Revenue Code of 1954 (ACRS) by the previous owner must use this section because the replacement property will become MACRS property in the hands of the acquiring taxpayer. In addition, elections made by previous owners in determining depreciation allowances for the replacement MACRS property have no effect on the acquiring taxpayer. For example, a taxpayer exchanging, in a like-kind exchange, MACRS property that the taxpayer depreciates under the general depreciation system of section 168(a) for other MACRS property that the previous owner elected to depreciate under the alternative depreciation system pursuant to section 168(g)(7) does not have to continue using the alternative depreciation system for the replacement MACRS property.

(3) ***Recovery period and/or depreciation method of the properties are the same, or both are not the same*** —

(i) ***In general.*** For purposes of paragraphs (c)(3) and (c)(4) of this section in determining whether the recovery period and the depreciation method prescribed under section 168 for the replacement MACRS property are the same as the recovery period and the depreciation method

prescribed under section 168 for the relinquished MACRS property, the recovery period and the depreciation method for the replacement MACRS property are considered to be the recovery period and the depreciation method that would have applied under section 168, taking into account any elections made by the acquiring taxpayer under section 168(b)(5) or 168(g)(7), had the replacement MACRS property been placed in service by the acquiring taxpayer at the same time as the relinquished MACRS property.

(ii) ***Both the recovery period and the depreciation method are the same.*** If both the recovery period and the depreciation method prescribed under section 168 for the replacement MACRS property are the same as the recovery period and the depreciation method prescribed under section 168 for the relinquished MACRS property, the depreciation allowances for the replacement MACRS property beginning in the year of replacement are determined by using the same recovery period and depreciation method that were used for the relinquished MACRS property. Thus, the replacement MACRS property is depreciated over the remaining recovery period (taking into account the applicable convention), and by using the depreciation method, of the relinquished MACRS property. Except as provided in paragraph (c)(5) of this section, the depreciation allowances for the depreciable exchanged basis for any 12-month taxable year beginning with the year of replacement are determined by multiplying the depreciable exchanged basis by the applicable depreciation rate for each taxable year (for further guidance, for example, see section 6 of Rev. Proc. 87-57 (1987-2 CB 687, 692) and § 601.601(d)(2)(ii)(*b*) of this chapter).

(iii) ***Either the recovery period or the depreciation method is the same, or both are not the same.*** If either the recovery period or the depreciation method prescribed under section 168 for the replacement MACRS property is the same as the recovery period or the depreciation method prescribed under section 168 for the relinquished MACRS property, the depreciation allowances for the depreciable exchanged basis beginning in the year of replacement are determined using the recovery period or the depreciation method that is the same as the relinquished MACRS property. See paragraph (c)(4) of this section to determine the depreciation allowances when the recovery period or the depreciation method of the replacement MACRS property is not the same as that of the relinquished MACRS property.

(4) ***Recovery period or depreciation method of the properties is not the same.*** If the recovery period prescribed under section 168 for the replacement MACRS property (as determined under paragraph (c)(3)(i) of this section) is not the same as the recovery period prescribed under section 168 for the relinquished MACRS property, the depreciation allowances for the depreciable exchanged basis beginning in the year of replacement are determined under this paragraph (c)(4). Similarly, if the depreciation method prescribed under section 168 for the replacement MACRS property (as determined under paragraph (c)(3)(i) of this section) is not the same as the depreciation method prescribed under section 168 for the relinquished MACRS property, the depreciation method used to determine the depreciation allowances for the depreciable exchanged basis beginning in the year of replacement is determined under this paragraph (c)(4).

(i) ***Longer recovery period.*** If the recovery period prescribed under section 168 for the replacement MACRS property (as determined under paragraph (c)(3)(i) of this section) is longer than that prescribed for the relinquished MACRS property, the depreciation allowances for the depreciable exchanged basis beginning in the year of replacement are determined as though the replacement MACRS property had originally been placed in service by the acquiring taxpayer in the same taxable year the relinquished MACRS property was placed in service by the acquiring taxpayer, but using the longer recovery period of the replacement MACRS

property (as determined under paragraph (c)(3)(i) of this section) and the convention determined under paragraph (c)(4)(v) of this section. Thus, the depreciable exchanged basis is depreciated over the remaining recovery period (taking into account the applicable convention) of the replacement MACRS property.

(ii) ***Shorter recovery period.*** If the recovery period prescribed under section 168 for the replacement MACRS property (as determined under paragraph (c)(3)(i) of this section) is shorter than that of the relinquished MACRS property, the depreciation allowances for the depreciable exchanged basis beginning in the year of replacement are determined using the same recovery period as that of the relinquished MACRS property. Thus, the depreciable exchanged basis is depreciated over the remaining recovery period (taking into account the applicable convention) of the relinquished MACRS property.

(iii) ***Less accelerated depreciation method*** —

(A) If the depreciation method prescribed under section 168 for the replacement MACRS property (as determined under paragraph (c)(3)(i) of this section) is less accelerated than that of the relinquished MACRS property at the time of disposition, the depreciation allowances for the depreciable exchanged basis beginning in the year of replacement are determined as though the replacement MACRS property had originally been placed in service by the acquiring taxpayer at the same time the relinquished MACRS property was placed in service by the acquiring taxpayer, but using the less accelerated depreciation method. Thus, the depreciable exchanged basis is depreciated using the less accelerated depreciation method.

(B) Except as provided in paragraph (c)(5) of this section, the depreciation allowances for the depreciable exchanged basis for any 12-month taxable year beginning in the year of replacement are determined by multiplying the adjusted depreciable basis by the applicable depreciation rate for each taxable year. If, for example, the depreciation method of the replacement MACRS property in the year of replacement is the 150-percent declining balance method and the depreciation method of the relinquished MACRS property in the year of replacement is the 200-percent declining balance method, and neither method had been switched to the straight line method in the year of replacement or any prior taxable year, the applicable depreciation rate for the year of replacement and subsequent taxable years is determined by using the depreciation rate of the replacement MACRS property as if the replacement MACRS property was placed in service by the acquiring taxpayer at the same time the relinquished MACRS property was placed in service by the acquiring taxpayer, until the 150-percent declining balance method has been switched to the straight line method. If, for example, the depreciation method of the replacement MACRS property is the straight line method, the applicable depreciation rate for the year of replacement is determined by using the remaining recovery period at the beginning of the year of disposition (as determined under this paragraph (c)(4) and taking into account the applicable convention).

(iv) ***More accelerated depreciation method*** —

(A) If the depreciation method prescribed under section 168 for the replacement MACRS property (as determined under paragraph (c)(3)(i) of this section) is more accelerated than that of the relinquished MACRS property at the time of disposition, the depreciation allowances for the replacement MACRS property beginning in the year of replacement are determined using the same depreciation method as the relinquished MACRS property.

(B) Except as provided in paragraph (c)(5) of this section, the depreciation allowances for the depreciable exchanged basis for any 12-month taxable year beginning in the year of replacement are determined by multiplying the adjusted depreciable basis by the applicable depreciation rate for each taxable year. If, for example, the depreciation method of the relinquished MACRS property in the year of replacement is the 150-percent declining balance method and the depreciation method of the replacement MACRS property in the year of replacement is the 200-percent declining balance method, and neither method had been switched to the straight line method in the year of replacement or any prior taxable year, the applicable depreciation rate for the year of replacement and subsequent taxable years is the same depreciation rate that applied to the relinquished MACRS property in the year of replacement, until the 150-percent declining balance method has been switched to the straight line method. If, for example, the depreciation method is the straight line method, the applicable depreciation rate for the year of replacement is determined by using the remaining recovery period at the beginning of the year of disposition (as determined under this paragraph (c)(4) and taking into account the applicable convention).

(v) ***Convention.*** The applicable convention for the exchanged basis is determined under this paragraph (c)(4)(v).

(A) ***Either the relinquished MACRS property or the replacement MACRS property is mid-month property.*** If either the relinquished MACRS property or the replacement MACRS property is property for which the applicable convention (as determined under section 168(d)) is the mid-month convention, the exchanged basis must be depreciated using the mid-month convention.

(B) ***Neither the relinquished MACRS property nor the replacement MACRS property is mid-month property.*** If neither the relinquished MACRS property nor the replacement MACRS property is property for which the applicable convention (as determined under section 168(d)) is the mid-month convention, the applicable convention for the exchanged basis is the same convention that applied to the relinquished MACRS property. If the relinquished MACRS property is placed in service in the year of disposition, and the time of replacement is also in the year of disposition, the convention that applies to the relinquished MACRS property is determined under paragraph (f)(1)(i) of this section. If, however, relinquished MACRS property was placed in service in the year of disposition and the time of replacement is in a taxable year subsequent to the year of disposition, the convention that applies to the exchanged basis is the convention that applies in that subsequent taxable year (see paragraph (f)(1)(ii) of this section).

(5) ***Year of disposition and year of replacement.*** No depreciation deduction is allowable for MACRS property disposed of by a taxpayer in a like-kind exchange or involuntary conversion in the same taxable year that such property was placed in service by the taxpayer. If replacement MACRS property is disposed of by a taxpayer during the same taxable year that the relinquished MACRS property is placed in service by the taxpayer, no depreciation deduction is allowable for either MACRS property. Otherwise, the depreciation allowances for the year of disposition and for the year of replacement are determined as follows:

(i) ***Relinquished MACRS property —***

(A) ***General rule.*** Except as provided in paragraphs (c)(5)(i)(B), (c)(5)(iii), (e), and (i) of this section, the depreciation allowance in the year of disposition for the relinquished MACRS property is computed by multiplying the allowable depreciation deduction for the property for that year by a fraction, the numerator of which is the number of months (including fractions of months) the property is deemed to be placed in service during the year of disposition (taking into account the applicable convention of the relinquished MACRS property), and the denominator of which is 12. In the case of termination under § 1.168(i)-1(e)(3)(v) of general asset account treatment of an asset, or of all the assets remaining, in a general asset account, the allowable depreciation deduction in the year of disposition for the asset or assets for which general asset account treatment is terminated is determined using the depreciation method, recovery period, and convention of the general asset account. This allowable depreciation deduction is adjusted to account for the period the asset or assets is deemed to be in service in accordance with this paragraph (c)(5)(i).

(B) ***Special rule.*** If, at the beginning of the year of disposition, the remaining recovery period of the relinquished MACRS property, taking into account the applicable convention of such property, is less than the period between the beginning of the year of disposition and the time of disposition, the depreciation deduction for the relinquished MACRS property for the year of disposition is equal to the adjusted depreciable basis of the relinquished MACRS property at the beginning of the year of disposition. If this paragraph applies, the exchanged basis is zero and no depreciation is allowable for the exchanged basis in the replacement MACRS property.

(ii) ***Replacement MACRS property*** —

(A) ***Remaining recovery period of the replacement MACRS property.*** The replacement MACRS property is treated as placed in service at the time of replacement under the convention that applies to the replacement MACRS property as determined under this paragraph (c)(5)(ii). The remaining recovery period of the replacement MACRS property at the time of replacement is the excess of the recovery period for the replacement MACRS property, as determined under paragraph (c) of this section, over the period of time that the replacement MACRS property would have been in service if it had been placed in service when the relinquished MACRS property was placed in service and removed from service at the time of disposition of the relinquished MACRS property. This period is determined by using the convention that applied to the relinquished MACRS property to determine the date that the relinquished MACRS property is deemed to have been placed in service and the date that it is deemed to have been disposed of. The length of time the replacement MACRS property would have been in service is determined by using these dates and the convention that applies to the replacement MACRS property.

(B) ***Year of replacement is 12 months.*** Except as provided in paragraphs (c)(5)(iii), (e), and (i) of this section, the depreciation allowance in the year of replacement for the depreciable exchanged basis is determined by—

(*1*) Calculating the applicable depreciation rate for the replacement MACRS property as of the beginning of the year of replacement taking into account the depreciation method prescribed for the replacement MACRS property under paragraph (c)(3) of this section and the remaining recovery period of the replacement MACRS property as of the beginning of the year of disposition as determined under this paragraph (c)(5)(ii);

(*2*) Calculating the depreciable exchanged basis of the replacement MACRS property, and adding to that amount the amount determined under paragraph (c)(5)(i) of this section for the year of disposition; and

(*3*) Multiplying the product of the amounts determined under paragraphs (c)(5)(ii)(B)(*1*) and (B)(*2*) of this section by a fraction, the numerator of which is the number of months (including fractions of months) the property is deemed to be in service during the year of replacement (in the year of replacement the replacement MACRS property is deemed to be placed in service by the acquiring taxpayer at the time of replacement under the convention determined under paragraph (c)(4)(v) of this section), and the denominator of which is 12.

(iii) ***Year of disposition or year of replacement is less than 12 months.*** If the year of disposition or the year of replacement is less than 12 months, the depreciation allowance determined under paragraph (c)(5)(ii)(A) of this section must be adjusted for a short taxable year (for further guidance, for example, see Rev. Proc. 89-15 (1989-1 CB 816) and § 601.601(d)(2)(ii)(*b*) of this chapter).

(iv) ***Deferred transactions*** —

(A) ***In general.*** If the replacement MACRS property is not acquired until after the disposition of the relinquished MACRS property, taking into account the applicable convention of the relinquished MACRS property and replacement MACRS property, depreciation is not allowable during the period between the disposition of the relinquished MACRS property and the acquisition of the replacement MACRS property. The recovery period for the replacement MACRS property is suspended during this period. For purposes of paragraph (c)(5)(ii) of this section, only the depreciable exchanged basis of the replacement MACRS property is taken into account for calculating the amount in paragraph (c)(5)(ii)(B)(*2*) of this section if the year of replacement is a taxable year subsequent to the year of disposition.

(B) ***Allowable depreciation for a qualified intermediary.*** [Reserved]

(v) ***Remaining recovery period.*** The remaining recovery period of the replacement MACRS property is determined as of the beginning of the year of disposition of the relinquished MACRS property. For purposes of determining the remaining recovery period of the replacement MACRS property, the replacement MACRS property is deemed to have been originally placed in service under the convention determined under paragraph (c)(4)(v) of this section, but at the time the relinquished MACRS property was deemed to be placed in service under the convention that applied to it when it was placed in service.

(6) ***Examples.*** The application of this paragraph (c) is illustrated by the following examples:

Example 1. A1, a calendar-year taxpayer, exchanges Building M, an office building, for Building N, a warehouse in a like-kind exchange. Building M is relinquished in July 2004 and Building N is acquired and placed in service in October 2004. A1 did not make any elections under section 168 for either Building M or Building N. The unadjusted depreciable basis of Building M was $4,680,000 when placed in service in July 1997. Since the recovery period and depreciation method prescribed under section 168 for Building N (39 years, straight line method) are the same as the recovery period and depreciation method prescribed under section 168 for Building M (39 years, straight line method), Building N is depreciated over the remaining recovery period of, and using the same depreciation method and convention as that of, Building M. Applying the applicable convention, Building M is deemed disposed of on July 15, 2004, and Building N is placed in service on October 15, 2004. Thus, Building N will be depreciated using the straight line method over a remaining recovery period of 32 years beginning in October 2004 (the remaining recovery period of 32 years and 6.5 months at the beginning of 2004, less the 6.5 months of depreciation taken prior to the disposition of the exchanged MACRS property (Building M) in 2004). For 2004, the year in which the transaction takes place, the depreciation allowance for Building M is ($120,000)(6.5/12) which equals $65,000. The depreciation allowance for Building N for 2004 is ($120,000)(2.5/12) which equals $25,000. For 2005 and subsequent years, Building N is depreciated over the remaining recovery period of, and using the same depreciation method and convention as that of, Building M. Thus, the depreciation allowance for Building N is the same as Building M, namely $10,000 per month.

Example 2. B, a calendar-year taxpayer, placed in service Bridge P in January 1998. Bridge P is depreciated using the half-year convention. In January 2004, B exchanges Bridge P for Building Q, an apartment building, in a like-kind exchange. Pursuant to paragraph (k)(2)(i) of this section, B decided to apply § 1.168(i)-6 to the exchange of Bridge P for Building Q, the replacement MACRS property. B did not make any elections under section 168 for either Bridge P or Building Q. Since the recovery period prescribed under section 168 for Building Q (27.5 years) is longer than that of Bridge P (15 years), Building Q is depreciated as if it had originally been placed in service in July 1998 and disposed of in July 2004 using a 27.5 year recovery period. Additionally, since the depreciation method prescribed under section 168 for Building Q (straight line method) is less accelerated than that of Bridge P (150-percent declining balance method), then the depreciation allowance for Building Q is computed using the straight line method. Thus, when Building Q is acquired and placed in service in 2004, its basis is depreciated over the remaining 21.5 year recovery period using the straight line method of depreciation and the mid-month convention beginning in July 2004.

Example 3. C, a calendar-year taxpayer, placed in service Building R, a restaurant, in January 1996. In January 2004, C exchanges Building R for Tower S, a radio transmitting tower, in a like-kind exchange. Pursuant to paragraph (k)(2)(i) of this section, C decided to apply § 1.168(i)-6 to the exchange of Building R for Tower S, the replacement MACRS property. C did not make any elections under section 168 for either Building R or Tower S. Since the recovery period prescribed under section 168 for Tower S (15 years) is shorter than that of Building R (39 years), Tower S is depreciated over the remaining recovery period of Building R. Additionally, since the depreciation method prescribed under section 168 for Tower S (150% declining balance method) is more accelerated than that of Building R (straight line method), then the depreciation allowance for Tower S is also computed using the same depreciation method as Building R. Thus, Tower S is depreciated over the remaining 31 year recovery period of Building R using the straight line method of depreciation and the mid-month convention. Alternatively, C

may elect under paragraph (i) of this section to treat Tower S as though it is placed in service in January 2004. In such case, C uses the applicable recovery period, depreciation method, and convention prescribed under section 168 for Tower S.

Example 4. (i) In February 2002, D, a calendar-year taxpayer and manufacturer of rubber products, acquired for $60,000 and placed in service Asset T (a special tool) and depreciated Asset T using the straight line method election under section 168(b)(5) and the mid-quarter convention over its 3-year recovery period. D elected not to deduct the additional first year depreciation for 3-year property placed in service in 2002. In June 2004, D exchanges Asset T for Asset U (not a special tool) in a like-kind exchange. D elected not to deduct the additional first year depreciation for 7-year property placed in service in 2004. Since the recovery period prescribed under section 168 for Asset U (7 years) is longer than that of Asset T (3 years), Asset U is depreciated as if it had originally been placed in service in February 2002 using a 7-year recovery period. Additionally, since the depreciation method prescribed under section 168 for Asset U (200-percent declining balance method) is more accelerated than that of Asset T (straight line method) at the time of disposition, the depreciation allowance for Asset U is computed using the straight line method. Asset U is depreciated over its remaining recovery period of 4.75 years using the straight line method of depreciation and the mid-quarter convention.
(ii) The 2004 depreciation allowance for Asset T is $7,500 ($20,000 allowable depreciation deduction for 2004) × 4.5 months ÷ 12).

(iii) The depreciation rate in 2004 for Asset U is 0.1951 (1 ÷ 5.125 years (the length of the applicable recovery period remaining as of the beginning of 2004)). Therefore, the depreciation allowance for Asset U in 2004 is $2,744 (0.1951 × $22,500 (the sum of the $15,000 depreciable exchanged basis of Asset U ($22,500 adjusted depreciable basis at the beginning of 2004 for Asset T, less the $7,500 depreciation allowable for Asset T for 2004) and the $7,500 depreciation allowable for Asset T for 2004) × 7.5 months ÷ 12).

Example 5. The facts are the same as in *Example 4* except that D exchanges Asset T for Asset U in June 2005, in a like-kind exchange. Under these facts, the remaining recovery period of Asset T at the beginning of 2005 is 1.5 months and, as a result, is less than the 5-month period between the beginning of 2005 (year of disposition) and June 2005 (time of disposition). Accordingly, pursuant to paragraph (c)(5)(i)(B) of this section, the 2005 depreciation allowance for Asset T is $2,500 ($2,500 adjusted depreciable basis at the beginning of 2005 ($60,000 original basis minus $17,500 depreciation deduction for 2002 minus $20,000 depreciation deduction for 2003 minus $20,000 depreciation deduction for 2004)). Because the exchanged basis of asset U is $0.00, no depreciation is allowable for asset U.

Example 6. On January 1, 2004, E, a calendar-year taxpayer, acquired and placed in service Canopy V, a gas station canopy. The purchase price of Canopy V was $60,000. On August 1, 2004, Canopy V was destroyed in a hurricane and was therefore no longer usable in E's business. On October

1, 2004, as part of the involuntary conversion, E acquired and placed in service new Canopy W with the insurance proceeds E received due to the loss of Canopy V. E elected not to deduct the additional first year depreciation for 5-year property placed in service in 2004. E depreciates both canopies under the general depreciation system of section 168(a) by using the 200-percent declining balance method of depreciation, a 5-year recovery period, and the half-year convention. No depreciation deduction is allowable for Canopy V. The depreciation deduction allowable for Canopy W for 2004 is $12,000 ($60,000 × the annual depreciation rate of .40 × $^{1}/_{2}$ year). For 2005, the depreciation deduction for Canopy W is $19,200 ($48,000 adjusted basis × the annual depreciation rate of .40).

Example 7. The facts are the same as in *Example 6*, except that E did not make the election out of the additional first year depreciation for 5-year property placed in service in 2004. E depreciates both canopies under the general depreciation system of section 168(a) by using the 200-percent declining balance method of depreciation, a 5-year recovery period, and the half-year convention. No depreciation deduction is allowable for Canopy V. For 2004, E is allowed a 50-percent additional first year depreciation deduction of $30,000 for Canopy W (the unadjusted depreciable basis of $60,000 multiplied by .50), and a regular MACRS depreciation deduction of $6,000 for Canopy W (the depreciable exchanged basis of $30,000 multiplied by the annual depreciation rate of .40 × $^{1}/_{2}$ year). For 2005, E is allowed a regular MACRS depreciation deduction of $9,600 for Canopy W (the depreciable exchanged basis of $24,000 ($30,000 minus regular 2003 depreciation of $6,000) multiplied by the annual depreciation rate of .40).

Example 8. In January 2001, F, a calendar-year taxpayer, places in service a paved parking lot, Lot W, and begins depreciating Lot W over its 15-year recovery period. F's unadjusted depreciable basis in Lot W is $1,000x. On April 1, 2004, F disposes of Lot W in a like-kind exchange for Building X, which is nonresidential real property. Lot W is depreciated using the 150 percent declining balance method and the half-year convention. Building X is depreciated using the straight-line method with a 39-year recovery period and using the mid-month convention. Both Lot W and Building X were in service at the time of the exchange. Because Lot W was depreciated using the half-year convention, it is deemed to have been placed in service on July 1, 2001, the first day of the second half of 2001, and to have been disposed of on July 1, 2004, the first day of the second half of 2004. To determine the remaining recovery period of Building X at the time of replacement, Building X is deemed to have been placed in service on July 1, 2001, and removed from service on July 1, 2004. Thus, Building X is deemed to have been in service, at the time of replacement, for 3 years (36 months = 5.5 months in 2001 + 12 months in 2002 + 12 months in 2003 + 6.5 months in 2004) and its remaining recovery period is 36 years (39 − 3). Because Building X is deemed to be placed in service at the time of replacement, July 1, 2004, the first day of the second half of 2004, Building X is depreciated for 5.5 months in 2004. However, at the beginning of the year of replacement the remaining recovery period for Building X is 36 years and 6.5 months (39 years − 2 years and 5.5 months (5.5 months in 2001 + 12 months in 2002 + 12 months in 2003)). The depreciation rate for building X for 2004 is 0.02737 (= 1/(39-2-5.5/12)). For 2005, the depreciation rate for Building X is 0.02814 (= 1/(39-3-5.5/12)).

Example 9. The facts are the same as in *Example 8.* F did not make the election under paragraph (i) of this section for Building Y in the initial exchange. In January 2006, F exchanges Building Y for Building Z, an office building, in a like-kind exchange. F did not make any elections under section 168 for either Building Y or Building Z. Since the recovery period prescribed for Building

Y as a result of the initial exchange (39 years) is longer than that of Building Z (27.5 years), Building Z is depreciated over the remaining 33 years of the recovery period of Building Y. The depreciation methods are the same for both Building Y and Building Z so F's exchanged basis in Building Z is depreciated over 33 years, using the straight-line method and the mid-month convention, beginning in January 2006. Alternatively, F could have made the election under paragraph (i) of this section. If F makes such election, Building Z is treated as placed in service by F when acquired in January 2006 and F would recover its exchanged basis in Building Z over 27.5 years, using the straight line method and the mid-month convention, beginning in January 2006.

(d) ***Special rules for determining depreciation allowances*** —

(1) ***Excess basis*** —

(i) ***In general.*** Any excess basis in the replacement MACRS property is treated as property that is placed in service by the acquiring taxpayer in the year of replacement. Thus, the depreciation allowances for the depreciable excess basis are determined by using the applicable recovery period, depreciation method, and convention prescribed under section 168 for the property at the time of replacement. However, if replacement MACRS property is disposed of during the same taxable year the relinquished MACRS property is placed in service by the acquiring taxpayer, no depreciation deduction is allowable for either MACRS property. See paragraph (g) of this section regarding the application of section 179. See paragraph (h) of this section regarding the application of section 168(k) or 1400L(b).

(ii) ***Example.*** The application of this paragraph (d)(1) is illustrated by the following example:

Example. In 1989, G placed in service a hospital. On January 16, 2004, G exchanges this hospital plus $2,000,000 cash for an office building in a like-kind exchange. On January 16, 2004, the hospital has an adjusted depreciable basis of $1,500,000. After the exchange, the basis of the office building is $3,500,000. Pursuant to paragraph (k)(2)(i) of this section, G decided to apply § 1.168(i)-6 to the exchange of the hospital for the office building, the replacement MACRS property. The depreciable exchanged basis of the office building is depreciated in accordance with paragraph (c) of this section. The depreciable excess basis of $2,000,000 is treated as being placed in service by G in 2004 and, as a result, is depreciated using the applicable depreciation method, recovery period, and convention prescribed for the office building under section 168 at the time of replacement.

(2) ***Depreciable and nondepreciable property.***

(i) If land or other nondepreciable property is acquired in a like-kind exchange for, or as a result of an involuntary conversion of, depreciable property, the land or other nondepreciable property is not depreciated. If both MACRS and nondepreciable property are acquired in a like-kind exchange for, or as part of an involuntary conversion of, MACRS property, the basis allocated to the nondepreciable property (as determined under section 1031(d) and the regulations under section 1031(d) or section 1033(b) and the regulations under section 1033(b)) is not depreciated and the basis allocated to the replacement MACRS property (as determined under section 1031(d) and the regulations under section 1031(d) or section 1033(b) and the regulations under section 1033(b)) is depreciated in accordance with this section.

(ii) If MACRS property is acquired, or if both MACRS and nondepreciable property are acquired, in a like-kind exchange for, or as part of an involuntary conversion of, land or other nondepreciable property, the basis in the replacement MACRS property that is attributable to the relinquished

nondepreciable property is treated as though the replacement MACRS property is placed in service by the acquiring taxpayer in the year of replacement. Thus, the depreciation allowances for the replacement MACRS property are determined by using the applicable recovery period, depreciation method, and convention prescribed under section 168 for the replacement MACRS property at the time of replacement. See paragraph (g) of this section regarding the application of section 179. See paragraph (h) of this section regarding the application of section 168(k) or 1400L(b).

(3) ***Depreciation limitations for automobiles*** —

(i) ***In general.*** Depreciation allowances under section 179 and section 167 (including allowances under sections 168 and 1400L(b)) for a passenger automobile, as defined in section 280F(d)(5), are subject to the limitations of section 280F(a). The depreciation allowances for a passenger automobile that is replacement MACRS property (replacement MACRS passenger automobile) generally are limited in any taxable year to the replacement automobile section 280F limit for the taxable year. The taxpayer's basis in the replacement MACRS passenger automobile is treated as being comprised of two separate components. The first component is the exchanged basis and the second component is the excess basis, if any. The depreciation allowances for a passenger automobile that is relinquished MACRS property (relinquished MACRS passenger automobile) for the taxable year generally are limited to the relinquished automobile section 280F limit for that taxable year. In the year of disposition the sum of the depreciation deductions for the relinquished MACRS passenger automobile and the replacement MACRS passenger automobile may not exceed the replacement automobile section 280F limit unless the taxpayer makes the election under § 1.168(i)-6(i). For purposes of this paragraph (d)(3), the following definitions apply:

(A) ***Replacement automobile section 280F limit*** is the limit on depreciation deductions under section 280F(a) for the taxable year based on the time of replacement of the replacement MACRS passenger automobile (including the effect of any elections under section 168(k) or section 1400L(b), as applicable).

(B) ***Relinquished automobile section 280F limit*** is the limit on depreciation deductions under section 280F(a) for the taxable year based on when the relinquished MACRS passenger automobile was placed in service by the taxpayer.

(ii) ***Order in which limitations on depreciation under section 280F(a) are applied.*** Generally, depreciation deductions allowable under section 280F(a) reduce the basis in the relinquished MACRS passenger automobile and the exchanged basis of the replacement MACRS passenger automobile, before the excess basis of the replacement MACRS passenger automobile is reduced. The depreciation deductions for the relinquished MACRS passenger automobile in the year of disposition and the replacement MACRS passenger automobile in the year of replacement and each subsequent taxable year are allowable in the following order:

(A) The depreciation deduction allowable for the relinquished MACRS passenger automobile as determined under paragraph (c)(5)(i) of this section for the year of disposition to the extent of the smaller of the replacement automobile section 280F limit and the relinquished automobile section 280F limit, if the year of disposition is the year of replacement. If the year of replacement is a taxable year subsequent to the year of disposition, the depreciation deduction allowable for the relinquished MACRS passenger automobile for the year of disposition is limited to the relinquished automobile section 280F limit.

(B) The additional first year depreciation allowable on the remaining exchanged basis (remaining carryover basis as determined under § 1.168(k)-1(f)(5), § 1.168(k)-2(g)(5), or § 1.1400L(b)-1(f)(5), as applicable) of the replacement MACRS passenger automobile, as determined under § 1.168(k)-1(f)(5), § 1.168(k)-2(g)(5), or § 1.1400L(b)-1(f)(5), as applicable, to the extent of the excess of the replacement automobile section 280F limit over the amount allowable under paragraph (d)(3)(ii)(A) of this section.

(C) The depreciation deduction allowable for the taxable year on the depreciable exchanged basis of the replacement MACRS passenger automobile determined under paragraph (c) of this section to the extent of any excess over the sum of the amounts allowable under paragraphs (d)(3)(ii)(A) and (B) of this section of the smaller of the replacement automobile section 280F limit and the relinquished automobile section 280F limit.

(D) Any section 179 deduction allowable in the year of replacement on the excess basis of the replacement MACRS passenger automobile to the extent of the excess of the replacement automobile section 280F limit over the sum of the amounts allowable under paragraphs (d)(3)(ii)(A), (B), and (C) of this section.

(E) The additional first year depreciation allowable on the remaining excess basis of the replacement MACRS passenger automobile, as determined under § 1.168(k)-1(f)(5), § 1.168(k)-2(g)(5), or § 1.1400L(b)-1(f)(5), as applicable, to the extent of the excess of the replacement automobile section 280F limit over the sum of the amounts allowable under paragraphs (d)(3)(ii)(A), (B), (C), and (D) of this section.

(F) The depreciation deduction allowable under paragraph (d) of this section for the depreciable excess basis of the replacement MACRS passenger automobile to the extent of the excess of the replacement automobile section 280F limit over the sum of the amounts allowable under paragraphs (d)(3)(ii)(A), (B), (C), (D), and (E) of this section.

(iii) ***Examples.*** The application of this paragraph (d)(3) is illustrated by the following examples:

Example 1. H, a calendar-year taxpayer, acquired and placed in service Automobile X in January 2000 for $30,000 to be used solely for H's business. In December 2003, H exchanges, in a like-kind exchange, Automobile X plus $15,000 cash for new Automobile Y that will also be used solely in H's business. Automobile Y is 50-percent bonus depreciation property for purposes of section 168(k)(4). Both automobiles are depreciated using the double declining balance method, the half-year convention, and a 5-year recovery period. Pursuant to § 1.168(k)-1(g)(3)(ii) and paragraph (k)(2)(i) of this section, H decided to apply § 1.168(i)-6 to the exchange of Automobile X for Automobile Y, the replacement MACRS property. The relinquished automobile section 280F limit for 2003 for Automobile X is $1,775. The replacement automobile section 280F limit for Automobile Y is $10,710. The exchanged basis for Automobile Y is $17,315 ($30,000 less total depreciation allowable of $12,685 (($3,060 for 2000, $4,900 for 2001, $2,950 for 2002, and $1,775 for 2003)). Without taking section 280F into account, the additional first year depreciation deduction for the remaining exchanged basis is $8,658 ($17,315 × 0.5). Because this amount is less than $8,935 ($10,710 (the replacement automobile section 280F limit for 2003 for Automobile Y) − $1,775 (the depreciation allowable for Automobile X for 2003)), the additional first year depreciation deduction for the exchanged basis is $8,658. No depreciation deduction is allowable in 2003 for the depreciable exchanged basis because the depreciation deductions taken for Automobile X and the remaining exchanged basis exceed the exchanged automobile section 280F limit. An additional first year depreciation

deduction of $277 is allowable for the excess basis of $15,000 in Automobile Y. Thus, at the end of 2003 the adjusted depreciable basis in Automobile Y is $23,379 comprised of adjusted depreciable exchanged basis of $8,657 ($17,315 (exchanged basis) − $8,658 (additional first year depreciation for exchanged basis)) and of an adjusted depreciable excess basis of $14,723 ($15,000 (excess basis) − $277 (additional first year depreciation for 2003)).

Example 2. The facts are the same as in *Example 1*, except that H used Automobile X only 75 percent for business use. As such, the total allowable depreciation for Automobile X is reduced to reflect that the automobile is only used 75 percent for business. The total allowable depreciation of Automobile X is $9,513.75 ($2,295 for 2000 ($3,060 limit × .75), $3,675 for 2001 ($4,900 limit × .75), $2,212.50 for 2002 ($2,950 limit × .75), and $1,331.25 for 2003 ($1,775 limit × .75). However, under § 1.280F-2T(g)(2)(ii)(A), the exchanged basis is reduced by the excess (if any) of the depreciation that would have been allowable if the exchanged automobile had been used solely for business over the depreciation that was allowable in those years. Thus, the exchanged basis, for purposes of computing depreciation, for Automobile Y is $17,315.

Example 3. The facts are the same as in *Example 1,* except that H placed in service Automobile X in January 2002, and H elected not to claim the additional first year depreciation deduction for 5-year property placed in service in 2002 and 2003. The relinquished automobile section 280F limit for Automobile X for 2003 is $4,900. Because the replacement automobile section 280F limit for 2003 for Automobile Y ($3,060) is less than the relinquished automobile section 280F limit for Automobile X for 2003 and is less than $5,388 (($30,000 (cost) − $3,060 (depreciation allowable for 2002)) × 0.4 × 6/12), the depreciation that would be allowable for Automobile X (determined without regard to section 280F) in the year of disposition, the depreciation for Automobile X in the year of disposition is limited to $3,060. For 2003 no depreciation is allowable for the excess basis and the exchanged basis in Automobile Y.

Example 4. AB, a calendar-year taxpayer, purchased and placed in service Automobile X1 in February 2000 for $10,000. X1 is a passenger automobile subject to section 280F(a) and is used solely for AB's business. AB depreciated X1 using a 5-year recovery period, the double declining balance method, and the half-year convention. As of January 1, 2003, the adjusted depreciable basis of X1 was $2,880 ($10,000 original cost minus $2,000 depreciation deduction for 2000, minus $3,200 depreciation deduction for 2001, and $1,920 depreciation deduction for 2002). In November 2003, AB exchanges, in a like-kind exchange, Automobile X1 plus $14,000 cash for new Automobile Y1 that will be used solely in AB's business. Automobile Y1 is 50-percent bonus depreciation property for purposes of section 168(k)(4) and qualifies for the expensing election under section 179. Pursuant to paragraph § 1.168(k)-1(g)(3)(ii) and paragraph (k)(2)(i) of this section, AB decided to apply § 1.168(i)-6 to the exchange of Automobile X1 for Automobile Y1, the replacement MACRS property. AB also makes the election under section 179 for the excess basis of Automobile Y1. AB depreciates Y1 using a five-year recovery period,

the double declining balance method and the half-year convention. For 2003, the relinquished automobile section 280F limit for Automobile X1 is $1,775 and the replacement automobile section 280F limit for 2003 for Automobile Y1 is $10,710.
(i) The 2003 depreciation deduction for Automobile X1 is $576. The depreciation deduction calculated for X1 is $576 (the adjusted depreciable basis of Automobile X1 at the beginning of 2003 of $2,880 × 40% × $^{1}/_{2}$ year), which is less than the relinquished automobile section 280F limit and the replacement automobile section 280F limit.

(ii) The additional first year depreciation deduction for the exchanged basis is $1,152. The additional first year depreciation deduction of $1,152 (remaining exchanged basis of $2,304 ($2,880 adjusted basis of Automobile X1 at the beginning of 2003 minus $576) − 0.5)) is less than the replacement automobile section 280F limit minus $576.

(iii) AB's MACRS depreciation deduction allowable in 2003 for the remaining exchanged basis of $1,152 is $47 (the relinquished automobile section 280F limit of $1,775 less the depreciation deduction of $576 taken for Automobile X1 less the additional first year depreciation deduction of $1,152 taken for the exchanged basis) which is less than the depreciation deduction calculated for the depreciable exchanged basis.

(iv) For 2003, AB takes a $1,400 section 179 deduction for the excess basis of Automobile Y1. AB must reduce the excess basis of $14,000 by the section 179 deduction of $1,400 to determine the remaining excess basis of $12,600.

(v) For 2003, AB is allowed a 50-percent additional first year depreciation deduction of $6,300 (the remaining excess basis of $12,600 multiplied by .50).

(vi) For 2003, AB's depreciation deduction for the depreciable excess basis is limited to $1,235. The depreciation deduction computed without regard to the replacement automobile section 280F limit is $1,260 ($6,300 depreciable excess basis × 0.4 × 6/12). However the depreciation deduction for the depreciable excess basis is limited to $1,235 ($10,710 (replacement automobile section 280F limit) − $576 (depreciation deduction for Automobile X1) − $1,152 (additional first year depreciation deduction for the exchanged basis) − $47 (depreciation deduction for exchanged basis) − 1,400 (section 179 deduction) − $6,300 (additional first year depreciation deduction for remaining excess basis)).

(4) ***Involuntary conversion for which the replacement MACRS property is acquired and placed in service before disposition of relinquished MACRS property.*** If, in an involuntary conversion, a taxpayer acquires and places in service the replacement MACRS property before the date of disposition of the relinquished MACRS property, the taxpayer depreciates the unadjusted depreciable basis of the replacement MACRS property under section 168 beginning in the taxable year when the replacement MACRS property is placed in service by the taxpayer and by using the applicable depreciation method, recovery period, and convention prescribed under section 168 for the replacement MACRS property at the placed-in-service date. However, at the time of disposition of the relinquished MACRS property, the taxpayer determines the exchanged basis and the excess basis of the replacement MACRS property and begins to depreciate the depreciable exchanged basis of the replacement MACRS property in accordance with paragraph (c) of this section. The depreciable excess basis of the replacement MACRS property continues to be depreciated by the taxpayer in accordance with the first sentence of this paragraph (d)(4). Further, in the year of disposition of the relinquished MACRS property, the taxpayer must include in taxable income the excess of the depreciation deductions allowable on the unadjusted depreciable basis of the replacement MACRS property over the depreciation deductions that would have been allowable to the taxpayer on the depreciable excess basis of the replacement MACRS property from the date the replacement MACRS property was placed in service by the taxpayer (taking into account the applicable convention) to the time of disposition of the relinquished MACRS property. However, see § 1.168(k)-1(f)(5)(v) for replacement MACRS property that is qualified property or 50-percent bonus depreciation property and § 1.1400L(b)-1(f)(5) for replacement MACRS property that is qualified New York Liberty Zone property. Further, see § 1.168(k)-2(g)(5)(iv) for replacement MACRS property that is qualified property under section 168(k), as amended by the Tax Cuts and Jobs Act, Public Law 115-97 (131 Stat. 2054 (December 22, 2017)).

(e) ***Use of optional depreciation tables*** —

(1) ***Taxpayer not bound by prior use of table.*** If a taxpayer used an optional depreciation table for the relinquished MACRS property, the taxpayer is not required to use an optional table for the depreciable exchanged basis of the replacement MACRS property. Conversely, if a taxpayer did not use an optional depreciation table for the relinquished MACRS property, the taxpayer may use the appropriate table for the depreciable exchanged basis of the replacement MACRS property. If a taxpayer decides not to use the table for the depreciable exchanged basis of the replacement MACRS property, the depreciation allowance for this property for the year of replacement and subsequent taxable years is determined under paragraph (c) of this section. If a taxpayer decides to use the optional depreciation tables, no depreciation deduction is allowable for MACRS property placed in service by the acquiring taxpayer and subsequently exchanged or involuntarily converted by such taxpayer in the same taxable year, and, if, during the same taxable year, MACRS property is placed in service by the acquiring taxpayer, exchanged or involuntarily converted by such taxpayer, and the replacement MACRS property is disposed of by such taxpayer, no depreciation deduction is allowable for either MACRS property.

(2) ***Determination of the depreciation deduction*** —

(i) ***Relinquished MACRS property.*** In the year of disposition, the depreciation allowance for the relinquished MACRS property is computed by multiplying the unadjusted depreciable basis (less the amount of the additional first year depreciation deduction allowed or allowable, whichever is greater, under section 168(k) or section 1400L(b), as applicable) of the relinquished MACRS property by the annual depreciation rate (expressed as a decimal equivalent) specified in the appropriate table for the recovery year corresponding to the year of

disposition. This product is then multiplied by a fraction, the numerator of which is the number of months (including fractions of months) the property is deemed to be placed in service during the year of the exchange or involuntary conversion (taking into account the applicable convention) and the denominator of which is 12. However, if the year of disposition is less than 12 months, the depreciation allowance determined under this paragraph (e)(2)(i) must be adjusted for a short taxable year (for further guidance, for example, see Rev. Proc. 89-15 (1989-1 CB 816) and § 601.601(d)(2)(ii)(*b*) of this chapter).

(ii) ***Replacement MACRS property*** —

(A) ***Determination of the appropriate optional depreciation table.*** If a taxpayer chooses to use the appropriate optional depreciation table for the depreciable exchanged basis, the depreciation allowances for the depreciable exchanged basis beginning in the year of replacement are determined by choosing the optional depreciation table that corresponds to the recovery period, depreciation method, and convention of the replacement MACRS property determined under paragraph (c) of this section.

(B) ***Calculating the depreciation deduction for the replacement MACRS property.***

(*1*) The depreciation deduction for the taxable year is computed by first determining the appropriate recovery year in the table identified under paragraph (e)(2)(ii)(A) of this section. The appropriate recovery year for the year of replacement is the same as the recovery year for the year of disposition, regardless of the taxable year in which the replacement property is acquired. For example, if the recovery year for the year of disposition would have been year 4 in the table that applied before the disposition of the relinquished MACRS property, then the recovery year for the year of replacement is Year 4 in the table identified under paragraph (e)(2)(ii)(A) of this section.

(*2*) Next, the annual depreciation rate (expressed as a decimal equivalent) for each recovery year is multiplied by a transaction coefficient. The transaction coefficient is the formula (1 / (1 − x)) where x equals the sum of the annual depreciation rates from the table identified under paragraph (e)(2)(ii)(A) of this section (expressed as a decimal equivalent) corresponding to the replacement MACRS property (as determined under paragraph (e)(2)(ii)(A) of this section) for the taxable years beginning with the placed-in-service year of the relinquished MACRS property through the taxable year immediately prior to the year of disposition. The product of the annual depreciation rate and the transaction coefficient is multiplied by the depreciable exchanged basis (taking into account paragraph (e)(2)(i) of this section). In the year of replacement, this product is then multiplied by a fraction, the numerator of which is the number of months (including fractions of months) the property is deemed to be placed in service by the acquiring taxpayer during the year of replacement (taking into account the applicable convention) and the denominator of which is 12. However, if the year of replacement is the year the relinquished MACRS property is placed in service by the acquiring taxpayer, the preceding sentence does not apply. In addition, if the year of replacement is less than 12 months, the depreciation allowance determined under paragraph (e)(2)(ii) of this section must be adjusted for a short taxable year (for further guidance, for example, see Rev. Proc. 89-15 (1989-1 CB 816) and § 601.601(d)(2)(ii)(*b*) of this chapter).

(iii) ***Unrecovered basis.*** If the replacement MACRS property would have unrecovered depreciable basis after the final recovery year (for example, due to a deferred exchange), the unrecovered basis is an allowable depreciation deduction in the taxable year that corresponds to the final recovery year unless the unrecovered basis is subject to a depreciation limitation such as section 280F.

(3) ***Excess basis.*** As provided in paragraph (d)(1) of this section, any excess basis in the replacement MACRS property is treated as property that is placed in service by the acquiring taxpayer at the time of replacement. Thus, if the taxpayer chooses to use the appropriate optional depreciation table for the depreciable excess basis in the replacement MACRS property, the depreciation allowances for the depreciable excess basis are determined by multiplying the depreciable excess basis by the annual depreciation rate (expressed as a decimal equivalent) specified in the appropriate table for each taxable year. The appropriate table for the depreciable excess basis is based on the depreciation method, recovery period, and convention applicable to the depreciable excess basis under section 168 at the time of replacement. However, If the year of replacement is less than 12 months, the depreciation allowance determined under this paragraph (e)(3) must be adjusted for a short taxable year (for further guidance, for example, see Rev. Proc. 89-15 (1989-1 CB 816) and § 601.601(d)(2)(ii)(*b*) of this chapter).

(4) ***Examples.*** The application of this paragraph (e) is illustrated by the following examples:

Example 1. J, a calendar-year taxpayer, acquired 5-year property for $10,000 and placed it in service in January 2001. J uses the optional tables to depreciate the property. J uses the half-year convention and did not make any elections for the property. In December 2003, J exchanges the 5-year property for used 7-year property in a like-kind exchange. Pursuant to paragraph (k)(2)(i) of this section, J decided to apply § 1.168(i)-6 to the exchange of the 5-year property for the 7-year property, the replacement MACRS property. The depreciable exchanged basis of the 7-year property equals the adjusted depreciable basis of the 5-year property at the time of disposition of the relinquished MACRS property, namely $3,840 ($10,000 less $2,000 depreciation in 2001, $3,200 depreciation in 2002, and $960 depreciation in 2003). J must first determine the appropriate optional depreciation table pursuant to paragraph (c) of this section. Since the replacement MACRS property has a longer recovery period and the same depreciation method as the relinquished MACRS property, J uses the optional depreciation table corresponding to a 7-year recovery period, the 200% declining balance method, and the half-year convention (because the 5-year property was depreciated using a half-year convention). Had the replacement MACRS property been placed in service in the same taxable year as the placed-in-service year of the relinquished MACRS property, the depreciation allowance for the replacement MACRS property for the year of replacement would be determined using recovery year 3 of the optional table. The depreciation allowance equals the depreciable exchanged basis ($3,840) multiplied by the annual depreciation rate for the current taxable year (.1749 for recovery year 3) as modified by the transaction coefficient [1 / (1 − (.1429 + .2449))] which equals 1.6335. Thus, J multiplies $3,840, its depreciable exchanged basis in the replacement MACRS property, by the product of .1749 and 1.6335, and then by one-half, to determine the depreciation allowance for 2003, $549. For 2004, J multiples its depreciable exchanged basis in the replacement MACRS property determined at the time of replacement of $3,840 by the product of the modified annual depreciation rate for the current taxable year (.1249 for recovery year 4) and the transaction coefficient (1.6335) to determine its depreciation allowance of $783.

Example 2. K, a calendar-year taxpayer, acquired used Asset V for $100,000 and placed it in service in January 1999. K depreciated Asset V under the general depreciation system of section 168(a) by using a 5-year recovery period, the 200-percent declining balance method of depreciation, and the half-year convention. In December 2003, as part of the involuntary conversion, Asset V is involuntarily converted due to an earthquake. In October 2005, K purchases used Asset W with the insurance proceeds from the destruction of Asset V and places Asset W in service to replace Asset V. Pursuant to paragraph (k)(2)(i) of this section, K decided to apply § 1.168(i)-6 to the involuntary conversion of Asset V with the replacement of Asset W, the replacement MACRS property. If Asset W had been placed in service when Asset V was placed in service, it would have been depreciated using a 7-year recovery period, the 200-percent declining balance method, and the half-year convention. K uses the optional depreciation tables to depreciate Asset V and Asset W. For 2003 (recovery year 5 on the optional table), the depreciation deduction for Asset V is $5,760 ((0.1152)($100,000)(1/2)). Thus, the adjusted depreciable basis of Asset V at the time of replacement is $11,520 ($100,000 less $20,000 depreciation in 1999, $32,000 depreciation in 2000, $19,200 depreciation in 2001, $11,520 depreciation in 2002, and $5,760 depreciation in 2003). Under the table that applied to Asset V, the year of disposition was recovery year 5 and the depreciation deduction was determined under the straight line method. The table that applies for Asset W is the table that applies the straight line depreciation method, the half-year convention, and a 7-year recovery period. The appropriate recovery year under this table is recovery year 5. The depreciation deduction for Asset W for 2005 is $1,646 (($11,520)(0.1429)(1/(1−0.5))(1/2)). Thus, the depreciation deduction for Asset W in 2006 (recovery year 6) is $3,290 ($11,520)(0.1428)(1/(1−0.5)). The depreciation deduction for 2007 (recovery year 7) is $3,292 (($11,520)(.1429)(1/(1−.5))). The depreciation deduction for 2008 (recovery year 8) is $3292 ($11,520 less allowable depreciation for Asset W for 2005 through 2007 ($1,646 + $3,290 + $3,292)).

Example 3. L, a calendar-year taxpayer, placed in service used Computer X in January 2002 for $5,000. L depreciated Computer X under the general depreciation system of section 168(a) by using the 200-percent declining balance method of depreciation, a 5-year recovery period, and the half-year convention. Computer X is destroyed in a fire in March 2004. For 2004, the depreciation deduction allowable for Computer X equals $480 ([($5,000)(.1920)] × (1/2)). Thus, the adjusted depreciable basis of Computer X was $1,920 when it was destroyed ($5,000 unadjusted depreciable basis less $1,000 depreciation for 2002, $1,600 depreciation for 2003, and $480 depreciation for 2004). In April 2004, as part of the involuntary conversion, L acquired and placed in service used Computer Y with insurance proceeds received due to the loss of Computer X. Computer Y will be depreciated using the same depreciation method, recovery period, and convention as Computer X. L elected to use the optional depreciation tables to compute the depreciation allowance for Computer X and Computer Y. The depreciation deduction allowable for 2004 for Computer Y equals $384 ([$1,920 × (.1920)(1/(1−.52))] × (1/2)).

(f) ***Mid-quarter convention.*** For purposes of applying the 40-percent test under section 168(d) and the regulations under section 168(d), the following rules apply:

(1) ***Exchanged basis.*** If, in a taxable year, MACRS property is placed in service by the acquiring taxpayer (but not as a result of a like-kind exchange or involuntary conversion) and—

(i) In the same taxable year, is disposed of by the acquiring taxpayer in a like-kind exchange or an involuntary conversion and replaced by the acquiring taxpayer with replacement MACRS property, the exchanged basis (determined without any adjustments for depreciation

deductions during the taxable year) of the replacement MACRS property is taken into account in the year of replacement in the quarter the relinquished MACRS property was placed in service by the acquiring taxpayer; or

(ii) In the same taxable year, is disposed of by the acquiring taxpayer in a like-kind exchange or an involuntary conversion, and in a subsequent taxable year is replaced by the acquiring taxpayer with replacement MACRS property, the exchanged basis (determined without any adjustments for depreciation deductions during the taxable year) of the replacement MACRS property is taken into account in the year of replacement in the quarter the replacement MACRS property was placed in service by the acquiring taxpayer; or

(iii) In a subsequent taxable year, disposed of by the acquiring taxpayer in a like-kind exchange or involuntary conversion, the exchanged basis of the replacement MACRS property is not taken into account in the year of replacement.

(2) ***Excess basis.*** Any excess basis is taken into account in the quarter the replacement MACRS property is placed in service by the acquiring taxpayer.

(3) ***Depreciable property acquired for nondepreciable property.*** Both the exchanged basis and excess basis of the replacement MACRS property described in paragraph (d)(2)(ii) of this section (depreciable property acquired for nondepreciable property), are taken into account for determining whether the mid-quarter convention applies in the year of replacement.

(g) ***Section 179 election.*** In applying the section 179 election, only the excess basis, if any, in the replacement MACRS property is taken into account. If the replacement MACRS property is described in paragraph (d)(2)(ii) of this section (depreciable property acquired for nondepreciable property), only the excess basis in the replacement MACRS property is taken into account.

(h) ***Additional first year depreciation deduction.*** See § 1.168(k)-1(f)(5) (for qualified property or 50-percent bonus depreciation property) and § 1.1400L(b)-1(f)(5) (for qualified New York Liberty Zone property). Further, see § 1.168(k)-2(g)(5) for qualified property under section 168(k), as amended by the Tax Cuts and Jobs Act, Public Law 115-97 (131 Stat. 2054 (December 22, 2017)).

(i) ***Elections*** —

(1) ***Election not to apply this section.*** A taxpayer may elect not to apply this section for any MACRS property involved in a like-kind exchange or involuntary conversion. An election under this paragraph (i)(1) applies only to the taxpayer making the election and the election applies to both the relinquished MACRS property and the replacement MACRS property. If an election is made under this paragraph (i)(1), the depreciation allowances for the replacement MACRS property beginning in the year of replacement and for the relinquished MACRS property in the year of disposition are not determined under this section (except as otherwise provided in this paragraph). Instead, for depreciation purposes only, the sum of the exchanged basis and excess basis, if any, in the replacement MACRS property is treated as property placed in service by the taxpayer at the time of replacement and the adjusted depreciable basis of the relinquished MACRS property is treated as being disposed of by the taxpayer at the time of disposition. While the relinquished MACRS property is treated as being disposed of at the time of disposition for depreciation purposes, the election not to apply this section does not affect the application of sections 1031 and 1033 (for example, if a taxpayer does not make the election under this paragraph (i)(1) and does not recognize gain or loss under section 1031, this result would not change if the taxpayer chose to make the election under this paragraph (i)(1)). In addition, the election not to apply this section does not affect the application of sections 1245 and 1250 to the relinquished MACRS property. Paragraphs (c)(5)(i)

(determination of depreciation for relinquished MACRS property in the year of disposition), (c)(5)(iii) (rules for deferred transactions), (g) (section 179 election), and (h) (additional first year depreciation deduction) of this section apply to property to which this paragraph (i)(1) applies. See paragraph (j) of this section for the time and manner of making the election under this paragraph (i)(1).

(2) ***Election to treat certain replacement property as MACRS property.*** If the tangible depreciable property acquired by a taxpayer in a like-kind exchange or involuntary conversion (the replacement property) replaces tangible depreciable property for which the taxpayer made a valid election under section 168(f)(1) to exclude it from the application of MACRS (the relinquished property), the taxpayer may elect to treat, for depreciation purposes only, the sum of the exchanged basis and excess basis, if any, of the replacement property as MACRS property that is placed in service by the taxpayer at the time of replacement. An election under this paragraph (i)(2) applies only to the taxpayer making the election and the election applies to both the relinquished property and the replacement property. If an election is made under this paragraph (i)(2), the adjusted depreciable basis of the relinquished property is treated as being disposed of by the taxpayer at the time of disposition. Rules similar to those provided in §§ 1.168(i)-6(b)(3) and (4) apply for purposes of determining the time of disposition and time of replacement under this paragraph (i)(2). While the relinquished property is treated as being disposed of at the time of disposition for depreciation purposes, the election under this paragraph (i)(2) does not affect the application of sections 1031 and 1033, and the application of sections 1245 and 1250 to the relinquished property. If an election is made under this paragraph (i)(2), rules similar to those provided in paragraphs (c)(5)(iii) (rules for deferred transactions), (g) (section 179 election), and (h) (additional first year depreciation deduction) of this section apply to property. Except as provided in paragraph (k)(3)(ii) of this section, a taxpayer makes the election under this paragraph (i)(2) by claiming the depreciation allowance as determined under MACRS for the replacement property on the taxpayer's timely filed (including extensions) original Federal tax return for the placed-in-service year of the replacement property as determined under this paragraph (i)(2).

(j) ***Time and manner of making election under paragraph (i)(1) of this section*** —

(1) ***In general.*** The election provided in paragraph (i)(1) of this section is made separately by each person acquiring replacement MACRS property. The election is made for each member of a consolidated group by the common parent of the group, by the partnership (and not by the partners separately) in the case of a partnership, or by the S corporation (and not by the shareholders separately) in the case of an S corporation. A separate election under paragraph (i)(1) of this section is required for each like-kind exchange or involuntary conversion. The election provided in paragraph (i)(1) of this section must be made within the time and manner provided in paragraph (j)(2) and (3) of this section and may not be made by the taxpayer in any other manner (for example, the election cannot be made through a request under section 446(e) to change the taxpayer's method of accounting), except as provided in paragraph (k)(2) of this section.

(2) ***Time for making election.*** The election provided in paragraph (i)(1) of this section must be made by the due date (including extensions) of the taxpayer's Federal tax return for the year of replacement.

(3) ***Manner of making election.*** The election provided in paragraph (i)(1) of this section is made in the manner provided for on Form 4562, Depreciation and Amortization, and its instructions. If Form 4562 is revised or renumbered, any reference in this section to that form is treated as a reference to the revised or renumbered form.

(4) ***Revocation.*** The election provided in paragraph (i)(1) of this section, once made, may be revoked only with the consent of the Commissioner of Internal Revenue. Such consent will be granted only in extraordinary circumstances. Requests for consent are requests for a letter ruling and must be filed with the Commissioner of Internal Revenue, Washington, DC 20224. Requests for consent may not be made in any other manner (for example, through a request under section 446(e) to change the taxpayer's method of accounting).

(k) ***Effective date*** —

(1) ***In general.*** Except as provided in paragraphs (k)(3) and (4) of this section, this section applies to a like-kind exchange or an involuntary conversion of MACRS property for which the time of disposition and the time of replacement both occur after February 27, 2004.

(2) ***Application to pre-effective date like-kind exchanges and involuntary conversions.*** For a like-kind exchange or an involuntary conversion of MACRS property for which the time of disposition, the time of replacement, or both occur on or before February 27, 2004, a taxpayer may—

(i) Apply the provisions of this section. If a taxpayer's applicable Federal tax return has been filed on or before February 27, 2004, and the taxpayer has treated the replacement MACRS property as acquired, and the relinquished MACRS property as disposed of, in a like-kind exchange or an involuntary conversion, the taxpayer changes its method of accounting for depreciation of the replacement MACRS property and relinquished MACRS property in accordance with this paragraph (k)(2)(i) by following the applicable administrative procedures issued under § 1.446-1(e)(3)(ii) for obtaining the Commissioner's automatic consent to a change in method of accounting (for further guidance, see Rev. Proc. 2002-9 (2002-1 CB 327) and § 601.601(d)(2)(ii)(*b*) of this chapter); or

(ii) Rely on prior guidance issued by the Internal Revenue Service for determining the depreciation deductions of replacement MACRS property and relinquished MACRS property (for further guidance, for example, see Notice 2000-4 (2001-1 CB 313) and § 601.601(d)(2)(ii)(*b*) of this chapter). In relying on such guidance, a taxpayer may use any reasonable, consistent method of determining depreciation in the year of disposition and the year of replacement. If a taxpayer's applicable Federal tax return has been filed on or before February 27, 2004, and the taxpayer has treated the replacement MACRS property as acquired, and the relinquished MACRS property as disposed of, in a like-kind exchange or an involuntary conversion, the taxpayer changes its method of accounting for depreciation of the replacement MACRS property and relinquished MACRS property in accordance with this paragraph (k)(2)(ii) by following the applicable administrative procedures issued under § 1.446-1(e)(3)(ii) for obtaining the Commissioner's automatic consent to a change in method of accounting (for further guidance, see Rev. Proc. 2002-9 (2002-1 CB 327) and § 601.601(d)(2)(ii)(*b*) of this chapter).

(3) ***Like-kind exchanges and involuntary conversions where the taxpayer made the election under section 168(f)(1) for the relinquished property*** —

(i) ***In general.*** If the tangible depreciable property acquired by a taxpayer in a like-kind exchange or involuntary conversion (the replacement property) replaces tangible depreciable property for which the taxpayer made a valid election under section 168(f)(1) to exclude it from the application of MACRS (the relinquished property), paragraph (i)(2) of this section applies to such relinquished property and replacement property for which the time of disposition and the time of replacement (both as determined under paragraph (i)(2) of this section) both occur after February 26, 2007.

(ii) ***Application of paragraph (i)(2) of this section to pre-February 26, 2007 like-kind exchanges and involuntary conversions.*** If the tangible depreciable property acquired by a taxpayer in a like-kind exchange or involuntary conversion (the replacement property) replaces tangible depreciable property for which the taxpayer made a valid election under section 168(f)(1) to exclude it from the application of MACRS (the relinquished property), the taxpayer may apply paragraph (i)(2) of this section to the relinquished property and the replacement property for which the time of disposition, the time of replacement (both as determined under paragraph (i)(2) of this section), or both occur on or before February 26, 2007. If the taxpayer wants to apply paragraph (i)(2) of this section and the taxpayer's applicable Federal tax return has been filed on or before February 26, 2007, the taxpayer must change its method of accounting for depreciation of the replacement property and relinquished property in accordance with this paragraph (k)(3)(ii) by following the applicable administrative procedures issued under § 1.446-1(e)(3)(ii) for obtaining the Commissioner's automatic consent to a change in method of accounting (for further guidance, see Rev. Proc. 2002-9 (2002-1 CB 327) and § 601.601(d)(2)(ii)(b) of this chapter).

(4) ***Qualified property under section 168(k) acquired and placed in service after September 27, 2017*** —

(i) ***In general.*** The language "1.168(k)-2(g)(5)," in paragraphs (d)(3)(ii)(B) and (E) of this section and the final sentence in paragraphs (d)(4) and (h) of this section apply to a like-kind exchange or an involuntary conversion of MACRS property, which is qualified property under section 168(k)(2), for which the time of replacement occurs on or after September 24, 2019.

(ii) ***Early application.*** A taxpayer may choose to apply the language "1.168(k)-2(g)(5)," in paragraphs (d)(3)(ii)(B) and (E) of this section and the final sentence in paragraphs (d)(4) and (h) of this section to a like-kind exchange or an involuntary conversion of MACRS property, which is qualified property under section 168(k)(2), for which the time of replacement occurs on or after September 28, 2017.

(iii) ***Early application of regulation project REG-104397-18.*** A taxpayer may rely on the language "1.168(k)-2(f)(5)," in paragraphs (d)(3)(ii)(B) and (E) of this section and the final sentence in paragraphs (d)(4) and (h) of this section in regulation project REG-104397-18 (2018-41 I.R.B. 558) (see § 601.601(d)(2)(ii)(*b*) of this chapter) for a like-kind exchange or an involuntary conversion of MACRS property, which is qualified property under section 168(k)(2), for which the time of replacement occurs on or after September 28, 2017, and occurs before September 24, 2019.

[T.D. 9314, 72 FR 9251, Mar. 1, 2007, as amended by T.D. 9874, 84 FR 50127, Sept. 24, 2019]

§ 1.168(i)-7 Accounting for MACRS property.

(a) ***In general.*** A taxpayer may account for MACRS property (as defined in § 1.168(b)-1(a)(2)) by treating each individual asset as an account (a "single asset account" or an "item account") or by combining two or more assets in a single account (a "multiple asset account" or a "pool"). A taxpayer may establish as many accounts for MACRS property as the taxpayer wants. This section does not apply to assets included in general asset accounts. For rules applicable to general asset accounts, see § 1.168(i)-1.

(b) ***Required use of single asset accounts.*** A taxpayer must account for an asset in a single asset account if the taxpayer uses the asset both in a trade or business or for the production of income and in a personal activity, or if the taxpayer places in service and disposes of the asset during the same taxable year. Also, if

general asset account treatment for an asset terminates under § 1.168(i)-1(c)(1)(ii)(A), (e)(3)(iii), (e)(3)(v), (e)(3)(vii), (g), or (h)(1), as applicable, the taxpayer must account for the asset in a single asset account beginning in the taxable year in which the general asset account treatment for the asset terminates. If a taxpayer accounts for an asset in a multiple asset account or a pool and the taxpayer disposes of the asset, the taxpayer must account for the asset in a single asset account beginning in the taxable year in which the disposition occurs. See § 1.168(i)-8(h)(2)(i). If a taxpayer disposes of a portion of an asset and § 1.168(i)-8(d)(1) applies to that disposition, the taxpayer must account for the disposed portion in a single asset account beginning in the taxable year in which the disposition occurs. See § 1.168(i)-8(h)(3)(i).

(c) ***Establishment of multiple asset accounts or pools*** —

(1) ***Assets eligible for multiple asset accounts or pools.*** Except as provided in paragraph (b) of this section, assets that are subject to either the general depreciation system of section 168(a) or the alternative depreciation system of section 168(g) may be accounted for in one or more multiple asset accounts or pools.

(2) ***Grouping assets in multiple asset accounts or pools*** —

(i) ***General rules.*** Assets that are eligible to be grouped into a single multiple asset account or pool may be divided into more than one multiple asset account or pool. Each multiple asset account or pool must include only assets that—

(A) Have the same applicable depreciation method;

(B) Have the same applicable recovery period;

(C) Have the same applicable convention; and

(D) Are placed in service by the taxpayer in the same taxable year.

(ii) ***Special rules.*** In addition to the general rules in paragraph (c)(2)(i) of this section, the following rules apply when establishing multiple asset accounts or pools—

(A) Assets subject to the mid-quarter convention may only be grouped into a multiple asset account or pool with assets that are placed in service in the same quarter of the taxable year;

(B) Assets subject to the mid-month convention may only be grouped into a multiple asset account or pool with assets that are placed in service in the same month of the taxable year;

(C) Passenger automobiles for which the depreciation allowance is limited under section 280F(a) must be grouped into a separate multiple asset account or pool;

(D) Assets not eligible for any additional first year depreciation deduction (including assets for which the taxpayer elected not to deduct the additional first year depreciation) provided by, for example, section 168(k) through (n), 1400L(b), or 1400N(d), must be grouped into a separate multiple asset account or pool;

(E) Assets eligible for the additional first year depreciation deduction may only be grouped into a multiple asset account or pool with assets for which the taxpayer claimed the same percentage of the additional first year depreciation (for example, 30 percent, 50 percent, or 100 percent);

(F) Except for passenger automobiles described in paragraph (c)(2)(ii)(C) of this section, listed property (as defined in section 280F(d)(4)) must be grouped into a separate multiple asset account or pool;

(G) Assets for which the depreciation allowance for the placed-in-service year is not determined by using an optional depreciation table (for further guidance, see section 8 of Rev. Proc. 87-57, 1987-2 CB 687, 693 (see § 601.601(d)(2) of this chapter)) must be grouped into a separate multiple asset account or pool; and

(H) Mass assets (as defined in § 1.168(i)-8(b)(3)) that are or will be subject to § 1.168(i)-8(g)(2)(iii) (disposed of or converted mass asset is identified by a mortality dispersion table) must be grouped into a separate multiple asset account or pool.

(d) ***Cross references.*** See § 1.167(a)-7(c) for the records to be maintained by a taxpayer for each account. In addition, see § 1.168(i)-1(l)(3) for the records to be maintained by a taxpayer for each general asset account.

(e) ***Effective/applicability dates*** —

(1) ***In general.*** This section applies to taxable years beginning on or after January 1, 2014.

(2) ***Early application of this section.*** A taxpayer may choose to apply the provisions of this section to taxable years beginning on or after January 1, 2012.

(3) ***Early application of regulation project REG-110732-13.*** A taxpayer may rely on the provisions of this section in regulation project REG-110732-13 (2013-43 IRB 404) (see § 601.601(d)(2) of this chapter) for taxable years beginning on or after January 1, 2012. However, a taxpayer may not rely on the provisions of this section in regulation project REG-110732-13 for taxable years beginning on or after January 1, 2014.

(4) ***Optional application of TD 9564.*** A taxpayer may choose to apply § 1.168(i)-7T as contained in 26 CFR part 1 edition revised as of April 1, 2013, to taxable years beginning on or after January 1, 2012. However, a taxpayer may not apply § 1.168(i)-7T as contained in 26 CFR part 1 edition revised as of April 1, 2013, to taxable years beginning on or after January 1, 2014.

(5) ***Change in method of accounting.*** A change to comply with this section for depreciable assets placed in service in a taxable year ending on or after December 30, 2003, is a change in method of accounting to which the provisions of section 446(e) and the regulations under section 446(e) apply. A taxpayer also may treat a change to comply with this section for depreciable assets placed in service in a taxable year ending before December 30, 2003, as a change in method of accounting to which the provisions of section 446(e) and the regulations under section 446(e) apply.

[T.D. 9636, 78 FR 57707, Sept. 19, 2013, as amended by T.D. 9689, 79 FR 48678, Aug. 18, 2014; 79 FR 78697, Dec. 31, 2014]

§ 1.168(i)-8 Dispositions of MACRS property.

(a) ***Scope.*** This section provides rules applicable to dispositions of MACRS property (as defined in § 1.168(b)-1(a)(2)) or to depreciable property (as defined in § 1.168(b)-1(a)(1)) that would be MACRS property but for an election made by the taxpayer either to expense all or some of the property's cost under section 179, section 179A, section 179B, section 179C, section 179D, or section 1400I(a)(1), or any similar provision, or to amortize all or some of the property's cost under section 1400I(a)(2) or any similar provision. This section also applies to dispositions described in paragraph (d)(1) of this section of a

portion of such property. Except as provided in § 1.168(i)-1(e)(3), this section does not apply to dispositions of assets included in a general asset account. For rules applicable to dispositions of assets included in a general asset account, see § 1.168(i)-1(e).

(b) ***Definitions.*** For purposes of this section—

(1) ***Building*** has the same meaning as that term is defined in § 1.48-1(e)(1).

(2) ***Disposition*** occurs when ownership of the asset is transferred or when the asset is permanently withdrawn from use either in the taxpayer's trade or business or in the production of income. A disposition includes the sale, exchange, retirement, physical abandonment, or destruction of an asset. A disposition also occurs when an asset is transferred to a supplies, scrap, or similar account, or when a portion of an asset is disposed of as described in paragraph (d)(1) of this section. If a structural component, or a portion thereof, of a building is disposed of in a disposition described in paragraph (d)(1) of this section, a disposition also includes the disposition of such structural component or such portion thereof.

(3) ***Mass assets*** is a mass or group of individual items of depreciable assets—

(i) That are not necessarily homogenous;

(ii) Each of which is minor in value relative to the total value of the mass or group;

(iii) Numerous in quantity;

(iv) Usually accounted for only on a total dollar or quantity basis;

(v) With respect to which separate identification is impracticable; and

(vi) Placed in service in the same taxable year.

(4) ***Portion of an asset*** is any part of an asset that is less than the entire asset as determined under paragraph (c)(4) of this section.

(5) ***Structural component*** has the same meaning as that term is defined in § 1.48-1(e)(2).

(6) ***Unadjusted depreciable basis of the multiple asset account or pool*** is the sum of the unadjusted depreciable bases (as defined in § 1.168(b)-1(a)(3)) of all assets included in the multiple asset account or pool.

(c) ***Special rules*** —

(1) ***Manner of disposition.*** The manner of disposition (for example, normal retirement, abnormal retirement, ordinary retirement, or extraordinary retirement) is not taken into account in determining whether a disposition occurs or gain or loss is recognized.

(2) ***Disposition by transfer to a supplies account.*** If a taxpayer made an election under § 1.162-3(d) to treat the cost of any rotable spare part, temporary spare part, or standby emergency spare part (as defined in § 1.162-3(c)) as a capital expenditure subject to the allowance for depreciation, the taxpayer can dispose of the rotable, temporary, or standby emergency spare part by transferring it to a supplies account only if the taxpayer has obtained the consent of the Commissioner to revoke the § 1.162-3(d) election. If a taxpayer made an election under § 1.162-3T(d) to treat the cost of any material and supply (as defined in § 1.162-3T(c)(1)) as a capital expenditure subject to the allowance for depreciation, the taxpayer can dispose of the material and supply by transferring it to a

supplies account only if the taxpayer has obtained the consent of the Commissioner to revoke the § 1.162-3T(d) election. See § 1.162-3(d)(3) for the procedures for revoking a § 1.162-3(d) or a § 1.162-3T(d) election.

(3) ***Leasehold improvements.*** This section also applies to—

(i) A lessor of leased property that made an improvement to that property for the lessee of the property, has a depreciable basis in the improvement, and disposes of the improvement, or disposes of a portion of the improvement under paragraph (d)(1) of this section, before or upon the termination of the lease with the lessee. See section 168(i)(8)(B); and

(ii) A lessee of leased property that made an improvement to that property, has a depreciable basis in the improvement, and disposes of the improvement, or disposes of a portion of the improvement under paragraph (d)(1) of this section, before or upon the termination of the lease.

(4) ***Determination of asset disposed of*** —

(i) ***General rules.*** For purposes of applying this section, the facts and circumstances of each disposition are considered in determining what is the appropriate asset disposed of. The asset for disposition purposes may not consist of items placed in service by the taxpayer on different dates, without taking into account the applicable convention. For purposes of determining what is the appropriate asset disposed of, the unit of property determination under § 1.263(a)-3(e) or in published guidance in the Internal Revenue Bulletin (see § 601.601(d)(2) of this chapter) under section 263(a) and the distinct asset determination under § 1.1031(a)-3(a)(4) do not apply.

(ii) ***Special rules.*** In addition to the general rules in paragraph (c)(4)(i) of this section, the following rules apply for purposes of applying this section:

(A) Each building, including its structural components, is the asset, except as provided in § 1.1250-1(a)(2)(ii) or in paragraph (c)(4)(ii)(B) or (D) of this section.

(B) If a building has two or more condominium or cooperative units, each condominium or cooperative unit, including its structural components, is the asset, except as provided in § 1.1250-1(a)(2)(ii) or in paragraph (c)(4)(ii)(D) of this section.

(C) If a taxpayer properly includes an item in one of the asset classes 00.11 through 00.4 of Rev. Proc. 87-56 (1987-2 CB 674) (see § 601.601(d)(2) of this chapter) or properly classifies an item in one of the categories under section 168(e)(3), except for a category that includes buildings or structural components (for example, retail motor fuels outlet, qualified leasehold improvement property, qualified restaurant property, and qualified retail improvement property), each item is the asset provided paragraph (c)(4)(ii)(D) of this section does not apply to the item. For example, each desk is the asset, each computer is the asset, and each qualified smart electric meter is the asset.

(D) If the taxpayer places in service an improvement or addition to an asset after the taxpayer placed the asset in service, the improvement or addition and, if applicable, its structural components are a separate asset.

(d) ***Disposition of a portion of an asset*** —

(1) ***In general.*** For purposes of applying this section, a disposition includes a disposition of a portion of an asset as a result of a casualty event described in section 165, a disposition of a portion of an asset for which gain, determined without regard to section 1245 or section 1250, is not recognized in whole or in part under section 1031 or section 1033, a transfer of a portion of an asset in a transaction described in section 168(i)(7)(B), or a sale of a portion of an asset, even if the taxpayer does not make the election under paragraph (d)(2)(i) of this section for that disposed portion. For other transactions, a disposition includes a disposition of a portion of an asset only if the taxpayer makes the election under paragraph (d)(2)(i) of this section for that disposed portion.

(2) ***Partial disposition election*** —

(i) ***In general.*** A taxpayer may make an election under this paragraph (d)(2) to apply this section to a disposition of a portion of an asset. If the asset is properly included in one of the asset classes 00.11 through 00.4 of Rev. Proc. 87-56, a taxpayer may make an election under this paragraph (d)(2) to apply this section to a disposition of a portion of such asset only if the taxpayer classifies the replacement portion of the asset under the same asset class as the disposed portion of the asset.

(ii) ***Time and manner for making election*** —

(A) ***Time for making election.*** Except as provided in paragraph (d)(2)(iii) or (iv) of this section, a taxpayer must make the election specified in paragraph (d)(2)(i) of this section by the due date, including extensions, of the original Federal tax return for the taxable year in which the portion of an asset is disposed of by the taxpayer.

(B) ***Manner of making election.*** Except as provided in paragraph (d)(2)(iii) or (iv) of this section, a taxpayer must make the election specified in paragraph (d)(2)(i) of this section by applying the provisions of this section for the taxable year in which the portion of an asset is disposed of by the taxpayer, by reporting the gain, loss, or other deduction on the taxpayer's timely filed, including extensions, original Federal tax return for that taxable year, and, if the asset is properly included in one of the asset classes 00.11 through 00.4 of Rev. Proc. 87-56, by classifying the replacement portion of such asset under the same asset class as the disposed portion of the asset in the taxable year in which the replacement portion is placed in service by the taxpayer. Except as provided in paragraph (d)(2)(iii) or (iv)(B) of this section or except as otherwise expressly provided by other guidance published in the Internal Revenue Bulletin (see § 601.601(d)(2) of this chapter), the election specified in paragraph (d)(2)(i) of this section may not be made through the filing of an application for change in accounting method.

(iii) ***Special rule for subsequent Internal Revenue Service adjustment.*** This paragraph (d)(2)(iii) applies when a taxpayer deducted the amount paid or incurred for the replacement of a portion of an asset as a repair under § 1.162-4, the taxpayer did not make the election specified in paragraph (d)(2)(i) of this section for the disposed portion of that asset within the time and in the manner under paragraph (d)(2)(ii) or (iv) of this section, and as a result of an examination of the taxpayer's Federal tax return, the Internal Revenue Service disallows the taxpayer's repair deduction for the amount paid or incurred for the replacement of the portion of that asset and instead capitalizes such amount under § 1.263(a)-2 or § 1.263(a)-3. If this paragraph (d)(2)(iii) applies, the taxpayer may make the election specified in paragraph (d)(2)(i) of this section for the disposition of the portion of the asset to which the Internal Revenue Service's adjustment

pertains by filing an application for change in accounting method, provided the asset of which the disposed portion was a part is owned by the taxpayer at the beginning of the year of change (as defined for purposes of section 446(e)).

(iv) ***Special rules for 2012 or 2013 returns.*** If, under paragraph (j)(2) of this section, a taxpayer chooses to apply the provisions of this section to a taxable year beginning on or after January 1, 2012, and ending on or before September 19, 2013 (applicable taxable year), and the taxpayer did not make the election specified in paragraph (d)(2)(i) of this section on its timely filed original Federal tax return for the applicable taxable year, including extensions, the taxpayer must make the election specified in paragraph (d)(2)(i) of this section for the applicable taxable year by filing either—

(A) An amended Federal tax return for the applicable taxable year on or before 180 days from the due date including extensions of the taxpayer's Federal tax return for the applicable taxable year, notwithstanding that the taxpayer may not have extended the due date; or

(B) An application for change in accounting method with the taxpayer's timely filed original Federal tax return for the first or second taxable year succeeding the applicable taxable year.

(v) ***Revocation.*** A taxpayer may revoke the election specified in paragraph (d)(2)(i) of this section only by filing a request for a private letter ruling and obtaining the Commissioner's consent to revoke the election. The Commissioner may grant a request to revoke this election if the taxpayer acted reasonably and in good faith, and the revocation will not prejudice the interests of the Government. See generally § 301.9100-3 of this chapter. The election specified in paragraph (d)(2)(i) of this section may not be revoked through the filing of an application for change in accounting method.

(e) ***Gain or loss on dispositions.*** Solely for purposes of this paragraph (e), the term *asset* is an asset within the scope of this section or the portion of such asset that is disposed of in a disposition described in paragraph (d)(1) of this section. Except as provided by section 280B and § 1.280B-1, the following rules apply when an asset is disposed of during a taxable year:

(1) If an asset is disposed of by sale, exchange, or involuntary conversion, gain or loss must be recognized under the applicable provisions of the Internal Revenue Code.

(2) If an asset is disposed of by physical abandonment, loss must be recognized in the amount of the adjusted depreciable basis (as defined in § 1.168(b)-1(a)(4)) of the asset at the time of the abandonment, taking into account the applicable convention. However, if the abandoned asset is subject to nonrecourse indebtedness, paragraph (e)(1) of this section applies to the asset instead of this paragraph (e)(2). For a loss from physical abandonment to qualify for recognition under this paragraph (e)(2), the taxpayer must intend to discard the asset irrevocably so that the taxpayer will neither use the asset again nor retrieve it for sale, exchange, or other disposition.

(3) If an asset is disposed of other than by sale, exchange, involuntary conversion, physical abandonment, or conversion to personal use (as, for example, when the asset is transferred to a supplies or scrap account), gain is not recognized. Loss must be recognized in the amount of the excess of the adjusted depreciable basis of the asset at the time of the disposition, taking into account the applicable convention, over the asset's fair market value at the time of the disposition, taking into account the applicable convention.

(f) ***Basis of asset disposed of*** —

(1) *In general.* The adjusted basis of an asset disposed of for computing gain or loss is its adjusted depreciable basis at the time of the asset's disposition, as determined under the applicable convention for the asset.

(2) *Assets disposed of are in multiple asset accounts.*

(i) If the taxpayer accounts for the asset disposed of in a multiple asset account or pool and it is impracticable from the taxpayer's records to determine the unadjusted depreciable basis (as defined in § 1.168(b)-1(a)(3)) of the asset disposed of, the taxpayer may use any reasonable method that is consistently applied to all assets in the same multiple asset account or pool for purposes of determining the unadjusted depreciable basis of assets disposed of. Examples of a reasonable method include, but are not limited to, the following:

(A) If the replacement asset is a restoration (as defined in § 1.263(a)-3(k)), and is not a betterment (as defined in § 1.263(a)-3(j)) or an adaptation to a new or different use (as defined in § 1.263(a)-3(l)), discounting the cost of the replacement asset to its placed-in-service year cost using the Producer Price Index for Finished Goods or its successor, the Producer Price Index for Final Demand, or any other index designated by guidance in the Internal Revenue Bulletin (see § 601.601(d)(2) of this chapter) for purposes of this paragraph (f)(2);

(B) A pro rata allocation of the unadjusted depreciable basis of the multiple asset account or pool based on the replacement cost of the disposed asset and the replacement cost of all of the assets in the multiple asset account or pool; and

(C) A study allocating the cost of the asset to its individual components.

(ii) To determine the adjusted depreciable basis of an asset disposed of in a multiple asset account or pool, the depreciation allowable for the asset disposed of is computed by using the depreciation method, recovery period, and convention applicable to the multiple asset account or pool in which the asset disposed of was included and by including the additional first year depreciation deduction claimed for the asset disposed of.

(3) *Disposition of a portion of an asset.*

(i) This paragraph (f)(3) applies only when a taxpayer disposes of a portion of an asset and paragraph (d)(1) of this section applies to that disposition. For computing gain or loss, the adjusted basis of the disposed portion of the asset is the adjusted depreciable basis of that disposed portion at the time of its disposition, as determined under the applicable convention for the asset. If it is impracticable from the taxpayer's records to determine the unadjusted depreciable basis (as defined in § 1.168(b)-1(a)(3)) of the disposed portion of the asset, the taxpayer may use any reasonable method for purposes of determining the unadjusted depreciable basis (as defined in § 1.168(b)-1(a)(3)) of the disposed portion of the asset. If a taxpayer disposes of more than one portion of the same asset and it is impracticable from the taxpayer's records to determine the unadjusted depreciable basis (as defined in § 1.168(b)-1(a)(3)) of the first disposed portion of the asset, the reasonable method used by the taxpayer must be consistently applied to all portions of the same asset for purposes of determining the unadjusted depreciable basis of each disposed portion of the asset. If the asset, a portion of which is disposed of, is in a multiple asset account or pool and it is impracticable from the taxpayer's records to determine the unadjusted depreciable basis (as defined in § 1.168(b)-1(a)(3)) of the disposed portion of the asset, the reasonable method used by the taxpayer must be consistently applied to all assets in the same multiple asset account or

pool for purposes of determining the unadjusted depreciable basis of assets disposed of or any disposed portion of the assets. Examples of a reasonable method include, but are not limited to, the following:

(A) If the replacement portion is a restoration (as defined in § 1.263(a)-3(k)), and is not a betterment (as defined in § 1.263(a)-3(j)) or an adaptation to a new or different use (as defined in § 1.263(a)-3(l)), discounting the cost of the replacement portion of the asset to its placed-in-service year cost using the Producer Price Index for Finished Goods or its successor, the Producer Price Index for Final Demand, or any other index designated by guidance in the Internal Revenue Bulletin (see § 601.601(d)(2) of this chapter) for purposes of this paragraph (f)(3);

(B) A pro rata allocation of the unadjusted depreciable basis of the asset based on the replacement cost of the disposed portion of the asset and the replacement cost of the asset; and

(C) A study allocating the cost of the asset to its individual components.

(ii) To determine the adjusted depreciable basis of the disposed portion of the asset, the depreciation allowable for the disposed portion is computed by using the depreciation method, recovery period, and convention applicable to the asset in which the disposed portion was included and by including the portion of the additional first year depreciation deduction claimed for the asset that is attributable to the disposed portion.

(g) ***Identification of asset disposed of*** —

(1) ***In general.*** Except as provided in paragraph (g)(2) or (3) of this section, a taxpayer must use the specific identification method of accounting to identify which asset is disposed of by the taxpayer. Under this method of accounting, the taxpayer can determine the particular taxable year in which the asset disposed of was placed in service by the taxpayer.

(2) ***Asset disposed of is in a multiple asset account.*** If a taxpayer accounts for the asset disposed of in a multiple asset account or pool and the total dispositions of assets with the same recovery period during the taxable year are readily determined from the taxpayer's records, but it is impracticable from the taxpayer's records to determine the particular taxable year in which the asset disposed of was placed in service by the taxpayer, the taxpayer must identify the asset disposed of by using—

(i) A first-in, first-out method of accounting if the unadjusted depreciable basis of the asset disposed of cannot be readily determined from the taxpayer's records. Under this method of accounting, the taxpayer identifies the multiple asset account or pool with the earliest placed-in-service year that has the same recovery period as the asset disposed of and that has assets at the beginning of the taxable year of the disposition, and the taxpayer treats the asset disposed of as being from that multiple asset account or pool;

(ii) A modified first-in, first-out method of accounting if the unadjusted depreciable basis of the asset disposed of can be readily determined from the taxpayer's records. Under this method of accounting, the taxpayer identifies the multiple asset account or pool with the earliest placed-in-service year that has the same recovery period as the asset disposed of and that has assets at the beginning of the taxable year of the disposition with the same unadjusted depreciable basis as the asset disposed of, and the taxpayer treats the asset disposed of as being from that multiple asset account or pool;

(iii) A mortality dispersion table if the asset disposed of is a mass asset. The mortality dispersion table must be based upon an acceptable sampling of the taxpayer's actual disposition experience for mass assets or other acceptable statistical or engineering techniques. To use a mortality dispersion table, the taxpayer must adopt recordkeeping practices consistent with the taxpayer's prior practices and consonant with good accounting and engineering practices; or

(iv) Any other method as the Secretary may designate by publication in the FEDERAL REGISTER or in the Internal Revenue Bulletin (see § 601.601(d)(2) of this chapter) on or after September 19, 2013. See paragraph (g)(4) of this section regarding the last-in, first-out method of accounting.

(3) ***Disposition of a portion of an asset.*** If a taxpayer disposes of a portion of an asset and paragraph (d)(1) of this section applies to that disposition, but it is impracticable from the taxpayer's records to determine the particular taxable year in which the asset was placed in service, the taxpayer must identify the asset by using any applicable method provided in paragraph (g)(2) of this section, after taking into account paragraph (g)(4) of this section.

(4) ***Last-in, first-out method of accounting.*** For purposes of this paragraph (g), a last-in, first-out method of accounting may not be used. Examples of a last-in, first-out method of accounting include the taxpayer identifying the multiple asset account or pool with the most recent placed-in-service year that has the same recovery period as the asset disposed of and that has assets at the beginning of the taxable year of the disposition, and the taxpayer treating the asset disposed of as being from that multiple asset account or pool, or the taxpayer treating the disposed portion of an asset as being from an asset with the most recent placed-in-service year that is the same as the asset of which the disposed portion is a part.

(h) ***Accounting for asset disposed of*** —

(1) ***Depreciation ends.*** Depreciation ends for an asset at the time of the asset's disposition, as determined under the applicable convention for the asset. See § 1.167(a)-10(b). If the asset disposed of is in a single asset account initially or as a result of § 1.168(i)-8(h)(2)(i), § 1.168(i)-8(h)(3)(i), or general asset account treatment for the asset terminated under § 1.168(i)-1(c)(1)(ii)(A), (e)(3)(iii), (e)(3)(v), (e)(3)(vii), (g), or (h)(1), as applicable, the single asset account terminates at the time of the asset's disposition, as determined under the applicable convention for the asset. If a taxpayer disposes of a portion of an asset and paragraph (d)(1) of this section applies to that disposition, depreciation ends for that disposed portion of the asset at the time of the disposition of the disposed portion, as determined under the applicable convention for the asset.

(2) ***Asset disposed of in a multiple asset account or pool.*** If the taxpayer accounts for the asset disposed of in a multiple asset account or pool, then—

(i) As of the first day of the taxable year in which the disposition occurs, the asset disposed of is removed from the multiple asset account or pool and is placed into a single asset account. See § 1.168(i)-7(b);

(ii) The unadjusted depreciable basis of the multiple asset account or pool must be reduced by the unadjusted depreciable basis of the asset disposed of as of the first day of the taxable year in which the disposition occurs. See paragraph (f)(2)(i) of this section for determining the unadjusted depreciable basis of the asset disposed of;

(iii) The depreciation reserve of the multiple asset account or pool must be reduced by the greater of the depreciation allowed or allowable for the asset disposed of as of the end of the taxable year immediately preceding the year of disposition. The allowable depreciation is computed by using the depreciation method, recovery period, and convention applicable to the multiple asset account or pool in which the asset disposed of was included and by including the additional first year depreciation deduction claimed for the asset disposed of; and

(iv) In determining the adjusted depreciable basis of the asset disposed of at the time of disposition, taking into account the applicable convention, the depreciation allowable for the asset disposed of is computed by using the depreciation method, recovery period, and convention applicable to the multiple asset account or pool in which the asset disposed of was included and by including the additional first year depreciation deduction claimed for the asset disposed of.

(3) ***Disposition of a portion of an asset.*** This paragraph (h)(3) applies only when a taxpayer disposes of a portion of an asset and paragraph (d)(1) of this section applies to that disposition. In this case—

(i) As of the first day of the taxable year in which the disposition occurs, the disposed portion is placed into a single asset account. See § 1.168(i)-7(b);

(ii) The unadjusted depreciable basis of the asset must be reduced by the unadjusted depreciable basis of the disposed portion as of the first day of the taxable year in which the disposition occurs. See paragraph (f)(3)(i) of this section for determining the unadjusted depreciable basis of the disposed portion;

(iii) The depreciation reserve of the asset must be reduced by the greater of the depreciation allowed or allowable for the disposed portion as of the end of the taxable year immediately preceding the year of disposition. The allowable depreciation is computed by using the depreciation method, recovery period, and convention applicable to the asset in which the disposed portion was included and by including the portion of the additional first year depreciation deduction claimed for the asset that is attributable to the disposed portion; and

(iv) In determining the adjusted depreciable basis of the disposed portion at the time of disposition, taking into account the applicable convention, the depreciation allowable for the disposed portion is computed by using the depreciation method, recovery period, and convention applicable to the asset in which the disposed portion was included and by including the portion of the additional first year depreciation deduction claimed for the asset that is attributable to the disposed portion.

(i) ***Examples.*** The application of this section is illustrated by the following examples:

Example 1. A owns an office building with four elevators. A replaces one of the elevators. The elevator is a structural component of the office building. In accordance with paragraph (c)(4)(ii)(A) of this section, the office building, including its structural components, is the asset for disposition purposes. A does not make the partial disposition election provided under paragraph (d)(2) of this section for the elevator. Thus, the retirement of the replaced elevator is not a disposition. As a result, depreciation continues for the cost of the building, including the cost of the retired elevator and the building's other structural components, and A does not recognize a loss for this retired elevator. If A must capitalize the amount paid for the replacement elevator pursuant to § 1.263(a)-3, the replacement elevator is a separate asset for disposition purposes pursuant to paragraph (c)(4)(ii)(D) of this section and for depreciation purposes pursuant to section 168(i)(6).

Example 2. The facts are the same as in *Example 1,* except A accounts for each structural component of the office building as a separate asset in its fixed asset system. Although A treats each structural component as a separate asset in its records, the office building, including its structural components, is the asset for disposition purposes in accordance with paragraph (c)(4)(ii)(A) of this section. Accordingly, the result is the same as in *Example 1*.

Example 3. The facts are the same as in *Example 1,* except A makes the partial disposition election provided under paragraph (d)(2) of this section for the elevator. Although the office building, including its structural components, is the asset for disposition purposes, the result of A making the partial disposition election for the elevator is that the retirement of the replaced elevator is a disposition. Thus, depreciation for the retired elevator ceases at the time of its retirement, taking into account the applicable convention, and A recognizes a loss upon this retirement. Further, A must capitalize the amount paid for the replacement elevator pursuant to § 1.263(a)-3(k)(1)(i), and the replacement elevator is a separate asset for disposition purposes pursuant to paragraph (c)(4)(ii)(D) of this section and for depreciation purposes pursuant to section 168(i)(6).

Example 4. B, a calendar-year commercial airline company, owns several aircraft that are used in the commercial carrying of passengers and described in asset class 45.0 of Rev. Proc. 87-56. B replaces the existing engines on one of the aircraft with new engines. Assume each aircraft is a unit of property as determined under § 1.263(a)-3(e)(3) and each engine of an aircraft is a major component or substantial structural part of the aircraft as determined under § 1.263(a)-3(k)(6). Assume also that B treats each aircraft as the asset for disposition purposes in accordance with paragraph (c)(4) of this section. B makes the partial disposition election provided under paragraph (d)(2) of this section for the engines in the aircraft. Although the aircraft is the asset for disposition purposes, the result of B making the partial disposition election for the engines is that the retirement of the replaced engines is a disposition. Thus, depreciation for the retired engines ceases at the time of their retirement, taking into account the applicable convention, and B recognizes a loss upon this retirement. Further, B must capitalize the amount paid for the replacement engines pursuant to § 1.263(a)-3(k)(1)(i), and the replacement engines are a separate asset for disposition purposes pursuant to paragraph (c)(4)(ii)(D) of this section and for depreciation purposes pursuant to section 168(i)(6).

Example 5. The facts are the same as in *Example 4,* except B does not make the partial disposition election provided under paragraph (d)(2) of this section for the engines. Thus, the retirement of the replaced engines on one of the aircraft is not a disposition. As a result, depreciation continues for the cost of the aircraft, including the cost of the retired engines, and B does not recognize a loss for these retired engines. If B must capitalize the amount paid for the replacement engines pursuant to § 1.263(a)-3, the replacement engines are a separate asset for disposition purposes pursuant to paragraph (c)(4)(ii)(D) of this section and for depreciation purposes pursuant to section 168(i)(6).

Example 6. C, a corporation, owns several trucks that are used in its trade or business and described in asset class 00.241 of Rev. Proc. 87-56. C replaces the engine on one of the trucks with a new engine. Assume each truck is a unit of property as determined under § 1.263(a)-3(e)(3) and each engine is a major component or substantial structural part of the truck as determined under § 1.263(a)-3(k)(6). Because the trucks are described in asset class 00.241 of Rev. Proc. 87-56, C must treat each truck as the asset for disposition purposes. C does not make the partial disposition election provided under paragraph (d)(2) of this section for the engine. Thus, the retirement of the replaced engine on the truck is not a disposition. As a result, depreciation continues for the cost of the truck, including the cost of the retired engine, and C does not recognize a loss for this retired

engine. If C must capitalize the amount paid for the replacement engine pursuant to § 1.263(a)-3, the replacement engine is a separate asset for disposition purposes pursuant to paragraph (c)(4)(ii)(D) of this section and for depreciation purposes pursuant to section 168(i)(6).

Example 7. D owns a retail building. D replaces 60% of the roof of this building. In accordance with paragraph (c)(4)(ii)(A) of this section, the retail building, including its structural components, is the asset for disposition purposes. Assume D must capitalize the costs incurred for replacing 60% of the roof pursuant to § 1.263(a)-3(k)(1)(vi). D makes the partial disposition election provided under paragraph (d)(2) of this section for the 60% of the replaced roof. Thus, the retirement of 60% of the roof is a disposition. As a result, depreciation for 60% of the roof ceases at the time of its retirement, taking into account the applicable convention, and D recognizes a loss upon this retirement. Further, D must capitalize the amount paid for the 60% of the roof pursuant to § 1.263(a)-3(k)(1)(i) and (vi) and the replacement 60% of the roof is a separate asset for disposition purposes pursuant to paragraph (c)(4)(ii)(D) of this section and for depreciation purposes pursuant to section 168(i)(6).

Example 8. (i) The facts are the same as in *Example 7.* Ten years after replacing 60% of the roof, D replaces 55% of the roof of the building. In accordance with paragraph (c)(4)(ii)(A) and (D) of this section, for disposition purposes, the retail building, including its structural components, except the replacement 60% of the roof, is an asset and the replacement 60% of the roof is a separate asset. Assume D must capitalize the costs incurred for replacing 55% of the roof pursuant to § 1.263(a)-3(k)(1)(vi). D makes the partial disposition election provided under paragraph (d)(2) of this section for the 55% of the replaced roof. Thus, the retirement of 55% of the roof is a disposition.
(ii) However, D cannot determine from its records whether the replaced 55% is part of the 60% of the roof replaced ten years ago or whether the replaced 55% includes part or all of the remaining 40% of the original roof. Pursuant to paragraph (g)(3) of this section, D identifies which asset it disposed of by using the first-in, first-out method of accounting. As a result, D disposed of the remaining 40% of the original roof and 25% of the 60% of the roof replaced ten years ago.

(iii) Thus, depreciation for the remaining 40% of the original roof ceases at the time of its retirement, taking into account the applicable convention, and D recognizes a loss upon this retirement. Further, depreciation for 25% of the 60% of the roof replaced ten years ago ceases at the time of its retirement, taking into account the applicable convention, and D recognizes a loss upon this retirement. Also, D must capitalize the amount paid for the 55% of the roof pursuant to § 1.263(a)-3(k)(1)(i) and (vi), and the replacement 55% of the roof is a separate asset for disposition purposes pursuant to paragraph (c)(4)(ii)(D) of this section and for depreciation purposes pursuant to section 168(i)(6).

Example 9. (i) On July 1, 2011, E, a calendar-year taxpayer, purchased and placed in service an existing multi-story office building that costs $20,000,000. The cost of each structural component of the building was not separately stated. E accounts for the building and its structural components in its tax and financial accounting records as a single asset with a

cost of $20,000,000. E depreciates the building as nonresidential real property and uses the optional depreciation table that corresponds with the general depreciation system, the straight-line method, a 39-year recovery period, and the mid-month convention. As of January 1, 2014, the depreciation reserve for the building is $1,261,000.
(ii) On June 30, 2014, E replaces one of the two elevators in the office building. E did not dispose of any other structural components of this building in 2014 and prior years. E makes the partial disposition election provided under paragraph (d)(2) of this section for this elevator. Although the office building, including its structural components, is the asset for disposition purposes, the result of E making the partial disposition election for the elevator is that the retirement of the replaced elevator is a disposition. Assume the replacement elevator is a restoration under § 1.263(a)-3(k), and not a betterment under § 1.263(a)-3(j) or an adaptation to a new or different use under § 1.263(a)-3(l). Because E cannot identify the cost of the elevator from its records and the replacement elevator is a restoration under § 1.263(a)-3(k), E determines the cost of the disposed elevator by discounting the cost of the replacement elevator to its placed-in-service year cost using the Producer Price Index for Final Demand. Using this reasonable method, E determines the cost of the retired elevator by discounting the cost of the replacement elevator to its cost in 2011 (the placed-in-service year) using the Producer Price Index for Final Demand, resulting in $150,000 of the $20,000,000 purchase price for the building to be the cost of the retired elevator. Using the optional depreciation table that corresponds with the general depreciation system, the straight-line method, a 39-year recovery period, and the mid-month convention, the depreciation allowed or allowable for the retired elevator as of December 31, 2013, is $9,458.

(iii) For E's 2014 Federal tax return, the loss for the retired elevator is determined as follows. The depreciation allowed or allowable for 2014 for the retired elevator is $1,763 ((unadjusted depreciable basis of $150,000 × depreciation rate of 2.564% for 2014) × 5.5/12 months). Thus, the adjusted depreciable basis of the retired elevator is $138,779 (the adjusted depreciable basis of $140,542 removed from the building cost less the depreciation allowed or allowable of $1,763 for 2014). As a result, E recognizes a loss of $138,779 for the retired elevator in 2014.

(iv) For E's 2014 Federal tax return, the depreciation allowance for the building is computed as follows. As of January 1, 2014, the unadjusted depreciable basis of the building is reduced from $20,000,000 to $19,850,000 ($20,000,000 less the unadjusted depreciable basis of $150,000 for the retired elevator), and the depreciation reserve of the building is reduced from $1,261,000 to $1,251,542 ($1,261,000 less the depreciation allowed or allowable of $9,458 for the retired elevator as of December 31, 2013). Consequently, the depreciation allowance for the building for 2014 is $508,954 ($19,850,000 × depreciation rate of 2.564% for 2014).

(v) E also must capitalize the amount paid for the replacement elevator pursuant to § 1.263(a)-3(k)(1). The replacement elevator is a separate asset for disposition purposes pursuant to paragraph (c)(4)(ii)(D) of this section and for depreciation purposes pursuant to section 168(i)(6).

Example 10. (i) Since 2005, F, a calendar year taxpayer, has accounted for items of MACRS property that are mass assets in pools. Each pool includes only the mass assets that have the same depreciation method, recovery period, and convention, and are placed in service by F in the same taxable year. None of the pools are general asset accounts under section 168(i)(4) and the regulations under section 168(i)(4). F identifies any dispositions of these mass assets by specific identification.
(ii) During 2014, F sells 10 items of mass assets with a 5-year recovery period each for $100. Under the specific identification method, F identifies these mass assets as being from the pool established by F in 2012 for mass assets with a 5-year recovery period. Assume F depreciates this pool using the optional depreciation table that corresponds with the general depreciation system, the 200-percent declining balance method, a 5-year recovery period, and the half-year convention. F elected not to deduct the additional first year depreciation provided by section 168(k) for 5-year property placed in service during 2012. As of January 1, 2014, this pool contains 100 similar items of mass assets with a total cost of $25,000 and a total depreciation reserve of $13,000. Because all the items of mass assets in the pool are similar, F allocates the cost and depreciation allowed or allowable for the pool ratably among each item in the pool. This allocation is a reasonable method because all the items of mass assets in the pool are similar. Using this reasonable method, F allocates a cost of $250 ($25,000 × (1/100)) to each disposed of mass asset and depreciation allowed or allowable of $130 ($13,000 × (1/100)) to each disposed of mass asset. The depreciation allowed or allowable in 2014 for each disposed of mass asset is $24 (($250 × 19.2%)/2). As a result, the adjusted depreciable basis of each disposed of mass asset under section 1011 is $96 ($250 − $130 − $24). Thus, F recognizes a gain of $4 for each disposed of mass asset in 2014, which is subject to section 1245.

(iii) Further, as of January 1, 2014, the unadjusted depreciable basis of the 2012 pool of mass assets with a 5-year recovery period is reduced from $25,000 to $22,500 ($25,000 less the unadjusted depreciable basis of $2,500 for the 10 disposed of items), and the depreciation reserve of this 2012 pool is reduced from $13,000 to $11,700 ($13,000 less the depreciation allowed or allowable of $1,300 for the 10 disposed of items as of December 31, 2013). Consequently, as of January 1, 2014, the 2012 pool of mass assets with a 5-year recovery period has 90 items with a total cost of $22,500 and a depreciation reserve of $11,700. Thus, the depreciation allowance for this pool for 2014 is $4,320 ($22,500 × 19.2%).

Example 11. (i) The facts are the same as in *Example 10.* Because of changes in F's recordkeeping in 2015, it is impracticable for F to continue to identify disposed of mass

assets using specific identification and to determine the unadjusted depreciable basis of the disposed of mass assets. As a result, F files a Form 3115, Application for Change in Accounting Method, to change to a first-in, first-out method beginning with the taxable year beginning on January 1, 2015, on a modified cut-off basis. See § 1.446-1(e)(2)(ii)(*d*)(*2*)(*vii*). Under the first-in, first-out method, the mass assets disposed of in a taxable year are deemed to be from the pool with the earliest placed-in-service year that has assets as of the beginning of the taxable year of the disposition with the same recovery period as the asset disposed of. The Commissioner of Internal Revenue consents to this change in method of accounting.
(ii) During 2015, F sells 20 items of mass assets with a 5-year recovery period each for $50. As of January 1, 2015, the 2008 pool is the pool with the earliest placed-in-service year for mass assets with a 5-year recovery period, and this pool contains 25 items of mass assets with a total cost of $10,000 and a total depreciation reserve of $10,000. Thus, F allocates a cost of $400 ($10,000 × (1/25)) to each disposed of mass asset and depreciation allowed or allowable of $400 to each disposed of mass asset. As a result, the adjusted depreciable basis of each disposed of mass asset is $0. Thus, F recognizes a gain of $50 for each disposed of mass asset in 2015, which is subject to section 1245.

(iii) Further, as of January 1, 2015, the unadjusted depreciable basis of the 2008 pool of mass assets with a 5-year recovery period is reduced from $10,000 to $2,000 ($10,000 less the unadjusted depreciable basis of $8,000 for the 20 disposed of items ($400 × 20)), and the depreciation reserve of this 2008 pool is reduced from $10,000 to $2,000 ($10,000 less the depreciation allowed or allowable of $8,000 for the 20 disposed of items as of December 31, 2014). Consequently, as of January 1, 2015, the 2008 pool of mass assets with a 5-year recovery period has 5 items with a total cost of $2,000 and a depreciation reserve of $2,000.

(j) ***Effective/applicability dates*** —

(1) ***In general.*** Except as provided in paragraph (j)(5) of this section, this section applies to taxable years beginning on or after January 1, 2014.

(2) ***Early application of this section.*** A taxpayer may choose to apply the provisions of this section to taxable years beginning on or after January 1, 2012.

(3) ***Early application of regulation project REG-110732-13.*** A taxpayer may rely on the provisions of this section in regulation project REG-110732-13 (2013-43 IRB 404) (see § 601.601(d)(2) of this chapter) for taxable years beginning on or after January 1, 2012. However, a taxpayer may not rely on the provisions of this section in regulation project REG-110732-13 for taxable years beginning on or after January 1, 2014.

(4) ***Optional application of TD 9564.*** A taxpayer may choose to apply § 1.168(i)-8T as contained in 26 CFR part 1 edition revised as of April 1, 2014, to taxable years beginning on or after January 1, 2012. However, a taxpayer may not apply § 1.168(i)-8T as contained in 26 CFR part 1 edition revised as of April 1, 2014, to taxable years beginning on or after January 1, 2014.

(5) ***Application of paragraph (c)(4)(i).*** The language "and the distinct asset determination under § 1.1031(a)-3(a)(4) do not apply." in the last sentence of paragraph (c)(4)(i) of this section applies on or after December 2, 2020. Paragraph (c)(4)(i) of this section as contained in 26 CFR part 1 edition revised as of April 1, 2020, applies before December 2, 2020.

(6) ***Change in method of accounting.*** A change to comply with this section for depreciable assets placed in service in a taxable year ending on or after December 30, 2003, is a change in method of accounting to which the provisions of section 446(e) and the regulations under section 446(e) apply. A taxpayer also may treat a change to comply with this section for depreciable assets placed in service in a taxable year ending before December 30, 2003, as a change in method of accounting to which the provisions of section 446(e) and the regulations under section 446(e) apply. This paragraph (j)(5) does not apply to a change to comply with paragraph (d)(2) of this section, except as provided in paragraph (d)(2)(iii) or (iv)(B) of this section or otherwise provided by other guidance published in the Internal Revenue Bulletin (see § 601.601(d)(2) of this chapter).

[T.D. 9689, 79 FR 48678, Aug. 18, 2014, as amended at 79 FR 78697, Dec. 31, 2014; T.D. 9935, 85 FR 77378, Dec. 2, 2020]

§ 1.168(j)-1T Questions and answers concerning tax-exempt entity leasing rules (temporary).

The following questions and answers concern tax-exempt entity leasing under section 168(j) of the Internal Revenue Code of 1954, as enacted by section 31 of the Tax Reform Act of 1984 ("TRA") (Pub. L. 98-369):

Consequences of Tax-Exempt Use Status

Q-1. If recovery property is subject to the tax-exempt entity leasing provisions of section 168(j), how must the taxpayer compute the property's recovery deductions?

A-1. The taxpayer must compute the property's recovery deductions in accordance with section 168(j) (1) and (2); that is, the taxpayer must use the straight line method and the specified recovery period. For property other than 18-year real property, the applicable recovery percentages for the specified recovery period are to be determined with reference to the tables contained in Prop. Treas. Reg. § 1.168-2(g)(3)(iv)(A). For 18-year real property for which a 40-year recovery period is required, the applicable recovery percentages are to be determined under the following table:

40-Year Straight Line Method (Assuming Mid-Month Convention)

If the recovery year is—	And the month in the first recovery year the property is placed in service is—											
	1	2	3	4	5	6	7	8	9	10	11	12
The applicable recovery percentage is—												
1	2.4	2.2	2.0	1.8	1.6	1.4	1.1	0.9	0.7	0.5	0.3	0.1
2	2.5	2.5	2.5	2.5	2.5	2.5	2.5	2.5	2.5	2.5	2.5	2.5
3	2.5	2.5	2.5	2.5	2.5	2.5	2.5	2.5	2.5	2.5	2.5	2.5
4	2.5	2.5	2.5	2.5	2.5	2.5	2.5	2.5	2.5	2.5	2.5	2.5
5	2.5	2.5	2.5	2.5	2.5	2.5	2.5	2.5	2.5	2.5	2.5	2.5
6	2.5	2.5	2.5	2.5	2.5	2.5	2.5	2.5	2.5	2.5	2.5	2.5
7	2.5	2.5	2.5	2.5	2.5	2.5	2.5	2.5	2.5	2.5	2.5	2.5
8	2.5	2.5	2.5	2.5	2.5	2.5	2.5	2.5	2.5	2.5	2.5	2.5
9	2.5	2.5	2.5	2.5	2.5	2.5	2.5	2.5	2.5	2.5	2.5	2.5
10	2.5	2.5	2.5	2.5	2.5	2.5	2.5	2.5	2.5	2.5	2.5	2.5
11	2.5	2.5	2.5	2.5	2.5	2.5	2.5	2.5	2.5	2.5	2.5	2.5
12	2.5	2.5	2.5	2.5	2.5	2.5	2.5	2.5	2.5	2.5	2.5	2.5
13	2.5	2.5	2.5	2.5	2.5	2.5	2.5	2.5	2.5	2.5	2.5	2.5
14	2.5	2.5	2.5	2.5	2.5	2.5	2.5	2.5	2.5	2.5	2.5	2.5
15	2.5	2.5	2.5	2.5	2.5	2.5	2.5	2.5	2.5	2.5	2.5	2.5
16	2.5	2.5	2.5	2.5	2.5	2.5	2.5	2.5	2.5	2.5	2.5	2.5
17	2.5	2.5	2.5	2.5	2.5	2.5	2.5	2.5	2.5	2.5	2.5	2.5
18	2.5	2.5	2.5	2.5	2.5	2.5	2.5	2.5	2.5	2.5	2.5	2.5
19	2.5	2.5	2.5	2.5	2.5	2.5	2.5	2.5	2.5	2.5	2.5	2.5
20	2.5	2.5	2.5	2.5	2.5	2.5	2.5	2.5	2.5	2.5	2.5	2.5
21	2.5	2.5	2.5	2.5	2.5	2.5	2.5	2.5	2.5	2.5	2.5	2.5
22	2.5	2.5	2.5	2.5	2.5	2.5	2.5	2.5	2.5	2.5	2.5	2.5
23	2.5	2.5	2.5	2.5	2.5	2.5	2.5	2.5	2.5	2.5	2.5	2.5
24	2.5	2.5	2.5	2.5	2.5	2.5	2.5	2.5	2.5	2.5	2.5	2.5
25	2.5	2.5	2.5	2.5	2.5	2.5	2.5	2.5	2.5	2.5	2.5	2.5
26	2.5	2.5	2.5	2.5	2.5	2.5	2.5	2.5	2.5	2.5	2.5	2.5
27	2.5	2.5	2.5	2.5	2.5	2.5	2.5	2.5	2.5	2.5	2.5	2.5
28	2.5	2.5	2.5	2.5	2.5	2.5	2.5	2.5	2.5	2.5	2.5	2.5
29	2.5	2.5	2.5	2.5	2.5	2.5	2.5	2.5	2.5	2.5	2.5	2.5
30	2.5	2.5	2.5	2.5	2.5	2.5	2.5	2.5	2.5	2.5	2.5	2.5
31	2.5	2.5	2.5	2.5	2.5	2.5	2.5	2.5	2.5	2.5	2.5	2.5

If the recovery year is—	And the month in the first recovery year the property is placed in service is—											
	1	2	3	4	5	6	7	8	9	10	11	12
32	2.5	2.5	2.5	2.5	2.5	2.5	2.5	2.5	2.5	2.5	2.5	2.5
33	2.5	2.5	2.5	2.5	2.5	2.5	2.5	2.5	2.5	2.5	2.5	2.5
34	2.5	2.5	2.5	2.5	2.5	2.5	2.5	2.5	2.5	2.5	2.5	2.5
35	2.5	2.5	2.5	2.5	2.5	2.5	2.5	2.5	2.5	2.5	2.5	2.5
36	2.5	2.5	2.5	2.5	2.5	2.5	2.5	2.5	2.5	2.5	2.5	2.5
37	2.5	2.5	2.5	2.5	2.5	2.5	2.5	2.5	2.5	2.5	2.5	2.5
38	2.5	2.5	2.5	2.5	2.5	2.5	2.5	2.5	2.5	2.5	2.5	2.5
39	2.5	2.5	2.5	2.5	2.5	2.5	2.5	2.5	2.5	2.5	2.5	2.5
40	2.5	2.5	2.5	2.5	2.5	2.5	2.5	2.5	2.5	2.5	2.5	2.5
41	0.1	0.3	0.5	0.7	0.9	1.1	1.4	1.6	1.8	2.0	2.2	2.4

Q-2. If recovery property that was placed in service after December 31, 1980 by a taxable entity subsequently becomes tax-exempt use property, how are such property's cost recovery deductions under section 168 affected?

A-2. A change to tax-exempt use property, as defined in section 168(j)(3), will cause the cost recovery deductions under the accelerated cost recovery system (ACRS) to be recomputed. The allowable recovery deduction for the taxable year in which the change occurs (and for subsequent taxable years) must be determined as if the property had originally been tax-exempt use property. Proper adjustment must be made under the principles of Prop. Treas. Reg. § 1.168-2(j)(3)(i)(B) to account for the difference between the deductions allowable with respect to the property prior to the year of change and those which would have been allowable had the taxpayer used the recovery period and method for tax-exempt use property under section 168(j) (1) and (2). However, no adjustment is made pursuant to the provisions of this A-2 if section 168(j)(2)(C) applies, that is, if the taxpayer had selected a longer recovery period in the year the property was placed in service than the recovery period prescribed for such property under section 168(j)(1).

Example 1. On July 1, 1983, X, a calendar year taxpayer, places in service 5-year recovery property with an unadjusted basis of $100. For 1983, X's allowable deduction is $15 (*i.e.,* .15 × $100). In 1984, the property becomes tax-exempt use property. Under section 168(j), assume the prescribed recovery period is 12 years. For 1984 (and subsequent taxable years), X's allowable deduction is determined as if the property had been tax-exempt use property since 1983, that is, the year it was placed in service. Thus, taxable year 1984 is the property's second recovery year of its 12-year recovery period. Additionally, X must account for the excess allowable recovery deduction of $11 (*i.e.,* the difference between the recovery allowance for 1983 ($15) and the allowance for that year had the property been tax-exempt use property ($4)) in accordance with the principles of Prop. Treas. Reg. § 1.168-2(j)(3)(i)(B). Thus, the recovery allowances in 1984 and 1985 are $7.97, determined as follows:

Unadjusted basis multiplied by the applicable recovery percentage for second recovery year ($100 × .09	$9.00
Excess allowable recovery deduction multiplied by the applicable recovery percentage for second recovery year divided by the sum of the remaining unused applicable percentages for tax-exempt use property existing as of the taxable year of change (1984) (($11 × .09)/.96)	−1.03
Difference—allowable deduction for 1984	$7.97
Unadjusted basis multiplied by the applicable recovery percentage for third recovery year ($100 × .09)	$9.00
Excess allowable recovery deduction multiplied by the applicable recovery percentage for third recovery year divided by the sum of the remaining unused applicable percentages for tax-exempt use property existing as of the taxable year of change (1984) (($11 × .09)/.96)	−1.03

Difference—allowable deduction for 1985	$7.97

Additionally, X must make a similar adjustment for the taxable years 1986 through 1995, that is, his fourth through thirteenth recovery years.

Example 2. Assume the same facts as in *Example (1)* except that in 1983, X elected under section 168 (b)(3) with respect to the 5-year property to use the optional recovery percentages over a 25-year recovery period. Based on these facts, the provisions of this A-2 do not apply.

Definition of Tax-Exempt Use Property

Mixed Leases of Real and Personal Property

Q-3. How is a mixed lease of real property and personal property (e.g., a building with furniture) to be treated for purposes of applying the rules of section 168(j)(3) defining which property constitutes tax-exempt use property?

A-3. The general rule is that 18-year real property and property other than 18-year real property are tested separately to determine whether each constitutes tax-exempt use property. However, if a lease of section 1245 class property is incidental to a lease of 18-year real property, and the 18-year real property is not tax-exempt use property, then the section 1245 class property also does not constitute tax-exempt use property. A lease of section 1245 class property will be considered incidental if the adjusted basis of all section 1245 class property leased in the same transaction is 1 percent or less of the adjusted basis of all 18-year real property leased in such transaction.

Buildings Which Are Partially Tax-Exempt Use Property

Q-4. If part of a building is leased to a tax-exempt entity in a disqualified lease and part of the building is leased other than to a tax-exempt entity in a disqualified lease, to what extent do the tax-exempt entity leasing rules apply to such building?

A-4. The taxpaper must determine the amount of the building's unadjusted basis that is properly allocable to the portion of the building that is tax-exempt use property; the section 168(j) rules apply to the allocated amount. Solely for purposes of determining what percentage of the building's basis is subject to the tax-exempt entity leasing rules, no part of the basis is allocated to common areas.

Example. A constructs a 3-story building in 1984 at a cost of $900,000. Each floor consists of 30,000 square feet. The only common area (10,000 square feet) in the building is on the first floor. A leases the first floor (other than the common areas) to a firm that is not a tax-exempt entity. A leases the top two floors to a tax-exempt entity in a 25-year lease. The top two floors constitute tax-exempt use property. Assume that square footage is the appropriate method for allocating basis in this case. Thus, A must allocate $675,000 of the $900,000 basis to the tax-exempt use portion, determined as follows:

$$\frac{\text{square footage of building which is tax-exempt use property (excluding common areas)}}{\text{total square footage in the building (excluding common areas)}} = \frac{60{,}000 \text{ sq. feet}}{80{,}000 \text{ sq. feet}} = 3/4$$

$$3/4 \times \$900{,}000 = \$675{,}000$$

A must compute his recovery deductions on this portion of the basis ($675,000) in accordance with the rules of section 168(j) (1) and (2).

Requirement of a Lease

Q-5. Can the use of property by a party other than a tax-exempt entity result in the property being treated as tax-exempt use property within the meaning of section 168(j)(3)?

A-5. Yes, if based on all the facts and circumstances it is more appropriate to characterize the transaction as a lease to a tax-exempt entity. A transaction can be characterized as a lease to a tax-exempt entity under section 168(j)(6)(A), which provides that "the term 'lease' includes any grant of a right to use property"; or under the service contract rules of section 7701(e). See Q&A #18 for rules regarding service contracts.

Example. A trust is executed on January 1, 1984, to create a pooled income fund (P) that meets the requirements of section 642(c)(5). A university (U) that is tax-exempt under section 501(c)(3) is the remainderman of the pooled income fund. P's purpose is to construct and operate an athletic center on land adjacent to U's campus. Construction of the athletic center, which has a 50-year useful life, was completed and the center was placed in service on February 1, 1985. The athletic center is managed for a fee by M, an unrelated taxable organization which operates athletic facilities open to the public. Office space at the facility is occupied rent-free by both the U athletic department and M. Scheduling of activities at the center is handled jointly by members of U's athletic department and M. General operating expenses of the athletic center are paid by P. Although the athletic center is open to the public for a membership fee, the majority of members are U's students who pay membership fees as part of their tuition. These fees are remitted by U to P. This arrangement is in substance a grant to U of a right to use the facility, and therefore a lease to U under section 168(j)(6)(A). U, as remainderman, will have obtained title to the entire building when the last pooled income fund donor dies. This arrangement is a disqualified lease because either

(1) U has the equivalent of a fixed price purchase option under section 168(j)(3)(B)(ii)(II) (if U receives title as remainderman before the end of the useful life of the building), or

(2) the lease has a term in excess of 20 years under section 168(j)(3)(B)(ii)(III) (if U does not receive title as remainderman until 20 years have elapsed), or both. Therefore, the allowable recovery deductions (without regard to salvage value) must be computed in accordance with section 168(j) (1) and (2). In addition, because this arrangement is treated as a lease under section 168(j), the facility is used by U for purposes of section 48(a)(4), and thus no investment tax credit is permitted with respect to any portion of the facility. This arrangement also may be treated as a lease to U for all purposes of chapter 1 of the Internal Revenue Code under section 7701 (e).

"More Than 35 Percent of the Property" Test

Q-6. How is the percentage of 18-year real property leased to a tax-exempt entity in a disqualified lease to be determined for purposes of the "more than 35 percent of the property" test of section 168(j)(3)(B)(iii)?

A-6. The phrase "more than 35 percent of the property" means more than 35 percent of the net rentable floor space of the property. The net rentable floor space in a building does not include the common areas of the building, regardless of the terms of the lease. For purposes of the "more than 35 percent of the property" rule, two or more buildings will be treated as separate properties unless they are part of the same project, in which case they will be treated as one property. Two or more buildings will be treated as part of the same project if the buildings are constructed, under a common plan, within a reasonable time of each other on the same site and will be used in an integrated manner.

Q-7. Are disqualified leases to different tax-exempt entities (regardless of whether they are related) aggregated in determining whether 18-year real property is tax-exempt use property?

A-7. Yes.

Example. A tax-exempt entity participates in industrial development bond financing for the acquisition of a new building by a taxable entity. The tax-exempt entity leases 60 percent of the net rentable floor space in the building for 5 years. Sixty percent of the building is tax-exempt use property. If the same tax-exempt entity leased only 19 percent of the net rentable floor space in the building for 5 years, no portion of the building would be tax-exempt use property because not more than 35 percent of the property is leased to a tax-exempt entity pursuant to a disqualified lease. If such tax-exempt entity leased only 19 percent of the net rentable floor space in the building for 5 years and another tax-exempt entity leased 20 percent of the net rentable floor space in the building for a term in excess of 20 years (or a related entity leased 20 percent of the building for 5 years), 39 percent of the building would be tax-exempt use property. See A-4 regarding the determination of the amount of the building's unadjusted basis that is properly allocable to the portion of the building that is tax-exempt use property.

"Predominantly Used" Test

Q-8. What does the term "predominantly used" mean for purposes of the section 168(j)(3)(D) exception to the tax-exempt use property rules?

A-8. "Predominantly used" means that for more than 50 percent of the time used, as determined for each taxable year, the real or personal property is used in an unrelated trade or business the income of which is subject to tax under section 511 (determined without regard to the debt-financed income rules of section 514). If only a portion of property is predominantly used in an unrelated trade or business, the remainder may nevertheless be tax-exempt use property.

Q-9. How is the "predominantly used" test of section 168(j)(3)(D) to be applied to a building?

A-9. The "predominantly used" test is to be applied to a building in the following manner:

(i) Identify the discrete portions (excluding common areas) of the building which are leased to a tax-exempt entity in a disqualified lease under section 168(j)(3)(B)(ii). A discrete portion of a building is an area physically separated from other areas. An area is physically separated from other areas if separated by permanent walls or by partitions serving as room dividers if such partitions remain in place throughout the taxable year. A discrete portion can be the entire building, floors, wings, offices,

rooms, or a combination thereof. For example, a building whose entire internal space consists of a single large room used as a gymnasium has only one discrete portion. On the other hand, if the building has 3 stories with 10 offices on each floor, each of the 30 offices is a discrete portion.

(ii) Determine whether each discrete portion is predominantly used in an unrelated trade or business subject to tax under section 511. See A-8 for the rules regarding how to make this determination.

(iii) Once the discrete portions of the building that constitute tax-exempt use property have been identified, an appropriate allocation of basis must be made to such discrete portions. See A-4 for rules regarding how to make such allocation.

(iv) The application of these rules is illustrated by the following example:

Example. A building, constructed in 1985, is leased in its entirety to a tax-exempt entity (E) pursuant to a 25-year lease. The building has 25,000 square feet of net rentable floor space and consists of an auditorium (15,000 square feet), a retail shop (10,000 square feet), plus common area of 5,000 square feet. E uses the auditorium 80 percent of the time in its exempt activity and 20 percent of the time in an unrelated trade or business subject to tax under section 511. The retail shop is used 90 percent of the time in an unrelated trade or business subject to tax under section 511 and 10 percent of the time in an exempt activity. Thus, the auditorium is tax-exempt use property; the retail shop is not. An appropriate allocation of basis to the auditorium must be made. See A-4.

Definition of Tax-Exempt Entity

Q-10. What elections must be made in order to avoid the “5-year lookback” rule of section 168(j)(4)(E)(i)?

A-10. Only organizations which were exempt from tax under section 501(a) as organizations described in section 501(c)(12) (and which are no longer tax-exempt) may avoid the 5-year lookback rule of section 168(j)(4)(E)(i). In order to avoid the 5-year lookback rule with respect to any property, two elections are required. First, the organization must elect not to be exempt from tax under section 501(a) during the tax-exempt use period (as defined in section 168(j)(4)(E)(ii)(II)) with respect to the property. Second, the organization must elect to be taxed on the exempt arbitrage profits as provided in section 31(g)(16) of the Tax Reform Act of 1984. See Temp. Treas. Reg. § 301.9100-6T(a) for the time and manner of making these elections. These elections, once made, are irrevocable.

Q-11. Does the term “tax-exempt entity” include tax-exempt plans of deferred compensation and similar arrangements?

A-11. Yes. For purposes of section 168 (j), the term “tax-exempt entity” includes trusts or other entities that are tax-qualified under section 401 (a), individual retirement accounts, simplified employee pensions, and other tax-exempt arrangements described in subchapter D of chapter 1 of the Internal Revenue Code.

Special Rules for High Technology Equipment

Q-12. What effect do the tax-exempt entity leasing provisions have on “qualified technological equipment”?

A-12. “Qualified technological equipment” which is leased to a tax-exempt entity for a term of 5 years or less shall not constitute tax-exempt use property. If “qualified technological equipment” which is leased to a tax-exempt entity for a term of more than 5 years constitutes tax-exempt use property (as defined in

section 168(j)(3)) and is not used predominantly outside the United States, the rules of section 168(j) (1) and (2) apply except that the recovery period to be used for such equipment shall be 5 years regardless of the length of the lease term. For purposes of section 168(j)(5), "qualified technological equipment" means

(1) any computer or peripheral equipment,

(2) any high technology telephone station equipment installed on the customer's premises, and

(3) any high technology medical equipment. For definitions of these terms, see A-13 through A-16.

Q-13. What is a "computer" as that term is used in section 168(j)(5)(C)(i)(I)?

A-13. Computers are electronically activated devices that are programmable by the user and that are capable of accepting information, applying prescribed processes to it, and supplying the results of those processes with or without human intervention. Computers consist of a central processing unit containing extensive storage, logic, arithmetic, and control capabilities. A computer does not include any equipment which is an integral part of property that is not a user-programmable device, any video games or other devices used by the user primarily for amusement or entertainment purposes, or any typewriters, calculators, adding or accounting machines, copiers, duplicating equipment, or similar equipment. A computer does not include any equipment that is not tangible personal property.

Q-14. What is "peripheral equipment" as that term is used in section 168(j)(5)(C)(i)(I)?

A-14. Peripheral equipment means tangible personal property such as auxiliary machines, whether on-line or off-line, that are designed to be placed under the control of the central processing unit of the computer. Some examples of peripheral equipment are: card readers, card punches, magnetic tape feeds, high speed printers, optical character readers, tape cassettes, mass storage units, paper tape equipment, keypunches, data entry devices, teleprinters, terminals, tape drives, disc drives, disc files, disc packs, visual image projector tubes, card sorters, plotters, and collators. Peripheral equipment does not include equipment not included in Asset Depreciation Range (ADR) 00.12 listed in section 3 of Rev. Proc. 83-35, 1983-1 C.B. 745, 746. Peripheral equipment also does not include any equipment that is an integral part of property that is not a user-programmable device, any video games or other devices used by the user primarily for amusement or entertainment purposes, or any typewriters, calculators, adding or accounting machines, copiers, duplicating equipment, or similar equipment.

Q-15. What does "high technology telephone station equipment" mean as that term is used in section 168(j)(5)(C)(i)(II)?

A-15. High technology telephone station equipment includes only tangible personal property described in asset depreciation range (ADR) class 48.13 listed in section 3 of Rev. Proc. 83-35, 1983-1 C.B. 745, 758 that has a high technology content and which, because of such high technology content, can reasonably be expected to become obsolete before the expiration of its physical useful life. For example, telephone booths and telephones which include only a standard dialing feature are not high technology equipment. However, telephones with features such as an abbreviated dialing short program, an automatic callback, or conference call feature may qualify as high technology equipment. High technology telephone station equipment may include terminal equipment including such extra features but not terminal equipment used in conjunction with features offered through central office capacity. There are no current plans to utilize the regulatory authority provided in section 168(j)(5)(C)(iv).

Q-16. What is "high technology medical equipment" as that term is used in section 168 (j)(5)(C)(i)(III)?

A-16. High technology medical equipment is any electronic, electromechanical, or computer-based high technology equipment which is tangible personal property used in the screening, monitoring, observation, diagnosis, or treatment of human patients in a laboratory, medical, or hospital environment. High technology medical equipment includes only equipment that has a high technology content and which, because of such high technology content, can reasonably be expected to become obsolete before the expiration of its physical useful life. High technology medical equipment may include computer axial tomography (C.A.T.) scanners, nuclear magnetic resonance equipment, clinical chemistry analyzers, drug monitors, diagnostic ultrasound scanners, nuclear cameras, radiographic and fluoroscopic systems, Holter monitors, and bedside monitors. Incidental use of any such equipment for othe purposes, such as research, will not prevent it from qualifying as high technology medical equipment. There are no current plans to utilize the regulatory authority provided in section 168(j)(5)(C)(iv).

Lease Term

Q-17. What is included in determining the length of a lease term?

A-17.

(i) The lease term starts when the property is first made available to the lessee under the lease. The lease term includes not only the stated duration, but also any additional period of time which is within the "realistic contemplation of the parties at the time the property is first put into service. *Hokanson* v. *Commissioner,* 730 F.2d 1245, 1248 (9th Cir. 1984). A subsequent period of time is included in the term of the original lease if the circumstances indicate that the parties, upon entering into the original lease, had informally agreed that there would be an extension of the original lease.

(ii) With respect to personal property, the lease term includes all periods for which the tax-exempt lessee or a related party (as defined under section 168(j)(7)) has a legally enforceable option to renew the lease, or the lessor has a legally enforceable option to compel its renewal by the tax-exempt entity or a related party. This is true regardless of the renewal terms of the lease agreement or whether the lease is in fact renewed.

(iii) With respect to real property, the lease term includes all periods for which the tax-exempt lessee or a related party (as defined under section 168(j)(7)) has a legally enforceable option to renew the lease, or the lessor has a legally enforceable option to compel its renewal by the tax-exempt entity or a related party, unless the option to renew is at fair market value, determined at the time of renewal. The *Hokanson* facts and circumstances test (see (i) above) may cause the term of a fair market value renewal option to be treated as part of the original lease term.

(iv) Successive leases that are part of the same transaction or a series of related transactions concerning the same or substantially similar property shall be treated as one lease. This rule applies if at substantially the same time or as part of one arrangement the parties enter into multiple leases covering the same or substantially similar property, each having a different term. If so, then the original lease term will be treated as running through the term of the lease that has the last expiration date of the multiple leases. The multiple lease rule will not apply merely because the parties enter into a new lease at fair market rental value at the end of the original lease term.

(v) The application of the above rules is illustrated by the following examples:

Example 1. On December 30, 1984, X, a taxable corporation, and Y, a tax-exempt entity, enter into a requirements contract for a period of 3 years. The requirements contract sets the terms and conditions under which X and Y will do business on those occasions when X actually leases items of

personal property to Y. The requirements contract imposes no obligation on either party to actually enter into a lease agreement. Pursuant to this requirements contract, on January 1, 1985, X and Y enter into three separate leases. Under the leases, Y obtained the use of three identical items of personal property, each for a term of six months beginning on January 1, 1985. On March 1, 1985, Y entered into a fourth lease for the use of a fourth item of personal property substantially similar to the other three items for a term of 20 months beginning on that date. The mere fact that all 4 leases were entered into pursuant to the same requirements contract and involved the same or substantially similar property does not require aggregation of the terms of such leases under section 168(j)(6)(B).

Example 2. Assume the same facts as in *example* (1) except that, instead of the 4 leases entered into in example (1), on January 1, 1985, pursuant to the requirements contract, X and Y enter into a lease for an item of personal property for one year. On January 10, 1986, after the end of the one-year lease term, X and Y enter into a second lease with respect to the same or substantially similar equipment. Assuming that the requirements contract itself is not a lease and assuming that the parties did not have any informal or implicit understanding (other than the general expectation of doing some business in the future) to enter into the second lease when the first lease was entered into, these two leases are not aggregated. The mere fact that the parties entered into two leases under the requirements contract does not result in the application of the section 168(j)(6)(B) rules for successive leases.

Example 3. The facts are the same as in *example* (2) except that the parties did have an understanding, informal or otherwise, at the time of the first lease that they would enter into a second lease of the same personal property. The terms of the leases are aggregated.

Example 4. The facts are the same as in *example* (2) except that, instead of the leases entered into in example (2), on January 1, 1985, X and Y enter into two separate leases, each for a term of one year. One lease is for the period beginning on January 1, 1985 and ending on December 31, 1985. The other lease is for the period beginning on January 1, 1986 and ending on December 31, 1986. Both leases involve the same or substantially similar personal property. Under the successive lease rule, the terms of both leases are aggregated for purposes of determining the term of either lease under section 168(j)(6)(B). This result occurs because the two leases were entered into as part of the same transaction, and they relate to the same or substantially similar personal property.

Service Contract Issues

Q-18. How is the treatment of service contracts affected by the service contract rules set forth in section 7701(e)?

A-18. If a contract which purports to be a service contract is treated as a lease under section 7701(e), such contract is to be treated as a lease for all purposes of Chapter 1 of the Internal Revenue Code (including, for example, section 168(j) and section 48(a) (4) and (5)).

Q-19. Does a contract to provide heating, maintenance, etc. services in low-income housing come within the low-income housing exception in section 7701(e)(5) to the service contract rules set forth in section 7701(e)?

A-19. No. Although certain low-income housing operated by or for an organization described in paragraphs (3) or (4) of section 501(c) is not subject to the service contract rules in section 7701(e), a contract, for instance, to provide heating services to low-income housing units, such as by installing and operating a furnace, does not constitute "low-income housing" within the meaning of section 7701(e)(5). Thus, the rules of section 7701(e) apply to such contracts in determining whether they are properly treated as leases.

Partnership Issues

Q-20. Do the provisions applicable to property leased to partnerships, set forth in section 168(j)(8), and the provisions applicable to property owned by partnerships, set forth in section 168(j)(9), apply to pass-through entities other than partnerships?

A-20. Yes. Rules similar to those provided in paragraphs (8), (9)(A), (9)(B), and (9)(C) of section 168(j) and those provided in Q & A's 21-26 apply to pass-through entities other than partnerships.

Q-21. What rules apply to property owned by a partnership in which one or more partners is a tax-exempt entity?

A-21. If property is owned by a partnership having both taxable and tax-exempt entities as partners, and any allocation to a tax-exempt entity partner is not a "qualified allocation" under section 168(j)(9)(B), then such entity's proportionate share of the property is to be treated as tax-exempt use property for all purposes. However, the property will not be tax-exempt use property if it is predominantly used by the partnership in an activity which, with respect to the tax-exempt entity, is an unrelated trade or business. An activity is an unrelated trade or business with respect to a tax-exempt entity if such entity's distributive share of the partnership's gross income from the activity is includible in computing its unrelated business taxable income under section 512(c) (determined without regard to the debt-financed income rules of section 514). A tax-exempt entity partner's proportionate share of property of a partnership equals such partner's share of that item of the partnership's income or gain (excluding income or gain allocated under section 704(c)) in which the tax-exempt entity has the highest share. If the tax-exempt entity partner's share of any item of income or gain (excluding income or gain allocated under section 704(c)) may vary during the period it is a partner, the previous sentence shall be applied with reference to the highest share of any such item that it may receive at any time during such period. The application of these rules is illustrated by the following example:

Example. A partnership (P) operates a factory, which consists of a building and various items of machinery. P has one tax-exempt entity (E) as a partner, and E's proportionate share is 10 percent (*i.e.,* 10 percent is the largest share of any item of income or gain that E may receive during the time E is a partner). Unless P's allocations to E are qualified under section 168(j)(9)(B), 10 percent of each item of partnership property (including the building) is tax-exempt use property, notwithstanding the 35 percent threshold test of section 168(j)(3)(B)(iii) that is otherwise applicable to 18-year real property. However, the property will not be tax-exempt use property if it is predominantly used by the partnership in an activity which, with respect to E, is an unrelated trade or business (determined without regard to the debt-financed income rules of section 514).

Q-22. What consititutes a "qualified allocation" under section 168(j)(9)(B)?

A-22.

(i) A "qualified allocation" means any allocation to a tax-exempt entity which is consistent with such entity's being allocated the same share (*i.e.,* the identical percentage) of each and every item of partnership income, gain, loss, deduction, credit, and basis during the entire period such entity is a

partner. Except as provided in A-23, an allocation is not qualified if it does not have substantial economic effect under section 704(b). However, for purposes of the two preceding sentences, items allocated under section 704(c) (relating to contributed property) are not taken into account. An allocation is not a "qualified allocation" under section 168(j)(9)(B) if the partnership agreement provides for, or the partners have otherwise formally or informally agreed to, any change (regardless of whether such change is contingent upon the happening of one or more events) in the tax-exempt entity's distributive share of income, gain, loss, deduction, credit, or basis at any time during the entire period the tax-exempt entity is a partner.

(ii) A change in a tax-exempt entity's distributive share of income, gain, loss, deduction, credit, or basis which occurs as a result of a sale or redemption of a partnership interest (or portion thereof) or a contribution of cash or property to the partnership shall be disregarded in determining whether the partnership allocations are qualified, provided that such transaction is based on fair market value at the time of the transaction and that the allocations are qualified after the change. For this purpose, the consideration determined by the parties dealing at arm's length and with adverse interests normally will be deemed to satisfy the fair market value requirement. In addition, a change in a tax-exempt entity's distributive share which occurs as a result of a partner's default (other than a prearranged default) under the terms of the partnership agreement will be disregarded, provided that the allocations are qualified after the change, and that the change does not have the effect of avoiding the restrictions of section 168(j)(9). Any of the above-described transactions between existing partners (and parties related to them) will be closely scrutinized.

Example 1. A, a taxable entity, and B, a tax-exempt entity, form a partnership in 1985. A contributes $800,000 to the partnership; B contributes $200,000. The partnership agreement allocates 95 percent of each item of income, gain, loss, deduction, credit, and basis to A; B's share of each of these items is 5 percent. Liquidation proceeds are, throughout the term of the partnership, to be distributed in accordance with the partner's capital account balances, and any partner with a deficit in his capital account following the distribution of liquidation proceeds is required to restore the amount of such deficit to the partnership. Assuming that these allocations have substantial economic effect within the meaning of section 704(b)(2), they are qualified because B's distributive share of each item of income, gain, loss, deduction, credit, and basis will remain the same during the entire period that B is a partner. The fact that the liquidation proceeds may be distributed in a ratio other than 95 percent/5 percent does not cause the allocations not to be qualified.

Example 2. A, B, and E are members of a partnership formed on July 1, 1984. On that date the partnership places in service a building and section 1245 class property. A and B are taxable entities; E is a tax-exempt entity. The partnership agreement provides that during the first 5 years of the partnership, A and B are each allocated 40 percent of each item of income, gain, loss, deduction, credit, and basis; E is allocated 20 percent. Thereafter, A, B, and E are each allocated $33^{1}/_{3}$ percent of each item of income, gain, loss, deduction, credit, and basis. Assume that these allocations meet the substantial economic effect test of section 704(b)(2) and E's distributive share of the partnership's income is not unrelated trade or business income subject to tax under section 511. The allocations to E are not qualified allocations under section 168(j)(9)(B) because E's distributive share of partnership items does not remain the same during the entire period that E is a partner in the partnership. Thus, $33^{1}/_{3}$ percent of the building and $33^{1}/_{3}$ percent of the section 1245 class property are tax-exempt use property from the time each is placed in service by the partnership and are thus subject to the cost recovery rules of section 168(j) (1) and (2). In addition, no investment tax credit is allowed for $33^{1}/_{3}$ percent of the section 1245 class property because of section 48(a)(4).

Q-23. In determining whether allocations constitute qualified allocations, what rules are applied to test allocations that are not governed by the substantial economic effect rules?

A-23. A-22 provides the general rules to be used in determining whether an allocation is a qualified allocation, including the rule that the allocation must have substantial economic effect. However, certain allocations are not governed by the substantial economic effect rules (e.g., an allocation of basis of an oil and gas property is generally governed by section 613A(c)(7)(D), rather than section 704(b)), and other allocations cannot satisfy the substantial economic effect rules (e.g., allocations of credits, allocations of deduction and loss attributable to nonrecourse debt, and allocations of percentage depletion in excess of basis). Since allocations in either of these categories cannot be tested under the substantial economic effect test, these allocations, in order to be qualified, must comply with the relevant Code or regulation section that governs the particular allocation (e.g., in the case of an allocation of basis of an oil and gas property, section 613A(c)(7)(D)).

Q-24. Will the Internal Revenue Service issue letter rulings on the issue of whether an allocation is a “qualified allocation” for purposes of section 168(j)(9)?

A-24. The Internal Revenue Service will accept requests for rulings on the question of whether an allocation is a “qualified allocation” for purposes of section 168(j)(9). Such requests should be submitted in accordance with the appropriate revenue procedure. One requirement of a qualified allocation is that such allocation must have substantial economic effect under section 704(b)(2). Currently, the Service will not rule on the question of whether an allocation has substantial economic effect under section 704(b)(2). Therefore, unless and until this policy is changed, a ruling request regarding a qualified allocation must contain a representation that the subject allocation has substantial economic effect (or complies with A-23, if applicable).

Q-25. Do priority cash distributions which constitute guaranteed payments under section 707(c) disqualify an otherwise qualified allocation?

A-25. Priority cash distributions to partners which constitute guaranteed payments will not disqualify an otherwise qualified allocation if the priority cash distributions are reasonable in amount (e.g., equal to the Federal short-term rate described in section 1274(d)) and are made in equal priorities to all partners in proportion to their capital in the partnership. Other guaranteed payments will be closely scrutinized and, in appropriate cases, will disqualify an otherwise qualified allocation.

Example. A and B form Partnership AB to operate a manufacturing business. A is a tax-exempt entity; B is a taxable person. A contributes $500,000 to the partnership; B contributes $100,000. The partnership agreement provides that A and B are each entitled to cash distributions each year, in equal priority, in an amount equal to 8 percent of their capital contribution. Assume that these payments are reasonable in amount and constitute guaranteed payments under section 707(c). Without taking into consideration the guaranteed payments, all allocations constitute qualified allocations under section 168(j)(9)(B) and A-22. These guaranteed payments will not disqualify such allocations.

Q-26. Can property be treated as tax-exempt use property under both the general rule of section 168(j)(3) and the partnership provisions of section 168(j)(9)?

A-26. Yes. For example, a tax-exempt entity may be a partner in a partnership that owns a building 60 percent of which is tax-exempt use property because it is leased to an unrelated tax-exempt entity under a 25-year lease. The status of the remaining 40 percent depends on whether or not allocations under the partnership agreement are qualified under section 168(j)(9). If the allocations are not qualified under section 168(j)(9), the tax-exempt entity's proportionate share (as determined under section 168(j)(9)(C)) of the remaining 40 percent will be tax-exempt use property. For example, if the tax-exempt entity's

proportionate share is 30 percent, then 12 percent of the remaining 40 percent (*i.e.,* .30 times .40) is tax-exempt use property and a total of 72 percent of the property (60 percent + 12 percent) is tax-exempt use property.

Effective Date Questions

Q-27. Does an amendment to a lease (or sublease) to a tax-exempt entity of property which, pursuant to the effective date provisions of section 31(g) of TRA, is not subject to section 168(j) cause such property to be subject to the provisions of section 168(j)?

A-27. An amendment to such a lease (or sublease) does not cause such property to be subject to the provisions of section 168(j) unless the amendment increases the term of the lease (or sublease). However, if the amendment increases the amount of property subject to the lease, the additional property must be tested independently under the effective date provisions of section 31(g) of TRA. See A-31 for special rules regarding improvements to property.

Example. On May 1, 1983, X, a taxable entity, and E, a tax-exempt entity, enter into a lease whereby X will lease to E the top 4 floors of a ten-story building for a lease term of 25 years. In 1985, the lease is amended to provide that E will lease an additional floor for the balance of the lease term. At that time the annual rent due under the lease is increased. Pursuant to the provisions of section 31(g)(2)(A) of TRA, section 168(j) does not apply to the lease to E of the top 4 floors of the building. Assuming that no other provision of section 31(g) of TRA provides otherwise, the floor added to the lease in 1985 is subject to the provisions of section 168(j).

Q-28. If property which is not subject to section 168(j) by virtue of the effective date provisions of section 31(g) of TRA is sold, subject to the lease to the tax-exempt entity, what are the consequences?

A-28. Property to which section 168(j) does not apply by virtue of the effective date provisions set forth in section 31(g) (2), (3), and (4) of TRA will not become subject to section 168(j) merely by reason of a transfer of the property subject to the lease by the lessor (or a transfer of the contract to acquire, construct, reconstruct, or rehabilitate the property), so long as the lessee (or party obligated to lease) does not change. For purposes of the preceding sentence, the term “transfer” includes the sale-leaseback by a taxable lessor of its interest in the property, subject to the underlying lease to the tax-exempt entity. However, if property is transferred to a partnership or other pass-through entity after the effective date of section 168(j)(9) (see section 31(g) of TRA), such property is subject to the provisions of section 168(j)(9).

Q-29. Can property which was leased to a tax-exempt entity after May 23, 1983 and acquired by a partnership before October 22, 1983 be tax-exempt use property?

A-29. Yes. Because the property was leased to a tax-exempt entity after May 23, 1983, it may be tax-exempt use property under section 168(j)(3) and section 31(g)(1) of TRA. However, if the partnership included a tax-exempt entity as a partner, section 168(j)(9) would be inapplicable under section 31(g)(3)(B) of TRA because the partnership acquired the property before October 22, 1983.

Q-30. What is a binding contract for purposes of the transitional rules in section 31(g) of TRA?

A-30.

(i) A contract is binding only if it is enforceable under State law against the taxpayer or a predecessor and does not limit damages to a specified amount, as for example, by a liquidated damages provision. A contract that limits damages to an amount equal to at least 5 percent of the total

contract price will not be treated as limiting damages for this purpose. In determining whether a contract limits damages, the fact that there may be little or no damages because the contract price does not significantly differ from fair market value will not be taken into account. For example, if a taxpayer entered into an irrevocable contract to purchase an asset for $100 and the contract contained no provision for liquidated damages, the contract is considered binding notwithstanding the fact that the property had a fair market value of $99 and under local law the seller would only recover the difference in the event the purchaser failed to perform. If the contract provided for a refund of the purchase price in lieu of any damages allowable by law in the event of breach or cancellation, the contract is not considered binding.

(ii) A contract is binding even if subject to a condition, so long as the condition is not within the control of either party or a predecessor in interest. A contract will not be treated as ceasing to be binding merely because the parties make insubstantial changes in its terms or because any term is to be determined by a standard beyond the control of either party. A contract which imposes significant obligations on the taxpayer (or a predecessor) will be treated as binding notwithstanding the fact that insubstantial terms remain to be negotiated by the parties to the contract.

(iii) A binding contract to acquire a component part of a larger piece of property will not be treated as a binding contract to acquire the larger piece of property. For example, if a tax-exempt entity entered into a binding contract on May 1, 1983 to acquire a new aircraft engine, there would be a binding contract to acquire only the engine, not the entire aircraft.

Q-31. If an improvement is made to a property that is “grandfathered” (*i.e.,* property that is not subject to section 168(j) because of the effective date provisions of section 31(g) of TRA), to what extent will such improvement be grandfathered?

A-31. Section 31(g)(20)(B) provides that a “substantial improvement” to property is treated as a separate property for purposes of the effective date provisions of section 31(g) of TRA. As a result, a “substantial improvement” will not be grandfathered unless such “substantial improvement” is grandfathered under a provision other than section 31(g)(20)(B). A property that is grandfathered will not become subject to section 168(j) merely because an improvement is made to such property, regardless of whether the improvement is a “substantial improvement”. If an improvement other than a “substantial improvement” is made to property (other than land) that is grandfathered, that improvement also will be grandfathered. The determination of whether new construction constitutes an improvement to property or the creation of a new separate property will be based on all facts and circumstances. Furthermore, any improvement to land will be treated as a separate property.

Example. On January 3, 1983, T, a taxable entity, entered into a lease of a parking lot to E, a tax-exempt entity. On January 1, 1985, T begins construction of a building for use by E on the site of the parking lot. The building is completed and placed in service in November 1985. The building is treated as a separate property, and is thus subject to the provisions of section 168(j), unless the building is grandfathered under a provision other than section 31(g)(20)(B) of TRA.

Q-32. What is “significant official governmental action” for purposes of the section 31(g)(4) transitional rule of TRA?

A-32.

(i) “Significant official governmental action” involves three separate requirements. First, the action must be an official action. Second, the action must be specific action with respect to a particular project. Third, the action must be taken by a governmental entity having authority to commit the tax-exempt entity to the project, to provide funds for it, or to approve the project under State or local law.

(ii) The first requirement of official action means that the governing body must adopt a resolution or ordinance, or take similar official action, on or before November 1, 1983. The action qualifies only if it conforms with Federal, State, and local law (as applicable) and is a proper exercise of the powers of the governing body. Moreover, the action must not have been withdrawn. There must be satisfactory written evidence of the action that was in existence on or before November 1, 1983. Satisfactory written evidence includes a formal resolution or ordinance, minutes of meetings, and binding contracts with third parties pursuant to which third parties are to render services in furtherance of the project.

(iii) The second requirement of specific action is directed at the substance of the action taken. The action must be a specific action with respect to a particular project in which the governing body indicates an intent to have the project (or the design work for it) proceed. This requires that a specific project have been formulated and that the significant official action be a step toward consummation of the project. If the action does not relate to a specific project or merely directs that a proposal or recommendation be formulated, it will not qualify. The following set of actions with respect to a particular project constitute specific action: the hiring of bond counsel or bond underwriters necessary to assist in the issuance and sale of bonds to finance a particular project or the adoption of an inducement resolution relating to bonds to be issued for such a project; applying for an Urban Development Action Grant on behalf of the project described in the application, receiving such a grant concerning the project, or the recommendation of a city planning authority to proceed with a project; the enactment of a State law authorizing the sale, lease, or construction of the property; the appropriation of funds for the property or authorization of a feasibility study or a development services contract with respect to it; the approval of financing arrangements by a regulatory agency; the enactment of a State law designed to provide funding for a project; the certification of a building as a historic structure by a State agency and the Department of the Interior; or the endorsement of the application for a certification of need with respect to a medical facility by a regulatory agency other than the agency empowered to issue such a certificate.

(iv) The third requirement for significant official governmental action is that the action must be taken by a Federal, State, or local governing body having authority to commit the tax-exempt entity to the project, to provide funds for it, or to approve the project under applicable law.

If the chief executive or another representative of a governing body has such authority, action by such representative would satisfy the requirement of this (iv). A governing body may have the authority to commit the tax-exempt entity to a project notwithstanding the fact that the project cannot be consummated without other governmental action being taken. For example, a city council will be treated as having authority to commit a city to do a sale-leaseback of its city hall notwithstanding the fact that State law needs to be amended to permit such a transaction. Similarly, if a local project cannot be completed without Federal approval, either legislative or administrative, the obtaining of such approval satisfies the requirements of this (iv).

(v) Routine governmental action at a local level will not qualify as significant official governmental action. Routine governmental action includes the granting of building permits or zoning changes and the issuance of environmental impact statements.

(vi) In order to qualify under the transitional rule of TRA section 31(g)(4), a sale and leaseback pursuant to a binding contract entered into before January 1, 1985 must be part of the project as to which there was significant official governmental action. Except as provided in the following sentence, where there has been significant official governmental action on or before November 1, 1983 with respect to the construction, reconstruction or rehabilitation of a property, the sale and leaseback of

such property pursuant to a binding contract entered into before January 1, 1985 will be treated as part of the project which was the subject of the significant official governmental action. However, if the construction, reconstruction or rehabilitation was substantially completed prior to January 1, 1983, the sale and leaseback of such property will be treated as a separate project, unless the sale and leaseback was contemplated at the time of the significant official governmental action. Nevertheless, where the sale and leaseback is treated as a separate project, section 31(g)(4) may apply if there was significant official governmental action on or before November 1, 1983, with respect to such sale and leaseback. The application of this provision is illustrated by the following example:

Example. In the summer of 1927, the Board of Aldermen of City C passed a resolution authorizing the design and contruction of a new city hall and appropriated the funds necessary for such project. Construction was completed in 1928. At the time of the significant official governmental action, City C had no plan to enter into a sale-leaseback arrangement with respect to the facility. On December 15, 1984, City C entered into a binding sale-leaseback arrangement concerning the city hall. This transaction will not qualify for exclusion from section 168(j) under the section 31(g)(4) of TRA since construction of the facility in question was substantially completed before January 1, 1983. If, however, there had been significant official governmental action on or before November 1, 1983 with respect to the sale-leaseback project, then the transitional rule of section 31(g)(4) of TRA would apply.

[T.D. 8033, 50 FR 27224, July 2, 1985, as amended by T.D. 8435, 57 FR 43896, Sept. 23, 1992]

§ 1.168(k)-0 Table of contents.

This section lists the major paragraphs contained in §§ 1.168(k)-1 and 1.168(k)-2.

§ 1.168(k)-1 Additional first year depreciation deduction.

(a) Scope and definitions.

(1) Scope.

(2) Definitions.

(b) Qualified property or 50-percent bonus depreciation property.

(1) In general.

(2) Description of qualified property or 50-percent bonus depreciation property.

(i) In general.

(ii) Property not eligible for additional first year depreciation deduction.

(A) Property that is not qualified property.

(B) Property that is not 50-percent bonus depreciation property.

(3) Original use.

(i) In general.

(ii) Conversion to business or income-producing use.

(A) Personal use to business or income-producing use.

(B) Inventory to business or income-producing use.

(iii) Sale-leaseback, syndication, and certain other transactions.

(A) Sale-leaseback transaction.

(B) Syndication transaction and certain other transactions.

(C) Sale-leaseback transaction followed by a syndication transaction and certain other transactions.

(iv) Fractional interests in property.

(v) Examples.

(4) Acquisition of property.

(i) In general.

(A) Qualified property.

(B) 50-percent bonus depreciation property.

(ii) Definition of binding contract.

(A) In general.

(B) Conditions.

(C) Options.

(D) Supply agreements.

(E) Components.

(iii) Self-constructed property.

(A) In general.

(B) When does manufacture, construction, or production begin.

(*1*) In general.

(*2*) Safe harbor.

(C) Components of self-constructed property.

(*1*) Acquired components.

(*2*) Self-constructed components.

(iv) Disqualified transactions.

(A) In general.

(B) Related party defined.

(v) Examples.

(5) Placed-in-service date.

(i) In general.

(ii) Sale-leaseback, syndication, and certain other transactions.

(A) Sale-leaseback transaction.

(B) Syndication transaction and certain other transactions.

(C) Sale-leaseback transaction followed by a syndication transaction and certain other transactions.

(iii) Technical termination of a partnership.

(iv) Section 168(i)(7) transactions.

(v) Example.

(c) Qualified leasehold improvement property.

(1) In general.

(2) Certain improvements not included.

(3) Definitions.

(d) Computation of depreciation deduction for qualified property or 50-percent bonus depreciation property.

(1) Additional first year depreciation deduction.

(i) In general.

(ii) Property having a longer production period.

(iii) Alternative minimum tax.

(2) Otherwise allowable depreciation deduction.

(i) In general.

(ii) Alternative minimum tax.

(3) Examples.

(e) Election not to deduct additional first year depreciation.

(1) In general.

(i) Qualified property.

(ii) 50-percent bonus depreciation property.

(2) Definition of class of property.

(3) Time and manner for making election.

(i) Time for making election.

(ii) Manner of making election.

(4) Special rules for 2000 or 2001 returns.

(5) Failure to make election.

(6) Alternative minimum tax.

(7) Revocation.

(i) In general.

(ii) Automatic 6-month extension.

(f) Special rules.

(1) Property placed in service and disposed of in the same taxable year.

(i) In general.

(ii) Technical termination of a partnership.

(iii) Section 168(i)(7) transactions.

(iv) Examples.

(2) Redetermination of basis.

(i) Increase in basis.

(ii) Decrease in basis.

(iii) Definition.

(iv) Examples.

(3) Section 1245 and 1250 depreciation recapture.

(4) Coordination with section 169.

(5) Like-kind exchanges and involuntary conversions.

(i) Scope.

(ii) Definitions.

(iii) Computation.

(A) In general.

(B) Year of disposition and year of replacement.

(C) Property having a longer production period.

(D) Alternative minimum tax.

(iv) Sale-leasebacks.

(v) Acquired MACRS property or acquired computer software that is acquired and placed in service before disposition of involuntarily converted MACRS property or involuntarily converted computer software.

(A) Time of replacement.

(B) Depreciation of acquired MACRS property or acquired computer software.

(vi) Examples.

(6) Change in use.

(i) Change in use of depreciable property.

(ii) Conversion to personal use.

(iii) Conversion to business or income-producing use.

(A) During the same taxable year.

(B) Subsequent to the acquisition year.

(iv) Depreciable property changes use subsequent to the placed-in-service year.

(v) Examples.

(7) Earnings and profits.

(8) Limitation of amount of depreciation for certain passenger automobiles.

(9) Section 754 election.

(10) Coordination with section 47.

(11) Coordination with section 514(a)(3).

(g) Effective date.

(1) In general.

(2) Technical termination of a partnership or section 168(i)(7) transactions.

(3) Like-kind exchanges and involuntary conversions.

(4) Change in method of accounting.

(i) Special rules for 2000 or 2001 returns.

(ii) Like-kind exchanges and involuntary conversions.

(5) Revisions to paragraphs (b)(3)(ii)(B) and (b)(5)(ii)(B).

(6) Rehabilitation credit.

§ 1.168(k)-2 Additional first year depreciation deduction for property acquired and placed in service after September 27, 2017.

(a) Scope and definitions.

(1) Scope.

(2) Definitions.

(b) Qualified property.

(1) In general.

(2) Description of qualified property.

(i) In general.

(ii) Property not eligible for additional first year depreciation deduction.

(iii) Examples.

(3) Original use or used property acquisition requirements.

(i) In general.

(ii) Original use.

(A) In general.

(B) Conversion to business or income-producing use.

(C) Fractional interests in property.

(iii) Used property acquisition requirements.

(A) In general.

(B) Property was not used by the taxpayer at any time prior to acquisition.

(C) Special rules for a series of related transactions.

(iv) Application to partnerships.

(A) Section 704(c) remedial allocations.

(B) Basis determined under section 732.

(C) Section 734(b) adjustments.

(D) Section 743(b) adjustments.

(v) Application to members of a consolidated group.

(vi) Syndication transaction.

(vii) Examples.

(4) Placed-in-service date.

(i) In general.

(ii) Specified plant.

(iii) Qualified film, television, or live theatrical production.

(A) Qualified film or television production.

(B) Qualified live theatrical production.

(iv) Syndication transaction.

(v) Technical termination of a partnership.

(vi) Section 168(i)(7) transactions.

(5) Acquisition of property.

(i) In general.

(ii) Acquisition date.

(A) In general.

(B) Determination of acquisition date for property acquired pursuant to a written binding contract.

(iii) Definition of binding contract.

(A) In general.

(B) Conditions.

(C) Options.

(D) Letter of intent.

(E) Supply agreements.

(F) Components.

(G) Acquisition of a trade or business or an entity.

(iv) Self-constructed property.

(A) In general.

(B) When does manufacture, construction, or production begin.

(C) Components of self-constructed property.

(v) Determination of acquisition date for property not acquired pursuant to a written binding contract.

(vi) Qualified film, television, or live theatrical production.

(A) Qualified film or television production.

(B) Qualified live theatrical production.

(vii) Specified plant.

(viii) Examples.

(c) Election for components of larger self-constructed property for which the manufacture, construction, or production begins before September 28, 2017.

(1) In general.

(2) Eligible larger self-constructed property.

(i) In general.

(ii) Residential rental property or nonresidential real property.

(iii) Beginning of manufacture, construction, or production.

(iv) Exception.

(3) Eligible components.

(i) In general.

(ii) Acquired components.

(iii) Self-constructed components.

(4) Special rules.

(i) Installation costs.

(ii) Property described in section 168(k)(2)(B).

(5) Computation of additional first year depreciation deduction.

(i) Election is made.

(ii) Election is not made.

(6) Time and manner for making election.

(i) Time for making election.

(ii) Manner of making election.

(7) Revocation of election.

(i) In general.

(ii) Automatic 6-month extension.

(8) Additional procedural guidance.

(9) Examples.

(d) Property described in section 168(k)(2)(B) or (C).

(1) In general.

(2) Definition of binding contract.

(3) Self-constructed property.

(i) In general.

(ii) When does manufacture, construction, or production begin.

(A) In general.

(B) Safe harbor.

(iii) Components of self-constructed property.

(A) Acquired components.

(B) Self-constructed components.

(iv) Determination of acquisition date for property not acquired pursuant to a written binding contract.

(4) Examples.

(e) Computation of depreciation deduction for qualified property.

(1) Additional first year depreciation deduction.

(i) Allowable taxable year.

(ii) Computation.

(iii) Property described in section 168(k)(2)(B).

(iv) Alternative minimum tax.

(A) In general.

(B) Special rules.

(2) Otherwise allowable depreciation deduction.

(i) In general.

(ii) Alternative minimum tax.

(3) Examples.

(f) Elections under section 168(k).

(1) Election not to deduct additional first year depreciation.

(i) In general.

(ii) Definition of class of property.

(iii) Time and manner for making election.

(A) Time for making election.

(B) Manner of making election.

(iv) Failure to make election.

(2) Election to apply section 168(k)(5) for specified plants.

(i) In general.

(ii) Time and manner for making election.

(A) Time for making election.

(B) Manner of making election.

(iii) Failure to make election.

(3) Election for qualified property placed in service during the 2017 taxable year.

(i) In general.

(ii) Time and manner for making election.

(A) Time for making election.

(B) Manner of making election.

(iii) Failure to make election.

(4) Alternative minimum tax.

(5) Revocation of election.

(i) In general.

(ii) Automatic 6-month extension.

(6) Special rules for 2016 and 2017 returns.

(7) Additional procedural guidance.

(g) Special rules.

(1) Property placed in service and disposed of in the same taxable year.

(i) In general.

(ii) Technical termination of a partnership.

(iii) Section 168(i)(7) transactions.

(iv) Examples.

(2) Redetermination of basis.

(i) Increase in basis.

(ii) Decrease in basis.

(iii) Definitions.

(iv) Examples.

(3) Sections 1245 and 1250 depreciation recapture.

(4) Coordination with section 169.

(5) Like-kind exchanges and involuntary conversions.

(i) Scope.

(ii) Definitions.

(iii) Computation.

(A) In general.

(B) Year of disposition and year of replacement.

(C) Property described in section 168(k)(2)(B).

(D) Effect of § 1.168(i)-6(i)(1) election.

(E) Alternative minimum tax.

(iv) Replacement MACRS property or replacement computer software that is acquired and placed in service before disposition of relinquished MACRS property or relinquished computer software.

(v) Examples.

(6) Change in use.

(i) Change in use of MACRS property.

(ii) Conversion to personal use.

(iii) Conversion to business or income-producing use.

(A) During the same taxable year.

(B) Subsequent to the acquisition year.

(iv) Depreciable property changes use subsequent to the placed-in-service year.

(v) Examples.

(7) Earnings and profits.

(8) Limitation of amount of depreciation for certain passenger automobiles.

(9) Coordination with section 47.

(i) In general.

(ii) Example.

(10) Coordination with section 514(a)(3).

(11) Mid-quarter convention.

(h) Applicability dates.

(1) In general.

(2) Early application of this section.

(3) Early application of regulation project REG-104397-18.

[T.D. 9091, 68 FR 52991, Sept. 8, 2003. Redesignated and amended by T.D. 9283, 71 FR 51738, Aug. 31, 2006; T.D. 9874, 84 FR 50128, Sept. 24, 2019; 85 FR 71752, Nov. 10, 2020]

§ 1.168(k)-1 Additional first year depreciation deduction.

(a) *Scope and definitions* —

(1) ***Scope.*** This section provides the rules for determining the 30-percent additional first year depreciation deduction allowable under section 168(k)(1) for qualified property and the 50-percent additional first year depreciation deduction allowable under section 168(k)(4) for 50-percent bonus depreciation property.

(2) ***Definitions.*** For purposes of section 168(k) and this section, the following definitions apply:

(i) ***Depreciable property*** is property that is of a character subject to the allowance for depreciation as determined under section 167 and the regulations thereunder.

(ii) ***MACRS property*** is tangible, depreciable property that is placed in service after December 31, 1986 (or after July 31, 1986, if the taxpayer made an election under section 203(a)(1)(B) of the Tax Reform Act of 1986; 100 Stat. 2143) and subject to section 168, except for property excluded from the application of section 168 as a result of section 168(f) or as a result of a transitional rule.

(iii) ***Unadjusted depreciable basis*** is the basis of property for purposes of section 1011 without regard to any adjustments described in section 1016(a)(2) and (3). This basis reflects the reduction in basis for the percentage of the taxpayer's use of property for the taxable year other than in the taxpayer's trade or business (or for the production of income), for any portion of the basis the taxpayer properly elects to treat as an expense under section 179 or section 179C, and for any adjustments to basis provided by other provisions of the Internal Revenue Code and the regulations thereunder (other than section 1016(a)(2) and (3)) (for example, a reduction in basis by the amount of the disabled access credit pursuant to section 44(d)(7)). For property subject to a lease, see section 167(c)(2).

(iv) ***Adjusted depreciable basis*** is the unadjusted depreciable basis of the property, as defined in § 1.168(k)-1(a)(2)(iii), less the adjustments described in section 1016(a)(2) and (3).

(b) ***Qualified property or 50-percent bonus depreciation property*** —

(1) ***In general.*** Qualified property or 50-percent bonus depreciation property is depreciable property that meets all the following requirements in the first taxable year in which the property is subject to depreciation by the taxpayer whether or not depreciation deductions for the property are allowable:

(i) The requirements in § 1.168(k)-1(b)(2) (description of property);

(ii) The requirements in § 1.168(k)-1(b)(3) (original use);

(iii) The requirements in § 1.168(k)-1(b)(4) (acquisition of property); and

(iv) The requirements in § 1.168(k)-1(b)(5) (placed-in-service date).

(2) ***Description of qualified property or 50-percent bonus depreciation property*** —

(i) ***In general.*** Depreciable property will meet the requirements of this paragraph (b)(2) if the property is—

(A) MACRS property (as defined in § 1.168(k)-1(a)(2)(ii)) that has a recovery period of 20 years or less. For purposes of this paragraph (b)(2)(i)(A) and section 168(k)(2)(B)(i)(II) and 168(k)(4)(C), the recovery period is determined in accordance with section 168(c) regardless of any election made by the taxpayer under section 168(g)(7);

(B) Computer software as defined in, and depreciated under, section 167(f)(1) and the regulations thereunder;

(C) Water utility property as defined in section 168(e)(5) and depreciated under section 168; or

(D) Qualified leasehold improvement property as defined in paragraph (c) of this section and depreciated under section 168.

(ii) ***Property not eligible for additional first year depreciation deduction*** —

(A) ***Property that is not qualified property.*** For purposes of the 30-percent additional first year depreciation deduction, depreciable property will not meet the requirements of this paragraph (b)(2) if the property is—

(*1*) Described in section 168(f);

(*2*) Required to be depreciated under the alternative depreciation system of section 168(g) pursuant to section 168(g)(1)(A) through (D) or other provisions of the Internal Revenue Code (for example, property described in section 263A(e)(2)(A) if the taxpayer (or any related person as defined in section 263A(e)(2)(B)) has made an election under section 263A(d)(3), or property described in section 280F(b)(1)).

(*3*) Included in any class of property for which the taxpayer elects not to deduct the 30-percent additional first year depreciation (for further guidance, see paragraph (e) of this section); or

(*4*) Qualified New York Liberty Zone leasehold improvement property as defined in section 1400L(c)(2).

(B) ***Property that is not 50-percent bonus depreciation property.*** For purposes of the 50-percent additional first year depreciation deduction, depreciable property will not meet the requirements of this paragraph (b)(2) if the property is—

(*1*) Described in paragraph (b)(2)(ii)(A)(*1*), (*2*), or (*4*) of this section; or

(*2*) Included in any class of property for which the taxpayer elects the 30-percent, instead of the 50-percent, additional first year depreciation deduction or elects not to deduct any additional first year depreciation (for further guidance, see paragraph (e) of this section).

(3) ***Original use*** —

(i) ***In general.*** For purposes of the 30-percent additional first year depreciation deduction, depreciable property will meet the requirements of this paragraph (b)(3) if the original use of the property commences with the taxpayer after September 10, 2001. For purposes of the 50-percent additional first year depreciation deduction, depreciable property will meet the requirements of this paragraph (b)(3) if the original use of the property commences with the taxpayer after May 5, 2003. Except as provided in paragraphs (b)(3)(iii) and (iv) of this section, original use means the first use to which the property is put, whether or not that use corresponds to the use of the property by the taxpayer. Thus, additional capital expenditures incurred by a taxpayer to recondition or rebuild property acquired or owned by the taxpayer satisfies the original use requirement. However, the cost of reconditioned or rebuilt property does not satisfy the original use requirement. The question of whether property is reconditioned or rebuilt property is a question of fact. For purposes of this paragraph (b)(3)(i),

property that contains used parts will not be treated as reconditioned or rebuilt if the cost of the used parts is not more than 20 percent of the total cost of the property, whether acquired or self-constructed.

(ii) *Conversion to business or income-producing use* —

(A) ***Personal use to business or income-producing use.*** If a taxpayer initially acquires new property for personal use and subsequently uses the property in the taxpayer's trade or business or for the taxpayer's production of income, the taxpayer is considered the original user of the property. If a person initially acquires new property for personal use and a taxpayer subsequently acquires the property from the person for use in the taxpayer's trade or business or for the taxpayer's production of income, the taxpayer is not considered the original user of the property.

(B) ***Inventory to business or income-producing use.*** If a taxpayer initially acquires new property and holds the property primarily for sale to customers in the ordinary course of the taxpayer's business and subsequently withdraws the property from inventory and uses the property primarily in the taxpayer's trade or business or primarily for the taxpayer's production of income, the taxpayer is considered the original user of the property. If a person initially acquires new property and holds the property primarily for sale to customers in the ordinary course of the person's business and a taxpayer subsequently acquires the property from the person for use primarily in the taxpayer's trade or business or primarily for the taxpayer's production of income, the taxpayer is considered the original user of the property. For purposes of this paragraph (b)(3)(ii)(B), the original use of the property by the taxpayer commences on the date on which the taxpayer uses the property primarily in the taxpayer's trade or business or primarily for the taxpayer's production of income.

(iii) *Sale-leaseback, syndication, and certain other transactions* —

(A) ***Sale-leaseback transaction.*** If new property is originally placed in service by a person after September 10, 2001 (for qualified property), or after May 5, 2003 (for 50-percent bonus depreciation property), and is sold to a taxpayer and leased back to the person by the taxpayer within three months after the date the property was originally placed in service by the person, the taxpayer-lessor is considered the original user of the property.

(B) ***Syndication transaction and certain other transactions.*** If new property is originally placed in service by a lessor (including by operation of paragraph (b)(5)(ii)(A) of this section) after September 10, 2001 (for qualified property), or after May 5, 2003 (for 50-percent bonus depreciation property), and is sold by the lessor or any subsequent purchaser within three months after the date the property was originally placed in service by the lessor (or, in the case of multiple units of property subject to the same lease, within three months after the date the final unit is placed in service, so long as the period between the time the first unit is placed in service and the time the last unit is placed in service does not exceed 12 months), and the user of the property after the last sale during the three-month period remains the same as when the property was originally placed in service by the lessor, the purchaser of the property in the last sale during the three-month period is considered the original user of the property.

(C) ***Sale-leaseback transaction followed by a syndication transaction and certain other transactions.*** If a sale-leaseback transaction that satisfies the requirements in paragraph (b)(3)(iii)(A) of this section is followed by a transaction that satisfies the requirements in paragraph (b)(3)(iii)(B) of this section, the original user of the property is determined in accordance with paragraph (b)(3)(iii)(B) of this section.

(iv) ***Fractional interests in property.*** If, in the ordinary course of its business, a taxpayer sells fractional interests in property to third parties unrelated to the taxpayer, each first fractional owner of the property is considered as the original user of its proportionate share of the property. Furthermore, if the taxpayer uses the property before all of the fractional interests of the property are sold but the property continues to be held primarily for sale by the taxpayer, the original use of any fractional interest sold to a third party unrelated to the taxpayer subsequent to the taxpayer's use of the property begins with the first purchaser of that fractional interest. For purposes of this paragraph (b)(3)(iv), persons are not related if they do not have a relationship described in section 267(b) or 707(b) and the regulations thereunder.

(v) ***Examples.*** The application of this paragraph (b)(3) is illustrated by the following examples:

Example 1. On August 1, 2002, *A* buys from *B* for $20,000 a machine that has been previously used by *B* in *B*'s trade or business. On March 1, 2003, *A* makes a $5,000 capital expenditure to recondition the machine. The $20,000 purchase price does not qualify for the additional first year depreciation deduction because the original use requirement of this paragraph (b)(3) is not met. However, the $5,000 expenditure satisfies the original use requirement of this paragraph (b)(3) and, assuming all other requirements are met, qualifies for the 30-percent additional first year depreciation deduction, regardless of whether the $5,000 is added to the basis of the machine or is capitalized as a separate asset.

Example 2. C, an automobile dealer, uses some of its automobiles as demonstrators in order to show them to prospective customers. The automobiles that are used as demonstrators by *C* are held by *C* primarily for sale to customers in the ordinary course of its business. On September 1, 2002, *D* buys from *C* an automobile that was previously used as a demonstrator by *C*. *D* will use the automobile solely for business purposes. The use of the automobile by *C* as a demonstrator does not constitute a “use” for purposes of the original use requirement and, therefore, *D* will be considered the original user of the automobile for purposes of this paragraph (b)(3). Assuming all other requirements are met, *D*'s purchase price of the automobile qualifies for the 30-percent additional first year depreciation deduction for *D,* subject to any limitation under section 280F.

Example 3. On April 1, 2000, *E* acquires a horse to be used in *E*'s thoroughbred racing business. On October 1, 2003, *F* buys the horse from *E* and will use the horse in *F*'s horse breeding business. The use of the horse by *E* in its racing business prevents the original use of the horse from commencing with *F.* Thus, *F*'s purchase price of the horse does not qualify for the additional first year depreciation deduction.

Example 4. In the ordinary course of its business, *G* sells fractional interests in its aircraft to unrelated parties. *G* holds out for sale eight equal fractional interests in an aircraft. On January 1, 2003, *G* sells five of the eight fractional interests in the aircraft to *H,* an unrelated party, and *H* begins to use its proportionate share of the aircraft immediately upon purchase. On June 1, 2003, G sells to I, an unrelated party to G, the remaining unsold $^{3}/_{8}$ fractional interests in the aircraft. *H* is considered the original user as to its $^{5}/_{8}$

fractional interest in the aircraft and *I* is considered the original user as to its $^{3}/_{8}$ fractional interest in the aircraft. Thus, assuming all other requirements are met, *H*'s purchase price for its $^{5}/_{8}$ fractional interest in the aircraft qualifies for the 30-percent additional first year depreciation deduction and I's purchase price for its $^{3}/_{8}$ fractional interest in the aircraft qualifies for the 50-percent additional first year depreciation deduction.

Example 5. On September 1, 2001, JJ, an equipment dealer, buys new tractors that are held by JJ primarily for sale to customers in the ordinary course of its business. On October 15, 2001, JJ withdraws the tractors from inventory and begins to use the tractors primarily for producing rental income. The holding of the tractors by JJ as inventory does not constitute a "use" for purposes of the original use requirement and, therefore, the original use of the tractors commences with JJ on October 15, 2001, for purposes of paragraph (b)(3) of this section. However, the tractors are not eligible for the additional first year depreciation deduction because JJ acquired the tractors before September 11, 2001.

(4) ***Acquisition of property*** —

(i) ***In general*** —

(A) ***Qualified property.*** For purposes of the 30-percent additional first year depreciation deduction, depreciable property will meet the requirements of this paragraph (b)(4) if the property is—

(*1*) Acquired by the taxpayer after September 10, 2001, and before January 1, 2005, but only if no written binding contract for the acquisition of the property was in effect before September 11, 2001; or

(*2*) Acquired by the taxpayer pursuant to a written binding contract that was entered into after September 10, 2001, and before January 1, 2005.

(B) ***50-percent bonus depreciation property.*** For purposes of the 50-percent additional first year depreciation deduction, depreciable property will meet the requirements of this paragraph (b)(4) if the property is—

(*1*) Acquired by the taxpayer after May 5, 2003, and before January 1, 2005, but only if no written binding contract for the acquisition of the property was in effect before May 6, 2003; or

(*2*) Acquired by the taxpayer pursuant to a written binding contract that was entered into after May 5, 2003, and before January 1, 2005.

(ii) ***Definition of binding contract*** —

(A) ***In general.*** A contract is binding only if it is enforceable under State law against the taxpayer or a predecessor, and does not limit damages to a specified amount (for example, by use of a liquidated damages provision). For this purpose, a contractual provision that limits damages to an amount equal to at least 5 percent of the total contract price will not be treated as limiting damages to a specified amount. In determining whether a contract limits damages, the fact that there may be little or no damages because the contract price does not significantly differ from fair market value will not be taken into account. For example, if a taxpayer entered into an irrevocable written contract to purchase an asset for $100 and the contract contained no provision for liquidated damages, the contract is considered binding notwithstanding the fact that the

asset had a fair market value of $99 and under local law the seller would only recover the difference in the event the purchaser failed to perform. If the contract provided for a full refund of the purchase price in lieu of any damages allowable by law in the event of breach or cancellation, the contract is not considered binding.

(B) ***Conditions.*** A contract is binding even if subject to a condition, as long as the condition is not within the control of either party or a predecessor. A contract will continue to be binding if the parties make insubstantial changes in its terms and conditions or because any term is to be determined by a standard beyond the control of either party. A contract that imposes significant obligations on the taxpayer or a predecessor will be treated as binding notwithstanding the fact that certain terms remain to be negotiated by the parties to the contract.

(C) ***Options.*** An option to either acquire or sell property is not a binding contract.

(D) ***Supply agreements.*** A binding contract does not include a supply or similar agreement if the amount and design specifications of the property to be purchased have not been specified. The contract will not be a binding contract for the property to be purchased until both the amount and the design specifications are specified. For example, if the provisions of a supply or similar agreement state the design specifications of the property to be purchased, a purchase order under the agreement for a specific number of assets is treated as a binding contract.

(E) ***Components.*** A binding contract to acquire one or more components of a larger property will not be treated as a binding contract to acquire the larger property. If a binding contract to acquire the component does not satisfy the requirements of this paragraph (b)(4), the component does not qualify for the 30-percent or 50-percent additional first year depreciation deduction, as applicable.

(iii) ***Self-constructed property*** —

(A) ***In general.*** If a taxpayer manufactures, constructs, or produces property for use by the taxpayer in its trade or business (or for its production of income), the acquisition rules in paragraph (b)(4)(i) of this section are treated as met for qualified property if the taxpayer begins manufacturing, constructing, or producing the property after September 10, 2001, and before January 1, 2005, and for 50-percent bonus depreciation property if the taxpayer begins manufacturing, constructing, or producing the property after May 5, 2003, and before January 1, 2005. Property that is manufactured, constructed, or produced for the taxpayer by another person under a written binding contract (as defined in paragraph (b)(4)(ii) of this section) that is entered into prior to the manufacture, construction, or production of the property for use by the taxpayer in its trade or business (or for its production of income) is considered to be manufactured, constructed, or produced by the taxpayer. If a taxpayer enters into a written binding contract (as defined in paragraph (b)(4)(ii) of this section) after September 10, 2001, and before January 1, 2005, with another person to manufacture, construct, or produce property described in section 168(k)(2)(B) (longer production period property) or section 168(k)(2)(C) (certain aircraft) and the manufacture, construction, or production of this property begins after December 31, 2004, the acquisition rule in paragraph (b)(4)(i)(A)(2) or (b)(4)(i)(B)(2) of this section is met.

(B) ***When does manufacture, construction, or production begin*** —

(1) ***In general.*** For purposes of paragraph (b)(4)(iii) of this section, manufacture, construction, or production of property begins when physical work of a significant nature begins. Physical work does not include preliminary activities such as planning or designing, securing financing, exploring, or researching. The determination of when physical work of a significant nature begins depends on the facts and circumstances. For example, if a retail motor fuels outlet or other facility is to be constructed on-site, construction begins when physical work of a significant nature commences at the site; that is, when work begins on the excavation for footings, pouring the pads for the outlet, or the driving of foundation pilings into the ground. Preliminary work, such as clearing a site, test drilling to determine soil condition, or excavation to change the contour of the land (as distinguished from excavation for footings) does not constitute the beginning of construction. However, if a retail motor fuels outlet or other facility is to be assembled on-site from modular units manufactured off-site and delivered to the site where the outlet will be used, manufacturing begins when physical work of a significant nature commences at the off-site location.

(2) ***Safe harbor.*** For purposes of paragraph (b)(4)(iii)(B)(*1*) of this section, a taxpayer may choose to determine when physical work of a significant nature begins in accordance with this paragraph (b)(4)(iii)(B)(*2*). Physical work of a significant nature will not be considered to begin before the taxpayer incurs (in the case of an accrual basis taxpayer) or pays (in the case of a cash basis taxpayer) more than 10 percent of the total cost of the property (excluding the cost of any land and preliminary activities such as planning or designing, securing financing, exploring, or researching). When property is manufactured, constructed, or produced for the taxpayer by another person, this safe harbor test must be satisfied by the taxpayer. For example, if a retail motor fuels outlet or other facility is to be constructed for an accrual basis taxpayer by another person for the total cost of $200,000 (excluding the cost of any land and preliminary activities such as planning or designing, securing financing, exploring, or researching), construction is deemed to begin for purposes of this paragraph (b)(4)(iii)(B)(*2*) when the taxpayer has incurred more than 10 percent (more than $20,000) of the total cost of the property. A taxpayer chooses to apply this paragraph (b)(4)(iii)(B)(*2*) by filing an income tax return for the placed-in-service year of the property that determines when physical work of a significant nature begins consistent with this paragraph (b)(4)(iii)(B)(*2*).

(C) ***Components of self-constructed property*** —

(1) ***Acquired components.*** If a binding contract (as defined in paragraph (b)(4)(ii) of this section) to acquire a component does not satisfy the requirements of paragraph (b)(4)(i) of this section, the component does not qualify for the 30-percent or 50-percent additional first year depreciation deduction, as applicable. A binding contract (as defined in paragraph (b)(4)(ii) of this section) to acquire one or more components of a larger self-constructed property will not preclude the larger self-constructed property from satisfying the acquisition rules in paragraph (b)(4)(iii)(A) of this section. Accordingly, the unadjusted depreciable basis of the larger self-constructed property that is eligible for the 30-percent or 50-percent additional first year depreciation deduction, as applicable (assuming all other requirements are met), must not include the unadjusted depreciable basis of any component that does

not satisfy the requirements of paragraph (b)(4)(i) of this section. If the manufacture, construction, or production of the larger self-constructed property begins before September 11, 2001, for qualified property, or before May 6, 2003, for 50-percent bonus depreciation property, the larger self-constructed property and any acquired components related to the larger self-constructed property do not qualify for the 30-percent or 50-percent additional first year depreciation deduction, as applicable. If a binding contract to acquire the component is entered into after September 10, 2001, for qualified property, or after May 5, 2003, for 50-percent bonus depreciation property, and before January 1, 2005, but the manufacture, construction, or production of the larger self-constructed property does not begin before January 1, 2005, the component qualifies for the additional first year depreciation deduction (assuming all other requirements are met) but the larger self-constructed property does not.

(2) ***Self-constructed components.*** If the manufacture, construction, or production of a component does not satisfy the requirements of paragraph (b)(4)(iii)(A) of this section, the component does not qualify for the 30-percent or 50-percent additional first year depreciation deduction, as applicable. However, if the manufacture, construction, or production of a component does not satisfy the requirements of paragraph (b)(4)(iii)(A) of this section, but the manufacture, construction, or production of the larger self-constructed property satisfies the requirements of paragraph (b)(4)(iii)(A) of this section, the larger self-constructed property qualifies for the 30-percent or 50-percent additional first year depreciation deduction, as applicable (assuming all other requirements are met) even though the component does not qualify for the 30-percent or 50-percent additional first year depreciation deduction. Accordingly, the unadjusted depreciable basis of the larger self-constructed property that is eligible for the 30-percent or 50-percent additional first year depreciation deduction, as applicable (assuming all other requirements are met), must not include the unadjusted depreciable basis of any component that does not qualify for the 30-percent or 50-percent additional first year depreciation deduction. If the manufacture, construction, or production of the larger self-constructed property began before September 11, 2001, for qualified property, or before May 6, 2003, for 50-percent bonus depreciation property, the larger self-constructed property and any self-constructed components related to the larger self-constructed property do not qualify for the 30-percent or 50-percent additional first year depreciation deduction, as applicable. If the manufacture, construction, or production of a component begins after September 10, 2001, for qualified property, or after May 5, 2003, for 50-percent bonus depreciation property, and before January 1, 2005, but the manufacture, construction, or production of the larger self-constructed property does not begin before January 1, 2005, the component qualifies for the additional first year depreciation deduction (assuming all other requirements are met) but the larger self-constructed property does not.

(iv) ***Disqualified transactions*** —

(A) ***In general.*** Property does not satisfy the requirements of this paragraph (b)(4) if the user of the property as of the date on which the property was originally placed in service (including by operation of paragraphs (b)(5)(ii), (iii), and (iv) of this section), or a related party to the user or to the taxpayer, acquired, or had a written binding contract (as defined

in paragraph (b)(4)(ii) of this section) in effect for the acquisition of the property at any time before September 11, 2001 (for qualified property), or before May 6, 2003 (for 50-percent bonus depreciation property). In addition, property manufactured, constructed, or produced for the use by the user of the property or by a related party to the user or to the taxpayer does not satisfy the requirements of this paragraph (b)(4) if the manufacture, construction, or production of the property for the user or the related party began at any time before September 11, 2001 (for qualified property), or before May 6, 2003 (for 50-percent bonus depreciation property).

(B) ***Related party defined.*** For purposes of this paragraph (b)(4)(iv), persons are related if they have a relationship specified in section 267(b) or 707(b) and the regulations thereunder.

(v) ***Examples.*** The application of this paragraph (b)(4) is illustrated by the following examples:

Example 1. On September 1, 2001, *J,* a corporation, entered into a written agreement with *K,* a manufacturer, to purchase 20 new lamps for $100 each within the next two years. Although the agreement specifies the number of lamps to be purchased, the agreement does not specify the design of the lamps to be purchased. Accordingly, the agreement is not a binding contract pursuant to paragraph (b)(4)(ii)(D) of this section.

Example 2. Same facts as *Example 1.* On December 1, 2001, *J* placed a purchase order with *K* to purchase 20 new model XPC5 lamps for $100 each for a total amount of $2,000. Because the agreement specifies the number of lamps to be purchased and the purchase order specifies the design of the lamps to be purchased, the purchase order placed by *J* with *K* on December 1, 2001, is a binding contract pursuant to paragraph (b)(4)(ii)(D) of this section. Accordingly, the cost of the 20 lamps qualifies for the 30-percent additional first year depreciation deduction.

Example 3. Same facts as *Example 1* except that the written agreement between *J* and *K* is to purchase 100 model XPC5 lamps for $100 each within the next two years. Because this agreement specifies the amount and design of the lamps to be purchased, the agreement is a binding contract pursuant to paragraph (b)(4)(ii)(D) of this section. Accordingly, because the agreement was entered into before September 11, 2001, any lamp acquired by *J* under this contract does not qualify for the additional first year depreciation deduction.

Example 4. On September 1, 2001, *L* began constructing an electric generation power plant for its own use. On November 1, 2002, *L* ceases construction of the power plant prior to its completion. Between September 1, 2001, and November 1, 2002, *L* incurred $3,000,000 for the construction of the power plant. On May 6, 2003, *L* resumed construction of the power plant and completed its construction on August 31, 2003. Between May 6, 2003, and August 31, 2003, *L* incurred another $1,600,000 to complete the construction of the power plant and, on September 1, 2003, *L* placed the power plant in service. None of *L*'s total expenditures of $4,600,000 qualify for the additional first year depreciation deduction because, pursuant to paragraph (b)(4)(iii)(A) of this section, *L* began constructing the power plant before September 11, 2001.

Example 5. Same facts as *Example 4* except that *L* began constructing the electric generation power plant for its own use on October 1, 2001. *L*'s total expenditures of $4,600,000 qualify for the additional first year depreciation deduction because, pursuant to paragraph (b)(4)(iii)(A) of this section, *L* began constructing the power plant after September 10,

2001, and placed the power plant in service before January 1, 2005. Accordingly, the additional first year depreciation deduction for the power plant will be $1,380,000, computed as $4,600,000 multiplied by 30 percent.

Example 6. On August 1, 2001, *M* entered into a written binding contract to acquire a new turbine. The new turbine is a component part of a new electric generation power plant that is being constructed on *M*'s behalf. The construction of the new electric generation power plant commenced in November 2001, and the new electric generation power plant was completed in November 2002. Because *M* entered into a written binding contract to acquire a component part (the new turbine) prior to September 11, 2001, pursuant to paragraph (b)(4)(iii)(C) of this section, the component part does not qualify for the additional first year depreciation deduction. However, pursuant to paragraphs (b)(4)(iii)(A) and (C) of this section, the new plant constructed for *M* will qualify for the 30-percent additional first year depreciation deduction because construction of the new plant began after September 10, 2001, and before May 6, 2003. Accordingly, the unadjusted depreciable basis of the new plant that is eligible for the 30-percent additional first year depreciation deduction must not include the unadjusted depreciable basis of the new turbine.

Example 7. Same facts as *Example 6* except that *M* entered into the written binding contract to acquire the new turbine on September 30, 2002, and construction of the new plant commenced on August 1, 2001. Because *M* began construction of the new plant prior to September 11, 2001, pursuant to paragraphs (b)(4)(iii)(A) and (C) of this section, neither the new plant constructed for *M* nor the turbine will qualify for the additional first year depreciation deduction because self-construction of the new plant began prior to September 11, 2001.

Example 8. On September 1, 2001, *N* began constructing property for its own use. On October 1, 2001, *N* sold its rights to the property to *O,* a related party under section 267(b). Pursuant to paragraph (b)(4)(iv) of this section, the property is not eligible for the additional first year depreciation deduction because *N* and *O* are related parties and construction of the property by *N* began prior to September 11, 2001.

Example 9. On September 1, 2001, *P* entered into a written binding contract to acquire property. On October 1, 2001, *P* sold its rights to the property to *Q,* a related party under section 267(b). Pursuant to paragraph (b)(4)(iv) of this section, the property is not eligible for the additional first year depreciation deduction because *P* and *Q* are related parties and a written binding contract for the acquisition of the property was in effect prior to September 11, 2001.

Example 10. Prior to September 11, 2001, *R* began constructing an electric generation power plant for its own use. On May 1, 2003, prior to the completion of the power plant, *R* transferred the rights to own and use this power plant to *S,* an unrelated party, for $6,000,000. Between May 6, 2003, and June 30, 2003, *S*, a calendar-year taxpayer, began construction, and incurred another $1,200,000 to complete the construction, of the power plant and, on August 1, 2003, *S* placed the power plant in service. Because *R* and *S* are not related parties, the transaction between *R* and *S* will not be a disqualified transaction pursuant to paragraph (b)(4)(iv) of this section. Accordingly, *S*'s total expenditures of $7,200,000 for the power plant qualify for the additional first year depreciation deduction. *S*'s additional first year depreciation deduction for the power plant will be $2,400,000,

computed as $6,000,000 multiplied by 30 percent, plus $1,200,000 multiplied by 50 percent. The $6,000,000 portion of the total $7,200,000 unadjusted depreciable basis qualifies for the 30-percent additional first year depreciation deduction because that portion of the total unadjusted depreciable basis was acquired by *S* after September 10, 2001, and before May 6, 2003. However, because *S* began construction to complete the power plant after May 5, 2003, the $1,200,000 portion of the total $7,200,000 unadjusted depreciable basis qualifies for the 50-percent additional first year depreciation deduction.

Example 11. On September 1, 2001, *T* acquired and placed in service equipment. On October 15, 2001, *T* sells the equipment to *U,* an unrelated party, and leases the property back from *U* in a sale-leaseback transaction. Pursuant to paragraph (b)(4)(iv) of this section, the equipment does not qualify for the additional first year depreciation deduction because *T,* the user of the equipment, acquired the equipment prior to September 11, 2001. In addition, the sale-leaseback rules in paragraphs (b)(3)(iii)(A) and (b)(5)(ii)(A) of this section do not apply because the equipment was originally placed in service by *T* before September 11, 2001.

Example 12. On July 1, 2001, KK began constructing property for its own use. KK placed this property in service on September 15, 2001. On October 15, 2001, KK sells the property to LL, an unrelated party, and leases the property back from LL in a sale-leaseback transaction. Pursuant to paragraph (b)(4)(iv) of this section, the property does not qualify for the additional first year depreciation deduction because the property was constructed for KK, the user of the property, and that construction began prior to September 11, 2001.

Example 13. On June 1, 2004, MM decided to construct property described in section 168(k)(2)(B) for its own use. However, one of the component parts of the property had to be manufactured by another person for MM. On August 15, 2004, MM entered into a written binding contract with NN to acquire this component part of the property for $100,000. The manufacture of the component part commenced on September 1, 2004, and MM received the completed component part on February 1, 2005. The cost of this component part is 9 percent of the total cost of the property to be constructed by MM. MM began constructing the property described in section 168(k)(2)(B) on January 15, 2005, and placed this property (including all component parts) in service on November 1, 2005. Pursuant to paragraph (b)(4)(iii)(C)(2) of this section, the self-constructed component part of $100,000 manufactured by NN for MM is eligible for the additional first year depreciation deduction (assuming all other requirements are met) because the manufacturing of the component part began after September 10, 2001, and before January 1, 2005, and the property described in section 168(k)(2)(B), the larger self-constructed property, was placed in service by MM before January 1, 2006. However, pursuant to paragraph (b)(4)(iii)(A) of this section, the cost of the property described in section 168(k)(2)(B) (excluding the cost of the self-constructed component part of $100,000 manufactured by NN for MM) is not eligible for the additional first year depreciation deduction because construction of the property began after December 31, 2004.

Example 14. On December 1, 2004, OO entered into a written binding contract (as defined in paragraph (b)(4)(ii) of this section) with PP to manufacture an aircraft described in section 168(k)(2)(C) for use in OO's trade or business. PP begins to manufacture the aircraft on February 1, 2005. OO places the aircraft in service on August 1, 2005. Pursuant to

paragraph (b)(4)(iii)(A) of this section, the aircraft meets the requirements of paragraph (b)(4)(i)(B)(2) of this section because the aircraft was acquired by OO pursuant to a written binding contract entered into after May 5, 2003, and before January 1, 2005.

(5) ***Placed-in-service date*** —

(i) ***In general.*** Depreciable property will meet the requirements of this paragraph (b)(5) if the property is placed in service by the taxpayer for use in its trade or business or for production of income before January 1, 2005, or, in the case of property described in section 168(k)(2)(B) or (C), is placed in service by the taxpayer for use in its trade or business or for production of income before January 1, 2006 (or placed in service by the taxpayer for use in its trade or business or for production of income before January 1, 2007, in the case of property described in section 168(k)(2)(B) or (C) to which section 105 of the Gulf Opportunity Zone Act of 2005 (Pub. L. 109-135, 119 Stat. 2577) applies (for further guidance, see Announcement 2006-29 (2006-19 I.R.B. 879) and § 601.601(d)(2)(ii)(*b*) of this chapter)).

(ii) ***Sale-leaseback, syndication, and certain other transactions*** —

(A) ***Sale-leaseback transaction.*** If qualified property is originally placed in service after September 10, 2001, or 50-percent bonus depreciation property is originally placed in service after May 5, 2003, by a person and sold to a taxpayer and leased back to the person by the taxpayer within three months after the date the property was originally placed in service by the person, the property is treated as originally placed in service by the taxpayer-lessor not earlier than the date on which the property is used by the lessee under the leaseback.

(B) ***Syndication transaction and certain other transactions.*** If qualified property is originally placed in service after September 10, 2001, or 50-percent bonus depreciation property is originally placed in service after May 5, 2003, by a lessor (including by operation of paragraph (b)(5)(ii)(A) of this section) and is sold by the lessor or any subsequent purchaser within three months after the date the property was originally placed in service by the lessor (or, in the case of multiple units of property subject to the same lease, within three months after the date the final unit is placed in service, so long as the period between the time the first unit is placed in service and the time the last unit is placed in service does not exceed 12 months), and the user of the property after the last sale during this three-month period remains the same as when the property was originally placed in service by the lessor, the property is treated as originally placed in service by the purchaser of the property in the last sale during the three-month period but not earlier than the date of the last sale.

(C) ***Sale-leaseback transaction followed by a syndication transaction and certain other transactions.*** If a sale-leaseback transaction that satisfies the requirements in paragraph (b)(5)(ii)(A) of this section is followed by a transaction that satisfies the requirements in paragraph (b)(5)(ii)(B) of this section, the placed-in-service date of the property is determined in accordance with paragraph (b)(5)(ii)(B) of this section.

(iii) ***Technical termination of a partnership.*** For purposes of this paragraph (b)(5), in the case of a technical termination of a partnership under section 708(b)(1)(B), qualified property or 50-percent bonus depreciation property placed in service by the terminated partnership during

the taxable year of termination is treated as originally placed in service by the new partnership on the date the qualified property or the 50-percent bonus depreciation property is contributed by the terminated partnership to the new partnership.

(iv) ***Section 168(i)(7) transactions.*** For purposes of this paragraph (b)(5), if qualified property or 50-percent bonus depreciation property is transferred in a transaction described in section 168(i)(7) in the same taxable year that the qualified property or the 50-percent bonus depreciation property is placed in service by the transferor, the transferred property is treated as originally placed in service on the date the transferor placed in service the qualified property or the 50-percent bonus depreciation property, as applicable. In the case of multiple transfers of qualified property or 50-percent bonus depreciation property in multiple transactions described in section 168(i)(7) in the same taxable year, the placed in service date of the transferred property is deemed to be the date on which the first transferor placed in service the qualified property or the 50-percent bonus depreciation property, as applicable.

(v) ***Example.*** The application of this paragraph (b)(5) is illustrated by the following example:

Example. On September 15, 2004, QQ acquired and placed in service new equipment. This equipment is not described in section 168(k)(2)(B) or (C). On December 1, 2004, QQ sells the equipment to RR and leases the equipment back from RR in a sale-leaseback transaction. On February 15, 2005, RR sells the equipment to TT subject to the lease with QQ. As of February 15, 2005, QQ is still the user of the equipment. The sale-leaseback transaction of December 1, 2004, between QQ and RR satisfies the requirements of paragraph (b)(5)(ii)(A) of this section. The sale transaction of February 15, 2005, between RR and TT satisfies the requirements of paragraph (b)(5)(ii)(B) of this section. Consequently, pursuant to paragraph (b)(5)(ii)(C) of this section, the equipment is treated as originally placed in service by TT on February 15, 2005. Further, pursuant to paragraph (b)(3)(iii)(C) of this section, TT is considered the original user of the equipment. Accordingly, the equipment is not eligible for the additional first year depreciation deduction.

(c) ***Qualified leasehold improvement property*** —

(1) ***In general.*** For purposes of section 168(k), qualified leasehold improvement property means any improvement, which is section 1250 property, to an interior portion of a building that is nonresidential real property if—

(i) The improvement is made under or pursuant to a lease by the lessee (or any sublessee) of the interior portion, or by the lessor of that interior portion;

(ii) The interior portion of the building is to be occupied exclusively by the lessee (or any sublessee) of that interior portion; and

(iii) The improvement is placed in service more than 3 years after the date the building was first placed in service by any person.

(2) ***Certain improvements not included.*** Qualified leasehold improvement property does not include any improvement for which the expenditure is attributable to:

(i) The enlargement of the building;

(ii) Any elevator or escalator;

(iii) Any structural component benefiting a common area; or

(iv) The internal structural framework of the building.

(3) ***Definitions.*** For purposes of this paragraph (c), the following definitions apply:

(i) ***Building*** has the same meaning as that term is defined in § 1.48-1(e)(1).

(ii) ***Common area*** means any portion of a building that is equally available to all users of the building on the same basis for uses that are incidental to the primary use of the building. For example, stairways, hallways, lobbies, common seating areas, interior and exterior pedestrian walkways and pedestrian bridges, loading docks and areas, and rest rooms generally are treated as common areas if they are used by different lessees of a building.

(iii) ***Elevator*** and *escalator* have the same meanings as those terms are defined in § 1.48-1(m)(2).

(iv) ***Enlargement*** has the same meaning as that term is defined in § 1.48-12(c)(10).

(v) ***Internal structural framework*** has the same meaning as that term is defined in § 1.48-12(b)(3)(i)(D)(iii).

(vi) ***Lease*** has the same meaning as that term is defined in section 168(h)(7). In addition, a commitment to enter into a lease is treated as a lease, and the parties to the commitment are treated as lessor and lessee. However, a lease between related persons is not considered a lease. For purposes of the preceding sentence, related persons are—

(A) Members of an affiliated group (as defined in section 1504 and the regulations thereunder); and

(B) Persons having a relationship described in section 267(b) and the regulations thereunder. For purposes of applying section 267(b), the language "80 percent or more" is used instead of "more than 50 percent."

(vii) ***Nonresidential real property*** has the same meaning as that term is defined in section 168(e)(2)(B).

(viii) ***Structural component*** has the same meaning as that term is defined in § 1.48-1(e)(2).

(d) ***Computation of depreciation deduction for qualified property or 50-percent bonus depreciation property*** —

(1) ***Additional first year depreciation deduction*** —

(i) ***In general.*** Except as provided in paragraph (f) of this section, the additional first year depreciation deduction is allowable in the first taxable year in which the qualified property or 50-percent bonus depreciation property is placed in service by the taxpayer for use in its trade or business or for the production of income. Except as provided in paragraph (f)(5) of this section, the allowable additional first year depreciation deduction for qualified property is determined by multiplying the unadjusted depreciable basis (as defined in § 1.168(k)-1(a)(2)(iii)) of the qualified property by 30 percent. Except as provided in paragraph (f)(5) of this section, the allowable additional first year depreciation deduction for 50-percent bonus depreciation property is determined by multiplying the unadjusted depreciable basis (as defined in § 1.168(k)-1(a)(2)(iii)) of the 50-percent bonus depreciation property by 50 percent. Except as provided in paragraph (f)(1) of this section, the 30-percent or 50-percent additional first year depreciation deduction is not affected by a taxable year of less than 12 months. See paragraph (f)(1) of this section for qualified property or 50-percent bonus depreciation property

placed in service and disposed of in the same taxable year. See paragraph (f)(5) of this section for qualified property or 50-percent bonus depreciation property acquired in a like-kind exchange or as a result of an involuntary conversion.

(ii) ***Property having a longer production period.*** For purposes of paragraph (d)(1)(i) of this section, the unadjusted depreciable basis (as defined in § 1.168(k)-1(a)(2)(iii)) of qualified property or 50-percent bonus depreciation property described in section 168(k)(2)(B) is limited to the property's unadjusted depreciable basis attributable to the property's manufacture, construction, or production after September 10, 2001 (for qualified property), or May 5, 2003 (for 50-percent bonus depreciation property), and before January 1, 2005.

(iii) ***Alternative minimum tax.*** The 30-percent or 50-percent additional first year depreciation deduction is allowed for alternative minimum tax purposes for the taxable year in which the qualified property or the 50-percent bonus depreciation property is placed in service by the taxpayer. In general, the 30-percent or 50-percent additional first year depreciation deduction for alternative minimum tax purposes is based on the unadjusted depreciable basis of the property for alternative minimum tax purposes. However, see paragraph (f)(5)(iii)(D) of this section for qualified property or 50-percent bonus depreciation property acquired in a like-kind exchange or as a result of an involuntary conversion.

(2) ***Otherwise allowable depreciation deduction.***

(i) ***In general.*** Before determining the amount otherwise allowable as a depreciation deduction for the qualified property or the 50-percent bonus depreciation property for the placed-in-service year and any subsequent taxable year, the taxpayer must determine the remaining adjusted depreciable basis of the qualified property or the 50-percent bonus depreciation property. This remaining adjusted depreciable basis is equal to the unadjusted depreciable basis of the qualified property or the 50-percent bonus depreciation property reduced by the amount of the additional first year depreciation allowed or allowable, whichever is greater. The remaining adjusted depreciable basis of the qualified property or the 50-percent bonus depreciation property is then depreciated using the applicable depreciation provisions under the Internal Revenue Code for the qualified property or the 50-percent bonus depreciation property. The remaining adjusted depreciable basis of the qualified property or the 50-percent bonus depreciation property that is MACRS property is also the basis to which the annual depreciation rates in the optional depreciation tables apply (for further guidance, see section 8 of Rev. Proc. 87-57 (1987-2 C.B. 687) and § 601.601(d)(2)(ii)(*b*) of this chapter). The depreciation deduction allowable for the remaining adjusted depreciable basis of the qualified property or the 50-percent bonus depreciation property is affected by a taxable year of less than 12 months.

(ii) ***Alternative minimum tax.*** For alternative minimum tax purposes, the depreciation deduction allowable for the remaining adjusted depreciable basis of the qualified property or the 50-percent bonus depreciation property is based on the remaining adjusted depreciable basis for alternative minimum tax purposes. The remaining adjusted depreciable basis of the qualified property or the 50-percent bonus depreciable property for alternative minimum tax purposes is depreciated using the same depreciation method, recovery period (or useful life in the case of computer software), and convention that apply to the qualified property or the 50-percent bonus depreciation property for regular tax purposes.

(3) ***Examples.*** This paragraph (d) is illustrated by the following examples:

Example 1. On March 1, 2003, *V,* a calendar-year taxpayer, purchased and placed in service qualified property that costs $1 million and is 5-year property under section 168(e). *V* depreciates its 5-year property placed in service in 2003 using the optional depreciation table that corresponds with the general depreciation system, the 200-percent declining balance method, a 5-year recovery period, and the half-year convention. For 2003, *V* is allowed a 30-percent additional first year depreciation deduction of $300,000 (the unadjusted depreciable basis of $1 million multiplied by .30). Next, *V* must reduce the unadjusted depreciable basis of $1 million by the additional first year depreciation deduction of $300,000 to determine the remaining adjusted depreciable basis of $700,000. Then, *V*'s depreciation deduction allowable in 2003 for the remaining adjusted depreciable basis of $700,000 is $140,000 (the remaining adjusted depreciable basis of $700,000 multiplied by the annual depreciation rate of .20 for recovery year 1).

Example 2. On June 1, 2003, *W,* a calendar-year taxpayer, purchased and placed in service 50-percent bonus depreciation property that costs $126,000. The property qualifies for the expensing election under section 179 and is 5-year property under section 168(e). *W* did not purchase any other section 179 property in 2003. *W* makes the election under section 179 for the property and depreciates its 5-year property placed in service in 2003 using the optional depreciation table that corresponds with the general depreciation system, the 200-percent declining balance method, a 5-year recovery period, and the half-year convention. For 2003, *W* is first allowed a $100,000 deduction under section 179. Next, *W* must reduce the cost of $126,000 by the section 179 deduction of $100,000 to determine the unadjusted depreciable basis of $26,000. Then, for 2003, *W* is allowed a 50-percent additional first year depreciation deduction of $13,000 (the unadjusted depreciable basis of $26,000 multiplied by .50). Next, *W* must reduce the unadjusted depreciable basis of $26,000 by the additional first year depreciation deduction of $13,000 to determine the remaining adjusted depreciable basis of $13,000. Then, *W*'s depreciation deduction allowable in 2003 for the remaining adjusted depreciable basis of $13,000 is $2,600 (the remaining adjusted depreciable basis of $13,000 multiplied by the annual depreciation rate of .20 for recovery year 1).

(e) ***Election not to deduct additional first year depreciation*** —

(1) ***In general.*** If a taxpayer makes an election under this paragraph (e), the election applies to all qualified property or 50-percent bonus depreciation property, as applicable, that is in the same class of property and placed in service in the same taxable year. The rules of this paragraph (e) apply to the following elections provided under section 168(k):

(i) ***Qualified property.*** A taxpayer may make an election not to deduct the 30-percent additional first year depreciation for any class of property that is qualified property placed in service during the taxable year. If this election is made, no additional first year depreciation deduction is allowable for the property placed in service during the taxable year in the class of property.

(ii) ***50-percent bonus depreciation property.*** For any class of property that is 50-percent bonus depreciation property placed in service during the taxable year, a taxpayer may make an election—

(A) To deduct the 30-percent, instead of the 50-percent, additional first year depreciation. If this election is made, the allowable additional first year depreciation deduction is determined as though the class of property is qualified property under section 168(k)(2); or

(B) Not to deduct both the 30-percent and the 50-percent additional first year depreciation. If this election is made, no additional first year depreciation deduction is allowable for the class of property.

(2) ***Definition of class of property.*** For purposes of this paragraph (e), the term class of property means:

(i) Except for the property described in paragraphs (e)(2)(ii) and (iv) of this section, each class of property described in section 168(e) (for example, 5-year property);

(ii) Water utility property as defined in section 168(e)(5) and depreciated under section 168;

(iii) Computer software as defined in, and depreciated under, section 167(f)(1) and the regulations thereunder; or

(iv) Qualified leasehold improvement property as defined in paragraph (c) of this section and depreciated under section 168.

(3) ***Time and manner for making election*** —

(i) ***Time for making election.*** Except as provided in paragraph (e)(4) of this section, any election specified in paragraph (e)(1) of this section must be made by the due date (including extensions) of the Federal tax return for the taxable year in which the qualified property or the 50-percent bonus depreciation property, as applicable, is placed in service by the taxpayer.

(ii) ***Manner of making election.*** Except as provided in paragraph (e)(4) of this section, any election specified in paragraph (e)(1) of this section must be made in the manner prescribed on Form 4562, "Depreciation and Amortization," and its instructions. The election is made separately by each person owning qualified property or 50-percent bonus depreciation property (for example, for each member of a consolidated group by the common parent of the group, by the partnership, or by the S corporation). If Form 4562 is revised or renumbered, any reference in this section to that form shall be treated as a reference to the revised or renumbered form.

(4) ***Special rules for 2000 or 2001 returns.*** For the election specified in paragraph (e)(1)(i) of this section for qualified property placed in service by the taxpayer during the taxable year that included September 11, 2001, the taxpayer should refer to the guidance provided by the Internal Revenue Service for the time and manner of making this election on the 2000 or 2001 Federal tax return for the taxable year that included September 11, 2001 (for further guidance, *see* sections 3.03(3) and 4 of Rev. Proc. 2002-33 (2002-1 C.B. 963), Rev. Proc. 2003-50 (2003-29 I.R.B. 119), and § 601.601(d)(2)(ii)(*b*) of this chapter).

(5) ***Failure to make election.*** If a taxpayer does not make the applicable election specified in paragraph (e)(1) of this section within the time and in the manner prescribed in paragraph (e)(3) or (4) of this section, the amount of depreciation allowable for that property under section 167(f)(1) or under section 168, as applicable, must be determined for the placed-in-service year and for all subsequent taxable years by taking into account the additional first year depreciation deduction. Thus, any election specified in paragraph (e)(1) of this section shall not be made by the taxpayer in any other manner (for example, the election cannot be made through a request under section 446(e) to change the taxpayer's method of accounting).

(6) ***Alternative minimum tax.*** If a taxpayer makes an election specified in paragraph (e)(1) of this section for a class of property, the depreciation adjustments under section 56 and the regulations under section 56 apply to the property to which that election applies for purposes of computing the taxpayer's alternative minimum taxable income.

(7) *Revocation of election* —

(i) ***In general.*** Except as provided in paragraph (e)(7)(ii) of this section, an election specified in paragraph (e)(1) of this section, once made, may be revoked only with the written consent of the Commissioner of Internal Revenue. To seek the Commissioner's consent, the taxpayer must submit a request for a letter ruling.

(ii) ***Automatic 6-month extension.*** If a taxpayer made an election specified in paragraph (e)(1) of this section for a class of property, an automatic extension of 6 months from the due date of the taxpayer's Federal tax return (excluding extensions) for the placed-in-service year of the class of property is granted to revoke that election, provided the taxpayer timely filed the taxpayer's Federal tax return for the placed-in-service year of the class of property and, within this 6-month extension period, the taxpayer (and all taxpayers whose tax liability would be affected by the election) files an amended Federal tax return for the placed-in-service year of the class of property in a manner that is consistent with the revocation of the election.

(f) *Special rules* —

(1) *Property placed in service and disposed of in the same taxable year* —

(i) ***In general.*** Except as provided in paragraphs (f)(1)(ii) and (iii) of this section, the additional first year depreciation deduction is not allowed for qualified property or 50-percent bonus depreciation property placed in service and disposed of during the same taxable year. Also if qualified property or 50-percent bonus depreciation property is placed in service and disposed of during the same taxable year and then reacquired and again placed in service in a subsequent taxable year, the additional first year depreciation deduction is not allowable for the property in the subsequent taxable year.

(ii) ***Technical termination of a partnership.*** In the case of a technical termination of a partnership under section 708(b)(1)(B), the additional first year depreciation deduction is allowable for any qualified property or 50-percent bonus depreciation property placed in service by the terminated partnership during the taxable year of termination and contributed by the terminated partnership to the new partnership. The allowable additional first year depreciation deduction for the qualified property or the 50-percent bonus depreciation property shall not be claimed by the terminated partnership but instead shall be claimed by the new partnership for the new partnership's taxable year in which the qualified property or the 50-percent bonus depreciation property was contributed by the terminated partnership to the new partnership. However, if qualified property or 50-percent bonus depreciation property is both placed in service and contributed to a new partnership in a transaction described in section 708(b)(1)(B) by the terminated partnership during the taxable year of termination, and if such property is disposed of by the new partnership in the same taxable year the new partnership received such property from the terminated partnership, then no additional first year depreciation deduction is allowable to either partnership.

(iii) ***Section 168(i)(7) transactions.*** If any qualified property or 50-percent bonus depreciation property is transferred in a transaction described in section 168(i)(7) in the same taxable year that the qualified property or the 50-percent bonus depreciation property is placed in service by the transferor, the additional first year depreciation deduction is allowable for the qualified property or the 50-percent bonus depreciation property. The allowable additional first year depreciation deduction for the qualified property or the 50-percent bonus depreciation property for the transferor's taxable year in which the property is placed in service is allocated between

the transferor and the transferee on a monthly basis. This allocation shall be made in accordance with the rules in § 1.168(d)-1(b)(7)(ii) for allocating the depreciation deduction between the transferor and the transferee. However, if qualified property or 50-percent bonus depreciation property is both placed in service and transferred in a transaction described in section 168(i)(7) by the transferor during the same taxable year, and if such property is disposed of by the transferee (other than by a transaction described in section 168(i)(7)) during the same taxable year the transferee received such property from the transferor, then no additional first year depreciation deduction is allowable to either party.

(iv) ***Examples.*** The application of this paragraph (f)(1) is illustrated by the following examples:

Example 1. *X* and *Y* are equal partners in *Partnership XY,* a general partnership. On February 1, 2002, *Partnership XY* purchased and placed in service new equipment at a cost of $30,000. On March 1, 2002, *X* sells its entire 50 percent interest to *Z* in a transfer that terminates the partnership under section 708(b)(1)(B). As a result, terminated *Partnership XY* is deemed to have contributed the equipment to new *Partnership XY.* Pursuant to paragraph (f)(1)(ii) of this section, new *Partnership XY,* not terminated *Partnership XY,* is eligible to claim the 30-percent additional first year depreciation deduction allowable for the equipment for the taxable year 2002 (assuming all other requirements are met).

Example 2. On January 5, 2002, *BB* purchased and placed in service new office desks for a total amount of $8,000. On August 20, 2002, *BB* transferred the office desks to *Partnership BC* in a transaction described in section 721. *BB* and *Partnership BC* are calendar-year taxpayers. Because the transaction between *BB* and *Partnership BC* is a transaction described in section 168(i)(7), pursuant to paragraph (f)(1)(iii) of this section the 30-percent additional first year depreciation deduction allowable for the desks is allocated between *BB* and *Partnership BC* in accordance with the rules in § 1.168(d)-1(b)(7)(ii) for allocating the depreciation deduction between the transferor and the transferee. Accordingly, the 30-percent additional first year depreciation deduction allowable for the desks for 2002 of $2,400 (the unadjusted depreciable basis of $8,000 multiplied by .30) is allocated between *BB* and *Partnership BC* based on the number of months that *BB* and *Partnership BC* held the desks in service. Thus, because the desks were held in service by *BB* for 7 of 12 months, which includes the month in which *BB* placed the desks in service but does not include the month in which the desks were transferred, *BB* is allocated $1,400 ($^{7}/_{12}$ × $2,400 additional first year depreciation deduction). *Partnership BC* is allocated $1,000, the remaining $^{5}/_{12}$ of the $2,400 additional first year depreciation deduction allowable for the desks.

(2) ***Redetermination of basis.*** If the unadjusted depreciable basis (as defined in § 1.168(k)-1(a)(2)(iii)) of qualified property or 50-percent bonus depreciation property is redetermined (for example, due to contingent purchase price or discharge of indebtedness) before January 1, 2005, or, in the case of property described in section 168(k)(2)(B) or (C), is redetermined before January 1, 2006 (or redetermined before January 1, 2007, in the case of property described in section 168(k)(2)(B) or (C) to which section 105 of the Gulf Opportunity Zone Act of 2005 (Pub. L. 109-135, 119 Stat. 2577) applies (for further guidance, see Announcement 2006-29 (2006-19 I.R.B. 879) and § 601.601(d)(2)(ii)(*b*) of this chapter)), the additional first year depreciation deduction allowable for the qualified property or the 50-percent bonus depreciation property is redetermined as follows:

(i) ***Increase in basis.*** For the taxable year in which an increase in basis of qualified property or 50-percent bonus depreciation property occurs, the taxpayer shall claim an additional first year depreciation deduction for qualified property by multiplying the amount of the increase in basis for this property by 30 percent or, for 50-percent bonus depreciation property, by multiplying the amount of the increase in basis for this property by 50 percent. For purposes of this paragraph (f)(2)(i), the 30-percent additional first year depreciation deduction applies to the increase in basis if the underlying property is qualified property and the 50-percent additional first year depreciation deduction applies to the increase in basis if the underlying property is 50-percent bonus depreciation property. To determine the amount otherwise allowable as a depreciation deduction for the increase in basis of qualified property or 50-percent bonus depreciation property, the amount of the increase in basis of the qualified property or the 50-percent bonus depreciation property must be reduced by the additional first year depreciation deduction allowed or allowable, whichever is greater, for the increase in basis and the remaining increase in basis of—

(A) Qualified property or 50-percent bonus depreciation property (except for computer software described in paragraph (b)(2)(i)(B) of this section) is depreciated over the recovery period of the qualified property or the 50-percent bonus depreciation property, as applicable, remaining as of the beginning of the taxable year in which the increase in basis occurs, and using the same depreciation method and convention applicable to the qualified property or 50-percent bonus depreciation property, as applicable, that applies for the taxable year in which the increase in basis occurs; and

(B) Computer software (as defined in paragraph (b)(2)(i)(B) of this section) that is qualified property or 50-percent bonus depreciation property is depreciated ratably over the remainder of the 36-month period (the useful life under section 167(f)(1)) as of the beginning of the first day of the month in which the increase in basis occurs.

(ii) ***Decrease in basis.*** For the taxable year in which a decrease in basis of qualified property or 50-percent bonus depreciation property occurs, the taxpayer shall reduce the total amount otherwise allowable as a depreciation deduction for all of the taxpayer's depreciable property by the excess additional first year depreciation deduction previously claimed for the qualified property or the 50-percent bonus depreciation property. If, for such taxable year, the excess additional first year depreciation deduction exceeds the total amount otherwise allowable as a depreciation deduction for all of the taxpayer's depreciable property, the taxpayer shall take into account a negative depreciation deduction in computing taxable income. The excess additional first year depreciation deduction for qualified property is determined by multiplying the amount of the decrease in basis for this property by 30 percent. The excess additional first year depreciation deduction for 50-percent bonus depreciation property is determined by multiplying the amount of the decrease in basis for this property by 50 percent. For purposes of this paragraph (f)(2)(ii), the 30-percent additional first year depreciation deduction applies to the decrease in basis if the underlying property is qualified property and the 50-percent additional first year depreciation deduction applies to the decrease in basis if the underlying property is 50-percent bonus depreciation property. Also, if the taxpayer establishes by adequate records or other sufficient evidence that the taxpayer claimed less than the additional first year depreciation deduction allowable for the qualified property or the 50-percent bonus depreciation property before the decrease in basis or if the taxpayer claimed more than the additional first year depreciation deduction allowable for the qualified property or the 50-percent bonus depreciation property before the decrease in basis, the excess additional first

year depreciation deduction is determined by multiplying the amount of the decrease in basis by the additional first year depreciation deduction percentage actually claimed by the taxpayer for the qualified property or the 50-percent bonus depreciation property, as applicable, before the decrease in basis. To determine the amount to reduce the total amount otherwise allowable as a depreciation deduction for all of the taxpayer's depreciable property for the excess depreciation previously claimed (other than the additional first year depreciation deduction) resulting from the decrease in basis of the qualified property or the 50-percent bonus depreciation property, the amount of the decrease in basis of the qualified property or the 50-percent bonus depreciation property must be adjusted by the excess additional first year depreciation deduction that reduced the total amount otherwise allowable as a depreciation deduction (as determined under this paragraph) and the remaining decrease in basis of—

(A) Qualified property or 50-percent bonus depreciation property (except for computer software described in paragraph (b)(2)(i)(B) of this section) reduces the amount otherwise allowable as a depreciation deduction over the recovery period of the qualified property or the 50-percent bonus depreciation property, as applicable, remaining as of the beginning of the taxable year in which the decrease in basis occurs, and using the same depreciation method and convention of the qualified property or 50-percent bonus depreciation property, as applicable, that applies in the taxable year in which the decrease in basis occurs. If, for any taxable year, the reduction to the amount otherwise allowable as a depreciation deduction (as determined under this paragraph (f)(2)(ii)(A)) exceeds the total amount otherwise allowable as a depreciation deduction for all of the taxpayer's depreciable property, the taxpayer shall take into account a negative depreciation deduction in computing taxable income; and

(B) Computer software (as defined in paragraph (b)(2)(i)(B) of this section) that is qualified property or 50-percent bonus depreciation property reduces the amount otherwise allowable as a depreciation deduction over the remainder of the 36-month period (the useful life under section 167(f)(1)) as of the beginning of the first day of the month in which the decrease in basis occurs. If, for any taxable year, the reduction to the amount otherwise allowable as a depreciation deduction (as determined under this paragraph (f)(2)(ii)(B)) exceeds the total amount otherwise allowable as a depreciation deduction for all of the taxpayer's depreciable property, the taxpayer shall take into account a negative depreciation deduction in computing taxable income.

(iii) ***Definition.*** Except as otherwise expressly provided by the Internal Revenue Code (for example, section 1017(a)), the regulations under the Internal Revenue Code, or other guidance published in the Internal Revenue Bulletin (see § 601.601(d)(2)(ii)(*b*) of this chapter), for purposes of this paragraph (f)(2):

(A) An increase in basis occurs in the taxable year an amount is taken into account under section 461; and

(B) A decrease in basis occurs in the taxable year an amount would be taken into account under section 451.

(iv) ***Examples.*** The application of this paragraph (f)(2) is illustrated by the following examples:

> *Example 1.* (i) On May 15, 2002, *CC,* a cash-basis taxpayer, purchased and placed in service qualified property that is 5-year property at a cost of $200,000. In addition to the

$200,000, *CC* agrees to pay the seller 25 percent of the gross profits from the operation of the property in 2002. On May 15, 2003, *CC* paid to the seller an additional $10,000. *CC* depreciates the 5-year property placed in service in 2002 using the optional depreciation table that corresponds with the general depreciation system, the 200-percent declining balance method, a 5-year recovery period, and the half-year convention.
(ii) For 2002, *CC* is allowed a 30-percent additional first year depreciation deduction of $60,000 (the unadjusted depreciable basis of $200,000 multiplied by .30). In addition, *CC*'s depreciation deduction for 2002 for the remaining adjusted depreciable basis of $140,000 (the unadjusted depreciable basis of $200,000 reduced by the additional first year depreciation deduction of $60,000) is $28,000 (the remaining adjusted depreciable basis of $140,000 multiplied by the annual depreciation rate of .20 for recovery year 1).

(iii) For 2003, *CC*'s depreciation deduction for the remaining adjusted depreciable basis of $140,000 is $44,800 (the remaining adjusted depreciable basis of $140,000 multiplied by the annual depreciation rate of .32 for recovery year 2). In addition, pursuant to paragraph (f)(2)(i) of this section, *CC* is allowed an additional first year depreciation deduction for 2003 for the $10,000 increase in basis of the qualified property. Consequently, *CC* is allowed an additional first year depreciation deduction of $3,000 (the increase in basis of $10,000 multiplied by .30). Also, *CC* is allowed a depreciation deduction for 2003 attributable to the remaining increase in basis of $7,000 (the increase in basis of $10,000 reduced by the additional first year depreciation deduction of $3,000). The depreciation deduction allowable for 2003 attributable to the remaining increase in basis of $7,000 is $3,111 (the remaining increase in basis of $7,000 multiplied by .4444, which is equal to 1/remaining recovery period of 4.5 years at January 1, 2003, multiplied by 2). Accordingly, for 2003, *CC*'s total depreciation deduction allowable for the qualified property is $50,911.

Example 2. (i) On May 15, 2002, DD, a calendar-year taxpayer, purchased and placed in service qualified property that is 5-year property at a cost of $400,000. To purchase the property, DD borrowed $250,000 from Bank2. On May 15, 2003, Bank2 forgives $50,000 of the indebtedness. DD makes the election provided in section 108(b)(5) to apply any portion of the reduction under section 1017 to the basis of the depreciable property of the taxpayer. DD depreciates the 5-year property placed in service in 2002 using the optional depreciation table that corresponds with the general depreciation system, the 200-percent declining balance method, a 5-year recovery period, and the half-year convention.
(ii) For 2002, DD is allowed a 30-percent additional first year depreciation deduction of $120,000 (the unadjusted depreciable basis of $400,000 multiplied by .30). In addition, DD's depreciation deduction allowable for 2002 for the remaining adjusted depreciable basis of $280,000 (the unadjusted depreciable basis of $400,000 reduced by the

additional first year depreciation deduction of $120,000) is $56,000 (the remaining adjusted depreciable basis of $280,000 multiplied by the annual depreciation rate of .20 for recovery year 1).

(iii) For 2003, DD's deduction for the remaining adjusted depreciable basis of $280,000 is $89,600 (the remaining adjusted depreciable basis of $280,000 multiplied by the annual depreciation rate .32 for recovery year 2). Although Bank2 forgave the indebtedness in 2003, the basis of the property is reduced on January 1, 2004, pursuant to sections 108(b)(5) and 1017(a) under which basis is reduced at the beginning of the taxable year following the taxable year in which the discharge of indebtedness occurs.

(iv) For 2004, DD's deduction for the remaining adjusted depreciable basis of $280,000 is $53,760 (the remaining adjusted depreciable basis of $280,000 multiplied by the annual depreciation rate .192 for recovery year 3). However, pursuant to paragraph (f)(2)(ii) of this section, DD must reduce the amount otherwise allowable as a depreciation deduction for 2004 by the excess depreciation previously claimed for the $50,000 decrease in basis of the qualified property. Consequently, DD must reduce the amount of depreciation otherwise allowable for 2004 by the excess additional first year depreciation of $15,000 (the decrease in basis of $50,000 multiplied by .30). Also, DD must reduce the amount of depreciation otherwise allowable for 2004 by the excess depreciation attributable to the remaining decrease in basis of $35,000 (the decrease in basis of $50,000 reduced by the excess additional first year depreciation of $15,000). The reduction in the amount of depreciation otherwise allowable for 2004 for the remaining decrease in basis of $35,000 is $19,999 (the remaining decrease in basis of $35,000 multiplied by .5714, which is equal to 1/remaining recovery period of 3.5 years at January 1, 2004, multiplied by 2). Accordingly, assuming the qualified property is the only depreciable property owned by DD, for 2004, DD's total depreciation deduction allowable for the qualified property is $18,761 ($53,760 minus $15,000 minus $19,999).

(3) ***Section 1245 and 1250 depreciation recapture.*** For purposes of section 1245 and the regulations thereunder, the additional first year depreciation deduction is an amount allowed or allowable for depreciation. Further, for purposes of section 1250(b) and the regulations thereunder, the additional first year depreciation deduction is not a straight line method.

(4) ***Coordination with section 169.*** The additional first year depreciation deduction is allowable in the placed-in-service year of a certified pollution control facility (as defined in § 1.169-2(a)) that is qualified property or 50-percent bonus depreciation property, even if the taxpayer makes the election to amortize the certified pollution control facility under section 169 and the regulations thereunder in the certified pollution control facility's placed-in-service year.

(5) ***Like-kind exchanges and involuntary conversions*** —

(i) ***Scope.*** The rules of this paragraph (f)(5) apply to acquired MACRS property or acquired computer software that is qualified property or 50-percent bonus depreciation property at the time of replacement provided the time of replacement is after September 10, 2001, and before

January 1, 2005, or, in the case of acquired MACRS property or acquired computer software that is qualified property, or 50-percent bonus depreciation property, described in section 168(k)(2)(B) or (C), the time of replacement is after September 10, 2001, and before January 1, 2006 (or the time of replacement is after September 10, 2001, and before January 1, 2007, in the case of property described in section 168(k)(2)(B) or (C) to which section 105 of the Gulf Opportunity Zone Act of 2005 (Pub. L. 109-135, 119 Stat. 2577) applies (for further guidance, see Announcement 2006-29 (2006-19 I.R.B. 879) and § 601.601(d)(2)(ii)(*b*) of this chapter)).

(ii) ***Definitions.*** For purposes of this paragraph (f)(5), the following definitions apply:

(A) ***Acquired MACRS property*** is MACRS property in the hands of the acquiring taxpayer that is acquired in a transaction described in section 1031(a), (b), or (c) for other MACRS property or that is acquired in connection with an involuntary conversion of other MACRS property in a transaction to which section 1033 applies.

(B) ***Exchanged or involuntarily converted MACRS property*** is MACRS property that is transferred by the taxpayer in a transaction described in section 1031(a), (b), or (c), or that is converted as a result of an involuntary conversion to which section 1033 applies.

(C) ***Acquired computer software*** is computer software (as defined in paragraph (b)(2)(i)(B) of this section) in the hands of the acquiring taxpayer that is acquired in a like-kind exchange under section 1031 or as a result of an involuntary conversion under section 1033.

(D) ***Exchanged or involuntarily converted computer software*** is computer software (as defined in paragraph (b)(2)(i)(B) of this section) that is transferred by the taxpayer in a like-kind exchange under section 1031 or that is converted as a result of an involuntary conversion under section 1033.

(E) ***Time of disposition*** is when the disposition of the exchanged or involuntarily converted MACRS property or the exchanged or involuntarily converted computer software, as applicable, takes place.

(F) Except as provided in paragraph (f)(5)(v) of this section, the *time of replacement* is the later of—

(*1*) When the acquired MACRS property or acquired computer software is placed in service; or

(*2*) The time of disposition of the exchanged or involuntarily converted property.

(G) ***Carryover basis*** is the lesser of:

(*1*) The basis in the acquired MACRS property or acquired computer software, as applicable and as determined under section 1031(d) or 1033(b) and the regulations thereunder; or

(*2*) The adjusted depreciable basis of the exchanged or involuntarily converted MACRS property or the exchanged or involuntarily converted computer software, as applicable.

(H) ***Excess basis*** is any excess of the basis in the acquired MACRS property or acquired computer software, as applicable and as determined under section 1031(d) or 1033(b) and the regulations thereunder, over the carryover basis as determined under paragraph (f)(5)(ii)(G) of this section.

(I) ***Remaining carryover basis*** is the carryover basis as determined under paragraph (f)(5)(ii)(G) of this section reduced by—

(*1*) The percentage of the taxpayer's use of property for the taxable year other than in the taxpayer's trade or business (or for the production of income); and

(*2*) Any adjustments to basis provided by other provisions of the Code and the regulations thereunder (including section 1016(a)(2) and (3)) for periods prior to the disposition of the exchanged or involuntarily converted property.

(J) ***Remaining excess basis*** is the excess basis as determined under paragraph (f)(5)(ii)(H) of this section reduced by—

(*1*) The percentage of the taxpayer's use of property for the taxable year other than in the taxpayer's trade or business (or for the production of income);

(*2*) Any portion of the basis the taxpayer properly elects to treat as an expense under section 179 or section 179C;

(*3*) Any adjustments to basis provided by other provisions of the Code and the regulations thereunder.

(K) ***Year of disposition*** is the taxable year that includes the time of disposition.

(L) ***Year of replacement*** is the taxable year that includes the time of replacement.

(iii) ***Computation*** —

(A) ***In general.*** Assuming all other requirements of section 168(k) and this section are met, the remaining carryover basis for the year of replacement and the remaining excess basis, if any, for the year of replacement for the acquired MACRS property or the acquired computer software, as applicable, are eligible for the additional first year depreciation deduction. The 30-percent additional first year depreciation deduction applies to the remaining carryover basis and the remaining excess basis, if any, of the acquired MACRS property or the acquired computer software if the time of replacement is after September 10, 2001, and before May 6, 2003, or if the taxpayer made the election provided in paragraph (e)(1)(ii)(A) of this section. The 50-percent additional first year depreciation deduction applies to the remaining carryover basis and the remaining excess basis, if any, of the acquired MACRS property or the acquired computer software if the time of replacement is after May 5, 2003, and before January 1, 2005, or, in the case of acquired MACRS property or acquired computer software that is 50-percent bonus depreciation property described in section 168(k)(2)(B) or (C), the time of replacement is after May 5, 2003, and before January 1, 2006 (or the time of replacement is after May 5, 2003, and before January 1, 2007, in the case of 50-percent bonus depreciation property described in section 168(k)(2)(B) or (C) to which section 105 of the Gulf Opportunity Zone Act of 2005 (Pub. L. 109-135, 119 Stat. 2577) applies (for further guidance, see Announcement 2006-29 (2006-19 I.R.B. 879) and § 601.601(d)(2)(ii)(*b*) of this chapter)). The additional first year depreciation deduction is computed separately for the remaining carryover basis and the remaining excess basis.

(B) ***Year of disposition and year of replacement.*** The additional first year depreciation deduction is allowable for the acquired MACRS property or acquired computer software in the year of replacement. However, the additional first year depreciation deduction is not

allowable for the exchanged or involuntarily converted MACRS property or the exchanged or involuntarily converted computer software if the exchanged or involuntarily converted MACRS property or the exchanged or involuntarily converted computer software, as applicable, is placed in service and disposed of in an exchange or involuntary conversion in the same taxable year.

(C) ***Property having a longer production period.*** For purposes of paragraph (f)(5)(iii)(A) of this section, the total of the remaining carryover basis and the remaining excess basis, if any, of the acquired MACRS property that is qualified property or 50-percent bonus depreciation property described in section 168(k)(2)(B) is limited to the total of the property's remaining carryover basis and remaining excess basis, if any, attributable to the property's manufacture, construction, or production after September 10, 2001 (for qualified property), or May 5, 2003 (for 50-percent bonus depreciation property), and before January 1, 2005.

(D) ***Alternative minimum tax.*** The 30-percent or 50-percent additional first year depreciation deduction is allowed for alternative minimum tax purposes for the year of replacement of acquired MACRS property or acquired computer software that is qualified property or 50-percent bonus depreciation property. The 30-percent or 50-percent additional first year depreciation deduction for alternative minimum tax purposes is based on the remaining carryover basis and the remaining excess basis, if any, of the acquired MACRS property or the acquired computer software for alternative minimum tax purposes.

(iv) ***Sale-leaseback transaction.*** For purposes of this paragraph (f)(5), if MACRS property or computer software is sold to a taxpayer and leased back to a person by the taxpayer within three months after the time of disposition of the MACRS property or computer software, as applicable, the time of replacement for this MACRS property or computer software, as applicable, shall not be earlier than the date on which the MACRS property or computer software, as applicable, is used by the lessee under the leaseback.

(v) ***Acquired MACRS property or acquired computer software that is acquired and placed in service before disposition of involuntarily converted MACRS property or involuntarily converted computer software.*** If, in an involuntary conversion, a taxpayer acquires and places in service the acquired MACRS property or the acquired computer software before the time of disposition of the involuntarily converted MACRS property or the involuntarily converted computer software and the time of disposition of the involuntarily converted MACRS property or the involuntarily converted computer software is after December 31, 2004, or, in the case of property described in section 168(k)(2)(B) or (C), after December 31, 2005 (or after December 31, 2006, in the case of property described in section 168(k)(2)(B) or (C) to which section 105 of the Gulf Opportunity Zone Act of 2005 (Pub. L. 109-135, 119 Stat. 2577) applies (for further guidance, see Announcement 2006-29 (2006-19 I.R.B. 879) and § 601.601(d)(2)(ii)(*b*) of this chapter)), then—

(A) ***Time of replacement.*** The time of replacement for purposes of this paragraph (f)(5) is when the acquired MACRS property or acquired computer software is placed in service by the taxpayer, provided the threat or imminence of requisition or condemnation of the involuntarily converted MACRS property or involuntarily converted computer software existed before January 1, 2005, or, in the case of property described in section 168(k)(2)(B) or (C), existed before January 1, 2006 (or existed before January 1, 2007, in the case of property described in section 168(k)(2)(B) or (C) to which section 105 of the

Gulf Opportunity Zone Act of 2005 (Pub. L. 109-135, 119 Stat. 2577) applies (for further guidance, see Announcement 2006-29 (2006-19 I.R.B. 879) and § 601.601(d)(2)(ii)(*b*) of this chapter)); and

(B) ***Depreciation of acquired MACRS property or acquired computer software.*** The taxpayer depreciates the acquired MACRS property or acquired computer software in accordance with paragraph (d) of this section. However, at the time of disposition of the involuntarily converted MACRS property, the taxpayer determines the exchanged basis (as defined in § 1.168(i)-6(b)(7)) and the excess basis (as defined in § 1.168(i)-6(b)(8)) of the acquired MACRS property and begins to depreciate the depreciable exchanged basis (as defined in § 1.168(i)-6(b)(9) of the acquired MACRS property in accordance with § 1.168(i)-6(c). The depreciable excess basis (as defined in § 1.168(i)-6(b)(10)) of the acquired MACRS property continues to be depreciated by the taxpayer in accordance with the first sentence of this paragraph (f)(5)(v)(B). Further, in the year of disposition of the involuntarily converted MACRS property, the taxpayer must include in taxable income the excess of the depreciation deductions allowable, including the additional first year depreciation deduction allowable, on the unadjusted depreciable basis of the acquired MACRS property over the additional first year depreciation deduction that would have been allowable to the taxpayer on the remaining carryover basis of the acquired MACRS property at the time of replacement (as defined in paragraph (f)(5)(v)(A) of this section) plus the depreciation deductions that would have been allowable, including the additional first year depreciation deduction allowable, to the taxpayer on the depreciable excess basis of the acquired MACRS property from the date the acquired MACRS property was placed in service by the taxpayer (taking into account the applicable convention) to the time of disposition of the involuntarily converted MACRS property. Similar rules apply to acquired computer software.

(vi) ***Examples.*** The application of this paragraph (f)(5) is illustrated by the following examples:

> *Example 1.* (i) In December 2002, EE, a calendar-year corporation, acquired for $200,000 and placed in service Canopy V1, a gas station canopy. Canopy V1 is qualified property under section 168(k)(1) and is 5-year property under section 168(e). EE depreciated Canopy V1 under the general depreciation system of section 168(a) by using the 200-percent declining balance method of depreciation, a 5-year recovery period, and the half-year convention. EE elected to use the optional depreciation tables to compute the depreciation allowance for Canopy V1. On January 1, 2003, Canopy V1 was destroyed in a fire and was no longer usable in EE's business. On June 1, 2003, in an involuntary conversion, EE acquired and placed in service new Canopy W1 with all of the $160,000 of insurance proceeds EE received due to the loss of Canopy V1. Canopy W1 is 50-percent bonus depreciation property under section 168(k)(4) and is 5-year property under section 168(e). Pursuant to paragraph (g)(3)(ii) of this section and § 1.168(i)-6(k)(2)(i), EE decided to apply § 1.168(i)-6 to the involuntary conversion of Canopy V1 with the replacement of Canopy W1, the acquired MACRS property.

(ii) For 2002, EE is allowed a 30-percent additional first year depreciation deduction of $60,000 for Canopy V1 (the unadjusted depreciable basis of $200,000 multiplied by .30), and a regular MACRS depreciation deduction of $28,000 for Canopy V1 (the remaining adjusted depreciable basis of $140,000 multiplied by the annual depreciation rate of .20 for recovery year 1).

(iii) For 2003, EE is allowed a regular MACRS depreciation deduction of $22,400 for Canopy V1 (the remaining adjusted depreciable basis of $140,000 multiplied by the annual depreciation rate of .32 for recovery year 2 × $^{1}/_{2}$ year).

(iv) Pursuant to paragraph (f)(5)(iii)(A) of this section, the additional first year depreciation deduction allowable for Canopy W1 equals $44,800 (.50 of Canopy W1's remaining carryover basis at the time of replacement of $89,600 (Canopy V1's remaining adjusted depreciable basis of $140,000 minus 2002 regular MACRS depreciation deduction of $28,000 minus 2003 regular MACRS depreciation deduction of $22,400)).

Example 2. (i) Same facts as in *Example 1,* except EE elected not to deduct the additional first year depreciation for 5-year property placed in service in 2002. EE deducted the additional first year depreciation for 5-year property placed in service in 2003.
(ii) For 2002, EE is allowed a regular MACRS depreciation deduction of $40,000 for Canopy V1 (the unadjusted depreciable basis of $200,000 multiplied by the annual depreciation rate of .20 for recovery year 1).

(iii) For 2003, EE is allowed a regular MACRS depreciation deduction of $32,000 for Canopy V1 (the unadjusted depreciable basis of $200,000 multiplied by the annual depreciation rate of .32 for recovery year 2 × $^{1}/_{2}$ year).

(iv) Pursuant to paragraph (f)(5)(iii)(A) of this section, the additional first year depreciation deduction allowable for Canopy W1 equals $64,000 (.50 of Canopy W1's remaining carryover basis at the time of replacement of $128,000 (Canopy V1's unadjusted depreciable basis of $200,000 minus 2002 regular MACRS depreciation deduction of $40,000 minus 2003 regular MACRS depreciation deduction of $32,000)).

Example 3. (i) In December 2001, FF, a calendar-year corporation, acquired for $10,000 and placed in service Computer X2. Computer X2 is qualified property under section 168(k)(1) and is 5-year property under section 168(e). FF depreciated Computer X2 under the general depreciation system of section 168(a) by using the 200-percent declining balance method of depreciation, a 5-year recovery period, and the half-year convention. FF elected to use the optional depreciation tables to compute the

depreciation allowance for Computer X2. On January 1, 2002, FF acquired new Computer Y2 by exchanging Computer X2 and $1,000 cash in a like-kind exchange. Computer Y2 is qualified property under section 168(k)(1) and is 5-year property under section 168(e). Pursuant to paragraph (g)(3)(ii) of this section and § 1.168(i)-6(k)(2)(i), FF decided to apply § 1.168(i)-6 to the exchange of Computer X2 for Computer Y2, the acquired MACRS property.
(ii) For 2001, FF is allowed a 30-percent additional first year depreciation deduction of $3,000 for Computer X2 (unadjusted basis of $10,000 multiplied by .30), and a regular MACRS depreciation deduction of $1,400 for Computer X2 (the remaining adjusted depreciable basis of $7,000 multiplied by the annual depreciation rate of .20 for recovery year 1).

(iii) For 2002, FF is allowed a regular MACRS depreciation deduction of $1,120 for Computer X2 (the remaining adjusted depreciable basis of $7,000 multiplied by the annual depreciation rate of .32 for recovery year 2 × $^{1}/_{2}$ year).

(iv) Pursuant to paragraph (f)(5)(iii)(A) of this section, the 30-percent additional first year depreciation deduction for Computer Y2 is allowable for the remaining carryover basis at the time of replacement of $4,480 (Computer X2's unadjusted depreciable basis of $10,000 minus additional first year depreciation deduction allowable of $3,000 minus 2001 regular MACRS depreciation deduction of $1,400 minus 2002 regular MACRS depreciation deduction of $1,120) and for the remaining excess basis at the time of replacement of $1,000 (cash paid for Computer Y2). Thus, the 30-percent additional first year depreciation deduction for the remaining carryover basis at the time of replacement equals $1,344 ($4,480 multiplied by .30) and for the remaining excess basis at the time of replacement equals $300 ($1,000 multiplied by .30), which totals $1,644.

Example 4. (i) In September 2002, GG, a June 30 year-end corporation, acquired for $20,000 and placed in service Equipment X3. Equipment X3 is qualified property under section 168(k)(1) and is 5-year property under section 168(e). GG depreciated Equipment X3 under the general depreciation system of section 168(a) by using the 200-percent declining balance method of depreciation, a 5-year recovery period, and the half-year convention. GG elected to use the optional depreciation tables to compute the depreciation allowance for Equipment X3. In December 2002, GG acquired new Equipment Y3 by exchanging Equipment X3 and $5,000 cash in a like-kind exchange. Equipment Y3 is qualified property under section 168(k)(1) and is 5-year property under section 168(e). Pursuant to paragraph (g)(3)(ii) of this section and § 1.168(i)-6(k)(2)(i), GG decided to apply § 1.168(i)-6 to the exchange of Equipment X3 for Equipment Y3, the acquired MACRS property.

(ii) Pursuant to paragraph (f)(5)(iii)(B) of this section, no additional first year depreciation deduction is allowable for Equipment X3 and, pursuant to § 1.168(d)-1T(b)(3)(ii), no regular depreciation deduction is allowable for Equipment X3, for the taxable year ended June 30, 2003.

(iii) Pursuant to paragraph (f)(5)(iii)(A) of this section, the 30-percent additional first year depreciation deduction for Equipment Y3 is allowable for the remaining carryover basis at the time of replacement of $20,000 (Equipment X3's unadjusted depreciable basis of $20,000) and for the remaining excess basis at the time of replacement of $5,000 (cash paid for Equipment Y3). Thus, the 30-percent additional first year depreciation deduction for the remaining carryover basis at the time of replacement equals $6,000 ($20,000 multiplied by .30) and for the remaining excess basis at the time of replacement equals $1,500 ($5,000 multiplied by .30), which totals $7,500.

Example 5. (i) Same facts as in *Example 4.* GG depreciated Equipment Y3 under the general depreciation system of section 168(a) by using the 200-percent declining balance method of depreciation, a 5-year recovery period, and the half-year convention. GG elected to use the optional depreciation tables to compute the depreciation allowance for Equipment Y3. On July 1, 2003, GG acquired new Equipment Z1 by exchanging Equipment Y3 in a like-kind exchange. Equipment Z1 is 50-percent bonus depreciation property under section 168(k)(4) and is 5-year property under section 168(e). Pursuant to paragraph (g)(3)(ii) of this section and § 1.168(i)-6(k)(2)(i), GG decided to apply § 1.168(i)-6 to the exchange of Equipment Y3 for Equipment Z1, the acquired MACRS property.
(ii) For the taxable year ending June 30, 2003, the regular MACRS depreciation deduction allowable for the remaining carryover basis at the time of replacement (after taking into account the additional first year depreciation deduction) of Equipment Y3 is $2,800 (the remaining carryover basis at the time of replacement of $20,000 minus the additional first year depreciation deduction of $6,000, multiplied by the annual depreciation rate of .20 for recovery year 1) and for the remaining excess basis at the time of replacement (after taking into account the additional first year depreciation deduction) of Equipment Y3 is $700 (the remaining excess basis at the time of replacement of $5,000 minus the additional first year depreciation deduction of $1,500, multiplied by the annual depreciation rate of .20 for recovery year 1), which totals $3,500.

(iii) For the taxable year ending June 30, 2004, the regular MACRS depreciation deduction allowable for the remaining carryover basis (after taking into account the additional first year depreciation deduction) of Equipment Y3 is $2,240 (the remaining carryover basis at the time of replacement of $20,000 minus the additional first year depreciation deduction of $6,000, multiplied by the annual depreciation rate of .32 for

recovery year 2 × $^{1}/_{2}$ year) and for the remaining excess basis (after taking into account the additional first year depreciation deduction) of Equipment Y3 is $560 (the remaining excess basis at the time of replacement of $5,000 minus the additional first year depreciation deduction of $1,500, multiplied by the annual depreciation rate of .32 for recovery year 2 × $^{1}/_{2}$ year), which totals $2,800.

(iv) For the taxable year ending June 30, 2004, pursuant to paragraph (f)(5)(iii)(A) of this section, the 50-percent additional first year depreciation deduction for Equipment Z1 is allowable for the remaining carryover basis at the time of replacement of $11,200 (Equipment Y3's unadjusted depreciable basis of $25,000 minus the total additional first year depreciation deduction of $7,500 minus the total 2003 regular MACRS depreciation deduction of $3,500 minus the total 2004 regular depreciation deduction (taking into account the half-year convention) of $2,800). Thus, the 50-percent additional first year depreciation deduction for the remaining carryover basis at the time of replacement equals $5,600 ($11,200 multiplied by .50).

Example 6. (i) In April 2004, SS, a calendar year-end corporation, acquired and placed in service Equipment K89. Equipment K89 is 50-percent bonus depreciation property under section 168(k)(4). In November 2004, SS acquired and placed in service used Equipment N78 by exchanging Equipment K89 in a like-kind exchange.
(ii) Pursuant to paragraph (f)(5)(iii)(B) of this section, no additional first year deduction is allowable for Equipment K89 and, pursuant to § 1.168(d)-1T(b)(3)(ii), no regular depreciation deduction is allowable for Equipment K89, for the taxable year ended December 31, 2004.

(iii) Equipment N78 is not qualified property under section 168(k)(1) or 50-percent bonus depreciation property under section 168(k)(4) because the original use requirement of paragraph (b)(3) of this section is not met. Accordingly, no additional first year depreciation deduction is allowable for Equipment N78.

(6) ***Change in use*** —

(i) ***Change in use of depreciable property.*** The determination of whether the use of depreciable property changes is made in accordance with section 168(i)(5) and regulations thereunder.

(ii) ***Conversion to personal use.*** If qualified property or 50-percent bonus depreciation property is converted from business or income-producing use to personal use in the same taxable year in which the property is placed in service by a taxpayer, the additional first year depreciation deduction is not allowable for the property.

(iii) ***Conversion to business or income-producing use*** —

(A) ***During the same taxable year.*** If, during the same taxable year, property is acquired by a taxpayer for personal use and is converted by the taxpayer from personal use to business or income-producing use, the additional first year depreciation deduction is allowable for the property in the taxable year the property is converted to business or income-producing use (assuming all of the requirements in paragraph (b) of this section are met). See paragraph (b)(3)(ii) of this section relating to the original use rules for a conversion of property to business or income-producing use.

(B) ***Subsequent to the acquisition year.*** If property is acquired by a taxpayer for personal use and, during a subsequent taxable year, is converted by the taxpayer from personal use to business or income-producing use, the additional first year depreciation deduction is allowable for the property in the taxable year the property is converted to business or income-producing use (assuming all of the requirements in paragraph (b) of this section are met). For purposes of paragraphs (b)(4) and (5) of this section, the property must be acquired by the taxpayer for personal use after September 10, 2001 (for qualified property), or after May 5, 2003 (for 50-percent bonus depreciation property), and converted by the taxpayer from personal use to business or income-producing use by January 1, 2005. See paragraph (b)(3)(ii) of this section relating to the original use rules for a conversion of property to business or income-producing use.

(iv) ***Depreciable property changes use subsequent to the placed-in-service year*** —

(A) If the use of qualified property or 50-percent bonus depreciation property changes in the hands of the same taxpayer subsequent to the taxable year the qualified property or the 50-percent bonus depreciation property, as applicable, is placed in service and, as a result of the change in use, the property is no longer qualified property or 50-percent bonus depreciation property, as applicable, the additional first year depreciation deduction allowable for the qualified property or the 50-percent bonus depreciation property, as applicable, is not redetermined.

(B) If depreciable property is not qualified property or 50-percent bonus depreciation property in the taxable year the property is placed in service by the taxpayer, the additional first year depreciation deduction is not allowable for the property even if a change in the use of the property subsequent to the taxable year the property is placed in service results in the property being qualified property or 50-percent bonus depreciation property in the taxable year of the change in use.

(v) ***Examples.*** The application of this paragraph (f)(6) is illustrated by the following examples:

> *Example 1.* (i) On January 1, 2002, HH, a calendar year corporation, purchased and placed in service several new computers at a total cost of $100,000. HH used these computers within the United States for 3 months in 2002 and then moved and used the computers outside the United States for the remainder of 2002. On January 1, 2003, HH permanently returns the computers to the United States for use in its business.
> (ii) For 2002, the computers are considered as used predominantly outside the United States in 2002 pursuant to § 1.48-1(g)(1)(i). As a result, the computers are required to be depreciated under the alternative depreciation system of section 168(g). Pursuant to paragraph (b)(2)(ii)(A)*2*) of this section, the computers are not qualified property in 2002,

the placed-in-service year. Thus, pursuant to (f)(6)(iv)(B) of this section, no additional first year depreciation deduction is allowed for these computers, regardless of the fact that the computers are permanently returned to the United States in 2003.

Example 2. (i) On February 8, 2002, *II,* a calendar year corporation, purchased and placed in service new equipment at a cost of $1,000,000 for use in its California plant. The equipment is 5-year property under section 168(e) and is qualified property under section 168(k). *II* depreciates its 5-year property placed in service in 2002 using the optional depreciation table that corresponds with the general depreciation system, the 200-percent declining balance method, a 5-year recovery period, and the half-year convention. On June 4, 2003, due to changes in *II*'s business circumstances, *II* permanently moves the equipment to its plant in Mexico.
(ii) For 2002, *II* is allowed a 30-percent additional first year depreciation deduction of $300,000 (the adjusted depreciable basis of $1,000,000 multiplied by .30). In addition, *II*'s depreciation deduction allowable in 2002 for the remaining adjusted depreciable basis of $700,000 (the unadjusted depreciable basis of $1,000,000 reduced by the additional first year depreciation deduction of $300,000) is $140,000 (the remaining adjusted depreciable basis of $700,000 multiplied by the annual depreciation rate of .20 for recovery year 1).

(iii) For 2003, the equipment is considered as used predominantly outside the United States pursuant to § 1.48-1(g)(1)(i). As a result of this change in use, the adjusted depreciable basis of $560,000 for the equipment is required to be depreciated under the alternative depreciation system of section 168(g) beginning in 2003. However, the additional first year depreciation deduction of $300,000 allowed for the equipment in 2002 is not redetermined.

(7) ***Earnings and profits.*** The additional first year depreciation deduction is not allowable for purposes of computing earnings and profits.

(8) ***Limitation of amount of depreciation for certain passenger automobiles.*** For a passenger automobile as defined in section 280F(d)(5), the limitation under section 280F(a)(1)(A)(i) is increased by—

(i) $4,600 for qualified property acquired by a taxpayer after September 10, 2001, and before May 6, 2003; and

(ii) $7,650 for qualified property or 50-percent bonus depreciation property acquired by a taxpayer after May 5, 2003.

(9) ***Section 754 election.*** In general, for purposes of section 168(k) any increase in basis of qualified property or 50-percent bonus depreciation property due to a section 754 election is not eligible for the additional first year depreciation deduction. However, if qualified property or 50-percent bonus depreciation property is placed in service by a partnership in the taxable year the partnership

terminates under section 708(b)(1)(B), any increase in basis of the qualified property or the 50-percent bonus depreciation property due to a section 754 election is eligible for the additional first year depreciation deduction.

(10) ***Coordination with section 47*** —

(i) ***In general.*** If qualified rehabilitation expenditures (as defined in section 47(c)(2) and § 1.48-12(c)) incurred by a taxpayer with respect to a qualified rehabilitated building (as defined in section 47(c)(1) and § 1.48-12(b)) are qualified property or 50-percent bonus depreciation property, the taxpayer may claim the rehabilitation credit provided by section 47(a) (provided the requirements of section 47 are met)—

(A) With respect to the portion of the basis of the qualified rehabilitated building that is attributable to the qualified rehabilitation expenditures if the taxpayer makes the applicable election under paragraph (e)(1)(i) or (e)(1)(ii)(B) of this section not to deduct any additional first year depreciation for the class of property that includes the qualified rehabilitation expenditures; or

(B) With respect to the portion of the remaining rehabilitated basis of the qualified rehabilitated building that is attributable to the qualified rehabilitation expenditures if the taxpayer claims the additional first year depreciation deduction on the unadjusted depreciable basis (as defined in paragraph (a)(2)(iii) of this section but before the reduction in basis for the amount of the rehabilitation credit) of the qualified rehabilitation expenditures and the taxpayer depreciates the remaining adjusted depreciable basis (as defined in paragraph (d)(2)(i) of this section) of such expenditures using straight line cost recovery in accordance with section 47(c)(2)(B)(i) and § 1.48-12(c)(7)(i). For purposes of this paragraph (f)(10)(i)(B), the remaining rehabilitated basis is equal to the unadjusted depreciable basis (as defined in paragraph (a)(2)(iii) of this section but before the reduction in basis for the amount of the rehabilitation credit) of the qualified rehabilitation expenditures that are qualified property or 50-percent bonus depreciation property reduced by the additional first year depreciation allowed or allowable, whichever is greater.

(ii) ***Example.*** The application of this paragraph (f)(10) is illustrated by the following example.

> *Example.* (i) Between February 8, 2004, and June 4, 2004, UU, a calendar-year taxpayer, incurred qualified rehabilitation expenditures of $200,000 with respect to a qualified rehabilitated building that is nonresidential real property under section 168(e). These qualified rehabilitation expenditures are 50-percent bonus depreciation property and qualify for the 10-percent rehabilitation credit under section 47(a)(1). UU's basis in the qualified rehabilitated building is zero before incurring the qualified rehabilitation expenditures and UU placed the qualified rehabilitated building in service in July 2004. UU depreciates its nonresidential real property placed in service in 2004 under the general depreciation system of section 168(a) by using the straight line method of depreciation, a 39-year recovery period, and the mid-month convention. UU elected to use the optional depreciation tables to compute the depreciation allowance for its depreciable property placed in service in 2004. Further, for 2004, UU did not make any election under paragraph (e) of this section.

(ii) Because UU did not make any election under paragraph (e) of this section, UU is allowed a 50-percent additional first year depreciation deduction of $100,000 for the qualified rehabilitation expenditures for 2004 (the unadjusted depreciable basis of $200,000 (before reduction in basis for the rehabilitation credit) multiplied by .50). For 2004, UU also is allowed to claim a rehabilitation credit of $10,000 for the remaining rehabilitated basis of $100,000 (the unadjusted depreciable basis (before reduction in basis for the rehabilitation credit) of $200,000 less the additional first year depreciation deduction of $100,000). Further, UU's depreciation deduction for 2004 for the remaining adjusted depreciable basis of $90,000 (the unadjusted depreciable basis (before reduction in basis for the rehabilitation credit) of $200,000 less the additional first year depreciation deduction of $100,000 less the rehabilitation credit of $10,000) is $1,059.30 (the remaining adjusted depreciable basis of $90,000 multiplied by the depreciation rate of .01177 for recovery year 1, placed in service in month 7).

(11) ***Coordination with section 514(a)(3).*** The additional first year depreciation deduction is not allowable for purposes of section 514(a)(3).

(g) ***Effective date*** —

(1) ***In general.*** Except as provided in paragraphs (g)(2), (3), and (5) of this section, this section applies to qualified property under section 168(k)(2) acquired by a taxpayer after September 10, 2001, and to 50-percent bonus depreciation property under section 168(k)(4) acquired by a taxpayer after May 5, 2003.

(2) ***Technical termination of a partnership or section 168(i)(7) transactions.*** If qualified property or 50 percent bonus depreciation property is transferred in a technical termination of a partnership under section 708(b)(1)(B) or in a transaction described in section 168(i)(7) for a taxable year ending on or before September 8, 2003, and the additional first year depreciation deduction allowable for the property was not determined in accordance with paragraph (f)(1)(ii) or (iii) of this section, as applicable, the Internal Revenue Service will allow any reasonable method of determining the additional first year depreciation deduction allowable for the property in the year of the transaction that is consistently applied to the property by all parties to the transaction.

(3)

(i) ***Like-kind exchanges and involuntary conversions.*** If a taxpayer did not claim on a federal tax return for a taxable year ending on or before September 8, 2003, the additional first year depreciation deduction for the remaining carryover basis of qualified property or 50-percent bonus depreciation property acquired in a transaction described in section 1031(a), (b), or (c), or in a transaction to which section 1033 applies and the taxpayer did not make an election not to deduct the additional first year depreciation deduction for the class of property applicable to the remaining carryover basis, the Internal Revenue Service will treat the taxpayer's method of not claiming the additional first year depreciation deduction for the remaining carryover basis as a permissible method of accounting and will treat the amount of the additional first year depreciation deduction allowable for the remaining carryover basis as being equal to zero, provided the taxpayer does not claim the additional first year depreciation deduction for the remaining carryover basis in accordance with paragraph (g)(4)(ii) of this section.

(ii) Paragraphs (f)(5)(ii)(F)(*2*) and (f)(5)(v) of this section apply to a like-kind exchange or an involuntary conversion of MACRS property and computer software for which the time of disposition and the time of replacement both occur after February 27, 2004. For a like-kind exchange or an involuntary conversion of MACRS property for which the time of disposition, the time of replacement, or both occur on or before February 27, 2004, see § 1.168(i)-6(k)(2)(ii). For a like-kind exchange or involuntary conversion of computer software for which the time of disposition, the time of replacement, or both occur on or before February 27, 2004, a taxpayer may rely on prior guidance issued by the Internal Revenue Service for determining the depreciation deductions of the acquired computer software and the exchanged or involuntarily converted computer software (for further guidance, see § 1.168(k)-1T(f)(5) published in the FEDERAL REGISTER on September 8, 2003 (68 FR 53000)). In relying on such guidance, a taxpayer may use any reasonable, consistent method of determining depreciation in the year of disposition and the year of replacement.

(4) ***Change in method of accounting*** —

(i) ***Special rules for 2000 or 2001 returns.*** If a taxpayer did not claim on the Federal tax return for the taxable year that included September 11, 2001, any additional first year depreciation deduction for a class of property that is qualified property and did not make an election not to deduct the additional first year depreciation deduction for that class of property, the taxpayer should refer to the guidance provided by the Internal Revenue Service for the time and manner of claiming the additional first year depreciation deduction for the class of property (for further guidance, *see* section 4 of Rev. Proc. 2002-33 (2002-1 C.B. 963), Rev. Proc. 2003-50 (2003-29 I.R.B. 119), and § 601.601(d)(2)(ii)(*b*) of this chapter).

(ii) ***Like-kind exchanges and involuntary conversions.*** If a taxpayer did not claim on a federal tax return for any taxable year ending on or before September 8, 2003, the additional first year depreciation deduction allowable for the remaining carryover basis of qualified property or 50-percent bonus depreciation property acquired in a transaction described in section 1031(a), (b), or (c), or in a transaction to which section 1033 applies and the taxpayer did not make an election not to deduct the additional first year depreciation deduction for the class of property applicable to the remaining carryover basis, the taxpayer may claim the additional first year depreciation deduction allowable for the remaining carryover basis in accordance with paragraph (f)(5) of this section either:

(A) By filing an amended return (or a qualified amended return, if applicable (for further guidance, *see* Rev. Proc. 94-69 (1994-2 C.B. 804) and § 601.601(d)(2)(ii)(*b*) of this chapter)) on or before December 31, 2003, for the year of replacement and any affected subsequent taxable year; or,

(B) By following the applicable administrative procedures issued under § 1.446-1(e)(3)(ii) for obtaining the Commissioner's automatic consent to a change in method of accounting (for further guidance, *see* Rev. Proc. 2002-9 (2002-1 C.B. 327) and § 601.601(d)(2)(ii)(*b*) of this chapter).

(5) ***Revision to paragraphs (b)(3)(iii)(B) and (b)(5)(ii)(B) of this section.*** The addition of "(or, in the case of multiple units of property subject to the same lease, within three months after the date the final unit is placed in service, so long as the period between the time the first unit is placed in service and the time the last unit is placed in service does not exceed 12 months)" to paragraphs (b)(3)(iii)(B) and (b)(5)(ii)(B) of this section applies to property sold after June 4, 2004.

(6) ***Rehabilitation credit.*** If a taxpayer did not claim on a Federal tax return for any taxable year ending on or before September 1, 2006, the rehabilitation credit provided by section 47(a) with respect to the portion of the basis of a qualified rehabilitated building that is attributable to qualified rehabilitation expenditures and the qualified rehabilitation expenditures are qualified property or 50-percent bonus depreciation property, and the taxpayer did not make the applicable election specified in paragraph (e)(1)(i) or (e)(1)(ii)(B) of this section for the class of property that includes the qualified rehabilitation expenditures, the taxpayer may claim the rehabilitation credit for the remaining rehabilitated basis (as defined in paragraph (f)(10)(i)(B) of this section) of the qualified rehabilitated building that is attributable to the qualified rehabilitation expenditures (assuming all the requirements of section 47 are met) in accordance with paragraph (f)(10)(i)(B) of this section by filing an amended Federal tax return for the taxable year for which the rehabilitation credit is to be claimed. The amended Federal tax return must include the adjustment to the tax liability for the rehabilitation credit and any collateral adjustments to taxable income or to the tax liability (for example, the amount of depreciation allowed or allowable in that taxable year for the qualified rehabilitated building). Such adjustments must also be made on amended Federal tax returns for any affected succeeding taxable years.

[T.D. 9091, 68 FR 52992, Sept. 8, 2003; 68 FR 63734, Nov. 10, 2003, as amended by T.D. 9115, 69 FR 9546, Mar. 1, 2004; 69 FR 17586, 17587, Apr. 5, 2004. Redesignated and amended by T.D. 9283, 71 FR 51738, Aug. 31, 2006; T.D. 9314, 72 FR 9261, Mar. 1, 2007]

§ 1.168(k)-2 Additional first year depreciation deduction for property acquired and placed in service after September 27, 2017.

(a) ***Scope and definitions*** —

(1) ***Scope.*** This section provides rules for determining the additional first year depreciation deduction allowable under section 168(k) for qualified property acquired and placed in service after September 27, 2017, except as provided in paragraph (c) of this section.

(2) ***Definitions.*** For purposes of this section—

(i) ***Act*** is the Tax Cuts and Jobs Act, Public Law 115-97 (131 Stat. 2054 (December 22, 2017));

(ii) ***Applicable percentage*** is the percentage provided in section 168(k)(6);

(iii) ***Initial live staged performance*** is the first commercial exhibition of a production to an audience. However, the term *initial live staged performance* does not include limited exhibition prior to commercial exhibition to general audiences if the limited exhibition is primarily for purposes of publicity, determining the need for further production activity, or raising funds for the completion of production. For example, an initial live staged performance does not include a preview of the production if the preview is primarily to determine the need for further production activity; and

(iv) ***Predecessor*** includes—

(A) A transferor of an asset to a transferee in a transaction to which section 381(a) applies;

(B) A transferor of the asset to a transferee in a transaction in which the transferee's basis in the asset is determined, in whole or in part, by reference to the basis of the asset in the hands of the transferor;

(C) A partnership that is considered as continuing under section 708(b)(2) and § 1.708-1; or

(D) The decedent in the case of an asset acquired by the estate.

(b) ***Qualified property*** —

(1) ***In general.*** Qualified property is depreciable property, as defined in § 1.168(b)-1(a)(1), that meets all the following requirements in the first taxable year in which the property is subject to depreciation by the taxpayer whether or not depreciation deductions for the property are allowable:

(i) The requirements in § 1.168(k)-2(b)(2) (description of qualified property);

(ii) The requirements in § 1.168(k)-2(b)(3) (original use or used property acquisition requirements);

(iii) The requirements in § 1.168(k)-2(b)(4) (placed-in-service date); and

(iv) The requirements in § 1.168(k)-2(b)(5) (acquisition of property).

(2) ***Description of qualified property*** —

(i) ***In general.*** Depreciable property will meet the requirements of this paragraph (b)(2) if the property is—

(A) MACRS property, as defined in § 1.168(b)-1(a)(2), that has a recovery period of 20 years or less. For purposes of this paragraph (b)(2)(i)(A) and section 168(k)(2)(A)(i)(I), the recovery period is determined in accordance with section 168(c) regardless of any election made by the taxpayer under section 168(g)(7). This paragraph (b)(2)(i)(A) includes the following MACRS property that is acquired by the taxpayer after September 27, 2017, and placed in service by the taxpayer after September 27, 2017, and before January 1, 2018:

(*1*) Qualified leasehold improvement property as defined in section 168(e)(6) as in effect on the day before amendment by section 13204(a)(1) of the Act;

(*2*) Qualified restaurant property, as defined in section 168(e)(7) as in effect on the day before amendment by section 13204(a)(1) of the Act, that is qualified improvement property as defined in § 1.168(b)-1(a)(5)(i)(C) and (a)(5)(ii); and

(*3*) Qualified retail improvement property as defined in section 168(e)(8) as in effect on the day before amendment by section 13204(a)(1) of the Act;

(B) Computer software as defined in, and depreciated under, section 167(f)(1) and § 1.167(a)-14;

(C) Water utility property as defined in section 168(e)(5) and depreciated under section 168;

(D) Qualified improvement property as defined in § 1.168(b)-1(a)(5)(i)(C) and (a)(5)(ii) and depreciated under section 168;

(E) A qualified film or television production, as defined in section 181(d) and § 1.181-3, for which a deduction would have been allowable under section 181 and §§ 1.181-1 through 1.181-6 without regard to section 181(a)(2) and (g), § 1.181-1(b)(1)(i) and (ii), and (b)(2)(i), or section 168(k). Only production costs of a qualified film or television production are allowable as a deduction under section 181 and §§ 1.181-1 through 1.181-6 without regard, for purposes of section 168(k), to section 181(a)(2) and (g), § 1.181-1(b)(1)(i) and (ii), and (b)(2)(i). The taxpayer that claims the additional first year depreciation deduction

under this section for the production costs of a qualified film or television production must be the owner, as defined in § 1.181-1(a)(2), of the qualified film or television production. See § 1.181-1(a)(3) for the definition of production costs;

(F) A qualified live theatrical production, as defined in section 181(e), for which a deduction would have been allowable under section 181 and §§ 1.181-1 through 1.181-6 without regard to section 181(a)(2) and (g), § 1.181-1(b)(1)(i) and (ii), and (b)(2)(i), or section 168(k). Only production costs of a qualified live theatrical production are allowable as a deduction under section 181 and §§ 1.181-1 through 1.181-6 without regard, for purposes of section 168(k), to section 181(a)(2) and (g), § 1.181-1(b)(1)(i) and (ii), and (b)(2)(i). The taxpayer that claims the additional first year depreciation deduction under this section for the production costs of a qualified live theatrical production must be the owner, as defined in § 1.181-1(a)(2), of the qualified live theatrical production. In applying § 1.181-1(a)(2)(ii) to a person that acquires a finished or partially-finished qualified live theatrical production, such person is treated as an owner of that production, but only if the production is acquired prior to its initial live staged performance. Rules similar to the rules in § 1.181-1(a)(3) for the definition of production costs of a qualified film or television production apply for defining production costs of a qualified live theatrical production; or

(G) A specified plant, as defined in section 168(k)(5)(B), for which the taxpayer has properly made an election to apply section 168(k)(5) for the taxable year in which the specified plant is planted, or grafted to a plant that has already been planted, by the taxpayer in the ordinary course of the taxpayer's farming business, as defined in section 263A(e)(4) (for further guidance, see paragraph (f) of this section).

(ii) ***Property not eligible for additional first year depreciation deduction.*** Depreciable property will not meet the requirements of this paragraph (b)(2) if the property is—

(A) Described in section 168(f) (for example, automobiles for which the taxpayer uses the optional business standard mileage rate);

(B) Required to be depreciated under the alternative depreciation system of section 168(g) pursuant to section 168(g)(1)(A), (B), (C), (D), (F), or (G), or other provisions of the Internal Revenue Code (for example, property described in section 263A(e)(2)(A) if the taxpayer or any related person, as defined in section 263A(e)(2)(B), has made an election under section 263A(d)(3), or property described in section 280F(b)(1)). If section 168(h)(6) applies to the property, only the tax-exempt entity's proportionate share of the property, as determined under section 168(h)(6), is treated as tax-exempt use property described in section 168(g)(1)(B) and in this paragraph (b)(2)(ii)(B). This paragraph (b)(2)(ii)(B) does not apply to property for which the adjusted basis is required to be determined using the alternative depreciation system of section 168(g) pursuant to section 250(b)(2)(B) or 951A(d)(3), as applicable, or to property for which the adjusted basis is required to be determined using the alternative depreciation system of section 168(g) for allocating business interest expense between excepted and non-excepted trades or businesses under section 163(j), but only if the property is not required to be depreciated under the alternative depreciation system of section 168(g) pursuant to section 168(g)(1)(A), (B), (C), (D), (F), or (G), or other provisions of the Code, other than section 163(j), 250(b)(2)(B), or 951A(d)(3), as applicable;

(C) Included in any class of property for which the taxpayer elects not to deduct the additional first year depreciation (for further guidance, see paragraph (f) of this section);

(D) A specified plant that is placed in service by the taxpayer during the taxable year and for which the taxpayer made an election to apply section 168(k)(5) for a prior taxable year;

(E) Included in any class of property for which the taxpayer elects to apply section 168(k)(4). This paragraph (b)(2)(ii)(E) applies to property placed in service by the taxpayer in any taxable year beginning before January 1, 2018;

(F) Primarily used in a trade or business described in section 163(j)(7)(A)(iv) and §§ 1.163(j)-1(b)(15)(i) and 1.163(j)-10(c)(3)(iii)(C)(*3*), and placed in service by the taxpayer in any taxable year beginning after December 31, 2017. For purposes of section 168(k)(9)(A) and this paragraph (b)(2)(ii)(F), the term *primarily used* has the same meaning as that term is used in § 1.167(a)-11(b)(4)(iii)(*b*) and (e)(3)(iii) for classifying property. This paragraph (b)(2)(ii)(F) does not apply to property that is leased to a lessee's trade or business described in section 163(j)(7)(A)(iv) and §§ 1.163(j)-1(b)(15)(i) and 1.163(j)-10(c)(3)(iii)(C)(*3*), by a lessor's trade or business that is not described in section 163(j)(7)(A)(iv) and §§ 1.163(j)-1(b)(15)(i) and 1.163(j)-10(c)(3)(iii)(C)(*3*) for the taxable year; or

(G) Used in a trade or business that has had floor plan financing indebtedness, as defined in section 163(j)(9)(B) and § 1.163(j)-1(b)(18), if the floor plan financing interest expense, as defined in section 163(j)(9)(A) and § 1.163(j)-1(b)(19), related to such indebtedness is taken into account under section 163(j)(1)(C) for the taxable year. Such property also must be placed in service by the taxpayer in any taxable year beginning after December 31, 2017. Solely for purposes of section 168(k)(9)(B) and this paragraph (b)(2)(ii)(G), floor plan financing interest expense is taken into account for the taxable year by a trade or business that has had floor plan financing indebtedness only if the business interest expense, as defined in section 163(j)(5) and § 1.163(j)-1(b)(3), of the trade or business for the taxable year (which includes floor plan financing interest expense) exceeds the sum of the amounts calculated under section 163(j)(1)(A) and (B) for the trade or business for the taxable year. If the trade or business has taken floor plan financing interest expense into account pursuant to this paragraph (b)(2)(ii)(G) for a taxable year, this paragraph (b)(2)(ii)(G) applies to any property placed in service by that trade or business in that taxable year. This paragraph (b)(2)(ii)(G) does not apply to property that is leased to a lessee's trade or business that has had floor plan financing indebtedness, by a lessor's trade or business that has not had floor plan financing indebtedness during the taxable year or that has had floor plan financing indebtedness but did not take into account floor plan financing interest expense for the taxable year pursuant to this paragraph (b)(2)(ii)(G).

(iii) ***Examples.*** The application of this paragraph (b)(2) is illustrated by the following examples. Unless the facts specifically indicate otherwise, assume that the parties are not related within the meaning of section 179(d)(2)(A) or (B) and § 1.179-4(c), and are not described in section 163(j)(3):

(A) ***Example 1.*** On February 8, 2018, *A* finishes the production of a qualified film, as defined in § 1.181-3. On June 4, 2018, *B* acquires this finished production from *A*. The initial release or broadcast, as defined in § 1.181-1(a)(7), of this qualified film is on July 28, 2018. Because *B* acquired the qualified film before its initial release or broadcast, *B* is treated as the owner of the qualified film for purposes of section 181 and § 1.181-1(a)(2). Assuming all other requirements of this section are met and all requirements of section 181 and §§

1.181-1 through 1.181-6, other than section 181(a)(2) and (g), and § 1.181-1(b)(1)(i) and (ii), and (b)(2)(i), are met, *B*'s acquisition cost of the qualified film qualifies for the additional first year depreciation deduction under this section.

(B) ***Example 2.*** The facts are the same as in *Example 1* of paragraph (b)(2)(iii)(A) of this section, except that *B* acquires a limited license or right to release the qualified film in Europe. As a result, *B* is not treated as the owner of the qualified film pursuant to § 1.181-1(a)(2). Accordingly, paragraph (b)(2)(i)(E) of this section is not satisfied, and *B*'s acquisition cost of the license or right does not qualify for the additional first year depreciation deduction.

(C) ***Example 3. C*** owns a film library. All of the films in this film library are completed and have been released or broadcasted. In 2018, *D* buys this film library from *C*. Because *D* acquired the films after their initial release or broadcast, *D*'s acquisition cost of the film library does not qualify for a deduction under section 181. As a result, paragraph (b)(2)(i)(E) of this section is not satisfied, and *D*'s acquisition cost of the film library does not qualify for the additional first year depreciation deduction.

(D) ***Example 4.*** During 2019, E Corporation, a domestic corporation, acquired new equipment for use in its manufacturing trade or business in Mexico. To determine its qualified business asset investment for purposes of section 250, E Corporation must determine the adjusted basis of the new equipment using the alternative depreciation system of section 168(g) pursuant to sections 250(b)(2)(B) and 951A(d)(3). E Corporation also is required to depreciate the new equipment under the alternative depreciation system of section 168(g) pursuant to section 168(g)(1)(A). As a result, the new equipment does not qualify for the additional first year depreciation deduction pursuant to paragraph (b)(2)(ii)(B) of this section.

(E) ***Example 5.*** The facts are the same as in *Example 4* of paragraph (b)(2)(iii)(D) of this section, except E Corporation acquired the new equipment for use in its manufacturing trade or business in California. The new equipment is not described in section 168(g)(1)(A), (B), (C), (D), (F), or (G). No other provision of the Internal Revenue Code, other than section 250(b)(2)(B) or 951A(d)(3), requires the new equipment to be depreciated using the alternative depreciation system of section 168(g). To determine its qualified business asset investment for purposes of section 250, E Corporation must determine the adjusted basis of the new equipment using the alternative depreciation system of section 168(g) pursuant to sections 250(b)(2)(B) and 951A(d)(3). Because E Corporation is not required to depreciate the new equipment under the alternative depreciation system of section 168(g), paragraph (b)(2)(ii)(B) of this section does not apply to this new equipment. Assuming all other requirements are met, the new equipment qualifies for the additional first year depreciation deduction under this section.

(F) ***Example 6.*** In 2019, a financial institution buys new equipment for $1 million and then leases this equipment to a lessee that primarily uses the equipment in a trade or business described in section 163(j)(7)(A)(iv) and §§ 1.163(j)-1(b)(15)(i) and 1.163(j)-10(c)(3)(iii)(C)(*3*). The financial institution is not described in section 163(j)(7)(A)(iv) and §§ 1.163(j)-1(b)(15)(i) and § 1.163(j)-10(c)(3)(iii)(C)(*3*). As a result,

paragraph (b)(2)(ii)(F) of this section does not apply to this new equipment. Assuming all other requirements are met, the financial institution's purchase price of $1 million for the new equipment qualifies for the additional first year depreciation deduction under this section.

(G) ***Example 7.*** During its taxable year beginning in 2020, *F,* a corporation that is an automobile dealer, buys new computers for $50,000 for use in its trade or business of selling automobiles. For purposes of section 163(j), *F* has the following for 2020: $700 of adjusted taxable income, $40 of business interest income, $400 of business interest expense (which includes $100 of floor plan financing interest expense). The sum of the amounts calculated under section 163(j)(1)(A) and (B) for *F* for 2020 is $390 ($40 + ($700 × 50 percent)). *F*'s business interest expense, which includes floor plan financing interest expense, for 2020 is $400. As a result, *F*'s floor plan financing interest expense is taken into account by *F* for 2020 pursuant to paragraph (b)(2)(ii)(G) of this section. Accordingly, *F*'s purchase price of $50,000 for the computers does not qualify for the additional first year depreciation deduction under this section.

(H) ***Example 8.*** The facts are the same as in *Example 7* in paragraph (b)(2)(iii)(G) of this section, except *F* buys new computers for $30,000 for use in its trade or business of selling automobiles and, for purposes of section 163(j), *F* has $1,300 of adjusted taxable income. The sum of the amounts calculated under section 163(j)(1)(A) and (B) for *F* for 2020 is $690 ($40 + ($1,300 × 50 percent)). *F*'s business interest expense, which includes floor plan financing interest expense, for 2020 is $400. As a result, *F*'s floor plan financing interest expense is not taken into account by *F* for 2020 pursuant to paragraph (b)(2)(ii)(G) of this section. Assuming all other requirements are met, *F*'s purchase price of $30,000 for the computers qualifies for the additional first year depreciation deduction under this section.

(I) ***Example 9.***

(*1*) ***G,*** a calendar-year taxpayer, owns an office building for use in its trade or business and *G* placed in service such building in 2000. In November 2018, *G* made and placed in service an improvement to the inside of such building at a cost of $100,000. In January 2019, *G* entered into a written contract with *H* for *H* to construct an improvement to the inside of the building. In March 2019, *H* completed construction of the improvement at a cost of $750,000 and *G* placed in service such improvement. Both improvements to the building are section 1250 property and are not described in § 1.168(b)-1(a)(5)(ii).

(*2*) Both the improvement to the office building made by *G* in November 2018 and the improvement to the office building that was constructed by *H* for *G* in 2019 are improvements made by *G* under § 1.168(b)-1(a)(5)(i)(A). Further, each improvement is made to the inside of the office building, is section 1250 property, and is not described in § 1.168(b)-1(a)(5)(ii). As a result, each improvement meets the definition of qualified improvement property in section 168(e)(6) and § 1.168(b)-1(a)(5)(i)(A) and (a)(5)(ii). Accordingly, each improvement is 15-year property under section 168(e)(3) and is described in § 1.168(k)-2(b)(2)(i)(A). Assuming all other requirements of this section are met, each improvement made by *G* qualifies for the additional first year depreciation deduction for *G* under this section.

(3) *Original use or used property acquisition requirements* —

(i) ***In general.*** Depreciable property will meet the requirements of this paragraph (b)(3) if the property meets the original use requirements in paragraph (b)(3)(ii) of this section or if the property meets the used property acquisition requirements in paragraph (b)(3)(iii) of this section.

(ii) *Original use* —

(A) ***In general.*** Depreciable property will meet the requirements of this paragraph (b)(3)(ii) if the original use of the property commences with the taxpayer. Except as provided in paragraphs (b)(3)(ii)(B) and (C) of this section, original use means the first use to which the property is put, whether or not that use corresponds to the use of the property by the taxpayer. Additional capital expenditures paid or incurred by a taxpayer to recondition or rebuild property acquired or owned by the taxpayer satisfy the original use requirement. However, the cost of reconditioned or rebuilt property does not satisfy the original use requirement (but may satisfy the used property acquisition requirements in paragraph (b)(3)(iii) of this section). The question of whether property is reconditioned or rebuilt property is a question of fact. For purposes of this paragraph (b)(3)(ii)(A), property that contains used parts will not be treated as reconditioned or rebuilt if the cost of the used parts is not more than 20 percent of the total cost of the property, whether acquired or self-constructed.

(B) *Conversion to business or income-producing use* —

(*1*) ***Personal use to business or income-producing use.*** If a taxpayer initially acquires new property for personal use and subsequently uses the property in the taxpayer's trade or business or for the taxpayer's production of income, the taxpayer is considered the original user of the property. If a person initially acquires new property for personal use and a taxpayer subsequently acquires the property from the person for use in the taxpayer's trade or business or for the taxpayer's production of income, the taxpayer is not considered the original user of the property.

(*2*) ***Inventory to business or income-producing use.*** If a taxpayer initially acquires new property and holds the property primarily for sale to customers in the ordinary course of the taxpayer's business and subsequently withdraws the property from inventory and uses the property primarily in the taxpayer's trade or business or primarily for the taxpayer's production of income, the taxpayer is considered the original user of the property. If a person initially acquires new property and holds the property primarily for sale to customers in the ordinary course of the person's business and a taxpayer subsequently acquires the property from the person for use primarily in the taxpayer's trade or business or primarily for the taxpayer's production of income, the taxpayer is considered the original user of the property. For purposes of this paragraph (b)(3)(ii)(B)(*2*), the original use of the property by the taxpayer commences on the date on which the taxpayer uses the property primarily in the taxpayer's trade or business or primarily for the taxpayer's production of income.

(C) ***Fractional interests in property.*** If, in the ordinary course of its business, a taxpayer sells fractional interests in new property to third parties unrelated to the taxpayer, each first fractional owner of the property is considered as the original user of its proportionate share of the property. Furthermore, if the taxpayer uses the property before all of the

fractional interests of the property are sold but the property continues to be held primarily for sale by the taxpayer, the original use of any fractional interest sold to a third party unrelated to the taxpayer subsequent to the taxpayer's use of the property begins with the first purchaser of that fractional interest. For purposes of this paragraph (b)(3)(ii)(C), persons are not related if they do not have a relationship described in section 267(b) and § 1.267(b)-1, or section 707(b) and § 1.707-1.

(iii) ***Used property acquisition requirements*** —

(A) ***In general.*** Depreciable property will meet the requirements of this paragraph (b)(3)(iii) if the acquisition of the used property meets the following requirements:

(*1*) Such property was not used by the taxpayer or a predecessor at any time prior to such acquisition;

(*2*) The acquisition of such property meets the requirements of section 179(d)(2)(A), (B), and (C), and § 1.179-4(c)(1)(ii), (iii), and (iv); or § 1.179-4(c)(2) (property is acquired by purchase); and

(*3*) The acquisition of such property meets the requirements of section 179(d)(3) and § 1.179-4(d) (cost of property) (for further guidance regarding like-kind exchanges and involuntary conversions, see paragraph (g)(5) of this section).

(B) ***Property was not used by the taxpayer at any time prior to acquisition*** —

(*1*) ***In general.*** Solely for purposes of paragraph (b)(3)(iii)(A)(*1*) of this section, the property is treated as used by the taxpayer or a predecessor at any time prior to acquisition by the taxpayer or predecessor if the taxpayer or the predecessor had a depreciable interest in the property at any time prior to such acquisition, whether or not the taxpayer or the predecessor claimed depreciation deductions for the property. To determine if the taxpayer or a predecessor had a depreciable interest in the property at any time prior to the acquisition, only the five calendar years immediately prior to the current calendar year in which the property is placed in service by the taxpayer, and the portion of such current calendar year before the placed-in-service date of the property without taking into account the applicable convention, are taken into account (lookback period). If either the taxpayer or a predecessor, or both, have not been in existence for the entire lookback period, only the portion of the lookback period during which the taxpayer or a predecessor, or both, as applicable, have been in existence is taken into account to determine if the taxpayer or a predecessor had a depreciable interest in the property at any time prior to the acquisition. If a lessee has a depreciable interest in the improvements made to leased property and subsequently the lessee acquires the leased property of which the improvements are a part, the unadjusted depreciable basis, as defined in § 1.168(b)-1(a)(3), of the acquired property that is eligible for the additional first year depreciation deduction, assuming all other requirements are met, must not include the unadjusted depreciable basis attributable to the improvements.

(*2*) ***Taxpayer has a depreciable interest in a portion of the property.*** If a taxpayer initially acquires a depreciable interest in a portion of the property and subsequently acquires a depreciable interest in an additional portion of the same property, such additional depreciable interest is not treated as used by the taxpayer at any time prior to its acquisition by the taxpayer under paragraphs (b)(3)(iii)(A)(*1*) and

(b)(3)(iii)(B)(*1*) of this section. This paragraph (b)(3)(iii)(B)(*2*) does not apply if the taxpayer or a predecessor previously had a depreciable interest in the subsequently acquired additional portion. For purposes of this paragraph (b)(3)(iii)(B)(*2*), a portion of the property is considered to be the percentage interest in the property. If a taxpayer holds a depreciable interest in a portion of the property, sells that portion or a part of that portion, and subsequently acquires a depreciable interest in another portion of the same property, the taxpayer will be treated as previously having a depreciable interest in the property up to the amount of the portion for which the taxpayer held a depreciable interest in the property before the sale.

(*3*) ***Substantial renovation of property.*** If a taxpayer acquires and places in service substantially renovated property and the taxpayer or a predecessor previously had a depreciable interest in the property before it was substantially renovated, the taxpayer's or predecessor's depreciable interest in the property before it was substantially renovated is not taken into account for determining whether the substantially renovated property was used by the taxpayer or a predecessor at any time prior to its acquisition by the taxpayer under paragraphs (b)(3)(iii)(A)(*1*) and (b)(3)(iii)(B)(*1*) of this section. For purposes of this paragraph (b)(3)(iii)(B)(*3*), property is substantially renovated if the cost of the used parts is not more than 20 percent of the total cost of the substantially renovated property, whether acquired or self-constructed.

(*4*) ***De minimis use of property.*** If a taxpayer acquires and places in service property, the taxpayer or a predecessor did not previously have a depreciable interest in the property, the taxpayer disposes of the property to an unrelated party within 90 calendar days after the date the property was originally placed in service by the taxpayer, without taking into account the applicable convention, and the taxpayer reacquires and again places in service the property, then the taxpayer's depreciable interest in the property during that 90-day period is not taken into account for determining whether the property was used by the taxpayer or a predecessor at any time prior to its reacquisition by the taxpayer under paragraphs (b)(3)(iii)(A)(*1*) and (b)(3)(iii)(B)(*1*) of this section. If the taxpayer originally acquired the property before September 28, 2017, as determined under § 1.168(k)-1(b)(4), and the taxpayer reacquires and again places in service the property during the same taxable year the taxpayer disposed of the property to the unrelated party, then this paragraph (b)(3)(iii)(B)(*4*) does not apply. For purposes of this paragraph (b)(3)(iii)(B)(*4*), an *unrelated party* is a person not described in section 179(d)(2)(A) or (B), and § 1.179-4(c)(1)(ii) or (iii) or (c)(2).

(C) ***Special rules for a series of related transactions*** —

(*1*) ***In general.*** Solely for purposes of paragraph (b)(3)(iii) of this section, each transferee in a series of related transactions tests its relationship under section 179(d)(2)(A) or (B) with the transferor from which the transferee directly acquires the depreciable property (immediate transferor) and with the original transferor of the depreciable property in the series. The transferee is treated as related to the immediate transferor or the original transferor if the relationship exists either when the transferee acquires, or immediately before the first transfer of, the depreciable property in the series. A series of related transactions may include, for example, a transfer of partnership assets followed by a transfer of an interest in the partnership that owned the assets;

or a disposition of property and a disposition, directly or indirectly, of the transferor or transferee of the property. For special rules that may apply when the transferor and transferee of the property are members of a consolidated group, as defined in § 1.1502-1(h), see § 1.1502-68.

(*2*) ***Special rules*** —

(*i*) ***Property placed in service and disposed of in same taxable year or property not placed in service.*** Any party in a series of related transactions that is neither the original transferor nor the ultimate transferee is disregarded (disregarded party) for purposes of testing the relationships under paragraph (b)(3)(iii)(C)(*1*) of this section if the party places in service and disposes of the depreciable property subject to the series, other than in a transaction described in paragraph (g)(1)(iii) of this section, during the party's same taxable year, or if the party does not place in service the depreciable property subject to the series for use in the party's trade or business or production of income. In either case, the party to which the disregarded party disposed of the depreciable property tests its relationship with the party from which the disregarded party acquired the depreciable property and with the original transferor of the depreciable property in the series. If the series has consecutive disregarded parties, the party to which the last disregarded party disposed of the depreciable property tests its relationship with the party from which the first disregarded party acquired the depreciable property and with the original transferor of the depreciable property in the series. The rules for testing the relationships in paragraph (b)(3)(iii)(C)(*1*) of this section continue to apply for the other transactions in the series.

(*ii*) ***All section 168(i)(7) transactions.*** This paragraph (b)(3)(iii)(C) does not apply if all transactions in a series of related transactions are described in paragraph (g)(1)(iii) of this section (section 168(i)(7) transactions in which property is transferred in the same taxable year that the property is placed in service by the transferor).

(*iii*) ***One or more section 168(i)(7) transactions.*** Any step in a series of related transactions that is neither the original step nor the ultimate step is disregarded (disregarded step) for purposes of testing the relationships under paragraph (b)(3)(iii)(C)(*1*) of this section if the step is a transaction described in paragraph (g)(1)(iii) of this section. In this case, the relationship is not tested between the transferor and transferee of that transaction. Instead, the relationship is tested between the transferor in the disregarded step and the party to which the transferee in the disregarded step disposed of the depreciable property, the transferee in the disregarded step and the party to which the transferee in the disregarded step disposed of the depreciable property, and the original transferor of the depreciable property in the series and the party to which the transferee in the disregarded step disposed of the depreciable property. If the series has consecutive disregarded steps, the relationship is tested between the transferor in the first disregarded step and the party to which the transferee in the last disregarded step disposed of the depreciable property, the transferee in the last disregarded step and the party to which the transferee in the last disregarded step disposed of the depreciable property, and the original transferor of the depreciable property in the series and the party to which the

transferee in the last disregarded step disposed of the depreciable property. The rules for testing the relationships in paragraph (b)(3)(iii)(C)(*1*) of this section continue to apply for the other transactions in the series.

(*iv*) ***Syndication transaction.*** This paragraph (b)(3)(iii)(C) does not apply to a syndication transaction described in paragraph (b)(3)(vi) of this section.

(*v*) ***Certain relationships disregarded.*** If a party acquires depreciable property in a series of related transactions in which the party acquires stock, meeting the requirements of section 1504(a)(2), of a corporation in a fully taxable transaction followed by a liquidation of the acquired corporation under section 331, any relationship created as part of such series of related transactions is disregarded in determining whether any party is related to such acquired corporation for purposes of testing the relationships under paragraph (b)(3)(iii)(C)(*1*) of this section.

(*vi*) ***Transferors that cease to exist for Federal tax purposes.*** Any transferor in a series of related transactions that ceases to exist for Federal tax purposes during the series is deemed, for purposes of testing the relationships under paragraph (b)(3)(iii)(C)(*1*) of this section, to be in existence at the time of any transfer in the series.

(*vii*) ***Newly created party.*** If a transferee in a series of related transactions acquires depreciable property from a transferor that was not in existence immediately prior to the first transfer of such property in such series (new transferor), the transferee tests its relationship with the party from which the new transferor acquired such property and with the original transferor of the depreciable property in the series for purposes of paragraph (b)(3)(iii)(C)(*1*) of this section. If the series has consecutive new transferors, the party to which the last new transferor disposed of the depreciable property tests its relationship with the party from which the first new transferor acquired the depreciable property and with the original transferor of the depreciable property in the series. The rules for testing the relationships in paragraph (b)(3)(iii)(C)(*1*) of this section continue to apply for the other transactions in the series.

(*viii*) ***Application of paragraph (g)(1) of this section.*** Paragraph (g)(1) of this section applies to each step in a series of related transactions.

(iv) ***Application to partnerships*** —

(A) ***Section 704(c) remedial allocations.*** Remedial allocations under section 704(c) do not satisfy the requirements of paragraph (b)(3) of this section. See § 1.704-3(d)(2).

(B) ***Basis determined under section 732.*** Any basis of distributed property determined under section 732 does not satisfy the requirements of paragraph (b)(3) of this section.

(C) ***Section 734(b) adjustments.*** Any increase in basis of depreciable property under section 734(b) does not satisfy the requirements of paragraph (b)(3) of this section.

(D) ***Section 743(b) adjustments*** —

(*1*) ***In general.*** For purposes of determining whether the transfer of a partnership interest meets the requirements of paragraph (b)(3)(iii)(A) of this section, each partner is treated as having a depreciable interest in the partner's proportionate share of partnership property. Any increase in basis of depreciable property under section 743(b) satisfies the requirements of paragraph (b)(3)(iii)(A) of this section if—

(*i*) At any time prior to the transfer of the partnership interest that gave rise to such basis increase, neither the transferee partner nor a predecessor of the transferee partner had any depreciable interest in the portion of the property deemed acquired to which the section 743(b) adjustment is allocated under section 755 and § 1.755-1; and

(*ii*) The transfer of the partnership interest that gave rise to such basis increase satisfies the requirements of paragraphs (b)(3)(iii)(A)(*2*) and (*3*) of this section.

(*2*) ***Relatedness tested at partner level.*** Solely for purposes of paragraph (b)(3)(iv)(D)(*1*)(*ii*) of this section, whether the parties are related or unrelated is determined by comparing the transferor and the transferee of the transferred partnership interest.

(v) ***Application to members of a consolidated group.*** For rules applicable to the acquisition of depreciable property by a member of a consolidated group, see § 1.1502-68.

(vi) ***Syndication transaction.*** If new property is acquired and placed in service by a lessor, or if used property is acquired and placed in service by a lessor and the lessor or a predecessor did not previously have a depreciable interest in the used property, and the property is sold by the lessor or any subsequent purchaser within three months after the date the property was originally placed in service by the lessor (or, in the case of multiple units of property subject to the same lease, within three months after the date the final unit is placed in service, so long as the period between the time the first unit is placed in service and the time the last unit is placed in service does not exceed 12 months), and the user of the property after the last sale during the three-month period remains the same as when the property was originally placed in service by the lessor, the purchaser of the property in the last sale during the three-month period is considered the taxpayer that acquired the property for purposes of applying paragraphs (b)(3)(ii) and (iii) of this section. The purchaser of the property in the last sale during the three-month period is treated, for purposes of applying paragraph (b)(3) of this section, as—

(A) The original user of the property in this transaction if the lessor acquired and placed in service new property; or

(B) The taxpayer having the depreciable interest in the property in this transaction if the lessor acquired and placed in service used property.

(vii) ***Examples.*** The application of this paragraph (b)(3) is illustrated by the following examples. Unless the facts specifically indicate otherwise, assume that the parties are not related within the meaning of section 179(d)(2)(A) or (B) and § 1.179-4(c), no corporation is a member of a consolidated or controlled group, and the parties do not have predecessors:

(A) ***Example 1.***

(1) On August 1, 2018, *A* buys a new machine for $35,000 from an unrelated party for use in *A*'s trade or business. On July 1, 2020, *B* buys that machine from *A* for $20,000 for use in *B*'s trade or business. On October 1, 2020, *B* makes a $5,000 capital expenditure to recondition the machine. *B* did not have any depreciable interest in the machine before *B* acquired it on July 1, 2020.

(2) ***A***' s purchase price of $35,000 satisfies the original use requirement of paragraph (b)(3)(ii) of this section and, assuming all other requirements are met, qualifies for the additional first year depreciation deduction under this section.

(3) ***B***' s purchase price of $20,000 does not satisfy the original use requirement of paragraph (b)(3)(ii) of this section, but it does satisfy the used property acquisition requirements of paragraph (b)(3)(iii) of this section. Assuming all other requirements are met, the $20,000 purchase price qualifies for the additional first year depreciation deduction under this section. Further, *B*'s $5,000 expenditure satisfies the original use requirement of paragraph (b)(3)(ii) of this section and, assuming all other requirements are met, qualifies for the additional first year depreciation deduction under this section, regardless of whether the $5,000 is added to the basis of the machine or is capitalized as a separate asset.

(B) ***Example 2. C,*** an automobile dealer, uses some of its automobiles as demonstrators in order to show them to prospective customers. The automobiles that are used as demonstrators by *C* are held by *C* primarily for sale to customers in the ordinary course of its business. On November 1, 2017, *D* buys from *C* an automobile that was previously used as a demonstrator by *C*. *D* will use the automobile solely for business purposes. The use of the automobile by *C* as a demonstrator does not constitute a "use" for purposes of the original use requirement and, therefore, *D* will be considered the original user of the automobile for purposes of paragraph (b)(3)(ii) of this section. Assuming all other requirements are met, *D*'s purchase price of the automobile qualifies for the additional first year depreciation deduction for *D* under this section, subject to any limitation under section 280F.

(C) ***Example 3.*** On April 1, 2015, *E* acquires a horse to be used in *E*'s thoroughbred racing business. On October 1, 2018, *F* buys the horse from *E* and will use the horse in *F*'s horse breeding business. *F* did not have any depreciable interest in the horse before *F* acquired it on October 1, 2018. The use of the horse by *E* in its racing business prevents *F* from satisfying the original use requirement of paragraph (b)(3)(ii) of this section. However, *F*'s acquisition of the horse satisfies the used property acquisition requirements of paragraph (b)(3)(iii) of this section. Assuming all other requirements are met, *F*'s purchase price of the horse qualifies for the additional first year depreciation deduction for *F* under this section.

(D) ***Example 4.*** In the ordinary course of its business, *G* sells fractional interests in its aircraft to unrelated parties. *G* holds out for sale eight equal fractional interests in an aircraft. On October 1, 2017, *G* sells five of the eight fractional interests in the aircraft to *H* and *H* begins to use its proportionate share of the aircraft immediately upon purchase. On February 1, 2018, *G* sells to *I* the remaining unsold $^{3}/_{8}$ fractional interests in the aircraft. *H* is considered the original user as to its $^{5}/_{8}$ fractional interest in the aircraft and *I* is considered the original user as to its $^{3}/_{8}$ fractional interest in the aircraft. Thus, assuming all other requirements are met, *H*'s purchase price for its $^{5}/_{8}$ fractional interest in the

aircraft qualifies for the additional first year depreciation deduction under this section and *I*'s purchase price for its $^{3}/_{8}$ fractional interest in the aircraft qualifies for the additional first year depreciation deduction under this section.

(E) ***Example 5.*** On September 1, 2017, *J,* an equipment dealer, buys new tractors that are held by *J* primarily for sale to customers in the ordinary course of its business. On October 15, 2017, *J* withdraws the tractors from inventory and begins to use the tractors primarily for producing rental income. The holding of the tractors by *J* as inventory does not constitute a "use" for purposes of the original use requirement and, therefore, the original use of the tractors commences with *J* on October 15, 2017, for purposes of paragraph (b)(3)(ii) of this section. However, the tractors are not eligible for the additional first year depreciation deduction under this section because *J* acquired the tractors before September 28, 2017.

(F) ***Example 6. K*** is in the trade or business of leasing equipment to others. During 2016, *K* buys a new machine (Machine #1) and then leases it to *L* for use in *L*'s trade or business. The lease between *K* and *L* for Machine #1 is a true lease for Federal income tax purposes. During 2018, *L* enters into a written binding contract with *K* to buy Machine #1 at its fair market value on May 15, 2018. *L* did not have any depreciable interest in Machine #1 before *L* acquired it on May 15, 2018. As a result, *L*'s acquisition of Machine #1 satisfies the used property acquisition requirements of paragraph (b)(3)(iii) of this section. Assuming all other requirements are met, *L*'s purchase price of Machine #1 qualifies for the additional first year depreciation deduction for *L* under this section.

(G) ***Example 7.*** The facts are the same as in *Example 6* of paragraph (b)(3)(vii)(F) of this section, except that *K* and *L* are related parties within the meaning of section 179(d)(2)(A) or (B) and § 1.179-4(c). As a result, *L*'s acquisition of Machine #1 does not satisfy the used property acquisition requirements of paragraph (b)(3)(iii) of this section. Thus, Machine #1 is not eligible for the additional first year depreciation deduction for *L*.

(H) ***Example 8.*** The facts are the same as in *Example 6* of paragraph (b)(3)(vii)(F) of this section, except *L* incurred capital expenditures of $5,000 to improve Machine #1 on September 5, 2017, and has a depreciable interest in such improvements. *L*'s purchase price of $5,000 for the improvements to Machine #1 satisfies the original use requirement of § 1.168(k)-1(b)(3)(i) and, assuming all other requirements are met, qualifies for the 50-percent additional first year depreciation deduction. Because *L* had a depreciable interest only in the improvements to Machine #1, *L*'s acquisition of Machine #1, excluding *L*'s improvements to such machine, satisfies the used property acquisition requirements of paragraph (b)(3)(iii) of this section. Assuming all other requirements are met, *L*'s unadjusted depreciable basis of Machine #1, excluding the amount of such unadjusted depreciable basis attributable to *L*'s improvements to Machine #1, qualifies for the additional first year depreciation deduction for *L* under this section.

(I) ***Example 9.*** During 2016, *M* and *N* purchased used equipment for use in their trades or businesses and each own a 50 percent interest in such equipment. Prior to this acquisition, *M* and *N* did not have any depreciable interest in the equipment. Assume this ownership arrangement is not a partnership. During 2018, *N* enters into a written binding contract with *M* to buy *M*'s interest in the equipment. Pursuant to paragraph (b)(3)(iii)(B)(2) of this section, *N* is not treated as using *M*'s interest in the equipment prior to *N*'s acquisition of *M*'s interest. As a result, *N*'s acquisition of *M*'s interest in the equipment satisfies the used property acquisition requirements of paragraph (b)(3)(iii) of

this section. Assuming all other requirements are met, *N*'s purchase price of *M*'s interest in the equipment qualifies for the additional first year depreciation deduction for *N* under this section.

(J) ***Example 10.*** The facts are the same as in *Example 9* of paragraph (b)(3)(vii)(I) of this section, except *N* had a 100-percent depreciable interest in the equipment during 2011 through 2015, and *M* purchased from *N* a 50-percent interest in the equipment during 2016. Pursuant to paragraph (b)(3)(iii)(B)(*1*) of this section, the lookback period is 2013 through 2017 to determine if *N* had a depreciable interest in *M*'s 50-percent interest in the equipment *N* acquired from *M* in 2018. Because *N* had a 100-percent depreciable interest in the equipment during 2013 through 2015, *N* had a depreciable interest in *M*'s 50-percent interest in the equipment during the lookback period. As a result, *N*'s acquisition of *M*'s interest in the equipment during 2018 does not satisfy the used property acquisition requirements of paragraphs (b)(3)(iii)(A)(*1*) and (b)(3)(iii)(B)(*1*) of this section. Paragraph (b)(3)(iii)(B)(*2*) of this section does not apply because *N* initially acquired a 100-percent depreciable interest in the equipment. Accordingly, *N*'s purchase price of *M*'s interest in the equipment during 2018 does not qualify for the additional first year depreciation deduction for *N*.

(K) ***Example 11.*** The facts are the same as in *Example 9* of paragraph (b)(3)(vii)(I) of this section, except *N* had a 100-percent depreciable interest in the equipment only during 2011, and *M* purchased from *N* a 50-percent interest in the equipment during 2012. Pursuant to paragraph (b)(3)(iii)(B)(*1*) of this section, the lookback period is 2013 through 2017 to determine if *N* had a depreciable interest in *M*'s 50-percent interest in the equipment *N* acquired from *M* in 2018. Because *N* had a depreciable interest in only its 50-percent interest in the equipment during this lookback period, *N*'s acquisition of *M*'s interest in the equipment during 2018 satisfies the used property acquisition requirements of paragraphs (b)(3)(iii)(A)(*1*) and (b)(3)(iii)(B)(*1*) of this section. Assuming all other requirements are met, *N*'s purchase price of *M*'s interest in the equipment during 2018 qualifies for the additional first year depreciation deduction for *N* under this section.

(L) ***Example 12.*** The facts are the same as in *Example 9* of paragraph (b)(3)(vii)(I) of this section, except during 2018, *M* also enters into a written binding contract with *N* to buy *N*'s interest in the equipment. Pursuant to paragraph (b)(3)(iii)(B)(*2*) of this section, both *M* and *N* are treated as previously having a depreciable interest in a 50-percent portion of the equipment. Accordingly, the acquisition by *M* of *N*'s 50-percent interest and the acquisition by *N* of *M*'s 50-percent interest in the equipment during 2018 do not qualify for the additional first year depreciation deduction.

(M) ***Example 13. O*** and *P* form an equal partnership, *OP,* in 2018. *O* contributes cash to *OP,* and *P* contributes equipment to *OP. OP*'s basis in the equipment contributed by *P* is determined under section 723. Because *OP*'s basis in such equipment is determined in whole or in part by reference to *P*'s adjusted basis in such equipment, *OP*'s acquisition of such equipment does not satisfy section 179(d)(2)(C) and § 1.179-4(c)(1)(iv) and, thus, does not satisfy the used property acquisition requirements of paragraph (b)(3)(iii) of this section. Accordingly, *OP*'s acquisition of such equipment is not eligible for the additional first year depreciation deduction.

(N) ***Example 14. Q, R,*** and *S* form an equal partnership, *QRS,* in 2019. Each partner contributes $100, which *QRS* uses to purchase a retail motor fuels outlet for $300. Assume this retail motor fuels outlet is *QRS'* only property and is qualified property under section 168(k)(2)(A)(i). *QRS* makes an election not to deduct the additional first year depreciation for all qualified property placed in service during 2019. *QRS* has a section 754 election in effect. *QRS* claimed depreciation of $15 for the retail motor fuels outlet for 2019. During 2020, when the retail motor fuels outlet's fair market value is $600, *Q* sells all of its partnership interest to *T* in a fully taxable transaction for $200. *T* never previously had a depreciable interest in the retail motor fuels outlet. *T* takes an outside basis of $200 in the partnership interest previously owned by *Q. T*'s share of the partnership's previously taxed capital is $95. Accordingly, *T*'s section 743(b) adjustment is $105 and is allocated entirely to the retail motor fuels outlet under section 755. Assuming all other requirements are met, *T*'s section 743(b) adjustment qualifies for the additional first year depreciation deduction under this section.

(O) ***Example 15.*** The facts are the same as in *Example 14* of paragraph (b)(3)(vii)(N) of this section, except that *Q* sells his partnership interest to *U,* a related person within the meaning of section 179(d)(2)(A) or (B) and § 1.179-4(c). *U*'s section 743(b) adjustment does not qualify for the additional first year depreciation deduction.

(P) ***Example 16.*** The facts are the same as in *Example 14* of paragraph (b)(3)(vii)(N) of this section, except that *Q* dies and his partnership interest is transferred to *V. V* takes a basis in *Q*'s partnership interest under section 1014. As a result, section 179(d)(2)(C)(ii) and § 1.179-4(c)(1)(iv) are not satisfied, and *V*'s section 743(b) adjustment does not qualify for the additional first year depreciation deduction.

(Q) ***Example 17.*** The facts are the same as in *Example 14* of paragraph (b)(3)(vii)(N) of this section, except that *QRS* purchased the retail motor fuels outlet from *T* prior to *T* purchasing *Q*'s partnership interest in *QRS. T* had a depreciable interest in such retail motor fuels outlet. Because *T* had a depreciable interest in the retail motor fuels outlet before *T* acquired its interest in *QRS, T*'s section 743(b) adjustment does not qualify for the additional first year depreciation deduction.

(R) ***Example 18.***

(*1*) ***W,*** a freight transportation company, acquires and places in service a used aircraft during 2019 (Airplane #1). Prior to this acquisition, *W* never had a depreciable interest in this aircraft. During September 2020, *W* enters into a written binding contract with a third party to renovate Airplane #1. The third party begins to renovate Airplane #1 in October 2020 and delivers the renovated aircraft (Airplane #2) to *W* in February 2021. To renovate Airplane #1, the third party used mostly new parts but also used parts from Airplane #1. The cost of the used parts is not more than 20 percent of the total cost of the renovated airplane, Airplane #2. *W* uses Airplane #2 in its trade or business.

(*2*) Although Airplane #2 contains used parts, the cost of the used parts is not more than 20 percent of the total cost of Airplane #2. As a result, Airplane #2 is not treated as reconditioned or rebuilt property, and *W* is considered the original user of Airplane #2, pursuant to paragraph (b)(3)(ii)(A) of this section. Accordingly, assuming all other requirements are met, the amount paid or incurred by *W* for Airplane #2 qualifies for the additional first year depreciation deduction for *W* under this section.

(S) *Example 19.*

(*1*) ***X,*** a freight transportation company, acquires and places in service a new aircraft in 2019 (Airplane #1). During 2022, *X* sells Airplane #1 to *AB* and *AB* uses Airplane #1 in its trade or business. Prior to this acquisition, *AB* never had a depreciable interest in Airplane #1. During January 2023, *AB* enters into a written binding contract with a third party to renovate Airplane #1. The third party begins to renovate Airplane #1 in February 2023 and delivers the renovated aircraft (Airplane #2) to *AB* in June 2023. To renovate Airplane #1, the third party used mostly new parts but also used parts from Airplane #1. The cost of the used parts is not more than 20 percent of the total cost of the renovated airplane, Airplane #2. *AB* uses Airplane #2 in its trade or business. During 2025, *AB* sells Airplane #2 to *X* and *X* uses Airplane #2 in its trade or business.

(*2*) With respect to *X*'s purchase of Airplane #1 in 2019, *X* is the original user of this airplane pursuant to paragraph (b)(3)(ii)(A) of this section. Accordingly, assuming all other requirements are met, *X*'s purchase price for Airplane #1 qualifies for the additional first year depreciation deduction for *X* under this section.

(*3*) Because *AB* never had a depreciable interest in Airplane #1 prior to its acquisition in 2022, the requirements of paragraphs (b)(3)(iii)(A)(*1*) and (b)(3)(ii)(B)(*1*) of this section are satisfied. Accordingly, assuming all other requirements are met, *AB*'s purchase price for Airplane #1 qualifies for the additional first year depreciation deduction for *AB* under this section.

(*4*) Although Airplane #2 contains used parts, the cost of the used parts is not more than 20 percent of the total cost of Airplane #2. As a result, Airplane #2 is not treated as reconditioned or rebuilt property, and *AB* is considered the original user of Airplane #2, pursuant to paragraph (b)(3)(ii)(A) of this section. Accordingly, assuming all other requirements are met, the amount paid or incurred by *AB* for Airplane #2 qualifies for the additional first year depreciation deduction for *AB* under this section.

(*5*) With respect to *X*'s purchase of Airplane #2 in 2025, Airplane #2 is substantially renovated property pursuant to paragraph (b)(3)(iii)(B)(*3*) of this section. Also, pursuant to paragraph (b)(3)(iii)(B)(*3*) of this section, *X*'s depreciable interest in Airplane #1 is not taken into account for determining if *X* previously had a depreciable interest in Airplane #2 prior to its acquisition during 2025. As a result, Airplane #2 is not treated as used by *X* at any time before its acquisition of Airplane #2 in 2025 pursuant to paragraph (b)(3)(iii)(B)(*3*) of this section. Accordingly, assuming all other requirements are met, *X*'s purchase price of Airplane #2 qualifies for the additional first year depreciation deduction for *X* under this section.

(T) ***Example 20.*** In November 2017, AA Corporation purchases a used drill press costing $10,000 and is granted a trade-in allowance of $2,000 on its old drill press. The used drill press is qualified property under section 168(k)(2)(A)(i). The old drill press had a basis of $1,200. Under sections 1012 and 1031(d), the basis of the used drill press is $9,200 ($1,200 basis of old drill press plus cash expended of $8,000). Only $8,000 of the basis of the used drill press satisfies the requirements of section 179(d)(3) and § 1.179-4(d) and, thus, satisfies the used property acquisition requirement of paragraph (b)(3)(iii) of this section. The remaining $1,200 of the basis of the used drill press does not satisfy the requirements of section 179(d)(3) and § 1.179-4(d) because it is determined by reference

to the old drill press. Accordingly, assuming all other requirements are met, only $8,000 of the basis of the used drill press is eligible for the additional first year depreciation deduction under this section.

(U) *Example 21*.

(*1*) M Corporation acquires and places in service a used airplane on March 26, 2018. Prior to this acquisition, M Corporation never had a depreciable interest in this airplane. On March 26, 2018, M Corporation also leases the used airplane to N Corporation, an airline company. On May 27, 2018, M Corporation sells to O Corporation the used airplane subject to the lease with N Corporation. M Corporation and O Corporation are related parties within the meaning of section 179(d)(2)(A) or (B) and § 1.179-4(c). As of May 27, 2018, N Corporation is still the lessee of the used airplane. Prior to this acquisition, O Corporation never had a depreciable interest in the used airplane. O Corporation is a calendar-year taxpayer.

(*2*) The sale transaction of May 27, 2018, satisfies the requirements of a syndication transaction described in paragraph (b)(3)(vi) of this section. As a result, O Corporation is considered the taxpayer that acquired the used airplane for purposes of applying the used property acquisition requirements in paragraph (b)(3)(iii) of this section. In applying these rules, the fact that M Corporation and O Corporation are related parties is not taken into account because O Corporation, not M Corporation, is treated as acquiring the used airplane. Also, O Corporation, not M Corporation, is treated as having the depreciable interest in the used airplane. Further, pursuant to paragraph (b)(4)(iv) of this section, the used airplane is treated as originally placed in service by O Corporation on May 27, 2018. Because O Corporation never had a depreciable interest in the used airplane and assuming all other requirements are met, O Corporation's purchase price of the used airplane qualifies for the additional first year depreciation deduction for O Corporation under this section.

(V) *Example 22*.

(*1*) The facts are the same as in *Example 21* of paragraph (b)(3)(vii)(U)(*1*) of this section. Additionally, on September 5, 2018, O Corporation sells to P Corporation the used airplane subject to the lease with N Corporation. Prior to this acquisition, P Corporation never had a depreciable interest in the used airplane.

(*2*) Because O Corporation, a calendar-year taxpayer, placed in service and disposed of the used airplane during 2018, the used airplane is not eligible for the additional first year depreciation deduction for O Corporation pursuant to paragraph (g)(1)(i) of this section.

(*3*) Because P Corporation never had a depreciable interest in the used airplane and assuming all other requirements are met, P Corporation's purchase price of the used airplane qualifies for the additional first year depreciation deduction for P Corporation under this section.

(W) *Example 23*.

(*1*) The facts are the same as in *Example 21* of paragraph (b)(3)(vii)(U)(*1*) of this section, except M Corporation and O Corporation are not related parties within the meaning of section 179(d)(2)(A) or (B) and § 1.179-4(c). Additionally, on March 26, 2020, O Corporation sells to M Corporation the used airplane subject to the lease with N Corporation.

(*2*) The sale transaction of May 27, 2018, satisfies the requirements of a syndication transaction described in paragraph (b)(3)(vi) of this section. As a result, O Corporation is considered the taxpayer that acquired the used airplane for purposes of applying the used property acquisition requirements in paragraph (b)(3)(iii) of this section. Also, O Corporation, not M Corporation, is treated as having the depreciable interest in the used airplane. Further, pursuant to paragraph (b)(4)(iv) of this section, the used airplane is treated as originally placed in service by O Corporation on May 27, 2018. Because O Corporation never had a depreciable interest in the used airplane before its acquisition in 2018 and assuming all other requirements are met, O Corporation's purchase price of the used airplane qualifies for the additional first year depreciation deduction for O Corporation under this section.

(*3*) Prior to its acquisition of the used airplane on March 26, 2020, M Corporation never had a depreciable interest in the used airplane pursuant to paragraph (b)(3)(vi) of this section. Assuming all other requirements are met, M Corporation's purchase price of the used airplane on March 26, 2020, qualifies for the additional first year depreciation deduction for M Corporation under this section.

(X) ***Example 24.***

(*1*) J, K, and L are corporations that are unrelated parties within the meaning of section 179(d)(2)(A) or (B) and § 1.179-4(c). None of J, K, or L is a member of a consolidated group. J has a depreciable interest in Equipment #5. During 2018, J sells Equipment #5 to K. During 2020, J merges into L in a transaction described in section 368(a)(1)(A). In 2021, L acquires Equipment #5 from K.

(*2*) Because J is the predecessor of L, and because J previously had a depreciable interest in Equipment #5, L's acquisition of Equipment #5 does not satisfy paragraphs (b)(3)(iii)(A)(*1*) and (b)(3)(iii)(B)(*1*) of this section. Thus, L's acquisition of Equipment #5 does not satisfy the used property acquisition requirements of paragraph (b)(3)(iii) of this section. Accordingly, L's acquisition of Equipment #5 is not eligible for the additional first year depreciation deduction.

(Y) ***Example 25.***

(*1*) ***JL*** is a fiscal year taxpayer with a taxable year ending June 30. On April 22, 2020, *JL* acquires and places in service a new machine for use in its trade or business. On May 1, 2022, *JL* sells this machine to *JM,* an unrelated party, for use in *JM*'s trade or business. *JM* is a fiscal year taxpayer with a taxable year ending March 31. On February 1, 2023, *JL* buys the machine from *JM* and places the machine in service. *JL* uses the machine in its trade or business for the remainder of its taxable year ending June 30, 2023.

(2) *JL*' s acquisition of the machine on April 22, 2020, satisfies the original use requirement in paragraph (b)(3)(ii) of this section. Assuming all other requirements are met, *JL*'s purchase price of the machine qualifies for the additional first year depreciation deduction for *JL* for the taxable year ending June 30, 2020, under this section.

(3) *JM* placed in service the machine on May 1, 2022, and disposed of it on February 1, 2023. As a result, *JM* placed in service and disposed of the machine during the same taxable year (*JM*'s taxable year beginning April 1, 2022, and ending March 31, 2023). Accordingly, *JM*'s acquisition of the machine on May 1, 2022, does not qualify for the additional first year depreciation deduction pursuant to paragraph (g)(1)(i) of this section.

(4) Pursuant to paragraph (b)(3)(iii)(B)(*1*) of this section, the lookback period is calendar years 2018 through 2022 and January 1, 2023, through January 31, 2023, to determine if *JL* had a depreciable interest in the machine when *JL* reacquired it on February 1, 2023. As a result, *JL*'s depreciable interest in the machine during the period April 22, 2020, to April 30, 2022, is taken into account for determining whether the machine was used by *JL* or a predecessor at any time prior to its reacquisition by *JL* on February 1, 2023. Accordingly, the reacquisition of the machine by *JL* on February 1, 2023, does not qualify for the additional first year depreciation deduction.

(Z) ***Example 26.***

(1) *EF* has owned and had a depreciable interest in Property since 2012. On January 1, 2016, *EF* contributes assets (not including Property) to existing *Partnership T* in a transaction described in section 721, in exchange for a partnership interest in *Partnership T,* and *Partnership T* placed in service these assets for use in its trade or business. On July 1, 2016, *EF* sells Property to *EG,* a party unrelated to either *EF* or *Partnership T.* On April 1, 2018, *Partnership T* buys Property from *EG* and places it in service for use in its trade or business.

(2) *EF* is not *Partnership T*'s predecessor with respect to Property within the meaning of paragraph (a)(2)(iv)(B) of this section. Pursuant to paragraph (b)(3)(iii)(B)(*1*) of this section, the lookback period is 2013-2017, plus January through March 2018, to determine if *Partnership T* had a depreciable interest in Property that *Partnership T* acquired on April 1, 2018. *EF* need not be examined in the lookback period to see if *EF* had a depreciable interest in Property, because *EF* is not *Partnership T*'s predecessor. Because *Partnership T* did not have a depreciable interest in Property in the lookback period prior to its acquisition of Property on April 1, 2018, *Partnership T*'s acquisition of Property on April 1, 2018, satisfies the used property acquisition requirement of paragraph (b)(3)(iii)(B)(*1*) of this section. Assuming all other requirements of this section are satisfied, *Partnership T*'s purchase price of Property qualifies for the additional first year depreciation deduction under this section.

(AA) ***Example 27.***

(1) The facts are the same as in *Example 26* of paragraph (b)(3)(vii)(Z)(*1*) of this section, except that on January 1, 2016, *EF*'s contribution of assets to *Partnership T* includes Property. On July 1, 2016, *Partnership T* sells Property to *EG*.

(*2*) ***Partnership T***' s acquisition of Property on January 1, 2016, does not satisfy the original use requirement of § 1.168(k)-1(b)(3) and is not eligible for the additional first year depreciation deduction under section 168(k) as in effect prior to the enactment of the Act.

(*3*) With respect to *Partnership T*'s acquisition of Property on April 1, 2018, *EF* is *Partnership T*'s predecessor with respect to Property within the meaning of paragraph (a)(2)(iv)(B) of this section. Pursuant to paragraph (b)(3)(iii)(B)(*1*) of this section, the lookback period is 2013-2017, plus January through March 2018, to determine if *EF* or *Partnership T* had a depreciable interest in Property that *Partnership T* acquired on April 1, 2018. Because *EF* had a depreciable interest in Property from 2013 to 2015 and *Partnership T* had a depreciable interest in Property from January through June 2016, *Partnership T*'s acquisition of Property on April 1, 2018, does not satisfy the used property acquisition requirement of paragraph (b)(3)(iii)(B)(*1*) of this section and is not eligible for the additional first year depreciation deduction.

(BB) ***Example 28.***

(*1*) X Corporation has owned and had a depreciable interest in Property since 2012. On January 1, 2015, X Corporation sold Property to *Q,* an unrelated party. Y Corporation is formed July 1, 2015. On January 1, 2016, Y Corporation merges into X Corporation in a transaction described in section 368(a)(1)(A). On April 1, 2018, X Corporation buys Property from *Q* and places it in service for use in its trade or business.

(*2*) Pursuant to paragraph (a)(2)(iv)(A) of this section, Y Corporation is X Corporation's predecessor. Pursuant to paragraph (b)(3)(iii)(B)(*1*) of this section, the lookback period is 2013-2017, plus January through March 2018, to determine if Y Corporation or X Corporation had a depreciable interest in Property that X Corporation acquired on April 1, 2018. Y Corporation did not have a depreciable interest in Property at any time during the lookback period. Because X Corporation had a depreciable interest in Property from 2013 through 2014, X Corporation's acquisition of Property on April 1, 2018, does not satisfy the used property acquisition requirement of paragraph (b)(3)(iii)(B)(*1*) of this section and is not eligible for the additional first year depreciation deduction.

(CC) ***Example 29.***

(*1*) Y Corporation has owned and had a depreciable interest in Property since 2012. On January 1, 2015, Y Corporation sells Property to *Q,* an unrelated party. X Corporation is formed on July 1, 2015. On January 1, 2016, Y Corporation merges into X Corporation in a transaction described in section 368(a)(1)(A). On April 1, 2018, X Corporation buys Property from *Q* and places it in service for use in its trade or business.

(*2*) Pursuant to paragraph (a)(2)(iv)(A) of this section, Y Corporation is X Corporation's predecessor. Pursuant to paragraph (b)(3)(iii)(B)(*1*) of this section, the lookback period is 2013-2017, plus January through March 2018, to determine if X Corporation or Y Corporation had a depreciable interest in Property that X Corporation acquired on April 1, 2018. Because Y Corporation had a depreciable interest in Property from

2013 through 2014, X Corporation's acquisition of Property on April 1, 2018, does not satisfy the used property acquisition requirement of paragraph (b)(3)(iii)(B)(*1*) of this section and is not eligible for the additional first year depreciation deduction.

(DD) ***Example 30.***

(*1*) On September 5, 2017, *Y,* a calendar-year taxpayer, acquires and places in service a new machine (Machine #1), and begins using Machine #1 in its manufacturing trade or business. On November 1, 2017, *Y* sells Machine #1 to *Z,* then *Z* leases Machine #1 back to *Y* for 4 years, and *Y* continues to use Machine #1 in its manufacturing trade or business. The lease agreement contains a purchase option provision allowing *Y* to buy Machine #1 at the end of the lease term. On November 1, 2021, *Y* exercises the purchase option in the lease agreement and buys Machine #1 from *Z*. The lease between *Y* and *Z* for Machine #1 is a true lease for Federal tax purposes.

(*2*) Because *Y,* a calendar-year taxpayer, placed in service and disposed of Machine #1 during 2017, Machine #1 is not eligible for the additional first year depreciation deduction for *Y* pursuant to § 1.168(k)-1(f)(1)(i).

(*3*) The use of Machine #1 by *Y* prevents *Z* from satisfying the original use requirement of paragraph (b)(3)(ii) of this section. However, *Z*'s acquisition of Machine #1 satisfies the used property acquisition requirements of paragraph (b)(3)(iii) of this section. Assuming all other requirements are met, *Z*'s purchase price of Machine #1 qualifies for the additional first year depreciation deduction for *Z* under this section.

(*4*) During 2017, *Y* sold Machine #1 within 90 calendar days of placing Machine #1 in service originally on September 5, 2017. Pursuant to paragraph (b)(3)(iii)(B)(*4*) of this section, *Y*'s depreciable interest in Machine #1 during that 90-day period is not taken into account for determining whether Machine #1 was used by *Y* or a predecessor at any time prior to its reacquisition by *Y* on November 1, 2021. Accordingly, assuming all other requirements are met, *Y*'s purchase price of Machine #1 on November 1, 2021, qualifies for the additional first year depreciation deduction for *Y* under this section.

(EE) ***Example 31.***

(*1*) On October 15, 2019, *FA,* a calendar-year taxpayer, buys and places in service a new machine for use in its trade or business. On January 10, 2020, *FA* sells this machine to *FB* for use in *FB*'s trade or business. *FB* is a calendar-year taxpayer and is not related to *FA.* On March 30, 2020, *FA* buys the machine from *FB* and places the machine in service. *FA* uses the machine in its trade or business for the remainder of 2020.

(*2*) ***FA***' s acquisition of the machine on October 15, 2019, satisfies the original use requirement in paragraph (b)(3)(ii) of this section. Assuming all other requirements are met, *FA*'s purchase price of the machine qualifies for the additional first year depreciation deduction for *FA* for the 2019 taxable year under this section.

(*3*) Because *FB* placed in service the machine on January 10, 2020, and disposed of it on March 30, 2020, *FB*'s acquisition of the machine on January 10, 2020, does not qualify for the additional first year depreciation deduction pursuant to § 1.168(k)-2(g)(1)(i).

(*4*) *FA* sold the machine to *FB* in 2020 and within 90 calendar days of placing the machine in service originally on October 15, 2019. Pursuant to paragraph (b)(3)(iii)(B)(*4*) of this section, *FA*'s depreciable interest in the machine during that 90-day period is not taken into account for determining whether the machine was used by *FA* or a predecessor at any time prior to its reacquisition by *FA* on March 30, 2020. Accordingly, assuming all other requirements are met, *FA*'s purchase price of the machine on March 30, 2020, qualifies for the additional first year depreciation deduction for *FA* for the 2020 taxable year under this section.

(FF) ***Example 32.***

(*1*) The facts are the same as in *Example 31* of paragraph (b)(3)(vii)(EE)(*1*) of this section, except that on November 1, 2020, *FB* buys the machine from *FA* and places the machine in service. *FB* uses the machine in its trade or business for the remainder of 2020.

(*2*) Because *FA* placed in service the machine on March 30, 2020, and disposed of it on November 1, 2020, *FA*'s reacquisition of the machine on March 30, 2020, does not qualify for the additional first year depreciation deduction pursuant to paragraph (g)(1)(i) of this section.

(*3*) During 2020, *FB* sold the machine to *FA* within 90 calendar days of placing the machine in service originally on January 10, 2020. After *FB* reacquired the machine on November 1, 2020, *FB* did not dispose of the property during the remainder of 2020. Pursuant to paragraph (b)(3)(iii)(B)(*4*) of this section, *FB*'s depreciable interest in the machine during that 90-day period is not taken into account for determining whether the machine was used by *FB* or a predecessor at any time prior to its reacquisition by *FB* on November 1, 2020. Accordingly, assuming all other requirements are met, *FB*'s purchase price of the machine on November 1, 2020, qualifies for the additional first year depreciation deduction for *FB* under this section.

(GG) ***Example 33.***

(*1*) The facts are the same as in *Example 32* of paragraph (b)(3)(vii)(FF)(*1*) of this section, except *FB* sells the machine to *FC,* an unrelated party, on December 31, 2020.

(*2*) Because *FB* placed in service the machine on November 1, 2020, and disposed of it on December 31, 2020, *FB*'s reacquisition of the machine on November 1, 2020, does not qualify for the additional first year depreciation deduction pursuant to paragraph (g)(1)(i) of this section.

(*3*) ***FC***' s acquisition of the machine on December 31, 2020, satisfies the used property acquisition requirement of paragraph (b)(3)(iii)(A)(*2*) of this section. Accordingly, assuming all other requirements of this section are satisfied, *FC*'s purchase price of the machine qualifies for the additional first year depreciation deduction under this section.

(HH) ***Example 34.***

(*1*) In August 2017, *FD,* a calendar-year taxpayer, entered into a written binding contract with *X* for *X* to manufacture a machine for *FD* for use in its trade or business. Before September 28, 2017, *FD* incurred more than 10 percent of the total cost of the machine. On February 8, 2020, *X* delivered the machine to *FD* and *FD* placed in service the machine. The machine is property described in section 168(k)(2)(B) as in effect on the day before the date of the enactment of the Act. *FD*'s entire unadjusted depreciable basis of the machine is attributable to the machine's manufacture before January 1, 2020. *FD* uses the safe harbor test in § 1.168(k)-1(b)(4)(iii)(B)(*2*) to determine when manufacturing of the machine began. On March 26, 2020, *FD* sells the machine to *FE* for use in *FE*'s trade or business. *FE* is a calendar-year taxpayer and is not related to *FD.* On November 7, 2020, *FD* buys the machine from *FE* and places in service the machine. *FD* uses the machine in its trade or business for the remainder of 2020.

(*2*) Because *FD* incurred more than 10 percent of the cost of the machine before September 28, 2017, and *FD* uses the safe harbor test in § 1.168(k)-1(b)(4)(iii)(B)(*2*) to determine when the manufacturing of the machine began, *FD* acquired the machine before September 28, 2017. If *FD* had not disposed of the machine on March 26, 2020, the cost of the machine would have qualified for the 30-percent additional first year depreciation deduction pursuant to section 168(k)(8), assuming all requirements are met under section 168(k)(2) as in effect on the day before the date of the enactment of the Act. However, because *FD* placed in service the machine on February 8, 2020, and disposed of it on March 26, 2020, FD's acquisition of the machine on February 8, 2020, does not qualify for the additional first year depreciation deduction pursuant to § 1.168(k)-1(f)(1)(i).

(*3*) Because *FE* placed in service the machine on March 26, 2020, and disposed of it on November 7, 2020, *FE*'s acquisition of the machine on March 26, 2020, does not qualify for the additional first year depreciation deduction pursuant to paragraph (g)(1)(i) of this section.

(*4*) During 2020, *FD* sold the machine to *FE* within 90 calendar days of placing the machine in service originally on February 8, 2020. After *FD* reacquired the machine on November 7, 2020, *FD* did not dispose of the machine during the remainder of 2020. *FD* originally acquired this machine before September 28, 2017. As a result, paragraph (b)(3)(iii)(B)(*4*) of this section does not apply. Pursuant to paragraph (b)(3)(iii)(B)(*1*) of this section, the lookback period is 2015 through 2019 and January 1, 2020, through November 6, 2020, to determine if *FD* had a depreciable interest in the machine when *FD* reacquired it on November 7, 2020. As a result, *FD*'s depreciable interest in the machine during the period February 8, 2020, to March 26, 2020, is taken into account for determining whether the machine was used by *FD* or a predecessor at any time prior to its reacquisition by *FD* on November 7, 2020. Accordingly, the reacquisition of the machine by *FD* on November 7, 2020, does not qualify for the additional first year depreciation deduction.

(II) ***Example 35.***

(*1*) In a series of related transactions, a father sells a machine to an unrelated individual on December 15, 2019, who sells the machine to the father's daughter on January 2, 2020, for use in the daughter's trade or business. Pursuant to paragraph

(b)(3)(iii)(C)(*1*) of this section, a transferee tests its relationship with the transferor from which the transferee directly acquires the depreciable property, and with the original transferor of the depreciable property in the series. The relationship is tested when the transferee acquires, and immediately before the first transfer of, the depreciable property in the series. As a result, the following relationships are tested under section 179(d)(2)(A): The unrelated individual tests its relationship to the father as of December 15, 2019; and the daughter tests her relationship to the unrelated individual as of January 2, 2020, and December 15, 2019, and to the father as of January 2, 2020, and December 15, 2019.

(*2*) Because the individual is not related to the father within the meaning of section 179(d)(2)(A) and § 1.179-4(c)(1)(ii) as of December 15, 2019, the individual's acquisition of the machine satisfies the used property acquisition requirement of paragraph (b)(3)(iii)(A)(*2*) of this section. Accordingly, assuming the unrelated individual placed the machine in service for use in its trade or business in 2019 and all other requirements of this section are satisfied, the unrelated individual's purchase price of the machine qualifies for the additional first year depreciation deduction under this section.

(*3*) The individual and the daughter are not related parties within the meaning of section 179(d)(2)(A) and § 1.179-4(c)(1)(ii) as of January 2, 2020, or December 15, 2019. However, the father and his daughter are related parties within the meaning of section 179(d)(2)(A) and § 1.179-4(c)(1)(ii) as of January 2, 2020, or December 15, 2019. Accordingly, the daughter's acquisition of the machine does not satisfy the used property acquisition requirements of paragraph (b)(3)(iii) of this section and is not eligible for the additional first year depreciation deduction.

(JJ) *Example 36*.

(*1*) The facts are the same as in *Example 35* of paragraph (b)(3)(vii)(II)(*1*) of this section, except that instead of selling to an unrelated individual, the father sells the machine to his son on December 15, 2019, who sells the machine to his sister (the father's daughter) on January 2, 2020. Pursuant to paragraph (b)(3)(iii)(C)(*1*) of this section, a transferee tests its relationship with the transferor from which the transferee directly acquires the depreciable property, and with the original transferor of the depreciable property in the series. The relationship is tested when the transferee acquires, and immediately before the first transfer of, the depreciable property in the series. As a result, the following relationships are tested under section 179(d)(2)(A): The son tests his relationship to the father as of December 15, 2019; and the daughter tests her relationship to her brother as of January 2, 2020, and December 15, 2019, and to the father as of January 2, 2020, and December 15, 2019.

(*2*) Because the father and his son are related parties within the meaning of section 179(d)(2)(A) and § 1.179-4(c)(1)(ii) as of December 15, 2019, the son's acquisition of the machine does not satisfy the used property acquisition requirements of paragraph (b)(3)(iii) of this section. Accordingly, the son's acquisition of the machine is not eligible for the additional first year depreciation deduction.

(*3*) The son and his sister are not related parties within the meaning of section 179(d)(2)(A) and § 1.179-4(c)(1)(ii) as of January 2, 2020, or December 15, 2019. However, the father and his daughter are related parties within the meaning of

section 179(d)(2)(A) and § 1.179-4(c)(1)(ii) as of January 2, 2020, or December 15, 2019. Accordingly, the daughter's acquisition of the machine does not satisfy the used property acquisition requirements of paragraph (b)(3)(iii) of this section and is not eligible for the additional first year depreciation deduction.

(KK) *Example 37.*

(*1*) In June 2018, *BA,* an individual, bought and placed in service a new machine from an unrelated party for use in its trade or business. In a series of related transactions, *BA* sells the machine to *BB* and *BB* places it in service on October 1, 2019, *BB* sells the machine to *BC* and *BC* places it in service on December 1, 2019, and *BC* sells the machine to *BD* and *BD* places it in service on January 2, 2020. *BA* and *BB* are related parties within the meaning of section 179(d)(2)(A) and § 1.179-4(c)(1)(ii). *BB* and *BC* are related parties within the meaning of section 179(d)(2)(B) and § 1.179-4(c)(1)(iii). *BC* and *BD* are not related parties within the meaning of section 179(d)(2)(A) and § 1.179-4(c)(1)(ii), or section 179(d)(2)(B) and § 1.179-4(c)(1)(iii). *BA* is not related to *BC* or to *BD* within the meaning of section 179(d)(2)(A) and § 1.179-4(c)(1)(ii). All parties are calendar-year taxpayers.

(*2*) ***BA***' s purchase of the machine in June 2018 satisfies the original use requirement of paragraph (b)(3)(ii) of this section and, assuming all other requirements of this section are met, *BA*'s purchase price of the machine qualifies for the additional first year depreciation deduction under this section.

(*3*) Pursuant to paragraph (b)(3)(iii)(C)(*1*) of this section, a transferee tests its relationship with the transferor from which the transferee directly acquires the depreciable property, and with the original transferor of the depreciable property in the series. The relationship is tested when the transferee acquires, and immediately before the first transfer of, the depreciable property in the series. However, because *BB* placed in service and disposed of the machine in the same taxable year, *BB* is disregarded pursuant to paragraph (b)(3)(iii)(C)(*2*)(*i*) of this section. As a result, the following relationships are tested under section 179(d)(2)(A) and (B): *BC* tests its relationship to *BA* as of December 1, 2019, and October 1, 2019; and *BD* tests its relationship to *BC* as of January 2, 2020, and October 1, 2019, and to *BA* as of January 2, 2020, and October 1, 2020.

(*4*) Because *BA* is not related to *BC* within the meaning of section 179(d)(2)(A) and § 1.179-4(c)(1)(ii) as of December 1, 2019, or October 1, 2019, *BC*'s acquisition of the machine satisfies the used property acquisition requirement of paragraph (b)(3)(iii)(A)(*2*) of this section. Accordingly, assuming all other requirements of this section are satisfied, *BC*'s purchase price of the machine qualifies for the additional first year depreciation deduction under this section.

(*5*) Because *BC* is not related to *BD* and *BA* is not related to *BD* within the meaning of section 179(d)(2)(A) and § 1.179-4(c)(1)(ii), or section 179(d)(2)(B) and § 1.179-4(c)(1)(iii) as of January 2, 2020, or October 1, 2019, *BD*'s acquisition of the machine satisfies the used property acquisition requirement of paragraph (b)(3)(iii)(A)(*2*) of this section. Accordingly, assuming all other requirements of this section are satisfied, *BD*'s purchase price of the machine qualifies for the additional first year depreciation deduction under this section.

(LL) *Example 38.*

(*1*) In June 2018, *CA,* an individual, bought and placed in service a new machine from an unrelated party for use in his trade or business. In a series of related transactions, *CA* sells the machine to *CB* and *CB* places it in service on September 1, 2019, *CB* transfers the machine to *CC* in a transaction described in paragraph (g)(1)(iii) of this section and *CC* places it in service on November 1, 2019, and *CC* sells the machine to *CD* and *CD* places it in service on January 2, 2020. *CA* and *CB* are not related parties within the meaning of section 179(d)(2)(A) and § 1.179-4(c)(1)(ii). *CB* and *CC* are related parties within the meaning of section 179(d)(2)(B) and § 1.179-4(c)(1)(iii). *CB* and *CD* are related parties within the meaning of section 179(d)(2)(A) and § 1.179-4(c)(1)(ii), or section 179(d)(2)(B) and § 1.179-4(c)(1)(iii). *CC* and *CD* are not related parties within the meaning of section 179(d)(2)(A) and § 1.179-4(c)(1)(ii), or section 179(d)(2)(B) and § 1.179-4(c)(1)(iii). *CA* is not related to *CC* or to *CD* within the meaning of section 179(d)(2)(A) and § 1.179-4(c)(1)(ii). All parties are calendar-year taxpayers.

(*2*) ***CA***' s purchase of the machine in June 2018 satisfies the original use requirement of paragraph (b)(3)(ii) of this section and, assuming all other requirements of this section are met, *CA*'s purchase price of the machine qualifies for the additional first year depreciation deduction under this section.

(*3*) Pursuant to paragraph (b)(3)(iii)(C)(*1*) of this section, a transferee tests its relationship with the transferor from which the transferee directly acquires the depreciable property, and with the original transferor of the depreciable property in the series. The relationship is tested when the transferee acquires, and immediately before the first transfer of, the depreciable property in the series. However, because *CB* placed in service and transferred the machine in the same taxable year in a transaction described in paragraph (g)(1)(iii) of this section, the section 168(i)(7) transaction between *CB* and *CC* is disregarded pursuant to paragraph (b)(3)(iii)(C)(*2*)(*iii*) of this section. As a result, the following relationships are tested under section 179(d)(2)(A) and (B): *CB* tests its relationship to *CA* as of September 1, 2019; and *CD* tests its relationship to *CB, CC,* and *CA* as of January 2, 2020, and September 1, 2019.

(*4*) Because *CA* is not related to *CB* within the meaning of section 179(d)(2)(A) and § 1.179-4(c)(1)(ii) as of September 1, 2019, *CB*'s acquisition of the machine satisfies the used property acquisition requirement of paragraph (b)(3)(iii)(A)(*2*) of this section. Accordingly, assuming all other requirements of this section are satisfied, *CB*'s purchase price of the machine qualifies for the additional first year depreciation deduction under this section. Pursuant to paragraph (g)(1)(iii) of this section, *CB* is allocated 2/12 of its 100-percent additional first year depreciation deduction for the machine, and *CC* is allocated the remaining portion of *CB*'s 100-percent additional first year depreciation deduction for the machine.

(*5*) ***CC*** is not related to *CD* and *CA* is not related to *CD* within the meaning of section 179(d)(2)(A) and § 1.179-4(c)(1)(ii), or section 179(d)(2)(B) and § 1.179-4(c)(1)(iii) as of January 2, 2020, or September 1, 2019. However, *CB* and *CD* are related parties within the meaning of section 179(d)(2)(A) and § 1.179-4(c)(1)(ii), or section 179(d)(2)(B) and § 1.179-4(c)(1)(iii) as of January 2, 2020, or September 1, 2019.

Accordingly, *CD*'s acquisition of the machine does not satisfy the used property acquisition requirements of paragraph (b)(3)(iii) of this section and is not eligible for the additional first year depreciation deduction.

(MM) ***Example 39.***

(*1*) In a series of related transactions, on January 2, 2018, *DA,* a corporation, bought and placed in service a new machine from an unrelated party for use in its trade or business. As part of the same series, *DB* purchases 100 percent of the stock of *DA* on January 2, 2019, and such stock acquisition meets the requirements of section 1504(a)(2). *DB* and *DA* were not related prior to the acquisition within the meaning of section 179(d)(2)(A) and § 1.179-4(c)(1)(ii) or section 179(d)(2)(B) and § 1.179-4(c)(1)(iii). Immediately after acquiring the *DA* stock, and *DB* liquidates *DA* under section 331. In the liquidating distribution, *DB* receives the machine that was acquired by *DA* on January 2, 2018. As part of the same series, on March 1, 2020, *DB* sells the machine to *DC* and *DC* places it in service. Throughout the series, *DC* is not related to *DB* or *DA* within the meaning of section 179(d)(2)(A) and § 1.179-4(c)(1)(ii) or section 179(d)(2)(B) and § 1.179-4(c)(1)(iii).

(*2*) ***DA***' s purchase of the machine on January 2, 2018, satisfies the original use requirement of paragraph (b)(3)(ii) of this section and, assuming all other requirements of this section are met, *DA*'s purchase price of the machine qualifies for the additional first year depreciation deduction under this section.

(*3*) Pursuant to paragraph (b)(3)(iii)(C)(*1*) of this section, a transferee tests its relationship with the transferor from which the transferee directly acquires the depreciable property, and with the original transferor of the depreciable property in the series. The relationship is tested when the transferee acquires, and immediately before the first transfer of, the depreciable property in the series. Although *DA* is no longer in existence as of the date *DC* acquires the machine, pursuant to paragraph (b)(3)(iii)(C)(*2*)(*vi*) of this section, *DA* is deemed to be in existence at the time of each transfer for purposes of testing relationships under paragraph (b)(3)(iii)(C)(*1*). As a result, the following relationships are tested under section 179(d)(2)(A) and (B): *DB* tests its relationship to *DA* as of January 2, 2019, and January 2, 2018; and *DC* tests its relationship to *DB* and *DA* as of March 1, 2020, and January 2, 2018.

(*4*) Because *DB* acquired the machine in a series of related transactions in which *DB* acquired stock, meeting the requirements of section 1504(a)(2), of *DA* followed by a liquidation of *DA* under section 331, the relationship of *DB* and *DA* created thereof is disregarded for purposes of testing the relationship pursuant to paragraph (b)(3)(iii)(C)(*2*)(*v*) of this section. Therefore, *DA* is not related to *DB* within the meaning of section 179(d)(2)(A) and § 1.179-4(c)(1)(ii) or section 179(d)(2)(B) and § 1.179-4(c)(1)(iii) as of January 2, 2019, or January 2, 2018, and *DB*'s acquisition of the machine satisfies the used property acquisition requirement of paragraph (b)(3)(iii)(A)(*2*) of this section. Accordingly, assuming all other requirements of this section are satisfied, *DB*'s depreciable basis of the machine as a result of the liquidation of *DA* qualifies for the additional first year depreciation deduction under this section.

(*5*) Because *DC* is not related to *DB* or *DA* within the meaning of section 179(d)(2)(A) and § 1.179-4(c)(1)(ii) or section 179(d)(2)(B) and § 1.179-4(c)(1)(iii) as of March 1, 2020, or January 2, 2018, *DC* 's acquisition of the machine satisfies the used property acquisition requirements of paragraph (b)(3)(iii)(A)(*2*) of this section. Accordingly, assuming all other requirements of this section are satisfied, *DC* 's purchase price of the machine qualifies for the additional first year depreciation deduction.

(NN) ***Example 40.***

(*1*) Pursuant to a series of related transactions, on January 2, 2018, *EA* bought and placed in service a new machine from an unrelated party for use in its trade or business. As part of the same series, *EA* sells the machine to *EB* and *EB* places it in service on January 2, 2019. As part of the same series, *EB* sells the machine to *EC* and *EC* places it in service on January 2, 2020. Throughout the series, *EA* is not related to *EB* or *EC* within the meaning of section 179(d)(2)(B) and § 1.179-4(c)(1)(iii). *EB* and *EC* were related parties within the meaning of section 179(d)(2)(B) and § 1.179-4(c)(1)(iii) until July 1, 2019, at which time, they ceased to be related.

(*2*) ***EA***' s purchase of the machine on January 2, 2018, satisfies the original use requirement of paragraph (b)(3)(ii) of this section and, assuming all other requirements of this section are met, *EA*'s purchase price of the machines qualifies for the additional first year depreciation deduction under this section.

(*3*) Pursuant to paragraph (b)(3)(iii)(C)(*1*) of this section, a transferee tests its relationship with the transferor from which the transferee directly acquires the depreciable property, and with the original transferor of the depreciable property in the series. The relationship is tested when the transferee acquires, and immediately before the first transfer of, the depreciable property in the series. As a result, the following relationships are tested under section 179(d)(2)(A) and (B): *EB* tests its relationship to *EA* as of January 2, 2019, and January 2, 2018; and *EC* tests its relationship to *EA* and *EB* as of January 2, 2020, and January 2, 2018.

(*4*) Because *EA* is not related to *EB* within the meaning of section 179(d)(2)(B) and § 1.179-4(c)(1)(iii) as of January 2, 2019, or January 2, 2018, *EB*'s acquisition of the machine satisfies the used property acquisition requirement of paragraph (b)(3)(iii)(A)(*2*) of this section. Accordingly, assuming all other requirements of this section are satisfied, *EB*'s purchase price of the machine qualifies for the additional first year depreciation deduction under this section.

(*5*) ***EC*** and *EA* are not related parties within the meaning of section 179(d)(2)(B) and § 1.179-4(c)(1)(iii) as of January 2, 2020, or January 2, 2018. Within the meaning of section 179(d)(2)(B) and § 1.179-4(c)(1)(iii), *EC* is not related to *EB* as of January 2, 2020; however, *EC* is related to *EB* as of January 2, 2018. Accordingly, *EC* 's acquisition of the machine does not satisfy the used property acquisition requirement of paragraph (b)(3)(iii) of this section and is not eligible for the additional first year depreciation deduction.

(OO) ***Example 41.***

(*1*) The facts are the same as in *Example 40* of paragraph (b)(3)(vii)(NN)(*1*) of this section, except that instead of selling to *EC, EB* sells the machine to *EE,* and *EE* places in service on January 2, 2020, and *EE* sells the machine to *EC* and *EC* places in service on January 2, 2021. *EE* was not in existence until July 2019 and is not related to *EA* or *EB*.

(*2*) ***EA***' s purchase of the machine on January 2, 2018, satisfies the original use requirement of paragraph (b)(3)(ii) of this section and, assuming all other requirements of this section are met, *EA*'s purchase price of the machine qualifies for the additional first year depreciation deduction under this section.

(*3*) Pursuant to paragraph (b)(3)(iii)(C)(*1*) of this section, a transferee tests its relationship with the transferor from which the transferee directly acquires the depreciable property, and with the original transferor of the depreciable property in the series. The relationship is tested when the transferee acquires, and immediately before the first transfer of, the depreciable property in the series. However, because *EE* was not in existence immediately prior to the first transfer of the depreciable property in the series, *EC* tests its relationship with *EB* and *EA* pursuant to paragraph (b)(3)(iii)(C)(*2*)(*vii*) of this section. As a result, the following relationships are tested under section 179(d)(2)(A) and (B): *EB* tests its relationship to *EA* as of January 2, 2019, and January 2, 2018; *EE* tests its relationship to *EA* and *EB* as of January 2, 2020, and January 2, 2018; and *EC* tests its relationship to *EA* and *EB* as of January 2, 2021, and January 2, 2018.

(*4*) Because *EA* is not related to *EB* within the meaning of section 179(d)(2)(B) and § 1.179-4(c)(1)(iii) as of January 2, 2019, or January 2, 2018, *EB*'s acquisition of the machine satisfies the used property acquisition requirement of paragraph (b)(3)(iii)(A)(*2*) of this section. Accordingly, assuming all other requirements of this section are satisfied, *EB*'s purchase price of the machine qualifies for the additional first year depreciation deduction under this section.

(*5*) Because *EE* is not related to *EA* or *EB* within the meaning of section 179(d)(2)(B) and § 1.179-4(c)(1)(iii) as of January 2, 2020, or January 2, 2018, *EE*'s acquisition of the machine satisfies the used property acquisition requirement of paragraph (b)(3)(iii)(A)(*2*) of this section. Accordingly, assuming all other requirements of this section are satisfied, *EE* 's purchase price of the machine qualifies for the additional first year depreciation deduction under this section.

(*6*) Within the meaning of section 179(d)(2)(B) and § 1.179-4(c)(1)(iii), *EC* is not related to *EA* as of January 2, 2021, or January 2, 2018; however, *EC* is related to *EB* as of January 2, 2018. Accordingly, *EC* 's acquisition of the machine does not satisfy the used property acquisition requirement of paragraph (b)(3)(iii) of this section and is not eligible for the additional first year depreciation deduction.

(4) ***Placed-in-service date*** —

(i) ***In general.*** Depreciable property will meet the requirements of this paragraph (b)(4) if the property is placed in service by the taxpayer for use in its trade or business or for production of income after September 27, 2017; and, except as provided in paragraphs (b)(2)(i)(A) and (D) of this section, before January 1, 2027, or, in the case of property described in section 168(k)(2)(B) or (C), before January 1, 2028.

(ii) ***Specified plant.*** If the taxpayer has properly made an election to apply section 168(k)(5) for a specified plant, the requirements of this paragraph (b)(4) are satisfied only if the specified plant is planted before January 1, 2027, or is grafted before January 1, 2027, to a plant that has already been planted, by the taxpayer in the ordinary course of the taxpayer's farming business, as defined in section 263A(e)(4).

(iii) ***Qualified film, television, or live theatrical production*** —

(A) ***Qualified film or television production.*** For purposes of this paragraph (b)(4), a qualified film or television production is treated as placed in service at the time of initial release or broadcast as defined under § 1.181-1(a)(7). The taxpayer that places in service a qualified film or television production must be the owner, as defined in § 1.181-1(a)(2), of the qualified film or television production.

(B) ***Qualified live theatrical production.*** For purposes of this paragraph (b)(4), a qualified live theatrical production is treated as placed in service at the time of the initial live staged performance. The taxpayer that places in service a qualified live theatrical production must be the owner, as defined in paragraph (b)(2)(i)(F) of this section and in § 1.181-1(a)(2), of the qualified live theatrical production.

(iv) ***Syndication transaction.*** If new property is acquired and placed in service by a lessor, or if used property is acquired and placed in service by a lessor and the lessor and any predecessor did not previously have a depreciable interest in the used property, and the property is sold by the lessor or any subsequent purchaser within three months after the date the property was originally placed in service by the lessor (or, in the case of multiple units of property subject to the same lease, within three months after the date the final unit is placed in service, so long as the period between the time the first unit is placed in service and the time the last unit is placed in service does not exceed 12 months), and the user of the property after the last sale during this three-month period remains the same as when the property was originally placed in service by the lessor, the property is treated as originally placed in service by the purchaser of the property in the last sale during the three-month period but not earlier than the date of the last sale for purposes of sections 167 and 168, and §§ 1.46-3(d) and 1.167(a)-11(e)(1).

(v) ***Technical termination of a partnership.*** For purposes of this paragraph (b)(4), in the case of a technical termination of a partnership under section 708(b)(1)(B) occurring in a taxable year beginning before January 1, 2018, qualified property placed in service by the terminated partnership during the taxable year of termination is treated as originally placed in service by the new partnership on the date the qualified property is contributed by the terminated partnership to the new partnership.

(vi) ***Section 168(i)(7) transactions.*** For purposes of this paragraph (b)(4), if qualified property is transferred in a transaction described in section 168(i)(7) in the same taxable year that the qualified property is placed in service by the transferor, the transferred property is treated as originally placed in service on the date the transferor placed in service the qualified property. In the case of multiple transfers of qualified property in multiple transactions described in section 168(i)(7) in the same taxable year, the placed-in-service date of the transferred property is deemed to be the date on which the first transferor placed in service the qualified property.

(5) ***Acquisition of property*** —

(i) ***In general.*** This paragraph (b)(5) provides rules for the acquisition requirements in section 13201(h) of the Act. These rules apply to all property, including self-constructed property or property described in section 168(k)(2)(B) or (C).

(ii) ***Acquisition date*** —

(A) ***In general.*** Except as provided in paragraph (b)(5)(vi) of this section, depreciable property will meet the requirements of this paragraph (b)(5) if the property is acquired by the taxpayer after September 27, 2017, or is acquired by the taxpayer pursuant to a written binding contract entered into by the taxpayer after September 27, 2017. Property that is manufactured, constructed, or produced for the taxpayer by another person under a written binding contract that is entered into prior to the manufacture, construction, or production of the property for use by the taxpayer in its trade or business or for its production of income is not acquired pursuant to a written binding contract but is considered to be self-constructed property under this paragraph (b)(5). For determination of acquisition date, see paragraph (b)(5)(ii)(B) of this section for property acquired pursuant to a written binding contract, paragraph (b)(5)(iv) of this section for self-constructed property, and paragraph (b)(5)(v) of this section for property not acquired pursuant to a written binding contract.

(B) ***Determination of acquisition date for property acquired pursuant to a written binding contract.*** Except as provided in paragraphs (b)(5)(vi) and (vii) of this section, the acquisition date of property that the taxpayer acquired pursuant to a written binding contract is the later of—

(*1*) The date on which the contract was entered into;

(*2*) The date on which the contract is enforceable under State law;

(*3*) If the contract has one or more cancellation periods, the date on which all cancellation periods end. For purposes of this paragraph (b)(5)(ii)(B)(*3*), a cancellation period is the number of days stated in the contract for any party to cancel the contract without penalty; or

(*4*) If the contract has one or more contingency clauses, the date on which all conditions subject to such clauses are satisfied. For purposes of this paragraph (b)(5)(ii)(B)(*4*), a contingency clause is one that provides for a condition (or conditions) or action (or actions) that is within the control of any party or a predecessor.

(iii) ***Definition of binding contract*** —

(A) ***In general.*** Except as provided in paragraph (b)(5)(iii)(G) of this section, a contract is binding only if it is enforceable under State law against the taxpayer or a predecessor, and does not limit damages to a specified amount (for example, by use of a liquidated damages provision). For this purpose, any contractual provision that limits damages to an amount equal to at least 5 percent of the total contract price will not be treated as limiting damages to a specified amount. If a contract has multiple provisions that limit damages, only the provision with the highest damages is taken into account in determining whether the contract limits damages. Also, in determining whether a contract limits damages, the fact that there may be little or no damages because the contract price does not significantly differ from fair market value will not be taken into account. For example, if a taxpayer entered into an irrevocable written contract to purchase an asset for $100 and

the contract did not contain a provision for liquidated damages, the contract is considered binding notwithstanding the fact that the asset had a fair market value of $99 and under local law the seller would only recover the difference in the event the purchaser failed to perform. If the contract provided for a full refund of the purchase price in lieu of any damages allowable by law in the event of breach or cancellation, the contract is not considered binding.

(B) ***Conditions.*** Except as provided in paragraph (b)(5)(iii)(G) of this section, a contract is binding even if subject to a condition, as long as the condition is not within the control of either party or a predecessor. A contract will continue to be binding if the parties make insubstantial changes in its terms and conditions or if any term is to be determined by a standard beyond the control of either party. A contract that imposes significant obligations on the taxpayer or a predecessor will be treated as binding notwithstanding the fact that certain terms remain to be negotiated by the parties to the contract.

(C) ***Options.*** An option to either acquire or sell property is not a binding contract.

(D) ***Letter of intent.*** A letter of intent for an acquisition is not a binding contract.

(E) ***Supply agreements.*** A binding contract does not include a supply or similar agreement if the amount and design specifications of the property to be purchased have not been specified. The contract will not be a binding contract for the property to be purchased until both the amount and the design specifications are specified. For example, if the provisions of a supply or similar agreement state the design specifications of the property to be purchased, a purchase order under the agreement for a specific number of assets is treated as a binding contract.

(F) ***Components.*** A binding contract to acquire one or more components of a larger property will not be treated as a binding contract to acquire the larger property. If a binding contract to acquire the component does not satisfy the requirements of this paragraph (b)(5), the component does not qualify for the additional first year depreciation deduction under this section.

(G) ***Acquisition of a trade or business or an entity.*** A contract to acquire all or substantially all of the assets of a trade or business or to acquire an entity (for example, a corporation, a partnership, or a limited liability company) is binding if it is enforceable under State law against the parties to the contract. The presence of a condition outside the control of the parties, including, for example, regulatory agency approval, will not prevent the contract from being a binding contract. Further, the fact that insubstantial terms remain to be negotiated by the parties to the contract, or that customary conditions remain to be satisfied, does not prevent the contract from being a binding contract. This paragraph (b)(5)(iii)(G) also applies to a contract for the sale of the stock of a corporation that is treated as an asset sale as a result of an election under section 338 or under section 336(e) made for a disposition described in § 1.336-2(b)(1).

(iv) ***Self-constructed property*** —

(A) ***In general.*** If a taxpayer manufactures, constructs, or produces property for use by the taxpayer in its trade or business or for its production of income, the acquisition rules in paragraph (b)(5)(ii) of this section are treated as met for the property if the taxpayer begins manufacturing, constructing, or producing the property after September 27, 2017. Property that is manufactured, constructed, or produced for the taxpayer by another

person under a written binding contract, as defined in paragraph (b)(5)(iii) of this section, that is entered into prior to the manufacture, construction, or production of the property for use by the taxpayer in its trade or business or for its production of income is considered to be manufactured, constructed, or produced by the taxpayer. If a taxpayer enters into a written binding contract, as defined in paragraph (b)(5)(iii) of this section, before September 28, 2017, with another person to manufacture, construct, or produce property and the manufacture, construction, or production of this property begins after September 27, 2017, the acquisition rules in paragraph (b)(5)(ii) of this section are met.

(B) ***When does manufacture, construction, or production begin*** —

(*1*) ***In general.*** For purposes of paragraph (b)(5)(iv)(A) of this section, manufacture, construction, or production of property begins when physical work of a significant nature begins. Physical work does not include preliminary activities such as planning or designing, securing financing, exploring, or researching. The determination of when physical work of a significant nature begins depends on the facts and circumstances. For example, if a retail motor fuels outlet is to be constructed on-site, construction begins when physical work of a significant nature commences at the site; that is, when work begins on the excavation for footings, pouring the pads for the outlet, or the driving of foundation pilings into the ground. Preliminary work, such as clearing a site, test drilling to determine soil condition, or excavation to change the contour of the land (as distinguished from excavation for footings) does not constitute the beginning of construction. However, if a retail motor fuels outlet is to be assembled on-site from modular units manufactured off-site and delivered to the site where the outlet will be used, manufacturing begins when physical work of a significant nature commences at the off-site location.

(*2*) ***Safe harbor.*** For purposes of paragraph (b)(5)(iv)(B)(*1*) of this section, a taxpayer may choose to determine when physical work of a significant nature begins in accordance with this paragraph (b)(5)(iv)(B)(*2*). Physical work of a significant nature will be considered to begin at the time the taxpayer incurs (in the case of an accrual basis taxpayer) or pays (in the case of a cash basis taxpayer) more than 10 percent of the total cost of the property, excluding the cost of any land and preliminary activities such as planning or designing, securing financing, exploring, or researching. When property is manufactured, constructed, or produced for the taxpayer by another person, this safe harbor test must be satisfied by the taxpayer. For example, if a retail motor fuels outlet or other facility is to be constructed for an accrual basis taxpayer by another person for the total cost of $200,000, excluding the cost of any land and preliminary activities such as planning or designing, securing financing, exploring, or researching, construction is deemed to begin for purposes of this paragraph (b)(5)(iv)(B)(*2*) when the taxpayer has incurred more than 10 percent (more than $20,000) of the total cost of the property. A taxpayer chooses to apply this paragraph (b)(5)(iv)(B)(*2*) by filing a Federal income tax return for the placed-in-service year of the property that determines when physical work of a significant nature begins consistent with this paragraph (b)(5)(iv)(B)(*2*).

(C) ***Components of self-constructed property*** —

(1) ***Acquired components.*** If a binding contract, as defined in paragraph (b)(5)(iii) of this section, to acquire a component does not satisfy the requirements of paragraph (b)(5)(ii) of this section, the component does not qualify for the additional first year depreciation deduction under this section. A binding contract described in the preceding sentence to acquire one or more components of a larger self-constructed property will not preclude the larger self-constructed property from satisfying the acquisition rules in paragraph (b)(5)(iv)(A) of this section. Accordingly, the unadjusted depreciable basis of the larger self-constructed property that is eligible for the additional first year depreciation deduction under this section, assuming all other requirements are met, must not include the unadjusted depreciable basis of any component that does not satisfy the requirements of paragraph (b)(5)(ii) of this section. If the manufacture, construction, or production of the larger self-constructed property begins before September 28, 2017, the larger self-constructed property and any acquired components related to the larger self-constructed property do not qualify for the additional first year depreciation deduction under this section, except as provided in paragraph (c) of this section. If a binding contract to acquire the component is entered into after September 27, 2017, but the manufacture, construction, or production of the larger self-constructed property does not begin before January 1, 2027, the component qualifies for the additional first year depreciation deduction under this section, assuming all other requirements are met, but the larger self-constructed property does not.

(2) ***Self-constructed components.*** If the manufacture, construction, or production of a component does not satisfy the requirements of this paragraph (b)(5)(iv), the component does not qualify for the additional first year depreciation deduction under this section. However, if the manufacture, construction, or production of a component does not satisfy the requirements of this paragraph (b)(5)(iv), but the manufacture, construction, or production of the larger self-constructed property satisfies the requirements of this paragraph (b)(5)(iv), the larger self-constructed property qualifies for the additional first year depreciation deduction under this section, assuming all other requirements are met, even though the component does not qualify for the additional first year depreciation deduction under this section. Accordingly, the unadjusted depreciable basis of the larger self-constructed property that is eligible for the additional first year depreciation deduction under this section, assuming all other requirements are met, must not include the unadjusted depreciable basis of any component that does not qualify for the additional first year depreciation deduction under this section. If the manufacture, construction, or production of the larger self-constructed property began before September 28, 2017, the larger self-constructed property and any self-constructed components related to the larger self-constructed property do not qualify for the additional first year depreciation deduction under this section, except as provided in paragraph (c) of this section. If the manufacture, construction, or production of a component begins after September 27, 2017, but the manufacture, construction, or production of the larger self-constructed property does not begin before January 1, 2027, the component qualifies for the additional first year depreciation deduction under this section, assuming all other requirements are met, but the larger self-constructed property does not.

(v) ***Determination of acquisition date for property not acquired pursuant to a written binding contract.*** Except as provided in paragraphs (b)(5)(iv), (vi), and (vii) of this section, the acquisition date of property that the taxpayer acquires pursuant to a contract that does not meet the definition of a written binding contract in paragraph (b)(5)(iii) of this section, is the date on which the taxpayer paid, in the case of a cash basis taxpayer, or incurred, in the case of an accrual basis taxpayer, more than 10 percent of the total cost of the property, excluding the cost of any land and preliminary activities such as planning and designing, securing financing, exploring, or researching. The preceding sentence also applies to property that is manufactured, constructed, or produced for the taxpayer by another person under a written contract that does not meet the definition of a binding contract in paragraph (b)(5)(iii) of this section, and that is entered into prior to the manufacture, construction, or production of the property for use by the taxpayer in its trade or business or for its production of income. This paragraph (b)(5)(v) does not apply to an acquisition described in paragraph (b)(5)(iii)(G) of this section.

(vi) ***Qualified film, television, or live theatrical production*** —

(A) ***Qualified film or television production.*** For purposes of section 13201(h)(1)(A) of the Act, a qualified film or television production is treated as acquired on the date principal photography commences.

(B) ***Qualified live theatrical production.*** For purposes of section 13201(h)(1)(A) of the Act, a qualified live theatrical production is treated as acquired on the date when all of the necessary elements for producing the live theatrical production are secured. These elements may include a script, financing, actors, set, scenic and costume designs, advertising agents, music, and lighting.

(vii) ***Specified plant.*** If the taxpayer has properly made an election to apply section 168(k)(5) for a specified plant, the requirements of this paragraph (b)(5) are satisfied if the specified plant is planted after September 27, 2017, or is grafted after September 27, 2017, to a plant that has already been planted, by the taxpayer in the ordinary course of the taxpayer's farming business, as defined in section 263A(e)(4).

(viii) ***Examples.*** The application of this paragraph (b)(5) is illustrated by the following examples. Unless the facts specifically indicate otherwise, assume that the parties are not related within the meaning of section 179(d)(2)(A) or (B) and § 1.179-4(c), paragraph (c) of this section does not apply, and the parties do not have predecessors:

(A) ***Example 1.*** On September 1, 2017, *BB,* a corporation, entered into a written agreement with *CC,* a manufacturer, to purchase 20 new lamps for $100 each within the next two years. Although the agreement specifies the number of lamps to be purchased, the agreement does not specify the design of the lamps to be purchased. Accordingly, the agreement is not a binding contract pursuant to paragraph (b)(5)(iii)(E) of this section.

(B) ***Example 2.*** The facts are the same as in *Example 1* of paragraph (b)(5)(viii)(A) of this section. On December 1, 2017, *BB* placed a purchase order with *CC* to purchase 20 new model XPC5 lamps for $100 each for a total amount of $2,000. Because the agreement specifies the number of lamps to be purchased and the purchase order specifies the design of the lamps to be purchased, the purchase order placed by *BB* with *CC* on December 1, 2017, is a binding contract pursuant to paragraph (b)(5)(iii)(E) of this section. Accordingly, assuming all other requirements are met, the cost of the 20 lamps qualifies for the 100-percent additional first year depreciation deduction.

(C) ***Example 3.*** The facts are the same as in *Example 1* of paragraph (b)(5)(viii)(A) of this section, except that the written agreement between *BB* and *CC* is to purchase 100 model XPC5 lamps for $100 each within the next two years. Because this agreement specifies the amount and design of the lamps to be purchased, the agreement is a binding contract pursuant to paragraph (b)(5)(iii)(E) of this section. However, because the agreement was entered into before September 28, 2017, no lamp acquired by *BB* under this contract qualifies for the 100-percent additional first year depreciation deduction.

(D) ***Example 4.*** On September 1, 2017, *DD* began constructing a retail motor fuels outlet for its own use. On November 1, 2018, *DD* ceases construction of the retail motor fuels outlet prior to its completion. Between September 1, 2017, and November 1, 2018, *DD* incurred $3,000,000 of expenditures for the construction of the retail motor fuels outlet. On May 1, 2019, *DD* resumed construction of the retail motor fuels outlet and completed its construction on August 31, 2019. Between May 1, 2019, and August 31, 2019, *DD* incurred another $1,600,000 of expenditures to complete the construction of the retail motor fuels outlet and, on September 1, 2019, *DD* placed the retail motor fuels outlet in service. None of *DD*'s total expenditures of $4,600,000 qualify for the 100-percent additional first year depreciation deduction because, pursuant to paragraph (b)(5)(iv)(A) of this section, *DD* began constructing the retail motor fuels outlet before September 28, 2017.

(E) ***Example 5.*** The facts are the same as in *Example 4* of paragraph (b)(5)(viii)(D) of this section except that *DD* began constructing the retail motor fuels outlet for its own use on October 1, 2017, and *DD* incurred the $3,000,000 between October 1, 2017, and November 1, 2018. *DD*'s total expenditures of $4,600,000 qualify for the 100-percent additional first year depreciation deduction because, pursuant to paragraph (b)(5)(iv)(A) of this section, *DD* began constructing the retail motor fuels outlet after September 27, 2017, and *DD* placed the retail motor fuels outlet in service on September 1, 2019. Accordingly, assuming all other requirements are met, the additional first year depreciation deduction for the retail motor fuels outlet will be $4,600,000, computed as $4,600,000 multiplied by 100 percent.

(F) ***Example 6.*** On August 15, 2017, *EE,* an accrual basis taxpayer, entered into a written binding contract with *FF* to manufacture an aircraft described in section 168(k)(2)(C) for use in *EE*'s trade or business. *FF* begins to manufacture the aircraft on October 1, 2017. The completed aircraft is delivered to *EE* on February 15, 2018, at which time *EE* incurred the total cost of the aircraft. *EE* places the aircraft in service on March 1, 2018. Pursuant to paragraphs (b)(5)(ii)(A) and (b)(5)(iv)(A) of this section, the aircraft is considered to be manufactured by *EE.* Because *EE* began manufacturing the aircraft after September 27, 2017, the aircraft qualifies for the 100-percent additional first year depreciation deduction, assuming all other requirements are met.

(G) ***Example 7.*** On June 1, 2017, *HH* entered into a written binding contract with GG to acquire a new component part of property that is being constructed by *HH* for its own use in its trade or business. *HH* commenced construction of the property in November 2017, and placed the property in service in November 2018. Because *HH* entered into a written binding contract to acquire a component part prior to September 28, 2017, pursuant to paragraphs (b)(5)(ii) and (b)(5)(iv)(C)(*1*) of this section, the component part does not qualify for the 100-percent additional first year depreciation deduction. However, pursuant to paragraphs (b)(5)(iv)(A) and (b)(5)(iv)(C)(*1*) of this section, the property constructed by *HH* will qualify for the 100-percent additional first year depreciation deduction, because

construction of the property began after September 27, 2017, assuming all other requirements are met. Accordingly, the unadjusted depreciable basis of the property that is eligible for the 100-percent additional first year depreciation deduction must not include the unadjusted depreciable basis of the component part.

(H) ***Example 8.*** The facts are the same as in *Example 7* of paragraph (b)(5)(viii)(G) of this section except that *HH* entered into the written binding contract with GG to acquire the new component part on September 30, 2017, and *HH* commenced construction of the property on August 1, 2017. Pursuant to paragraphs (b)(5)(iv)(A) and (C) of this section, neither the property constructed by *HH* nor the component part will qualify for the 100-percent additional first year depreciation deduction, because *HH* began construction of the property prior to September 28, 2017.

(I) ***Example 9.*** On September 1, 2017, *II* acquired and placed in service equipment. On January 15, 2018, *II* sells the equipment to *JJ* and leases the property back from *JJ* in a sale-leaseback transaction. Pursuant to paragraph (b)(5)(ii) of this section, *II*'s cost of the equipment does not qualify for the 100-percent additional first year depreciation deduction because *II* acquired the equipment prior to September 28, 2017. However, *JJ* acquired used equipment from an unrelated party after September 27, 2017, and, assuming all other requirements are met, *JJ*'s cost of the used equipment qualifies for the 100-percent additional first year depreciation deduction for *JJ*.

(J) ***Example 10.*** On July 1, 2017, *KK* began constructing property for its own use in its trade or business. *KK* placed this property in service on September 15, 2017. On January 15, 2018, *KK* sells the property to *LL* and leases the property back from *LL* in a sale-leaseback transaction. Pursuant to paragraph (b)(5)(iv) of this section, *KK*'s cost of the property does not qualify for the 100-percent additional first year depreciation deduction because *KK* began construction of the property prior to September 28, 2017. However, *LL* acquired used property from an unrelated party after September 27, 2017, and, assuming all other requirements are met, *LL*'s cost of the used property qualifies for the 100-percent additional first year depreciation deduction for *LL*.

(K) ***Example 11. MM,*** a calendar year taxpayer, is engaged in a trade or business described in section 163(j)(7)(A)(iv). In December 2018, *MM* began constructing a new electric generation power plant for its own use. *MM* placed in service this new power plant, including all component parts, in 2020. Even though *MM* began constructing the power plant after September 27, 2017, none of *MM*'s total expenditures of the power plant qualify for the additional first year depreciation deduction under this section because, pursuant to paragraph (b)(2)(ii)(F) of this section, the power plant is property that is primarily used in a trade or business described in section 163(j)(7)(A)(iv) and the power plant was placed in service in *MM*'s taxable year beginning after 2017.

(c) ***Election for components of larger self-constructed property for which the manufacture, construction, or production begins before September 28, 2017*** —

(1) ***In general.*** A taxpayer may elect to treat any acquired or self-constructed component, as described in paragraph (c)(3) of this section, of the larger self-constructed property, as described in paragraph (c)(2) of this section, as being eligible for the additional first year depreciation deduction under this section, assuming all requirements of section 168(k) and this section are met. The taxpayer may make this election for one or more such components.

(2) *Eligible larger self-constructed property* —

(i) ***In general.*** Solely for purposes of this paragraph (c), a larger self-constructed property is property that is manufactured, constructed, or produced by the taxpayer for its own use in its trade or business or production of income. Solely for purposes of this paragraph (c), property that is manufactured, constructed, or produced for the taxpayer by another person under a written binding contract, as defined in paragraph (b)(5)(iii) of this section, or under a written contract that does not meet the definition of a binding contract in paragraph (b)(5)(iii) of this section, that is entered into prior to the manufacture, construction, or production of the property for use by the taxpayer in its trade or business or production of income is considered to be manufactured, constructed, or produced by the taxpayer. Except as provided in paragraph (c)(2)(iv) of this section, such larger self-constructed property must be property—

(A) That is described in paragraph (b)(2)(i)(A), (B), (C), or (D) of this section. Solely for purposes of the preceding sentence, the requirement that property has to be acquired after September 27, 2017, is disregarded;

(B) That meets the requirements under paragraph (b) of this section, determined without regard to the acquisition date requirement in paragraph (b)(5) of this section; and

(C) For which the taxpayer begins the manufacture, construction, or production before September 28, 2017.

(ii) ***Residential rental property or nonresidential real property.*** If the taxpayer constructs, manufactures, or produces residential rental property or nonresidential real property, as defined in section 168(e)(2), or an improvement to such property, for use in its trade or business or production of income, all property that is constructed, manufactured, or produced as part of such residential rental property, nonresidential real property, or improvement, as applicable, and that is described in paragraph (c)(2)(i)(A) of this section is the larger self-constructed property for purposes of applying the rules in this paragraph (c).

(iii) ***Beginning of manufacturing, construction, or production.*** Solely for purposes of paragraph (c)(2)(i)(C) of this section, the determination of when manufacture, construction, or production of the larger self-constructed property begins is made in accordance with the rules in paragraph (b)(5)(iv)(B) of this section if the larger self-constructed property is manufactured, constructed, or produced by the taxpayer for its own use in its trade or business or production of income, or is manufactured, constructed, or produced for the taxpayer by another person under a written binding contract, as defined in paragraph (b)(5)(iii) of this section, that is entered into prior to the manufacture, construction, or production of the property for use by the taxpayer in its trade or business or production of income. If the larger self-constructed property is manufactured, constructed, or produced for the taxpayer by another person under a written contract that does not meet the definition of a binding contract in paragraph (b)(5)(iii) of this section, that is entered into prior to the manufacture, construction, or production of the property for use by the taxpayer in its trade or business or production of income, the determination of when manufacture, construction, or production of the larger self-constructed property begins is made in accordance with the rules in paragraph (b)(5)(v) of this section. If the taxpayer enters into a written binding contract, as defined in paragraph (b)(5)(iii) of this section, before September 28, 2017, with another person to manufacture, construct, or produce the larger self-constructed property and the manufacture, construction, or production of this property begins after September 27, 2017, as determined under paragraph (b)(5)(iv)(B) of this section, this paragraph (c) does not apply. If the taxpayer enters into a written contract that does not meet

the definition of a binding contract in paragraph (b)(5)(iii) of this section before September 28, 2017, with another person to manufacture, construct, or produce the larger self-constructed property and the manufacture, construction, or production of this property begins after September 27, 2017, as determined under paragraph (b)(5)(v) of this section, this paragraph (c) does not apply.

(iv) ***Exception.*** This paragraph (c) does not apply to any larger self-constructed property that is included in a class of property for which the taxpayer made an election under section 168(k)(7) (formerly section 168(k)(2)(D)(iii)) not to deduct the additional first year depreciation deduction.

(3) ***Eligible components*** —

(i) ***In general.*** Solely for purposes of this paragraph (c), a component of the larger self-constructed property, as described in paragraph (c)(2) of this section, must be qualified property under section 168(k)(2) and paragraph (b) of this section. Solely for purposes of the preceding sentence, a component will satisfy the acquisition date requirement in paragraph (b)(5) of this section if it satisfies the requirements in paragraph (c)(3)(ii) or (iii) of this section, as applicable.

(ii) ***Acquired components.*** If a component of the larger self-constructed property is acquired pursuant to a written binding contract, as defined in paragraph (b)(5)(iii) of this section, the component must be acquired by the taxpayer after September 27, 2017, as determined under the rules in paragraph (b)(5)(ii)(B) of this section. If a component of the larger self-constructed property is acquired pursuant to a written contract that does not meet the definition of a binding contract in paragraph (b)(5)(iii) of this section, the component must be acquired by the taxpayer after September 27, 2017, as determined under the rules in paragraph (b)(5)(v) of this section.

(iii) ***Self-constructed components.*** The manufacture, construction, or production of a component of a larger self-constructed property must begin after September 27, 2017. The determination of when manufacture, construction, or production of the component begins is made in accordance with the rules in—

(A) Paragraph (b)(5)(iv)(B) of this section if the component is manufactured, constructed, or produced by the taxpayer for its own use in its trade or business or for its production of income, or is manufactured, constructed, or produced for the taxpayer by another person under a written binding contract, as defined in paragraph (b)(5)(iii) of this section, that is entered into prior to the manufacture, construction, or production of the component for use by the taxpayer in its trade or business or for its production of income; or

(B) Paragraph (b)(5)(v) of this section if the component is manufactured, constructed, or produced for the taxpayer by another person under a written contract that does not meet the definition of a binding contract in paragraph (b)(5)(iii) of this section, that is entered into prior to the manufacture, construction, or production of the component for use by the taxpayer in its trade or business or for its production of income.

(4) ***Special rules*** —

(i) ***Installation costs.*** If the taxpayer pays, in the case of a cash basis taxpayer, or incurs, in the case of an accrual basis taxpayer, costs, including labor costs, to install a component of the larger self-constructed property, as described in paragraph (c)(2) of this section, such costs are

eligible for the additional first year depreciation under this section, assuming all requirements are met, only if the component being installed meets the requirements in paragraph (c)(3) of this section.

(ii) ***Property described in section 168(k)(2)(B).*** The rules in paragraph (e)(1)(iii) of this section apply for determining the unadjusted depreciable basis, as defined in § 1.168(b)-1(a)(3), of larger self-constructed property described in paragraph (c)(2) of this section and in section 168(k)(2)(B).

(5) ***Computation of additional first year depreciation deduction*** —

(i) ***Election is made.*** Before determining the allowable additional first year depreciation deduction for the larger self-constructed property, as described in paragraph (c)(2) of this section, for which the taxpayer makes the election specified in this paragraph (c) for one or more components of such property, the taxpayer must determine the portion of the unadjusted depreciable basis, as defined in § 1.168(b)-1(a)(3), of the larger self-constructed property, including all components, attributable to the component that meets the requirements of paragraphs (c)(3) and (c)(4)(i) of this section (component basis). The additional first year depreciation deduction for the component basis is determined by multiplying such component basis by the applicable percentage for the placed-in-service year of the larger self-constructed property. The additional first year depreciation deduction, if any, for the remaining unadjusted depreciable basis of the larger self-constructed property, as described in paragraph (c)(2) of this section, is determined under section 168(k), as in effect on the day before the date of the enactment of the Act, and section 168(k)(8). For purposes of this paragraph (c), the remaining unadjusted depreciable basis of the larger self-constructed property is equal to the unadjusted depreciable basis, as defined in § 1.168(b)-1(a)(3), of the larger self-constructed property, including all components, reduced by the sum of the component basis of the components for which the taxpayer makes the election specified in this paragraph (c).

(ii) ***Election is not made.*** If the taxpayer does not make the election specified in this paragraph (c), the additional first year depreciation deduction, if any, for the larger self-constructed property, including all components, is determined under section 168(k), as in effect on the day before the date of the enactment of the Act, and section 168(k)(8).

(6) ***Time and manner for making election*** —

(i) ***Time for making election.*** The election specified in this paragraph (c) must be made by the due date, including extensions, of the Federal tax return for the taxable year in which the taxpayer placed in service the larger self-constructed property.

(ii) ***Manner of making election.*** The election specified in this paragraph (c) must be made by attaching a statement to such return indicating that the taxpayer is making the election provided in this paragraph (c) and whether the taxpayer is making the election for all or some of the components described in paragraph (c)(3) of this section. The election is made separately by each person owning qualified property (for example, for each member of a consolidated group by the agent for the group (within the meaning of § 1.1502-77(a) and (c)), by the partnership (including a lower-tier partnership), or by the S corporation).

(7) ***Revocation of election*** —

(i) ***In general.*** Except as provided in paragraph (c)(7)(ii) of this section, the election specified in this paragraph (c), once made, may be revoked only by filing a request for a private letter ruling and obtaining the Commissioner of Internal Revenue's written consent to revoke the election. The Commissioner may grant a request to revoke the election if the taxpayer acted reasonably and in good faith, and the revocation will not prejudice the interests of the Government. See generally § 301.9100-3 of this chapter. The election specified in this paragraph (c) may not be revoked through a request under section 446(e) to change the taxpayer's method of accounting.

(ii) ***Automatic 6-month extension.*** If a taxpayer made the election specified in this paragraph (c), an automatic extension of 6 months from the due date of the taxpayer's Federal tax return, excluding extensions, for the placed-in-service year of the larger self-constructed property is granted to revoke that election, provided the taxpayer timely filed the taxpayer's Federal tax return for that placed-in-service year and, within this 6-month extension period, the taxpayer, and all taxpayers whose tax liability would be affected by the election, file an amended Federal tax return for the placed-in-service year in a manner that is consistent with the revocation of the election.

(8) ***Additional procedural guidance.*** The IRS may publish procedural guidance in the Internal Revenue Bulletin (see § 601.601(d)(2)(ii)(*b*) of this chapter) that provides alternative procedures for complying with paragraph (c)(6) or (c)(7)(i) of this section.

(9) ***Examples.*** The application of this paragraph (c) is illustrated by the following examples. Unless the facts specifically indicate otherwise, assume that the larger self-constructed property is described in paragraph (c)(2) of this section, the components that are acquired or self-constructed after September 27, 2017, are described in paragraph (c)(3) of this section, the taxpayer is an accrual basis taxpayer, and none of the costs paid or incurred after September 27, 2017, are for the installation of components that do not meet the requirements of paragraph (c)(3) of this section.

(i) ***Example 1.***

(A) ***BC,*** a calendar year taxpayer, is engaged in a trade or business described in section 163(j)(7)(A)(iv) and §§ 1.163(j)-1(b)(15)(i) and 1.163(j)-10(c)(3)(iii)(C)(*3*). In December 2015, *BC* decided to construct an electric generation power plant for its own use. This plant is property described in section 168(k)(2)(B) as in effect on the day before the date of the enactment of the Act. However, the turbine for the plant had to be manufactured by another person for *BC*. In January 2016, *BC* entered into a written binding contract with *CD* to acquire the turbine. *BC* received the completed turbine in August 2017 at which time *BC* incurred the cost of the turbine. The cost of the turbine is 11 percent of the total cost of the electric generation power plant to be constructed by *BC*. *BC* began constructing the electric generation power plant in October 2017 and placed in service this new power plant, including all component parts, in 2020.

(B) The larger self-constructed property is the electric generation power plant to be constructed by *BC*. For determining if the construction of this power plant begins before September 28, 2017, paragraph (b)(5)(iv)(B) of this section provides that manufacture, construction, or production of property begins when physical work of a significant nature begins. *BC* uses the safe harbor test in paragraph (b)(5)(iv)(B)(*2*) of this section to determine when physical work of a significant nature begins for the electric generation

power plant. Because the turbine that was manufactured by *CD* for *BC* is more than 10 percent of the total cost of the electric generation power plant, physical work of a significant nature for this plant began before September 28, 2017.

(C) The power plant is described in section 168(k)(9)(A) and paragraph (b)(2)(ii)(F) of this section and, therefore, is not larger self-constructed property eligible for the election pursuant to paragraph (c)(2)(i)(B) of this section. Accordingly, none of *BC*'s expenditures for components of the power plant that are acquired or self-constructed after September 27, 2017, are eligible for the election specified in this paragraph (c). Assuming all requirements are met under section 168(k)(2) as in effect on the day before the date of the enactment of the Act, the unadjusted depreciable basis of the power plant, including all components, attributable to its construction before January 1, 2020, is eligible for the 30-percent additional first year depreciation deduction pursuant to section 168(k)(8).

(ii) *Example 2.*

(A) In August 2017, *BD,* a calendar-year taxpayer, entered into a written binding contract with *CE* for *CE* to manufacture a locomotive for *BD* for use in its trade or business. Before September 28, 2017, *BD* acquired or self-constructed components of the locomotive. These components cost $500,000, which is more than 10 percent of the total cost of the locomotive, and *BD* incurred such costs before September 28, 2017. After September 27, 2017, *BD* acquired or self-constructed components of the locomotive and these components cost $4,000,000. In February 2019, *CE* delivered the locomotive to *BD* and *BD* placed in service the locomotive. The total cost of the locomotive is $4,500,000. The locomotive is property described in section 168(k)(2)(B) as in effect on the day before the date of the enactment of the Act. On its timely filed Federal income tax return for 2019, *BD* made the election specified in this paragraph (c).

(B) The larger self-constructed property is the locomotive being manufactured by *CE* for *BD*. For determining if the manufacturing of this locomotive begins before September 28, 2017, paragraph (b)(5)(iv)(B) of this section provides that manufacture, construction, or production of property begins when physical work of a significant nature begins. *BD* uses the safe harbor test in paragraph (b)(5)(iv)(B)(*2*) of this section to determine when physical work of a significant nature begins for the locomotive. Because *BD* had incurred more than 10 percent of the total cost of the locomotive before September 28, 2017, physical work of a significant nature for this locomotive began before September 28, 2017.

(C) Because *BD* made the election specified in this paragraph (c), the cost of $4,000,000 for the locomotive's components acquired or self-constructed after September 27, 2017, qualifies for the 100-percent additional first year depreciation deduction under this section, assuming all other requirements are met. The remaining cost of the locomotive is $500,000 and such amount qualifies for the 40-percent additional first year depreciation deduction pursuant to section 168(k)(8), assuming all other requirements in section 168(k) as in effect on the day before the date of the enactment of the Act are met.

(iii) *Example 3.*

(A) In February 2016, *BF,* a calendar-year taxpayer, entered into a written binding contract with *CG* for *CG* to manufacture a vessel for *BF* for use in its trade or business. Before September 28, 2017, *BF* acquired or self-constructed components for the vessel. These

components cost $30,000,000, which is more than 10 percent of the total cost of the vessel, and *BF* incurred such costs before September 28, 2017. After September 27, 2017, *BF* acquired or self-constructed components for the vessel and these components cost $15,000,000. In February 2021, *CG* delivered the vessel to *BF* and *BF* placed in service the vessel. The vessel is property described in section 168(k)(2)(B) as in effect on the day before the date of the enactment of the Act. The total cost of the vessel is $45,000,000. On its timely filed Federal income tax return for 2021, *BF* made the election specified in this paragraph (c).

(B) The larger self-constructed property is the vessel being manufactured by *CG* for *BF*. For determining if the manufacturing of this vessel begins before September 28, 2017, paragraph (b)(5)(iv)(B) of this section provides that manufacture, construction, or production of property begins when physical work of a significant nature begins. *BF* uses the safe harbor test in paragraph (b)(5)(iv)(B)(*2*) of this section to determine when physical work of a significant nature begins for the vessel. Because *BF* had incurred more than 10 percent of the total cost of the vessel before September 28, 2017, physical work of a significant nature for this vessel began before September 28, 2017.

(C) Because *BF* made the election specified in this paragraph (c), the cost of $15,000,000 for the vessel's components acquired or self-constructed after September 27, 2017, qualifies for the 100-percent additional first year depreciation deduction under this section, assuming all other requirements are met. Pursuant to section 168(k)(8) and because *BF* placed in service the vessel after 2020, none of the remaining cost of the vessel is eligible for any additional first year depreciation deduction under section 168(k) and this section nor under section 168(k) as in effect on the day before the date of the enactment of the Act.

(iv) ***Example 4.***

(A) In March 2017, *BG,* a calendar year taxpayer, entered into a written contract with *CH* for *CH* to construct a building for *BG* to use in its retail business. This written contract does not meet the definition of a binding contract in paragraph (b)(5)(iii) of this section. In September 2019, the construction of the building was completed and placed in service by *BG*. The total cost is $10,000,000. Of this amount, $3,000,000 is the total cost for all section 1245 properties constructed as part of the building, and $7,000,000 is for the building. Under section 168(e), section 1245 properties in the total amount of $2,400,000 are 5-year property and in the total amount of $600,000 are 7-year property. The building is nonresidential real property under section 168(e). Before September 28, 2017, *BG* acquired or self-constructed certain components and the total cost of these components is $500,000 for the section 1245 properties and $3,000,000 for the building. *BG* incurred these costs before September 28, 2017. After September 27, 2017, *BG* acquired or self-constructed the remaining components of the section 1245 properties and these components cost $2,500,000. *BG* incurred these costs of $2,500,000 after September 27, 2017. On its timely filed Federal income tax return for 2019, *BG* made the election specified in this paragraph (c).

(B) All section 1245 properties are constructed as part of the construction of the building and are described in paragraph (b)(2)(i)(A) of this section. The building is not described in paragraph (b)(2)(i)(A), (B), (C), or (D) of this section. As a result, under paragraph (c)(2)(ii) of this section, the larger self-constructed property is all section 1245 properties with a

total cost of $3,000,000. For determining if the construction of these section 1245 properties begins before September 28, 2017, paragraph (b)(5)(v) of this section provides that manufacture, construction, or production of property begins when the taxpayer incurs more than 10 percent of the total cost of the property. Because *BG* incurred more than 10 percent of the total cost of the section 1245 properties before September 28, 2017, construction of the section 1245 properties began before September 28, 2017.

(C) Because *BG* made the election specified in this paragraph (c), the cost of $2,500,000 for the section 1245 components acquired or self-constructed by *BG* after September 27, 2017, qualifies for the 100-percent additional first year depreciation deduction under this section, assuming all other requirements are met. The remaining cost of the section 1245 components is $500,000 and such amount qualifies for the 30-percent additional first year depreciation deduction pursuant to section 168(k)(8), assuming all other requirements in section 168(k), as in effect on the day before the date of the enactment of the Act, are met. Because the building is not qualified property under section 168(k), as in effect on the day before the date of the enactment of the Act, none of the cost of $7,000,000 for the building is eligible for any additional first year depreciation deduction under section 168(k) and this section or under section 168(k), as in effect on the day before the date of the enactment of the Act.

(d) ***Property described in section 168(k)(2)(B) or (C)*** —

(1) ***In general.*** Property described in section 168(k)(2)(B) or (C) will meet the acquisition requirements of section 168(k)(2)(B)(i)(III) or (k)(2)(C)(i) if the property is acquired by the taxpayer before January 1, 2027, or acquired by the taxpayer pursuant to a written binding contract that is entered into before January 1, 2027. Property described in section 168(k)(2)(B) or (C), including its components, also must meet the acquisition requirement in section 13201(h)(1)(A) of the Act (for further guidance, see paragraph (b)(5) of this section).

(2) ***Definition of binding contract.*** For purposes of this paragraph (d), the rules in paragraph (b)(5)(iii) of this section for a binding contract apply.

(3) ***Self-constructed property*** —

(i) ***In general.*** If a taxpayer manufactures, constructs, or produces property for use by the taxpayer in its trade or business or for its production of income, the acquisition rules in paragraph (d)(1) of this section are treated as met for the property if the taxpayer begins manufacturing, constructing, or producing the property before January 1, 2027. Property that is manufactured, constructed, or produced for the taxpayer by another person under a written binding contract, as defined in paragraph (b)(5)(iii) of this section, that is entered into prior to the manufacture, construction, or production of the property for use by the taxpayer in its trade or business or for its production of income is considered to be manufactured, constructed, or produced by the taxpayer. If a taxpayer enters into a written binding contract, as defined in paragraph (b)(5)(iii) of this section, before January 1, 2027, with another person to manufacture, construct, or produce property described in section 168(k)(2)(B) or (C) and the manufacture, construction, or production of this property begins after December 31, 2026, the acquisition rule in paragraph (d)(1) of this section is met.

(ii) ***When does manufacture, construction, or production begin*** —

(A) ***In general.*** For purposes of this paragraph (d)(3), manufacture, construction, or production of property begins when physical work of a significant nature begins. Physical work does not include preliminary activities such as planning or designing, securing financing, exploring, or researching. The determination of when physical work of a significant nature begins depends on the facts and circumstances. For example, if a retail motor fuels outlet is to be constructed on-site, construction begins when physical work of a significant nature commences at the site; that is, when work begins on the excavation for footings, pouring the pads for the outlet, or the driving of foundation pilings into the ground. Preliminary work, such as clearing a site, test drilling to determine soil condition, or excavation to change the contour of the land (as distinguished from excavation for footings) does not constitute the beginning of construction. However, if a retail motor fuels outlet is to be assembled on-site from modular units manufactured off-site and delivered to the site where the outlet will be used, manufacturing begins when physical work of a significant nature commences at the off-site location.

(B) ***Safe harbor.*** For purposes of paragraph (d)(3)(ii)(A) of this section, a taxpayer may choose to determine when physical work of a significant nature begins in accordance with this paragraph (d)(3)(ii)(B). Physical work of a significant nature will be considered to begin at the time the taxpayer incurs (in the case of an accrual basis taxpayer) or pays (in the case of a cash basis taxpayer) more than 10 percent of the total cost of the property, excluding the cost of any land and preliminary activities such as planning or designing, securing financing, exploring, or researching. When property is manufactured, constructed, or produced for the taxpayer by another person, this safe harbor test must be satisfied by the taxpayer. For example, if a retail motor fuels outlet is to be constructed for an accrual basis taxpayer by another person for the total cost of $200,000, excluding the cost of any land and preliminary activities such as planning or designing, securing financing, exploring, or researching, construction is deemed to begin for purposes of this paragraph (d)(3)(ii)(B) when the taxpayer has incurred more than 10 percent (more than $20,000) of the total cost of the property. A taxpayer chooses to apply this paragraph (d)(3)(ii)(B) by filing a Federal income tax return for the placed-in-service year of the property that determines when physical work of a significant nature begins consistent with this paragraph (d)(3)(ii)(B).

(iii) ***Components of self-constructed property*** —

(A) ***Acquired components.*** If a binding contract, as defined in paragraph (b)(5)(iii) of this section, to acquire a component does not satisfy the requirements of paragraph (d)(1) of this section, the component does not qualify for the additional first year depreciation deduction under this section. A binding contract described in the preceding sentence to acquire one or more components of a larger self-constructed property will not preclude the larger self-constructed property from satisfying the acquisition rules in paragraph (d)(3)(i) of this section. Accordingly, the unadjusted depreciable basis of the larger self-constructed property that is eligible for the additional first year depreciation deduction under this section, assuming all other requirements are met, must not include the unadjusted depreciable basis of any component that does not satisfy the requirements of paragraph (d)(1) of this section. If a binding contract to acquire the component is entered into before January 1, 2027, but the manufacture, construction, or production of the larger

self-constructed property does not begin before January 1, 2027, the component qualifies for the additional first year depreciation deduction under this section, assuming all other requirements are met, but the larger self-constructed property does not.

(B) ***Self-constructed components.*** If the manufacture, construction, or production of a component by the taxpayer does not satisfy the requirements of paragraph (d)(3)(i) of this section, the component does not qualify for the additional first year depreciation deduction under this section. However, if the manufacture, construction, or production of a component does not satisfy the requirements of paragraph (d)(3)(i) of this section, but the manufacture, construction, or production of the larger self-constructed property satisfies the requirements of paragraph (d)(3)(i) of this section, the larger self-constructed property qualifies for the additional first year depreciation deduction under this section, assuming all other requirements are met, even though the component does not qualify for the additional first year depreciation deduction under this section. Accordingly, the unadjusted depreciable basis of the larger self-constructed property that is eligible for the additional first year depreciation deduction under this section, assuming all other requirements are met, must not include the unadjusted depreciable basis of any component that does not qualify for the additional first year depreciation deduction under this section. If the manufacture, construction, or production of a component begins before January 1, 2027, but the manufacture, construction, or production of the larger self-constructed property does not begin before January 1, 2027, the component qualifies for the additional first year depreciation deduction under this section, assuming all other requirements are met, but the larger self-constructed property does not.

(iv) ***Determination of acquisition date for property not acquired pursuant to a written binding contract.*** For purposes of the acquisition rules in paragraph (d)(1) of this section, the following property is acquired by the taxpayer before January 1, 2027, if the taxpayer paid, in the case of a cash basis taxpayer, or incurred, in the case of an accrual basis taxpayer, more than 10 percent of the total cost of the property before January 1, 2027, excluding the cost of any land and preliminary activities such as planning and designing, securing financing, exploring, or researching:

(A) Property that the taxpayer acquires pursuant to a contract that does not meet the definition of a written binding contract in paragraph (b)(5)(iii) of this section; or

(B) Property that is manufactured, constructed, or produced for the taxpayer by another person under a written contract that does not meet the definition of a binding contract in paragraph (b)(5)(iii) of this section, and that is entered into prior to the manufacture, construction, or production of the property for use by the taxpayer in its trade or business or production of income.

(4) ***Examples.*** The application of this paragraph (d) is illustrated by the following examples:

(A) *Example 1.* (*1*) On June 1, 2016, *NN* decided to construct property described in section 168(k)(2)(B) for its own use. However, one of the component parts of the property had to be manufactured by another person for *NN.* On August 15, 2016, *NN* entered into a written binding contract with *OO* to acquire this component part of the property for $100,000. *OO* began manufacturing the component part on November 1, 2016, and delivered the completed component part to *NN* on September 1, 2017, at which time *NN* incurred $100,000 for the cost of the component. The cost of this component part is 9 percent of the total cost of the property to be constructed by *NN. NN* did not incur any other cost of the property to be constructed before *NN* began construction. *NN* began constructing the property described in section 168(k)(2)(B) on

October 15, 2017, and placed in service this property, including all component parts, on November 1, 2020. *NN* uses the safe harbor test in paragraph (d)(3)(ii)(B) of this section to determine when physical work of a significant nature begins for the property described in section 168(k)(2)(B).

(*2*) Because the component part of $100,000 that was manufactured by *OO* for *NN* is not more than 10 percent of the total cost of the property described in section 168(k)(2)(B), physical work of a significant nature for the property described in section 168(k)(2)(B) did not begin before September 28, 2017.

(*3*) Pursuant to paragraphs (b)(5)(iv)(C)(*2*) and (d)(1) of this section, the self-constructed component part of $100,000 manufactured by *OO* for *NN* is not eligible for the 100-percent additional first year depreciation deduction because the manufacturing of such component part began before September 28, 2017. However, pursuant to paragraph (d)(3)(i) of this section, the cost of the property described in section 168(k)(2)(B), excluding the cost of the component part of $100,000 manufactured by *OO* for *NN,* is eligible for the 100-percent additional first year depreciation deduction, assuming all other requirements are met, because construction of the property began after September 27, 2017, and before January 1, 2027, and the property described in section 168(k)(2)(B) was placed in service by *NN* during 2020.

(B) *Example 2.* (*1*) On June 1, 2026, *PP* decided to construct property described in section 168(k)(2)(B) for its own use. However, one of the component parts of the property had to be manufactured by another person for *PP.* On August 15, 2026, *PP* entered into a written binding contract with *XP* to acquire this component part of the property for $100,000. *XP* began manufacturing the component part on September 1, 2026, and delivered the completed component part to *PP* on February 1, 2027, at which time *PP* incurred $100,000 for the cost of the component. The cost of this component part is 9 percent of the total cost of the property to be constructed by *PP. PP* did not incur any other cost of the property to be constructed before *PP* began construction. *PP* began constructing the property described in section 168(k)(2)(B) on January 15, 2027, and placed this property, including all component parts, in service on November 1, 2027.

(*2*) Pursuant to paragraph (d)(3)(iii)(B) of this section, the self-constructed component part of $100,000 manufactured by *XP* for *PP* is eligible for the additional first year depreciation deduction under this section, assuming all other requirements are met, because the manufacturing of the component part began before January 1, 2027, and the property described in section 168(k)(2)(B), the larger self-constructed property, was placed in service by *PP* before January 1, 2028. However, pursuant to paragraph (d)(3)(i) of this section, the cost of the property described in section 168(k)(2)(B), excluding the cost of the self-constructed component part of $100,000 manufactured by *XP* for *PP,* is not eligible for the additional first year depreciation deduction under this section because construction of the property began after December 31, 2026.

(C) *Example 3.* On December 1, 2026, *QQ* entered into a written binding contract, as defined in paragraph (b)(5)(iii) of this section, with *RR* to manufacture an aircraft described in section 168(k)(2)(C) for use in *QQ*'s trade or business. *RR* begins to manufacture the aircraft on February 1, 2027. *QQ* places the aircraft in service on August 1, 2027. Pursuant to paragraph (d)(3)(i) of this section, the aircraft meets the requirements of paragraph (d)(1) of this section because the aircraft was acquired by *QQ* pursuant to a written binding contract entered into before January 1, 2027. Further, the aircraft was placed in service by *QQ* before January 1, 2028. Thus, assuming all other requirements are met, *QQ*'s cost of the aircraft is eligible for the additional first year depreciation deduction under this section.

(e) ***Computation of depreciation deduction for qualified property —***

(1) *Additional first year depreciation deduction* —

(i) ***Allowable taxable year.*** The additional first year depreciation deduction is allowable—

(A) Except as provided in paragraph (e)(1)(i)(B) or (g) of this section, in the taxable year in which the qualified property is placed in service by the taxpayer for use in its trade or business or for the production of income; or

(B) In the taxable year in which the specified plant is planted, or grafted to a plant that has already been planted, by the taxpayer in the ordinary course of the taxpayer's farming business, as defined in section 263A(e)(4), if the taxpayer properly made the election to apply section 168(k)(5) (for further guidance, see paragraph (f) of this section).

(ii) ***Computation.*** Except as provided in paragraph (g)(5) of this section, the allowable additional first year depreciation deduction for qualified property is determined by multiplying the unadjusted depreciable basis, as defined in § 1.168(b)-1(a)(3), of the qualified property by the applicable percentage. Except as provided in paragraph (g)(1) of this section, the additional first year depreciation deduction is not affected by a taxable year of less than 12 months. See paragraph (g)(1) of this section for qualified property placed in service or planted or grafted, as applicable, and disposed of during the same taxable year. See paragraph (g)(5) of this section for qualified property acquired in a like-kind exchange or as a result of an involuntary conversion.

(iii) ***Property described in section 168(k)(2)(B).*** For purposes of paragraph (e)(1)(ii) of this section, the unadjusted depreciable basis, as defined in § 1.168(b)-1(a)(3), of qualified property described in section 168(k)(2)(B) is limited to the property's unadjusted depreciable basis attributable to the property's manufacture, construction, or production before January 1, 2027. The amounts of unadjusted depreciable basis attributable to the property's manufacture, construction, or production before January 1, 2027, are referred to as “progress expenditures.” Rules similar to the rules in section 4.02(1)(b) of Notice 2007-36 (2007-17 I.R.B. 1000) (see § 601.601(d)(2)(ii)(*b*) of this chapter) apply for determining progress expenditures, regardless of whether the property is manufactured, constructed, or produced for the taxpayer by another person under a written binding contract, as defined in paragraph (b)(5)(iii) of this section, or under a written contract that does not meet the definition of a binding contract in paragraph (b)(5)(iii) of this section. The IRS may publish procedural guidance in the Internal Revenue Bulletin (see § 601.601(d)(2)(ii)(*b*) of this chapter) that provides alternative procedures for complying with this paragraph (e)(1)(iii).

(iv) *Alternative minimum tax* —

(A) ***In general.*** The additional first year depreciation deduction is allowable for alternative minimum tax purposes—

(*1*) Except as provided in paragraph (e)(1)(iv)(A)(*2*) of this section, in the taxable year in which the qualified property is placed in service by the taxpayer; or

(*2*) In the taxable year in which a specified plant is planted by the taxpayer, or grafted by the taxpayer to a plant that was previously planted, if the taxpayer properly made the election to apply section 168(k)(5) (for further guidance, see paragraph (f) of this section).

(B) ***Special rules.*** In general, the additional first year depreciation deduction for alternative minimum tax purposes is based on the unadjusted depreciable basis of the property for alternative minimum tax purposes. However, see paragraph (g)(5)(iii)(E) of this section for qualified property acquired in a like-kind exchange or as a result of an involuntary conversion.

(2) ***Otherwise allowable depreciation deduction*** —

(i) ***In general.*** Before determining the amount otherwise allowable as a depreciation deduction for the qualified property for the placed-in-service year and any subsequent taxable year, the taxpayer must determine the remaining adjusted depreciable basis of the qualified property. This remaining adjusted depreciable basis is equal to the unadjusted depreciable basis, as defined in § 1.168(b)-1(a)(3), of the qualified property reduced by the amount of the additional first year depreciation allowed or allowable, whichever is greater. The remaining adjusted depreciable basis of the qualified property is then depreciated using the applicable depreciation provisions under the Internal Revenue Code for the qualified property. The remaining adjusted depreciable basis of the qualified property that is MACRS property is also the basis to which the annual depreciation rates in the optional depreciation tables apply (for further guidance, see section 8 of Rev. Proc. 87-57 (1987-2 C.B. 687) and § 601.601(d)(2)(ii)(*b*) of this chapter). The depreciation deduction allowable for the remaining adjusted depreciable basis of the qualified property is affected by a taxable year of less than 12 months.

(ii) ***Alternative minimum tax.*** For alternative minimum tax purposes, the depreciation deduction allowable for the remaining adjusted depreciable basis of the qualified property is based on the remaining adjusted depreciable basis for alternative minimum tax purposes. The remaining adjusted depreciable basis of the qualified property for alternative minimum tax purposes is depreciated using the same depreciation method, recovery period (or useful life in the case of computer software), and convention that apply to the qualified property for regular tax purposes.

(3) ***Examples.*** This paragraph (e) is illustrated by the following examples:

(i) ***Example 1.*** On March 1, 2023, *SS,* a calendar-year taxpayer, purchased and placed in service qualified property that costs $1 million and is 5-year property under section 168(e). *SS* depreciates its 5-year property placed in service in 2023 using the optional depreciation table that corresponds with the general depreciation system, the 200-percent declining balance method, a 5-year recovery period, and the half-year convention. For 2023, *SS* is allowed an 80-percent additional first year depreciation deduction of $800,000 (the unadjusted depreciable basis of $1 million multiplied by 0.80). Next, *SS* must reduce the unadjusted depreciable basis of $1 million by the additional first year depreciation deduction of $800,000 to determine the remaining adjusted depreciable basis of $200,000. Then, *SS*' depreciation deduction allowable in 2023 for the remaining adjusted depreciable basis of $200,000 is $40,000 (the remaining adjusted depreciable basis of $200,000 multiplied by the annual depreciation rate of 0.20 for recovery year 1).

(ii) ***Example 2.*** On June 1, 2023, *TT,* a calendar-year taxpayer, purchased and placed in service qualified property that costs $1,500,000. The property qualifies for the expensing election under section 179 and is 5-year property under section 168(e). *TT* did not purchase any other section 179 property in 2023. *TT* makes the election under section 179 for the property and depreciates its 5-year property placed in service in 2023 using the optional depreciation table that corresponds with the general depreciation system, the 200-percent declining balance method, a

5-year recovery period, and the half-year convention. Assume the maximum section 179 deduction for 2023 is $1,000,000. For 2023, *TT* is first allowed a $1,000,000 deduction under section 179. Next, *TT* must reduce the cost of $1,500,000 by the section 179 deduction of $1,000,000 to determine the unadjusted depreciable basis of $500,000. Then, for 2023, *TT* is allowed an 80-percent additional first year depreciation deduction of $400,000 (the unadjusted depreciable basis of $500,000 multiplied by 0.80). Next, *TT* must reduce the unadjusted depreciable basis of $500,000 by the additional first year depreciation deduction of $400,000 to determine the remaining adjusted depreciable basis of $100,000. Then, *TT*'s depreciation deduction allowable in 2023 for the remaining adjusted depreciable basis of $100,000 is $20,000 (the remaining adjusted depreciable basis of $100,000 multiplied by the annual depreciation rate of 0.20 for recovery year 1).

(f) ***Elections under section 168(k)*** —

(1) ***Election not to deduct additional first year depreciation*** —

(i) ***In general.*** A taxpayer may make an election not to deduct the additional first year depreciation for any class of property that is qualified property placed in service during the taxable year. If this election is made, the election applies to all qualified property that is in the same class of property and placed in service in the same taxable year, and no additional first year depreciation deduction is allowable for the property placed in service during the taxable year in the class of property, except as provided in § 1.743-1(j)(4)(i)(B)(*1*).

(ii) ***Definition of class of property.*** For purposes of this paragraph (f)(1), the term *class of property* means:

(A) Except for the property described in paragraphs (f)(1)(ii)(B) and (D), and (f)(2) of this section, each class of property described in section 168(e) (for example, 5-year property);

(B) Water utility property as defined in section 168(e)(5) and depreciated under section 168;

(C) Computer software as defined in, and depreciated under, section 167(f)(1) and § 1.167(a)-14(b);

(D) Qualified improvement property as defined in § 1.168(b)-1(a)(5)(i)(C) and (a)(5)(ii) (acquired by the taxpayer after September 27, 2017, and placed in service by the taxpayer after September 27, 2017, and before January 1, 2018), and depreciated under section 168;

(E) Each separate production, as defined in § 1.181-3(b), of a qualified film or television production;

(F) Each separate production, as defined in section 181(e)(2), of a qualified live theatrical production; or

(G) Each partner's basis adjustment in partnership assets under section 743(b) for each class of property described in paragraphs (f)(1)(ii)(A) through (F), and (f)(2) of this section (for further guidance, see § 1.743-1(j)(4)(i)(B)(*1*)).

(iii) ***Time and manner for making election*** —

(A) ***Time for making election.*** Except as provided in paragraph (f)(6) of this section, any election specified in paragraph (f)(1)(i) of this section must be made by the due date, including extensions, of the Federal tax return for the taxable year in which the qualified property is placed in service by the taxpayer.

(B) ***Manner of making election.*** Except as provided in paragraph (f)(6) of this section, any election specified in paragraph (f)(1)(i) of this section must be made in the manner prescribed on Form 4562, "Depreciation and Amortization," and its instructions. The election is made separately by each person owning qualified property (for example, for each member of a consolidated group by the common parent of the group, by the partnership (including a lower-tier partnership; also including basis adjustments in the partnership assets under section 743(b)), or by the S corporation). If Form 4562 is revised or renumbered, any reference in this section to that form shall be treated as a reference to the revised or renumbered form.

(iv) ***Failure to make election.*** If a taxpayer does not make the election specified in paragraph (f)(1)(i) of this section within the time and in the manner prescribed in paragraph (f)(1)(iii) of this section, the amount of depreciation allowable for that property under section 167 or 168, as applicable, must be determined for the placed-in-service year and for all subsequent taxable years by taking into account the additional first year depreciation deduction. Thus, any election specified in paragraph (f)(1)(i) of this section shall not be made by the taxpayer in any other manner (for example, the election cannot be made through a request under section 446(e) to change the taxpayer's method of accounting).

(2) ***Election to apply section 168(k)(5) for specified plants*** —

(i) ***In general.*** A taxpayer may make an election to apply section 168(k)(5) to one or more specified plants that are planted, or grafted to a plant that has already been planted, by the taxpayer in the ordinary course of the taxpayer's farming business, as defined in section 263A(e)(4). If this election is made for a specified plant, such plant is not treated as qualified property under section 168(k) and this section in its placed-in-service year.

(ii) ***Time and manner for making election*** —

(A) ***Time for making election.*** Except as provided in paragraph (f)(6) of this section, any election specified in paragraph (f)(2)(i) of this section must be made by the due date, including extensions, of the Federal tax return for the taxable year in which the taxpayer planted or grafted the specified plant to which the election applies.

(B) ***Manner of making election.*** Except as provided in paragraph (f)(6) of this section, any election specified in paragraph (f)(2)(i) of this section must be made in the manner prescribed on Form 4562, "Depreciation and Amortization," and its instructions. The election is made separately by each person owning specified plants (for example, for each member of a consolidated group by the common parent of the group, by the partnership (including a lower-tier partnership), or by the S corporation). If Form 4562 is revised or renumbered, any reference in this section to that form shall be treated as a reference to the revised or renumbered form.

(iii) ***Failure to make election.*** If a taxpayer does not make the election specified in paragraph (f)(2)(i) of this section for a specified plant within the time and in the manner prescribed in paragraph (f)(2)(ii) of this section, the specified plant is treated as qualified property under section 168(k), assuming all requirements are met, in the taxable year in which such plant is placed in service

by the taxpayer. Thus, any election specified in paragraph (f)(2)(i) of this section shall not be made by the taxpayer in any other manner (for example, the election cannot be made through a request under section 446(e) to change the taxpayer's method of accounting).

(3) ***Election for qualified property placed in service during the 2017 taxable year*** —

(i) ***In general.*** A taxpayer may make an election to deduct 50 percent, instead of 100 percent, additional first year depreciation for all qualified property acquired after September 27, 2017, by the taxpayer and placed in service by the taxpayer during its taxable year that includes September 28, 2017. If a taxpayer makes an election to apply section 168(k)(5) for its taxable year that includes September 28, 2017, the taxpayer also may make an election to deduct 50 percent, instead of 100 percent, additional first year depreciation for all specified plants that are planted, or grafted to a plant that has already been planted, after September 27, 2017, by the taxpayer in the ordinary course of the taxpayer's farming business during such taxable year.

(ii) ***Time and manner for making election*** —

(A) ***Time for making election.*** Except as provided in paragraph (f)(6) of this section, any election specified in paragraph (f)(3)(i) of this section must be made by the due date, including extensions, of the Federal tax return for the taxpayer's taxable year that includes September 28, 2017.

(B) ***Manner of making election.*** Except as provided in paragraph (f)(6) of this section, any election specified in paragraph (f)(3)(i) of this section must be made in the manner prescribed on the 2017 Form 4562, "Depreciation and Amortization," and its instructions. The election is made separately by each person owning qualified property (for example, for each member of a consolidated group by the common parent of the group, by the partnership (including a lower-tier partnership), or by the S corporation).

(iii) ***Failure to make election.*** If a taxpayer does not make the election specified in paragraph (f)(3)(i) of this section within the time and in the manner prescribed in paragraph (f)(3)(ii) of this section, the amount of depreciation allowable for qualified property under section 167 or 168, as applicable, acquired and placed in service, or planted or grafted, as applicable, by the taxpayer after September 27, 2017, must be determined for the taxable year that includes September 28, 2017, and for all subsequent taxable years by taking into account the 100-percent additional first year depreciation deduction, unless the taxpayer makes the election specified in paragraph (f)(1)(i) of this section within the time and in the manner prescribed in paragraph (f)(1)(iii) of this section for the class of property in which the qualified property is included. Thus, any election specified in paragraph (f)(3)(i) of this section shall not be made by the taxpayer in any other manner (for example, the election cannot be made through a request under section 446(e) to change the taxpayer's method of accounting).

(4) ***Alternative minimum tax.*** If a taxpayer makes an election specified in paragraph (f)(1) of this section for a class of property or in paragraph (f)(2) of this section for a specified plant, the depreciation adjustments under section 56 and the regulations in this part under section 56 do not apply to the property or specified plant, as applicable, to which that election applies for purposes of computing the taxpayer's alternative minimum taxable income. If a taxpayer makes an election specified in paragraph (f)(3) of this section for all qualified property, see paragraphs (e)(1)(iv) and (e)(2)(ii) of this section.

(5) ***Revocation of election*** -(i) *In general.* Except as provided in paragraphs (f)(5)(ii) and (f)(6) of this section, an election specified in this paragraph (f), once made, may be revoked only by filing a request for a private letter ruling and obtaining the Commissioner of Internal Revenue's written consent to revoke the election. The Commissioner may grant a request to revoke the election if the taxpayer acted reasonably and in good faith, and the revocation will not prejudice the interests of the Government. See generally § 301.9100-3 of this chapter. An election specified in this paragraph (f) may not be revoked through a request under section 446(e) to change the taxpayer's method of accounting.

(ii) ***Automatic 6-month extension.*** If a taxpayer made an election specified in this paragraph (f), an automatic extension of 6 months from the due date of the taxpayer's Federal tax return, excluding extensions, for the placed-in-service year or the taxable year in which the specified plant is planted or grafted, as applicable, is granted to revoke that election, provided the taxpayer timely filed the taxpayer's Federal tax return for the placed-in-service year or the taxable year in which the specified plant is planted or grafted, as applicable, and, within this 6-month extension period, the taxpayer, and all taxpayers whose tax liability would be affected by the election, file an amended Federal tax return for the placed-in-service year or the taxable year in which the specified plant is planted or grafted, as applicable, in a manner that is consistent with the revocation of the election.

(6) ***Special rules for 2016 and 2017 returns.*** For an election specified in this paragraph (f) for qualified property placed in service, or for a specified plant that is planted, or grafted to a plant that has already been planted, by the taxpayer during its taxable year that included September 28, 2017, the taxpayer should refer to Rev. Proc. 2019-33 (2019-34 I.R.B. 662) (see § 601.601(d)(2)(ii)(*b*) of this chapter) for the time and manner of making the election on the 2016 or 2017 Federal tax return.

(7) ***Additional procedural guidance.*** The IRS may publish procedural guidance in the Internal Revenue Bulletin (see § 601.601(d)(2)(ii)(*b*) of this chapter) that provides alternative procedures for complying with paragraph (f)(1)(iii), (f)(1)(iv), (f)(2)(ii), (f)(2)(iii), (f)(3)(ii), (f)(3)(iii), or (f)(5)(i) of this section.

(g) ***Special rules*** —

(1) ***Property placed in service and disposed of in the same taxable year*** —

(i) ***In general.*** Except as provided in paragraphs (g)(1)(ii) and (iii) of this section and by the application of paragraph (b)(3)(iii)(B)(*4*) of this section, the additional first year depreciation deduction is not allowed for qualified property placed in service or planted or grafted, as applicable, and disposed of during the same taxable year. If a partnership interest is acquired and disposed of during the same taxable year, the additional first year depreciation deduction is not allowed for any section 743(b) adjustment arising from the initial acquisition. Also, if qualified property is placed in service and disposed of during the same taxable year and then reacquired and again placed in service in a subsequent taxable year, the additional first year depreciation deduction is not allowable for the property in the subsequent taxable year, except as otherwise provided by the application of paragraph (b)(3)(iii)(B) of this section.

(ii) ***Technical termination of a partnership.*** In the case of a technical termination of a partnership under section 708(b)(1)(B) in a taxable year beginning before January 1, 2018, the additional first year depreciation deduction is allowable for any qualified property placed in service or planted or grafted, as applicable, by the terminated partnership during the taxable year of termination and contributed by the terminated partnership to the new partnership. The

allowable additional first year depreciation deduction for the qualified property shall not be claimed by the terminated partnership but instead shall be claimed by the new partnership for the new partnership's taxable year in which the qualified property was contributed by the terminated partnership to the new partnership. However, if qualified property is both placed in service or planted or grafted, as applicable, and contributed to a new partnership in a transaction described in section 708(b)(1)(B) by the terminated partnership during the taxable year of termination, and if such property is disposed of by the new partnership in the same taxable year the new partnership received such property from the terminated partnership, then no additional first year depreciation deduction is allowable to either partnership.

(iii) ***Section 168(i)(7) transactions.*** If any qualified property is transferred in a transaction described in section 168(i)(7) in the same taxable year that the qualified property is placed in service or planted or grafted, as applicable, by the transferor, the additional first year depreciation deduction is allowable for the qualified property. If a partnership interest is purchased and transferred in a transaction described in section 168(i)(7) in the same taxable year, the additional first year depreciation deduction is allowable for any section 743(b) adjustment that arises from the initial acquisition with respect to qualified property held by the partnership, provided the requirements of paragraph (b)(3)(iv)(D) of this section and all other requirements of section 168(k) and this section are satisfied. The allowable additional first year depreciation deduction for the qualified property for the transferor's taxable year in which the property is placed in service or planted or grafted, as applicable, is allocated between the transferor and the transferee on a monthly basis. The allowable additional first year depreciation deduction for a section 743(b) adjustment with respect to qualified property held by the partnership is allocated between the transferor and the transferee on a monthly basis notwithstanding that under § 1.743-1(f) a transferee's section 743(b) adjustment is determined without regard to a transferors section 743(b) adjustment. These allocations shall be made in accordance with the rules in § 1.168(d)-1(b)(7)(ii) for allocating the depreciation deduction between the transferor and the transferee. However, solely for purposes of this section, if the qualified property is transferred in a section 721(a) transaction to a partnership that has as a partner a person, other than the transferor, who previously had a depreciable interest in the qualified property, in the same taxable year that the qualified property is acquired or planted or grafted, as applicable, by the transferor, the qualified property is deemed to be placed in service or planted or grafted, as applicable, by the transferor during that taxable year, and the allowable additional first year depreciation deduction is allocated entirely to the transferor and not to the partnership. Additionally, if qualified property is both placed in service or planted or grafted, as applicable, and transferred in a transaction described in section 168(i)(7) by the transferor during the same taxable year, and if such property is disposed of by the transferee, other than by a transaction described in section 168(i)(7), during the same taxable year the transferee received such property from the transferor, then no additional first year depreciation deduction is allowable to either party.

(iv) ***Examples.*** The application of this paragraph (g)(1) is illustrated by the following examples:

(A) ***Example 1. UU*** and *VV* are equal partners in *Partnership JL,* a general partnership. *Partnership JL* is a calendar-year taxpayer. On October 1, 2017, *Partnership JL* purchased and placed in service qualified property at a cost of $30,000. On November 1, 2017, *UU* sells its entire 50 percent interest to *WW* in a transfer that terminates the partnership under section 708(b)(1)(B). As a result, terminated *Partnership JL* is deemed to have contributed the qualified property to new *Partnership JL.* Pursuant to paragraph (g)(1)(ii)

of this section, new *Partnership JL,* not terminated *Partnership JL,* is eligible to claim the 100-percent additional first year depreciation deduction allowable for the qualified property for the taxable year 2017, assuming all other requirements are met.

(B) ***Example 2.*** On January 5, 2018, *XX* purchased and placed in service qualified property for a total amount of $9,000. On August 20, 2018, *XX* transferred this qualified property to *Partnership BC* in a transaction described in section 721(a). No other partner of *Partnership BC* has ever had a depreciable interest in the qualified property. *XX* and *Partnership BC* are calendar-year taxpayers. Because the transaction between *XX* and *Partnership BC* is a transaction described in section 168(i)(7), pursuant to paragraph (g)(1)(iii) of this section, the 100-percent additional first year depreciation deduction allowable for the qualified property is allocated between *XX* and *Partnership BC* in accordance with the rules in § 1.168(d)-1(b)(7)(ii) for allocating the depreciation deduction between the transferor and the transferee. Accordingly, the 100-percent additional first year depreciation deduction allowable of $9,000 for the qualified property for 2018 is allocated between *XX* and *Partnership BC* based on the number of months that *XX* and *Partnership BC* held the qualified property in service during 2018. Thus, because the qualified property was held in service by *XX* for 7 of 12 months, which includes the month in which *XX* placed the qualified property in service but does not include the month in which the qualified property was transferred, *XX* is allocated $5,250 ($^{7}/_{12}$ × $9,000 additional first year depreciation deduction). *Partnership BC* is allocated $3,750, the remaining $^{5}/_{12}$ of the $9,000 additional first year depreciation deduction allowable for the qualified property.

(2) ***Redetermination of basis.*** If the unadjusted depreciable basis, as defined in § 1.168(b)-1(a)(3), of qualified property is redetermined (for example, due to contingent purchase price or discharge of indebtedness) before January 1, 2027, or in the case of property described in section 168(k)(2)(B) or (C), is redetermined before January 1, 2028, the additional first year depreciation deduction allowable for the qualified property is redetermined as follows:

(i) ***Increase in basis.*** For the taxable year in which an increase in basis of qualified property occurs, the taxpayer shall claim an additional first year depreciation deduction for qualified property by multiplying the amount of the increase in basis for this property by the applicable percentage for the taxable year in which the underlying property was placed in service by the taxpayer. For purposes of this paragraph (g)(2)(i), the additional first year depreciation deduction applies to the increase in basis only if the underlying property is qualified property. To determine the amount otherwise allowable as a depreciation deduction for the increase in basis of qualified property, the amount of the increase in basis of the qualified property must be reduced by the additional first year depreciation deduction allowed or allowable, whichever is greater, for the increase in basis and the remaining increase in basis of—

(A) Qualified property, except for computer software described in paragraph (b)(2)(i)(B) of this section, a qualified film or television production described in paragraph (b)(2)(i)(E) of this section, or a qualified live theatrical production described in paragraph (b)(2)(i)(F) of this section, is depreciated over the recovery period of the qualified property remaining as of the beginning of the taxable year in which the increase in basis occurs, and using the same depreciation method and convention applicable to the qualified property that applies for the taxable year in which the increase in basis occurs; and

(B) Computer software, as defined in paragraph (b)(2)(i)(B) of this section, that is qualified property is depreciated ratably over the remainder of the 36-month period, the useful life under section 167(f)(1), as of the beginning of the first day of the month in which the increase in basis occurs.

(ii) ***Decrease in basis.*** For the taxable year in which a decrease in basis of qualified property occurs, the taxpayer shall reduce the total amount otherwise allowable as a depreciation deduction for all of the taxpayer's depreciable property by the excess additional first year depreciation deduction previously claimed for the qualified property. If, for such taxable year, the excess additional first year depreciation deduction exceeds the total amount otherwise allowable as a depreciation deduction for all of the taxpayer's depreciable property, the taxpayer shall take into account a negative depreciation deduction in computing taxable income. The excess additional first year depreciation deduction for qualified property is determined by multiplying the amount of the decrease in basis for this property by the applicable percentage for the taxable year in which the underlying property was placed in service by the taxpayer. For purposes of this paragraph (g)(2)(ii), the additional first year depreciation deduction applies to the decrease in basis only if the underlying property is qualified property. Also, if the taxpayer establishes by adequate records or other sufficient evidence that the taxpayer claimed less than the additional first year depreciation deduction allowable for the qualified property before the decrease in basis, or if the taxpayer claimed more than the additional first year depreciation deduction allowable for the qualified property before the decrease in basis, the excess additional first year depreciation deduction is determined by multiplying the amount of the decrease in basis by the additional first year depreciation deduction percentage actually claimed by the taxpayer for the qualified property before the decrease in basis. To determine the amount to reduce the total amount otherwise allowable as a depreciation deduction for all of the taxpayer's depreciable property for the excess depreciation previously claimed, other than the additional first year depreciation deduction, resulting from the decrease in basis of the qualified property, the amount of the decrease in basis of the qualified property must be adjusted by the excess additional first year depreciation deduction that reduced the total amount otherwise allowable as a depreciation deduction, as determined under this paragraph (g)(2)(ii), and the remaining decrease in basis of—

(A) Qualified property, except for computer software described in paragraph (b)(2)(i)(B) of this section, a qualified film or television production described in paragraph (b)(2)(i)(E) of this section, or a qualified live theatrical production described in paragraph (b)(2)(i)(F) of this section, reduces the amount otherwise allowable as a depreciation deduction over the recovery period of the qualified property remaining as of the beginning of the taxable year in which the decrease in basis occurs, and using the same depreciation method and convention of the qualified property that applies in the taxable year in which the decrease in basis occurs. If, for any taxable year, the reduction to the amount otherwise allowable as a depreciation deduction, as determined under this paragraph (g)(2)(ii)(A), exceeds the total amount otherwise allowable as a depreciation deduction for all of the taxpayer's depreciable property, the taxpayer shall take into account a negative depreciation deduction in computing taxable income; and

(B) Computer software, as defined in paragraph (b)(2)(i)(B) of this section, that is qualified property reduces the amount otherwise allowable as a depreciation deduction over the remainder of the 36-month period, the useful life under section 167(f)(1), as of the beginning of the first day of the month in which the decrease in basis occurs. If, for any

taxable year, the reduction to the amount otherwise allowable as a depreciation deduction, as determined under this paragraph (g)(2)(ii)(B), exceeds the total amount otherwise allowable as a depreciation deduction for all of the taxpayer's depreciable property, the taxpayer shall take into account a negative depreciation deduction in computing taxable income.

(iii) ***Definitions.*** Except as otherwise expressly provided by the Internal Revenue Code (for example, section 1017(a)), the regulations under the Internal Revenue Code, or other guidance published in the Internal Revenue Bulletin for purposes of this paragraph (g)(2)—

(A) An increase in basis occurs in the taxable year an amount is taken into account under section 461; and

(B) A decrease in basis occurs in the taxable year an amount would be taken into account under section 451.

(iv) ***Examples.*** The application of this paragraph (g)(2) is illustrated by the following examples:

(A) ***Example 1.***

(*1*) On May 15, 2023, *YY,* a cash-basis taxpayer, purchased and placed in service qualified property that is 5-year property at a cost of $200,000. In addition to the $200,000, *YY* agrees to pay the seller 25 percent of the gross profits from the operation of the property in 2023. On May 15, 2024, *YY* paid to the seller an additional $10,000. *YY* depreciates the 5-year property placed in service in 2023 using the optional depreciation table that corresponds with the general depreciation system, the 200-percent declining balance method, a 5-year recovery period, and the half-year convention.

(*2*) For 2023, *YY* is allowed an 80-percent additional first year depreciation deduction of $160,000 (the unadjusted depreciable basis of $200,000 multiplied by 0.80). In addition, *YY*'s depreciation deduction for 2023 for the remaining adjusted depreciable basis of $40,000 (the unadjusted depreciable basis of $200,000 reduced by the additional first year depreciation deduction of $160,000) is $8,000 (the remaining adjusted depreciable basis of $40,000 multiplied by the annual depreciation rate of 0.20 for recovery year 1).

(*3*) For 2024, *YY*'s depreciation deduction for the remaining adjusted depreciable basis of $40,000 is $12,800 (the remaining adjusted depreciable basis of $40,000 multiplied by the annual depreciation rate of 0.32 for recovery year 2). In addition, pursuant to paragraph (g)(2)(i) of this section, *YY* is allowed an additional first year depreciation deduction for 2024 for the $10,000 increase in basis of the qualified property. Consequently, *YY* is allowed an additional first year depreciation deduction of $8,000 (the increase in basis of $10,000 multiplied by 0.80, the applicable percentage for 2023). Also, *YY* is allowed a depreciation deduction for 2024 attributable to the remaining increase in basis of $2,000 (the increase in basis of $10,000 reduced by the additional first year depreciation deduction of $8,000). The depreciation deduction allowable for 2024 attributable to the remaining increase in basis of $2,000 is $889 (the remaining increase in basis of $2,000 multiplied by 0.4444, which is equal to 1/remaining recovery period of 4.5 years at January 1, 2024, multiplied by 2). Accordingly, for 2024, *YY*'s total depreciation deduction allowable for the qualified property is $21,689 ($12,800 plus $8,000 plus $889).

(B) *Example 2.*

(*1*) On May 15, 2023, *ZZ,* a calendar-year taxpayer, purchased and placed in service qualified property that is 5-year property at a cost of $400,000. To purchase the property, *ZZ* borrowed $250,000 from Bank1. On May 15, 2024, Bank1 forgives $50,000 of the indebtedness. *ZZ* makes the election provided in section 108(b)(5) to apply any portion of the reduction under section 1017 to the basis of the depreciable property of the taxpayer. *ZZ* depreciates the 5-year property placed in service in 2023 using the optional depreciation table that corresponds with the general depreciation system, the 200-percent declining balance method, a 5-year recovery period, and the half-year convention.

(*2*) For 2023, *ZZ* is allowed an 80-percent additional first year depreciation deduction of $320,000 (the unadjusted depreciable basis of $400,000 multiplied by 0.80). In addition, *ZZ*'s depreciation deduction allowable for 2023 for the remaining adjusted depreciable basis of $80,000 (the unadjusted depreciable basis of $400,000 reduced by the additional first year depreciation deduction of $320,000) is $16,000 (the remaining adjusted depreciable basis of $80,000 multiplied by the annual depreciation rate of 0.20 for recovery year 1).

(*3*) For 2024, *ZZ*'s deduction for the remaining adjusted depreciable basis of $80,000 is $25,600 (the remaining adjusted depreciable basis of $80,000 multiplied by the annual depreciation rate 0.32 for recovery year 2). Although Bank1 forgave the indebtedness in 2024, the basis of the property is reduced on January 1, 2025, pursuant to sections 108(b)(5) and 1017(a) under which basis is reduced at the beginning of the taxable year following the taxable year in which the discharge of indebtedness occurs.

(*4*) For 2025, *ZZ*'s deduction for the remaining adjusted depreciable basis of $80,000 is $15,360 (the remaining adjusted depreciable basis of $80,000 multiplied by the annual depreciation rate 0.192 for recovery year 3). However, pursuant to paragraph (g)(2)(ii) of this section, *ZZ* must reduce the amount otherwise allowable as a depreciation deduction for 2025 by the excess depreciation previously claimed for the $50,000 decrease in basis of the qualified property. Consequently, *ZZ* must reduce the amount of depreciation otherwise allowable for 2025 by the excess additional first year depreciation of $40,000 (the decrease in basis of $50,000 multiplied by 0.80, the applicable percentage for 2023). Also, *ZZ* must reduce the amount of depreciation otherwise allowable for 2025 by the excess depreciation attributable to the remaining decrease in basis of $10,000 (the decrease in basis of $50,000 reduced by the excess additional first year depreciation of $40,000). The reduction in the amount of depreciation otherwise allowable for 2025 for the remaining decrease in basis of $10,000 is $5,714 (the remaining decrease in basis of $10,000 multiplied by 0.5714, which is equal to (1/remaining recovery period of 3.5 years at January 1, 2025, multiplied by 2). Accordingly, assuming the qualified property is the only depreciable property owned by *ZZ,* for 2025, *ZZ* has a negative depreciation deduction for the qualified property of $30,354 ($15,360 minus $40,000 minus $5,714).

(3) ***Sections 1245 and 1250 depreciation recapture.*** For purposes of section 1245 and §§ 1.1245-1 through -6, the additional first year depreciation deduction is an amount allowed or allowable for depreciation. Further, for purposes of section 1250(b) and § 1.1250-2, the additional first year depreciation deduction is not a straight line method.

(4) ***Coordination with section 169.*** The additional first year depreciation deduction is allowable in the placed-in-service year of a certified pollution control facility, as defined in § 1.169-2(a), that is qualified property even if the taxpayer makes the election to amortize the certified pollution control facility under section 169 and §§ 1.169-1 through -4 in the certified pollution control facility's placed-in-service year.

(5) ***Like-kind exchanges and involuntary conversions*** —

(i) ***Scope.*** The rules of this paragraph (g)(5) apply to replacement MACRS property or replacement computer software that is qualified property at the time of replacement provided the time of replacement is after September 27, 2017, and before January 1, 2027; or, in the case of replacement MACRS property or replacement computer software that is qualified property described in section 168(k)(2)(B) or (C), the time of replacement is after September 27, 2017, and before January 1, 2028.

(ii) ***Definitions.*** For purposes of this paragraph (g)(5), the following definitions apply:

(A) ***Replacement MACRS property*** has the same meaning as that term is defined in § 1.168(i)-6(b)(1).

(B) ***Relinquished MACRS property*** has the same meaning as that term is defined in § 1.168(i)-6(b)(2).

(C) ***Replacement computer software*** is computer software, as defined in paragraph (b)(2)(i)(B) of this section, in the hands of the acquiring taxpayer that is acquired for other computer software in a like-kind exchange or in an involuntary conversion.

(D) ***Relinquished computer software*** is computer software that is transferred by the taxpayer in a like-kind exchange or in an involuntary conversion.

(E) ***Time of disposition*** has the same meaning as that term is defined in § 1.168(i)-6(b)(3) for relinquished MACRS property. For relinquished computer software, *time of disposition* is when the disposition of the relinquished computer software takes place under the convention determined under § 1.167(a)-14(b).

(F) Except as provided in paragraph (g)(5)(iv) of this section, the *time of replacement* has the same meaning as that term is defined in § 1.168(i)-6(b)(4) for replacement MACRS property. For replacement computer software, the *time of replacement* is, except as provided in paragraph (g)(5)(iv) of this section, the later of—

(*1*) When the replacement computer software is placed in service under the convention determined under § 1.167(a)-14(b); or

(*2*) The time of disposition of the relinquished property.

(G) ***Exchanged basis*** has the same meaning as that term is defined in § 1.168(i)-6(b)(7) for MACRS property, as defined in § 1.168(b)-1(a)(2). For computer software, the *exchanged basis* is determined after the amortization deductions for the year of disposition are determined under § 1.167(a)-14(b) and is the lesser of—

(1) The basis in the replacement computer software, as determined under section 1031(d) and § 1.1031(d)-1, § 1.1031(d)-2, § 1.1031(j)-1, or § 1.1031(k)-1; or section 1033(b) and § 1.1033(b)-1; or

(2) The adjusted depreciable basis of the relinquished computer software.

(H) ***Excess basis*** has the same meaning as that term is defined in § 1.168(i)-6(b)(8) for replacement MACRS property. For replacement computer software, the *excess basis* is any excess of the basis in the replacement computer software, as determined under section 1031(d) and § 1.1031(d)-1, § 1.1031(d)-2, § 1.1031(j)-1, or § 1.1031(k)-1; or section 1033(b) and § 1.1033(b)-1, over the exchanged basis as determined under paragraph (g)(5)(ii)(G) of this section.

(I) ***Remaining exchanged basis*** is the exchanged basis as determined under paragraph (g)(5)(ii)(G) of this section reduced by—

(1) The percentage of such basis attributable to the taxpayer's use of property for the taxable year other than in the taxpayer's trade or business or for the production of income; and

(2) Any adjustments to basis provided by other provisions of the Code and the regulations under the Code (including section 1016(a)(2) and (3)) for periods prior to the disposition of the relinquished property.

(J) ***Remaining excess basis*** is the excess basis as determined under paragraph (g)(5)(ii)(H) of this section reduced by—

(1) The percentage of such basis attributable to the taxpayer's use of property for the taxable year other than in the taxpayer's trade or business or for the production of income;

(2) Any portion of the basis the taxpayer properly elects to treat as an expense under section 179 or 179C; and

(3) Any adjustments to basis provided by other provisions of the Code and the regulations under the Code.

(K) ***Year of disposition*** has the same meaning as that term is defined in § 1.168(i)-6(b)(5).

(L) ***Year of replacement*** has the same meaning as that term is defined in § 1.168(i)-6(b)(6).

(M) ***Like-kind exchange*** has the same meaning as that term is defined in § 1.168(i)-6(b)(11).

(N) ***Involuntary conversion*** has the same meaning as that term is defined in § 1.168(i)-6(b)(12).

(iii) ***Computation*** —

(A) ***In general.*** If the replacement MACRS property or the replacement computer software, as applicable, meets the original use requirement in paragraph (b)(3)(ii) of this section and all other requirements of section 168(k) and this section, the remaining exchanged basis for the year of replacement and the remaining excess basis, if any, for the year of replacement for the replacement MACRS property or the replacement computer software, as applicable, are eligible for the additional first year depreciation deduction under this section. If the replacement MACRS property or the replacement computer software, as

applicable, meets the used property acquisition requirements in paragraph (b)(3)(iii) of this section and all other requirements of section 168(k) and this section, only the remaining excess basis for the year of replacement for the replacement MACRS property or the replacement computer software, as applicable, is eligible for the additional first year depreciation deduction under this section. See paragraph (b)(3)(iii)(A)(*3*) of this section. The additional first year depreciation deduction applies to the remaining exchanged basis and any remaining excess basis, as applicable, of the replacement MACRS property or the replacement computer software, as applicable, if the time of replacement is after September 27, 2017, and before January 1, 2027; or, in the case of replacement MACRS property or replacement computer software, as applicable, described in section 168(k)(2)(B) or (C), the time of replacement is after September 27, 2017, and before January 1, 2028. The additional first year depreciation deduction is computed separately for the remaining exchanged basis and any remaining excess basis, as applicable.

(B) ***Year of disposition and year of replacement.*** The additional first year depreciation deduction is allowable for the replacement MACRS property or replacement computer software in the year of replacement. However, the additional first year depreciation deduction is not allowable for the relinquished MACRS property or the relinquished computer software, as applicable, if the relinquished MACRS property or the relinquished computer software, as applicable, is placed in service and disposed of in a like-kind exchange or in an involuntary conversion in the same taxable year.

(C) ***Property described in section 168(k)(2)(B).*** For purposes of paragraph (g)(5)(iii)(A) of this section, the total of the remaining exchanged basis and the remaining excess basis, if any, of the replacement MACRS property that is qualified property described in section 168(k)(2)(B) and meets the original use requirement in paragraph (b)(3)(ii) of this section is limited to the total of the property's remaining exchanged basis and remaining excess basis, if any, attributable to the property's manufacture, construction, or production after September 27, 2017, and before January 1, 2027. For purposes of paragraph (g)(5)(iii)(A) of this section, the remaining excess basis, if any, of the replacement MACRS property that is qualified property described in section 168(k)(2)(B) and meets the used property acquisition requirements in paragraph (b)(3)(iii) of this section is limited to the property's remaining excess basis, if any, attributable to the property's manufacture, construction, or production after September 27, 2017, and before January 1, 2027.

(D) ***Effect of § 1.168(i)-6(i)(1) election.*** If a taxpayer properly makes the election under § 1.168(i)-6(i)(1) not to apply § 1.168(i)-6 for any MACRS property, as defined in § 1.168(b)-1(a)(2), involved in a like-kind exchange or involuntary conversion, then:

(*1*) If the replacement MACRS property meets the original use requirement in paragraph (b)(3)(ii) of this section and all other requirements of section 168(k) and this section, the total of the exchanged basis, as defined in § 1.168(i)-6(b)(7), and the excess basis, as defined in § 1.168(i)-6(b)(8), if any, in the replacement MACRS property is eligible for the additional first year depreciation deduction under this section; or

(*2*) If the replacement MACRS property meets the used property acquisition requirements in paragraph (b)(3)(iii) of this section and all other requirements of section 168(k) and this section, only the excess basis, as defined in § 1.168(i)-6(b)(8), if any, in the replacement MACRS property is eligible for the additional first year depreciation deduction under this section.

(E) ***Alternative minimum tax.*** The additional first year depreciation deduction is allowed for alternative minimum tax purposes for the year of replacement of replacement MACRS property or replacement computer software, as applicable, that is qualified property. If the replacement MACRS property or the replacement computer software, as applicable, meets the original use requirement in paragraph (b)(3)(ii) of this section and all other requirements of section 168(k) and this section, the additional first year depreciation deduction for alternative minimum tax purposes is based on the remaining exchanged basis and the remaining excess basis, if any, of the replacement MACRS property or the replacement computer software, as applicable, for alternative minimum tax purposes. If the replacement MACRS property or the replacement computer software, as applicable, meets the used property acquisition requirements in paragraph (b)(3)(iii) of this section and all other requirements of section 168(k) and this section, the additional first year depreciation deduction for alternative minimum tax purposes is based on the remaining excess basis, if any, of the replacement MACRS property or the replacement computer software, as applicable, for alternative minimum tax purposes.

(iv) ***Replacement MACRS property or replacement computer software that is acquired and placed in service before disposition of relinquished MACRS property or relinquished computer software.*** If, in an involuntary conversion, a taxpayer acquires and places in service the replacement MACRS property or the replacement computer software, as applicable, before the time of disposition of the involuntarily converted MACRS property or the involuntarily converted computer software, as applicable; and the time of disposition of the involuntarily converted MACRS property or the involuntarily converted computer software, as applicable, is after December 31, 2026, or, in the case of property described in service 168(k)(2)(B) or (C), after December 31, 2027, then—

(A) The time of replacement for purposes of this paragraph (g)(5) is when the replacement MACRS property or replacement computer software, as applicable, is placed in service by the taxpayer, provided the threat or imminence of requisition or condemnation of the involuntarily converted MACRS property or involuntarily converted computer software, as applicable, existed before January 1, 2027, or, in the case of property described in section 168(k)(2)(B) or (C), existed before January 1, 2028; and

(B) The taxpayer depreciates the replacement MACRS property or replacement computer software, as applicable, in accordance with paragraph (e) of this section. However, at the time of disposition of the involuntarily converted MACRS property, the taxpayer determines the exchanged basis, as defined in § 1.168(i)-6(b)(7), and the excess basis, as defined in § 1.168(i)-6(b)(8), of the replacement MACRS property and begins to depreciate the depreciable exchanged basis, as defined in § 1.168(i)-6(b)(9), of the replacement MACRS property in accordance with § 1.168(i)-6(c). The depreciable excess basis, as defined in § 1.168(i)-6(b)(10), of the replacement MACRS property continues to be depreciated by the taxpayer in accordance with the first sentence of this paragraph (g)(5)(iv)(B). Further, in the year of disposition of the involuntarily converted MACRS property, the taxpayer must include in taxable income the excess of the depreciation deductions allowable, including the additional first year depreciation deduction allowable, on the unadjusted depreciable basis of the replacement MACRS property over the additional first year depreciation deduction that would have been allowable to the taxpayer on the remaining exchanged basis of the replacement MACRS property at the time of replacement, as defined in paragraph (g)(5)(iv)(A) of this section, plus the depreciation deductions that would have been allowable, including the additional first year depreciation

deduction allowable, to the taxpayer on the depreciable excess basis of the replacement MACRS property from the date the replacement MACRS property was placed in service by the taxpayer, taking into account the applicable convention, to the time of disposition of the involuntarily converted MACRS property. Similar rules apply to replacement computer software.

(v) ***Examples.*** The application of this paragraph (g)(5) is illustrated by the following examples:

(A) ***Example 1.***

(*1*) In April 2016, *CSK,* a calendar-year corporation, acquired for $200,000 and placed in service Canopy V1, a gas station canopy. Canopy V1 is qualified property under section 168(k)(2), as in effect on the day before amendment by the Act, and is 5-year property under section 168(e). *CSK* depreciated Canopy V1 under the general depreciation system of section 168(a) by using the 200-percent declining balance method of depreciation, a 5-year recovery period, and the half-year convention. *CSK* elected to use the optional depreciation tables to compute the depreciation allowance for Canopy V1. In November 2017, Canopy V1 was destroyed in a fire and was no longer usable in *CSK*'s business. In December 2017, in an involuntary conversion, *CSK* acquired and placed in service Canopy W1 with all of the $160,000 of insurance proceeds *CSK* received due to the loss of Canopy V1. Canopy W1 is qualified property under section 168(k)(2) and this section, and is 5-year property under section 168(e). Canopy W1 also meets the original use requirement in paragraph (b)(3)(ii) of this section. *CSK* did not make the election under § 1.168(i)-6(i)(1).

(*2*) For 2016, *CSK* is allowed a 50-percent additional first year depreciation deduction of $100,000 for Canopy V1 (the unadjusted depreciable basis of $200,000 multiplied by 0.50), and a regular MACRS depreciation deduction of $20,000 for Canopy V1 (the remaining adjusted depreciable basis of $100,000 multiplied by the annual depreciation rate of 0.20 for recovery year 1).

(*3*) For 2017, *CSK* is allowed a regular MACRS depreciation deduction of $16,000 for Canopy V1 (the remaining adjusted depreciable basis of $100,000 multiplied by the annual depreciation rate of 0.32 for recovery year 2 × $^{1}/_{2}$ year).

(*4*) Pursuant to paragraph (g)(5)(iii)(A) of this section, the additional first year depreciation deduction allowable for Canopy W1 for 2017 equals $64,000 (100 percent of Canopy W1's remaining exchanged basis at the time of replacement of $64,000 (Canopy V1's remaining adjusted depreciable basis of $100,000 minus 2016 regular MACRS depreciation deduction of $20,000 minus 2017 regular MACRS depreciation deduction of $16,000)).

(B) ***Example 2.***

(*1*) The facts are the same as in *Example 1* of paragraph (g)(5)(v)(A)(*1*) of this section, except *CSK* elected not to deduct the additional first year depreciation for 5-year property placed in service in 2016. *CSK* deducted the additional first year depreciation for 5-year property placed in service in 2017.

(2) For 2016, *CSK* is allowed a regular MACRS depreciation deduction of $40,000 for Canopy V1 (the unadjusted depreciable basis of $200,000 multiplied by the annual depreciation rate of 0.20 for recovery year 1).

(3) For 2017, *CSK* is allowed a regular MACRS depreciation deduction of $32,000 for Canopy V1 (the unadjusted depreciable basis of $200,000 multiplied by the annual depreciation rate of 0.32 for recovery year 2 × $^{1}/_{2}$ year).

(4) Pursuant to paragraph (g)(5)(iii)(A) of this section, the additional first year depreciation deduction allowable for Canopy W1 for 2017 equals $128,000 (100 percent of Canopy W1's remaining exchanged basis at the time of replacement of $128,000 (Canopy V1's unadjusted depreciable basis of $200,000 minus 2016 regular MACRS depreciation deduction of $40,000 minus 2017 regular MACRS depreciation deduction of $32,000)).

(C) ***Example 3.*** The facts are the same as in *Example 1* of paragraph (g)(5)(v)(A)(*1*) of this section, except Canopy W1 meets the used property acquisition requirements in paragraph (b)(3)(iii) of this section. Because the remaining excess basis of Canopy W1 is zero, *CSK* is not allowed any additional first year depreciation for Canopy W1 pursuant to paragraph (g)(5)(iii)(A) of this section.

(D) ***Example 4.***

(1) In December 2016, *AB,* a calendar-year corporation, acquired for $10,000 and placed in service Computer X2. Computer X2 is qualified property under section 168(k)(2), as in effect on the day before amendment by the Act, and is 5-year property under section 168(e). *AB* depreciated Computer X2 under the general depreciation system of section 168(a) by using the 200-percent declining balance method of depreciation, a 5-year recovery period, and the half-year convention. *AB* elected to use the optional depreciation tables to compute the depreciation allowance for Computer X2. In November 2017, *AB* acquired Computer Y2 by exchanging Computer X2 and $1,000 cash in a like-kind exchange. Computer Y2 is qualified property under section 168(k)(2) and this section, and is 5-year property under section 168(e). Computer Y2 also meets the original use requirement in paragraph (b)(3)(ii) of this section. *AB* did not make the election under § 1.168(i)-6(i)(1).

(2) For 2016, *AB* is allowed a 50-percent additional first year depreciation deduction of $5,000 for Computer X2 (unadjusted basis of $10,000 multiplied by 0.50), and a regular MACRS depreciation deduction of $1,000 for Computer X2 (the remaining adjusted depreciable basis of $5,000 multiplied by the annual depreciation rate of 0.20 for recovery year 1).

(3) For 2017, *AB* is allowed a regular MACRS depreciation deduction of $800 for Computer X2 (the remaining adjusted depreciable basis of $5,000 multiplied by the annual depreciation rate of 0.32 for recovery year 2 × $^{1}/_{2}$ year).

(4) Pursuant to paragraph (g)(5)(iii)(A) of this section, the 100-percent additional first year depreciation deduction for Computer Y2 for 2017 is allowable for the remaining exchanged basis at the time of replacement of $3,200 (Computer X2's unadjusted depreciable basis of $10,000 minus additional first year depreciation deduction allowable of $5,000 minus the 2016 regular MACRS depreciation deduction of $1,000

minus the 2017 regular MACRS depreciation deduction of $800) and for the remaining excess basis at the time of replacement of $1,000 (cash paid for Computer Y2). Thus, the 100-percent additional first year depreciation deduction allowable for Computer Y2 totals $4,200 for 2017.

(E) *Example 5.*

(*1*) In July 2017, *BC,* a calendar-year corporation, acquired for $20,000 and placed in service Equipment X3. Equipment X3 is qualified property under section 168(k)(2), as in effect on the day before amendment by the Act, and is 5-year property under section 168(e). *BC* depreciated Equipment X3 under the general depreciation system of section 168(a) by using the 200-percent declining balance method of depreciation, a 5-year recovery period, and the half-year convention. *BC* elected to use the optional depreciation tables to compute the depreciation allowance for Equipment X3. In December 2017, *BC* acquired Equipment Y3 by exchanging Equipment X3 and $5,000 cash in a like-kind exchange. Equipment Y3 is qualified property under section 168(k)(2) and this section, and is 5-year property under section 168(e). Equipment Y3 also meets the used property acquisition requirements in paragraph (b)(3)(iii) of this section. *BC* did not make the election under § 1.168(i)-6(i)(1).

(*2*) Pursuant to § 1.168(k)-1(f)(5)(iii)(B), no additional first year depreciation deduction is allowable for Equipment X3 and, pursuant to § 1.168(d)-1(b)(3)(ii), no regular depreciation deduction is allowable for Equipment X3, for 2017.

(*3*) Pursuant to paragraph (g)(5)(iii)(A) of this section, no additional first year depreciation deduction is allowable for Equipment Y3's remaining exchanged basis at the time of replacement of $20,000 (Equipment X3's unadjusted depreciable basis of $20,000). However, pursuant to paragraph (g)(5)(iii)(A) of this section, the 100-percent additional first year depreciation deduction is allowable for Equipment Y3's remaining excess basis at the time of replacement of $5,000 (cash paid for Equipment Y3). Thus, the 100-percent additional first year depreciation deduction allowable for Equipment Y3 is $5,000 for 2017.

(F) *Example 6.*

(*1*) The facts are the same as in *Example 5* of paragraph (g)(5)(v)(E)(*1*) of this section, except *BC* properly makes the election under § 1.168(i)-6(i)(1) not to apply § 1.168(i)-6 to Equipment X3 and Equipment Y3.

(*2*) Pursuant to § 1.168(k)-1(f)(5)(iii)(B), no additional first year depreciation deduction is allowable for Equipment X3 and, pursuant to § 1.168(d)-1(b)(3)(ii), no regular depreciation deduction is allowable for Equipment X3, for 2017.

(*3*) Pursuant to § 1.168(i)-6(i)(1), *BC* is treated as placing Equipment Y3 in service in December 2017 with a basis of $25,000 (the total of the exchanged basis of $20,000 and the excess basis of $5,000). However, pursuant to paragraph (g)(5)(iii)(D)(*2*) of this section, the 100-percent additional first year depreciation deduction is allowable only for Equipment Y3's excess basis at the time of replacement of $5,000 (cash paid for Equipment Y3). Thus, the 100-percent additional first year depreciation deduction allowable for Equipment Y3 is $5,000 for 2017.

(6) *Change in use* —

(i) ***Change in use of MACRS property.*** The determination of whether the use of MACRS property, as defined in § 1.168(b)-1(a)(2), changes is made in accordance with section 168(i)(5) and § 1.168(i)-4.

(ii) ***Conversion to personal use.*** If qualified property is converted from business or income-producing use to personal use in the same taxable year in which the property is placed in service by a taxpayer, the additional first year depreciation deduction is not allowable for the property.

(iii) ***Conversion to business or income-producing use*** —

(A) ***During the same taxable year.*** If, during the same taxable year, property is acquired by a taxpayer for personal use and is converted by the taxpayer from personal use to business or income-producing use, the additional first year depreciation deduction is allowable for the property in the taxable year the property is converted to business or income-producing use, assuming all of the requirements in paragraph (b) of this section are met. See paragraph (b)(3)(ii) of this section relating to the original use rules for a conversion of property to business or income-producing use. See § 1.168(i)-4(b)(1) for determining the depreciable basis of the property at the time of conversion to business or income-producing use.

(B) ***Subsequent to the acquisition year.*** If property is acquired by a taxpayer for personal use and, during a subsequent taxable year, is converted by the taxpayer from personal use to business or income-producing use, the additional first year depreciation deduction is allowable for the property in the taxable year the property is converted to business or income-producing use, assuming all of the requirements in paragraph (b) of this section are met. For purposes of paragraphs (b)(4) and (5) of this section, the property must be acquired by the taxpayer for personal use after September 27, 2017, and converted by the taxpayer from personal use to business or income-producing use by January 1, 2027. See paragraph (b)(3)(ii) of this section relating to the original use rules for a conversion of property to business or income-producing use. See § 1.168(i)-4(b)(1) for determining the depreciable basis of the property at the time of conversion to business or income-producing use.

(iv) ***Depreciable property changes use subsequent to the placed-in-service year.***

(A) If the use of qualified property changes in the hands of the same taxpayer subsequent to the taxable year the qualified property is placed in service and, as a result of the change in use, the property is no longer qualified property, the additional first year depreciation deduction allowable for the qualified property is not redetermined.

(B) If depreciable property is not qualified property in the taxable year the property is placed in service by the taxpayer, the additional first year depreciation deduction is not allowable for the property even if a change in the use of the property subsequent to the taxable year the property is placed in service results in the property being qualified property in the taxable year of the change in use.

(v) ***Examples.*** The application of this paragraph (g)(6) is illustrated by the following examples:

(A) ***Example 1.***

(*1*) On January 1, 2019, *FFF,* a calendar year corporation, purchased and placed in service several new computers at a total cost of $100,000. *FFF* used these computers within the United States for 3 months in 2019 and then moved and used the computers outside the United States for the remainder of 2019. On January 1, 2020, *FFF* permanently returns the computers to the United States for use in its business.

(*2*) For 2019, the computers are considered as used predominantly outside the United States in 2019 pursuant to § 1.48-1(g)(1)(i). As a result, the computers are required to be depreciated under the alternative depreciation system of section 168(g). Pursuant to paragraph (b)(2)(ii)(B) of this section, the computers are not qualified property in 2019, the placed-in-service year. Thus, pursuant to paragraph (g)(6)(iv)(B) of this section, no additional first year depreciation deduction is allowed for these computers, regardless of the fact that the computers are permanently returned to the United States in 2020.

(B) ***Example 2.***

(*1*) On February 8, 2023, *GGG,* a calendar year corporation, purchased and placed in service new equipment at a cost of $1,000,000 for use in its California plant. The equipment is 5-year property under section 168(e) and is qualified property under section 168(k). *GGG* depreciates its 5-year property placed in service in 2023 using the optional depreciation table that corresponds with the general depreciation system, the 200-percent declining balance method, a 5-year recovery period, and the half-year convention. On June 4, 2024, due to changes in *GGG*'s business circumstances, *GGG* permanently moves the equipment to its plant in Mexico.

(*2*) For 2023, *GGG* is allowed an 80-percent additional first year depreciation deduction of $800,000 (the adjusted depreciable basis of $1,000,000 multiplied by 0.80). In addition, *GGG*'s depreciation deduction allowable in 2023 for the remaining adjusted depreciable basis of $200,000 (the unadjusted depreciable basis of $1,000,000 reduced by the additional first year depreciation deduction of $800,000) is $40,000 (the remaining adjusted depreciable basis of $200,000 multiplied by the annual depreciation rate of 0.20 for recovery year 1).

(*3*) For 2024, the equipment is considered as used predominantly outside the United States pursuant to § 1.48-1(g)(1)(i). As a result of this change in use, the adjusted depreciable basis of $160,000 for the equipment is required to be depreciated under the alternative depreciation system of section 168(g) beginning in 2024. However, the additional first year depreciation deduction of $800,000 allowed for the equipment in 2023 is not redetermined.

(7) ***Earnings and profits.*** The additional first year depreciation deduction is not allowable for purposes of computing earnings and profits.

(8) ***Limitation of amount of depreciation for certain passenger automobiles.*** For a passenger automobile as defined in section 280F(d)(5), the limitation under section 280F(a)(1)(A)(i) is increased by $8,000 for qualified property acquired and placed in service by a taxpayer after September 27, 2017.

(9) ***Coordination with section 47 —***

(i) ***In general.*** If qualified rehabilitation expenditures, as defined in section 47(c)(2) and § 1.48-12(c), incurred by a taxpayer with respect to a qualified rehabilitated building, as defined in section 47(c)(1) and § 1.48-12(b), are qualified property, the taxpayer may claim the rehabilitation credit provided by section 47(a), provided the requirements of section 47 are met—

(A) With respect to the portion of the basis of the qualified rehabilitated building that is attributable to the qualified rehabilitation expenditures if the taxpayer makes the applicable election under paragraph (f)(1)(i) of this section not to deduct any additional first year depreciation for the class of property that includes the qualified rehabilitation expenditures; or

(B) With respect to the portion of the remaining rehabilitated basis of the qualified rehabilitated building that is attributable to the qualified rehabilitation expenditures if the taxpayer claims the additional first year depreciation deduction on the unadjusted depreciable basis, as defined in § 1.168(b)-1(a)(3) but before the reduction in basis for the amount of the rehabilitation credit, of the qualified rehabilitation expenditures; and the taxpayer depreciates the remaining adjusted depreciable basis, as defined in paragraph (e)(2)(i) of this section, of such expenditures using straight line cost recovery in accordance with section 47(c)(2)(B)(i) and § 1.48-12(c)(7)(i). For purposes of this paragraph (g)(9)(i)(B), the remaining rehabilitated basis is equal to the unadjusted depreciable basis, as defined in § 1.168(b)-1(a)(3) but before the reduction in basis for the amount of the rehabilitation credit, of the qualified rehabilitation expenditures that are qualified property reduced by the additional first year depreciation allowed or allowable, whichever is greater.

(ii) ***Example.*** The application of this paragraph (g)(9) is illustrated by the following example:

(A) Between February 8, 2023, and June 4, 2023, *JM,* a calendar-year taxpayer, incurred qualified rehabilitation expenditures of $200,000 with respect to a qualified rehabilitated building that is nonresidential real property under section 168(e). These qualified rehabilitation expenditures are qualified property and qualify for the 20-percent rehabilitation credit under section 47(a)(1). *JM*'s basis in the qualified rehabilitated building is zero before incurring the qualified rehabilitation expenditures and *JM* placed the qualified rehabilitated building in service in July 2023. *JM* depreciates its nonresidential real property placed in service in 2023 under the general depreciation system of section 168(a) by using the straight line method of depreciation, a 39-year recovery period, and the mid-month convention. *JM* elected to use the optional depreciation tables to compute the depreciation allowance for its depreciable property placed in service in 2023. Further, for 2023, *JM* did not make any election under paragraph (f) of this section.

(B) Because *JM* did not make any election under paragraph (f) of this section, *JM* is allowed an 80-percent additional first year depreciation deduction of $160,000 for the qualified rehabilitation expenditures for 2023 (the unadjusted depreciable basis of $200,000 (before reduction in basis for the rehabilitation credit) multiplied by 0.80). *JM* also is allowed to claim a rehabilitation credit of $8,000 for the remaining rehabilitated basis of $40,000 (the unadjusted depreciable basis (before reduction in basis for the rehabilitation credit) of $200,000 less the additional first year depreciation deduction of $160,000, multiplied by 0.20 to calculate the rehabilitation credit). For 2023, the ratable share of the

rehabilitation credit of $8,000 is $1,600. Further, *JM*'s depreciation deduction for 2023 for the remaining adjusted depreciable basis of $32,000 (the unadjusted depreciable basis (before reduction in basis for the rehabilitation credit) of $200,000 less the additional first year depreciation deduction of $160,000 less the rehabilitation credit of $8,000) is $376.64 (the remaining adjusted depreciable basis of $32,000 multiplied by the depreciation rate of 0.01177 for recovery year 1, placed in service in month 7).

(10) ***Coordination with section 514(a)(3).*** The additional first year depreciation deduction is not allowable for purposes of section 514(a)(3).

(11) ***Mid-quarter convention.*** In determining whether the mid-quarter convention applies for a taxable year under section 168(d)(3) and § 1.168(d)-1, the depreciable basis, as defined in § 1.168(d)-1(b)(4), for the taxable year the qualified property is placed in service by the taxpayer is not reduced by the allowed or allowable additional first year depreciation deduction for that taxable year. See § 1.168(d)-1(b)(4).

(h) ***Applicability dates*** —(1) *In general.* Except as provided in paragraphs (h)(2) and (3) of this section, this section applies to—

(i) Depreciable property acquired after September 27, 2017, by the taxpayer and placed in service by the taxpayer during or after the taxpayer's taxable year that begins on or after January 1, 2021;

(ii) A specified plant for which the taxpayer properly made an election to apply section 168(k)(5) and that is planted, or grafted to a plant that was previously planted, by the taxpayer during or after the taxpayer's taxable year that begins on or after January 1, 2021; and

(iii) Components acquired or self-constructed after September 27, 2017, of larger self-constructed property described in paragraph (c)(2) of this section and placed in service by the taxpayer during or after the taxpayer's taxable year that begins on or after January 1, 2021.

(2) ***Applicability of this section for prior taxable years.*** For taxable years beginning before January 1, 2021, see § 1.168(k)-2 as contained in 26 CFR part 1, revised as of April 1, 2020.

(3) ***Early application of this section and § 1.1502-68*** —

(i) ***In general.*** Subject to paragraphs (h)(3)(ii) and (iii) of this section, and provided that all members of a consolidated group consistently apply the same set of rules, a taxpayer may choose to apply both the rules of this section and the rules of § 1.1502-68 (to the extent relevant), in their entirety and in a consistent manner, to—

(A) Depreciable property acquired after September 27, 2017, by the taxpayer and placed in service by the taxpayer during a taxable year ending on or after September 28, 2017;

(B) A specified plant for which the taxpayer properly made an election to apply section 168(k)(5) and that is planted, or grafted to a plant that was previously planted, after September 27, 2017, by the taxpayer during a taxable year ending on or after September 28, 2017; and

(C) Components acquired or self-constructed after September 27, 2017, of larger self-constructed property described in paragraph (c)(2) of this section and placed in service by the taxpayer during a taxable year ending on or after September 28, 2017.

(ii) ***Early application to certain transactions.*** In the case of property described in § 1.1502-68(e)(2)(i) that is acquired in a transaction that satisfies the requirements of § 1.1502-68(c)(1)(ii) or (c)(2)(ii), the taxpayer may apply the rules of this section and the rules of § 1.1502-68 (to the extent relevant), in their entirety and in a consistent manner, to such property only if those rules are applied, in their entirety and in a consistent manner, by all parties to the transaction, including the transferor member, the transferee member, and the target, as applicable, and the consolidated groups of which they are members, for the taxable year(s) in which the transaction occurs and the taxable year(s) that includes the day after the deconsolidation date, as defined in § 1.1502-68(a)(2)(iii).

(iii) ***Bound by early application.*** Once a taxpayer applies the rules of this section and the rules of § 1.1502-68 (to the extent relevant), in their entirety, for a taxable year, the taxpayer must continue to apply the rules of this section and the rules of § 1.1502-68 (to the extent relevant), in their entirety, for the taxpayer's subsequent taxable years.

[T.D. 9874, 84 FR 50129, Sept. 24, 2019, as amended by T.D. 9916, 85 FR 71753, Nov. 10, 2020]

§ 1.168A-1 Amortization of emergency facilities; general rule.

(a) A person (including an estate or trust (see section 642(f) and § 1.642(f)-1) and a partnership (see section 703 and § 1.703-1)) is entitled, by election, to a deduction with respect to the amortization of the adjusted basis (for determining gain) of an emergency facility, such amortization to be based on a period of 60 months. As to the adjusted basis of an emergency facility, see § 1.168A-5. The taxpayer may elect to begin the 60-month amortization period with

(1) the month following the month in which such facility was completed or acquired, or

(2) the taxable year succeeding that in which such facility was completed or acquired (see § 1.168A-2). The date on which, or the month within which, an emergency facility is completed or acquired is to be determined upon the facts in the particular case. Ordinarily, the taxpayer is in possession of all the facts and, therefore, in a position to ascertain such date. A statement of the date ascertained by the taxpayer, together with a statement of the pertinent facts relied upon, should be filed with the taxpayer's election to take amortization deductions with respect to such facility.

(b) Generally, an amortization deduction will not be allowed with respect to an emergency facility for any taxable year unless such facility has been certified before the date of filing of the taxpayer's income tax return for such taxable year. However, this limitation does not apply in the case of a certificate made after August 22, 1957, for an emergency facility to provide primary processing for uranium ore or uranium concentrate under a program of the Atomic Energy Commission for the development of any sources of uranium ore or uranium concentrate, if application for such certificate was filed either

(1) before September 2, 1958, and before the expiration of six months after the beginning of construction, reconstruction, erection, or installation or the date of acquisition of the facility, or

(2) after September 1, 1958, and on or before December 2, 1958.

(c) In general, with respect to each month of the 60-month period which falls within the taxable year, the amortization deduction is an amount equal to the adjusted basis of the facility at the end of each month divided by the number of months (including the particular month for which the deduction is computed) remaining in the 60-month period. The adjusted basis at the end of any month shall be computed without regard to the amortization deduction for such month. The total amortization deduction with respect to an

emergency facility for a particular taxable year is the sum of the amortization deductions allowable for each month of the 60-month period which falls within such taxable year. The amortization deduction taken for any month is in lieu of the deduction for depreciation which would otherwise be allowable under section 167. See, however, § 1.168A-6, relating to depreciation with respect to any portion of the emergency facility not subject to amortization.

(d) This section may be illustrated by the following examples:

Example 1. On July 1, 1954, the X Corporation, which makes its income tax returns on the calendar year basis, begins the construction of an emergency facility which is completed on September 30, 1954, at a cost of $240,000. The certificate covers the entire construction. The X Corporation elects to take amortization deductions with respect to the facility and to begin the 60-month amortization period with October, the month following its completion. The adjusted basis of the facility at the end of October is $240,000. The allowable amortization deduction with respect to such facility for the taxable year 1954 is $12,000, computed as follows:

Monthly amortization deductions:	
October: $240,000 divided by 60	$4,000
November: $236,000 ($240,000 minus $4,000) divided by 59	4,000
December: $232,000 ($236,000 minus $4,000) divided by 58	4,000
Total amortization deduction for 1954	12,000

Example 2. The Y Corporation, which makes its income tax returns on the basis of a fiscal year ending November 30, purchases an emergency facility (No. 1) on July 29, 1955. On June 15, 1955, it begins the construction of an emergency facility (No. 2) which is completed on August 2, 1955. The entire acquisition and construction of such facilities are covered by the certificate. The Y Corporation elects to take amortization deductions with respect to both facilities and to begin the 60-month amortization period in each case with the month following the month of acquisition or completion. At the end of the first month of the amortization period the adjusted basis of facility No. 1 is $300,000 and the adjusted basis of facility No. 2 is $54,000. In September 1955, facility No. 1 is damaged by fire, as a result of which its adjusted basis is properly reduced by $25,370. The allowable amortization deduction with respect to such facilities for the taxable year ending November 30, 1955, is $21,410, computed as follows:

Facility No. 1

Monthly amortization deductions:	
August: $300,000 divided by 60	$5,000
September: $269,630 ($300,000 minus $5,000 and $25,370) divided by 59	4,570

October: $265,060 ($269,630 minus $4,570) divided by 58	4,570
November: $260,490 ($265,060 minus $4,570) divided by 57	4,570
Amortization deduction for 1955	18,710
Facility No. 2	
Monthly amortization deductions:	
September: $54,000 divided by 60	$900
October: $53,100 divided by 59	900
November: $52,200 divided by 58	900
Amortization deduction for 1955	2,700
Total amortization deduction for 1955	21,410

Example 3. On June 15, 1954, the Z Corporation, which makes its income tax returns on the calendar year basis, completes the construction of an emergency facility at a cost of $110,000. In its income tax return for 1954, filed on March 15, 1955, the Z Corporation elects to take amortization deductions with respect to such facility and to begin the 60-month amortization period with July 1954, the month following its completion. No certificate with respect to such facility is made until April 10, 1955, and therefore no amortization deduction with respect to such facility is allowable for any month in the taxable year 1954. The Z Corporation is entitled, however, to take a deduction for depreciation of such facility for the taxable year 1954, such deduction being assumed, for the purposes of this example, to be $2,000. Accordingly, the adjusted basis of such facility at the end of January 1955 (without regard to the amortization deduction for such month) is $108,000 ($110,000 minus $2,000). For the taxable year 1955, the Z Corporation is, with respect to such facility, entitled to an amortization deduction of $24,000, computed as follows:

Monthly amortization deductions:	
January: $108,000 divided by 54	$2,000
February: $106,000 ($108,000 minus $2,000) divided by 53	2,000
March: $104,000 ($106,000 minus $2,000) divided by 52	2,000
For the remaining nine months (similarly computed)	18,000
Total amortization deduction for 1955	24,000

Since the Z Corporation elected in its return for 1954 to take amortization deductions with respect to such facility and to begin the 60-month amortization period with July 1954, it must compute its amortization deductions for the 12 months in the taxable year 1955 on the basis of the remaining months of the established 60-month amortization period, as indicated in the above computation.

[T.D. 6500, 25 FR 11402, Nov. 26, 1960; 25 FR 14021, Dec. 21, 1960. Redesignated and amended by T.D. 8116, 51 FR 46618, Dec. 24, 1986]

§ 1.168A-2 Election of amortization.

(a) ***General rule.*** An election by the taxpayer to take amortization deductions with respect to an emergency facility and to begin the 60-month amortization period either with the month following the month in which such facility was completed or acquired, or with the taxable year succeeding the taxable year in which such facility was completed or acquired, shall be made by a statement to that effect in its return for the taxable year in which falls the first month of the 60-month amortization period so elected. However, if the facility is described in section 168(e)(2)(C) and an application for a certificate is filed within the period prescribed by section 9(c) of the Technical Amendments Act of 1958 (72 Stat. 1609) and paragraph (b) of § 1.168A-1, the election may be made by a statement in an amended income tax return for the taxable year in which falls the first month of the 60-month amortization period so elected. The statement and amended return in such case must be filed not later than 90 days after the date the certificate is made or not later than April 4, 1960, whichever is later. Amended income tax returns or claims for credit or refund should also be filed for other taxable years which are within such amortization period and which precede the taxable year in which the election is made. Nothing in this paragraph should be construed as extending the time specified in section 6511 within which a claim for credit or refund may be filed.

(b) ***Election not made, in prescribed manner.*** If the statement of election is not made by the taxpayer as prescribed in paragraph (a) of this section, it may, in the discretion of the Commissioner and for good cause shown, be made in such manner and form and within such time as may be approved by the Commissioner.

(c) ***Other requirements and considerations.*** No method of making such election other than those prescribed in this section and corresponding sections of prior regulations is permitted. Any statement of election should contain a description clearly identifying each emergency facility for which an amortization deduction is claimed. A taxpayer which does not elect, in the manner prescribed in this section or corresponding sections of prior regulations, to take amortization deductions with respect to an emergency facility shall not be entitled to such deductions.

[T.D. 6500, 25 FR 11402, Nov. 26, 1960; 25 FR 14021, Dec. 21, 1960. Redesignated and amended by T.D. 8116, 51 FR 46618, Dec. 24, 1986]

§ 1.168A-3 Election to discontinue amortization.

(a) If a taxpayer has elected to take amortization deductions with respect to an emergency facility, it may, after such election and prior to the expiration of the 60-month amortization period, discontinue the amortization deductions for the remainder of the 60-month period. An election to discontinue the amortization deductions shall be made by a notice in writing filed with the district director for the internal revenue district in which the return of the taxpayer is required to be filed, specifying the month as of the beginning of which the taxpayer elects to discontinue such deductions. Such notice shall be filed before the beginning of the month specified therein, and shall contain a description clearly identifying the emergency facility with respect to which the taxpayer elects to discontinue the amortization deductions. If the taxpayer so elects to discontinue the amortization deductions, it shall not be entitled to any further amortization deductions with respect to such facility.

(b) A taxpayer which thus elects to discontinue amortization deductions with respect to an emergency facility is entitled, if such facility is depreciable property under section 167 and the regulations thereunder, to a deduction for depreciation with respect to such facility. The deduction for depreciation shall begin with the first month as to which the amortization deduction is not applicable, and shall be computed on the adjusted basis of the property as of the beginning of such month (see section 1011 and the regulations thereunder).

(c) This section may be illustrated by the following example:

Example. On July 1, 1954, the X Corporation, which makes its income tax returns on the calendar year basis, purchases an emergency facility, consisting of land with a building thereon, at a cost of $306,000 of which $60,000 is allocable to the land and $246,000 to the building. The certificate covers the entire acquisition. The corporation elects to take amortization deductions with respect to the facility and to begin the 60-month amortization period with the taxable year 1955. Depreciation of the building in the amount of $6,000 is deducted and allowed for the taxable year 1954. On March 25, 1956, the corporation files notice with the district director of its election to discontinue the amortization deductions beginning with the month of April 1956. The adjusted basis of the facility on January 31, 1955, is $300,000, or the cost of the facility ($306,000) less the depreciation allowed for 1954 ($6,000). The amortization deductions for the taxable year 1955 and the months of January, February, and March 1956, amount to $75,000, or $5,000 per month for 15 months. Since, at the beginning of the amortization period (January 1, 1955), the adjusted basis of the land ($60,000) is one-fifth of the adjusted basis of the entire facility ($300,000) and since there are no adjustments to basis other than on account of amortization during the period, the adjusted basis of the land should be reduced by $15,000, or one-fifth of the entire amortization deduction, and the adjusted basis of the building should be reduced by $60,000, or four-fifths of the entire amortization deduction. Accordingly, the adjusted basis of the facility as of April 1, 1956, is $225,000, of which $180,000 is allocable to the building for the purpose of depreciation deductions under section 167, and $45,000 is allocable to the land.

[T.D. 6500, 25 FR 11402, Nov. 26, 1960; 25 FR 14021, Dec. 21, 1960. Redesignated by T.D. 8116, 51 FR 46619, Dec. 24, 1986]

§ 1.168A-4 Definitions.

As used in the regulations under section 168, the term—

(a) "Certifying authority" means the certifying authority designated by the President by Executive order.

(b) "Emergency facility" means any facility, land, building, machinery, or equipment, or any part thereof, the acquisition of which occurred after December 31, 1949, or the construction, reconstruction, erection, or installation of which was completed after such date, and with respect to which a certificate under section 168(e) has been made. In the case of an application for a certificate under section 168(e) which is filed after March 23, 1951, only the part of any such facility which is constructed, reconstructed, erected, or installed by any person not earlier than six months prior to the filing of such application, and which is certified in accordance with section 168(e), shall be deemed to be an emergency facility, notwithstanding that the other part of such facility was constructed, reconstructed, erected, or installed earlier than six months prior to the filing of such application. However, if the facility is one described in section 168(e)(2)(C) and the application was filed after September 1, 1958, and on or before December 2, 1958, the preceding sentence shall not apply. The term "emergency facility," as so defined, may include, among other things, improvements of land, such as the construction of roads, bridges, and airstrips, and the dredging of channels.

(c) "Emergency period" means the period beginning on January 1, 1950, and ending on the date on which the President proclaims that the utilization of a substantial portion of the certified emergency facilities is no longer required in the interest of national defense.

[T.D. 6500, 25 FR 11402, Nov. 26, 1960; 25 FR 14021, Dec. 21, 1960. Redesignated by T.D. 8116, 51 FR 46619, Dec. 24, 1986]

§ 1.168A-5 Adjusted basis of emergency facility.

(a) ***In general.***

(1) The adjusted basis of an emergency facility for the purpose of computing the amortization deduction may differ from what would otherwise constitute the adjusted basis of such emergency facility in that it shall be the adjusted basis for determining gain (see Part II (section 1011 and following), Subchapter 0, Chapter 1 of the Code) and in that it may be only a portion of what would otherwise constitute the adjusted basis. It will be only a portion of such other adjusted basis if only a portion of the basis (unadjusted) is attributable to certified construction, reconstruction, erection, installation, or acquisition taking place after December 31, 1949. Also, it will be only a portion of what would otherwise constitute the adjusted basis of the emergency facility if only a portion of the basis (unadjusted) is certified as attributable to defense purposes or, in the case of a certification after August 22, 1957, if only a portion of the basis (unadjusted) is certified as attributable to the national defense program. It is therefore necessary first to determine the unadjusted basis of the emergency facility from which the adjusted basis for amortization purposes is derived.

(2) The unadjusted basis for amortization purposes is the same as the unadjusted basis otherwise determined only when the entire construction, reconstruction, erection, installation, or acquisition takes place after December 31, 1949, and is certified in its entirety by the certifying authority.

(3) In cases in which only a portion of the construction, reconstruction, erection, installation, or acquisition takes place after December 31, 1949, and that portion is certified in its entirety by the certifying authority, the unadjusted basis for the purpose of amortization is so much of the entire unadjusted basis as is attributable to the certified construction, reconstruction, erection, installation, or acquisition which takes place after December 31, 1949. For example, the X Corporation begins the construction of a facility on November 15, 1949, and such facility is completed on April 1, 1952, at a cost of $5,000,000, of which $4,600,000 is attributable to construction after December 31, 1949. The entire construction after December 31, 1949, is certified by the certifying authority. The unadjusted basis of the emergency facility for amortization purposes is therefore $4,600,000. For depreciation of the remaining portion ($400,000) of the cost see § 1.168A-6.

(4) If the certifying authority certifies only a portion of the construction, reconstruction, erection, installation, or acquisition of property which takes place after December 31, 1949, the unadjusted basis for amortization purposes is limited to such portion so certified. Assuming the same facts as in the example in subparagraph (3) of this paragraph, except that only 50 percent of the construction, reconstruction, erection, installation, or acquisition after December 31, 1949, is certified, the unadjusted basis for amortization purposes is 50 percent of $4,600,000, or $2,300,000.

(5) The adjusted basis of an emergency facility for amortization purposes is the unadjusted basis for amortization purposes less the adjustments properly applicable thereto. Such adjustments are those specified in sections 1016 and 1017, except that no adjustments are to be taken into account which increase the adjusted basis. (See paragraph (b) of this section.) If the taxpayer constructs, reconstructs, erects, installs, or acquires an emergency facility pursuant to a cost reimbursement

contract with an obligation for reimbursement by the United States of all or a part of the cost of such facility, the unadjusted basis of such facility for amortization purposes shall not include that part of the cost for which the taxpayer is entitled to reimbursement, and the amount received as reimbursement shall be treated as a capital receipt. However, amounts received by a taxpayer which represent in fact compensation by reason of termination of a government contract or payment for articles under such a contract, though denominated reimbursements for all or a part of the cost of an emergency facility, are not to be treated as capital receipts but are to be taken into account in computing income, and are therefore not to be applied in reduction of the basis of such facility.

(6) The following examples will illustrate the computation of the adjusted basis of an emergency facility for amortization purposes:

Example 1. The X Corporation completes an emergency facility on July 1, 1954, the entire unadjusted basis of which is $500,000, and the unadjusted basis of which for the purpose of amortization is $300,000. The X Corporation elects to begin amortization as of January 1, 1955. The only adjustment to basis for the period July 1, 1954, to January 31, 1955, other than depreciation or amortization for January 1955, is $5,000 for depreciation for the last six months of 1954. The adjusted basis for the purpose of amortization is therefore $300,000 less $3,000 (300,000/500,000 × $5,000), or $297,000.

Example 2. On July 31, 1956, the Y Corporation has an emergency facility (a building) which was completed on July 1, 1952, the entire basis of which is $500,000 and the unadjusted basis of which for the purpose of amortization is $300,000. The corporation elected to begin amortization as of January 1, 1953, at which time it was entitled to $5,000 depreciation for the last six months of 1952. On July 1, 1956, the facility was damaged by fire, as the result of which its adjusted basis is properly reduced by $200,000. The adjusted basis of the emergency facility as of July 1956 for the purpose of amortization and depreciation, and the adjusted basis for other purposes, are $23,849.18, $49,250.82, and $73,100.00, respectively, computed as follows:

	For amortization	For depreciation	For other purposes
Unadjusted basis	$300,000.00	$200,000.00	$500,000
Less depreciation to Jan. 1, 1953	3,000.00	2,000.00	5,000
Adjusted basis January 1953	297,000.00	198,000.00	495,000
Less amortization for 42 months	207,900.00		207,900
Less depreciation for 42 months		14,000.00	14,000
Adjusted basis at time of fire	89,100.00	184,000.00	273,100
Less fire loss (apportioned as explained below)	65,250.82	134,749.18	200,000

	For amortization	For depreciation	For other purposes
Adjusted basis after fire loss	23,849.18	49,250.82	73,100

The $200,000 fire loss is applied against the adjusted basis for the purpose of amortization and the adjusted basis for the purpose of depreciation in the proportion that each such adjusted basis at the time of the fire bears to their sum, *i.e.*, 89,100/273,100 × $200,000 or $65,250.82, against the amortization basis, and 184,000/273,100 × $200,000, or $134,749.18 against the depreciation basis.

(b) ***Capital additions.***

(1) If, after the completion or acquisition of an emergency facility which has been certified by the certifying authority, further expenditures are made for construction, reconstruction, erection, installation, or acquisition attributable to such facility but not covered by such certification, such expenditures shall not be added to the adjusted basis of the emergency facility for amortization purposes under such certification. If such further expenditures are separately certified in accordance with the provisions of section 168(e) (1) or (2) and this section, they are treated as certified expenditures in connection with a new and separate emergency facility and, if proper election is made, will be taken into account in computing the adjusted basis of such new and separate emergency facility for the purpose of amortization.

(2) The application of subparagraph (1) of this paragraph may be illustrated by the following example:

Example. On March 1, 1954, the certifying authority certifies as an emergency facility a heating plant proposed to be constructed by the Z Corporation. Such facility is completed on July 1, 1954. The Z Corporation, on August 1, 1954, begins the installation in the plant of an additional boiler, which is not included in the certification for the plant but is certified as a new and separate emergency facility. For amortization purposes, the adjusted basis of the heating plant is determined without including the cost of the additional boiler. Such cost is taken into account in computing the adjusted basis of the new and separate emergency facility (the boiler), as to which the taxpayer has a separate election for amortization purposes and a separate amortization period.

[T.D. 6500, 25 FR 11402, Nov. 26, 1960; 25 FR 14021, Dec. 21, 1960. Redesignated and amended by T.D. 8116, 51 FR 46619, Dec. 24, 1986]

§ 1.168A-6 Depreciation of portion of emergency facility not subject to amortization.

(a) The rule that an amortization deduction with respect to an emergency facility is in lieu of any deduction for depreciation which would otherwise be allowable under section 167 is subject to the exception provided in section 168(f). Under this exception, if the property constituting such facility is depreciable property under section 167 and the regulations thereunder and if the adjusted basis of such facility as computed under section 1011 for purposes other than the amortization deductions is in excess of the adjusted basis computed for the purpose of the amortization deductions, then the excess shall be charged off over the useful life of the facility and recovered through depreciation deductions. Thus, if the

construction of an emergency facility is begun on or before December 31, 1949, and completed after such date, no amortization deductions are allowable with respect to the amount attributable to such construction on or before such date (see § 1.168A-5). However, if the property constituting such facility is depreciable property under section 167 and the regulations thereunder, then the depreciation deduction provided by such section and regulations is allowable with respect to the amount attributable to such construction on or before December 31, 1949.

(b) Similarly, if only a portion of the construction, reconstruction, erection, installation, or acquisition after December 31, 1949, of an emergency facility has been certified by the certifying authority, and if such facility is depreciable property under section 167 and the regulations thereunder, then the depreciation deduction provided by such section and regulations is allowable with respect to the portion which has not been so certified.

(c) For illustration of the treatment of a depreciable portion of an emergency facility, see example (2) in paragraph (a)(6) of § 1.168A-5.

[T.D. 6500, 25 FR 11402, Nov. 26, 1960; 25 FR 14021, Dec. 21, 1960. Redesignated and amended by T.D. 8116, 51 FR 46619, Dec. 24, 1986]

§ 1.168A-7 Payment by United States of unamortized cost of facility.

(a) Section 168(g) contemplates that certain payments may be made by the United States to a taxpayer as compensation for the unamortized cost of an emergency facility. If any such payment is properly includible in gross income and has been certified, as provided in section 168(g), as having been paid under the circumstances described therein, a taxpayer which is recovering the adjusted basis of an emergency facility through amortization rather than depreciation may elect to take an amount equal to such payment as an amortization deduction with respect to such facility for the month in which such payment is so includible. Such amortization deduction shall be in lieu of the amortization deduction otherwise allowable with respect to such facility for such month, but it shall not in any case exceed the adjusted basis of such facility (see § 1.168A-5) as of the end of such month (computed without regard to any amortization deduction for such month). The election referred to in this paragraph shall be made in the return for the taxable year in which the amount of such payment is includible in gross income.

(b) If a taxpayer is recovering the adjusted basis of an emergency facility through depreciation rather than amortization, the depreciation deduction allowable under section 167 for the month in which the amount of any such payment is includible in gross income shall, at the taxpayer's election, be increased by such amount; but the total deduction with respect to the certified portion of such facility shall not in any case exceed the adjusted basis of such facility (computed as provided in section 168(e) and § 1.168A-5 for amortization purposes) as of the end of such month (computed without regard to any amount allowable for such month under section 167 or 168(g)(2)). The election referred to in this paragraph shall be made in the return for the taxable year in which the amount of such payment is includible in gross income.

(c) This section may be illustrated by the following examples:

Example 1. On January 31, 1954, the X Corporation purchases an emergency facility at a cost of $600,000. The certificate covers the entire acquisition. The X Corporation elects to take amortization deductions with respect to such facility and to begin the 60-month amortization period with February 1954, the month following the month of acquisition. On July 15, 1955, as a result of the cancellation of certain contracts with the X Corporation, the United States makes a payment of $300,000 to the corporation as compensation for the unamortized cost of such facility. The $300,000 payment is includible in the X

Corporation's gross income for July 1955. The adjusted basis of such facility for amortization purposes as of the end of July 1955, computed without regard to any amortization deduction for such month, is $430,000. Accordingly, the corporation is entitled to take an amortization deduction of $300,000 for such month, in lieu of the $10,000 amortization deduction which is otherwise allowable.

Example 2. On November 30, 1954, the Y Corporation purchases an emergency facility, consisting of land with a building thereon, at a cost of $500,000, of which $200,000 is allocable to the land and $300,000 to the building. The certificate covers the entire acquisition. The Y Corporation does not elect to take amortization deductions with respect to such facility, but is entitled to a depreciation deduction with respect to the building at the rate of 3 percent per annum, or $750 per month. On August 12, 1956, as a result of cancellation of certain contracts, the United States makes a payment of $400,000 to the corporation as compensation for the unrecovered cost of such facility. The $400,000 is includible in the Y Corporation's gross income for August 1956. The adjusted basis of the facility as of the end of August 1956, computed without regard to depreciation for such month, is $485,000, of which amount $200,000 is allocable to the land and $285,000 to the building. Accordingly, the corporation is entitled to increase the $750 depreciation deduction for August 1956 by the full amount of the $400,000 payment.

[T.D. 6500, 25 FR 11402, Nov. 26, 1960; 25 FR 14021, Dec. 21, 1960. Redesignated and amended by T.D. 8116, 51 FR 46619, Dec. 24, 1986]

§ 1.169-1 Amortization of pollution control facilities.

(a) ***Allowance of deduction*** —

(1) ***In general.*** Under section 169(a), every person, at his election, shall be entitled to a deduction with respect to the amortization of the amortizable basis (as defined in § 1.169-3) of any certified pollution control facility (as defined in § 1.169-2), based on a period of 60 months. Under section 169(b) and paragraph (a) of § 1.169-4, the taxpayer may further elect to begin such 60-month period either with the month following the month in which the facility is completed or acquired or with the first month of the taxable year succeeding the taxable year in which such facility is completed or acquired. Under section 169(c), a taxpayer who has elected under section 169(b) to take the amortization deduction provided by section 169(a) may, at any time after making such election and prior to the expiration of the 60-month amortization period, elect to discontinue the amortization deduction for the remainder of the 60-month period in the manner prescribed in paragraph (b)(1) of § 1.169-4. In addition, if on or before May 18, 1971, an election under section 169(a) has been made, consent is hereby given to revoke such election without the consent of the Commissioner in the manner prescribed in (b)(2) of § 1.169-4.

(2) ***Amount of deduction.*** With respect to each month of such 60-month period which falls within the taxable year, the amortization deduction shall be an amount equal to the amortizable basis of the certified pollution control facility at the end of such month divided by the number of months (including the month for which the deduction is computed) remaining in such 60-month period. The amortizable basis at the end of any month shall be computed without regard to the amortization deduction for such month. The total amortization deduction with respect to a certified pollution control facility for a taxable year is the sum of the amortization deductions allowable for each month of the 60-month period which falls within such taxable year. If a certified pollution control facility is sold or exchanged or otherwise disposed of during 1 month, the amortization deduction (if any) allowable to the original holder in respect of such month shall be that portion of the amount to which such person would be entitled for a full month which the number of days in such month during which the facility was held by such person bears to the total number of days in such month.

(3) *Effect on other deductions.*

(i) The amortization deduction provided by section 169 with respect to any month shall be in lieu of the depreciation deduction which would otherwise be allowable under section 167 or a deduction in lieu of depreciation which would otherwise be allowable under paragraph (b) of § 1.162-11 for such month.

(ii) If the adjusted basis of such facility as computed under section 1011 for purposes other than the amortization deduction provided by section 169 is in excess of the amortizable basis, as computed under § 1.169-3, such excess shall be recovered through depreciation deductions under the rules of section 167. See section 169(g).

(iii) See section 179 and paragraph (e)(1)(ii) of § 1.179-1 and paragraph (b)(2) of § 1.169-3 for additional first-year depreciation in respect of a certified pollution control facility.

(4) [Reserved]

(5) *Special rules.*

(i) In the case of a certified pollution control facility held by one person for life with the remainder to another person, the amortization deduction under section 169(a) shall be computed as if the life tenant were the absolute owner of the property and shall be allowable to the life tenant during his life.

(ii) If the assets of a corporation which has elected to take the amortization deduction under section 169(a) are acquired by another corporation in a transaction to which section 381 (relating to carryovers in certain corporate acquisitions) applies, the acquiring corporation is to be treated as if it were the distributor or transferor corporation for purposes of this section.

(iii) For the right of estates and trusts to amortize pollution control facilities see section 642(f) and § 1.642 (f)-1. For the allowance of the amortization deduction in the case of pollution control facilities of partnerships, see section 703 and § 1.703-1.

(6) *Depreciation subsequent to discontinuance or in the case of revocation of amortization.* A taxpayer which elects in the manner prescribed under paragraph (b) (1) of § 1.169-4 to discontinue amortization deductions or under paragraph (b) (2) of § 1.169-4 to revoke an election under section 169(a) with respect to a certified pollution control facility is entitled, if such facility is of a character subject to the allowance for depreciation provided in section 167, to a deduction for depreciation (to the extent allowable) with respect to such facility. In the case of an election to discontinue an amortization deduction, the deduction for depreciation shall begin with the first month as to which such amortization deduction is not applicable and shall be computed on the adjusted basis of the property as of the beginning of such month (see section 1011 and the regulations thereunder). Such depreciation deduction shall be based upon the remaining portion of the period authorized under section 167 for the facility as determined, as of the first day of the first month as of which the amortization deduction is not applicable. If the taxpayer so elects to discontinue the amortization deduction under section 169(a), such taxpayer shall not be entitled to any further amortization deduction under this section and section 169(a) with respect to such pollution control facility. In the case of a revocation of an election under section 169(a), the deduction for depreciation shall begin as of the time such depreciation deduction would have been taken but for the election under section 169(a). See paragraph (b)(2) of § 1.169-4 for rules as to filing amended returns for years for which amortization deductions have been taken.

(7) ***Definitions.*** Except as otherwise provided in § 1.169-2, all terms used in section 169 and the regulations thereunder shall have the meaning provided by this section and §§ 1.169-2 through 1.169-4.

(b) ***Examples.*** This section may be illustrated by the following examples:

Example 1. On September 30, 1970, the X Corporation, which uses the calendar year as its taxable year, completes the installation of a facility all of which qualifies as a certified pollution control facility within the meaning of paragraph (a) of § 1.169-2. The cost of the facility is $120,000 and the period referred to in paragraph (a)(6) of § 1.169-2 is 10 years in accordance with the rules set forth in paragraph (a) of § 1.169-4, on its income tax return filed for 1970, X elects to take amortization deductions under section 169(a) with respect to the facility and to begin the 60-month amortization period with October 1970, the month following the month in which it was completed. The amortizable basis at the end of October 1970 (determined without regard to the amortization deduction under section 169(a) for that month) is $120,000. The allowable amortization deduction with respect to such facility for the taxable year 1970 is $6,000, computed as follows:

Monthly amortization deductions:	
October: $120,000 divided by 60	$2,000
November: $118,000 (that is, $120,000 minus $2,000) divided by 59	2,000
December: $116,000 (that is, $118,000 minus $2,000) divided by 58	2,000
Total amortization deduction for 1970	6,000

Example 2. Assume the same facts as in example (1). Assume further that on May 20, 1972, X properly files notice of its election to discontinue the amortization deductions with the month of June 1972. The adjusted basis of the facility as of June 1, 1972, is $80,000, computed as follows:

Yearly amortization deductions:	
1970 (as computed in example (1))	$6,000
1971 (computed in accordance with example (1))	24,000
1972 (for the first 5 months of 1972 computed in accordance with example (1))	10,000
Total amortization deductions for 20 months	40,000
Adjusted basis as beginning of amortization period	120,000
Less: Amortization deductions	40,000

Adjusted basis as of June 1, 1972	80,000

Beginning as of June 1, 1972, the deduction for depreciation under section 167 is allowable with respect to the property on its adjusted basis of $80,000.

[T.D. 7116, 36 FR 9012, May 18, 1971; 36 FR 9770, May 28, 1971, as amended by T.D. 7203, 37 FR 17133, Aug. 25, 1972]

§ 1.169-2 Definitions.

(a) ***Certified pollution control facility*** —

(1) ***In general.*** Under section 169 (d), the term "certified pollution control facility" means a facility which—

(i) The Federal certifying authority certifies, in accordance with the rules prescribed in paragraph (c) of this section, is a "treatment facility" described in subparagraph (2) of this paragraph, and

(ii) Is "a new identifiable facility" (as defined in paragraph (b) of this section).

For profitmaking abatement works limitation, see paragraph (d) of this section.

(2) ***Treatment facility.*** For purposes of subparagraph (1)(i) of this paragraph, a "treatment facility" is a facility which

(i) is used to abate or control water or atmospheric pollution or contamination by removing, altering, disposing, or storing of pollutants, contaminants, wastes, or heat and

(ii) is used in connection with a plant or other property in operation before January 1, 1969. Determinations under subdivision (i) of this subparagraph shall be made solely by the Federal certifying authority. See subparagraph (3) of this paragraph. For meaning of the phrases "plant or other property" and "in operation before January 1, 1969," see subparagraphs (4) and (5), respectively, of this paragraph.

(3) ***Facilities performing multiple functions or used in connection with several plants, etc.***

(i) If a facility is designed to perform or does perform a function in addition to abating or controlling water or atmospheric pollution or contamination by removing, altering, disposing or storing pollutants, contaminants, wastes, or heat, such facility shall be a treatment facility only with respect to that part of the cost thereof which is certified by the Federal certifying authority as attributable to abating of controlling water or atmospheric pollution or contamination. For example, if a machine which performs a function in addition to abating water pollution is installed at a cost of $100,000 in, and is used only in connection with, a plant which was in operation before January 1, 1969, and if the Federal certifying authority certifies that $30,000 of the cost of such machine is allocable to its function of abating water pollution, such $30,000 will be deemed to be the adjusted basis for purposes of determining gain for purposes of paragraph (a) of § 1.169-3.

(ii) If a facility is used in connection with more than one plant or other property, and at least one such plant or other property was not in operation before January 1, 1969, such facility shall be a treatment facility only to the extent of that part of the cost thereof certified by the Federal certifying authority as attributable to abating or controlling water or atmospheric pollution in connection with plants or other property in operation before January 1, 1969. For example, if a machine is constructed after December 31, 1968, at a cost of $100,000 and is used in connection with a number of plants only some of which were in operation before January 1, 1969, and if the Federal certifying authority certifies that $20,000 of the cost of such machine is allocable to its function of abating or controlling water pollution in connection with the plants or other property in operation before January 1, 1969, such $20,000 will be deemed to be the adjusted basis for purposes of determining gain for purposes of paragraph (a) of § 1.169-3. In a case in which the Federal certifying authority certifies the percentage of a facility which is used in connection with plants or other property in operation before January 1, 1969, the adjusted basis for the purposes of determining gain for purposes of paragraph (a) of § 1.169-3 of the portion of the facility so used shall be the adjusted basis for determining gain of the entire facility multiplied by such percentage.

(4) ***Plant or other property.*** As used in subparagraph (2) of this paragraph, the phrase "plant or other property" means any tangible property whether or not such property is used in the trade or business or held for the production of income. Such term includes, for example, a papermill, a motor vehicle, or a furnace in an apartment house.

(5) ***In operation before January 1, 1969.***

(i) For purposes of subparagraph (2) of this paragraph and section 169 (d), a plant or other property will be considered to be in operation before January 1, 1969, if prior to that date such plant or other property was actually performing the function for which it was constructed or acquired. For example, a papermill which is completed in July 1968, but which is not actually used to produce paper until 1969 would not be considered to be in operation before January 1, 1969. The fact that such plant or other property was only operating at partial capacity prior to January 1, 1969, or was being used as a standby facility prior to such date, shall not prevent its being considered to be in operation before such date.

(ii)

(*a*) A piece of machinery which replaces one which was in operation prior to January 1, 1969, and which was a part of the manufacturing operation carried on by the plant but which does not substantially increase the capacity of the plant will be considered to be in operation prior to January 1, 1969. However, an additional machine that is added to a plant which was in operation before January 1, 1969, and which represents a substantial increase in the plant's capacity will not be considered to have been in operation before such date. There shall be deemed to be a substantial increase in the capacity of a plant or other property as of the time its capacity exceeds by more than 20 percent its capacity on December 31, 1968.

(*b*) In addition, if the total replacements of equipment in any single taxable year beginning after December 31, 1968, represents the replacement of a substantial portion of a manufacturing plant which had been in operation before such date, such replacement shall be considered to result in a new plant which was not in operation before such date. Thus, if a substantial portion of a plant which was in existence before January 1, 1969, is subsequently destroyed by fire and such substantial portion is replaced in a taxable year

beginning after that date, such replacement property shall not be considered to have been in operation before January 1, 1969. The replacement of a substantial portion of a plant or other property shall be deemed to have occurred if, during a single taxable year, the taxpayer replaces manufacturing or production facilities or equipment which comprises such plant or other property and which has an adjusted basis (determined without regard to the adjustments provided in section 1016(a) (2) and (3)) in excess of 20 percent of the adjusted basis (so determined) of such plant or other property determined as of the first day of such taxable year.

(6) ***Useful life.*** For purposes of section 169 and the regulations thereunder, the terms "useful life" and "actual useful life" shall mean the shortest period authorized under section 167 and the regulations thereunder if an election were not made under section 169.

(b) ***New identifiable facility*** —

(1) ***In general.*** For purposes of paragraph (a)(1)(ii) of this section, the term "new identifiable facility" includes only tangible property (not including a building and its structural components referred to in subparagraph (2)(i) of this paragraph, other than a building and its structural components which under subparagraph (2)(ii) of this paragraph is exclusively a treatment facility) which—

(i) Is of a character subject to the allowance for depreciation provided in section 167,

(ii)

(*a*) Is property the construction, reconstruction, or erection (as defined in subparagraph (2)(iii) of this paragraph) of which is completed by the taxpayer after December 31, 1968, or

(*b*) Is property acquired by the taxpayer after December 31, 1968, if the original use of the property commences with the taxpayer and commences after such date (see subparagraph (2)(iii) of this paragraph), and

(iii) Is placed in service (as defined in subparagraph (2)(v) of this paragraph) prior to January 1, 1975.

(2) ***Meaning of terms.***

(i) For purposes of subparagraph (1) of this paragraph, the terms "building" and "structural component" shall be construed in a manner consistent with the principles set forth in paragraph (e) of § 1.48-1. Thus, for example, the following rules are applicable:

(*a*) The term "building" generally means any structure or edifice enclosing a space within its walls, and usually covered by a roof, the purpose of which is, for example, to provide shelter or housing, or to provide working, office, parking, display, or sales space. The term includes, for example, structures such as apartment houses, factory and office buildings, warehouses, barns, garages, railway or bus stations, and stores. Such term includes any such structure constructed by, or for, a lessee even if such structure must be removed, or ownership of such structure reverts to the lessor, at the termination of the lease. Such term does not include

(*1*) a structure which is essentially an item of machinery or equipment, or

(*2*) an enclosure which is so closely combined with the machinery or equipment which it supports, houses, or serves that it must be replaced, retired, or abandoned contemporaneously with such machinery or equipment, and which is depreciated

over the life of such machinery or equipment. Thus, the term "building" does not include such structures as oil and gas storage tanks, grain storage bins, silos, fractioning towers, blast furnaces, coke ovens, brick kilns, and coal tipples.

(*b*) The term "structural components" includes, for example, chimneys, and other components relating to the operating or maintenance of a building. However, the term "structural components" does not include machinery or a device which serves no function other than the abatement or control of water or atmospheric pollution.

(ii) For purposes of subparagraph (1) of this paragraph, a building and its structural components will be considered to be exclusively a treatment facility if its only function is the abatement or control of air or water pollution. However, the incidental recovery of profits from wastes or otherwise shall not be deemed to be a function other than the abatement or control of air or water pollution. A building and its structural components which serve no function other than the treatment of wastes will be considered to be exclusively a treatment facility even if it contains areas for employees to operate the treatment facility, rest rooms for such workers, and an office for the management of such treatment facility. However, for example, if a portion of a building is used for the treatment of sewage and another portion of the building is used for the manufacture of machinery, the building is not exclusively a treatment facility. The Federal certifying authority will not certify as to what is a building and its structural components within the meaning of subdivision (i) of this subparagraph.

(iii) For purposes of subparagraph (1)(ii) (*a*) and (*b*) of this paragraph (relating to construction, reconstruction, or erection after December 31, 1968, and original use after December 31, 1968) and paragraph (b)(1) of § 1.169-3 (relating to definition of amortizable basis), the principles set forth in paragraph (a) (1) and (2) of § 1.167(c)-1 and in paragraphs (b) and (c) of § 1.48-2 shall be applied. Thus, for example, the following rules are applicable:

(*a*) Property is considered as constructed, reconstructed, or erected by the taxpayer if the work is done for him in accordance with his specifications.

(*b*) The portion of the basis of property attributable to construction, reconstruction, or erection after December 31, 1968, consists of all costs of construction, reconstruction, or erection allocable to the period after December 31, 1968, including the cost or other basis of materials entering into such work (but not including, in the case of reconstruction of property, the adjusted basis of the property as of the time such reconstruction is commenced).

(*c*) It is not necessary that materials entering into construction, reconstruction or erection be acquired after December 31, 1968, or that they be new in use.

(*d*) If construction or erection by the taxpayer began after December 31, 1968, the entire cost or other basis of such construction or erection may be taken into account for purposes of determining the amortizable basis under section 169.

(*e*) Construction, reconstruction, or erection by the taxpayer begins when physical work is started on such construction, reconstruction, or erection.

(*f*) Property shall be deemed to be acquired when reduced to physical possession or control.

(*g*) The term "original use" means the first use to which the property is put, whether or not such use corresponds to the use of such property by the taxpayer. For example, a reconditioned or rebuilt machine acquired by the taxpayer after December 31, 1968, for pollution control purposes will not be treated as being put to original use by the taxpayer regardless of whether it was used for purposes other than pollution control by its previous owner. Whether property is reconditioned or rebuilt property is a question of fact. Property will not be treated as reconditioned or rebuilt merely because it contains some used parts.

(iv) For purposes of subparagraph (1)(iii) of this paragraph (relating to property placed in service prior to January 1, 1975), the principles set forth in paragraph (d) of § 1.46-3 are applicable. Thus, property shall be considered placed in service in the earlier of the following taxable years:

(*a*) The taxable year in which, under the taxpayer's depreciation practice, the period for depreciation with respect to such property begins or would have begun; or

(*b*) The taxable year in which the property is placed in a condition or state of readiness and availability for the abatement or control of water or atmospheric pollution.

Thus, if property meets the conditions of (*b*) of this subdivision in a taxable year, it shall be considered placed in service in such year notwithstanding that the period for depreciation with respect to such property begins or would have begun in a succeeding taxable year because, for example, under the taxpayer's depreciation practice such property is or would have been accounted for in a multiple asset account and depreciation is or would have been computed under an "averaging convention" (§ 1.167(a)-10), or depreciation with respect to such property would have been computed under the completed contract method, the unit of production method, or the retirement method. In the case of property acquired by a taxpayer for use in his trade or business (or in the production of income), property shall be considered in a condition or state of readiness and availability for the abatement or control of water or atmospheric pollution if, for example, equipment is acquired for the abatement or control of water or atmospheric pollution and is operational but is undergoing testing to eliminate any defects. However, materials and parts acquired to be used in the construction of an item of equipment shall not be considered in a condition or state of readiness and availability for the abatement or control of water or atmospheric pollution.

(c) ***Certification*** —

(1) ***In general.*** For purposes of paragraph (a)(1) of this section, a facility is certified in accordance with the rules prescribed in this paragraph if—

(i) The State certifying authority (as defined in subparagraph (2) of this paragraph) having jurisdiction with respect to such facility has certified to the Federal certifying authority (as defined in subparagraph (3) of this paragraph) that the facility was constructed, reconstructed, erected, or acquired in conformity with the State program or requirements for the abatement or control of water or atmospheric pollution or contamination applicable at the time of such certification, and

(ii) The Federal certifying authority has certified such facility to the Secretary or his delegate as (*a*) being in compliance with the applicable regulations of Federal agencies (such as, for example, the Atomic Energy Commission's regulations pertaining to radiological discharge (10 CFR Part 20)) and (*b*) being in furtherance of the general policy of the United States for cooperation with

the States in the prevention and abatement of water pollution under the Federal Water Pollution Control Act, as amended (33 U.S.C. 1151-1175) or in the prevention and abatement of atmospheric pollution and contamination under the Clean Air Act, as amended (42 U.S.C. 1857 *et seq.*).

(2) ***State certifying authority.*** The term "state certifying authority" means—

(i) In the case of water pollution, the State water pollution control agency as defined in section 23(a) of the Federal Water Pollution Control Act, as amended (33 U.S.C. 1173(a)),

(ii) In the case of air pollution, the air pollution control agency designated pursuant to section 302(b)(1) of the Clean Air Act, as amended (42 U.S.C. 1857h(b)), and

(iii) Any interstate agency authorized to act in place of a certifying authority of a State. See section 23(a) of the Federal Water Pollution Control Act, as amended (33 U.S.C. 1173(b)) and section 302(c) of the Clean Air Act, as amended (42 U.S.C. 1857h(c)).

(3) ***Federal certifying authority.*** The term "Federal certifying authority" means the Administrator of the Environmental Protection Agency (see Reorganization Plan No. 3 of 1970, 35 FR 15623).

(d) ***Profitmaking abatement works, etc.*** —

(1) ***In general.*** Section 169(e) provides that the Federal certifying authority shall not certify any property to the extent it appears that by reason of estimated profits to be derived through the recovery of wastes or otherwise in the operation of such property its costs will be recovered over the period referred to in paragraph (a) (6) of this section for such property. The Federal certifying authority need not certify the amount of estimated profits to be derived from such recovery of wastes or otherwise with respect to such facility. Such estimated profits shall be determined pursuant to subparagraph (2) of this paragraph. However, the Federal certifying authority shall certify—

(i) Whether, in connection with any treatment facility so certified, there is potential cost recovery through the recovery of wastes or otherwise, and

(ii) A specific description of the wastes which will be recovered, or the nature of such cost recovery if otherwise than through the recovery of wastes.

For effect on computation of amortizable basis, see paragraph (c) of § 1.169-3.

(2) ***Estimated profits.*** For purpose of this paragraph, the term "estimated profits" means the estimated gross receipts from the sale of recovered wastes reduced by the sum of the

(i) estimated average annual maintenance and operating expenses, including utilities and labor, allocable to that portion of the facility which is certified as a treatment facility pursuant to paragraph (a)(1)(i) of this section which produces the recovered waste from which the gross receipts are derived, and

(ii) estimated selling expenses. However, in determining expenses to be subtracted neither depreciation nor amortization of the facility is to be taken into account. Estimated profits shall not include any estimated savings to the taxpayer by reason of the taxpayer's reuse or recycling of wastes or other items recovered in connection with the operation of the plant or other property served by the treatment facility.

(3) ***Special rules.*** The estimates of cost recovery required by subparagraph (2) of this paragraph shall be based on the period referred to in paragraph (a)(6) of this section. Such estimates shall be made at the time the election provided for by section 169 is made and shall also be set out in the application for certification made to the Federal certifying authority. There shall be no redetermination of estimated profits due to unanticipated fluctuations in the market price for wastes or other items, to an unanticipated increase or decrease in the costs of extracting them from the gas or liquid released, or to other unanticipated factors or events occurring after certification.

[T.D. 7116, 36 FR 9013, May 18, 1971; 36 FR 9770, May 28, 1971]

§ 1.169-3 Amortizable basis.

(a) ***In general.*** The amortizable basis of a certified pollution control facility for the purpose of computing the amortization deduction under section 169 is the adjusted basis of the facility for purposes of determining gain (see part II (section 1011 and following), subchapter O, chapter 1 of the Internal Revenue Code), in conjunction with paragraphs (b), (c), and (d) of this section. The adjusted basis for purposes of determining gain (computed without regard to paragraphs (b), (c), and (d) of this section) of a facility that performs a function in addition to pollution control, or that is used in connection with more than one plant or other property, or both, is determined under § 1.169-2(a)(3). For rules as to additions and improvements to such a facility, see paragraph (f) of this section. Before computing the amortization deduction allowable under section 169, the adjusted basis for purposes of determining gain for a facility that is placed in service by a taxpayer after September 10, 2001, and that is qualified property under section 168(k)(2) or § 1.168(k)-1, 50-percent bonus depreciation property under section 168(k)(4) or § 1.168(k)-1, or qualified New York Liberty Zone property under section 1400L(b) or § 1.1400L(b)-1 must be reduced by the amount of the additional first year depreciation deduction allowed or allowable, whichever is greater, under section 168(k) or section 1400L(b), as applicable, for the facility. Further, before computing the amortization deduction allowable under section 169, the adjusted basis for purposes of determining gain for a facility that is acquired and placed in service after September 27, 2017, and that is qualified property under section 168(k), as amended by the Tax Cuts and Jobs Act, Public Law 115-97 (131 Stat. 2054 (December 22, 2017)) (the "Act"), or § 1.168(k)-2, must be reduced by the amount of the additional first year depreciation deduction allowed or allowable, whichever is greater, under section 168(k), as amended by the Act.

(b) ***Limitation to post-1968 construction, reconstruction, or erection.***

(1) If the construction, reconstruction, or erection was begun before January 1, 1969, there shall be included in the amortizable basis only so much of the adjusted basis of such facility for purposes of determining gain (referred to in paragraph (a) of this section) as is properly attributable under the rules set forth in paragraph (b)(2)(iii) of § 1.169-2 to construction, reconstruction, or erection after December 31, 1968. See section 169 (d)(4). For example, assume a certified pollution control facility for which the shortest period authorized under section 167 is 10 years has a cost of $500,000, of which $450,000 is attributable to construction after December 31, 1968. Further, assume such facility does not perform a function in addition to pollution control and is used only in connection with a plant in operation before January 1, 1969. The facility would have an amortizable basis of $450,000 (computed without regard to paragraphs (c) and (d) of this section). For depreciation of the remaining portion ($50,000) of the cost, see section 169(g) and paragraph (a)(3)(ii) of § 1.169-1. For the definition of the term "certified pollution control facility" see paragraph (a) of § 1.169-2.

(2) If the taxpayer elects to begin the 60-month amortization period with the first month of the taxable year succeeding the taxable year in which the facility is completed or acquired and a depreciation deduction is allowable under section 167 (including an additional first-year depreciation allowance under former section 179; for a facility that is acquired by the taxpayer after September 10, 2001, and that is qualified property under section 168(k)(2) or § 1.168(k)-1 or qualified New York Liberty Zone property under section 1400L(b) or § 1.1400L(b)-1, the additional first year depreciation deduction under section 168(k)(1) or 1400L(b), as applicable; and for a facility that is acquired by the taxpayer after May 5, 2003, and that is 50-percent bonus depreciation property under section 168(k)(4) or § 1.168(k)-1, the additional first year depreciation deduction under section 168(k)(4)) with respect to the facility for the taxable year in which it is completed or acquired, the amount determined under paragraph (b)(1) of this section shall be reduced by an amount equal to the amount of the depreciation deduction allowed or allowable, whichever is greater, multiplied by a fraction the numerator of which is the amount determined under paragraph (b)(1) of this section, and the denominator of which is the facility's total cost. The additional first-year allowance for depreciation under former section 179 will be allowable only for the taxable year in which the facility is completed or acquired and only if the taxpayer elects to begin the amortization deduction under section 169 with the taxable year succeeding the taxable year in which such facility is completed or acquired. For a facility that is acquired by a taxpayer after September 10, 2001, and that is qualified property under section 168(k)(2) or § 1.168(k)-1 or qualified New York Liberty Zone property under section 1400L(b) or § 1.1400L(b)-1, see § 1.168(k)-1(f)(4) or § 1.1400L(b)-1(f)(4), as applicable, with respect to when the additional first year depreciation deduction under section 168(k)(1) or 1400L(b) is allowable. For a facility that is acquired by a taxpayer after May 5, 2003, and that is 50-percent bonus depreciation property under section 168(k)(4) or § 1.168(k)-1, see § 1.168(k)-1(f)(4) with respect to when the additional first year depreciation deduction under section 168(k)(4) is allowable.

(c) ***Modification for profitmaking abatement works, etc.*** If it appears that by reason of estimated profits to be derived through the recovery of wastes or otherwise (as determined by applying the rules prescribed in paragraph (d) of § 1.169-2) a portion or all of the total costs of the certified pollution control facility will be recovered over the period referred to in paragraph (a)(b) of § 1.169-2, its amortizable basis (computed without regard to this paragraph and paragraph (d) of this section) shall be reduced by an amount equal to

(1) its amortizable basis (so computed) multiplied by

(2) a fraction the numerator of which is such estimated profits and the denominator of which is its adjusted basis for purposes of determining gain. See section 169(e).

(d) ***Cases in which the period referred to in paragraph (a)(6) of § 1.169-2 exceeds 15 years.*** If as to a certified pollution control facility the period referred to in paragraph (a)(6) of § 1.169-2 exceeds 15 years (determined as of the first day of the first month for which a deduction is allowable under the election made under the section 169(b) and paragraph (a) of § 1.169-4), the amortizable basis of such facility shall be an amount equal to

(1) its amortizable basis (computed without regard to this paragraph) multiplied by

(2) a fraction the numerator of which is 15 years and the denominator of which is the number of years of such period. See section 169(f) (2)(A).

(e) ***Examples.*** This section may be illustrated by the following example:

> *Example 1.* The X Corporation, which uses the calendar year as its taxable year, began the

installation of a facility on November 1, 1968, and completed the installation on June 30, 1970, at a cost of $400,000. All of the facility qualifies as a certified pollution control facility within the meaning of paragraph (a) of § 1.169-2. $40,000 of such cost is attributable to construction prior to January 1, 1969. The X Corporation elects to take amortization deductions under section 169(a) with respect to the facility and to begin the 60-month amortization period with January 1, 1971. The corporation takes a depreciation deduction under sections 167 and 179 of $10,000 (the amount allowable, of which $2,000 is for additional first year depreciation under section 179) for the last 6 months of 1970. It is estimated that over the period referred to in paragraph (a) (6) of § 1.169-2 (20 years) as to such facility, $80,000 in profits will be realized from the sale of wastes recovered in its operation. The amortizable basis of the facility for purposes of computing the amortization deduction as of January 1, 1971, is $210,600, computed as follows:

(1) Portion of $400,000 cost attributable to post-1968 construction, reconstruction, or erection		$360,000
(2) Reduction for portion of depreciation deduction taken for the taxable year in which the facility was completed:		
(a) $10,000 depreciation deduction taken for last 6 months of 1970 including $2,000 for additional first year depreciation under section 179	$10,000	
(b) Multiplied by the amount in line (1) and divided by the total cost of the facility ($360,000/ $400,000)	0.9	$9,000
(3) Subtotal		$351,000
(4) Modification for profitmaking abatement works: Multiply line (3) by estimated profits through waste recovery ($80,000) and divide by the adjusted basis for determining gain of the facility ($400,000).		
(5) Reduction		$70,200
(6) Subtotal		$280,800
(7) Modification for period referred to in paragraph (a)(6) of § 1.169-2 exceeding 15 years: Multiply by 15 years and divide by such period (determined in accordance with paragraph (d) of this section) (20 years)		0.75
(8) Amortizable basis		$210,600

Example 2. Assume the same facts as in example (1) except that the facility is used in connection with a number of separate plants some of which were in operation before January 1, 1969, that the Federal certifying authority certifies that 80 percent of the capacity of the facility is allocable to the plants which were in operation before such date, and that all of the waste recovery is allocable to the portion of the facility used in connection with the plants in operation before January 1, 1969. The amortizable basis of such facility, for purposes of computing the

amortization deduction as of January 1, 1971, is $157,950 computed as follows:

(1) Adjusted basis for purposes of determining gain: Multiply percent certified as allocable to plants in operation before January 1, 1969 (80 percent) by cost of entire facility ($400,000)		$320,000
(2) Portion of adjusted basis for determining gain attributable to post-1968 construction, reconstruction, or rection: Multiply line (1) by portion of total cost of facility attributable to post-1968 construction, reconstruction, or erection ($360,000) and divide by the total cost of the facility ($400,000)		$288,000
(3) Reduction for portion of depreciation deduction taken for the taxable year in which the facility was completed:		
(a) $10,000 depreciation deduction taken for last 6 months of 1970 including $2,000 for additional first year depreciation under section 170	$10,000	
(b) Multiplied by the amount in line (2) and divided by the total cost of the facility ($288,000/$400,000)	0.72	$7,200
(4) Subtotal		$280,800
(5) Modification for profitmaking abatement works; Multiply line (4) by estimated profits through waste recovery ($80,000) and divide by the amount in line (1) ($320,000).		
(6) Reduction		$70,200
(7) Subtotal		$210,600
(8) Modification for period referred to in paragraph (a)(6) of § 1.169-2 exceeding 15 years: Multiply by 15 years and divide by such period (determined in accordance with paragraph (d) of this section) (20 years)		0.75
(9) Amortizable basis		$157,950

(f) ***Additions or improvements.***

(1) If after the completion or acquisition of a certified pollution control facility further expenditures are made for additional construction, reconstruction, or improvements, the cost of such additions or improvements made prior to the beginning of the amortization period shall increase the amortizable basis of such facility, but the cost of additions or improvements made after the amortization period has begun, shall not increase the amortizable basis. See section 169(f)(2)(B).

(2) If expenditures for such additional construction, reconstruction, or improvements result in a facility which is new and is separately certified as a certified pollution control facility as defined in section 169(d)(1) and paragraph (a) of § 1.169-2, and, if proper election is made, such expenditures shall be taken into account in computing under paragraph (a) of this section the amortizable basis of such new and separately certified pollution control facility.

(g) ***Effective date for qualified property, 50-percent bonus depreciation property, and qualified New York Liberty Zone property.*** This section applies to a certified pollution control facility. This section also applies to a certified pollution control facility that is qualified property under section 168(k)(2) or qualified New York Liberty Zone property under section 1400L(b) acquired by a taxpayer after September 10, 2001, and to a certified pollution control facility that is 50-percent bonus depreciation property under section 168(k)(4)

acquired by a taxpayer after May 5, 2003. The last sentence of paragraph (a) of this section applies to a certified pollution control facility that is qualified property under section 168(k)(2) and placed in service by a taxpayer during or after the taxpayer's taxable year that includes September 24, 2019. However, a taxpayer may choose to apply the last sentence of paragraph (a) of this section to a certified pollution control facility that is qualified property under section 168(k)(2) and acquired and placed in service after September 27, 2017, by the taxpayer during taxable years ending on or after September 28, 2017. A taxpayer may rely on the last sentence in paragraph (a) of this section in regulation project REG-104397-18 (2018-41 IRB 558) (see § 601.601(d)(2)(ii)(b) of this chapter) for a certified pollution control facility that is qualified property under section 168(k)(2) and acquired and placed in service after September 27, 2017, by the taxpayer during taxable years ending on or after September 28, 2017, and ending before the taxpayer's taxable year that includes September 24, 2019.

[T.D. 7116, 36 FR 9015, May 18, 1971; 36 FR 9770, May 28, 1971, as amended by T.D. 9091, 68 FR 53004, Sept. 8, 2003; T.D. 9283, 71 FR 51746, Aug. 31, 2006; T.D. 9874, 84 FR 50149, Sept. 24, 2019]

§ 1.169-4 Time and manner of making elections.

(a) ***Election of amortization*** —

(1) ***In general.*** Under section 169(b), an election by the taxpayer to take an amortization deduction with respect to a certified pollution control facility and to begin the 60-month amortization period (either with the month following the month in which the facility is completed or acquired, or with the first month of the taxable year succeeding the taxable year in which such facility is completed or acquired) shall be made by a statement to that effect attached to its return for the taxable year in which falls the first month of the 60-month amortization period so elected. Such statement shall include the following information (if not otherwise included in the documents referred to in subdivision (ix) of this subparagraph):

(i) A description clearly identifying each certified pollution control facility for which an amortization deduction is claimed;

(ii) The date on which such facility was completed or acquired (see paragraph (b)(2)(iii) of § 1.169-2);

(iii) The period referred to in paragraph (a)(6) of § 1.169-2 for the facility as of the date the property is placed in service;

(iv) The date as of which the amortization period is to begin;

(v) The date the plant or other property to which the facility is connected began operating (see paragraph (a)(5) of § 1.169-2);

(vi) The total costs and expenditures paid or incurred in the acquisition, construction, and installation of such facility;

(vii) A description of any wastes which the facility will recover during the course of its operation, and a reasonable estimate of the profits which will be realized by the sale of such wastes whether pollutants or otherwise, over the period referred to in paragraph (a)(6) of § 1.169-2 as to the facility. Such estimate shall include a schedule setting forth a detailed computation illustrating how the estimate was arrived at including every element prescribed in the definition of estimated profits in paragraph (d)(2) of § 1.169-2;

(viii) A computation showing the amortizable basis (as defined in § 1.169-3) of the facility as of the first month for which the amortization deduction provided for by section 169(a) is elected; and

(ix) (*a*) A statement that the facility has been certified by the Federal certifying authority, together with a copy of such certification, and a copy of the application for certification which was filed with and approved by the Federal certifying authority or (*b*), if the facility has not been certified by the Federal certifying authority, a statement that application has been made to the proper State certifying authority (see paragraph (c)(2) of § 1.169-2) together with a copy of such application and (except in the case of an election to which subparagraph (4) of this paragraph applies) a copy of the application filed or to be filed with the Federal certifying authority.

If subdivision (ix)(*b*) of this subparagraph applies, within 90 days after receipt by the taxpayer, the certification from the Federal certifying authority shall be filed by the taxpayer with the district director, or with the director of the internal revenue service center, with whom the return referred to in this subparagraph was filed.

(2) ***Special rule.*** If the return for the taxable year in which falls the first month of the 60-month amortization period to be elected is filed before November 16, 1971, without making the election for such year, then on or before December 31, 1971 (or if there is no State certifying authority in existence on November 16, 1971, on or before the 90th day after such authority is established), the election may be made by a statement attached to an amended income tax return for the taxable year in which falls the first month of the 60-month amortization period so elected. Amended income tax returns or claims for credit or refund must also be filed at this time for other taxable years which are within the amortization period and which are subsequent to the taxable year for which the election is made. Nothing in this paragraph should be construed as extending the time specified in section 6511 within which a claim for credit or refund may be filed.

(3) ***Other requirements and considerations.*** No method of making the election provided for in section 169(a) other than that prescribed in this section shall be permitted on or after May 18, 1971. A taxpayer which does not elect in the manner prescribed in this section to take amortization deductions with respect to a certified pollution control facility shall not be entitled to such deductions. In the case of a taxpayer which elects prior to May 18, 1971, the statement required by subparagraph (1) of this paragraph shall be attached to its income tax return for either its taxable year in which December 31, 1971, occurs or its taxable year preceding such year.

(4) ***Elections filed before February 29, 1972.*** If a statement of election required by subparagraph (1) of this paragraph is attached to a return (including an amended return referred to in subparagraph (2) of this paragraph) filed before February 29, 1972, such statement of election need not include a copy of the Federal application to be filed with the Federal certifying authority but a copy of such application must be filed no later than February 29, 1972, by the taxpayer with the district director, or with the director of the internal revenue service center, with whom the return or amended return referred to in this subparagraph was filed.

(b) ***Election to discontinue or revoke amortization*** —

(1) ***Election to discontinue.*** An election to discontinue the amortization deduction provided by section 169(c) and paragraph (a)(1) of § 1.169-1 shall be made by a statement in writing filed with the district director, or with the director of the internal revenue service center, with whom the return of the taxpayer is required to be filed for its taxable year in which falls the first month for which the election terminates. Such statement shall specify the month as of the beginning of which the taxpayer elects to discontinue such deductions. Unless the election to discontinue amortization is

one to which subparagraph (2) of this paragraph applies, such statement shall be filed before the beginning of the month specified therein. In addition, such statement shall contain a description clearly identifying the certified pollution control facility with respect to which the taxpayer elects to discontinue the amortization deduction, and, if a certification has previously been issued, a copy of the certification by the Federal certifying authority. If at the time of such election a certification has not been issued (or if one has been issued it has not been filed as provided in paragraph (a)(1) of this section), the taxpayer shall file, with respect to any taxable year or years for which a deduction under section 169 has been taken, a copy of such certification within 90 days after receipt thereof. For purposes of this paragraph, notification to the Secretary or his delegate from the Federal certifying authority that the facility no longer meets the requirements under which certification was originally granted by the State or Federal certifying authority shall have the same effect as a notice from the taxpayer electing to terminate amortization as of the month following the month such facility ceased functioning in accordance with such requirements.

(2) ***Revocation of elections made prior to May 18, 1971.*** If on or before May 18, 1971, an election under section 169(a) has been made, such election may be revoked (see paragraph (a)(1) of § 1.169-1) by filing on or before August 16, 1971, a statement of revocation of an election under section 169(a) in accordance with the requirements in subparagraph (1) of this paragraph for filing a notice to discontinue an election. If such election to revoke is for a period which falls within one or more taxable years for which an income tax return has been filed, amended income tax returns shall be filed for any such taxable years in which deductions were taken under section 169 on or before August 16, 1971.

[T.D. 7116, 36 FR 9016, May 18, 1971, as amended by T.D. 7135, 36 FR 14183, July 31, 1971; 36 FR 24995, Dec. 28, 1971]

COMPUTATION OF TAXABLE INCOME (CONTINUED)

ITEMIZED DEDUCTIONS FOR INDIVIDUALS AND CORPORATIONS (CONTINUED)

§ 1.170-3 Contributions or gifts by corporations (before amendment by Tax Reform Act of 1969).

(a) ***In general.*** The deduction by a corporation in any taxable year for charitable contributions, as defined in section 170(c), is limited to 5 percent of its taxable income for the year computed without regard to:

(1) The deduction for charitable contributions,

(2) The special deductions for corporations allowed under part VIII (except section 248), subchapter B, chapter 1 of the Code,

(3) Any net operating loss carryback to the taxable year under section 172,

(4) The special deduction for Western Hemisphere trade corporations under section 922, and

(5) Any capital loss carryback to the taxable year under section 1212(a)(1).

A contribution by a corporation to a trust, chest, fund, or foundation organized and operated exclusively for religious, charitable, scientific, literary, or educational purposes or for the prevention of cruelty to children or animals is deductible only if the contribution is to be used in the United States or its possessions for those purposes. See section 170(c)(2). For the purposes of section 170, amounts excluded from the gross income of a corporation under section 114 (relating to sports programs

conducted for the American National Red Cross) are not to be considered contributions or gifts. For reduction or disallowance of certain charitable, etc., deductions, see paragraphs (c)(2), (e), and (f) of § 1.170-1.

(b) ***Election by corporations on an accrual method.*** A corporation reporting its taxable income on an accrual method may elect to have a charitable contribution (as defined in section 170 (c)) considered as paid during the taxable year, if payment is actually made on or before the fifteenth day of the third month following the close of the year and if, during the year, the board of directors authorized the contribution. The election must be made at the time the return for the taxable year is filed, by reporting the contribution on the return. There shall be attached to the return when filed a written declaration that the resolution authorizing the contribution was adopted by the board of directors during the taxable year, and the declaration shall be verified by a statement signed by an officer authorized to sign the return that it is made under the penalties of perjury. There shall also be attached to the return when filed a copy of the resolution of the board of directors authorizing the contribution.

(c) ***Charitable contributions carryover of corporations*** —

(1) ***Contributions made in taxable years beginning before January 1, 1962.*** Subject to the rules set forth in subparagraph (3) of this paragraph, any contributions made by a corporation in a taxable year (hereinafter in this paragraph referred to as the contribution year) subject to the Code beginning before January 1, 1962, in excess of the amount deductible in such contribution year under the 5-percent limitation of section 170(b)(2) are deductible in each of the two succeeding taxable years in order of time, but only to the extent of the lesser of the following amounts:

(i) The excess of the maximum amount deductible for the succeeding year under the 5-percent limitation of section 170(b)(2) over the contributions made in that year; and

(ii) In the case of the first taxable year succeeding the contribution year, the amount of the excess contributions; and, in the case of the second taxable year succeeding the contribution year, the portion of the excess contributions not deductible in the first succeeding taxable year.

The application of the rules in this subparagraph may be illustrated by the following example:

Example. A corporation which reports its income on the calendar year basis makes a charitable contribution of $10,000 in June 1961, anticipating taxable income for 1961 of $200,000. Its actual taxable income (without regard to any deduction for charitable contributions) for 1961 is only $50,000 and the charitable deduction for that year is limited to $2,500 (5 percent of $50,000). The excess charitable contribution not deductible in 1961 ($7,500) represents a carryover potentially available as a deduction in the two succeeding taxable years. The corporation has taxable income (without regard to any deduction for charitable contributions) of $150,000 in 1962 and makes a charitable contribution of $2,500 in that year. For 1962, the corporation may deduct as a charitable contribution the amount of $7,500 (5 percent of $150,000). This amount consists first of the $2,500 contribution made in 1962, and $5,000 of the $7,500 carried over from 1961. The remaining $2,500 carried over from 1961 and not allowable as a deduction in 1962 because of the 5-percent limitation may be carried over to 1963. The corporation has taxable income (without regard to any deduction for charitable contributions) of $100,000 in 1963 and makes a charitable contribution of $3,000. For 1963, the corporation may deduct under section 170 the amount of $5,000 (5 percent of $100,000). This amount consists first of the $3,000 contributed in 1963, and $2,000 of the $2,500 carried over

from 1961 to 1963. The remaining $500 of the carryover from 1961 is not allowable as a deduction in any year because of the 2-year limitation with respect to excess contributions made in taxable years beginning before January 1, 1962.

(2) ***Contributions made in taxable years beginning after December 31, 1961.*** Subject to the rules set forth in subparagraph (3) of this paragraph, any contributions made by a corporation in a taxable year (hereinafter in this paragraph referred to as the contribution year) beginning after December 31, 1961, in excess of the amount deductible in such contribution year under the 5-percent limitation of section 170(b)(2) are deductible in each of the five succeeding taxable years in order of time, but only to the extent of the lesser of the following amounts:

(i) The excess of the maximum amount deductible for such succeeding taxable year under the 5-percent limitation of section 170(b)(2) over the sum of the contributions made in that year plus the aggregate of the excess contributions which were made in taxable years before the contribution year and which are deductible under this paragraph in such succeeding taxable year; or

(ii) In the case of the first taxable year succeeding the contribution year, the amount of the excess contributions, and in the case of the second, third, fourth, or fifth taxable years succeeding the contribution year, the portion of the excess contributions not deductible under this subparagraph for any taxable year intervening between the contribution year and such succeeding taxable year.

The application of the rules of this subparagraph may be illustrated by the following example:

Example. A corporation which reports its income on the calendar year basis makes a charitable contribution of $20,000 in June 1964, anticipating taxable income for 1964 of $400,000. Its actual taxable income (without regard to any deduction for charitable contributions) for 1964 is only $100,000 and the charitable deduction for that year is limited to $5,000 (5 percent of $100,000). The excess charitable contribution not deductible in 1964 ($15,000) represents a carryover potentially available as a deduction in the five succeeding taxable years. The corporation has taxable income (without regard to any deduction for charitable contributions) of $150,000 in 1965 and makes a charitable contribution of $5,000 in that year. For 1965 the corporation may deduct as a charitable contribution the amount of $7,500 (5 percent of $150,000). This amount consists first of the $5,000 contribution made in 1965, and $2,500 carried over from 1964. The remaining $12,500 carried over from 1964 and not allowable as a deduction for 1965 because of the 5-percent limitation may be carried over to 1966. The corporation has taxable income (without regard to any deduction for charitable contributions) of $200,000 in 1966 and makes a charitable contribution of $5,000. For 1966, the corporation may deduct the amount of $10,000 (5 percent of $200,000). This amount consists first of the $5,000 contributed in 1966, and $5,000 of the $12,500 carried over from 1964 to 1966. The remaining $7,500 of the carryover from 1964 is available for purposes of computing the charitable contributions carryover from 1964 to 1967, 1968, and 1969.

(3) ***Reduction of excess contributions.*** A corporation having a net operating loss carryover (or carryovers) must apply the special rule of section 170(b)(3) and this subparagraph before computing under subparagraph (1) or (2) of this paragraph the charitable contributions carryover for any taxable year subject to the Internal Revenue Code of 1954. In determining the amount of charitable contributions that may be deducted in accordance with the rules set forth in subparagraph (1) or (2) of this paragraph in taxable years succeeding the contribution year, the excess of contributions made by a corporation in the contribution year over the amount deductible in such year must be reduced by the

amount by which such excess reduces taxable income (for purposes of determining the net operating loss carryover under the second sentence of section 172(b)(2) and increases a net operating loss carryover to a succeeding taxable year. Thus, if the excess of the contributions made in a taxable year over the amount deductible in the taxable year is utilized to reduce taxable income (under the provisions of section 172(b)(2)) for such year, thereby serving to increase the amount of the net operating loss carryover to a succeeding year or years, no charitable contributions carryover will be allowed. If only a portion of the excess charitable contributions is so used, the charitable contributions carryover. will be reduced only to that extent. The application of the rules of this subparagraph may be illustrated by the following example:

Example. A corporation which reports its income on the calendar year basis makes a charitable contribution of $10,000 during the taxable year 1960. Its taxable income for 1960 is $80,000 (computed without regard to any net operating loss deduction and computed in accordance with section 170(b)(2) without regard to any deduction for charitable contributions). The corporation has a net operating loss carryover from 1959 of $80,000. In the absence of the net operating loss deduction the corporation would have been allowed a deduction for charitable contributions of $4,000 (5 percent of $80,000). After the application of the net operating loss deduction the corporation is allowed no deduction for charitable contributions, and there is a tentative charitable contribution carryover of $10,000. For purposes of determining the net operating loss carryover to 1961 the corporation computes its taxable income for its prior taxable year 1960 under section 172(b)(2) by deducting the $4,000 charitable contribution. Thus, after the $80,000 net operating loss carryover is applied against the $76,000 of taxable income for 1960 (computed in accordance with section 172(b)(2)), there remains a $4,000 net operating loss carryover to 1961. Since the application of the net operating loss carryover of $80,000 from 1959 reduces the taxable income for 1960 to zero, no part of the $10,000 of charitable contributions in that year is deductible under section 170(b)(2). However, in determining the amount of the allowable charitable contributions carryover to the taxable years 1961 and 1962, the $10,000 must be reduced by the portion thereof ($4,000) which was used to reduce taxable income for 1960 (as computed for purposes of the second sentence of section 172(b)(2)) and which thereby served to increase the net operating loss carryover to 1961 from zero to $4,000.

(4) ***Year contribution is made.*** For purposes of this paragraph, contributions made by a corporation in a contribution year include contributions which, in accordance with the provisions of section 170(a)(2) and paragraph (b) of this section, are considered as paid during such contribution year.

(5) ***Effect of net operating loss carryback to contribution year.*** The amount of the excess contribution for a contribution year (computed as provided in this paragraph) shall not be increased because a net operating loss carryback is available as a deduction in the contribution year. In addition, in determining (under the provisions of section 172(b)(2)) the amount of the net operating loss for any year subsequent to the contribution year which is a carryback or carryover to taxable years succeeding the contribution year, the amount of contributions shall be limited to the maximum amount deductible under the 5-percent limitation of section 170(b)(2) (computed without regard to any net operating loss carryback or any of the modifications referred to in section 172(d)) for the contribution year.

(6) ***Effect of net operating loss carryback to taxable years succeeding the contribution year.*** The amount of the charitable contribution from a preceding taxable year which is deductible (as provided in this paragraph) in a current taxable year (hereinafter referred to in this subparagraph as the "deduction year") shall not be reduced because a net operating loss carryback is available as a deduction in the

deduction year. In addition, in determining (under the provisions of section 172(b)(2)) the amount of the net operating loss for any year subsequent to the deduction year which is a carryback or a carryover to taxable years succeeding the deduction year, the amount of contributions shall be limited to the maximum amount deductible under the 5-percent limitation of section 170(b)(2) (computed without regard to any net operating loss carryback or any of the modifications referred to in section 172(d)) for the deduction year.

[T.D. 6500, 25 FR 11402, Nov. 26, 1960, as amended by T.D. 6605, 27 FR 8096, Aug. 15, 1962; T.D. 6900, 31 FR 14640, Nov. 17, 1966; T.D. 7207, 37 FR 20768, Oct. 4, 1972]

§ 1.170A-1 Charitable, etc., contributions and gifts; allowance of deduction.

(a) ***Allowance of deduction.*** Any charitable contribution, as defined in section 170(c), actually paid during the taxable year is allowable as a deduction in computing taxable income irrespective of the method of accounting employed or of the date on which the contribution is pledged. However, charitable contributions by corporations may under certain circumstances be deductible even though not paid during the taxable year as provided in section 170(a)(2) and § 1.170A-11. For rules relating to record keeping and return requirements in support of deductions for charitable contributions (whether by an itemizing or nonitemizing taxpayer), see §§ 1.170A-13 (generally applicable to contributions on or before July 30, 2018), 1.170A-14, 1.170A-15, 1.170A-16, 1.170A-17, and 1.170A-18. The deduction is subject to the limitations of section 170(b) and § 1.170A-8 or § 1.170A-11. Subject to the provisions of section 170(d) and §§ 1.170A-10 and 1.170A-11, certain excess charitable contributions made by individuals and corporations shall be treated as paid in certain succeeding taxable years. For provisions relating to direct charitable deductions under section 63 by nonitemizers, see section 63 (b)(1)(C) and (i) and section 170(i). For rules relating to the detemination of, and the deduction for, amounts paid to maintain certain students as members of the taxpayer's household and treated under section 170(g) as paid for the use of an organization described in section 170(c) (2), (3), or (4), see § 1.170A-2. For the reduction of any charitable contributions for interest on certain indebtedness, see section 170(f)(5) and § 1.170A-3. For a special rule relating to the computation of the amount of the deduction with respect to a charitable contribution of certain ordinary income or capital gain property, see section 170(e) and §§ 1.170A-4 and 1.170A-4A. For rules for postponing the time for deduction of a charitable contribution of a future interest in tangible personal property, see section 170(a)(3) and § 1.170A-5. For rules with respect to transfers in trust and of partial interests in property, see section 170(e), section 170(f) (2) and (3), §§ 1.170A-4, 1.170A-6, and 1.170A-7. For definition of the term *section 170(b)(1)(A) organization,* see § 1.170A-9. For valuation of a remainder interest in real property, see section 170(f)(4) and the regulations thereunder. The deduction for charitable contributions is subject to verification by the district director.

(b) ***Time of making contribution.*** Ordinarily, a contribution is made at the time delivery is effected. The unconditional delivery or mailing of a check which subsequently clears in due course will constitute an effective contribution on the date of delivery or mailing. If a taxpayer unconditionally delivers or mails a properly endorsed stock certificate to a charitable donee or the donee's agent, the gift is completed on the date of delivery or, if such certificate is received in the ordinary course of the mails, on the date of mailing. If the donor delivers the stock certificate to his bank or broker as the donor's agent, or to the issuing corporation or its agent, for transfer into the name of the donee, the gift is completed on the date the stock is transferred on the books of the corporation. For rules relating to the date of payment of a contribution consisting of a future interest in tangible personal property, see section 170(a)(3) and § 1.170A-5.

(c) ***Value of a contribution in property.***

(1) If a charitable contribution is made in property other than money, the amount of the contribution is the fair market value of the property at the time of the contribution reduced as provided in section 170(e)(1) and paragraph (a) of § 1.170A-4, or section 170(e)(3) and paragraph (c) of § 1.170A-4A.

(2) The fair market value is the price at which the property would change hands between a willing buyer and a willing seller, neither being under any compulsion to buy or sell and both having reasonable knowledge of relevant facts. If the contribution is made in property of a type which the taxpayer sells in the course of his business, the fair market value is the price which the taxpayer would have received if he had sold the contributed property in the usual market in which he customarily sells, at the time and place of the contribution and, in the case of a contribution of goods in quantity, in the quantity contributed. The usual market of a manufacturer or other producer consists of the wholesalers or other distributors to or through whom he customarily sells, but if he sells only at retail the usual market consists of his retail customers.

(3) If a donor makes a charitable contribution of property, such as stock in trade, at a time when he could not reasonably have been expected to realize its usual selling price, the value of the gift is not the usual selling price but is the amount for which the quantity of property contributed would have been sold by the donor at the time of the contribution.

(4) Any costs and expenses pertaining to the contributed property which were incurred in taxable years preceding the year of contribution and are properly reflected in the opening inventory for the year of contribution must be removed from inventory and are not a part of the cost of goods sold for purposes of determining gross income for the year of contribution. Any costs and expenses pertaining to the contributed property which are incurred in the year of contribution and would, under the method of accounting used, be properly reflected in the cost of goods sold for such year are to be treated as part of the costs of goods sold for such year. If costs and expenses incurred in producing or acquiring the contributed property are, under the method of accounting used, properly deducted under section 162 or other section of the Code, such costs and expenses will be allowed as deductions for the taxable year in which they are paid or incurred whether or not such year is the year of the contribution. Any such costs and expenses which are treated as part of the cost of goods sold for the year of contribution, and any such costs and expenses which are properly deducted under section 162 or other section of the Code, are not to be treated under any section of the Code as resulting in any basis for the contributed property. Thus, for example, the contributed property has no basis for purposes of determining under section 170(e)(1)(A) and paragraph (a) of § 1.170A-4 the amount of gain which would have been recognized if such property had been sold by the donor at its fair market value at the time of its contribution. The amount of any charitable contribution for the taxable year is not to be reduced by the amount of any costs or expenses pertaining to the contributed property which was properly deducted under section 162 or other section of the Code for any taxable year preceding the year of the contribution. This subparagraph applies only to property which was held by the taxpayer for sale in the course of a trade or business. The application of this subparagraph may be illustrated by the following examples:

Example 1. In 1970, A, an individual using the calendar year as the taxable year and the accrual method of accounting, contributed to a church property from inventory having a fair market value of $600. The closing inventory at the end of 1969 properly included $400 of costs attributable to the acquisition of such property, and in 1969 A properly deducted under section 162 $50 of administrative and other expenses attributable to such property. Under section 170(e)(1)(A) and paragraph (a) of § 1.170A-4, the amount of the charitable contribution allowed

for 1970 is $400 ($600−[$600−$400]). Pursuant to this subparagraph, the cost of goods sold to be used in determining gross income for 1970 may not include the $400 which was included in opening inventory for that year.

Example 2. The facts are the same as in *Example 1* except that the contributed property was acquired in 1970 at a cost of $400. The $400 cost of the property is included in determining the cost of goods sold for 1970, and $50 is allowed as a deduction for that year under section 162. A is not allowed any deduction under section 170 for the contributed property, since under section 170(e)(1)(A) and paragraph (a) of § 1.170A-4 the amount of the charitable contribution is reduced to zero ($600−[$600−$0]).

Example 3. In 1970, B, an individual using the calendar year as the taxable year and the accrual method of accounting, contributed to a church property from inventory having a fair market value of $600. Under § 1.471-3(c), the closing inventory at the end of 1969 properly included $450 costs attributable to the production of such property, including $50 of administrative and other indirect expenses which, under his method of accounting, was properly added to inventory rather than deducted as a business expense. Under section 170(e)(1)(A) and paragraph (a) of § 1.170A-4, the amount of the charitable contribution allowed for 1970 is $450 ($600−[$600−$450]). Pursuant to this subparagraph, the cost of goods sold to be used in determining gross income for 1970 may not include the $450 which was included in opening inventory for that year.

Example 4. The facts are the same as in *Example 3* except that the contributed property was produced in 1970 at a cost of $450, including $50 of administrative and other indirect expenses. The $450 cost of the property is included in determining the cost of goods sold for 1970. B is not allowed any deduction under section 170 for the contributed property, since under section 170(e)(1)(A) and paragraph (a) of § 1.170A-4 the amount of the charitable contribution is reduced to zero ($600−[$600−$0]).

Example 5. In 1970, C, a farmer using the cash method of accounting and the calendar year as the taxable year, contributed to a church a quantity of grain which he had raised having a fair market value of $600. In 1969, C paid expenses of $450 in raising the property which he properly deducted for such year under section 162. Under section 170(e)(1)(A) and paragraph (a) of § 1.170A-4, the amount of the charitable contribution in 1970 is reduced to zero ($600−[$600−$0]). Accordingly, C is not allowed any deduction under section 170 for the contributed property.

Example 6. The facts are the same as in *Example 5* except that the $450 expenses incurred in raising the contributed property were paid in 1970. The result is the same as in *Example 5,* except the amount of $450 is deductible under section 162 for 1970.

(5) For payments or transfers to an entity described in section 170(c) by a taxpayer carrying on a trade or business, see § 1.162-15(a).

(d) ***Purchase of an annuity.***

(1) In the case of an annuity or portion thereof purchased from an organization described in section 170(c), there shall be allowed as a deduction the excess of the amount paid over the value at the time of purchase of the annuity or portion purchased.

(2) The value of the annuity or portion is the value of the annuity determined in accordance with paragraph (e)(1)(iii) (*b*)(*2*) of § 1.101-2.

(3) For determining gain on any such transaction constituting a bargain sale, see section 1011(b) and § 1.1011-2.

(e) ***Transfers subject to a condition or power.*** If as of the date of a gift a transfer for charitable purposes is dependent upon the performance of some act or the happening of a precedent event in order that it might become effective, no deduction is allowable unless the possibility that the charitable transfer will not become effective is so remote as to be negligible. If an interest in property passes to, or is vested in, charity on the date of the gift and the interest would be defeated by the subsequent performance of some act or the happening of some event, the possibility of occurrence of which appears on the date of the gift to be so remote as to be negligible, the deduction is allowable. For example, A transfers land to a city government for as long as the land is used by the city for a public park. If on the date of the gift the city does plan to use the land for a park and the possibility that the city will not use the land for a public park is so remote as to be negligible, A is entitled to a deduction under section 170 for his charitable contribution.

(f) ***Special rules applicable to certain contributions.***

(1) See section 14 of the Wild and Scenic Rivers Act (Pub. L. 90-542, 82 Stat. 918) for provisions relating to the claim and allowance of the value of certain easements as a charitable contribution under section 170.

(2) For treatment of gifts accepted by the Secretary of State or the Secretary of Commerce, for the purpose of organizing and holding an international conference to negotiate a Patent Corporation Treaty, as gifts to or for the use of the United States, see section 3 of joint resolution of December 24, 1969 (Pub. L. 91-160, 83 Stat. 443).

(3) For treatment of gifts accepted by the Secretary of the Department of Housing and Urban Development, for the purpose of aiding or facilitating the work of the Department, as gifts to or for the use of the United States, see section 7(k) of the Department of Housing and Urban Development Act (42 U.S.C. 3535), as added by section 905 of Pub. L. 91-609 (84 Stat. 1809).

(g) ***Contributions of services.*** No deduction is allowable under section 170 for a contribution of services. However, unreimbursed expenditures made incident to the rendition of services to an organization contributions to which are deductible may constitute a deductible contribution. For example, the cost of a uniform without general utility which is required to be worn in performing donated services is deductible. Similarly, out-of-pocket transportation expenses necessarily incurred in performing donated services are deductible. Reasonable expenditures for meals and lodging necessarily incurred while away from home in the course of performing donated services also are deductible. For the purposes of this paragraph, the phrase *while away from home* has the same meaning as that phrase is used for purposes of section 162 and the regulations thereunder.

(h) ***Payment in exchange for consideration*** —

(1) ***Burden on taxpayer to show that all or part of payment is a charitable contribution or gift.*** No part of a payment that a taxpayer makes to or for the use of an organization described in section 170(c) that is in consideration for (as defined in paragraph (h)(4)(i) of this section goods or services (as defined in paragraph (h)(4)(ii) of this section is a contribution or gift within the meaning of section 170(c) unless the taxpayer—

(i) Intends to make a payment in an amount that exceeds the fair market value of the goods or services; and

(ii) Makes a payment in an amount that exceeds the fair market value of the goods or services.

(2) *Limitation on amount deductible* —

(i) ***In general.*** The charitable contribution deduction under section 170(a) for a payment a taxpayer makes partly in consideration for goods or services may not exceed the excess of—

(A) The amount of any cash paid and the fair market value of any property (other than cash) transferred by the taxpayer to an organization described in section 170(c); over

(B) The fair market value of the goods or services received or expected to be received in return.

(ii) ***Special rules.*** For special limits on the deduction for charitable contributions of ordinary income and capital gain property, see section 170(e) and §§ 1.170A-4 and 1.170A-4A.

(3) *Payments resulting in state or local tax benefits* —

(i) ***State or local tax credits.*** Except as provided in paragraph (h)(3)(vi) of this section, if a taxpayer makes a payment or transfers property to or for the use of an entity described in section 170(c), the amount of the taxpayer's charitable contribution deduction under section 170(a) is reduced by the amount of any state or local tax credit that the taxpayer receives or expects to receive in consideration for the taxpayer's payment or transfer.

(ii) *State or local tax deductions* —

(A) ***In general.*** If a taxpayer makes a payment or transfers property to or for the use of an entity described in section 170(c), and the taxpayer receives or expects to receive state or local tax deductions that do not exceed the amount of the taxpayer's payment or the fair market value of the property transferred by the taxpayer to the entity, the taxpayer is not required to reduce its charitable contribution deduction under section 170(a) on account of the state or local tax deductions.

(B) ***Excess state or local tax deductions.*** If the taxpayer receives or expects to receive a state or local tax deduction that exceeds the amount of the taxpayer's payment or the fair market value of the property transferred, the taxpayer's charitable contribution deduction under section 170(a) is reduced.

(iii) ***In consideration for.*** For purposes of paragraph (h) of this section, the term *in consideration for* has the meaning set forth in paragraph (h)(4)(i) of this section.

(iv) ***Amount of reduction.*** For purposes of paragraph (h)(3)(i) of this section, the amount of any state or local tax credit is the maximum credit allowable that corresponds to the amount of the taxpayer's payment or transfer to the entity described in section 170(c).

(v) ***State or local tax.*** For purposes of paragraph (h)(3) of this section, the term *state or local tax* means a tax imposed by a State, a possession of the United States, or by a political subdivision of any of the foregoing, or by the District of Columbia.

(vi) ***Exception.*** Paragraph (h)(3)(i) of this section shall not apply to any payment or transfer of property if the total amount of the state and local tax credits received or expected to be received by the taxpayer is 15 percent or less of the taxpayer's payment, or 15 percent or less of the fair market value of the property transferred by the taxpayer.

(vii) ***Examples.*** The following examples illustrate the provisions of this paragraph (h)(3). The examples in paragraph (h)(6) of this section are not illustrative for purposes of this paragraph (h)(3).

(A) ***Example 1. A,*** an individual, makes a payment of $1,000 to X, an entity described in section 170(c). In exchange for the payment, A receives or expects to receive a state tax credit of 70 percent of the amount of A's payment to X. Under paragraph (h)(3)(i) of this section, A's charitable contribution deduction is reduced by $700 (0.70 × $1,000). This reduction occurs regardless of whether A is able to claim the state tax credit in that year. Thus, A's charitable contribution deduction for the $1,000 payment to X may not exceed $300.

(B) ***Example 2. B,*** an individual, transfers a painting to Y, an entity described in section 170(c). At the time of the transfer, the painting has a fair market value of $100,000. In exchange for the painting, B receives or expects to receive a state tax credit equal to 10 percent of the fair market value of the painting. Under paragraph (h)(3)(vi) of this section, B is not required to apply the general rule of paragraph (h)(3)(i) of this section because the amount of the tax credit received or expected to be received by B does not exceed 15 percent of the fair market value of the property transferred to Y. Accordingly, the amount of B's charitable contribution deduction for the transfer of the painting is not reduced under paragraph (h)(3)(i) of this section.

(C) ***Example 3. C,*** an individual, makes a payment of $1,000 to Z, an entity described in section 170(c). In exchange for the payment, under state M law, C is entitled to receive a state tax deduction equal to the amount paid by C to Z. Under paragraph (h)(3)(ii)(A) of this section, C's charitable contribution deduction under section 170(a) is not required to be reduced on account of C's state tax deduction for C's payment to Z.

(viii) ***Safe harbor for payments by C corporations and specified passthrough entities.*** For payments by a C corporation or by a specified passthrough entity to an entity described in section 170(c), where the C corporation or specified passthrough entity receives or expects to receive a State or local tax credit that reduces the charitable contribution deduction for such payments under paragraph (h)(3) of this section, see § 1.162-15(a)(3) (providing safe harbors under section 162(a) to the extent of that reduction).

(ix) ***Safe harbor for individuals.*** Under certain circumstances, an individual who itemizes deductions and makes a payment to an entity described in section 170(c) in consideration for a State or local tax credit may treat the portion of such payment for which a charitable contribution deduction is disallowed under paragraph (h)(3) of this section as a payment of State or local taxes under section 164. See § 1.164-3(j), providing a safe harbor for certain payments by individuals in exchange for State or local tax credits.

(x) ***Effective/applicability date.*** This paragraph (h)(3) applies to amounts paid or property transferred by a taxpayer after August 27, 2018.

(4) ***Definitions.*** For purposes of this paragraph (h), the following definitions apply:

(i) ***In consideration for.*** A taxpayer receives goods or services in consideration for a taxpayer's payment or transfer to an entity described in section 170(c) if, at the time the taxpayer makes the payment to such entity, the taxpayer receives or expects to receive goods or services from that entity or any other party in return.

(ii) ***Goods or services.*** Goods or services means cash, property, services, benefits, and privileges.

(iii) ***Applicability date.*** The definitions provided in this paragraph (h)(4) are applicable to amounts paid or property transferred on or after December 17, 2019.

(5) ***Certain goods or services disregarded.*** For purposes of section 170(a) and paragraphs (h)(1) and (h)(2) of this section, goods or services described in § 1.170A-13(f)(8)(i) or § 1.170A-13(f)(9)(i) are disregarded.

(6) ***Donee estimates of the value of goods or services may be treated as fair market value*** —

(i) ***In general.*** For purposes of section 170(a), a taxpayer may rely on either a contemporaneous written acknowledgment provided under section 170(f)(8) and § 1.170A-13(f) or a written disclosure statement provided under section 6115 for the fair market value of any goods or services provided to the taxpayer by the donee organization.

(ii) ***Exception.*** A taxpayer may not treat an estimate of the value of goods or services as their fair market value if the taxpayer knows, or has reason to know, that such treatment is unreasonable. For example, if a taxpayer knows, or has reason to know, that there is an error in an estimate provided by an organization described in section 170(c) pertaining to goods or services that have a readily ascertainable value, it is unreasonable for the taxpayer to treat the estimate as the fair market value of the goods or services. Similarly, if a taxpayer is a dealer in the type of goods or services provided in consideration for the taxpayer's payment and knows, or has reason to know, that the estimate is in error, it is unreasonable for the taxpayer to treat the estimate as the fair market value of the goods or services.

(7) ***Examples.*** The following examples illustrate the rules of this paragraph (h).

Example 1. Certain goods or services disregarded. Taxpayer makes a $50 payment to Charity *B,* an organization described in section 170(c), in exchange for a family membership. The family membership entitles Taxpayer and members of Taxpayer's family to certain benefits. These benefits include free admission to weekly poetry readings, discounts on merchandise sold by *B* in its gift shop or by mail order, and invitations to special events for members only, such as lectures or informal receptions. When *B* first offers its membership package for the year, *B* reasonably projects that each special event for members will have a cost to *B,* excluding any allocable overhead, of $5 or less per person attending the event. Because the family membership benefits are disregarded pursuant to § 1.170A-13(f)(8)(i), Taxpayer may treat the $50 payment as a contribution or gift within the meaning of section 170(c), regardless of Taxpayer's intent and whether or not the payment exceeds the fair market value of the goods or services. Furthermore, any charitable contribution deduction available to Taxpayer may be calculated without regard to the membership benefits.

Example 2. Treatment of good faith estimate at auction as the fair market value. Taxpayer attends an auction held by Charity *C,* an organization described in section 170(c). Prior to the auction, *C* publishes a catalog that meets the requirements for a written disclosure statement under section 6115(a) (including *C*'s good faith estimate of the value of items that will be available for bidding). A representative of *C* gives a copy of the catalog to each individual (including Taxpayer) who attends the auction. Taxpayer notes that in the catalog *C*'s estimate of the value of a vase is $100. Taxpayer has no reason to doubt the accuracy of this estimate. Taxpayer successfully bids and pays $500 for the vase. Because Taxpayer knew, prior to making her payment, that the estimate in the catalog was less than the amount of her payment, Taxpayer satisfies the requirement of paragraph (h)(1)(i) of this section. Because Taxpayer makes a

payment in an amount that exceeds that estimate, Taxpayer satisfies the requirements of paragraph (h)(1)(ii) of this section. Taxpayer may treat *C*'s estimate of the value of the vase as its fair market value in determining the amount of her charitable contribution deduction.

Example 3. Good faith estimate not in error. Taxpayer makes a $200 payment to Charity *D,* an organization described in section 170(c). In return for Taxpayer's payment, *D* gives Taxpayer a book that Taxpayer could buy at retail prices typically ranging from $18 to $25. *D* provides Taxpayer with a good faith estimate, in a written disclosure statement under section 6115(a), of $20 for the value of the book. Because the estimate is within the range of typical retail prices for the book, the estimate contained in the written disclosure statement is not in error. Although Taxpayer knows that the book is sold for as much as $25, Taxpayer may treat the estimate of $20 as the fair market value of the book in determining the amount of his charitable contribution deduction.

(i) [Reserved]

(j) ***Exceptions and other rules.***

(1) The provisions of section 170 do not apply to contributions by an estate; nor do they apply to a trust unless the trust is a private foundation which, pursuant to section 642(c)(6) and § 1.642(c)-4, is allowed a deduction under section 170 subject to the provisions applicable to individuals.

(2) No deduction shall be allowed under section 170 for a charitable contribution to or for the use of an organization or trust described in section 508(d) or 4948(c)(4), subject to the conditions specified in such sections and the regulations thereunder.

(3) For disallowance of deductions for contributions to or for the use of communist controlled organizations, see section 11(a) of the Internal Security Act of 1950, as amended (50 U.S.C. 790).

(4) For denial of deductions for charitable contributions as trade or business expenses and rules with respect to treatment of payments to organizations other than those described in section 170(c), see section 162 and the regulations thereunder.

(5) No deduction shall be allowed under section 170 for amounts paid to an organization:

(i) Which is disqualified for tax exemption under section 501(c)(3) by reason of attempting to influence legislation, or

(ii) Which participates in, or intervenes in (including the publishing or distribution of statements), any political campaign on behalf of or in opposition to any candidate for public office.

For purposes of determining whether an organization is attempting to influence legislation or is engaging in political activities, see sections 501(c)(3), 501(h), 4911 and the regulations thereunder.

(6) No deduction shall be allowed under section 170 for expenditures for lobbying purposes, the promotion or defeat of legislation, etc. See also the regulations under sections 162 and 4945.

(7) No deduction for charitable contributions is allowed in computing the taxable income of a common trust fund or of a partnership. See sections 584(d)(3) and 703(a)(2)(D). However, a partner's distributive share of charitable contributions actually paid by a partnership during its taxable year may be allowed as a deduction in the partner's separate return for his taxable year with or within which the taxable year of the partnership ends, to the extent that the aggregate of his share of the partnership contributions and his own contributions does not exceed the limitations in section 170(b).

(8) For charitable contributions paid by a nonresident alien individual or a foreign corporation, see § 1.170A-4(b)(5) and sections 873, 876, 877, and 882(c), and the regulations thereunder.

(9) Charitable contributions paid by bona fide residents of a section 931 possession as defined in § 1.931-1(c)(1) or Puerto Rico are deductible only to the extent allocable to income that is not excluded under section 931 or 933. For the rules for allocating deductions for charitable contributions, see the regulations under section 861.

(10) For carryover of excess charitable contributions in certain corporate acquisitions, see section 381(c)(19) and the regulations thereunder.

(11) No deduction shall be allowed under section 170 for out-of-pocket expenditures on behalf of an eligible organization (within the meaning of § 1.501(h)-2(b)(1)) if the expenditure is made in connection with influencing legislation (within the meaning of section 501(c)(3) or § 56.4911-2), or in connection with the payment of the organization's tax liability under section 4911. For the treatment of similar expenditures on behalf of other organizations see paragraph (h)(6) of this section.

(k) ***Effective/applicability date.*** In general this section applies to contributions made in taxable years beginning after December 31, 1969. Paragraph (j)(11) of this section, however, applies only to out-of-pocket expenditures made in taxable years beginning after December 31, 1976. In addition, paragraph (h) of this section applies only to payments made on or after December 16, 1996. However, taxpayers may rely on the rules of paragraph (h) of this section for payments made on or after January 1, 1994. Paragraph (j)(9) of this section is applicable for taxable years ending after April 9, 2008. The third sentence of paragraph (a) applies as provided in the sections referenced in that sentence.

(68A Stat. 58, 26 U.S.C. 170(a)(1); 68A Stat. 917, 26 U.S.C. 7805)

[T.D. 7207, 37 FR 20771, Oct. 4, 1972, as amended by T.D. 7340, 40 FR 1238, Jan. 7, 1975; T.D. 7807, 47 FR 4510, Feb. 1, 1982; T.D. 8002, 49 FR 50666, Dec. 31, 1984; T.D. 8308, 55 FR 35587, Aug. 31, 1990; T.D. 8690, 61 FR 65951, Dec. 16, 1996; T.D. 9194, 70 FR 18928, Apr. 11, 2005; T.D. 9391, 73 FR 19358, Apr. 9, 2008; T.D. 9836, 83 FR 36421, July 30, 2018; 83 FR 45827, Sept. 11, 2018; T.D. 9864, 84 FR 27530, June 13, 2019; T.D, 9907, 85 FR 48474, Aug. 11, 2020]

§ 1.170A-2 Amounts paid to maintain certain students as members of the taxpayer's household.

(a) ***In general.***

(1) The term *charitable contributions* includes amounts paid by the taxpayer during the taxable year to maintain certain students as members of his household which, under the provisions of section 170(h) and this section, are treated as amounts paid for the use of an organization described in section 170(c) (2), (3), or (4), and such amounts, to the extent they do not exceed the limitations under section 170(h)(2) and paragraph (b) of this section, are contributions deductible under section 170. In order for such amounts to be so treated, the student must be an individual who is neither a dependent (as defined in section 152) of the taxpayer nor related to the taxpayer in a manner described in any of the paragraphs (1) through (8) of section 152(a), and such individual must be a member of the taxpayer's household pursuant to a written agreement between the taxpayer and an organization described in section 170(c) (2), (3), or (4) to implement a program of the organization to provide educational opportunities for pupils or students placed in private homes by such organization. Furthermore, such amounts must be paid to maintain such individual during the period in the taxable year he is a member of the taxpayer's household and is a full-time pupil or student in the 12th or any lower grade at an educational institution, as defined in section 151(e)(4) and §

1.151-3, located in the United States. Amounts paid outside of such period, but within the taxable year, for expenses necessary for the maintenance of the student during the period will qualify for the charitable contributions deduction if the other limitation requirements of the section are met.

(2) For purposes of subparagraph (1) of this paragraph, amounts treated as charitable contributions include only those amounts actually paid by the taxpayer during the taxable year which are directly attributable to the maintenance of the student while he is a member of the taxpayer's household and is attending an educational institution on a full-time basis. This would include amounts paid to insure the well-being of the individual and to carry out the purpose for which the individual was placed in the taxpayer's home. For example, a deduction under section 170 would be allowed for amounts paid for books, tuition, food, clothing, transportation, medical and dental care, and recreation for the individual. Amounts treated as charitable contributions under this section do not include amounts which the taxpayer would have expended had the student not been in the household. They would not include, for example, amounts paid in connection with the taxpayer's home for taxes, insurance, interest on a mortgage, repairs, etc. Moreover, such amounts do not include any depreciation sustained by the taxpayer in maintaining such student or students in his household, nor do they include the value of any services rendered on behalf of such student or students by the taxpayer or any member of the taxpayer's household.

(3) For purposes of section 170(h) and this section, an individual will be considered to be a full-time pupil or student at an educational institution only if he is enrolled for a course of study prescribed for a full-time student at such institution and is attending classes on a full-time basis. Nevertheless, such individual may be absent from school due to special circumstances and still be considered to be in full-time attendance. Periods during the regular school term when the school is closed for holidays, such as Christmas and Easter, and for periods between semesters are treated as periods during which the pupil or student is in full-time attendance at the school. Also, absences during the regular school term due to illness of such individual shall not prevent him from being considered as a full-time pupil or student. Similarly, absences from the taxpayer's household due to special circumstances will not disqualify the student as a member of the household. Summer vacations between regular school terms are not considered periods of school attendance.

(4) When claiming a deduction for amounts described in section 170(h) and this section, the taxpayer must submit with his return a copy of his agreement with the organization sponsoring the individual placed in the taxpayer's household, together with a summary of the various items for which amounts were paid to maintain such individual, and a statement as to the date the individual became a member of the household and the period of his full-time attendance at school and the name and location of such school. Substantiation of amounts claimed must be supported by adequate records of the amounts actually paid. Due to the nature of certain items, such as food, a record of amount spent for all members of the household, with an equal portion thereof allocated to each member, will be acceptable.

(b) ***Limitations.*** Section 170(h) and this section shall apply to amounts paid during the taxable year only to the extent that the amounts paid in maintaining each pupil or student do not exceed $50 multiplied by the number of full calendar months in the taxable year that the pupil or student is maintained in accordance with the provisions of this section. For purposes of such limitation if 15 or more days of a calendar month fall within the period to which the maintenance of such pupil or student relates, such month is considered as a full calendar month. To the extent that such amounts qualify as charitable contributions under section 170(c), the aggregate of such amounts plus other contributions made during the taxable year for the use of an organization described in section 170(c) is deductible under section 170 subject to the limitation provided in section 170(b)(1)(B) and paragraph (c) of § 1.170A-8.

(c) ***Compensation or reimbursement.*** Amounts paid during the taxable year to maintain a pupil or student as a member of the taxpayer's household as provided in paragraph (a) of this section, shall not be taken into account under section 170(h) and this section, if the taxpayer receives any money or other property as compensation or reimbursement for any portion of such amounts. The taxpayer will not be denied the benefits of section 170(h) if he prepays an extraordinary or nonrecurring expense such as a hospital bill or vacation trip, at the request of the individual's parents or the sponsoring organization and is reimbursed for such prepayment. The value of services performed by the pupil or student in attending to ordinary chores of the household will generally not be considered to constitute compensation or reimbursement. However, if the pupil or student is taken into the taxpayer's household to replace a former employee of the taxpayer or gratuitously to perform substantial services for the taxpayer, the facts and circumstances may warrant a conclusion that the taxpayer received reimbursement for maintaining the pupil or student.

(d) ***No other amount allowed as deduction.*** Except to the extent that amounts described in section 170(h) and this section are treated as charitable contributions under section 170(c) and, therefore, deductible under section 170(a), no deduction is allowed for any amount paid to maintain an individual, as a member of the taxpayer's household, in accordance with the provisions of section 170(h) and this section.

(e) ***Illustrations.*** The application of this section may be illustrated by the following examples:

Example 1. The X organization is an organization described in section 170(c)(2) and is engaged in a program under which a number of European children are placed in the homes of U.S. residents in order to further the children's high school education. In accordance with paragraph (a) of this section, the taxpayer, A, who reports his income on the calendar year basis, agreed with X to take two of the children, and they were placed in the taxpayer's home on January 2, 1970, where they remained until January 21, 1971, during which time they were fully maintained by the taxpayer. The children enrolled at the local high school for the full course of study prescribed for 10th grade students and attended the school on a full-time basis for the spring semester starting January 18, 1970, and ending June 3, 1970, and for the fall semester starting September 1, 1970, and ending January 13, 1971. The total cost of food paid by A in 1970 for himself, his wife, and the two children amounted to $1,920, or $40 per month for each member of the household. Since the children were actually full-time students for only $8^1/_2$ months during 1970, the amount paid for food for each child during that period amounted to $340. Other amounts paid during the 8 1/2-month period for each child for laundry, lights, water, recreation, and school supplies amounted to $160. Thus, the amounts treated under section 170(h) and this section as paid for the use of X would, with respect to each child, total $500 ($340 + $160), or a total for both children of $1,000, subject to the limitations of paragraph (b) of this section. Since, for purposes of such limitations, the children were full-time students for only 8 full calendar months during 1970 (less than 15 days in January 1970), the taxpayer may treat only $800 as a charitable contribution made in 1970, that is, $50 multiplied by the 8 full calendar months, or $400 paid for the maintenance of each child. Neither the excess payments nor amounts paid to maintain the children during the period before school opened and for the period in summer between regular school terms is taken into account by reason of section 170(h). Also, because the children were full-time students for less than 15 days in January 1971 (although maintained in the taxpayer's household for 21 days), amounts paid to maintain the children during 1971 would not qualify as a charitable contribution.

Example 2. A religious organization described in section 170(c)(2) has a program for providing educational opportunities for children it places in private homes. In order to implement the program, the taxpayer, H, who resides with his wife, son, and daughter of high school age in a town in the United States, signs an agreement with the organization to maintain a girl sponsored by the organization as a member of his household while the child attends the local high school for the regular 1970-71 school

year. The child is a full-time student at the school during the school year starting September 6, 1970, and ending June 6, 1971, and is a member of the taxpayer's household during that period. Although the taxpayer pays $200 during the school period falling in 1970, and $240 during the school period falling in 1971, to maintain the child, he cannot claim either amount as a charitable contribution because the child's parents, from time to time during the school year, send butter, eggs, meat, and vegetables to H to help defray the expenses of maintaining the child. This is considered property received as reimbursement under paragraph (c) of this section. Had her parents not contributed the food, the fact that the child, in addition to the normal chores she shared with the taxpayer's daughter, such as cleaning their own rooms and helping with the shopping and cooking, was responsible for the family laundry and for the heavy cleaning of the entire house while the taxpayer's daughter had no comparable responsibilities would also preclude a claim for a charitable contributions deduction. These substantial gratuitous services are considered property received as reimbursement under paragraph (c) of this section.

Example 3. A taxpayer resides with his wife in a city in the eastern United States. He agrees, in writing, with a fraternal society described in section 170(c)(4) to accept a child selected by the society for maintenance by him as a member of his household during 1971 in order that the child may attend the local grammar school as a part of the society's program to provide elementary education for certain children selected by it. The taxpayer maintains the child, who has as his principal place of abode the home of the taxpayer, and is a member of the taxpayer's household, during the entire year 1971. The child is a full-time student at the local grammar school for 9 full calendar months during the year. Under the agreement, the society pays the taxpayer $30 per month to help maintain the child. Since the $30 per month is considered as compensation or reimbursement to the taxpayer for some portion of the maintenance paid on behalf of the child, no amounts paid with respect to such maintenance can be treated as amounts paid in accordance with section 170(h). In the absence of the $30 per month payments, if the child qualifies as a dependent of the taxpayer under section 152(a)(9), that fact would also prevent the maintenance payments from being treated as charitable contributions paid for the use of the fraternal society.

(f) ***Effective date.*** This section applies only to contributions paid in taxable years beginning after December 31, 1969.

[T.D. 7207, 37 FR 20774, Oct. 4, 1972]

§ 1.170A-3 Reduction of charitable contribution for interest on certain indebtedness.

(a) ***In general.*** Section 170(f)(5) requires that the amount of a charitable contribution be reduced for certain interest to the extent necessary to avoid the deduction of the same amount both as an interest deduction under section 163 and as a deduction for charitable contributions under section 170. The reduction is to be determined in accordance with paragraphs (b) and (c) of this section.

(b) ***Interest attributable to postcontribution period.*** In determining the amount to be taken into account as a charitable contribution for purposes of section 170, the amount determined without regard to section 170(f)(5) or this section shall be reduced by the amount of interest which has been paid, or is to be paid, by the taxpayer, which is attributable to any liability connected with the contribution, and which is attributable to any period of time after the making of the contribution. The deduction otherwise allowable for charitable contributions under section 170 is required to be reduced pursuant to section 170(f)(5) and this section only if, in connection with a charitable contribution, a liability is assumed by the recipient of the contribution or by any other person or if the charitable contribution is of property which is subject to a

liability. Thus, if a charitable contribution is made in property and the transfer is conditioned upon the assumption of a liability by the donee or by some other person, the contribution must be reduced by the amount of any interest which has been paid, or will be paid, by the taxpayer, which is attributable to the liability, and which is attributable to any period after the making of the contribution. The adjustment referred to in this paragraph must also be made where the contributed property is subject to a liability and the value of the property reflects the payment by the donor of interest with respect to a period of time after the making of the contribution.

(c) ***Interest attributable to precontribution period.*** If, in connection with the charitable contribution of a bond, a liability is assumed by the recipient or by any other person, or if the bond is subject to a liability, then, in determining the amount to be taken into account as a charitable contribution under section 170, the amount determined without regard to section 170(f)(5) and this section shall, without regard to whether any reduction may be required by paragraph (b) of this section, also be reduced for interest which has been paid, or is to be paid, by the taxpayer on indebtedness incurred or continued to purchase or carry such bond, and which is attributable to any period before the making of the contribution. However, the reduction referred to in this paragraph shall be made only to the extent that such reduction does not exceed the interest (including bond discount and other interest equivalent) receivable on the bond, and attributable to any period before the making of the contribution which is not, by reason of the taxpayer's method of accounting, includible in the taxpayer's gross income for any taxable year. For purposes of section 170(f)(5) and this section the term *bond* means any bond, debenture, note, or certificate or other evidence of indebtedness.

(d) ***Illustrations.*** The application of this section may be illustrated by the following examples:

Example 1. On January 1, 1970, A, a cash basis taxpayer using the calendar year as the taxable year, contributed to a charitable organization real estate having a fair market value and adjusted basis of $10,000. In connection with the contribution the charitable organization assumed an indebtedness of $8,000 which A had incurred. On December 31, 1969, A prepaid one year's interest on that indebtedness for 1970, amounting to $960, and took an interest deduction of $960 for such amount. The amount of the gift, determined without regard to this section, is $2,960 ($10,000 less $8,000, the outstanding indebtedness, plus $960, the amount of prepaid interest). In determining the amount of the deduction for the charitable contribution, the value of the gift ($2,960) must be reduced by $960 to eliminate from the computation of such deduction that portion thereof for which A has been allowed an interest deduction.

Example 2. (a) On January 1, 1970, B, an individual using the cash receipts and disbursements method of accounting, purchased for $9,950 a $5^1/_2$ percent $10,000, 20-year M Corporation bond, the interest on which was payable semiannually on June 30 and December 31. The M Corporation had issued the bond on January 1, 1960, at a discount of $720 from the principal amount. On December 1, 1970, B donated the bond to a charitable organization, and, in connection with the contribution, the charitable organization assumed an indebtedness of $7,000 which B had incurred to purchase and carry the bond.
(b) During the calendar year 1970 B paid accrued interest of $330 on the indebtedness for the period from January 1, 1970, to December 1, 1970, and has taken an interest deduction of $330 for such amount. No portion of the bond discount of $36 a year ($720 divided by 20 years) has been included in B's income, and of the $550 of annual interest receivable on the bond, he included in income only the June 30, 1970, payment of $275.

(c) The market value of the bond on December 1, 1970, was $9,902. Such value includes $229 of interest receivable which had accrued from July 1 to December 1, 1970.

(d) The amount of the charitable contribution determined without regard to this section is $2,902 ($9,902, the value of the property on the date of gift, less $7,000, the amount of the liability assumed by the charitable organization). In determining the amount of the allowable deduction for charitable contributions, the value of the gift ($2,902) must be reduced to eliminate from the deduction that portion thereof for which B has been allowed an interest deduction. Although the amount of such interest deduction was $330, the reduction required by this section is limited to $262, since the reduction is not in excess of the amount of interest income on the bond ($229 of accrued interest plus $33, the amount of bond discount attributable to the 11-month period B held the bond).

(e) ***Effective date.*** This section applies only to contributions paid in taxable years beginning after December 31, 1969.

[T.D. 7207, 37 FR 20775, Oct. 4, 1972]

§ 1.170A-4 Reduction in amount of charitable contributions of certain appreciated property.

(a) ***Amount of reduction.*** Section 170(e)(1) requires that the amount of the charitable contribution which would be taken into account under section 170(a) without regard to section 170(e) shall be reduced before applying the percentage limitations under section 170(b):

(1) In the case of a contribution by an individual or by a corporation of ordinary income property, as defined in paragraph (b)(1) of this section, by the amount of gain (hereinafter in this section referred to as ordinary income) which would have been recognized as gain which is not long-term capital gain if the property had been sold by the donor at its fair market value at the time of its contribution to the charitable organization,

(2) In the case of a contribution by an individual of section 170(e) capital gain property, as defined in paragraph (b)(2) of this section, by 50 percent of the amount of gain (hereinafter in this section referred to as long-term capital gain) which would have been recognized as long-term capital gain if the property had been sold by the donor at its fair market value at the time of its contribution to the charitable organization, and

(3) In the case of a contribution by a corporation of section 170(e) capital gain property, as defined in paragraph (b)(2) of this section, by $62^1/_2$ percent of the amount of gain (hereinafter in this section referred to as long-term capital gain) which would have been recognized as long-term capital gain if the property had been sold by the donor at its fair market value at the time of its contribution to the charitable organization.

Section 170(e)(1) and this paragraph do not apply to reduce the amount of the charitable contribution where, by reason of the transfer of the contributed property, ordinary income or capital gain is recognized by the donor in the same taxable year in which the contribution is made. Thus, where income or gain is recognized under section 453(d) upon the transfer of an installment obligation to a charitable organization, or under section 454(b) upon the transfer of an obligation issued at a discount to such an organization, or upon the assignment of income to such an organization, section 170(e)(1) and this

paragraph do not apply if recognition of the income or gain occurs in the same taxable year in which the contribution is made. Section 170(e)(1) and this paragraph apply to a charitable contribution of an interest in ordinary income property or section 170(e) capital gain property which is described in paragraph (b) of § 1.170A-6, or paragraph (b) of § 1.170A-7. For purposes of applying section 170(e)(1) and this paragraph it is immaterial whether the charitable contribution is made "to" the charitable organization or whether it is made "for the use of" the charitable organization. See § 1.170A-8(a)(2).

(b) ***Definitions and other rules.*** For purposes of this section:

(1) ***Ordinary income property.*** The term *ordinary income property* means property any portion of the gain on which would not have been long term capital gain if the property had been sold by the donor at its fair market value at the time of its contribution to the charitable organization. Such term includes, for example, property held by the donor primarily for sale to customers in the ordinary course of his trade or business, a work of art created by the donor, a manuscript prepared by the donor, letters and memorandums prepared by or for the donor, a capital asset held by the donor for not more than 1 year (6 months for taxable years beginning before 1977; 9 months for taxable years beginning in 1977), and stock described in section 306(a), 341(a), or 1248(a) to the extent that, after applying such section, gain on its disposition would not have been long-term capital gain. The term does not include an income interest in respect of which a deduction is allowed under section 170(f)(2)(B) and paragraph (c) of § 1.170A-6.

(2) ***Section 170(e) capital gain property.*** The term *section 170(e) capital gain property* means property any portion of the gain on which would have been treated as long-term capital gain if the property had been sold by the donor at its fair market value at the time of its contribution to the charitable organization and which:

(i) Is contributed to or for the use of a private foundation, as defined in section 509(a) and the regulations thereunder, other than a private foundation described in section 170(b)(1)(E),

(ii) Constitutes tangible personal property contributed to or for the use of a charitable organization, other than a private foundation to which subdivision (i) of this subparagraph applies, which is put to an unrelated use by the charitable organization within the meaning of subparagraph (3) of this paragraph, or

(iii) Constitutes property not described in subdivision (i) or (ii) of this subparagraph which is 30-percent capital gain property to which an election under paragraph (d)(2) of § 1.170A-8 applies.

For purposes of this subparagraph a fixture which is intended to be severed from real property shall be treated as tangible personal property.

(3) ***Unrelated use*** —

(i) ***In general.*** The term *unrelated use* means a use which is unrelated to the purpose or function constituting the basis of the charitable organization's exemption under section 501 or, in the case of a contribution of property to a governmental unit, the use of such property by such unit for other than exclusively public purposes. For example, if a painting contributed to an educational institution is used by that organization for educational purposes by being placed in its library for display and study by art students, the use is not an unrelated use; but if the painting is sold and the proceeds used by the organization for educational purposes, the use of the property is an unrelated use. If furnishings contributed to a charitable organization are used by it in its offices and buildings in the course of carrying out its functions, the use of the

property is not an unrelated use. If a set or collection of items of tangible personal property is contributed to a charitable organization or governmental unit, the use of the set or collection is not an unrelated use if the donee sells or otherwise disposes of only an insubstantial portion of the set or collection. The use by a trust of tangible personal property contributed to it for the benefit of a charitable organization is an unrelated use if the use by the trust is one which would have been unrelated if made by the charitable organization.

(ii) ***Proof of use.*** For purposes of applying subparagraph (2)(ii) of this paragraph, a taxpayer who makes a charitable contribution of tangible personal property to or for the use of a charitable organization or governmental unit may treat such property as not being put to an unrelated use by the donee if:

(*a*) He establishes that the property is not in fact put to an unrelated use by the donee, or

(*b*) At the time of the contribution or at the time the contribution is treated as made, it is reasonable to anticipate that the property will not be put to an unrelated use by the donee. In the case of a contribution of tangible personal property to or for the use of a museum, if the object donated is of a general type normally retained by such museum or other museums for museum purposes, it will be reasonable for the donor to anticipate, unless he has actual knowledge to the contrary, that the object will not be put to an unrelated use by the donee, whether or not the object is later sold or exchanged by the donee.

(4) ***Property used in trade or business.*** For purposes of applying subparagraphs (1) and (2) of this paragraph, property which is used in the trade or business, as defined in section 1231(b), shall be treated as a capital asset, except that any gain in respect of such property which would have been recognized if the property had been sold by the donor at its fair market value at the time of its contribution to the charitable organization shall be treated as ordinary income to the extent that such gain would have constituted ordinary income by reason of the application of section 617 (d)(1), 1245(a), 1250(a), 1251(c), 1252(a), or 1254(a).

(5) ***Nonresident alien individuals and foreign corporations.*** The reduction in the case of a nonresident alien individual or a foreign corporation shall be determined by taking into account the gain which would have been recognized and subject to tax under chapter 1 of the Code if the property had been sold or disposed of within the United States by the donor at its fair market value at the time of its contribution to the charitable organization. However, the amount of such gain which would have been subject to tax under section 871(a) or 881 (relating to gain not effectively connected with the conduct of a trade or business within the United States) if there had been a sale or other disposition within the United States shall be treated as long-term capital gain. Thus, a charitable contribution by a nonresident alien individual or a foreign corporation of property the sale or other disposition of which within the United States would have resulted in gain subject to tax under section 871(a) or 881 will be reduced only as provided in section 170(e)(1)(B) and paragraph (a) (2) or (3) of this section, but only if the property contributed is described in subdivision (i), (ii), or (iii) of subparagraph (2) of this paragraph. A charitable contribution by a nonresident alien individual or a foreign corporation of property the sale or other disposition of which within the United States would have resulted in gain subject to tax under section 871(a) or 881 will in no case be reduced under section 170(e)(1)(A) and paragraph (a)(1) of this section.

(c) ***Allocation of basis and gain —***

(1) ***In general.*** Except as provided in subparagraph (2) of this paragraph:

(i) If a taxpayer makes a charitable contribution of less than his entire interest in appreciated property, whether or not the transfer is made in trust, as, for example, in the case of a transfer of appreciated property to a pooled income fund described in section 642(c)(5) and § 1.642(c)-5, and is allowed a deduction under section 170 for a portion of the fair market value of such property, then for purposes of applying the reduction rules of section 170(e)(1) and this section to the contributed portion of the property the taxpayer's adjusted basis in such property at the time of the contribution shall be allocated under section 170(e)(2) between the contributed portion of the property and the noncontributed portion.

(ii) The adjusted basis of the contributed portion of the property shall be that portion of the adjusted basis of the entire property which bears the same ratio to the total adjusted basis as the fair market value of the contributed portion of the property bears to the fair market value of the entire property.

(iii) The ordinary income and the long-term capital gain which shall be taken into account in applying section 170(e)(1) and paragraph (a) of this section to the contributed portion of the property shall be the amount of gain which would have been recognized as ordinary income and long-term capital gain if such contributed portion had been sold by the donor at its fair market value at the time of its contribution to the charitable organization.

(2) ***Bargain sale.***

(i) Section 1011(b) and § 1.1011-2 apply to bargain sales of property to charitable organizations. For purposes of applying the reduction rules of section 170(e)(1) and this section to the contributed portion of the property in the case of a bargain sale, there shall be allocated under section 1011(b) to the contributed portion of the property that portion of the adjusted basis of the entire property that bears the same ratio to the total adjusted basis as the fair market value of the contributed portion of the property bears to the fair market value of the entire property. For purposes of applying section 170(e)(1) and paragraph (a) of this section to the contributed portion of the property in such a case, there shall be allocated to the contributed portion the amount of gain that is not recognized on the bargain sale but that would have been recognized if such contributed portion had been sold by the donor at its fair market value at the time of its contribution to the charitable organization.

(ii) The term *bargain sale,* as used in this subparagraph, means a transfer of property which is in part a sale or exchange of the property and in part a charitable contribution, as defined in section 170(c), of the property.

(3) ***Ratio of ordinary income and capital gain.*** For purposes of applying subparagraphs (1)(iii) and (2)(i) of this paragraph, the amount of ordinary income (or long-term capital gain) which would have been recognized if the contributed portion of the property had been sold by the donor at its fair market value at the time of its contribution shall be that amount which bears the same ratio to the ordinary income (or long-term capital gain) which would have been recognized if the entire property had been sold by the donor at its fair market value at the time of its contribution as

(i) the fair market value of the contributed portion at such time bears to

(ii) the fair market value of the entire property at such time. In the case of a bargain sale, the fair market value of the contributed portion for purposes of subdivision (i) is the amount determined by subtracting from the fair market value of the entire property the amount realized on the sale.

(4) ***Donee's basis of property acquired.*** The adjusted basis of the contributed portion of the property, as determined under subparagraph (1) or (2) of this paragraph, shall be used by the donee in applying to the contributed portion such provisions as section 514(a)(1), relating to adjusted basis of debt-financed property; section 1015(a), relating to basis of property acquired by gift; section 4940(c)(4), relating to capital gains and losses in determination of net investment income; and section 4942(f)(2)(B), relating to net short-term capital gain in determination of tax on failure to distribute income. The fair market value of the contributed portion of the property at the time of the contribution shall not be used by the donee as the basis of such contributed portion.

(d) ***Illustrations.*** The application of this section may be illustrated by the following examples:

Example 1. (a) On July 1, 1970, C, an individual, makes the following charitable contributions, all of which are made to a church except in the case of the stock (as indicated):

Property	Fair market value	Adjusted basis	Recognized gain sold
Ordinary income property	$50,000	$35,000	$15,000
Property which, if sold, would produce long-term capital gain:			
(1) Stock held more than 6 months contributed to—			
(i) A church	25,000	21,000	4,000
(ii) A private foundation not described in section 170(b)(1)(E)	15,000	10,000	5,000
(2) Tangible personal property held more than 6 months (put to unrelated use by church)	12,000	6,000	6,000
Total	102,000	72,000	30,000

(b) After making the reductions required by paragraph (a) of this section, the amount of charitable contributions allowed (before application of section 170(b) limitations) is as follows:

Property	Fair market value	Reduction	Contribution allowed
Ordinary income property	$50,000	$15,000	$35,000
Property which, if sold, would produce long-term capital gain:			
(1) Stock contributed to:			
(i) The church	25,000		25,000
(ii) The private foundation	15,000	2,500	12,500

Property	Fair market value	Reduction	Contribution allowed
(2) Tangible personal property	12,000	3,000	9,000
Total	102,000	20,500	81,500

(c) If C were a corporation, rather than an individual, the amount of charitable contributions allowed (before application of section 170(b) limitation) would be as follows:

Property	Fair market value	Reduction	Contribution allowed
Ordinary income property	$50,000	$15,000	$35,000
Property which, if sold, would produce long-term capital gain:			
(1) Stock contributed to:			
(i) The church	25,000		25,000
(ii) The private foundation	15,000	3,125	11,875
(2) Tangible personal property	12,000	3,750	8,250
Total	102,000	21,875	80,125

Example 2. On March 1, 1970, D, an individual, contributes to a church intangible property to which section 1245 applies which has a fair market value of $60,000 and an adjusted basis of $10,000. At the time of the contribution D has used the property in his business for more than 6 months. If the property had been sold by D at its fair market value at the time of its contribution, it is assumed that under section 1245 $20,000 of the gain of $50,000 would have been treated as ordinary income and $30,000 would have been long-term capital gain. Under paragraph (a)(1) of this section, D's contribution of $60,000 is reduced by $20,000.

Example 3. The facts are the same as in *Example 2* except that the property is contributed to a private foundation not described in section 170(b)(1)(E). Under paragraph (a) (1) and (2) of this section, D's contribution is reduced by $35,000 (100 percent of the ordinary income of $20,000 and 50 percent of the long-term capital gain of $30,000).

Example 4. (a) In 1971, E, an individual calendar-year taxpayer, contributes to a church stock held for more than 6 months which has a fair market value of $90,000 and an adjusted basis of $10,000. In 1972, E also contributes to a church stock held for more than 6 months which has a fair market value of $20,000 and an adjusted basis of $10,000. E's contribution base for 1971 is $200,000; and for 1972, is $150,000. E makes no other charitable contributions for these 2 taxable years.

(b) For 1971 the amount of the contribution which may be taken into account under section 170(a) is limited by section 170(b)(1)(D)(i) to $60,000 ($200,000 × 30%), and A is allowed a deduction for $60,000. Under section 170(b)(1)(D)(ii), E has a $30,000 carryover to 1972 of 30-percent capital gain property, as defined in paragraph (d)(3) of § 1.170A-8. For 1972 the amount of the charitable contributions deduction is $45,000 (total contributions of $50,000 [$30,000 + $20,000] but not to exceed 30% of $150,000).

(c) Assuming, however, that in 1972 E elects under section 170(b)(1)(D)(iii) and paragraph (d)(2) of § 1.170A-8 to have section 170(e)(1)(B) apply to his contributions and carryovers of 30-percent capital gain property, he must apply section 170(d)(1) as if section 170(e)(1)(B) had applied to the contribution for 1971. If section 170 (e)(1)(B) had applied in 1971 to his contributions of 30-percent capital gain property, E's contribution would have been reduced from $90,000 to $50,000, the reduction of $40,000 being 50 percent of the gain of $80,000 ($90,000−$10,000) which would have been recognized as long-term capital gain if the property had been sold by E at its fair market value at the time of its contribution to the church. Accordingly, by taking the election into account, E has no carryover of 30-percent capital gain property to 1972 since the charitable contributions deduction of $60,000 allowed for 1971 in respect of that property exceeds the reduced contribution of $50,000 for 1971 which may be taken into account by reason of the election. The charitable contributions deduction of $60,000 allowed for 1971 is not reduced by reason of the election.

(d) Since by reason of the election E is allowed under paragraph (a)(2) of this section a charitable contributions deduction for 1972 of $15,000 ($20,000−[($20,000− $10,000) × 50%]) and since the $30,000 carryover from 1971 is eliminated, it would not be to E's advantage to make the election under section 170(b)(1)(D)(iii) in 1972.

Example 5. In 1970, F, an individual calendar-year taxpayer, sells to a church for $4,000 ordinary income property with a fair market value of $10,000 and an adjusted basis of $4,000. F's contribution base for 1970 is $20,000, and F makes no other charitable contributions in 1970. Thus, F makes a charitable contribution to the church of $6,000 ($10,000−$4,000 amount realized), which is 60% of the value of the property. The amount realized on the bargain sale is 40% ($4,000/$10,000) of the value of the property. In applying section 1011(b) to the bargain sale, adjusted basis in the amount of $1,600 ($4,000 adjusted basis × 40%) is allocated under § 1.1011-2(b) to the noncontributed portion of the property, and F recognizes $2,400 ($4,000 amount realized less $1,600 adjusted basis) of ordinary income. Under paragraphs (a)(1) and (c)(2)(i) of this section, F's contribution of $6,000 is reduced by $3,600 ($6,000 − [$4,000 adjusted basis × 60%]) (*i.e.,* the amount of ordinary income that would have been recognized on the contributed portion had the property been sold). The reduced contribution of $2,400 consists of the portion ($4,000 × 60%) of the adjusted basis not allocated to the noncontributed portion of the property. That is, the reduced contribution consists of the portion of the adjusted basis allocated to the contributed portion. Under sections 1012 and 1015(a) the basis of the property to the church is $6,400 ($4,000 + $2,400).

Example 6. In 1970, G, an individual calendar-year taxpayer, sells to a church for $6,000 ordinary income property with a fair market value of $10,000 and an adjusted basis of $4,000. G's contribution base for 1970 is $20,000, and G makes no other charitable contributions in 1970. Thus, G makes a charitable contribution to the church of $4,000 ($10,000 − $6,000 amount realized), which is 40% of the value of the property. The amount realized on the bargain sale is 60% ($6,000 / $10,000) of the value of the property. In applying section 1011(b) to the bargain sale, adjusted basis in the amount of $2,400 ($4,000 adjusted basis × 60%) is allocated under § 1.1011-2(b) to the noncontributed portion of the property, and G recognizes $3,600 ($6,000 amount realized less $2,400 adjusted basis) of ordinary income. Under paragraphs (a)(1) and (c)(2)(i) of this section, G's contribution of $4,000 is reduced by $2,400 ($4,000 − [$4,000 adjusted basis × 40%]) (*i.e.,* the amount of ordinary income that would have been recognized on the contributed portion had the property been sold). The reduced contribution of $1,600 consist of the portion ($4,000 × 40%) of the adjusted basis not allocated to the noncontributed portion of the property. That is, the reduced contribution consists of the portion of the adjusted basis allocated to the contributed portion. Under sections 1012 and 1015(a) the basis of the property to the church is $7,600 ($6,000 + $1,600).

Example 7. In 1970, H, an individual calendar-year taxpayer, sells to a church for $2,000 stock held for not more than 6 months which has an adjusted basis of $4,000 and a fair market value of $10,000. H's contribution base for 1970 is $20,000, and H makes no other charitable contributions in 1970. Thus, H makes a charitable contribution to the church of $8,000 ($10,000 − $2,000 amount realized), which is 80% of the value of the property. The amount realized on the bargain sale is 20% ($2,000 / $10,000) of the value of the property. In applying section 1011(b) to the bargain sale, adjusted basis in the amount of $800 ($4,000 adjusted basis × 20%) is allocated under § 1.1011-2(b) to the noncontributed portion of the property, and H recognizes $1,200 ($2,000 amount realized less $800 adjusted basis) of ordinary income. Under paragraphs (a)(1) and (c)(2)(i) of this section, H's contribution of $8,000 is reduced by $4,800 ($8,000 − [$4,000 adjusted basis × 80%]) (*i.e.,* the amount of ordinary income that would have been recognized on the contributed portion had the property been sold). The reduced contribution of $3,200 consists of the portion ($4,000 × 80%) of the adjusted basis not allocated to the noncontributed portion of the property. That is, the reduced contribution consists of the portion of the adjusted basis allocated to the contributed portion. Under sections 1012 and 1015(a) the basis of the property to the church is $5,200 ($2,000 + $3,200).

Example 8. In 1970, F, an individual calendar-year taxpayer, sells for $4,000 to a private foundation not described in section 170(b)(1)(E) property to which section 1245 applies which has a fair market value of $10,000 and an adjusted basis of $4,000. F's contribution base for 1970 is $20,000, and F makes no other charitable contributions in 1970. At the time of the bargain sale, F has used the property in his business for more than 6 months. Thus F makes a charitable contribution of $6,000 ($10,000 − $4,000 amount realized), which is 60% of the value of the property. The amount realized on the bargain sale is 40% ($4,000/$10,000) of the value of the property. If the property had been sold by F at its fair market value at the time of its contribution, it is assumed that under section 1245 $4,000 of the gain of $6,000 ($10,000−$4,000 adjusted basis) would have been treated as ordinary income and $2,000 would have been long-term capital gain. In applying section 1011(b) to the bargain sale, adjusted basis in the amount of $1,600 ($4,000 adjusted basis × 40%) is allocated under § 1.1011-2(b) to the noncontributed portion of the property, and F's recognized gain of $2,400 ($4,000 amount realized less $1,600 adjusted basis) consists of $1,600 ($4,000 × 40%) of ordinary income and $800 ($2,000 × 40%) of long-term capital gain. Under paragraphs (a) and (c)(2)(i) of this section, F's contribution of $6,000 is reduced by $3,000 (the sum of $2,400 ($4,000 × 60%) of ordinary income and $600 ([$2,000 × 60%] × 50%) of long-term capital gain) (*i.e.,* the amount of gain that would have been recognized on the contributed portion had the property been sold). The

reduced contribution of $3,000 consists of $2,400 ($4,000 × 60%) of adjusted basis and $600 ([$2,000 × 60%] × 50%) of long-term capital gain not used as a reduction under paragraph (a)(2) of this section. Under sections 1012 and 1015(a) the basis of the property to the private foundation is $6,400 ($4,000 + $2,400).

Example 9. On January 1, 1970, A, an individual, transfers to a charitable remainder annuity trust described in section 664 (d)(1) stock which he has held for more than 6 months and which has a fair market value of $250,000 and an adjusted basis of $50,000, an irrevocable remainder interest in the property being contributed to a private foundation not described in section 170(b)(1)(E). The trusts provides that an annuity of $12,500 a year is payable to A at the end of each year for 20 years. By reference to § 20.2031-7A(c) of this chapter (Estate Tax Regulations) the figure in column (2) opposite 20 years is 11.4699. Therefore, under § 1.664-2 the fair market value of the gift of the remainder interest to charity is $106,626.25 ($250,000 − [$12,500 × 11.4699]). Under paragraph (c)(1)(ii) of this section, the adjusted basis allocated to the contributed portion of the property is $21,325.25 ($50,000 × $106,626.25/$250,000). Under paragraphs (a)(2) and (c)(1) of this section, A's contribution is reduced by $42,650.50 (50 percent × [$106,626.25−$21,325.25]) to $63,975.75 ($106,626.25−$42,650.50). If, however, the irrevocable remainder interest in the property had been contributed to a section 170(b)(1)(A) organization, A's contribution of $106,626.25 would not be reduced under paragraph (a) of this section.

Example 10. (a) On July 1, 1970, B, a calendar-year individual taxpayer, sells to a church for $75,000 intangible property to which section 1245 applies which has a fair market value of $250,000 and an adjusted basis of $75,000. Thus, B makes a charitable contribution to the church of $175,000 ($250,000−$75,000 amount realized), which is 70% ($175,000/$250,000) of the value of the property, the amount realized on the bargain sale is 30% ($75,000/$250,000) of the value of the property. At the time of the bargain sale, B has used the property in his business for more than 6 months. B's contribution base for 1970 is $500,000, and B makes no other charitable contributions in 1970. If the property had been sold by B at its fair market value at the time of its contribution, it is assumed that under section 1245 $105,000 of the gain of $175,000 ($250,000−$75,000 adjusted basis) would have been treated as ordinary income and $70,000 would have been long-term capital gain. In applying section 1011(b) to the bargain sale, adjusted basis in the amount of $22,500 ($75,000 adjusted basis × 30%) is allocated under § 1.1011-2(b) to the noncontributed portion of the property and B's recognized gain of $52,500 ($75,000 amount realized less $22,500 adjusted basis) consists of $31,500 ($105,000 × 30%) of ordinary income and $21,000 ($70,000 × 30%) of long term capital gain.
(b) Under paragraphs (a)(1) and (c)(2)(i) of this section B's contribution of $175,000 is reduced by $73,500 ($105,000 × 70%) (*i.e.,* the amount of ordinary income that would have been recognized on the contributed portion had the property been sold). The reduced contribution of $101,500 consists of $52,500 [$75,000 × 70%] of adjusted basis allocated to the contributed portion of the property and $49,000 [$70,000 × 70%] of long-term capital gain allocated to the contributed portion. Under sections 1012 and 1015(a) the basis of the property to the church is $127,500 ($75,000 + $52,500).

(e) ***Effective date.*** This section applies only to contributions paid after December 31, 1969, except that, in the case of a charitable contribution of a letter, memorandum, or property similar to a letter or memorandum, it applies to contributions paid after July 25, 1969.

[T.D. 7207, 37 FR 20776, Oct. 4, 1972; 37 FR 22982, Oct. 27, 1972, as amended by T.D. 7728, 45 FR 72650, Nov. 3, 1980; T.D. 7807, 47 FR 4510, Feb. 1, 1982; T.D. 8176, 53 FR 5569, Feb. 25, 1988; T.D. 8540, 59 FR 30102, June 10, 1994]

§ 1.170A-4A Special rule for the deduction of certain charitable contributions of inventory and other property.

(a) ***Introduction.*** Section 170(e)(3) provides a special rule for the deduction of certain qualified contributions of inventory and certain other property. To be treated as a "qualified contribution", a contribution must meet the restrictions and requirements of section 170(e)(3)(A) and paragraph (b) of this section. Paragraph (b)(1) of this section describes the corporations whose contributions may be subject to this section, the exempt organizations to which these contributions may be made, and the kinds of property which may be contributed. Under paragraph (b)(2) of this section, the use of the property must be related to the purpose or function constituting the ground for the exemption of the organization to which the contribution is made. Also, the property must be used for the care of the ill, needy, or infants. Under paragraph (b)(3) of this section, the recipient organization may not, except as there provided, require or receive in exchange money, property, or services for the transfer or use of property contributed under section 170(e)(3). Under paragraph (b)(4) of this section, the recipient organization must provide the contributing taxpayer with a written statement representing that the organization intends to comply with the restrictions set forth in paragraph (b) (2) and (3) of this section on the use and transfer of the property. Under paragraph (b)(5) of this section, the contributed property must conform to any applicable provisions of the Federal Food, Drug, and Cosmetic Act (as amended), and the regulations thereunder, at the date of contribution and for the immediately preceding 180 days. Paragraph (c) of this section provides the rules for determining the amount of reduction of the charitable contribution under section 170(e)(3). In general, the amount of the reduction is equal to one-half of the amount of gain (other than gain described in paragraph (d) of this section) which would not have been long-term capital gain if the property had been sold by the donor-taxpayer at fair market value at the date of contribution. If, after this reduction, the amount of the deduction would be more than twice the basis of the contributed property, the amount of the deduction is accordingly further reduced under paragraph (c)(1) of this section. The basis of contributed property which is inventory is determined under paragraph (c)(2) of this section, and the donor's cost of goods sold for the year of contribution must be adjusted under paragraph (c)(3) of this section. Under paragraph (d) of this section, a deduction is not allowed for any amount which, if the property had been sold by the donor-taxpayer, would have been gain to which the recapture provisions of section 617, 1245, 1250, 1251, or 1252 would have applied. For purposes of section 170(e)(3) the rules of § 1.170A-4 apply where not inconsistent with the rules of this section.

(b) ***Qualified contributions*** —

(1) ***In general.*** A contribution of property qualifies under section 170(e)(3) of this section only if it is a charitable contribution:

(i) By a corporation, other than a corporation which is an electing small business corporation within the meaning of section 1371(b);

(ii) To an organization described in section 501(c)(3) and exempt under section 501(a), other than a private foundation, as defined in section 509(a), which is not an operating foundation, as defined in section 4942(j)(e);

(iii) Of property described in section 1221 (1) or (2);

(iv) Which contribution meets the restrictions and requirements of paragraph (b) (2) through (5) of this section.

(2) ***Restrictions on use of contributed property.*** In order for the contribution to qualify under this section, the contributed property is subject to the following restrictions in use. If the transferred property is used or transferred by the donee organization (or by any subsequent transferee that furnished to the donee organization the written statement described in paragraph (b)(4)(ii) of this section) in a manner inconsistent with the requirements of subdivision (i) or (ii) of this paragraph (b)(2) or the requirements of paragraph (b)(3) of this section, the donor's deduction is reduced to the amount allowable under section 170 of the regulations thereunder, determined without regard to section 170(e)(3) of this section. If, however, the donor establishes that, at the time of the contribution, the donor reasonably anticipated that the property would be used in a manner consistent with those requirements, then the donor's deduction is not reduced.

(i) ***Requirement of use for exempt purpose.*** The use of the property must be related to the purpose or function constituting the ground for exemption under section 501(c)(3) of the organization to which the contribution is made. The property may not be used in connection with any activity which gives rise to unrelated trade or business income, as defined in sections 512 and 513 and the regulations thereunder.

(ii) ***Requirement of use for care of the ill, needy, or infants*** —

(A) ***In general.*** The property must be used for the care of the ill, needy, or infants, as defined in this subdivision (ii). The property itself must ultimately either be transferred to (or for the use of) the ill, needy, or infants for their care or be retained for their care. No other person may use the contributed property except as incidental to primary use in the care of the ill, needy, or infants. The organization may satisfy the requirement of this subdivision by transferring the property to a relative, custodian, parent or guardian of the ill or needy individual or infant, or to any other individual if it makes a reasonable effort to ascertain that the property will ultimately be used primarily for the care of the ill or needy individual, or infant, and not for the primary benefit of any other person. The recipient organization may transfer the property to another exempt organization within the jurisdiction of the United States which meets the description contained in paragraph (b)(1)(ii) of this section, or to an organization not within the jurisdiction of the United States that, but for the fact that it is not within the jurisdiction of the United States, would be described in paragraph (b)(1)(ii) of this section. If an organization transfers the property to another organization, the transferring organization must obtain a written statement from the transferee organization as set forth in paragraph (b)(4) of this section. If the property is ultimately transferred to, or used for the benefit of, ill or needy persons, or infants, not within the jurisdiction of the United States, the organization which so transfers the property outside the jurisdiction of the United States must necessarily be a corporation. See section 170(c)(2) and § 1.170A-11(a). For purposes of this subdivision, if the donee-organization charges for its transfer of contributed property (other than a fee allowed by paragraph (b)(3)(ii) of this section), the requirement of this subdivision is not met. See paragraph (b)(3) of this section.

(B) ***Definition of the ill.*** An ill person is a person who requires medical care within the meaning of § 1.213-1(e). Examples of ill persons include a person suffering from physical injury, a person with a significant impairment of a bodily organ, a person with an existing handicap,

whether from birth or later injury, a person suffering from malnutrition, a person with a disease, sickness, or infection which significantly impairs physical health, a person partially or totally incapable of self-care (including incapacity due to old age). A person suffering from mental illness is included if the person is hospitalized or institutionalized for the mental disorder, or, although the person is nonhospitalized or noninstitutionalized, if the person's mental illness constitutes a significant health impairment.

(C) ***Definition of care of the ill.*** Care of the ill means alleviation or cure of an existing illness and includes care of the physical, mental, or emotional needs of the ill.

(D) ***Definition of the needy.*** A needy person is a person who lacks the necessities of life, involving physical, mental, or emotional well-being, as a result of poverty or temporary distress. Examples of needy persons include a person who is financially impoverished as a result of low income and lack of financial resources, a person who temporarily lacks food or shelter (and the means to provide for it), a person who is the victim of a natural disaster (such as fire or flood), a person who is the victim of a civil disaster (such as a civil disturbance), a person who is temporarily not self-sufficient as a result of a sudden and severe personal or family crisis (such as a person who is the victim of a crime of violence or who has been physically abused), a person who is a refugee or immigrant and who is experiencing language, cultural, or financial difficulties, a minor child who is not self-sufficient and who is not cared for by a parent or guardian, and a person who is not self-sufficient as a result of previous institutionalization (such as a former prisoner or a former patient in a mental institution).

(E) ***Definition of care of the needy.*** Care of the needy means alleviation or satisfaction of an existing need. Since a person may be needy in some respects and not needy in other respects, care of the needy must relate to the particular need which causes the person to be needy. For example, a person whose temporary need arises from a natural disaster may need temporary shelter and food but not recreational facilities.

(F) ***Definition of infant.*** An infant is a minor child (as determined under the laws of the jurisdiction in which the child resides).

(G) ***Definition of care of an infant.*** Care of an infant means performance of parental functions and provision for the physical, mental, and emotional needs of the infant.

(3) ***Restrictions on Transfer of contributed property*** —

(i) ***In general.*** Except as otherwise provided in subdivision (ii) of this paragraph (b)(3), a contribution will not qualify under this section, if the donee-organization or any transferee of the donee-organization requires or receives any money, property, or services for the transfer or use of property contributed under section 170(e)(3). For example, if an organization provides temporary shelter for a fee, and also provides free meals to ill or needy individuals, or infants using food contributed under this section the contribution of food is subject to this section (if the other requirements of this section are met). However, the fee charged by the organization for the shelter may not be increased merely because meals are served to the ill or needy individuals or infants.

(ii) ***Exception.*** A contribution may qualify under this section if the donee-organization charges a fee to another organization in connection with its transfer of the donated property, if:

(A) The fee is small or nominal in relation to the value of the transferred property and is not determined by this value; and

(B) The fee is designed to reimburse the donee-organization for its administrative, warehousing, or other similar costs.

For example, if a charitable organization (such as a food bank) accepts surplus food to distribute to other charities which give the food to needy persons, a small fee may be charged to cover administrative, warehousing, and other similar costs. This fee may be charged on the basis of the total number of pounds of food distributed to the transferee charity but not on the basis of the value of the food distributed. The provisions of this subdivision (ii) do not apply to a transfer of donated property directly from an organization to ill or needy individuals, or infants.

(4) ***Requirement of a written statement*** —

(i) ***Furnished to taxpayer.*** In the case of any contribution made on or after March 3, 1982, the donee-organization must furnish to the taxpayer a written statement which:

(A) Describes the contributed property, stating the date of its receipt;

(B) Represents that the property will be used in compliance with section 170(e)(3) and paragraphs (b) (2) and (3) of this section;

(C) Represents that the donee-organization meets the requirements of paragraph (b)(1)(ii) of this section; and

(D) Represents that adequate books and records will be maintained, and made available to the Internal Revenue Service upon request.

The written statement must be furnished within a reasonable period after the contribution, but not later than the date (including extensions) by which the donor is required to file a United States corporate income tax return for the year in which the contribution was made. The books and records described in (D) of this subdivision (i) need not trace the receipt and disposition of specific items of donated property if they disclose compliance with the requirements by reference to aggregate quantities of donated property. The books and records are adequate if they reflect total amounts received and distributed (or used), and outline the procedure used for determining that the ultimate recipient of the property is an ill or needy individual, or infant. However, the books and records need not reflect the names of the ultimate individual recipients or the property distributed to (or used by) each one.

(ii) ***Furnished to transferring organization.*** If an organization that received a contribution under this section transfers the contributed property to another organization on or after March 3, 1982, the transferee organization must furnish to the transferring organization a written statement which contains the information required in paragraph (b)(4)(i) (A), (B) and (D) of this section. The statement must also represent that the transferee organization meets the requirements of paragraph (b)(1)(ii) of this section (or, in the case of a transferee organization which is a foreign organization not within the jurisdiction of the United States, that, but for such fact, the organization would meet the requirements of paragraph (b)(1)(ii) of this section). The written statement must be furnished within a reasonable period after the transfer.

(5) ***Requirement of compliance with the Federal Food, Drug, and Cosmetic Act*** —

(i) ***In general.*** With respect to property contributed under this section which is subject to the Federal Food, Drug, and Cosmetic Act (as amended), and regulations thereunder, the contributed property must comply with the applicable provisions of that Act and regulations thereunder at the date of the contribution and for the immediately preceding 180 days. In the case of specific items of contributed property not in existence for the entire period of 180 days immediately preceding the date of contribution, the requirement of this paragraph (b)(5) is considered met if the contributed property complied with that Act and the regulations thereunder during the period of its existence and at the date of contribution and if, for the 180 day period prior to contribution other property (if any) held by the taxpayer at any time during that period, which property was fungible with the contributed property, complied with that Act and the regulations thereunder during the period held by the taxpayer.

(ii) ***Example.*** The rule of this paragraph (b)(5) may be illustrated by the following example.

Example. Corporation X a grocery store, contributes 12 crates of navel oranges. The oranges were picked and placed in the grocery store's stock two weeks prior to the date of contribution. The contribution satisfies the requirements of this paragraph (b)(5) if X complied with the Act and regulations thereunder for 180 days prior to the date of contribution with respect to all navel oranges in stock during that period.

(c) ***Amount of reduction*** —

(1) ***In general.*** Section 170(e)(3)(B) requires that the amount of the charitable contribution subject to this section which would be taken into account under section 170(a), without regard to section 170(e), must be reduced before applying the percentage limitations under section 170(b). The amount of the first reduction is equal to one-half of the amount of gain which would not have been long-term capital gain if the property had been sold by the donor-taxpayer at its fair market value on the date of its contribution, excluding, however, any amount described in paragraph (d) of this section. If the amount of the charitable contribution which remains after this reduction exceeds twice the basis of the contributed property, then the amount of the charitable contribution is reduced a second time to an amount which is equal to twice the amount of the basis of the property.

(2) ***Basis of contributed property which is inventory.*** For the purposes of this section, notwithstanding the rules of § 1.170A-1(c)(4), the basis of contributed property which is inventory must be determined under the donor's method of accounting for inventory for purposes of United States income tax. The donor must use as the basis of the contributed item the inventoriable carrying cost assigned to any similar item not included in closing inventory. For example, under the LIFO dollar value method of accounting for inventory, where there has been an invasion of a prior year's layer, the donor may choose to treat the item contributed as having a basis of the unit's cost with reference to the layer(s) of prior year(s) cost or with reference to the current year cost.

(3) ***Adjustment to cost of goods sold.*** Notwithstanding the rules of § 1.170A-1(c)(4), the donor of the property which is inventory contributed under this section must make a corresponding adjustment to cost of goods sold by decreasing the cost of goods sold by the lesser of the fair market value of the contributed item or the amount of basis determined under paragraph (c)(2) of this section.

(4) ***Examples.*** The rules of this paragraph (c) may be illustrated by the following examples:

Example 1. During 1978 corporation X, a calendar year taxpayer, makes a qualified contribution of women's coats which were section 1221(1) property. The fair market value of the property at the date of contribution is $1,000, and the basis of the property is $200. The amount of the charitable contribution which would be taken into account under section 170(a) is the fair

market value ($1,000). The amount of gain which would not have been long-term capital gain if the property had been sold is $800 ($1,000−$200). The amount of the contribution is reduced by one-half the amount which would not have been capital gain if the property had been sold ($800/2=-$400). After this reduction, the amount of the contribution which may be taken into account is $600 ($1,000−$400). A second reduction is made in the amount of the charitable contribution because this amount (as first reduced to $600) is more than $400 which is an amount equal to twice the basis of the property. The amount of the further reduction is $200 [$600−(2 × $200)], and the amount of the contribution as finally reduced is $400 [$1,00−($400 + $200)]. X would also have to decrease its cost of goods sold for the year of contribution by $200.

Example 2. Assume the same facts as set forth in *Example 1* except that the basis of the property is $600. The amount of the first reduction is $200 (($1,000−$600)/2). As reduced, the amount of the contribution which may be taken into account is $800 ($1,000−$200). There is no second reduction because $800 is less than $1,200 which is twice the basis of the property. However, X would have to decrease its cost of goods sold for the year of contribution by $600.

(d) ***Recapture excluded.*** A deduction is not allowed under section 170(e)(3) or this section for any amount which, if the property had been sold by the donor-taxpayer on the date of its contribution for an amount equal to its fair market value, would have been treated as ordinary income under section 617, 1245, 1250, 1251, or 1252. Thus, before making either reduction required by section 170(e)(3)(B) and paragraph (c) of this section, the fair market value of the contributed property must be reduced by the amount of gain that would have been recognized (if the property had been sold) as ordinary income under section 617, 1245, 1250, 1251, or 1252.

(e) ***Effective date.*** This section applies to qualified contributions made after October 4, 1976.

[T.D. 7807, 47 FR 4510, Feb. 1, 1982, as amended by T.D. 7962, 49 FR 27317, July 3, 1984]

§ 1.170A-5 Future interests in tangible personal property.

(a) ***In general.***

(1) A contribution consisting of a transfer of a future interest in tangible personal property shall be treated as made only when all intervening interests in, and rights to the actual possession or enjoyment of, the property:

(i) Have expired, or

(ii) Are held by persons other than the taxpayer or those standing in a relationship to the taxpayer described in section 267(b) and the regulations thereunder, relating to losses, expenses, and interest with respect to transactions between related taxpayers.

(2) Section 170(a)(3) and this section have no application in respect of a transfer of an undivided present interest in property. For example, a contribution of an undivided one-quarter interest in a painting with respect to which the donee is entitled to possession during 3 months of each year shall be treated as made upon the receipt by the donee of a formally executed and acknowledged deed of gift. However, the period of initial possession by the donee may not be deferred in time for more than 1 year.

(3) Section 170(a)(3) and this section have no application in respect of a transfer of a future interest in intangible personal property or in real property. However, a fixture which is intended to be severed from real property shall be treated as tangible personal property. For example, a contribution of a future interest in a chandelier which is attached to a building is considered a contribution which consists of a future interest in tangible personal property if the transferor intends that it be detached from the building at or prior to the time when the charitable organization's right to possession or enjoyment of the chandelier is to commence.

(4) For purposes of section 170(a)(3) and this section, the term *future interest* has generally the same meaning as it has when used in section 2503 and § 25.2503-3 of this chapter (Gift Tax Regulations); it includes reversions, remainders, and other interests or estates, whether vested or contingent, and whether or not supported by a particular interest or estate, which are limited to commence in use, possession, or enjoyment at some future date or time. The term *future interest* includes situations in which a donor purports to give tangible personal property to a charitable organization, but has an understanding, arrangement, agreement, etc., whether written or oral, with the charitable organization which has the effect of reserving to, or retaining in, such donor a right to the use, possession, or enjoyment of the property.

(5) In the case of a charitable contribution of a future interest to which section 170(a)(3) and this section apply the other provisions of section 170 and the regulations thereunder are inapplicable to the contribution until such time as the contribution is treated as made under section 170(a)(3).

(b) ***Illustrations.*** The application of this section may be illustrated by the following examples:

Example 1. On December 31, 1970, A, an individual who reports his income on the calendar year basis, conveys by deed of gift to a museum title to a painting, but reserves to himself the right to the use, possession, and enjoyment of the painting during his lifetime. It is assumed that there was no intention to avoid the application of section 170(f)(3)(A) by the conveyance. At the time of the gift the value of the painting is $90,000. Since the contribution consists of a future interest in tangible personal property in which the donor has retained an intervening interest, no contribution is considered to have been made in 1970.

Example 2. Assume the same facts as in *Example 1* except that on December 31, 1971, A relinquishes all of his right to the use, possession, and enjoyment of the painting and delivers the painting to the museum. Assuming that the value of the painting has increased to $95,000, A is treated as having made a charitable contribution of $95,000 in 1971 for which a deduction is allowable without regard to section 170(f)(3)(A).

Example 3. Assume the same facts as in *Example 1* except A dies without relinquishing his right to the use, possession, and enjoyment of the painting. Since A did not relinquish his right to the use, possession, and enjoyment of the property during his life, A is treated as not having made a charitable contribution of the painting for income tax purposes.

Example 4. Assume the same facts as in *Example 1* except A, on December 31, 1971, transfers his interest in the painting to his son, B, who reports his income on the calendar year basis. Since the relationship between A and B is one described in section 267(b), no contribution of the remainder interest in the painting is considered to have been made in 1971.

Example 5. Assume the same facts as in *Example 4.* Also assume that on December 31, 1972, B conveys to the museum the interest measured by A's life. B has made a charitable contribution of the present interest in the painting conveyed to the museum. In addition, since all intervening interests in, and rights to the actual possession or enjoyment of the property, have expired, a charitable contribution

of the remainder interest is treated as having been made by A in 1972 for which a deduction is allowable without regard to section 170(f)(3)(A). Such remainder interest is valued according to § 20.2031-7A(c) of this chapter (estate tax regulations), determined by subtracting the value of B's interest measured by A's life expectancy in 1972, and B receives a deduction in 1972 for the life interest measured by A's life expectancy and valued according to Table A(1) in such section.

Example 6. On December 31, 1970, C, an individual who reports his income on the calendar year basis, transfers a valuable painting to a pooled income fund described in section 642(c)(5), which is maintained by a university. C retains for himself for life an income interest in the painting, the remainder interest in the painting being contributed to the university. Since the contribution consists of a future interest in tangible personal property in which the donor has retained an intervening interest, no charitable contribution is considered to have been made in 1970.

Example 7. On January 15, 1972, D, an individual who reports his income on the calendar year basis, transfers a capital asset held for more than 6 months consisting of a valuable painting to a pooled income fund described in section 642(c)(5), which is maintained by a university, and creates an income interest in such painting for E for life. E is an individual not standing in a relationship to D described in section 267(b). The remainder interest in the property is contributed by D to the university. The trustee of the pooled income fund puts the painting to an unrelated use within the meaning of paragraph (b)(3) of § 1.170A-4. Accordingly, D is allowed a deduction under section 170 in 1972 for the present value of the remainder interest in the painting, after reducing such amount under section 170 (e)(1)(B)

(i) and paragraph (a)(2) of § 1.170A-4. This reduction in the amount of the contribution is required since under paragraph (b)(3) of that section the use by the pooled income fund of the painting is a use which would have been an unrelated use if it had been made by the university.

(c) ***Effective date.*** This section applies only to contributions paid in taxable years beginning after December 31, 1969.

[T.D. 7207, 37 FR 20779, Oct. 4, 1972, as amended by T.D. 8540, 59 FR 30102, June 10, 1994]

§ 1.170A-6 Charitable contributions in trust.

(a) ***In general.***

(1) No deduction is allowed under section 170 for the fair market value of a charitable contribution of any interest in property which is less than the donor's entire interest in the property and which is transferred in trust unless the transfer meets the requirements of paragraph (b) or (c) of this section. If the donor's entire interest in the property is transferred in trust and is contributed to a charitable organization described in section 170(c), a deduction is allowed under section 170. Thus, if on July 1, 1972, property is transferred in trust with the requirement that the income of the trust be paid for a term of 20 years to a church and thereafter the remainder be paid to an educational organization described in section 170(b)(1)(A), a deduction is allowed for the value of such property. See section 170(f)(2) and (3)(B), and paragraph (b)(1) of § 1.170A-7.

(2) A deduction is allowed without regard to this section for a contribution of a partial interest in property if such interest is the taxpayer's entire interest in the property, such as an income interest or a remainder interest. If, however, the property in which such partial interest exists was divided in order to create such interest and thus avoid section 170(f)(2), the deduction will not be allowed. Thus, for example, assume that a taxpayer desires to contribute to a charitable organization the

reversionary interest in certain stocks and bonds which he owns. If the taxpayer transfers such property in trust with the requirement that the income of the trust be paid to his son for life and that the reversionary interest be paid to himself and immediately after creating the trust contributes the reversionary interest to a charitable organization, no deduction will be allowed under section 170 for the contribution of the taxpayer's entire interest consisting of the reversionary interest in the trust.

(b) ***Charitable contribution of a remainder interest in trust*** —

(1) ***In general.*** No deduction is allowed under section 170 for the fair market value of a charitable contribution of a remainder interest in property which is less than the donor's entire interest in the property and which the donor transfers in trust unless the trust is:

(i) A pooled income fund described in section 642(c)(5) and § 1.642(c)-5,

(ii) A charitable remainder annuity trust described in section 664(d)(1) and § 1.664-2, or

(iii) A charitable remainder unitrust described in section 664(d)(2) and § 1.664-3.

(2) ***Value of a remainder interest.*** The fair market value of a remainder interest in a pooled income fund shall be computed under § 1.642(c)-6. The fair market value of a remainder interest in a charitable remainder annuity trust shall be computed under § 1.664-2. The fair market value of a remainder interest in a charitable remainder unitrust shall be computed under § 1.664-4. However, in some cases a reduction in the amount of a charitable contribution of the remainder interest may be required. See section 170(e) and § 1.170A-4.

(c) ***Charitable contribution of an income interest in trust*** —

(1) ***In general.*** No deduction is allowed under section 170 for the fair market value of a charitable contribution of an income interest in property which is less than the donor's entire interest in the property and which the donor transfers in trust unless the income interest is either a guaranteed annuity interest or a unitrust interest, as defined in paragraph (c)(2) of this section, and the grantor is treated as the owner of such interest for purposes of applying section 671, relating to grantors and others treated as substantial owners. See section 4947(a)(2) for the application to such income interests in trust of the provisions relating to private foundations and section 508(e) for rules relating to provisions required in the governing instruments.

(2) ***Definitions.*** For purposes of this paragraph:

(i) ***Guaranteed annuity interest.***

(A) An income interest is a “guaranteed annuity interest” only if it is an irrevocable right pursuant to the governing instrument of the trust to receive a guaranteed annuity. A guaranteed annuity is an arrangement under which a determinable amount is paid periodically, but not less often than annually, for a specified term of years or for the life or lives of certain individuals, each of whom must be living at the date of transfer and can be ascertained at such date. Only one or more of the following individuals may be used as measuring lives: the donor, the donor's spouse, and an individual who, with respect to all remainder beneficiaries (other than charitable organizations described in section 170, 2055, or 2522), is either a lineal ancestor or the spouse of a lineal ancestor of those beneficiaries. A trust will satisfy the requirement that all noncharitable remainder beneficiaries are lineal descendants of the individual who is the measuring life, or that individual's spouse, if there is less than a 15% probability that individuals who are not lineal descendants will receive any trust corpus. This probability must be computed, based

on the current applicable Life Table contained in § 20.2031-7, at the time property is transferred to the trust taking into account the interests of all primary and contingent remainder beneficiaries who are living at that time. An interest payable for a specified term of years can qualify as a guaranteed annuity interest even if the governing instrument contains a savings clause intended to ensure compliance with a rule against perpetuities. The savings clause must utilize a period for vesting of 21 years after the deaths of measuring lives who are selected to maximize, rather than limit, the term of the trust. The rule in this paragraph that a charitable interest may be payable for the life or lives of only certain specified individuals does not apply in the case of a charitable guaranteed annuity interest payable under a charitable remainder trust described in section 664. An amount is determinable if the exact amount which must be paid under the conditions specified in the governing instrument of the trust can be ascertained as of the date of transfer. For example, the amount to be paid may be a stated sum for a term of years, or for the life of the donor, at the expiration of which it may be changed by a specified amount, but it may not be redetermined by reference to a fluctuating index such as the cost of living index. In further illustration, the amount to be paid may be expressed in terms of a fraction or percentage of the cost of living index on the date of transfer.

(B) An income interest is a guaranteed annuity interest only if it is a guaranteed annuity interest in every respect. For example, if the income interest is the right to receive from a trust each year a payment equal to the lesser of a sum certain or a fixed percentage of the net fair market value of the trust assets, determined annually, such interest is not a guaranteed annuity interest.

(C) Where a charitable interest is in the form of a guaranteed annuity interest, the governing instrument of the trust may provide that income of the trust which is in excess of the amount required to pay the guaranteed annuity interest shall be paid to or for the use of a charitable organization. Nevertheless, the amount of the deduction under section 170(f)(2)(B) shall be limited to the fair market value of the guaranteed annuity interest as determined under paragraph (c)(3) of this section. For a rule relating to treatment by the grantor of any contribution made by the trust in excess of the amount required to pay the guaranteed annuity interest, see paragraph (d)(2)(ii) of this section.

(D) If the present value on the date of transfer of all the income interests for a charitable purpose exceeds 60 percent of the aggregate fair market value of all amounts in the trust (after the payment of liabilities), the income interest will not be considered a guaranteed annuity interest unless the governing instrument of the trust prohibits both the acquisition and the retention of assets which would give rise to a tax under section 4944 if the trustee had acquired such assets. The requirement in this subdivision (D) for a prohibition in the governing instrument against the retention of assets which would give rise to a tax under section 4944 if the trustee had acquired the assets shall not apply to a transfer in trust made on or before May 21, 1972.

(E) Where a charitable interest in the form of a guaranteed annuity interest is transferred after May 21, 1972, the charitable interest generally is not a guaranteed annuity interest if any amount may be paid by the trust for a private purpose before the expiration of all the charitable annuity interests. There are two exceptions to this general rule. First, the charitable interest is a guaranteed annuity interest if the amount payable for a private purpose is in the form of a guaranteed annuity interest and the trust's governing instrument does not provide for any preference or priority in the payment of the private

annuity as opposed to the charitable annuity. Second, the charitable interest is a guaranteed annuity interest if under the trust's governing instrument the amount that may be paid for a private purpose is payable only from a group of assets that are devoted exclusively to private purposes and to which section 4947(a)(2) is inapplicable by reason of section 4947(a)(2)(B). For purposes of this paragraph (c)(2)(i)(E), an amount is not paid for a private purpose if it is paid for an adequate and full consideration in money or money's worth. See § 53.4947-1(c) of this chapter for rules relating to the inapplicability of section 4947(a)(2) to segregated amounts in a split-interest trust.

(F) For rules relating to certain governing instrument requirements and to the imposition of certain excise taxes where the guaranteed annuity interest is in trust and for rules governing payment of private income interests by a split-interest trust, see section 4947(a)(2) and (b)(3)(A), and the regulations thereunder.

(ii) ***Unitrust interest.***

(A) An income interest is a “unitrust interest” only if it is an irrevocable right pursuant to the governing instrument of the trust to receive payment, not less often than annually of a fixed percentage of the net fair market value of the trust assets, determined annually. In computing the net fair market value of the trust assets, all assets and liabilities shall be taken into account without regard to whether particular items are taken into account in determining the income of the trust. The net fair market value of the trust assets may be determined on any one date during the year or by taking the average of valuations made on more than one date during the year, provided that the same valuation date or dates and valuation methods are used each year. Where the governing instrument of the trust does not specify the valuation date or dates, the trustee shall select such date or dates and shall indicate his selection on the first return on Form 1041 which the trust is required to file. Payments under a unitrust interest may be paid for a specified term of years or for the life or lives of certain individuals, each of whom must be living at the date of transfer and can be ascertained at such date. Only one or more of the following individuals may be used as measuring lives: the donor, the donor's spouse, and an individual who, with respect to all remainder beneficiaries (other than charitable organizations described in section 170, 2055, or 2522), is either a lineal ancestor or the spouse of a lineal ancestor of those beneficiaries. A trust will satisfy the requirement that all noncharitable remainder beneficiaries are lineal descendants of the individual who is the measuring life, or that individual's spouse, if there is less than a 15% probability that individuals who are not lineal descendants will receive any trust corpus. This probability must be computed, based on the current applicable Life Table contained in § 20.2031-7, at the time property is transferred to the trust taking into account the interests of all primary and contingent remainder beneficiaries who are living at that time. An interest payable for a specified term of years can qualify as a unitrust interest even if the governing instrument contains a savings clause intended to ensure compliance with a rule against perpetuities. The savings clause must utilize a period for vesting of 21 years after the deaths of measuring lives who are selected to maximize, rather than limit, the term of the trust. The rule in this paragraph that a charitable interest may be payable for the life or lives of only certain specified individuals does not apply in the case of a charitable unitrust interest payable under a charitable remainder trust described in section 664.

(B) An income interest is a unitrust interest only if it is a unitrust interest in every respect. For example, if the income interest is the right to receive from a trust each year a payment equal to the lesser of a sum certain or a fixed percentage of the net fair market value of the trust assets, determined annually, such interest is not a unitrust interest.

(C) Where a charitable interest is in the form of a unitrust interest, the governing instrument of the trust may provide that income of the trust which is in excess of the amount required to pay the unitrust interest shall be paid to or for the use of a charitable organization. Nevertheless, the amount of the deduction under section 170(f)(2)(B) shall be limited to the fair market value of the unitrust interest as determined under paragraph (c)(3) of this section. For a rule relating to treatment by the grantor of any contribution made by the trust in excess of the amount required to pay the unitrust interest, see paragraph (d)(2)(ii) of this section.

(D) Where a charitable interest is in the form of a unitrust interest, the charitable interest generally is not a unitrust interest if any amount may be paid by the trust for a private purpose before the expiration of all the charitable unitrust interests. There are two exceptions to this general rule. First, the charitable interest is a unitrust interest if the amount payable for a private purpose is in the form of a unitrust interest and the trust's governing instrument does not provide for any preference or priority in the payment of the private unitrust interest as opposed to the charitable unitrust interest. Second, the charitable interest is a unitrust interest if under the trust's governing instrument the amount that may be paid for a private purpose is payable only from a group of assets that are devoted exclusively to private purposes and to which section 4947(a)(2) is inapplicable by reason of section 4947(a)(2)(B). For purposes of this paragraph (c)(2)(ii)(D), an amount is not paid for a private purpose if it is paid for an adequate and full consideration in money or money's worth. See § 53.4947-1(c) of this chapter for rules relating to the inapplicability of section 4947(a)(2) to segregated amounts in a split-interest trust.

(E) For rules relating to certain governing instrument requirements and to the imposition of certain excise taxes where the unitrust interest is in trust and for rules governing payment of private income interests by a split-interest trust, see section 4947(a)(2) and (b)(3)(A), and the regulations thereunder.

(3) ***Valuation of income interest.***

(i) The deduction allowed by section 170(f)(2)(B) for a charitable contribution of a guaranteed annuity interest is limited to the fair market value of such interest on the date of contribution, as computed under § 20.2031-7 or, for certain prior periods, 20.2031-7A of this chapter (Estate Tax Regulations).

(ii) The deduction allowed under section 170(f)(2)(B) for a charitable contribution of a unitrust interest is limited to the fair market value of the unitrust interest on the date of contribution. The fair market value of the unitrust interest shall be determined by subtracting the present value of all interests in the transferred property other than the unitrust interest from the fair market value of the transferred property.

(iii) If by reason of all the conditions and circumstances surrounding a transfer of an income interest in property in trust it appears that the charity may not receive the beneficial enjoyment of the interest, a deduction will be allowed under paragraph (c)(1) of this section only for the minimum amount it is evident the charity will receive. The application of this subdivision may be illustrated by the following examples:

Example 1. In 1972, B transfers $20,000 in trust with the requirement that M Church be paid a guaranteed annuity interest (as defined in subparagraph (2)(i) of this paragraph) of $4,000, payable annually at the end of each year for 9 years, and that the residue revert to himself. Since the fair market value of an annuity of $4,000 a year for a period of 9 years, as determined under § 20.2031-7A(c) of this chapter, is $27,206.80 ($4,000 × 6.8017), it appears that M will not receive the beneficial enjoyment of the income interest. Accordingly, even though B is treated as the owner of the trust under section 673, he is allowed a deduction under subparagraph (1) of this paragraph for only $20,000, which is the minimum amount it is evident M will receive.

Example 2. In 1975, C transfers $40,000 in trust with the requirement that D, an individual, and X Charity be paid simultaneously guaranteed annuity interests (as defined in subparagraph (2)(i) of this paragraph) of $5,000 a year each, payable annually at the end of each year, for a period of 5 years and that the remainder be paid to C's children. The fair market value of two annuities of $5,000 each a year for a period of 5 years is $42,124 ([$5,000 × 4.2124] × 2), as determined under § 20.2031-7A(c) of this chapter. The trust instrument provides that in the event the trust fund is insufficient to pay both annuities in a given year, the trust fund will be evenly divided between the charitable and private annuitants. The deduction under subparagraph (1) of this paragraph with respect to the charitable annuity will be limited to $20,000, which is the minimum amount it is evident X will receive.

Example 3. In 1975, D transfers $65,000 in trust with the requirement that a guaranteed annuity interest (as defined in subparagraph (2)(i) of this paragraph) of $5,000 a year, payable annually at the end of each year, be paid to Y Charity for a period of 10 years and that a guaranteed annuity interest (as defined in subparagraph (2)(i) of this paragraph) of $5,000 a year, payable annually at the end of each year, be paid to W, his wife, aged 62, for 10 years or until her prior death. The annuities are to be paid simultaneously, and the remainder is to be paid to D's children. The fair market value of the private annuity is $33,877 ($5,000 × 6.7754), as determined pursuant to § 20.2031-7A(c) of this chapter and by the use of factors involving one life and a term of years as published in Publication 723A (12-70). The fair market value of the charitable annuity is $36,800.50 ($5,000 × 7.3601), as determined under § 20.2031-7A(c) of this chapter. It is not evident from the governing instrument of the trust or from local law that the trustee would be required to apportion the trust fund between the wife and charity in the event the fund were insufficient to pay both annuities in a given year. Accordingly, the deduction under subparagraph (1) of this paragraph with respect to the charitable annuity will be limited to $31,123 ($65,000 less $33,877 [the value of the private annuity]), which is the minimum amount it is evident Y will receive.

(iv) See paragraph (b)(1) of § 1.170A-4 for rule that the term *ordinary income property* for purposes of section 170(e) does not include an income interest in respect of which a deduction is allowed under section 170(f)(2)(B) and this paragraph.

(4) ***Recapture upon termination of treatment as owner.*** If for any reason the donor of an income interest in property ceases at any time before the termination of such interest to be treated as the owner of such interest for purposes of applying section 671, as for example, where he dies before the termination of such interest, he shall for purposes of this chapter be considered as having received, on the date he ceases to be so treated, an amount of income equal to

(i) the amount of any deduction he was allowed under section 170 for the contribution of such interest reduced by

(ii) the discounted value of all amounts which were required to be, and actually were, paid with respect to such interest under the terms of trust to the charitable organization before the time at which he ceases to be treated as the owner of the interest. The discounted value of the amounts described in subdivision (ii) of this subparagraph shall be computed by treating each such amount as a contribution of a remainder interest after a term of years and valuing such amount as of the date of contribution of the income interest by the donor, such value to be determined under § 20.2031-7 of this chapter consistently with the manner in which the fair market value of the income interest was determined pursuant to subparagraph (3)(i) of this paragraph. The application of this subparagraph will not be construed to disallow a deduction to the trust for amounts paid by the trust to the charitable organization after the time at which the donor ceased to be treated as the owner of the trust.

(5) ***Illustrations.*** The application of this paragraph may be illustrated by the following examples:

Example 1. On January 1, 1971, A contributes to a church in trust a 9-year irrevocable income interest in property. Both A and the trust report income on a calendar year basis. The fair market value of the property placed in trust is $10,000. The trust instrument provides that the church will receive an annuity of $500, payable annually at the end of each year for 9 years. The income interest is a guaranteed annuity interest as defined in subparagraph (2)(i) of this paragraph; upon termination of such interest the residue of the trust is to revert to A. By reference to § 20.2031-7A(c) of this chapter, it is found that the figure in column (2) opposite 9 years is 6.8017. The present value of the annuity is therefore $3,400.85 ($500 × 6.8017). The present value of the income interest and A's charitable contribution for 1971 is $3,400.85.

Example 2. (a) On January 1, B contributes to a church in trust a 9-year irrevocable income interest in property. Both B and the trust report income on a calendar year basis. The fair market value of the property placed in trust is $10,000. The trust instrument provides that the trust will pay to the church at the end of each year for 9 years 5 percent of the fair market value of all property in the trust at the beginning of the year. The income interest is a unitrust interest as defined in subparagraph (2)(ii) of this paragraph; upon termination of such interest the residue of the trust is to revert to B.

(b) The section 7520 rate at the time of the transfer was 6.0 percent. By reference to Table F(6.0) in § 1.664-4(e)(6), the adjusted payout rate is 4.717% (5% × 0.943396). The present value of the reversion is $6,473.75, computed by reference to Table D in § 1.664-4(e)(6), as follows:

Factor at 4.6 percent for 9 years	0.654539
Factor at 4.8 percent for 9 years	.642292
Difference	.012247
Interpolation adjustment:	
4.717% − 4.6% / 0.2% = × / 0.012247	
× = 0.007164	
Factor at 4.6 percent for 9 years	.654539
Less: Interpolation adjustment	.007164
Interpolated factor	.647375
Present value of reversion ($10,000 × 0.647375)	$6,473.75

(c) The present value of the income interest and B's charitable contribution is $3,526.25 ($10,000−$6,473.75).

Example 3. (a) On January 1, 1971, C contributes to a church in trust a 9-year irrevocable income interest in property. Both C and the trust report income on a calendar year basis. The fair market value of the property placed in trust is $10,000. The trust instrument provides that the church will receive an annuity of $500, payable annually at the end of each year for 9 years. The income interest is a guaranteed annuity interest as defined in subparagraph (2)(i) of this paragraph; upon termination of such interest the residue of the trust is to revert to C. C's charitable contribution for 1971 is $3,400.85, determined as provided in *Example 1.* The trust earns income of $600 in 1971, $400 in 1972, and $500 in 1973, all of which is taxable to C under section 671. The church is paid $500 at the end of 1971, 1972, and 1973, respectively. On December 31, 1973, C dies and ceases to be treated as the owner of the income interest under section 673.

(b) Pursuant to subparagraph (4) of this paragraph, the discounted value as of January 1, 1971, of the amounts paid to the church by the trust is $1,336.51, determined by reference to column (4) of § 20.2031-7A(c) of this chapter, as follows:

Annuity Payment date	Amount paid	Years from Jan. 1, 1971, to payment date	Discount factor	Discount value as of Jan. 1, 1971
Dec. 31, 1971	$500	1	0.943396	$471.70
Dec. 31, 1972	500	2	.889996	445.00
Dec. 31, 1973	500	3	.839619	419.81
Total discounted value				1,336.51

(c) Pursuant to subparagraph (4) of this paragraph, there must be included in C's gross income for 1973 the amount of $2,064.34 ($3,400.85 less $1,336.51).
(d) For deduction by the trust for amounts paid to the church after December 31, 1973, see section 642(c)(1) and the regulations thereunder.

(d) ***Denial of deduction for certain contributions by a trust.***

(1) If by reason of section 170(f)(2)(B) and paragraph (c) of this section a charitable contributions deduction is allowed under section 170 for the fair market value of an income interest transferred in trust, neither the grantor of the income interest, the trust, nor any other person shall be allowed a deduction under section 170 or any other section for the amount of any charitable contribution made by the trust with respect to, or in fulfillment of, such income interest.

(2) Section 170(f)(2)(C) and subparagraph (1) of this paragraph shall not be construed, however, to:

(i) Disallow a deduction to the trust, pursuant to section 642(c)(1) and the regulations thereunder, for amounts paid by the trust after the grantor ceases to be treated as the owner of the income interest for purposes of applying section 671 and which are not taken into account in determining the amount of recapture under paragraph (c)(4) of this section, or

(ii) Disallow a deduction to the grantor under section 671 and § 1.671-2(c) for a charitable contribution made by the trust in excess of the contribution required to be made by the trust under the terms of the trust instrument with respect to, or in fulfillment of, the income interest.

(3) Although a deduction for the fair market value of an income interest in property which is less than the donor's entire interest in the property and which the donor transfers in trust is disallowed under section 170 because such interest is not a guaranteed annuity interest, or a unitrust interest, as

defined in paragraph (c)(2) of this section, the donor may be entitled to a deduction under section 671 and § 1.671-2(c) for any charitable contributions made by the trust if he is treated as the owner of such interest for purposes of applying section 671.

(e) ***Effective date.*** This section applies only to transfers in trust made after July 31, 1969. In addition, the rule in paragraphs (c)(2)(i)(A) and (ii)(A) of this section that guaranteed annuity interests and unitrust interests, respectively, may be payable for a specified term of years or for the life or lives of only certain individuals applies to transfers made on or after April 4, 2000. If a transfer is made to a trust on or after April 4, 2000 that uses an individual other than one permitted in paragraphs (c)(2)(i)(A) and (ii)(A) of this section, the trust may be reformed to satisfy this rule. As an alternative to reformation, rescission may be available for a transfer made on or before March 6, 2001. See § 25.2522(c)-3(e) of this chapter for the requirements concerning reformation or possible rescission of these interests.

[T.D. 7207, 37 FR 20780, Oct. 5, 1972; 37 FR 22982, Oct. 27, 1972, as amended by T.D. 7340, 40 FR 1238, Jan. 7, 1975; T.D. 7955, 49 FR 19975, May 11, 1984; T.D. 8540, 59 FR 30102, June 10, 1994; T.D. 8819, 64 FR 23189, 23228, Apr. 30, 1999; 64 FR 33196, June 22, 1999; T.D. 8923, 66 FR 1041, Jan. 5, 2001; T.D. 9068, 68 FR 40131, July 7, 2003]

§ 1.170A-7 Contributions not in trust of partial interests in property.

(a) ***In general.***

(1) In the case of a charitable contribution, not made by a transfer in trust, of any interest in property which consists of less than the donor's entire interest in such property, no deduction is allowed under section 170 for the value of such interest unless the interest is an interest described in paragraph (b) of this section. See section 170(f)(3)(A). For purposes of this section, a contribution of the right to use property which the donor owns, for example, a rent-free lease, shall be treated as a contribution of less than the taxpayer's entire interest in such property.

(2)

(i) A deduction is allowed without regard to this section for a contribution of a partial interest in property if such interest is the taxpayer's entire interest in the property, such as an income interest or a remainder interest. Thus, if securities are given to A for life, with the remainder over to B, and B makes a charitable contribution of his remainder interest to an organization described in section 170(c), a deduction is allowed under section 170 for the present value of B's remainder interest in the securities. If, however, the property in which such partial interest exists was divided in order to create such interest and thus avoid section 170(f)(3)(A), the deduction will not be allowed. Thus, for example, assume that a taxpayer desires to contribute to a charitable organization an income interest in property held by him, which is not of a type described in paragraph (b)(2) of this section. If the taxpayer transfers the remainder interest in such property to his son and immediately thereafter contributes the income interest to a charitable organization, no deduction shall be allowed under section 170 for the contribution of the taxpayer's entire interest consisting of the retained income interest. In further illustration, assume that a taxpayer desires to contribute to a charitable organization the reversionary interest in certain stocks and bonds held by him, which is not of a type described in paragraph (b)(2) of this section. If the taxpayer grants a life estate in such property to his son and immediately thereafter contributes the reversionary interest to a charitable organization, no deduction will be allowed under section 170 for the contribution of the taxpayer's entire interest consisting of the reversionary interest.

(ii) A deduction is allowed without regard to this section for a contribution of a partial interest in property if such contribution constitutes part of a charitable contribution not in trust in which all interests of the taxpayer in the property are given to a charitable organization described in section 170(c). Thus, if on March 1, 1971, an income interest in property is given not in trust to a church and the remainder interest in the property is given not in trust to an educational organization described in section 170(b)(1)(A), a deduction is allowed for the value of such property.

(3) A deduction shall not be disallowed under section 170(f)(3)(A) and this section merely because the interest which passes to, or is vested in, the charity may be defeated by the performance of some act or the happening of some event, if on the date of the gift it appears that the possibility that such act or event will occur is so remote as to be negligible. See paragraph (e) of § 1.170A-1.

(b) ***Contributions of certain partial interests in property for which a deduction is allowed.*** A deduction is allowed under section 170 for a contribution not in trust of a partial interest which is less than the donor's entire interest in property and which qualifies under one of the following subparagraphs:

(1) ***Undivided portion of donor's entire interest.***

(i) A deduction is allowed under section 170 for the value of a charitable contribution not in trust of an undivided portion of a donor's entire interest in property. An undivided portion of a donor's entire interest in property must consist of a fraction or percentage of each and every substantial interest or right owned by the donor in such property and must extend over the entire term of the donor's interest in such property and in other property into which such property is converted. For example, assuming that in 1967 B has been given a life estate in an office building for the life of A and that B has no other interest in the office building, B will be allowed a deduction under section 170 for his contribution in 1972 to charity of a one-half interest in such life estate in a transfer which is not made in trust. Such contribution by B will be considered a contribution of an undivided portion of the donor's entire interest in property. In further illustration, assuming that in 1968 C has been given the remainder interest in a trust created under the will of his father and C has no other interest in the trust, C will be allowed a deduction under section 170 for his contribution in 1972 to charity of a 20-percent interest in such remainder interest in a transfer which is not made in trust. Such contribution by C will be considered a contribution of an undivided portion of the donor's entire interest in property. If a taxpayer owns 100 acres of land and makes a contribution of 50 acres to a charitable organization, the charitable contribution is allowed as a deduction under section 170. A deduction is allowed under section 170 for a contribution of property to a charitable organization whereby such organization is given the right, as a tenant in common with the donor, to possession, dominion, and control of the property for a portion of each year appropriate to its interest in such property. However, for purposes of this subparagraph a charitable contribution in perpetuity of an interest in property not in trust where the donor transfers some specific rights and retains other substantial rights will not be considered a contribution of an undivided portion of the donor's entire interest in property to which section 170(f)(3)(A) does not apply. Thus, for example, a deduction is not allowable for the value of an immediate and perpetual gift not in trust of an interest in original historic motion picture films to a charitable organization where the donor retains the exclusive right to make reproductions of such films and to exploit such reproductions commercially.

(ii) With respect to contributions made on or before December 17, 1980, for purposes of this subparagraph a charitable contribution of an open space easement in gross in perpetuity shall be considered a contribution of an undivided portion of the donor's entire interest in property to which section 170(f)(3)(A) does not apply. For this purpose an easement in gross is a mere personal interest in, or right to use, the land of another; it is not supported by a dominant estate but is attached to, and vested in, the person to whom it is granted. Thus, for example, a deduction is allowed under section 170 for the value of a restrictive easement gratuitously conveyed to the United States in perpetuity whereby the donor agrees to certain restrictions on the use of his property, such as, restrictions on the type and height of buildings that may be erected, the removal of trees, the erection of utility lines, the dumping of trash, and the use of signs. For the deductibility of a qualified conservation contribution, see § 1.170A-14.

(2) ***Partial interests in property which would be deductible in trust.*** A deduction is allowed under section 170 for the value of a charitable contribution not in trust of a partial interest in property which is less than the donor's entire interest in the property and which would be deductible under section 170(f)(2) and § 1.170A-6 if such interest had been transferred in trust.

(3) ***Contribution of a remainder interest in a personal residence.*** A deduction is allowed under section 170 for the value of a charitable contribution not in trust of an irrevocable remainder interest in a personal residence which is not the donor's entire interest in such property. Thus, for example, if a taxpayer contributes not in trust to an organization described in section 170(c) a remainder interest in a personal residence and retains an estate in such property for life or for a term of years, a deduction is allowed under section 170 for the value of such remainder interest not transferred in trust. For purposes of section 170(f)(3)(B)(i) and this subparagraph, the term *personal residence* means any property used by the taxpayer as his personal residence even though it is not used as his principal residence. For example, the taxpayer's vacation home may be a personal residence for purposes of this subparagraph. The term *personal residence* also includes stock owned by a taxpayer as a tenant-stockholder in a cooperative housing corporation (as those terms are defined in section 216(b) (1) and (2)) if the dwelling which the taxpayer is entitled to occupy as such stockholder is used by him as his personal residence.

(4) ***Contribution of a remainder interest in a farm.*** A deduction is allowed under section 170 for the value of a charitable contribution not in trust of an irrevocable remainder interest in a farm which is not the donor's entire interest in such property. Thus, for example, if a taxpayer contributes not in trust to an organization described in section 170(c) a remainder interest in a farm and retains an estate in such farm for life or for a term of years, a deduction is allowed under section 170 for the value of such remainder interest not transferred in trust. For purposes of section 170(f)(3)(B)(i) and this subparagraph, the term *farm* means any land used by the taxpayer or his tenant for the production of crops, fruits, or other agricultural products or for the sustenance of livestock. The term *livestock* includes cattle, hogs, horses, mules, donkeys, sheep, goats, captive fur-bearing animals, chickens, turkeys, pigeons, and other poultry. A farm includes the improvements thereon.

(5) ***Qualified conservation contribution.*** A deduction is allowed under section 170 for the value of a qualified conservation contribution. For the definition of a qualified conservation contribution, see § 1.170A-14.

(c) ***Valuation of a partial interest in property.*** Except as provided in § 1.170A-14, the amount of the deduction under section 170 in the case of a charitable contribution of a partial interest in property to which paragraph (b) of this section applies is the fair market value of the partial interest at the time of the contribution. See § 1.170A-1(c). The fair market value of such partial interest must be determined in

accordance with § 20.2031-7, of this chapter (Estate Tax Regulations), except that, in the case of a charitable contribution of a remainder interest in real property which is not transferred in trust, the fair market value of such interest must be determined in accordance with section 170(f)(4) and § 1.170A-12. In the case of a charitable contribution of a remainder interest in the form of a remainder interest in a pooled income fund, a charitable remainder annuity trust, or a charitable remainder unitrust, the fair market value of the remainder interest must be determined as provided in paragraph (b)(2) of § 1.170A-6. However, in some cases a reduction in the amount of a charitable contribution of the remainder interest may be required. See section 170(e) and paragraph (a) of § 1.170A-4.

(d) ***Illustrations.*** The application of this section may be illustrated by the following examples:

Example 1. A, an individual owning a 10-story office building, donates the rent-free use of the top floor of the building for the year 1971 to a charitable organization. Since A's contribution consists of a partial interest to which section 170(f)(3)(A) applies, he is not entitled to a charitable contributions deduction for the contribution of such partial interest.

Example 2. In 1971, B contributes to a charitable organization an undivided one-half interest in 100 acres of land, whereby as tenants in common they share in the economic benefits from the property. The present value of the contributed property is $50,000. Since B's contribution consists of an undivided portion of his entire interest in the property to which section 170(f)(3)(B) applies, he is allowed a deduction in 1971 for his charitable contribution of $50,000.

Example 3. In 1971, D loans $10,000 in cash to a charitable organization and does not require the organization to pay any interest for the use of the money. Since D's contribution consists of a partial interest to which section 170(f)(3)(A) applies, he is not entitled to a charitable contributions deduction for the contribution of such partial interest.

(e) ***Effective date.*** This section applies only to contributions made after July 31, 1969. The deduction allowable under § 1.170A-7(b)(1)(ii) shall be available only for contributions made on or before December 17, 1980. Except as otherwise provided in § 1.170A-14(g)(4)(ii), the deduction allowable under § 1.170A-7(b)(5) shall be available for contributions made on or after December 18, 1980.

(83 Stat. 544, 26 U.S.C. 170(f)(4); 83 Stat. 560, 26 U.S.C. 642(c)(5); 68A Stat. 917, 26 U.S.C. 7805)

[T.D. 7207, 37 FR 20782, Oct. 4, 1972; 37 FR 22982, Oct. 27, 1972, as amended by T.D. 7955, 49 FR 19975, May 11, 1984; T.D. 8069, 51 FR 1498, Jan. 14, 1986; T.D. 8540, 59 FR 30102, June 10, 1994]

§ 1.170A-8 Limitations on charitable deductions by individuals.

(a) ***Percentage limitations*** —

(1) ***In general.*** An individual's charitable contributions deduction is subject to 20-, 30-, and 50-percent limitations unless the individual qualifies for the unlimited charitable contributions deduction under section 170(b)(1)(C). For a discussion of these limitations and examples of their application, see paragraphs (b) through (f) of this section. If a husband and wife make a joint return, the deduction for contributions is the aggregate of the contributions made by the spouses, and the limitations in section 170(b) and this section are based on the aggregate contribution base of the spouses. A charitable contribution by an individual to or for the use of an organization described in section 170(c) may be deductible even though all, or some portion, of the funds of the organization may be used in foreign countries for charitable or educational purposes.

(2) ***"To" or "for the use of" defined.*** For purposes of section 170, a contribution of an income interest in property, whether or not such contributed interest is transferred in trust, for which a deduction is allowed under section 170(f)(2)(B) or (3)(A) shall be considered as made "for the use of" rather than "to" the charitable organization. A contribution of a remainder interest in property, whether or not such contributed interest is transferred in trust, for which a deduction is allowed under section 170(f)(2)(A) or (3)(A), shall be considered as made "to" the charitable organization except that, if such interest is transferred in trust and, pursuant to the terms of the trust instrument, the interest contributed is, upon termination of the predecessor estate, to be held in trust for the benefit of such organization, the contribution shall be considered as made "for the use of" such organization. Thus, for example, assume that A transfers property to a charitable remainder annuity trust described in section 664(d)(1) which is required to pay to B for life an annuity equal to 5 percent of the initial fair market value of the property transferred in trust. The trust instrument provides that after B's death the remainder interest in the trust is to be transferred to M Church or, in the event M Church is not an organization described in section 170(c) when the amount is to be irrevocably transferred to such church, to an organization which is described in section 170(c) at that time. The contribution by A of the remainder interest shall be considered as made "to" M Church. However, if in the trust instrument A had directed that after B's death the remainder interest is to be held in trust for the benefit of M Church, the contribution shall be considered as made "for the use of" M Church. This subparagraph does not apply to the contribution of a partial interest in property, or of an undivided portion of such partial interest, if such partial interest is the donor's entire interest in the property and such entire interest was not created to avoid section 170(f)(2) or (3)(A). See paragraph (a)(2) of § 1.170A-6 and paragraphs (a)(2)(i) and (b)(1) of § 1.170A-7.

(b) ***50-percent limitation.*** An individual may deduct charitable contributions made during a taxable year to any one or more section 170(b)(1)(A) organizations, as defined in § 1.170A-9, to the extent that such contributions in the aggregate do not exceed 50 percent of his contribution base, as defined in section 170(b)(1)(F) and paragraph (e) of this section, for the taxable year. However, see paragraph (d) of this section for a limitation on the amount of charitable contributions of 30-percent capital gain property. To qualify for the 50-percent limitation the contributions must be made "to," and not merely "for the use of," one of the specified organizations. A contribution to an organization referred to in section 170(c)(2), other than a section 170(b)(1)(A) organization, will not qualify for the 50-percent limitation even though such organization makes the contribution available to an organization which is a section 170 (b)(1)(A) organization. For provisions relating to the carryover of contributions in excess of 50-percent of an individual's contribution base see section 170(d)(1) and paragraph (b) of § 1.170A-10.

(c) ***20-percent limitation.***

(1) An individual may deduct charitable contributions made during a taxable year:

(i) To any one or more charitable organizations described in section 170(c) other than section 170(b)(1)(A) organizations, as defined in § 1.170A-9, and,

(ii) For the use of any charitable organization described in section 170(c), to the extent that such contributions in the aggregate do not exceed the lesser of the limitations under subparagraph (2) of this paragraph.

(2) For purposes of subparagraph (1) of this paragraph the limitations are:

(i) 20 percent of the individual's contribution base, as defined in paragraph (e) of this section, for the taxable year, or

(ii) The excess of 50 percent of the individual's contribution base, as so defined, for the taxable year over the total amount of the charitable contributions allowed under section 170(b)(1)(A) and paragraph (b) of this section, determined by first reducing the amount of such contributions under section 170(e)(1) and paragraph (a) of § 1.170A-4 but without applying the 30-percent limitation under section 170(b)(1)(D)(i) and paragraph (d)(1) of this section.

However, see paragraph (d) of this section for a limitation on the amount of charitable contributions of 30-percent capital gain property. If an election under section 170(b)(1)(D)(iii) and paragraph (d)(2) of this section applies to any contributions of 30-percent capital gain property made during the taxable year or carried over to the taxable year, the amount allowed for the taxable year under paragraph (b) of this section with respect to such contributions for purposes of applying subdivision (ii) of this subparagraph shall be the reduced amount of such contributions determined by applying paragraph (d)(2) of this section.

(d) *30-percent limitation* —

(1) ***In general.*** An individual may deduct charitable contributions of 30-percent capital gain property, as defined in subparagraph (3) of this paragraph, made during a taxable year to or for the use of any charitable organization described in section 170(c) to the extent that such contributions in the aggregate do not exceed 30-percent of his contribution base, as defined in paragraph (e) of this section, subject, however, to the 50- and 20-percent limitations prescribed by paragraphs (b) and (c) of this section. For purposes of applying the 50-percent and 20-percent limitations described in paragraphs (b) and (c) of this section, charitable contributions of 30-percent capital gain property paid during the taxable year, and limited as provided by this subparagraph, shall be taken into account after all other charitable contributions paid during the taxable year. For provisions relating to the carryover of certain contributions of 30-percent capital gain property in excess of 30-percent of an individual's contribution base, see section 170(b)(1)(D)(ii) and paragraph (c) of § 1.170A-10.

(2) ***Election by an individual to have section 170(e)(1)(B) apply to contributions*** —

(i) ***In general.***

(A) An individual may elect under section 170(b)(1)(D)(iii) for any taxable year to have the reduction rule of section 170(e)(1)(B) and paragraph (a) of § 1.170A-4 apply to all his charitable contributions of 30-percent capital gain property made during such taxable year or carried over to such taxable year from a taxable year beginning after December 31, 1969. If such election is made such contributions shall be treated as contributions of section 170(e) capital gain property in accordance with paragraph (b)(2)(iii) of § 1.170A-4. The election may be made with respect to contributions of 30-percent capital gain property carried over to the taxable year even though the individual has not made any contribution of 30-percent capital gain property in such year. If such an election is made, section 170(b)(1)(D) (i) and (ii) and subparagraph (1) of this paragraph shall not apply to such contributions made during such year. However, such contributions must be reduced as required under section 170(e)(1)(B) and paragraph (a) of § 1.170A-4.

(B) If there are carryovers to such taxable year of charitable contributions of 30-percent capital gain property made in preceding taxable years beginning after December 31, 1969, the amount of such contributions in each such preceding year shall be reduced as if section 170(e)(1)(B) had applied to them in the preceding year and shall be carried over to the taxable year and succeeding taxable years under section 170(d)(1) and paragraph (b) of § 1.170A-10 as contributions of property other than 30-percent capital gain property.

For purposes of applying the immediately preceding sentence, the percentage limitations under section 170(b) for the preceding taxable year and for any taxable years intervening between such year and the year of the election shall not be redetermined and the amount of any deduction allowed for such years under section 170 in respect of the charitable contributions of 30-percent capital gain property in the preceding taxable year shall not be redetermined. However, the amount of the deduction so allowed under section 170 in the preceding taxable year must be subtracted from the reduced amount of the charitable contributions made in such year in order to determine the excess amount which is carried over from such year under section 170(d)(1). If the amount of the deduction so allowed in the preceding taxable year equals or exceeds the reduced amount of the charitable contributions, there shall be no carryover from such year to the year of the election.

(C) An election under this subparagraph may be made for each taxable year in which charitable contributions of 30-percent capital gain property are made or to which they are carried over under section 170(b)(1)(D)(ii). If there are also carryovers under section 170(d)(1) to the year of the election by reason of an election made under this subparagraph for a previous taxable year, such carryovers under section 170(d)(1) shall not be redetermined by reason of the subsequent election.

(ii) ***Husband and wife making joint return.*** If a husband and wife make a joint return of income for a contribution year and one of the spouses elects under this subparagraph in a later year when he files a separate return, or if a spouse dies after a contribution year for which a joint return is made, any excess contribution of 30-percent capital gain property which is carried over to the election year from the contribution year shall be allocated between the husband and wife as provided in paragraph (d)(4) (i) and (iii) of § 1.170A-10. If a husband and wife file separate returns in a contribution year, any election under this subparagraph in a later year when a joint return is filed shall be applicable to any excess contributions of 30-percent capital gain property of either taxpayer carried over from the contribution year to the election year. The immediately preceding sentence shall also apply where two single individuals are subsequently married and file a joint return. A remarried individual who filed a joint return with his former spouse for a contribution year and thereafter files a joint return with his present spouse shall treat the carryover to the election year as provided in paragraph (d)(4)(ii) of § 1.170A-10.

(iii) ***Manner of making election.*** The election under subdivision (i) of this subparagraph shall be made by attaching to the income tax return for the election year a statement indicating that the election under section 170(b)(1)(D)(iii) and this subparagraph is being made. If there is a carryover to the taxable year of any charitable contributions of 30-percent capital gain property from a previous taxable year or years, the statement shall show a recomputation, in accordance with this subparagraph and § 1.170A-4, of such carryover, setting forth sufficient information with respect to the previous taxable year or any intervening year to show the basis of the recomputation. The statement shall indicate the district director, or the director of the internal revenue service center, with whom the return for the previous taxable year or years was filed, the name or names in which such return or returns were filed, and whether each such return was a joint or separate return.

(3) ***30-percent capital gain property defined.*** If there is a charitable contribution of a capital asset which, if it were sold by the donor at its fair market value at the time of its contribution, would result in the recognition of gain all, or any portion, of which would be long-term capital gain and if the amount of such contribution is not required to be reduced under section 170(e)(1)(B) and § 1.170A-4(a)(2), such capital asset shall be treated as "30-percent capital gain property" for purposes of section 170

and the regulations thereunder. For such purposes any property which is property used in the trade or business, as defined in section 1231(b), shall be treated as a capital asset. However, see paragraph (b)(4) of § 1.170A-4. For the treatment of such property as section 170(e) capital gain property, see paragraph (b)(2)(iii) of § 1.170A-4.

(e) ***Contribution base defined.*** For purposes of section 170 the term *contribution base* means adjusted gross income under section 62, computed without regard to any net operating loss carryback to the taxable year under section 172. See section 170(b)(1)(F).

(f) ***Illustrations.*** The application of this section may be illustrated by the following examples:

Example 1. B, an individual, reports his income on the calendar-year basis and for 1970 has a contribution base of $100,000. During 1970 he makes charitable contributions of $70,000 in cash, of which $40,000 is given to section 170(b)(1)(A) organizations and $30,000 is given to other organizations described in section 170(c). Accordingly, B is allowed a charitable contributions deduction of $50,000 (50% of $100,000), which consists of the $40,000 contributed to section 170(b)(1)(A) organizations and $10,000 of the $30,000 contributed to the other organizations. Under paragraph (c) of this section, only $10,000 of the $30,000 contributed to the other organizations is allowed as a deduction since such contribution of $30,000 is allowed to the extent of the lesser of $20,000 (20% of $100,000) or $10,000 ([50% of $100,000]−$40,000 (contributions allowed under section 170(b)(1)(A) and paragraph (b) of this section)). Under section 170 (b)(1)(D)(ii) and (d)(1) and § 1.170A-10, B is not allowed a carryover to 1971 or to any other taxable year for any of the $20,000 ($30,000−$10,000) not deductible under section 170(b)(1)(B) and paragraph (c) of this section.

Example 2. C, an individual, reports his income on the calendar-year basis and for 1970 has a contribution base of $100,000. During 1970 he makes charitable contributions of $40,000 in 30-percent capital gain property to section 170(b)(1)(A) organizations and of $30,000 in cash to other organizations described in section 170(c). The 20-percent limitation in section 170(b)(1)(B) and paragraph (c) of this section is applied before the 30-percent limitation in section 170(b)(1)(D)(i) and paragraph (d) of this section; accordingly section 170(b)(1)(B)(ii) limits the deduction for the $30,000 cash contribution to $10,000 ([50% of $100,000]− $40,000). The amount of the contribution of 30-percent capital gain property is limited by section 170(b)(1)(D)(i) and paragraph (d) of this section to $30,000 (30% of $100,000). Accordingly, C's charitable contributions deduction for 1970 is limited to $40,000 ($10,000 + $30,000). Under section 170 (b)(1)(D)(ii) and paragraph (c) of § 1.170A-10, C is allowed a carryover to 1971 of $10,000 ($40,000−$30,000) in respect of his contributions of 30-percent capital gain property. C is not allowed a carryover to 1971 or to any other taxable year for any of the $20,000 cash ($30,000−$10,000) not deductible under section 170(b)(1)(B) and paragraph (c) of this section.

> *Example 3.* (a) D, an individual, reports his income on the calendar-year basis and for 1970 has a contribution base of $100,000. During 1970 he makes charitable contributions of $70,000 in cash, of which $40,000 is given to section 170(b)(1)(A) organizations and $30,000 is given to other organizations described in section 170(c). During 1971 D makes charitable contributions to a section 170(b)(1)(A) organization of $12,000, consisting of cash of $1,000 and $11,000 in 30-percent capital gain property. His contribution base for 1971 is $10,000.
> (b) For 1970, D is allowed a charitable contributions deduction of $50,000 (50% of $100,000), which consists of the $40,000 contributed to section 170(b)(1)(A) organizations and $10,000 of the $30,000 contributed to the other organizations. Under paragraph (c) of this section, only $10,000 of the $30,000 contributed to the other organizations is allowed as a deduction

since such contribution of $30,000 is allowed to the extent of the lesser of $20,000 (20% of $100,000) or $10,000 ([50% of $100,000]−$40,000 (contributions allowed under section 170(b)(1)(A) and paragraph (b) of this section)). D is not allowed a carryover to 1971 or to any other taxable year for any of the $20,000 ($30,000−$10,000) not deductible under section 170(b)(1)(B) and paragraph (c) of this section.

(c) For 1971, D is allowed a charitable contributions deduction of $4,000, consisting of $1,000 cash and $3,000 of the 30-percent capital gain property (30% of $10,000). Under section 170(b)(1)(D)(ii) and paragraph (c) of § 1.170A-10, D is allowed a carryover to 1972 of $8,000 ($11,000−$3,000) in respect of his contribution of 30-percent capital gain property in 1971.

Example 4. (a) E, an individual, reports his income on the calendar-year basis and for 1970 has a contribution base of $100,000. During 1970 he makes charitable contributions of $70,000 in cash, of which $40,000 is given to section 170(b)(1)(A) organizations and $30,000 is given to other organizations described in section 170(c). During 1971 E makes charitable contributions to a section 170(b)(1)(A) organization of $14,000 consisting of cash of $3,000 and $11,000 in 30-percent capital gain property. His contribution base for 1971 is $10,000.
(b) For 1970, E is allowed a charitable contributions deduction of $50,000 (50% of $100,000), which consists of the $40,000 contributed to section 170(b)(1)(A) organizations and $10,000 of the $30,000 contributed to the other organizations. Under paragraph (c) of this section, only $10,000 of the $30,000 contributed to the other organizations is allowed as a deduction since such contribution of $30,000 is allowed to the extent of the lesser of $20,000 (20% of $100,000) or ($10,000 ([50% of $100,000]−$40,000 (contributions allowed under section 170(b)(1)(A) and paragraph (b) of this section)). E is not allowed a carryover to 1971 or to any other taxable year for any of the $20,000 ($30,000−$10,000) not deductible under section 170(b)(1)(B) and paragraph (c) of this section.

(c) For 1971, E is allowed a charitable contributions deduction of $5,000 (50% of $10,000), consisting of $3,000 cash and $2,000 of the $3,000 (30% of $10,000) 30-percent capital gain property which is taken into account. This result is reached because, as provided in section 170(b)(1)(D)(i) and paragraph (d)(1) of this section, cash contributions are taken into account before charitable contributions of 30-percent capital gain property. Under section 170(b)(1)(D)(ii) and (d)(1) and paragraphs (b) and (c) of § 1.170A-10, E is allowed a carryover of $9,000 ([$11,000−$3,000] plus [$6,000 −$5,000]) to 1972 in respect of his contribution of 30-percent capital gain property in 1971.

Example 5. In 1970, C, a calendar-year individual taxpayer, contributes to section 170(b)(1)(A) organizations the amount of $8,000, consisting of $3,000 in cash and $5,000 in 30-percent capital gain property. In 1970, C also makes charitable contributions of $8,500 in 30 percent capital gain property to other organizations described in section 170(c). C's contribution base for 1970 is $20,000. The 20-percent limitation in section 170(b)(1)(B) and paragraph (c) of this section is applied before the 30-percent limitation in section 170(b)(1)(D)(i) and paragraph (d) of this section;

accordingly, section 170(b)(1)(B)(ii) limits the deduction for the $8,500 of contributions to the other organizations described in section 170(c) to $2,000 ([50% of $20,000]−[$3,000 + $5,000]). However, the total amount of contributions of 30-percent capital gain property which is allowed as a deduction for 1970 is limited by section 170(b)(1)(D)(i) and paragraph (d) of this section to $6,000 (30% of $20,000), consisting of the $5,000 contribution to the section 170(b)(1)(A) organizations and $1,000 of the contributions to the other organizations described in section 170(c). Accordingly C is allowed a charitable contributions deduction for 1970 of $9,000, which consists of $3,000 cash and $6,000 of the $13,500 of 30-percent capital gain property. C is not allowed to carryover to 1971 or any other year the remaining $7,500 because his contributions of 30-percent capital gain property for 1970 to section 170(b)(1)(A) organizations amount only to $5,000 and do not exceed $6,000 (30% of $20,000). Thus, the requirement of section 170(b)(1)(D)(ii) is not satisfied.

Example 6. During 1971, D, a calendar-year individual taxpayer, makes a charitable contribution to a church of $8,000, consisting of $5,000 in cash and $3,000 in 30-percent capital gain property. For such year, D's contribution base is $10,000. Accordingly, D is allowed a charitable contributions deduction for 1971 of $5,000 (50% of $10,000) of cash. Under section 170(d)(1) and paragraph (b) of § 1.170A-10, D is allowed a carryover to 1972 of his $3,000 contribution of 30-percent capital gain property, even though such amount does not exceed 30 percent of his contribution base for 1971.

Example 7. In 1970, E, a calendar-year individual taxpayer, makes a charitable contribution to a section 170(b)(1)(A) organization in the amount of $10,000, consisting of $8,000 in 30-percent capital gain property and of $2,000 (after reduction under section 170(e)) in other property. E's contribution base of 1970 is $20,000. Accordingly, E is allowed a charitable contributions deduction for 1970 of $8,000, consisting of the $2,000 of property the amount of which was reduced under section 170(e) and $6,000 (30% of $20,000) of the 30-percent capital gain property. Under section 170(b)(1)(D)(ii) and paragraph (c) of § 1.170A-10, E is allowed to carryover to 1971 $2,000 ($8,000−$6,000) of his contribution of 30-percent capital gain property.

Example 8. (a) In 1972, F, calendar-year individual taxpayer, makes a charitable contribution to a church of $4,000, consisting of $1,000 in cash and $3,000 in 30-percent capital gain property. In addition, F makes a charitable contribution in 1972 of $2,000 in cash to an organization described in section 170(c)(4). F also has a carryover from 1971 under section 170(d)(1) of $5,000 (none of which consists of contributions of 30-percent capital gain property) and a carryover from 1971 under section 170(b)(1)(D)(ii) of $6,000 of contributions of 30-percent capital gain property. F's contribution base for 1972 is $11,000. Accordingly, F is allowed a charitable contributions deduction for 1972 of $5,500 (50% of $11,000), which consists of $1,000 cash contributed in 1972 to the church, $3,000 of 30-percent capital gain property contributed in 1972 to the church, and $1,500 (carryover of $5,000 but not to exceed [$5,500−($1,000 + $3,000)]) of the carryover from 1971 under section 170(d)(1).

(b) No deduction is allowed for 1972 for the contribution in that year of $2,000 cash to the section 170(c)(4) organization since section 170(b)(1)(B)(ii) and paragraph (c) of this section limit the deduction for such contribution to $0([50% of $11,000]−[$1,000 + $1,500 + $3,000]). Moreover, F is not allowed a carryover to 1973 or to any other year for any of such $2,000 cash contributed to the section 170(c)(4) organization.

(c) Under section 170(d)(1) and paragraph (b) of § 1.170A-10, F is allowed a carryover to 1973 from 1971 of $3,500 ($5,000−$1,500) of contributions of other than 30-percent capital gain property. Under section 170(b)(1)(D)(ii) and paragraph (c) of § 1.170A-10, F is allowed a carryover to 1973 from 1971 of $6,000 ($6,000−$0 of such carryover treated as paid in 1972) of contributions of 30-percent capital gain property. The portion of such $6,000 carryover from 1971 which is treated as paid in 1972 is $0 ([50% of $11,000]−[$4,000 contributions to the church in 1972 plus $1,500 of section 170(d)(1) carryover treated as paid in 1972]).

Example 9. (a) In 1970, A, a calendar-year individual taxpayer, makes a charitable contribution to a church of 30-percent capital gain property having a fair market value of $60,000 and an adjusted basis of $10,000. A's contribution base for 1970 is $50,000, and he makes no other charitable contributions in that year. A does not elect for 1970 under paragraph (d)(2) of this section to have section 170(e)(1)(B) apply to such contribution. Accordingly, under section 170(b)(1)(D)(i) and paragraph (d) of this section, A is allowed a charitable contributions deduction for 1970 of $15,000 (30% of $50,000). Under section 170(b)(1)(D)(ii) and paragraph (c) of § 1.170A-10, A is allowed a carryover to 1971 of $45,000 ($60,000−$15,000) for his contribution of 30-percent capital gain property.
(b) In 1971, A makes a charitable contribution to a church of 30-percent capital gain property having a fair market value of $11,000 and an adjusted basis of $10,000. A's contribution base for 1971 is $60,000, and he makes no other charitable contributions in that year. A elects for 1971 under paragraph (d)(2) of this section to have section 170(e)(1)(B) and § 1.170A-4 apply to his contribution of $11,000 in that year and to his carryover of $45,000 from 1970. Accordingly, he is required to recompute his carryover from 1970 as if section 170(e)(1)(B) had applied to his contribution of 30-percent capital gain property in that year.

(c) If section 170(e)(1)(B) had applied in 1970 to his contribution of 30-percent capital gain property, A's contribution would have been reduced from $60,000 to $35,000, the reduction of $25,000 being 50 percent of the gain of $50,000 ($60,000−$10,000) which would have been recognized as long-term capital gain if the property had been sold by A at its fair market value at the time of the contribution in 1970. Accordingly, by taking the election under paragraph (d)(2) of this section into account, A has a recomputed carryover to 1971 of $20,000 ($35,000− $15,000) of his contribution of 30-percent capital gain property in 1970. However, A's charitable contributions deduction of $15,000 allowed for 1970 is not recomputed by reason of the election.

(d) Pursuant to the election for 1971, the contribution of 30-percent capital gain property for 1971 is reduced from $11,000 to $10,500, the reduction of $500 being 50 percent of the gain of $1,000 ($11,000−$10,000) which would have been recognized as long-term capital gain if the property had been sold by A at its fair market value at the time of its contribution in 1971.

(e) Accordingly, A is allowed a charitable contributions deduction for 1971 of $30,000 (total contributions of $30,500 [$20,000 + $10,500] but not to exceed 50% of $60,000).

(f) Under section 170(d)(1) and paragraph (b) of § 1.170A-10, A is allowed a carryover of $500 ($30,500−$30,000) to 1972 and the 3 succeeding taxable years. The $500 carryover, which by reason of the election is no longer treated as a contribution of 30-percent capital gain property, is treated as carried over under paragraph (b) of § 1.170A-10 from 1970 since in 1971 current year contributions are deducted before contributions which are carried over from preceding taxable years.

Example 10. The facts are the same as in *Example 9* except that A also makes a charitable contribution in 1971 of $2,000 cash to a private foundation not described in section 170(b)(1)(E) and that A's contribution base for that year is $62,000, instead of $60,000. Accordingly, A is allowed a charitable contributions deduction for 1971 of $31,000, determined in the following manner Under section 170(b)(1)(A) and paragraph (b) of this section, A is allowed a charitable contributions deduction for 1971 of $30,500, consisting of $10,500 of property contributed to the church in 1971 and of $20,000 (carryover of $20,000 but not to exceed [($62,000 × 50%)−$10,500]) of contributions of property carried over to 1971 under section 170(d)(1) and paragraph (b) of § 1.170A-10. Under section 170(b)(1)(B) and paragraph (c) of this section, A is allowed a charitable contributions deduction for 1971 of $500 ([50% of $62,000]−[$10,500 + $20,000]) of cash contributed to the private foundation in that year. A is not allowed a carryover to 1972 or to any other taxable year for any of the $1,500 ($2,000−$500) cash not deductible in 1971 under section 170(b)(1)(B) and paragraph (c) of this section.

Example 11. The facts are the same as in *Example 9* except that A's contribution base for 1970 is $120,000. Thus, before making the election under paragraph (d)(2) of this section for 1971, A is allowed a charitable contributions deduction for 1970 of $36,000 (30% of $120,000) and is allowed a carryover to 1971 of $24,000 ($60,000−$36,000). By making the election for 1971, A is required to recompute the carryover from 1970, which is reduced from $24,000 to zero, since the charitable contributions deduction of $36,000 allowed for 1970 exceeds the reduced $35,000 contribution for 1970 which iay be taken into account by reason of the election for 1971. Accordingly, A is allowed a deduction for 1971 of $10,500 and is allowed no carryover to 1972, since the reduced contribution for 1971 ($10,500) does not exceed the limitation of $30,000 (50% of $60,000) for 1971 which applies under section 170(d)(1) and paragraph (b) of § 1.170A-10. A's charitable contributions deduction of $36,000 allowed for 1970 is not recomputed by reason of the election. Thus, it is not to A's advantage to make the election under paragraph (d)(2) of this section.

Example 12. (a) B, an individual, reports his income on the calendar-year basis and for 1970 has a contribution base of $100,000. During 1970 he makes charitable contributions of $70,000, consisting of $50,000 in 30-percent capital gain property contributed to a church

and $20,000 in cash contributed to a private foundation not described in section 170(b)(1)(E). For 1971, B's contribution base is $40,000, and in that year he makes a charitable contribution of $5,000 in cash to such private foundation. During the years involved B makes no other charitable contributions.
(b) The amount of the contribution of 30-percent capital gain property which may be taken into account for 1970 is limited by section 170(b)(1)(D)(i) and paragraph (d) of this section to $30,000 (30% of $100,000). Accordingly, under section 170(b)(1)(A) and paragraph (b) of this section B is allowed a deduction for 1970 of $30,000 of 30-percent capital gain property (contribution of $30,000 but not to exceed $50,000 [50% of $100,000]). No deduction is allowed for 1970 for the contribution in that year of $20,000 of cash to the private foundation since section 170(b)(1)(B)(ii) and paragraph (c) of this section limit the deduction for such contribution to $0 ([50% of $100,000]− $50,000, the amount of the contribution of 30-percent capital gain property).

(c) Under section 170(b)(1)(D)(ii) and paragraph (c) of § 1.170A-10, B is allowed a carryover to 1971 of $20,000 ($50,000−[30% of $100,000]) of his contribution in 1970 of 30-percent capital gain property. B is not allowed a carryover to 1971 or to any other taxable year for any of the $20,000 cash contribution in 1970 which is not deductible under section 170(b)(1)(B) and paragraph (c) of this section.

(d) The amount of the contribution of 30-percent capital gain property which may be taken into account for 1971 is limited by section 170(b)(1)(D)(i) and paragraph (d) of this section to $12,000 (30% of $40,000).

Accordingly, under section 170(b)(1)(A) and paragraph (b) of this section B is allowed a deduction for 1971 of $12,000 of 30-percent capital gain property (contribution of $12,000 but not to exceed $20,000 [50% of $40,000]). No deduction is allowed for 1971 for the contribution in that year of $5,000 of cash to the private foundation, since section 170(b)(1)(B)(ii) and paragraph (c) of this section limit the deduction for such contribution to $0 ([50% of $40,000] −$20,000 carryover of 30-percent capital gain property from 1970).

(e) Under section 170(b)(1)(D)(ii) and paragraph (c) of § 1.170A-10, B is allowed a carryover to 1972 of $8,000 ($20,000−[30% of $40,000]) of his contribution in 1970 of 30-percent capital gain property. B is not allowed a carryover to 1972 or to any other taxable year for any of the $5,000 cash contribution for 1971 which is not deductible under section 170(b)(1)(B) and paragraph (c) of this section.

Example 13. D, an individual, reports his income on the calendar-year basis and for 1970 has a contribution base of $100,000. On March 1, 1970, he contributes to a church intangible property to which section 1245 applies which has a fair market value of $60,000 and an adjusted basis of $10,000. At the time of the contribution D has used the property in his business for more than 6 months. If the property had been sold by D at its fair market value at the time of its contribution, it is assumed that under

section 1245 $20,000 of the gain of $50,000 would have been treated as ordinary income and $30,000 would have been long-term capital gain. Since the property contributed is ordinary income property within the meaning of paragraph (b)(1) of § 1.170A-4, D's contribution of $60,000 is reduced under paragraph (a)(1) of such section to $40,000 ($60,000−$20,000 ordinary income). However, since the property contributed is also 30-percent capital gain property within the meaning of paragraph (d)(3) of this section, D's deduction for 1970 is limited by section 170(b)(1)(D)(i) and paragraph (d) of this section to $30,000 (30% of $100,000). Under section 170(b)(1)(D)(ii) and paragraph (c) of § 1.170A-10, D is allowed to carry over to 1971 $10,000 ($40,000−$30,000) of his contribution of 30-percent capital gain property.

Example 14. C, an individual, reports his income on the calendar-year basis and for 1970 has a contribution base of $50,000. During 1970 he makes charitable contributions to a church of $57,000, consisting of $2,000 cash and of 30-percent capital gain property with a fair market value of $55,000 and an adjusted basis of $15,000. In addition, C contributes $3,000 cash in 1970 to a private foundation not described in section 170(b)(1)(E). For 1970, C elects under paragraph (d)(2) of this section to have section 170(e)(1)(B) and § 1.170A-4(a) apply to his contribution of property to the church. Accordingly, for 1970 C's contribution of property to the church is reduced from $55,000 to $35,000, the reduction of $20,000 being 50 percent of the gain of $40,000 ($55,000 −$15,000) which would have been recognized as long-term capital gain if the property had been sold by C at its fair market value at the time of its contribution to the church. Under section 170(b)(1)(A) and paragraph (b) of this section, C is allowed a charitable contributions deduction for 1970 of $25,000 ([$2,000 + $35,000] but not to exceed [$50,000 × 50%]). Under section 170(d)(1) and paragraph (b) of § 1.170A-10, C is allowed a carryover from 1970 to 1971 of $12,000 ($37,000−$25,000). No deduction is allowed for 1970 for the contribution in that year of $3,000 cash to the private foundation since section 170(b)(1)(B) and paragraph (c) of this section limit the deduction for such contribution to the smaller of $10,000 ($50,000 × 20%) or $0 ([$50,000 × 50%]−$25,000). C is not allowed a carryover from 1970 for any of the $3,000 cash contribution in that year which is not deductible under section 170(b)(1)(B) and paragraph (c) of this section.

Example 15. (a) D, an individual, reports his income on the calendar-year basis and for 1970 has a contribution base of $100,000. During 1970 he makes a charitable contribution to a church of 30-percent capital gain property with a fair market value of $40,000 and an adjusted basis of $21,000. In addition, he contributes $23,000 cash in 1970 to a private foundation not described in section 170(b)(1)(E). For 1970, D elects under paragraph (d)(2) of this section to have section 170(e)(1)(B) and § 1.170A-4(a) apply to his contribution of property to the church. Accordingly, for 1970 D's contribution of property to the church is reduced from $40,000 to $30,500, the reduction of $9,500 being 50 percent of the gain of $19,000 ($40,000−$21,000) which would have been recognized as long-term capital gain if the property had been sold by D at its fair market value at the time of its contribution to the church. Under section 170(b)(1)(A) and paragraph (b) of this section, D is allowed a charitable contributions deduction for 1970 of $30,500 for the property contributed to the church. In addition, under section 170(b)(1)(B) and paragraph (c) of this section D is allowed a deduction of $19,500 for the cash contributed to the private foundation, since such contribution of $23,000 is allowed to the extent of the lesser of $20,000 (20% of $100,000) or $19,500 ([$100,000 × 50%]−$30,500). D is not allowed a carryover to 1971 or to any other

taxable year for any of the $3,500 ($23,000−$19,500) of cash not deductible under section 170(b)(1)(B) and paragraph (c) of this section.
(b) If D had not made the election under paragraph (d)(2) of this section for 1970, his deduction for 1970 under section 170(a) for the $40,000 contribution of property to the church would have been limited by section 170(b)(1)(D)(i) and paragraph (d) of this section to $30,000 (30% of $100,000), and under section 170(b)(1)(D)(ii) and paragraph (c) of § 1.170A-10 he would have been allowed a carryover to 1971 of $10,000 ($40,000−$30,000) for his contribution of such property. In addition, he would have been allowed under section 170(b)(1)(B)(ii) and paragraph (c) of this section for 1970 a charitable contributions deduction of $10,000 ([$100,000 × 50%]−$40,000) for the cash contributed to the private foundation. In such case, D would not have been allowed a carryover to 1971 or to any other taxable year for any of the $13,000 ($23,000−$10,000) of cash not deductible under section 170(b)(1)(B) and paragraph (c) of this section.

(g) ***Effective date.*** This section applies only to contributions paid in taxable years beginning after December 31, 1969.

[T.D. 7207, 37 FR 20783, Oct. 4, 1972; 37 FR 22982, Oct. 27, 1972]

§ 1.170A-9 Definition of section 170(b)(1)(A) organization.

(a) The term *section 170(b)(1)(A) organization* as used in the regulations under section 170 means any organization described in paragraphs (b) through (j) of this section, effective with respect to taxable years beginning after December 31, 1969, except as otherwise provided. Section 1.170-2(b) shall continue to be applicable with respect to taxable years beginning prior to January 1, 1970. The term *one or more organizations described in section 170(b)(1)(A) (other than clauses (vii) and (viii))* as used in sections 507 and 509 of the Internal Revenue Code (Code) and the regulations means one or more organizations described in paragraphs (b) through (f) of this section, except as modified by the regulations under part II of subchapter F of chapter 1 or under chapter 42.

(b) ***Church or a convention or association of churches.*** An organization is described in section 170(b)(1)(A)(i) if it is a church or a convention or association of churches.

(c) ***Educational organization and organizations for the benefit of certain State and municipal colleges and universities*** —

(1) ***Educational organization.*** An educational organization is described in section 170(b)(1)(A)(ii) if its primary function is the presentation of formal instruction and it normally maintains a regular faculty and curriculum and normally has a regularly enrolled body of pupils or students in attendance at the place where its educational activities are regularly carried on. The term includes institutions such as primary, secondary, preparatory, or high schools, and colleges and universities. It includes Federal, State, and other public-supported schools which otherwise come within the definition. It does not include organizations engaged in both educational and noneducational activities unless the latter are merely incidental to the educational activities. A recognized university which incidentally operates a museum or sponsors concerts is an educational organization within the meaning of section 170(b)(1)(A)(ii). However, the operation of a school by a museum does not necessarily qualify the museum as an educational organization within the meaning of this subparagraph.

(2) *Organizations for the benefit of certain State and municipal colleges and universities.*

(i) An organization is described in section 170(b)(1)(A)(iv) if it meets the support requirements of subdivision (ii) of this subparagraph and is organized and operated exclusively to receive, hold, invest, and administer property and to make expenditures to or for the benefit of a college or university which is an organization described in subdivision (iii) of this subparagraph. The phrase "expenditures to or for the benefit of a college or university" includes expenditures made for any one or more of the normal functions of colleges and universities such as the acquisition and maintenance of real property comprising part of the campus area; the erection of, or participation in the erection of, college or university buildings; the acquisition and maintenance of equipment and furnishings used for, or in conjunction with, normal functions of colleges and universities; or expenditures for scholarships, libraries and student loans.

(ii) To qualify under section 170(b)(1)(A)(iv), the organization receiving the contribution must normally receive a substantial part of its support from the United States or any State or political subdivision thereof or from direct or indirect contributions from the general public, or from a combination of two or more of such sources. For such purposes, the term "support" does not include income received in the exercise or performance by the organization of its charitable, educational, or other purpose or function constituting the basis for its exemption under section 501(a). An example of an indirect contribution from the public is the receipt by the organization of its share of the proceeds of an annual collection campaign of a community chest, community fund, or united fund. In determining the amount of support received by such organization with respect to a contribution of property which is subject to reduction under section 170(e), the fair market value of the property shall be taken into account.

(iii) The college or university (including a land grant college or university) to be benefited must be an educational organization referred to in section 170(b)(1)(A)(ii) and subparagraph (1) of this paragraph which is an agency or instrumentality of a State or political subdivision thereof, or which is owned or operated by a State or political subdivision thereof or by an agency or instrumentality of one or more States or political subdivisions.

(d) *Hospitals and medical research organizations* —

(1) *Hospitals.* An organization (other than one described in paragraph (d)(2) of this section) is described in section 170(b)(1)(A)(iii) if—

(i) It is a hospital; and

(ii) Its principal purpose or function is the providing of medical or hospital care or medical education or medical research.

(A) The term *hospital* includes—

(*1*) Federal hospitals; and

(*2*) State, county, and municipal hospitals which are instrumentalities of governmental units referred to in section 170(c)(1) and otherwise come within the definition. A rehabilitation institution, outpatient clinic, or community mental health or drug treatment center may qualify as a "hospital" within the meaning of paragraph (d)(1)(i) of this section if its principal purpose or function is the providing of hospital or medical care. For purposes of this paragraph (d)(1)(ii), the term *medical care* shall include the treatment of any physical or mental disability or condition, whether on an

inpatient or outpatient basis, provided the cost of such treatment is deductible under section 213 by the person treated. An organization, all the accommodations of which qualify as being part of a "skilled nursing facility" within the meaning of 42 U.S.C. 1395x(j), may qualify as a "hospital" within the meaning of paragraph (d)(1)(i) of this section if its principal purpose or function is the providing of hospital or medical care. For taxable years ending after June 28, 1968, the term *hospital* also includes cooperative hospital service organizations which meet the requirements of section 501(e) and § 1.501(e)-1.

(B) The term *hospital* does not, however, include convalescent homes or homes for children or the aged, nor does the term include institutions whose principal purpose or function is to train handicapped individuals to pursue some vocation. An organization whose principal purpose or function is the providing of medical education or medical research will not be considered a "hospital" within the meaning of paragraph (d)(1)(i) of this section, unless it is also actively engaged in providing medical or hospital care to patients on its premises or in its facilities, on an inpatient or outpatient basis, as an integral part of its medical education or medical research functions. See, however, paragraph (d)(2) of this section with respect to certain medical research organizations.

(2) ***Certain medical research organizations*** —

(i) ***Introduction.*** A medical research organization is described in section 170(b)(1)(A)(iii) if the principal purpose or functions of such organization are medical research and if it is directly engaged in the continuous active conduct of medical research in conjunction with a hospital. In addition, for purposes of the 50 percent limitation of section 170(b)(1)(A) with respect to a contribution, during the calendar year in which the contribution is made such organization must be committed to spend such contribution for such research before January 1 of the fifth calendar year which begins after the date such contribution is made. An organization need not receive contributions deductible under section 170 to qualify as a medical research organization and such organization need not be committed to spend amounts to which the limitation of section 170(b)(1)(A) does not apply within the 5-year period referred to in this paragraph (d)(2)(i). However, the requirement of continuous active conduct of medical research indicates that the type of organization contemplated in this paragraph (d)(2) is one which is primarily engaged directly in the continuous active conduct of medical research, as compared to an inactive medical research organization or an organization primarily engaged in funding the programs of other medical research organizations. As in the case of a hospital, since an organization is ordinarily not described in section 170(b)(1)(A)(iii) as a hospital unless it functions primarily as a hospital, similarly a medical research organization is not so described unless it is primarily engaged directly in the continuous active conduct of medical research in conjunction with a hospital. Accordingly, the rules of this paragraph (d)(2) shall only apply with respect to such medical research organizations.

(ii) ***General rule.*** An organization (other than a hospital described in paragraph (d)(1) of this section) is described in section 170(b)(1)(A)(iii) only if within the meaning of this paragraph (d)(2):

(A) The principal purpose or functions of such organization are to engage primarily in the conduct of medical research; and

(B) It is primarily engaged directly in the continuous active conduct of medical research in conjunction with a hospital which is—

(1) Described in section 501(c)(3);

(2) A Federal hospital; or

(3) An instrumentality of a governmental unit referred to in section 170(c)(1).

(C) In order for a contribution to such organization to qualify for purposes of the 50 percent limitation of section 170(b)(1)(A), during the calendar year in which such contribution is made or treated as made, such organization must be committed (within the meaning of paragraph (d)(2)(viii) of this section) to spend such contribution for such active conduct of medical research before January 1 of the fifth calendar year beginning after the date such contribution is made. For the meaning of the term “medical research” see paragraph (d)(2)(iii) of this section. For the meaning of the term “principal purpose or functions” see paragraph (d)(2)(iv) of this section. For the meaning of the term “primarily engaged directly in the continuous active conduct of medical research” see paragraph (d)(2)(v) of this section. For the meaning of the term “medical research in conjunction with a hospital” see paragraph (d)(2)(vii) of this section.

(iii) ***Definition of medical research. Medical research*** means the conduct of investigations, experiments, and studies to discover, develop, or verify knowledge relating to the causes, diagnosis, treatment, prevention, or control of physical or mental diseases and impairments of man. To qualify as a medical research organization, the organization must have or must have continuously available for its regular use the appropriate equipment and professional personnel necessary to carry out its principal function. Medical research encompasses the associated disciplines spanning the biological, social and behavioral sciences. Such disciplines include chemistry (biochemistry, physical chemistry, bioorganic chemistry, etc.), behavioral sciences (psychiatry, physiological psychology, neurophysiology, neurology, neurobiology, and social psychology, etc.), biomedical engineering (applied biophysics, medical physics, and medical electronics, for example, developing pacemakers and other medically related electrical equipment), virology, immunology, biophysics, cell biology, molecular biology, pharmacology, toxicology, genetics, pathology, physiology, microbiology, parasitology, endocrinology, bacteriology, and epidemiology.

(iv) ***Principal purpose or functions.*** An organization must be organized for the principal purpose of engaging primarily in the conduct of medical research in order to be an organization meeting the requirements of this paragraph (d)(2). An organization will normally be considered to be so organized if it is expressly organized for the purpose of conducting medical research and is actually engaged primarily in the conduct of medical research. Other facts and circumstances, however, may indicate that an organization does not meet the principal purpose requirement of this paragraph (d)(2)(iv) even where its governing instrument so expressly provides. An organization that otherwise meets all of the requirements of this paragraph (d)(2) (including this paragraph (d)(2)(iv)) to qualify as a medical research organization will not fail to so qualify solely because its governing instrument does not specifically state that its principal purpose is to conduct medical research.

(v) ***Primarily engaged directly in the continuous active conduct of medical research*** —

(A) In order for an organization to be primarily engaged directly in the continuous active conduct of medical research, the organization must either devote a substantial part of its assets to, or expend a significant percentage of its endowment for, such purposes, or both. Whether an organization devotes a substantial part of its assets to, or makes

significant expenditures for, such continuous active conduct depends upon the facts and circumstances existing in each specific case. An organization will be treated as devoting a substantial part of its assets to, or expending a significant percentage of its endowment for, such purposes if it meets the appropriate test contained in paragraph (d)(2)(v)(B) of this section. If an organization fails to satisfy both of such tests, in evaluating the facts and circumstances, the factor given most weight is the margin by which the organization failed to meet such tests. Some of the other facts and circumstances to be considered in making such a determination are—

(*1*) If the organization fails to satisfy the tests because it failed to properly value its assets or endowment, then upon determination of the improper valuation it devotes additional assets to, or makes additional expenditures for, such purposes, so that it satisfies such tests on an aggregate basis for the prior year in addition to such tests for the current year;

(*2*) The organization acquires new assets or has a significant increase in the value of its securities after it had developed a budget in a prior year based on the assets then owned and the then current values;

(*3*) The organization fails to make expenditures in any given year because of the interrelated aspects of its budget and long-term planning requirements, for example, where an organization prematurely terminates an unsuccessful program and because of long-term planning requirements it will not be able to establish a fully operational replacement program immediately; and

(*4*) The organization has as its objective to spend less than a significant percentage in a particular year but make up the difference in the subsequent few years, or to budget a greater percentage in an earlier year and a lower percentage in a later year.

(B) For purposes of this section, an organization which devotes more than one half of its assets to the continuous active conduct of medical research will be considered to be devoting a substantial part of its assets to such conduct within the meaning of paragraph (d)(2)(v)(A) of this section. An organization which expends funds equaling 3.5 percent or more of the fair market value of its endowment for the continuous active conduct of medical research will be considered to have expended a significant percentage of its endowment for such purposes within the meaning of paragraph (d)(2)(v)(A) of this section.

(C) Engaging directly in the continuous active conduct of medical research does not include the disbursing of funds to other organizations for the conduct of research by them or the extending of grants or scholarships to others. Therefore, if an organization's primary purpose is to disburse funds to other organizations for the conduct of research by them or to extend grants or scholarships to others, it is not primarily engaged directly in the continuous active conduct of medical research.

(vi) ***Special rules.*** The following rules shall apply in determining whether a substantial part of an organization's assets are devoted to, or its endowment is expended for, the continuous active conduct of medical research activities:

(A) An organization may satisfy the tests of paragraph (d)(2)(v)(B) of this section by meeting such tests either for a computation period consisting of the immediately preceding taxable year, or for the computation period consisting of the immediately preceding four

taxable years. In addition, for taxable years beginning in 1970, 1971, 1972, 1973, and 1974, if an organization meets such tests for the computation period consisting of the first four taxable years beginning after December 31, 1969, an organization will be treated as meeting such tests, not only for the taxable year beginning in 1974, but also for the preceding four taxable years. Thus, for example, if a calendar year organization failed to satisfy such tests for a computation period consisting of 1969, 1970, 1971, and 1972, but on the basis of a computation period consisting of the years 1970 through 1973, it expended funds equaling 3.5 percent or more of the fair market value of its endowment for the continuous active conduct of medical research, such organization will be considered to have expended a significant percentage of its endowment for such purposes for the taxable years 1970 through 1974. In applying such tests for a four-year computation period, although the organization's expenditures for the entire four-year period shall be aggregated, the fair market value of its endowment for each year shall be summed, even though, in the case of an asset held throughout the four-year period, the fair market value of such an asset will be counted four times. Similarly, the fair market value of an organization's assets for each year of a four-year computation period shall be summed.

(B) Any property substantially all the use of which is “substantially related” (within the meaning of section 514(b)(1)(A)) to the exercise or performance of the organization's medical research activities will not be treated as part of its endowment.

(C) The valuation of assets must be made with commonly accepted methods of valuation. A method of valuation made in accordance with the principles stated in the regulations under section 2031 constitutes an acceptable method of valuation. Assets may be valued as of any day in the organization's taxable year to which such valuation applies, provided the organization follows a consistent practice of valuing such asset as of such date in all taxable years. For purposes of paragraph (d)(2)(v) of this section, an asset held by the organization for part of a taxable year shall be taken into account by multiplying the fair market value of such asset by a fraction, the numerator of which is the number of days in such taxable year that the organization held such asset and the denominator of which is the number of days in such taxable year.

(vii) ***Medical research in conjunction with a hospital.*** The organization need not be formally affiliated with a hospital to be considered primarily engaged directly in the continuous active conduct of medical research in conjunction with a hospital, but in any event there must be a joint effort on the part of the research organization and the hospital pursuant to an understanding that the two organizations will maintain continuing close cooperation in the active conduct of medical research. For example, the necessary joint effort will normally be found to exist if the activities of the medical research organization are carried on in space located within or adjacent to a hospital, the organization is permitted to utilize the facilities (including equipment, case studies, etc.) of the hospital on a continuing basis directly in the active conduct of medical research, and there is substantial evidence of the close cooperation of the members of the staff of the research organization and members of the staff of the particular hospital or hospitals. The active participation in medical research by members of the staff of the particular hospital or hospitals will be considered to be evidence of such close cooperation. Because medical research may involve substantial investigation, experimentation and study not immediately connected with hospital or medical care, the requisite joint effort will also normally

be found to exist if there is an established relationship between the research organization and the hospital which provides that the cooperation of appropriate personnel and the use of facilities of the particular hospital or hospitals will be required whenever it would aid such research.

(viii) ***Commitment to spend contributions.*** The organization's commitment that the contribution will be spent within the prescribed time only for the prescribed purposes must be legally enforceable. A promise in writing to the donor in consideration of his making a contribution that such contribution will be so spent within the prescribed time will constitute a commitment. The expenditure of contributions received for plant, facilities, or equipment, used solely for medical research purposes (within the meaning of paragraph (d)(2)(ii) of this section), shall ordinarily be considered to be an expenditure for medical research. If a contribution is made in other than money, it shall be considered spent for medical research if the funds from the proceeds of a disposition thereof are spent by the organization within the five-year period for medical research; or, if such property is of such a kind that it is used on a continuing basis directly in connection with such research, it shall be considered spent for medical research in the year in which it is first so used. A medical research organization will be presumed to have made the commitment required under this paragraph (d)(2)(viii) with respect to any contribution if its governing instrument or by-laws require that every contribution be spent for medical research before January 1 of the fifth year which begins after the date such contribution is made.

(ix) ***Organizational period for new organizations.*** A newly created organization, for its "organizational" period, shall be considered to be primarily engaged directly in the continuous active conduct of medical research in conjunction with a hospital within the meaning of paragraphs (d)(2)(v) and (d)(2)(vii) of this section if during such period the organization establishes to the satisfaction of the Commissioner that it reasonably can be expected to be so engaged by the end of such period. The information to be submitted shall include detailed plans showing the proposed initial medical research program, architectural drawings for the erection of buildings and facilities to be used for medical research in accordance with such plans, plans to assemble a professional staff and detailed projections showing the timetable for the expected accomplishment of the foregoing. The "organizational" period shall be that period which is appropriate to implement the proposed plans, giving effect to the proposed amounts involved and the magnitude and complexity of the projected medical research program, but in no event in excess of three years following organization.

(x) ***Examples.*** The application of this paragraph (d)(2) may be illustrated by the following examples:

Example 1. N, an organization referred to in section 170(c)(2), was created to promote human knowledge within the field of medical research and medical education. All of N's assets were contributed to it by A and consist of a diversified portfolio of stocks and bonds. N's endowment earns 3.5 percent annually, which N expends in the conduct of various medical research programs in conjunction with Y hospital. N is located adjacent to Y hospital, makes substantial use of Y's facilities, and there is close cooperation between the staffs of N and Y. N is directly engaged in the continuous active conduct of medical research in conjunction with a hospital, meets the principal purpose test described in paragraph (d)(2)(iv) of this section, and is therefore an organization described in section 170(b)(1)(A)(iii).

Example 2. O, an organization referred to in section 170(c)(2), was created to promote human knowledge within the field of medical research and medical education. All of O's assets consist of a diversified portfolio of stocks and bonds. O's endowment earns 3.5 percent annually, which O expends in the conduct of various medical research programs in conjunction with certain hospitals. However, in 1974, O receives a substantial bequest of additional stocks and bonds. O's budget for 1974 does not take into account the bequest and as a result O expends only 3.1 percent of its endowment in 1974. However, O establishes that it will expend at least 3.5 percent of its endowment for the active conduct of medical research for taxable years 1975 through 1978. O is therefore directly engaged in the continuous active conduct of medical research in conjunction with a hospital for taxable year 1975. Since O also meets the principal purpose test described in paragraph (d)(2)(iv) of this section, it is therefore an organization described in section 170(b)(1)(A)(iii) for taxable year 1975.

Example 3. M, an organization referred to in section 170(c)(2), was created to promote human knowledge within the field of medical research and medical education. M's activities consist of the conduct of medical research programs in conjunction with various hospitals. Under such programs, researchers employed by M engage in research at laboratories set aside for M within the various hospitals. Substantially all of M's assets consist of 100 percent of the stock of X corporation, which has a fair market value of approximately 100 million dollars. X pays M approximately 3.3 million dollars in dividends annually, which M expends in the conduct of its medical research programs. Since M expends only 3.3 percent of its endowment, which does not constitute a significant percentage, in the active conduct of medical research, M is not an organization described in section 170(b)(1)(A)(iii) because M is not engaged in the continuous active conduct of medical research.

(xi) ***Special rule for organizations with existing ruling.*** This paragraph (d)(2)(xi) shall apply to an organization that prior to January 1, 1970, had received a ruling or determination letter which has not been expressly revoked holding the organization to be a medical research organization described in section 170(b)(1)(A)(iii) and with respect to which the facts and circumstances on which the ruling was based have not substantially changed. An organization to which this paragraph (d)(2)(xi) applies shall be treated as an organization described in section 170(b)(1)(A)(iii) for a period not ending prior to 90 days after February 13, 1976 (or where appropriate, for taxable years beginning before such 90th day). In addition, with respect to a grantor or contributor under sections 170, 507, 545(b)(2), 556(b)(2), 642(c), 4942, 4945, 2055, 2106(a)(2), and 2522, the status of an organization to which this paragraph (d)(2)(xi) applies will not be affected until notice of change of status under section 170(b)(1)(A)(iii) is made to the public (such as by publication in the Internal Revenue Bulletin). The preceding sentence shall not apply if the grantor or contributor had previously acquired knowledge that the Internal Revenue Service had given notice to such organization that it would be deleted from classification as a section 170(b)(1)(A)(iii) organization.

(e) ***Governmental unit.*** A governmental unit is described in section 170(b)(1)(A)(v) if it is referred to in section 170(c)(1).

(f) ***Definition of section 170(b)(1)(A)(vi) organization*** —

(1) ***In general.*** An organization is described in section 170(b)(1)(A)(vi) if it—

(i) Is referred to in section 170(c)(2) (other than an organization specifically described in paragraphs (b) through (e) of this section); and

(ii) Normally receives a substantial part of its support from a governmental unit referred to in section 170(c)(1) or from direct or indirect contributions from the general public ("publicly supported"). For purposes of this paragraph (f), an organization is publicly supported if it meets the requirements of either paragraph (f)(2) of this section ($33^1/_3$ percent support test) or paragraph (f)(3) of this section (facts and circumstances test). Paragraph (f)(4) of this section defines "normally" for purposes of the $33^1/_3$ percent support test and the facts and circumstances test, and for new organizations in the first five years of the organization's existence as a section 501(c)(3) organization. Paragraph (f)(5) of this section provides for determinations of foundation classification and rules for reliance by donors and contributors. Paragraphs (f)(6), (f)(7), and (f)(8) of this section list the items that are included and excluded from the term support. Paragraph (f)(9) of this section provides examples of the application of this paragraph. Types of organizations that, subject to the provisions of this paragraph (f), generally qualify under section 170(b)(1)(A)(vi) as "publicly supported" are publicly or governmentally supported museums of history, art, or science, libraries, community centers to promote the arts, organizations providing facilities for the support of an opera, symphony orchestra, ballet, or repertory drama or for some other direct service to the general public.

(2) ***Determination whether an organization is "publicly supported"; $33^1/_3$ percent support test.*** An organization is publicly supported if the total amount of support (see paragraphs (f)(6), (f)(7), and (f)(8) of this section) that the organization normally (see paragraph (f)(4)(i) of this section) receives from governmental units referred to in section 170(c)(1), from contributions made directly or indirectly by the general public, or from a combination of these sources, equals at least $33^1/_3$ percent of the total support normally received by the organization. See paragraph (f)(9), *Example 1* of this section.

(3) ***Determination whether an organization is "publicly supported"; facts and circumstances test.*** Even if an organization fails to meet the $33^1/_3$ percent support test described in paragraph (f)(2) of this section, it is publicly supported if it normally (see paragraph (f)(4)(i) of this section) receives a substantial part of its support from governmental units, from contributions made directly or indirectly by the general public, or from a combination of these sources, and meets the other requirements of this paragraph (f)(3). In order to satisfy the facts and circumstances test, an organization must meet the requirements of paragraphs (f)(3)(i) and (f)(3)(ii) of this section. In addition, the organization must be in the nature of an organization that is publicly supported, taking into account all pertinent facts and circumstances, including the factors listed in paragraphs (f)(3)(iii)(A) through (f)(3)(iii)(E) of this section.

(i) ***Ten-percent support limitation.*** The percentage of support (see paragraphs (f)(6), (f)(7) and (f)(8) of this section) normally received by an organization from governmental units, from contributions made directly or indirectly by the general public, or from a combination of these sources, must be substantial. For purposes of this paragraph (f)(3), an organization will not be treated as normally receiving a substantial amount of governmental or public support unless the total amount of governmental and public support normally received equals at least 10 percent of the total support normally received by such organization.

(ii) ***Attraction of public support.*** An organization must be so organized and operated as to attract new and additional public or governmental support on a continuous basis. An organization will be considered to meet this requirement if it maintains a continuous and bona fide program for

solicitation of funds from the general public, community, or membership group involved, or if it carries on activities designed to attract support from governmental units or other organizations described in section 170(b)(1)(A)(i) through (b)(1)(A)(vi). In determining whether an organization maintains a continuous and bona fide program for solicitation of funds from the general public or community, consideration will be given to whether the scope of its fundraising activities is reasonable in light of its charitable activities. Consideration will also be given to the fact that an organization, in its early years of existence, may limit the scope of its solicitation to persons deemed most likely to provide seed money in an amount sufficient to enable it to commence its charitable activities and expand its solicitation program.

(iii) In addition to the requirements set forth in paragraphs (f)(3)(i) and (f)(3)(ii) of this section that must be satisfied, all pertinent facts and circumstances, including the following factors, will be taken into consideration in determining whether an organization is "publicly supported" within the meaning of paragraph (f)(1) of this section. However, an organization is not generally required to satisfy all of the factors in paragraphs (f)(3)(iii)(A) through (f)(3)(iii)(E) of this section. The factors relevant to each case and the weight accorded to any one of them may differ depending upon the nature and purpose of the organization and the length of time it has been in existence.

(A) ***Percentage of financial support.*** The percentage of support received by an organization from public or governmental sources will be taken into consideration in determining whether an organization is "publicly supported." The higher the percentage of support above the 10 percent requirement of paragraph (f)(3)(i) of this section from public or governmental sources, the lesser will be the burden of establishing the publicly supported nature of the organization through other factors, including those described in this paragraph (f)(3), while the lower the percentage, the greater will be the burden. If the percentage of the organization's support from public or governmental sources is low because it receives a high percentage of its total support from investment income on its endowment funds, such fact will be treated as evidence of an organization being "publicly supported" if such endowment funds were originally contributed by a governmental unit or by the general public. However, if such endowment funds were originally contributed by a few individuals or members of their families, such fact will increase the burden on the organization of establishing that it is "publicly supported" taking into account all pertinent facts and circumstances, including the other factors described in paragraph (f)(3)(iii) of this section.

(B) ***Sources of support.*** The fact that an organization meets the requirement of paragraph (f)(3)(i) of this section through support from governmental units or directly or indirectly from a representative number of persons, rather than receiving almost all of its support from the members of a single family, will be considered evidence of an organization being "publicly supported." In determining what is a "representative number of persons," consideration will be given to the type of organization involved, the length of time it has been in existence, and whether it limits its activities to a particular community or region or to a special field which can be expected to appeal to a limited number of persons.

(C) ***Representative governing body.*** The fact that an organization has a governing body which represents the broad interests of the public, rather than the personal or private interests of a limited number of donors (or persons standing in a relationship to such donors which is described in section 4946(a)(1)(C) through (a)(1)(G)), will be considered evidence of an organization being "publicly supported." An organization will be treated as having a

representative governing body if it has a governing body (whether designated in the organization's governing instrument or bylaws as a Board of Directors, Board of Trustees, or similar governing body) which is comprised of public officials acting in their capacities as such; of individuals selected by public officials acting in their capacities as such; of persons having special knowledge or expertise in the particular field or discipline in which the organization is operating; of community leaders, such as elected or appointed officials, clergymen, educators, civic leaders, or other such persons representing a broad cross-section of the views and interests of the community; or, in the case of a membership organization, of individuals elected pursuant to the organization's governing instrument or bylaws by a broadly based membership.

(D) ***Availability of public facilities or services; public participation in programs or policies.***

(*1*) The fact that an organization generally provides facilities or services directly for the benefit of the general public on a continuing basis (such as a museum or library which holds open its building or facilities to the public, a symphony orchestra which gives public performances, a conservation organization which provides educational services to the public through the distribution of educational materials, or an old age home which provides domiciliary or nursing services for members of the general public) will be considered evidence that such organization is “publicly supported.”

(*2*) The fact that an organization is an educational or research institution which regularly publishes scholarly studies that are widely used by colleges and universities or by members of the general public will also be considered evidence that such organization is “publicly supported.”

(*3*) The following factors will also be considered evidence that an organization is “publicly supported”:

(*i*) The participation in, or sponsorship of, the programs of the organization by members of the public having special knowledge or expertise, public officials, or civic or community leaders.

(*ii*) The maintenance of a definitive program by an organization to accomplish its charitable work in the community, such as combating community deterioration in an economically depressed area that has suffered a major loss of population and jobs.

(*iii*) The receipt of a significant part of its funds from a public charity or governmental agency to which it is in some way held accountable as a condition of the grant, contract, or contribution.

(E) ***Additional factors pertinent to membership organizations.*** The following are additional factors to be considered in determining whether a membership organization is “publicly supported”:

(*1*) Whether the solicitation for dues-paying members is designed to enroll a substantial number of persons in the community or area, or in a particular profession or field of special interest (taking into account the size of the area and the nature of the organization's activities).

(2) Whether membership dues for individual (rather than institutional) members have been fixed at rates designed to make membership available to a broad cross section of the interested public, rather than to restrict membership to a limited number of persons.

(3) Whether the activities of the organization will be likely to appeal to persons having some broad common interest or purpose, such as educational activities in the case of alumni associations, musical activities in the case of symphony societies, or civic affairs in the case of parent-teacher associations. See *Example 2* through *Example 5* contained in paragraph (f)(9) of this section for illustrations of this paragraph (f)(3).

(4) ***Definition of normally; general rule*** —

(i) ***Normally; 33 1/3 percent support test.*** An organization "normally" receives the requisite amount of public support and meets the 33 1/3 percent support test for a taxable year and the taxable year immediately succeeding that year, if, for the taxable year being tested and the four taxable years immediately preceding that taxable year, the organization meets the 33 1/3 percent support test on an aggregate basis.

(ii) ***Normally; facts and circumstances test.*** An organization "normally" receives the requisite amount of public support and meets the facts and circumstances test of paragraph (f)(3) for a taxable year and the taxable year immediately succeeding that year, if, for the taxable year being tested and the four taxable years immediately preceding that taxable year, the organization meets the facts and circumstances test on an aggregate basis. In the case of paragraphs (f)(3)(iii)(A) and (f)(3)(iii)(B) of this section, facts pertinent to years preceding the five-year period may also be taken into consideration. The combination of factors set forth in paragraphs (f)(3)(iii)(A) through (f)(3)(iii)(E) of this section that an organization normally must meet does not have to be the same for each five-year period so long as there exists a sufficient combination of factors to show compliance with the facts and circumstances test.

(iii) ***Special rule.*** The fact that an organization has normally met the requirements of the 33 1/3 percent support test for a current taxable year, but is unable normally to meet such requirements for a succeeding taxable year, will not in itself prevent such organization from meeting the facts and circumstances test for such succeeding taxable year.

(iv) ***Example.*** The application of paragraphs (f)(4)(i), (f)(4)(ii), and (f)(4)(iii) of this section may be illustrated by the following example:

> *Example.* (i) X is recognized as an organization described in section 501(c)(3). On the basis of support received during taxable years 2008, 2009, 2010, 2011, and 2012, in the aggregate, X receives at least 33 1/3 percent of its support from governmental units referred to in section 170(c)(1), from contributions made directly or indirectly by the general public, or from a combination of these sources. Consequently, X meets the 33 1/3 percent support test for taxable year 2012 (the current taxable year). X also meets the 33 1/3 support test for 2013, as the immediately succeeding taxable year.

(ii) In taxable years 2009, 2010, 2011, 2012, and 2013, in the aggregate, X does not receive at least $33^1/_3$ percent of its support from governmental units referred to in section 170(c)(1), from contributions made directly or indirectly by the general public, or from a combination of these sources. However, X still meets the $33^1/_3$ percent support test for taxable year 2013 based on the aggregate support received for taxable years 2008 through 2012.

(iii) In taxable years 2010, 2011, 2012, 2013, and 2014, in the aggregate, X does not receive at least $33^1/_3$ percent of its support from governmental units referred to in section 170(c)(1), from contributions made directly or indirectly by the general public, or from a combination of these sources. X does not meet the $33^1/_3$ percent support test for taxable year 2014.

(iv) X meets the facts and circumstances test for taxable year 2013 and for taxable year 2014 (the immediately succeeding taxable year) based on the aggregate support X receives, X's fundraising program, and consideration of other factors, including those listed in paragraphs (f)(3)(iii)(A) through (f)(3)(iii)(E) of this section, during taxable years 2009, 2010, 2011, 2012, and 2013. Therefore, even though X does not meet the $33^1/_3$ percent support test for taxable year 2014, X is still an organization described in section 170(b)(1)(A)(vi) for that year.

(v) ***Normally; first five years of an organization's existence.***

(A) An organization “normally” receives the requisite amount of public support and meets the $33^1/_3$ percent public support test or the facts and circumstances test during its first five taxable years as a section 501(c)(3) organization if the organization can reasonably be expected to meet the requirements of the $33^1/_3$ percent support test or the facts and circumstances test during that period. With respect to such organization's sixth taxable year, the general definition of normally set forth in paragraphs (f)(4)(i), (f)(4)(ii), and (f)(4)(iii) of this section apply. Alternatively, the organization shall be treated as “normally” meeting the $33^1/_3$ percent support test or the facts and circumstances test for its sixth taxable year (but not its seventh taxable year) if it meets the $33^1/_3$ percent support test or the facts and circumstances test under the definition of normally set forth in paragraphs (f)(4)(i), (f)(4)(ii), and (f)(4)(iii) of this section for its fifth taxable year (based on support received in its first through fifth taxable years).

(B) ***Basic consideration.*** In determining whether an organization can reasonably be expected (within the meaning of paragraph (f)(4)(v)(A) of this section) to meet the requirements of the $33^1/_3$ percent support test or the facts and circumstances test during its first five taxable years, the basic consideration is whether its organizational structure, current or proposed programs or activities, and actual or intended method of operation are such as can reasonably be expected to attract the type of broadly based support from the general public, public charities, and governmental units that is necessary to meet such tests. The factors that are relevant to this determination, and the weight accorded to each of them,

may differ from case to case, depending on the nature and functions of the organization. The information to be considered for this purpose shall consist of all pertinent facts and circumstances, including the factors set forth in paragraph (f)(3) of this section.

(vi) ***Example.*** The application of paragraph (f)(4)(v) of this section may be illustrated by the following example:

> *Example.* (i) Organization Y was formed in January 2008, and uses a taxable year ending December 31. After September 9, 2008, and before December 31, 2008, Organization Y filed Form 1023 requesting recognition of exemption as an organization described in section 501(c)(3) and in sections 170(b)(1)(A)(vi) and 509(a)(1). In its application, Organization Y established that it can reasonably be expected to operate as a publicly supported organization under paragraph (f)(2) or (f)(3) and paragraph (f)(4)(v) of this section. Subsequently, Organization Y received a ruling or determination letter that it is an organization described in section 501(c)(3) and sections 170(b)(1)(A)(vi) and 509(a)(1) effective as of the date of its formation.
> (ii) Organization Y is described in sections 170(b)(1)(A)(vi) and 509(a)(1) for its first five taxable years (the taxable years ending December 31, 2008, through December 31, 2012).
>
> (iii) Organization Y can qualify as a publicly supported organization for the taxable year ending December 31, 2013, if Organization Y can meet the requirements of either paragraph (f)(2) or paragraph (f)(3) of this section or § 1.509(a)-3(a) and § 1.509(a)-(3)(b) for the taxable years ending December 31, 2009, through December 31, 2013, or for the taxable years ending December 31, 2008, through December 31, 2012.

(vii) ***Organizations reclassified as private foundations.***

(A) ***New publicly supported organizations.*** If a new publicly supported organization described under section 170(b)(1)(A)(vi) cannot meet the requirements of the $33^{1}/_{3}$ percent test of paragraph (f)(2) or the facts and circumstances test of paragraph (f)(3) for its sixth taxable year under the general definition of normally set forth in paragraphs (f)(4)(i), (f)(4)(ii), and (f)(4)(iii) of this section or under the alternate rule set forth in paragraph (f)(4)(v) of this section (effectively failing to meet a public support test for both its fifth and sixth taxable years), it will be treated as a private foundation as of the first day of its sixth taxable year only for purposes of sections 507, 4940, and 6033. Such an organization must file a Form 990-PF, "Return of Private Foundation or Section 4947(a)(1) Nonexempt Charitable Trust Treated as a Private Foundation," and will be liable for the net investment tax imposed by section 4940 and, if applicable, the private foundation termination tax imposed by section 507(c), for its sixth taxable year. For succeeding taxable years, the organization will be treated as a private foundation for all purposes.

(B) ***Other publicly supported organizations.*** A publicly supported organization described in section 170(b)(1)(A)(vi) (other than a new publicly supported organization described in paragraph (f)(4)(vii)(A) of this section) that has failed to meet both the $33^{1}/_{3}$ percent support test and the facts and circumstances test for any two consecutive taxable years

will be treated as a private foundation as of the first day of the second consecutive taxable year only for purposes of sections 507, 4940, and 6033. Such an organization must file a Form 990-PF, "Return of Private Foundation or Section 4947(a)(1) Nonexempt Charitable Trust Treated as a Private Foundation," and will be liable for the net investment tax imposed by section 4940 and, if applicable, the private foundation termination tax imposed by section 507(c), for the second consecutive failed taxable year. For succeeding taxable years, the organization will be treated as a private foundation for all purposes.

(5) ***Determinations of foundation classification and reliance.***

(i) A ruling or determination letter that an organization is described in section 170(b)(1)(A)(vi) may be issued to an organization. Such determination may be made in conjunction with the recognition of the organization's tax-exempt status or at such other time as the organization believes it is described in section 170(b)(1)(A)(vi). The ruling or determination letter that the organization is described in section 170(b)(1)(A)(vi) may be revoked if, upon examination, the organization has not met the requirements of paragraph (f) of this section. The ruling or determination letter that the organization is described in section 170(b)(1)(A)(vi) also may be revoked if the organization's application for a ruling or determination contained one or more material misstatements or omissions of fact or if such application was part of a scheme or plan to avoid or evade any provision of the Internal Revenue Code. The revocation of the determination that an organization is described in section 170(b)(1)(A)(vi) does not preclude revocation of the determination that the organization is described in section 501(c)(3).

(ii) ***Status of grantors or contributors.*** For purposes of sections 170, 507, 545(b)(2), 642(c), 4942, 4945, 4966, 2055, 2106(a)(2), and 2522, grantors or contributors may rely upon a determination letter or ruling that an organization is described in section 170(b)(1)(A)(vi) until the IRS publishes notice of a change of status (for example, in the Internal Revenue Bulletin or Publication 78, "Cumulative List of Organizations described in Section 170(c) of the Internal Revenue Code of 1986," which can be searched at *http://www.irs.gov.*) For this purpose, grantors or contributors also may rely on an advance ruling that expires on or after June 9, 2008. However, a grantor or contributor may not rely on such an advance ruling or any determination letter or ruling if the grantor or contributor was responsible for, or aware of, the act or failure to act that resulted in the organization's loss of classification under section 170(b)(1)(A)(vi) or acquired knowledge that the IRS had given notice to such organization that it would be deleted from such classification.

(iii) ***Reliance by grantors or contributors.*** A grantor or contributor, other than one of the organization's founders, creators, or foundation managers (within the meaning of section 4946(b)), will not be considered to be responsible for, or aware of, the act or failure to act that resulted in the loss of the organization's "publicly supported" classification under section 170(b)(1)(A)(vi), if such grantor or contributor has made such grant or contribution in reliance upon a written statement by the grantee organization that such grant or contribution will not result in the loss of such organization's classification as a publicly supported organization as described in section 170(b)(1)(A)(vi). Such statement must be signed by a responsible officer of the grantee organization and must set forth sufficient information, including a summary of the pertinent financial data for the five taxable years immediately preceding the current taxable year, to assure a reasonably prudent person that his grant or contribution will not result in the loss of the grantee organization's classification as a publicly supported organization as described in section 170(b)(1)(A)(vi). If a reasonable doubt exists as to the effect of such grant or contribution, or if the grantor or contributor is one of the organization's founders, creators, or

foundation managers, the procedure set forth in paragraph (f)(6)(iv) of this section for requesting a determination from the IRS may be followed by the grantee organization for the protection of the grantor or contributor.

(6) ***Definition of support; meaning of general public*** —

(i) ***In general.*** In determining whether the $33^{1}/_{2}$ percent support test or the 10 percent support limitation described in paragraph (f)(3)(i) of this section is met, contributions by an individual, trust, or corporation shall be taken into account as support from direct or indirect contributions from the general public only to the extent that the total amount of the contributions by any such individual, trust, or corporation during the period described in paragraph (f)(4)(i) or paragraph (f)(4)(ii) of this section does not exceed two percent of the organization's total support for such period, except as provided in paragraph (f)(6)(ii) of this section. Therefore, for example, any contribution by one individual will be included in full in the denominator of the fraction determining the $33^{1}/_{2}$ percent support or the 10 percent support limitation, but will be includible in the numerator of such fraction only to the extent that such amount does not exceed two percent of the denominator. In applying the two percent limitation, all contributions made by a donor and by any person or persons standing in a relationship to the donor that is described in section 4946(a)(1)(C) through (a)(1)(G) and the related regulations shall be treated as made by one person. The two percent limitation shall not apply to support received from governmental units referred to in section 170(c)(1) or to contributions from organizations described in section 170(b)(1)(A)(vi), except as provided in paragraph (f)(6)(v) of this section. For purposes of paragraphs (f)(2), (f)(3)(i), and (f)(7)(iii)(A)(*2*) of this section, the term *indirect contributions from the general public* includes contributions received by the organization from organizations (such as section 170(b)(1)(A)(vi) organizations) that normally receive a substantial part of their support from direct contributions from the general public, except as provided in paragraph (f)(6)(v) of this section. See the examples in paragraph (f)(9) of this section for the application of this paragraph (f)(6)(i). For purposes of this paragraph (f), the term *contributions* includes qualified sponsorship payments (as defined in § 1.513-4) in the form of money or property (but not services).

(ii) ***Exclusion of unusual grants.***

(A) For purposes of applying the two percent limitation described in paragraph (f)(6)(i) of this section to determine whether the $33^{1}/_{3}$ percent support test or the 10 percent support limitation in paragraph (f)(3)(i) of this section is satisfied, one or more contributions may be excluded from both the numerator and the denominator of the applicable support fraction if such contributions meet the requirements of paragraph (f)(6)(iii) of this section. The exclusion provided by this paragraph (f)(6)(ii) is generally intended to apply to substantial contributions or bequests from disinterested parties, which contributions or bequests—

(*1*) Are attracted by reason of the publicly supported nature of the organization;

(*2*) Are unusual or unexpected with respect to the amount thereof; and

(*3*) Would, by reason of their size, adversely affect the status of the organization as normally being publicly supported for the applicable period described in paragraph (f)(4) of this section.

(B) In the case of a grant (as defined in § 1.509(a)-3(g)) that meets the requirements of this paragraph (f)(6)(ii), if the terms of the granting instrument require that the funds be paid to the recipient organization over a period of years, the grant amounts received by the organization may be excluded for such year or years in which they would otherwise be includible in computing support under the method of accounting on the basis of which the organization regularly computes its income in keeping its books under section 446. However, no item of gross investment income may be excluded under this paragraph (f)(6). The provisions of this paragraph (f)(6) shall apply to exclude unusual grants made during any of the applicable periods described in paragraph (f)(4) or paragraph (f)(6) of this section. See paragraph (f)(6)(iv) of this section as to reliance by a grantee organization upon an unusual grant ruling under this paragraph (f)(6).

(iii) ***Determining factors.*** In determining whether a particular contribution may be excluded under paragraph (f)(6)(ii) of this section, all pertinent facts and circumstances will be taken into consideration. No single factor will necessarily be determinative. For some of the factors similar to the factors to be considered, see § 1.509(a)-3(c)(4).

(iv) ***Grantors and contributors.*** Prior to the making of any grant or contribution that will allegedly meet the requirements for exclusion under paragraph (f)(6)(ii) of this section, a potential grantee organization may request a determination whether such grant or contribution may be so excluded. Requests for such determination may be filed by the grantee organization in the time and manner specified by revenue procedure or other guidance published in the Internal Revenue Bulletin. The issuance of such determination will be at the sole discretion of the Commissioner. The organization must submit all information necessary to make a determination on the factors referred to in paragraph (f)(6)(iii) of this section. If a favorable determination is issued, such determination may be relied upon by the grantor or contributor of the particular contribution in question for purposes of sections 170, 507, 545(b)(2), 642(c), 4942, 4945, 4966, 2055, 2106(a)(2), and 2522 and by the grantee organization for purposes of paragraph (f)(6)(ii) of this section.

(v) ***Grants from public charities.*** Pursuant to paragraph (f)(6)(i) of this section, contributions received from a governmental unit or from a section 170(b)(1)(A)(vi) organization are not subject to the two percent limitation described in paragraph (f)(6)(i) of this section unless such contributions represent amounts which have been expressly or impliedly earmarked by a donor to such governmental unit or section 170(b)(1)(A)(vi) organization as being for, or for the benefit of, the particular organization claiming section 170(b)(1)(A)(vi) status. See § 1.509(a)-3(j)(3) for examples illustrating the rules of this paragraph (f)(6)(v).

(7) ***Definition of support; special rules and meaning of terms*** —

(i) ***Definition of support.*** For purposes of this paragraph (f), the term “support” shall be as defined in section 509(d) (without regard to section 509(d)(2)). The term “support” does not include—

(A) Any amounts received from the exercise or performance by an organization of its charitable, educational, or other purpose or function constituting the basis for its exemption under section 501(a). In general, such amounts include amounts received from any activity the conduct of which is substantially related to the furtherance of such purpose or function (other than through the production of income); or

(B) Contributions of services for which a deduction is not allowable.

(ii) For purposes of the $33^{1}/_{3}$ percent support test and the 10 percent support limitation in paragraph (f)(3)(i) of this section, all amounts received that are described in paragraph (f)(7)(i)(A) or paragraph (f)(7)(i)(B) of this section are to be excluded from both the numerator and the denominator of the fractions determining compliance with such tests, except as provided in paragraph (f)(7)(iii) of this section.

(iii) ***Organizations dependent primarily on gross receipts from related activities.***

(A) Notwithstanding the provisions of paragraph (f)(7)(i) of this section, an organization will not be treated as satisfying the $33^{1}/_{3}$ percent support test or the 10 percent support limitation in paragraph (f)(3)(i) of this section if it receives—

(*1*) Almost all of its support (as defined in section 509(d)) from gross receipts from related activities; and

(*2*) An insignificant amount of its support from governmental units (without regard to amounts referred to in paragraph (f)(7)(i)(A) of this section) and contributions made directly or indirectly by the general public.

(B) ***Example.*** The application of this paragraph (f)(7)(iii) may be illustrated by the following example:

Example. Z, an organization described in section 501(c)(3), is controlled by A, its president. Z received $500,000 during the period consisting of the current taxable year and the four immediately preceding taxable years under a contract with the Department of Transportation, pursuant to which Z has engaged in research to improve a particular vehicle used primarily by the Federal government. During this same period, the only other support received by Z consisted of $5,000 in small contributions primarily from Z's employees and business associates. The $500,000 amount constitutes support under sections 509(d)(2) and 509(a)(2)(A). Under these circumstances, Z meets the conditions of paragraphs (f)(7)(iii)(A)(*1*) and (f)(7)(iii)(A)(*2*) of this section and will not be treated as meeting the requirements of either the $33^{1}/_{3}$ percent support test or the facts and circumstances test. As to the rules applicable to organizations that fail to qualify under section 170(b)(1)(A)(vi) because of the provisions of this paragraph (f)(7)(iii), see section 509(a)(2) and the related regulations. For the distinction between gross receipts (as referred to in section 509(d)(2)) and gross investment income (as referred to in section 509(d)(4)), see § 1.509(a)-3(m).

(iv) ***Membership fees.*** For purposes of this paragraph (f)(7), the term *support* shall include "membership fees" within the meaning of § 1.509(a)-3(h) (that is, if the basic purpose for making a payment is to provide support for the organization rather than to purchase admissions, merchandise, services, or the use of facilities).

(v) ***Unrelated business activities.*** The term *net income from unrelated business activities* in section 509(d)(3) includes (but is not limited to) an organization's unrelated business taxable income (UBTI) within the meaning of section 512. However, when calculating UBTI for purposes of determining support (within the meaning of this paragraph (f)(7)), section 512(a)(6) does not apply. Accordingly, in the case of an organization that derives gross income from the regular conduct of two or more unrelated business activities, support includes the aggregate of gross income from all such unrelated business activities less the aggregate of the deductions

allowed with respect to all such unrelated business activities. Nonetheless, when determining support, such organization can use either its UBTI calculated under section 512(a)(6) or its UBTI calculated in the aggregate.

(8) ***Support from a governmental unit.***

(i) For purposes of the $33^1/_3$ percent support test and the 10 percent support limitation described in paragraph (f)(3)(i) of this section, the term *support from a governmental unit* includes any amounts received from a governmental unit, including donations or contributions and amounts received in connection with a contract entered into with a governmental unit for the performance of services or in connection with a government research grant. However, such amounts will not constitute support from a governmental unit for such purposes if they constitute amounts received from the exercise or performance of the organization's exempt functions as provided in paragraph (f)(7)(i)(A) of this section.

(ii) For purposes of paragraph (f)(8)(i) of this section, any amount paid by a governmental unit to an organization is not to be treated as received from the exercise or performance of its charitable, educational, or other purpose or function constituting the basis for its exemption under section 501(a) (within the meaning of paragraph (f)(7)(i)(A) of this section) if the purpose of the payment is primarily to enable the organization to provide a service to, or maintain a facility for, the direct benefit of the public (regardless of whether part of the expense of providing such service or facility is paid for by the public), rather than to serve the direct and immediate needs of the payor. For example—

(A) Amounts paid for the maintenance of library facilities which are open to the public;

(B) Amounts paid under government programs to nursing homes or homes for the aged in order to provide health care or domiciliary services to residents of such facilities; and

(C) Amounts paid to child placement or child guidance organizations under government programs for services rendered to children in the community, are considered payments the purpose of which is primarily to enable the recipient organization to provide a service or maintain a facility for the direct benefit of the public, rather than to serve the direct and immediate needs of the payor. Furthermore, any amount received from a governmental unit under circumstances such that the amount would be treated as a “grant” within the meaning of § 1.509(a)-3(g) will generally constitute “support from a governmental unit” described in this paragraph (f)(8), rather than an amount described in paragraph (f)(7)(i)(A) of this section.

(9) ***Examples.*** The application of paragraphs (f)(1) through (f)(8) of this section may be illustrated by the following examples:

> *Example 1.* (i) M is recognized as an organization described in section 501(c)(3). For the years 2008 through 2012 (the applicable period with respect to the taxable year 2012 under paragraph (f)(4) of this section), M received support (as defined in paragraphs (f)(6) through

(8) of this section) of $600,000 from the following sources:

Investment income	$300,000
City R (a governmental unit described in section 170(c)(1))	40,000
United Fund (an organization described in section 170(b)(1)(A)(vi))	40,000
Contributions (including six contributions in excess of the two-percent limit, totaling $170,000)	220,000
Total support	600,000

(ii) With respect to the taxable year 2012, M's public support is computed as follows:

Support from a governmental unit described in section 170(c)(1)	$40,000
Indirect contributions from the general public (United Fund)	40,000
Contributions by various donors that were not in excess of $12,000, or two percent of total support	50,000
Six contributions that were each in excess of $12,000, or two percent of total support, up to the two-percent limitation, 6 × $12,000	72,000
Total support	202,000

(iii) M's support from governmental units referred to in section 170(c)(1) and from direct and indirect contributions from the general public (as defined in paragraph (f)(6) of this section) with respect to the taxable year 2012 normally exceeds $33^1/_3$ percent of M's total support ($202,000/$600,000 = 33.67 percent) for the applicable period (2008 through 2012). M meets the $33^1/_3$ percent support test with respect to 2012 and is therefore publicly supported for the taxable years 2012 and 2013.

Example 2. (i) N is recognized as an organization described in section 501(c)(3). It was created to maintain public gardens containing botanical specimens and displaying statuary and other art objects. The facilities, works of art, and a large endowment were all contributed by a single contributor. The members of the governing body of the organization are unrelated to its creator. The gardens are open to the public without charge and attract a substantial number of visitors each year. For the current taxable year and the four taxable years immediately preceding the current taxable year, 95 percent of the organization's total support was received from investment income from its original endowment. N also maintains a membership society that is supported by members of the general public who wish to contribute to the upkeep of the gardens by paying a small annual membership fee. Over the five-year period in question, these fees from the general public constituted the remaining five percent of the organization's total support for such period.

(ii) Under these circumstances, N does not meet the $33^1/_3$ percent support test for its current taxable year. Furthermore, because only five percent of its total support is, with respect to the current taxable year, normally received from the general public, N does not satisfy the 10 percent support limitation described in paragraph (f)(3)(i) of this section and therefore does not qualify as publicly supported under the facts and circumstances test. Because N has failed to satisfy the 10 percent support limitation under paragraph (f)(3)(i) of this section, none of the other requirements or factors set forth in paragraphs (f)(3)(iii)(A) through (f)(3)(iii)(E) of this section can be considered in determining whether N qualifies as a publicly supported organization. For its current taxable year, therefore, N is not an organization described in section 170(b)(1)(A)(vi).

Example 3. (i) O, an art museum, is recognized as an organization described in section 501(c)(3). In 1930, O was founded in S City by the members of a single family to collect, preserve, interpret, and display to the public important works of art. O is governed by a Board of Trustees that originally consisted almost entirely of members of the founding family. However, since 1945, members of the founding family or persons standing in a relationship to the members of such family described in section 4946(a)(1)(C) through (G) have annually constituted less than one-fifth of the Board of Trustees. The remaining board members are citizens of S City from a variety of professions and occupations who represent the interests and views of the people of S City in the activities carried on by the organization rather than the personal or private interests of the founding family. O solicits contributions from the general public and, for the current taxable year and each of the four taxable years immediately preceding the current taxable year, O has received total contributions (in small sums of less than $100, none of which exceeds two percent of O's total support for such period) in excess of $10,000. These contributions from the general public (as defined in paragraph (f)(6) of this section) represent 25 percent of the organization's total support for such five-year period. For this same period, investment income from several large endowment funds has constituted 75 percent of O's total support. O expends substantially all of its annual income for its exempt purposes and thus depends upon the funds it annually solicits from the public as well as its investment income in order to carry out its activities on a normal and continuing basis and to acquire new works of art. O has, for the entire period of its existence, been open to the public and more than 300,000 people (from S City and elsewhere) have visited the museum in each of the current taxable year and the four immediately preceding taxable years.

(ii) Under these circumstances, O does not meet the $33^1/_3$ percent support test for its current year because it has received only 25 percent of its total support for the applicable five-year period from the general public. However, under the facts set forth above, O meets the 10 percent support limitation under paragraph (f)(3)(i) of this section, as well as the requirements of paragraph (f)(3)(ii) of this section. Under all of the facts set forth in this

example, O is considered as meeting the requirements of the facts and circumstances test on the basis of satisfying paragraphs (f)(3)(i) and (f)(3)(ii) of this section and the factors set forth in paragraphs (f)(3)(iii)(A) through (f)(3)(iii)(D) of this section. O is therefore publicly supported for its current taxable year and the immediately succeeding taxable year.

Example 4. (i) In 1960, the P Philharmonic Orchestra was organized in T City through the combined efforts of a local music society and a local women's club to present to the public a wide variety of musical programs intended to foster music appreciation in the community. P is recognized as an organization described in section 501(c)(3). The orchestra is composed of professional musicians who are paid by the association. Twelve performances open to the public are scheduled each year. A small admission fee is charged for each of these performances. In addition, several performances are staged annually without charge. During the current taxable year and the four taxable years immediately preceding the current taxable year, P has received separate contributions of $200,000 each from A and B (not members of a single family) and support of $120,000 from the T Community Chest, a public federated fundraising organization operating in T City. P depends on these funds in order to carry out its activities and will continue to depend on contributions of this type to be made in the future. P has also begun a fundraising campaign in an attempt to expand its activities for the coming years. P is governed by a Board of Directors comprised of five individuals. A faculty member of a local college, the president of a local music society, the head of a local banking institution, a prominent doctor, and a member of the governing body of the local chamber of commerce currently serve on P's Board and represent the interests and views of the community in the activities carried on by P.
(ii) With respect to P's current taxable year, P's sources of support are computed on the basis of the current taxable year and the four taxable years immediately preceding the current taxable year, as follows:

Contributions	$520,000
Receipts from performances	100,000
Total support	620,000
Less:	
Receipts from performances (excluded under paragraph (f)(7)(i)(A) of this section)	100,000
Total support for purposes of paragraphs (f)(2) and (f)(3)(i) of this section	520,000

(iii) For purposes of paragraphs (f)(2) and (f)(3)(i) of this section, P's public support is

computed as follows:

T Community Chest (indirect support from the general public)	120,000
Two contributions from A & B (each in excess of $10,400 − 2 percent of total support) 2 × $10,400	20,800
Total	140,800

(iv) Under these circumstances, P does not meet the $33^1/_3$ percent support test for its current year because it has received only 27 percent of its total support ($140,800/$520,000) for the applicable five-year period from the general public. However, under the facts set forth above, P meets the 10 percent support limitation under paragraph (f)(3)(i) of this section, as well as the requirements of paragraph (f)(3)(ii) of this section. Under all of the facts set forth in this example, P is considered as meeting the requirements of the facts and circumstances test on the basis of satisfying paragraphs (f)(3)(i) and (f)(3)(ii) of this section and the factors set forth in paragraphs (f)(3)(iii)(A) through (f)(3)(iii)(D) of this section. P is therefore publicly supported for its current taxable year and the immediately succeeding taxable year.

Example 5. (i) Q is recognized as an organization described in section 501(c)(3). It is a philanthropic organization founded in 1965 by C for the purpose of making annual contributions to worthy charities. C created Q as a charitable trust by the transfer of appreciated securities worth $500,000 to Q. Pursuant to the trust agreement, C and two other members of his family are the sole trustees of Q and are vested with the right to appoint successor trustees. In each of the current taxable year and the four taxable years immediately preceding the current taxable year, Q received $12,000 in investment income from its original endowment. Each year Q makes a solicitation for funds by operating a charity ball at C's residence. Guests are invited and requested to make contributions of $100 per couple. During the five-year period at issue, $15,000 was received from the proceeds of these events. C and his family have also made contributions to Q of $25,000 over the five-year period at issue. Q makes disbursements each year of substantially all of its net income to the public charities chosen by the trustees.
(ii) Q's sources of support for the current taxable year and the four taxable years immediately preceding the current taxable year as follows:

Investment income	$60,000
Contributions	40,000

Total support	100,000

(iii) For purposes of paragraphs (f)(2) and (f)(3)(i) of this section, Q's public support is computed as follows:

Contributions from the general public	$ 15,000
C's contribution (in excess of $ 2,000 − 2 percent of total support) 1 × $2,000	2,000
Total	17,000

(iv) Under these circumstances, Q does not meet the $33^{1}/_{3}$ percent support test for its current year because it has received only 17 percent of its total support ($17,000/$100,000) for the applicable five-year period from the general public. Thus, Q's classification as a "publicly supported" organization depends on whether it meets the requirements of the facts and circumstances test. Even though it satisfies the 10 percent support limitation under paragraph (f)(3)(i) of this section, its method of solicitation makes it questionable whether Q satisfies the requirements of paragraph (f)(3)(ii) of this section. Because of its method of operating, Q also has a greater burden of establishing its publicly supported nature under paragraph (f)(3)(iii)(A) of this section. Based upon the foregoing facts and circumstances, including Q's failure to receive favorable consideration under the factors set forth in paragraphs (f)(3)(iii)(B), (f)(3)(iii)(C), and (f)(3)(iii)(D) of this section, Q does not satisfy the facts and circumstances test.

(10) ***Community trust; introduction.*** Community trusts have often been established to attract large contributions of a capital or endowment nature for the benefit of a particular community or area, and often such contributions have come initially from a small number of donors. While the community trust generally has a governing body comprised of representatives of the particular community or area, its contributions are often received and maintained in the form of separate trusts or funds, which are subject to varying degrees of control by the governing body. To qualify as a "publicly supported" organization, a community trust must meet the $33^{1}/_{3}$ percent support test, or, if it cannot meet that test, be organized and operated so as to attract new and additional public or governmental support on a continuous basis sufficient to meet the facts and circumstances test. Such facts and circumstances test includes a requirement of attraction of public support in paragraph (f)(3)(ii) of this section which, as applied to community trusts, generally will be satisfied if they seek gifts and bequests from a wide range of potential donors in the community or area served, through banks or trust companies, through attorneys or other professional persons, or in other appropriate ways that call attention to the community trust as a potential recipient of gifts and bequests made for the benefit of the community or area served. A community trust is not required to engage in periodic,

community-wide, fundraising campaigns directed toward attracting a large number of small contributions in a manner similar to campaigns conducted by a community chest or united fund. Paragraph (f)(11) of this section provides rules for determining the extent to which separate trusts or funds may be treated as component parts of a community trust, fund, or foundation (herein collectively referred to as a "community trust," and sometimes referred to as an "organization") for purposes of meeting the requirements of this paragraph for classification as a publicly supported organization. Paragraph (f)(12) of this section contains rules for trusts or funds that are prevented from qualifying as component parts of a community trust by paragraph (f)(11) of this section.

(11) ***Community trusts; requirements for treatment as a single entity*** —

(i) ***General rule.*** For purposes of sections 170, 501, 507, 508, 509, and Chapter 42, any organization that meets the requirements contained in paragraphs (f)(11)(iii) through (f)(11)(vi) of this section will be treated as a single entity, rather than as an aggregation of separate funds, and except as otherwise provided, all funds associated with such organization (whether a trust, not-for-profit corporation, unincorporated association, or a combination thereof) which meet the requirements of paragraph (f)(11)(ii) of this section will be treated as component parts of such organization.

(ii) ***Component part of a community trust.*** In order to be treated as a component part of a community trust referred to in this paragraph (f)(11) (rather than as a separate trust or not-for-profit corporation or association), a trust or fund:

(A) Must be created by a gift, bequest, legacy, devise, or other transfer to a community trust which is treated as a single entity under this paragraph (f)(11); and

(B) May not be directly or indirectly subjected by the transferor to any material restriction or condition (within the meaning of § 1.507-2(a)(7)) with respect to the transferred assets. For purposes of this paragraph (f)(11)(ii)(B), if the transferor is not a private foundation, the provisions of § 1.507-2(a)(7) shall be applied to the trust or fund as if the transferor were a private foundation established and funded by the person establishing the trust or fund and such foundation transferred all its assets to the trust or fund. Any transfer made to a fund or trust which is treated as a component part of a community trust under this paragraph (f)(11)(ii) will be treated as a transfer made "to" a "publicly supported" community trust for purposes of sections 170(b)(1)(A) and 507(b)(1)(A) if such community trust meets the requirements of section 170(b)(1)(A)(vi) as a "publicly supported" organization at the time of the transfer, except as provided in paragraph (f)(5)(ii) of this section or §§ 1.508-1(b)(4) and 1.508-1(b)(6) (relating, generally, to reliance by grantors and contributors). See also paragraphs (f)(12)(ii) and (f)(12)(iii) of this section for special provisions relating to split-interest trusts and certain private foundations described in section 170(b)(1)(F)(iii).

(iii) ***Name.*** The organization must be commonly known as a community trust, fund, foundation, or other similar name conveying the concept of a capital or endowment fund to support charitable activities (within the meaning of section 170(c)(1) or section 170(c)(2)(B)) in the community or area it serves.

(iv) ***Common instrument.*** All funds of the organization must be subject to a common governing instrument or a master trust or agency agreement (herein referred to as the "governing instrument"), which may be embodied in a single document or several documents containing common language. Language in an instrument of transfer to the community trust making a

fund subject to the community trust's governing instrument or master trust or agency agreement will satisfy the requirements of this paragraph (f)(11)(iv). In addition, if a community trust adopts a new governing instrument (or creates a corporation) to put into effect new provisions (applying to future transfers to the community trust), the adoption of such new governing instrument (or creation of a corporation with a governing instrument) which contains common language with the existing governing instrument shall not preclude the community trust from meeting the requirements of this paragraph (f)(11)(iv).

(v) ***Common governing body.***

(A) The organization must have a common governing body or distribution committee (herein referred to as the "governing body") which either directs or, in the case of a fund designated for specified beneficiaries, monitors the distribution of all of the funds exclusively for charitable purposes (within the meaning of section 170(c)(1) or section 170(c)(2)(B)). For purposes of this paragraph (f)(11)(v), a fund is designated for specified beneficiaries only if no person is left with the discretion to direct the distribution of the fund.

(B) ***Powers of modification and removal.*** The fact that the exercise of any power described in this paragraph (f)(11)(v)(B) is reviewable by an appropriate State authority will not preclude the community trust from meeting the requirements of this paragraph (f)(11)(v)(B). Except as provided in paragraph (f)(11)(v)(C) of this section, the governing body must have the power in the governing instrument, the instrument of transfer, the resolutions or by-laws of the governing body, a written agreement, or otherwise—

(*1*) To modify any restriction or condition on the distribution of funds for any specified charitable purposes or to specified organizations if in the sole judgment of the governing body (without the necessity of the approval of any participating trustee, custodian, or agent), such restriction or condition becomes, in effect, unnecessary, incapable of fulfillment, or inconsistent with the charitable needs of the community or area served;

(*2*) To replace any participating trustee, custodian, or agent for breach of fiduciary duty under State law; and

(*3*) To replace any participating trustee, custodian, or agent for failure to produce a reasonable (as determined by the governing body) return of net income (within the meaning of paragraph (f)(11)(v)(F) of this section) over a reasonable period of time (as determined by the governing body).

(C) ***Transitional rule*** —

(*1*) Notwithstanding paragraph (f)(11)(v)(B) of this section, if a community trust meets the requirements of paragraph (f)(11)(v)(C)(*3*) of this section, then in the case of any instrument of transfer which is executed before July 19, 1977, and is not revoked or amended thereafter (with respect to any dispositive provision affecting the transfer to the community trust), and in the case of any instrument of transfer which is irrevocable on January 19, 1982, the governing body must have the power to cause proceedings to be instituted (by request to the appropriate State authority)—

(*i*) To modify any restriction or condition on the distribution of funds for any specified charitable purposes or to specified organizations if in the judgment of the governing body such restriction or condition becomes, in effect, unnecessary, incapable of fulfillment, or inconsistent with the charitable needs of the community or area served; and

(*ii*) To remove any participating trustee, custodian, or agent for breach of fiduciary duty under State law.

(*2*) The necessity for the governing body to obtain the approval of a participating trustee to exercise the powers described in paragraph (f)(11)(v)(C)(*1*) of this section shall be treated as not preventing the governing body from having such power, unless (and until) such approval has been (or is) requested by the governing body and has been (or is) denied.

(*3*) Paragraph (f)(11)(v)(C)(*1*) of this section shall not apply unless the community trust meets the requirements of paragraph (f)(11)(v)(B) of this section, with respect to funds other than those under instruments of transfer described in the first sentence of such paragraph (f)(11)(v)(C)(*1*) of this section, by January 19, 1978, or such later date as the Commissioner may provide for such community trust, and unless the community trust does not, once it so complies, thereafter solicit for funds that will not qualify under the requirements of paragraph (f)(11)(v)(B) of this section.

(D) ***Inconsistent State law*** —

(*1*) For purposes of paragraphs (f)(11)(v)(B)(*1*), (f)(11)(v)(B)(*2*), (f)(11)(v)(B)(*3*), (f)(11)(v)(C)(*1*)(i), (f)(11)(v)(C)(*1*)(ii), and (f)(11)(v)(E) of this section, if a power described in such a provision is inconsistent with State law even if such power were expressly granted to the governing body by the governing instrument and were accepted without limitation under an instrument of transfer, then the community trust will be treated as meeting the requirements of such a provision if it meets such requirements to the fullest extent possible consistent with State law (if such power is or had been so expressly granted).

(*2*) For example, if, under the conditions of paragraph (f)(11)(v)(D)(*1*) of this section, the power to modify is inconsistent with State law, but the power to institute proceedings to modify, if so expressly granted, would be consistent with State law, the community trust will be treated as meeting such requirements to the fullest extent possible if the governing body has the power (in the governing instrument or otherwise) to institute proceedings to modify a condition or restriction. On the other hand, if in such a case the community trust has only the power to cause proceedings to be instituted to modify a condition or restriction, it will not be treated as meeting such requirements to the fullest extent possible.

(*3*) In addition, if, for example, under the conditions of paragraph (f)(11)(v)(D)(*1*) of this section, the power to modify and the power to institute proceedings to modify a condition or restriction is inconsistent with State law, but the power to cause such proceedings to be instituted would be consistent with State law, if it were expressly granted in the governing instrument and if the approval of the State Attorney General were obtained, then the community trust will be treated as meeting such

requirements to the fullest extent possible if it has the power (in the governing instrument or otherwise) to cause such proceedings to be instituted, even if such proceedings can be instituted only with the approval of the State Attorney General.

(E) ***Exercise of powers.*** The governing body shall (by resolution or otherwise) commit itself to exercise the powers described in paragraphs (f)(11)(v)(B), (f)(11)(v)(C), and (f)(11)(v)(D) of this section in the best interests of the community trust. The governing body will be considered not to be so committed where it has grounds to exercise such a power and fails to exercise it by taking appropriate action. Such appropriate action may include, for example, consulting with the appropriate State authority prior to taking action to replace a participating trustee.

(F) ***Reasonable return.*** In addition to the requirements of paragraphs (f)(11)(v)(B), (f)(11)(v)(C), (f)(11)(v)(D), or (f)(11)(v)(E) of this section, the governing body shall (by resolution or otherwise) commit itself to obtain information and take other appropriate steps with the view to seeing that each participating trustee, custodian, or agent, with respect to each restricted trust or fund that is, and with respect to the aggregate of the unrestricted trusts or funds that are, a component part of the community trust, administers such trust or fund in accordance with the terms of its governing instrument and accepted standards of fiduciary conduct to produce a reasonable return of net income (or appreciation where not inconsistent with the community trust's need for current income), with due regard to safety of principal, in furtherance of the exempt purposes of the community trust (except for assets held for the active conduct of the community trust's exempt activities). In the case of a low return of net income (and, where appropriate, appreciation), the IRS will examine carefully whether the governing body has, in fact, committed itself to take the appropriate steps. For purposes of this paragraph (f)(11)(v)(F), any income that has been designated by the donor of the gift or bequest to which such income is attributable as being available only for the use or benefit of a broad charitable purpose, such as the encouragement of higher education or the promotion of better health care in the community, will be treated as unrestricted. However, any income that has been designated for the use or benefit of a named charitable organization or agency or for the use or benefit of a particular class of charitable organizations or agencies, the members of which are readily ascertainable and are less than five in number, will be treated as restricted.

(vi) ***Common reports.*** The organization must prepare periodic financial reports treating all of the funds which are held by the community trust, either directly or in component parts, as funds of the organization.

(12) ***Community trusts; treatment of trusts and not-for-profit corporations and associations not included as components.***

(i) For purposes of sections 170, 501, 507, 508, 509, and Chapter 42, any trust or not-for-profit corporation or association that is alleged to be a component part of a community trust, but that fails to meet the requirements of paragraph (f)(11)(ii) of this section, shall not be treated as a component part of a community trust and, if a trust, shall be treated as a separate trust and be subject to the provisions of section 501, section 4947(a)(1), or section 4947(a)(2), as the case may be. If such organization is a not-for-profit corporation or association, it will be treated as a separate entity, and, if it is described in section 501(c)(3), it will be treated as a private foundation unless it is described in section 509(a)(1), section 509(a)(2), section 509(a)(3), or section 509(a)(4). In the case of a fund that is ultimately treated as not being a component part

of a community trust pursuant to this paragraph (f)(12), if the Forms 990 filed annually by the community trust included financial information with respect to such fund and treated such fund in the same manner as other component parts thereof, such returns filed by the community trust prior to the taxable year in which the Commissioner notifies such fund that it will not be treated as a component part will be treated as its separate return for purpose of Subchapter A of Chapter 61 of Subtitle F, and the first such return filed by the community trust will be treated as the notification required of the separate entity for purposes of section 508(a).

(ii) If a transfer is made in trust to a community trust to make income or other payments for a period of a life or lives in being or a term of years to any individual or for any noncharitable purpose, followed by payments to or for the use of the community trust (such as in the case of a charitable remainder annuity trust or a charitable remainder unitrust described in section 664 or a pooled income fund described in section 642(c)(5)), such trust will be treated as a component part of the community trust upon the termination of all intervening noncharitable interests and rights to the actual possession or enjoyment of the property if such trust satisfies the requirements of paragraph (f)(11) of this section at such time. Until such time, the trust will be treated as a separate trust. If a transfer is made in trust to a community trust to make income or other payments to or for the use of the community trust, followed by payments to any individual or for any noncharitable purpose, such trust will be treated as a separate trust rather than as a component part of the community trust. See section 4947(a)(2) and the related regulations for the treatment of such split-interest trusts. The provisions of this paragraph (f)(12)(ii) provide rules only for determining when a charitable remainder trust or pooled income fund may be treated as a component part of a community trust and are not intended to preclude a community trust from maintaining a charitable remainder trust or pooled income fund. For purposes of grantors and contributors, a pooled income fund of a publicly supported community trust shall be treated no differently than a pooled income fund of any other publicly supported organization.

(iii) An organization described in section 170(b)(1)(F)(iii) will not ordinarily satisfy the requirements of paragraph (f)(11)(ii) of this section because of the unqualified right of the donor to designate the recipients of the income and principal of the trust. Such organization will therefore ordinarily be treated as other than a component part of a community trust under paragraph (f)(12)(i) of this section. However, see section 170(b)(1)(F)(iii) and the related regulations with respect to the treatment of contributions to such organizations.

(13) ***Method of accounting.*** For purposes of section 170(b)(1)(A)(vi), an organization's support will be determined under the method of accounting on the basis of which the organization regularly computes its income in keeping its books under section 446. For example, if a grantor makes a grant to an organization payable over a term of years, such grant will be includible in the support fraction of the grantee organization under the method of accounting on the basis of which the grantee organization regularly computes its income in keeping its books under section 446.

(14) ***Transition rules.***

(i) An organization that received an advance ruling, that expires on or after June 9, 2008, that it will be treated as an organization described in sections 170(b)(1)(A)(vi) and 509(a)(1) will be treated as meeting the requirements of paragraph (f)(2) or paragraph (f)(3) of this section for the first five taxable years of its existence as a section 501(c)(3) organization unless the IRS issued to the organization a proposed determination prior to September 9, 2008, that the organization is not described in sections 170(b)(1)(A)(vi) and 509(a)(1) or in section 509(a)(2).

(ii) Paragraph (f)(4)(v) of this section shall not apply with respect to an organization that received an advance ruling that expired prior to June 9, 2008, and that did not timely file with the Internal Revenue Service the required information to establish that it is an organization described in sections 170(b)(1)(A)(vi) and 509(a)(1) or in section 509(a)(2).

(iii) An organization that fails to meet a public support test for its first taxable year beginning on or after January 1, 2008, under the regulations in this section may use the prior tests set forth in § 1.170A-9(e)(2) or § 1.170A-9(e)(3), or in §§ 1.509(a)-3(a)(2) and 1.509(a)-3(a)(3), as in effect before September 9, 2008 (as contained in 26 CFR part 1 revised April 1, 2008), to determine whether the organization was publicly supported for its 2008 taxable year based on its satisfaction of a public support test for taxable year 2007, computed over the period 2003 through 2006.

(iv) ***Examples.*** The application of this paragraph (f)(14) may be illustrated by the following examples:

> *Example 1.* (i) Organization X was formed in January 2004 and uses a taxable year ending June 30. Organization X received an advance ruling letter that it is recognized as an organization described in section 501(c)(3) effective as of the date of its formation and that it is treated as a publicly supported organization under sections 170(b)(1)(A)(vi) and 509(a)(1) during the five-year advance ruling period that will end on June 30, 2008. This date is on or after June 9, 2008.
> (ii) Under the transition rule, Organization X is a publicly supported organization described in sections 170(b)(1)(A)(vi) and 509(a)(1) for the taxable years ending June 30, 2004, through June 30, 2008. Organization X does not need to establish within 90 days after June 30, 2008, that it met a public support test under § 1.170A-9(e) or § 1.509(a)-3, as in effect prior to September 9, 2008, (as contained in 26 CFR part 1 revised April 1, 2008), for its advance ruling period.
>
> (iii) Organization X can qualify as a publicly supported organization for the taxable year ending June 30, 2009, if Organization X can meet the requirements of paragraph (f)(2) or (f)(3) of this section or §§ 1.509(a)-3(a)(2) and 1.509(a)-3(a)(3) for the taxable years ending June 30, 2005, through June 30, 2009, or for the taxable years ending June 30, 2004, through June 30, 2008. In addition, for its taxable year ending June 30, 2009, Organization X may qualify as a publicly supported organization by availing itself of the transition rule contained in paragraph (f)(14)(iii) of this section, which looks to support received by X in the taxable years ending June 30, 2004, through June 30, 2007.

> *Example 2.* (i) Organization Y was formed in January 2000, and uses a taxable year ending December 31. Organization Y received a final determination that it was recognized as tax-exempt under section 501(c)(3) and as a publicly supported organization prior to September 9, 2008.

(ii) For taxable year 2008, Organization Y will qualify as publicly supported if it meets the requirements under either paragraph (f)(2) or (f)(3) of this section or §§ 1.509(a)-3(a)(2) or 1.509(a)-3(a)(3) for the five-year period January 1, 2004, through December 31, 2008. Organization Y will also qualify as publicly supported for taxable year 2008 if it meets the requirements under § 1.170A-9(e)(2) or § 1.170A-9(e)(3), or under §§ 1.509(a)-3(a)(2) and 1.509(a)-3(a)(3), as in effect prior to September 9, 2008, (as contained in 26 CFR part 1 revised April 1, 2008) for taxable year 2007, using the four-year period from January 1, 2003, through December 31, 2006.

(g) ***Private operating foundation.*** An organization is described in section 170(b)(1) (A)(vii) and (E)(i) if it is a private "operating foundation" as defined in section 4942(j)(3) and the regulations thereunder.

(h) ***Private nonoperating foundation distributing amount equal to all contributions received*** —

(1) ***In general.*** (i) An organization is described in section 170(b)(1) (A)(vii) and (E)(ii) if it is a private foundation which, not later than the 15th day of the third month after the close of its taxable year in which any contributions are received, distributes an amount equal in value to 100 percent of all contributions received in such year. Such distributions must be qualifying distributions (as defined in section 4942(g) without regard to paragraph (3) thereof) which are treated, after the application of section 4942(g)(3), as distributions out of corpus in accordance with section 4942(h). Qualifying distributions, as defined in section 4942(g) without regard to paragraph (3) thereof, cannot be made to

(i) an organization controlled directly or indirectly by the foundation or by one or more disqualified persons (as defined in section 4946) with respect to the foundation or (ii) a private foundation which is not an operating foundation (as defined in section 4942(j)(3)). The phrase "after the application of section 4942(g)(3)" means that every contribution described in section 4942(g)(3) received by a private foundation described in this subparagraph in a particular taxable year must be distributed (within the meaning of section 4942(g)(3)(A)) by such foundation not later than the 15th day of the third month after the close of such taxable year in order for any other distribution by such foundation to be counted toward the 100-percent requirement described in this subparagraph.

(ii) In order for an organization to meet the distribution requirements of subdivision (i) of this subparagraph, it must, not later than the 15th day of the third month after the close of its taxable year in which any contributions are received, distribute (within the meaning of subdivision (i) of this subparagraph) an amount equal in value to 100 percent of all contributions received in such year and have no remaining undistributed income for such year.

(iii) The provisions of this subparagraph may be illustrated by the following examples:

Example 1. X is a private foundation on a calendar year basis. As of January 1, 1971, X had no undistributed income for 1970. X's distributable amount for 1971 was $600,000. In July 1971, A, an individual, contributed $500,000 (fair market value determined at the time of the contribution) of appreciated property to X (which, if sold, would give rise to long-term capital gain). X did not receive any other contribution in either 1970 or 1971. During 1971, X made qualifying distributions of $700,000 which were treated as made out of the

undistributed income for 1971 and $100,000 out of corpus. X will meet the requirements of section 170(b)(1)(E)(ii) for 1971 if it makes additional qualifying distributions of $400,000 out of corpus by March 15, 1972.

Example 2. Assume the facts as stated in *Example 1,* except that as of January 1, 1971, X had $100,000 of undistributed income for 1970. Under these circumstances, the $700,000 distributed by X in 1971 would be treated as made out of the undistributed income for 1970 and 1971. X would therefore have to make additional qualifying distributions of $500,000 out of corpus between January 1, 1972, and March 15, 1972, in order to meet the requirements of section 170(b)(1)(E)(ii) for 1971.

(2) ***Special rules.*** In applying subparagraph (1) of this paragraph:

(i) For purposes of section 170(b)(1)(A)(vii), an organization described in section 170(b)(1)(E)(ii) must distribute all contributions received in any year, whether of cash or property. However, solely for purposes of section 170(e)(1)(B)(ii), an organization described in section 170(b)(1)(E)(ii) is required to distribute all contributions of property only received in any year. Contributions for purposes of this paragraph do not include bequests, legacies, devises, or transfers within the meaning of section 2055 or 2106(a)(2) with respect to which a deduction was not allowed under section 170.

(ii) Any distributions made by a private foundation pursuant to subparagraph (1) of this paragraph with respect to a particular taxable year shall be treated as made first out of contributions of property and then out of contributions of cash received by such foundation in such year.

(iii) A private foundation is not required to trace specific contributions of property, or amounts into which such contributions are converted, to specific distributions.

(iv) For purposes of satisfying the requirements of section 170(b)(1)(D)(ii), except as provided to the contrary in this subdivision (iv), the fair market value of contributed property, determined on the date of contribution, is required to be used for purposes of determining whether an amount equal in value to 100 percent of the contribution received has been distributed. However, reasonable selling expenses, if any, incurred by the foundation in the sale of the contributed property may be deducted from the fair market value of the contributed property on the date of contribution, and distribution of the balance of the fair market value will satisfy the 100 percent distribution requirement. If a private foundation receives a contribution of property and, within 30 days thereafter, either sells the property or makes an in kind distribution of the property to a public charity, then at the choice of the private foundation the gross amount received on the sale (less reasonable selling expenses incurred) or the fair market value of the contributed property at the date of its distribution to the public charity, and not the fair market value of the contributed property on the sale of contribution (less reasonable selling expenses, if any), is considered to be the amount of the fair market value of the contributed property for purposes of the requirements of section 170(b)(1)(D)(ii).

(v) A private foundation may satisfy the requirements of subparagraph (1) of this paragraph for a particular taxable year by electing (pursuant to section 4942(h)(2) and the regulations thereunder) to treat a portion or all of one or more distributions, made not later than the 15th day of the third month after the close of such year, as made out of corpus.

(3) ***Transitional rules*** —

(i) ***Taxable years beginning before January 1, 1970, and ending after December 31, 1969.*** In order for an organization to meet the distribution requirements of subparagraph (1)(i) of this paragraph for a taxable year which begins before January 1, 1970, and ends after December 31, 1969, it must, not later than the 15th day of the third month after the close of such taxable year, distribute (within the meaning of subparagraph (1)(i) of this paragraph) an amount equal in value to 100 percent of all contributions (other than contributions described in section 4942(g)(3)) which were received between January 1, 1970, and the last day of such taxable year. Because the organization is not subject to the provisions of section 4942 for such year, the organization need not satisfy subparagraph (1)(ii) of this paragraph or the phrase "after the application of section 4942(g)(3)" for such year.

(ii) ***Extension of period.*** For purposes of section 170(b)(1)(A)(vii) and 170(e)(1)(B)(ii), in the case of a taxable year ending in either 1970, 1971 or 1972, the period referred to in section 170(b)(1)(E)(ii) for making distributions shall not expire before April 2, 1973.

(4) ***Adequate records required.*** A taxpayer claiming a deduction under section 170 for a charitable contribution to a foundation described in subparagraph (1) of this paragraph must obtain adequate records or other sufficient evidence from such foundation showing that the foundation made the required qualifying distributions within the time prescribed. Such records or other evidence must be attached to the taxpayer's return for the taxable year for which the charitable contribution deduction is claimed. If necessary, an amended income tax return or claim for refund may be filed in accordance with § 301.6402-2 and § 301.6402-3 of this chapter (procedure and administration regulations).

(i) ***Private foundation maintaining a common fund*** —

(1) ***Designation by substantial contributors.*** An organization is described in section 170(b)(1) (A)(vii) and (E)(iii) if it is a private foundation all of the contributions to which are pooled in a common fund and which would be described in section 509(a)(3) but for the right of any donor who is a substantial contributor or his spouse to designate annually the recipients, from among public charities, of the income attributable to the donor's contribution to the fund and to direct (by deed or by will) the payment, to public charities, of the corpus in the common fund attributable to the donor's contribution. For purposes of this paragraph, the private foundation is to be treated as meeting the requirements of section 509(a)(3) (A) and (B) even though donors to the foundation, or their spouses, retain the right to, and in fact do, designate public charities to receive income or corpus from the fund.

(2) ***Distribution requirements.*** To qualify under subparagraph (1) of this paragraph, the private foundation described therein must be required by its governing instrument to distribute, and it must in fact distribute (including administrative expenses):

(i) All of the adjusted net income (as defined in section 4942(f)) of the common fund to one or more public charities not later than the 15th day of the third month after the close of the taxable year in which such income is realized by the fund, and

(ii) All the corpus attributable to any donor's contribution to the fund to one or more public charities not later than 1 year after the donor's death or after the death of the donor's surviving spouse if such surviving spouse has the right to designate the recipients of such corpus.

(3) ***Failure to designate.*** A private foundation will not fail to qualify under this paragraph merely because a substantial contributor or his spouse fails to exercise his right to designate the recipients of income or corpus of the fund, provided that the income and corpus attributable to his contribution are distributed as required by subparagraph (2) of this paragraph.

(4) ***Definitions.*** For purposes of this paragraph:

(i) The term *substantial contributor* is as defined in section 507(d)(2) and the regulations thereunder.

(ii) The term *public charity* means an organization described in section 170(b)(1)(A) (i) through (vi). If an organization is described in section 170(b)(1)(A) (i) through (vi), and is also described in section 170(b)(1)(A)(viii), it shall be treated as a public charity for purposes of this paragraph.

(iii) The term *income attributable to* means the income earned by the fund which is properly allocable to the contributed amount by any reasonable and consistently applied method. See, for example, § 1.642(c)-5(c).

(iv) The term *corpus attributable to* means the portion of the corpus of the fund attributable to the contributed amount. Such portion may be determined by any reasonable and consistently applied method.

(v) The term *donor* means any individual who makes a contribution (whether of cash or property) to the private foundation, whether or not such individual is a substantial contributor.

(j) ***Section 509(a) (2) or (3) organization.*** An organization is described in section 170(b)(1)(A)(viii) if it is described in section 509(a) (2) or (3) and the regulations thereunder.

(k) ***Effective/applicability date*** —

(1) ***In general.*** These regulations shall apply to taxable years beginning after December 31, 1969.

(2) ***Applicability date.*** The regulations in paragraph (f) of this section shall apply to taxable years beginning on or after January 1, 2008. For tax years beginning after December 31, 1969, and beginning before January 1, 2008, see § 1.170A-9(e) (as contained in 26 CFR part 1 revised April 1, 2008).

(3) ***Applicability date.*** Paragraph (f)(7)(v) of this section applies to taxable years beginning on or after December 2, 2020. Taxpayers may choose to apply this section to taxable years beginning on or after January 1, 2018, and before December 2, 2020.

[T.D. 7242, 38 FR 12, Jan. 3, 1973; 38 FR 3598, Feb. 8, 1973, as amended by T.D. 7406, 41 FR 7096, Feb. 17, 1976; T.D. 7440, 41 FR 50650, Nov. 17, 1976; T.D. 7456, 42 FR 4436, Jan. 25, 1977; T.D. 7679, 45 FR 13452, Feb. 29, 1980; T.D. 8100, 51 FR 31614, Sept. 4, 1986; T.D. 8991, 67 FR 20437, Apr. 25, 2002; T.D. 9423, 73 FR 52533, Sept. 9, 2008; T.D. 9549, 76 FR 55750, Sept. 8, 2011; T.D. 9933, 85 FR 77978, Dec. 2, 2020]

§ 1.170A-10 Charitable contributions carryovers of individuals.

(a) ***In general.***

(1) Section 170(d)(1), relating to carryover of charitable contributions in excess of 50 percent of contribution base, and section 170(b)(1)(D)(ii), relating to carryover of charitable contributions in excess of 30 percent of contribution base, provide for excess charitable contributions carryovers by individuals of charitable contributions to section 170(b)(1)(A) organizations described in § 1.170A-9.

These carryovers shall be determined as provided in paragraphs (b) and (c) of this section. No excess charitable contributions carryover shall be allowed with respect to contributions "for the use of," rather than "to," section 170(b)(1)(A) organizations or with respect to contributions "to" or "for the use of" organizations which are not section 170(b)(1)(A) organizations. See § 1.170A-8(a)(2) for definitions of "to" or "for the use of" a charitable organization.

(2) The carryover provisions apply with respect to contributions made during a taxable year in excess of the applicable percentage limitation even though the taxpayer elects under section 144 to take the standard deduction in that year instead of itemizing the deduction allowable in computing taxable income for that year.

(3) For provisions requiring a reduction of the excess charitable contribution computed under paragraph (b)(1) or (c)(1) of this section when there is a net operating loss carryover to the taxable year, see paragraph (d)(1) of this section.

(4) The provisions of section 170 (b)(1)(D)(ii) and (d)(1) and this section do not apply to contributions by an estate; nor do they apply to a trust unless the trust is a private foundation which, pursuant to § 1.642(c)-4, is allowed a deduction under section 170 subject to the provisions applicable to individuals.

(b) *50-percent charitable contributions carryover of individuals* —

(1) ***Computation of excess of charitable contributions made in a contribution year.*** Under section 170(d)(1), subject to certain conditions and limitations, the excess of:

(i) The amount of the charitable contributions made by an individual in a taxable year (hereinafter) in this paragraph referred to as the "contribution year") to section 170(b)(1)(A) organizations described in § 1.170A-9, over

(ii) 50 percent of his contribution base, as defined in section 170(b)(1)(F), for such contribution year, shall be treated as a charitable contribution paid by him to a section 170(b)(1)(A) organization in each of the 5 taxable years immediately succeeding the contribution year in order of time. However, such excess to the extent it consists of contributions of 30-percent capital gain property, as defined in § 1.170A-8(d)(3), shall be subject to the rules of section 170(b)(1)(D)(ii) and paragraph (c) of this section in the years to which it is carried over. A charitable contribution made in a taxable year beginning before January 1, 1970, to a section 170(b)(1)(A) organization and carried over to a taxable year beginning after December 31, 1969, under section 170(b)(5) (before its amendment by the Tax Reform Act of 1969) shall be treated in such taxable year beginning after December 31, 1969, as a charitable contribution of cash subject to the limitations of this paragraph, whether or not such carryover consists of contributions of 30-percent capital gain property or of ordinary income property described in § 1.170A-4(b)(1). For purposes of applying this paragraph and paragraph (c) of this section, such a carryover from a taxable year beginning before January 1, 1970, which is so treated as paid to a section 170(b)(1)(A) organization in a taxable year beginning after December 31, 1969, shall be treated as paid to such an organization under section 170(d)(1) and this section. The provisions of this subparagraph may be illustrated by the following examples:

Example 1. Assume that H and W (husband and wife) have a contribution base for 1970 of $50,000 and for 1971 of $40,000 and file a joint return for each year. Assume further that in 1970 they make a charitable contribution in cash of $26,500 to a church and $1,000 to X (not a section 170(b)(1)(A) organization) and in 1971 they make a charitable contribution in cash of $19,000 to a church and $600 to X. They may claim a charitable contributions deduction of $25,000 in

1970, and the excess of $26,500 (contribution to the church) over $25,000 (50 percent of contribution base), or $1,500, constitutes a charitable contributions carryover which shall be treated as a charitable contribution paid by them to a section 170(b)(1)(A) organization in each of the 5 succeeding taxable years in order of time. No carryover is allowed with respect to the $1,000 contribution made to X in 1970. Since 50 percent of their contribution base for 1971 ($20,000) exceeds the charitable contributions of $19,000 made by them in 1971 to section 170(b)(1)(A) organizations (computed without regard to section 170 (b)(1)(D)(ii) and (d)(1) and this section), the portion of the 1970 carryover equal to such excess of $1,000 ($20,000 minus $19,000) is treated, pursuant to the provisions of subparagraph (2) of this paragraph, as paid to a section 170(b)(1)(A) organization in 1971; the remaining $500 constitutes an unused charitable contributions carryover. No deduction for 1971, and no carryover, are allowed with respect to the $600 contribution made to X in 1971.

Example 2. Assume the same facts as in *Example 1* except that H and W have a contribution base for 1971 of $42,000. Since 50 percent of their contribution base for 1971 ($21,000) exceeds by $2,000 the charitable contribution of $19,000 made by them in 1971 to the section 170(b)(1)(A) organization (computed without regard to section 170 (b)(1)(D)(ii) and (d)(1) and this section), the full amount of the 1970 carryover of $1,500 is treated, pursuant to the provisions of subparagraph (2) of this paragraph, as paid to a section 170(b)(1)(A) organization in 1971. They may also claim a charitable contribution of $500 ($21,000 −$20,500[$19,000 + $1,500]) with respect to the gift to X in 1971. No carryover is allowed with respect to the $100 ($600−$500) of the contribution to X which is not deductible in 1971.

(2) ***Determination of amount treated as paid in taxable years succeeding contribution year.*** In applying the provisions of subparagraph (1) of this paragraph, the amount of the excess computed in accordance with the provisions of such subparagraph and paragraph (d)(1) of this section which is to be treated as paid in any one of the 5 taxable years immediately succeeding the contribution year to a section 170(b)(1)(A) organization shall not exceed the lesser of the amounts computed under subdivisions (i) to (iii), inclusive, of this subparagraph:

(i) The amount by which 50 percent of the taxpayer's contribution base for such succeeding taxable year exceeds the sum of:

(*a*) The charitable contributions actually made (computed without regard to the provisions of section 170 (b)(1)(D)(ii) and (d)(1) and this section) by the taxpayer in such succeeding taxable year to section 170(b)(1)(A) organizations, and

(*b*) The charitable contributions, other than contributions of 30-percent capital gain property, made to section 170(b)(1)(A) organizations in taxable years preceding the contribution year which, pursuant to the provisions of section 170(d)(1) and this section, are treated as having been paid to a section 170(b)(1)(A) organization in such succeeding year.

(ii) In the case of the first taxable year succeeding the contribution year, the amount of the excess charitable contribution in the contribution year, computed under subparagraph (1) of this paragraph and paragraph (d)(1) of this section.

(iii) In the case of the second, third, fourth, and fifth taxable years succeeding the contribution year, the portion of the excess charitable contribution in the contribution year, computed under subparagraph (1) of this paragraph and paragraph (d)(1) of this section, which has not been treated as paid to a section 170(b)(1)(A) organization in a year intervening between the contribution year and such succeeding taxable year.

For purposes of applying subdivision (i)(*a*) of this subparagraph, the amount of charitable contributions of 30-percent capital gain property actually made in a taxable year succeeding the contribution year shall be determined by first applying the 30-percent limitation of section 170(b)(1)(D)(i) and paragraph (d) of § 1.170A-8. If a taxpayer, in any one of the 4 taxable years succeeding a contribution year, elects under section 144 to take the standard deduction instead of itemizing the deductions allowable in computing taxable income, there shall be treated as paid (but not allowable as a deduction) in such standard deduction year the lesser of the amounts determined under subdivisions (i) to (iii), inclusive, of this subparagraph. The provisions of this subparagraph may be illustrated by the following examples:

Example 1. Assume that B has a contribution base for 1970 of $20,000 and for 1971 of $30,000. Assume further that in 1970 B contributed $12,000 in cash to a church and in 1971 he contributed $13,500 in cash to the church. B may claim a charitable contributions deduction of $10,000 in 1970, and the excess of $12,000 (contribution to the church) over $10,000 (50 percent of B's contribution base), or $2,000, constitutes a charitable contributions carryover which shall be treated as a charitable contribution paid by B to a section 170(b)(1)(A) organization in the 5 taxable years succeeding 1970 in order of time. B may claim a charitable contributions deduction of $15,000 in 1971. Such $15,000 consists of the $13,500 contribution to the church in 1971 and $1,500 carried over from 1970 and treated as a charitable contribution paid to a section 170(b)(1)(A) organization in 1971. The $1,500 contribution treated as paid in 1971 is computed as follows:

1970 excess contributions		$2,000
50 percent of B's contribution base for 1971		15,000
Less:		
Contributions actually made in 1971 to section 170(b)(1)(A) organizations	$13,500	
Contributions made to section 170(b)(1)(A) organizations in taxable years prior to 1970 treated as having been paid in 1971	0	13,500
Balance		1,500
Amount of 1970 excess treated as paid in 1971—the lesser of $2,000 (1970 excess contributions) or $1,500 (excess of 50 percent of contribution base for 1971 ($15,000) over the sum of the section 170(b)(1)(A) contributions actually made in 1971 ($13,500) and the		1,500

section 170(b)(1)(A) contributions made in years prior to 1970 treated as having been paid in 1971 ($0))

If the excess contributions made by B in 1970 had been $1,000 instead of $2,000, then, for purposes of this example, the amount of the 1970 excess treated as paid in 1971 would be $1,000 rather than $1,500.

Example 2. Assume the same facts as in *Example 1,* and, in addition, that B has a contribution base for 1972 of $10,000 and for 1973 of $20,000. Assume further with respect to 1972 that B elects under section 144 to take the standard deduction in computing taxable income and that his actual contributions to section 170(b)(1)(A) organizations in that year are $300 in cash. Assume further with respect to 1973 that R itemizes his deductions, which include a $5,000 cash contribution to a church. B's deductions for 1972 are not increased by reason of the $500 available as a charitable contributions carryover from 1970 (excess contributions made in 1970 ($2,000) less the amount of such excess treated as paid in 1971 ($1,500)), since B elected to take the standard deduction in 1972. However, for purposes of determining the amount of the excess charitable contributions made in 1970 which is available as a carryover to 1973, B is required to treat such $500 as a charitable contribution paid in 1972—the lesser of $500 or $4,700 (50 percent of contribution base ($5,000) over contributions actually made in 1972 to section 170(b)(1)(A) organizations ($300)). Therefore, even though the $5,000 contribution made by B in 1973 to a church does not amount to 50 percent of B's contribution base for 1973 (50 percent of $20,000), B may claim a charitable contributions deduction of only the $5,000 actually paid in 1973 since the entire excess charitable contribution made in 1970 ($2,000) has been treated as paid in 1971 ($1,500) and 1972 ($500).

Example 3. Assume the following factual situation for C who itemizes his deductions in computing taxable income for each of the years set forth in the example:

	1970	1971	1972	1973	1974
Contribution base	$10,000	$7,000	$15,000	$10,000	$9,000
Contributions of cash to section 170(b)(1)(A) organizations (no other contributions)	6,000	4,400	8,000	3,000	1,500
Allowable charitable contributions deductions computed without regard to carryover of contributions	5,000	3,500	7,500	3,000	1,500
Excess contributions for taxable year to be treated as paid in 5 succeeding taxable	1,000	900	500	0	0

	1970	1971	1972	1973	1974
years					

Since C's contributions in 1973 and 1974 to section 170(b)(1)(A) organizations are less than 50 percent of his contribution base for such years, the excess contributions for 1970, 1971, and 1972 are treated as having been paid to section 170(b)(1)(A) organizations in 1973 and 1974 as follows:

1973

Contribution year	Total excess	Less: Amount treated as paid in year prior to 1973	Available charitable contributions carryovers
1970	$1,000	0	$1,000
1971	900	0	900
1972	500	0	500
Total			2,400
50 percent of B's contribution base for 1973			$5,000
Less: Charitable contributions made in 1973 to section 170(b)(1)(A) organizations			3,000
			2,000
Amount of excess contributions treated as paid in 1973—lesser of $2,400 (available carryovers to 1973) or $2,000 (excess of 50 percent of contribution base ($5,000) over contributions actually made in 1973 to section 170(b)(1)(A) organizations ($3,000))			2,000

1974

Contribution year	Total excess	Less: Amount treated as paid in year prior to 1974	Available charitable contributions carryovers
1970	$1,000	$1,000	

Contribution year	Total excess	Less: Amount treated as paid in year prior to 1974	Available charitable contributions carryovers
1971	900	900	
1972	500	100	$40
1973	0	0	
Total			400
50 percent of B's contribution base for 1974			$4,500
Less: Charitable contributions made in 1974 to section 170(b)(1)(A) organizations			1,500
			3,000
Amount of excess contributions treated as paid in 1974—the lesser of $400 (available carryovers to 1974) or $3,000 (excess of 50 percent of contribution base ($4,500) over contributions actually made in 1974 to section 170(b)(1)(A) organizations ($1,500))			400

(c) *30-percent charitable contributions carryover of individuals* —

(1) ***Computation of excess of charitable contributions made in a contribution year.*** Under section 170(b)(1)(D)(ii), subject to certain conditions and limitations, the excess of:

(i) The amount of the charitable contributions of 30-percent capital gain property, as defined in § 1.170A-8(d)(3), made by an individual in a taxable year (hereinafter in this paragraph referred to as the "contribution year") to section 170(b)(1)(A) organizations described in § 1.170A-9, over

(ii) 30 percent of his contribution base for such contribution year, shall, subject to section 170(b)(1)(A) and paragraph (b) of § 1.170A-8, be treated as a charitable contribution of 30-percent capital gain property paid by him to a section 170(b)(1)(A) organization in each of the 5 taxable years immediately succeeding the contribution year in order of time. In addition, any charitable contribution of 30-percent capital gain property which is carried over to such years under section 170(d)(1) and paragraph (b) of this section shall also be treated as though it were a carryover of 30-percent capital gain property under section 170(b)(1)(D)(ii) and this paragraph. The provisions of this subparagraph may be illustrated by the following examples:

Example 1. Assume that H and W (husband and wife) have a contribution base for 1970 of $50,000 and for 1971 of $40,000 and file a joint return for each year. Assume further that in 1970 they contribute $20,000 cash and $13,000 of 30-percent capital gain property to a church, and that in 1971 they contribute $5,000 cash and $10,000 of 30-percent capital gain property to a church. They may claim a charitable contributions deduction of $25,000 in 1970 and the excess of $33,000 (contributed to the church) over $25,000 (50 percent of contribution base), or $8,000, constitutes a charitable contributions carryover which shall be treated as a charitable contribution of 30-percent capital gain property paid by them to a section 170(b)(1)(A) organization in each of the 5 succeeding taxable years in order of time. Since 30 percent of their contribution base for 1971 ($12,000) exceeds the charitable contributions of 30-percent

capital gain property ($10,000) made by them in 1971 to section 170(b)(1)(A) organizations (computed without regard to section 170 (b)(1)(D)(ii) and (d)(1) and this section), the portion of the 1970 carryover equal to such excess of $2,000 ($12,000—$10,000) is treated, pursuant to the provisions of subparagraph (2) of this paragraph, as paid to a section 170(b)(1)(A) organization in 1971; the remaining $6,000 constitutes an unused charitable contributions carryover in respect of 30-percent capital gain property from 1970.

Example 2. Assume the same facts as in *Example 1* except the $33,000 of charitable contributions in 1970 are all 30-percent capital gain property. Since their charitable contributions in 1970 exceed 30 percent of their contribution base ($15,000) by $18,000 ($33,000—$15,000), they may claim a charitable contributions deduction of $15,000 in 1970, and the excess of $33,000 over $15,000, or $18,000, constitutes a charitable contributions carryover which shall be treated as a charitable contribution of 30-percent capital gain property paid by them to a section 170(b)(1)(A) organization in each of the 5 succeeding taxable years in order of time. Since they are allowed to treat only $2,000 of their 1970 contribution as paid in 1971, they have a remaining unused charitable contributions carryover of $16,000 in respect of 30-percent capital gain property from 1970.

(2) ***Determination of amount treated as paid in taxable years succeeding contribution year.*** In applying the provisions of subparagraph (1) of this paragraph, the amount of the excess computed in accordance with the provisions of such subparagraph and paragraph (d)(1) of this section which is to be treated as paid in any one of the 5 taxable years immediately succeeding the contribution year to a section 170(b)(1)(A) organization shall not exceed the least of the amounts computed under subdivisions (i) to (iv), inclusive, of this subparagraph:

(i) The amount by which 30 percent of the taxpayer's contribution base for such succeeding taxable year exceeds the sum of:

(*a*) The charitable contributions of 30-percent capital gain property actually made (computed without regard to the provisions of section 170 (b)(1)(D)(ii) and (d)(1) and this section) by the taxpayer in such succeeding taxable year to section 170(b)(1)(A) organizations, and

(*b*) The charitable contributions of 30-percent capital gain property made to section 170(b)(1)(A) organizations in taxable years preceding the contribution year, which, pursuant to the provisions of section 170 (b)(1)(D)(ii) and (d)(1) and this section, are treated as having been paid to a section 170(b)(1)(A) organization in such succeeding year.

(ii) The amount by which 50 percent of the taxpayer's contribution base for such succeeding taxable year exceeds the sum of:

(*a*) The charitable contributions actually made (computed without regard to the provisions of section 170 (b)(1)(D)(ii) and (d)(1) and this section) by the taxpayer in such succeeding taxable year to section 170(b)(1)(A) organizations,

(*b*) The charitable contributions of 30-percent capital gain property made to section 170(b)(1)(A) organizations in taxable years preceding the contribution year which, pursuant to the provisions of section 170 (b)(1)(D)(ii) and (d)(1) and this section, are treated as having been paid to a section 170(b)(1)(A) organization in such succeeding year, and

(*c*) The charitable contributions, other than contributions of 30-percent capital gain property, made to section 170(b)(1)(A) organizations which, pursuant to the provisions of section 170(d)(1) and paragraph (b) of this section, are treated as having been paid to a section 170(b)(1)(A) organization in such succeeding year.

(iii) In the case of the first taxable year succeeding the contribution year, the amount of the excess charitable contribution of 30-percent capital gain property in the contribution year, computed under subparagraph (1) of this paragraph and paragraph (d)(1) of this section.

(iv) In the case of the second, third, fourth, and fifth succeeding taxable years succeeding the contribution year, the portion of the excess charitable contribution of 30-percent capital gain property in the contribution year (computed under subparagraph (1) of this paragraph and paragraph (d)(1) of this section) which has not been treated as paid to a section 170(b)(1)(A) organization in a year intervening between the contribution year and such succeeding taxable year.

For purposes of applying subdivisions (i) and (ii) of this subparagraph, the amount of charitable contributions of 30-percent capital gain property actually made in a taxable year succeeding the contribution year shall be determined by first applying the 30-percent limitation of section 170(b)(1)(D)(i) and paragraph (d) of § 1.170A-8. If a taxpayer, in any one of the four taxable years succeeding a contribution year, elects under section 144 to take the standard deduction instead of itemizing the deductions allowable in computing taxable income, there shall be treated as paid (but not allowable as a deduction) in the standard deduction year the least of the amounts determined under subdivisions (i) to (iv), inclusive, of this subparagraph. The provisions of this subparagraph may be illustrated by the following example:

Example. Assume the following factual situation for C who itemizes his deductions in computing taxable income for each of the years set forth in the example:

	1970	1971	1972	1973	1974
Contribution base	$10,000	$15,000	$20,000	$15,000	$33,000
Contributions of cash to section 170(b)(1)(A) organizations	2,000	8,500	0	14,000	700
Contributions of 30-percent capital gain property to section 170(b)(1)(A) organizations	5,000	0	7,800	0	6,400
Allowable charitable contributions deductions (computed without regard to carryover of contributions) subject to limitations of:					
50 percent	2,000	7,500	0	7,500	700
30 percent	3,000	0	6,000	0	6,400
Total	5,000	7,500	6,000	7,500	7,100

C's excess contributions for 1970, 1971, 1972, and 1973 which are treated as having been paid to section 170(b)(1)(A) organizations in 1972, 1973, and 1974 are indicated below. The portion of the excess charitable contribution for 1972 of 30-percent capital gain property which is not treated as paid in 1974 ($1,800-$900) is available as a carryover to 1975.

	1970	1971	1972	1973	1974
Excess of contributions for taxable year to be treated as paid in 5 succeeding taxable years:					
Carryover of contributions of property other than 30-percent capital gain property	0	1,000	0	6,500	
Carryover of contributions of 30-percent capital gain property.	2,000	0	1,800	0	

C's excess contributions for 1970, 1971, 1972, and 1973 which are treated as having been paid to section 170(b)(1)(A) organizations in 1972, 1973, and 1974 are indicated below. The portion of the excess charitable contribution for 1972 of 30-percent capital gain property which is not treated as paid in 1974 ($1,800-$900) is available as a carryover to 1975.

1971

Contribution	Total excess		Less: Amount treated as paid in years prior to 1971	Available charitable contributions carryovers	
	50%	30%		50%	30%
1970	0	$2,000	0	0	$2,000
50 percent of C's contribution base for 1971				$7,500	
30 percent of C's contribution base for 1971					4,500
Less: Charitable contributions actually made in 1971 to section 170(b)(1)(A) organizations ($8,500, but not to exceed 50% of contribution base)				7,500	0
Excess				0	4,500
The amount of excess contributions for 1970 of 30-percent capital gain property which is treated as paid in 1971 is the least of:					
(i) Available carryover from 1970 to 1971 of contributions of 30-percent capital gain property				2,000	
(ii) Excess of 50 percent of contribution base for 1971 ($7,500) over sum of contributions actually made in 1971 to section 170(b)(1)(A) organizations ($7,500)				0	
(iii) Excess of 30 percent of contribution base for 1971 ($4,500) over contributions of 30 percent capital gain property actually made in 1971 to section 170(b)(1)(A) organizations ($0)				4,500	

Contribution	Total excess		Less: Amount treated as paid in years prior to 1971	Available charitable contributions carryovers	
	50%	30%		50%	30%
Amount treated as paid					0

1972

Contribution year	Total excess		Less: Amount treated as paid in years prior to 1972	Available charitable contributions carryovers	
	50%	30%		50%	30%
1970	0	$2,000	0	0	$2,000
1971	$1,000	0	0	$1,000	0
				1,000	2,000
50 percent of C's contribution base for 1972				10,000	
30 percent of C's contribution base for 1972					6,000
Less: Charitable contributions actually made in 1972 to section 170(b)(1)(A) organizations ($7,800, but not to exceed 30% of contribution base)				0	6,000
Excess				10,000	0
(1) The amount of excess contributions for 1971 of property other than 30-percent capital gain property which is treated as paid in 1972 is the lesser of:					
(i) Available carryover from 1971 to 1972 of contributions of property other than 30-percent capital gain property				1,000	
(ii) Excess of 50 percent of contribution base for 1972 ($10,000) over contributions actually made in 1972 to section 170(b)(1)(A) organizations ($6,000)				4,000	
Amount treated as paid					1,000
(2) The amount of excess contributions for 1970 of 30-percent capital gain property which is treated as paid in 1972 is the least of:					
(i) Available carryover from 1970 to 1972 of contributions of 30-percent capital gain property				2,000	
(ii) Excess of 50 percent of contribution base for 1972 ($10,000) over sum of contributions actually made in 1972 to section 170(b)(1)(A) organizations ($6,000) and excess contributions for 1971 treated under item (1) above as paid in 1972 ($1,000)				3,000	
(iii) Excess of 30 percent of contribution base for 1972 ($6,000) over contributions				0	

Contribution year	Total excess		Less: Amount treated as paid in years prior to 1972	Available charitable contributions carryovers	
	50%	30%		50%	30%
of 30-percent capital gain property actually made in 1972 to section 170(b)(1)(A) organizations ($6,000)					
Amount treated as paid					0

1973

Contribution year	Total excess		Less: Amount treated as paid in years prior to 1973	Available charitable contributions carryovers	
	50%	30%		50%	30%
1970	0	$2,000	0	0	$2,000
1971	$1,000	0	$1,000	0	0
1972	0	1,800	0	0	1,800
				0	3,800
50 percent of C's contribution base for 1973				$7,500	
30 percent of C's contribution base for 1973					4,500
Less: Charitable contributions actually made in 1973 to section 170(b)(1)(A) organizations ($14,000, but not to exceed 50% of contribution base)				7,500	0
Excess				0	4,500
(1) The amount of excess contributions for 1970 of 30-percent capital gain property which is treated as paid in 1973 is the least of:					
(i) Available carryover from 1970 to 1973 of contributions of 30-percent capital gain property				2,000	
(ii) Excess of 50 percent of contribution base for 1973 ($7,500) over contributions actually made in 1973 to section 170(b)(1)(A) organizations ($7,500)				0	
(iii) Excess of 30 percent of contribution base for 1973 ($4,500) over contributions of 30-percent capital gain property actually made in 1973 to section 170(b)(1)(A) organizations ($0)				4,500	
Amount treated as paid				0	
(2) The amount of excess contributions for 1972 of 30-percent capital gain property which is treated as paid in 1973 is the least of:					
(i) Available carryover from 1972 to 1973 of contributions of 30-percent capital gain				1,800	

Contribution year	Total excess		Less: Amount treated as paid in years prior to 1973	Available charitable contributions carryovers	
	50%	30%		50%	30%
property					
(ii) Excess of 50 percent of contribution base for 1973 ($7,500) over contributions actually made in 1973 to section 170(b)(1)(A) organizations ($7,500)				0	
(iii) Excess of 30 percent of contribution base for 1973 ($4,500) over sum of contributions of 30-percent capital gain property actually made in 1973 to section 170(b)(1)(A) organizations ($0) and excess contributions for 1970 treated under item (1) above as paid in 1973 ($0)				4,500	
Amount treated as paid				0	

1974

Contribution year	Total excess		Less: Amount treated as paid in years prior to 1974	Available charitable contributions carryovers	
	50%	30%		50%	30%
1970	0	$2,000	0	0	$2,000
1971	$1,000	0	$1,000	0	0
1972	0	1,800	0	0	1,800
1973	6,500	0	0	$6,500	0
				6,500	3,800
50 percent of C's contribution base for 1974				16,500	
30 percent of C's contribution base for 1974					9,900
Less: Charitable contributions actually made in 1974 to section 170(b)(1)(A) organizations				700	6,400
Excess				15,800	3,500
(1) The amount of excess contributions for 1973 of property other than 30-percent capital gain property which is treated as paid in 1974 is the lesser of:					
(i) Available carryover from 1973 to 1974 of contributions of property other than 30-percent capital gain property				6,500	
(ii) Excess of 50 percent of contribution base for 1974 ($16,500) over contributions actually made in 1974 to section 170(b)(1)(A) organizations ($7,100)				9,400	
Amount treated as paid					6,500

Contribution year	Total excess		Less: Amount treated as paid in years prior to 1974	Available charitable contributions carryovers	
	50%	30%		50%	30%
(2) The amount of excess contributions for 1970 of 30-percent capital gain property which is treated as paid in 1974 is the least of:					
(i) Available carryover from 1970 to 1974 of contributions of 30-percent capital gain property				$2,000	
(ii) Excess of 50 percent of contribution base for 1974 ($16,500) over sum of contributions actually made in 1974 to section 170(b)(1)(A) organizations ($7,100) and excess contributions for 1973 of property other than 30-percent capital gain property treated under item (1) above as paid in 1974 ($6,500)				2,900	
(iii) Excess of 30 percent of contribution base for 1974 ($9,900) over contributions of 30-percent capital gain property actually made in 1974 to section 170(b)(1)(A) organizations ($6,400)				3,500	
Amount treated as paid					$2,000
(3) The amount of excess contributions for 1972 of 30-percent capital gain property which is treated as paid in 1974 is the least of:					
(i) Available carryover from 1972 to 1974 of contributions of 30-percent capital gain property				1,800	
(ii) Excess of 50 percent of contribution base for 1974 ($16,500) over sum of contributions actually made in 1974 to section 170(b)(1)(A) organizations ($7,100) and excess contributions for 1973 and 1970 treated under items (1) and (2) above as paid in 1974 ($8,500)				900	
(iii) Excess of 30 percent of contribution base for 1974 ($9,900) over sum of contributions of 30-percent capital gain property actually made in 1974 to section 170(b)(1)(A) organizations ($6,400) and excess contributions for 1970 of 30-percent capital gain property treated under item (2) above as paid in 1974 ($2,000)				1,500	
Amount treated as paid					900

(d) ***Adjustments*** —

(1) ***Effect of net operating loss carryovers on carryover of excess contributions.*** An individual having a net operating loss carryover from a prior taxable year which is available as a deduction in a contribution year must apply the special rule of section 170(d)(1)(B) and this subparagraph in computing the excess described in paragraph (b)(1) or (c)(1) of this section for such contribution year. In determining the amount of excess charitable contributions that shall be treated as paid in each of the 5 taxable years succeeding the contribution year, the excess charitable contributions described in paragraph (b)(1) or (c)(1) of this section must be reduced by the amount by which such excess reduces taxable income (for purposes of determining the portion of a net operating loss which shall be carried to taxable years succeeding the contribution year under the second sentence of section 172(b)(2)) and increases the net operating loss which is carried to a succeeding taxable year. In

reducing taxable income under the second sentence of section 172(b)(2), an individual who has made charitable contributions in the contribution year to both section 170(b)(1)(A) organizations, as defined in § 1.170A-9, and to organizations which are not section 170(b)(1)(A) organizations must first deduct contributions made to the section 170(b)(1)(A) organizations from his adjusted gross income computed without regard to his net operating loss deduction before any of the contributions made to organizations which are not section 170(b)(1)(A) organizations may be deducted from such adjusted gross income. Thus, if the excess of the contributions made in the contribution year to section 170(b)(1)(A) organizations over the amount deductible in such contribution year is utilized to reduce taxable income (under the provisions of section 172(b)(2)) for such year, thereby serving to increase the amount of the net operating loss carryover to a succeeding year or years, no part of the excess charitable contributions made in such contribution year shall be treated as paid in any of the 5 immediately succeeding taxable years. If only a portion of the excess charitable contributions is so used, the excess charitable contributions shall be reduced only to that extent. The provisions of this subparagraph may be illustrated by the following examples:

Example 1. B, an individual, reports his income on the calendar year basis and for the year 1970 has adjusted gross income (computed without regard to any net operating loss deduction) of $50,000. During 1970 he made charitable contributions of cash in the amount of $30,000 all of which were to section 170(b)(1)(A) organizations. B has a net operating loss carryover from 1969 of $50,000. In the absence of the net operating loss deduction B would have been allowed a deduction for charitable contributions of $25,000. After the application of the net operating loss deduction, B is allowed no deduction for charitable contributions, and there is (before applying the special rule of section 170(d)(1)(B) and this subparagraph) a tentative excess charitable contribution of $30,000. For purposes of determining the net operating loss which remains to be carried over to 1971, B computes his taxable income for 1970 under section 172(b)(2) by deducting the $25,000 charitable contribution. After the $50,000 net operating loss carryover is applied against the $25,000 of taxable income for 1970 (computed in accordance with section 172(b)(2), assuming no deductions other than the charitable contributions deduction are applicable in making such computation), there remains a $25,000 net operating loss carryover to 1971. Since the application of the net operating loss carryover of $50,000 from 1969 reduces the 1970 adjusted gross income (for purposes of determining 1970 tax liability) to zero, no part of the $25,000 of charitable contributions in that year is deductible under section 170(b)(1). However, in determining the amount of the excess charitable contributions which shall be treated as paid in taxable years 1971, 1972, 1973, 1974, and 1975, the $30,000 must be reduced to $5,000 by the portion of the excess charitable contributions ($25,000) which was used to reduce taxable income for 1970 (as computed for purposes of the second sentence of section 172(b)(2)) and which thereby served to increase the net operating loss carryover to 1971 from zero to $25,000.

Example 2. Assume the same facts as in *Example 1,* except that B's total charitable contributions of $30,000 in cash made during 1970 consisted of $25,000 to section 170(b)(1)(A) organizations and $5,000 to organizations other than section 170(b)(1)(A) organizations. Under these facts there is a tentative excess charitable contribution of $25,000, rather than $30,000 as in *Example 1.* For purposes of determining the net operating loss which remains to be carried over to 1971, B computes his taxable income for 1970 under section 172(b)(2) by deducting the $25,000 of charitable contributions made to section 170(b)(1)(A) organizations. Since the excess charitable contribution of $25,000 determined in accordance with paragraph (b)(1) of this section was used to reduce taxable income for 1970 (as computed for purposes of the second sentence of section 172(b)(2)) and thereby served to increase the net operating loss carryover

to 1971 from zero to $25,000, no part of such excess charitable contributions made in the contribution year shall be treated as paid in any of the five immediately succeeding taxable years. No carryover is allowed with respect to the $5,000 of charitable contributions made in 1970 to organizations other than section 170(b)(1)(A) organizations.

Example 3. Assume the same facts as in *Example 1,* except that B's total contributions of $30,000 made during 1970 were of 30-percent capital gain property. Under these facts there is a tentative excess charitable contribution of $30,000. For purposes of determining the net operating loss which remains to be carried over to 1971, B computes his taxable income for 1970 under section 172(b)(2)(B) by deducting the $15,000 (30% of $50,000) contribution of 30-percent capital gain property which would have been deductible in 1970 absent the net operating loss deduction. Since $15,000 of the excess charitable contribution of $30,000 determined in accordance with paragraph (c)(1) of this section was used to reduce taxable income for 1970 (as computed for purposes of the second sentence of section 172(b)(2)) and thereby served to increase the net operating loss carryover to 1971 from zero to $15,000, only $15,000 ($30,000—$15,000) of such excess shall be treated as paid in taxable years 1971, 1972, 1973, 1974, and 1975.

(2) ***Effect of net operating loss carryback to contribution year.*** The amount of the excess contribution for a contribution year computed as provided in paragraph (b)(1) or (c)(1) of this section and subparagraph (1) of this paragraph shall not be increased because a net operating loss carryback is available as a deduction in the contribution year. Thus, for example, assuming that in 1970 there is an excess contribution of $50,000 (determined as provided in paragraph (b)(1) of this section) which is to be carried to the 5 succeeding taxable years and that in 1973 the taxpayer has a net operating loss which may be carried back to 1970, the excess contribution of $50,000 for 1970 is not increased by reason of the fact that the adjusted gross income for 1970 (on which such excess contribution was based) is subsequently decreased by the carryback of the net operating loss from 1973. In addition, in determining under the provisions of section 172(b)(2) the amount of the net operating loss for any year subsequent to the contribution year which is a carryback or carryover to taxable years succeeding the contribution year, the amount of contributions made to section 170(b)(1)(A) organizations shall be limited to the amount of such contributions which did not exceed 50 percent or, in the case of 30-percent capital gain property, 30 percent of the donor's contribution base, computed without regard to any of the modifications referred to in section 172(d), for the contribution year. Thus, for example, assume that the taxpayer has a net operating loss in 1973 which is carried back to 1970 and in turn to 1971 and that he has made charitable contributions in 1970 to section 170(b)(1)(A) organizations. In determining the maximum amount of such charitable contributions which may be deducted in 1970 for purposes of determining the taxable income for 1970 which is deducted under section 172(b)(2) from the 1973 loss in order to ascertain the amount of such loss which is carried back to 1971, the 50-percent limitation of section 170(b)(1)(A) is based upon the adjusted gross income for 1970 computed without taking into account the net operating loss carryback from 1973 and without making any of the modifications specified in section 172(d).

(3) ***Effect of net operating loss carryback to taxable years succeeding the contribution year.*** The amount of the charitable contribution from a preceding taxable year which is treated as paid, as provided in paragraph (b)(2) or (c)(2) of this section, in a current taxable year (hereinafter referred to in this subparagraph as the "deduction year") shall not be reduced because a net operating loss carryback is available as a deduction in the deduction year. In addition, in determining under the provisions of section 172(b)(2) the amount of the net operating loss for any taxable year subsequent to the deduction year which is a carryback or carryover to taxable years succeeding the deduction year, the

amount of contributions made to section 170(b)(1)(A) organizations in the deduction year shall be limited to the amount of such contributions, which were actually made in such year and those which were treated as paid in such year, which did not exceed 50 percent or, in the case of 30-percent capital gain property, 30 percent of the donor's contribution base, computed without regard to any of the modifications referred to in section 172(d), for the deduction year.

(4) ***Husband and wife filing joint returns*** —

(i) ***Change from joint return to separate returns.*** If a husband and wife:

(*a*) Make a joint return for a contribution year and compute an excess charitable contribution for such year in accordance with the provisions of paragraph (b)(1) or (c)(1) of this section and subparagraph (1) of this paragraph, and

(*b*) Make separate returns for one or more of the 5 taxable years immediately succeeding such contribution year, any excess charitable contribution for the contribution year which is unused at the beginning of the first such taxable year for which separate returns are filed shall be allocated between the husband and wife. For purposes of the allocation, a computation shall be made of the amount of any excess charitable contribution which each spouse would have computed in accordance with paragraph (b)(1) or (c)(1) of this section and subparagraph (1) of this paragraph if separate returns (rather than a joint return) had been filed for the contribution year. The portion of the total unused excess charitable contribution for the contribution year allocated to each spouse shall be an amount which bears the same ratio to such unused excess charitable contribution as such spouse's excess contribution, based on the separate return computation, bears to the total excess contributions of both spouses, based on the separate return computation. To the extent that a portion of the amount allocated to either spouse in accordance with the foregoing provisions of this subdivision is not treated in accordance with the provisions of paragraph (b)(2) or (c)(2) of this section as a charitable contribution paid to a section 170(b)(1)(A) organization in the taxable year in which a separate return or separate returns are filed, each spouse shall for purposes of paragraph (b)(2) or (c)(2) of this section treat his respective unused portion as the available charitable contributions carryover to the next succeeding taxable year in which the joint excess charitable contribution may be treated as paid in accordance with paragraph (b)(1) or (c)(1) of this section. If such husband and wife make a joint return in one of the 5 taxable years immediately succeeding the contribution year with respect to which a joint excess charitable contribution is computed and following such first taxable year for which such husband and wife filed a separate return, the amounts allocated to each spouse in accordance with this subdivision for such first year reduced by the portion of such amounts treated as paid to a section 170(b)(1)(A) organization in such first year and in any taxable year intervening between such first year and the succeeding taxable year in which the joint return is filed shall be aggregated for purposes of determining the amount of the available charitable contributions carryover to such succeeding taxable year. The provisions of this subdivision may be illustrated by the following example:

> *Example.* (a) H and W file joint returns for 1970, 1971, and 1972, and in 1973 they file separate returns. In each such year H and W itemize their deductions in computing taxable income. Assume the following factual situation with respect to

H and W for 1970:

1970

	H	W	Joint return
Contribution base	$50,000	$40,000	$90,000
Contributions of cash to section 170(b)(1)(A) organizations (no other contributions)	37,000	28,000	65,000
Allowable charitable contributions deductions	25,000	20,000	45,000
Excess contributions for taxable year to be treated as paid in 5 succeeding taxable years	12,000	8,000	20,000

(b) The joint excess charitable contribution of $20,000 is to be treated as having been paid to a section 170(b)(1)(A) organization in the 5 succeeding taxable years. Assume that in 1971 the portion of such excess treated as paid by H and W is $3,000, and that in 1972 the portion of such excess treated as paid is $7,000. Thus, the unused portion of the excess charitable contribution made in the contribution year is $10,000 ($20,000 less $3,000 [amount treated as paid in 1971] and $7,000 [amount treated as paid in 1972]). Since H and W file separate returns in 1973, $6,000 of such $10,000 is allocable to H, and $4,000 is allocable to W. Such allocation is computed as follows:
$12,000 (excess charitable contributions made by H (based on separate return computation) in 1970)/$20,000 (total excess charitable contributions made by H and W (based on separate return computation) in 1970) × $10,000 = $6,000

$8,000 (excess charitable contributions made by W (based on separate return computation) in 1970)/$20,000 (total excess charitable contributions made by H and W (based on separate return computation) in 1970) × $10,000 = $4,000

(c) In 1973 H has a contribution base of $70,000, and he contributes $14,000 in cash to a section 170(b)(1)(A) organization. In 1973 W has a contribution base of $50,000, and she contributes $10,000 in cash to a section 170(b)(1)(A) organization. Accordingly, H may claim a charitable contributions deduction of $20,000 in 1973, and W may claim a charitable contributions deduction of $14,000 in 1973. H's $20,000 deduction consists of the $14,000 contribution made to the section 170(b)(1)(A) organization in 1973 and the $6,000 carried over from 1970 and treated as a charitable contribution paid by him to a section 170(b)(1)(A)

organization in 1973. W's $14,000 deduction consists of the $10,000 contribution made to a section 170(b)(1)(A) organization in 1973 and the $4,000 carried over from 1970 and treated as a charitable contribution paid by her to a section 170(b)(1)(A) organization in 1973.

(d) The $6,000 contribution treated as paid in 1973 by H, and the $4,000 contribution treated as paid in 1973 by W, are computed as follows:

	H	W
Available charitable contribution carryover (see computations in (b))	$6,000	$4,000
50 percent of contribution base	35,000	25,000
Contributions of cash made in 1973 to section 170(b)(1)(A) organizations (no other contributions)	14,000	10,000
	21,000	15,000
Amount of excess contributions treated as paid in 1973: The lesser of $6,000 (available carryover of H to 1973) or $21,000 (excess of 50 percent of contribution base ($35,000) over contributions actually made in 1973 to section 170(b)(1)(A) organizations ($14,000))	$6,000	
The lesser of $4,000 (available carryover of W to 1973) or $15,000 (excess of 50 percent of contribution base ($25,000) over contributions actually made in 1973 to section 170(b)(1)(A) organizations ($10,000))		$4,000

(e) It is assumed that H and W made no contributions of 30-percent capital gain property during these years. If they had made such contributions, there would have been similar adjustments based on 30 percent of the contribution base.

(ii) ***Change from separate returns to joint return.*** If in the case of a husband and wife:

(*a*) Either or both of the spouses make a separate return for a contribution year and compute an excess charitable contribution for such year in accordance with the provisions of paragraph (b)(1) or (c)(1) of this section and subparagraph (1) of this paragraph, and

(*b*) Such husband and wife make a joint return for one or more of the taxable years succeeding such contribution year, the excess charitable contribution of the husband and wife for the contribution year which is unused at the beginning of the first taxable year for which a joint return is filed shall be aggregated for purposes of determining the portion of such unused charitable contribution which shall be treated in accordance with paragraph (b)(2) or (c)(2) of this section as a charitable contribution paid to a section 170(b)(1)(A) organization. The provisions of this subdivision also apply in the case of two single individuals who are subsequently married and file a joint return. A remarried taxpayer who filed a joint return with a former spouse in a contribution year with respect to which an

excess charitable contribution was computed and who in any one of the 5 taxable years succeeding such contribution year files a joint return with his or her present spouse shall treat the unused portion of such excess charitable contribution allocated to him or her in accordance with subdivision (i) of this subparagraph in the same manner as the unused portion of an excess charitable contribution computed in a contribution year in which he filed a separate return, for purposes of determining the amount which in accordance with paragraph (b)(2) or (c)(2) of this section shall be treated as paid to an organization specified in section 170(b)(1)(A) in such succeeding year.

(iii) ***Unused excess charitable contribution of deceased spouse.*** In case of the death of one spouse, any unused portion of an excess charitable contribution which is allocable in accordance with subdivision (i) of this subparagraph to such spouse shall not be treated as paid in the taxable year in which such death occurs or in any subsequent taxable year except on a separate return made for the deceased spouse by a fiduciary for the taxable year which ends with the date of death or on a joint return for the taxable year in which such death occurs. The application of this subdivision may be illustrated by the following example:

Example. Assume the same facts as in the example in subdivision (i) of this subparagraph except that H dies in 1972 and W files a separate return for 1973. W made a joint return for herself and H for 1972. In the example, the unused excess charitable contribution as of January 1, 1973, was $10,000, $6,000 of which was allocable to H and $4,000 to W. No portion of the $6,000 allocable to H may be treated as paid by W or any other person in 1973 or any subsequent year.

(e) ***Information required in support of a deduction of an amount carried over and treated as paid.*** If, in a taxable year, a deduction is claimed in respect of an excess charitable contribution which, in accordance with the provisions of paragraph (b)(2) or (c)(2) of this section, is treated (in whole or in part) as paid in such taxable year, the taxpayer shall attach to his return a statement showing:

(1) The contribution year (or years) in which the excess charitable contributions were made,

(2) The excess charitable contributions made in each contribution year, and the amount of such excess charitable contributions consisting of 30-percent capital gain property,

(3) The portion of such excess, or of each such excess, treated as paid in accordance with paragraph (b)(2) or (c)(2) of this section in any taxable year intervening between the contribution year and the taxable year for which the return is made, and the portion of such excess which consists of 30-percent capital gain property.

(4) Whether or not an election under section 170(b)(1)(D)(iii) has been made which affects any of such excess contributions of 30-percent capital gain property, and

(5) Such other information as the return or the instructions relating thereto may require.

(f) ***Effective date.*** This section applies only to contributions paid in taxable years beginning after December 31, 1969. For purposes of applying section 170(d)(1) with respect to contributions paid in a taxable year beginning before January 1, 1970, subsection (b)(1)(D), subsection (e), and paragraphs (1), (2), (3), and (4) of subsection (f) of section 170 shall not apply. See section 201(g)(1)(D) of the Tax Reform Act of 1969 (83 Stat. 564).

[T.D. 7207, 37 FR 20787, Oct. 4, 1972; 37 FR 22982, Oct. 27, 1972, as amended by T.D. 7340, 40 FR 1240, Jan. 7, 1975]

§ 1.170A-11 Limitation on, and carryover of, contributions by corporations.

(a) ***In general.*** The deduction by a corporation in any taxable year for charitable contributions, as defined in section 170(c), is limited to 5 percent of its taxable income for the year, computed without regard to:

(1) The deduction under section 170 for charitable contributions,

(2) The special deductions for corporations allowed under Part VIII (except section 248), Subchapter B, Chapter 1 of the Code,

(3) Any net operating loss carryback to the taxable year under section 172, and

(4) Any capital loss carryback to the taxable year under section 1212(a)(1).

A charitable contribution by a corporation to a trust, chest, fund, or foundation described in section 170(c)(2) is deductible under section 170 only if the contribution is to be used in the United States or its possessions exclusively for religious, charitable, scientific, literary, or educational purposes or for the prevention of cruelty to children or animals. For the purposes of section 170, amounts excluded from the gross income of a corporation under section 114, relating to sports programs conducted for the American National Red Cross, are not to be considered contributions or gifts.

(b) ***Election by corporations on an accrual method.***

(1) A corporation reporting its taxable income on an accrual method may elect to have a charitable contribution treated as paid during the taxable year, if payment is actually made on or before the 15th day of the third month following the close of such year and if, during such year, its board of directors authorizes the charitable contribution. If by reason of such an election a charitable contribution (other than a contribution of a letter, memorandum, or property similar to a letter or memorandum) paid in a taxable year beginning after December 31, 1969, is treated as paid during a taxable year beginning before January 1, 1970, the provisions of § 1.170A-4 shall not be applied to reduce the amount of such contribution. However, see section 170(e) before its amendment by the Tax Reform Act of 1969.

(2) The election must be made at the time the return for the taxable year is filed, by reporting the contribution on the return. There shall be attached to the return when filed a written declaration stating that the resolution authorizing the contribution was adopted by the board of directors during the taxable year. For taxable years beginning before January 1, 2003, the declaration shall be verified by a statement signed by an officer authorized to sign the return that it is made under penalties of perjury, and there shall also be attached to the return when filed a copy of the resolution of the board of directors authorizing the contribution. For taxable years beginning after December 31, 2002, the declaration must also include the date of the resolution, the declaration shall be verified by signing the return, and a copy of the resolution of the board of directors authorizing the contribution is a record that the taxpayer must retain and keep available for inspection in the manner required by § 1.6001-1(e).

(c) ***Charitable contributions carryover of corporations*** —

(1) ***In general.*** Subject to the reduction provided in subparagraph (2) of this paragraph, any charitable contributions made by a corporation in a taxable year (hereinafter in this paragraph referred to as the "contribution year") in excess of the amount deductible in such contribution year under the 5-percent limitation of section 170(b)(2) are deductible in each of the five succeeding taxable years in order of time, but only to the extent of the lesser of the following amounts:

(i) The excess of the maximum amount deductible for such succeeding taxable year under the 5-percent limitation of section 170(b)(2) over the sum of the charitable contributions made in that year plus the aggregate of the excess contributions which were made in taxable years before the contribution year and which are deductible under this paragraph in such succeeding taxable year; or

(ii) In the case of the first taxable year succeeding the contribution year, the amount of the excess charitable contributions, and in the case of the second, third, fourth, and fifth taxable years succeeding the contribution year, the portion of the excess charitable contributions not deductible under this subparagraph for any taxable year intervening between the contribution year and such succeeding taxable year.

This paragraph applies to excess charitable contributions by a corporation, whether or not such contributions are made to, or for the use of, the donee organization and whether or not such organization is a section 170(b)(1)(A) organization, as defined in § 1.170A-9. For purposes of applying this paragraph, a charitable contribution made in a taxable year beginning before January 1, 1970, which is carried over to taxable year beginning after December 31, 1969, under section 170(b)(2) (before its amendment by the Tax Reform Act of 1969) and is deductible in such taxable year beginning after December 31, 1969, shall be treated as deductible under section 170(d)(1) and this paragraph. The application of this subparagraph may be illustrated by the following example:

Example. A corporation which reports its income on the calendar year basis makes a charitable contribution of $20,000 in 1970. Its taxable income (determined without regard to any deduction for charitable contributions) for 1970 is $100,000. Accordingly, the charitable contributions deduction for that year is limited to $5,000 (5 percent of $100,000). The excess charitable contribution not deductible in 1970 ($15,000) is a carryover to 1971. The corporation has taxable income (determined without regard to any deduction for charitable contributions) of $150,000 in 1971 and makes a charitable contribution of $5,000 in that year. For 1971 the corporation may deduct as a charitable contribution the amount of $7,500 (5 percent of $150,000). This amount consists of the $5,000 contribution made in 1971 and of the $2,500 carried over from 1970. The remaining $12,500 carried over from 1970 and not allowable as a deduction for 1971 because of the 5-percent limitation may be carried over to 1972. The corporation has taxable income (determined without regard to any deduction for charitable contributions) of $200,000 in 1972 and makes a charitable contribution of $5,000 in that year. For 1972 the corporation may deduct the amount of $10,000 (5 percent of $200,000). This amount consists of the $5,000 contributed in 1972, and $5,000 of the $12,500 carried over from 1970 to 1972. The remaining $7,500 of the carryover from 1970 is available for purposes of computing the charitable contributions carryover from 1970 to 1973, 1974, and 1975.

(2) ***Effect of net operating loss carryovers on carryover of excess contributions.*** A corporation having a net operating loss carryover from any taxable year must apply the special rule of section 170(d)(2)(B) and this subparagraph before computing under subparagraph (1) of this paragraph the excess charitable contributions carryover from any taxable year. In determining the amount of excess charitable contributions that may be deducted in accordance with subparagraph (1) of this paragraph in taxable years succeeding the contribution year, the excess of the charitable contributions made by a corporation in the contributions year over the amount deductible in such year must be reduced by the amount by which such excess reduces taxable income for purposes of determining the net operating loss carryover under the second sentence of section 172(b)(2)) and increases a net operating loss carryover to a succeeding taxable year. Thus, if the excess of the contributions made in a taxable year over the amount deductible in the taxable year is utilized to

reduce taxable income (under the provisions of section 172(b)(2)) for such year, thereby serving to increase the amount of the net operating loss carryover to a succeeding taxable year or years, no charitable contributions carryover will be allowed. If only a portion of the excess charitable contributions is so used, the charitable contributions carryover will be reduced only to that extent. The application of this subparagraph may be illustrated by the following example:

Example. A corporation, which reports its income on the calendar year basis, makes a charitable contribution of $10,000 during 1971. Its taxable income for 1971 is $80,000 (computed without regard to any net operating loss deduction and computed in accordance with section 170(b)(2) without regard to any deduction for charitable contributions). The corporation has a net operating loss carryover from 1970 of $80,000. In the absence of the net operating loss deduction the corporation would have been allowed a deduction for charitable contributions of $4,000 (5 percent of $80,000). After the application of the net operating loss deduction the corporation is allowed no deduction for charitable contributions, and there is a tentative charitable contribution carryover from 1971 of $10,000. For purposes of determining the net operating loss carryover to 1972 the corporation computes its taxable income for 1971 under section 172(b)(2) by deducting the $4,000 charitable contribution. Thus, after the $80,000 net operating loss carryover is applied against the $76,000 of taxable income for 1971 (computed in accordance with section 172(b)(2)), there remains a $4,000 net operating loss carryover to 1972. Since the application of the net operating loss carryover of $80,000 from 1970 reduces the taxable income for 1971 to zero, no part of the $10,000 of charitable contributions in that year is deductible under section 170(b)(2). However, in determining the amount of the allowable charitable contributions carryover from 1971 to 1972, 1973, 1974, 1975, and 1976, the $10,000 must be reduced by the portion thereof ($4,000) which was used to reduce taxable income for 1971 (as computed for purposes of the second sentence of section 172(b)(2)) and which thereby served to increase the net operating loss carryover from 1970 to 1972 from zero to $4,000.

(3) ***Effect of net operating loss carryback to contribution year.*** The amount of the excess contribution for a contribution year computed as provided in subparagraph (1) of this paragraph shall not be increased because a net operating loss carryback is available as a deduction in the contribution year. In addition, in determining under the provisions of section 172(b)(2) the amount of the net operating loss for any year subsequent to the contribution year which is a carryback or carryover to taxable years succeeding the contribution year, the amount of any charitable contributions shall be limited to the amount of such contributions which did not exceed 5 percent of the donor's taxable income, computed as provided in paragraph (a) of this section and without regard to any of the modifications referred to in section 172(d), for the contribution year. For illustrations see paragraph (d)(2) of § 1.170A-10.

(4) ***Effect of net operating loss carryback to taxable year succeeding the contribution year.*** The amount of the charitable contribution from a preceding taxable year which is deductible (as provided in this paragraph) in a current taxable year (hereinafter referred to in this subparagraph as the "deduction year") shall not be reduced because a net operating loss carryback is available as a deduction in the deduction year. In addition, in determining under the provisions of section 172(b)(2) the amount of the net operating loss for any taxable year subsequent to the deduction year which is a carryback or a carryover to taxable years succeeding the deduction year, the amount of contributions made in the deduction year shall be limited to the amount of such contributions, which were actually made in

such year and those which were deductible in such year under section 170(d)(2), which did not exceed 5 percent of the donor's taxable income, computed as provided in paragraph (a) of this section and without regard to any of the modifications referred to in section 172(d), for the deduction year.

(5) ***Year contribution is made.*** For purposes of this paragraph, contributions made by a corporation in a contribution year include contributions which, in accordance with the provisions of section 170(a)(2) and paragraph (b) of this section, are considered as paid during such contribution year.

(d) ***Effective date.*** This section applies only to contributions paid in taxable years beginning after December 31, 1969. For purposes of applying section 170(d)(2) with respect to contributions paid, or treated under section 170(a)(2) as paid, in a taxable year beginning before January 1, 1970, subsection (e), and paragraphs (1), (2), (3), and (4) of subsection (f) of section 170 shall not apply. See section 201(g)(1)(D) of the Tax Reform Act of 1969 (83 Stat. 564).

[T.D. 7207, 37 FR 20793, Oct. 4, 1972, as amended by T.D. 7807, 47 FR 4512, Feb. 1, 1982; T.D. 9100, 68 FR 70704, Dec. 19, 2003; T.D. 9300, 71 FR 71041, Dec. 8, 2006]

§ 1.170A-12 Valuation of a remainder interest in real property for contributions made after July 31, 1969.

(a) ***In general.***

(1) Section 170(f)(4) provides that, in determining the value of a remainder interest in real property for purposes of section 170, depreciation and depletion of such property shall be taken into account. Depreciation shall be computed by the straight line method and depletion shall be computed by the cost depletion method. Section 170(f)(4) and this section apply only in the case of a contribution, not made in trust, of a remainder interest in real property made after July 31, 1969, for which a deduction is otherwise allowable under section 170.

(2) In the case of the contribution of a remainder interest in real property consisting of a combination of both depreciable and nondepreciable property, or of both depletable and nondepletable property, and allocation of the fair market value of the property at the time of the contribution shall be made between the depreciable and nondepreciable property, or the depletable and nondepletable property, and depreciation or depletion shall be taken into account only with respect to the depreciable or depletable property. The expected value at the end of its “estimated useful life” (as defined in paragraph (d) of this section) of that part of the remainder interest consisting of depreciable property shall be considered to be nondepreciable property for purposes of the required allocation. In the case of the contribution of a remainder interest in stock in a cooperative housing corporation (as defined in section 216(b)(1)), an allocation of the fair market value of the stock at the time of the contribution shall be made to reflect the respective values of the depreciable and nondepreciable property underlying such stock, and depreciation on the depreciable part shall be taken into account for purposes of valuing the remainder interest in such stock.

(3) If the remainder interest that has been contributed follows only one life, the value of the remainder interest shall be computed under the rules contained in paragraph (b) of this section. If the remainder interest that has been contributed follows a term for years, the value of the remainder interest shall be computed under the rules contained in paragraph (c) of this section. If the remainder interest that has been contributed is dependent upon the continuation or the termination of more than one life or upon a term certain concurrent with one or more lives, the provisions of

paragraph (e) of this section shall apply. In every case where it is provided in this section that the rules contained in § 25.2512-5 (or, for certain prior periods, § 25.2512-5A) of this chapter (Gift Tax Regulations) apply, such rules shall apply notwithstanding the general effective date for such rules contained in paragraph (a) of such section. Except as provided in § 1.7520-3(b) of this chapter, for transfers of remainder interests after April 30, 1989, the present value of the remainder interest is determined under § 25.2512-5 of this chapter by use of the interest rate component on the date the interest is transferred unless an election is made under section 7520 and § 1.7520-2 of this chapter to compute the present value of the interest transferred by use of the interest rate component for either of the 2 months preceding the month in which the interest is transferred. In some cases, a reduction in the amount of a charitable contribution of a remainder interest, after the computation of its value under section 170(f)(4) and this section, may be required. See section 170(e) and § 1.170A-4.

(b) ***Valuation of a remainder interest following only one life*** —

(1) ***General rule.*** The value of a remainder interest in real property following only one life is determined under the rules provided in § 20.2031-7 (or for certain prior periods, § 20.2031-7A) of this chapter (Estate Tax Regulations), using the interest rate and life contingencies prescribed for the date of the gift. See, however, § 1.7520-3(b) (relating to exceptions to the use of prescribed tables under certain circumstances). However, if any part of the real property is subject to exhaustion, wear and tear, or obsolescence, the special factor determined under paragraph (b)(2) of this section shall be used in valuing the remainder interest in that part. Further, if any part of the property is subject to depletion of its natural resources, such depletion is taken into account in determining the value of the remainder interest.

(2) ***Computation of depreciation factor.*** If the valuation of the remainder interest in depreciable property is dependent upon the continuation of one life, a special factor must be used. The factor determined under this paragraph (b)(2) is carried to the fifth decimal place. The special factor is to be computed on the basis of the interest rate and life contingency rates from the mortality table prescribed in § 20.2031-7 of this chapter (or for periods before June 1, 2023, §§ 20.2031-7(d)(3) and 20.2031-7A of this chapter) and on the assumption that the property depreciates on a straight-line basis over its estimated useful life. For transfers for which the valuation date is on or after June 1, 2023, special factors for determining the present value of a remainder interest following one life may be computed by taxpayers based on Table 2010CM, found in § 20.2031-7(d)(7)(ii) of this chapter, and using the formula provided in this paragraph (b)(2). Alternatively, taxpayers may use the actuarial factors provided in Table C to determine the special factor for the remainder interest following one life. Table C currently is available, at no charge, electronically via the IRS website at *https://www.irs.gov/retirement-plans/actuarial-tables* (or a corresponding URL as may be updated from time to time). IRS Publication 1459, *Actuarial Valuations Version 4C* (2023), references and explains Table C and provides examples describing the computation. This publication will be available within a reasonable time after June 1, 2023. For transfers for which the valuation date is on or after May 1, 2009, and before June 1, 2023, special factors for determining the present value of a remainder interest following one life and an example describing the computation are contained in the previous version of Table C, which currently is available, at no charge, electronically via the IRS website at *https://www.irs.gov/retirement-plans/actuarial-tables*. IRS Publication 1459, *Actuarial Valuations Version 3C* (2009), references and explains this version of Table C and provides examples describing the computation. See, however, § 1.7520-3(b) (relating to exceptions to the use of prescribed tables under certain circumstances). Otherwise, in the case of the valuation of a remainder interest following one life, the special factor may be obtained through use of the formula in Figure 1 to this

paragraph (b)(2). The prescribed mortality table is Table 2010CM as set forth in § 20.2031-7(d)(7)(ii) of this chapter, or for periods before June 1, 2023, the appropriate table found in § 20.2031-7A of this chapter. Table 2010CM is referenced by IRS Publication 1459, *Actuarial Values Version 4C.* The mortality tables prescribed for periods before June 1, 2023, are referenced by prior versions of IRS Publication 1459.

Figure 1 to paragraph (b)(2)—Formula for Determining Single Life Remainder Interest in Depreciable Property

$$\left(1+\frac{i}{2}\right)\sum_{t=0}^{n-1} v^{t+1}\left({}_{t+1}q_x - {}_{t}q_x\right)\left(1-\frac{1}{2n}-\frac{t}{n}\right)$$

where:

n = the estimated number of years of useful life;

i = the applicable interest rate under section 7520 of the Internal Revenue Code;

v = 1 / (1 + i) ;

$${}_{t}q_x = 1 - \frac{l_{x+t}}{l_x} \quad ;$$

x = the age of the measuring life (determined as age at nearest birthday); and

l_x = the number associated with age x as set forth in the prescribed mortality table, representing the number of persons alive at age x.

(3) ***Sample factors from actuarial Table S.*** The present value of a remainder interest dependent on the termination of one life is determined by using the formula in § 20.2031-7(d)(2)(ii)(B) of this chapter to derive a remainder factor expressed to at least five decimal places. For the convenience of taxpayers, actuarial factors have been computed by the IRS and appear in Table S. The complete Table S can be found on the IRS website at *https://www.irs.gov/retirement-plans/actuarial-tables*. For purposes of the example in paragraph (b)(4) of this section, the following factors from Table S will be used:

TABLE 1 TO PARAGRAPH (b)(3)

Age	Annuity	Life estate	Remainder
FACTORS FROM TABLE S—BASED ON TABLE 2010CM			
INTEREST AT 3.2 PERCENT			

Age	Annuity	Life estate	Remainder
62	14.6131	0.46762	0.53238

(4) ***Example.*** After June 1, 2023, A, who is 62, donates to Y University a remainder interest in a personal residence, consisting of a house and land, subject to a reserved life estate in A. At the time of the gift, the land has a value of $30,000 and the house has a value of $100,000 with an estimated useful life of 28 years, at the end of which period the value of the house is expected to be $10,000. The portion of the property considered to be depreciable is $90,000 (the value of the house ($100,000) less its expected value at the end of 28 years ($10,000)). The portion of the property considered to be nondepreciable is $40,000 (the value of the land at the time of the gift ($30,000) plus the expected value of the house at the end of 28 years ($10,000)). A chooses to use the interest rate prescribed under section 7520 for the month in which the gift was made (3.2 percent). Based on an interest rate of 3.2 percent, the remainder factor for $1.00 prescribed in § 20.2031-7(d) and found in Table S for a person age 62 is 0.53238. The value of the nondepreciable remainder interest is $21,295.20 (0.53238 times $40,000). The factor for the remainder interest in depreciable property is computed under the formula described in paragraph (b)(2) of this section and is 0.19392. (This factor, 0.19392, may instead be determined by using Table C, which can be found on the IRS website at *https://www.irs.gov/retirement-plans/actuarial-tables,* and following the method provided in IRS Publication 1459, *Actuarial Values Version 4C.*) The value of the depreciable remainder interest is $17,452.80 (0.19392 times $90,000). Therefore, the value of the remainder interest is $38,748.00 ($21,295.20 plus $17,452.80).

(c) ***Valuation of a remainder interest following a term for years.*** The value of a remainder interest in real property following a term for years shall be determined under the rules provided in § 25.2512-5 (or, for certain prior periods, § 25.2512-5A) of this chapter (Gift Tax Regulations) using Table B provided in § 20.2031-7(d)(6) of this chapter. However, if any part of the real property is subject to exhaustion, wear and tear, or obsolescence, in valuing the remainder interest in that part the value of such part is adjusted by subtracting from the value of such part the amount determined by multiplying such value by a fraction, the numerator of which is the number of years in the term or, if less, the estimated useful life of the property, and the denominator of which is the estimated useful life of the property. The resultant figure is the value of the property to be used in § 25.2512-5 (or, for certain prior periods, § 25.2512-5A) of this chapter (Gift Tax Regulations). Further, if any part of the property is subject to depletion of its natural resources, such depletion shall be taken into account in determining the value of the remainder interest. The provisions of this paragraph as it relates to depreciation are illustrated by the following example:

Example. In 1972, B donates to Z University a remainder interest in his personal residence, consisting of a house and land, subject to a 20 year term interest provided for his sister. At such time the house has a value of $60,000, and an expected useful life of 45 years, at the end of which time it is expected to have a value of $10,000, and the land has a value of $8,000. The value of the portion of the property considered to be depreciable is $50,000 (the value of the house ($60,000) less its expected value at the end of 45 years ($10,000)), and this is multiplied by the fraction 20/45. The product, $22,222.22, is subtracted from $68,000, the value of the entire property, and the balance, $45,777.78, is multiplied by the factor .311805 (see § 25.2512-5A(c)). The result, $14,273.74, is the value of the remainder interest in the property.

(d) ***Definition of estimated useful life.*** For the purposes of this section, the determination of the estimated useful life of depreciable property shall take account of the expected use of such property during the period of the life estate or term for years. The term "estimated useful life" means the estimated period (beginning with the date of the contribution) over which such property may reasonably be expected to be useful for such expected use. This period shall be determined by reference to the experience based on any prior use of the property for such purposes if such prior experience is adequate. If such prior experience is inadequate or if the property has not been previously used for such purposes, the estimated useful life shall be determined by reference to the general experience of persons normally holding similar property for such expected use, taking into account present conditions and probable future developments. The estimated useful life of such depreciable property is not limited to the period of the life estate or term for years preceding the remainder interest. In determining the expected use and the estimated useful life of the property, consideration is to be given to the provisions of the governing instrument creating the life estate or term for years or applicable local law, if any, relating to use, preservation, and maintenance of the property during the life estate or term for years. In arriving at the estimated useful life of the property, estimates, if available, of engineers or other persons skilled in estimating the useful life of similar property may be taken into account. At the option of the taxpayer, the estimated useful life of property contributed after December 31, 1970, for purposes of this section, shall be an asset depreciation period selected by the taxpayer that is within the permissible asset depreciation range for the relevant asset guideline class established pursuant to § 1.167(a)-11(b) (4)(ii). For purposes of the preceding sentence, such period, range, and class shall be those which are in effect at the time that the contribution of the remainder interest was made. At the option of the taxpayer, in the case of property contributed before January 1, 1971, the estimated useful life, for purposes of this section, shall be the guideline life provided in Revenue Procedure 62-21 for the relevant asset guideline class.

(e) ***Valuation of a remainder interest following more than one life or a term certain concurrent with one or more lives.***

(1)

(i) If the valuation of the remainder interest in the real property is dependent upon the continuation or the termination of more than one life or upon a term certain concurrent with one or more lives, a special factor must be used.

(ii) The special factor is to be computed on the basis of—

(A) Interest at the rate prescribed under § 25.2512-5 (or, for certain prior periods, § 25.2512-5A) of this chapter, compounded annually;

(B) Life contingencies determined from the values that are set forth in the mortality table in § 20.2031-7 (or, for certain prior periods, § 20.2031-7A) of this chapter; and

(C) If depreciation is involved, the assumption that the property depreciates on a straight-line basis over its estimated useful life.

(iii) If any part of the property is subject to depletion of its natural resources, such depletion must be taken into account in determining the value of the remainder interest.

(2) In the case of the valuation of a remainder interest following two lives, the special factor may be obtained through use of the formula in Figure 2 to this paragraph (e)(2). The prescribed mortality table is Table 2010CM as set forth in § 20.2031-7(d)(7)(ii) of this chapter, or for periods before June

1, 2023, the appropriate table found in § 20.2031-7A of this chapter. Table 2010CM is referenced by IRS Publication 1459, *Actuarial Values Version 4C.* The mortality tables prescribed for periods before June 1, 2023, are referenced by prior versions of IRS Publication 1459.

Figure 2 to Paragraph (e)(2)—Formula for Determining Two-Life Remainder Interest in Depreciable Property

$$\left(1+\frac{i}{2}\right)\sum_{t=0}^{n-1} v^{t+1}\left({}_{t+1}q_x \cdot {}_{t+1}q_y - {}_{t}q_x \cdot {}_{t}q_y\right)\left(1-\frac{1}{2n}-\frac{t}{n}\right)$$

where:

n = the estimated number of years of useful life;

i = the applicable interest rate under section 7520 of the Internal Revenue Code;

v = 1 / (1 + i) ;

$${}_{t}q_x = 1 - \frac{l_{x+t}}{l_x} \quad ;$$

x and y are the ages of the measuring lives (determined as age at nearest birthday); and

l_x = the number associated with age x as set forth in the prescribed mortality table, representing the number of persons alive at age x.

(3) Notwithstanding that the taxpayer may be able to compute the special factor in certain cases under paragraph (2), if a special factor is required in the case of an actual contribution, the Commissioner will furnish the factor to the donor upon request. The request must be accompanied by a statement of the sex and date of birth of each person the duration of whose life may affect the value of the remainder interest, copies of the relevant instruments, and, if depreciation is involved, a statement of the estimated useful life of the depreciable property. However, since remainder interests in that part of any property which is depletable cannot be valued on a purely actuarial basis, special factors will not be furnished with respect to such part. Requests should be forwarded to the Commissioner of Internal Revenue, Attention: OP:E:EP:A:1, Washington, DC 20224.

(f) ***Applicability date.*** This section applies to contributions made after July 31, 1969, except that paragraphs (b)(2), (3), and (4) and (e)(2) of this section apply to all contributions made on or after June 1, 2023.

[T.D. 7370, 40 FR 34337, Aug. 15, 1975, as amended by T.D. 7955, 49 FR 19975, May 11, 1984; T.D. 8540, 59 FR 30102, 30104, June 10, 1994; T.D. 8819, 64 FR 23228, Apr. 30, 1999; T.D. 8886, 65 FR 36909, 36943, June 12, 2000; T.D. 9448, 74 FR 21439, 21518, May 7, 2009; 74 FR 27079, June 8, 2009; T.D. 9540, 76 FR 49571, 49612, Aug. 10, 2011; T.D. 9974, 88 FR 37427, June 7, 2023]

§ 1.170A-13 Recordkeeping and return requirements for deductions for charitable contributions.

(a) ***Charitable contributions of money made in taxable years beginning after December 31, 1982 —***

(1) ***In general.*** If a taxpayer makes a charitable contribution of money in a taxable year beginning after December 31, 1982, the taxpayer shall maintain for each contribution one of the following:

(i) A cancelled check.

(ii) A receipt from the donee charitable organization showing the name of the donee, the date of the contribution, and the amount of the contribution. A letter or other communication from the donee charitable organization acknowledging receipt of a contribution and showing the date and amount of the contribution constitutes a receipt for purposes of this paragraph (a).

(iii) In the absence of a canceled check or receipt from the donee charitable organization, other reliable written records showing the name of the donee, the date of the contribution, and the amount of the contribution.

(2) ***Special rules*** —

(i) ***Reliability of records.*** The reliability of the written records described in paragraph (a)(1)(iii) of this section is to be determined on the basis of all of the facts and circumstances of a particular case. In all events, however, the burden shall be on the taxpayer to establish reliability. Factors indicating that the written records are reliable include, but are not limited to:

(A) The contemporaneous nature of the writing evidencing the contribution.

(B) The regularity of the taxpayer's recordkeeping procedures. For example, a contemporaneous diary entry stating the amount and date of the donation and the name of the donee charitable organization made by a taxpayer who regularly makes such diary entries would generally be considered reliable.

(C) In the case of a contribution of a small amount, the existence of any written or other evidence from the donee charitable organization evidencing receipt of a donation that would not otherwise constitute a receipt under paragraph (a)(1)(ii) of this section (including an emblem, button, or other token traditionally associated with a charitable organization and regularly given by the organization to persons making cash donations).

(ii) ***Information stated in income tax return.*** The information required by paragraph (a)(1)(iii) of this section shall be stated in the taxpayer's income tax return if required by the return form or its instructions.

(3) ***Taxpayer option to apply paragraph (d)(1) to pre-1985 contribution.*** See paragraph (d)(1) of this section with regard to contributions of money made on or before December 31, 1984.

(b) ***Charitable contributions of property other than money made in taxable years beginning after December 31, 1982*** —

(1) ***In general.*** Except in the case of certain charitable contributions of property made after December 31, 1984, to which paragraph (c) of this section applies, any taxpayer who makes a charitable contribution of property other than money in a taxable year beginning after December 31, 1982, shall maintain for each contribution a receipt from the donee showing the following information:

(i) The name of the donee.

(ii) The date and location of the contribution.

(iii) A description of the property in detail reasonably sufficient under the circumstances. Although the fair market value of the property is one of the circumstances to be taken into account in determining the amount of detail to be included on the receipt, such value need not be stated on the receipt.

A letter or other written communication from the donee acknowledging receipt of the contribution, showing the date of the contribution, and containing the required description of the property contributed constitutes a receipt for purposes of this paragraph. A receipt is not required if the contribution is made in circumstances where it is impractical to obtain a receipt (*e.g.,* by depositing property at a charity's unattended drop site). In such cases, however, the taxpayer shall maintain reliable written records with respect to each item of donated property that include the information required by paragraph (b)(2)(ii) of this section.

(2) ***Special rules*** —

(i) ***Reliability of records.*** The rules described in paragraph (a)(2)(i) of this section also apply to this paragraph (b) for determining the reliability of the written records described in paragraph (b)(1) of this section

(ii) ***Content of records.*** The written records described in paragraph (b)(1) of this section shall include the following information and such information shall be stated in the taxpayers income tax return if required by the return form or its instructions:

(A) The name and address of the donee organization to which the contribution was made.

(B) The date and location of the contribution.

(C) A description of the property in detail reasonable under the circumstances (including the value of the property), and, in the case of securities, the name of the issuer, the type of security, and whether or not such security is regularly traded on a stock exchange or in an over-the-counter market.

(D) The fair market value of the property at the time the contribution was made, the method utilized in determining the fair market value, and, if the valuation was determined by appraisal, a copy of the signed report of the appraiser.

(E) In the case of property to which section 170(e) applies, the cost or other basis, adjusted as provided by section 1016, the reduction by reason of section 170(e)(1) in the amount of the charitable contribution otherwise taken into account, and the manner in which such reduction was determined. A taxpayer who elects under paragraph (d)(2) of § 1.170A-8 to apply section 170(e)(1) to contributions and carryovers of 30 percent capital gain property shall maintain a written record indicating the years for which the election was made and showing the contributions in the current year and carryovers from preceding years to which it applies. For the definition of the term “30-percent capital gain property,” see paragraph (d)(3) of § 1.170A-8.

(F) If less than the entire interest in the property is contributed during the taxable year, the total amount claimed as a deduction for the taxable year due to the contribution of the property, and the amount claimed as a deduction in any prior year or years for contributions of other interests in such property, the name and address of each organization to which any such contribution was made, the place where any such property

which is tangible property is located or kept, and the name of any person, other than the organization to which the property giving rise to the deduction was contributed, having actual possession of the property.

(G) The terms of any agreement or understanding entered into by or on behalf of the taxpayer which relates to the use, sale, or other disposition of the property contributed, including for example, the terms of any agreement or understanding which:

(*1*) Restricts temporarily or permanently the donee's right to use or dispose of the donated property,

(*2*) Reserves to, or confers upon, anyone (other than the donee organization or an organization participating with the donee organization in cooperative fundraising) any right to the income from the donated property or to the possession of the property, including the right to vote donated securities, to acquire the property by purchase or otherwise, or to designate the person having such income, possession, or right to acquire, or

(*3*) Earmarks donated property for a particular use.

(3) ***Deductions in excess of $500 claimed for a charitable contribution of property other than money*** —

(i) ***In general.*** In addition to the information required under paragraph (b)(2)(ii) of this section, if a taxpayer makes a charitable contribution of property other than money in a taxable year beginning after December 31, 1982, and claims a deduction in excess of $500 in respect of the contribution of such item, the taxpayer shall maintain written records that include the following information with respect to such item of donated property, and shall state such information in his or her income tax return if required by the return form or its instructions:

(A) The manner of acquisition, as for example by purchase, gift bequest, inheritance, or exchange, and the approximate date of acquisition of the property by the taxpayer or, if the property was created, produced, or manufactured by or for the taxpayer, the approximate date the property was substantially completed.

(B) The cost or other basis, adjusted as provided by section 1016, of property, other than publicly traded securities, held by the taxpayer for a period of less than 12 months (6 months for property contributed in taxable years beginning after December 31, 1982, and on or before June 6, 1988, immediately preceding the date on which the contribution was made and, when the information is available, of property, other than publicly traded securities, held for a period of 12 months or more (6 months or more for property contributed in taxable years beginning after December 31, 1982, and on or before June 6, 1988, preceding the date on which the contribution was made.

(ii) ***Information on acquisition date or cost basis not available.*** If the return form or its instructions require the taxpayer to provide information on either the acquisition date of the property or the cost basis as described in paragraph (b)(3)(i) (A) and (B), respectively, of this section, and the taxpayer has reasonable cause for not being able to provide such information, the taxpayer shall attach an explanatory statement to the return. If a taxpayer has reasonable cause for not being able to provide such information, the taxpayer shall not be disallowed a charitable contribution deduction under section 170 for failure to comply with paragraph (b)(3)(i) (A) and (B) of the section.

(4) ***Taxpayer option to apply paragraph (d) (1) and (2) to pre-1985 contributions.*** See paragraph (d) (1) and (2) of this section with regard to contributions of property made on or before December 31, 1984.

(c) ***Deductions in excess of $5,000 for certain charitable contributions of property made after December 31, 1984 —***

(1) ***General Rule —***

(i) ***In general.*** This paragraph applies to any charitable contribution made after December 31, 1984, by an individual, closely held corporation, personal service corporation, partnership, or S corporation of an item of property (other than money and publicly traded securities to which § 1.170A-13(c)(7)(xi)(B) does not apply if the amount claimed or reported as a deduction under section 170 with respect to such item exceeds $5,000. This paragraph also applies to charitable contributions by C corporations (as defined in section 1361(a)(2) of the Code) to the extent described in paragraph (c)(2)(ii) of this section. No deduction under section 170 shall be allowed with respect to a charitable contribution to which this paragraph applies unless the substantiation requirements described in paragraph (c)(2) of this section are met. For purposes of this paragraph (c), the amount claimed or reported as a deduction for an item of property is the aggregate amount claimed or reported as a deduction for a charitable contribution under section 170 for such items of property and all similar items of property (as defined in paragraph (c)(7)(iii) of this section) by the same donor for the same taxable year (whether or not donated to the same donee).

(ii) ***Special rule for property to which section 170(e) (3) or (4) applies.*** For purposes of this paragraph (c), in computing the amount claimed or reported as a deduction for donated property to which section 170(e) (3) or (4) applies (pertaining to certain contributions of inventory and scientific equipment) there shall be taken into account only the amount claimed or reported as a deduction in excess of the amount which would have been taken into account for tax purposes by the donor as costs of goods sold if the donor had sold the contributed property to the donee. For example, assume that a donor makes a contribution from inventory of clothing for the care of the needy to which section 170(e)(3) applies. The cost of the property to the donor was $5,000, and, pursuant to section 170(e)(3)(B), the donor claims a charitable contribution deduction of $8,000 with respect to the property. Therefore, $3,000 ($8,000-$5,000) is the amount taken into account for purposes of determining whether the $5,000 threshold of this paragraph (c)(1) is met.

(2) ***Substantiation requirements —***

(i) ***In general.*** Except as provided in paragraph (c)(2)(ii) of this section, a donor who claims or reports a deduction with respect to a charitable contribution to which this paragraph (c) applies must comply with the following three requirements:

(A) Obtain a qualified appraisal (as defined in paragraph (c) (3) of this section) for such property contributed. If the contributed property is a partial interest, the appraisal shall be of the partial interest.

(B) Attach a fully completed appraisal summary (as defined in paragraph (c) (4) of this section) to the tax return (or, in the case of a donor that is a partnership or S corporation, the information return) on which the deduction for the contribution is first claimed (or reported) by the donor.

(C) Maintain records containing the information required by paragraph (b) (2) (ii) of this section.

(ii) ***Special rules for certain nonpublicly traded stock, certain publicly traded securities, and contributions by certain C corporations.***

(A) In cases described in paragraph (c)(2)(ii)(B) of this section, a qualified appraisal is not required, and only a partially completed appraisal summary form (as described in paragraph (c)(4)(iv)(A) of this section) is required to be attached to the tax or information return specified in paragraph (c)(2)(i)(B) of this section. However, in all cases donors must maintain records containing the information required by paragraph (b)(2)(ii) of this section.

(B) This paragraph (c)(2)(ii) applies in each of the following cases:

(*1*) The contribution of nonpublicly traded stock, if the amount claimed or reported as a deduction for the charitable contribution of such stock is greater than $5,000 but does not exceed $10,000;

(*2*) The contribution of a security to which paragraph (c)(7)(xi)(B) of this section applies; and

(*3*) The contribution of an item of property or of similar items of property described in paragraph (c)(1) of this section made after June 6, 1988, by a C corporation (as defined in section 1361(a)(2) of the Code), other than a closely held corporation or a personal service corporation.

(3) ***Qualified appraisal*** —

(i) ***In general.*** For purposes of this paragraph (c), the term "qualified appraisal" means an appraisal document that—

(A) Relates to an appraisal that is made not earlier than 60 days prior to the date of contribution of the appraised property nor later than the date specified in paragraph (c)(3)(iv)(B) of this section;

(B) Is prepared, signed, and dated by a qualified appraiser (within the meaning of paragraph (c)(5) of this section);

(C) Includes the information required by paragraph (c)(3)(ii) of this section; and

(D) Does not involve an appraisal fee prohibited by paragraph (c)(6) of this section.

(ii) ***Information included in qualified appraisal.*** A qualified appraisal shall include the following information:

(A) A description of the property in sufficient detail for a person who is not generally familiar with the type of property to ascertain that the property that was appraised is the property that was (or will be) contributed;

(B) In the case of tangible property, the physical condition of the property;

(C) The date (or expected date) of contribution to the donee;

(D) The terms of any agreement or understanding entered into (or expected to be entered into) by or on behalf of the donor or donee that relates to the use, sale, or other disposition of the property contributed, including, for example, the terms of any agreement or understanding that—

(*1*) Restricts temporarily or permanently a donee's right to use or dispose of the donated property,

(*2*) Reserves to, or confers upon, anyone (other than a donee organization or an organization participating with a donee organization in cooperative fundraising) any right to the income from the contributed property or to the possession of the property, including the right to vote donated securities, to acquire the property by purchase or otherwise, or to designate the person having such income, possession, or right to acquire, or

(*3*) Earmarks donated property for a particular use;

(E) The name, address, and (if a taxpayer identification number is otherwise required by section 6109 and the regulations thereunder) the identifying number of the qualified appraiser; and, if the qualified appraiser is acting in his or her capacity as a partner in a partnership, an employee of any person (whether an individual, corporation, or partnerships), or an independent contractor engaged by a person other than the donor, the name, address, and taxpayer identification number (if a number is otherwise required by section 6109 and the regulations thereunder) of the partnership or the person who employs or engages the qualified appraiser;

(F) The qualifications of the qualified appraiser who signs the appraisal, including the appraiser's background, experience, education, and membership, if any, in professional appraisal associations;

(G) A statement that the appraisal was prepared for income tax purposes;

(H) The date (or dates) on which the property was appraised;

(I) The appraised fair market value (within the meaning of § 1.170A-1 (c)(2)) of the property on the date (or expected date) of contribution;

(J) The method of valuation used to determine the fair market value, such as the income approach, the market-data approach, and the replacement-cost-less-depreciation approach; and

(K) The specific basis for the valuation, such as specific comparable sales transactions or statistical sampling, including a justification for using sampling and an explanation of the sampling procedure employed.

(iii) ***Effect of signature of the qualified appraiser.*** Any appraiser who falsely or fraudulently overstates the value of the contributed property referred to in a qualified appraisal or appraisal summary (as defined in paragraphs (c) (3) and (4), respectively, of this section) that the appraiser has signed may be subject to a civil penalty under section 6701 for aiding and abetting an understatement of tax liability and, moreover, may have appraisals disregarded pursuant to 31 U.S.C. 330(c).

(iv) ***Special rules*** —

(A) ***Number of qualified appraisals.*** For purposes of paragraph (c)(2)(i)(A) of this section, a separate qualified appraisal is required for each item of property that is not included in a group of similar items of property. See paragraph (c)(7)(iii) of this section for the definition of similar items of property. Only one qualified appraisal is required for a group of similar items of property contributed in the same taxable year of the donor, although a donor may obtain separate qualified appraisals for each item of property. A qualified appraisal prepared with respect to a group of similar items of property shall provide all the information required by paragraph (c)(3)(ii) of this section for each item of similar property, except that the appraiser may select any items whose aggregate value is appraised at $100 or less and provide a group description of such items.

(B) ***Time of receipt of qualified appraisal.*** The qualified appraisal must be received by the donor before the due date (including extensions) of the return on which a deduction is first claimed (or reported in the case of a donor that is a partnership or S corporation) under section 170 with respect to the donated property, or, in the case of a deduction first claimed (or reported) on an amended return, the date on which the return is filed.

(C) ***Retention of qualified appraisal.*** The donor must retain the qualified appraisal in the donor's records for so long as it may be relevant in the administration of any internal revenue law.

(D) ***Appraisal disregarded pursuant to 31 U.S.C. 330(c).*** If an appraisal is disregarded pursuant to 31 U.S.C. 330(c) it shall have no probative effect as to the value of the appraised property. Such appraisal will, however, otherwise constitute a “qualified appraisal” for purposes of this paragraph (c) if the appraisal summary includes the declaration described in paragraph (c)(4)(ii)(L)(2) and the taxpayer had no knowledge that such declaration was false as of the time described in paragraph (c)(4)(i)(B) of this section.

(4) ***Appraisal summary*** —

(i) ***In general.*** For purposes of this paragraph (c), except as provided in paragraph (c)(4)(iv)(A) of this section, the term *appraisal summary* means a summary of a qualified appraisal that—

(A) Is made on the form prescribed by the Internal Revenue Service;

(B) Is signed and dated (as described in paragraph (c)(4)(iii) of this section) by the donee (or presented to the donee for signature in cases described in paragraph (c)(4)(iv)(C)(2) of this section);

(C) Is signed and dated by the qualified appraiser (within the meaning of paragraph (c)(5) of this section) who prepared the qualified appraisal (within the meaning of paragraph (c)(3) of this section); and

(D) Includes the information required by paragraph (c)(4)(ii) of this section.

(ii) ***Information included in an appraisal summary.*** An appraisal summary shall include the following information:

(A) The name and taxpayer identification number of the donor (social security number if the donor is an individual or employer identification number if the donor is a partnership or corporation);

(B) A description of the property in sufficient detail for a person who is not generally familiar with the type of property to ascertain that the property that was appraised is the property that was contributed;

(C) In the case of tangible property, a brief summary of the overall physical condition of the property at the time of the contribution;

(D) The manner of acquisition (*e.g.,* purchase, exchange, gift, or bequest) and the date of acquisition of the property by the donor, or, if the property was created, produced, or manufactured by or for the donor, a statment to that effect and the approximate date the property was substantially completed;

(E) The cost or other basis of the property adjusted as provided by section 1016;

(F) The name, address, and taxpayer identification number of the donee;

(G) The date the donee received the property;

(H) For charitable contributions made after June 6, 1988, a statement explaining whether or not the charitable contribution was made by means of a bargain sale and the amount of any consideration received from the donee for the contribution;

(I) The name, address, and (if a taxpayer identification number is otherwise required by section 6109 and the regulations thereunder) the identifying number of the qualified appraiser who signs the appraisal summary and of other persons as required by paragraph (c)(3)(ii)(E) of this section;

(J) The appraised fair market value of the property on the date of contribution;

(K) The declaration by the appraiser described in paragraph (c)(5)(i) of this section;

(L) A declaration by the appraiser stating that—

(*1*) The fee charged for the appraisal is not of a type prohibited by paragraph (c)(6) of this section; and

(*2*) Appraisals prepared by the appraiser are not being disregarded pursuant to 31 U.S.C. 330(c) on the date the appraisal summary is signed by the appraiser; and

(M) Such other information as may be specified by the form.

(iii) ***Signature of the original donee.*** The person who signs the appraisal summary for the donee shall be an official authorized to sign the tax or information returns of the donee, or a person specifically authorized to sign appraisal summaries by an official authorized to sign the tax or information returns of such done. In the case of a donee that is a governmental unit, the person who signs the appraisal summary for such donee shall be the official authorized by such donee to sign appraisal summaries. The signature of the donee on the appraisal summary does not represent concurrence in the appraised value of the contributed property. Rather, it represents acknowledgment of receipt of the property described in the appraisal summary on the date specified in the appraisal summary and that the donee understands the information reporting requirements imposed by section 6050L and § 1.6050L-1. In general, § 1.6050L-1 requires the donee to file an information return with the Internal Revenue Service in the event the donee

sells, exchanges, consumes, or otherwise disposes of the property (or any portion thereof) described in the appraisal summary within 2 years after the date of the donor's contribution of such property.

(iv) ***Special rules*** —

(A) ***Content of appraisal summary required in certain cases.*** With respect to contributions of nonpublicly traded stock described in paragraph (c)(2)(ii)(B)(*1*) of this section, contributions of securities described in paragraph (c)(7)(xi)(B) of this section, and contributions by C corporations described in paragraph (c)(2)(ii)(B)(*3*) of this section, the term *appraisal summary* means a document that—

(*1*) Complies with the requirements of paragraph (c)(4)(i) (A) and (B) of this section,

(*2*) Includes the information required by paragraph (c)(4)(ii) (A) through (H) of this section,

(*3*) Includes the amount claimed or reported as a charitable contribution deduction, and

(*4*) In the case of securities described in paragraph (c)(7)(xi)(B) of this section, also includes the pertinent average trading price (as described in paragraph (c)(7)(xi)(B)(*2*)(iii) of this section).

(B) ***Number of appraisal summaries.*** A separate appraisal summary for each item of property described in paragraph (c)(1) of this section must be attached to the donor's return. If, during the donor's taxable year, the donor contributes similar items of property described in paragraph (c)(1) of this section to more than one donee, the donor shall attach to the donor's return a separate appraisal summary for each donee. See paragraph (c)(7)(iii) of this section for the definition of similar items of property. If, however, during the donor's taxable year, a donor contributes similar items of property described in paragraph (c)(1) of this section to the same donee, the donor may attach to the donor's return a single appraisal summary with respect to all similar items of property contributed to the same donee. Such an appraisal summary shall provide all the information required by paragraph (c)(4)(ii) of this section for each item of property, except that the appraiser may select any items whose aggregate value is appraised at $100 or less and provide a group description for such items.

(C) ***Manner of acquisition, cost basis and donee's signature.***

(1) If a taxpayer has reasonable cause for being unable to provide the information required by paragraph (c)(4)(ii) (D) and (E) of this section (relating to the manner of acquisition and basis of the contributed property), an appropriate explanation should be attached to the appraisal summary. The taxpayer's deduction will not be disallowed simply because of the inability (for reasonable cause) to provide these items of information.

(*2*) In rare and unusual circumstances in which it is impossible for the taxpayer to obtain the signature of the donee on the appraisal summary as required by paragraph (c)(4)(i)(B) of this section, the taxpayer's deduction will not be disallowed for that reason provided that the taxpayer attaches a statement to the appraisal summary explaining, in detail, why it was not possible to obtain the donee's signature. For example, if the donee ceases to exist as an entity subsequent to the date of the

contribution and prior to the date when the appraisal summary must be signed, and the donor acted reasonably in not obtaining the donee's signature at the time of the contribution, relief under this paragraph (c)(4)(iv)(C)(*2*) would generally be appropriate.

(D) ***Information excluded from certain appraisal summaries.*** The information required by paragraph (c)(4)(i)(C), paragraph (c)(4)(ii) (D), (E), (H) through (M), and paragraph (c)(4)(iv)(A)(*3*), and the average trading price referred to in paragraph (c)(4)(iv)(A)(*4*) of this section do not have to be included on the appraisal summary at the time it is signed by the donee or a copy is provided to the donee pursuant to paragraph (c)(4)(iv)(E) of this section.

(E) ***Statement to be furnished by donors to donees.*** Every donor who presents an appraisal summary to a donee for signature after June 6, 1988, in order to comply with paragraph (c)(4)(i)(B) of this section shall furnish a copy of the appraisal summary to such donee.

(F) ***Appraisal summary required to be provided to partners and S corporation shareholders.*** If the donor is a partnership or S corporation, the donor shall provide a copy of the appraisal summary to every partner or shareholder, respectively, who receives an allocation of a charitable contribution deduction under section 170 with respect to the property described in the appraisal summary.

(G) ***Partners and S corporation shareholders.*** A partner of a partnership or shareholder of an S corporation who receives an allocation of a deduction under section 170 for a charitable contribution of property to which this paragraph (c) applies must attach a copy of the partnership's or S corporation's appraisal summary to the tax return on which the deduction for the contribution is first claimed. If such appraisal summary is not attached, the partner's or shareholder's deduction shall not be allowed except as provided for in paragraph (c)(4)(iv)(H) of this section.

(H) ***Failure to attach appraisal summary.*** In the event that a donor fails to attach to the donor's return an appraisal summary as required by paragraph (c)(2)(i)(B) of this section, the Internal Revenue Service may request that the donor submit the appraisal summary within 90 days of the request. If such a request is made and the donor complies with the request within the 90-day period, the deduction under section 170 shall not be disallowed for failure to attach the appraisal summary, provided that the donor's failure to attach the appraisal summary was a good faith omission and the requirements of paragraph (c) (3) and (4) of this section are met (including the completion of the qualified appraisal prior to the date specified in paragraph (c)(3)(iv)(B) of this section).

(5) ***Qualified appraiser*** —

(i) ***In general.*** The term *qualified appraiser* means an individual (other than a person described in paragraph (c)(5)(iv) of this section) who includes on the appraisal summary (described in paragraph (c)(4) of this section), a declaration that—

(A) The individual either holds himself or herself out to the public as an appraiser or performs appraisals on a regular basis;

(B) Because of the appraiser's qualifications as described in the appraisal (pursuant to paragraph (c)(3)(ii)(F) of this section), the appraiser is qualified to make appraisals of the type of property being valued;

(C) The appraiser is not one of the persons described in paragraph (c)(5)(iv) of this section; and

(D) The appraiser understands that an intentionally false or fraudulent overstatement of the value of the property described in the qualified appraisal or appraisal summary may subject the appraiser to a civil penalty under section 6701 for aiding and abetting an understatement of tax liability, and, moreover, the appraiser may have appraisals disregarded pursuant to 31 U.S.C. 330(c) (see paragraph (c)(3)(iii) of this section).

(ii) ***Exception.*** An individual is not a qualified appraiser with respect to a particular donation, even if the declaration specified in paragraph (c)(5)(i) of this section is provided in the appraisal summary, if the donor had knowledge of facts that would cause a reasonable person to expect the appraiser falsely to overstate the value of the donated property (*e.g.,* the donor and the appraiser make an agreement concerning the amount at which the property will be valued and the donor knows that such amount exceeds the fair market value of the property).

(iii) ***Numbers of appraisers.*** More than one appraiser may appraise the donated property. If more than one appraiser appraises the property, the donor does not have to use each appraiser's appraisal for purposes of substantiating the charitable contribution deduction pursuant to this paragraph (c). If the donor uses the appraisal of more than one appraiser, or if two or more appraisers contribute to a single appraisal, each appraiser shall comply with the requirements of this paragraph (c), including signing the qualified appraisal and appraisal summary as required by paragraphs (c)(3)(i)(B) and (c)(4)(i)(C) of this section, respectively.

(iv) ***Qualified appraiser exclusions.*** The following persons cannot be qualified appraisers with respect to particular property:

(A) The donor or the taxpayer who claims or reports a deductions under section 170 for the contribution of the property that is being appraised.

(B) A party to the transaction in which the donor acquired the property being appraised (*i.e.,* the person who sold, exchanged, or gave the property to the donor, or any person who acted as an agent for the transferor or for the donor with respect to such sale, exchange, or gift), unless the property is donated within 2 months of the date of acquisition and its appraised value does not exceed its acquisition price.

(C) The donee of the property.

(D) Any person employed by any of the foregoing persons (*e.g.,* if the donor acquired a painting from an art dealer, neither the art dealer nor persons employed by the dealer can be qualified appraisers with respect to that painting).

(E) Any person related to any of the foregoing persons under section 267(b), or, with respect to appraisals made after June 6, 1988, married to a person who is in a relationship described in section 267(b) with any of the foregoing persons.

(F) An appraiser who is regularly used by any person described in paragraph (c)(5)(iv) (A), (B), or (C) of this section and who does not perform a majority of his or her appraisals made during his or her taxable year for other persons.

(6) *Appraisal fees* —

(i) ***In general.*** Except as otherwise provided in paragraph (c)(6)(ii) of this section, no part of the fee arrangement for a qualified appraisal can be based, in effect, on a percentage (or set of percentages) of the appraised value of the property. If a fee arrangement for an appraisal is based in whole or in part on the amount of the appraised value of the property, if any, that is allowed as a deduction under section 170, after Internal Revenue Service examination or otherwise, it shall be treated as a fee based on a percentage of the appraised value of the property. For example, an appraiser's fee that is subject to reduction by the same percentage as the appraised value may be reduced by the Internal Revenue Service would be treated as a fee that violates this paragraph (c)(6).

(ii) ***Exception.*** Paragraph (c)(6)(i) of this section does not apply to a fee paid to a generally recognized association that regulates appraisers provided all of the following requirements are met:

(A) The association is not organized for profit and no part of the net earnings of the association inures to the benefit of any private shareholder or individual (these terms have the same meaning as in section 501(c)),

(B) The appraiser does not receive any compensation from the association or any other persons for making the appraisal, and

(C) The fee arrangement is not based in whole or in part on the amount of the appraised value of the donated property, if any, that is allowed as a deduction under section 170 after Internal Revenue Service examination or otherwise.

(7) ***Meaning of terms.*** For purposes of this paragraph (c)—

(i) ***Closely held corporation.*** The term *closely held corporation* means any corporation (other than an S corporation) with respect to which the stock ownership requirement of paragraph (2) of section 542(a) of the Code is met.

(ii) ***Personal service corporation.*** The term *personal service corporation* means any corporation (other than an S corporation) which is a service organization (within the meaning of section 414(m)(3) of the Code).

(iii) ***Similar items of property.*** The phrase *similar items of property* means property of the same generic category or type, such as stamp collections (including philatelic supplies and books on stamp collecting), coin collections (including numismatic supplies and books on coin collecting), lithographs, paintings, photographs, books, nonpublicly traded stock, nonpublicly traded securities other than nonpublicly trade stock, land, buildings, clothing, jewelry, funiture, electronic equipment, household appliances, toys, everyday kitchenware, china, crystal, or silver. For example, if a donor claims on her return for the year deductions of $2,000 for books given by her to College A, $2,500 for books given by her to College B, and $900 for books given by her to College C, the $5,000 threshold of paragraph (c)(1) of this section is exceeded. Therefore, the donor must obtain a qualified appraisal for the books and attach to her return three appraisal summaries for the books donated to A, B, and C. For rules regarding the number of qualified appraisals and appraisal summaries required when similar items of property are contributed, see paragraphs (c)(3)(iv)(A) and (c)(4)(iv)(B), respectively, of this section.

(iv) ***Donor.*** The term *donor* means a person or entity (other than an organization described in section 170(c) to which the donated property was previously contributed) that makes a charitable contribution of property.

(v) ***Donee.*** The term *donee* means—

(A) Except as provided in paragraph (c)(7)(v) (B) and (C) of this section, an organization described in section 170(c) to which property is contributed,

(B) Except as provided in paragraph (c)(7)(v)(C) of this section, in the case of a charitable contribution of property placed in trust for the benefit of an organization described in section 170(c), the trust, or

(C) In the case of a charitable contribution of property placed in trust for the benefit of an organization described in section 170(c) made on or before June 6, 1988, the beneficiary that is an organization described in section 170(c), or if the trust has assumed the duties of a donee by signing the appraisal summary pursuant to paragraph (c)(4)(i)(B) of this section, the trust.

In general, the term, refers only to the original donee. However, with respect to paragraph (c)(3)(ii)(D), the last sentence of paragraph (c)(4)(iii), and paragraph (c)(5)(iv)(C) of this section, the term *donee* means the original donee and all successor donees in cases where the original donee transfers the contributed property to a successor donee after July 5, 1988.

(vi) ***Original donee.*** The term *original donee* means the donee to or for which property is initially donated by a donor.

(vii) ***Successor donee.*** The term *successor donee* means any donee of property other than its original donee (*i.e.,* a transferee of property for less than fair market value from an original donee or another successor donee).

(viii) ***Fair market value.*** For the meaning of the term *fair market value,* see section 1.170A-1(c)(2).

(ix) ***Nonpublicly traded securities.*** The term *nonpublicly traded securities* means securities (within the meaning of section 165(g)(2) of the Code) which are not publicly traded securities as defined in paragraph (c)(7)(xi) of this section.

(x) ***Nonpublicly traded stock.*** The term *nonpublicly traded stock* means any stock of a corporation (evidence by a stock certificate) which is not a publicly traded security. The term stock does not include a debenture or any other evidence of indebtedness.

(xi) ***Publicly traded securities*** —

(A) ***In general.*** Except as provided in paragraph (c)(7)(xi)(C) of this section, the term *publicly traded securities* means securities (within the meaning of section 165(g)(2) of the Code) for which (as of the date of the contribution) market quotations are readily available on an established securities market. For purposes of this section, market quotations are readily available on an established securities market with respect to a security if:

(*1*) The security is listed on the New York Stock Exchange, the American Stock Exchange, or any city or regional exchange in which quotations are published on a daily basis, including foreign securities listed on a recognized foreign, national, or regional exchange in which quotations are published on a daily basis;

(*2*) The security is regularly traded in the national or regional over-the-counter market, for which published quotations are available; or

(*3*) The security is a share of an open-end investment company (commonly known as a mutual fund) registered under the Investment Company Act of 1940, as amended (15 U.S.C. 80a-1 to 80b-2), for which quotations are published on a daily basis in a newspaper of general circulation throughout the United States.

(If the market value of an issue of a security is reflected only on an interdealer quotation system, the issue shall not be considered to be publicly traded unless the special rule described in paragraph (c)(7)(xi)(B) of this section is satisfied.)

(B) ***Special rule*** —

(*1*) ***In General.*** An issue of a security that does not satisfy the requirements of paragraph (c)(7)(xi)(A) (*1*), (*2*), or (*3*) of this section shall nonetheless be considered to have market quotations readily available on an established securities market for purposes of paragraph (c)(7)(xi)(A) of this section if all of the following five requirements are met:

(*i*) The issue is regularly traded during the computational period (as defined in paragraph (c)(7)(xi)(B)(*2*)(*iv*) of this section) in a market that is reflected by the existence of an interdealer quotation system for the issue,

(*ii*) The issuer or an agent of the issuer computes the average trading price (as defined in paragraph (c)(7)(xi)(B)(*2*)(*iii*) of this section) for the issue for the computational period,

(*iii*) The average trading price and total volume of the issue during the computational period are published in a newspaper of general circulation throughout the United States not later than the last day of the month following the end of the calendar quarter in which the computational period ends,

(*iv*) The issuer or its agent keeps books and records that list for each transaction during the computational period involving each issue covered by this procedure the date of the settlement of the transaction, the name and address of the broker or dealer making the market in which the transaction occurred, and the trading price and volume, and

(*v*) The issuer or its agent permits the Internal Revenue Service to review the books and records described in paragraph (c)(7)(xi)(B)(*1*)(*iv*) of this section with respect to transactions during the computational period upon giving reasonable notice to the issuer or agent.

(*2*) ***Definitions.*** For purposes of this paragraph (c)(7)(xi)(B)—

(*i*) ***Issue of a security.*** The term *issue of a security* means a class of debt securities with the same obligor and identical terms except as to their relative denominations (amounts) or a class of stock having identical rights.

(*ii*) ***Interdealer quotation system.*** The term *interdealer quotation system* means any system of general circulation to brokers and dealers that regularly disseminates quotations of obligations by two or more identified brokers or dealers, who are not related to either the issuer of the security or to the issuer's agent, who compute the average trading price of the security. A quotation sheet prepared

and distributed by a broker or dealer in the regular course of its business and containing only quotations of such broker or dealer is not an interdealer quotation system.

(*iii*) ***Average trading price.*** The term *average trading price* means the mean price of all transactions (weighted by volume), other than original issue or redemption transactions, conducted through a United States office of a broker or dealer who maintains a market in the issue of the security during the computational period. For this purpose, bid and asked quotations are not taken into account.

(*iv*) ***Computational period.*** For calendar quarters beginning on or after June 6, 1988, the term *computational period* means weekly during October through December (beginning with the first Monday in October and ending with the first Sunday following the last Monday in December) and monthly during January through September (beginning January 1). For calendar quarters beginning before June 6, 1988, the term *computational period* means weekly during October through December and monthly during January through September.

(C) ***Exception.*** Securities described in paragraph (c)(7)(xi) (A) or (B) of this section shall not be considered publicly traded securities if—

(*1*) The securities are subject to any restrictions that materially affect the value of the securities to the donor or prevent the securities from being freely traded, or

(*2*) If the amount claimed or reported as a deduction with respect to the contribution of the securities is different than the amount listed in the market quotations that are readily available on an established securities market pursuant to paragraph (c)(7)(xi) (A) or (B) of this section.

(D) ***Market quotations and fair market value.*** The fair market value of a publicly traded security, as defined in this paragraph (c)(7)(xi), is not necessarily equal to its market quotation, its average trading price (as defined in paragraph (c)(7)(xi)(B)(2)(*iii*) of this section), or its face value, if any. See section 1.170A-1(c)(2) for the definition of *fair market value.*

(d) ***Charitable contributions; information required in support of deductions for taxable years beginning before January 1, 1983*** —

(1) ***In general.*** This paragraph (d)(1) shall apply to deductions for charitable contributions made in taxable years beginning before January 1, 1983. At the option of the taxpayer the requirements of this paragraph (d)(1) shall also apply to all charitable contributions made on or before December 31, 1984 (in lieu of the requirements of paragraphs (a) and (b) of this section). In connection with claims for deductions for charitable contributions, taxpayers shall state in their income tax returns the name of each organization to which a contribution was made and the amount and date of the actual payment of each contribution. If a contribution is made in property other than money, the taxpayer shall state the kind of property contributed, for example, used clothing, paintings, or securities, the method utilized in determining the fair market value of the property at the time the contribution was made, and whether or not the amount of the contribution was reduced under section 170(e). If a taxpayer makes more than one cash contribution to an organization during the taxable year, then in lieu of listing each cash contribution and the date of payment the taxpayer may state the total cash payments made to such organization during the taxable year. A taxpayer who elects under paragraph (d)(2) of § 1.170A-8 to apply section 170(e)(1) to his contributions and carryovers of 30-percent

capital gain property must file a statement with his return indicating that he has made the election and showing the contributions in the current year and carryovers from preceding years to which it applies. For the definition of the term *30-percent capital gain property,* see paragraph (d)(3) of § 1.170A-8.

(2) ***Contribution by individual of property other than money.*** This paragraph (d)(2) shall apply to deductions for charitable contributions made in taxable years beginning before January 1, 1983. At the option of the taxpayer, the requirements of this paragraph (d)(2) shall also apply to contributions of property made on or before December 31, 1984 (in lieu of the requirements of paragraph (b) of this section). If an individual taxpayer makes a charitable contribution of an item of property other than money and claims a deduction in excess of $200 in respect of his contribution of such item, he shall attach to his income tax return the following information with respect to such item:

(i) The name and address of the organization to which the contribution was made.

(ii) The date of the actual contribution.

(iii) A description of the property in sufficient detail to identify the particular property contributed, including in the case of tangible property the physical condition of the property at the time of contribution, and, in the case of securities, the name of the issuer, the type of security, and whether or not such security is regularly traded on a stock exchange or in an over-the-counter market.

(iv) The manner of acquisition, as, for example, by purchase, gift, bequest, inheritance, or exchange, and the approximate date of acquisition of the property by the taxpayer or, if the property was created, produced, or manufactured by or for the taxpayer, the approximate date the property was substantially completed.

(v) The fair market value of the property at the time the contribution was made, the method utilized in determining the fair market value, and, if the valuation was determined by appraisal, a copy of the signed report of the appraiser.

(vi) The cost or other basis, adjusted as provided by section 1016, of property, other than securities, held by the taxpayer for a period of less than 5 years immediately preceding the date on which the contribution was made and, when the information is available, of property, other than securities, held for a period of 5 years or more preceding the date on which the contribution was made.

(vii) In the case of property to which section 170(e) applies, the cost or other basis, adjusted as provided by section 1016, the reduction by reason of section 170(e)(1) in the amount of the charitable contribution otherwise taken into account, and the manner in which such reduction was determined.

(viii) The terms of any agreement or understanding entered into by or on behalf of the taxpayer which relates to the use, sale, or disposition of the property contributed, as, for example, the terms of any agreement or understanding which:

(A) Restricts temporarily or permanently the donee's right to dispose of the donated property,

(B) Reserves to, or confers upon, anyone other than the donee organization or other than an organization participating with such organization in cooperative fundraising, any right to the income from such property, to the possession of the property, including the right to vote securities, to acquire such property by purchase or otherwise, or to designate the person to have such income, possession, or right to acquire, or

(C) Earmarks contributed property for a particular charitable use, such as the use of donated furniture in the reading room of the donee organization's library.

(ix) The total amount claimed as a deduction for the taxable year due to the contribution of the property and, if less than the entire interest in the property is contributed during the taxable year, the amount claimed as a deduction in any prior year or years for contributions of other interests in such property, the name and address of each organization to which any such contribution was made, the place where any such property which is tangible property is located or kept, and the name of any person, other than the organization to which the property giving rise to the deduction was contributed, having actual possession of the property.

(3) ***Statement from donee organization.*** Any deduction for a charitable contribution must be substantiated, when required by the district director, by a statement from the organization to which the contribution was made indicating whether the organization is a domestic organization, the name and address of the contributor, the amount of the contribution, the date of actual receipt of the contribution, and such other information as the district director may deem necessary. If the contribution includes an item of property, other than money or securities which are regularly traded on a stock exchange or in an over-the-counter market, which the donee deems to have a fair market value in excess of $500 ($200 in the case of a charitable contribution made in a taxable year beginning before January 1, 1983) at the time of receipt, such statement shall also indicate for each such item its location if it is retained by the organization, the amount received by the organization on any sale of the property and the date of sale or, in case of any other disposition of the property, the method of disposition. In the case of any contribution of tangible personal property, the statement shall indicate the use of the property by the organization and whether or not it is used for a purpose or function constituting the basis for the donee organization's exemption from income tax under section 501 or, in the case of a governmental unit, whether or not it is used for exclusively public purposes.

(e) [Reserved]

(f) ***Substantiation of charitable contributions of $250 or more*** —

(1) ***In general.*** No deduction is allowed under section 170(a) for all or part of any contribution of $250 or more unless the taxpayer substantiates the contribution with a contemporaneous written acknowledgment from the donee organization. A taxpayer who makes more than one contribution of $250 or more to a donee organization in a taxable year may substantiate the contributions with one or more contemporaneous written acknowledgments. Section 170(f)(8) does not apply to a payment of $250 or more if the amount contributed (as determined under § 1.170A-1(h)) is less than $250. Separate contributions of less than $250 are not subject to the requirements of section 170(f)(8), regardless of whether the sum of the contributions made by a taxpayer to a donee organization during a taxable year equals $250 or more.

(2) ***Written acknowledgment.*** Except as otherwise provided in paragraphs (f)(8) through (f)(11) and (f)(13) of this section, a written acknowledgment from a donee organization must provide the following information—

(i) The amount of any cash the taxpayer paid and a description (but not necessarily the value) of any property other than cash the taxpayer transferred to the donee organization;

(ii) A statement of whether or not the donee organization provides any goods or services in consideration, in whole or in part, for any of the cash or other property transferred to the donee organization;

(iii) If the donee organization provides any goods or services other than intangible religious benefits (as described in section 170(f)(8)), a description and good faith estimate of the value of those goods or services; and

(iv) If the donee organization provides any intangible religious benefits, a statement to that effect.

(3) ***Contemporaneous.*** A written acknowledgment is contemporaneous if it is obtained by the taxpayer on or before the earlier of—

(i) The date the taxpayer files the original return for the taxable year in which the contribution was made; or

(ii) The due date (including extensions) for filing the taxpayer's original return for that year.

(4) ***Donee organization.*** For purposes of this paragraph (f), a donee organization is an organization described in section 170(c).

(5) ***Goods or services.*** Goods or services means cash, property, services, benefits, and privileges.

(6) ***In consideration for.*** A donee organization provides goods or services in consideration for a taxpayer's payment if, at the time the taxpayer makes the payment to the donee organization, the taxpayer receives or expects to receive goods or services in exchange for that payment. Goods or services a donee organization provides in consideration for a payment by a taxpayer include goods or services provided in a year other than the year in which the taxpayer makes the payment to the donee organization.

(7) ***Good faith estimate.*** For purposes of this section, good faith estimate means a donee organization's estimate of the fair market value of any goods or services, without regard to the manner in which the organization in fact made that estimate. See § 1.170A-1(h)(6) for rules regarding when a taxpayer may treat a donee organization's estimate of the value of goods or services as the fair market value.

(8) ***Certain goods or services disregarded*** —

(i) ***In general.*** For purposes of section 170(f)(8), the following goods or services are disregarded—

(A) Goods or services that have insubstantial value under the guidelines provided in Revenue Procedures 90-12, 1990-1 C.B. 471, 92-49, 1992-1 C.B. 987, and any successor documents. (See § 601.601(d)(2)(ii) of the Statement of Procedural Rules, 26 CFR part 601.); and

(B) Annual membership benefits offered to a taxpayer in exchange for a payment of $75 or less per year that consist of—

(*1*) Any rights or privileges, other than those described in section 170(l), that the taxpayer can exercise frequently during the membership period. Examples of such rights and privileges may include, but are not limited to, free or discounted admission to the organization's facilities or events, free or discounted parking, preferred access to goods or services, and discounts on the purchase of goods or services; and

(2) Admission to events during the membership period that are open only to members of a donee organization and for which the donee organization reasonably projects that the cost per person (excluding any allocable overhead) attending each such event is within the limits established for "low cost articles" under section 513(h)(2). The projected cost to the donee organization is determined at the time the organization first offers its membership package for the year (using section 3.07 of Revenue Procedure 90-12, or any successor documents, to determine the cost of any items or services that are donated).

(ii) ***Examples.*** The following examples illustrate the rules of this paragraph (f)(8).

Example 1. Membership benefits disregarded. Performing Arts Center *E* is an organization described in section 170(c). In return for a payment of $75, *E* offers a package of basic membership benefits that includes the right to purchase tickets to performances one week before they go on sale to the general public, free parking in *E*'s garage during evening and weekend performances, and a 10% discount on merchandise sold in *E*'s gift shop. In return for a payment of $150, *E* offers a package of preferred membership benefits that includes all of the benefits in the $75 package as well as a poster that is sold in *E*'s gift shop for $20. The basic membership and the preferred membership are each valid for twelve months, and there are approximately 50 performances of various productions at *E* during a twelve-month period. *E*'s gift shop is open for several hours each week and at performance times. *F,* a patron of the arts, is solicited by *E* to make a contribution. *E* offers *F* the preferred membership benefits in return for a payment of $150 or more. *F* makes a payment of $300 to *E*. *F* can satisfy the substantiation requirement of section 170(f)(8) by obtaining a contemporaneous written acknowledgment from *E* that includes a description of the poster and a good faith estimate of its fair market value ($20) and disregards the remaining membership benefits.

Example 2. Contemporaneous written acknowledgment need not mention rights or privileges that can be disregarded. The facts are the same as in Example 1, except that *F* made a payment of $300 and received only a basic membership. *F* can satisfy the section 170(f)(8) substantiation requirement with a contemporaneous written acknowledgment stating that no goods or services were provided.

Example 3. Rights or privileges that cannot be exercised frequently. Community Theater Group *G* is an organization described in section 170(c). Every summer, *G* performs four different plays. Each play is performed two times. In return for a membership fee of $60, *G* offers its members free admission to any of its performances. Non-members may purchase tickets on a performance by performance basis for $15 a ticket. *H,* an individual who is a sponsor of the theater, is solicited by *G* to make a contribution. *G* tells *H* that the membership benefit will be provided in return for any payment of $60 or more. *H* chooses to make a payment of $350 to *G* and receives in return the membership benefit. *G*'s membership benefit of free admission is not described in paragraph (f)(8)(i)(B) of this section because it is not a privilege that can be exercised frequently (due to the limited number of performances offered by *G*). Therefore, to meet the requirements of section 170(f)(8), a contemporaneous written acknowledgment of *H*'s $350 payment must include a description of the free admission benefit and a good faith estimate of its value.

Example 4. Multiple memberships. In December of each year, *K,* an individual, gives each of her six grandchildren a junior membership in Dinosaur Museum, an organization described in section 170(c). Each junior membership costs $50, and *K* makes a single payment of $300 for all six memberships. A junior member is entitled to free admission to the museum and to weekly films, slide shows, and lectures about dinosaurs. In addition, each junior member receives a bi-monthly, non-commercial quality newsletter with information about dinosaurs and upcoming events. *K*'s contemporaneous written acknowledgment from Dinosaur Museum may state that no goods or services were provided in exchange for *K*'s payment.

(9) ***Goods or services provided to employees or partners of donors*** —

(i) ***Certain goods or services disregarded.*** For purposes of section 170(f)(8), goods or services provided by a donee organization to employees of a donor, or to partners of a partnership that is a donor, in return for a payment to the organization may be disregarded to the extent that the goods or services provided to each employee or partner are the same as those described in paragraph (f)(8)(i) of this section.

(ii) ***No good faith estimate required for other goods or services.*** If a taxpayer makes a contribution of $250 or more to a donee organization and, in return, the donee organization offers the taxpayer's employees or partners goods or services other than those described in paragraph (f)(9)(i) of this section, the contemporaneous written acknowledgment of the taxpayer's contribution is not required to include a good faith estimate of the value of such goods or services but must include a description of those goods or services.

(iii) ***Example.*** The following example illustrates the rules of this paragraph (f)(9).

Example. Museum *J* is an organization described in section 170(c). For a payment of $40, *J* offers a package of basic membership benefits that includes free admission and a 10% discount on merchandise sold in *J*'s gift shop. *J*'s other membership categories are for supporters who contribute $100 or more. Corporation *K* makes a payment of $50,000 to *J* and, in return, *J* offers *K*'s employees free admission for one year, a tee-shirt with *J*'s logo that costs *J* $4.50, and a gift shop discount of 25% for one year. The free admission for *K*'s employees is the same as the benefit made available to holders of the $40 membership and is otherwise described in paragraph (f)(8)(i)(B) of this section. The tee-shirt given to each of *K*'s employees is described in paragraph (f)(8)(i)(A) of this section. Therefore, the contemporaneous written acknowledgment of *K*'s payment is not required to include a description or good faith estimate of the value of the free admission or the tee-shirts. However, because the gift shop discount offered to *K*'s employees is different than that offered to those who purchase the $40 membership, the discount is not described in paragraph (f)(8)(i) of this section. Therefore, the contemporaneous written acknowledgment of *K*'s payment is required to include a description of the 25% discount offered to *K*'s employees.

(10) ***Substantiation of out-of-pocket expenses.*** A taxpayer who incurs unreimbursed expenditures incident to the rendition of services, within the meaning of § 1.170A-1(g), is treated as having obtained a contemporaneous written acknowledgment of those expenditures if the taxpayer—

(i) Has adequate records under paragraph (a) of this section to substantiate the amount of the expenditures; and

(ii) Obtains by the date prescribed in paragraph (f)(3) of this section a statement prepared by the donee organization containing—

(A) A description of the services provided by the taxpayer;

(B) A statement of whether or not the donee organization provides any goods or services in consideration, in whole or in part, for the unreimbursed expenditures; and

(C) The information required by paragraphs (f)(2) (iii) and (iv) of this section.

(11) ***Contributions made by payroll deduction*** —

(i) ***Form of substantiation.*** A contribution made by means of withholding from a taxpayer's wages and payment by the taxpayer's employer to a donee organization may be substantiated, for purposes of section 170(f)(8), by both—

(A) A pay stub, Form W-2, or other document furnished by the employer that sets forth the amount withheld by the employer for the purpose of payment to a donee organization; and

(B) A pledge card or other document prepared by or at the direction of the donee organization that includes a statement to the effect that the organization does not provide goods or services in whole or partial consideration for any contributions made to the organization by payroll deduction.

(ii) ***Application of $250 threshold.*** For the purpose of applying the $250 threshold provided in section 170(f)(8)(A) to contributions made by the means described in paragraph (f)(11)(i) of this section, the amount withheld from each payment of wages to a taxpayer is treated as a separate contribution.

(12) ***Distributing organizations as donees.*** An organization described in section 170(c), or an organization described in 5 CFR 950.105 (a Principal Combined Fund Organization for purposes of the Combined Federal Campaign) and acting in that capacity, that receives a payment made as a contribution is treated as a donee organization solely for purposes of section 170(f)(8), even if the organization (pursuant to the donor's instructions or otherwise) distributes the amount received to one or more organizations described in section 170(c). This paragraph (f)(12) does not apply, however, to a case in which the distributee organization provides goods or services as part of a transaction structured with a view to avoid taking the goods or services into account in determining the amount of the deduction to which the donor is entitled under section 170.

(13) ***Transfers to certain trusts.*** Section 170(f)(8) does not apply to a transfer of property to a trust described in section 170(f)(2)(B), a charitable remainder annuity trust (as defined in section 664(d)(1)), or a charitable remainder unitrust (as defined in section 664(d)(2) or (d)(3) or § 1.664(3)(a)(1)(i)(*b*)). Section 170(f)(8) does apply, however, to a transfer to a pooled income fund (as defined in section 642(c)(5)); for such a transfer, the contemporaneous written acknowledgment must state that the contribution was transferred to the donee organization's pooled income fund and indicate whether any goods or services (in addition to an income interest in the fund) were provided in exchange for the transfer. The contemporaneous written acknowledgment is not required to include a good faith estimate of the income interest.

(14) ***Substantiation of payments to a college or university for the right to purchase tickets to athletic events.*** For purposes of paragraph (f)(2)(iii) of this section, the right to purchase tickets for seating at an athletic event in exchange for a payment described in section 170(l) is treated as having a value equal to twenty percent of such payment. For example, when a taxpayer makes a payment of

$312.50 for the right to purchase tickets for seating at an athletic event, the right to purchase tickets is treated as having a value of $62.50. The remaining $250 is treated as a charitable contribution, which the taxpayer must substantiate in accordance with the requirements of this section.

(15) ***Substantiation of charitable contributions made by a partnership or an S corporation.*** If a partnership or an S corporation makes a charitable contribution of $250 or more, the partnership or S corporation will be treated as the taxpayer for purposes of section 170(f)(8). Therefore, the partnership or S corporation must substantiate the contribution with a contemporaneous written acknowledgment from the donee organization before reporting the contribution on its income tax return for the year in which the contribution was made and must maintain the contemporaneous written acknowledgment in its records. A partner of a partnership or a shareholder of an S corporation is not required to obtain any additional substantiation for his or her share of the partnership's or S corporation's charitable contribution.

(16) ***Purchase of an annuity.*** If a taxpayer purchases an annuity from a charitable organization and claims a charitable contribution deduction of $250 or more for the excess of the amount paid over the value of the annuity, the contemporaneous written acknowledgment must state whether any goods or services in addition to the annuity were provided to the taxpayer. The contemporaneous written acknowledgment is not required to include a good faith estimate of the value of the annuity. See § 1.170A-1(d)(2) for guidance in determining the value of the annuity.

(17) ***Substantiation of matched payments*** —

(i) ***In general.*** For purposes of section 170, if a taxpayer's payment to a donee organization is matched, in whole or in part, by another payor, and the taxpayer receives goods or services in consideration for its payment and some or all of the matching payment, those goods or services will be treated as provided in consideration for the taxpayer's payment and not in consideration for the matching payment.

(ii) ***Example.*** The following example illustrates the rules of this paragraph (f)(17).

Example. Taxpayer makes a $400 payment to Charity *L*, a donee organization. Pursuant to a matching payment plan, Taxpayer's employer matches Taxpayer's $400 payment with an additional payment of $400. In consideration for the combined payments of $800, *L* gives Taxpayer an item that it estimates has a fair market value of $100. *L* does not give the employer any goods or services in consideration for its contribution. The contemporaneous written acknowledgment provided to the employer must include a statement that no goods or services were provided in consideration for the employer's $400 payment. The contemporaneous written acknowledgment provided to Taxpayer must include a statement of the amount of Taxpayer's payment, a description of the item received by Taxpayer, and a statement that *L*'s good faith estimate of the value of the item received by Taxpayer is $100.

(18) ***Effective date.*** This paragraph (f) applies to contributions made on or after December 16, 1996. However, taxpayers may rely on the rules of this paragraph (f) for contributions made on or after January 1, 1994.

[T.D. 8002, 49 FR 50664, 50666, Dec. 31, 1984, as amended by T.D. 8003, 49 FR 50659, Dec. 31, 1984; T.D. 8199, 53 FR 16080, May 5, 1988; 53 FR 18372, May 23, 1988; T.D. 8623, 60 FR 53128, Oct. 12, 1995; T.D. 8690, 61 FR 65952, Dec. 16, 1996; T.D. 9864, 84 FR 27530, June 13, 2019; T.D. 9907, 85 FR 48474, Aug. 11, 2020]

§ 1.170A-14 Qualified conservation contributions.

(a) *Qualified conservation contributions.* A deduction under section 170 of the Internal Revenue Code (Code) is generally not allowed for a charitable contribution of any interest in property that consists of less than the donor's entire interest in the property other than certain transfers in trust (*see* § 1.170A-6 relating to charitable contributions in trust and § 1.170A-7 relating to contributions not in trust of partial interests in property). However, a deduction may be allowed under section 170(f)(3)(B)(iii) for the value of a qualified conservation contribution if the requirements of this section are met and the contribution is not a disallowed qualified conservation contribution within the meaning of paragraph (j) of this section. A *qualified conservation contribution* is the contribution of a qualified real property interest to a qualified organization exclusively for conservation purposes. To be eligible for a deduction under section 170(h) and this section, the conservation purpose must be protected in perpetuity.

(b) *Qualified real property interest*—(1) *Entire interest of donor other than qualified mineral interest.* (i) The entire interest of the donor other than a qualified mineral interest is a qualified real property interest. A qualified mineral interest is the donor's interest in subsurface oil, gas, or other minerals and the right of access to such minerals.

(ii) A real property interest shall not be treated as an entire interest other than a qualified mineral interest by reason of section 170(h)(2)(A) and this paragraph (b)(1) if the property in which the donor's interest exists was divided prior to the contribution in order to enable the donor to retain control of more than a qualified mineral interest or to reduce the real property interest donated. See Treasury regulations § 1.170A-7(a)(2)(i). An entire interest in real property may consist of an undivided interest in the property. But see section 170(h)(5)(A) and the regulations thereunder (relating to the requirement that the conservation purpose which is the subject of the donation must be protected in perpetuity). Minor interests, such as rights-of-way, that will not interfere with the conservation purposes of the donation, may be transferred prior to the conservation contribution without affecting the treatment of a property interest as a qualified real property interest under this paragraph (b)(1).

(2) ***Perpetual conservation restriction.*** A "perpetual conservation restriction" is a qualified real property interest. A "perpetual conservation restriction" is a restriction granted in perpetuity on the use which may be made of real property—including, an easement or other interest in real property that under state law has attributes similar to an easement (e.g., a restrictive covenant or equitable servitude). For purposes of this section, the terms *easement, conservation restriction,* and *perpetual conservation restriction* have the same meaning. The definition of *perpetual conservation restriction* under this paragraph (b)(2) is not intended to preclude the deductibility of a donation of affirmative rights to use a land or water area under § 1.170A-13(d)(2). Any rights reserved by the donor in the donation of a perpetual conservation restriction must conform to the requirements of this section. See *e.g.,* paragraph (d)(4)(ii), (d)(5)(i), (e)(3), and (g)(4) of this section.

(c) *Qualified organization*—(1) *Eligible donee.* To be considered an eligible donee under this section, an organization must be a qualified organization, have a commitment to protect the conservation purposes of the donation, and have the resources to enforce the restrictions. A conservation group organized or operated primarily or substantially for one of the conservation purposes specified in section 170(h)(4)(A) will be considered to have the commitment required by the preceding sentence. A qualified organization need not set aside funds to enforce the restrictions that are the subject of the contribution. For purposes of this section, the term *qualified organization* means:

(i) A governmental unit described in section 170(b)(1)(A)(v);

(ii) An organization described in section 170(b)(1)(A)(vi);

(iii) A charitable organization described in section 501(c)(3) that meets the public support test of section 509(a)(2);

(iv) A charitable organization described in section 501(c)(3) that meets the requirements of section 509(a)(3) and is controlled by an organization described in paragraphs (c)(1) (i), (ii), or (iii) of this section.

(2) ***Transfers by donee.*** A deduction shall be allowed for a contribution under this section only if in the instrument of conveyance the donor prohibits the donee from subsequently transferring the easement (or, in the case of a remainder interest or the reservation of a qualified mineral interest, the property), whether or not for consideration, unless the donee organization, as a condition of the subsequent transfer, requires that the conservation purposes which the contribution was originally intended to advance continue to be carried out. Moreover, subsequent transfers must be restricted to organizations qualifying, at the time of the subsequent transfer, as an eligible donee under paragraph (c)(1) of this section. When a later unexpected change in the conditions surrounding the property that is the subject of a donation under paragraph (b)(1), (2), or (3) of this section makes impossible or impractical the continued use of the property for conservation purposes, the requirement of this paragraph will be met if the property is sold or exchanged and any proceeds are used by the donee organization in a manner consistent with the conservation purposes of the original contribution. In the case of a donation under paragraph (b)(3) of this section to which the preceding sentence applies, see also paragraph (g)(5)(ii) of this section.

(d) *Conservation purposes*—(1) *In general.* For purposes of section 170(h) and this section, the term *conservation purposes* means—

(i) The preservation of land areas for outdoor recreation by, or the education of, the general public, within the meaning of paragraph (d)(2) of this section,

(ii) The protection of a relatively natural habitat of fish, wildlife, or plants, or similar ecosystem, within the meaning of paragraph (d)(3) of this section,

(iii) The preservation of certain open space (including farmland and forest land) within the meaning of paragraph (d)(4) of this section, or

(iv) The preservation of a historically important land area or a certified historic structure, within the meaning of paragraph (d)(5) of this section.

(2) ***Recreation or education*** —

(i) ***In general.*** The donation of a qualified real property interest to preserve land areas for the outdoor recreation of the general public or for the education of the general public will meet the conservation purposes test of this section. Thus, conservation purposes would include, for example, the preservation of a water area for the use of the public for boating or fishing, or a nature or hiking trail for the use of the public.

(ii) ***Access.*** The preservation of land areas for recreation or education will not meet the test of this section unless the recreation or education is for the substantial and regular use of the general public.

(3) ***Protection of environmental system*** —

(i) ***In general.*** The donation of a qualified real property interest to protect a significant relatively natural habitat in which a fish, wildlife, or plant community, or similar ecosystem normally lives will meet the conservation purposes test of this section. The fact that the habitat or environment has been altered

to some extent by human activity will not result in a deduction being denied under this section if the fish, wildlife, or plants continue to exist there in a relatively natural state. For example, the preservation of a lake formed by a man-made dam or a salt pond formed by a man-made dike would meet the conservation purposes test if the lake or pond were a nature feeding area for a wildlife community that included rare, endangered, or threatened native species.

(ii) ***Significant habitat or ecosystem.*** Significant habitats and ecosystems include, but are not limited to, habitats for rare, endangered, or threatened species of animal, fish, or plants; natural areas that represent high quality examples of a terrestrial community or aquatic community, such as islands that are undeveloped or not intensely developed where the coastal ecosystem is relatively intact; and natural areas which are included in, or which contribute to, the ecological viability of a local, state, or national park, nature preserve, wildlife refuge, wilderness area, or other similar conservation area.

(iii) ***Access.*** Limitations on public access to property that is the subject of a donation under this paragraph (d)(3) shall not render the donation nondeductible. For example, a restriction on all public access to the habitat of a threatened native animal species protected by a donation under this paragraph (d)(3) would not cause the donation to be nondeductible.

(4) ***Preservation of open space*** —

(i) ***In general.*** The donation of a qualified real property interest to preserve open space (including farmland and forest land) will meet the conservation purposes test of this section if such preservation is—

(A) Pursuant to a clearly delineated Federal, state, or local governmental conservation policy and will yield a significant public benefit, or

(B) For the scenic enjoyment of the general public and will yield a significant public benefit.

An open space easement donated on or after December 18, 1980, must meet the requirements of section 170(h) in order to be deductible.

(ii) ***Scenic enjoyment*** —

(A) ***Factors.*** A contribution made for the preservation of open space may be for the scenic enjoyment of the general public. Preservation of land may be for the scenic enjoyment of the general public if development of the property would impair the scenic character of the local rural or urban landscape or would interfere with a scenic panorama that can be enjoyed from a park, nature preserve, road, waterbody, trail, or historic structure or land area, and such area or transportation way is open to, or utilized by, the public. “Scenic enjoyment” will be evaluated by considering all pertinent facts and circumstances germane to the contribution. Regional variations in topography, geology, biology, and cultural and economic conditions require flexibility in the application of this test, but do not lessen the burden on the taxpayer to demonstrate the scenic characteristics of a donation under this paragraph. The application of a particular objective factor to help define a view as *scenic* in one setting may in fact be entirely inappropriate in another setting. Among the factors to be considered are:

(*1*) The compatibility of the land use with other land in the vicinity;

(*2*) The degree of contrast and variety provided by the visual scene;

(*3*) The openness of the land (which would be a more significant factor in an urban or densely populated setting or in a heavily wooded area);

(4) Relief from urban closeness;

(5) The harmonious variety of shapes and textures;

(6) The degree to which the land use maintains the scale and character of the urban landscape to preserve open space, visual enjoyment, and sunlight for the surrounding area;

(7) The consistency of the proposed scenic view with a methodical state scenic identification program, such as a state landscape inventory; and

(8) The consistency of the proposed scenic view with a regional or local landscape inventory made pursuant to a sufficiently rigorous review process, especially if the donation is endorsed by an appropriate state or local governmental agency.

(B) ***Access.*** To satisfy the requirement of scenic enjoyment by the general public, visual (rather than physical) access to or across the property by the general public is sufficient. Under the terms of an open space easement on scenic property, the entire property need not be visible to the public for a donation to qualify under this section, although the public benefit from the donation may be insufficient to qualify for a deduction if only a small portion of the property is visible to the public.

(iii) ***Governmental conservation policy*** —

(A) ***In general.*** The requirement that the preservation of open space be pursuant to a clearly delineated Federal, state, or local governmental policy is intended to protect the types of property identified by representatives of the general public as worthy of preservation or conservation. A general declaration of conservation goals by a single official or legislative body is not sufficient. However, a governmental conservation policy need not be a certification program that identifies particular lots or small parcels of individually owned property. This requirement will be met by donations that further a specific, identified conservation project, such as the preservation of land within a state or local landmark district that is locally recognized as being significant to that district; the preservation of a wild or scenic river, the preservation of farmland pursuant to a state program for flood prevention and control; or the protection of the scenic, ecological, or historic character of land that is contiguous to, or an integral part of, the surroundings of existing recreation or conservation sites. For example, the donation of a perpetual conservation restriction to a qualified organization pursuant to a formal resolution or certification by a local governmental agency established under state law specifically identifying the subject property as worthy of protection for conservation purposes will meet the requirement of this paragraph. A program need not be funded to satisfy this requirement, but the program must involve a significant commitment by the government with respect to the conservation project. For example, a governmental program according preferential tax assessment or preferential zoning for certain property deemed worthy of protection for conservation purposes would constitute a significant commitment by the government.

(B) ***Effect of acceptance by governmental agency.*** Acceptance of an easement by an agency of the Federal Government or by an agency of a state or local government (or by a commission, authority, or similar body duly constituted by the state or local government and acting on behalf of the state or local government) tends to establish the requisite clearly delineated governmental policy, although such acceptance, without more, is not sufficient. The more rigorous the review process by the governmental agency, the more the acceptance of the

easement tends to establish the requisite clearly delineated governmental policy. For example, in a state where the legislature has established an Environmental Trust to accept gifts to the state which meet certain conservation purposes and to submit the gifts to a review that requires the approval of the state's highest officials, acceptance of a gift by the Trust tends to establish the requisite clearly delineated governmental policy. However, if the Trust merely accepts such gifts without a review process, the requisite clearly delineated governmental policy is not established.

(C) ***Access.*** A limitation on public access to property subject to a donation under this paragraph (d)(4)(iii) shall not render the deduction nondeductible unless the conservation purpose of the donation would be undermined or frustrated without public access. For example, a donation pursuant to a governmental policy to protect the scenic character of land near a river requires visual access to the same extent as would a donation under paragraph (d)(4)(ii) of this section.

(iv) ***Significant public benefit*** —

(A) ***Factors.*** All contributions made for the preservation of open space must yield a significant public benefit. Public benefit will be evaluated by considering all pertinent facts and circumstances germane to the contribution. Factors germane to the evaluation of public benefit from one contribution may be irrelevant in determining public benefit from another contribution. No single factor will necessarily be determinative. Among the factors to be considered are:

(*1*) The uniqueness of the property to the area;

(*2*) The intensity of land development in the vicinity of the property (both existing development and foreseeable trends of development);

(*3*) The consistency of the proposed open space use with public programs (whether Federal, state or local) for conservation in the region, including programs for outdoor recreation, irrigation or water supply protection, water quality maintenance or enhancement, flood prevention and control, erosion control, shoreline protection, and protection of land areas included in, or related to, a government approved master plan or land management area;

(*4*) The consistency of the proposed open space use with existing private conservation programs in the area, as evidenced by other land, protected by easement or fee ownership by organizations referred to in § 1.170A-14(c)(1), in close proximity to the property;

(*5*) The likelihood that development of the property would lead to or contribute to degradation of the scenic, natural, or historic character of the area;

(*6*) The opportunity for the general public to use the property or to appreciate its scenic values;

(*7*) The importance of the property in preserving a local or regional landscape or resource that attracts tourism or commerce to the area;

(*8*) The likelihood that the donee will acquire equally desirable and valuable substitute property or property rights;

(*9*) The cost to the donee of enforcing the terms of the conservation restriction;

(*10*) The population density in the area of the property; and

(*11*) The consistency of the proposed open space use with a legislatively mandated program identifying particular parcels of land for future protection.

(B) ***Illustrations.*** The preservation of an ordinary tract of land would not in and of itself yield a significant public benefit, but the preservation of ordinary land areas in conjunction with other factors that demonstrate significant public benefit or the preservation of a unique land area for public employment would yield a significant public benefit. For example, the preservation of a vacant downtown lot would not by itself yield a significant public benefit, but the preservation of the downtown lot as a public garden would, absent countervailing factors, yield a significant public benefit. The following are other examples of contributions which would, absent countervailing factors, yield a significant public benefit: The preservation of farmland pursuant to a state program for flood prevention and control; the preservation of a unique natural land formation for the enjoyment of the general public; the preservation of woodland along a public highway pursuant to a government program to preserve the appearance of the area so as to maintain the scenic view from the highway; and the preservation of a stretch of undeveloped property located between a public highway and the ocean in order to maintain the scenic ocean view from the highway.

(v) ***Limitation.*** A deduction will not be allowed for the preservation of open space under section 170(h)(4)(A)(iii), if the terms of the easement permit a degree of intrusion or future development that would interfere with the essential scenic quality of the land or with the governmental conservation policy that is being furthered by the donation. See § 1.170A-14(e)(2) for rules relating to inconsistent use.

(vi) ***Relationship of requirements*** —

(A) ***Clearly delineated governmental policy and significant public benefit.*** Although the requirements of "clearly delineated governmental policy" and "significant public benefit" must be met independently, for purposes of this section the two requirements may also be related. The more specific the governmental policy with respect to the particular site to be protected, the more likely the governmental decision, by itself, will tend to establish the significant public benefit associated with the donation. For example, while a statute in State X permitting preferential assessment for farmland is, by definition, governmental policy, it is distinguishable from a state statute, accompanied by appropriations, naming the X River as a valuable resource and articulating the legislative policy that the X River and the relatively natural quality of its surrounding be protected. On these facts, an open space easement on farmland in State X would have to demonstrate additional factors to establish "significant public benefit." The specificity of the legislative mandate to protect the X River, however, would by itself tend to establish the significant public benefit associated with an open space easement on land fronting the X River.

(B) ***Scenic enjoyment and significant public benefit.*** With respect to the relationship between the requirements of "scenic enjoyment" and "significant public benefit," since the degrees of scenic enjoyment offered by a variety of open space easements are subjective and not as easily delineated as are increasingly specific levels of governmental policy, the significant public benefit of preserving a scenic view must be independently established in all cases.

(C) ***Donations may satisfy more than one test.*** In some cases, open space easements may be both for scenic enjoyment and pursuant to a clearly delineated governmental policy. For example, the preservation of a particular scenic view identified as part of a scenic landscape inventory by a rigorous governmental review process will meet the tests of both paragraphs (d)(4)(i)(A) and (d)(4)(i)(B) of this section.

(5) ***Historic preservation*** —

(i) ***In general.*** The donation of a qualified real property interest to preserve an historically important land area or a certified historic structure will meet the conservation purposes test of this section. When restrictions to preserve a building or land area within a registered historic district permit future development on the site, a deduction will be allowed under this section only if the terms of the restrictions require that such development conform with appropriate local, state, or Federal standards for construction or rehabilitation within the district. See also, § 1.170A-14(h)(3)(ii).

(ii) ***Historically important land area.*** The term *historically important land area* includes:

(A) An independently significant land area including any related historic resources (for example, an archaeological site or a Civil War battlefield with related monuments, bridges, cannons, or houses) that meets the National Register Criteria for Evaluation in 36 CFR 60.4 (Pub. L. 89-665, 80 Stat. 915);

(B) Any land area within a registered historic district including any buildings on the land area that can reasonably be considered as contributing to the significance of the district; and

(C) Any land area (including related historic resources) adjacent to a property listed individually in the National Register of Historic Places (but not within a registered historic district) in a case where the physical or environmental features of the land area contribute to the historic or cultural integrity of the property.

(iii) ***Certified historic structure.*** The term *certified historic structure,* for purposes of this section, means any building, structure or land area which is—

(A) Listed in the National Register, or

(B) Located in a registered historic district (as defined in section 48(g)(3)(B)) and is certified by the Secretary of the Interior (pursuant to 36 CFR 67.4) to the Secretary of the Treasury as being of historic significance to the district.

A *structure* for purposes of this section means any structure, whether or not it is depreciable. Accordingly easements on private residences may qualify under this section. In addition, a structure would be considered to be a certified historic structure if it were certified either at the time the transfer was made or at the due date (including extensions) for filing the donor's return for the taxable year in which the contribution was made.

(iv) ***Access.***

(A) In order for a conservation contribution described in section 170(h)(4)(A)(iv) and this paragraph (d)(5) to be deductible, some visual public access to the donated property is required. In the case of an historically important land area, the entire property need not be visible to the public for a donation to qualify under this section. However, the public benefit from the donation may be insufficient to qualify for a deduction if only a small portion of the property is so visible. Where the historic land area or certified historic structure which is the subject of the donation is

not visible from a public way (*e.g.,* the structure is hidden from view by a wall or shrubbery, the structure is too far from the public way, or interior characteristics and features of the structure are the subject of the easement), the terms of the easement must be such that the general public is given the opportunity on a regular basis to view the characteristics and features of the property which are preserved by the easement to the extent consistent with the nature and condition of the property.

(B) Factors to be considered in determining the type and amount of public access required under paragraph (d)(5)(iv)(A) of this section include the historical significance of the donated property, the nature of the features that are the subject of the easement, the remoteness or accessibility of the site of the donated property, the possibility of physical hazards to the public visiting the property (for example, an unoccupied structure in a dilapidated condition), the extent to which public access would be an unreasonable intrusion on any privacy interests of individuals living on the property, the degree to which public access would impair the preservation interests which are the subject of the donation, and the availability of opportunities for the public to view the property by means other than visits to the site.

(C) The amount of access afforded the public by the donation of an easement shall be determined with reference to the amount of access permitted by the terms of the easement which are established by the donor, rather than the amount of access actually provided by the donee organization. However, if the donor is aware of any facts indicating that the amount of access that the donee organization will provide is significantly less than the amount of access permitted under the terms of the easement, then the amount of access afforded the public shall be determined with reference to this lesser amount.

(v) ***Examples.*** The provisions of paragraph (d)(5)(iv) of this section may be illustrated by the following examples:

Example 1. A and his family live in a house in a certified historic district in the State of X. The entire house, including its interior, has architectural features representing classic Victorian period architecture. A donates an exterior and interior easement on the property to a qualified organization but continues to live in the house with his family. A's house is surrounded by a high stone wall which obscures the public's view of it from the street. Pursuant to the terms of the easement, the house may be opened to the public from 10:00 a.m. to 4:00 p.m. on one Sunday in May and one Sunday in November each year for house and garden tours. These tours are to be under the supervision of the donee and open to members of the general public upon payment of a small fee. In addition, under the terms of the easement, the donee organization is given the right to photograph the interior and exterior of the house and distribute such photographs to magazines, newsletters, or other publicly available publications. The terms of the easement also permit persons affiliated with educational organizations, professional architectural associations, and historical societies to make an appointment through the donee organization to study the property. The donor is not aware of any facts indicating that the public access to be provided by the donee organization will be significantly less than that permitted by the terms of the easement. The 2 opportunities for public visits per year, when combined with the ability of the general public to view the architectural characteristics and features that are the subject of the easement through photographs, the opportunity for scholarly study of the property, and the fact that the house is used as an occupied residence, will enable the donation to satisfy the requirement of public access.

Example 2. B owns an unoccupied farmhouse built in the 1840's and located on a property that is adjacent to a Civil War battlefield. During the Civil War the farmhouse was used as quarters for Union troops. The battlefield is visited year round by the general public. The condition of the farmhouse is such that the safety of visitors will not be jeopardized and opening it to the public will not result in significant deterioration. The farmhouse is not visible from the battlefield or any public way. It is accessible only by way of a private road owned by B. B donates a conservation easement on the farmhouse to a qualified organization. The terms of the easement provide that the donee organization may open the property (via B's road) to the general public on four weekends each year from 8:30 a.m. to 4:00 p.m. The donation does not meet the public access requirement because the farmhouse is safe, unoccupied, and easily accessible to the general public who have come to the site to visit Civil War historic land areas (and related resources), but will only be open to the public on four weekends each year. However, the donation would meet the public access requirement if the terms of the easement permitted the donee organization to open the property to the public every other weekend during the year and the donor is not aware of any facts indicating that the donee organization will provide significantly less access than that permitted.

(e) *Exclusively for conservation purposes*—(1) *In general.* To meet the requirements of this section, a donation must be exclusively for conservation purposes. See paragraphs (c)(1) and (g)(1) through (g)(6)(ii) of this section. A deduction will not be denied under this section when incidental benefit inures to the donor merely as a result of conservation restrictions limiting the uses to which the donor's property may be put.

(2) *Inconsistent use.* Except as provided in paragraph (e)(4) of this section, a deduction will not be allowed if the contribution would accomplish one of the enumerated conservation purposes but would permit destruction of other significant conservation interests. For example, the preservation of farmland pursuant to a State program for flood prevention and control would not qualify under paragraph (d)(4) of this section if under the terms of the contribution a significant naturally occurring ecosystem could be injured or destroyed by the use of pesticides in the operation of the farm. However, this requirement is not intended to prohibit uses of the property, such as selective timber harvesting or selective farming if, under the circumstances, those uses do not impair significant conservation interests.

(3) *Inconsistent use permitted.* A use that is destructive of conservation interests will be permitted only if such use is necessary for the protection of the conservation interests that are the subject of the contribution. For example, a deduction for the donation of an easement to preserve an archaeological site that is listed on the National Register of Historic Places will not be disallowed if site excavation consistent with sound archaeological practices may impair a scenic view of which the land is a part. A donor may continue a pre-existing use of the property that does not conflict with the conservation purposes of the gift.

(f) *Examples.* The provisions of this section relating to conservation purposes may be illustrated by the following examples.

Example 1. State S contains many large tract forests that are desirable recreation and scenic areas for the general public. The forests' scenic values attract millions of people to the State. However, due to the increasing intensity of land development in State S, the continued existence of forestland parcels greater than 45 acres is threatened. J grants a perpetual easement on a 100-acre parcel of forestland that is part of one of the State's scenic areas to a qualifying organization. The easement imposes restrictions on the use of the parcel for the purpose of maintaining its scenic values. The restrictions include a requirement

that the parcel be maintained forever as open space devoted exclusively to conservation purposes and wildlife protection, and that there be no commercial, industrial, residential, or other development use of such parcel. The law of State S recognizes a limited public right to enter private land, particularly for recreational pursuits, unless such land is posted or the landowner objects. The easement specifically restricts the landowner from posting the parcel, or from objecting, thereby maintaining public access to the parcel according to the custom of the State. J's parcel provides the opportunity for the public to enjoy the use of the property and appreciate its scenic values. Accordingly, J's donation qualifies for a deduction under this section.

Example 2. A qualified conservation organization owns Greenacre in fee as a nature preserve. Greenacre contains a high quality example of a tall grass prairie ecosystem. Farmacre, an operating farm, adjoins Greenacre and is a compatible buffer to the nature preserve. Conversion of Farmacre to a more intense use, such as a housing development, would adversely affect the continued use of Greenacre as a nature preserve because of human traffic generated by the development. The owner of Farmacre donates an easement preventing any future development on Farmacre to the qualified conservation organization for conservation purposes. Normal agricultural uses will be allowed on Farmacre. Accordingly, the donation qualifies for a deduction under this section.

Example 3. H owns Greenacre, a 900-acre parcel of woodland, rolling pasture, and orchards on the crest of a mountain. All of Greenacre is clearly visible from a nearby national park. Because of the strict enforcement of an applicable zoning plan, the highest and best use of Greenacre is as a subdivision of 40-acre tracts. H wishes to donate a scenic easement on Greenacre to a qualifying conservation organization, but H would like to reserve the right to subdivide Greenacre into 90-acre parcels with no more than one single-family home allowable on each parcel. Random building on the property, even as little as one home for each 90 acres, would destroy the scenic character of the view. Accordingly, no deduction would be allowable under this section.

Example 4. Assume the same facts as in *example (3),* except that not all of Greenacre is visible from the park and the deed of easement allows for limited cluster development of no more than five nine-acre clusters (with four houses on each cluster) located in areas generally not visible from the national park and subject to site and building plan approval by the donee organization in order to preserve the scenic view from the park. The donor and the donee have already identified sites where limited cluster development would not be visible from the park or would not impair the view. Owners of homes in the clusters will not have any rights with respect to the surrounding Greenacre property that are not also available to the general public. Accordingly, the donation qualifies for a deduction under this section.

Example 5. In order to protect State S's declining open space that is suited for agricultural use from increasing development pressure that has led to a marked decline in such open space, the Legislature of State S passed a statute authorizing the purchase of “agricultural land development rights” on open acreage. Agricultural land development rights allow the State to place agricultural preservation restrictions on land designated as worthy of protection in order to preserve open space and farm resources. Agricultural preservation restrictions prohibit or limit construction or placement of buildings except those used for agricultural purposes or dwellings used for family living by the farmer and his family and employees; removal of mineral substances in any manner that adversely affects the land's agricultural potential; or other uses detrimental to retention of the land for agricultural use. Money has been appropriated for this program and some landowners have in fact sold their “agricultural land development rights” to State S. K owns and operates a small dairy farm in State S located in an area designated by the Legislature as worthy of protection. K desires to preserve his farm for agricultural purposes in perpetuity. Rather than selling the development rights to State S, K grants to a qualified organization an agricultural preservation restriction on his property in the form of a conservation easement. K reserves to himself, his heirs and

assigns the right to manage the farm consistent with sound agricultural and management practices. The preservation of K's land is pursuant to a clearly delineated governmental policy of preserving open space available for agricultural use, and will yield a significant public benefit by preserving open space against increasing development pressures.

(g) *Enforceable in perpetuity*—(1) *In general.* In the case of any donation under this section, any interest in the property retained by the donor (and the donor's successors in interest) must be subject to legally enforceable restrictions (for example, by recordation in the land records of the jurisdiction in which the property is located) that will prevent uses of the retained interest inconsistent with the conservation purposes of the donation. In the case of a contribution of a remainder interest, the contribution will not qualify if the tenants, whether they are tenants for life or a term of years, can use the property in a manner that diminishes the conservation values which are intended to be protected by the contribution.

(2) *Protection of a conservation purpose in case of donation of property subject to a mortgage.* In the case of conservation contributions made after February 13, 1986, no deducion will be permitted under this section for an interest in property which is subject to a mortgage unless the mortgagee subordinates its rights in the property to the right of the qualified organization to enforce the conservation purposes of the gift in perpetuity. For conservation contributions made prior to February 14, 1986, the requirement of section 170 (h)(5)(A) is satisfied in the case of mortgaged property (with respect to which the mortgagee has not subordinated its rights) only if the donor can demonstrate that the conservation purpose is protected in perpetuity without subordination of the mortgagee's rights.

(3) *Remote future event.* A deduction shall not be disallowed under section 170(f)(3)(B)(iii) and this section merely because the interest which passes to, or is vested in, the donee organization may be defeated by the performance of some act or the happening of some event, if on the date of the gift it appears that the possibility that such act or event will occur is so remote as to be negligible. See paragraph (e) of § 1.170A-1. For example, a state's statutory requirement that use restrictions must be rerecorded every 30 years to remain enforceable shall not, by itself, render an easement nonperpetual.

(4) *Retention of qualified mineral interest*—(i) *In general.* Except as otherwise provided in paragraph (g)(4)(ii) of this section, the requirements of this section are not met and no deduction shall be allowed in the case of a contribution of any interest when there is a retention by any person of a qualified mineral interest (as defined in paragraph (b)(1)(i) of this section) if at any time there may be extractions or removal of minerals by any surface mining method. Moreover, in the case of a qualified mineral interest gift, the requirement that the conservation purposes be protected in perpetuity is not satisfied if any method of mining that is inconsistent with the particular conservation purposes of a contribution is permitted at any time. See also § 1.170A-14(e)(2). However, a deduction under this section will not be denied in the case of certain methods of mining that may have limited, localized impact on the real property but that are not irremediably destructive of significant conservation interests. For example, a deduction will not be denied in a case where production facilities are concealed or compatible with existing topography and landscape and when surface alteration is to be restored to its original state.

(ii) *Exception for qualified conservation contributions after July 1984.* (A) A contribution made after July 18, 1984, of a qualified real property interest described in section 170(h)(2)(A) shall not be disqualified under the first sentence of paragraph (g)(4)(i) of this section if the following requirements are satisfied.

(*1*) The ownership of the surface estate and mineral interest were separated before June 13, 1976, and remain so separated up to and including the time of the contribution.

(2) The present owner of the mineral interest is not a person whose relationship to the owner of the surface estate is described at the time of the contribution in section 267(b) or section 707(b), and

(3) The probability of extraction or removal of minerals by any surface mining method is so remote as to be negligible.

Whether the probability of extraction or removal of minerals by surface mining is so remote as to be negligible is a question of fact and is to be made on a case by case basis. Relevant factors to be considered in determining if the probability of extraction or removal of minerals by surface mining is so remote as to be negligible include: Geological, geophysical or economic data showing the absence of mineral reserves on the property, or the lack of commercial feasibility at the time of the contribution of surface mining the mineral interest.

(B) If the ownership of the surface estate and mineral interest first became separated after June 12, 1976, no deduction is permitted for a contribution under this section unless surface mining on the property is completely prohibited.

(iii) *Examples.* The provisions of paragraph (g)(4)(i) and (ii) of this section may be illustrated by the following examples:

Example 1. K owns 5,000 acres of bottomland hardwood property along a major watershed system in the southern part of the United States. Agencies within the Department of the Interior have determined that southern bottomland hardwoods are a rapidly diminishing resource and a critical ecosystem in the south because of the intense pressure to cut the trees and convert the land to agricultural use. These agencies have further determined (and have indicated in correspondence with K) that bottomland hardwoods provide a superb habitat for numerous species and play an important role in controlling floods and purifying rivers. K donates to a qualified organization his entire interest in this property other than his interest in the gas and oil deposits that have been identified under K's property. K covenants and can ensure that, although drilling for gas and oil on the property may have some temporary localized impact on the real property, the drilling will not interfere with the overall conservation purpose of the gift, which is to protect the unique bottomland hardwood ecosystem. Accordingly, the donation qualifies for a deduction under this section.

Example 2. Assume the same facts as in *Example 1,* except that in 1979, K sells the mineral interest to A, an unrelated person, in an arm's-length transaction, subject to a recorded prohibition on the removal of any minerals by any surface mining method and a recorded prohibition against any mining technique that will harm the bottomland hardwood ecosystem. After the sale to A, K donates a qualified real property interest to a qualified organization to protect the bottomland hardwood ecosystem. Since at the time of the transfer, surface mining and any mining technique that will harm the bottomland hardwood ecosystem are completely prohibited, the donation qualifies for a deduction under this section.

(5) ***Protection of conservation purpose where taxpayer reserves certain rights*** —

(i) ***Documentation.*** In the case of a donation made after February 13, 1986, of any qualified real property interest when the donor reserves rights the exercise of which may impair the conservation interests associated with the property, for a deduction to be allowable under this section the donor must make available to the donee, prior to the time the donation is made, documentation sufficient to establish the condition of the property at the time of the gift. Such documentation is designed to

protect the conservation interests associated with the property, which although protected in perpetuity by the easement, could be adversely affected by the exercise of the reserved rights. Such documentation may include:

(A) The appropriate survey maps from the United States Geological Survey, showing the property line and other contiguous or nearby protected areas;

(B) A map of the area drawn to scale showing all existing man-made improvements or incursions (such as roads, buildings, fences, or gravel pits), vegetation and identification of flora and fauna (including, for example, rare species locations, animal breeding and roosting areas, and migration routes), land use history (including present uses and recent past disturbances), and distinct natural features (such as large trees and aquatic areas);

(C) An aerial photograph of the property at an appropriate scale taken as close as possible to the date the donation is made; and

(D) On-site photographs taken at appropriate locations on the property. If the terms of the donation contain restrictions with regard to a particular natural resource to be protected, such as water quality or air quality, the condition of the resource at or near the time of the gift must be established. The documentation, including the maps and photographs, must be accompanied by a statement signed by the donor and a representative of the donee clearly referencing the documentation and in substance saying “This natural resources inventory is an accurate representation of [the protected property] at the time of the transfer.”.

(ii) ***Donee's right to inspection and legal remedies.*** In the case of any donation referred to in paragraph (g)(5)(i) of this section, the donor must agree to notify the donee, in writing, before exercising any reserved right, *e.g.* the right to extract certain minerals which may have an adverse impact on the conservation interests associated with the qualified real property interest. The terms of the donation must provide a right of the donee to enter the property at reasonable times for the purpose of inspecting the property to determine if there is compliance with the terms of the donation. Additionally, the terms of the donation must provide a right of the donee to enforce the conservation restrictions by appropriate legal proceedings, including but not limited to, the right to require the restoration of the property to its condition at the time of the donation.

(6) ***Extinguishment.***

(i) In general. If a subsequent unexpected change in the conditions surrounding the property that is the subject of a donation under this paragraph can make impossible or impractical the continued use of the property for conservation purposes, the conservation purpose can nonetheless be treated as protected in perpetuity if the restrictions are extinguished by judicial proceeding and all of the donee's proceeds (determined under paragraph (g)(6)(ii) of this section) from a subsequent sale or exchange of the property are used by the donee organization in a manner consistent with the conservation purposes of the original contribution.

(ii) ***Proceeds.*** In case of a donation made after February 13, 1986, for a deduction to be allowed under this section, at the time of the gift the donor must agree that the donation of the perpetual conservation restriction gives rise to a property right, immediately vested in the donee organization, with a fair market value that is at least equal to the proportionate value that the perpetual conservation restriction at the time of the gift, bears to the value of the property as a whole at that time. See § 1.170A-14(h)(3)(iii) relating to the allocation of basis. For purposes of this paragraph (g)(6)(ii), that proportionate value of the donee's property rights shall remain constant. Accordingly, when a change in conditions give rise to the extinguishment of a perpetual conservation restriction

under paragraph (g)(6)(i) of this section, the donee organization, on a subsequent sale, exchange, or involuntary conversion of the subject property, must be entitled to a portion of the proceeds at least equal to that proportionate value of the perpetual conservation restriction, unless state law provides that the donor is entitled to the full proceeds from the conversion without regard to the terms of the prior perpetual conservation restriction.

(h) *Valuation*—(1) *Entire interest of donor other than qualified mineral interest.* The value of the contribution under section 170 in the case of a contribution of a taxpayer's entire interest in property other than a qualified mineral interest is the fair market value of the surface rights in the property contributed. The value of the contribution shall be computed without regard to the mineral rights. See paragraph (h)(4), *example (1),* of this section.

(2) *Remainder interest in real property.* In the case of a contribution of any remainder interest in real property, section 170(f)(4) provides that in determining the value of such interest for purposes of section 170, depreciation and depletion of such property shall be taken into account. See § 1.170A-12. In the case of the contribution of a remainder interest for conservation purposes, the current fair market value of the property (against which the limitations of § 1.170A-12 are applied) must take into account any pre-existing or contemporaneously recorded rights limiting, for conservation purposes, the use to which the subject property may be put.

(3) *Perpetual conservation restriction*—(i) *In general.* The value of the contribution under section 170 in the case of a charitable contribution of a perpetual conservation restriction is the fair market value of the perpetual conservation restriction at the time of the contribution. See § 1.170A-7(c). If there is a substantial record of sales of easements comparable to the donated easement (such as purchases pursuant to a governmental program), the fair market value of the donated easement is based on the sales prices of such comparable easements. If no substantial record of market-place sales is available to use as a meaningful or valid comparison, as a general rule (but not necessarily in all cases) the fair market value of a perpetual conservation restriction is equal to the difference between the fair market value of the property it encumbers before the granting of the restriction and the fair market value of the encumbered property after the granting of the restriction. The amount of the deduction in the case of a charitable contribution of a perpetual conservation restriction covering a portion of the contiguous property owned by a donor and the donor's family (as defined in section 267(c)(4)) is the difference between the fair market value of the entire contiguous parcel of property before and after the granting of the restriction. If the granting of a perpetual conservation restriction after January 14, 1986, has the effect of increasing the value of any other property owned by the donor or a related person, the amount of the deduction for the conservation contribution shall be reduced by the amount of the increase in the value of the other property, whether or not such property is contiguous. If, as a result of the donation of a perpetual conservation restriction, the donor or a related person receives, or can reasonably expect to receive, financial or economic benefits that are greater than those that will inure to the general public from the transfer, no deduction is allowable under this section. However, if the donor or a related person receives, or can reasonably expect to receive, a financial or economic benefit that is substantial, but it is clearly shown that the benefit is less than the amount of the transfer, then a deduction under this section is allowable for the excess of the amount transferred over the amount of the financial or economic benefit received or reasonably expected to be received by the donor or the related person. For purposes of this paragraph (h)(3)(i), related person shall have the same meaning as in either section 267(b) or section 707(b). (See *Example 10* of paragraph (h)(4) of this section.)

(ii) ***Fair market value of property before and after restriction.*** If before and after valuation is used, the fair market value of the property before contribution of the conservation restriction must take into account not only the current use of the property but also an objective assessment of how immediate or remote the likelihood is that the property, absent the restriction, would in fact be developed, as well as any effect from zoning, conservation, or historic preservation laws that already restrict the property's potential highest and best use. Further, there may be instances where the grant of a conservation restriction may have no material effect on the value of the property or may in fact serve to enhance, rather than reduce, the value of property. In such instances no deduction would be allowable. In the case of a conservation restriction that allows for any development, however limited, on the property to be protected, the fair maket value of the property after contribution of the restriction must take into account the effect of the development. In the case of a conservation easement such as an easement on a certified historic structure, the fair market value of the property after contribution of the restriction must take into account the amount of access permitted by the terms of the easement. Additionally, if before and after valuation is used, an appraisal of the property after contribution of the restriction must take into account the effect of restrictions that will result in a reduction of the potential fair market value represented by highest and best use but will, nevertheless, permit uses of the property that will increase its fair market value above that represented by the property's current use. The value of a perpetual conservation restriction shall not be reduced by reason of the existence of restrictions on transfer designed solely to ensure that the conservation restriction will be dedicated to conservation purposes. See § 1.170A-14 (c)(3).

(iii) ***Allocation of basis.*** In the case of the donation of a qualified real property interest for conservation purposes, the basis of the property retained by the donor must be adjusted by the elimination of that part of the total basis of the property that is properly allocable to the qualified real property interest granted. The amount of the basis that is allocable to the qualified real property interest shall bear the same ratio to the total basis of the property as the fair market value of the qualified real property interest bears to the fair market value of the property before the granting of the qualified real property interest. When a taxpayer donates to a qualifying conservation organization an easement on a structure with respect to which deductions are taken for depreciation, the reduction required by this paragraph (h)(3)(ii) in the basis of the property retained by the taxpayer must be allocated between the structure and the underlying land.

(4) *Examples.* The provisions of this section may be illustrated by the following examples. In examples illustrating the value or deductibility of donations, the applicable restrictions and limitations of § 1.170A-4, with respect to reduction in amount of charitable contributions of certain appreciated property, and § 1.170A-8, with respect to limitations on charitable deductions by individuals. must also be taken into account.

(i) ***Example 1.*** A owns Goldacre, a property adjacent to a state park. A wants to donate Goldacre to the state to be used as part of the park, but A wants to reserve a qualified mineral interest in the property, to exploit currently and to devise at death. The fair market value of the surface rights in Goldacre is $200,000 and the fair market value of the mineral rights in $100.000. In order to ensure that the quality of the park will not be degraded, restrictions must be imposed on the right to extract the minerals that reduce the fair market value of the mineral rights to $80,000. Under this section, the value of the contribution is $200,000 (the value of the surface rights).

(ii) ***Example 2.*** In 1984 B, who is 62, donates a remainder interest in Greenacre to a qualifying organization for conservation purposes, retaining an interest for B's life. Greenacre is a tract of 200 acres of undeveloped woodland that is valued at $200,000 at its highest and best use. Under § 1.170A-12(b), the value of a remainder interest in real property following one life is determined under

§ 25.2512-5 of this chapter (Gift Tax Regulations). (See § 25.2512-5A of this chapter with respect to the valuation of annuities, interests for life or a term of years, and remainder or reversionary interests transferred before June 1, 2023.) For transfers occurring after November 30, 1983, and before May 1, 1989, the single life remainder factors, valued at 10 percent, can be found in Table A of § 20.2031-7A(d)(6) of this chapter. The remainder factor under these facts is 0.27998. Accordingly, the value of the remainder interest, and thus the amount eligible for an income tax deduction under section 170(f), is $55,996 ($200,000 × 0.27998).

(iii) ***Example 3.*** Assume the same facts as in paragraph (h)(4)(ii) of this section (*Example 2*) except that Greenacre is B's 200-acre estate with a home built during the colonial period. Some of the acreage around the home is cleared; the balance of Greenacre, except for access roads, is wooded and undeveloped. See section 170(f)(3)(B)(i). However, B would like Greenacre to be maintained in its current state after his death, so he donates a remainder interest in Greenacre to a qualifying organization for conservation purposes pursuant to section 170 (f)(3)(B)(iii) and (h)(2)(B). At the time of the gift the land has a value of $200,000 and the house has a value of $100,000. The value of the remainder interest, and thus the amount eligible for an income tax deduction under section 170(f), is computed pursuant to § 1.170A-12. See § 1.170A-12(b)(3).

(iv) ***Example 4.*** Assume the same facts as in paragraph (h)(4)(ii) of this section (*Example 2*) except that at age 62 instead of donating a remainder interest B donates an easement in Greenacre to a qualifying organization for conservation purposes. The fair market value of Greenacre after the donation is reduced to $110,000. Accordingly, the value of the easement, and thus the amount eligible for a deduction under section 170(f), is $90,000 ($200,000 less $110,000).

(v) ***Example 5.*** Assume the same facts as in paragraph (h)(4)(iv) of this section (*Example 4*) and assume that three years later, at age 65, B decides to donate a remainder interest in Greenacre to a qualifying organization for conservation purposes. Increasing real estate values in the area have raised the fair market value of Greenacre (subject to the easement) to $130,000. Accordingly, the value of the remainder interest, and thus the amount eligible for a deduction under section 170(f), is $41,639 ($130,000 × .32030).

(vi) ***Example 6.*** Assume the same facts as in paragraph (h)(2)(ii) of this section (*Example 2*) except that at the time of the donation of a remainder interest in Greenacre, B also donates an easement to a different qualifying organization for conservation purposes. Based on all the facts and circumstances, the value of the easement is determined to be $100,000. Therefore, the value of the property after the easement is $100,000 and the value of the remainder interest, and thus the amount eligible for deduction under section 170(f), is $27,998 ($100,000 × .27998).

(vii) ***Example 7.*** C owns Greenacre, a 200-acre estate containing a house built during the colonial period. At its highest and best use, for home development, the fair market value of Greenacre is $300,000. C donates an easement (to maintain the house and Green acre in their current state) to a qualifying organization for conservation purposes. The fair market value of Greenacre after the donation is reduced to $125,000. Accordingly, the value of the easement and the amount eligible for a deduction under section 170(f) is $175.000 ($300,000 less $125,000).

(viii) ***Example 8.*** Assume the same facts as in paragraph (h)(4)(vii) of this section (*Example 7*) and assume that three years later, C decides to donate a remainder interest in Greenacre to a qualifying organization for conservation purposes. Increasing real estate values in the area have raised the fair market value of Greenacre to $180.000. Assume that because of the perpetual easement prohibiting

any development of the land, the value of the house is $120,000 and the value of the land is $60,000. The value of the remainder interest, and thus the amount eligible for an income tax deduction under section 170(f), is computed pursuant to § 1.170A-12. See § 1.170A-12(b)(3).

(ix) ***Example 9.*** D owns property with a basis of $20,000 and a fair market value of $80,000. D donates to a qualifying organization an easement for conservation purposes that is determined under this section to have a fair market value of $60,000. The amount of basis allocable to the easement is $15,000 ($60,000/$80,000 = $15,000/$20,000). Accordingly, the basis of the property is reduced to $5,000 ($20,000 minus $15,000)

(x) ***Example 10.*** E owns 10 one-acre lots that are currently woods and parkland. The fair market value of each of E's lots is $15,000 and the basis of each lot is $3,000. E grants to the county a perpetual easement for conservation purposes to use and maintain eight of the acres as a public park and to restrict any future development on those eight acres. As a result of the restrictions, the value of the eight acres is reduced to $1,000 an acre. However, by perpetually restricting development on this portion of the land, E has ensured that the two remaining acres will always be bordered by parkland, thus increasing their fair market value to $22,500 each. If the eight acres represented all of E's land, the fair market value of the easement would be $112,000, an amount equal to the fair market value of the land before the granting of the easement (8 × $15,000 = $120,000) minus the fair market value of the encumbered land after the granting of the easement (8 × $1,000 = $8,000). However, because the easement only covered a portion of the taxpayer's contiguous land, the amount of the deduction under section 170 is reduced to $97,000 ($150,000-$53,000), that is, the difference between the fair market value of the entire tract of land before ($150,000) and after ((8 × $1,000) + (2 × $22,500)) the granting of the easement.

(xi) ***Example 11.*** Assume the same facts as in paragraph (h)(4)(x) of this section (*Example 10*) Since the easement covers a portion of E's land, only the basis of that portion is adjusted. Therefore, the amount of basis allocable to the easement is $22,400 ((8 × $3,000) × ($112,000/$120,000)). Accordingly, the basis of the eight acres encumbered by the easement is reduced to $1,600 ($24,000-$22,400), or $200 for each acre. The basis of the two remaining acres is not affected by the donation.

(xii) ***Example 12.*** F owns and uses as professional offices a two-story building that lies within a registered historic district. F's building is an outstanding example of period architecture with a fair market value of $125,000. Restricted to its current use, which is the highest and best use of the property without making changes to the facade, the building and lot would have a fair market value of $100,000, of which $80,000 would be allocable to the building and $20,000 woud be allocable to the lot. F's basis in the property is $50,000, of which $40,000 is allocable to the building and $10,000 is allocable to the lot. F's neighborhood is a mix of residential and commercial uses, and it is possible that F (or another owner) could enlarge the building for more extensive commercial use, which is its highest and best use. However, this would require changes to the facade. F would like to donate to a qualifying preservation organization an easement restricting any changes to the facade and promising to maintain the facade in perpetuity. The donation would qualify for a deduction under this section. The fair market value of the easement is $25,000 (the fair market value of the property before the easement, $125,000, minus the fair market value of the property after the easement, $100,000). Pursuant to § 1.170A-14(h)(3)(iii), the basis allocable to the easement is $10,000 and the basis of the underlying property (building and lot) is reduced to $40,000.

(i) ***Substantiation requirement.*** If a taxpayer makes a qualified conservation contribution and claims a deduction, the taxpayer must maintain written records of the fair market value of the underlying property before and after the donation and the conservation purpose furthered by the donation, and such information shall be stated in the taxpayer's income tax return if required by the return or its instructions. See also § 1.170A-13(c) (relating to substantiation requirements for deductions in excess of $5,000 for charitable contributions made on or before July 30, 2018); § 1.170A-16(d) (relating to substantiation of charitable contributions of more than $5,000 made after July 30, 2018); § 1.170A-17 (relating to the definitions of qualified appraisal and qualified appraiser for substantiation of contributions made on or after January 1, 2019); and section 6662 (relating to the imposition of an accuracy-related penalty on underpayments). Taxpayers may rely on the rules in § 1.170A-16(d) for contributions made after June 3, 2004, or appraisals prepared for returns or submissions filed after August 17, 2006. Taxpayers may rely on the rules in § 1.170A-17 for appraisals prepared for returns or submissions filed after August 17, 2006.

(j) *Disallowance of certain deductions for contributions by partnerships and S corporations that exceed 2.5 times the sum of the relevant bases*—(1) *In general.* This paragraph (j) applies the rules of section 170(h)(7), which disallow a deduction for certain qualified conservation contributions, as defined in section 170(h)(1) and this section, made by, or allocated to, partnerships or S corporations (as defined in section 1361(a)(1) of the Code) if the amount of the qualified conservation contribution exceeds 2.5 times the sum of the relevant bases as determined by this paragraph (j) and paragraphs (k) through (m) of this section (Disallowance Rule). The Disallowance Rule does not apply to qualified conservation contributions made directly by landowners that are not pass-through entities, such as individuals or C corporations. *See* paragraph (n) of this section for certain exceptions. *See* paragraph (j)(3) of this section for definitions of terms used in this paragraph (j) and paragraphs (k) through (n) of this section.

(2) *Application*—(i) *Contributing partnerships and contributing S corporations.* Except as provided in paragraph (n) of this section, a qualified conservation contribution by a contributing partnership or a contributing S corporation is a disallowed qualified conservation contribution if the amount of the qualified conservation contribution exceeds 2.5 times the sum of each of the contributing partnership's or contributing S corporation's ultimate member's relevant basis as determined under this paragraph (j) and paragraphs (k) through (m) of this section.

(ii) ***Upper-tier partnerships and upper-tier S corporations.*** Except as provided in paragraph (n) of this section, an allocated portion received by an upper-tier partnership or upper-tier S corporation is a disallowed qualified conservation contribution if either the contribution is a disallowed qualified conservation contribution with respect to the partnership that allocated the allocated portion to the upper-tier partnership or upper-tier S corporation, or such allocated portion exceeds 2.5 times the sum of each of that upper-tier partnership's or upper-tier S corporation's ultimate member's relevant basis as determined under this paragraph (j) and paragraphs (k) through (m) of this section.

(iii) ***Partner or S corporation shareholder claiming an inconsistent amount.*** If a partner or S corporation shareholder claims an amount of qualified conservation contribution that is inconsistent with and greater than the partner's distributive share or S corporation shareholder's pro rata share of qualified conservation contribution reported to the partner or S corporation shareholder by the partnership or S corporation, predicated on a position that the partnership's or S corporation's qualified conservation contribution was a greater amount than the amount claimed by the partnership or S corporation, and the qualified conservation contribution would have been a disallowed qualified conservation contribution if the partnership or S corporation had actually claimed that greater amount, then the partner's or S corporation shareholder's claimed qualified conservation contribution is a disallowed qualified conservation contribution.

(3) *Definitions*. The following definitions apply for purposes of this paragraph (j) and paragraphs (k) through (n) of this section:

(i) ***Allocated portion.*** In the case of an upper-tier partnership or upper-tier S corporation that receives, directly or indirectly, a distributive share of a qualified conservation contribution, the phrase *allocated portion* means the amount of such distributive share.

(ii) ***Amount of qualified conservation contribution.*** The amount of a contributing partnership's or contributing S corporation's qualified conservation contribution is the amount claimed as a qualified conservation contribution on the return of the contributing partnership or contributing S corporation for the taxable year in which the contribution is made. If the contributing partnership or contributing S corporation files an amended return or administrative adjustment request under section 6227 of the Code claiming a higher amount with respect to the qualified conservation contribution, the rules of this section must be re-applied with respect to such higher amount to determine the application of section 170(h)(7) and this section; for example, if a contributing S corporation's original return claims a qualified conservation contribution that does not exceed 2.5 times the sum of the relevant bases, and the S corporation subsequently files an amended return claiming a higher amount with respect to the qualified conservation contribution that does exceed 2.5 times the sum of the relevant bases, then the entire amount of the qualified conservation contribution is a disallowed qualified conservation contribution (unless one of the exceptions in paragraph (n) of this section applies). If the contributing partnership or contributing S corporation files an amended return or timely administrative adjustment request under section 6227 claiming a lower amount with respect to the qualified conservation contribution, the rules of this section will be re-applied with respect to such lower amount to determine the application of section 170(h)(7) and this section if and only if the amended return or timely administrative adjustment request is filed before the contributing partnership or contributing S corporation is put on notice of an IRS examination with respect to the qualified conservation contribution. A contributing partnership or contributing S corporation is considered to be on notice after the earlier of—

(A) The date the contributing partnership or contributing S corporation is first contacted by the Internal Revenue Service in connection with any examination of a return that relates to the qualified conservation contribution; or

(B) The date any person is first contacted by the Internal Revenue Service concerning an examination of that person under section 6700 (relating to the penalty for promoting abusive tax shelters) for an activity that relates to the qualified conservation contribution.

(iii) ***Contributing partnership.*** The term *contributing partnership* means a partnership that makes a qualified conservation contribution.

(iv) ***Contributing S corporation.*** The term *contributing S corporation* means an S corporation that makes a qualified conservation contribution.

(v) ***Direct interest.*** The term *direct interest* refers to an ownership interest in a contributing partnership, upper-tier partnership, contributing S corporation, or upper-tier S corporation that is held directly, or through an entity disregarded as separate from its owner for Federal income tax purposes, a qualified subchapter S subsidiary as defined in section 1361(b)(3), or through a grantor trust (under subpart E of part 1 of subchapter J of chapter 1 of the Code). In the case of a partner that is a C corporation (as defined in section 1361(a)(2)), non-grantor trust, or an estate, or an S corporation shareholder that is a non-grantor trust or an estate, the *direct interest* in the partnership or S corporation, as applicable, is held by the C corporation, non-grantor trust, or estate; the C

corporation's shareholders, trust beneficiaries, and estate beneficiaries are not considered to hold any interest in the partnership or S corporation, as applicable, for purposes of this paragraph (j) and paragraphs (k) through (n) of this section.

(vi) ***Directly.*** An ownership interest is held *directly* if it is not held through one or more upper-tier partnerships or upper-tier S corporations. A distributive share or pro rata share of a qualified conservation contribution is received *directly* if it does not pass through one or more upper-tier partnerships or upper-tier S corporations.

(vii) ***Disallowed qualified conservation contribution.*** The term *disallowed qualified conservation contribution* means a qualified conservation contribution or allocated portion for which no deduction is allowed pursuant to section 170(h)(7) and this paragraph (j).

(viii) ***Indirect interest.*** The term *indirect interest* refers to an ownership interest in a contributing partnership, contributing S corporation, upper-tier partnership, or upper-tier S corporation held through an upper-tier S corporation or one or more upper-tier partnerships.

(ix) ***Indirectly.*** An ownership interest is held *indirectly* if it is held through one or more upper-tier partnerships or upper-tier S corporations. A distributive share or pro rata share of a qualified conservation contribution is received *indirectly* if it passes through one or more upper-tier partnerships or upper-tier S corporations.

(x) ***Ultimate member.*** The term *ultimate member* means, with respect to any partnership or S corporation, any partner (that is not itself a partnership or S corporation) or S corporation shareholder that receives a distributive share or pro rata share, directly or indirectly, of a qualified conservation contribution. Thus, ultimate members will either be partners holding a direct interest in a partnership, which may be the contributing partnership or an upper-tier partnership, or shareholders holding a direct interest in an S corporation, which may be the contributing S corporation or an upper-tier S corporation. Upper-tier S corporations and upper-tier partnerships themselves are not considered ultimate members.

(xi) ***Upper-tier partnership.*** The term *upper-tier partnership* means a partnership that receives an allocated portion.

(xii) ***Upper-tier S corporation.*** The term *upper-tier S corporation* means an S corporation that receives an allocated portion.

(4) *Effect of Disallowance Rule*—(i) *If the Disallowance Rule applies to a contributing partnership or contributing S corporation.* If a contributing partnership's or contributing S corporation's qualified conservation contribution is a disallowed qualified conservation contribution under this paragraph (j), then:

(A) Any upper-tier partnership's or upper-tier S corporation's allocated portion of such contribution is a disallowed qualified conservation contribution, regardless of whether such allocated portion exceeds 2.5 times the sum of each of the upper-tier partnership's or upper-tier S corporation's ultimate member's relevant basis; and

(B) No person (whether holding a direct or indirect interest in such contributing partnership or contributing S corporation) may claim a deduction under any provision of the Code with respect to any amount of such disallowed qualified conservation contribution, regardless of whether that person's distributive share or pro rata share of the disallowed qualified conservation contribution exceeds 2.5 times its relevant basis.

(ii) *If the Disallowance Rule does not apply to a contributing partnership or contributing S corporation.* If a contributing partnership's or contributing S corporation's qualified conservation contribution is not a disallowed qualified conservation contribution under this paragraph (j), then:

(A) The distributive share or pro rata share of any ultimate member holding a direct interest in the contributing partnership or contributing S corporation is not a disallowed qualified conservation contribution; and

(B) Any upper-tier partnership or upper-tier S corporation that receives an allocated portion of such qualified conservation contribution must separately apply the rules of section 170(h)(7) and this paragraph (j) and paragraphs (k) through (m) of this section to determine whether that upper-tier partnership's or upper-tier S corporation's allocated portion is a disallowed qualified conservation contribution.

(iii) *If the Disallowance Rule applies to an upper-tier partnership or an upper-tier S corporation.* If an upper-tier partnership's or upper-tier S corporation's allocated portion is a disallowed qualified conservation contribution under this paragraph (j), then:

(A) Any subsequent upper-tier partnership's or upper-tier S corporation's allocated portion of such allocated portion is a disallowed qualified conservation contribution, regardless of whether the subsequent upper-tier partnership's or upper-tier S corporation's allocated portion exceeds 2.5 times the sum of each of the subsequent upper-tier partnership's or upper-tier S corporation's ultimate member's relevant basis; and

(B) No person holding a direct or indirect interest in that upper-tier partnership or upper-tier S corporation may claim a deduction under any provision of the Code with respect to any amount of that upper-tier partnership's or upper-tier S corporation's allocated portion, regardless of whether that person's distributive share or pro rata share of the allocated portion exceeds 2.5 times its relevant basis. However, this does not affect the application of this paragraph (j) and paragraphs (k) through (m) of this section to another partner of the contributing partnership; for example, if the qualified conservation contribution is not a disallowed qualified conservation contribution with respect to the contributing partnership, then the distributive share of such contribution of an ultimate member holding a direct interest in the contributing partnership is not a disallowed qualified conservation contribution, notwithstanding that the qualified conservation contribution is a disallowed qualified conservation contribution with respect to one or more upper-tier partnerships or upper-tier S corporations.

(iv) *If the Disallowance Rule does not apply to an upper-tier partnership or upper-tier S corporation.* If an upper-tier partnership's or upper-tier S corporation's allocated portion is not a disallowed qualified conservation contribution under this paragraph (j), then:

(A) The distributive share or pro rata share of such allocated portion of any ultimate member holding a direct interest in the upper-tier partnership or upper-tier S corporation is not a disallowed qualified conservation contribution; and

(B) Any subsequent upper-tier partnership or upper-tier S corporation that receives an allocated portion of such allocated portion must separately apply the rules of section 170(h)(7) and this paragraph (j) and paragraphs (k) through (m) of this section to determine whether that subsequent upper-tier partnership's or upper-tier S corporation's allocated portion is treated as a disallowed qualified conservation contribution.

(5) *No inference.* There is no presumption that a qualified conservation contribution that is not a disallowed qualified conservation contribution as defined in paragraph (j)(3)(vii) of this section is compliant with section 170, any other section of the Code, the regulations, or any other guidance. Compliance with section 170(h)(7) and this paragraph (j) and paragraphs (k) through (n) of this section is not a safe harbor for purposes of any other provision of law or with respect to the value of the contribution. Such transactions are subject to adjustment or disallowance for any other reason, including failure to satisfy the other requirements of section 170 or overvaluation of the contribution. In addition, taxpayers who engage in such transactions may be required to disclose under § 1.6011-4 the transactions as listed transactions.

(6) ***Examples.*** The following examples illustrate the rules of this paragraph (j). For these three examples in this paragraph (j)(6), assume that the partnership allocations comply with the rules of subchapter K of chapter 1 of the Code, and that the exceptions in paragraph (n) of this section do not apply.

(i) ***Example 1: Disallowed qualified conservation contribution*** —

(A) ***Facts.*** A, an individual, and B, a C corporation, form AB Partnership, a partnership for Federal income tax purposes. AB Partnership acquires real property. Two years later, AB Partnership makes a qualified conservation contribution with respect to the property and claims a contribution of $100X on its return. AB Partnership allocates the contribution equally to A and B. A's relevant basis is $30X, and B's relevant basis is $8X.

(B) ***Analysis.*** A and B are the ultimate members of AB Partnership because they each receive a distributive share of the qualified conservation contribution and are not partnerships or S corporations. The claimed amount of AB Partnership's qualified conservation contribution is $100X, which exceeds 2.5 times the sum of A's and B's relevant bases, which is $95X ($95X = 2.5 × (A's $30X relevant basis + B's $8X relevant basis)). Therefore, AB Partnership's contribution is a disallowed qualified conservation contribution. No person may claim any deduction with respect to this contribution, even though A's $50X distributive share of the contribution does not exceed 2.5 times A's $30X relevant basis.

(ii) ***Example 2: Not a disallowed qualified conservation contribution*** —

(A) ***Facts.*** Individuals C and D form CD Partnership, a partnership for Federal income tax purposes. CD Partnership acquires real property. Two years later, CD Partnership makes a qualified conservation contribution with respect to the property and claims a contribution of $100X on its return. CD Partnership allocates the contribution $5X to C and $95X to D. C's relevant basis is $6X, and D's relevant basis is $34X.

(B) ***Analysis.*** C and D are the ultimate members of CD Partnership because they each receive a distributive share of the qualified conservation contribution and are not partnerships or S corporations. The claimed amount of CD Partnership's qualified conservation contribution is $100X, which does not exceed 2.5 times the sum of C's and D's relevant bases, which is also $100X ($100X = 2.5 × (C's $6X relevant basis + D's $34X relevant basis)). Therefore, CD Partnership's contribution is not a disallowed qualified conservation contribution (that is, not

disallowed by section 170(h)(7) and this paragraph (j)) with respect to CD Partnership, C, or D, even though D's $95X distributive share of the contribution exceeds 2.5 times D's $34X relevant basis.

(iii) *Example 3: Tiered partnerships* —

(A) ***Facts.*** Individuals E and F form UTP Partnership, a partnership for Federal income tax purposes. UTP Partnership and G, a C corporation, form LTP Partnership, a partnership for Federal income tax purposes. LTP Partnership acquires real property. Two years later, LTP Partnership makes a qualified conservation contribution with respect to the property and claims a contribution of $100X on its return. LTP Partnership allocates the contribution $5X to G and $95X to UTP Partnership. UTP Partnership allocates its $95X portion of the contribution $45X to E and $50X to F. G's relevant basis is $10X, E's relevant basis is $11X, and F's relevant basis is $21X.

(B) ***Analysis for LTP Partnership.*** The ultimate members of LTP Partnership are G, E, and F because they each receive a distributive share of the qualified conservation contribution and are not a partnership or S corporation. Because UTP Partnership is a partnership, it is not an ultimate member of LTP Partnership, even though it receives a distributive share of the qualified conservation contribution. The amount of LTP Partnership's qualified conservation contribution is $100X, which does not exceed 2.5 times the sum of each of the ultimate member's relevant basis, which is $105X ($105X = 2.5 × (G's $10X relevant basis + E's $11X relevant basis + F's $21X relevant basis)). Therefore, LTP Partnership's contribution is not a disallowed qualified conservation contribution (that is, is not disallowed by section 170(h)(7) and this paragraph (j)) with respect to LTP Partnership and G.

(C) ***Analysis for UTP Partnership.*** Because UTP Partnership receives an allocated portion, UTP Partnership must apply this paragraph (j) and paragraphs (k) through (m) of this section to determine whether its allocated portion is a disallowed qualified conservation contribution. The ultimate members of UTP Partnership are E and F because they each receive a distributive share of UTP Partnership's allocated portion and are not partnerships or S corporations. The amount of UTP Partnership's allocated portion of LTP Partnership's qualified conservation contribution is $95X, which exceeds 2.5 times the sum of E's and F's relevant bases, which is $80X ($80X = 2.5 × (E's $11X relevant basis + F's $21X relevant basis)). Therefore, UTP Partnership's allocated portion of LTP Partnership's contribution is a disallowed qualified conservation contribution with respect to UTP Partnership, E, and F. No partner of UTP Partnership may claim any deduction with respect to this contribution, even though F's $50X distributive share of the contribution does not exceed 2.5 times F's $21X relevant basis. This does not affect the determination that G's distributive share of the contribution is not a disallowed qualified conservation contribution.

(k) *Determination of relevant basis.* For purposes of this section, the term *relevant basis* means, with respect to any ultimate member, the portion of such ultimate member's modified basis (as determined under paragraph (l) of this section) that is allocable (under the rules of paragraph (m) of this section) to the portion of the real property with respect to which the qualified conservation contribution is made.

(l) *Determination of modified basis*—(1) *In general.* In the case of an ultimate member holding a direct interest in a partnership, the ultimate member's modified basis is determined by such partnership immediately before the qualified conservation contribution is made in the manner described in paragraph (l)(2) of this section. In the case of an ultimate member holding a direct interest in an S corporation, the ultimate member's modified basis is determined by such S corporation in the manner described in paragraph (l)(3) of this section.

(2) *Partners in partnerships*—(i) *Computation.* For purposes of this section, the term *modified basis* means, with respect to any ultimate member that is a direct partner in either a contributing partnership or an upper-tier partnership, such ultimate member's adjusted basis in its interest in the partnership in which the ultimate member holds a direct interest as of the beginning of the first day of the partnership's taxable year in which the qualified conservation contribution is made, with adjustments as determined under paragraphs (l)(2)(ii) through (vi) of this section. However, if the ultimate member was not a partner as of the beginning of the first day of the partnership's taxable year in which the qualified conservation contribution is made, then the term *modified basis* means such ultimate member's adjusted basis in its interest in the partnership immediately after the transaction that resulted in the ultimate member becoming a partner, with adjustments as determined under paragraphs (l)(2)(ii) through (vi) of this section. The adjustments under paragraphs (l)(2)(ii) through (vi) must be made in the order in which they are listed.

(ii) *Step 1.* First, the computation of modified basis must start with the ultimate member's adjusted basis under paragraph (l)(2)(i) of this section and then reflect an increase for any contributions made by the ultimate member to the partnership during the portion of the year commencing with the beginning of the taxable year of the partnership and ending immediately prior to the time of day at which the qualified conservation contribution is made as provided in section 722 of the Code.

(iii) ***Step 2.*** Second, if between the beginning of the partnership's taxable year and the time of day at which the qualified conservation contribution is made, the ultimate member acquired additional interests in the partnership, the amount determined under paragraph (l)(2)(ii) of this section must be increased by the ultimate member's initial basis in those additional interests. If, between the beginning of the partnership's taxable year and the time of day at which the qualified conservation contribution is made, the ultimate member partially disposed of its interest in the partnership, the amount determined under paragraph (l)(2)(ii) of this section must be decreased by the ultimate member's basis in the interests disposed of.

(iv) ***Step 3.*** Third, the amount determined under paragraph (l)(2)(iii) of this section must be adjusted, as provided in section 705 of the Code, by the ultimate member's hypothetical distributive share of partnership items attributable to the portion of the year commencing with the beginning of the taxable year of the partnership and ending immediately prior to the time of day at which the qualified conservation contribution is made. In making this determination, the partnership must apply the rules of § 1.706-4 and apply a hypothetical interim closing method to allocate the partnership's items attributable to the portion of the year commencing with the beginning of the taxable year of the partnership and ending immediately prior to the time of day at which the qualified conservation contribution is made. The partnership cannot apply any convention in § 1.706-4(c) to the hypothetical determination of the partners' distributive shares, but rather must perform the calculation as though the determination occurred immediately prior to the time of day at which the qualified conservation contribution is made. This hypothetical determination of the partners' distributive shares is only for purposes of calculating modified basis. This paragraph (l) does not require the partnership to use the interim closing method with respect to the determination of its partners' actual distributive shares of partnership items of income, gain, loss, deduction, and credit

for the taxable year in which the qualified conservation contribution is made or otherwise. *See* § 1.706-4 for applicable rules for the determination of a partner's distributive share when a partner's interest varies during a partnership taxable year.

(v) ***Step 4.*** Fourth, the amount determined under paragraph (l)(2)(iv) of this section must be reduced (but not below zero) by any distributions made by the partnership to the ultimate member during the portion of the year commencing with the beginning of the taxable year of the partnership and ending immediately prior to the time of day at which the qualified conservation contribution is made as provided in section 733 of the Code.

(vi) ***Step 5.*** Fifth, the amount determined under paragraph (l)(2)(v) of this section must be reduced by the full amount of the ultimate member's share of § 1.752-1 liabilities of any partnership (including a lower-tier partnership). The remaining amount is such ultimate member's modified basis. Thus, an ultimate member's modified basis may be less than zero.

(3) *S corporation shareholder*—(i) *Computation.* For purposes of this section, the term *modified basis* means, with respect to any ultimate member that is a shareholder of either a contributing S corporation or an upper-tier S corporation, such ultimate member's adjusted basis in its shares in the S corporation as of the end of the S corporation's taxable year in which the qualified conservation contribution is made, with adjustments as determined under paragraphs (l)(3)(ii) and (iii) of this section. However, if the ultimate member was not a shareholder at the end of the S corporation's taxable year in which the qualified conservation contribution is made, then the term *modified basis* means such ultimate member's adjusted basis in its shares in the S corporation immediately prior to the transaction that terminated its interest in the S corporation, with adjustments as determined under paragraphs (l)(3)(ii) and (iii) of this section. Modified basis does not include the ultimate member's adjusted basis in any indebtedness of the S corporation to the ultimate member. The adjustments under paragraphs (l)(3)(ii) and (iii) of this section must be made in the order in which they are listed.

(ii) *Step 1.* First, the computation of modified basis must start with the ultimate member's adjusted basis under paragraph (l)(3)(i) of this section, and then reflect an increase for the extent to which the ultimate member's adjusted basis reflects a reduction as a result of the qualified conservation contribution. Thus, the ultimate member's modified basis with respect to a qualified conservation contribution does not reflect any reduction for the ultimate member's pro rata share of the S corporation's basis in the conservation easement or other property contributed in the qualified conservation contribution.

(iii) *Step 2.* Second, the amount determined under paragraph (l)(3)(ii) of this section must be multiplied by the number of days during the S corporation's taxable year in which the ultimate member was a shareholder and divided by the total number of days during the S corporation's taxable year. The resulting amount is such ultimate member's modified basis.

(4) *Examples.* The following examples illustrate the provisions of this paragraph (l). For the four examples in this paragraph (l)(4), assume that the partnership allocations comply with the rules of subchapter K of chapter 1 of the Code and the exceptions in paragraph (n) of this section do not apply.

(i) ***Example 1*** —

(A) ***Facts.*** AB Partnership is a calendar-year partnership for Federal income tax purposes whose partners are A and B, each of whom is an individual and has a 50 percent interest in income, gain, loss, and deduction. Several years ago, B contributed property to AB Partnership subject to a § 1.752-1 liability. At the beginning of AB Partnership's 2024 taxable year (the beginning of

the day on January 1, 2024), A's adjusted basis in its interest in AB Partnership is $19X, and B's adjusted basis in its interest in AB Partnership is $17X. At 10:01 a.m. on August 29, 2024, AB Partnership makes a qualified conservation contribution. On August 29, 2024, the amount of the § 1.752-1 liability is $10X and is allocated under the rules of section 752 to A. During 2024, there were no variations in any partner's interests in AB Partnership within the meaning of section 706. During 2024, AB Partnership earned $8X of ordinary income and sustained ($4X) of capital loss in the ordinary course of its business, both of which are allocated equally to A and B. Within 2024, AB Partnership earned $6X of ordinary income, and sustained ($4X) of capital loss between the beginning of the day on January 1, 2024, and 10:00 a.m. on August 29, 2024, and AB Partnership earned $2X of ordinary income, and sustained $0X of capital loss between 10:01 a.m. on August 29, 2024, and the end of the day on December 31, 2024. Other than the qualified conservation contribution, none of AB Partnership's items are extraordinary items within the meaning of § 1.706-4(e)(2). In April 2024, AB Partnership distributed $1X cash to A. In November 2024, B contributed $2X cash to AB Partnership.

(B) ***Analysis.*** The ultimate members of AB Partnership are A and B because they each receive a distributive share of the qualified conservation contribution and are not partnerships or S corporations. To determine A's and B's modified bases, AB Partnership must start with A's and B's adjusted bases in AB Partnership as of the beginning of the first day of the taxable year of AB Partnership and then make the adjustments required under paragraphs (l)(2)(ii) through (vi) of this section. Accordingly, the computation of A's beginning modified basis begins with $19X, and the computation of B's modified basis begins with $17X. First, those amounts must be increased by any contributions between the beginning of the day on January 1, 2024, and 10 a.m. on August 29, 2024. Because there were none, after this step, the computation of A's modified basis remains at $19X and the computation of B's modified basis remains at $17X. Next, these amounts must be adjusted for any additional acquisitions of partnership interests by an existing partner or partial dispositions of partnership interests by a continuing partner between the beginning of the partnership's taxable year and the time of day at which the qualified conservation contribution is made. Because there were none, after this step, the computation of A's modified basis remains at $19X and the computation of B's modified basis remains at $17X. Then these amounts must be adjusted as provided in section 705 by A's and B's hypothetical distributive shares of AB Partnership's items attributable to the portion of the year between the beginning of the day on January 1, 2024, and 10:00 a.m. on August 29, 2024. Thus, the computations of A's and B's modified bases will each reflect an increase for their hypothetical $3X distributive share of the $6X ordinary income that AB Partnership earned between the beginning of the day on January 1, 2024, and 10:00 a.m. on August 29, 2024, and a decrease for their hypothetical ($2X) distributive share of the ($4X) capital loss that AB Partnership incurred between the beginning of the day on January 1, 2024, and 10:00 a.m. on August 29, 2024. Therefore, after this step, the computation of A's modified basis reflects an increase from $19X to $20X, and the computation of B's modified basis reflects an increase from $17X to $18X. Next, these amounts must be reduced by any distributions between the beginning of the day on January 1, 2024, and 10:00 a.m. on August 29, 2024. Thus, the computation of A's modified basis reflects a reduction from $20X to $19X. B did not receive any distribution, so the computation of B's modified basis remains at $18X. Finally, the full amount of A's and B's shares of § 1.752-1 liabilities must be subtracted. Thus, the computation of A's modified basis reflects a reduction from $19X to $9X, which is A's modified basis. B's modified basis is $18X.

(ii) ***Example 2 —***

(A) ***Facts.*** CD Partnership, a partnership for Federal income tax purposes, is a calendar-year partnership using the calendar day convention under § 1.706-4 whose partners on January 1, 2024, are C and D, each of whom is an individual and has a 50 percent interest in income, gain, loss, and deduction. On March 15, 2024, C sells its interest to E, a C corporation. At 1:15 p.m. on September 15, 2024, CD Partnership makes a qualified conservation contribution. On September 21, 2024, D sells its interest to F, an individual. During 2024, CD Partnership earned $8X of ordinary income and sustained ($14X) of ordinary loss. Within 2024, CD Partnership earned all $8X of ordinary income in November and December, and sustained all ($14X) of ordinary loss in April through August. In May 2024, D contributed $6X cash to CD Partnership, and E contributed property with a fair market value of $6X and basis of $3X. D and E are equal partners during the period in which they are both partners. CD Partnership made no distributions during 2024. CD Partnership had no § 1.752-1 liabilities during 2024. In accordance with § 1.706-4(e)(2)(xiii), CD Partnership treats its qualified conservation contribution as an extraordinary item allocable only to D and E, its partners at 1:15 p.m. on September 15, 2024. Other than the qualified conservation contribution, none of AB Partnership's items are extraordinary items within the meaning of § 1.706-4(e)(2). CD Partnership uses the proration method under § 1.706-4 to allocate its items among C, D, E, and F. Under the proration method, CD Partnership allocates each C, D, E, and F a distributive share of a portion of both the $8X ordinary income and the ($14X) ordinary loss. D's adjusted basis in its interest in CD Partnership at the beginning of CD Partnership's 2024 taxable year (the beginning of the day on January 1, 2024) is $8X. E's adjusted basis in its interest in CD Partnership immediately after E acquires C's interest in CD Partnership is $6X.

(B) ***Analysis.*** The ultimate members of CD Partnership are D and E because they each receive a distributive share of the qualified conservation contribution and are not partnerships or S corporations. To determine D's and E's modified bases, CD Partnership must start with D's and E's adjusted bases in CD Partnership as of the beginning of the day on January 1, 2024, and then make the adjustments required under paragraphs (l)(2)(ii) through (vi) of this section. However, because E was not a partner as of the beginning of the day on January 1, 2024, CD Partnership must start with E's adjusted basis immediately after E's purchase of C's interest in CD Partnership. Accordingly, the computation of D's modified basis begins with $8X, and the computation of E's modified basis begins with $6X. Then, these amounts must be increased by any contributions made by D or E, respectively, to CD Partnership between the beginning of the day on January 1, 2024, and 1:14 p.m. on September 15, 2024. Therefore, the computation of D's modified basis reflects an increase from $8X to $14X (for D's $6X contribution of cash to CD Partnership in May 2024), and the computation of E's modified basis reflects an increase from $6X to $9X (for E's contribution of property to CD Partnership with a basis of $3X in May 2024). Next, these amounts must be adjusted for any additional acquisitions of partnership interests by an existing partner or partial dispositions of partnership interests by a continuing partner between the beginning of the partnership's taxable year and the time of day at which the qualified conservation contribution is made. Because there were none, after this step, the computation of D's modified basis remains at $14X and the computation of E's modified basis remains at $9X. Next, these amounts must be adjusted as provided in section 705 by D's and E's hypothetical distributive shares of CD Partnership's items attributable to the portion of the year between the beginning of the day on January 1, 2024, and 1:14 p.m. on September 15, 2024. CD Partnership must perform the analysis using an interim closing method to a hypothetical variation at 1:14 p.m. on September 15, 2024, immediately prior to the qualified conservation contribution. The computation of D's modified basis will reflect an adjustment for

its hypothetical distributive share of all CD Partnership's items incurred from the beginning of the day on January 1, 2024, through 1:14 p.m. on September 15, 2024. The computation of E's modified basis will reflect an adjustment for its hypothetical distributive share of all CD Partnership's items incurred from the end of the day on March 15, 2024, through 1:14 p.m. on September 15, 2024. For purposes of this paragraph (l)(4)(ii)(B) (*Example 2*), it does not matter that CD Partnership actually used the proration method to allocate its 2024 income. Instead, under this hypothetical calculation of the distributive shares, the computation of D's and E's modified bases will each reflect a reduction for their 50 percent share of the ($14X) ordinary loss. Because none of CD Partnership's $8X of ordinary income was earned between the beginning of the day on January 1, 2024, and 1:14 p.m. on September 15, 2024, neither D's nor E's modified basis will reflect an increase for any amount of that income. Thus, after this step, the computation of D's modified basis reflects a reduction from $14X to $7X, and the computation of E's modified basis reflects a reduction from $9X to $2X. Then, these amounts must be reduced by any distributions between the beginning of the day on January 1, 2024, and 1:14 p.m. on September 15, 2024. Because there were none, after this step, the computation of D's modified basis remains at $7X, and the computation of E's modified basis remains at $2X. Finally, the full amount of D's and E's shares of § 1.752-1 liabilities must be subtracted. Because there were none, D's modified basis is $7X, and E's modified basis is $2X.

(iii) ***Example 3*** —

(A) ***Facts.*** HI Inc. is a calendar-year S corporation whose shareholders on January 1, 2024, are H and I, each of whom owns 50 percent of the shares. On May 1, 2024, H sells all of its stock to J. In June 2024, HI Inc. contributes a conservation easement that is a qualified conservation contribution on 400 acres of real property. HI Inc.'s adjusted basis in the conservation easement is $12X (which is different from HI Inc.'s adjusted basis in the 400 acres and also may be different from the value of the conservation easement). On July 1, 2024, I sells all of its stock to K. Under § 1.1377-1, HI Inc. allocates its qualified conservation contribution $^1/_6$ to H, $^1/_4$ to I, $^1/_3$ to J, and $^1/_4$ to K. Pursuant to the second sentence of section 1367(a)(2)(B), as a result of the qualified conservation contribution, H's adjusted basis in its shares is reduced by $2X, I's adjusted basis in its shares is reduced by $3X, J's adjusted basis in its shares is reduced by $4X, and K's adjusted basis in its shares is reduced by $3X. At the end of HI Inc.'s 2024 taxable year (the end of the day on December 31, 2024), J's adjusted basis in its shares is $15X and K's adjusted basis in its shares is $11X. Immediately prior to H's sale to J, H's adjusted basis in its shares was $8X. Immediately prior to I's sale to K, I's adjusted basis in its shares was $7X. Whether H, I, J, or K have adjusted basis in indebtedness of HI Inc., has no effect on the computation of their modified bases. H is an estate of a deceased shareholder, and I, J, and K are individuals that are not nonresident aliens.

(B) ***Analysis.*** The ultimate members of HI Inc. are H, I, J, and K, because they each receive a pro rata share of the qualified conservation contribution and are not partnerships or S corporations. To determine H's, I's, J's, and K's modified bases, HI Inc. must begin with each shareholder's adjusted basis in its shares as of the end of the day on December 31, 2024 (the end of the S corporation's taxable year in which it made the qualified conservation contribution). However, because H and I were not shareholders as of the end of the day on December 31, 2024, HI Inc. must begin with H's adjusted basis immediately before H's sale to J, and I's adjusted basis immediately before I's sale to K. Accordingly, the computation of H's modified basis begins with $8X, the computation of I's modified basis begins with $7X, the computation of J's modified basis begins with $15X, and the computation of K's modified basis begins with $11X. Next, HI

Inc. must increase these amounts by the extent the adjusted bases were reduced as a result of the qualified conservation contribution. Accordingly, the computation of H's modified basis reflects an increase from $8X to $10X, the computation of I's modified basis reflects an increase from $7X to $10X, the computation of J's modified basis reflects an increase from $15X to $19X, and the computation of K's modified basis reflects an increase from $11X to $14X. Finally, HI Inc. must multiply each of these amounts by the number of days during 2024 in which each ultimate member was a shareholder, and divide by 366 (the total number of days in HI Inc.'s 2024 taxable year). H was a shareholder for 122 days. Thus, H's modified basis is $3.33X ($10X × 122/366). I was a shareholder for 183 days. Thus, I's modified basis is $5X ($10X × 183/366). J was a shareholder for 244 days. Thus, J's modified basis is $12.67X ($19X × 244/366). K was a shareholder for 183 days. Thus, K's modified basis is $7X ($14X × 183/366).

(iv) ***Example 4*** —

(A) ***Facts.*** PQ Partnership is a calendar-year partnership for Federal income tax purposes whose partners are individuals P and Q. At the beginning of PQ Partnership's 2024 taxable year (the beginning of the day on January 1, 2024), P has a sixty percent interest in all of PQ Partnership's items, including items of income, gain, loss, deduction, credit, and charitable contributions, and P's adjusted basis in its interest in PQ Partnership is $60X. At the beginning of PQ Partnership's 2024 taxable year, Q has a forty percent interest in all of PQ Partnership's items, including items of income, gain, loss, deduction, credit, and charitable contributions, and Q's adjusted basis in its interest in PQ Partnership is $30X. On March 15, 2024, P sells two-thirds of P's interest in PQ Partnership to individual Z, who was not previously a partner in PQ Partnership, for $55X. At the time of the sale, P's adjusted basis in the partnership interests P sold to Z was $40X. At noon on August 29, 2024, PQ Partnership makes a qualified conservation contribution. PQ Partnership allocates twenty percent of the qualified conservation contribution to P, forty percent to Q, and forty percent to Z. Between January 1 and August 29, 2024, PQ Partnership had no items of income, gain, loss, or deduction, and did not make any distributions. No partner made any contributions during 2024. PQ Partnership did not have any § 1.752-1 liabilities during 2024.

(B) ***Analysis.*** P, Q, and Z are the ultimate members of PQ Partnership because they each receive a distributive share of the qualified conservation contribution and are not partnerships or S corporations. To determine P's, Q's, and Z's modified bases, PQ Partnership must start with P's, Q's, and Z's adjusted bases in PQ Partnership as of the beginning of the first day of the taxable year of PQ Partnership and then make the adjustments required under paragraphs (l)(2)(ii) through (vi) of this section. However, because Z was not a partner as of the beginning of the day on January 1, 2024, PQ Partnership must start with Z's adjusted basis immediately after Z's purchase of two-thirds of P's interest in PQ Partnership. Accordingly, the computation of P's modified basis begins with $60X, the computation of Q's modified basis begins with $30X, and the computation of Z's modified basis begins with $55X. First, those amounts must be increased by any contributions between the beginning of the day on January 1, 2024, and noon on August 29, 2024. Because there were none, after this step, the computation of P's modified basis remains at $60X, the computation of Q's modified basis remains at $30X, and the computation of Z's modified basis remains at $55X. Next, these amounts must be adjusted for any additional acquisitions of partnership interests by an existing partner or partial dispositions of partnership interests by a continuing partner between the beginning of the partnership's taxable year and the time of day at which the qualified conservation contribution is made. P

sold two-thirds of its interest to Z prior to PQ Partnership's qualified conservation contribution; P's basis in the interests it sold was $40X. As a result, the computation of P's modified basis reflects a reduction from $60X to $20X. Then these amounts must be adjusted as provided in section 705 by P's, Q's, and Z's hypothetical distributive shares of PQ Partnership's items attributable to the portion of the year between the beginning of the day on January 1, 2024, and noon on August 29, 2024. Because there were none, after this step, the computation of P's modified basis remains at $20X, the computation of Q's modified basis remains at $30X, and the computation of Z's modified basis remains at $55X. Next, these amounts must be reduced by any distributions between the beginning of the day on January 1, 2024, and noon on August 29, 2024. Because there were none, after this step, the computation of P's modified basis remains at $20X, the computation of Q's modified basis remains at $30X, and the computation of Z's modified basis remains at $55X. Finally, the full amount of P's, Q's, and Z's shares of § 1.752-1 liabilities must be subtracted. Because there were none, P's modified basis is $20X, Q's modified basis is $30X, and Z's modified basis is $55X.

(m) *Allocation of modified basis*—(1) *In general.* An allocation of an ultimate member's modified basis to the portion of the real property with respect to which the qualified conservation contribution is made must be made in accordance with this paragraph (m). Rules for allocating an ultimate member's modified basis in a contributing partnership are provided in paragraph (m)(2) of this section. Rules for allocating an ultimate member's modified basis in a contributing S corporation are provided in paragraph (m)(3) of this section. Rules for allocating an ultimate member's modified basis in an upper-tier partnership are provided in paragraph (m)(4) of this section. Rules for allocating an ultimate member's modified basis in an upper-tier S corporation are provided in paragraph (m)(5) of this section. Records must be kept in accordance with paragraph (m)(6) of this section.

(2) *Determination of relevant basis for an ultimate member holding a direct interest in a contributing partnership*—(i) *Narrative rule.* This paragraph (m)(2) applies in the case of an ultimate member holding a direct interest in a contributing partnership and provides that a contributing partnership must determine each such ultimate member's relevant basis as provided in this paragraph (m)(2). Relevant basis equals each ultimate member's modified basis as determined under paragraph (l)(2) of this section multiplied by a fraction—

(A) The numerator of which is the ultimate member's share of the contributing partnership's adjusted basis in the portion of the real property with respect to which the qualified conservation contribution is made as determined under paragraph (m)(2)(ii) of this section; and

(B) The denominator of which is the ultimate member's portion of the adjusted basis in all the contributing partnership's properties as determined under paragraph (m)(2)(iii) of this section.

(ii) *Ultimate member's share of the contributing partnership's adjusted basis in the portion of the real property with respect to which the qualified conservation contribution is made.* For purposes of this paragraph (m)(2), an ultimate member's share of the contributing partnership's adjusted basis in the portion of the real property with respect to which the qualified conservation contribution is made equals the contributing partnership's adjusted basis in the portion of the real property with respect to which the qualified conservation contribution is made (determined as of the time of day of the contribution) multiplied by a fraction—

(A) The numerator of which is the ultimate member's distributive share of the qualified conservation contribution; and

(B) The denominator of which is the total amount of the contributing partnership's qualified conservation contribution.

(iii) *Ultimate member's portion of the adjusted basis in all the contributing partnership's properties*—(A) For purposes of this paragraph (m)(2), an ultimate member's portion of the adjusted basis in all the contributing partnership's properties is equal to the sum of:

(*1*) The ultimate member's share of the contributing partnership's adjusted basis in the portion of the real property with respect to which the qualified conservation contribution is made as determined under paragraph (m)(2)(ii) of this section; plus

(*2*) The ultimate member's portion of the adjusted basis in all the contributing partnership's properties other than the portion of the real property with respect to which the qualified conservation contribution is made as determined under paragraph (m)(2)(iii)(B) of this section.

(B) To determine a partner's portion of the adjusted basis in all of a contributing partnership's properties, the contributing partnership must apportion among its partners its adjusted basis in each of its properties (except the portion of the real property with respect to which the qualified conservation contribution is made), using the adjusted basis immediately before the qualified conservation contribution, without duplication or omission of any property, and by treating the adjusted basis in each property as not less than zero. This apportionment must be done under principles similar to the determination of the partners' interests in the partnership under section 704(b), including the factors in § 1.704-1(b)(3)(ii). In addition, the apportionment must reflect section 704(c) principles. For example, if a partnership property has built-in loss (the adjusted basis of the property exceeds its fair market value), and section 704(c) would require all of that built-in loss to be allocated to a certain partner if that property was sold, all of the basis in the property that exceeds the property's fair market value must be apportioned to the partner to whom the loss would be allocated if the property was sold.

(iv) ***Formulaic rule.*** The rule of this paragraph (m)(2) is also expressed in the following formula:

Equation 1 to Paragraph (m)(2)(iv)

$$R = M \times (T \div (D + T))$$

Where:

R = Relevant basis.

M = Modified basis as determined under paragraph (l) of this section.

D = Ultimate member's portion of the adjusted basis in all the contributing partnership's properties (other than the portion of the real property with respect to which the qualified conservation contribution is made) as determined under paragraph (m)(2)(iii)(B) of this section.

T = Ultimate member's share of the contributing partnership's adjusted basis in the portion of the real property with respect to which the qualified conservation contribution is made, determined according to the following formula: A × (B ÷ C).

A = Contributing partnership's adjusted basis in the portion of the real property with respect to which the qualified conservation contribution is made.

B = Ultimate member's distributive share of the qualified conservation contribution.

C = Total amount of the contributing partnership's qualified conservation contribution.

(3) *Determination of relevant basis for an ultimate member holding a direct interest in a contributing S corporation*—(i) *Narrative rule.* This paragraph (m)(3) applies in the case of an ultimate member holding a direct interest in a contributing S corporation and provides that a contributing S corporation must determine each such ultimate member's relevant basis as provided in this paragraph (m)(3). Relevant basis equals each ultimate member's modified basis as determined under paragraph (l)(3) of this section multiplied by a fraction—

(A) The numerator of which is the ultimate member's pro rata portion of the contributing S corporation's adjusted basis in the portion of the real property with respect to which the qualified conservation contribution is made; and

(B) The denominator of which is the ultimate member's pro rata portion of the adjusted basis in all the contributing S corporation's properties (including the portion of the real property with respect to which the qualified conservation contribution is made).

(ii) *Formulaic rule.* The rule of this paragraph (m)(3) is also expressed in the following formula:

Equation 2 to Paragraph (m)(3)(ii)

R = M × (E ÷ F)

Where:

R = Relevant basis.

M = Modified basis as determined under paragraph (l) of this section.

E = Ultimate member's pro rata portion of the contributing S corporation's adjusted basis in the portion of the real property with respect to which the qualified conservation contribution is made.

F = Ultimate member's pro rata portion of the adjusted basis in all the contributing S corporation's properties (including the portion of the real property with respect to which the qualified conservation contribution is made).

(4) *Determination of relevant basis for an ultimate member holding a direct interest in an upper-tier partnership*—(i) *In general.* This paragraph (m)(4) applies in the case of an ultimate member holding a direct interest in an upper-tier partnership. Each such ultimate member's modified basis must be traced through all upper-tier partnerships to the

contributing partnership, and the contributing partnership must determine the relevant basis. This involves a multi-step process under which, beginning with the upper-tier partnership in which the ultimate member holds a direct interest, each upper-tier partnership must perform calculations, and then finally the contributing partnership must use those calculations to compute the ultimate member's relevant basis. For simplicity, this paragraph (m)(4) describes a situation in which there are two tiers of partnerships—a contributing partnership and an upper-tier partnership. In a situation involving more tiers, each partnership must apply the rules and principles of this paragraph (m)(4) iteratively to determine relevant basis.

(ii) *Upper-tier partnership*—(A) *Narrative rule*—(*1*) *In general.* The upper-tier partnership must determine the portion of each ultimate member's modified basis that is allocable to the upper-tier partnership's interest in the partnership in which it holds a direct interest (in a situation involving only two tiers of partnerships, that will be the contributing partnership). This determination must be done in accordance with the principles of paragraph (m)(2) of this section, the rule in paragraph (m)(4)(ii)(A)(*2*) of this section, and the formula provided in paragraph (m)(4)(ii)(B) of this section. In other words, the formula provided in paragraph (m)(4)(ii)(B) of this section is similar to the formula provided in paragraph (m)(2)(iv) of this section, except that, instead of determining the portion of modified basis that is allocable to the portion of the real property with respect to which the qualified conservation contribution is made, the formula in paragraph (m)(4)(ii)(B) of this section determines the portion of modified basis that is allocable to the upper-tier partnership's interest in the next lower-tier partnership. As explained in paragraph (m)(4)(iii) of this section, the contributing partnership will then use the amount determined under the formula in paragraph (m)(4)(ii)(B) of this section to compute the portion of modified basis that is allocable to the portion of the real property with respect to which the qualified conservation contribution is made.

(*2*) *Apportionment of upper-tier partnership's adjusted bases in its properties.* To determine a partner's portion of the adjusted basis in all of an upper-tier partnership's properties, the upper-tier partnership must apportion among its partners its adjusted basis in each of its properties (except its interest in the lower-tier partnership), using the adjusted basis immediately before the qualified conservation contribution, without duplication or omission of any property, and by treating the adjusted basis in each property as not less than zero. This apportionment must be done under principles similar to the determination of the partners' interests in the partnership under section 704(b), including the factors in § 1.704-1(b)(3)(ii). In addition, the apportionment must reflect section 704(c) principles. For example, if a partnership property has built-in loss (the adjusted basis of the property exceeds its fair market value), and section 704(c) would require all of that built-in loss to be allocated to a certain partner if that property was sold, all of the basis in the property that exceeds the property's fair market value must be apportioned to the partner to whom the loss would be allocated if the property was sold.

(B) ***Formulaic rule.*** The rule of this paragraph (m)(4)(ii) is also expressed in the following formula:

Equation 3 to Paragraph (m)(4)(ii)(B)

$$G = M \times (U \div (J + U))$$

Where:

G = The portion of the ultimate member's modified basis that is allocable to the upper-tier partnership's interest in the contributing partnership.

M = Modified basis as determined under paragraph (l) of this section.

J = Ultimate member's portion of the adjusted basis in all the upper-tier partnership's properties (other than the upper-tier partnership's interest in the contributing partnership) as determined under paragraph (m)(4)(ii)(A)(2) of this section.

U = Ultimate member's share of the upper-tier partnership's adjusted basis in its interest in the contributing partnership, determined according to the following formula: H × (B ÷ K).

H = Upper-tier partnership's adjusted basis in its interest in the contributing partnership.

B = Ultimate member's distributive share of the qualified conservation contribution.

K = Upper-tier partnership's allocated portion of the qualified conservation contribution.

(iii) *Contributing partnership*—(A) *Narrative rule.* After completion of the computations under paragraph (m)(4)(ii) of this section, the contributing partnership must determine the portion of the amount determined under item G (*see* paragraph (m)(4)(ii)(B) of this section) with respect to each ultimate member that is allocable to the portion of the real property with respect to which the qualified conservation contribution is made. This determination must be done in accordance with the principles of paragraph (m)(2) of this section and the formula provided in paragraph (m)(4)(iii)(B) of this section.

(B) ***Formulaic rule.*** The rule of this paragraph (m)(4)(iii) is also expressed in the following formula:

Equation 4 to Paragraph (m)(4)(iii)(B)

R = G × (V ÷ (L + V))

Where:

R = Relevant basis.

G = Amount determined with respect to item G as described under paragraph (m)(4)(ii)(B) of this section.

L = Upper-tier partnership's portion of adjusted basis in all the contributing partnership's properties (other than the portion of the real property with respect to which the qualified conservation contribution is made) as determined under paragraph (m)(2)(iii)(B) of this section.

V = Upper-tier partnership's share of the contributing partnership's adjusted basis in the portion of the real property with respect to which the qualified conservation contribution is made, determined according to the following formula: A × (K ÷ C).

A = Contributing partnership's adjusted basis in the portion of the real property with respect to which the qualified conservation contribution is made.

K = Upper-tier partnership's allocated portion of the qualified conservation contribution.

C = Total amount of the contributing partnership's qualified conservation contribution.

(5) *Determination of relevant basis for an ultimate member holding a direct interest in an upper-tier S corporation*—(i) *In general.* This paragraph (m)(5) applies in the case of an ultimate member holding a direct interest in an upper-tier S corporation. Each such ultimate member's modified basis must be traced through the upper-tier S corporation and any upper-tier partnerships to the contributing partnership, and the contributing partnership must determine the relevant basis. This involves a multi-step process under which, beginning with the upper-tier S corporation, the upper-tier S corporation and any upper-tier partnerships must perform calculations, and then finally the contributing partnership must use those calculations to compute the ultimate member's relevant basis. For simplicity, this paragraph (m)(5) describes a situation in which there are two tiers—a contributing partnership and an upper-tier S corporation. In a situation involving more tiers, each partnership and the upper-tier S corporation must apply the rules and principles of this paragraph (m) iteratively to determine relevant basis.

(ii) *Upper-tier S corporation*—(A) *Narrative rule.* The upper-tier S corporation must determine the portion of each ultimate member's modified basis that is allocable to the upper-tier S corporation's interest in the partnership in which it holds a direct interest (in a situation involving only two tiers, that will be the contributing partnership). This determination must be done in accordance with the principles of paragraph (m)(3) of this section and the formula provided in paragraph (m)(5)(ii)(B) of this section. In other words, the formula provided in paragraph (m)(5)(ii)(B) of this section is similar to the formula provided in paragraph (m)(3)(ii) of this section, except that, instead of determining the portion of modified basis that is allocable to the portion of the real property with respect to which the qualified conservation contribution is made, the formula in paragraph (m)(5)(ii)(B) of this section determines the portion of modified basis that is allocable to the upper-tier S corporation's interest in the next lower-tier partnership. As explained in paragraph (m)(5)(iii) of this section, the contributing partnership will then use the amount determined under the formula in paragraph (m)(5)(ii)(B) of this section to compute the portion of modified basis that is allocable to the portion of the real property with respect to which the qualified conservation contribution is made.

(B) ***Formulaic rule.*** The rule of this paragraph (m)(5)(ii) is also expressed in the following formula:

Equation 5 to Paragraph (m)(5)(ii)(B)

$$N = M \times (P \div Q)$$

Where:

N = Portion of the ultimate member's modified basis that is allocable to the upper-tier S corporation's interest in the contributing partnership.

M = Modified basis as determined under paragraph (l) of this section.

P = Ultimate member's pro rata portion of the upper-tier S corporation's adjusted basis in its interest in the contributing partnership.

Q = Ultimate member's pro rata portion of the adjusted basis in all the upper-tier S corporation's properties (including the upper-tier S corporation's interest in the contributing partnership).

(iii) *Contributing partnership*—(A) *Narrative rule.* After completion of the computations under paragraph (m)(5)(ii) of this section, the contributing partnership must determine the portion of the amount determined under item N (*see* paragraph (m)(5)(ii)(B) of this section) with respect to each ultimate member that is allocable to the portion of the

real property with respect to which the qualified conservation contribution is made. This determination must be done in accordance with the principles of paragraph (m)(2) of this section and the formula provided in paragraph (m)(5)(iii)(B) of this section.

(B) ***Formulaic rule.*** The rule of this paragraph (m)(5)(iii) is also expressed in the following formula:

Equation 6 to Paragraph (m)(5)(iii)(B)

R = N × (W ÷ (S + W))

Where:

R = Relevant basis.

N = Amount determined with respect to item N as described under paragraph (m)(5)(ii)(B) of this section.

S = Upper-tier S corporation's portion of the adjusted basis in all the contributing partnership's properties (other than the portion of the real property with respect to which the qualified conservation contribution is made) as determined under paragraph (m)(2)(iii)(B) of this section.

W = Upper-tier S corporation's share of the contributing partnership's adjusted basis in the portion of the real property with respect to which the qualified conservation contribution is made, determined according to the following formula: A × (Y ÷ C).

A = Contributing partnership's adjusted basis in the portion of the real property with respect to which the qualified conservation contribution is made.

Y = Upper-tier S corporation's allocated portion of the qualified conservation contribution.

C = Total amount of the contributing partnership's qualified conservation contribution.

(6) ***Recordkeeping requirements.*** Contributing partnerships, contributing S corporations, upper-tier partnerships, and upper-tier S corporations must maintain dated, written statements in their books and records, by the due date, including extensions, of their Federal income tax returns, substantiating the computation of each ultimate member's adjusted basis, modified basis, and relevant basis. *See* § 1.6001-1. These statements need not be maintained (nor does modified basis or relevant basis need to be computed) with respect to contributions that meet an exception in paragraph (n)(2) or (3) of this section, unless the contribution also meets the exception in paragraph (n)(4) of this section (in which case these statements need to be maintained and modified basis and relevant basis need to be computed).

(7) ***Examples.*** The following examples illustrate the provisions of this paragraph (m). For the examples in this paragraph (m)(7), assume that the partnership allocations comply with the rules of subchapter K of chapter 1 of the Code and the exceptions in paragraph (n) of this section do not apply.

(i) ***Example 1*** —

(A) ***Facts.*** YZ Partnership is a partnership for Federal income tax purposes whose partners are individuals Y and Z. YZ Partnership owns 100 acres of real property with an adjusted basis of $10X. YZ Partnership makes a qualified conservation contribution on 60 acres of the property. YZ Partnership claims a contribution of $18X, which it allocates $12X to Y and $6X to Z. YZ Partnership's adjusted basis in the 60 acres is $6X, and its adjusted basis in all of its other properties (including its $4X basis in the 40 acres on which a qualified conservation contribution was not made) is $18X. Y's modified basis is $8X. Y's portion of YZ Partnership's adjusted basis in all partnership property (other than the 60 acres) as determined under paragraph (m)(2)(iii)(B) of this section is $4X. Z's modified basis is $12X. Z's portion of YZ Partnership's adjusted basis in all partnership property (other than the 60 acres) as determined under paragraph (m)(2)(iii)(B) of this section is $14X.

(B) ***General analysis.*** Y and Z are the ultimate members of YZ Partnership because they each receive a distributive share of the qualified conservation contribution and are not partnerships or S corporations. Their relevant bases must be determined according to the following formula:

Equation 7 to Paragraph (m)(7)(i)(B)

$$R = M \times (T \div (D + T))$$

Where:

R = Relevant basis.

M = Modified basis as determined under paragraph (l) of this section.

D = Ultimate member's portion of the adjusted basis in all of the contributing partnership's properties (other than the portion of the real property with respect to which the qualified conservation contribution is made) as determined under paragraph (m)(2)(iii)(B) of this section.

T = Ultimate member's share of the contributing partnership's adjusted basis in the portion of the real property with respect to which the qualified conservation contribution is made, determined according to the following formula: A × (B ÷ C).

A = Contributing partnership's adjusted basis in the portion of the real property with respect to which the qualified conservation contribution is made.

B = Ultimate member's distributive share of the qualified conservation contribution.

C = Total amount of the contributing partnership's qualified conservation contribution.

(C) ***Y's relevant basis.*** With respect to Y:

(*1*) M = $8X.

(*2*) D = $4X.

(*3*) A = $6X.

(4) B = $12X.

(5) C = $18X.

(6) Thus, T is $4X = $6X × ($12X ÷ $18X).

(7) Accordingly, Y's relevant basis is $4X = $8X × ($4X ÷ ($4X + $4X)).

(D) ***Z's relevant basis.*** With respect to Z:

(1) M = $12X.

(2) D = $14X.

(3) A = $6X.

(4) B = $6X.

(5) C = $18X.

(6) Thus, T is $2X = $6X × ($6X ÷ $18X).

(7) Accordingly, Z's relevant basis is $1.5X = $12X × ($2X ÷ ($14X + $2X)).

(E) ***Sum of the relevant bases.*** The amount of YZ Partnership's claimed contribution is $18X, which exceeds 2.5 times the sum of Y's and Z's relevant bases, which is $13.75X ($13.75X = 2.5 × (Y's relevant basis of $4X + Z's relevant basis of $1.5X)). Accordingly, YZ Partnership's contribution is a disallowed qualified conservation contribution. No person may claim any deduction with respect to this contribution.

(ii) ***Example 2*** —

(A) ***Facts.*** CD Inc. is an S corporation with shareholders C and D, each of whom is an individual that is not a nonresident alien. C owns one third of the outstanding stock in CD Inc., and D owns the remaining two thirds. CD Inc. owns 100 acres of real property with an adjusted basis of $10X. CD Inc. makes a qualified conservation contribution on 60 acres of the property. CD Inc. claims a contribution of $9X, which it allocates $3X to C and $6X to D. CD Inc.'s adjusted basis in the 60 acres is $6X, and its adjusted basis in all its properties (including its $6X basis in the 60 acres) is $24X. C's modified basis in CD Inc. is $8X. D's modified basis in CD Inc. is $12X.

(B) ***General analysis.*** C and D are the ultimate members of CD Inc. because they each receive a pro rata share of the qualified conservation contribution and are not partnerships or S corporations. Their relevant bases must be determined according to the following formula:

Equation 8 to Paragraph (m)(7)(ii)(B)

R = M × (E ÷ F)

> Where:
>
> R = Relevant basis.
>
> M = Modified basis as determined under paragraph (l) of this section.

E = Ultimate member's pro rata portion of the contributing S corporation's adjusted basis in the portion of the real property with respect to which the qualified conservation contribution is made.

F = Ultimate member's pro rata portion of the adjusted basis in all the contributing S corporation's properties (including the portion of the real property with respect to which the qualified conservation contribution is made).

(C) ***C's relevant basis.*** With respect to C:

(*1*) M = $8X.

(*2*) E = $2X ($^{1}/_{3}$ of $6X).

(*3*) F = $8X ($^{1}/_{3}$ of $24X).

(*4*) Thus, C's relevant basis is $2X = $8X × ($2X ÷ $8X).

(D) ***D's relevant basis.*** With respect to D:

(*1*) M = $12X.

(*2*) E = $4X ($^{2}/_{3}$ of $6X).

(*3*) F = $16X ($^{2}/_{3}$ of $24X).

(*4*) Thus, D's relevant basis is $3X = $12X × ($4X ÷ $16X).

(E) ***Sum of the relevant bases.*** The amount of CD Inc.'s claimed qualified conservation contribution is $9X, which does not exceed 2.5 times the sum of C's and D's relevant bases, which is $12.50X ($12.50X = 2.5 × (C's relevant basis of $2X + D's relevant basis of $3X)). Accordingly, CD Inc.'s contribution is not a disallowed qualified conservation contribution (that is, is not disallowed by section 170(h)(7) and paragraph (j) of this section).

(iii) ***Example 3*** —

(A) ***Facts.*** LTP Partnership is a partnership for Federal income tax purposes whose partners are individual E and UTP Partnership, a partnership for Federal income tax purposes. UTP Partnership's partners are C corporations P and Q. LTP Partnership owns 300 acres of real property. LTP Partnership makes a qualified conservation contribution on all 300 acres. LTP Partnership claims a qualified conservation contribution of $22X, which it allocates $2X to E and $20X to UTP Partnership. UTP Partnership allocates its $20X share of the qualified conservation contribution $6X to P and $14X to Q. LTP Partnership's basis in the 300 acres is $18X, and its adjusted basis in all of its other properties is $12X. E's modified basis in LTP Partnership is $4X. E's portion of LTP Partnership's adjusted basis in all partnership property (other than the 300 acres) as determined under paragraph (m)(2)(iii)(B) of this section is $4.36X. UTP Partnership's portion of LTP Partnership's adjusted basis in all partnership property (other than the 300 acres) as determined under paragraph (m)(2)(iii)(B) of this section is $7.64X. UTP Partnership's adjusted basis in its interest in LTP Partnership is $19X, and its adjusted basis in all other properties is $6X. P's modified basis in UTP Partnership is $12X. P's portion of UTP Partnership's adjusted basis in all partnership property (other than the interest in LTP Partnership) as determined under paragraph (m)(4)(ii)(A)(*2*) of this section is $3.6X. Q's

modified basis in UTP Partnership is $8X. Q's portion of UTP Partnership's adjusted basis of all partnership property (other than the interest in LTP Partnership) as determined under paragraph (m)(4)(ii)(A)(2) of this section is $2.4X.

(B) ***Analysis: partner E.***

(1) The ultimate members of LTP Partnership are E, P, and Q because they each receive a distributive share of the qualified conservation contribution and are not partnerships or S corporations. Because E holds a direct interest in LTP Partnership, E's relevant basis must be determined in accordance with the following formula:

Equation 9 to Paragraph (m)(7)(iii)(B)(1)

R = M × (T ÷ (D + T))

Where:

R = Relevant basis.

M = Modified basis as determined under paragraph (l) of this section.

D = Ultimate member's portion of the adjusted basis in all the contributing partnership's properties (other than the portion of the real property with respect to which the qualified conservation contribution is made) as determined under paragraph (m)(2)(iii)(B) of this section.

T = Ultimate member's share of the contributing partnership's adjusted basis in the portion of the real property with respect to which the qualified conservation contribution is made, determined according to the following formula: A × (B ÷ C).

A = Contributing partnership's adjusted basis in the portion of the real property with respect to which the qualified conservation contribution is made.

B = Ultimate member's distributive share of the qualified conservation contribution.

C = Total amount of the contributing partnership's qualified conservation contribution.

(2) With respect to E:

(*i*) M = $4X.

(*ii*) D = $4.36X.

(*iii*) A = $18X.

(*iv*) B = $2X.

(*v*) C = $22X.

(*vi*) Thus, T is $1.64X = $18X × ($2X ÷ $22X).

(*vii*) Accordingly, E's relevant basis is $1.09X = $4X × ($1.64X ÷ ($4.36X + $1.64X)).

(C) ***Analysis: General rule for UTP Partnership.*** Because P and Q hold interests in an upper-tier partnership, UTP Partnership must first determine the portions of P's and Q's modified bases that are allocable to UTP Partnership's interest in LTP Partnership. This is to be done according to the following formula:

Equation 10 to Paragraph (m)(7)(iii)(C)

G = M × (U ÷ (J + U))

Where:

G = The portion of the ultimate member's modified basis that is allocable to the upper-tier partnership's interest in the contributing partnership.

M = Modified basis as determined under paragraph (l) of this section.

J = Ultimate member's portion of adjusted basis in all the upper-tier partnership's properties (other than the upper-tier partnership's interest in the contributing partnership) as determined under paragraph (m)(4)(ii)(A)(2) of this section.

U = Ultimate member's share of the upper-tier partnership's adjusted basis in its interest in the contributing partnership, determined according to the following formula: H × (B ÷ K).

H = Upper-tier partnership's adjusted basis in its interest in the contributing partnership.

B = Ultimate member's distributive share of the qualified conservation contribution.

K = Upper-tier partnership's allocated portion of the qualified conservation contribution.

(D) ***Analysis: Step 1 for P.*** With respect to P:

(1) M = $12X.

(2) J = $3.6X.

(3) H = $19X.

(4) B = $6X.

(5) K = $20X.

(6) Thus, U is $5.70X = $19X × ($6X ÷ $20X).

(7) Accordingly, the portion of P's modified basis that is allocable to UTP Partnership's interest in LTP Partnership is $7.35X = $12X × ($5.70X ÷ ($3.60X + $5.70X)).

(E) ***Analysis: Step 1 for Q.*** With respect to Q:

(1) M = $8X.

(2) J = $2.4X.

(3) H = $19X.

(4) B = $14X.

(5) K = $20X.

(6) Thus, U is $13.30X = $19X × ($14X ÷ $20X).

(7) Accordingly, the portion of Q's modified basis that is allocable to UTP Partnership's interest in LTP Partnership is $6.78X = $8X × ($13.30X ÷ ($2.40X + $13.30X)).

(F) ***Analysis: General rule for LTP Partnership.*** Next, LTP Partnership must determine P's and Q's relevant bases, which equal the portions of the amounts determined under paragraphs (m)(7)(iii)(D) and (E) of this section (*Example 3*) that are allocable to the portion of the real property with respect to which the qualified conservation contribution was made. This must be done according to the following formula:

Equation 11 to Paragraph (m)(7)(iii)(F)

R = G × (V ÷ (L + V))

Where:

R = Relevant basis.

G = Amount determined with respect to item G under paragraph (m)(4)(ii)(B) of this section.

L = Upper-tier partnership's portion of adjusted basis in all the contributing partnership's properties (other than the portion of the real property with respect to which the qualified conservation contribution is made) as determined under paragraph (m)(2)(iii)(B) of this section.

V = Upper-tier partnership's share of the contributing partnership's adjusted basis in the portion of the real property with respect to which the qualified conservation contribution is made, determined according to the following formula: A × (K ÷ C).

A = Contributing partnership's adjusted basis in the portion of the real property with respect to which the qualified conservation contribution is made.

K = Upper-tier partnership's allocated portion of the qualified conservation contribution.

C = Total amount of the contributing partnership's qualified conservation contribution.

(G) ***Analysis: Step 2 for P.*** With respect to P:

(1) G = $7.35X.

(2) L = $7.64X.

(3) A = $18X.

(4) K = $20X.

(5) C = $22X.

(6) Thus, V is $16.36X = $18X × ($20X ÷ $22X).

(7) Accordingly, P's relevant basis is $5.01X = $7.35X × ($16.36X ÷ ($7.64X + $16.36X)).

(H) ***Analysis: Step 2 for Q.*** With respect to Q:

(1) G = $6.78X.

(2) L = $7.64X.

(3) A = $18X.

(4) K = $20X.

(5) C = $22X.

(6) Thus, V is $16.36X = $18X × ($20X ÷ $22X).

(7) Accordingly, Q's relevant basis is $4.62X = $6.78X × ($16.36X ÷ ($7.64X + $16.36X)).

(I) ***Analysis: Computation of 2.5 times sum of the relevant bases.*** The ultimate members of LTP Partnership are E, P, and Q. The amount of LTP Partnership's qualified conservation contribution is $22X. This does not exceed 2.5 times the sum of each of the ultimate member's relevant basis, which totals $26.80X ($26.80X = 2.5 x (E's relevant basis of 1.09X + P's relevant basis of $5.01X + Q's relevant basis of $4.62X)). Therefore, LTP Partnership's contribution is not a disallowed qualified conservation contribution (that is, is not disallowed by section 170(h)(7) and paragraph (j) of this section). Because UTP Partnership receives an allocated portion, it must apply paragraphs (j) through (l) of this section and this paragraph (m) to determine whether its allocated portion is a disallowed qualified conservation contribution. The ultimate members of UTP Partnership are P and Q. The amount of UTP Partnership's allocated portion of LTP Partnership's qualified conservation contribution is $20X. This does not exceed 2.5 times the sum of P's and Q's relevant bases, which is $24.08X ($24.08X = 2.5 × (P's relevant basis of $5.01X + Q's relevant basis of $4.62X)). Therefore, UTP Partnership's allocated portion of LTP Partnership's contribution is not a disallowed qualified conservation contribution (that is, is not disallowed by section 170(h)(7) and paragraph (j) of this section).

(iv) ***Example 4*** —

(A) ***Facts.*** Individuals V and W form VW Partnership, a partnership for Federal income tax purposes. V and W each hold a fifty percent interest in all of VW Partnership's items of income, gain, loss, deduction, credits, and charitable contributions. On formation of VW Partnership, V contributes $1,000X cash to VW Partnership and W contributes GainProp, which is non-depreciable property with a value of $1,000X and basis of $500X. VW Partnership buys real property (RealProp), with its $1,000X cash. Later, at a time when VW Partnership's basis in RealProp is still $1,000X, and its basis in GainProp is still $500X, VW Partnership makes a qualified conservation contribution with respect to all of RealProp, which it allocates equally to V and W. VW Partnership continues to hold GainProp. V's modified basis is $1,000X and W's modified basis is $500X.

(B) ***General analysis.*** V and W are the ultimate members of VW Partnership because they each receive a distributive share of the qualified conservation contribution and are not partnerships or S corporations. Their relevant bases must be determined according to the following formula:

Equation 12 to Paragraph (m)(7)(iv)(B)

R = M × (T ÷ (D + T))

Where:

R = Relevant basis.

M = Modified basis as determined under paragraph (l) of this section.

D = Ultimate member's portion of the adjusted basis in all of the contributing partnership's properties (other than the portion of the real property with respect to which the qualified conservation contribution is made) as determined under paragraph (m)(2)(iii)(B) of this section.

T = Ultimate member's share of the contributing partnership's adjusted basis in the portion of the real property with respect to which the qualified conservation contribution is made, determined according to the following formula: A × (B ÷ C).

A = Contributing partnership's adjusted basis in the portion of the real property with respect to which the qualified conservation contribution is made.

B = Ultimate member's distributive share of the qualified conservation contribution.

C = Total amount of the contributing partnership's qualified conservation contribution.

(C) ***V's relevant basis.*** With respect to V:

(*1*) M = $1,000X.

(*2*) D = $250X (half of VW Partnership's adjusted basis in GainProp).

(*3*) T = $500X (half of VW Partnership's adjusted basis in RealProp).

(*4*) Accordingly, V's relevant basis is $666.67X = $1,000X × ($500X ÷ ($250X + $500X)).

(D) ***W's relevant basis.*** With respect to W:

(*1*) M = $500X.

(*2*) D = $250X (half of VW Partnership's basis in GainProp).

(*3*) T = $500X (half of VW Partnership's adjusted basis in RealProp).

(*4*) Accordingly, W's relevant basis is $333.33X = $500X × ($500X ÷ ($250X + $500X)).

(v) ***Example 5*** —

(A) ***Facts.*** Assume the same facts as in paragraph (m)(7)(iv) of this section (*Example 4*), except that W does not contribute GainProp; instead, W contributes LossProp, which is non-depreciable property with a value of $1,000X and basis of $2,000X. At the time that VW

Partnership makes the qualified conservation contribution on RealProp, the value of LossProp is still $1,000X and the basis of LossProp is still $2,000X. V's modified basis is $1,000X and W's modified basis is $2,000X.

(B) ***General analysis.*** V and W are the ultimate members of VW Partnership because they each receive a distributive share of the qualified conservation contribution and are not partnerships or S corporations. Their relevant bases must be determined according to the following formula:

Equation 13 to Paragraph (m)(7)(v)(B)

R = M × (T ÷ (D + T))

Where:

R = Relevant basis.

M = Modified basis as determined under paragraph (l) of this section.

D = Ultimate member's portion of the adjusted basis in all of the contributing partnership's properties (other than the portion of the real property with respect to which the qualified conservation contribution is made) as determined under paragraph (m)(2)(iii)(B) of this section.

T = Ultimate member's share of the contributing partnership's adjusted basis in the portion of the real property with respect to which the qualified conservation contribution is made, determined according to the following formula: A × (B ÷ C).

A = Contributing partnership's adjusted basis in the portion of the real property with respect to which the qualified conservation contribution is made.

B = Ultimate member's distributive share of the qualified conservation contribution.

C = Total amount of the contributing partnership's qualified conservation contribution.

(C) ***V's relevant basis.*** With respect to V:

(*1*) M = $1,000X.

(*2*) D = $500X (half of the $1,000X portion of LossProp's adjusted basis that does not exceed LossProp's $1,000X value)

(*3*) T = $500X (half of VW Partnership's adjusted basis in RealProp)

(*4*) Accordingly, V's relevant basis is $500X = $1,000X × ($500X ÷ ($500X + $500X)).

(D) ***W's relevant basis.*** With respect to W:

(*1*) M = $2,000X.

(2) D = $1,500X (half of the $1,000X portion of LossProp's adjusted basis that does not exceed LossProp's $1,000X value, plus all of the $1,000X portion of LossProp's adjusted basis in excess of LossProp's $1,000X value).

(3) T = $500X (half of VW Partnership's adjusted basis in RealProp).

(4) Accordingly, W's relevant basis is $500X = $2,000X × ($500X ÷ ($1,500X + $500X)).

(n) *Exceptions*—(1) *In general.* Paragraph (j) of this section does not apply to any qualified conservation contribution that satisfies one or more of the three exceptions in this paragraph (n). However, as provided in paragraph (j)(5) of this section, there is no presumption that a contribution that satisfies one or more of the three exceptions in this paragraph (n) is compliant with section 170, any other section of the Code, the regulations in this part, or any other guidance. Being described in this paragraph (n) is not a safe harbor for purposes of any other provision of law or with respect to the value of the contribution. Such transactions are subject to adjustment or disallowance for any other reason, including failure to satisfy other requirements of section 170 or overvaluation of the contribution. In addition, taxpayers who engage in transactions that satisfy one or more of the three exceptions in this paragraph (n) may nonetheless be required to disclose, under § 1.6011-4, the transactions as listed transactions.

(2) *Exception for contributions outside three-year holding period*—(i) *In general.* Paragraph (j) of this section does not apply to any qualified conservation contribution by a contributing partnership or contributing S corporation made at least three years after the latest of—

(A) The last date on which the contributing partnership or contributing S corporation acquired any portion of the real property with respect to which such qualified conservation contribution is made;

(B) The last date on which any partner in the contributing partnership or shareholder in the contributing S corporation acquired any interest in such partnership or S corporation; and

(C) If the interest in the contributing partnership is held through one or more upper-tier partnerships or upper-tier S corporations—

(1) The last date on which any such upper-tier partnership or upper-tier S corporation acquired any interest in the contributing partnership or any other upper-tier partnership; and

(2) The last date on which any partner or shareholder in any such upper-tier partnership or upper-tier S corporation acquired any interest in such upper-tier partnership or upper-tier S corporation.

(ii) *Acquisition of partnership interest.* For purposes of this paragraph (n)(2), an acquisition of any interest in a partnership is any *variation* within the meaning of that term in § 1.706-4(a)(1); however, a variation does not include a change in allocations that satisfies the requirements of § 1.706-4(b)(1).

(iii) *Acquisition of interest in an S corporation.* For purposes of this paragraph (n)(2), an acquisition of any interest in an S corporation is any transfer, issuance, redemption, or other disposition of stock in the S corporation; however, an acquisition does not include any issuance or redemption involving all shareholders that does not affect the proportionate ownership of any shareholder.

(iv) *Exception is determined at the level of the contributing partnership or contributing S corporation.* If the contributing partnership or contributing S corporation does not satisfy the requirements of this paragraph (n)(2), then this paragraph (n)(2) will not apply to any person who receives a distributive share or pro rata share of the qualified conservation contribution (including an upper-tier partnership or upper-tier S corporation), regardless of whether the person receiving such distributive share or pro rata share would have satisfied the requirements of this paragraph (n)(2) if the person had been the one to make the qualified conservation contribution.

(v) ***Examples.*** The following examples illustrate the provisions of this paragraph (n)(2). For the two examples in this paragraph (n)(2)(v), assume that the exceptions in paragraphs (n)(3) and (4) of this section do not apply.

(A) ***Example 1*** —

(*1*) ***Facts.*** ABC Partnership is a partnership for Federal income tax purposes. Since 2015, ABC Partnership's partners have been A, an individual, and BC Inc., an S corporation. Since 2015, BC Inc.'s shareholders have been B and C, each of whom is an individual that is not a nonresident alien. On December 27, 2024, ABC Partnership acquires real property. On August 29, 2025, BC Inc. redeems half of B's shares in BC Inc. On December 28, 2027, ABC Partnership makes a qualified conservation contribution.

(*2*) ***Analysis.*** Pursuant to paragraph (n)(2)(iii) of this section, BC Inc.'s redemption of some of B's shares is treated as an acquisition of an interest in BC Inc. for purposes of this paragraph (n)(2). Accordingly, ABC Partnership's contribution occurred less than three years after the latest acquisition of an interest in a partnership or S corporation that held an interest in ABC Partnership, the contributing partnership. Therefore, ABC Partnership's contribution fails to satisfy the requirements of this paragraph (n)(2) and ABC Partnership must apply the provisions of paragraphs (j) through (m) of this section to determine whether the contribution is a disallowed qualified conservation contribution.

(B) ***Example 2*** —

(*1*) ***Facts.*** LTP Partnership is a partnership for Federal income tax purposes. Since 2017, LTP Partnership's partners have been UTP Partnership, a partnership for Federal income tax purposes, and FG Inc., an S corporation. Since 2018, UTP Partnership's partners have been individuals D and E, and there has been no variation in their ownership. Since 2019, FG Inc.'s shareholders have been F and G, each of whom is an individual that is not a nonresident alien. On March 15, 2024, LTP Partnership acquires real property. On September 15, 2026, D dies and D's interest in UTP Partnership passes to D's estate. On March 18, 2027, LTP Partnership makes a qualified conservation contribution. LTP Partnership allocates all of the qualified conservation contribution to FG Inc.

(*2*) ***Analysis.*** Pursuant to paragraph (n)(2)(ii) of this section, the transfer of D's interest in UTP Partnership to D's estate is treated as an acquisition of an interest in UTP Partnership for purposes of this paragraph (n)(2). Accordingly, LTP Partnership's contribution occurred less than three years after the latest acquisition of an interest in a partnership or S corporation that held an interest in LTP Partnership, the contributing partnership. Therefore, LTP Partnership's contribution fails to satisfy the requirements of this paragraph (n)(2). Pursuant to paragraph (n)(2)(iv) of this section, FG Inc. cannot avail itself of this paragraph (n)(2) with respect to its allocated portion of LTP Partnership's

contribution. Accordingly, FG Inc. must apply the provisions of paragraphs (j) through (m) of this section to determine whether its allocated portion is a disallowed qualified conservation contribution.

(3) ***Exception for family partnerships and S corporations*** —

(i) ***General rule.*** Paragraph (j) of this section does not apply with respect to any qualified conservation contribution made by a contributing partnership or contributing S corporation if at least 90 percent of the interests in the contributing partnership or contributing S corporation are held by an individual and members of the family of such individual and the contributing partnership or contributing S corporation meets the requirements of this paragraph (n)(3).

(ii) ***Ninety percent of the interests*** —(A) *Family partnerships.* In the case of a contributing partnership, at least 90 percent of the interests in the contributing partnership are held by an individual and members of the family of such individual if, at the time of the qualified conservation contribution, at least 90 percent of the interests in capital and profits in such partnership are held, directly or indirectly, by an individual and members of the family of such individual.

(B) *Family S corporations.* In the case of a contributing S corporation, at least 90 percent of the interests in the contributing S corporation are held by an individual and members of the family of such individual if, at the time of the qualified conservation contribution, at least 90 percent of the total value and at least 90 percent of the total voting power of the outstanding stock in such S corporation are held by an individual and members of the family of such individual.

(iii) ***Members of the family.*** For purposes of this paragraph (n)(3), the term *members of the family* means, with respect to any individual—

(A) The spouse of such individual;

(B) Any individual who bears a relationship to such individual that is described in section 152(d)(2)(A) through (G) of the Code;

(C) The estate of a deceased individual who was described in paragraph (n)(3)(iii)(A) or (B) of this section at the time of death; and

(D) A trust all of the beneficiaries of which are individuals described in paragraph (n)(3)(iii)(A) or (B) of this section, treating as *beneficiaries* for this purpose those persons who currently must or may receive income or principal from the trust and those persons who would succeed to the property of the trust if the trust were to terminate immediately before the qualified conservation contribution.

(iv) *Anti-abuse rules*—(A) *Holding period.* This paragraph (n)(3) does not apply unless at least 90 percent of the interests in the property with respect to which the qualified conservation contribution was made were owned, directly or indirectly, by an individual and members of the family of that individual for at least one year prior to the date of the contribution. The members of the family during that year need not be the same members of the family that own an interest at the time of the qualified conservation contribution; however, at least one individual must own an interest for the entire year, and at least 90 percent of the interests in the property must be owned, directly or indirectly, during that year by that individual and members of that individual's family. Solely for purposes of this

paragraph (n)(3)(iv)(A), section 1223(1) and (2) of the Code do not apply in determining whether at least ninety percent of the interests in the property with respect to which the qualified conservation contribution was made were owned, directly or indirectly, by one individual and members of the family of that individual for at least one year prior to the date of the contribution. This paragraph (n)(3)(iv)(A) does not apply if the entire amount of the qualified conservation contribution is limited by section 170(e) to the contributing partnership's or contributing S corporation's adjusted basis in the qualified conservation contribution.

(B) *Allocations.* This paragraph (n)(3) does not apply unless at least 90 percent of the qualified conservation contribution is allocated to the individual and all members of the family who own at least 90 percent of the interests in the contributing partnership or contributing S corporation under paragraph (n)(3)(ii) of this section.

(v) ***Exception is determined at the level of the contributing partnership or contributing S corporation.*** If the contributing partnership or contributing S corporation satisfies the requirements of this paragraph (n)(3), then any upper-tier partnership or upper-tier S corporation need not apply paragraphs (j) through (m) of this section and this paragraph (n) to its allocated portions of such contribution. If the contributing partnership or contributing S corporation does not satisfy the requirements of this paragraph (n)(3), then the exception in this paragraph (n)(3) will not apply to any person who receives a distributive share or pro rata share of the qualified conservation contribution (including an upper-tier partnership or upper-tier S corporation), regardless of whether the person receiving such distributive share or pro rata share would have satisfied the requirements of this paragraph (n)(3) if the person had been the one to make the contribution.

(vi) ***Examples.*** The following examples illustrate the provisions of this paragraph (n)(3). For the two examples in this paragraph (n)(3)(vi), assume that the exceptions in paragraphs (n)(2) and (4) of this section do not apply.

(A) ***Example 1*** —

(1) ***Facts.*** Individual A and A's sibling B acquire real property by purchase on July 5, 2024. On September 14, 2024, B transfers its interest in the real property to B's child C. On February 21, 2025, A and C transfer their interests in the real property to AC Partnership, a partnership for Federal income tax purposes whose only partners are A and C. On March 18, 2025, A's stepfather D becomes a partner in AC Partnership in exchange for a capital contribution. On September 15, 2025, AC Partnership makes a qualified conservation contribution on the real property. AC Partnership never had any partners other than A, C, and D.

(2) ***Analysis.*** B, C, and D qualify as members of the family with respect to A. Accordingly, as of the time of the qualified conservation contribution, at least 90 percent of the interests in capital and profits of AC Partnership were owned by an individual and members of that individual's family. In addition, at least 90 percent of the interests in the property with respect to which the qualified conservation contribution was made were owned, directly and indirectly, by A and members of A's family for at least one year prior to the date of the contribution. Moreover, at least 90 percent of the contribution is allocated to A and members of A's family. Accordingly, the requirements of this paragraph (n)(3) are satisfied, and the Disallowance Rule in section 170(h)(7)(A) and paragraph (j) of this section does not apply.

(B) ***Example 2*** —

(1) ***Facts.*** LTP Partnership is a partnership for Federal income tax purposes whose partners are EF Inc., an S corporation, and UTP Partnership, a partnership for Federal income tax purposes. EF Inc. and UTP Partnership each hold a 50 percent interest in the profits and capital of LTP Partnership. The shareholders of EF Inc. are E and E's sibling F. The partners of UTP Partnership are G and G's child H. E and F are not related to G and H. LTP Partnership has held real property since 2019. On July 5, 2024, LTP Partnership distributes half of the acres of its real property to EF Inc., and the remaining acres to UTP Partnership. On October 21, 2024, EF Inc., makes a qualified conservation contribution on the real property it received from LTP Partnership. The amount of EF Inc.'s qualified conservation contribution is not limited by section 170(e).

(2) ***Analysis.*** F qualifies as a member of the family with respect to E. Accordingly, as of the time of EF Inc.'s qualified conservation contribution, EF Inc. was owned at least 90 percent by an individual and members of that individual's family. In addition, at least 90 percent of EF Inc's qualified conservation contribution is allocated to E and members of E's family. However, E and members of E's family failed to own at least 90 percent of the property with respect to which the qualified conservation contribution was made for at least one year prior to the date of the contribution. In particular, G and H (who are not members of the family with respect to E or F) indirectly owned a 50 percent interest in the property until July 5, 2024. Accordingly, the requirements of this paragraph (n)(3) are not satisfied. EF Inc. must apply the provisions of paragraphs (j) through (m) of this section to determine whether the contribution is a disallowed qualified conservation contribution. If the entire amount of EF Inc.'s qualified conservation contribution had been limited by section 170(e) to EF Inc.'s adjusted basis in the qualified conservation contribution, then paragraph (n)(3)(iv)(A) of this section would not have applied; accordingly, the requirements of this paragraph (n)(3) would have been satisfied, and the Disallowance Rule in section 170(h)(7)(A) and paragraph (j) of this section would not have applied.

(4) *Exception for contributions to preserve certified historic structures.* Paragraph (j) of this section does not apply to any qualified conservation contribution the conservation purpose of which is the preservation of any building that is a certified historic structure (as defined in section 170(h)(4)(C)). *See* § 1.170A-16(f)(6) for special reporting requirements for a contribution that meets the exception in this paragraph (n)(4).

(o) *Applicability dates*—(1) *In general.* Except as provided in paragraphs (g)(4)(ii), (i), and (o)(2) of this section, paragraphs (a) through (i) of this section apply only to contributions made on or after December 18, 1980. Paragraphs (j) through (n) of this section apply to contributions made after December 29, 2022.

(2) *Exception.* Paragraph (h)(4)(ii) of this section applies on and after June 1, 2023.

[T.D. 8069, 51 FR 1499, Jan. 14, 1986; 51 FR 5322, Feb. 13, 1986; 51 FR 6219, Feb. 21, 1986, as amended by T.D. 8199, 53 FR 16085, May 5, 1988; T.D. 8540, 59 FR 30105, June 10, 1994; T.D. 8819, 64 FR 23228, Apr. 30, 1999; T.D. 9448, 74 FR 21518, May 7, 2009; T.D. 9836, 83 FR 36422, July 30, 2018; T.D. 9974, 88 FR 37429, June 7, 2023; T.D. 9999, 89 FR 54311, June 28, 2024; 89 FR 70486, Aug. 30, 2024]

§ 1.170A-15 Substantiation requirements for charitable contribution of a cash, check, or other monetary gift.

(a) ***In general*** —

(1) ***Bank record or written communication required.*** No deduction is allowed under sections 170(a) and 170(f)(17) for a charitable contribution in the form of a cash, check, or other monetary gift, as described in paragraph (b)(1) of this section, unless the donor substantiates the deduction with a bank record, as described in paragraph (b)(2) of this section, or a written communication, as described in paragraph (b)(3) of this section, from the donee showing the name of the donee, the date of the contribution, and the amount of the contribution.

(2) ***Additional substantiation required for contributions of $250 or more.*** No deduction is allowed under section 170(a) for any contribution of $250 or more unless the donor substantiates the contribution with a contemporaneous written acknowledgment, as described in section 170(f)(8) and § 1.170A-13(f), from the donee.

(3) ***Single document may be used.*** The requirements of paragraphs (a)(1) and (2) of this section may be met by a single document that contains all the information required by paragraphs (a)(1) and (2) of this section, if the document is obtained by the donor no later than the date prescribed by paragraph (c) of this section.

(b) ***Terms*** —

(1) ***Monetary gift*** includes a transfer of a gift card redeemable for cash, and a payment made by credit card, electronic fund transfer (as described in section 5061(e)(2)), an online payment service, or payroll deduction.

(2) ***Bank record*** includes a statement from a financial institution, an electronic fund transfer receipt, a canceled check, a scanned image of both sides of a canceled check obtained from a bank website, or a credit card statement.

(3) ***Written communication*** includes email.

(c) ***Deadline for receipt of substantiation.*** The substantiation described in paragraph (a) of this section must be received by the donor on or before the earlier of—

(1) The date the donor files the original return for the taxable year in which the contribution was made; or

(2) The due date, including any extension, for filing the donor's original return for that year.

(d) ***Special rules*** —

(1) ***Contributions made by payroll deduction.*** In the case of a charitable contribution made by payroll deduction, a donor is treated as meeting the requirements of section 170(f)(17) and paragraph (a) of this section if, no later than the date described in paragraph (c) of this section, the donor obtains—

(i) A pay stub, Form W-2, “Wage and Tax Statement,” or other employer-furnished document that sets forth the amount withheld during the taxable year for payment to a donee; and

(ii) A pledge card or other document prepared by or at the direction of the donee that shows the name of the donee.

(2) ***Distributing organizations as donees.*** The following organizations are treated as donees for purposes of section 170(f)(17) and paragraph (a) of this section, even if the organization (pursuant to the donor's instructions or otherwise) distributes the amount received to one or more organizations described in section 170(c):

(i) An organization described in section 170(c).

(ii) An organization described in 5 CFR 950.105 (a Principal Combined Fund Organization (PCFO) for purposes of the Combined Federal Campaign (CFC)) and acting in that capacity. For purposes of the requirement for a written communication under section 170(f)(17), if the donee is a PCFO, the name of the local CFC campaign may be treated as the name of the donee organization.

(e) ***Substantiation of out-of-pocket expenses.*** Paragraph (a)(1) of this section does not apply to a donor who incurs unreimbursed expenses of less than $250 incident to the rendition of services, within the meaning of § 1.170A-1(g). For substantiation of unreimbursed out-of-pocket expenses of $250 or more, see § 1.170A-13(f)(10).

(f) ***Charitable contributions made by partnership or S corporation.*** If a partnership or an S corporation makes a charitable contribution, the partnership or S corporation is treated as the donor for purposes of section 170(f)(17) and paragraph (a) of this section.

(g) ***Transfers to certain trusts.*** The requirements of section 170(f)(17) and paragraphs (a)(1) and (3) of this section do not apply to a transfer of a cash, check, or other monetary gift to a trust described in section 170(f)(2)(B); a charitable remainder annuity trust, as described in section 664(d)(1) and the corresponding regulations; or a charitable remainder unitrust, as described in section 664(d)(2) or (d)(3) and the corresponding regulations. The requirements of section 170(f)(17) and paragraphs (a)(1) and (2) of this section do apply, however, to a transfer to a pooled income fund, as defined in section 642(c)(5).

(h) ***Effective/applicability date.*** This section applies to contributions made after July 30, 2018. Taxpayers may rely on the rules of this section for contributions made in taxable years beginning after August 17, 2006.

[T.D. 9836, 83 FR 36422, July 30, 2018]

§ 1.170A-16 Substantiation and reporting requirements for noncash charitable contributions.

(a) ***Substantiation of charitable contributions of less than $250*** —

(1) ***Individuals, partnerships, and certain corporations required to obtain receipt.*** Except as provided in paragraph (a)(2) of this section, no deduction is allowed under section 170(a) for a noncash charitable contribution of less than $250 by an individual, partnership, S corporation, or C corporation that is a personal service corporation or closely held corporation unless the donor maintains for each contribution a receipt from the donee showing the following information:

(i) The name and address of the donee;

(ii) The date of the contribution;

(iii) A description of the property in sufficient detail under the circumstances (taking into account the value of the property) for a person who is not generally familiar with the type of property to ascertain that the described property is the contributed property; and

(iv) In the case of securities, the name of the issuer, the type of security, and whether the securities are publicly traded securities within the meaning of § 1.170A-13(c)(7)(xi).

(2) ***Substitution of reliable written records*** —

(i) ***In general.*** If it is impracticable to obtain a receipt (for example, where a donor deposits property at a donee's unattended drop site), the donor may satisfy the recordkeeping rules of this paragraph (a) by maintaining reliable written records, as described in paragraphs (a)(2)(ii) and (iii) of this section, for the contributed property.

(ii) ***Reliable written records.*** The reliability of written records is to be determined on the basis of all of the facts and circumstances of a particular case, including the proximity in time of the written record to the contribution.

(iii) ***Contents of reliable written records.*** Reliable written records must include—

(A) The information required by paragraph (a)(1) of this section;

(B) The fair market value of the property on the date the contribution was made;

(C) The method used in determining the fair market value; and

(D) In the case of a contribution of clothing or a household item as defined in § 1.170A-18(c), the condition of the item.

(3) ***Additional substantiation rules may apply.*** For additional substantiation rules, see paragraph (f) of this section.

(b) ***Substantiation of charitable contributions of $250 or more but not more than $500.*** No deduction is allowed under section 170(a) for a noncash charitable contribution of $250 or more but not more than $500 unless the donor substantiates the contribution with a contemporaneous written acknowledgment, as described in section 170(f)(8) and § 1.170A-13(f).

(c) ***Substantiation of charitable contributions of more than $500 but not more than $5,000*** —

(1) ***In general.*** No deduction is allowed under section 170(a) for a noncash charitable contribution of more than $500 but not more than $5,000 unless the donor substantiates the contribution with a contemporaneous written acknowledgment, as described in section 170(f)(8) and § 1.170A-13(f), and meets the applicable requirements of this section.

(2) ***Individuals, partnerships, and certain corporations also required to file Form 8283 (Section A).*** No deduction is allowed under section 170(a) for a noncash charitable contribution of more than $500 but not more than $5,000 by an individual, partnership, S corporation, or C corporation that is a personal service corporation or closely held corporation unless the donor completes Form 8283 (Section A), "Noncash Charitable Contributions," as provided in paragraph (c)(3) of this section, or a successor form, and files it with the return on which the deduction is claimed.

(3) ***Completion of Form 8283 (Section A).*** A completed Form 8283 (Section A) includes—

(i) The donor's name and taxpayer identification number (for example, a social security number or employer identification number);

(ii) The name and address of the donee;

(iii) The date of the contribution;

(iv) The following information about the contributed property:

(A) A description of the property in sufficient detail under the circumstances, taking into account the value of the property, for a person who is not generally familiar with the type of property to ascertain that the described property is the contributed property;

(B) In the case of real or tangible personal property, the condition of the property;

(C) In the case of securities, the name of the issuer, the type of security, and whether the securities are publicly traded securities within the meaning of § 1.170A-13(c)(7)(xi);

(D) The fair market value of the property on the date the contribution was made and the method used in determining the fair market value;

(E) The manner of acquisition (for example, by purchase, gift, bequest, inheritance, or exchange), and the approximate date of acquisition of the property by the donor (except that in the case of a contribution of publicly traded securities as defined in § 1.170A-13(c)(7)(xi), a representation that the donor held the securities for more than one year is sufficient) or, if the property was created, produced, or manufactured by or for the donor, the approximate date the property was substantially completed;

(F) The cost or other basis, adjusted as provided by section 1016, of the property (except that the cost or basis is not required for contributions of publicly traded securities (as defined in § 1.170A-13(c)(7)(xi)) that would have resulted in long-term capital gain if sold on the contribution date, unless the donor has elected to limit the deduction to basis under section 170(b)(1)(C)(iii)); and

(G) In the case of tangible personal property, whether the donee has certified it for a use related to the purpose or function constituting the donee's basis for exemption under section 501, or in the case of a governmental unit, an exclusively public purpose;

(v) If a number can be inserted into any box on Form 8283 (Section A), the number inserted in the box on Form 8283 (Section A). Alternatively, taxpayers may attach a statement to the Form 8283 explaining why a number cannot be inserted. Nothing in this paragraph (c)(3)(v) precludes a taxpayer from both inserting the number in the appropriate box on Form 8283 (Section A) and including an attached statement explaining any additional information regarding the number. Taxpayers may not respond to a request for information on Form 8283 (Section A) with nonresponsive language; for example, by indicating that the requested information is *available upon request* or will be *provided upon request.* The inclusion of such nonresponsive language in response to a request for information on Form 8283 (Section A) may be treated by the IRS as being an incomplete filing of Form 8283; and

(vi) Any other information required by Form 8283 (Section A) or the instructions to Form 8283 (Section A).

(4) ***Additional requirement for certain vehicle contributions.*** In the case of a contribution of a qualified vehicle described in section 170(f)(12)(E) for which an acknowledgment by the donee organization is required under section 170(f)(12)(D), the donor must attach a copy of the acknowledgment to the Form 8283 (Section A) for the return on which the deduction is claimed.

(5) ***Additional substantiation rules may apply.*** For additional substantiation rules, see paragraph (f) of this section.

(d) ***Substantiation of charitable contributions of more than $5,000*** —

(1) ***In general.*** Except as provided in paragraph (d)(2) of this section, no deduction is allowed under section 170(a) for a noncash charitable contribution of more than $5,000 unless the donor—

(i) Substantiates the contribution with a contemporaneous written acknowledgment, as described in section 170(f)(8) and § 1.170A-13(f);

(ii) Obtains a qualified appraisal, as defined in § 1.170A-17(a)(1), prepared by a qualified appraiser, as defined in § 1.170A-17(b)(1); and

(iii) Completes Form 8283 (Section B), as provided in paragraph (d)(3) of this section, or a successor form, and files it with the return on which the deduction is claimed.

(2) ***Exception for certain noncash contributions.*** A qualified appraisal is not required, and a completed Form 8283 (Section A) containing the information required in paragraph (c)(3) of this section meets the requirements of paragraph (d)(1)(iii) of this section for contributions of—

(i) Publicly traded securities as defined in § 1.170A-13(c)(7)(xi);

(ii) Property described in section 170(e)(1)(B)(iii) (certain intellectual property);

(iii) A qualified vehicle described in section 170(f)(12)(A)(ii) for which an acknowledgment under section 170(f)(12)(B)(iii) is provided; and

(iv) Property described in section 1221(a)(1) (inventory and property held by the donor primarily for sale to customers in the ordinary course of the donor's trade or business).

(3) ***Completed Form 8283 (Section B).*** A completed Form 8283 (Section B) includes—

(i) The donor's name and taxpayer identification number (for example, a social security number or employer identification number);

(ii) The donee's name, address, taxpayer identification number, signature, the date signed by the donee, and the date the donee received the property;

(iii) The appraiser's name, address, taxpayer identification number, appraiser declaration, as described in paragraph (d)(4) of this section, signature, and the date signed by the appraiser;

(iv) The following information about the contributed property:

(A) The fair market value on the valuation effective date, as defined in § 1.170A-17(a)(5)(i).

(B) A description in sufficient detail under the circumstances, taking into account the value of the property, for a person who is not generally familiar with the type of property to ascertain that the described property is the contributed property.

(C) In the case of real property or tangible personal property, the condition of the property;

(v) The manner of acquisition (for example, by purchase, gift, bequest, inheritance, or exchange), and the approximate date of acquisition of the property by the donor, or, if the property was created, produced, or manufactured by or for the donor, the approximate date the property was substantially completed;

(vi) The cost or other basis of the property, adjusted as provided by section 1016;

(vii) A statement explaining whether the charitable contribution was made by means of a bargain sale and, if so, the amount of any consideration received for the contribution;

(viii) In the case of a partnership or S corporation that makes a qualified conservation contribution, the sum of each ultimate member's relevant basis, computed in accordance with § 1.170A-14(j) through (m), but only:

(A) For contributions described in section 170(h)(7)(E) and § 1.170A-14(n)(4) (for contributions to preserve certified historic structures), regardless of whether they are also described in section 170(h)(7)(C) and § 1.170A-14(n)(2) (for contributions made outside of the three-year holding period) and/or section 170(h)(7)(D) and § 1.170A-14(n)(3) (for contributions made by certain family partnerships or S corporations); and

(B) For all contributions not described in section 170(h)(7)(E) and § 1.170A-14(n)(4), provided they are not described in section 170(h)(7)(C) and § 1.170A-14(n)(2) (for contributions made outside of the three-year holding period) and/or section 170(h)(7)(D) and § 1.170A-14(n)(3) (for contributions made by certain family partnerships or S corporations);

(ix) If a number can be inserted into any box on Form 8283 (Section B), the number inserted in the box on Form 8283 (Section B). Alternatively, taxpayers may attach a statement to the Form 8283 explaining why a number cannot be inserted. Nothing in this paragraph (d)(3)(ix) precludes a taxpayer from both inserting the number in the appropriate box on Form 8283 (Section B) and including an attached statement explaining any additional information regarding the number. Taxpayers may not respond to a request for information on Form 8283 (Section B) with nonresponsive language; for example, by indicating that the requested information is *available upon request* or will be *provided upon request.* The inclusion of such nonresponsive language in response to a request for information on Form 8283 (Section B) may be treated by the IRS as being an incomplete filing of Form 8283; and

(x) Any other information required by Form 8283 (Section B) or the instructions to Form 8283 (Section B).

(4) ***Appraiser declaration.*** The appraiser declaration referred to in paragraph (d)(3)(iii) of this section must include the following statement: "I understand that my appraisal will be used in connection with a return or claim for refund. I also understand that, if there is a substantial or gross valuation misstatement of the value of the property claimed on the return or claim for refund that is based on my appraisal, I may be subject to a penalty under section 6695A of the Internal Revenue Code, as well as other applicable penalties. I affirm that I have not been at any time in the three-year period ending on the date of the appraisal barred from presenting evidence or testimony before the Department of the Treasury or the Internal Revenue Service pursuant to 31 U.S.C. 330(c)."

(5) ***Donee signature*** —

(i) ***Person authorized to sign.*** The person who signs Form 8283 (Section B) for the donee must be either an official authorized to sign the tax or information returns of the donee, or a person specifically authorized to sign Forms 8283 (Section B) by that official. In the case of a donee that is a governmental unit, the person who signs Form 8283 (Section B) for the donee must be an official of the governmental unit.

(ii) ***Effect of donee signature.*** The signature of the donee on Form 8283 (Section B) does not represent concurrence in the appraised value of the contributed property. Rather, it represents acknowledgment of receipt of the property described in Form 8283 (Section B) on the date specified in Form 8283 (Section B) and that the donee understands the information reporting requirements imposed by section 6050L and § 1.6050L-1.

(iii) ***Certain information not required on Form 8283 (Section B) before donee signs.*** Before Form 8283 (Section B) is signed by the donee, Form 8283 (Section B) must be completed (as described in paragraph (d)(3) of this section), except that it is not required to contain the following:

(A) The appraiser declaration or information about the qualified appraiser.

(B) The manner or date of acquisition.

(C) The cost or other basis of the property.

(D) The appraised fair market value of the contributed property.

(E) The amount claimed as a charitable contribution.

(6) ***Additional substantiation rules may apply.*** For additional substantiation rules, see paragraph (f) of this section.

(7) ***More than one appraiser.*** More than one appraiser may appraise the donated property. If more than one appraiser appraises the property, the donor does not have to use each appraiser's appraisal for purposes of substantiating the charitable contribution deduction under this paragraph (d). If the donor uses the appraisal of more than one appraiser, or if two or more appraisers contribute to a single appraisal, each appraiser shall comply with the requirements of this paragraph (d) and the requirements in § 1.170A-17, including signing the qualified appraisal and appraisal summary.

(e) ***Substantiation of noncash charitable contributions of more than $500,000*** —

(1) ***In general.*** Except as provided in paragraph (e)(2) of this section, no deduction is allowed under section 170(a) for a noncash charitable contribution of more than $500,000 unless the donor—

(i) Substantiates the contribution with a contemporaneous written acknowledgment, as described in section 170(f)(8) and § 1.170A-13(f);

(ii) Obtains a qualified appraisal, as defined in § 1.170A-17(a)(1), prepared by a qualified appraiser, as defined in § 1.170A-17(b)(1);

(iii) Completes, as described in paragraph (d)(3) of this section, Form 8283 (Section B) and files it with the return on which the deduction is claimed; and

(iv) Attaches the qualified appraisal of the property to the return on which the deduction is claimed.

(2) ***Exception for certain noncash contributions.*** For contributions of property described in paragraph (d)(2) of this section, a qualified appraisal is not required, and a completed Form 8283 (Section A), containing the information required in paragraph (c)(3) of this section, meets the requirements of paragraph (e)(1)(iii) of this section.

(3) ***Additional substantiation rules may apply.*** For additional substantiation rules, see paragraph (f) of this section.

(f) ***Additional substantiation rules*** —

(1) ***Form 8283 (Section B) furnished by donor to donee.*** A donor who presents a Form 8283 (Section B) to a donee for signature must furnish to the donee a copy of the Form 8283 (Section B).

(2) ***Number of Forms 8283 (Section A or Section B)*** —

(i) ***In general.*** For each item of contributed property for which a Form 8283 (Section A or Section B) is required under paragraphs (c), (d), or (e) of this section, a donor must attach a separate Form 8283 (Section A or Section B) to the return on which the deduction for the item is claimed.

(ii) ***Exception for similar items.*** The donor may attach a single Form 8283 (Section A or Section B) for all similar items of property, as defined in § 1.170A-13(c)(7)(iii), contributed to the same donee during the donor's taxable year, if the donor includes on Form 8283 (Section A or Section B) the information required by paragraph (c)(3) or (d)(3) of this section for each item of property.

(3) ***Substantiation requirements for carryovers of noncash contribution deductions.*** The rules in paragraphs (c), (d), and (e) of this section (regarding substantiation that must be submitted with a return) also apply to the return for any carryover year under section 170(d).

(4) ***Partners and S corporation shareholders*** —

(i) ***Form 8283 (Section A or Section B) must be provided to partners and S corporation shareholders.*** If the donor is a partnership or an S corporation, the donor must provide a copy of its completed Form 8283 (Section A or Section B) to every partner or shareholder who receives an allocation of a charitable contribution under section 170 for the property described in Form 8283 (Section A or Section B). Similarly, a recipient partner that is a partnership or S corporation must provide a copy of the donor's completed Form 8283 (Section A or Section B) to each of its partners or shareholders who receives an allocation of the charitable contribution, and so on through any additional tiers.

(ii) ***Partners and S corporation shareholders must attach Forms 8283 (Section A or Section B) to return.*** A partner of a partnership or shareholder of an S corporation who receives an allocation of a charitable contribution under section 170 for property to which paragraph (c), (d), or (e) of this section applies must attach to the return on which the contribution is claimed a copy of each Form 8283 that must be provided to them under paragraph (f)(4)(i) or (iii) of this section.

(iii) ***Partners and S corporation shareholders must file separate Forms 8283 and provide copies to any partners*** —

(A) ***In general.*** Subject to paragraph (f)(4)(iii)(B) of this section, every partner of a partnership (including a partner that is itself a partnership or S corporation) or shareholder of an S corporation that receives an allocation of a charitable contribution under section 170 for which paragraph (c), (d), or (e) of this section applies must complete a separate Form 8283 with any information required by Form 8283 and the instructions to Form 8283. In the case of a partner that is itself a partnership or S corporation, that partnership or S corporation must provide a copy of its completed separate Form 8283 to every partner or shareholder who receives an allocation of the charitable contribution, and so on through any additional tiers. The partner or shareholder must attach its separate Form 8283 to the return on which the contribution is claimed, in addition to the copy of each Form 8283 that the partner or shareholder is required to attach pursuant to paragraph (f)(4)(ii) of this section.

(B) ***Conservation contributions.*** The terms defined in § 1.170A-14(j)(3) apply for purposes of this paragraph (f)(4)(iii)(B). In the case of a qualified conservation contribution that is made by a partnership or S corporation, an ultimate member's separate Form 8283 must include their own relevant basis. An upper-tier partnership's or upper-tier S corporation's separate Form 8283 must include the sum of each of its ultimate member's relevant basis (as computed in accordance with § 1.170A-14(j) through (m)). This paragraph (f)(4)(iii)(B) does not apply to contributions described in section 170(h)(7)(C) and § 1.170A-14(n)(2) (for contributions made outside of the three-year holding period) or section 170(h)(7)(D)

and § 1.170A-14(n)(3) (for contributions made by certain family partnerships or S corporations), provided that they are not also described in section 170(h)(7)(E) and § 1.170A-14(n)(4) (for contributions to preserve certified historic structures), in which case this paragraph (f)(4)(iii)(B) does apply.

(5) ***Determination of deduction amount for purposes of substantiation rules*** —

(i) ***In general.*** In determining whether the amount of a donor's deduction exceeds the amounts set forth in section 170(f)(11)(B) (noncash contributions exceeding $500), 170(f)(11)(C) (noncash contributions exceeding $5,000), or 170(f)(11)(D) (noncash contributions exceeding $500,000), the rules of paragraphs (f)(5)(ii) and (iii) of this section apply.

(ii) ***Similar items of property must be aggregated.*** Under section 170(f)(11)(F), the donor must aggregate the amount claimed as a deduction for all similar items of property, as defined in § 1.170A-13(c)(7)(iii), contributed during the taxable year. For rules regarding the number of qualified appraisals and Forms 8283 (Section A or Section B) required if similar items of property are contributed, see § 1.170A-13(c)(3)(iv)(A) and (4)(iv)(B).

(iii) ***For contributions of certain inventory and scientific property, excess of amount claimed over cost of goods sold taken into account*** —

(A) ***In general.*** In determining the amount of a donor's contribution of property to which section 170(e)(3) (relating to contributions of inventory and other property) or (e)(4) (relating to contributions of scientific property used for research) applies, the donor must take into account only the excess of the amount claimed as a deduction over the amount that would have been treated as the cost of goods sold if the donor had sold the contributed property to the donee.

(B) ***Example.*** The following example illustrates the rule of this paragraph (f)(5)(iii):

Example. X Corporation makes a contribution of inventory described in section 1221(a)(2). The contribution, described in section 170(e)(3), is for the care of the needy. The cost of the property to *X* Corporation is $5,000 and the fair market value of the property at the time of the contribution is $11,000. Pursuant to section 170(e)(3)(B), *X* Corporation claims a charitable contribution deduction of $8,000 ($5,000 + $^1/_2$ × ($11,000 − 5,000) = $8,000). The amount taken into account for purposes of determining the $5,000 threshold of paragraph (d) of this section is $3,000 ($8,000−$5,000).

(6) ***Conservation contributions by pass-through entities preserving certified historic structures*** —

(i) ***In general.*** The terms defined in § 1.170A-14(j)(3) apply for purposes of this paragraph (f)(6). For any contribution described in paragraph (f)(6)(ii) of this section, pursuant to section 170(f)(19), no deduction is allowed under section 170 or any other provision of the Code under which deductions are allowable to pass-through entities with respect to such contribution unless the contributing partnership, the contributing S corporation, the upper-tier partnership, or the upper-tier S corporation, respectively—

(A) Includes on its return for the taxable year in which the contribution is made a statement that it made such a contribution or received such allocated portion, as described in paragraph (f)(6)(iii) of this section; and

(B) Provides such information about the contribution as the Secretary of the Treasury or her delegate may require in guidance, forms, or instructions.

(ii) ***Contributions to which this paragraph (f)(6) applies.*** This paragraph (f)(6) applies to any qualified conservation contribution (as defined in section 170(h)(1) and § 1.170A-14):

(A) The conservation purpose of which is preservation of a building that is a certified historic structure (as defined in section 170(h)(4)(C));

(B) That is either:

(*1*) Made by a contributing partnership (as defined in § 1.170A-14(j)(3)(iii)) or contributing S corporation (as defined in § 1.170A-14(j)(3)(iv)); or

(2) Is an allocated portion (as defined in § 1.170A-14(j)(3)(i)) of an upper-tier partnership (as defined in § 1.170A-14(j)(3)(xi)) or upper-tier S corporation (as defined in § 1.170A-14(j)(3)(xii)); and

(C) The amount of such contribution (as defined in § 1.170A-14(j)(3)(ii)) or such allocated portion (as defined in § 1.170A-14(j)(3)(i)) exceeds 2.5 times the sum of each ultimate member's relevant basis (as defined in § 1.170A-14(j) through (m)).

(iii) ***Required information.*** A partnership or S corporation satisfies the requirements of section 170(f)(19)(A) and paragraph (f)(6)(i) of this section by filing a completed Form 8283, including information about relevant basis, in accordance with section 170, the regulations under section 170, and the instructions to Form 8283.

(g) ***Applicability dates*** —

(1) ***In general.*** Except as provided in paragraph (g)(2) of this section, this section applies to contributions made after July 30, 2018.

(2) ***Certain paragraphs.*** Paragraphs (c)(3)(v), (d)(3)(viii) and (ix), and (f)(4) and (6) of this section apply to taxable years ending on or after November 20, 2023.

[T.D.9836, 83 FR 36423, July 30, 2018, as amended by T.D. 9999, 89 FR 54325, June 28, 2024; 89 FR 70486, Aug. 30, 2024]

§ 1.170A-17 Qualified appraisal and qualified appraiser.

(a) ***Qualified appraisal*** —

(1) ***Definition.*** For purposes of section 170(f)(11) and § 1.170A-16(d)(1)(ii) and (e)(1)(ii), the term *qualified appraisal* means an appraisal document that is prepared by a qualified appraiser (as defined in paragraph (b)(1) of this section) in accordance with generally accepted appraisal standards (as defined in paragraph (a)(2) of this section) and otherwise complies with the requirements of this paragraph (a).

(2) ***Generally accepted appraisal standards defined.*** For purposes of paragraph (a)(1) of this section, *generally accepted appraisal standards* means the substance and principles of the Uniform Standards of Professional Appraisal Practice, as developed by the Appraisal Standards Board of the Appraisal Foundation.

(3) ***Contents of qualified appraisal.*** A qualified appraisal must include—

(i) The following information about the contributed property:

(A) A description in sufficient detail under the circumstances, taking into account the value of the property, for a person who is not generally familiar with the type of property to ascertain that the appraised property is the contributed property.

(B) In the case of real property or tangible personal property, the condition of the property.

(C) The valuation effective date, as defined in paragraph (a)(5)(i) of this section.

(D) The fair market value, within the meaning of § 1.170A-1(c)(2), of the contributed property on the valuation effective date;

(ii) The terms of any agreement or understanding by or on behalf of the donor and donee that relates to the use, sale, or other disposition of the contributed property, including, for example, the terms of any agreement or understanding that—

(A) Restricts temporarily or permanently a donee's right to use or dispose of the contributed property;

(B) Reserves to, or confers upon, anyone, other than a donee or an organization participating with a donee in cooperative fundraising, any right to the income from the contributed property or to the possession of the property, including the right to vote contributed securities, to acquire the property by purchase or otherwise, or to designate the person having income, possession, or right to acquire; or

(C) Earmarks contributed property for a particular use;

(iii) The date, or expected date, of the contribution to the donee;

(iv) The following information about the appraiser:

(A) Name, address, and taxpayer identification number.

(B) Qualifications to value the type of property being valued, including the appraiser's education and experience.

(C) If the appraiser is acting in his or her capacity as a partner in a partnership, an employee of any person, whether an individual, corporation, or partnership, or an independent contractor engaged by a person other than the donor, the name, address, and taxpayer identification number of the partnership or the person who employs or engages the qualified appraiser;

(v) The signature of the appraiser and the date signed by the appraiser (appraisal report date);

(vi) The following declaration by the appraiser: “I understand that my appraisal will be used in connection with a return or claim for refund. I also understand that, if there is a substantial or gross valuation misstatement of the value of the property claimed on the return or claim for refund that is based on my appraisal, I may be subject to a penalty under section 6695A of the Internal Revenue Code, as well as other applicable penalties. I affirm that I have not been at any time in the three-year period ending on the date of the appraisal barred from presenting evidence or testimony before the Department of the Treasury or the Internal Revenue Service pursuant to 31 U.S.C. 330(c)”;

(vii) A statement that the appraisal was prepared for income tax purposes;

(viii) The method of valuation used to determine the fair market value, such as the income approach, the market-data approach, or the replacement-cost-less-depreciation approach; and

(ix) The specific basis for the valuation, such as specific comparable sales transactions or statistical sampling, including a justification for using sampling and an explanation of the sampling procedure employed.

(4) ***Timely appraisal report.*** A qualified appraisal must be signed and dated by the qualified appraiser no earlier than 60 days before the date of the contribution and no later than—

(i) The due date, including extensions, of the return on which the deduction for the contribution is first claimed;

(ii) In the case of a donor that is a partnership or S corporation, the due date, including extensions, of the return on which the deduction for the contribution is first reported; or

(iii) In the case of a deduction first claimed on an amended return, the date on which the amended return is filed.

(5) ***Valuation effective date*** —

(i) ***Definition.*** The *valuation effective date* is the date to which the value opinion applies.

(ii) ***Timely valuation effective date.*** For an appraisal report dated before the date of the contribution, as described in § 1.170A-1(b), the valuation effective date must be no earlier than 60 days before the date of the contribution and no later than the date of the contribution. For an appraisal report dated on or after the date of the contribution, the valuation effective date must be the date of the contribution.

(6) ***Exclusion for donor knowledge of falsity.*** An appraisal is not a qualified appraisal for a particular contribution, even if the requirements of this paragraph (a) are met, if the donor either failed to disclose or misrepresented facts, and a reasonable person would expect that this failure or misrepresentation would cause the appraiser to misstate the value of the contributed property.

(7) ***Number of appraisals required.*** A donor must obtain a separate qualified appraisal for each item of property for which an appraisal is required under section 170(f)(11)(C) and (D) and paragraph (d) or (e) of § 1.170A-16 and that is not included in a group of similar items of property, as defined in § 1.170A-13(c)(7)(iii). For rules regarding the number of appraisals required if similar items of property are contributed, see section 170(f)(11)(F) and § 1.170A-13(c)(3)(iv)(A).

(8) ***Time of receipt of qualified appraisal.*** The qualified appraisal must be received by the donor before the due date, including extensions, of the return on which a deduction is first claimed, or reported in the case of a donor that is a partnership or S corporation, under section 170 with respect to the donated property, or, in the case of a deduction first claimed, or reported, on an amended return, the date on which the return is filed.

(9) ***Prohibited appraisal fees.*** The fee for a qualified appraisal cannot be based to any extent on the appraised value of the property. For example, a fee for an appraisal will be treated as based on the appraised value of the property if any part of the fee depends on the amount of the appraised value that is allowed by the Internal Revenue Service after an examination.

(10) ***Retention of qualified appraisal.*** The donor must retain the qualified appraisal for so long as it may be relevant in the administration of any internal revenue law.

(11) ***Effect of appraisal disregarded pursuant to 31 U.S.C. 330(c).*** If an appraiser has been prohibited from practicing before the Internal Revenue Service by the Secretary under 31 U.S.C. 330(c) at any time during the three-year period ending on the date the appraisal is signed by the appraiser, any appraisal prepared by the appraiser will be disregarded as to value, but could constitute a qualified appraisal if the requirements of this section are otherwise satisfied, and the donor had no knowledge that the signature, date, or declaration was false when the appraisal and Form 8283 (Section B) were signed by the appraiser.

(12) ***Partial interest.*** If the contributed property is a partial interest, the appraisal must be of the partial interest.

(b) ***Qualified appraiser*** —

(1) ***Definition.*** For purposes of section 170(f)(11) and § 1.170A-16(d)(1)(ii) and (e)(1)(ii), the term *qualified appraiser* means an individual with verifiable education and experience in valuing the type of property for which the appraisal is performed, as described in paragraphs (b)(2) through (4) of this section.

(2) ***Education and experience in valuing the type of property*** —

(i) ***In general.*** An individual is treated as having education and experience in valuing the type of property within the meaning of paragraph (b)(1) of this section if, as of the date the individual signs the appraisal, the individual has—

(A) Successfully completed (for example, received a passing grade on a final examination) professional or college-level coursework, as described in paragraph (b)(2)(ii) of this section, in valuing the type of property, as described in paragraph (b)(3) of this section, and has two or more years of experience in valuing the type of property, as described in paragraph (b)(3) of this section; or

(B) Earned a recognized appraiser designation, as described in paragraph (b)(2)(iii) of this section, for the type of property, as described in paragraph (b)(3) of this section.

(ii) ***Coursework must be obtained from an educational organization, generally recognized professional trade or appraiser organization, or employer educational program.*** For purposes of paragraph (b)(2)(i)(A) of this section, the coursework must be obtained from—

(A) A professional or college-level educational organization described in section 170(b)(1)(A)(ii);

(B) A generally recognized professional trade or appraiser organization that regularly offers educational programs in valuing the type of property; or

(C) An employer as part of an employee apprenticeship or educational program substantially similar to the educational programs described in paragraphs (b)(2)(ii)(A) and (B) of this section.

(iii) ***Recognized appraiser designation defined.*** A *recognized appraiser designation* means a designation awarded by a generally recognized professional appraiser organization on the basis of demonstrated competency.

(3) ***Type of property defined*** —

(i) ***In general.*** The type of property means the category of property customary in the appraisal field for an appraiser to value.

(ii) ***Examples.*** The following examples illustrate the rule of paragraphs (b)(2)(i) and (b)(3)(i) of this section:

Example (1). Coursework in valuing type of property. There are very few professional-level courses offered in widget appraising, and it is customary in the appraisal field for personal property appraisers to appraise widgets. Appraiser *A* has successfully completed professional-level coursework in valuing personal property generally but has completed no coursework in valuing widgets. The coursework completed by Appraiser *A* is for the type of property under paragraphs (b)(2)(i) and (b)(3)(i) of this section.

Example (2). Experience in valuing type of property. It is customary for professional antique appraisers to appraise antique widgets. Appraiser *B* has 2 years of experience in valuing antiques generally and is asked to appraise an antique widget. Appraiser *B* has obtained experience in valuing the type of property under paragraphs (b)(2)(i) and (b)(3)(i) of this section.

Example (3). No experience in valuing type of property. It is not customary for professional antique appraisers to appraise new widgets. Appraiser *C* has experience in appraising antiques generally but no experience in appraising new widgets. Appraiser *C* is asked to appraise a new widget. Appraiser *C* does not have experience in valuing the type of property under paragraphs (b)(2)(i) and (b)(3)(i) of this section.

(4) ***Verifiable.*** For purposes of paragraph (b)(1) of this section, education and experience in valuing the type of property are verifiable if the appraiser specifies in the appraisal the appraiser's education and experience in valuing the type of property, as described in paragraphs (b)(2) and (3) of this section, and the appraiser makes a declaration in the appraisal that, because of the appraiser's education and experience, the appraiser is qualified to make appraisals of the type of property being valued.

(5) ***Individuals who are not qualified appraisers.*** The following individuals are not qualified appraisers for the appraised property:

(i) An individual who receives a fee prohibited by paragraph (a)(9) of this section for the appraisal of the appraised property.

(ii) The donor of the property.

(iii) A party to the transaction in which the donor acquired the property (for example, the individual who sold, exchanged, or gave the property to the donor, or any individual who acted as an agent for the transferor or for the donor for the sale, exchange, or gift), unless the property is contributed within 2 months of the date of acquisition and its appraised value does not exceed its acquisition price.

(iv) The donee of the property.

(v) Any individual who is either—

(A) Related, within the meaning of section 267(b), to, or an employee of, an individual described in paragraph (b)(5)(ii), (iii), or (iv) of this section;

(B) Married to an individual described in paragraph (b)(5)(v)(A) of this section; or

(C) An independent contractor who is regularly used as an appraiser by any of the individuals described in paragraph (b)(5)(ii), (iii), or (iv) of this section, and who does not perform a majority of his or her appraisals for others during the taxable year.

(vi) An individual who is prohibited from practicing before the Internal Revenue Service by the Secretary under 31 U.S.C. 330(c) at any time during the three-year period ending on the date the appraisal is signed by the individual.

(c) ***Effective/applicability date.*** This section applies to contributions made on or after January 1, 2019. Taxpayers may rely on the rules of this section for appraisals prepared for returns or submissions filed after August 17, 2006.

[T.D. 9836, 83 FR 36425, July 30, 2018]

§ 1.170A-18 Contributions of clothing and household items.

(a) ***In general.*** Except as provided in paragraph (b) of this section, no deduction is allowed under section 170(a) for a contribution of clothing or a household item (as described in paragraph (c) of this section) unless—

(1) The item is in good used condition or better at the time of the contribution; and

(2) The donor meets the substantiation requirements of § 1.170A-16.

(b) ***Certain contributions of clothing or household items with claimed value of more than $500.*** The rule described in paragraph (a)(1) of this section does not apply to a contribution of a single item of clothing or a household item for which a deduction of more than $500 is claimed, if the donor submits with the return on which the deduction is claimed a qualified appraisal, as defined in § 1.170A-17(a)(1), of the property prepared by a qualified appraiser, as defined in § 1.170A-17(b)(1), and a completed Form 8283 (Section B), "Noncash Charitable Contributions," as described in § 1.170A-16(d)(3).

(c) ***Definition of household items.*** For purposes of section 170(f)(16) and this section, the term *household items* includes furniture, furnishings, electronics, appliances, linens, and other similar items. Food, paintings, antiques, and other objects of art, jewelry, gems, and collections are not household items.

(d) ***Effective/applicability date.*** This section applies to contributions made after July 30, 2018. Taxpayers may rely on the rules of this section for contributions made after August 17, 2006.

[T.D. 9836, 83 FR 36427, July 30, 2018]

§ 1.171-1 Bond premium.

(a) ***Overview*** —

(1) ***In general.*** This section and §§ 1.171-2 through 1.171-5 provide rules for the determination and amortization of bond premium by a holder. In general, a holder amortizes bond premium by offsetting the interest allocable to an accrual period with the premium allocable to that period. Bond premium is allocable to an accrual period based on a constant yield. The use of a constant yield to amortize bond premium is intended to generally conform the treatment of bond premium to the treatment of original issue discount under sections 1271 through 1275. Unless otherwise provided, the terms used in this section and §§ 1.171-2 through 1.171-5 have the same meaning as those terms in sections 1271 through 1275 and the corresponding regulations. Moreover, unless otherwise

provided, the provisions of this section and §§ 1.171-2 through 1.171-5 apply in a manner consistent with those of sections 1271 through 1275 and the corresponding regulations. In addition, the anti-abuse rule in § 1.1275-2(g) applies for purposes of this section and §§ 1.171-2 through 1.171-5.

(2) ***Cross-references.*** For rules dealing with the adjustments to a holder's basis to reflect the amortization of bond premium, see § 1.1016-5(b). For rules dealing with the treatment of bond issuance premium by an issuer, see § 1.163-13.

(b) ***Scope*** —

(1) ***In general.*** Except as provided in paragraph (b)(2) of this section and § 1.171-5, this section and §§ 1.171-2 through 1.171-4 apply to any bond that, upon its acquisition by the holder, is held with bond premium. For purposes of this section and §§ 1.171-2 through 1.171-5, the term *bond* has the same meaning as the term *debt instrument* in § 1.1275-1(d).

(2) ***Exceptions.*** This section and §§ 1.171-2 through 1.171-5 do not apply to—

(i) A bond described in section 1272(a)(6)(C) (regular interests in a REMIC, qualified mortgages held by a REMIC, and certain other debt instruments, or pools of debt instruments, with payments subject to acceleration);

(ii) A bond to which § 1.1275-4 applies (relating to certain debt instruments that provide for contingent payments);

(iii) A bond held by a holder that has made a § 1.1272-3 election with respect to the bond;

(iv) A bond that is stock in trade of the holder, a bond of a kind that would properly be included in the inventory of the holder if on hand at the close of the taxable year, or a bond held primarily for sale to customers in the ordinary course of the holder's trade or business; or

(v) A bond issued before September 28, 1985, unless the bond bears interest and was issued by a corporation or by a government or political subdivision thereof.

(c) ***General rule*** —

(1) ***Tax-exempt obligations.*** A holder must amortize bond premium on a bond that is a tax-exempt obligation. See § 1.171-2(c) *Example 4.*

(2) ***Taxable bonds.*** A holder may elect to amortize bond premium on a taxable bond. Except as provided in paragraph (c)(3) of this section, a taxable bond is any bond other than a tax-exempt obligation. See § 1.171-4 for rules relating to the election to amortize bond premium on a taxable bond.

(3) ***Bonds the interest on which is partially excludable.*** For purposes of this section and §§ 1.171-2 through 1.171-5, a bond the interest on which is partially excludable from gross income is treated as two instruments, a tax-exempt obligation and a taxable bond. The holder's basis in the bond and each payment on the bond are allocated between the two instruments based on a reasonable method.

(d) ***Determination of bond premium*** —

(1) ***In general.*** A holder acquires a bond at a premium if the holder's basis in the bond immediately after its acquisition by the holder exceeds the sum of all amounts payable on the bond after the acquisition date (other than payments of qualified stated interest). This excess is bond premium, which is amortizable under § 1.171-2.

(2) ***Additional rules for amounts payable on certain bonds.*** Additional rules apply to determine the amounts payable on a variable rate debt instrument, an inflation-indexed debt instrument, a bond that provides for certain alternative payment schedules, and a bond that provides for remote or incidental contingencies. See § 1.171-3.

(e) ***Basis.*** A holder determines its basis in a bond under this paragraph (e). This determination of basis applies only for purposes of this section and §§ 1.171-2 through 1.171-5. Because of the application of this paragraph (e), the holder's basis in the bond for purposes of these sections may differ from the holder's basis for determining gain or loss on the sale or exchange of the bond.

(1) ***Determination of basis*** —

(i) ***In general.*** In general, the holder's basis in the bond is the holder's basis for determining loss on the sale or exchange of the bond.

(ii) ***Bonds acquired in certain exchanges.*** If the holder acquired the bond in exchange for other property (other than in a reorganization defined in section 368) and the holder's basis in the bond is determined in whole or in part by reference to the holder's basis in the other property, the holder's basis in the bond may not exceed its fair market value immediately after the exchange. See paragraph (f) *Example 1* of this section. If the bond is acquired in a reorganization, see section 171(b)(4)(B).

(iii) ***Convertible bonds*** —

(A) ***General rule.*** If the bond is a convertible bond, the holder's basis in the bond is reduced by an amount equal to the value of the conversion option. The value of the conversion option may be determined under any reasonable method. For example, the holder may determine the value of the conversion option by comparing the market price of the convertible bond to the market prices of similar bonds that do not have conversion options. See paragraph (f) *Example 2* of this section.

(B) ***Convertible bonds acquired in certain exchanges.*** If the bond is a convertible bond acquired in a transaction described in paragraph (e)(1)(ii) of this section, the holder's basis in the bond may not exceed its fair market value immediately after the exchange reduced by the value of the conversion option.

(C) ***Definition of convertible bond.*** A convertible bond is a bond that provides the holder with an option to convert the bond into stock of the issuer, stock or debt of a related party (within the meaning of section 267(b) or 707(b)(1)), or into cash or other property in an amount equal to the approximate value of such stock or debt. For bonds issued on or after February 5, 2013, the term *stock* in the preceding sentence means an equity interest in any entity that is classified, for Federal tax purposes, as either a partnership or a corporation.

(2) ***Basis in bonds held by certain transferees.*** Notwithstanding paragraph (e)(1) of this section, if the bond is transferred basis property (as defined in section 7701(a)(43)) and the transferor had acquired the bond at a premium, the holder's basis in the bond is—

(i) The holder's basis for determining loss on the sale or exchange of the bond; reduced by

(ii) Any amounts that the transferor could not have amortized under this paragraph (e) or under § 1.171-4(c), except to the extent that the holder's basis already reflects a reduction attributable to such nonamortizable amounts.

(f) ***Examples.*** The following examples illustrate the rules of this section:

Example 1. Bond received in liquidation of a partnership interest. (i) *Facts.* PR is a partner in partnership PRS. PRS does not have any unrealized receivables or inventory items as defined in section 751. On January 1, 1998, PRS distributes to PR a taxable bond, issued by an unrelated corporation, in liquidation of PR's partnership interest. At that time, the fair market value of PR's partnership interest is $40,000 and the basis is $100,000. The fair market value of the bond is $40,000.
(ii) *Determination of basis.* Under section 732(b), PR's basis in the bond is equal to PR's basis in the partnership interest. Therefore, PR's basis for determining loss on the sale or exchange of the bond is $100,000. However, because the distribution is treated as an exchange for purposes of section 171(b)(4), PR's basis in the bond is $40,000 for purposes of this section and §§ 1.171-2 through 1.171-5. See paragraph (e)(1)(ii) of this section.

Example 2. Convertible bond. (i) *Facts.* On January 1, A purchases for $1,100 B corporation's bond maturing in three years from the purchase date, with a stated principal amount of $1,000, payable at maturity. The bond provides for unconditional payments of interest of $30 on January 1 and July 1 of each year. In addition, the bond is convertible into 15 shares of B corporation stock at the option of the holder. On the purchase date, B corporation's nonconvertible, publicly-traded, three-year debt of comparable credit quality trades at a price that reflects a yield of 6.75 percent, compounded semiannually.
(ii) *Determination of basis.* A's basis for determining loss on the sale or exchange of the bond is $1,100. As of the purchase date, discounting the remaining payments on the bond at the yield at which B's similar nonconvertible bonds trade (6.75 percent, compounded semiannually) results in a present value of $980. Thus, the value of the conversion option is $120. Under paragraph (e)(1)(iii)(A) of this section, A's basis is $980 ($1,100−$120) for purposes of this section and §§ 1.171-2 through 1.171-5. The sum of all amounts payable on the bond other than qualified stated interest is $1,000. Because A's basis (as determined under paragraph (e)(1)(iii)(A) of this section) does not exceed $1,000, A does not acquire the bond at a premium.

(iii) *Applicability date.* Notwithstanding § 1.171-5(a)(1), this *Example 2* applies to bonds acquired on or after July 6, 2011.

[T.D. 8746, 62 FR 68177, Dec. 31, 1997, as amended by T.D. 9533, 76 FR 39280, July 6, 2011; T.D. 9612, 78 FR 8005, Feb. 5, 2013; T.D. 9637, 78 FR 54759, Sept. 6, 2013]

§ 1.171-2 Amortization of bond premium.

(a) ***Offsetting qualified stated interest with premium*** —

(1) ***In general.*** A holder amortizes bond premium by offsetting the qualified stated interest allocable to an accrual period with the bond premium allocable to the accrual period. This offset occurs when the holder takes the qualified stated interest into account under the holder's regular method of accounting.

(2) ***Qualified stated interest allocable to an accrual period.*** See § 1.446-2(b) to determine the accrual period to which qualified stated interest is allocable and to determine the accrual of qualified stated interest within an accrual period.

(3) ***Bond premium allocable to an accrual period.*** The bond premium allocable to an accrual period is determined under this paragraph (a)(3). Within an accrual period, the bond premium allocable to the period accrues ratably.

(i) ***Step one: Determine the holder's yield.*** The holder's yield is the discount rate that, when used in computing the present value of all remaining payments to be made on the bond (including payments of qualified stated interest), produces an amount equal to the holder's basis in the bond as determined under § 1.171-1(e). For this purpose, the remaining payments include only payments to be made after the date the holder acquires the bond. The yield is calculated as of the date the holder acquires the bond, must be constant over the term of the bond, and must be calculated to at least two decimal places when expressed as a percentage.

(ii) ***Step two: Determine the accrual periods.*** A holder determines the accrual periods for the bond under the rules of § 1.1272-1(b)(1)(ii).

(iii) ***Step three: Determine the bond premium allocable to the accrual period.*** The bond premium allocable to an accrual period is the excess of the qualified stated interest allocable to the accrual period over the product of the holder's adjusted acquisition price (as defined in paragraph (b) of this section) at the beginning of the accrual period and the holder's yield. In performing this calculation, the yield must be stated appropriately taking into account the length of the particular accrual period. Principles similar to those in § 1.1272-1(b)(4) apply in determining the bond premium allocable to an accrual period.

(4) ***Bond premium in excess of qualified stated interest*** —

(i) ***Taxable bonds*** —

(A) ***Bond premium deduction.*** In the case of a taxable bond, if the bond premium allocable to an accrual period exceeds the qualified stated interest allocable to the accrual period, the excess is treated by the holder as a bond premium deduction under section 171(a)(1) for the accrual period. However, the amount treated as a bond premium deduction is limited to the amount by which the holder's total interest inclusions on the bond in prior accrual periods exceed the total amount treated by the holder as a bond premium deduction on the bond in prior accrual periods. A deduction determined under this paragraph (a)(4)(i)(A) is not subject to section 67 (the 2-percent floor on miscellaneous itemized deductions). See *Example 1* of § 1.171-3(e).

(B) ***Carryforward.*** If the bond premium allocable to an accrual period exceeds the sum of the qualified stated interest allocable to the accrual period and the amount treated as a deduction for the accrual period under paragraph (a)(4)(i)(A) of this section, the excess is carried forward to the next accrual period and is treated as bond premium allocable to that period.

(C) ***Carryforward in holder's final accrual period*** —

(*1*) ***Bond premium deduction.*** If there is a bond premium carryforward determined under paragraph (a)(4)(i)(B) of this section as of the end of the holder's accrual period in which the bond is sold, retired, or otherwise disposed of, the holder treats the

amount of the carryforward as a bond premium deduction under section 171(a)(1) for the holder's taxable year in which the sale, retirement, or other disposition occurs. For purposes of § 1.1016-5(b), the holder's basis in the bond is reduced by the amount of bond premium allowed as a deduction under this paragraph (a)(4)(i)(C)(*1*).

(2) ***Effective/applicability date.*** Notwithstanding § 1.171-5(a)(1), paragraph (a)(4)(i)(C)(*1*) of this section applies to a bond acquired on or after January 4, 2013. A taxpayer, however, may rely on paragraph (a)(4)(i)(C)(*1*) of this section for a bond acquired before that date.

(ii) ***Tax-exempt obligations.*** In the case of a tax-exempt obligation, if the bond premium allocable to an accrual period exceeds the qualified stated interest allocable to the accrual period, the excess is a nondeductible loss. If a regulated investment company (RIC) within the meaning of section 851 has excess bond premium for an accrual period that would be a nondeductible loss under the prior sentence, the RIC must use this excess bond premium to reduce its tax-exempt interest income on other tax-exempt obligations held during the accrual period.

(5) ***Additional rules for certain bonds.*** Additional rules apply to determine the amortization of bond premium on a variable rate debt instrument, an inflation-indexed debt instrument, a bond that provides for certain alternative payment schedules, and a bond that provides for remote or incidental contingencies. See § 1.171-3.

(b) ***Adjusted acquisition price.*** The adjusted acquisition price of a bond at the beginning of the first accrual period is the holder's basis as determined under § 1.171-1(e). Thereafter, the adjusted acquisition price is the holder's basis in the bond decreased by—

(1) The amount of bond premium previously allocable under paragraph (a)(3) of this section; and

(2) The amount of any payment previously made on the bond other than a payment of qualified stated interest.

(c) ***Examples.*** The following examples illustrate the rules of this section. Each example assumes the holder uses the calendar year as its taxable year and has elected to amortize bond premium, effective for all relevant taxable years. In addition, each example assumes a 30-day month and 360-day year. Although, for purposes of simplicity, the yield as stated is rounded to two decimal places, the computations do not reflect this rounding convention. The examples are as follows:

Example 1. Taxable bond. (i) *Facts.* On February 1, 1999, A purchases for $110,000 a taxable bond maturing on February 1, 2006, with a stated principal amount of $100,000, payable at maturity. The bond provides for unconditional payments of interest of $10,000, payable on February 1 of each year. A uses the cash receipts and disbursements method of accounting, and A decides to use annual accrual periods ending on February 1 of each year.
(ii) *Amount of bond premium.* The interest payments on the bond are qualified stated interest. Therefore, the sum of all amounts payable on the bond (other than the interest payments) is $100,000. Under § 1.171-1, the amount of bond premium is $10,000 ($110,000−$100,000).

(iii) *Bond premium allocable to the first accrual period.* Based on the remaining payment schedule of the bond and A's basis in the bond, A's yield is 8.07 percent, compounded annually. The bond premium allocable to the accrual period ending on February 1, 2000, is the excess of the qualified stated interest

allocable to the period ($10,000) over the product of the adjusted acquisition price at the beginning of the period ($110,000) and A's yield (8.07 percent, compounded annually). Therefore, the bond premium allocable to the accrual period is $1,118.17 ($10,000−$8,881.83).

(iv) *Premium used to offset interest.* Although A receives an interest payment of $10,000 on February 1, 2000, A only includes in income $8,881.83, the qualified stated interest allocable to the period ($10,000) offset with bond premium allocable to the period ($1,118.17). Under § 1.1016-5(b), A's basis in the bond is reduced by $1,118.17 on February 1, 2000.

Example 2. Alternative accrual periods. (i) *Facts.* The facts are the same as in *Example 1* of this paragraph (c) except that A decides to use semiannual accrual periods ending on February 1 and August 1 of each year.
(ii) *Bond premium allocable to the first accrual period.* Based on the remaining payment schedule of the bond and A's basis in the bond, A's yield is 7.92 percent, compounded semiannually. The bond premium allocable to the accrual period ending on August 1, 1999, is the excess of the qualified stated interest allocable to the period ($5,000) over the product of the adjusted acquisition price at the beginning of the period ($110,000) and A's yield, stated appropriately taking into account the length of the accrual period (7.92 percent/2). Therefore, the bond premium allocable to the accrual period is $645.29 ($5,000−$4,354.71). Although the accrual period ends on August 1, 1999, the qualified stated interest of $5,000 is not taken into income until February 1, 2000, the date it is received. Likewise, the bond premium of $645.29 is not taken into account until February 1, 2000. The adjusted acquisition price of the bond on August 1, 1999, is $109,354.71 (the adjusted acquisition price at the beginning of the period ($110,000) less the bond premium allocable to the period ($645.29)).

(iii) *Bond premium allocable to the second accrual period.* Because the interval between payments of qualified stated interest contains more than one accrual period, the adjusted acquisition price at the beginning of the second accrual period must be adjusted for the accrued but unpaid qualified stated interest. See paragraph (a)(3)(iii) of this section and § 1.1272-1(b)(4)(i)(B). Therefore, the adjusted acquisition price on August 1, 1999, is $114,354.71 ($109,354.71 + $5,000). The bond premium allocable to the accrual period ending on February 1, 2000, is the excess of the qualified stated interest allocable to the period ($5,000) over the product of the adjusted acquisition price at the beginning of the period ($114,354.71) and A's yield, stated appropriately taking into account the length of the accrual period (7.92 percent/2). Therefore, the bond premium allocable to the accrual period is $472.88 ($5,000−$4,527.12).

(iv) *Premium used to offset interest.* Although A receives an interest payment of $10,000 on February 1, 2000, A only includes in income $8,881.83, the qualified stated interest of $10,000 ($5,000 allocable to the accrual period ending on August 1, 1999, and $5,000 allocable to the accrual period ending on February 1, 2000) offset with bond premium of $1,118.17 ($645.29 allocable to the accrual period ending on August 1, 1999, and $472.88 allocable to the accrual period ending on February 1, 2000). As indicated in *Example 1* of this paragraph (c), this same amount would be taken into income at the same time had A used annual accrual periods.

Example 3. Holder uses accrual method of accounting. (i) *Facts.* The facts are the same as in *Example 1* of this paragraph (c) except that A uses an accrual method of accounting. Thus, for the accrual period ending on February 1, 2000, the qualified stated interest allocable to the period is $10,000, and the bond premium allocable to the period is $1,118.17. Because the accrual period extends beyond the end of A's taxable year, A must allocate these amounts between the two taxable years.
(ii) *Amounts allocable to the first taxable year.* The qualified stated interest allocable to the first taxable year is $9,166.67 ($10,000 × $^{11}/_{12}$). The bond premium allocable to the first taxable year is $1,024.99 ($1,118.17 × $^{11}/_{12}$).

(iii) *Premium used to offset interest.* For 1999, A includes in income $8,141.68, the qualified stated interest allocable to the period ($9,166.67) offset with bond premium allocable to the period ($1,024.99). Under § 1.1016-5(b), A's basis in the bond is reduced by $1,024.99 in 1999.

(iv) *Amounts allocable to the next taxable year.* The remaining amounts of qualified stated interest and bond premium allocable to the accrual period ending on February 1, 2000, are taken into account for the taxable year ending on December 31, 2000.

Example 4. Tax-exempt obligation. (i) *Facts.* On January 15, 1999, C purchases for $120,000 a tax-exempt obligation maturing on January 15, 2006, with a stated principal amount of $100,000, payable at maturity. The obligation provides for unconditional payments of interest of $9,000, payable on January 15 of each year. C uses the cash receipts and disbursements method of accounting, and C decides to use annual accrual periods ending on January 15 of each year.
(ii) *Amount of bond premium.* The interest payments on the obligation are qualified stated interest. Therefore, the sum of all amounts payable on the obligation (other than the interest payments) is $100,000. Under § 1.171-1, the amount of bond premium is $20,000 ($120,000—$100,000).

(iii) *Bond premium allocable to the first accrual period.* Based on the remaining payment schedule of the obligation and C's basis in the obligation, C's yield is 5.48 percent, compounded annually. The bond premium allocable to the accrual period ending on January 15, 2000, is the excess of the qualified stated interest allocable to the period ($9,000) over the product of the adjusted acquisition price at the beginning of the period ($120,000) and C's yield (5.48 percent, compounded annually). Therefore, the bond premium allocable to the accrual period is $2,420.55 ($9,000−$6,579.45).

(iv) *Premium used to offset interest.* Although C receives an interest payment of $9,000 on January 15, 2000, C only receives tax-exempt interest income of $6,579.45, the qualified stated interest allocable to the period ($9,000) offset with bond premium allocable to the period ($2,420.55). Under § 1.1016-5(b), C's basis in the obligation is reduced by $2,420.55 on January 15, 2000.

[T.D. 8746, 62 FR 68178, Dec. 31, 1997, as amended by T.D. 9653, 79 FR 2590, Jan. 15, 2014]

§ 1.171-3 Special rules for certain bonds.

(a) ***Variable rate debt instruments.*** A holder determines bond premium on a variable rate debt instrument by reference to the stated redemption price at maturity of the equivalent fixed rate debt instrument constructed for the variable rate debt instrument. The holder also allocates any bond premium among the accrual periods by reference to the equivalent fixed rate debt instrument. The holder constructs the equivalent fixed rate debt instrument, as of the date the holder acquires the variable rate debt instrument, by using the principles of § 1.1275-5(e). See paragraph (e) *Example 1* of this section.

(b) ***Inflation-indexed debt instruments.*** A holder determines bond premium on an inflation-indexed debt instrument by assuming that there will be no inflation or deflation over the remaining term of the instrument. The holder also allocates any bond premium among the accrual periods by assuming that there will be no inflation or deflation over the remaining term of the instrument. The bond premium allocable to an accrual period offsets qualified stated interest allocable to the period. Notwithstanding § 1.171-2(a)(4), if the bond premium allocable to an accrual period exceeds the qualified stated interest allocable to the period, the excess is treated as a deflation adjustment under § 1.1275-7(f)(1)(i). However, the rules in § 1.171-2(a)(4)(i)(C) apply to any remaining deflation adjustment attributable to bond premium as of the end of the holder's accrual period in which the bond is sold, retired, or otherwise disposed of. See § 1.1275-7 for other rules relating to inflation-indexed debt instruments.

(c) ***Yield and remaining payment schedule of certain bonds subject to contingencies*** —

(1) ***Applicability.*** This paragraph (c) provides rules that apply in determining the yield and remaining payment schedule of certain bonds that provide for an alternative payment schedule (or schedules) applicable upon the occurrence of a contingency (or contingencies). This paragraph (c) applies, however, only if the timing and amounts of the payments that comprise each payment schedule are known as of the date the holder acquires the bond (the acquisition date) and the bond is subject to paragraph (c)(2), (3), or (4) of this section. A bond does not provide for an alternative payment schedule merely because there is a possibility of impairment of a payment (or payments) by insolvency, default, or similar circumstances. See § 1.1275-4 for the treatment of a bond that provides for a contingency that is not described in this paragraph (c).

(2) ***Remaining payment schedule that is significantly more likely than not to occur.*** If, based on all the facts and circumstances as of the acquisition date, a single remaining payment schedule for a bond is significantly more likely than not to occur, this remaining payment schedule is used to determine and amortize bond premium under §§ 1.171-1 and 1.171-2.

(3) ***Mandatory sinking fund provision.*** Notwithstanding paragraph (c)(2) of this section, if a bond is subject to a mandatory sinking fund provision described in § 1.1272-1(c)(3), the provision is ignored for purposes of determining and amortizing bond premium under §§ 1.171-1 and 1.171-2.

(4) ***Treatment of certain options*** —

(i) ***Applicability.*** Notwithstanding paragraphs (c)(2) and (3) of this section, the rules of this paragraph (c)(4) determine the remaining payment schedule of a bond that provides the holder or issuer with an unconditional option or options, exercisable on one or more dates during the remaining term of the bond, to alter the bond's remaining payment schedule.

(ii) ***Operating rules.*** A holder determines the remaining payment schedule of a bond by assuming that each option will (or will not) be exercised under the following rules:

(A) ***Issuer options.*** In general, the issuer is deemed to exercise or not exercise an option or combination of options in the manner that minimizes the holder's yield on the obligation. However, the issuer of a taxable bond is deemed to exercise or not exercise a call option or combination of call options in the manner that maximizes the holder's yield on the bond.

(B) ***Holder options.*** A holder is deemed to exercise or not exercise an option or combination of options in the manner that maximizes the holder's yield on the bond.

(C) ***Multiple options.*** If both the issuer and the holder have options, the rules of paragraphs (c)(4)(ii)(A) and (B) of this section are applied to the options in the order that they may be exercised. Thus, the deemed exercise of one option may eliminate other options that are later in time.

(5) ***Subsequent adjustments*** —

(i) ***In general.*** Except as provided in paragraph (c)(5)(ii) of this section, if a contingency described in this paragraph (c) (including the exercise of an option described in paragraph (c)(4) of this section) actually occurs or does not occur, contrary to the assumption made pursuant to paragraph (c) of this section (a change in circumstances), then solely for purposes of section 171, the bond is treated as retired and reacquired by the holder on the date of the change in circumstances for an amount equal to the adjusted acquisition price of the bond as of that date. If, however, the change in circumstances results in a substantially contemporaneous pro-rata prepayment as defined in § 1.1275-2(f)(2), the pro-rata prepayment is treated as a payment in retirement of a portion of the bond. See paragraph (e) *Example 2* of this section.

(ii) ***Bond premium deduction on the issuer's call of a taxable bond.*** If a change in circumstances results from an issuer's call of a taxable bond or a partial call that is a pro-rata prepayment, the holder may deduct as bond premium an amount equal to the excess, if any, of the holder's adjusted acquisition price of the bond over the greater of—

(A) The amount received on redemption; and

(B) The amounts that would have been payable under the bond (other than payments of qualified stated interest) if no change in circumstances had occurred.

(d) ***Remote and incidental contingencies.*** For purposes of determining and amortizing bond premium, if a bond provides for a contingency that is remote or incidental (within the meaning of § 1.1275-2(h)), the holder takes the contingency into account under the rules for remote and incidental contingencies in § 1.1275-2(h).

(e) ***Examples.*** The following examples illustrate the rules of this section. Each example assumes the holder uses the calendar year as its taxable year and has elected to amortize bond premium, effective for all relevant taxable years. In addition, each example assumes a 30-day month and 360-day year. Although, for purposes of simplicity, the yield as stated is rounded to two decimal places, the computations do not reflect this rounding convention. The examples are as follows:

> *Example 1. Variable rate debt instrument.* (i) *Facts.* On March 1, 1999, E purchases for $110,000 a taxable bond maturing on March 1, 2007, with a stated principal amount of $100,000, payable at maturity. The bond provides for unconditional payments of interest on March 1 of each year based on the percentage appreciation of a nationally-known commodity index. On March 1, 1999, it is reasonably

expected that the bond will yield 12 percent, compounded annually. E uses the cash receipts and disbursements method of accounting, and E decides to use annual accrual periods ending on March 1 of each year. Assume that the bond is a variable rate debt instrument under § 1.1275-5.

(ii) *Amount of bond premium.* Because the bond is a variable rate debt instrument, E determines and amortizes its bond premium by reference to the equivalent fixed rate debt instrument constructed for the bond as of March 1, 1999. Because the bond provides for interest at a single objective rate that is reasonably expected to yield 12 percent, compounded annually, the equivalent fixed rate debt instrument for the bond is an eight-year bond with a principal amount of $100,000, payable at maturity. It provides for annual payments of interest of $12,000. E's basis in the equivalent fixed rate debt instrument is $110,000. The sum of all amounts payable on the equivalent fixed rate debt instrument (other than payments of qualified stated interest) is $100,000. Under § 1.171-1, the amount of bond premium is $10,000 ($110,000 −$100,000).

(iii) *Bond premium allocable to each accrual period.* E allocates bond premium to the remaining accrual periods by reference to the payment schedule on the equivalent fixed rate debt instrument. Based on the payment schedule of the equivalent fixed rate debt instrument and E's basis in the bond, E's yield is 10.12 percent, compounded annually. The bond premium allocable to the accrual period ending on March 1, 2000, is the excess of the qualified stated interest allocable to the period for the equivalent fixed rate debt instrument ($12,000) over the product of the adjusted acquisition price at the beginning of the period ($110,000) and E's yield (10.12 percent, compounded annually). Therefore, the bond premium allocable to the accrual period is $870.71 ($12,000−$11,129.29). The bond premium allocable to all the accrual periods is listed in the following schedule:

Accrual period ending	Adjusted acquisition price at beginning of accrual period	Premium allocable to accrual period
3/1/00	$110,000.00	$870.71
3/1/01	109,129.29	958.81
3/1/02	108,170.48	1,055.82
3/1/03	107,114.66	1,162.64
3/1/04	105,952.02	1,280.27
3/1/05	104,671.75	1,409.80
3/1/06	103,261.95	1,552.44
3/1/07	101,709.51	1,709.51
		10,000.00

(iv) *Qualified stated interest for each accrual period.* Assume the bond actually pays the following amounts

of qualified stated interest:

Accrual period ending	Qualified stated interest
3/1/00	$2,000.00
3/1/01	0.00
3/1/02	0.00
3/1/03	10,000.00
3/1/04	8,000.00
3/1/05	12,000.00
3/1/06	15,000.00
3/1/07	8,500.00

(v) *Premium used to offset interest.* E's interest income for each accrual period is determined by offsetting the qualified stated interest allocable to the period with the bond premium allocable to the period. For the accrual period ending on March 1, 2000, E includes in income $1,129.29, the qualified stated interest allocable to the period ($2,000) offset with the bond premium allocable to the period ($870.71). For the accrual period ending on March 1, 2001, the bond premium allocable to the accrual period ($958.81) exceeds the qualified stated interest allocable to the period ($0) and, therefore, E does not have interest income for this accrual period. However, under § 1.171-2(a)(4)(i)(A), E may deduct as bond premium $958.81, the excess of the bond premium allocable to the accrual period ($958.81) over the qualified stated interest allocable to the accrual period ($0). For the accrual period ending on March 1, 2002, the bond premium allocable to the accrual period ($1,055.82) exceeds the qualified stated interest allocable to the accrual period ($0) and, therefore, E does not have interest income for the accrual period. Under § 1.171-2(a)(4)(i)(A), E's deduction for bond premium for the accrual period is limited to $170.48, the excess of E's total interest inclusions on the bond in prior accrual periods ($1,129.29) over the total amount treated by E as a bond premium deduction in prior accrual periods ($958.81). Under § 1.171-2(a)(4)(i)(B), E must carry forward the remaining $885.34 of bond premium allocable to the period ending March 1, 2002, and treat it as bond premium allocable to the period ending March 1, 2003. The amount E includes in income for each accrual period is shown in the following schedule:

Accrual period ending	Qualified stated interest	Premium allocable to accrual period	Interest income	Premium deduction	Premium carryforward
3/1/00	$2,000.00	$870.71	$1,129.29		

Accrual period ending	Qualified stated interest	Premium allocable to accrual period	Interest income	Premium deduction	Premium carryforward
3/1/01	0.00	958.81	0.00	$958.81	
3/1/02	0.00	1,055.82	0.00	170.48	$885.34
3/1/03	10,000.00	1,162.64	7,951.93		
3/1/04	8,000.00	1,280.27	6,719.73		
3/1/05	12,000.00	1,409.80	10,590.20		
3/1/06	15,000.00	1,552.44	13,447.56		
3/1/07	8,500.00	1,709.51	6,790.49		
		10,000.00			

Example 2. Partial call that results in a pro-rata prepayment. (i) *Facts.* On April 1, 1999, M purchases for $110,000 N's taxable bond maturing on April 1, 2006, with a stated principal amount of $100,000, payable at maturity. The bond provides for unconditional payments of interest of $10,000, payable on April 1 of each year. N has the option to call all or part of the bond on April 1, 2001, at a 5 percent premium over the principal amount. M uses the cash receipts and disbursements method of accounting.
(ii) *Determination of yield and the remaining payment schedule.* M's yield determined without regard to the call option is 8.07 percent, compounded annually. M's yield determined by assuming N exercises its call option is 6.89 percent, compounded annually. Under paragraph (c)(4)(ii)(A) of this section, it is assumed N will not exercise the call option because exercising the option would minimize M's yield. Thus, for purposes of determining and amortizing bond premium, the bond is assumed to be a seven-year bond with a single principal payment at maturity of $100,000.

(iii) *Amount of bond premium.* The interest payments on the bond are qualified stated interest. Therefore, the sum of all amounts payable on the bond (other than the interest payments) is $100,000. Under § 1.171-1, the amount of bond premium is $10,000 ($110,000−$100,000).

(iv) *Bond premium allocable to the first two accrual periods.* For the accrual period ending on April 1, 2000, M includes in income $8,881.83, the qualified stated interest allocable to the period ($10,000) offset with bond premium allocable to the period ($1,118.17). The adjusted acquisition price on April 1, 2000, is $108,881.83 ($110,000−$1,118.17). For the accrual period ending on April 1, 2001, M includes in income $8,791.54, the qualified stated interest allocable to the period ($10,000) offset with bond premium allocable to the period ($1,208.46). The adjusted acquisition price on April 1, 2001, is $107,673.37 ($108,881.83−$1,208.46).

(v) *Partial call.* Assume N calls one-half of M's bond for $52,500 on April 1, 2001. Because it was assumed the call would not be exercised, the call is a change in circumstances. However, the partial call is also a pro-rata prepayment within the meaning of § 1.1275-2(f)(2). As a result, the call is treated as a retirement of one-half of the bond. Under paragraph (c)(5)(ii) of this section, M may deduct $1,336.68, the excess of its adjusted acquisition price in the retired portion of the bond ($107,673.37/2, or $53,836.68) over the amount received on redemption ($52,500). M's adjusted basis in the portion of the bond that remains outstanding is $53,836.68 ($107,673.37−$53,836.68).

[T.D. 8746, 62 FR 68180, Dec. 31, 1997, as amended by T.D. 8838, 64 FR 48547, Sept. 7, 1999; T.D. 9609, 78 FR 668, Jan. 4, 2013; T.D. 9653, 79 FR 2591, Jan. 15, 2014]

§ 1.171-4 Election to amortize bond premium on taxable bonds.

(a) ***Time and manner of making the election*** —

(1) ***In general.*** A holder makes the election to amortize bond premium by offsetting interest income with bond premium in the holder's timely filed federal income tax return for the first taxable year to which the holder desires the election to apply. The holder should attach to the return a statement that the holder is making the election under this section.

(2) ***Coordination with OID election.*** If a holder makes an election under § 1.1272-3 for a bond with bond premium, the holder is deemed to have made the election under this section.

(b) ***Scope of election.*** The election under this section applies to all taxable bonds held during or after the taxable year for which the election is made.

(c) ***Election to amortize made in a subsequent taxable year*** —

(1) ***In general.*** If a holder elects to amortize bond premium and holds a taxable bond acquired before the taxable year for which the election is made, the holder may not amortize amounts that would have been amortized in prior taxable years had an election been in effect for those prior years.

(2) ***Example.*** The following example illustrates the rule of this paragraph (c):

Example. (i) *Facts.* On May 1, 1999, C purchases for $130,000 a taxable bond maturing on May 1, 2006, with a stated principal amount of $100,000, payable at maturity. The bond provides for unconditional payments of interest of $15,000, payable on May 1 of each year. C uses the cash receipts and disbursements method of accounting and the calendar year as its taxable year. C has not previously elected to amortize bond premium, but does so for 2002. (ii) *Amount to amortize.* C's basis for determining loss on the sale or exchange of the bond is $130,000. Thus, under § 1.171-1, the amount of bond premium is $30,000. Under § 1.171-2, if a bond premium election were in effect for the prior taxable years, C would have amortized $3,257.44 of bond premium on May 1, 2000, and $3,551.68 of bond premium on May 1, 2001, based on annual accrual periods ending on May 1. Thus, for 2002 and future years to which the election applies, C may amortize only $23,190.88 ($30,000−$3,257.44−$3,551.68).

(d) ***Revocation of election.*** The election under this section may not be revoked unless approved by the Commissioner. Because a revocation of the election is a change in accounting method, a taxpayer must follow the rules under § 1.446-1(e)(3)(i) to request the Commissioner's consent to revoke the election. A revocation of the election applies to all taxable bonds held during or after the taxable year for which the revocation is effective. The holder may not amortize any remaining bond premium on bonds held at the beginning of the taxable year for which the revocation is effective. Therefore, no adjustment under section 481 is allowed upon the revocation of the election because no items of income or deduction are omitted or duplicated.

[T.D. 8746, 62 FR 68182, Dec. 31, 1997]

§ 1.171-5 Effective date and transition rules.

(a) ***Effective date*** —

(1) ***In general.*** Sections 1.171-1 through 1.171-4 apply to bonds acquired on or after March 2, 1998. However, if a holder makes the election under § 1.171-4 for the taxable year containing March 2, 1998, or any subsequent taxable year, §§ 1.171-1 through 1.171-4 apply to bonds held on or after the first day of the taxable year in which the election is made.

(2) ***Transition rule for use of constant yield.*** Notwithstanding paragraph (a)(1) of this section, § 1.171-2(a)(3) (providing that the bond premium allocable to an accrual period is determined with reference to a constant yield) does not apply to a bond issued before September 28, 1985.

(b) ***Coordination with existing election.*** A holder is deemed to have made the election under § 1.171-4 for the taxable year containing March 2, 1998, if the holder elected to amortize bond premium under section 171 and that election is effective on March 2, 1998. If the holder is deemed to have made the election under § 1.171-4 for the taxable year containing March 2, 1998, §§ 1.171-1 through 1.171-4 apply to bonds acquired on or after the first day of that taxable year. See § 1.171-4(d) for rules relating to a revocation of an election under section 171.

(c) ***Accounting method changes*** —

(1) ***Consent to change.*** A holder required to change its method of accounting for bond premium to comply with §§ 1.171-1 through 1.171-3 must secure the consent of the Commissioner in accordance with the requirements of § 1.446-1(e). Paragraph (c)(2) of this section provides the Commissioner's automatic consent for certain changes. A holder making the election under § 1.171-4 does not need the Commissioner's consent to make the election.

(2) ***Automatic consent.*** The Commissioner grants consent for a holder to change its method of accounting for bond premium with respect to taxable bonds to which §§ 1.171-1 through 1.171-3 apply. Because this change is made on a cut-off basis, no items of income or deduction are omitted or duplicated and, therefore, no adjustment under section 481 is allowed. The consent granted by this paragraph (c)(2) applies provided—

(i) The holder elected to amortize bond premium under section 171 for a taxable year prior to the taxable year containing March 2, 1998, and that election has not been revoked;

(ii) The change is made for the first taxable year for which the holder must account for a bond under §§ 1.171-1 through 1.171-3; and

(iii) The holder attaches to its return for the taxable year containing the change a statement that it has changed its method of accounting under this section.

[T.D. 8746, 62 FR 68182, Dec. 31, 1997]

§ 1.172-1 Net operating loss deduction.

(a) ***Allowance of deduction.*** Section 172(a) allows as a deduction in computing taxable income for any taxable year subject to the Code the aggregate of the net operating loss carryovers and net operating loss carrybacks to such taxable year. This deduction is referred to as the net operating loss deduction. The net operating loss is the basis for the computation of the net operating loss carryovers and net operating loss carrybacks and ultimately for the net operating loss deduction itself. The net operating loss deduction shall not be disallowed for any taxable year merely because the taxpayer has no income from a trade or business for the taxable year.

(b) ***Steps in computation of net operating loss deduction.*** The three steps to be taken in the ascertainment of the net operating loss deduction for any taxable year subject to the Code are as follows:

(1) Compute the net operating loss for any preceding or succeeding taxable year from which a net operating loss may be carried over or carried back to such taxable year.

(2) Compute the net operating loss carryovers to such taxable year from such preceding taxable years and the net operating loss carrybacks to such taxable year from such succeeding taxable years.

(3) Add such net operating loss carryovers and carrybacks in order to determine the net operating loss deduction for such taxable year.

(c) ***Statement with tax return.*** Every taxpayer claiming a net operating loss deduction for any taxable year shall file with his return for such year a concise statement setting forth the amount of the net operating loss deduction claimed and all material and pertinent facts relative thereto, including a detailed schedule showing the computation of the net operating loss deduction.

(d) ***Ascertainment of deduction dependent upon net operating loss carryback.*** If the taxpayer is entitled in computing his net operating loss deduction to a carryback which he is not able to ascertain at the time his return is due, he shall compute the net operating loss deduction on his return without regard to such net operating loss carryback. When the taxpayer ascertains the net operating loss carryback, he may within the applicable period of limitations file a claim for credit or refund of the overpayment, if any, resulting from the failure to compute the net operating loss deduction for the taxable year with the inclusion of such carryback; or he may file an application under the provisions of section 6411 for a tentative carryback adjustment.

(e) ***Law applicable to computations.***

(1) In determining the amount of any net operating loss carryback or carryover to any taxable year, the necessary computations involving any other taxable year shall be made under the law applicable to such other taxable year.

(2) The net operating loss for any taxable year shall be determined under the law applicable to that year without regard to the year to which it is to be carried and in which, in effect, it is to be deducted as part of the net operating loss deduction.

(3) The amount of the net operating loss deduction which shall be allowed for any taxable year shall be determined under the law applicable to that year.

(f) ***Electing small business corporations.*** In determining the amount of the net operating loss deduction of any corporation, there shall be disregarded the net operating loss of such corporation for any taxable year for which such corporation was an electing small business corporation under subchapter S (section 1371 and following), chapter 1 of the Code. In applying section 172(b)(1) and (2) to a net operating loss sustained in a taxable year in which the corporation was not an electing small business corporation, a taxable year in which the corporation was an electing small business corporation is counted as a taxable year to which such net operating loss is carried back or over. However, the taxable income for such year as determined under section 172(b)(2) is treated as if it were zero for purposes of computing the balance of the loss available to the corporation as a carryback or carryover to other taxable years in which the corporation is not an electing small business corporation. See section 1374 and the regulations thereunder for allowance of a deduction to shareholders for a net operating loss sustained by an electing small business corporation.

(g) ***Husband and wife.*** The net operating loss deduction of a husband and wife shall be determined in accordance with this section, but subject also to the provisions of § 1.172-7.

[T.D. 6500, 25 FR 11402, Nov. 26, 1960, as amended by T.D. 8107, 51 FR 43345, Dec. 2, 1986]

§ 1.172-2 Net operating loss in case of a corporation.

(a) ***Modification of deductions.*** A net operating loss is sustained by a corporation in any taxable year if and to the extent that, for such year, there is an excess of deductions allowed by chapter 1 of the Code over gross income computed thereunder. In determining the excess of deductions over gross income for such purpose—

(1) ***Items not deductible.*** No deduction shall be allowed under—

(i) Section 172 for the net operating loss deduction, and

(ii) Section 922 in respect of Western Hemisphere trade corporations;

(2) ***Dividends received.*** The 85-percent limitation provided by section 246(b) shall not apply to the deductions otherwise allowed under—

(i) Section 243(a) in respect of dividends received from domestic corporations.

(ii) Section 244 in respect of dividends received on preferred stock of public utilities, and

(iii) Section 245 in respect of dividends received from foreign corporations; and

(3) ***Dividends paid.*** The deduction granted by section 247 in respect of dividends paid on the preferred stock of public utilities shall be computed without regard to subsection (a)(1)(B) of Section 247.

(b) ***Example.*** The following example illustrates the application of paragraph (a):

> *Example.* For the calendar year 1981, the X corporation has a gross income of $400,000 and total deductions allowed by chapter 1 of the Code of $375,000 exclusive of any net operating loss deduction and exclusive of any deduction for dividends received or paid. Corporation X in 1981 received $100,000 of dividends entitled to the benefits of section 243(a). These dividends are included in Corporation X's $400,000 gross income. Corporation X has no other deductions to which section 172(d) applies. On the basis of these facts, Corporation X has a net operating loss

for the year 1981 of $60,000, computed as follows:

Deductions for 1981	$375,000
Plus: Deduction for dividends received, computed without regard to the limitation provided in section 246(b) (85% of $100,000)	85,000
Total	460,000
Less: Gross income for 1981 (including $100,000 dividends)	400,000
Net operating loss for 1981	60,000

(c) ***Qualified real estate investment trusts.*** For taxable years ending after October 4, 1976, the net operating loss of a qualified real estate investment trust (as defined in § 1.172-10(b)) is computed by taking into account the adjustments described in section 857(b)(2) (other than the deduction for dividends paid, as defined in section 561), as well as the modifications required by paragraph (a)(1) of this section. Thus, for example, the special deductions for dividends received, etc., provided in part VIII of subchapter B (other than section 248), as well as the net operating loss deduction under section 172, are not allowed in computing the net operating loss of a qualified real estate investment trust.

[T.D. 8107, 51 FR 43345, Dec. 2, 1986]

§ 1.172-3 Net operating loss in case of a taxpayer other than a corporation.

(a) ***Modification of deductions.*** A net operating loss is sustained by a taxpayer other than a corporation in any taxable year if and to the extent that, for such year there is an excess of deductions allowed by chapter 1 of the Internal Revenue Code over gross income computed thereunder. In determining the excess of deductions over gross income for such purpose:

(1) ***Items not deductible.*** No deduction shall be allowed under:

(i) Section 151 for the personal exemptions or under any other section which grants a deduction in lieu of the deductions allowed by section 151,

(ii) Section 172 for the net operating loss deduction, and

(iii) Section 1202 in respect of the net long-term capital gain.

(2) ***Capital losses.***

(i) The amount deductible on account of business capital losses shall not exceed the sum of the amount includible on account of business capital gains and that portion of nonbusiness capital gains which is computed in accordance with paragraph (c) of this section.

(ii) The amount deductible on account of nonbusiness capital losses shall not exceed the amount includible on account of nonbusiness capital gains.

(3) ***Nonbusiness deductions*** —

(i) ***Ordinary deductions.*** Ordinary nonbusiness deductions shall be taken into account without regard to the amount of business deductions and shall be allowed in full to the extent, but not in excess, of that amount which is the sum of the ordinary nonbusiness gross income and the excess of nonbusiness capital gains over nonbusiness capital losses. See paragraph (c) of this section. For purposes of section 172, nonbusiness deductions and income are those deductions and that income which are not attributable to, or derived from, a taxpayer's trade or business. Wages and salary constitute income attributable to the taxpayer's trade or business for such purposes.

(ii) ***Sale of business property.*** Any gain or loss on the sale or other disposition of property which is used in the taxpayer's trade or business and which is of a character that is subject to the allowance for depreciation provided in section 167, or of real property used in the taxpayer's trade or business, shall be considered, for purposes of section 172(d)(4), as attributable to, or derived from, the taxpayer's trade or business. Such gains and losses are to be taken into account fully in computing a net operating loss without regard to the limitation on nonbusiness deductions. Thus, a farmer who sells at a loss land used in the business of farming may, in computing a net operating loss, include in full the deduction otherwise allowable with respect to such loss, without regard to the amount of his nonbusiness income and without regard to whether he is engaged in the trade or business of selling farms. Similarly, an individual who sells at a loss machinery which is used in his trade or business and which is of a character that is subject to the allowance for depreciation may, in computing the net operating loss, include in full the deduction otherwise allowable with respect to such loss.

(iii) ***Casualty losses.*** Any deduction allowable under section 165(c)(3) for losses of property not connected with a trade or business shall not be considered, for purposes of section 172(d)(4), to be a nonbusiness deduction but shall be treated as a deduction attributable to the taxpayer's trade or business.

(iv) ***Self-employed retirement plans.*** Any deduction allowed under section 404, relating to contributions of an employer to an employees' trust or annuity plan, or under section 405(c), relating to contributions to a bond purchase plan, to the extent attributable to contributions made on behalf of an individual while he is an employee within the meaning of section 401(c)(1), shall not be treated, for purposes of section 172(d)(4), as attributable to, or derived from, the taxpayer's trade or business, but shall be treated as a nonbusiness deduction.

(v) ***Limitation.*** The provisions of this subparagraph shall not be construed to permit the deduction of items disallowed by subparagraph (1) of this paragraph.

(b) ***Treatment of capital loss carryovers.*** Because of the distinction between business and nonbusiness capital gains and losses, a taxpayer who has a capital loss carryover from a preceding taxable year, includible by virtue of section 1212 among the capital losses for the taxable year in issue, is required to determine how much of such capital loss carryover is a business capital loss and how much is a nonbusiness capital loss. In order to make this determination, the taxpayer shall first ascertain what proportion of the net capital loss for such preceding taxable year was attributable to an excess of business capital losses over business capital gains for such year, and what proportion was attributable to an excess of nonbusiness capital losses over nonbusiness capital gains. The same proportion of the capital loss carryover from such preceding taxable year shall be treated as a business capital loss and a nonbusiness capital loss, respectively. In order to determine the composition (business—nonbusiness) of a net capital loss for a taxable year, for purposes of this paragraph, if such net capital loss is computed under paragraph (b) of § 1.1212-1 and takes into account a capital loss carryover from a preceding

taxable year, the composition (business—nonbusiness) of the net capital loss for such preceding taxable year must also be determined. For purposes of this paragraph, the term *capital loss carryover* means the sum of the short-term and long-term capital loss carryovers from such year. This paragraph may be illustrated by the following examples:

Example 1. (i) A, an individual, has $5,000 ordinary taxable income (computed without regard to the deductions for personal exemptions) for the calendar year 1954 and also has the following capital gains and losses for such year: Business capital gains of $2,000; business capital losses of $3,200; nonbusiness capital gains of $1,000; and nonbusiness capital losses of $1,200.
(ii) A's net capital loss for the taxable year 1954 is $400, computed as follows:

Capital losses	$4,400
Capital gains	3,000
Excess of capital losses over capital gains	1,400
Less: $1,000 of such ordinary taxable income	1,000
Net capital loss for 1954	400

(iii) A's capital losses for 1954 exceeded his capital gains for such year by $1,400. Since A's business capital losses for 1954 exceeded his business capital gains for such year by $1,200, 6/7ths ($1,200/$1,400) of A's net capital loss for 1954 is attributable to an excess of his business capital losses over his business capital gains for such year. Similarly, 1/7th of the net capital loss is attributable to the excess of nonbusiness capital losses over nonbusiness capital gains. Since the capital loss carryover for 1954 to 1955 is $400, 6/7ths of $400, or $342.86, shall be treated as a business capital loss in 1955; and 1/7th of $400, or $57.14, as a nonbusiness capital loss.

Example 2. (i) A, an individual who is computing a net operating loss for the calendar year 1966, has a capital loss carryover from 1965 of $8,000. In order to apply the provisions of this paragraph, A must determine what portion of the $8,000 carryover is attributable to the excess of business capital losses over business capital gains and what portion thereof is attributable to the excess of nonbusiness capital losses over nonbusiness capital gains. For 1965, A had $10,000 ordinary taxable income (computed without regard to the deductions for personal exemptions), and a short-term capital loss carryover of $6,000 from 1964. In order to determine the composition (business—nonbusiness) of the $8,000 carryover from 1965, A first determines that of the $6,000 carryover from 1964, $5,000 is a business capital loss and $1,000 is a nonbusiness capital loss. This must be done since, under paragraph (b) of § 1.1212-1, the net capital loss for 1965 is computed by taking into account the capital loss carryover from 1964. A's capital gains and losses

for 1965 are as follows:

	1965	Carried over from 1964
Business capital gains	$2,000	0
Business capital losses	3,000	$5,000
Nonbusiness capital gains	4,000	0
Nonbusiness capital losses	6,000	1,000

(ii) A's net capital loss for the taxable year 1965 is $8,000, computed as follows:

Capital losses (including carryovers)	$15,000
Capital gains	6,000
Excess of capital losses over capital gains	9,000
Less: $1,000 of such ordinary taxable income	1,000
Net capital loss for 1965	8,000

(iii) A's capital losses, including carryovers, for 1965 exceeded his capital gains for such year by $9,000. Since A's business capital losses for 1965 exceeded his business capital gains for such year by $6,000, 2/3rds ($6,000/$9,000) of A's net capital loss for 1965 is attributable to an excess of his business capital losses over his business capital gains for such year. Similarly, 1/3rd of the net capital loss is attributable to the excess of nonbusiness capital losses over nonbusiness capital gains. Since the total capital loss carryover from 1965 to 1966 is $8,000, 2/3rds of $8,000, or $5,333.33, shall be treated as a business capital loss in 1966; and 1/3rd of $8,000, or $2,666.67, as a nonbusiness capital loss.

(c) ***Determination of portion of nonbusiness capital gains available for the deduction of business capital losses.*** In the computation of a net operating loss a taxpayer other than a corporation must use his nonbusiness capital gains for the deduction of his nonbusiness capital losses. Any amount not necessary for this purpose shall then be used for the deduction of any excess of ordinary nonbusiness deductions over ordinary nonbusiness gross income. The remainder, computed by applying the excess ordinary nonbusiness deductions against the excess nonbusiness capital gains, shall be treated as nonbusiness capital gains and used for the purpose of determining the deductibility of business capital losses under paragraph (a)(2)(i) of this section. This principle may be illustrated by the following example:

Example. (1) A, an individual, has a total nonbusiness gross income of $20,500, computed as

follows:

Ordinary gross income	$7,500
Capital gains	13,000
Total gross income	20,500

(2) A also has total nonbusiness deductions of $16,000, computed as follows:

Ordinary deductions	$9,000
Capital loss	7,000
Total deductions	16,000

(3) The portion of nonbusiness capital gains to be used for the purpose of determining the deductibility of business capital losses is $4,500, computed as follows:

Nonbusiness capital gains		$13,000
Less: Nonbusiness capital loss		7,000
Excess to be taken into account for purposes of paragraph (a)(3)(i) of this section		6,000
Ordinary nonbusiness deductions	$9,000	
Less: Ordinary nonbusiness gross income	7,500	
	————	1,500
Portion of nonbusiness capital gains to be used for purposes of paragraph (a)(2)(i) of this section		4,500

(d) ***Joint net operating loss of husband and wife.*** In the case of a husband and wife, the joint net operating loss for any taxable year for which a joint return is filed is to be computed on the basis of the combined income and deductions of both spouses, and the modifications prescribed in paragraph (a) of this section are to be computed as if the combined income and deductions of both spouses were the income and deductions of one individual.

(e) ***Illustration of computation of net operating loss of a taxpayer other than a corporation*** —

(1) ***Facts.*** For the calendar year 1954 A, an individual, has gross income of $483,000 and allowable deductions of $540,000. The latter amount does not include the net operating loss deduction or any deduction on account of the sale or exchange of capital assets. Included in gross income are business capital gains of $50,000 and ordinary nonbusiness income of $10,000. Included among the

deductions are ordinary nonbusiness deductions of $12,000 and a deduction of $600 for his personal exemption. A has a business capital loss of $60,000 in 1954. A has no other items of income or deductions to which section 172(d) applies.

(2) ***Computation.*** On the basis of these facts, A has a net operating loss for 1954 of $104,400, computed as follows:

Deductions for 1954 (as specified in first sentence of subparagraph (1))		$540,000
Plus: Amount of business capital loss ($60,000) to extent such amount does not exceed business capital gains ($50,000)		50,000
Total		590,000
Less: Excess of ordinary nonbusiness deductions over ordinary nonbusiness gross income ($12,000 minus $10,000)	$2,000	
Deduction for personal exemption	600	
	————	$2,600
Deductions for 1954 adjusted as required by section 172(d)		587,400
Gross income for 1954	483,000	
Net operating loss for 1954	104,400	

[T.D. 6500, 25 FR 11402, Nov. 26, 1960, as amended by T.D. 6828, 30 FR 7805, June 17, 1965; T.D. 6862, 30 FR 14427, Nov. 18, 1965; T.D. 8107, 51 FR 43345, Dec. 2, 1986]

§ 1.172-4 Net operating loss carrybacks and net operating loss carryovers.

(a) ***General provisions*** —

(1) ***Years to which loss may be carried*** —

(i) ***In general.*** In order to compute the net operating loss deduction the taxpayer must first determine the part of any net operating losses for any preceding or succeeding taxable years which are carrybacks or carryovers to the taxable year in issue.

(ii) ***General rule for carrybacks and carryovers.*** Except as provided in section 172 (b)(1)(C), (D), (E), (F), (G), (H), (I), and (J), paragraphs (a)(1)(iii), (iv), (v), and (vi) of this section, and § 1.172-10(a), a net operating loss shall be carried back to the 3 preceding taxable years and carried over to the 15 succeeding taxable years (5 succeeding taxable years for a loss sustained in a taxable year ending before January 1, 1976).

(iii) ***Loss of a regulated transportation corporation.*** Except as provided in subdivision (iv) of this subparagraph and § 1.172-10(a), a net operating loss sustained by a taxpayer which is a regulated transportation corporation (as defined in section 172(g)(1)) in a taxable year ending before January 1, 1976, shall, subject to the provisions of section 172(g) and § 1.172-8, be carried back to the taxable years specified in paragraph (a)(1)(ii) of this section and shall be carried over to the 7 succeeding taxable years.

(iv) ***Loss attributable to foreign expropriation.*** If the provisions of section 172(b)(3)(A) and § 1.172-9 are satisfied, the portion of a net operating loss attributable to a foreign expropriation loss (as defined in section 172(h)) shall not be a net operating loss carryback to any taxable year preceding the taxable year of such loss and shall be a net operating loss carryover to each of the 10 taxable years following the taxable year of such loss.

(v) ***Loss of a financial institution.*** A net operating loss sustained in a taxable year beginning after December 31, 1975, by a taxpayer to which section 585, 586, or 593 applies shall be carried back (except as provided in § 1.172-10(a)) to the 10 preceding taxable years and shall be carried over to the 5 succeeding taxable years.

(vi) ***Loss of a Bank for Cooperatives.*** A net operating loss sustained by a taxpayer which is a Bank for Cooperatives (organized and chartered pursuant to section 2 of the Farm Credit Act of 1933 (12 U.S.C. 1134)) shall be carried back (except as provided in § 1.172-10(a)) to the 10 preceding taxable years and shall be carried over to the 5 succeeding taxable years.

(2) ***Periods of less than 12 months.*** A fractional part of a year which is a taxable year under sections 441(b) and 7701(a)(23) is a preceding or a succeeding taxable year for the purpose of determining under section 172 the first, second, etc., preceding or succeeding taxable year.

(3) ***Amount of loss to be carried.*** The amount which is carried back or carried over to any taxable year is the net operating loss to the extent it was not absorbed in the computation of the taxable (or net) income for other taxable years, preceding such taxable year, to which it may be carried back or carried over. For the purpose of determining the taxable (or net) income for any such preceding taxable year, the various net operating loss carryovers and carrybacks to such taxable year are considered to be applied in reduction of the taxable (or net) income in the order of the taxable years from which such losses are carried over or carried back, beginning with the loss for the earliest taxable year.

(4) ***Husband and wife.*** The net operating loss carryovers and carrybacks of a husband and wife shall be determined in accordance with this section, but subject also to the provisions of § 1.172-7.

(5) ***Corporate acquisitions.*** For the computation of the net operating loss carryovers in the case of certain acquisitions of the assets of a corporation by another corporation, see section 381 and the regulations thereunder.

(6) ***Special limitations.*** For special limitations on the net operating loss carryovers in certain cases of change in both the ownership and the trade or business of a corporation and in certain cases of corporate reorganization lacking specified continuity of ownership, see section 382 and the regulations thereunder.

(7) ***Electing small business corporations.*** For special rule applicable to corporations which were electing small business corporations under Subchapter S (section 1361 and following), chapter 1 of the Code, during one or more of the taxable years described in section 172 (b)(1), see paragraph (f) of § 1.172-1.

(b) ***Portion of net operating loss which is a carryback or a carryover to the taxable year in issue.***

(1) A net operating loss shall first be carried to the earliest of the several taxable years for which such loss is allowable as a carryback or a carryover, and shall then be carried to the next earliest of such several taxable years, etc. Except as provided in § 1.172-9, the entire net operating loss shall be carried back to such earliest year.

(2) The portion of the loss which shall be carried to any of such several taxable years subsequent to the earliest taxable year is the excess of such net operating loss over the sum of the taxable incomes (computed as provided in § 1.172-5) for all of such several taxable years preceding such subsequent taxable year.

(3) If a portion of the net operating loss for a taxable year is attributable to a foreign expropriation loss (as defined in section 172(h)) and if an election under paragraph (c) of § 1.172-9 is made with respect to such portion of the net operating loss, then see § 1.172-9 for the separate treatment of such portion of the net operating loss.

(c) ***Illustration.*** The principles of this section are illustrated in § 1.172-6.

[T.D. 6500, 25 FR 11402, Nov. 26, 1960, as amended by T.D. 8107, 51 FR 43345, Dec. 2, 1986]

§ 1.172-5 Taxable income which is subtracted from net operating loss to determine carryback or carryover.

(a) ***Taxable year subject to the Internal Revenue Code of 1954.*** The taxable income for any taxable year subject to the Internal Revenue Code of 1954 which is subtracted from the net operating loss for any other taxable year to determine the portion of such net operating loss which is a carryback or a carryover to a particular taxable year is computed with the modifications prescribed in this paragraph. These modifications shall be made independently of, and without reference to, the modifications required by §§ 1.172-2(a) and 1.172-3(a) for purposes of computing the net operating loss itself.

(1) ***Modifications applicable to unincorporated taxpayers only.*** In the case of a taxpayer other than a corporation, in computing taxable income and adjusted gross income:

(i) No deduction shall be allowed under section 151 for the personal exemptions (or under any other section which grants a deduction in lieu of the deductions allowed by section 151) and under section 1202 in respect of the net long-term capital gain.

(ii) The amount deductible on account of losses from sales or exchanges of capital assets shall not exceed the amount includible on account of gains from sales or exchanges of capital assets.

(2) ***Modifications applicable to all taxpayers.*** In the case either of a corporation or of a taxpayer other than a corporation:

(i) ***Net operating loss deduction.*** The net operating loss deduction for such taxable year shall be computed by taking into account only such net operating losses otherwise allowable as carrybacks or carryovers to such taxable year as were sustained in taxable years preceding the taxable year in which the taxpayer sustained the net operating loss from which the taxable income is to be deducted. Thus, for such purposes, the net operating loss for the loss year or any taxable year thereafter shall not be taken into account.

Example. The taxpayer's income tax returns are made on the basis of the calendar year. In computing the net operating loss deduction for 1954, the taxpayer has a carryover from 1952 of $9,000, a carryover from 1953 of $6,000, a carryback from 1955 of $18,000, and a carryback from 1956 of $10,000, or an aggregate of $43,000 in carryovers and carrybacks. Thus, the net operating loss deduction for 1954, for purposes of determining the tax liability for 1954, is $43,000. However, in computing the taxable income for 1954 which is subtracted from the net operating loss for 1955 for the purpose of determining the portion

of such loss which may be carried over to subsequent taxable years, the net operating loss deduction for 1954 is $15,000, that is, the aggregate of the $9,000 carryover from 1952 and the $6,000 carryover from 1953. In computing the net operating loss deduction for such purpose, the $18,000 carryback from 1955 and the $10,000 carryback from 1956 are disregarded. In computing the taxable income for 1954, however, which is subtracted from the net operating loss for 1956 for the purpose of determining the portion of such loss which may be carried over to subsequent taxable years, the net operating loss deduction for 1954 is $33,000, that is, the aggregate of the $9,000 carryover from 1952, the $6,000 carryover from 1953, and the $18,000 carryback from 1955. In computing the net operating loss deduction for such purpose, the $10,000 carryback from 1956 is disregarded.

(ii) ***Recomputation of percentage limitations.*** Unless otherwise specifically provided in this subchapter, any deduction which is limited in amount to a percentage of the taxpayer's taxable income or adjusted gross income shall be recomputed upon the basis of the taxable income or adjusted gross income, as the case may be, determined with the modifications prescribed in this paragraph. Thus, in the case of an individual the deduction for medical expenses would be recomputed after making all the modifications prescribed in this paragraph, whereas the deduction for charitable contributions would be determined without regard to any net operating loss carryback but with regard to any other modifications so prescribed. See, however, the regulations under paragraph (g) of § 1.170-2 (relating to charitable contributions carryover of individuals) and paragraph (c) of § 1.170-3 (relating to charitable contributions carryover of corporations) for special rules regarding charitable contributions in excess of the percentage limitations which may be treated as paid in succeeding taxable years.

Example 1. For the calendar year 1954 the taxpayer, an individual, files a return showing taxable income of $4,800, computed as follows:

Salary		$5,000
Net long-term capital gain		4,000
Total gross income		9,000
Less: Deduction allowed by section 1202 in respect of net long-term capital gain		2,000
Adjusted gross income		7,000
Less:		
Deduction for personal exemption	$600	
Deduction for medical expense ($410 actually paid but allowable only to extent in excess of 3 percent of adjusted gross income)	200	
Deduction for charitable contributions ($2,000 actually paid but allowable only to extent not in excess of 20 percent of adjusted gross income)	$1,400	
		$2,200

Taxable income	4,800

In 1955 the taxpayer undertakes the operation of a trade or business and sustains therein a net operating loss of $3,000. Under section 172(b)(2), it is determined that the entire $3,000 is a carryback to 1954. In 1956 he sustains a net operating loss of $10,000 in the operation of the business. In determining the amount of the carryover of the 1956 loss to 1957, the taxable income for 1954 as computed under this paragraph is $3,970, determined as follows:

Salary		$5,000
Net long-term capital gain		4,000
Total gross income		9,000
Less: Deduction for carryback of 1955 net operating loss		3,000
Adjusted gross income		6,000
Less:		
Deduction for medical expense ($410 actually paid but allowable only to extent in excess of 3 percent of adjusted gross income as modified under this paragraph)	$230	
Deduction for charitable contributions ($2,000 actually paid but allowable only to extent not in excess of 20 percent of adjusted gross income determined with all the modifications prescribed in this paragraph other than the net operating loss carryback)	1,800	
		2,030
Taxable income		3,970

Example 2. For the calendar year 1959 the taxpayer, an individual, files a return showing taxable income of $5,700, computed as follows:

Salary	$5,000
Net long-term capital gain	4,000
Total gross income	9,000
Less: Deduction allowed by section 1202 in respect of net long-term capital gain	2,000
Adjusted gross income	7,000
Less:	

Deduction for personal exemption	$600	
Standard deduction allowed by section 141	$700	
		$1,300
Taxable income		5,700

In 1960 the taxpayer undertakes the operation of a trade or business and sustains therein a net operating loss of $4,700. In 1961 he sustains a net operating loss of $10,000 in the operation of the business. Under section 172(b)(2), it is determined that the entire amount of each loss, $4,700 and $10,000, is a carryback to 1959. In determining the amount of the carryover of the 1961 loss to 1962, the taxable income for 1959 as computed under this paragraph is $3,870, determined as follows:

Salary	$5,000
Net long-term capital gain	4,000
Total gross income	9,000
Less: Deduction for carryback of 1960 net operating loss	4,700
Adjusted gross income	4,300
Less: Standard deduction	430
Taxable income	3,870

(iii) ***Minimum limitation.*** The taxable income, as modified under this paragraph, shall in no case be considered less than zero.

(3) ***Electing small business corporations.*** For special rule applicable to corporations which were electing small business corporations under Subchapter S (section 1361 and following), Chapter 1 of the Code, during one or more of the taxable years described in section 172(b)(1), see paragraph (f) of § 1.172-1.

(4) ***Qualified real estate investment trust.*** Where a net operating loss is carried over to a qualified taxable year (as defined in § 1.172-10(b)) ending after October 4, 1976, the real estate investment trust taxable income (as defined in section 857(b)(2)) shall be used as the "taxable income" for that taxable year to determine, under section 172(b)(2), the balance of the net operating loss available as a carryover to a subsequent taxable year. The real estate investment trust taxable income, however, is computed by applying the rules applicable to corporations in paragraph (a)(2) of this section. Thus, in computing real estate investment trust taxable income for purposes of section 172(b)(2), the net operating loss deduction for the taxable year shall be computed in accordance with paragraph (a)(2)(i) of this section. The principles of this subparagraph may be illustrated by the following examples:

Example 1. Corporation X, a calendar year taxpayer, is formed on January 1, 1977. X incurs a net operating loss of $100,000 for its taxable year 1977, which under section 172(b)(2), is a carryover to 1978. For 1978 X is a qualified real estate investment trust (as defined in § 1.172-10(b)) and has real estate investment trust taxable income (determined without regard to the deduction for dividends paid or the net operating loss deduction) of $150,000, all of which consists of ordinary income. X pays dividends in 1978 totaling $120,000 that qualify for the deduction for dividends paid under section 857(b)(2)(B). The portion of the 1977 net operating loss available as a carryover to 1979 and subsequent years is $70,000 (i.e., the excess of the amount of the net operating loss ($100,000) over the amount of the real estate investment trust taxable income for 1978 ($30,000), determined by taking into account the deduction for dividends paid allowable under section 857(b)(2)(B) and without taking into account the net operating loss of 1977).

> *Example 2.* (i) Assume the same facts as in *Example 1,* except that the $150,000 of real estate investment trust taxable income (determined without the net operating loss deduction or the dividends paid deduction) consists of $80,000 of ordinary income and $70,000 of net capital gain. The amount of capital gain dividends which may be paid for 1978 is limited to $50,000, that is, the amount of the real estate investment trust taxable income for 1978, determined by taking into account the net operating loss deduction for the taxable year, but not the deduction for dividends paid ($150,000 minus $100,000). See § 1.857-6(e)(1)(ii).
> (ii) X designated $50,000 of the $120,000 of dividends paid as capital gains dividends (as defined in section 857(b)(3)(C) and § 1.857-6(e)). Thus, $70,000 is an ordinary dividend. Since both ordinary dividends and capital gains dividends are taken into account in computing the deduction for dividends paid under section 857(b)(2)(B), the result will be the same as in *Example 1;* that is, the portion of the 1977 net operating loss available as a carryover to 1979 and subsequent years is $70,000.

(b) [Reserved]

[T.D. 6500, 25 FR 11402, Nov. 26, 1960, as amended by T.D. 6862, 30 FR 14428, Nov. 18, 1965; T.D. 6900, 31 FR 14641, Nov. 17, 1966; T.D. 7767, 46 FR 11263, Feb. 6, 1981; T.D. 8107, 51 FR 43346, Dec. 2, 1986]

§ 1.172-6 Illustration of net operating loss carrybacks and carryovers.

The application of § 1.172-4 may be illustrated by the following example:

(a) ***Facts.*** The books of the taxpayer, whose return is made on the basis of the calendar year, reveal the following facts:

Taxable year	*Taxable income*	*Net operating loss*
1954	$15,000	
1955	30,000	
1956		($75,000)

Taxable year	*Taxable income*	*Net operating loss*
1957	20,000	
1958		(150,000)
1959	30,000	
1960	35,000	
1961	75,000	
1962	17,000	
1963	53,000	

The taxable income thus shown is computed without any net operating loss deduction. The assumption is also made that none of the other modifications prescribed in § 1.172-5 apply. There are no net operating losses for 1950, 1951, 1952, 1953, 1964, 1965, or 1966.

(b) ***Loss sustained in 1956.*** The portions of the $75,000 net operating loss for 1956 which shall be used as carrybacks to 1954 and 1955 and as carryovers to 1957, 1958, 1959, 1960, and 1961 are computed as follows:

(1) ***Carryback to 1954.*** The carryback to this year is $75,000, that is, the amount of the net operating loss.

(2) ***Carryback to 1955.*** The carryback to this year is $60,000, computed as follows:

Net operating loss	$75,000
Less:	
Taxable income for 1954 (computed without the deduction of the carryback from 1956)	15,000
Carryback	60,000

(3) ***Carryover to 1957.*** The carryover to this year is $30,000, computed as follows:

Net operating loss		$75,000
Less:		
Taxable income for 1954 (computed without the deduction of the carryback from 1956)	$15,000	
Taxable income for 1955 (computed without the deduction of the carryback from 1956 or the carryback from 1958)	30,000	
		45,000

Carryover		30,000

(4) ***Carryover to 1958.*** The carryover to this year is $10,000, computed as follows:

Net operating loss		$75,000
Less:		
Taxable income for 1954 (computed without the deduction of the carryback from 1956)	$15,000	
Taxable income for 1955 (computed without the deduction of the carryback from 1956 or the carryback from 1958)	30,000	
Taxable income for 1957 (computed without the deduction of the carryover from 1956 or the carryback from 1958)	20,000	
		65,000
Carryover		10,000

(5) ***Carryover to 1959.*** The carryover to this year is $10,000, computed as follows:

Net operating loss		$75,000
Less:		
Taxable income for 1954 (computed without the deduction of the carryback from 1956)	$15,000	
Taxable income for 1955 (computed without the deduction of the carryback from 1956 or the carryback from 1958)	30,000	
Taxable income for 1957 (computed without the deduction of the carryover from 1956 or the carryback from 1958)	20,000	
Taxable income for 1958 (a year in which a net operating loss was sustained)	0	
	————	65,000
Carryover		10,000

(6) ***Carryover to 1960.*** The carryover to this year is $0, computed as follows:

Net operating loss		$75,000
Less:		

Taxable income for 1954 (computed without the deduction of the carryback from 1956)	$15,000	
Taxable income for 1955 (computed without the deduction of the carryback from 1956 or the carryback from 1958)	30,000	
Taxable income for 1957 (computed without the deduction of the carryover from 1956 or the carryback from 1958)	20,000	
Taxable income for 1958 (a year in which a net operating loss was sustained)	0	
Taxable income for 1959 (computed without the deduction of the carryover from 1956 or the carryover from 1958)	30,000	
	————	95,000
Carryover		0

(7) ***Carryover to 1961.*** The carryover to this year is $0, computed as follows:

Net operating loss		$75,000
Less:		
Taxable income for 1954 (computed without the deduction of the carryback from 1956)	$15,000	
Taxable income for 1955 (computed without the deduction of the carryback from 1956 or the carryback from 1958)	30,000	
Taxable income for 1957 (computed without the deduction of the carryover from 1956 or the carryback from 1958)	20,000	
Taxable income for 1958 (a year in which a net operating loss was sustained)	0	
Taxable income for 1959 (computed without the deduction of the carryover from 1956 or the carryover from 1958)	30,000	
Taxable income for 1960 (computed without the deduction of the carryover from 1956 or the carryover from 1958)	35,000	
	————	130,000
Carryover		0

(c) ***Loss sustained in 1958.*** The portions of the $150,000 net operating loss for 1958 which shall be used as carrybacks to 1955, 1956, and 1957 and as carryovers to 1959, 1960, 1961, 1962, and 1963 are computed as follows:

(1) ***Carryback to 1955.*** The carryback to this year is $150,000, that is, the amount of the net operating loss.

(2) ***Carryback to 1956.*** The carryback to this year is $150,000, computed as follows:

Net operating loss	$150,000
Less:	
Taxable income for 1955 (the $30,000 taxable income for such year reduced by the carryback to such year of $60,000 from 1956, the carryback from 1958 to 1955 not being taken into account)	0
Carryback	150,000

(3) ***Carryback to 1957.*** The carryback to this year is $150,000, computed as follows:

Net operating loss		$150,000
Less:		
Taxable income for 1955 (the $30,000 taxable income for such year reduced by the carryback to such year of $60,000 from 1956, the carryback from 1958 to 1955 not being taken into account)	0	
Taxable income for 1956 (a year in which a net operating loss was sustained)	0	
	————	0
Carryback		150,000

(4) ***Carryover to 1959.*** The carryover to this year is $150,000, computed as follows:

Net operating loss		$150,000
Less:		
Taxable income for 1955 (the $30,000 taxable income for such year reduced by the carryback to such year of $60,000 from 1956, the carryback from 1958 to 1955 not being taken into account)	0	
Taxable income for 1956 (a year in which a net operating loss was sustained)	0	
Taxable income for 1957 (the $20,000 taxable income for such year reduced by the carryover to such year of $30,000 from 1956, the carryback from 1958 to 1957 not being taken into account)	0	
	————	0

Carryover		150,000

(5) ***Carryover to 1960.*** The carryover to this year is $130,000, computed as follows:

Net operating loss		$150,000
Less:		
Taxable income for 1955 (the $30,000 taxable income for such year reduced by the carryback to such year of $60,000 from 1956, the carryback from 1958 to 1955 not being taken into account)	0	
Taxable income for 1956 (a year in which a net operating loss was sustained)	0	
Taxable income for 1957 (the $20,000 taxable income for such year reduced by the carryover to such year of $30,000 from 1956, the carryback from 1958 to 1957 not being taken into account)	0	
Taxable income for 1959 (the $30,000 taxable income for such year reduced by the carryover to such year of $10,000 from 1956, the carryover from 1958 to 1959 not being taken into account)	$20,000	
	————	20,000
Carryover		130,000

(6) ***Carryover to 1961.*** The carryover to this year is $95,000, computed as follows:

Net operating loss		$150,000
Less:		
Taxable income for 1955 (the $30,000 taxable income for such year reduced by the carryback to such year of $60,000 from 1956, the carryback from 1958 to 1955 not being taken into account)	0	
Taxable income for 1956 (a year in which a net operating loss was sustained)	0	
Taxable income for 1957 (the $20,000 taxable income for such year reduced by the carryover to such year of $30,000 from 1956, the carryback from 1958 to 1957 not being taken into account)	0	
Taxable income for 1959 (the $30,000 taxable income for such year reduced by the carryover to such year of $10,000 from 1956, the carryover from 1958 to 1959 not being taken into account)	$20,000	
Taxable income for 1960 (the $35,000 taxable income for such year reduced by the carryover to such year of $0 from 1956, the carryover from 1958 to 1960 not being taken into account)	35,000	
	————	55,000

Carryover	95,000

(7) ***Carryover to 1962.*** The carryover to this year is $20,000, computed as follows:

Net operating loss		$150,000
Less:		
Taxable income for 1955 (the $30,000 taxable income for such year reduced by the carryback to such year of $60,000 from 1956, the carryback from 1958 to 1955 not being taken into account)	0	
Taxable income for 1956 (a year in which a net operating loss was sustained)	0	
Taxable income for 1957 (the $20,000 taxable income for such year reduced by the carryover to such year of $30,000 from 1956, the carryback from 1958 to 1957 not being taken into account)	0	
Taxable income for 1959 (the $30,000 taxable income for such year reduced by the carryover to such year of $10,000 from 1956, the carryover from 1958 to 1959 not being taken into account)	$20,000	
Taxable income for 1960 (the $35,000 taxable income for such year reduced by the carryover to such year of $0 from 1956, the carryover from 1958 to 1960 not being taken into account)	35,000	
Taxable income for 1961 (the $75,000 taxable income for such year reduced by the carryover to such year of $0 from 1956, the carryover from 1958 to 1961 not being taken into account)	75,000	
	————	130,000
Carryover		20,000

(8) ***Carryover to 1963.*** The carryover to this year is $3,000, computed as follows:

Net operating loss		$150,000
Less:		
Taxable income for 1955 (the $30,000 taxable income for such year reduced by the carryback to such year of $60,000 from 1956, the carryback from 1958 to 1955 not being taken into account)	0	
Taxable income for 1956 (a year in which a net operating loss was sustained)	0	
Taxable income for 1957 (the $20,000 taxable income for such year reduced by the carryover to such year of $30,000 from 1956, the carryback from 1958 to 1957 not being taken into account)	0	
Taxable income for 1959 (the $30,000 taxable income for such year reduced by	$20,000	

the carryover to such year of $10,000 from 1956, the carryover from 1958 to 1959 not being taken into account)		
Taxable income for 1960 (the $35,000 taxable income for such year reduced by the carryover to such year of $0 from 1956, the carryover from 1958 to 1960 not being taken into account)	35,000	
Taxable income for 1961 (the $75,000 taxable income for such year reduced by the carryover to such year of $0 from 1956, the carryover from 1958 to 1961 not being taken into account)	75,000	
Taxable income for 1962 (computed without the deduction of the carryover from 1958)	17,000	
	————	147,000
Carryover		3,000

(d) ***Determination of net operating loss deduction for each year.*** The carryovers and carrybacks computed under paragraphs (b) and (c) of this section are used as a basis for the computation of the net operating loss deduction in the following manner:

Taxable year	Carryover		Carryback		Net operating loss deduction
	From 1956	From 1958	From 1956	From 1958	
1954	$0	$0	$75,000	$0	$75,000
1955	0	0	60,000	150,000	210,000
1957	30,000	0	0	150,000	180,000
1959	10,000	150,000	0	0	160,000
1960	0	130,000	0	0	130,000
1961	0	95,000	0	0	95,000
1962	0	20,000	0	0	20,000
1963	0	3,000	0	0	3,000

§ 1.172-7 Joint return by husband and wife.

(a) ***In general.*** This section prescribes additional rules for computing the net operating loss carrybacks and carryovers of a husband and wife making a joint return for one or more of the taxable years involved in the computation of the net operating loss deduction.

(b) ***From separate to joint return.*** If a husband and wife, making a joint return for any taxable year, did not make a joint return for any of the taxable years involved in the computation of a net operating loss carryover or a net operating loss carryback to the taxable year for which the joint return is made, such separate net operating loss carryover or separate net operating loss carryback is a joint net operating loss carryover or joint net operating loss carryback to such taxable year.

(c) ***Continuous use of joint return.*** If a husband and wife making a joint return for a taxable year made a joint return for each of the taxable years involved in the computation of a net operating loss carryover or net operating loss carryback to such taxable year, the joint net operating loss carryover or joint net operating loss carryback to such taxable year is computed in the same manner as the net operating loss carryover or net operating loss carryback of an individual under § 1.172-4 but upon the basis of the joint net operating losses and the combined taxable income of both spouses.

(d) ***From joint to separate return.*** If a husband and wife making separate returns for a taxable year made a joint return for any, or all, of the taxable years involved in the computation of a net operating loss carryover or net operating loss carryback to such taxable year, the separate net operating loss carryover or separate net operating loss carryback of each spouse to the taxable year is computed in the manner set forth in § 1.172-4 but with the following modifications:

(1) ***Net operating loss.*** The net operating loss of each spouse for a taxable year for which a joint return was made shall be deemed to be that portion of the joint net operating loss (computed in accordance with paragraph (d) of § 1.172-3) which is attributable to the gross income and deductions of such spouse, gross income and deductions being taken into account to the same extent that they are taken into account in computing the joint net operating loss.

(2) ***Taxable income to be subtracted*** —

(i) ***Net operating loss of other spouse.*** The taxable income of a particular spouse for any taxable year which is subtracted from the net operating loss of such spouse for another taxable year in order to determine the amount of such loss which may be carried back or carried over to still another taxable year is deemed to be, in a case in which such taxable income was reported in a joint return, the sum of the following:

(*a*) That portion of the combined taxable income of both spouses for such year for which the joint return was made which is attributable to the gross income and deductions of the particular spouse, gross income and deductions being taken into account to the same extent that they are taken into account in computing such combined taxable income, and

(*b*) That portion of such combined taxable income which is attributable to the other spouse; but, if such other spouse sustained a net operating loss in a taxable year beginning on the same date as the taxable year in which the particular spouse sustained the net operating loss from which the taxable income is subtracted, then such portion shall first be reduced by such net operating loss of such other spouse.

(ii) ***Modifications.*** For purposes of this subparagraph, the combined taxable income shall be computed as though the combined income and deductions of both spouses were those of one individual. The provisions of § 1.172-5 shall apply in computing the combined taxable income for such purposes except that the net operating loss deduction shall be determined without taking into account any separate net operating loss of either spouse, or any joint net operating loss of both spouses, which was sustained in a taxable year beginning on or after the date of the beginning of the taxable year in which the particular spouse sustained the net operating loss from which the taxable income is subtracted.

(e) ***Recurrent use of joint return.*** If a husband and wife making a joint return for any taxable year made a joint return for one or more, but not all, of the taxable years involved in the computation of a net operating loss carryover or net operating loss carryback to such taxable year, such net operating loss carryover or net

operating loss carryback to the taxable year is computed in the manner set forth in paragraph (d) of this section. Such net operating loss carryover or net operating loss carryback is considered a joint net operating loss carryover or joint net operating loss carryback to such taxable year.

(f) ***Joint carryovers and carrybacks.*** The joint net operating loss carryovers and the joint net operating loss carrybacks to any taxable year for which a joint return is made are all the net operating loss carryovers and net operating loss carrybacks of both spouses to such taxable year. For example, a husband and wife file a joint return for the calendar year 1956, having a joint taxable income for such year. The wife filed a separate return for the calendar years 1954 and 1955, in which years she sustained net operating losses. The husband filed separate returns for his fiscal year ending June 30, 1955, and, having received permission to change his accounting period to a calendar year basis, for the 6-month period ending December 31, 1955. The husband sustained net operating losses in both such taxable years. Since the husband and wife did not file a joint return for any taxable year involved in the computation of the net operating loss carryovers to 1956 from 1954 and 1955, the joint net operating loss carryovers to 1956 are the separate net operating loss carryovers of the wife from the calendar years 1954 and 1955 and the separate net operating loss carryovers of the husband from the fiscal year ending June 30, 1955, and from the short taxable year ending December 31, 1955. If the husband and wife also file joint returns for the calendar years 1957, 1958, and 1959, having joint taxable income in 1957 and 1958 and a joint net operating loss in 1959, the joint net operating loss carrybacks to 1956, 1957, and 1958 from 1959 are computed on the basis of the joint net operating loss for 1959, since separate returns were not made for any taxable year involved in the computation of such carrybacks.

(g) ***Illustration of principles.*** In the following examples, which illustrate the application of this section, it is assumed that there are no items of adjustment under section 172(b)(2)(A) and that the taxable income or loss in each case is the taxable income or loss determined without any net operating loss deduction. The taxpayers in each example, H, a husband, and W, his wife, report their income on the calendar-year basis.

Example 1. H and W filed joint returns for 1954 and 1955. They sustained a joint net operating loss of $1,000 for 1954 and a joint net operating loss of $2,000 for 1955. For 1954 the deductions of H exceeded his gross income by $700, and the deductions of W exceeded her gross income by $300, the total of such amounts being $1,000. Therefore, $700 of the $1,000 joint net operating loss for 1954 is considered the net operating loss of H for 1954, and $300 of such joint net operating loss is considered the net operating loss of W for 1954. For 1955 the gross income of H exceeded his deductions, so that his separate taxable income would be $1,500, and the deductions of W exceeded her gross income by $3,500. Therefore, all of the $2,000 joint net operating loss for 1955 is considered the separate net operating loss of W for 1955.

Example 2. (i) H and W filed joint returns for 1954 and 1956, and separate returns for 1955 and 1957. For the years 1954, 1955, 1956, and 1957 they had taxable incomes and net operating losses as follows, losses being indicated in parentheses:

	1954	1955	1956	1957
H	($5,000)	($2,500)	$6,500	($4,000)
W	(3,000)	2,000	3,000	(1,500)

	1954	1955	1956	1957
Total	(8,000)		9,500	

(ii) The net operating loss carryover of H from 1957 to 1958 is $4,000, that is, his $4,000 net operating loss for 1957 which is not reduced by any part of the taxable income for 1956, since none of such taxable income is attributable to H and the portion attributable to W is entirely offset by her separate net operating loss for her taxable year 1957, which taxable year begins on the same date as H's taxable year 1957. H's $4,000 net operating loss for 1957 likewise is not reduced by reference to 1955 since H sustained a loss in 1955. The $0 taxable income for 1956 which reduces H's net operating loss for 1957 is computed as follows:
(iii) The combined taxable income of $9,500 for 1956 is reduced to $1,000 by the net operating loss deduction for such year of $8,500. This net operating loss deduction is computed without taking into account any net operating loss of either H or W sustained in a taxable year beginning on or after January 1, 1957, the date of the beginning of the taxable year in which H sustained the net operating loss from which the taxable income is subtracted. This $8,500 is composed of H's carryovers of $5,000 from 1954 and $2,500 from 1955, and of W's carryover of $1,000 from 1954 (the excess of W's $3,000 loss for 1954 over her $2,000 income for 1955). None of the $1,000 combined taxable income for 1956 (computed with the net operating loss deduction described above) is attributable to H since it is caused by W's income (computed after deducting her separate carryover) offsetting H's loss (computed by deducting from his income his separate carryovers). No part of the $1,000 combined taxable income for 1956 which is attributable to W is used to reduce H's net operating loss for 1957 since such taxable income attributable to W must first be reduced by W's $1,500 net operating loss for 1957, her taxable year beginning on the same date as the taxable year of H in which he sustained the net operating loss from which the taxable income is subtracted.

(iv) The net operating loss carryover of W from 1957 to 1958 is $500, her $1,500 loss reduced by the sum of her $0 taxable income for 1955 (computed by taking into account her $3,000 carryover from 1954) and her $1,000 taxable income for 1956, that is, the portion of the combined taxable income for 1956 which is attributable to her.

Example 3. (i) Assume the same facts as in *Example 2* except that for 1957 the net operating loss of W is $200 instead of $1,500.
(ii) The net operating loss carryover of H from 1957 to 1958 is $3,200, that is, his $4,000 net operating loss for 1957 reduced by the sum of his $0 taxable income for 1955 (a year in which he sustained a loss) and his $800 taxable income for 1956. Such $800 is computed as follows:

(iii) The combined taxable income for 1956, computed with the net operating loss deduction in the manner described in *Example 2,* remains $1,000, no part of which is attributable to H. To the $0 taxable income attributable to H for 1956 there is added $800, the excess of the $1,000 taxable income for such year attributable to W over her $200 net operating loss sustained in 1957, a taxable year beginning on the same date as the taxable year of H in which he sustained the $4,000 net operating loss from which the taxable income is subtracted.

(iv) W has no net operating loss carryover from 1957 to 1958 since her net operating loss of $200 for 1957 does not exceed the $1,000 taxable income for 1956 attributable to her.

Example 4. (i) Assume the same facts as in *Example 2,* except that W changes her accounting period in 1957 to a fiscal year ending on January 31, and has neither income nor losses for the taxable year January 1, 1957, to January 31, 1957, or for the fiscal year February 1, 1957, to January 31, 1958, but has a net operating loss of $200 for the fiscal year February 1, 1958, to January 31, 1959.
(ii) The net operating loss carryover of H from 1957 to 1958 is $3,000, that is, his net operating loss of $4,000 for 1957 reduced by the sum of his $0 taxable income for 1955 (a year in which he sustained a loss) and his $1,000 taxable income for 1956. Such $1,000 is computed as follows:

(iii) The combined taxable income for 1956, computed with the net operating loss deduction in the manner described in *Example 2,* remains $1,000, no part of which is attributable to H. To the $0 taxable income attributable to H for 1956 there is added the $1,000 taxable income attributable to W for such year. The taxable income attributable to W is not reduced by any amount since she does not have a net operating loss for her taxable year beginning on January 1, 1957, the date of the beginning of the taxable year of H in which he sustained the $4,000 net operating loss from which his taxable income is subtracted.

(iv) The net operating loss carryover of W from the fiscal year beginning February 1, 1958, to her next fiscal year is $200, that is, her net operating loss of $200 for the fiscal year beginning February 1, 1958, reduced by the sum of her $0 taxable income for 1956, her $0 taxable income for the taxable year January 1, 1957, to January 31, 1957 (a year in which she had neither income nor loss), and her $0 taxable income for the fiscal year February 1, 1957, to January 31, 1958 (also a year in which she had neither income nor loss). The $0 taxable income for 1956 is computed as follows:

(v) The combined taxable income of $9,500 for 1956 is reduced to $0 amount by the net operating loss deduction for such year of $12,500. This net operating loss deduction is computed by taking into account the net operating loss of H for 1957 since it was sustained in a taxable year beginning before February 1, 1958, the date of the beginning of the taxable year of W in which she sustained the $200 net operating loss from which her taxable income is subtracted. This $12,500 is composed of H's carryovers of $5,000 from 1954 and $2,500 from 1955 and of his carryback of $4,000 from 1957, plus W's carryover of $1,000 from 1954 (the excess of W's $3,000 loss for 1954 over her $2,000 income for 1955). Since there is no combined taxable income for 1956, there is no taxable income attributable to W for such year.

[T.D. 6500, 25 FR 11402, Nov. 26, 1960, as amended by T.D. 8107, 51 FR 43346, Dec. 2, 1986]

§ 1.172-8 Net operating loss carryovers for regulated transportation corporations.

(a) ***In general.*** A net operating loss sustained in a taxable year ending before January 1, 1976, shall be a carryover to the 7 succeeding taxable years if the taxpayer is a regulated transportation corporation (as defined in paragraph (b) of this section) for the loss year and for the 6th and 7th succeeding taxable years. If, however, the taxpayer is a regulated transportation corporation for the loss year and for the 6th succeeding taxable year, but not for the 7th succeeding taxable year, then the loss shall be a carryover to the 6 succeeding taxable years. If the taxpayer is not a regulated transportation corporation for the 6th succeeding taxable year then this section shall not apply. A net operating loss sustained in a taxable year ending after December 31, 1975, shall be a carryover to the 15 succeeding taxable years.

(b) ***Regulated transportation corporations.*** A corporation is a *regulated transportation corporation* for a taxable year if it is included within one or more of the following categories:

(1) Eighty percent or more of the corporation's gross income (computed without regard to dividends and capital gains and losses) for such taxable year is income from transportation sources described in paragraph (c) of this section.

(2) The corporation is a railroad corporation, subject to Part I of the Interstate Commerce Act, which is either a lessor railroad corporation described in section 7701(a)(33)(G) or a common parent railroad corporation described in section 7701(a)(33)(H).

(3) The corporation is a member of a regulated transportation system for the taxable year. For purposes of this section, a member of a regulated transportation system for a taxable year means a member of an affiliated group of corporations making a consolidated return for such year, if 80 percent or more of the sum of the gross incomes of the members of the affiliated group for such year (computed without regard to dividends, capital gains and losses, or eliminations for intercompany transactions) is derived from transportation sources described in paragraph (c) of this section. For purposes of this subparagraph, income derived by a corporation described in subparagraph (2) of this paragraph from leases described in section 7701(a)(33)(G) shall be considered as income from transportation sources described in paragraph (c) of this section.

(c) ***Transportation sources.*** For purposes of this section, income from “transportation sources” means income received directly in consideration for transportation services, and income from the furnishing or sale of essential facilities, products, and other services which are directly necessary and incidental to the furnishing of transportation services. For purposes of the preceding sentence, the term *transportation services* means:

(1) Transportation by railroad as a common carrier subject to the jurisdiction of the Interstate Commerce Commission;

(2)

(i) Transportation, which is not included in subparagraph (1) of this paragraph:

(*a*) On an intrastate, suburban, municipal, or interurban electric railroad,

(*b*) On an intrastate, municipal, or suburban trackless trolley system,

(*c*) On a municipal or suburban bus system, or

(*d*) By motor vehicle not otherwise included in this subparagraph, if the rates for the furnishing or sale of such transportation are established or approved by a regulatory body described in section 7701(a)(33)(A);

(ii) In the case of a corporation which establishes to the satisfaction of the district director that:

(*a*) Its revenue from regulated rates from transportation services described in subdivision (i) of this subparagraph and its revenue derived from unregulated rates are derived from its operation of a single interconnected and coordinated system or from the operation of more than one such system, and

(*b*) The unregulated rates have been and are substantially as favorable to users and consumers as are the regulated rates, transportation, which is not included in subparagraph (1) of this paragraph, from which such revenue from unregulated rates is derived.

(3) Transportation by air as a common carrier subject to the jurisdiction of the Civil Aeronautics Board; and

(4) Transportation by water by common carrier subject to the jurisdiction of either the Interstate Commerce Commission under Part III of the Interstate Commerce Act (54 Stat. 929), or the Federal Maritime Board under the Intercoastal Shipping Act, 1933 (52 Stat. 965).

(d) ***Corporate acquisitions.*** This section shall apply to a carryover of a net operating loss sustained by a regulated transportation corporation (as defined in paragraph (b) of this section) to which an acquiring corporation succeeds under section 381(a) only if the acquiring corporation is a regulated transportation corporation (as defined in paragraph (b) of this section):

(1) For the sixth succeeding taxable year in the case of a carryover to the sixth succeeding taxable year, and

(2) For the sixth and seventh succeeding taxable years in the case of a carryover to the seventh succeeding taxable year.

[T.D. 6862, 30 FR 14430, Nov. 18, 1965, as amended by T.D. 8107, 51 FR 43346, Dec. 2, 1986]

§ 1.172-9 Election with respect to portion of net operating loss attributable to foreign expropriation loss.

(a) ***In general.*** If a taxpayer has a net operating loss for a taxable year ending after December 31, 1958, and if the foreign expropriation loss for such year (as defined in paragraph (b)(1) of this section) equals or exceeds 50 percent of the net operating loss for such year, then the taxpayer may elect (at the time and in the manner provided in paragraph (c) (1) or (2) of this section, whichever is applicable) to have the provisions of this section apply. If the taxpayer so elects, the portion of the net operating loss for such taxable year attributable (under paragraph (b)(2) of this section) to such foreign expropriation loss shall not be a net operating loss carryback to any taxable year preceding the taxable year of such loss and shall be a net operating loss carryover to each of the ten taxable years following the taxable year of such loss. In such case, the portion, if any, of the net operating loss not attributable to a foreign expropriation loss shall be carried back or carried over as provided in paragraph (a)(1)(ii) of § 1.172-4.

(b) ***Determination of "foreign expropriation loss"*** —

(1) ***Definition of "foreign expropriation loss".*** The term *foreign expropriation loss* means, for any taxable year, the sum of the losses allowable as deductions under section 165 (other than losses from, or which under section 165(g) or 1231(a) are treated or considered as losses from, sales or exchanges of capital assets and other than losses described in section 165(i)(1)) sustained by reason of the expropriation, intervention, seizure, or similar taking of property by the government or any foreign country, any political subdivision thereof, or any agency or instrumentality of the foregoing. For purposes of the preceding sentence, a debt which becomes worthless in whole or in part, shall, to the extent of any deduction allowed under section 166(a), be treated as a loss allowable as a deduction under section 165.

(2) ***Portion of the net operating loss attributable to a foreign expropriation loss.***

(i) Except as provided in subdivision (ii) of this subparagraph, the portion of the net operating loss for any taxable year attributable to a foreign expropriation loss is the amount of the foreign expropriation loss for such taxable year (determined under subparagraph (1) of this paragraph).

(ii) The portion of the net operating loss for a taxable year attributable to a foreign expropriation loss shall not exceed the amount of the net operating loss, computed under section 172(c), for such year.

(3) ***Examples.*** The application of this paragraph may be illustrated by the following examples:

Example 1. M Corporation, a domestic calendar year corporation manufacturing cigars in the United States, owns, in country X, a tobacco plantation having an adjusted basis of $400,000 and farm equipment having an adjusted basis of $300,000. On January 15, 1961, country X expropriates the plantation and equipment without any allowance for compensation. For the taxable year 1961, M Corporation sustains a loss from the operation of its business (not including losses from the seizure of its plantation and equipment in country X) of $200,000, which loss would not have been sustained in the absence of the seizure. Accordingly, M has a net operating loss of $900,000 (the sum of $400,000, $300,000, and $200,000). For purposes of section 172(k)(1), M Corporation has a foreign expropriation loss for 1961 of $700,000 (the sum of $400,000 and $300,000, the losses directly sustained by reason of the seizure of its property by country X). Since the foreign expropriation loss for 1961, $700,000, equals or exceeds 50 percent of the net operating loss for such year, or $450,000 (i.e., 50 percent of $900,000), M Corporation may make the election under paragraph (c)(2) of this section with respect to $700,000, the portion of the net operating loss attributable to the foreign expropriation loss.

Example 2. Assume the same facts as in *Example 1* except that for 1961, M Corporation has operating profits of $300,000 (not including losses from the seizure of its plantation and equipment in country X) so that its net operating loss (as defined in section 172(c)) is only $400,000. Under the provisions of section 172(k)(2) and paragraph (b)(2) of this section, the portion of the net operating loss for 1961 attributable to a foreign expropriation loss is limited to $400,000, the amount of the net operating loss.

(c) ***Time and manner of making election —***

(1) ***Taxable years ending after December 31, 1963.*** In the case of a taxpayer who has a foreign expropriation loss for a taxable year ending after December 31, 1963, the election referred to in paragraph (a) of this section shall be made by attaching to the taxpayer's income tax return (filed

within the time prescribed by law, including extensions of time) for the taxable year of such foreign expropriation loss a statement containing the information required by subparagraph (3) of this paragraph. Such election shall be irrevocable after the due date (including extensions of time) of such return.

(2) ***Information required.*** The statement referred to in subparagraph (1) of this paragraph shall contain the following information:

(i) The name, address, and taxpayer account number of the taxpayer;

(ii) A statement that the taxpayer elects under section 172(b)(3)(A)(ii) or (iii), whichever is applicable, to have section 172(b)(1)(D) of the Code apply;

(iii) The amount of the net operating loss for the taxable year; and

(iv) The amount of the foreign expropriation loss for the taxable year, including a schedule showing the computation of such foreign expropriation loss.

(d) ***Amount of foreign expropriation loss which is a carryover to the taxable year in issue*** —

(1) ***General.*** If a portion of a net operating loss for the taxable year is attributable to a foreign expropriation loss and if an election under paragraph (a) of this section has been made with respect to such portion of the net operating loss, then such portion shall be considered to be a separate net operating loss for such year, and, for the purpose of determining the amount of such separate loss which may be carried over to other taxable years, such portion shall be applied after the other portion (if any) of such net operating loss. Such separate loss shall be carried to the earliest of the several taxable years to which such separate loss is allowable as a carryover under the provisions of paragraph (a)(1)(iv) of § 1.172-4, and the amount of such separate loss which shall be carried over to any taxable year subsequent to such earliest year is an amount (not exceeding such separate loss) equal to the excess of:

(i) The sum of (*a*) such separate loss and (*b*) the other portion (if any) of the net operating loss (i.e., that portion not attributable to a foreign expropriation loss) to the extent such other portion is a carryover to such earliest taxable year, over

(ii) The sum of the aggregate of the taxable incomes (computed as provided in § 1.172-5) for all of such several taxable years preceding such subsequent taxable year.

(2) ***Cross reference.*** The portion of a net operating loss which is not attributable to a foreign expropriation loss shall be carried back or carried over, in accordance with the rules provided in paragraph (b)(1) of § 1.172-4, as if such portion were the only net operating loss for such year.

(3) ***Examples.*** The application of this paragraph may be illustrated by the following examples:

Example 1. Corporation A, organized in 1960 and whose return is made on the basis of the calendar year, incurs for 1960 a net operating loss of $10,000, of which $7,500 is attributable to a foreign expropriation loss. With respect to such $7,500, A makes the election described in paragraph (a) of this section. In each of the years 1961, 1962, 1963, 1964, and 1965, A has taxable income in the amount of $600 (computed without any net operating loss deduction). The assumption is made that none of the other modifications prescribed in § 1.172-5 apply. The portion of the net operating loss attributable to the foreign expropriation loss which is a carryover to the year 1966 is $7,000, which is the sum of $7,500 (the portion of the net operating loss attributable to

the foreign expropriation loss) and $2,500 (the other portion of the net operating loss available as a carryover to 1961), minus $3,000 (the aggregate of the taxable incomes for taxable years 1961 through 1965).

Example 2. Assume the same facts as in *Example 1* except that taxable income for each of the years 1961 through 1965 is $400 (computed without any net operating loss deduction). The carryover to the year 1966 is $7,500, that is, the sum of $7,500 (the portion of the net operating loss attributable to the foreign expropriation loss) and $2,500 (the other portion of the net operating loss available as a carryover to 1961), minus $2,000 (the aggregate of the taxable incomes for taxable years 1961 through 1965), but limited to $7,500 (the portion of the net operating loss attributable to the foreign expropriation loss).

(e) ***Taxable income which is subtracted from net operating loss to determine carryback or carryover.*** In computing taxable income for a taxable year (hereinafter called a "prior taxable year") for the purpose of determining the portion of a net operating loss for another taxable year which shall be carried to each of the several taxable years subsequent to the earliest taxable year to which such loss may be carried, the net operating loss deduction for any such prior taxable year shall be determined without regard to that portion, if any, of a net operating loss for a taxable year attributable to a foreign expropriation loss, if such portion may not, under the provisions of section 172(b)(1)(D) and paragraph (a)(1)(iv) of § 1.172-4, be carried back to such prior taxable year. Thus, if the taxpayer has a foreign expropriation loss for 1962 and elects the 10-year carryover with respect to the portion of his net operating loss for 1962 attributable to the foreign expropriation loss, then in computing taxable income for the year 1960 for the purpose of determining the portion of a net operating loss for 1963 which is carried to years subsequent to 1960, the net operating loss deduction for 1960 is determined without regard to the portion of the net operating loss for 1962 attributable to the foreign expropriation loss, since under the provisions of section 172(b)(1)(D) and paragraph (a)(1)(iv) of § 1.172-4 such portion of the net operating loss for 1962 may not be carried back to 1960.

[T.D. 6862, 30 FR 14431, Nov. 18, 1965, as amended by T.D. 8107, 51 FR 43346, Dec. 2, 1986]

§ 1.172-10 Net operating losses of real estate investment trusts.

(a) ***Taxable years to which a loss may be carried.***

(1) A net operating loss sustained by a qualified real estate investment trust (as defined in paragraph (b)(1) of this section) in a qualified taxable year (as defined in paragraph (b)(2) of this section) ending after October 4, 1976, shall not be carried back to a preceding taxable year.

(2) A net operating loss sustained by a qualified real estate investment trust in a qualified taxable year ending before October 5, 1976, shall be carried back to the 3 preceding taxable years. However, see § 1.857-2(a)(5), which does not allow the net operating loss deduction in computing real estate investment trust taxable income for taxable years ending before October 5, 1976.

(3) A net operating loss sustained by a qualified real estate investment trust in a qualified taxable year ending after December 31, 1972, shall be carried over to the 15 succeeding taxable years. However, see § 1.857-2(a)(5).

(4) A net operating loss sustained by a qualified real estate investment trust in a qualified taxable year ending before January 1, 1973, shall be carried over to 8 succeeding taxable years. However, see § 1.857-2(a)(5).

(5) A net operating loss sustained in a taxable year for which the taxpayer is not a qualified real estate investment trust generally may be carried back to the 3 preceding taxable years; however, a net operating loss sustained in a taxable year ending after December 31, 1975, shall not be carried back to any qualified taxable year. However, see § 1.857-2(a)(5), with respect to a net operating loss sustained in a taxable year ending before January 1, 1976.

(6) A net operating loss sustained in a taxable year ending after December 31, 1975, for which the taxpayer is not a qualified real estate investment trust generally may be carried over to the 15 succeeding taxable years.

(7)

(i) A net operating loss sustained in a taxable year ending before January 1, 1986, for which the taxpayer is not a qualified real estate investment trust generally may be a net operating loss carryover to each of the 5 succeeding taxable years. However, where the loss was a net operating loss carryback to one or more qualified taxable years, the net operating loss, in accordance with paragraph (a)(7)(ii) of this section shall be—

(A) Carried over to the 15 succeeding taxable years if the loss could be a net operating loss carryover to a taxable year ending in 1981, or

(B) Carried over to the 5, 6, 7, or 8 succeeding taxable years if paragraph (a)(7)(i)(A) of this section does not apply.

(ii) For purposes of determining whether a net operating loss could be a carryover to a taxable year ending in 1981 under paragraph (a)(7)(i)(A) of this section or, where paragraph (a)(7)(i)(A) of this section does not apply, to determine the actual carryover period under paragraph (a)(7)(i)(B) of this section, the net operating loss shall have a carryover period of 5 years, and such period shall be increased (to a number not greater than 8) by the number of qualified taxable years to which such loss was a net operating loss carryback; however, where the taxpayer acted so as to cause itself to cease to be a qualified real estate investment trust and the principal purpose for such action was to secure the benefit of the allowance of a net operating loss carryover under section 172(b)(1)(B), the net operating loss carryover period shall be limited to 5 years. However, see § 1.857-2(a)(5).

(8) A qualified taxable year is a taxable year preceding or following the taxable year of the net operating loss, for purposes of section 172(b)(1), even though the loss may not be carried to, or allowed as a deduction in, such qualified taxable year. Thus, a qualified taxable year ending before October 5, 1976 (for which no net operating loss deduction is allowable) is nevertheless a preceding or following taxable year for purposes of section 172(b)(1). Moreover, a qualified taxable year ending after October 4, 1976 (to which a net operating loss cannot be carried back because of section 172(b)(1)(E)) is nevertheless a preceding taxable year for purposes of section 172(b)(1). For purposes of determining, under section 172(b)(2), the balance of the loss available as a carryback or carryover to other taxable years, however, the net operating loss is not reduced on account of such qualified taxable year being a preceding or following taxable year.

(b) ***Definitions.*** For purposes of this section and §§ 1.172-2 and 1.172-5:

(1) The term *qualified real estate investment trust* means, with respect to any taxable year, a real estate investment trust within the meaning of part II of subchapter M which is taxable for such year under that part as a real estate investment trust, and

(2) The term *qualified taxable year* means a taxable year for which the taxpayer is a qualified real estate investment trust.

(c) ***Examples.*** The provisions of this section may be illustrated by the following examples:

Example 1. (i) *Facts.* X was a qualified real estate investment trust for the taxable years ending on December 31, 1972, and December 31, 1973. X was not a qualified real estate investment trust for the taxable years ending on December 31, 1971, and December 31, 1974. X sustained a net operating loss for the taxable year ending on December 31, 1974.
(ii) *Applicable carryback and carryover periods.* The net operating loss must be carried back to the 3 preceding taxable years. Under § 1.857-2 (a)(5) the net operating loss deduction shall not be allowed in computing real estate investment trust taxable income for the years ending December 31, 1972, and December 31, 1973. Where a net operating loss is sustained in a taxable year ending before January 1, 1976, for which the taxpayer is not a qualified real estate investment trust and the loss is a net operating loss carryback to one or more qualified taxable years, the carryover period is determined under § 1.172-10 (a)(7); the carryover period is determined by first applying the rule provided in paragraph (a)(7)(ii) of this section to obtain the carryover period for purposes of determining whether the net operating loss could have been a net operating loss carryover to a taxable year ending in 1981. Under these facts, paragraph (a)(7)(ii) of this section provides for a 7-year carryover period (5 years increased by the 2 qualified taxable years to which the loss was a net operating loss carryback); therefore, since the carryover period provided for by paragraph (a)(7)(ii) of this section would allow the net operating loss to be a net operating loss carryover to a taxable year ending in 1981, under paragraph (a)(7)(ii)(A) of this section the applicable carryover period is 15 years (provided that X did not act so as to cause itself to cease to qualify as a real estate investment trust for the principal purpose of securing the benefit of a net operating loss carryover under section 172 (b)(1)(B)).

Example 2. (i) *Facts.* The facts are the same as in *example* (1) except that the taxable year ending December 31, 1973, was not a qualified taxable year for X.
(ii) *Applicable carryback and carryover periods.* The net operating loss must be carried back to the 3 preceding taxable years. Section 1.857-2 (a)(5) provides that the net operating loss deduction shall not be allowed in computing real estate investment trust taxable income for the year ending December 31, 1972. Under these facts the carryover period is determined under § 1.172-10 (a)(7). Paragraph (a)(7)(ii) of this section provides for a 6 year carryover period (5 years increased by the 1 qualified taxable year to which the loss was a net operating loss carryback); therefore, since a 6 year carryover period would not allow the net operating loss to be a net operating loss carryover to a taxable year ending in 1981, paragraph (a)(7)(i)(A) of this section does not apply. Where the rule stated in paragraph (a)(7)(i)(A) of this section does not apply, paragraph (a)(7)(i)(B) of this section provides that the applicable carryover period is the carryover period determined under paragraph (a)(7)(ii) of this section, which, in this case, is 6 years (provided that the principal purpose for X acting so as to cause itself to cease to qualify as a real estate investment trust was not to secure the benefit of the allowance of a net operating loss carryover under section 172 (b)(1)(B)).

(d) ***Cross references.*** See §§ 1.172-2(c) and 1.172-5(a)(5) for the computation of the net operating loss of a qualified real estate investment trust for a taxable year ending after October 4, 1976, and the amount of a net operating loss which is absorbed when carried over to a qualified taxable year ending after October 4, 1976. See § 1.857-2(a)(5), which provides that for a taxable year ending before October 5, 1976, the net operating loss deduction is not allowed in computing the real estate investment trust taxable income of a qualified real estate investment trust.

[T.D. 7767, 46 FR 11263, Feb. 6, 1981, as amended by T.D. 8107, 51 FR 43346, Dec. 2, 1986]

§ 1.172-13 Product liability losses.

(a) ***Entitlement to 10-year carryback*** —

(1) ***In general.*** Unless an election is made pursuant to paragraph (c) of this section, in the case of a taxpayer which has a product liability loss (as defined in section 172(j) and paragraph (b)(1) of this section) for a taxable year beginning after September 30, 1979 (hereinafter "loss year"), the product liability loss shall be a net operating loss carryback to each of the 10 taxable years preceding the loss year.

(2) ***Years to which loss may be carried.*** A product liability loss shall first be carried to the earliest of the taxable years to which such loss is allowable as a carryback and shall then be carried to the next earliest of such taxable years, etc.

(3) ***Example.*** The application of this paragraph may be illustrated as follows:

Example. Taxpayer A incurs a net operating loss for taxable year 1980 of $80,000, of which $60,000 is a product liability loss. A's taxable income for each of the 10 years immediately preceding taxable year 1980 was $5,000. The product liability loss of $60,000 is first carried back to the 10th through the 4th preceding taxable years ($5,000 per year), thus offsetting $35,000 of the loss. The remaining $25,000 of product liability loss is added to the remaining portion of the total net operating loss for taxable year 1980 which was not a product liability loss ($20,000), and the total is then carried back to the 3rd through 1st years preceding taxable year 1980, which offsets $15,000 of this loss. The remaining loss ($30,000) is carried forward pursuant to section 172(b)(1) and the regulations thereunder without regard to whether all or any portion thereof originated as a product liability loss.

(b) ***Definitions*** —

(1) ***Product liability loss.*** The term *product liability loss* means, for any taxable year, the lesser of—

(i) The net operating loss for the current taxable year (not including the portion of such net operating loss attributable to foreign expropriation losses, as defined in § 1.172-11), or

(ii) The total of the amounts allowable as deductions under sections 162 and 165 directly attributable to—

(A) Product liability (as defined in paragraph (b)(2) of this section), and

(B) Expenses (including settlement payments) incurred in connection with the investigation or settlement of or opposition to claims against the taxpayer on account of alleged product liability.

Indirect corporate expense, or overhead, is not to be allocated to product liability claims so as to become a product liability loss.

(2) ***Product liability.***

(i) The term *product liability* means the liability of a taxpayer for damages resulting from physical injury or emotional harm to individuals, or damage to or loss of the use of property, on account of any defect in any product which is manufactured, leased, or sold by the taxpayer. The preceding sentence applies only to the extent that the injury, harm, or damage occurs after the taxpayer has completed or terminated operations with respect to the product, including, but not limited to the manufacture, installation, delivery, or testing of the product, and has relinquished possession of such product.

(ii) The term *product liability* does not include liabilities arising under warranty theories relating to repair or replacement of the property that are essentially contract liabilities. For example, the costs incurred by a taxpayer in repairing or replacing defective products under the terms of a warranty, express or implied, are not product liability losses. On the other hand, the taxpayer's liability for damage done to other property or for harm done to persons that is attributable to a defective product may be product liability losses regardless of whether the claim sounds in tort or contract. Further, liability incurred as a result of services performed by a taxpayer is not product liability. For purposes of the preceding sentence, where both a product and services are integral parts of a transaction, product liability does not arise until all operations with respect to the product are completed and the taxpayer has relinquished possession of it. On the other hand, any liability that arises after completion of the initial delivery, installation, servicing, testing, etc., is considered “product liability” even if such liability arises during the subsequent servicing of the product pursuant to a service agreement or otherwise.

(iii) Liability for injury, harm, or damage due to a defective product as described in this subparagraph shall be “product liability” notwithstanding that the liability is not considered product liability under the law of the State in which such liability arose.

(iv) Amounts paid for insurance against product liability risks are not paid on account of product liability.

(v) Notwithstanding subparagraph (iv), an amount is paid on account of product liability (even if such amount is paid to an insurance company) if the amount satisifies the provisions of paragraph (b)(2) (i) through (iii) of this section and the amount—

(A) Is paid on account of specific claims against the taxpayer (or on account of expenses incurred in connection with the investigation or settlement of or opposition to such claims), subsequent to the events giving rise to the claims and pursuant to a contract entered into before those events,

(B) Is not refundable, and

(C) Is not applicable to other claims, other expenses or to subsequent coverage.

(3) ***Examples.*** Paragraph (b)(2) of this section is illustrated by the following examples:

Example 1. X, a manufacturer of heating equipment, sells a boiler to A, a homeowner. Subsequent to the sale and installation of the boiler, the boiler explodes due to a defect causing physical injury to A. A sues X for damages for the injuries sustained in the explosion and is awarded $250,000, which X pays. The payment was made on account of product liability.

Example 2. Assume the same facts as in *Example 1* and that A also sues under the contract with X to recover for the cost of the boiler and recovers $1,000, the boiler's replacement cost. The $1,000 payment is not a payment on account of product liability. Similarly, if X agrees to repair the destroyed boiler, any amount expended by X for such repair is not payment made on account of product liability.

Example 3. Y, a professional medical association, is sued by B, a patient, in an action based on the malpractice of one of its doctors. B recovers $25,000. Because the suit was based on the services of B, the payment is not made on account of product liability.

Example 4. R, a retailer of communications equipment, sells a telecommunication device to C. R also contracts with C to service the equipment for 3 years. While R is installing the equipment, the unit catches on fire due to faulty wiring within the unit and destroys C's office. Because R had not relinquished possession of this equipment when the fire started, any amount paid to C by R for the damage to C's property on account of the defective product is not payment on account of product liability.

Example 5. Assume the same facts as in *Example 4* except that the fire and resulting property damages occurred after R had installed the equipment and relinquished possession of it. Any amount paid for the property damages sustained on account of the defective product is payment on account of product liability.

Example 6. Assume the same facts as in *Example 4* except that the equipment catches on fire during the subsequent servicing of the unit. Because C is in possession of the unit during the servicing, any amount paid for the property damage sustained on account of the defective product would be payment on account of product liability.

Example 7. X, a manufacturer of computers, sells a computer to A. X also has its employees periodically service the computer for A from time to time after it is placed in service. After the initial delivery, installation, servicing, and testing of the computer is completed, the computer catches on fire while X's employee is servicing the equipment. This fire causes property damage to A's office and physical injury to A. Any amount paid for the property or physical damage sustained on account of the defective product is payment on account of product liability.

(c) ***Election*** —

(1) ***In general.*** The 10-year carryback provision of this section applies, except as provided in this paragraph, to any taxpayer who, for a taxable year beginning after September 30, 1979, incurs a product liability loss. Any taxpayer entitled to a 10-year carryback under paragraph (a) of this section in any loss year may elect (at the time and in the manner provided in paragraph (c)(2) of this section) to have the carryback period with respect to the product liability loss determined without regard to the carryback rules provided by paragraph (a) of this section. If the taxpayer so elects, the product liability loss shall not be carried back to the 10th through the 4th taxable years preceding the loss year. In such case, the product liability loss shall be carried back or carried over as provided by section 172(b) (except subparagraph (1)(I) thereof) and the regulations thereunder.

(2) ***Time and manner of making election.*** An election by any taxpayer entitled to the 10-year carryback for the product liability loss to have the carryback with respect to such loss determined without regard to the 10-year carryback provision of paragraph (a) of this section must be made by attaching to the taxpayer's tax return (filed within the time prescribed by law, including extensions of time) for the taxable year in which such product liability loss is sustained, a statement containing the information

required by paragraph (c)(3) of this section. Such election, once made for any taxable year, shall be irrevocable after the due date (including extensions of time) of the taxpayer's tax return for that taxable year.

(3) ***Information required.*** In the case of a statement filed after April 25, 1983, the statement referred to in paragraph (c)(2) of this section shall contain the following information:

(i) The name, address, and taxpayer identifying number of the taxpayer; and

(ii) A statement that the taxpayer elects under section 172(j)(3) not to have section 172(b)(1)(I) apply.

(4) ***Relationship with section 172(b)(3)(C) election.*** If a taxpayer sustains during the taxable year both a net operating loss not attributable to product liability and a product liability loss (as defined in section 172(j)(1) and paragraph (b)(1) of this section), an election pursuant to section 172(b)(3)(C) (relating to election to relinquish the entire carryback period) does not preclude the product liability loss from being carried back 10 years under section 172(b)(1)(I) and paragraph (a)(1) of this section.

[T.D. 8096, 51 FR 30482, Aug. 27, 1986]

§ 1.173-1 Circulation expenditures.

(a) ***Allowance of deduction.*** Section 173 provides for the deduction from gross income of all expenditures to establish, maintain, or increase the circulation of a newspaper, magazine, or other periodical, subject to the following limitations:

(1) No deduction shall be allowed for expenditures for the purchase of land or depreciable property or for the acquisition of circulation through the purchase of any part of the business of another publisher of a newspaper, magazine, or other periodical;

(2) The deduction shall be allowed only to the publisher making the circulation expenditures; and

(3) The deduction shall be allowed only for the taxable year in which such expenditures are paid or incurred.

Subject to the provisions of paragraph (c) of this section, the deduction permitted under section 173 and this paragraph shall be allowed without regard to the method of accounting used by the taxpayer and notwithstanding the provisions of section 263 and the regulations thereunder, relating to capital expenditures.

(b) ***Deferred expenditures.*** Notwithstanding the provisions of paragraph (a)(3) of this section, expenditures paid or incurred in a taxable year subject to the Internal Revenue Code of 1939 which are deferrable pursuant to I.T. 3369 (C.B. 1940-1, 46), as modified by Rev. Rul. 57-87 (C.B. 1957-1, 507) may be deducted in the taxable year subject to the Internal Revenue Code of 1954 to which so deferred.

(c) ***Election to capitalize.***

(1) A taxpayer entitled to the deduction for circulation expenditures provided in section 173 and paragraph (a) of this section may, in lieu of taking such deduction, elect to capitalize the portion of such circulation expenditures which is properly chargeable to capital account. As a general rule, expenditures normally made from year to year in an effort to maintain circulation are not properly chargeable to capital account; conversely, expenditures made in an effort to establish or to increase circulation are properly chargeable to capital account. For example, if a newspaper normally

employs five persons to obtain renewals of subscriptions by telephone, the expenditures in connection therewith would not be properly chargeable to capital account. However, if such newspaper, in a special effort to increase its circulation, hires for a limited period 20 additional employees to obtain new subscriptions by means of telephone calls to the general public, the expenditures in connection therewith would be properly chargeable to capital account. If an election is made by a taxpayer to treat any portion of his circulation expenditures as chargeable to capital account, the election must apply to all such expenditures which are properly so chargeable. In such case, no deduction shall be allowed under section 173 for any such expenditures. In particular cases, the extent to which any deductions attributable to the amortization of capital expenditures are allowed may be determined under sections 162, 263, and 461.

(2) A taxpayer may make the election referred to in subparagraph (1) of this paragraph by attaching a statement to his return for the first taxable year to which the election is applicable. Once an election is made, the taxpayer must continue in subsequent taxable years to charge to capital account all circulation expenditures properly so chargeable, unless the Commissioner, on application made to him in writing by the taxpayer, permits a revocation of such election for any subsequent taxable year or years. Permission to revoke such election may be granted subject to such conditions as the Commissioner deems necessary.

(3) Elections filed under section 23(bb) of the Internal Revenue Code of 1939 shall be given the same effect as if they were filed under section 173. (See section 7807(b)(2).)

§ 1.174-1 Research and experimental expenditures; in general.

Section 174 provides two methods for treating research or experimental expenditures paid or incurred by the taxpayer in connection with his trade or business. These expenditures may be treated as expenses not chargeable to capital account and deducted in the year in which they are paid or incurred (see § 1.174-3), or they may be deferred and amortized (see § 1.174-4). Research or experimental expenditures which are neither treated as expenses nor deferred and amortized under section 174 must be charged to capital account. The expenditures to which section 174 applies may relate either to a general research program or to a particular project. See § 1.174-2 for the definition of research and experimental expenditures. The term *paid or incurred,* as used in section 174 and in §§ 1.174-1 to 1.174-4, inclusive, is to be construed according to the method of accounting used by the taxpayer in computing taxable income. See section 7701(a)(25).

§ 1.174-2 Definition of research and experimental expenditures.

(a) ***In general.***

(1) ***Research or experimental expenditures defined.*** The term *research or experimental expenditures,* as used in section 174, means expenditures incurred in connection with the taxpayer's trade or business which represent research and development costs in the experimental or laboratory sense. The term generally includes all such costs incident to the development or improvement of a product. The term includes the costs of obtaining a patent, such as attorneys' fees expended in making and perfecting a patent application. Expenditures represent research and development costs in the experimental or laboratory sense if they are for activities intended to discover information that would eliminate uncertainty concerning the development or improvement of a product. Uncertainty exists if the information available to the taxpayer does not establish the capability or method for developing or improving the product or the appropriate design of the product. Whether expenditures qualify as research or experimental expenditures depends on the nature of the activity to which the expenditures relate, not the nature of the product or improvement being developed or the level of

technological advancement the product or improvement represents. The ultimate success, failure, sale, or use of the product is not relevant to a determination of eligibility under section 174. Costs may be eligible under section 174 if paid or incurred after production begins but before uncertainty concerning the development or improvement of the product is eliminated.

(2) ***Production costs.*** Except as provided in paragraph (a)(5) of this section (the rule concerning the application of section 174 to components of a product), costs paid or incurred in the production of a product after the elimination of uncertainty concerning the development or improvement of the product are not eligible under section 174.

(3) ***Product defined.*** For purposes of this section, the term *product* includes any pilot model, process, formula, invention, technique, patent, or similar property, and includes products to be used by the taxpayer in its trade or business as well as products to be held for sale, lease, or license.

(4) ***Pilot model defined.*** For purposes of this section, the term *pilot model* means any representation or model of a product that is produced to evaluate and resolve uncertainty concerning the product during the development or improvement of the product. The term includes a fully-functional representation or model of the product or, to the extent paragraph (a)(5) of this section applies, a component of the product.

(5) ***Application of section 174 to components of a product.*** If the requirements of paragraph (a)(1) of this section are not met at the level of a product (as defined in paragraph (a)(3) of this section), then whether expenditures represent research and development costs is determined at the level of the component or subcomponent of the product. The presence of uncertainty concerning the development or improvement of certain components of a product does not necessarily indicate the presence of uncertainty concerning the development or improvement of other components of the product or the product as a whole. The rule in this paragraph (a)(5) is not itself applied as a reason to exclude research or experimental expenditures from section 174 eligibility.

(6) ***Research or experimental expenditures—exclusions.*** The term *research or experimental expenditures* does not include expenditures for—

(i) The ordinary testing or inspection of materials or products for quality control (quality control testing);

(ii) Efficiency surveys;

(iii) Management studies;

(iv) Consumer surveys;

(v) Advertising or promotions;

(vi) The acquisition of another's patent, model, production or process; or

(vii) Research in connection with literary, historical, or similar projects.

(7) ***Quality control testing.*** For purposes of paragraph (a)(6)(i) of this section, testing or inspection to determine whether particular units of materials or products conform to specified parameters is quality control testing. However, quality control testing does not include testing to determine if the design of the product is appropriate.

(8) ***Expenditures for literary, historical, or similar research—cross reference.*** See section 263A and the regulations thereunder for cost capitalization rules which apply to expenditures paid or incurred for research in connection with literary, historical, or similar projects involving the production of property, including the production of films, sound recordings, video tapes, books, or similar properties.

(9) ***Research or experimental expenditures limited to reasonable amounts.*** Section 174 applies to a research or experimental expenditure only to the extent that the amount of the expenditure is reasonable under the circumstances. In general, the amount of an expenditure for research or experimental activities is reasonable if the amount would ordinarily be paid for like activities by like enterprises under like circumstances. Amounts supposedly paid for research that are not reasonable under the circumstances may be characterized as disguised dividends, gifts, loans, or similar payments. The reasonableness requirement of this paragraph (a)(9) does not apply to the reasonableness of the type or nature of the activities themselves.

(10) ***Amounts paid to others for research or experimentation.*** The provisions of this section apply not only to costs paid or incurred by the taxpayer for research or experimentation undertaken directly by him but also to expenditures paid or incurred for research or experimentation carried on in his behalf by another person or organization (such as a research institute, foundation, engineering company, or similar contractor). However, any expenditures for research or experimentation carried on in the taxpayer's behalf by another person are not expenditures to which section 174 relates, to the extent that they represent expenditures for the acquisition or improvement of land or depreciable property, used in connection with the research or experimentation, to which the taxpayer acquires rights of ownership.

(11) ***Examples.*** The following examples illustrate the application of this paragraph (a).

Example 1. Amounts paid to others for research or experimentation allowed as a deduction. A engages B to undertake research and experimental work in order to create a particular product. B will be paid annually a fixed sum plus an amount equivalent to his actual expenditures. In 1957, A pays to B in respect of the project the sum of $150,000 of which $25,000 represents an addition to B's laboratory and the balance represents charges for research and experimentation on the project. It is agreed between the parties that A will absorb the entire cost of this addition to B's laboratory which will be retained by B. A may treat the entire $150,000 as expenditures under section 174.

Example 2. Amounts paid to others not allowable as a deduction. S Corporation, a manufacturer of explosives, contracts with the T research organization to attempt through research and experimentation the creation of a new process for making certain explosives. Because of the danger involved in such an undertaking, T is compelled to acquire an isolated tract of land on which to conduct the research and experimentation. It is agreed that upon completion of the project T will transfer this tract, including any improvements thereon, to S. Section 174 does not apply to the amount paid to T representing the costs of the tract of land and improvements.

Example 3. Pilot model. U is engaged in the manufacture and sale of custom machines. U contracts to design and produce a machine to meet a customer's specifications. Because U has never designed a machine with these specifications, U is uncertain regarding the appropriate design of the machine, and particularly whether features desired by the customer can be designed and integrated into a functional machine. U incurs a total of $31,000 on the project. Of the $31,000, U incurs $10,000 of costs on materials and labor to produce a model that is used to evaluate and resolve the uncertainty concerning the appropriate design. U also incurs $1,000 of costs using the model to test whether certain features can be integrated into the design of the

machine. This $11,000 of costs represents research and development costs in the experimental or laboratory sense. After uncertainty is eliminated, U incurs $20,000 to produce the machine for sale to the customer based on the appropriate design. The model produced and used to evaluate and resolve uncertainty is a pilot model within the meaning of paragraph (a)(4) of this section. Therefore, the $10,000 incurred to produce the model and the $1,000 incurred on design testing activities qualifies as research or experimental expenditures under section 174. However, section 174 does not apply to the $20,000 that U incurred to produce the machine for sale to the customer based on the appropriate design. See paragraph (a)(2) of this section (relating to production costs).

Example 4. Product component redesign. Assume the same facts as *Example 3,* except that during a quality control test of the machine, a component of the machine fails to function due to the component's inappropriate design. U incurs an additional $8,000 (including design retesting) to reconfigure the component's design. The $8,000 of costs represents research and development costs in the experimental or laboratory sense. After the elimination of uncertainty regarding the appropriate design of the component, U incurs an additional $2,000 on its production. The reconfigured component produced and used to evaluate and resolve uncertainty with respect to the component is a pilot model within the meaning of paragraph (a)(4) of this section. Therefore, in addition to the $11,000 of research and experimental expenditures previously incurred, the $8,000 incurred on design activities to establish the appropriate design of the component qualifies as research or experimental expenditures under section 174. However, section 174 does not apply to the additional $2,000 that U incurred for the production after the elimination of uncertainty of the re-designed component based on the appropriate design or to the $20,000 previously incurred to produce the machine. See paragraph (a)(2) of this section (relating to production costs).

Example 5. Multiple pilot models. V is a manufacturer that designs a new product. V incurs $5,000 to produce a number of models of the product that are to be used in testing the appropriate design before the product is mass-produced for sale. The $5,000 of costs represents research and development costs in the experimental or laboratory sense. Multiple models are necessary to test the design in a variety of different environments (exposure to extreme heat, exposure to extreme cold, submersion, and vibration). In some cases, V uses more than one model to test in a particular environment. Upon completion of several years of testing, V enters into a contract to sell one of the models to a customer and uses another model in its trade or business. The remaining models were rendered inoperable as a result of the testing process. Because V produced the models to resolve uncertainty regarding the appropriate design of the product, the models are pilot models under paragraph (a)(4) of this section. Therefore, the $5,000 that V incurred in producing the models qualifies as research or experimental expenditures under section 174. See also paragraph (a)(1) of this section (ultimate use is not relevant).

Example 6. Development of a new component; pilot model. W wants to improve a machine for use in its trade or business and incurs $20,000 to develop a new component for the machine. The $20,000 is incurred for engineering labor and materials to produce a model of the new component that is used to eliminate uncertainty regarding the development of the new component for the machine. The $20,000 of costs represents research and experimental costs in the experimental or laboratory sense. After W completes its research and experimentation on the new component, W incurs $10,000 for materials and labor to produce the component and incorporate it into the machine. The model produced and used to evaluate and resolve uncertainty with respect to the new component is a pilot model within the meaning of

paragraph (a)(4) of this section. Therefore, the $20,000 incurred to produce the model and eliminate uncertainty regarding the development of the new component qualifies as research or experimental expenditures under section 174. However, section 174 does not apply to the $10,000 of production costs of the component because those costs were not incurred for research or experimentation. See paragraph (a)(2) of this section (relating to production costs).

Example 7. Disposition of a pilot model. X is a manufacturer of aircraft. X is researching and developing a new, experimental aircraft that can take off and land vertically. To evaluate and resolve uncertainty during the development or improvement of the product and test the appropriate design of the experimental aircraft, X produces a working aircraft at a cost of $5,000,000. The $5,000,000 of costs represents research and development costs in the experimental or laboratory sense. In a later year, X sells the aircraft. Because X produced the aircraft to resolve uncertainty regarding the appropriate design of the product during the development of the experimental aircraft, the aircraft is a pilot model under paragraph (a)(4) of this section. Therefore, the $5,000,000 of costs that X incurred in producing the aircraft qualifies as research or experimental expenditures under section 174. Further, it would not matter if X sold the pilot model or incorporated it in its own business as a demonstration model. See paragraph (a)(1) of this section (ultimate use is not relevant).

Example 8. Development of new component; pilot model. Y is a manufacturer of aircraft engines. Y is researching and developing a new type of compressor blade, a component of an aircraft engine, to improve the performance of an existing aircraft engine design that Y already manufactures and sells. To test the appropriate design of the new compressor blade and evaluate the impact of fatigue on the compressor blade design, Y produces and installs the compressor blade on an aircraft engine held by Y in its inventory. The costs of producing and installing the compressor blade component that Y incurred represent research and development costs in the experimental or laboratory sense. Because Y produced the compressor blade component to resolve uncertainty regarding the appropriate design of the component, the component is a pilot model under paragraph (a)(4) of this section. Therefore, the costs that Y incurred to produce and install the component qualify as research or experimental expenditures under section 174. See paragraph (a)(5) of this section (regarding the application of section 174 to components of a product). However, section 174 does not apply to Y's costs of producing the aircraft engine on which the component was installed. See paragraph (a)(2) of this section (relating to production costs).

Example 9. Variant product. T is a fuselage manufacturer for commercial and military aircraft. T is modifying one of its existing fuselage products, Class 20XX-1, to enable it to carry a larger passenger and cargo load. T modifies the Class 20XX-1 design by extending its length by 40 feet. T incurs $1,000,000 to develop and evaluate different designs to resolve uncertainty with respect to the appropriate design of the new fuselage class, Class 20XX-2. The $1,000,000 of costs represents research and development costs in the experimental or laboratory sense. Although Class 20XX-2, is a variant of Class 20XX-1, Class 20XX-2 is a new product because the information available to T as a result of T's development of Class 20XX-1 does not resolve uncertainty with respect to T's development of Class 20XX-2. Therefore, the $1,000,000 of costs that T incurred to develop and evaluate the Class 20XX-2 qualifies as research or experimental expenditures under section 174. Paragraph (a)(5) of this section does not apply, as the requirements of paragraph (a)(1) of this section are met with respect to the entire product.

Example 10. New process development. Z is a wine producer. Z is researching and developing a new wine production process that involves the use of a different method of crushing the wine grapes. In order to test the effectiveness of the new method of crushing wine grapes, Z incurs $2,000 in labor and materials to conduct the test on this part of the new manufacturing process. The $2,000 of costs represents research and development costs in the experimental or laboratory sense. Therefore, the $2,000 incurred qualifies as research or experimental expenditures under section 174 because it is a cost incident to the development or improvement of a component of a process.

(b) ***Certain expenditures with respect to land and other property.***

(1) ***Land and other property.*** Expenditures by the taxpayer for the acquisition or improvement of land, or for the acquisition or improvement of property which is subject to an allowance for depreciation under section 167 or depletion under section 611, are not deductible under section 174, irrespective of the fact that the property or improvements may be used by the taxpayer in connection with research or experimentation. However, allow- ances for depreciation or depletion of property are considered as research or experimental expenditures, for purposes of section 174, to the extent that the property to which the allowances relate is used in connection with research or experimentation. If any part of the cost of acquisition or improvement of depreciable property is attributable to research or experimentation (whether made by the taxpayer or another), see subparagraphs (2), (3), and (4) of this paragraph.

(2) ***Expenditure resulting in depreciable property.*** Expenditures for research or experimentation which result, as an end product of the research or experimentation, in depreciable property to be used in the taxpayer's trade or business may, subject to the limitations of subparagraph (4) of this paragraph, be allowable as a current expense deduction under section 174(a). Such expenditures cannot be amortized under section 174(b) except to the extent provided in paragraph (a)(4) of § 1.174-4.

(3) ***Amounts paid to others for research or experimentation resulting in depreciable property.*** If expenditures for research or experimentation are incurred in connection with the construction or manufacture of depreciable property by another, they are deductible under section 174(a) only if made upon the taxpayer's order and at his risk. No deduction will be allowed

(i) if the taxpayer purchases another's product under a performance guarantee (whether express, implied, or imposed by local law) unless the guarantee is limited, to engineering specifications or otherwise, in such a way that economic utility is not taken into account; or

(ii) for any part of the purchase price of a product in regular production. For example, if a taxpayer orders a specially-built automatic milling machine under a guarantee that the machine will be capable of producing a given number of units per hour, no portion of the expenditure is deductible since none of it is made at the taxpayer's risk. Similarly, no deductible expense is incurred if a taxpayer enters into a contract for the construction of a new type of chemical processing plant under a turn-key contract guaranteeing a given annual production and a given consumption of raw material and fuel per unit. On the other hand, if the contract contained no guarantee of quality of production and of quantity of units in relation to consumption of raw material and fuel, and if real doubt existed as to the capabilities of the process, expenses for research or experimentation under the contract are at the taxpayer's risk and are deductible under section 174(a). However, see subparagraph (4) of this paragraph.

(4) ***Deductions limited to amounts expended for research or experimentation.*** The deductions referred to in paragraphs (b)(2) and (3) of this section for expenditures in connection with the acquisition or production of depreciable property to be used in the taxpayer's trade or business are limited to amounts expended for research or experimentation within the meaning of section 174 and paragraph (a) of this section.

(5) ***Examples.*** The following examples illustrate the application of paragraph (b) of this section.

Example 1. Amounts paid to others for research or experimentation resulting in depreciable property. X is a tool manufacturer. X has developed a new tool design, and orders a specially-built machine from Y to produce X's new tool. The machine is built upon X's order and at X's risk, and Y does not provide a guarantee of economic utility. There is uncertainty regarding the appropriate design of the machine. Under X's contract with Y, X pays $15,000 for Y's engineering and design labor, $5,000 for materials and supplies used to develop the appropriate design of the machine, and $10,000 for Y's machine production materials and labor. The $15,000 of engineering and design labor costs and the $5,000 of materials and supplies costs represent research and development costs in the experimental or laboratory sense. Therefore, the $15,000 X pays Y for Y's engineering and design labor and the $5,000 for materials and supplies used to develop the appropriate design of the machine are for research or experimentation under section 174. However, section 174 does not apply to the $10,000 of production costs of the machine because those costs were not incurred for research or experimentation. See paragraph (a)(2) of this section (relating to production costs) and paragraph (b)(4) of this section (limiting deduction to amounts expended for research or experimentation).

Example 2. Expenditures with respect to other property. Z is an aircraft manufacturer. Z incurs $5,000,000 to construct a new test bed that will be used in the development and improvement of Z's aircraft. No portion of Z's $5,000,000 of costs to construct the new test bed represent research and development costs in the experimental or laboratory sense to develop or improve the test bed. Because no portion of the costs to construct the new test bed were incurred for research or experimentation, the $5,000,000 will be considered an amount paid or incurred in the production of depreciable property to be used in the taxpayer's trade or business that are not allowable under section 174. However, the allowances for depreciation of the test bed are considered research and experimental expenditures of other products, for purposes of section 174, to the extent the test bed is used in connection with research or experimentation of other products. See paragraph (b)(1) of this section (depreciation allowances may be considered research or experimental expenditures).

Example 3. Expenditure resulting in depreciable property. Assume the same facts as *Example 2,* except that $50,000 of the costs of the test bed relates to costs to resolve uncertainties regarding the new test bed design. The $50,000 of costs represents research and development costs in the experimental or laboratory sense. Because $50,000 of Z's costs to construct the new test bed was incurred for research and experimentation, the costs qualify as research or experimental expenditures under section 174. Paragraph (b)(2) of this section applies to $50,000 of Z's costs for the test bed because they are expenditures for research or experimentation that result in depreciable property to be used in the taxpayer's trade or business. Z's remaining $4,950,000 of costs is not allowable under section 174 because these costs were not incurred for research or experimentation.

(c) ***Exploration expenditures.*** The provisions of section 174 are not applicable to any expenditures paid or incurred for the purpose of ascertaining the existence, location, extent, or quality of any deposit of ore, oil, gas or other mineral. See sections 617 and 263.

(d) ***Effective/applicability date.*** The eighth and ninth sentences of § 1.174-2(a)(1); § 1.174-2(a)(2); § 1.174-2(a)(4); § 1.174-2(a)(5); § 1.174-2(a)(11) *Example 3* through *Example 10;* § 1.174-2(b)(4); and § 1.174-2(b)(5) apply to taxable years ending on or after July 21, 2014. Taxpayers may apply the provisions enumerated in the preceding sentence to taxable years for which the limitations for assessment of tax has not expired.

[T.D. 6500, 25 FR 11402, Nov. 26, 1960, as amended by T.D. 8562, 59 FR 50160, Oct. 3, 1994; T.D. 9680, 79 FR 42195, July 21, 2014]

§ 1.174-3 Treatment as expenses.

(a) ***In general.*** Research or experimental expenditures paid or incurred by a taxpayer during the taxable year in connection with his trade or business are deductible as expenses, and are not chargeable to capital account, if the taxpayer adopts the method provided in section 174(a). See paragraph (b) of this section. If adopted, the method shall apply to all research and experimental expenditures paid or incurred in the taxable year of adoption and all subsequent taxable years, unless a different method is authorized by the Commissioner under section 174(a)(3) with respect to part or all of the expenditures. See paragraph (b)(3) of this section. Thus, if a change to the deferred expense method under section 174(b) is authorized by the Commissioner with respect to research or experimental expenditures attributable to a particular project or projects, the taxpayer, for the taxable year of the change and for subsequent taxable years, must apply the deferred expense method to all such expenditures paid or incurred during any of those taxable years in connection with the particular project or projects, even though all other research and experimental expenditures are required to be deducted as current expenses under this section. In no event will the taxpayer be permitted to adopt the method described in this section as to part of the expenditures relative to a particular project and adopt for the same taxable year a different method of treating the balance of the expenditures relating to the same project.

(b) ***Adoption and change of method*** —

(1) ***Adoption without consent.*** The method described in this section may be adopted for any taxable year beginning after December 31, 1953, and ending after August 16, 1954. The consent of the Commissioner is not required if the taxpayer adopts the method for the first such taxable year in which he pays or incurs research or experimental expenditures. The taxpayer may do so by claiming in his income tax return for such year a deduction for his research or experimental expenditures. If the taxpayer fails to adopt the method for the first taxable year in which he incurs such expenditures, he cannot do so in subsequent taxable years unless he obtains the consent of the Commissioner under section 174(a)(2)(B) and subparagraph (2) of this paragraph. See, however, subparagraph (4) of this paragraph, relating to extensions of time.

(2) ***Adoption with consent.*** A taxpayer may, with the consent of the Commissioner, adopt at any time the method provided in section 174(a). The method adopted in this manner shall be applicable only to expenditures paid or incurred during the taxable year for which the request is made and in subsequent taxable years. A request to adopt this method shall be in writing and shall be addressed to the Commissioner of Internal Revenue, Attention: T:R, Washington, DC, 20224. The request shall set forth the name and address of the taxpayer, the first taxable year for which the adoption of the method is requested, and a description of the project or projects with respect to which research or experimental expenditures are to be, or have already been, paid or incurred. The request shall be

signed by the taxpayer (or his duly authorized representative) and shall be filed not later than the last day of the first taxable year for which the adoption of the method is requested. See, however, subparagraph (4) of this paragraph, relating to extensions of time.

(3) ***Change of method.*** An application for permission to change to a different method of treating research or experimental expenditures shall be in writing and shall be addressed to the Commissioner of Internal Revenue, Attention: T:R, Washington, DC, 20224. The application shall include the name and address of the taxpayer, shall be signed by the taxpayer (or his duly authorized representative), and shall be filed not later than the last day of the first taxable year for which the change in method is to apply. See, however, subparagraph (4) of this paragraph, relating to extensions of time. The application shall:

(i) State the first year to which the requested change is to be applicable;

(ii) State whether the change is to apply to all research or experimental expenditures paid or incurred by the taxpayer, or only to expenditures attributable to a particular project or projects;

(iii) Include such information as will identify the project or projects to which the change is applicable;

(iv) Indicate the number of months (not less than 60) selected for amortization of the expenditures, if any, which are to be treated as deferred expenses under section 174(b);

(v) State that, upon approval of the application, the taxpayer will make an accounting segregation on his books and records of the research or experimental expenditures to which the change in method is to apply; and

(vi) State the reasons for the change.

If permission is granted to make the change, the taxpayer shall attach a copy of the letter granting permission to his income tax return for the first taxable year in which the different method is effective.

(4) ***Special rules.*** If the last day prescribed by law for filing a return for any taxable year (including extensions thereof) to which section 174(a) is applicable falls before January 2, 1958, consent is hereby given for the taxpayer to adopt the expense method or to change from the expense method to a different method. In the case of a change from the expense method to a different method, the taxpayer, on or before January 2, 1958, must submit to the district director for the internal revenue district in which the return was filed the information required by subparagraph (3) of this paragraph. For any taxable year for which the expense method or a different method is adopted pursuant to this subparagraph, an amended return reflecting such method shall be filed on or before January 2, 1958, if such return is necessary.

§ 1.174-4 Treatment as deferred expenses.

(a) ***In general.***

(1) If a taxpayer has not adopted the method provided in section 174(a) of treating research or experimental expenditures paid or incurred by him in connection with his trade or business as currently deductible expenses, he may, for any taxable year beginning after December 31, 1953, elect to treat such expenditures as deferred expenses under section 174(b), subject to the limitations of subparagraph (2) of this paragraph. If a taxpayer has adopted the method of treating such

expenditures as expenses under section 174(a), he may not elect to defer and amortize any such expenditures unless permission to do so is granted under section 174(a)(3). See paragraph (b) of this section.

(2) The election to treat research or experimental expenditures as deferred expenses under section 174(b) applies only to those expenditures which are chargeable to capital account but which are not chargeable to property of a character subject to an allowance for depreciation or depletion under section 167 or 611, respectively. Thus, the election under section 174(b) applies only if the property resulting from the research or experimental expenditures has no determinable useful life. If the property resulting from the expenditures has a determinable useful life, section 174(b) is not applicable, and the capitalized expenditures must be amortized or depreciated over the determinable useful life. Amounts treated as deferred expenses are properly chargeable to capital account for purposes of section 1016(a)(1), relating to adjustments to basis of property. See section 1016(a)(14). See section 174(c) and paragraph (b)(1) of § 1.174-2 for treatment of expenditures for the acquisition or improvement of land or of depreciable or depletable property to be used in connection with the research or experimentation.

(3) Expenditures which are treated as deferred expenses under section 174(b) are allowable as a deduction ratably over a period of not less than 60 consecutive months beginning with the month in which the taxpayer first realizes benefits from the expenditures. The length of the period shall be selected by the taxpayer at the time he makes the election to defer the expenditures. If a taxpayer has two or more separate projects, he may select a different amortization period for each project. In the absence of a showing to the contrary, the taxpayer will be deemed to have begun to realize benefits from the deferred expenditures in the month in which the taxpayer first puts the process, formula, invention, or similar property to which the expenditures relate to an income-producing use. See section 1016(a)(14) for adjustments to basis of property for amounts allowed as deductions under section 174(b) and this section. See section 165 and the regulations thereunder for rules relating to the treatment of losses resulting from abandonment.

(4) If expenditures which the taxpayer has elected to defer and deduct ratably over a period of time in accordance with section 174(b) result in the development of depreciable property, deductions for the unrecovered expenditures, beginning with the time the asset becomes depreciable in character, shall be determined under section 167 (relating to depreciation) and the regulations thereunder. For example, for the taxable year 1954, A, who reports his income on the basis of a calendar year, elects to defer and deduct ratably over a period of 60 months research and experimental expenditures made in connection with a particular project. In 1956, the total of the deferred expenditures amounts to $60,000. At that time, A has developed a process which he seeks to patent. On July 1, 1956, A first realized benefits from the marketing of products resulting from this process. Therefore, the expenditures deferred are deductible ratably over the 60-month period beginning with July 1, 1956 (when A first realized benefits from the project). In his return for the year 1956. A deducted $6,000; in 1957, A deducted $12,000 ($1,000 per month). On July 1, 1958, a patent protecting his process is obtained by A. In his return for 1958, A is entitled to a deduction of $6,000, representing the amortizable portion of the deferred expenses attributable to the period prior to July 1, 1958. The balance of the unrecovered expenditures ($60,000 minus $24,000, or $36,000) is to be recovered as a depreciation deduction over the life of the patent commencing with July 1, 1958. Thus, one-half of the annual depreciation deduction based upon the useful life of the patent is also deductible for 1958 (from July 1 to December 31).

(5) The election shall be applicable to all research and experimental expenditures paid or incurred by the taxpayer or, if so limited by the taxpayer's election, to all such expenditures with respect to the particular project, subject to the limitations of subparagraph (2) of this paragraph. The election shall apply for the taxable year for which the election is made and for all subsequent taxable years, unless a change to a different treatment is authorized by the Commissioner under section 174(b)(2). See paragraph (b)(2) of this section. Likewise, the taxpayer shall adhere to the amortization period selected at the time of the election unless a different period of amortization with respect to a part or all of the expenditures is similarly authorized. However, no change in method will be permitted with respect to expenditures paid or incurred before the taxable year to which the change is to apply. In no event will the taxpayer be permitted to treat part of the expenditures with respect to a particular project as deferred expenses under section 174(b) and to adopt a different method of treating the balance of the expenditures relating to the same project for the same taxable year. The election under this section shall not apply to any expenditures paid or incurred before the taxable year for which the taxpayer makes the election.

(b) ***Election and change of method*** —

(1) ***Election.*** The election under section 174(b) shall be made not later than the time (including extensions) prescribed by law for filing the return for the taxable year for which the method is to be adopted. The election shall be made by attaching a statement to the taxpayer's return for the first taxable year to which the election is applicable. The statement shall be signed by the taxpayer (or his duly authorized representative), and shall:

(i) Set forth the name and address of the taxpayer;

(ii) Designate the first taxable year to which the election is to apply;

(iii) State whether the election is intended to apply to all expenditures within the permissible scope of the election, or only to a particular project or projects, and, if the latter, include such information as will identify the project or projects as to which the election is to apply;

(iv) Set forth the amount of all research or experimental expenditures paid or incurred during the taxable year for which the election is made;

(v) Indicate the number of months (not less than 60) selected for amortization of the deferred expenses for each project; and

(vi) State that the taxpayer will make an accounting segregation in his books and records of the expenditures to which the election relates.

(2) ***Change to a different method or period.*** Application for permission to change to a different method of treating research or experimental expenditures or to a different period of amortization for deferred expenses shall be in writing and shall be addressed to the Commissioner of Internal Revenue, Attention: T:R, Washington, DC, 20224. The application shall include the name and address of the taxpayer, shall be signed by the taxpayer (or his duly authorized representative), and shall be filed not later than the end of the first taxable year in which the different method or different amortization period is to be used (unless subparagraph (3) of this paragraph, relating to extensions of time, is applicable). The application shall set forth the following information with regard to the research or experimental expenditures which are being treated under section 174(b) as deferred expenses:

(i) Total amount of research or experimental expenditures attributable to each project;

(ii) Amortization period applicable to each project; and

(iii) Unamortized expenditures attributable to each project at the beginning of the taxable year in which the application is filed.

In addition, the application shall set forth the length of the new period or periods proposed, or the new method of treatment proposed, the reasons for the proposed change, and such information as will identify the project or projects to which the expenditures affected by the change relate. If permission is granted to make the change, the taxpayer shall attach a copy of the letter granting the permission to his income tax return for the first taxable year in which the different method or period is to be effective.

(3) ***Special rules.*** If the last day prescribed by law for filing a return for any taxable year for which the deferred method provided in section 174(b) has been adopted falls before January 2, 1958, consent is hereby given for the taxpayer to change from such method and adopt a different method of treating research or experimental expenditures, provided that on or before January 2, 1958, he submits to the district director for the district in which the return was filed the information required by subparagraph (2) of this paragraph, relating to a change to a different method or period. For any taxable year for which the different method is adopted pursuant to this subparagraph, an amended return reflecting such method shall be filed on or before January 2, 1958.

(c) ***Example.*** The application of this section is illustrated by the following example:

Example. N Corporation is engaged in the business of manufacturing chemical products. On January 1, 1955, work is begun on a special research project. N Corporation elects, pursuant to section 174(b), to defer the expenditures relating to the special project and to amortize the expenditures over a period of 72 months beginning with the month in which benefits from the expenditures are first realized. On January 1, 1955, N Corporation also purchased for $57,600 a building having a remaining useful life of 12 years as of the date of purchase and no salvage value at the end of the period. Fifty percent of the building's facilities are to be used in connection with the special research project. During 1955, N Corporation pays or incurs the following expenditures relating to the special research project:

Salaries	$15,000
Heat, light and power	700
Drawings	2,000
Models	6,500
Laboratory materials	8,000
Attorneys' fees	1,400
Depreciation on building attributable to project (50 percent of $4,800 allowable depreciation)	2,400

Total research and development expenditures	36,000

The above expenditures result in a process which is marketable but not patentable and which has no determinable useful life. N Corporation first realizes benefits from the process in January 1956. N Corporation is entitled to deduct the amount of $6,000 ($36,000 × 12 months ÷ 72 months) as deferred expenses under section 174(b) in computing taxable income for 1956.

§ 1.175-1 Soil and water conservation expenditures; in general.

Under section 175, a farmer may deduct his soil or water conservation expenditures which do not give rise to a deduction for depreciation and which are not otherwise deductible. The amount of the deduction is limited annually to 25 percent of the taxpayer's gross income from farming. Any excess may be carried over and deducted in succeeding taxable years. As a general rule, once a farmer has adopted this method of treating soil and water conservation expenditures, he must deduct all such expenditures (subject to the 25-percent limitation) for the current and subsequent taxable years. If a farmer does not adopt this method, such expenditures increase the basis of the property to which they relate.

§ 1.175-2 Definition of soil and water conservation expenditures.

(a) *Expenditures treated as a deduction.*

(1) The method described in section 175 applies to expenditures paid or incurred for the purpose of soil or water conservation in respect of land used in farming, or for the prevention of erosion of land used in farming, but only if such expenditures are made in the furtherance of the business of farming. More specifically, a farmer may deduct expenditures made for these purposes which are for

(i) the treatment or moving of earth,

(ii) the construction, control, and protection of diversion channels, drainage ditches, irrigation ditches, earthen dams, watercourses, outlets, and ponds,

(iii) the eradication of brush, and

(iv) the planting of windbreaks. Expenditures for the treatment or moving of earth include but are not limited to expenditures for leveling, conditioning, grading, terracing, contour furrowing, and restoration of soil fertility. For rules relating to the allocation of expenditures that benefit both land used in farming and other land of the taxpayer, see § 1.175-7.

(2) The following are examples of soil and water conservation:

(i) Constructing terraces, or the like, to detain or control the flow of water, to check soil erosion on sloping land, to intercept runoff, and to divert excess water to protected outlets;

(ii) constructing water detention or sediment retention dams to prevent or fill gullies, to retard or reduce run-off of water, or to collect stock water; and

(iii) constructing earthen floodways, levies, or dikes, to prevent flood damage to farmland.

(b) *Expenditures not subject to section 175 treatment.*

(1) The method described in section 175 applies only to expenditures for nondepreciable items. Accordingly, a taxpayer may not deduct expenditures for the purchase, construction, installation, or improvement of structures, appliances, or facilities subject to the allowance for depreciation. Thus, the method does not apply to depreciable nonearthen items such as those made of masonry or concrete (see section 167). For example, expenditures in respect of depreciable property include those for materials, supplies, wages, fuel, hauling, and dirt moving for making structures such as tanks, reservoirs, pipes, conduits, canals, dams, wells, or pumps composed of masonry, concrete, tile, metal, or wood. However, the method applies to expenditures for earthen items which are not subject to a depreciation allowance. For example, expenditures for earthen terraces and dams which are nondepreciable are deductible under section 175. For taxable years beginning after December 31, 1959, in the case of expenditures paid or incurred by farmers for fertilizer, lime, etc., for purposes other than soil or water conservation, see section 180 and the regulations thereunder.

(2) The method does not apply to expenses deductible apart from section 175. Adoption of the method is not necessary in order to deduct such expenses in full without limitation. Thus, the method does not apply to interest (deductible under section 163), nor to taxes (deductible under section 164). It does not apply to expenses for the repair of completed soil or water conservation structures, such as costs of annual removal of sediment from a drainage ditch. It does not apply to expenditures paid or incurred primarily to produce an agricultural crop even though they incidentally conserve soil. Thus, the cost of fertilizing (the effectiveness of which does not last beyond one year) used to produce hay is deductible without adoption of the method prescribed in section 175. For taxable years beginning after December 31, 1959, in the case of expenditures paid or incurred by farmers for fertilizer, lime, etc., for purposes other than soil or water conservation, see section 180 and the regulations thereunder. However, the method would apply to expenses incurred to produce vegetation primarily to conserve soil or water or to prevent erosion. Thus, for example, the method would apply to such expenditures as the cost of dirt moving, lime, fertilizer, seed and planting stock used in gulley stabilization, or in stabilizing severely eroded areas, in order to obtain a soil binding stand of vegetation on raw or infertile land.

(c) ***Assessments.*** The method applies also to that part of assessments levied by a soil or water conservation or drainage district to reimburse it for its expenditures which, if actually paid or incurred during the taxable year by the taxpayer directly, would be deductible under section 175. Depending upon the farmer's method of accounting, the time when the farmer pays or incurs the assessment, and not the time when the expenditures are paid or incurred by the district, controls the time the deduction must be taken. The provisions of this paragraph may be illustrated by the following example:

Example. In 1955 a soil and water conservation district levies an assessment of $700 upon a farmer on the cash method of accounting. The assessment is to reimburse the district for its expenditures in 1954. The farmer's share of such expenditures is as follows: $400 for digging drainage ditches for soil conservation and $300 for assets subject to the allowance for depreciation. If the farmer pays the assessment in 1955 and has adopted the method of treating expenditures for soil or water conservation as current expenses under section 175, he may deduct in 1955 the $400 attributable to the digging of drainage ditches as a soil conservation expenditure subject to the 25-percent limitation.

(74 Stat. 1001; 26 U.S.C. 180)

[T.D. 6500, 25 FR 11402, Nov. 26, 1960, as amended by T.D. 6548, 26 FR 1487, Feb. 22, 1961; T.D. 7740, 45 FR 78634, Nov. 26, 1980]

§ 1.175-3 Definition of "the business of farming."

The method described in section 175 is available only to a taxpayer engaged in "the business of farming". A taxpayer is engaged in the business of farming if he cultivates, operates, or manages a farm for gain or profit, either as owner or tenant. For the purpose of section 175, a taxpayer who receives a rental (either in cash or in kind) which is based upon farm production is engaged in the business of farming. However, a taxpayer who receives a fixed rental (without reference to production) is engaged in the business of farming only if he participates to a material extent in the operation or management of the farm. A taxpayer engaged in forestry or the growing of timber is not thereby engaged in the business of farming. A person cultivating or operating a farm for recreation or pleasure rather than a profit is not engaged in the business of farming. For the purpose of this section, the term *farm* is used in its ordinary, accepted sense and includes stock, dairy, poultry, fish, fruit, and truck farms, and also plantations, ranches, ranges, and orchards. A fish farm is an area where fish are grown or raised, as opposed to merely caught or harvested; that is, an area where they are artificially fed, protected, cared for, etc. A taxpayer is engaged in "the business of farming" if he is a member of a partnership engaged in the business of farming. See paragraphs (a)(8)(i) and (c)(1)(iv) of § 1.702-1.

[T.D. 6649, 28 FR 3762, Apr. 18, 1963]

§ 1.175-4 Definition of "land used in farming."

(a) ***Requirements.*** For purposes of section 175, the term *land used in farming* means land which is used in the business of farming and which meets both of the following requirements:

(1) The land must be used for the production of crops, fruits, or other agricultural products, including fish, or for the sustenance of livestock. The term *livestock* includes cattle, hogs, horses, mules, donkeys, sheep, goats, captive fur-bearing animals, chickens, turkeys, pigeons, and other poultry. Land used for the sustenance of livestock includes land used for grazing such livestock.

(2) The land must be or have been so used either by the taxpayer or his tenant at some time before or at the same time as, the taxpayer makes the expenditures for soil or water conservation or for the prevention of the erosion of land. The taxpayer will be considered to have used the land in farming before making such expenditure if he or his tenant has employed the land in a farming use in the past. If the expenditures are made by the taxpayer in respect of land newly acquired from one who immediately prior to the acquisition was using it in farming, the taxpayer will be considered to be using the land in farming at the time that such expenditures are made, if the use which is made by the taxpayer of the land from the time of its acquisition by him is substantially a continuation of its use in farming, whether for the same farming use as that of the taxpayer's predecessor or for one of the other uses specified in paragraph (a)(1) of this section.

(b) ***Examples.*** The provisions of paragraph (a) of this section may be illustrated by the following examples:

Example 1. A purchases an operating farm from B in the autumn after B has harvested his crops. Prior to spring plowing and planting when the land is idle because of the season, A makes certain soil and water conservation expenditures on this farm. At the time such expenditures are made the land is considered to be used by A in farming, and A may deduct such expenditures under section 175, subject to the other requisite conditions of such section.

Example 2. C acquires uncultivated land, not previously used in farming, which he intends to develop for farming. Prior to putting this land into production it is necessary for C to clear brush, construct earthen terraces and ponds, and make other soil and water conservation expenditures. The land is not used in farming at the same time that such expenditures are made. Therefore, C may not deduct such expenditures under section 175.

Example 3. D acquires several tracts of land from persons who had used such land immediately prior to D's acquisition for grazing cattle. D intends to use the land for growing grapes. In order to make the land suitable for this use, D constructs earthen terraces, builds drainage ditches and irrigation ditches, extensively treats the soil, and makes other soil and water conservation expenditures. The land is considered to be used in farming by D at the time he makes such expenditures, even though it is being prepared for a different type of farming activity than that engaged in by D's predecessors. Therefore, D may deduct such expenditures under section 175, subject to the other requisite conditions of such section.

(c) ***Cross reference.*** For rules relating to the allocation of expenditures that benefit both land used in farming and other land of the taxpayer, see § 1.175-7.

[T.D. 7740, 45 FR 78634, Nov. 26, 1980]

§ 1.175-5 Percentage limitation and carryover.

(a) ***The limitation*** —

(1) ***General rule.*** The amount of soil and water conservation expenditures which the taxpayer may deduct under section 175 in any one taxable year is limited to 25 percent of his "gross income from farming".

(2) ***Definition of "gross income from farming."*** For the purpose of section 175, the term *gross income from farming* means the gross income of the taxpayer, derived in "the business of farming" as defined in § 1.175-3, from the production of crops, fruits, or other agricultural products, including fish, or from livestock (including livestock held for draft, breeding, or dairy purposes). It includes such income from land used in farming other than that upon which expenditures are made for soil or water conservation or for the prevention of erosion of land. It does not include gains from sales of assets such as farm machinery or gains from the disposition of land. A taxpayer shall compute his "gross income from farming" in accordance with his accounting method used in determining gross income. (See the regulations under section 61 relating to accounting methods used by farmers in determining gross income.) The provisions of this subparagraph may be illustrated by the following example:

Example. A, who uses the cash receipts and disbursements method of accounting, includes in his "gross income from farming" for purposes of determining the 25-percent limitation the following items:

Proceeds from sale of his 1955 yield of corn	$10,000
Gain from disposition of old breeding cows replaced by younger cows	500

Total gross income from farming	10,500

A must exclude from “gross income from farming” the following items which are included in his gross income:

Gain from sale of tractor	$100
Gain from sale of 40 acres of taxpayer's farm	8,000
Interest on loan to neighboring farmer	100

(3) ***Deduction qualifies for net operating loss deduction.*** Any amount allowed as a deduction under section 175, either for the year in which the expenditure is paid or incurred or for the year to which it is carried, is taken into account in computing a net operating loss for such taxable year. If a deduction for soil or water conservation expenditures has been taken into account in computing a net operating loss carryback or carryover, it shall not be considered a soil or water conservation expenditure for the year to which the loss is carried, and therefore, is not subject to the 25-percent limitation for that year. The provisions of this subparagraph may be illustrated by the following example:

Example. Assume that in 1956 A has gross income from farming of $4,000, soil and water conservation expenditures of $1,600 and deductible farm expenses of $3,500. Of the soil and water conservation expenditures $1,000 is deductible in 1956. The $600 in excess of 25 percent of A's gross income from farming is carried over into 1957. Assuming that A has no other income, his deductions of $4,500 ($1,000 plus $3,500) exceed his gross income of $4,000 by $500. This $500 will constitute a net operating loss which he must carry back two years and carry forward five years, until it has offset $500 of taxable income. No part of this $500 net operating loss carryback or carryover will be taken into account in determining the amount of soil and water conservation expenditures in the years to which it is carried.

(b) ***Carryover of expenditures in excess of deduction.*** The deduction for soil and water conservation expenditures in any one taxable year is limited to 25 percent of the taxpayer's gross income from farming. The taxpayer may carry over the excess of such expenditures over 25 percent of his gross income from farming into his next taxable year, and, if not deductible in that year, into the next year, and so on without limit as to time. In determining the deductible amount of such expenditures for any taxable year, the actual expenditures of that year shall be added to any such expenditures carried over from prior years, before applying the 25-percent limitation. Any such expenditures in excess of the deductible amount may be carried over during the taxpayer's entire existence. For this purpose in a farm partnership, since the 25-percent limitation is applied to each partner, not the partnership, the carryover may be carried forward during the life of the partner. The provisions of this paragraph may be illustrated by the following example:

Example. Assume the expenditures and income shown in the following table:

Year	Deductible soil and water conservation expenditures		Total	25 percent of gross income from farming	Excess to be carried forward
	Paid or incurred during taxable year	Carried forward from prior year			
1954	$900	None	$900	$800	$100
1955	1,000	$100	1,100	900	200
1956	None	200	200	1,000	None

The deduction for 1954 is limited to $800. The remainder, $100 ($900 minus $800), not being deductible for 1954, is a carryover to 1955. For 1955, accordingly, the total of the expenditures to be taken into account is $1,100 (the $100 carryover and the $1,000 actually paid in that year). The deduction for 1955 is limited to $900, and the remainder of the $1,100 total, or $200, is a carryover to 1956. The deduction for 1956 consists solely of this carryover of $200. Since the total expenditures, actual and carried-over, for 1956 are less than 25 percent of gross income from farming, there is no carryover into 1957.

[T.D. 6500, 25 FR 11402, Nov. 26, 1960, as amended by T.D. 6649, 28 FR 3762, Apr. 18, 1963]

§ 1.175-6 Adoption or change of method.

(a) ***Adoption with consent.*** A taxpayer may, without consent, adopt the method of treating expenditures for soil or water conservation as expenses for the first taxable year:

(1) Which begins after December 31, 1953, and ends after August 16, 1954, and

(2) For which soil or water conservation expenditures described in section 175(a) are paid or incurred.

Such adoption shall be made by claiming the deduction on his income tax return. For a taxable year ending prior to May 31, 1957, the adoption of the method described in section 175 shall be made by claiming the deduction on such return for that year, or by claiming the deduction on an amended return filed for that year on or before August 30, 1957.

(b) ***Adoption with consent.*** A taxpayer may adopt the method of treating soil and water conservation expenditures as provided by section 175 for any taxable year to which the section is applicable if consent is obtained from the district director for the internal revenue district in which the taxpayer's return is required to be filed.

(c) ***Change of method.*** A taxpayer who has adopted the method of treating expenditures for soil or water conservation, as provided by section 175, may change from this method and capitalize such expenditures made after the effective date of the change, if he obtains the consent of the district director for the internal revenue district in which his return is required to be filed.

(d) ***Request for consent to adopt or change method.*** Where the consent of the district director is required under paragraph (b) or (c) of this section, the request for his consent shall be in writing, signed by the taxpayer or his authorized representative, and shall be filed not later than the date prescribed by law for filing the income tax return for the first taxable year to which the adoption of, or change of, method is to apply, or not later than August 20, 1957, following their adoption, whichever is later. The request shall:

(1) Set forth the name and address of the taxpayer;

(2) Designate the first taxable year to which the method or change of method is to apply;

(3) State whether the method or change of method is intended to apply to all expenditures within the permissible scope of section 175, or only to a particular project or farm and, if the latter, include such information as will identify the project or farm as to which the method or change of method is to apply;

(4) Set forth the amount of all soil and water conservation expenditures paid or incurred during the first taxable year for which the method or change of method is to apply; and

(5) State that the taxpayer will make an accounting segregation in his books and records of the expenditures to which the election relates.

(e) ***Scope of method.*** Except with the consent of the district director as provided in paragraph (b) or (c) of this section, the taxpayer's method of treating soil and water conservation expenditures described in section 175 shall apply to all such expenditures for the taxable year of adoption and all subsequent taxable years. Although a taxpayer may have elected to deduct soil and water conservation expenditures, he may request an authorization to capitalize his soil and water conservation expenditures attributable to a special project or single farm. Similarly, a taxpayer who has not elected to deduct such expenditures may request an authorization to deduct his soil and water conservation expenditures attributable to a special project or single farm. The authorization with respect to the special project or single farm will not affect the method adopted with respect to the taxpayer's regularly incurred soil and water conservation expenditures. No adoption of, or change of, the method under section 175 will be permitted as to expenditures actually paid or incurred before the taxable year to which the method or change of method is to apply. Thus, if a taxpayer adopts such method for 1956, he cannot deduct any part of such expenditures which he capitalized, or should have capitalized, in 1955. Likewise, if a taxpayer who has adopted such method has an unused carryover of such expenditures in excess of the 25-percent limitation, and is granted consent to capitalize soil and water conservation expenditures beginning in 1956, he cannot capitalize any part of the unused carryover. The excess expenditures carried over continue to be deductible to the extent of 25 percent of the taxpayer's gross income from farming. No adjustment to the basis of land shall be made under section 1016 for expenditures to which the method under section 175 applies. For example, A has an unused carryover of soil and water conservation expenditures amounting to $5,000 as of December 31, 1956. On January 1, 1957, A sells his farm and goes out of the business of farming. The unused carryover of $5,000 cannot be added to the basis of the farm for purposes of determining gain or loss on its sale. In 1959, A purchases another farm and resumes the business of farming. In such year, A may deduct the amount of the unused carryover to the extent of 25 percent of his gross income from farming and may carry over any excess to subsequent years.

§ 1.175-7 Allocation of expenditures in certain circumstances.

(a) ***General rule.*** If at the time the taxpayer paid or incurred expenditures for the purpose of soil or water conservation, or for the prevention of erosion of land, it was reasonable to believe that such expenditures would directly and substantially benefit land of the taxpayer which does not qualify as "land used in farming," as defined in § 1.175-4, as well as land of the taxpayer which does so qualify, then, for purposes of section 175, only a part of the taxpayer's total expenditures is in respect of "land used in farming."

(b) ***Method of allocation.*** The part of expenditures allocable to "land used in farming" generally equals the amount which bears the same proportion to the total amount of such expenditures as the area of land of the taxpayer used in farming which it was reasonable to believe would be directly and substantially benefited as a result of the expenditures bears to the total area of land of the taxpayer which it was reasonable to believe would be so benefited. If it is established by clear and convincing evidence that, in the light of all the facts and circumstances, another method of allocation is more reasonable than the method provided in the preceding sentence, the taxpayer may allocate the expenditures under that other method. For purposes of this section, the term *land of the taxpayer* means land with respect to which the taxpayer has title, leasehold, or some other substantial interest.

(c) ***Examples.*** The provisions of this section may be illustrated by the following examples:

Example 1. A owns a 200-acre tract of land, 80 acres of which qualify as "land used in farming." A makes expenditures for the purpose of soil and water conservation which can reasonably be expected to directly and substantially benefit the entire 200-acre tract. In the absence of clear and convincing evidence that a different allocation is more reasonable, A may deduct 40 percent (80/200) of such expenditures under section 175. The same result would obtain if A had made the expenditures after newly acquiring the tract from a person who had used 80 of the 200 acres in farming immediately prior to A's acquisition.

Example 2. Assume the same facts as in *Example 1,* except that A's expenditures for the purpose of soil and water conservation can reasonably be expected to directly and substantially benefit only the 80 acres which qualify as land used in farming; any benefit to the other 120 acres would be minor and incidental. A may deduct all of such expenditures under section 175.

Example 3. Assume the same facts as in *Example 1,* except that A's expenditures for the purpose of soil and water conservation can reasonably be expected to directly and substantially benefit only the 120 acres which do not qualify as land used in farming. A may not deduct any of such expenditures under section 175. The same result would obtain even if A had leased the 200-acre tract to B in the expectation that B would farm the entire tract.

[T.D. 7740, 45 FR 78635, Nov. 26, 1980]

§ 1.178-1 Depreciation or amortization of improvements on leased property and cost of acquiring a lease.

(a) ***In general.*** Section 178 provides rules for determining the amount of the deduction allowable for any taxable year to a lessee for depreciation or amortization of improvements made on leased property and as amortization of the cost of acquiring a lease. For purposes of section 178 the term *depreciation* means the deduction allowable for exhaustion, wear and tear, or obsolescence under provisions of the Code such as section 167 or 611 and the regulations thereunder and the term *amortization* means the deduction allowable for amortization of buildings or other improvements made on leased property or for amortization of the cost of acquiring a lease under provisions of the Code such as section 162 or 212 and

the regulations thereunder. The provisions of section 178 are applicable with respect to costs of acquiring a lease incurred, and improvements begun, after July 28, 1958, other than improvements which, on July 28, 1958, and at all times thereafter, the lessee was under a binding legal obligation to make.

(b) ***Determination of amount of deduction.***

(1) In determining the amount of the deduction allowable to a lessee (other than a lessee who is related to the lessor within the meaning of § 1.178-2) for any taxable year for depreciation or amortization of improvements made on leased property, or for amortization in respect of the cost of acquiring a lease, the term of the lease shall, except as provided in subparagraph (2) of this paragraph, be treated as including all periods for which the lease may be renewed, extended, or continued pursuant to an option or options exercisable by the lessee (whether or not specifically provided for in the lease) if:

(i) In the case of any building erected, or other improvements made, by the lessee on the leased property, the portion of the term of the lease (excluding all periods for which the lease may subsequently be renewed, extended, or continued pursuant to an option or options exercisable by the lessee) remaining upon the completion of such building or other improvements is less than 60 percent of the estimated useful life of such building or other improvements; or

(ii) In the case of any cost of acquiring the lease, less than 75 percent of such cost is attributable to the portion of the term of the lease (excluding all periods for which the lease may be renewed, extended, or continued pursuant to an option or options exercisable by the lessee) remaining on the date of its acquisition.

(2) The rules provided in subparagraph (1) of this paragraph shall not apply if the lessee establishes that, as of the close of the taxable year, it is more probable that the lease will not be renewed, extended, or continued than that the lease will be renewed, extended, or continued. In such case, the cost of improvements made on leased property or the cost of acquiring a lease shall be amortized over the remaining term of the lease without regard to any options exercisable by the lessee to renew, extend, or continue the lease. The probability test referred to in the first sentence of this subparagraph shall be applicable to each option period to which the lease may be renewed, extended, or continued. The establishment by a lessee as of the close of the taxable year that it is more probable that the lease will not be renewed, extended, or continued will ordinarily be effective as of the close of such taxable year and any subsequent taxable year, and the deduction for amortization will be based on the term of the lease without regard to any periods for which the lease may be renewed, extended, or continued pursuant to an option or options exercisable by the lessee. However, in appropriate cases, if the facts as of the close of any subsequent taxable year indicate that it is more probable that the lease will be renewed, extended, or continued, the deduction for amortization (or depreciation) shall, beginning with the first day of such subsequent taxable year, be determined by including in the remaining term of the lease all periods for which it is more probable that the lease will be renewed, extended, or continued.

(3) If at any time the remaining term of the lease determined in accordance with section 178 and this section is equal to or of longer duration than the then estimated useful life of the improvements made on the leased property by the lessee, the cost of such improvements shall be depreciated over the estimated useful life of such improvements under the provisions of section 167 and the regulations thereunder.

(4) For purposes of section 178(a)(1) and this section, the date on which the building erected or other improvements made are completed is the date on which the building or improvements are usable, whether or not used.

(5)

(i) For purposes of section 178(a)(2) and this section, the portion of the cost of acquiring a lease which is attributable to the term of the lease remaining on the date of its acquisition without regard to options exercisable by the lessee to renew, extend, or continue the lease shall be determined on the basis of the facts and circumstances of each case. In some cases, it may be appropriate to determine such portion of the cost of acquiring a lease by applying the principles used to measure the present value of an annuity. Where that method is used, such portion shall be determined by multiplying the cost of the lease by a fraction, the numerator comprised of a factor representing the present value of an annually recurring savings of $1 per year for the period of the remaining term of the lease (without regard to options to renew, extend, or continue the lease) at an appropriate rate of interest (determined on the basis of all the facts and circumstances in each case), and the denominator comprised of a factor representing the present value of $1 per year for the period of the remaining term of the lease including the options to renew, extend, or continue the lease at an appropriate rate of interest.

(ii) The provisions of this subparagraph may be illustrated by the following example:

Example. Lessee A acquires a lease with respect to unimproved property at a cost of $100,000 at which time there are 21 years remaining in the original term of the lease with two renewal options of 21 years each. The lease provides for a uniform annual rental for the remaining term of the lease and the renewal periods. It has been determined that this is an appropriate case for the application of the principles used to measure the present value of an annuity. Assume that in this case the appropriate rate of interest is 5 percent. By applying the tables (Inwood) used to measure the present value of an annuity of $1 per year, the factor representing the present value of $1 per annum for 21 years at 5% is ascertained to be 12.821, and the factor representing the present value of $1 per annum for 63 years at 5% is 19.075. The portion of the cost of the lease ($100,000) attributable to the remaining term of the original lease (21 years) is 67.21% or $67,210 determined as follows: 12.821/19.075 or 67.21%.

(6) The provisions of this paragraph may be illustrated by the following examples:

Example 1. Lessee A constructs a building on land leased from lessor B. The construction is commenced on August 1, 1958, and is completed and placed in service on December 31, 1958, at which time A has 15 years remaining on his lease with an option to renew for an additional 20 years. Lessee A computes his taxable income on a calendar year basis. Lessee A was not, on July 28, 1958, under a binding legal obligation to erect the building. The building has an estimated useful life of 30 years. A is not related to B. Since the portion of the term of the lease (without regard to any renewals) remaining upon completion of the building (15 years) is less than 60 percent of the estimated useful life of the building (60 percent of 30 years, or 18 years), the term of the lease shall be treated as including the remaining portion of the original lease period and the renewal period, or 35 years. Since the estimated useful life of the building (30 years) is less than 35 years, the cost of the building shall, in accord with paragraph (b)(3) of this section, be depreciated under the provisions of section 167, over its estimated useful life. If, however, lessee A establishes, as of the close of the taxable year 1958, it is more probable that the lease will not be renewed than that it will be renewed, then in such case the remaining term of the lease shall be treated as including only the 15-year period remaining

in the original lease. Since this is less than the estimated useful life of the building, the remaining cost of the building would be amortized over such 15-year period under the provisions of section 162 and the regulations thereunder.

Example 2. Assume the same facts as in *Example 1,* except that A has 21 years remaining on his lease with an option to renew for an additional 10 years. Section 178(a) and paragraph (b)(1) of this section do not apply since the term of the lease remaining on the date of completion of the building (21 years) is not less than 60 percent of the estimated useful life of the building (60 percent of 30 years, or 18 years).

Example 3. Assume the same facts as in *Example 1,* except that A has no renewal option until July 1, 1961, when lessor B grants A an option to renew the lease for a 10-year period. Because there is no option to renew the lease, the term of the lease is, for the taxable years 1959 and 1960 and for the first six months of the taxable year 1961, determined without regard to section 178(a). However, as of July 1, 1961, the date the renewal option is granted, section 178(a) and paragraph (b)(1) of this section become applicable since the portion of the term of the lease remaining upon completion of the building (15 years) was less than 60 percent of the estimated useful life of the building (60 percent of 30 years, or 18 years). As of July 1, 1961, the term of the lease shall be treated as including the remaining portion of the original lease period ($12^1/_2$ years) and the 10-year renewal period, or $22^1/_2$ years, unless lessee A can establish that, as of the close of 1961, it is more probable that the lease will not be renewed than that it will be.

Example 4. On January 1, 1959, lessee A pays $10,000 to acquire a lease for 20 years with two options exercisable by him to renew for periods of 5 years each. Of the total $10,000 cost to acquire the lease, $7,000 was paid for the original 20-year lease period and the balance of $3,000 was paid for the renewal options. Since the $7,000 cost of acquiring the initial lease is less than 75 percent of the $10,000 cost of the lease ($7,500), the term of the lease shall be treated as including the original lease period and the 2 renewal periods, or 30 years. However, if lessee A establishes that, as of the close of the taxable year 1959, it is more probable that the lease will not be renewed than that it will be renewed, the term of the lease shall be treated as including only the original lease period, or 20 years.

Example 5. Assume the same facts as in *Example 4,* except that the portion of the total cost ($10,000) paid for the 20-year original lease period is $8,000. Since the $8,000 cost of acquiring the original lease is not less than 75 percent of the $10,000 cost of the lease ($7,500), section 178(a) and paragraph (b)(1) of this section do not apply.

(c) ***Application of section 178(a) where lessee gives notice to lessor of intention to exercise option.***

(1) If the lessee has given notice to the lessor of his intention to renew, extend, or continue a lease, the lessee shall, for purposes of applying the provisions of section 178(a) and paragraph (b)(1) of this section, take into account such renewal or extension in determining the portion of the term of the lease remaining upon the completion of the improvements or on the date of the acquisition of the lease.

(2) The application of the provisions of this paragraph may be illustrated by the following examples:

Example 1. Lessee A constructs a building on land leased from lessor B. The construction was commenced on September 1, 1958, and was completed and placed in service on December 31, 1958. Lessee A was not, on July 28, 1958, under a binding legal obligation to erect the building. A and B are not related. At the time the building was completed (December 31, 1958), lessee A had 3 years remaining on his lease with 2 options to renew for periods of 20 years each. The estimated

useful life of the building is 50 years. Prior to completion of the building, lessee A gives notice to lessor B of his intention to exercise the first 20-year option. Therefore, the portion of the term of the lease remaining on January 1, 1959, shall be the 3 years remaining in the original lease period plus the 20-year renewal period, or 23 years. Since the term of the lease remaining upon completion of the building (23 years) is less than 60 percent of the estimated useful life of the building (60 percent of 50 years, or 30 years), the provisions of section 178(a) and paragraph (b)(1) of this section are applicable. Accordingly, the term of the lease shall be treated as including the aggregate of the remaining term of the original lease (23 years) and the second 20-year renewal period or 43 years, unless lessee A establishes that it is more probable that the lease will not be renewed, extended, or continued under the second 20-year option than that it will be so renewed, extended, or continued under such option. If this is established by lessee A, then the term of the lease shall be treated as including only the remaining portion of the original lease period and the first 20-year renewal period, or 23 years.

Example 2. Assume the same facts as in *Example 1,* except that the estimated useful life of the building is 30 years. Since the term of the lease remaining upon completion of the building (23 years) is not less than 60 percent of the estimated life of the building (60 percent of 30 years, or 18 years), the provisions of section 178(a) and paragraph (b)(1) of this section do not apply.

Example 3. If in *Examples 1* and (*2,* the lessee failed to give notice of his intention to exercise the renewal option, the renewal period would not be taken into account in computing the percentage requirements under section 178(a) and paragraph (b)(1) of this section. Thus, unless lessee A establishes the required probability, the provisions of section 178(a) and paragraph (b)(1) of this section would apply in both examples since the term of the lease remaining upon completion of the building (3 years) is less than 60 percent of the estimated useful life of the building in either example (60 percent of 50 years, or 30 years; 60 percent of 30 years, or 18 years).

(d) ***Application of section 178 where lessee is related to lessor.***

(1)

(i) If the lessee and lessor are related persons within the meaning of section 178(b)(2) and § 1.178-2 at any time during the taxable year, the lease shall be treated as including a period of not less duration than the remaining estimated useful life of improvements made by the lessee on leased property for purposes of determining the amount of deduction allowable to the lessee for such taxable year for depreciation or amortization in respect of any building erected or other improvements made on leased property. If the lessee and lessor cease to be related persons during any taxable year, then for the immediately following and subsequent taxable years during which they continue to be unrelated, the amount allowable to the lessee as a deduction shall be determined without reference to section 178(b) and in accordance with section 178(a) or section 178(c), whichever is applicable.

(ii) Although the related lessee and lessor rule of section 178(b) and § 1.178-2 does not apply in determining the period over which the cost of acquiring a lease may be amortized, the relationship between a lessee and lessor will be a significant factor in applying section 178 (a) and (c) in cases in which the lease may be renewed, extended, or continued pursuant to an option or options exercisable by the lessee.

(2) The application of the provisions of this paragraph may be illustrated by the following examples:

Example 1. Lessee A constructs a building on land leased from lessor B. The construction was commenced on August 1, 1958, and was completed and put in service on December 31, 1958. Lessee A was not on July 28, 1958, under a binding legal obligation to erect the building. On the completion date of the building, lessee A had 20 years remaining in his original lease period with an option to renew for an additional 20 years. The building has an estimated useful life of 50 years. During the taxable years 1959 and 1960, A and B are related persons within the meaning of section 178(b)(2) and § 1.178-2, but they are not related persons at any time during the taxable year 1961 or during any subsequent taxable year. Since A and B are related persons during the taxable years 1959 and 1960, the term of the lease shall, for each of those years, be treated as 50 years. Section 178(a) and paragraph (b)(1) of this section become applicable in the taxable year 1961 since A and B are not related persons at any time during that year and because the portion of the original lease period remaining at the time the building was completed (20 years) is less than 60 percent of the estimated useful life of the building (60 percent of 50 years, or 30 years). Thus, the term of the lease shall, beginning on January 1, 1961, be treated as including the remaining portion of the original lease period (18 years) and the renewal period (20 years), or 38 years, unless lessee A can establish that, as of the close of the taxable year 1961 or any subsequent taxable year, it is more probable that the lease will not be renewed than that it will be renewed.

Example 2. Assume the same facts as in *Example 1,* except that the estimated useful life of the building is 30 years. During the taxable years 1959 and 1960, the term of the lease shall be treated as 30 years. For the taxable year 1961, however, neither section 178(a) nor section 178(b) apply since the percentage requirement of section 178(a) and paragraph (b) of this section are not satisfied and A and B are not related persons within the meaning of section 178(b)(2) and § 1.178-2.

[T.D. 6520, 25 FR 13689, Dec. 24, 1960]

§ 1.179-0 Table of contents for section 179 expensing rules.

This section lists captioned paragraphs contained in §§ 1.179-1 through 1.179-6.

§ 1.179-1 Election to Expense Certain Depreciable Assets

(a) In general.

(b) Cost subject to expense.

(c) Proration not required.

(1) In general.

(2) Example.

(d) Partial business use.

(1) In general.

(2) Example.

(3) Additional rules that may apply.

(e) Change in use; recapture.

(1) In general.

(2) Predominant use.

(3) Basis; application with section 1245.

(4) Carryover of disallowed deduction.

(5) Example.

(f) Basis.

(1) In general.

(2) Special rules for partnerships and S corporations.

(3) Special rules with respect to trusts and estates which are partners or S corporation shareholders.

(g) Disallowance of the section 38 credit.

(h) Partnerships and S corporations.

(1) In general.

(2) Example.

(i) Leasing of section 179 property.

(1) In general.

(2) Noncorporate lessor.

(j) Application of sections 263 and 263A.

(k) Cross references.

§ 1.179-2 Limitations on Amount Subject to Section 179 Election

(a) In general.

(b) Dollar limitation.

(1) In general.

(2) Excess section 179 property.

(3) Application to partnerships.

(i) In general.

(ii) Example.

(iii) Partner's share of section 179 expenses.

(iv) Taxable year.

(v) Example.

(4) S corporations.

(5) Joint returns.

(i) In general.

(ii) Joint returns filed after separate returns.

(iii) Example.

(6) Married individuals filing separately.

(i) In general.

(ii) Example.

(7) Component members of a controlled group.

(i) In general.

(ii) Statement to be filed.

(iii) Revocation.

(c) Taxable income limitation.

(1) In general.

(2) Application to partnerships and partners.

(i) In general.

(ii) Taxable year.

(iii) Example.

(iv) Taxable income of a partnership.

(v) Partner's share of partnership taxable income.

(3) S corporations and S corporation shareholders.

(i) In general.

(ii) Taxable income of an S corporation.

(iii) Shareholder's share of S corporation taxable income.

(4) Taxable income of a corporation other than an S corporation.

(5) Ordering rule for certain circular problems.

(i) In general.

(ii) Example.

(6) Active conduct by the taxpayer of a trade or business.

(i) Trade or business.

(ii) Active conduct.

(iii) Example.

(iv) Employees.

(7) Joint returns.

(i) In general.

(ii) Joint returns filed after separate returns.

(8) Married individuals filing separately.

(d) Examples.

§ 1.179-3 Carryover of Disallowed Deduction

(a) In general.

(b) Deduction of carryover of disallowed deduction.

(1) In general.

(2) Cross references.

(c) Unused section 179 expense allowance.

(d) Example.

(e) Recordkeeping requirement and ordering rule.

(f) Dispositions and other transfers of section 179 property.

(1) In general.

(2) Recapture under section 179(d)(10).

(g) Special rules for partnerships and S corporations.

(1) In general.

(2) Basis adjustment.

(3) Dispositions and other transfers of section 179 property by a partnership or an S corporation.

(4) Example.

(h) Special rules for partners and S corporation shareholders.

(1) In general.

(2) Dispositions and other transfers of a partner's interest in a partnership or a shareholder's interest in an S corporation.

(3) Examples.

§ 1.179-4 Definitions

(a) Section 179 property.

(b) Section 38 property.

(c) Purchase.

(d) Cost.

(e) Placed in service.

(f) Controlled group of corporations and component member of controlled group.

§ 1.179-5 Time and Manner of Making Election

(a) Election.

(b) Revocation.

(c) Section 179 property placed in service by the taxpayer in a taxable year beginning after 2002 and before 2008.

(d) Election or revocation must not be made in any other manner.

§ 1.179-6 Effective dates.

(a) In general.

(b) Section 179 property placed in service by the taxpayer in a taxable year beginning after 2002 and before 2008.

(c) Application of § 1.179-5(d).

[T.D. 8455, 57 FR 61316, Dec. 24, 1992, as amended by T.D. 9146, 69 FR 46983, Aug. 4, 2004; T.D. 9209, 70 FR 40191, July 13, 2005]

§ 1.179-1 Election to expense certain depreciable assets.

(a) ***In general.*** Section 179(a) allows a taxpayer to elect to expense the cost (as defined in § 1.179-4(d)), or a portion of the cost, of section 179 property (as defined in § 1.179-4(a)) for the taxable year in which the property is placed in service (as defined in § 1.179-4(e)). The election is not available for trusts, estates, and certain noncorporate lessors. See paragraph (i)(2) of this section for rules concerning noncorporate lessors. However, section 179(b) provides certain limitations on the amount that a taxpayer may elect to expense in any one taxable year. See §§ 1.179-2 and 1.179-3 for rules relating to the dollar and taxable income limitations and the carryover of disallowed deduction rules. For rules describing the time and manner of making an election under section 179, see § 1.179-5. For the effective date, see § 1.179-6.

(b) ***Cost subject to expense.*** The expense deduction under section 179 is allowed for the entire cost or a portion of the cost of one or more items of section 179 property. This expense deduction is subject to the limitations of section 179(b) and § 1.179-2. The taxpayer may select the properties that are subject to the election as well as the portion of each property's cost to expense.

(c) ***Proration not required*** —

(1) ***In general.*** The expense deduction under section 179 is determined without any proration based on—

(i) The period of time the section 179 property has been in service during the taxable year; or

(ii) The length of the taxable year in which the property is placed in service.

(2) ***Example.*** The following example illustrates the provisions of paragraph (c)(1) of this section.

Example. On December 1, 1991, X, a calendar-year corporation, purchases and places in service section 179 property costing $20,000. For the taxable year ending December 31, 1991, X may elect to claim a section 179 expense deduction on the property (subject to the limitations imposed under section 179(b)) without proration of its cost for the number of days in 1991 during which the property was in service.

(d) ***Partial business use*** —

(1) ***In general.*** If a taxpayer uses section 179 property for trade or business as well as other purposes, the portion of the cost of the property attributable to the trade or business use is eligible for expensing under section 179 provided that more than 50 percent of the property's use in the taxable year is for trade or business purposes. The limitations of section179(b) and § 1.179-2 are applied to the portion of the cost attributable to the trade or business use.

(2) ***Example.*** The following example illustrates the provisions of paragraph (d)(1) of this section.

Example. A purchases section 179 property costing $10,000 in 1991 for which 80 percent of its use will be in A's trade or business. The cost of the property adjusted to reflect the business use of the property is $8,000 (80 percent × $10,000). Thus, A may elect to expense up to $8,000 of the cost of the property (subject to the limitations imposed under section 179(b) and § 1.179-2).

(3) ***Additional rules that may apply.*** If a section 179 election is made for "listed property" within the meaning of section 280F(d)(4) and there is personal use of the property, section 280F(d)(1), which provides rules that coordinate section 179 with the section 280F limitation on the amount of depreciation, may apply. If section 179 property is no longer predominantly used in the taxpayer's trade or business, paragraphs (e) (1) through (4) of this section, relating to recapture of the section 179 deduction, may apply.

(e) ***Change in use; recapture*** —

(1) ***In general.*** If a taxpayer's section 179 property is not used predominantly in a trade or business of the taxpayer at any time before the end of the property's recovery period, the taxpayer must recapture in the taxable year in which the section 179 property is not used predominantly in a trade or business any benefit derived from expensing such property. The benefit derived from expensing the property is equal to the excess of the amount expensed under this section over the total amount that would have been allowable for prior taxable years and the taxable year of recapture as a deduction under section 168 (had section 179 not been elected) for the portion of the cost of the property to which the expensing relates (regardless of whether such excess reduced the taxpayer's tax liability). For purposes of the preceding sentence

(i) the "amount expensed under this section" shall not include any amount that was not allowed as a deduction to a taxpayer because the taxpayer's aggregate amount of allowable section 179 expenses exceeded the section 179(b) dollar limitation, and

(ii) in the case of an individual who does not elect to itemize deductions under section 63(g) in the taxable year of recapture, the amount allowable as a deduction under section 168 in the taxable year of recapture shall be determined by treating property used in the production of income other than rents or royalties as being property used for personal purposes. The amount to be recaptured shall be treated as ordinary income for the taxable year in which the property is no longer used predominantly in a trade or business of the taxpayer. For taxable years following the year of recapture, the taxpayer's deductions under section 1688(a) shall be determined as if no section 179 election with respect to the property had been made. However, see section

280F(d)(1) relating to the coordination of section 179 with the limitation on the amount of depreciation for luxury automobiles and where certain property is used for personal purposes. If the recapture rules of both section 280F(b)(2) and this paragraph (e)(1) apply to an item of section 179 property, the amount of recapture for such property shall be determined only under the rules of section 280F(b)(2).

(2) ***Predominant use.*** Property will be treated as not used predominantly in a trade or business of the taxpayer if 50 percent or more of the use of such property during any taxable year within the recapture period is for a use other than in a trade or business of the taxpayer. If during any taxable year of the recapture period the taxpayer disposes of the property (other than in a disposition to which section 1245(a) applies) or ceases to use the property in a trade or business in a manner that had the taxpayer claimed a credit under section 38 for such property such disposition or cessation in use would cause recapture under section 47, the property will be treated as not used in a trade or business of the taxpayer. However, for purposes of applying the recapture rules of section 47 pursuant to the preceding sentence, converting the use of the property from use in trade or business to use in the production of income will be treated as a conversion to personal use.

(3) ***Basis; application with section 1245.*** The basis of property with respect to which there is recapture under paragraph (e)(1) of this section shall be increased immediately before the event resulting in such recapture by the amount recaptured. If section 1245(a) applies to a disposition of property, there is no recapture under paragraph (e)(1) of this section.

(4) ***Carryover of disallowed deduction.*** See § 1.179-3 for rules on applying the recapture provisions of this paragraph (e) when a taxpayer has a carryover of disallowed deduction.

(5) ***Example.*** The following example illustrates the provisions of paragraphs (e)(1) through (e)(4) of this section.

Example. A, a calendar-year taxpayer, purchases and places in service on January 1, 1991, section 179 property costing $15,000. The property is 5-year property for section 168 purposes and is the only item of depreciable property placed in service by A during 1991. A properly elects to expense $10,000 of the cost and elects under section 168(b)(5) to depreciate the remaining cost under the straight-line method. On January 1, 1992, A converts the property from use in A's business to use for the production of income, and A uses the property in the latter capacity for the entire year. A elects to itemize deductions for 1992. Because the property was not predominantly used in A's trade or business in 1992, A must recapture any benefit derived from expensing the property under section 179. Had A not elected to expense the $10,000 in 1991, A would have been entitled to deduct, under section 168, 10 percent of the $10,000 in 1991, and 20 percent of the $10,000 in 1992. Therefore, A must include $7,000 in ordinary income for the 1992 taxable year, the excess of $10,000 (the section 179 expense amount) over $3,000 (30 percent of $10,000).

(f) ***Basis*** —

(1) ***In general.*** A taxpayer who elects to expense under section 179 must reduce the depreciable basis of the section 179 property by the amount of the section 179 expense deduction.

(2) ***Special rules for partnerships and S corporations.*** Generally, the basis of a partnership or S corporation's section 179 property must be reduced to reflect the amount of section 179 expense elected by the partnership or S corporation. This reduction must be made in the basis of partnership or S corporation property even if the limitations of section 179(b) and § 1.179-2 prevent a partner in

a partnership or a shareholder in an S corporation from deducting all or a portion of the amount of the section 179 expense allocated by the partnership or S corporation. See § 1.179-3 for rules on applying the basis provisions of this paragraph (f) when a person has a carryover of disallowed deduction.

(3) ***Special rules with respect to trusts and estates which are partners or S corporation shareholders.*** Since the section 179 election is not available for trusts or estates, a partner or S corporation shareholder that is a trust or estate may not deduct its allocable share of the section 179 expense elected by the partnership or S corporation. The partnership or S corporation's basis in section 179 property shall not be reduced to reflect any portion of the section 179 expense that is allocable to the trust or estate. Accordingly, the partnership or S corporation may claim a depreciation deduction under section 168 or a section 38 credit (if available) with respect to any depreciable basis resulting from the trust or estate's inability to claim its allocable portion of the section 179 expense.

(g) ***Disallowance of the section 38 credit.*** If a taxpayer elects to expense under section 179, no section 38 credit is allowable for the portion of the cost expensed. In addition, no section 38 credit shall be allowed under section 48(d) to a lessee of property for the portion of the cost of the property that the lessor expensed under section 179.

(h) ***Partnerships and S corporations*** —

(1) ***In general.*** In the case of property purchased and placed in service by a partnership or an S corporation, the determination of whether the property is section 179 property is made at the partnership or S corporation level. The election to expense the cost of section 179 property is made by the partnership or the S corporation. See sections 703(b), 1363(c), 6221, 6231(a)(3), 6241, and 6245.

(2) ***Example.*** The following example illustrates the provisions of paragraph (h)(1) of this section.

Example. A owns certain residential rental property as an investment. A and others form ABC partnership whose function is to rent and manage such property. A and ABC partnership file their income tax returns on a calendar-year basis. In 1991, ABC partnership purchases and places in service office furniture costing $20,000 to be used in the active conduct of ABC's business. Although the office furniture is used with respect to an investment activity of A, the furniture is being used in the active conduct of ABC's trade or business. Therefore, because the determination of whether property is section 179 property is made at the partnership level, the office furniture is section 179 property and ABC may elect to expense a portion of its cost under section 179.

(i) ***Leasing of section 179 property*** —

(1) ***In general.*** A lessor of section 179 property who is treated as the owner of the property for Federal tax purposes will be entitled to the section 179 expense deduction if the requirements of section 179 and the regulations thereunder are met. These requirements will not be met if the lessor merely holds the property for the production of income. For certain leases entered into prior to January 1, 1984, the safe harbor provisions of section 168(f)(8) apply in determining whether an agreement is treated as a lease for Federal tax purposes.

(2) ***Noncorporate lessor.*** In determining the class of taxpayers (other than an estate or trust) for which section 179 is applicable, section 179(d)(5) provides that if a taxpayer is a noncorporate lessor (*i.e.,* a person who is not a corporation and is a lessor), the taxpayer shall not be entitled to claim a section 179 expense for section 179 property purchased and leased by the taxpayer unless the taxpayer has satisfied all of the requirements of section 179(d)(5) (A) or (B).

(j) ***Application of sections 263 and 263A.*** Under section 263(a)(1)(G), expenditures for which a deduction is allowed under section 179 and this section are excluded from capitalization under section 263(a). Under this paragraph (j), amounts allowed as a deduction under section 179 and this section are excluded from the application of the uniform capitalization rules of section 263A.

(k) ***Cross references.*** See section 453(i) and the regulations thereunder with respect to installment sales of section 179 property. See section 1033(g)(3) and the regulations thereunder relating to condemnation of outdoor advertising displays. See section 1245(a) and the regulations thereunder with respect to recapture rules for section 179 property.

[T.D. 8121, 52 FR 410, Jan. 6, 1987, as amended by T.D. 8455, 57 FR 61316, Dec. 24, 1992]

§ 1.179-2 Limitations on amount subject to section 179 election.

(a) ***In general.*** Sections 179(b) (1) and (2) limit the aggregate cost of section 179 property that a taxpayer may elect to expense under section 179 for any one taxable year (dollar limitation). See paragraph (b) of this section. Section 179(b)(3)(A) limits the aggregate cost of section 179 property that a taxpayer may deduct in any taxable year (taxable income limitation). See paragraph (c) of this section. Any cost that is elected to be expensed but that is not currently deductible because of the taxable income limitation may be carried forward to the next taxable year (carryover of disallowed deduction). See § 1.179-3 for rules relating to carryovers of disallowed deductions. See also sections 280F(a), (b), and (d)(1) relating to the coordination of section 179 with the limitations on the amount of depreciation for luxury automobiles and other listed property. The dollar and taxable income limitations apply to each taxpayer and not to each trade or business in which the taxpayer has an interest.

(b) ***Dollar limitation*** —

(1) ***In general.*** The aggregate cost of section 179 property that a taxpayer may elect to expense under section 179 for any taxable year beginning in 2003 and thereafter is $25,000 ($100,000 in the case of taxable years beginning after 2002 and before 2008 under section 179(b)(1), indexed annually for inflation under section 179(b)(5) for taxable years beginning after 2003 and before 2008), reduced (but not below zero) by the amount of any excess section 179 property (described in paragraph (b)(2) of this section) placed in service during the taxable year.

(2) ***Excess section 179 property.*** The amount of any excess section 179 property for a taxable year equals the excess (if any) of—

(i) The cost of section 179 property placed in service by the taxpayer in the taxable year; over

(ii) $200,000 ($400,000 in the case of taxable years beginning after 2002 and before 2008 under section 179(b)(2), indexed annually for inflation under section 179(b)(5) for taxable years beginning after 2003 and before 2008).

(3) ***Application to partnerships*** —

(i) ***In general.*** The dollar limitation of this paragraph (b) applies to the partnership as well as to each partner. In applying the dollar limitation to a taxpayer that is a partner in one or more partnerships, the partner's share of section 179 expenses allocated to the partner from each partnership is aggregated with any nonpartnership section 179 expenses of the taxpayer for the taxable year. However, in determining the excess section 179 property placed in service by a partner in a taxable year, the cost of section 179 property placed in service by the partnership is not attributed to any partner.

(ii) ***Example.*** The following example illustrates the provisions of paragraph (b)(3)(i) of this section.

Example. During 1991, CD, a calendar-year partnership, purchases and places in service section 179 property costing $150,000 and elects under section 179(c) and § 1.179-5 to expense $10,000 of the cost of that property. CD properly allocates to C, a calendar-year taxpayer and a partner in CD, $5,000 of section 179 expenses (C's distributive share of CD's section 179 expenses for 1991). In applying the dollar limitation to C for 1991, C must include the $5,000 of section 179 expenses allocated from CD. However, in determining the amount of any excess section 179 property C placed in service during 1991, C does not include any of the cost of section 179 property placed in service by CD, including the $5,000 of cost represented by the $5,000 of section 179 expenses allocated to C by the partnership.

(iii) ***Partner's share of section 179 expenses.*** Section 704 and the regulations thereunder govern the determination of a partner's share of a partnership's section 179 expenses for any taxable year. However, no allocation among partners of the section 179 expenses may be modified after the due date of the partnership return (without regard to extensions of time) for the taxable year for which the election under section 179 is made.

(iv) ***Taxable year.*** If the taxable years of a partner and the partnership do not coincide, then for purposes of section 179, the amount of the partnership's section 179 expenses attributable to a partner for a taxable year is determined under section 706 and the regulations thereunder (generally the partner's distributive share of partnership section 179 expenses for the partnership year that ends with or within the partner's taxable year).

(v) ***Example.*** The following example illustrates the provisions of paragraph (b)(3)(iv) of this section.

Example. AB partnership has a taxable year ending January 31. A, a partner of AB, has a taxable year ending December 31. AB purchases and places in service section 179 property on March 10, 1991, and elects to expense a portion of the cost of that property under section 179. Under section 706 and § 1.706-1(a)(1), A will be unable to claim A's distributive share of any of AB's section 179 expenses attributable to the property placed in service on March 10, 1991, until A's taxable year ending December 31, 1992.

(4) ***S Corporations.*** Rules similar to those contained in paragraph (b)(3) of this section apply in the case of S corporations (as defined in section 1361(a)) and their shareholders. Each shareholder's share of the section 179 expenses of an S corporation is determined under section 1366.

(5) ***Joint returns*** —

(i) ***In General.*** A husband and wife who file a joint income tax return under section 6013(a) are treated as one taxpayer in determining the amount of the dollar limitation under paragraph (b)(1) of this section, regardless of which spouse purchased the property or placed it in service.

(ii) ***Joint returns filed after separate returns.*** In the case of a husband and wife who elect under section 6013(b) to file a joint income tax return for a taxable year after the time prescribed by law for filing the return for such taxable year has expired, the dollar limitation under paragraph (b)(1) of this section is the lesser of—

(A) The dollar limitation (as determined under paragraph (b)(5)(i) of this section); or

(B) The aggregate cost of section 179 property elected to be expensed by the husband and wife on their separate returns.

(iii) ***Example.*** The following example illustrates the provisions of paragraph (b)(5)(ii) of this section.

Example. During 1991, Mr. and Mrs. B, both calendar-year taxpayers, purchase and place in service section 179 property costing $100,000. On their separate returns for 1991, Mr. B elects to expense $3,000 of section 179 property as an expense and Mrs. B elects to expense $4,000. After the due date of the return they elect under section 6013(b) to file a joint income tax return for 1991. The dollar limitation for their joint income tax return is $7,000, the lesser of the dollar limitation ($10,000) or the aggregate cost elected to be expensed under section 179 on their separate returns ($3,000 elected by Mr. B plus $4,000 elected by Mrs. B, or $7,000).

(6) ***Married individuals filing separately*** —

(i) ***In general.*** In the case of an individual who is married but files a separate income tax return for a taxable year, the dollar limitation of this paragraph (b) for such taxable year is the amount that would be determined under paragraph (b)(5)(i) of this section if the individual filed a joint income tax return under section 6013(a) multiplied by either the percentage elected by the individual under this paragraph (b)(6) or 50 percent. The election in the preceding sentence is made in accordance with the requirements of section 179(c) and § 1.179-5. However, the amount determined under paragraph (b)(5)(i) of this section must be multiplied by 50 percent if either the individual or the individual's spouse does not elect a percentage under this paragraph (b)(6) or the sum of the percentages elected by the individual and the individual's spouse does not equal 100 percent. For purposes of this paragraph (b)(6), marital status is determined under section 7703 and the regulations thereunder.

(ii) ***Example.*** The following example illustrates the provisions of paragraph (b)(6)(i) of this section.

Example. Mr. and Mrs. D, both calendar-year taxpayers, file separate income tax returns for 1991. During 1991, Mr. D places $195,000 of section 179 property in service and Mrs. D places $9,000 of section 179 property in service. Neither of them elects a percentage under paragraph (b)(6)(i) of this section. The 1991 dollar limitation for both Mr. D and Mrs. D is determined by multiplying by 50 percent the dollar limitation that would apply had they filed a joint income tax return. Had Mr. and Mrs. D filed a joint return for 1991, the dollar limitation would have been $6,000, $10,000 reduced by the excess section 179 property they placed in service during 1991 ($195,000 placed in service by Mr. D plus $9,000 placed in service by Mrs. D less $200,000, or $4,000). Thus, the 1991 dollar limitation for Mr. and Mrs. D is $3,000 each ($6,000 multiplied by 50 percent).

(7) ***Component members of a controlled group*** —

(i) ***In general.*** Component members of a controlled group (as defined in § 1.179-4(f)) on December 31 are treated as one taxpayer in applying the dollar limitation of sections 179(b) (1) and (2) and this paragraph (b). The expense deduction may be taken by any one component member or allocated (for the taxable year of each member that includes that December 31) among the several members in any manner. Any allocation of the expense deduction must be pursuant to an allocation by the common parent corporation if a consolidated return is filed for all component members of the group, or in accordance with an agreement entered into by the members of the group if separate returns are filed. If a consolidated return is filed by some component members of the group and separate returns are filed by other component members, the common parent of the group filing the consolidated return must enter into an agreement with those members that do not join in filing the consolidated return allocating the amount between the group filing the consolidated return and the other component members of the controlled group that do not join in filing the consolidated return. The amount of the expense allocated to any component member, however, may not exceed the cost of section 179 property actually purchased and placed in service by the member in the taxable year. If the component members have different taxable years, the term *taxable year* in sections 179(b) (1) and (2) means the taxable year of the member whose taxable year begins on the earliest date.

(ii) ***Statement to be filed.*** If a consolidated return is filed, the common parent corporation must file a separate statement attached to the income tax return on which the election is made to claim an expense deduction under section 179. See § 1.179-5. If separate returns are filed by some or all component members of the group, each component member not included in a consolidated return must file a separate statement attached to the income tax return on which an election is made to claim a deduction under section 179. The statement must include the name, address, employer identification number, and the taxable year of each component member of the controlled group, a copy of the allocation agreement signed by persons duly authorized to act on behalf of the component members, and a description of the manner in which the deduction under section 179 has been divided among the component members.

(iii) ***Revocation.*** If a consolidated return is filed for all component members of the group, an allocation among such members of the expense deduction under section 179 may not be revoked after the due date of the return (including extensions of time) of the common parent corporation for the taxable year for which an election to take an expense deduction is made. If some or all of the component members of the controlled group file separate returns for taxable years including a particular December 31 for which an election to take the expense deduction is made, the allocation as to all members of the group may not be revoked after the due date of the return (including extensions of time) of the component member of the controlled group whose taxable year that includes such December 31 ends on the latest date.

(c) ***Taxable income limitation*** —

(1) ***In general.*** The aggregate cost of section 179 property elected to be expensed under section 179 that may be deducted for any taxable year may not exceed the aggregate amount of taxable income of the taxpayer for such taxable year that is derived from the active conduct by the taxpayer of any trade or business during the taxable year. For purposes of section 179(b)(3) and this paragraph (c), the aggregate amount of taxable income derived from the active conduct by an individual, a partnership, or an S corporation of any trade or business is computed by aggregating the net income (or loss) from all of the trades or businesses actively conducted by the individual, partnership, or S corporation during the taxable year. Items of income that are derived from the active conduct of a trade or business include section 1231 gains (or losses) from the trade or business and interest

from working capital of the trade or business. Taxable income derived from the active conduct of a trade or business is computed without regard to the deduction allowable under section 179, any section 164(f) deduction, any net operating loss carryback or carryforward, and deductions suspended under any section of the Code. See paragraph (c)(6) of this section for rules on determining whether a taxpayer is engaged in the active conduct of a trade or business for this purpose.

(2) *Application to partnerships and partners* —

(i) ***In general.*** The taxable income limitation of this paragraph (c) applies to the partnership as well as to each partner. Thus, the partnership may not allocate to its partners as a section 179 expense deduction for any taxable year more than the partnership's taxable income limitation for that taxable year, and a partner may not deduct as a section 179 expense deduction for any taxable year more than the partner's taxable income limitation for that taxable year.

(ii) ***Taxable year.*** If the taxable year of a partner and the partnership do not coincide, then for purposes of section 179, the amount of the partnership's taxable income attributable to a partner for a taxable year is determined under section 706 and the regulations thereunder (generally the partner's distributive share of partnership taxable income for the partnership year that ends with or within the partner's taxable year).

(iii) ***Example.*** The following example illustrates the provisions of paragraph (c)(2)(ii) of this section.

Example. AB partnership has a taxable year ending January 31. A, a partner of AB, has a taxable year ending December 31. For AB's taxable year ending January 31, 1992, AB has taxable income from the active conduct of its trade or business of $100,000, $90,000 of which was earned during 1991. Under section 706 and § 1.706-1(a)(1), A includes A's entire share of partnership taxable income in computing A's taxable income limitation for A's taxable year ending December 31, 1992.

(iv) ***Taxable income of a partnership.*** The taxable income (or loss) derived from the active conduct by a partnership of any trade or business is computed by aggregating the net income (or loss) from all of the trades or businesses actively conducted by the partnership during the taxable year. The net income (or loss) from a trade or business actively conducted by the partnership is determined by taking into account the aggregate amount of the partnership's items described in section 702(a) (other than credits, tax-exempt income, and guaranteed payments under section 707(c)) derived from that trade or business. For purposes of determining the aggregate amount of partnership items, deductions and losses are treated as negative income. Any limitation on the amount of a partnership item described in section 702(a) which may be taken into account for purposes of computing the taxable income of a partner shall be disregarded in computing the taxable income of the partnership.

(v) ***Partner's share of partnership taxable income.*** A taxpayer who is a partner in a partnership and is engaged in the active conduct of at least one of the partnership's trades or businesses includes as taxable income derived from the active conduct of a trade or business the amount of the taxpayer's allocable share of taxable income derived from the active conduct by the partnership of any trade or business (as determined under paragraph (c)(2)(iv) of this section).

(3) *S corporations and S corporation shareholders* —

(i) ***In general.*** Rules similar to those contained in paragraphs (c)(2) (i) and (ii) of this section apply in the case of S corporations (as defined in section 1361(a)) and their shareholders. Each shareholder's share of the taxable income of an S corporation is determined under section 1366.

(ii) ***Taxable income of an S corporation.*** The taxable income (or loss) derived from the active conduct by an S corporation of any trade or business is computed by aggregating the net income (or loss) from all of the trades or businesses actively conducted by the S corporation during the taxable year. The net income (or loss) from a trade or business actively conducted by an S corporation is determined by taking into account the aggregate amount of the S corporation's items described in section 1366(a) (other than credits, tax-exempt income, and deductions for compensation paid to an S corporation's shareholder-employees) derived from that trade or business. For purposes of determining the aggregate amount of S corporation items, deductions and losses are treated as negative income. Any limitation on the amount of an S corporation item described in section 1366(a) which may be taken into account for purposes of computing the taxable income of a shareholder shall be disregarded in computing the taxable income of the S corporation.

(iii) ***Shareholder's share of S corporation taxable income.*** Rules similar to those contained in paragraph (c)(2)(v) and (c)(6)(ii) of this section apply to a taxpayer who is a shareholder in an S corporation and is engaged in the active conduct of the S corporation's trades or businesses.

(4) ***Taxable income of a corporation other than an S corporation.*** The aggregate amount of taxable income derived from the active conduct by a corporation other than an S corporation of any trade or business is the amount of the corporation's taxable income before deducting its net operating loss deduction and special deductions (as reported on the corporation's income tax return), adjusted to reflect those items of income or deduction included in that amount that were not derived by the corporation from a trade or business actively conducted by the corporation during the taxable year.

(5) ***Ordering rule for certain circular problems*** —

(i) ***In general.*** A taxpayer who elects to expense the cost of section 179 property (the deduction of which is subject to the taxable income limitation) also may have to apply another Internal Revenue Code section that has a limitation based on the taxpayer's taxable income. Except as provided in paragraph (c)(1) of this section, this section provides rules for applying the taxable income limitation under section 179 in such a case. First, taxable income is computed for the other section of the Internal Revenue Code. In computing the taxable income of the taxpayer for the other section of the Internal Revenue Code, the taxpayer's section 179 deduction is computed by assuming that the taxpayer's taxable income is determined without regard to the deduction under the other Internal Revenue Code section. Next, after reducing taxable income by the amount of the section 179 deduction so computed, a hypothetical amount of deduction is determined for the other section of the Internal Revenue Code. The taxable income limitation of the taxpayer under section 179(b)(3) and this paragraph (c) then is computed by including that hypothetical amount in determining taxable income.

(ii) ***Example.*** The following example illustrates the ordering rule described in paragraph (c)(5)(i) of this section.

Example. X, a calendar-year corporation, elects to expense $10,000 of the cost of section 179 property purchased and placed in service during 1991. Assume X's dollar limitation is $10,000. X also gives a charitable contribution of $5,000 during the taxable year. X's

taxable income for purposes of both sections 179 and 170(b)(2), but without regard to any deduction allowable under either section 179 or section 170, is $11,000. In determining X's taxable income limitation under section 179(b)(3) and this paragraph (c), X must first compute its section 170 deduction. However, section 170(b)(2) limits X's charitable contribution to 10 percent of its taxable income determined by taking into account its section 179 deduction. Paragraph (c)(5)(i) of this section provides that in determining X's section 179 deduction for 1991, X first computes a hypothetical section 170 deduction by assuming that its section 179 deduction is not affected by the section 170 deduction. Thus, in computing X's hypothetical section 170 deduction, X's taxable income limitation under section 179 is $11,000 and its section 179 deduction is $10,000. X's hypothetical section 170 deduction is $100 (10 percent of $1,000 ($11,000 less $10,000 section 179 deduction)). X's taxable income limitation for section 179 purposes is then computed by deducting the hypothetical charitable contribution of $100 for 1991. Thus, X's section 179 taxable income limitation is $10,900 ($11,000 less hypothetical $100 section 170 deduction), and its section 179 deduction for 1991 is $10,000. X's section 179 deduction so calculated applies for all purposes of the Code, including the computation of its actual section 170 deduction.

(6) ***Active conduct by the taxpayer of a trade or business*** —

(i) ***Trade or business.*** For purposes of this section and § 1.179-4(a), the term *trade or business* has the same meaning as in section 162 and the regulations thereunder. Thus, property held merely for the production of income or used in an activity not engaged in for profit (as described in section 183) does not qualify as section 179 property and taxable income derived from property held for the production of income or from an activity not engaged in for profit is not taken into account in determining the taxable income limitation.

(ii) ***Active conduct.*** For purposes of this section, the determination of whether a trade or business is actively conducted by the taxpayer is to be made from all the facts and circumstances and is to be applied in light of the purpose of the active conduct requirement of section 179(b)(3)(A). In the context of section 179, the purpose of the active conduct requirement is to prevent a passive investor in a trade or business from deducting section 179 expenses against taxable income derived from that trade or business. Consistent with this purpose, a taxpayer generally is considered to actively conduct a trade or business if the taxpayer meaningfully participates in the management or operations of the trade or business. Generally, a partner is considered to actively conduct a trade or business of the partnership if the partner meaningfully participates in the management or operations of the trade or business. A mere passive investor in a trade or business does not actively conduct the trade or business.

(iii) ***Example.*** The following example illustrates the provisions of paragraph (c)(6)(ii) of this section.

Example. A owns a salon as a sole proprietorship and employs B to operate it. A periodically meets with B to review developments relating to the business. A also approves the salon's annual budget that is prepared by B. B performs all the necessary operating functions, including hiring beauticians, acquiring the necessary beauty supplies, and writing the checks to pay all bills and the beauticians' salaries. In 1991, B purchased, as provided for in the salon's annual budget, equipment costing $9,500 for use in the active conduct of the salon. There were no other purchases of section 179 property during 1991. A's net income from the salon, before any section 179 deduction, totaled $8,000. A also is a partner in PRS, a calendar-year partnership, which owns a grocery store. C, a partner in PRS, runs the

grocery store for the partnership, making all the management and operating decisions. PRS did not purchase any section 179 property during 1991. A's allocable share of partnership net income was $6,000. Based on the facts and circumstances, A meaningfully participates in the management of the salon. However, A does not meaningfully participate in the management or operations of the trade or business of PRS. Under section 179(b)(3)(A) and this paragraph (c), A's aggregate taxable income derived from the active conduct by A of any trade or business is $8,000, the net income from the salon.

(iv) ***Employees.*** For purposes of this section, employees are considered to be engaged in the active conduct of the trade or business of their employment. Thus, wages, salaries, tips, and other compensation (not reduced by unreimbursed employee business expenses) derived by a taxpayer as an employee are included in the aggregate amount of taxable income of the taxpayer under paragraph (c)(1) of this section.

(7) ***Joint returns*** —

(i) ***In general.*** The taxable income limitation of this paragraph (c) is applied to a husband and wife who file a joint income tax return under section 6013(a) by aggregating the taxable income of each spouse (as determined under paragraph (c)(1) of this section).

(ii) ***Joint returns filed after separate returns.*** In the case of a husband and wife who elect under section 6013(b) to file a joint income tax return for a taxable year after the time prescribed by law for filing the return for such taxable year, the taxable income limitation of this paragraph (c) for the taxable year for which the joint return is filed is determined under paragraph (c)(7)(i) of this section.

(8) ***Married individuals filing separately.*** In the case of an individual who is married but files a separate tax return for a taxable year, the taxable income limitation for that individual is determined under paragraph (c)(1) of this section by treating the husband and wife as separate taxpayers.

(d) ***Examples.*** The following examples illustrate the provisions of paragraphs (b) and (c) of this section.

Example 1. (i) During 1991, PRS, a calendar-year partnership, purchases and places in service $50,000 of section 179 property. The taxable income of PRS derived from the active conduct of all its trades or businesses (as determined under paragraph (c)(1) of this section) is $8,000.
(ii) Under the dollar limitation of paragraph (b) of this section, PRS may elect to expense $10,000 of the cost of section 179 property purchased in 1991. Assume PRS elects under section 179(c) and § 1.179-5 to expense $10,000 of the cost of section 179 property purchased in 1991.

(iii) Under the taxable income limitation of paragraph (c) of this section, PRS may allocate to its partners as a deduction only $8,000 of the cost of section 179 property in 1991. Under section 179(b)(3)(B) and § 1.179-3(a), PRS may carry forward the remaining $2,000 it elected to expense, which would have been deductible under section 179(a) for 1991 absent the taxable income limitation.

Example 2. (i) The facts are the same as in *Example 1*, except that on December 31, 1991, PRS allocates to A, a calendar-year taxpayer and a partner in PRS, $7,000 of section 179 expenses and $2,000 of taxable income. A was engaged in the active conduct of a trade or business of PRS during 1991.

(ii) In addition to being a partner in PRS, A conducts a business as a sole proprietor. During 1991, A purchases and places in service $201,000 of section 179 property in connection with the sole proprietorship. A's 1991 taxable income derived from the active conduct of this business is $6,000.

(iii) Under the dollar limitation, A may elect to expense only $9,000 of the cost of section 179 property purchased in 1991, the $10,000 limit reduced by $1,000 (the amount by which the cost of section 179 property placed in service during 1991 ($201,000) exceeds $200,000). Under paragraph (b)(3)(i) of this section, the $7,000 of section 179 expenses allocated from PRS is subject to the $9,000 limit. Assume that A elects to expense $2,000 of the cost of section 179 property purchased by A's sole proprietorship in 1991. Thus, A has elected to expense under section 179 an amount equal to the dollar limitation for 1991 ($2,000 elected to be expensed by A's sole proprietorship plus $7,000, the amount of PRS's section 179 expenses allocated to A in 1991).

(iv) Under the taxable income limitation, A may only deduct $8,000 of the cost of section 179 property elected to be expensed in 1991, the aggregate taxable income derived from the active conduct of A's trades or businesses in 1991 ($2,000 from PRS and $6,000 from A's sole proprietorship). The entire $2,000 of taxable income allocated from PRS is included by A as taxable income derived from the active conduct by A of a trade or business because it was derived from the active conduct of a trade or business by PRS and A was engaged in the active conduct of a trade or business of PRS during 1991. Under section 179(b)(3)(B) and § 1.179-3(a), A may carry forward the remaining $1,000 A elected to expense, which would have been deductible under section 179(a) for 1991 absent the taxable income limitation.

[T.D. 8455, 57 FR 61318, Dec. 24, 1992, as amended by T.D. 9146, 69 FR 46983, Aug. 4, 2004; T.D. 9209, 70 FR 40191, July 13, 2005]

§ 1.179-3 Carryover of disallowed deduction.

(a) ***In general.*** Under section 179(b)(3)(B), a taxpayer may carry forward for an unlimited number of years the amount of any cost of section 179 property elected to be expensed in a taxable year but disallowed as a deduction in that taxable year because of the taxable income limitation of section 179(b)(3)(A) and § 1.179-2(c) ("carryover of disallowed deduction"). This carryover of disallowed deduction may be deducted under section 179(a) and § 1.179-1(a) in a future taxable year as provided in paragraph (b) of this section.

(b) ***Deduction of carryover of disallowed deduction*** —

(1) ***In general.*** The amount allowable as a deduction under section 179(a) and § 1.179-1(a) for any taxable year is increased by the lesser of—

(i) The aggregate amount disallowed under section 179(b)(3)(A) and § 1.179-2(c) for all prior taxable years (to the extent not previously allowed as a deduction by reason of this section); or

(ii) The amount of any unused section 179 expense allowance for the taxable year (as described in paragraph (c) of this section).

(2) ***Cross references.*** See paragraph (f) of this section for rules that apply when a taxpayer disposes of or otherwise transfers section 179 property for which a carryover of disallowed deduction is outstanding. See paragraph (g) of this section for special rules that apply to partnerships and S corporations and paragraph (h) of this section for special rules that apply to partners and S corporation shareholders.

(c) ***Unused section 179 expense allowance.*** The amount of any unused section 179 expense allowance for a taxable year equals the excess (if any) of—

(1) The maximum cost of section 179 property that the taxpayer may deduct under section 179 and § 1.179-1 for the taxable year after applying the limitations of section 179(b) and § 1.179-2; over

(2) The amount of section 179 property that the taxpayer actually elected to expense under section 179 and § 1.179-1(a) for the taxable year.

(d) ***Example.*** The following example illustrates the provisions of paragraphs (b) and (c) of this section.

Example. A, a calendar-year taxpayer, has a $3,000 carryover of disallowed deduction for an item of section 179 property purchased and placed in service in 1991. In 1992, A purchases and places in service an item of section 179 property costing $25,000. A's 1992 taxable income from the active conduct of all A's trades or businesses is $100,000. A elects, under section 179(c) and § 1.179-5, to expense $8,000 of the cost of the item of section 179 property purchased in 1992. Under paragraph (b) of this section, A may deduct $2,000 of A's carryover of disallowed deduction from 1991 (the lesser of A's total outstanding carryover of disallowed deductions ($3,000), or the amount of any unused section 179 expense allowance for 1992 ($10,000 limit less $8,000 elected to be expensed, or $2,000)). For 1993, A has a $1,000 carryover of disallowed deduction for the item of section 179 property purchased and placed in service in 1991.

(e) ***Recordkeeping requirement and ordering rule.*** The properties and the apportionment of cost that will be subject to a carryover of disallowed deduction are selected by the taxpayer in the year the properties are placed in service. This selection must be evidenced on the taxpayer's books and records and be applied consistently in subsequent years. If no selection is made, the total carryover of disallowed deduction is apportioned equally over the items of section 179 property elected to be expensed for the taxable year. For this purpose, the taxpayer treats any section 179 expense amount allocated from a partnership (or an S corporation) for a taxable year as one item of section 179 property. If the taxpayer is allowed to deduct a portion of the total carryover of disallowed deduction under paragraph (b) of this section, the taxpayer must deduct the cost of section 179 property carried forward from the earliest taxable year.

(f) ***Dispositions and other transfers of section 179 property*** —

(1) ***In general.*** Upon a sale or other disposition of section 179 property, or a transfer of section 179 property in a transaction in which gain or loss is not recognized in whole or in part (including transfers at death), immediately before the transfer the adjusted basis of the section 179 property is increased by the amount of any outstanding carryover of disallowed deduction with respect to the property. This carryover of disallowed deduction is not available as a deduction to the transferor or the transferee of the section 179 property.

(2) ***Recapture under section 179(d)(10).*** Under § 1.179-1(e), if a taxpayer's section 179 property is subject to recapture under section 179(d)(10), the taxpayer must recapture the benefit derived from expensing the property. Upon recapture, any outstanding carryover of disallowed deduction with

respect to the property is no longer available for expensing. In determining the amount subject to recapture under section 179(d)(10) and § 1.179-1(e), any outstanding carryover of disallowed deduction with respect to that property is not treated as an amount expensed under section 179.

(g) ***Special rules for partnerships and S corporations*** —

(1) ***In general.*** Under section 179(d)(8) and § 1.179-2(c), the taxable income limitation applies at the partnership level as well as at the partner level. Therefore, a partnership may have a carryover of disallowed deduction with respect to the cost of its section 179 property. Similar rules apply to S corporations. This paragraph (g) provides special rules that apply when a partnership or an S corporation has a carryover of disallowed deduction.

(2) ***Basis adjustment.*** Under § 1.179-1(f)(2), the basis of a partnership's section 179 property must be reduced to reflect the amount of section 179 expense elected by the partnership. This reduction must be made for the taxable year for which the election is made even if the section 179 expense amount, or a portion thereof, must be carried forward by the partnership. Similar rules apply to S corporations.

(3) ***Dispositions and other transfers of section 179 property by a partnership or an S corporation.*** The provisions of paragraph (f) of this section apply in determining the treatment of any outstanding carryover of disallowed deduction with respect to section 179 property disposed of, or transferred in a nonrecognition transaction, by a partnership or an S corporation.

(4) ***Example.*** The following example illustrates the provisions of this paragraph (g).

Example. ABC, a calendar-year partnership, owns and operates a restaurant business. During 1992, ABC purchases and places in service two items of section 179 property—a cash register costing $4,000 and office furniture costing $6,000. ABC elects to expense under section 179(c) the full cost of the cash register and the office furniture. For 1992, ABC has $6,000 of taxable income derived from the active conduct of its restaurant business. Therefore, ABC may deduct only $6,000 of section 179 expenses and must carry forward the remaining $4,000 of section 179 expenses at the partnership level. ABC must reduce the adjusted basis of the section 179 property by the full amount elected to be expensed. However, ABC may not allocate to its partners any portion of the carryover of disallowed deduction until ABC is able to deduct it under paragraph (b) of this section.

(h) ***Special rules for partners and S corporation shareholders*** —

(1) ***In general.*** Under section 179(d)(8) and § 1.179-2(c), a partner may have a carryover of disallowed deduction with respect to the cost of section 179 property elected to be expensed by the partnership and allocated to the partner. A partner who is allocated section 179 expenses from a partnership must reduce the basis of his or her partnership interest by the full amount allocated regardless of whether the partner may deduct for the taxable year the allocated section 179 expenses or is required to carry forward all or a portion of the expenses. Similar rules apply to S corporation shareholders.

(2) ***Dispositions and other transfers of a partner's interest in a partnership or a shareholder's interest in an S corporation.*** A partner who disposes of a partnership interest, or transfers a partnership interest in a transaction in which gain or loss is not recognized in whole or in part (including transfers of a partnership interest at death), may have an outstanding carryover of disallowed deduction of section 179 expenses allocated from the partnership. In such a case, immediately before the transfer the partner's basis in the partnership interest is increased by the amount of the partner's outstanding

carryover of disallowed deduction with respect to the partnership interest. This carryover of disallowed deduction is not available as a deduction to the transferor or transferee partner of the section 179 property. Similar rules apply to S corporation shareholders.

(3) ***Examples.*** The following examples illustrate the provisions of this paragraph (h).

Example 1. (i) G is a general partner in GD, a calendar-year partnership, and is engaged in the active conduct of GD's business. During 1991, GD purchases and places section 179 property in service and elects to expense a portion of the cost of the property under section 179. GD allocates $2,500 of section 179 expenses and $15,000 of taxable income (determined without regard to the section 179 deduction) to G. The income was derived from the active conduct by GD of a trade or business.
(ii) In addition to being a partner in GD, G conducts a business as a sole proprietor. During 1991, G purchases and places in service office equipment costing $25,000 and a computer costing $10,000 in connection with the sole proprietorship. G elects under section 179(c) and § 1.179-5 to expense $7,500 of the cost of the office equipment. G has a taxable loss (determined without regard to the section 179 deduction) derived from the active conduct of this business of $12,500.

(iii) G has no other taxable income (or loss) derived from the active conduct of a trade or business during 1991. G's taxable income limitation for 1991 is $2,500 ($15,000 taxable income allocated from GD less $12,500 taxable loss from the sole proprietorship). Therefore, G may deduct during 1991 only $2,500 of the $10,000 of section 179 expenses. G notes on the appropriate books and records that G expenses the $2,500 of section 179 expenses allocated from GD and carries forward the $7,500 of section 179 expenses with respect to the office equipment purchased by G's sole proprietorship.

(iv) On January 1, 1992, G sells the office equipment G's sole proprietorship purchased and placed in service in 1991. Under paragraph (f) of this section, immediately before the sale G increases the adjusted basis of the office equipment by $7,500, the amount of the outstanding carryover of disallowed deduction with respect to the office equipment.

Example 2. (i) Assume the same facts as in *Example 1,* except that G notes on the appropriate books and records that G expenses $2,500 of section 179 expenses relating to G's sole proprietorship and carries forward the remaining $5,000 of section 179 expenses relating to G's sole proprietorship and $2,500 of section 179 expenses allocated from GD.
(ii) On January 1, 1992, G sells G's partnership interest to A. Under paragraph (h)(2) of this section, immediately before the sale G increases the adjusted basis of G's partnership interest by $2,500, the amount of the outstanding carryover of disallowed deduction with respect to the partnership interest.

[T.D. 8455, 57 FR 61321, Dec. 24, 1992]

§ 1.179-4 Definitions.

The following definitions apply for purposes of section 179 and §§ 1.179-1 through 1.179-6:

(a) ***Section 179 property.*** The term *section 179 property* means any tangible property described in section 179(d)(1) that is acquired by purchase for use in the active conduct of the taxpayer's trade or business (as described in § 1.179-2(c)(6)). For taxable years beginning after 2002 and before 2008, the term *section 179 property* includes computer software described in section 179(d)(1) that is placed in service by the taxpayer in a taxable year beginning after 2002 and before 2008 and is acquired by purchase for use in the active conduct of the taxpayer's trade or business (as described in 1.179-2(c)(6)). For purposes of this paragraph (a), the term *trade or business* has the same meaning as in section 162 and the regulations under section 162.

(b) ***Section 38 property.*** The term *section 38 property* shall have the same meaning assigned to it in section 48(a) and the regulations thereunder.

(c) ***Purchase.***

(1)

(i) Except as otherwise provided in paragraph (d)(2) of this section, the term *purchase* means any acquisition of the property, but only if all the requirements of paragraphs (c)(1) (ii), (iii), and (iv) of this section are satisfied.

(ii) Property is not acquired by purchase if it is acquired from a person whose relationship to the person acquiring it would result in the disallowance of losses under section 267 or 707(b). The property is considered not acquired by purchase only to the extent that losses would be disallowed under section 267 or 707(b). Thus, for example, if property is purchased by a husband and wife jointly from the husband's father, the property will be treated as not acquired by purchase only to the extent of the husband's interest in the property. However, in applying the rules of section 267 (b) and (c) for this purpose, section 267(c)(4) shall be treated as providing that the family of an individual will include only his spouse, ancestors, and lineal descendants. For example, a purchase of property from a corporation by a taxpayer who owns, directly or indirectly, more than 50 percent in value of the outstanding stock of such corporation does not qualify as a purchase under section 179(d)(2); nor does the purchase of property by a husband from his wife. However, the purchase of section 179 property by a taxpayer from his brother or sister does qualify as a purchase for purposes of section 179(d)(2).

(iii) The property is not acquired by purchase if acquired from a component member of a controlled group of corporations (as defined in paragraph (g) of this section) by another component member of the same group.

(iv) The property is not acquired by purchase if the basis of the property in the hands of the person acquiring it is determined in whole or in part by reference to the adjusted basis of such property in the hands of the person from whom acquired, is determined under section 1014(a), relating to property acquired from a decedent, or is determined under section 1022, relating to property acquired from certain decedents who died in 2010. For example, property acquired by gift or bequest does not qualify as property acquired by purchase for purposes of section 179(d)(2); nor does property received in a corporate distribution the basis of which is determined under section 301(d)(2)(B), property acquired by a corporation in a transaction to which section 351 applies, property acquired by a partnership through contribution (section 723), or property received in a partnership distribution which has a carryover basis under section 732(a)(1).

(2) Property deemed to have been acquired by a new target corporation as a result of a section 338 election (relating to certain stock purchases treated as asset acquisitions) or a section 336(e) election (relating to certain stock dispositions treated as asset transfers) made for a disposition described in § 1.336-2(b)(1) will be considered acquired by purchase.

(d) ***Cost.*** The cost of section 179 property does not include so much of the basis of such property as is determined by reference to the basis of other property held at any time by the taxpayer. For example, X Corporation purchases a new drill press costing $10,000 in November 1984 which qualifies as section 179 property, and is granted a trade-in allowance of $2,000 on its old drill press. The old drill press had a basis of $1,200. Under the provisions of sections 1012 and 1031(d), the basis of the new drill press is $9,200 ($1,200 basis of oil drill press plus cash expended of $8,000). However, only $8,000 of the basis of the new drill press qualifies as cost for purposes of the section 179 expense deduction; the remaining $1,200 is not part of the cost because it is determined by reference to the basis of the old drill press.

(e) ***Placed in service.*** The term *placed in service* means the time that property is first placed by the taxpayer in a condition or state of readiness and availability for a specifically assigned function, whether for use in a trade or business, for the production of income, in a tax-exempt activity, or in a personal activity. See § 1.46-3(d)(2) for examples regarding when property shall be considered in a condition or state of readiness and availability for a specifically assigned function.

(f) ***Controlled group of corporations and component member of controlled group.*** The terms *controlled group of corporations* and *component member* of a controlled group of corporations shall have the same meaning assigned to those terms in section 1563 (a) and (b), except that the phrase “more than 50 percent” shall be substituted for the phrase “at least 80 percent” each place it appears in section 1563(a)(1).

[T.D. 8121, 52 FR 413, Jan. 6, 1987. Redesignated by T.D. 8455, 57 FR 61321, 61323, Dec. 24, 1992, as amended by T.D. 9146, 69 FR 46984, Aug. 4, 2004; T.D. 9209, 70 FR 40191, July 13, 2005; T.D. 9811, 82 FR 6236, Jan. 19, 2016; T.D. 9874, 84 FR 50149, Sept. 24, 2019]

§ 1.179-5 Time and manner of making election.

(a) ***Election.*** A separate election must be made for each taxable year in which a section 179 expense deduction is claimed with respect to section 179 property. The election under section 179 and § 1.179-1 to claim a section 179 expense deduction for section 179 property shall be made on the taxpayer's first income tax return for the taxable year to which the election applies (whether or not the return is timely) or on an amended return filed within the time prescribed by law (including extensions) for filing the return for such taxable year. The election shall be made by showing as a separate item on the taxpayer's income tax return the following items:

(1) The total section 179 expense deduction claimed with respect to all section 179 property selected, and

(2) The portion of that deduction allocable to each specific item.

The person shall maintain records which permit specific identification of each piece of section 179 property and reflect how and from whom such property was acquired and when such property was placed in service. However, for this purpose a partner (or an S corporation shareholder) treats partnership (or S corporation) section 179 property for which section 179 expenses are allocated from a partnership (or an S corporation) as one item of section 179 property. The election to claim a section 179 expense deduction under this section, with respect to any property, is irrevocable and will be binding on the

taxpayer with respect to such property for the taxable year for which the election is made and for all subsequent taxable years, unless the Commissioner consents to the revocation of the election. Similarly, the selection of section 179 property by the taxpayer to be subject to the expense deduction and apportionment scheme must be adhered to in computing the taxpayer's taxable income for the taxable year for which the election is made and for all subsequent taxable years, unless consent to change is given by the Commissioner.

(b) ***Revocation.*** Any election made under section 179, and any specification contained in such election, may not be revoked except with the consent of the Commissioner. Such consent will be granted only in extraordinary circumstances. Requests for consent must be filed with the Commissioner of Internal Revenue, Washington, DC 20224. The request must include the name, address, and taxpayer identification number of the taxpayer and must be signed by the taxpayer or his duly authorized representative. It must be accompanied by a statement showing the year and property involved, and must set forth in detail the reasons for the request.

(c) ***Section 179 property placed in service by the taxpayer in a taxable year beginning after 2002 and before 2008 —***

(1) ***In general.*** For any taxable year beginning after 2002 and before 2008, a taxpayer is permitted to make or revoke an election under section 179 without the consent of the Commissioner on an amended Federal tax return for that taxable year. This amended return must be filed within the time prescribed by law for filing an amended return for such taxable year.

(2) ***Election —***

(i) ***In general.*** For any taxable year beginning after 2002 and before 2008, a taxpayer is permitted to make an election under section 179 on an amended Federal tax return for that taxable year without the consent of the Commissioner. Thus, the election under section 179 and § 1.179-1 to claim a section 179 expense deduction for section 179 property may be made on an amended Federal tax return for the taxable year to which the election applies. The amended Federal tax return must include the adjustment to taxable income for the section 179 election and any collateral adjustments to taxable income or to the tax liability (for example, the amount of depreciation allowed or allowable in that taxable year for the item of section 179 property to which the election pertains). Such adjustments must also be made on amended Federal tax returns for any affected succeeding taxable years.

(ii) ***Specifications of elections.*** Any election under section 179 must specify the items of section 179 property and the portion of the cost of each such item to be taken into account under section 179(a). Any election under section 179 must comply with the specification requirements of section 179(c)(1)(A), § 1.179-1(b), and § 1.179-5(a). If a taxpayer elects to expense only a portion of the cost basis of an item of section 179 property for a taxable year beginning after 2002 and before 2008 (or did not elect to expense any portion of the cost basis of the item of section 179 property), the taxpayer is permitted to file an amended Federal tax return for that particular taxable year and increase the portion of the cost of the item of section 179 property to be taken into account under section 179(a) (or elect to expense any portion of the cost basis of the item of section 179 property if no prior election was made) without the consent of the Commissioner. Any such increase in the amount expensed under section 179 is not deemed to be a revocation of the prior election for that particular taxable year.

(3) ***Revocation —***

(i) ***In general.*** Section 179(c)(2) permits the revocation of an entire election or specification, or a portion of the selected dollar amount of a specification. The term *specification* in section 179(c)(2) refers to both the selected specific item of section 179 property subject to a section 179 election and the selected dollar amount allocable to the specific item of section 179 property. Any portion of the cost basis of an item of section 179 property subject to an election under section 179 for a taxable year beginning after 2002 and before 2008 may be revoked by the taxpayer without the consent of the Commissioner by filing an amended Federal tax return for that particular taxable year. The amended Federal tax return must include the adjustment to taxable income for the section 179 revocation and any collateral adjustments to taxable income or to the tax liability (for example, allowable depreciation in that taxable year for the item of section 179 property to which the revocation pertains). Such adjustments must also be made on amended Federal tax returns for any affected succeeding taxable years. Reducing or eliminating a specified dollar amount for any item of section 179 property with respect to any taxable year beginning after 2002 and before 2008 results in a revocation of that specified dollar amount.

(ii) ***Effect of revocation.*** Such revocation, once made, shall be irrevocable. If the selected dollar amount reflects the entire cost of the item of section 179 property subject to the section 179 election, a revocation of the entire selected dollar amount is treated as a revocation of the section 179 election for that item of section 179 property and the taxpayer is unable to make a new section 179 election with respect to that item of property. If the selected dollar amount is a portion of the cost of the item of section 179 property, revocation of a selected dollar amount shall be treated as a revocation of only that selected dollar amount. The revoked dollars cannot be the subject of a new section 179 election for the same item of property.

(4) ***Examples.*** The following examples illustrate the rules of this paragraph (c):

Example 1. Taxpayer, a sole proprietor, owns and operates a jewelry store. During 2003, Taxpayer purchased and placed in service two items of section 179 property—a cash register costing $4,000 (5-year MACRS property) and office furniture costing $10,000 (7-year MACRS property). On his 2003 Federal tax return filed on April 15, 2004, Taxpayer elected to expense under section 179 the full cost of the cash register and, with respect to the office furniture, claimed the depreciation allowable. In November 2004, Taxpayer determines it would have been more advantageous to have made an election under section 179 to expense the full cost of the office furniture rather than the cash register. Pursuant to paragraph (c)(1) of this section, Taxpayer is permitted to file an amended Federal tax return for 2003 revoking the section 179 election for the cash register, claiming the depreciation allowable in 2003 for the cash register, and making an election to expense under section 179 the cost of the office furniture. The amended return must include an adjustment for the depreciation previously claimed in 2003 for the office furniture, an adjustment for the depreciation allowable in 2003 for the cash register, and any other collateral adjustments to taxable income or to the tax liability. In addition, once Taxpayer revokes the section 179 election for the entire cost basis of the cash register, Taxpayer can no longer expense under section 179 any portion of the cost of the cash register.

Example 2. Taxpayer, a sole proprietor, owns and operates a machine shop that does specialized repair work on industrial equipment. During 2003, Taxpayer purchased and placed in service one item of section 179 property—a milling machine costing $135,000. On Taxpayer's 2003 Federal tax return filed on April 15, 2004, Taxpayer elected to expense under section 179 $5,000 of the cost of the milling machine and claimed allowable depreciation on the remaining cost. Subsequently, Taxpayer determines it would have been to Taxpayer's advantage to have elected

to expense $100,000 of the cost of the milling machine on Taxpayer's 2003 Federal tax return. In November 2004, Taxpayer files an amended Federal tax return for 2003, increasing the amount of the cost of the milling machine that is to be taken into account under section 179(a) to $100,000, decreasing the depreciation allowable in 2003 for the milling machine, and making any other collateral adjustments to taxable income or to the tax liability. Pursuant to paragraph (c)(2)(ii) of this section, increasing the amount of the cost of the milling machine to be taken into account under section 179(a) supplements the portion of the cost of the milling machine that was already taken into account by the original section 179 election made on the 2003 Federal tax return and no revocation of any specification with respect to the milling machine has occurred.

Example 3. Taxpayer, a sole proprietor, owns and operates a real estate brokerage business located in a rented storefront office. During 2003, Taxpayer purchases and places in service two items of section 179 property—a laptop computer costing $2,500 and a desktop computer costing $1,500. On Taxpayer's 2003 Federal tax return filed on April 15, 2004, Taxpayer elected to expense under section 179 the full cost of the laptop computer and the full cost of the desktop computer. Subsequently, Taxpayer determines it would have been to Taxpayer's advantage to have originally elected to expense under section 179 only $1,500 of the cost of the laptop computer on Taxpayer's 2003 Federal tax return. In November 2004, Taxpayer files an amended Federal tax return for 2003 reducing the amount of the cost of the laptop computer that was taken into account under section 179(a) to $1,500, claiming the depreciation allowable in 2003 on the remaining cost of $1,000 for that item, and making any other collateral adjustments to taxable income or to the tax liability. Pursuant to paragraph (c)(3)(ii) of this section, the $1,000 reduction represents a revocation of a portion of the selected dollar amount and no portion of those revoked dollars may be the subject of a new section 179 election for the laptop computer.

Example 4. Taxpayer, a sole proprietor, owns and operates a furniture making business. During 2003, Taxpayer purchases and places in service one item of section 179 property—an industrial-grade cabinet table saw costing $5,000. On Taxpayer's 2003 Federal tax return filed on April 15, 2004, Taxpayer elected to expense under section 179 $3,000 of the cost of the saw and, with respect to the remaining $2,000 of the cost of the saw, claimed the depreciation allowable. In November 2004, Taxpayer files an amended Federal tax return for 2003 revoking the selected $3,000 amount for the saw, claiming the depreciation allowable in 2003 on the $3,000 cost of the saw, and making any other collateral adjustments to taxable income or to the tax liability. Subsequently, in December 2004, Taxpayer files a second amended Federal tax return for 2003 selecting a new dollar amount of $2,000 for the saw, including an adjustment for the depreciation previously claimed in 2003 on the $2,000, and making any other collateral adjustments to taxable income or to the tax liability. Pursuant to paragraph (c)(2)(ii) of this section, Taxpayer is permitted to select a new selected dollar amount to expense under section 179 encompassing all or a part of the initially non-elected portion of the cost of the elected item of section 179 property. However, no portion of the revoked $3,000 may be the subject of a new section 179 dollar amount selection for the saw. In December 2005, Taxpayer files a third amended Federal tax return for 2003 revoking the entire selected $2,000 amount with respect to the saw, claiming the depreciation allowable in 2003 for the $2,000, and making any other collateral adjustments to taxable income or to the tax liability. Because Taxpayer elected to expense, and subsequently revoke, the entire cost basis of the saw, the section 179 election for the saw has been revoked and Taxpayer is unable to make a new section 179 election with respect to the saw.

(d) ***Election or revocation must not be made in any other manner.*** Any election or revocation specified in this section must be made in the manner prescribed in paragraphs (a), (b), and (c) of this section. Thus, this election or revocation must not be made by the taxpayer in any other manner (for example, an election or a revocation of an election cannot be made through a request under section 446(e) to change the taxpayer's method of accounting), except as otherwise expressly provided by the Internal Revenue Code, the regulations under the Code, or other guidance published in the Internal Revenue Bulletin.

[T.D. 8121, 52 FR 414, Jan. 6, 1987. Redesignated by T.D. 8455, 57 FR 61321, 61323, Dec. 24, 1992, as amended by T.D. 9146, 69 FR 46984, Aug. 4, 2004; T.D. 9209, 70 FR 40191, July 13, 2005]

§ 1.179-6 Effective/applicability dates.

(a) ***In general.*** Except as provided in paragraphs (b), (c), (d), and (e) of this section, the provisions of §§ 1.179-1 through 1.179-5 apply for property placed in service by the taxpayer in taxable years ending after January 25, 1993. However, a taxpayer may apply the provisions of §§ 1.179-1 through 1.179-5 to property placed in service by the taxpayer after December 31, 1986, in taxable years ending on or before January 25, 1993. Otherwise, for property placed in service by the taxpayer after December 31, 1986, in taxable years ending on or before January 25, 1993, the final regulations under section 179 as in effect for the year the property was placed in service apply, except to the extent modified by the changes made to section 179 by the Tax Reform Act of 1986 (100 Stat. 2085), the Technical and Miscellaneous Revenue Act of 1988 (102 Stat. 3342) and the Revenue Reconciliation Act of 1990 (104 Stat. 1388-400). For that property, a taxpayer may apply any reasonable method that clearly reflects income in applying the changes to section 179, provided the taxpayer consistently applies the method to the property.

(b) ***Section 179 property placed in service by the taxpayer in a taxable year beginning after 2002 and before 2008.*** The provisions of § 1.179-2(b)(1) and (b)(2)(ii), the second sentence of § 1.179-4(a), and the provisions of § 1.179-5(c), reflecting changes made to section 179 by the Jobs and Growth Tax Relief Reconciliation Act of 2003 (117 Stat. 752) and the American Jobs Creation Act of 2004 (118 Stat. 1418), apply for property placed in service in taxable years beginning after 2002 and before 2008.

(c) ***Application of § 1.179-5(d).*** Section 1.179-5(d) applies on or after July 12, 2005.

(d) ***Application of § 1.179-4(c)(1)(iv).*** The provisions of § 1.179-4(c)(1)(iv) relating to section 1022 are effective on and after January 19, 2017.

(e) ***Application of § 1.179-4(c)(2)*** -(1) *In general.* Except as provided in paragraphs (e)(2) and (3) of this section, the provisions of § 1.179-4(c)(2) relating to section 336(e) are applicable on or after September 24, 2019.

(2) ***Early application of § 1.179-4(c)(2).*** A taxpayer may choose to apply the provisions of § 1.179-4(c)(2) relating to section 336(e) for the taxpayer's taxable years ending on or after September 28, 2017.

(3) ***Early application of regulation project REG-104397-18.*** A taxpayer may rely on the provisions of § 1.179-4(c)(2) relating to section 336(e) in regulation project REG-104397-18 (2018-41 I.R.B. 558) (see § 601.601(d)(2)(ii)(b) of this chapter) for the taxpayer's taxable years ending on or after September 28, 2017, and ending before September 24, 2019.

[T.D. 9146, 69 FR 46985, Aug. 4, 2004. Redesignated and amended by T.D. 9209, 70 FR 40192, July 13, 2005; T.D. 9811, 82 FR 6236, Jan. 19, 2017; T.D. 9874, 84 FR 50149, Sept. 24, 2019]

§ 1.179A-1 [Reserved]

§ 1.179B-1T Deduction for capital costs incurred in complying with Environmental Protection Agency sulfur regulations (temporary).

(a) *Scope and definitions* —

(1) ***Scope.*** This section provides the rules for determining the amount of the deduction allowable under section 179B(a) for qualified capital costs paid or incurred by a small business refiner to comply with the highway diesel fuel sulfur control requirements of the Environmental Protection Agency (EPA). This section also provides rules for making elections under section 179B.

(2) ***Definitions.*** For purposes of section 179B and this section, the following definitions apply:

(i) The *applicable EPA regulations* are the EPA regulations establishing the highway diesel fuel sulfur control program (40 CFR part 80, subpart I).

(ii) The *average daily domestic refinery run* for a refinery is the lesser of—

(A) The total amount of crude oil input (in barrels) to the refinery's domestic processing units during the 1-year period ending on December 31, 2002, divided by 365; or

(B) The total amount of refined petroleum product (in barrels) produced by the refinery's domestic processing units during such 1-year period divided by 365.

(iii) The *aggregate average domestic daily refinery run* for a refiner is the sum of the average daily domestic refinery runs for all refineries that were owned by the refiner or a related person on April 1, 2003.

(iv) ***Cooperative owner*** is a person that—

(A) Directly holds an ownership interest in a cooperative small business refiner, as defined in paragraph (a)(2)(v) of this section; and

(B) Is a cooperative to which part 1 of subchapter T of the Internal Revenue Code (Code) applies.

(v) ***Cooperative small business refiner*** is a small business refiner that is a cooperative to which part 1 of subchapter T of the Code applies.

(vi) ***Low sulfur diesel fuel*** has the meaning prescribed in section 45H(c)(5).

(vii) ***Qualified capital costs*** are qualified costs as defined in section 45H(c)(2) that are properly chargeable to capital account.

(viii) ***Related person*** has the meaning prescribed in section 613A(d)(3) and the regulations under section 613A(d)(3).

(ix) ***Small business refiner*** has the meaning prescribed in section 45H(c)(1).

(b) *Section 179B deduction* —

(1) ***In general.*** Section 179B(a) allows a deduction with respect to the qualified capital costs paid or incurred by a small business refiner (the section 179B deduction). The deduction is allowable with respect to the qualified capital costs paid or incurred during a taxable year only if the small business refiner makes an election under paragraph (d) of this section for the taxable year. The certification requirement in section 45H(e) (relating to the certification required to support a credit under section

45H) does not apply for purposes of the section 179B deduction. Accordingly, the section 179B deduction is allowable with respect to the qualified capital costs of an electing small business refiner even if the refiner never obtains a certification under section 45H(e) with respect to those costs.

(2) ***Computation of section 179B deduction*** —

(i) ***In general.*** Except as provided in paragraphs (b)(2)(ii) and (c)(3) of this section, a small business refiner that makes an election under paragraph (d) of this section for a taxable year is allowed a section 179B deduction in an amount equal to 75 percent of qualified capital costs that are paid or incurred by the small business refiner during the taxable year.

(ii) ***Reduced percentage.*** A small business refiner's section 179B deduction is reduced if the refiner's aggregate average daily domestic refinery run is in excess of 155,000 barrels. In that case, the number of percentage points used in computing the deduction under paragraph (b)(2)(i) of this section (75) is reduced (not below zero) by the product of 75 and the ratio of the excess barrels to 50,000 barrels.

(3) ***Example.*** The application of this paragraph (b) is illustrated by the following example:

> *Example.* (i) A, an accrual method taxpayer, is a small business refiner with a taxable year ending December 31. On April 1, 2003, A owns a refinery with an average daily domestic refinery run (that is, an average daily run during calendar year 2002) of 100,000 barrels and a person related to A owns a refinery with an average daily domestic refinery run of 85,000 barrels. These are the only domestic refineries owned by A and persons related to A. A's aggregate average daily domestic refinery run for the two refineries is 185,000 barrels. A incurs qualified capital costs of $10 million in the taxable year ended December 31, 2007. The costs are incurred with respect to property that is placed in service in year 2008. A makes the election under paragraph (d) of this section for the 2007 taxable year.
> (ii) Because A's aggregate average daily domestic refinery run is 185,000 barrels, the percentage of the qualified capital costs that is deductible under section 179B(a) is reduced from 75 percent to 30 percent (75 percent reduced by 75 percent multiplied by 0.6 ((185,000 barrels minus 155,000 barrels)/50,000 barrels)). Thus, for 2007, A's deduction under section 179B(a) is $3,000,000 ($10,000,000 qualified capital costs multiplied by .30).

(c) ***Effect on basis*** —

(1) ***In general.*** If qualified capital costs are included in the basis of property, the basis of the property is reduced by the amount of the section 179B deduction allowed with respect to such costs.

(2) ***Treatment as depreciation.*** If qualified capital costs are included in the basis of depreciable property, the amount of the section 179B deduction allowed with respect to such costs is treated as a depreciation deduction for purposes of section 1245.

(d) ***Election to deduct qualified capital costs*** —

(1) ***In general*** —

(i) ***Section 179B election.*** This paragraph (d) prescribes rules for the election to deduct the qualified capital costs paid or incurred by a small business refiner during a taxable year (the section 179B election). A small business refiner making the section 179B election for a taxable year consents to, and agrees to apply, all of the provisions of section 179B and this section to qualified capital costs paid or incurred by the refiner during the taxable year. The section 179B election for a taxable year applies with respect to all qualified capital costs paid or incurred by the small business refiner during that taxable year.

(ii) ***Year-by-year election.*** A separate section 179B election must be made for each taxable year in which the taxpayer seeks to deduct qualified capital costs under section 179B. A small business refiner may make the section 179B election for some taxable years and not for other taxable years.

(iii) ***Elections for cooperative small business refiners.*** See paragraph (e) of this section for the rules applicable to the election provided under section 179B(e), relating to the election to allocate the section 179B deduction to cooperative owners of a cooperative small business refiner (the section 179B(e) election).

(2) ***Time and manner for making section 179B election*** —

(i) ***Time for making election.*** Except as provided in paragraph (d)(2)(iii) of this section, a taxpayer's section 179B election for a taxable year must be made by the due date (including extensions) for filing the taxpayer's Federal income tax return for the taxable year.

(ii) ***Manner of making election*** —

(A) ***In general.*** Except as provided in paragraph (d)(2)(iii) of this section, the section 179B election for a taxable year is made by claiming a section 179B deduction on the taxpayer's original Federal income tax return for the taxable year and attaching the statement described in paragraph (d)(2)(ii)(B) of this section to the return. The section 179B election with respect to qualified capital costs paid or incurred by a partnership is made by the partnership and the section 179B election with respect to qualified capital costs paid or incurred by an S corporation is made by the S corporation. In the case of qualified capital costs paid or incurred by the members of a consolidated group (within the meaning of § 1.1502-1(h)), the section 179B election with respect to such costs is made for each member by the common parent of the group.

(B) ***Information required in election statement.*** The election statement attached to the taxpayer's return must contain the following information:

(*1*) The name and identification number of the small business refiner.

(*2*) The amount of the qualified capital costs paid or incurred during the taxable year for which the election is made.

(*3*) The aggregate average daily domestic refinery run (as determined under paragraph (a)(2)(iii) of this section).

(*4*) The date by which the small business refiner must comply with the applicable EPA regulations. If this date is not June 1, 2006, the statement also must explain why compliance is not required by June 1, 2006.

(*5*) The calculation of the section 179B deduction for the taxable year.

(6) For each property that will have its basis reduced on account of the section 179B deduction for the taxable year, a description of the property, the amount included in the basis of the property on account of qualified capital costs paid or incurred during the taxable year, and the amount of the basis reduction to that property on account of the section 179B deduction for the taxable year.

(iii) Except as otherwise expressly provided by the Code, the regulations under the Code, or other guidance published in the Internal Revenue Bulletin, a section 179B election is valid only if made at the time and in the manner prescribed in this paragraph (d)(2). For example, except as otherwise expressly provided, the 179B election cannot be made for a taxable year to which this section applies through a request under section 446(e) to change the taxpayer's method of accounting.

(3) ***Revocation of election.*** An election made under this paragraph (d) may not be revoked without the prior written consent of the Commissioner of Internal Revenue. To seek the Commissioner's consent, the taxpayer must submit a request for a private letter ruling (for further guidance, see, for example, Rev. Proc. 2008-1 (2008-1 IRB 1) and § 601.601(d)(2)(ii)(*b*) of this chapter).

(4) ***Failure to make election.*** If a small business refiner does not make the section 179B election for a taxable year at the time and in the manner prescribed in paragraph (d)(2) of this section, no deduction is allowed for the qualified capital costs that the refiner paid or incurred during the year. Instead these qualified capital costs are chargeable to a capital account in that taxable year, the basis of the property to which these costs are capitalized is not reduced on account of section 179B, and the amount of depreciation allowable for the property attributable to these costs is determined by reference to these costs unreduced by section 179B.

(5) ***Elections for taxable years ending before June 26, 2008.*** This section does not apply to section 179B elections for taxable years ending before June 26, 2008. The rules for making the section 179B election for a taxable year ending before June 26, 2008 are provided in Notice 2006-47 (2006-20 IRB 892). See § 601.601(d)(2)(ii)(*b*) of this chapter.

(e) ***Election under section 179B(e) to allocate section 179B deduction to cooperative owners*** —

(1) ***In general.*** A cooperative small business refiner may elect to allocate part or all of its cooperative owners' ratable shares of the section 179B deduction for a taxable year to the cooperative owners (the section 179B(e) election). The section 179B deduction allocated to a cooperative owner is equal to the cooperative owner's ratable share of the total section 179B deduction allocated. A cooperative owner's ratable share is determined for this purpose on the basis of the cooperative owner's ownership interest in the cooperative small business refiner during the cooperative small business refiner's taxable year. If the cooperative owners' interests vary during the year, the cooperative small business refiner shall determine the owners' ratable shares under a consistently applied method that reasonably takes into account the owners' varying interests during the taxable year.

(2) ***Cooperative small business refiner denied section 1382 deduction for allocated portion.*** In computing taxable income under section 1382, a cooperative small business refiner must reduce its section 179B deduction for the taxable year by an amount equal to the section 179B deduction allocated under this paragraph (e) to the refiner's cooperative owners for the taxable year.

(3) ***Time and manner for making election*** —

(i) ***Time for making election.*** The section 179B(e) election for a taxable year must be made by the due date (including extensions) for filing the cooperative small business refiner's Federal income tax return for the taxable year.

(ii) ***Manner of making election.*** The section 179B(e) election for a taxable year is made by attaching a statement to the cooperative small business refiner's Federal income tax return for the taxable year. The election statement must contain the following information:

(A) The name and identification number of the cooperative small business refiner.

(B) The amount of the section 179B deduction allowable to the cooperative small business refiner for the taxable year (determined before the application of section 179B(e) and this paragraph (e)).

(C) The name and identification number of each cooperative owner to which the cooperative small business refiner is allocating all or some of the section 179B deduction.

(D) The amount of the section 179B deduction that is allocated to each cooperative owner listed in response to paragraph (e)(3)(ii)(C) of this section.

(4) ***Irrevocable election.*** A section 179B(e) election for a taxable year, once made, is irrevocable for that taxable year.

(5) ***Written notice to owners.*** A cooperative small business refiner that makes a section 179B(e) election for a taxable year must notify each cooperative owner of the amount of the section 179B deduction that is allocated to that cooperative owner. This notification must be provided in a written notice that is mailed by the cooperative small business refiner to its cooperative owner before the due date (including extensions) of the cooperative small business refiner's Federal income tax return for the election year. In addition, the cooperative small business refiner must report the amount of the cooperative owner's section 179B deduction on Form 1099-PATR, “Taxable Distributions Received From Cooperatives,” issued to the cooperative owner. If Form 1099-PATR is revised or renumbered, the amount of the cooperative owner's section 179B deduction must be reported on the revised or renumbered form.

(f) ***Effective/applicability date*** —

(1) ***In general.*** This section applies to taxable years ending on or after June 26, 2008.

(2) ***Application to taxable years ending before June 26, 2008.*** A small business refiner may apply this section to a taxable year ending before June 26, 2008, provided that the small business refiner applies all provisions in this section, with the modifications described in paragraph (f)(3) of this section, to the taxable year.

(3) ***Modifications applicable to taxable years ending before June 26, 2008.*** The following modifications to the rules of this section apply to a small business refiner that applies those rules to a taxable year ending before *June 26, 2008*:

(i) ***Rules relating to section 179B election.*** The section 179B election for a taxable year ending before *June 26, 2008* may be made under the rules provided in Notice 2006-47, rather than under the rules set forth in paragraph (d) of this section.

(ii) ***Rules relating to section 179B(e) election.*** A section 179B(e) election for a taxable year ending before *June 26, 2008* will be treated as satisfying the requirements of paragraph (f) if the cooperative small business refiner has calculated its tax liability in a manner consistent with

the election and has used any reasonable method consistent with the principles of section 179B(e) to inform the Internal Revenue Service that an election has been made under section 179B(e) and to inform cooperative owners of the amount of the section 179B deduction they have been allocated.

(4) ***Expiration date.*** The applicability of § 179B-1T expires on *June 24, 2011*.

[T.D. 9404, 73 FR 36422, June 27, 2008]

§ 1.179C-1 Election to expense certain refineries.

(a) ***Scope and definitions*** —

(1) ***Scope.*** This section provides the rules for determining the deduction allowable under section 179C(a) for the cost of any qualified refinery property. The provisions of this section apply only to a taxpayer that elects to apply section 179C in the manner prescribed under paragraph (d) of this section.

(2) ***Definitions.*** For purposes of section 179C and this section, the following definitions apply:

(i) ***Applicable environmental laws*** are any applicable federal, state, or local environmental laws.

(ii) ***Qualified fuels*** has the meaning set forth in section 45K(c).

(iii) ***Cost*** is the unadjusted depreciable basis (as defined in § 1.168(b)-1(a)(3), but without regard to the reduction in basis for any portion of the basis the taxpayer properly elects to treat as an expense under section 179C and this section) of the property.

(iv) ***Throughput*** is a volumetric rate measuring the flow of crude oil, qualified fuels, or, in the case of property placed in service after October 3, 2008, and before January 1, 2014, shale or tar sands, processed over a given period of time, typically referenced on the basis of barrels per calendar day.

(v) ***Barrels per calendar day*** is the amount of fuels that a facility can process under usual operating conditions, expressed in terms of capacity during a 24-hour period and reduced to account for down time and other limitations.

(vi) ***United States*** has the same meaning as that term is defined in section 7701(a)(9).

(b) ***Qualified refinery property*** —

(1) ***In general.*** Qualified refinery property is any property that meets the requirements set forth in paragraphs (b)(2) through (b)(7) of this section.

(2) ***Description of qualified refinery property*** —

(i) ***In general.*** Property that comprises any portion of a qualified refinery may be qualified refinery property. For purposes of section 179C and this section, a qualified refinery is any refinery located in the United States that—

(A) In the case of property placed in service after August 8, 2005, and on or before October 3, 2008, is designed to serve the primary purpose of processing liquid fuel from crude oil or qualified fuels; or

(B) In the case of property placed in service after October 3, 2008, and before January 1, 2014, is designed to serve the primary purpose of processing liquid fuel from crude oil, qualified fuels, or directly from shale or tar sands.

(ii) ***Nonqualified refinery property.*** Refinery property is not qualified refinery property for purposes of this paragraph (b)(2) if—

(A) The primary purpose of the refinery property is for use as a topping plant, asphalt plant, lube oil facility, crude or product terminal, or blending facility; or

(B) The refinery property is built solely to comply with consent decrees or projects mandated by Federal, State, or local governments.

(3) ***Original use*** —

(i) ***In general.*** For purposes of the deduction allowable under section 179C(a), refinery property will meet the requirements of this paragraph (b)(3) if the original use of the property commences with the taxpayer. Except as provided in paragraph (b)(3)(ii) of this section, original use means the first use to which the property is put, whether or not that use corresponds to the use of the property by the taxpayer. Thus, if a taxpayer incurs capital expenditures to recondition or rebuild property acquired or owned by the taxpayer, only the capital expenditures incurred by the taxpayer to recondition or rebuild the property acquired or owned by the taxpayer satisfy the original use requirement. However, the cost of reconditioned or rebuilt property acquired by a taxpayer does not satisfy the original use requirement. Whether property is reconditioned or rebuilt property is a question of fact. For purposes of this paragraph (b)(3)(i), acquired or self-constructed property that contains used parts will be treated as reconditioned or rebuilt only if the cost of the used parts is more than 20 percent of the total cost of the property.

(ii) ***Sale-leaseback.*** If any new portion of a qualified refinery is originally placed in service by a person after August 8, 2005, and is sold to a taxpayer and leased back to the person by the taxpayer within three months after the date the property was originally placed in service by the person, the taxpayer-lessor is considered the original user of the property.

(4) ***Placed-in-service date*** —

(i) ***In general.*** Refinery property will meet the requirements of this paragraph (b)(4) if the property is placed in service by the taxpayer after August 8, 2005, and before January 1, 2014.

(ii) ***Sale-leaseback.*** If a new portion of refinery property is originally placed in service by a person after August 8, 2005, and is sold to a taxpayer and leased back to the person by the taxpayer within three months after the date the property was originally placed in service by the person, the property is treated as originally placed in service by the taxpayer-lessor not earlier than the date on which the property is used by the lessee under the leaseback.

(5) ***Production capacity*** —

(i) ***In general.*** Refinery property is considered qualified refinery property if—

(A) It enables the existing qualified refinery to increase the total volume output, determined without regard to asphalt or lube oil, by at least 5 percent on an average daily basis;

(B) In the case of property placed in service after August 8, 2005, and on or before October 3, 2008, it enables the existing qualified refinery to increase the percentage of total throughput attributable to processing qualified fuels to a rate that is at least 25 percent of total throughput on an average daily basis; or

(C) In the case of property placed in service after October 3, 2008, and before January 1, 2014, it enables the existing qualified refinery to increase the percentage of total throughput attributable to processing qualified fuels, shale, or tar sands to a rate that is at least 25 percent of total throughput on an average daily basis.

(ii) ***When production capacity is tested.*** The production capacity requirement of this paragraph (b)(5) is determined as of the date the property is placed in service by the taxpayer. Any reasonable method may be used to determine the appropriate baseline for measuring capacity increases and to demonstrate and substantiate that the capacity of the existing qualified refinery has been sufficiently increased.

(iii) ***Multi-stage projects.*** In the case of multi-stage projects, a taxpayer must satisfy the reporting requirements of paragraph (f)(2) of this section, sufficient to establish that the production capacity requirements of this paragraph (b)(5) will be met as a result of the taxpayer's overall plan.

(6) ***Applicable environmental laws*** —

(i) ***In general.*** The environmental compliance requirement applies only with respect to refinery property, or any portion of refinery property, that is placed in service after August 8, 2005. A refinery's failure to meet applicable environmental laws with respect to a portion of the refinery that was in service prior to August 8, 2005 will not disqualify a taxpayer from making the election under section 179C(a) with respect to otherwise qualifying refinery property.

(ii) ***Waiver under the Clean Air Act.*** Refinery property must comply with the Clean Air Act, notwithstanding any waiver received by the taxpayer under that Act.

(7) ***Construction of property*** —

(i) ***In general.*** Qualified property will meet the requirements of this paragraph (b)(7) if no written binding contract for the construction of the property was in effect before June 14, 2005, and if—

(A) The construction of the property is subject to a written binding contract entered into before January 1, 2010;

(B) The property is placed in service before January 1, 2010; or

(C) In the case of self-constructed property, the construction of the property began after June 14, 2005, and before January 1, 2010.

(ii) ***Definition of binding contract*** —

(A) ***In general.*** A contract is binding only if it is enforceable under state law against the taxpayer or a predecessor, and does not limit damages to a specified amount (for example, by use of a liquidated damages provision). For this purpose, a contractual provision that limits damages to an amount equal to at least 5 percent of the total contract price will not be treated as limiting damages to a specified amount. In

determining whether a contract limits damages, the fact that there may be little or no damages because the contract price does not significantly differ from fair market value will not be taken into account.

(B) ***Conditions.*** A contract is binding even if subject to a condition, as long as the condition is not within the control of either party or the predecessor of either party. A contract will continue to be binding if the parties make insubstantial changes in its terms and conditions, or if any term is to be determined by a standard beyond the control of either party. A contract that imposes significant obligations on the taxpayer or a predecessor will be treated as binding, notwithstanding the fact that insubstantial terms remain to be negotiated by the parties to the contract.

(C) ***Options.*** An option to either acquire or sell property is not a binding contract.

(D) ***Supply agreements.*** A binding contract does not include a supply or similar agreement if the payment amount and design specification of the property to be purchased have not been specified.

(E) ***Components.*** A binding contract to acquire one or more components of a larger property will not be treated as a binding contract to acquire the larger property. If a binding contract to acquire a component does not satisfy the requirements of this paragraph (b)(7), the component is not qualified refinery property.

(iii) ***Self-constructed property*** —

(A) ***In general.*** Except as provided in paragraph (b)(7)(iii)(B) of this section, if a taxpayer manufactures, constructs, or produces property for use by the taxpayer in its trade or business (or for the production of income by the taxpayer), the construction of property rules in this paragraph (b)(7) are treated as met for qualified refinery property if the taxpayer begins manufacturing, constructing, or producing the property after June 14, 2005, and before January 1, 2010. Property that is manufactured, constructed, or produced for the taxpayer by another person under a written binding contract (as defined in paragraph (b)(7)(ii) of this section) that is entered into prior to the manufacture, construction, or production of the property for use by the taxpayer in its trade or business (or for the production of income) is considered to be manufactured, constructed, or produced by the taxpayer.

(B) ***When construction begins.*** For purposes of this paragraph (b)(7)(iii), construction of property generally begins when physical work of a significant nature begins. Physical work does not include preliminary activities such as planning or designing, securing financing, exploring, or researching. The determination of when physical work of a significant nature begins depends on the facts and circumstances.

(C) ***Components of self-constructed property*** —

(*1*) ***Acquired components.*** If a binding contract (as defined in paragraph (b)(7)(ii) of this section) to acquire a component of self-constructed property is in effect on or before June 14, 2005, the component does not satisfy the requirements of paragraph (b)(7)(i) of this section, and is not qualified refinery property. However, if construction of the self-constructed property begins after June 14, 2005, the self-constructed property may be qualified refinery property if it meets all other requirements of section 179C and this section (including paragraph (b)(7)(i) of this section), even

though the component is not qualified refinery property. If the construction of self-constructed property begins before June 14, 2005, neither the self-constructed property nor any component related to the self-constructed property is qualified refinery property. If the component is acquired before January 1, 2010, but the construction of the self-constructed property begins after December 31, 2009, the component may qualify as qualified refinery property even if the self-constructed property is not qualified refinery property.

(2) ***Self-constructed components.*** If the manufacture, construction, or production of a component fails to meet any of the requirements of paragraph (b)(7)(iii) of this section, the component is not qualified refinery property. However, if the manufacture, construction, or production of a component fails to meet any of the requirements provided in paragraph (b)(7)(iii) of this section, but the construction of the self-constructed property begins after June 14, 2005, the self constructed property may qualify as qualified refinery property if it meets all other requirements of section 179C and this section (including paragraph (b)(7)(i) of this section). If the construction of the self-constructed property begins before June 14, 2005, neither the self-constructed property nor any components related to the self-constructed property are qualified refinery property. If the component was self-constructed before January 1, 2010, but the construction of the self-constructed property begins after December 31, 2009, the component may qualify as qualified refinery property, although the self-constructed property is not qualified refinery property.

(c) ***Computation of expense deduction for qualified refinery property.*** In general, the allowable deduction under paragraph (d) of this section for qualified refinery property is determined by multiplying by 50 percent the cost of the qualified refinery property paid or incurred by the taxpayer.

(d) ***Election*** —

(1) ***In general.*** A taxpayer may make an election to deduct as an expense 50 percent of the cost of any qualified refinery property. A taxpayer making this election takes the 50 percent deduction for the taxable year in which the qualified refinery property is placed in service.

(2) ***Time and manner for making election*** —

(i) ***Time for making election.*** An election specified in this paragraph (d) generally must be made not later than the due date (including extensions) for filing the original Federal income tax return for the taxable year in which the qualified refinery property is placed in service by the taxpayer.

(ii) ***Manner of making election.*** The taxpayer makes an election under section 179C(a) and this paragraph (d) by entering the amount of the deduction at the appropriate place on the taxpayer's timely filed original Federal income tax return for the taxable year in which the qualified refinery property is placed in service, and attaching a report as specified in paragraph (f) of this section to the taxpayer's timely filed original federal income tax return for the taxable year in which the qualified refinery property is placed in service.

(3) ***Revocation of election*** —

(i) ***In general.*** An election made under section 179C(a) and this paragraph (d), and any specification contained in such election, may not be revoked except with the consent of the Commissioner of Internal Revenue.

(ii) ***Revocation prior to the revocation deadline.*** A taxpayer is deemed to have requested, and to have been granted, the consent of the Commissioner to revoke an election under section 179C(a) and this paragraph (d) if the taxpayer revokes the election before the revocation deadline. The revocation deadline is 24 months after the due date (including extensions) for filing the taxpayer's Federal income return for the taxable year for which the election applies. An election under section 179C(a) and this paragraph (d) is revoked by attaching a statement to an amended return for the taxable year for which the election applies. The statement must specify the name and address of the refinery for which the election applies and the amount deducted on the taxpayer's original Federal income tax return for the taxable year for which the election applies.

(iii) ***Revocation after the revocation deadline.*** An election under section 179C(a) and this paragraph (d) may not be revoked after the revocation deadline. The revocation deadline may not be extended under § 301.9100-1.

(iv) ***Revocation by cooperative taxpayer.*** A taxpayer that has made an election to allocate the section 179C deduction to cooperative owners under section 179C(g) and paragraph (e) of this section may not revoke its election under section 179C(a).

(e) ***Election to allocate section 179C deduction to cooperative owners*** —

(1) In *general.* If a cooperative taxpayer makes an election under section 179C(g) and this paragraph (e), the cooperative taxpayer may elect to allocate all, some, or none of the deduction allowable under section 179C(a) for that taxable year to the cooperative owner(s). This allocation is equal to the cooperative owner(s)' ratable share of the total amount allocated, determined on the basis of each cooperative owner's ownership interest in the cooperative taxpayer. For purposes of this section, a cooperative taxpayer is an organization to which part I of subchapter T applies, and in which another organization to which part I of subchapter T applies (cooperative owner) directly holds an ownership interest. No deduction shall be allowed under section 1382 for any amount allocated under this paragraph (e).

(2) ***Time and manner for making election*** —

(i) ***Time for making election.*** A cooperative taxpayer must make the election under section 179C(g) and this paragraph (e) by the due date (including extensions) for filing the cooperative taxpayer's original Federal income tax return for the taxable year to which the cooperative taxpayer's election under section 179C(a) and paragraph (d) of this section applies.

(ii) ***Manner of making election.*** An election under this paragraph (e) is made by attaching to the cooperative taxpayer's timely filed Federal income tax return for the taxable year (including extensions) to which the cooperative taxpayer's election under section 179C(a) and paragraph (d) of this section applies a statement providing the following information:

(A) The name and taxpayer identification number of the cooperative taxpayer.

(B) The amount of the deduction allowable to the cooperative taxpayer for the taxable year to which the election under section 179C(a) and paragraph (d) of this section applies.

(C) The name and taxpayer identification number of each cooperative owner to which the cooperative taxpayer is allocating all or some of the deduction allowable.

(D) The amount of the allowable deduction that is allocated to each cooperative owner listed in paragraph (e)(2)(ii)(C) of this section.

(3) ***Written notice to owners.*** If any portion of the deduction allowable under section 179C(a) is allocated to a cooperative owner, the cooperative taxpayer must notify the cooperative owner of the amount of the deduction allocated to the cooperative owner in a written notice, and on Form 1099-PATR, "Taxable Distributions Received from Cooperatives." This notice must be provided on or before the due date (including extensions) of the cooperative taxpayer's original federal income tax return for the taxable year for which the cooperative taxpayer's election under section 179C(a) and paragraph (d) of this section applies.

(4) ***Irrevocable election.*** A section 179C(g) election, once made, is irrevocable.

(f) ***Reporting requirement*** —

(1) ***In general.*** A taxpayer may not claim a deduction under section 179C(a) for any taxable year unless the taxpayer files a report with the Secretary containing information with respect to the operation of the taxpayer's refineries.

(2) ***Information to be included in the report.*** The taxpayer must specify—

(i) The name and address of the refinery;

(ii) Under which production capacity requirement under section 179C(e) and paragraph (b)(5)(i)(A), (B), and (C) of this section the taxpayer's qualified refinery qualifies;

(iii) Whether the refinery is qualified refinery property under section 179C(d) and paragraph (b)(2) of this section, sufficient to establish that the primary purpose of the refinery is to process liquid fuel from crude oil, qualified fuels, or directly from shale or tar sands.

(iv) The total cost basis of the qualified refinery property at issue for the taxpayer's current taxable year; and

(v) The depreciation treatment of the capitalized portion of the qualified refinery property.

(3) ***Time and manner for submitting report*** —

(i) ***Time for submitting report.*** The taxpayer is required to submit the report specified in this paragraph (f) not later than the due date (including extensions) of the taxpayer's Federal income tax return for the taxable year in which the qualified refinery property is placed in service.

(ii) ***Manner of submitting report.*** The taxpayer must attach the report specified in this paragraph (f) to the taxpayer's timely filed original Federal income tax return for the taxable year in which the qualified refinery property is placed in service.

(g) ***Effective/applicability date.*** This section is applicable for taxable years ending on or after August 22, 2011. For taxable years ending before August 22, 2011, taxpayers may apply the proposed regulations published on July 9, 2008, or, in the alternative, may apply these final regulations.

[T.D. 9547, 76 FR 52558, Aug. 23, 2011]

§§ 1.179D-1-1.179D-2 [Reserved]

§ 1.179D-3 Rules relating to the increased deduction for prevailing wage and apprenticeship.

(a) In general. If any energy efficient commercial building property (as defined in section 179D(c)(1)), energy efficient building retrofit property (as defined in section 179D(f)(3)), or property installed pursuant to a qualified retrofit plan (as defined in section 179D(f)(2)) satisfies the requirements in paragraph (b) of this section, the applicable dollar value for determining the maximum amount of the deduction determined under section 179D(b)(2) is the increased amount described in section 179D(b)(3)(A). For purposes of this section, installation means those activities described in §§ 1.45-7(d)(3) and 1.45-8(g)(1) that are performed with respect to energy efficient commercial building property, energy efficient building retrofit property, or property installed pursuant to a qualified retrofit plan within the meaning of section 179D before such property is placed in service.

(b) ***Certain energy efficient commercial building property requirements.*** Energy efficient commercial building property, energy efficient building retrofit property, or property installed pursuant to a qualified retrofit plan satisfies the requirements of this paragraph (b) if it is one of the following—

(1) Property the installation of which began prior to January 29, 2023; or

(2) Property that meets the prevailing wage requirements of section 45(b)(7) of the Code and § 1.45-7, the apprenticeship requirements of section 45(b)(8) of the Code and § 1.45-8, and the recordkeeping and reporting requirements of § 1.45-12, all with respect to the installation of any property.

(c) ***Applicability date.*** This section applies to energy efficient commercial building property, energy efficient building retrofit property, or property installed pursuant to a qualified retrofit plan installed in taxable years ending after June 25, 2024, and the installation of which begins after June 25, 2024. Taxpayers may apply this section to energy efficient commercial building property, energy efficient building retrofit property, or property installed pursuant to a qualified retrofit plan installed in taxable years ending on or before June 25, 2024, and energy efficient commercial building property, energy efficient building retrofit property, or property installed pursuant to a qualified retrofit plan installed in taxable years ending after June 25, 2024, the installation of which begins before June 25, 2024, provided that taxpayers follow this section in its entirety and in a consistent manner.

[T.D. 9998, 89 FR 53272, June 25, 2024]

§ 1.180-1 Expenditures by farmers for fertilizer, etc.

(a) ***In general.*** A taxpayer engaged in the business of farming may elect, for any taxable year beginning after December 31, 1959, to treat as deductible expenses those expenditures otherwise chargeable to capital account which are paid or incurred by him during the taxable year for the purchase or acquisition of fertilizer, lime, ground limestone, marl, or other materials to enrich, neutralize, or condition land used in farming, and those expenditures otherwise chargeable to capital account paid or incurred for the application of such items and materials to such land. No election is required to be made for those expenditures which are not capital in nature. Section 180, § 1.180-2, and this section are not applicable to those expenses which are deductible under section 162 and the regulations thereunder or which are subject to the method described in section 175 and the regulations thereunder.

(b) ***Land used in farming.*** For purposes of section 180(a) and of paragraph (a) of this section, the term *land used in farming* means land used (before or simultaneously with the expenditures described in such section and such paragraph) by the taxpayer or his tenant for the production of crops, fruits, or other agricultural products or for the sustenance of livestock. See section 180(b). Expenditures for the initial preparation of land never previously used for farming purposes by the taxpayer or his tenant (although

chargeable to capital account) are not subject to the election. The principles stated in §§ 1.175-3 and 1.175-4 are equally applicable under this section in determining whether the taxpayer is engaged in the business of farming and whether the land is used in farming.

(74 Stat. 1001, 26 U.S.C. 180)

[T.D. 6548, 26 FR 1486, Feb. 22, 1961]

§ 1.180-2 Time and manner of making election and revocation.

(a) ***Election.*** The claiming of a deduction on the taxpayer's return for an amount to which section 180 applies for amounts (otherwise chargeable to capital account) expended for fertilizer, lime, etc., shall constitute an election under section 180 and paragraph (a) of § 1.180-1. Such election shall be effective only for the taxable year for which the deduction is claimed.

(b) ***Revocation.*** Once the election is made for any taxable year such election may not be revoked without the consent of the district director for the district in which the taxpayer's return is required to be filed. Such requests for consent shall be in writing and signed by the taxpayer or his authorized representative and shall set forth:

(1) The name and address of the taxpayer;

(2) The taxable year to which the revocation of the election is to apply;

(3) The amount of expenditures paid or incurred during the taxable year, or portions thereof (where applicable), previously taken as a deduction on the return in respect of which the revocation of the election is to be applicable; and

(4) The reasons for the request to revoke the election.

(74 Stat. 1001, 26 U.S.C. 180)

[T.D. 6548, 26 FR 1486, Feb. 22, 1961]

§ 1.181-0 Table of contents.

This section lists the table of contents for §§ 1.181-1 through 1.181-6.

§ 1.181-1 Deduction for qualified film and television production costs.

(a) Deduction.

(1) In general.

(2) Owner.

(3) Production costs.

(4) Aggregate production costs.

(5) Pre-amendment production.

(6) Post-amendment production.

(7) Initial release or broadcast.

(8) Special rule.

(b) Limit on amount of aggregate production costs and amount of deduction.

(1) In general.

(i) Pre-amendment production.

(ii) Post-amendment production.

(iii) Special rules.

(2) Higher limit for productions in certain areas.

(i) In general.

(ii) Significantly paid or incurred for live action productions.

(iii) Significantly paid or incurred for animated productions.

(iv) Significantly paid or incurred for productions incorporating both live action and animation.

(v) Establishing qualification.

(vi) Allocation.

(c) Effect on depreciation or amortization of a qualified film or television production.

(1) Pre-amendment production.

(2) Post-amendment production.

§ 1.181-2 Election to deduct production costs.

(a) Election.

(1) In general.

(2) Exception.

(b) Time of making election.

(1) In general.

(2) Special rule.

(3) Six-month extension.

(c) Manner of making election.

(1) In general.

(2) Information required.

(i) Initial election.

(ii) Subsequent taxable years.

(3) Deductions by more than one person.

(d) Revocation of election.

(1) In general.

(2) Consent granted.

§ 1.181-3 Qualified film or television production.

(a) In general.

(b) Production.

(1) In general.

(2) Special rules for television productions.

(3) Exception for certain sexually explicit productions.

(c) Compensation.

(d) Qualified compensation.

(e) Special rule for acquired productions.

(f) Other definitions.

(1) Actors.

(2) Production personnel.

(3) United States.

§ 1.181-4 Special rules.

(a) Recapture.

(1) Applicability.

(i) In general.

(ii) Special rule.

(2) Principal photography not commencing prior to the date of expiration of section 181.

(3) Amount of recapture.

(b) Recapture under section 1245.

§ 1.181-5 Examples.

§ 1.181-6 Effective/applicability date.

(a) In general.

(b) Pre-effective date productions.

[T.D. 9551, 76 FR 60724, Sept. 30, 2011, as amended by T.D. 9603, 77 FR 72924, Dec. 7, 2012]

§ 1.181-1 Deduction for qualified film and television production costs.

(a) ***Deduction*** —

(1) ***In general.***

(i) An owner (as defined in paragraph (a)(2) of this section) of any film or television production (production, as defined in § 1.181-3(b)) that the owner reasonably expects will be, upon completion, a qualified film or television production (as defined in § 1.181-3(a)) may elect to treat production costs paid or incurred by that owner (subject to the limits imposed under paragraph (b) of this section) as an expense that is deductible for the taxable year in which the costs are paid (for an owner who uses the cash receipts and disbursements method of accounting) or incurred (for an owner who uses an accrual method of accounting). The deduction under section 181 is subject to recapture if the owner's expectations are later determined to be inaccurate.

(ii) This section provides rules for determining the owner of a production, the production costs (as defined in paragraph (a)(3) of this section), the maximum amount of aggregate production costs (as defined in paragraph (a)(4) of this section) that may be paid or incurred for a pre-amendment production (as defined in paragraph (a)(5) of this section) for which the owner makes an election under section 181, and the maximum amount of aggregate production costs that may be claimed as a deduction for a post-amendment production (as defined in paragraph (a)(6) of this section) for which the owner makes an election under section 181. Section

1.181-2 provides rules for making the election under section 181. Section 1.181-3 provides definitions and rules concerning qualified film and television productions. Section 1.181-4 provides special rules, including rules for recapture of the deduction. Section 1.181-5 provides examples of the application of §§ 1.181-1 through 1.181-4, while § 1.181-6 provides the effective date of §§ 1.181-1 through 1.181-5.

(2) *Owner.*

(i) For purposes of this section and §§ 1.181-2 through 1.181-6, an owner of a production is any person that is required under section 263A to capitalize the costs of producing the production into the cost basis of the production, or that would be required to do so if section 263A applied to that person.

(ii) Further, a person that acquires a finished or partially-finished production is treated as an owner of that production for purposes of this section and §§ 1.181-2 through 1.181-6, but only if the production is acquired prior to its initial release or broadcast (as defined in paragraph (a)(7) of this section). Moreover, a person that acquires only a limited license or right to exploit a production, or receives an interest or profit participation in a production, as compensation for services, is not an owner of the production for purposes of this section and §§ 1.181-2 through 1.181-6.

(3) *Production costs.*

(i) For purposes of this section and §§ 1.181-2 through 1.181-6, the term *production costs* means all costs that are paid or incurred by an owner in producing a production that are required, absent the provisions of section 181, to be capitalized under section 263A, or that would be required to be capitalized if section 263A applied to the owner, and, if applicable, all costs that are paid or incurred by an owner in acquiring a production prior to its initial release or broadcast. Production costs include, but are not limited to, participations and residuals paid or incurred, compensation paid or incurred for services, compensation paid or incurred for property rights, non-compensation costs, and costs paid or incurred in connection with obtaining financing for the production (for example, premiums paid or incurred to obtain a completion bond for the production).

(ii) Production costs do not include costs paid or incurred to distribute or exploit a production (including advertising and print costs).

(iii) Production costs do not include the costs to prepare a new release or new broadcast of an existing production after the initial release or broadcast of the production (for example, the preparation of a DVD release of a theatrically-released film, or the preparation of an edited version of a theatrically-released film for television broadcast). Costs paid or incurred to prepare a new release or a new broadcast of a production after its initial release or broadcast, therefore, are not taken into account for purposes of paragraph (b)(1) of this section, and may not be deducted under this paragraph (a).

(iv) If a pre-amendment production is acquired from any person prior to its initial release or broadcast, the acquiring person must use as its initial aggregate costs the greater of—

(A) The cost of acquisition; or

(B) The seller's aggregate production costs.

(v) Production costs do not include costs that the owner has deducted or begun to amortize prior to the taxable year the owner makes an election under § 1.181-2 for the production (for example, costs described in § 1.181-2(a)(2)). These costs, however, are included in aggregate production costs to the extent they would have been treated as production costs by the owner notwithstanding this paragraph (a)(3)(v).

(4) ***Aggregate production costs.*** The term *aggregate production costs* means all production costs described in paragraph (a)(3) of this section paid or incurred by any person, whether paid or incurred directly by an owner or indirectly on behalf of an owner.

(5) ***Pre-amendment production.*** The term *pre-amendment production* means a qualified film or television production commencing after October 22, 2004, and before January 1, 2008.

(6) ***Post-amendment production.*** The term *post-amendment production* means a qualified film or television production commencing on or after January 1, 2008.

(7) ***Initial release or broadcast.*** Solely for purposes of this section and §§ 1.181-2 through 1.181-6, the term *initial release or broadcast* means the first commercial exhibition or broadcast of a production to an audience. However, the term "initial release or broadcast" does not include limited exhibition prior to commercial exhibition to general audiences if the limited exhibition is primarily for purposes of publicity, marketing to potential purchasers or distributors, determining the need for further production activity, or raising funds for the completion of production. For example, the term initial release or broadcast does not include exhibition to a test audience to determine the need for further production activity, or exhibition at a film festival for promotional purposes, if the exhibition precedes commercial exhibition to general audiences.

(8) ***Special rule.*** The provisions of this paragraph (a) apply notwithstanding the treatment of participations and residuals permitted under the income forecast method in section 167(g)(7)(D).

(b) ***Limit on amount of aggregate production costs and amount of deduction*** —

(1) ***In general*** —

(i) ***Pre-amendment production.*** Except as provided under paragraph (b)(2) of this section, no deduction is allowed under section 181 for any pre-amendment production, the aggregate production costs of which exceed $15,000,000. See also paragraph (a)(3)(iv) of this section. For a pre-amendment production for which the aggregate production costs do not exceed $15,000,000 (or, if applicable under paragraph (b)(2) of this section, $20,000,000), an owner may deduct under section 181 all of the production costs paid or incurred by that owner.

(ii) ***Post-amendment production.*** Section 181 permits a deduction for the first $15,000,000 (or, if applicable under paragraph (b)(2) of this section, $20,000,000) of the aggregate production costs of any post-amendment production.

(iii) ***Special rules.*** The owner's deduction under section 181 is limited to the owner's acquisition costs of the production plus any further production costs paid or incurred by the owner. The deduction under section 181 is not available for any portion of the acquisition costs, and any subsequent production costs, of a production with an initial release or broadcast that is prior to the date of acquisition.

(2) ***Higher limit for productions in certain areas*** —

(i) ***In general.*** This section is applied by substituting $20,000,000 for $15,000,000 in paragraph (b)(1) of this section for any production the aggregate production costs of which are significantly paid or incurred in an area eligible for designation as—

(A) A low income community under section 45D; or

(B) A distressed county or isolated area of distress by the Delta Regional Authority established under 7 U.S.C. section 2009aa-1.

(ii) ***Significantly paid or incurred for live action productions.*** The aggregate production costs of a live action production are significantly paid or incurred within one or more areas specified in paragraph (b)(2)(i) of this section if—

(A) At least 20 percent of the aggregate production costs paid or incurred in connection with first-unit principal photography for the production are paid or incurred in connection with first-unit principal photography that takes place in such areas; or

(B) At least 50 percent of the total number of days of first-unit principal photography for the production consists of days during which first-unit principal photography takes place in such areas.

(iii) ***Significantly paid or incurred for animated productions.*** For purposes of an animated production, the aggregate production costs of the production are significantly paid or incurred within one or more areas specified in paragraph (b)(2)(i) of this section if—

(A) At least 20 percent of the aggregate production costs paid or incurred in connection with keyframe animation, in-between animation, animation photography, and the recording of voice acting performances for the production are paid or incurred in connection with such activities that take place in such areas; or

(B) At least 50 percent of the total number of days of keyframe animation, in-between animation, animation photography, and the recording of voice acting performances for the production consists of days during which such activities take place in such areas.

(iv) ***Significantly paid or incurred for productions incorporating both live action and animation.*** For purposes of a production incorporating both live action and animation, the aggregate production costs of the production are significantly paid or incurred within one or more areas specified in paragraph (b)(2)(i) of this section if—

(A) At least 20 percent of the aggregate production costs paid or incurred in connection with first-unit principal photography, keyframe animation, in-between animation, animation photography, and the recording of voice acting performances for the production are paid or incurred in connection with such activities that take place in such areas; or

(B) At least 50 percent of the total number of days of first-unit principal photography, keyframe animation, in-between animation, animation photography, and the recording of voice acting performances for the production consists of days during which such activities take place in such areas.

(v) ***Establishing qualification.*** An owner intending to utilize the higher aggregate production costs limit under this paragraph (b)(2) must establish qualification under this paragraph (b)(2).

(vi) ***Allocation.*** Solely for purposes of determining whether a production qualifies for the higher production cost limit (for pre-amendment productions) or deduction limit (for post-amendment productions) provided under this paragraph (b)(2), compensation to actors (as defined in § 1.181-3(f)(1)), directors, producers, and other relevant production personnel (as defined in § 1.181-3 (f)(2)) is allocated entirely to first-unit principal photography.

(c) ***Effect on depreciation or amortization of a qualified film or television production*** —

(1) ***Pre-amendment production.*** Except as provided in §§ 1.181-1(a)(3)(v) and 1.181-2(a)(2), an owner that elects to deduct production costs under section 181 for a pre-amendment production may not deduct production costs for that production under any provision of the Internal Revenue Code other than section 181 unless the recapture requirements of § 1.181-4(a) apply to the production.

(2) ***Post-amendment production.*** Amounts not allowable as a deduction under section 181 for a post-amendment production may be deducted under any other applicable provision of the Code.

[T.D. 9551, 76 FR 60724, Sept. 30, 2011, as amended by T.D. 9552, 76 FR 64817, Oct. 19, 2011; T.D. 9603, 77 FR 72924, Dec. 7, 2012]

§ 1.181-2 Election to deduct production costs.

(a) ***Election*** —

(1) ***In general.*** Except as provided in paragraph (a)(2) of this section, an owner may make an election under section 181 to deduct production costs of a production only if that owner has not deducted in a previous taxable year any production costs for that production under any provision of the Internal Revenue Code (Code) other than section 181.

(2) ***Exception.*** An owner may make an election under section 181 despite prior deductions under any other provision of the Code for amortization of the costs of acquiring or developing screenplays, scripts, story outlines, motion picture production rights to books and plays, and other similar properties for purposes of potential future development or production of a production, if such costs were paid or incurred before the first taxable year for which an election may be made under § 1.181-2(b) and are included in aggregate production costs.

(b) ***Time of making election*** —

(1) ***In general.*** The election to deduct production costs for a production under section 181 must be made by the due date (including any extension) for filing the owner's Federal income tax return for the first taxable year in which:

(i) Any aggregate production costs have been paid or incurred;

(ii) The owner reasonably expects (based on all of the facts and circumstances) that the production will be set for production and will, upon completion, be a qualified film or television production; and

(iii) For any pre-amendment production, the owner reasonably expects (based on all of the facts and circumstances) that the aggregate production costs paid or incurred for the pre-amendment production will, at no time, exceed the applicable aggregate production costs limit set forth under § 1.181-1(b)(1)(i) or (b)(2).

(2) ***Special rule.*** If paragraph (b)(1) of this section is not satisfied until a taxable year subsequent to the taxable year in which any aggregate production costs were first paid or incurred, the owner must make the election for the taxable year in which paragraph (b)(1) of this section is first satisfied, and any production costs paid or incurred prior to the taxable year in which the owner makes the election and not deducted in a prior taxable year are treated as production costs (except costs described in § 1.181-2(a)(2)) that are deductible under § 1.181-1(a)(1)(i) for the taxable year paragraph (b)(1) of this section is first satisfied and the election is made.

(3) ***Six-month extension.*** See § 301.9100-2 for a six-month extension of time to make the election in certain circumstances.

(c) ***Manner of making election*** —

(1) ***In general.*** An owner must make the election under section 181 separately for each production. For a production owned by an entity, the election must be made by the entity. For example, if the production is owned by a partnership or S corporation, the partnership or S corporation must make the election.

(2) ***Information required*** —

(i) ***Initial election.*** For each production to which the election applies, the owner must attach a statement to the owner's Federal income tax return for the taxable year of the election stating that the owner is making an election under section 181 and providing—

(A) The name (or other unique identifying designation) of the production;

(B) The date aggregate production costs were first paid or incurred for the production;

(C) The amount of aggregate production costs paid or incurred for the production during the taxable year (including costs described in §§ 1.181-1(a)(3)(v) and 1.181-2(b)(2));

(D) The amount of qualified compensation (as defined in § 1.181-3(d)) paid or incurred for the production during the taxable year (including costs described in § 1.181-2(b)(2));

(E) The amount of compensation (as defined in § 1.181-3(c)) paid or incurred for the production during the taxable year (including costs described in § 1.181-2(b)(2));

(F) If the owner expects that the aggregate production costs of the production will be significantly paid or incurred in (or, if applicable, if a significant portion of the total number of days of first-unit principal photography will occur in) one or more of the areas specified in § 1.181-1(b)(2)(i), the identity of the area or areas, the amount of aggregate production costs paid or incurred (or the number of days of first-unit principal photography engaged in) for the applicable activities described in § 1.181-1(b)(2)(ii), (b)(2)(iii), or (b)(2)(iv), as applicable, that took place within such areas (including costs described in §§ 1.181-1(a)(3)(v) and 1.181-2(b)(2)), and the aggregate production costs paid or incurred (or the total number of days of first-unit principal photography engaged in) for such activities (whether or not they took place in such areas), for the taxable year (including costs described in §§ 1.181-1(a)(3)(v) and 1.181-2(b)(2));

(G) A declaration that the owner reasonably expects (based on all of the facts and circumstances at the time the election is made) both that the production will be set for production (or has been set for production) and will be a qualified film or television production; and

(H) For any pre-amendment production, a declaration that the owner reasonably expects (based on all of the facts and circumstances at the time the election is made) that the aggregate production costs paid or incurred for the pre-amendment production will not, at any time, exceed the applicable aggregate production costs limit set forth under § 1.181-1(b)(1)(i) or (b)(2).

(ii) ***Subsequent taxable years.*** If the owner pays or incurs additional production costs in any taxable year subsequent to the taxable year for which production costs are first deducted under section 181, the owner must attach a statement to its Federal income tax return for that subsequent taxable year providing—

(A) The name (or other unique identifying designation) of the production that was used in the initial election, and any revised name (or unique identifying designation) subsequently used for the production;

(B) The date the aggregate production costs were first paid or incurred for the production;

(C) The amount of aggregate production costs paid or incurred for the production during the current taxable year;

(D) The amount of qualified compensation paid or incurred for the production during the current taxable year;

(E) The amount of compensation paid or incurred for the production during the current taxable year, and the aggregate amount of compensation paid or incurred for the production in all prior taxable years;

(F) If the owner expects that the aggregate production costs of the production will be significantly paid or incurred in (or, if applicable, if a significant portion of the total number of days of first-unit principal photography will occur in) one or more of the areas specified in § 1.181-1(b)(2)(i), the identity of the area or areas, the amount of aggregate production costs paid or incurred (or the number of days of first-unit principal photography engaged in) for the applicable activities described in § 1.181-1(b)(2)(ii), (b)(2)(iii), or (b)(2)(iv), as applicable, that took place within such areas, and the aggregate production costs paid or incurred (or the number of days of first-unit principal photography engaged in) for such activities (whether or not they took place in such areas), for the current taxable year;

(G) A declaration that the owner continues to reasonably expect (based on all of the facts and circumstances at the end of the current taxable year) both that the production will be set for production (or has been set for production) and will be a qualified film or television production; and

(H) For any pre-amendment production, a declaration that the owner continues to reasonably expect (based on all of the facts and circumstances at the end of the current taxable year) that the aggregate production costs paid or incurred for the pre-amendment production will not, at any time, exceed the applicable aggregate production costs limit set forth under § 1.181-1(b)(1)(i) or (b)(2).

(3) ***Deductions by more than one person.*** If more than one person will claim deductions under section 181 with respect to the production for the taxable year, each person claiming the deduction (but not the members of an entity who are issued a Schedule K-1 by the entity with respect to their interest in the production) must provide a list of the names and taxpayer identification numbers of all such

persons, the dollar amount that each such person will deduct under section 181, and the information required by paragraph (c)(2) of this section for all such persons. Notwithstanding the preceding sentence, whether or not multiple persons form a partnership with respect to the production will be determined in accordance with § 301.7701-3 of this chapter.

(d) ***Revocation of election*** —

(1) ***In general.*** An owner may revoke an election made under this section only with the consent of the Commissioner. Except as provided in paragraph (d)(2) of this section, an owner seeking consent to revoke an election made under this section must submit a letter ruling request, other than a Form 3115, "Application for Change in Accounting Method," under the appropriate revenue procedure. See, for example, Rev. Proc. 2011-1, 2011-1 CB 1 (updated annually) (see § 601.601(d)(2)(ii)(*b*) of this chapter).

(2) ***Consent granted.*** The Commissioner grants consent to an owner to revoke an election under this section for a particular production if the owner—

(i) Complies with the recapture provisions of § 1.181-4(a)(3) on a timely filed (including any extension) original Federal income tax return for the taxable year of the revocation; and

(ii) Attaches a statement to that Federal income tax return that includes the name of the production that was in the owner's original election statement, and any revised name (or other unique identifying designation) of the production, and a statement that the owner revokes the election under section 181 for that production, pursuant to § 1.181-2(d)(2).

[T.D. 9551, 76 FR 60726, Sept. 30, 2011]

§ 1.181-3 Qualified film or television production.

(a) ***In general.*** The term *qualified film or television production* means any production (as defined in paragraph (b) of this section) for which not less than 75 percent of the aggregate amount of compensation (as defined in paragraph (c) of this section) paid or incurred for the production is qualified compensation (as defined in paragraph (d) of this section).

(b) ***Production*** —

(1) ***In general.*** Except as provided in paragraph (b)(3) of this section, for purposes of this section and §§ 1.181-1, 1.181-2, 1.181-4, 1.181-5, and 1.181-6, the term *production* means any motion picture film or video tape (including digital video) production the production costs of which are subject to capitalization under section 263A, or that would be subject to capitalization if section 263A applied to the owner of the production. If, prior to its initial release or broadcast, a person acquires a completed motion picture film or video tape (including digital video) that the seller was entitled to treat as a production under this paragraph (b)(1), then the new owner may treat the acquired asset as a production within the meaning of this paragraph (b)(1).

(2) ***Special rules for television productions.*** Each episode of a television series is a separate production to which the rules, limits, and election requirements of this section and §§ 1.181-1, 1.181-2, 1.181-4, 1.181-5, and 1.181-6 apply. An owner may elect to deduct production costs under section 181 only for the first 44 episodes of a television series (including pilot episodes). A television series may include more than one season of programming.

(3) ***Exception for certain sexually explicit productions.*** A production does not include property for which records are required to be maintained under 18 U.S.C. 2257.

(c) ***Compensation.*** The term *compensation* means, for purposes of this section and § 1.181-2(c)(2), all amounts paid or incurred either directly by the owner or indirectly on the owner's behalf for services performed by actors (as defined in paragraph (f)(1) of this section), directors, producers, and other production personnel (as defined in paragraph (f)(2) of this section) for the production. Examples of indirect payments paid or incurred on the owner's behalf are payments by a partner on behalf of an owner that is a partnership, payments by a shareholder on behalf of an owner that is a corporation, and payments by a contract producer on behalf of the owner. Payments for services are all elements of compensation as provided for in §§ 1.263A-1(e)(2)(i)(B) and (e)(3)(ii)(D). Compensation is not limited to wages reported on Form W-2, "Wage and Tax Statement," and includes compensation paid or incurred to independent contractors. However, solely for purposes of paragraph (a) of this section, the term "compensation" does not include participations and residuals (as defined in section 167(g)(7)(B)). See § 1.181-1(a)(3) for additional rules concerning participations and residuals.

(d) ***Qualified compensation.*** The term *qualified compensation* means, for purposes of this section and § 1.181-2(c)(2), all compensation (as defined in paragraph (c) of this section) paid or incurred for services performed in the United States (as defined in paragraph (f)(3) of this section) by actors, directors, producers, and other production personnel for the production. A service is performed in the United States for purposes of this paragraph (d) if the principal photography to which the compensated service relates occurs within the United States and the person performing the service is physically present in the United States. For purposes of an animated film or animated television production, the location where production activities such as keyframe animation, in-between animation, animation photography, and the recording of voice acting performances are performed is considered in lieu of the location of principal photography. For purposes of a production incorporating both live action and animation, the location where production activities such as keyframe animation, in-between animation, animation photography, and the recording of voice acting performances for the production is considered in addition to the location of principal photography.

(e) ***Special rule for acquired productions.*** A person who acquires a production from a prior owner must take into account all compensation paid or incurred by or on behalf of the seller and any previous owners in determining if the production is a qualified film or television production as defined in paragraph (a) of this section. Any owner that elects to deduct as production costs the costs of acquiring a production and any subsequent production costs must obtain from the seller detailed records concerning the compensation paid or incurred for the production and, for a pre-amendment production, concerning aggregate production costs, in order to demonstrate the eligibility of the production under section 181.

(f) ***Other definitions.*** The following definitions apply for purposes of this section and §§ 1.181-1, 1.181-2, 1.181-4, 1.181-5, and 1.181-6:

(1) ***Actors.*** The term *actors* means players, newscasters, or any other persons who are compensated for their performance or appearance in a production.

(2) ***Production personnel.*** The term *production personnel* means persons who are compensated for providing services directly related to the production, such as writers, choreographers, composers, casting agents, camera operators, set designers, lighting technicians, and make-up artists.

(3) ***United States.*** The term *United States* means the 50 states, the District of Columbia, the territorial waters of the continental United States, the airspace or space over the continental United States and its territorial waters, and the seabed and subsoil of those submarine areas that are adjacent to the

territorial waters of the continental United States and over which the United States has exclusive rights, in accordance with international law, for the exploration and exploitation of natural resources. The term "United States" does not include possessions and territories of the United States (or the airspace or space over these areas).

[T.D. 9551, 76 FR 60727, Sept. 30, 2011]

§ 1.181-4 Special rules.

(a) ***Recapture*** —

(1) ***Applicability*** —

(i) ***In general.*** The requirements of this paragraph (a) apply notwithstanding whether an owner has satisfied the revocation requirements of § 1.181-2(d). An owner that claimed a deduction under section 181 for a production in any taxable year in an amount in excess of the amount that would be allowable as a deduction for that year in the absence of section 181 must recapture the excess amount as provided for in paragraph (a)(3) of this section for the production in the first taxable year for which—

(A) For any pre-amendment production, the aggregate production costs of the production exceed the applicable aggregate production costs limit under § 1.181-1(b)(1)(i) or (b)(2);

(B) For any pre-amendment production, the owner no longer reasonably expects (based on all of the facts and circumstances at the end of the current taxable year) that the aggregate production costs of the production will not, at any time, exceed the applicable aggregate production costs limit set forth under § 1.181-1(b)(1)(i) or (b)(2);

(C) The owner no longer reasonably expects (based on all of the facts and circumstances at the end of the current taxable year) either that the production will be set for production or that the production will be a qualified film or television production; or

(D) The owner revokes the election pursuant to § 1.181-2(d).

(ii) ***Special rule.*** An owner that claimed a deduction under section 181 and disposes of the production prior to its initial release or broadcast must recapture the entire amount specified under paragraph (a)(3) of this section in the year the owner disposes of the production before computing gain or loss from the disposition.

(2) ***Principal photography not commencing prior to the date of expiration of section 181.*** If an owner claims a deduction under section 181 for a production for which principal photography does not commence prior to the date of expiration of section 181, the owner must recapture deductions as provided for in paragraph (a)(3) of this section in the owner's taxable year that includes the date of expiration of section 181.

(3) ***Amount of recapture.*** An owner subject to the recapture requirements under this section must, for the taxable year in which recapture is required, include in the owner's gross income as ordinary income and add to the owner's adjusted basis in the property—

(i) For a production that is placed in service in a taxable year prior to the taxable year for which recapture is required, the difference between the aggregate amount the owner claimed as a deduction under section 181 for the production for all such prior taxable years and the aggregate depreciation deductions that would have been allowable for the production for such

prior taxable years (or that the owner could have elected to deduct in the taxable year that the production was placed in service) for the production under the owner's method of accounting; or

(ii) For a production that has not been placed in service, the aggregate amount claimed as a deduction under section 181 for the production for all such prior taxable years.

(b) ***Recapture under section 1245.*** For purposes of recapture under section 1245, any deduction allowed under section 181 is treated as a deduction allowable for amortization.

[T.D. 9551, 76 FR 60728, Sept. 30, 2011]

§ 1.181-5 Examples.

The following examples illustrate the application of §§ 1.181-1 through 1.181-4:

Example 1. X, a corporation that uses an accrual method of accounting and files Federal income tax returns on a calendar-year basis, is a producer of films. X is the owner (within the meaning of § 1.181-1(a)(2)) of film ABC. X incurs production costs in year 1, but does not commence principal photography for film ABC until year 2. In year 1, X reasonably expects, based on all of the facts and circumstances, that film ABC will be set for production and will be a qualified film or television production. Provided that X satisfies all other requirements of §§ 1.181-1 through 1.181-4 and § 1.181-6, X may deduct in year 1 the production costs for film ABC that X incurred in year 1.

Example 2. The facts are the same as in *Example 1.* In year 2, X begins, but does not complete, principal photography for film ABC. Most of the scenes that X films in year 2 are shot outside the United States and, as of December 31, year 2, less than 75 percent of the total compensation paid for film ABC is qualified compensation. Nevertheless, X still reasonably expects, based on all of the facts and circumstances, that film ABC will be a qualified film or television production. Provided that X satisfies all other requirements of §§ 1.181-1 through 1.181-4 and § 1.181-6, X may deduct in year 2 the production costs for film ABC that X incurred in year 2.

Example 3. The facts are the same as in *Example 2.* In year 3, X continues, but does not complete, production of film ABC. Due to changes in the expected production costs of film ABC, X no longer expects film ABC to qualify under section 181. X files a statement with its return for year 3 identifying the film and stating that X revokes its election under section 181. X includes in income in year 3 the deductions claimed in year 1 and in year 2 as provided for in § 1.181-4(a)(3). X has successfully revoked its election pursuant to § 1.181-2(d).

[T.D. 9551, 76 FR 60729, Sept. 30, 2011]

§ 1.181-6 Effective/applicability date.

(a) ***In general.*** Except as otherwise provided in this section, §§ 1.181-1 through 1.181-5 apply to productions the first day of principal photography for which occurs on or after September 29, 2011. Paragraphs 1.181-1(a)(1)(ii), (a)(6), (b)(1)(ii), (b)(2)(vi), and (c)(2) of § 1.181-1 apply to productions to which section 181 is applicable and for which the first day of principal photography or in-between animation occurs on or after December 7, 2012.

(b) ***Pre-effective date productions.*** For any taxable year for which the period of limitation on refund or credit under section 6511 has not expired, the owner may apply §§ 1.181-1 through 1.181-5 to any production to which section 181 applies and for which the first day of principal photography (or in-between animation) occurred before December 7, 2012, provided the owner applies all relevant provisions of §§ 1.181-1 through 1.181-5 to the production.

[T.D. 9603, 77 FR 72924, Dec. 7, 2012]

§ 1.182-1 Expenditures by farmers for clearing land; in general.

Under section 182, a taxpayer engaged in the business of farming may elect, in the manner provided in § 1.182-6, to deduct certain expenditures paid or incurred by him in any taxable year beginning after December 31, 1962, in the clearing of land. The expenditures to which the election applies are all expenditures paid or incurred during the taxable year in clearing land for the purpose of making the "land suitable for use in farming" (as defined in § 1.182-4) which are not otherwise deductible (exclusive of expenditures for or in connection with depreciable items referred to in paragraph (b)(1) of § 1.182-3), but only if such expenditures are made in furtherance of the taxpayer's business of farming. The term *expenditures* to which the election applies also includes a reasonable allowance for depreciation (not otherwise allowable) on equipment used in the clearing of land provided such equipment, if used in the carrying on of a trade or business, would be subject to the allowance for depreciation under section 167. (See paragraph (c) of § 1.182-3.) (See section 175 and the regulations thereunder for deductibility of certain expenditures for treatment or moving of earth by a farmer where the land already qualifies as land used in farming as defined in § 1.175-4.) The amount deductible for any taxable year is limited to the lesser of $5,000 or 25 percent of the taxable income derived from farming (as defined in paragraph (a)(2) of § 1.182-5) during the taxable year. Expenditures paid or incurred in a taxable year in excess of the amount deductible under section 182 for such taxable year shall be treated as capital expenditures and shall constitute an adjustment to the basis of the land under section 1016(a).

[T.D. 6794, 30 FR 790, Jan. 26, 1965]

§ 1.182-2 Definition of "the business of farming."

Under section 182, the election to deduct expenditures incurred in the clearing of land is applicable only to a taxpayer who is engaged in "the business of farming" during the taxable year. A taxpayer is engaged in the business of farming if he cultivates, operates, or manages a farm for gain or profit, either as owner or tenant. For purposes of section 182, a taxpayer who receives a rental (either in cash or in kind) which is based upon farm production is engaged in the business of farming. However, a taxpayer who receives a fixed rental (without reference to production) is engaged in the business of farming only if he participates to a material extent in the operation or management of the farm. A taxpayer engaged in forestry or the growing of timber is not thereby engaged in the business of farming. A person cultivating or operating a farm for recreation or pleasure rather than for profit is not engaged in the business of farming. For purposes of section 182 and this section, the term *farm* is used in its ordinary, accepted sense and includes stock, dairy, poultry, fish, fruit, and truck farms, and also plantations, ranches, ranges, and orchards. A fish farm is an area where fish are grown or raised, as opposed to merely caught or harvested; that is, an area where they are artificially fed, protected, cared for, etc. A taxpayer is engaged in "the business of farming" if he is a member of a partnership engaged in the business of farming. See § 1.702-1.

[T.D. 6794, 30 FR 790, Jan. 26, 1965]

§ 1.182-3 Definition, exceptions, etc., relating to deductible expenditures.

(a) *Clearing of land.*

(1) For purposes of section 182, the term *clearing of land* includes (but is not limited to):

(i) The removal of rocks, stones, trees, stumps, brush or other natural impediments to the use of the land in farming through blasting, cutting, burning, bulldozing, plowing, or in any other way;

(ii) The treatment or moving of earth, including the construction, repair or removal of nondepreciable earthen structures, such as dikes or levies, if the purpose of such treatment or moving of earth is to protect, level, contour, terrace, or condition the land so as to permit its use as farming land; and

(iii) The diversion of streams and watercourses, including the construction of nondepreciable drainage facilities, provided that the purpose is to remove or divert water from the land so as to make it available for use in farming.

(2) The following are examples of land clearing activities:

(i) The cutting of trees, the blasting of the resulting stumps, and the burning of the residual undergrowth;

(ii) The leveling of land so as to permit irrigation or planting;

(iii) The removal of salt or other minerals which might inhibit cultivation of the soil;

(iv) The draining and filling in of a swamp or marsh; and

(v) The diversion of a stream from one watercourse to another.

(b) *Expenditures not allowed as a deduction under section 182.*

(1) Section 182 applies only to expenditures for nondepreciable items. Accordingly, a taxpayer may not deduct expenditures for the purchase, construction, installation, or improvement of structures, appliances, or facilities which are of a character which is subject to the allowance for depreciation under section 167 and the regulations thereunder. Expenditures in respect of such depreciable property include those for materials, supplies, wages, fuel, freight, and the moving of earth, paid or incurred with respect to tanks, reservoirs, pipes, conduits, canals, dams, wells, or pumps constructed of masonry, concrete, tile, metal, wood, or other nonearthen material.

(2) Expenditures which are deductible without regard to section 182 are not deductible under section 182. Thus, such expenditures are deductible without being subject to the limitations imposed by section 182(b) and § 1.182-5. For example, section 182 does not apply to the ordinary and necessary expenses incurred in the business of farming which are deductible under section 162 even though they might otherwise be considered to be clearing of land expenditures. Section 182 also does not apply to interest (deductible under section 163) nor to taxes (deductible under section 164). Similarly, section 182 does not apply to any expenditures (whether or not currently deductible) paid or incurred for the purpose of soil or water conservation in respect of land used in farming, or for the prevention of erosion of land used in farming, within the meaning of section 175 and the regulations thereunder, nor to expenditures deductible under section 180 and the regulations thereunder, relating to expenditures for fertilizer, etc.

(c) ***Depreciation.*** In addition to expenditures for the activities described in paragraph (a) of this section, there also shall be treated as an expenditure to which section 182 applies a reasonable allowance for depreciation not otherwise deductible on property of the taxpayer which is used in the clearing of land for the purpose of making such land suitable for use in farming, provided the property is property which, if used in a trade or business, would be subject to the allowance for depreciation under section 167. Depreciation allowable as a deduction under section 182 is limited to the portion of depreciation which is attributable to the use of the property in the clearing of land. The depreciation shall be computed in accordance with section 167 and the regulations thereunder. To the extent an amount representing a reasonable allowance for depreciation with respect to property used in clearing land is treated as an expenditure to which section 182 applies, such depreciation shall, for purposes of chapter 1 of the Code, be treated as an amount allowed under section 167 for depreciation. Thus, if a deduction is allowed for depreciation under section 182 in respect of property used in clearing land, proper adjustment to the basis of the property so used shall be made under section 1016(a).

[T.D. 6794, 30 FR 791, Jan. 26, 1965]

§ 1.182-4 Definition of "land suitable for use in farming", etc.

For purposes of section 182, the term *land suitable for use in farming* means land which, as a result of the land clearing activities described in paragraph (a) of § 1.182-3, could be used by the taxpayer or his tenant for the production of crops, fruits, or other agricultural products, including fish, or for the sustenance of livestock. The term *livestock* includes cattle, hogs, horses, mules, donkeys, sheep, goats, captive fur-bearing animals, chickens, turkeys, pigeons, and other poultry. Land used for the sustenance of livestock includes land used for grazing such livestock. Expenditures are considered to be for the purpose of making land suitable for use in farming by the taxpayer or his tenant only if made to prepare the land which is cleared for use by the taxpayer or his tenant in farming. Thus, if the taxpayer pays or incurs expenditures to clear land for the purpose of sale (whether or not for use in farming by the purchaser) or to be held by the taxpayer or his tenant other than for use in farming, section 182 does not apply to such expenditures. Whether the land is cleared for the purpose of making it suitable for use in farming by the taxpayer or his tenant, is a question of fact which must be resolved on the basis of all the relevant facts and circumstances. For purposes of section 182, it is not necessary that the land cleared actually be used in farming following the clearing activities. However, the fact that following the clearing operation, the land is used by the taxpayer or his tenant in the business of farming will, in most cases, constitute evidence that the purpose of the clearing was to make land suitable for use in farming by the taxpayer or his tenant. On the other hand, if the land cleared is sold or converted to nonfarming use soon after the taxpayer has completed his clearing activities, there will be a presumption that the expenditures were not made for the purpose of making the land suitable for use in farming by the taxpayer or his tenant. Other factors which will be considered in determining the taxpayer's purpose for clearing the land are, for example, the acreage, location, and character of the land cleared, the nature of the taxpayer's farming operation, and the use to which adjoining or nearby land is put.

[T.D. 6794, 30 FR 791, Jan. 26, 1965]

§ 1.182-5 Limitation.

(a) ***Limitation*** —

(1) ***General rule.*** The amount of land clearing expenditures which the taxpayer may deduct under section 182 in any one taxable year is limited to the lesser of $5,000 or 25 percent of his "taxable income derived from farming". Expenditures in excess of the applicable limitation are to be charged to the capital account and constitute additions to the taxpayer's basis in the land.

(2) ***Definition of "taxable income derived from farming".*** For purposes of section 182, the term *taxable income derived from farming* means the gross income derived from the business of farming reduced by the deductions attributable to such gross income. Gross income derived from the business of farming is the gross income of the taxpayer derived from the production of crops, fruits, or other agricultural products, including fish, or from livestock (including livestock held for draft, breeding or dairy purposes). It does not include gains from sales of assets such as farm machinery or gains from the disposition of land. The deductions attributable to the business of farming are all the deductions allowed by Chapter 1 of the Code (other than the deduction allowed by section 182) for expenditures or charges (including depreciation and amortization) paid or incurred in connection with the production or raising of crops, fruits, or other agricultural products, including fish, or livestock. However, the deduction under section 1202 (relating to the capital gains deduction) attributable to gain on the sale or other disposition of assets (other than draft, breeding, or dairy stock), and the net operating loss deduction (computed under section 172) shall not be taken into account in computing "taxable income derived from farming." Similarly, deductible losses on the sale, disposition, destruction, condemnation, or abandonment of assets (other than draft, breeding, or dairy stock) shall not be considered as deductions attributable to the business of farming. A taxpayer shall compute his gross income from farming in accordance with his accounting method used in determining gross income. (See the regulations under section 61 relating to accounting methods used by farmers in determining gross income.)

(b) ***Examples.*** The provisions of paragraph (a) of this section may be illustrated by the following examples:

Example 1. For the taxable year 1963, A, who uses the cash receipts and disbursements method of accounting, incurs expenditures to which section 182 applies in the amount of $2,000 and makes the election under section 182. A has the following items of income and deductions (without regard to section 182 expenditures).

Income:	
Proceeds from sale of his 1963 yield of corn	$10,000
Proceeds from sales of milk	8,000
Gain from disposition of old breeding cows	500
Gain from sale of tractor	100
Gain from sale of farmland	5,000
Interest on loan to brother	100
	23,700
Deductions:	
Cost of labor	4,000
Cost of feed	3,000
Depreciation on farm equipment and buildings	2,500
Cost of maintenance, fuel, etc	2,000
Interest paid, mortgage on farm buildings	1,000
Interest paid, personal loan	500

Loss on destruction of barn	2,000	
Loss on sale of truck	300	
Section 1202 deduction—gain on sale of cows (500 × 1/2)	250	
Section 1202 deduction—net gain on disposition of section 1231 property, other than cows [$2,800 ($5,100−$2,300) × $^{1}/_{2}$]	1,400	
	———	$16,950
Net income before section 182 deduction		6,750

For purposes of computing taxable income derived from farming under section 182, the following items of income and deductions are not taken into account:

Income:		
Gain from the sale of tractor	$100	
Gain from the sale of farmland	5,000	
Interest on loan to brother	100	
	———	$5,200
Deductions:		
Interest paid, personal loan	$500	
Loss on destruction of barn	2,000	
Loss on sale of truck	300	
Section 1202 deduction—Net gain from disposition of 1231 assets other than cows	1,400	
	———	$4,200

A's "taxable income derived from farming" for purposes of section 182 is $5,750; income of $18,500 ($23,700−$5,200), less deductions of $12,750 ($16,950−$4,200). A may deduct $1,437.50 (25% of $5,750) under section 182. The excess expenditures in the amount of $562.50 are to be charged to capital account and serve to increase the taxpayer's basis of the land.

Example 2. Assume the same facts as in *Example 1* and in addition, assume that A is allowed a deduction for a net operating loss carryback from the taxable year 1966 in the amount of $3,000. The net operating loss deduction will not be taken into account in computing A's "taxable income derived from farming" for 1963 Accordingly, A will not be required to recompute such taxable income for purposes of applying the limitation on the deduction provided in section 182 and the deduction of $1,437.50 will not be reduced.

[T.D. 6794, 30 FR 791, Jan. 26, 1965]

§ 1.182-6 Election to deduct land clearing expenditures.

(a) ***Manner of making election.*** The election to deduct expenditures for land clearing provided by section 182(a) shall be made by means of a statement attached to the taxpayer's income tax return for the taxable year for which such election is to apply. The statement shall include the name and address of the taxpayer, shall be signed by the taxpayer (or his duly authorized representative), and shall be filed not later than the time prescribed by law for filing the income tax return (including extensions thereof) for the taxable year for which the election is to apply. The statement shall also set forth the amount and description of the expenditures for land clearing claimed as a deduction under section 182, and shall include a computation of "taxable income derived from farming", if the amount of such income is not the same as the net income from farming shown on Schedule F of Form 1040, increased by the amount of the deduction claimed under section 182.

(b) ***Scope of election.*** An election under section 182(a) shall apply only to the taxable year for which made. However, once made, an election applies to all expenditures described in § 1.182-3 paid or incurred during the taxable year, and is binding for such taxable year unless the district director consents to a revocation of such election. Requests for consent to revoke an election under section 182 shall be made by means of a letter to the district director for the district in which the taxpayer is required to file his return, setting forth the taxpayer's name, address and identification number, the year for which it is desired to revoke the election, and the reasons therefor. However, consent will not be granted where the only reason therefor is a change in tax consequences.

[T.D. 6794, 30 FR 791, Jan. 26, 1965]

§ 1.183-1 Activities not engaged in for profit.

(a) ***In general.*** Section 183 provides rules relating to the allowance of deductions in the case of activities (whether active or passive in character) not engaged in for profit by individuals and electing small business corporations, creates a presumption that an activity is engaged in for profit if certain requirements are met, and permits the taxpayer to elect to postpone determination of whether such presumption applies until he has engaged in the activity for at least 5 taxable years, or, in certain cases, 7 taxable years. Whether an activity is engaged in for profit is determined under section 162 and section 212 (1) and (2) except insofar as section 183(d) creates a presumption that the activity is engaged in for profit. If deductions are not allowable under sections 162 and 212 (1) and (2), the deduction allowance rules of section 183(b) and this section apply. Pursuant to section 641(b), the taxable income of an estate or trust is computed in the same manner as in the case of an individual, with certain exceptions not here relevant. Accordingly, where an estate or trust engages in an activity or activities which are not for profit, the rules of section 183 and this section apply in computing the allowable deductions of such trust or estate. No inference is to be drawn from the provisions of section 183 and the regulations thereunder that any activity of a corporation (other than an electing small business corporation) is or is not a business or engaged in for profit. For rules relating to the deductions that may be taken into account by taxable membership organizations which are operated primarily to furnish services, facilities, or goods to members, see section 277 and the regulations thereunder. For the definition of an activity not engaged in for profit, see § 1.183-2. For rules relating to the election contained in section 183(e), see § 1.183-3.

(b) ***Deductions allowable —***

(1) ***Manner and extent.*** If an activity is not engaged in for profit, deductions are allowable under section 183(b) in the following order and only to the following extent:

(i) Amounts allowable as deductions during the taxable year under Chapter 1 of the Code without regard to whether the activity giving rise to such amounts was engaged in for profit are allowable to the full extent allowed by the relevant sections of the Code, determined after taking into account any limitations or exceptions with respect to the allowability of such amounts. For example, the allowability-of-interest expenses incurred with respect to activities not engaged in for profit is limited by the rules contained in section 163(d).

(ii) Amounts otherwise allowable as deductions during the taxable year under Chapter 1 of the Code, but only if such allowance does not result in an adjustment to the basis of property, determined as if the activity giving rise to such amounts was engaged in for profit, are allowed only to the extent the gross income attributable to such activity exceeds the deductions allowed or allowable under subdivision (i) of this subparagraph.

(iii) Amounts otherwise allowable as deductions for the taxable year under Chapter 1 of the Code which result in (or if otherwise allowed would have resulted in) an adjustment to the basis of property, determined as if the activity giving rise to such deductions was engaged in for profit, are allowed only to the extent the gross income attributable to such activity exceeds the deductions allowed or allowable under subdivisions (i) and (ii) of this subparagraph. Deductions falling within this subdivision include such items as depreciation, partial losses with respect to property, partially worthless debts, amortization, and amortizable bond premium.

(2) ***Rule for deductions involving basis adjustments*** —

(i) ***In general.*** If deductions are allowed under subparagraph (1)(iii) of this paragraph, and such deductions are allowed with respect to more than one asset, the deduction allowed with respect to each asset shall be determined separately in accordance with the computation set forth in subdivision (ii) of this subparagraph.

(ii) ***Basis adjustment fraction.*** The deduction allowed under subparagraph (1)(iii) of this paragraph is computed by multiplying the amount which would have been allowed, had the activity been engaged in for profit, as a deduction with respect to each particular asset which involves a basis adjustment, by the basis adjustment fraction:

(*a*) The numerator of which is the total of deductions allowable under subparagraph (1)(iii) of this paragraph, and

(*b*) The denominator of which is the total of deductions which involve basis adjustments which would have been allowed with respect to the activity had the activity been engaged in for profit.

The amount resulting from this computation is the deduction allowed under subparagraph (1)(iii) of this paragraph with respect to the particular asset. The basis of such asset is adjusted only to the extent of such deduction.

(3) ***Examples.*** The provisions of subparagraphs (1) and (2) of this paragraph may be illustrated by the following examples:

> *Example 1.* A, an individual, maintains a herd of dairy cattle, which is an "activity not engaged in for profit" within the meaning of section 183(c). A sold milk for $1,000 during the year. During the year A paid $300 State taxes on gasoline used to transport the cows, milk,

etc., and paid $1,200 for feed for the cows. For the year A also had a casualty loss attributable to this activity of $500. A determines the amount of his allowable deductions under section 183 as follows:
(i) First, A computes his deductions allowable under subparagraph (1)(i) of this paragraph as follows:

State gasoline taxes specifically allowed under section 164(a)(5) without regard to whether the activity is engaged in for profit	$300
Casualty loss specifically allowed under section 165(c)(3) without regard to whether the activity is engaged in for profit ($500 less $100 limitation)	400
Deductions allowable under subparagraph (1)(i) of this paragraph	700

(ii) Second, A computes his deductions allowable under subparagraph (1)(ii) of this paragraph (deductions which would be allowed under chapter 1 of the Code if the activity were engaged in for profit and which do not involve basis adjustments) as follows:
Maximum amount of deductions allowable under subparagraph (1)(ii) of this paragraph:

Income from milk sales	$1,000
Gross income from activity	1,000
Less: deductions allowable under subparagraph (1)(i) of this paragraph	700
Maximum amount of deductions allowable under subparagraph (1)(ii) of this paragraph	300
Feed for cows	1,200
Deduction allowed under subparagraph (1)(ii) of this paragraph	300

$900 of the feed expense is not allowed as a deduction under section 183 because the total feed expense ($1,200) exceeds the maximum amount of deductions allowable under subparagraph (1)(ii) of this paragraph ($300). In view of these circumstances, it is not necessary to determine deductions allowable under subparagraph (1)(iii) of this paragraph which would be allowable under chapter 1 of the Code if the activity were engaged in for profit and which involve basis adjustment (the $100 of casualty loss not allowable under subparagraph (1)(i) of this paragraph because of the limitation in section 165(c)(3)) because none of such amount will be allowed as a deduction under section 183.

Example 2. Assume the same facts as in *Example 1*, except that A also had income from sales of hay grown on the farm of $1,200 and that depreciation of $750 with respect to a

barn, and $650 with respect to a tractor would have been allowed with respect to the activity had it been engaged in for profit. A determines the amount of his allowable deductions under section 183 as follows:
(i) First, A computes his deductions allowable under subparagraph (1)(i) of this paragraph as follows:

State gasoline taxes specifically allowed under section 164(a)(5) without regard to whether the activity is engaged in for profit	$300
Casualty loss specifically allowed under section 165(c)(3) without regard to whether the activity is engaged in for profit ($500 less $100 limitation)	400
Deductions allowable under subparagraph (1)(i) of this paragraph	700

(ii) Second, A computes his deductions allowable under subparagraph (1)(ii) of this paragraph (deductions which would be allowable under chapter 1 of the Code if the activity were engaged in for profit and which do not involve basis adjustments) as follows:
Maximum amount of deductions allowable under subparagraph (1)(ii) of this paragraph:

Income from milk sales	$1,000
Income from hay sales	1,200
Gross income from activity	2,200
Less: deductions allowable under subparagraph (1)(i) of this paragraph	700
Maximum amount of deductions allowable under subparagraph (1)(ii) of this paragraph	1,500
Feed for cows	1,200

The entire $1,200 of expenses relating to feed for cows is allowable as a deduction under subparagraph (1)(ii) of this paragraph, since it does not exceed the maximum amount of deductions allowable under such subparagraph.

(iii) Last, A computes the deductions allowable under subparagraph (1)(iii) of this paragraph (deductions which would be allowable under chapter 1 of the Code if the activity were engaged in for profit and which involve basis adjustments) as follows:

Maximum amount of deductions allowable under subparagraph (1)(iii) of this paragraph:

Gross income from farming		$2,200
Less: Deductions allowed under subparagraph (1)(i) of this paragraph	$700	
Deductions allowed under subparagraph (1)(ii) of this paragraph	1,200	1,900
Maximum amount of deductions allowable under subparagraph (1)(iii) of this paragraph		300

(iv) Since the total of A's deductions under chapter 1 of the Code (determined as if the activity was engaged in for profit) which involve basis adjustments ($750 with respect to barn, $650 with respect to tractor, and $100 with respect to limitation on casualty loss) exceeds the maximum amount of the deductions allowable under subparagraph (1)(iii) of this paragraph ($300), A computes his allowable deductions with respect to such assets as follows:
A first computes his basis adjustment fraction under subparagraph (2)(ii) of this paragraph as follows:

The numerator of the fraction is the maximum of deductions allowable under subparagraph (1)(iii) of this paragraph which involve basis adjustments	$300
The denominator of the fraction is the total of deductions that involve basis adjustments which would have been allowed with respect to the activity had the activity been engaged in for profit	1,500

The basis adjustment fraction is then applied to the amount of each deduction which would have been allowable if the activity were engaged in for profit and which involves a basis adjustment as follows:

Depreciation allowed with respect to barn (300/1,500 × $750)	$150
Depreciation allowed with respect to tractor (300/1,500 × $650)	130
Deduction allowed with respect to limitation on casualty loss (300/1,500 × $100)	20

The basis of the barn and of the tractor are adjusted only by the amount of depreciation actually allowed under section 183 with respect to each (as determined by the above computation). The basis of the asset with regard to which the casualty loss was suffered is

adjusted only to the extent of the amount of the casualty loss actually allowed as a deduction under subparagraph (1) (i) and (iii) of this paragraph.

(4) ***Rule for capital gains and losses*** —

(i) ***In general.*** For purposes of section 183 and the regulations thereunder, the gross income from any activity not engaged in for profit includes the total of all capital gains attributable to such activity determined without regard to the section 1202 deduction. Amounts attributable to an activity not engaged in for profit which would be allowable as a deduction under section 1202, without regard to section 183, shall be allowable as a deduction under section 183(b)(1) in accordance with the rules stated in this subparagraph.

(ii) ***Cases where deduction not allowed under section 183.*** No deduction is allowable under section 183(b)(1) with respect to capital gains attributable to an activity not engaged in for profit if:

(*a*) Without regard to section 183 and the regulations thereunder, there is no excess of net long-term capital gain over net short-term capital loss for the year, or

(*b*) There is no excess of net long-term capital gain attributable to the activity over net short-term capital loss attributable to the activity.

(iii) ***Allocation of deduction.*** If there is:

(*a*) An excess of net long-term capital gain over net short-term capital loss attributable to an activity not engaged in for profit, and

(*b*) Such an excess attributable to all activities, determined without regard to section 183 and the regulations thereunder, the deduction allowable under section 183(b)(1) attributable to capital gains with respect to each activity not engaged in for profit (with respect to which there is an excess of net long-term capital gain over net short-term capital loss for the year) shall be an amount equal to the deduction allowable under section 1202 for the taxable year (determined without regard to section 183) multiplied by a fraction the numerator of which is the excess of the net long-term capital gain attributable to the activity over the net short-term capital loss attributable to the activity and the denominator of which is an amount equal to the total excess of net long-term capital gain over net short-term capital loss for all activities with respect to which there is such excess. The amount of the total section 1202 deduction allowable for the year shall be reduced by the amount determined to be allocable to activities not engaged in for profit and accordingly allowed as a deduction under section 183(b)(1).

(iv) ***Example.*** The provisions of this subparagraph may be illustrated by the following example:

Example. A, an individual who uses the cash receipts and disbursement method of accounting and the calendar year as the taxable year, has three activities not engaged in for profit. For his taxable year ending on December 31, 1973, A has a $200 net long-term capital gain from activity No. 1, a $100 net short-term capital loss from activity No. 2, and a $300 net long-term capital gain from activity No. 3. In addition, A has a $500 net long-term capital gain from another activity which he engages in for profit. A computes his deductions for capital gains for calendar year 1973 as follows:

Section 1202 deduction without regard to section 183 is determined as follows:

Net long-term capital gain from activity No. 1	$200
Net long-term capital gain from activity No. 3	300
Net long-term capital gain from activity engaged in for profit	500
Total net long-term capital gain from all activities	1,000
Less: Net short-term capital loss attributable to activity No. 2	100
Aggregate net long-term capital gain over net short-term capital loss from all activities	900
Section 1202 deduction determined without regard to section 183 (one-half of $900)	$450

Allocation of the total section 1202 deduction among A's various activities:

Portion allocable to activity No. 1 which is deductible under section 183(b)(1) (Excess net long-term capital gain attributable to activity No. 1 ($200) over total excess net long-term capital gain attributable to all of A's activities with respect to which there is such an excess ($1,000) times amount of section 1202 deduction ($450))	90
Portion allocable to activity No. 3 which is deductible under section 183(b)(1) (Excess net long-term capital gain attributable to activity No. 3 ($300) over total excess net long-term capital gain attributable to all of A's activities with respect to which there is such an excess ($1,000) times amount of section 1202 deduction ($450))	135
Portion allocable to all activities engaged in for profit (total section 1202 deduction ($450) less section 1202 deduction allowable to activities Nos. 1 and 3 ($225))	225
Total section 1202 deduction deductible under sections 1202 and 183(b)(1)	450

(c) ***Presumption that activity is engaged in for profit*** —

(1) ***In general.*** If for:

(i) Any 2 of 7 consecutive taxable years, in the case of an activity which consists in major part of the breeding, training, showing, or racing of horses, or

(ii) Any 2 of 5 consecutive taxable years, in the case of any other activity, the gross income derived from an activity exceeds the deductions attributable to such activity which would be allowed or allowable if the activity were engaged in for profit, such activity is presumed, unless the Commissioner establishes to the contrary, to be engaged in for profit. For purposes of this determination the deduction permitted by section 1202 shall not be taken into account. Such

presumption applies with respect to the second profit year and all years subsequent to the second profit year within the 5- or 7-year period beginning with the first profit year. This presumption arises only if the activity is substantially the same activity for each of the relevant taxable years, including the taxable year in question. If the taxpayer does not meet the requirements of section 183(d) and this paragraph, no inference that the activity is not engaged in for profit shall arise by reason of the provisions of section 183. For purposes of this paragraph, a net operating loss deduction is not taken into account as a deduction. For purposes of this subparagraph a short taxable year constitutes a taxable year.

(2) ***Examples.*** The provisions of subparagraph (1) of this paragraph may be illustrated by the following examples, in each of which it is assumed that the taxpayer has not elected, in accordance with section 183(e), to postpone determination of whether the presumption described in section 183(d) and this paragraph is applicable.

Example 1. For taxable years 1970-74, A, an individual who uses the cash receipts and disbursement method of accounting and the calendar year as the taxable year, is engaged in the activity of farming. In taxable years 1971, 1973, and 1974, A's deductible expenditures with respect to such activity exceed his gross income from the activity. In taxable years 1970 and 1972 A has income from the sale of farm produce of $30,000 for each year. In each of such years A had expenses for feed for his livestock of $10,000, depreciation of equipment of $10,000, and fertilizer cost of $5,000 which he elects to take as a deduction. A also has a net operating loss carryover to taxable year 1970 of $6,000. A is presumed, for taxable years 1972, 1973, and 1974, to have engaged in the activity of farming for profit, since for 2 years of a 5-consecutive-year period the gross income from the activity ($30,000 for each year) exceeded the deductions (computed without regard to the net operating loss) which are allowable in the case of the activity ($25,000 for each year).

Example 2. For the taxable years 1970 and 1971, B, an individual who uses the cash receipts and disbursement method of accounting and the calendar year as taxable year, engaged in raising pure-bred Charolais cattle for breeding purposes. The operation showed a loss during 1970. At the end of 1971, B sold a substantial portion of his herd and the cattle operation showed a profit for that year. For all subsequent relevant taxable years B continued to keep a few Charolais bulls at stud. In 1972, B started to raise Tennessee Walking Horses for breeding and show purposes, utilizing substantially the same pasture land, barns, and (with structural modifications) the same stalls. The Walking Horse operations showed a small profit in 1973 and losses in 1972 and 1974 through 1976.

(i) Assuming that under paragraph (d)(1) of this section the raising of cattle and raising of horses are determined to be separate activities, no presumption that the Walking Horse operation was carried on for profit arises under section 183(d) and this paragraph since this activity was not the same activity that generated the profit in 1971 and there are not, therefore, 2 profit years attributable to the horse activity.

(ii) Assuming the same facts as in (i) above, if there were no stud fees received in 1972 with respect to Charolais bulls, but for 1973 stud fees with respect to such bulls exceed deductions attributable to maintenance of the bulls in that year, the presumption will arise under section 183(d) and this paragraph with respect to the activity of raising and maintaining Charolais cattle for 1973 and for all subsequent years within the 5-year period beginning with taxable year 1971, since the activity of raising and maintaining Charolais cattle is the same activity in 1971 and in 1973, although carried on by B on a much reduced basis and in a different manner. Since it has been assumed that the horse and cattle operations are separate activities, no presumption will arise with respect to the Walking Horse operation because there are not 2 profit years attributable to such horse operation during the period in question.

(iii) Assuming, alternatively, that the raising of cattle and raising of horses would be considered a single activity under paragraph (d)(1) of this section, B would receive the benefit of the presumption beginning in 1973 with respect to both the cattle and horses since there were profits in 1971 and 1973. The presumption would be effective through 1977 (and longer if there is an excess of income over deductions in this activity in 1974, 1975, 1976, or 1977 which would extend the presumption) if, under section 183(d) and subparagraph (3) of this paragraph, it was determined that the activity consists in major part of the breeding, training, showing, or racing of horses. Otherwise, the presumption would be effective only through 1975 (assuming no excess of income over deductions in this activity in 1974 or 1975 which would extend the presumption).

(3) ***Activity which consists in major part of the breeding, training, showing, or racing of horses.*** For purposes of this paragraph an activity consists in major part of the breeding, training, showing, or racing of horses for the taxable year if the average of the portion of expenditures attributable to breeding, training, showing, and racing of horses for the 3 taxable years preceding the taxable year (or, in the case of an activity which has not been conducted by the taxpayer for 3 years, for so long as it has been carried on by him) was at least 50 percent of the total expenditures attributable to the activity for such prior taxable years.

(4) ***Transitional rule.*** In applying the presumption described in section 183(d) and this paragraph, only taxable years beginning after December 31, 1969, shall be taken into account. Accordingly, in the case of an activity referred to in subparagraph (1) (i) or (ii) of this paragraph, section 183(d) does not apply prior to the second profitable taxable year beginning after December 31, 1969, since taxable years prior to such date are not taken into account.

(5) ***Cross reference.*** For rules relating to section 183(e) which permits a taxpayer to elect to postpone determination of whether any activity shall be presumed to be “an activity engaged in for profit” by operation of the presumption described in section 183(d) and this paragraph until after the close of the fourth taxable year (sixth taxable year, in the case of activity which consists in major part of breeding, training, showing, or racing of horses) following the taxable year in which the taxpayer first engages in the activity, see § 1.183-3.

(d) ***Activity defined*** —

(1) ***Ascertainment of activity.*** In order to determine whether, and to what extent, section 183 and the regulations thereunder apply, the activity or activities of the taxpayer must be ascertained. For instance, where the taxpayer is engaged in several undertakings, each of these may be a separate activity, or several undertakings may constitute one activity. In ascertaining the activity or activities of the taxpayer, all the facts and circumstances of the case must be taken into account. Generally, the most significant facts and circumstances in making this determination are the degree of organizational and economic interrelationship of various undertakings, the business purpose which is (or might be) served by carrying on the various undertakings separately or together in a trade or business or in an investment setting, and the similarity of various undertakings. Generally, the Commissioner will accept the characterization by the taxpayer of several undertakings either as a single activity or as separate activities. The taxpayer's characterization will not be accepted, however, when it appears that his characterization is artificial and cannot be reasonably supported under the facts and circumstances of the case. If the taxpayer engages in two or more separate activities, deductions and income from each separate activity are not aggregated either in determining whether a particular activity is engaged in for profit or in applying section 183. Where land is purchased or held primarily with the intent to profit from increase in its value, and the taxpayer also engages in farming on such land, the farming and the holding of the land will ordinarily be considered a single activity only if the farming activity reduces the net cost of carrying the land for its appreciation in value. Thus, the farming and holding of the land will be considered a single activity only if the income derived from farming exceeds the deductions attributable to the farming activity which are not directly attributable to the holding of the land (that is, deductions other than those directly attributable to the holding of the land such as interest on a mortgage secured by the land, annual property taxes attributable to the land and improvements, and depreciation of improvements to the land).

(2) ***Rules for allocation of expenses.*** If the taxpayer is engaged in more than one activity, an item of deduction or income may be allocated between two or more of these activities. Where property is used in several activities, and one or more of such activities is determined not to be engaged in for profit, deductions relating to such property must be allocated between the various activities on a reasonable and consistently applied basis.

(3) ***Example.*** The provisions of this paragraph may be illustrated by the following example:

> *Example.* (i) A, an individual, owns a small house located near the beach in a resort community. Visitors come to the area for recreational purposes during only 3 months of the year. During the remaining 9 months of the year houses such as A's are not rented. Customarily, A arranges that the house will be leased for 2 months of 3-month recreational season to vacationers and reserves the house for his own vacation during the remaining month of the recreational season. In 1971, A leases the house for 2 months for $1,000 per month and actually uses the house for his own vacation during the other month of the recreational season. For 1971, the expenses attributable to the house are $1,200 interest, $600 real estate taxes, $600 maintenance, $300 utilities, and $1,200 which would have been allowed as depreciation had the activity been engaged in for profit. Under these facts and circumstances, A is engaged in a single activity, holding the beach house primarily for personal purposes, which is an “activity not engaged in for profit” within the meaning of section 183(c). See paragraph (b)(9) of § 1.183-2.

(ii) Since the $1,200 of interest and the $600 of real estate taxes are specifically allowable as deductions under sections 163 and 164(a) without regard to whether the beach house activity is engaged in for profit, no allocation of these expenses between the uses of the beach house is necessary. However, since section 262 specifically disallows personal, living, and family expenses as deductions, the maintenance and utilities expenses and the depreciation from the activity must be allocated between the rental use and the personal use of the beach house. Under the particular facts and circumstances, $^{2}/_{3}$ (2 months of rental use over 3 months of total use) of each of these expenses are allocated to the rental use, and $^{1}/_{3}$ (1 month of personal use over 3 months of total use) of each of these expenses are allocated to the personal use as follows:

	Rental use 2/3— expenses allocable to section 183(b)(2)	Personal use 1/3— expenses allocable to section 262
Maintenance expense $600	$400	$200
Utilities expense $300	200	100
Depreciation $1,200	800	400
Total	1,400	700

The $700 of expenses and depreciation allocated to the personal use of the beach house are disallowed as a deduction under section 262. In addition, the allowability of each of the expenses and the depreciation allocated to section 183(b)(2) is determined under paragraph (b)(1) (ii) and (iii) of this section. Thus, the maximum amount allowable as a deduction under section 183(b)(2) is $200 ($2,000 gross income from activity, less $1,800 deductions under section 183(b)(1)). Since the amounts described in section 183(b)(2) ($1,400) exceed the maximum amount allowable ($200), and since the amounts described in paragraph (b)(1)(ii) of this section ($600) exceed such maximum amount allowable ($200), none of the depreciation (an amount described in paragraph (b)(1)(iii) of this section) is allowable as a deduction.

(e) ***Gross income from activity not engaged in for profit defined.*** For purposes of section 183 and the regulations thereunder, gross income derived from an activity not engaged in for profit includes the total of all gains from the sale, exchange, or other disposition of property, and all other gross receipts derived from such activity. Such gross income shall include, for instance, capital gains, and rents received for the use of property which is held in connection with the activity. The taxpayer may determine gross income from any activity by subtracting the cost of goods sold from the gross receipts so long as he consistently does so and follows generally accepted methods of accounting in determining such gross income.

(f) ***Rule for electing small business corporations.*** Section 183 and this section shall be applied at the corporate level in determining the allowable deductions of an electing small business corporation.

[T.D. 7198, 37 FR 13680, July 13, 1972]

§ 1.183-2 Activity not engaged in for profit defined.

(a) ***In general.*** For purposes of section 183 and the regulations thereunder, the term *activity not engaged in for profit* means any activity other than one with respect to which deductions are allowable for the taxable year under section 162 or under paragraph (1) or (2) of section 212. Deductions are allowable under section 162 for expenses of carrying on activities which constitute a trade or business of the taxpayer and under section 212 for expenses incurred in connection with activities engaged in for the production or collection of income or for the management, conservation, or maintenance of property held for the production of income. Except as provided in section 183 and § 1.183-1, no deductions are allowable for expenses incurred in connection with activities which are not engaged in for profit. Thus, for example, deductions are not allowable under section 162 or 212 for activities which are carried on primarily as a sport, hobby, or for recreation. The determination whether an activity is engaged in for profit is to be made by reference to objective standards, taking into account all of the facts and circumstances of each case. Although a reasonable expectation of profit is not required, the facts and circumstances must indicate that the taxpayer entered into the activity, or continued the activity, with the objective of making a profit. In determining whether such an objective exists, it may be sufficient that there is a small chance of making a large profit. Thus it may be found that an investor in a wildcat oil well who incurs very substantial expenditures is in the venture for profit even though the expectation of a profit might be considered unreasonable. In determining whether an activity is engaged in for profit, greater weight is given to objective facts than to the taxpayer's mere statement of his intent.

(b) ***Relevant factors.*** In determining whether an activity is engaged in for profit, all facts and circumstances with respect to the activity are to be taken into account. No one factor is determinative in making this determination. In addition, it is not intended that only the factors described in this paragraph are to be taken into account in making the determination, or that a determination is to be made on the basis that the number of factors (whether or not listed in this paragraph) indicating a lack of profit objective exceeds the number of factors indicating a profit objective, or vice versa. Among the factors which should normally be taken into account are the following:

(1) ***Manner in which the taxpayer carries on the activity.*** The fact that the taxpayer carries on the activity in a businesslike manner and maintains complete and accurate books and records may indicate that the activity is engaged in for profit. Similarly, where an activity is carried on in a manner substantially similar to other activities of the same nature which are profitable, a profit motive may be indicated. A change of operating methods, adoption of new techniques or abandonment of unprofitable methods in a manner consistent with an intent to improve profitability may also indicate a profit motive.

(2) ***The expertise of the taxpayer or his advisors.*** Preparation for the activity by extensive study of its accepted business, economic, and scientific practices, or consultation with those who are expert therein, may indicate that the taxpayer has a profit motive where the taxpayer carries on the activity in accordance with such practices. Where a taxpayer has such preparation or procures such expert advice, but does not carry on the activity in accordance with such practices, a lack of intent to derive profit may be indicated unless it appears that the taxpayer is attempting to develop new or superior techniques which may result in profits from the activity.

(3) ***The time and effort expended by the taxpayer in carrying on the activity.*** The fact that the taxpayer devotes much of his personal time and effort to carrying on an activity, particularly if the activity does not have substantial personal or recreational aspects, may indicate an intention to derive a profit. A taxpayer's withdrawal from another occupation to devote most of his energies to the activity may also be evidence that the activity is engaged in for profit. The fact that the taxpayer devotes a limited amount of time to an activity does not necessarily indicate a lack of profit motive where the taxpayer employs competent and qualified persons to carry on such activity.

(4) ***Expectation that assets used in activity may appreciate in value.*** The term *profit* encompasses appreciation in the value of assets, such as land, used in the activity. Thus, the taxpayer may intend to derive a profit from the operation of the activity, and may also intend that, even if no profit from current operations is derived, an overall profit will result when appreciation in the value of land used in the activity is realized since income from the activity together with the appreciation of land will exceed expenses of operation. See, however, paragraph (d) of § 1.183-1 for definition of an activity in this connection.

(5) ***The success of the taxpayer in carrying on other similar or dissimilar activities.*** The fact that the taxpayer has engaged in similar activities in the past and converted them from unprofitable to profitable enterprises may indicate that he is engaged in the present activity for profit, even though the activity is presently unprofitable.

(6) ***The taxpayer's history of income or losses with respect to the activity.*** A series of losses during the initial or start-up stage of an activity may not necessarily be an indication that the activity is not engaged in for profit. However, where losses continue to be sustained beyond the period which customarily is necessary to bring the operation to profitable status such continued losses, if not explainable, as due to customary business risks or reverses, may be indicative that the activity is not being engaged in for profit. If losses are sustained because of unforeseen or fortuitous circumstances which are beyond the control of the taxpayer, such as drought, disease, fire, theft, weather damages, other involuntary conversions, or depressed market conditions, such losses would not be an indication that the activity is not engaged in for profit. A series of years in which net income was realized would of course be strong evidence that the activity is engaged in for profit.

(7) ***The amount of occasional profits, if any, which are earned.*** The amount of profits in relation to the amount of losses incurred, and in relation to the amount of the taxpayer's investment and the value of the assets used in the activity, may provide useful criteria in determining the taxpayer's intent. An occasional small profit from an activity generating large losses, or from an activity in which the taxpayer has made a large investment, would not generally be determinative that the activity is engaged in for profit. However, substantial profit, though only occasional, would generally be indicative that an activity is engaged in for profit, where the investment or losses are comparatively small. Moreover, an opportunity to earn a substantial ultimate profit in a highly speculative venture is ordinarily sufficient to indicate that the activity is engaged in for profit even though losses or only occasional small profits are actually generated.

(8) ***The financial status of the taxpayer.*** The fact that the taxpayer does not have substantial income or capital from sources other than the activity may indicate that an activity is engaged in for profit. Substantial income from sources other than the activity (particularly if the losses from the activity generate substantial tax benefits) may indicate that the activity is not engaged in for profit especially if there are personal or recreational elements involved.

(9) ***Elements of personal pleasure or recreation.*** The presence of personal motives in carrying on of an activity may indicate that the activity is not engaged in for profit, especially where there are recreational or personal elements involved. On the other hand, a profit motivation may be indicated where an activity lacks any appeal other than profit. It is not, however, necessary that an activity be engaged in with the exclusive intention of deriving a profit or with the intention of maximizing profits. For example, the availability of other investments which would yield a higher return, or which would be more likely to be profitable, is not evidence that an activity is not engaged in for profit. An activity will not be treated as not engaged in for profit merely because the taxpayer has purposes or motivations other than solely to make a profit. Also, the fact that the taxpayer derives personal pleasure from engaging in the activity is not sufficient to cause the activity to be classified as not engaged in for profit if the activity is in fact engaged in for profit as evidenced by other factors whether or not listed in this paragraph.

(c) ***Examples.*** The provisions of this section may be illustrated by the following examples:

Example 1. The taxpayer inherited a farm from her husband in an area which was becoming largely residential, and is now nearly all so. The farm had never made a profit before the taxpayer inherited it, and the farm has since had substantial losses in each year. The decedent from whom the taxpayer inherited the farm was a stockbroker, and he also left the taxpayer substantial stock holdings which yield large income from dividends. The taxpayer lives on an area of the farm which is set aside exclusively for living purposes. A farm manager is employed to operate the farm, but modern methods are not used in operating the farm. The taxpayer was born and raised on a farm, and expresses a strong preference for living on a farm. The taxpayer's activity of farming, based on all the facts and circumstances, could be found not to be engaged in for profit.

Example 2. The taxpayer is a wealthy individual who is greatly interested in philosophy. During the past 30 years he has written and published at his own expense several pamphlets, and he has engaged in extensive lecturing activity, advocating and disseminating his ideas. He has made a profit from these activities in only occasional years, and the profits in those years were small in relation to the amounts of the losses in all other years. The taxpayer has very sizable income from securities (dividends and capital gains) which constitutes the principal source of his livelihood. The activity of lecturing, publishing pamphlets, and disseminating his ideas is not an activity engaged in by the taxpayer for profit.

Example 3. The taxpayer, very successful in the business of retailing soft drinks, raises dogs and horses. He began raising a particular breed of dogs many years ago in the belief that the breed was in danger of declining, and he has raised and sold the dogs in each year since. The taxpayer recently began raising and racing thoroughbred horses. The losses from the taxpayer's dog and horse activities have increased in magnitude over the years, and he has not made a profit on these operations during any of the last 15 years. The taxpayer generally sells the dogs only to friends, does not advertise the dogs for sale, and shows the dogs only infrequently. The taxpayer races his horses only at the “prestige” tracks at which he combines his racing activities with social and recreational activities. The horse and dog operations are conducted at a large residential property on which the taxpayer also lives, which includes substantial living quarters and attractive recreational facilities for the taxpayer and his family. Since

(i) the activity of raising dogs and horses and racing the horses is of a sporting and recreational nature,

(ii) the taxpayer has substantial income from his business activities of retailing soft drinks,

(iii) the horse and dog operations are not conducted in a businesslike manner, and

(iv) such operations have a continuous record of losses, it could be determined that the horse and dog activities of the taxpayer are not engaged in for profit.

Example 4. The taxpayer inherited a farm of 65 acres from his parents when they died 6 years ago. The taxpayer moved to the farm from his house in a small nearby town, and he operates it in the same manner as his parents operated the farm before they died. The taxpayer is employed as a skilled machine operator in a nearby factory, for which he is paid approximately $8,500 per year. The farm has not been profitable for the past 15 years because of rising costs of operating farms in general, and because of the decline in the price of the produce of this farm in particular. The taxpayer consults the local agent of the State agricultural service from time to time, and the suggestions of the agent have generally been followed. The manner in which the farm is operated by the taxpayer is substantially similar to the manner in which farms of similar size, and which grow similar crops in the area, are operated. Many of these other farms do not make profits. The taxpayer does much of the required labor around the farm himself, such as fixing fences, planting crops, etc. The activity of farming could be found, based on all the facts and circumstances, to be engaged in by the taxpayer for profit.

Example 5. A, an independent oil and gas operator, frequently engages in the activity of searching for oil on undeveloped and unexplored land which is not near proven fields. He does so in a manner substantially similar to that of others who engage in the same activity. The chances, based on the experience of A and others who engaged in this activity, are strong that A will not find a commercially profitable oil deposit when he drills on land not established geologically to be proven oil bearing land. However, on the rare occasions that these activities do result in discovering a well, the operator generally realizes a very large return from such activity. Thus, there is a small chance that A will make a large profit from his soil exploration activity. Under these circumstances, A is engaged in the activity of oil drilling for profit.

Example 6. C, a chemist, is employed by a large chemical company and is engaged in a wide variety of basic research projects for his employer. Although he does no work for his employer with respect to the development of new plastics, he has always been interested in such development and has outfitted a workshop in his home at his own expense which he uses to experiment in the field. He has patented several developments at his own expense but as yet has realized no income from his inventions or from such patents. C conducts his research on a regular, systematic basis, incurs fees to secure consultation on his projects from time to time, and makes extensive efforts to "market" his developments. C has devoted substantial time and expense in an effort to develop a plastic sufficiently hard, durable, and malleable that it could be used in lieu of sheet steel in many major applications, such as automobile bodies. Although there may be only a small chance that C will invent new plastics, the return from any such development would be so large that it induces C to incur the costs of his experimental work. C is sufficiently qualified by his background that there is some reasonable basis for his experimental activities. C's experimental work does not involve substantial personal or recreational aspects and is conducted in an effort to find practical applications for his work. Under these circumstances, C may be found to be engaged in the experimental activities for profit.

[T.D. 7198, 37 FR 13683, July 13, 1972]

§ 1.183-3 Election to postpone determination with respect to the presumption described in section 183(d). [Reserved]

§ 1.183-4 Taxable years affected.

The provisions of section 183 and the regulations thereunder shall apply only with respect to taxable years beginning after December 31, 1969. For provisions applicable to prior taxable years, see section 270 and § 1.270-1.

[T.D. 7198, 37 FR 13685, July 13, 1972]

§ 1.186-1 Recoveries of damages for antitrust violations, etc.

(a) ***Allowance of deduction.*** Under section 186, when a compensatory amount which is included in gross income is received or accrued during a taxable year for a compensable injury, a deduction is allowed in an amount equal to the lesser of

(1) such compensatory amount, or

(2) the unrecovered losses sustained as a result of such compensable injury.

(b) ***Compensable injury*** —

(1) ***In general.*** For purposes of this section, the term *compensable injury* means any of the injuries described in subparagraph (2), (3), or (4) of this paragraph.

(2) ***Patent infringement.*** An injury sustained as a result of an infringement of a patent issued by the United States (whether or not issued to the taxpayer or another person or persons) constitutes a compensable injury. The term *patent issued by the United States* means any patent issued or granted by the United States under the authority of the Commissioner of Patents pursuant to 35 U.S.C. 153.

(3) ***Breach of contract or of fiduciary duty or relationship.*** An injury sustained as a result of a breach of contract (including an injury sustained by a third party beneficiary) or a breach of fiduciary duty or relationship constitutes a compensable injury.

(4) ***Injury suffered under certain antitrust law violations.*** An injury sustained in business, or to property, by reason of any conduct forbidden in the antitrust laws for which a civil action may be brought under section 4 of the Act of October 15, 1914 (15 U.S.C. 15), commonly known as the Clayton Act, constitutes a compensable injury.

(c) ***Compensatory amount*** —

(1) ***In general.*** For purposes of this section, the term, *compensatory amount* means any amount received or accrued during the taxable year as damages as a result of an award in, or in settlement of, a civil action for recovery for a compensable injury, reduced by any amounts paid or incurred in the taxable year in securing such award or settlement. The term *compensatory amount* includes only amounts compensating for actual economic injury. Thus, additional amounts representing punitive, exemplary, or treble damages are not included within the term. Where, for example, a taxpayer recovers treble damages under section 4 of the Clayton Act, only one-third of the recovery representing economic injury constitutes a compensatory amount. In the absence of any indication to the contrary, amounts received in settlement of an action shall be deemed to be a recovery for an actual economic injury except to the extent such settlement amounts exceed actual damages claimed by the taxpayer in such action.

(2) ***Interest on a compensatory amount.*** Interest attributable to a compensatory amount shall not be included within the term *compensatory amount.*

(3) ***Settlement of a civil action for damages*** —

(i) ***Necessity for an action.*** The term *compensatory amount* does not include an amount received or accrued in settlement of a claim for a compensable injury if the amount is received or accrued prior to institution of an action. An action shall be considered as instituted upon completion of service of process, in accordance with the laws and rules of the court in which the action has been commenced or to which the action has been removed, upon all defendants who pay or incur an obligation to pay a compensatory amount.

(ii) ***Specifications of the parties.*** If an action for a compensable injury is settled, the specifications of the parties will generally determine compensatory amounts unless such specifications are not reasonably supported by the facts and circumstances of the case. For example, the parties may provide that the sum of $1,000 represents actual damages sustained as the result of antitrust violations and that the total amount of the settlement after the trebling of damages is $3,000. In such case, only the sum of $1,000 would be a compensatory amount. In the absence of specifications of the parties, the complaint filed by the taxpayer may be considered in determining what portion of the amount of the settlement is a compensatory amount.

(4) ***Amounts paid or incurred in securing the award or settlement.*** For purposes of this section, the term *amounts paid or incurred in the taxable year in securing such award or settlement* shall include legal expenses such as attorney's fees, witness fees, accountant fees, and court costs. Expenses incurred in securing a recovery of both a compensatory amount and other amounts from the same action shall be allocated among such amounts in the ratio each of such amounts bears to the total recovery. For instance, where a taxpayer incurs attorney's fees and other expenses of $3,000 in recovering $10,000 as a compensatory amount, $5,000 as a return of capital, and $25,000 as punitive damages from the same action, the taxpayer shall allocate $750 of the expenses to the compensatory amount (10,000/40,000 × 3,000), $375 to the return of capital (5,000/40,000 × 3,000), and $1,875 to the punitive damages (25,000/40,000 × 3,000).

(d) ***Unrecovered losses*** —

(1) ***In general.*** For purposes of this section, the term *unrecovered losses sustained as a result of such compensable injury* means the sum of the amounts of the net operating losses for each taxable year in whole or in part within the injury period, to the extent that such net operating losses are attributable to such compensable injury, reduced by

(i) the sum of any amounts of such net operating losses which were allowed as a net operating loss carryback or carryover for any prior taxable year under the provisions of section 172, and

(ii) the sum of any amounts allowed as deductions under section 186 (a) and this section for all prior taxable years with respect to the same compensable injury. Accordingly, a deduction is permitted under section 186(a) and this section with respect to net operating losses whether or not the period for carryover under section 172 has expired.

(2) ***Injury period.*** For purposes of this section, the term *injury period* means

(i) with respect to an infringement of a patent, the period during which the infringement of the patent continued,

(ii) with respect to a breach of contract or breach of fiduciary duty or relationship, the period during which amounts would have been received or accrued but for such breach of contract or breach of fiduciary duty or relationship, or

(iii) with respect to injuries sustained by reason of a violation of section 4 of the Clayton Act, the period during which such injuries were sustained. The injury period will be determined on the basis of the facts and circumstances of the taxpayer's situation. The injury period may include a periods before and after the period covered by the civil action instituted.

(3) ***Net operating losses attributable to compensable injuries.*** A net operating loss for any taxable year shall be treated as attributable (whether actually attributable or not) to a compensable injury to the extent the compensable injury is sustained during the taxable year. For purposes of determining the extent of the compensable injury sustained during a taxable year, a judgment for a compensable injury apportioning the amount of the recovery (not reduced by any amounts paid or incurred in securing such recovery) to specific taxable years within the injury period will be conclusive. If a judgment for a compensable injury does not apportion the amount of the recovery to specific taxable years within the injury period, the amount of the recovery will be prorated among the years within the injury period in the proportion that the net operating loss sustained in each of such years bear to the total net operating losses sustained for all such years. If an action is settled, the specifications of the parties will generally determine the apportionment of the amount of the recovery unless such specifications are not reasonably supported by the facts and circumstances of the case. In the absence of specifications of the parties, the amount of the recovery will be prorated among the years within the injury period in the proportion that the net operating loss sustained in each of such years bears to the total net operating losses sustained for all such years.

(4) ***Application of losses attributable to a compensable injury.*** If only a portion of a net operating loss for any taxable year is attributable to a compensable injury, such portion shall (in applying section 172 for purposes of this section) be considered to be a separate net operating loss for such year to be applied after the other portion of such net operating loss. If, for example, in the year of the compensable injury the net operating loss was $1,000 and the amount of the compensable injury was $600, the amount of $400 not attributable to the compensable injury would be used first to offset profits in the carryover or carryback periods as prescribed by section 172. After the amount not attributable to the compensable injury is used to offset profits in other years, then the amount attributable to the compensable injury will be applied against profits in the carryover or carryback periods.

(e) ***Effect on net operating loss carryovers*** —

(1) ***In general.*** Under section 186 (e) if for the taxable year in which a compensatory amount is received or accrued any portion of the net operating loss carryovers to such year is attributable to the compensable injury for which such amount is received or accrued, such portion of the net operating loss carryovers must be reduced by the excess, if any, of

(i) the amount computed under section 186(e)(1) with respect to such compensatory amount, over

(ii) the amount computed under section 186(e)(2) with respect to such compensable injury.

(2) ***Amount computed under section 186(e)(1).*** The amount computed under section 186(e)(1) is equal to the deduction allowed under section 186(a) with respect to the compensatory amount received or accrued for the taxable year.

(3) ***Amount computed under section 186(e)(2).*** The amount computed under section 186(e)(2) is equal to that portion of the unrecovered losses sustained as a result of the compensable injury with respect to which, as of the beginning of the taxable year, the period for carryover under section 172 has expired without benefit to the taxpayer, but only to the extent that such portion of the unrecovered losses did not reduce an amount computed under section 186(e)(1) for any prior taxable year.

(4) ***Increase in income under section 172(b)(2).*** If there is a reduction for any taxable year under subparagraph (1) of this paragraph in the portion of the net operating loss carryovers to such year attributable to a compensable injury, then, solely for purposes of determining the amount of such portion which may be carried to subsequent taxable years, the income of such taxable year, as computed under section 172(b)(2), shall be increased by the amount of the reduction computed under subparagraph (1) of this paragraph, for such year.

(f) ***Illustration.*** The provisions of section 186 and this section may be illustrated by the following example:

Example. (i) As of the beginning of his taxable year 1969, taxpayer A has a net operating loss carryover from his taxable year 1966 of $550 of which $250 is attributable to a compensable injury. In addition, he has a net operating loss attributable to the compensable injury of $150 with respect to which the period for carryover under section 172 has expired without benefit to the taxpayer. In 1969, he receives a $100 compensatory amount with respect to that injury and he has $75 in other income. Thus, A has gross income of $175 and he is entitled to a $100 deduction (the compensatory amount received) under section 186(a) and this section since this amount is less than the unrecovered losses sustained as a result of the compensable injury ($250 + $150 = $400). No portion of the net operating loss carryover to the current taxable year attributable to the compensable injury is reduced under section 186(e) since the amount determined under section 186(e)(1) ($100) does not exceed the amount determined under section 186(e)(2) ($150). Therefore, A applies a net operating loss carryover of $550 against his remaining income of $75 and retains a net operating loss carryover of $475 to following years of which amount $250 remains attributable to the compensable injury. In addition, he retains $50 of net operating losses attributable to the compensable injury with respect to which the period for carryover under section 172 has expired without benefit to the taxpayer.
(ii) In 1970, A receives a $200 compensatory amount with respect to the same compensable injury and has $75 of other income. Thus, A has gross income of $275 and he is entitled to a $200 deduction (the compensatory amount received) under section 186(a) and this section since this amount is less than the remaining unrecovered loss sustained as a result of the compensable injury ($250 + $50 = $300). The net operating loss carryover to the current taxable year of $250 attributable to the compensable injury is reduced under section 186(e) by $150, which is the excess of the amount determined under section 186(e)(1) ($200) over the amount determined under section 186(e)(2) ($50). Therefore, A applies net operating loss carryovers of $325 ($225 not attributable to the compensable injury, + $100 attributable to such injury) against his remaining income of $75. A retains net operating loss carryovers of $250 for following years, of which

amount $100 is attributable to the compensable injury. A has used all of his net operating losses attributable to the compensable injury with respect to which the period for carryover under section 172 has expired without benefit to the taxpayer.

(iii) In 1971, A receives a $200 compensatory amount with respect to the same compensable injury and has $75 of other income. Thus, A has gross income of $275 and he is entitled to a $100 deduction (the amount of unrecovered losses) under section 186(a) and this section since this amount is less than the compensatory amount received ($200). The net operating loss carryover to the current taxable year of $100 attributable to the compensable injury is reduced under section 186(e) by $100, which is the excess of the amount determined under section 186(e)(1) ($100) over the amount determined under section 186(e)(2) ($0). Therefore, A applies net operating loss carryovers of $150 against his remaining income of $175 ($100 compensatory amount plus $75 other income) which leaves $25 taxable income. No net operating loss carryover remains for following years.

(g) ***Effective date.*** The provisions of this section are applicable as to compensatory amounts received or accrued in taxable years beginning after December 31, 1968, even though the compensable injury was sustained in taxable years beginning before such date.

[T.D. 7220, 37 FR 24744, Nov. 21, 1972]

§ 1.187-1 Amortization of certain coal mine safety equipment.

(a) ***Allowance of deduction*** —

(1) ***In general.*** Under section 187(a), every person, at his election, shall be entitled to a deduction with respect to the amortization of the adjusted basis (for determining gain) of any certified coal mine safety equipment (as defined in § 1.187-2), based on a period of 60 months. Such 60-month period shall, at the election of the taxpayer, begin either with the month following the month in which such equipment was placed in service or with the succeeding taxable year. For rules as to making or discontinuing the election, see paragraphs (b) and (c) of this section. For the computation of the adjusted basis (for determining gain) of any certified coal mine safety equipment, see paragraph (b) of § 1.187-2.

(2) ***Amount of deduction.***

(i) Such amortization deduction shall be an amount, with respect to each month of such 60-month period which falls within the taxable year, equal to the adjusted basis for determining gain of the certified coal mine safety equipment at the end of such month divided by the number of months (including the month for which the deduction is computed) remaining in such 60-month period. Such adjusted basis at the end of any month shall be computed without regard to the amortization deduction for such month. The total amortization deduction with respect to any certified coal mine safety equipment for a particular taxable year is the sum of the amortization deductions allowable for each month of the 60-month period which falls within such taxable year.

(ii) If any certified coal mine safety equipment is sold or exchanged or otherwise disposed of during a particular month, then the amortization deduction (if any) allowable to the transferor in respect of that month shall be that portion of the amount to which such person would be entitled for a full month which the number of days in such month during which the equipment was held by such person bears to the total number of days in such month.

(3) *Effect on other deductions.*

(i) The amortization deduction provided by section 187(a) with respect to any month shall be in lieu of the depreciation deduction which would otherwise be allowable with respect to such equipment under section 167 for such month.

(ii) If the adjusted basis of such coal mine safety equipment as computed under section 1011 for purposes other than the amortization deduction provided by section 187(a) is in excess of the adjusted basis, as computed under paragraph (b) of § 1.187-2, then such excess shall be recovered through depreciation deductions under the rules of section 167. See section 187(e), and paragraph (b)(2) of § 1.187-2.

(iii) See section 179 and paragraph (e)(1)(ii) of § 1.179-1 for additional first-year depreciation in respect of certified coal mine safety equipment.

(4) *Special rules.*

(i) If the assets of a corporation which has elected to take the amortization deduction under section 187(a) are acquired by another corporation in a transaction to which section 381 (relating to carryovers in certain corporate acquisitions) applies, the acquiring corporation is to be treated as if it were the transferor or distributor corporation for purposes of this section.

(ii) For the right of estates and trusts to take the amortization deduction provided by section 187 see section 642(f) and § 1.642(f)-1.

(iii) For the allowance of the amortization deduction in the case of coal mine safety equipment of partnerships see section 703 and § 1.703-1.

(iv) In the case of certified coal mine safety equipment held by one person for life with the remainder to another person, the amortization deduction under section 187(a) shall be computed as if the life tenant were the absolute owner of the property and shall be allowable to the life tenant during his life.

(5) *Effective date.* The provisions of this paragraph shall apply to taxable years ending after December 31, 1969.

(6) *Meaning of terms.* Except as otherwise provided in § 1.187-2, all terms used in section 187 and the regulations thereunder shall have the meaning provided by this section and § 1.187-2.

(b) *Election of amortization* —

(1) *In general.* Under section 187(b), an election by the taxpayer to make amortization deductions with respect to any certified coal mine safety equipment and to begin the 60-month amortization period shall be made by a statement to that effect attached to his return for the taxable year in which falls the first month of the 60-month amortization period so elected. Such statement shall include the following information:

(i) A description clearly identifying each piece of certified coal mine safety equipment for which an amortization deduction is claimed;

(ii) The date on which such equipment was "placed in service" (see paragraph (a)(2)(i) of § 1.187-2);

(iii) The date on which the amortization period began;

(iv) The total costs paid or incurred in the acquisition and installation of such equipment;

(v) A computation showing the adjusted basis (as defined in paragraph (b) of § 1.187-2) of the equipment as of the beginning of the amortization period;

(vi) In the case of electric face equipment which is newly acquired by the taxpayer, a statement that the equipment has been certified by the Secretary of the Interior or the Director of the Bureau of Mines as being permissible within the meaning of section 305(a)(2) of the Federal Coal Mine Health and Safety Act of 1969; and

(vii) In the case of property placed in service in connection with used electric face equipment (within the meaning of paragraph (a)(2)(ii) of § 1.187-2), a statement that such property has resulted in the used electric face equipment becoming permissible and a copy of the notification that such property is permissible.

(2) ***Late certification.*** If, 90 days before the date on which the return described in this paragraph is due, a piece of coal mine safety equipment has not been certified as permissible by the Secretary of the Interior or the Director of the Bureau of Mines, then the election may be made by a statement in an amended income tax return for the taxable year in which falls the first month of the 60-month amortization period so elected. The statement and amended return in such case must be filed not later than 90 days after the date the equipment is certified as permissible by the Secretary of the Interior or the Director of the Bureau of Mines. Amended income tax returns or claims for credit or refund should also be filed at this time for other taxable years which are within the amortization period and which are subsequent to the taxable year for which the election is made. Nothing in this paragraph shall be construed as extending the time specified in section 6511 within which a claim for credit or refund may be filed.

(3) ***Other requirements and considerations.*** No method of making the election provided for in section 187(a) other than that prescribed in this section shall be permitted on or after August 11, 1971. A taxpayer who does not elect in the manner prescribed in this section to take amortization deductions with respect to certified coal mine safety equipment shall not be entitled to such deductions. In the case of a taxpayer who has elected prior to August 11, 1971 the statement required by subparagraph (1) of this paragraph shall be attached to his income tax return for his taxable year in which August 11, 1971 occurs.

(c) ***Election to discontinue or revoke amortization*** —

(1) ***Election to discontinue.***

(i) Under section 187(c), if a taxpayer has elected to take the amortization deduction provided by section 187(a) with respect to any certified coal mine safety equipment, he may, after such election and prior to the expiration of the 60-month amortization period, elect to discontinue the amortization deduction for the remainder of the 60-month period for such equipment.

(ii) An election to discontinue the amortization deduction shall be made by a statement in writing filed with the District Director or with the director of the Internal Revenue Service center with whom the return of the taxpayer is required to be filed for its taxable year in which falls the first month for which the election terminates. In addition, a copy of such statement shall be attached to the taxpayer's income tax return filed for such taxable year. Such statement shall specify the month as of the beginning of which the taxpayer elects to discontinue such deductions, and shall be filed before the beginning of the month specified therein. In addition, such notice shall contain a description clearly identifying the certified coal mine safety equipment with respect to which the taxpayer elects to discontinue the amortization deduction. If the taxpayer so elects to discontinue the amortization deduction, he shall not be entitled to any further amortization deductions under section 187 with respect to such equipment.

(2) ***Revocation of elections made prior to August 11, 1971.*** If before August 11, 1971 an election under section 187(a) has been made, consent is hereby given for the taxpayer to revoke such election without the consent of the Commissioner. Such election may be revoked by filing a notice of revocation on or before November 9, 1971. Such notice shall be in the form and shall be filed in the manner required by subparagraph (1)(ii) of this paragraph. If such revocation is for a period which falls within one or more taxable years for which an income tax return has been filed, an amended income tax return shall be filed for any taxable year in which a deduction was taken under section 187 on or before November 9, 1971.

(3) ***Depreciation subsequent to discontinuance or in the case of revocation of amortization.***

(i) A taxpayer who elects in the manner prescribed under subparagraph (1) of this section to discontinue amortization deductions under section 187(a) or under subparagraph (2) of this paragraph to revoke an election made prior to August 11, 1971 with respect to an item of certified coal mine safety equipment may be entitled to a deduction for depreciation with respect to such equipment. See section 167 and the regulations thereunder.

(ii) In the case of an election to discontinue an amortization deduction under section 187, the deduction for depreciation shall be computed beginning with the first month as to which such amortization deduction is not applicable, and shall be based upon the adjusted basis (see section 1011 and the regulations thereunder) of the property as of the beginning of such month. Such depreciation deduction shall be based upon the remaining portion of the period authorized under section 167 for the facility, as determined as of the first day of the first month as of which the amortization deduction is not applicable.

(iii) In the case of a revocation of an election under section 187 referred to in paragraph (c)(2) of this section the deduction for depreciation shall begin as of the time such depreciation deduction would have been taken but for the election under section 187. See subparagraph (2) of this section for rules as to filing amended returns for years for which amortization deductions have been taken.

(d) ***Examples.*** This section may be illustrated by the following examples:

> *Example 1.* On September 30, 1970, the X Corporation, which uses the calendar year as its taxable year, places in service a piece of coal mine safety equipment required as a result of the Federal Coal Mine Health and Safety Act of 1969 which is certified as indicated in paragraph (a) of § 1.187-2. The cost of the equipment is $120,000. On its income tax return filed for 1970, the

corporation elects to take the amortization deductions allowed by section 187(a) with respect to the equipment and to begin the 60-month amortization period with October 1970, the month following the month in which it was placed in service. The adjusted basis at the end of October 1970 (determined without regard to the amortization deduction allowed by section 187(a) for that month) is $120,000. The allowable amortization deduction with respect to such equipment for the taxable year 1970 is $6,000, computed as follows:

Monthly amortization deductions:	
October: $120,000 divided by 60	$2,000
November: $118,000 ($120,000 minus $2,000) divided by 59	2,000
December: $116,000 ($118,000 minus $2,000) divided by 58	2,000
Total amortization deduction for 1970	6,000

Example 2. Assume the same facts as in *Example 1.* Assume further that on May 20, 1972, X properly files notice of its election to discontinue the amortization deductions with the month of June 1972. The adjusted basis of the equipment as of June 1, 1972 (assuming no capital additions or improvements) is $80,000, computed as follows: Yearly amortization deductions computed in accordance with *Example 1:*

1970	$6,000
1971	24,000
1972 (for the first 5 months)	10,000
Total amortization deductions for 20 months	40,000
Adjusted basis at beginning of amortization period	120,000
Less: Amortization deductions	40,000
Adjusted basis as of June 1, 1972	80,000

Beginning as of June 1, 1972, the deduction for depreciation under section 167 is allowable with respect to the property on its adjusted basis of $80,000.

Example 3. Assume the same facts as in *Example 1,* except that on its income tax return filed in 1970, X does not elect to take amortization deductions allowed by section 187(a) but that on its income tax return filed for 1971 X elects to begin the amortization period as of January 1, 1971, the taxable year succeeding the taxable year the equipment was placed in service. Assume further that the only adjustment to basis for the period October 1, 1970, to January 1, 1971, is $3,000 for depreciation

(the amount allowable, of which $2,000 is for additional first year depreciation under section 179) for the last 3 months of 1970. The adjusted basis (for determining gain) for purposes of section 187 as of that date is $120,000 less $3,000 or $117,000.

[T.D. 7137, 36 FR 14733, Aug. 11, 1971; 36 FR 16656, Aug. 25, 1971]

§ 1.187-2 Definitions.

(a) ***Certified coal mine safety equipment*** —

(1) ***In general*** —

(i) The term *certified coal mine safety equipment* means property which:

(*a*) Is electric face equipment (within the meaning of section 305 of the Federal Coal Mine Health and Safety Act of 1969) required in order to meet the requirements of section 305(a)(2) of such Act,

(*b*) The Secretary of the Interior or the Director of the Bureau of Mines certifies is permissible within the meaning of such section 305(a)(2), and

(*c*) Is placed in service (as defined in subparagraph (2)(i) of this paragraph) before January 1, 1975.

(ii) In addition, property placed in service in connection with any used electric face equipment which the Secretary of the Interior or the Director of the Bureau of Mines certifies makes such used electric face equipment permissible shall be treated as a separate item of certified coal mine safety equipment. See subparagraph (2)(ii) of this paragraph.

(2) ***Meaning of terms.***

(i) For purposes of subparagraph (1)(i)(c) of this paragraph, the term *placed in service* shall have the meaning assigned to such term in paragraph (d) of § 1.46-3.

(ii) For purposes of subparagraph (1)(ii) of this paragraph, the term *property* includes those costs of converting existing nonpermissible electric face equipment to a permissible condition which are chargeable to capital account under the principles of § 1.1016-2. Property is considered to be placed in service in connection with used electric face equipment (which was not permissible) if its use causes such electric face equipment to be certified as permissible.

(b) ***Adjusted basis*** —

(1) ***In general.*** The basis upon which the deduction with respect to amortization allowed by section 187 is to be computed with respect to any item of certified coal mine safety equipment shall be the adjusted basis provided in section 1011 for the purpose of determining gain on the sale or other disposition of such property (see part II (section 1011 and following) subchapter O, chapter 1 of the Code) computed as of the first day of the amortization period. For an example showing the determination of the adjusted basis referred to in the preceding sentence in the case where the amortization period begins with the taxable year succeeding the taxable year in which the property is placed in service see *Example 3* in paragraph (d) of § 1.187-1.

(2) ***Capital additions.*** The adjusted basis of any certified coal mine safety equipment, with respect to which an election is made under section 187(b), shall not be increased, for purposes of section 187, for amounts chargeable to the capital account for additions or improvements after the amortization

period has begun. However, nothing contained in this section or § 1.187-1 shall be deemed to disallow a deduction for depreciation for such capital additions. Thus, for example, if a taxpayer places a piece of certified coal mine safety equipment in service in 1971 and in 1972 makes improvements to it the expenditures for which are chargeable to the capital account, such improvements shall not increase the adjusted basis of the equipment for purposes of computing the amortization deduction allowed by section 187(a). However, the depreciation deduction provided by section 167 shall be allowed with respect to such improvements in accordance with the principles of section 167.

[T.D. 7137, 36 FR 14734, Aug. 11, 1971; 36 FR 19251, Oct. 1, 1971]

§ 1.188-1 Amortization of certain expenditures for qualified on-the-job training and child care facilities.

(a) ***Allowance of deduction*** —

(1) ***In general.*** Under section 188, at the election of the taxpayer, any eligible expenditure (as defined in paragraph (d)(1) of this section) made by such taxpayer to acquire, construct, reconstruct, or rehabilitate section 188 property (as defined in paragraph (d)(2) of this section) shall be allowable as a deduction ratably over a period of 60 months. Such 60-month period shall begin with the month in which such property is placed in service. For rules for making the election, see paragraph (b) of this section. For rules relating to the termination of an election, see paragraph (c) of this section.

(2) ***Amount of deduction*** —

(i) ***In general.*** For each eligible expenditure attributable to an item of section 188 property the amortization deduction shall be an amount, with respect to each month of the 60-month amortization period which falls within the taxable year, equal to the elgible expenditure divided by 60. The total amortization deduction with respect to each item of section 188 property for a particular taxable year is the sum of the amortization deductions allowable for each month of the 60-month period which falls within such taxable year. The total amortization deduction under section 188 for a particular taxable year is the sum of the amortization deductions allowable with respect to each item of section 188 property for that taxable year.

(ii) ***Separate amortization period for each expenditure.*** Each eligible expenditure attributable to an item of section 188 property to which an election relates shall be amortized over a 60-month period beginning with the month in which the item of section 188 property is placed in service. Thus, if a taxpayer makes an eligible expenditure for an addition to, or improvement of, section 188 property, such expenditure must be amortized over a separate 60-month period beginning with the month in which the section 188 property is placed in service.

(iii) ***Separate items.*** The determination of what constitutes a separate item of section 188 property is to be made on the basis of the facts and circumstances of each individual case. Additions or improvements to an existing item of section 188 property are treated as a separate item of section 188 property. In general, each item of personal property is a separate item of property and each building, or separate element or structural component thereof, is a separate item of property. For purposes of subdivisions (i) and (ii) of this subparagraph, two or more items of property may be treated as a single item of property if such items

(A) are placed in service within the same month of the taxable year,

(B) have same estimated useful life, and

(C) are to be used in a functionally related manner in the operation of a qualified on-the-job training or child care facility or are integrally related facilities (described in paragraph (d)(3) or (4) of this section.

(iv) ***Disposition of property or termination of election.*** If an item of section 188 property is sold or exchanged or otherwise disposed of (or if the item of property ceases to be used as section 188 property by the taxpayer) during a particular month, then the amortization deduction (if any) allowable to the taxpayer in respect of that item for that month shall be an amount which bears the same ratio to the amount to which the taxpayer would be entitled for a full month as the number of days in such month during which the property was held by him (or used by him as section 188 property) bears to the total number of days in such month.

(3) ***Effect on other deductions.*** The amortization deduction provided by section 188(a) with respect to any month shall be in lieu of any depreciation deduction which would otherwise be allowable under sections 167 or 179 with respect to that portion of the adjusted basis of the property attributable to an adjustment under section 1016(a)(1) made on account of an eligible expenditure.

(4) ***Depreciation with respect to property ceasing to be used as section 188 property.*** A taxpayer is entitled to a deduction for the depreciation (to the extent allowable under section 167) of property with respect to which the election under section 188 is terminated under the provisions of paragraph (c) of this section. The deduction for depreciation shall begin with the date of such termination and shall be computed on the adjusted basis of the property as of such date. The depreciation deduction shall be based upon the estimated remaining useful life and salvage value authorized under section 167 for the property as of the termination date.

(5) ***Investment credit not to be allowed.*** Any property with respect to which an election has been made under section 188(a) shall not be treated as section 38 property within the meaning of section 48(a).

(6) ***Special rules*** —

(i) ***Life estates.*** In the case of section 188 property held by one person for life with the remainder to another person, the amortization deduction under section 188(a) shall be computed as if the life tenant were the absolute owner of the property and shall be allowable to the life tenant during his life.

(ii) ***Certain corporate acquistions.*** If the assets of a corporation which has elected to take the amortization deduction under section 188(a) are acquired by another corporation in a transaction to which section 381(a) (relating to carryovers in certain corporate acquisitions) applies, the acquiring corporation is to be treated as if it were the distributor or transferor corporation for purposes of this section.

(iii) ***Estates and trusts.*** For the allowance of the amortization deduction in the case of estates and trusts, see section 642(f) and § 1.642(f)-(1).

(iv) ***Partnerships.*** For the allowance of the amortization deduction in the case of partnerships, see section 703 and § 1.703-1.

(b) ***Time and manner of making election*** —

(1) ***In general.*** Except as otherwise provided in subparagraph (2) of this paragraph, an election to amortize an eligible expenditure under section 188 shall be made by attaching, to the taxpayer's income tax return for the taxable period for which the deduction is first allowable to such taxpayer, a written statement containing:

(i) A description clearly identifying each item of property (or two or more items of property treated as a single item) forming a part of a qualified on-the-job training or child care facility to which the election relates. e.g., building, classroom equipment, etc.;

(ii) The date on which the eligible expenditure was made for such item of property (or the period during which eligible expenditures were made for two or more items of property treated as a single item of property);

(iii) The date on which such item of property was “placed in service” (see paragraph (d)(5) of this section);

(iv) The amount of the eligible expenditure of such item of property (or the total amount of expenditures for two or more items of property treated as a single item); and

(v) The annual amortization deduction claimed with respect to such item of property.

If the taxpayer does not file a timely return (taking into account extensions of the time for filing) for the taxable year for which the election is first to be made, the election shall be filed at the time the taxpayer files his first return for that year. The election may be made with an amended return only if such amended return is filed no later than the time prescribed by law (including extensions thereof) for filing the return for the taxable year of election.

(2) ***Special rule.*** With respect to any return filed before (90 days after the date on which final regulations are filed with the Office of the Federal Register), the election to amortize an eligible expenditure for section 188 property shall be made by a statement on, or attached to, the income tax return (or an amended return) for the taxable year, indicating that an election is being made under section 188 and setting forth information to identify the election and the facility or facilities to which it applies. An election made under the provisions of this subparagraph, must be made not later than

(i) the time, including extensions thereof, prescribed by law for filing the income tax return for the first taxable year for which the election is being made or

(ii) before (90 days after the date on which final regulations under section 188 are filed with the Office of the Federal Register), whichever is later. Nothing in this subparagraph shall be construed as extending the time specified in section 6511 within which a claim for credit or refund may be filed.

(3) ***No other method of making election.*** No method for making the election under section 188(a) other than the method prescribed in this paragraph shall be permitted. If an election to amortize section 188 property is not made within the time and in the manner prescribed in this paragraph, no election may be made (by the filing of an amended return or in any other manner) with respect to such section 188 property.

(4) ***Effect of election.*** An election once made may not be revoked by a taxpayer with respect to any item of section 188 property to which the election relates. The election of the amortization deducted for an item of section 188 property shall not affect the taxpayer's right to elect or not to elect the

amortization deduction as to other items of section 188 property even though the items are part of the same facility. For rules relating to the termination of an election other than by revocation by the taxpayer, see paragraph (c) of this section.

(c) ***Termination of election.*** If the specific use of an item of section 188 property in connection with a qualified on-the-job training or child care facility is discontinued, the election made with respect to that item of property shall be terminated. The termination shall be effective with respect to such item of property as of the earliest date on which the taxpayer's specific use of the item is no longer in connection with the operation of a qualified on-the-job training or child care facility. If a facility ceases to meet the applicable requirements of paragraph (d)(3) of this section, relating to qualified on-the-job training facilities, or paragraph (d)(4) of this section, relating to qualified child care facilities, the election or elections made with respect to the items of section 188 property comprising such facility shall be terminated. The termination shall be effective with respect to such items of poperty as of the earliest date on which the facility is no longer qualified under the applicable rules. For rules relating to depreciation with respect to property ceasing to be used as section 188 property, see paragraph (a)(4) of this section.

(d) ***Definitions and special requirements*** —

(1) ***Eligible expenditure.*** For purposes of this section, the term *eligible expenditure* means an expenditure:

(i) Chargeable to capital account;

(ii) Made after December 31, 1971, and before January 1, 1982, to acquire, construct, reconstruct, or rehabilitate section 188 property which is a qualified child care center facility (or, made after December 31, 1971, and before January 1, 1977, to acquire, construct, reconstruct, or rehabilitate section 188 property which is a qualified on-the-job training facility); and

(iii) For which, but only to the extent that, a grant or other reimbursement excludable from gross income is not, directly or indirectly, payable to, or for the benefit of, the taxpayer with respect to such expenditure under any job training or child care program established or funded by the United States, a State, or any instrumentality of the foregoing, or the District of Columbia.

For purposes of this subparagraph, an expenditure is considered to be made when actually paid by a taxpayer who computes his taxable income under the cash receipts and disbursements method or when the obligation therefore is incurred by a taxpayer who computes his taxable income under the accrual method. See subparagraph (5) of this paragraph for the determination of when section 188 property is placed in service for purposes of beginning the 60-month amortization period.

(2) ***Section 188 property.*** Section 188 property is tangible property which is:

(i) Of a character subject to depreciation;

(ii) Located within the United States; and

(iii) Specifically used as an integral part of a qualified on-the-job training facility (as defined in subparagraph (3) of this paragraph) or as an integral part of a qualified child care center facility (as defined in subparagraph (4) of this paragraph.)

(3) ***Qualified on-the-job training facility.*** A *qualified on-the-job training facility* is a facility specifically used by an employer as an on-the-job training facility in connection with an occupational training program for his employees or prospective employees provided that with respect to such program:

(i) All of the following requirements are met:

(A) There is offered at the training facility a systematic program comprised of work and training and related instruction;

(B) The occupation, together with a listing of its basic skills, and the estimated schedule of time for accomplishments of such skills, are clearly identified;

(C) The content of the training is adequate to qualify the employee, or prospective employee, for the occupation for which the individual is being trained;

(D) The skills are to be imparted by competent instructors;

(E) Upon completion of the training, placement is to be based primarily upon the skills learned through the training program;

(F) The period of training is not less than the time necessary to acquire minimum job skills nor longer than the usual period of training for the same occupation; and

(G) There is reasonable certainty that employment will be available with the employer in the occupation for which the training is provided; or

(ii) The employer has entered into an agreement with the United States, or a State agency, under the provisions of the Manpower Development and Training Act of 1962, as amended and supplemented (42 U.S.C. 2571 *et seq.*), the Economic Opportunity Act of 1964, as amended and supplemented (42 U.S.C. 2701 *et seq.*), section 432(b)(1) of the Social Security Act, as amended and supplemented (42 U.S.C. 632(b)(1)), the National Apprenticeship Act of 1937, as amended and supplemented (29 U.S.C. 50 *et seq.*), or other similar Federal statute.

A *facility* consists of a building or any portion of a building and its structural components in which training is conducted, and equipment or other personal property necessary to teach a trainee the basic skills required for satisfactory performance in the occupation for which the training is being given. A facility also includes a building or portion of a building which provides essential services for trainees during the course of the training program, such as a dormitory or dining hall. For purposes of this section, a facility is considered to be specifically used as an on-the-job training facility if such facility is actually used for such purposes and is not used in a significant manner for any purpose other than job training or the furnishing of essential services for trainees such as meals and lodging. For purposes of the preceding sentence if a facility is used 20 percent of the time for a purpose other than on-the-job training or providing trainees with essential services, it would not satisfy the significant use test. Thus, a production facility is not an on-the-job training facility for purposes of section 188 simply because new employees receive training on the machines they will be using as fully productive employees. A facility is considered to be used by an employer in connection with an occupational training program for his employees or prospective employees if at least 80 percent of the trainees participating in the program are employees or prospective employees. For purposes of this section, a prospective employee is a trainee with respect to whom it is reasonably expected that the trainee will be employed by the employer upon successful completion of the training program.

(4) ***Qualified child care facility.*** A *qualified child care facility* is a facility which is:

(i) Particulary suited to provide child care services and specifically used by an employer to provide such services primarily for his employees' children;

(ii) Operated as a licensed or approved facility under applicable local law, if any, relating to the day care of children; and

(iii) If directly or indirectly funded to any extent by the United States, established and operated in compliance with the requirements contained in Part 71 of title 45 of the Code of Federal Regulations, relating to Federal Interagency Day Care Requirements. For purposes of this subparagraph, a *facility* consists of the buildings, or portions or structural components thereof, in which children receive such personal care protection, and supervision in the absence of their parents as may be required to meet their needs, and the equipment or other personal property necessary to render such services. Whether or not a facility, or any component property thereof, is particularly suited for the needs of the children being cared for depends upon the facts and circumstances of each individual case. Generally, a building and its structural component, or a room therein, and equipment are particulary suitable for furnishing child care service if they are designed or adapted for such use or satisfy requirements under local law for such use as a condition to granting a license for the operation of the facility. For example, such property includes special kitchen or toilet facilities connected to the building or room in which the services are rendered and equipment such as children's desks, chairs, and play or instructional equipment. Such property would not include general purpose rooms used for many purposes (for example, a room used as an employee recreation center during the evening) nor would it include a room or a part of a room which is simply screened off for use by children during the day. For purposes of this section, a facility is considered to be specifically used as a child care facility if such facility is actually used for such purpose and is not used in a significant manner for any purpose other than child care. For purposes of this subparagraph, a child care facility is used by an employer to provide child care services primarily for children of employees of the employer if, for any month, no more than 20 percent of the average daily enrolled or attending children for such month are other than children of such employees.

(5) ***Placed in service.*** For purposes of section 188 and this section, the term *placed in service* shall have the meaning assigned to such term in paragraph (d) of § 1.46-3.

(6) ***Employees.*** For purposes of section 188 and this section, the terms *employees* and *prospective employees* include employees and prospective employees of a member of a controlled group of corporations (within the meaning of section 1563) of which the taxpayer is a member.

(e) ***Effective date.*** The provisions of section 188 and this section apply to taxable years ending after December 31, 1971.

[T.D. 7599, 44 FR 14549, Mar. 13, 1979]

§ 1.190-1 Expenditures to remove architectural and transportation barriers to the handicapped and elderly.

(a) ***In general.*** Under section 190 of the Internal Revenue Code of 1954, a taxpayer may elect, in the manner provided in § 1.190-3 of this chapter, to deduct certain amounts paid or incurred by him in any taxable year beginning after December 31, 1976, and before January 1, 1980, for qualified architectural and transportation barrier removal expenses (as defined in § 1.190-2(b) of this chapter). In the case of a partnership, the election shall be made by the partnership. The election applies to expenditures paid or incurred during the taxable year which (but for the election) are chargeable to capital account.

(b) ***Limitation.*** The maximum deduction for a taxpayer (including an affiliated group of corporations filing a consolidated return) for any taxable year is $25,000. The $25,000 limitation applies to a partnership and to each partner. Expenditures paid or incurred in a taxable year in excess of the amount deductible under section 190 for such taxable year are capital expenditures and are adjustments to basis under section

1016(a). A partner must combine his distributive share of the partnership's deductible expenditures (after application of the $25,000 limitation at the partnership level) with that partner's distributive share of deductible expenditures from any other partnership plus that partner's own section 190 expenditures, if any (if he makes the election with respect to his own expenditures), and apply the partner's $25,000 limitation to the combined total to determine the aggregate amount deductible by that partner. In so doing, the partner may allocate the partner's $25,000 limitation among the partner's own section 190 expenditures and the partner's distributive share of partnership deductible expenditures in any manner. If such allocation results in all or a portion of the partner's distributive share of a partnership's deductible expenditures not being an allowable deduction by the partner, the partnership may capitalize such unallowable portion by an appropriate adjustment to the basis of the relevant partnership property under section 1016. For purposes of adjustments to the basis of properties held by a partnership, however, it shall be presumed that each partner's distributive share of partnership deductible expenditures (after application of the $25,000 limitation at the partnership level) was allowable in full to the partner. This presumption can be rebutted only by clear and convincing evidence that all or any portion of a partner's distributive share of the partnership section 190 deduction was not allowable as a deduction to the partner because it exceeded that partner's $25,000 limitation as allocated by him. For example, suppose for 1978 A's distributive share of the ABC partnership's deductible section 190 expenditures (after application of the $25,000 limitation at the partnership level) is $15,000. A also made section 190 expenditures of $20,000 in 1978 which he elects to deduct. A allocates $10,000 of his $25,000 limitation to his distributive share of the ABC expenditures and $15,000 to his own expenditures. A may capitalize the excess $5,000 of his own expenditures. In addition, if ABC obtains from A evidence which meets the requisite burden of proof, it may capitalize the $5,000 of A's distributive share which is not allowable as a deduction to A.

[T.D. 7634, 44 FR 43270, July 24, 1979]

§ 1.190-2 Definitions.

For purposes of section 190 and the regulations thereunder:

(a) ***Architectural and transportation barrier removal expenses.*** The term *architectural and transportation barrier removal expenses* means expenditures for the purpose of making any facility, or public transportation vehicle, owned or leased by the taxpayer for use in connection with his trade or business more accessible to, or usable by, handicapped individuals or elderly individuals. For purposes of this section:

(1) The term *facility* means all or any portion of buildings, structures, equipment, roads, walks, parking lots, or similar real or personal property.

(2) The term *public transportation vehicle* means a vehicle, such as a bus, a railroad car, or other conveyance, which provides to the public general or special transportation service (including such service rendered to the customers of a taxpayer who is not in the trade or business of rendering transportation services).

(3) The term *handicapped individual* means any individual who has:

(i) A physical or mental disability (including, but not limited to, blindness or deafness) which for such individual constitutes or results in a functional limitation to employment, or

(ii) A physical or mental impairment (including, but not limited to, a sight or hearing impairment) which substantially limits one or more of such individual's major life activities, such as performing manual tasks, walking, speaking, breathing, learning, or working.

(4) The term *elderly individual* means an individual age 65 or over.

(b) ***Qualified architectual and transportation barrier removal expense*** —

(1) ***In general.*** The term *qualified architectural and transportation barrier removal expense* means an architectural or transportation barrier removal expense (as defined in paragraph (a) of this section) with respect to which the taxpayer establishes, to the satisfaction of the Commissioner or his delegate, that the resulting removal of any such barrier conforms a facility or public transportation vehicle to all the requirements set forth in one or more of paragraphs (b) (2) through (22) of this section or in one or more of the subdivisions of paragraph (b) (20) or (21). Such term includes only expenses specifically attributable to the removal of an existing architectural or transportation barrier. It does not include any part of any expense paid or incurred in connection with the construction or comprehensive renovation of a facility or public transportation vehicle or the normal replacement of depreciable property. Such term may include expenses of construction, as, for example, the construction of a ramp to remove the barrier posed for wheelchair users by steps. Major portions of the standards set forth in this paragraph were adapted from “American National Standard Specifications for Making Buildings and Facilities Accessible to, and Usable by, the Physically Handicapped” (1971), the copyright for which is held by the American National Standards Institute, 1430 Broadway, New York, New York 10018.

(2) ***Grading.*** The grading of ground, even contrary to existing topography, shall attain a level with a normal entrance to make a facility accessible to individuals with physical disabilities.

(3) ***Walks.***

(i) A public walk shall be at least 48 inches wide and shall have a gradient not greater than 5 percent. A walk of maximum or near maximum grade and of considerable length shall have level areas at regular intervals. A walk or driveway shall have a nonslip surface.

(ii) A walk shall be of a continuing common surface and shall not be interrupted by steps or abrupt changes in level.

(iii) Where a walk crosses a walk, a driveway, or a parking lot, they shall blend to a common level. However, the preceding sentence does not require the elimination of those curbs which are a safety feature for the handicapped, particularly the blind.

(iv) An inclined walk shall have a level platform at the top and at the bottom. If a door swings out onto the platform toward the walk, such platform shall be at least 5 feet deep and 5 feet wide. If a door does not swing onto the platform or toward the walk, such platform shall be at least 3 feet deep and 5 feet wide. A platform shall extend at least 1 foot beyond the strike jamb side of any doorway.

(4) ***Parking lots.***

(i) At least one parking space that is accessible and approximate to a facility shall be set aside and identified for use by the handicapped.

(ii) A parking space shall be open on one side to allow room for individuals in wheelchairs and individuals on braces or crutches to get in and out of an automobile onto a level surface which is suitable for wheeling and walking.

(iii) A parking space for the handicapped, when placed between two conventional diagonal or head-on parking spaces, shall be at least 12 feet wide.

(iv) A parking space shall be positioned so that individuals in wheelchairs and individuals on braces or crutches need not wheel or walk behind parked cars.

(5) *Ramps.*

(i) A ramp shall not have a slope greater than 1 inch rise in 12 inches.

(ii) A ramp shall have at least one handrail that is 32 inches in height, measured from the surface of the ramp, that is smooth, and that extends 1 foot beyond the top and bottom of the ramp. However, the preceding sentence does not require a handrail extension which is itself a hazard.

(iii) A ramp shall have a nonslip surface.

(iv) A ramp shall have a level platform at the top and at the bottom. If a door swings out onto the platform or toward the ramp, such platform shall be at least 5 feet deep and 5 feet wide. If a door does not swing onto the platform or toward the ramp, such platform shall be at least 3 feet deep and 5 feet wide. A platform shall extend at least 1 foot beyond the strike jamb side of any doorway.

(v) A ramp shall have level platforms at not more than 30-foot intervals and at any turn.

(vi) A curb ramp shall be provided at an intersection. The curb ramp shall not be less than 4 feet wide; it shall not have a slope greater than 1 inch rise in 12 inches. The transition between the two surfaces shall be smooth. A curb ramp shall have a nonslip surface.

(6) *Entrances.* A building shall have at least one primary entrance which is usable by individuals in wheelchairs and which is on a level accessible to an elevator.

(7) *Doors and doorways.*

(i) A door shall have a clear opening of no less than 32 inches and shall be operable by a single effort.

(ii) The floor on the inside and outside of a doorway shall be level for a distance of at least 5 feet from the door in the direction the door swings and shall extend at least 1 foot beyond the strike jamb side of the doorway.

(iii) There shall be no sharp inclines or abrupt changes in level at a doorway. The threshold shall be flush with the floor. The door closer shall be selected, placed, and set so as not to impair the use of the door by the handicapped.

(8) *Stairs.*

(i) Stairsteps shall have round nosing of between 1 and $1^1/_2$ inch radius.

(ii) Stairs shall have a handrail 32 inches high as measured from the tread at the face of the riser.

(iii) Stairs shall have at least one handrail that extends at least 18 inches beyond the top step and beyond the bottom step. The preceding sentence does not require a handrail extension which is itself a hazard.

(iv) Steps shall have risers which do not exceed 7 inches.

(9) *Floors.*

(i) Floors shall have a nonslip surface.

(ii) Floors on a given story of a building shall be of a common level or shall be connected by a ramp in accordance with subparagraph (5) of this paragraph.

(10) *Toilet rooms.*

(i) A toilet room shall have sufficient space to allow traffic of individuals in wheelchairs.

(ii) A toilet room shall have at least one toilet stall that:

(A) Is at least 36 inches wide;

(B) Is at least 56 inches deep;

(C) Has a door, if any, that is at least 32 inches wide and swings out;

(D) Has handrails on each side, 33 inches high and parallel to the floor, $1^1/_2$ inches in outside diameter, $1^1/_2$ inches clearance between rail and wall, and fastened securely at ends and center; and

(E) Has a water closet with a seat 19 to 20 inches from the finished floor.

(iii) A toilet room shall have, in addition to or in lieu of a toilet stall described in (ii), at least one toilet stall that:

(A) Is at least 66 inches wide;

(B) Is at least 60 inches deep;

(C) Has a door, if any, that is at least 32 inches wide and swings out;

(D) Has a handrail on one side, 33 inches high and parallel to the floor, $1^1/_2$ inches in outside diameter, $1^1/_2$ inches clearance between rail and wall, and fastened securely at ends and center; and

(E) Has a water closet with a seat 19 to 20 inches from the finished floor, centerline located 18 inches from the side wall on which the handrail is located.

(iv) A toilet room shall have lavatories with narrow aprons. Drain pipes and hot water pipes under a lavatory shall be covered or insulated.

(v) A mirror and a shelf above a lavatory shall be no higher than 40 inches above the floor, measured from the top of the shelf and the bottom of the mirror.

(vi) A toilet room for men shall have wall-mounted urinals with the opening of the basin 15 to 19 inches from the finished floor or shall have floor-mounted urinals that are level with the main floor of the toilet room.

(vii) Towel racks, towel dispensers, and other dispensers and disposal units shall be mounted no higher than 40 inches from the floor.

(11) ***Water fountains.***

(i) A water fountain and a cooler shall have upfront spouts and controls.

(ii) A water fountain and a cooler shall be hand-operated or hand-and-foot-operated.

(iii) A water fountain mounted on the side of a floor-mounted cooler shall not be more than 30 inches above the floor.

(iv) A wall-mounted, hand-operated water cooler shall be mounted with the basin 36 inches from the floor.

(v) A water fountain shall not be fully recessed and shall not be set into an alcove unless the alcove is at least 36 inches wide.

(12) ***Public telephones.***

(i) A public telephone shall be placed so that the dial and the headset can be reached by individuals in wheelchairs.

(ii) A public telephone shall be equipped for those with hearing disabilities and so identified with instructions for use.

(iii) Coin slots of public telephones shall be not more than 48 inches from the floor.

(13) ***Elevators.***

(i) An elevator shall be accessible to, and usable by the handicapped or the elderly on the levels they use to enter the building and all levels and areas normally used.

(ii) Cab size shall allow for the turning of a wheelchair. It shall measure at least 54 by 68 inches.

(iii) Door clear opening width shall be at least 32 inches.

(iv) All essential controls shall be within 48 to 54 inches from cab floor. Such controls shall be usable by the blind and shall be tactilely identifiable.

(14) ***Controls.*** Switches and controls for light, heat, ventilation, windows, draperies, fire alarms, and all similar controls of frequent or essential use, shall be placed within the reach of individuals in wheelchairs. Such switches and controls shall be no higher than 48 inches from the floor.

(15) ***Identification.***

(i) Raised letters or numbers shall be used to identify a room or an office. Such identification shall be placed on the wall to the right or left of the door at a height of 54 inches to 66 inches, measured from the finished floor.

(ii) A door that might prove dangerous if a blind person were to exit or enter by it (such as a door leading to a loading platform, boiler room, stage, or fire escape) shall be tactilely identifiable.

(16) ***Warning signals.***

(i) An audible warning signal shall be accompanied by a simultaneous visual signal for the benefit of those with hearing disabilities.

(ii) A visual warning signal shall be accompanied by a simultaneous audible signal for the benefit of the blind.

(17) ***Hazards.*** Hanging signs, ceiling lights, and similar objects and fixtures shall be placed at a minimum height of 7 feet, measured from the floor.

(18) ***International accessibility symbol.*** The international accessibility symbol (see illustration) shall be displayed on routes to and at wheelchair-accessible entrances to facilities and public transportation vehicles.

(19) ***Additional standards for rail facilities.***

(i) A rail facility shall contain a fare control area with at least one entrance with a clear opening at least 36 inches wide.

(ii) A boarding platform edge bordering a drop-off or other dangerous condition shall be marked with a warning device consisting of a strip of floor material differing in color and texture from the remaining floor surface. The gap between boarding platform and vehicle doorway shall be minimized.

(20) ***Standards for buses.***

(i) A bus shall have a level change mechanism (e.g., lift or ramp) to enter the bus and sufficient clearance to permit a wheelchair user to reach a secure location.

(ii) A bus shall have a wheelchair securement device. However, the preceding sentence does not require a wheelchair securement device which is itself a barrier or hazard.

(iii) The vertical distance from a curb or from street level to the first front door step shall not exceed 8 inches; the riser height for each front doorstep after the first step up from the curb or street level shall also not exceed 8 inches; and the tread depth of steps at front and rear doors shall be no less than 12 inches.

(iv) A bus shall contain clearly legible signs that indicate that seats in the front of the bus are priority seats for handicapped or elderly persons, and that encourage other passengers to make such seats available to handicapped and elderly persons who wish to use them.

(v) Handrails and stanchions shall be provided in the entranceway to the bus in a configuration that allows handicapped and elderly persons to grasp such assists from outside the bus while starting to board and to continue to use such assists throughout the boarding and fare collection processes. The configuration of the passenger assist system shall include a rail across the front of the interior of the bus located to allow passengers to lean against it while paying fares. Overhead handrails shall be continuous except for a gap at the rear doorway.

(vi) Floors and steps shall have nonslip surfaces. Step edges shall have a band of bright contrasting color running the full width of the step.

(vii) A stepwell immediately adjacent to the driver shall have, when the door is open, at least 2 foot-candles of illumination measured on the step tread. Other stepwells shall have, at all times, at least 2 foot-candles of illumination measured on the step tread.

(viii) The doorways of the bus shall have outside lighting that provides at least 1 foot-candle of illumination on the street surface for a distance of 3 feet from all points on the bottom step tread edge. Such lighting shall be located below window level and shall be shielded to protect the eyes of entering and exiting passengers.

(ix) The fare box shall be located as far forward as practicable and shall not obstruct traffic in the vestibule.

(21) ***Standards for rapid and light rail vehicles.***

(i) Passenger doorways on the vehicle sides shall have clear openings at least 32 inches wide.

(ii) Audible or visual warning signals shall be provided to alert handicapped and elderly persons of closing doors.

(iii) Handrails and stanchions shall be sufficient to permit safe boarding, onboard circulation, seating and standing assistance, and unboarding by handicapped and elderly persons. On a levelentry vehicle, handrails, stanchions, and seats shall be located so as to allow a wheelchair user to enter the vehicle and position the wheelchair in a location which does not obstruct the movement of other passengers. On a vehicle that requires the use of steps in the boarding process, handrails and stanchions shall be provided in the entranceway to the vehicle in a configuration that allows handicapped and elderly persons to grasp such assists from outside the vehicle while starting to board, and to continue using such assists throughout the boarding process.

(iv) Floors shall have nonslip surfaces. Step edges on a light rail vehicle shall have a band of bright contrasting color running the full width of the step.

(v) A stepwell immediately adjacent to the driver shall have, when the door is open, at least 2 foot-candles of illumination measured on the step tread. Other stepwells shall have, at all times, at least 2 foot-candles of illumination measured on the step tread.

(vi) Doorways on a light rail vehicle shall have outside lighting that provides at least 1 foot-candle of illumination on the street surface for a distance of 3 feet from all points on the bottom step tread edge. Such lighting shall be located below window level and shall be shielded to protect the eyes of entering and exiting passengers.

(22) ***Other barrier removals.*** The provisions of this subparagraph apply to any barrier which would not be removed by compliance with paragraphs (b)(2) through (21) of this section. The requirements of this subparagraph are:

(i) A substantial barrier to the access to or use of a facility or public transportation vehicle by handicapped or elderly individuals is removed;

(ii) The barrier which is removed had been a barrier for one or more major classes of such individuals (such as the blind, deaf, or wheelchair users); and

(iii) The removal of that barrier is accomplished without creating any new barrier that significantly impairs access to or use of the facility or vehicle by such class or classes.

[T.D. 7634, 44 FR 43270, July 24, 1979]

§ 1.190-3 Election to deduct architectural and transportation barrier removal expenses.

(a) ***Manner of making election.*** The election to deduct expenditures for removal of architectural and transportation barriers provided by section 190(a) shall be made by claiming the deduction as a separate item identified as such on the taxpayer's income tax return for the taxable year for which such election is to apply (or, in the case of a partnership, to the return of partnership income for such year). For the election to be valid, the return must be filed not later than the time prescribed by law for filing the return (including extensions thereof) for the taxable year for which the election is to apply.

(b) ***Scope of election.*** An election under section 190(a) shall apply to all expenditures described in § 1.190-2 (or in the case of a taxpayer whose architectural and transportation barrier removal expenses exceed $25,000 for the taxable year, to the $25,000 of such expenses with respect to which the deduction is claimed) paid or incurred during the taxable year for which made and shall be irrevocable after the date by which any such election must have been made.

(c) ***Records to be kept.*** In any case in which an election is made under section 190(a), the taxpayer shall have available, for the period prescribed by paragraph (e) of § 1.6001-1 of this chapter (Income Tax Regulations), records and documentation, including architectural plans and blueprints, contracts, and any building permits, of all the facts necessary to determine the amount of any deduction to which he is entitled by reason of the election, as well as the amount of any adjustment to basis made for expenditures in excess of the amount deductible under section 190.

[T.D. 7634, 44 FR 13273, July 24, 1979]

§ 1.193-1 Deduction for tertiary injectant expenses.

(a) ***In general.*** Subject to the limitations and restrictions of paragraphs (c) and (d) of this section, there shall be allowed as a deduction from gross income an amount equal to the qualified tertiary injectant expenses of the taxpayer. This deduction is allowed for the later of:

(1) The taxable year in which the injectant is injected, or

(2) The taxable year in which the expenses are paid or incurred.

(b) ***Definitions*** —

(1) ***Qualified tertiary injectant expenses.*** Except as otherwise provided in this section, the term *qualified tertiary injectant expense* means any cost paid or incurred for any tertiary injectant which is used as part of a tertiary recovery method.

(2) ***Tertiary recovery method. Tertiary recovery method*** means:

(i) Any method which is described in subparagraphs (1) through (9) of section 212.78(c) of the June 1979 energy regulations (as defined by section 4996(b)(8)(C)),

(ii) Any method for which the taxpayer has obtained the approval of the Associate Chief Counsel (Technical), under section 4993(d)(1)(B) for purposes of Chapter 45 of the Internal Revenue Code,

(iii) Any method which is approved in the regulations under section 4993(d)(1)(B), or

(iv) Any other method to provide tertiary enhanced recovery for which the taxpayer obtains the approval of the Associate Chief Counsel (Technical) for purposes of section 193.

(c) ***Special rules for hydrocarbons*** —

(1) ***In general.*** If an injectant contains more than an insignificant amount of recoverable hydrocarbons, the amount deductible under section 193 and paragraph (a) of this section shall be limited to the cost of the injectant reduced by the lesser of:

(i) The fair market value of the hydrocarbon component in the form in which it is recovered, or

(ii) The cost to the taxpayer of the hydrocarbon component of the injectant. Price levels at the time of injection are to be used in determining the fair market value of the recoverable hydrocarbons.

(2) ***Presumption of recoverability.*** Except to the extent that the taxpayer can demonstrate otherwise, all hydrocarbons shall be presumed recoverable and shall be presumed to have the same value on recovery that they would have if separated from the other components of the injectant before injection. Estimates based on generally accepted engineering practices may provide evidence of limitations on the amount or value of recoverable hydrocarbons.

(3) ***Significant amount.*** For purposes of section 193 and this section, an injectant contains more than an insignificant amount of recoverable hydrocarbons if the fair market value of the recoverable hydrocarbon component of the injectant, in the form in which it is recovered, equals or exceeds 25 percent of the cost of the injectant.

(4) ***Hydrocarbon defined.*** For purposes of section 193 and this section, the term *hydrocarbon* means all forms of natural gas and crude oil (which includes oil recovered from sources such as oil shale and condensate).

(5) ***Injectant defined.*** For purposes of applying this paragraph (c), an injectant is the substance or mixture of substances injected at a particular time. Substances injected at different times are not treated as components of a single injectant even if the injections are part of a single tertiary recovery process.

(d) ***Application with other deductions.*** No deduction shall be allowed under section 193 and this section for any expenditure:

(1) With respect to which the taxpayer has made an election under section 263(c) or

(2) With respect to which a deduction is allowed or allowable under any other provision of chapter 1 of the Code.

(e) ***Examples.*** The application of this section may be illustrated by the following examples:

Example 1. B, a calendar year taxpayer why uses the cash receipts and disbursements method of accounting, uses an approved tertiary recovery method for the enhanced recovery of crude oil from one of B's oil properties. During 1980, B pays $100x for a tertiary injectant which contains 1,000y units of hydrocarbon; if separated from the other components of the injectant before injection, the hydrocarbons would have a fair market value of $80x. B uses this injectant during the recovery effort during 1981. B has not made any election under section 263(c) with respect to the expenditures for the injectant, and no section of chapter 1 of the Code other than section 193 allows a deduction for the expenditure. B is unable to demonstrate that the value of the injected hydrocarbons recovered during production will be less than $80x. B's deduction under section 193 is limited to the excess of the cost for the injectant over the fair market value of the hydrocarbon component expected to be recovered ($100x−$80x = $20x). B may claim the deduction only for 1981, the year of the injection.

Example 2. Assume the same facts as in *Example 1* except that through engineering studies B has shown that 700y units or 70 percent of the hydrocarbon injected is nonrecoverable. The recoverable hydrocarbons have a fair market value of $24x (30 percent of $80x). The recoverable hydrocarbon portion of the injectant is 24 percent of the cost of the injectant ($24x divided by $100x). The injectant does not contain a significant amount of recoverable hydrocarbons. B may claim a deduction for $100x, the entire cost of the injectant.

Example 3. Assume the same facts as in *Example 1* except that through laboratory studies B has shown that because of chemical changes in the course of production the injected hydrocarbons that are recovered will have a fair market value of only $40x. B may claim a deduction for $60x, the excess of the cost of the injectant ($100x) over the fair market value of the recoverable hydrocarbons ($40x).

Example 4. B prepares an injectant from crude oil and certain non-hydrocarbon materials purchased by B. The total cost of the injectant to B is $100x, of which $24x is attributable to the crude oil. The fair market value of the crude oil used in the injectant is $27x. B is unable to demonstrate that the value of the crude oil from the injectant that will be recovered is less than $27x. The injectant contains more than an insignificant amount of recoverable hydrocarbons because the value of the recoverable crude oil ($27x) exceeds $25x (25 percent of $100x, the cost of the injectant). Because the cost to B of the hydrocarbon component of the injectant ($24x) is less than the fair market value of the hydrocarbon component in the form in which it is recovered ($27x), the cost rather than the value is taken into account in the adjustment required under paragraph (c)(1) of this section. B's deduction under section 193 is limited to the excess of the cost of the injectant over the cost of the hydrocarbon component ($100x−$24x = $76x).

(Secs. 193 and 7805, Internal Revenue Code of 1954, 94 Stat. 286, 26 U.S.C. 193; 68A Stat. 917, 26 U.S.C. 7805)

[T.D. 7980, 49 FR 39052, Oct. 3, 1984]

§ 1.194-1 Amortization of reforestation expenditures.

(a) ***In general.*** Section 194 allows a taxpayer to elect to amortize over an 84-month period, up to $10,000 of reforestation expenditures (as defined in § 1.194-3(c)) incurred by the taxpayer in a taxable year in connection with qualified timber property (as defined in § 1.194-3(a)). The election is not available to trusts. Only those reforestation expenditures which result in additions to capital accounts after December 31, 1979 are eligible for this special amortization.

(b) ***Determination of amortization period.*** The amortization period must begin on the first day of the first month of the last half of the taxable year during which the taxpayer incurs the reforestation expenditures. For example, the 84-month amortization period begins on July 1 of a taxable year for a calendar year taxpayer, regardless of whether the reforestation expenditures are incurred in January or December of that taxable year. Therefore, a taxpayer will be allowed to claim amortization deductions for only six months of each of the first and eighth taxable years of the period over which the reforestation expenditures will be amortized.

(c) ***Recapture.*** If a taxpayer disposes of qualified timber property within ten years of the year in which the amortizable basis was created and the taxpayer has claimed amortization deductions under section 194, part or all of any gain on the disposition may be recaptured as ordinary income. See section 1245.

[T.D. 7927, 48 FR 55849, Dec. 16, 1983]

§ 1.194-2 Amount of deduction allowable.

(a) ***General rule.*** The allowable monthly deduction with respect to reforestation expenditures made in a taxable year is determined by dividing the amount of reforestation expenditures made in such taxable year (after applying the limitations of paragraph (b) of this section) by 84. In order to determine the total allowable amortization deduction for a given month, a taxpayer should add the monthly amortization deductions computed under the preceding sentence for qualifying expenditures made by the taxpayer in the taxable year and the preceding seven taxable years.

(b) ***Dollar limitation*** —

(1) ***Maximum amount subject to election.*** A taxpayer may elect to amortize up to $10,000 of qualifying reforestation expenditures each year under section 194. However, the maximum amortizable amount is $5,000 in the case of a married individual (as defined in section 143) filing a separate return. No carryover or carryback of expenditures in excess of $10,000 is permitted. The maximum annual amortization deduction for expenditures incurred in any taxable year is $1,428.57 ($10,000/7). The maximum deduction in the first and eighth taxable years of the amortization period is one-half that amount, or $714.29, because of the half-year convention provided in § 1.194-1(b). Total deductions for any one year under this section will reach $10,000 only if a taxpayer incurs and elects to amortize the maximum $10,000 of expenditures each year over an 8-year period.

(2) ***Allocation of amortizable basis among taxpayer's timber properties.*** The limit of $10,000 on amortizable reforestation expenditures applies to expenditures paid or incurred during a taxable year on all of the taxpayer's timber properties. A taxpayer who incurs more than $10,000 in qualifying expenditures in connection with more than one qualified timber property during a taxable year may select the properties for which section 194 amortization will be elected as well as the manner in which the $10,000 limitation on amortizable basis is allocated among such properties. For example,

A incurred $10,000 of qualifying reforestation expenditures on each of four properties in 1981. A may elect under section 194 to amortize $2,500 of the amount spent on each property, $5,000 of the amount spent on any two properties, the entire $10,000 spent on any one property, or A may allocate the $10,000 maximum amortizable basis among some or all of the properties in any other manner.

(3) *Basis* —

(i) ***In general.*** Except as provided in paragraph (b)(3)(ii) of this section, the basis of a taxpayer's interest in qualified timber property for which an election is made under section 194 shall be adjusted to reflect the amount of the section 194 amortization deduction allowable to the taxpayer.

(ii) ***Special rule for trusts.*** Although a trust may be a partner of a partnership, income beneficiary of an estate, or (for taxable years beginning after December 31, 1982) shareholder of an S corporation, it may not deduct its allocable share of a section 194 amortization deduction allowable to such a partnership, estate, or S corporation. In addition, the basis of the interest held by the partnership, estate, or S corporation in the qualified timber property shall not be adjusted to reflect the portion of the section 194 amortization deduction that is allocable to the trust.

(4) ***Allocation of amortizable basis among component members of a controlled group.*** Component members of a controlled group (as defined in § 1.194-3(d)) on a December 31 shall be treated as one taxpayer in applying the $10,000 limitation of paragraph (b)(1) of this section. The amortizable basis may be allocated to any one such member or allocated (for the taxable year of each such member which includes such December 31) among the several members in any manner, *Provided* That the amount of amortizable basis allocated to any member does not exceed the amount of amortizable basis actually acquired by the member in the taxable year. The allocation is to be made

(i) by the common parent corporation if a consolidated return is filed for all component members of the group, or

(ii) in accordance with an agreement entered into by the members of the group if separate returns are filed. If a consolidated return is filed by some component members of the group and separate returns are filed by other component members, then the common parent of the group filing the consolidated return shall enter into an agreement with those members who do not join in filing the consolidated return allocating the amount between the group filing the return and the other component members of the controlled group who do not join in filing the consolidated return. If a consolidated return is filed, the common parent corporation shall file a separate statement attached to the income tax return on which an election is made to amortize reforestation costs under section 194. See § 1.194-4. If separate returns are filed by some or all component members of the group, each component member to which is allocated any part of the deduction under section 194 shall file a separate statement attached to the income tax return in which an election is made to amortize reforestation expenditures. See § 1.194-4. Such statement shall include the name, address, employer identification number, and the taxable year of each component member of the controlled group, a copy of the allocation agreement signed by persons duly authorized to act on behalf of those members who file separate returns, and a description of the manner in which the deduction under section 194 has been divided among them.

(5) *Partnerships* —

(i) ***Election to be made by partnership.*** A partnership makes the election to amortize qualified reforestation expenditures of the partnership. See section 703(b).

(ii) ***Dollar limitations applicable to partnerships.*** The dollar limitations of section 194 apply to the partnership as well as to each partner. Thus, a partnership may not elect to amortize more than $10,000 of reforestation expenditures under section 194 in any taxable year.

(iii) ***Partner's share of amortizable basis.*** Section 704 and the regulations thereunder shall govern the determination of a partner's share of a partnership's amortizable reforestation expenditures for any taxable year.

(iv) ***Dollar limitation applicable to partners.*** A partner shall in no event be entitled in any taxable year to claim a deduction for amortization based on more than $10,000 ($5,000 in the case of a married taxpayer who files a separate return) of amortizable basis acquired in such taxable year regardless of the source of the amortizable basis. In the case of a partner who is a member of two or more partnerships that elect under section 194, the partner's aggregate share of partnership amortizable basis may not exceed $10,000 or $5,000, whichever is applicable. In the case of a member of a partnership that elects under section 194 who also has separately acquired qualified timber property, the aggregate of the member's partnership and non-partnership amortizable basis may not exceed $10,000 or $5,000 whichever is applicable.

(6) ***S corporations.*** For taxable years beginning after December 31, 1982, rules similar to those contained in paragraph (b)(5) (ii) and (iv) of this section shall apply in the case of S corporations (as defined in section 1361(a)) and their shareholders.

(7) ***Estates.*** Estates may elect to amortize in each taxable year up to a maximum of $10,000 of qualifying reforestation expenditures under section 194. Any amortizable basis acquired by an estate shall be apportioned between the estate and the income beneficiary on the basis of the income of the estate allocable to each. The amount of amortizable basis apportioned from an estate to a beneficiary shall be taken into account in determining the $10,000 (or $5,000) amount of amortizable basis allowable to such beneficiary under this section.

(c) ***Life tenant and remainderman.*** If property is held by one person for life with remainder to another person, the life tenant is entitled to the full benefit of any amortization allowable under section 194 on qualifying expenditures he or she makes. Any remainder interest in the property is ignored for this purpose.

[T.D. 7927, 48 FR 55849, Dec. 16, 1983]

§ 1.194-3 Definitions.

(a) ***Qualified timber property.*** The term *qualified timber property* means property located in the United States which will contain trees in significant commercial quantities. The property may be a woodlot or other site but must consist of at least one acre which is planted with tree seedlings in the manner normally used in forestation or reforestation. The property must be held by the taxpayer for the growing and cutting of timber which will either be sold for use in, or used by the taxpayer in, the commercial production of timber products. A taxpayer does not have to own the property in order to be eligible to elect to amortize costs attributable to it under section 194. Thus, a taxpayer may elect to amortize qualifying reforestation expenditures incurred by such taxpayer on leased qualified timber property. Qualified timber property does not include property on which the taxpayer has planted shelter belts (for which current deductions are allowed under section 175) or ornamental trees, such as Christmas trees.

(b) ***Amortizable basis.*** The term *amortizable basis* means that portion of the basis of qualified timber property which is attributable to reforestation expenditures.

(c) ***Reforestation expenditures*** —

(1) ***In general.*** The term *reforestation expenditures* means direct costs incurred to plant or seed for forestation or reforestation purposes. Qualifying expenditures include amounts spent for site preparation, seed or seedlings, and labor and tool costs, including depreciation on equipment used in planting or seeding. Only those costs which must be capitalized and are included in the adjusted basis of the property qualify as reforestation expenditures. Costs which are currently deductible do not qualify.

(2) ***Cost-sharing programs.*** Any expenditures for which the taxpayer has been reimbursed under any governmental reforestation cost-sharing program do not qualify as reforestation expenditures unless the amounts reimbursed have been included in the gross income of the taxpayer.

(d) ***Definitions of controlled group of corporations and component member of controlled group.*** For purposes of section 194, the terms *controlled group of corporations* and *component member* of a controlled group of corporations shall have the same meaning assigned to those terms in section 1563 (a) and (b), except that the phrase “more than 50 percent” shall be substituted for the phrase “at least 80 percent” each place it appears in section 1563(a)(1).

[T.D. 7927, 48 FR 55850, Dec. 16, 1983]

§ 1.194-4 Time and manner of making election.

(a) ***In general.*** Except as provided in paragraph (b) of this section, an election to amortize reforestation expenditures under section 194 shall be made by entering the amortization deduction claimed at the appropriate place on the taxpayer's income tax return for the year in which the expenditures were incurred, and by attaching a statement to such return. The statement should state the amounts of the expenditures, describe the nature of the expenditures, and give the date on which each was incurred. The statement should also state the type of timber being grown and the purpose for which it is being grown. A separate statement must be included for each property for which reforestation expenditures are being amortized under section 194. The election may only be made on a timely return (taking into account extensions of the time for filing) for the taxable year in which the amortizable expenditures were made.

(b) ***Special rule.*** With respect to any return filed before March 15, 1984, on which a taxpayer was eligible to, but did not make an election under section 194, the election to amortize reforestation expenditures under section 194 may be made by a statement on, or attached to, the income tax return (or an amended return) for the taxable year, indicating that an election is being made under section 194 and setting forth the information required under paragraph (a) of this section. An election made under the provisions of this paragraph (b) must be made not later than,

(1) The time prescribed by law (including extensions thereof) for filing the income tax return for the year in which the reforestation expenditures were made, or

(2) March 15, 1984, whichever is later. Nothing in this paragraph shall be construed as extending the time specified in section 6511 within which a claim for credit or refund may be filed.

(c) ***Revocation.*** An application for consent to revoke an election under section 194 shall be in writing and shall be addressed to the Commissioner of Internal Revenue, Washington, DC 20224. The application shall set forth the name and address of the taxpayer, state the taxable years for which the election was in effect,

and state the reason for revoking the election. The application shall be signed by the taxpayer or a duly authorized representative of the taxpayer and shall be filed at least 90 days prior to the time prescribed by law (without regard to extensions thereof) for filing the income tax return for the first taxable year for which the election is to terminate. Ordinarily, the request for consent to revoke the election will not be granted if it appears from all the facts and circumstances that the only reason for the desired change is to obtain a tax advantage.

[T.D. 7927, 48 FR 55851, Dec. 16, 1983]

§ 1.195-1 Election to amortize start-up expenditures.

(a) ***In general.*** Under section 195(b), a taxpayer may elect to amortize start-up expenditures as defined in section 195(c)(1). In the taxable year in which a taxpayer begins an active trade or business, an electing taxpayer may deduct an amount equal to the lesser of the amount of the start-up expenditures that relate to the active trade or business, or $5,000 (reduced (but not below zero) by the amount by which the start-up expenditures exceed $50,000). The remainder of the start-up expenditures is deductible ratably over the 180-month period beginning with the month in which the active trade or business begins. All start-up expenditures that relate to the active trade or business are considered in determining whether the start-up expenditures exceed $50,000, including expenditures incurred on or before October 22, 2004.

(b) ***Time and manner of making election.*** A taxpayer is deemed to have made an election under section 195(b) to amortize start-up expenditures as defined in section 195(c)(1) for the taxable year in which the active trade or business to which the expenditures relate begins. A taxpayer may choose to forgo the deemed election by affirmatively electing to capitalize its start-up expenditures on a timely filed Federal income tax return (including extensions) for the taxable year in which the active trade or business to which the expenditures relate begins. The election either to amortize start-up expenditures under section 195(b) or to capitalize start-up expenditures is irrevocable and applies to all start-up expenditures that are related to the active trade or business. A change in the characterization of an item as a start-up expenditure is a change in method of accounting to which sections 446 and 481(a) apply if the taxpayer treated the item consistently for two or more taxable years. A change in the determination of the taxable year in which the active trade or business begins also is treated as a change in method of accounting if the taxpayer amortized start-up expenditures for two or more taxable years.

(c) ***Examples.*** The following examples illustrate the application of this section:

Example 1. Expenditures of $5,000 or less Corporation X, a calendar year taxpayer, incurs $3,000 of start-up expenditures after October 22, 2004, that relate to an active trade or business that begins on July 1, 2011. Under paragraph (b) of this section, Corporation X is deemed to have elected to amortize start-up expenditures under section 195(b) in 2011. Therefore, Corporation X may deduct the entire amount of the start-up expenditures in 2011, the taxable year in which the active trade or business begins.

Example 2. Expenditures of more than $5,000 but less than or equal to $50,000 The facts are the same as in *Example 1* except that Corporation X incurs start-up expenditures of $41,000. Under paragraph (b) of this section, Corporation X is deemed to have elected to amortize start-up expenditures under section 195(b) in 2011. Therefore, Corporation X may deduct $5,000 and the portion of the remaining $36,000 that is allocable to July through December of 2011 ($36,000/180 × 6 = $1,200) in 2011, the taxable year in which the active trade or business begins. Corporation X may amortize the remaining $34,800 ($36,000 − $1,200 = $34,800) ratably over the remaining 174 months.

Example 3. Subsequent change in the characterization of an item The facts are the same as in *Example 2* except that Corporation X determines in 2013 that Corporation X incurred $10,000 for an additional start-up expenditure erroneously deducted in 2011 under section 162 as a business expense. Under paragraph (b) of this section, Corporation X is deemed to have elected to amortize start-up expenditures under section 195(b) in 2011, including the additional $10,000 of start-up expenditures. Corporation X is using an impermissible method of accounting for the additional $10,000 of start-up expenditures and must change its method under § 1.446-1(e) and the applicable general administrative procedures in effect in 2013.

Example 4. Subsequent redetermination of year in which business begins The facts are the same as in *Example 2* except that, in 2012, Corporation X deducted the start-up expenditures allocable to January through December of 2012 ($36,000/180 × 12 = $2,400). In addition, in 2013 it is determined that Corporation X actually began business in 2012. Under paragraph (b) of this section, Corporation X is deemed to have elected to amortize start-up expenditures under section 195(b) in 2012. Corporation X impermissibly deducted start-up expenditures in 2011, and incorrectly determined the amount of start-up expenditures deducted in 2012. Therefore, Corporation X is using an impermissible method of accounting for the start-up expenditures and must change its method under § 1.446-1(e) and the applicable general administrative procedures in effect in 2013.

Example 5. Expenditures of more than $50,000 but less than or equal to $55,000 The facts are the same as in *Example 1* except that Corporation X incurs start-up expenditures of $54,500. Under paragraph (b) of this section, Corporation X is deemed to have elected to amortize start-up expenditures under section 195(b) in 2011. Therefore, Corporation X may deduct $500 ($5,000 − $4,500) and the portion of the remaining $54,000 that is allocable to July through December of 2011 ($54,000/180 × 6 = $1,800) in 2011, the taxable year in which the active trade or business begins. Corporation X may amortize the remaining $52,200 ($54,000 − $1,800 = $52,200) ratably over the remaining 174 months.

Example 6. Expenditures of more than $55,000 The facts are the same as in *Example 1* except that Corporation X incurs start-up expenditures of $450,000. Under paragraph (b) of this section, Corporation X is deemed to have elected to amortize start-up expenditures under section 195(b) in 2011. Therefore, Corporation X may deduct the amounts allocable to July through December of 2011 ($450,000/180 × 6 = $15,000) in 2011, the taxable year in which the active trade or business begins. Corporation X may amortize the remaining $435,000 ($450,000 − $15,000 = $435,000) ratably over the remaining 174 months.

(d) ***Effective/applicability date.*** This section applies to start-up expenditures paid or incurred after August 16, 2011. However, taxpayers may apply all the provisions of this section to start-up expenditures paid or incurred after October 22, 2004, provided that the period of limitations on assessment of tax for the year the election under paragraph (b) of this section is deemed made has not expired. For start-up expenditures paid or incurred on or before September 8, 2008, taxpayers may instead apply § 1.195-1, as in effect prior to that date (§ 1.195-1 as contained in 26 CFR part 1 edition revised as of April 1, 2008).

[T.D. 9542, 76 FR 50888, Aug. 17, 2011]

§ 1.195-2 Technical termination of a partnership.

(a) ***In general.*** If a partnership that has elected to amortize start-up expenditures under section 195(b) and § 1.195-1 terminates in a transaction (or a series of transactions) described in section 708(b)(1)(B) or § 1.708-1(b)(2), the termination shall not be treated as resulting in a disposition of the partnership's trade or business for purposes of section 195(b)(2). See § 1.708-1(b)(6) for rules concerning the treatment of these start-up expenditures by the new partnership.

(b) ***Effective/applicability date.*** This section applies to a technical termination of a partnership under section 708(b)(1)(B) that occurs on or after December 9, 2013.

[T.D. 9681, 79 FR 42679, July 23, 2014]

§ 1.197-0 Table of contents.

This section lists the headings that appear in § 1.197-2.

§ 1.197-2 Amortization of goodwill and certain other intangibles.

(a) Overview.

(1) In general.

(2) Section 167(f) property.

(3) Amounts otherwise deductible.

(b) Section 197 intangibles; in general.

(1) Goodwill.

(2) Going concern value.

(3) Workforce in place.

(4) Information base.

(5) Know-how, etc.

(6) Customer-based intangibles.

(7) Supplier-based intangibles.

(8) Licenses, permits, and other rights granted by governmental units.

(9) Covenants not to compete and other similar arrangements.

(10) Franchises, trademarks, and trade names.

(11) Contracts for the use of, and term interests in, other section 197 intangibles.

(12) Other similar items.

(c) Section 197 intangibles; exceptions.

(1) Interests in a corporation, partnership, trust, or estate.

(2) Interests under certain financial contracts.

(3) Interests in land.

(4) Certain computer software.

(i) Publicly available.

(ii) Not acquired as part of trade or business.

(iii) Other exceptions.

(iv) Computer software defined.

(5) Certain interests in films, sound recordings, video tapes, books, or other similar property.

(6) Certain rights to receive tangible property or services.

(7) Certain interests in patents or copyrights.

(8) Interests under leases of tangible property.

(i) Interest as a lessor.

(ii) Interest as a lessee.

(9) Interests under indebtedness.

(i) In general.

(ii) Exceptions.

(10) Professional sports franchises.

(11) Mortgage servicing rights.

(12) Certain transaction costs.

(13) Rights of fixed duration or amount.

(d) Amortizable section 197 intangibles.

(1) Definition.

(2) Exception for self-created intangibles.

(i) In general.

(ii) Created by the taxpayer.

(A) Defined.

(B) Contracts for the use of intangibles.

(C) Improvements and modifications.

(iii) Exceptions.

(3) Exception for property subject to anti-churning rules.

(e) Purchase of a trade or business.

(1) Goodwill or going concern value.

(2) Franchise, trademark, or trade name.

(i) In general.

(ii) Exceptions.

(3) Acquisitions to be included.

(4) Substantial portion.

(5) Deemed asset purchases under section 338.

(6) Mortgage servicing rights.

(7) Computer software acquired for internal use.

(f) Computation of amortization deduction.

(1) In general.

(2) Treatment of contingent amounts.

(i) Amounts added to basis during 15-year period.

(ii) Amounts becoming fixed after expiration of 15-year period.

(iii) Rules for including amounts in basis.

(3) Basis determinations for certain assets.

(i) Covenants not to compete.

(ii) Contracts for the use of section 197 intangibles; acquired as part of a trade or business.

(A) In general.

(B) Know-how and certain information base.

(iii) Contracts for the use of section 197 intangibles; not acquired as part of a trade or business.

(iv) Applicable rules.

(A) Franchises, trademarks, and trade names.

(B) Certain amounts treated as payable under a debt instrument.

(1) In general.

(2) Rights granted by governmental units.

(3) Treatment of other parties to transaction.

(4) Basis determinations in certain transactions.

(i) Certain renewal transactions.

(ii) Transactions subject to section 338 or 1060.

(iii) Certain reinsurance transactions.

(g) Special rules.

(1) Treatment of certain dispositions.

(i) Loss disallowance rules.

(A) In general.

(B) Abandonment or worthlessness.

(C) Certain nonrecognition transfers.

(ii) Separately acquired property.

(iii) Disposition of a covenant not to compete.

(iv) Taxpayers under common control.

(A) In general.

(B) Treatment of disallowed loss.

(2) Treatment of certain nonrecognition and exchange transactions.

(i) Relationship to anti-churning rules.

(ii) Treatment of nonrecognition and exchange transactions generally.

(A) Transfer disregarded.

(B) Application of general rule.

(C) Transactions covered.

(iii) Certain exchanged-basis property.

(iv) Transfers under section 708(b)(1).

(A) In general.

(B) Termination by sale or exchange of interest.

(C) Other terminations.

(3) Increase in the basis of partnership property under section 732(b), 734(b), 743(b), or 732(d).

(4) Section 704(c) allocations.

(i) Allocations where the intangible is amortizable by the contributor.

(ii) Allocations where the intangible is not amortizable by the contributor.

(5) Treatment of certain insurance contracts acquired in an assumption reinsurance transaction.

(i) In general.

(ii) Determination of adjusted basis of amortizable section 197 intangible resulting from an assumption reinsurance transaction.

(A) In general.

(B) Amount paid or incurred by acquirer (reinsurer) under the assumption reinsurance transaction.

(C) Amount required to be capitalized under section 848 in connection with the transaction.

(*1*) In general.

(*2*) Required capitalization amount.

(*3*) General deductions allocable to the assumption reinsurance transaction.

(*4*) Treatment of a capitalization shortfall allocable to the reinsurance agreement.

(*i*) In general.

(*ii*) Treatment of additional capitalized amounts as the result of an election under § 1.848-2(g)(8).

(*5*) Cross references and special rules.

(D) Examples

(E) Effective/applicability date.

(iii) Application of loss disallowance rule upon a disposition of an insurance contract acquired in an assumption reinsurance transaction.

(A) Disposition.

(*1*) In general.

(*2*) Treatment of indemnity reinsurance transactions.

(B) Loss.

(C) Examples.

(iv) Effective dates.

(A) In general.

(B) Application to pre-effective date acquisitions and dispositions.

(C) Change in method of accounting.

(*1*) In general.

(*2*) Acquisitions and dispositions on or after effective date.

(*3*) Acquisitions and dispositions before the effective date.

(6) Amounts paid or incurred for a franchise, trademark, or trade name.

(7) Amounts properly taken into account in determining the cost of property that is not a section 197 intangible.

(8) Treatment of amortizable section 197 intangibles as depreciable property.

(h) Anti-churning rules.

(1) Scope and purpose.

(i) Scope.

(ii) Purpose.

(2) Treatment of section 197(f)(9) intangibles.

(3) Amounts deductible under section 1253(d) or § 1.162-11.

(4) Transition period.

(5) Exceptions.

(6) Related person.

(i) In general.

(ii) Time for testing relationships.

(iii) Certain relationships disregarded.

(iv) De minimis rule.

(A) In general.

(B) Determination of beneficial ownership interest.

(7) Special rules for entities that owned or used property at any time during the transition period and that are no longer in existence.

(8) Special rules for section 338 deemed acquisitions.

(9) Gain-recognition exception.

(i) Applicability.

(ii) Effect of exception.

(iii) Time and manner of election.

(iv) Special rules for certain entities.

(v) Effect of nonconforming elections.

(vi) Notification requirements.

(vii) Revocation.

(viii) Election Statement.

(ix) Determination of highest marginal rate of tax and amount of other Federal income tax on gain.

(A) Marginal rate.

(*1*) Noncorporate taxpayers.

(*2*) Corporations and tax-exempt entities.

(B) Other Federal income tax on gain.

(x) Coordination with other provisions.

(A) In general.

(B) Section 1374.

(C) Procedural and administrative provisions.

(D) Installment method.

(xi) Special rules for persons not otherwise subject to Federal income tax.

(10) Transactions subject to both anti-churning and nonrecognition rules.

(11) Avoidance purpose.

(12) Additional partnership anti-churning rules

(i) In general.

(ii) Section 732(b) adjustments. [Reserved]

(iii) Section 732(d) adjustments.

(iv) Section 734(b) adjustments. [Reserved]

(v) Section 743(b) adjustments.

(vi) Partner is or becomes a user of partnership intangible.

(A) General rule.

(B) Anti-churning partner.

(C) Effect of retroactive elections.

(vii) Section 704(c) elections.

(A) Allocations where the intangible is amortizable by the contributor.

(B) Allocations where the intangible is not amortizable by the contributor.

(viii) Operating rule for transfers upon death.

(i) Reserved

(j) General anti-abuse rule.

(k) Examples.

(l) Effective dates.

(1) In general.

(2) Application to pre-effective date acquisitions.

(3) Application of regulation project REG-209709-94 to pre-effective date acquisitions.

(4) Change in method of accounting.

(i) In general.

(ii) Application to pre-effective date transactions.

(iii) Automatic change procedures.

[T.D. 8867, 65 FR 3826, Jan. 25, 2000, as amended by T.D. 9257, 71 FR 17996, Apr. 10, 2006; T.D. 9377, 73 FR 3869, Jan. 23, 2008]

§ 1.197-1T Certain elections for intangible property (temporary).

(a) ***In general.*** This section provides rules for making the two elections under section 13261 of the Omnibus Budget Reconciliation Act of 1993 (OBRA '93). Paragraph (c) of this section provides rules for making the section 13261(g)(2) election (the retroactive election) to apply the intangibles provisions of OBRA '93 to property acquired after July 25, 1991, and on or before August 10, 1993 (the date of enactment of OBRA '93). Paragraph (d) of this section provides rules for making the section 13261(g)(3) election (binding contract election) to apply prior law to property acquired pursuant to a written binding contract in effect on August 10, 1993, and at all times thereafter before the date of acquisition. The provisions of this section apply only to property for which an election is made under paragraph (c) or (d) of this section.

(b) ***Definitions and special rules*** —

(1) ***Intangibles provisions of OBRA '93.*** The intangibles provisions of OBRA '93 are sections 167(f) and 197 of the Internal Revenue Code (Code) and all other pertinent provisions of section 13261 of OBRA '93 (e.g., the amendment of section 1253 in the case of a franchise, trademark, or trade name).

(2) ***Transition period property.*** The transition period property of a taxpayer is any property that was acquired by the taxpayer after July 25, 1991, and on or before August 10, 1993.

(3) ***Eligible section 197 intangibles.*** The eligible section 197 intangibles of a taxpayer are any section 197 intangibles that—

(i) Are transition period property; and

(ii) Qualify as amortizable section 197 intangibles (within the meaning of section 197(c)) if an election under section 13261(g)(2) of OBRA '93 applies.

(4) ***Election date.*** The election date is the date (determined after application of section 7502(a)) on which the taxpayer files the original or amended return to which the election statement described in paragraph (e) of this section is attached.

(5) ***Election year.*** The election year is the taxable year of the taxpayer that includes August 10, 1993.

(6) ***Common control.*** A taxpayer is under common control with the electing taxpayer if, at any time after August 2, 1993, and on or before the election date (as defined in paragraph (b)(4) of this section), the two taxpayers would be treated as a single taxpayer under section 41(f)(1) (A) or (B).

(7) ***Applicable convention for sections 197 and 167(f) intangibles.*** For purposes of computing the depreciation or amortization deduction allowable with respect to transition period property described in section 167(f) (1) or (3) or with respect to eligible section 197 intangibles—

(i) Property acquired at any time during the month is treated as acquired as of the first day of the month and is eligible for depreciation or amortization during the month; and

(ii) Property is not eligible for depreciation or amortization in the month of disposition.

(8) ***Application to adjustment to basis of partnership property under section 734(b) or 743(b).*** Any increase in the basis of partnership property under section 734(b) (relating to the optional adjustment to basis of undistributed partnership property) or section 743(b) (relating to the optional adjustment to the basis of partnership property) will be taken into account under this section by a partner as if the increased portion of the basis were attributable to the partner's acquisition of the underlying partnership property on the date the distribution or transfer occurs. For example, if a section 754 election is in effect and, as a result of its acquisition of a partnership interest, a taxpayer obtains an increased basis in an intangible held through the partnership, the increased portion of the basis in the intangible will be treated as an intangible asset newly acquired by that taxpayer on the date of the transaction.

(9) ***Former member.*** A former member of a consolidated group is a corporation that was a member of the consolidated group at any time after July 25, 1991, and on or before August 2, 1993, but that is not under common control with the common parent of the group for purposes of paragraph (c)(1)(ii) of this section.

(c) ***Retroactive election*** —

(1) ***Effect of election*** —

(i) ***On taxpayer.*** Except as provided in paragraph (c)(1)(v) of this section, if a taxpayer makes the retroactive election, the intangibles provisions of OBRA '93 will apply to all the taxpayer's transition period property. Thus, for example, section 197 will apply to all the taxpayer's eligible section 197 intangibles.

(ii) ***On taxpayers under common control.*** If a taxpayer makes the retroactive election, the election applies to each taxpayer that is under common control with the electing taxpayer. If the retroactive election applies to a taxpayer under common control, the intangibles provisions of OBRA '93 apply to that taxpayer's transition period property in the same manner as if that taxpayer had itself made the retroactive election. However, a retroactive election that applies to a non-electing taxpayer under common control is not treated as an election by that taxpayer for purposes of re-applying the rule of this paragraph (c)(1)(ii) to any other taxpayer.

(iii) ***On former members of consolidated group.*** A retroactive election by the common parent of a consolidated group applies to transition period property acquired by a former member while it was a member of the consolidated group and continues to apply to that property in each subsequent consolidated or separate return year of the former member.

(iv) ***On transferred assets*** —

(A) ***In general.*** If property is transferred in a transaction described in paragraph (c)(1)(iv)(C) of this section and the intangibles provisions of OBRA '93 applied to such property in the hands of the transferor, the property remains subject to the intangibles provisions of OBRA '93 with respect to so much of its adjusted basis in the hands of the transferee as does not exceed its adjusted basis in the hands of the transferor. The transferee is not required

to apply the intangibles provisions of OBRA '93 to any other transition period property that it owns, however, unless such provisions are otherwise applicable under the rules of this paragraph (c)(1).

(B) ***Transferee election.*** If property is transferred in a transaction described in paragraph (c)(1)(iv)(C)(*1*) of this section and the transferee makes the retroactive election, the transferor is not required to apply the intangibles provisions of OBRA '93 to any of its transition period property (including the property transferred to the transferee in the transaction described in paragraph (c)(1)(iv)(C)(*1*) of this section), unless such provisions are otherwise applicable under the rules of this paragraph (c)(1).

(C) ***Transactions covered.*** This paragraph (c)(1)(iv) applies to—

(*1*) Any transaction described in section 332, 351, 361, 721, 731, 1031, or 1033; and

(*2*) Any transaction between corporations that are members of the same consolidated group immediately after the transaction.

(D) ***Exchanged basis property.*** In the case of a transaction involving exchanged basis property (e.g., a transaction subject to section 1031 or 1033)—

(*1*) Paragraph (c)(1)(iv)(A) of this section shall not apply; and

(*2*) If the intangibles provisions of OBRA '93 applied to the property by reference to which the exchanged basis is determined (the predecessor property), the exchanged basis property becomes subject to the intangibles provisions of OBRA '93 with respect to so much of its basis as does not exceed the predecessor property's basis.

(E) ***Acquisition date.*** For purposes of paragraph (b)(2) of this section (definition of transition period property), property (other than exchanged basis property) acquired in a transaction described in paragraph (c)(1)(iv)(C)(*1*) of this section generally is treated as acquired when the transferor acquired (or was treated as acquiring) the property (or predecessor property). However, if the adjusted basis of the property in the hands of the transferee exceeds the adjusted basis of the property in the hands of the transferor, the property, with respect to that excess basis, is treated as acquired at the time of the transfer. The time at which exchanged basis property is considered acquired is determined by applying similar principles to the transferee's acquisition of predecessor property.

(v) ***Special rule for property of former member of consolidated group*** —

(A) ***Intangibles provisions inapplicable for certain periods.*** If a former member of a consolidated group makes a retroactive election pursuant to paragraph (c)(1)(i) of this section or if an election applies to the former member under the common control rule of paragraph (c)(1)(ii) of this section, the intangibles provisions of OBRA '93 generally apply to all transition period property of the former member. The intangibles provisions of OBRA '93 do not apply, however, to the transition period property of a former member (including a former member that makes or is bound by a retroactive election) during the period beginning immediately after July 25, 1991, and ending immediately before the earlier of—

(*1*) The first day after July 25, 1991, that the former member was not a member of a consolidated group; or

(2) The first day after July 25, 1991, that the former member was a member of a consolidated group that is otherwise required to apply the intangibles provisions of OBRA '93 to its transition period property (e.g., because the common control election under paragraph (c)(1)(ii) of this section applies to the group).

(B) ***Subsequent adjustments.*** See paragraph (c)(5) of this section for adjustments when the intangibles provisions of OBRA '93 first apply to the transition period property of the former member after the property is acquired.

(2) ***Making the election*** —

(i) ***Partnerships, S corporations, estates, and trusts.*** Except as provided in paragraph (c)(2)(ii) of this section, in the case of transition period property of a partnership, S corporation, estate, or trust, only the entity may make the retroactive election for purposes of paragraph (c)(1)(i) of this section.

(ii) ***Partnerships for which a section 754 election is in effect.*** In the case of increased basis that is treated as transition period property of a partner under paragraph (b)(8) of this section, only that partner may make the retroactive election for purposes of paragraph (c)(1)(i) of this section.

(iii) ***Consolidated groups.*** An election by the common parent of a consolidated group applies to members and former members as described in paragraphs (c)(1)(ii) and (iii) of this section. Further, for purposes of paragraph (c)(1)(ii) of this section, an election by the common parent is not treated as an election by any subsidiary member. A retroactive election cannot be made by a corporation that is a subsidiary member of a consolidated group on August 10, 1993, but an election can be made on behalf of the subsidiary member under paragraph (c)(1)(ii) of this section (e.g., by the common parent of the group). See paragraph (c)(1)(iii) of this section for rules concerning the effect of the common parent's election on transition period property of a former member.

(3) ***Time and manner of election*** —

(i) ***Time.*** In general, the retroactive election must be made by the due date (including extensions of time) of the electing taxpayer's Federal income tax return for the election year. If, however, the taxpayer's original Federal income tax return for the election year is filed before April 14, 1994, the election may be made by amending that return no later than September 12, 1994.

(ii) ***Manner.*** The retroactive election is made by attaching the election statement described in paragraph (e) of this section to the taxpayer's original or amended income tax return for the election year. In addition, the taxpayer must—

(A) Amend any previously filed return when required to do so under paragraph (c)(4) of this section; and

(B) Satisfy the notification requirements of paragraph (c)(6) of this section.

(iii) ***Effect of nonconforming elections.*** An attempted election that does not satisfy the requirements of this paragraph (c)(3) (including an attempted election made on a return for a taxable year prior to the election year) is not valid.

(4) ***Amended return requirements*** —

(i) ***Requirements.*** A taxpayer subject to this paragraph (c)(4) must amend all previously filed income tax returns as necessary to conform the taxpayer's treatment of transition period property to the treatment required under the intangibles provisions of OBRA '93. See paragraph (c)(5) of this section for certain adjustments that may be required on the amended returns required under this paragraph (c)(4) in the case of certain consolidated group member dispositions and tax-free transactions.

(ii) ***Applicability.*** This paragraph (c)(4) applies to a taxpayer if—

(A) The taxpayer makes the retroactive election; or

(B) Another person's retroactive election applies to the taxpayer or to any property acquired by the taxpayer.

(5) ***Adjustment required with respect to certain consolidated group member dispositions and tax-free transactions*** —

(i) ***Application.*** This paragraph (c)(5) applies to transition period property if the intangibles provisions of OBRA '93 first apply to the property while it is held by the taxpayer but do not apply to the property for some period (the "interim period") after the property is acquired (or considered acquired) by the taxpayer. For example, this paragraph (c)(5) may apply to transition period property held by a former member of a consolidated group if a retroactive election is made by or on behalf of the former member but is not made by the consolidated group. See paragraph (c)(1)(v) of this section.

(ii) ***Required adjustment to income.*** If this paragraph (c)(5) applies, an adjustment must be taken into account in computing taxable income of the taxpayer for the taxable year in which the intangibles provisions of OBRA '93 first apply to the property. The amount of the adjustment is equal to the difference for the transition period property between—

(A) The sum of the depreciation, amortization, or other cost recovery deductions that the taxpayer (and its predecessors) would have been permitted if the intangibles provisions of OBRA '93 applied to the property during the interim period; and

(B) The sum of the depreciation, amortization, or other cost recovery deductions that the taxpayer (and its predecessors) claimed during that interim period.

(iii) ***Required adjustment to basis.*** The taxpayer also must make a corresponding adjustment to the basis of its transition period property to reflect any adjustment to taxable income with respect to the property under this paragraph (c)(5).

(6) ***Notification requirements*** —

(i) ***Notification of commonly controlled taxpayers.*** A taxpayer that makes the retroactive election must provide written notification of the retroactive election (on or before the election date) to each taxpayer that is under common control with the electing taxpayer.

(ii) ***Notification of certain former members, former consolidated groups, and transferees.*** This paragraph (c)(6)(ii) applies to a common parent of a consolidated group that makes or is notified of a retroactive election that applies to transition period property of a former member, a corporation that makes or is notified of a retroactive election that affects any consolidated group of which the corporation is a former member, or a taxpayer that makes or is notified of a retroactive election that applies to transition period property the taxpayer transfers in a

transaction described in paragraph (c)(1)(iv)(C) of this section. Such common parent, former member, or transferor must provide written notification of the retroactive election to any affected former member, consolidated group, or transferee. The written notification must be provided on or before the election date in the case of an election by the common parent, former member, or transferor, and within 30 days of the election date in the case of an election by a person other than the common parent, former member, or transferor.

(7) ***Revocation.*** Once made, the retroactive election may be revoked only with the consent of the Commissioner.

(8) ***Examples.*** The following examples illustrate the application of this paragraph (c).

Example 1. (i) X is a partnership with 5 equal partners, A through E. X acquires in 1989, as its sole asset, intangible asset M. X has a section 754 election in effect for all relevant years. F, an unrelated individual, purchases A's entire interest in the X partnership in January 1993 for $700. At the time of F's purchase, X's inside basis for M is $2,000, and its fair market value is $3,500.
(ii) Under section 743(b), X makes an adjustment to increase F's basis in asset M by $300, the difference between the allocated purchase price and M's inside basis ($700−$400 = $300). Under paragraphs (b)(8) and (c)(2)(ii) of this section, if F makes the retroactive election, the section 743(b) basis increase of $300 in M is an amortizable section 197 intangible even though asset M is not an amortizable section 197 intangible in the hands of X. F's increase in the basis of asset M is amortizable over 15 years beginning with the month of F's acquisition of the partnership interest. With respect to the remaining $400 of basis, F is treated as stepping into A's shoes and continues A's amortization (if any) in asset M. F's retroactive election applies to all other intangibles acquired by F or a taxpayer under common control with F.

Example 2. A, a calendar year taxpayer, is under common control with B, a June 30 fiscal year taxpayer. A files its original election year Federal income tax return on March 15, 1994, and does not make either the retroactive election or the binding contract election. B files its election year tax return on September 15, 1994, and makes the retroactive election. B is required by paragraph (c)(6)(i) of this section to notify A of its election. Even though A had already filed its election year return, A is bound by B's retroactive election under the common control rules. Additionally, if A had made a binding contract election, it would have been negated by B's retroactive election. Because of B's retroactive election, A must comply with the requirements of this paragraph (c), and file amended returns for the election year and any affected prior years as necessary to conform the treatment of transition period property to the treatment required under the intangibles provisions of OBRA '93.

Example 3. (i) P and Y, calendar year taxpayers, are the common parents of unrelated calendar year consolidated groups. On August 15, 1991, S, a subsidiary member of the P group, acquires a section 197 intangible with an unadjusted basis of $180. Under prior law, no amortization or depreciation was allowed with respect to the acquired intangible. On November 1, 1992, a member of the Y group acquires the S stock in a taxable

transaction. On the P group's 1993 consolidated return, P makes the retroactive election. The P group also files amended returns for its affected prior years. Y does not make the retroactive election for the Y group.
(ii) Under paragraph (c)(1)(iii) of this section, a retroactive election by the common parent of a consolidated group applies to all transition period property acquired by a former member while it was a member of the group. The section 197 intangible acquired by S is transition period property that S, a former member of the P group, acquired while a member of the P group. Thus, P's election applies to the acquired asset. P must notify S of the election pursuant to paragraph (c)(6)(ii) of this section.

(iii) S amortizes the unadjusted basis of its eligible section 197 intangible ($180) over the 15-year amortization period using the applicable convention beginning as of the first day of the month of acquisition (August 1, 1991). Thus, the P group amends its 1991 consolidated tax return to take into account $5 of amortization ($180/15 years × $^{5}/_{12}$ year = $5) for S.

(iv) For 1992, S is entitled to $12 of amortization ($180/15). Assume that under § 1.1502-76, $10 of S's amortization for 1992 is allocated to the P group's consolidated return and $2 is allocated to the Y group's return. The P group amends its 1992 consolidated tax return to reflect the $10 deduction for S. The Y group must amend its 1992 return to reflect the $2 deduction for S.

Example 4. (i) The facts are the same as in *Example 3,* except that the retroactive election is made for the Y group, not for the P group.
(ii) The Y group amends its 1992 consolidated return to claim a section 197 deduction of $2 ($180/15 years × 2/12 year = $2) for S.

(iii) Under paragraph (c)(1)(ii) of this section, the retroactive election by Y applies to all transition period property acquired by S. However, under paragraph (c)(1)(v)(A) of this section, the intangibles provisions of OBRA '93 do not apply to S's transition period property during the period when it held such property as a member of P group. Instead, these provisions become applicable to S's transition period property beginning on November 1, 1992, when S becomes a member of Y group.

(iv) Because the P group did not make the retroactive election, there is an interim period during which the intangibles provisions of OBRA '93 do not apply to the asset acquired by S. Thus, under paragraph (c)(5) of this section, the Y group must take into account in computing taxable income in 1992 an adjustment equal to the difference between the section 197 deduction that would have been permitted if the intangibles provisions of OBRA '93 applied to the property for the interim period (i.e., the period for which S was included in the P group's 1991 and 1992 consolidated returns) and any amortization or

> depreciation deductions claimed by S for the transferred intangible for that period. The retroactive election does not affect the P group, and the P group is not required to amend its returns.

Example 5. The facts are the same as in *Example 3,* except that both P and Y make the retroactive election. P must notify S of its election pursuant to paragraph (c)(6)(ii) of this section. Further, both the P and Y groups must file amended returns for affected prior years. Because there is no period of time during which the intangibles provisions of OBRA '93 do not apply to the asset acquired by S, the Y group is permitted no adjustment under paragraph (c)(5) of this section for the asset.

(d) ***Binding contract election*** —

(1) ***General rule*** —

(i) ***Effect of election.*** If a taxpayer acquires property pursuant to a written binding contract in effect on August 10, 1993, and at all times thereafter before the acquisition (an eligible acquisition) and makes the binding contract election with respect to the contract, the law in effect prior to the enactment of OBRA '93 will apply to all property acquired pursuant to the contract. A separate binding contract election must be made with respect to each eligible acquisition to which the law in effect prior to the enactment of OBRA '93 is to apply.

(ii) ***Taxpayers subject to retroactive election.*** A taxpayer may not make the binding contract election if the taxpayer or a person under common control with the taxpayer makes the retroactive election under paragraph (c) of this section.

(iii) ***Revocation.*** A binding contract election, once made, may be revoked only with the consent of the Commissioner.

(2) ***Time and manner of election*** —

(i) ***Time.*** In general, the binding contract election must be made by the due date (including extensions of time) of the electing taxpayer's Federal income tax return for the election year. If, however, the taxpayer's original Federal income tax return for the election year is filed before April 14, 1994, the election may be made by amending that return no later than September 12, 1994.

(ii) ***Manner.*** The binding contract election is made by attaching the election statement described in paragraph (e) of this section to the taxpayer's original or amended income tax return for the election year.

(iii) ***Effect of nonconforming election.*** An attempted election that does not satisfy the requirements of this paragraph (d)(2) is not valid.

(e) ***Election statement*** —

(1) ***Filing requirements.*** For an election under paragraph (c) or (d) of this section to be valid, the electing taxpayer must:

(i) File (with its Federal income tax return for the election year and with any affected amended returns required under paragraph (c)(4) of this section) a written election statement, as an attachment to Form 4562 (Depreciation and Amortization), that satisfies the requirements of paragraph (e)(2) of this section; and

(ii) Forward a copy of the election statement to the Statistics Branch (QAM:S:6111), IRS Ogden Service Center, ATTN: Chief, Statistics Branch, P.O. Box 9941, Ogden, UT 84409.

(2) ***Content of the election statement.*** The written election statement must include the information in paragraphs (e)(2) (i) through (vi) and (ix) of this section in the case of a retroactive election, and the information in paragraphs (e)(2) (i) and (vii) through (ix) of this section in the case of a binding contract election. The required information should be arranged and identified in accordance with the following order and numbering system—

(i) The name, address and taxpayer identification number (TIN) of the electing taxpayer (and the common parent if a consolidated return is filed).

(ii) A statement that the taxpayer is making the retroactive election.

(iii) Identification of the transition period property affected by the retroactive election, the name and TIN of the person from which the property was acquired, the manner and date of acquisition, the basis at which the property was acquired, and the amount of depreciation, amortization, or other cost recovery under section 167 or any other provision of the Code claimed with respect to the property.

(iv) Identification of each taxpayer under common control (as defined in paragraph (b)(6) of this section) with the electing taxpayer by name, TIN, and Internal Revenue Service Center where the taxpayer's income tax return is filed.

(v) If any persons are required to be notified of the retroactive election under paragraph (c)(6) of this section, identification of such persons and certification that written notification of the election has been provided to such persons.

(vi) A statement that the transition period property being amortized under section 197 is not subject to the anti-churning rules of section 197(f)(9).

(vii) A statement that the taxpayer is making the binding contract election.

(viii) Identification of the property affected by the binding contract election, the name and TIN of the person from which the property was acquired, the manner and date of acquisition, the basis at which the property was acquired, and whether any of the property is subject to depreciation under section 167 or to amortization or other cost recovery under any other provision of the Code.

(ix) The signature of the taxpayer or an individual authorized to sign the taxpayer's Federal income tax return.

(f) ***Effective date.*** These regulations are effective March 15, 1994.

[T.D. 8528, 59 FR 11920, Mar. 15, 1994, as amended by T.D. 9377, 73 FR 3869, Jan. 23, 2008]

§ 1.197-2 Amortization of goodwill and certain other intangibles.

(a) ***Overview*** —

(1) ***In general.*** Section 197 allows an amortization deduction for the capitalized costs of an amortizable section 197 intangible and prohibits any other depreciation or amortization with respect to that property. Paragraphs (b), (c), and (e) of this section provide rules and definitions for determining whether property is a section 197 intangible, and paragraphs (d) and (e) of this section provide rules

and definitions for determining whether a section 197 intangible is an amortizable section 197 intangible. The amortization deduction under section 197 is determined by amortizing basis ratably over a 15-year period under the rules of paragraph (f) of this section. Section 197 also includes various special rules pertaining to the disposition of amortizable section 197 intangibles, nonrecognition transactions, anti-churning rules, and anti-abuse rules. Rules relating to these provisions are contained in paragraphs (g), (h), and (j) of this section. Examples demonstrating the application of these provisions are contained in paragraph (k) of this section. The effective date of the rules in this section is contained in paragraph (l) of this section.

(2) ***Section 167(f) property.*** Section 167(f) prescribes rules for computing the depreciation deduction for certain property to which section 197 does not apply. See § 1.167(a)-14 for rules under section 167(f) and paragraphs (c)(4), (6), (7), (11), and (13) of this section for a description of the property subject to section 167(f).

(3) ***Amounts otherwise deductible.*** Section 197 does not apply to amounts that are not chargeable to capital account under paragraph (f)(3) (relating to basis determinations for covenants not to compete and certain contracts for the use of section 197 intangibles) of this section and are otherwise currently deductible. For this purpose, an amount described in § 1.162-11 is not currently deductible if, without regard to § 1.162-11, such amount is properly chargeable to capital account.

(b) ***Section 197 intangibles; in general.*** Except as otherwise provided in paragraph (c) of this section, the term *section 197 intangible* means any property described in section 197(d)(1). The following rules and definitions provide guidance concerning property that is a section 197 intangible unless an exception applies:

(1) ***Goodwill.*** Section 197 intangibles include goodwill. Goodwill is the value of a trade or business attributable to the expectancy of continued customer patronage. This expectancy may be due to the name or reputation of a trade or business or any other factor.

(2) ***Going concern value.*** Section 197 intangibles include going concern value. Going concern value is the additional value that attaches to property by reason of its existence as an integral part of an ongoing business activity. Going concern value includes the value attributable to the ability of a trade or business (or a part of a trade or business) to continue functioning or generating income without interruption notwithstanding a change in ownership, but does not include any of the intangibles described in any other provision of this paragraph (b). It also includes the value that is attributable to the immediate use or availability of an acquired trade or business, such as, for example, the use of the revenues or net earnings that otherwise would not be received during any period if the acquired trade or business were not available or operational.

(3) ***Workforce in place.*** Section 197 intangibles include workforce in place. Workforce in place (sometimes referred to as agency force or assembled workforce) includes the composition of a workforce (for example, the experience, education, or training of a workforce), the terms and conditions of employment whether contractual or otherwise, and any other value placed on employees or any of their attributes. Thus, the amount paid or incurred for workforce in place includes, for example, any portion of the purchase price of an acquired trade or business attributable to the existence of a highly-skilled workforce, an existing employment contract (or contracts), or a relationship with employees or consultants (including, but not limited to, any key employee contract or relationship). Workforce in place does not include any covenant not to compete or other similar arrangement described in paragraph (b)(9) of this section.

(4) ***Information base.*** Section 197 intangibles include any information base, including a customer-related information base. For this purpose, an information base includes business books and records, operating systems, and any other information base (regardless of the method of recording the information) and a customer-related information base is any information base that includes lists or other information with respect to current or prospective customers. Thus, the amount paid or incurred for information base includes, for example, any portion of the purchase price of an acquired trade or business attributable to the intangible value of technical manuals, training manuals or programs, data files, and accounting or inventory control systems. Other examples include the cost of acquiring customer lists, subscription lists, insurance expirations, patient or client files, or lists of newspaper, magazine, radio, or television advertisers.

(5) ***Know-how, etc.*** Section 197 intangibles include any patent, copyright, formula, process, design, pattern, know-how, format, package design, computer software (as defined in paragraph (c)(4)(iv) of this section), or interest in a film, sound recording, video tape, book, or other similar property. (See, however, the exceptions in paragraph (c) of this section.)

(6) ***Customer-based intangibles.*** Section 197 intangibles include any customer-based intangible. A customer-based intangible is any composition of market, market share, or other value resulting from the future provision of goods or services pursuant to contractual or other relationships in the ordinary course of business with customers. Thus, the amount paid or incurred for customer-based intangibles includes, for example, any portion of the purchase price of an acquired trade or business attributable to the existence of a customer base, a circulation base, an undeveloped market or market growth, insurance in force, the existence of a qualification to supply goods or services to a particular customer, a mortgage servicing contract (as defined in paragraph (c)(11) of this section), an investment management contract, or other relationship with customers involving the future provision of goods or services. (See, however, the exceptions in paragraph (c) of this section.) In addition, customer-based intangibles include the deposit base and any similar asset of a financial institution. Thus, the amount paid or incurred for customer-based intangibles also includes any portion of the purchase price of an acquired financial institution attributable to the value represented by existing checking accounts, savings accounts, escrow accounts, and other similar items of the financial institution. However, any portion of the purchase price of an acquired trade or business attributable to accounts receivable or other similar rights to income for goods or services provided to customers prior to the acquisition of a trade or business is not an amount paid or incurred for a customer-based intangible.

(7) ***Supplier-based intangibles*** —

(i) ***In general.*** Section 197 intangibles include any supplier-based intangible. A *supplier-based intangible* is the value resulting from the future acquisition, pursuant to contractual or other relationships with suppliers in the ordinary course of business, of goods or services that will be sold or used by the taxpayer. Thus, the amount paid or incurred for supplier-based intangibles includes, for example, any portion of the purchase price of an acquired trade or business attributable to the existence of a favorable relationship with persons providing distribution services (such as favorable shelf or display space at a retail outlet), or the existence of favorable supply contracts. The amount paid or incurred for supplier-based intangibles does not include any amount required to be paid for the goods or services themselves pursuant to the terms of the agreement or other relationship. In addition, see the exceptions in paragraph 2(c) of this section, including the exception in paragraph 2(c)(6) of this section for certain rights to receive tangible property or services from another person.

(ii) ***Applicability date.*** This section applies to supplier-based intangibles acquired after July 6, 2011.

(8) ***Licenses, permits, and other rights granted by governmental units.*** Section 197 intangibles include any license, permit, or other right granted by a governmental unit (including, for purposes of section 197, an agency or instrumentality thereof) even if the right is granted for an indefinite period or is reasonably expected to be renewed for an indefinite period. These rights include, for example, a liquor license, a taxi-cab medallion (or license), an airport landing or takeoff right (sometimes referred to as a slot), a regulated airline route, or a television or radio broadcasting license. The issuance or renewal of a license, permit, or other right granted by a governmental unit is considered an acquisition of the license, permit, or other right. (See, however, the exceptions in paragraph (c) of this section, including the exceptions in paragraph (c)(3) of this section for an interest in land, paragraph (c)(6) of this section for certain rights to receive tangible property or services, paragraph (c)(8) of this section for an interest under a lease of tangible property, and paragraph (c)(13) of this section for certain rights granted by a governmental unit. See paragraph (b)(10) of this section for the treatment of franchises.)

(9) ***Covenants not to compete and other similar arrangements.*** Section 197 intangibles include any covenant not to compete, or agreement having substantially the same effect, entered into in connection with the direct or indirect acquisition of an interest in a trade or business or a substantial portion thereof. For purposes of this paragraph (b)(9), an acquisition may be made in the form of an asset acquisition (including a qualified stock purchase that is treated as a purchase of assets under section 338), a stock acquisition or redemption, and the acquisition or redemption of a partnership interest. An agreement requiring the performance of services for the acquiring taxpayer or the provision of property or its use to the acquiring taxpayer does not have substantially the same effect as a covenant not to compete to the extent that the amount paid under the agreement represents reasonable compensation for the services actually rendered or for the property or use of the property actually provided.

(10) ***Franchises, trademarks, and trade names.***

(i) Section 197 intangibles include any franchise, trademark, or trade name. The term *franchise* has the meaning given in section 1253(b)(1) and includes any agreement that provides one of the parties to the agreement with the right to distribute, sell, or provide goods, services, or facilities, within a specified area. The term *trademark* includes any word, name, symbol, or device, or any combination thereof, adopted and used to identify goods or services and distinguish them from those provided by others. The term *trade name* includes any name used to identify or designate a particular trade or business or the name or title used by a person or organization engaged in a trade or business. A license, permit, or other right granted by a governmental unit is a franchise if it otherwise meets the definition of a franchise. A trademark or trade name includes any trademark or trade name arising under statute or applicable common law, and any similar right granted by contract. The renewal of a franchise, trademark, or trade name is treated as an acquisition of the franchise, trademark, or trade name.

(ii) Notwithstanding the definitions provided in paragraph (b)(10)(i) of this section, any amount that is paid or incurred on account of a transfer, sale, or other disposition of a franchise, trademark, or trade name and that is subject to section 1253(d)(1) is not included in the basis of a section 197 intangible. (See paragraph (g)(6) of this section.)

(11) ***Contracts for the use of, and term interests in, section 197 intangibles.*** Section 197 intangibles include any right under a license, contract, or other arrangement providing for the use of property that would be a section 197 intangible under any provision of this paragraph (b) (including this paragraph (b)(11)) after giving effect to all of the exceptions provided in paragraph (c) of this section. Section 197 intangibles also include any term interest (whether outright or in trust) in such property.

(12) ***Other similar items.*** Section 197 intangibles include any other intangible property that is similar in all material respects to the property specifically described in section 197(d)(1)(C)(i) through (v) and paragraphs (b)(3) through (7) of this section. (See paragraph (g)(5) of this section for special rules regarding certain reinsurance transactions.)

(c) ***Section 197 intangibles; exceptions.*** The term *section 197 intangible* does not include property described in section 197(e). The following rules and definitions provide guidance concerning property to which the exceptions apply:

(1) ***Interests in a corporation, partnership, trust, or estate.*** Section 197 intangibles do not include an interest in a corporation, partnership, trust, or estate. Thus, for example, amortization under section 197 is not available for the cost of acquiring stock, partnership interests, or interests in a trust or estate, whether or not the interests are regularly traded on an established market. (See paragraph (g)(3) of this section for special rules applicable to property of a partnership when a section 754 election is in effect for the partnership.)

(2) ***Interests under certain financial contracts.*** Section 197 intangibles do not include an interest under an existing futures contract, foreign currency contract, notional principal contract, interest rate swap, or other similar financial contract, whether or not the interest is regularly traded on an established market. However, this exception does not apply to an interest under a mortgage servicing contract, credit card servicing contract, or other contract to service another person's indebtedness, or an interest under an assumption reinsurance contract. (See paragraph (g)(5) of this section for the treatment of assumption reinsurance contracts. See paragraph (c)(11) of this section and § 1.167(a)-14(d) for the treatment of mortgage servicing rights.)

(3) ***Interests in land.*** Section 197 intangibles do not include any interest in land. For this purpose, an interest in land includes a fee interest, life estate, remainder, easement, mineral right, timber right, grazing right, riparian right, air right, zoning variance, and any other similar right, such as a farm allotment, quota for farm commodities, or crop acreage base. An interest in land does not include an airport landing or takeoff right, a regulated airline route, or a franchise to provide cable television service. The cost of acquiring a license, permit, or other land improvement right, such as a building construction or use permit, is taken into account in the same manner as the underlying improvement.

(4) ***Certain computer software*** —

(i) ***Publicly available.*** Section 197 intangibles do not include any interest in computer software that is (or has been) readily available to the general public on similar terms, is subject to a nonexclusive license, and has not been substantially modified. Computer software will be treated as readily available to the general public if the software may be obtained on substantially the same terms by a significant number of persons that would reasonably be expected to use the software. This requirement can be met even though the software is not available through a system of retail distribution. Computer software will not be considered to have been substantially modified if the cost of all modifications to the version of the software that is readily available to the general public does not exceed the greater of 25 percent of the

price at which the unmodified version of the software is readily available to the general public or $2,000. For the purpose of determining whether computer software has been substantially modified—

(A) Integrated programs acquired in a package from a single source are treated as a single computer program; and

(B) Any cost incurred to install the computer software on a system is not treated as a cost of the software. However, the costs for customization, such as tailoring to a user's specifications (other than embedded programming options) are costs of modifying the software.

(ii) ***Not acquired as part of trade or business.*** Section 197 intangibles do not include an interest in computer software that is not acquired as part of a purchase of a trade or business.

(iii) ***Other exceptions.*** For other exceptions applicable to computer software, see paragraph (a)(3) of this section (relating to otherwise deductible amounts) and paragraph (g)(7) of this section (relating to amounts properly taken into account in determining the cost of property that is not a section 197 intangible).

(iv) ***Computer software defined.*** For purposes of this section, computer software is any program or routine (that is, any sequence of machine-readable code) that is designed to cause a computer to perform a desired function or set of functions, and the documentation required to describe and maintain that program or routine. It includes all forms and media in which the software is contained, whether written, magnetic, or otherwise. Computer programs of all classes, for example, operating systems, executive systems, monitors, compilers and translators, assembly routines, and utility programs as well as application programs, are included. Computer software also includes any incidental and ancillary rights that are necessary to effect the acquisition of the title to, the ownership of, or the right to use the computer software, and that are used only in connection with that specific computer software. Such incidental and ancillary rights are not included in the definition of trademark or trade name under paragraph (b)(10)(i) of this section. For example, a trademark or trade name that is ancillary to the ownership or use of a specific computer software program in the taxpayer's trade or business and is not acquired for the purpose of marketing the computer software is included in the definition of computer software and is not included in the definition of trademark or trade name. Computer software does not include any data or information base described in paragraph (b)(4) of this section unless the data base or item is in the public domain and is incidental to a computer program. For this purpose, a copyrighted or proprietary data or information base is treated as in the public domain if its availability through the computer program does not contribute significantly to the cost of the program. For example, if a word-processing program includes a dictionary feature used to spell-check a document or any portion thereof, the entire program (including the dictionary feature) is computer software regardless of the form in which the feature is maintained or stored.

(5) ***Certain interests in films, sound recordings, video tapes, books, or other similar property.*** Section 197 intangibles do not include any interest (including an interest as a licensee) in a film, sound recording, video tape, book, or other similar property (such as the right to broadcast or transmit a live event) if the interest is not acquired as part of a purchase of a trade or business. A film, sound recording, video tape, book, or other similar property includes any incidental and ancillary rights (such as a trademark or trade name) that are necessary to effect the acquisition of title to, the ownership of, or the right to use the property and are used only in connection with that property. Such incidental and

ancillary rights are not included in the definition of trademark or trade name under paragraph (b)(10)(i) of this section. For purposes of this paragraph (c)(5), computer software (as defined in paragraph (c)(4)(iv) of this section) is not treated as other property similar to a film, sound recording, video tape, or book. (See section 167 for amortization of excluded intangible property or interests.)

(6) ***Certain rights to receive tangible property or services.*** Section 197 intangibles do not include any right to receive tangible property or services under a contract or from a governmental unit if the right is not acquired as part of a purchase of a trade or business. Any right that is described in the preceding sentence is not treated as a section 197 intangible even though the right is also described in section 197(d)(1)(D) and paragraph (b)(8) of this section (relating to certain governmental licenses, permits, and other rights) and even though the right fails to meet one or more of the requirements of paragraph (c)(13) of this section (relating to certain rights of fixed duration or amount). (See § 1.167(a)-14(c) (1) and (3) for applicable rules.)

(7) ***Certain interests in patents or copyrights.*** Section 197 intangibles do not include any interest (including an interest as a licensee) in a patent, patent application, or copyright that is not acquired as part of a purchase of a trade or business. A patent or copyright includes any incidental and ancillary rights (such as a trademark or trade name) that are necessary to effect the acquisition of title to, the ownership of, or the right to use the property and are used only in connection with that property. Such incidental and ancillary rights are not included in the definition of trademark or trade name under paragraph (b)(10)(i) of this section. (See § 1.167(a)-14(c)(4) for applicable rules.)

(8) ***Interests under leases of tangible property*** —

(i) ***Interest as a lessor.*** Section 197 intangibles do not include any interest as a lessor under an existing lease or sublease of tangible real or personal property. In addition, the cost of acquiring an interest as a lessor in connection with the acquisition of tangible property is taken into account as part of the cost of the tangible property. For example, if a taxpayer acquires a shopping center that is leased to tenants operating retail stores, any portion of the purchase price attributable to favorable lease terms is taken into account as part of the basis of the shopping center and in determining the depreciation deduction allowed with respect to the shopping center. (See section 167(c)(2).)

(ii) ***Interest as a lessee.*** Section 197 intangibles do not include any interest as a lessee under an existing lease of tangible real or personal property. For this purpose, an airline lease of an airport passenger or cargo gate is a lease of tangible property. The cost of acquiring such an interest is taken into account under section 178 and § 1.162-11(a). If an interest as a lessee under a lease of tangible property is acquired in a transaction with any other intangible property, a portion of the total purchase price may be allocable to the interest as a lessee based on all of the relevant facts and circumstances.

(9) ***Interests under indebtedness*** —

(i) ***In general.*** Section 197 intangibles do not include any interest (whether as a creditor or debtor) under an indebtedness in existence when the interest was acquired. Thus, for example, the value attributable to the assumption of an indebtedness with a below-market interest rate is not amortizable under section 197. In addition, the premium paid for acquiring a debt instrument with an above-market interest rate is not amortizable under section 197. See section 171 for rules concerning the treatment of amortizable bond premium.

(ii) ***Exceptions.*** For purposes of this paragraph (c)(9), an interest under an existing indebtedness does not include the deposit base (and other similar items) of a financial institution. An interest under an existing indebtedness includes mortgage servicing rights, however, to the extent the rights are stripped coupons under section 1286.

(10) ***Professional sports franchises.*** Section 197 intangibles do not include any franchise to engage in professional baseball, basketball, football, or any other professional sport, and any item (even though otherwise qualifying as a section 197 intangible) acquired in connection with such a franchise.

(11) ***Mortgage servicing rights.*** Section 197 intangibles do not include any right described in section 197(e)(7) (concerning rights to service indebtedness secured by residential real property that are not acquired as part of a purchase of a trade or business). (See § 1.167(a)-14(d) for applicable rules.)

(12) ***Certain transaction costs.*** Section 197 intangibles do not include any fees for professional services and any transaction costs incurred by parties to a transaction in which all or any portion of the gain or loss is not recognized under part III of subchapter C of the Internal Revenue Code.

(13) ***Rights of fixed duration or amount.***

(i) Section 197 intangibles do not include any right under a contract or any license, permit, or other right granted by a governmental unit if the right—

(A) Is acquired in the ordinary course of a trade or business (or an activity described in section 212) and not as part of a purchase of a trade or business;

(B) Is not described in section 197(d)(1)(A), (B), (E), or (F);

(C) Is not a customer-based intangible, a customer-related information base, or any other similar item; and

(D) Either—

(*1*) Has a fixed duration of less than 15 years; or

(2) Is fixed as to amount and the adjusted basis thereof is properly recoverable (without regard to this section) under a method similar to the unit-of-production method.

(ii) See § 1.167(a)-14(c)(2) and (3) for applicable rules.

(d) ***Amortizable section 197 intangibles*** —

(1) ***Definition.*** Except as otherwise provided in this paragraph (d), the term *amortizable section 197 intangible* means any section 197 intangible acquired after August 10, 1993 (or after July 25, 1991, if a valid retroactive election under § 1.197-1T has been made), and held in connection with the conduct of a trade or business or an activity described in section 212.

(2) ***Exception for self-created intangibles*** —

(i) ***In general.*** Except as provided in paragraph (d)(2)(iii) of this section, amortizable section 197 intangibles do not include any section 197 intangible created by the taxpayer (a self-created intangible).

(ii) ***Created by the taxpayer*** —

(A) ***Defined.*** A section 197 intangible is created by the taxpayer to the extent the taxpayer makes payments or otherwise incurs costs for its creation, production, development, or improvement, whether the actual work is performed by the taxpayer or by another person under a contract with the taxpayer entered into before the contracted creation, production, development, or improvement occurs. For example, a technological process developed specifically for a taxpayer under an arrangement with another person pursuant to which the taxpayer retains all rights to the process is created by the taxpayer.

(B) ***Contracts for the use of intangibles.*** A section 197 intangible is not a self-created intangible to the extent that it results from the entry into (or renewal of) a contract for the use of an existing section 197 intangible. Thus, for example, the exception for self-created intangibles does not apply to capitalized costs, such as legal and other professional fees, incurred by a licensee in connection with the entry into (or renewal of) a contract for the use of know-how or similar property.

(C) ***Improvements and modifications.*** If an existing section 197 intangible is improved or otherwise modified by the taxpayer or by another person under a contract with the taxpayer, the existing intangible and the capitalized costs (if any) of the improvements or other modifications are each treated as a separate section 197 intangible for purposes of this paragraph (d).

(iii) ***Exceptions.***

(A) The exception for self-created intangibles does not apply to any section 197 intangible described in section 197(d)(1)(D) (relating to licenses, permits or other rights granted by a governmental unit), 197(d)(1)(E) (relating to covenants not to compete), or 197(d)(1)(F) (relating to franchises, trademarks, and trade names). Thus, for example, capitalized costs incurred in the development, registration, or defense of a trademark or trade name do not qualify for the exception and are amortized over 15 years under section 197.

(B) The exception for self-created intangibles does not apply to any section 197 intangible created in connection with the purchase of a trade or business (as defined in paragraph (e) of this section).

(C) If a taxpayer disposes of a self-created intangible and subsequently reacquires the intangible in an acquisition described in paragraph (h)(5)(ii) of this section, the exception for self-created intangibles does not apply to the reacquired intangible.

(3) ***Exception for property subject to anti-churning rules.*** Amortizable section 197 intangibles do not include any property to which the anti-churning rules of section 197(f)(9) and paragraph (h) of this section apply.

(e) ***Purchase of a trade or business.*** Several of the exceptions in section 197 apply only to property that is not acquired in (or created in connection with) a transaction or series of related transactions involving the acquisition of assets constituting a trade or business or a substantial portion thereof. Property acquired in (or created in connection with) such a transaction or series of related transactions is referred to in this section as property acquired as part of (or created in connection with) a purchase of a trade or business. For purposes of section 197 and this section, the applicability of the limitation is determined under the following rules:

(1) ***Goodwill or going concern value.*** An asset or group of assets constitutes a trade or business or a substantial portion thereof if their use would constitute a trade or business under section 1060 (that is, if goodwill or going concern value could under any circumstances attach to the assets). See § 1.1060-1(b)(2). For this purpose, all the facts and circumstances, including any employee relationships that continue (or covenants not to compete that are entered into) as part of the transfer of the assets, are taken into account in determining whether goodwill or going concern value could attach to the assets.

(2) ***Franchise, trademark, or trade name*** —

(i) ***In general.*** The acquisition of a franchise, trademark, or trade name constitutes the acquisition of a trade or business or a substantial portion thereof.

(ii) ***Exceptions.*** For purposes of this paragraph (e)(2)—

(A) A trademark or trade name is disregarded if it is included in computer software under paragraph (c)(4) of this section or in an interest in a film, sound recording, video tape, book, or other similar property under paragraph (c)(5) of this section;

(B) A franchise, trademark, or trade name is disregarded if its value is nominal or the taxpayer irrevocably disposes of it immediately after its acquisition; and

(C) The acquisition of a right or interest in a trademark or trade name is disregarded if the grant of the right or interest is not, under the principles of section 1253, a transfer of all substantial rights to such property or of an undivided interest in all substantial rights to such property.

(3) ***Acquisitions to be included.*** The assets acquired in a transaction (or series of related transactions) include only assets (including a beneficial or other indirect interest in assets where the interest is of a type described in paragraph (c)(1) of this section) acquired by the taxpayer and persons related to the taxpayer from another person and persons related to that other person. For purposes of this paragraph (e)(3), persons are related only if their relationship is described in section 267(b) or 707(b) or they are engaged in trades or businesses under common control within the meaning of section 41(f)(1).

(4) ***Substantial portion.*** The determination of whether acquired assets constitute a substantial portion of a trade or business is to be based on all of the facts and circumstances, including the nature and the amount of the assets acquired as well as the nature and amount of the assets retained by the transferor. The value of the assets acquired relative to the value of the assets retained by the transferor is not determinative of whether the acquired assets constitute a substantial portion of a trade or business.

(5) ***Deemed asset purchases under section 338.*** A qualified stock purchase that is treated as a purchase of assets under section 338 is treated as a transaction involving the acquisition of assets constituting a trade or business only if the direct acquisition of the assets of the corporation would have been treated as the acquisition of assets constituting a trade or business or a substantial portion thereof.

(6) ***Mortgage servicing rights.*** Mortgage servicing rights acquired in a transaction or series of related transactions are disregarded in determining for purposes of paragraph (c)(11) of this section whether the assets acquired in the transaction or transactions constitute a trade or business or substantial portion thereof.

(7) ***Computer software acquired for internal use.*** Computer software acquired in a transaction or series of related transactions solely for internal use in an existing trade or business is disregarded in determining for purposes of paragraph (c)(4) of this section whether the assets acquired in the transaction or series of related transactions constitute a trade or business or substantial portion thereof.

(f) ***Computation of amortization deduction —***

(1) ***In general.*** Except as provided in paragraph (f)(2) of this section, the amortization deduction allowable under section 197(a) is computed as follows:

(i) The basis of an amortizable section 197 intangible is amortized ratably over the 15-year period beginning on the later of—

(A) The first day of the month in which the property is acquired; or

(B) In the case of property held in connection with the conduct of a trade or business or in an activity described in section 212, the first day of the month in which the conduct of the trade or business or the activity begins.

(ii) Except as otherwise provided in this section, basis is determined under section 1011 and salvage value is disregarded.

(iii) Property is not eligible for amortization in the month of disposition.

(iv) The amortization deduction for a short taxable year is based on the number of months in the short taxable year.

(2) ***Treatment of contingent amounts —***

(i) ***Amounts added to basis during 15-year period.*** Any amount that is properly included in the basis of an amortizable section 197 intangible after the first month of the 15-year period described in paragraph (f)(1)(i) of this section and before the expiration of that period is amortized ratably over the remainder of the 15-year period. For this purpose, the remainder of the 15-year period begins on the first day of the month in which the basis increase occurs.

(ii) ***Amounts becoming fixed after expiration of 15-year period.*** Any amount that is not properly included in the basis of an amortizable section 197 intangible until after the expiration of the 15-year period described in paragraph (f)(1)(i) of this section is amortized in full immediately upon the inclusion of the amount in the basis of the intangible.

(iii) ***Rules for including amounts in basis.*** See §§ 1.1275-4(c)(4) and 1.483-4(a) for rules governing the extent to which contingent amounts payable under a debt instrument given in consideration for the sale or exchange of an amortizable section 197 intangible are treated as payments of principal and the time at which the amount treated as principal is included in basis. See § 1.461-1(a)(1) and (2) for rules governing the time at which other contingent amounts are taken into account in determining the basis of an amortizable section 197 intangible.

(3) ***Basis determinations for certain assets —***

(i) ***Covenants not to compete.*** In the case of a covenant not to compete or other similar arrangement described in paragraph (b)(9) of this section (a covenant), the amount chargeable to capital account includes, except as provided in this paragraph (f)(3), all amounts that are required to be paid pursuant to the covenant, whether or not any such amount would be deductible under section 162 if the covenant were not a section 197 intangible.

(ii) ***Contracts for the use of section 197 intangibles; acquired as part of a trade or business*** —

(A) ***In general.*** Except as provided in this paragraph (f)(3), any amount paid or incurred by the transferee on account of the transfer of a right or term interest described in paragraph (b)(11) of this section (relating to contracts for the use of, and term interests in, section 197 intangibles) by the owner of the property to which such right or interest relates and as part of a purchase of a trade or business is chargeable to capital account, whether or not such amount would be deductible under section 162 if the property were not a section 197 intangible.

(B) ***Know-how and certain information base.*** The amount chargeable to capital account with respect to a right or term interest described in paragraph (b)(11) of this section is determined without regard to the rule in paragraph (f)(3)(ii)(A) of this section if the right or interest relates to property (other than a customer-related information base) described in paragraph (b)(4) or (5) of this section and the acquiring taxpayer establishes that—

(*1*) The transfer of the right or interest is not, under the principles of section 1235, a transfer of all substantial rights to such property or of an undivided interest in all substantial rights to such property; and

(*2*) The right or interest was transferred for an arm's-length consideration.

(iii) ***Contracts for the use of section 197 intangibles; not acquired as part of a trade or business.*** The transfer of a right or term interest described in paragraph (b)(11) of this section by the owner of the property to which such right or interest relates but not as part of a purchase of a trade or business will be closely scrutinized under the principles of section 1235 for purposes of determining whether the transfer is a sale or exchange and, accordingly, whether amounts paid on account of the transfer are chargeable to capital account. If under the principles of section 1235 the transaction is not a sale or exchange, amounts paid on account of the transfer are not chargeable to capital account under this paragraph (f)(3).

(iv) ***Applicable rules*** —

(A) ***Franchises, trademarks, and trade names.*** For purposes of this paragraph (f)(3), section 197 intangibles described in paragraph (b)(11) of this section do not include any property that is also described in paragraph (b)(10) of this section (relating to franchises, trademarks, and trade names).

(B) ***Certain amounts treated as payable under a debt instrument*** —

(*1*) ***In general.*** For purposes of applying any provision of the Internal Revenue Code to a person making payments of amounts that are otherwise chargeable to capital account under this paragraph (f)(3) and are payable after the acquisition of the section 197 intangible to which they relate, such amounts are treated as payable under a debt instrument given in consideration for the sale or exchange of the section 197 intangible.

(2) ***Rights granted by governmental units.*** For purposes of applying any provision of the Internal Revenue Code to any amounts that are otherwise chargeable to capital account with respect to a license, permit, or other right described in paragraph (b)(8) of this section (relating to rights granted by a governmental unit or agency or instrumentality thereof) and are payable after the acquisition of the section 197 intangible to which they relate, such amounts are treated, except as provided in paragraph (f)(4)(i) of this section (relating to renewal transactions), as payable under a debt instrument given in consideration for the sale or exchange of the section 197 intangible.

(3) ***Treatment of other parties to transaction.*** No person shall be treated as having sold, exchanged, or otherwise disposed of property in a transaction for purposes of any provision of the Internal Revenue Code solely by reason of the application of this paragraph (f)(3) to any other party to the transaction.

(4) ***Basis determinations in certain transactions*** —

(*i*) ***Certain renewal transactions.*** The costs paid or incurred for the renewal of a franchise, trademark, or trade name or any license, permit, or other right granted by a governmental unit or an agency or instrumentality thereof are amortized over the 15-year period that begins with the month of renewal. Any costs paid or incurred for the issuance, or earlier renewal, continue to be taken into account over the remaining portion of the amortization period that began at the time of the issuance, or earlier renewal. Any amount paid or incurred for the protection, expansion, or defense of a trademark or trade name and chargeable to capital account is treated as an amount paid or incurred for a renewal.

(*ii*) ***Transactions subject to section 338 or 1060.*** In the case of a section 197 intangible deemed to have been acquired as the result of a qualified stock purchase within the meaning of section 338(d)(3), the basis shall be determined pursuant to section 338(b)(5) and the regulations thereunder. In the case of a section 197 intangible acquired in an applicable asset acquisition within the meaning of section 1060(c), the basis shall be determined pursuant to section 1060(a) and the regulations thereunder.

(*iii*) ***Certain reinsurance transactions.*** See paragraph (g)(5)(ii) of this section for special rules regarding the adjusted basis of an insurance contract acquired through an assumption reinsurance transaction.

(g) ***Special rules*** —

(1) ***Treatment of certain dispositions*** —

(i) ***Loss disallowance rules*** —

(A) ***In general.*** No loss is recognized on the disposition of an amortizable section 197 intangible if the taxpayer has any retained intangibles. The retained intangibles with respect to the disposition of any amortizable section 197 intangible (the transferred intangible) are all amortizable section 197 intangibles, or rights to use or interests (including beneficial or other indirect interests) in amortizable section 197 intangibles (including the transferred intangible) that were acquired in the same transaction or series

of related transactions as the transferred intangible and are retained after its disposition. Except as otherwise provided in paragraph (g)(1)(iv)(B) of this section, the adjusted basis of each of the retained intangibles is increased by the product of—

(1) The loss that is not recognized solely by reason of this rule; and

(2) A fraction, the numerator of which is the adjusted basis of the retained intangible on the date of the disposition and the denominator of which is the total adjusted bases of all the retained intangibles on that date.

(B) ***Abandonment or worthlessness.*** The abandonment of an amortizable section 197 intangible, or any other event rendering an amortizable section 197 intangible worthless, is treated as a disposition of the intangible for purposes of this paragraph (g)(1), and the abandoned or worthless intangible is disregarded (that is, it is not treated as a retained intangible) for purposes of applying this paragraph (g)(1) to the subsequent disposition of any other amortizable section 197 intangible.

(C) ***Certain nonrecognition transfers.*** The loss disallowance rule in paragraph (g)(1)(i)(A) of this section also applies when a taxpayer transfers an amortizable section 197 intangible from an acquired trade or business in a transaction in which the intangible is transferred basis property and, after the transfer, retains other amortizable section 197 intangibles from the trade or business. Thus, for example, the transfer of an amortizable section 197 intangible to a corporation in exchange for stock in the corporation in a transaction described in section 351, or to a partnership in exchange for an interest in the partnership in a transaction described in section 721, when other amortizable section 197 intangibles acquired in the same transaction are retained, followed by a sale of the stock or partnership interest received, will not avoid the application of the loss disallowance provision to the extent the adjusted basis of the transferred intangible at the time of the sale exceeds its fair market value at that time.

(ii) ***Separately acquired property.*** Paragraph (g)(1)(i) of this section does not apply to an amortizable section 197 intangible that is not acquired in a transaction or series of related transactions in which the taxpayer acquires other amortizable section 197 intangibles (a separately acquired intangible). Consequently, a loss may be recognized upon the disposition of a separately acquired amortizable section 197 intangible. However, the termination or worthlessness of only a portion of an amortizable section 197 intangible is not the disposition of a separately acquired intangible. For example, neither the loss of several customers from an acquired customer list nor the worthlessness of only some information from an acquired data base constitutes the disposition of a separately acquired intangible.

(iii) ***Disposition of a covenant not to compete.*** If a covenant not to compete or any other arrangement having substantially the same effect is entered into in connection with the direct or indirect acquisition of an interest in one or more trades or businesses, the disposition or worthlessness of the covenant or other arrangement will not be considered to occur until the disposition or worthlessness of all interests in those trades or businesses. For example, a covenant not to compete entered into in connection with the purchase of stock continues to be amortized ratably over the 15-year recovery period (even after the covenant expires or becomes worthless) unless all the trades or businesses in which an interest was acquired through the stock purchase (or all the purchaser's interests in those trades or businesses) also are disposed of or become worthless.

(iv) *Taxpayers under common control* —

(A) ***In general.*** Except as provided in paragraph (g)(1)(iv)(B) of this section, all persons that would be treated as a single taxpayer under section 41(f)(1) are treated as a single taxpayer under this paragraph (g)(1). Thus, for example, a loss is not recognized on the disposition of an amortizable section 197 intangible by a member of a controlled group of corporations (as defined in section 41(f)(5)) if, after the disposition, another member retains other amortizable section 197 intangibles acquired in the same transaction as the amortizable section 197 intangible that has been disposed of.

(B) ***Treatment of disallowed loss.*** If retained intangibles are held by a person other than the person incurring the disallowed loss, only the adjusted basis of intangibles retained by the person incurring the disallowed loss is increased, and only the adjusted basis of those intangibles is included in the denominator of the fraction described in paragraph (g)(1)(i)(A) of this section. If none of the retained intangibles are held by the person incurring the disallowed loss, the loss is allowed ratably, as a deduction under section 197, over the remainder of the period during which the intangible giving rise to the loss would have been amortizable, except that any remaining disallowed loss is allowed in full on the first date on which all other retained intangibles have been disposed of or become worthless.

(2) *Treatment of certain nonrecognition and exchange transactions* —

(i) ***Relationship to anti-churning rules.*** This paragraph (g)(2) provides rules relating to the treatment of section 197 intangibles acquired in certain transactions. If these rules apply to a section 197(f)(9) intangible (within the meaning of paragraph (h)(1)(i) of this section), the intangible is, notwithstanding its treatment under this paragraph (g)(2), treated as an amortizable section 197 intangible only to the extent permitted under paragraph (h) of this section.

(ii) *Treatment of nonrecognition and exchange transactions generally* —

(A) ***Transfer disregarded.*** If a section 197 intangible is transferred in a transaction described in paragraph (g)(2)(ii)(C) of this section, the transfer is disregarded in determining—

(*1*) Whether, with respect to so much of the intangible's basis in the hands of the transferee as does not exceed its basis in the hands of the transferor, the intangible is an amortizable section 197 intangible; and

(*2*) The amount of the deduction under section 197 with respect to such basis.

(B) ***Application of general rule.*** If the intangible described in paragraph (g)(2)(ii)(A) of this section was an amortizable section 197 intangible in the hands of the transferor, the transferee will continue to amortize its adjusted basis, to the extent it does not exceed the transferor's adjusted basis, ratably over the remainder of the transferor's 15-year amortization period. If the intangible was not an amortizable section 197 intangible in the hands of the transferor, the transferee's adjusted basis, to the extent it does not exceed the transferor's adjusted basis, cannot be amortized under section 197. In either event, the intangible is treated, with respect to so much of its adjusted basis in the hands of the transferee as exceeds its adjusted basis in the hands of the transferor, in the same manner for purposes of section 197 as an intangible acquired from the transferor in a

transaction that is not described in paragraph (g)(2)(ii)(C) of this section. The rules of this paragraph (g)(2)(ii) also apply to any subsequent transfers of the intangible in a transaction described in paragraph (g)(2)(ii)(C) of this section.

(C) ***Transactions covered.*** The transactions described in this paragraph (g)(2)(ii)(C) are—

(*1*) Any transaction described in section 332, 351, 361, 721, or 731; and

(*2*) Any transaction between corporations that are members of the same consolidated group immediately after the transaction.

(iii) ***Certain exchanged-basis property.*** This paragraph (g)(2)(iii) applies to property that is acquired in a transaction subject to section 1031 or 1033 and is permitted to be acquired without recognition of gain (replacement property). Replacement property is treated as if it were the property by reference to which its basis is determined (the predecessor property) in determining whether, with respect to so much of its basis as does not exceed the basis of the predecessor property, the replacement property is an amortizable section 197 intangible and the amortization period under section 197 with respect to such basis. Thus, if the predecessor property was an amortizable section 197 intangible, the taxpayer will amortize the adjusted basis of the replacement property, to the extent it does not exceed the adjusted basis of the predecessor property, ratably over the remainder of the 15-year amortization period for the predecessor property. If the predecessor property was not an amortizable section 197 intangible, the adjusted basis of the replacement property, to the extent it does not exceed the adjusted basis of the predecessor property, may not be amortized under section 197. In either event, the replacement property is treated, with respect to so much of its adjusted basis as exceeds the adjusted basis of the predecessor property, in the same manner for purposes of section 197 as property acquired from the transferor in a transaction that is not subject to section 1031 or 1033.

(iv) ***Transfers under section 708(b)(1)*** —

(A) ***In general.*** Paragraph (g)(2)(ii) of this section applies to transfers of section 197 intangibles that occur or are deemed to occur by reason of the termination of a partnership under section 708(b)(1).

(B) ***Termination by sale or exchange of interest.*** In applying paragraph (g)(2)(ii) of this section to a partnership that is terminated pursuant to section 708(b)(1)(B) (relating to deemed terminations from the sale or exchange of an interest), the terminated partnership is treated as the transferor and the new partnership is treated as the transferee with respect to any section 197 intangible held by the terminated partnership immediately preceding the termination. (See paragraph (g)(3) of this section for the treatment of increases in the bases of property of the terminated partnership under section 743(b).)

(C) ***Other terminations.*** In applying paragraph (g)(2)(ii) of this section to a partnership that is terminated pursuant to section 708(b)(1)(A) (relating to cessation of activities by a partnership), the terminated partnership is treated as the transferor and the distributee partner is treated as the transferee with respect to any section 197 intangible held by the terminated partnership immediately preceding the termination.

(3) ***Increase in the basis of partnership property under section 732(b), 734(b), 743(b), or 732(d).*** Any increase in the adjusted basis of a section 197 intangible under sections 732(b) or 732(d) (relating to a partner's basis in property distributed by a partnership), section 734(b) (relating to the optional

adjustment to the basis of undistributed partnership property after a distribution of property to a partner), or section 743(b) (relating to the optional adjustment to the basis of partnership property after transfer of a partnership interest) is treated as a separate section 197 intangible. For purposes of determining the amortization period under section 197 with respect to the basis increase, the intangible is treated as having been acquired at the time of the transaction that causes the basis increase, except as provided in § 1.743-1(j)(4)(i)(B)(*2*). The provisions of paragraph (f)(2) of this section apply to the extent that the amount of the basis increase is determined by reference to contingent payments. For purposes of the effective date and anti-churning provisions (paragraphs (l)(1) and (h) of this section) for a basis increase under section 732(d), the intangible is treated as having been acquired by the transferee partner at the time of the transfer of the partnership interest described in section 732(d).

(4) ***Section 704(c) allocations*** —

(i) ***Allocations where the intangible is amortizable by the contributor.*** To the extent that the intangible was an amortizable section 197 intangible in the hands of the contributing partner, a partnership may make allocations of amortization deductions with respect to the intangible to all of its partners under any of the permissible methods described in the regulations under section 704(c). See § 1.704-3.

(ii) ***Allocations where the intangible is not amortizable by the contributor.*** To the extent that the intangible was not an amortizable section 197 intangible in the hands of the contributing partner, the intangible is not amortizable under section 197 by the partnership. However, if a partner contributes a section 197 intangible to a partnership and the partnership adopts the remedial allocation method for making section 704(c) allocations of amortization deductions, the partnership generally may make remedial allocations of amortization deductions with respect to the contributed section 197 intangible in accordance with § 1.704-3(d). See paragraph (h)(12) of this section to determine the application of the anti-churning rules in the context of remedial allocations.

(5) ***Treatment of certain insurance contracts acquired in an assumption reinsurance transaction*** —

(i) ***In general.*** Section 197 generally applies to insurance and annuity contracts acquired from another person through an assumption reinsurance transaction. *See* § 1.809-5(a)(7)(ii) for the definition of assumption reinsurance. The transfer of insurance or annuity contracts and the assumption of related liabilities deemed to occur by reason of a section 338 election for a target insurance company is treated as an assumption reinsurance transaction. The transfer of a reinsurance contract by a reinsurer (transferor) to another reinsurer (acquirer) is treated as an assumption reinsurance transaction if the transferor's obligations are extinguished as a result of the transaction.

(ii) ***Determination of adjusted basis of amortizable section 197 intangible resulting from an assumption reinsurance transaction*** —

(A) ***In general.*** Section 197(f)(5) determines the basis of an amortizable section 197 intangible for insurance or annuity contracts acquired in an assumption reinsurance transaction. The basis of such intangible is the excess, if any, of—

(*1*) The amount paid or incurred by the acquirer (reinsurer) under the assumption reinsurance transaction; over

(2) The amount, if any, required to be capitalized under section 848 in connection with such transaction.

(B) ***Amount paid or incurred by acquirer (reinsurer) under the assumption reinsurance transaction.*** The amount paid or incurred by the acquirer (reinsurer) under the assumption reinsurance transaction is—

(1) In a deemed asset sale resulting from an election under section 338, the amount of the adjusted grossed-up basis (AGUB) allocable thereto (see §§ 1.338-6 and 1.338-11(b)(2));

(2) In an applicable asset acquisition within the meaning of section 1060, the amount of the consideration allocable thereto (see §§ 1.338-6, 1.338-11(b)(2), and 1.1060-1(c)(5)); and

(3) In any other transaction, the excess of the increase in the reinsurer's tax reserves resulting from the transaction (computed in accordance with sections 807, 832(b)(4)(B), and 846) over the value of the net assets received from the ceding company in the transaction.

(C) ***Amount required to be capitalized under section 848 in connection with the transaction*** —

(1) ***In general.*** The amount required to be capitalized under section 848 for specified insurance contracts (as defined in section 848(e)) acquired in an assumption reinsurance transaction is the lesser of—

(*i*) The reinsurer's required capitalization amount for the assumption reinsurance transaction; or

(*ii*) The reinsurer's general deductions (as defined in section 848(c)(2)) allocable to the transaction.

(2) ***Required capitalization amount.*** The reinsurer determines the required capitalization amount for an assumption reinsurance transaction by multiplying the net positive or net negative consideration for the transaction by the applicable percentage set forth in section 848(c)(1) for the category of specified insurance contracts acquired in the transaction. See § 1.848-2(g)(5). If more than one category of specified insurance contracts is acquired in an assumption reinsurance transaction, the required capitalization amount for each category is determined as if the transfer of the contracts in that category were made under a separate assumption reinsurance transaction. See § 1.848-2(f)(7).

(3) ***General deductions allocable to the assumption reinsurance transaction.*** The reinsurer determines the general deductions allocable to the assumption reinsurance transaction in accordance with the procedure set forth in § 1.848-2(g)(6). Accordingly, the reinsurer must allocate its general deductions to the amount required under section 848(c)(1) on specified insurance contracts that the reinsurer has issued directly before determining the general deductions allocable to the assumption reinsurance transaction. For purposes of allocating its general deductions under § 1.848-2(g)(6), the reinsurer includes premiums received on the acquired specified insurance contracts after the assumption reinsurance transaction in determining the amount required under section 848(c)(1) on specified insurance

contracts that the reinsurer has issued directly. If the reinsurer has entered into multiple reinsurance agreements during the taxable year, the reinsurer determines the general deductions allocable to each reinsurance agreement (including the assumption reinsurance transaction) by allocating the general deductions allocable to reinsurance agreements under § 1.848-2(g)(6) to each reinsurance agreement with a positive required capitalization amount.

(*4*) ***Treatment of a capitalization shortfall allocable to the reinsurance agreement*** —

(i) ***In general.*** The reinsurer determines any capitalization shortfall allocable to the assumption reinsurance transaction in the manner provided in §§ 1.848-2(g)(4) and 1.848-2(g)(7). If the reinsurer has a capitalization shortfall allocable to the assumption reinsurance transaction, the ceding company must reduce the net negative consideration (as determined under § 1.848-2(f)(2)) for the transaction by the amount described in § 1.848-2(g)(3) unless the parties make the election provided in § 1.848-2(g)(8) to determine the amounts capitalized under section 848 in connection with the transaction without regard to the general deductions limitation of section 848(c)(2).

(*ii*) ***Treatment of additional capitalized amounts as the result of an election under § 1.848-2(g)(8).*** The additional amounts capitalized by the reinsurer as the result of the election under § 1.848-2(g)(8) reduce the adjusted basis of any amortizable section 197 intangible with respect to specified insurance contracts acquired in the assumption reinsurance transaction. If the additional capitalized amounts exceed the adjusted basis of the amortizable section 197 intangible, the reinsurer must reduce its deductions under section 805 or section 832 by the amount of such excess. The additional capitalized amounts are treated as specified policy acquisition expenses attributable to the premiums and other consideration on the assumption reinsurance transaction and are deducted ratably over a 120-month period as provided under section 848(a)(2).

(*5*) ***Cross references and special rules.*** In general, for rules applicable to the determination of specified policy acquisition expenses, net premiums, and net consideration, see section 848(c) and (d), and § 1.848-2(a) and (f). However, the following special rules apply for purposes of this paragraph (g)(5)(ii)(C)—

(*i*) The amount required to be capitalized under section 848 in connection with the assumption reinsurance transaction cannot be less than zero;

(*ii*) For purposes of determining the company's general deductions under section 848(c)(2) for the taxable year of the assumption reinsurance transaction, the reinsurer takes into account a tentative amortization deduction under section 197(a) as if the entire amount paid or incurred by the reinsurer for the specified insurance contracts were allocated to an amortizable section 197 intangible with respect to insurance contracts acquired in an assumption reinsurance transaction; and

(*iii*) Any reduction of specified policy acquisition expenses pursuant to an election under § 1.848-2(i)(4) (relating to an assumption reinsurance transaction with an insolvent insurance company) is disregarded.

(D) ***Examples.*** The following examples illustrate the principles of this paragraph (g)(5)(ii):

Example 1. (i) *Facts.* On January 15, 2006, P acquires all of the stock of T, an insurance company, in a qualified stock purchase and makes a section 338 election for T. T issues individual life insurance contracts which are specified insurance contracts as defined in section 848(e)(1). P and new T are calendar year taxpayers. Under §§ 1.338-6 and 1.338-11(b)(2), the amount of AGUB allocated to old T's individual life insurance contracts is $300,000. On the acquisition date, the tax reserves for old T's individual life insurance contracts are $2,000,000. After the acquisition date, new T receives $1,000,000 of net premiums with respect to new and renewal individual life insurance contracts and incurs $100,000 of general deductions under section 848(c)(2) through December 31, 2006. New T engages in no other reinsurance transactions other than the assumption reinsurance transaction treated as occurring by reason of the section 338 election.
(ii) *Analysis.* The transfer of insurance contracts and the assumption of related liabilities deemed to occur by reason of the election under section 338 is treated as an assumption reinsurance transaction. New T determines the adjusted basis under section 197(f)(5) for the life insurance contracts acquired in the assumption reinsurance transaction as follows. The amount paid or incurred for the individual life insurance contracts is $300,000. To determine the amount required to be capitalized under section 848 in connection with the assumption reinsurance transaction, new T compares the required capitalization amount for the assumption reinsurance transaction with the general deductions allocable to the transaction. The required capitalization amount for the assumption reinsurance transaction is $130,900, which is determined by multiplying the $1,700,000 net positive consideration for the transaction ($2,000,000 reinsurance premium less $300,000 ceding commission) by the applicable percentage under section 848(c)(1) for the acquired individual life insurance contracts (7.7 percent). To determine its general deductions, new T takes into account a tentative amortization deduction under section 197(a) as if the entire amount paid or incurred for old T's individual life insurance contracts ($300,000) were allocable to an amortizable section 197 intangible with respect to insurance contracts acquired in the assumption reinsurance transaction. Accordingly, for the year of the assumption reinsurance transaction, new T is treated as having general deductions under section 848(c)(2) of $120,000 ($100,000 + $300,000/15). Under § 1.848-2(g)(6), these general deductions are first allocated to the $77,000 capitalization requirement for new T's directly written business ($1,000,000 × .077). Thus, $43,000 ($120,000 − $77,000) of the general deductions are allocable to the assumption reinsurance transaction. Because the general deductions allocable to the assumption reinsurance transaction ($43,000) are less than the required capitalization amount for the transaction ($130,900), new T has a capitalization shortfall of $87,900 ($130,900 −

$43,000) with regard to the transaction. Under § 1.848-2(g), this capitalization shortfall would cause old T to reduce the net negative consideration taken into account with respect to the assumption reinsurance transaction by $1,141,558 ($87,900 ÷ .077) unless the parties make the election under § 1.848-2(g)(8) to capitalize specified policy acquisition expenses in connection with the assumption reinsurance transaction without regard to the general deductions limitation. If the parties make the election, the amount capitalized by new T under section 848 in connection with the assumption reinsurance transaction would be $130,900. The $130,900 capitalized by new T under section 848 would reduce new T's adjusted basis of the amortizable section 197 intangible with respect to the specified insurance contracts acquired in the assumption reinsurance transaction. Accordingly, new T would have an adjusted basis under section 197(f)(5) with respect to the individual life insurance contracts acquired from old T of $169,100 ($300,000 − $130,900). New T's actual amortization deduction under section 197(a) with respect to the amortizable section 197 intangible for insurance contracts acquired in the assumption reinsurance transaction would be $11,273 ($169,100 ÷ 15).

Example 2. (i) *Facts.* The facts are the same as *Example 1,* except that T only issues accident and health insurance contracts that are qualified long-term care contracts under section 7702B. Under section 7702B(a)(5), T's qualified long-term care insurance contracts are treated as guaranteed renewable accident and health insurance contracts, and, therefore, are considered specified insurance contracts under section 848(e)(1). Under §§ 1.338-6 and 1.338-11(b)(2), the amount of AGUB allocable to T's qualified long-term care insurance contracts is $250,000. The amount of T's tax reserves for the qualified long-term care contracts on the acquisition date is $7,750,000. Following the acquisition, new T receives net premiums of $500,000 with respect to qualified long-term care contracts and incurs general deductions of $75,000 through December 31, 2006.
(ii) *Analysis.* The transfer of insurance contracts and the assumption of related liabilities deemed to occur by reason of the election under section 338 is treated as an assumption reinsurance transaction. New T determines the adjusted basis under section 197(f)(5) for the insurance contracts acquired in the assumption reinsurance transaction as follows. The amount paid or incurred for the insurance contracts is $250,000. To determine the amount required to be capitalized under section 848 in connection with the assumption reinsurance transaction, new T compares the required capitalization amount for the assumption reinsurance transaction with the general deductions allocable to the transaction. The required capitalization amount for the assumption reinsurance transaction is $577,500, which is determined by multiplying the $7,500,000 net positive consideration for the

transaction ($7,750,000 reinsurance premium less $250,000 ceding commission) by the applicable percentage under section 848(c)(1) for the acquired insurance contracts (7.7 percent). To determine its general deductions, new T takes into account a tentative amortization deduction under section 197(a) as if the entire amount paid or incurred for old T's insurance contracts ($250,000) were allocable to an amortizable section 197 intangible with respect to insurance contracts acquired in the assumption reinsurance transaction. Accordingly, for the year of the assumption reinsurance transaction, new T is treated as having general deductions under section 848(c)(2) of $91,667 ($75,000 + $250,000 / 15). Under § 1.848-2(g)(6), these general deductions are first allocated to the $38,500 capitalization requirement for new T's directly written business ($500,000 × .077). Thus, $53,167 ($91,667 − $38,500) of general deductions are allocable to the assumption reinsurance transaction. Because the general deductions allocable to the assumption reinsurance transaction ($53,167) are less than the required capitalization amount for the transaction ($577,500), new T has a capitalization shortfall of $524,333 ($577,500 − $53,167) with regard to the transaction. Under § 1.848-2(g), this capitalization shortfall would cause old T to reduce the net negative consideration taken into account with respect to the assumption reinsurance transaction by $6,809,519 ($524,333 ÷ .077) unless the parties make the election under § 1.848-2(g)(8) to capitalize specified policy acquisition expenses in connection with the assumption reinsurance transaction without regard to the general deductions limitation. If the parties make the election, the amount capitalized by new T under section 848 in connection with the assumption reinsurance transaction would increase from $53,167 to $577,500. Pursuant to paragraph (g)(5)(ii)(C)(*4*) of this section, the additional $524,333 ($577,500 − $53,167) capitalized by new T under section 848 would reduce new T's adjusted basis of the amortizable section 197 intangible with respect to the insurance contracts acquired in the assumption reinsurance transaction. Accordingly, new T's adjusted basis of the section 197 intangible with regard to the insurance contracts is reduced from $196,833 ($250,000 − $53,167) to $0. Because the additional $524,333 capitalized pursuant to the § 1.848-2(g)(8) election exceeds the $196,833 adjusted basis of the section 197 intangible before the reduction, new T is required to reduce its deductions under section 805 by the $327,500 ($524,333 − $196,833).

(E) ***Effective/applicability date.*** This section applies to acquisitions and dispositions of insurance contracts on or after April 10, 2006.

(iii) ***Application of loss disallowance rule upon a disposition of an insurance contract acquired in an assumption reinsurance transaction.*** The following rules apply for purposes of applying the loss disallowance rules of section 197(f)(1)(A) to the disposition of a section 197(f)(5) intangible. For this purpose, a section 197(f)(5) intangible is an amortizable section 197 intangible the basis of which is determined under section 197(f)(5).

(A) *Disposition* —

(1) ***In general.*** A disposition of a section 197 intangible is any event as a result of which, absent section 197, recovery of basis is otherwise allowed for Federal income tax purposes.

(2) ***Treatment of indemnity reinsurance transactions.*** The transfer through indemnity reinsurance of the right to the future income from the insurance contracts to which a section 197(f)(5) intangible relates does not preclude the recovery of basis by the ceding company, provided that sufficient economic rights relating to the reinsured contracts are transferred to the reinsurer. However, the ceding company is not permitted to recover basis in an indemnity reinsurance transaction if it has a right to experience refunds reflecting a significant portion of the future profits on the reinsured contracts, or if it retains an option to reacquire a significant portion of the future profits on the reinsured contracts through the exercise of a recapture provision. In addition, the ceding company is not permitted to recover basis in an indemnity reinsurance transaction if the reinsurer assumes only a limited portion of the ceding company's risk relating to the reinsured contracts (excess loss reinsurance).

(B) ***Loss.*** The loss, if any, recognized by a taxpayer on the disposition of a section 197(f)(5) intangible equals the amount by which the taxpayer's adjusted basis in the section 197(f)(5) intangible immediately before the disposition exceeds the amount, if any, that the taxpayer receives from another person for the future income right from the insurance contracts to which the section 197(f)(5) intangible relates. In determining the amount of the taxpayer's loss on the disposition of a section 197(f)(5) intangible through a reinsurance transaction, any effect of the transaction on the amounts capitalized by the taxpayer as specified policy acquisition expenses under section 848 is disregarded.

(C) ***Examples.*** The following examples illustrate the principles of this paragraph (g)(5)(iii):

> *Example 1.* (i) *Facts.* In a prior taxable year, as a result of a section 338 election with respect to T, new T was treated as purchasing all of old T's insurance contracts that were in force on the acquisition date in an assumption reinsurance transaction. Under §§ 1.338-6 and 1.338-11(b)(2), the amount of AGUB allocable to the future income right from the purchased insurance contracts was $15, net of the amounts required to be capitalized under section 848 as a result of the assumption reinsurance transaction. At the beginning of the current taxable year, as a result of amortization deductions allowed by section 197(a), new T's adjusted basis in the section 197(f)(5) intangible resulting from the assumption reinsurance transaction is $12. During the current taxable year, new T enters into an indemnity reinsurance agreement with R, another insurance company, in which R assumes 100 percent of the risk relating to the insurance contracts to which the section 197(f)(5) intangible relates. In the indemnity reinsurance transaction, R agrees to pay new T a ceding commission of $10 in exchange for the future profits on the underlying reinsured policies. Under the indemnity reinsurance agreement, new T continues to

administer the reinsured policies, but transfers investment assets equal to the required reserves for the reinsured policies together with all future premiums to R. The indemnity reinsurance agreement does not contain an experience refund provision or a provision allowing new T to terminate the reinsurance agreement at its sole option. New T retains the insurance licenses and other amortizable section 197 intangibles acquired in the deemed asset sale and continues to underwrite and issue new insurance contracts.

(ii) *Analysis.* The indemnity reinsurance agreement constitutes a disposition of the section 197(f)(5) intangible because it involves the transfer of sufficient economic rights attributable to the insurance contracts to which the section 197(f)(5) intangible relates such that recovery of basis is allowed. For purposes of applying the loss disallowance rules of section 197(f)(1) and paragraph (g) of this section, new T's loss is $2 (new T's adjusted basis in the section 197(f)(5) intangible immediately before the disposition ($12) less the ceding commission ($10)). Therefore, new T applies $10 of the adjusted basis in the section 197(f)(5) intangible against the amount received from R for the future income right on the reinsured policies and increases its basis in the amortizable section 197 intangibles that it acquired and retained from the deemed asset sale by $2, the amount of the disallowed loss. The amount of new T's disallowed loss under section 197(f)(1)(A) is determined without regard to the effect of the indemnity reinsurance transaction on the amounts capitalized by new T as specified policy acquisition expenses under section 848.

Example 2. (i) *Facts.* Assume the same facts as in *Example 1,* except that under the indemnity reinsurance agreement R agrees to pay new T a ceding commission of $5 with respect to the underlying reinsured contracts. In addition, under the indemnity reinsurance agreement, new T is entitled to an experience refund equal to any future profits on the reinsured contracts in excess of the ceding commission plus an annual risk charge. New T also has a right to recapture the business at any time after R has recovered an amount equal to the ceding commission.

(ii) *Analysis.* The indemnity reinsurance agreement between new T and R does not represent a disposition because it does not involve the transfer of sufficient economic rights with respect to the future income on the reinsured contracts. Therefore, new T may not recover its basis in the section 197(f)(5) intangible to which the contracts relate and must continue to amortize ratably the adjusted basis of the section 197(f)(5) intangible over the remainder of the 15-year recovery period and cannot apply any portion of this adjusted basis to offset the ceding commission received from R in the indemnity reinsurance transaction.

(iv) ***Effective dates*** —

(A) ***In general*** —This paragraph (g)(5) applies to acquisitions and dispositions on or after April 10, 2006. For rules applicable to acquisitions and dispositions before that date, see § 1.197-2 in effect before that date (*see* 26 CFR part 1, revised April 1, 2001).

(B) ***Application to pre-effective date acquisitions and dispositions.*** A taxpayer may choose, on a transaction-by-transaction basis, to apply the provisions of this paragraph (g)(5) to property acquired and disposed of before April 10, 2006.

(C) ***Change in method of accounting*** —

(*1*) ***In general*** —A change in a taxpayer's treatment of all property acquired and disposed under paragraph (g)(5) is a change in method of accounting to which the provisions of sections 446 and 481 and the regulations thereunder apply.

(*2*) ***Acquisitions and dispositions on or after effective date.*** A Taxpayer is granted the consent of the Commissioner under section 446(e) to change its method of accounting to comply with this paragraph (g)(5) for acquisitions and dispositions on or after April 10, 2006. The change must be made on a cut-off basis with no section 481(a) adjustment. Notwithstanding § 1.446-1(e)(3), a taxpayer should not file a Form 3115, "Application for Change in Accounting Method," to obtain the consent of the Commissioner to change its method of accounting under this paragraph (g)(5)(iv)(C)(*2*). Instead, a taxpayer must make the change by using the new method on its federal income tax returns.

(*3*) ***Acquisitions and dispositions before the effective date.*** For the first taxable year ending after April 10, 2006, a taxpayer is granted consent of the Commissioner to change its method of accounting for all property acquired in transactions described in paragraph (g)(5)(iv)(B) to comply with this paragraph (g)(5) unless the proper treatment of any such property is an issue under consideration in an examination, before an Appeals office, or before a Federal Court. (For the definition of when an issue is under consideration, see, Rev. Proc. 97-27 (1997-1 C.B. 680); and, § 601.601(d)(2) of this chapter). A taxpayer changing its method of accounting in accordance with this paragraph (g)(5)(iv)(C)(*3*) must follow the applicable administrative procedures for obtaining the Commissioner's automatic consent to a change in method of accounting (for further guidance, see, for example, Rev. Proc. 2002-9 (2002-1 C.B. 327) as modified and clarified by Announcement 2002-17 (2002-1 C.B. 561), modified and amplified by Rev. Proc. 2002-19 (2002-1 C.B. 696), and amplified, clarified and modified by Rev. Proc. 2002-54 (2002-2 C.B. 432); and, § 601.601(d)(2) of this chapter), except, for purposes of this paragraph (g)(5)(iv)(C)(*3*), any limitations in such administrative procedures for obtaining the automatic consent of the Commissioner shall not apply. However, if the taxpayer is under examination, before an appeals office, or before a Federal court, the taxpayer must provide a copy of the application to the examining agent(s), appeals officer, or counsel for the government, as appropriate, at the same time that it files the copy of the application with the National Office. The application must contain the name(s) and telephone number(s) of the examining agent(s), appeals officer, or counsel for the government, as appropriate. For purposes of From 3115, "Application for Change in Accounting Method," the designated number for the automatic accounting method

change authorized by this paragraph (g)(5)(iv)(C)(*3*) is "98." A change in method of accounting in accordance with this paragraph (g)(5)(iv)(C)(*3*) requires an adjustment under section 481(a).

(6) ***Amounts paid or incurred for a franchise, trademark, or trade name.*** If an amount to which section 1253(d) (relating to the transfer, sale, or other disposition of a franchise, trademark, or trade name) applies is described in section 1253(d)(1)(B) (relating to contingent serial payments deductible under section 162), the amount is not included in the adjusted basis of the intangible for purposes of section 197. Any other amount, whether fixed or contingent, to which section 1253(d) applies is chargeable to capital account under section 1253(d)(2) and is amortizable only under section 197.

(7) ***Amounts properly taken into account in determining the cost of property that is not a section 197 intangible.*** Section 197 does not apply to an amount that is properly taken into account in determining the cost of property that is not a section 197 intangible. The entire cost of acquiring the other property is included in its basis and recovered under other applicable Internal Revenue Code provisions. Thus, for example, section 197 does not apply to the cost of an interest in computer software to the extent such cost is included, without being separately stated, in the cost of the hardware or other tangible property and is consistently treated as part of the cost of the hardware or other tangible property.

(8) ***Treatment of amortizable section 197 intangibles as depreciable property.*** An amortizable section 197 intangible is treated as property of a character subject to the allowance for depreciation under section 167. Thus, for example, an amortizable section 197 intangible is not a capital asset for purposes of section 1221, but if used in a trade or business and held for more than one year, gain or loss on its disposition generally qualifies as section 1231 gain or loss. Also, an amortizable section 197 intangible is section 1245 property and section 1239 applies to any gain recognized upon its sale or exchange between related persons (as defined in section 1239(b)).

(h) ***Anti-churning rules*** —

(1) ***Scope and purpose*** —

(i) ***Scope.*** This paragraph (h) applies to section 197(f)(9) intangibles. For this purpose, section 197(f)(9) intangibles are goodwill and going concern value that was held or used at any time during the transition period and any other section 197 intangible that was held or used at any time during the transition period and was not depreciable or amortizable under prior law.

(ii) ***Purpose.*** To qualify as an amortizable section 197 intangible, a section 197 intangible must be acquired after the applicable date (July 25, 1991, if the acquiring taxpayer has made a valid retroactive election pursuant to § 1.197-1T; August 10, 1993, in all other cases). The purpose of the anti-churning rules of section 197(f)(9) and this paragraph (h) is to prevent the amortization of section 197(f)(9) intangibles unless they are transferred after the applicable effective date in a transaction giving rise to a significant change in ownership or use. (Special rules apply for purposes of determining whether transactions involving partnerships give rise to a significant change in ownership or use. See paragraph (h)(12) of this section.) The anti-churning rules are to be applied in a manner that carries out their purpose.

(2) ***Treatment of section 197(f)(9) intangibles.*** Except as otherwise provided in this paragraph (h), a section 197(f)(9) intangible acquired by a taxpayer after the applicable effective date does not qualify for amortization under section 197 if—

(i) The taxpayer or a related person held or used the intangible or an interest therein at any time during the transition period;

(ii) The taxpayer acquired the intangible from a person that held the intangible at any time during the transition period and, as part of the transaction, the user of the intangible does not change; or

(iii) The taxpayer grants the right to use the intangible to a person that held or used the intangible at any time during the transition period (or to a person related to that person), but only if the transaction in which the taxpayer grants the right and the transaction in which the taxpayer acquired the intangible are part of a series of related transactions.

(3) ***Amounts deductible under section 1253(d) or § 1.162-11.*** For purposes of this paragraph (h), deductions allowable under section 1253(d)(2) or pursuant to an election under section 1253(d)(3) (in either case as in effect prior to the enactment of section 197) and deductions allowable under § 1.162-11 are treated as deductions allowable for amortization under prior law.

(4) ***Transition period.*** For purposes of this paragraph (h), the transition period is July 25, 1991, if the acquiring taxpayer has made a valid retroactive election pursuant to § 1.197-1T and the period beginning on July 25, 1991, and ending on August 10, 1993, in all other cases.

(5) ***Exceptions.*** The anti-churning rules of this paragraph (h) do not apply to—

(i) The acquisition of a section 197(f)(9) intangible if the acquiring taxpayer's basis in the intangible is determined under section 1014(a) or 1022; or

(ii) The acquisition of a section 197(f)(9) intangible that was an amortizable section 197 intangible in the hands of the seller (or transferor), but only if the acquisition transaction and the transaction in which the seller (or transferor) acquired the intangible or interest therein are not part of a series of related transactions.

(6) ***Related person*** —

(i) ***In general.*** Except as otherwise provided in paragraph (h)(6)(ii) of this section, a person is related to another person for purposes of this paragraph (h) if—

(A) The person bears a relationship to that person that would be specified in section 267(b) (determined without regard to section 267(e)) and, by substitution, section 267(f)(1), if those sections were amended by substituting 20 percent for 50 percent; or

(B) The person bears a relationship to that person that would be specified in section 707(b)(1) if that section were amended by substituting 20 percent for 50 percent; or

(C) The persons are engaged in trades or businesses under common control (within the meaning of section 41(f)(1) (A) and (B)).

(ii) ***Time for testing relationships.*** Except as provided in paragraph (h)(6)(iii) of this section, a person is treated as related to another person for purposes of this paragraph (h) if the relationship exists—

(A) In the case of a single transaction, immediately before or immediately after the transaction in which the intangible is acquired; and

(B) In the case of a series of related transactions (or a series of transactions that together comprise a qualified stock purchase within the meaning of section 338(d)(3)), immediately before the earliest such transaction or immediately after the last such transaction.

(iii) ***Certain relationships disregarded.*** In applying the rules in paragraph (h)(7) of this section, if a person acquires an intangible in a series of related transactions in which the person acquires stock (meeting the requirements of section 1504(a)(2)) of a corporation in a fully taxable transaction followed by a liquidation of the acquired corporation under section 331, any relationship created as part of such series of transactions is disregarded in determining whether any person is related to such acquired corporation immediately after the last transaction.

(iv) ***De minimis rule*** —

(A) ***In general.*** Two corporations are not treated as related persons for purposes of this paragraph (h) if—

(*1*) The corporations would (but for the application of this paragraph (h)(6)(iv)) be treated as related persons solely by reason of substituting "more than 20 percent" for "more than 50 percent" in section 267(f)(1)(A); and

(*2*) The beneficial ownership interest of each corporation in the stock of the other corporation represents less than 10 percent of the total combined voting power of all classes of stock entitled to vote and less than 10 percent of the total value of the shares of all classes of stock outstanding.

(B) ***Determination of beneficial ownership interest.*** For purposes of this paragraph (h)(6)(iv), the beneficial ownership interest of one corporation in the stock of another corporation is determined under the principles of section 318(a), except that—

(*1*) In applying section 318(a)(2)(C), the 50-percent limitation contained therein is not applied; and

(*2*) Section 318(a)(3)(C) is applied by substituting "20 percent" for "50 percent".

(7) ***Special rules for entities that owned or used property at any time during the transition period and that are no longer in existence.*** A corporation, partnership, or trust that owned or used a section 197 intangible at any time during the transition period and that is no longer in existence is deemed, for purposes of determining whether a taxpayer acquiring the intangible is related to such entity, to be in existence at the time of the acquisition.

(8) ***Special rules for section 338 deemed acquisitions.*** In the case of a qualified stock purchase that is treated as a deemed sale and purchase of assets pursuant to section 338, the corporation treated as purchasing assets as a result of an election thereunder (new target) is not considered the person that held or used the assets during any period in which the assets were held or used by the corporation treated as selling the assets (old target). Thus, for example, if a corporation (the purchasing corporation) makes a qualified stock purchase of the stock of another corporation after the transition period, new target will not be treated as the owner during the transition period of assets owned by old target during that period even if old target and new target are treated as the same corporation for certain other purposes of the Internal Revenue Code or old target and new target are the same corporation under the laws of the State or other jurisdiction of its organization.

However, the anti-churning rules of this paragraph (h) may nevertheless apply to a deemed asset purchase resulting from a section 338 election if new target is related (within the meaning of paragraph (h)(6) of this section) to old target.

(9) *Gain-recognition exception* —

(i) ***Applicability.*** A section 197(f)(9) intangible qualifies for the gain-recognition exception if—

(A) The taxpayer acquires the intangible from a person that would not be related to the taxpayer but for the substitution of 20 percent for 50 percent under paragraph (h)(6)(i)(A) of this section; and

(B) That person (whether or not otherwise subject to Federal income tax) elects to recognize gain on the disposition of the intangible and agrees, notwithstanding any other provision of law or treaty, to pay for the taxable year in which the disposition occurs an amount of tax on the gain that, when added to any other Federal income tax on such gain, equals the gain on the disposition multiplied by the highest marginal rate of tax for that taxable year.

(ii) ***Effect of exception.*** The anti-churning rules of this paragraph (h) apply to a section 197(f)(9) intangible that qualifies for the gain-recognition exception only to the extent the acquiring taxpayer's basis in the intangible exceeds the gain recognized by the transferor.

(iii) ***Time and manner of election.*** The election described in this paragraph (h)(9) must be made by the due date (including extensions of time) of the electing taxpayer's Federal income tax return for the taxable year in which the disposition occurs. The election is made by attaching an election statement satisfying the requirements of paragraph (h)(9)(viii) of this section to the electing taxpayer's original or amended income tax return for that taxable year (or by filing the statement as a return for the taxable year under paragraph (h)(9)(xi) of this section). In addition, the taxpayer must satisfy the notification requirements of paragraph (h)(9)(vi) of this section. The election is binding on the taxpayer and all parties whose Federal tax liability is affected by the election.

(iv) ***Special rules for certain entities.*** In the case of a partnership, S corporation, estate or trust, the election under this paragraph (h)(9) is made by the entity rather than by its owners or beneficiaries. If a partnership or S corporation makes an election under this paragraph (h)(9) with respect to the disposition of a section 197(f)(9) intangible, each of its partners or shareholders is required to pay a tax determined in the manner described in paragraph (h)(9)(i)(B) of this section on the amount of gain that is properly allocable to such partner or shareholder with respect to the disposition.

(v) ***Effect of nonconforming elections.*** An attempted election that does not substantially comply with each of the requirements of this paragraph (h)(9) is disregarded in determining whether a section 197(f)(9) intangible qualifies for the gain-recognition exception.

(vi) ***Notification requirements.*** A taxpayer making an election under this paragraph (h)(9) with respect to the disposition of a section 197(f)(9) intangible must provide written notification of the election on or before the due date of the return on which the election is made to the person acquiring the section 197 intangible. In addition, a partnership or S corporation making an election under this paragraph (h)(9) must attach to the Schedule K-1 furnished to each partner or shareholder a written statement containing all information necessary to determine the recipient's additional tax liability under this paragraph (h)(9).

(vii) ***Revocation.*** An election under this paragraph (h)(9) may be revoked only with the consent of the Commissioner.

(viii) ***Election Statement.*** An election statement satisfies the requirements of this paragraph (h)(9)(viii) if it is in writing and contains the information listed below. The required information should be arranged and identified in accordance with the following order and numbering system:

(A) The name and address of the electing taxpayer.

(B) Except in the case of a taxpayer that is not otherwise subject to Federal income tax, the taxpayer identification number (TIN) of the electing taxpayer.

(C) A statement that the taxpayer is making the election under section 197(f)(9)(B).

(D) Identification of the transaction and each person that is a party to the transaction or whose tax return is affected by the election (including, except in the case of persons not otherwise subject to Federal income tax, the TIN of each such person).

(E) The calculation of the gain realized, the applicable rate of tax, and the amount of the taxpayer's additional tax liability under this paragraph (h)(9).

(F) The signature of the taxpayer or an individual authorized to sign the taxpayer's Federal income tax return.

(ix) ***Determination of highest marginal rate of tax and amount of other Federal income tax on gain*** —

(A) ***Marginal rate.*** The following rules apply for purposes of determining the highest marginal rate of tax applicable to an electing taxpayer:

(*1*) ***Noncorporate taxpayers.*** In the case of an individual, estate, or trust, the highest marginal rate of tax is the highest marginal rate of tax in effect under section 1, determined without regard to section 1(h).

(*2*) ***Corporations and tax-exempt entities.*** In the case of a corporation or an entity that is exempt from tax under section 501(a), the highest marginal rate of tax is the highest marginal rate of tax in effect under section 11, determined without regard to any rate that is added to the otherwise applicable rate in order to offset the effect of the graduated rate schedule.

(B) ***Other Federal income tax on gain.*** The amount of Federal income tax (other than the tax determined under this paragraph (h)(9)) imposed on any gain is the lesser of—

(*1*) The amount by which the taxpayer's Federal income tax liability (determined without regard to this paragraph (h)(9)) would be reduced if the amount of such gain were not taken into account; or

(*2*) The amount of the gain multiplied by the highest marginal rate of tax for the taxable year.

(x) ***Coordination with other provisions*** —

(A) ***In general.*** The amount of gain subject to the tax determined under this paragraph (h)(9) is not reduced by any net operating loss deduction under section 172(a), any capital loss under section 1212, or any other similar loss or deduction. In addition, the amount of tax

determined under this paragraph (h)(9) is not reduced by any credit of the taxpayer. In computing the amount of any net operating loss, capital loss, or other similar loss or deduction, or any credit that may be carried to any taxable year, any gain subject to the tax determined under this paragraph (h)(9) and any tax paid under this paragraph (h)(9) is not taken into account.

(B) ***Section 1374.*** No provision of paragraph (h)(9)(iv) of this section precludes the application of section 1374 (relating to a tax on certain built-in gains of S corporations) to any gain with respect to which an election under this paragraph (h)(9) is made. In addition, neither paragraph (h)(9)(iv) nor paragraph (h)(9)(x)(A) of this section precludes a taxpayer from applying the provisions of section 1366(f)(2) (relating to treatment of the tax imposed by section 1374 as a loss sustained by the S corporation) in determining the amount of tax payable under paragraph (h)(9) of this section.

(C) ***Procedural and administrative provisions.*** For purposes of subtitle F, the amount determined under this paragraph (h)(9) is treated as a tax imposed by section 1 or 11, as appropriate.

(D) ***Installment method.*** The gain subject to the tax determined under paragraph (h)(9)(i) of this section may not be reported under the method described in section 453(a). Any such gain that would, but for the application of this paragraph (h)(9)(x)(D), be taken into account under section 453(a) shall be taken into account in the same manner as if an election under section 453(d) (relating to the election not to apply section 453(a)) had been made.

(xi) ***Special rules for persons not otherwise subject to Federal income tax.*** If the person making the election under this paragraph (h)(9) with respect to a disposition is not otherwise subject to Federal income tax, the election statement satisfying the requirements of paragraph (h)(9)(viii) of this section must be filed with the Philadelphia Service Center. For purposes of this paragraph (h)(9) and subtitle F, the statement is treated as an income tax return for the calendar year in which the disposition occurs and as a return due on or before March 15 of the following year.

(10) ***Transactions subject to both anti-churning and nonrecognition rules.*** If a person acquires a section 197(f)(9) intangible in a transaction described in paragraph (g)(2) of this section from a person in whose hands the intangible was an amortizable section 197 intangible, and immediately after the transaction (or series of transactions described in paragraph (h)(6)(ii)(B) of this section) in which such intangible is acquired, the person acquiring the section 197(f)(9) intangible is related to any person described in paragraph (h)(2) of this section, the intangible is, notwithstanding its treatment under paragraph (g)(2) of this section, treated as an amortizable section 197 intangible only to the extent permitted under this paragraph (h). (See, for example, paragraph (h)(5)(ii) of this section.)

(11) ***Avoidance purpose.*** A section 197(f)(9) intangible acquired by a taxpayer after the applicable effective date does not qualify for amortization under section 197 if one of the principal purposes of the transaction in which it is acquired is to avoid the operation of the anti-churning rules of section 197(f)(9) and this paragraph (h). A transaction will be presumed to have a principal purpose of avoidance if it does not effect a significant change in the ownership or use of the intangible. Thus, for example, if section 197(f)(9) intangibles are acquired in a transaction (or series of related transactions) in which an option to acquire stock is issued to a party to the transaction, but the option is not treated as having been exercised for purposes of paragraph (h)(6) of this section, this paragraph (h)(11) may apply to the transaction.

(12) *Additional partnership anti-churning rules* —

(i) ***In general.*** In determining whether the anti-churning rules of this paragraph (h) apply to any increase in the basis of a section 197(f)(9) intangible under section 732(b), 732(d), 734(b), or 743(b), the determinations are made at the partner level and each partner is treated as having owned and used the partner's proportionate share of partnership property. In determining whether the anti-churning rules of this paragraph (h) apply to any transaction under another section of the Internal Revenue Code, the determinations are made at the partnership level, unless under § 1.701-2(e) the Commissioner determines that the partner level is more appropriate.

(ii) *Section 732(b) adjustments* —

(A) ***In general.*** The anti-churning rules of this paragraph (h) apply to any increase in the adjusted basis of a section 197(f)(9) intangible under section 732(b) to the extent that the basis increase exceeds the total unrealized appreciation from the intangible allocable to—

(*1*) Partners other than the distributee partner or persons related to the distributee partner;

(*2*) The distributee partner and persons related to the distributee partner if the distributed intangible is a section 197(f)(9) intangible acquired by the partnership on or before August 10, 1993, to the extent that—

(*i*) The distributee partner and related persons acquired an interest or interests in the partnership after August 10, 1993;

(*ii*) Such interest or interests were held after August 10, 1993, by a person or persons other than either the distributee partner or persons who were related to the distributee partner; and

(*iii*) The acquisition of such interest or interests by such person or persons was not part of a transaction or series of related transactions in which the distributee partner (or persons related to the distributee partner) subsequently acquired such interest or interests; and

(*3*) The distributee partner and persons related to the distributee partner if the distributed intangible is a section 197(f)(9) intangible acquired by the partnership after August 10, 1993, that is not amortizable with respect to the partnership, to the extent that—

(*i*) The distributee partner and persons related to the distributee partner acquired an interest or interests in the partnership after the partnership acquired the distributed intangible;

(*ii*) Such interest or interests were held after the partnership acquired the distributed intangible, by a person or persons other than either the distributee partner or persons who were related to the distributee partner; and

(*iii*) The acquisition of such interest or interests by such person or persons was not part of a transaction or series of related transactions in which the distributee partner (or persons related to the distributee partner) subsequently acquired such interest or interests.

(B) ***Effect of retroactive elections.*** For purposes of paragraph (h)(12)(ii)(A) of this section, references to August 10, 1993, are treated as references to July 25, 1991, if the relevant party made a valid retroactive election under § 1.197-1T.

(C) ***Intangible still subject to anti-churning rules.*** Notwithstanding paragraph (h)(12)(ii) of this section, in applying the provisions of this paragraph (h) with respect to subsequent transfers, the distributed intangible remains subject to the provisions of this paragraph (h) in proportion to a fraction (determined at the time of the distribution), as follows—

(*1*) The numerator of which is equal to the sum of—

(*i*) The amount of the distributed intangible's basis that is nonamortizable under paragraph (g)(2)(ii)(B) of this section; and

(*ii*) The total unrealized appreciation inherent in the intangible reduced by the amount of the increase in the adjusted basis of the distributed intangible under section 732(b) to which the anti-churning rules do not apply; and

(*2*) The denominator of which is the fair market value of such intangible.

(D) ***Partner's allocable share of unrealized appreciation from the intangible.*** The amount of unrealized appreciation from an intangible that is allocable to a partner is the amount of taxable gain that would have been allocated to that partner if the partnership had sold the intangible immediately before the distribution for its fair market value in a fully taxable transaction.

(E) ***Acquisition of partnership interest by contribution.*** Solely for purposes of paragraphs (h)(12)(ii)(A)(*2*) and (*3*) of this section, a partner who acquires an interest in a partnership in exchange for a contribution of property to the partnership is deemed to acquire a pro rata portion of that interest in the partnership from each person who is a partner in the partnership at the time of the contribution based on each partner's respective proportionate interest in the partnership.

(iii) ***Section 732(d) adjustments.*** The anti-churning rules of this paragraph (h) do not apply to an increase in the basis of a section 197(f)(9) intangible under section 732(d) if, had an election been in effect under section 754 at the time of the transfer of the partnership interest, the distributee partner would have been able to amortize the basis adjustment made pursuant to section 743(b).

(iv) ***Section 734(b) adjustments*** —

(A) ***In general.*** The anti-churning rules of this paragraph (h) do not apply to a continuing partner's share of an increase in the basis of a section 197(f)(9) intangible held by a partnership under section 734(b) to the extent that the continuing partner is an eligible partner.

(B) ***Eligible partner.*** For purposes of this paragraph (h)(12)(iv), eligible partner means—

(*1*) A continuing partner that is not the distributee partner or a person related to the distributee partner;

(*2*) A continuing partner that is the distributee partner or a person related to the distributee partner, with respect to any section 197(f)(9) intangible acquired by the partnership on or before August 10, 1993, to the extent that—

(*i*) The distributee partner's interest in the partnership was acquired after August 10, 1993;

(*ii*) Such interest was held after August 10, 1993 by a person or persons who were not related to the distributee partner; and

(*iii*) The acquisition of such interest by such person or persons was not part of a transaction or series of related transactions in which the distributee partner or persons related to the distributee partner subsequently acquired such interest; or

(*3*) A continuing partner that is the distributee partner or a person related to the distributee partner, with respect to any section 197(f)(9) intangible acquired by the partnership after August 10, 1993, that is not amortizable with respect to the partnership, to the extent that—

(*i*) The distributee partner's interest in the partnership was acquired after the partnership acquired the relevant intangible;

(*ii*) Such interest was held after the partnership acquired the relevant intangible by a person or persons who were not related to the distributee partner; and

(*iii*) The acquisition of such interest by such person or persons was not part of a transaction or series of related transactions in which the distributee partner or persons related to the distributee partner subsequently acquired such interest.

(C) ***Effect of retroactive elections.*** For purposes of paragraph (h)(12)(iv)(A) of this section, references to August 10, 1993, are treated as references to July 25, 1991, if the distributee partner made a valid retroactive election under § 1.197-1T.

(D) ***Partner's share of basis increase*** —

(*1*) In general. Except as provided in paragraph (h)(12)(iv)(D)(*2*) of this section, for purposes of this paragraph (h)(12)(iv), a continuing partner's share of a basis increase under section 734(b) is equal to—

(*i*) The total basis increase allocable to the intangible; multiplied by

(*ii*) A fraction the numerator of which is the amount of the continuing partner's post-distribution capital account (determined immediately after the distribution in accordance with the capital accounting rules of § 1.704-1(b)(2)(iv)), and the denominator of which is the total amount of the post-distribution capital accounts (determined immediately after the distribution in accordance with the capital accounting rules of § 1.704-1(b)(2)(iv)) of all continuing partners.

(*2*) ***Exception where partnership does not maintain capital accounts.*** If a partnership does not maintain capital accounts in accordance with § 1.704-1(b)(2)(iv), then for purposes of this paragraph (h)(12)(iv), a continuing partner's share of a basis increase is equal to—

(*i*) The total basis increase allocable to the intangible; multiplied by

(*ii*) The partner's overall interest in the partnership as determined under § 1.704-1(b)(3) immediately after the distribution.

(E) ***Interests acquired by contribution*** —

(*1*) ***Application of paragraphs (h)(12)(iv)(B) (2) and (3) of this section.*** Solely for purposes of paragraphs (h)(12)(iv)(B)(*2*) and (*3*) of this section, a partner who acquires an interest in a partnership in exchange for a contribution of property to the partnership is deemed to acquire a pro rata portion of that interest in the partnership from each person who is a partner in the partnership at the time of the contribution based on each such partner's proportionate interest in the partnership.

(*2*) ***Special rule with respect to paragraph (h)(12)(iv)(B)(1) of this section.*** Solely for purposes of paragraph (h)(12)(iv)(B)(*1*) of this section, if a distribution that gives rise to an increase in the basis under section 734(b) of a section 197(f)(9) intangible held by the partnership is undertaken as part of a series of related transactions that include a contribution of the intangible to the partnership by a continuing partner, the continuing partner is treated as related to the distributee partner in analyzing the basis adjustment with respect to the contributed section 197(f)(9) intangible.

(F) ***Effect of section 734(b) adjustments on partners' capital accounts.*** If one or more partners are subject to the anti-churning rules under this paragraph (h) with respect to a section 734(b) adjustment allocable to an intangible asset, taxpayers may use any reasonable method to determine amortization of the asset for book purposes, provided that the method used does not contravene the purposes of the anti-churning rules under section 197 and this paragraph (h). A method will be considered to contravene the purposes of the anti-churning rules if the effect of the book adjustments resulting from the method is such that any portion of the tax deduction for amortization attributable to the section 734 adjustment is allocated, directly or indirectly, to a partner who is subject to the anti-churning rules with respect to such adjustment.

(v) ***Section 743(b) adjustments*** —

(A) ***General rule.*** The anti-churning rules of this paragraph (h) do not apply to an increase in the basis of a section 197 intangible under section 743(b) if the person acquiring the partnership interest is not related to the person transferring the partnership interest. In addition, the anti-churning rules of this paragraph (h) do not apply to an increase in the basis of a section 197 intangible under section 743(b) to the extent that—

(*1*) The partnership interest being transferred was acquired after August 10, 1993, provided—

(*i*) The section 197(f)(9) intangible was acquired by the partnership on or before August 10, 1993;

(*ii*) The partnership interest being transferred was held after August 10, 1993, by a person or persons (the post-1993 person or persons) other than the person transferring the partnership interest or persons who were related to the person transferring the partnership interest; and

(*iii*) The acquisition of such interest by the post-1993 person or persons was not part of a transaction or series of related transactions in which the person transferring the partnership interest or persons related to the person transferring the partnership interest acquired such interest; or

(2) The partnership interest being transferred was acquired after the partnership acquired the section 197(f)(9) intangible, provided—

(i) The section 197(f)(9) intangible was acquired by the partnership after August 10, 1993, and is not amortizable with respect to the partnership;

(ii) The partnership interest being transferred was held after the partnership acquired the section 197(f)(9) intangible by a person or persons (the post-contribution person or persons) other than the person transferring the partnership interest or persons who were related to the person transferring the partnership interest; and

(iii) The acquisition of such interest by the post-contribution person or persons was not part of a transaction or series of related transactions in which the person transferring the partnership interest or persons related to the person transferring the partnership interest acquired such interest.

(B) ***Acquisition of partnership interest by contribution.*** Solely for purposes of paragraph (h)(12)(v)(A) (*1*) and (*2*) of this section, a partner who acquires an interest in a partnership in exchange for a contribution of property to the partnership is deemed to acquire a pro rata portion of that interest in the partnership from each person who is a partner in the partnership at the time of the contribution based on each such partner's proportionate interest in the partnership.

(C) ***Effect of retroactive elections.*** For purposes of paragraph (h)(12)(v)(A) of this section, references to August 10, 1993, are treated as references to July 25, 1991, if the transferee partner made a valid retroactive election under § 1.197-1T.

(vi) ***Partner is or becomes a user of partnership intangible*** —

(A) ***General rule.*** If, as part of a series of related transactions that includes a transaction described in paragraph (h)(12)(ii), (iii), (iv), or (v) of this section, an anti-churning partner or related person (other than the partnership) becomes (or remains) a direct user of an intangible that is treated as transferred in the transaction (as a result of the partners being treated as having owned their proportionate share of partnership assets), the anti-churning rules of this paragraph (h) apply to the proportionate share of such intangible that is treated as transferred by such anti-churning partner, notwithstanding the application of paragraph (h)(12)(ii), (iii), (iv), or (v) of this section.

(B) ***Anti-churning partner.*** For purposes of this paragraph (h)(12)(vi), anti-churning partner means—

(*1*) With respect to all intangibles held by a partnership on or before August 10, 1993, any partner, but only to the extent that

(*i*) The partner's interest in the partnership was acquired on or before August 10, 1993, or

(*ii*) The interest was acquired from a person related to the partner on or after August 10, 1993, and such interest was not held by any person other than persons related to such partner at any time after August 10, 1993 (disregarding,

for this purpose, a person's holding of an interest if the acquisition of such interest was part of a transaction or series of related transactions in which the partner or persons related to the partner subsequently acquired such interest),

(2) With respect to any section 197(f)(9) intangible acquired by a partnership after August 10, 1993, that is not amortizable with respect to the partnership, any partner, but only to the extent that

(*i*) The partner's interest in the partnership was acquired on or before the date the partnership acquired the section 197(f)(9) intangible, or

(*ii*) The interest was acquired from a person related to the partner on or after the date the partnership acquired the section 197(f)(9) intangible, and such interest was not held by any person other than persons related to such partner at any time after the date the partnership acquired the section 197(f)(9) intangible (disregarding, for this purpose, a person's holding of an interest if the acquisition of such interest was part of a transaction or series of related transactions in which the partner or persons related to the partner subsequently acquired such interest).

(C) ***Effect of retroactive elections.*** For purposes of paragraph (h)(12)(vi)(B) of this section, references to August 10, 1993, are treated as references to July 25, 1991, if the relevant party made a valid retroactive election under § 1.197-1T.

(vii) ***Section 704(c) allocations*** —

(A) ***Allocations where the intangible is amortizable by the contributor.*** The anti-churning rules of this paragraph (h) do not apply to the curative or remedial allocations of amortization with respect to a section 197(f)(9) intangible if the intangible was an amortizable section 197 intangible in the hands of the contributing partner (unless paragraph (h)(10) of this section applies so as to cause the intangible to cease to be an amortizable section 197 intangible in the hands of the partnership).

(B) ***Allocations where the intangible is not amortizable by the contributor.*** If a section 197(f)(9) intangible was not an amortizable section 197 intangible in the hands of the contributing partner, a non-contributing partner generally may receive remedial allocations of amortization under section 704(c) that are deductible for Federal income tax purposes. However, such a partner may not receive remedial allocations of amortization under section 704(c) if that partner is related to the partner that contributed the intangible or if, as part of a series of related transactions that includes the contribution of the section 197(f)(9) intangible to the partnership, the contributing partner or related person (other than the partnership) becomes (or remains) a direct user of the contributed intangible. Taxpayers may use any reasonable method to determine amortization of the asset for book purposes, provided that the method used does not contravene the purposes of the anti-churning rules under section 197 and this paragraph (h). A method will be considered to contravene the purposes of the anti-churning rules if the effect of the book adjustments resulting from the method is such that any portion of the tax deduction for amortization attributable to section 704(c) is allocated, directly or indirectly, to a partner who is subject to the anti-churning rules with respect to such adjustment.

(C) ***Rules for section 721(c) partnerships.*** See § 1.704-3(d)(5)(iii) if there is a contribution of a section 197(f)(9) intangible to a section 721(c) partnership (as defined in § 1.721(c)-1(b)(14)).

(viii) ***Operating rule for transfers upon death.*** For purposes of this paragraph (h)(12), if the basis of a partner's interest in a partnership is determined under section 1014(a) or 1022, such partner is treated as acquiring such interest from a person who is not related to such partner, and such interest is treated as having previously been held by a person who is not related to such partner.

(i) [Reserved]

(j) ***General anti-abuse rule.*** The Commissioner will interpret and apply the rules in this section as necessary and appropriate to prevent avoidance of the purposes of section 197. If one of the principal purposes of a transaction is to achieve a tax result that is inconsistent with the purposes of section 197, the Commissioner will recast the transaction for Federal tax purposes as appropriate to achieve tax results that are consistent with the purposes of section 197, in light of the applicable statutory and regulatory provisions and the pertinent facts and circumstances.

(k) ***Examples.*** The following examples illustrate the application of this section:

> *Example 1. Advertising costs.* (i) Q manufactures and sells consumer products through a series of wholesalers and distributors. In order to increase sales of its products by encouraging consumer loyalty to its products and to enhance the value of the goodwill, trademarks, and trade names of the business, Q advertises its products to the consuming public. It regularly incurs costs to develop radio, television, and print advertisements. These costs generally consist of employee costs and amounts paid to independent advertising agencies. Q also incurs costs to run these advertisements in the various media for which they were developed.
> (ii) The advertising costs are not chargeable to capital account under paragraph (f)(3) of this section (relating to costs incurred for covenants not to compete, rights granted by governmental units, and contracts for the use of section 197 intangibles) and are currently deductible as ordinary and necessary expenses under section 162. Accordingly, under paragraph (a)(3) of this section, section 197 does not apply to these costs.

> *Example 2. Computer software.* (i) X purchases all of the assets of an existing trade or business from Y. One of the assets acquired is all of Y's rights in certain computer software previously used by Y under the terms of a nonexclusive license from the software developer. The software was developed for use by manufacturers to maintain a comprehensive accounting system, including general and subsidiary ledgers, payroll, accounts receivable and payable, cash receipts and disbursements, fixed asset accounting, and inventory cost accounting and controls. The developer modified the software for use by Y at a cost of $1,000 and Y made additional modifications at a cost of $500. The developer does not maintain wholesale or retail outlets but markets the software directly to ultimate users. Y's license of the software is limited to an entity that is actively engaged in business as a manufacturer.

(ii) Notwithstanding these limitations, the software is considered to be readily available to the general public for purposes of paragraph (c)(4)(i) of this section. In addition, the software is not substantially modified because the cost of the modifications by the developer and Y to the version of the software that is readily available to the general public does not exceed $2,000. Accordingly, the software is not a section 197 intangible.

Example 3. Acquisition of software for internal use. (i) B, the owner and operator of a worldwide package-delivery service, purchases from S all rights to software developed by S. The software will be used by B for the sole purpose of improving its package-tracking operations. B does not purchase any other assets in the transaction or any related transaction.
(ii) Because B acquired the software solely for internal use, it is disregarded in determining for purposes of paragraph (c)(4)(ii) of this section whether the assets acquired in the transaction or series of related transactions constitute a trade or business or substantial portion thereof. Since no other assets were acquired, the software is not acquired as part of a purchase of a trade or business and under paragraph (c)(4)(ii) of this section is not a section 197 intangible.

Example 4. Governmental rights of fixed duration. (i) City M operates a municipal water system. In order to induce X to locate a new manufacturing business in the city, M grants X the right to purchase water for 16 years at a specified price.
(ii) The right granted by M is a right to receive tangible property or services described in section 197(e)(4)(B) and paragraph (c)(6) of this section and, thus, is not a section 197 intangible. This exclusion applies even though the right does not qualify for exclusion as a right of fixed duration or amount under section 197(e)(4)(D) and paragraph (c)(13) of this section because the duration exceeds 15 years and the right is not fixed as to amount. It is also immaterial that the right would not qualify for exclusion as a self-created intangible under section 197(c)(2) and paragraph (d)(2) of this section because it is granted by a governmental unit.

Example 5. Separate acquisition of franchise. (i) S is a franchiser of retail outlets for specialty coffees. G enters into a franchise agreement (within the meaning of section 1253(b)(1)) with S pursuant to which G is permitted to acquire and operate a store using the S trademark and trade name at the location specified in the agreement. G agrees to pay S $100,000 upon execution of the agreement and also agrees to pay, throughout the term of the franchise, additional amounts that are deductible under section 1253(d)(1). The agreement contains detailed specifications for the construction and operation of the business, but G is not required to purchase from S any of the materials necessary to construct the improvements at the location specified in the franchise agreement.
(ii) The franchise is a section 197 intangible within the meaning of paragraph (b)(10) of this section. The franchise does not qualify for the exclusion relating to self-created intangibles described in section 197(c)(2) and paragraph (d)(2) of this section because the franchise is described in section 197(d)(1)(F). In addition, because the acquisition of the franchise constitutes

the acquisition of an interest in a trade or business or a substantial portion thereof, the franchise may not be excluded under section 197(e)(4). Thus, the franchise is an amortizable section 197 intangible, the basis of which must be recovered over a 15-year period. However, the amounts that are deductible under section 1253(d)(1) are not subject to the provisions of section 197 by reason of section 197(f)(4)(C) and paragraph (b)(10)(ii) of this section.

Example 6. Acquisition and amortization of covenant not to compete. (i) As part of the acquisition of a trade or business from C, B and C enter into an agreement containing a covenant not to compete. Under this agreement, C agrees that it will not compete with the business acquired by B within a prescribed geographical territory for a period of three years after the date on which the business is sold to B. In exchange for this agreement, B agrees to pay C $90,000 per year for each year in the term of the agreement. The agreement further provides that, in the event of a breach by C of his obligations under the agreement, B may terminate the agreement, cease making any of the payments due thereafter, and pursue any other legal or equitable remedies available under applicable law. The amounts payable to C under the agreement are not contingent payments for purposes of § 1.1275-4. The present fair market value of B's rights under the agreement is $225,000. The aggregate consideration paid excluding any amount treated as interest or original issue discount under applicable provisions of the Internal Revenue Code, for all assets acquired in the transaction (including the covenant not to compete) exceeds the sum of the amount of Class I assets and the aggregate fair market value of all Class II, Class III, Class IV, Class V, and Class VI assets by $50,000. See § 1.338-6(b) for rules for determining the assets in each class.
(ii) Because the covenant is acquired in an applicable asset acquisition (within the meaning of section 1060(c)), paragraph (f)(4)(ii) of this section applies and the basis of B in the covenant is determined pursuant to section 1060(a) and the regulations thereunder. Under §§ 1.1060-1(c)(2) and 1.338-6(c)(1), B's basis in the covenant cannot exceed its fair market value. Thus, B's basis in the covenant immediately after the acquisition is $225,000. This basis is amortized ratably over the 15-year period beginning on the first day of the month in which the agreement is entered into. All of the remaining consideration after allocation to the convenant and other Class VI assets ($50,000) is allocated to Class VII assets (goodwill and going concern value). See §§ 1.1060-1(c)(2) and 1.338-6(b).

Example 7. Stand-alone license of technology. (i) X is a manufacturer of consumer goods that does business throughout the world through subsidiary corporations organized under the laws of each country in which business is conducted. X licenses to Y, its subsidiary organized and conducting business in Country K, all of the patents, formulas, designs, and know-how necessary for Y to manufacture the same products that X manufactures in the United States. Assume that the license is not considered a sale or exchange under the principles of section 1235. The license is for a term of 18 years, and there are no facts to indicate that the license does not have a fixed duration. Y agrees to pay X a royalty equal to a specified, fixed percentage of the revenues

obtained from selling products manufactured using the licensed technology. Assume that the royalty is reasonable and is not subject to adjustment under section 482. The license is not entered into in connection with any other transaction. Y incurs capitalized costs in connection with entering into the license.
(ii) The license is a contract for the use of a section 197 intangible within the meaning of paragraph (b)(11) of this section. It does not qualify for the exception in section 197(e)(4)(D) and paragraph (c)(13) of this section (relating to rights of fixed duration or amount because it does not have a term of less than 15 years, and the other exceptions in section 197(e) and paragraph (c) of this section are also inapplicable. Accordingly, the license is a section 197 intangible.

(iii) The license is not acquired as part of a purchase of a trade or business. Thus, under paragraph (f)(3)(iii) of this section, the license will be closely scrutinized under the principles of section 1235 for purposes of determining whether the transfer is a sale or exchange and, accordingly, whether the payments under the license are chargeable to capital account. Because the license is not a sale or exchange under the principles of section 1235, the royalty payments are not chargeable to capital account for purposes section 197. The capitalized costs of entering into the license are not within the exception under paragraph (d)(2) of this section for self-created intangibles, and thus are amortized under section 197.

Example 8. License of technology and trademarks. (i) The facts are the same as in *Example 7,* except that the license also includes the use of the trademarks and trade names that X uses to manufacture and distribute its products in the United States. Assume that under the principles of section 1253 the transfer is not a sale or exchange of the trademarks and trade names or an undivided interest therein and that the royalty payments are described in section 1253(d)(1)(B).
(ii) As in *Example 7,* the license is a section 197 intangible. Although the license conveys an interest in X's trademarks and trade names to Y, the transfer of the interest is disregarded for purposes of paragraph (e)(2) of this section unless the transfer is considered a sale or exchange of the trademarks and trade names or an undivided interest therein. Accordingly, the licensing of the technology and the trademarks and trade names is not treated as part of a purchase of a trade or business under paragraph (e)(2) of this section.

(iii) Because the technology license is not part of the purchase of a trade or business, it is treated in the manner described in *Example 7.* The royalty payments for the use of the trademarks and trade names are deductible under section 1253(d)(1) and, under section 197(f)(4)(C) and paragraph (b)(10)(ii) of this section, are not chargeable to capital account for purposes of section 197. The capitalized costs of entering into the license are treated in the same manner as in example 7.

Example 9. Disguised sale. (i) The facts are the same as in *Example 7,* except that Y agrees to pay X, in addition to the contingent royalty, a fixed minimum royalty immediately upon entering into the agreement and there are sufficient facts present to characterize the transaction, for federal tax

purposes, as a transfer of ownership of the intellectual property from X to Y.
(ii) The purported license of technology is, in fact, an acquisition of an intangible described in section 197(d)(1)(C)(iii) and paragraph (b)(5) of this section (relating to know-how, etc.). As in *Example 7*, the exceptions in section 197(e) and paragraph (c) of this section do not apply to the transfer. Accordingly, the transferred property is a section 197 intangible. Y's basis in the transferred intangible includes the capitalized costs of entering into the agreement and the fixed minimum royalty payment payable at the time of the transfer. In addition, except to the extent that a portion of any payment will be treated as interest or original issue discount under applicable provisions of the Internal Revenue Code, all of the contingent payments under the purported license are properly chargeable to capital account for purposes of section 197 and this section. The extent to which such payments are treated as payments of principal and the time at which any amount treated as a payment of principal is taken into account in determining basis are determined under the rules of § 1.1275-4(c)(4) or 1.483-4(a), whichever is applicable. Any contingent amount that is included in basis after the month in which the acquisition occurs is amortized under the rules of paragraph (f)(2)(i) or (ii) of this section.

Example 10. License of technology and customer list as part of sale of a trade or business. (i) X is a computer manufacturer that produces, in separate operating divisions, personal computers, servers, and peripheral equipment. In a transaction that is the purchase of a trade or business for purposes of section 197, Y (who is unrelated to X) purchases from X all assets of the operating division producing personal computers, except for certain patents that are also used in the division manufacturing servers and customer lists that are also used in the division manufacturing peripheral equipment. As part of the transaction, X transfers to Y the right to use the retained patents and customer lists solely in connection with the manufacture and sale of personal computers. The transfer agreement requires annual royalty payments contingent on the use of the patents and also requires a payment for each use of the customer list. In addition, Y incurs capitalized costs in connection with entering into the licenses.
(ii) The rights to use the retained patents and customer lists are contracts for the use of section 197 intangibles within the meaning of paragraph (b)(11) of this section. The rights do not qualify for the exception in 197(e)(4)(D) and paragraph (c)(13) of this section (relating to rights of fixed duration or amount) because they are transferred as part of a purchase of a trade or business and the other exceptions in section 197(e) and paragraph (c) of this section are also inapplicable. Accordingly, the licenses are section 197 intangibles.

(iii) Because the right to use the retained patents is described in paragraph (b)(11) of this section and the right is transferred as part of a purchase of a trade or business, the treatment of the royalty payments is determined under paragraph (f)(3)(ii) of this section. In addition, however, the retained patents are described in paragraph (b)(5) of this section. Thus, the annual royalty payments are chargeable to capital account under the general rule of paragraph (f)(3)(ii)(A) of this section unless Y establishes that the license is not a sale or exchange under the principles of section 1235 and the royalty payments are an arm's length consideration for the rights transferred. If these facts are established, the exception in

paragraph (f)(3)(ii)(B) of this section applies and the royalty payments are not chargeable to capital account for purposes of section 197. The capitalized costs of entering into the license are treated in the same manner as in Example 7.

(iv) The right to use the retained customer list is also described in paragraph (b)(11) of this section and is transferred as part of a purchase of a trade or business. Thus, the treatment of the payments for use of the customer list is also determined under paragraph (f)(3)(ii) of this section. The customer list, although described in paragraph (b)(6) of this section, is a customer-related information base. Thus, the exception in paragraph (f)(3)(ii)(B) of this section does not apply. Accordingly, payments for use of the list are chargeable to capital account under the general rule of paragraph (f)(3)(ii)(A) of this section and are amortized under section 197. In addition, the capitalized costs of entering into the contract for use of the customer list are treated in the same manner as in *Example 7*.

Example 11. Loss disallowance rules involving related persons. (i) Assume that X and Y are treated as a single taxpayer for purposes of paragraph (g)(1) of this section. In a single transaction, X and Y acquired from Z all of the assets used by Z in a trade or business. Z had operated this business at two locations, and X and Y each acquired the assets used by Z at one of the locations. Three years after the acquisition, X sold all of the assets it acquired, including amortizable section 197 intangibles, to an unrelated purchaser. The amortizable section intangibles are sold at a loss of $120,000.
(ii) Because X and Y are treated as a single taxpayer for purposes of the loss disallowance rules of section 197(f)(1) and paragraph (g)(1) of this section, X's loss on the sale of the amortizable section 197 intangibles is not recognized. Under paragraph (g)(1)(iv)(B) of this section, X's disallowed loss is allowed ratably, as a deduction under section 197, over the remainder of the 15-year period during which the intangibles would have been amortized, and Y may not increase the basis of the amortizable section 197 intangibles that it acquired from Z by the amount of X's disallowed loss.

Example 12. Disposition of retained intangibles by related person. (i) The facts are the same as in *Example 11*, except that 10 years after the acquisition of the assets by X and Y and 7 years after the sale of the assets by X, Y sells all of the assets acquired from Z, including amortizable section 197 intangibles, to an unrelated purchaser.
(ii) Under paragraph (g)(1)(iv)(B) of this section, X may recognize, on the date of the sale by Y, any loss that has not been allowed as a deduction under section 197. Accordingly, X recognizes a loss of $50,000, the amount obtained by reducing the loss on the sale of the assets at the end of the third year ($120,000) by the amount allowed as a deduction under paragraph (g)(1)(iv)(B) of this section during the 7 years following the sale by X ($70,000).

Example 13. Acquisition of an interest in partnership with no section 754 election. (i) A, B, and C each contribute $1,500 for equal shares in general partnership P. On January 1, 1998, P acquires as its sole asset an amortizable section 197 intangible for $4,500. P still holds the intangible on January 1, 2003, at which time the intangible has an adjusted basis to P of $3,000, and A, B, and C each have an adjusted basis of $1,000 in their partnership interests. D (who is not related to A) acquires A's interest in P for

$1,600. No section 754 election is in effect for 2003.
(ii) Because there is no change in the basis of the intangible under section 743(b), D merely steps into the shoes of A with respect to the intangible. D's proportionate share of P's adjusted basis in the intangible is $1,000, which continues to be amortized over the 10 years remaining in the original 15-year amortization period for the intangible.

Example 14. Acquisition of an interest in partnership with a section 754 election. (i) The facts are the same as in *Example 13,* except that a section 754 election is in effect for 2003.
(ii) Pursuant to paragraph (g)(3) of this section, for purposes of section 197, D is treated as if P owns two assets. D's proportionate share of P's adjusted basis in one asset is $1,000, which continues to be amortized over the 10 years remaining in the original 15-year amortization period. For the other asset, D's proportionate share of P's adjusted basis is $600 (the amount of the basis increase under section 743 as a result of the section 754 election), which is amortized over a new 15-year period beginning January 2003. With respect to B and C, P's remaining $2,000 adjusted basis in the intangible continues to be amortized over the 10 years remaining in the original 15-year amortization period.

Example 15. Payment to a retiring partner by partnership with a section 754 election. (i) The facts are the same as in *Example 13,* except that a section 754 election is in effect for 2003 and, instead of D acquiring A's interest in P, A retires from P. A, B, and C are not related to each other within the meaning of paragraph (h)(6) of this section. P borrows $1,600, and A receives a payment under section 736 from P of such amount, all of which is in exchange for A's interest in the intangible asset owned by P. (Assume, for purposes of this example, that the borrowing by P and payment of such funds to A does not give rise to a disguised sale of A's partnership interest under section 707(a)(2)(B).) P makes a positive basis adjustment of $600 with respect to the section 197 intangible under section 734(b).
(ii) Pursuant to paragraph (g)(3) of this section, because of the section 734 adjustment, P is treated as having two amortizable section 197 intangibles, one with a basis of $3,000 and a remaining amortization period of 10 years and the other with a basis of $600 and a new amortization period of 15 years.

Example 16. Termination of partnership under section 708(b)(1)(B). (i) A and B are partners with equal shares in the capital and profits of general partnership P. P's only asset is an amortizable section 197 intangible, which P had acquired on January 1, 1995. On January 1, 2000, the asset had a fair market value of $100 and a basis to P of $50. On that date, A sells his entire partnership interest in P to C, who is unrelated to A, for $50. At the time of the sale, the basis of each of A and B in their respective partnership interests is $25.
(ii) The sale causes a termination of P under section 708(b)(1)(B). Under section 708, the transaction is treated as if P transfers its sole asset to a new partnership in exchange for the assumption of its liabilities and the receipt of all of the interests in the new partnership. Immediately thereafter, P is treated as if it is liquidated, with B and C each receiving their proportionate share of the interests in the new partnership. The contribution by P of its asset to the new partnership is governed by section 721, and the liquidating distributions by P of the interests in the new partnership are governed by section 731. C does not realize a

basis adjustment under section 743 with respect to the amortizable section 197 intangible unless P had a section 754 election in effect for its taxable year in which the transfer of the partnership interest to C occurred or the taxable year in which the deemed liquidation of P occurred.

(iii) Under section 197, if P had a section 754 election in effect, C is treated as if the new partnership had acquired two assets from P immediately preceding its termination. Even though the adjusted basis of the new partnership in the two assets is determined solely under section 723, because the transfer of assets is a transaction described in section 721, the application of sections 743(b) and 754 to P immediately before its termination causes P to be treated as if it held two assets for purposes of section 197. See paragraph (g)(3) of this section. B's and C's proportionate share of the new partnership's adjusted basis is $25 each in one asset, which continues to be amortized over the 10 years remaining in the original 15-year amortization period. For the other asset, C's proportionate share of the new partnership's adjusted basis is $25 (the amount of the basis increase resulting from the application of section 743 to the sale or exchange by A of the interest in P), which is amortized over a new 15-year period beginning in January 2000.

(iv) If P did not have a section 754 election in effect for its taxable year in which the sale of the partnership interest by A to C occurred or the taxable year in which the deemed liquidation of P occurred, the adjusted basis of the new partnership in the amortizable section 197 intangible is determined solely under section 723, because the transfer is a transaction described in section 721, and P does not have a basis increase in the intangible. Under section 197(f)(2) and paragraph (g)(2)(ii) of this section, the new partnership continues to amortize the intangible over the 10 years remaining in the original 15-year amortization period. No additional amortization is allowable with respect to this asset.

Example 17. Disguised sale to partnership. (i) E and F are individuals who are unrelated to each other within the meaning of paragraph (h)(6) of this section. E has been engaged in the active conduct of a trade or business as a sole proprietor since 1990. E and F form EF Partnership. E transfers all of the assets of the business, having a fair market value of $100, to EF, and F transfers $40 of cash to EF. E receives a 60 percent interest in EF and the $40 of cash contributed by F, and F receives a 40 percent interest in EF, under circumstances in which the transfer by E is partially treated as a sale of property to EF under § 1.707-3(b). (ii) Under § 1.707-3(a)(1), the transaction is treated as if E had sold to EF a 40 percent interest in each asset for $40 and contributed the remaining 60 percent interest in each asset to EF in exchange solely for an interest in EF. Because E and EF are related persons within the meaning of paragraph (h)(6) of this section, no portion of any transferred section 197(f)(9) intangible that E held during the transition period (as defined in paragraph (h)(4) of this section) is an amortizable section 197 intangible pursuant to paragraph (h)(2) of this section. Section 197(f)(9)(F) and paragraph (g)(3) of this section do not apply to any portion of the section 197 intangible in the hands of EF because the basis of EF in these assets was not increased under any of sections 732, 734, or 743.

Example 18. Acquisition by related person in nonrecognition transaction. (i) A owns a nonamortizable intangible that A acquired in 1990. In 2000, A sells a one-half interest in the intangible to B for cash.

Immediately after the sale, A and B, who are unrelated to each other, form partnership P as equal partners. A and B each contribute their one-half interest in the intangible to P.
(ii) P has a transferred basis in the intangible from A and B under section 723. The nonrecognition transfer rule under paragraph (g)(2)(ii) of this section applies to A's transfer of its one-half interest in the intangible to P, and consequently P steps into A's shoes with respect to A's nonamortizable transferred basis. The anti-churning rules of paragraph (h) of this section apply to B's transfer of its one-half interest in the intangible to P, because A, who is related to P under paragraph (h)(6) of this section immediately after the series of transactions in which the intangible was acquired by P, held B's one-half interest in the intangible during the transition period. Pursuant to paragraph (h)(10) of this section, these rules apply to B's transfer of its one-half interest to P even though the nonrecognition transfer rule under paragraph (g)(2)(ii) of this section would have permitted P to step into B's shoes with respect to B's otherwise amortizable basis. Therefore, P's entire basis in the intangible is nonamortizable. However, if A (not B) elects to recognize gain under paragraph (h)(9) of this section on the transfer of each of the one-half interests in the intangible to B and P, then the intangible would be amortizable by P to the extent provided in section 197(f)(9)(B) and paragraph (h)(9) of this section.

Example 19. Acquisition of partnership interest following formation of partnership. (i) The facts are the same as in *Example 18* except that, in 2000, A formed P with an affiliate, S, and contributed the intangible to the partnership and except that in a subsequent year, in a transaction that is properly characterized as a sale of a partnership interest for Federal tax purposes, B purchases a 50 percent interest in P from A. P has a section 754 election in effect and holds no assets other than the intangible and cash.
(ii) For the reasons set forth in *Example 16* (iii), B is treated as if P owns two assets. B's proportionate share of P's adjusted basis in one asset is the same as A's proportionate share of P's adjusted basis in that asset, which is not amortizable under section 197. For the other asset, B's proportionate share of the remaining adjusted basis of P is amortized over a new 15-year period.

Example 20. Acquisition by related corporation in nonrecognition transaction. (i) The facts are the same as *Example 18,* except that A and B form corporation P as equal owners.
(ii) P has a transferred basis in the intangible from A and B under section 362. Pursuant to paragraph (h)(10) of this section, the application of the nonrecognition transfer rule under paragraph (g)(2)(ii) of this section and the anti-churning rules of paragraph (h) of this section to the facts of this *Example 18* is the same as in *Example 16.* Thus, P's entire basis in the intangible is nonamortizable.

Example 21. Acquisition from corporation related to purchaser through remote indirect interest. (i) X, Y, and Z are each corporations that have only one class of issued and outstanding stock. X owns 25 percent of the stock of Y and Y owns 25 percent of the outstanding stock of Z. No other shareholder of any of these corporations is related to any other shareholder or to any of the corporations. On June 30, 2000, X purchases from Z section 197(f)(9) intangibles that Z owned during the transition period (as defined in paragraph (h)(4) of this section).

(ii) Pursuant to paragraph (h)(6)(iv)(B) of this section, the beneficial ownership interest of X in Z is 6.25 percent, determined by treating X as if it owned a proportionate (25 percent) interest in the stock of Z that is actually owned by Y. Thus, even though X is related to Y and Y is related to Z, X and Z are not considered to be related for purposes of the anti-churning rules of section 197.

Example 22. Gain recognition election. (i) B owns 25 percent of the stock of S, a corporation that uses the calendar year as its taxable year. No other shareholder of B or S is related to each other. S is not a member of a controlled group of corporations within the meaning of section 1563(a). S has section 197(f)(9) intangibles that it owned during the transition period. S has a basis of $25,000 in the intangibles. In 2001, S sells these intangibles to B for $75,000. S recognizes a gain of $50,000 on the sale and has no other items of income, deduction, gain, or loss for the year, except that S also has a net operating loss of $20,000 from prior years that it would otherwise be entitled to use in 2001 pursuant to section 172(b). S makes a valid gain recognition election pursuant to section 197(f)(9)(B) and paragraph (h)(9) of this section. In 2001, the highest marginal tax rate applicable to S is 35 percent. But for the election, all of S's taxable income would be taxed at a rate of 15 percent.
(ii) If the gain recognition election had not been made, S would have taxable income of $30,000 for 2001 and a tax liability of $4,500. If the gain were not taken into account, S would have no tax liability for the taxable year. Thus, the amount of tax (other than the tax imposed under paragraph (h)(9) of this section) imposed on the gain is also $4,500. The gain on the disposition multiplied by the highest marginal tax rate is $17,500 ($50,000 × .35). Accordingly, S's tax liability for the year is $4,500 plus an additional tax under paragraph (h)(9) of this section of $13,000 ($17,500—$4,500).

(iii) Pursuant to paragraph (h)(9)(x)(A) of this section, S determines the amount of its net operating loss deduction in subsequent years without regard to the gain recognized on the sale of the section 197 intangible to B. Accordingly, the entire $20,000 net operating loss deduction that would have been available in 2001 but for the gain recognition election may be used in 2002, subject to the limitations of section 172.

(iv) B has a basis of $75,000 in the section 197(f)(9) intangibles acquired from S. As the result of the gain recognition election by S, B may amortize $50,000 of its basis under section 197. Under paragraph (h)(9)(ii) of this section, the remaining basis does not qualify for the gain-recognition exception and may not be amortized by B.

Example 23. Section 338 election. (i) Corporation P makes a qualified stock purchase of the stock of T corporation from two shareholders in July 2000, and a section 338 election is made by P. No shareholder of either T or P owns stock in both of these corporations, and no other shareholder is related to any other shareholder of either corporation.
(ii) Pursuant to paragraph (h)(8) of this section, in the case of a qualified stock purchase that is treated as a deemed sale and purchase of assets pursuant to section 338, the corporation treated as purchasing assets as a result of an election thereunder (new target) is not considered the person that held or used the assets during any period in which the assets were held or used by the corporation treated as selling the

assets (old target). Because there are no relationships described in paragraph (h)(6) of this section among the parties to the transaction, any nonamortizable section 197(f)(9) intangible held by old target is an amortizable section 197 intangible in the hands of new target.

(iii) Assume the same facts as set forth in paragraph (i) of this *Example 23,* except that one of the selling shareholders is an individual who owns 25 percent of the total value of the stock of each of the T and P corporation.

(iv) Old target and new target (as these terms are defined in § 1.338-2(c)(17)) are members of a controlled group of corporations under section 267(b)(3), as modified by section 197(f)(9)(C)(i), and any nonamortizable section 197(f)(9) intangible held by old target is not an amortizable section 197 intangible in the hands of new target. However, a gain recognition election under paragraph (h)(9) of this section may be made with respect to this transaction.

Example 24. Relationship created as part of public offering. (i) On January 1, 2001, Corporation X engages in a series of related transactions to discontinue its involvement in one line of business. X forms a new corporation, Y, with a nominal amount of cash. Shortly thereafter, X transfers all the stock of its subsidiary conducting the unwanted business (Target) to Y in exchange for 100 shares of Y common stock and a Y promissory note. Target owns a nonamortizable section 197(f)(9) intangible. Prior to January 1, 2001, X and an underwriter (U) had entered into a binding agreement pursuant to which U would purchase 85 shares of Y common stock from X and then sell those shares in a public offering. On January 6, 2001, the public offering closes. X and Y make a section 338(h)(10) election for Target.
(ii) Pursuant to paragraph (h)(8) of this section, in the case of a qualified stock purchase that is treated as a deemed sale and purchase of assets pursuant to section 338, the corporation treated as purchasing assets as a result of an election thereunder (new target) is not considered the person that held or used the assets during any period in which the assets were held or used by the corporation treated as selling the assets (old target). Further, for purposes of determining whether the nonamortizable section 197(f)(9) intangible is acquired by new target from a related person, because the transactions are a series of related transactions, the relationship between old target and new target must be tested immediately before the first transaction in the series (the formation of Y) and immediately after the last transaction in the series (the sale to U and the public offering). See paragraph (h)(6)(ii)(B) of this section. Because there was no relationship between old target and new target immediately before the formation of Y (because the section 338 election had not been made) and only a 15% relationship between old target and new target immediately after, old target is not related to new target for purposes of applying the anti-churning rules of paragraph (h) of this section. Accordingly, Target may amortize the section 197 intangible.

Example 25. Other transfers to controlled corporations. (i) In 2001, Corporation A transfers a section 197(f)(9) intangible that it held during the transition period to X, a newly formed corporation, in exchange for 15% of X's stock. As part of the same transaction, B transfers property to X in exchange for the remaining 85% of X stock.

(ii) Because the acquisition of the intangible by X is part of a qualifying section 351 exchange, under section 197(f)(2) and paragraph (g)(2)(ii) of this section, X is treated in the same manner as the transferor of the asset. Accordingly, X may not amortize the intangible. If, however, at the time of the exchange, B has a binding commitment to sell 25 percent of the X stock to C, an unrelated third party, the exchange, including A's transfer of the section 197(f)(9) intangible, would fail to qualify as a section 351 exchange. Because the formation of X, the transfers of property to X, and the sale of X stock by B are part of a series of related transactions, the relationship between A and X must be tested immediately before the first transaction in the series (the transfer of property to X) and immediately after the last transaction in the series (the sale of X stock to C). See paragraph (h)(6)(ii)(B) of this section. Because there was no relationship between A and X immediately before and only a 15% relationship immediately after, A is not related to X for purposes of applying the anti-churning rules of paragraph (h) of this section. Accordingly, X may amortize the section 197 intangible.

Example 26. Relationship created as part of stock acquisition followed by liquidation. (i) In 2001, Partnership P purchases 100 percent of the stock of Corporation X. P and X were not related prior to the acquisition. Immediately after acquiring the X stock, and as part of a series of related transactions, P liquidates X under section 331. In the liquidating distribution, P receives a section 197(f)(9) intangible that was held by X during the transition period.
(ii) Because the relationship between P and X was created pursuant to a series of related transactions where P acquires stock (meeting the requirements of section 1504(a)(2)) in a fully taxable transaction followed by a liquidation under section 331, the relationship immediately after the last transaction in the series (the liquidation) is disregarded. See paragraph (h)(6)(iii) of this section. Accordingly, P is entitled to amortize the section 197(f)(9) intangible.

Example 27. Section 743(b) adjustment with no change in user. (i) On January 1, 2001, A forms a partnership (PRS) with B in which A owns a 40-percent, and B owns a 60-percent, interest in profits and capital. A contributes a nonamortizable section 197(f)(9) intangible with a value of $80 and an adjusted basis of $0 to PRS in exchange for its PRS interest and B contributes $120 cash. At the time of the contribution, PRS licenses the section 197(f)(9) intangible to A. On February 1, 2001, A sells its entire interest in PRS to C, an unrelated person, for $80. PRS has a section 754 election in effect.
(ii) The section 197(f)(9) intangible contributed to PRS by A is not amortizable in the hands of PRS. Pursuant to section (g)(2)(ii) of this section, PRS steps into the shoes of A with respect to A's nonamortizable transferred basis in the intangible.

(iii) When A sells the PRS interest to C, C will have a basis adjustment in the PRS assets under section 743(b) equal to $80. The entire basis adjustment will be allocated to the intangible because the only other asset held by PRS is cash. Ordinarily, under paragraph (h)(12)(v) of this section, the anti-churning rules will not apply to an increase in the basis of partnership property under section 743(b) if the person acquiring the partnership interest is not related to the person transferring the partnership interest. However, A is an anti-churning partner under paragraph (h)(12)(vi)(B)(2)(*i*) of this section. As a result of the license

agreement, A remains a direct user of the section 197(f)(9) intangible after the transfer to C. Accordingly, paragraph (h)(12)(vi)(A) of this section will cause the anti-churning rules to apply to the entire basis adjustment under section 743(b).

Example 28. Distribution of section 197(f)(9) intangible to partner who acquired partnership interest prior to the effective date. (i) In 1990, A, B, and C each contribute $150 cash to form general partnership ABC for the purpose of engaging in a consulting business and a software manufacturing business. The partners agree to share partnership profits and losses equally. In 2000, the partnership distributes the consulting business to A in liquidation of A's entire interest in ABC. The only asset of the consulting business is a nonamortizable intangible, which has a fair market value of $180 and a basis of $0. At the time of the distribution, the adjusted basis of A's interest in ABC is $150. A is not related to B or C. ABC does not have a section 754 election in effect.
(ii) Under section 732(b), A's adjusted basis in the intangible distributed by ABC is $150, a $150 increase over the basis of the intangible in ABC's hands. In determining whether the anti-churning rules apply to any portion of the basis increase, A is treated as having owned and used A's proportionate share of partnership property. Thus, A is treated as holding an interest in the intangible during the transition period. Because the intangible was not amortizable prior to the enactment of section 197, the section 732(b) increase in the basis of the intangible may be subject to the anti-churning provisions. Paragraph (h)(12)(ii) of this section provides that the anti-churning provisions apply to the extent that the section 732(b) adjustment exceeds the total unrealized appreciation from the intangible allocable to partners other than A or persons related to A, as well as certain other partners whose purchase of their interests meet certain criteria. Because B and C are not related to A, and A's acquisition of its partnership interest does not satisfy the necessary criteria, the section 732(b) basis increase is subject to the anti-churning provisions to the extent that it exceeds B and C's proportionate share of the unrealized appreciation from the intangible. B and C's proportionate share of the unrealized appreciation from the intangible is $120 (2/3 of $180). This is the amount of gain that would be allocated to B and C if the partnership sold the intangible immediately before the distribution for its fair market value of $180. Therefore, $120 of the section 732(b) basis increase is not subject to the anti-churning rules. The remaining $30 of the section 732(b) basis increase is subject to the anti-churning rules. Accordingly, A is treated as having two intangibles, an amortizable section 197 intangible with an adjusted basis of $120 and a new amortization period of 15 years and a nonamortizable intangible with an adjusted basis of $30.

(iii) In applying the anti-churning rules to future transfers of the distributed intangible, under paragraph (h)(12)(ii)(C) of this section, one-third of the intangible will continue to be subject to the anti-churning rules, determined as follows: The sum of the amount of the distributed intangible's basis that is nonamortizable under paragraph (g)(2)(ii)(B) of this section ($0) and the total unrealized appreciation inherent in the intangible reduced by the amount of the increase in the adjusted basis of the distributed intangible under section 732(b) to which the anti-churning rules do not apply ($180−$120 = $60), over the fair market value of the distributed intangible ($180).

Example 29. Distribution of section 197(f)(9) intangible to partner who acquired partnership interest after

the effective date. (i) The facts are the same as in *Example 28,* except that B and C form ABC in 1990. A does not acquire an interest in ABC until 1995. In 1995, A contributes $150 to ABC in exchange for a one-third interest in ABC. At the time of the distribution, the adjusted basis of A's interest in ABC is $150.
(ii) As in *Example 28,* the anti-churning rules do not apply to the increase in the basis of the intangible distributed to A under section 732(b) to the extent that it does not exceed the unrealized appreciation from the intangible allocable to B and C. Under paragraph (h)(12)(ii) of this section, the anti-churning provisions also do not apply to the section 732(b) basis increase to the extent of A's allocable share of the unrealized appreciation from the intangible because A acquired the ABC interest from an unrelated person after August 10, 1993, and the intangible was acquired by the partnership before A acquired the ABC interest. Under paragraph (h)(12)(ii)(E) of this section, A is deemed to acquire the ABC partnership interest from an unrelated person because A acquired the ABC partnership interest in exchange for a contribution to the partnership of property other than the distributed intangible and, at the time of the contribution, no partner in the partnership was related to A. Consequently, the increase in the basis of the intangible under section 732(b) is not subject to the anti-churning rules to the extent of the total unrealized appreciation from the intangible allocable to A, B, and C. The total unrealized appreciation from the intangible allocable to A, B, and C is $180 (the gain the partnership would have recognized if it had sold the intangible for its fair market value immediately before the distribution). Because this amount exceeds the section 732(b) basis increase of $150, the entire section 732(b) basis increase is amortizable.

(iii) In applying the anti-churning rules to future transfers of the distributed intangible, under paragraph (h)(12)(ii)(C) of this section, one-sixth of the intangible will continue to be subject to the anti-churning rules, determined as follows: The sum of the amount of the distributed intangible's basis that is nonamortizable under paragraph (g)(2)(ii)(B) of this section ($0) and the total unrealized appreciation inherent in the intangible reduced by the amount of the increase in the adjusted basis of the distributed intangible under section 732(b) to which the anti-churning rules do not apply ($180−$150 = $30), over the fair market value of the distributed intangible ($180).

Example 30. Distribution of section 197(f)(9) intangible contributed to the partnership by a partner. (i) The facts are the same as in *Example 29,* except that C purchased the intangible used in the consulting business in 1988 for $60 and contributed the intangible to ABC in 1990. At that time, the intangible had a fair market value of $150 and an adjusted tax basis of $60. When ABC distributes the intangible to A in 2000, the intangible has a fair market value of $180 and a basis of $60.
(ii) As in *Examples 28* and *29,* the adjusted basis of the intangible in A's hands is $150 under section 732(b). However, the increase in the adjusted basis of the intangible under section 732(b) is only $90 ($150 adjusted basis after the distribution compared to $60 basis before the distribution). Pursuant to paragraph (g)(2)(ii)(B) of this section, A steps into the shoes of ABC with respect to the $60 of A's adjusted basis in the intangible that corresponds to ABC's basis in the intangible and this portion of the basis is nonamortizable. B and C are not related to A, A acquired the ABC interest from an unrelated person after August 10, 1993, and the intangible was acquired by ABC before A acquired the ABC interest. Therefore, under paragraph (h)(12)(ii) of this section, the section 732(b) basis increase is amortizable to the extent of A, B, and C's allocable share of the unrealized appreciation from the intangible. The total unrealized

appreciation from the intangible that is allocable to A, B, and C is $120. If ABC had sold the intangible immediately before the distribution to A for its fair market value of $180, it would have recognized gain of $120, which would have been allocated $10 to A, $10 to B, and $100 to C under section 704(c). Because A, B, and C's allocable share of the unrealized appreciation from the intangible exceeds the section 732(b) basis increase in the intangible, the entire $90 of basis increase is amortizable by A. Accordingly, after the distribution, A will be treated as having two intangibles, an amortizable section 197 intangible with an adjusted basis of $90 and a new amortization period of 15 years and a nonamortizable intangible with an adjusted basis of $60.

(iii) In applying the anti-churning rules to future transfers of the distributed intangible, under paragraph (h)(12)(ii)(C) of this section, one-half of the intangible will continue to be subject to the anti-churning rules, determined as follows: The sum of the amount of the distributed intangible's basis that is nonamortizable under paragraph (g)(2)(ii)(B) of this section ($60) and the total unrealized appreciation inherent in the intangible reduced by the amount of the increase in the adjusted basis of the distributed intangible under section 732(b) to which the anti-churning rules do not apply ($120−$90 = $30), over the fair market value of the distributed intangible ($180).

Example 31. Partnership distribution causing section 734(b) basis adjustment to section 197(f)(9) intangible. (i) On January 1, 2001, A, B, and C form a partnership (ABC) in which each partner shares equally in capital and income, gain, loss, and deductions. On that date, A contributes a section 197(f)(9) intangible with a zero basis and a value of $150, and B and C each contribute $150 cash. A and B are related, but neither A nor B is related to C. ABC does not adopt the remedial allocation method for making section 704(c) allocations of amortization expenses with respect to the intangible. On December 1, 2004, when the value of the intangible has increased to $600, ABC distributes $300 to B in complete redemption of B's interest in the partnership. ABC has an election under section 754 in effect for the taxable year that includes December 1, 2004. (Assume that, at the time of the distribution, the basis of A's partnership interest remains zero, and the basis of each of B's and C's partnership interest remains $150.)
(ii) Immediately prior to the distribution, the assets of the partnership are revalued pursuant to § 1.704-1(b)(2)(iv)(*f*), so that the section 197(f)(9) intangible is reflected on the books of the partnership at a value of $600. B recognizes $150 of gain under section 731(a)(1) upon the distribution of $300 in redemption of B's partnership interest. As a result, the adjusted basis of the intangible held by ABC increases by $150 under section 734(b). A does not satisfy any of the tests set forth under paragraph (h)(12)(iv)(B) and thus is not an eligible partner. C is not related to B and thus is an eligible partner under paragraph (h)(12)(iv)(B)(*1*) of this section. The capital accounts of A and C are equal immediately after the distribution, so, pursuant to paragraph (h)(12)(iv)(D)(*1*) of this section, each partner's share of the basis increase is equal to $75. Because A is not an eligible partner, the anti-churning rules apply to A's share of the basis increase. The anti-churning rules do not apply to C's share of the basis increase.

(iii) For book purposes, ABC determines the amortization of the asset as follows: First, the intangible that is subject to adjustment under section 734(b) will be divided into three assets: the first, with a basis and value of $75 will be amortizable for both book and tax purposes; the second, with a basis and value of $75

will be amortizable for book, but not tax purposes; and a third asset with a basis of zero and a value of $450 will not be amortizable for book or tax purposes. Any subsequent revaluation of the intangible pursuant to § 1.704-1(b)(2)(iv)(*f*) will be made solely with respect to the third asset (which is not amortizable for book purposes). The book and tax attributes from the first asset (*i.e.,* book and tax amortization) will be specially allocated to C. The book and tax attributes from the second asset (*i.e.,* book amortization and non-amortizable tax basis) will be specially allocated to A. Upon disposition of the intangible, each partner's share of gain or loss will be determined first by allocating among the partners an amount realized equal to the book value of the intangible attributable to such partner, with any remaining amount realized being allocated in accordance with the partnership agreement. Each partner then will compare its share of the amount realized with its remaining basis in the intangible to arrive at the gain or loss to be allocated to such partner. This is a reasonable method for amortizing the intangible for book purposes, and the results in allocating the income, gain, loss, and deductions attributable to the intangible do not contravene the purposes of the anti-churning rules under section 197 or paragraph (h) of this section.

(l) ***Effective dates*** —

(1) ***In general.*** This section applies to property acquired after January 25, 2000, except that paragraph (c)(13) of this section (exception from section 197 for separately acquired rights of fixed duration or amount) applies to property acquired after August 10, 1993 (or July 25, 1991, if a valid retroactive election has been made under § 1.197-1T), and paragraphs (h)(12)(ii), (iii), (iv), (v), (vi)(A), and (vii)(B) of this section (anti-churning rules applicable to partnerships) apply to partnership transactions occurring on or after November 20, 2000.

(2) ***Application to pre-effective date acquisitions.*** A taxpayer may choose, on a transaction-by-transaction basis, to apply the provisions of this section and § 1.167(a)-14 to property acquired (or partnership transactions occurring) after August 10, 1993 (or July 25, 1991, if a valid retroactive election has been made under § 1.197-1T) and—

(i) On or before January 25, 2000; or

(ii) With respect to paragraphs (h)(12)(ii), (iii), (iv), (v), (vi)(A), and (vii)(B) of this section, before November 20, 2000.

(3) ***Application of regulation project REG-209709-94 to pre-effective date acquisitions.*** A taxpayer may rely on the provisions of regulation project REG-209709-94 (1997-1 C.B. 731) for property acquired after August 10, 1993 (or July 25, 1991, if a valid retroactive election has been made under § 1.197-1T) and on or before January 25, 2000.

(4) ***Change in method of accounting*** —

(i) ***In general.*** For the first taxable year ending after January 25, 2000, a taxpayer that has acquired property to which the exception in § 1.197-2(c)(13) applies is granted consent of the Commissioner to change its method of accounting for such property to comply with the provisions of this section and § 1.167(a)-14 unless the proper treatment of such property is an issue under consideration (within the meaning of Rev. Proc. 97-27 (1997-21 IRB 10)(see § 601.601(d)(2) of this chapter)) in an examination, before an Appeals office, or before a Federal court.

(ii) ***Application to pre-effective date acquisitions.*** For the first taxable year ending after January 25, 2000, a taxpayer is granted consent of the Commissioner to change its method of accounting for all property acquired in transactions described in paragraph (l)(2) of this section to comply with the provisions of this section and § 1.167(a)-14 unless the proper treatment of any such property is an issue under consideration (within the meaning of Rev. Proc. 97-27 (1997-21 IRB 10)(see § 601.601(d)(2) of this chapter)) in an examination, before an Appeals office, or before a Federal court.

(iii) ***Automatic change procedures.*** A taxpayer changing its method of accounting in accordance with this paragraph (l)(4) must follow the automatic change in accounting method provisions of Rev. Proc. 99-49 (1999-52 IRB 725)(see § 601.601(d)(2) of this chapter) except, for purposes of this paragraph (l)(4), the scope limitations in section 4.02 of Rev. Proc. 99-49 (1999-52 IRB 725) are not applicable. However, if the taxpayer is under examination, before an appeals office, or before a Federal court, the taxpayer must provide a copy of the application to the examining agent(s), appeals officer, or counsel for the government, as appropriate, at the same time that it files the copy of the application with the National Office. The application must contain the name(s) and telephone number(s) of the examining agent(s), appeals officer, or counsel for the government, as appropriate.

(5) ***Applicability dates for section 721(c) partnerships —***

(i) ***In general.*** Except as provided in paragraph (l)(5)(ii) of this section, paragraph (h)(12)(vii)(C) of this section applies with respect to contributions occurring on or after January 18, 2017, and with respect to contributions that occurred before January 18, 2017 resulting from an entity classification election made under § 301.7701-3 of this chapter that was effective on or before January 18, 2017 but was filed on or after January 18, 2017.

(ii) ***Application of the provisions described in paragraph (l)(5)(i)(A) of this section retroactively.*** Paragraph (h)(12)(vii)(C) of this section may be applied with respect to a contribution occurring on or after August 6, 2015, and to a contribution that occurred before August 6, 2015 resulting from an entity classification election made under § 301.7701-3 of this chapter that was effective on or before August 6, 2015 but was filed on or after August 6, 2015. A taxpayer applying paragraph (h)(12)(vii)(C) of this section retroactively must apply paragraph (h)(12)(vii)(C) of this section on a timely filed original return (including extensions) or an amended return filed no later than July 18, 2017.

[T.D. 8865, 65 FR 3827, Jan. 25, 2000; 65 FR 16318, Mar. 28, 2000; 65 FR 60585, Oct. 12, 2000, as amended by T.D. 8907, 65 FR 69671, Nov. 20, 2000; T.D. 8940, 66 FR 9929, Feb. 13, 2001; 66 FR 17363, Mar. 30, 2001; 67 FR 22286, May 3, 2002; T.D. 9257, 71 FR 17996, Apr. 10, 2006; 73 FR 3869, Jan. 23, 2008; T.D. 9533, 76 FR 39280, July 6, 2011; T.D. 9637, 78 FR 54745, Sept. 6, 2013; T.D. 9811, 82 FR 6237, Jan. 19, 2017; T.D. 9814, 82 FR 7597, Jan. 19, 2017; T.D. 9891, 84 FR 3838, Jan. 23, 2020]

§ 1.199A-0 Table of contents.

This section lists the section headings that appear in §§ 1.199A-1 through 1.199A-6.

§ 1.199A-1 Operational rules.

(a) Overview.

(1) In general.

(2) Usage of term individual.

(b) Definitions.

(1) Aggregated trade or business.

(2) Applicable percentage.

(3) Net capital gain.

(4) Phase-in range.

(5) Qualified business income (QBI).

(6) QBI component.

(7) Qualified PTP income.

(8) Qualified REIT dividends.

(9) Reduction amount.

(10) Relevant passthrough entity (RPE).

(11) Specified service trade or business (SSTB).

(12) Threshold amount.

(13) Total QBI amount.

(14) Trade or business.

(15) Unadjusted basis immediately after the acquisition of qualified property (UBIA of qualified property).

(16) W-2 wages.

(c) Computation of the section 199A deduction for individuals with taxable income not exceeding threshold amount.

(1) In general.

(2) Carryover rules.

(i) Negative total QBI amount.

(ii) Negative combined qualified REIT dividends/qualified PTP income.

(3) Examples.

(d) Computation of the section 199A deduction for individuals with taxable income above the threshold amount.

(1) In general.

(2) QBI component.

(i) SSTB exclusion.

(ii) Aggregated trade or business.

(iii) Netting and carryover.

(A) Netting.

(B) Carryover of negative total QBI amount.

(iv) QBI component calculation.

(A) General rule.

(B) Taxpayers with taxable income within phase-in range.

(3) Qualified REIT dividends/qualified PTP income component.

(i) In general.

(ii) SSTB exclusion.

(iii) Negative combined qualified REIT dividends/qualified PTP income.

(4) Examples.

(e) Special rules.

(1) Effect of deduction.

(2) Disregarded entities.

(3) Self-employment tax and net investment income tax.

(4) Commonwealth of Puerto Rico.

(5) Coordination with alternative minimum tax.

(6) Imposition of accuracy-related penalty on underpayments.

(7) Reduction for income received from cooperatives.

(f) Applicability date.

(1) General rule.

(2) Exception for non-calendar year RPE.

§ 1.199A-2 Determination of W-2 Wages and unadjusted basis immediately after acquisition of qualified property.

(a) Scope.

(1) In general.

(2) W-2 wages.

(3) UBIA of qualified property.

(i) In general.

(ii) UBIA of qualified property held by a partnership.

(iii) UBIA of qualified property held by an S corporation.

(iv) UBIA and section 743(b) basis adjustments.

(A) In general.

(B) Excess section 743(b) basis adjustments.

(C) Computation of partner's share of UBIA with excess section 734(b) basis adjustments.

(D) Examples.

(b) W-2 wages.

(1) In general.

(2) Definition of W-2 wages.

(i) In general.

(ii) Wages paid by a person other than a common law employer.

(iii) Requirement that wages must be reported on return filed with the Social Security Administration.

(A) In general.

(B) Corrected return filed to correct a return that was filed within 60 days of the due date.

(C) Corrected return filed to correct a return that was filed later than 60 days after the due date.

(iv) Methods for calculating W-2 Wages.

(A) In general.

(B) Acquisition or disposition of a trade or business.

(*1*) In general.

(*2*) Acquisition or disposition.

(C) Application in the case of a person with a short taxable year.

(*1*) In general.

(*2*) Short taxable year that does not include December 31.

(D) Remuneration paid for services performed in the Commonwealth of Puerto Rico.

(3) Allocation of wages to trades or businesses.

(4) Allocation of wages to QBI.

(5) Non-duplication rule.

(c) UBIA of qualified property.

(1) Qualified property.

(i) In general.

(ii) Improvements to qualified property.

(iii) Adjustments under sections 734(b) and 743(b).

(iv) Property acquired at end of year.

(2) Depreciable period.

(i) In general.

(ii) Additional first-year depreciation under section 168.

(iii) Qualified property acquired in transactions subject to section 1031 or section 1033.

(A) Replacement property received in a section 1031 or 1033 transaction.

(B) Other property received in a section 1031 or 1033 transaction.

(iv) Qualified property acquired in transactions subject to section 168(i)(7)(B).

(v) Excess section 743(b) basis adjustment.

(3) Unadjusted basis immediately after acquisition.

(i) In general.

(ii) Qualified property acquired in a like-kind exchange.

(A) In general.

(B) Excess boot.

(iii) Qualified property acquired pursuant to an involuntary conversion.

(A) In general.

(B) Excess boot.

(iv) Qualified property acquired in transactions described in section 168(i)(7)(B).

(v) Qualified property acquired from a decedent.

(vi) Property acquired in a nonrecognition transaction with principal purpose of increasing UBIA.

(4) Examples.

(d) Applicability date.

(1) General rule.

(2) Exceptions.

(i) Anti-abuse rules.

(ii) Non-calendar year RPE.

§ 1.199A-3 Qualified business income, qualified REIT dividends, and qualified PTP income.

(a) In general.

(b) Definition of qualified business income.

(1) In general.

(i) Section 751 gain.

(ii) Guaranteed payments for the use of capital.

(iii) Section 481 adjustments.

(iv) Previously disallowed losses

(A) In general.

(B) Partial allowance.

(C) Attributes of disallowed loss determined in year loss is incurred.

(*1*) In general.

(*2*) Specified service trades or businesses.

(D) Examples.

(v) Net operating losses.

(vi) Other deductions.

(2) Qualified items of income, gain, deduction, and loss.

(i) In general.

(ii) Items not taken into account.

(3) Commonwealth of Puerto Rico.

(4) Wages.

(5) Allocation of items among directly-conducted trades or businesses.

(c) Qualified REIT dividends and qualified PTP income.

(1) In general.

(2) Qualified REIT dividend.

(3) Qualified PTP income.

(i) In general.

(ii) Special rules.

(d) Section 199A dividends paid by a regulated investment company.

(1) In general.

(2) Definition of section 199A dividend.

(i) In general.

(ii) Reduction in the case of excess reported amounts.

(iii) Allocation of excess reported amount.

(A) In general.

(B) Special rule for noncalendar-year RICs.

(3) Definitions.

(i) Reported section 199A dividend amount.

(ii) Excess reported amount.

(iii) Aggregate reported amount.

(iv) Post-December reported amount.

(v) Qualified REIT dividend income.

(4) Treatment of section 199A dividends by shareholders.

(i) In general.

(ii) Holding period.

(5) Example.

(e) Applicability date.

(1) General rule.

(2) Exceptions.

(i) Anti-abuse rules.

(ii) Non-calendar year RPE.

(iii) Previously disallowed losses.

(iv) Section 199A dividends.

§ 1.199A-4 Aggregation.

(a) Scope and purpose.

(b) Aggregation rules.

(1) General rule.

(2) Operating rules.

(i) Individuals.

(ii) RPEs.

(c) Reporting and consistency.

(1) For individual.

(2) Individual disclosure.

(i) Required annual disclosure.

(ii) Failure to disclose.

(3) For RPEs.

(i) Required annual disclosure.

(ii) Failure to disclose.

(d) Examples.

(e) Applicability date.

(1) General rule.

(2) Exception for non-calendar year RPE.

§ 1.199A-5 Specified service trades or businesses and the trade or business of performing services as an employee.

(a) Scope and effect.

(1) Scope.

(2) Effect of being an SSTB.

(3) Trade or business of performing services as an employee.

(b) Definition of specified service trade or business.

(1) Listed SSTBs.

(2) Additional rules for applying section 199A(d)(2) and paragraph (b) of this section.

(i) In general.

(A) No effect on other tax rules.

(B) Hedging transactions.

(ii) Meaning of services performed in the field of health.

(iii) Meaning of services performed in the field of law.

(iv) Meaning of services performed in the field of accounting.

(v) Meaning of services performed in the field of actuarial science.

(vi) Meaning of services performed in the field of performing arts.

(vii) Meaning of services performed in the field of consulting.

(viii) Meaning of services performed in the field of athletics.

(ix) Meaning of services performed in the field of financial services.

(x) Meaning of services performed in the field of brokerage services.

(xi) Meaning of the provision of services in investing and investment management.

(xii) Meaning of the provision of services in trading.

(xiii) Meaning of the provision of services in dealing.

(A) Dealing in securities.

(B) Dealing in commodities.

(*1*) Qualified active sale.

(*2*) Active conduct of a commodities business.

(*3*) Directly holds commodities as inventory or similar property.

(*4*) Directly incurs substantial expenses in the ordinary course.

(*5*) Significant activities for purposes of paragraph (b)(2)(xiii)(B)(*4*)(*iii*) of this section.

(C) Dealing in partnership interests.

(xiv) Meaning of trade or business where the principal asset of such trade or business is the reputation or skill of one or more of its employees or owners.

(3) Examples.

(c) Special rules.

(1) De minimis rule.

(i) Gross receipts of $25 million or less.

(ii) Gross receipts of greater than $25 million.

(2) Services or property provided to an SSTB.

(i) In general.

(ii) 50 percent or more common ownership.

(iii) Examples.

(d) Trade or business of performing services as an employee.

(1) In general.

(2) Employer's Federal employment tax classification of employee immaterial.

(3) Presumption that former employees are still employees.

(i) Presumption.

(ii) Rebuttal of presumption.

(iii) Examples.

(e) Applicability date.

(1) General rule.

(2) Exceptions.

(i) Anti-abuse rules.

(ii) Non-calendar year RPE.

§ 1.199A-6 Relevant passthrough entities (RPEs), publicly traded partnerships (PTPs), trusts, and estates.

(a) Overview.

(b) Computational and reporting rules for RPEs.

(1) In general.

(2) Computational rules.

(3) Reporting rules for RPEs.

(i) Trade or business directly engaged in.

(ii) Other items.

(iii) Failure to report information.

(c) Computational and reporting rules for PTPs.

(1) Computational rules.

(2) Reporting rules.

(d) Application to trusts, estates, and beneficiaries.

(1) In general.

(2) Grantor trusts.

(3) Non-grantor trusts and estates.

(i) Calculation at entity level.

(ii) Allocation among trust or estate and beneficiaries.

(iii) Separate shares.

(iv) Threshold amount.

(v) Charitable remainder trusts.

(vi) Electing small business trusts.

(vii) Anti-abuse rule for creation of a trust to avoid exceeding the threshold amount.

(viii) Example.

(e) Applicability date.

(1) General rule.

(2) Exceptions.

(i) Anti-abuse rules.

(ii) Non-calendar year RPE.

(iii) Separate shares.

(iv) Charitable remainder trusts.

[T.D. 9847, 84 FR 2988, Feb. 8, 2019; T.D. 9847, 84 FR 15954, Apr. 17, 2019; T.D. 9899, 85 FR 38065, June 25, 2020]

Editorial Note: At 84 FR 15954, Apr. 17, 2019, § 1.199A-0 was amended be adding an entry for § 1.199A-2(b)(2)(iv), however, this paragraph already exists and the amendment could not be incorporated due to inaccurate amendatory instruction.

§ 1.199A-1 Operational rules.

(a) *Overview* —

(1) ***In general.*** This section provides operational rules for calculating the section 199A(a) qualified business income deduction (section 199A deduction) under section 199A of the Internal Revenue Code (Code). This section refers to the rules in §§ 1.199A-2 through 1.199A-6. This paragraph (a) provides an overview of this section. Paragraph (b) of this section provides definitions that apply for purposes of section 199A and §§ 1.199A-1 through 1.199A-6. Paragraph (c) of this section provides computational rules and examples for individuals whose taxable income does not exceed the threshold amount. Paragraph (d) of this section provides computational rules and examples for individuals whose taxable income exceeds the threshold amount. Paragraph (e) of this section provides special rules for purposes of section 199A and §§ 1.199A-1 through 1.199A-6. This section and §§ 1.199A-2 through 1.199A-6 do not apply for purposes of calculating the deduction in section 199A(g) for specified agricultural and horticultural cooperatives.

(2) ***Usage of term individual.*** For purposes of applying the rules of §§ 1.199A-1 through 1.199A-6, a reference to an individual includes a reference to a trust (other than a grantor trust) or an estate to the extent that the section 199A deduction is determined by the trust or estate under the rules of § 1.199A-6.

(b) ***Definitions.*** For purposes of section 199A and §§ 1.199A-1 through 1.199A-6, the following definitions apply:

(1) ***Aggregated trade or business*** means two or more trades or businesses that have been aggregated pursuant to § 1.199A-4.

(2) ***Applicable percentage*** means, with respect to any taxable year, 100 percent reduced (not below zero) by the percentage equal to the ratio that the taxable income of the individual for the taxable year in excess of the threshold amount, bears to $50,000 (or $100,000 in the case of a joint return).

(3) ***Net capital gain*** means *net capital gain* as defined in section 1222(11) plus any *qualified dividend income* (as defined in section 1(h)(11)(B)) for the taxable year.

(4) ***Phase-in range*** means a range of taxable income between the threshold amount and the threshold amount plus $50,000 (or $100,000 in the case of a joint return).

(5) ***Qualified business income (QBI)*** means the net amount of qualified items of income, gain, deduction, and loss with respect to any trade or business (or aggregated trade or business) as determined under the rules of § 1.199A-3(b).

(6) ***QBI component*** means the amount determined under paragraph (d)(2) of this section.

(7) ***Qualified PTP income*** is defined in § 1.199A-3(c)(3).

(8) ***Qualified REIT dividends*** are defined in § 1.199A-3(c)(2).

(9) ***Reduction amount*** means, with respect to any taxable year, the excess amount multiplied by the ratio that the taxable income of the individual for the taxable year in excess of the threshold amount, bears to $50,000 (or $100,000 in the case of a joint return). For purposes of this paragraph (b)(9), the *excess amount* is the amount by which 20 percent of QBI exceeds the greater of 50 percent of W-2 wages or the sum of 25 percent of W-2 wages plus 2.5 percent of the UBIA of qualified property.

(10) ***Relevant passthrough entity (RPE)*** means a partnership (other than a PTP) or an S corporation that is owned, directly or indirectly, by at least one individual, estate, or trust. Other passthrough entities including common trust funds as described in § 1.6032-1T and religious or apostolic organizations described in section 501(d) are also treated as RPEs if the entity files a Form 1065, *U.S. Return of*

Partnership Income, and is owned, directly or indirectly, by at least one individual, estate, or trust. A trust or estate is treated as an RPE to the extent it passes through QBI, W-2 wages, UBIA of qualified property, qualified REIT dividends, or qualified PTP income.

(11) ***Specified service trade or business (SSTB)*** means a specified service trade or business as defined in § 1.199A-5(b).

(12) ***Threshold amount*** means, for any taxable year beginning before 2019, $157,500 (or $315,000 in the case of a taxpayer filing a joint return). In the case of any taxable year beginning after 2018, the threshold amount is the dollar amount in the preceding sentence increased by an amount equal to such dollar amount, multiplied by the cost-of-living adjustment determined under section 1(f)(3) of the Code for the calendar year in which the taxable year begins, determined by substituting "calendar year 2017" for "calendar year 2016" in section 1(f)(3)(A)(ii). The amount of any increase under the preceding sentence is rounded as provided in section 1(f)(7) of the Code.

(13) ***Total QBI amount*** means the net total QBI from all trades or businesses (including the individual's share of QBI from trades or business conducted by RPEs).

(14) ***Trade or business*** means a trade or business that is a trade or business under section 162 (a section 162 trade or business) other than the trade or business of performing services as an employee. In addition, rental or licensing of tangible or intangible property (rental activity) that does not rise to the level of a section 162 trade or business is nevertheless treated as a trade or business for purposes of section 199A, if the property is rented or licensed to a trade or business conducted by the individual or an RPE which is commonly controlled under § 1.199A-4(b)(1)(i) (regardless of whether the rental activity and the trade or business are otherwise eligible to be aggregated under § 1.199A-4(b)(1)).

(15) ***Unadjusted basis immediately after acquisition of qualified property*** (*UBIA of qualified property*) is defined in § 1.199A-2(c).

(16) ***W-2 wages*** means W-2 wages of a trade or business (or aggregated trade or business) properly allocable to QBI as determined under § 1.199A-2(b).

(c) ***Computation of the section 199A deduction for individuals with taxable income not exceeding threshold amount —***

(1) ***In general.*** The section 199A deduction is determined for individuals with taxable income for the taxable year that does not exceed the threshold amount by adding 20 percent of the total QBI amount (including the individual's share of QBI from an RPE and QBI attributable to an SSTB) and 20 percent of the combined amount of qualified REIT dividends and qualified PTP income (including the individual's share of qualified REIT dividends and qualified PTP income from RPEs and qualified PTP income attributable to an SSTB). That sum is then compared to 20 percent of the amount by which the individual's taxable income exceeds net capital gain. The lesser of these two amounts is the individual's section 199A deduction.

(2) ***Carryover rules —***

(i) ***Negative total QBI amount.*** If the total QBI amount is less than zero, the portion of the individual's section 199A deduction related to QBI is zero for the taxable year. The negative total QBI amount is treated as negative QBI from a separate trade or business in the

succeeding taxable years of the individual for purposes of section 199A and this section. This carryover rule does not affect the deductibility of the loss for purposes of other provisions of the Code.

(ii) ***Negative combined qualified REIT dividends/qualified PTP income.*** If the combined amount of REIT dividends and qualified PTP income is less than zero, the portion of the individual's section 199A deduction related to qualified REIT dividends and qualified PTP income is zero for the taxable year. The negative combined amount must be carried forward and used to offset the combined amount of REIT dividends and qualified PTP income in the succeeding taxable years of the individual for purposes of section 199A and this section. This carryover rule does not affect the deductibility of the loss for purposes of other provisions of the Code.

(3) ***Examples.*** The following examples illustrate the provisions of this paragraph (c). For purposes of these examples, unless indicated otherwise, assume that all of the trades or businesses are trades or businesses as defined in paragraph (b)(14) of this section and all of the tax items are effectively connected to a trade or business within the United States within the meaning of section 864(c). Total taxable income does not include the section 199A deduction.

(i) ***Example 1.*** A, an unmarried individual, owns and operates a computer repair shop as a sole proprietorship. The business generates $100,000 in net taxable income from operations in 2018. A has no capital gains or losses. After allowable deductions not relating to the business, A's total taxable income for 2018 is $81,000. The business's QBI is $100,000, the net amount of its qualified items of income, gain, deduction, and loss. A's section 199A deduction for 2018 is equal to $16,200, the lesser of 20% of A's QBI from the business ($100,000 × 20% = $20,000) and 20% of A's total taxable income for the taxable year ($81,000 × 20% = $16,200).

(ii) ***Example 2.*** Assume the same facts as in *Example 1* of paragraph (c)(3)(i) of this section, except that A also has $7,000 in net capital gain for 2018 and that, after allowable deductions not relating to the business, A's taxable income for 2018 is $74,000. A's taxable income minus net capital gain is $67,000 ($74,000−$7,000). A's section 199A deduction is equal to $13,400, the lesser of 20% of A's QBI from the business ($100,000 × 20% = $20,000) and 20% of A's total taxable income minus net capital gain for the taxable year ($67,000 × 20% = $13,400).

(iii) ***Example 3.*** B and C are married and file a joint individual income tax return. B earns $50,000 in wages as an employee of an unrelated company in 2018. C owns 100% of the shares of X, an S corporation that provides landscaping services. X generates $100,000 in net income from operations in 2018. X pays C $150,000 in wages in 2018. B and C have no capital gains or losses. After allowable deductions not related to X, B and C's total taxable income for 2018 is $270,000. B's and C's wages are not considered to be income from a trade or business for purposes of the section 199A deduction. Because X is an S corporation, its QBI is determined at the S corporation level. X's QBI is $100,000, the net amount of its qualified items of income, gain, deduction, and loss. The wages paid by X to C are considered to be a qualified item of deduction for purposes of determining X's QBI. The section 199A deduction with respect to X's QBI is then determined by C, X's sole shareholder, and is claimed on the joint return filed by B and C. B and C's section 199A deduction is equal to $20,000, the lesser of 20% of C's QBI from the business ($100,000 × 20% = $20,000) and 20% of B and C's total taxable income for the taxable year ($270,000 × 20% = $54,000).

(iv) ***Example 4.*** Assume the same facts as in *Example 3* of paragraph (c)(3)(iii) of this section except that B also earns $1,000 in qualified REIT dividends and $500 in qualified PTP income in 2018, increasing taxable income to $271,500. B and C's section 199A deduction is equal to $20,300, the lesser of:

(A) 20% of C's QBI from the business ($100,000 × 20% = $20,000) plus 20% of B's combined qualified REIT dividends and qualified PTP income ($1,500 × 20% = $300); and

(B) 20% of B and C's total taxable for the taxable year ($271,500 × 20% = $54,300).

(d) ***Computation of the section 199A deduction for individuals with taxable income above threshold amount*** —

(1) ***In general.*** The section 199A deduction is determined for individuals with taxable income for the taxable year that exceeds the threshold amount by adding the QBI component described in paragraph (d)(2) of this section and the qualified REIT dividends/qualified PTP income component described in paragraph (d)(3) of this section (including the individual's share of qualified REIT dividends and qualified PTP income from RPEs). That sum is then compared to 20 percent of the amount by which the individual's taxable income exceeds net capital gain. The lesser of these two amounts is the individual's section 199A deduction.

(2) ***QBI component.*** An individual with taxable income for the taxable year that exceeds the threshold amount determines the QBI component using the following computational rules, which are to be applied in the order they appear.

(i) ***SSTB exclusion.*** If the individual's taxable income is within the phase-in range, then only the applicable percentage of QBI, W-2 wages, and UBIA of qualified property for each SSTB is taken into account for all purposes of determining the individual's section 199A deduction, including the application of the netting and carryover rules described in paragraph (d)(2)(iii) of this section. If the individual's taxable income exceeds the phase-in range, then none of the individual's share of QBI, W-2 wages, or UBIA of qualified property attributable to an SSTB may be taken into account for purposes of determining the individual's section 199A deduction.

(ii) ***Aggregated trade or business.*** If an individual chooses to aggregate trades or businesses under the rules of § 1.199A-4, the individual must combine the QBI, W-2 wages, and UBIA of qualified property of each trade or business within an aggregated trade or business prior to applying the netting and carryover rules described in paragraph (d)(2)(iii) of this section and the W-2 wage and UBIA of qualified property limitations described in paragraph (d)(2)(iv) of this section.

(iii) ***Netting and carryover*** —

(A) ***Netting.*** If an individual's QBI from at least one trade or business (including an aggregated trade or business) is less than zero, the individual must offset the QBI attributable to each trade or business (or aggregated trade or business) that produced net positive QBI with the QBI from each trade or business (or aggregated trade or business) that produced net negative QBI in proportion to the relative amounts of net QBI in the trades or businesses (or aggregated trades or businesses) with positive QBI. The adjusted QBI is then used in paragraph (d)(2)(iv) of this section. The W-2 wages and UBIA of qualified property from the trades or businesses (including aggregated trades or businesses) that produced net negative QBI are not taken into account for purposes of this paragraph (d) and are not carried over to the subsequent year.

(B) ***Carryover of negative total QBI amount.*** If an individual's QBI from all trades or businesses (including aggregated trades or businesses) combined is less than zero, the QBI component is zero for the taxable year. This negative amount is treated as negative QBI from a separate trade or business in the succeeding taxable years of the individual for purposes of section 199A and this section. This carryover rule does not affect the deductibility of the loss for purposes of other provisions of the Code. The W-2 wages and UBIA of qualified property from the trades or businesses (including aggregated trades or businesses) that produced net negative QBI are not taken into account for purposes of this paragraph (d) and are not carried over to the subsequent year.

(iv) ***QBI component calculation*** —

(A) ***General rule.*** Except as provided in paragraph (d)(2)(iv)(B) of this section, the QBI component is the sum of the amounts determined under this paragraph (d)(2)(iv)(A) for each trade or business (or aggregated trade or business). For each trade or business (or aggregated trade or business) (including trades or businesses operated through RPEs) the individual must determine the lesser of—

(*1*) 20 percent of the QBI for that trade or business (or aggregated trade or business); or

(*2*) The greater of—

(*i*) 50 percent of W-2 wages with respect to that trade or business (or aggregated trade or business); or

(*ii*) The sum of 25 percent of W-2 wages with respect to that trade or business (or aggregated trade or business) plus 2.5 percent of the UBIA of qualified property with respect to that trade or business (or aggregated trade or business).

(B) ***Taxpayers with taxable income within phase-in range.*** If the individual's taxable income is within the phase-in range and the amount determined under paragraph (d)(2)(iv)(A)(*2*) of this section for a trade or business (or aggregated trade or business) is less than the amount determined under paragraph (d)(2)(iv)(A)(*1*) of this section for that trade or business (or aggregated trade or business), the amount determined under paragraph (d)(2)(iv)(A) of this section for such trade or business (or aggregated trade or business) is modified. Instead of the amount determined under paragraph (d)(2)(iv)(A)(*2*) of this section, the QBI component for the trade or business (or aggregated trade or business) is the amount determined under paragraph (d)(2)(iv)(A)(*1*) of this section reduced by the reduction amount as defined in paragraph (b)(9) of this section. This reduction amount does not apply if the amount determined in paragraph (d)(2)(iv)(A)(*2*) of this section is greater than the amount determined under paragraph (d)(2)(iv)(A)(*1*) of this section (in which circumstance the QBI component for the trade or business (or aggregated trade or business) will be the unreduced amount determined in paragraph (d)(2)(iv)(A)(*1*) of this section).

(3) ***Qualified REIT dividends/qualified PTP income component*** —

(i) ***In general.*** The qualified REIT dividend/qualified PTP income component is 20 percent of the combined amount of qualified REIT dividends and qualified PTP income received by the individual (including the individual's share of qualified REIT dividends and qualified PTP income from RPEs).

(ii) ***SSTB exclusion.*** If the individual's taxable income is within the phase-in range, then only the applicable percentage of qualified PTP income generated by an SSTB is taken into account for purposes of determining the individual's section 199A deduction, including the determination of the combined amount of qualified REIT dividends and qualified PTP income described in paragraph (d)(1) of this section. If the individual's taxable income exceeds the phase-in range, then none of the individual's share of qualified PTP income generated by an SSTB may be taken into account for purposes of determining the individual's section 199A deduction.

(iii) ***Negative combined qualified REIT dividends/qualified PTP income.*** If the combined amount of REIT dividends and qualified PTP income is less than zero, the portion of the individual's section 199A deduction related to qualified REIT dividends and qualified PTP income is zero for the taxable year. The negative combined amount must be carried forward and used to offset the combined amount of REIT dividends/qualified PTP income in the succeeding taxable years of the individual for purposes of section 199A and this section. This carryover rule does not affect the deductibility of the loss for purposes of other provisions of the Code.

(4) ***Examples.*** The following examples illustrate the provisions of this paragraph (d). For purposes of these examples, unless indicated otherwise, assume that all of the trades or businesses are trades or businesses as defined in paragraph (b)(14) of this section, none of the trades or businesses are SSTBs as defined in paragraph (b)(11) of this section and § 1.199A-5(b); and all of the tax items associated with the trades or businesses are effectively connected to a trade or business within the United States within the meaning of section 864(c). Also assume that the taxpayers report no capital gains or losses or other tax items not specified in the examples. Total taxable income does not include the section 199A deduction.

(i) ***Example 1.*** D, an unmarried individual, operates a business as a sole proprietorship. The business generates $1,000,000 of QBI in 2018. Solely for purposes of this example, assume that the business paid no wages and holds no qualified property for use in the business. After allowable deductions unrelated to the business, D's total taxable income for 2018 is $980,000. Because D's taxable income exceeds the applicable threshold amount, D's section 199A deduction is subject to the W-2 wage and UBIA of qualified property limitations. D's section 199A deduction is limited to zero because the business paid no wages and held no qualified property.

(ii) ***Example 2.*** Assume the same facts as in *Example 1* of paragraph (d)(4)(i) of this section, except that D holds qualified property with a UBIA of $10,000,000 for use in the trade or business. D reports $4,000,000 of QBI for 2020. After allowable deductions unrelated to the business, D's total taxable income for 2020 is $3,980,000. Because D's taxable income is above the threshold amount, the QBI component of D's section 199A deduction is subject to the W-2 wage and UBIA of qualified property limitations. Because the business has no W-2 wages, the QBI component of D's section 199A deduction is limited to the lesser of 20% of the business's QBI or 2.5% of its UBIA of qualified property. Twenty percent of the $4,000,000 of QBI is $800,000. Two and one-half percent of the $10,000,000 UBIA of qualified property is $250,000. The QBI component of D's section 199A deduction is thus limited to $250,000. D's section 199A deduction is equal to the lesser of:

(A) 20% of the QBI from the business as limited ($250,000); or

(B) 20% of D's taxable income ($3,980,000 × 20% = $796,000). Therefore, D's section 199A deduction for 2020 is $250,000.

(iii) *Example 3.* E, an unmarried individual, is a 30% owner of LLC, which is classified as a partnership for Federal income tax purposes. In 2018, the LLC has a single trade or business and reports QBI of $3,000,000. The LLC pays total W-2 wages of $1,000,000, and its total UBIA of qualified property is $100,000. E is allocated 30% of all items of the partnership. For the 2018 taxable year, E reports $900,000 of QBI from the LLC. After allowable deductions unrelated to LLC, E's taxable income is $880,000. Because E's taxable income is above the threshold amount, the QBI component of E's section 199A deduction will be limited to the lesser of 20% of E's share of LLC's QBI or the greater of the W-2 wage or UBIA of qualified property limitations. Twenty percent of E's share of QBI of $900,000 is $180,000. The W-2 wage limitation equals 50% of E's share of the LLC's wages ($300,000) or $150,000. The UBIA of qualified property limitation equals $75,750, the sum of 25% of E's share of LLC's wages ($300,000) or $75,000 plus 2.5% of E's share of UBIA of qualified property ($30,000) or $750. The greater of the limitation amounts ($150,000 and $75,750) is $150,000. The QBI component of E's section 199A deduction is thus limited to $150,000, the lesser of 20% of QBI ($180,000) and the greater of the limitations amounts ($150,000). E's section 199A deduction is equal to the lesser of 20% of the QBI from the business as limited ($150,000) or 20% of E's taxable income ($880,000 × 20% = $176,000). Therefore, E's section 199A deduction is $150,000 for 2018.

(iv) *Example 4.* F, an unmarried individual, owns a 50% interest in Z, an S corporation for Federal income tax purposes that conducts a single trade or business. In 2018, Z reports QBI of $6,000,000. Z pays total W-2 wages of $2,000,000, and its total UBIA of qualified property is $200,000. For the 2018 taxable year, F reports $3,000,000 of QBI from Z. F is not an employee of Z and receives no wages or reasonable compensation from Z. After allowable deductions unrelated to Z and a deductible qualified net loss from a PTP of ($10,000), F's taxable income is $1,880,000. Because F's taxable income is above the threshold amount, the QBI component of F's section 199A deduction will be limited to the lesser of 20% of F's share of Z's QBI or the greater of the W-2 wage and UBIA of qualified property limitations. Twenty percent of F's share of Z's QBI ($3,000,000) is $600,000. The W-2 wage limitation equals 50% of F's share of Z's W-2 wages ($1,000,000) or $500,000. The UBIA of qualified property limitation equals $252,500, the sum of 25% of F's share of Z's W-2 wages ($1,000,000) or $250,000 plus 2.5% of E's share of UBIA of qualified property ($100,000) or $2,500. The greater of the limitation amounts ($500,000 and $252,500) is $500,000. The QBI component of F's section 199A deduction is thus limited to $500,000, the lesser of 20% of QBI ($600,000) and the greater of the limitations amounts ($500,000). F reports a qualified loss from a PTP and has no qualified REIT dividend. F does not net the ($10,000) loss from the PTP against QBI. Instead, the portion of F's section 199A deduction related to qualified REIT dividends and qualified PTP income is zero for 2018. F's section is 199A deduction is equal to the lesser of 20% of the QBI from the business as limited ($500,000) or 20% of F's taxable income over net capital gain ($1,880,000 x 20% = $376,000). Therefore, F's section 199A deduction is $376,000 for 2018. F must also carry forward the ($10,000) qualified loss from a PTP to be netted against F's qualified REIT dividends and qualified PTP income in the succeeding taxable year.

(v) *Example 5: Phase-in range.*

(A) B and C are married and file a joint individual income tax return. B is a shareholder in M, an entity taxed as an S corporation for Federal income tax purposes that conducts a single trade or business. M holds no qualified property. B's share of the M's QBI is $300,000 in 2018. B's share of the W-2 wages from M in 2018 is $40,000. C earns wage income from

employment by an unrelated company. After allowable deductions unrelated to M, B and C's taxable income for 2018 is $375,000. B and C are within the phase-in range because their taxable income exceeds the applicable threshold amount, $315,000, but does not exceed the threshold amount plus $100,000, or $415,000. Consequently, the QBI component of B and C's section 199A deduction may be limited by the W-2 wage and UBIA of qualified property limitations but the limitations will be phased in.

(B) Because M does not hold qualified property, only the W-2 wage limitation must be calculated. In order to apply the W-2 wage limitation, B and C must first determine 20% of B's share of M's QBI. Twenty percent of B's share of M's QBI of $300,000 is $60,000. Next, B and C must determine 50% of B's share of M's W-2 wages. Fifty percent of B's share of M's W-2 wages of $40,000 is $20,000. Because 50% of B's share of M's W-2 wages ($20,000) is less than 20% of B's share of M's QBI ($60,000), B and C must determine the QBI component of their section 199A deduction by reducing 20% of B's share of M's QBI by the reduction amount.

(C) B and C are 60% through the phase-in range (that is, their taxable income exceeds the threshold amount by $60,000 and their phase-in range is $100,000). B and C must determine the excess amount, which is the excess of 20% of B's share of M's QBI, or $60,000, over 50% of B's share of M's W-2 wages, or $20,000. Thus, the excess amount is $40,000. The reduction amount is equal to 60% of the excess amount, or $24,000. Thus, the QBI component of B and C's section 199A deduction is equal to $36,000, 20% of B's $300,000 share M's QBI (that is, $60,000), reduced by $24,000. B and C's section 199A deduction is equal to the lesser of 20% of the QBI from the business as limited ($36,000) or 20% of B and C's taxable income ($375,000 × 20% = $75,000). Therefore, B and C's section 199A deduction is $36,000 for 2018.

(vi) *Example 6.*

(A) Assume the same facts as in *Example 5* of paragraph (d)(4)(v) of this section, except that M is engaged in an SSTB. Because B and C are within the phase-in range, B must reduce the QBI and W-2 wages allocable to B from M to the applicable percentage of those items. B and C's applicable percentage is 100% reduced by the percentage equal to the ratio that their taxable income for the taxable year ($375,000) exceeds their threshold amount ($315,000), or $60,000, bears to $100,000. Their applicable percentage is 40%. The applicable percentage of B's QBI is ($300,000 × 40% =) $120,000, and the applicable percentage of B's share of W-2 wages is ($40,000 × 40% =) $16,000. These reduced numbers must then be used to determine how B's section 199A deduction is limited.

(B) B and C must apply the W-2 wage limitation by first determining 20% of B's share of M's QBI as limited by paragraph (d)(4)(vi)(A) of this section. Twenty percent of B's share of M's QBI of $120,000 is $24,000. Next, B and C must determine 50% of B's share of M's W-2 wages. Fifty percent of B's share of M's W-2 wages of $16,000 is $8,000. Because 50% of B's share of M's W-2 wages ($8,000) is less than 20% of B's share of M's QBI ($24,000), B and C's must determine the QBI component of their section 199A deduction by reducing 20% of B's share of M's QBI by the reduction amount.

(C) B and C are 60% through the phase-in range (that is, their taxable income exceeds the threshold amount by $60,000 and their phase-in range is $100,000). B and C must determine the excess amount, which is the excess of 20% of B's share of M's QBI, as adjusted in paragraph (d)(4)(vi)(A) of this section or $24,000, over 50% of B's share of M's

W-2 wages, as adjusted in paragraph (d)(4)(vi)(A) of this section, or $8,000. Thus, the excess amount is $16,000. The reduction amount is equal to 60% of the excess amount or $9,600. Thus, the QBI component of B and C's section 199A deduction is equal to $14,400, 20% of B's share M's QBI of $24,000, reduced by $9,600. B and C's section 199A deduction is equal to the lesser of 20% of the QBI from the business as limited ($14,400) or 20% of B's and C's taxable income ($375,000 × 20% = $75,000). Therefore, B and C's section 199A deduction is $14,400 for 2018.

(vii) *Example 7.*

(A) F, an unmarried individual, owns as a sole proprietor 100 percent of three trades or businesses, Business X, Business Y, and Business Z. None of the businesses hold qualified property. F does not aggregate the trades or businesses under § 1.199A-4. For taxable year 2018, Business X generates $1 million of QBI and pays $500,000 of W-2 wages with respect to the business. Business Y also generates $1 million of QBI but pays no wages. Business Z generates $2,000 of QBI and pays $500,000 of W-2 wages with respect to the business. F also has $750,000 of wage income from employment with an unrelated company. After allowable deductions unrelated to the businesses, F's taxable income is $2,722,000.

(B) Because F's taxable income is above the threshold amount, the QBI component of F's section 199A deduction is subject to the W-2 wage and UBIA of qualified property limitations. These limitations must be applied on a business-by-business basis. None of the businesses hold qualified property, therefore only the 50% of W-2 wage limitation must be calculated. Because QBI from each business is positive, F applies the limitation by determining the lesser of 20% of QBI and 50% of W-2 wages for each business.For Business X, the lesser of 20% of QBI ($1,000,000 × 20 percent = $200,000) and 50% of Business X's W-2 wages ($500,000 × 50% = $250,000) is $200,000. Business Y pays no W-2 wages. The lesser of 20% of Business Y's QBI($1,000,000 × 20% = $200,000) and 50% of its W-2 wages (zero) is zero. For Business Z, the lesser of 20% of QBI ($2,000 × 20% = $400) and 50% of W-2 wages ($500,000 × 50% = $250,000) is $400.

(C) Next, F must then combine the amounts determined in paragraph (d)(4)(vii)(B) of this section and compare that sum to 20% of F's taxable income. The lesser of these two amounts equals F's section 199A deduction. The total of the combined amounts in paragraph (d)(4)(vii)(B) of this section is $200,400 ($200,000 + zero + 400). Twenty percent of F's taxable income is $544,400 ($2,722,000 × 20%). Thus, F's section 199A deduction for 2018 is $200,400.

(viii) *Example 8.*

(A) Assume the same facts as in *Example 7* of paragraph (d)(4)(vii) of this section, except that F aggregates Business X, Business Y, and Business Z under the rules of § 1.199A-4.

(B) Because F's taxable income is above the threshold amount, the QBI component of F's section 199A deduction is subject to the W-2 wage and UBIA of qualified property limitations. Because the businesses are aggregated, these limitations are applied on an aggregated basis. None of the businesses holds qualified property, therefore only the W-2 wage limitation must be calculated. F applies the limitation by determining the lesser of 20% of the QBI from the aggregated businesses, which is $400,400 ($2,002,000 × 20%) and 50% of W-2 wages from the aggregated businesses, which is $500,000 ($1,000,000 x

50%). F's section 199A deduction is equal to the lesser of $400,400 and 20% of F's taxable income ($2,722,000 × 20% = $544,400). Thus, F's section 199A deduction for 2018 is $400,400.

(ix) *Example 9.*

(A) Assume the same facts as in *Example 7* of paragraph (d)(4)(vii) of this section, except that for taxable year 2018, Business Z generates a loss that results in ($600,000) of negative QBI and pays $500,000 of W-2 wages. After allowable deductions unrelated to the businesses, F's taxable income is $2,120,000. Because Business Z had negative QBI, F must offset the positive QBI from Business X and Business Y with the negative QBI from Business Z in proportion to the relative amounts of positive QBI from Business X and Business Y. Because Business X and Business Y produced the same amount of positive QBI, the negative QBI from Business Z is apportioned equally among Business X and Business Y. Therefore, the adjusted QBI for each of Business X and Business Y is $700,000 ($1 million plus 50% of the negative QBI of $600,000). The adjusted QBI in Business Z is $0, because its negative QBI has been fully apportioned to Business X and Business Y.

(B) Because F's taxable income is above the threshold amount, the QBI component of F's section 199A deduction is subject to the W-2 wage and UBIA of qualified property limitations. These limitations must be applied on a business-by-business basis. None of the businesses hold qualified property, therefore only the 50% of W-2 wage limitation must be calculated. For Business X, the lesser of 20% of QBI ($700,000 × 20% = $140,000) and 50% of W-2 wages ($500,000 × 50% = $250,000) is $140,000. Business Y pays no W-2 wages. The lesser of 20% of Business Y's QBI ($700,000 × 20% = $140,000) and 50% of its W-2 wages (zero) is zero.

(C) F must combine the amounts determined in paragraph (d)(4)(ix)(B) of this section and compare the sum to 20% of taxable income. F's section 199A deduction equals the lesser of these two amounts. The combined amount from paragraph (d)(4)(ix)(B) of this section is $140,000 ($140,000 + zero) and 20% of F's taxable income is $424,000 ($2,120,000 × 20%). Thus, F's section 199A deduction for 2018 is $140,000. There is no carryover of any loss into the following taxable year for purposes of section 199A.

(x) *Example 10.*

(A) Assume the same facts as in *Example 9* of paragraph (d)(4)(ix) of this section, except that F aggregates Business X, Business Y, and Business Z under the rules of § 1.199A-4.

(B) Because F's taxable income is above the threshold amount, the QBI component of F's section 199A deduction is subject to the W-2 wage and UBIA of qualified property limitations. Because the businesses are aggregated, these limitations are applied on an aggregated basis. None of the businesses holds qualified property, therefore only the W-2 wage limitation must be calculated. F applies the limitation by determining the lesser of 20% of the QBI from the aggregated businesses ($1,400,000 × 20% = $280,000) and 50% of W-2 wages from the aggregated businesses ($1,000,000 × 50% = $500,000), or $280,000. F's section 199A deduction is equal to the lesser of $280,000 and 20% of F's taxable income ($2,120,000 × 20% = $424,000). Thus, F's section 199A deduction for 2018 is $280,000. There is no carryover of any loss into the following taxable year for purposes of section 199A.

(xi) *Example 11.*

(A) Assume the same facts as in *Example 7* of paragraph (d)(4)(vii) of this section, except that Business Z generates a loss that results in ($2,150,000) of negative QBI and pays $500,000 of W-2 wages with respect to the business in 2018. Thus, F has a negative combined QBI of ($150,000) when the QBI from all of the businesses are added together ($1 million plus $1 million minus the loss of ($2,150,000)). Because F has a negative combined QBI for 2018, F has no section 199A deduction with respect to any trade or business for 2018. Instead, the negative combined QBI of ($150,000) carries forward and will be treated as negative QBI from a separate trade or business for purposes of computing the section 199A deduction in the next taxable year. None of the W-2 wages carry forward. However, for income tax purposes, the $150,000 loss may offset F's $750,000 of wage income (assuming the loss is otherwise allowable under the Code).

(B) In taxable year 2019, Business X generates $200,000 of net QBI and pays $100,000 of W-2 wages with respect to the business. Business Y generates $150,000 of net QBI but pays no wages. Business Z generates a loss that results in ($120,000) of negative QBI and pays $500 of W-2 wages with respect to the business. F also has $750,000 of wage income from employment with an unrelated company. After allowable deductions unrelated to the businesses, F's taxable income is $960,000. Pursuant to paragraph (d)(2)(iii)(B) of this section, the ($150,000) of negative QBI from 2018 is treated as arising in 2019 from a separate trade or business. Thus, F has overall net QBI of $80,000 when all trades or businesses are taken together ($200,000) plus $150,000 minus $120,000 minus the carryover loss of ($150,000). Because Business Z had negative QBI and F also has a negative QBI carryover amount, F must offset the positive QBI from Business X and Business Y with the negative QBI from Business Z and the carryover amount in proportion to the relative amounts of positive QBI from Business X and Business Y. Because Business X produced 57.14% of the total QBI from Business X and Business Y, 57.14% of the negative QBI from Business Z and the negative QBI carryforward must be apportioned to Business X, and the remaining 42.86% allocated to Business Y. Therefore, the adjusted QBI in Business X is $45,722 ($200,000 minus 57.14% of the loss from Business Z ($68,568), minus 57.14% of the carryover loss ($85,710). The adjusted QBI in Business Y is $34,278 ($150,000, minus 42.86% of the loss from Business Z ($51,432) minus 42.86% of the carryover loss ($64,290)). The adjusted QBI in Business Z is $0, because its negative QBI has been apportioned to Business X and Business Y.

(C) Because F's taxable income is above the threshold amount, the QBI component of F's section 199A deduction is subject to the W-2 wage and UBIA of qualified property limitations. These limitations must be applied on a business-by-business basis. None of the businesses hold qualified property, therefore only the 50% of W-2 wage limitation must be calculated. For Business X, 20% of QBI is $9,144 ($45,722 × 20%) and 50% of W-2 wages is $50,000 ($100,000 × 50%), so the lesser amount is $9,144. Business Y pays no W-2 wages. Twenty percent of Business Y's QBI is $6,856 ($34,278 × 20%) and 50% of its W-2 wages (zero) is zero, so the lesser amount is zero.

(D) F must then compare the combined amounts determined in paragraph (d)(4)(xi)(C) of this section to 20% of F's taxable income. The section 199A deduction equals the lesser of these amounts. F's combined amount from paragraph (d)(4)(xi)(C) of this section is

$9,144 ($9,144 plus zero) and 20% of F's taxable income is $192,000 ($960,000 × 20%) Thus, F's section 199A deduction for 2019 is $9,144. There is no carryover of any negative QBI into the following taxable year for purposes of section 199A.

(xii) *Example 12.*

(A) Assume the same facts as in *Example 11* of paragraph (d)(4)(xi) of this section, except that F aggregates Business X, Business Y, and Business Z under the rules of § 1.199A-4. For 2018, F's QBI from the aggregated trade or business is ($150,000). Because F has a combined negative QBI for 2018, F has no section 199A deduction with respect to any trade or business for 2018. Instead, the negative combined QBI of ($150,000) carries forward and will be treated as negative QBI from a separate trade or business for purposes of computing the section 199A deduction in the next taxable year. However, for income tax purposes, the $150,000 loss may offset taxpayer's $750,000 of wage income (assuming the loss is otherwise allowable under the Code).

(B) In taxable year 2019, F will have QBI of $230,000 and W-2 wages of $100,500 from the aggregated trade or business. F also has $750,000 of wage income from employment with an unrelated company. After allowable deductions unrelated to the businesses, F's taxable income is $960,000. F must treat the negative QBI carryover loss ($150,000) from 2018 as a loss from a separate trade or business for purposes of section 199A. This loss will offset the positive QBI from the aggregated trade or business, resulting in an adjusted QBI of $80,000 ($230,000 − $150,000).

(C) Because F's taxable income is above the threshold amount, the QBI component of F's section 199A deduction is subject to the W-2 wage and UBIA of qualified property limitations. These limitations must be applied on a business-by-business basis. None of the businesses hold qualified property, therefore only the 50% of W-2 wage limitation must be calculated. For the aggregated trade or business, the lesser of 20% of QBI ($80,000 × 20% = $16,000) and 50% of W-2 wages ($100,500 × 50% = $50,250) is $16,000. F's section 199A deduction equals the lesser of that amount ($16,000) and 20% of F's taxable income ($960,000 × 20% = $192,000). Thus, F's section 199A deduction for 2019 is $16,000. There is no carryover of any negative QBI into the following taxable year for purposes of section 199A.

(e) *Special rules* —

(1) ***Effect of deduction.*** In the case of a partnership or S corporation, section 199A is applied at the partner or shareholder level. The rules of subchapter K and subchapter S of the Code apply in their entirety for purposes of determining each partner's or shareholder's share of QBI, W-2 wages, UBIA of qualified property, qualified REIT dividends, and qualified PTP income or loss. The section 199A deduction has no effect on the adjusted basis of a partner's interest in the partnership, the adjusted basis of a shareholder's stock in an S corporation, or an S corporation's accumulated adjustments account.

(2) ***Disregarded entities.*** An entity with a single owner that is treated as disregarded as an entity separate from its owner under any provision of the Code is disregarded for purposes of section 199A and §§ 1.199A-1 through 1.199A-6.

(3) ***Self-employment tax and net investment income tax.*** The deduction allowed under section 199A does not reduce net earnings from self-employment under section 1402 or net investment income under section 1411.

(4) ***Commonwealth of Puerto Rico.*** If all of an individual's QBI from sources within the Commonwealth of Puerto Rico is taxable under section 1 of the Code for a taxable year, then for purposes of determining the QBI of such individual for such taxable year, the term "United States" includes the Commonwealth of Puerto Rico.

(5) ***Coordination with alternative minimum tax.*** For purposes of determining alternative minimum taxable income under section 55, the deduction allowed under section 199A(a) for a taxable year is equal in amount to the deduction allowed under section 199A(a) in determining taxable income for that taxable year (that is, without regard to any adjustments under sections 56 through 59).

(6) ***Imposition of accuracy-related penalty on underpayments.*** For rules related to the imposition of the accuracy-related penalty on underpayments for taxpayers who claim the deduction allowed under section 199A, see section 6662(d)(1)(C).

(7) ***Reduction for income received from cooperatives.*** In the case of any trade or business of a patron of a *specified agricultural or horticultural cooperative,* as defined in section 199A(g)(4), the amount of section 199A deduction determined under paragraph (c) or (d) of this section with respect to such trade or business must be reduced by the lesser of:

(i) Nine percent of the QBI with respect to such trade or business as is properly allocable to qualified payments received from such cooperative; or

(ii) 50 percent of the W-2 wages with respect to such trade or business as are so allocable as determined under § 1.199A-2.

(f) ***Applicability date*** —

(1) ***General rule.*** Except as provided in paragraph (f)(2) of this section, the provisions of this section apply to taxable years ending after February 8, 2019.

(2) ***Exception for non-calendar year RPE.*** For purposes of determining QBI, W-2 wages, UBIA of qualified property, and the aggregate amount of qualified REIT dividends and qualified PTP income, if an individual receives any of these items from an RPE with a taxable year that begins before January 1, 2018, and ends after December 31, 2017, such items are treated as having been incurred by the individual during the individual's taxable year in which or with which such RPE taxable year ends.

[T.D. 9847, 84 FR 2989, Feb. 8, 2019, as amended by T.D. 9847, 84 FR 15954, Apr. 17, 2019]

§ 1.199A-2 Determination of W-2 wages and unadjusted basis immediately after acquisition of qualified property.

(a) ***Scope*** —

(1) ***In general.*** This section provides guidance on calculating a trade or business's W-2 wages properly allocable to QBI (W-2 wages) and the trade or business's unadjusted basis immediately after acquisition of all qualified property (UBIA of qualified property). The provisions of this section apply solely for purposes of section 199A of the Internal Revenue Code (Code).

(2) ***W-2 wages.*** Paragraph (b) of this section provides guidance on the determination of W-2 wages. The determination of W-2 wages must be made for each trade or business by the individual or RPE that directly conducts the trade or business (or aggregated trade or business). In the case of W-2 wages

paid by an RPE, the RPE must determine and report W-2 wages for each trade or business (or aggregated trade or business) conducted by the RPE. W-2 wages are presumed to be zero if not determined and reported for each trade or business (or aggregated trade or business).

(3) ***UBIA of qualified property*** —

(i) ***In general.*** Paragraph (c) of this section provides guidance on the determination of the UBIA of qualified property. The determination of the UBIA of qualified property must be made for each trade or business (or aggregated trade or business) by the individual or RPE that directly conducts the trade or business (or aggregated trade or business). The UBIA of qualified property is presumed to be zero if not determined and reported for each trade or business (or aggregated trade or business).

(ii) ***UBIA of qualified property held by a partnership.*** In the case of qualified property held by a partnership, each partner's share of the UBIA of qualified property is determined in accordance with how the partnership would allocate depreciation under § 1.704-1(b)(2)(iv)(*g*) on the last day of the taxable year.

(iii) ***UBIA of qualified property held by an S corporation.*** In the case of qualified property held by an S corporation, each shareholder's share of the UBIA of qualified property is the share of the unadjusted basis proportionate to the ratio of shares in the S corporation held by the shareholder on the last day of the taxable year over the total issued and outstanding shares of the S corporation.

(iv) ***UBIA and section 743(b) basis adjustments*** —

(A) ***In general.*** A partner will be allowed to take into account UBIA with respect to an item of qualified property in addition to the amount of UBIA with respect to such qualified property determined under paragraphs (a)(3)(i) and (c) of this section and allocated to such partner under paragraph (a)(3)(ii) of this section to the extent of the partner's excess section 743(b) basis adjustment with respect to such item of qualified property.

(B) ***Excess section 743(b) basis adjustments.*** A partner's *excess section 743(b) basis adjustment* is an amount that is determined with respect to each item of qualified property and is equal to an amount that would represent the partner's section 743(b) basis adjustment with respect to the same item of qualified property, as determined under §§ 1.743-1(b) and 1.755-1, but calculated as if the adjusted basis of all of the partnership's property was equal to the UBIA of such property. The absolute value of the excess section 743(b) basis adjustment cannot exceed the absolute value of the total section 743(b) basis adjustment with respect to qualified property.

(C) ***Computation of partner's share of UBIA with excess section 743(b) basis adjustments.*** The partnership first computes its UBIA with respect to qualified property under paragraphs (a)(3)(i) and (c) of this section and allocates such UBIA under paragraph (a)(3)(ii) of this section. If the sum of the excess section 743(b) basis adjustment for all of the items of qualified property is a negative number, that amount will be subtracted from the partner's UBIA of qualified property determined under paragraphs (a)(3)(i) and (c) of this section and allocated under paragraph (a)(3)(ii) of this section. A partner's UBIA of qualified property may not be below $0. Excess section 743(b) basis adjustments are computed with respect to all section 743(b) adjustments, including adjustments made as a result of a substantial built-in loss under section 743(d).

(D) ***Examples.*** The provisions of this paragraph (a)(3)(iv) are illustrated by the following examples:

(*1*) ***Example 1*** —

(*i*) ***Facts.*** A, B, and C are equal partners in partnership, PRS. PRS has a single trade or business that generates QBI. PRS has no liabilities and only one asset, a single item of qualified property with a UBIA equal to $900,000. Each partner's share of the UBIA is $300,000. A sells its one-third interest in PRS to T for $350,000 when a section 754 election is in effect. At the time of the sale, the tax basis of the qualified property held by PRS is $750,000. The amount of gain that would be allocated to T from a hypothetical transaction under § 1.743-1(d)(2) is $100,000. Thus, T's interest in PRS's previously taxed capital is equal to $250,000 ($350,000, the amount of cash T would receive if PRS liquidated immediately after the hypothetical transaction, decreased by $100,000, T's share of gain from the hypothetical transaction). The amount of T's section 743(b) basis adjustment to PRS's qualified property is $100,000 (the excess of $350,000, T's cost basis for its interest, over $250,000, T's share of the adjusted basis to PRS of the partnership's property).

(*ii*) [Reserved]

(*iii*) ***Analysis.*** In order for T to determine its UBIA, T must calculate its excess section 743(b) basis adjustment. T's excess section 743(b) basis adjustment is equal to an amount that would represent T's section 743(b) basis adjustment with respect to the same item of qualified property, as determined under §§ 1.743-1(b) and 1.755-1, but calculated as if the adjusted basis of all of PRS's property was equal to the UBIA of such property. T's section 743(b) basis adjustment calculated as if adjusted basis of the qualified property were equal to its UBIA is $50,000 (the excess of $350,000, T's cost basis for its interest, over $300,000, T's share of the adjusted basis to PRS of the partnership's property). Thus, T's excess section 743(b) basis adjustment is equal to $50,000. For purposes of applying the UBIA limitation to T's share of QBI from PRS's trade or business, T's UBIA is equal to $350,000 ($300,000, T's one-third share of the qualified property's UBIA, plus $50,000, T's excess section 743(b) basis adjustment).

(*2*) ***Example 2*** —

(*i*) ***Facts.*** Assume the same facts as in *Example 1* of paragraph (a)(3)(iv)(D)(*1*) of this section, except that A sells its one-third interest in PRS to T for $200,000 when a section 754 election is in effect. At the time of the sale, the tax basis of the qualified property held by PRS is $750,000, and the amount of loss that would be allocated to T from a hypothetical transaction under § 1.743-1(d)(2) is $50,000. Thus, T's interest in PRS's previously taxed capital is equal to $250,000 ($200,000, the amount of cash T would receive if PRS liquidated immediately after the hypothetical transaction, increased by $50,000, T's share of loss from the hypothetical transaction). The amount of T's section 743(b) basis adjustment to PRS's qualified property is negative $50,000 (the excess of $250,000, T's share of the adjusted basis to PRS of the partnership's property, over $200,000, T's cost basis for its interest).

(*ii*) ***Analysis.*** In order for T to determine its UBIA, T must calculate its excess section 743(b) basis adjustment. T's excess section 743(b) basis adjustment is equal to an amount that would represent T's section 743(b) basis adjustment with respect to the same item of qualified property, as determined under §§ 1.743-1(b) and 1.755-1, but calculated as if the adjusted basis of all of PRS's property was equal to the UBIA of such property. T's section 743(b) basis adjustment calculated as if adjusted basis of the qualified property were equal to its UBIA is negative $100,000 (the excess of $300,000, T's share of the adjusted basis to PRS of the partnership's property, over $200,000, T's cost basis for its interest). T's excess section 743(b) basis adjustment to the qualified property is limited to the amount of T's section 743(b) basis adjustment of negative $50,000. Thus, T's excess section 743(b) basis adjustment is equal to negative $50,000. For purposes of applying the UBIA limitation to T's share of QBI from PRS's trade or business, T's UBIA is equal to $250,000 ($300,000, T's one-third share of the qualified property's UBIA, reduced by T's negative $50,000 excess section 743(b) basis adjustment).

(b) ***W-2 wages*** —

(1) ***In general.*** Section 199A(b)(2)(B) provides limitations on the section 199A deduction based on the W-2 wages paid with respect to each trade or business (or aggregated trade or business). Section 199A(b)(4)(B) provides that W-2 wages do not include any amount which is not properly allocable to QBI for purposes of section 199A(c)(1). This section provides a three step process for determining the W-2 wages paid with respect to a trade or business that are properly allocable to QBI. First, each individual or RPE must determine its total W-2 wages paid for the taxable year under the rules in paragraph (b)(2) of this section. Second, each individual or RPE must allocate its W-2 wages between or among one or more trades or businesses under the rules in paragraph (b)(3) of this section. Third, each individual or RPE must determine the amount of such wages with respect to each trade or business, which are allocable to the QBI of the trade or business (or aggregated trade or business) under the rules in paragraph (b)(4) of this section.

(2) ***Definition of W-2 wages*** —

(i) ***In general.*** Section 199A(b)(4)(A) provides that the term W-2 wages means with respect to any person for any taxable year of such person, the amounts described in section 6051(a)(3) and (8) paid by such person with respect to employment of employees by such person during the calendar year ending during such taxable year. Thus, the term W-2 wages includes the total amount of wages as defined in section 3401(a) plus the total amount of elective deferrals (within the meaning of section 402(g)(3)), the compensation deferred under section 457, and the amount of designated Roth contributions (as defined in section 402A). For this purpose, except as provided in paragraphs (b)(2)(iv)(C)(*2*) and (b)(2)(iv)(D) of this section, the Forms W-2, “Wage and Tax Statement,” or any subsequent form or document used in determining the amount of W-2 wages, are those issued for the calendar year ending during the individual's or RPE's taxable year for wages paid to employees (or former employees) of the individual or RPE for employment by the individual or RPE. For purposes of this section, employees of the individual or RPE are limited to employees of the individual or RPE as defined in section 3121(d)(1) and (2). (For purposes of section 199A, this includes officers of an S corporation and employees of an individual or RPE under common law.)

(ii) ***Wages paid by a person other than a common law employer.*** In determining W-2 wages, an individual or RPE may take into account any W-2 wages paid by another person and reported by the other person on Forms W-2 with the other person as the employer listed in Box c of the Forms W-2, provided that the W-2 wages were paid to common law employees or officers of the individual or RPE for employment by the individual or RPE. In such cases, the person paying the W-2 wages and reporting the W-2 wages on Forms W-2 is precluded from taking into account such wages for purposes of determining W-2 wages with respect to that person. For purposes of this paragraph (b)(2)(ii), persons that pay and report W-2 wages on behalf of or with respect to others can include, but are not limited to, certified professional employer organizations under section 7705, statutory employers under section 3401(d)(1), and agents under section 3504.

(iii) ***Requirement that wages must be reported on return filed with the Social Security Administration (SSA)*** —

(A) ***In general.*** Pursuant to section 199A(b)(4)(C), the term W-2 wages does not include any amount that is not properly included in a return filed with SSA on or before the 60th day after the due date (including extensions) for such return. Under § 31.6051-2 of this chapter, each Form W-2 and the transmittal Form W-3, "Transmittal of Wage and Tax Statements," together constitute an information return to be filed with SSA. Similarly, each Form W-2c, "Corrected Wage and Tax Statement," and the transmittal Form W-3 or W-3c, "Transmittal of Corrected Wage and Tax Statements," together constitute an information return to be filed with SSA. In determining whether any amount has been properly included in a return filed with SSA on or before the 60th day after the due date (including extensions) for such return, each Form W-2 together with its accompanying Form W-3 will be considered a separate information return and each Form W-2c together with its accompanying Form W-3 or Form W-3c will be considered a separate information return. Section 6071(c) provides that Forms W-2 and W-3 must be filed on or before January 31 of the year following the calendar year to which such returns relate (but see the special rule in § 31.6071(a)-1T(a)(3)(i) of this chapter for monthly returns filed under § 31.6011(a)-5(a) of this chapter). Corrected Forms W-2 are required to be filed with SSA on or before January 31 of the year following the year in which the correction is made.

(B) ***Corrected return filed to correct a return that was filed within 60 days of the due date.*** If a corrected information return (Return B) is filed with SSA on or before the 60th day after the due date (including extensions) of Return B to correct an information return (Return A) that was filed with SSA on or before the 60th day after the due date (including extensions) of the information return (Return A) and paragraph (b)(2)(iii)(C) of this section does not apply, then the wage information on Return B must be included in determining W-2 wages. If a corrected information return (Return D) is filed with SSA later than the 60th day after the due date (including extensions) of Return D to correct an information return (Return C) that was filed with SSA on or before the 60th day after the due date (including extensions) of the information return (Return C), and if Return D reports an increase (or increases) in wages included in determining W-2 wages from the wage amounts reported on Return C, then such increase (or increases) on Return D will be disregarded in determining W-2 wages (and only the wage amounts on Return C may be included in determining W-2 wages). If Return D reports a decrease (or decreases) in wages included in determining W-2 wages from the amounts reported on Return C, then, in determining W-2 wages, the wages reported on Return C must be reduced by the decrease (or decreases) reflected on Return D.

(C) ***Corrected return filed to correct a return that was filed later than 60 days after the due date.*** If an information return (Return F) is filed to correct an information return (Return E) that was not filed with SSA on or before the 60th day after the due date (including extensions) of Return E, then Return F (and any subsequent information returns filed with respect to Return E) will not be considered filed on or before the 60th day after the due date (including extensions) of Return F (or the subsequent corrected information return). Thus, if a Form W-2c is filed to correct a Form W-2 that was not filed with SSA on or before the 60th day after the due date (including extensions) of the Form W-2 (or to correct a Form W-2c relating to Form W-2 that had not been filed with SSA on or before the 60th day after the due date (including extensions) of the Form W-2), then this Form W-2c will not be considered to have been filed with SSA on or before the 60th day after the due date (including extensions) for this Form W-2c (or corrected Form W-2), regardless of when the Form W-2c is filed.

(iv) ***Methods for calculating W-2 wages*** —

(A) ***In general.*** The Secretary may provide for methods to be used in calculating W-2 wages, including W-2 wages for short taxable years by publication in the Internal Revenue Bulletin (see § 601.601(d)(2)(ii)(*b*) of this chapter).

(B) ***Acquisition or disposition of a trade or business*** —

(*1*) ***In general.*** In the case of an acquisition or disposition of a trade or business, the major portion of a trade or business, or the major portion of a separate unit of a trade or business that causes more than one individual or entity to be an employer of the employees of the acquired or disposed of trade or business during the calendar year, the W-2 wages of the individual or entity for the calendar year of the acquisition or disposition are allocated between each individual or entity based on the period during which the employees of the acquired or disposed of trade or business were employed by the individual or entity, regardless of which permissible method is used for reporting predecessor and successor wages on Form W-2, "Wage and Tax Statement." For this purpose, the period of employment is determined consistently with the principles for determining whether an individual is an employee described in paragraph (b) of this section.

(*2*) ***Acquisition or disposition.*** For purposes of this paragraph (b)(2)(iv)(B), the term *acquisition or disposition* includes an incorporation, a formation, a liquidation, a reorganization, or a purchase or sale of assets.

(C) ***Application in the case of a person with a short taxable year*** —

(*1*) ***In general.*** In the case of an individual or RPE with a short taxable year, subject to the rules of paragraph (b)(2) of this section, the W-2 wages of the individual or RPE for the short taxable year include only those wages paid during the short taxable year to employees of the individuals or RPE, only those elective deferrals (within the meaning of section 402(g)(3)) made during the short taxable year by employees of the individual or RPE and only compensation actually deferred under section 457 during the short taxable year with respect to employees of the individual or RPE.

(*2*) ***Short taxable year that does not include December 31.*** If an individual or RPE has a short taxable year that does not contain a calendar year ending during such short taxable year, wages paid to employees for employment by such individual or RPE

during the short taxable year are treated as W-2 wages for such short taxable year for purposes of paragraph (b) of this section (if the wages would otherwise meet the requirements to be W-2 wages under this section but for the requirement that a calendar year must end during the short taxable year).

(D) ***Remuneration paid for services performed in the Commonwealth of Puerto Rico.*** In the case of an individual or RPE that conducts a trade or business in the Commonwealth of Puerto Rico, the determination of W-2 wages of such individual or RPE will be made without regard to any exclusion under section 3401(a)(8) for remuneration paid for services performed in the Commonwealth of Puerto Rico. The individual or RPE must maintain sufficient documentation (for example, Forms 499R-2/W-2PR) to substantiate the amount of remuneration paid for services performed in the Commonwealth of Puerto Rico that is used in determining the W-2 wages of such individual or RPE with respect to any trade or business conducted in the Commonwealth of Puerto Rico.

(3) ***Allocation of wages to trades or businesses.*** After calculating total W-2 wages for a taxable year, each individual or RPE that directly conducts more than one trade or business must allocate those wages among its various trades or businesses. W-2 wages must be allocated to the trade or business that generated those wages. In the case of W-2 wages that are allocable to more than one trade or business, the portion of the W-2 wages allocable to each trade or business is determined in the same manner as the expenses associated with those wages are allocated among the trades or businesses under § 1.199A-3(b)(5).

(4) ***Allocation of wages to QBI.*** Once W-2 wages for each trade or business have been determined, each individual or RPE must identify the amount of W-2 wages properly allocable to QBI for each trade or business (or aggregated trade or business). W-2 wages are properly allocable to QBI if the associated wage expense is taken into account in computing QBI under § 1.199A-3. In the case of an RPE, the wage expense must be allocated and reported to the partners or shareholders of the RPE as required by the Code, including subchapters K and S of chapter 1 of subtitle A of the Code. The RPE must also identify and report the associated W-2 wages to its partners or shareholders.

(5) ***Non-duplication rule.*** Amounts that are treated as W-2 wages for a taxable year under any method cannot be treated as W-2 wages of any other taxable year. Also, an amount cannot be treated as W-2 wages by more than one trade or business (or aggregated trade or business).

(c) ***UBIA of qualified property*** —

(1) ***Qualified property*** —

(i) ***In general.*** The term *qualified property* means, with respect to any trade or business (or aggregated trade or business) of an individual or RPE for a taxable year, tangible property of a character subject to the allowance for depreciation under section 167(a)—

(A) Which is held by, and available for use in, the trade or business (or aggregated trade or business) at the close of the taxable year;

(B) Which is used at any point during the taxable year in the trade or business's (or aggregated trade or business's) production of QBI; and

(C) The depreciable period for which has not ended before the close of the individual's or RPE's taxable year.

(ii) ***Improvements to qualified property.*** In the case of any addition to, or improvement of, qualified property that has already been placed in service by the individual or RPE, such addition or improvement is treated as separate qualified property first placed in service on the date such addition or improvement is placed in service for purposes of paragraph (c)(2) of this section.

(iii) ***Adjustments under sections 734(b) and 743(b).*** Excess section 743(b) basis adjustments as defined in paragraph (a)(3)(iv)(B) of this section are treated as qualified property. Otherwise, basis adjustments under sections 734(b) and 743(b) are not treated as qualified property.

(iv) ***Property acquired at end of year.*** Property is not qualified property if the property is acquired within 60 days of the end of the taxable year and disposed of within 120 days of acquisition without having been used in a trade or business for at least 45 days prior to disposition, unless the taxpayer demonstrates that the principal purpose of the acquisition and disposition was a purpose other than increasing the section 199A deduction.

(2) ***Depreciable period*** —

(i) ***In general.*** The term *depreciable period* means, with respect to qualified property of a trade or business, the period beginning on the date the property was first placed in service by the individual or RPE and ending on the later of—

(A) The date that is 10 years after such date; or

(B) The last day of the last full year in the applicable recovery period that would apply to the property under section 168(c), regardless of any application of section 168(g).

(ii) ***Additional first-year depreciation under section 168.*** The additional first-year depreciation deduction allowable under section 168 (for example, under section 168(k) or (m)) does not affect the applicable recovery period under this paragraph for the qualified property.

(iii) ***Qualified property acquired in transactions subject to section 1031 or section 1033.*** Solely for purposes of paragraph (c)(2)(i) of this section, the following rules apply to qualified property acquired in a like-kind exchange or in an involuntary conversion (replacement property).

(A) ***Replacement property received in a section 1031 or 1033 transaction.*** The date on which replacement property that is of like-kind to relinquished property or is similar or related in service or use to involuntarily converted property was first placed in service by the individual or RPE is determined as follows—

(*1*) For the portion of the individual's or RPE's UBIA, as defined in paragraph (c)(3) of this section, in such replacement property that does not exceed the individual's or RPE's UBIA in the relinquished property or involuntarily converted property, the date such portion in the replacement property was first placed in service by the individual or RPE is the date on which the relinquished property or involuntarily converted property was first placed in service by the individual or RPE; and

(*2*) For the portion of the individual's or RPE's UBIA, as defined in paragraph (c)(3) of this section, in such replacement property that exceeds the individual's or RPE's UBIA in the relinquished property or involuntarily converted property, such portion in the replacement property is treated as separate qualified property that the individual or RPE first placed in service on the date on which the replacement property was first placed in service by the individual or RPE.

(B) ***Other property received in a section 1031 or 1033 transaction.*** Other property, as defined in paragraph (c)(3)(ii) or (iii) of this section, that is qualified property is treated as separate qualified property that the individual or RPE first placed in service on the date on which such other property was first placed in service by the individual or RPE.

(iv) ***Qualified property acquired in transactions described in section 168(i)(7)(B).*** If an individual or RPE acquires qualified property in a transaction described in section 168(i)(7)(B) (pertaining to treatment of transferees in certain nonrecognition transactions), the individual or RPE must determine the date on which the qualified property was first placed in service solely for purposes of paragraph (c)(2)(i) of this section as follows—

(A) For the portion of the transferee's UBIA in the qualified property that does not exceed the transferor's UBIA in such property, the date such portion was first placed in service by the transferee is the date on which the transferor first placed the qualified property in service; and

(B) For the portion of the transferee's UBIA in the qualified property that exceeds the transferor's UBIA in such property, such portion is treated as separate qualified property that the transferee first placed in service on the date of the transfer.

(v) ***Excess section 743(b) basis adjustment.*** Solely for purposes of paragraph (c)(2)(i) of this section, an excess section 743(b) basis adjustment with respect to an item of partnership property that is qualified property is treated as being placed in service when the transfer of the partnership interest occurs, and the recovery period for such property is determined under § 1.743-1(j)(4)(i)(B) with respect to positive basis adjustments and § 1.743-1(j)(4)(ii)(B) with respect to negative basis adjustments.

(3) ***Unadjusted basis immediately after acquisition*** —

(i) ***In general.*** Except as provided in paragraphs (c)(3)(ii) through (v) of this section, the term *unadjusted basis immediately after acquisition* (UBIA) means the basis on the placed in service date of the property as determined under section 1012 or other applicable sections of chapter 1 of the Code, including the provisions of subchapters O (relating to gain or loss on dispositions of property), C (relating to corporate distributions and adjustments), K (relating to partners and partnerships), and P (relating to capital gains and losses). UBIA is determined without regard to any adjustments described in section 1016(a)(2) or (3), to any adjustments for tax credits claimed by the individual or RPE (for example, under section 50(c)), or to any adjustments for any portion of the basis which the individual or RPE has elected to treat as an expense (for example, under sections 179, 179B, or 179C). However, UBIA does reflect the reduction in basis for the percentage of the individual's or RPE's use of property for the taxable year other than in the trade or business.

(ii) ***Qualified property acquired in a like-kind exchange*** —

(A) ***In general.*** Solely for purposes of this section, if property that is qualified property (replacement property) is acquired in a like-kind exchange that qualifies for deferral of gain or loss under section 1031, then the UBIA of such property is the same as the UBIA of the qualified property exchanged (relinquished property), decreased by excess boot or increased by the amount of money paid or the fair market value of property not of a like kind to the relinquished property (other property) transferred by the taxpayer to acquire the replacement property. If the taxpayer acquires more than one piece of qualified property as replacement property that is of a like kind to the relinquished property in an exchange

described in section 1031, UBIA is apportioned between or among the qualified replacement properties in proportion to their relative fair market values. Other property received by the taxpayer in a section 1031 transaction that is qualified property has a UBIA equal to the fair market value of such other property.

(B) ***Excess boot.*** For purposes of paragraph (c)(3)(ii)(A) of this section, *excess boot* is the amount of any money or the fair market value of other property received by the taxpayer in the exchange over the amount of appreciation in the relinquished property. Appreciation for this purpose is the excess of the fair market value of the relinquished property on the date of the exchange over the fair market value of the relinquished property on the date of the acquisition by the taxpayer.

(iii) ***Qualified property acquired pursuant to an involuntary conversion*** —

(A) ***In general.*** Solely for purposes of this section, if qualified property is compulsorily or involuntarily converted (converted property) within the meaning of section 1033 and qualified replacement property is acquired in a transaction that qualifies for deferral of gain under section 1033, then the UBIA of the replacement property is the same as the UBIA of the converted property, decreased by excess boot or increased by the amount of money paid or the fair market value of property not similar or related in service or use to the converted property (other property) transferred by the taxpayer to acquire the replacement property. If the taxpayer acquires more than one piece of qualified replacement property that meets the similar or related in service or use requirements in section 1033, UBIA is apportioned between the qualified replacement properties in proportion to their relative fair market values. Other property acquired by the taxpayer with the proceeds of an involuntary conversion that is qualified property has a UBIA equal to the fair market value of such other property.

(B) ***Excess boot.*** For purposes of paragraph (c)(3)(iii)(A) of this section, *excess boot* is the amount of any money or the fair market value of other property received by the taxpayer in the conversion over the amount of appreciation in the converted property. Appreciation for this purpose is the excess of the fair market value of the converted property on the date of the conversion over the fair market value of the converted property on the date of the acquisition by the taxpayer.

(iv) ***Qualified property acquired in transactions described in section 168(i)(7)(B).*** Solely for purposes of this section, if qualified property is acquired in a transaction described in section 168(i)(7)(B) (pertaining to treatment of transferees in certain nonrecognition transactions), the transferee's UBIA in the qualified property shall be the same as the transferor's UBIA in the property, decreased by the amount of money received by the transferor in the transaction or increased by the amount of money paid by the transferee to acquire the property in the transaction.

(v) ***Qualified property acquired from a decedent.*** In the case of qualified property acquired from a decedent and immediately placed in service, the UBIA of the property will generally be the fair market value at the date of the decedent's death under section 1014. See section 1014 and the regulations thereunder. Solely for purposes of paragraph (c)(2)(i) of this section, a new depreciable period for the property commences as of the date of the decedent's death.

(vi) ***Property acquired in a nonrecognition transaction with principal purpose of increasing UBIA.*** If qualified property is acquired in a transaction described in section 1031, 1033, or 168(i)(7) with the principal purpose of increasing the UBIA of the qualified property, the UBIA of the acquired

qualified property is its basis as determined under relevant Code sections and not under the rules described in paragraphs (c)(3)(i) through (iv) of this section. For example, in a section 1031 transaction undertaken with the principal purpose of increasing the UBIA of the replacement property, the UBIA of the replacement property is its basis as determined under section 1031(d).

(4) ***Examples.*** The provisions of this paragraph (c) are illustrated by the following examples:

(i) ***Example 1.***

(A) On January 5, 2012, A purchases Real Property X for $1 million and places it in service in A's trade or business. A's trade or business is not an SSTB. A's basis in Real Property X under section 1012 is $1 million. Real Property X is qualified property within the meaning of section 199A(b)(6). As of December 31, 2018, A's basis in Real Property X, as adjusted under section 1016(a)(2) for depreciation deductions under section 168(a), is $821,550.

(B) For purposes of section 199A(b)(2)(B)(ii) and this section, A's UBIA of Real Property X is its $1 million cost basis under section 1012, regardless of any later depreciation deductions under section 168(a) and resulting basis adjustments under section 1016(a)(2).

(ii) ***Example 2.***

(A) The facts are the same as in *Example 1* of paragraph (c)(4)(i) of this section, except that on January 15, 2019, A enters into a like-kind exchange under section 1031 in which A exchanges Real Property X for Real Property Y. Real Property Y has a value of $1 million. No cash or other property is involved in the exchange. As of January 15, 2019, A's basis in Real Property X, as adjusted under section 1016(a)(2) for depreciation deductions under section 168(a), is $820,482.

(B) A's UBIA in Real Property Y is $1 million as determined under paragraph (c)(3)(ii) of this section. Pursuant to paragraph (c)(2)(iii)(A) of this section, Real Property Y is first placed in service by A on January 5, 2012, which is the date on which Real Property X was first placed in service by A.

(iii) ***Example 3.***

(A) The facts are the same as in *Example 1* of paragraph (c)(4)(i) of this section, except that on January 15, 2019, A enters into a like-kind exchange under section 1031, in which A exchanges Real Property X for Real Property Y. Real Property X has appreciated in value to $1.3 million, and Real Property Y also has a value of $1.3 million. No cash or other property is involved in the exchange. As of January 15, 2019, A's basis in Real Property X, as adjusted under section 1016(a)(2), is $820,482.

(B) A's UBIA in Real Property Y is $1 million as determined under paragraph (c)(3)(ii) of this section. Pursuant to paragraph (c)(2)(iii)(A) of this section, Real Property Y is first placed in service by A on January 5, 2012, which is the date on which Real Property X was first placed in service by A.

(iv) ***Example 4.***

(A) The facts are the same as in *Example 1* of paragraph (c)(4)(i) of this section, except that on January 15, 2019, A enters into a like-kind exchange under section 1031, in which A exchanges Real Property X for Real Property Y. Real Property X has appreciated in value to $1.3 million, but Real Property Y has a value of $1.5 million. A therefore adds $200,000 in cash to the exchange of Real Property X for Real Property Y. On January 15, 2019, A places Real Property Y in service. As of January 15, 2019, A's basis in Real Property X, as adjusted under section 1016(a)(2), is $820,482.

(B) A's UBIA in Real Property Y is $1.2 million as determined under paragraph (c)(3)(ii) of this section ($1 million in UBIA from Real Property X plus $200,000 cash paid by A to acquire Real Property Y). Because the UBIA of Real Property Y exceeds the UBIA of Real Property X, Real Property Y is treated as being two separate qualified properties for purposes of applying paragraph (c)(2)(iii)(A) of this section. One property has a UBIA of $1 million (the portion of A's UBIA of $1.2 million in Real Property Y that does not exceed A's UBIA of $1 million in Real Property X) and it is first placed in service by A on January 5, 2012, which is the date on which Real Property X was first placed in service by A. The other property has a UBIA of $200,000 (the portion of A's UBIA of $1.2 million in Real Property Y that exceeds A's UBIA of $1 million in Real Property X) and it is first placed in service by A on January 15, 2019, which is the date on which Real Property Y was first placed in service by A.

(v) ***Example 5.***

(A) The facts are the same as in *Example 1* of paragraph (c)(4)(i) of this section, except that on January 15, 2019, A enters into a like-kind exchange under section 1031, in which A exchanges Real Property X for Real Property Y. Real Property X has appreciated in value to $1.3 million. Real Property Y has a fair market value of $1 million. As of January 15, 2019, A's basis in Real Property X, as adjusted under section 1016(a)(2), is $820,482. Pursuant to the exchange, A receives Real Property Y and $300,000 in cash.

(B) A's UBIA in Real Property Y is $1 million as determined under paragraph (c)(3)(ii) of this section ($1 million in UBIA from Real Property X, less $0 excess boot ($300,000 cash received in the exchange over $300,000 in appreciation in Property X, which is equal to the excess of the $1.3 million fair market value of Property X on the date of the exchange over $1 million fair market value of Property X on the date of acquisition by the taxpayer)). Pursuant to paragraph (c)(2)(iii)(A) of this section, Real Property Y is first placed in service by A on January 5, 2012, which is the date on which Real Property X was first placed in service by A.

(vi) ***Example 6.***

(A) The facts are the same as in *Example 1* of paragraph (c)(4)(i) of this section, except that on January 15, 2019, A enters into a like-kind exchange under section 1031, in which A exchanges Real Property X for Real Property Y. Real Property X has appreciated in value to $1.3 million. Real Property Y has a fair market value of $900,000. Pursuant to the exchange, A receives Real Property Y and $400,000 in cash. As of January 15, 2019, A's basis in Real Property X, as adjusted under section 1016(a)(2), is $820,482.

(B) A's UBIA in Real Property Y is $900,000 as determined under paragraph (c)(3)(ii) of this section ($1 million in UBIA from Real Property X less $100,000 excess boot ($400,000 in cash received in the exchange over $300,000 in appreciation in Property X, which is equal to the excess of the $1.3 million fair market value of Property X on the date of the

exchange over the $1 million fair market value of Property X on the date of acquisition by the taxpayer)). Pursuant to paragraph (c)(2)(iii)(A) of this section, Real Property Y is first placed in service by A on January 5, 2012, which is the date on which Real Property X was first placed in service by A.

(vii) *Example 7.*

(A) The facts are the same as in *Example 1* of paragraph (c)(4)(i) of this section, except that on January 15, 2019, A enters into a like-kind exchange under section 1031, in which A exchanges Real Property X for Real Property Y. Real Property X has declined in value to $900,000, and Real Property Y also has a value of $900,000. No cash or other property is involved in the exchange. As of January 15, 2019, A's basis in Real Property X, as adjusted under section 1016(a)(2), is $820,482.

(B) Even though Real Property Y is worth only $900,000, A's UBIA in Real Property Y is $1 million as determined under paragraph (c)(3)(ii) of this section because no cash or other property was involved in the exchange. Pursuant to paragraph (c)(2)(iii)(A) of this section, Real Property Y is first placed in service by A on January 5, 2012, which is the date on which Real Property X was first placed in service by A.

(viii) *Example 8.*

(A) C operates a trade or business that is not an SSTB as a sole proprietorship. On January 5, 2011, C purchases Machinery Y for $10,000 and places it in service in C's trade or business. C's basis in Machinery Y under section 1012 is $10,000. Machinery Y is qualified property within the meaning of section 199A(b)(6). Assume that Machinery Y's recovery period under section 168(c) is 10 years, and C depreciates Machinery Y under the general depreciation system by using the straight-line depreciation method, a 10-year recovery period, and the half-year convention. As of December 31, 2018, C's basis in Machinery Y, as adjusted under section 1016(a)(2) for depreciation deductions under section 168(a), is $2,500. On January 1, 2019, C incorporates the sole proprietorship and elects to treat the newly formed entity as an S corporation for Federal income tax purposes. C contributes Machinery Y and all other assets of the trade or business to the S corporation in a non-recognition transaction under section 351. The S corporation immediately places all the assets in service.

(B) For purposes of section 199A(b)(2)(B)(ii) and this section, C's UBIA of Machinery Y from 2011 through 2018 is its $10,000 cost basis under section 1012, regardless of any later depreciation deductions under section 168(a) and resulting basis adjustments under section 1016(a)(2). The S corporation's basis of Machinery Y is $2,500, the basis of the property under section 362 at the time the S corporation places the property in service. Pursuant to paragraph (c)(3)(iv) of this section, S corporation's UBIA of Machinery Y is $10,000, which is C's UBIA of Machinery Y. Pursuant to paragraph (c)(2)(iv)(A) of this section, for purposes of determining the depreciable period of Machinery Y, the S corporation's placed in service date of Machinery Y will be January 5, 2011, which is the date C originally placed the property in service in 2011. Therefore, Machinery Y may be qualified property of the S corporation (assuming it continues to be used in the business) for 2019 and 2020 and will not be qualified property of the S corporation after 2020, because its depreciable period will have expired.

(ix) *Example 9.*

(A) LLC, a partnership, operates a trade or business that is not an SSTB. On January 5, 2011, LLC purchases Machinery Z for $30,000 and places it in service in LLC's trade or business. LLC's basis in Machinery Z under section 1012 is $30,000. Machinery Z is qualified property within the meaning of section 199A(b)(6). Assume that Machinery Z's recovery period under section 168(c) is 10 years, and LLC depreciates Machinery Z under the general depreciation system by using the straight-line depreciation method, a 10-year recovery period, and the half-year convention. As of December 31, 2018, LLC's basis in Machinery Z, as adjusted under section 1016(a)(2) for depreciation deductions under section 168(a), is $7,500. On January 1, 2019, LLC distributes Machinery Z to Partner A in full liquidation of Partner A's interest in LLC. Partner A's outside basis in LLC is $35,000.

(B) For purposes of section 199A(b)(2)(B)(ii) and this section, LLC's UBIA of Machinery Z from 2011 through 2018 is its $30,000 cost basis under section 1012, regardless of any later depreciation deductions under section 168(a) and resulting basis adjustments under section 1016(a)(2). Prior to the distribution to Partner A, LLC's basis of Machinery Z is $7,500. Under section 732(b), Partner A's basis in Machinery Z is $35,000. Pursuant to paragraph (c)(3)(iv) of this section, upon distribution of Machinery Z, Partner A's UBIA of Machinery Z is $30,000, which was LLC's UBIA of Machinery Z.

(d) ***Applicability date*** —

(1) ***General rule.*** Except as provided in paragraph (d)(2) of this section, the provisions of this section apply to taxable years ending after February 8, 2019.

(2) ***Exceptions*** —

(i) ***Anti-abuse rules.*** The provisions of paragraph (c)(1)(iv) of this section apply to taxable years ending after December 22, 2017.

(ii) ***Non-calendar year RPE.*** For purposes of determining QBI, W-2 wages, UBIA of qualified property, and the aggregate amount of qualified REIT dividends and qualified PTP income if an individual receives any of these items from an RPE with a taxable year that begins before January 1, 2018, and ends after December 31, 2017, such items are treated as having been incurred by the individual during the individual's taxable year in which or with which such RPE taxable year ends.

[T.D. 9847, 84 FR 2995, Feb. 8, 2019, as amended by T.D. 9847, 84 FR 15954, Apr. 17, 2019]

§ 1.199A-3 Qualified business income, qualified REIT dividends, and qualified PTP income.

(a) ***In general.*** This section provides rules on the determination of a trade or business's qualified business income (QBI), as well as the determination of qualified real estate investment trust (REIT) dividends and qualified publicly traded partnership (PTP) income. The provisions of this section apply solely for purposes of section 199A of the Internal Revenue Code (Code). Paragraph (b) of this section provides rules for the determination of QBI. Paragraph (c) of this section provides rules for the determination of qualified REIT dividends and qualified PTP income. QBI must be determined and reported for each trade or business by the individual or relevant passthrough entity (RPE) that directly conducts the trade or business before applying the aggregation rules of § 1.199A-4.

(b) ***Definition of qualified business income*** —

(1) ***In general.*** For purposes of this section, the term *qualified business income* or *QBI* means, for any taxable year, the net amount of qualified items of income, gain, deduction, and loss with respect to any trade or business of the taxpayer as described in paragraph (b)(2) of this section, provided the other requirements of this section and section 199A are satisfied (including, for example, the exclusion of income not effectively connected with a United States trade or business).

(i) ***Section 751 gain.*** With respect to a partnership, if section 751(a) or (b) applies, then gain or loss attributable to assets of the partnership giving rise to ordinary income under section 751(a) or (b) is considered attributable to the trades or businesses conducted by the partnership, and is taken into account for purposes of computing QBI.

(ii) ***Guaranteed payments for the use of capital.*** Income attributable to a guaranteed payment for the use of capital is not considered to be attributable to a trade or business, and thus is not taken into account for purposes of computing QBI except to the extent properly allocable to a trade or business of the recipient. The partnership's deduction associated with the guaranteed payment will be taken into account for purposes of computing QBI if such deduction is properly allocable to the trade or business and is otherwise deductible for Federal income tax purposes.

(iii) ***Section 481 adjustments.*** Section 481 adjustments (whether positive or negative) are taken into account for purposes of computing QBI to the extent that the requirements of this section and section 199A are otherwise satisfied, but only if the adjustment arises in taxable years ending after December 31, 2017.

(iv) ***Previously disallowed losses*** —

(A) ***In general.*** Previously disallowed losses or deductions allowed in the taxable year generally are taken into account for purposes of computing QBI to the extent the disallowed loss or deduction is otherwise allowed by section 199A. These previously disallowed losses include, but are not limited to losses disallowed under sections 461(l), 465, 469, 704(d), and 1366(d). These losses are used for purposes of section 199A and this section in order from the oldest to the most recent on a first-in, first-out (FIFO) basis and are treated as losses from a separate trade or business. To the extent such losses relate to a PTP, they must be treated as a loss from a separate PTP in the taxable year the losses are taken into account. However, losses or deductions that were disallowed, suspended, limited, or carried over from taxable years ending before January 1, 2018 (including under sections 465, 469, 704(d), and 1366(d)), are not taken into account in a subsequent taxable year for purposes of computing QBI.

(B) ***Partial allowance.*** If a loss or deduction attributable to a trade or business is only partially allowed during the taxable year in which incurred, only the portion of the allowed loss or deduction that is attributable to QBI will be considered in determining QBI from the trade or business in the year the loss or deduction is incurred. The portion of the allowed loss or deduction attributable to QBI is determined by multiplying the total amount of the allowed loss by a fraction, the numerator of which is the portion of the total loss incurred during the taxable year that is attributable to QBI and the denominator of which is the amount of the total loss incurred during the taxable year.

(C) ***Attributes of disallowed loss or deduction determined in year loss is incurred*** —

(*1*) ***In general.*** Whether a disallowed loss or deduction is attributable to a trade or business, and otherwise meets the requirements of this section, is determined in the year the loss is incurred.

(2) ***Specified service trades or businesses.*** If a disallowed loss or deduction is attributable to a specified service trade or business (SSTB), whether an individual has taxable income at or below the threshold amount as defined in § 1.199A-1(b)(12), within the phase-in range as defined in § 1.199A-1(b)(4), or in excess of the phase-in range is determined in the year the loss or deduction is incurred. If the individual's taxable income is at or below the threshold amount in the year the loss or deduction is incurred, the entire disallowed loss or deduction must be taken into account when applying paragraph (b)(1)(iv)(A) of this section. If the individual's taxable income is within the phase-in range, then only the applicable percentage, as defined in § 1.199A-1(b)(2), of the disallowed loss or deduction is taken into account when applying paragraph (b)(1)(iv)(A) of this section. If the individual's taxable income exceeds the phase-in range, none of the disallowed loss or deduction will be taken into account in applying paragraph (b)(1)(iv)(A) of this section.

(D) ***Examples.*** The following examples illustrate the provisions of this paragraph (b)(1)(iv).

(1) ***Example 1.*** A is an unmarried individual and a 50% owner of LLC, an entity classified as a partnership for Federal income tax purposes. In 2018, A's allocable share of loss from LLC is $100,000 of which $80,000 is negative QBI. Under section 465, $60,000 of the allocable loss is allowed in determining A's taxable income. A has no other previously disallowed losses under section 465 or any other provision of the Code for 2018 or prior years. Because 80% of A's allocable loss is attributable to QBI ($80,000/$100,000), A will reduce the amount A takes into account in determining QBI proportionately. Thus, A will include $48,000 of the allowed loss in negative QBI (80% of $60,000) in determining A's section 199A deduction in 2018. The remaining $32,000 of negative QBI is treated as negative QBI from a separate trade or business for purposes of computing the section 199A deduction in the year the loss is taken into account in determining taxable income as described in § 1.199A-1(d)(2)(iii).

(2) ***Example 2.*** B is an unmarried individual and a 50% owner of LLC, an entity classified as a partnership for Federal income tax purposes. After allowable deductions other than the section 199A deduction, B's taxable income for 2018 is $177,500. In 2018, LLC has a single trade or business that is an SSTB. B's allocable share of loss is $100,000, all of which is suspended under section 465. B's allocable share of negative QBI is also $100,000. B has no other previously disallowed losses under section 465 or any other provision of the Code for 2018 or prior years. Because the entire loss is suspended, none of the negative QBI is taken into account in determining B's section 199A deduction for 2018. Further, because the negative QBI is from an SSTB and B's taxable income before the section 199A deduction is within the phase-in range, B must determine the applicable percentage of the negative QBI that must be taken into account in the year that the loss is taken into account in determining taxable income. B's applicable percentage is 100% reduced by 40% (the percentage equal to the amount that B's taxable income for the taxable year exceeds B's threshold amount ($20,000 = $177,500−$157,500) over $50,000). Thus, B's applicable percentage is 60%. Therefore, B will have $60,000 (60% of $100,000) of negative QBI from a separate trade or business to be applied proportionately to QBI in the year(s) the loss is taken into account in determining taxable income, regardless of the amount of taxable income and how rules under § 1.199A-5 apply in the year the loss is taken into account in determining taxable income.

(v) ***Net operating losses.*** Generally, a net operating loss deduction under section 172 is not considered with respect to a trade or business and therefore, is not taken into account in computing QBI. However, an excess business loss under section 461(l) is treated as a net operating loss carryover to the following taxable year and is taken into account for purposes of computing QBI in the subsequent taxable year in which it is deducted.

(vi) ***Other deductions.*** Generally, deductions attributable to a trade or business are taken into account for purposes of computing QBI to the extent that the requirements of section 199A and this section are otherwise satisfied. For purposes of section 199A only, deductions such as the deductible portion of the tax on self-employment income under section 164(f), the self-employed health insurance deduction under section 162(l), and the deduction for contributions to qualified retirement plans under section 404 are considered attributable to a trade or business to the extent that the individual's gross income from the trade or business is taken into account in calculating the allowable deduction, on a proportionate basis to the gross income received from the trade or business.

(2) ***Qualified items of income, gain, deduction, and loss*** —

(i) ***In general.*** The term *qualified items of income, gain, deduction, and loss* means items of gross income, gain, deduction, and loss to the extent such items are—

(A) Effectively connected with the conduct of a trade or business within the United States (within the meaning of section 864(c), determined by substituting “trade or business (within the meaning of section 199A)” for “nonresident alien individual or a foreign corporation” or for “a foreign corporation” each place it appears); and

(B) Included or allowed in determining taxable income for the taxable year.

(ii) ***Items not taken into account.*** Notwithstanding paragraph (b)(2)(i) of this section and in accordance with section 199A(c)(3)(B) and (c)(4), the following items are not taken into account as qualified items of income, gain, deduction, or loss and thus are not included in determining QBI:

(A) Any item of short-term capital gain, short-term capital loss, long-term capital gain, or long-term capital loss, including any item treated as one of such items under any other provision of the Code. This provision does not apply to the extent an item is treated as anything other than short-term capital gain, short-term capital loss, long-term capital gain, or long-term capital loss.

(B) Any dividend, income equivalent to a dividend, or payment in lieu of dividends described in section 954(c)(1)(G). Any amount described in section 1385(a)(1) is not treated as described in this clause.

(C) Any interest income other than interest income which is properly allocable to a trade or business. For purposes of section 199A and this section, interest income attributable to an investment of working capital, reserves, or similar accounts is not properly allocable to a trade or business.

(D) Any item of gain or loss described in section 954(c)(1)(C) (transactions in commodities) or section 954(c)(1)(D) (excess foreign currency gains) applied in each case by substituting “trade or business (within the meaning of section 199A)” for “controlled foreign corporation.”

(E) Any item of income, gain, deduction, or loss described in section 954(c)(1)(F) (income from notional principal contracts) determined without regard to section 954(c)(1)(F)(ii) and other than items attributable to notional principal contracts entered into in transactions qualifying under section 1221(a)(7).

(F) Any amount received from an annuity which is not received in connection with the trade or business.

(G) Any qualified REIT dividends as defined in paragraph (c)(2) of this section or qualified PTP income as defined in paragraph (c)(3) of this section.

(H) Reasonable compensation received by a shareholder from an S corporation. However, the S corporation's deduction for such reasonable compensation will reduce QBI if such deduction is properly allocable to the trade or business and is otherwise deductible for Federal income tax purposes.

(I) Any guaranteed payment described in section 707(c) received by a partner for services rendered with respect to the trade or business, regardless of whether the partner is an individual or an RPE. However, the partnership's deduction for such guaranteed payment will reduce QBI if such deduction is properly allocable to the trade or business and is otherwise deductible for Federal income tax purposes.

(J) Any payment described in section 707(a) received by a partner for services rendered with respect to the trade or business, regardless of whether the partner is an individual or an RPE. However, the partnership's deduction for such payment will reduce QBI if such deduction is properly allocable to the trade or business and is otherwise deductible for Federal income tax purposes.

(3) ***Commonwealth of Puerto Rico.*** For the purposes of determining QBI, the term *United States* includes the Commonwealth of Puerto Rico in the case of any taxpayer with QBI for any taxable year from sources within the Commonwealth of Puerto Rico, if all of such receipts are taxable under section 1 for such taxable year. This paragraph (b)(3) only applies as provided in section 199A(f)(1)(C).

(4) ***Wages.*** Expenses for all wages paid (or incurred in the case of an accrual method taxpayer) must be taken into account in computing QBI (if the requirements of this section and section 199A are satisfied) regardless of the application of the W-2 wage limitation described in § 1.199A-1(d)(2)(iv).

(5) ***Allocation of items among directly-conducted trades or businesses.*** If an individual or an RPE directly conducts multiple trades or businesses, and has items of QBI that are properly attributable to more than one trade or business, the individual or RPE must allocate those items among the several trades or businesses to which they are attributable using a reasonable method based on all the facts and circumstances. The individual or RPE may use a different reasonable method with respect to different items of income, gain, deduction, and loss. The chosen reasonable method for each item must be consistently applied from one taxable year to another and must clearly reflect the income and expenses of each trade or business. The overall combination of methods must also be reasonable based on all facts and circumstances. The books and records maintained for a trade or business must be consistent with any allocations under this paragraph (b)(5).

(c) ***Qualified REIT Dividends and Qualified PTP Income*** —

(1) ***In general.*** Qualified REIT dividends and qualified PTP income are the sum of qualified REIT dividends as defined in paragraph (c)(2) of this section earned directly or through an RPE and the net amount of qualified PTP income as defined in paragraph (c)(3) of this section earned directly or through an RPE.

(2) ***Qualified REIT dividend*** —

(i) The term *qualified REIT dividend* means any dividend from a REIT received during the taxable year which—

(A) Is not a capital gain dividend, as defined in section 857(b)(3); and

(B) Is not qualified dividend income, as defined in section 1(h)(11).

(ii) The term qualified REIT dividend does not include any REIT dividend received with respect to any share of REIT stock—

(A) That is held by the shareholder for 45 days or less (taking into account the principles of section 246(c)(3) and (4)) during the 91-day period beginning on the date which is 45 days before the date on which such share becomes ex-dividend with respect to such dividend; or

(B) To the extent that the shareholder is under an obligation (whether pursuant to a short sale or otherwise) to make related payments with respect to positions in substantially similar or related property.

(3) ***Qualified PTP income*** —

(i) ***In general.*** The term *qualified PTP income* means the sum of—

(A) The net amount of such taxpayer's allocable share of income, gain, deduction, and loss from a PTP as defined in section 7704(b) that is not taxed as a corporation under section 7704(a); plus

(B) Any gain or loss attributable to assets of the PTP giving rise to ordinary income under section 751(a) or (b) that is considered attributable to the trades or businesses conducted by the partnership.

(ii) ***Special rules.*** The rules applicable to the determination of QBI described in paragraph (b) of this section also apply to the determination of a taxpayer's allocable share of income, gain, deduction, and loss from a PTP. An individual's allocable share of income from a PTP, and any section 751 gain or loss is qualified PTP income only to the extent the items meet the qualifications of section 199A and this section, including the requirement that the item is included or allowed in determining taxable income for the taxable year, and the requirement that the item be effectively connected with the conduct of a trade or business within the United States. For example, if an individual owns an interest in a PTP, and for the taxable year is allocated a distributive share of net loss which is disallowed under the passive activity rules of section 469, such loss is not taken into account for purposes of section 199A. The specified service trade or business limitations described in §§ 1.199A-1(d)(3) and 1.199A-5 also apply to income earned from a PTP. Furthermore, each PTP is required to determine its qualified PTP income for each trade or business and report that information to its owners as described in § 1.199A-6(b)(3).

(d) ***Section 199A dividends paid by a regulated investment company*** —

(1) ***In general.*** If section 852(b) applies to a regulated investment company (RIC) for a taxable year, the RIC may pay section 199A dividends, as defined in this paragraph (d).

(2) ***Definition of section 199A dividend*** —

(i) ***In general.*** Except as provided in paragraph (d)(2)(ii) of this section, a section 199A dividend is any dividend or part of such a dividend that a RIC pays to its shareholders and reports as a section 199A dividend in written statements furnished to its shareholders.

(ii) ***Reduction in the case of excess reported amounts.*** If the aggregate reported amount with respect to the RIC for any taxable year exceeds the RIC's qualified REIT dividend income for the taxable year, then a section 199A dividend is equal to—

(A) The reported section 199A dividend amount; reduced by

(B) The excess reported amount that is allocable to that reported section 199A dividend amount.

(iii) ***Allocation of excess reported amount*** —

(A) ***In general.*** Except as provided in paragraph (d)(2)(iii)(B) of this section, the excess reported amount (if any) that is allocable to the reported section 199A dividend amount is that portion of the excess reported amount that bears the same ratio to the excess reported amount as the reported section 199A dividend amount bears to the aggregate reported amount.

(B) ***Special rule for noncalendar-year RICs.*** In the case of any taxable year that does not begin and end in the same calendar year, if the post-December reported amount equals or exceeds the excess reported amount for that taxable year, paragraph (d)(2)(iii)(A) of this section is applied by substituting “post-December reported amount” for “aggregate reported amount,” and no excess reported amount is allocated to any dividend paid on or before December 31 of that taxable year.

(3) ***Definitions.*** For purposes of paragraph (d) of this section—

(i) ***Reported section 199A dividend amount.*** The term *reported section 199A dividend amount* means the amount of a dividend distribution reported to the RIC's shareholders under paragraph (d)(2)(i) of this section as a section 199A dividend.

(ii) ***Excess reported amount.*** The term *excess reported amount* means the excess of the aggregate reported amount over the RIC's qualified REIT dividend income for the taxable year.

(iii) ***Aggregate reported amount.*** The term *aggregate reported amount* means the aggregate amount of dividends reported by the RIC under paragraph (d)(2)(i) of this section as section 199A dividends for the taxable year (including section 199A dividends paid after the close of the taxable year and described in section 855).

(iv) ***Post-December reported amount.*** The term *post-December reported amount* means the aggregate reported amount determined by taking into account only dividends paid after December 31 of the taxable year.

(v) ***Qualified REIT dividend income.*** The term *qualified REIT dividend income* means, with respect to a taxable year of a RIC, the excess of the amount of qualified REIT dividends, as defined in paragraph (c)(2) of this section, includible in the RIC's taxable income for the taxable year over the amount of the RIC's deductions that are properly allocable to such income.

(4) ***Treatment of section 199A dividends by shareholders*** —

(i) ***In general.*** For purposes of section 199A, and §§ 1.199A-1 through 1.199A-6, a section 199A dividend is treated by a taxpayer that receives the section 199A dividend as a qualified REIT dividend.

(ii) ***Holding period.*** Paragraph (d)(4)(i) of this section does not apply to any dividend received with respect to a share of RIC stock—

(A) That is held by the shareholder for 45 days or less (taking into account the principles of section 246(c)(3) and (4)) during the 91-day period beginning on the date which is 45 days before the date on which the share becomes ex-dividend with respect to such dividend; or

(B) To the extent that the shareholder is under an obligation (whether pursuant to a short sale or otherwise) to make related payments with respect to positions in substantially similar or related property.

(5) ***Example.*** The following example illustrates the provisions of this paragraph (d).

(i) X is a corporation that has elected to be a RIC. For its taxable year ending March 31, 2021, X has $25,000x of net long-term capital gain, $60,000x of qualified dividend income, $25,000x of taxable interest income, $15,000x of net short-term capital gain, and $25,000x of qualified REIT dividends. X has $15,000x of deductible expenses, of which $3,000x is allocable to the qualified REIT dividends. On December 31, 2020, X pays a single dividend of $100,000x, and reports $20,000x of the dividend as a section 199A dividend in written statements to its shareholders. On March 31, 2021, X pays a dividend of $35,000x, and reports $5,000x of the dividend as a section 199A dividend in written statements to its shareholders.

(ii) X's qualified REIT dividend income under paragraph (d)(3)(v) of this section is $22,000x, which is the excess of X's $25,000x of qualified REIT dividends over $3,000x in allocable expenses. The reported section 199A dividend amounts for the December 31, 2020, and March 31, 2021, distributions are $20,000x and $5,000x, respectively. For the taxable year ending March 31, 2021, the aggregate reported amount of section 199A dividends is $25,000x, and the excess reported amount under paragraph (d)(3)(ii) of this section is $3,000x. Because X is a noncalendar-year RIC and the post-December reported amount of $5,000x exceeds the excess reported amount of $3,000x, the entire excess reported amount is allocated under paragraphs (d)(2)(iii)(A) and (B) of this section to the reported section 199A dividend amount for the March 31, 2021, distribution. No portion of the excess reported amount is allocated to the reported section 199A dividend amount for the December 31, 2020, distribution. Thus, the section 199A dividend on March 31, 2021, is $2,000x, which is the reported section 199A dividend amount of $5,000x reduced by the $3,000x of allocable excess reported amount. The section 199A dividend on December 31, 2020, is the $20,000x that X reports as a section 199A dividend.

(iii) Shareholder A, a United States person, receives a dividend from X of $100x on December 31, 2020, of which $20x is reported as a section 199A dividend. If A meets the holding period requirements in paragraph (d)(4)(ii) of this section with respect to the stock of X, A treats $20x of the dividend from X as a qualified REIT dividend for purposes of section 199A for A's 2020 taxable year.

(iv) A receives a dividend from X of $35x on March 31, 2021, of which $5x is reported as a section 199A dividend. Only $2x of the dividend is a section 199A dividend. If A meets the holding period requirements in paragraph (d)(4)(ii) of this section with respect to the stock of X, A may treat the $2x section 199A dividend as a qualified REIT dividend for A's 2021 taxable year.

(e) ***Applicability date*** —

(1) ***General rule.*** Except as provided in paragraph (e)(2) of this section, the provisions of this section apply to taxable years ending after February 8, 2019.

(2) ***Exceptions*** —

(i) ***Anti-abuse rules.*** The provisions of paragraph (c)(2)(ii) of this section apply to taxable years ending after December 22, 2017.

(ii) ***Non-calendar year RPE.*** For purposes of determining QBI, W-2 wages, UBIA of qualified property, and the aggregate amount of qualified REIT dividends and qualified PTP income if an individual receives any of these items from an RPE with a taxable year that begins before January 1, 2018, and ends after December 31, 2017, such items are treated as having been incurred by the individual during the individual's taxable year in which or with which such RPE taxable year ends.

(iii) ***Previously disallowed losses.*** The provisions of paragraph (b)(1)(iv) of this section apply to taxable years beginning after August 24, 2020. Taxpayers may choose to apply the rules in paragraph (b)(1)(iv) of this section for taxable years beginning on or before August 24, 2020, so long as the taxpayers consistently apply the rules in paragraph (b)(1)(iv) of this section for each such year.

(iv) ***Section 199A dividends.*** The provisions of paragraph (d) of this section apply to taxable years beginning after August 24, 2020. Taxpayers may choose to apply the rules in paragraph (d) of this section for taxable years beginning on or before August 24, 2020, so long as the taxpayers consistently apply the rules in paragraph (d) of this section for each such year.

[T.D. 9847, 84 FR 3000, Feb. 8, 2019, as amended by T.D. 9899, 85 FR 38065, June 25, 2020]

§ 1.199A-4 Aggregation.

(a) ***Scope and purpose.*** An individual or RPE may be engaged in more than one trade or business. Except as provided in this section, each trade or business is a separate trade or business for purposes of applying the limitations described in § 1.199A-1(d)(2)(iv). This section sets forth rules to allow individuals and RPEs to aggregate trades or businesses, treating the aggregate as a single trade or business for purposes of applying the limitations described in § 1.199A-1(d)(2)(iv). Trades or businesses may be aggregated only to the extent provided in this section, but aggregation by taxpayers is not required.

(b) ***Aggregation rules*** —

(1) ***General rule.*** Trades or businesses may be aggregated only if an individual or RPE can demonstrate that—

(i) The same person or group of persons, directly or by attribution under sections 267(b) or 707(b), owns 50 percent or more of each trade or business to be aggregated, meaning in the case of such trades or businesses owned by an S corporation, 50 percent or more of the issued and outstanding shares of the corporation, or, in the case of such trades or businesses owned by a partnership, 50 percent or more of the capital or profits in the partnership;

(ii) The ownership described in paragraph (b)(1)(i) of this section exists for a majority of the taxable year, including the last day of the taxable year, in which the items attributable to each trade or business to be aggregated are included in income;

(iii) All of the items attributable to each trade or business to be aggregated are reported on returns with the same taxable year, not taking into account short taxable years;

(iv) None of the trades or businesses to be aggregated is a *specified service trade or business* (SSTB) as defined in § 1.199A-5; and

(v) The trades or businesses to be aggregated satisfy at least two of the following factors (based on all of the facts and circumstances):

(A) The trades or businesses provide products, property, or services that are the same or customarily offered together.

(B) The trades or businesses share facilities or share significant centralized business elements, such as personnel, accounting, legal, manufacturing, purchasing, human resources, or information technology resources.

(C) The trades or businesses are operated in coordination with, or reliance upon, one or more of the businesses in the aggregated group (for example, supply chain interdependencies).

(2) *Operating rules* —

(i) ***Individuals.*** An individual may aggregate trades or businesses operated directly or through an RPE to the extent an aggregation is not inconsistent with the aggregation of an RPE. If an individual aggregates multiple trades or businesses under paragraph (b)(1) of this section, QBI, W-2 wages, and UBIA of qualified property must be combined for the aggregated trades or businesses for purposes of applying the W-2 wage and UBIA of qualified property limitations described in § 1.199A-1(d)(2)(iv). An individual may not subtract from the trades or businesses aggregated by an RPE but may aggregate additional trades or businesses with the RPE's aggregation if the rules of this section are otherwise satisfied.

(ii) ***RPEs.*** An RPE may aggregate trades or businesses operated directly or through a lower-tier RPE to the extent an aggregation is not inconsistent with the aggregation of a lower-tier RPE. If an RPE itself does not aggregate, multiple owners of an RPE need not aggregate in the same manner. If an RPE aggregates multiple trades or businesses under paragraph (b)(1) of this section, the RPE must compute and report QBI, W-2 wages, and UBIA of qualified property for the aggregated trade or business under the rules described in § 1.199A-6(b). An RPE may not subtract from the trades or businesses aggregated by a lower-tier RPE but may aggregate additional trades or businesses with a lower-tier RPE's aggregation if the rules of this section are otherwise satisfied.

(c) *Reporting and consistency requirements* —

(1) ***Individuals.*** Once an individual chooses to aggregate two or more trades or businesses, the individual must consistently report the aggregated trades or businesses in all subsequent taxable years. A failure to aggregate will not be considered to be an aggregation for purposes of this rule. An individual that fails to aggregate may not aggregate trades or businesses on an amended return (other than an amended return for the 2018 taxable year). However, an individual may add a newly created or newly acquired (including through non-recognition transfers) trade or business to an existing aggregated trade or business (including the aggregated trade or business of an RPE) if the requirements of paragraph (b)(1) of this section are satisfied. In a subsequent year, if there is a significant change in facts and circumstances such that an individual's prior aggregation of trades or businesses no longer qualifies for aggregation under the rules of this section, then the trades or businesses will no longer be aggregated within the meaning of this section, and the individual must reapply the rules in paragraph (b)(1) of this section to determine a new permissible aggregation (if any). An individual also must report aggregated trades or businesses of an RPE in which the individual holds a direct or indirect interest.

(2) ***Individual disclosure*** —

(i) ***Required annual disclosure.*** For each taxable year, individuals must attach a statement to their returns identifying each trade or business aggregated under paragraph (b)(1) of this section. The statement must contain—

(A) A description of each trade or business;

(B) The name and EIN of each entity in which a trade or business is operated;

(C) Information identifying any trade or business that was formed, ceased operations, was acquired, or was disposed of during the taxable year;

(D) Information identifying any aggregated trade or business of an RPE in which the individual holds an ownership interest; and

(E) Such other information as the Commissioner may require in forms, instructions, or other published guidance.

(ii) ***Failure to disclose.*** If an individual fails to attach the statement required in paragraph (c)(2)(i) of this section, the Commissioner may disaggregate the individual's trades or businesses. The individual may not aggregate trades or businesses that are disaggregated by the Commissioner for the subsequent three taxable years.

(3) ***RPEs.*** Once an RPE chooses to aggregate two or more trades or businesses, the RPE must consistently report the aggregated trades or businesses in all subsequent taxable years. A failure to aggregate will not be considered to be an aggregation for purposes of this rule. An RPE that fails to aggregate may not aggregate trades or businesses on an amended return (other than an amended return for the 2018 taxable year). However, an RPE may add a newly created or newly acquired (including through non-recognition transfers) trade or business to an existing aggregated trade or business (including the aggregated trade or business of a lower-tier RPE) if the requirements of paragraph (b)(1) of this section are satisfied. In a subsequent year, if there is a significant change in facts and circumstances such that an RPE's prior aggregation of trades or businesses no longer qualifies for aggregation under the rules of this section, then the trades or businesses will no longer be aggregated within the meaning of this section, and the RPE must reapply the rules in paragraph

(b)(1) of this section to determine a new permissible aggregation (if any). An RPE also must report aggregated trades or businesses of a lower-tier RPE in which the RPE holds a direct or indirect interest.

(4) *RPE disclosure* —

(i) ***Required annual disclosure.*** For each taxable year, RPEs (including each RPE in a tiered structure) must attach a statement to each owner's Schedule K-1 identifying each trade or business aggregated under paragraph (b)(1) of this section. The statement must contain—

(A) A description of each trade or business;

(B) The name and EIN of each entity in which a trade or business is operated;

(C) Information identifying any trade or business that was formed, ceased operations, was acquired, or was disposed of during the taxable year;

(D) Information identifying any aggregated trade or business of an RPE in which the RPE holds an ownership interest; and

(E) Such other information as the Commissioner may require in forms, instructions, or other published guidance.

(ii) ***Failure to disclose.*** If an RPE fails to attach the statement required in paragraph (c)(4)(i) of this section, the Commissioner may disaggregate the RPE's trades or businesses. The RPE may not aggregate trades or businesses that are disaggregated by the Commissioner for the subsequent three taxable years.

(d) ***Examples.*** The following examples illustrate the principles of this section. For purposes of these examples, assume the taxpayer is a United States citizen, all individuals and RPEs use a calendar taxable year, there are no ownership changes during the taxable year, all trades or businesses satisfy the requirements under section 162, all tax items are effectively connected to a trade or business within the United States within the meaning of section 864(c), and none of the trades or businesses is an SSTB within the meaning of § 1.199A-5. Except as otherwise specified, a single capital letter denotes an individual taxpayer.

(1) *Example 1* —

(i) ***Facts.*** A wholly owns and operates a catering business and a restaurant through separate disregarded entities. The catering business and the restaurant share centralized purchasing to obtain volume discounts and a centralized accounting office that performs all of the bookkeeping, tracks and issues statements on all of the receivables, and prepares the payroll for each business. A maintains a website and print advertising materials that reference both the catering business and the restaurant. A uses the restaurant kitchen to prepare food for the catering business. The catering business employs its own staff and owns equipment and trucks that are not used or associated with the restaurant.

(ii) ***Analysis.*** Because the restaurant and catering business are held in disregarded entities, A will be treated as operating each of these businesses directly and thereby satisfies paragraph (b)(1)(i) of this section. Under paragraph (b)(1)(v) of this section, A satisfies the following factors: Paragraph (b)(1)(v)(A) of this section is met as both businesses offer prepared food to customers; and paragraph (b)(1)(v)(B) of this section is met because the two businesses share

the same kitchen facilities in addition to centralized purchasing, marketing, and accounting. Having satisfied paragraphs (b)(1)(i) through (v) of this section, A may treat the catering business and the restaurant as a single trade or business for purposes of applying § 1.199A-1(d).

(2) *Example 2* —

(i) ***Facts.*** Assume the same facts as in *Example 1* of paragraph (d)(1) of this section, but the catering and restaurant businesses are owned in separate partnerships and A, B, C, and D each own a 25% interest in each of the two partnerships. A, B, C, and D are unrelated.

(ii) ***Analysis.*** Because under paragraph (b)(1)(i) of this section A, B, C, and D together own more than 50% of each of the two partnerships, they may each treat the catering business and the restaurant as a single trade or business for purposes of applying § 1.199A-1(d).

(3) *Example 3* —

(i) ***Facts.*** W owns a 75% interest in S1, an S corporation, and a 75% interest in PRS, a partnership. S1 manufactures clothing and PRS is a retail pet food store. W manages S1 and PRS.

(ii) ***Analysis.*** W owns more than 50% of the stock of S1 and more than 50% of PRS thereby satisfying paragraph (b)(1)(i) of this section. Although W manages both S1 and PRS, W is not able to satisfy the requirements of paragraph (b)(1)(v) of this section as the two businesses do not provide goods or services that are the same or customarily offered together; there are no significant centralized business elements; and no facts indicate that the businesses are operated in coordination with, or reliance upon, one another. W must treat S1 and PRS as separate trades or businesses for purposes of applying § 1.199A-1(d).

(4) *Example 4* —

(i) ***Facts.*** E owns a 60% interest in each of four partnerships (PRS1, PRS2, PRS3, and PRS4). Each partnership operates a hardware store. A team of executives oversees the operations of all four of the businesses and controls the policy decisions involving the business as a whole. Human resources and accounting are centralized for the four businesses. E reports PRS1, PRS3, and PRS4 as an aggregated trade or business under paragraph (b)(1) of this section and reports PRS2 as a separate trade or business. Only PRS2 generates a net taxable loss.

(ii) ***Analysis.*** E owns more than 50% of each partnership thereby satisfying paragraph (b)(1)(i) of this section. Under paragraph (b)(1)(v) of this section, the following factors are satisfied: Paragraph (b)(1)(v)(A) of this section because each partnership operates a hardware store; and paragraph (b)(1)(v)(B) of this section because the businesses share accounting and human resource functions. E's decision to aggregate only PRS1, PRS3, and PRS4 into a single trade or business for purposes of applying § 1.199A-1(d) is permissible. The loss from PRS2 will be netted against the aggregate profits of PRS1, PRS3, and PRS4 pursuant to § 1.199A-1(d)(2)(iii).

(5) *Example 5* —

(i) ***Facts.*** Assume the same facts as *Example 4* of paragraph (d)(4) of this section, and that F owns a 10% interest in PRS1, PRS2, PRS3, and PRS4.

(ii) ***Analysis.*** Because under paragraph (b)(1)(i) of this section E owns more than 50% of the four partnerships, F may aggregate PRS 1, PRS2, PRS3, and PRS4 as a single trade or business for purposes of applying § 1.199A-1(d), provided that F can demonstrate that the ownership test is met by E.

(6) ***Example 6*** —

(i) ***Facts.*** D owns 75% of the stock of S1, S2, and S3, each of which is an S corporation. Each S corporation operates a grocery store in a separate state. S1 and S2 share centralized purchasing functions to obtain volume discounts and a centralized accounting office that performs all of the bookkeeping, tracks and issues statements on all of the receivables, and prepares the payroll for each business. S3 is operated independently from the other businesses.

(ii) ***Analysis.*** D owns more than 50% of the stock of each S corporation thereby satisfying paragraph (b)(1)(i) of this section. Under paragraph (b)(1)(v) of this section, the grocery stores satisfy paragraph (b)(1)(v)(A) of this section because they are in the same trade or business. Only S1 and S2 satisfy paragraph (b)(1)(v)(B) of this section because of their centralized purchasing and accounting offices. D is only able to show that the requirements of paragraph (b)(1)(v)(B) of this section are satisfied for S1 and S2; therefore, D only may aggregate S1 and S2 into a single trade or business for purposes of § 1.199A-1(d). D must report S3 as a separate trade or business for purposes of applying § 1.199A-1(d).

(7) ***Example 7*** —

(i) ***Facts.*** Assume the same facts as *Example 6* of paragraph (d)(6) of this section except each store is independently operated and S1 and S2 do not have centralized purchasing or accounting functions.

(ii) ***Analysis.*** Although the stores provide the same products and services within the meaning of paragraph (b)(1)(v)(A) of this section, D cannot show that another factor under paragraph (b)(1)(v) of this section is present. Therefore, D must report S1, S2, and S3 as separate trades or businesses for purposes of applying § 1.199A-1(d).

(8) ***Example 8*** —

(i) ***Facts.*** G owns 80% of the stock in S1, an S corporation and 80% of LLC1 and LLC2, each of which is a partnership for Federal tax purposes. LLC1 manufactures and supplies all of the widgets sold by LLC2. LLC2 operates a retail store that sells LLC1's widgets. S1 owns the real property leased to LLC1 and LLC2 for use by the factory and retail store. The entities share common advertising and management.

(ii) ***Analysis.*** G owns more than 50% of the stock of S1 and more than 50% of LLC1 and LLC2 thus satisfying paragraph (b)(1)(i) of this section. LLC1, LLC2, and S1 share significant centralized business elements and are operated in coordination with, or in reliance upon, one or more of the businesses in the aggregated group. G can treat the business operations of LLC1 and LLC2 as a single trade or business for purposes of applying § 1.199A-1(d). S1 is eligible to be included in the aggregated group because it leases property to a trade or business within the aggregated trade or business as described in § 1.199A-1(b)(14) and meets the requirements of paragraph (b)(1) of this section.

(9) ***Example 9*** —

(i) ***Facts.*** Same facts as *Example 8* of paragraph (d)(8) of this section, except G owns 80% of the stock in S1 and 20% of each of LLC1 and LLC2. B, G's son, owns a majority interest in LLC2, and M, G's mother, owns a majority interest in LLC1. B does not own an interest in S1 or LLC1, and M does not own an interest in S1 or LLC2.

(ii) ***Analysis.*** Under the rules in paragraph (b)(1) of this section, B and M's interest in LLC2 and LLC1, respectively, are attributable to G and G is treated as owning a majority interest in LLC2 and LLC1; G thus satisfies paragraph (b)(1)(i) of this section. G may aggregate his interests in LLC1, LLC2, and S1 as a single trade or business for purposes of applying § 1.199A-1(d). Under paragraph (b)(1) of this section, S1 is eligible to be included in the aggregated group because it leases property to a trade or business within the aggregated trade or business as described in § 1.199A-1(b)(14) and meets the requirements of paragraph (b)(1) of this section.

(10) ***Example 10*** —

(i) ***Facts.*** F owns a 75% interest and G owns a 5% interest in five partnerships (PRS1-PRS5). H owns a 10% interest in PRS1 and PRS2. Each partnership operates a restaurant and each restaurant separately constitutes a trade or business for purposes of section 162. G is the executive chef of all of the restaurants and as such he creates the menus and orders the food supplies.

(ii) ***Analysis.*** F owns more than 50% of the partnerships thereby satisfying paragraph (b)(1)(i) of this section. Under paragraph (b)(1)(v) of this section, the restaurants satisfy paragraph (b)(1)(v)(A) of this section because they are in the same trade or business, and paragraph (b)(1)(v)(B) of this section is satisfied as G is the executive chef of all of the restaurants and the businesses share a centralized function for ordering food and supplies. F can show the requirements under paragraph (b)(1) of this section are satisfied as to all of the restaurants. Because F owns a majority interest in each of the partnerships, G can demonstrate that paragraph (b)(1)(i) of this section is satisfied. G can also aggregate all five restaurants into a single trade or business for purposes of applying § 1.199A-1(d). H, however, only owns an interest in PRS1 and PRS2. Like G, H satisfies paragraph (b)(1)(i) of this section because F owns a majority interest. H can, therefore, aggregate PRS1 and PRS2 into a single trade or business for purposes of applying § 1.199A-1(d).

(11) ***Example 11*** —

(i) ***Facts.*** H, J, K, and L own interests in PRS1 and PRS2, each a partnership, and S1 and S2, each an S corporation. H, J, K, and L also own interests in C, an entity taxable as a C corporation. H owns 30%, J owns 20%, K owns 5%, and L owns 45% of each of the five entities. All of the entities satisfy 2 of the 3 factors under paragraph (b)(1)(v) of this section. For purposes of section 199A the taxpayers report the following aggregated trades or businesses: H aggregates PRS1 and S1 together and aggregates PRS2 and S2 together; J aggregates PRS1, S1 and S2 together and reports PRS2 separately; K aggregates PRS1 and PRS2 together and aggregates S1 and S2 together; and L aggregates S1, S2, and PRS2 together and reports PRS1 separately. C cannot be aggregated.

(ii) ***Analysis.*** Under paragraph (b)(1)(i) of this section, because H, J, and K together own a majority interest in PRS1, PRS2, S1, and S2, H, J, K, and L are permitted to aggregate under paragraph (b)(1) of this section. Further, the aggregations reported by the taxpayers are permitted, but not required for each of H, J, K, and L. C's income is not eligible for the section 199A deduction and it cannot be aggregated for purposes of applying § 1.199A-1(d).

(12) *Example 12* —

(i) ***Facts.*** L owns 60% of PRS1, a partnership, a business that sells non-food items to grocery stores. L also owns 55% of PRS2, a partnership, which owns and operates a distribution trucking business. The predominant portion of PRS2's business is transporting goods for PRS1.

(ii) ***Analysis.*** L is able to meet paragraph (b)(1)(i) of this section as the majority owner of PRS1 and PRS2. Under paragraph (b)(1)(v) of this section, L is only able to show the operations of PRS1 and PRS2 are operated in reliance of one another under paragraph (b)(1)(v)(C) of this section. For purposes of applying § 1.199A-1(d), L must treat PRS1 and PRS2 as separate trades or businesses.

(13) *Example 13* —

(i) ***Facts.*** C owns a majority interest in a sailboat racing team and also owns an interest in PRS1 which operates a marina. PRS1 is a trade or business under section 162, but the sailboat racing team is not a trade or business within the meaning of section 162.

(ii) ***Analysis.*** C has only one trade or business for purposes of section 199A and, therefore, cannot aggregate the interest in the racing team with PRS1 under paragraph (b)(1) of this section.

(14) *Example 14* —

(i) ***Facts.*** Trust wholly owns LLC1, LLC2, and LLC3. LLC1 operates a trucking company that delivers lumber and other supplies sold by LLC2. LLC2 operates a lumber yard and supplies LLC3 with building materials. LLC3 operates a construction business. LLC1, LLC2, and LLC3 have a centralized human resources department, payroll, and accounting department.

(ii) ***Analysis.*** Because Trust owns 100% of the interests in LLC1, LLC2, and LLC3, Trust satisfies paragraph (b)(1)(i) of this section. Trust can also show that it satisfies paragraph (b)(1)(v)(B) of this section as the trades or businesses have a centralized human resources department, payroll, and accounting department. Trust also can show is meets paragraph (b)(1)(v)(C) of this section as the trades or businesses are operated in coordination, or reliance upon, one or more in the aggregated group. Trust can aggregate LLC1, LLC2, and LLC3 for purposes of applying § 1.199A-1(d).

(15) *Example 15* —

(i) ***Facts.*** PRS1, a partnership, directly operates a food service trade or business and owns 60% of PRS2, which directly operates a movie theater trade or business and a food service trade or business. PRS2's movie theater and food service businesses operate in coordination with, or reliance upon, one another and share a centralized human resources department, payroll, and accounting department. PRS1's and PRS2's food service businesses provide products and services that are the same and share centralized purchasing and shipping to obtain volume discounts.

(ii) ***Analysis.*** PRS2 may aggregate its movie theater and food service businesses. Paragraph (b)(1)(v) of this section is satisfied because the businesses operate in coordination with one another and share centralized business elements. If PRS2 does aggregate the two businesses, PRS1 may not aggregate its food service business with PRS2's aggregated trades or businesses. Because PRS1 owns more than 50% of PRS2, thereby satisfying paragraph (b)(1)(i) of this section, PRS1 may aggregate its food service businesses with PRS2's food service business if PRS2 has not aggregated its movie theater and food service businesses. Paragraph

(b)(1)(v) of this section is satisfied because the businesses provide the same products and services and share centralized business elements. Under either alternative, PRS1's food service business and PRS2's movie theater cannot be aggregated because there are no factors in paragraph (b)(1)(v) of this section present between the businesses.

(16) *Example 16* —

(i) ***Facts.*** PRS1, a partnership, owns 60% of a commercial rental office building in state A, and 80% of a commercial rental office building in state B. Both commercial rental office building operations share centralized accounting, legal, and human resource functions. PRS1 treats the two commercial rental office buildings as an aggregated trade or business under paragraph (b)(1) of this section.

(ii) ***Analysis.*** PRS1 owns more than 50% of each trade or business thereby satisfying paragraph (b)(1)(i) of this section. Under paragraph (b)(1)(v) of this section, PRS1 may aggregate its commercial rental office buildings because the businesses provide the same type of property and share accounting, legal, and human resource functions.

(17) *Example 17* —

(i) ***Facts.*** S, an S corporation owns 100% of the interests in a residential condominium building and 100% of the interests in a commercial rental office building. Both building operations share centralized accounting, legal, and human resource functions.

(ii) ***Analysis.*** S owns more than 50% of each trade or business thereby satisfying paragraph (b)(1)(i) of this section. Although both businesses share significant centralized business elements, S cannot show that another factor under paragraph (b)(1)(v) of this section is present because the two building operations are not of the same type of property. S must treat the residential condominium building and the commercial rental office building as separate trades or businesses for purposes of applying § 1.199A-1(d).

(18) *Example 18* —

(i) ***Facts.*** M owns 75% of a residential apartment building. M also owns 80% of PRS2. PRS2 owns 80% of the interests in a residential condominium building and 80% of the interests in a residential apartment building. PRS2's residential condominium building and residential apartment building operations share centralized back office functions and management. M's residential apartment building and PRS2's residential condominium and apartment building operate in coordination with each other in renting apartments to tenants.

(ii) ***Analysis.*** PRS2 may aggregate its residential condominium and residential apartment building operations. PRS2 owns more than 50% of each trade or business thereby satisfying paragraph (b)(1)(i) of this section. Paragraph (b)(1)(v) of this section is satisfied because the businesses are of the same type of property and share centralized back office functions and management. M may also add its residential apartment building operations to PRS2's aggregated residential condominium and apartment building operations. M owns more than 50% of each trade or business thereby satisfying paragraph (b)(1)(i) of this section. Paragraph (b)(1)(v) of this section is also satisfied because the businesses operate in coordination with each other.

(e) *Applicability date* —

(1) ***General rule.*** Except as provided in paragraph (e)(2) of this section, the provisions of this section apply to taxable years ending after February 8, 2019.

(2) ***Exception for non-calendar year RPE.*** For purposes of determining QBI, W-2 wages, and UBIA of qualified property, and the aggregate amount of qualified REIT dividends and qualified PTP income, if an individual receives any of these items from an RPE with a taxable year that begins before January 1, 2018, and ends after December 31, 2017, such items are treated as having been incurred by the individual during the individual's taxable year in which or with which such RPE taxable year ends.

[T.D. 9847, 84 FR 3002, Feb. 8, 2019, as amended by T.D. 9847, 84 FR 15955, Apr. 17, 2019]

§ 1.199A-5 Specified service trades or businesses and the trade or business of performing services as an employee.

(a) *Scope and effect* —

(1) ***Scope.*** This section provides guidance on specified service trades or businesses (SSTBs) and the trade or business of performing services as an employee. This paragraph (a) describes the effect of a trade or business being an SSTB and the trade or business of performing services as an employee. Paragraph (b) of this section provides definitional guidance on SSTBs. Paragraph (c) of this section provides special rules related to SSTBs. Paragraph (d) of this section provides guidance on the trade or business of performing services as an employee. The provisions of this section apply solely for purposes of section 199A of the Internal Revenue Code (Code).

(2) ***Effect of being an SSTB.*** If a trade or business is an SSTB, no qualified business income (QBI), W-2 wages, or unadjusted basis immediately after acquisition (UBIA) of qualified property from the SSTB may be taken into account by any individual whose taxable income exceeds the phase-in range as defined in § 1.199A-1(b)(4), even if the item is derived from an activity that is not itself a specified service activity. The SSTB limitation also applies to income earned from a publicly traded partnership (PTP). If a trade or business conducted by a relevant passthrough entity (RPE) or PTP is an SSTB, this limitation applies to any direct or indirect individual owners of the business, regardless of whether the owner is passive or participated in any specified service activity. However, the SSTB limitation does not apply to individuals with taxable income below the threshold amount as defined in § 1.199A-1(b)(12). A phase-in rule, provided in § 1.199A-1(d)(2), applies to individuals with taxable income within the phase-in range, allowing them to take into account a certain “applicable percentage” of QBI, W-2 wages, and UBIA of qualified property from an SSTB. The phase-in rule also applies to income earned from a PTP. A direct or indirect owner of a trade or business engaged in the performance of a specified service is engaged in the performance of the specified service for purposes of section 199A and this section, regardless of whether the owner is passive or participated in the specified service activity.

(3) ***Trade or business of performing services as an employee.*** The trade or business of performing services as an employee is not a trade or business for purposes of section 199A and the regulations thereunder. Therefore, no items of income, gain, deduction, or loss from the trade or business of performing services as an employee constitute QBI within the meaning of section 199A and § 1.199A-3. No taxpayer may claim a section 199A deduction for wage income, regardless of the amount of taxable income.

(b) ***Definition of specified service trade or business.*** Except as provided in paragraph (c)(1) of this section, the term *specified service trade or business (SSTB)* means any of the following:

(1) ***Listed SSTBs.*** Any trade or business involving the performance of services in one or more of the following fields:

(i) ***Health*** as described in paragraph (b)(2)(ii) of this section;

(ii) ***Law*** as described in paragraph (b)(2)(iii) of this section;

(iii) ***Accounting*** as described in paragraph (b)(2)(iv) of this section;

(iv) ***Actuarial science*** as described in paragraph (b)(2)(v) of this section;

(v) ***Performing arts*** as described in paragraph (b)(2)(vi) of this section;

(vi) ***Consulting*** as described in paragraph (b)(2)(vii) of this section;

(vii) ***Athletics*** as described in paragraph (b)(2)(viii) of this section;

(viii) ***Financial services*** as described in paragraph (b)(2)(ix) of this section;

(ix) ***Brokerage services*** as described in paragraph (b)(2)(x) of this section;

(x) ***Investing and investment management*** as described in paragraph (b)(2)(xi) of this section;

(xi) ***Trading*** as described in paragraph (b)(2)(xii) of this section;

(xii) ***Dealing in securities (as defined in section 475(c)(2)), partnership interests, or commodities (as defined in section 475(e)(2))*** as described in paragraph (b)(2)(xiii) of this section; or

(xiii) ***Any trade or business where the principal asset of such trade or business is the reputation or skill of one or more of its employees or owners*** as defined in paragraph (b)(2)(xiv) of this section.

(2) ***Additional rules for applying section 199A(d)(2) and paragraph (b) of this section —***

(i) ***In general —***

(A) ***No effect on other tax rules.*** This paragraph (b)(2) provides additional rules for determining whether a business is an SSTB within the meaning of section 199A(d)(2) and paragraph (b) of this section only. The rules of this paragraph (b)(2) apply solely for purposes of section 199A and therefore may not be taken into account for purposes of applying any provision of law or regulation other than section 199A and the regulations thereunder, except to the extent such provision expressly refers to section 199A(d) or this section.

(B) ***Hedging transactions.*** Income, deduction, gain or loss from a *hedging transaction* (as defined in § 1.1221-2(b)) entered into by an individual or RPE in the normal course of the individual's or RPE's trade or business is treated as income, deduction, gain, or loss from that trade or business for purposes of this paragraph (b)(2). See also § 1.446-4.

(ii) ***Meaning of services performed in the field of health.*** For purposes of section 199A(d)(2) and paragraph (b)(1)(i) of this section only, the *performance of services in the field of health* means the provision of medical services by individuals such as physicians, pharmacists, nurses, dentists, veterinarians, physical therapists, psychologists, and other similar healthcare professionals performing services in their capacity as such. The performance of services in the field of health does not include the provision of services not directly related to a medical services field, even though the services provided may purportedly relate to the health of the service recipient. For example, the performance of services in the field of health does not include the operation of health clubs or health spas that provide physical exercise or conditioning to their customers, payment processing, or the research, testing, and manufacture and/or sales of pharmaceuticals or medical devices.

(iii) ***Meaning of services performed in the field of law.*** For purposes of section 199A(d)(2) and paragraph (b)(1)(ii) of this section only, the *performance of services in the field of law* means the performance of legal services by individuals such as lawyers, paralegals, legal arbitrators, mediators, and similar professionals performing services in their capacity as such. The performance of services in the field of law does not include the provision of services that do not require skills unique to the field of law; for example, the provision of services in the field of law does not include the provision of services by printers, delivery services, or stenography services.

(iv) ***Meaning of services performed in the field of accounting.*** For purposes of section 199A(d)(2) and paragraph (b)(1)(iii) of this section only, the *performance of services in the field of accounting* means the provision of services by individuals such as accountants, enrolled agents, return preparers, financial auditors, and similar professionals performing services in their capacity as such.

(v) ***Meaning of services performed in the field of actuarial science.*** For purposes of section 199A(d)(2) and paragraph (b)(1)(iv) of this section only, the *performance of services in the field of actuarial science* means the provision of services by individuals such as actuaries and similar professionals performing services in their capacity as such.

(vi) ***Meaning of services performed in the field of performing arts.*** For purposes of section 199A(d)(2) and paragraph (b)(1)(v) of this section only, the *performance of services in the field of the performing arts* means the performance of services by individuals who participate in the creation of performing arts, such as actors, singers, musicians, entertainers, directors, and similar professionals performing services in their capacity as such. The performance of services in the field of performing arts does not include the provision of services that do not require skills unique to the creation of performing arts, such as the maintenance and operation of equipment or facilities for use in the performing arts. Similarly, the performance of services in the field of the performing arts does not include the provision of services by persons who broadcast or otherwise disseminate video or audio of performing arts to the public.

(vii) ***Meaning of services performed in the field of consulting.*** For purposes of section 199A(d)(2) and paragraph (b)(1)(vi) of this section only, the *performance of services in the field of consulting* means the provision of professional advice and counsel to clients to assist the client in achieving goals and solving problems. Consulting includes providing advice and counsel regarding advocacy with the intention of influencing decisions made by a government or governmental agency and all attempts to influence legislators and other government officials on behalf of a client by lobbyists and other similar professionals performing services in their capacity as such. The performance of services in the field of consulting does not include the performance of services other than advice and counsel, such as sales (or economically similar services) or the provision of training and educational courses. For purposes of the preceding sentence, the determination of whether a person's services are sales or economically similar services will be based on all the facts and circumstances of that person's business. Such facts and circumstances include, for example, the manner in which the taxpayer is compensated for the services provided. Performance of services in the field of consulting does not include the performance of consulting services embedded in, or ancillary to, the sale of goods or performance of services on behalf of a trade or business that is otherwise not an SSTB (such as typical services provided by a building contractor) if there is no separate payment for the consulting services. Services within the fields of architecture and engineering are not treated as consulting services.

(viii) ***Meaning of services performed in the field of athletics.*** For purposes of section 199A(d)(2) and paragraph (b)(1)(vii) of this section only, the *performance of services in the field of athletics* means the performance of services by individuals who participate in athletic competition such as athletes, coaches, and team managers in sports such as baseball, basketball, football, soccer, hockey, martial arts, boxing, bowling, tennis, golf, skiing, snowboarding, track and field, billiards, and racing. The performance of services in the field of athletics does not include the provision of services that do not require skills unique to athletic competition, such as the maintenance and operation of equipment or facilities for use in athletic events. Similarly, the performance of services in the field of athletics does not include the provision of services by persons who broadcast or otherwise disseminate video or audio of athletic events to the public.

(ix) ***Meaning of services performed in the field of financial services.*** For purposes of section 199A(d)(2) and paragraph (b)(1)(viii) of this section only, the *performance of services in the field of financial services* means the provision of financial services to clients including managing wealth, advising clients with respect to finances, developing retirement plans, developing wealth transition plans, the provision of advisory and other similar services regarding valuations, mergers, acquisitions, dispositions, restructurings (including in title 11 of the Code or similar cases), and raising financial capital by underwriting, or acting as a client's agent in the issuance of securities and similar services. This includes services provided by financial advisors, investment bankers, wealth planners, retirement advisors, and other similar professionals performing services in their capacity as such. Solely for purposes of section 199A, the performance of services in the field of financial services does not include taking deposits or making loans, but does include arranging lending transactions between a lender and borrower.

(x) ***Meaning of services performed in the field of brokerage services.*** For purposes of section 199A(d)(2) and paragraph (b)(1)(ix) of this section only, the *performance of services in the field of brokerage services* includes services in which a person arranges transactions between a buyer and a seller with respect to securities (as defined in section 475(c)(2)) for a commission or fee. This includes services provided by stock brokers and other similar professionals, but does not include services provided by real estate agents and brokers, or insurance agents and brokers.

(xi) ***Meaning of the provision of services in investing and investment management.*** For purposes of section 199A(d)(2) and paragraph (b)(1)(x) of this section only, the *performance of services that consist of investing and investment management* refers to a trade or business involving the receipt of fees for providing investing, asset management, or investment management services, including providing advice with respect to buying and selling investments. The performance of services of investing and investment management does not include directly managing real property.

(xii) ***Meaning of the provision of services in trading.*** For purposes of section 199A(d)(2) and paragraph (b)(1)(xi) of this section only, the *performance of services that consist of trading* means a trade or business of trading in securities (as defined in section 475(c)(2)), commodities (as defined in section 475(e)(2)), or partnership interests. Whether a person is a trader in securities, commodities, or partnership interests is determined by taking into account all relevant facts and circumstances, including the source and type of profit that is associated with engaging in the activity regardless of whether that person trades for the person's own account, for the account of others, or any combination thereof.

(xiii) ***Meaning of the provision of services in dealing*** —

(A) ***Dealing in securities.*** For purposes of section 199A(d)(2) and paragraph (b)(1)(xii) of this section only, *the performance of services that consist of dealing in securities (as defined in section 475(c)(2))* means regularly purchasing securities from and selling securities to customers in the ordinary course of a trade or business or regularly offering to enter into, assume, offset, assign, or otherwise terminate positions in securities with customers in the ordinary course of a trade or business. Solely for purposes of the preceding sentence, the performance of services to originate a loan is not treated as the purchase of a security from the borrower in determining whether the lender is dealing in securities.

(B) ***Dealing in commodities.*** For purposes of section 199A(d)(2) and paragraph (b)(1)(xii) of this section only, *the performance of services that consist of dealing in commodities (as defined in section 475(e)(2))* means regularly purchasing commodities from and selling commodities to customers in the ordinary course of a trade or business or regularly offering to enter into, assume, offset, assign, or otherwise terminate positions in commodities with customers in the ordinary course of a trade or business. Solely for purposes of the preceding sentence, gains and losses from qualified active sales as defined in paragraph (b)(2)(xiii)(B)(*1*) of this section are not taken into account in determining whether a person is engaged in the trade or business of dealing in commodities.

(*1*) ***Qualified active sale.*** The term *qualified active sale* means the sale of commodities in the active conduct of a commodities business as a producer, processor, merchant, or handler of commodities if the trade or business is as an active producer, processor, merchant or handler of commodities. A hedging transaction described in paragraph (b)(2)(i)(B) of this section is treated as a qualified active sale. The sale of commodities held by a trade or business other than in its capacity as an active producer, processor, merchant, or handler of commodities is not a qualified active sale. For example, the sale by a trade or business of commodities that were held for investment or speculation would not be a qualified active sale.

(*2*) ***Active conduct of a commodities business.*** For purposes of paragraph (b)(2)(xiii)(B)(*1*) of this section, a trade or business is engaged in the active conduct of a commodities business as a producer, processor, merchant, or handler of commodities only with respect to commodities for which each of the conditions described in paragraphs (b)(2)(xiii)(B)(*3*) through (*5*) of this section are satisfied.

(*3*) ***Directly holds commodities as inventory or similar property.*** The commodities trade or business holds the commodities directly, and not through an agent or independent contractor, as inventory or similar property. The term inventory or similar property means property that is stock in trade of the trade or business or other property of a kind that would properly be included in the inventory of the trade or business if on hand at the close of the taxable year, or property held by the trade or business primarily for sale to customers in the ordinary course of its trade or business.

(*4*) ***Directly incurs substantial expenses in the ordinary course.*** The commodities trade or business incurs substantial expenses in the ordinary course of the commodities trade or business from engaging in one or more of the following activities directly, and not through an agent or independent contractor—

(*i*) Substantial activities in the production of the commodities, including planting, tending or harvesting crops, raising or slaughtering livestock, or extracting minerals;

(*ii*) Substantial processing activities prior to the sale of the commodities, including the blending and drying of agricultural commodities, or the concentrating, refining, mixing, crushing, aerating or milling of commodities; or

(*iii*) Significant activities as described in paragraph (b)(2)(xiii)(B)(*5*) of this section.

(*5*) ***Significant activities for purposes of paragraph (b)(2)(xiii)(B)(4)(iii) of this section.*** The commodities trade or business performs significant activities with respect to the commodities that consists of—

(*i*) The physical movement, handling and storage of the commodities, including preparation of contracts and invoices, arranging transportation, insurance and credit, arranging for receipt, transfer or negotiation of shipping documents, arranging storage or warehousing, and dealing with quality claims;

(*ii*) Owning and operating facilities for storage or warehousing; or

(*iii*) Owning, chartering, or leasing vessels or vehicles for the transportation of the commodities.

(C) ***Dealing in partnership interests.*** For purposes of section 199A(d)(2) and paragraph (b)(1)(xii) of this section only, *the performance of services that consist of dealing in partnership interests* means regularly purchasing partnership interests from and selling partnership interests to customers in the ordinary course of a trade or business or regularly offering to enter into, assume, offset, assign, or otherwise terminate positions in partnership interests with customers in the ordinary course of a trade or business.

(xiv) ***Meaning of trade or business where the principal asset of such trade or business is the reputation or skill of one or more employees or owners.*** For purposes of section 199A(d)(2) and paragraph (b)(1)(xiii) of this section only, the term *any trade or business where the principal asset of such trade or business is the reputation or skill of one or more of its employees or owners* means any trade or business that consists of any of the following (or any combination thereof):

(A) A trade or business in which a person receives fees, compensation, or other income for endorsing products or services;

(B) A trade or business in which a person licenses or receives fees, compensation, or other income for the use of an individual's image, likeness, name, signature, voice, trademark, or any other symbols associated with the individual's identity; or

(C) Receiving fees, compensation, or other income for appearing at an event or on radio, television, or another media format.

(D) For purposes of paragraphs (b)(2)(xiv)(A) through (C) of this section, the term *fees, compensation, or other income* includes the receipt of a partnership interest and the corresponding distributive share of income, deduction, gain, or loss from the partnership, or the receipt of stock of an S corporation and the corresponding income, deduction, gain, or loss from the S corporation stock.

(3) *Examples.* The following examples illustrate the rules in paragraphs (a) and (b) of this section. The examples do not address all types of services that may or may not qualify as specified services. Unless otherwise provided, the individual in each example has taxable income in excess of the threshold amount.

(i) *Example 1.* B is a board-certified pharmacist who contracts as an independent contractor with X, a small medical facility in a rural area. X employs one full time pharmacist, but contracts with B when X's needs exceed the capacity of its full-time staff. When engaged by X, B is responsible for receiving and reviewing orders from physicians providing medical care at the facility; making recommendations on dosing and alternatives to the ordering physician; performing inoculations, checking for drug interactions, and filling pharmaceutical orders for patients receiving care at X. B is engaged in the performance of services in the field of health within the meaning of section 199A(d)(2) and paragraphs (b)(1)(i) and (b)(2)(ii) of this section.

(ii) *Example 2.* X is the operator of a residential facility that provides a variety of services to senior citizens who reside on campus. For residents, X offers standard domestic services including housing management and maintenance, meals, laundry, entertainment, and other similar services. In addition, X contracts with local professional healthcare organizations to offer residents a range of medical and health services provided at the facility, including skilled nursing care, physical and occupational therapy, speech-language pathology services, medical social services, medications, medical supplies and equipment used in the facility, ambulance transportation to the nearest supplier of needed services, and dietary counseling. X receives all of its income from residents for the costs associated with residing at the facility. Any health and medical services are billed directly by the healthcare providers to the senior citizens for those professional healthcare services even though those services are provided at the facility. X does not perform services in the field of health within the meaning of section 199A(d)(2) and paragraphs (b)(1)(i) and (b)(2)(ii) of this section.

(iii) *Example 3.* Y operates specialty surgical centers that provide outpatient medical procedures that do not require the patient to remain overnight for recovery or observation following the procedure. Y is a private organization that owns a number of facilities throughout the country. For each facility, Y ensures compliance with state and Federal laws for medical facilities and manages the facility's operations and performs all administrative functions. Y does not employ physicians, nurses, and medical assistants, but enters into agreements with other professional medical organizations or directly with the medical professionals to perform the procedures and provide all medical care. Patients are billed by Y for the facility costs relating to their procedure and by the healthcare professional or their affiliated organization for the actual costs of the procedure conducted by the physician and medical support team. Y does not perform services in the field of health within the meaning of section 199A(d)(2) and paragraphs (b)(1)(i) and (b)(2)(ii) of this section.

(iv) *Example 4.* Z is the developer and the only provider of a patented test used to detect a particular medical condition. Z accepts test orders only from health care professionals (Z's clients), does not have contact with patients, and Z's employees do not diagnose, treat, or manage any aspect of patient care. A, who manages Z's testing operations, is the only employee with an advanced medical degree. All other employees are technical support staff and not healthcare professionals. Z's workers are highly educated, but the skills the workers bring to the job are not often useful for Z's testing methods. In order to perform the duties required by Z, employees receive more than a year of specialized training for working with Z's test, which is of no use to other employers. Upon completion of an ordered test, Z analyses the results and provides its

clients a report summarizing the findings. Z does not discuss the report's results, or the patient's diagnosis or treatment with any health care provider or the patient. Z is not informed by the healthcare provider as to the healthcare provider's diagnosis or treatment. Z is not providing services in the field of health within the meaning of section 199A(d)(2) and paragraphs (b)(1)(i) and (b)(2)(ii) of this section or where the principal asset of the trade or business is the reputation or skill of one or more of its employees within the meaning of paragraphs (b)(1)(xiii) and (b)(2)(xiv) of this section.

(v) ***Example 5.*** A, a singer and songwriter, writes and records a song. A is paid a mechanical royalty when the song is licensed or streamed. A is also paid a performance royalty when the recorded song is played publicly. A is engaged in the performance of services in an SSTB in the field of performing arts within the meaning of section 199A(d)(2) or paragraphs (b)(1)(v) and (b)(2)(vi) of this section. The royalties that A receives for the song are not eligible for a deduction under section 199A.

(vi) ***Example 6.*** B is a partner in Movie LLC, a partnership. Movie LLC is a film production company. Movie LLC plans and coordinates film production. Movie LLC shares in the profits of the films that it produces. Therefore, Movie LLC is engaged in the performance of services in an SSTB in the field of performing arts within the meaning of section 199A(d)(2) or paragraphs (b)(1)(v) and (b)(2)(vi) of this section. B is a passive owner in Movie LLC and does not provide any services with respect to Movie LLC. However, because Movie LLC is engaged in an SSTB in the field of performing arts, B's distributive share of the income, gain, deduction, and loss with respect to Movie LLC is not eligible for a deduction under section 199A.

(vii) ***Example 7.*** C is a partner in Partnership, which solely owns and operates a professional sports team. Partnership employs athletes and sells tickets and broadcast rights for games in which the sports team competes. Partnership sells the broadcast rights to Broadcast LLC, a separate trade or business. Broadcast LLC solely broadcasts the games. Partnership is engaged in the performance of services in an SSTB in the field of athletics within the meaning of section 199A(d)(2) or paragraphs (b)(1)(vii) and (b)(2)(viii) of this section. The tickets sales and the sale of the broadcast rights are both the performance of services in the field of athletics. C is a passive owner in Partnership and C does not provide any services with respect to Partnership or the sports team. However, because Partnership is engaged in an SSTB in the field of athletics, C's distributive share of the income, gain, deduction, and loss with respect to Partnership is not eligible for a deduction under section 199A. Broadcast LLC is not engaged in the performance of services in an SSTB in the field of athletics.

(viii) ***Example 8.*** D is in the business of providing services that assist unrelated entities in making their personnel structures more efficient. D studies its client's organization and structure and compares it to peers in its industry. D then makes recommendations and provides advice to its client regarding possible changes in the client's personnel structure, including the use of temporary workers. D does not provide any temporary workers to its clients and D's compensation and fees are not affected by whether D's clients used temporary workers. D is engaged in the performance of services in an SSTB in the field of consulting within the meaning of section 199A(d)(2) or paragraphs (b)(1)(vi) and (b)(2)(vii) of this section.

(ix) ***Example 9.*** E is an individual who owns and operates a temporary worker staffing firm primarily focused on the software consulting industry. Business clients hire E to provide temporary workers that have the necessary technical skills and experience with a variety of business software to provide consulting and advice regarding the proper selection and operation of

software most appropriate for the business they are advising. E does not have a technical software engineering background and does not provide software consulting advice herself. E reviews resumes and refers candidates to the client when the client indicates a need for temporary workers. E does not evaluate her clients' needs about whether the client needs workers and does not evaluate the clients' consulting contracts to determine the type of expertise needed. Rather, the client provides E with a job description indicating the required skills for the upcoming consulting project. E is paid a fixed fee for each temporary worker actually hired by the client and receives a bonus if that worker is hired permanently within a year of referral. E's fee is not contingent on the profits of its clients. E is not considered to be engaged in the performance of services in the field of consulting within the meaning of section 199A(d)(2) or (b)(1)(vi) and (b)(2)(vii) of this section.

(x) *Example 10.* F is in the business of licensing software to customers. F discusses and evaluates the customer's software needs with the customer. The taxpayer advises the customer on the particular software products it licenses. F is paid a flat price for the software license. After the customer licenses the software, F helps to implement the software. F is engaged in the trade or business of licensing software and not engaged in an SSTB in the field of consulting within the meaning of section 199A(d)(2) or paragraphs (b)(1)(vi) and (b)(2)(vii) of this section.

(xi) *Example 11.* G is in the business of providing services to assist clients with their finances. G will study a particular client's financial situation, including, the client's present income, savings, and investments, and anticipated future economic and financial needs. Based on this study, G will then assist the client in making decisions and plans regarding the client's financial activities. Such financial planning includes the design of a personal budget to assist the client in monitoring the client's financial situation, the adoption of investment strategies tailored to the client's needs, and other similar services. G is engaged in the performance of services in an SSTB in the field of financial services within the meaning of section 199A(d)(2) or paragraphs (b)(1)(viii) and (b)(2)(ix) of this section.

(xii) *Example 12.* H is in the business of franchising a brand of personal financial planning offices, which generally provide personal wealth management, retirement planning, and other financial advice services to customers for a fee. H does not provide financial planning services itself. H licenses the right to use the business tradename, other branding intellectual property, and a marketing plan to third-party financial planner franchisees that operate the franchised locations and provide all services to customers. In exchange, the franchisees compensate H based on a fee structure, which includes a one-time fee to acquire the franchise. H is not engaged in the performance of services in the field of financial services within the meaning of section 199A(d)(2) or paragraphs (b)(1)(viii) and (b)(2)(ix) of this section.

(xiii) *Example 13.* J is in the business of executing transactions for customers involving various types of securities or commodities generally traded through organized exchanges or other similar networks. Customers place orders with J to trade securities or commodities based on the taxpayer's recommendations. J's compensation for its services typically is based on completion of the trade orders. J is engaged in an SSTB in the field of brokerage services within the meaning of section 199A(d)(2) or paragraphs (b)(1)(ix) and (b)(2)(x) of this section.

(xiv) *Example 14.* K owns 100% of Corp, an S corporation, which operates a bicycle sales and repair business. Corp has 8 employees, including K. Half of Corp's net income is generated from sales of new and used bicycles and related goods, such as helmets, and bicycle-related equipment. The other half of Corp's net income is generated from bicycle repair servicesperformed by K

and Corp's other employees. Corp's assets consist of inventory, fixtures, bicycle repair equipment, and a leasehold on its retail location. Several of the employees and K have worked in the bicycle business for many years, and have acquired substantial skill and reputation in the field. Customers often consult with the employees on the best bicycle for purchase. K is in the business of sales and repairs of bicycles and is not engaged in an SSTB within the meaning of section 199A(d)(2) or paragraphs (b)(1)(xiii) and (b)(2)(xiv) of this section.

(xv) ***Example 15.*** L is a well-known chef and the sole owner of multiple restaurants each of which is owned in a disregarded entity. Due to L's skill and reputation as a chef, L receives an endorsement fee of $500,000 for the use of L's name on a line of cooking utensils and cookware. L is in the trade or business of being a chef and owning restaurants and such trade or business is not an SSTB. However, L is also in the trade or business of receiving endorsement income. L's trade or business consisting of the receipt of the endorsement fee for L's skill and/or reputation is an SSTB within the meaning of section 199A(d)(2) or paragraphs (b)(1)(xiii) and (b)(2)(xiv) of this section.

(xvi) ***Example 16.*** M is a well-known actor. M entered into a partnership with Shoe Company, in which M contributed her likeness and the use of her name to the partnership in exchange for a 50% interest in the partnership and a guaranteed payment. M's trade or business consisting of the receipt of the partnership interest and the corresponding distributive share with respect to the partnership interest for M's likeness and the use of her name is an SSTB within the meaning of section 199A(d)(2) or paragraphs (b)(1)(xiii) and (b)(2)(xiv) of this section.

(c) ***Special rules*** —

(1) ***De minimis rule*** —

(i) ***Gross receipts of $25 million or less.*** For a trade or business with gross receipts of $25 million or less for the taxable year, a trade or business is not an SSTB if less than 10 percent of the gross receipts of the trade or business are attributable to the performance of services in a field described in paragraph (b) of this section. For purposes of determining whether this 10 percent test is satisfied, the performance of any activity incident to the actual performance of services in the field is considered the performance of services in that field.

(ii) ***Gross receipts of greater than $25 million.*** For a trade or business with gross receipts of greater than $25 million for the taxable year, the rules of paragraph (c)(1)(i) of this section are applied by substituting “5 percent” for “10 percent” each place it appears.

(iii) ***Examples.*** The following examples illustrate the provisions of paragraph (c)(1) of this section.

(A) ***Example 1.*** Landscape LLC sells lawn care and landscaping equipment and also provides advice and counsel on landscape design for large office parks and residential buildings. The landscape design services include advice on the selection and placement of trees, shrubs, and flowers and are considered to be the performance of services in the field of consulting under paragraphs (b)(1)(vi) and (b)(2)(vii) of this section. Landscape LLC separately invoices for its landscape design services and does not sell the trees, shrubs, or flowers it recommends for use in the landscape design. Landscape LLC maintains one set of books and records and treats the equipment sales and design services as a single trade or business for purposes of sections 162 and 199A. Landscape LLC has gross receipts of $2 million. $250,000 of the gross receipts is attributable to the landscape

design services, an SSTB. Because the gross receipts from the consulting services exceed 10 percent of Landscape LLC's total gross receipts, the entirety of Landscape LLC's trade or business is considered an SSTB.

(B) ***Example 2.*** Animal Care LLC provides veterinarian services performed by licensed staff and also develops and sells its own line of organic dog food at its veterinarian clinic and online. The veterinarian services are considered to be the performance of services in the field of health under paragraphs (b)(1)(i) and (b)(2)(ii) of this section. Animal Care LLC separately invoices for its veterinarian services and the sale of its organic dog food. Animal Care LLC maintains separate books and records for its veterinarian clinic and its development and sale of its dog food. Animal Care LLC also has separate employees who are unaffiliated with the veterinary clinic and who only work on the formulation, marketing, sales, and distribution of the organic dog food products. Animal Care LLC treats its veterinary practice and the dog food development and sales as separate trades or businesses for purposes of section 162 and 199A. Animal Care LLC has gross receipts of $3,000,000. $1,000,000 of the gross receipts is attributable to the veterinary services, an SSTB. Although the gross receipts from the services in the field of health exceed 10 percent of Animal Care LLC's total gross receipts, the dog food development and sales business is not considered an SSTB due to the fact that the veterinary practice and the dog food development and sales are separate trades or businesses under section 162.

(2) ***Services or property provided to an SSTB*** —

(i) ***In general.*** If a trade or business provides property or services to an SSTB within the meaning of this section and there is 50 percent or more common ownership of the trades or businesses, that portion of the trade or business of providing property or services to the 50 percent or more commonly-owned SSTB will be treated as a separate SSTB with respect to the related parties.

(ii) ***50 percent or more common ownership.*** For purposes of paragraph (c)(2)(i) and (ii) of this section, 50 percent or more common ownership includes direct or indirect ownership by related parties within the meaning of sections 267(b) or 707(b).

(iii) ***Examples.*** The following examples illustrate the provisions of paragraph (c)(2) of this section.

(A) ***Example 1.*** Law Firm is a partnership that provides legal services to clients, owns its own office building and employs its own administrative staff. Law Firm divides into three partnerships. Partnership 1 performs legal services to clients. Partnership 2 owns the office building and rents the entire building to Partnership 1. Partnership 3 employs the administrative staff and through a contract with Partnership 1 provides administrative services to Partnership 1 in exchange for fees. All three of the partnerships are owned by the same people (the original owners of Law Firm). Because Partnership 2 provides all of its property to Partnership 1, and Partnership 3 provides all of its services to Partnership 1, Partnerships 2 and 3 will each be treated as an SSTB under paragraph (c)(2) of this section.

(B) ***Example 2.*** Assume the same facts as in Example 1 of this paragraph (c)(2), except that Partnership 2, which owns the office building, rents 50 percent of the building to Partnership 1, which provides legal services, and the other 50 percent to various unrelated third party tenants. Because Partnership 2 is owned by the same people as Partnership 1,

the portion of Partnership 2's leasing activity related to the lease of the building to Partnership 1 will be treated as a separate SSTB. The remaining 50 percent of Partnership 2's leasing activity will not be treated as an SSTB.

(d) ***Trade or business of performing services as an employee*** —

(1) ***In general.*** The trade or business of performing services as an employee is not a trade or business for purposes of section 199A and the regulations thereunder. Therefore, no items of income, gain, deduction, and loss from the trade or business of performing services as an employee constitute QBI within the meaning of section 199A and § 1.199A-3. Except as provided in paragraph (d)(3) of this section, income from the trade or business of performing services as an employee refers to all wages (within the meaning of section 3401(a)) and other income earned in a capacity as an employee, including payments described in § 1.6041-2(a)(1) (other than payments to individuals described in section 3121(d)(3)) and § 1.6041-2(b)(1).

(2) ***Employer's Federal employment tax classification of employee immaterial.*** For purposes of determining whether wages are earned in a capacity as an employee as provided in paragraph (d)(1) of this section, the treatment of an employee by an employer as anything other than an employee for Federal employment tax purposes is immaterial. Thus, if a worker should be properly classified as an employee, it is of no consequence that the employee is treated as a non-employee by the employer for Federal employment tax purposes.

(3) ***Presumption that former employees are still employees*** —

(i) ***Presumption.*** Solely for purposes of section 199A(d)(1)(B) and paragraph (d)(1) of this section, an individual that was properly treated as an employee for Federal employment tax purposes by the person to which he or she provided services and who is subsequently treated as other than an employee by such person with regard to the provision of substantially the same services directly or indirectly to the person (or a related person), is presumed, for three years after ceasing to be treated as an employee for Federal employment tax purposes, to be in the trade or business of performing services as an employee with regard to such services. As provided in paragraph (d)(3)(ii) of this section, this presumption may be rebutted upon a showing by the individual that, under Federal tax law, regulations, and principles (including common-law employee classification rules), the individual is performing services in a capacity other than as an employee. This presumption applies regardless of whether the individual provides services directly or indirectly through an entity or entities.

(ii) ***Rebuttal of presumption.*** Upon notice from the IRS, an individual rebuts the presumption in paragraph (d)(3)(i) of this section by providing records, such as contracts or partnership agreements, that provide sufficient evidence to corroborate the individual's status as a non-employee.

(iii) ***Examples.*** The following examples illustrate the provision of paragraph (d)(3) of this section. Unless otherwise provided, the individual in each example has taxable income in excess of the threshold amount.

(A) ***Example 1.*** A is employed by PRS, a partnership for Federal tax purposes, as a fulltime employee and is treated as such for Federal employment tax purposes. A quits his job for PRS and enters into a contract with PRS under which A provides substantially the same services that A previously provided to PRS in A's capacity as an employee. Because A was treated as an employee for services he provided to PRS, and now is no longer treated as an employee with regard to such services, A is presumed (solely for purposes of section

199A(d)(1)(B) and paragraphs (a)(3) and (d) of this section) to be in the trade or business of performing services as an employee with regard to his services performed for PRS. Unless the presumption is rebutted with a showing that, under Federal tax law, regulations, and principles (including the common-law employee classification rules), A is not an employee, any amounts paid by PRS to A with respect to such services will not be QBI for purposes of section 199A. The presumption would apply even if, instead of contracting directly with PRS, A formed a disregarded entity, or a passthrough entity, and the entity entered into the contract with PRS.

(B) *Example 2.* C is an attorney employed as an associate in a law firm (Law Firm 1) and was treated as such for Federal employment tax purposes. C and the other associates in Law Firm 1 have taxable income below the threshold amount. Law Firm 1 terminates its employment relationship with C and its other associates. C and the other former associates form a new partnership, Law Firm 2, which contracts to perform legal services for Law Firm 1. Therefore, in form, C is now a partner in Law Firm 2 which earns income from providing legal services to Law Firm 1. C continues to provide substantially the same legal services to Law Firm 1 and its clients. Because C was previously treated as an employee for services she provided to Law Firm 1, and now is no longer treated as an employee with regard to such services, C is presumed (solely for purposes of section 199A(d)(1)(B) and paragraphs (a)(3) and (d) of this section) to be in the trade or business of performing services as an employee with respect to the services C provides to Law Firm 1 indirectly through Law Firm 2. Unless the presumption is rebutted with a showing that, under Federal tax law, regulations, and principles (including common-law employee classification rules), C is not an employee, C's distributive share of Law Firm 2 income (including any guaranteed payments) will not be QBI for purposes of section 199A. The results in this example would not change if, instead of contracting with Law Firm 1, Law Firm 2 was instead admitted as a partner in Law Firm 1.

(C) *Example 3.* E is an engineer employed as a senior project engineer in an engineering firm, Engineering Firm. Engineering Firm is a partnership for Federal tax purposes and structured such that after 10 years, senior project engineers are considered for partner if certain career milestones are met. After 10 years, E meets those career milestones and is admitted as a partner in Engineering Firm. As a partner in Engineering Firm, E shares in the net profits of Engineering Firm, and also otherwise satisfies the requirements under Federal tax law, regulations, and principles (including common-law employee classification rules) to be respected as a partner. E is presumed (solely for purposes of section 199A(d)(1)(B) and paragraphs (a)(3) and (d) of this section) to be in the trade or business of performing services as an employee with respect to the services E provides to Engineering Firm. However, E is able to rebut the presumption by showing that E became a partner in Engineering Firm as a career milestone, shares in the overall net profits in Engineering Firm, and otherwise satisfies the requirements under Federal tax law, regulations, and principles (including common-law employee classification rules) to be respected as a partner.

(D) *Example 4.* F is a financial advisor employed by a financial advisory firm, Advisory Firm, a partnership for Federal tax purposes, as a fulltime employee and is treated as such for Federal employment tax purposes. F has taxable income below the threshold amount. Advisory Firm is a partnership and offers F the opportunity to be admitted as a partner. F elects to be admitted as a partner to Advisory Firm and is admitted as a partner to

Advisory Firm. As a partner in Advisory Firm, F shares in the net profits of Advisory Firm, is obligated to Advisory Firm in ways that F was not previously obligated as an employee, is no longer entitled to certain benefits available only to employees of Advisory Firm, and has materially modified his relationship with Advisory Firm. F's share of net profits is not subject to a floor or capped at a dollar amount. F is presumed (solely for purposes of section 199A(d)(1)(B) and paragraphs (a)(3) and (d) of this section) to be in the trade or business of performing services as an employee with respect to the services F provides to Advisory Firm. However, F is able to rebut the presumption by showing that F became a partner in Advisory Firm by sharing in the profits of Advisory Firm, materially modifying F's relationship with Advisory Firm, and otherwise satisfying the requirements under Federal tax law, regulations, and principles (including common-law employee classification rules) to be respected as a partner.

(e) ***Applicability date*** —

(1) ***General rule.*** Except as provided in paragraph (e)(2) of this section, the provisions of this section apply to taxable years ending after February 8, 2019.

(2) ***Exceptions*** -(i) *Anti-abuse rules.* The provisions of paragraphs (c)(2) and (d)(3) of this section apply to taxable years ending after December 22, 2017.

(ii) ***Non-calendar year RPE.*** For purposes of determining QBI, W-2 wages, UBIA of qualified property, and the aggregate amount of qualified REIT dividends and qualified PTP income, if an individual receives any of these items from an RPE with a taxable year that begins before January 1, 2018, and ends after December 31, 2017, such items are treated as having been incurred by the individual during the individual's taxable year in which or with which such RPE taxable year ends.

[T.D. 9847, 84 FR 3006, Feb. 8, 2019, as amended by T.D. 9847, 84 FR 15955, Apr. 17, 2019]

§ 1.199A-6 Relevant passthrough entities (RPEs), publicly traded partnerships (PTPs), trusts, and estates.

(a) ***Overview.*** This section provides special rules for RPEs, PTPs, trusts, and estates necessary for the computation of the section 199A deduction of their owners or beneficiaries. Paragraph (b) of this section provides computational and reporting rules for RPEs necessary for individuals who own interests in RPEs to calculate their section 199A deduction. Paragraph (c) of this section provides computational and reporting rules for PTPs necessary for individuals who own interests in PTPs to calculate their section 199A deduction. Paragraph (d) of this section provides computational and reporting rules for trusts (other than grantor trusts) and estates necessary for their beneficiaries to calculate their section 199A deduction.

(b) ***Computational and reporting rules for RPEs*** —

(1) ***In general.*** An RPE must determine and report information attributable to any trades or businesses it is engaged in necessary for its owners to determine their section 199A deduction.

(2) ***Computational rules.*** Using the following four rules, an RPE must determine the items necessary for individuals who own interests in the RPE to calculate their section 199A deduction under § 1.199A-1(c) or (d). An RPE that chooses to aggregate trades or businesses under the rules of § 1.199A-4 may determine these items for the aggregated trade or business.

(i) First, the RPE must determine if it is engaged in one or more trades or businesses. The RPE must also determine whether any of its trades or businesses is an SSTB under the rules of § 1.199A-5.

(ii) Second, the RPE must apply the rules in § 1.199A-3 to determine the QBI for each trade or business engaged in directly.

(iii) Third, the RPE must apply the rules in § 1.199A-2 to determine the W-2 wages and UBIA of qualified property for each trade or business engaged in directly.

(iv) Fourth, the RPE must determine whether it has any qualified REIT dividends as defined in § 1.199A-3(c)(1) earned directly or through another RPE. The RPE must also determine the amount of qualified PTP income as defined in § 1.199A-3(c)(2) earned directly or indirectly through investments in PTPs.

(3) *Reporting rules for RPEs* —

(i) ***Trade or business directly engaged in.*** An RPE must separately identify and report on the Schedule K-1 issued to its owners for any trade or business (including an aggregated trade or business) engaged in directly by the RPE—

(A) Each owner's allocable share of QBI, W-2 wages, and UBIA of qualified property attributable to each such trade or business; and

(B) Whether any of the trades or businesses described in paragraph (b)(3)(i) of this section is an SSTB.

(ii) ***Other items.*** An RPE must also report on an attachment to the Schedule K-1, any QBI, W-2 wages, UBIA of qualified property, or SSTB determinations, reported to it by any RPE in which the RPE owns a direct or indirect interest. The RPE must also report each owner's allocated share of any qualified REIT dividends received by the RPE (including through another RPE) as well as any qualified PTP income or loss received by the RPE for each PTP in which the RPE holds an interest (including through another RPE). Such information can be reported on an amended or late filed return to the extent that the period of limitations remains open.

(iii) ***Failure to report information.*** If an RPE fails to separately identify or report on the Schedule K-1 (or any attachments thereto) issued to an owner an item described in paragraph (b)(3)(i) of this section, the owner's share (and the share of any upper-tier indirect owner) of each unreported item of positive QBI, W-2 wages, or UBIA of qualified property attributable to trades or businesses engaged in by that RPE will be presumed to be zero.

(c) *Computational and reporting rules for PTPs* —

(1) ***Computational rules.*** Each PTP must determine its QBI under the rules of § 1.199A-3 for each trade or business in which the PTP is engaged in directly. The PTP must also determine whether any of the trades or businesses it is engaged in directly is an SSTB.

(2) ***Reporting rules.*** Each PTP is required to separately identify and report the information described in paragraph (c)(1) of this section on Schedules K-1 issued to its partners. Each PTP must also determine and report any qualified REIT dividends or qualified PTP income or loss received by the PTP including through an RPE, a REIT, or another PTP. A PTP is not required to determine or report W-2 wages or the UBIA of qualified property attributable to trades or businesses it is engaged in directly.

(d) *Application to trusts, estates, and beneficiaries* —

(1) ***In general.*** A trust or estate computes its section 199A deduction based on the QBI, W-2 wages, UBIA of qualified property, qualified REIT dividends, and qualified PTP income that are allocated to the trust or estate. An individual beneficiary of a trust or estate takes into account any QBI, W-2 wages, UBIA of qualified property, qualified REIT dividends, and qualified PTP income allocated from a trust or estate in calculating the beneficiary's section 199A deduction, in the same manner as though the items had been allocated from an RPE. For purposes of this section and §§ 1.199A-1 through 1.199A-5, a trust or estate is treated as an RPE to the extent it allocates QBI and other items to its beneficiaries, and is treated as an individual to the extent it retains the QBI and other items.

(2) ***Grantor trusts.*** To the extent that the grantor or another person is treated as owning all or part of a trust under sections 671 through 679, such person computes its section 199A deduction as if that person directly conducted the activities of the trust with respect to the portion of the trust treated as owned by the grantor or other person.

(3) *Non-grantor trusts and estates* —

(i) ***Calculation at entity level.*** A trust or estate must calculate its QBI, W-2 wages, UBIA of qualified property, qualified REIT dividends, and qualified PTP income. The QBI of a trust or estate must be computed by allocating qualified items of deduction described in section 199A(c)(3) in accordance with the classification of those deductions under § 1.652(b)-3(a), and deductions not directly attributable within the meaning of § 1.652(b)-3(b) (other deductions) are allocated in a manner consistent with the rules in § 1.652(b)-3(b). Any depletion and depreciation deductions described in section 642(e) and any amortization deductions described in section 642(f) that otherwise are properly included in the computation of QBI are included in the computation of QBI of the trust or estate, regardless of how those deductions may otherwise be allocated between the trust or estate and its beneficiaries for other purposes of the Code.

(ii) ***Allocation among trust or estate and beneficiaries.*** The QBI (including any amounts that may be less than zero as calculated at the trust or estate level), W-2 wages, UBIA of qualified property, qualified REIT dividends, and qualified PTP income of a trust or estate are allocated to each beneficiary and to the trust or estate based on the relative proportion of the trust's or estate's *distributable net income (DNI),* as defined by section 643(a), for the taxable year that is distributed or required to be distributed to the beneficiary or is retained by the trust or estate. For this purpose, the trust's or estate's DNI is determined with regard to the separate share rule of section 663(c), but without regard to section 199A. If the trust or estate has no DNI for the taxable year, any QBI, W-2 wages, UBIA of qualified property, qualified REIT dividends, and qualified PTP income are allocated entirely to the trust or estate.

(iii) ***Separate shares.*** In the case of a trust or estate described in section 663(c) with substantially separate and independent shares for multiple beneficiaries, such trust or estate will be treated as a single trust or estate for purposes of determining whether the taxable income of the trust or estate exceeds the threshold amount; determining taxable income, net capital gain, net QBI, W-2 wages, UBIA of qualified property, qualified REIT dividends, and qualified PTP income for each trade or business of the trust and estate; and computing the W-2 wage and UBIA of qualified property limitations. The allocation of these items to the separate shares of a trust or estate will be governed by the rules under §§ 1.663(c)-1 through 1.663(c)-5, as they may be adjusted or clarified by publication in the Internal Revenue Bulletin (see § 601.601(d)(2)(ii)(*b*) of this chapter).

(iv) ***Threshold amount.*** The threshold amount applicable to a trust or estate is $157,500 for any taxable year beginning before 2019. For taxable years beginning after 2018, the threshold amount shall be $157,500 increased by the cost-of-living adjustment as outlined in § 1.199A-1(b)(12). For purposes of determining whether a trust or estate has taxable income in excess of the threshold amount, the taxable income of the trust or estate is determined after taking into account any distribution deduction under sections 651 or 661.

(v) ***Charitable remainder trusts.*** A charitable remainder trust described in section 664 is not entitled to and does not calculate a section 199A deduction, and the threshold amount described in section 199A(e)(2) does not apply to the trust. However, any taxable recipient of a unitrust or annuity amount from the trust must determine and apply the recipient's own threshold amount for purposes of section 199A taking into account any annuity or unitrust amounts received from the trust. A recipient of a unitrust or annuity amount from a trust may take into account QBI, qualified REIT dividends, or qualified PTP income for purposes of determining the recipient's section 199A deduction for the taxable year to the extent that the unitrust or annuity amount distributed to such recipient consists of such section 199A items under § 1.664-1(d). For example, if a charitable remainder trust has investment income of $500, qualified dividend income of $200, and qualified REIT dividends of $1,000, and distributes $1,000 to the recipient, the trust would be treated as having income in two classes within the category of income, described in § 1.664-1(d)(1)(i)(*a*)(*1*), for purposes of § 1.664-1(d)(1)(ii)(*b*). Because the annuity amount first carries out income in the class subject to the highest income tax rate, the entire annuity payment comes from the class with the investment income and qualified REIT dividends. Thus, the charitable remainder trust would be treated as distributing a proportionate amount of the investment income ($500 / (1,000 + 500) * 1,000 = $333) and qualified REIT dividends ($1000 / (1,000 + 500) * 1000 = $667) because the investment income and qualified REIT dividends are taxed at the same rate and within the same class, which is higher than the rate of tax for the qualified dividend income in a separate class. The charitable remainder trust in this example would not be treated as distributing any of the qualified dividend income until it distributed all the investment income and qualified REIT dividends (more than $1,500 in total) to the recipient. To the extent that a trust is treated as distributing QBI, qualified REIT dividends, or qualified PTP income to more than one unitrust or annuity recipient in the taxable year, the distribution of such income will be treated as made to the recipients proportionately, based on their respective shares of total QBI, qualified REIT dividends, or qualified PTP income distributed for that year. The trust allocates and reports any W-2 wages or UBIA of qualified property to the taxable recipient of the annuity or unitrust interest based on each recipient's share of the trust's total QBI (whether or not distributed) for that taxable year. Accordingly, if 10 percent of the QBI of a charitable remainder trust is distributed to the recipient and 90 percent of the QBI is retained by the trust, 10 percent of the W-2 wages and UBIA of qualified property is allocated and reported to the recipient and 90 percent of the W-2 wages and UBIA of qualified property is treated as retained by the trust. However, any W-2 wages retained by the trust cannot be used to compute W-2 wages in a subsequent taxable year for section 199A purposes. Any QBI, qualified REIT dividends, or qualified PTP income of the trust that is unrelated business taxable income is subject to excise tax and that tax must be allocated to the corpus of the trust under § 1.664-1(c).

(vi) ***Electing small business trusts.*** An electing small business trust (ESBT) is entitled to the deduction under section 199A. Any section 199A deduction attributable to the assets in the S portion of the ESBT is to be taken into account by the S portion. The S portion of the ESBT must take into account the QBI and other items from any S corporation owned by the ESBT, the

grantor portion of the ESBT must take into account the QBI and other items from any assets treated as owned by a grantor or another person (owned portion) of a trust under sections 671 through 679, and the non-S portion of the ESBT must take into account any QBI and other items from any other entities or assets owned by the ESBT. For purposes of determining whether the taxable income of an ESBT exceeds the threshold amount, the S portion and the non-S portion of an ESBT are treated as a single trust. *See* § 1.641(c)-1.

(vii) ***Anti-abuse rule for creation of a trust to avoid exceeding the threshold amount.*** A trust formed or funded with a principal purpose of avoiding, or of using more than one, threshold amount for purposes of calculating the deduction under section 199A will not be respected as a separate trust entity for purposes of determining the threshold amount for purposes of section 199A. *See also* § 1.643(f)-1 of the regulations.

(viii) ***Example.*** The following example illustrates the application of paragraph (d) of this section.

(A) ***Example*** —

(*1*) ***Computation of DNI and inclusion and deduction amounts*** —

(*i*) ***Trust's distributive share of partnership items.*** Trust, an irrevocable testamentary complex trust, is a 25% partner in PRS, a family partnership that operates a restaurant that generates QBI and W-2 wages. A and B, Trust's beneficiaries, own the remaining 75% of PRS directly. In 2018, PRS properly allocates gross income from the restaurant of $55,000, and expenses directly allocable to the restaurant of $45,000 (including W-2 wages of $25,000, and miscellaneous expenses of $20,000) to Trust. These items are properly included in Trust's DNI. PRS distributes $10,000 of cash to Trust in 2018.

(*ii*) ***Trust's activities.*** In addition to its interest in PRS, Trust also operates a family bakery conducted through an LLC wholly-owned by the Trust that is treated as a disregarded entity. In 2018, the bakery produces $100,000 of gross income and $155,000 of expenses directly allocable to operation of the bakery (including W-2 wages of $50,000, rental expense of $75,000, miscellaneous expenses of $25,000, and depreciation deductions of $5,000). (The net loss from the bakery operations is not subject to any loss disallowance provisions outside of section 199A.) Trust maintains a reserve of $5,000 for depreciation. Trust also has $125,000 of UBIA of qualified property in the bakery. For purposes of computing its section 199A deduction, Trust and its beneficiaries have properly chosen to aggregate the family restaurant conducted through PRS with the bakery conducted directly by Trust under § 1.199A-4. Trust also owns various investment assets that produce portfolio-type income consisting of dividends ($25,000), interest ($15,000), and tax-exempt interest ($15,000). Accordingly, Trust has the following items which are properly included in Trust's DNI:

TABLE 1 TO PARAGRAPH (d)(3)(viii)(A)(*1*)(*ii*)

Interest Income	15,000

Dividends	25,000
Tax-exempt interest	15,000
Net business loss from PRS and bakery	(45,000)
Trustee commissions	3,000
State and local taxes	5,000

(*iii*) ***Allocation of deductions under § 1.652(b)-3 (Directly attributable expenses).*** In computing Trust's DNI for the taxable year, the distributive share of expenses of PRS are directly attributable under § 1.652(b)-3(a) to the distributive share of income of PRS. Accordingly, Trust has gross business income of $155,000 ($55,000 from PRS and $100,000 from the bakery) and direct business expenses of $200,000 ($45,000 from PRS and $155,000 from the bakery). In addition, $1,000 of the trustee commissions and $1,000 of state and local taxes are directly attributable under § 1.652(b)-3(a) to Trust's business income. Accordingly, Trust has excess business deductions of $47,000. Pursuant to its authority recognized under § 1.652(b)-3(d), Trust allocates the $47,000 excess business deductions as follows: $15,000 to the interest income, resulting in $0 interest income, $25,000 to the dividends, resulting in $0 dividend income, and $7,000 to the tax exempt interest.

(*iv*) ***Allocation of deductions under § 1.652(b)-3 (Non-directly attributable expenses).*** The trustee must allocate the sum of the balance of the trustee commissions ($2,000) and state and local taxes ($4,000) to Trust's remaining tax-exempt interest income, resulting in $2,000 of tax exempt interest.

(*v*) ***Amounts included in taxable income.*** For 2018, Trust has DNI of $2,000. Pursuant to Trust's governing instrument, Trustee distributes 50%, or $1,000, of that DNI to A, an individual who is a discretionary beneficiary of Trust. In addition, Trustee is required to distribute 25%, or $500, of that DNI to B, a current income beneficiary of Trust. Trust retains the remaining 25% of DNI. Consequently, with respect to the $1,000 distribution A receives from Trust, A properly excludes $1,000 of tax-exempt interest income under section 662(b). With respect to the $500 distribution B receives from Trust, B properly excludes $500 of tax exempt interest income under section 662(b). Because the DNI consists entirely of tax-exempt income, Trust deducts $0 under section 661 with respect to the distributions to A and B.

(*2*) ***Section 199A deduction*** —

(*i*) ***Trust's W-2 wages and QBI.*** For the 2018 taxable year, prior to allocating the beneficiaries' shares of the section 199A items, Trust has $75,000 ($25,000 from PRS + $50,000 of Trust) of W-2 wages. Trust also has $125,000 of UBIA of qualified property. Trust has negative QBI of ($47,000) ($155,000 gross income from aggregated businesses less the sum of $200,000 direct expenses from aggregated businesses and $2,000 directly attributable business expenses from Trust under the rules of § 1.652(b)-3(a)).

(*ii*) ***A's Section 199A deduction computation.*** Because the $1,000 Trust distribution to A equals one-half of Trust's DNI, A has W-2 wages from Trust of $37,500. A also has W-2 wages of $2,500 from a trade or business outside of Trust (computed without regard to A's interest in Trust), which A has properly aggregated under § 1.199A-4 with the Trust's trade or businesses (the family's restaurant and bakery), for a total of $40,000 of W-2 wages from the aggregate trade or businesses. A also has $62,500 of UBIA from Trust and $25,000 of UBIA of qualified property from the trade or business outside of Trust for $87,500 of total UBIA of qualified property. A has $100,000 of QBI from the non-Trust trade or businesses in which A owns an interest. Because the $1,000 Trust distribution to A equals one-half of Trust's DNI, A has (negative) QBI from Trust of ($23,500). A's total QBI is determined by combining the $100,000 QBI from non-Trust sources with the ($23,500) QBI from Trust for a total of $76,500 of QBI. Assume that A's taxable income is $357,500, which exceeds A's applicable threshold amount for 2018 by $200,000. A's tentative deductible amount is $15,300 (20% × $76,500 of QBI), limited to the greater of (i) $20,000 (50% × $40,000 of W-2 wages), or (ii) $12,187.50 ($10,000, 25% × $40,000 of W-2 wages, plus $2,187.50, 2.5% × $87,500 of UBIA of qualified property). A's section 199A deduction is equal to the lesser of $15,300, or $71,500 (20% × $357,500 of taxable income). Accordingly, A's section 199A deduction for 2018 is $15,300.

(*iii*) ***B's Section 199A deduction computation.*** For 2018, B's taxable income is below the threshold amount so B is not subject to the W-2 wage limitation. Because the $500 Trust distribution to B equals one-quarter of Trust's DNI, B has a total of ($11,750) of QBI. B also has no QBI from non-Trust trades or businesses, so B has a total of ($11,750) of QBI. Accordingly, B's section 199A deduction for 2018 is zero. The ($11,750) of QBI is carried over to 2019 as a loss from a qualified business in the hands of B pursuant to section 199A(c)(2).

(*iv*) ***Trust's Section 199A deduction computation.*** For 2018, Trust's taxable income is below the threshold amount so it is not subject to the W-2 wage limitation. Because Trust retained 25% of Trust's DNI, Trust is allocated 25% of its QBI, which is ($11,750). Trust's section 199A deduction for 2018 is zero. The ($11,750) of QBI is carried over to 2019 as a loss from a qualified business in the hands of Trust pursuant to section 199A(c)(2).

(B) [Reserved]

(e) ***Applicability date*** —

(1) ***General rule.*** Except as provided in paragraph (e)(2) of this section, the provisions of this section apply to taxable years ending after February 8, 2019.

(2) ***Exceptions*** —

(i) ***Anti-abuse rules.*** The provisions of paragraph (d)(3)(vii) of this section apply to taxable years ending after December 22, 2017.

(ii) ***Non-calendar year RPE.*** For purposes of determining QBI, W-2 wages, UBIA of qualified property, and the aggregate amount of qualified REIT dividends and qualified PTP income, if an individual receives any of these items from an RPE with a taxable year that begins before January 1, 2018, and ends after December 31, 2017, such items are treated as having been incurred by the individual during the individual's taxable year in which or with which such RPE taxable year ends.

(iii) ***Separate shares.*** The provisions of paragraph (d)(3)(iii) of this section apply to taxable years beginning after August 24, 2020. Taxpayers may choose to apply the rules in paragraph (d)(3)(iii) of this section for taxable years beginning on or before August 24, 2020, so long as the taxpayers consistently apply the rules in paragraph (d)(3)(iii) of this section for each such year.

(iv) ***Charitable remainder trusts.*** The provisions of paragraph (d)(3)(v) of this section apply to taxable years beginning after August 24, 2020. Taxpayers may choose to apply the rules in paragraph (d) of this section for taxable years beginning on or before August 24, 2020, so long as the taxpayers consistently apply the rules in paragraph (d)(3)(v) of this section for each such year.

[T.D. 9847, 84 FR 3012, Feb. 8, 2019, as amended by T.D. 9899, 85 FR 38067, June 25, 2020]

§ 1.199A-7 Section 199A(a) Rules for Cooperatives and their patrons.

(a) ***Overview*** —

(1) ***In general.*** This section provides guidance and special rules on the application of the rules of §§ 1.199A-1 through 1.199A-6 regarding the deduction for qualified business income (QBI) under section 199A(a) (section 199A(a) deduction) of the Internal Revenue Code (Code) by patrons (patrons) of cooperatives to which Part I of subchapter T of chapter 1 of the Code (subchapter T) applies (Cooperatives). Unless otherwise provided in this section, all the rules in §§ 1.199A-1 through 1.199A-6 relating to calculating the section 199A(a) deduction apply to patrons and Cooperatives. Paragraph (b) of this section provides special rules for patrons relating to trades or businesses. Paragraph (c) of this section provides special rules for patrons and Cooperatives relating to the definition of QBI. Paragraph (d) of this section provides special rules for patrons and Cooperatives relating to specified service trades or businesses (SSTBs). Paragraph (e) of this section provides special rules for patrons relating to the statutory limitations based on W-2 wages and unadjusted basis immediately after acquisition (UBIA) of qualified property. Paragraph (f) of this section provides special rules for specified agricultural or horticultural cooperatives (Specified Cooperatives) and paragraph (g) of this section provides examples for Specified Cooperatives and their patrons. Paragraph (h) of this section sets forth the applicability date of this section and a special transition rule relating to Specified Cooperatives and their patrons.

(2) ***At patron level.*** The section 199A(a) deduction is applied at the patron level, and patrons who are individuals (as defined in § 1.199A-1(a)(2)) may take the section 199A(a) deduction.

(3) ***Definitions.*** For purposes of section 199A and § 1.199A-7, the following definitions apply—

(i) ***Individual*** is defined in § 1.199A-1(a)(2).

(ii) ***Patron*** is defined in § 1.1388-1(e).

(iii) ***Patronage and nonpatronage*** is defined in § 1.1388-1(f).

(iv) ***Relevant Passthrough Entity (RPE)*** is defined in § 1.199A-1(a)(9).

(v) ***Qualified payment*** is defined in § 1.199A-8(d)(2)(ii).

(vi) ***Specified Cooperative*** is defined in § 1.199A-8(a)(2) and is a subset of Cooperatives defined in § 1.199A-7(a)(1).

(b) ***Trade or business.*** A patron (whether the patron is an RPE or an individual), and not a Cooperative, must determine whether it has one or more trades or businesses that it directly conducts as defined in § 1.199A-1(b)(14). To the extent a patron operating a trade or business has income directly from that business, the patron must follow the rules of §§ 1.199A-1 through 1.199A-6 to calculate the section 199A(a) deduction. Patronage dividends or similar payments are considered to be generated from the trade or business the Cooperative conducts on behalf of or with the patron. A Cooperative that distributes patronage dividends or similar payments, as described in paragraph (c)(1) of this section, must determine and report information to its patrons relating to qualified items of income, gain, deduction, and loss in accordance with paragraphs (c)(3) and (d)(3) of this section. A patron that receives patronage dividends or similar payments, as described in paragraph (c)(1) of this section, from a Cooperative must follow the rules of paragraphs (c) through (e) of this section to calculate the section 199A(a) deduction.

(c) ***Qualified Business Income*** —

(1) ***In general.*** QBI means the net amount of qualified items of income, gain, deduction, and loss with respect to any trade or business as determined under the rules of section 199A(c)(3) and § 1.199A-3(b). A qualified item of income includes distributions for which the Cooperative is allowed a deduction under section 1382(b) and (c)(2) (including patronage dividends or similar payments, such as money, property, qualified written notices of allocations, and qualified per-unit retain certificates, as well as money or property paid in redemption of a nonqualified written notice of allocation (collectively patronage dividends or similar payments)), provided such distribution is otherwise a qualified item of income, gain, deduction, or loss. *See* special rule in paragraph (d)(3) of this section relating to SSTBs that may affect QBI.

(2) ***QBI determinations made by patron.*** A patron must determine QBI for each trade or business it directly conducts. In situations where the patron receives distributions described in paragraph (c)(1) of this section, the Cooperative must determine whether those distributions include qualified items of income, gain, deduction, and loss as determined under rules of section 199A(c)(3) and § 1.199A-3(b). These distributions may be included in the QBI of the patron's trade or business to the extent that:

(i) The distributions are related to the patron's trade or business as defined in § 1.199A-1(b)(14);

(ii) The distributions are qualified items of income, gain, deduction, and loss as determined under rules of section 199A(c)(3) and § 1.199A-3(b) at the Cooperative's trade or business level;

(iii) The distributions are not items from an SSTB as defined in section 199A(d)(2) at the Cooperative's trade or business level (except as permitted by the threshold rules in section 199A(d)(3) and § 1.199A-5(a)(2)); and

(iv) Certain information is reported by the Cooperative about these payments as provided in paragraphs (c)(3) and (d)(3) of this section.

(3) ***Qualified items of income, gain, deduction, and loss determinations made and reported by Cooperatives.*** In the case of a Cooperative that makes distributions described in paragraph (c)(1) of this section to a patron, the Cooperative must determine the amount of qualified items of income,

gain, deduction, and loss as determined under the rules of section 199A(c)(3) and § 1.199A-3(b) in those distributions. A patron must determine whether these qualified items relate to one or more trades or businesses that it directly conducts as defined in § 1.199A-1(b)(14). Pursuant to this paragraph (c)(3), the Cooperative must report the net amount of qualified items with respect to non-SSTBs of the Cooperative in the distributions made to the patron on an attachment to or on the Form 1099-PATR, Taxable Distributions Received From Cooperatives, (or any successor form) issued by the Cooperative to the patron, unless otherwise provided by the instructions to the Form. If the Cooperative does not report on or before the due date of the Form 1099-PATR the amount of such qualified items of income, gain, deduction, and loss in the distributions to the patron, the amount of distributions from the Cooperative that may be included in the patron's QBI is presumed to be zero. *See* special rule in paragraph (d)(3) of this section relating to reporting of qualified items of income, gain, deduction, and loss with respect to SSTBs of the Cooperative.

(d) ***Specified Service Trades or Businesses*** —

(1) ***In general.*** This section provides guidance on the determination of SSTBs as defined in section 199A(d)(2) and § 1.199A-5. Unless otherwise provided in this section, all of the rules in § 1.199A-5 relating to SSTBs apply to patrons of Cooperatives.

(2) ***SSTB determinations made by patron.*** A patron (whether an RPE or an individual) must determine whether each trade or business it directly conducts is an SSTB.

(3) ***SSTB determinations made and reported by Cooperatives*** —

(i) ***In general.*** In the case of a Cooperative that makes distributions described in paragraph (c)(1) of this section to a patron, the Cooperative must determine the amount of qualified items of income, gain, deduction, and loss as determined under the rules of section 199A(c)(3) and § 1.199A-3(b) with respect to SSTBs directly conducted by the Cooperative. A patron must determine whether these qualified items relate to one or more trades or businesses that it directly conducts as defined in § 1.199A-1(b)(14). The Cooperative must report the net amount of qualified items with respect to the SSTBs of the Cooperative in the distributions made to the patron on an attachment to or on the Form 1099-PATR, Taxable Distributions Received from Cooperatives, (or any successor form) issued by the Cooperative to the patron, unless otherwise provided by the instructions to the Form. If the Cooperative does not report the amount on or before the due date of the Form 1099-PATR, then only the amount that a Cooperative reports as qualified items of income, gain, deduction, and loss under § 1.199A-7(c)(3) may be included in the patron's QBI, and the remaining amount of distributions from the Cooperative that may be included in the patron's QBI is presumed to be zero.

(ii) ***Patron allocation of expenses paid to Cooperative for SSTB items of income reported by Cooperative*** —

(A) ***In general.*** When a Cooperative reports SSTB items to a patron, a patron may allocate a deductible expense that was paid to the Cooperative in connection with the patron's qualified trade or business between a patron's qualified trade or business income and the SSTB income reported to it by the Cooperative only if the SSTB income directly relates to the deductible expense. A patron can allocate the deductible expense paid by the patron to the Cooperative only up to the amount of SSTB income reported by the Cooperative.

(B) ***Example. Patron allocating expenses between qualified trade or business and SSTB income from a Cooperative.***

(1) Cooperative provides to its patrons a service that is an SSTB under section 199A(d)(2). P, a patron, runs a qualified trade or business under section 199A(d)(1) and incurs expenses for the service from the Cooperative in P's qualified trade or business. P pays the Cooperative $1,000 for the service. Cooperative later pays P a patronage dividend of $50 related to the service.

(2) Cooperative reports the $50 as SSTB income on the Form 1099-PATR issued to P.

(3) Since P's deductible expense for services from the Cooperative was in connection with a qualified trade or business and the SSTB income directly relates to that expense, P may allocate the expense under paragraph (d)(3)(ii) of this section. Accordingly, $50 of the $1,000 expense is allocated to P's SSTB income, and $950 of the expense is allocated to P's qualified trade or business and is included in P's QBI calculation.

(e) ***W-2 wages and unadjusted basis immediately after acquisition of qualified property*** —

(1) ***In general.*** This section provides guidance on calculating a trade or business's W-2 wages and the UBIA of qualified property properly allocable to QBI.

(2) ***Determinations made by patron.*** The determination of W-2 wages and UBIA of qualified property must be made for each trade or business by the patron (whether an RPE or individual) that directly conducts the trade or business before applying the aggregation rules of § 1.199A-4. Unlike RPEs, Cooperatives do not compute and allocate their W-2 wages and UBIA of qualified property to patrons.

(f) ***Special rules for patrons of Specified Cooperatives*** —

(1) ***Section 199A(b)(7) reduction.*** A patron of a Specified Cooperative that receives a qualified payment must reduce its section 199A(a) deduction as provided in § 1.199A-1(e)(7). This reduction applies whether the Specified Cooperative passes through all, some, or none of the Specified Cooperative's section 199A(g) deduction to the patron in that taxable year. The rules relating to the section 199A(g) deduction can be found in §§ 1.199A-8 through 1.199A-12.

(2) ***Reduction calculation*** —

(i) ***Allocation method.*** If in any taxable year, a patron receives income or gain related to qualified payments and income or gain that is not related to qualified payments in a trade or business, the patron must allocate the income or gain and related deductions, losses and W-2 wages using a reasonable method based on all the facts and circumstances for purposes of calculating the reduction in § 1.199A-1(e)(7). Different reasonable methods may be used for different items and related deductions of income, gain, deduction, and loss. The chosen reasonable method for each item must be consistently applied from one taxable year of the patron to another, and must clearly reflect the income and expenses of each trade or business. The overall combination of methods must also be reasonable based on all the facts and circumstances. The books and records maintained for a trade or business must be consistent with any allocations under this paragraph (f)(2)(i).

(ii) ***Safe harbor.*** A patron with taxable income under the threshold amount set forth in section 199A(e)(2) is eligible to use the safe harbor set forth in this paragraph (f)(2)(ii) to apportion its deductions, losses and W-2 wages instead of the allocation method set forth in paragraph (f)(2)(i) of this section for any taxable year in which the patron receives income or gain related

to qualified payments and income or gain not related to qualified payments in a trade or business. Under the safe harbor the patron may apportion its deductions, losses and W-2 wages ratably between income or gain related to qualified payments and income or gain that is not related to qualified payments for purposes of calculating the reduction in paragraph (f)(1) of this section. Accordingly, the amount of deductions and losses apportioned to determine QBI allocable to qualified payments is equal to the proportion of the total deductions and losses that the amount of income or gain related to qualified payments bears to total income or gain used to determine QBI. The same proportion applies to determine the amount of W-2 wages allocable to the portion of the trade or business that received qualified payments.

(3) ***Qualified payments notice requirement.*** A Specified Cooperative must report the amount of the qualified payments made to the eligible taxpayer, as defined in section 199A(g)(2)(D), on an attachment to or on the Form 1099-PATR (or any successor form) issued by the Cooperative to the patron, unless otherwise provided by the instructions to the Form.

(g) ***Examples.*** The following examples illustrate the provisions of paragraph (f) of this section. For purposes of these examples, assume that the Specified Cooperative has satisfied the applicable written notice requirements in paragraphs (c)(3), (d)(3) and (f)(3) of this section.

(1) ***Example 1. Patron of Specified Cooperative with W-2 wages.***

(i) P, a grain farmer and patron of nonexempt Specified Cooperative C, delivered to C during 2020 2% of all grain marketed through C during such year. During 2021, P receives $20,000 in patronage dividends and $1,000 of allocated section 199A(g) deduction from C related to the grain delivered to C during 2020.

(ii) P has taxable income of $75,000 for 2021 (determined without regard to section 199A) and has a filing status of married filing jointly. P's QBI related to its grain trade or business for 2021 is $50,000, which consists of gross receipts of $150,000 from sales to an independent grain elevator, per-unit retain allocations received from C during 2021 of $80,000, patronage dividends received from C during 2021 related to C's 2020 net earnings of $20,000, and expenses of $200,000 (including $50,000 of W-2 wages).

(iii) The portion of QBI from P's grain trade or business related to qualified payments received from C during 2021 is $10,000, which consists of per-unit retain allocations received from C during 2021 of $80,000, patronage dividends received from C during 2021 related to C's 2020 net earnings of $20,000, and properly allocable expenses of $90,000 (including $25,000 of W-2 wages).

(iv) P's deductible amount related to the grain trade or business is 20% of QBI ($10,000) reduced by the lesser of 9% of QBI related to qualified payments received from C ($900) or 50% of W-2 wages related to qualified payments received from C ($12,500), or $9,100. As P does not have any other trades or businesses, the combined QBI amount is also $9,100.

(v) P's deduction under section 199A for 2021 is $10,100, which consists of the combined QBI amount of $9,100, plus P's deduction passed through from C of $1,000.

(2) ***Example 2. Patron of Specified Cooperative without W-2 wages.***

(i) C and P have the same facts for 2020 and 2021 as *Example 1,* except that P has expenses of $200,000 that include zero W-2 wages during 2021.

(ii) P's deductible amount related to the grain trade or business is 20% of QBI ($10,000) reduced by the lesser of 9% of QBI related to qualified payments received from C ($900) or 50% of W-2 wages related to qualified payments received from C ($0), or $10,000.

(iii) P's deduction under section 199A for 2021 is $11,000, which consists of the combined QBI amount of $10,000, plus P's deduction passed through from C of $1,000.

(3) ***Example 3. Patron of Specified Cooperative—Qualified Payments do not equal QBI and no section 199A(g) passthrough.***

(i) P, a grain farmer and a patron of a nonexempt Specified Cooperative C, during 2020, receives $60,000 in patronage dividends, $100,000 in per-unit retain allocations, and $0 of allocated section 199A(g) deduction from C related to the grain delivered to C. C notifies P that only $150,000 of the patronage dividends and per-unit retain allocations are qualified payments because $10,000 of the payments are not attributable to C's QPAI.

(ii) P has taxable income of $90,000 (determined without regard to section 199A) and has a filing status of married filing jointly. P's QBI related to its grain trade or business is $45,000, which consists of gross receipts of $95,000 from sales to an independent grain elevator, plus $160,000 from C (all payments from C qualify as qualified items of income, gain, deduction, and loss), less expenses of $210,000 (including $30,000 of W-2 wages).

(iii) The portion of QBI from P's grain trade or business related to qualified payments received from C is $25,000, which consists of the qualified payments received from C of $150,000, less the properly allocable expenses of $125,000 (including $18,000 of W-2 wages), which were determined using a reasonable method under paragraph (f)(2)(ii) of this section.

(iv) P's patron reduction is $2,250, which is the lesser of 9% of QBI related to qualified payments received from C, $2,250 (9% × $25,000), or 50% of W-2 wages related to qualified payments received from C, $9,000 (50% × $18,000). As P does not have any other trades or businesses, the combined QBI amount is $6,750 (20% of P's total QBI, $9,000 (20% × $45,000), reduced by the patron reduction of $2,250).

(v) P's deduction under section 199A is $6,750, which consists of the combined QBI amount of $6,750.

(4) ***Example 4. Patron of Specified Cooperative—Reasonable Method under paragraph (f)(2)(i) of this section.*** P is a grain farmer that has $45,000 of QBI related to P's grain trade or business in 2020. P's QBI consists of $105,000 of sales to an independent grain elevator, $100,000 of per-unit retain allocations, and $50,000 of patronage dividends from a nonexempt Specified Cooperative C, for which C reports $150,000 of qualified payments to P as required by paragraph (f)(3) of this section. P's grain trade or business has $210,000 of expenses (including $30,000 of W-2 wages). P delivered 65x bushels of grain to C and sold 35x bushels of comparable grain to the independent grain elevator. To allocate the expenses between qualified payments ($150,000) and other income ($105,000), P compares the bushels of grain delivered to C (65x) to the total bushels of grain delivered to C and sold to the independent grain elevator (100x). P determines $136,500 (65% × $210,000) of expenses (including $19,500 of W-2 wages) are properly allocable to the qualified payments. The portion of QBI from P's grain trade or business related to qualified payments received from C is $13,500, which consists of qualified payments of $150,000 less the properly allocable expenses of $136,500 (including $19,500 of W-2 wages). P's method of allocating expenses is a reasonable method under paragraph (f)(2)(i) of this section.

(5) *Example 5. Patron of Specified Cooperative using safe harbor to allocate.*

(i) P is a grain farmer with taxable income of $100,000 for 2021 (determined without regard to section 199A) and has a filing status of married filing jointly. P's QBI related to P's grain trade or business for 2021 is $50,000, which consists of gross receipts of $180,000 from sales to an independent grain elevator, per-unit retain allocations received from a Specified Cooperative C during 2021 of $15,000, patronage dividends received from C during 2021 related to C's 2020 net earnings of $5,000, and expenses of $150,000 (including $50,000 of W-2 wages). C also passed through $1,800 of the section 199A(g) deduction to P, which related to the grain delivered by P to the Specified Cooperative during 2020. P uses the safe harbor in paragraph (f)(2)(ii) of this section to determine the expenses (including W-2 wages) allocable to the qualified payments.

(ii) Using the safe harbor to allocate P's $150,000 of expenses, P allocates $15,000 of the expenses to the qualified payments ($150,000 of expenses multiplied by the ratio (0.10) of qualified payments ($20,000) to total gross receipts ($200,000)). Using the same ratio, P also determines there are $5,000 of W-2 wages allocable ($50,000 multiplied by 0.10) to the qualified payments.

(iii) The portion of QBI from P's grain trade or business related to qualified payments received from C during 2021 is $5,000, which consists of per-unit retain allocations received from C during 2021 of $15,000, patronage dividends of $5,000, and properly allocable expenses of $15,000 (including $5,000 of W-2 wages).

(iv) P's QBI related to the grain trade or business is 20% of QBI ($10,000) reduced by the lesser of 9% of QBI related to qualified payments received from C ($450) or 50% of W-2 wages related to qualified payments received from C ($2,500), or $9,550. As P does not have any other trades or businesses, the combined QBI amount is also $9,550.

(v) P's deduction under section 199A for 2021 is $11,350, which consists of the combined QBI amount of $9,550, plus P's deduction passed through from C of $1,800.

(h) *Applicability date* —

(1) ***General rule.*** Except as provided in paragraph (h)(2) of this section, the provisions of this section apply to taxable years beginning after January 19, 2021. Taxpayers, however, may choose to apply the rules of §§ 1.199A-7 through 1.199A-12 for taxable years beginning on or before that date, provided taxpayers apply the rules in their entirety and in a consistent manner.

(2) ***Transition rule for qualified payments of patrons of Cooperatives.*** See the transition rule for qualified payments of patrons of Cooperatives for a taxable year of a Cooperative beginning before January 1, 2018 in the Consolidated Appropriations Act, 2018 (Pub. L. 115-141, 132 Stat. 348) Division T, section 101(c).

(3) ***Notice from the Cooperative.*** If a patron of a Cooperative cannot claim a deduction under section 199A for any qualified payments described in the transition rule set forth in paragraph (h)(2) of this section, the Cooperative must use a reasonable method to identify the qualified payments to its patrons. A reasonable method includes reporting this information on an attachment to or on the Form 1099-PATR (or any successor form) issued by the Cooperative to the patron, unless otherwise provided by the instructions to the Form.

[T.D. 9947, 86 FR 5569, Jan. 19, 2021, as amended by 87 FR 68898, Nov. 17, 2022]

§ 1.199A-8 Deduction for income attributable to domestic production activities of specified agricultural or horticultural cooperatives.

(a) *Overview* —

(1) ***In general.*** This section provides rules relating to the deduction for income attributable to domestic production activities of a specified agricultural or horticultural cooperative (Specified Cooperative). This paragraph (a) provides an overview and definitions of certain terms. Paragraph (b) of this section provides rules explaining the steps a nonexempt Specified Cooperative performs to calculate its section 199A(g) deduction and includes definitions of relevant terms. Paragraph (c) of this section provides rules explaining the steps an exempt Specified Cooperative performs to calculate its section 199A(g) deduction. Paragraph (d) of this section provides rules for Specified Cooperatives passing through the section 199A(g) deduction to patrons. Paragraph (e) of this section provides examples that illustrate the provisions of paragraphs (b), (c), and (d) of this section. Paragraph (f) of this section provides guidance for Specified Cooperatives that are partners in a partnership. Paragraph (g) of this section provides guidance on the recapture of a claimed section 199A(g) deduction. Paragraph (h) of this section provides effective dates. For additional rules addressing an expanded affiliated group (EAG), to which the principles of this section apply, *see* § 1.199A-12. The provisions of this section apply solely for purposes of section 199A of the Internal Revenue Code (Code).

(2) ***Specified Cooperative*** —

(i) ***In general.*** Specified Cooperative means a cooperative to which Part I of subchapter T of chapter 1 of the Code applies and which—

(A) Manufactures, produces, grows, or extracts (MPGE) in whole or significant part within the United States any agricultural or horticultural product, or

(B) Is engaged in the marketing of agricultural or horticultural products that have been MPGE in whole or significant part within the United States by the patrons of the cooperative.

(C) See § 1.199A-9 for rules to determine if a Specified Cooperative has MPGE an agricultural or horticultural product in whole or significant part within the United States.

(ii) ***Types of Specified Cooperatives.*** A Specified Cooperative that is qualified as a farmer's cooperative organization under section 521 is an *exempt Specified Cooperative,* while a Specified Cooperative not so qualified is a *nonexempt Specified Cooperative.*

(3) ***Patron*** is defined in § 1.1388-1(e).

(4) ***Agricultural or horticultural products*** are agricultural, horticultural, viticultural, and dairy products, livestock and the products thereof, the products of poultry and bee raising, the edible products of forestry, and any and all products raised or produced on farms and processed or manufactured products thereof within the meaning of the Cooperative Marketing Act of 1926, 44 Stat. 802 (1926). Agricultural or horticultural products also include aquatic products that are farmed. Some examples of agricultural or horticultural products include, but are not limited to, fruits, grains, oilseeds, rice, vegetables, legumes, grasses (including hay), plants of all kinds, flowers (including hops), seeds, tobacco, cotton, sugar cane and sugar beets. Some examples of livestock products include, but are not limited to, wool, fur, hides, eggs, down, honey, and silk. Some examples of edible forestry products include, but are not limited to, fruits, nuts, berries and mushrooms. Some examples of aquatic products include, but are not limited to, fish, crustaceans, shellfish and seaweed. In addition,

agricultural or horticultural products include fertilizer, diesel fuel, and other supplies (for example, seed, feed, herbicides, and pesticides) used in agricultural or horticultural production that are MPGE by a Specified Cooperative. Agricultural or horticultural products, however, do not include intangible property other than when incorporated into a tangible agricultural or horticultural product (other than as provided in the exception in § 1.199A-9(b)(2)). Intangible property for this purpose includes, for example, the rights to MPGE and sell an agricultural or horticultural product with certain characteristics protected by a patent, or the rights to a trademark or tradename. This exclusion of intangible property does not apply to intangible characteristics of any particular agricultural or horticultural product. For example, gross receipts from the sale of different varieties of oranges would be considered from the disposition of agricultural or horticultural products. However, gross receipts from the license of the right to produce and sell a certain variety of an orange would be considered separate from the orange and not from an agricultural or horticultural product.

(b) ***Steps for a nonexempt Specified Cooperative in calculating deduction*** —

(1) ***In general.*** Except as provided in paragraph (c)(3) of this section, this paragraph (b) applies only to nonexempt Specified Cooperatives.

(2) ***Step 1—Gross receipts and related deductions*** —

(i) ***Identify.*** To determine the section 199A(g) deduction, a Specified Cooperative first identifies its patronage and nonpatronage gross receipts and related cost of goods sold (COGS), deductible expenses, W-2 wages, etc. (deductions) and allocates them between patronage and nonpatronage. A single definition for the term *patronage and nonpatronage* is found in § 1.1388-1(f).

(ii) ***Applicable gross receipts and deductions.*** Except as described in this paragraph (b)(ii), for all purposes of the section 199A(g) deduction, a Specified Cooperative can use only patronage gross receipts and related deductions to calculate qualified production activities income (QPAI) as defined in paragraph (b)(4)(ii) of this section, oil-related QPAI as defined in paragraph (b)(7)(ii) of this section, the W-2 wage limitation in paragraph (b)(5)(ii)(B) of this section, or taxable income as defined in paragraph (b)(5)(ii)(C) of this section. A Specified Cooperative cannot use its nonpatronage gross receipts and related deductions to calculate its section 199A(g) deduction, other than treating all of its nonpatronage gross receipts as patronage non-DPGR for purposes of applying the de minimis rules in § 1.199A-9(c)(3). If a Specified Cooperative treats all nonpatronage gross receipts as DPGR under § 1.199A-9(c)(3)(i), then a Specified Cooperative shall also treat its deductions related to the nonpatronage gross receipts as patronage in calculating QPAI, oil-related QPAI, the W-2 wage limitation, or taxable income for purposes of the section 199A(g) deduction.

(iii) ***Gross receipts*** are the Specified Cooperative's receipts for the taxable year that are recognized under the Specified Cooperative's methods of accounting used for Federal income tax purposes for the taxable year. See § 1.199A-12 if the gross receipts are recognized in an intercompany transaction within the meaning of § 1.1502-13. Gross receipts include total sales (net of returns and allowances) and all amounts received for services. In addition, gross receipts include any income from investments and from incidental or outside sources. For example, gross receipts include interest (except interest under section 103 but including original issue discount), dividends, rents, royalties, and annuities, regardless of whether the amounts are derived in the ordinary course of the Specified Cooperative's trade or business. Gross receipts are not reduced by COGS or by the cost of property sold if such property is described in section 1221(a)(1), (2), (3), (4), or (5). Finally, gross receipts do not include

amounts received by the Specified Cooperative with respect to sales tax or other similar state or local taxes if, under the applicable state or local law, the tax is legally imposed on the purchaser of the good or service and the Specified Cooperative merely collects and remits the tax to the taxing authority. If, in contrast, the tax is imposed on the Specified Cooperative under the applicable law, then gross receipts include the amounts received that are allocable to the payment of such tax.

(3) ***Step 2—Determine gross receipts that are DPGR*** —

(i) ***In general.*** A Specified Cooperative examines its patronage gross receipts to determine which of these are DPGR. A Specified Cooperative does not use nonpatronage gross receipts to determine DPGR.

(ii) ***DPGR*** are the gross receipts of the Specified Cooperative that are derived from any lease, rental, license, sale, exchange, or other disposition of an agricultural or horticultural product that is MPGE by the Specified Cooperative or its patrons in whole or significant part within the United States. DPGR does not include gross receipts derived from services or the lease, rental, license, sale, exchange, or other disposition of land unless a de minimis or other exception applies. See § 1.199A-9 for additional rules on determining if gross receipts are DPGR.

(4) ***Step 3—Determine QPAI*** —

(i) ***In general.*** A Specified Cooperative determines QPAI from patronage DPGR and patronage deductions identified in paragraphs (b)(3)(ii) and (b)(2)(i) of this section, respectively. A Specified Cooperative does not use nonpatronage gross receipts or deductions to determine QPAI.

(ii) ***QPAI*** for the taxable year means an amount equal to the excess (if any) of—

(A) DPGR for the taxable year, over

(B) The sum of—

(*1*) COGS that are allocable to DPGR, and

(*2*) Other expenses, losses, or deductions (other than the section 199A(g) deduction) that are properly allocable to DPGR.

(C) ***QPAI computational rules.*** QPAI is computed without taking into account the section 199A(g) deduction or any deduction allowed under section 1382(b). *See* § 1.199A-10 for additional rules on calculating QPAI.

(5) ***Step 4—Calculate deduction*** —

(i) ***In general.*** From QPAI and taxable income, a Specified Cooperative calculates its section 199A(g) deduction as provided in paragraph (b)(5)(ii) of this section.

(ii) ***Deduction*** —

(A) ***In general.*** A Specified Cooperative is allowed a deduction equal to 9 percent of the lesser of—

(*1*) QPAI of the Specified Cooperative for the taxable year, or

(*2*) Taxable income of the Specified Cooperative for the taxable year.

(B) ***W-2 wage limitation.*** The deduction allowed under paragraph (b)(5)(ii)(A) of this section for any taxable year cannot exceed 50 percent of the patronage W-2 wages attributable to DPGR for the taxable year. *See* § 1.199A-11 for additional rules on calculating the patronage W-2 wage limitation.

(C) ***Taxable income.*** Taxable income is defined in section 63, and adjusted under section 1382 and § 1.1382-1 and § 1.1382-2. For purposes of determining the amount of the deduction allowed under paragraph (b)(5)(ii) of this section, taxable income is limited to taxable income and related deductions from patronage sources, other than as allowed under paragraph (b)(2)(ii) of this section. Taxable income is computed without taking into account the section 199A(g) deduction or any deduction allowable under section 1382(b). Patronage net operating losses (NOLs) reduce taxable income in the amount that the Specified Cooperative would use to reduce taxable income (no lower than zero) before using the section 199A(g) deduction, but do not reduce taxable income that is the result of not taking into account any deduction allowable under section 1382(b).

(6) ***Use of patronage section 199A(g) deduction.*** Except as provided in § 1.199A-12(c)(2) related to the rules for EAGs, the patronage section 199A(g) deduction cannot create or increase a patronage or nonpatronage NOL or the amount of a patronage or nonpatronage NOL carryover or carryback, if applicable, in accordance with section 172. A patronage section 199A(g) deduction can be applied only against patronage income and deductions. A patronage section 199A(g) deduction that is not used in the appropriate taxable year is lost. To the extent that a Specified Cooperative passes through the section 199A(g) deduction to patrons and appropriately adjusts the section 1382 deduction under § 1.199A-8(d), the amount passed through is not considered to create or increase a patronage or nonpatronage NOL or the amount of a patronage or nonpatronage NOL carryover or carryback, if applicable, in accordance with section 172.

(7) ***Special rules for nonexempt Specified Cooperatives that have oil-related QPAI*** —

(i) ***Reduction of section 199A(g) deduction.*** If a Specified Cooperative has oil-related QPAI for any taxable year, the amount otherwise allowable as a deduction under paragraph (b)(5)(ii) of this section must be reduced by 3 percent of the least of—

(A) Oil-related QPAI of the Specified Cooperative for the taxable year,

(B) QPAI of the Specified Cooperative for the taxable year, or

(C) Taxable income of the Specified Cooperative for the taxable year.

(ii) ***Oil-related QPAI*** means, for any taxable year, the patronage QPAI that is attributable to the production, refining, processing, transportation, or distribution of oil, gas, or any primary product thereof (within the meaning of section 927(a)(2)(C), as in effect before its repeal) during such taxable year. Oil-related QPAI for any taxable year is an amount equal to the excess (if any) of patronage DPGR derived from the production, refining or processing of oil, gas, or any primary product thereof (oil-related DPGR) over the sum of—

(A) COGS of the Specified Cooperative that is allocable to such receipts; and

(B) Other expenses, losses, or deductions (other than the section 199A(g) deduction) that are properly allocable to such receipts.

(iii) ***Special rule for patronage oil-related DPGR.*** Oil-related DPGR does not include gross receipts derived from the transportation or distribution of oil, gas, or any primary product thereof. However, to the extent that the nonexempt Specified Cooperative treats gross receipts derived from transportation or distribution of oil, gas, or any primary product thereof as part of DPGR under § 1.199A-9(c)(3)(i), or under § 1.199A-9(j)(3)(i)(B), then the Specified Cooperative must treat those patronage gross receipts as oil-related DGPR.

(iv) ***Oil*** includes oil recovered from both conventional and non-conventional recovery methods, including crude oil, shale oil, and oil recovered from tar/oil sands. The *primary product from oil* includes all products derived from the destructive distillation of oil, including volatile products, light oils such as motor fuel and kerosene, distillates such as naphtha, lubricating oils, greases and waxes, and residues such as fuel oil. The *primary product from gas* means all gas and associated hydrocarbon components from gas wells or oil wells, whether recovered at the lease or upon further processing, including natural gas, condensates, liquefied petroleum gases such as ethane, propane, and butane, and liquid products such as natural gasoline. The primary products from oil and gas provided in this paragraph (b)(7)(iv) are not intended to represent either the only primary products from oil or gas, or the only processes from which primary products may be derived under existing and future technologies. Examples of non-primary products include, but are not limited to, petrochemicals, medicinal products, insecticides, and alcohols.

(c) ***Exempt Specified Cooperatives*** —

(1) ***In general.*** This paragraph (c) applies only to exempt Specified Cooperatives.

(2) ***Two section 199A(g) deductions.*** The Specified Cooperative must calculate two separate section 199A(g) deductions, one patronage sourced and the other nonpatronage sourced, unless a Specified Cooperative treats all of its nonpatronage gross receipts and related deductions as patronage as described in paragraph (b)(2)(ii) of this section. Patronage and nonpatronage gross receipts, related COGS that are allocable to DPGR, and other expenses, losses, or deductions (other than the section 199A(g) deduction) that are properly allocable to DPGR (deductions), DPGR, QPAI, NOLs, W-2 wages, etc. are not netted to calculate these two separate section 199A(g) deductions.

(3) ***Exempt Specified Cooperative patronage section 199A(g) deduction.*** The Specified Cooperative calculates its patronage section 199A(g) deduction following steps 1 through 4 in paragraphs (b)(2) through (5) of this section as if it were a nonexempt Specified Cooperative.

(4) ***Exempt Specified Cooperative nonpatronage section 199A(g) deduction*** —

(i) ***In general.*** The Specified Cooperative calculates its nonpatronage section 199A(g) deduction following steps 2 through 4 in paragraphs (b)(2) through (5) of this section using only nonpatronage gross receipts and related nonpatronage deductions, unless a Specified Cooperative treats all of its nonpatronage gross receipts and related deductions as patronage as described in paragraph (b)(2)(ii) of this section. For purposes of determining the amount of the nonpatronage section 199A(g) deduction allowed under paragraph (b)(5)(ii) of this section, taxable income is limited to taxable income and related deductions from nonpatronage sources. Nonpatronage NOLs reduce taxable income. Taxable income is computed without taking into account the section 199A(g) deduction or any deduction allowable under section 1382(c).

(ii) ***Use of nonpatronage section 199A(g) deduction.*** Except as provided in § 1.199A-12(c)(2) related to the rules for EAGs, the nonpatronage section 199A(g) deduction cannot create or increase a nonpatronage NOL or the amount of nonpatronage NOL carryover or carryback, if applicable, in accordance with section 172. A Specified Cooperative cannot pass through its nonpatronage section 199A(g) deduction under paragraph (d) of this section and can apply the nonpatronage section 199A(g) deduction only against its nonpatronage income and deductions. As is the case for the patronage section 199A(g) deduction, the nonpatronage section 199A(g) deduction that a Specified Cooperative does not use in the appropriate taxable year is lost.

(d) ***Discretion to pass through deduction*** —

(1) ***Permitted amount***

(i) ***In general.*** A Specified Cooperative may, at its discretion, pass through all, some, or none of its patronage section 199A(g) deduction to all patrons. Only eligible taxpayers as defined in section 199A(g)(2)(D) may claim the section 199A(g) deduction that is passed through. A Specified Cooperative member of a federated cooperative may pass through the patronage section 199A(g) deduction it receives from the federated cooperative to its member patrons.

(ii) ***Specified Cooperative identifies eligibility of patron.*** If a Specified Cooperative determines that a patron is not an eligible taxpayer, then the Specified Cooperative may, at its discretion, retain any of the patronage section 199A(g) deduction attributable to the patron that would otherwise be passed through and lost under the general rule in paragraph (d)(1)(i) of this section.

(2) ***Amount of deduction being passed through*** —

(i) ***In general.*** A Specified Cooperative is permitted to pass through an amount equal to the portion of the Specified Cooperative's section 199A(g) deduction that is allowed with respect to the portion of the cooperative's QPAI that is attributable to the qualified payments the Specified Cooperative distributed to the patron during the taxable year and identified on the notice required in § 1.199A-7(f)(3) on an attachment to or on the Form 1099-PATR, Taxable Distributions Received From Cooperatives (Form 1099-PATR), (or any successor form) issued by the Specified Cooperative to the patron, unless otherwise provided by the instructions to the Form 1099-PATR. The notice requirement to pass through the section 199A(g) deduction is in paragraph (d)(3) of this section.

(ii) ***Qualified payment*** means any amount of a patronage dividend or per-unit retain allocation, as described in section 1385(a)(1) or (3) received by a patron from a Specified Cooperative that is attributable to the portion of the Specified Cooperative's QPAI, for which the cooperative is allowed a section 199A(g) deduction. For this purpose, patronage dividends include any advances on patronage and per-unit retain allocations include per-unit retains paid in money during the taxable year.

(3) ***Notice requirement to pass through deduction.*** A Specified Cooperative must identify in a written notice the amount of the section 199A(g) deduction being passed through to its patrons. This written notice must be mailed by the Specified Cooperative to the patron no later than the 15th day of the ninth month following the close of the taxable year of the Specified Cooperative. The Specified Cooperative may use the same written notice, if any, that it uses to notify the patron of the patron's respective allocations of patronage distributions, or may use a separate timely written notice(s) to comply with this section. The Specified Cooperative must report the amount of section 199A(g)

deduction passed through to the patron on an attachment to or on the Form 1099-PATR (or any successor form) issued by the Specified Cooperative to the patron, unless otherwise provided by the instructions to the Form 1099-PATR.

(4) ***Section 199A(g) deduction allocated to eligible taxpayer.*** An eligible taxpayer may deduct the lesser of the section 199A(g) deduction identified on the notice described in paragraph (d)(3) of this section or the eligible taxpayer's taxable income in the taxable year in which the eligible taxpayer receives the timely written notice described in paragraph (d)(3) of this section. For this purpose, the eligible taxpayer's taxable income is determined without taking into account the section 199A(g) deduction being passed through to the eligible taxpayer and after taking into account any section 199A(a) deduction allowed to the eligible taxpayer. Any section 199A(g) deduction the eligible taxpayer does not use in the taxable year in which the eligible taxpayer receives the notice (received on or before the due date of the Form 1099-PATR) is lost and cannot be carried forward or back to other taxable years. The taxable income limitation for the section 199A(a) deduction set forth in section 199A(b)(3) and § 1.199A-1(a) and (b) does not apply to limit the deductibility of the section 199A(g) deduction passed through to the eligible taxpayer.

(5) ***Special rules for eligible taxpayers that are Specified Cooperatives.*** Any Specified Cooperative that receives a section 199A(g) deduction as an eligible taxpayer can take the deduction against patronage gross income and related deductions to the extent it relates to its patronage gross income and related deductions. Only a patron that is an exempt Specified Cooperative may take a section 199A(g) deduction passed through from another Specified Cooperative if the deduction relates to the patron Specified Cooperative's nonpatronage gross income and related deductions.

(6) ***W-2 wage limitation.*** The W-2 wage limitation described in paragraph (b)(5)(ii)(B) of this section is applied at the cooperative level whether or not the Specified Cooperative chooses to pass through some or all of the section 199A(g) deduction. Any section 199A(g) deduction that has been passed through by a Specified Cooperative to an eligible taxpayer is not subject to the W-2 wage limitation a second time at the eligible taxpayer's level.

(7) ***Specified Cooperative denied section 1382 deduction for portion of qualified payments.*** A Specified Cooperative must reduce its section 1382 deduction by an amount equal to the portion of any qualified payment that is attributable to the Specified Cooperative's section 199A(g) deduction passed through. This means the Specified Cooperative must reduce its section 1382 deduction in an amount equal to the section 199A(g) deduction passed through.

(8) ***No double counting.*** A qualified payment received by a Specified Cooperative that is a patron of a Specified Cooperative is not taken into account by the patron for purposes of section 199A(g).

(e) ***Examples.*** The following examples illustrate the application of paragraphs (a), (b), (c), and (d) of this section. The examples of this section apply solely for purposes of section 199A of the Code. Assume for each example that the Specified Cooperative sent all required notices to patrons on or before the due date of the Form 1099-PATR.

(1) ***Example 1. Nonexempt Specified Cooperative calculating section 199A(g) deduction.***

(i) C is a grain marketing nonexempt Specified Cooperative, with $5,250,000 in gross receipts during 2020 from the sale of grain grown by its patrons. C paid $4,000,000 to its patrons at the time the grain was delivered in the form of per-unit retain allocations and another $1,000,000 in patronage dividends after the close of the 2020 taxable year. C has other expenses of $250,000 during 2020, including $100,000 of W-2 wages.

(ii) C has DPGR of $5,250,000 and QPAI as defined in § 1.199A-8(b)(4)(ii) of $5,000,000 for 2020. C's section 199A(g) deduction is equal to the least of 9% of QPAI ($450,000), 9% of taxable income ($450,000), or 50% of W-2 wages ($50,000). C passes through the entire section 199A(g) deduction to its patrons. Accordingly, C reduces its $5,000,000 deduction allowable under section 1382(b) (relating to the $1,000,000 patronage dividends and $4,000,000 per-unit retain allocations) by $50,000.

(2) ***Example 2. Nonexempt Specified Cooperative determines amounts included in QPAI and taxable income.***

(i) C, a nonexempt Specified Cooperative, offers harvesting services and markets the grain of patrons and nonpatrons. C had gross receipts from harvesting services and grain sales, and expenses related to both. All of C's harvesting services were performed for their patrons, and 75% of the grain sales were for patrons.

(ii) C identifies 75% of the gross receipts and related expenses from grain sales and 100% of the gross receipts and related expenses from the harvesting services as patronage sourced. C identifies 25% of the gross receipts and related expenses from grain sales as nonpatronage sourced.

(iii) C does not include any nonpatronage gross receipts or related expenses from grain sales in either QPAI or taxable income when calculating the section 199A(g) deduction. C's QPAI includes the patronage DPGR, less related expenses (allocable COGS, wages and other expenses). C's taxable income includes the patronage gross receipts, whether such gross receipts are DPGR or non-DPGR.

(iv) C allocates and reports patronage dividends to its harvesting patrons and grain marketing patrons. C also notifies its grain marketing patrons (in accordance with the requirements of § 1.199A-7(f)(3)) that their patronage dividends are qualified payments used in C's section 199A(g) computation. The patrons must use this information for purposes of computing their section 199A(b)(7) reduction to their section 199A(a) deduction (*see* § 1.199A-7(f)).

(3) ***Example 3. Nonexempt Specified Cooperative with patronage and nonpatronage gross receipts and related deductions.***

(i) C, a nonexempt Specified Cooperative, markets corn grown by its patrons in the United States. For the calendar year ending December 31, 2020, C derives gross receipts from the marketing activity of $1,800. Such gross receipts qualify as DPGR. Assume C has $800 of expenses (including COGS, other expenses, and $400 of W-2 wages) properly allocable to DPGR, and a $1,000 deduction allowed under section 1382(b). C also derives gross receipts from nonpatronage sources in the amount of $500, and has nonpatronage deductions in the amount of $400 (including COGS, other expenses, and $100 of W-2 wages).

(ii) C does not include any gross receipts or deductions from nonpatronage sources when calculating the deduction under paragraph (b)(5)(ii) of this section. C's QPAI and taxable income both equal $1,000 ($1,800–800). C's deduction under paragraph (b)(5)(ii) of this section for the taxable year is equal to $90 (9% of $1,000), which does not exceed $200 (50% of C's W-2 wages properly allocable to DPGR). C passes through $90 of the deduction to patrons and C reduces its section 1382(b) deduction by $90.

(4) ***Example 4. Exempt Specified Cooperative with patronage and nonpatronage income and deductions.***

(i) C, an exempt Specified Cooperative, markets corn MPGE by its patrons in the United States. For the calendar year ending December 31, 2020, C derives gross receipts from the marketing activity of $1,800. For this activity assume C has $800 of expenses (including COGS, other expenses, and $400 of W-2 wages) properly allocable to DPGR, and a $1,000 deduction under section 1382(b). C also derives gross receipts from nonpatronage sources in the amount of $500. Assume the gross receipts qualify as DPGR. For this activity assume C has $400 of expenses (including COGS, other expenses, and $20 of W-2 wages) properly allocable to DPGR and no deduction under section 1382(c).

(ii) C calculates two separate section 199A(g) deduction amounts. C's section 199A(g) deduction attributable to patronage sources is the same as the deduction calculated by the nonexempt Specified Cooperative in *Example 3* in paragraph (e)(3) of this section.

(iii) C's nonpatronage QPAI and taxable income is equal to $100 ($500−$400). C's deduction under paragraph (c)(4) of this section that directs C to use paragraph (b)(5)(ii) of this section attributable to nonpatronage sources is equal to $9 (9% of $100), which does not exceed $10 (50% of C's W-2 wages properly allocable to DPGR). C cannot pass through any of the nonpatronage section 199A(g) deduction amount to its patrons.

(5) ***Example 5. NOL.***

(i) In 2021, E, a nonexempt Specified Cooperative that is not part of an EAG, generates QPAI and taxable income of $100 (without taking into account any section 1382(b) deductions, NOLs, or the section 199A(g) deduction). E pays out patronage dividends of $91 that are deductible under section 1382(b). E has an NOL carryover of $500 attributable to losses incurred prior to 2018. While taxable income and QPAI do not take into account the section 1382(b) deduction, taxable income does take into account NOLs. When calculating its section 199A(g) deduction, E must take into account the NOL carryover when calculating taxable income, unless the taxable income is the result of not taking into account any deduction allowable under section 1382(b). In this case $91 of taxable income is the result of not taking into account the deduction allowed under section 1382(b) and the remaining $9 should be reduced by the NOL carryover so that taxable income equals $91. E calculates a section 199A(g) deduction of $8.19 (.09 × $91 (which is the lesser of $100 QPAI or $91 taxable income)).

(ii) E may pass through the entire $8.19 of section 199A(g) deduction to patrons (which will reduce its section 1382(b) deduction from $91 to $82.81). However, if E does not pass the deduction through, paragraph (b)(6) of this section prohibits E from claiming any of the section 199A(g) deduction in 2021.

(iii) If E passes through the deduction to patrons, E's taxable income under section 172(b)(2) for NOL absorption purposes is $9 ($100−$82.81−$9 NOL−$8.19 section 199A(g) deduction). If E does not pass through the deduction, then E's taxable income under section 172(b)(2) for NOL absorption purposes is $9 ($100−$91−$9 NOL).

(iv) Assuming E passes through the deduction to patrons, E would use $9 of the NOL carryover and have a $491 NOL carryover remaining. To the extent E does not pass through the deduction, E would still use $9 of the NOL carryover and have a $491 NOL carryover remaining.

(6) ***Example 6. Nonexempt Specified Cooperative not passing through the section 199A(g) deduction to patrons.***

(i) D, a nonexempt Specified Cooperative, markets corn grown by its patrons within the United States. For its calendar year ended December 31, 2020, D has gross receipts of $1,500,000, all derived from the sale of corn grown by its patrons within the United States. D pays $300,000 for its patrons' corn at the time the grain was delivered in the form of per-unit retain allocations and its W-2 wages (as defined in § 1.199A-11) for 2020 total $300,000. D has no other costs. Patron A is a patron of D. Patron A is a cash basis taxpayer and files Federal income tax returns on a calendar year basis. All corn grown by Patron A in 2020 is sold through D and Patron A is eligible to share in patronage dividends paid by D for that year.

(ii) All of D's gross receipts from the sale of its patrons' corn qualify as DPGR (as defined paragraph (8)(b)(3)(ii) of this section). D's QPAI and taxable income is $1,200,000. D's section 199A(g) deduction for its taxable year 2020 is $108,000 (.09 × $1,200,000). Because this amount is less than 50% of D's W-2 wages, the entire amount is allowed as a section 199A(g) deduction. D decides not to pass any of its section 199A(g) deduction to its patrons. The section 199A(g) deduction of $108,000 is applied to, and reduces, D's taxable income.

(7) ***Example 7. Nonexempt Specified Cooperative passing through the section 199A(g) deduction to patrons paid a patronage dividend.***

(i) The facts are the same as in Example 6 except that D decides to pass its entire section 199A(g) deduction through to its patrons. D declares a patronage dividend for its 2020 taxable year of $900,000, which it pays on March 15, 2021.Pursuant to paragraph (d)(3) of this section, D notifies patrons in written notices that accompany the patronage dividend notification that D is allocating to them the section 199A(g) deduction D is entitled to claim in the calendar year 2020. On March 15, 2021, Patron A receives a $9,000 patronage dividend that is a qualified payment under paragraph (d)(2)(ii) of this section from D. In the notice that accompanies the patronage dividend, Patron A is designated a $1,080 section 199A(g) deduction. Under paragraph (a) of this section, Patron A may claim a $1,080 section 199A(g) deduction for the taxable year ending December 31, 2021, subject to the limitations set forth under paragraph (d)(4) of this section.

(ii) Under paragraph (d)(7) of this section, D is required to reduce its section 1382 deduction of $1,200,000 by the $108,000 section 199A(g) deduction passed through to patrons (whether D pays patronage dividends on book or Federal income tax net earnings). As a consequence, D is entitled to a section 1382 deduction for the taxable year ending December 31, 2020, in the amount of $1,092,000 ($1,200,000−$108,000) and to a section 199A(g) deduction in the amount of $108,000 ($1,200,000 × .09).

(8) ***Example 8. Nonexempt Specified Cooperative passing through the section 199A(g) deduction to patrons paid a patronage dividend and advances on expected patronage net earnings.***

(i) The facts are the same as in Example 6 except that D paid out $500,000 to its patrons as advances on expected patronage net earnings. In 2020, D pays its patrons a $400,000 ($900,000−$500,000 already paid) patronage dividend in cash or a combination of cash and qualified written notices of allocation. Under paragraph (d)(7) of this section and section 1382, D is allowed a deduction of $1,092,000 ($1,200,000−$108,000 section 199A(g) deduction), whether patronage net earnings are distributed on book or Federal income tax net earnings.

(ii) The patrons will have received a gross amount of $1,200,000 in qualified payments under paragraph (d)(2)(ii) of this section from Cooperative D ($300,000 paid as per-unit retain allocations, $500,000 paid during the taxable year as advances, and the additional $400,000

paid as patronage dividends). If D passes through its entire section 199A(g) deduction to its patrons by providing the notice required by paragraph (d)(3) of this section, then the patrons will be allowed a $108,000 section 199A(g) deduction, resulting in a net $1,092,000 taxable distribution from D. Pursuant to paragraph (d)(8) of this section, any of the $1,200,000 received by patrons that are Specified Cooperatives from D is not taken into account for purposes of calculating the patrons' section 199A(g) deduction. Patrons that are not Specified Cooperatives must include those payments in the section 199A(b)(7) reduction when calculating a section 199A(a) deduction as applicable.

(9) ***Example 9. Intangible property transaction as part of disposition of agricultural or horticultural products.*** F, a Specified Cooperative, markets patrons' oranges by processing the oranges into orange juice, and then bottling and selling the orange juice to customers. F markets the orange juice under its own brand name, but F also licenses from G, an unrelated third party, the rights to use G's brand name on the bottled orange juice. F's gross receipts from the sale of both brands of orange juice qualify as DPGR, assuming all other requirements of this section are met.

(10) ***Example 10. Intangible property transaction that is not a disposition of an agricultural or horticultural product.*** H, a Specified Cooperative, licenses H's brand name to J, an unrelated third party. J purchases oranges, produces orange juice, and then bottles and sells the orange juice to customers. Gross receipts that H derives from the license of the brand name to J are not DPGR from the disposition of an agricultural or horticultural product.

(11) ***Example 11. Allocation rules when Specified Cooperative retains the section 199A(g) deduction attributable to non-eligible taxpayers.*** K, a Specified Cooperative, for the taxable year has $200 of taxable income and QPAI ($100 is attributable to business done for patrons that are C corporation patrons and $100 is attributable to business done for patrons that are eligible taxpayers). K calculates an $18 section 199A(g) deduction. K passes through $9 to its patrons that are eligible taxpayers, distributes $191 to patrons in distributions that are deductible under section 1382(b) (including patronage dividends that were paid out in the same amounts to C corporation patrons and eligible taxpayer patrons because the value of their business,$100 each, was the same), and adjusts its deduction under section 1382 by $9 (the amount of the section 199A(g) deduction passed through). K's taxable income after the section 199A deduction and distributions is $0.

(f) ***Special rule for Specified Cooperative partners.*** In the case described in section 199A(g)(5)(B), where a Specified Cooperative is a partner in a partnership, the partnership must separately identify and report on the Schedule K-1 of the Form 1065, U.S. Return of Partnership Income (or any successor form) issued to the Specified Cooperative partner the cooperative's share of gross receipts and related deductions, W-2 wages, and COGS, unless otherwise provided by the instructions to the Form. The Specified Cooperative partner determines what gross receipts reported by the partnership qualify as DPGR and includes these gross receipts and related deductions, W-2 wages, and COGS to calculate one section 199A(g) deduction (in the case of a nonexempt Specified Cooperative) or two section 199A(g) deductions (in the case of an exempt Specified Cooperative) using the steps set forth in paragraphs (b) and (c) of this section. For purposes of determining whether gross receipts are DPGR, the MPGE activities of the Specified Cooperative partner may be attributed to the partnership, and the partnership's MPGE activities may be attributed to the Specified Cooperative partner.

(g) ***Recapture of section 199A(g) deduction.*** If the amount of the section 199A(g) deduction that was passed through to eligible taxpayers exceeds the amount allowable as a section 199A(g) deduction as determined on examination or reported on an amended return, then recapture of the excess will occur at the Specified Cooperative level in the taxable year the Specified Cooperative took the excess section 199A(g) deduction.

(h) ***Applicability date.*** Except as provided in paragraph (h)(2) of § 1.199A-7, the provisions of this section apply to taxable years beginning after January 19, 2021. Taxpayers, however, may choose to apply the rules of §§ 1.199A-7 through 1.199A-12 for taxable years beginning on or before that date, provided the taxpayers apply the rules in their entirety and in a consistent manner.

[T.D. 9947, 86 FR 5569, Jan. 19, 2021, as amended by 87 FR 68899, Nov. 17, 2022]

§ 1.199A-9 Domestic production gross receipts.

(a) ***Domestic production gross receipts*** —

(1) ***In general.*** The provisions of this section apply solely for purposes of section 199A(g) of the Internal Revenue Code (Code). The provisions of this section provide guidance to determine what gross receipts (defined in § 1.199A-8(b)(2)(iii)) are domestic production gross receipts (DPGR) (defined in § 1.199A-8(b)(3)(ii)). DPGR does not include gross receipts derived from services or the lease, rental, license, sale, exchange, or other disposition of land unless a de minimis or other exception applies. Partners, including partners in an EAG partnership described in § 1.199A-12(i)(1), may not treat guaranteed payments under section 707(c) as DPGR.

(2) ***Application to marketing cooperatives.*** For purposes of determining DPGR, a Specified Cooperative (defined in § 1.199A-8(a)(2)) will be treated as having manufactured, produced, grown, or extracted (MPGE) (defined in paragraph (f) of this section) in whole or significant part (defined in paragraph (h) of this section) any agricultural or horticultural product (defined in § 1.199A-8(a)(4)) within the United States (defined in paragraph (i) of this section) marketed by the Specified Cooperative which its patrons (defined in § 1.1388-1(e)) have so MPGE.

(b) ***Related persons*** —

(1) ***In general.*** Pursuant to section 199A(g)(3)(D)(ii), DPGR does not include any gross receipts derived from agricultural or horticultural products leased, licensed, or rented by the Specified Cooperative for use by any related person. A person is treated as related to another person if both persons are treated as a single employer under either section 52(a) or (b) (without regard to section 1563(b)), or section 414(m) or (o). Any other person is an unrelated person for purposes of the section 199A(g) deduction.

(2) ***Exceptions.*** Notwithstanding paragraph (b)(1) of this section, gross receipts derived from any agricultural or horticultural product leased or rented by the Specified Cooperative to a related person may qualify as DPGR if the agricultural or horticultural product is held for sublease or rent, or is subleased or rented, by the related person to an unrelated person for the ultimate use of the unrelated person. Similarly, notwithstanding paragraph (b)(1) of this section, gross receipts derived from a license of the right to reproduce an agricultural or horticultural product to a related person for reproduction and sale, exchange, lease, or rental to an unrelated person for the ultimate use of the unrelated person are treated as gross receipts from a disposition of an agricultural or horticultural product and may qualify as DPGR.

(c) *Allocating gross receipts* —

(1) ***In general.*** A Specified Cooperative must determine the portion of its gross receipts for the taxable year that is DPGR and the portion of its gross receipts that is non-DPGR using a reasonable method based on all the facts and circumstances. Applicable Federal income tax principles apply to determine whether a transaction is, in substance, a lease, rental, license, sale, exchange, or other disposition the gross receipts of which may constitute DPGR, whether it is a service the gross receipts of which may constitute non-DPGR, or some combination thereof. For example, if a Specified Cooperative sells an agricultural or horticultural product and, in connection with that sale, also provides services, the Specified Cooperative must allocate its gross receipts from the transaction using a reasonable method based on all the facts and circumstances that accurately identifies the gross receipts that constitute DPGR and non-DPGR in accordance with the requirements of § 1.199A-8(b) and/or (c). The chosen reasonable method must be consistently applied from one taxable year to another and must clearly reflect the portion of gross receipts for the taxable year that is DPGR and the portion of gross receipts that is non-DPGR. The books and records maintained for gross receipts must be consistent with any allocations under this paragraph (c)(1).

(2) ***Reasonable method of allocation.*** If a Specified Cooperative has the information readily available and can, without undue burden or expense, specifically identify whether the gross receipts are derived from an item (and thus, are DPGR), then the Specified Cooperative must use that specific identification to determine DPGR. If the Specified Cooperative does not have information readily available to specifically identify whether gross receipts are derived from an item or cannot, without undue burden or expense, specifically identify whether gross receipts are derived from an item, then the Specified Cooperative is not required to use a method that specifically identifies whether the gross receipts are derived from an item but can use a reasonable allocation method. Factors taken into consideration in determining whether the Specified Cooperative's method of allocating gross receipts between DPGR and non-DPGR is reasonable include whether the Specified Cooperative uses the most accurate information available; the relationship between the gross receipts and the method used; the accuracy of the method chosen as compared with other possible methods; whether the method is used by the Specified Cooperative for internal management or other business purposes; whether the method is used for other Federal or state income tax purposes; the time, burden, and cost of using alternative methods; and whether the Specified Cooperative applies the method consistently from year to year.

(3) *De minimis rules* —

(i) ***DPGR.*** A Specified Cooperative's applicable gross receipts as provided in § 1.199A-8(b) and/or (c) may be treated as DPGR if less than 10 percent of the Specified Cooperative's total gross receipts are non-DPGR (after application of the exceptions provided in § 1.199A-9(j)(3)). If the amount of the Specified Cooperative's gross receipts that are non-DPGR equals or exceeds 10 percent of the Specified Cooperative's total gross receipts, then, except as provided in paragraph (c)(3)(ii) of this section, the Specified Cooperative is required to allocate all gross receipts between DPGR and non-DPGR in accordance with paragraph (c)(1) of this section. If a Specified Cooperative is a member of an expanded affiliated group (EAG) (defined in § 1.199A-12), but is not a member of a consolidated group, then the determination of whether less than 10 percent of the Specified Cooperative's total gross receipts are non-DPGR is made at the Specified Cooperative level. If a Specified Cooperative is a member of a consolidated group, then the determination of whether less than 10 percent of the Specified Cooperative's total gross receipts are non-DPGR is made at the consolidated group level. *See* § 1.199A-12(d).

(ii) ***Non-DPGR.*** A Specified Cooperative's applicable gross receipts as provided in § 1.199A-8(b) and/or (c) may be treated as non-DPGR if less than 10 percent of the Specified Cooperative's total gross receipts are DPGR. If a Specified Cooperative is a member of an EAG, but is not a member of a consolidated group, then the determination of whether less than 10 percent of the Specified Cooperative's total gross receipts are DPGR is made at the Specified Cooperative level. If a Specified Cooperative is a member of a consolidated group, then the determination of whether less than 10 percent of the Specified Cooperative's total gross receipts are DPGR is made at the consolidated group level.

(d) ***Use of historical data for multiple-year transactions.*** If a Specified Cooperative recognizes and reports gross receipts from upfront payments or other similar payments on a Federal income tax return for a taxable year, then the Specified Cooperative's use of historical data in making an allocation of gross receipts from the transaction between DPGR and non-DPGR may constitute a reasonable method. If a Specified Cooperative makes allocations using historical data, and subsequently updates the data, then the Specified Cooperative must use the more recent or updated data, starting in the taxable year in which the update is made.

(e) ***Determining DPGR item-by-item*** —

(1) ***In general.*** For purposes of the section 199A(g) deduction, a Specified Cooperative determines, using a reasonable method based on all the facts and circumstances, whether gross receipts qualify as DPGR on an item-by-item basis (and not, for example, on a division-by-division, product line-by-product line, or transaction-by-transaction basis). The chosen reasonable method must be consistently applied from one taxable year to another and must clearly reflect the portion of gross receipts that is DPGR. The books and records maintained for gross receipts must be consistent with any allocations under this paragraph (e)(1).

(i) The term *item* means the agricultural or horticultural product offered by the Specified Cooperative in the normal course of its trade or business for lease, rental, license, sale, exchange, or other disposition (for purposes of this paragraph (e), collectively referred to as disposition) to customers, if the gross receipts from the disposition of such product qualify as DPGR; or

(ii) If paragraph (e)(1)(i) of this section does not apply to the product, then any component of the product described in paragraph (e)(1)(i) of this section is treated as the item, provided that the gross receipts from the disposition of the product described in paragraph (e)(1)(i) of this section that are attributable to such component qualify as DPGR. Each component that meets the requirements under this paragraph (e)(1)(ii) must be treated as a separate item and a component that meets the requirements under this paragraph (e)(1)(ii) may not be combined with a component that does not meet these requirements.

(2) ***Special rules.***

(i) For purposes of paragraph (e)(1)(i) of this section, in no event may a single item consist of two or more products unless those products are offered for disposition, in the normal course of the Specified Cooperative's trade or business, as a single item (regardless of how the products are packaged).

(ii) In the case of agricultural or horticultural products customarily sold by weight or by volume, the item is determined using the most common custom of the industry (for example, barrels of oil).

(3) ***Exception.*** If the Specified Cooperative MPGE agricultural or horticultural products within the United States that it disposes of, and the Specified Cooperative leases, rents, licenses, purchases, or otherwise acquires property that contains or may contain the agricultural or horticultural products (or a portion thereof), and the Specified Cooperative cannot reasonably determine, without undue burden and expense, whether the acquired property contains any of the original agricultural or horticultural products MPGE by the Specified Cooperative, then the Specified Cooperative is not required to determine whether any portion of the acquired property qualifies as an item for purposes of paragraph (e)(1) of this section. Therefore, the gross receipts derived from the disposition of the acquired property may be treated as non-DPGR. Similarly, the preceding sentences apply if the Specified Cooperative can reasonably determine that the acquired property contains agricultural or horticultural products (or a portion thereof) MPGE by the Specified Cooperative, but cannot reasonably determine, without undue burden or expense, how much, or what type, grade, etc., of the agricultural or horticultural MPGE by the Specified Cooperative the acquired property contains.

(f) ***Definition of manufactured, produced, grown, or extracted (MPGE)*** —

(1) ***In general.*** Except as provided in paragraphs (f)(2) and (3) of this section, the term *MPGE* includes manufacturing, producing, growing, extracting, installing, developing, improving, and creating agricultural or horticultural products; making agricultural or horticultural products out of material by processing, manipulating, refining, or changing the form of an article, or by combining or assembling two or more articles; cultivating soil, raising livestock, and farming aquatic products. The term MPGE also includes storage, handling, or other processing activities (other than transportation activities) within the United States related to the sale, exchange, or other disposition of agricultural or horticultural products only if the products are consumed in connection with or incorporated into the MPGE of agricultural or horticultural products, whether or not by the Specified Cooperative. The Specified Cooperative (or the patron if § 1.199A-9(a)(2) applies) must have the benefits and burdens of ownership of the agricultural or horticultural products under Federal income tax principles during the period the MPGE activity occurs for the gross receipts derived from the MPGE of the agricultural or horticultural products to qualify as DPGR.

(2) ***Packaging, repackaging, or labeling.*** If the Specified Cooperative packages, repackages, or labels agricultural or horticultural products and engages in no other MPGE activity with respect to those agricultural or horticultural products, the packaging, repackaging, or labeling does not qualify as MPGE with respect to those agricultural or horticultural products.

(3) ***Installing.*** If a Specified Cooperative installs agricultural or horticultural products and engages in no other MPGE activity with respect to the agricultural or horticultural products, the Specified Cooperative's installing activity does not qualify as an MPGE activity. Notwithstanding paragraph (j)(3)(i)(A) of this section, if the Specified Cooperative installs agricultural or horticultural products MPGE by the Specified Cooperative and the Specified Cooperative has the benefits and burdens of ownership of the agricultural or horticultural products under Federal income tax principles during the period the installing activity occurs, then the portion of the installing activity that relates to the agricultural or horticultural products is an MPGE activity.

(4) ***Consistency with section 263A.*** A Specified Cooperative that has MPGE agricultural or horticultural products for the taxable year must treat itself as a producer under section 263A with respect to the agricultural or horticultural products unless the Specified Cooperative is not subject to section 263A. A Specified Cooperative that currently is not properly accounting for its production activities under section 263A, and wishes to change its method of accounting to comply with the producer requirements of section 263A, must follow the applicable administrative procedures issued under §

1.446-1(e)(3)(ii) for obtaining the Commissioner's consent to a change in accounting method (for further guidance, for example, *see* Rev. Proc. 2015-13, 2015-5 IRB 419, or any applicable subsequent guidance (*see* § 601.601(d)(2) of this chapter)).

(5) ***Examples.*** The following examples illustrate the application of paragraphs (f)(1), (2), and (3) of this section.

(i) ***Example 1. MPGE activities conducted within United States.*** A, B, and C are unrelated persons. A is a Specified Cooperative, B is an individual patron of A, and C is a C corporation. B grows agricultural products outside of the United States and A markets those agricultural products for B. A stores the agricultural products in agricultural storage bins in the United States and has the benefits and burdens of ownership under Federal income tax principles of the agricultural products while they are being stored. A sells the agricultural products to C, who processes them into refined agricultural products in the United States. The gross receipts from A's activities are DPGR from the MPGE of agricultural products.

(ii) ***Example 2. MPGE activities conducted within and outside United States.*** The facts are the same as in Example 1 except that B grows the agricultural products outside the United States and C processes them into refined agricultural products outside the United States. Pursuant to paragraph (f)(1) of this section, the gross receipts derived by A from its sale of the agricultural products to C are DPGR from the MPGE of agricultural products within the United States.

(g) ***By the taxpayer.*** With respect to the exception of the rules applicable to an EAG and EAG partnerships under § 1.199A-12, only one Specified Cooperative may claim the section 199A(g) deduction with respect to any qualifying activity under paragraph (f) of this section performed in connection with the same agricultural or horticultural product. If an unrelated party performs a qualifying activity under paragraph (f) of this section pursuant to a contract with a Specified Cooperative (or its patron as relevant under paragraph (a)(2) of this section), then only if the Specified Cooperative (or its patron) has the benefits and burdens of ownership of the agricultural or horticultural product under Federal income tax principles during the period in which the qualifying activity occurs is the Specified Cooperative (or its patron) treated as engaging in the qualifying activity.

(h) ***In whole or significant part defined*** —

(1) ***In general.*** Agricultural or horticultural products must be MPGE in whole or significant part by the Specified Cooperative (or its patrons in the case described in paragraph (a)(2) of this section) and in whole or significant part within the United States to qualify under section 199A(g)(3)(D)(i). If a Specified Cooperative enters into a contract with an unrelated person for the unrelated person to MPGE agricultural or horticultural products for the Specified Cooperative and the Specified Cooperative has the benefits and burdens of ownership of the agricultural or horticultural products under applicable Federal income tax principles during the period the MPGE activity occurs, then, pursuant to paragraph (g) of this section, the Specified Cooperative is considered to MPGE the agricultural or horticultural products under this section. The unrelated person must perform the MPGE activity on behalf of the Specified Cooperative in whole or significant part within the United States in order for the Specified Cooperative to satisfy the requirements of this paragraph (h)(1).

(2) ***Substantial in nature.*** Agricultural or horticultural products will be treated as MPGE in whole or in significant part by the Specified Cooperative (or its patrons in the case described in paragraph (a)(2) of this section) within the United States for purposes of paragraph (h)(1) of this section. However, MPGE of the agricultural or horticultural products by the Specified Cooperative within the United States must be substantial in nature taking into account all the facts and circumstances, including

the relative value added by, and relative cost of, the Specified Cooperative's MPGE within the United States, the nature of the agricultural or horticultural products, and the nature of the MPGE activity that the Specified Cooperative performs within the United States. The MPGE of a key component of an agricultural or horticultural product does not, in itself, meet the substantial-in-nature requirement with respect to an agricultural or horticultural product under this paragraph (h)(2). In the case of an agricultural or horticultural product, research and experimental activities under section 174 and the creation of intangible assets are not taken into account in determining whether the MPGE of the agricultural or horticultural product is substantial in nature.

(3) *Safe harbor* —

(i) ***In general.*** A Specified Cooperative (or its patrons in the case described in paragraph (a)(2) of this section) will be treated as having MPGE an agricultural or horticultural product in whole or in significant part within the United States for purposes of paragraph (h)(1) of this section if the direct labor and overhead of such Specified Cooperative to MPGE the agricultural or horticultural product within the United States account for 20 percent or more of the Specified Cooperative's COGS of the agricultural or horticultural product, or in a transaction without COGS (for example, a lease, rental, or license), account for 20 percent or more of the Specified Cooperative's unadjusted depreciable basis (as defined in paragraph (h)(3)(ii) of this section) in property included in the definition of agricultural or horticultural products. For Specified Cooperatives subject to section 263A, overhead is all costs required to be capitalized under section 263A except direct materials and direct labor. For Specified Cooperatives not subject to section 263A, overhead may be computed using a reasonable method based on all the facts and circumstances, but may not include any cost, or amount of any cost, that would not be required to be capitalized under section 263A if the Specified Cooperative were subject to section 263A. Research and experimental expenditures under section 174 and the costs of creating intangible assets are not taken into account in determining direct labor or overhead for any agricultural or horticultural product. In the case of agricultural or horticultural products, research and experimental expenditures under section 174 and any other costs incurred in the creation of intangible assets may be excluded from COGS or unadjusted depreciable basis for purposes of determining whether the Specified Cooperative meets the safe harbor under this paragraph (h)(3). For Specified Cooperatives not subject to section 263A, the chosen reasonable method to compute overhead must be consistently applied from one taxable year to another and must clearly reflect the Specified Cooperative's portion of overhead not subject to section 263A. The method must also be reasonable based on all the facts and circumstances. The books and records maintained for overhead must be consistent with any allocations under this paragraph (h)(3)(i).

(ii) ***Unadjusted depreciable basis.*** The term unadjusted depreciable basis means the basis of property for purposes of section 1011 without regard to any adjustments described in section 1016(a)(2) and (3). This basis does not reflect the reduction in basis for—

(A) Any portion of the basis the Specified Cooperative properly elects to treat as an expense under sections 179 or 179C; or

(B) Any adjustments to basis provided by other provisions of the Code and the regulations under the Code (for example, a reduction in basis by the amount of the disabled access credit pursuant to section 44(d)(7)).

(4) *Special rules* —

(i) ***Contract with an unrelated person.*** If a Specified Cooperative enters into a contract with an unrelated person for the unrelated person to MPGE an agricultural or horticultural product within the United States for the Specified Cooperative, and the Specified Cooperative is considered to MPGE the agricultural or horticultural product pursuant to paragraph (f)(1) of this section, then, for purposes of the substantial-in-nature requirement under paragraph (h)(2) of this section and the safe harbor under paragraph (h)(3)(i) of this section, the Specified Cooperative's MPGE activities or direct labor and overhead must include both the Specified Cooperative's MPGE activities or direct labor and overhead to MPGE the agricultural or horticultural product within the United States as well as the MPGE activities or direct labor and overhead of the unrelated person to MPGE the agricultural or horticultural product within the United States under the contract.

(ii) ***Aggregation.*** In determining whether the substantial-in-nature requirement under paragraph (h)(2) of this section or the safe harbor under paragraph (h)(3)(i) of this section is met at the time the Specified Cooperative disposes of an agricultural or horticultural product—

(A) An EAG member must take into account all the previous MPGE activities or direct labor and overhead of the other members of the EAG;

(B) An EAG partnership as defined in § 1.199A-12(i)(1) must take into account all of the previous MPGE activities or direct labor and overhead of all members of the EAG in which the partners of the EAG partnership are members (as well as the previous MPGE activities of any other EAG partnerships owned by members of the same EAG); and

(C) A member of an EAG in which the partners of an EAG partnership are members must take into account all of the previous MPGE activities or direct labor and overhead of the EAG partnership (as well as those of any other members of the EAG and any previous MPGE activities of any other EAG partnerships owned by members of the same EAG).

(i) ***United States defined.*** For purposes of section 199A(g), the term *United States* includes the 50 states, the District of Columbia, the territorial waters of the United States, and the seabed and subsoil of those submarine areas that are adjacent to the territorial waters of the United States and over which the United States has exclusive rights, in accordance with international law, with respect to the exploration and exploitation of natural resources. Consistent with its definition in section 7701(a)(9), the term *United States* does not include possessions and territories of the United States or the airspace or space over the United States and these areas.

(j) ***Derived from the lease, rental, license, sale, exchange, or other disposition*** —

(1) ***In general*** —

(i) ***Definition.*** The term *derived from the lease, rental, license, sale, exchange, or other disposition* is defined as, and limited to, the gross receipts directly derived from the lease, rental, license, sale, exchange, or other disposition of agricultural or horticultural products even if the Specified Cooperative has already recognized receipts from a previous lease, rental, license, sale, exchange, or other disposition of the same agricultural or horticultural products. Applicable Federal income tax principles apply to determine whether a transaction is, in substance, a lease, rental, license, sale, exchange, or other disposition, whether it is a service, or whether it is some combination thereof.

(ii) ***Lease income.*** The financing and interest components of a lease of agricultural or horticultural products are considered to be derived from the lease of such agricultural or horticultural products. However, any portion of the lease income that is attributable to services or non-qualified property as defined in paragraph (j)(3) of this section is not derived from the lease of agricultural or horticultural products.

(iii) ***Income substitutes.*** The proceeds from business interruption insurance, governmental subsidies, and governmental payments not to produce are treated as gross receipts derived from the lease, rental, license, sale, exchange, or other disposition to the extent they are substitutes for gross receipts that would qualify as DPGR.

(iv) ***Exchange of property*** —

(A) ***Taxable exchanges.*** The value of property received by the Specified Cooperative in a taxable exchange of agricultural or horticultural products MPGE in whole or in significant part by the Specified Cooperative within the United States is DPGR for the Specified Cooperative (assuming all the other requirements of this section are met). However, unless the Specified Cooperative meets all of the requirements under this section with respect to any additional MPGE by the Specified Cooperative of the agricultural or horticultural products received in the taxable exchange, any gross receipts derived from the sale by the Specified Cooperative of the property received in the taxable exchange are non-DPGR, because the Specified Cooperative did not MPGE such property, even if the property was an agricultural or horticultural product in the hands of the other party to the transaction.

(B) ***Safe harbor.*** For purposes of paragraph (j)(1)(iv)(A) of this section, the gross receipts derived by the Specified Cooperative from the sale of eligible property (as defined in paragraph (j)(1)(iv)(C) of this section) received in a taxable exchange, net of any adjustments between the parties involved in the taxable exchange to account for differences in the eligible property exchanged (for example, location differentials and product differentials), may be treated as the value of the eligible property received by the Specified Cooperative in the taxable exchange. For purposes of the preceding sentence, the taxable exchange is deemed to occur on the date of the sale of the eligible property received in the taxable exchange by the Specified Cooperative, to the extent the sale occurs no later than the last day of the month following the month in which the exchanged eligible property is received by the Specified Cooperative. In addition, if the Specified Cooperative engages in any further MPGE activity with respect to the eligible property received in the taxable exchange, then, unless the Specified Cooperative meets the in-whole-or-in-significant-part requirement under paragraph (h)(1) of this section with respect to the property sold, for purposes of this paragraph (j)(1)(iv)(B), the Specified Cooperative must also value the property sold without taking into account the gross receipts attributable to the further MPGE activity.

(C) ***Eligible property.*** For purposes of paragraph (j)(1)(iv)(B) of this section, eligible property is—

(*1*) Oil, natural gas, or petrochemicals, or products derived from oil, natural gas, or petrochemicals; or

(*2*) Any other property or product designated by publication in the Internal Revenue Bulletin (*see* § 601.601(d)(2)(ii)(b) of this chapter).

(3) For this purpose, the term *natural gas* includes only natural gas extracted from a natural deposit and does not include, for example, methane gas extracted from a landfill. In the case of natural gas, production activities include all activities involved in extracting natural gas from the ground and processing the gas into pipeline quality gas.

(2) ***Hedging transactions*** —

(i) ***In general.*** For purposes of this section, if a transaction is a hedging transaction within the meaning of section 1221(b)(2)(A) and § 1.1221-2(b), is properly identified as a hedging transaction in accordance with § 1.1221-2(f), and the risk being hedged relates to property described in section 1221(a)(1) that gives rise to DPGR or to property described in section 1221(a)(8) that is consumed in an activity that gives rise to DPGR, then—

(A) In the case of a hedge of purchases of property described in section 1221(a)(1), income, deduction, gain, or loss on the hedging transaction must be taken into account in determining COGS;

(B) In the case of a hedge of sales of property described in section 1221(a)(1), income, deduction, gain, or loss on the hedging transaction must be taken into account in determining DPGR; and

(C) In the case of a hedge of purchases of property described in section 1221(a)(8), income, deduction, gain, or loss on the hedging transaction must be taken into account in determining DPGR.

(ii) ***Allocation.*** The income, deduction, gain and loss from hedging transactions described in paragraph (j)(2) of this section must be allocated between the patronage and nonpatronage (defined in § 1.1388-1(f)) sourced income and related deductions of the Specified Cooperatives consistent with the cooperative's method for determining patronage and nonpatronage income and deductions.

(iii) ***Effect of identification and nonidentification.*** The principles of § 1.1221-2(g) apply to a Specified Cooperative that identifies or fails to identify a transaction as a hedging transaction, except that the consequence of identifying as a hedging transaction a transaction that is not in fact a hedging transaction described in paragraph (j)(2) of this section, or of failing to identify a transaction that the Specified Cooperative has no reasonable grounds for treating as other than a hedging transaction described in paragraph (j)(2) of this section, is that deduction or loss (but not income or gain) from the transaction is taken into account under paragraph (j)(2) of this section.

(iv) ***Other rules.*** See § 1.1221-2(e) for rules applicable to hedging by members of a consolidated group and § 1.446-4 for rules regarding the timing of income, deductions, gains or losses with respect to hedging transactions.

(3) ***Allocation of gross receipts to embedded services and non-qualified property*** —

(i) ***Embedded services and non-qualified property*** —

(A) ***In general.*** Except as otherwise provided in paragraph (j)(3)(i)(B) of this section, gross receipts derived from the performance of services do not qualify as DPGR. In the case of an embedded service, that is, a service the price of which, in the normal course of the business, is not separately stated from the amount charged for the lease, rental, license,

sale, exchange, or other disposition of agricultural or horticultural products, DPGR includes only the gross receipts derived from the lease, rental, license, sale, exchange, or other disposition of agricultural or horticultural products (assuming all the other requirements of this section are met) and not any receipts attributable to the embedded service. In addition, DPGR does not include gross receipts derived from the lease, rental, license, sale, exchange, or other disposition of property that does not meet all of the requirements under this section (non-qualified property). The allocation of the gross receipts attributable to the embedded services or non-qualified property will be deemed to be reasonable if the allocation reflects the fair market value of the embedded services or non-qualified property.

(B) ***Exceptions.*** There are five exceptions to the rules under paragraph (j)(3)(i)(A) of this section regarding embedded services and non-qualified property. A Specified Cooperative may include in DPGR, if all the other requirements of this section are met with respect to the underlying item of agricultural or horticultural products to which the embedded services or non-qualified property relate, the gross receipts derived from—

(*1*) A qualified warranty, that is, a warranty that is provided in connection with the lease, rental, license, sale, exchange, or other disposition of agricultural or horticultural products if, in the normal course of the Specified Cooperative's business—

(*i*) The price for the warranty is not separately stated from the amount charged for the lease, rental, license, sale, exchange, or other disposition of the agricultural or horticultural products; and

(*ii*) The warranty is neither separately offered by the Specified Cooperative nor separately bargained for with customers (that is, a customer cannot purchase the agricultural or horticultural products without the warranty).

2) A qualified delivery, that is, a delivery or distribution service that is provided in connection with the lease, rental, license, sale, exchange, or other disposition of agricultural or horticultural products if, in the normal course of the Specified Cooperative's business—

(*i*) The price for the delivery or distribution service is not separately stated from the amount charged for the lease, rental, license, sale, exchange, or other disposition of the agricultural or horticultural products; and

(*ii*) The delivery or distribution service is neither separately offered by the Specified Cooperative nor separately bargained for with customers (that is, a customer cannot purchase the agricultural or horticultural products without the delivery or distribution service).

(*3*) A qualified operating manual, that is, a manual of instructions that is provided in connection with the lease, rental, license, sale, exchange, or other disposition of the agricultural or horticultural products if, in the normal course of the Specified Cooperative's business—

(*i*) The price for the manual is not separately stated from the amount charged for the lease, rental, license, sale, exchange, or other disposition of the agricultural or horticultural products;

(*ii*) The manual is neither separately offered by the Specified Cooperative nor separately bargained for with customers (that is, a customer cannot purchase the agricultural or horticultural products without the manual); and

(*iii*) The manual is not provided in connection with a training course for customers.

(*4*) A qualified installation, that is, an installation service for agricultural or horticultural products that is provided in connection with the lease, rental, license, sale, exchange, or other disposition of the agricultural or horticultural products if, in the normal course of the Specified Cooperative's business—

(*i*) The price for the installation service is not separately stated from the amount charged for the lease, rental, license, sale, exchange, or other disposition of the agricultural or horticultural products; and

(*ii*) The installation is neither separately offered by the Specified Cooperative nor separately bargained for with customers (that is, a customer cannot purchase the agricultural or horticultural products without the installation service).

(*5*) A *de minimis* amount of gross receipts from embedded services and non-qualified property for each item of agricultural or horticultural products may qualify. For purposes of this exception, a *de minimis* amount of gross receipts from embedded services and non-qualified property is less than 5 percent of the total gross receipts derived from the lease, rental, license, sale, exchange, or other disposition of each item of agricultural or horticultural products. In the case of gross receipts derived from the lease, rental, license, sale, exchange, or other disposition of agricultural or horticultural products that are received over a period of time (for example, a multi-year lease or installment sale), this *de minimis* exception is applied by taking into account the total gross receipts for the entire period derived (and to be derived) from the lease, rental, license, sale, exchange, or other disposition of the item of agricultural or horticultural products. For purposes of the preceding sentence, if a Specified Cooperative treats gross receipts as DPGR under this *de minimis* exception, then the Specified Cooperative must treat the gross receipts recognized in each taxable year consistently as DPGR. The gross receipts that the Specified Cooperative treats as DPGR under paragraphs (j)(3)(i)(B)(1) through (4) of this section are treated as DPGR for purposes of applying this *de minimis* exception. This *de minimis* exception does not apply if the price of a service or non-qualified property is separately stated by the Specified Cooperative, or if the service or non-qualified property is separately offered or separately bargained for with the customer (that is, the customer can purchase the agricultural or horticultural products without the service or non-qualified property).

(ii) ***Non-DPGR.*** Applicable gross receipts as provided in §§ 1.199A-8(b) and/or (c) derived from the lease, rental, license, sale, exchange or other disposition of an item of agricultural or horticultural products may be treated as non-DPGR if less than 5 percent of the Specified Cooperative's total gross receipts derived from the lease, rental, license, sale, exchange or other disposition of that item are DPGR (taking into account embedded services and non-qualified property included in such disposition, but not part of the item). In the case of gross receipts derived from the lease, rental, license, sale, exchange, or other disposition of agricultural or horticultural products that are received over a period of time (for example, a multi-year lease or installment sale), this paragraph (j)(5)(ii) is applied by taking into account the total gross

receipts for the entire period derived (and to be derived) from the lease, rental, license, sale, exchange, or other disposition of the item of agricultural or horticultural products. For purposes of the preceding sentence, if the Specified Cooperative treats gross receipts as non-DPGR under this *de minimis* exception, then the Specified Cooperative must treat the gross receipts recognized in each taxable year consistently as non-DPGR.

(k) ***Applicability date.*** The provisions of this section apply to taxable years beginning after January 19, 2021. Taxpayers, however, may choose to apply the rules of §§ 1.199A-7 through 1.199A-12 for taxable years beginning on or before that date, provided the taxpayers apply the rules in their entirety and in a consistent manner.

[T.D. 9947, 86 FR 5569, Jan. 19, 2021, as amended by 87 FR 68899, Nov. 17, 2022]

§ 1.199A-10 Allocation of cost of goods sold (COGS) and other deductions to domestic production gross receipts (DPGR), and other rules.

(a) ***In general.*** The provisions of this section apply solely for purposes of section 199A(g) of the Internal Revenue Code (Code). The provisions of this section provide additional guidance on determining qualified production activities income (QPAI) as described and defined in § 1.199A-8(b)(4)(ii).

(b) ***COGS allocable to DPGR*** —

(1) ***In general.*** When determining its QPAI, the Specified Cooperative (defined in § 1.199A-8(a)(2)) must subtract from its DPGR (defined in § 1.199A-8(b)(3)(ii)) the COGS allocable to its DPGR. The Specified Cooperative determines its COGS allocable to DPGR in accordance with this paragraph (b)(1) or, if applicable, paragraph (f) of this section. In the case of a sale, exchange, or other disposition of inventory, COGS is equal to beginning inventory of the Specified Cooperative plus purchases and production costs incurred during the taxable year and included in inventory costs by the Specified Cooperative, less ending inventory of the Specified Cooperative. In determining its QPAI, the Specified Cooperative does not include in COGS any payment made, whether during the taxable year, or included in beginning inventory, for which a deduction is allowed under section 1382(b) and/or (c), as applicable. *See* § 1.199A-8(b)(4)(ii)(C). COGS is determined under the methods of accounting that the Specified Cooperative uses to compute taxable income. *See* sections 263A, 471, and 472. If section 263A requires the Specified Cooperative to include additional section 263A costs (as defined in § 1.263A-1(d)(3)) in inventory, additional section 263A costs must be included in determining COGS. COGS also include the Specified Cooperative's inventory valuation adjustments such as write-downs under the lower of cost or market method. In the case of a sale, exchange, or other disposition (including, for example, theft, casualty, or abandonment) by the Specified Cooperative of non-inventory property, COGS for purposes of this section includes the adjusted basis of the property.

(2) ***Allocating COGS*** —

(i) ***In general.*** A Specified Cooperative must use a reasonable method based on all the facts and circumstances to allocate COGS between DPGR and non-DPGR. Whether an allocation method is reasonable is based on all the facts and circumstances, including whether the Specified Cooperative uses the most accurate information available; the relationship between COGS and the method used; the accuracy of the method chosen as compared with other possible methods; whether the method is used by the Specified Cooperative for internal management or other business purposes; whether the method is used for other Federal or state income tax

purposes; the availability of costing information; the time, burden, and cost of using alternative methods; and whether the Specified Cooperative applies the method consistently from year to year. Depending on the facts and circumstances, reasonable methods may include methods based on gross receipts (defined in § 1.199A-8(b)(2)(iii)), number of units sold, number of units produced, or total production costs. Ordinarily, if a Specified Cooperative uses a method to allocate gross receipts between DPGR and non-DPGR, then the use of a different method to allocate COGS that is not demonstrably more accurate than the method used to allocate gross receipts will not be considered reasonable. However, if a Specified Cooperative has information readily available to specifically identify COGS allocable to DPGR and can specifically identify that amount without undue burden or expense, COGS allocable to DPGR is that amount irrespective of whether the Specified Cooperative uses another allocation method to allocate gross receipts between DPGR and non-DPGR. A Specified Cooperative that does not have information readily available to specifically identify COGS allocable to DPGR and that cannot, without undue burden or expense, specifically identify that amount is not required to use a method that specifically identifies COGS allocable to DPGR. The chosen reasonable method must be consistently applied from one taxable year to another and must clearly reflect the portion of COGS between DPGR and non-DPGR. The method must also be reasonable based on all the facts and circumstances. The books and records maintained for COGS must be consistent with any allocations under this paragraph (b)(2).

(ii) ***Gross receipts recognized in an earlier taxable year.*** If the Specified Cooperative (other than a Specified Cooperative that uses the small business simplified overall method of paragraph (f) of this section) recognizes and reports gross receipts on a Federal income tax return for a taxable year, and incurs COGS related to such gross receipts in a subsequent taxable year, then regardless of whether the gross receipts ultimately qualify as DPGR, the Specified Cooperative must allocate the COGS to—

(A) DPGR if the Specified Cooperative identified the related gross receipts as DPGR in the prior taxable year; or

(B) Non-DPGR if the Specified Cooperative identified the related gross receipts as non-DPGR in the prior taxable year or if the Specified Cooperative recognized under the Specified Cooperative's methods of accounting those gross receipts in a taxable year to which section 199A(g) does not apply.

(iii) ***COGS associated with activities undertaken in an earlier taxable year*** —

(A) ***In general.*** A Specified Cooperative must allocate its COGS between DPGR and non-DPGR under the rules provided in paragraphs (b)(2)(i) and (iii) of this section, regardless of whether certain costs included in its COGS can be associated with activities undertaken in an earlier taxable year (including a year prior to the effective date of section 199A(g)). A Specified Cooperative may not segregate its COGS into component costs and allocate those component costs between DPGR and non-DPGR.

(B) ***Example.*** The following example illustrates an application of paragraph (b)(2)(iii)(A) of this section.

(*1*) ***Example 1.*** During the 2020 taxable year, nonexempt Specified Cooperative X grew and sold Horticultural Product A. All of the patronage gross receipts from sales recognized by X in 2020 were from the sale of Horticultural Product A and qualified as DPGR. Employee 1 of X was involved in X's production process until he retired in

2013. In 2020, X paid $30 directly from its general assets for Employee 1's medical expenses pursuant to an unfunded, self-insured plan for retired X employees. For purposes of computing X's 2020 taxable income, X capitalized those medical costs to inventory under section 263A. In 2020, the COGS for a unit of Horticultural Product A was $100 (including the applicable portion of the $30 paid for Employee 1's medical costs that was allocated to COGS under X's allocation method for additional section 263A costs). X has information readily available to specifically identify COGS allocable to DPGR and can identify that amount without undue burden and expense because all of X's gross receipts from sales in 2020 are attributable to the sale of Horticultural Product A and qualify as DPGR. The inventory cost of each unit of Horticultural Product A sold in 2020, including the applicable portion of retiree medical costs, is related to X's gross receipts from the sale of Horticultural Product A in 2020. X may not segregate the 2020 COGS by separately allocating the retiree medical costs, which are components of COGS, to DPGR and non-DPGR. Thus, even though the retiree medical costs can be associated with activities undertaken in prior years, $100 of inventory cost of each unit of Horticultural Product A sold in 2020, including the applicable portion of the retiree medical expense cost component, is allocable to DPGR in 2020.

(3) ***Special allocation rules.*** Section 199A(g)(3)(C) provides the following two special rules—

(i) For purposes of determining the COGS that are allocable to DPGR, any item or service brought into the United States (defined in § 1.199A-9(i)) is treated as acquired by purchase, and its cost is treated as not less than its value immediately after it entered the United States. A similar rule applies in determining the adjusted basis of leased or rented property where the lease or rental gives rise to DPGR.

(ii) In the case of any property described in paragraph (b)(3)(i) of this section that has been exported by the Specified Cooperative for further manufacture, the increase in cost or adjusted basis under paragraph (b)(3)(i) of this section cannot exceed the difference between the value of the property when exported and the value of the property when brought back into the United States after the further manufacture. For the purposes of this paragraph (b)(3), the value of property is its customs value as defined in section 1059A(b)(1).

(4) ***Rules for inventories valued at market or bona fide selling prices.*** If part of COGS is attributable to the Specified Cooperative's inventory valuation adjustments, then COGS allocable to DPGR includes inventory adjustments to agricultural or horticultural products that are MPGE in whole or significant part within the United States. Accordingly, a Specified Cooperative that values its inventory under § 1.471-4 (inventories at cost or market, whichever is lower) or § 1.471-2(c) (subnormal goods at bona fide selling prices) must allocate a proper share of such adjustments (for example, write-downs) to DPGR based on a reasonable method based on all the facts and circumstances. Factors taken into account in determining whether the method is reasonable include whether the Specified Cooperative uses the most accurate information available; the relationship between the adjustment and the allocation base chosen; the accuracy of the method chosen as compared with other possible methods; whether the method is used by the Specified Cooperative for internal management or other business purposes; whether the method is used for other Federal or state income tax purposes; the time, burden, and cost of using alternative methods; and whether the Specified Cooperative applies the method consistently from year to year. If the Specified Cooperative has information readily available to specifically identify the proper amount of inventory valuation adjustments allocable to DPGR, then the Specified Cooperative must allocate that amount to DPGR. The Specified

Cooperative that does not have information readily available to specifically identify the proper amount of its inventory valuation adjustments allocable to DPGR and that cannot, without undue burden or expense, specifically identify the proper amount of its inventory valuation adjustments allocable to DPGR, is not required to use a method that specifically identifies inventory valuation adjustments to DPGR. The chosen reasonable method must be consistently applied from one taxable year to another and must clearly reflect inventory adjustments. The method must also be reasonable based on all the facts and circumstances. The books and records maintained for inventory adjustments must be consistent with any allocations under this paragraph (b)(4).

(5) ***Rules applicable to inventories accounted for under the last-in, first-out inventory method*** —

(i) ***In general.*** This paragraph (b)(5) applies to inventories accounted for using the specific goods last-in, first-out (LIFO) method or the dollar-value LIFO method. Whenever a specific goods grouping or a dollar-value pool contains agricultural or horticultural products that produce DPGR and goods that do not, the Specified Cooperative must allocate COGS attributable to that grouping or pool between DPGR and non-DPGR using a reasonable method based on all the facts and circumstances. Whether a method of allocating COGS between DPGR and non-DPGR is reasonable must be determined in accordance with paragraph (b)(2) of this section. In addition, this paragraph (b)(5) provides methods that a Specified Cooperative may use to allocate COGS for a Specified Cooperative's inventories accounted for using the LIFO method. If the Specified Cooperative uses the LIFO/FIFO ratio method provided in paragraph (b)(5)(ii) of this section or the change in relative base-year cost method provided in paragraph (b)(5)(iii) of this section, then the Specified Cooperative must use that method for all of the Specified Cooperative's inventory accounted for under the LIFO method. The chosen reasonable method must be consistently applied from one taxable year to another and must clearly reflect the inventory method. The method must also be reasonable based on all the facts and circumstances. The books and records maintained for the inventory method must be consistent with any allocations under this paragraph (b)(5).

(ii) ***LIFO/FIFO ratio method.*** The LIFO/FIFO ratio method is applied with respect to the LIFO inventory on a grouping-by-grouping or pool-by-pool basis. Under the LIFO/FIFO ratio method, a Specified Cooperative computes the COGS of a grouping or pool allocable to DPGR by multiplying the COGS of agricultural or horticultural products (defined in § 1.199A-8(a)(4)) in the grouping or pool that produced DPGR computed using the FIFO method by the LIFO/FIFO ratio of the grouping or pool. The LIFO/FIFO ratio of a grouping or pool is equal to the total COGS of the grouping or pool computed using the LIFO method over the total COGS of the grouping or pool computed using the FIFO method.

(iii) ***Change in relative base-year cost method.*** A Specified Cooperative using the dollar-value LIFO method may use the change in relative base-year cost method. The change in relative base-year cost method for a Specified Cooperative using the dollar-value LIFO method is applied to all LIFO inventory on a pool-by-pool basis. The change in relative base-year cost method determines the COGS allocable to DPGR by increasing or decreasing the total production costs (section 471 costs and additional section 263A costs) of agricultural or horticultural products that generate DPGR by a portion of any increment or liquidation of the dollar-value pool. The portion of an increment or liquidation allocable to DPGR is determined by multiplying the LIFO value of the increment or liquidation (expressed as a positive number) by the ratio of the change in total base-year cost (expressed as a positive number) of agricultural or horticultural products that will generate DPGR in ending inventory to the change in total base-year cost

(expressed as a positive number) of all goods in ending inventory. The portion of an increment or liquidation allocable to DPGR may be zero but cannot exceed the amount of the increment or liquidation. Thus, a ratio in excess of 1.0 must be treated as 1.0.

(6) ***Specified Cooperative using a simplified method for additional section 263A costs to ending inventory.*** A Specified Cooperative that uses a simplified method specifically described in the section 263A regulations to allocate additional section 263A costs to ending inventory must follow the rules in paragraph (b)(2) of this section to determine the amount of additional section 263A costs allocable to DPGR. Allocable additional section 263A costs include additional section 263A costs included in the Specified Cooperative's beginning inventory as well as additional section 263A costs incurred during the taxable year by the Specified Cooperative. Ordinarily, if the Specified Cooperative uses a simplified method specifically described in the section 263A regulations to allocate its additional section 263A costs to its ending inventory, the additional section 263A costs must be allocated in the same proportion as section 471 costs are allocated.

(c) ***Other deductions properly allocable to DPGR or gross income attributable to DPGR*** —

(1) ***In general.*** In determining its QPAI, the Specified Cooperative must subtract from its DPGR (in addition to the COGS), the deductions that are properly allocable and apportioned to DPGR. A Specified Cooperative generally must allocate and apportion these deductions using the rules of the section 861 method provided in paragraph (d) of this section. In lieu of the section 861 method, an eligible Specified Cooperative may apportion these deductions using the simplified deduction method provided in paragraph (e) of this section. Paragraph (f) of this section provides a small business simplified overall method that may be used by a qualifying small Specified Cooperative. A Specified Cooperative using the simplified deduction method or the small business simplified overall method must use that method for all deductions. A Specified Cooperative eligible to use the small business simplified overall method may choose at any time for any taxable year to use the small business simplified overall method or the simplified deduction method for a taxable year.

(2) ***Treatment of net operating losses.*** A deduction under section 172 for a net operating loss (NOL) is not allocated or apportioned to DPGR or gross income attributable to DPGR.

(3) ***W-2 wages.*** Although only W-2 wages as described in § 1.199A-11 are taken into account in computing the W-2 wage limitation, all wages paid (or incurred in the case of an accrual method taxpayer) in the taxable year are taken into account in computing QPAI for that taxable year.

(d) ***Section 861 method.*** Under the section 861 method, the Specified Cooperative must allocate and apportion its deductions using the allocation and apportionment rules provided under the section 861 regulations under which section 199A(g) is treated as an operative section described in § 1.861-8(f). Accordingly, the Specified Cooperative applies the rules of the section 861 regulations to allocate and apportion deductions (including, if applicable, its distributive share of deductions from passthrough entities) to gross income attributable to DPGR. If the Specified Cooperative applies the allocation and apportionment rules of the section 861 regulations for section 199A(g) and another operative section, then the Specified Cooperative must use the same method of allocation and the same principles of apportionment for purposes of all operative sections. Research and experimental expenditures must be allocated and apportioned in accordance with § 1.861-17 without taking into account the exclusive apportionment rule of § 1.861-17(b). Deductions for charitable contributions (as allowed under section 170 and section 873(b)(2) or 882(c)(1)(B)) must be ratably apportioned between gross income attributable to DPGR and gross income attributable to non-DPGR based on the relative amounts of gross income.

(e) ***Simplified deduction method*** —

(1) ***In general.*** An eligible Specified Cooperative (defined in paragraph (e)(2) of this section) may use the simplified deduction method to apportion business deductions between DPGR and non-DPGR. The simplified deduction method does not apply to COGS. Under the simplified deduction method, the business deductions (except the NOL deduction) are ratably apportioned between DPGR and non-DPGR based on relative gross receipts. Accordingly, the amount of deductions for the current taxable year apportioned to DPGR is equal to the proportion of the total business deductions for the current taxable year that the amount of DPGR bears to total gross receipts.

(2) ***Eligible Specified Cooperative.*** For purposes of this paragraph (e), an eligible Specified Cooperative is—

(i) A Specified Cooperative that has average annual total gross receipts (as defined in paragraph (g) of this section) of $100,000,000 or less; or

(ii) A Specified Cooperative that has total assets (as defined in paragraph (e)(3) of this section) of $10,000,000 or less.

(3) ***Total assets.*** —

(i) ***In general.*** For purposes of the simplified deduction method, total assets mean the total assets the Specified Cooperative has at the end of the taxable year.

(ii) ***Members of an expanded affiliated group.*** To compute the total assets of an *expanded affiliated group* (EAG) at the end of the taxable year, the total assets at the end of the taxable year of each member of the EAG at the end of the taxable year that ends with or within the taxable year of the computing member (as described in § 1.199A-12(g)) are aggregated.

(4) ***Members of an expanded affiliated group*** —

(i) ***In general.*** Whether the members of an EAG may use the simplified deduction method is determined by reference to all the members of the EAG. If the average annual gross receipts of the EAG are less than or equal to $100,000,000 or the total assets of the EAG are less than or equal to $10,000,000, then each member of the EAG may individually determine whether to use the simplified deduction method, regardless of the cost allocation method used by the other members.

(ii) ***Exception.*** Notwithstanding paragraph (e)(4)(i) of this section, all members of the same consolidated group must use the same cost allocation method.

(f) ***Small business simplified overall method*** —

(1) ***In general.*** A qualifying small Specified Cooperative may use the small business simplified overall method to apportion COGS and deductions between DPGR and non-DPGR. Under the small business simplified overall method, a Specified Cooperative's total costs for the current taxable year (as defined in paragraph (f)(3) of this section) are apportioned between DPGR and non-DPGR based on relative gross receipts. Accordingly, the amount of total costs for the current taxable year apportioned to DPGR is equal to the proportion of total costs for the current taxable year that the amount of DPGR bears to total gross receipts.

(2) ***Qualifying small Specified Cooperative.*** For purposes of this paragraph (f), a qualifying small Specified Cooperative is a Specified Cooperative that has average annual total gross receipts (as defined in paragraph (g) of this section) of $25,000,000 or less.

(3) ***Total costs for the current taxable year.*** For purposes of the small business simplified overall method, total costs for the current taxable year means the total COGS and deductions for the current taxable year. Total costs for the current taxable year are determined under the methods of accounting that the Specified Cooperative uses to compute taxable income.

(4) ***Members of an expanded affiliated group*** —

(i) ***In general.*** Whether the members of an EAG may use the small business simplified overall method is determined by reference to all the members of the EAG. If the average annual gross receipts of the EAG are less than or equal to $25,000,000 then each member of the EAG may individually determine whether to use the small business simplified overall method, regardless of the cost allocation method used by the other members.

(ii) ***Exception.*** Notwithstanding paragraph (f)(4)(i) of this section, all members of the same consolidated group must use the same cost allocation method.

(g) ***Average annual gross receipts*** —

(1) ***In general.*** For purposes of the simplified deduction method and the small business simplified overall method, average annual gross receipts means the average annual gross receipts of the Specified Cooperative for the 3 taxable years (or, if fewer, the taxable years during which the taxpayer was in existence) preceding the current taxable year, even if one or more of such taxable years began before the effective date of section 199A(g). In the case of any taxable year of less than 12 months (a short taxable year), the gross receipts of the Specified Cooperative are annualized by multiplying the gross receipts for the short period by 12 and dividing the result by the number of months in the short period.

(2) ***Members of an expanded affiliated group*** —

(i) ***In general.*** To compute the average annual gross receipts of an EAG, the gross receipts for the entire taxable year of each member that is a member of the EAG at the end of its taxable year that ends with or within the taxable year are aggregated. For purposes of this paragraph (g)(2), a consolidated group is treated as one member of an EAG.

(ii) ***Exception.*** Notwithstanding paragraph (g)(1)(i) of this section, all members of the same consolidated group must use the same cost allocation method.

(h) ***Cost allocation methods for determining oil-related QPAI*** —

(1) ***Section 861 method.*** A Specified Cooperative that uses the section 861 method to determine deductions that are allocated and apportioned to gross income attributable to DPGR must use the section 861 method to determine deductions that are allocated and apportioned to gross income attributable to oil-related DPGR.

(2) ***Simplified deduction method.*** A Specified Cooperative that uses the simplified deduction method to apportion deductions between DPGR and non-DPGR must determine the portion of deductions allocable to oil-related DPGR by multiplying the deductions allocable to DPGR by the ratio of oil-related DPGR to DPGR from all activities.

(3) ***Small business simplified overall method.*** A Specified Cooperative that uses the small business simplified overall method to apportion total costs (COGS and deductions) between DPGR and non-DPGR must determine the portion of total costs allocable to oil-related DPGR by multiplying the total costs allocable to DPGR by the ratio of oil-related DPGR to DPGR from all activities.

(i) ***Applicability date.*** The provisions of this section apply to taxable years beginning after January 19, 2021. Taxpayers, however, may choose to apply the rules of §§ 1.199A-7 through 1.199A-12 for taxable years beginning on or before that date, provided the taxpayers apply the rules in their entirety and in a consistent manner.

[T.D. 9947, 86 FR 5569, Jan. 19, 2021]

§ 1.199A-11 Wage limitation for the section 199A(g) deduction.

(a) ***Rules of application —***

(1) ***In general.*** The provisions of this section apply solely for purposes of section 199A(g) of the Internal Revenue Code (Code). The provisions of this section provide guidance on determining the W-2 wage limitation as defined in § 1.199A-8(b)(5)(ii)(B). Except as provided in paragraph (d)(2) of this section, the Form W-2, Wage and Tax Statement, or any subsequent form or document used in determining the amount of W-2 wages, are those issued for the calendar year ending during the taxable year of the Specified Cooperative (defined in § 1.199A-8(a)(2)) for wages paid to employees (or former employees) of the Specified Cooperative for employment by the Specified Cooperative. Employees are limited to employees defined in section 3121(d)(1) and (2) (that is, officers of a corporate taxpayer and employees of the taxpayer under the common law rules). See paragraph (a)(5) of this section for the requirement that W-2 wages must have been included in a return filed with the Social Security Administration (SSA) within 60 days after the due date (including extensions) of the return. *See also* section 199A(a)(4)(C).

(2) ***Wage limitation for section 199A(g) deduction.*** The amount of the deduction allowable under section 199A(g) to the Specified Cooperative for any taxable year cannot exceed 50 percent of the W-2 wages (as defined in section 199A(g)(1)(B)(ii) and paragraph (b) of this section) for the taxable year that are attributable to domestic production gross receipts (DPGR), defined in § 1.199A-8(b)(3)(ii), of agricultural or horticultural products defined in § 1.199A-8(a)(4).

(3) ***Wages paid by entity other than common law employer.*** In determining W-2 wages, the Specified Cooperative may take into account any W-2 wages paid by another entity and reported by the other entity on Forms W-2 with the other entity as the employer listed in Box c of the Forms W-2, provided that the W-2 wages were paid to common law employees or officers of the Specified Cooperative for employment by the Specified Cooperative. In such cases, the entity paying the W-2 wages and reporting the W-2 wages on Forms W-2 is precluded from taking into account such wages for purposes of determining W-2 wages with respect to that entity. For purposes of this paragraph (a)(4), entities that pay and report W-2 wages on behalf of or with respect to other taxpayers can include, but are not limited to, certified professional employer organizations under section 7705, statutory employers under section 3401(d)(1), and agents under section 3504.

(4) ***Requirement that wages must be reported on return filed with the Social Security Administration —***

(i) ***In general.*** Pursuant to section 199A(g)(1)(B)(ii) and section 199A(b)(4)(C), the term W-2 wages does not include any amount that is not properly included in a return filed with SSA on or before the 60th day after the due date (including extensions) for such return. Under § 31.6051-2 of this chapter, each Form W-2 and the transmittal Form W-3, Transmittal of Wage and Tax Statements, together constitute an information return to be filed with SSA. Similarly, each Form W-2c, Corrected Wage and Tax Statement, and the transmittal Form W-3 or W-3c, Transmittal of Corrected Wage and Tax Statements, together constitute an information return to be filed with

SSA. In determining whether any amount has been properly included in a return filed with SSA on or before the 60th day after the due date (including extensions) for such return, each Form W-2 together with its accompanying Form W-3 is considered a separate information return and each Form W-2c together with its accompanying Form W-3 or Form W-3c is considered a separate information return. Section 6071(c) provides that Forms W-2 and W-3 must be filed on or before January 31 of the year following the calendar year to which such returns relate (but see the special rule in § 31.6071(a)-1T(a)(3)(1) of this chapter for monthly returns filed under § 31.6011(a)-5(a) of this chapter). Corrected Forms W-2 are required to be filed with SSA on or before January 31 of the year following the year in which the correction is made.

(ii) ***Corrected return filed to correct a return that was filed within 60 days of the due date.*** If a corrected information return (Return B) is filed with SSA on or before the 60th day after the due date (including extensions) of Return B to correct an information return (Return A) that was filed with SSA on or before the 60th day after the due date (including extensions) of the information return (Return A) and paragraph (a)(5)(iii) of this section does not apply, then the wage information on Return B must be included in determining W-2 wages. If a corrected information return (Return D) is filed with SSA later than the 60th day after the due date (including extensions) of Return D to correct an information return (Return C) that was filed with SSA on or before the 60th day after the due date (including extensions) of the information return (Return C), then if Return D reports an increase (or increases) in wages included in determining W-2 wages from the wage amounts reported on Return C, such increase (or increases) on Return D is disregarded in determining W-2 wages (and only the wage amounts on Return C may be included in determining W-2 wages). If Return D reports a decrease (or decreases) in wages included in determining W-2 wages from the amounts reported on Return C, then, in determining W-2 wages, the wages reported on Return C must be reduced by the decrease (or decreases) reflected on Return D.

(iii) ***Corrected return filed to correct a return that was filed later than 60 days after the due date.*** If an information return (Return F) is filed to correct an information return (Return E) that was not filed with SSA on or before the 60th day after the due date (including extensions) of Return E, then Return F (and any subsequent information returns filed with respect to Return E) will not be considered filed on or before the 60th day after the due date (including extensions) of Return F (or the subsequent corrected information return). Thus, if a Form W-2c is filed to correct a Form W-2 that was not filed with SSA on or before the 60th day after the due date (including extensions) of the Form W-2 (or to correct a Form W-2c relating to a Form W-2 that had not been filed with SSA on or before the 60th day after the due date (including extensions) of the Form W-2), then this Form W-2c is not to be considered to have been filed with SSA on or before the 60th day after the due date (including extensions) for this Form W-2c, regardless of when the Form W-2c is filed.

(b) ***Definition of W-2 wages —***

(1) ***In general.*** Section 199A(g)(1)(B)(ii) provides that the W-2 wages of the Specified Cooperative must be determined in the same manner as under section 199A(b)(4) (without regard to section 199A(b)(4)(B) and after application of section 199A(b)(5)). Section 199A(b)(4)(A) provides that the term W-2 wages means with respect to any person for any taxable year of such person, the amounts described in paragraphs (3) and (8) of section 6051(a) paid by such person with respect to employment of employees by such person during the calendar year ending during such taxable year.

Thus, the term W-2 wages includes the total amount of wages as defined in section 3401(a); the total amount of elective deferrals (within the meaning of section 402(g)(3)); the compensation deferred under section 457; and the amount of designated Roth contributions (as defined in section 402A).

(2) ***Section 199A(g) deduction.*** Pursuant to section 199A(g)(3)(A), W-2 wages do not include any amount which is not properly allocable to DPGR for purposes of calculating qualified production activities income (QPAI) as defined in § 1.199A-8(b)(4)(ii). The Specified Cooperative may determine the amount of wages that is properly allocable to DPGR using a reasonable method based on all the facts and circumstances. The chosen reasonable method must be consistently applied from one taxable year to another and must clearly reflect the wages allocable to DPGR for purposes of QPAI. The books and records maintained for wages allocable to DPGR for purposes of QPAI must be consistent with any allocations under this paragraph (b)(2).

(c) ***Methods for calculating W-2 wages.*** The Secretary may provide for methods that may be used in calculating W-2 wages, including W-2 wages for short taxable years by publication in the Internal Revenue Bulletin (*see* § 601.601(d)(2)(ii)(b) of this chapter).

(d) ***Wage limitation—acquisitions, dispositions, and short taxable years*** —

(1) ***In general.*** For purposes of computing the deduction under section 199A(g) of the Specified Cooperative, in the case of an acquisition or disposition (as defined in section 199A(b)(5) and paragraph (d)(3) of this section) that causes more than one Specified Cooperative to be an employer of the employees of the acquired or disposed of Specified Cooperative during the calendar year, the W-2 wages of the Specified Cooperative for the calendar year of the acquisition or disposition are allocated between or among each Specified Cooperative based on the period during which the employees of the acquired or disposed of Specified Cooperatives were employed by the Specified Cooperative, regardless of which permissible method is used for reporting predecessor and successor wages on Form W-2, Wage and Tax Statement.

(2) ***Short taxable year that does not include December 31.*** If the Specified Cooperative has a short taxable year that does not contain a calendar year ending during such short taxable year, wages paid to employees for employment by the Specified Cooperative during the short taxable year are treated as W-2 wages for such short taxable year for purposes of paragraph (a) of this section (if the wages would otherwise meet the requirements to be W-2 wages under this section but for the requirement that a calendar year must end during the short taxable year).

(3) ***Acquisition or disposition.*** For purposes of paragraph (d)(1) and (2) of this section, the terms *acquisition* and *disposition* include an incorporation, a liquidation, a reorganization, or a purchase or sale of assets.

(e) ***Application in the case of a Specified Cooperative with a short taxable year.*** In the case of a Specified Cooperative with a short taxable year, subject to the rules of paragraph (a) of this section, the W-2 wages of the Specified Cooperative for the short taxable year can include only those wages paid during the short taxable year to employees of the Specified Cooperative, only those elective deferrals (within the meaning of section 402(g)(3)) made during the short taxable year by employees of the Specified Cooperative, and only compensation actually deferred under section 457 during the short taxable year with respect to employees of the Specified Cooperative.

(f) ***Non-duplication rule.*** Amounts that are treated as W-2 wages for a taxable year under any method cannot be treated as W-2 wages of any other taxable year. Also, an amount cannot be treated as W-2 wages by more than one taxpayer. Finally, an amount cannot be treated as W-2 wages by the Specified Cooperative both in determining patronage and nonpatronage W-2 wages.

(g) ***Wage expense safe harbor*** —

(1) ***In general.*** A Specified Cooperative using either the section 861 method of cost allocation under § 1.199A-10(d) or the simplified deduction method under § 1.199A-10(e) may determine the amount of W-2 wages that are properly allocable to DPGR for a taxable year by multiplying the amount of W-2 wages determined under paragraph (b)(1) of this section for the taxable year by the ratio of the Specified Cooperative's wage expense included in calculating QPAI for the taxable year to the Specified Cooperative's total wage expense used in calculating the Specified Cooperative's taxable income for the taxable year, without regard to any wage expense disallowed by section 465, 469, 704(d), or 1366(d). A Specified Cooperative that uses either the section 861 method of cost allocation or the simplified deduction method to determine QPAI must use the same expense allocation and apportionment methods that it uses to determine QPAI to allocate and apportion wage expense for purposes of this safe harbor. For purposes of this paragraph (g)(1), the term wage expense means wages (that is, compensation paid by the employer in the active conduct of a trade or business to its employees) that are properly taken into account under the Specified Cooperative's method of accounting.

(2) ***Wage expense included in cost of goods sold.*** For purposes of paragraph (g)(1) of this section, a Specified Cooperative may determine its wage expense included in cost of goods sold (COGS) using a reasonable method based on all the facts and circumstances, such as using the amount of direct labor included in COGS or using section 263A labor costs (as defined in § 1.263A-1(h)(4)(ii)) included in COGS. The chosen reasonable method must be consistently applied from one taxable year to another and must clearly reflect the portion of wage expense included in COGS. The method must also be reasonable based on all the facts and circumstances. The books and records maintained for wage expense included in COGS must be consistent with any allocations under this paragraph (g)(2).

(3) ***Small business simplified overall method safe harbor.*** The Specified Cooperative that uses the small business simplified overall method under § 1.199A-10(f) may use the small business simplified overall method safe harbor for determining the amount of W-2 wages determined under paragraph (b)(1) of this section that is properly allocable to DPGR. Under this safe harbor, the amount of W-2 wages determined under paragraph (b)(1) of this section that is properly allocable to DPGR is equal to the same proportion of W-2 wages determined under paragraph (b)(1) of this section that the amount of DPGR bears to the Specified Cooperative's total gross receipts.

(h) ***Applicability date.*** The provisions of this section apply to taxable years beginning after January 19, 2021. Taxpayers, however, may choose to apply the rules of §§ 1.199A-7 through 1.199A-12 for taxable years beginning on or before that date, provided the taxpayers apply the rules in their entirety and in a consistent manner.

[T.D. 9947, 86 FR 5569, Jan. 19, 2021]

§ 1.199A-12 Expanded affiliated groups.

(a) ***In general.*** The provisions of this section apply solely for purposes of section 199A(g) of the Internal Revenue Code (Code). Except as otherwise provided in the Code or regulations issued under the relevant section of the Code (for example, sections 199A(g)(3)(D)(ii) and 267, § 1.199A-8(c), paragraph (a)(3) of this section, and the consolidated return regulations under section 1502), each nonexempt Specified Cooperative (defined in § 1.199A-8(a)(2)(ii)) that is a member of an expanded affiliated group (EAG) (defined in paragraph (a)(1) of this section) computes its own taxable income or loss, qualified production activities income (QPAI) (defined in § 1.199A-8(b)(4)(ii)), and W-2 wages (defined in § 1.199A-11(b)). For purposes of this section unless otherwise specified, the term *Specified Cooperative* means a nonexempt Specified Cooperative. If a Specified Cooperative is also a member of a consolidated group, see paragraph (d) of this section.

(1) ***Definition of an expanded affiliated group.*** An EAG is an affiliated group as defined in section 1504(a), determined by substituting "more than 50 percent" for "at least 80 percent" in each place it appears and without regard to section 1504(b)(2) and (4).

(2) ***Identification of members of an expanded affiliated group*** —

(i) ***In general.*** Each Specified Cooperative must determine if it is a member of an EAG on a daily basis.

(ii) ***Becoming or ceasing to be a member of an expanded affiliated group.*** If a Specified Cooperative becomes or ceases to be a member of an EAG, the Specified Cooperative is treated as becoming or ceasing to be a member of the EAG at the end of the day on which its status as a member changes.

(3) ***Attribution of activities*** —

(i) ***In general.*** Except as provided in paragraph (a)(3)(iv) of this section, if a Specified Cooperative that is a member of an EAG (disposing member) derives gross receipts (defined in § 1.199A-8(b)(2)(iii)) from the lease, rental, license, sale, exchange, or other disposition (defined in § 1.199A-9(j)) of agricultural or horticultural products (defined in § 1.199A-8(a)(4)) that were manufactured, produced, grown or extracted (MPGE) (defined in § 1.199A-9(f)), in whole or significant part (defined in § 1.199A-9(h)), in the United States (defined in § 1.199A-9(i)) by another Specified Cooperative, then the disposing member is treated as conducting the previous activities conducted by such other Specified Cooperative with respect to the agricultural or horticultural products in determining whether its gross receipts are domestic production gross receipts (DPGR) (defined in § 1.199A-8(b)(3)(ii)) if—

(A) Such property was MPGE by such other Specified Cooperative, and

(B) The disposing member is a member of the same EAG as such other Specified Cooperative at the time that the disposing member disposes of the agricultural or horticultural products.

(ii) ***Date of disposition for leases, rentals, or licenses.*** Except as provided in paragraph (a)(3)(iv) of this section, with respect to a lease, rental, or license, the disposing member described in paragraph (a)(3)(i) of this section is treated as having disposed of the agricultural or horticultural products on the date or dates on which it takes into account the gross receipts derived from the lease, rental, or license under its methods of accounting.

(iii) ***Date of disposition for sales, exchanges, or other dispositions.*** Except as provided in paragraph (a)(3)(iv) of this section, with respect to a sale, exchange, or other disposition, the disposing member is treated as having disposed of the agricultural or horticultural products on the date on which it ceases to own the agricultural or horticultural products for Federal income tax purposes, even if no gain or loss is taken into account.

(iv) ***Exception.*** A Specified Cooperative is not attributed nonpatronage activities conducted by another Specified Cooperative. *See* § 1.199A-8(b)(2)(ii).

(4) ***Marketing Specified Cooperatives.*** A Specified Cooperative is treated as having MPGE in whole or significant part any agricultural or horticultural product within the United States marketed by the Specified Cooperative which its patrons have so MPGE. Patrons are defined in § 1.1388-1(e).

(5) ***Anti-avoidance rule.*** If a transaction between members of an EAG is engaged in or structured with a principal purpose of qualifying for, or increasing the amount of, the section 199A(g) deduction of the EAG or the portion of the section 199A(g) deduction allocated to one or more members of the EAG, the Secretary may make adjustments to eliminate the effect of the transaction on the computation of the section 199A(g) deduction.

(b) ***Computation of EAG's section 199A(g) deduction.*** —

(1) ***In general.*** The section 199A(g) deduction for an EAG is determined by separately computing the section 199A(g) deduction from the patronage sources of Specified Cooperatives that are members of the EAG. The section 199A(g) deduction from patronage sources of Specified Cooperatives is determined by aggregating the income or loss, QPAI, and W-2 wages, if any, of each patronage source of a Specified Cooperative that is a member of the EAG. For purposes of this determination, a member's QPAI may be positive or negative. A Specified Cooperative's taxable income or loss and QPAI is determined by reference to the Specified Cooperative's method of accounting. For purposes of determining the section 199A(g) deduction for an EAG, taxable income or loss, QPAI, and W-2 wages of a Specified Cooperative from nonpatronage sources are considered to be zero, other than as allowed under § 1.199A-8(b)(2)(ii).

(2) ***Example.*** The following example illustrates the application of paragraph (b)(1) of this section.

(i) ***Facts.*** Nonexempt Specified Cooperatives X, Y, and Z, calendar year taxpayers, are the only members of an EAG and are not members of a consolidated group. X has patronage source taxable income of $50,000, QPAI of $15,000, and W-2 wages of $0. Y has patronage source taxable income of ($20,000), QPAI of ($1,000), and W-2 wages of $750. Z has patronage source taxable income of $0, QPAI of $0, and W-2 wages of $3,000.

(ii) ***Analysis.*** In determining the EAG's section 199A(g) deduction, the EAG aggregates each member's patronage source taxable income or loss, QPAI, and W-2 wages. Thus, the EAG has patronage source taxable income of $30,000, the sum of X's patronage source taxable income of $50,000, Y's patronage source taxable income of ($20,000), and Z's patronage source taxable income of $0. The EAG has QPAI of $14,000, the sum of X's QPAI of $15,000, Y's QPAI of ($1,000), and Z's QPAI of $0. The EAG has W-2 wages of $3,750, the sum of X's W-2 wages of $0, Y's W-2 wages of $750, and Z's W-2 wages of $3,000. Accordingly, the EAG's section 199A(g) deduction equals $1,260, 9% of $14,000, the lesser of the QPAI and patronage source taxable income, but not greater than $1,875, 50% of its W-2 wages of $3,750. This result would be the same if X had a nonpatronage source income or loss, because nonpatronage source income of a nonexempt Specified Cooperative is not taken into account in determining the section 199A(g) deduction.

(3) ***Net operating loss carryovers/carrybacks.*** In determining the taxable income of an EAG, if a Specified Cooperative has a net operating loss (NOL) from its patronage sources that may be carried over or carried back (in accordance with section 172) to the taxable year, then for purposes of determining the taxable income of the Specified Cooperative, the amount of the NOL used to offset taxable income cannot exceed the taxable income of the patronage source of that Specified Cooperative.

(4) ***Losses used to reduce taxable income of an expanded affiliated group.*** The amount of an NOL sustained by a Specified Cooperative member of an EAG that is used in the year sustained in determining an EAG's taxable income limitation under § 1.199A-8(b)(5)(ii)(C) is not treated as an NOL carryover to any taxable year in determining the taxable income limitation under § 1.199A-8(b)(5)(ii)(C). For purposes of this paragraph (b)(4), an NOL is considered to be used if it reduces an EAG's aggregate taxable income from patronage sources or nonpatronage sources, as the case may be, regardless of whether the use of the NOL actually reduces the amount of the section 199A(g) deduction that the EAG would otherwise derive. An NOL is not considered to be used to the extent that it reduces an EAG's aggregate taxable income from patronage sources to an amount less than zero. If more than one Specified Cooperative has an NOL used in the same taxable year to reduce the EAG's taxable income from patronage sources, the respective NOLs are deemed used in proportion to the amount of each Specified Cooperative's NOL.

(5) ***Example.*** The following example illustrates the application of paragraph (b)(4) of this section.

(i) ***Facts.*** Nonexempt Specified Cooperatives A and B are the only two members of an EAG. A and B are both calendar year taxpayers and they do not join in the filing of a consolidated Federal income tax return. Neither A nor B had taxable income or loss prior to 2020. In 2020, A has patronage QPAI and patronage taxable income of $1,000 and B has patronage QPAI of $1,000 and a patronage NOL of $1,500. A also has nonpatronage income of $3,000. B has no activities other than from its patronage activities. In 2021, A has patronage QPAI of $2,000 and patronage taxable income of $1,000 and B has patronage QPAI of $2,000 and patronage taxable income prior to the NOL deduction allowed under section 172 of $2,000. Neither A nor B has nonpatronage activities in 2021. A's and B's patronage activities have aggregate W-2 wages in excess of the section 199A(g)(1)(B) wage limitation in both 2020 and 2021.

(ii) ***Section 199A(g) deduction for 2020.*** In determining the EAG's section 199A(g) deduction for 2020, A's $1,000 of QPAI and B's $1,000 of QPAI are aggregated, as are A's $1,000 of taxable income from its patronage activities and B's $1,500 NOL from its patronage activities. A's nonpatronage income is not included. Thus, for 2020, the EAG has patronage QPAI of $2,000 and patronage taxable income of ($500). The EAG's section 199A(g) deduction for 2020 is 9% of the lesser of its patronage QPAI or its patronage taxable income. Because the EAG has a taxable loss from patronage sources in 2020, the EAG's section 199A(g) deduction is $0.

(iii) ***Section 199A(a) deduction for 2021.*** In determining the EAG's section 199A deduction for 2021, A's patronage QPAI of $2,000 and B's patronage QPAI of $2,000 are aggregated, resulting in the EAG having patronage QPAI of $4,000. Also, $1,000 of B's patronage NOL from 2020 was used in 2020 to reduce the EAG's taxable income from patronage sources to $0. The remaining $500 of B's patronage NOL from 2020 is not considered to have been used in 2020 because it reduced the EAG's patronage taxable income to less than $0. Accordingly, for purposes of determining the EAG's taxable income limitation under § 1.199A-8(b)(5) in 2021, B is deemed to have only a $500 NOL carryover from its patronage sources from 2020 to offset a portion of its 2021 taxable income from its patronage sources. Thus, B's taxable income from its patronage sources in 2021 is $1,500, which is aggregated with A's $1,000 of taxable income from its

patronage sources. The EAG's taxable income limitation in 2021 is $2,500. The EAG's section 199A(g) deduction is 9% of the lesser of its patronage sourced QPAI of $4,000 and its taxable income from patronage sources of $2,500. Thus, the EAG's section 199A(g) deduction in 2021 is 9% of $2,500, or $225. The results for 2021 would be the same if neither A nor B had patronage sourced QPAI in 2020.

(c) ***Allocation of an expanded affiliated group's section 199A(g) deduction among members of the expanded affiliated group*** —

(1) ***In general.*** An EAG's section 199A(g) deduction from its patronage sources, as determined in paragraph (b) of this section, is allocated among the Specified Cooperatives that are members of the EAG in proportion to each Specified Cooperative's patronage QPAI, regardless of whether the Specified Cooperative has patronage taxable income or W-2 wages for the taxable year. For these purposes, if a Specified Cooperative has negative patronage QPAI, such QPAI is treated as zero. Pursuant to § 1.199A-8(b)(6), a patronage section 199A(g) deduction can be applied only against patronage income and deductions.

(2) ***Use of section 199A(g) deduction to create or increase a net operating loss.*** If a Specified Cooperative that is a member of an EAG has some or all of the EAG's section 199A(g) deduction allocated to it under paragraph (c)(1) of this section and the amount allocated exceeds patronage taxable income, determined as described in this section and prior to allocation of the section 199A(g) deduction, the section 199A(g) deduction will create an NOL for the patronage source. Similarly, if a Specified Cooperative that is a member of an EAG, prior to the allocation of some or all of the EAG's section 199A(g) deduction to the member, has a patronage NOL for the taxable year, the portion of the EAG's section 199A(g) deduction allocated to the member will increase such NOL.

(d) ***Special rules for members of the same consolidated group*** —

(1) ***Intercompany transactions.*** In the case of an intercompany transaction between consolidated group members S and B (as the terms intercompany transaction, S, and B are defined in § 1.1502-13(b)(1)), S takes the intercompany transaction into account in computing the section 199A(g) deduction at the same time and in the same proportion as S takes into account the income, gain, deduction, or loss from the intercompany transaction under § 1.1502-13.

(2) ***Application of the simplified deduction method and the small business simplified overall method.*** For purposes of applying the simplified deduction method under § 1.199A-10(e) and the small business simplified overall method under § 1.199A-10(f), a Specified Cooperative that is part of a consolidated group determines its QPAI using its members' DPGR, non-DPGR, cost of goods sold (COGS), and all other deductions, expenses, or losses (hereinafter deductions), determined after the application of § 1.1502-13.

(3) ***Determining the section 199A(g) deduction*** —

(i) ***Expanded affiliated group consists of consolidated group and non-consolidated group members.*** In determining the section 199A(g) deduction, if an EAG includes Specified Cooperatives that are members of the same consolidated group and Specified Cooperatives that are not members of the same consolidated group, the consolidated taxable income or loss, QPAI, and W-2 wages, from patronage sources, if any, of the consolidated group (and not the separate taxable income or loss, QPAI, and W-2 wages from patronage sources of the members of the consolidated group), are aggregated with the taxable income or loss, QPAI, and W-2 wages, from patronage sources, if any, of the non-consolidated group members. For example, if A, B, C, S1, and S2 are Specified Cooperatives that are members of the same EAG, and A, S1, and S2

are members of the same consolidated group (the A consolidated group), then the A consolidated group is treated as one member of the EAG. Accordingly, the EAG is considered to have three members—the A consolidated group, B, and C. The consolidated taxable income or loss, QPAI, and W-2 wages from patronage sources, if any, of the A consolidated group are aggregated with the taxable income or loss from patronage sources, QPAI, and W-2 wages, if any, of B and C in determining the EAG's section 199A(g) deduction from patronage sources. Pursuant to § 1.199A-8(b)(6), a patronage section 199A(g) deduction can be applied only against patronage income and deductions.

(ii) ***Expanded affiliated group consists only of members of a single consolidated group.*** If all of the Specified Cooperatives that are members of an EAG are also members of the same consolidated group, the consolidated group's section 199A(g) deduction is determined using the consolidated group's consolidated taxable income or loss, QPAI, and W-2 wages, from patronage sources rather than the separate taxable income or loss, QPAI, and W-2 wages from patronage sources of its members.

(4) ***Allocation of the section 199A(g) deduction of a consolidated group among its members.*** The section 199A(g) deduction from patronage sources of a consolidated group (or the section 199A(g) deduction allocated to a consolidated group that is a member of an EAG) is allocated among the patronage sources of Specified Cooperatives in proportion to each Specified Cooperative's patronage QPAI, regardless of whether the Specified Cooperative has patronage separate taxable income or W-2 wages for the taxable year. In allocating the section 199A(g) deduction of a patronage source of a Specified Cooperative that is part of a consolidated group among patronage sources of other members of the same group, any redetermination of a member's patronage receipts, COGS, or other deductions from an intercompany transaction under § 1.1502-13(c)(1)(i) or (c)(4) is not taken into account for purposes of section 199A(g). Also, for purposes of this allocation, if a patronage source of a Specified Cooperative that is a member of a consolidated group has negative QPAI, the QPAI of the patronage source is treated as zero.

(e) ***Examples.*** The following examples illustrate the application of paragraphs (a) through (d) of this section.

(1) ***Example 1.*** Specified Cooperatives X, Y, and Z are members of the same EAG but are not members of a consolidated group. X, Y, and Z each files Federal income tax returns on a calendar year basis. None of X, Y, or Z have activities other than from its patronage sources. Prior to 2020, X had no taxable income or loss. In 2020, X has taxable income of $0, QPAI of $2,000, and W-2 wages of $0, Y has taxable income of $4,000, QPAI of $3,000, and W-2 wages of $500, and Z has taxable income of $4,000, QPAI of $5,000, and W-2 wages of $2,500. Accordingly, the EAG's patronage source taxable income is $8,000, the sum of X's taxable income of $0, Y's taxable income of $4,000, and Z's taxable income of $4,000. The EAG has QPAI of $10,000, the sum of X's QPAI of $2,000, Y's QPAI of $3,000, and Z's QPAI of $5,000. The EAG's W-2 wages are $3,000, the sum of X's W-2 wages of $0, Y's W-2 wages of $500, and Z's W-2 wages of $2,500. Thus, the EAG's section 199A(g) deduction for 2020 is $720 (9% of the lesser of the EAG's patronage source taxable income of $8,000 and the EAG's QPAI of $10,000, but no greater than 50% of its W-2 wages of $3,000, that is $1,500). Pursuant to paragraph (c)(1) of this section, the $720 section 199A(g) deduction is allocated to X, Y, and Z in proportion to their respective amounts of QPAI, that is $144 to X ($720 × $2,000/$10,000), $216 to Y ($720 × $3,000/$10,000), and $360 to Z ($720 × $5,000/$10,000). Although X's patronage source taxable income for 2020 determined prior to allocation of a portion of the EAG's section 199A(g) deduction to it was $0, pursuant to paragraph (c)(2) of this section, X will have an NOL from its patronage source for 2020 equal to $144, which will be a carryover to 2021.

(2) *Example 2.*

(i) ***Facts.*** Corporation X is the common parent of a consolidated group, consisting of X and Y, which has filed a consolidated Federal income tax return for many years. Corporation P is the common parent of a consolidated group, consisting of P and S, which has filed a consolidated Federal income tax return for many years. The X and P consolidated groups each file their consolidated Federal income tax returns on a calendar year basis. X, Y, P, and S are each Specified Cooperatives, and none of X, Y, P, or S has ever had activities other than from its patronage sources. The X consolidated group and the P consolidated group are members of the same EAG in 2021. In 2020, the X consolidated group incurred a consolidated net operating loss (CNOL) of $25,000. Neither P nor S (nor the P consolidated group) has ever incurred an NOL. In 2021, the X consolidated group has (prior to the deduction under section 172) taxable income of $8,000 and the P consolidated group has taxable income of $20,000. X's QPAI is $8,000, Y's QPAI is ($13,000), P's QPAI is $16,000 and S's QPAI is $4,000. There are sufficient W-2 wages to exceed the section 199A(g)(1)(B) limitation.

(ii) ***Analysis.*** The X consolidated group uses $8,000 of its CNOL from 2020 to offset the X consolidated group's taxable income in 2021. None of the X consolidated group's remaining CNOL may be used to offset taxable income of the P consolidated group under paragraph (b)(3) of this section. Accordingly, for purposes of determining the EAG's section 199A(g) deduction for 2021, the EAG has taxable income of $20,000 (the X consolidated group's taxable income, after the deduction under section 172, of $0 plus the P consolidated group's taxable income of $20,000). The EAG has QPAI of $15,000 (the X consolidated group's QPAI of ($5,000) (X's $8,000 + Y's ($13,000)), and the P consolidated group's QPAI of $20,000 (P's $16,000 + S's $4,000)). The EAG's section 199A(g) deduction equals $1,350, 9% of the lesser of its taxable income of $20,000 and its QPAI of $15,000. The section 199A(g) deduction is allocated between the X and P consolidated groups in proportion to their respective QPAI. Because the X consolidated group has negative QPAI, all of the section 199A(g) deduction of $1,350 is allocated to the P consolidated group. This $1,350 is allocated between P and S, the members of the P consolidated group, in proportion to their QPAI. Accordingly, P is allocated $1,080 ($1,350 × $16,000/$20,000) and S is allocated $270 ($1,350 × $4,000/$20,000).

(f) ***Allocation of patronage income and loss by a Specified Cooperative that is a member of the expanded affiliated group for only a portion of the year —***

(1) ***In general.*** A Specified Cooperative that becomes or ceases to be a member of an EAG during its taxable year must allocate its taxable income or loss, QPAI, and W-2 wages between the portion of the taxable year that the Specified Cooperative is a member of the EAG and the portion of the taxable year that the Specified Cooperative is not a member of the EAG. This allocation of items is made by using the pro rata allocation method described in this paragraph (f)(1). Under the pro rata allocation method, an equal portion of patronage taxable income or loss, QPAI, and W-2 wages is assigned to each day of the Specified Cooperative's taxable year. Those items assigned to those days that the Specified Cooperative was a member of the EAG are then aggregated.

(2) ***Coordination with rules relating to the allocation of income under § 1.1502-76(b).*** If § 1.1502-76(b) (relating to items included in a consolidated return) applies to a Specified Cooperative that is a member of an EAG, then any allocation of items required under this paragraph (f) is made only after the allocation of the items pursuant to § 1.1502-76(b).

(g) ***Total section 199A(g) deduction for a Specified Cooperative that is a member of an expanded affiliated group for some or all of its taxable year —***

(1) ***Member of the same EAG for the entire taxable year.*** If a Specified Cooperative is a member of the same EAG for its entire taxable year, the Specified Cooperative's section 199A(g) deduction for the taxable year is the amount of the section 199A(g) deduction allocated to it by the EAG under paragraph (c)(1) of this section.

(2) ***Member of the expanded affiliated group for a portion of the taxable year.*** If a Specified Cooperative is a member of an EAG for only a portion of its taxable year and is either not a member of any EAG or is a member of another EAG, or both, for another portion of the taxable year, the Specified Cooperative's section 199A(g) deduction for the taxable year is the sum of its section 199A(g) deductions for each portion of the taxable year.

(3) ***Example.*** The following example illustrates the application of paragraphs (f) and (g) of this section.

(i) ***Facts.*** Specified Cooperatives X and Y, calendar year taxpayers, are members of the same EAG for the entire 2020 taxable year. Specified Cooperative Z, also a calendar year taxpayer, is a member of the EAG of which X and Y are members for the first half of 2020 and not a member of any EAG for the second half of 2020. None of X, Y, or Z have activities other than from its patronage sources. Assume that X, Y, and Z each has W-2 wages in excess of the section 199A(g)(1)(B) wage limitation for all relevant periods. In 2020, X has taxable income of $2,000 and QPAI of $600, Y has taxable loss of $400 and QPAI of ($200), and Z has taxable income of $1,400 and QPAI of $2,400.

(ii) ***Analysis.*** Pursuant to the pro rata allocation method, $700 of Z's 2020 taxable income and $1,200 of its QPAI are allocated to the first half of the 2020 taxable year (the period in which Z is a member of the EAG) and $700 of Z's 2020 taxable income and $1,200 of its QPAI are allocated to the second half of the 2020 taxable year (the period in which Z is not a member of any EAG). Accordingly, in 2020, the EAG has taxable income from patronage sources of $2,300 ($2,000 + ($400) + $700) and QPAI of $1,600 ($600 + ($200) + $1,200). The EAG's section 199A(g) deduction for 2020 is $144 (9% of the lesser of the EAG's taxable income of $2,300 or QPAI of $1,600). Pursuant to § 1.199A-12(c)(1), this $144 deduction is allocated to X, Y, and Z in proportion to their respective QPAI. Accordingly, X is allocated $48 of the EAG's section 199A(g) deduction ($144 × ($600/($600 + $0 + $1,200))), Y is allocated $0 of the EAG's section 199A(g) deduction ($144 × ($0/($600 + $0 + $1,200))), and Z is allocated $96 of the EAG's section 199A(g) deduction ($144 × ($1,200/($600 + $0 + $1,200))). For the second half of 2020, Z has taxable income of $700 and QPAI of $1,200. Therefore, for the second half of 2020, Z has a section 199A(g) deduction of $63 (9% of the lesser of its taxable income of $700 or its QPAI of $1,200). Accordingly, X's 2020 section 199A(g) deduction is $48 and Y's 2020 section 199A(g) deduction is $0. Z's 2020 section 199A(g) deduction is $159, the sum of $96, the portion of the EAG's section 199A(g) deduction allocated to Z for the first half of 2020 and Z's $63 section 199A(g) deduction for the second half of 2020.

(h) ***Computation of section 199A(g) deduction for members of an expanded affiliated group with different taxable years —***

(1) ***In general.*** If Specified Cooperatives that are members of an EAG have different taxable years, in determining the section 199A(g) deduction of a member (the computing member), the computing member is required to take into account the taxable income or loss, determined without regard to the section 199A(g) deduction, QPAI, and W-2 wages of each other group member that are both—

(i) Attributable to the period that each other member of the EAG and the computing member are members of the EAG; and

(ii) Taken into account in a taxable year that begins after the effective date of section 199A(g) and ends with or within the taxable year of the computing member with respect to which the section 199A(g) deduction is computed.

(2) ***Example.*** The following example illustrates the application of this paragraph (h).

(i) ***Facts.*** Specified Cooperatives X, Y, and Z are members of the same EAG. Neither X, Y, nor Z is a member of a consolidated group. X and Y are calendar year taxpayers and Z is a June 30 fiscal year taxpayer. Z came into existence on July 1, 2020. None of X, Y, or Z have activities other than from its patronage sources. Each Specified Cooperative has taxable income that exceeds its QPAI and W-2 wages in excess of the section 199A(g)(1)(B) wage limitation. For the taxable year ending December 31, 2020, X's QPAI is $8,000 and Y's QPAI is ($6,000). For its taxable year ending June 30, 2021, Z's QPAI is $2,000.

(ii) ***2020 Computation.*** In computing X's and Y's respective section 199A(g) deductions for their taxable years ending December 31, 2020, X's taxable income or loss, QPAI and W-2 wages and Y's taxable income or loss, QPAI, and W-2 wages from their respective taxable years ending December 31, 2020, are aggregated. The EAG's QPAI for this purpose is $2,000 (X's QPAI of $8,000 + Y's QPAI of ($6,000)). Accordingly, the EAG's section 199A(g) deduction is $180 (9% × $2,000). The $180 deduction is allocated to each of X and Y in proportion to their respective QPAI as a percentage of the QPAI of each member of the EAG that was taken into account in computing the EAG's section 199A(g) deduction. Pursuant to paragraph (c)(1) of this section, in allocating the section 199A(g) deduction between X and Y, because Y's QPAI is negative, Y's QPAI is treated as being $0. Accordingly, X's section 199A(g) deduction for its taxable year ending December 31, 2020, is $180 ($180 × $8,000/($8,000 + $0)). Y's section 199A(g) deduction for its taxable year ending December 31, 2020, is $0 ($180 × $0/($8,000 + $0)).

(iii) ***2021 Computation.*** In computing Z's section 199A(g) deduction for its taxable year ending June 30, 2021, X's and Y's items from their respective taxable years ending December 31, 2020, are taken into account. Therefore, X's taxable income or loss and Y's taxable income or loss, determined without regard to the section 199A(g) deduction, QPAI, and W-2 wages from their taxable years ending December 31, 2020, are aggregated with Z's taxable income or loss, QPAI, and W-2 wages from its taxable year ending June 30, 2021. The EAG's QPAI is $4,000 (X's QPAI of $8,000 + Y's QPAI of ($6,000) + Z's QPAI of $2,000). The EAG's section 199A(g) deduction is $360 (9% × $4,000). A portion of the $360 deduction is allocated to Z in proportion to its QPAI as a percentage of the QPAI of each member of the EAG that was taken into account in computing the EAG's section 199A(g) deduction. Pursuant to paragraph (c)(1) of this section, in allocating a portion of the $360 deduction to Z, Y's QPAI is treated as being $0 because Y's QPAI is negative. Z's section 199A(g) deduction for its taxable year ending June 30, 2021, is $72 ($360 × ($2,000/($8,000 + $0 + $2,000))).

(i) ***Partnership owned by expanded affiliated group*** —

(1) ***In general.*** For purposes of section 199A(g)(3)(D) relating to DPGR, if all of the interests in the capital and profits of a partnership are owned by members of a single EAG at all times during the taxable year of such partnership (EAG partnership), then the EAG partnership and all members of that EAG are treated as a single taxpayer during such period.

(2) ***Attribution of activities*** —

(*i*) ***In general.*** If a Specified Cooperative which is a member of an EAG (disposing member) derives gross receipts from the lease, rental, license, sale, exchange, or other disposition of property that was MPGE by an EAG partnership, all the partners of which are members of the same EAG to which the disposing member belongs at the time that the disposing member disposes of such property, then the disposing member is treated as conducting the MPGE activities previously conducted by the EAG partnership with respect to that property. The previous sentence applies only for those taxable years in which the disposing member is a member of the EAG of which all the partners of the EAG partnership are members for the entire taxable year of the EAG partnership. With respect to a lease, rental, or license, the disposing member is treated as having disposed of the property on the date or dates on which it takes into account its gross receipts from the lease, rental, or license under its method of accounting. With respect to a sale, exchange, or other disposition, the disposing member is treated as having disposed of the property on the date it ceases to own the property for Federal income tax purposes, even if no gain or loss is taken into account. Likewise, if an EAG partnership derives gross receipts from the lease, rental, license, sale, exchange, or other disposition of property that was MPGE by a member (or members) of the same EAG (the producing member) to which all the partners of the EAG partnership belong at the time that the EAG partnership disposes of such property, then the EAG partnership is treated as conducting the MPGE activities previously conducted by the producing member with respect to that property. The previous sentence applies only for those taxable years in which the producing member is a member of the EAG of which all the partners of the EAG partnership are members for the entire taxable year of the EAG partnership. With respect to a lease, rental, or license, the EAG partnership is treated as having disposed of the property on the date or dates on which it takes into account its gross receipts derived from the lease, rental, or license under its method of accounting. With respect to a sale, exchange, or other disposition, the EAG partnership is treated as having disposed of the property on the date it ceases to own the property for Federal income tax purposes, even if no gain or loss is taken into account.

(*ii*) ***Attribution between expanded affiliated group partnerships.*** If an EAG partnership (disposing partnership) derives gross receipts from the lease, rental, license, sale, exchange, or other disposition of property that was MPGE by another EAG partnership (producing partnership), then the disposing partnership is treated as conducting the MPGE activities previously conducted by the producing partnership with respect to that property, provided that each of these partnerships (the producing partnership and the disposing partnership) is owned for its entire taxable year in which the disposing partnership disposes of such property by members of the same EAG. With respect to a lease, rental, or license, the disposing partnership is treated as having disposed of the property on the date or dates on which it takes into account its gross receipts from the lease, rental, or license under its method of accounting. With respect to a sale, exchange, or other disposition, the disposing partnership is treated as having disposed of the property on the date it ceases to own the property for Federal income tax purposes, even if no gain or loss is taken into account.

(j) ***Applicability date.*** The provisions of this section apply to taxable years beginning after January 19, 2021. Taxpayers, however, may choose to apply the rules of §§ 1.199A-7 through 1.199A-12 for taxable years beginning on or before that date, provided the taxpayers apply the rules in their entirety and in a consistent manner.

[T.D. 9947, 86 FR 5569, Jan. 19, 2021, as amended by 87 FR 68900, Nov. 17, 2022]

ADDITIONAL ITEMIZED DEDUCTIONS FOR INDIVIDUALS

§ 1.211-1 Allowance of deductions.

In computing taxable income under section 63(a), the deductions provided by sections 212, 213, 214, 215, 216, and 217 shall be allowed subject to the exceptions provided in Part IX, Subchapter B, Chapter 1 of the Code (section 261 and following, relating to items not deductible).

[T.D. 6796, 30 FR 1037, Feb. 2, 1965]

§ 1.212-1 Nontrade or nonbusiness expenses.

(a) An expense may be deducted under section 212 only if:

(1) It has been paid or incurred by the taxpayer during the taxable year

(i) for the production or collection of income which, if and when realized, will be required to be included in income for Federal income tax purposes, or

(ii) for the management, conservation, or maintenance of property held for the production of such income, or

(iii) in connection with the determination, collection, or refund of any tax; and

(2) It is an ordinary and necessary expense for any of the purposes stated in subparagraph (1) of this paragraph.

(b) The term *income* for the purpose of section 212 includes not merely income of the taxable year but also income which the taxpayer has realized in a prior taxable year or may realize in subsequent taxable years; and is not confined to recurring income but applies as well to gains from the disposition of property. For example, if defaulted bonds, the interest from which if received would be includible in income, are purchased with the expectation of realizing capital gain on their resale, even though no current yield thereon is anticipated, ordinary and necessary expenses thereafter paid or incurred in connection with such bonds are deductible. Similarly, ordinary and necessary expenses paid or incurred in the management, conservation, or maintenance of a building devoted to rental purposes are deductible notwithstanding that there is actually no income therefrom in the taxable year, and regardless of the manner in which or the purpose for which the property in question was acquired. Expenses paid or incurred in managing, conserving, or maintaining property held for investment may be deductible under section 212 even though the property is not currently productive and there is no likelihood that the property will be sold at a profit or will otherwise be productive of income and even though the property is held merely to minimize a loss with respect thereto.

(c) In the case of taxable years beginning before January 1, 1970, expenses of carrying on transactions which do not constitute a trade or business of the taxpayer and are not carried on for the production or collection of income or for the management, conservation, or maintenance of property held for the production of income, but which are carried on primarily as a sport, hobby, or recreation are not allowable as nontrade or nonbusiness expenses. The question whether or not a transaction is carried on primarily for the production of income or for the management, conservation, or maintenance of property held for the production or collection of income, rather than primarily as a sport, hobby, or recreation, is not to be determined solely from the intention of the taxpayer but rather from all the circumstances of the case. For example, consideration will be given to the record of prior gain or loss of the taxpayer in the activity, the

relation between the type of activity and the principal occupation of the taxpayer, and the uses to which the property or what it produces is put by the taxpayer. For provisions relating to activities not engaged in for profit applicable to taxable years beginning after December 31, 1969, see section 183 and the regulations thereunder.

(d) Expenses, to be deductible under section 212, must be “ordinary and necessary”. Thus, such expenses must be reasonable in amount and must bear a reasonable and proximate relation to the production or collection of taxable income or to the management, conservation, or maintenance of property held for the production of income.

(e) A deduction under section 212 is subject to the restrictions and limitations in part IX (section 261 and following), subchapter B, chapter 1 of the Code, relating to items not deductible. Thus, no deduction is allowable under section 212 for any amount allocable to the production or collection of one or more classes of income which are not includible in gross income, or for any amount allocable to the management, conservation, or maintenance of property held for the production of income which is not included in gross income. See section 265. Nor does section 212 allow the deduction of any expenses which are disallowed by any of the provisions of subtitle A of the Code, even though such expenses may be paid or incurred for one of the purposes specified in section 212.

(f) Among expenditures not allowable as deductions under section 212 are the following: Commuter's expenses; expenses of taking special courses or training; expenses for improving personal appearance; the cost of rental of a safe-deposit box for storing jewelry and other personal effects; expenses such as those paid or incurred in seeking employment or in placing oneself in a position to begin rendering personal services for compensation, campaign expenses of a candidate for public office, bar examination fees and other expenses paid or incurred in securing admission to the bar, and corresponding fees and expenses paid or incurred by physicians, dentists, accountants, and other taxpayers for securing the right to practice their respective professions. See, however, section 162 and the regulations thereunder.

(g) Fees for services of investment counsel, custodial fees, clerical help, office rent, and similar expenses paid or incurred by a taxpayer in connection with investments held by him are deductible under section 212 only if

(1) they are paid or incurred by the taxpayer for the production or collection of income or for the management, conservation, or maintenance of investments held by him for the production of income; and

(2) they are ordinary and necessary under all the circumstances, having regard to the type of investment and to the relation of the taxpayer to such investment.

(h) Ordinary and necessary expenses paid or incurred in connection with the management, conservation, or maintenance of property held for use as a residence by the taxpayer are not deductible. However, ordinary and necessary expenses paid or incurred in connection with the management, conservation, or maintenance of property held by the taxpayer as rental property are deductible even though such property was formerly held by the taxpayer for use as a home.

(i) Reasonable amounts paid or incurred by the fiduciary of an estate or trust on account of administration expenses, including fiduciaries' fees and expenses of litigation, which are ordinary and necessary in connection with the performance of the duties of administration are deductible under section 212, notwithstanding that the estate or trust is not engaged in a trade or business, except to the extent that such expenses are allocable to the production or collection of tax-exempt income. But see section 642 (g) and the regulations thereunder for disallowance of such deductions to an estate where such items are allowed as a deduction under section 2053 or 2054 in computing the net estate subject to the estate tax.

(j) Reasonable amounts paid or incurred for the services of a guardian or committee for a ward or minor, and other expenses of guardians and committees which are ordinary and necessary, in connection with the production or collection of income inuring to the ward or minor, or in connection with the management, conservation, or maintenance of property, held for the production of income, belonging to the ward or minor, are deductible.

(k) Expenses paid or incurred in defending or perfecting title to property, in recovering property (other than investment property and amounts of income which, if and when recovered, must be included in gross income), or in developing or improving property, constitute a part of the cost of the property and are not deductible expenses. Attorneys' fees paid in a suit to quiet title to lands are not deductible; but if the suit is also to collect accrued rents thereon, that portion of such fees is deductible which is properly allocable to the services rendered in collecting such rents. Expenses paid or incurred in protecting or asserting one's right to property of a decedent as heir or legatee, or as beneficiary under a testamentary trust, are not deductible.

(l) Expenses paid or incurred by an individual in connection with the determination, collection, or refund of any tax, whether the taxing authority be Federal, State, or municipal, and whether the tax be income, estate, gift, property, or any other tax, are deductible. Thus, expenses paid or incurred by a taxpayer for tax counsel or expenses paid or incurred in connection with the preparation of his tax returns or in connection with any proceedings involved in determining the extent of his tax liability or in contesting his tax liability are deductible.

(m) An expense (not otherwise deductible) paid or incurred by an individual in determining or contesting a liability asserted against him does not become deductible by reason of the fact that property held by him for the production of income may be required to be used or sold for the purpose of satisfying such liability.

(n) Capital expenditures are not allowable as nontrade or nonbusiness expenses. The deduction of an item otherwise allowable under section 212 will not be disallowed simply because the taxpayer was entitled under Subtitle A of the Code to treat such item as a capital expenditure, rather than to deduct it as an expense. For example, see section 266. Where, however, the item may properly be treated only as a capital expenditure or where it was properly so treated under an option granted in Subtitle A of the Code, no deduction is allowable under section 212; and this is true regardless of whether any basis adjustment is allowed under any other provision of the Code.

(o) The provisions of section 212 are not intended in any way to disallow expenses which would otherwise be allowable under section 162 and the regulations thereunder. Double deductions are not permitted. Amounts deducted under one provision of the Internal Revenue Code of 1954 cannot again be deducted under any other provision thereof.

(p) ***Frustration of public policy.*** The deduction of a payment will be disallowed under section 212 if the payment is of a type for which a deduction would be disallowed under section 162(c), (f), or (g) and the regulations thereunder in the case of a business expense.

[T.D. 6500, 25 FR 11402, Nov. 26, 1960; 25 FR 14021, Dec. 12, 1960, as amended by T.D. 7198, 37 FR 13685, July 13, 1972; T.D. 7345, 40 FR 7439, Feb. 20, 1975]

§ 1.213-1 Medical, dental, etc., expenses.

(a) ***Allowance of deduction.***

(1) Section 213 permits a deduction of payments for certain medical expenses (including expenses for medicine and drugs). Except as provided in paragraph (d) of this section (relating to special rule for decedents) a deduction is allowable only to individuals and only with respect to medical expenses actually paid during the taxable year, regardless of when the incident or event which occasioned the expenses occurred and regardless of the method of accounting employed by the taxpayer in making his income tax return. Thus, if the medical expenses are incurred but not paid during the taxable year, no deduction for such expenses shall be allowed for such year.

(2) Except as provided in subparagraphs (4)(i) and (5)(i) of this paragraph, only such medical expenses (including the allowable expenses for medicine and drugs) are deductible as exceed 3 percent of the adjusted gross income for the taxable year. For taxable years beginning after December 31, 1966, the amounts paid during the taxable year for insurance that constitute expenses paid for medical care shall, for purposes of computing total medical expenses, be reduced by the amount determined under subparagraph (5)(i) of this paragraph. For the amounts paid during the taxable year for medicine and drugs which may be taken into account in computing total medical expenses, see paragraph (b) of this section. For the maximum deduction allowable under section 213 in the case of certain taxable years, see paragraph (c) of this section. As to what constitutes “adjusted gross income”, see section 62 and the regulations thereunder.

(3)

(i) For medical expenses paid (including expenses paid for medicine and drugs) to be deductible, they must be for medical care of the taxpayer, his spouse, or a dependent of the taxpayer and not be compensated for by insurance or otherwise. Expenses paid for the medical care of a dependent, as defined in section 152 and the regulations thereunder, are deductible under this section even though the dependent has gross income equal to or in excess of the amount determined pursuant to § 1.151-2 applicable to the calendar year in which the taxable year of the taxpayer begins. Where such expenses are paid by two or more persons and the conditions of section 152(c) and the regulations thereunder are met, the medical expenses are deductible only by the person designated in the multiple support agreement filed by such persons and such deduction is limited to the amount of medical expenses paid by such person.

(ii) An amount excluded from gross income under section 105 (c) or (d) (relating to amounts received under accident and health plans) and the regulations thereunder shall not constitute compensation for expenses paid for medical care. Exclusion of such amounts from gross income will not affect the treatment of expenses paid for medical care.

(iii) The application of the rule allowing a deduction for medical expenses to the extent not compensated for by insurance or otherwise may be illustrated by the following example in which it is assumed that neither the taxpayer nor his wife has attained the age of 65:

> *Example.* Taxpayer H, married to W and having one dependent child, had adjusted gross income for 1956 of $3,000. During 1956 he paid $300 for medical care, of which $100 was for treatment of his dependent child and $200 for an operation on W which was performed in September 1955. In 1956 he received a payment of $50 for health insurance to cover a portion of the cost of W's operation performed during 1955. The deduction allowable under section 213 for the calendar year 1956, provided the taxpayer itemizes his deductions and does not compute his tax under section 3 by use of the tax

table, is $160, computed as follows:

Payments in 1956 for medical care	$300
Less: Amount of insurance received in 1956	50
Payments in 1956 for medical care not compensated for during 1956	250
Less: 3 percent of $3,000 (adjusted gross income)	90
Excess, allowable as a deduction for 1956	160

(4)

(i) For taxable years beginning before January 1, 1967, where either the taxpayer or his spouse has attained the age of 65 before the close of the taxable year, the 3-percent limitation on the deduction for medical expenses does not apply with respect to expenses for medical care of the taxpayer or his spouse. Moreover, for taxable years beginning after December 31, 1959, and before January 1, 1967, the 3-percent limitation on the deduction for medical expenses does not apply to amounts paid for the medical care of a dependent (as defined in sec. 152) who is the mother or father of the taxpayer or his spouse and who has attained the age of 65 before the close of the taxpayer's taxable year. For taxable years beginning before January 1, 1964, and for taxable years beginning after December 31, 1966, all amounts paid by the taxpayer for medicine and drugs are subject to the 1-percent limitation provided by section 213(b). For taxable years beginning after December 31, 1963, and before January 1, 1967, the 1-percent limitation provided by section 213(b) does not apply, under certain circumstances, to amounts paid by the taxpayer for medicine and drugs for the taxpayer and his spouse or for a dependent (as defined in sec. 152) who is the mother or father of the taxpayer or of his spouse. (For additional provisions relating to the 1-percent limitation with respect to medicine and drugs, see paragraph (b) of this section.) For taxable years beginning before January 1, 1967, whether or not the 3-percent or 1-percent limitation applies, the total medical expenses deductible under section 213 are subject to the limitations described in section 213(c) and paragraph (c) of this section and, where applicable, to the limitations described in section 213(g) and § 1.213-2.

(ii) The age of a taxpayer shall be determined as of the last day of his taxable year. In the event of the taxpayer's death, his taxable year shall end as of the date of his death. The age of a taxpayer's spouse shall be determined as of the last day of the taxpayer's taxable year, except that, if the spouse dies within such taxable year, her age shall be determined as of the date of her death. Likewise, the age of the taxpayer's dependent who is the mother or father of the taxpayer or of his spouse shall be determined as of the last day of the taxpayer's taxable year but not later than the date of death of such dependent.

(iii) The application of subdivision (i) of this subparagraph may be illustrated by the following examples:

Example 1. Taxpayer A, who attained the age of 65 on February 22, 1956, makes his return on the basis of the calendar year. During the year 1956, A had adjusted gross income of $8,000, and paid the following medical bills:

(*a*) $560 (7 percent of adjusted gross income) for the medical care of himself and his spouse, and

(*b*) $160 (2 percent of adjusted gross income) for the medical care of his dependent son. No part of these payments was for medicine and drugs nor compensated for by insurance or otherwise. The allowable deduction under section 213 for 1956 is $560, the full amount of the medical expenses for the taxpayer and his spouse. No deduction is allowable for the amount of $160 paid for medical care of the dependent son since the amount of such payment (determined without regard to the payments for the care of the taxpayer and his spouse) does not exceed 3 percent of adjusted gross income.

Example 2. H and W, who have a dependent child, made a joint return for the calendar year 1956. H became 65 years of age on August 15, 1956. The adjusted gross income of H and W in 1956 was $40,000 and they paid in such year the following amounts for medical care: (*a*) $3,000 for the medical care of H; (*b*) $2,000 for the medical care of W; and (*c*) $3,000 for the medical care of the dependent child. No part of these payments was for medicine and drugs nor compensated for by insurance or otherwise. The allowable deduction under section 213 for medical expenses paid in 1956 is $6,800 computed as follows:

Payments for medical care of H and W in 1956		$5,000
Payments for medical care of the dependent in 1956	$3,000	
Less: 3 percent of $40,000 (adjusted gross income)	1,200	
	————	1,800
Allowable deduction for 1956		6,800

Example 3. D and his wife, E, made a joint income tax return for the calendar year 1962, and reported adjusted gross income of $30,000. On December 13, 1962, D attained the age of 65. During the year 1962, D's father, F, who was 87 years of age, received over half of his support from, and was a dependent (as defined in section 152) of, D. However, D could not claim an exemption under section 151 for F because F had gross income from rents in 1962 of $800. D paid the following medical expenses in 1962, none of which were compensated for by insurance or otherwise: hospital and doctor bills for D and E, $6,500; hospital and doctor bills for F, $4,850; medicine and drugs for D and E, $225, and for F, $225. Since none of the medical expenses are subject to the 3-percent limitation, the amount of medical expenses to be taken into account

(before computing the maximum deduction) is $11,500, computed as follows:

Hospital and doctor bills—for D and E		$6,500
Hospital and doctor bills—for F		4,850
Medicine and drugs—for D and E	$225	
Medicine and drugs—for F	$225	
Total medicine and drugs	450	
Less: 1 percent of adjusted gross income ($30,000)	300	
Allowable expenses for medicine and drugs		$150
Total medical expenses taken into account		11,500

Since an exemption cannot be claimed for F on the 1962 return of D and E, their deduction for medical expenses (assuming that section 213(g) does not apply) is limited to $10,000 for that year ($5,000 multiplied by the two exemptions allowed for D and E under section 151(b)). If these identical facts had occurred in a taxable year beginning before January 1, 1962, the medical expense deduction for D and E would, for such taxable year, be limited to $5,000 ($2,500 multiplied by the two exemptions allowed for D and E under section 151(b)). See paragraph (c) of this section.

Example 4. Assume the same facts as in *Example 3,* except that D furnished the entire support of his father's twin sister, G, who had no gross income during 1962 and for whom D was entitled to a dependency exemption. In addition, D paid $4,800 to doctors and hospitals during 1962 for the medical care of G. No part of the $4,800 was for medicine and drugs, and no amount was compensated for by insurance or otherwise. For purposes of the maximum limitation under section 213(c), the maximum deduction for medical expenses on the 1962 return of D and E is limited to $15,000 ($5,000 multiplied by 3, the number of exemptions allowed under section 151, exclusive of the exemptions for old age or blindness). If these identical facts had occurred in a taxable year beginning before January 1, 1962, the medical expense deduction for D and E would, for such taxable year, be limited to $7,500 ($2,500 multiplied by the three exemptions allowed under section 151, exclusive of the exemptions for old age or blindness). The medical expenses to be taken into account by D and E for 1962 and the maximum deductions allowable for such

expenses are $15,400 and $15,000, respectively, computed as follows:

Medical expenses per *Example 3*		$11,500
Add: Expenses paid for G	$4,800	
Less: 3 percent of adjusted gross income ($30,000)	900	
	———	3,900
Total medical expenses taken into account		15,400
Maximum deduction for 1962 ($5,000 multiplied by 3 exemptions)		15,000
Medical expenses not deductible		400

Example 5. Assume that the facts set forth in *Example 3* had occurred in respect of the calendar year 1964 rather than the calendar year 1962. Since both D and his father, F, had attained the age of 65 before the close of the taxable year, the 1-percent limitation does not apply to the amounts paid for medicine and drugs for D, E, and F. Accordingly, the total medical expenses taken into account by D and E for 1964 would be $11,800 (rather than $11,500 as in *Example 3*) computed as follows:

Hospital and doctor bills—for D and E	$6,500
Hospital and doctor bills—for F	4,350
Medicine and drugs—for D and E	225
Medicine and drugs—for F	225
Total medical expenses taken into account	11,800

(5)

(i) For taxable years beginning after December 31, 1966, there may be deducted without regard to the 3-percent limitation the lesser of—(a) One-half of the amounts paid during the taxable year for insurance which constitute expenses for medical care for the taxpayer, his spouse, and dependents; or (b) $150.

(ii) The application of subdivision (i) of this subparagraph may be illustrated by the following example:

Example. H and W made a joint return for the calendar year 1967. The adjusted gross income of H and W for 1967 was $10,000 and they paid in such year $370 for medical care of which amount $350 was paid for insurance which constitutes medical care for H

and W. No part of the payment was for medicine and drugs or was compensated for by insurance or otherwise. The allowable deduction under section 213 for medical expenses paid in 1967 is $150, computed as follows:

(1) Lesser of $175 (one-half of amounts paid for insurance) or $150			$150
(2) Payments for medical care	$370		
(3) Less line 1	150		
(4) Medical expenses to be taken into account under 3-percent limitation (line 2 minus line 3)		$220	
(5) Less: 3 percent of $10,000 (adjusted gross income)		300	
(6) Excess allowable as a deduction for 1967 (excess of line 4 over line 5)			0
(7) Allowable medical expense deduction for 1967 (line 1 plus line 6)			$150

(b) ***Limitation with respect to medicine and drugs*** —

(1) ***Taxable years beginning before January 1, 1964.***

(i) Amounts paid during taxable years beginning before January 1, 1964, for medicine and drugs are to be taken into account in computing the allowable deduction for medical expenses paid during the taxable year only to the extent that the aggregate of such amounts exceeds 1 percent of the adjusted gross income for the taxable year. Thus, if the aggregate of the amounts paid for medicine and drugs exceeds 1 percent of adjusted gross income, the excess is added to other medical expenses for the purpose of computing the medical expense deduction. The application of this subdivision may be illustrated by the following example:

Example. The taxpayer, a single individual with no dependents, had an adjusted gross income of $6,000 for the calendar year 1956. During 1956, he paid a doctor $300 for medical services, a hospital $100 for hospital care, and also spent $100 for medicine and drugs. These payments were not compensated for by insurance or otherwise. The deduction allowable under section 213 for the calendar year 1956 is $260, computed as follows:
Payments for medical care in 1956:

Doctor		$300
Hospital		100
Medicine and drugs	$100	
Less: 1 percent of $6,000 (adjusted gross income)	60	40
Total medical expenses taken into account		440

Less: 3 percent of $6,000 (adjusted gross income)	180
Allowable deduction for 1956	260

(ii) For taxable years beginning before January 1, 1964, the 1-percent limitation is applicable to all amounts paid by a taxpayer during the taxable year for medicine and drugs. Moreover, this limitation applies regardless of the fact that the amounts paid are for medicine and drugs for the taxpayer, his spouse, or dependent parent (the mother or father of the taxpayer or of his spouse) who has attained the age of 65 before the close of the taxable year. In a case where either a taxpayer or his spouse has attained the age of 65 and the taxpayer pays an amount in excess of 1 percent of adjusted gross income for medicine and drugs for himself, his spouse, and his dependents, it is necessary to apportion the 1 percent of adjusted gross income (the portion which is not taken into account as expenses paid for medical care) between the taxpayer and his spouse on the one hand and his dependents on the other. The part of the 1 percent allocable to the taxpayer and his spouse is an amount which bears the same ratio to 1 percent of his adjusted gross income which the amount paid for medicine and drugs for the taxpayer and his spouse bears to the total amount paid for medicine and drugs for the taxpayer, his spouse, and his dependents. The balance of the 1 percent shall be allocated to his dependents. The amount paid for medicine and drugs in excess of the allocated part of the 1 percent shall be taken into account as payments for medical care for the taxpayer and his spouse on the one hand and his dependents on the other, respectively. A similar apportionment must be made in the case of a dependent parent (65 years of age or over) of the taxpayer or his spouse. The application of this subdivision (ii) may be illustrated by the following example:

Example. H and W, who have a dependent child, made a joint return for the calendar year 1956. H became 65 years of age on September 15, 1956. The adjusted gross income of H and W for 1956 is $10,000. During the year, H and W paid the following amounts for medical care: (i) $1,000 for doctors and hospital expenses and $180 for medicine and drugs for themselves; and (ii) $500 for doctors and hospital expenses and $140 for medicine and drugs for the dependent child. These payments were not compensated for by insurance or otherwise. The deduction allowable under section 213(a)(2) for medical expenses paid in 1956 is $1,420, computed as follows:

H and W:		
Payments for doctors and hospital		$1,000.00
Payments for medicine and drugs	$180.00	
Less: Limitation for medicine and drugs (see computation below)	56.25	123.75
Medical expenses for H and W to be taken into account		1,123.75

Dependent:			
Payments for doctors and hospital		500.00	
Payments for medicine and drugs	$140.00		
Less: Limitation for medicine and drugs (see computation below)	43.75	96.25	
Total medical expenses		596.25	
Less: 3 percent of $10,000 (adjusted gross income)		300.00	
Medical expenses for the dependent to be taken into account			296.25
Allowable deductions for 1956			1,420.00
Payments for medicine and drugs:			
H and W			180.00
Dependent			140.00
Total payments			320.00
Less: 1 percent of $10,000 (adjusted gross income)			100.00
Payments to be taken into account			20.00
Allocation of 1-percent exclusion:			
H and W (180 ÷ 320 × $100)			56.25
Dependent (140 ÷ 320 × $100)			43.75
Total			100.00

(2) ***Taxable years beginning after December 31, 1963.***

(i) Except as otherwise provided in subdivision (ii) of this subparagraph, amounts paid during taxable years beginning after December 31, 1963, for medicine and drugs are to be taken into account in computing the allowable deduction for medical expenses paid during the taxable year only to the extent that the aggregate of such amounts exceeds 1 percent of the adjusted gross income for the taxable year. Thus, if the aggregate of the amounts paid for medicine and drugs which are subject to the 1-percent limitation exceeds 1 percent of adjusted gross income, the excess is added to other medical expenses for the purpose of computing the medical expense deduction.

(ii) The 1-percent limitation provided by section 213 does not apply to amounts paid by a taxpayer during a taxable year beginning after December 31, 1963, and before January 1, 1967, for medicine and drugs for the medical care of the taxpayer and his spouse if either has attained the age of 65 before the close of the taxable year. Moreover, for taxable years beginning after December 31, 1963, and before January 1, 1967, the 1-percent limitation with respect to medicine and drugs does not apply to amounts paid for the medical care of a dependent (as defined in sec. 152) who is the mother or father of the taxpayer or of his spouse and who has attained the age of 65 before the close of the taxpayer's taxable year. Amounts paid for medicine and drugs which are not subject to the limitation on medicine and drugs are added to other medical expenses of a taxpayer and his spouse or the dependent (as the case may be) for the purpose of computing the medical expense deduction.

(iii) The application of this subparagraph may be illustrated by the following examples:

Example 1. H and W, who have a dependent child, C, were both under 65 years of age at the close of the calendar year 1964 and made a joint return for that calendar year. During the year 1964, H's mother, M, attained the age of 65, and was a dependent (as defined in section 152) of H. The adjusted gross income of H and W in 1964 was $12,000. During 1964 H and W paid the following amounts for medical care: (i) $600 for doctors and hospital expenses and $120 for medicine and drugs for themselves; (ii) $350 for doctors and hospital expenses and $60 for medicine and drugs for C; and (iii) $400 for doctors and hospital expenses and $100 for medicine and drugs for M. These payments were not compensated for by insurance or otherwise. The deduction allowable under section 213(a) (1) for medical expenses paid in 1964 is $1,150, computed as follows:

H, W, and C:			
Payments for doctors and hospital		$950	
Payments for medicine and drugs	$180		
Less: 1 percent of $12,000 (adjusted gross income)	120	60	
Total medical expenses		1,010	
Less: 3 percent of $12,000 (adjusted gross income)		360	
Medical expenses of H, W, and C to be taken into account			$650
M:			
Payments for doctors and hospitals		400	
Payments for medicine and drugs		100	
Medical expenses of M to be taken into account			500
Allowable deduction for 1964			1,150

Example 2. H and W, who have a dependent child, C, made a joint return for the calendar year 1964, and reported adjusted gross income of $12,000. H became 65 years of age on January 23, 1964. F, the 87 year old father of W, was a dependent of H. During 1964, H and W paid the following amounts for medical care: (i) $400 for doctors and hospital expenses and $75 for medicine and drugs for H; (ii) $200 for doctors and hospital expenses and $100 for medicine and drugs for W; (iii) $200 for doctors and hospital expenses and $175 for medicine and drugs for C; and (iv) $700 for doctors and hospital expenses and $150 for medicine and drugs for F. These payments were not compensated for by insurance or otherwise. The deduction allowable under section

213(a) (2) for medical expenses paid in 1964 is $1,625, computed as follows:

H and W:			
Payments for doctors and hospital		$600	
Payments for medicine and drugs		175	
Medical expenses for H and W to be taken into account			$775
F:			
Payments for doctors and hospital		700	
Payments for medicine and drugs		150	
Medical expenses for F to be taken into account			850
C:			
Payments for doctors and hospital		200	
Payments for medicine and drugs	$175		
Less: 1 percent of $12,000 (adjusted gross income)	120	55	
Total medical expenses		255	
Less: 3 percent of $12,000 (adjusted gross income)		360	
Medical expenses for C to be taken into account			0
Allowable deduction for 1964.			1,625

Example 3. Assume the same facts as example (2) except that the calendar year of the return is 1967 and the amounts paid for medical care were paid during 1967. The deduction allowable under section 213(a) for medical expenses paid in 1967 is $1,520, computed as follows:

Payments for doctors and hospitals:			
H	$400		
W	200		
C	200		
F	700		
	———		$1,500
Payments for medicine and drugs:			
H	75		
W	100		
C	175		
F	150		
	——	$500	
Less: 1 percent of $12,000 (adjusted gross income)		120	380

Medical expenses to be taken into account	$1,880
Less: 3 percent of $12,000 (adjusted gross income)	360
Allowable medical expense deduction for 1967	1,520

(3) ***Definition of medicine and drugs.*** For definition of medicine and drugs, see paragraph (e) (2) of this section.

(c) ***Maximum limitations.***

(1) For taxable years beginning after December 31, 1966, there shall be no maximum limitation on the amount of the deduction allowable for payment of medical expenses.

(2) Except as provided in section 213(g) and § 1.213-2 (relating to maximum limitations with respect to certain aged and disabled individuals for taxable years beginning before January 1, 1967), for taxable years beginning after December 31, 1961, and before January 1, 1967, the maximum deduction allowable for medical expenses paid in any one taxable year is the lesser of:

(i) $5,000 multiplied by the number of exemptions allowed under section 151 (exclusive of exemptions allowed under section 151(c) for a taxpayer or spouse attaining the age of 65, or section 151(d) for a taxpayer who is blind or a spouse who is blind);

(ii) $10,000, if the taxpayer is single, not the head of a household (as defined in section 1(b) (2)) and not a surviving spouse (as defined in section 2(b)), or is married and files a separate return; or

(iii) $20,000 if the taxpayer is married and files a joint return with his spouse under section 6013, or is the head of a household (as defined in section 1(b) (2)), or a surviving spouse (as defined in section 2(b)).

(3) The application of subparagraph (2) of this paragraph may be illustrated by the following example:

Example. H and W made a joint return for the calendar year 1962 and were allowed five exemptions (exclusive of exemptions under sec. 151 (c) and (d)), one for each taxpayer and three for their dependents. The adjusted gross income of H and W in 1962 was $80,000. They paid during such year $26,000 for medical care, no part of which is compensated for by insurance or otherwise. The deduction allowable under section 213 for the calendar year 1962 is $20,000, computed as follows:

Payments for medical care in 1962	$26,000
Less: 3 percent of $80,000 (adjusted gross income)	2,400
Excess of medical expenses in 1962 over 3 percent of adjusted gross income	23,600
Allowable deduction for 1962 ($5,000 multiplied by five exemptions allowed	20,000

under sec. 151 (b) and (e) but not in excess of $20,000)

(4) Except as provided in section 213(g) and § 1.213-2 (relating to certain aged and disabled individuals), for taxable years beginning before January 1, 1962, the maximum deduction allowable for medical expenses paid in any 1 taxable year is the lesser of:

(i) $2,500 multiplied by the number of exemptions allowed under section 151 (exclusive of exemptions allowed under section 151(c) for a taxpayer or spouse attaining the age of 65, or section 151(d) for a taxpayer who is blind or a spouse who is blind);

(ii) $5,000, if the taxpayer is single, not the head of a household (as defined in section 1(b) (2)) and not a surviving spouse (as defined in section 2(b)) or is married and files a separate return; or

(iii) $10,000, if the taxpayer is married and files a joint return with his spouse under section 6013, or is head of a household (as defined in section 1(b) (2)), or a surviving spouse (as defined in section 2(b)).

(5) For the maximum deduction allowable for taxable years beginning before January 1, 1967, if the taxpayer or his spouse is age 65 or over and is disabled, see § 1.213-2.

(d) ***Special rule for decedents.***

(1) For the purpose of section 213 (a), expenses for medical care of the taxpayer which are paid out of his estate during the 1-year period beginning with the day after the date of his death shall be treated as paid by the taxpayer at the time the medical services were rendered. However, no credit or refund of tax shall be allowed for any taxable year for which the statutory period for filing a claim has expired. See section 6511 and the regulations thereunder.

(2) The rule prescribed in subparagraph (1) of this paragraph shall not apply where the amount so paid is allowable under section 2053 as a deduction in computing the taxable estate of the decedent unless there is filed in duplicate

(i) a statement that such amount has not been allowed as a deduction under section 2053 in computing the taxable estate of the decedent and

(ii) a waiver of the right to have such amount allowed at any time as a deduction under section 2053. The statement and waiver shall be filed with or for association with the return, amended return, or claim for credit or refund for the decedent for any taxable year for which such an amount is claimed as a deduction.

(e) ***Definitions —***

(1) ***General.***

(i) The term *medical care* includes the diagnosis, cure, mitigation, treatment, or prevention of disease. Expenses paid for “medical care” shall include those paid for the purpose of affecting any structure or function of the body or for transportation primarily for and essential to medical care. See subparagraph (4) of this paragraph for provisions relating to medical insurance.

(ii) Amounts paid for operations or treatments affecting any portion of the body, including obstetrical expenses and expenses of therapy or X-ray treatments, are deemed to be for the purpose of affecting any structure or function of the body and are therefore paid for medical care. Amounts expended for illegal operations or treatments are not deductible. Deductions for expenditures for medical care allowable under section 213 will be confined strictly to expenses incurred primarily for the prevention or alleviation of a physical or mental defect or illness. Thus, payments for the following are payments for medical care: hospital services, nursing services (including nurses' board where paid by the taxpayer), medical, laboratory, surgical, dental and other diagnostic and healing services, X-rays, medicine and drugs (as defined in subparagraph (2) of this paragraph, subject to the 1-percent limitation in paragraph (b) of this section), artificial teeth or limbs, and ambulance hire. However, an expenditure which is merely beneficial to the general health of an individual, such as an expenditure for a vacation, is not an expenditure for medical care.

(iii) Capital expenditures are generally not deductible for Federal income tax purposes. See section 263 and the regulations thereunder. However, an expenditure which otherwise qualifies as a medical expense under section 213 shall not be disqualified merely because it is a capital expenditure. For purposes of section 213 and this paragraph, a capital expenditure made by the taxpayer may qualify as a medical expense, if it has as its primary purpose the medical care (as defined in subdivisions (i) and (ii) of this subparagraph) of the taxpayer, his spouse, or his dependent. Thus, a capital expenditure which is related only to the sick person and is not related to permanent improvement or betterment of property, if it otherwise qualifies as an expenditure for medical care, shall be deductible; for example, an expenditure for eye glasses, a seeing eye dog, artificial teeth and limbs, a wheel chair, crutches, an inclinator or an air conditioner which is detachable from the property and purchased only for the use of a sick person, etc. Moreover, a capital expenditure for permanent improvement or betterment of property which would not ordinarily be for the purpose of medical care (within the meaning of this paragraph) may, nevertheless, qualify as a medical expense to the extent that the expenditure exceeds the increase in the value of the related property, if the particular expenditure is related directly to medical care. Such a situation could arise, for example, where a taxpayer is advised by a physician to install an elevator in his residence so that the taxpayer's wife who is afflicted with heart disease will not be required to climb stairs. If the cost of installing the elevator is $1,000 and the increase in the value of the residence is determined to be only $700, the difference of $300, which is the amount in excess of the value enhancement, is deductible as a medical expense. If, however, by reason of this expenditure, it is determined that the value of the residence has not been increased, the entire cost of installing the elevator would qualify as a medical expense. Expenditures made for the operation or maintenance of a capital asset are likewise deductible medical expenses if they have as their primary purpose the medical care (as defined in subdivisions (i) and (ii) of this subparagraph) of the taxpayer, his spouse, or his dependent. Normally, if a capital expenditure qualifies as a medical expense, expenditures for the operation or maintenance of the capital asset would also qualify provided that the medical reason for the capital expenditure still exists. The entire amount of such operation and maintenance expenditures qualifies, even if none or only a portion of the original cost of the capital asset itself qualified.

(iv) Expenses paid for transportation primarily for and essential to the rendition of the medical care are expenses paid for medical care. However, an amount allowable as a deduction for “transportation primarily for and essential to medical care” shall not include the cost of any meals and lodging while away from home receiving medical treatment. For example, if a doctor

prescribes that a taxpayer go to a warm climate in order to alleviate a specific chronic ailment, the cost of meals and lodging while there would not be deductible. On the other hand, if the travel is undertaken merely for the general improvement of a taxpayer's health, neither the cost of transportation nor the cost of meals and lodging would be deductible. If a doctor prescribes an operation or other medical care, and the taxpayer chooses for purely personal considerations to travel to another locality (such as a resort area) for the operation or the other medical care, neither the cost of transportation nor the cost of meals and lodging (except where paid as part of a hospital bill) is deductible.

(v) The cost of in-patient hospital care (including the cost of meals and lodging therein) is an expenditure for medical care. The extent to which expenses for care in an institution other than a hospital shall constitute medical care is primarily a question of fact which depends upon the condition of the individual and the nature of the services he receives (rather than the nature of the institution). A private establishment which is regularly engaged in providing the types of care or services outlined in this subdivision shall be considered an institution for purposes of the rules provided herein. In general, the following rules will be applied:

(*a*) Where an individual is in an institution because his condition is such that the availability of medical care (as defined in subdivisions (i) and (ii) of this subparagraph) in such institution is a principal reason for his presence there, and meals and lodging are furnished as a necessary incident to such care, the entire cost of medical care and meals and lodging at the institution, which are furnished while the individual requires continual medical care, shall constitute an expense for medical care. For example, medical care includes the entire cost of institutional care for a person who is mentally ill and unsafe when left alone. While ordinary education is not medical care, the cost of medical care includes the cost of attending a special school for a mentally or physically handicapped individual, if his condition is such that the resources of the institution for alleviating such mental or physical handicap are a principal reason for his presence there. In such a case, the cost of attending such a special school will include the cost of meals and lodging, if supplied, and the cost of ordinary education furnished which is incidental to the special services furnished by the school. Thus, the cost of medical care includes the cost of attending a special school designed to compensate for or overcome a physical handicap, in order to qualify the individual for future normal education or for normal living, such as a school for the teaching of braille or lip reading. Similarly, the cost of care and supervision, or of treatment and training, of a mentally retarded or physically handicapped individual at an institution is within the meaning of the term *medical care*.

(*b*) Where an individual is in an institution, and his condition is such that the availability of medical care in such institution is not a principal reason for his presence there, only that part of the cost of care in the institution as is attributable to medical care (as defined in subdivisions (i) and (ii) of this subparagraph) shall be considered as a cost of medical care; meals and lodging at the institution in such a case are not considered a cost of medical care for purposes of this section. For example, an individual is in a home for the aged for personal or family considerations and not because he requires medical or nursing attention. In such case, medical care consists only of that part of the cost for care in the home which is attributable to medical care or nursing attention furnished to him; his meals and lodging at the home are not considered a cost of medical care.

(*c*) It is immaterial for purposes of this subdivision whether the medical care is furnished in a Federal or State institution or in a private institution.

(vi) See section 262 and the regulations thereunder for disallowance of deduction for personal living, and family expenses not falling within the definition of medical care.

(2) ***Medicine and drugs.*** The term *medicine and drugs* shall include only items which are legally procured and which are generally accepted as falling within the category of medicine and drugs (whether or not requiring a prescription). Such term shall not include toiletries or similar preparations (such as toothpaste, shaving lotion, shaving cream, etc.) nor shall it include cosmetics (such as face creams, deodorants, hand lotions, etc., or any similar preparation used for ordinary cosmetic purposes) or sundry items. Amounts expended for items which, under this subparagraph, are excluded from the term *medicine and drugs* shall not constitute amounts expended for “medical care”.

(3) ***Status as spouse or dependent.*** In the case of medical expenses for the care of a person who is the taxpayer's spouse or dependent, the deduction under section 213 is allowable if the status of such person as “spouse” or “dependent” of the taxpayer exists either at the time the medical services were rendered or at the time the expenses were paid. In determining whether such status as “spouse” exists, a taxpayer who is legally separated from his spouse under a decree of separate maintenance is not considered as married. Thus, payments made in June 1956 by A, for medical services rendered in 1955 to B, his wife, may be deducted by A for 1956 even though, before the payments were made, B may have died or in 1956 secured a divorce. Payments made in July 1956 by C, for medical services rendered to D in 1955 may be deducted by C for 1956 even though C and D were not married until June 1956.

(4) ***Medical insurance.***

(i)

(*a*) For taxable years beginning after December 31, 1966, expenditures for insurance shall constitute expenses paid for medical care only to the extent that such amounts are paid for insurance covering expenses of medical care referred to in subparagraph (1) of this paragraph. In the case of an insurance contract under which amounts are payable for other than medical care (as, for example, a policy providing an indemnity for loss of income or for loss of life, limb, or sight):

(*1*) No amount shall be treated as paid for insurance covering expenses of medical care referred to in subparagraph (1) of this paragraph unless the charge for such insurance is either separately stated in the contract or furnished to the policyholder by the insurer in a separate statement,

(*2*) The amount taken into account as the amount paid for such medical insurance shall not exceed such charge, and

(*3*) No amount shall be treated as paid for such medical insurance if the amount specified in the contract (or furnished to the policyholder by the insurer in a separate statement) as the charge for such insurance is unreasonably large in relation to the total charges under the contract.

For purposes of the preceding sentence, amounts will be considered payable for other than medical care under the contract if the contract provides for the waiver of premiums upon the occurrence of an event. In determining whether a separately stated charge for insurance covering expenses of medical care is unreasonably large in relation to the total premium, the relationship of the coverages under the contract together with all of the facts and circumstances shall be considered. In determining whether a contract constitutes an

"insurance" contract it is irrelevant whether the benefits are payable in cash or in services. For example, amounts paid for hospitalization insurance, for membership in an association furnishing cooperative or so-called free-choice medical service, or for group hospitalization and clinical care are expenses paid for medical care. Premiums paid under Part B, title XVIII of the Social Security Act (42 U.S.C. 1395j-1395w), relating to supplementary medical insurance benefits for the aged, are amounts paid for insurance covering expenses of medical care. Taxes imposed by any governmental unit do not, however, constitute amounts paid for such medical insurance.

(*b*) For taxable years beginning after December 31, 1966, subject to the rules of (*a*) of this subdivision, premiums paid during a taxable year by a taxpayer under the age of 65 for insurance covering expenses of medical care for the taxpayer, his spouse, or a dependent after the taxpayer attains the age of 65 are to be treated as expenses paid during the taxable year for insurance covering expenses of medical care if the premiums for such insurance are payable (on a level payment basis) under the contract:

(*1*) For a period of 10 years or more, or

(*2*) Until the year in which the taxpayer attains the age of 65 (but in no case for a period of less than 5 years).

For purposes of this subdivision (*b*), premiums will be considered payable on a level payment basis if the total premium under the contract is payable in equal annual or more frequent installments. Thus, a total premium of $10,000 payable over a period of 10 years at $1,000 a year shall be considered payable on a level payment basis.

(ii) For taxable years beginning before January 1, 1967, expenses paid for medical care shall include amounts paid for accident or health insurance. In determining whether a contract constitutes an "insurance" contract it is irrelevant whether the benefits are payable in cash or in services. For example, amounts paid for hospitalization insurance, for membership in an association furnishing cooperative or so-called free-choice medical service, or for group hospitalization and clinical care are expenses paid for medical care.

(f) ***Exclusion of amounts allowed for care of certain dependents.*** Amounts taken into account under section 44A in computing a credit for the care of certain dependents shall not be treated as expenses paid for medical care.

(g) ***Reimbursement for expenses paid in prior years.***

(1) Where reimbursement, from insurance or otherwise, for medical expenses is received in a taxable year subsequent to a year in which a deduction was claimed on account of such expenses, the reimbursement must be included in gross income in such subsequent year to the extent attributable to (and not in excess of) deductions allowed under section 213 for any prior taxable year. See section 104, relating to compensation for injuries or sickness, and section 105(b), relating to amounts expended for medical care, and the regulations thereunder, with regard to amounts in excess of or not attributable to deductions allowed.

(2) If no medical expense deduction was taken in an earlier year, for example, if the standard deduction under section 141 was taken for the earlier year, the reimbursement received in the taxable year for the medical expense of the earlier year is not includible in gross income.

(3) In order to allow the same aggregate medical expense deductions as if the reimbursement received in a subsequent year or years had been received in the year in which the payments for medical care were made, the following rules shall be followed:

(i) If the amount of the reimbursement is equal to or less than the amount which was deducted in a prior year, the entire amount of the reimbursement shall be considered attributable to the deduction taken in such prior year (and hence includible in gross income); or

(ii) If the amount of the reimbursement received in such subsequent year or years is greater than the amount which was deducted for the prior year, that portion of the reimbursement received which is equal in amount to the deduction taken in the prior year shall be considered as attributable to such deduction (and hence includible in gross income); but

(iii) If the deduction for the prior year would have been greater but for the limitations on the maximum amount of such deduction provided by section 213 (c), then the amount of the reimbursement attributable to such deduction (and hence includible in gross income) shall be the amount of the reimbursement received in a subsequent year or years reduced by the amount disallowed as a deduction because of the maximum limitation, but not in excess of the deduction allowed for the previous year.

(4) The application of subparagraphs (1), (2), and (3) of this paragraph may be illustrated by the following examples. *Examples 1* and *2* reflect the maximum limitation on the medical expense deduction applicable to taxable years beginning after December 31, 1961. *Examples 3* and *4* reflect the maximum limitation on the medical expense deduction applicable to taxable years beginning prior to January 1, 1962. For explanation of such maximum medical expense limitations, see paragraph (c) of this section.

Example 1. Taxpayer A, a single individual (not the head of a household and not a surviving spouse) with one dependent, is entitled to two exemptions under the provisions of section 151. He had an adjusted gross income of $35,000 for the calendar year 1962. During 1962 he paid $16,000 for medical care. A received no reimbursement for such medical expenses in 1962, but in 1963 he received $6,000 upon an insurance policy covering the medical expenses which he paid in 1962. A was allowed a deduction of $10,000 (the maximum) from his adjusted gross income for 1962. The amount which A must include in his gross income for 1963 is $1,050, and the amount to be excluded from gross income for 1963 is $4,950, computed as follows:

Payments for medical care in 1962 (not reimbursed in 1962)	$16,000
Less: 3 percent of $35,000 (adjusted gross income)	1,050
Excess of medical expenses not reimbursed in 1962 over 3 percent of adjusted gross income	10,000
Allowable deduction for 1962	10,000
Amount by which the medical deductions for 1962 would have been greater than $10,000 but for the limitations on the maximum amount provided by	4,950

section 213	
Reimbursement received in 1963	$6,000
Less: Amount by which the medical deduction for 1962 would have been greater than $10,000 but for the limitation on the maximum amount provided by section 213	4,950
Reimbursement received in 1963 reduced by the amount by which the medical deduction for 1962 would have been greater than $10,000 but for the limitations on the maximum amount provided by section 213	1,050
Amount attributed to medical deduction taken for 1962	1,050
Amount to be included in gross income for 1963	1,050
Amount to be excluded from gross income for 1963 ($6,000 less $1,050)	4,950

Example 2. Assuming that A, in example (1), received $15,000 in 1963 as reimbursement for the medical expenses which he paid in 1962, the amount which A must include in his gross income for 1963 is $10,000, and the amount to be excluded from gross income for 1963 is $5,000, computed as follows:

Reimbursement received in 1963	$15,000
Less: Amount by which the medical deduction for 1962 would have been greater than $10,000 but for the limitations on the maximum amount provided by section 213	4,950
Reimbursement received in 1963 reduced by the amount by which the medical deduction for 1962 would have been greater than $10,000 but for the limitations on the maximum amount provided by section 213	10,050
Deduction allowable for 1962	10,000
Amount of reimbursement received in 1963 to be included in gross income for 1963 as attributable to deduction allowable for 1962	10,000
Amount to be excluded from gross income for 1963 ($15,000 less $10,000)	5,000

Example 3. Taxpayer A, a single individual (not the head of a household and not a surviving spouse) with one dependent, is entitled to two exemptions under the provisions of section 151. He had an adjusted gross income of $35,000 for the calendar year 1956. During 1956 he paid $9,000 for medical care. A received no reimbursement for such medical expenses in 1956, but in 1957 he received $6,000 upon an insurance policy covering the medical expenses which he paid in 1956. A was allowed a deduction of $5,000 (the maximum) from his adjusted gross income for 1956. The amount which A must include in his gross income for 1957 is $3,050 and the amount to be excluded from gross income for 1957 is $2,950,

computed as follows:

Payments for medical care in 1956 (not reimbursed in 1956)	$9,000
Less: 3 percent of $35,000 (adjusted gross income)	1,050
Excess of medical expenses not reimbursed in 1956 over 3 percent of adjusted gross income	7,950
Allowable deduction for 1956	5,000
Amount by which the medical deductions for 1956 would have been greater than $5,000 but for the limitations on the maximum amount provided by section 213	2,950
Reimbursement received in 1957	6,000
Less: Amount by which the medical deduction for 1956 would have been greater than $5,000 but for the limitations on the maximum amount provided by section 213	2,950
Reimbursement received in 1957 reduced by the amount by which the medical deduction for 1956 would have been greater than $5,000 but for the limitations on the maximum amount provided by section 213	8,050
Amount attributed to medical deduction taken for 1956	3,050
Amount to be included in gross income for 1957	3,050
Amount to be excluded from gross income for 1957 ($6,000 less $3,050)	2,950

Example 4. Assuming that A, in example (3), received $8,000 in 1957 as reimbursement for the medical expenses which he paid in 1956, the amount which A must include in his gross income for 1957 is $5,000 and the amount to be excluded from gross income for 1957 is $3,000 computed as follows:

Reimbursement received in 1957	$8,000
Less: Amount by which the medical deduction for 1956 would have been greater than $5,000 but for the limitations on the maximum amount provided by section 213	2,950
Reimbursement received in 1957 reduced by the amount by which the medical deduction for 1956 would have been greater than $5,000 but for the limitations on the maximum amount provided by section 213	5,050
Deduction allowable for 1956	5,000
Amount of reimbursement received in 1957 to be included in gross income for 1957 as attributable to deduction allowable for 1956	5,000

Amount to be excluded from gross income for 1957 ($8,000 less $5,000)	3,000

(h) ***Substantiation of deductions.*** In connection with claims for deductions under section 213, the taxpayer shall furnish the name and address of each person to whom payment for medical expenses was made and the amount and date of the payment thereof in each case. If payment was made in kind, such fact shall be so reflected. Claims for deductions must be substantiated, when requested by the district director, by a statement or itemized invoice from the individual or entity to which payment for medical expenses was made showing the nature of the service rendered, and to or for whom rendered; the nature of any other item of expense and for whom incurred and for what specific purpose, the amount paid therefor and the date of the payment thereof; and by such other information as the district director may deem necessary.

[T.D. 6500, 25 FR 11402, Nov. 26, 1960]

Editorial Note: For FEDERAL REGISTER citations affecting § 1.213-1, see the List of CFR Sections Affected, which appears in the Finding Aids section of the printed volume and at *www.govinfo.gov*.

§ 1.215-1 Periodic alimony, etc., payments.

(a) A deduction is allowable under section 215 with respect to periodic payments in the nature of, or in lieu of, alimony or an allowance for support actually paid by the taxpayer during his taxable year and required to be included in the income of the payee wife or former wife, as the case may be, under section 71. As to the amounts required to be included in the income of such wife or former wife, see section 71 and the regulations thereunder. For definition of *husband* and *wife* see section 7701(a) (17).

(b) The deduction under section 215 is allowed only to the obligor spouse. It is not allowed to an estate, trust, corporation, or any other person who may pay the alimony obligation of such obligor spouse. The obligor spouse, however, is not allowed a deduction for any periodic payment includible under section 71 in the income of the wife or former wife, which payment is attributable to property transferred in discharge of his obligation and which, under section 71(d) or section 682, is not includible in his gross income.

(c) The following examples, in which both H and W file their income tax returns on the basis of a calendar year, illustrate cases in which a deduction is or is not allowed under section 215:

Example 1. Pursuant to the terms of a decree of divorce, H, in 1956, transferred securities valued at $100,000 in trust for the benefit of W, which fully discharged all his obligations to W. The periodic payments made by the trust to W are required to be included in W's income under section 71. Such payments are stated in section 71(d) not to be includible in H's income and, therefore, under section 215 are not deductible from his income.

Example 2. A decree of divorce obtained by W from H incorporated a previous agreement of H to establish a trust, the trustees of which were instructed to pay W $5,000 a year for the remainder of her life. The court retained jurisdiction to order H to provide further payments if necessary for the support of W. In 1956 the trustee paid to W $4,000 from the income of the trust and $1,000 from the corpus of the trust. Under the provisions of sections 71 and 682(b), W would include $5,000 in her income for

1956. H would not include any part of the $5,000 in his income nor take a deduction therefor. If H had paid the $1,000 to W pursuant to court order rather than allowing the trustees to pay it out of corpus, he would have been entitled to a deduction of $1,000 under the provisions of section 215.

(d) For other examples, see sections 71 and 682 and the regulations thereunder.

§ 1.215-1T Alimony, etc., payments (temporary).

Q-1 What information is required by the Internal Revenue Service when an alimony or separate maintenance payment is claimed as a deduction by a payor?

A-1 The payor spouse must include on his/her first filed return of tax (Form 1040) for the taxable year in which the payment is made the payee's social security number, which the payee is required to furnish to the payor. For penalties applicable to a payor spouse who fails to include such information on his/her return of tax or to a payee spouse who fails to furnish his/her social security number to the payor spouse, see section 6676.

(98 Stat. 798, 26 U.S.C. 1041(d)(4); 98 Stat. 802, 26 U.S.C. 152(e)(2)(A); 98 Stat. 800, 26 U.S.C. 215(c); 68A Stat. 917, 26 U.S.C. 7805)

[T.D. 7973, 49 FR 34458, Aug. 31, 1984]

§ 1.216-1 Amounts representing taxes and interest paid to cooperative housing corporation.

(a) ***General rule.*** A tenant-stockholder of a cooperative housing corporation may deduct from his gross income amounts paid or accrued within his taxable year to a cooperative housing corporation representing his proportionate share of:

(1) The real estate taxes allowable as a deduction to the corporation under section 164 which are paid or incurred by the corporation before the close of the taxable year of the tenant-stockholder on the houses (or apartment building) and the land on which the houses (or apartment building) are situated, or

(2) The interest allowable as a deduction to the corporation under section 163 which is paid or incurred by the corporation before the close of the taxable year of the tenant-stockholder on its indebtedness contracted in the acquisition, construction, alteration, rehabilitation, or maintenance of the houses (or apartment building), or in the acquisition of the land on which the houses (or apartment building) are situated.

(b) ***Limitation.*** The deduction allowable under section 216 shall not exceed the amount of the tenant-stockholder's proportionate share of the taxes and interest described therein. If a tenant-stockholder pays or incurs only a part of his proportionate share of such taxes and interest to the corporation, only the amount so paid or incurred which represents taxes and interest is allowable as a deduction under section 216. If a tenant-stockholder pays an amount, or incurs an obligation for an amount, to the corporation on account of such taxes and interest and other items, such as maintenance, overhead expenses, and reduction of mortgage indebtedness, the amount representing such taxes and interest is an amount which bears the same ratio to the total amount of the tenant-stockholder's payment or liability, as the case may be, as the total amount of the tenant-stockholder's proportionate share of such taxes and interest bears to the total amount of the tenant-stockholder's proportionate share of the taxes, interest, and other items on account of which such payment is made or liability incurred. No deduction is allowable under section 216 for that part of amounts representing the taxes or interest described in that section which are deductible by a tenant-stockholder under any other provision of the Code.

(c) ***Disallowance of deduction for certain payments to the corporation.*** For taxable years beginning after December 31, 1986, no deduction shall be allowed to a stockholder during any taxable year for any amount paid or accrued to a cooperative housing corporation (in excess of the stockholder's proportionate share of the items described in paragraphs (a) (1) and (2) of this section) which is allocable to amounts that are paid or incurred at any time by the cooperative housing corporation and which is chargeable to the corporation's capital account. Examples of expenditures chargeable to the corporation's capital account include the cost of paving a community parking lot, the purchase of a new boiler or roof, and the payment of the principal of the corporation's building mortgage. The adjusted basis of the stockholder's stock in such corporation shall be increased by the amount of such disallowance. This paragraph may be illustrated by the following example:

Example. The X corporation is a cooperative housing corporation within the meaning of section 216. In 1988 X uses $275,000 that it received from its shareholders in such year to purchase and place in service a new boiler. The $275,000 will be chargeable to the corporation's capital account. A owns 10% of the shares of X and uses in a trade or business the dwelling unit appurtenant to A's shares and was responsible for paying 10% of the cost of the boiler. A is thus responsible for $27,500 of the cost of the boiler, which amount A will not be able to deduct currently. A will, however, add the $27,500 to A's basis for A's shares in X.

(d) ***Tenant-stockholder's proportionate share*** —

(1) ***General rule.*** The tenant-stockholder's proportionate share is that proportion which the stock of the cooperative housing corporation owned by the tenant-stockholder is of the total outstanding stock of the corporation, including any stock held by the corporation. For taxable years beginning after December 31, 1969, if the cooperative housing corporation had issued stock to a governmental unit, as defined in paragraph (g) of this section, then in determining the total outstanding stock of the corporation, the governmental unit shall be deemed to hold the number of shares that it would have held, with respect to the apartments or houses it is entitled to occupy, if it had been a tenant-stockholder. That is, the number of shares the governmental unit is deemed to hold is determined in the same manner as if stock had been issued to it as a tenant-stockholder. For example, if a cooperative housing corporation requires each tenant-stockholder to buy one share of stock for each one thousand dollars of value of the apartment he is entitled to occupy, a governmental unit shall be deemed to hold one share of stock for each one thousand dollars of value of the apartments it is entitled to occupy, regardless of the number of shares formally issued to it.

(2) ***Special rule*** —

(i) ***In general.*** For taxable years beginning after December 31, 1986, if a cooperative housing corporation allocates to each tenant-stockholder a portion of the real estate taxes or interest (or both) that reasonably reflects the cost to the corporation of the taxes or interest attributable to each tenant-stockholder's dwelling unit (and the unit's share of the common areas), the cooperative housing corporation may elect to treat the amounts so allocated as the tenant-stockholders' proportionate shares.

(ii) ***Time and manner of making election.*** The election referred to in paragraph (d)(2)(i) of this section is effective only if, by January 31 of the year following the first calendar year that includes any period to which the election applies, the cooperative housing corporation furnishes to each person that is a tenant-stockholder during that period a written statement showing the amount of real estate taxes or interest (or both) allocated to the tenant-stockholder with respect to the tenant-stockholder's dwelling unit or units and share of common areas for that period. The election must be made by attaching a statement to the

corporation's timely filed tax return (taking extensions into account) for the first taxable year for which the election is to be effective. The statement must contain the name, address, and taxpayer identification number of the cooperative housing corporation, identify the election as an election under section 216(b)(3)(B)(ii) of the Code, indicate whether the election is being made with respect to the allocation of real estate taxes or interest (or both), and include a description of the method of allocation being elected. The election applies for the taxable year and succeeding taxable years. It is revocable only with the consent of the Commissioner and will be binding on all tenant-stockholders.

(iii) ***Reasonable allocation.*** It is reasonable to allocate to each tenant-stockholder a portion of the real estate taxes or interest (or both) that bears the same ratio to the cooperative housing corporation's total interest or real estate taxes as the fair market value of each dwelling unit (including the unit's share of the common areas) bears to the fair market value of all the dwelling units with respect to which stock is outstanding (including stock held by the corporation) at the time of allocation. If real estate taxes are separately assessed on each dwelling unit by the relevant taxing authority, an allocation of real estates taxes to tenant-stockholders based on separate assessments is a reasonable allocation. If one or more of the tenant-stockholders prepays any portion of the principal of the indebtedness and gives rise to interest, an allocation of interest to those tenant-stockholders will be a reasonable allocation of interest if the allocation is reduced to reflect the reduction in the debt service attributable to the prepayment. In addition, similar kinds of allocations may also be reasonable, depending on the facts and circumstances.

(3) ***Examples.*** The provisions of this paragraph may be illustrated by the following examples:

Example 1. The X Corporation is a cooperative housing corporation within the meaning of section 216. In 1970, it acquires a building containing 40 category A apartments and 25 category B apartments, for $750,000. The value of each category A apartment is $12,500, and of each category B apartment is $10,000. X values each share of stock issued with respect to the category A apartments at $125, and sells 4,000 shares of its stock, along with the right to occupy the 40 category A apartments, to 40 tenant-stockholders for $500,000. X also sells 1,000 shares of nonvoting stock to G, a State housing authority qualifying as a governmental unit under paragraph (f) of this section, for $250,000. The purchase of this stock gives G the right to occupy all the category B apartments. G is deemed to hold the number of shares that it would have held if it had been a tenant-stockholder. G is therefore deemed to own 2,000 shares of stock of X. All stockholders are required to pay a specified part of the corporation's expenses. F, one of the tenant-stockholders, purchased 100 shares of the category A stock for $12,500 in order to obtain a right to occupy a category A apartment. Since there are 6,000 total shares deemed outstanding, F's proportionate share is 1/60 (100/6,000).

Example 2. The X Corporation is a cooperative housing corporation within the meaning of section 216. In 1960 it acquired a housing development containing 100 detached houses, each house having the same value. X issued one share of stock to each of 100 tenant-stockholders, each share carrying the right to occupy one of the houses. In 1971 X redeemed 40 of its 100 shares. It then sold to G, a municipal housing authority qualifying as a governmental unit under paragraph (f) of this section, 1,000 shares of preferred stock and the right to occupy the 40 houses with respect to which the stock had been redeemed. X sold the preferred stock to G for an amount equal to the cost of redeeming the 40 shares. G also agreed to pay 40 percent of X's expenses. For purposes of determining the total stock which X has outstanding, G is deemed to hold 40 shares of X.

Example 3. The X Corporation is a cooperative housing corporation within the meaning of section 216. In 1987, it acquires for $1,000,000 a building containing 10 category A apartments, 10 category B apartments, and 10 category C apartments. The value of each category A apartment is $20,000, of each category B apartment is $30,000 and of each category C apartment is $50,000. X issues 1 share of stock to each of the 30 tenant-stockholders, each share carrying the right to occupy one of the apartments. X allocates the real estate taxes and interest to the tenant-stockholders on the basis of the fair market value of their respective apartments. Since the total fair market value of all of the apartments is $1,000,000, the allocation of taxes and interest to each tenant-stockholder that has the right to occupy a category A apartment is 2/100 ($20,000/$1,000,000). Similarly, the allocation of taxes and interest to each tenant-stockholder who has a right to occupy a category B apartment is 3/100 ($30,000/$1,000,000) and of a category C apartment is 5/100 ($50,000/$1,000,000). X may elect in accordance with the rules described in paragraph (d)(2) of this section to treat the amounts so allocated as each tenant-stockholder's proportionate share of real estate taxes and interest.

Example 4. The Y Corporation is a cooperative housing corporation within the meaning of section 216. In 1987, it acquires a housing development containing 5 detached houses for $1,500,000, incurring an indebtedness of $1,000,000 for the purchase of the property. Each house is valued at $300,000, although the shares appurtenant to those houses have been sold to tenant-stockholders for $100,000. Y issues one share of stock to each of the five tenant-stockholders, each share carrying the right to occupy one of the houses. A, a tenant-stockholder, prepays all of the corporation's indebtedness allocable to A's house. The periodic charges payable to Y by A are reduced commensurately with the reduction in Y's debt service. Because no part of the indebtedness remains outstanding with respect to A's house, A's share of the interest expense is $0. The other four tenant-stockholders do not prepay their share of the indebtedness. Accordingly, $^1/_4$ of the interest is allocated to each of the tenant-stockholders other than A. Y may elect in accordance with the rules described in paragraph (d)(2) of this section to treat the amounts so allocated as each tenant-stockholder's proportionate share of interest.

Example 5. The Z Corporation is a cooperative housing corporation within the meaning of section 216. In 1987, it acquires a building containing 10 apartments. One of the apartments is occupied by a senior citizen. Under local law, a senior citizen who owns and occupies a residential apartment is entitled to a $500 reduction in local property taxes assessed upon the apartment. As a result, Z corporation is eligible under local law for a reduction in local property taxes assessed upon the building. Z's real estate tax assessment for the year would have been $10,000, however, with the senior citizen reduction, the assessment is $9,500. The proprietary lease provides for a reduced maintenance fee to the senior citizen tenant-stockholder in accordance with the real estate tax reduction. Accordingly, each apartment owner is assessed $1,000 for local real estate taxes, except the senior citizen tenant-stockholder, who is assessed $500. Z may elect in accordance with the rules described in paragraph (d)(2) of this section to treat the amounts so allocated as each tenant-stockholder's proportionate share of taxes.

(e) ***Cooperative housing corporation.*** In order to qualify as a "cooperative housing corporation" under section 216, the requirements of subparagraphs (1) through (4) of this paragraph must be met.

(1) ***One class of stock.*** The corporation shall have one and only one class of stock outstanding. However, a special classification of preferred stock, in a nominal amount not exceeding $100, issued to a Federal housing agency or other governmental agency solely for the purpose of creating a security device on the mortgage indebtedness of the corporation, shall be disregarded for purposes of determining whether the corporation has one class of stock outstanding and such agency will not be

considered a stockholder for purposes of section 216 and this section. Furthermore, for taxable years beginning after December 31, 1969, a special class of stock issued to a governmental unit, as defined in paragraph (g) of this section, shall also be disregarded for purposes of this paragraph in determining whether the corporation has one class of stock outstanding.

(2) ***Right of occupancy.*** Each stockholder of the corporation, whether or not the stockholder qualifies as a tenant-stockholder under section 216(b)(2) and paragraph (f) of this section, must be entitled to occupy for dwelling purposes an apartment in a building or a unit in a housing development owned or leased by such corporation. The stockholder is not required to occupy the premises. The right as against the corporation to occupy the premises is sufficient. Such right must be conferred on each stockholder solely by reasons of his or her ownership of stock in the corporation. That is, the stock must entitle the owner thereof either to occupy the premises or to a lease of the premises. The fact that the right to continue to occupy the premises is dependent upon the payment of charges to the corporation in the nature of rentals or assessments is immaterial. For taxable years beginning after December 31, 1986, the fact that, by agreement with the cooperative housing corporation, a person or his nominee may not occupy the house or apartment without the prior approval of such corporation will not be taken into account for purposes of this paragraph in the following cases.

(i) In any case where a person acquires stock of the cooperative housing corporation by operation of law, by inheritance, or by foreclosure (or by instrument in lieu of foreclosure),

(ii) In any case where a person other than an individual acquires stock in the cooperative housing corporation, and

(iii) In any case where the person from whom the corporation has acquired the apartments or houses (or leaseholds therein) acquires any stock of the cooperative housing corporation from the corporation not later than one year after the date on which the apartments or houses (or leaseholds therein) are transferred to the corporation by such person. For purposes of the preceding sentence, paragraphs (e)(2) (i) and (ii) of this section will not apply to acquisitions of stock by foreclosure by the person from whom the corporation has acquired the apartments or houses (or leaseholds therein).

(3) ***Distributions.*** None of the stockholders of the corporation may be entitled, either conditionally or unconditionally, except upon a complete or partial liquidation of the corporation, to receive any distribution other than out of earnings and profits of the corporation.

(4) ***Gross income.*** Eighty percent or more of the gross income of the corporation for the taxable year of the corporation in which the taxes and interest are paid or incurred must be derived from the tenant-stockholders. For purposes of the 80-percent test, in taxable years beginning after December 31, 1969, gross income attributable to any house or apartment which a governmental unit is entitled to occupy, pursuant to a lease or stock ownership, shall be disregarded.

(f) ***Tenant-stockholder.*** The term *tenant-stockholder* means a person that is a stockholder in a cooperative housing corporation, as defined in section 216(b)(1) and paragraph (e) of this section, and whose stock is fully paid up in an amount at least equal to an amount shown to the satisfaction of the district director as bearing a reasonable relationship to the portion of the fair market value, as of the date of the original issuance of the stock, of the corporation's equity in the building and the land on which it is situated that is attributable to the apartment or housing unit which such person is entitled to occupy (within the meaning of paragraph (e)(2) of this section). Notwithstanding the preceding sentence, for taxable years beginning

before January 1, 1987, tenant-stockholders include only individuals, certain lending institutions, and certain persons from whom the cooperative housing corporation has acquired the apartments or houses (or leaseholds thereon).

(g) ***Governmental unit.*** For purposes of section 216(b) and this section, the term *governmental unit* means the United States or any of its possessions, a State or any political subdivision thereof, or any agency or instrumentality of the foregoing empowered to acquire shares in a cooperative housing corporation for the purpose of providing housing facilities.

(h) ***Examples.*** The application of section 216(a) and (b) and this section may be illustrated by the following examples, which refer to apartments but which are equally applicable to housing units:

Example 1. The X Corporation is a cooperative housing corporation within the meaning of section 216. In 1970, at a total cost of $200,000, it purchased a site and constructed thereon a building with 15 apartments. The fair market value of the land and building was $200,000 at the time of completion of the building. The building contains five category A apartment units, each of equal value, and 10 category B apartment units. The total value of all of the category A apartment units is $100,000. The total value of all of the category B apartments is also $100,000. Upon completion of the building, the X Corporation mortgaged the land and building for $100,000, and sold its total authorized capital stock for $100,000. The stock attributable to the category A apartments was purchased by five individuals, each of whom paid $10,000 for 100 shares, or $100 a share. Each certificate for 100 shares of such stock provides that the holder thereof is entitled to a lease of a particular apartment in the building for a specified term of years. The stock attributable to the category B apartments was purchased by a governmental unit for $50,000. Since the shares sold to the tenant-stockholders are valued at $100 per share, the governmental unit is deemed to hold a total of 500 shares. The certificate of such stock provides that the governmental unit is entitled to a lease of all of the category B apartments. All leases provide that the lessee shall pay his proportionate part of the corporation's expenses. In 1970 the original owner of 100 shares of stock attributable to the category A apartments and to the lease to apartment No. 1 made a gift of the stock and lease to A, an individual. The taxable year of A and of the X Corporation is the calendar year. The corporation computes its taxable income on an accrual method, while A computes his taxable income on the cash receipts and disbursements method. In 1971, the X Corporation incurred expenses aggregating $13,800, including $4,000 for the real estate taxes on the land and building, and $5,000 for the interest on the mortgage. In 1972, A pays the X Corporation $1,380, representing his proportionate part of the expenses incurred by the corporation. The entire gross income of the X Corporation for 1971 was derived from the five tenant-stockholders and from the governmental unit. A is entitled under section 216 to a deduction of $900 in computing his taxable income for 1972. The deduction is computed as follows:

Shares of X Corporation owned by A	100
Shares of X Corporation owned by four other tenant-stockholders	400
Shares of X Corporation deemed owned by governmental unit	500

Total shares of X Corporation outstanding		1,000
A's proportionate share of the stock of X Corporation (100/1,000)		1/10
Expenses incurred by X Corporation:		
Real estate taxes	$4,000	
Interest	5,000	
Other	4,800	
Total		$13,800
Amount paid by A		1,380
A's proportionate share of real estate taxes and interest based on his stock ownership (1/10 of $9,000)		$900
A's proportionate share of total corporate expenses based on his stock ownership (1/10 of $13,800)		1,380
Amount of A's payment representing real estate taxes and interest (900/1,380 of $1,380)		$900
A's allowable deduction		$900

Since the stock which A acquired by gift was fully paid up by his donor in an amount equal to the portion of the fair market value, as of the date of the original issuance of the stock, of the corporation's equity in the land and building which is attributable to apartment No. 1, the requirement of section 216 in this regard is satisfied. The fair market value at the time of the gift of the corporation's equity attributable to the apartment is immaterial.

Example 2. The facts are the same as in *Example 1* except that the building constructed by the X Corporation contained, in addition to the 15 apartments, business space on the ground floor, which the corporation rented at $2,400 for the calendar year 1971. The corporation deducted the $2,400 from its expenses in determining the amount of the expenses to be prorated among its tenant-stockholders. The amount paid by A to the corporation in 1972 is $1,140 instead of $1,380. More than 80 percent of the gross income of the corporation for 1971 was derived from tenant-stockholders. A is entitled under section 216 to a deduction of $743.48 in computing his taxable income for 1972. The deduction is computed as follows:

Expenses incurred by X Corporation	$13,800.00	
Less: Rent from business space	2,400.00	
Expenses to be prorated among tenant-stockholders		$11,400.00
Amount paid by A		1,140.00
A's proportionate share of real estate taxes and interest based on his stock ownership (1/10 of $9,000)		900.00
A's proportionate share of total corporate expenses based on his stock ownership (1/		1,380.00

10 of $13,800)	
Amount of A's payment representing real estate taxes and interest (900/1380 of $1,140)	743.48
A's allowable deduction	743.48

Since the portion of A's payment allocable to real estate taxes and interest is only $743.48, that amount instead of $900 is allowable as a deduction in computing A's taxable income for 1972.

Example 3. The facts are the same as in *Example 1* except that the amount paid by A to the X Corporation in 1972 is $1,000 instead of $1,380. A is entitled under section 216 to a deduction of $652.17 in computing his taxable income for 1972. The deduction is computed as follows:

Amount paid by A	$1,000.00
A's proportionate share of real estate taxes and interest based on his stock ownership (1/10 of $9,000)	900.00
A's proportionate share of total corporate expenses based on his stock ownership (1/10 of $13,800)	1,380.00
Amount of A's payment representing real estate taxes and interest (900/1380 of $1,000)	652.17
A's allowable deduction	652.17

Since the portion of A's payment allocable to real estate taxes and interest is only $652.17, that amount instead of $900 is allowable as a deduction in computing A's taxable income for 1972.

Example 4. The facts are the same as in *Example 1* except that X Corporation leases recreational facilities from Y Corporation for use by the tenant-stockholders of X. Under the terms of the lease, X is obligated to pay an annual rental of $5,000 plus all real estate taxes assessed against the facilities. In 1971 X paid, in addition to the $13,800 of expenses enumerated in *Example 1,* $5,000 rent and $1,000 real estate taxes. In 1972 A pays the X Corporation $2,000, no part of which is refunded to him in 1972. A is entitled under section 216 to a deduction of $900 in computing his taxable income for 1972. The deduction is computed as follows:

Expenses to be prorated among tenant-stockholders	$19,800
Amount paid by A	2,000
A's proportionate share of real estate taxes and interest based on his stock ownership (1/	900

10 of $9,000)	
A's proportionate share of total corporate expenses based on his stock ownership (1/10 of $19,800)	1,980
Amount of A's payment representing real estate taxes and interest (900/1,980 of $1,980)	900
A's allowable deduction	900

The $1,000 of real estate taxes assessed against the recreational facilities constitutes additional rent and hence is not deductible by A as taxes under section 216. A's allowable deduction is limited to his proportionate share of real estate taxes and interest based on stock ownership and cannot be increased by the payment of an amount in excess of his proportionate share.

[T.D. 7092, 36 FR 4597, Mar. 10, 1971; 36 FR 4985, Mar. 16, 1971, as amended by T.D. 8316, 55 FR 42004, Oct. 17, 1990]

§ 1.216-2 Treatment as property subject to depreciation.

(a) ***General rule.*** For taxable years beginning after December 31, 1961, stock in a cooperative housing corporation (as defined by section 216(b)

(1) and paragraph (c) of § 1.216-1) owned by a tenant-stockholder (as defined by section 216(b)

(2) and paragraph (d) of § 1.216-1) who uses the proprietary lease or right of tenancy, which was conferred on him solely by reason of his ownership of such stock, in a trade or business or for the production of income shall be treated as property subject to the allowance for depreciation under section 167(a) in the manner and to the extent prescribed in this section.

(b) ***Determination of allowance for depreciation*** —

(1) ***In general.*** Subject to the special rules provided in subparagraphs (2) and (3) of this paragraph and the limitation provided in paragraph (c) of this section, the allowance for depreciation for the taxable year with respect to stock of a tenant-stockholder, subject to the extent provided in this section to an allowance for depreciation, shall be determined:

(i) By computing the amount of depreciation (amortization in the case of a leasehold) which would be allowable under one of the methods of depreciation prescribed in section 167(b) and the regulations thereunder (in paragraph (a) of § 1.162-11 and § 1.167(a)-4 in the case of a leasehold) in respect of the depreciable (amortizable) real property owned by the cooperative housing corporation in which such tenant-stockholder has a proprietary lease or right of tenancy,

(ii) By reducing the amount of depreciation (amortization) so computed in the same ratio as the rentable space in such property which is not subject to a proprietary lease or right of tenancy by reason of stock ownership but which is held for rental purposes bears to the total rentable space in such property, and

(iii) By computing such tenant-stockholder's proportionate share of such annual depreciation (amortization), so reduced.

As used in this section, the terms *depreciation* and *depreciable real property* include amortization and amortizable leasehold of real property. As used in this section, the tenant-stockholder's proportionate share is that proportion which stock of the cooperative housing corporation owned by the tenant-stockholder is of the total outstanding stock of the corporation, including any stock held by the corporation. In order to determine whether a tenant-stockholder may use one of the methods of depreciation prescribed in section 167(b) (2), (3), or (4) for purposes of subdivision (i) of this subparagraph, the limitations provided in section 167(c) on the use of such methods of depreciation shall be applied with respect to the depreciable real property owned by the cooperative housing corporation in which the tenant-stockholder has a proprietary lease or right of tenancy, rather than with respect to the stock in the cooperative housing corporation owned by the tenant-stockholder or with respect to the proprietary lease or right of tenancy conferred on the tenant-stockholder by reason of his ownership of such stock. The allowance for depreciation determined under this subparagraph shall be properly adjusted where only a portion of the property occupied under a proprietary lease or right of tenancy is used in a trade or business or for the production of income.

(2) ***Stock acquired subsequent to first offering.*** Except as provided in subparagraph (3), in the case of a tenant-stockholder who purchases stock other than as part of the first offering of stock by the corporation, the basis of the depreciable real property for purposes of the computation required by subparagraph (1)(i) of this paragraph shall be the amount obtained by:

(i) Multiplying the taxpayer's cost per share by the total number of outstanding shares of stock of the corporation, including any shares held by the corporation,

(ii) Adding thereto the mortgage indebtedness to which such depreciable real property is subject on the date of purchase of such stock, and

(iii) Subtracting from the sum so obtained the portion thereof not properly allocable as of the date such stock was purchased to the depreciable real property owned by the cooperative housing corporation in which such tenant-stockholder has a proprietary lease or right of tenancy.

In order to prevent an overstatement or understatement of the basis of the depreciable real property for purposes of the computation required by subparagraph (1)(i) of this paragraph, appropriate adjustment for purposes of the computations described in subdivisions (i) and (ii) of this subparagraph shall be made in respect of prepayments and delinquencies on account of the corporation's mortgage indebtedness. Thus, for purposes of subdivision (i) of this subparagraph, the taxpayer's cost per share shall be reduced by an amount determined by dividing the total mortgage indebtedness prepayments in respect of the shares purchased by the taxpayer by the number of such shares. For purposes of subdivision (ii) of this subparagraph, the mortgage indebtedness shall be increased by the sum of all prepayments applied in reduction of the mortgage indebtedness and shall be decreased by any amount due under the terms of the mortgage and unpaid.

(3) ***Conversion subsequent to date of acquisition.*** In the case of a tenant-stockholder whose proprietary lease or right of tenancy is converted, in whole or in part, to use in a trade or business or for the production of income on a date subsequent to the date on which he acquired the stock conferring on him such lease or right of tenancy, the basis of the depreciable real property for purposes of the computation required by subparagraph (1)(i) of this paragraph shall be the fair market value of such depreciable real property on the date of the conversion if the fair market value is less than the adjusted basis of such property in the hands of the cooperative housing corporation provided in section 1011 without taking into account any adjustment for depreciation required by section 1016(a)(2). Such fair market value shall be deemed to be equal to the adjusted basis of such property, taking into account adjustments required by section 1016(a)(2) computed as if the

corporation had used the straight line method of depreciation, in the absence of evidence establishing that the fair market value so attributed to the property is unrealistic. In the case of a tenant-stockholder who purchases stock other than as part of the first offering of stock of the corporation, and at a later date converts his proprietary lease to use for business or production of income:

(i) The adjusted basis of the cooperative housing corporation's depreciable real property without taking into account any adjustment for depreciation shall be the amount determined in accordance with subdivisions (i), (ii), and (iii) of subparagraph (2) of this paragraph, and

(ii) The fair market value shall be deemed to be equal to such adjusted basis reduced by the amount of depreciation, computed under the straight line method, which would have been allowable in respect of depreciable real property having a cost or other basis equal to the amount representing such adjusted basis in the absence of evidence establishing that the fair market value so attributed to the property is unrealistic.

(c) ***Limitation.*** If the allowance for depreciation for the taxable year determined in accordance with the provisions of paragraph (b) of this section exceeds the adjusted basis (provided in section 1011) of the stock described in paragraph (a) of this section allocable to the tenant-stockholder's proprietary lease or right of tenancy used in a trade or business or for the production of income, such excess is not allowable as a deduction. For taxable years beginning after December 31, 1986, such excess, subject to the provisions of this paragraph (c), is allowable as a deduction for depreciation in the succeeding taxable year. To determine the portion of the adjusted basis of such stock which is allocable to such proprietary lease or right of tenancy, the adjusted basis is reduced by taking into account the same factors as are taken into account under paragraph (b)(1) of this section in determining the allowance for depreciation.

(d) ***Examples.*** The provisions of section 216(c) and this section may be illustrated by the following examples:

Example 1. The Y corporation, a cooperative housing corporation within the meaning of section 216, in 1961 purchased a site and constructed thereon a building with 10 apartments at a total cost of $250,000 ($200,000 being allocable to the building and $50,000 being allocable to the land). Such building was completed on January 1, 1962, and at that time had an estimated useful life of 50 years, with an estimated salvage value of $20,000. Each apartment is of equal value. Upon completion of the building, Y corporation mortgaged the land and building for $150,000 and sold its total authorized capital stock, consisting of 1000 shares of common stock, for $100,000. The stock was purchased by 10 individuals each of whom paid $10,000 for 100 shares. Each certificate for 100 shares provides that the holder thereof is entitled to a proprietary lease of a particular apartment in the building. Each lease provides that the lessee shall pay his proportionate share of the corporation's expenses including an amount on account of the curtailment of Y's mortgage indebtedness. B, a calendar year taxpayer, is the original owner of 100 shares of stock in Y corporation. On January 1, 1962, B subleases his apartment for a term of 5 years. B's stock in Y corporation is treated as property subject to the allowance for depreciation under section 167(a), and B, who uses the straight line method of depreciation for purposes of the computation prescribed by paragraph (b)(1)(i) of this section, computes the allowance for depreciation for the taxable year 1962 with

respect to such stock as follows:

Y's basis in the building	$200,000
Less: Estimated salvage value	$20,000
Y's basis for depreciation	$180,000
Annual straight line depreciation on Y's building (1/50 of $180,000)	$3,600
Proportion of outstanding shares of stock of Y corporation (1,000) owned by B (100)	1/10
B's proportionate share of annual depreciation (1/10 of $3,600)	$360
Depreciation allowance for 1962 with respect to B's stock (if the limitation in paragraph (c) of this section is not applicable)	$360

Example 2. The facts are the same as in *Example 1* except that the building constructed by Y corporation contained, in addition to the 10 apartments, space on the ground floor for 2 stores which were rented to persons who do not have a proprietary lease of such space by reason of stock ownership. Y corporation's building has a total area of 16,000 square feet, the 10 apartments in such building have an area of 10,000 square feet, and the 2 stores on the ground floor have an area of 2,000 square feet. Thus, the total rentable space in Y corporation's building is 12,000 square feet. B, who uses the straight line method of depreciation for purposes of the computation prescribed by paragraph (b)(1)(i) of this section, computes the allowance for depreciation for the taxable year 1962 with respect to his stock in Y corporation as follows:

Y's basis in the building	$200,000
Less: Estimated salvage value	20,000
Y's basis for depreciation	180,000
Annual straight line depreciation on Y's building (1/50 of $180,000)	3,600
Less: Amount representing rentable space not subject to proprietary lease but held for rental purposes over total rentable space 2,000 ÷ 12,000 (of $3,600)	600
Annual depreciation, as reduced	3,000
B's proportionate share of annual depreciation (1/10 of $3,000)	300
Depreciation allowance for 1962 with respect to B's stock (if the limitation in paragraph (c) of this section is not applicable)	300

Example 3. The facts are the same as in *Example 1* except that B occupies his apartment from January 1, 1962, until December 31, 1966, and that on January 1, 1967, B sells his stock to C, an individual, for $15,000. C thereby obtains a proprietary lease from Y corporation with the same rights and obligations as B's lease provided. Y corporation's records disclose that its outstanding mortgage indebtedness is

$135,000 on January 1, 1967. C, a physician, uses the entire apartment solely as an office. C's stock in Y corporation is treated as property subject to the allowance for depreciation under section 167(a), and C, who uses the straight line method of depreciation for purposes of the computation prescribed by paragraph (b)(1)(i) of this section, computes the allowance for depreciation for the taxable year 1967 with respect to such stock as follows:

Price paid for each share of stock in Y corporation purchased by C on 1-1-67 ($15,000 ÷ 100)	$150
Per share price paid by C multiplied by total shares of stock in Y corporation outstanding on 1-1-67 ($150 × 1,000)	150,000
Y's mortgage indebtedness outstanding on 1-1-67	135,000
	285,000
Less: Amount attributable to land (assumed to be $^1/_5$ of $285,000)	57,000
	228,000
Less: Estimated salvage value	20,000
Basis of Y's building for purposes of computing C's depreciation	208,000
Annual straight line depreciation (1/45 of $208,000)	4,622.22
C's proportionate share of annual depreciation (1/10 of $4,622.22)	462.22
Depreciation allowance for 1967 with respect to C's stock (if the limitation in paragraph (c) of this section is not applicable)	462.22

[T.D. 6725, 29 FR 5665, Apr. 29, 1964, as amended by T.D. 8316, 55 FR 42006, Oct. 17, 1990]

§ 1.217-1 Deduction for moving expenses paid or incurred in taxable years beginning before January 1, 1970.

(a) ***Allowance of deduction*** —

(1) ***In general.*** Section 217(a) allows a deduction from gross income for moving expenses paid or incurred by the taxpayer during the taxable year in connection with the commencement of work as an employee at a new principal place of work. Except as provided in section 217, no deduction is allowable for any expenses incurred by the taxpayer in connection with moving himself, the members of his family or household, or household goods and personal effects. The deduction allowable under this section is only for expenses incurred after December 31, 1963, in taxable years ending after such date and beginning before January 1, 1970, except in cases where a taxpayer makes an election under paragraph (g) of § 1.217-2 with respect to moving expenses paid or incurred before January 1, 1971, in connection with the commencement of work by such taxpayer as an employee at a new principal place of work of which such taxpayer has been notified by his employer on or before December 19, 1969. To qualify for the deduction the expenses must meet the definition of the term “moving expenses” provided in section 217(b); the taxpayer must meet the conditions set forth in section 217(c); and, if the taxpayer receives a reimbursement or other expense allowance for an item of expense, the deduction for the portion of the expense reimbursed is allowable only to the extent that such reimbursement or other expense allowance is included in

his gross income as provided in section 217(e). The deduction is allowable only to a taxpayer who pays or incurs moving expenses in connection with his commencement of work as an employee and is not allowable to a taxpayer who pays or incurs such expenses in connection with his commencement of work as a self-employed individual. The term *employee* as used in this section has the same meaning as in § 31.3401(c)-1 of this chapter (Employment Tax Regulations). All references to section 217 in this section are to section 217 prior to the effective date of section 231 of the Tax Reform Act of 1969 (83 Stat. 577).

(2) ***Commencement of work.*** To be deductible, the moving expenses must be paid or incurred by the taxpayer in connection with the commencement of work by him at a new principal place of work (see paragraph (c)(3) of this section for a discussion of the term *principal place of work*). While it is not necessary that the taxpayer have a contract or commitment of employment prior to his moving to a new location, the deduction is not allowable unless employment actually does occur. The term *commencement* includes

(i) the beginning of work by a taxpayer for the first time or after a substantial period of unemployment or part-time employment,

(ii) the beginning of work by a taxpayer for a different employer, or

(iii) the beginning of work by a taxpayer for the same employer at a new location. To qualify as being in connection with the commencement of work, the move for which moving expenses are incurred must bear a reasonable proximity both in time and place to such commencement. In general, moving expenses incurred within one year of the date of the commencement of work are considered to be reasonably proximate to such commencement. Moving expenses incurred in relocating the taxpayer's residence to a location which is farther from his new principal place of work than was his former residence are not generally to be considered as incurred in connection with such commencement of work. For example, if A is transferred by his employer from place X to place Y and A's old residence while he worked at place X is 25 miles from Y, A will not generally be entitled to deduct moving expenses in moving to a new residence 40 miles from Y even though the minimum distance limitation contained in section 217(c)(1) is met. If, however, A is required, as a condition of his employment, to reside at a particular place, or if such residency will result in an actual decrease in his commuting time or expense, the expenses of the move may be considered as incurred in connection with his commencement of work at place Y.

(b) ***Definition of moving expenses*** —

(1) ***In general.*** Section 217(b) defines the term *moving expenses* to mean only the reasonable expenses

(i) of moving household goods and personal effects from the taxpayer's former residence to his new residence, and

(ii) of traveling (including meals and lodging) from the taxpayer's former residence to his new place of residence. The test of deductibility thus is whether the expenses are reasonable and are incurred for the items set forth in (i) and (ii) above.

(2) ***Reasonable expenses.***

(i) The term *moving expenses* includes only those expenses which are reasonable under the circumstances of the particular move. Generally, expenses are reasonable only if they are paid or incurred for movement by the shortest and most direct route available from the taxpayer's

former residence to his new residence by the conventional mode or modes of transportation actually used and in the shortest period of time commonly required to travel the distance involved by such mode. Expenses paid or incurred in excess of a reasonable amount are not deductible. Thus, if moving or travel arrangements are made to provide a circuitous route for scenic, stopover, or other similar reasons, the additional expenses resulting therefrom are not deductible since they do not meet the test of reasonableness.

(ii) The application of this subparagraph may be illustrated by the following example:

Example. A, an employee of the M Company works and maintains his principal residence in Boston, Massachusetts. Upon receiving orders from his employer that he is to be transferred to M's Los Angeles, California office, A motors to Los Angeles with his family with stopovers at various cities between Boston and Los Angeles to visit friends and relatives. In addition, A detours into Mexico for sight-seeing. Because of the stopovers and tour into Mexico, A's travel time and distance are increased over what they would have been had he proceeded directly to Los Angeles. To the extent that A's route of travel between Boston and Los Angeles is in a generally southwesterly direction it may be said that he is traveling by the shortest and most direct route available by motor vehicle. Since A's excursion into Mexico is away from the usual Boston-Los Angeles route, the portion of the expenses paid or incurred attributable to such excursion is not deductible. Likewise, that portion of the expenses attributable to A's delays en route not necessitated by reasons of rest or repair of his vehicle are not deductible.

(3) ***Expenses of moving household goods and personal effects.*** Expenses of moving household goods and personal effects include expenses of transporting such goods and effects owned by the taxpayer or a member of his household from the taxpayer's former residence to his new residence, and expenses of packing, crating and in-transit storage and insurance for such goods and effects. Expenses paid or incurred in moving household goods and personal effects to a taxpayer's new residence from a place other than his former residence are allowable, but only to the extent that such expenses do not exceed the amount which would be allowable had such goods and effects been moved from the taxpayer's former residence. Examples of items not deductible as moving expenses include, but are not limited to, storage charges (other than in-transit), costs incurred in the acquisition of property, costs incurred and losses sustained in the disposition of property, penalties for breaking leases, mortgage penalties, expenses of refitting rugs or draperies, expenses of connecting or disconnecting utilities, losses sustained on the disposal of memberships in clubs, tuition fees, and similar items.

(4) ***Expenses of traveling.*** Expenses of traveling include the cost of transportation and of meals and lodging en route (including the date of arrival) of both the taxpayer and members of his household, who have both the taxpayer's former residence and the taxpayer's new residence as their principal place of abode, from the taxpayer's former residence to his new place of residence. Expenses of traveling do not include, for example: living or other expenses of the taxpayer and members of his household following their date of arrival at the new place of residence and while they are waiting to enter the new residence or waiting for their household goods to arrive; expenses in connection with house or apartment hunting; living expenses preceding the date of departure for the new place of residence; expenses of trips for purposes of selling property; expenses of trips to the former residence by the taxpayer pending the move by his family to the new place of residence; or any allowance for depreciation. The deduction for traveling expenses is allowable for only one trip made by the taxpayer and members of his household; however, it is not necessary that the taxpayer and all members of his household travel together or at the same time.

(5) ***Residence.*** The term *former residence* refers to the taxpayer's principal residence before his departure for his new principal place of work. The term *new residence* refers to the taxpayer's principal residence within the general location of his new principal place of work. Thus, neither term includes other residences owned or maintained by the taxpayer or members of his family or seasonal residences such as a summer beach cottage. Whether or not property is used by the taxpayer as his residence, and whether or not property is used by the taxpayer as his principal residence (in the case of a taxpayer using more than one property as a residence), depends upon all the facts and circumstances in each case. Property used by the taxpayer as his principal residence may include a houseboat, a house trailer, or similar dwelling. The term *new place of residence* generally includes the area within which the taxpayer might reasonably be expected to commute to his new principal place of work. The application of the terms *former residence, new residence* and *new place of residence* as defined in this paragraph and as used in section 217(b)(1) may be illustrated in the following manner: Expenses of moving household goods and personal effects are moving expenses when paid or incurred for transporting such items from the taxpayer's former residence to the taxpayer's new residence (such as from one street address to another). Expenses of traveling, on the other hand, are limited to those incurred between the taxpayer's former residence (a geographic point) and his new place of residence (a commuting area) up to and including the date of arrival. The date of arrival is the day the taxpayer secures lodging within that commuting area, even if on a temporary basis.

(6) ***Individuals other than taxpayer.*** In addition to the expenses set forth in section 217(b)(1) which are attributable to the taxpayer alone, the same type of expenses attributable to certain individuals other than the taxpayer, if paid or incurred by the taxpayer, are deductible. Those other individuals must

(i) be members of the taxpayer's household, and

(ii) have both the taxpayer's former residence and his new residence as their principal place of abode. A member of the taxpayer's household may not be, for example, a tenant residing in the taxpayer's residence, nor an individual such as a servant, governess, chauffeur, nurse, valet, or personal attendant.

(c) ***Conditions for allowance*** —

(1) ***In general.*** Section 217(c) provides two conditions which must be satisfied in order for a deduction of moving expenses to be allowed under section 217(a). The first is a minimum distance requirement prescribed by section 217(c)(1), and the second is a minimum period of employment requirement prescribed by section 217(c)(2).

(2) ***Minimum distance.*** For purposes of applying the minimum distance requirement of section 217(c)(1) all taxpayers are divided into one or the other of the following categories: taxpayers having a former principal place of work, and taxpayers not having a former principal place of work. In this latter category are individuals who are seeking full-time employment for the first time (for example, recent high school or college graduates), or individuals who are re-entering the labor force after a substantial period of unemployment or part-time employment.

(i) In the case of a taxpayer having a former principal place of work, section 217(c)(1)(A) provides that no deduction is allowable unless the distance between his new principal place of work and his former residence exceeds by at least 20 miles the distance between his former principal place of work and such former residence.

(ii) In the case of a taxpayer not having a former principal place of work, section 217(c)(1)(B) provides that no deduction is allowable unless the distance between his new principal place of work and his former residence is at least 20 miles.

(iii) For purposes of measuring distances under section 217(c)(1) all computations are to be made on the basis of a straight-line measurement.

(3) ***Principal place of work.***

(i) A taxpayer's "principal place of work" usually is the place at which he spends most of his working time. Generally, where a taxpayer performs services as an employee, his principal place of work is his employer's plant, office, shop, store or other property. However, a taxpayer may have a principal place of work even if there is no one place at which he spends a substantial portion of his working time. In such case, the taxpayer's principal place of work is the place at which his business activities are centered—for example, because he reports there for work, or is otherwise required either by his employer or the nature of his employment to "base" his employment there. Thus, while a member of a railroad crew, for example, may spend most of his working time aboard a train, his principal place of work is his home terminal, station, or other such central point where he reports in, checks out, or receives instructions. In those cases where the taxpayer is employed by a number of employers on a relatively short-term basis, and secures employment by means of a union hall system (such as a construction or building trades worker), the taxpayer's principal place of work would be the union hall.

(ii) In cases where a taxpayer has more than one employment (i.e., more than one employer at any particular time) his principal place of work is usually determined with reference to his principal employment. The location of a taxpayer's principal place of work is necessarily a question of fact which must be determined on the basis of the particular circumstances in each case. The more important factors to be considered in making a factual determination regarding the location of a taxpayer's principal place of work are (*a*) the total time ordinarily spent by the taxpayer at each place, (*b*) the degree of the taxpayer's business activity at each place, and (*c*) the relative significance of the financial return to the taxpayer from each place.

(iii) In general, a place of work is not considered to be the taxpayer's principal place of work for purposes of this section if the taxpayer maintains an inconsistent position, for example, by claiming an allowable deduction under section 162 (relating to trade or business expenses) for traveling expenses "while away from home" with respect to expenses incurred while he is not away from such place of work and after he has incurred moving expenses for which a deduction is claimed under this section.

(4) ***Minimum period of employment.*** Under section 217(c)(2), no deduction is allowed unless, during the 12-month period immediately following the taxpayer's arrival in the general location of his new principal place of work, he is a full-time employee, in such general location, during at least 39 weeks.

(i) The 12-month period and the 39-week period set forth in section 217(c)(2) are measured from the date of the taxpayer's arrival in the general location of his new principal place of work. Generally, the taxpayer's date of arrival is the date of the termination of the last trip preceding the taxpayer's commencement of work on a regular basis, regardless of the date on which the taxpayer's family or household goods and effects arrive.

(ii) It is not necessary that the taxpayer remain in the employ of the same employer for 39 weeks, but only that he be employed in the same general location of his new principal place of work during such period. The *general location* of the new principal place of work refers to the area

within which an individual might reasonably be expected to commute to such place of work, and will usually be the same area as is known as the *new place of residence*; see paragraph (b)(5) of this section.

(iii) Only a week during which the taxpayer is a full-time employee qualifies as a week of work for purposes of the 39-week requirement of section 217(c)(2). Whether an employee is a full-time employee during any particular week depends upon the customary practices of the occupation in the geographic area in which the taxpayer works. In the case of occupations where employment is on a seasonal basis, weeks occuring in the off-season when no work is required or available (as the case may be) may be counted as weeks of full-time employment only if the employee's contract or agreement of employment covers the off-season period and the off-season period is less than 6 months. Thus, a school teacher whose employment contract covers a 12-month period and who teaches on a full-time basis for more than 6 months in fulfillment of such contract is considered a full-time employee during the entire 12-month period. A taxpayer will not be deemed as other than a full-time employee during any week merely because of periods of involuntary temporary absence from work, such as those due to illness, strikes, shutouts, layoffs, natural disasters, etc.

(iv) In the case of taxpayers filing a joint return, either spouse may satisfy this 39-week requirement. However, weeks worked by one spouse may not be added to weeks worked by the other spouse in order to satisfy such requirement.

(v) The application of this subparagraph may be illustrated by the following examples:

Example 1. A is an electrician residing in New York City. Having heard of the possibility of better employment prospects in Denver, Colorado, he moves himself, his family and his household goods and personal effects, at his own expense, to Denver where he secures employment with the M Aircraft Corporation. After working full-time for 30 weeks his job is terminated, and he subsequently moves to and secures employment in Los Angeles, California, which employment lasts for more than 39 weeks. Since A was not employed in the general location of his new principal place of employment while in Denver for at least 39 weeks, no deduction is allowable for moving expenses paid or incurred between New York City and Denver. A will be allowed to deduct only those moving expenses attributable to his move from Denver to Los Angeles, assuming all other conditions of section 217 are met.

Example 2. Assume the same facts as in *Example 1,* except that B, A's wife, secures employment in Denver at the same time as A, and that she continues to work in Denver for at least 9 weeks after A's departure for Los Angeles. Since she has met the 39-week requirement in Denver, and assuming all other requirements of section 217 are met, the moving expenses paid by A attributable to the move from New York City to Denver will be allowed as a deduction, provided A and B filed a joint return.

Example 3. Assume the same facts as in *Example 1,* except that B, A's wife, secures employment in Denver on the same day that A departs for Los Angeles, and continues to work in Denver for 9 weeks thereafter. Since neither A (who has worked 30 weeks) nor B (who has worked 9 weeks) has independently satisfied the 39-week requirement, no deduction for moving expenses attributable to the move from New York City to Denver is allowable.

(d) ***Rules for application of section 217(c)(2)*** —

(1) ***Inapplicability of 39-week test to reimbursed expenses.***

(i) Paragraph (1) of section 217(d) provides that the 39-week employment condition of section 217(c)(2) does not apply to any moving expense item to the extent that the taxpayer receives reimbursement or other allowance from his employer for such item. A reimbursement or other allowance to an employee for expenses of moving, in the absence of a specific allocation by the employer, is allocated first to items deductible under section 217(a) and then, if a balance remains, to items not so deductible.

(ii) The application of this subparagraph may be illustrated by the following examples:

Example 1. A, a recent college graduate, with his residence in Washington, DC, is hired by the M Corporation in San Francisco, California. Under the terms of the employment contract, M agrees to reimburse A for three-fifths of his moving expenses from Washington to San Francisco. A moves to San Francisco, and pays $1,000 for expenses incurred, for which he is reimbursed $600 by M. After working for M for a period of 3 months, A becomes dissatisfied with the job and returns to Washington to continue his education. Since he has failed to satisfy the 39-week requirement of section 217(c)(2) the expenses totaling $400 for which A has received no reimbursement are not deductible. Under the special rule of section 217(d)(1), however, the deduction for the $600 reimbursed moving expenses is not disallowed by reason of section 217(c)(2).

Example 2. B, a self-employed accountant, who works and resides in Columbus, Ohio, is hired by the N Company in St. Petersburg, Florida. Pursuant to its policy with respect to newly hired employees, N agrees to reimburse B to the extent of $1,000 of the expenses incurred by him in connection with his move to St. Petersburg, allocating $700 for the items specified in section 217(b)(1), and $300 for "temporary living expenses." B moves to St. Petersburg, and incurs $800 of "moving expenses" and $300 of "temporary living expenses" in St. Petersburg. B receives reimbursement of $1,000 from N, which amount is included in his gross income. Assuming B fails to satisfy the 39-week test of section 217(c)(2), he will nevertheless be allowed to deduct $700 as a moving expense. On the other hand, had N made no allocation between deductible and non-deductible items, B would have been allowed to deduct $800 since, in the absence of a specific allocation of the reimbursement by N, it is presumed that the reimbursement was for items specified in section 217(b)(1) to the extent thereof.

(2) ***Election of deduction before 39-week test is satisfied.***

(i) Paragraph (2) of section 217(d) provides a special rule which applies in those cases where a taxpayer paid or incurred, in a particular taxable year, moving expenses which would be deductible in that taxable year except for the fact that the 39-week employment condition of section 217(c)(2) has not been satisfied before the time prescribed by law (including extensions thereof) for filing the return for such taxable year. The rule provides that where a taxpayer has paid or incurred moving expenses and as of the date prescribed by section 6072 for filing his return for such taxable year, including extensions thereof as may be allowed under section 6081, there remains unexpired a sufficient portion of the 12-month period so that it is still possible for the taxpayer to satisfy the 39-week requirement, then the taxpayer may elect to claim a deduction for such moving expenses on the return for such taxable year. The election shall be exercised by taking the deduction on the return filed within the time prescribed by section 6072 (including extensions as may be allowed under section 6081). It is not necessary that the taxpayer wait until the date prescribed by law for filing his return in order to make the election. He may make the election on an early return based upon the facts known on the date

such return is filed. However, an election made on an early return will become invalid if, as of the date prescribed by law for filing the return, it is not possible for the taxpayer to satisfy the 39-week requirement.

(ii) In the event that a taxpayer does not elect to claim a deduction for moving expenses on the return for the taxable year in which such expenses were paid or incurred in accordance with (i) of this subparagraph, and the 39-week employment condition of section 217(c)(2) (as well as all other requirements of section 217) is subsequently satisfied, then the taxpayer may file an amended return for the taxable year in which such moving expenses were paid or incurred on which he may claim a deduction under section 217. The taxpayer may, in lieu of filing an amended return, file a claim for refund based upon the deduction allowable under section 217.

(iii) The application of this subparagraph may be illustrated by the following examples:

Example 1. A is transferred by his employer, M, from Boston, Massachusetts, to Cleveland, Ohio, and begins working there on November 1, 1964, followed by his family and household goods and personal effects on November 15, 1964. Moving expenses are paid or incurred by A in 1964 in connection with this move. On April 15, 1965, when A files his income tax return for the year 1964, A has been a full-time employee in Cleveland for approximately 24 weeks. Notwithstanding the fact that as of April 15, 1965, A has not satisfied the 39-week employment condition of section 217(c)(2) he may nevertheless elect to claim his 1964 moving expenses on his 1964 income tax return since there is still sufficient time remaining before November 1, 1965, within which to satisfy the 39-week requirement.

Example 2. Assume the facts are the same as in *Example 1,* except that as of April 15, 1965, A has left the employ of M, and is in the process of seeking further employment in Cleveland. Since, under these conditions, A may be unsure whether or not he will be able to satisfy the 39-week requirement by November 1, 1965, he may not wish to avail himself of the election provided by section 217(d)(2). In such event, A may wait until he has actually satisfied the 39-week requirement, at which time he may file an amended return claiming as a deduction the moving expenses paid or incurred in 1964. A may, in lieu of filing an amended return, file a claim for refund based upon a deduction for such expenses. Should A fail to satisfy the 39-week requirement on or before November 1, 1965, no deduction is allowable for moving expenses incurred in 1964.

(3) ***Recapture of deduction where 39-week test is not met.*** Paragraph (3) of section 217(d) provides a special rule which applies in cases where a taxpayer has deducted moving expenses under the election provided in section 217(d)(2) prior to his satisfying the 39-week employment condition of section 217(c)(2), and the 39-week test is not satisfied during the taxable year immediately following the taxable year in which the expenses were deducted. In such cases an amount equal to the expenses which were deducted must be included in the taxpayer's gross income for the taxable year immediately following the taxable year in which the expenses were deducted. In the event the taxpayer has deducted moving expenses under the election provided in section 217(d)(2) for the taxable year, and subsequently files an amended return for such year on which he eliminates such deduction, such expenses will not be deemed to have been deducted for purposes of the recapture rule of the preceding sentence.

(e) ***Disallowance of deduction with respect to reimbursements not included in gross income.*** Section 217(e) provides that no deduction shall be allowed under section 217 for any item to the extent that the taxpayer receives reimbursement or other expense allowance for such item unless the amount of such reimbursement or other expense allowance is included in his gross income. A reimbursement or other

allowance to an employee for expenses of moving, in the absence of a specific allocation by the employer, is allocated first to items deductible under section 217(a) and then, if a balance remains, to items not so deductible. For purposes of this section, moving services furnished in-kind, directly or indirectly, by a taxpayer's employer to the taxpayer or members of his household are considered as being a reimbursement or other allowance received by the taxpayer for moving expenses. If a taxpayer pays or incurs moving expenses and either prior or subsequent thereto receives reimbursement or other expense allowance for such item, no deduction is allowed for such moving expenses unless the amount of the reimbursement or other expense allowance is included in his gross income in the year in which such reimbursement or other expense allowance is received. In those cases where the reimbursement or other expense allowance is received by a taxpayer for an item of moving expense subsequent to his having claimed a deduction for such item, and such reimbursement or other expense allowance is properly excluded from gross income in the year in which received, the taxpayer must file an amended return for the taxable year in which the moving expenses were deducted and decrease such deduction by the amount of the reimbursement or other expense allowance not included in gross income. This does not mean, however, that a taxpayer has an option to include or not include in his gross income an amount received as reimbursement or other expense allowance in connection with his move as an employee. This question remains one which must be resolved under section 61(a) (relating to the definition of gross income).

[T.D. 6796, 30 FR 1038, Feb. 2, 1965, as amended by T.D. 7195, 37 FR 13535, July 11, 1972]

§ 1.217-2 Deduction for moving expenses paid or incurred in taxable years beginning after December 31, 1969.

(a) ***Allowance of deduction*** —

(1) ***In general.*** Section 217(a) allows a deduction from gross income for moving expenses paid or incurred by the taxpayer during the taxable year in connection with his commencement of work as an employee or as a self-employed individual at a new principal place of work. For purposes of this section, amounts are considered as being paid or incurred by an individual whether goods or services are furnished to the taxpayer directly (by an employer, a client, a customer, or similar person) or indirectly (paid to a third party on behalf of the taxpayer by an employer, a client, a customer, or similar person). A cash basis taxpayer will treat moving expenses as being paid for purposes of section 217 and this section in the year in which the taxpayer is considered to have received such payment under section 82 and § 1.82-1. No deduction is allowable under section 162 for any expenses incurred by the taxpayer in connection with moving from one residence to another residence unless such expenses are deductible under section 162 without regard to such change in residence. To qualify for the deduction under section 217 the expenses must meet the definition of the term *moving expenses* provided in section 217(b) and the taxpayer must meet the conditions set forth in section 217(c). The term *employee* as used in this section has the same meaning as in § 31.3401(c)-1 of this chapter (Employment Tax Regulations). The term *self-employed individual* as used in this section is defined in paragraph (f)(1) of this section.

(2) ***Expenses paid in a taxable year other than the taxable year in which reimbursement representing such expenses is received.*** In general, moving expenses are deductible in the year paid or incurred. If a taxpayer who uses the cash receipts and disbursements method of accounting receives reimbursement for a moving expense in a taxable year other than the taxable year the taxpayer pays such expense, he may elect to deduct such expense in the taxable year that he receives such reimbursement, rather than the taxable year when he paid such expense in any case where:

(i) The expense is paid in a taxable year prior to the taxable year in which the reimbursement is received, or

(ii) The expense is paid in the taxable year immediately following the taxable year in which the reimbursement is received, provided that such expense is paid on or before the due date prescribed for filing the return (determined with regard to any extension of time for such filing) for the taxable year in which the reimbursement is received.

An election to deduct moving expenses in the taxable year that the reimbursement is received shall be made by claiming the deduction on the return, amended return, or claim for refund for the taxable year in which the reimbursement is received.

(3) ***Commencement of work.***

(i) To be deductible the moving expenses must be paid or incurred by the taxpayer in connection with his commencement of work at a new principal place of work (see paragraph (c)(3) of this section for a discussion of the term *principal place of work*). Except for those expenses described in section 217(b)(1) (C) and (D) it is not necessary for the taxpayer to have made arrangements to work prior to his moving to a new location; however, a deduction is not allowable unless employment or self-employment actually does occur. The term *commencement* includes (*a*) the beginning of work by a taxpayer as an employee or as a self-employed individual for the first time or after a substantial period of unemployment or part-time employment, (*b*) the beginning of work by a taxpayer for a different employer or in the case of a self-employed individual in a new trade or business, or (*c*) the beginning of work by a taxpayer for the same employer or in the case of a self-employed individual in the same trade or business at a new location. To qualify as being in connection with the commencement of work, the move must bear a reasonable proximity both in time and place to such commencement at the new principal place of work. In general, moving expenses incurred within 1 year of the date of the commencement of work are considered to be reasonably proximate in time to such commencement. Moving expenses incurred after the 1-year period may be considered reasonably proximate in time if it can be shown that circumstances existed which prevented the taxpayer from incurring the expenses of moving within the 1-year period allowed. Whether circumstances existed which prevented the taxpayer from incurring the expenses of moving within the period allowed is dependent upon the facts and circumstances of each case. The length of the delay and the fact that the taxpayer may have incurred part of the expenses of the move within the 1-year period allowed shall be taken into account in determining whether expenses incurred after such period are allowable. In general, a move is not considered to be reasonably proximate in place to the commencement of work at the new princpal place of work where the distance between the taxpayer's new residence and his new principal place of work exceeds the distance between his former residence and his new principal place of work. A move to a new residence which does not satisfy this test may, however, be considered reasonably proximate in place to the commencement of work if the taxpayer can demonstrate, for example, that he is required to live at such residence as a condition of employment or that living at such residence will result in an actual decrease in commuting time or expense. For example, assume that in 1977 A is transferred by his employer to a new principal place of work and the distance between his former residence and his new principal place of work is 35 miles greater than was the distance between his former residence and his former principal place of work. However, the distance between his new residence and his new principal place of work is 10 miles greater than was the distance between his former residence and his new principal place of work. Although the minimum distance requirement of section 217(c)(1) is met the

expenses of moving to the new residence are not considered as incurred in connection with A's commencement of work at his new principal place of work since the new residence is not proximate in place to the new place of work. If, however, A can demonstrate, for example, that he is required to live at such new residence as a condition of employment or if living at such new residence will result in an actual decrease in commuting time or expense, the expenses of the move may be considered as incurred in connection with A's commencement of work at his new principal place of work.

(ii) The provisions of subdivision (i) of this subparagraph may be illustrated by the following examples:

Example 1. Assume that A is tranferred by his employer from Boston, MA, to Washington, DC. A moves to a new residence in Washington, DC, and commences work on February 1, 1971. A's wife and his two children remain in Boston until June 1972 in order to allow A's children to complete their grade school education in Boston. On June 1, 1972, A sells his home in Boston and his wife and children move to the new residence in Washington, DC. The expenses incurred on June 1, 1972, in selling the old residence and in moving A's family, their household goods, and personal effects to the new residence in Washington are allowable as a deduction although they were incurred 16 months after the date of the commencement of work by A since A has moved to and established a new residence in Washington, DC, and thus incurred part of the total expenses of the move prior to the expiration of the 1-year period.

Example 2. Assume that A is transferred by his employer from Washington, DC, to Baltimore, MD. A commences work on January 1, 1971, in Baltimore. A commutes from his residence in Washington to his new principal place of work in Baltimore for a period of 18 months. On July 1, 1972, A decides to move to and establish a new residence in Baltimore. None of the moving expenses otherwise allowable under section 217 may be deducted since A neither incurred the expenses within 1 year nor has shown circumstances under which he was prevented from moving within such period.

(b) ***Definition of moving expenses*** —

(1) ***In general.*** Section 217(b) defines the term *moving expenses* to mean only the reasonable expenses

(i) of moving household goods and personal effects from the taxpayer's former residence to his new residence,

(ii) of traveling (including meals and lodging) from the taxpayer's former residence to his new place of residence,

(iii) of traveling (including meals and lodging), after obtaining employment, from the taxpayer's former residence to the general location of his new principal place of work and return, for the principal purpose of searching for a new residence,

(iv) of meals and lodging while occupying temporary quarters in the general location of the new principal place of work during any period of 30 consecutive days after obtaining employment, or

(v) of a nature constituting qualified residence sale, purchase, or lease expenses. Thus, the test of deductibility is whether the expenses are reasonable and are incurred for the items set forth in subdivisions (i) through (v) of this subparagraph.

(2) ***Reasonable expenses.***

(i) The term *moving expenses* includes only those expenses which are reasonable under the circumstances of the particular move. Expenses paid or incurred in excess of a reasonable amount are not deductible. Generally, expenses paid or incurred for movement of household goods and personal effects or for travel (including meals and lodging) are reasonable only to the extent that they are paid or incurred for such movement or travel by the shortest and most direct route available from the former residence to the new residence by the conventional mode or modes of transportation actually used and in the shortest period of time commonly required to travel the distance involved by such mode. Thus, if moving or travel arrangements are made to provide a circuitous route for scenic, stopover, or other similar reasons, additional expenses resulting therefrom are not deductible since they are not reasonable nor related to the commencement of work at the new principal place of work. In addition, expenses paid or incurred for meals and lodging while traveling from the former residence to the new place of residence or to the general location of the new principal place of work and return or occupying temporary quarters in the general location of the new principal place of work are reasonable only if under the facts and circumstances involved such expenses are not lavish or extravagant.

(ii) The application of this subparagraph may be illustrated by the following example:

Example. A, an employee of the M Company works and maintains his residence in Boston, MA. Upon receiving orders from his employer that he is to be transferred to M's Los Angeles, CA, office, A motors to Los Angeles with his family with stopovers at various cities between Boston and Los Angeles to visit friends and relatives. In addition, A detours into Mexico for sightseeing. Because of the stopovers and tour into Mexico, A's travel time and distance are increased over what they would have been had he proceeded directly to Los Angeles. To the extent that A's route of travel between Boston and Los Angeles is in a generally southwesterly direction it may be said that he is traveling by the shortest and most direct route available by motor vehicle. Since A's excursion into Mexico is away from the usual Boston-Los Angeles route, the portion of the expenses paid or incurred attributable to such excursion is not deductible. Likewise, that portion of the expenses attributable to A's delay en route in visiting personal friends and sightseeing are not deductible.

(3) ***Expense of moving household goods and personal effects.*** Expenses of moving household goods and personal effects include expenses of transporting such goods and effects from the taxpayer's former residence to his new residence, and expenses of packing, crating, and in-transit storage and insurance for such goods and effects. Such expenses also include any costs of connecting or disconnecting utilities required because of the moving of household goods, appliances, or personal effects. Expenses of storing and insuring household goods and personal effects constitute in-transit expenses if incurred within any consecutive 30-day period after the day such goods and effects are moved from the taxpayer's former residence and prior to delivery at the taxpayer's new residence. Expenses paid or incurred in moving household goods and personal effects to the taxpayer's new residence from a place other than his former residence are allowable, but only to the extent that such expenses do not exceed the amount which would be allowable had such goods and effects been moved from the taxpayer's former residence. Expenses of moving household goods and personal effects do not include, for example, storage charges (other than in-transit), costs incurred in the acquisition of property, costs incurred and losses sustained in the disposition of property, penalties for breaking leases, mortgage penalties, expenses of refitting rugs or draperies, losses sustained on the disposal of memberships in clubs, tuition fees, and similar items. The above expenses may, however, be described in other provisions of section 217(b) and if so a deduction may be allowed for them subject to the allowable dollar limitations.

(4) ***Expenses of traveling from the former residence to the new place of residence.*** Expenses of traveling from the former residence to the new place of residence include the cost of transportation and of meals and lodging en route (including the date of arrival) from the taxpayer's former residence to his new place of residence. Expenses of meals and lodging incurred in the general location of the former residence within 1 day after the former residence is no longer suitable for occupancy because of the removal of household goods and personal effects shall be considered as expenses of traveling for purposes of this subparagraph. The date of arrival is the day the taxpayer secures lodging at the new place of residence, even if on a temporary basis. Expenses of traveling from the taxpayer's former residence to his new place of residence do not include, for example, living or other expenses following the date of arrival at the new place of residence and while waiting to enter the new residence or waiting for household goods to arrive, expenses in connection with house or apartment hunting, living expenses preceding date of departure for the new place of residence (other than expenses of meals and lodging incurred within 1 day after the former residence is no longer suitable for occupancy), expenses of trips for purposes of selling property, expenses of trips to the former residence by the taxpayer pending the move by his family to the new place of residence, or any allowance for depreciation. The above expenses may, however, be described in other provisions of section 217(b) and if so a deduction may be allowed for them subject to the allowable dollar limitations. The deduction for traveling expenses from the former residence to the new place of residence is allowable for only one trip made by the taxpayer and members of his household; however, it is not necessary that the taxpayer and all members of his household travel together or at the same time.

(5) ***Expenses of traveling for the principal purpose of looking for a new residence.*** Expenses of traveling, after obtaining employment, from the former residence to the general location of the new principal place of work and return, for the principal purpose of searching for a new residence include the cost of transportation and meals and lodging during such travel and while at the general location of the new place of work for the principal purpose of searching for a new residence. However, such expenses do not include, for example, expenses of meals and lodging of the taxpayer and members of his household before departing for the new principal place of work, expenses for trips for purposes of selling property, expenses of trips to the former residence by the taxpayer pending the move by his family to the place of residence, or any allowance for depreciation. The above expenses may, however, be described in other provisions of section 217(b) and if so a deduction may be allowed for them. The deduction for expenses of traveling for the principal purpose of looking for a new residence is not limited to any number of trips by the taxpayer and by members of his household. In addition, the taxpayer and all members of his household need not travel together or at the same time. Moreover, a trip need not result in acquisition of a lease of property or purchase of property. An employee is considered to have obtained employment in the general location of the new principal place of work after he has obtained a contract or agreement of employment. A self-employed individual is considered to have obtained employment when he has made substantial arrangements to commence work at the new principal place of work (see paragraph (f)(2) of this section for a discussion of the term *made substantial arrangements to commence to work*).

(6) ***Expenses of occupying temporary quarters.*** Expenses of occupying temporary quarters include only the cost of meals and lodging while occupying temporary quarters in the general location of the new principal place of work during any period of 30 consecutive days after the taxpayer has obtained employment in such general location. Thus, expenses of occupying temporary quarters do not include, for example, the cost of entertainment, laundry, transportation, or other personal, living family expenses, or expenses of occupying temporary quarters in the general location of the former

place of work. The 30 consecutive day period is any one period of 30 consecutive days which can begin, at the option of the taxpayer, on any day after the day the taxpayer obtains employment in the general location of the new principal place of work.

(7) ***Qualified residence sale, purchase, or lease expenses.*** Qualified residence sale, purchase, or lease expenses (hereinafter "qualified real estate expenses") are only reasonable amounts paid or incurred for any of the following purposes:

(i) Expenses incident to the sale or exchange by the taxpayer or his spouse of the taxpayer's former residence which, but for section 217 (b) and (e), would be taken into account in determining the amount realized on the sale or exchange of the residence. These expenses include real estate commissions, attorneys' fees, title fees, escrow fees, so called "points" or loan placement charges which the seller is required to pay, State transfer taxes and similar expenses paid or incurred in connection with the sale or exchange. No deduction, however, is permitted under section 217 and this section for the cost of physical improvements intended to enhance salability by improving the condition or appearance of the residence.

(ii) Expenses incident to the purchase by the taxpayer or his spouse of a new residence in the general location of the new principal place of work which, but for section 217 (b) and (e), would be taken into account in determining either the adjusted basis of the new residence or the cost of a loan. These expenses include attorney's fees, escrow fees, appraisal fees, title costs, so-called "points" or loan placement charges not representing payments or prepayments of interest, and similar expenses paid or incurred in connection with the purchase of the new residence. No deduction, however, is permitted under section 217 and this section for any portion of real estate taxes or insurance, so-called "points" or loan placement charges which are, in essence, prepayments of interest, or the purchase price of the residence.

(iii) Expenses incident to the settlement of an unexpired lease held by the taxpayer or his spouse on property used by the taxpayer as his former residence. These expenses include consideration paid to a lessor to obtain a release from a lease, attorneys' fees, real estate commissions, or similar expenses incident to obtaining a release from a lease or to obtaining an assignee or a sublessee such as the difference between rent paid under a primary lease and rent received under a sublease. No deduction, however, is permitted under section 217 and this section for the cost of physical improvement intended to enhance marketability of the leasehold by improving the condition or appearance of the residence.

(iv) Expenses incident to the acquisition of a lease by the taxpayer or his spouse. These expenses include the cost of fees or commissions for obtaining a lease, a sublease, or an assignment of an interest in property used by the taxpayer as his new residence in the general location of the new principal place of work. No deduction, however, is permitted under section 217 and this section for payments or prepayments of rent or payments representing the cost of a security or other similar deposit.

Qualified real estate expenses do not include losses sustained on the disposition of property or mortgage penalties, to the extent that such penalties are otherwise deductible as interest.

(8) ***Residence.*** The term *former residence* refers to the taxpayer's principal residence before his departure for his new principal place of work. The term *new residence* refers to the taxpayer's principal residence within the general location of his new principal place of work. Thus, neither term includes other residences owned or maintained by the taxpayer or members of his family or seasonal residences such as a summer beach cottage. Whether or not property is used by the

taxpayer as his principal residence depends upon all the facts and circumstances in each case. Property used by the taxpayer as his principal residence may include a houseboat, a housetrailer, or similar dwelling. The term *new place of residence* generally includes the area within which the taxpayer might reasonably be expected to commute to his new principal place of work.

(9) ***Dollar limitations.***

(i) Expenses described in subparagraphs (A) and (B) of section 217(b)(1) are not subject to an overall dollar limitation. Thus, assuming all other requirements of section 217 are satisfied, a taxpayer who, in connection with his commencement of work at a new principal place of work, pays or incurs reasonable expenses of moving household goods and personal effects from his former residence to his new place of residence and reasonable expenses of traveling, including meals and lodging, from his former residence to his new place of residence is permitted to deduct the entire amount of these expenses.

(ii) Expenses described in subparagraphs (C), (D), and (E) of section 217(b)(1) are subject to an overall dollar limitation for each commencement of work of 3,000 ($2,500 in the case of a commencement of work in a taxable year beginning before January 1, 1977), of which the expenses described in subparagraphs (C) and (D) of section 217(b)(1) cannot exceed $1,500 ($1,000 in the case of a commencement of work in a taxable year beginning before January 1, 1977). The dollar limitation applies to the amount of expenses paid or incurred in connection with each commencement of work and not to the amount of expenses paid or incurred in each taxable year. Thus, for example, a taxpayer who paid or incurred $2,000 of expenses described in subparagraphs (C), (D), and (E) of section 217(b)(1) in taxable year 1977 in connection with his commencement of work at a principal place of work and paid or incurred an additional $2,000 of such expenses in taxable year 1978 in connection with the same commencement of work is permitted to deduct the $2,000 of such expenses paid or incurred in taxable year 1977 and only $1,000 of such expenses paid or incurred in taxable year 1978.

(iii) A taxpayer who pays or incurs expenses described in subparagraphs (C), (D), and (E) of section 217(b)(1) in connection with the same commencement of work may choose to deduct any combination of such expenses within the dollar amounts specified in subdivision (ii) of this subparagraph. For example, a taxpayer who pays or incurs such expenses in connection with the same commencement of work may either choose to deduct: (*a*) Expenses described in subparagraphs (C) and (D) of section 217(b)(1) to the extent of $1,500 ($1,000 in the case of a commencement of work in a taxable year beginning before January 1, 1977) before deducting any of the expenses described in subparagraph (E) of such section, or (*b*) expenses described in subparagraph (E) of section 217(b)(1) to the extent of $3,000 ($2,500 in the case of a commencement of work in a taxable year beginning before January 1, 1977) before deducting any of the expenses described in subparagraphs (C) and (D) of such section.

(iv) For the purpose of computing the dollar limitation contained in subparagraph (A) of section 217(b)(3) a commencement of work by a taxpayer at a new principal place of work and a commencement of work by his spouse at a new principal place of work which are in the same general location constitute a single commencement of work. Two principal places of work are treated as being in the same general location where the taxpayer and his spouse reside together and commute to their principal places of work. Two principal places of work are not treated as being in the same general location where, as of the close of the taxable year, the taxpayer and his spouse have not shared the same new residence nor made specific plans to share the same new residence within a determinable time. Under such circumstances, the

separate commencements of work by a taxpayer and his spouse will be considered separately in assigning the dollar limitations and expenses to the appropriate return in the manner described in subdivisions (v) and (vi) of this subparagraph.

(v) Moving expenses (described in subparagraphs (C), (D), and (E) of section 217(b)(1)), paid or incurred with respect to the commencement of work by both a husband and wife which is considered a single commencement of work under subdivision (iv) of this subparagraph are subject to an overall dollar limitation of $3,000 ($2,500 in the case of a commencement of work in a taxable year beginning before January 1, 1977), per move of which the expenses described in subparagraphs (C) and (D) of section 217(b)(1) cannot exceed $1,500 ($1,000 in the case of a commencement of work in a taxable year beginning before January 1, 1977). If separate returns are filed with respect to the commencement of work by both a husband and wife which is considered a single commencement of work under subdivision (iv) of this subparagraph, moving expenses (described in subparagraphs (C), (D), and (E) of section 217(b)(1)) are subject to an overall dollar limitation of $1,500 ($1,250 in the case of a commencement of work in a taxable year beginning before January 1, 1977), per move of which the expenses described in subparagraphs (C) and (D) of section 217(b)(1) cannot exceed $750 ($500 in the case of a commencement of work in a taxable year beginning before January 1, 1977) with respect to each return. Where moving expenses are paid or incurred in more than 1 taxable year with respect to a single commencement of work by a husband and wife they shall, for purposes of applying the dollar limitations to such move, be subject to a $3,000 and $1,500 limitation ($2,500 and $1,000, respectively, in the case of a commencement of work in a taxable year beginning before January 1, 1977) for all such years that they file a joint return and shall be subject to a separate $1,500 and $750 limitation ($1,250 and $500, respectively, in the case of a commencement of work in a taxable year beginning before January 1, 1977) for all such years that they file separate returns. If a joint return is filed for the first taxable year moving expenses are paid or incurred with respect to a move but separate returns are filed in a subsequent year, the unused portion of the amount which may be deducted shall be allocated equally between the husband and wife in the later year. If separate returns are filed for the first taxable year such moving expenses are paid or incurred but a joint return is filed in a subsequent year, the deductions claimed on their separate returns shall be aggregated for purposes of determining the unused portion of the amount which may be deducted in the later year.

(vi) The application of subdivisions (iv) and (v) of this subparagraph may be illustrated by the following examples:

Example 1. A, who was transferred by his employer, effective January 15, 1977, moved from Boston, MA, to Washington, DC. A's wife was transferred by her employer, effective January 15, 1977, from Boston, MA, to Baltimore, MD. A and his wife reside together at the same new residence. A and his wife are cash basis taxpayers and file a joint return for taxable year 1977. Because A and his wife reside together at the new residence, the commencement of work by both is considered a single commencement of work under subdivision (iv) of this subparagraph. They are permitted to deduct with respect to their commencement of work in Washington and Baltimore up to $3,000 of the expenses described in subparagraphs (C), (D), and (E) of section 217(b)(1) of which the expenses described in subparagraphs (C) and (D) of such section cannot exceed $1,500.

Example 2. Assume the same facts as in *Example 1* except that for taxable year 1977, A and his wife file separate returns. Because A and his wife reside together, the commencement of work by both is considered a single commencement of work under subdivision (iv) of this

subparagraph. A is permitted to deduct with respect to his commencement of work in Washington up to $1,500 of the expenses described in subparagraphs (C), (D), and (E) of section 217(b)(1) of which the expenses described in subparagraphs (C) and (D) cannot exceed $750. A is not permitted to deduct any of the expenses described in subparagraphs (C), (D), and (E) of section 217(b)(1) paid by his wife in connection with her commencement of work at a new principal place of work. A's wife is permitted to deduct with respect to her commencement of work in Baltimore up to $1,500 of the expenses described in subparagraphs (C), (D), and (E) of section 217(b)(1) that are paid by her of which the expenses described in subparagraphs (C) and (D) cannot exceed $750. A's wife is not permitted to deduct any of the expenses described in subparagraphs (C), (D), and (E) of section 217(b)(1) paid by A in connection with his commencement of work in Washington, DC.

Example 3. Assume the same facts as in *Example 1* except that A and his wife take up separate residences in Washington and Baltimore, do not reside together during the entire taxable year, and have no specific plans to reside together. The commencement of work by A in Washington, DC, and by his wife in Baltimore are considered separate commencements of work since their principal places of work are not treated as being in the same general location. If A and his wife file a joint return for taxable year 1977, the moving expenses described in subparagraphs (C), (D), and (E) of section 217(b)(1) paid in connection with the commencement of work by A in Washington, DC, and his wife in Baltimore, MD, are subject to an overall limitation of $6,000 of which the expenses described in subparagrahs (C) and (D) cannot exceed $3,000. If A and his wife file separate returns for taxable year 1977, A may deduct up to $3,000 of the expenses described in subparagraphs (C), (D), and (E) of which the expenses described in subparagraphs (C) and (D) cannot exceed $1,500. A's wife may deduct up to $3,000 of the expenses described in subparagraphs (C), (D), and (E) of which the expenses described in subparagraphs (C) and (D) cannot exceed $1,500.

(10) ***Individuals other than taxpayer.***

(i) In addition to the expenses set forth in subparagraphs (A) through (D) of section 217(b)(1) attributable to the taxpayer alone, the same type of expenses attributable to certain individuals other than the taxpayer, if paid or incurred by the taxpayer, are deductible. These other individuals must be members of the taxpayer's household, and have both the taxpayer's former residence and his new residence as their principal place of abode. A member of the taxpayer's household includes any individual residing at the taxpayer's residence who is neither a tenant nor an employee of the taxpayer. Thus, for example, a member of the taxpayer's household may not be an individual such as a servant, governess, chauffeur, nurse, valet, or personal attendant. However, for purposes of this paragraph, a tenant or employee will be considered a member of the taxpayer's household where the tenant or employee is a dependent of the taxpayer as defined in section 152.

(ii) In addition to the expenses set forth in section 217(b)(2) paid or incurred by the taxpayer attributable to property sold, purchased, or leased by the taxpayer alone, the same type of expenses paid or incurred by the taxpayer attributable to property sold, purchased, or leased by the taxpayer's spouse or by the taxpayer and his spouse are deductible providing such property is used by the taxpayer as his principal place of residence.

(c) ***Conditions for allowance —***

(1) ***In general.*** Section 217(c) provides two conditions which must be satisfied in order for a deduction of moving expenses to be allowed under section 217(a). The first is a minimum distance condition prescribed by section 217(c)(1), and the second is a minimum period of employment condition prescribed by section 217(c)(2).

(2) ***Minimum distance.*** For purposes of applying the minimum distance condition of section 217(c)(1) all taxpayers are divided into one or the other of the following categories: Taxpayers having a former principal place of work, and taxpayers not having a former principal place of work. Included in this latter category are individuals who are seeking fulltime employment for the first time either as an employee or on a self- employed basis (for example, recent high school or college graduates), or individuals who are reentering the labor force after a substantial period of unemployment or part-time employment.

(i) In the case of a taxpayer having a former principal place of work, section 217(c)(1)(A) provides that no deduction is allowable unless the distance between the former residence and the new principal place of work exceeds by at least 35 miles (50 miles in the case of expenses paid or incurred in taxable years beginning before January 1, 1977) the distance between the former residence and the former principal place of work.

(ii) In the case of a taxpayer not having a former principal place of work, section 217(c)(1)(B) provides that no deduction is allowable unless the distance between the former residence and the new principal place of work is at least 35 miles (50 miles in the case of expenses paid or incurred in taxable years beginning before January 1, 1977).

(iii) For purposes of measuring distances under section 217(c)(1) the distance between two geographic points is measured by the shortest of the more commonly traveled routes between such points. The shortest of the more commonly traveled routes refers to the line of travel and the mode or modes of transportation commonly used to go between two geographic points comprising the shortest distance between such points irrespective of the route used by the taxpayer.

(3) ***Principal place of work.***

(i) A taxpayer's *principal place of work* usually is the place where he spends most of his working time. The principal place of work of a taxpayer who performs services as an employee is his employer's plant, office, shop, store, or other property. The principal place of work of a taxpayer who is self-employed is the plant, office, shop, store, or other property which serves as the center of his business activities. However, a taxpayer may have a principal place of work even if there is no one place where he spends a substantial portion of his working time. In such case, the taxpayer's principal place of work is the place where his business activities are centered—for example, because he reports there for work, or is required either by his employer or the nature of his employment to “base” his employment there. Thus, while a member of a railroad crew may spend most of his working time aboard a train, his principal place of work is his home terminal, station, or other such central point where he reports in, checks out, or receives instructions. The principal place of work of a taxpayer who is employed by a number of employers on a relatively short-term basis, and secures employment by means of a union hall system (such as a construction or building trades worker) would be the union hall.

(ii) Where a taxpayer has more than one employment (i.e., the taxpayer is employed by more than one employer, or is self-employed in more than one trade or business, or is an employee and is self-employed at any particular time) his principal place of work is determined with reference to

his principal employment. The location of a taxpayer's principal place of work is a question of fact determined on the basis of the particular circumstances in each case. The more important factors to be considered in making this determination are (*a*) the total time ordinarily spent by the taxpayer at each place, (*b*) the degree of the taxpayer's business activity at each place, and (*c*) the relative significance of the financial return to the taxpayer from each place.

(iii) Where a taxpayer maintains inconsistent positions by claiming a deduction for expenses of meals and lodging while away from home (incurred in the general location of the new principal place of work) under section 162 (relating to trade or business expenses) and by claiming a deduction under this section for moving expenses incurred in connection with the commencement of work at such place of work, it will be a question of facts and circumstances as to whether such new place of work will be considered a principal place of work, and accordingly, which category of deductions he will be allowed.

(4) ***Minimum period of employment.***

(i) Under section 217(c)(2) no deduction is allowed unless:

(*a*) Where a taxpayer is an employee, during the 12-month period immediately following his arrival in the general location of the new principal place of work, he is a full-time employee, in such general location, during at least 39 weeks, or

(*b*) Where a taxpayer is a self-employed individual (including a taxpayer who is also an employee, but is unable to satisfy the requirements of the 39-week test of (a) of this subdivision (i)), during the 24-month period immediately following his arrival in the general location of the new principal place of work, he is a full-time employee or performs services as a self-employed individual on a full-time basis, in such general location, during at least 78 weeks, of which not less than 39 weeks are during the 12-month period referred to above.

Where a taxpayer works as an employee and at the same time performs services as a self-employed individual his principal employment (determined according to subdivision (i) of subparagraph (3) of this paragraph) governs whether the 39-week or 78-week test is applicable.

(ii) The 12-month period and the 39- week period set forth in subparagraph (A) of section 217(c)(2) and the 12- and 24-month periods as well as 39- and 78- week periods set forth in subparagraph (B) of such section are measured from the date of the taxpayer's arrival in the general location of the new principal place of work. Generally, date of arrival is the date of the termination of the last trip preceding the taxpayer's commencement of work on a regular basis and is not the date the taxpayer's family or household goods and effects arrive.

(iii) The taxpayer need not remain in the employ of the same employer or remain self-employed in the same trade or business for the required number of weeks. However, he must be employed in the same general location of the new principal place of work during such period. The *general location* of the new principal place of work refers to a general commutation area and is usually the same area as the “new place of residence”; see paragraph (b)(8) of this section.

(iv) Only those weeks during which the taxpayer is a full-time employee or during which he performs services as a self-employed individual on a full-time basis qualify as a week of work for purposes of the minimum period of employment condition of section 217(c)(2).

(*a*) Whether an employee is a full-time employee during any particular week depends upon the customary practices of the occupation in the geographic area in which the taxpayer works. Where employment is on a seasonal basis, weeks occurring in the off-season when no work is required or available may be counted as weeks of full-time employment only if the employee's contract or agreement of employment covers the off-season period and such period is less than 6 months. Thus, for example, a schoolteacher whose employment contract covers a 12-month period and who teaches on a full-time basis for more than 6 months is considered a full-time employee during the entire 12-month period. A taxpayer will be treated as a full-time employee during any week of involuntary temporary absence from work because of illness, strikes, shutouts, layoffs, natural disasters, etc. A taxpayer will, also, be treated as a full-time employee during any week in which he voluntarily absents himself from work for leave or vacation provided for in his contract or agreement of employment.

(*b*) Whether a taxpayer performs services as a self-employed individual on a full-time basis during any particular week depends on the practices of the trade or business in the geographic area in which the taxpayer works. For example, a self-employed dentist maintaining office hours 4 days a week is considered to perform services as a self-employed individual on a full-time basis providing it is not unusual for other self-employed dentists in the geographic area in which the taxpayer works to maintain office hours only 4 days a week. Where a trade or business is seasonal, weeks occurring during the off-season when no work is required or available may be counted as weeks of performance of services on a full-time basis only if the off-season is less than 6 months and the taxpayer performs services on a full-time basis both before and after the off-season. For example, a taxpayer who owns and operates a motel at a beach resort is considered to perform services as a self-employed individual on a full-time basis if the motel is closed for a period not exceeding 6 months during the off-season and if he performs services on a full-time basis as the operator of a motel both before and after the off-season. A taxpayer will be treated as performing services as a self-employed individual on a full-time basis during any week of involuntary temporary absence from work because of illness, strikes, natural disasters, etc.

(v) Where taxpayers file a joint return, either spouse may satisfy the minimum period of employment condition. However, weeks worked by one spouse may not be added to weeks worked by the other spouse in order to satisfy such condition. The taxpayer seeking to satisfy the minimum period of employment condition must satisfy the condition applicable to him. Thus, if a taxpayer is subject to the 39-week condition and his spouse is subject to the 78-week condition and the taxpayer satisfies the 39-week condition, his spouse need not satisfy the 78-week condition. On the other hand, if the taxpayer does not satisfy the 39-week condition, his spouse in such case must satisfy the 78-week condition.

(vi) The application of this subparagraph may be illustrated by the following examples:

Example 1. A is an electrician residing in New York City. He moves himself, his family, and his household goods and personal effects, at his own expense, to Denver where he commences employment with the M Aircraft Corporation. After working full-time for 30 weeks he voluntarily leaves his job, and he subsequently moves to and commences employment in Los Angeles, CA, which employment lasts for more than 39 weeks. Since A was not employed in the general location of his new principal place of employment in Denver for at least 39 weeks, no deduction is allowable for moving expenses paid

or incurred between New York City and Denver. A will be allowed to deduct only those moving expenses attributable to his move from Denver to Los Angeles, assuming all other conditions of section 217 are met.

Example 2. Assume the same facts as in *Example 1,* except that A's wife commences employment in Denver at the same time as A, and that she continues to work in Denver for at least 9 weeks after A's departure for Los Angeles. Since she has met the 39-week requirement in Denver, and assuming all other requirements of section 217 are met, the moving expenses paid by A attributable to the move from New York City to Denver will be allowed as a deduction, provided A and his wife file a joint return. If A and his wife file separate returns moving expenses paid by A's wife attributable to the move from New York City to Denver will be allowed as a deduction on A's wife's return.

Example 3. Assume the same facts as in *Example 1,* except that A's wife commences employment in Denver on the same day that A departs for Los Angeles, and continues to work in Denver for 9 weeks thereafter. Since neither A (who has worked 30 weeks) nor his wife (who has worked 9 weeks) has independently satisfied the 39-week requirement, no deduction for moving expenses attributable to the move from New York City to Denver is allowable.

(d) ***Rules for application of section 217(c)(2)*** —

(1) ***Inapplicability of minimum period of employment condition in certain cases.*** Section 217(d)(1) provides that the minimum period of employment condition of section 217(c)(2) does not apply in the case of a taxpayer who is unable to meet such condition by reason of:

(i) Death or disability, or

(ii) Involuntary separation (other than for willfull misconduct) from the service of an employer or separation by reason of transfer for the benefit of an employer after obtaining full-time employment in which the taxpayer could reasonably have been expected to satisfy such condition.

For purposes of subdivision (i) of this paragraph disability shall be determined according to the rules in section 72(m)(7) and § 1.72-17(f). Subdivision (ii) of this subparagraph applies only where the taxpayer has obtained full-time employment in which he could reasonably have been expected to satisfy the minimum period of employment condition. A taxpayer could reasonably have been expected to satisfy the minimum period of employment condition if at the time he commences work at the new principal place of work he could have been expected, based upon the facts known to him at such time, to satisfy such condition. Thus, for example, if the taxpayer at the time of transfer was not advised by his employer that he planned to transfer him within 6 months to another principal place of work, the taxpayer could, in the absence of other factors, reasonably have been expected to satisfy the minimum employment period condition at the time of the first transfer. On the other hand, a taxpayer could not reasonably have been expected to satisfy the minimum employment condition if at the time of the commencement of the move he knew that his employer's retirement age policy would prevent his satisfying the minimum employment period condition.

(2) ***Election of deduction before minimum period of employment condition is satisfied.***

(i) Paragraph (2) of section 217(d) provides a rule which applies where a taxpayer paid or incurred, in a taxable year, moving expenses which would be deductible in that taxable year except that the minimum period of employment condition of section 217(c)(2) has not been satisfied before the time prescribed by law for filing the return for such taxable year. The rule provides that where a taxpayer has paid or incurred moving expenses and as of the date prescribed by

section 6072 for filing his return for such taxable year (determined with regard to extensions of time for filing) there remains unexpired a sufficient portion of the 12-month or the 24-month period so that it is still possible for the taxpayer to satisfy the applicable period of employment condition, the taxpayer may elect to claim a deduction for such moving expenses on the return for such taxable year. The election is exercised by taking the deduction on the return.

(ii) Where a taxpayer does not elect to claim a deduction for moving expenses on the return for the taxable year in which such expenses were paid or incurred in accordance with subdivision (i) of this subparagraph and the applicable minimum period of employment condition of section 217(c)(2) (as well as all other requirements of section 217) is subsequently satisfied, the taxpayer may file an amended return or a claim for refund for the taxable year such moving expenses were paid or incurred on which he may claim a deduction under section 217.

(iii) The application of this subparagraph may be illustrated by the following examples:

Example 1. A is transferred by his employer from Boston, MA, to Cleveland, OH. He begins working there on November 1, 1970. Moving expenses are paid by A in 1970 in connection with this move. On April 15, 1971, when he files his income tax return for the year 1970, A has been a full-time employee in Cleveland for approximately 24 weeks. Although he has not satisfied the 39-week employment condition at this time, A may elect to claim his 1970 moving expenses on his 1970 income tax return as there is still sufficient time remaining before November 1, 1971, to satisfy such condition.

Example 2. Assume the same facts as in *Example 1,* except that on April 15, 1971, A has voluntarily left his employer and is looking for other employment in Cleveland. A may not be sure he will be able to meet the 39-week employment condition by November 1, 1971. Thus, he may if he wishes wait until such condition is met and file an amended return claiming as a deduction the expenses paid in 1970. Instead of filing an amended return A may file a claim for refund based on a deduction for such expenses. If A fails to meet the 39-week employment condition on or before November 1, 1971, no deduction is allowable for such expenses.

Example 3. B is a self-employed accountant. He moves from Rochester, NY, to New York, NY, and begins to work there on December 1, 1970. Moving expenses are paid by B in 1970 and 1971 in connection with this move. On April 15, 1971, when he files his income tax return for the year 1970, B has been performing services as a self-employed individual on a full-time basis in New York City for approximately 20 weeks. Although he has not satisfied the 78-week employment condition at this time, A may elect to claim his 1970 moving expenses on his 1970 income tax return as there is still sufficient time remaining before December 1, 1972, to satisfy such condition. On April 15, 1972, when he files his income tax return for the year 1971, B has been performing services as a self-employed individual on a full-time basis in New York City for approximately 72 weeks. Although he has not met the 78-week employment condition at this time, B may elect to claim his 1971 moving expenses on his 1971 income tax return as there is still sufficient time remaining before December 1, 1972, to satisfy such requirement.

(3) ***Recapture of deduction.*** Paragraph (3) of section 217(d) provides a rule which applies where a taxpayer has deducted moving expenses under the election provided in section 217(d)(2) prior to satisfying the applicable minimum period of employment condition and such condition cannot be satisfied at the close of a subsequent taxable year. In such cases an amount equal to the expenses deducted must be included in the taxpayer's gross income for the taxable year in which the taxpayer is no longer able to satisfy such minimum period of employment condition. Where the taxpayer has deducted moving expenses under the election provided in section 217(d)(2) for the taxable year and

subsequently files an amended return for such year on which he does not claim the deduction, such expenses are not treated as having been deducted for purposes of the recapture rule of the preceding sentence.

(e) ***Denial of double benefit*** —

(1) ***In general.*** Section 217(e) provides a rule for computing the amount realized and the basis where qualified real estate expenses are allowed as a deduction under section 217(a).

(2) ***Sale or exchange of residence.*** Section 217(e) provides that the amount realized on the sale or exchange of a residence owned by the taxpayer, by the taxpayer's spouse, or by the taxpayer and his spouse and used by the taxpayer as his principal place of residence is not decreased by the amount of any expenses described in subparagraph (A) of section 217(b)(2) and deducted under section 217(a). For the purposes of section 217(e) and of this paragraph the term amount realized" has the same meaning as under section 1001(b) and the regulations thereunder. Thus, for example, if the taxpayer sells a residence used as his principal place of residence and real estate commissions or similar expenses described in subparagraph (A) of section 217(b)(2) are deducted by him pursuant to section 217(a), the amount realized on the sale of the residence is not reduced by the amount of such real estate commissions or such similar expenses described in subparagraph (A) of section 217(b)(2).

(3) ***Purchase of a residence.*** Section 217(e) provides that the basis of a residence purchased or received in exchange for other property by the taxpayer, by the taxpayer's spouse, or by the taxpayer and his spouse and used by the taxpayer as his principal place of residence is not increased by the amount of any expenses described in subparagraph (B) of section 217(b)(2) and deducted under section 217(a). For the purposes of section 217(e) and of this paragraph the term *basis* has the same meaning as under section 1011 and the regulations thereunder. Thus, for example, if a taxpayer purchases a residence to be used as his principal place of residence and attorneys' fees or similar expenses described in subparagraph (B) of section 217(b)(2) are deducted pursuant to section 217(a), the basis of such residence is not increased by the amount of such attorneys' fees or such similar expenses described in subparagraph (B) of section 217(b)(2).

(4) ***Inapplicability of section 217(e).***

(i) Section 217(e) and subparagraphs (1) through (3) of this paragraph do not apply to any expenses with respect to which an amount is included in gross income under section 217(d)(3). Thus, the amount of any expenses described in subparagraph (A) of section 217(b)(2) deducted in the year paid or incurred pursuant to the election under section 217(d)(2) and subsequently recaptured pursuant to section 217(d)(3) may be taken into account in computing the amount realized on the sale or exchange of the residence described in such subparagraph. Also, the amount of expenses described in subparagraph (B) of section 217(b)(2) deducted in the year paid or incurred pursuant to such election under section 217(d)(2) and subsequently recaptured pursuant to section 217(d)(3) may be taken into account as an adjustment to the basis of the residence described in such subparagraph.

(ii) The application of subdivision (i) of this subparagraph may be illustrated by the following examples:

Example 1. A was notified of his transfer effective December 15, 1972, from Seattle, WA, to Philadelphia, PA. In connection with the transfer A sold his house in Seattle on November 10, 1972. Expenses incident to the sale of the house of $2,500 were paid by A prior to or at the time of the closing of the contract of sale on December 10, 1972. The amount realized on the sale of the house was $47,500

and the adjusted basis of the house was $30,000. Pursuant to the election provided in section 217(d)(2), A deducted the expenses of moving from Seattle to Philadelphia including the expenses incident to the sale of his former residence in taxable year 1972. Dissatisfied with his position with his employer in Philadelphia, A took a position with an employer in Chicago, IL, on July 15, 1973. Since A was no longer able to satisfy the minimum period employment condition at the close of taxable year 1973 he included an amount equal to the amount deducted as moving expenses including the expenses incident to the sale of his former residence in gross income for taxable year 1973. A is permitted to decrease the amount realized on the sale of the house by the amount of the expenses incident to the sale of the house deducted from gross income and subsequently included in gross income. Thus, the amount realized on the sale of the house is decreased from $47,500 to $45,000 and thus, the gain on the sale of the house is reduced from $17,500 to $15,000. A is allowed to file an amended return or a claim for refund in order to reflect the recomputation of the amount realized.

Example 2. B, who is self-employed decided to move from Washington, DC, to Los Angeles, CA. In connection with the commencement of work in Los Angeles on March 1, 1973, B purchased a house in a suburb of Los Angeles for $65,000. Expenses incident to the purchase of the house in the amount of $1,500 were paid by B prior to or at the time of the closing of the contract of sale on September 15, 1973. Pursuant to the election provided in section 217(d)(2), B deducted the expenses of moving from Washington to Los Angeles including the expenses incident to the purchase of his new residence in taxable year 1973. Dissatisfied with his prospects in Los Angeles, B moved back to Washington on July 1, 1974. Since B was no longer able to satisfy the minimum period of employment condition at the close of taxable year 1974 he included an amount equal to the amount deducted as moving expenses incident to the purchase of the former residence in gross income for taxable year 1974. B is permitted to increase the basis of the house by the amount of the expenses incident to the purchase of the house deducted from gross income and subsequently included in gross income. Thus, the basis of the house is increased to $66,500.

(f) ***Rules for self-employed individuals*** —

(1) ***Definition.*** Section 217(f)(1) defines the term *self-employed individual* for purposes of section 217 to mean an individual who performs personal services either as the owner of the entire interest in an unincorporated trade or business or as a partner in a partnership carrying on a trade or business. The term *self-employed individual* does not include the semiretired, part-time students, or other similarly situated taxpayers who work only a few hours each week. The application of this subparagraph may be illustrated by the following example:

Example. A is the owner of the entire interest in an unincorporated construction business. A hires a manager who performs all of the daily functions of the business including the negotiation of contracts with customers, the hiring and firing of employees, the purchasing of materials used on the projects, and other similar services. A and his manager discuss the operations of the business about once a week over the telephone. Otherwise A does not perform any managerial services for the business. For the purposes of section 217, A is not considered to be a self-employed individual.

(2) ***Rule for application of subsection (b)(1) (C) and (D).*** Section 217(f)(2) provides that for purposes of subparagraphs (C) and (D) of section 217(b)(1) an individual who commences work at a new principal place of work as a self-employed individual is treated as having obtained employment when he has made substantial arrangements to commence such work. Whether the taxpayer has made substantial arrangements to commence work at a new principal place of work is determined on the

basis of all the facts and circumstances in each case. The factors to be considered in this determination depend upon the nature of the taxpayer's trade or business and include such considerations as whether the taxpayer has:

(i) Leased or purchased a plant, office, shop, store, equipment, or other property to be used in the trade or business,

(ii) made arrangements to purchase inventory or supplies to be used in connection with the operation of the trade or business,

(iii) entered into commitments with individuals to be employed in the trade or business, and

(iv) made arrangements to contact customers or clients in order to advertise the business in the general location of the new principal place of work. The application of this subparagraph may be illustrated by the following examples:

Example 1. A, a partner in a growing chain of drug stores decided to move from Houston, TX, to Dallas, TX, in order to open a drug store in Dallas. A made several trips to Dallas for the purpose of looking for a site for the drug store. After the signing of a lease on a building in a shopping plaza, suppliers were contacted, equipment was purchased, and employees were hired. Shortly before the opening of the store A and his wife moved from Houston to Dallas and took up temporary quarters in a motel until the time their apartment was available. By the time he and his wife took up temporary quarters in the motel A was considered to have made substantial arrangements to commence work at the new principal place of work.

Example 2. B, who is a partner in a securities brokerage firm in New York, NY, decided to move to Rochester, NY, to become the resident partner in the firm's new Rochester office. After a lease was signed on an office in downtown Rochester B moved to Rochester and took up temporary quarters in a motel until his apartment became available. Before the opening of the office B supervised the decoration of the office, the purchase of equipment and supplies necessary for the operation of the office, the hiring of personnel for the office, as well as other similar activities. By the time B took up temporary quarters in the motel he was considered to have made substantial arrangements to commence to work at the new principal place of work.

Example 3. C, who is about to complete his residency in ophthalmology at a hospital in Pittsburgh, PA, decided to fly to Philadelphia, PA, for the purpose of looking into opportunities for practicing in that city. Following his arrival in Philadelphia C decided to establish his practice in that city. He leased an office and an apartment. At the time he departed Pittsburgh for Philadelphia C was not considered to have made substantial arrangements to commence work at the new principal place of work, and, therefore, is not allowed to deduct expenses described in subparagraph (C) of section 217(b)(1) (relating to expenses of traveling (including meals and lodging), after obtaining employment, from the former residence to the general location of the new principal place of work and return, for the principal purpose of searching for a new residence).

(g) ***Rules for members of the Armed Forces of the United States*** —

(1) ***In general.*** The rules in paragraphs (a)(1) and (2), (b), and (e) of this section apply to moving expenses paid or incurred by members of the Armed Forces of the United States on active duty who move pursuant to a military order and incident to a permament change of station, except as provided

in this paragraph (g). However, if the moving expenses are not paid or incurred incident to a permanent change of station, this paragraph (g) does not apply, but all other paragraphs of this section do apply. The provisions of this paragraph apply to taxable years beginning December 31, 1975.

(2) ***Treatment of services or reimbursement provided by Government*** —

(i) ***Services in kind.*** The value of any moving or storage services furnished by the United States Government to members of the Armed Forces, their spouses, or their dependents in connection with a permanent change of station is not includible in gross income. The Secretary of Defense and (in cases involving members of the peacetime Coast Guard) the Secretary of Transportation are not required to report or withhold taxes with respect to those services. Services furnished by the Government include services rendered directly by the Government or rendered by a third party who is compensated directly by the Government for the services.

(ii) ***Reimbursements.*** The following rules apply to reimbursements or allowances by the Government to members of the Armed Forces, their spouses, or their dependents for moving or storage expenses paid or incurred by them in connection with a permanent change of station. If the reimbursement or allowance exceeds the actual expenses paid or incurred, the excess is includible in the gross income of the member, and the Secretary of Defense or Secretary of Transportation must report the excess as payment of wages and withhold income taxes under section 3402 and the employee taxes under section 3102 with respect to that excess. If the reimbursement or allowance does not exceed the actual expenses, the reimbursement or allowance in not includible in gross income, and no reporting or withholding by the Secretary of Defense or Secretary of Transportation is required. If the actual expenses, as limited by paragraph (b)(9) of this section, exceed the reimbursement of allowance, the member may deduct the excess if the other requirements of this section, as modified by this paragraph, are met. The determination of the limitation on actual expenses under paragraph (b)(9) of this section is made without regard to any services in kind furnished by the Government.

(3) ***Permanent change of station.*** For purposes of this section, the term *permanent change of station* includes the following situations.

(i) A move from home to the first post of duty when appointed, reappointed, reinstated, or inducted.

(ii) A move from the last post of duty to home or a nearer point in the United States in connection with retirement, discharge, resignation, separation under honorable conditions, transfer, relief from active duty, temporary disability retirement, or transfer to a Fleet Reserve, if such move occurs within 1 year of such termination of active duty or within the period prescribed by the Joint Travel Regulations promulgated under the authority contained in sections 404 through 411 of title 37 of the United States Code.

(iii) A move from one permanent post of duty to another permanent post of duty at a different duty station, even if the member separates from the Armed Forces immediately or shortly after the move.

The term *permanent, post of duty, duty station,* and *honorable* have the meanings given them in appropriate Department of Defense or Department of Transportation rules and regulations.

(4) ***Storage expenses.*** This paragraph applies to storage expenses as well as to moving expenses described in paragraph (b)(1) of this section. the term *storage expenses* means the cost of storing personal effects of members of the Armed Forces, their spouses, and their dependents.

(5) ***Moves of spouses and dependents.***

(i) The following special rule applies for purposes of paragraphs (b)(9) and (10) of this section, if the spouse or dependents of a member of the Armed Forces move to or from a different location than does the member. In this case, the spouse is considered to have commenced work as an employee at a new principal place of work that is within the same general location as the location to which the member moves.

(ii) The following special rule applies for purposes of this paragraph to moves by spouses or dependents of members of the Armed Forces who die, are imprisoned, or desert while on active duty. In these cases, a move to a member's place of enlistment or induction or the member's, spouse's, or dependent's home of record or nearer point in the United States is considered incident to a permanent change of station.

(6) ***Disallowance of deduction.*** No deduction is allowed under this section for any moving or storage expense reimbursed by an allowance that is excluded from gross income.

(h) ***Special rules for foreign moves*** —

(1) ***Increase in limitations.*** In the case of a foreign move (as defined in paragraph (h)(3) of this section), paragraph (b)(6) of this section shall be applied by substituting “90 consecutive” for “30 consecutive” each time it appears. Paragraph (b)(9) (ii), (iii) and (v) of this section shall be applied by substituting “$6,000” for “$3,000” each time it appears and by substituting “$4,500” for “$1,500” each time it appears. Paragraph (b)(9)(ii) of this section shall be applied by substituting “$5,000” for “$2,000” each time it appears and by substituting “1979” for “1977” and “1980” for “1978” each time they appear in the last sentence. Paragraph (b)(9)(v) of this section shall be applied by substituting “$2,250” for “$750” each time it appears. Paragraph (b)(9)(vi) of this section does not apply.

(2) ***Allowance of certain storage fees.*** In the case of a foreign move, for purposes of this section, the moving expenses described in paragraph (b)(3) of this section shall include the reasonable expenses of moving household goods and personal effects to and from storage, and of storing such goods and effects for part or all of the period during which the new place of work continues to be the taxpayer's principal place of work.

(3) ***Foreign move.*** For purposes of this paragraph, the term *foreign move* means a move in connection with the commencement of work by the taxpayer at a new principal place of work located outside the United States. Thus, a move from the United States to a foreign country or from one foreign country to another foreign country qualifies as a foreign move. A move within a foreign country also qualifies as a foreign move. A move from a foreign country to the United States does not qualify as a foreign move.

(4) ***United States.*** For purposes of this paragraph, the term *United States* includes the possessions of the United States.

(5) ***Effective date.*** The provisions of this paragraph apply to expenses paid or incurred in taxable years beginning after December 31, 1978. The paragraph also applies to the expenses paid or incurred in the taxable year beginning during 1978 of taxpayers who do not make an election pursuant to section 209(c) of the Foreign Earned Income Act of 1978 (Pub. L. 95-615, 92 Stat. 3109) to have section 911 under prior law apply to that taxable year.

(i) ***Allowance of deductions in case of retirees or decedents who were working abroad*** —

(1) ***In general.*** In the case of any qualified retiree moving expenses or qualified survivor moving expenses, this section (other than paragraph (h)) shall be applied to such expenses as if they were incurred in connection with the commencement of work by the taxpayer as an employee at a new principal place of work located within the United States and the limitations of paragraph (c)(4) of this section (relating to the minimum period of employment) shall not apply.

(2) ***Qualified retiree moving expenses.*** For purposes of this paragraph, the term *qualified retiree moving expenses* means any moving expenses which are incurred by an individual whose former principal place of work and former residence were outside the United States and which are incurred for a move to a new residence in the United States in connection with the bona fide retirement of the individual. *Bona fide retirement* means the permanent withdrawal from gainful full-time employment and self-employment. An individual who at the time of withdrawal from gainful full-time employment or self-employment, intends the withdrawal to be permanent shall be considered to be a *bona fide retiree* even though the individual ultimately resumes gainful full-time employment or self-employment. An individual's intention may be evidenced by relevant facts and circumstances which include the age and health of the individual, the customary retirement age of employees engaged in similar work, whether the individual is receiving a retirement allowance under a pension annuity, retirement or similar fund or system, and the length of time before resuming full-time employment or self-employment.

(3) ***Qualified survivor moving expenses.***

(i) For purposes of this paragraph, the term *qualified survivor moving expenses* means any moving expenses:

(A) Which are paid or incurred by the spouse or any dependent (as defined in section 152) of any decedent who (as of the time of his death) had a principal place of work outside the United States, and

(B) Which are incurred for a move which begins within 6 months after the death of the decedent and which is to a residence in the United States from a former residence outside the United States which (as of the time of the decedent's death) was the residence of such decedent and the individual paying or incurring the expense.

(ii) For purposes of paragraph (i)(3) (i) (B) of this section, a move begins when:

(A) The taxpayer contracts for the moving of his or her household goods and personal effects to a residence in the United States but only if the move is completed within a reasonable time thereafter;

(B) The taxpayer's household goods and personal effects are packed and in transit to a residence in the United States; or

(C) The taxpayer leaves the former residence to travel to a new place of residence in the United States.

(4) ***United States.*** For purposes of this paragraph, the term *United States* includes the possessions of the United States.

(5) ***Effective date.*** The provisions of this paragraph apply to expenses paid or incurred in taxable years beginning after December 31, 1978. The paragraph also applies to the expenses paid or incurred in the taxable year beginning during 1978 of taxpayers who do not make an election pursuant to section 209(c) of the Foreign Earned Income Act of 1978 (Pub. L. 95-615, 92 Stat. 3109) to have section 911 under prior law apply to that taxable year.

(j) ***Effective date*** —

(1) ***In general.*** This section, except as provided in subparagraphs (2) and (3) of this paragraph, is applicable to items paid or incurred in taxable years beginning after December 31, 1969.

(2) ***Reimbursement not included in gross income.*** This section does not apply to items to the extent that the taxpayer received or accrued in a taxable year beginning before January 1, 1970, a reimbursement or other expense allowance for such items which was not included in his gross income.

(3) ***Election in cases of expenses paid or incurred before January 1, 1971, in connection with certain moves*** —

(i) ***In general.*** A taxpayer who was notified by his employer on or before December 19, 1969, of a transfer to a new principal place of work and who pays or incurs moving expenses after December 31, 1969, but before January 1, 1971, in connection with such transfer may elect to have the rules governing moving expenses in effect prior to the effective date of section 231 of the Tax Reform Act of 1969 (83 Stat. 577) govern such expenses. If such election is made, this section and section 82 and the regulations thereunder do not apply to such expenses. A taxpayer is considered to have been notified on or before December 19, 1969, by his employer of a transfer, for example, if before such date the employer has sent a notice to all employees or a reasonably defined group of employees, which includes such taxpayer, of a relocation of the operations of such employer from one plant or facility to another plant or facility. An employee who is transferred to a new principal place of work for the benefit of his employer and who makes an election under this paragraph is permitted to exclude amounts received or accrued, directly or indirectly, as payment for or reimbursement of expenses of moving household goods and personal effects from the former residence to the new residence and of traveling (including meals and lodging) from the former residence to the new place of residence. Such exclusion is limited to amounts received or accrued, directly or indirectly, as a payment for or reimbursement of the expenses described above. Amounts in excess of actual expenses paid or incurred must be included in gross income. No deduction is allowable under section 217 for expenses representing amounts excluded from gross income. Also, an employee who is transferred to a new principal place of work which is less than 50 miles but at least 20 miles farther from his former residence than was his former principal place of work and who is not reimbursed, either directly or indirectly, for the expenses described above is permitted to deduct such expenses providing all of the requirements of section 217 and the regulations thereunder prior to the effective date of section 231 of the Tax Reform Act of 1969 (83 Stat. 577) are satisfied.

(ii) ***Election made before the date of publication of this notice as a Treasury decision.*** An election under this subparagraph made before the date of publication of this notice as a Treasury decision shall be made pursuant to the procedure prescribed in temporary income tax regulations relating to treatment of payments of expenses of moving from one residence to another residence (Part 13 of this chapter) T.D. 7032 (35 FR 4330), approved Mar. 11, 1970.

(iii) ***Election made on or after the date of publication of this notice as a Treasury decision.*** An election made under this subparagraph on or after the date of publication of this notice as a Treasury decision shall be made not later than the time, including extensions thereof, prescribed by law for filing the income tax return for the year in which the expenses were paid or 30 days after the date of publication of this notice as a Treasury decision, whichever occurs last. The election shall be made by a statement attached to the return (or the amended return) for the taxable year, setting forth the following information:

(*a*) The items to which the election relates;

(*b*) The amount of each item;

(*c*) The date each item was paid or incurred; and

(*d*) The date the taxpayer was informed by his employer of his transfer to the new principal place of work.

(iv) ***Revocation of election.*** An election made in accordance with this subparagraph is revocable upon the filing by the taxpayer of an amended return or a claim for refund with the district director, or the director of the Internal Revenue service center with whom the election was filed not later than the time prescribed by law, including extensions thereof, for the filing of a claim for refund with respect to the items to which the election relates.

[T.D. 7195, 37 FR 13535, July 11, 1972, 37 FR 14230, July 18, 1972, as amended by T.D. 7578 43 FR 59355, Dec. 20, 1978; T.D. 7605, 44 FR 18970, Mar. 30, 1979; T.D. 7689, 45 FR 20796, Mar. 31, 1980; T.D. 7810, 47 FR 6003, Feb. 10, 1982; T.D. 8607, 60 FR 40077, Aug. 7, 1995]

§ 1.219-1 Deduction for retirement savings.

(a) ***In general.*** Subject to the limitations and restrictions of paragraph (b) and the special rules of paragraph (c)(3) of this section, there shall be allowed a deduction under section 62 from gross income of amounts paid for the taxable year of an individual on behalf of such individual to an individual retirement account described in section 408(a), for an individual retirement annuity described in section 408(b), or for a retirement bond described in section 409. The deduction described in the preceding sentence shall be allowed only to the individual on whose behalf such individual retirement account, individual retirement annuity, or retirement bond is maintained. The first sentence of this paragraph shall apply only in the case of a contribution of cash. A contribution of property other than cash is not allowable as a deduction under this section. In the case of a retirement bond, a deduction will not be allowed if the bond is redeemed within 12 months of its issue date.

(b) ***Limitations and restrictions*** —

(1) ***Maximum deduction.*** The amount allowable as a deduction under section 219(a) to an individual for any taxable year cannot exceed an amount equal to 15 percent of the compensation includible in the gross income of the individual for such taxable year, or $1,500, whichever is less.

(2) *Restrictions* —

(i) ***Individuals covered by certain other plans.*** No deduction is allowable under section 219(a) to an individual for the taxable year if for any part of such year:

(A) He was an active participant in:

(*1*) A plan described in section 401(a) which includes a trust exempt from tax under section 501(a),

(*2*) An annuity plan described in section 403(a),

(*3*) A qualified bond purchase plan described in section 405(a), or

(*4*) A retirement plan established for its employees by the United States, by a State or political subdivision thereof, or by an agency or instrumentality of any of the foregoing, or

(B) Amounts were contributed by his employer for an annuity contract described in section 403(b) (whether or not the individual's rights in such contract are nonforfeitable).

(ii) ***Contributions after age 70½.*** No deduction is allowable under section 219 (a) to an individual for the taxable year of the individual, if he has attained the age of 70½ before the close of such taxable year.

(iii) ***Rollover contributions.*** No deduction is allowable under section 219 for any taxable year of an individual with respect to a rollover contribution described in section 402(a)(5), 402(a)(7), 403(a)(4), 403(b)(8), 408(d)(3), or 409(b)(3)(C).

(3) ***Amounts contributed under endowment contracts.***

(i) For any taxable year, no deduction is allowable under section 219(a) for amounts paid under an endowment contract described in § 1.408-3(e) which is allocable under subdivision (ii) of this subparagraph to the cost of life insurance.

(ii) For any taxable year, the cost of current life insurance protection under an endowment contract described in paragraph (b)(3)(i) of this section is the product of the net premium cost, as determined by the Commissioner, and the excess, if any, of the death benefit payable under the contract during the policy year beginning in the taxable year over the cash value of the contract at the end of such policy year.

(iii) The provisions of this subparagraph may be illustrated by the following examples:

Example 1. A, an individual who is otherwise entitled to the maximum deduction allowed under section 219, purchases, at age 20, an endowment contract described in § 1.408-3(e) which provides for the payment of an annuity of $100 per month, at age 65, with a minimum death benefit of $10,000, and an annual premium of $220. The cash value at the end of the first policy year is 0. The net premium cost, as determined by the Commissioner, for A's age is $1.61 per thousand dollars of life insurance protection. The cost of current life insurance protection is $16.10 ($1.61 × 10). A's maximum deduction under section 219 with respect to amounts paid under the endowment contract for the taxable year in which the first policy year begins is $203.90 ($220 − $16.10).

Example 2. Assume the same facts as in *Example 1,* except that the cash value at the end of the second policy year is $200 and the net premium cost is $1.67 per thousand for A's age. The cost of current life insurance protection is $16.37 ($1.67 × 9.8). A's maximum deduction under section 219 with respect to amounts paid under the endowment contract for the taxable year in which the second policy year begins is $203.63 ($220 − $16.37).

(c) ***Definitions and special rules*** —

(1) ***Compensation.*** For purposes of this section, the term *compensation* means wages, salaries, professional fees, or other amounts derived from or received for personal service actually rendered (including, but not limited to, commissions paid salesmen, compensation for services on the basis of a percentage of profits, commissions on insurance premiums, tips, and bonuses) and includes earned income, as defined in section 401 (c) (2), but does not include amounts derived from or received as earnings or profits from property (including, but not limited to, interest and dividends) or amounts not includible in gross income.

(2) ***Active participant.*** For the definition of active participant, see § 1.219-2.

(3) ***Special rules.***

(i) The maximum deduction allowable under section 219(b)(1) is computed separately for each individual. Thus, if a husband and wife each has compensation of $10,000 for the taxable year and they are each otherwise eligible to contribute to an individual retirement account and they file a joint return, then the maximum amount allowable as a deduction under section 219 is $3,000, the sum of the individual maximums of $1,500. However, if, for example, the husband has compensation of $20,000, the wife has no compensation, each is otherwise eligible to contribute to an individual retirement account for the taxable year, and they file a joint return, the maximum amount allowable as a deduction under section 219 is $1,500.

(ii) Section 219 is to be applied without regard to any community property laws. Thus, if, for example, a husband and wife, who are otherwise eligible to contribute to an individual retirement account, live in a community property jurisdiction and the husband alone has compensation of $20,000 for the taxable year, then the maximum amount allowable as a deduction under section 219 is $1,500.

(4) ***Employer contributions.*** For purposes of this chapter, any amount paid by an employer to an individual retirement account or for an individual retirement annuity or retirement bond constitutes the payment of compensation to the employee (other than a self-employed individual who is an employee within the meaning of section 401(c)(1)) includible in his gross income, whether or not a deduction for such payment is allowable under section 219 to such employee after the application of section 219(b). Thus, an employer will be entitled to a deduction for compensation paid to an employee for amounts the employer contributes on the employee's behalf to an individual retirement account, for an individual retirement annuity, or for a retirement bond if such deduction is otherwise allowable under section 162.

[T.D. 7714, 45 FR 52788, Aug. 8, 1980]

§ 1.219-2 Definition of active participant.

(a) ***In general.*** This section defines the term *active participant* for individuals who participate in retirement plans described in section 219(b)(2). Any individual who is an active participant in such a plan is not allowed a deduction under section 219(a) for contributions to an individual retirement account.

(b) ***Defined benefit plans*** —

(1) ***In general.*** Except as provided in subparagraphs (2), (3) and (4) of this paragraph, an individual is an active participant in a defined benefit plan if for any portion of the plan year ending with or within such individual's taxable year he is not excluded under the eligibility provisions of the plan. An individual is not an active participant in a particular taxable year merely because the individual meets the plan's eligibility requirements during a plan year beginning in that particular taxable year but ending in a later taxable year of the individual. However, for purposes of this section, an individual is deemed not to satisfy the eligibility provisions for a particular plan year if his compensation is less than the minimum amount of compensation needed under the plan to accrue a benefit. For example, assume a plan is integrated with Social Security and only those individuals whose compensation exceeds a certain amount accrue benefits under the plan. An individual whose compensation for the plan year ending with or within his taxable year is less than the amount necessary under the plan to accrue a benefit is not an active participant in such plan.

(2) ***Rules for plans maintained by more than one employer.*** In the case of a defined benefit plan described in section 413(a) and funded at least in part by service-related contributions, *e.g.,* so many cents-per-hour, an individual is an active participant if an employer is contributing or is required to contribute to the plan an amount based on that individual's service taken into account for the plan year ending with or within the individual's taxable year. The general rule in paragraph (b)(1) of this section applies in the case of plans described in section 413(a) and funded only on some non-service-related unit, *e.g.,* so many cents-per-ton of coal.

(3) ***Plans in which accruals for all participants have ceased.*** In the case of a defined benefit plan in which accruals for all participants have ceased, an individual in such a plan is not an active participant. However, any benefit that may vary with future compensation of an individual provides additional accruals. For example, a plan in which future benefit accruals have ceased, but the actual benefit depends upon final average compensation will not be considered as one in which accruals have ceased.

(4) ***No accruals after specified age.*** An individual in a defined benefit plan who accrues no additional benefits in a plan year ending with or within such individual's taxable year by reason of attaining a specified age is not an active participant by reason of his participation in that plan.

(c) ***Money purchase plan.*** An individual is an active participant in a money purchase plan if under the terms of the plan employer contributions must be allocated to the individual's account with respect to the plan year ending with or within the individual's taxable year. This rule applies even if an individual is not employed at any time during the individual's taxable year.

(d) ***Profit-sharing and stock-bonus plans*** —

(1) ***In general.*** This paragraph applies to profit-sharing and stock bonus plans. An individual is an active participant in such plans in a taxable year if a forfeiture is allocated to his account as of a date in such taxable year. An individual is also an active participant in a taxable year in such plans if an employer contribution is added to the participant's account in such taxable year. A contribution is added to a participant's account as of the later of the following two dates: the date the contribution

is made or the date as of which it is allocated. Thus, if a contribution is made in an individual's taxable year 2 and allocated as of a date in individual's taxable year 1, the later of the relevant dates is the date the contribution is made. Consequently, the individual is an active participant in year 2 but not in year 1 as a result of that contribution.

(2) ***Special rule.*** An individual is not an active participant for a particular taxable year by reason of a contribution made in such year allocated to a previous year if such individual was an active participant in such previous year by reason of a prior contribution that was allocated as of a date in such previous year.

(e) ***Employee contributions.*** If an employee makes a voluntary or mandatory contribution to a plan described in paragraphs (b), (c), or (d) of this section, such employee is an active participant in the plan for the taxable year in which such contribution is made.

(f) ***Certain individuals not active participants.*** For purposes of this section, an individual is not an active participant under a plan for any taxable year of such individual for which such individual elects, pursuant to the plan, not to participate in such plan.

(g) ***Retirement savings for married individuals.*** The provisions of this section apply in determining whether an individual or his spouse is an active participant in a plan for purposes of section 220 (relating to retirement savings for certain married individuals).

(h) ***Examples.*** The provisions of this section may be illustrated by the following examples:

Example 1. The X Corporation maintains a defined benefit plan which has the following rules on participation and accrual of benefits. Each employee who has attained the age of 25 or has completed one year of service is a participant in the plan. The plan further provides that each participant shall receive upon retirement $12 per month for each year of service in which the employee completes 1,000 hours of service. The plan year is the calendar year. B, a calendar-year taxpayer, enters the plan on January 2, 1980, when he is 27 years of age. Since B has attained the age of 25, he is a participant in the plan. However, B completes less than 1,000 hours of service in 1980 and 1981. Although B is not accruing any benefits under the plan in 1980 and 1981, he is an active participant under section 219(b)(2) because he is a participant in the plan. Thus, B cannot make deductible contributions to an individual retirement arrangement for his taxable years of 1980 and 1981.

Example 2. The Y Corporation maintains a profit-sharing plan for its employees. The plan year of the plan is the calendar year. C is a calendar-year taxpayer and a participant in the plan. On June 30, 1980, the employer makes a contribution for 1980 which as allocated on July 31, 1980. In 1981 the employer makes a second contribution for 1980, allocated as of December 31, 1980. Under the general rule stated in § 1.219-2(d)(1), C is an active participant in 1980. Under the special rule stated in § 1.219-2(d)(2), however, C is not an active participant in 1981 by reason of that contribution made in 1981.

(i) ***Effective date.*** The provisions set forth in this section are effective for taxable years beginning after December 31, 1978.

[T.D. 7714, 45 FR 52789, Aug. 8, 1980]

§ 1.221-1 Deduction for interest paid on qualified education loans after December 31, 2001.

(a) ***In general*** —

(1) ***Applicability.*** Under section 221, an individual taxpayer may deduct from gross income certain interest paid by the taxpayer during the taxable year on a qualified education loan. See paragraph (b)(4) of this section for rules on payments of interest by third parties. The rules of this section are applicable to periods governed by section 221 as amended in 2001, which relates to deductions for interest paid on qualified education loans after December 31, 2001, in taxable years ending after December 31, 2001, and on or before December 31, 2010. For rules applicable to interest due and paid on qualified education loans after January 21, 1999, if paid before January 1, 2002, see § 1.221-2. Taxpayers also may apply § 1.221-2 to interest due and paid on qualified education loans after December 31, 1997, but before January 21, 1999. To the extent that the effective date limitation (sunset) of the 2001 amendment remains in force unchanged, section 221 before amendment in 2001, to which § 1.221-2 relates, also applies to interest due and paid on qualified education loans in taxable years beginning after December 31, 2010.

(2) ***Example.*** The following example illustrates the rules of this paragraph (a). In the example, assume that the institution the student attends is an eligible educational institution, the loan is a qualified education loan, the student is legally obligated to make interest payments under the terms of the loan, and any other applicable requirements, if not otherwise specified, are fulfilled. The example is as follows:

Example. Effective dates. Student A begins to make monthly interest payments on her loan beginning January 1, 1997. Student A continues to make interest payments in a timely fashion. However, under the effective date provisions of section 221, no deduction is allowed for interest Student A pays prior to January 1, 1998. Student A may deduct interest due and paid on the loan after December 31, 1997. Student A may apply the rules of § 1.221-2 to interest due and paid during the period beginning January 1, 1998, and ending January 20, 1999. Interest due and paid during the period January 21, 1999, and ending December 31, 2001, is deductible under the rules of § 1.221-2, and interest paid after December 31, 2001, is deductible under the rules of this section.

(b) ***Eligibility*** —

(1) ***Taxpayer must have a legal obligation to make interest payments.*** A taxpayer is entitled to a deduction under section 221 only if the taxpayer has a legal obligation to make interest payments under the terms of the qualified education loan.

(2) ***Claimed dependents not eligible*** —

(i) ***In general.*** An individual is not entitled to a deduction under section 221 for a taxable year if the individual is a dependent (as defined in section 152) for whom another taxpayer is allowed a deduction under section 151 on a Federal income tax return for the same taxable year (or, in the case of a fiscal year taxpayer, the taxable year beginning in the same calendar year as the individual's taxable year).

(ii) ***Examples.*** The following examples illustrate the rules of this paragraph (b)(2):

Example 1. Student not claimed as dependent. Student B pays $750 of interest on qualified education loans during 2003. Student B's parents are not allowed a deduction for her as a dependent for 2003. Assuming fulfillment of all other relevant requirements, Student B may deduct under section 221 the $750 of interest paid in 2003.

Example 2. Student claimed as dependent. Student C pays $750 of interest on qualified education loans during 2003. Only Student C has the legal obligation to make the payments. Student C's parent claims him as a dependent and is allowed a deduction under section 151 with respect to Student C in computing the parent's 2003 Federal income tax. Student C is not entitled to a deduction under section 221 for the $750 of interest paid in 2003. Because Student C's parent was not legally obligated to make the payments, Student C's parent also is not entitled to a deduction for the interest.

(3) ***Married taxpayers.*** If a taxpayer is married as of the close of a taxable year, he or she is entitled to a deduction under this section only if the taxpayer and the taxpayer's spouse file a joint return for that taxable year.

(4) ***Payments of interest by a third party*** —

(i) ***In general.*** If a third party who is not legally obligated to make a payment of interest on a qualified education loan makes a payment of interest on behalf of a taxpayer who is legally obligated to make the payment, then the taxpayer is treated as receiving the payment from the third party and, in turn, paying the interest.

(ii) ***Examples.*** The following examples illustrate the rules of this paragraph (b)(4):

Example 1. Payment by employer. Student D obtains a qualified education loan to attend college. Upon Student D's graduation from college, Student D works as an intern for a non-profit organization during which time Student D's loan is in deferment and Student D makes no interest payments. As part of the internship program, the non-profit organization makes an interest payment on behalf of Student D after the deferment period. This payment is not excluded from Student D's income under section 108(f) and is treated as additional compensation includible in Student D's gross income. Assuming fulfillment of all other requirements of section 221, Student D may deduct this payment of interest for Federal income tax purposes.

Example 2. Payment by parent. Student E obtains a qualified education loan to attend college. Upon graduation from college, Student E makes legally required monthly payments of principal and interest. Student E's mother makes a required monthly payment of interest as a gift to Student E. A deduction for Student E as a dependent is not allowed on another taxpayer's tax return for that taxable year. Assuming fulfillment of all other requirements of section 221, Student E may deduct this payment of interest for Federal income tax purposes.

(c) ***Maximum deduction.*** The amount allowed as a deduction under section 221 for any taxable year may not exceed $2,500.

(d) ***Limitation based on modified adjusted gross income*** —

(1) ***In general.*** The deduction allowed under section 221 is phased out ratably for taxpayers with modified adjusted gross income between $50,000 and $65,000 ($100,000 and $130,000 for married individuals who file a joint return). Section 221 does not allow a deduction for taxpayers with modified adjusted gross income of $65,000 or above ($130,000 or above for married individuals who file a joint return). See paragraph (d)(3) of this section for inflation adjustment of amounts in this paragraph (d)(1).

(2) ***Modified adjusted gross income defined.*** The term *modified adjusted gross income* means the adjusted gross income (as defined in section 62) of the taxpayer for the taxable year increased by any amount excluded from gross income under section 911, 931, or 933 (relating to income earned abroad or from certain United States possessions or Puerto Rico). Modified adjusted gross income must be determined under this section after taking into account the inclusions, exclusions, deductions, and limitations provided by sections 86 (social security and tier 1 railroad retirement benefits), 135 (redemption of qualified United States savings bonds), 137 (adoption assistance programs), 219 (deductible qualified retirement contributions), and 469 (limitation on passive activity losses and credits), but before taking into account the deductions provided by sections 221 and 222 (qualified tuition and related expenses).

(3) ***Inflation adjustment.*** For taxable years beginning after 2002, the amounts in paragraph (d)(1) of this section will be increased for inflation occurring after 2001 in accordance with section 221(f)(1). If any amount adjusted under section 221(f)(1) is not a multiple of $5,000, the amount will be rounded to the next lowest multiple of $5,000.

(e) ***Definitions*** —

(1) ***Eligible educational institution.*** In general, an *eligible educational institution* means any college, university, vocational school, or other postsecondary educational institution described in section 481 of the Higher Education Act of 1965 (20 U.S.C. 1088), as in effect on August 5, 1997, and certified by the U.S. Department of Education as eligible to participate in student aid programs administered by the Department, as described in section 25A(f)(2) and § 1.25A-2(b). For purposes of this section, an eligible educational institution also includes an institution that conducts an internship or residency program leading to a degree or certificate awarded by an institution, a hospital, or a health care facility that offers postgraduate training.

(2) ***Qualified higher education expenses*** —

(i) ***In general. Qualified higher education expenses*** means the cost of attendance (as defined in section 472 of the Higher Education Act of 1965, 20 U.S.C. 1087ll, as in effect on August 4, 1997), at an eligible educational institution, reduced by the amounts described in paragraph (e)(2)(ii) of this section. Consistent with section 472 of the Higher Education Act of 1965, a student's cost of attendance is determined by the eligible educational institution and includes tuition and fees normally assessed a student carrying the same academic workload as the student, an allowance for room and board, and an allowance for books, supplies, transportation, and miscellaneous expenses of the student.

(ii) ***Reductions.*** Qualified higher education expenses are reduced by any amount that is paid to or on behalf of a student with respect to such expenses and that is—

(A) A qualified scholarship that is excludable from income under section 117;

(B) An educational assistance allowance for a veteran or member of the armed forces under chapter 30, 31, 32, 34 or 35 of title 38, United States Code, or under chapter 1606 of title 10, United States Code;

(C) Employer-provided educational assistance that is excludable from income under section 127;

(D) Any other amount that is described in section 25A(g)(2)(C) (relating to amounts excludable from gross income as educational assistance);

(E) Any otherwise includible amount excluded from gross income under section 135 (relating to the redemption of United States savings bonds);

(F) Any otherwise includible amount distributed from a Coverdell education savings account and excluded from gross income under section 530(d)(2); or

(G) Any otherwise includible amount distributed from a qualified tuition program and excluded from gross income under section 529(c)(3)(B).

(3) ***Qualified education loan*** —

(i) ***In general.*** A *qualified education loan* means indebtedness incurred by a taxpayer solely to pay qualified higher education expenses that are—

(A) Incurred on behalf of a student who is the taxpayer, the taxpayer's spouse, or a dependent (as defined in section 152) of the taxpayer at the time the taxpayer incurs the indebtedness;

(B) Attributable to education provided during an academic period, as described in section 25A and the regulations thereunder, when the student is an eligible student as defined in section 25A(b)(3) (requiring that the student be a degree candidate carrying at least half the normal full-time workload); and

(C) Paid or incurred within a reasonable period of time before or after the taxpayer incurs the indebtedness.

(ii) ***Reasonable period.*** Except as otherwise provided in this paragraph (e)(3)(ii), what constitutes a reasonable period of time for purposes of paragraph (e)(3)(i)(C) of this section generally is determined based on all the relevant facts and circumstances. However, qualified higher education expenses are treated as paid or incurred within a reasonable period of time before or after the taxpayer incurs the indebtedness if—

(A) The expenses are paid with the proceeds of education loans that are part of a Federal postsecondary education loan program; or

(B) The expenses relate to a particular academic period and the loan proceeds used to pay the expenses are disbursed within a period that begins 90 days prior to the start of that academic period and ends 90 days after the end of that academic period.

(iii) ***Related party.*** A qualified education loan does not include any indebtedness owed to a person who is related to the taxpayer, within the meaning of section 267(b) or 707(b)(1). For example, a parent or grandparent of the taxpayer is a related person. In addition, a qualified education loan does not include a loan made under any qualified employer plan as defined in section 72(p)(4) or under any contract referred to in section 72(p)(5).

(iv) ***Federal issuance or guarantee not required.*** A loan does not have to be issued or guaranteed under a Federal postsecondary education loan program to be a qualified education loan.

(v) ***Refinanced and consolidated indebtedness*** —

(A) ***In general.*** A qualified education loan includes indebtedness incurred solely to refinance a qualified education loan. A qualified education loan includes a single, consolidated indebtedness incurred solely to refinance two or more qualified education loans of a borrower.

(B) ***Treatment of refinanced and consolidated indebtedness.*** [Reserved]

(4) ***Examples.*** The following examples illustrate the rules of this paragraph (e):

Example 1. Eligible educational institution. University F is a postsecondary educational institution described in section 481 of the Higher Education Act of 1965. The U.S. Department of Education has certified that University F is eligible to participate in federal financial aid programs administered by that Department, although University F chooses not to participate. University F is an eligible educational institution.

Example 2. Qualified higher education expenses. Student G receives a $3,000 qualified scholarship for the 2003 fall semester that is excludable from Student G's gross income under section 117. Student G receives no other forms of financial assistance with respect to the 2003 fall semester. Student G's cost of attendance for the 2003 fall semester, as determined by Student G's eligible educational institution for purposes of calculating a student's financial need in accordance with section 472 of the Higher Education Act, is $16,000. For the 2003 fall semester, Student G has qualified higher education expenses of $13,000 (the cost of attendance as determined by the institution ($16,000) reduced by the qualified scholarship proceeds excludable from gross income ($3,000)).

Example 3. Qualified education loan. Student H borrows money from a commercial bank to pay qualified higher education expenses related to his enrollment on a half-time basis in a graduate program at an eligible educational institution. Student H uses all the loan proceeds to pay qualified higher education expenses incurred within a reasonable period of time after incurring the indebtedness. The loan is not federally guaranteed. The commercial bank is not related to Student H within the meaning of section 267(b) or 707(b)(1). Student H's loan is a qualified education loan within the meaning of section 221.

Example 4. Qualified education loan. Student I signs a promissory note for a loan on August 15, 2003, to pay for qualified higher education expenses for the 2003 fall and 2004 spring semesters. On August 20, 2003, the lender disburses loan proceeds to Student I's college. The college credits them to Student I's account to pay qualified higher education expenses for the 2003 fall semester, which begins on August 25, 2003. On January 26, 2004, the lender disburses additional loan proceeds to Student I's college. The college credits them to Student I's account to pay qualified higher education expenses for the 2004 spring semester, which began on January 12, 2004. Student I's qualified higher education expenses for the two semesters are paid within a reasonable period of time, as the first loan disbursement occurred within the 90 days prior to the start of the fall 2003 semester and the second loan disbursement occurred during the spring 2004 semester.

Example 5. Qualified education loan. The facts are the same as in *Example 4* except that in 2005 the college is not an eligible educational institution because it loses its eligibility to participate in certain federal financial aid programs administered by the U.S. Department of Education. The qualification of Student I's loan, which was used to pay for qualified higher education expenses for the 2003 fall and 2004 spring semesters, as a qualified education loan is not affected by the college's subsequent loss of eligibility.

Example 6. Mixed-use loans. Student J signs a promissory note for a loan secured by Student J's personal residence. Student J will use part of the loan proceeds to pay for certain improvements to Student J's residence and part of the loan proceeds to pay qualified higher education expenses of Student J's spouse. Because Student J obtains the loan not solely to pay qualified higher education expenses, the loan is not a qualified education loan.

(f) ***Interest*** —

(1) ***In general.*** Amounts paid on a qualified education loan are deductible under section 221 if the amounts are interest for Federal income tax purposes. For example, interest includes—

(i) Qualified stated interest (as defined in § 1.1273-1(c)); and

(ii) Original issue discount, which generally includes capitalized interest. For purposes of section 221, capitalized interest means any accrued and unpaid interest on a qualified education loan that, in accordance with the terms of the loan, is added by the lender to the outstanding principal balance of the loan.

(2) ***Operative rules for original issue discount*** —

(i) ***In general.*** The rules to determine the amount of original issue discount on a loan and the accruals of the discount are in sections 163(e), 1271 through 1275, and the regulations thereunder. In general, original issue discount is the excess of a loan's stated redemption price at maturity (all payments due under the loan other than qualified stated interest payments) over its issue price (the amount loaned). Although original issue discount generally is deductible as it accrues under section 163(e) and § 1.163-7, original issue discount on a qualified education loan is not deductible until paid. See paragraph (f)(3) of this section to determine when original issue discount is paid.

(ii) ***Treatment of loan origination fees by the borrower.*** If a loan origination fee is paid by the borrower other than for property or services provided by the lender, the fee reduces the issue price of the loan, which creates original issue discount (or additional original issue discount) on the loan in an amount equal to the fee. See § 1.1273-2(g). For an example of how a loan origination fee is taken into account, see *Example 2* of paragraph (f)(4) of this section.

(3) ***Allocation of payments.*** See §§ 1.446-2(e) and 1.1275-2(a) for rules on allocating payments between interest and principal. In general, these rules treat a payment first as a payment of interest to the extent of the interest that has accrued and remains unpaid as of the date the payment is due, and second as a payment of principal. The characterization of a payment as either interest or principal under these rules applies regardless of how the parties label the payment (either as interest or principal). Accordingly, the taxpayer may deduct the portion of a payment labeled as principal that these rules treat as a payment of interest on the loan, including any portion attributable to capitalized interest or loan origination fees.

(4) ***Examples.*** The following examples illustrate the rules of this paragraph (f). In the examples, assume that the institution the student attends is an eligible educational institution, the loan is a qualified education loan, the student is legally obligated to make interest payments under the terms of the loan, and any other applicable requirements, if not otherwise specified, are fulfilled. The examples are as follows:

Example 1. Capitalized interest. Interest on Student K's loan accrues while Student K is in school, but Student K is not required to make any payments on the loan until six months after he graduates or otherwise leaves school. At that time, the lender capitalizes all accrued but unpaid interest and adds it to the outstanding principal amount of the loan. Thereafter, Student K is required to make monthly payments of interest and principal on the loan. The interest payable on the loan, including the capitalized interest, is original issue discount. See section 1273 and the regulations thereunder. Therefore, in determining the total amount of interest paid on the loan each taxable year, Student K may deduct any payments that § 1.1275-2(a) treats as payments of interest, including any principal payments that are treated as payments of capitalized interest. See paragraph (f)(3) of this section.

Example 2. Allocation of payments. The facts are the same as in *Example 1,* except that, in addition, the lender charges Student K a loan origination fee, which is not for any property or services provided by the lender. Under § 1.1273-2(g), the loan origination fee reduces the issue price of the loan, which reduction increases the amount of original issue discount on the loan by the amount of the fee. The amount of original issue discount (which includes the capitalized interest and loan origination fee) that accrues each year is determined under section 1272 and § 1.1272-1. In effect, the loan origination fee accrues over the entire term of the loan. Because the loan has original issue discount, the payment ordering rules in § 1.1275-2(a) must be used to determine how much of each payment is interest for federal tax purposes. See paragraph (f)(3) of this section. Under § 1.1275-2(a), each payment (regardless of its designation by the parties as either interest or principal) generally is treated first as a payment of original issue discount, to the extent of the original issue discount that has accrued as of the date the payment is due and has not been allocated to prior payments, and second as a payment of principal. Therefore, in determining the total amount of interest paid on the qualified education loan for a taxable year, Student K may deduct any payments that the parties label as principal but that are treated as payments of original issue discount under § 1.1275-2(a).

(g) ***Additional Rules*** —

(1) ***Payment of interest made during period when interest payment not required.*** Payments of interest on a qualified education loan to which this section is applicable are deductible even if the payments are made during a period when interest payments are not required because, for example, the loan has not yet entered repayment status or is in a period of deferment or forbearance.

(2) ***Denial of double benefit.*** No deduction is allowed under this section for any amount for which a deduction is allowable under another provision of Chapter 1 of the Internal Revenue Code. No deduction is allowed under this section for any amount for which an exclusion is allowable under section 108(f) (relating to cancellation of indebtedness).

(3) ***Examples.*** The following examples illustrate the rules of this paragraph (g). In the examples, assume that the institution the student attends is an eligible educational institution, the loan is a qualified education loan, and the student is legally obligated to make interest payments under the terms of the loan:

Example 1. Voluntary payment of interest before loan has entered repayment status. Student L obtains a loan to attend college. The terms of the loan provide that interest accrues on the loan while Student L earns his undergraduate degree but that Student L is not required to begin making payments of interest until six full calendar months after he graduates or otherwise leaves school. Nevertheless, Student L voluntarily pays interest on the loan during 2003, while enrolled

in college. Assuming all other relevant requirements are met, Student L is allowed a deduction for interest paid while attending college even though the payments were made before interest payments were required.

Example 2. Voluntary payment during period of deferment or forbearance. The facts are the same as in *Example 2,* except that Student L makes no payments on the loan while enrolled in college. Student L graduates in June 2003 and begins making monthly payments of principal and interest on the loan in January 2004, as required by the terms of the loan. In August 2004, Student L enrolls in graduate school on a full-time basis. Under the terms of the loan, Student L may apply for deferment of the loan payments while Student L is enrolled in graduate school. Student L applies for and receives a deferment on the outstanding loan. However, Student L continues to make some monthly payments of interest during graduate school. Student L may deduct interest paid on the loan during the period beginning in January 2004, including interest paid while Student L is enrolled in graduate school.

(h) ***Effective date.*** This section is applicable to periods governed by section 221 as amended in 2001, which relates to interest paid on a qualified education loan after December 31, 2001, in taxable years ending after December 31, 2001, and on or before December 31, 2010.

[T.D. 9125, 69 FR 25492, May 7, 2004]

§ 1.221-2 Deduction for interest due and paid on qualified education loans before January 1, 2002.

(a) ***In general.*** Under section 221, an individual taxpayer may deduct from gross income certain interest due and paid by the taxpayer during the taxable year on a qualified education loan. The deduction is allowed only with respect to interest due and paid on a qualified education loan during the first 60 months that interest payments are required under the terms of the loan. See paragraph (e) of this section for rules relating to the 60-month rule. See paragraph (b)(4) of this section for rules on payments of interest by third parties. The rules of this section are applicable to interest due and paid on qualified education loans after January 21, 1999, if paid before January 1, 2002. Taxpayers also may apply the rules of this section to interest due and paid on qualified education loans after December 31, 1997, but before January 21, 1999. To the extent that the effective date limitation ("sunset") of the 2001 amendment remains in force unchanged, section 221 before amendment in 2001, to which this section relates, also applies to interest due and paid on qualified education loans in taxable years beginning after December 31, 2010. For rules applicable to periods governed by section 221 as amended in 2001, which relates to deductions for interest paid on qualified education loans after December 31, 2001, in taxable years ending after December 31, 2001, and before January 1, 2011, see § 1.221-1.

(b) ***Eligibility*** —

(1) ***Taxpayer must have a legal obligation to make interest payments.*** A taxpayer is entitled to a deduction under section 221 only if the taxpayer has a legal obligation to make interest payments under the terms of the qualified education loan.

(2) ***Claimed dependents not eligible*** —

(i) ***In general.*** An individual is not entitled to a deduction under section 221 for a taxable year if the individual is a dependent (as defined in section 152) for whom another taxpayer is allowed a deduction under section 151 on a Federal income tax return for the same taxable year (or, in the case of a fiscal year taxpayer, the taxable year beginning in the same calendar year as the individual's taxable year).

(ii) ***Examples.*** The following examples illustrate the rules of this paragraph (b)(2):

Example 1. Student not claimed as dependent. Student A pays $750 of interest on qualified education loans during 1998. Student A's parents are not allowed a deduction for her as a dependent for 1998. Assuming fulfillment of all other relevant requirements, Student A may deduct the $750 of interest paid in 1998 under section 221.

Example 2. Student claimed as dependent. Student B pays $750 of interest on qualified education loans during 1998. Only Student B has the legal obligation to make the payments. Student B's parent claims him as a dependent and is allowed a deduction under section 151 with respect to Student B in computing the parent's 1998 Federal income tax. Student B may not deduct the $750 of interest paid in 1998 under section 221. Because Student B's parent was not legally obligated to make the payments, Student B's parent also may not deduct the interest.

(3) ***Married taxpayers.*** If a taxpayer is married as of the close of a taxable year, he or she is entitled to a deduction under this section only if the taxpayer and the taxpayer's spouse file a joint return for that taxable year.

(4) ***Payments of interest by a third party*** —

(i) ***In general.*** If a third party who is not legally obligated to make a payment of interest on a qualified education loan makes a payment of interest on behalf of a taxpayer who is legally obligated to make the payment, then the taxpayer is treated as receiving the payment from the third party and, in turn, paying the interest.

(ii) ***Examples.*** The following examples illustrate the rules of this paragraph (b)(4):

Example 1. Payment by employer. Student C obtains a qualified education loan to attend college. Upon Student C's graduation from college, Student C works as an intern for a non-profit organization during which time Student C's loan is in deferment and Student C makes no interest payments. As part of the internship program, the non-profit organization makes an interest payment on behalf of Student C after the deferment period. This payment is not excluded from Student C's income under section 108(f) and is treated as additional compensation includible in Student C's gross income. Assuming fulfillment of all other requirements of section 221, Student C may deduct this payment of interest for Federal income tax purposes.

Example 2. Payment by parent. Student D obtains a qualified education loan to attend college. Upon graduation from college, Student D makes legally required monthly payments of principal and interest. Student D's mother makes a required monthly payment of interest as a gift to Student D. A deduction for Student D as a dependent is not allowed on another taxpayer's tax return for that taxable year. Assuming fulfillment of all other requirements of section 221, Student D may deduct this payment of interest for Federal income tax purposes.

(c) ***Maximum deduction.*** In any taxable year beginning before January 1, 2002, the amount allowed as a deduction under section 221 may not exceed the amount determined in accordance with the following table:

Taxable year beginning in	Maximum deduction
1998	$1,000
1999	1,500
2000	2,000
2001	2,500

(d) ***Limitation based on modified adjusted gross income*** —

(1) ***In general.*** The deduction allowed under section 221 is phased out ratably for taxpayers with modified adjusted gross income between $40,000 and $55,000 ($60,000 and $75,000 for married individuals who file a joint return). Section 221 does not allow a deduction for taxpayers with modified adjusted gross income of $55,000 or above ($75,000 or above for married individuals who file a joint return).

(2) ***Modified adjusted gross income defined.*** The term *modified adjusted gross income* means the adjusted gross income (as defined in section 62) of the taxpayer for the taxable year increased by any amount excluded from gross income under section 911, 931, or 933 (relating to income earned abroad or from certain United States possessions or Puerto Rico). Modified adjusted gross income must be determined under this section after taking into account the inclusions, exclusions, deductions, and limitations provided by sections 86 (social security and tier 1 railroad retirement benefits), 135 (redemption of qualified United States savings bonds), 137 (adoption assistance programs), 219 (deductible qualified retirement contributions), and 469 (limitation on passive activity losses and credits), but before taking into account the deduction provided by section 221.

(e) ***60-month rule*** —

(1) ***In general.*** A deduction for interest paid on a qualified education loan is allowed only for payments made during the first 60 months that interest payments are required on the loan. The 60-month period begins on the first day of the month that includes the date on which interest payments are first required and ends 60 months later, unless the 60-month period is suspended for periods of deferment or forbearance within the meaning of paragraph (e)(3) of this section. The 60-month period continues to run regardless of whether the required interest payments are actually made. The date on which the first interest payment is required is determined under the terms of the loan agreement or, in the case of a loan issued or guaranteed under a federal postsecondary education loan program (such as loan programs under title IV of the Higher Education Act of 1965 (20 U.S.C. 1070) and titles VII and VIII of the Public Health Service Act (42 U.S.C. 292., and 42 U.S.C. 296)) under applicable Federal regulations. For a discussion of interest, see paragraph (h) of this section. For special rules relating to loan refinancings, consolidated loans, and collapsed loans, see paragraph (i) of this section.

(2) ***Loans that entered repayment status prior to January 1, 1998.*** In the case of any qualified education loan that entered repayment status prior to January 1, 1998, section 221 allows no deduction for interest paid during the portion of the 60-month period described in paragraph (e)(1) of this section that occurred prior to January 1, 1998. Section 221 allows a deduction only for interest due and paid during that portion, if any, of the 60-month period remaining after December 31, 1997.

(3) ***Periods of deferment or forbearance.*** The 60-month period described in paragraph (e)(1) of this section generally is suspended for any period when interest payments are not required on a qualified education loan because the lender has granted the taxpayer a period of deferment or forbearance (including postponement in anticipation of cancellation). However, in the case of a qualified education loan that is not issued or guaranteed under a Federal postsecondary education loan program, the 60-month period will be suspended under this paragraph (e)(3) only if the promissory note contains conditions substantially similar to the conditions for deferment or forbearance established by the U.S. Department of Education for Federal student loan programs under title IV of the Higher Education Act of 1965, such as half-time study at a postsecondary educational institution, study in an approved graduate fellowship program or in an approved rehabilitation program for the disabled, inability to find full-time employment, economic hardship, or the performance of services in certain occupations or federal programs, and the borrower satisfies one of those conditions. For any qualified education loan, the 60-month period is not suspended if under the terms of the loan interest continues to accrue while the loan is in deferment or forbearance and either—

(i) In the case of deferment, the taxpayer agrees to pay interest currently during the deferment period; or

(ii) In the case of forbearance, the taxpayer agrees to make reduced payments, or payments of interest only, during the forbearance period.

(4) ***Late payments.*** A deduction is allowed for a payment of interest required in one month but actually made in a subsequent month prior to the expiration of the 60-month period. A deduction is not allowed for a payment of interest required in one month but actually made in a subsequent month after the expiration of the 60-month period. A late payment made during a period of deferment or forbearance is treated, solely for purposes of determining whether it is made during the 60-month period, as made on the date it is due.

(5) ***Examples.*** The following examples illustrate the rules of this paragraph (e). In the examples, assume that the institution the student attends is an eligible educational institution, the loan is a qualified education loan and is issued or guaranteed under a federal postsecondary education loan program, the student is legally obligated to make interest payments under the terms of the loan, the interest payments occur after December 31, 1997, but before January 1, 2002, and with respect to any period after December 31, 1997, but before January 21, 1999, the taxpayer elects to apply the rules of this section. The examples are as follows:

Example 1. Payment prior to 60-month period. Student E obtains a loan to attend college. The terms of the loan provide that interest accrues on the loan while Student E earns his undergraduate degree but that Student E is not required to begin making payments of interest until six full calendar months after he graduates. Nevertheless, Student E voluntarily pays interest on the loan while attending college. Student E is not allowed a deduction for interest paid during that period, because those payments were made prior to the start of the 60-month period. Similarly, Student E would not be allowed a deduction for any interest paid during the six month grace period after graduation when interest payments are not required.

Example 2. Deferment option not exercised. The facts are the same as in *Example* 1 except that Student E makes no payments on the loan while enrolled in college. Student E graduates in June 1999, and is required to begin making monthly payments of principal and interest on the loan in January 2000. The 60-month period described in paragraph (e)(1) of this section begins in January 2000. In August 2000, Student E enrolls in graduate school on a full-time basis. Under the terms of the loan, Student E may apply for deferment of the loan payments while enrolled in graduate school. However, Student E elects not to apply for deferment and continues to make required monthly payments on the loan during graduate school. Assuming fulfillment of all other relevant requirements, Student E may deduct interest paid on the loan during the 60-month period beginning in January 2000, including interest paid while enrolled in graduate school.

Example 3. Late payment, within 60-month period. The facts are the same as in *Example 2* except that, after the loan enters repayment status in January 2000, Student E makes no interest payments until March 2000. In March 2000, Student E pays interest required for the months of January, February, and March 2000. Assuming fulfillment of all other relevant requirements, Student E may deduct the interest paid in March for the months of January, February, and March because the interest payments are required under the terms of the loan and are paid within the 60-month period, even though the January and February interest payments may be late.

Example 4. Late payment during deferment but within 60-month period. The terms of Student F's loan require her to begin making monthly payments of interest on the loan in January 2000. The 60-month period described in paragraph (e)(1) of this section begins in January 2000. Student F fails to make the required interest payments for the months of November and December 2000. In January 2001, Student F enrolls in graduate school on a half-time basis. Under the terms of the loan, Student F obtains a deferment of the loan payments due while enrolled in graduate school. The deferment becomes effective January 1, 2001. In March 2001, while the loan is in deferment, Student F pays the interest due for the months of November and December 2000. Assuming fulfillment of all other relevant requirements, Student F may deduct interest paid in March 2001, for the months of November and December 2000, because the late interest payments are treated, solely for purposes of determining whether they were made during the 60-month period, as made in November and December 2000.

Example 5. 60-month period. The terms of Student G's loan require him to begin making monthly payments of interest on the loan in November 1999. The 60-month period described in paragraph (e)(1) of this section begins in November 1999. In January 2000, Student G enrolls in graduate school on a half-time basis. As permitted under the terms of the loan, Student G applies for deferment of the loan payments due while enrolled in graduate school. While awaiting formal approval from the lender of his request for deferment, Student G pays interest due for the month of January 2000. In February 2000, the lender approves Student G's request for deferment, effective as of January 1, 2000. Assuming fulfillment of all other relevant requirements, Student G may deduct interest paid in January 2000, prior to his receipt of the lender's approval, even though the deferment was retroactive to January 1, 2000. As of February 2000, there are 57 months remaining in the 60-month period for that loan. Because Student G is not required to make interest payments during the period of deferment, the 60-month period is suspended. After January 2000, Student G may not deduct any voluntary payments of interest made during the period of deferment.

Example 6. 60-month period. The terms of Student H's loan require her to begin making monthly payments of interest on the loan in November 1999. The 60-month period described in paragraph (e)(1) of this section begins in November 1999. In January 2000, Student H enrolls in graduate school on a half-time basis. As permitted under the terms of the loan, Student H applies to make reduced payments of principal and interest while enrolled in graduate school. After the lender approves her application, Student H pays principal and interest due for the month of January 2000 at the reduced rate. Assuming fulfillment of all other relevant requirements, Student H may deduct interest paid in January 2000. As of February 2000, there are 57 months remaining in the 60-month period for that loan.

Example 7. Reduction of 60-month period for months prior to January 1, 1998. The first payment of interest on a loan is due in January 1997. Thereafter, interest payments are required on a monthly basis. The 60-month period described in paragraph (e)(1) of this section for this loan begins on January 1, 1997, the first day of the month that includes the date on which the first interest payment is required. However, the borrower may not deduct interest paid prior to January 1, 1998, under the effective date provisions of section 221. Assuming fulfillment of all other relevant requirements, the borrower may deduct interest due and paid on the loan during the 48 months beginning on January 1, 1998 (unless such period is extended for periods of deferment or forbearance under paragraph (e)(3) of this section).

(f) ***Definitions*** —

(1) ***Eligible educational institution.*** In general, an *eligible educational institution* means any college, university, vocational school, or other post-secondary educational institution described in section 481 of the Higher Education Act of 1965, 20 U.S.C. 1088, as in effect on August 5, 1997, and certified by the U.S. Department of Education as eligible to participate in student aid programs administered by the Department, as described in section 25A(f)(2) and § 1.25A-2(b). For purposes of this section, an eligible educational institution also includes an institution that conducts an internship or residency program leading to a degree or certificate awarded by an institution, a hospital, or a health care facility that offers postgraduate training.

(2) ***Qualified higher education expenses*** —

(i) ***In general. Qualified higher education expenses*** means the cost of attendance (as defined in section 472 of the Higher Education Act of 1965, 20 U.S.C. 1087ll, as in effect on August 4, 1997), at an eligible educational institution, reduced by the amounts described in paragraph (f)(2)(ii) of this section. Consistent with section 472 of the Higher Education Act of 1965, a student's cost of attendance is determined by the eligible educational institution and includes tuition and fees normally assessed a student carrying the same academic workload as the student, an allowance for room and board, and an allowance for books, supplies, transportation, and miscellaneous expenses of the student.

(ii) ***Reductions.*** Qualified higher education expenses are reduced by any amount that is paid to or on behalf of a student with respect to such expenses and that is—

(A) A qualified scholarship that is excludable from income under section 117;

(B) An educational assistance allowance for a veteran or member of the armed forces under chapter 30, 31, 32, 34 or 35 of title 38, United States Code, or under chapter 1606 of title 10, United States Code;

(C) Employer-provided educational assistance that is excludable from income under section 127;

(D) Any other amount that is described in section 25A(g)(2)(C) (relating to amounts excludable from gross income as educational assistance);

(E) Any otherwise includible amount excluded from gross income under section 135 (relating to the redemption of United States savings bonds); or

(F) Any otherwise includible amount distributed from a Coverdell education savings account and excluded from gross income under section 530(d)(2).

(3) ***Qualified education loan*** —

(i) ***In general.*** A *qualified education loan* means indebtedness incurred by a taxpayer solely to pay qualified higher education expenses that are—

(A) Incurred on behalf of a student who is the taxpayer, the taxpayer's spouse, or a dependent (as defined in section 152) of the taxpayer at the time the taxpayer incurs the indebtedness;

(B) Attributable to education provided during an academic period, as described in section 25A and the regulations thereunder, when the student is an eligible student as defined in section 25A(b)(3) (requiring that the student be a degree candidate carrying at least half the normal full-time workload); and

(C) Paid or incurred within a reasonable period of time before or after the taxpayer incurs the indebtedness.

(ii) ***Reasonable period.*** Except as otherwise provided in this paragraph (f)(3)(ii), what constitutes a reasonable period of time for purposes of paragraph (f)(3)(i)(C) of this section generally is determined based on all the relevant facts and circumstances. However, qualified higher education expenses are treated as paid or incurred within a reasonable period of time before or after the taxpayer incurs the indebtedness if—

(A) The expenses are paid with the proceeds of education loans that are part of a federal postsecondary education loan program; or

(B) The expenses relate to a particular academic period and the loan proceeds used to pay the expenses are disbursed within a period that begins 90 days prior to the start of that academic period and ends 90 days after the end of that academic period.

(iii) ***Related party.*** A qualified education loan does not include any indebtedness owed to a person who is related to the taxpayer, within the meaning of section 267(b) or 707(b)(1). For example, a parent or grandparent of the taxpayer is a related person. In addition, a qualified education loan does not include a loan made under any qualified employer plan as defined in section 72(p)(4) or under any contract referred to in section 72(p)(5).

(iv) ***Federal issuance or guarantee not required.*** A loan does not have to be issued or guaranteed under a federal postsecondary education loan program to be a qualified education loan.

(v) ***Refinanced and consolidated indebtedness*** —

(A) In *general.* A qualified education loan includes indebtedness incurred solely to refinance a qualified education loan. A qualified education loan includes a single, consolidated indebtedness incurred solely to refinance two or more qualified education loans of a borrower.

(B) ***Treatment of refinanced and consolidated indebtedness.*** [Reserved]

(4) ***Examples.*** The following examples illustrate the rules of this paragraph (f):

Example 1. Eligible educational institution. University J is a postsecondary educational institution described in section 481 of the Higher Education Act of 1965. The U.S. Department of Education has certified that University J is eligible to participate in federal financial aid programs administered by that Department, although University J chooses not to participate. University J is an eligible educational institution.

Example 2. Qualified higher education expenses. Student K receives a $3,000 qualified scholarship for the 1999 fall semester that is excludable from Student K's gross income under section 117. Student K receives no other forms of financial assistance with respect to the 1999 fall semester. Student K's cost of attendance for the 1999 fall semester, as determined by Student K's eligible educational institution for purposes of calculating a student's financial need in accordance with section 472 of the Higher Education Act, is $16,000. For the 1999 fall semester, Student K has qualified higher education expenses of $13,000 (the cost of attendance as determined by the institution ($16,000) reduced by the qualified scholarship proceeds excludable from gross income ($3,000)).

Example 3. Qualified education loan. Student L borrows money from a commercial bank to pay qualified higher education expenses related to his enrollment on a half-time basis in a graduate program at an eligible educational institution. Student L uses all the loan proceeds to pay qualified higher education expenses incurred within a reasonable period of time after incurring the indebtedness. The loan is not federally guaranteed. The commercial bank is not related to Student L within the meaning of section 267(b) or 707(b)(1). Student L's loan is a qualified education loan within the meaning of section 221.

Example 4. Qualified education loan. Student M signs a promissory note for a loan on August 15, 1999, to pay for qualified higher education expenses for the 1999 fall and 2000 spring semesters. On August 20, 1999, the lender disburses loan proceeds to Student M's college. The college credits them to Student M's account to pay qualified higher education expenses for the 1999 fall semester, which begins on August 23, 1999. On January 25, 2000, the lender disburses additional loan proceeds to Student M's college. The college credits them to Student M's account to pay qualified higher education expenses for the 2000 spring semester, which began on January 10, 2000. Student M's qualified higher education expenses for the two semesters are paid within a reasonable period of time, as the first loan disbursement occurred within the 90 days prior to the start of the fall 1999 semester, and the second loan disbursement occurred during the spring 2000 semester.

Example 5. Qualified education loan. The facts are the same as in *Example 4,* except that in 2001 the college is not an eligible educational institution because it loses its eligibility to participate in certain federal financial aid programs administered by the U.S. Department of Education. The qualification of Student M's loan, which was used to pay for qualified higher education expenses for the 1999 fall and 2000 spring semesters, as a qualified education loan is not affected by the college's subsequent loss of eligibility.

Example 6. Mixed-use loans. Student N signs a promissory note for a loan that is secured by Student N's personal residence. Student N will use part of the loan proceeds to pay for certain improvements to Student N's residence and part of the loan proceeds to pay qualified higher education expenses of Student N's spouse. Because Student N obtains the loan not solely to pay qualified higher education expenses, the loan is not a qualified education loan.

(g) ***Denial of double benefit.*** No deduction is allowed under this section for any amount for which a deduction is allowable under another provision of Chapter 1 of the Internal Revenue Code. No deduction is allowed under this section for any amount for which an exclusion is allowable under section 108(f) (relating to cancellation of indebtedness).

(h) ***Interest*** —

(1) ***In general.*** Amounts paid on a qualified education loan are deductible under section 221 if the amounts are interest for Federal income tax purposes. For example, interest includes—

(i) Qualified stated interest (as defined in § 1.1273-1(c)); and

(ii) Original issue discount, which generally includes capitalized interest. For purposes of section 221, capitalized interest means any accrued and unpaid interest on a qualified education loan that, in accordance with the terms of the loan, is added by the lender to the outstanding principal balance of the loan.

(2) ***Operative rules for original issue discount*** —

(i) ***In general.*** The rules to determine the amount of original issue discount on a loan and the accruals of the discount are in sections 163(e), 1271 through 1275, and the regulations thereunder. In general, original issue discount is the excess of a loan's stated redemption price at maturity (all payments due under the loan other than qualified stated interest payments) over its issue price (the amount loaned). Although original issue discount generally is deductible as it accrues under section 163(e) and § 1.163-7, original issue discount on a qualified education loan is not deductible until paid. See paragraph (h)(3) of this section to determine when original issue discount is paid.

(ii) ***Treatment of loan origination fees by the borrower.*** If a loan origination fee is paid by the borrower other than for property or services provided by the lender, the fee reduces the issue price of the loan, which creates original issue discount (or additional original issue discount) on the loan in an amount equal to the fee. See § 1.1273-2(g). For an example of how a loan origination fee is taken into account, see *Example 2* of paragraph (h)(4) of this section.

(3) ***Allocation of payments.*** See §§ 1.446-2(e) and 1.1275-2(a) for rules on allocating payments between interest and principal. In general, these rules treat a payment first as a payment of interest to the extent of the interest that has accrued and remains unpaid as of the date the payment is due, and second as a payment of principal. The characterization of a payment as either interest or principal under these rules applies regardless of how the parties label the payment (either as interest or principal). Accordingly, the taxpayer may deduct the portion of a payment labeled as principal that these rules treat as a payment of interest on the loan, including any portion attributable to capitalized interest or loan origination fees.

(4) ***Examples.*** The following examples illustrate the rules of this paragraph (h). In the examples, assume that the institution the student attends is an eligible educational institution, the loan is a qualified education loan, the student is legally obligated to make interest payments under the terms of the loan, and any other applicable requirements, if not otherwise specified, are fulfilled. The examples are as follows:

Example 1. Capitalized interest. Interest on Student O's qualified education loan accrues while Student O is in school, but Student O is not required to make any payments on the loan until six months after he graduates or otherwise leaves school. At that time, the lender capitalizes all accrued but unpaid interest and adds it to the outstanding principal amount of the loan. Thereafter, Student O is required to make monthly payments of interest and principal on the loan. The interest payable on the loan, including the capitalized interest, is original issue discount. Therefore, in determining the total amount of interest paid on the qualified education loan during the 60-month period described in paragraph (e)(1) of this section, Student O may deduct any payments that § 1.1275-2(a) treats as payments of interest, including any principal payments that are treated as payments of capitalized interest. See paragraph (h)(3) of this section.

Example 2. Allocation of payments. The facts are the same as in *Example 1* of this paragraph (h)(4), except that, in addition, the lender charges Student O a loan origination fee, which is not for any property or services provided by the lender. Under § 1.1273-2(g), the loan origination fee reduces the issue price of the loan, which reduction increases the amount of original issue discount on the loan by the amount of the fee. The amount of original issue discount (which includes the capitalized interest and loan origination fee) that accrues each year is determined under section § 1272 and § 1.1272-1. In effect, the loan origination fee accrues over the entire term of the loan. Because the loan has original issue discount, the payment ordering rules in § 1.1275-2(a) must be used to determine how much of each payment is interest for federal tax purposes. See paragraph (h)(3) of this section. Under § 1.1275-2(a), each payment (regardless of its designation by the parties as either interest or principal) generally is treated first as a payment of original issue discount, to the extent of the original issue discount that has accrued as of the date the payment is due and has not been allocated to prior payments, and second as a payment of principal. Therefore, in determining the total amount of interest paid on the qualified education loan during the 60-month period described in paragraph (e)(1) of this section, Student O may deduct any payments that the parties label as principal but that are treated as payments of original issue discount under § 1.1275-2(a). The 60-month period does not begin in the month in which the lender charges Student O the loan origination fee.

(i) ***Special rules regarding 60-month limitation*** —

(1) ***Refinancing.*** A qualified education loan and all indebtedness incurred solely to refinance that loan constitute a single loan for purposes of calculating the 60-month period described in paragraph (e)(1) of this section.

(2) ***Consolidated loans.*** A consolidated loan is a single loan that refinances more than one qualified education loan of a borrower. For consolidated loans, the 60-month period described in paragraph (e)(1) of this section begins on the latest date on which any of the underlying loans entered repayment status and includes any subsequent month in which the consolidated loan is in repayment status.

(3) ***Collapsed loans.*** A collapsed loan is two or more qualified education loans of a single taxpayer that constitute a single qualified education loan for loan servicing purposes and for which the lender or servicer does not separately account. For a collapsed loan, the 60-month period described in paragraph (e)(1) of this section begins on the latest date on which any of the underlying loans entered repayment status and includes any subsequent month in which any of the underlying loans is in repayment status.

(4) ***Examples.*** The following examples illustrate the rules of this paragraph (i):

Example 1. Refinancing. Student P obtains a qualified education loan to pay for an undergraduate degree at an eligible educational institution. After graduation, Student P is required to make monthly interest payments on the loan beginning in January 2000. Student P makes the required interest payments for 15 months. In April 2001, Student P borrows money from another lender exclusively to repay the first qualified education loan. The new loan requires interest payments to start immediately. At the time Student P must begin interest payments on the new loan, which is a qualified education loan, there are 45 months remaining of the original 60-month period referred to in paragraph (e)(1) of this section.

Example 2. Collapsed loans. To finance his education, Student Q obtains four separate qualified education loans from Lender R. The loans enter repayment status, and their respective 60-month periods described in paragraph (e)(1) of this section begin, in July, August, September, and December of 1999. After all of Student Q's loans have entered repayment status, Lender R informs Student Q that Lender R will transfer all four loans to Lender S. Following the transfer, Lender S treats the loans as a single loan for loan servicing purposes. Lender S sends Student Q a single statement that shows the total principal and interest, and does not keep separate records with respect to each loan. With respect to the single collapsed loan, the 60-month period described in paragraph (e)(1) of this section begins in December 1999.

(j) ***Effective date.*** This section is applicable to interest due and paid on qualified education loans after January 21, 1999, if paid before January 1, 2002. Taxpayers also may apply this section to interest due and paid on qualified education loans after December 31, 1997, but before January 21, 1999. This section also applies to interest due and paid on qualified education loans in a taxable year beginning after December 31, 2010.

[T.D. 9125, 69 FR 25492, May 7, 2004]

SPECIAL DEDUCTIONS FOR CORPORATIONS

§ 1.241-1 Allowance of special deductions.

A corporation, in computing its taxable income, is allowed as deductions the items specified in Part VIII (section 242 and following), Subchapter B, Chapter 1 of the Code, in addition to the deductions provided in part VI (section 161 and following) Subchapter B, Chapter 1 of the Code.

§ 1.242-1 Deduction for partially tax-exempt interest.

A corporation is allowed a deduction under section 242(a) in an amount equal to certain interest received on obligations of the United States, or an obligation of corporations organized under Acts of Congress which are instrumentalities of the United States. The interest for which a deduction shall be allowed is interest which is

included in gross income and which is exempt from normal tax under the act, as amended and supplemented, which authorized the issuance of the obligations. The deduction allowed by section 242(a) is allowed only for the purpose of computing normal tax, and therefore, no deduction is allowed for such interest in the computation of any surtax imposed by Subtitle A of the Internal Revenue Code of 1954.

[T.D. 7100, 36 FR 5333, Mar. 20, 1971]

§ 1.243-1 Deduction for dividends received by corporations.

(a)

(1) A corporation is allowed a deduction under section 243 for dividends received from a domestic corporation which is subject to taxation under Chapter 1 of the Internal Revenue Code of 1954.

(2) Except as provided in section 243(c) and in section 246, the deduction is:

(i) For the taxable year, an amount equal to 85 percent of the dividends received from such domestic corporations during the taxable year (other than dividends to which subdivision (ii) or (iii) of this subparagraph applies).

(ii) For a taxable year beginning after September 2, 1958, an amount equal to 100 percent of the dividends received from such domestic corporations if at the time of receipt of such dividends the recipient corporation is a Federal licensee under the Small Business Investment Act of 1958 (15 U.S.C. ch. 14B). However, to claim the deduction provided by section 243(a)(2) the company must file with its return a statement that it was a Federal licensee under the Small Business Investment Act of 1958 at the time of the receipt of the dividends.

(iii) For a taxable year ending after December 31, 1963, an amount equal to 100 percent of the dividends received which are *qualifying dividends,* as defined in section 243(b) and § 1.243-4.

(3) To determine the amount of the distribution to a recipient corporation and the amount of the dividend, see §§ 1.301-1 and 1.316-1.

(b) For limitation on the dividends received deduction, see section 246 and the regulations thereunder.

[T.D. 6992, 34 FR 817, Jan. 18, 1969]

§ 1.243-2 Special rules for certain distributions.

(a) ***Dividends paid by mutual savings banks, etc.*** In determining the deduction provided in section 243(a), any amount allowed as a deduction under section 591 (relating to deduction for dividends paid by mutual savings banks, cooperative banks, and domestic building and loan associations) shall not be considered as a dividend.

(b) ***Dividends received from regulated investment companies.*** In determining the deduction provided in section 243(a), dividends received from a regulated investment company shall be subject to the limitations provided in section 854.

(c) ***Dividends received from real estate investment trusts.*** See section 857(c) and paragraph (d) of § 1.857-6 for special rules which deny a deduction under section 243 in the case of dividends received from a real estate investment trust with respect to a taxable year for which such trust is taxable under Part II, Subchapter M, Chapter 1 of the Code.

(d) ***Dividends received on preferred stock of a public utility.*** The deduction allowed by section 243(a) shall be determined without regard to any dividends described in section 244 (relating to dividends on the preferred stock of a public utility). That is, such deduction shall be determined without regard to any dividends received on the preferred stock of a public utility which is subject to taxation under Chapter 1 of the Code and with respect to which a deduction is allowed by section 247 (relating to dividends paid on certain preferred stock of public utilities). For a deduction with respect to such dividends received on the preferred stock of a public utility, see section 244. If a deduction for dividends paid is not allowable to the distributing corporation under section 247 with respect to the dividends on its preferred stock, such dividends received from a domestic public utility corporation subject to taxation under Chapter 1 of the Code are includible in determining the deduction allowed by section 243(a).

[T.D. 6598, 27 FR 4092, Apr. 28, 1962, as amended by T.D. 6992, 34 FR 817, Jan. 18, 1969; T.D. 7767, 46 FR 11264, Feb. 6, 1981]

§ 1.243-3 Certain dividends from foreign corporations.

(a) ***In general.***

(1) In determining the deduction provided in section 243(a), section 243(d) provides that a dividend received from a foreign corporation after December 31, 1959, shall be treated as a dividend from a domestic corporation which is subject to taxation under chapter 1 of the Code, but only to the extent that such dividend is out of earnings and profits accumulated by a domestic corporation during a period with respect to which such domestic corporation was subject to taxation under Chapter 1 of the Code (or corresponding provisions of prior law). Thus, for example, if a domestic corporation accumulates earnings and profits during a period or periods with respect to which it is subject to taxation under Chapter 1 of the Code (or corresponding provisions of prior law) and subsequently such domestic corporation reincorporates in a foreign country, any dividends paid out of such earnings and profits after such reincorporation are eligible for the deduction provided in section 243(a) (1) and (2).

(2) Section 243(d) and this section do not apply to dividends paid out of earnings and profits accumulated

(i) by a corporation organized under the China Trade Act, 1922,

(ii) by a domestic corporation during any period with respect to which such corporation was exempt from taxation under section 501 (relating to certain charitable, etc. organizations) or 521 (relating to farmers' cooperative associations), or

(iii) by a domestic corporation during any period to which section 931 (relating to income from sources within possessions of the United States), as in effect for taxable years beginning before January 1, 1976, applied.

(b) ***Establishing separate earnings and profits accounts.*** A foreign corporation shall, for purposes of section 243(d), maintain a separate account for earnings and profits to which it succeeds which were accumulated by a domestic corporation, and such foreign corporation shall treat such earnings and profits as having been accumulated during the accounting periods in which earned by such domestic corporation. Such foreign corporation shall also maintain such a separate account for the earnings and profits, or deficit in earnings and profits, accumulated by it or accumulated by any other corporations to the earnings and profits of which it succeeds.

(c) ***Effect of dividends on earnings and profits accounts.*** Dividends paid out of the accumulated earnings and profits (see section 316(a)(1) of such foreign corporation shall be treated as having been paid out of the most recently accumulated earnings and profits of such corporation. A deficit in an earnings and profits account for any accounting period shall reduce the most recently accumulated earnings and profits for a prior accounting period in such account. If there are no accumulated earnings and profits in an earnings and profits account because of a deficit incurred in a prior accounting period, such deficit must be restored before earnings and profits can be accumulated in a subsequent accounting period. If a dividend is paid out of earnings and profits of a foreign corporation which maintains two or more accounts (established under the provisions of paragraph (b) of this section) with respect to two or more accounting periods ending on the same day, then the portion of such dividend considered as paid out of each account shall be the same proportion of the total dividend as the amount of earnings and profits in that account bears to the sum of the earnings and profits in all such accounts.

(d) ***Illustration.*** The application of the principles of this section in the determination of the amount of the dividends received deduction may be illustrated by the following example:

Example. On December 31, 1960, corporation X, a calendar-year corporation organized in the United States on January 1, 1958, consolidated with corporation Y, a foreign corporation organized on January 1, 1958, which used an annual accounting period based on the calendar year, to form corporation Z, a foreign corporation not engaged in trade or business within the United States. Corporation Z is a wholly-owned subsidiary of corporation M, a domestic corporation. On January 1, 1961, corporation Z's accumulated earnings and profits of $31,000 are, under the provisions of paragraph (b) of this section, maintained in separate earnings and profits accounts containing the following amounts:

Earnings and profits accumulated for—	Domestic corp. X	Foreign corp. Y
1958	($1,000)	$11,000
1959	10,000	9,000
1960	5,000	(3,000)

Corporation Z had earnings and profits of $10,000 in each of the years 1961, 1962, and 1963 and makes distributions with respect to its stock to corporation M for such years in the following amounts:

1961	$14,000
1962	23,000
1963	16,000

(1) For 1961, a deduction of $3,400 is allowable to M with respect to the $14,000 distribution from Z,

computed as follows:

(i) Dividend from current year earnings and profits (1961)	$10,000
(ii) Dividend from earnings and profits of corporation X accumulated for 1960	4,000
(iii) Deduction: 85 percent of $4,000 (the amount distributed from the accumulated earnings and profits of corporation X)	3,400

(2) For 1962, a deduction of $6,970 is allowable to corporation M with respect to the $23,000 distribution from corporation Z, computed as follows:

(i) Dividend from current year earnings and profits (1962)		$10,000
(ii) Dividend from earnings and profits of corporation X accumulated for:		
1960	$1,000	
1959: $9,000 (i.e., $10,000 − $1,000) divided by $15,000 (i.e., $9,000 + $9,000−$3,000) multiplied by $12,000 (i.e., $23,000−$11,000)		7,200
Total	8,200	
(iii) Dividend from earnings and profits of corporation Y accumulated for:		
1959: $6,000/$15,000 × $12,000		4,800
(iv) Deduction: 85 percent of $8,200 (the amount distributed from the accumulated earnings and profits of corporation X)		6,970

(3) For 1963, a deduction of $1,530 is allowable to M with respect to the $16,000 distribution from Z, computed as follows:

(i) Dividend from current year earnings and profits (1963)	$10,000
(ii) Dividend from earnings and profits of corporation X accumulated for 1959:	
Earnings and profits remaining after 1962 distribution (i.e., $9,000−$7,200)	1,800
(iii) Dividend from earnings and profits of corporation Y accumulated for 1959:	
Earnings and profits remaining after 1962 distribution (i.e., $6,000−$4,800)	1,200
1958	8,000
(iv) Deduction: 85 percent of $1,800 (the amount distributed from the accumulated earnings and profits of corporation X)	1,530

[T.D. 6830, 30 FR 8045, June 23, 1965, as amended by T.D. 9194, 70 FR 18928, Apr. 11, 2005]

§ 1.243-4 Qualifying dividends.

(a) *Definition of qualifying dividends* —

(1) ***General.*** For purposes of section 243(a)(3), the term *qualifying dividends* means dividends received by a corporation if:

(i) At the close of the day the dividends are received, such corporation is a member of the same affiliated group of corporations (as defined in paragraph (b) of this section) as the corporation distributing the dividends,

(ii) An election by such affiilated group under section 243(b)(2) and paragraph (c) of this section is effective for the taxable years of its members which include such day, and

(iii) The dividends are distributed out of earnings and profits specified in subparagraph (2) of this paragraph.

(2) ***Earnings and profits.*** The earnings and profits specified in this subparagraph are earnings and profits of a taxable year of the distributing corporation (or a predecessor corporation) which satisfies each of the following conditions:

(i) Such year must end after December 31, 1963;

(ii) On each day of such year the distributing corporation (or the predecessor corporation) and the corporation receiving the dividends must have been members of the affiliated group of which the distributing corporation and the corporation receiving the dividends are members on the day the dividends are received; and

(iii) An election under section 1562 (relating to the election of multiple surtax exmptions) was never effective (or is no longer effective pursuant to section 1562(c)) for such year.

(3) ***Special rule for insurance companies.*** Notwithstanding the provisions of subparagraph (2) of this paragraph, if an insurance company subject to taxation under section 802 or 821 distributes a dividend out of earnings and profits of a taxable year with respect to which the company would have been a component member of a controlled group of corporations within the meaning of section 1563 were it not for the application of section 1563(b)(2)(D), such dividend shall not be treated as a qualifying dividend unless an election under section 243(b)(2) is effective for such taxable year.

(4) ***Predecessor corporations.*** For purposes of this paragraph, a corporation shall be considered to be a predecessor corporation with respect to a distributing corporation if the distributing corporation succeeds to the earnings and profits of such corporation, for example, as the result of a transaction to which section 381(a) applies. A distributing corporation shall, for purposes of this section, maintain, in respect of each predecessor corporation, a separate account for earnings and profits to which it succeeds, and such earnings and profits shall be considered to be earnings and profits of the predecessor's taxable year in which the earnings and profits were accumulated.

(5) ***Mere change in form.***

(i) For purposes of subparagraph (2)(ii) of this paragraph, the affiliated group in existence during the taxable year out of the earnings and profits of which the dividend is distributed shall not be considered as a different group from that in existence on the day on which the dividend is received merely because:

(*a*) The common parent corporation has undergone a mere change in identity, form, or place of organization (within the meaning of section 368(a)(1)(F)), or

(*b*) A newly organized corporation (the "acquiring corporation") has acquired substantially all of the outstanding stock of the common parent corporation (the "acquired corporation") solely in exchange for stock of such acquiring corporation, and the stockholders (immediately before the acquisition) of the acquired corporation, as a result of owning stock of the acquired corporation, own (immediately after the acquisition) all of the outstanding stock of the acquiring corporation.

If a transaction described in the preceding sentence has occurred, the acquiring corporation shall be treated as having been a member of the affiliated group for the entire period during which the acquired corporation was a member of such group.

(ii) For purposes of subdivision (i) (b) of this subparagraph, if immediately before the acquisition:

(*a*) The stockholders of the acquired corporation also owned all of the outstanding stock of another corporation (the "second corporation"), and

(*b*) Stock of the acquired corporation and of the second corporation could be acquired or transferred only as a unit (hereinafter referred to as the "limitation on transferability"), then the second corporation shall be treated as an acquired corporation and such second corporation shall be treated as having been a member of the affiliated group for the entire period (while such group was in existence) during which the limitation on transferability was in existence, and if the second corporation is itself the common parent corporation of an affiliated group (the "second group") any other member of the second group shall be treated as having been a member of the affiliated group for the entire period during which it was a member of the second group while the limitation on transferability existed. For purposes of (*a*) of this subdivision and subdivision (i)(*b*) of this subparagraph, if the limitation on transferability of stock of the acquired corporation and the second corporation is achieved by using a voting trust, then the stock owned by the trust shall be considered as owned by the holders of the beneficial interests in the trust.

(6) ***Source of distributions.*** In determining from what year's earnings and profits a dividend is treated as having been distributed for purposes of this section, the principles of paragraph (a) of § 1.316-2 shall apply. A dividend shall be considered to be distributed, first, out of the earnings and profits of the taxable year which includes the date the dividend is distributed, second, out of the earnings and profits accumulated for the immediately preceding taxable year, third, out of the earnings and profits accumulated for the second preceding taxable year, etc. A deficit in an earnings and profits account for any taxable year shall reduce the most recently accumulated earnings and profits for a prior year in such account. If there are no accumulated earnings and profits in an earnings and profits account because of a deficit incurred in a prior year, such deficit must be restored before earnings and profits can be accumulated in a subsequent year. If a dividend is distributed out of separate earnings and profits accounts (established under the provisions of subparagraph (4) of this paragraph) for two or more taxable years ending on the same day, then the portion of such dividend considered as distributed out of each account shall be the same proportion of the total dividend as the amount of earnings and profits in that account bears to the sum of the earnings and profits in all such accounts.

(7) ***Examples.*** The provisions of this paragraph may be illustrated by the following examples:

Example 1. On March 1, 1965, corporation P, a publicly owned corporation, acquires all of the stock of corporation S and continues to hold the stock throughout the remainder of 1965 and all of 1966. P and S are domestic corporations which file separate returns on the basis of a calendar year. The affiliated group consisting of P and S makes an election under section 243(b)(2) which is effective for the 1966 taxable years of P and S. A multiple surtax exemption election under section 1562 is not effective for their 1965 taxable years. On February 1, 1966, S distributes $50,000 with respect to its stock which is received by P on the same date. S had earnings and profits of $40,000 for 1966 (computed without regard to distributions during 1966). S also had earnings and profits accumulated for 1965 of $70,000. Since $40,000 was distributed out of earnings and profits for 1966 and since each of the conditions prescribed in subparagraphs (1) and (2) of this paragraph is satisfied, P is entitled to a 100-percent dividends received deduction with respect to $40,000 of the $50,000 distribution. However, since $10,000 was distributed out of earnings and profits accumulated for 1965, and since on each day of 1965 S and P were not members of the affiliated group of which S and P were members on February 1, 1966, $10,000 of the $50,000 distribution does not satisfy the condition specified in subparagraph (2)(ii) of this paragraph and thus does not qualify for the 100-percent dividends received deduction.

Example 2. Assume the same facts as in *Example 1,* except that corporation P acquires all the stock of corporation S on January 1, 1965, and sells such stock on November 1, 1966. Since $10,000 is distributed out of earnings and profits for 1965, and since each of the conditions prescribed in subparagraphs (1) and (2) of this paragraph is satisfied, P is entitled to a 100-percent dividends received deduction with respect to $10,000 of the $50,000 distribution. However, since $40,000 of the $50,000 distribution was made out of earnings and profits of S for its 1966 taxable year, and on each day of such year S and P were not members of the affiliated group of which S and P were members on February 1, 1966, $40,000 of the distribution does not satisfy the condition specified in subparagraph (2)(ii) of this paragraph and thus does not qualify for the 100-percent dividends received deduction.

Example 3. Assume the same facts as in *Example 1,* except that corporation P acquires all the stock of corporation S on January 1, 1965, and that a multiple surtax exemption election under section 1562 is effective for P's and S's 1965 taxable years. Further assume that the section 1562 election is terminated effective with respect to their 1966 taxable years, and that an election under section 243(b) (2) is effective for such taxable years. Since $10,000 of the February 1, 1966, distribution was made out of earnings and profits of S for its 1965 taxable year and since a multiple surtax exemption election is effective for such year, $10,000 of the distribution does not satisfy the condition specified in subparagraph (2) (iii) of this paragraph and thus does not qualify for the 100-percent dividends received deduction. However, the portion of the distribution which was distributed out of earnings and profits of S's 1966 year ($40,000) qualifies for the 100-percent dividends received deduction.

Example 4. Assume the same facts as in *Example 1,* except that corporation P acquires all the stock of corporation S on January 1, 1965, and that S is a life insurance company subject to taxation under section 802. Accordingly, S would have been a member of a controlled group of corporations except for the application of section 1563(b)(2)(D). Since $10,000 of the distribution was made out of earnings and profits of S for its 1965 taxable year, and since with respect to such year an election under section 243(b)(2) was not effective, $10,000 of the distribution is not a qualifying dividend by reason of subparagraph (3) of this paragraph. On the other hand, the portion of the distribution which was distributed out of earnings and profits for

S's 1966 year ($40,000) does qualify for the 100-percent dividends received deduction because the distribution was out of earnings and profits of a year for which an election under section 243(b) (2) is effective, and because the other conditions specified in subparagraphs (1) and (2) of this paragraph are satisfied. However, if P were also a life insurance company subject to taxation under section 802, then subparagraph (3) of this paragraph would not result in the disqualification of the portion of the distribution made out of S's 1965 earnings and profits because S would be a component member of an insurance group of corporations (as defined in section 1563(a)(4)), consisting of P and S, with respect to its 1965 year.

Example 5. Corporation X owns all the stock of corporation Y from January 1, 1965, through December 31, 1969. X and Y are domestic corporations which file separate returns on the basis of a calendar year. On June 30, 1965, Y acquired all the stock of domestic corporation Z, a calendar year taxpayer, and on December 31, 1967, Y acquired the assets of Z in a transaction to which section 381(a) applied. A multiple surtax exemption election under section 1562, was not effective for any taxable year of X, Y, or Z, and an election under section 243(b)(2) is effective for the 1968 and 1969 taxable years of X and Y. On January 1, 1968, Y's accumulated earnings and profits are, under the provisions of subparagraph (4) of this paragraph, maintained in separate earnings and profits accounts containing the following amounts:

Earnings and profits accumulated for	Corp	Corp
	Y	Z
1964	$60,000	$40,000
1965	30,000	15,000
1966	(5,000)	2,000
1967	12,000	6,000

Corporation Y had earnings and profits of $10,000 in each of the years 1968 and 1969, and made distributions during such years in the following amounts:

1968	$29,000
1969	31,000

(i) The source of the 1968 distribution, determined in accordance with the rules of

subparagraph (6) of this paragraph, is as follows:

(*a*) Dividend from Y's current year's earnings and profits (1968)	$10,000
(*b*) Dividend from earnings and profits of Y accumulated for 1967	12,000
(*c*) Dividend from earnings and profits of Z accumulated for:	
1967	6,000
1966	1,000
	29,000

Since the 1968 dividend is considered paid out of earnings and profits of Y's 1968 and 1967 years, and Z's 1967 and 1966 years, and since each of these years satisfies each of the conditions specified in subparagraph (2) of this paragraph, X is entitled to a 100-percent dividends received deduction with respect to the entire 1968 distribution of $29,000 from Y.

(ii) The source of the 1969 distribution of $31,000, determined in accordance with the rules of subparagraph (6) of this paragraph, is as follows:

(*a*) Dividend from Y's current year's earnings and profits (1969)	$10,000
(*b*) Dividend from earnings and profits of Z accumulated for 1966 (1966 earnings and profits remaining after 1968 distribution, i.e., $2,000−$1,000	1,000
(*c*) Dividend from earnings and profits of Y and Z accumulated for 1965:	
Corporation Y: $25,000 (i.e., $30,000−$5,000 deficit) divided by $40,000 (i.e., the sum of the 1965 earnings and profits of Y and Z) multiplied by $20,000 (the portion of the distribution from the 1965 earnings and profits of Y and Z)	12,500
Corporation Z: $15,000 divided by $40,000 multiplied by $20,000	7,500
	31,000

The sum of the dividends from Y's 1969 year ($10,000), Z's 1966 year ($1,000), and Y's 1965 year ($12,500), or $23,500, qualifies for the 100-percent dividends received deduction. However, the dividends paid out of Z's 1965 year ($7,500) do not qualify because on each day of 1965 Z and X were not members of the affiliated group of which Y (the distributing corporation) and X (the corporation receiving the dividends) were members on the day in 1969 when the dividends were received by X.

(b) ***Definition of affiliated group.*** For purposes of this section and § 1.243-5, the term *affiliated group* shall have the meaning assigned to it by section 1504(a), except that insurance companies subject to taxation under section 802 or 821 shall be treated as includible corporations (notwithstanding section 1504(b)(2)), and the provisions of section 1504(c) shall not apply.

(c) ***Election*** —

(1) ***Manner and time of making election*** —

(i) ***General.*** The election provided by section 243(b)(2) shall be made for an affiliated group by the common parent corporation and shall be made for a particular taxable year of the common parent corporation. Such election may not be made for any taxable year of the common parent corporation for which a multiple surtax exemption election under section 1562 is effective. The election shall be made by means of a statement, signed by any person who is duly authorized to act on behalf of the common parent corporation, stating that the affiliated group elects under section 243(b)(2) for such taxable year. The statement shall be filed with the district director for the internal revenue district in which is located the principal place of business or principal office or agency of the common parent. The statement shall set forth the name, address, taxpayer account number, and taxable year of each corporation (including wholly-owned subsidiaries) that is a member of the affiliated group at the time the election is filed. The statement may be filed at any time, provided that, with respect to each corporation the tax liability of which for its matching taxable year of election (or for any subsequent taxable year) would be increased because of the election, at the time of filing there is at least 1 year remaining in the statutory period (including any extensions thereof) for the assessment of a deficiency against such corporation for such year. (If there is less than 1 year remaining with respect to any taxable year, the district director for the internal revenue district in which is located the principal place of business or principal office or agency of the corporation will ordinarily, upon request, enter into an agreement to extend such statutory period for assessment and collection of deficiencies.

(ii) ***Information statement by common parent.*** If a corporation becomes a member of the affiliated group after the date on which the election is filed and during its matching taxable year of election, then the common parent shall file, within 60 days after such corporation becomes a member of the affiliated group, an additional statement containing the name, address, taxpayer account number, and taxable year of such corporation. Such additional statement shall be filed with the internal revenue officer with whom the election was filed.

(iii) ***Definition of matching taxable year of election.*** For purposes of this paragraph and paragraphs (d) and (e) of this section, the term *matching taxable year of election* shall mean the taxable year of each member (including the common parent corporation) of the electing affiliated group which includes the last day of the taxable year of the common parent corporation for which an election by the affiiliated group is made under section 243(b)(2).

(2) ***Consents by subsidiary corporations*** —

(i) ***General.*** Each corporation (other than the common parent corporation) which is a member of the electing affiliated group (including any member which joins in the filing of a consolidated return) at any time during its matching taxable year of election must consent to such election in the manner and time provided in subdivision (ii) or (iii) of this subparagraph, whichever is applicable.

(ii) ***Wholly owned subsidiary.*** If all of the stock of a corporation is owned by a member or members of the affiliated group on each day of such corporation's matching taxable year of election, then such corporation (referred to in this paragraph as a “wholly owned subsidiary”) shall be deemed to consent to such election.

(iii) ***Other members.*** The consent of each member of the affiliated group (other than a wholly owned subsidiary) shall be made by means of a statement, signed by any person who is duly authorized to act on behalf of the consenting member, stating that such member consents to the election under section 243(b)(2). The statement shall set forth the name, address, taxpayer account number, and taxable year of the consenting member and of the common parent corporation, and in the case of a statement filed after December 31, 1968, the identity of the internal revenue district in which is located the principal place of business or principal office or agency of the common parent corporation. The consent of more than one such member may be incorporated in a single statement. The statement (or statements) shall be attached to the election filed by the common parent corporation. The consent of a corporation that, after the date the election was filed and during its matching taxable year of election, either

(*a*) becomes a member, or

(*b*) ceases to be a wholly owned subsidiary but continues to be a member, shall be filed with the internal revenue officer with whom the election was filed and shall be filed on or before the date prescribed by law (including extensions of time) for the filing of the consenting member's income tax return for such taxable year, or on or before June 10, 1964, whichever is later.

(iv) ***Statement attached to return.*** Each corporation that consents to an election by means of a statement described in subdivision (iii) of this subparagraph should attach a copy of the statement to its income tax return for its matching taxable year of election, or, if such return has already been filed, to its first income tax return filed on or after the date on which the statement is filed. However, if such return is filed on or before June 10, 1964, a copy of such statement should be filed on or before June 10, 1964, with the district director with whom such return is filed. Each wholly owned subsidiary should attach a statement to its income tax return for its matching taxable year of election, or, if such return has already been filed, to its first income tax return filed on or after the date on which the statement is filed stating that it is subject to an election under section 243(b)(2) and the taxable year to which the election applies, and setting forth the name, address, taxpayer account number, and taxable year of the common parent corporation, and in the case of a statement filed after December 31, 1968, the identity of the internal revenue district in which is located the principal place of business or principal office or agency of the common parent corporation. However, if the due date for such return (including extensions of time) is before June 10, 1964, such statement should be filed on or before June 10, 1964, with the district director with whom such return is filed.

(3) ***Information statement by member.*** If a corporation becomes a member of the affiliated group during a taxable year that begins after the last day of the common parent corporation's matching taxable year of election, then (unless such election has been terminated) such corporation should attach a statement to its income tax return for such taxable year stating that it is subject to an election under section 243(b)(2) for such taxable year and setting forth the name, address, taxpayer account number, and taxable year of the common parent corporation, and the identity of the internal revenue district in which is located the principal place of business or principal office or agency of the common parent corporation. In the case of an affiliated group that made an election under the rules

provided in Treasury Decision 6721, approved April 8, 1964 (29 FR 4997, C.B. 1964-1 (Part 1), 625), such statement shall be filed, on or before March 15, 1969, with the district director for the internal revenue district in which is located such member's principal place of business or principal office or agency.

(4) ***Years for which election effective*** —

(i) ***General rule.*** An election under section 243(b)(2) by an affiliated group shall be effective:

(*a*) In the case of each corporation which is a member of such group at any time during its matching taxable year of election, for such taxable year, and

(*b*) In the case of each corporation which is a member of such group at any time during a taxable year ending after the last day of the common parent's taxable year of election but which does not include such last day, for such taxable year, unless the election is terminated under section 243(b)(4) and paragraph (e) of this section. Thus, the election has a continuing effect and need not be renewed annually.

(ii) ***Special rule for certain taxable years ending in 1964.*** In the case of a taxable year of a member (other than the common parent corporation) of the affiliated group

(*a*) which begins in 1963 and ends in 1964, and

(*b*) for which an election is not effective under subdivision (i)(*a*) of this subparagraph, if an election under section 243(b)(2) is effective for the taxable year of the common parent corporation which includes the last day of such taxable year of such member, then such election shall be effective for such taxable year of such member if such member files a separate consent with respect to such taxable year. However, in order for a dividend distributed by such member during such taxable year to meet the requirements of section 243(b)(1), an election under section 243(b)(2) must be effective for the taxable year of each member of the affiliated group which includes the date such dividend is received. See section 243(b)(1)(A) and paragraph (a)(1) of this section. Accordingly, if the dividend is to qualify for the 100-percent dividends received deduction under section 243(a)(3), a consent must be filed under this subdivision by each member of the affiliated group with respect to its taxable year which includes the day the dividend is received (unless an election is effective for such taxable year under subdivision (i)(*a*) of this subparagraph). For purposes of this subdivision, a consent shall be made by means of a statement meeting the requirements of subparagraph (2)(iii) of this paragraph, and shall be attached to the election made by the common parent corporation for its taxable year which includes the last day of the taxable year of the member with respect to which the consent is made. A copy of the statement should be filed, within 60 days after such election is filed by the common parent corporation, with the district director with whom the consenting member filed its income tax return for such taxable year.

(iii) ***Examples.*** The provisions of subdivision (ii) of this subparagraph, relating to the special rule for certain taxable years ending in 1964, may be illustrated by the following examples:

Example 1. P Corporation owns all the stock of S-1 Corporation on each day of 1963, 1964, and 1965. P uses the calendar year as its taxable year and S-1 uses a fiscal year ending June 30 as its taxable year. P makes an election under section 243(b)(2) for 1964. Since S-1 is a wholly owned subsidiary for its taxable year ending June 30, 1965, it is deemed to consent to the election. However, in order for the election to be effective with respect to S-1's

taxable year ending June 30, 1964, a statement specifying that S-1 consents to the election with respect to such taxable year and containing the information required in a statement of consent under subparagraph (2)(iii) of this paragraph must be attached to the election.

Example 2. Assume the same facts as in *Example 1,* except that P also owns all the stock of S-2 Corporation on each day of 1963, 1964, and 1965. S-2 uses a fiscal year ending May 31 as its taxable year. If S-1 distributes a dividend to P on January 15, 1964, the dividend may qualify under section 243(a)(3) only if S-1 and S-2 both consent to the election made by P for 1964 with respect to their taxable years ending in 1964.

Example 3. Assume the same facts as in *Example 1,* except that P uses a fiscal year ending on January 31 as its taxable year and makes an election under subparagraph (1) of this paragraph for its taxable year ending January 31, 1964. Since S-1's taxable year beginning in 1963 and ending in 1964 includes January 31, 1964, the last day of P's taxable year for which the election was made, the election is effective under subdivision (i)(*a*) of this subparagraph, for S-1's taxable year ending June 30, 1964. Accordingly, the special rule of subdivision (ii) of this subparagraph has no application.

(d) ***Effect of election.*** For restrictions and limitations applicable to corporations which are members of an electing affiliated group on each day of their taxable years, see § 1.243-5.

(e) ***Termination of election*** —

(1) ***In general.*** An election under section 243(b)(2) by an affiliated group may be terminated with respect to any taxable year of the common parent corporation after the matching taxable year of election of the common parent corporation. The election is terminated as a result of one of the occurrences described in subparagraph (2) or (3) of this paragraph. For years affected by termination, see subparagraph (4) of this paragraph.

(2) ***Consent of members*** —

(i) ***General.*** An election may be terminated for an affiliated group by its common parent corporation with respect to a taxable year of the common parent corporation provided each corporation (other than the common parent) that was a member of the affiliated group at any time during its taxable year that includes the last day of such year of the common parent (the "matching taxable year of termination") consents to such termination. The statement of termination may be filed by the common parent corporation at any time, provided that, with respect to each corporation the tax liability of which for its matching taxable year of termination (or for any subsequent taxable year) would be increased because of the termination, at the time of filing there is at least 1 year remaining in the statutory period (including any extensions thereof) for the assessment of a deficiency against such corporation for such year. (If there is less than 1 year remaining with respect to any taxable year, the district director for the internal revenue district in which is located the principal place of business or principal office or agency of the corporation will ordinarily, upon request, enter into agreement to extend such statutory period for assessment and collection of deficiencies.)

(ii) ***Statements filed after December 31, 1968.*** With respect to statements of termination filed after December 31, 1968:

(*a*) The statement shall be filed with the district director for the internal revenue district in which is located the principal place of business or principal office or agency of the common parent corporation;

(*b*) The statement shall be signed by any person who is duly authorized to act on behalf of the common parent corporation and shall state that the affiliated group terminates the election under section 243(b)(2) for such taxable year;

(*c*) The statement shall set forth the name, address, taxpayer account number, and taxable year of each corporation (including wholly owned subsidiaries) which is a member of the affiliated group at the time the termination is filed; and

(*d*) The consents to the termination shall be given in accordance with the rules prescribed in paragraph (c)(2) of this section, relating to manner and time for giving consents to an election under section 243(b)(2).

(3) ***Refusal by new member to consent*** —

(i) ***Manner of giving refusal.*** If any corporation which is a new member of an affiliated group with respect to a taxable year of the common parent corporation (other than the matching taxable year of election of the common parent corporation) files a statement that it does not consent to an election under section 243(b)(2) with respect to such taxable year, then such election shall terminate with respect to such taxable year. Such statement shall be signed by any person who is duly authorized to act on behalf of the new member, and shall be filed with the timely filed income tax return of such new member for its taxable year within which falls the last day of such taxable year of the common parent corporation. In the event of a termination under this subparagraph, each corporation (other than such new member) that is a member of the affiliated group at any time during its taxable year which includes such last day should, within 30 days after such new member files the statement of refusal to consent, notify the district director of such termination. Such notification should be filed with the district director for the internal revenue district in which is located the principal place of business or principal office or agency of the corporation.

(ii) ***Corporation considered as new member.*** For purposes of subdivision (i) of this subparagraph, a corporation shall be considered to be a new member of an affiliated group of corporations with respect to a taxable year of the common parent corporation if such corporation:

(*a*) Is a member of the affiliated group at any time during such taxable year of the common parent corporation, and

(*b*) Was not a member of the affiliated group at any time during the common parent corporation's immediately preceding taxable year.

(4) ***Effect of termination.*** A termination under subparagraph (2) or (3) of this paragraph is effective with respect to

(i) the common parent corporation's taxable year referred to in the particular subparagraph under which the termination occurs, and

(ii) the taxable years of the other members of the affiliated group which include the last day of such taxable year of the common parent. An election, once terminated, is no longer effective. Accordingly, the termination is also effective with respect to the succeeding taxable years of the members of the group. However, the affiliated group may make a new election in accordance with the provisions of section 243(b)(2) and paragraph (c) of this section.

[T.D. 6992, 34 FR 817, Jan. 18, 1969]

§ 1.243-5 Effect of election.

(a) ***General*** —

(1) ***Corporations subject to restrictions and limitations.*** If an election by an affiliated group under section 243(b)(2) is effective with respect to a taxable year of the common parent corporation, then each corporation (including the common parent corporation) which is a member of such group on each day of its matching taxable year shall be subject to the restrictions and limitations prescribed by paragraphs (b), (c), and (d) of this section for such taxable year. For purposes of this section, the term *matching taxable year* shall mean the taxable year of each member (including the common parent corporation) of an affiliated group which includes the last day of a particular taxable year of the common parent corporation for which an election by the affiliated group under section 243(b)(2) is effective. If a corporation is a member of an affiliated group on each day of a short taxable year which does not include the last day of a taxable year of the common parent corporation, and if an election under section 243(b)(2) is effective for such short year, see paragraph (g) of this section. In the case of taxable years beginning in 1963 and ending in 1964 for which an election under section 243(b)(2) is effective under paragraph (c)(4)(ii) of § 1.243-4, see paragraph (f)(9) of this section.

(2) ***Members filing consolidated returns.*** The restrictions and limitations prescribed by this section shall apply notwithstanding the fact that some of the corporations which are members of the electing affiliated group (within the meaning of section 243(b)(5)) join in the filing of a consolidated return. Thus, for example, if an electing affiliated group includes one or more corporations taxable under section 11 of the Code and two or more insurance companies taxable under section 802 of the Code, and if the insurance companies join in the filing of a consolidated return, the amount of such companies' exemptions from estimated tax (for purposes of sections 6016 and 6655) shall be the amounts determined under paragraph (d)(5) of this section and not the amounts determined pursuant to the regulations under section 1502.

(b) ***Multiple surtax exemption election*** —

(1) ***General rule.*** If an election by an affiliated group under section 243(b)(2) is effective with respect to a taxable year of the common parent corporation, then no corporation which is a member of such affiliated group on each day of its matching taxable year may consent (or shall be deemed to consent) to an election under section 1562(a)(1), relating to election of multiple surtax exemptions, which would be effective for such matching taxable year. Thus, each corporation which is a component member of the controlled group of corporations with respect to its matching taxable year (determined by applying section 1563(b) without regard to paragraph (2)(D) thereof) shall determine its surtax exemption for such taxable year in accordance with section 1561 and the regulations thereunder.

(2) ***Special rule for certain insurance companies.*** Under section 243(b)(6)(A), if the provisions of subparagraph (1) of this paragraph apply with respect to the taxable year of an insurance company subject to taxation under section 802 or 821, then the surtax exemption of such insurance company for such taxable year shall be determined by applying part II (section 1561 and following), subchapter B, chapter 6 of the Code, with respect to such insurance company and the other corporations which are component members of the controlled group of corporations (as determined under section 1563 without regard to subsections (a)(4) and (b)(2)(D) thereof) of which such insurance company is a member, without regard to section 1563(a)(4) (relating to certain insurance companies treated as a separate controlled group) and section 1563(b)(2)(D) (relating to certain insurance companies treated as excluded members).

(3) ***Example.*** The provisions of this paragraph may be illustrated by the following example:

Example. Throughout 1965 corporation M owns all the stock of corporations L-1, L-2, S-1, and S-2. M is a domestic mutual insurance company subject to tax under section 821 of the Code, L-1 and L-2 are domestic life insurance companies subject to tax under section 802 of the Code, and S-1 and S-2 are domestic corporations subject to tax under section 11 of the Code. Each corporation uses the calendar year as its taxable year. M makes a valid election under section 243(b)(2) for the affiliated group consisting of M, L-1, L-2, S-1, and S-2. If part II, subchapter B, chapter 6 of the Code were applied with respect to the 1965 taxable years of the corporations without regard to section 243(b)(6)(A), the following would result: S-1 and S-2 would be treated as component members of a controlled group of corporations on such date; L-1 and L-2 would be treated as component members of a separate controlled group on such date; and M would be treated as an excluded member. However, since section 243(b)(6)(A) requires that part II of subchapter B be applied without regard to section 1563(a)(4) and (b)(2)(D), for purposes of determining the surtax exemptions of M, L-1, L-2, S-1, and S-2 for their 1965 taxable years, such corporations are treated for purposes of such part II as component members of a single controlled group of corporations on December 31, 1965. Moreover, by reason of having made the election under section 243(b)(2), M, L-1, L-2, S-1, and S-2 cannot consent to multiple surtax exemption elections under section 1562 which would be effective for their 1965 taxable years. Thus, such corporations are limited to a single $25,000 surtax exemption for such taxable years (to be apportioned among such corporations in accordance with section 1561 and the regulations thereunder).

(c) ***Foreign tax credit*** —

(1) ***General.*** If an election by an affiliated group under section 243(b)(2) is effective with respect to a taxable year of the common parent corporation, then:

(i) The credit under section 901 for taxes paid or accrued to any foreign country or possession of the United States shall be allowed to a corporation which is a member of such affiliated group for each day of its matching taxable year only if each other corporation which pays or accrues such foreign taxes to any foreign country or possession, and which is a member of such group on each day of its matching taxable year, does not deduct such taxes in computing its tax liability for its matching taxable year, and

(ii) A corporation which is a member of such affiliated group on each day of its matching taxable year may use the overall limitation provided in section 904(a)(2) for such matching taxable year only if each other corporation which pays or accrues foreign taxes to any foreign country or possession, and which is a member of such group on each day of its matching taxable year, uses such limitation for its matching taxable year.

(2) ***Consent of the Commissioner.*** In the absence of unusual circumstances, a request by a corporation for the consent of the Commissioner to the revocation of an election of the overall limitation, or to a new election of the overall limitation, for the purpose of satisfying the requirements of subparagraph (1)(ii) of this paragraph will be given favorable consideration, notwithstanding the fact that there has been no change in the basic nature of the corporation's business or changes in conditions in a foreign country which substantially affect the corporation's business. See paragraph (d)(3) of § 1.904-1.

(d) ***Other restrictions and limitations*** —

(1) ***General rule.*** If an election by an affilated group under section 243(b)(2) is effective with respect to a taxable year of the common parent corporation, then, except to the extent that an apportionment plan adopted under paragraph (f) of this section for such taxable year provides otherwise with respect to a restriction or limitation described in this paragraph, the rules provided in subparagraphs (2), (3), (4), and (5) of this paragraph shall apply to each corporation which is a member of such affiliated group on each day of its matching taxable year for the purpose of computing the amount of such restriction or limitation for its matching taxable year. For purposes of this paragraph, each corporation which is a member of an electing affiliated group (including any member which joins in filing a consolidated return) shall be treated as a separate corporation for purposes of determining the amount of such restrictions and limitations.

(2) ***Accumulated earnings credit*** —

(i) ***General.*** Except as provided in subdivision (ii) of this subparagraph, in determining the minimum accumulated earnings credit under section 535(c)(2) (or the accumulated earnings credit of a mere holding or investment company under section 535(c)(3) for each corporation which is a member of the affiliated group on each day of its matching taxable year, in lieu of the $150,000 amount ($100,000 amount in the case of taxable years beginning before January 1, 1975) mentioned in such sections there shall be substituted an amount equal to (*a*) $150,000 ($100,000 in the case of taxable years beginning before January 1, 1975), divided by (*b*) the number of such members.

(ii) ***Allocation of excess.*** If, with respect to one or more members, the amount determined under subdivision (i) of this subparagraph exceeds the sum of (*a*) such member's accumulated earnings and profits as of the close of the preceding taxable year, plus (*b*) such member's earnings and profits for the taxable year which are retained (within the meaning of section 535(c)(1), then any such excess shall be subtracted from the amount determined under subdivision (i) of this subparagraph and shall be divided equally among those remaining members of the affiliated group that do not have such an excess (until no such excess remains to be divided among those remaining members that have not had such an excess). The excess so divided among such remaining members shall be added to the amount determined under subdivision (i) with respect to such members.

(iii) ***Apportionment plan not allowed.*** An affiliated group may not adopt an apportionment plan, as provided in paragraph (f) of this section, with respect to the amounts computed under the provisions of this subparagraph.

(iv) ***Example.*** The provisions of this subparagraph may be illustrated by the following example;

> *Example.* An affiliated group is composed of four member corporations, W, X, Y, and Z. The sum of the accumulated earnings and profits (as of the close of the preceding

taxable year ending December 31, 1975) plus the earnings and profits for the taxable year ending December 31, 1976 which are retained is $15,000, $75,000, $37,500, and $300,000 in the case of W, X, Y, and Z, respectively. The amounts determined under this subparagraph for W, X, Y, and Z are $15,000, $48,750, $37,500 and $48,750, respectively, computed as follows:

	Component members			
	W	X	Y	Z
Earnings and profits	$15,000	$75,000	$37,500	$300,000
Amount computed under subpar. (1)	37,500	37,500	37,500	37,500
Excess	22,500	0	0	0
Allocation of excess		7,500	7,500	7,500
New excess			7,500	
Reallocation of new excess		3,750		3,750
Amount to be used for purposes of sec. 535(c) (2) and (3)	15,000	48,750	37,500	48,750

(3) *Mine exploration expenditures* —

(i) ***Limitation under section 615(a).*** If the aggregate of the expenditures to which section 615(a) applies, which are paid or incurred by corporations which are members of the affiliated group on each day of their matching taxable years (during such taxable years) exceeds $100,000, then the deduction (or amount deferrable) under section 615 for any such member for its matching taxable year shall be limited to an amount equal to the amount which bears the same ratio to $100,000 as the amount deductible or deferrable by such member under section 615 (computed without regard to this subdivision) bears to the aggregate of the amounts deductible or deferrable under section 615 (as so computed) by all such members.

(ii) ***Limitation under section 615(c).*** If the aggregate of the expenditures to which section 615(a) applies which are paid or incurred by the corporations which are members of such affiliated group on each day of their matching taxable years (during such taxable years) would, when added to the aggregate of the amounts deducted or deferred in prior taxable years which are taken into account by such corporations in applying the limitation of section 615(c), exceed $400,000, then section 615 shall not apply to any such expenditure so paid or incurred by any such member to the extent such expenditure would exceed the amount which bears the same ratio to (*a*) the amount, if any, by which $400,000 exceeds the amounts so deducted or deferred in prior years, as (*b*) such member's deduction (or amount deferrable) under section 615 (computed without regard to this subdivision) for such expenditures paid or incurred by such member during its matching taxable year, bears to (*c*) the aggregate of the amounts deductible or deferrable under section 615 (as so computed) by all such members during their matching taxable years.

(iii) ***Treatment of corporations filing consolidated returns.*** For purposes of making the computations under subdivisions (i) and (ii) of this subparagraph, a corporation which joins in the filing of a consolidated return shall be treated as if it filed a separate return.

(iv) ***Estimate of exploration expenditures.*** If, on the date a corporation (which is a member of an affiliated group on each day of its matching taxable year) files its income tax return for such taxable year, it cannot be determined whether or not the $100,000 limitation prescribed by subdivision (i) of this subparagraph, or the $400,000 limitation prescribed by subdivision (ii) of this subparagraph, will apply with respect to such taxable year, then such member shall, for purposes of such return, apply the provisions of such subdivisions (i) and (ii) with respect to such taxable year on the basis of an estimate of the aggregate of the exploration expenditures by all such members of the affiliated group for their matching taxable years. Such estimate shall be made on the basis of the facts and circumstances known at the time of such estimate. If an estimate is used by any such member of the affiliated group pursuant to this subdivision, and if the actual expenditures by all such members differ from the estimate, then each such member shall file as soon as possible an original or amended return reflecting an amended apportionment (either pursuant to an apportionment plan adopted under paragraph (f) of this section or pursuant to the application of the rule provided by subdivision (i) or (ii) of this subparagraph) based upon such actual expenditures.

(v) ***Amount apportioned under apportionment plan.*** If an electing affiliated group adopts an apportionment plan as provided in paragraph (f) of this section with respect to the limitation under section 615(a) or 615(c), then the amount apportioned under such plan to any corporation which is a member of such group may not exceed the amount which such member could have deducted (or deferred) under section 615 had such affiliated group not filed an election under section 243(b)(2).

(4) ***Small business deductions of life insurance companies.*** In the case of a life insurance company taxable under section 802 which is a member of such affiliated group on each day of its matching taxable year, the small business deduction under sections 804(a)(4) and 809(d)(10) shall not exceed an amount equal to $25,000 divided by the number of life insurance companies taxable under section 802 which are members of such group on each day of their matching taxable years.

(5) ***Estimated tax —***

(i) ***Exemption from estimated tax.*** Except as otherwise provided in subdivision (ii) of this subparagraph, the exemption from estimated tax (for purposes of estimated tax filing requirements under section 6016 and the addition to tax under section 6655 for failure to pay estimated tax) of each corporation which is a member of such affiliated group on each day of its matching taxable year shall be (in lieu of the $100,000 amount specified in section 6016(a) and (b)(2)(A) and in section 6655(d)(1) and (e)(2)(A) an amount equal to $100,000 divided by the number of such members.

(ii) ***Nonapplication to certain taxable years beginning in 1963 and ending in 1964.*** For purposes of this section, if a corporation has a taxable year beginning in 1963 and ending in 1964 the last day of the eighth month of which falls on or before April 10, 1964, then (notwithstanding the fact that an election under section 243(b)(2) is effective for such taxable year) subdivision (i) of this subparagraph shall not apply to such corporation for such taxable year. Thus, such corporation shall be entitled to a $100,000 exemption from estimated tax for such taxable year.

Also, with respect to a taxable year described in the first sentence of this subdivision, any such corporation shall not be considered to be a member of the affiliated group for purposes of determining the number of members referred to in subdivision (i) of this subparagraph.

(iii) ***Examples.*** The provisions of subdivision (i) of this subparagraph may be illustrated by the following examples:

Example 1. Corporation P owns all the stock of corporation S-1 on each day of 1965. On March 1, 1965, P acquires all the stock of corporation S-2. Corporations P, S-1, and S-2 file separate returns on a calendar year basis. On March 31, 1965, the affiliated group consisting of P, S-1, and S-2 anticipates making an election under section 243(b)(2) for P's 1965 taxable year. If the affiliated group does make a valid election under section 243(b)(2) for P's 1965 year, under subdivision (i) of this subparagraph the exemption from estimated tax of P for 1965, and the exemption from estimated tax of S-1 for 1965, will be (assuming an apportionment plan is not filed pursuant to paragraph (f) of this section) an amount equal to $50,000 ($100,000 ÷ 2). (Since S-2 is not a member of the affiliated group on each day of 1965, S-2's exemption from estimated tax will be determined for the year 1965 without regard to subdivision (i) of this subparagraph, whether or not the affiliated group makes the election under section 243(b)(2).) P and S-1 file declarations of estimated tax on April 15, 1965, on such basis and make payments with respect to such declarations on such basis. Thus, if the affiliated group does make a valid election under section 243(b)(2) for P's 1965 year, P and S-1 will not incur (as a result of the application of subdivision (i) of this subparagraph to their 1965 years) additions to tax under section 6655 for failure to pay estimated tax.

Example 2. Assume the same facts as in *Example 1,* except that, on March 31, 1965, S-1 anticipates that it will incur a loss for its 1965 year. Accordingly, in anticipation of making an election under section 243(b)(2) for P's 1965 year and adopting an apportionment plan under paragraph (f) of this section, P computes its estimated tax liability for 1965 on the basis of a $100,000 exemption, and S-1 computes its estimated tax liability for 1965 on the basis of a zero exemption. Assume S-1 incurs a loss for 1965 as anticipated. Thus, if P does make the election for 1965, and an apportionment plan is adopted apportioning $100,000 to P and zero to S-1 (for their 1965 years), P and S-1 will not incur (as a result of the application of subdivision (i) of this subparagraph to their 1965 years) additions to tax under section 6655 for failure to pay estimated tax.

Example 3. Assume the same facts as in *Example 1,* except that P and S-1 file declarations of estimated tax on April 15, 1965, on the basis of separate $100,000 exemptions from estimated tax for their 1965 years, and make payments with respect to such declarations on such basis. Assume that the affiliated group makes an election under section 243(b)(2) for P's 1965 year. Under subdivision (i) of this subparagraph, P and S-1 are limited in the aggregate to a single $100,000 exemption from estimated tax for their 1965 years. The provisions of section 6655 will be applied to the 1965 year of P and the 1965 year of S-1 on the basis of a $50,000 exemption from estimated tax for each corporation, unless a different apportionment of the $100,000 amount is adopted under paragraph (f) of this section. Since the election was made under section 243(b)(2), regardless of whether or not the affiliated group anticipated making the election, P or S-1 (or both) may incur additions to tax under section 6655 for failure to pay estimated tax.

(e) ***Effect of election for certain taxable years beginning in 1963 and ending in 1964.*** If an election under section 243(b)(2) by an affiliated group is effective for a taxable year of a corporation under paragraph (c)(4)(ii) of § 1.243-4 (relating to election for certain taxable years beginning in 1963 and ending in 1964), and if such corporation is a member of such group on each day of such taxable year, then the restrictions and limitations prescribed by paragraphs (b), (c), and (d) of this section shall apply to all such members having such taxable years (for such taxable years). For purposes of this paragraph, such paragraphs shall be applied with respect to such taxable years as if such taxable years included the last day of a taxable year of the common parent corporation for which an election was effective under section 243(b)(2), *i.e.,* as if such taxable years were matching taxable years. For apportionment plans with respect to such taxable years, see paragraph (f) (9) of this section.

(f) ***Apportionment plans*** —

(1) ***In general.*** In the case of corporations which are members of an affiliated group of corporations on each day of their matching taxable years:

(i) The $100,000 amount referred to in paragraph (d)(3)(i) of this section (relating to limitation under section 615(a)),

(ii) The amount determined under paragraph (d)(3)(ii)(*a*) of this section (relating to limitation under section 615(c)),

(iii) The $25,000 amount referred to in paragraph (d)(4) of this section (relating to small business deduction of life insurance companies), and

(iv) The $100,000 amount referred to in paragraph (d)(5)(i) of this section (relating to exemption from estimated tax), may be apportioned among such members (for such taxable years) if the common parent corporation files an apportionment plan with respect to such taxable years in the manner provided in subparagraph (4) of this paragraph, and if all other members consent to the plan, in the manner provided in subparagraph (5) or (6) of this paragraph (whichever is applicable). The plan may provide for the apportionment to one or more of such members, in fixed dollar amounts, of one or more of the amounts referred to in subdivisions (i), (ii), (iii), and (iv) of this subparagraph, but in no event shall the sum of the amounts so apportioned in respect to any such subdivision exceed the amount referred to in such subdivision. See also paragraph (d)(3)(v) of this section, relating to the maximum amount that may be apportioned to a corporation under this subparagraph with respect to exploration expenditures to which section 615 applies.

(2) ***Time for adopting plan.*** An affiliated group may adopt an apportionment plan with respect to the matching taxable years of its members only if, at the time such plan is sought to be adopted, there is at least 1 year remaining in the statutory period (including any extensions thereof) for the assessment of a deficiency against any corporation the tax liability of which for any taxable year would be increased by the adoption of such plan. (If there is less than 1 year remaining with respect to any taxable year, the district director for the internal revenue district in which is located the principal place of business or principal office or agency of the corporation will ordinarily, upon request, enter into an agreement to extend such statutory period for assessment and collection of deficiencies.)

(3) ***Years for which effective.*** A valid apportionment plan with respect to matching taxable years of members of an affiliated group shall be effective for such matching taxable years, and for all succeeding matching taxable years of such members, unless the plan is amended in accordance with subparagraph (8) of this paragraph or is terminated. Thus, the apportionment plan (including

any amendments thereof) has a continuing effect and need not be renewed annually. An apportionment plan with respect to a particular taxable year of the common parent shall terminate with respect to the taxable years of the members of the affiliated group which include the last day of a succeeding taxable year of the common parent if:

(i) Any corporation which was a member of the affiliated group on each day of its matching taxable year which included the last day of the particular taxable year of the common parent is not a member of such group on each day of its taxable year which includes the last day of such succeeding taxable year of the common parent, or

(ii) Any corporation which was not a member of such group on each day of its taxable year which included the last day of the particular taxable year of the common parent is a member of such group on each day of its taxable year which includes the last day of such succeeding taxable year of the common parent.

An apportionment plan, once terminated, is no longer effective. Accordingly, unless a new apportionment plan is filed and consented to (or the section 243(b)(2) election is terminated) the amounts referred to in subparagraph (1) of this paragraph will be apportioned among the corporations which are members of the affiliated group on each day of their matching taxable years in accordance with the rules provided in paragraphs (d)(3)(i), (d)(3)(ii), (d)(4), and (d)(5)(i) of this section.

(4) ***Filing of plan.*** The apportionment plan shall be in the form of a statement filed by the common parent corporation with the district director for the internal revenue district in which is located the principal place of business or principal office or agency of such common parent. The statement shall be signed by any person who is duly authorized to act on behalf of the common parent corporation and shall set forth the name, address, internal revenue district, taxpayer account number, and taxable year of each member to whom the common parent could apportion an amount under subparagraph (1) of this paragraph (or, in the case of an apportionment plan referred to in subparagraph (9) of this paragraph, each member to whom the common parent could apportion an amount under such subparagraph) and the amount (or amounts) apportioned to each such member under the plan.

(5) ***Consent of wholly owned subsidiaries.*** If all the stock of a corporation which is a member of the affiliated group on each day of its matching taxable year is owned on each such day by another corporation (or corporations) which is a member of such group on each day of its matching taxable year, such corporation (hereinafter in this paragraph referred to as a “wholly owned subsidiary”) shall be deemed to consent to the apportionment plan. Each wholly owned subsidiary should attach a copy of the plan filed by the common parent corporation to an income tax return, amended return, or claim for refund for its matching taxable year.

(6) ***Consent of other members.*** The consent of each member (other than the common parent corporation and wholly owned subsidiaries) to an apportionment plan shall be in the form of a statement, signed by any person who is duly authorized to act on behalf of the member consenting to the plan, stating that such member consents to the plan. The consent of more than one such member may be incorporated in a single statement. The statement (or statements) shall be attached to the apportionment plan filed by the common parent corporation. The consent of any such member which, after the date the apportionment plan was filed and during its matching taxable year referred to in subparagraph (1) of this paragraph, ceases to be a wholly owned subsidiary but continues to be a member, shall be filled with the district director with whom the apportionment plan is filed (as soon as possible after it ceases to be a wholly owned subsidiary). Each consenting member should attach

a copy of the apportionment plan filed by the common parent to an income tax return, amended return, or claim for refund for its matching taxable year which includes the last day of the taxable year of the common parent corporation for which the apportionment plan was filed.

(7) *Members of group filing consolidated return* —

(i) ***General rule.*** Except as provided in subdivision (ii) of this subparagraph, if the members of an affiliated group of corporations include one or more corporations taxable under section 11 of the Code and one or more insurance companies taxable under section 802 or 821 of the Code and if the affiliated group includes corporations which join in the filing of a consolidated return, then, for purposes of determining the amount to be apportioned to a corporation under an apportionment plan adopted under this paragraph, the corporations filing the consolidated return shall be treated as a single member.

(ii) ***Consenting to an apportionment plan.*** For purposes of consenting to an apportionment plan under subparagraphs (5) and (6) of this paragraph, if the members of an affiliated group of corporations include corporations which join in the filing of a consolidated return, each corporation which joins in filing the consolidated return shall be treated as a separate member.

(8) ***Amendment of plan.*** An apportionment plan, which is effective for the matching taxable years of members of an affiliated group, may be amended if an amended plan is filed (and consented to) within the time and in accordance with the rules prescribed in this paragraph for the adoption of an original plan with respect to such taxable years.

(9) ***Certain taxable years beginning in 1963 and ending in 1964.*** In the case of corporations which are members of an affiliated group of corporations on each day of their taxable years referred to in paragraph (e) of this section:

(i) The $100,000 amount referred to in paragraph (d)(3)(i) of this section (relating to limitation under section 615(a)),

(ii) The amount determined under paragraph (d)(3)(ii)(*a*) of this section (relating to limitation under section 615(c)),

(iii) The $25,000 amount referred to in paragraph (d)(4) of this section (relating to small business deduction of life insurance companies), and

(iv) The $100,000 amount referred to in paragraph (d)(5)(i) of this section (relating to exemption from estimated tax), may be apportioned among such members (for such taxable years) if an apportionment plan is filed (and consented to) with respect to such taxable years in accordance with the rules provided in subparagraphs (2), (4), (5), (6), (7), and (8) of this paragraph. For purposes of this subparagraph, such subparagraphs shall be applied as if such taxable years included the last day of a taxable year of the common parent corporation, i.e., as if such taxable years were matching taxable years. An apportionment plan adopted under this subparagraph shall be effective only with respect to taxable years referred to in paragraph (e) of this section. The plan may provide for the apportionment to one or more of such members, in fixed dollar amounts, of one or more of the amounts referred to in subdivisions (i), (ii), (iii), and (iv) of this subparagraph, but in no event shall the sum of the amounts so apportioned in respect of any such subdivision exceed the amount referred to in such subdivision. See also paragraph (d)(3)(v) of this section, relating to the maximum amount that may be apportioned to a corporation under an apportionment plan described in this subparagraph with respect to exploration expenditures to which section 615 applies.

(g) *Short taxable years* —

(1) *General.* If:

(i) The return of a corporation is for a short period (ending after December 31, 1963) on each day of which such corporation is a member of an affiliated group,

(ii) The last day of the common parent's taxable year does not end with or within such short period, and

(iii) An election under section 243(b)(2) by such group is effective under paragraph (c) (4) (i) of § 1.243-4 for the taxable year of the common parent within which falls such short period, then the restrictions and limitations prescribed by section 243(b)(3) shall be applied in the manner provided in subparagraph (2) of this paragraph.

(2) *Manner of applying restrictions.* In the case of a corporation described in subparagraph (1) of this paragraph having a short period described in such subparagraph:

(i) Such corporation may not consent to an election under section 1562, relating to election of multiple surtax exemptions, which would be effective for such short period;

(ii) The credit under section 901 shall be allowed to such corporation for such short period if, and only if, each corporation, which pays or accrues foreign taxes and which is a member of the affiliated group on each day of its taxable year which includes the last day of the common parent's taxable year within which falls such short period, does not deduct such taxes in computing its tax liability for its taxable year which includes such last day;

(iii) The overall limitation provided in section 904(a)(2) shall be allowed to such corporation for such short period if, and only if, each corporation, which pays or accrues foreign taxes and which is a member of the affiliated group on each day of its taxable year which includes the last day of the common parent's taxable year within which falls such short period, uses such limitation for its taxable year which includes such last day;

(iv) The minimum accumulated earnings credit provided by section 535(c)(2) (or in the case of a mere holding or investment company, the accumulated earnings credit provided by section 535(c)(3)) allowable for such short period shall be the amount computed by dividing (a) the amount (if any) by which $100,000 exceeds the aggregate of the accumulated earnings and profits of the corporations, which are members of the affiliated group on the last day of such short period, as of the close of their taxable years preceding the taxable year which includes the last day of such short period, by (b) the number of such members on the last day of such short period;

(v) The deduction allowable under section 615(a) for such short period shall be limited to an amount equal to $100,000 divided by the number of corporations which are members of the affiliated group on the last day of such short period;

(vi) If the expenditures to which section 615(a) applies which are paid or incurred by such corporation during such short period would, when added to the aggregate of the amounts deducted or deferred (in taxable years ending before the last day of such short period) which are taken into account in applying the limitation of section 615(c) by corporations which are members of the affiliated group on the last day of such short period exceed $400,000, then section 615 shall not apply to any such expenditure so paid or incurred by such corporation to the extent such expenditure would exceed an amount equal to (*a*) the amount (if any) by which

$400,000 exceeds the aggregate of the amounts so deducted or deferred in such taxable years (computed as if each member filed a separate return), divided by (*b*) the number of corporations in the group which have taxable years ending on such last day;

(vii) If such corporation is a life insurance company taxable under section 802, the small business deduction under sections 804(a)(4) and 809(d)(10) shall not exceed an amount equal to (*a*) $25,000, divided by (*b*) the number of life insurance companies taxable under section 802 which are members of the affiliated group on the last day of such short period; and

(viii) The exemption from estimated tax (for purposes of estimated tax filing requirements under section 6016 and the addition to tax under section 6655 for failure to pay estimated tax) for such short period shall be an amount equal to $100,000 divided by the number of corporations which are members of the affiliated group on the last day of such short period.

[T.D. 6992, 34 FR 821, Jan. 18, 1969, as amended by T.D. 7376, 40 FR 42745, Sept. 16, 1975]

§ 1.245-1 Dividends received from certain foreign corporations.

(a) ***General rule.***

(1) A corporation is allowed a deduction under section 245(a) for dividends received from a foreign corporation (other than a foreign personal holding company as defined in section 552) which is subject to taxation under chapter 1 of the Code if, for an uninterrupted period of not less than 36 months ending with the close of the foreign corporation's taxable year in which the dividends are paid, (i) the foreign corporation is engaged in trade or business in the United States, and (ii) 50 percent or more of the foreign corporation's entire gross income is effectively connected with the conduct of a trade or business in the United States by that corporation. If the foreign corporation has been in existence less than 36 months as of the close of the taxable year in which the dividends are paid, then the applicable uninterrupted period to be taken into consideration in lieu of the uninterrupted period of 36 or more months is the entire period such corporation has been in existence as of the close of such taxable year. An uninterrupted period which satisfied the twofold requirement with respect to business activity and gross income may start at a date later than the date on which the foreign corporation first commenced an uninterrupted period of engaging in trade or business within the United States, but the applicable uninterrupted period is in any event the longest uninterrupted period which satisfies such twofold requirement. The deduction under section 245(a) is allowable to any corporation, whether foreign or domestic, receiving dividends from a distributing corporation which meets the requirements of that section.

(2) Any taxable year of a foreign corporation which falls within the uninterrupted period described in section 245(a)(2) shall not be taken into account in applying section 245(a)(2) and this paragraph if the 100 percent dividends received deduction would be allowable under paragraph (b) of this section, whether or not in fact allowed, with respect to any dividends payable, whether or not in fact paid, out of the earnings and profits of such foreign corporation for that taxable year. Thus, in such case the foreign corporation shall be treated as having no earnings and profits for that taxable year for purposes of determining the dividends received deduction allowable under section 245(a) and this paragraph. However, that taxable year may be taken into account for purposes of determining whether the foreign corporation meets the requirements of section 245(a) that, for the uninterrupted period specified therein, the foreign corporation is engaged in trade or business in the United States and meets the 50 percent gross income requirement.

(b) ***Dividends from wholly owned foreign subsidiaries.***

(1) A domestic corporation is allowed a deduction under section 245(b) for any taxable year beginning after December 31, 1966, for dividends received from a foreign corporation (other than a foreign personal holding company as defined in section 552) which is subject to taxation under Chapter 1 of the Code if:

(i) The domestic corporation owns either directly or indirectly all of the outstanding stock of the foreign corporation during the entire taxable year of the domestic corporation in which the dividends are received, and

(ii) The dividends are paid out of earnings and profits of a taxable year of the foreign corporation during which (*a*) the domestic corporation receiving the dividends owns directly or indirectly throughout such year all of the outstanding stock of the foreign corporation, and (*b*) all of the gross income of the foreign corporation from all sources is effectively connected for that year with the conduct of a trade or business in the United States by that corporation.

(2) The deduction allowed by section 245(b) does not apply if an election under section 1562, relating to the privilege of a controlled group of corporations to elect multiple surtax exemptions, is effective for either the taxable year of the domestic corporation in which the dividends are received or the taxable year of the foreign corporation out of the earnings and profits of which the dividends are paid.

(c) ***Rules of application.***

(1) Except as provided in section 246, the deduction provided by section 245 for any taxable year is the sum of the amounts computed under paragraphs (1) and (2) of section 245(a) plus, in the case of a domestic corporation for any taxable year beginning after December 31, 1966, the sum of the amounts computed under section 245(b)(2).

(2) To the extent that a dividend received from a foreign corporation is treated as a dividend from a domestic corporation in accordance with section 243(d) and § 1.243-3, it shall not be treated as a dividend received from a foreign corporation for purposes of this section.

(3) For purposes of section 245 (a) and (b), the amount of a distribution shall be determined under subparagraph (B) (without reference to subparagraph (C)) of section 301(b)(1).

(4) In determining from what year's earnings and profits a dividend is treated as having been distributed for purposes of this section, the principles of paragraph (a) of § 1.316-2 shall apply. A dividend shall be considered to be distributed, first, out of the earnings and profits of the taxable year which includes the date the dividend is distributed, second, out of the earnings and profits accumulated for the immediately preceding taxable year, third, out of the earnings and profits accumulated for the second preceding taxable year, etc. A deficit in an earnings and profits account for any taxable year shall reduce the most recently accumulated earnings and profits for a prior year in such account. If there are no accumulated earnings and profits in an earnings and profits account because of a deficit incurred in a prior year, such deficit must be restored before earnings and profits can be accumulated in a subsequent accounting year. See also paragraph (c) of § 1.243-3 and paragraph (a)(6) of § 1.243-4.

(5) For purposes of this section the gross income of a foreign corporation for any period before its first taxable year beginning after December 31, 1966, which is from sources within the United States shall be treated as gross income which is effectively connected for that period with the conduct of a trade or business in the United States by that corporation.

(6) For the determination of the source of income and the income which is effectively connected with the conduct of a trade or business in the United States, see sections 861 through 864, and the regulations thereunder.

(d) ***Illustrations.*** The application of this section may be illustrated by the following examples:

Example 1. Corporation A (a foreign corporation filing its income tax returns on a calendar year basis) whose stock is 100 percent owned by Corporation B (a domestic corporation filing its income tax returns on a calendar year basis) for the first time engaged in trade or business within the United States on January 1, 1943, and qualifies under section 245 for the entire period beginning on that date and ending on December 31, 1954. Corporation A had accumulated earnings and profits of $50,000 immediately prior to January 1, 1943, and had earnings and profits of $10,000 for each taxable year during the uninterrupted period from January 1, 1943, through December 31, 1954. It derived for the period from January 1, 1943, through December 31, 1953, 90 percent of its gross income from sources within the United States and in 1954 derived 95 percent of its gross income from sources within the United States. During the calendar years 1943, 1944, 1945, 1946, and 1947 Corporation A distributed in each year $15,000; during the calendar years 1948, 1949, 1950, 1951, 1952, and 1953 it distributed in each year $5,000; and during the year 1954, $50,000. An analysis of the accumulated earnings and profits under the above statement of facts discloses that at December 31, 1953, the accumulation amounted to $55,000, of which $25,000 was accumulated prior to the "uninterrupted period" and $30,000 was accumulated during the uninterrupted period. (See section 316(a) and paragraph (c) of this section.) For 1954 a deduction under section 245 of $31,025 ($8,075 on 1954 earnings of the foreign corporation, plus $22,950 from the $30,000 accumulation at December 31, 1953) for dividends received from a foreign corporation is allowable to Corporation B with respect to the $50,000 received from Corporation A, computed as follows:
(i) $8,075, which is $8,500 (85 percent—the percent specified in section 243 for the calendar year 1954—of the $10,000 of earnings and profits of the taxable year) multiplied by 95 percent (the portion of the gross income of Corporation A derived during the taxable year 1954 from sources within the United States), plus

(ii) $22,950, which is $25,500 (85 percent—the percent specified in section 243 for the calendar year 1954—of $30,000, the part of the earnings and profits accumulated after the beginning of the uninterrupted period) multiplied by 90 percent (the portion of the gross income of Corporation A derived from sources within the United States during that portion of the uninterrupted period ending at the beginning of the taxable year 1954).

Example 2. If in *Example 1,* Corporation A for the taxable year 1954 had incurred a deficit of $10,000 (shown to have been incurred before December 31) the amount of the earnings and profits accumulated after the beginning of the uninterrupted period would be $20,000. If Corporation A had distributed $50,000 on December 31, 1954, the deduction under section 245 for dividends received from a foreign corporation allowable to Corporation B for 1954 would be $15,300, computed by multiplying $17,000 (85 percent—the percent specified in section 243 for the calendar year 1954—of $20,000 earnings and profits accumulated after the beginning of the uninterrupted period) by 90 percent (the portion of the gross income of Corporation A derived from United States sources during that portion of the uninterrupted period ending at the beginning of the taxable year 1954).

Example 3. Corporation A (a foreign corporation filing its income tax returns on a calendar year basis) whose stock is 100 percent owned by corporation B (a domestic corporation filing its income tax returns on a calendar year basis) for the first time engaged in trade or business within the United States on January 1, 1960, and qualifies under section 245 for the entire period beginning on that date and ending on December 31, 1963. In 1963, A derived 75 percent of its gross income from sources within the United States. A's earnings and profits for 1963 (computed as of the close of the taxable year without diminution by reason of any distributions made during the taxable year) are $200,000. On December 31, 1963, corporation A distributes to corporation B 100 shares of corporation C stock which have an adjusted basis in A's hands of $40,000 and a fair market value of $100,000. For purposes of computing the deduction under section 245 for dividends received from a foreign corporation, the amount of the distribution is $40,000. B is allowed a deduction under section 245 of $25,500, i.e., $34,000 ($40,000 multiplied by 85 percent, the percent specified in section 243 for 1963), multiplied by 75 percent (the portion of the gross income of corporation A derived during 1963 from sources within the United States).

[T.D. 6500, 25 FR 11402, Nov. 26, 1960, as amended by T.D. 6752, 29 FR 12701, Sept. 9, 1964; T.D. 6830; 30 FR 8046, June 23, 1965; T.D. 7293, 38 FR 32793, Nov. 28, 1973]

§§ 1.245A-1-1.245A-4 [Reserved]

§ 1.245A-5 Limitation of section 245A deduction and section 954(c)(6) exception.

(a) ***Overview.*** This section provides rules that limit a deduction under section 245A(a) to the portion of a dividend that exceeds the ineligible amount of such dividend or the applicability of section 954(c)(6) when a portion of a dividend is paid out of an extraordinary disposition account or when an extraordinary reduction occurs. Paragraph (b) of this section provides rules regarding ineligible amounts. Paragraph (c) of this section provides rules for determining ineligible amounts attributable to an extraordinary disposition. Paragraph (d) of this section provides rules that limit the application of section 954(c)(6) when one or more section 245A shareholders of a lower-tier CFC have an extraordinary disposition account. Paragraph (e) of this section provides rules for determining ineligible amounts attributable to an extraordinary reduction. Paragraph (f) of this section provides rules that limit the application of section 954(c)(6) when a lower-tier CFC has an extraordinary reduction amount. Paragraph (g) of this section provides special rules for purposes of applying this section. Paragraph (h) of this section provides an anti-abuse rule. Paragraph (i) of this section provides definitions. Paragraph (j) of this section provides examples illustrating the application of this section. Paragraph (k) of this section provides the applicability date of this section.

(b) ***Limitation of deduction under section 245A*** —

(1) ***In general.*** A section 245A shareholder is allowed a section 245A deduction for any dividend received from an SFC (provided all other applicable requirements are satisfied) only to the extent that the dividend exceeds the ineligible amount of the dividend. See paragraphs (j)(2), (4), and (5) of this section for examples illustrating the application of this paragraph (b)(1).

(2) ***Definition of ineligible amount.*** The term *ineligible amount* means, with respect to a dividend received by a section 245A shareholder from an SFC, an amount equal to the sum of—

(i) 50 percent of the extraordinary disposition amount (as determined under paragraph (c) of this section); and

(ii) The extraordinary reduction amount (as determined under paragraph (e) of this section).

(c) ***Rules for determining extraordinary disposition amount*** —

(1) ***Definition of extraordinary disposition amount.*** The term *extraordinary disposition amount* means the portion of a dividend received by a section 245A shareholder from an SFC that is paid out of the extraordinary disposition account with respect to the section 245A shareholder. See paragraph (j)(2) of this section for an example illustrating the application of this paragraph (c).

(2) ***Determination of portion of dividend paid out of extraordinary disposition account*** —

(i) ***In general.*** For purposes of determining the portion of a dividend received by a section 245A shareholder from an SFC that is paid out of the extraordinary disposition account with respect to the section 245A shareholder, the following rules apply—

(A) The dividend is first considered paid out of non-extraordinary disposition E&P with respect to the section 245A shareholder; and

(B) The dividend is next considered paid out of the extraordinary disposition account to the extent of the section 245A shareholder's extraordinary disposition account balance.

(ii) ***Definition of non-extraordinary disposition E&P.*** The term *non-extraordinary disposition E&P* means, with respect to a section 245A shareholder and an SFC, an amount of earnings and profits of the SFC equal to the excess, if any, of—

(A) The product of—

(*1*) The amount of the SFC's earnings and profits described in section 959(c)(3), determined as of the end of the SFC's taxable year (for purposes of paragraph (c)(2)(ii) of this section, without regard to distributions during the taxable year other than as provided in this paragraph (c)(2)(ii)(A)(*1*)), but, if during the taxable year the SFC pays more than one dividend, reduced (but not below zero) by the amounts of any dividends paid by the SFC earlier in the taxable year; and

(*2*) The percentage of the stock (by value) of the SFC that the section 245A shareholder owns directly or indirectly immediately before the distribution; over

(B) The balance of the section 245A shareholder's extraordinary disposition account with respect to the SFC, determined immediately before the distribution.

(3) ***Definitions with respect to extraordinary disposition accounts*** —

(i) ***Extraordinary disposition account*** —

(A) ***In general.*** The term *extraordinary disposition account* means, with respect to a section 245A shareholder of an SFC, an account, the balance of which is equal to the product of the extraordinary disposition ownership percentage and the extraordinary disposition E&P, reduced (but not below zero) by the prior extraordinary disposition amount and as provided in § 1.245A-7 or § 1.245A-8, and adjusted under paragraph (c)(4) of this section, as applicable. An extraordinary disposition account is maintained in the same functional currency as the extraordinary disposition E&P.

(B) ***Extraordinary disposition ownership percentage.*** The term *extraordinary disposition ownership percentage* means the percentage of stock (by value) of an SFC that a section 245A shareholder owns directly or indirectly at the beginning of the disqualified period or, if later, on the first day during the disqualified period on which the SFC is a CFC, regardless of whether the section 245A shareholder owns directly or indirectly such stock of the SFC on the date of an extraordinary disposition giving rise to extraordinary disposition E&P; if not, see paragraph (c)(4) of this section.

(C) ***Extraordinary disposition E&P.*** The term *extraordinary disposition E&P* means an amount of earnings and profits of an SFC equal to the sum of the net gain recognized by the SFC with respect to specified property in each extraordinary disposition. In the case of an extraordinary disposition with respect to the SFC arising as a result of a disposition of specified property by a specified entity (other than a foreign corporation), an interest of which is owned directly or indirectly (through one or more other specified entities that are not foreign corporations) by the SFC, the net gain taken into account for purposes of the preceding sentence is the SFC's distributive share of the net gain recognized by the specified entity with respect to the specified property.

(D) ***Prior extraordinary disposition amount*** —

(*1*) ***General rule.*** The term *prior extraordinary disposition amount* means, with respect to an SFC and a section 245A shareholder, the sum of the extraordinary disposition amount of each prior dividend received by the section 245A shareholder from the SFC by reason of paragraph (c)(1) of this section and 200 percent of the sum of the amounts included in the section 245A shareholder's gross income under section 951(a) by reason of paragraph (d) of this section (in the case in which the SFC is, or has been, a lower-tier CFC). A section 245A shareholder's prior extraordinary disposition amount also includes—

(*i*) A prior dividend received by the section 245A shareholder from the SFC to the extent not an extraordinary reduction amount and to the extent the dividend would have been an extraordinary disposition amount but for the failure of the dividend to qualify for the section 245A deduction by reason of one or more of the following: Application of section 245A(e); the recipient domestic corporation does not satisfy the holding period requirement of section 246; or the recipient domestic corporation is not a United States shareholder with respect to the foreign corporation from whose earnings and profits the dividend is sourced;

(*ii*) The portion of a prior dividend (to the extent not a tiered extraordinary disposition amount by reason of paragraph (d) of this section) received by an upper-tier CFC from the SFC that by reason of section 245A(e) or being properly allocable to subpart F income of the SFC for the taxable year of the dividend

pursuant to section 954(c)(6)(A) was included in the upper-tier CFC's foreign personal holding company income and was included in gross income by the section 245A shareholder under section 951(a) but would have been a tiered extraordinary disposition amount by reason of paragraph (d) of this section had paragraph (d) applied to the dividend;

(*iii*) If a prior dividend received by an upper-tier CFC from a lower-tier CFC gives rise to a tiered extraordinary disposition amount with respect to the section 245A shareholder by reason of paragraph (d) of this section, the qualified portion; and

(*iv*) 200 percent of an amount included in the gross income of a domestic corporation under section 951(a)(1)(B) with respect to a CFC for the taxable year of the domestic corporation in which or with which the CFC's taxable year ends, to the extent so included by reason of the application of this section to the hypothetical distribution described in § 1.956-1(a)(2), or to the extent the amount would have been so included by reason of the application of this section to the hypothetical distribution but for the application of section 245A(e) or the holding period requirement in section 246 to the hypothetical distribution.

(*2*) ***Definition of qualified portion*** —

(*i*) ***In general.*** The term *qualified portion* means, with respect to a tiered extraordinary disposition amount of a section 245A shareholder and a lower-tier CFC, 200 percent of the portion of the disqualified amount with respect to the tiered extraordinary disposition amount equal to the sum of the amounts included in gross income by each U.S. tax resident under section 951(a) in the taxable year in which the tiered extraordinary disposition amount arose with respect to the lower-tier CFC by reason of paragraph (d) of this section. For purposes of the preceding sentence, the reference to a U.S. tax resident does not include any section 245A shareholder with a tiered extraordinary disposition amount with respect to the lower-tier CFC.

(*ii*) ***Determining a qualified portion if multiple section 245A shareholders have tiered extraordinary disposition amounts.*** For the purposes of applying paragraph (c)(3)(i)(D)(*2*)(*i*) of this section, if more than one section 245A shareholder has a tiered extraordinary disposition amount with respect to a dividend received by an upper-tier CFC from a lower-tier CFC, then the qualified portion with respect to each section 245A shareholder is equal to the amount described in paragraph (c)(3)(i)(D)(*2*)(*i*) of this section, without regard to this paragraph (c)(3)(i)(D)(*2*)(*ii*), multiplied by a fraction, the numerator of which is the section 245A shareholder's tiered extraordinary disposition amount with respect to the lower-tier CFC and the denominator of which is the sum of the tiered extraordinary disposition amounts with respect to each section 245A shareholder and the lower-tier CFC.

(ii) ***Extraordinary disposition*** —

(A) ***In general.*** Except as provided in paragraph (c)(3)(ii)(E) of this section, the term *extraordinary disposition* means, with respect to an SFC, any disposition of specified property by the SFC on a date on which it was a CFC and during the SFC's disqualified

period to a related party if the disposition occurs outside of the ordinary course of the SFC's activities. An extraordinary disposition also includes a disposition during the disqualified period on a date on which the SFC is not a CFC if there is a plan, agreement, or understanding involving a section 245A shareholder to cause the SFC to recognize gain that would give rise to an extraordinary disposition if the SFC were a CFC.

(B) ***Facts and circumstances.*** A determination as to whether a disposition is undertaken outside of the ordinary course of an SFC's activities is made on the basis of facts and circumstances, taking into account whether the transaction is consistent with the SFC's past activities, including with respect to quantity and frequency. In addition, a disposition of specified property by an SFC to a related party may be considered outside of the ordinary course of the SFC's activities notwithstanding that the SFC regularly disposes of property of the same type of, or similar to, the specified property to persons that are not related parties.

(C) ***Per se rules*** —

(*1*) ***In general.*** Even if a disposition would otherwise be considered to be undertaken in the ordinary course of an SFC's activities under the requirements of paragraph (c)(3)(ii)(B) of this section, that disposition is treated as occurring outside of the ordinary course of an SFC's activities if the disposition is undertaken with a principal purpose of generating earnings and profits during the disqualified period or, except as provided in paragraph (c)(3)(ii)(C)(*2*) of this section, if the disposition is of intangible property, as defined in section 367(d)(4).

(*2*) ***Exception to the per se rule for certain property*** —

(*i*) ***Exception.*** Paragraph (c)(3)(ii)(C)(*1*) of this section does not apply to a disposition of intangible property that is not described in section 367(d)(4)(C) or (F), provided that the property is transferred to a related person during the disqualified period with a reasonable expectation that the related person will resell the property to an unrelated customer within one year. Subject to paragraph (c)(3)(ii)(C)(*2*)(*ii*) of this section, a disposition of intangible property that satisfies the requirements of this paragraph (c)(3)(ii)(C)(*2*)(*i*) is determined to be within or without the ordinary course of an SFC's activities based on the test described in paragraph (c)(3)(ii)(B) of this section.

(*ii*) ***Facts and circumstances presumption for property described in section 367(d)(4)(A).*** Notwithstanding paragraph (c)(3)(ii)(B) of this section, any disposition described in paragraph (c)(3)(ii)(C)(*2*)(*i*) of this section of a copyright right within the meaning of § 1.861-18 or of intangible property described in section 367(d)(4)(A) is presumed to take place outside of the ordinary course of an SFC's activities for purposes of paragraph (c)(3)(ii)(A) of this section. The presumption in the preceding sentence may be rebutted only if the taxpayer can show that the facts and circumstances clearly establish that the disposition took place in the ordinary course of the SFC's activities.

(D) ***Treatment of dispositions by certain specified entities.*** For purposes of paragraph (c)(3)(ii)(A) of this section, an extraordinary disposition with respect to an SFC includes a disposition by a specified entity other than a foreign corporation, provided that immediately before or immediately after the disposition the specified entity is a related

party with respect to the SFC, the SFC directly or indirectly (through one or more other specified entities other than foreign corporations) owns an interest in the specified entity, and the disposition would have otherwise qualified as an extraordinary disposition had the specified entity been a foreign corporation.

(E) ***De minimis exception to extraordinary disposition.*** If the sum of the net gain recognized by an SFC with respect to specified property in all dispositions otherwise described in paragraph (c)(3)(ii)(A) of this section does not exceed the lesser of $50 million or 5 percent of the gross value of all of the SFC's property held immediately before the beginning of its disqualified period, then no disposition of specified property by the SFC is an extraordinary disposition.

(iii) ***Disqualified period.*** The term *disqualified period* means, with respect to an SFC that is a CFC on any day during the taxable year that includes January 1, 2018, the period beginning on January 1, 2018, and ending as of the close of the taxable year of the SFC, if any, that begins before January 1, 2018, and ends after December 31, 2017.

(iv) ***Specified property.*** The term *specified property* means any property if gain recognized with respect to such property during the disqualified period is not described in section 951A(c)(2)(A)(i)(I) through (V). If only a portion of the gain recognized with respect to property during the disqualified period is gain that is not described in section 951A(c)(2)(A)(i)(I) through (V), then a portion of the property is treated as specified property in an amount that bears the same ratio to the value of the property as the amount of gain not described in section 951A(c)(2)(A)(i)(I) through (V) bears to the total amount of gain recognized with respect to such property during the disqualified period. Specified property is also property with respect to which a loss was recognized during the disqualified period if the loss is properly allocable to income not described in section 951A(c)(2)(A)(i)(I) through (V) under the principles of section 954(b)(5) (specified loss). If only a portion of the loss recognized with respect to property during the disqualified period is specified loss, then a portion of the property is treated as specified property in an amount that bears the same ratio to the value of the property as the amount of specified loss bears to the total amount of loss recognized with respect to such property during the disqualified period.

(4) ***Successor rules for extraordinary disposition accounts.*** This paragraph (c)(4) applies with respect to an extraordinary disposition account upon certain direct or indirect transfers of stock of an SFC by a section 245A shareholder.

(i) ***Another section 245A shareholder succeeds to all or portion of account.*** Except as provided in paragraph (c)(4)(vi) of this section, paragraphs (c)(4)(i)(A) through (D) of this section apply when a section 245A shareholder of an SFC (the *transferor*) transfers directly or indirectly a share of stock (or a portion of a share of stock) of the SFC that it owns directly or indirectly (the share or portion thereof, a *transferred share*).

(A) If immediately after the transfer (taking into account all transactions related to the transfer) another person is a section 245A shareholder of the SFC, then such other person's extraordinary disposition account with respect to the SFC is increased by the person's proportionate share of the amount allocated to the transferred share.

(B) For purposes of paragraph (c)(4)(i)(A) of this section, the amount allocated to a transferred share is equal to the product of—

(1) The balance of the transferor's extraordinary disposition account with respect to the SFC, determined after any reduction pursuant to paragraph (c)(3) of this section by reason of dividends and before the application of this paragraph (c)(4)(i)(B); and

(2) A fraction, the numerator of which is the value of the transferred share and the denominator of which is the value of all of the stock of the SFC that the transferor owns directly or indirectly immediately before the transfer.

(C) For purposes of paragraph (c)(4)(i)(A) of this section, a person's proportionate share of the amount allocated to a transferred share under paragraph (c)(4)(i)(B) of this section is equal to the product of—

(1) The amount allocated to the share; and

(2) The percentage of the share (by value) that the person owns directly or indirectly immediately after the transfer (taking into account all transactions related to the transfer).

(D) The transferor's extraordinary disposition account with respect to the SFC is decreased by the amount by which another person's extraordinary disposition account with respect to the SFC is increased pursuant to paragraph (c)(4)(i)(A) of this section.

(ii) ***Certain section 381 transactions*** —

(A) ***In general.*** If assets of an SFC (the *acquired corporation*) are acquired by another SFC (the *acquiring corporation*) pursuant to a transaction described in section 381(a) in which the acquired corporation is the transferor corporation for purposes of section 381, then a section 245A shareholder's extraordinary disposition account with respect to the acquiring corporation is increased by the balance of its extraordinary disposition account with respect to the acquired corporation, determined after any reduction pursuant to paragraph (c)(3) of this section by reason of dividends and before the application of this paragraph (c)(4)(ii)(A).

(B) ***Certain triangular asset reorganizations.*** If, in a transaction described in paragraph (c)(4)(ii)(A) of this section, the section 245A shareholder receives stock of a domestic corporation that controls (within the meaning of section 368(c)) the acquiring corporation, the domestic corporation's extraordinary disposition account with respect to the acquiring corporation is increased by the balance of the section 245A shareholder's extraordinary disposition account with respect to the acquired corporation, determined after any reduction pursuant to paragraph (c)(3) of this section by reason of dividends and before the application of this paragraph (c)(4)(ii)(B).

(iii) ***Certain distributions involving section 355 or 356.*** In the case of a transaction involving a distribution under section 355 (or so much of section 356 as it relates to section 355) by an SFC (the *distributing corporation*) of stock of another SFC (the *controlled corporation*), a section 245A shareholder's extraordinary disposition account with respect to the distributing corporation is attributed to (and treated as) an extraordinary disposition account with respect to the controlled corporation in a manner similar to how earnings and profits of the distributing corporation and the controlled corporation are adjusted under § 1.312-10. To the extent that a section 245A shareholder's extraordinary disposition account with respect to the distributing

CFC is not so attributed to (and treated as) an extraordinary disposition account with respect to the controlled corporation, the extraordinary disposition account remains as an extraordinary disposition account with respect to the distributing corporation.

(iv) ***Transfer of all of the stock of the SFC owned by a section 245A shareholder*** —

(A) ***In general.*** If, in a transaction described in paragraph (c) of this section, a section 245A shareholder of an SFC transfers directly or indirectly all of the stock of the SFC that it owns directly or indirectly, then, except as provided in paragraph (c)(4)(iv)(B) of this section, any remaining balance of the section 245A shareholder's extraordinary disposition account that is not allocated or attributed under paragraph (c) of this section is eliminated and therefore not taken into account by any person.

(B) ***Related party retains the extraordinary distribution account.*** If any related party with respect to the section 245A shareholder described in paragraph (c)(4)(iv)(A) of this section is a section 245A shareholder with respect to the SFC immediately after the transfer (taking into account all transactions related to the transfer), then the remaining balance of the section 245A shareholder's extraordinary disposition account with respect to the SFC is added to the related party's extraordinary disposition account. If multiple related parties are section 245A shareholders of the SFC, then the remaining balance of the extraordinary disposition account is allocated between the related parties in proportion to the value of the stock of the SFC that they own directly or indirectly immediately after the transfer (taking into account all transactions related to the transfer).

(v) ***Effect of section 338(g) election*** —

(A) ***In general.*** Except as provided in paragraph (c)(4)(v)(B) of this section, if an election under section 338(g) is made with respect to a qualified stock purchase (as defined in section 338(d)(3)) of stock of an SFC, then a section 245A shareholder's extraordinary disposition account with respect to the old target (as defined in § 1.338-2(c)(17)) is not treated as (or attributed to) an extraordinary disposition account with respect to the new target (as defined in § 1.338-2(c)(17)). Accordingly, the remaining balance of the old target's extraordinary disposition account is eliminated and is not thereafter taken into account by any person.

(B) ***Special rules regarding carryover foreign target stock.*** If an election under section 338(g) is made with respect to a qualified stock purchase (as described in section 338(d)(3)) of stock of an SFC and there are one or more shares of carryover foreign target stock ("FT stock") (as described in § 1.338-9(b)(3)(i)), then the following rules apply as to a section 245A shareholder of the new target that after the qualified stock purchase directly or indirectly owns carryover FT stock (such shareholder, the *carryover FT stock shareholder*):

(*1*) In a case in which before the qualified stock purchase the carryover FT stock shareholder directly or indirectly owned carryover FT stock, the carryover FT stock shareholder's extraordinary disposition account with respect to the old target, determined after any reduction pursuant to paragraph (c)(3) of this section by reason of dividends, is treated as its extraordinary disposition account with respect to the new target.

(*2*) In a case in which before the qualified stock purchase the carryover FT stock shareholder did not directly or indirectly own carryover FT stock, but the stock retains its character as carryover FT stock (taking into account § 1.338-9(b)(3)(vi)), a ratable

portion of each section 245A shareholder's extraordinary disposition account with respect to the old target, determined after any reduction pursuant to paragraph (c)(3) of this section by reason of dividends, is treated as the carryover FT stock shareholder's extraordinary disposition account with respect to the new target, based on the value of the carryover FT stock that the carryover FT stock shareholder owns directly or indirectly after the qualified stock purchase relative to the value of all of the stock of the new target.

(vi) ***Certain transfers described in § 1.1248-8(a)(1)*** —

(A) ***In general.*** If a person transfers stock of an SFC with respect to which a section 245A shareholder has an extraordinary disposition account to a foreign acquiring corporation in a transaction described § 1.1248-8(a)(1) (other than a transfer that is also described in § 1.1248(f)-1(b)(2) or (3)) in which stock of a foreign corporation is received by the transferor, then, except in the case in which the transfer is also described in paragraph (c)(4)(ii) or (iii) of this section, the section 245A shareholder's extraordinary disposition account is not adjusted under this paragraph (c)(4).

(B) ***Certain transfers described in § 1.1248(f)-1(b).*** In the case of a transfer directly or indirectly of stock of an SFC by a section 245A shareholder described in § 1.1248(f)-1(b)(2) or (3), but which does not result in an income inclusion, in whole or in part, by reason of § 1.1248-2, the section 245A shareholder's extraordinary disposition account with respect to the SFC, determined after any reduction pursuant to paragraph (c)(3) of this section by reason of dividends and before the application of this paragraph (c)(4)(vi)(B), is allocated and adjusted in the same manner as under paragraph (c)(4)(i) of this section, except that, for purposes of applying paragraphs (c)(4)(i)(B) and (C) of this section, stock of the SFC that is owned directly or indirectly by persons who are not section 1248 shareholders (as defined in § 1.1248(f)-1(c)(12)) is disregarded.

(vii) ***Anti-abuse rule.*** Pursuant to paragraph (h) of this section, if a principal purpose of a transaction or series of transactions is to shift to another person, or to avoid, an amount of a section 245A shareholder's extraordinary disposition account with respect to an SFC or otherwise avoid the purposes of this section, then appropriate adjustments are made for purposes of this section, including disregarding the transaction or series of transactions. A principal purpose described in the preceding sentence is deemed to exist if stock of an SFC is directly or indirectly acquired by one of more section 245A shareholders within one year of a transaction or transactions to which paragraph (c)(4)(iv)(A) of this section would otherwise apply.

(d) ***Limitation of amount eligible for section 954(c)(6) when there is an extraordinary disposition account with respect to a lower-tier CFC*** —

(1) ***In general.*** If an upper-tier CFC receives a dividend from a lower-tier CFC, then the dividend is eligible for the exception to foreign personal holding company income under section 954(c)(6) (provided all other applicable requirements are satisfied) with respect to the portion of the dividend that exceeds the disqualified amount. With respect to the portion of the dividend that does not exceed the disqualified amount, the exception to foreign personal holding company income under section 954(c)(6) is allowed (provided all other applicable requirements are satisfied) only for the amount equal to 50 percent of the portion of the dividend that does not exceed the disqualified amount. The disqualified amount is the quotient of the amounts described in paragraphs (d)(1)(i) and (ii) of this section.

(i) The sum of each section 245A shareholder's tiered extraordinary disposition amount with respect to the lower-tier CFC.

(ii) The percentage of stock of the upper-tier CFC (by value) owned, in the aggregate, by U.S. tax residents that include in gross income their pro rata share of the upper-tier CFC's subpart F income under section 951(a) on the last day of the upper-tier CFC's taxable year. If a U.S. tax resident is a direct or indirect partner in a domestic partnership that is a United States shareholder of the upper-tier CFC, the amount of stock owned by the U.S. tax resident for purposes of the preceding sentence is determined under the principles of paragraph (g)(3) of this section.

(2) ***Definition of tiered extraordinary disposition amount*** —

(i) ***In general.*** The term *tiered extraordinary disposition amount* means, with respect to a dividend received by an upper-tier CFC from a lower-tier CFC and a section 245A shareholder, the portion of the dividend that would be an extraordinary disposition amount if the section 245A shareholder received as a dividend its pro rata share of the dividend from the lower-tier CFC. The preceding sentence does not apply to an amount treated as a dividend received by an upper-tier CFC from a lower-tier CFC by reason of section 964(e)(4) (in such case, see paragraphs (b)(1) and (g)(2) of this section).

(ii) ***Section 245A shareholder's pro rata share of a dividend received by an upper-tier CFC.*** For the purposes of paragraph (d)(2)(i) of this section, a section 245A shareholder's pro rata share of the amount of a dividend received by an upper-tier CFC from a lower-tier CFC equals the amount by which the dividend would increase the section 245A shareholder's pro rata share of the upper-tier CFC's subpart F income under section 951(a)(2) and § 1.951-1(b) and (e) if the dividend were included in the upper-tier CFC's foreign personal holding company income under section 951(a)(1), determined without regard to section 952(c) and as if the upper-tier CFC had no deductions properly allocable to the dividend under section 954(b)(5).

(e) ***Extraordinary reduction amount*** —

(1) ***In general.*** Except as provided in paragraph (e)(3) of this section, the term *extraordinary reduction amount* means, with respect to a dividend received by a controlling section 245A shareholder from a CFC during a taxable year of the CFC ending after December 31, 2017, in which an extraordinary reduction occurs with respect to the controlling section 245A shareholder's ownership of the CFC, the lesser of the amounts described in paragraph (e)(1)(i) or (ii) of this section. *See* paragraphs (j)(4) through (6) of this section for examples illustrating the application of this paragraph (e).

(i) The amount of the dividend.

(ii) The amount equal to the sum of the controlling section 245A shareholder's pre-reduction pro rata share of the CFC's subpart F income (as defined in section 952(a)) and tested income (as defined in section 951A(c)(2)(A)) for the taxable year, reduced, but not below zero, by the prior extraordinary reduction amount.

(2) ***Rules regarding extraordinary reduction amounts*** —

(i) ***Extraordinary reduction*** —

(A) ***In general.*** Except as provided in paragraph (e)(2)(i)(C) of this section, an *extraordinary reduction* occurs, with respect to a controlling section 245A shareholder's ownership of a CFC during a taxable year of the CFC, if either of the conditions described in paragraph (e)(2)(i)(A)(*1*) or (*2*) of this section is satisfied. See paragraphs (j)(4) and (5) of this section for examples illustrating an extraordinary reduction.

(*1*) The condition of this paragraph (e)(2)(i)(A)(*1*) requires that during the taxable year, the controlling section 245A shareholder transfers directly or indirectly (other than by reason of a transfer occurring pursuant to an exchange described in section 368(a)(1)(E) or (F)), in the aggregate, more than 10 percent (by value) of the stock of the CFC that the section 245A shareholder owns directly or indirectly as of the beginning of the taxable year of the CFC, provided the stock transferred, in the aggregate, represents at least 5 percent (by value) of the outstanding stock of the CFC as of the beginning of the taxable year of the CFC; or

(*2*) The condition of this paragraph (e)(2)(i)(A)(*2*) requires that, as a result of one or more transactions occurring during the taxable year, the percentage of stock (by value) of the CFC that the controlling section 245A shareholder owns directly or indirectly as of the close of the last day of the taxable year of the CFC is less than 90 percent of the percentage of stock (by value) that the controlling section 245A shareholder owns directly or indirectly on either of the dates described in paragraphs (e)(2)(i)(B)(*1*) and (*2*) of this section (such percentage, the *initial percentage*), provided the difference between the initial percentage and percentage at the end of the year is at least five percentage points.

(B) ***Dates for purposes of the initial percentage.*** For purposes of paragraph (e)(2)(i)(A)(*2*) of this section, the dates described in paragraphs (e)(2)(i)(B)(*1*) and (*2*) of this section are—

(*1*) The day of the taxable year on which the controlling section 245A shareholder owns directly or indirectly its highest percentage of stock (by value) of the CFC; and

(*2*) The day immediately before the first day on which stock was transferred directly or indirectly in the preceding taxable year in a transaction (or a series of transactions) occurring pursuant to a plan to reduce the percentage of stock (by value) of the CFC that the controlling section 245A shareholder owns directly or indirectly.

(C) ***Transactions pursuant to which CFC's taxable year ends.*** A controlling section 245A shareholder's direct or indirect transfer of stock of a CFC that but for this paragraph (e)(2)(i)(C) would give rise to an extraordinary reduction under paragraph (e)(2)(i)(A) of this section does not give rise to an extraordinary reduction if the taxable year of the CFC ends immediately after the transfer, provided that the controlling section 245A shareholder directly or indirectly owns the stock on the last day of such year. Thus, for example, if a controlling section 245A shareholder exchanges all the stock of a CFC pursuant to a complete liquidation of the CFC, the exchange does not give rise to an extraordinary reduction.

(ii) ***Rules for determining pre-reduction pro rata share*** —

(A) ***In general.*** Except as provided in paragraph (e)(2)(ii)(B) of this section, the term *pre-reduction pro rata share* means, with respect to a controlling section 245A shareholder and the subpart F income or tested income of a CFC, the controlling section 245A shareholder's pro rata share of the CFC's subpart F income or tested income under section

951(a)(2) and § 1.951-1(b) and (e) or section 951A(e)(1) and § 1.951A-1(d)(1), respectively, determined based on the controlling section 245A shareholder's direct or indirect ownership of stock of the CFC immediately before the extraordinary reduction (or, if the extraordinary reduction occurs by reason of multiple transactions, immediately before the first transaction) and without regard to section 951(a)(2)(B) and § 1.951-1(b)(1)(ii), but only to the extent that such subpart F income or tested income is not included in the controlling section 245A shareholder's pro rata share of the CFC's subpart F income or tested income under section 951(a)(2) and § 1.951-1(b) and (e) or section 951A(e)(1) and § 1.951A-1(d)(1), respectively.

(B) ***Decrease in section 245A shareholder's pre-reduction pro rata share for amounts taken into account by U.S. tax resident.*** A controlling section 245A shareholder's pre-reduction pro rata share of subpart F income or tested income of a CFC for a taxable year is reduced by an amount equal to the sum of the amounts by which each U.S. tax resident's pro rata share of the subpart F income or tested income is increased as a result of a transfer directly or indirectly of stock of the CFC by the controlling section 245A shareholder or an issuance of stock by the CFC (such an amount with respect to a U.S. tax resident, a *specified amount*), in either case, during the taxable year in which the extraordinary reduction occurs. For purposes of this paragraph (e)(2)(ii)(B), if there are extraordinary reductions with respect to more than one controlling section 245A shareholder during the CFC's taxable year, then a U.S. tax resident's specified amount attributable to an acquisition of stock from the CFC is prorated with respect to each controlling section 245A shareholder based on its relative decrease in ownership of the CFC. See paragraph (j)(5) of this section for an example illustrating a decrease in a section 245A shareholder's pre-reduction pro rata share for amounts taken into account by a U.S. tax resident.

(C) ***Prior extraordinary reduction amount.*** The term *prior extraordinary reduction amount* means, with respect to a CFC and section 245A shareholder and a taxable year of the CFC in which an extraordinary reduction occurs, the sum of the extraordinary reduction amount of each prior dividend received by the section 245A shareholder from the CFC during the taxable year. A section 245A shareholder's prior extraordinary reduction amount also includes—

(*1*) A prior dividend received by the section 245A shareholder from the CFC during the taxable year to the extent the dividend was not eligible for the section 245A deduction by reason of section 245A(e) or the holding period requirement of section 246 not being satisfied but would have been an extraordinary reduction amount had this paragraph (e) applied to the dividend;

(*2*) If the CFC is a lower-tier CFC for a portion of the taxable year during which the lower-tier CFC pays any dividend to an upper tier-CFC, the portion of a prior dividend received by an upper-tier CFC from the lower-tier CFC during the taxable year of the lower-tier CFC that, by reason of section 245A(e), was included in the upper-tier CFC's foreign personal holding company income and that by reason of section 951(a) was included in income of the section 245A shareholder, and that would have given rise to a tiered extraordinary reduction amount by reason of paragraph (f) of this section had paragraph (f) applied to the dividend of which the section 245A shareholder would have included a pro rata share of the tiered extraordinary reduction amount in income by reason of section 951(a); and

(3) If the CFC is a lower-tier CFC for a portion of the taxable year during which the lower-tier CFC pays any dividend to an upper-tier CFC, the sum of the portion of the tiered extraordinary reduction amount of each prior dividend received by an upper-tier CFC from the lower-tier CFC during the taxable year that is included in income of the section 245A shareholder by reason of section 951(a).

(3) *Exceptions* —

(i) *Elective exception to close CFC's taxable year* —

(A) *In general.* For a taxable year of a CFC in which an extraordinary reduction occurs with respect to a controlling section 245A shareholder and for which, absent this paragraph (e)(3)(i), there would be an extraordinary reduction amount or tiered extraordinary reduction amount greater than zero, no amount is considered an extraordinary reduction amount or tiered extraordinary reduction amount with respect to the controlling section 245A shareholder if each controlling section 245A shareholder elects, and each U.S. tax resident described in paragraph (e)(3)(i)(C)(2) of this section agrees, pursuant to this paragraph (e)(3)(i), to close the CFC's taxable year for all purposes of the Internal Revenue Code (and, therefore, as to all shareholders of the CFC) as of the end of the date on which the extraordinary reduction occurs, or, if the extraordinary reduction occurs by reason of multiple transactions, as of the end of each date on which a transaction forming a part of the extraordinary reduction occurs. Because the determination as to whether there would be an extraordinary reduction amount or tiered extraordinary reduction amount greater than zero is made without regard to this paragraph (e)(3)(i), this determination is made without taking into account any elections that may be available, or other events that may occur, solely by reason of an election described in this paragraph (e)(3)(i), such as the application of section 954(b)(4) to a short taxable year created as a result of the election. If an election is made pursuant to this paragraph (e)(3)(i), all shareholders of the CFC that are a controlling section 245A shareholder or a U.S. tax resident described in paragraph (e)(3)(i)(C)(2) of this section must file their respective U.S. income tax and information returns consistently with the election. If each controlling section 245A shareholder elects to close the CFC's taxable year, that closing will be treated as a change in accounting period for purposes of the notice requirement in § 1.964-1(c)(3)(iii), treating any controlling section 245A shareholders as controlling domestic shareholders for this purpose. However, the notice described in § 1.964-1(c)(3)(iii) does not need to be provided to persons that are U.S. tax residents described in paragraph (e)(3)(i)(C) of this section. For purposes of applying this paragraph (e)(3)(i), a controlling section 245A shareholder that has an extraordinary reduction (or a transaction forming a part thereof) with respect to a CFC is treated as owning the same amount of stock it owned in the CFC immediately before the extraordinary reduction (or a transaction forming a part thereof) on the end of the date on which the extraordinary reduction occurs (or such transaction forming a part thereof occurs). To the extent that shares of a CFC are treated as owned by a controlling section 245A shareholder as of the close of the CFC's taxable year pursuant to the preceding sentence, such shares are treated as not being owned by any other person as of the close of the CFC's taxable year.

(B) *Allocation of foreign taxes.* If an election is made pursuant to this paragraph (e)(3) to close a CFC's taxable year and the CFC's taxable year under foreign law (if any) does not close at the end of the date on which the CFC's taxable year closes as a result of the election, foreign taxes paid or accrued with respect to such foreign taxable year are allocated

between the period of the foreign taxable year that ends with, and the period of the foreign taxable year that begins after, the date on which the CFC's taxable year closes as a result of the election. If there is more than one date on which the CFC's taxable year closes as a result of the election, foreign taxes paid or accrued with respect to the foreign taxable year are allocated to all such periods. The allocation is made based on the respective portions of the taxable income of the CFC (as determined under foreign law) for the foreign taxable year that are attributable under the principles of § 1.1502-76(b) to the periods during the foreign taxable year. Foreign taxes allocated to a period under this paragraph (e)(3)(i)(B) are treated as paid or accrued by the CFC as of the close of that period.

(C) *Time and manner of making election* —

(*1*) ***Election by controlling section 245A shareholder.*** An election pursuant to this paragraph (e)(3) is made and effective if the statement described in paragraph (e)(3)(i)(D) of this section is timely filed (including extensions) by each controlling section 245A shareholder making the election with its original U.S. tax return for the taxable year in which the extraordinary reduction occurs. If a controlling section 245A shareholder is a member of a consolidated group (within the meaning of § 1.1502-1(h)) and participates in the extraordinary reduction, the agent for such group (within the meaning of § 1.1502-77(c)(1)) must file the election described in this paragraph (e)(3) on behalf of such member.

(*2*) ***Binding agreement.*** Before the filing of the statement described in paragraph (e)(3)(i)(D) of this section, each controlling section 245A shareholder must enter into a written, binding agreement with each U.S. tax resident that on the end of the date on which the extraordinary reduction occurs (or, if the extraordinary reduction occurs by reason of multiple transactions, each U.S. tax resident that on the end of each date on which a transaction forming a part of the extraordinary reduction occurs) owns directly or indirectly, without regard to the final two sentences of paragraph (e)(3)(i)(A) of this section, stock of the CFC and is a United States shareholder with respect to the CFC. In the case of a U.S. tax resident that owns stock of the CFC indirectly through one or more partnerships, the partnership that directly owns the stock of the CFC may enter into the binding agreement on behalf of the U.S. tax resident partner provided that, before the due date of the partner's original Federal income tax return, including extensions, the partner delegated the authority to the partnership to enter into the binding agreement pursuant to a written partnership agreement (within the meaning of § 1.704-1(b)(2)(ii)(*h*)). The written, binding agreement must provide that each controlling section 245A shareholder will elect to close the taxable year of the CFC.

(*3*) ***Transition rule.*** In the case of an extraordinary reduction occurring before August 27, 2020, the statement described in paragraph (e)(3)(i)(D) of this section is considered timely filed if it is attached by each controlling section 245A shareholder to an original or amended return for the taxable year in which the extraordinary reduction occurs. In the case of an amended return, the statement is considered timely filed only if it is filed with an amended return no later than February 23, 2021.

(D) ***Form and content of statement.*** The statement required by paragraph (e)(3)(i)(C) of this section is to be titled “Elective Section 245A Year-Closing Statement.” The statement must—

(1) Identify (by name and tax identification number, if any) each controlling section 245A shareholder, each U.S tax resident described in paragraph (e)(3)(i)(C) of this section, and the CFC;

(2) State the date of the extraordinary reduction (or, if the extraordinary reduction includes transactions on more than one date, the dates of all such transactions) to which the election applies;

(3) State the filing controlling section 245A shareholder's pro rata share of the subpart F income, tested income, and foreign taxes described in section 960 with respect to the stock of the CFC subject to the extraordinary reduction, and, if applicable, the amount of earnings and profits attributable to such stock within the meaning of section 1248, as of the date of the extraordinary reduction;

(4) State that each controlling section 245A shareholder and each U.S tax resident described in paragraph (e)(3)(i)(C) of this section have entered into a written, binding agreement to elect to close the CFC's taxable year in accordance with paragraph (e)(3)(i)(C) of this section; and

(5) Be filed in the manner, if any, prescribed by forms, publications, or other guidance published in the Internal Revenue Bulletin.

(E) ***Consistency requirements.*** If multiple extraordinary reductions occur with respect to one or more controlling section 245A shareholders' ownership in a single CFC during one or more taxable years of the CFC, then to the extent those extraordinary reductions occur pursuant to a plan or series of related transactions, the election described in this paragraph (e)(3) section may be made only if it is made for all such extraordinary reductions with respect to the CFC for which there was an extraordinary reduction amount. Furthermore, if an extraordinary reduction occurs with respect to a controlling section 245A shareholders' ownership in one or more CFCs, then, to the extent those extraordinary reductions occur pursuant to a plan or series of related transactions, the election described in this paragraph (e)(3) may be made only if it is made for each extraordinary reduction for which there was an extraordinary reduction amount with respect to all of the CFCs that have the same or related (within the meaning of section 267(b) or 707(b)) controlling section 245A shareholders.

(ii) ***De minimis subpart F income and tested income.*** For a taxable year of a CFC in which an extraordinary reduction occurs, no amount is considered an extraordinary reduction amount (or, with respect to a lower-tier CFC, a tiered extraordinary reduction amount under paragraph (f) of this section) with respect to a controlling section 245A shareholder of the CFC if the sum of the CFC's subpart F income and tested income (as defined in section 951A(c)(2)(A)) for the taxable year does not exceed the lesser of $50 million or 5 percent of the CFC's total income for the taxable year.

(f) ***Limitation of amount eligible for section 954(c)(6) where extraordinary reduction occurs with respect to lower-tier CFC*** s—

(1) ***In general.*** If an extraordinary reduction occurs with respect to a lower-tier CFC and an upper-tier CFC receives a dividend from the lower-tier CFC in the taxable year in which the extraordinary reduction occurs, then the dividend is eligible for the exception to foreign personal holding company income under section 954(c)(6) (provided all other applicable requirements are satisfied) only with respect to the portion of the dividend that exceeds the tiered extraordinary reduction amount. The preceding

sentence does not apply to an amount treated as a dividend received by an upper-tier CFC by reason of section 964(e)(4) (in this case, see paragraphs (b)(1) and (g)(2) of this section). See paragraph (j)(7) of this section for an example illustrating the application of this paragraph (f)(1).

(2) ***Definition of tiered extraordinary reduction amount.*** The term *tiered extraordinary reduction amount* means, with respect to the portion of a dividend received by an upper-tier CFC from a lower-tier CFC during a taxable year of the lower-tier CFC, the amount of such dividend equal to the excess, if any, of—

(i) The product of—

(A) The sum of the amount of the subpart F income and tested income of the lower-tier CFC for the taxable year; and

(B) The percentage (by value) of stock of the lower-tier CFC owned (within the meaning of section 958(a)(2)) by the upper-tier CFC immediately before the extraordinary reduction (or the first transaction forming a part thereof); over

(ii) The following amounts—

(A) The sum of each U.S. tax resident's pro rata share of the lower-tier CFC's subpart F income and tested income under section 951(a) or 951A(a), respectively, that is attributable to shares of the lower-tier CFC owned (within the meaning of section 958(a)(2)) by the upper-tier CFC immediately prior to the extraordinary reduction (or the first transaction forming a part thereof), computed without the application of this paragraph (f);

(B) The sum of each prior tiered extraordinary reduction amount and sum of each amount included in an upper-tier CFC's subpart F income by reason of section 245A(e) with respect to prior dividends from the lower-tier CFC during the taxable year;

(C) The sum of each U.S. tax resident's pro rata share of an upper-tier CFC's subpart F income under section 951(a) and § 1.951-1(e) that is attributable to dividends received from the lower-tier CFC in the taxable year of the extraordinary reduction that do not qualify for the exception to foreign personal holding company income under section 954(c)(6) because the dividends, or portions thereof, are properly allocable to subpart F income of the lower-tier CFC for the taxable year of the extraordinary reduction pursuant to section 954(c)(6)(A);

(D) The sum of the prior extraordinary reduction amounts (but, for this purpose, computed without regard to amounts described in paragraphs (e)(2)(ii)(C)(*2*) and (*3*) of this section) of each controlling section 245A shareholder with respect to shares of the lower-tier CFC that were owned by such controlling section 245A shareholder (including indirectly through a specified entity other than a foreign corporation) for a portion of the taxable year but are owned by an upper-tier CFC (including indirectly through a specified entity other than a foreign corporation) at the time of the distribution of the dividend; and

(E) The product of the amount described in paragraph (f)(2)(i)(B) of this section and the sum of the amounts of each U.S. tax resident's pro rata share of subpart F income and tested income for the taxable year under section 951(a) or 951A(a), respectively, attributable to shares of the lower-tier CFC directly or indirectly acquired by the U.S. tax resident from the lower-tier CFC during the taxable year.

(3) ***Transition rule for computing tiered extraordinary reduction amount.*** Solely for purposes of applying this paragraph (f) in taxable years of a lower-tier CFC beginning on or after January 1, 2018, and ending before June 14, 2019, a tiered extraordinary reduction amount is determined by treating the lower-tier CFC's subpart F income for the taxable year as if it were neither subpart F income nor tested income.

(g) ***Special rules.*** The rules in this paragraph (g) apply for purposes of this section.

(1) ***Source of dividends.*** A dividend received by any person is considered received directly by such person from the foreign corporation whose earnings and profits give rise to the dividend. Therefore, for example, if a section 245A shareholder sells or exchanges stock of an upper-tier CFC and the gain recognized on the sale or exchange is included in the gross income of the section 245A shareholder as a dividend under section 1248(a), then, to the extent the dividend is attributable under section 1248(c)(2) to the earnings and profits of a lower-tier CFC owned, within the meaning of section 958(a)(2), by the section 245A shareholder through the upper-tier CFC, the dividend is considered received directly by the section 245A shareholder from the lower-tier CFC.

(2) ***Certain section 964(e) inclusions treated as dividends.*** An amount included in the gross income of a section 245A shareholder under section 951(a)(1)(A) by reason of section 964(e)(4) is considered a dividend received by the section 245A shareholder directly from the foreign corporation whose earnings and profits give rise to the amount described in section 964(e)(1). Therefore, for example, if an upper-tier CFC sells or exchanges stock of a lower-tier CFC, and, as a result of the sale or exchange, a section 245A shareholder with respect to the upper-tier CFC includes an amount in gross income under section 951(a)(1)(A) by reason of section 964(e)(4), then the inclusion is treated as a dividend received directly by the section 245A shareholder from the lower-tier CFC whose earnings and profits give rise to the dividend, and the section 245A shareholder is not allowed a section 245A deduction for the dividend to the extent of the ineligible amount of such dividend.

(3) ***Rules regarding stock ownership and stock transfers*** —

(i) ***Determining indirect ownership of stock of an SFC or a CFC.*** For purposes of this section, if a person owns an interest in, or stock of, a specified entity, including through a chain of ownership of one or more other specified entities, then the person is considered to own indirectly a pro rata share of stock of an SFC or a CFC owned by the specified entity. To determine a person's pro rata share of stock owned by a specified entity, the principles of section 958(a) apply without regard to whether the specified entity is foreign or domestic.

(ii) ***Determining indirect transfers for stock owned indirectly.*** If, under paragraph (g)(3)(i) of this section, a person is considered to own indirectly stock of an SFC or CFC that is owned by a specified entity, then the following rules apply in determining if the person transfers stock of the SFC or CFC—

(A) To the extent the specified entity transfers stock that is considered owned indirectly by the person immediately before the transfer, the person is considered to transfer indirectly such stock;

(B) If the person transfers an interest in, or stock of, the specified entity, then the person is considered to transfer indirectly the stock of the SFC or CFC attributable to the interest in, or the stock of, the specified entity that is transferred; and

(C) In the case in which the person owns the specified entity through a chain of ownership of one or more other specified entities, if there is a transfer of an interest in, or stock of, another specified entity in the chain of ownership, then the person is considered to transfer indirectly the stock of the SFC or CFC attributable to the interest in, or the stock of, the other specified entity transferred.

(iii) ***Definition of specified entity.*** The term *specified entity* means any partnership, trust (other than a trust treated as a corporation for U.S. income tax purposes), or estate (in each case, domestic or foreign), or any foreign corporation.

(4) ***Coordination rules*** —

(i) ***General rule.*** A dividend is first subject to section 245A(e). To the extent the dividend is not a hybrid dividend or tiered hybrid dividend under section 245A(e), the dividend is subject to paragraph (e) or (f) of this section, as applicable, and then, to the extent the dividend is not subject to paragraph (e) or (f) of this section, it is subject to paragraph (c) or (d) of this section, as applicable.

(ii) ***Coordination rule for paragraphs (c) and (d) and (e) and (f) of this section, respectively.*** If an SFC or CFC pays a dividend (or simultaneous dividends), a portion of which may be subject to paragraph (c) or (e) of this section and a portion of which may be subject to paragraph (d) or (f) of this section, the rules of this section apply by treating the portion of the dividend or dividends that may be subject to paragraph (c) or (e) of this section as if it occurred immediately before the portion of the dividend or dividends that may be subject to paragraph (d) or (f) of this section. For example, if a dividend arising under section 964(e)(4) occurs at the same time as a dividend that would be eligible for the exception to foreign personal holding company income under section 954(c)(6) but for the potential application of paragraph (d) this section, then the tiered extraordinary disposition amount with respect to the other dividend is determined as if the dividend arising under section 964(e)(4) occurs immediately before the other dividend.

(5) ***Ordering rule for multiple dividends made by an SFC or a CFC during a taxable year.*** If an SFC or a CFC pays dividends on more than one date during its taxable year or at different times on the same date, this section applies based on the order in which the dividends are paid.

(6) ***Partner's distributive share of a domestic partnership's pro rata share of subpart F income or tested income.*** If a section 245A shareholder or a U.S. tax resident is a direct or indirect partner in a domestic partnership that is a United States shareholder with respect to a CFC and includes in gross income its distributive share of the domestic partnership's inclusion under section 951(a) or 951A(a) with respect to the CFC then, solely for purposes of this section, a reference to the section 245A shareholder's or U.S. tax resident's pro rata share of the CFC's subpart F income or tested income included in gross income under section 951(a) or 951A(a), respectively, includes such person's distributive share of the domestic partnership's pro rata share of the CFC's subpart F income or tested income. A person is an indirect partner with respect to a domestic partnership if the person indirectly owns the domestic partnership through one or more specified entities (other than a foreign corporation).

(7) ***Related domestic corporations treated as a single domestic corporation for certain purposes.*** For purposes of determining the extent that a dividend is an extraordinary disposition amount or a tiered extraordinary disposition amount, as well as for purposes of determining the extent to which an extraordinary disposition account is reduced by a prior extraordinary disposition amount, domestic

corporations that are related parties are treated as a single domestic corporation. Thus, for example, if two domestic corporations are related parties and either or both of them are section 245A shareholders with respect to an SFC, then the extent to which a dividend received by either domestic corporation from the SFC is an extraordinary disposition amount is based on the sum of each domestic corporation's extraordinary disposition account with respect to the SFC. When, by reason of this paragraph (g)(7), the extent to which a dividend is an extraordinary disposition amount or tiered extraordinary disposition amount is determined based on the sum of two or more extraordinary disposition accounts, a pro rata amount in each extraordinary disposition account is considered to give rise to the extraordinary disposition amount or tiered extraordinary disposition amount, if any.

(h) ***Anti-abuse rule.*** Appropriate adjustments are made pursuant to this section, including adjustments that would disregard a transaction or arrangement in whole or in part, to any amounts determined under (or subject to the application of) this section if a transaction or arrangement is engaged in with a principal purpose of avoiding the purposes of this section. For examples illustrating the application of this paragraph (h), see paragraphs (j)(8) through (10) of this section.

(i) ***Definitions.*** The following definitions apply for purposes of this section.

(1) ***Controlled foreign corporation.*** The term *controlled foreign corporation* (or *CFC*) has the meaning provided in section 957.

(2) ***Controlling section 245A shareholder.*** The term *controlling section 245A shareholder* means, with respect to a CFC, any section 245A shareholder that owns directly or indirectly more than 50 percent (by vote or value) of the stock of the CFC. For purposes of determining whether a section 245A shareholder is a controlling section 245A shareholder with respect to a CFC, all stock of the CFC owned by a related party with respect to the section 245A shareholder or by other persons acting in concert with the section 245A shareholder to undertake an extraordinary reduction is considered owned by the section 245A shareholder. If section 964(e)(4) applies to a sale or exchange of a lower-tier CFC with respect to a controlling section 245A shareholder, all United States shareholders of the CFC are considered to act in concert with regard to the sale or exchange. In addition, if all persons selling stock in a CFC, held directly, sell such stock to the same buyer or buyers (or a related party with respect to the buyer or buyers) as part of the same plan, all sellers will be considered to act in concert with regard to the sale or exchange.

(3) ***Disqualified amount.*** The term *disqualified amount* has the meaning set forth in paragraph (d)(1) of this section.

(4) ***Disqualified period.*** The term *disqualified period* has the meaning set forth in paragraph (c)(3)(iii) of this section.

(5) ***Extraordinary disposition.*** The term *extraordinary disposition* has the meaning set forth in paragraph (c)(3)(ii) of this section.

(6) ***Extraordinary disposition account.*** The term *extraordinary disposition amount* has the meaning set forth in paragraph (c)(3)(i) of this section.

(7) ***Extraordinary disposition amount.*** The term *extraordinary disposition amount* has the meaning set forth in paragraph (c)(1) of this section.

(8) ***Extraordinary disposition E&P.*** The term *extraordinary disposition E&P* has the meaning set forth in paragraph (c)(3)(i)(C) of this section.

(9) ***Extraordinary disposition ownership percentage.*** The term *extraordinary disposition ownership percentage* has the meaning set forth in paragraph (c)(3)(i)(B) of this section.

(10) ***Extraordinary reduction.*** The term *extraordinary reduction* has the meaning set forth in paragraph (e)(2)(i)(A) of this section.

(11) ***Extraordinary reduction amount.*** The term *extraordinary reduction amount* has the meaning set forth in paragraph (e)(1) of this section.

(12) ***Ineligible amount.*** The term *ineligible amount* has the meaning set forth in paragraph (b)(2) of this section.

(13) ***Lower-tier CFC.*** The term *lower-tier CFC* means a CFC whose stock is owned (within the meaning of section 958(a)(2)), in whole or in part, by another CFC.

(14) ***Non-extraordinary disposition E&P.*** The term *non-extraordinary disposition E&P* has the meaning set forth in paragraph (c)(2)(ii) of this section.

(15) ***Pre-reduction pro rata share.*** The term *pre-reduction pro rata share* has the meaning set forth in paragraph (e)(2)(ii) of this section.

(16) ***Prior extraordinary disposition amount.*** The term *prior extraordinary disposition amount* has the meaning set forth in paragraph (c)(3)(i)(D) of this section.

(17) ***Prior extraordinary reduction amount.*** The term *prior extraordinary reduction amount* has the meaning set forth in paragraph (e)(2)(ii)(C) of this section.

(18) ***Qualified portion.*** The term *qualified portion* has the meaning set forth in paragraph (c)(3)(i)(D)(*2*)(*i*) of this section.

(19) ***Related party.*** The term *related party* means, with respect to a person, another person bearing a relationship described in section 267(b) or 707(b) to the person, in which case such persons are *related*.

(20) ***Section 245A deduction.*** The term *section 245A deduction* means, with respect to a dividend received by a section 245A shareholder from an SFC, the amount of the deduction allowed to the section 245A shareholder by reason of the dividend.

(21) ***Section 245A shareholder.*** The term *section 245A shareholder* means a domestic corporation that is a United States shareholder with respect to an SFC and that owns directly or indirectly stock of the SFC.

(22) ***Specified 10-percent owned foreign corporation (SFC).*** The term *specified 10-percent owned foreign corporation* (or *SFC*) has the meaning provided in section 245A(b)(1).

(23) ***Specified entity.*** The term *specified entity* has the meaning set forth in paragraph (g)(3)(iii) of this section.

(24) ***Specified property.*** The term *specified property* has the meaning set forth in paragraph (c)(3)(iv) of this section.

(25) ***Tiered extraordinary disposition amount.*** The term *tiered extraordinary disposition amount* has the meaning set forth in paragraph (d)(2)(i) of this section.

(26) ***Tiered extraordinary reduction amount.*** The term *tiered extraordinary reduction amount* has the meaning set forth in paragraph (f)(2) of this section.

(27) ***United States shareholder.*** The term *United States shareholder* has the meaning provided in section 951(b).

(28) ***Upper-tier CFC.*** The term *upper-tier CFC* means a CFC that owns (within the meaning of section 958(a)(2)) stock in another CFC.

(29) ***U.S. tax resident.*** The term *U.S. tax resident* means a United States person described in section 7701(a)(30)(A) or (C).

(j) ***Examples.*** The application of this section is illustrated by the examples in this paragraph (j).

(1) ***Facts.*** Except as otherwise stated, the facts described in this paragraph (j)(1) are assumed for purposes of the examples.

(i) US1 and US2 are domestic corporations, each with a calendar taxable year, and are not related parties with respect to each other.

(ii) CFC1, CFC2, and CFC3 are foreign corporations that are SFCs and CFCs.

(iii) Each entity uses the U.S. dollar as its functional currency.

(iv) Year 2 begins on or after January 1, 2018 and has 365 days.

(v) Absent application of this section, dividends received by US1 and US2 from a CFC meet the requirements to qualify for the section 245A deduction, and dividends received by one CFC from another CFC qualify for the exception to foreign personal holding company income under section 954(c)(6).

(vi) The de minimis rules in paragraphs (c)(3)(ii)(E) and (e)(3)(ii) of this section do not apply.

(vii) Section 1059 is not relevant to the tax results described in the examples in this paragraph (j).

(2) *Example 1. Extraordinary disposition*—(i) *Facts.* US1 and US2 own 60% and 40%, respectively, of the single class of stock of CFC1. CFC1 owns all of the single class of stock of CFC2. CFC1 and CFC2 use the taxable year ending November 30 as their taxable year. On November 1, 2018, CFC1 sells specified property to CFC2 in exchange for $200x of cash (the "Property Transfer"). The Property Transfer is outside of CFC1's ordinary course of activities. The transferred property has a basis of $100x in the hands of CFC1. CFC1 recognizes $100x of gain as a result of the Property Transfer ($200x − $100x). On December 1, 2018, CFC1 distributes $80x pro rata to US1 ($48x) and US2 ($32x), all of which is a dividend within the meaning of section 316 and treated as a distribution out of earnings described in section 959(c)(3). No other distributions are made by CFC1 to either US1 or US2 in CFC1's taxable year ending November 30, 2019. For its taxable year ending on November 30, 2019, CFC1 has $110x of earnings and profits described in section 959(c)(3), without regard to any distributions during the taxable year.

(ii) *Analysis*—(A) *Identification of extraordinary disposition.* Because CFC1 is a CFC and uses the taxable year ending on November 30, under paragraph (c)(3)(iii) of this section, it has a disqualified period beginning on January 1, 2018, and ending on November 30, 2018. In addition, under paragraph (c)(3)(ii) of this section, the Property Transfer is an extraordinary disposition because it: Is a disposition of specified property by CFC1 on a date on which it was a CFC and during CFC1's disqualified period; is to CFC2, a related party with respect to CFC1; occurs outside of the ordinary course of CFC1's activities; and, is not subject to the de minimis rule in paragraph (c)(3)(ii)(E) of this section.

(B) *Determination of section 245A shareholders and their extraordinary disposition accounts.* Because CFC1 undertook an extraordinary disposition, under paragraph (c)(3)(i) of this section, a portion of CFC1's earnings and profits are extraordinary disposition E&P and, therefore, give rise to an extraordinary disposition account with respect to each of CFC1's section 245A shareholders. Under paragraph (i)(21) of this section, US1 and US2 are both section 245A shareholders with respect to CFC1. The amount of the extraordinary disposition account with respect to US1 is $60x, which is equal to the product of the extraordinary disposition E&P (the amount of the net gain recognized by CFC1 as a result of the Property Transfer ($100x)) and the extraordinary disposition ownership percentage (the percentage of the stock of CFC1 owned directly or indirectly by US1 on January 1, 2018 (60%)), reduced by the prior extraordinary disposition amount ($0). *See* paragraph (c)(3)(i) of this section. Similarly, the amount of the extraordinary disposition account with respect to US2 is $40x, which is equal to the product of the extraordinary disposition E&P (the net gain recognized by CFC1 as a result of the Property Transfer ($100x)) and extraordinary disposition ownership percentage (the percentage of the stock of CFC1 owned directly or indirectly by US2 on January 1, 2018 (40%)), reduced by the prior extraordinary disposition amount ($0).

(C) *Determination of extraordinary disposition amount with respect to US1.* The dividend of $48x paid to US1 on December 1, 2018, is an extraordinary disposition amount to the extent the dividend is paid out of the extraordinary disposition account with respect to US1. *See* paragraph (c)(1) of this section. Under paragraph (c)(2)(i) of this section, the dividend is first considered paid out of non-extraordinary disposition E&P with respect to US1, to the extent thereof. With respect to US1, $6x of CFC1's earnings and profits is non-extraordinary disposition E&P, calculated as the excess of $66x (the product of $110x of earnings and profits described in section 959(c)(3), without regard to the $80x distribution, and 60%) over $60x (the balance of US1's extraordinary disposition account with respect to CFC1, immediately before the distribution). *See* paragraph (c)(2)(ii) of this section. Thus, $6x of the dividend is considered paid out of non-extraordinary disposition E&P with respect to US1. Under paragraph (c)(2)(i)(B) of this section, the remaining $42x of the dividend is next considered paid out of US1's extraordinary disposition account with respect to CFC1, to the extent thereof. Accordingly, $42x of the dividend is considered paid out of the extraordinary disposition account with respect to CFC1 and gives rise to $42x of an extraordinary disposition amount. As a result, US1's prior extraordinary disposition amount is increased by $42x under paragraph (c)(3)(i)(D) of this section, and US1's extraordinary disposition account is reduced to $18x ($60x − $42x) under paragraph (c)(3)(i)(A) of this section.

(D) *Determination of extraordinary disposition amount with respect to US2.* The dividend of $32x paid to US2, on December 1, 2018, is an extraordinary disposition amount to the extent the dividend is paid out of extraordinary disposition E&P with respect to US2. *See* paragraph (c)(1) of this section. Under paragraph (c)(2)(i) of this section, the dividend is first considered paid out of non-extraordinary disposition E&P with respect to US2, to the extent thereof. With respect to US2, $4x of CFC1's earnings and profits is non-extraordinary disposition E&P, calculated as the excess of $44x (the product of $110x of earnings and profits described in section 959(c)(3), without regard to the $80x distribution, and 40%) over $40x (the balance of US2's extraordinary disposition account with respect to CFC1, immediately before the distribution). *See* paragraph (c)(2)(ii) of this section. Thus, $4x of the dividend is considered paid out of non-extraordinary disposition E&P with respect to US2. Under paragraph (c)(2)(i)(B) of this section, the remaining $28x of the dividend is next considered paid out of US2's extraordinary disposition account with respect to CFC1, to the extent thereof. Accordingly, $28x of the dividend is considered paid out of the extraordinary disposition account with respect to US2 and gives rise to $28x of an extraordinary disposition amount. As a result, US2's

prior extraordinary disposition amount is increased by $28x under paragraph (c)(3)(i)(D) of this section, and US2's extraordinary disposition account is reduced to $12x ($40x − $28x) under paragraph (c)(3)(i)(A) of this section.

(E) *Determination of ineligible amount with respect to US1 and US2.* Under paragraph (b)(2) of this section, with respect to US1 and the dividend of $48x, the ineligible amount is $21x, the sum of 50 percent of the extraordinary disposition amount ($42x) and extraordinary reduction amount ($0). Therefore, with respect to the dividend received by US1 of $48x, $27x is eligible for a section 245A deduction. With respect to US2 and the dividend of $32x, the ineligible amount is $14x, the sum of 50% of the extraordinary disposition amount ($28x) and extraordinary reduction amount ($0). Therefore, with respect to the dividend received by US2 of $32x, $18x is eligible for a section 245A deduction.

(3) *Example 2. Application of section 954(c)(6) exception with extraordinary disposition account*—(i) *Facts.* The facts are the same as in paragraph (j)(2)(i) of this section (the facts in *Example 1*) except that the Property Transfer is a sale by CFC2 to CFC1 instead of a sale by CFC1 to CFC2, the $80x distribution is by CFC2 to CFC1 in a separate transaction that is unrelated to the Property Transfer, and the description of the earnings and profits of CFC1 is applied to CFC2. Additionally, absent the application of this section, section 954(c)(6) would apply to the distribution by CFC2 to CFC1. Under section 951(a)(2) and § 1.951-1(b) and (e), US1's pro rata share of any subpart F income of CFC1 is 60% and US2's pro rata share of any subpart F income of CFC2 is 40%.

(ii) *Analysis*—(A) *Identification of extraordinary disposition.* The Property Transfer is an extraordinary disposition under the same analysis as provided in paragraph (j)(2)(ii)(A) of this section (the analysis in *Example 1*).

(B) *Determination of section 245A shareholders and their extraordinary disposition accounts.* Both US1 and US2 are section 245A shareholders with respect to CFC2, US1 has an extraordinary disposition account of $60x with respect to CFC2, and US2 has an extraordinary disposition account of $40x with respect to CFC2 under the same analysis as provided in paragraph (j)(2)(ii)(B) of this section (the analysis in *Example 1*).

(C) *Determination of tiered extraordinary disposition amount*—(*1*) *In general.* US1 and US2 each have a tiered extraordinary disposition amount with respect to the $80x dividend paid by CFC2 to CFC1 to the extent that US1 and US2 would have an extraordinary disposition amount if each had received as a dividend its pro rata share of the dividend from CFC2. *See* paragraph (d)(2)(i) of this section. Under paragraph (d)(2)(ii) of this section, US1's pro rata share of the dividend is $48x (60% × $80x), that is, the increase to US1's pro rata share of the subpart F income if the dividend were included in CFC1's foreign personal holding company income, without regard to section 952(c) and the allocation of expenses. Similarly, US2's pro rata share of the dividend is $32x (40% × $80x).

(*2*) *Determination of tiered extraordinary disposition amount with respect to US1.* The extraordinary disposition amount with respect to US1 is $42x, under the same analysis provided in paragraph (j)(2)(ii)(C) of this section (the analysis in *Example 1*). Accordingly, the tiered extraordinary disposition amount with respect to US1 is $42x.

(*3*) *Determination of extraordinary disposition amount with respect to US2.* The extraordinary disposition amount with respect to US2 is $28x, under the same analysis provided in paragraph (j)(2)(ii)(D) of this section (the analysis in *Example 1*). Accordingly, the tiered extraordinary disposition amount with respect to US2 is $28x.

(D) *Limitation of section 954(c)(6) exception.* The sum of US1 and US2's tiered extraordinary disposition amounts is $70x ($42x + $28x). The portion of the stock of CFC1 (by value) owned (within the meaning of section 958(a)) by U.S. tax residents on the last day of CFC1's taxable year is 100%. Under paragraph (d)(1) of this section, the disqualified amount with respect to the dividend is $70x ($70x/100%). Accordingly, the portion of the $80x dividend from CFC2 to CFC1 that is eligible for the exception to foreign personal holding company income under section 954(c)(6) is $45x, equal to the sum of $10x (the portion of the $80x dividend that exceeds the $70x disqualified amount) and $35x (50 percent of $70x, the portion of the dividend that does not exceed the disqualified amount). Under section 951(a)(2) and § 1.951-1(b) and (e), US1 includes $21x (60% × $35x) and US2 includes $14x (40% × $35x) in income under section 951(a).

(E) *Changes in extraordinary disposition account of US1.* Under paragraph (c)(3)(i)(D)(*1*) of this section, US1's prior extraordinary disposition amount with respect to CFC2 is increased by $42x, or 200% of $21x, the amount US1 included in income under section 951(a) with respect to CFC1. Under paragraph (c)(3)(i)(D)(*1*)(*iii*) of this section, US1 has no qualified portion because all of the owners of CFC2 are section 245A shareholders with a tiered extraordinary disposition amount with respect to CFC2. As a result, US1's extraordinary disposition account is reduced to $18x ($60x−$42x) under paragraph (c)(3)(i)(A) of this section.

(F) *Changes in extraordinary disposition account of US2.* Under paragraph (c)(3)(i)(D)(*1*) of this section, US2's prior extraordinary disposition amount with respect to CFC2 is increased by $28x, or 200% of $14x, the amount US2 included in income under section 951(a) with respect to CFC1. Under paragraph (c)(3)(i)(D)(*1*)(*iii*) of this section, US2 has no qualified portion because all of the owners of CFC2 are section 245A shareholders with a tiered extraordinary disposition amount with respect to CFC2. As a result, US2's extraordinary disposition account is reduced to $12x ($40x−$28x) under paragraph (c)(3)(i)(A) of this section.

(4) *Example 3. Extraordinary reduction*—(i) *Facts.* At the beginning of CFC1's taxable year ending on December 31, Year 2, US1 owns all of the single class of stock of CFC1, and no person transferred any CFC1 stock directly or indirectly in Year 1 pursuant to a plan to reduce the percentage of stock (by value) of CFC1 owned by US1. Also as of the beginning of Year 2, CFC1 has no earnings and profits described in section 959(c)(1) or (2), and US1 does not have an extraordinary disposition account with respect to CFC1. As of the end of Year 2, CFC1 has $160x of tested income and no other income. CFC1 has $160x of earnings and profits for Year 2. On October 19, Year 2, US1 sells all of its CFC1 stock to US2 for $100x in a transaction (the “Stock Sale”) in which US1 recognizes $90x of gain. Under section 1248(a), the entire $90x of gain is included in US1's gross income as a dividend and, pursuant to section 1248(j), the $90x is treated as a dividend for purposes of applying section 245A. At the end of Year 2, under section 951A, US2 takes into account $70x of tested income, calculated as $160x (100% of the $160x of tested income) less $90x, the amount described in section 951(a)(2)(B). The amount described in section 951(a)(2)(B) is the lesser of $90x, the amount of dividends received by US1 with respect to the transferred stock, and $128x, the amount of

tested income attributable to the transferred stock ($160x) multiplied by 292/365 (the ratio of the number of days in Year 2 that US2 did not own the transferred stock to the total number of days in Year 2). US1 does not make an election pursuant to paragraph (e)(3)(i) of this section.

(ii) *Analysis*—(A) *Determination of controlling section 245A shareholder and extraordinary reduction of ownership.* Under paragraph (i)(2) of this section, US1 is a controlling section 245A shareholder with respect to CFC1. In addition, the Stock Sale results in an extraordinary reduction with respect to US1's ownership of CFC1. *See* paragraph (e)(2)(i) of this section. The extraordinary reduction occurs because during Year 2, US1 transferred 100% of the CFC1 stock it owned at the beginning of the year and such amount is more than 5% of the total value of the stock of CFC1 at the beginning of Year 2; it also occurs because on the last day of the year the percentage of stock (by value) of CFC1 that US1 owns directly or indirectly (0%) (the end of year percentage) is less than 90% of the stock (by value) of CFC1 that US1 owns directly or indirectly on the day of the taxable year when it owned the highest percentage of CFC1 stock by value (100%) (the initial percentage), no transactions occurred in the preceding year pursuant to a plan to reduce the percentage of CFC1 stock owned by US1, and the difference between the initial percentage and the end of year percentage (100 percentage points) is at least 5 percentage points.

(B) *Determination of extraordinary reduction amount.* Under paragraph (e)(1) of this section, the entire $90x dividend to US1 is an extraordinary reduction amount with respect to US1 because the dividend is at least equal to US1's pre-reduction pro rata share of CFC1's Year 2 tested income described in paragraph (e)(2)(ii)(A) of this section ($160x), reduced by the amount of tested income taken into account by US2, a U.S. tax resident, under paragraph (e)(2)(ii)(B) of this section ($70x).

(C) *Determination of ineligible amount.* Under paragraph (b)(2) of this section, with respect to US1 and the dividend of $90x, the ineligible amount is $90x, the sum of 50% of the extraordinary disposition amount ($0) and extraordinary reduction amount ($90x). Therefore, with respect to the dividend received of $90x, no portion is eligible for the dividends received deduction allowed under section 245A(a).

(iii) *Alternative facts—election to close CFC's taxable year.* The facts are the same as in paragraph (j)(4)(i) of this section (the facts of this *Example 3*), except that, pursuant to paragraph (e)(3)(i) of this section, US1 elects to close CFC1's Year 2 taxable year for all purposes of the Code as of the end of October 19, Year 2, the date on which the Stock Sale occurs; in addition, US1 and US2 enter into a written, binding agreement that US1 will elect to close CFC1's Year 2 taxable year. Accordingly, under section 951A(a), US1 takes into account 100% of CFC1's tested income for the taxable year beginning January 1, Year 2, and ending October 19, Year 2, and US2 takes into account 100% of CFC1's tested income for the taxable year beginning October 20, Year 2, and ending December 31, Year 2. Under paragraph (e)(3)(i)(A) of this section, no amount is considered an extraordinary reduction amount with respect to US1.

(5) *Example 4. Extraordinary reduction; decrease in section 245A shareholder's pre-reduction pro rata share for amounts taken into account by U.S. tax residents*—(i) *Facts.* At the beginning of CFC1's taxable year ending December 31, Year 2, US1 owns all of the single class of stock of CFC1, and no person transferred any CFC1 stock directly or indirectly in Year 1 pursuant to a plan to reduce the percentage of stock (by value) of CFC1 owned by US1. CFC1 generates $120x of subpart F income during its taxable year ending on December 31, Year 2. On October 1, Year 2, CFC1 distributes a

$120x dividend to US1. On October 19, Year 2, US1 sells 100% of its stock of CFC1 to PRS, a domestic partnership, in a transaction in which no gain or loss is realized (the "Stock Sale"). A, an individual who is a citizen of the United States, and B, a foreign individual who is not a U.S. tax resident, each own 50% of the capital and profits interests of PRS. On December 1, Year 2, US2 and FP, a foreign corporation, contribute property to CFC1; in exchange, each of US2 and FP receives 25% of the stock of CFC1. PRS owns the remaining 50% of the stock of CFC1. US1 does not make an election pursuant to paragraph (e)(3)(i) of this section.

(ii) *Analysis*—(A) *Determination of controlling section 245A shareholder and extraordinary reduction.* Under paragraph (i)(2) of this section, US1 is a controlling section 245A shareholder with respect to CFC1. In addition, the Stock Sale results in an extraordinary reduction with respect to US1's ownership of CFC1. *See* paragraph (e)(2)(i) of this section. The extraordinary reduction occurs because during Year 2, US1 transferred 100% of the CFC1 stock it owns on the first day of Year 2, and that amount is more than 5% of the total value of the stock of CFC1 at the beginning of Year 2; it also occurs because on the last day of Year 2 the percentage of stock (by value) of CFC1 that US1 owns directly or indirectly (0%) (the end of year percentage) is less than 90% of the highest percentage of stock (by value) of CFC1 that US1 owns directly or indirectly on the day of the taxable year when it owned the highest percentage of CFC1 stock by value (100%) (the initial percentage), no transactions occurred in the preceding year pursuant to a plan to reduce the percentage of CFC1 stock owned by US1, and the difference between the initial percentage and the end of year percentage (100 percentage points) is at least 5 percentage points.

(B) *Determination of pre-reduction pro rata share.* Before the extraordinary reduction, US1 owned 100% of the stock of CFC1. Thus, under paragraph (e)(2)(ii)(A) of this section, the tentative amount of US1's pre-reduction pro rata share of CFC1's subpart F income is $120x. A and US2 are U.S. tax residents pursuant to paragraph (i)(29) of this section because they are United States persons described in section 7701(a)(30)(A) or (C). Thus, US1's pre-reduction pro rata share amount is subject to the reduction described in paragraph (e)(2)(ii)(B) of this section because U.S. tax residents directly or indirectly acquire stock of CFC1 from US1 or CFC1 during the taxable year in which the extraordinary reduction occurs. With respect to US1's pre-reduction pro rata share of CFC1's subpart F income, the reduction equals the amount of subpart F income of CFC1 taken into account under section 951(a) by these U.S. tax residents.

(C) *Determination of decrease in pre-reduction pro rata share for amounts taken into account by U.S. tax resident.* On December 31, Year 2, both PRS and US2 will be United States shareholders with respect to CFC1 and will include in gross income their pro rata share of CFC1's subpart F income under section 951(a). With respect to US2, this amount will be $30x, which is equal to 25% of CFC1's subpart F income for the taxable year. With respect to PRS, its pro rata share of $60x under section 951(a)(2)(A) (50% of $120x) will be reduced under section 951(a)(2)(B) by $48x. The section 951(a)(2)(B) reduction is equal to the lesser of the $120x dividend paid with respect to those shares to US1 or $48x (50% × $120x × 292/365, the period during the taxable year that PRS did not own CFC1 stock). Thus, PRS includes $12x in gross income pursuant to section 951(a). Of this amount, $6x is allocated to A (as a 50% partner of PRS) and, therefore, treated as taken into account by A under paragraphs (e)(2)(ii)(B) and (g)(6) of this section. Thus, A and US2 take into account a total of $36x of CFC1's subpart F income under section 951(a). This amount reduces US1's pre-reduction pro rata share of CFC1's subpart F income to $84x ($120x−$36x) under paragraph (e)(2)(ii)(B) of this

section. CFC1 did not generate tested income during the taxable year and, therefore, no amount is taken into account under section 951A with respect to CFC1, and US1 has no pre-reduction pro rata share with respect to tested income of CFC1.

(D) *Determination of extraordinary reduction amount.* Under paragraph (e)(1) of this section, the extraordinary reduction amount equals $84x, which is the lesser of the amount of the dividend received by US1 from CFC1 during Year 2 ($120x) and the sum of US1's pre-reduction pro rata share of CFC1's subpart F income ($84x) and tested income ($0).

(E) *Determination of ineligible amount.* Under paragraph (b)(2) of this section, with respect to US1 and the dividend of $120x, the ineligible amount is $84x, the sum of 50% of the extraordinary disposition amount ($0) and extraordinary reduction amount ($84x). Therefore, with respect to the dividend received by US1 from CFC1, $36x ($120x−$84x) is eligible for a section 245A deduction.

(6) *Example 5. Controlling section 245A shareholder*—(i) *Facts.* US1 and US2 own 30% and 25% of the stock of CFC1, respectively. FP, a foreign corporation that is not a CFC, owns all of the stock of US1 and US2. FP owns the remaining 45% of the stock of CFC1. On September 30, Year 2, US1 sells all of its stock of CFC1 to US3, a domestic corporation that is not a related party with respect to FP, US1, or US2. No person transferred any stock of CFC1 directly or indirectly in Year 1 pursuant to a plan to reduce the percentage of stock (by value) of CFC1 owned by US1.

(ii) *Analysis.* Under paragraph (i)(21) of this section, US1 is a section 245A shareholder with respect to CFC1, an SFC. Because US1 owns, together with US2 and FP (related persons with respect to US1), more than 50% of the stock of CFC1, US1 is a controlling section 245A shareholder of CFC1. The sale of US1's CFC1 stock results in an extraordinary reduction occurring with respect to US1's ownership of CFC1. The extraordinary reduction occurs because during Year 2, US1 transferred 100% of the stock of CFC1 that it owned at the beginning of the year and that amount is more than 5% of the total value of the stock of CFC1 at the beginning of Year 2. The extraordinary disposition also occurs because on the last day of the year the percentage of stock (by value) of CFC1 that US1 directly or indirectly owns (0%) (the end of year percentage) is less than 90% of the stock (by value) of CFC1 that US1 directly or indirectly owned on the day of the taxable year when it owned the highest percentage of CFC1 stock by value (30%) (the initial percentage), no transactions occurred in the preceding year pursuant to a plan to reduce the percentage of CFC1 stock owned by US1, and the difference between the initial percentage and end of year percentage (30 percentage points) is at least 5 percentage points.

(7) *Example 6. Limitation of section 954(c)(6) exception with respect to an extraordinary reduction*—(i) *Facts.* At the beginning of CFC1 and CFC2's taxable year ending on December 31, Year 2, US1 and A, an individual who is a citizen of the United States, own 80% and 20% of the single class of stock of CFC1, respectively. CFC1 owns 100% of the stock of CFC2. Both US1 and A are United States shareholders with respect to CFC1 and CFC2, and US1 and A are not related parties with respect to each other. No person transferred CFC2 stock directly or indirectly in Year 2 pursuant to a plan to reduce the percentage of stock (by value) of CFC2 owned by US1, and US1 does not have an extraordinary disposition account with respect to CFC2. At the end of Year 2, and without regard to any distributions during Year 2, CFC2 had $150x of tested income and no other income, and CFC1 had no income or expenses. On June 30, Year 2, CFC2 distributed $150x as a dividend to CFC1, which would qualify for the exception from foreign personal holding company income under section

954(c)(6) but for the application of this section. On August 7, Year 2, CFC1 sells all of its CFC2 stock to US2 for $100x in a transaction (the "Stock Sale") in which CFC1 realizes no gain or loss. At the end of Year 2, under section 951A, US2 takes into account $60x of tested income, calculated as $150x (100% of the $150x of tested income) less $90x, the amount described in section 951(a)(2)(B). The amount described in section 951(a)(2)(B) is the lesser of $150x, the amount of dividends received by CFC1 during Year 2 with respect to the transferred stock, and $90x, the amount of tested income attributable to the transferred stock ($150x) multiplied by 219/365 (the ratio of the number of days in Year 2 that US2 did not own the transferred stock to the total number of days in Year 2). US1 does not make an election pursuant to paragraph (e)(3)(i) of this section.

(ii) *Analysis*—(A) *Determination of controlling section 245A shareholder and extraordinary reduction of ownership.* Under paragraph (i)(2) of this section, US1 is a controlling section 245A shareholder with respect to CFC2, but A is not. In addition, the Stock Sale results in an extraordinary reduction with respect to US1's ownership of CFC2. *See* paragraph (e)(2)(i) of this section. The extraordinary reduction occurs because during Year 2, US1 transferred indirectly 100% of the CFC2 stock it owned at the beginning of the year and such amount is more than 5% of the total value of the stock of CFC2 at the beginning of Year 2. The extraordinary disposition also occurs because on the last day of the year the percentage of stock (by value) of CFC2 that US1 owns directly or indirectly (0%) (the end of year percentage) is less than 90% of the stock (by value) of CFC2 that US1 owns directly or indirectly on the day of the taxable year when it owned the highest percentage of CFC2 stock by value (80%) (the initial percentage), no transactions occurred in the preceding year pursuant to a plan to reduce the percentage of CFC2 stock owned by US1, and the difference between the initial percentage and the end of year percentage (80 percentage points) is at least 5 percentage points. Because there is an extraordinary reduction with respect to CFC2 in Year 2 and CFC1 received a dividend from CFC2 in Year 2, under paragraph (f)(1) of this section, it is necessary to determine the limitation on the amount of the dividend eligible for the exception under section 954(c)(6).

(B) *Determination of tiered extraordinary reduction amount.* The limitation on the amount of the dividend eligible for the exception under section 954(c)(6) is based on the tiered extraordinary reduction amount. The sum of the amount of subpart F income and tested income of CFC2 for Year 2 is $150x, and immediately before the extraordinary reduction, CFC1 held 100% of the stock of CFC2. Additionally, US2 is a U.S. tax resident as defined in paragraph (i)(29) of this section because it is a United States person described in section 7701(a)(30)(A) or (C), and US2 has a pro rata share of $60x of tested income under section 951A with respect to CFC2. Accordingly, under paragraph (f)(2) of this section, the tiered extraordinary reduction amount is $90x (($150x × 100%) − $60x).

(C) *Limitation of section 954(c)(6) exception.* Under paragraph (f)(1) of this section, the portion of the $150x dividend from CFC2 to CFC1 that is eligible for the exception to foreign personal holding company income under section 954(c)(6) is $60x ($150x − $90x). To the extent that the $90x that does not qualify for the exception gives rise to additional subpart F income to CFC1, both US1 and A will take into account their pro rata share of that subpart F income under section 951(a)(2) and § 1.951-1(b) and (e).

(8) *Example 7. Application of anti-abuse rule to a prepayment of a royalty*—(i) *Facts.* US1 owns 100% of the single class of stock of CFC1 and CFC2. CFC1 has a November 30 taxable year, and CFC2 has a calendar year taxable year. There is a license agreement between CFC1 and CFC2 pursuant to which CFC2 is obligated to pay annual royalties to CFC1 for the use of intangible property. As of November 1, 2018, the remaining term of the agreement is 10 years. On November 1, 2018, CFC1 receives from

CFC2, and accrues into income, $100x of pre-paid royalties that are for the use of the intangible property for the subsequent 10 years. The form of the arrangement as a license, including the prepayment of the royalty, is respected for U.S. tax purposes; therefore CFC1's receipt of the $100x royalty prepayment does not constitute a disposition of the intangible property and is excluded from CFC1's subpart F income pursuant to section 954(c)(6). A principal purpose of CFC2 prepaying the royalty is for CFC1 to generate earnings and profits during the disqualified period that would not be subject to current U.S. tax yet may be eligible for the section 245A deduction and could, for example, be used to reduce the amount of gain recognized on a disposition of the stock of CFC1 that would be subject to U.S. tax by increasing the portion of such gain treated as a dividend.

(ii) *Analysis.* Because the royalty prepayment was carried out with a principal purpose of avoiding the purposes of this section, appropriate adjustments are required to be made under the anti-abuse rule in paragraph (h) of this section. CFC1 is a CFC that has a November 30 taxable year, so under paragraph (c)(3)(iii) of this section, CFC1 has a disqualified period beginning on January 1, 2018, and ending on November 30, 2018. In addition, even though the intangible property licensed by CFC1 to CFC2 is specified property, CFC2's prepayment of the royalty would not be treated as a disposition of the specified property by CFC1 and, therefore, would not constitute an extraordinary disposition (and thus would not give rise to extraordinary disposition E&P), absent the application of the anti-abuse rule of paragraph (h) of this section. Pursuant to paragraph (h) of this section, the earnings and profits of CFC1 generated as a result of the $100x of prepaid royalty are treated as extraordinary disposition E&P for purposes of this section and, therefore, US1 has an extraordinary disposition account with respect to CFC1 of $100x. In addition, the prepaid royalty gives rise to a disqualified payment (as defined in § 1.951A-2(c)(6)(ii)(A)) of $100x. As a result, § 1.245A-7(b) or § 1.245A-8(b), as applicable, applies to reduce the disqualified payment in the same manner as if the disqualified payment were disqualified basis, and § 1.245A-7(c) or § 1.245A-8(c), as applicable, applies to reduce the extraordinary disposition account in the same manner as if the deductions directly or indirectly related to the disqualified payment were deductions attributable to disqualified basis of an item of specified property that corresponds to the extraordinary disposition account.

(9) *Example 8. Application of anti-abuse rule to restructuring transaction*—(i) *Facts.* FP, a foreign corporation with no United States shareholders, owns 100% of the single class of stock of US1. US1 owns 100% of the single class of stock of CFC1 that, in turn, owns 100% of the single class of stock of CFC2. CFC2 has $100x of extraordinary disposition E&P, and US1 has a $100x extraordinary disposition account with respect to CFC2. In Year 1, FP transfers property to CFC1 in exchange for newly issued stock of CFC1. After the transfer, FP and US1 own, respectively, 90% and 10% of the single class of stock of CFC1. In Year 3, CFC2 pays a $100x dividend to CFC1, and the dividend gives rise to a tiered extraordinary disposition amount with respect to US1 of $10x. US1 includes $10x in gross income under section 951(a) with respect to the tiered extraordinary disposition amount. The $10x tiered extraordinary disposition amount reduces US1's extraordinary disposition account from $100x to $90x. In Year 5, CFC1 redeems all of the stock of CFC1 held by US1 in exchange for $100x of cash. Under sections 302(d) and 301(c)(1), the redemption results in a $100x dividend to US1. Under section 959(a), $10x of the $100x dividend is not included in US1's gross income and, but for the application of paragraph (h) of this section, US1 would claim a section 245A deduction of $90x with respect to $90x of the dividend. The transfer of property from FP to CFC1 in exchange for stock of CFC1, the $100x dividend from CFC2 to CFC1, and CFC1's redemption of all of its stock held by US1 (together, the “Transaction”) were undertaken with the principal purpose of avoiding the application of this section to distributions from CFC2. As a result of the redemption, CFC2 is wholly

owned by FP through CFC1, and CFC2's earnings and profits can be distributed without incurring U.S. tax irrespective of the availability of the section 245A deduction or the exception under section 954(c)(6).

(ii) *Analysis.* Because the Transaction was carried out with a principal purpose of avoiding the purposes of this section, appropriate adjustments are required to be made under the anti-abuse rule in paragraph (h) of this section. Pursuant to paragraph (h) of this section, all $90x of the dividend included in US1's income in Year 5 is treated as an extraordinary disposition amount. Therefore, $45x of the dividend is treated as an ineligible amount for which US1 cannot claim a section 245A deduction pursuant to paragraph (b)(2)(i) of this section (that is, 50% of the extraordinary disposition amount) and, accordingly, US1 is only allowed a section 245A deduction of $45x ($90x dividend received, less the $45x ineligible amount) with respect to the $90x dividend from CFC1 that it included in income. In addition, US1's extraordinary disposition account with respect to CFC2 is reduced from $90x to zero pursuant to paragraph (c)(3)(i)(A) and (D) of this section.

(10) *Example 9. Application of anti-abuse rule to a related-party loan*—(i) *Facts.* US1 owns 100% of the single class of stock of CFC1 and CFC2. US1 does not own stock of any other foreign corporation. US1 intends to repatriate $100x cash from CFC1 at the end of taxable year Y1. At the end of taxable year Y1, CFC1 has $100x of earnings and profits described in section 959(c)(3) (all of which is extraordinary disposition E&P) and $100x of cash, and US1 has an extraordinary disposition account balance with respect to CFC1 equal to $100x. In addition, at the end of taxable year Y1, CFC2 has $100x of earnings and profits described in section 959(c)(3). US1 does not have an extraordinary disposition account with respect to CFC2. Anticipating the application of this section to a distribution from CFC1, US1 instead causes CFC1 to loan $100x of cash to CFC2 during taxable year Y1 in exchange for a $100x note. The form of the transaction is respected as a loan for U.S. tax purposes. At the end of taxable Y1, CFC2 distributes $100x of cash to US1. The loan and distribution are part of a plan a principal purpose of which is to repatriate CFC1's $100x cash without triggering the application of this section.

(ii) *Analysis.* Because the loan from CFC1 to CFC2 and the subsequent distribution of cash were carried out with a principal purpose of avoiding the purposes of this section, appropriate adjustments are required to be made under the anti-abuse rule in paragraph (h) of this section. Pursuant to that rule, the distribution of $100x of cash is treated as a distribution out of US1's extraordinary disposition account with respect to CFC1. Accordingly, the $100x distribution is taxed as a dividend, and only $50x of the dividend received by US1 is eligible for the section 245A deduction pursuant to paragraph (b)(1) of this section. As a result of the distribution, the balance of US1's extraordinary disposition account with respect to CFC1 is reduced by $100x to zero pursuant to paragraph (c)(3)(i)(A) of this section.

(k) ***Applicability date*** —

(1) ***In general.*** This section applies to taxable periods of a foreign corporation ending on or after June 14, 2019, and to taxable periods of section 245A shareholders in which or with which such taxable periods end. For taxable periods described in the previous sentence, this section (and not § 1.245A-5T) applies regardless of whether, but for this paragraph (k)(1), § 1.245A-5T would apply. See § 1.245A-5T as contained in 26 CFR part 1 edition revised as of April 1, 2020 for distributions occurring after December 31, 2017, as to which this section does not apply.

(2) ***Early application of this section.*** Notwithstanding paragraph (k)(1) of this section, a taxpayer may choose to apply this section to taxable periods of a foreign corporation ending before June 14, 2019, and to taxable periods of section 245A shareholders in which or with which such taxable periods end, provided that the taxpayer and all persons bearing a relationship to the taxpayer described in section 267(b) or 707(b) apply this section in its entirety for all such taxable periods.

[T.D. 9909, 85 FR 53083, Aug. 27, 2020, as amended by 85 FR 60358, Sept. 25, 2020; 85 FR 72564, Nov. 13, 2020; T.D. 9934, 85 FR 76963, Dec. 1, 2020]

§ 1.245A-6 Coordination of extraordinary disposition and disqualified basis rules.

(a) ***Scope.*** This section and §§ 1.245A-7 through 1.245A-11 coordinate the application of the extraordinary disposition rules of § 1.245A-5(c) and (d) and the disqualified basis rule of § 1.951A-2(c)(5). Section 1.245A-7 provides coordination rules for simple cases, and § 1.245A-8 provides coordination rules for complex cases. Section 1.245A-9 provides definitions and other rules, including rules of general applicability for purposes of this section and §§ 1.245A-7 through 1.245A-11. Section 1.245A-10 provides examples illustrating the application of this section and §§ 1.245A-7 through 1.245A-9. Section 1.245A-11 provides applicability dates.

(b) ***Conditions to apply coordination rules for simple cases.*** For a taxable year of a section 245A shareholder for which the conditions described in paragraphs (b)(1) and (2) of this section are satisfied, the section 245A shareholder may apply the coordination rules of § 1.245A-7 (rules for simple cases) to an extraordinary disposition account of the section 245A shareholder with respect to an SFC and disqualified basis of an item of specified property that corresponds to the extraordinary disposition account (as determined pursuant to § 1.245A-9(b)(1)). If the conditions are not satisfied, then the coordination rules of § 1.245A-8 (rules for complex cases) apply beginning with the first day of the first taxable year of the section 245A shareholder for which the conditions are not satisfied and all taxable years thereafter. If the conditions are satisfied for a taxable year of the section 245A shareholder but the section 245A shareholder chooses not to apply the coordination rules of § 1.245A-7 for that taxable year, then the coordination rules of § 1.245A-8 apply to that taxable year (though, for a subsequent taxable year, the section 245A shareholder may apply the coordination rules of § 1.245A-7, provided that the conditions described in paragraphs (b)(1) and (2) of this section are satisfied for such subsequent taxable year and have been satisfied for all earlier taxable years). For purposes of applying paragraphs (b)(1) and (2) of this section, a reference to a section 245A shareholder, an SFC, or a CFC does not include a successor of the section 245A shareholder, the SFC, or the CFC, respectively.

(1) ***Requirements related to the SFC.*** The condition of this paragraph (b)(1) is satisfied for a taxable year of the section 245A shareholder if the following requirements are satisfied:

(i) On January 1, 2018, the section 245A shareholder owns (within the meaning of section 958(a)) all of the stock (by vote and value) of the SFC.

(ii) On each day of the taxable year of the section 245A shareholder, the section 245A shareholder owns (within the meaning of section 958(a)) all of the stock (by vote and value) of the SFC.

(iii) On no day during the taxable year of the section 245A shareholder was the SFC a distributing or controlled corporation in a transaction described in a section 355, or did the SFC acquire the assets of a corporation as to which there is an extraordinary disposition account pursuant to a transaction described in section 381 (that is, taking into account the requirements of this

paragraph (b)(1) and paragraph (b)(2) of this section, the section 245A shareholder's extraordinary disposition account with respect to the SFC has not been not been adjusted pursuant to the rules of § 1.245A-5(c)(4)).

(2) ***Requirements related to an item of specified property that corresponds to an extraordinary disposition account and a CFC holding the item.*** The condition of this paragraph (b)(2) is satisfied for a taxable year of a section 245A shareholder if the following requirements are satisfied:

(i) For each item of specified property with disqualified basis that corresponds to the extraordinary disposition account, the item of specified property is held by a CFC immediately after the extraordinary disposition of the item of specified property.

(ii) For each CFC described in paragraph (b)(2)(i) of this section—

(A) All of the stock (by vote and value) of the CFC is owned (within the meaning of section 958(a)) by the section 245A shareholder and any domestic affiliates of the section 245A shareholder immediately after the extraordinary disposition described in paragraph (b)(2)(i) of this section;

(B) For each taxable year of the CFC that ends with or within the taxable year of the section 245A shareholder, there is no extraordinary disposition account with respect to the CFC, and the sum of the balance of the hybrid deduction accounts (as described in § 1.245A(e)-1(d)(1)) with respect to shares of stock of the CFC is zero (determined as of the end of the taxable year of the CFC and taking into account any adjustments to the accounts for the taxable year); and

(C) On each day of each taxable year of the CFC that ends with or within the taxable year of the section 245A shareholder, and on each day of each taxable year of the CFC that begins with or within the taxable year of the section 245A shareholder—

(*1*) The CFC holds the item of specified property described in paragraph (b)(1)(i) of this section;

(*2*) The section 245A shareholder and any domestic affiliates own (within the meaning of section 958(a)) all of the stock (by vote and value) of the CFC;

(*3*) The CFC does not hold any item of specified property with disqualified basis other than an item of specified property that corresponds to the extraordinary disposition account;

(*4*) The CFC does not own an interest in a partnership, trust, or estate (directly or indirectly through one or more other partnerships, trusts, or estates) that holds an item of specified property with disqualified basis; and

(*5*) The CFC is not engaged in the conduct of a trade or business in the United States and therefore does not have ECTI, and the CFC does not have any deficit in earnings and profits subject to § 1.381(c)(2)-1(a)(5).

[T.D. 9934, 85 FR 76963, Dec. 1, 2020]

§ 1.245A-7 Coordination rules for simple cases.

(a) ***Scope.*** This section applies for a taxable year of a section 245A shareholder for which the conditions of § 1.245A-6(b)(1) and (2) are satisfied and for which the section 245A shareholder chooses to apply this section (in lieu of § 1.245A-8).

(b) ***Reduction of disqualified basis by reason of an extraordinary disposition amount or tiered extraordinary disposition amount*** —

(1) ***In general.*** If, for a taxable year of a section 245A shareholder, an extraordinary disposition account of the section 245A shareholder gives rise to one or more extraordinary disposition amounts or tiered extraordinary disposition amounts, then, with respect to an item of specified property that corresponds to the extraordinary disposition account, the disqualified basis of the item of specified property is, solely for purposes of § 1.951A-2(c)(5), reduced (but not below zero) by an amount (determined in the functional currency in which the extraordinary disposition account is maintained) equal to the product of—

(i) The sum of the extraordinary disposition amounts and the tiered extraordinary disposition amounts; and

(ii) A fraction, the numerator of which is the disqualified basis of the item of specified property, and the denominator of which is the sum of the disqualified basis of each item of specified property that corresponds to the extraordinary disposition account.

(2) ***Timing rules regarding disqualified basis.*** See § 1.245A-9(b)(2) for timing rules regarding the determination of, and reduction to, disqualified basis of an item of specified property.

(3) ***Special rule regarding prior extraordinary disposition amounts.*** For purposes of paragraph (b)(1) of this section, to the extent that an extraordinary disposition account of a section 245A shareholder is reduced under § 1.245A-5(c)(3)(i)(A) by reason of a prior extraordinary disposition amount described in § 1.245A-5(c)(3)(i)(D)(*1*)(*i*) through (*iv*), the extraordinary disposition account is considered to give rise to an extraordinary disposition amount or tiered extraordinary disposition amount (and the amount by which the account is reduced is treated as an extraordinary disposition amount or tiered extraordinary disposition amount).

(c) ***Reduction of extraordinary disposition account by reason of the allocation and apportionment of deductions or losses attributable to disqualified basis*** —

(1) ***In general.*** If, for a taxable year of a CFC, the CFC holds one or more items of specified property that correspond to an extraordinary disposition account of a section 245A shareholder with respect to an SFC, then the extraordinary disposition account is reduced (but not below zero) by the lesser of the amounts described in paragraphs (c)(1)(i) and (ii) of this section (each determined in the functional currency of the CFC).

(i) The excess (if any) of the adjusted earnings of the CFC for the taxable year of the CFC, over the sum of the previously taxed earnings and profits accounts with respect to the CFC for purposes of section 959 (determined as of the end of the taxable year of the CFC and taking into account any adjustments to the accounts for the taxable year).

(ii) The balance of the section 245A shareholder's RGI account with respect to the CFC (determined as of the end of the taxable year of the CFC, but without regard to the application of paragraph (c)(4)(ii) of this section for the taxable year).

(2) ***Timing of reduction to extraordinary disposition account.*** See § 1.245A-9(b)(3) for timing rules regarding the reduction to an extraordinary disposition account.

(3) ***Adjusted earnings.*** The term *adjusted earnings* means, with respect to a CFC and a taxable year of the CFC, the earnings and profits of the CFC, determined as of the end of the CFC's taxable year (taking into account all distributions during the taxable year), and with the adjustments described in paragraphs (c)(3)(i) through (iii) of this section.

(i) The earnings and profits are increased by the amount of any deduction or loss that is or was allocated and apportioned to residual CFC gross income of the CFC solely by reason of § 1.951A-2(c)(5)(i).

(ii) The earnings and profits are decreased by the amount by which an RGI account with respect to the CFC has been decreased pursuant to paragraph (c)(4)(ii) of this section for a prior taxable year of the CFC.

(iii) The earnings and profits are determined without regard to income described in section 245(a)(5)(A) or dividends described in section 245(a)(5)(B) (determined without regard to section 245(a)(12)).

(4) ***RGI account.*** For a taxable year of a CFC, the following rules apply to determine the balance of a section 245A shareholder's RGI account with respect to the CFC:

(i) The balance of the RGI account is increased by the sum of the amounts of deductions and losses of the CFC that, but for § 1.951A-2(c)(5)(i), would have decreased one or more categories of the CFC's positive subpart F income or the CFC's tested income, or increased or given rise to a tested loss or one or more qualified deficits of the CFC.

(ii) The balance of the RGI account is decreased to the extent that, by reason of the application of paragraph (c)(1) of this section with respect to the taxable year of the CFC, there is a reduction to the extraordinary disposition account of the section 245A shareholder.

[T.D. 9934, 85 FR 76963, Dec. 1, 2020]

§ 1.245A-8 Coordination rules for complex cases.

(a) ***Scope.*** This section applies beginning with the first day of the first taxable year of a section 245A shareholder for which § 1.245A-7 does not apply and for all taxable years thereafter, or for a taxable year of a section 245A shareholder for which the section 245A shareholder chooses not to apply § 1.245A-7.

(b) ***Reduction of disqualified basis by reason of an extraordinary disposition amount or tiered extraordinary disposition amount*** —

(1) ***In general.*** If, for a taxable year of a section 245A shareholder, an extraordinary disposition account of the section 245A shareholder gives rise to one or more extraordinary disposition amounts or tiered extraordinary disposition amounts, then, with respect to an item of specified property that corresponds to the extraordinary disposition account and for which the ownership requirement of paragraph (b)(3)(i) of this section is satisfied for the taxable year of the section 245A shareholder, solely for purposes of § 1.951A-2(c)(5), the disqualified basis of the item of specified property is reduced (but not below zero) by an amount (determined in the functional currency in which the extraordinary disposition account is maintained) equal to the product of—

(i) The excess (if any) of—

(A) The sum of the extraordinary disposition amounts and the tiered extraordinary disposition amounts; over

(B) The basis benefit account with respect to the extraordinary disposition account (determined as of the end of the taxable year of the section 245A shareholder, and without regard to the application of paragraph (b)(4)(i)(B) of this section for the taxable year); and

(ii) A fraction, the numerator of which is the disqualified basis of the item of specified property, and the denominator of which is the sum of the disqualified basis of each item of specified property that corresponds to the extraordinary disposition account and for which the ownership requirement of paragraph (b)(3)(i) of this section is satisfied for the taxable year of the section 245A shareholder.

(2) ***Timing rules regarding disqualified basis.*** See § 1.245A-9(b)(2) for timing rules regarding the determination of, and reduction to, disqualified basis of an item of specified property.

(3) ***Ownership requirement with respect to an item of specified property*** —

(i) ***In general.*** For a taxable year of a section 245A shareholder, the ownership requirement of this paragraph (b)(3)(i) is satisfied with respect to an item of specified property if, on at least one day that falls within the taxable year, the item of specified property is held by—

(A) The section 245A shareholder;

(B) A person (other than the section 245A shareholder) that, on at least one day that falls within the section 245A shareholder's taxable year, is a related party with respect to the section 245A shareholder (such a person, a *qualified related party* with respect to the section 245A shareholder for the taxable year of the section 245A shareholder); or

(C) A specified entity at least 10 percent of the interests of which are, on at least one day that falls within the section 245A shareholder's taxable year, owned directly or indirectly through one or more other specified entities by the section 245A shareholder or a qualified related party.

(ii) ***Rules for determining an interest in a specified entity.*** For purposes of paragraph (b)(3)(i)(C) of this section, the phrase *at least 10 percent of the interests* means—

(A) If the specified entity is a foreign corporation, at least 10 percent of the stock (by vote or value) of the foreign corporation;

(B) If the specified entity is a partnership, at least 10 percent of the interests in the capital or profits of the partnership; or

(C) If the specified entity is not a foreign corporation or a partnership, at least 10 percent of the value of the interests in the specified entity.

(4) ***Basis benefit account*** —

(i) ***General rules.*** The term *basis benefit account* means, with respect to an extraordinary disposition account of a section 245A shareholder, an account of the section 245A shareholder (the initial balance of which is zero), adjusted pursuant to the rules of paragraphs (b)(4)(i)(A) and (B) of this section on the last day of each taxable year of the section 245A shareholder. The basis benefit account must be maintained in the same functional currency as the extraordinary disposition account.

(A) The balance of the basis benefit account is increased to the extent that a basis benefit amount with respect to an item of specified property that corresponds to the section 245A shareholder's extraordinary disposition account is assigned to the taxable year of the section 245A shareholder. However, if the extraordinary disposition ownership percentage applicable to the section 245A shareholder's extraordinary disposition account is less than 100 percent, then, the basis benefit account is instead increased by the amount equal to the basis benefit amount multiplied by the extraordinary disposition ownership percentage.

(B) The balance of the basis benefit account is decreased to the extent that, for a taxable year that includes the date on which the section 245A shareholder's taxable year ends, disqualified basis of an item of specified property would have been reduced pursuant to paragraph (b)(1) of this section but for an amount in the basis benefit account.

(ii) ***Rules for determining a basis benefit amount*** —

(A) ***In general.*** The term *basis benefit amount* means, with respect to an item of specified property that has disqualified basis, the portion of disqualified basis that, for a taxable year, is directly (or indirectly through one or more specified entities that are not corporations) taken into account for U.S. tax purposes by a U.S. tax resident, a CFC described in § 1.267A-5(a)(17), or a specified foreign person and—

(*1*) Reduces the amount of the U.S. tax resident's taxable income, one or more categories of the CFC's positive subpart F income, the CFC's tested income, or the specified foreign person's ECTI, as applicable; or

(*2*) Prevents a decrease or offset of the amount of the CFC's tested loss or qualified deficits.

(B) ***Rules for determining whether disqualified basis of an item of specified property is taken into account.*** For purposes of paragraph (b)(4)(ii)(A) of this section, disqualified basis of an item of specified property is taken into account for U.S. tax purposes without regard to whether the disqualified basis is reduced or eliminated under § 1.951A-3(h)(2)(ii)(B)(*1*).

(C) ***Timing rules when disqualified basis gives rise to a deferred or disallowed loss.*** To the extent disqualified basis of an item of specified property gives rise to a deduction or loss during a taxable year that is deferred, then the determination of whether the item of deduction or loss gives rise to a basis benefit amount under paragraph (b)(4)(ii)(A) of this section is made when the item of deduction or loss is no longer deferred. In addition, to the extent disqualified basis of an item of specified property gives rise to a deduction or loss during a taxable year that is disallowed under section 267(a)(1), then a basis benefit amount is treated as occurring in the taxable year when and to the extent that gain is reduced pursuant to section 267(d), and provided that the gain is described in paragraph (b)(4)(ii)(A) of this section.

(iii) ***Rules for assigning a basis benefit amount to a taxable year of a section 245A shareholder*** —

(A) ***In general.*** For purposes of applying paragraph (b)(4)(i)(A) of this section with respect to a section 245A shareholder, a basis benefit amount with respect to an item of specified property is assigned to a taxable year of the section 245A shareholder if—

(*1*) With respect to the item of specified property, the ownership requirement of paragraph (b)(3)(i) of this section is satisfied for the taxable year of the section 245A shareholder; and

(*2*) The basis benefit amount occurs during the taxable year of the section 245A shareholder, or a taxable year of a U.S. tax resident (other than the section 245A shareholder), a CFC described in § 1.267A-5(a)(17), or a specified foreign person, as applicable, that—

(*i*) Ends with or within the taxable year of the section 245A shareholder; or

(*ii*) Begins with or within the taxable year of the section 245A shareholder, but only in a case in which but for this paragraph (b)(4)(iii)(A)(*2*)(*ii*) the basis benefit amount would not be assigned to a taxable year of the section 245A shareholder.

(B) ***Anti-duplication rule.*** For purposes of paragraph (b)(4)(i)(A) of this section, to the extent that disqualified basis of an item of specified property gives rise to a basis benefit amount that is assigned to a taxable year of a section 245A shareholder under paragraph (b)(4)(iii)(A) of this section, and thereafter such disqualified basis gives rise to an additional basis benefit amount, the additional basis benefit amount cannot be assigned to another taxable year of any section 245A shareholder. Thus, for example, if the entire amount of disqualified basis of an item of specified property gives rise to a basis benefit amount for a particular taxable year of a CFC and is assigned to a taxable year of a section 245A shareholder but, pursuant to § 1.951A-3(h)(2)(ii)(B)(*1*)(*ii*), the disqualified basis is not reduced or eliminated in such taxable year of the CFC (because, for example, the buyer is a CFC that is a related party) and, as a result, the disqualified basis thereafter gives rise to an additional basis benefit amount, then no portion of the additional basis benefit amount is assigned to a taxable year of any section 245A shareholder.

(iv) ***Successor rules for basis benefit accounts.*** To the extent that an extraordinary disposition account of a section 245A shareholder is adjusted pursuant to § 1.245A-5(c)(4), a basis benefit account with respect to the extraordinary disposition account is adjusted in a similar manner.

(5) ***Special rules regarding duplicate DQB of an item of exchanged basis property*** —

(i) ***Adjustments to certain rules in applying paragraph (b)(1) of this section.*** For purposes of paragraph (b)(1) of this section for a taxable year of a section 245A shareholder, the following rules apply with respect to duplicate DQB of an item of exchanged basis property:

(A) Duplicate DQB of the item of exchanged basis property with respect to an item of specified property to which the item of exchanged property relates is not taken into account for purposes of paragraph (b)(1) of this section if the disqualified basis of the item of specified property is taken into account for purposes of paragraph (b)(1) of this section. Thus, for example, if for a taxable year of a section 245A shareholder the ownership requirement of paragraph (b)(3) of this section is satisfied with respect to an item of specified property and an item of exchanged basis property that relates to the item of specified property, all of the disqualified basis of which is duplicate DQB with respect to the item of specified property, then only the disqualified basis of the item of specified property is taken into account for purposes of, and is subject to reduction under, paragraph (b)(1) of this section.

(B) If, pursuant to paragraph (b)(5)(i)(A) of this section, duplicate DQB of an item of exchanged basis property with respect to an item of specified property is not taken into account for purposes of paragraph (b)(1) of this section, then, solely for purposes of § 1.951A-2(c)(5), the duplicate DQB of the item of exchanged basis property is reduced (in the same manner as it would be if the disqualified basis were taken into account for purposes of paragraph (b)(1) of this section) by the product of the amounts described in paragraphs (b)(5)(i)(B)(*1*) and (*2*) of this section.

(*1*) The reduction, under paragraph (b)(1) of this section for the taxable year of the section 245A shareholder, to the disqualified basis of the item of specified property to which the item of exchanged basis property relates.

(*2*) A fraction, the numerator of which is the duplicate DQB of the item of exchanged basis property with respect to the item of specified property, and the denominator of which is the sum of the amounts of duplicate DQB with respect to the item of specified property of each item of exchanged basis property that relates to the item of specified property and for which the ownership requirement of paragraph (b)(3)(i) of this section is satisfied for the taxable year of the section 245A shareholder. For purposes of determining this fraction, duplicate DQB of an item of exchanged basis property is determined pursuant to the rules of paragraph (b)(2)(i) of this section (by replacing the term “paragraph (b)(1)” in that paragraph with the term “paragraph (b)(5)(i)(B)”). In addition, duplicate DQB of an item of exchanged basis property is excluded from the denominator of the fraction to the extent the duplicate DQB is attributable to duplicate DQB of another item of exchanged basis property that is included in the denominator of the fraction.

(ii) ***Adjustments to certain rules in applying paragraph (b)(4) of this section.*** For purposes of paragraph (b)(4)(i)(A) of this section, to the extent that disqualified basis of an item of specified property gives rise to a basis benefit amount that is assigned to a taxable year of a section 245A shareholder under paragraph (b)(4)(iii)(A) of this section, and thereafter duplicate DQB attributable to such disqualified basis of the item of specified property gives rise to an additional basis benefit amount, the additional basis benefit amount cannot be assigned to another taxable year of any section 245A shareholder. Similarly, for purposes of paragraph (b)(4)(i)(A) of this section, to the extent that duplicate DQB attributable to disqualified basis of an item of specified property gives rise to a basis benefit amount that is assigned to a taxable year of a section 245A shareholder under paragraph (b)(4)(iii)(A) of this section, and thereafter such disqualified basis of the item of specified property (or duplicate DQB attributable to such disqualified basis of the item of specified property) gives rise to an additional basis benefit amount, the additional basis benefit amount cannot be assigned to another taxable year of any section 245A shareholder.

(6) ***Special rule regarding prior extraordinary disposition amounts.*** For purposes of paragraph (b)(1) of this section, to the extent that an extraordinary disposition account of a section 245A shareholder is reduced under § 1.245A-5(c)(3)(i)(A) by reason of a prior extraordinary disposition amount described in § 1.245A-5(c)(3)(i)(D)(*1*)(*i*) through (*iv*), the extraordinary disposition account is considered to give rise to an extraordinary disposition amount or tiered extraordinary disposition amount (and the amount by which the account is reduced is treated as an extraordinary disposition amount or tiered extraordinary disposition amount).

(c) ***Reduction of extraordinary disposition account by reason of the allocation and apportionment of deductions or losses attributable to disqualified basis*** —

(1) ***In general.*** For a taxable year of a CFC, if there is an RGI account with respect to the CFC that relates to an extraordinary disposition account of a section 245A shareholder with respect to an SFC, and the section 245A shareholder satisfies the ownership requirement of paragraph (c)(5) of this section for the taxable year of the CFC, then, subject to the limitations in paragraphs (c)(6) and (7) of this section, the extraordinary disposition account is reduced (but not below zero) by the lesser of the following amounts (each determined in the functional currency of the CFC)—

(i) The excess (if any) of—

(A) The product of—

(*1*) The adjusted earnings of the CFC for the taxable year of the CFC; and

(*2*) The percentage of stock of the CFC (by value) that, in aggregate, is owned directly or indirectly through one or more specified entities by the section 245A shareholder and any domestic affiliates on the last day of the taxable year of the CFC; over

(B) The sum of—

(*1*) The sum of the balance of the section 245A shareholder's and any domestic affiliates' previously taxed earnings and profits accounts with respect to the CFC for purposes of section 959 (determined as of the end of the taxable year of the CFC and taking into account any adjustments to the accounts for the taxable year);

(*2*) The sum of the balance of the hybrid deduction accounts (as described in § 1.245A(e)-1(d)(1)) with respect to shares of stock of the CFC that the section 245A shareholder and any domestic affiliates own (within the meaning of section 958(a), and determined by treating a domestic partnership as foreign) as of the end of the taxable year of the CFC and taking into account any adjustments to the accounts for the taxable year; and

(*3*) The sum of the balance of the section 245A shareholder's and any domestic affiliates' extraordinary disposition accounts with respect to the CFC (determined as of the end of the taxable year of the CFC and taking into account any adjustments to the accounts for the taxable year). However, if the section 245A shareholder or a domestic affiliate has an RGI account with respect to the CFC that relates to an extraordinary disposition account with respect to the CFC, then only the excess, if any, of the balance of the extraordinary disposition account over the balance of the RGI account that relates to the extraordinary disposition account (determined as of the end of the taxable year of the CFC, but without regard to the application of paragraph (c)(4)(i)(B) of this section for the taxable year) is taken into account for purposes of this paragraph (c)(1)(i)(B)(*3*). In addition, for purposes of this paragraph (c)(1)(i)(B)(*3*), an extraordinary disposition account that but for paragraph (e)(1) of this section would be with respect to the CFC for purposes of this section is treated as an extraordinary disposition account with respect to the CFC and thus is taken into account for purposes of this paragraph (c)(1)(i)(B)(*3*).

(ii) The balance of the RGI account with respect to the CFC that relates to the section 245A shareholder's extraordinary disposition account with respect to the SFC (determined as of the end of the taxable year of the CFC, but without regard to the application of paragraph (c)(4)(i)(B) of this section for the taxable year).

(2) ***Timing of reduction to extraordinary disposition account.*** See § 1.245A-9(b)(3) for timing rules regarding the reduction to an extraordinary disposition account.

(3) ***Adjusted earnings.*** The term *adjusted earnings* means, with respect to a CFC and a taxable year of the CFC, the earnings and profits of the CFC, determined as of the end of the CFC's taxable year (taking into account all distributions during the taxable year, and not taking into account any deficit in earnings and profits subject to § 1.381(c)(2)-1(a)(5)) and with the adjustments described in paragraphs (c)(3)(i) through (iv) of this section.

(i) The earnings and profits are increased by the amount of any deduction or loss that—

(A) Is or was attributable to disqualified basis of an item of specified property, but only to the extent that gain recognized on the extraordinary disposition of the item of specified property was included in the initial balance of an extraordinary disposition account;

(B) Is or was allocated and apportioned to residual CFC gross income of the CFC (or a predecessor) solely by reason of § 1.951A-2(c)(5)(i); and

(C) Does not or has not given rise to or increased a deficit in earnings and profits subject to § 1.381(c)(2)-1(a)(5), determined as of the end of the taxable year of the CFC.

(ii) The earnings and profits are decreased by the amount by which any RGI account with respect to the CFC has been decreased pursuant to paragraph (c)(4)(i)(B) of this section for a prior taxable year of the CFC.

(iii) The earnings and profits are determined without regard to earnings attributable to income described in section 245(a)(5)(A) or dividends described in section 245(a)(5)(B) (determined without regard to section 245(a)(12)).

(iv) The earnings and profits are decreased by the amount of any deduction or loss that, but for paragraph (c)(3)(i)(C) of this section, would be described in paragraph (c)(3)(i) of this section.

(4) ***RGI account*** —

(i) ***In general.*** For a taxable year of a CFC, the following rules apply to determine the balance of a section 245A shareholder's RGI account that is with respect to the CFC and that relates to an extraordinary disposition account of the section 245A shareholder with respect to an SFC:

(A) The balance of the RGI account is increased by the product of the amounts described in paragraphs (c)(4)(i)(A)(*1*) and (2) of this section for a taxable year of the CFC.

(*1*) The sum of the amounts of deductions and losses of the CFC that—

(*i*) Are attributable to disqualified basis of one or more items of specified property that correspond to the extraordinary disposition account; and

(*ii*) But for § 1.951A-2(c)(5)(i), would have decreased one or more categories of the CFC's positive subpart F income, the CFC's tested income, or the CFC's ECTI, or increased or given rise to a tested loss or one or more qualified deficits of the CFC.

(2) The lesser of—

(*i*) A fraction (expressed as a percentage), the numerator of which is the sum of the portions of the CFC's subpart F income and tested income or tested loss (expressed as a positive number) taken into account under sections 951(a)(1)(A) and 951A(a) (as determined under the rules of §§ 1.951-1(b) and (e) and 1.951A-1(d)) by the section 245A shareholder and any domestic affiliates of the section 245A shareholder and the section 245A shareholder's and any domestic affiliates' pro rata shares of the CFC's qualified deficits (expressed as a positive number), and the denominator of which is the sum of the CFC's subpart F income, tested income or tested loss (expressed as a positive number), and qualified deficits (expressed as a positive number), but for purposes of this paragraph (c)(4)(i)(A)(*2*)(*i*) treating ECTI (expressed as a positive number) as if it were subpart F income; and

(*ii*) The extraordinary disposition ownership percentage applicable as to the section 245A shareholder's extraordinary disposition account.

(B) The balance of the RGI account is decreased to the extent that, by reason of the application of paragraph (c)(1) of this section with respect to the taxable year of the CFC, there is a reduction to the extraordinary disposition account of the section 245A shareholder.

(ii) ***Successor rules for RGI accounts.*** To the extent that an extraordinary disposition account of a section 245A shareholder is adjusted pursuant to § 1.245A-5(c)(4), an RGI account of a CFC with respect to the extraordinary disposition account is adjusted in a similar manner.

(5) ***Ownership requirement with respect to a CFC.*** For a taxable year of a CFC, a section 245A shareholder satisfies the ownership requirement of this paragraph (c)(5) if, on the last day of the CFC's taxable year, the section 245A shareholder or a domestic affiliate is a United States shareholder with respect to the CFC.

(6) ***Allocation of reductions among multiple extraordinary disposition accounts.*** This paragraph (c)(6) applies if, by reason of the application of paragraph (c)(1) of this section with respect to a taxable year of a CFC (and but for the application of this paragraph (c)(6) and paragraph (c)(7) of this section), the sum of the reductions under paragraph (c)(1) of this section to two or more extraordinary disposition accounts of a section 245A shareholder or a domestic affiliate of the section 245A shareholder would exceed the amount described in paragraph (c)(1)(i)(A) of this section (the amount of such excess, the *excess amount*). When this paragraph (c)(6) applies, the reduction to each extraordinary disposition account described in the previous sentence is equal to the reduction that would occur but for this paragraph (c)(6) and paragraph (c)(7) of this section, less the product of the excess amount and a fraction, the numerator of which is the balance of the extraordinary disposition account, and the denominator of which is the sum of the balances of all of the extraordinary dispositions accounts described in the previous sentence. For purposes of determining this fraction, the balance of an extraordinary disposition account is determined as of the end of the taxable year of the section 245A shareholder or the domestic affiliate, as applicable, that includes the date on which the CFC's taxable year ends (and after the determination of any extraordinary disposition amounts or tiered extraordinary disposition amounts for the taxable year of the section 245A shareholder or the domestic affiliate, as applicable, and adjustments to the extraordinary disposition account for prior extraordinary disposition amounts).

(7) ***Extraordinary disposition account not reduced below balance of basis benefit account.*** An extraordinary disposition account of a section 245A shareholder cannot be reduced pursuant to paragraph (c)(1) of this section below the balance of the basis benefit account with respect to the extraordinary disposition account (determined when a reduction to the extraordinary disposition account would occur under paragraph (c)(1) of this section).

(d) ***Special rules for determining when specified property corresponds to an extraordinary disposition account —***

(1) ***Substituted property —***

(i) ***Treatment as specified property that corresponds to an extraordinary disposition account.*** For purposes of this section, an item of substituted property is treated as an item of specified property that corresponds to an extraordinary disposition account to which the related item of specified property (that is, the item of specified property to which the item of substituted property relates, as described in paragraph (d)(1)(ii) of this section) corresponds. In addition, in a case in which an item of substituted property relates to an item of specified property that corresponds to a particular extraordinary disposition account and an item of specified property that corresponds to another extraordinary disposition account (such that, pursuant to this paragraph (d)(1)(i), the item of substituted property is treated as corresponding to multiple extraordinary disposition accounts), only the disqualified basis of the item of substituted property attributable to the first item of specified property is taken into account for purposes of applying this section as to the first extraordinary disposition account, and, similarly, only the disqualified basis of the item of substituted property attributable to the second item of specified property is taken into account for purposes of applying this section as to the second extraordinary disposition account.

(ii) ***Definition of substituted property.*** The term *substituted property* means an item of property the disqualified basis of which is, pursuant to § 1.951A-3(h)(2)(ii)(B)(*2*)(*i*) or (*iii*), increased by reason of a reduction under § 1.951A-3(h)(2)(ii)(*B*)(*1*) in disqualified basis of an item of specified property. An item of substituted property relates to an item of specified property if the disqualified basis of the item of substituted property was increased by reason of a reduction in disqualified basis of the item of specified property.

(2) ***Exchanged basis property —***

(i) ***Treatment as specified property that corresponds to an extraordinary disposition account for certain purposes.*** For purposes of this section, an item of exchanged basis property is treated as an item of specified property that corresponds to an extraordinary disposition account to which the related item of specified property (that is, the item of specified property to which the item of exchanged basis property relates) corresponds.

(ii) ***Definition of exchanged basis property.*** The term *exchanged basis property* means an item of property the disqualified basis of which, pursuant to § 1.951A-3(h)(2)(ii)(B)(*2*)(*ii*), includes disqualified basis of an item of specified property. An item of exchanged basis property relates to an item of specified property if the disqualified basis of the item of exchanged basis property includes disqualified basis of the item of specified property.

(iii) ***Definition of duplicate DQB —***

(A) ***In general.*** The term *duplicate DQB* means, with respect to an item of exchanged basis property and the item of specified property to which the exchanged basis property relates, the disqualified basis of the item of exchanged basis property that includes or is attributable to disqualified basis of the item of specified property.

(B) ***Certain nonrecognition transfers involving stock or a partnership interest.*** To the extent that an item of exchanged basis property that is stock or an interest in a partnership (*lower-tier item*) includes disqualified basis of an item of specified property to which the lower-tier item relates (*contributed item*), and another item of exchanged basis property that is stock or a partnership interest (*upper-tier item*) includes disqualified basis of the lower-tier item that is attributable to disqualified basis of the contributed item, the disqualified basis of the upper-tier item is attributable to disqualified basis of the contributed item and the upper-tier item is an item of exchanged basis property that relates to the contributed item. The principles of the preceding sentence apply each time disqualified basis of an item of exchanged basis property that is stock or an interest in a partnership is included in disqualified basis of another item of exchanged basis property that is stock or an interest in a partnership.

(C) ***Multiple nonrecognition transfers of an item of specified property.*** To the extent that multiple items of exchanged basis property that are stock or interests in a partnership include disqualified basis of the same item of specified property (*contributed item*) to which the items of exchanged basis property relate, and the issuer of one of the items of exchanged basis property (*upper-tier successor item*) receives the other item of exchanged basis property (*lower-tier successor item*) in exchange for the contributed property, the disqualified basis of the upper-tier successor item is attributable to disqualified basis of the lower-tier successor item and the upper-tier successor item is an item of exchanged basis property that relates to the lower-tier successor item. The principles of the preceding sentence apply each time disqualified basis of an item of specified property to which an item of exchanged basis property that is stock or an interest in partnership relates is included in disqualified basis of another item of exchanged basis property that is stock or an interest in a partnership.

(e) ***Special rules when extraordinary disposition accounts are adjusted pursuant to § 1.245A-5(c)(4)*** —

(1) ***Extraordinary disposition account with respect to multiple SFCs.*** This paragraph (e)(1) applies if, pursuant to § 1.245A-5(c)(4)(ii) or (iii) (the transaction or transactions by reason of which § 1.245A-5(c)(4)(ii) or (iii) applies, the *adjustment transaction*), an extraordinary disposition account of a section 245A shareholder with respect to an SFC (such extraordinary disposition account, the *transferor ED account;* and such SFC, the *transferor SFC*) gives rise to an increase in the balance of an extraordinary disposition account with respect to another SFC (such extraordinary disposition account, the *transferee ED account;* such SFC, the *transferee SFC;* and such increase, the *adjustment amount*). When this paragraph (e)(1) applies, the following rules apply for purposes of this section:

(i) A ratable portion of the transferee ED account is treated as retaining its status as an extraordinary disposition account with respect to the transferor SFC and is not treated as an extraordinary disposition account with respect to the transferee SFC (the transferee ED account to such extent, the *deemed transferor ED account*), based on the adjustment amount relative to the balance of the transferee ED account (without regard to this paragraph (e)(1)) immediately after the adjustment transaction. Thus, for example, whether or not the transferor SFC is in existence immediately after the transaction, the items of specified property that correspond to

the deemed transferor ED account are the same as the items of specified property that correspond to the transferor ED account. As an additional example, whether or not the transferor SFC is in existence immediately after the transaction the extraordinary disposition ownership percentage with respect to the deemed transferor ED account is the same as the extraordinary disposition ownership percentage with respect to the transferor ED account (except to the extent the extraordinary disposition ownership percentage is adjusted pursuant to the rules of paragraph (e)(2) of this section).

(ii) In the case of an amount (such as an extraordinary disposition amount or tiered extraordinary disposition amount) determined by reference to the transferee ED account (without regard to this paragraph (e)(1)), the portion of the amount that is considered attributable to the deemed transferor ED account (and not the transferee ED account) is equal to the product of such amount and a fraction, the numerator of which is the balance of the deemed transferor ED account, and the denominator of which is the balance of the transferee ED account (determined without regard to this paragraph (e)(1)). Thus, for example, if after an adjustment transaction the transferee ED account (without regard to this paragraph (e)(1)) gives rise to an extraordinary disposition amount, and if the fraction (expressed as a percentage) is 40, then, for purposes of this section, 40 percent of the extraordinary disposition amount is treated as attributable to the deemed transferor ED account and the remaining 60 percent of the extraordinary disposition amount is attributable to the transferee ED account, and the balance of each of the deemed transferor ED account and the transferee ED account is correspondingly reduced.

(2) ***Extraordinary disposition accounts with respect to a single SFC.*** If an extraordinary disposition account of a section 245A shareholder with respect to an SFC is reduced by reason of § 1.245A-5(c)(4), then, except as provided in paragraph (e)(1) of this section, for purposes of this section, the extraordinary disposition ownership percentage as to the extraordinary disposition account (as well as the extraordinary disposition ownership percentage as to any extraordinary disposition account with respect to the SFC that is increased by reason of the reduction) is adjusted in a similar manner.

[T.D. 9934, 85 FR 76963, Dec. 1, 2020]

§ 1.245A-9 Other rules and definitions.

(a) ***In general.*** This section provides rules of general applicability for purposes of §§ 1.245A-6 through 1.245A-10, a transition rule to revoke an election to eliminate disqualified basis, and definitions.

(b) ***Rules of general applicability*** —

(1) ***Correspondence.*** An item of specified property corresponds to a section 245A shareholder's extraordinary disposition account if gain was recognized on the extraordinary disposition of the item and the gain was taken into account in determining the initial balance of the account. See § 1.245A-8(d) for additional rules regarding when an item of property is treated as corresponding to an extraordinary disposition account in certain complex cases.

(2) ***Timing rules related to disqualified basis for purposes of applying §§ 1.245A-7(b) and 1.245A-8(b)*** —

(i) ***Determination of disqualified basis.*** For purposes of determining the fraction described in § 1.245A-7(b)(1)(ii) or § 1.245A-8(b)(1)(ii) when applying § 1.245A-7(b)(1) or § 1.245A-8(b)(1)(ii), respectively, for a taxable year of a section 245A shareholder, disqualified basis of an item of

specified property is determined as of the beginning of the taxable year of the CFC that holds the item of specified property (in a case in which § 1.245A-7(b) applies) or the specified property owner (in a case in which § 1.245A-8(b) applies), in either case, that includes the date on which the section 245A shareholder's taxable year ends (and without regard to any reductions to the disqualified basis of the item of specified property pursuant to § 1.245A-7(b)(1) or § 1.245A-8(b)(1) for such taxable year of the CFC or the specified property owner, as applicable). However, if disqualified basis of the item of specified property arose as a result of an extraordinary disposition that occurred after the beginning of the taxable year of the CFC or the specified property owner described in the preceding sentence, then the disqualified basis of the item of specified property is determined as of the date on which the extraordinary disposition occurred (and without regard to any reductions to the disqualified basis of the item of specified property pursuant to paragraph (b)(1) of this section for such taxable year of the CFC or the specified property owner).

(ii) ***Reduction to disqualified basis of an item of specified property.*** The reduction to disqualified basis of an item of specified property pursuant to § 1.245A-7(b)(1) or § 1.245A-8(b)(1) occurs on the date described in paragraph (b)(2)(i) of this section.

(iii) ***Definition of specified property owner.*** For purposes of applying § 1.245A-8(b)(1) and paragraphs (b)(2)(i) and (ii) of this section for a taxable year of a section 245A shareholder, the term *specified property owner* means, with respect to an item of specified property, the person that, on at least one day of the taxable year of the person that includes the date on which the section 245A shareholder's taxable year ends, held the item of specified property. However, if, but for this sentence, there would be more than one specified property owner with respect to the item of specified property, then the specified property owner is the person that held the item of specified property on the earliest date that falls within the section 245A shareholder's taxable year.

(3) ***Timing rules for reducing an extraordinary disposition account under §§ 1.245A-7(c) and 1.245A-8(c).*** For purposes of § 1.245A-7(c)(1) or § 1.245A-8(c)(1), as applicable, with respect to a taxable year of a CFC, the reduction to an extraordinary disposition account pursuant to § 1.245A-7(c)(1) or § 1.245A-8(c)(1) occurs as of the end of the taxable year of the section 245A shareholder that includes the date on which the CFC's taxable year ends (and after the determination of any extraordinary disposition amounts or tiered extraordinary amounts, adjustments to the extraordinary disposition account for prior extraordinary disposition amounts, and the application of § 1.245A-7(b) or § 1.245A-8(b), as applicable, each for the taxable year of the section 245A shareholder).

(4) ***Currency translation.*** For purposes of applying §§ 1.245A-7(b) and 1.245A-8(b), the disqualified basis of (and, if applicable, a basis benefit amount with respect to) an item of specified property that corresponds to an extraordinary disposition account are translated (if necessary) into the functional currency in which the extraordinary disposition account is maintained, using the spot rate on the date the extraordinary disposition occurred. A reduction in disqualified basis of an item of specified property determined under § 1.245A-7(b)(1) or § 1.245A-8(b)(1) is translated (if necessary) into the functional currency in which the disqualified basis of the item of specified property is maintained, and a reduction in an extraordinary disposition account determined under § 1.245A-7(c) or § 1.245A-8(c) section is translated (if necessary) into the functional currency in which the extraordinary disposition account is maintained, in each case using the spot rate described in the preceding sentence.

(5) ***Anti-avoidance rule.*** Appropriate adjustments are made pursuant to this paragraph (b)(5), including adjustments that would disregard a transaction or arrangement in whole or in part, to any amounts determined under (or subject to application of) this section if a transaction or arrangement is engaged in with a principal purpose of avoiding the purposes of §§ 1.245A-6 through 1.245A-10.

(c) ***Transition rule to revoke election to eliminate disqualified basis*** —

(1) ***In general.*** This paragraph (c)(1) applies to an election that is filed, pursuant to § 1.951A-3(h)(2)(ii)(B)(*3*), to eliminate the disqualified basis of an item of specified property. An election to which this paragraph (c)(1) applies may be revoked if, on or before March 1, 2021—

(i) All controlling domestic shareholders (as defined in § 1.964-1(c)(5)) of the CFC (or, in the case of an election made by a partnership, the partnership) each attach a revocation statement (in the manner described in paragraph (c)(2) of this section) to an amended return, for the taxable year to which the election applies, that revokes the election (or, in the case of a partnership subject to subchapter C of chapter 63 of the Internal Revenue Code, requests administrative adjustment under section 6227); and

(ii) The controlling domestic shareholders (or the partnership) each file an amended tax return, for any other taxable years reflecting the election to eliminate the disqualified basis, that reflects the election having been revoked (or, in the case of a partnership subject to subchapter C of chapter 63, requests administrative adjustment under section 6227).

(2) ***Revocation statement.*** Except as otherwise provided in publications, forms, instructions, or other guidance, a revocation statement attached by a person to an amended tax return must include the person's name, taxpayer identification number, and a statement that the revocation statement is filed pursuant to paragraph (c)(1) of this section to revoke an election pursuant to § 1.951A-3(h)(2)(ii)(B)(*3*). In addition, the revocation statement must be filed in the manner prescribed in publications, forms, instructions, or other guidance.

(d) ***Definitions.*** In addition to the definitions in § 1.245A-5, the following definitions apply for purposes of §§ 1.245A-6 through 1.245A-11.

(1) The term *adjusted earnings* has the meaning provided in § 1.245A-7(c)(3) or § 1.245A-8(c)(3), as applicable.

(2) The term *basis benefit account* has the meaning provided in § 1.245A-8(b)(4)(i).

(3) The term *basis benefit amount* has the meaning provided in § 1.245A-8(b)(4)(ii).

(4) The term *disqualified basis* has the meaning provided in § 1.951A-3(h)(2)(ii).

(5) The term *domestic affiliate* means, with respect to a section 245A shareholder, a domestic corporation that is a related party with respect to the section 245A shareholder. *See also* § 1.245A-5(i)(19) (defining related party).

(6) The term *duplicate DQB* has the meaning provided in § 1.245A-8(d)(2)(iii).

(7) The term *ECTI* means, with respect to a taxable year of a specified foreign person, the taxable income (or loss) of the specified foreign person determined by taking into account only items of income and gain that are, or are treated as, effectively connected with the conduct of a trade or business in the United States (as described in § 1.882-4(a)(1)) and are not exempt from U.S. tax pursuant to a treaty obligation of the United States, and items of deduction and loss that are allocated and apportioned to such items of income and gain.

(8) The term *exchanged basis property* has the meaning provided in § 1.245A-8(d)(2)(ii).

(9) The term *qualified deficit* has the meaning provided in section 952(c)(1)(B)(ii).

(10) The term *qualified related party* has the meaning provided in § 1.245A-8(b)(3)(ii).

(11) The term *RGI account* means, with respect to a CFC and an extraordinary disposition account of a section 245A shareholder with respect to an SFC, an account of the section 245A shareholder with respect to an SFC (the initial balance of which is zero), adjusted at the end of each taxable year of the CFC pursuant to the rules of § 1.245A-7(c)(4) or § 1.245A-8(c)(4), as applicable. The RGI account must be maintained in the functional currency of the CFC.

(12) The term *specified foreign person* means a nonresident alien individual (as defined in section 7701(b) and the regulations under section 7701(b)) or a foreign corporation (including a CFC) that conducts, or is treated as conducting, a trade or business in the United States (as described in § 1.882-4(a)(1)).

(13) The term *specified property owner* has the meaning provided in § 1.245A-8(b)(2)(iii).

(14) The term *subpart F income* has the meaning provided in section 952(a).

(15) The term *substituted property* has the meaning provided in § 1.245A-8(d)(1)(ii).

(16) The term *tested income* has the meaning provided in section 951A(c)(2)(A).

(17) The term *tested loss* has the meaning provided in section 951A(c)(2)(B).

[T.D. 9934, 85 FR 76963, Dec. 1, 2020]

§ 1.245A-10 Examples.

(a) ***Scope.*** This section provides examples illustrating the application of §§ 1.245A-6 through 1.245A-9.

(b) ***Presumed facts.*** For purposes of the examples in the section, except as otherwise stated, the following facts are presumed:

(1) US1 and US2 are both domestic corporations that have calendar taxable years.

(2) CFC1, CFC2, CFC3, and CFC4 are all SFCs and CFCs that have taxable years ending November 30.

(3) Each entity uses the U.S. dollar as its functional currency.

(4) There are no items of deduction or loss attributable to an item of specified property.

(5) Absent the application of § 1.245A-5, any dividends received by US1 from CFC1 would meet the requirements to qualify for the section 245A deduction.

(6) All dispositions of items of specified property by an SFC during a disqualified period of the SFC to a related party give rise to an extraordinary disposition.

(7) None of the CFCs have a deficit subject to § 1.381(c)(2)-1(a)(5), and none of the CFCs are engaged in the conduct of a trade or business in the United States (and therefore none of the CFCs have ECTI).

(8) There is no previously taxed earnings and profits account with respect to any CFC for purposes of section 959. In addition, each hybrid deduction account with respect to a share of stock of a CFC has a zero balance at all times. Further, there is no extraordinary disposition account with respect to any CFC.

(9) Under § 1.245A-11(b), taxpayers choose to apply §§ 1.245A-6 through 1.245A-11 to the relevant taxable years.

(c) *Examples*—(1) *Example 1. Reduction of disqualified basis under rule for simple cases by reason of dividend paid out of extraordinary disposition account*—(i) *Facts.* US1 owns 100% of the single class of stock of CFC1 and CFC2. On November 30, 2018, in a transaction that is an extraordinary disposition, CFC1 sells two items of specified property, Item 1 and Item 2, to CFC2 in exchange for $150x of cash (the "Disqualified Transfer"). Item 1 is sold for $90x and Item 2 is sold for $60x. Item 1 and Item 2 each has a basis of $0 in the hands of CFC1 immediately before the Disqualified Transfer, and therefore CFC1 recognizes $150x of gain as a result of the Disqualified Transfer ($150×−$0). After the Disqualified Transfer, CFC2's only assets are Item 1 and Item 2. On November 30, 2018, and thus during US1's taxable year ending December 31, 2018, CFC1 distributes $150x of cash to US1, and all of the distribution is characterized as a dividend under section 301(c)(1) and treated as a distribution out of earnings and profits described in section 959(c)(3). For CFC1's taxable year ending on November 30, 2018, CFC1 has $160x of earnings and profits described in section 959(c)(3), without regard to any distributions during the taxable year. CFC2 continues to hold Item 1 and Item 2. Lastly, because the conditions of § 1.245A-6(b)(1) and (2) are satisfied for US1's 2018 taxable year, US1 chooses to apply § 1.245A-7 (rules for simple cases) in lieu of § 1.245A-8 (rules for complex cases) for that taxable year.

(ii) *Analysis*—(A) *Application of §§ 1.245A-5 and 1.951A-2 as a result of the Disqualified Transfer.* As a result of the Disqualified Transfer, under § 1.951A-2(c)(5), Item 1 has disqualified basis of $90x, and Item 2 has disqualified basis of $60x. In addition, as a result of the Disqualified Transfer, under § 1.245A-5(c)(3)(i)(A), US1 has an extraordinary disposition account with respect to CFC1 with an initial balance of $150x. Under § 1.245A-5(c)(2)(i), $10x of the dividend is considered paid out of non-extraordinary disposition E&P of CFC1 with respect to US1, and $140x of the dividend is considered paid out of US1's extraordinary disposition account with respect to CFC1 to the extent of the balance of the extraordinary disposition account ($150x). Thus, the dividend of $150x is an extraordinary disposition amount, within the meaning of § 1.245A-5(c)(1), to the extent of $140x. As a result, the balance of the extraordinary disposition account is reduced to $10x ($150×−$140x).

(B) *Correspondence requirement.* Under § 1.245A-9(b)(1), each of Item 1 and Item 2 corresponds to US1's extraordinary disposition account with respect to CFC1, because as a result of the Disqualified Transfer CFC1 recognized gain with respect to Item 1 and Item 2, and the gain was taken into account in determining the initial balance of US1's extraordinary disposition account with respect to CFC1.

(C) *Reduction of disqualified basis of Item 1.* Because Item 1 corresponds to US1's extraordinary disposition account, the disqualified basis of Item 1 is reduced pursuant to § 1.245A-7(b)(1) by reason of US1's $140x extraordinary disposition amount for US1's 2018 taxable year. Paragraphs (c)(2)(ii)(C)(*1*) through (*3*) of this section describe the determinations pursuant to § 1.245A-7(b)(1).

(*1*) To determine the reduction to the disqualified basis of Item 1, the disqualified basis of Item 1, as well as the disqualified basis of Item 2, must be determined as of the date described in § 1.245A-9(b)(2)(i) (and before the application of § 1.245A-7(b)(1)). *See* § 1.245A-7(b)(1)(ii). For each of Item 1 and Item 2, that date is December 1, 2018. December 1, 2018, is the first day of the taxable year of CFC2 (the CFC that holds Item 1 and Item 2) beginning on December 1, 2018, which is the taxable year of CFC2 that includes December 31, 2018, the date on which US1's 2018 taxable year ends. *See* § 1.245A-9(b)(2)(i).

(*2*) Pursuant to § 1.245A-7(b)(1), the disqualified basis of Item 1 is reduced by $84x, computed as the product of—

(*i*) $140x, the extraordinary disposition amount; and

(*ii*) A fraction, the numerator of which is $90x (the disqualified basis of Item 1 on December 1, 2018, and before the application of § 1.245A-7(b)(1)), and the denominator of which is $150x (the disqualified basis of Item 1, $90x, plus the disqualified basis of Item 2, $60x, in each case determined on December 1, 2018, and before the application of § 1.245A-7(b)(1)). *See* § 1.245A-7(b)(1).

(*3*) The $84x reduction to the disqualified basis of Item 1 occurs on December 1, 2018, the date on which the disqualified basis of Item 1 is determined for purposes of determining the reduction pursuant to § 1.245A-7(b)(1). *See* § 1.245A-9(b)(2)(ii).

(D) *Reduction of disqualified basis of Item 2.* For reasons similar to those described in paragraph (c)(2)(ii)(C) of this section, on December 1, 2018, the disqualified basis of Item 2 is reduced by $56x, the amount equal to the product of $140x, the extraordinary disposition amount, and a fraction, the numerator of which is $60x (the disqualified basis of Item 2 on December 1, 2018, and before the application of § 1.245A-7(b)(1)), and the denominator of which is $150x (the disqualified basis of Item 1, $90x, plus the disqualified basis of Item 2, $60x, in each case determined on December 1, 2018, and before the application of § 1.245A-7(b)(1)).

(2) *Example 2. Basis benefit amount and impact on reduction to disqualified basis under rule for complex cases*—(i) *Facts.* The facts are the same as in paragraph (c)(1)(i) of this section (*Example 1*) (and the results are the same as in paragraph (c)(1)(ii)(A) of this section), except that, on December 1, 2018, CFC2 sells Item 1 for $90x of cash to an individual that is not a related party with respect to US1 or CFC2 (such transaction, the "Sale," and such individual, "Individual A"). At the time of the Sale, CFC2's basis in Item 1 is $90x (all of which is disqualified basis, as described in § 1.951A-3(h)(2)(ii)(A)). CFC2 takes into the account the disqualified basis of Item 1 for purposes of determining the amount of gain recognized on the Sale, which is $0 ($90x−$90x); but for the disqualified basis, CFC2 would have had $90x of gain that would have been taken into account in computing its tested income. As a result of the Sale, the condition of § 1.245A-6(b)(2) is not satisfied, because on at least one day of CFC2's taxable year beginning on December 1, 2018 (which begins within US1's 2018 taxable year) CFC2 does not hold Item 1. *See* § 1.245A-6(b)(2)(ii)(C)(*1*). US1 therefore applies § 1.245A-8 (rules for complex cases) for its 2018 taxable year. *See* § 1.245A-6(b).

(ii) *Analysis*—(A) *Ownership requirement.* With respect to each of Item 1 and Item 2, the ownership requirement of § 1.245A-8(b)(3)(i) is satisfied for US1's 2018 taxable year. This is because on at least one day that falls within US1's 2018 taxable year, each of Item 1 and Item 2 is held by CFC2, and US1 directly owns all of the stock of CFC2 throughout such taxable year (and thus, for purposes of applying § 1.245A-8(b)(3)(i), US1 owns at least 10% of the interests of CFC2 on at least one day that falls within such taxable year). *See* § 1.245A-8(b)(3).

(B) *Basis benefit amount with respect to Item 1 as a result of the Sale.* Under § 1.245A-8(b)(4)(i), US1 has a basis benefit account with respect to its extraordinary disposition account with respect to CFC1. As described in paragraphs (c)(2)(ii)(B)(*1*) through (*3*) of this section, the balance of the basis benefit account (which is initially zero) is, on December 31, 2018, increased by $90x, the basis benefit amount with respect to Item 1 and assigned to US1's 2018 taxable year.

(*1*) By reason of the Sale, for CFC2's taxable year beginning December 1, 2018, and ending November 30, 2019, the entire $90x of disqualified basis of Item 1 is taken into account for U.S. tax purposes by CFC2 and, as a result, reduces CFC2's tested income or increases CFC2's tested loss. Accordingly, for such taxable year, there

is a $90x basis benefit amount with respect to Item 1. *See* § 1.245A-8(b)(4)(ii)(A). The result would be the same if the Sale were to a related person and thus, pursuant to § 1.951A-3(h)(2)(ii)(B)(*1*)(*ii*), no portion of the $90x of disqualified basis were eliminated or reduced by reason of the Sale. *See* § 1.245A-8(b)(4)(ii)(B).

(*2*) The $90x basis benefit amount with respect to Item 1 is assigned to US1's 2018 taxable year. This is because the ownership requirement of § 1.245A-8(b)(3)(i) is satisfied with respect to Item 1 for US1's 2018 taxable year, and the basis benefit amount occurs in CFC2's taxable year beginning December 1, 2018, a taxable year of CFC2 that begins within US1's 2018 taxable year (and, but for § 1.245A-8(b)(4)(iii)(A)(*2*)(*ii*), the basis benefit amount would not be assigned to a taxable year of US1, such as the taxable year of US1 beginning January 1, 2019, given that, as result of the Sale, the ownership requirement of § 1.245A-8(b)(3)(i) would not be satisfied with respect to Item 1 for such taxable year). *See* § 1.245A-8(b)(4)(iii)(A).

(*3*) On December 31, 2018 (the last day of US1's 2018 taxable year), US1's basis benefit account with respect to its extraordinary disposition account with respect to CFC1 is increased by $90x, the $90x basis benefit amount with respect to Item 1 and assigned to US1's 2018 taxable year. The basis benefit account is increased by such amount because Item 1 corresponds to US1's extraordinary disposition account with respect to CFC1, and the extraordinary disposition ownership percentage applicable to such extraordinary disposition account is 100. *See* § 1.245A-8(b)(4)(i)(A).

(C) *Basis benefit amount limitation on reduction to disqualified basis.* By reason of US1's $140x extraordinary disposition amount for US1's 2018 taxable year, the disqualified basis of Item 1 is reduced by $30x, and the disqualified basis of Item 2 is reduced by $20x, pursuant to § 1.245A-8(b)(1). *See* § 1.245A-8(b). Paragraphs (c)(2)(ii)(C)(*1*) through (*4*) of this section describe the determinations pursuant to § 1.245A-8(b)(1).

(*1*) For purposes of determining the reduction to the disqualified bases of Item 1 and Item 2, the disqualified bases of the Items are determined on December 1, 2018 (and before the application of § 1.245A-8(b)(1)). *See* § 1.245A-8(b)(1)(ii). The disqualified bases of the Items are determined on December 1, 2018, because that date is the first day of the taxable year of CFC2 beginning on December 1, 2018, which is the taxable year of CFC2 (the specified property owner of each of Item 1 and Item 2) that includes December 31, 2018, the date on which US1's 2018 taxable year ends. *See* § 1.245A-8(b)(2)(i). For purposes of applying §§ 1.245A-8(b)(1) and § 1.245A-9(b)(2) for US1's 2018 taxable year, CFC2 is the specified property owner of each of Item 1 and Item 2 because, on at least one day of CFC2's taxable year that includes the date on which US1's 2018 taxable year ends (that is, on at least one day of CFC2's taxable year beginning December 1, 2018), CFC2 held the Item. *See* § 1.245A-9(b)(2)(iii). CFC2 is the specified property owner of Item 1 even though Individual A also held Item 1 during Individual A's taxable year that includes the date on which US1's 2018 taxable year ends because CFC2 held Item 1 on an earlier date than Individual A. *See* § 1.245A-9(b)(2)(iii).

(*2*) Pursuant to § 1.245A-8(b)(1), the disqualified basis of Item 1 is reduced by $30x, computed as the product of—

(*i*) $50x, the excess of the extraordinary disposition amount ($140x) over the balance of the basis benefit account with respect to US1's extraordinary disposition with respect to CFC1 ($90x); and

(*ii*) A fraction, the numerator of which is $90x (the disqualified basis of Item 1 on December 1, 2018, and before the application of § 1.245A-8(b)(1)), and the denominator of which is $150x (the disqualified basis of Item 1, $90x, plus the disqualified basis of Item 2, $60x, in each case determined on December 1, 2018, and before the application of § 1.245A-8(b)(1)). *See* paragraph § 1.245A-8(b)(1).

(*3*) Pursuant to § 1.245A-8(b)(1), the disqualified basis of Item 2 is reduced by $20x, computed as the product of—

(*i*) $50x, the excess of the extraordinary disposition amount ($140x) over the balance of the basis benefit account with respect to US1's extraordinary disposition with respect to CFC1 ($90x); and

(*ii*) A fraction, the numerator of which is $60x (the disqualified basis of Item 2 on December 1, 2018, and before the application of paragraph (b)(1) of this section), and the denominator of which is $150x (the disqualified basis of Item 1, $90x, plus the disqualified basis of Item 2, $60x, in each case determined on December 1, 2018, and before the application of § 1.245A-8(b)(1)). *See* § 1.245A-8(b)(1).

(*4*) The $30x and $20x reductions to the disqualified bases of Item 1 and Item 2, respectively, occur on December 1, 2018, the date on which the disqualified bases of the Items are determined for purposes of determining the reductions pursuant to § 1.245A-8(b)(1). *See* § 1.245A-9(b)(2)(ii).

(D) *Reduction of basis benefit account.* The balance of the basis benefit account with respect to US1's extraordinary disposition account with respect to CFC1 is decreased by $90x, the amount by which, for CFC2's taxable year beginning December 1, 2018, the disqualified bases of Item 1 and Item 2 would have been reduced pursuant to § 1.245A-8(b)(1) but for the $90x balance of the basis benefit account. *See* § 1.245A-8(b)(4)(i)(B). The reduction to the balance of the basis benefit account occurs on December 31, 2018, and after the completion of all other computations pursuant to § 1.245A-8(b). *See* § 1.245A-8(b)(4)(i)(B).

(3) *Example 3. Reduction in balance of extraordinary disposition account under rules for simple cases by reason of allocation and apportionment of deductions to residual CFC gross income*—(i) *Facts.* The facts are the same as in paragraph (c)(1)(i) of this section (*Example 1*) (and the results are the same as in paragraph (c)(1)(ii)(A) of this section), except that CFC1 does not make a distribution to US1. In addition, during CFC2's taxable year beginning December 1, 2018, and ending November 30, 2019, the disqualified basis of Item 1 gives rise to a $6x amortization deduction, and the disqualified basis of Item 2 gives rise to a $4x amortization deduction, and each of the amortization deductions is allocated and apportioned to residual CFC gross income of CFC2 solely by reason of § 1.951A-2(c)(5) (though, but for § 1.951A-2(c)(5), would have been allocated and apportioned to gross tested income of CFC2). Further, as of the end of CFC2's taxable year ending November 30, 2019, CFC2 has $15x of earnings and profits. Lastly, because the conditions of § 1.245A-6(b)(1) and (2) are satisfied for US1's 2018 taxable year, US1 chooses to apply § 1.245A-7 (rules for simple cases) in lieu of § 1.245A-8 (rules for complex cases) for that taxable year.

(ii) *Analysis.* Pursuant to § 1.245A-7(c)(1), US1's extraordinary disposition account with respect to CFC1 is reduced by the lesser of the amount described in § 1.245A-7(c)(1)(i) with respect to US1, and the RGI account of US1 with respect to CFC2 that relates to its extraordinary disposition account with respect to CFC1. *See* § 1.245A-7(c)(1). Paragraphs (c)(3)(ii)(A) through (D) of this section describe the determinations pursuant to § 1.245A-8(c)(1).

(A) *Computation of adjusted earnings of CFC2, and amount described in § 1.245A-7(c)(1)(i) with respect to US1.* To determine the amount described in § 1.245A-7(c)(1)(i) with respect to US1, the adjusted earnings of CFC2 must be computed for CFC2's taxable year ending November 30, 2019. *See* § 1.245A-7(c)(1)(i). Paragraphs (c)(3)(ii)(A)(*1*) and (*2*) of this section describe these determinations.

(*1*) The adjusted earnings of CFC2 for its taxable year ending November 30, 2019, is $25x, computed as $15x (CFC2's earnings and profits as of November 30, 2019, the last day of that taxable year), plus $10x (the sum of the $6x and $4x amortization deductions of CFC2 for that taxable year, which is the amount of all deductions or losses of CFC2 that is or was attributable to disqualified basis of items of specified property and allocated and apportioned to residual CFC gross income of CFC2 solely by reason of § 1.951A-2(c)(5)(i)). *See* § 1.245A-7(c)(3).

(*2*) For CFC2's taxable year ending November 30, 2019, the amount described in § 1.245A-7(c)(1)(i) with respect to US1 is $25x, computed as the excess of $25x (the adjusted earnings) over $0 (the sum of the balance of the previously taxed earnings and profits accounts with respect to CFC2).

(B) *Increase to balance of RGI account.* Under § 1.245A-9(d)(11), US1 has an RGI account with respect to CFC2 that relates to its extraordinary disposition account with respect to CFC1. On November 30, 2019 (the last day of CFC2's taxable year), the balance of the RGI account (which is initially zero) is increased by $10x, the sum of the $6x and $4x amortization deductions of CFC2 for its taxable year ending November 30, 2019. *See* § 1.245A-7(c)(4)(i). Each of the amortization deductions is taken into account for this purpose because, but for § 1.951A-2(c)(5)(i), the deduction would have decreased CFC2's tested income or increased or given rise to a tested loss of CFC2. *See* § 1.245A-7(c)(4)(i).

(C) *Reduction in balance of extraordinary disposition account.* Pursuant to § 1.245A-7(c)(1), US1's extraordinary disposition account with respect to CFC1 is reduced by $10x, the lesser of the amount described in § 1.245A-7(c)(1)(i) with respect to US1 for CFC2's taxable year ending November 30, 2019 ($25x), and the balance of US1's RGI account with respect to CFC2 that relates to its extraordinary disposition account with respect to CFC1 ($10x, determined as of November 30, 2019, but without regard to the application of § 1.245A-7(c)(4)(ii) for the taxable year of CFC2 ending on that date). *See* § 1.245A-7(c)(1). The $10x reduction in the balance of US1's extraordinary disposition account occurs on December 31, 2019, the last day of US1's taxable year that includes November 30, 2019 (the last day of CFC2's taxable year). *See* § 1.245A-9(c)(3).

(D) *Reduction in balance of RGI account.* On November 30, 2019 (the last day of CFC2's taxable year), the balance of US1's RGI account with respect to CFC2 that relates to its extraordinary disposition account with respect to CFC1 is decreased by $10x, the amount of the reduction, pursuant to § 1.245A-7(c)(1) section and by reason of the RGI account, to US1's extraordinary disposition account with respect to CFC1. *See* § 1.245A-7(c)(4)(ii). Therefore, following that reduction, the balance of the RGI account is zero ($10x−$10x).

(iii) *Alternative facts in which the reduction is limited by earnings and profits.* The facts are the same as in paragraph (c)(3)(i) of this section (*Example 3*), except that CFC2 has a $5x deficit in its earnings and profits as of the end of its taxable year ending November 30, 2019. In this case—

(A) The adjusted earnings of CFC2 for its taxable year ending November 30, 2019, is $5x, computed as −$5x (CFC2's deficit in earnings and profits as of November 30, 2019) plus $10x (the sum of the $6x and $4x amortization deductions of CFC2), *see* § 1.245A-7(c)(3);

(B) The amount described in § 1.245A-7(c)(1)(i) with respect to US1 for CFC's taxable year ending November 30, 2019, is $5x, computed as the excess of $5x (the adjusted earnings) over $0 (the sum of the balance of the previously taxed earnings and profits accounts with respect to CFC2), *see* § 1.245A-7(c)(1)(i);

(C) On December 31, 2019, US1's extraordinary disposition account with respect to CFC1 is reduced by $5x, the lesser of the amount described in § 1.245A-7(c)(1)(i) with respect to US1 for CFC2's taxable year ending November 30, 2019 ($5x), and the balance of US1's RGI account with respect to CFC2 that relates to its extraordinary disposition account with respect to CFC1 ($10x, determined as of November 30, 2019, but without regard to the application of § 1.245A-8(c)(4)(i)(B) for the taxable year of CFC2 ending on that date), *see* §§ 1.245A-7(c)(1) and 1.245A-9(c)(3); and

(D) On November 30, 2019 (the last day of CFC2's taxable year), the balance of US1's RGI account with respect to CFC2 is decreased by $5x (the amount of the reduction, pursuant to § 1.245A-7(c)(1) and by reason of the RGI account, to US1's extraordinary disposition account with respect to CFC1) and, therefore, following such reduction, the balance of the RGI account is $5x ($10x−$5x), *see* § 1.245A-7(c)(4)(ii).

(4) *Example 4. Reduction to extraordinary disposition accounts limited by § 1.245A-8(c)(6)*—(i) *Facts.* The facts are the same as in paragraph (c)(3)(iii) of this section (*Example 3,* alternative facts in which the reduction is limited by earnings and profits) (and the results are the same as in paragraph (c)(1)(ii)(A) of this section), except that US1 also owns 100% of the stock of US2, which owns 100% of the stock of CFC3, and on November 30, 2018, in a transaction that was an extraordinary disposition, CFC3 sold an item of specified property ("Item 3") to CFC2 in exchange for $200x of cash. Item 3 had a basis of $0 in the hands of CFC3 immediately before the sale and, therefore, CFC3 recognized $200x of gain as a result of the sale ($200x−$0), Item 3 has $200x of disqualified basis under § 1.951A-2(c)(5), and US2 has an extraordinary disposition account with respect to CFC3 with an initial balance of $200x under § 1.245A-5(c)(3)(i)(A). Moreover, during CFC2's taxable year beginning December 1, 2018, and ending November 30, 2019, the disqualified basis of Item 3 gives rise to a $20x amortization deduction, which is allocated and apportioned to residual CFC gross income of CFC2 solely by reason of § 1.951A-2(c)(5) (though, but for § 1.951A-2(c)(5), would have been allocated and apportioned to gross tested income of CFC2). Further, as of the end of US1's 2018 taxable year, the balance of US1's basis benefit account with respect to its extraordinary disposition account with respect to CFC1 is $0; similarly, as of the end of US2's 2018 taxable year, the balance of US2's basis benefit account with respect to its extraordinary disposition account with respect to CFC2 is $0. Because CFC2 holds items of specified property that correspond to more than one extraordinary disposition account (that is, Item 1 and Item 2 correspond to US1's extraordinary disposition account with respect to CFC2, and Item 3 corresponds to US2's extraordinary disposition account with respect to CFC2), the condition of § 1.245A-6(b)(2) is not satisfied. *See* § 1.245A-6(b)(2)(ii)(C)(*3*). US1 and US2 therefore apply § 1.245A-8 (rules for complex cases) for their 2018 taxable years.

(ii) *Analysis.* Pursuant to § 1.245A-8(c)(1), US1's extraordinary disposition account with respect to CFC1 is, subject to the limitation in § 1.245A-8(c)(6), reduced by the lesser of the amount described in § 1.245A-8(c)(1)(i) with respect to US1, and the RGI account of US1 with respect to CFC2 that relates to its extraordinary disposition account with respect to CFC1. *See* § 1.245A-8(c)(1). Similarly, US2's extraordinary disposition account with respect to CFC3 is, subject to the limitation in § 1.245A-8(c)(6), reduced by the lesser of the amount described in § 1.245A-8(c)(1)(i) with respect to US2, and the RGI account of US2 with respect to CFC2 that relates to its extraordinary disposition account with respect to CFC3. *See* § 1.245A-8(c)(1). Paragraphs (c)(4)(ii)(A) through (F) of this section describe the determinations pursuant to § 1.245A-8(c)(1).

(A) *Ownership requirement.* Each of US1 and US2 satisfy the ownership requirement of § 1.245A-8(c)(5) for CFC2's taxable year ending November 30, 2019, because on the last day of that taxable year each is a United States shareholder with respect to CFC2. *See* § 1.245A-8(c)(5).

(B) *Computation of adjusted earnings of CFC2, and amount described in § 1.245A-8(c)(1)(i) with respect to US1 and US2.* The adjusted earnings of CFC2 for its taxable year ending November 30, 2019, is $25x, computed as −$5x (CFC2's deficit in earnings and profits as of November 30, 2019), plus $30x (the sum of the $6x, $4x, and $20x amortization deductions of CFC2). *See* § 1.245A-8(c)(3). For CFC2's taxable year ending November 30, 2019, the amount described in § 1.245A-8(c)(1)(i) with respect to US1 is $25x, computed as the excess of the product of $25x (the adjusted earnings) and 100% (the percentage of the stock of CFC2 that US1 and its domestic affiliate, US2, own), over $0 (the sum of the balance of certain previously taxed earnings and profits accounts and hybrid deduction accounts). *See* § 1.245A-8(c)(1)(i). Similarly, for CFC2's taxable year ending November 30, 2019, the amount described in § 1.245A-8(c)(1)(i) with respect to US2 is $25x, computed as the excess of the product of $25x (the adjusted earnings) and 100% (the percentage of the stock of CFC2 that US2 and its domestic affiliate, US1, own), over $0 (the sum of the balance of certain previously taxed earnings and profits accounts and hybrid deduction accounts). *See* § 1.245A-8(c)(1)(i).

(C) *Increase to balance of RGI account.* As described in paragraph (c)(3)(ii)(B) of this section, US1 has an RGI account with respect to CFC2 that relates to its extraordinary disposition account with respect to CFC1, and the balance of the RGI account is $10x on November 30, 2019 (the last day of CFC2's taxable year). Similarly, US2 has an RGI account with respect to CFC2 that relates to its extraordinary disposition account with respect to CFC3, and the balance of the RGI account is $20x on November 30, 2019 (reflecting a $20x increase to the balance of the account for the $20x amortization deduction of CFC2 for its taxable year ending November 30, 2019). *See* § 1.245A-8(c)(4)(i).

(D) *Reduction in balance of extraordinary disposition accounts but for § 1.245A-8(c)(6).* But for the application of § 1.245A-8(c)(6), US1's extraordinary disposition account with respect to CFC2 would be reduced by $10x, which is the lesser of $25x, the amount described in § 1.245A-8(c)(1)(i) with respect to US1 for CFC2's taxable year ending November 30, 2019, and $10x, the balance of the RGI account of US1 with respect to CFC2 that relates to its extraordinary disposition account with respect to CFC1 (determined as of November 30, 2019, but without regard to the application of § 1.245A-8(c)(4)(i)(B) for the taxable year of CFC2 ending on that date). *See* § 1.245A-8(c)(1)(i) and (ii). Similarly, but for the application of § 1.245A-8(c)(6), US2's extraordinary disposition account with respect to CFC3 would be reduced by $20x, which is the lesser of $25x, the amount described in § 1.245A-8(c)(1)(i) with respect to US2 for CFC2's taxable year ending November 30, 2019, and $20x, the balance of the RGI account of US2 with respect to CFC2 that relates to its extraordinary disposition account with respect to CFC3 (determined as of November 30, 2019, but without regard to the application of § 1.245A-8(c)(4)(i)(B) for the taxable year of CFC2 ending on that date). *See* § 1.245A-8(c)(1)(i) and (ii).

(E) *Application of limitation of § 1.245A-8(c)(6).* As described in paragraph (c)(4)(ii)(D) of this section, but for the application of § 1.245A-8(c)(6), there would be a total of $30x of reductions to US1's extraordinary disposition account with respect to CFC1, and US2's extraordinary disposition account with respect to CFC3, by reason of the application of § 1.245A-8(c)(1) with respect to CFC2's taxable year ending November 30, 2019. Because that $30x exceeds the amount described in § 1.245A-8(c)(1)(i) with respect to US1 and US2 ($25x)—

(*1*) US1's extraordinary disposition account with respect to CFC1 is reduced by $7.86x, computed as $10x (the reduction that would occur but for § 1.245A-8(c)(6)) less the product of $5x (the excess amount, computed as $30x, the total reductions that would occur but for the application of § 1.245A-8(c)(6), less $25x, the amount described in § 1.245A-8(c)(1)(i)) and a fraction, the numerator of which is $150x (the balance of US1's extraordinary disposition account with respect to CFC1) and the denominator of which is $350x ($150x, the balance of US1's extraordinary disposition account with respect to CFC1, plus $200x, the balance of US2's extraordinary disposition account with respect to CFC3), *see* § 1.245A-8(c)(6); and

(*2*) US2's extraordinary disposition account with respect to CFC3 is reduced by $17.14x, computed as $20x (the reduction that would occur but for § 1.245A-8(c)(6)) less the product of $5x (the excess amount, computed as $30x, the total reductions that would occur but for the application of § 1.245A-8(c)(6), less $25x, the amount described in § 1.245A-8(c)(1)(i)) and a fraction, the numerator of which is $200x (the balance of US2's extraordinary disposition account with respect to CFC3) and the denominator of which is $350x ($150x, the balance of US1's extraordinary disposition account with respect to CFC1, plus $200x, the balance of US2's extraordinary disposition account with respect to CFC3), *see* § 1.245A-8(c)(6) of this section.

(F) *Reduction in balance of RGI accounts.* On November 30, 2019 (the last day of CFC2's taxable year)—

(*1*) The balance of US1's RGI account with respect to CFC2 that relates to its extraordinary disposition account with respect to CFC1 is decreased by $7.86x (the amount of the reduction, pursuant to § 1.245A-8(c)(1) and by reason of the RGI account, to US1's extraordinary disposition account with respect to CFC1) and, thus, following that reduction, the balance of the RGI account is $2.14x ($10x−$7.86x), *see* § 1.245A-8(c)(4)(i)(B); and

(*2*) The balance of US2's RGI account with respect to CFC2 that relates to its extraordinary disposition account with respect to CFC3 is decreased by $17.14x (the amount of the reduction, pursuant to § 1.245A-8(c)(1) and by reason of the RGI account, to US2's extraordinary disposition account with respect to CFC3) and, thus, following that reduction, the balance of the RGI account is $2.86x ($20x−$17.14x), *see* § 1.245A-8(c)(4)(i)(B).

(5) *Example 5. Computation of duplicate DQB*—(i) *Facts.* The facts are the same as in paragraph (c)(1)(i) of this section (*Example 1*) (and the results are the same as in paragraph (c)(1)(ii)(A) of this section), except that CFC1 does not make any distribution to US1, and on November 30, 2018, immediately after the Disqualified Transfer, CFC2 transfers Item 1 to newly-formed CFC3 solely in exchange for the sole share of stock of CFC3 (the contribution, "Contribution 1," and the share of stock of CFC3, the "CFC3 Share") and, immediately after Contribution 1, CFC3 transfers Item 1 to newly-formed CFC4 solely in exchange for the sole share of stock of CFC4 (the contribution, "Contribution 2," and the share of stock of CFC4, the "CFC4 Share"). Pursuant to section 358(a)(1), CFC2's basis in its share of stock of CFC3 is $90x, and CFC3's basis in its share of stock of CFC4 is $90x basis. As a result of Contribution 1, the condition of § 1.245A-6(b)(2) is not satisfied, because on at least one day of CFC2's taxable year ending on November 30, 2018 (which ends within US1's 2018 taxable year), CFC2 does not hold Item 1. *See* § 1.245A-6(b)(2)(ii)(C)(*1*). US1 therefore applies § 1.245A-8 (rules for complex cases) for its 2018 taxable year. *See* § 1.245A-6(b).

(ii) *Analysis*—(A) *Application of exchanged basis rule under section 951A to Contribution 1 and Contribution 2.* As a result of Contribution 1, pursuant to § 1.951A-3(h)(2)(ii)(B)(*2*)(*ii*), the disqualified basis of CFC3 Share includes the disqualified basis of Item 1 ($90x), and therefore the disqualified basis of CFC3 Share is $90x. Similarly, as a result of Contribution 2, pursuant to § 1.951A-3(h)(2)(ii)(B)(*2*)(*ii*), the disqualified basis of CFC4 Share also includes the disqualified basis of Item 1 ($90x), and therefore the disqualified basis of CFC4 Share is $90x.

(B) *Determination of duplicate DQB of CFC3 Share as a result of Contribution 1.* Because the disqualified basis of CFC3 Share includes the disqualified basis of Item 1, CFC3 Share is an item of exchanged basis property that relates to Item 1. *See* § 1.245A-8(d)(2)(ii). In addition, because CFC3 Share is an item of exchanged basis property that relates to Item 1 (which corresponds to US1's extraordinary disposition account with respect to CFC1), CFC3 Share is, for purposes of § 1.245A-8, treated as an item of specified property that corresponds to

US1's extraordinary disposition account with respect to CFC1. *See* § 1.245A-8(d)(2)(i). Further, the duplicate DQB of CFC3 Share as to Item 1 is $90x, the portion of the disqualified basis of CFC3 Share that includes Item 1's disqualified basis of $90x. *See* § 1.245A-8(d)(2)(iii)(A).

(C) *Determination of duplicate DQB of CFC4 Share as a result of Contribution 2.* For reasons similar to those described in paragraph (c)(5)(ii)(B) of this section, CFC4 Share is an item of exchanged basis property that relates to Item 1, CFC4 is treated for purposes of § 1.245A-8 as an item of specified property that corresponds to US1's extraordinary disposition account with respect to CFC1, and the duplicate DQB of CFC4 Share as to Item 1 is $90x.

(D) *Determination of duplicate DQB of CFC3 Share as a result of Contribution 2.* Because the disqualified basis of CFC3 Share and the disqualified basis of CFC4 Share each includes $90x of the disqualified basis of Item 1 and CFC3 receives the CFC4 Share in Contribution 2, the $90x of disqualified basis of CFC3 Share is attributable to the $90x of disqualified basis of CFC4 Share, and CFC3 Share is an item of exchanged basis property that relates to CFC4 Share. *See* § 1.245A-8(d)(2)(i) and (d)(2)(iii)(C). In addition, the duplicate DQB of CFC3 Share as to CFC4 Share is $90x. *See* § 1.245A-8(d)(2)(iii)(A).

(E) *Application of duplicate basis rules in* § *1.245A-8(b)(5).* For purposes of computing the fraction described in § 1.245A-8(b)(1)(ii), if US1's extraordinary disposition account with respect to CFC1 were to give rise to an extraordinary disposition amount or a tiered extraordinary disposition amount during US1's 2018 taxable year, then the duplicate DQB of CFC3 Share and the duplicate DQB of CFC4 Share would not be taken into account, because the disqualified basis of Item 1 (an item of specified property that corresponds to US1's extraordinary disposition account and as to which each of CFC3 Share and CFC4 share relates) would be taken into account. *See* § 1.245A-8(b)(1)(ii) and (b)(5)(i)(A). Accordingly, in such a case, for US1's 2018 taxable year, the numerator of the fraction described in § 1.245A-8(b)(1)(ii) would reflect only the disqualified basis of Item 1 or Item 2, as applicable, and the denominator would reflect only the sum of the disqualified basis of each of Item 1 and Item 2. *See* § 1.245A-8(b)(1)(ii) and (b)(5)(i)(A). Furthermore, to the extent there were to be a reduction under § 1.245A-8(b)(1) to the disqualified basis of Item 1, then the duplicate DQB of CFC4 Share would be reduced (but not below zero) by the product of the reduction to the disqualified basis of Item 1 and a fraction, the numerator of which would be $90x (the duplicate DQB of CFC4 Share), and the denominator of which would also be $90x (the duplicate DQB of CFC4 Share). *See* § 1.245A-8(b)(5)(i)(B). The $90x of duplicate DQB of CFC3 Share would be excluded from the denominator of the fraction described in the previous sentence because it is attributable to the $90x of duplicate DQB of CFC4 Share. *See* § 1.245A-8(b)(5)(i)(B)(*2*) (last sentence). For reasons similar to those described in this paragraph (c)(4)(ii)(E) with respect to the application of § 1.245A-8(b)(5)(i)(B) to CFC4 Share, the duplicate DQB of CFC3 Share would be reduced (but not below zero) by the product of the reduction to the disqualified basis of Item 1 and a fraction, the numerator of which would be $90x, and the denominator of which would also be $90x.

[T.D. 9934, 85 FR 76963, Dec. 1, 2020]

§ 1.245A-11 Applicability dates.

(a) ***In general.*** Sections 1.245A-6 through 1.245A-11 apply to taxable years of a foreign corporation beginning on or after December 1, 2020 and to taxable years of section 245A shareholders in which or with which such taxable years end.

(b) ***Exception.*** Notwithstanding paragraph (a) of this section, a taxpayer may choose to apply §§ 1.245A-6 through 1.245A-11 for a taxable year of a foreign corporation beginning before December 1, 2020 and to a taxable year of a section 245A shareholder in which or with which such taxable year ends, provided that the taxpayer and all persons bearing a relationship to the taxpayer described in section 267(b) or 707(b) apply §§ 1.245A-6 through 1.245A-11, in their entirety, and § 1.6038-2(f)(18) for all such taxable years and any subsequent taxable years beginning before December 1, 2020.

[T.D. 9934, 85 FR 76963, Dec. 1, 2020]

§ 1.245A(d)-1 Disallowance of foreign tax credit or deduction.

(a) ***No foreign tax credit or deduction allowed under section 245A(d)*** -(1) *Foreign income taxes paid or accrued by domestic corporations or successors.* No credit under section 901 or deduction is allowed in any taxable year for:

(i) Foreign income taxes paid or accrued by a domestic corporation that are attributable to section 245A(d) income of the domestic corporation;

(ii) Foreign income taxes paid or accrued by a successor to a domestic corporation that are attributable to section 245A(d) income of the successor; and

(iii) Foreign income taxes paid or accrued by a domestic corporation that is a United States shareholder of a foreign corporation, other than a foreign corporation that is a passive foreign investment company (as defined in section 1297) with respect to the domestic corporation and that is not a controlled foreign corporation, that are attributable to non-inclusion income of the foreign corporation and are not otherwise disallowed under paragraph (a)(1)(i) or (ii) of this section.

(2) ***Foreign income taxes paid or accrued by foreign corporations.*** No credit under section 901 or deduction is allowed in any taxable year for foreign income taxes paid or accrued by a foreign corporation that are attributable to section 245A(d) income, and such taxes are not eligible to be deemed paid under section 960 in any taxable year.

(3) ***Effect of disallowance on earnings and profits.*** The disallowance of a credit or deduction for foreign income taxes under this paragraph (a) does not affect whether the foreign income taxes reduce earnings and profits of a corporation.

(b) ***Attribution of foreign income taxes*** —

(1) ***Section 245A(d) income.*** Foreign income taxes are attributable to section 245A(d) income to the extent that the foreign income taxes are allocated and apportioned under § 1.861-20 to the section 245A(d) income group. For purposes of this paragraph (b)(1), § 1.861-20 is applied by treating the section 245A(d) income group in each section 904 category of a domestic corporation, successor, or foreign corporation as a statutory grouping and treating all other income, including the receipt of a distribution of previously taxed earnings and profits other than section 245A(d) PTEP, as income in the residual grouping. See § 1.861-20(d)(2) through (3) for rules regarding the allocation and apportionment of foreign income taxes to the statutory and residual groupings if the taxpayer does not realize, recognize, or take into account a corresponding U.S. item in the U.S. taxable year in which the foreign income taxes are paid or accrued. In the case of a foreign law distribution or foreign law disposition, a corresponding U.S. item is assigned to the statutory and residual groupings under § 1.861-20(d)(2)(ii)(B) and (C) without regard to the application of section 246(c), the holding periods described in sections 964(e)(4)(A) and 1248(j), and § 1.245A-5.

(2) *Non-inclusion income of a foreign corporation* —

(i) ***Scope.*** This paragraph (b)(2) provides rules for attributing foreign income taxes paid or accrued by a domestic corporation that is a United States shareholder of a foreign corporation to non-inclusion income of the foreign corporation. It applies only in cases in which the foreign income taxes are allocated and apportioned under § 1.861-20 by reference to the characterization of the tax book value of stock, whether the stock is held directly or indirectly through a partnership or other passthrough entity, for purposes of allocating and apportioning the domestic corporation's interest expense, or by reference to the income of a foreign corporation that is a reverse hybrid or foreign law CFC.

(ii) ***Foreign income taxes on a remittance, U.S. return of capital amount, or U.S. return of partnership basis amount.*** This paragraph (b)(2)(ii) applies to foreign income taxes paid or accrued by a domestic corporation that is a United States shareholder of a foreign corporation with respect to foreign taxable income that the domestic corporation includes by reason of a remittance, a distribution (including a foreign law distribution) that is a U.S. return of capital amount or U.S. return of partnership basis amount, or a disposition (including a foreign law disposition) that gives rise to a U.S. return of capital amount or a U.S. return of partnership basis amount. These foreign income taxes are attributable to non-inclusion income of the foreign corporation to the extent that they are allocated and apportioned to the domestic corporation's section 245A subgroup of general category stock, section 245A subgroup of passive category stock, or section 245A subgroup of U.S. source category stock in applying § 1.861-20 for purposes of section 904 as the operative section. For purposes of this paragraph (b)(2)(ii), § 1.861-20 is applied by treating the domestic corporation's section 245A subgroup of general category stock, section 245A subgroup of passive category stock, and section 245A subgroup of U.S. source category stock as the statutory groupings and treating the tax book value of the non-section 245A subgroup of stock for each separate category as tax book value in the residual grouping.

(iii) ***Foreign income taxes on income of a reverse hybrid or a foreign law CFC.*** This paragraph (b)(2)(iii) applies to foreign income taxes paid or accrued by a domestic corporation, other than a regulated investment company (as defined in section 851), real estate investment trust (as defined in section 856), or S corporation (as defined in section 1361), that is a United States shareholder of a foreign corporation that is a reverse hybrid or foreign law CFC with respect to the foreign law pass-through income or foreign law inclusion regime income of the reverse hybrid or foreign law CFC, respectively. These taxes are attributable to the non-inclusion income of a reverse hybrid or foreign law CFC to the extent that they are allocated and apportioned to the non-inclusion income group under § 1.861-20. For purposes of this paragraph (b)(2)(iii), § 1.861-20 is applied by treating the non-inclusion income group in each section 904 category of the domestic corporation and the foreign corporation as a statutory grouping and treating all other income as income in the residual grouping.

(3) ***Anti-avoidance rule.*** Foreign income taxes are treated as attributable to section 245A(d) income of a domestic corporation or foreign corporation, or non-inclusion income of a foreign corporation, if a transaction, series of related transactions, or arrangement is undertaken with a principal purpose of avoiding the purposes of section 245A(d) and this section with respect to such foreign income taxes, including, for example, by separating foreign income taxes from the income, or earnings and profits, to which such foreign income taxes relate or by making distributions (or causing inclusions)

under foreign law in multiple years that give rise to foreign income taxes that are allocated and apportioned with reference to the same previously taxed earnings and profits. See paragraph (d)(4) of this section (*Example 3*).

(c) ***Definitions.*** The following definitions apply for purposes of this section.

(1) ***Corresponding U.S. item.*** The term *corresponding U.S. item* has the meaning set forth in § 1.861-20(b).

(2) ***Foreign income tax.*** The term *foreign income tax* has the meaning set forth in § 1.901-2(a).

(3) ***Foreign law CFC.*** The term *foreign law CFC* has the meaning set forth in § 1.861-20(b).

(4) ***Foreign law disposition.*** The term *foreign law disposition* has the meaning set forth in § 1.861-20(b).

(5) ***Foreign law distribution.*** The term *foreign law distribution* has the meaning set forth in § 1.861-20(b).

(6) ***Foreign law inclusion regime.*** The term *foreign law inclusion regime* has the meaning set forth in § 1.861-20(b).

(7) ***Foreign law inclusion regime income.*** The term *foreign law inclusion regime income* has the meaning set forth in § 1.861-20(b).

(8) ***Foreign law pass-through income.*** The term *foreign law pass-through income* has the meaning set forth in § 1.861-20(b).

(9) ***Foreign taxable income.*** The term *foreign taxable income* has the meaning set forth in § 1.861-20(b).

(10) ***Gross included tested income.*** The term *gross included tested income* means, with respect to a foreign corporation that is described in paragraph (b)(2)(iii) of this section, an item of gross tested income multiplied by the inclusion percentage of a domestic corporation that is described in paragraph (b)(2)(iii) of this section for the domestic corporation's U.S. taxable year with or within which the foreign corporation's taxable year described in § 1.861-20(d)(3)(i)(C) or § 1.861-20(d)(3)(iii) ends.

(11) ***Hybrid dividend.*** The term *hybrid dividend* has the meaning set forth in § 1.245A(e)-1(b)(2).

(12) ***Inclusion percentage.*** The term *inclusion percentage* has the meaning set forth in § 1.960-1(b).

(13) ***Non-inclusion income.*** The term *non-inclusion income* means the items of gross income of a foreign corporation other than the items that are described in § 1.960-1(d)(2)(ii)(B)(*2*) (items of income assigned to the subpart F income groups) and section 245(a)(5) (without regard to section 245(a)(12)), and other than gross included tested income.

(14) ***Non-inclusion income group.*** The term *non-inclusion income group* means the income group within a section 904 category that consists of non-inclusion income.

(15) ***Non-section 245A subgroup.*** The term *non-section 245A subgroup* means each non-section 245A subgroup determined under § 1.861-13(a)(5), applied as if the foreign corporation whose stock is being characterized were a controlled foreign corporation.

(16) ***Pass-through entity.*** The term *pass-through entity* has the meaning set forth in § 1.904-5(a)(4).

(17) ***Remittance.*** The term *remittance* has the meaning set forth in § 1.861-20(d)(3)(v)(E).

(18) ***Reverse hybrid.*** The term *reverse hybrid* has the meaning set forth in § 1.861-20(b).

(19) ***Section 245A subgroup.*** The term *section 245A subgroup* means each section 245A subgroup determined under § 1.861-13(a)(5), applied as if the foreign corporation whose stock is being characterized were a controlled foreign corporation.

(20) ***Section 245A(d) income.*** With respect to a domestic corporation, the term *section 245A(d) income* means a dividend (including a section 1248 dividend and a dividend received indirectly through a pass-through entity) or an inclusion under section 951(a)(1)(A) for which a deduction under section 245A(a) is allowed, a distribution of section 245A(d) PTEP, a hybrid dividend, or an inclusion under section 245A(e)(2) and § 1.245A(e)-1(c)(1) by reason of a tiered hybrid dividend. With respect to a successor of a domestic corporation, the term *section 245A(d) income* means the receipt of a distribution of section 245A(d) PTEP. With respect to a foreign corporation, the term *section 245A(d) income* means an item of subpart F income that gave rise to a deduction under section 245A(a), a tiered hybrid dividend or a distribution of section 245A(d) PTEP. An item described in this paragraph (c)(20) that qualifies for the deduction under section 245A(a) is considered section 245A(d) income regardless of whether the domestic corporation claims the deduction on its return with respect to the item.

(21) ***Section 245A(d) income group.*** The term *section 245A(d) income group* means an income group within a section 904 category that consists of section 245A(d) income.

(22) ***Section 245A(d) PTEP.*** The term *section 245A(d) PTEP* means previously taxed earnings and profits described in § 1.960-3(c)(2)(v) or (ix) if such previously taxed earnings and profits arose either as a result of a dividend that gave rise to a deduction under section 245A(a), or as a result of a tiered hybrid dividend that, by reason of section 245A(e)(2) and § 1.245A(e)-1(c)(1), gave rise to an inclusion in the gross income of a United States shareholder. For purposes of this paragraph (c)(22), a dividend that qualifies for the deduction under section 245A(a) is considered to have given rise to a deduction under section 245A(a) regardless of whether the domestic corporation claims the deduction on its return with respect to the dividend.

(23) ***Section 904 category.*** The term *section 904 category* has the meaning set forth in § 1.960-1(b).

(24) ***Section 1248 dividend.*** The term *section 1248 dividend* means an amount of gain that is treated as a dividend under section 1248.

(25) ***Successor.*** The term successor means a person, including an individual who is a citizen or resident of the United States, that acquires from any person any portion of the interest of a United States shareholder in a foreign corporation for purposes of section 959(a).

(26) ***Tested income.*** The term *tested income* has the meaning set forth in § 1.960-1(b).

(27) ***Tiered hybrid dividend.*** The term *tiered hybrid dividend* has the meaning set forth in § 1.245A(e)-1(c)(2).

(28) ***U.S. capital gain amount.*** The term *U.S. capital gain amount* has the meaning set forth in § 1.861-20(b).

(29) ***U.S. return of capital amount.*** The term *U.S. return of capital amount* has the meaning set forth in § 1.861-20(b).

(30) ***U.S. return of partnership basis amount.*** The term *U.S. return of partnership basis amount* means, with respect to a partnership in which a domestic corporation is a partner, the portion of a distribution by the partnership to the domestic corporation, or the portion of the proceeds of a disposition of the domestic corporation's interest in the partnership, that exceeds the U.S. capital gain amount.

(d) ***Examples.*** The following examples illustrate the application of this section.

(1) ***Presumed facts.*** Except as otherwise provided, the following facts are presumed for purposes of the examples:

(i) USP is a domestic corporation;

(ii) CFC is a controlled foreign corporation organized in Country A, and is not a reverse hybrid or a foreign law CFC;

(iii) USP owns all of the outstanding stock of CFC;

(iv) USP would be allowed a deduction under section 245A(a) for dividends received from CFC;

(v) All parties have a U.S. dollar functional currency and a U.S. taxable year and foreign taxable year that correspond to the calendar year; and

(vi) References to income are to gross items of income, and no party has deductions for Country A tax purposes or deductions for Federal income tax purposes (other than foreign income tax expense).

(2) ***Example 1: Distribution for foreign and Federal income tax purposes—***

(i) ***Facts.*** As of December 31, Year 1, CFC has $800x of section 951A PTEP (as defined in § 1.960-3(c)(2)(viii)) in a single annual PTEP account (as defined in § 1.960-3(c)(1)), and $500x of earnings and profits described in section 959(c)(3). On December 31, Year 1, CFC distributes $1,000x of cash to USP. For Country A tax purposes, the entire $1,000x distribution is a dividend and is therefore a foreign dividend amount (as defined in § 1.861-20(b)). Country A imposes a withholding tax on USP of $150x with respect to the $1,000x of foreign gross dividend income under Country A law. For Federal income tax purposes, USP includes in gross income $200x of the distribution as a dividend for which a deduction is allowable under section 245A(a). The remaining $800x of the distribution is a distribution of PTEP that is excluded from USP's gross income and not treated as a dividend under section 959(a) and (d), respectively. The entire $1,000x dividend is a U.S. dividend amount (as defined in § 1.861-20(b)).

(ii) ***Analysis —***

(A) ***In general.*** The rules of this section are applied by first determining the portion of the $150x Country A withholding tax that is attributable under paragraph (b)(1) of this section to the section 245A(d) income of USP, and then by determining the portion of the $150x Country A withholding tax that is described in paragraph (b)(2)(i) of this section and that is attributable under either paragraph (b)(2)(ii) or (b)(2)(iii) of this section to the non-inclusion income of CFC. No credit or deduction is allowed in any taxable year under paragraph (a)(1)(i) of this section for any portion of the $150x Country A withholding tax that is attributable to the section 245A(d) income of USP, or, under paragraph (a)(1)(iii) of this section, for any portion of that tax that is attributable to the non-inclusion income of CFC, to the extent the tax is not disallowed under paragraph (a)(1)(i) of this section.

(B) ***Attribution of foreign income taxes to section 245A(d) income.*** Under paragraph (b)(1) of this section, the $150x Country A withholding tax is attributable to the section 245A(d) income of USP to the extent that it is allocated and apportioned to the section 245A(d) income group (the statutory grouping) under § 1.861-20. Section 1.861-20(c) allocates and apportions foreign income tax to the statutory and residual groupings to which the

items of foreign gross income that were included in the foreign tax base are assigned under § 1.861-20(d). Section 1.861-20(d)(3)(i) assigns foreign gross income that is a foreign dividend amount, to the extent of the U.S. dividend amount, to the statutory and residual groupings to which the U.S. dividend amount is assigned. The $1,000x foreign dividend amount is therefore assigned to the statutory and residual groupings to which the $1,000x U.S. dividend amount is assigned under Federal income tax law. The $1,000x U.S. dividend amount comprises a $200x dividend for which a deduction under section 245A(a) is allowed, which is an item of section 245A(d) income, and $800x of section 951A PTEP, the receipt of which is income in the residual grouping. Accordingly, $200x of the $1,000x of foreign gross dividend income is assigned to the section 245A(d) income group, and $800x is assigned to the residual grouping. Under § 1.861-20(f), $30x ($150x × $200x/$1,000x) of the $150x Country A withholding tax is apportioned to the section 245A(d) income group and is attributable to the section 245A(d) income of USP. The remaining $120x ($150x × $800x/$1,000x) of the tax is apportioned to the residual grouping.

(C) ***Attribution of foreign income taxes to non-inclusion income.*** Under paragraph (b)(2) of this section, the $150x Country A withholding tax may be attributed to non-inclusion income of CFC if the tax is allocated and apportioned under § 1.861-20 by reference to either the characterization of the tax book value of stock under § 1.861-9 or the income of a foreign corporation that is a reverse hybrid or foreign law CFC. CFC is neither a reverse hybrid nor a foreign law CFC. In addition, no portion of the $150x Country A withholding tax is allocated and apportioned under § 1.861-20 by reference to the characterization of the tax book value of CFC's stock. See § 1.861-20(d)(3)(i). Therefore, none of the tax is attributable to non-inclusion income of CFC.

(D) ***Disallowance.*** Under paragraph (a)(1)(i) of this section, no credit under section 901 or deduction is allowed in any taxable year to USP for the $30x portion of the Country A withholding tax that is attributable to section 245A(d) income of USP.

(3) ***Example 2: Distribution for foreign law purposes*** —

(i) ***Facts.*** As of December 31, Year 1, CFC has $800x of section 951A PTEP (as defined in § 1.960-3(c)(2)(viii)) in a single annual PTEP account (as defined in § 1.960-3(c)(1)), and $500x of earnings and profits described in section 959(c)(3). On December 31, Year 1, CFC distributes $1,000x of its stock to USP. For Country A tax purposes, the entire $1,000x stock distribution is treated as a dividend to USP and is therefore a foreign dividend amount (as defined in § 1.861-20(b)). Country A imposes a withholding tax on USP of $150x with respect to the $1,000x of foreign gross dividend income that USP includes under Country A law. For Federal income tax purposes, USP does not recognize gross income as a result of the stock distribution under section 305(a). The $1,000x stock distribution is therefore a foreign law distribution.

(ii) ***Analysis*** —

(A) ***In general.*** The rules of this section are applied by first determining the portion of the $150x Country A withholding tax that is attributable under paragraph (b)(1) of this section to the section 245A(d) income of USP, and then by determining the portion of the $150x Country A withholding tax that is described in paragraph (b)(2)(i) of this section and that is attributable under either paragraph (b)(2)(ii) or (b)(2)(iii) of this section to the non-inclusion income of CFC. No credit or deduction is allowed in any taxable year under paragraph (a)(1)(i) of this section for any portion of the $150x Country A withholding tax

that is attributable to the section 245A(d) income of USP or, under paragraph (a)(1)(iii) of this section, for any portion of that tax that is attributable to the non-inclusion income of CFC, to the extent the tax is not disallowed under paragraph (a)(1)(i) of this section.

(B) ***Attribution of foreign income taxes to section 245A(d) income.*** Under paragraph (b)(1) of this section, the $150x Country A withholding tax is attributable to the section 245A(d) income of USP to the extent that it is allocated and apportioned to the section 245A(d) income group (the statutory grouping) under § 1.861-20. Section 1.861-20(c) allocates and apportions foreign income tax to the statutory and residual groupings to which the items of foreign gross income that were included in the foreign tax base are assigned under § 1.861-20(d). In general, § 1.861-20(d) assigns foreign gross income to the statutory and residual groupings to which the corresponding U.S. item is assigned. If a taxpayer does not recognize a corresponding U.S. item in the year in which it pays or accrues foreign income tax with respect to foreign gross income that it includes by reason of a foreign law dividend, § 1.861-20(d)(2)(ii)(B) assigns the foreign dividend amount to the same statutory or residual groupings to which the foreign dividend amount would be assigned if a distribution were made for Federal income tax purposes in the amount of, and on the date of, the foreign law distribution. Further, § 1.861-20(d)(2)(ii)(B) computes the U.S. dividend amount (as defined in § 1.861-20(b)) as if the distribution occurred on the date the distribution occurs for foreign law purposes. Therefore, the foreign dividend amount is assigned to the same statutory and residual groupings to which it would be assigned if a $1,000x distribution occurred on December 31, Year 1 for Federal income tax purposes. If such a distribution occurred, it would result in a $200x dividend to USP for which a deduction would be allowed under section 245A(a). The remaining $800x of the distribution would be excluded from USP's gross income and not treated as a dividend under section 959(a) and (d), respectively. Under paragraphs (c)(20) and (b)(1) of this section, the $1,000x U.S. dividend amount comprises a $200x dividend for which a deduction under section 245A(a) would be allowed, which is an item of section 245A(d) income, and $800x of section 951A PTEP, which is income in the residual grouping. Accordingly, $200x of the $1,000x foreign gross dividend income is assigned to the section 245A(d) income group, and $800x is assigned to the residual grouping. Under § 1.861-20(f), $30x ($150x × $200x/$1,000x) of the Country A foreign income tax is apportioned to the section 245A(d) income group and is attributable to the section 245A(d) income of USP. The remaining $120x ($150x × $800x/$1,000x) of the tax is apportioned to the residual grouping.

(C) ***Attribution of foreign income taxes to non-inclusion income.*** Under paragraph (b)(2) of this section, the $150x Country A withholding tax may be attributed to non-inclusion income of CFC if the tax is allocated and apportioned under § 1.861-20 by reference to either the characterization of the tax book value of stock under § 1.861-9 or the income of a foreign corporation that is a reverse hybrid or foreign law CFC. CFC is neither a reverse hybrid nor a foreign law CFC. In addition, no portion of the $150x Country A withholding tax is allocated and apportioned under § 1.861-20 by reference to the characterization of the tax book value of CFC's stock. See § 1.861-20(d)(3)(i). Therefore, none of the tax is attributable to non-inclusion income of CFC.

(D) ***Disallowance.*** Under paragraph (a)(1)(i) of this section, no credit under section 901 or deduction is allowed in any taxable year to USP for the $30x portion of the Country A withholding tax that is attributable to section 245A(d) income of USP.

(4) *Example 3: Successive foreign law distributions subject to anti-avoidance rule* —

(i) ***Facts.*** For Year 1, CFC earns $500x of subpart F income that gives rise to a $500x gross income inclusion to USP under section 951(a), and income that creates $500x of earnings and profits described in section 959(c)(3). CFC earns no income in Years 2 through 4. As of January 1, Year 2, and through December 31, Year 4, CFC has $500x of earnings and profits described in section 959(c)(3) and $500x of section 951(a)(1)(A) PTEP (as defined in § 1.960-3(c)(2)(x)) in a single annual PTEP account (as defined in § 1.960-3(c)(1)). In each of Years 2 and 3, USP makes a consent dividend election under Country A law that, for Country A tax purposes, deems CFC to distribute to USP, and USP immediately to contribute to CFC, $500x on December 31 of each year. For Country A tax purposes, each deemed distribution is a dividend of $500x to USP, and each deemed contribution is a non-taxable contribution of $500x to the capital of CFC. Each $500x deemed distribution is therefore a foreign dividend amount (as defined in § 1.861-20(b)). Country A imposes $150x of withholding tax on USP in each of Years 2 and 3 with respect to the $500x of foreign gross dividend income that USP includes in income under Country A law. For Federal income tax purposes, the Country A deemed distributions in Years 2 and 3 are disregarded such that USP recognizes no income, and the deemed distributions are therefore foreign law distributions. On December 31, Year 4, CFC distributes $1,000x to USP, which for Country A tax purposes is treated as a return of contributed capital on which no withholding tax is imposed. For Federal income tax purposes, $500x of the $1,000x distribution is a dividend to USP for which a deduction under section 245A(a) is allowed; the remaining $500x of the distribution is a distribution of section 951(a)(1)(A) PTEP that is excluded from USP's gross income and not treated as a dividend under section 959(a) and (d), respectively. The entire $1,000x dividend is a U.S. dividend amount (as defined in § 1.861-20(b)). The Country A consent dividend elections in Years 2 and 3 are made with a principal purpose of avoiding the purposes of section 245A(d) and this section to disallow a credit or deduction for Country A withholding tax incurred with respect to USP's section 245A(d) income.

(ii) *Analysis* —

(A) ***In general.*** The rules of this section are applied by first determining the portion of the $150x Country A withholding tax paid by USP in each of Years 2 and 3 that is attributable under paragraph (b)(1) of this section to the section 245A(d) income of USP, and then by determining the portion of the $150x Country A withholding tax paid by USP in each of Years 2 and 3 that is described in paragraph (b)(2)(i) of this section and that is attributable under either paragraph (b)(2)(ii) or (b)(2)(iii) of this section to the non-inclusion income of CFC. Finally, the anti-avoidance rule under paragraph (b)(3) of this section applies to treat any portion of the $150x Country A withholding tax paid by USP in each of Years 2 and 3 as attributable to section 245A(d) income of USP or non-inclusion income of CFC, if a transaction, series of related transactions, or arrangement is undertaken with a principal purpose of avoiding the purposes of section 245A(d) and this section. No credit or deduction is allowed in any taxable year under paragraph (a)(1)(i) of this section for any portion of the $150x Country A withholding tax paid by USP in each of Years 2 and 3 that is attributable to the section 245A(d) income of USP or, under paragraph (a)(1)(iii) of this section, for any portion of that tax that is attributable to the non-inclusion income of CFC, to the extent the tax is not disallowed under paragraph (a)(1)(i) of this section.

(B) ***Attribution of foreign income taxes to section 245A(d) income.*** Under paragraph (b)(1) of this section, the $150x Country A withholding tax paid by USP in each of Years 2 and 3 is attributable to the section 245A(d) income of USP to the extent that it is allocated and

apportioned to the section 245A(d) income group (the statutory grouping) under § 1.861-20. Section 1.861-20(c) allocates and apportions foreign income tax to the statutory and residual groupings to which the items of foreign gross income that were included in the foreign tax base are assigned under § 1.861-20(d). In general, § 1.861-20(d) assigns foreign gross income to the statutory and residual groupings to which the corresponding U.S. item is assigned. If a taxpayer does not recognize a corresponding U.S. item in the year in which it pays or accrues foreign income tax with respect to foreign gross income that it includes by reason of a foreign law dividend, § 1.861-20(d)(2)(ii)(B) assigns the foreign dividend amount to the same statutory or residual groupings to which the foreign dividend amount would be assigned if a distribution were made for Federal income tax purposes in the amount of, and on the date of, the foreign law distribution. Therefore, the $500x foreign dividend amount in each of Years 2 and 3 is assigned to the same statutory and residual groupings to which it would be assigned if a $500x distribution occurred on December 31 of each of those years for Federal income tax purposes.

(*1*) ***Year 2 $500x deemed distribution.*** CFC made no distributions in Year 1 and earned no income and made no distributions in Year 2 for Federal income tax purposes. As of December 31, Year 2, CFC has $500x of earnings and profits described in section 959(c)(3) and $500x of section 951(a)(1)(A) PTEP. If CFC distributed $500x on that date, the distribution would be a distribution of section 951(a)(1)(A) PTEP. A distribution of previously taxed earnings and profits is a U.S. dividend amount. Section 1.861-20(d)(3)(i) assigns the foreign dividend amount, to the extent of the U.S. dividend amount, to the statutory and residual groupings to which the U.S. dividend amount is assigned. The receipt of a distribution of previously taxed earnings and profits is assigned to the residual grouping under paragraph (b)(1) of this section. Therefore, all $500x foreign dividend amount would be assigned to the residual grouping, and none of the $150x withholding tax paid or accrued by USP in Year 2 would be treated as attributable to section 245A(d) income of USP.

(*2*) ***Year 3 $500x deemed distribution.*** CFC made no distributions in Year 1 and earned no income and made no distributions in Year 2 or Year 3 for Federal income tax purposes. Consequently, as of December 31, Year 3, CFC has $500x of earnings and profits described in section 959(c)(3) and $500x of section 951(a)(1)(A) PTEP. If CFC distributed $500x on that date, the distribution would be a distribution of section 951(a)(1)(A) PTEP. For the reasons described in paragraph (d)(4)(ii)(B)(*1*) of this section, all $500x of the foreign dividend amount would be assigned to the residual grouping, and none of the $150x withholding tax paid or accrued by USP in Year 3 would be treated as attributable to section 245A(d) income of USP.

(*3*) ***Year 4 $1,000x distribution.*** The Year 4 $1,000x distribution is, for Country A purposes, a return of capital distribution that is not subject to withholding tax. For Federal income tax purposes, it comprises a $500x dividend for which a deduction under section 245A(a) is allowed, which is an item of section 245A(d) income of USP, and a $500x distribution of section 951(a)(1)(A) PTEP, the receipt of which is income in the residual grouping.

(C) ***Attribution of foreign income taxes to non-inclusion income.*** Under paragraph (b)(2) of this section, the $150x Country A withholding tax paid by USP in each of Years 2 and 3 may be attributed to non-inclusion income of CFC if the tax is allocated and apportioned under § 1.861-20 by reference to either the characterization of the tax book value of stock under §

1.861-9 or the income of a foreign corporation that is a reverse hybrid or foreign law CFC. CFC is neither a reverse hybrid nor a foreign law CFC. In addition, no portion of the Country A withholding tax is allocated and apportioned under § 1.861-20 by reference to the characterization of the tax book value of CFC's stock. See § 1.861-20(d)(3)(i). Therefore, none of the tax is attributable to non-inclusion income of CFC.

(D) ***Attribution of foreign income taxes pursuant to anti-avoidance rule.*** USP made two successive foreign law distributions in Years 2 and 3 that were subject to Country A withholding tax and that did not individually exceed, but together exceeded, the section 951(a)(1)(A) PTEP of CFC. The Country A withholding tax on each consent dividend is allocated to the residual grouping rather than to the statutory grouping of section 245A(d) income under §§ 1.861-20(d)(2)(ii) and 1.861-20(d)(3)(i). USP paid no Country A withholding tax on the Year 4 distribution as a result of the Country A consent dividends in Years 2 and 3. If CFC had distributed its earnings and profits in Year 4 without the prior consent dividends, the distribution would have been subject to withholding tax, a portion of which would have been attributable to the section 245A(d) income arising from the distribution. But for the application of the anti-avoidance rule in paragraph (b)(3) of this section, USP would avoid the disallowance under section 245A(d) with respect to this portion of the withholding tax. Because USP made foreign law distributions that caused withholding tax from multiple foreign law distributions to be associated with the same previously taxed earnings and profits with a principal purpose of avoiding the purposes of section 245A(d) and this section, the $150x Country A withholding tax paid by USP in each of Years 2 and 3 is treated as being attributable to section 245A(d) income of USP.

(E) ***Disallowance.*** Under paragraph (a)(1)(i) of this section, no credit under section 901 or deduction is allowed in any taxable year to USP for the $150x Country A withholding tax paid by USP in each of Years 2 and 3 that is attributable to section 245A(d) income of USP.

(5) ***Example 4: Distribution that is in part a dividend and in part a return of capital*** —

(i) ***Facts.*** CFC uses the modified gross income method to allocate and apportion its interest expense, and its stock has a tax book value of $10,000x. For Year 1, CFC earns $500x of income that is specified foreign source general category gross income as that term is defined in § 1.861-13(a)(1)(i)(A)(*9*) and is therefore neither tested income nor subpart F income of CFC. As of December 31, Year 1, CFC has $500x of earnings and profits described in section 959(c)(3). On that date, CFC distributes $1,000x of cash to USP. For Country A tax purposes, the entire $1,000x distribution is a dividend to USP and is therefore a foreign dividend amount (as defined in § 1.861-20(b)). Country A imposes a withholding tax on USP of $150x with respect to the $1,000x of foreign gross dividend income that USP includes under the law of Country A. For Federal income tax purposes, USP includes $500x of the distribution in its gross income as a dividend for which a $500x deduction is allowed to USP under section 245A(a); the remaining $500x of the distribution is applied against and reduces USP's basis in its CFC stock under section 301(c)(2). The portion of the distribution that is a $500x dividend is a U.S. dividend amount (as defined in § 1.861-20(b)). The remaining $500x of the distribution is a U.S. return of capital amount.

(ii) ***Analysis*** —

(A) ***In general.*** The rules of this section are applied by first determining the portion of the $150x Country A withholding tax that is attributable under paragraph (b)(1) of this section to the section 245A(d) income of USP, and then by determining the portion of the $150x

Country A withholding tax that is described in paragraph (b)(2)(i) of this section and that is attributable under either paragraph (b)(2)(ii) or (b)(2)(iii) of this section to the non-inclusion income of CFC. No credit or deduction is allowed under paragraph (a)(1)(i) of this section for any portion of the $150x Country A withholding tax that is attributable to the section 245A(d) income of USP or, under paragraph (a)(1)(iii) of this section, for any portion of that tax that is attributable to the non-inclusion income of CFC, to the extent the tax is not disallowed under paragraph (a)(1)(i) of this section.

(B) ***Attribution of foreign income taxes to section 245A(d) income.*** Under paragraph (b)(1) of this section, the $150x Country A withholding tax is attributable to the section 245A(d) income of USP to the extent that it is allocated and apportioned to the section 245A(d) income group (the statutory grouping) under § 1.861-20. Section 1.861-20(c) allocates and apportions foreign income tax to the statutory and residual groupings to which the items of foreign gross income that were included in the foreign tax base are assigned under § 1.861-20(d). Section 1.861-20(d)(3)(i) assigns foreign gross income that is a foreign dividend amount, to the extent of the U.S. dividend amount, to the statutory and residual groupings to which the U.S. dividend amount is assigned. Of the $1,000x foreign dividend amount, $500x is therefore assigned to the statutory and residual groupings to which the $500x U.S. dividend amount is assigned under Federal income tax law. The entire $500x U.S. dividend amount is a dividend for which a section 245A(a) deduction is allowed and is therefore section 245A(d) income that is assigned to the section 245A(d) income group. Accordingly, $500x of the foreign dividend amount is assigned to the section 245A(d) income group. Under § 1.861-20(f), $75x ($150x × $500x/$1,000x) of the Country A withholding tax is allocated to the section 245A(d) income group and so under paragraph (b)(1) of this section is attributable to the section 245A(d) income of USP.

(C) ***Attribution of foreign income taxes to non-inclusion income.*** The remaining $75x of the Country A withholding tax is described in paragraph (b)(2)(i) of this section because the $500x of foreign dividend amount that corresponds to the $500x U.S. return of capital amount is assigned, and the remaining withholding tax imposed on that foreign dividend amount is allocated and apportioned, by reference to the characterization of the tax book value of the stock of CFC. Under paragraph (b)(2)(ii) of this section, the remaining $75x Country A withholding tax is attributable to non-inclusion income of CFC to the extent that the tax is allocated and apportioned under § 1.861-20 to USP's section 245A subgroup of general category stock, section 245A subgroup of passive category stock, and section 245A subgroup of U.S. source category stock (the statutory groupings) for purposes of section 904 as the operative section. Under § 1.861-20(d)(3)(i), the $500x portion of the foreign dividend amount that corresponds to the $500x U.S. return of capital amount is assigned to the statutory and residual groupings to which $500x of earnings of CFC would be assigned if CFC recognized them in Year 1. Those earnings are deemed to arise in the statutory and residual groupings in the same proportions as the proportions of the tax book value of CFC's stock in the groupings for Year 1 for purposes of applying the asset method of expense allocation and apportionment under § 1.861-9. Under § 1.861-9, § 1.861-9T(f), and § 1.861-13, for purposes of section 904 as the operative section, all of the tax book value of the stock of CFC is assigned to USP's section 245A subgroup of general category stock because CFC uses the modified gross income method to allocate and apportion its interest expense and earns only specified foreign source general category gross income for Year 1. Under § 1.861-20(d)(3)(i), if CFC recognized $500x of earnings in Year 1 these earnings would be deemed to arise in the section 245A subgroup of general

category stock. Accordingly, the remaining $500x of foreign dividend amount is assigned to USP's section 245A subgroup of general category stock. Under § 1.861-20(f), the remaining $75x of withholding tax is allocated to the section 245A subgroup and, under paragraph (b)(2)(ii) of this section, is attributable to the non-inclusion income of CFC.

(D) ***Disallowance.*** Under paragraph (a)(1)(i) of this section, no credit under section 901 or deduction is allowed in any taxable year to USP for the $75x portion of the Country A withholding tax that is attributable to section 245A(d) income of USP. Under paragraph (a)(1)(iii) of this section, no credit under section 901 or deduction is allowed in any taxable year to USP for the $75x portion of the Country A withholding tax that is attributable to non-inclusion income of CFC.

(6) ***Example 5: Income of a reverse hybrid*** —

(i) ***Facts.*** CFC is a reverse hybrid. In Year 1, CFC earns a $500x item of gain described in section 907(c)(1)(B) that is non-inclusion income. CFC also earns for Federal income tax purposes and Country A tax purposes a $1,000x item of royalty income, of which $500x is gross included tested income and $500x is non-inclusion income. USP includes the $500x item of foreign gain and the $1,000x item of foreign gross royalty income in its Country A taxable income, and the items are foreign law pass-through income. If CFC included these items under Country A tax law, its $1,000x of royalty income for Federal income tax purposes would be the corresponding U.S. item for the foreign gross royalty income, and its $500x of gain for Federal income tax purposes would be the corresponding U.S. item for the foreign gain. Country A imposes a $150x foreign income tax on USP with respect to $1,500x of foreign gross income.

(ii) ***Analysis*** —

(A) ***In general.*** The rules of this section are applied by first determining the portion of the $150x Country A tax that is attributable under paragraph (b)(1) of this section to the section 245A(d) income of USP, and then by determining the portion of the $150x Country A tax that is described in paragraph (b)(2)(i) of this section and that is attributable under either paragraph (b)(2)(ii) or (iii) of this section to the non-inclusion income of CFC. No credit or deduction is allowed under paragraph (a)(1)(i) of this section for any portion of the $150x Country A tax that is attributable to the section 245A(d) income of USP or, under paragraph (a)(1)(iii) of this section, for any portion of that tax that is attributable to the non-inclusion income of CFC, to the extent the tax is not disallowed under paragraph (a)(1)(i) of this section.

(B) ***Attribution of foreign income taxes to section 245A(d) income.*** Under paragraph (b)(1) of this section, the $150x Country A tax is attributable to section 245A(d) income to the extent the tax is allocated and apportioned to the section 245A(d) income group (the statutory grouping) under § 1.861-20. Section 1.861-20(c) allocates and apportions foreign income tax to the statutory and residual groupings to which the items of foreign gross income that were included in the foreign tax base are assigned under § 1.861-20(d). In general, § 1.861-20(d) assigns foreign gross income to the statutory and residual groupings to which the corresponding U.S. item is assigned. Section 1.861-20(d)(3)(i)(C) assigns the foreign law pass-through income that USP includes by reason of its ownership of CFC to the statutory and residual groupings by treating USP's foreign law pass-through income as foreign gross income of CFC, and by treating CFC as paying the $150x of Country A tax in CFC's U.S. taxable year within which its foreign taxable year ends (Year 1). CFC is therefore treated as including a $1,000x foreign gross royalty item and a $500x

foreign gross income item of gain and paying $150x of Country A tax in Year 1. These foreign gross income items are assigned to the statutory and residual groupings to which the corresponding U.S. items are assigned under Federal income tax law. No foreign gross income is assigned to the section 245A(d) income group because neither the corresponding U.S. item of royalty income nor the corresponding U.S. item of gain is assigned to the section 245A(d) income group. Therefore, none of USP's Country A tax is allocated to the section 245A(d) income group.

(C) ***Attribution of foreign income taxes to non-inclusion income.*** The $150x Country A tax is described in paragraph (b)(2) of this section because USP is a United States shareholder of CFC, CFC is a reverse hybrid, and § 1.861-20(d)(3)(i)(C) allocates and apportions the tax by reference to the income of CFC. Under paragraph (b)(2)(iii) of this section, the $150x Country A tax is attributable to the non-inclusion income of CFC to the extent that the foreign income taxes are allocated and apportioned to the non-inclusion income group under § 1.861-20. For the reasons described in paragraph (d)(6)(ii)(B) of this section, under § 1.861-20(d)(3)(i)(C) CFC is treated as including a $1,000x foreign gross royalty item and a $500x foreign gross income item of gain and paying $150x of Country A tax in Year 1. These foreign gross income items are assigned to the statutory and residual groupings to which the corresponding U.S. items are assigned under Federal income tax law. For Federal income tax purposes, the $500x item of gain and $500x of the $1,000x item of royalty income are items of non-inclusion income that are therefore assigned to the non-inclusion income group. The remaining $500x of the foreign gross royalty income item is assigned to the residual grouping. Under § 1.861-20(f), $100x ($150x × $1,000x/$1,500x) of the Country A tax is apportioned to the non-inclusion income group, and $50x ($150x × $500x/$1,500x) is apportioned to the residual grouping. Under paragraph (b)(2)(iii) of this section, the $100x of Country A tax that is apportioned to the non-inclusion income group under § 1.861-20(d)(3)(i)(C) is attributable to non-inclusion income of CFC.

(D) ***Disallowance.*** Under paragraph (a)(1)(iii) of this section, no credit under section 901 or deduction is allowed in any taxable year to USP for the $100x of Country A foreign income tax that is attributable to non-inclusion income of CFC.

(e) ***Applicability date.*** This section applies to taxable years of a foreign corporation that begin after December 31, 2019, and end on or after November 2, 2020, and with respect to a United States person, taxable years in which or with which such taxable years of the foreign corporation end.

[T.D. 9959, 87 FR 317, Jan. 4, 2022, as amended by 87 FR 45018, July 27, 2022]

§ 1.245A(e)-1 Special rules for hybrid dividends.

(a) ***Overview.*** This section provides rules for hybrid dividends. Paragraph (b) of this section disallows the deduction under section 245A(a) for a hybrid dividend received by a United States shareholder from a CFC. Paragraph (c) of this section provides a rule for hybrid dividends of tiered corporations. Paragraph (d) of this section sets forth rules regarding a hybrid deduction account. Paragraph (e) of this section provides an anti-avoidance rule. Paragraph (f) of this section provides definitions. Paragraph (g) of this section illustrates the application of the rules of this section through examples. Paragraph (h) of this section provides the applicability date.

(b) ***Hybrid dividends received by United States shareholders*** —

(1) ***In general.*** If a United States shareholder receives a hybrid dividend, then—

(i) The United States shareholder is not allowed a deduction under section 245A(a) for the hybrid dividend; and

(ii) The rules of section 245A(d) and § 1.245A(d)-1 (disallowance of foreign tax credits and deductions) apply to the hybrid dividend. See paragraph (g)(1) of this section for an example illustrating the application of paragraph (b) of this section.

(2) ***Definition of hybrid dividend.*** The term *hybrid dividend* means an amount received by a United States shareholder from a CFC for which, without regard to section 245A(e) and this section as well as § 1.245A-5, the United States shareholder would be allowed a deduction under section 245A(a), to the extent of the sum of the United States shareholder's hybrid deduction accounts (as described in paragraph (d) of this section) with respect to each share of stock of the CFC, determined at the close of the CFC's taxable year (or in accordance with paragraph (d)(5) of this section, as applicable). No other amount received by a United States shareholder from a CFC is a hybrid dividend for purposes of section 245A.

(3) ***Special rule for certain dividends attributable to earnings of lower-tier foreign corporations.*** This paragraph (b)(3) applies if a domestic corporation directly or indirectly (as determined under the principles of § 1.245A-5(g)(3)(ii)) sells or exchanges stock of a foreign corporation and, pursuant to section 1248, the gain recognized on the sale or exchange is included in gross income as a dividend. In such a case, for purposes of this section—

(i) To the extent that earnings and profits of a lower-tier CFC gave rise to the dividend under section 1248(c)(2), those earnings and profits are treated as distributed as a dividend by the lower-tier CFC directly to the domestic corporation under the principles of § 1.1248-1(d); and

(ii) To the extent the domestic corporation indirectly owns (within the meaning of section 958(a)(2), and determined by treating a domestic partnership as foreign) shares of stock of the lower-tier CFC, the hybrid deduction accounts with respect to those shares are treated as the domestic corporation's hybrid deduction accounts with respect to stock of the lower-tier CFC. Thus, for example, if a domestic corporation sells or exchanges all the stock of an upper-tier CFC and under this paragraph (b)(3) there is considered to be a dividend paid directly by the lower-tier CFC to the domestic corporation, then the dividend is generally a hybrid dividend to the extent of the sum of the upper-tier CFC's hybrid deduction accounts with respect to stock of the lower-tier CFC.

(4) ***Ordering rule.*** Amounts received by a United States shareholder from a CFC are subject to the rules of section 245A(e) and this section based on the order in which they are received. Thus, for example, if on different days during a CFC's taxable year a United States shareholder receives dividends from the CFC, then the rules of section 245A(e) and this section apply first to the dividend received on the earliest date (based on the sum of the United States shareholder's hybrid deduction accounts with respect to each share of stock of the CFC), and then to the dividend received on the next earliest date (based on the remaining sum).

(c) ***Hybrid dividends of tiered corporations*** —

(1) ***In general.*** If a CFC (the *receiving CFC*) receives a tiered hybrid dividend from another CFC, and a domestic corporation is a United States shareholder with respect to both CFCs, then, notwithstanding any other provision of the Code—

(i) For purposes of section 951(a) as to the United States shareholder, the tiered hybrid dividend is treated for purposes of section 951(a)(1)(A) as subpart F income of the receiving CFC for the taxable year of the CFC in which the tiered hybrid dividend is received;

(ii) The United States shareholder includes in gross income an amount equal to its pro rata share (determined in the same manner as under section 951(a)(2)) of the subpart F income described in paragraph (c)(1)(i) of this section; and

(iii) The rules of section 245A(d) and § 1.245A(d)-1 (disallowance of foreign tax credit, including for taxes that would have been deemed paid under section 960(a) or (b), and deductions) apply to the amount included under paragraph (c)(1)(ii) of this section in the United States shareholder's gross income. See paragraph (g)(2) of this section for an example illustrating the application of paragraph (c) of this section.

(2) ***Definition of tiered hybrid dividend.*** The term *tiered hybrid dividend* means an amount received by a receiving CFC from another CFC to the extent that the amount would be a hybrid dividend under paragraph (b)(2) of this section if, for purposes of section 245A and the regulations in this part under section 245A (except for section 245A(e)(2) and this paragraph (c)), the receiving CFC were a domestic corporation. A tiered hybrid dividend does not include an amount described in section 959(b). No other amount received by a receiving CFC from another CFC is a tiered hybrid dividend for purposes of section 245A.

(3) ***Special rule for certain dividends attributable to earnings of lower-tier foreign corporations.*** This paragraph (c)(3) applies if a CFC directly or indirectly (as determined under the principles of § 1.245A-5(g)(3)(ii)) sells or exchanges stock of a foreign corporation and pursuant to section 964(e)(1) the gain recognized on the sale or exchange is included in gross income as a dividend. In such a case, the rules of paragraph (b)(3) of this section apply, by treating the CFC as the domestic corporation described in paragraph (b)(3) of this section and substituting the phrase "sections 964(e)(1) and 1248(c)(2)" for the phrase "section 1248(c)(2)" in paragraph (b)(3)(i) of this section.

(4) ***Interaction with rules under section 964(e).*** To the extent a dividend described in section 964(e)(1) (gain on certain stock sales by CFCs treated as dividends) is a tiered hybrid dividend, the rules of section 964(e)(4) do not apply as to a domestic corporation that is a United States shareholder of both of the CFCs described in paragraph (c)(1) of this section and, therefore, such United States shareholder is not allowed a deduction under section 245A(a) for the amount included in gross income under paragraph (c)(1)(ii) of this section.

(d) ***Hybrid deduction accounts*** —

(1) ***In general.*** A specified owner of a share of CFC stock must maintain a hybrid deduction account with respect to the share. The hybrid deduction account with respect to the share must reflect the amount of hybrid deductions of the CFC allocated to the share (as determined under paragraphs (d)(2) and (3) of this section), and must be maintained in accordance with the rules of paragraphs (d)(4) through (6) of this section.

(2) ***Hybrid deductions*** —

(i) ***In general.*** The term *hybrid deduction* of a CFC means a deduction or other tax benefit (such as an exemption, exclusion, or credit, to the extent equivalent to a deduction) for which the requirements of paragraphs (d)(2)(i)(A) and (B) of this section are both satisfied.

(A) The deduction or other tax benefit is allowed to the CFC (or a person related to the CFC) under a relevant foreign tax law, regardless of whether the deduction or other tax benefit is used, or otherwise reduces tax, currently under the relevant foreign tax law.

(B) The deduction or other tax benefit relates to or results from an amount paid, accrued, or distributed with respect to an instrument issued by the CFC and treated as stock for U.S. tax purposes, or is a deduction allowed to the CFC with respect to equity. Examples of such a deduction or other tax benefit include an interest deduction, a dividends paid deduction, and a notional interest deduction (or similar deduction determined with respect to the CFC's equity). However, a deduction or other tax benefit relating to or resulting from a distribution by the CFC that is a dividend for purposes of the relevant foreign tax law is considered a hybrid deduction only to the extent it has the effect of causing the earnings that funded the distribution to not be included in income (determined under the principles of § 1.267A-3(a)) or otherwise subject to tax under such tax law. Thus, for example, upon a distribution by a CFC that is treated as a dividend for purposes of the CFC's tax law to a shareholder of the CFC, a dividends paid deduction allowed to the CFC under its tax law (or a refund to the shareholder, including through a credit, of tax paid by the CFC on the earnings that funded the distribution) pursuant to an integration or imputation system is not a hybrid deduction of the CFC to the extent that the shareholder, if a tax resident of the CFC's country, includes the distribution in income under the CFC's tax law or, if not a tax resident of the CFC's country, is subject to withholding tax (as defined in section 901(k)(1)(B)) on the distribution under the CFC's tax law. As an additional example, upon a distribution by a CFC to a shareholder of the CFC that is a tax resident of the CFC's country, a dividends received deduction allowed to the shareholder under the tax law of such foreign country pursuant to a regime intended to relieve double-taxation within the group is not a hybrid deduction of the CFC (though if the CFC were also allowed a deduction or other tax benefit for the distribution under such tax, such deduction or other tax benefit would be a hybrid deduction of the CFC). See paragraphs (g)(1) and (2) of this section for examples illustrating the application of paragraph (d) of this section.

(ii) ***Coordination with foreign disallowance rules.*** The following special rules apply for purposes of determining whether a deduction or other tax benefit is allowed to a CFC (or a person related to the CFC) under a relevant foreign tax law:

(A) Whether the deduction or other tax benefit is allowed is determined without regard to a rule under the relevant foreign tax law that disallows or suspends deductions if a certain ratio or percentage is exceeded (for example, a thin capitalization rule that disallows interest deductions if debt to equity exceeds a certain ratio, or a rule similar to section 163(j) that disallows or suspends interest deductions if interest exceeds a certain percentage of income).

(B) Except as provided in this paragraph (d)(2)(ii)(B), whether the deduction or other tax benefit is allowed is determined without regard to hybrid mismatch rules, if any, under the relevant foreign tax law that may disallow such deduction or other tax benefit. However, whether the deduction or other tax benefit is allowed is determined with regard to hybrid mismatch rules under the relevant foreign tax law if the amount giving rise to the deduction or other tax benefit neither gives rise to a dividend for U.S. tax purposes nor, based on all the facts and circumstances, is reasonably expected to give rise to a dividend for U.S. tax purposes that will be paid within 12 months from the end of the taxable period

for which the deduction or other tax benefit would be allowed but for the hybrid mismatch rules. For purposes of this paragraph (d)(2)(ii)(B), the term hybrid mismatch rules has the meaning provided in § 1.267A-5(b)(10).

(iii) ***Anti-duplication rule.*** A deduction or other tax benefit allowed to a CFC (or a person related to the CFC) under a relevant foreign tax law for an amount paid, accrued, or distributed with respect to an instrument issued by the CFC is not a hybrid deduction to the extent that treating it as a hybrid deduction would have the effect of duplicating a hybrid deduction that is a deduction or other tax benefit allowed under such tax law for an amount paid, accrued, or distributed with respect to an instrument that is issued by a CFC at a higher tier and that has terms substantially similar to the terms of the first instrument. For example, if an upper tier CFC issues to a corporate United States shareholder a hybrid instrument (the "upper tier instrument"), a lower tier CFC issues to the upper tier CFC a hybrid instrument that has terms substantially similar to the terms of the upper tier instrument (the "mirror instrument"), the CFCs are tax residents of the same foreign country, and the upper tier CFC includes in income under its tax law (as determined under the principles of § 1.267A-3(a)) amounts accrued with respect to the mirror instrument, then a deduction allowed to the lower tier CFC under such foreign tax law for an amount accrued pursuant to the mirror instrument is not a hybrid deduction (but a deduction allowed to the upper tier CFC under the foreign tax law for an amount accrued with respect to the upper tier instrument is a hybrid deduction).

(iv) ***Application limited to items allowed in taxable years ending on or after December 20, 2018; special rule for deductions with respect to equity.*** A deduction or other tax benefit, other than a deduction with respect to equity, allowed to a CFC (or a person related to the CFC) under a relevant foreign tax law is taken into account for purposes of this section only if it was allowed with respect to a taxable year under the relevant foreign tax law ending on or after December 20, 2018. A deduction with respect to equity allowed to a CFC under a relevant foreign tax law is taken into account for purposes of this section only if it was allowed with respect to a taxable year under the relevant foreign tax law beginning on or after December 20, 2018.

(3) ***Allocating hybrid deductions to shares.*** A hybrid deduction is allocated to a share of stock of a CFC to the extent that the hybrid deduction (or amount equivalent to a deduction) relates to an amount paid, accrued, or distributed by the CFC with respect to the share. However, in the case of a hybrid deduction that is a deduction with respect to equity (such as a notional interest deduction), the deduction is allocated to a share of stock of a CFC based on the product of—

(i) The amount of the deduction allowed for all of the equity of the CFC; and

(ii) A fraction, the numerator of which is the value of the share and the denominator of which is the value of all of the stock of the CFC.

(4) ***Maintenance of hybrid deduction accounts*** —

(i) ***In general.*** A specified owner's hybrid deduction account with respect to a share of stock of a CFC is, as of the close of the taxable year of the CFC, adjusted pursuant to the following rules.

(A) First, the account is increased by the amount of hybrid deductions of the CFC allocated to the share for the taxable year.

(B) Second, the account is decreased (but not below zero) pursuant to the rules of paragraphs (d)(4)(i)(B)(*1*) through (*3*) of this section, in the order set forth in this paragraph (d)(4)(i)(B).

(*1*) ***Adjusted subpart F inclusions*** —

(*i*) ***In general.*** Subject to the limitation in paragraph (d)(4)(i)(B)(*1*)(*ii*) of this section, the account is reduced by an adjusted subpart F inclusion with respect to the share for the taxable year, as determined pursuant to the rules of paragraph (d)(4)(ii) of this section.

(*ii*) ***Limitation.*** The reduction pursuant to paragraph (d)(4)(i)(B)(*1*)(*i*) of this section cannot exceed the hybrid deductions of the CFC allocated to the share for the taxable year multiplied by a fraction, the numerator of which is the sum of the items of gross income of the CFC that give rise to subpart F income (determined without regard to an amount treated as subpart F income by reason of section 964(e)(4)(A)(i), to the extent that a deduction under section 245A(a) is allowed for a portion of the amount included under section 964(e)(4)(A)(ii) in the gross income of a domestic corporation) of the CFC for the taxable year and the denominator of which is the sum of all the items of gross income of the CFC for the taxable year.

(*iii*) ***Special rule allocating otherwise unused adjusted subpart F inclusions across accounts in certain cases.*** This paragraph (d)(4)(i)(B)(*1*)(*iii*) applies after each of the specified owner's hybrid deduction accounts with respect to its shares of stock of the CFC are adjusted pursuant to paragraph (d)(4)(i)(B)(*1*)(*i*) of this section but before the accounts are adjusted pursuant to paragraph (d)(4)(i)(B)(*2*) of this section, to the extent that one or more of the hybrid deduction accounts would have been reduced by an amount pursuant to paragraph (d)(4)(i)(B)(*1*)(*i*) of this section but for the limitation in paragraph (d)(4)(i)(B)(*1*)(*ii*) of this section (the aggregate of the amounts that would have been reduced but for the limitation, the *unused reduction amount,* and the accounts that would have been reduced by the unused reduction amount, the *unused reduction amount accounts*). When this paragraph (d)(4)(i)(B)(*1*)(*iii*) applies, the specified owner's hybrid deduction accounts other than the unused reduction amount accounts (if any) are ratably reduced by the lesser of the unused reduction amount and the difference of the following two amounts: The hybrid deductions of the CFC allocated to the specified owner's shares of stock of the CFC for the taxable year multiplied by the fraction described in paragraph (d)(4)(i)(B)(*1*)(*ii*) of this section; and the reductions pursuant to paragraph (d)(4)(i)(B)(*1*)(*i*) of this section with respect to the specified owner's shares of stock of the CFC.

(*2*) ***Adjusted GILTI inclusions*** —

(*i*) ***In general.*** Subject to the limitation in paragraph (d)(4)(i)(B)(*2*)(*ii*) of this section, the account is reduced by an adjusted GILTI inclusion with respect to the share for the taxable year, as determined pursuant to the rules of paragraph (d)(4)(ii) of this section.

(*ii*) ***Limitation.*** The reduction pursuant to paragraph (d)(4)(i)(B)(*2*)(*i*) of this section cannot exceed the hybrid deductions of the CFC allocated to the share for the taxable year multiplied by a fraction, the numerator of which is the sum of the

items of gross tested income of the CFC for the taxable year and the denominator of which is the sum of all the items of gross income of the CFC for the taxable year.

(*iii*) ***Special rule allocating otherwise unused adjusted GILTI inclusions across accounts in certain cases.*** This paragraph (d)(4)(i)(B)(*2*)(*iii*) applies after each of the specified owner's hybrid deduction accounts with respect to its shares of stock of the CFC are adjusted pursuant to paragraph (d)(4)(i)(B)(*2*)(*i*) of this section but before the accounts are adjusted pursuant to paragraph (d)(4)(i)(B)(*3*) of this section, to the extent that one or more of the hybrid deduction accounts would have been reduced by an amount pursuant to paragraph (d)(4)(i)(B)(*2*)(*i*) of this section but for the limitation in paragraph (d)(4)(i)(B)(*2*)(*ii*) of this section (the aggregate of the amounts that would have been reduced but for the limitation, the *unused reduction amount,* and the accounts that would have been reduced by the unused reduction amount, the *unused reduction amount accounts*). When this paragraph (d)(4)(i)(B)(*2*)(*iii*) applies, the specified owner's hybrid deduction accounts other than the unused reduction amount accounts (if any) are ratably reduced by the lesser of the unused reduction amount and the difference of the following two amounts: The hybrid deductions of the CFC allocated to the specified owner's shares of stock of the CFC for the taxable year multiplied by the fraction described in paragraph (d)(4)(i)(B)(*2*)(*ii*) of this section; and the reductions pursuant to paragraph (d)(4)(i)(B)(*2*)(*i*) of this section with respect to the specified owner's shares of stock of the CFC. *See* paragraph (g)(1)(v)(C) of this section for an illustration of the application of this paragraph (d)(4)(i)(B)(*2*)(*iii*).

(*3*) ***Certain section 956 inclusions.*** The account is reduced by an amount included in the gross income of a domestic corporation under sections 951(a)(1)(B) and 956 with respect to the share for the taxable year of the domestic corporation in which or with which the CFC's taxable year ends, to the extent so included by reason of the application of section 245A(e) and this section to the hypothetical distribution described in § 1.956-1(a)(2).

(C) Third, the account is decreased by the amount of hybrid deductions in the account that gave rise to a hybrid dividend or tiered hybrid dividend during the taxable year. If the specified owner has more than one hybrid deduction account with respect to its stock of the CFC, then a pro rata amount in each hybrid deduction account is considered to have given rise to the hybrid dividend or tiered hybrid dividend, based on the amounts in the accounts before applying this paragraph (d)(4)(i)(C).

(ii) ***Rules regarding adjusted subpart F and GILTI inclusions.***

(A) The term *adjusted subpart F inclusion* means, with respect to a share of stock of a CFC for a taxable year of the CFC, a domestic corporation's pro rata share of the CFC's subpart F income included in gross income under section 951(a)(1)(A) (determined without regard to an amount included in gross income by the domestic corporation by reason of section 964(e)(4)(A)(ii), to the extent a deduction under section 245A(a) is allowed for the

amount) for the taxable year of the domestic corporation in which or with which the CFC's taxable year ends, to the extent attributable to the share (as determined under the principles of section 951(a)(2) and § 1.951-1(b) and (e)), adjusted (but not below zero) by—

(*1*) Adding to the amount the associated foreign income taxes with respect to the amount; and

(*2*) Subtracting from such sum the quotient of the associated foreign income taxes divided by the percentage described in section 11(b).

(B) The term *adjusted GILTI inclusion* means, with respect to a share of stock of a CFC for a taxable year of the CFC, a domestic corporation's GILTI inclusion amount (within the meaning of § 1.951A-1(c)(1)) for the U.S. shareholder inclusion year (within the meaning of § 1.951A-1(f)(7)), to the extent attributable to the share (as determined under paragraph (d)(4)(ii)(C) of this section), adjusted (but not below zero) by—

(*1*) Adding to the amount the associated foreign income taxes with respect to the amount;

(*2*) Multiplying such sum by the difference of 100 percent and the section 250(a)(1)(B)(i) deduction percentage; and

(*3*) Subtracting from such product the quotient of 80 percent of the associated foreign income taxes divided by the percentage described in section 11(b).

(C) A domestic corporation's GILTI inclusion amount for a U.S. shareholder inclusion year is attributable to a share of stock of the CFC based on a fraction—

(*1*) The numerator of which is the domestic corporation's pro rata share of the tested income of the CFC for the U.S. shareholder inclusion year, to the extent attributable to the share (as determined under the principles of § 1.951A-1(d)(2)); and

(*2*) The denominator of which is the aggregate of the domestic corporation's pro rata share of the tested income of each tested income CFC (as defined in § 1.951A-2(b)(1)) for the U.S. shareholder inclusion year.

(D) The term *associated foreign income taxes* means—

(*1*) With respect to a domestic corporation's pro rata share of the subpart F income of the CFC included in gross income under section 951(a)(1)(A) and attributable to a share of stock of a CFC for a taxable year of the CFC, current year tax (as described in § 1.960-1(b)(4)) allocated and apportioned under § 1.960-1(d)(3)(ii) to the subpart F income groups (as described in § 1.960-1(b)(30)) of the CFC for the taxable year, to the extent allocated to the share under paragraph (d)(4)(ii)(E) of this section; and

(*2*) With respect to a domestic corporation's GILTI inclusion amount under section 951A attributable to a share of stock of a CFC for a taxable year of the CFC, the product of—

(*i*) Current year tax (as described in § 1.960-1(b)(4)) allocated and apportioned under § 1.960-1(d)(3)(ii) to the tested income groups (as described in § 1.960-1(b)(33)) of the CFC for the taxable year, to the extent allocated to the share under paragraph (d)(4)(ii)(F) of this section;

(*ii*) The domestic corporation's inclusion percentage (as described in § 1.960-2(c)(2)); and

(*iii*) The section 904 limitation fraction with respect to the domestic corporation for the U.S. shareholder inclusion year.

(E) Current year tax allocated and apportioned to a subpart F income group of a CFC for a taxable year is allocated to a share of stock of the CFC by multiplying the foreign income tax by a fraction—

(*1*) The numerator of which is the domestic corporation's pro rata share of the subpart F income of the CFC for the taxable year, to the extent attributable to the share (as determined under the principles of section 951(a)(2) and § 1.951-1(b) and (e)); and

(*2*) The denominator of which is the subpart F income of the CFC for the taxable year.

(F) Current year tax allocated and apportioned to a tested income group of a CFC for a taxable year is allocated to a share of stock of the CFC by multiplying the foreign income tax by a fraction—

(*1*) The numerator of which is the domestic corporation's pro rata share of tested income of the CFC for the taxable year, to the extent attributable to the share (as determined under the principles § 1.951A-1(d)(2)); and

(*2*) The denominator of which is the tested income of the CFC for the taxable year.

(G) The term *section 904 limitation fraction* means, with respect to a domestic corporation for a U.S. shareholder inclusion year, a fraction—

(*1*) The numerator of which is the amount of foreign tax credits for the U.S. shareholder inclusion year that, by reason of sections 901 and 960(d) and taking into account section 904, the domestic corporation is allowed for the separate category set forth in section 904(d)(1)(A) (amounts includible in gross income under section 951A); and

(*2*) The denominator of which is the amount of foreign tax credits for the U.S. shareholder inclusion year that, by reason of sections 901 and 960(d) and without regard to section 904, the domestic corporation would be allowed for the separate category set forth in section 904(d)(1)(A) (amounts includible in gross income under section 951A).

(H) The term *section 250(a)(1)(B)(i) deduction percentage* means, with respect to a domestic corporation for a U.S. shareholder inclusion year, a fraction—

(*1*) The numerator of which is the amount of the deduction under section 250 allowed to the domestic corporation for the U.S. shareholder inclusion year by reason of section 250(a)(1)(B)(i) (taking into account section 250(a)(2)(B)); and

(*2*) The denominator of which is the domestic corporation's GILTI inclusion amount for the U.S. shareholder inclusion year.

(iii) ***Acquisition of account and certain other adjustments*** —

(A) ***In general.*** The following rules apply when a person (the *acquirer*) directly or indirectly through a partnership, trust, or estate acquires a share of stock of a CFC from another person (the *transferor*).

(*1*) In the case of an acquirer that is a specified owner of the share immediately after the acquisition, the transferor's hybrid deduction account, if any, with respect to the share becomes the hybrid deduction account of the acquirer.

(*2*) In the case of an acquirer that is not a specified owner of the share immediately after the acquisition, the transferor's hybrid deduction account, if any, is eliminated and accordingly is not thereafter taken into account by any person.

(B) ***Additional rules.*** The following rules apply in addition to the rules of paragraph (d)(4)(iii)(A) of this section.

(*1*) ***Certain section 354 or 356 exchanges.*** The following rules apply when a shareholder of a CFC (the CFC, the *target CFC;* the shareholder, the *exchanging shareholder*) exchanges stock of the target CFC for stock of another CFC (the *acquiring CFC*) pursuant to an exchange described in section 354 or 356 that occurs in connection with a transaction described in section 381(a)(2) in which the target CFC is the transferor corporation.

(*i*) In the case of an exchanging shareholder that is a specified owner of one or more shares of stock of the acquiring CFC immediately after the exchange, the exchanging shareholder's hybrid deduction accounts with respect to the shares of stock of the target CFC that it exchanges are attributed to the shares of stock of the acquiring CFC that it receives in the exchange.

(*ii*) In the case of an exchanging shareholder that is not a specified owner of one or more shares of stock of the acquiring CFC immediately after the exchange, the exchanging shareholder's hybrid deduction accounts with respect to its shares of stock of the target CFC are eliminated and accordingly are not thereafter taken into account by any person.

(*2*) ***Section 332 liquidations.*** If a CFC is a distributor corporation in a transaction described in section 381(a)(1) (the *distributor CFC*) in which a controlled foreign corporation is the acquiring corporation (the *distributee CFC*), then each hybrid deduction account with respect to a share of stock of the distributee CFC is increased pro rata by the sum of the hybrid deduction accounts with respect to shares of stock of the distributor CFC.

(*3*) ***Recapitalizations.*** If a shareholder of a CFC exchanges stock of the CFC pursuant to a reorganization described in section 368(a)(1)(E) or a transaction to which section 1036 applies, then the shareholder's hybrid deduction accounts with respect to the stock of the CFC that it exchanges are attributed to the shares of stock of the CFC that it receives in the exchange.

(*4*) ***Certain distributions involving section 355 or 356.*** In the case of a transaction involving a distribution under section 355 (or so much of section 356 as it relates to section 355) by a CFC (the *distributing CFC*) of stock of another CFC (the *controlled CFC*), the balance of the hybrid deduction accounts with respect to stock of the distributing CFC is attributed to stock of the controlled CFC in a manner similar to

how earnings and profits of the distributing CFC and controlled CFC are adjusted. To the extent the balance of the hybrid deduction accounts with respect to stock of the distributing CFC is not so attributed to stock of the controlled CFC, such balance remains as the balance of the hybrid deduction accounts with respect to stock of the distributing CFC.

(*5*) ***Effect of section 338(g) election*** —

(*i*) ***In general.*** If an election under section 338(g) is made with respect to a qualified stock purchase (as described in section 338(d)(3)) of stock of a CFC, then a hybrid deduction account with respect to a share of stock of the old target is not treated as (or attributed to) a hybrid deduction account with respect to a share of stock of the new target. Accordingly, immediately after the deemed asset sale described in § 1.338-1, the balance of a hybrid deduction account with respect to a share of stock of the new target is zero; the account must then be maintained in accordance with the rules of paragraph (d) of this section.

(*ii*) ***Special rule regarding carryover FT stock.*** Paragraph (d)(4)(iii)(B)(*5*)(*i*) of this section does not apply as to a hybrid deduction account with respect to a share of carryover FT stock (as described in § 1.338-9(b)(3)(i)). A hybrid deduction account with respect to a share of carryover FT stock is attributed to the corresponding share of stock of the new target.

(5) ***Determinations and adjustments made during year of transfer in certain cases.*** This paragraph (d)(5) applies if on a date other than the date that is the last day of the CFC's taxable year a United States shareholder of the CFC or an upper-tier CFC with respect to the CFC directly or indirectly (as determined under the principles of § 1.245A-5(g)(3)(ii)) transfers a share of stock of the CFC, and, during the taxable year, but on or before the transfer date, the United States shareholder or upper-tier CFC receives an amount from the CFC that is subject to the rules of section 245A(e) and this section. In such a case, the following rules apply:

(i) As to the United States shareholder or upper-tier CFC and the United States shareholder's or upper-tier CFC's hybrid deduction accounts with respect to each share of stock of the CFC (regardless of whether such share is transferred), the determinations and adjustments under this section that would otherwise be made at the close of the CFC's taxable year are made at the close of the date of the transfer. When making these determinations and adjustments at the close of the date of the transfer, each hybrid deduction account described in the previous sentence is pursuant to paragraph (d)(4)(ii)(A) of this section increased by a ratable portion (based on the number of days in the taxable year within the pre-transfer period to the total number of days in the taxable year) of the hybrid deductions of the CFC allocated to the share for the taxable year, and pursuant to paragraph (d)(4)(ii)(C) of this section decreased by the amount of hybrid deductions in the account that gave rise to a hybrid dividend or tiered hybrid dividend during the portion of the taxable year up to and including the transfer date. Thus, for example, if a United States shareholder of a CFC exchanges stock of the CFC in an exchange described in § 1.367(b)-4(b)(1)(i) and is required to include in income as a deemed dividend the section 1248 amount attributable to the stock exchanged, then: As of the close of the date of the exchange, each of the United States shareholder's hybrid deductions accounts with respect to a share of stock of the CFC is increased by a ratable portion of the hybrid deductions of the CFC allocated to the share for the taxable year (based on the number of days in the taxable year within the pre-transfer period to the total number of days in the taxable year); the deemed

dividend is a hybrid dividend to the extent of the sum of the United States shareholder's hybrid deduction accounts with respect to each share of stock of the CFC; and, as the close of the date of the exchange, each of the accounts is decreased by the amount of hybrid deductions in the account that gave rise to a hybrid dividend during the portion of the taxable year up to and including the date of the exchange.

(ii) As to a hybrid deduction account described in paragraph (d)(5)(i) of this section, the adjustments to the account as of the close of the taxable year of the CFC must take into account the adjustments, if any, occurring with respect to the account pursuant to paragraph (d)(5)(i) of this section. Thus, for example, if an acquisition of a share of stock of a CFC occurs on a date other than the date that is the last day of the CFC's taxable year and pursuant to paragraph (d)(4)(iii)(A)(*1*) of this section the acquirer succeeds to the transferor's hybrid deduction account with respect to the share, then, as of the close of the taxable year of the CFC, the account is increased by a ratable portion of the hybrid deductions of the CFC allocated to the share for the taxable year (based on the number of days in the taxable year within the post-transfer period to the total number of days in the taxable year), and, decreased by the amount of hybrid deductions in the account that gave rise to a hybrid dividend or tiered hybrid dividend during the portion of the taxable year following the transfer date.

(6) *Effects of CFC functional currency* —

(i) ***Maintenance of the hybrid deduction account.*** A hybrid deduction account with respect to a share of CFC stock must be maintained in the functional currency (within the meaning of section 985) of the CFC. Thus, for example, the amount of a hybrid deduction and the adjustments described in paragraphs (d)(4)(i)(A) and (B) of this section are determined based on the functional currency of the CFC. In addition, for purposes of this section, the amount of a deduction or other tax benefit allowed to a CFC (or a person related to the CFC) is determined taking into account foreign currency gain or loss recognized with respect to such deduction or other tax benefit under a provision of foreign tax law comparable to section 988 (treatment of certain foreign currency transactions).

(ii) ***Determination of amount of hybrid dividend.*** This paragraph (d)(6)(ii) applies if a CFC's functional currency is other than the functional currency of a United States shareholder or upper-tier CFC that receives an amount from the CFC that is subject to the rules of section 245A(e) and this section. In such a case, the sum of the United States shareholder's or upper-tier CFC's hybrid deduction accounts with respect to each share of stock of the CFC is, for purposes of determining the extent that a dividend is a hybrid dividend or tiered hybrid dividend, translated into the functional currency of the United States shareholder or upper-tier CFC based on the spot rate (within the meaning of § 1.988-1(d)) as of the date of the dividend.

(e) ***Anti-avoidance rule.*** Appropriate adjustments are made pursuant to this section, including adjustments that would disregard the transaction or arrangement, if a transaction or arrangement is undertaken with a principal purpose of avoiding the purposes of section 245A(e) and this section. For example, if a specified owner of a share of CFC stock transfers the share to another person, and a principal purpose of the transfer is to shift the hybrid deduction account with respect to the share to the other person or to cause the hybrid deduction account to be eliminated, then for purposes of this section the shifting or elimination of the hybrid deduction account is disregarded as to the transferor. As another example, if a transaction or arrangement is undertaken to affirmatively fail to satisfy the holding period requirement under section 246(c)(5) with a principal purpose of avoiding the tiered hybrid dividend rules described in paragraph (c) of this section, the transaction or arrangement is disregarded for purposes of this section. This paragraph

(e) will not apply, however, to disregard (or make other adjustments with respect to) a transaction pursuant to which an instrument or arrangement that gives rise to hybrid deductions is eliminated or otherwise converted into another instrument or arrangement that does not give rise to hybrid deductions.

(f) ***Definitions.*** The following definitions apply for purposes of this section.

(1) The term *controlled foreign corporation* (or *CFC*) has the meaning provided in section 957.

(2) The term *domestic corporation* means an entity classified as a domestic corporation under section 7701(a)(3) and (4) or otherwise treated as a domestic corporation by the Internal Revenue Code. However, for purposes of this section, a domestic corporation does not include a regulated investment company (as described in section 851), a real estate investment trust (as described in section 856), or an S corporation (as described in section 1361).

(3) The term *person* has the meaning provided in section 7701(a)(1).

(4) The term *related* has the meaning provided in this paragraph (f)(4). A person is related to a CFC if the person is a related person within the meaning of section 954(d)(3). *See also* § 1.954-1(f)(2)(iv)(B)(*1*) (neither section 318(a)(3), nor § 1.958-2(d) or the principles thereof, applies to attribute stock or other interests).

(5) The term *relevant foreign tax law* means, with respect to a CFC, any regime of any foreign country or possession of the United States that imposes an income, war profits, or excess profits tax with respect to income of the CFC, other than a foreign anti-deferral regime under which a person that owns an interest in the CFC is liable to tax. If a foreign country has an income tax treaty with the United States that applies to taxes imposed by a political subdivision or other local authority of that country, then the tax law of the political subdivision or other local authority is deemed to be a tax law of a foreign country. Thus, the term includes any regime of a foreign country or possession of the United States that imposes income, war profits, or excess profits tax under which—

(i) The CFC is liable to tax as a resident;

(ii) The CFC has a branch that gives rise to a taxable presence in the foreign country or possession of the United States; or

(iii) A person related to the CFC is liable to tax as a resident, provided that under such person's tax law the person is allowed a deduction for amounts paid or accrued by the CFC (because the CFC is fiscally transparent under the person's tax law).

(6) The term *specified owner* means, with respect to a share of stock of a CFC, a person for which the requirements of paragraphs (f)(6)(i) and (ii) of this section are satisfied.

(i) The person is a domestic corporation that is a United States shareholder of the CFC, or is an upper-tier CFC that would be a United States shareholder of the CFC were the upper-tier CFC a domestic corporation (provided that, for purposes of sections 951 and 951A, a domestic corporation that is a United States shareholder of the upper-tier CFC owns (within the meaning of section 958(a), and determined by treating a domestic partnership as foreign) one or more shares of stock of the upper-tier CFC).

(ii) The person owns the share directly or indirectly through a partnership, trust, or estate. Thus, for example, if a domestic corporation directly owns all the shares of stock of an upper-tier CFC and the upper-tier CFC directly owns all the shares of stock of another CFC, the domestic corporation is the specified owner with respect to each share of stock of the upper-tier CFC and the upper-tier CFC is the specified owner with respect to each share of stock of the other CFC.

(7) The term *United States shareholder* has the meaning provided in section 951(b).

(g) ***Examples.*** This paragraph (g) provides examples that illustrate the application of this section. For purposes of the examples in this paragraph (g), unless otherwise indicated, the following facts are presumed. US1 is a domestic corporation. FX and FZ are CFCs formed at the beginning of year 1, and the functional currency (within the meaning of section 985) of each of FX and FZ is the dollar. FX is a tax resident of Country X and FZ is a tax resident of Country Z. US1 is a United States shareholder with respect to FX and FZ. No distributed amounts are attributable to amounts which are, or have been, included in the gross income of a United States shareholder under section 951(a). All instruments are treated as stock for U.S. tax purposes. Only the tax law of the United States contains hybrid mismatch rules. No amounts are included in the gross income of US1 under section 951(a)(1)(A), 951A(a), or 951(a)(1)(B) and section 956.

(1) ***Example 1. Hybrid dividend resulting from hybrid instrument*** —

(i) ***Facts.*** US1 holds both shares of stock of FX, which have an equal value. One share is treated as indebtedness for Country X tax purposes (“Share A”), and the other is treated as equity for Country X tax purposes (“Share B”). During year 1, under Country X tax law, FX accrues $80x of interest to US1 with respect to Share A and is allowed a deduction for the amount (the “Hybrid Instrument Deduction”). During year 2, FX distributes $30x to US1 with respect to each of Share A and Share B. For U.S. tax purposes, each of the $30x distributions is treated as a dividend for which, without regard to section 245A(e) and this section as well as § 1.245A-5, US1 would be allowed a deduction under section 245A(a). For Country X tax purposes, the $30x distribution with respect to Share A represents a payment of interest for which a deduction was already allowed (and thus FX is not allowed an additional deduction for the amount), and the $30x distribution with respect to Share B is treated as a dividend (for which no deduction is allowed).

(ii) ***Analysis.*** The entire $30x of each dividend received by US1 from FX during year 2 is a hybrid dividend, because the sum of US1's hybrid deduction accounts with respect to each of its shares of FX stock at the end of year 2 ($80x) is at least equal to the amount of the dividends ($60x). *See* paragraph (b)(2) of this section. This is the case for the $30x dividend with respect to Share B even though there are no hybrid deductions allocated to Share B. *See* paragraph (b)(2) of this section. As a result, US1 is not allowed a deduction under section 245A(a) for the entire $60x of hybrid dividends and the rules of section 245A(d) and § 1.245A(d)-1 (disallowance of foreign tax credits and deductions) apply. *See* paragraph (b)(1) of this section. Paragraphs (g)(1)(ii)(A) through (D) of this section describe the determinations under this section.

(A) At the end of year 1, US1's hybrid deduction accounts with respect to Share A and Share B are $80x and $0, respectively, calculated as follows.

(*1*) The $80x Hybrid Instrument Deduction allowed to FX under Country X tax law (a relevant foreign tax law) is a hybrid deduction of FX, because the deduction is allowed to FX and relates to or results from an amount accrued with respect to an instrument issued by FX and treated as stock for U.S. tax purposes. *See* paragraph (d)(2)(i) of this section. Thus, FX's hybrid deductions for year 1 are $80x.

(*2*) The entire $80x Hybrid Instrument Deduction is allocated to Share A, because the deduction was accrued with respect to Share A. *See* paragraph (d)(3) of this section. As there are no additional hybrid deductions of FX for year 1, there are no additional hybrid deductions to allocate to either Share A or Share B. Thus, there are no hybrid deductions allocated to Share B.

(*3*) At the end of year 1, US1's hybrid deduction account with respect to Share A is increased by $80x (the amount of hybrid deductions allocated to Share A). *See* paragraph (d)(4)(i)(A) of this section. Because FX did not pay any dividends with respect to either Share A or Share B during year 1 (and therefore did not pay any hybrid dividends or tiered hybrid dividends), no further adjustments are made. *See* paragraph (d)(4)(i)(C) of this section. Therefore, at the end of year 1, US1's hybrid deduction accounts with respect to Share A and Share B are $80x and $0, respectively.

(B) At the end of year 2, and before the adjustments described in paragraph (d)(4)(i)(C) of this section, US1's hybrid deduction accounts with respect to Share A and Share B remain $80x and $0, respectively. This is because there are no hybrid deductions of FX for year 2. *See* paragraph (d)(4)(i)(A) of this section.

(C) Because at the end of year 2 (and before the adjustments described in paragraph (d)(4)(i)(C) of this section) the sum of US1's hybrid deduction accounts with respect to Share A and Share B ($80x, calculated as $80x plus $0) is at least equal to the aggregate $60x of year 2 dividends, the entire $60x dividend is a hybrid dividend. *See* paragraph (b)(2) of this section.

(D) At the end of year 2, US1's hybrid deduction account with respect to Share A is decreased by $60x, the amount of the hybrid deductions in the account that gave rise to a hybrid dividend or tiered hybrid dividend during year 2. *See* paragraph (d)(4)(i)(C) of this section. Because there are no hybrid deductions in the hybrid deduction account with respect to Share B, no adjustments with respect to that account are made under paragraph (d)(4)(i)(C) of this section. Therefore, at the end of year 2 and taking into account the adjustments under paragraph (d)(4)(i)(C) of this section, US1's hybrid deduction account with respect to Share A is $20x ($80x less $60x) and with respect to Share B is $0.

(iii) ***Alternative facts—notional interest deductions.*** The facts are the same as in paragraph (g)(1)(i) of this section, except that for each of year 1 and year 2 FX is allowed $10x of notional interest deductions with respect to its equity, Share B, under Country X tax law (the “NIDs”). In addition, during year 2, FX distributes $47.5x (rather than $30x) to US1 with respect to each of Share A and Share B. For U.S. tax purposes, each of the $47.5x distributions is treated as a dividend for which, without regard to section 245A(e) and this section as well as § 1.245A-5, US1 would be allowed a deduction under section 245A(a). For Country X tax purposes, the $47.5x distribution with respect to Share A represents a payment of interest for which a deduction was already allowed (and thus FX is not allowed an additional deduction for the amount), and the $47.5x distribution with respect to Share B is treated as a dividend (for which no deduction is allowed).

The entire $47.5x of each dividend received by US1 from FX during year 2 is a hybrid dividend, because the sum of US1's hybrid deduction accounts with respect to each of its shares of FX stock at the end of year 2 ($80x plus $20x, or $100x) is at least equal to the amount of the dividends ($95x). *See* paragraph (b)(2) of this section. As a result, US1 is not allowed a deduction under section 245A(a) for the $95x hybrid dividend and the rules of section 245A(d) and § 1.245A(d)-1 (disallowance of foreign tax credits and deductions) apply. *See* paragraph (b)(1) of this section. Paragraphs (g)(1)(iii)(A) through (D) of this section describe the determinations under this section.

(A) The $10x of NIDs allowed to FX under Country X tax law in year 1 are hybrid deductions of FX for year 1. *See* paragraph (d)(2)(i) of this section. The $10x of NIDs is allocated equally to each of Share A and Share B, because the hybrid deduction is with respect to equity and the shares have an equal value. *See* paragraph (d)(3) of this section. Thus, $5x of the NIDs is allocated to each of Share A and Share B for year 1. For the reasons described in paragraph (g)(1)(ii)(A)(*2*) of this section, the entire $80x Hybrid Instrument Deduction is allocated to Share A. Therefore, at the end of year 1, US1's hybrid deduction accounts with respect to Share A and Share B are $85x and $5x, respectively.

(B) Similarly, the $10x of NIDs allowed to FX under Country X tax law in year 2 are hybrid deductions of FX for year 2, and $5x of the NIDs is allocated to each of Share A and Share B for year 2. *See* paragraphs (d)(2)(i) and (d)(3) of this section. Thus, at the end of year 2 (and before the adjustments described in paragraph (d)(4)(i)(C) of this section), US1's hybrid deduction account with respect to Share A is $90x ($85x plus $5x) and with respect to Share B is $10x ($5x plus $5x). *See* paragraph (d)(4)(i) of this section.

(C) Because at the end of year 2 (and before the adjustments described in paragraph (d)(4)(i)(C) of this section) the sum of US1's hybrid deduction accounts with respect to Share A and Share B ($100x, calculated as $90x plus $10x) is at least equal to the aggregate $95x of year 2 dividends, the entire $95x of dividends are hybrid dividends. *See* paragraph (b)(2) of this section.

(D) At the end of year 2, US1's hybrid deduction accounts with respect to Share A and Share B are decreased by the amount of hybrid deductions in the accounts that gave rise to a hybrid dividend or tiered hybrid dividend during year 2. *See* paragraph (d)(4)(i)(C) of this section. A total of $95x of hybrid deductions in the accounts gave rise to a hybrid dividend during year 2. For the hybrid deduction account with respect to Share A, $85.5x in the account is considered to have given rise to a hybrid deduction (calculated as $95x multiplied by $90x/$100x). *See* paragraph (d)(4)(i)(C) of this section. For the hybrid deduction account with respect to Share B, $9.5x in the account is considered to have given rise to a hybrid deduction (calculated as $95x multiplied by $10x/$100x). *See* paragraph (d)(4)(i)(C) of this section. Thus, following these adjustments, at the end of year 2, US1's hybrid deduction account with respect to Share A is $4.5x ($90x less $85.5x) and with respect to Share B is $0.5x ($10x less $9.5x).

(iv) ***Alternative facts—deduction in branch country*** —

(A) ***Facts.*** The facts are the same as in paragraph (g)(1)(i) of this section, except that for Country X tax purposes Share A is treated as equity (and thus the Hybrid Instrument Deduction does not exist, and under Country X tax law FX is not allowed a deduction for the $30x distributed in year 2 with respect to Share A). However, FX has a branch in Country Z that gives rise to a taxable presence under Country Z tax law, and for Country Z

tax purposes Share A is treated as indebtedness and Share B is treated as equity. Also, during year 1, for Country Z tax purposes, FX accrues $80x of interest to US1 with respect to Share A and is allowed an $80x interest deduction with respect to its Country Z branch income. Moreover, for Country Z tax purposes, the $30x distribution with respect to Share A in year 2 represents a payment of interest for which a deduction was already allowed (and thus FX is not allowed an additional deduction for the amount), and the $30x distribution with respect to Share B in year 2 is treated as a dividend (for which no deduction is allowed).

(B) ***Analysis.*** The $80x interest deduction allowed to FX under Country Z tax law (a relevant foreign tax law) with respect to its Country Z branch income is a hybrid deduction of FX for year 1. *See* paragraphs (d)(2)(i) and (f)(5) of this section. For reasons similar to those discussed in paragraph (g)(1)(ii) of this section, at the end of year 2 (and before the adjustments described in paragraph (d)(4)(i)(C) of this section), US1's hybrid deduction accounts with respect to Share A and Share B are $80x and $0, respectively, and the sum of the accounts is $80x. Accordingly, the entire $60x of the year 2 dividend is a hybrid dividend. *See* paragraph (b)(2) of this section. Further, for the reasons described in paragraph (g)(1)(ii)(D) of this section, at the end of year 2 and taking into account the adjustments under paragraph (d)(4)(i)(C) of this section, US1's hybrid deduction account with respect to Share A is $20x ($80x less $60x) and with respect to Share B is $0.

(v) ***Alternative facts—account reduced by adjusted GILTI inclusion.*** The facts are the same as in paragraph (g)(1)(i) of this section, except that for taxable year 1 FX has $130x of gross tested income and $10.5x of current year tax (as described in § 1.960-1(b)(4)) that is allocated and apportioned under § 1.960-1(d)(3)(ii) to the tested income groups of FX. US1's ability to credit the $10.5x of current year tax is not limited under section 904(a). In addition, FX has $119.5x of tested income ($130x of gross tested income, less the $10.5x of current year tax deductions properly allocable to the gross tested income). Further, of US1's pro rata share of the tested income ($119.5x), $80x is attributable to Share A and $39.5x is attributable to Share B (as determined under the principles of § 1.951A-1(d)(2)). Moreover, US1's net deemed tangible income return (as defined in § 1.951A-1(c)(3)) for taxable year 1 is $71.7x, and US1 does not own any stock of a CFC other than its stock of FX. Thus, US1's GILTI inclusion amount (within the meaning of § 1.951A-1(c)(1)) for taxable year 1, the U.S. shareholder inclusion year, is $47.8x (net CFC tested income of $119.5x, less net deemed tangible income return of $71.7x) and US1's inclusion percentage (as described in § 1.960-2(c)(2)) is 40 ($47.8x/$119.5x). The deduction allowed to US1 under section 250 by reason of section 250(a)(1)(B)(i) is not limited as a result of section 250(a)(2)(B). At the end of year 1, US1's hybrid deduction account with respect to Share A is: First, increased by $80x (the amount of hybrid deductions allocated to Share A); and second, decreased by $10x (the sum of the adjusted GILTI inclusion with respect to Share A, and the adjusted GILTI inclusion with respect to Share B that is allocated to the hybrid deduction account with respect to Share A) to $70x. *See* paragraphs (d)(4)(i)(A) and (B) of this section. In year 2, the entire $30x of each dividend received by US1 from FX during year 2 is a hybrid dividend, because the sum of US1's hybrid deduction accounts with respect to each of its shares of FX stock at the end of year 2 ($70x) is at least equal to the amount of the dividends ($60x). *See* paragraph (b)(2) of this section. At the end of year 2, US1's hybrid deduction account with respect to Share A is decreased by $60x (the amount of the hybrid deductions in the account that give rise to a hybrid dividend or tiered hybrid dividend during year 2) to $10x. *See* paragraph (d)(4)(i)(C) of this section. Paragraphs (g)(1)(v)(A) through (C) of this section describe the computations pursuant to paragraph (d)(4)(i)(B)(2) of this section.

(A) To determine the adjusted GILTI inclusion with respect to Share A for taxable year 1, it must be determined to what extent US1's $47.8x GILTI inclusion amount is attributable to Share A. *See* paragraph (d)(4)(ii)(B) of this section. Here, $32x of the inclusion is attributable to Share A, calculated as $47.8x multiplied by a fraction, the numerator of which is $80x (US1's pro rata share of the tested income of FX attributable to Share A) and denominator of which is $119.5x (US1's pro rata share of the tested income of FX, its only CFC). *See* paragraph (d)(4)(ii)(C) of this section. Next, the associated foreign income taxes with respect to the $32x GILTI inclusion amount attributable to Share A must be determined. *See* paragraphs (d)(4)(ii)(B) and (D) of this section. Such associated foreign income taxes are $2.8x, calculated as $10.5x (the current year tax allocated and apportioned to the tested income groups of FX) multiplied by a fraction, the numerator of which is $80x (US1's pro rata share of the tested income of FX attributable to Share A) and the denominator of which is $119.5x (the tested income of FX), multiplied by 40% (US1's inclusion percentage), multiplied by 1 (the section 904 limitation fraction with respect to US1's GILTI inclusion amount). *See* paragraphs (d)(4)(ii)(D), (F), and (G) of this section. Thus, pursuant to paragraph (d)(4)(ii)(B) of this section, the adjusted GILTI inclusion with respect to Share A is $6.7x, computed by—

(*1*) Adding $2.8x (the associated foreign income taxes with respect to the $32x GILTI inclusion attributable to Share A) to $32x, which is $34.8x;

(*2*) Multiplying $34.8x (the sum of the amounts in paragraph (g)(1)(v)(A)(*1*) of this section) by 50% (the difference of 100 percent and the section 250(a)(1)(B)(i) deduction percentage), which is $17.4x; and

(*3*) Subtracting $10.7x (calculated as $2.24x (80% of the $2.8x of associated foreign income taxes) divided by .21 (the percentage described in section 11(b)) from $17.4x (the product of the amounts in paragraph (g)(1)(v)(A)(*2*) of this section), which is $6.7x.

(B) Pursuant to computations similar to those discussed in paragraph (g)(1)(v)(A) of this section, the adjusted GILTI inclusion with respect to Share B is $3.3x. However, the hybrid deduction account with respect to Share B is not reduced by such $3.3x, because of the limitation in paragraph (d)(4)(i)(B)(*2*)(*ii*) of this section, which, with respect to Share B, limits the reduction pursuant to paragraph (d)(4)(i)(B)(*2*)(*i*) of this section to $0 (calculated as $0, the hybrid deductions allocated to the share for the taxable year, multiplied by 1, the fraction described in paragraph (d)(4)(i)(B)(*2*)(*ii*) of this section (computed as $130x, the sole item of gross tested income, divided by $130x, the sole item of gross income)). *See* paragraphs (d)(4)(i)(B)(*2*)(*i*) and (*ii*) of this section.

(C) US1's hybrid deduction account with respect to Share A is reduced by the entire $6.7x adjusted GILTI inclusion with respect to the share, as such $6.7x does not exceed the limit in paragraph (d)(4)(i)(B)(*2*)(*ii*) of this section ($80x, calculated as $80x, the hybrid deductions allocated to the share for the taxable year, multiplied by 1, the fraction described in paragraph (d)(4)(i)(B)(*2*)(*ii*) of this section). *See* paragraphs (d)(4)(i)(B)(*2*)(*i*) and (*ii*) of this section. In addition, the hybrid deduction account is reduced by another $3.3x, the amount of the adjusted GILTI inclusion with respect to Share B that is allocated to the hybrid deduction account with respect to Share A. *See* paragraph (d)(4)(i)(B)(*2*)(*iii*) of this section. As a result, pursuant to paragraph (d)(4)(i)(B)(*2*) of this section, US1's hybrid deduction account with respect to Share A is reduced by $10x ($6.7x plus $3.3x).

(2) *Example 2. Tiered hybrid dividend rule; tax benefit equivalent to a deduction* —

(i) ***Facts.*** US1 holds all the stock of FX, and FX holds all 100 shares of stock of FZ (the "FZ shares"), which have an equal value. The FZ shares are treated as equity for Country Z tax purposes. At the end of year 1, the sum of FX's hybrid deduction accounts with respect to each of its shares of FZ stock is $0. During year 2, FZ distributes $10x to FX with respect to each of the FZ shares, for a total of $1,000x. The $1,000x is treated as a dividend for U.S. and Country Z tax purposes, and is not deductible for Country Z tax purposes. If FX were a domestic corporation, then, without regard to section 245A(e) and this section as well as § 1.245A-5, FX would be allowed a deduction under section 245A(a) for the $1,000x. Under Country Z tax law, 75% of the corporate income tax paid by a Country Z corporation with respect to a dividend distribution is refunded to the corporation's shareholders (regardless of where such shareholders are tax residents) upon a dividend distribution by the corporation. The corporate tax rate in Country Z is 20%. With respect to FZ's distributions, FX is allowed a refundable tax credit of $187.5x. The $187.5x refundable tax credit is calculated as $1,250x (the amount of pre-tax earnings that funded the distribution, determined as $1,000x (the amount of the distribution) divided by 0.8 (the percentage of pre-tax earnings that a Country Z corporation retains after paying Country Z corporate tax)) multiplied by 0.2 (the Country Z corporate tax rate) multiplied by 0.75 (the percentage of the Country Z tax credit). Under Country Z tax law, FX is not subject to Country Z withholding tax (or any other tax) with respect to the $1,000x dividend distribution.

(ii) ***Analysis.*** As described in paragraphs (g)(2)(ii)(A) and (B) of this section, the sum of FX's hybrid deduction accounts with respect to each of its shares of FZ stock at the end of year 2 is $937.5x and, as a result, $937.5x of the $1,000x of dividends received by FX from FZ during year 2 is a tiered hybrid dividend. *See* paragraphs (b)(2) and (c)(2) of this section. The $937.5x tiered hybrid dividend is treated for purposes of section 951(a)(1)(A) as subpart F income of FX and US1 must include in gross income its pro rata share of such subpart F income, which is $937.5x. *See* paragraph (c)(1) of this section. This is the case notwithstanding any other provision of the Code, including section 952(c) or section 954(c)(3) or (6). In addition, the rules of section 245A(d) and § 1.245A(d)-1 (disallowance of foreign tax credits and deductions) apply with respect to US1's inclusion. *See* paragraph (c)(1) of this section. Paragraphs (g)(2)(ii)(A) through (C) of this section describe the determinations under this section. The characterization of the FZ stock for Country X tax purposes (or for purposes of any other foreign tax law) does not affect this analysis.

(A) The $187.5x refundable tax credit allowed to FX under Country Z tax law (a relevant foreign tax law) is equivalent to a $937.5x deduction, calculated as $187.5x (the amount of the credit) divided by 0.2 (the Country Z corporate tax rate). The $937.5x is a hybrid deduction of FZ because it is allowed to FX (a person related to FZ), it relates to or results from amounts distributed with respect to instruments issued by FZ and treated as stock for U.S. tax purposes, and it has the effect of causing the earnings that funded the distributions to not be included in income under Country Z tax law. *See* paragraph (d)(2)(i) of this section. $9.375x of the hybrid deduction is allocated to each of the FZ shares, calculated as $937.5x (the amount of the hybrid deduction) multiplied by 1/100 (the value of each FZ share relative to the value of all the FZ shares). *See* paragraph (d)(3) of this section. The result would be the same if FX were instead a tax resident of Country Z (and not Country X), FX were allowed the $187.5x refundable tax credit under Country Z tax law, and under Country Z tax law FX were to not include the $1,000x in income (because, for

example, Country Z tax law provides Country Z resident corporations a 100% exclusion or dividends received deduction with respect to dividends received from a resident corporation). *See* paragraph (d)(2)(i) of this section.

(B) At the end of year 2, and before the adjustments described in paragraph (d)(4)(i)(C) of this section, the sum of FX's hybrid deduction accounts with respect to each of its shares of FZ stock is $937.5x, calculated as $9.375x (the amount in each account) multiplied by 100 (the number of accounts). *See* paragraph (d)(4)(i) of this section. Accordingly, $937.5x of the $1,000x dividend received by FX from FZ during year 2 is a tiered hybrid dividend. *See* paragraphs (b)(2) and (c)(2) of this section.

(C) At the end of year 2, each of FX's hybrid deduction accounts with respect to its shares of FZ is decreased by the $9.375x in the account that gave rise to a hybrid dividend or tiered hybrid dividend during year 2. *See* paragraph (d)(4)(i)(C) of this section. Thus, following these adjustments, at the end of year 2, each of FX's hybrid deduction accounts with respect to its shares of FZ stock is $0, calculated as $9.375x (the amount in the account before the adjustments described in paragraph (d)(4)(i)(C) of this section) less $9.375x (the adjustment described in paragraph (d)(4)(i)(C) of this section with respect to the account).

(iii) ***Alternative facts—imputation system that taxes shareholders.*** The facts are the same as in paragraph (g)(2)(i) of this section, except that under Country Z tax law the $1,000x dividend to FX is subject to a 30% gross basis withholding tax, or $300x, and the $187.5x refundable tax credit is applied against and reduces the withholding tax to $112.5x. The $187.5x refundable tax credit provided to FX is not a hybrid deduction because FX was subject to Country Z withholding tax of $300x on the $1,000x dividend (such withholding tax being greater than the $187.5x credit). *See* paragraph (d)(2)(i) of this section. If instead FZ were allowed a $1,000x dividends paid deduction for the $1,000x dividend (and FX were not allowed the refundable tax credit) and the dividend were subject to 5% gross basis withholding tax (or $50x), then $750x of the dividends paid deduction would be a hybrid deduction, calculated as the excess of $1,000x (the dividends paid deduction) over $250x (the amount of income that under Country Z tax law would produce an amount of tax equal to the $50x of withholding tax, calculated as $50x, the amount of withholding tax, divided by 0.2, the Country Z corporate tax rate). *See* paragraph (d)(2)(i) of this section.

(h) ***Applicability dates*** —

(1) ***In general.*** Except as provided in paragraph (h)(2) of this section, this section applies to distributions made after December 31, 2017, provided that such distributions occur during taxable years ending on or after December 20, 2018. However, taxpayers may apply this section in its entirety to distributions made after December 31, 2017 and occurring during taxable years ending before December 20, 2018. In lieu of applying the regulations in this section, taxpayers may apply the provisions matching this section from the Internal Revenue Bulletin (IRB) 2019-03 (*https://www.irs.gov/pub/irs-irbs/irb19-03.pdf*) in their entirety for all taxable years ending on or before April 8, 2020.

(2) ***Special rules.*** Paragraphs (d)(4)(i)(B) and (d)(4)(ii) of this section (decrease of hybrid deduction accounts; rules regarding adjusted subpart F and GILTI inclusions) apply to taxable years ending on or after November 12, 2020. However, a taxpayer may choose to apply paragraphs (d)(4)(i)(B) and

(d)(4)(ii) of this section to a taxable year ending before November 12, 2020, so long as the taxpayer consistently applies paragraphs (d)(4)(i)(B) and (d)(4)(ii) of this section to that taxable year and any subsequent taxable year ending before November 12, 2020.

[T.D. 9896, 85 FR 19830, Apr. 8, 2020, as amended by T.D. 9909, 85 FR 53096, Aug. 27, 2020; T.D. 9922, 85 FR 72031, Nov. 12, 2020; T.D.9959, 87 FR 324, Jan. 4, 2022]

§ 1.246-1 Deductions not allowed for dividends from certain corporations.

The deductions provided in sections 243 (relating to dividends received by corporations), 244 (relating to dividends received on certain preferred stock), and 245 (relating to dividends received from certain foreign corporations), are not allowable with respect to any dividend received from:

(a) A corporation organized under the China Trade Act, 1922 (15 U.S.C. ch. 4) (see section 941); or

(b) A corporation which is exempt from tax under section 501 (relating to certain charitable, etc., organizations) or section 521 (relating to farmers' cooperative associations) for the taxable year of the corporation in which the distribution is made or for its next preceding taxable year; for

(c) A corporation to which section 931 (relating to income from sources within possessions of the United States) applies for the taxable year of the corporation in which the distribution is made or for its next preceding taxable year; or

(d) A real estate investment trust which, for its taxable year in which the distribution is made, is taxable under Part II, Subchapter M, Chapter 1 of the Code. See section 243(c)(3), paragraph (c) of § 1.243-2, section 857(c), and paragraph (d) of § 1.857-6.

[T.D. 6500, 25 FR 11402, Nov. 26, 1960, as amended by T.D. 6598, 27 FR 4092, Apr. 28, 1962; T.D. 7767, 46 FR 11264, Feb. 6, 1981]

§ 1.246-2 Limitation on aggregate amount of deductions.

(a) ***General rule.*** The sum of the deductions allowed by sections 243(a)(1) (relating to dividends received by corporations), 244(a) (relating to dividends received on certain preferred stock), and 245 (relating to dividends received from certain foreign corporations), except as provided in section 246(b)(2) and in paragraph (b) of this section, is limited to 85 percent of the taxable income of the corporation. The taxable income of the corporation for this purpose is computed without regard to the net operating loss deduction allowed by section 172, the deduction for dividends paid on certain preferred stock of public utilities allowed by section 247, any capital loss carryback under section 1212(a)(1), and the deductions provided in sections 243(a)(1), 244(a), and 245. For definition of the term *taxable income,* see section 63.

(b) ***Effect of net operating loss.*** If the shareholder corporation has a net operating loss (as determined under sec. 172) for a taxable year, the limitation provided in section 246(b)(1) and in paragraph (a) of this section is not applicable for such taxable year. In that event, the deductions provided in sections 243(a)(1), 244(a), and 245 shall be allowable for all tax purposes to the shareholder corporation for such taxable year without regard to such limitation. If the shareholder corporation does not have a net operating loss for the taxable year, however, the limitation will be applicable for all tax purposes for such taxable year. In determining whether the shareholder corporation has a net operating loss for a taxable year under section 172, the deductions allowed by sections 243(a)(1), 244(a), and 245 are to be computed without regard to the limitation provided in section 246(b)(1) and in paragraph (a) of this section.

[T.D. 6992, 34 FR 825, Jan. 18, 1969, as amended by T.D. 7301, 39 FR 963, Jan. 4, 1974]

§ 1.246-3 Exclusion of certain dividends.

(a) ***In general.*** Corporate taxpayers are denied, in certain cases, the dividends-received deduction provided by section 243 (dividends received by corporations), section 244 (dividends received on certain preferred stock), and section 245 (dividends received from certain foreign corporations). The above-mentioned dividends-received deductions are denied, under section 246(c)(1), to corporate shareholders:

(1) If the dividend is in respect of any share of stock which is sold or otherwise disposed of in any case where the taxpayer has held such share for 15 days or less; or

(2) If and to the extent that the taxpayer is under an obligation to make corresponding payments with respect to substantially identical stock or securities. It is immaterial whether the obligation has arisen pursuant to a short sale or otherwise.

(b) ***Ninety-day rule for certain preference dividends.*** In the case of any stock having a preference in dividends, a special rule is provided by section 246(c)(2) in lieu of the 15-day rule described in section 246(c)(1) and paragraph (a)(1) of this section. If the taxpayer receives dividends on such stock which are attributable to a period or periods aggregating in excess of 366 days, the holding period specified in section 246(c)(1)(A) shall be 90 days (in lieu of 15 days).

(c) ***Definitions*** —

(1) ***"Otherwise disposed of".*** As used in this section the term *otherwise disposed of* includes disposal by gift.

(2) ***"Substantially identical stock or securities".*** The term *substantially identical stock or securities* is to be applied according to the facts and circumstances in each case. In general, the term has the same meaning as the corresponding terms in sections 1091 and 1233 and the regulations thereunder. See paragraph (d)(1) of § 1.1233-1.

(3) ***Obligation to make corresponding payments.***

(i) Section 246(c)(1)(B) of the Code denies the dividends-received deduction to a corporate taxpayer to the extent that such taxpayer is under an obligation, with respect to substantially identical stock or securities, to make payments corresponding to the dividend received. Thus, for example, where a corporate taxpayer is in both a "long" and "short" position with respect to the same stock on the date that such stock goes ex-dividend, the dividend received on the stock owned by the taxpayer will not be eligible for the dividends-received deduction to the extent that the taxpayer is obligated to make payments to cover the dividends with respect to its offsetting short position in the same stock. The dividends-received deduction is denied in such a case without regard to the length of time the taxpayer has held the stock on which such dividends are received.

(ii) The provisions of subdivision (i) of this subparagraph may be illustrated by the following example:

Example. Y Corporation owns 100 shares of the Z Corporation's common stock on January 1, 1959. Z Corporation on January 15, 1959, declares a dividend of $1.00 per share payable to shareholders of record on January 30, 1959. On January 21, 1959, Y Corporation sells short 25 shares of the Z Corporation's common stock and remains in the short position on January 31, 1959, the day that Z Corporation's common stock goes ex-dividend. Y Corporation is therefore obligated to make a

payment to the lender of the 25 shares of Z Corporation's common stock which were sold short, corresponding to the $1.00 a share dividend that the lender would have received on those 25 shares, or $25.00. Therefore, $25.00 of the $100.00 that the Y Corporation receives as dividends from the Z Corporation with respect to the 100 shares of common stock in which it has a long position is not eligible for the dividends-received deduction.

(d) ***Determination of holding period*** —

(1) ***In general.*** Special rules are provided by paragraph (3) of section 246(c) for determining the period for which the taxpayer has held any share of stock for purposes of the restriction provided by such section. In computing the holding period the day of disposition but not the day of acquisition shall be taken into account. Also, there shall not be taken into account any day which is more than 15 days after the date on which the share of stock becomes ex-dividend. Thus, the holding period is automatically terminated at the end of such 15-day period without regard to how long the stock may be held after that date. In the case of stock qualifying under paragraph (2) of section 246(c) (as having preference in dividends) a 90-day period is substituted for the 15-day period prescribed in this subparagraph. Finally, section 1223(4), relating to holding periods in the case of wash sales, shall not apply. Therefore, tacking of the holding period of the stock disposed of to the holding period of the stock acquired where a wash sale occurs is not permitted for purposes of determining the holding period described in section 246(c).

(2) ***Special rules.*** Section 246(c) requires that the holding periods determined thereunder shall be appropriately reduced for any period that the taxpayer's stock holding is offset by a corresponding short position resulting from an option to sell, a contractual obligation to sell, or a short sale of, substantially identical stock or securities. The holding periods of stock held for a period of 15 days or less on the date such short position is created shall accordingly be reduced to the extent of such short position. Where the amount of stock acquired within such period exceeds the amount as to which the taxpayer establishes a short position, the stock the holding period of which must be reduced because of such short position shall be that most recently acquired within such period. If, on the date the short position is created, the amount of stock subject to the short position exceeds the amount, if any, of stock held by the taxpayer for 15 days or less, the excess shares of stock sold short shall, to the extent thereof, postpone until the termination of the short position the commencement of the holding periods of subsequently acquired stock. Stock having a preference in dividends is also subject to the rules prescribed in this subparagraph, except that the 90-day period provided by paragraph (b) of this section shall apply in lieu of the 15-day period otherwise applicable. The rules prescribed in this subparagraph may be illustrated by the following examples:

Example 1. L Company purchased 100 shares of Z Corporation's common stock during January 1959. On November 26, 1959, L Company purchased an additional 100 shares of the same stock. On December 1, 1959, Z Corporation declared a dividend payable on its common stock to shareholders of record on December 20, 1959. Also on December 1, L Company sold short 150 shares of Z Corporation's common stock. On December 16, 1959 (before the stock went ex-dividend), L Company closed its short sale with 150 shares purchased on that date. In determining, for purposes of section 246(c), whether L Company has held the 100 shares of stock acquired on November 26 for a period in excess of 15 days, the period of the short position (from December 2 through December 16) shall be excluded. Thus, if on or before December 26, 1959, L Company sold the 100 shares of Z Corporation stock which it purchased on November 26, 1959, it would not be entitled to a dividends-received deduction for the dividends received on such shares because it would have held such shares for 15 days or less on the date of the sale. Since L Company had held the 100 shares

acquired during January 1959 for more than 15 days on December 2, 1959, and since it was under no obligation to make payments corresponding to the dividends received thereon, section 246(c) is inapplicable to the dividends received with respect to those shares.

Example 2. Assume the same facts as in *Example 1* above except that the additional 100 shares of Z Corporation common stock were purchased by L Company on December 10, 1959, rather than November 26, 1959. In determining, for purposes of section 246(c), whether L Company has held such shares for a period in excess of 15 days, the period from December 11, 1959, until December 16, 1959 (the date the short sale made on December 1 was closed), shall be excluded.

(e) ***Effective date.*** The provisions of this section shall apply to stock acquired after December 31, 1957, or with respect to stock acquired before that date where the taxpayer has made a short sale of substantially identical stock or securities after that date.

§ 1.246-4 Dividends from a DISC or former DISC.

The deduction provided in section 243 (relating to dividends received by corporations) is not allowable with respect to any dividend (whether in the form of a deemed or actual distribution or an amount treated as a dividend pursuant to section 995(c)) from a corporation which is a DISC or former DISC (as defined in section 992(a)(1) or (3) as the case may be) to the extent such dividend is from the corporation's accumulated DISC income (as defined in section 996(f)(1)) or previously taxed income (as defined in section 996(f)(2)) or is a deemed distribution pursuant to section 995(b)(1) in a taxable year for which the corporation qualifies (or is treated) as a DISC. To the extent that a dividend is paid out of earnings and profits which are not made up of accumulated DISC income or previously taxed income, the corporate recipient is entitled to the deduction provided in section 243 in the same manner and to the same extent as a dividend from a domestic corporation which is not a DISC or former DISC.

[T.D. 7283, 38 FR 20824, Aug. 3, 1973]

§ 1.246-5 Reduction of holding periods in certain situations.

(a) ***In general.*** Under section 246(c)(4)(C), the holding period of stock for purposes of the dividends received deduction is appropriately reduced for any period in which a taxpayer has diminished its risk of loss by holding one or more other positions with respect to substantially similar or related property. This section provides rules for applying section 246(c)(4)(C).

(b) ***Definitions*** —

(1) ***Substantially similar or related property.*** The term substantially similar or related property is applied according to the facts and circumstances in each case. In general, property is substantially similar or related to stock when—

(i) The fair market values of the stock and the property primarily reflect the performance of—

(A) A single firm or enterprise;

(B) The same industry or industries; or

(C) The same economic factor or factors such as (but not limited to) interest rates, commodity prices, or foreign-currency exchange rates; and

(ii) Changes in the fair market value of the stock are reasonably expected to approximate, directly or inversely, changes in the fair market value of the property, a fraction of the fair market value of the property, or a multiple of the fair market value of the property.

(2) ***Diminished risk of loss.*** A taxpayer has diminished its risk of loss on its stock by holding positions with respect to substantially similar or related property if changes in the fair market values of the stock and the positions are reasonably expected to vary inversely.

(3) ***Position.*** For purposes of this section, a position with respect to property is an interest (including a futures or forward contract or an option) in property or any contractual right to a payment, whether or not severable from stock or other property. A position does not include traditional equity rights to demand payment from the issuer, such as the rights traditionally provided by mandatorily redeemable preferred stock.

(4) ***Reasonable expectations.*** For purposes of paragraphs (b)(1)(i), (b)(2), or (c)(1)(vi) of this section, reasonable expectations are the expectations of a reasonable person, based on all the facts and circumstances at the later of the time the stock is acquired or the positions are entered into. Reasonable expectations include all explicit or implicit representations made with respect to the marketing or sale of the position.

(c) ***Special rules*** —

(1) ***Positions in more than one stock*** —

(i) ***In general.*** This paragraph (c)(1) provides rules for the treatment of positions that reflect the value of more than one stock. In general, positions that reflect the value of a portfolio of stocks are treated under the rules of paragraphs (c)(1) (ii) through (iv) of this section, and positions that reflect the value of more than one stock but less than a portfolio are treated under the rules of paragraph (c)(1)(v) of this section. A portfolio for this purpose is any group of stocks of 20 or more unrelated issuers. Paragraph (c)(1)(vi) of this section provides an anti-abuse rule.

(ii) ***Portfolios.*** Notwithstanding paragraph (b)(1) of this section, a position reflecting the value of a portfolio of stocks is substantially similar or related to the stocks held by the taxpayer only if the position and the taxpayer's holdings substantially overlap as of the most recent testing date. A position may be substantially similar or related to a taxpayer's entire stock holdings or a portion of a taxpayer's stock holdings.

(iii) ***Determining substantial overlap.*** This paragraph (c)(1)(iii) provides rules for determining whether a position and a taxpayer's stock holdings or a portion of a taxpayer's stock holdings substantially overlap. Paragraphs (c)(1)(iii) (A) through (C) of this section determine whether there is substantial overlap as of any testing date.

(A) ***Step One.*** Construct a subportfolio (the Subportfolio) that consists of stock in an amount equal to the lesser of the fair market value of each stock represented in the position and the fair market value of the stock in the taxpayer's stock holdings. (The Subportfolio may contain fewer than 20 stocks.)

(B) ***Step Two.*** If the fair market value of the Subportfolio is equal to or greater than 70 percent of the fair market value of the stocks represented in the position, the position and the Subportfolio substantially overlap.

(C) ***Step Three.*** If the position does not substantially overlap with the Subportfolio, repeat Steps One and Two (paragraphs (c)(1)(iii)(A) and (B) of this section) reducing the size of the position. The largest percentage of the position that results in a substantial overlap is substantially similar or related to the Subportfolio determined with respect to that percentage of the position.

(iv) ***Testing date.*** A testing date is any day on which the taxpayer purchases or sells any stock if the fair market value of the stock or the fair market value of substantially similar or related property is reflected in the position, any day on which the taxpayer changes the position, or any day on which the composition of the position changes.

(v) ***Nonportfolio positions.*** A position that reflects the fair market value of more than one stock but not of a portfolio of stocks is treated as a separate position with respect to each of the stocks the value of which the position reflects.

(vi) ***Anti-abuse rule.*** Notwithstanding paragraphs (c)(1)(i) through (v) of this section, a position that reflects the value of more than one stock is a position in substantially similar or related property to the appropriate portion of the taxpayer's stock holdings if—

(A) Changes in the value of the position or the stocks reflected in the position are reasonably expected to virtually track (directly or inversely) changes in the value of the taxpayer's stock holdings, or any portion of the taxpayer's stock holdings and other positions of the taxpayer; and

(B) The position is acquired or held as part of a plan a principal purpose of which is to obtain tax savings (including by deferring tax) the value of which is significantly in excess of the expected pre-tax economic profits from the plan.

(2) ***Options*** —

(i) ***Options that are significantly out of the money.*** For purposes of paragraph (b)(2) of this section, an option to sell that is significantly out of the money does not diminish the taxpayer's risk of loss on its stock unless the option is held as part of a strategy to substantially offset changes in the fair market value of the stock.

(ii) ***Conversion rights.*** Notwithstanding paragraphs (b)(1) and (2) of this section, a taxpayer is treated as diminishing its risk of loss by holding substantially similar or related property if it engages in the following transactions or their substantial equivalents—

(A) A short sale of common stock while holding convertible preferred stock of the same issuer and the price changes of the convertible preferred stock and the common stock are related;

(B) A short sale of a convertible debenture while holding convertible preferred stock into which the debenture is convertible or common stock; or

(C) A short sale of convertible preferred stock while holding common stock.

(3) ***Stacking rule.*** If a taxpayer diminishes its risk of loss by holding a position in substantially similar or related property with respect to only a portion of the shares that the taxpayer holds in a particular stock, the holding period of those shares having the shortest holding period is reduced.

(4) ***Guarantees, surety agreements, or similar arrangements.*** A taxpayer has diminished its risk of loss on stock by holding a position in substantially similar or related property if the taxpayer is the beneficiary of a guarantee, surety agreement, or similar arrangement and the guarantee, surety agreement, or similar arrangement provides for payments that will substantially offset decreases in the fair market value of the stock.

(5) ***Hedges counted only once.*** A position established as a hedge of one outstanding position, transaction, or obligation of the taxpayer (other than stock) is not treated as diminishing the risk of loss with respect to any other position held by the taxpayer. In determining whether a position is established to hedge an outstanding position, transaction, or obligation of the taxpayer, substantial deference will be given to the relationships that are established in its books and records at the time the position is entered into.

(6) ***Use of related persons or pass-through entities.*** Positions held by a party related to the taxpayer within the meaning of sections 267(b) or 707(b)(1) are treated as positions held by the taxpayer if the positions are held with a view to avoiding the application of this section or § 1.1092(d)-2. In addition, a taxpayer is treated as diminishing its risk of loss by holding substantially similar or related property if the taxpayer holds an interest in, or is the beneficiary of, a pass-through entity, intermediary, or other arrangement with a view to avoiding the application of this section or § 1.1092(d)-2.

(7) ***Notional principal contracts.*** For purposes of this section, rights and obligations under notional principal contracts are considered separately even though payments with regard to those rights and obligations are generally netted for other purposes. Therefore, if a taxpayer is treated under the preceding sentence as receiving payments under a notional principal contract when the fair market value of the taxpayer's stock declines, the taxpayer has diminished its risk of loss by holding a position in substantially similar or related property regardless of the netting of the payments under the contract for any other purposes.

(d) ***Examples.*** The following examples illustrate the provisions of this section:

Example 1. General application to common stock. Corporation A and Corporation B are both automobile manufacturers. The fair market values of Corporation A and Corporation B common stock primarily reflect the value of the same industry. Because Corporation A and Corporation B common stock are affected not only by the general level of growth in the industry but also by individual corporate management decisions and corporate capital structures, changes in the fair market value of Corporation A common stock are not reasonably expected to approximate changes in the fair market value of the Corporation B common stock. Under paragraph (b)(1) of this section, Corporation A common stock is not substantially similar or related to Corporation B common stock.

Example 2. Common stock value primarily reflects commodity price. Corporation C and Corporation D both hold gold as their primary asset, and historically changes in the fair market value of Corporation C common stock approximated changes in the fair market value of Corporation D common stock. Corporation M purchased Corporation C common stock and sold short Corporation D common stock. Corporation C common stock is substantially similar or related to Corporation D common stock because their fair market values primarily reflect the performance of the same economic factor, the price of gold, and changes in the fair market value of Corporation C common stock are reasonably expected to approximate changes in the fair market value of Corporation D common stock. It was reasonably expected that changes in the fair market values of the Corporation C common stock and the short position in Corporation D common stock would vary inversely. Thus, Corporation M has diminished its risk of loss on its Corporation C common stock for purposes of section 246(c)(4)(C) and this section by holding a position in substantially similar or related property.

> *Example 3. Portfolios of stocks.* (i) Corporation Z holds a portfolio of stocks and acquires a short position on a publicly traded index through a regulated futures contract (RFC) that

reflects the value of a portfolio of stocks as defined in paragraph (c)(1)(i) of this section. The index reflects the fair market value of stocks A through T. The values of stocks reflected in the index and the values of the same stocks in Corporation Z's holdings are as follows:

Stock	Z's holdings	RFC	Subportfolio
A	$300	$300	$300
B	300	300	300
C	—	300	—
D	400	500	400
E	300	500	300
F	300	500	300
G	500	600	500
H	300	300	300
I	—	300	—
J	400	450	400
K	200	500	200
L	200	400	200
M	200	500	200
N	100	200	100
O	—	200	—
P	200	200	200
Q	100	300	100
R	200	100	100
S	100	100	100
T	100	200	100
Totals	$4,200	$6,750	$4,100

(ii) The position is substantially similar or related to Z's stock holdings only if they substantially overlap. To determine whether they substantially overlap, Corporation Z must construct a Subportfolio of stocks with the lesser of the value of the stock as reflected in the RFC and its holdings. The Subportfolio is given in the rightmost column above. The value of the Subportfolio is 60.74 percent of the value of the stocks represented in the position ($4100 ÷ $6750), so the position and the Subportfolio do not substantially overlap.

(iii) To determine whether any portion of the position substantially overlaps with any portion of the Z's stock holdings, the values of the stocks in the RFC are reduced for purposes of the above steps. Eighty percent of the position and the corresponding subportfolio (consisting of stocks with a value of the lesser of the stocks represented in Z's holdings and in 80 percent of the RFC) substantially overlap, computed as follows:

Stock	Z's holdings	80% of RFC	Subportfolio
A	$300	$240	$240
B	300	240	240
C	—	240	—
D	400	400	400
E	300	400	300
F	300	400	300
G	500	480	480
H	300	240	240
I	—	240	—
J	400	360	360
K	200	400	200
L	200	320	200
M	200	400	200
N	100	160	100
O	—	160	—
P	200	160	160
Q	100	240	100
R	200	80	80
S	100	80	80
T	100	160	100
Totals	$4,200	$5,400	$3,780

(iv) Because $3,780 is 70 percent of $5,400, the Subportfolio substantially overlaps with 80 percent of the position. Under paragraph (c)(3) of this section, Z's stocks having the shortest holding period are treated as included in the Subportfolio. A larger portion of Z's stocks may be treated as substantially similar or related property under the anti-abuse rule of paragraph (c)(1)(vi) of this section.

Example 4. Hedges counted only once. January 1, 1996, Corporation X owns a $100 million portfolio of stocks all of which would substantially overlap with a $100 million regulated futures contract (RFC) on a commonly used index (the Index). On January 15, Corporation X enters into a $100 million short position in an RFC on the Index with a March delivery date and enters into a $75 million long position

in an RFC on the Index for June delivery. Also on January 15, 1996, Corporation X indicates in its books and records that the long and short RFC positions are intended to offset one another. Under paragraph (c)(5) of this section, $75 million of the short position in the RFC is not treated as diminishing the risk of loss on the stock portfolio and instead is treated as a straddle or a hedging transaction, as appropriate, with respect to the $75 million long position in the RFC, under section 1092. The remaining $25 million short position is treated as diminishing the risk of loss on the portfolio by holding a position in substantially similar or related property. The rules of paragraph (c)(1) determine how much of the portfolio is subject to this rule and the rules of paragraph (c)(3) determine which shares have their holding periods tolled.

(e) ***Effective date*** —

(1) ***In general.*** The provisions of this section apply to dividends received on or after March 17, 1995, on stock acquired after July 18, 1984.

(2) ***Special rule for dividends received on certain stock.*** Notwithstanding paragraph (e)(1) of this section, this section applies to any dividends received by a taxpayer on stock acquired after July 18, 1984, if the taxpayer has diminished its risk of loss by holding substantially similar or related property involving the following types of transactions—

(i) The short sale of common stock when holding convertible preferred stock of the same issuer and the price changes of the two stocks are related, or the short sale of a convertible debenture while holding convertible preferred stock into which the debenture is convertible (or common stock), or a short sale of convertible preferred stock while holding common stock; or

(ii) The acquisition of a short position in a regulated futures contract on a stock index, or the acquisition of an option to sell the regulated futures contract or the stock index itself, or the grant of a deep-in-the-money option to buy the regulated futures contract or the stock index while holding the stock of an investment company whose principal holdings mimic the performance of the stocks included in the stock index; or alternatively, while holding a portfolio composed of stocks that mimic the performance of the stocks included in the stock index.

[T.D. 8590, 60 FR 14638, Mar. 20, 1995]

§ 1.247-1 Deduction for dividends paid on preferred stock of public utilities.

(a) ***Amount of deduction.***

(1) A deduction is provided in section 247 for dividends paid during the taxable year by certain public utility corporations (see paragraph (b) of this section) on certain preferred stock (see paragraph (c) of this section). This deduction is an amount equal to the product of a specified fraction times the lesser of

(i) the amount of the dividends paid during the taxable year by a public utility on its preferred stock (as defined in paragraph (c) of this section), or

(ii) the taxable income of the public utility for such taxable year (computed without regard to the deduction allowed by section 247). The specified fraction for any taxable year is the fraction the numerator of which is 14 and the denominator of which is the sum of the corporation normal tax rate and the surtax rate for such taxable year specified in section 11. Since section 11 provides that for the calendar year 1954 the corporation normal tax rate is 30 percent and the surtax rate is 22 percent, the sum of the two tax rates is 52 percent and the specified fraction

for the calendar year 1954 is 14/52. If, for example, section 11 should specify that the corporation's normal tax rate is 25 percent and the surtax rate is 22 percent for the calendar year, the sum of the two tax rates will be 47 percent and the specified fraction for the calendar year will be 14/47. If Corporation A, a public utility which files its income tax return on the calendar year basis, pays $100,000 dividends on its preferred stock in the calendar year 1954 and if its taxable income for such year is greater than $100,000 the deduction allowable to Corporation A under section 247 for 1954 is $100,000 times 14/52, or $26,923.08. If in 1954 Corporation A's taxable income, computed without regard to the deduction provided in section 247, had been $90,000 (that is, less than the amount of the dividends which it paid on its preferred stock in that year), the deduction allowable under section 247 for 1954 would have been $90,000 times 14/52, or $24,230.77.

(2) For the purpose of determining the amount of the deduction provided in section 247(a) and in subparagraph (1) of this paragraph, the amount of dividends paid in a given taxable year shall not include any amount distributed in such year with respect to dividends unpaid and accumulated in any taxable year ending before October 1, 1942. If any distribution is made in the current taxable year with respect to dividends unpaid and accumulated for a prior taxable year, such distribution will be deemed to have been made with respect to the earliest year or years for which there are dividends unpaid and accumulated. Thus, if a public utility makes a distribution with respect to a prior taxable year, it shall be considered that such distribution was made with respect to the earliest year or years for which there are dividends unpaid and accumulated, whether or not the public utility states that the distribution was made with respect to such year or years and even though the public utility stated that the distribution was made with respect to a later year. Even though it has dividends unpaid and accumulated with respect to a taxable year ending before October 1, 1942, a public utility may, however, include the dividends paid with respect to the current taxable year in computing the deduction under section 247. If there are no dividends unpaid and accumulated with respect to a taxable year ending before October 1, 1942, a public utility may include the dividends paid with respect to a prior taxable year which ended after October 1, 1942, in computing the deduction under section 247; such public utility in addition may include the dividends paid with respect to the current taxable year in computing the deduction under section 247. However, if local law or its own charter requires a public utility to pay all unpaid and accumulated dividends before any dividends can be paid with respect to the current taxable year, such public utility may not include any distribution in the current year in computing the deduction under section 247 to the extent that there are dividends unpaid and accumulated with respect to taxable years ending before October 1, 1942.

(3) If a corporation which is engaged in one or more of the four types of business activities (called utility activities in this section) enumerated in section 247(b)(1) (the furnishing of telephone service or the sale of electrical energy, gas, or water) is also engaged in some other business that does not fall within any of the enumerated categories, the deduction under section 247 is allowable only for such portion of the amount computed under section 247(a) as is allocable to the income from utility activities. For this purpose, the allocation may be made on the basis of the ratio which the total income from the utility activities bears to total income from all sources (total income being considered either gross income or gross receipts, whichever method results in the higher deduction). However, if such an allocation reaches an inequitable result and the books of the corporation are so kept that the taxable income attributable to the utility activities can be readily determined, particularly where the books of the corporation are required by governmental bodies to be so kept for rate making or other purposes, the allocation may be made upon the basis of taxable income. No

such apportionment will be required if the income from sources other than utility activities is less than 20 percent of the total income of the corporation, irrespective of the method used in determining such total income.

(b) ***Public utility.*** As used in section 247 and this section, public utility means a corporation engaged in the furnishing of telephone service, or in the sale of electric energy, gas, or water if the rates charged by such corporation for such furnishing or sale, as the case may be, have been established or approved by a State or political subdivision thereof or by an agency or instrumentality of the United States or by a public utility or public service commission or other similar body of the District of Columbia or of any State or political subdivision thereof. If a schedule of rates has been filed with any of the above bodies having the power to disapprove such rates, then such rates shall be considered as established or approved rates even though such body has taken no action on the filed schedule. Rates fixed by contract between the corporation and the purchaser, except where the purchaser is the United States, a State, the District of Columbia, or an agency or political subdivision of the United States, a State, or the District of Columbia, shall not be considered as established or approved rates in those cases where they are not subject to direct control, or where no maximum rate for such contract rates has been established by the United States, a State, the District of Columbia, or by an agency or political subdivision thereof. The deduction provided in section 247 will not be denied solely because part of the gross income of the corporation consists of revenue derived from such furnishing or sale at rates which are not so regulated, provided the corporation establishes to the satisfaction of the Commissioner

(1) that the revenue from regulated rates and the revenue from unregulated rates are derived from the operation of a single interconnected and coordinated system within a single area or region in one or more States, or from the operation of more than one such system and

(2) that the regulation to which it is subject in part of its operating territory in one such system is effective to control rates within the unregulated territory of the same system so that the rates within the unregulated territory have been and are substantially as favorable to users and consumers as are the rates within the regulated territory.

(c) ***Preferred stock.***

(1) For the purposes of section 247 and this section, preferred stock means stock

(i) which was issued before October 1, 1942,

(ii) the dividends in respect of which (during the whole of the taxable year, or the part of the taxable year after the actual date of the issue of such stock) were cumulative, nonparticipating as to current distributions, and payable in preference to the payment of dividends on other stock, and

(iii) the rate of return on which is fixed and cannot be changed by a vote of the board of directors or by some similar method. However, if there are several classes of preferred stock, all of which meet the above requirements, the deduction provided in section 247 shall not be denied in the case of a given class of preferred stock merely because there is another class of preferred stock whose dividends are to be paid before those of the given class of stock. Likewise, it is immaterial for the purposes of section 247 and this section whether the stock be voting or nonvoting stock.

(2) Preferred stock issued on or after October 1, 1942, under certain circumstances will be considered as having been issued before October 1, 1942, for purposes of the deduction provided in section 247. If the new stock is issued on or after October 1, 1942, to refund or replace bonds or debentures which were issued before October 1, 1942, or to refund or replace other stock which was preferred

stock within the meaning of section 247(b)(2) (or the corresponding provision of the Internal Revenue Code of 1939), such new stock shall be considered as having been issued before October 1, 1942. If preferred stock is issued to refund or replace stock which was preferred stock within the meaning of section 247(b)(2) (or the corresponding provision of the Internal Revenue Code of 1939), it shall be immaterial whether the preferred stock so refunded or replaced was issued before, on, or after October 1, 1942. If stock issued on or after October 1, 1942, to refund or replace stock which was issued before October 1, 1942, and which was preferred stock within the meaning of section 247(b)(2) (or the corresponding provision of the Internal Revenue Code of 1939), is not itself preferred stock within the meaning of section 247(b)(2) (or the corresponding provision of the Internal Revenue Code of 1939), no stock issued to refund or replace such stock can be considered preferred stock for purposes of the deduction provided in section 247.

(3) In the case of any preferred stock issued on or after October 1, 1942, to refund or replace bonds or debentures issued before October 1, 1942, or to refund or replace other stock which was preferred stock within the meaning of section 247(b)(2) (or the corresponding provision of the Internal Revenue Code of 1939), only that portion of the stock issued on or after October 1, 1942, will be considered as having been issued before October 1, 1942, the par or stated value of which does not exceed the par, stated, or face value of such bonds, debentures, or other preferred stock which the new stock was issued to refund or replace. In such case no shares of the new stock issued on or after October 1, 1942, shall be earmarked in determining the deduction allowable under section 247, but the appropriate allocable portion of the total amount of dividends paid on such stock will be considered as having been paid on stock which was issued before October 1, 1942.

(4) The provisions of section 247(b)(2) may be illustrated by the following example:

Example. A public utility has outstanding 1,000 bonds which were issued before October 1, 1942, and each of which has a face value of $100. On or after October 1, 1942, each of such bonds is retired in exchange for $1\frac{1}{10}$ shares of preferred stock issued on or after October 1, 1942, and having a par value of $100 per share. Only $\frac{10}{11}$ of the dividends paid on the preferred stock thus issued in exchange for the bonds will be considered as having been paid on stock which was issued before October 1, 1942. Likewise, if preferred stock which is issued on or after October 1, 1942, has no par value but a stated value of $50 per share and such stock is issued in a ratio of three shares to one share to refund or replace preferred stock having a par value of $100 per share, only two-thirds of the dividends paid on the new shares of stock will be considered as having been paid on stock which was issued before October 1, 1942.

(5) Whether or not preferred stock issued on or after October 1, 1942, was issued to refund or replace bonds or debentures issued before October 1, 1942, or to refund or replace other preferred stock, is in each case a question of fact. Among the factors to be considered is whether such stock is new in an economic sense to the corporation or whether it was issued merely to take the place, directly or indirectly, of bonds, debentures, or other preferred stock of such corporation. It is not necessary that the new preferred stock be issued in exchange for such bonds, debentures, or other preferred stock. The mere fact that the bonds, debentures, or other preferred stock remain in existence for a short period of time after the issuance of the new stock (or were retired before the issuance of the new stock) does not necessarily mean that such new stock was not issued to refund or replace such bonds, debentures, or other preferred stock. It is necessary to consider the entire transaction, including the issuance of the new preferred stock, the date of such issuance, the retirement of the old bonds, debentures, or preferred stock, and the date of such retirement, in order to determine whether such new stock really was issued to take the place of bonds, debentures, or other preferred stock of the corporation or whether it represents something essentially new in an economic sense in

the corporation's financial structure. If, for example, a public utility, which has outstanding bonds issued before October 1, 1942, issues new preferred stock on October 1, 1954, in order to secure funds with which to retire such bonds and with the money paid in for such stock retires the bonds on November 1, 1954, such stock may be considered as having been issued to refund or replace bonds issued before October 1, 1942. Whether the money used to retire the bonds can be traced back and identified as the money paid in for the stock will have evidentiary value, but will not be conclusive, in determining whether the stock was issued to refund or replace the bonds. Similarly, whether the amount of money used to retire the bonds was smaller than, equal to, or greater than that paid in for the stock, or whether the entire issue of bonds is retired, will be important, but not decisive, in making such determination.

(6) Preferred stock issued on or after October 1, 1942, by a corporation to refund or replace bonds or debentures of a second corporation which were issued before October 1, 1942, or to refund or replace other preferred stock of such second corporation, may be considered as having been issued before October 1, 1942, if such new stock was issued

(i) in a transaction which is a reorganization within the meaning of section 368(a) or the corresponding provisions of the Internal Revenue Code of 1939; or

(ii) in a transaction to which section 371 (relating to insolvency reorganizations), or the corresponding provisions of the Internal Revenue Code of 1939, is applicable; or

(iii) in a transaction which is subject to the provisions of Part VI, Subchapter O, Chapter 1 of the Code (relating to exchanges and distributions in obedience to orders of the Securities and Exchange Commission) or to the corresponding provisions of the Internal Revenue Code of 1939. Whether the stock actually was issued to refund or replace bonds or debentures of the second corporation issued before October 1, 1942, or to refund or replace preferred stock of such second corporation, shall be determined under the same principles as if only one corporation were involved. A corporation may issue stock to refund or replace its own bonds, debentures, or other preferred stock in a transaction which is a reorganization within the meaning of section 368(a) or the corresponding provisions of the Internal Revenue Code of 1939, in a transaction to which section 371 or the corresponding provisions of the Internal Revenue Code of 1939 is applicable, or in a transaction which is subject to the provisions of Part VI, Subchapter O, Chapter 1 of the Code, or to the corresponding provisions of the Internal Revenue Code of 1939. The provisions of this paragraph, in addition, are applicable in case a corporation issues stock on or after October 1, 1942, to refund or replace its own bonds, debentures, or other preferred stock even though the issuance of such stock may not fall within one of the categories enumerated above.

(7) Even though stock issued on or after October 1, 1942, is considered as having been issued before October 1, 1942, by reason of having been issued to refund or replace bonds or debentures issued before October 1, 1942, or to refund or replace other preferred stock, such stock will not be deemed to be preferred stock within the meaning of section 247(b)(2), and no deduction will be allowable in respect of dividends paid on such stock, unless the stock fulfills all the other requirements of a preferred stock set forth in section 247(b)(2) and in this paragraph.

§ 1.248-1 Election to amortize organizational expenditures.

(a) ***In general.*** Under section 248(a), a corporation may elect to amortize organizational expenditures as defined in section 248(b) and § 1.248-1(b). In the taxable year in which a corporation begins business, an electing corporation may deduct an amount equal to the lesser of the amount of the organizational

expenditures of the corporation, or $5,000 (reduced (but not below zero) by the amount by which the organizational expenditures exceed $50,000). The remainder of the organizational expenditures is deducted ratably over the 180-month period beginning with the month in which the corporation begins business. All organizational expenditures of the corporation are considered in determining whether the organizational expenditures exceed $50,000, including expenditures incurred on or before October 22, 2004.

(b) ***Organizational expenditures defined.***

(1) Section 248(b) defines the term *organizational expenditures.* Such expenditures, for purposes of section 248 and this section, are those expenditures which are directly incident to the creation of the corporation. An expenditure, in order to qualify as an organizational expenditure, must be

(i) incident to the creation of the corporation,

(ii) chargeable to the capital account of the corporation, and

(iii) of a character which, if expended incident to the creation of a corporation having a limited life, would be amortizable over such life. An expenditure which fails to meet each of these three tests may not be considered an organizational expenditure for purposes of section 248 and this section.

(2) The following are examples of organizational expenditures within the meaning of section 248 and this section: legal services incident to the organization of the corporation, such as drafting the corporate charter, by-laws, minutes of organizational meetings, terms of original stock certificates, and the like; necessary accounting services; expenses of temporary directors and of organizational meetings of directors or stockholders; and fees paid to the State of incorporation.

(3) The following expenditures are not organizational expenditures within the meaning of section 248 and this section:

(i) Expenditures connected with issuing or selling shares of stock or other securities, such as commissions, professional fees, and printing costs. This is so even where the particular issue of stock to which the expenditures relate is for a fixed term of years;

(ii) Expenditures connected with the transfer of assets to a corporation.

(4) Expenditures connected with the reorganization of a corporation, unless directly incident to the creation of a corporation, are not organizational expenditures within the meaning of section 248 and this section.

(c) ***Time and manner of making election.*** A corporation is deemed to have made an election under section 248(a) to amortize organizational expenditures as defined in section 248(b) and § 1.248-1(b) for the taxable year in which the corporation begins business. A corporation may choose to forgo the deemed election by affirmatively electing to capitalize its organizational expenditures on a timely filed Federal income tax return (including extensions) for the taxable year in which the corporation begins business. The election either to amortize organizational expenditures under section 248(a) or to capitalize organizational expenditures is irrevocable and applies to all organizational expenditures of the corporation. A change in the characterization of an item as an organizational expenditure is a change in method of accounting to which sections 446 and 481(a) apply if the corporation treated the item consistently for two or more taxable years. A change in the determination of the taxable year in which the corporation begins business also is treated as a change in method of accounting if the corporation amortized organizational expenditures for two or more taxable years.

(d) ***Determination of when corporation begins business.*** The deduction allowed under section 248 must be spread over a period beginning with the month in which the corporation begins business. The determination of the date the corporation begins business presents a question of fact which must be determined in each case in light of all the circumstances of the particular case. The words "begins business," however, do not have the same meaning as "in existence." Ordinarily, a corporation begins business when it starts the business operations for which it was organized; a corporation comes into existence on the date of its incorporation. Mere organizational activities, such as the obtaining of the corporate charter, are not alone sufficient to show the beginning of business. If the activities of the corporation have advanced to the extent necessary to establish the nature of its business operations, however, it will be deemed to have begun business. For example, the acquisition of operating assets which are necessary to the type of business contemplated may constitute the beginning of business.

(e) ***Examples.*** The following examples illustrate the application of this section:

Example 1. Expenditures of $5,000 or less Corporation X, a calendar year taxpayer, incurs $3,000 of organizational expenditures after October 22, 2004, and begins business on July 1, 2011. Under paragraph (c) of this section, Corporation X is deemed to have elected to amortize organizational expenditures under section 248(a) in 2011. Therefore, Corporation X may deduct the entire amount of the organizational expenditures in 2011, the taxable year in which Corporation X begins business.

Example 2. Expenditures of more than $5,000 but less than or equal to $50,000 The facts are the same as in *Example 1* except that Corporation X incurs organizational expenditures of $41,000. Under paragraph (c) of this section, Corporation X is deemed to have elected to amortize organizational expenditures under section 248(a) in 2011. Therefore, Corporation X may deduct $5,000 and the portion of the remaining $36,000 that is allocable to July through December of 2011 ($36,000/180 × 6 = $1,200) in 2011, the taxable year in which Corporation X begins business. Corporation X may amortize the remaining $34,800 ($36,000 − $1,200 = $34,800) ratably over the remaining 174 months.

Example 3. Subsequent change in the characterization of an item The facts are the same as in *Example 2* except that Corporation X determines in 2013 that Corporation X incurred $10,000 for an additional organizational expenditure erroneously deducted in 2011 under section 162 as a business expense. Under paragraph (c) of this section, Corporation X is deemed to have elected to amortize organizational expenditures under section 248(a) in 2011, including the additional $10,000 of organizational expenditures. Corporation X is using an impermissible method of accounting for the additional $10,000 of organizational expenditures and must change its method under § 1.446-1(e) and the applicable general administrative procedures in effect in 2013.

Example 4. Subsequent redetermination of year in which business begins The facts are the same as in *Example 2* except that, in 2012, Corporation X deducted the organizational expenditures allocable to January through December of 2012 ($36,000/180 × 12 = $2,400). In addition, in 2013 it is determined that Corporation X actually began business in 2012. Under paragraph (c) of this section, Corporation X is deemed to have elected to amortize organizational expenditures under section 248(a) in 2012. Corporation X impermissibly deducted organizational expenditures in 2011, and incorrectly determined the amount of organizational expenditures deducted in 2012. Therefore, Corporation X is using an impermissible method of accounting for the organizational expenditures and must change its method under § 1.446-1(e) and the applicable general administrative procedures in effect in 2013.

Example 5. Expenditures of more than $50,000 but less than or equal to $55,000 The facts are the same as in *Example 1* except that Corporation X incurs organizational expenditures of $54,500. Under paragraph (c) of this section, Corporation X is deemed to have elected to amortize organizational expenditures

under section 248(a) in 2011. Therefore, Corporation X may deduct $500 ($5,000 − $4,500) and the portion of the remaining $54,000 that is allocable to July through December of 2011 ($54,000/180 × 6 = $1,800) in 2011, the taxable year in which Corporation X begins business. Corporation X may amortize the remaining $52,200 ($54,000 − $1,800 = $52,200) ratably over the remaining 174 months.

Example 6. Expenditures of more than $55,000 The facts are the same as in *Example 1* except that Corporation X incurs organizational expenditures of $450,000. Under paragraph (c) of this section, Corporation X is deemed to have elected to amortize organizational expenditures under section 248(a) in 2011. Therefore, Corporation X may deduct the amounts allocable to July through December of 2011 ($450,000/180 × 6 = $15,000) in 2011, the taxable year in which Corporation X begins business. Corporation X may amortize the remaining $435,000 ($450,000 − $15,000 = $435,000) ratably over the remaining 174 months.

(f) ***Effective/applicability date.*** This section applies to organizational expenditures paid or incurred after August 16, 2011. However, taxpayers may apply all the provisions of this section to organizational expenditures paid or incurred after October 22, 2004, provided that the period of limitations on assessment of tax for the year the election under paragraph (c) of this section is deemed made has not expired. For organizational expenditures paid or incurred on or before September 8, 2008, taxpayers may instead apply § 1.248-1, as in effect prior to that date (§ 1.248-1 as contained in 26 CFR part 1 edition revised as of April 1, 2008).

[T.D. 9411, 73 FR 38913, July 8, 2008, as amended by T.D. 9542, 76 FR 50889, Aug. 17, 2011]

§ 1.249-1 Limitation on deduction of bond premium on repurchase.

(a) ***Limitation*** —

(1) ***General rule.*** No deduction is allowed to the issuing corporation for any "repurchase premium" paid or incurred to repurchase a convertible obligation to the extent the repurchase premium exceeds a "normal call premium."

(2) ***Exception.*** Under paragraph (e) of this section, the preceding sentence shall not apply to the extent the corporation demonstrates that such excess is attributable to the cost of borrowing and not to the conversion feature.

(b) ***Obligations*** —

(1) ***Definition.*** For purposes of this section, the term *obligation* means any bond, debenture, note, or certificate or other evidence of indebtedness.

(2) ***Convertible obligation.*** Section 249 applies to an obligation which is convertible into the stock of the issuing corporation or a corporation which, at the time the obligation is issued or repurchased, is in control of or controlled by the issuing corporation. For purposes of this subparagraph, the term *control* has the meaning assigned to such term by section 368(c).

(3) ***Comparable nonconvertible obligation.*** A nonconvertible obligation is comparable to a convertible obligation if both obligations are of the same grade and classification, with the same issue and maturity dates, and bearing the same rate of interest. The term *comparable nonconvertible obligation* does not include any obligation which is convertible into property.

(c) ***Repurchase premium.*** For purposes of this section, the term *repurchase premium* means the excess of the repurchase price paid or incurred to repurchase the obligation over its adjusted issue price (within the meaning of § 1.1275-1(b)) as of the repurchase date. For the general rules applicable to the deductibility of repurchase premium, see § 1.163-7(c). This paragraph (c) applies to convertible obligations repurchased on or after March 2, 1998.

(d) ***Normal call premium*** —

(1) ***In general.*** Except as provided in subparagraph (2) of this paragraph, for purposes of this section, a *normal call premium* on a convertible obligation is an amount equal to a normal call premium on a nonconvertible obligation which is comparable to the convertible obligation. A normal call premium on a comparable nonconvertible obligation is a call premium specified in dollars under the terms of such obligation. Thus, if such a specified call premium is constant over the entire term of the obligation, the normal call premium is the amount specified. If, however, the specified call premium varies during the period the comparable nonconvertible obligation is callable or if such obligation is not callable over its entire term, the normal call premium is the amount specified for the period during the term of such comparable nonconvertible obligation which corresponds to the period during which the convertible obligation was repurchased.

(2) ***One-year's interest rule.*** For a convertible obligation repurchased on or after March 2, 1998, a call premium specified in dollars under the terms of the obligation is considered to be a normal call premium on a nonconvertible obligation if the call premium applicable when the obligation is repurchased does not exceed an amount equal to the interest (including original issue discount) that otherwise would be deductible for the taxable year of repurchase (determined as if the obligation were not repurchased). The provisions of this subparagraph shall not apply if the amount of interest payable for the corporation's taxable year is subject under the terms of the obligation to any contingency other than repurchase prior to the close of such taxable year.

(e) ***Exception*** —

(1) ***In general.*** If a repurchase premium exceeds a normal call premium, the general rule of paragraph (a)(1) of this section does not apply to the extent that the corporation demonstrates to the satisfaction of the Commissioner or his delegate that such repurchase premium is attributable to the cost of borrowing and is not attributable to the conversion feature. For purposes of this paragraph, if a normal call premium cannot be established under paragraph (d) of this section, the amount thereof shall be considered to be zero.

(2) ***Determination of the portion of a repurchase premium attributable to the cost of borrowing and not attributable to the conversion feature.***

(i) For purposes of subparagraph (1) of this paragraph, the portion of a repurchase premium which is attributable to the cost of borrowing and which is not attributable to the conversion feature is the amount by which the selling price of the convertible obligation increased between the dates it was issued and repurchased by reason of a decline in yields on comparable nonconvertible obligations traded on an established securities market or, if such comparable traded obligations do not exist, by reason of a decline in yields generally on nonconvertible obligations which are as nearly comparable as possible.

(ii) In determining the amount under paragraph (e)(2)(i) of this section, appropriate consideration shall be given to all factors affecting the selling price or yields of comparable nonconvertible obligations. Such factors include general changes in prevailing yields of comparable obligations between the dates the convertible obligation was issued and repurchased and the

amount (if any) by which the selling price of the nonconvertible obligation was affected by reason of any change in the issuing corporation's credit quality or the credit quality of the obligation during such period (determined on the basis of widely published financial information or on the basis of other relevant facts and circumstances which reflect the relative credit quality of the corporation or the comparable obligation).

(iii) The relationship between selling price and yields in subdivision (i) of this subparagraph shall ordinarily be determined by means of standard bond tables.

(f) ***Effective/applicability dates*** —

(1) ***In general.*** Under section 414(c) of the Tax Reform Act of 1969, the provisions of section 249 and this section shall apply to any repurchase of a convertible obligation occurring after April 22, 1969, other than a convertible obligation repurchased pursuant to a binding obligation incurred on or before April 22, 1969, to repurchase such convertible obligation at a specified call premium. A binding obligation on or before such date may arise if, for example, the issuer irrevocably obligates itself, on or before such date, to repurchase the convertible obligation at a specified price after such date, or if, for example, the issuer, without regard to the terms of the convertible obligation, negotiates a contract which, on or before such date, irrevocably obligates the issuer to repurchase the convertible obligation at a specified price after such date. A binding obligation on or before such date does not include a privilege in the convertible obligation permitting the issuer to call such convertible obligation after such date, which privilege was not exercised on or before such date.

(2) ***Effect on transactions not subject to this section.*** No inferences shall be drawn from the provisions of section 249 and this section as to the proper treatment of transactions not subject to such provisions because of the effective date limitations thereof. For provisions relating to repurchases of convertible bonds or other evidences of indebtedness to which section 249 and this section do not apply, see §§ 1.163-3(c) and 1.163-4(c).

(3) ***Portion of repurchase premium attributable to cost of borrowing.*** Paragraph (e)(2)(ii) of this section applies to any repurchase of a convertible obligation occurring on or after July 6, 2011.

(g) ***Example.*** The provisions of this section may be illustrated by the following example:

Example. On May 15, 1968, corporation A issues a callable 20-year convertible bond at face for $1,000 bearing interest at 10 percent per annum. The bond is convertible at any time into 2 shares of the common stock of corporation A. Under the terms of the bond, the applicable call price prior to May 15, 1975, is $1,100. On June 1, 1974, corporation A calls the bond for $1,100. Since the repurchase premium, $100 (i.e., $1,100 minus $1,000), was specified in dollars in the obligation and does not exceed 1 year's interest at the rate fixed in the obligation, the $100 is considered under paragraph (d)(2) of this section to be a normal call premium on a comparable nonconvertible obligation. Accordingly, A may deduct the $100 under § 1.163-3(c).

[T.D. 7259, 38 FR 4254, Feb. 12, 1973, as amended by T.D. 8746, 62 FR 68182, Dec. 31, 1997; T.D. 9533, 76 FR 39281, July 6, 2011; T.D. 9637, 78 FR 54759, Sept. 6, 2013]

§ 1.250-0 Table of contents.

This section contains a listing of the headings for §§ 1.250-1, 1.250(a)-1, and 1.250(b)-1 through 1.250(b)-6.

§ 1.250-1 Introduction.

(a) Overview.

(b) Applicability dates.

§ 1.250(a)-1 Deduction for foreign-derived intangible income (FDII) and global intangible low-taxed income (GILTI).

(a) Scope.

(b) Allowance of deduction.

(1) In general.

(2) Taxable income limitation.

(3) Reduction in deduction for taxable years after 2025.

(4) Treatment under section 4940.

(c) Definitions.

(1) Domestic corporation.

(2) Foreign-derived intangible income (FDII).

(3) Global intangible low-taxed income (GILTI).

(4) Section 250(a)(2) amount.

(5) Taxable income.

(i) In general.

(ii) [Reserved]

(d) Reporting requirement.

(e) Determination of deduction for consolidated groups.

(f) Example: Application of the taxable income limitation.

§ 1.250(b)-1 Computation of foreign-derived intangible income (FDII).

(a) Scope.

(b) Definition of FDII.

(c) Definitions.

(1) Controlled foreign corporation.

(2) Deduction eligible income.

(3) Deemed intangible income.

(4) Deemed tangible income return.

(5) Dividend.

(6) Domestic corporation.

(7) Domestic oil and gas extraction income.

(8) FDDEI sale.

(9) FDDEI service.

(10) FDDEI transaction.

(11) Foreign branch income.

(12) Foreign-derived deduction eligible income.

(13) Foreign-derived ratio.

(14) Gross RDEI.

(15) Gross DEI.

(16) Gross FDDEI.

(17) Modified affiliated group.

(i) In general.

(ii) Special rule for noncorporate entities.

(iii) Definition of control.

(18) Qualified business asset investment.

(19) Related party.

(20) United States shareholder.

(d) Treatment of cost of goods sold and allocation and apportionment of deductions.

(1) Cost of goods sold for determining gross DEI and gross FDDEI.

(2) Deductions properly allocable to gross DEI and gross FDDEI.

(i) In general.

(ii) Determination of deductions to allocate.

(3) Examples.

(e) Domestic corporate partners.

(1) In general.

(2) Reporting requirement for partnership with domestic corporate partners.

(3) Examples.

(f) Determination of FDII for consolidated groups.

(g) Determination of FDII for tax-exempt corporations.

§ 1.250(b)-2 Qualified business asset investment (QBAI).

(a) Scope.

(b) Definition of qualified business asset investment.

(c) Specified tangible property.

(1) In general.

(2) Tangible property.

(d) Dual use property.

(1) In general.

(2) Definition of dual use property.

(3) Dual use ratio.

(4) Example.

(e) Determination of adjusted basis of specified tangible property.

(1) In general.

(2) Effect of change in law.

(3) Specified tangible property placed in service before enactment of section 250.

(f) Special rules for short taxable years.

(1) In general.

(2) Determination of when the quarter closes.

(3) Reduction of qualified business asset investment.

(4) Example.

(g) Partnership property.

(1) In general.

(2) Determination of partnership QBAI.

(3) Determination of partner adjusted basis.

(i) In general.

(ii) Sole use partnership property.

(A) In general.

(B) Definition of sole use partnership property.

(iii) Dual use partnership property.

(A) In general.

(B) Definition of dual use partnership property.

(4) Determination of proportionate share of the partnership's adjusted basis in partnership specified tangible property.

(i) In general.

(ii) Proportionate share ratio.

(5) Definition of partnership specified tangible property.

(6) Determination of partnership adjusted basis.

(7) Determination of partner-specific QBAI basis.

(8) Examples.

(h) Anti-avoidance rule for certain transfers of property.

(1) In general.

(2) Rule for structured arrangements.

(3) Per se rules for certain transactions.

(4) Definitions related to anti-avoidance rule.

(i) Disqualified period.

(ii) FDII-eligible related party.

(iii) Specified related party.

(iv) Transfer.

(5) Transactions occurring before March 4, 2019.

(6) Examples.

§ 1.250(b)-3 Foreign-derived deduction eligible income (FDDEI) transactions.

(a) Scope.

(b) Definitions.

(1) Digital content.

(2) End user.

(3) FDII filing date.

(4) Finished goods.

(5) Foreign person.

(6) Foreign related party.

(7) Foreign retail sale.

(8) Foreign unrelated party.

(9) Fungible mass of general property.

(10) General property.

(11) Intangible property.

(12) International transportation property.

(13) IP address.

(14) Recipient.

(15) Renderer.

(16) Sale.

(17) Seller.

(18) United States.

(19) United States person.

(20) United States territory.

(c) Foreign military sales and services.

(d) Transactions with multiple elements.

(e) Treatment of partnerships.

(1) In general.

(2) Examples.

(f) Substantiation for certain FDDEI transactions.

(1) In general.

(2) Exception for small businesses.

(3) Treatment of certain loss transactions.

(i) In general.

(ii) Reason to know.

(A) Sales to a foreign person for a foreign use.

(B) General services provided to a business recipient located outside the United States.

(iii) Multiple transactions.

(iv) Example.

§ 1.250(b)-4 Foreign-derived deduction eligible income (FDDEI) sales.

(a) Scope.

(b) Definition of FDDEI sale.

(c) Presumption of foreign person status.

(1) In general.

(2) Sales of property.

(d) Foreign use.

(1) Foreign use for general property.

(i) In general.

(ii) Rules for determining foreign use.

(A) Sales that are delivered to an end user by a carrier or freight forwarder.

(B) Sales to an end user without the use of a carrier or freight forwarder.

(C) Sales for resale.

(D) Sales of digital content.

(E) Sales of international transportation property used for compensation or hire.

(F) Sales of international transportation property not used for compensation or hire.

(iii) Sales for manufacturing, assembly, or other processing.

(A) In general.

(B) Property subject to a physical and material change.

(C) Property incorporated into a product as a component.

(iv) Sales of property subject to manufacturing, assembly, or other processing in the United States

(v) Examples.

(2) Foreign use for intangible property.

(i) In general.

(ii) Determination of end users and revenue earned from end users.

(A) Intangible property embedded in general property or used in connection with the sale of general property.

(B) Intangible property used in providing a service.

(C) Intangible property consisting of a manufacturing method or process.

(*1*) In general.

(*2*) Exception for certain manufacturing arrangements.

(*3*) Manufacturing method or process.

(D) Intangible property used in research and development.

(iii) Determination of revenue for periodic payments versus lump sums.

(A) Sales in exchange for periodic payments.

(B) Sales in exchange for a lump sum.

(C) Sales to a foreign unrelated party of intangible property consisting of a manufacturing method or process.

(iv) Examples.

(3) Foreign use substantiation for certain sales of property.

(i) In general.

(ii) Substantiation of foreign use for resale.

(iii) Substantiation of foreign use for manufacturing, assembly, or other processing. outside the United States.

(iv) Substantiation of foreign use of intangible property.

(v) Examples.

(e) Sales of interests in a disregarded entity.

(f) FDDEI sales hedging transactions.

(1) In general.

(2) FDDEI sales hedging transaction.

§ 1.250(b)-5 Foreign-derived deduction eligible income (FDDEI) services.

(a) Scope.

(b) Definition of FDDEI service.

(c) Definitions.

(1) Advertising service.

(2) Benefit.

(3) Business recipient.

(4) Consumer.

(5) Electronically supplied service.

(6) General service.

(7) Property service.

(8) Proximate service.

(9) Transportation service.

(d) General services provided to consumers.

(1) In general.

(2) Electronically supplied services.

(3) Example.

(e) General services provided to business recipients.

(1) In general.

(2) Determination of business operations that benefit from the service.

(i) In general.

(ii) Advertising services.

(iii) Electronically supplied services.

(3) Identification of business recipient's operations.

(i) In general.

(ii) Advertising services and electronically supplied services.

(iii) No office or fixed place of business.

(4) Substantiation of the location of a business recipient's operations outside the United States.

(5) Examples.

(f) Proximate services.

(g) Property services.

(1) In general.

(2) Exception for service provided with respect to property temporarily in the United States.

(h) Transportation services.

§ 1.250(b)-6 Related party transactions.

(a) Scope.

(b) Definitions.

(1) Related party sale.

(2) Related party service.

(3) Unrelated party transaction.

(c) Related party sales.

(1) In general.

(i) Sale of property in an unrelated party transaction.

(ii) Use of property in an unrelated party transaction.

(2) Treatment of foreign related party as seller or renderer.

(3) Transactions between related parties.

(4) Example.

(d) Related party services.

(1) In general.

(2) Substantially similar services.

(3) Special rules.

(i) Rules for determining the location of and price paid by recipients of a service provided by a related party.

(ii) Rules for allocating the benefits provided by and price paid to the renderer of a related party service.

(4) Examples.

[T.D. 9901, 85 FR 43080, July 15, 2020, as amended by 85 FR 60910, Sept. 29, 2020]

§ 1.250-1 Introduction.

(a) ***Overview.*** Sections 1.250(a)-1 and 1.250(b)-1 through 1.250(b)-6 provide rules to determine a domestic corporation's section 250 deduction. Section 1.250(a)-1 provides rules to determine the amount of a domestic corporation's deduction for foreign-derived intangible income and global intangible low-taxed income. Section 1.250(b)-1 provides general rules and definitions regarding the computation of foreign-derived intangible income. Section 1.250(b)-2 provides rules for determining a domestic corporation's qualified business asset investment. Section 1.250(b)-3 provides general rules and definitions regarding the determination of gross foreign-derived deduction eligible income. Section 1.250(b)-4 provides rules regarding the determination of gross foreign-derived deduction eligible income from the sale of property.

Section 1.250(b)-5 provides rules regarding the determination of gross foreign-derived deduction eligible income from the provision of a service. Section 1.250(b)-6 provides rules regarding the sale of property or provision of a service to a related party.

(b) ***Applicability dates.*** Except as otherwise provided in this paragraph (b), §§ 1.250(a)-1 and 1.250(b)-1 through 1.250(b)-6 apply to taxable years beginning on or after January 1, 2021. Section 1.250(b)-2(h) applies to taxable years ending on or after March 4, 2019. The last sentence in § 1.250(b)-2(e)(2) applies to taxable years beginning after December 31, 2017.

[T.D. 9901, 85 FR 43080, July 15, 2020, as amended by 85 FR 68249, Oct. 28, 2020; T.D. 9956, 86 FR 52972, Sept. 24, 2021]

§ 1.250(a)-1 Deduction for foreign-derived intangible income (FDII) and global intangible low-taxed income (GILTI).

(a) ***Scope.*** This section provides rules for determining the amount of a domestic corporation's deduction for foreign-derived intangible income (FDII) and global intangible low-taxed income (GILTI). Paragraph (b) of this section provides general rules for determining the amount of the deduction. Paragraph (c) of this section provides definitions relevant for determining the amount of the deduction. Paragraph (d) of this section provides reporting requirements for a domestic corporation claiming the deduction. Paragraph (e) of this section provides a rule for determining the amount of the deduction of a member of a consolidated group. Paragraph (f) of this section provides examples illustrating the application of this section.

(b) ***Allowance of deduction*** —

(1) ***In general.*** A domestic corporation is allowed a deduction for any taxable year equal to the sum of—

(i) 37.5 percent of its foreign-derived intangible income for the year; and

(ii) 50 percent of—

(A) Its global intangible low-taxed income for the year; and

(B) The amount treated as a dividend received by the corporation under section 78 which is attributable to its GILTI for the year.

(2) ***Taxable income limitation.*** In the case of a domestic corporation with a section 250(a)(2) amount for a taxable year, for purposes of applying paragraph (b)(1) of this section for the year—

(i) The corporation's FDII for the year (if any) is reduced (but not below zero) by an amount that bears the same ratio to the corporation's section 250(a)(2) amount that the corporation's FDII for the year bears to the sum of the corporation's FDII and GILTI for the year; and

(ii) The corporation's GILTI for the year (if any) is reduced (but not below zero) by the excess of the corporation's section 250(a)(2) amount over the amount of the reduction described in paragraph (b)(2)(i) of this section.

(3) ***Reduction in deduction for taxable years after 2025.*** For any taxable year of a domestic corporation beginning after December 31, 2025, paragraph (b)(1) of this section applies by substituting—

(i) 21.875 percent for 37.5 percent in paragraph (b)(1)(i) of this section; and

(ii) 37.5 percent for 50 percent in paragraph (b)(1)(ii) of this section.

(4) ***Treatment under section 4940.*** For purposes of section 4940(c)(3)(A), a deduction under section 250(a) is not treated as an ordinary and necessary expense paid or incurred for the production or collection of gross investment income.

(c) ***Definitions.*** The following definitions apply for purposes of this section.

(1) ***Domestic corporation.*** The term *domestic corporation* has the meaning set forth in section 7701(a), but does not include a regulated investment company (as defined in section 851), a real estate investment trust (as defined in section 856), or an S corporation (as defined in section 1361).

(2) ***Foreign-derived intangible income (FDII).*** The term *foreign-derived intangible income* or *FDII* has the meaning set forth in § 1.250(b)-1(b).

(3) ***Global intangible low-taxed income (GILTI).*** The term *global intangible low-taxed income* or *GILTI* means, with respect to a domestic corporation for a taxable year, the corporation's GILTI inclusion amount under § 1.951A-1(c) for the taxable year.

(4) ***Section 250(a)(2) amount.*** The term *section 250(a)(2) amount* means, with respect to a domestic corporation for a taxable year, the excess (if any) of the sum of the corporation's FDII and GILTI (determined without regard to section 250(a)(2) and paragraph (b)(2) of this section), over the corporation's taxable income. For a corporation that is subject to the unrelated business income tax under section 511, taxable income is determined only by reference to that corporation's unrelated business taxable income defined under section 512.

(5) ***Taxable income*** —

(i) ***In general.*** The term *taxable income* has the meaning set forth in section 63(a) determined without regard to the deduction allowed under section 250 and this section.

(ii) [Reserved]

(d) ***Reporting requirement.*** Each domestic corporation (or individual making an election under section 962) that claims a deduction under section 250 for a taxable year must make an annual return on Form 8993, "Section 250 Deduction for Foreign-Derived Intangible Income (FDII) and Global Intangible Low-Taxed Income (GILTI)" (or any successor form) for such year, setting forth the information, in such form and manner, as Form 8993 (or any successor form) or its instructions prescribe. Returns on Form 8993 (or any successor form) for a taxable year must be filed with the domestic corporation's (or in the case of a section 962 election, the individual's) income tax return on or before the due date (taking into account extensions) for filing the corporation's (or in the case of a section 962 election, the individual's) income tax return.

(e) ***Determination of deduction for consolidated groups.*** A member of a consolidated group (as defined in § 1.1502-1(h)) determines its deduction under section 250(a) and this section under the rules provided in § 1.1502-50(b).

(f) ***Example: Application of the taxable income limitation.*** The following example illustrates the application of this section. For purposes of the example, it is assumed that DC is a domestic corporation that is not a member of a consolidated group and the taxable year of DC begins after 2017 and before 2026.

(1) ***Facts.*** For the taxable year, without regard to section 250(a)(2) and paragraph (b)(2) of this section, DC has FDII of $100x and GILTI of $300x. DC's taxable income (without regard to section 250(a) and this section) is $300x.

(2) ***Analysis.*** DC has a section 250(a)(2) amount of $100x, which is equal to the excess of the sum of DC's FDII and GILTI of $400x ($100x + $300x) over its taxable income of $300x. As a result, DC's FDII and GILTI are reduced, in the aggregate, by $100x under section 250(a)(2) and paragraph (b)(2) of this section for purposes of calculating DC's deduction allowed under section 250(a)(1) and paragraph (b)(1) of this section. DC's FDII is reduced by $25x, the amount that bears the same ratio to the section 250(a)(2) amount ($100x) as DC's FDII ($100x) bears to the sum of DC's FDII and GILTI ($400x). DC's GILTI is reduced by $75x, which is the remainder of the section 250(a)(2) amount ($100x−$25x). Therefore, for purposes of calculating its deduction under section 250(a)(1) and paragraph (b)(1) of this section, DC's FDII is $75x ($100x−$25x) and its GILTI is $225x ($300x−$75x). Accordingly, DC is allowed a deduction for the taxable year under section 250(a)(1) and paragraph (b)(1) of this section of $140.63x ($75x × 0.375 + $225x × 0.50).

[T.D. 9901, 85 FR 43080, July 15, 2020]

§ 1.250(b)-1 Computation of foreign-derived intangible income (FDII).

(a) ***Scope.*** This section provides rules for computing FDII. Paragraph (b) of this section defines FDII. Paragraph (c) of this section provides definitions that are relevant for computing FDII. Paragraph (d) of this section provides rules for computing gross income and allocating and apportioning deductions for purposes of computing deduction eligible income (DEI) and foreign-derived deduction eligible income (FDDEI). Paragraph (e) of this section provides rules for computing the DEI and FDDEI of a domestic corporate partner. Paragraph (f) of this section provides a rule for computing the FDII of a member of a consolidated group. Paragraph (g) of this section provides a rule for computing the FDII of a tax-exempt corporation.

(b) ***Definition of FDII.*** Subject to the provisions of this section, the term *FDII* means, with respect to a domestic corporation for a taxable year, the corporation's deemed intangible income for the year multiplied by the corporation's foreign-derived ratio for the year.

(c) ***Definitions.*** This paragraph (c) provides definitions that apply for purposes of this section and §§ 1.250(b)-2 through 1.250(b)-6.

(1) ***Controlled foreign corporation.*** The term *controlled foreign corporation* has the meaning set forth in section 957(a) and § 1.957-1(a).

(2) ***Deduction eligible income.*** The term *deduction eligible income* or *DEI* means, with respect to a domestic corporation for a taxable year, the excess (if any) of the corporation's gross DEI for the year over the deductions properly allocable to gross DEI for the year, as determined under paragraph (d)(2) of this section.

(3) ***Deemed intangible income.*** The term *deemed intangible income* means, with respect to a domestic corporation for a taxable year, the excess (if any) of the corporation's DEI for the year over the corporation's deemed tangible income return for the year.

(4) ***Deemed tangible income return.*** The term *deemed tangible income return* means, with respect to a domestic corporation and a taxable year, 10 percent of the corporation's qualified business asset investment for the year.

(5) ***Dividend.*** The term *dividend* has the meaning set forth in section 316, and includes any amount treated as a dividend under any other provision of subtitle A of the Internal Revenue Code or the regulations in this part (for example, under section 78, 356(a)(2), 367(b), or 1248).

(6) ***Domestic corporation.*** The term *domestic corporation* has the meaning set forth in § 1.250(a)-1(c)(1).

(7) ***Domestic oil and gas extraction income.*** The term *domestic oil and gas extraction income* means income described in section 907(c)(1), substituting "within the United States" for "without the United States." A taxpayer must use a consistent method to determine the amount of its domestic oil and gas extraction income ("DOGEI") and its foreign oil and gas extraction income ("FOGEI") from the sale of oil or gas that has been transported or processed. For example, a taxpayer must use a consistent method to determine the amount of FOGEI from the sale of gasoline from foreign crude oil sources in computing the exclusion from gross tested income under § 1.951A-2(c)(1)(v) and the amount of DOGEI from the sale of gasoline from domestic crude oil sources in computing its section 250 deduction.

(8) ***FDDEI sale.*** The term *FDDEI sale* has the meaning set forth in § 1.250(b)-4(b).

(9) ***FDDEI service.*** The term *FDDEI service* has the meaning set forth in § 1.250(b)-5(b).

(10) ***FDDEI transaction.*** The term *FDDEI transaction* means a FDDEI sale or a FDDEI service.

(11) ***Foreign branch income.*** The term *foreign branch income* has the meaning set forth in section 904(d)(2)(J) and § 1.904-4(f)(2).

(12) ***Foreign-derived deduction eligible income.*** The term *foreign-derived deduction eligible income* or *FDDEI* means, with respect to a domestic corporation for a taxable year, the excess (if any) of the corporation's gross FDDEI for the year, over the deductions properly allocable to gross FDDEI for the year, as determined under paragraph (d)(2) of this section.

(13) ***Foreign-derived ratio.*** The term *foreign-derived ratio* means, with respect to a domestic corporation for a taxable year, the ratio (not to exceed one) of the corporation's FDDEI for the year to the corporation's DEI for the year. If a domestic corporation has no FDDEI for a taxable year, the corporation's foreign-derived ratio is zero for the taxable year.

(14) ***Gross RDEI.*** The term *gross RDEI* means, with respect to a domestic corporation or a partnership for a taxable year, the portion of the corporation or partnership's gross DEI for the year that is not included in gross FDDEI.

(15) ***Gross DEI.*** The term *gross DEI* means, with respect to a domestic corporation or a partnership for a taxable year, the gross income of the corporation or partnership for the year determined without regard to the following items of gross income—

(i) Amounts included in gross income under section 951(a)(1);

(ii) GILTI (as defined in § 1.250(a)-1(c)(3));

(iii) Financial services income (as defined in section 904(d)(2)(D) and § 1.904-4(e)(1)(ii));

(iv) Dividends received from a controlled foreign corporation with respect to which the corporation or partnership is a United States shareholder;

(v) Domestic oil and gas extraction income; and

(vi) Foreign branch income.

(16) ***Gross FDDEI.*** The term *gross FDDEI* means, with respect to a domestic corporation or a partnership for a taxable year, the portion of the gross DEI of the corporation or partnership for the year which is derived from all of its FDDEI transactions.

(17) ***Modified affiliated group*** —

(i) ***In general.*** The term *modified affiliated group* means an affiliated group as defined in section 1504(a) determined by substituting "more than 50 percent" for "at least 80 percent" each place it appears, and without regard to section 1504(b)(2) and (3).

(ii) ***Special rule for noncorporate entities.*** Any person (other than a corporation) that is controlled by one or more members of a modified affiliated group (including one or more persons treated as a member or members of a modified affiliated group by reason of this paragraph (c)(17)(ii)) or that controls any such member is treated as a member of the modified affiliated group.

(iii) ***Definition of control.*** For purposes of paragraph (c)(17)(ii) of this section, the term *control* has the meaning set forth in section 954(d)(3).

(18) ***Qualified business asset investment.*** The term *qualified business asset investment* or *QBAI* has the meaning set forth in § 1.250(b)-2(b).

(19) ***Related party.*** The term *related party* means, with respect to any person, any member of a modified affiliated group that includes such person.

(20) ***United States shareholder.*** The term *United States shareholder* has the meaning set forth in section 951(b) and § 1.951-1(g).

(d) ***Treatment of cost of goods sold and allocation and apportionment of deductions*** —

(1) ***Cost of goods sold for determining gross DEI and gross FDDEI.*** For purposes of determining the gross income included in gross DEI and gross FDDEI of a domestic corporation or a partnership, the cost of goods sold of the corporation or partnership is attributed to gross receipts with respect to gross DEI or gross FDDEI under any reasonable method that is applied consistently. Cost of goods sold must be attributed to gross receipts with respect to gross DEI or gross FDDEI regardless of whether certain costs included in cost of goods sold can be associated with activities undertaken in an earlier taxable year (including a year before the effective date of section 250). A domestic corporation or partnership may not segregate cost of goods sold with respect to a particular product into component costs and attribute those component costs disproportionately to gross receipts with respect to amounts excluded from gross DEI or gross FDDEI, as applicable.

(2) ***Deductions properly allocable to gross DEI and gross FDDEI*** —

(i) ***In general.*** For purposes of determining a domestic corporation's deductions that are properly allocable to gross DEI and gross FDDEI, the corporation's deductions are allocated and apportioned to gross DEI and gross FDDEI under the rules of §§ 1.861-8 through 1.861-14T and 1.861-17 by treating section 250(b) as an operative section described in § 1.861-8(f). In allocating and apportioning deductions under §§ 1.861-8 through 1.861-14T and 1.861-17, gross FDDEI and gross RDEI are treated as separate statutory groupings. The deductions allocated and apportioned to gross DEI equal the sum of the deductions allocated and apportioned to gross FDDEI and gross RDEI. All items of gross income described in paragraphs (c)(15)(i) through (vi) of this section are in the residual grouping.

(ii) ***Determination of deductions to allocate.*** For purposes of determining the deductions of a domestic corporation for a taxable year properly allocable to gross DEI and gross FDDEI, the deductions of the corporation for the taxable year are determined without regard to sections 163(j), 170(b)(2), 172, 246(b), and 250.

(3) *Examples.* The following examples illustrate the application of this paragraph (d).

(i) *Assumed facts.* The following facts are assumed for purposes of the examples—

(A) DC is a domestic corporation that is not a member of a consolidated group.

(B) All sales and services are provided to persons that are not related parties.

(C) All sales and services to foreign persons qualify as FDDEI transactions.

(ii) *Examples* —

(A) *Example 1: Allocation of deductions* —

(*1*) *Facts.* For a taxable year, DC manufactures products A and B in the United States. DC sells products A and B and provides services associated with products A and B to United States and foreign persons. DC's QBAI for the taxable year is $1,000x. DC has $300x of deductible interest expense allowed under section 163. DC has assets with a tax book value of $2,500x. The tax book value of DC's assets used to produce products A and B and services is split evenly between assets that produce gross FDDEI and assets that produce gross RDEI. DC has $840x of supportive deductions, as defined in § 1.861-8(b)(3), attributable to general and administrative expenses incurred for the purpose of generating the class of gross income that consists of gross DEI. DC apportions the $840x of deductions on the basis of gross income in accordance with § 1.861-8T(c)(1). For purposes of determining gross FDDEI and gross DEI under paragraph (d)(1) of this section, DC attributes $200x of cost of goods sold to Product A and $400x of cost of goods sold to Product B, and then attributes the cost of goods sold for each product ratably between the gross receipts of such product sold to foreign persons and the gross receipts of such product sold to United States persons. The manner in which DC attributes the cost of goods sold is a reasonable method. DC has no other items of income, loss, or deduction. For the taxable year, DC has the following income tax items relevant to the determination of its FDII:

TABLE 1 TO PARAGRAPH (d)(3)(ii)(A)(*1*)

	Product A	Product B	Services	Total
Gross receipts from U.S. persons	$200x	$800x	$100x	$1,100x
Gross receipts from foreign persons	200x	800x	100x	1,100x
Total gross receipts	400x	1,600x	200x	2,200x
Cost of goods sold for gross receipts from U.S. persons	100x	200x	0	300x
Cost of goods sold for gross receipts from foreign persons	100x	200x	0	300x
Total cost of goods sold	200x	400x	0	600x
Gross income	200x	1,200x	200x	1,600x

	Product A	Product B	Services	Total
Tax book value of assets used to produce products/ services	500x	500x	1,500x	2,500x

(2) *Analysis* —

(i) ***Determination of gross FDDEI and gross RDEI.*** Because DC does not have any income described in section 250(b)(3)(A)(i)(I) through (VI) and paragraphs (c)(15)(i) through (vi) of this section, none of its gross income is excluded from gross DEI. DC's gross DEI is $1,600x ($2,200x total gross receipts less $600x total cost of goods sold). DC's gross FDDEI is $800x ($1,100x of gross receipts from foreign persons minus attributable cost of goods sold of $300x).

(ii) ***Determination of foreign-derived deduction eligible income.*** To calculate its FDDEI, DC must determine the amount of its deductions that are allocated and apportioned to gross FDDEI and then subtract those amounts from gross FDDEI. DC's interest deduction of $300x is allocated and apportioned to gross FDDEI on the basis of the average total value of DC's assets in each grouping. DC has assets with a tax book value of $2,500x split evenly between assets that produce gross FDDEI and assets that produce gross RDEI. Accordingly, an interest expense deduction of $150x is apportioned to DC's gross FDDEI. With respect to DC's supportive deductions of $840x that are related to DC's gross DEI, DC apportions such deductions between gross FDDEI and gross RDEI on the basis of gross income. Accordingly, supportive deductions of $420x are apportioned to DC's gross FDDEI. Thus, DC's FDDEI is $230x, which is equal to its gross FDDEI of $800x less $150x of interest expense deduction and $420x of supportive deductions.

(iii) ***Determination of deemed intangible income.*** DC's deemed tangible income return is $100x, which is equal to 10 percent of its QBAI of $1,000x. DC's DEI is $460x, which is equal to its gross DEI of $1,600x less $300x of interest expense deductions and $840x of supportive deductions. Therefore, DC's deemed intangible income is $360x, which is equal to the excess of its DEI of $460x over its deemed tangible income return of $100x.

(iv) ***Determination of foreign-derived intangible income.*** DC's foreign-derived ratio is 50 percent, which is the ratio of DC's FDDEI of $230x to DC's DEI of $460x. Therefore, DC's FDII is $180x, which is equal to DC's deemed intangible income of $360x multiplied by its foreign-derived ratio of 50 percent.

(B) *Example 2: Allocation of deductions with respect to a partnership* —

(1) *Facts* —

(i) ***DC's operations.*** DC is engaged in the production and sale of products consisting of two separate product groups in three-digit Standard Industrial Classification (SIC) Industry Groups, hereafter referred to as Group AAA and

Group BBB. All of the gross income of DC is included in gross DEI. DC incurs $250x of research and experimental (R&E) expenditures in the United States that are deductible under section 174. None of the R&E is included in cost of goods sold. For purposes of determining gross FDDEI and gross DEI under paragraph (d)(1) of this section, DC attributes $210x of cost of goods sold to Group AAA products and $900x of cost of goods sold to Group BBB products, and then attributes the cost of goods sold with respect to each such product group ratably between the gross receipts with respect to such product group sold to foreign persons and the gross receipts with respect to such product group not sold to foreign persons. The manner in which DC attributes the cost of goods sold is a reasonable method. For the taxable year, DC has the following income tax items relevant to the determination of its FDII:

TABLE 2 TO (d)(3)(ii)(B)(*1*)(*i*)

	Group AAA products	Group BBB products	Total
Gross receipts from U.S. persons	$200x	$800x	$1,000x
Gross receipts from foreign persons	100x	400x	500x
Total gross receipts	300x	1,200x	1,500x
Cost of goods sold for gross receipts from U.S. persons	140x	600x	740x
Cost of goods sold for gross receipts from foreign persons	70x	300x	370x
Total cost of goods sold	210x	900x	1,110x
Gross income	90x	300x	390x
R&E deductions	40x	210x	250x

(*ii*) ***PRS's operations.*** In addition to its own operations, DC is a partner in PRS, a partnership that also produces products described in SIC Group AAA. DC is allocated 50 percent of all income, gain, loss, and deductions of PRS. During the taxable year, PRS sells Group AAA products solely to foreign persons, and all of its gross income is included in gross DEI. PRS has $400 of gross receipts from sales of Group AAA products for the taxable year and incurs $100x of research and experimental (R&E) expenditures in the United States that are deductible under section 174. None of the R&E is included in cost of goods sold. For purposes of determining gross FDDEI and gross DEI under paragraph (d)(1) of this section, PRS attributes $200x of cost of goods sold to Group AAA products, and then attributes the cost of goods sold with respect to such product group ratably between the gross receipts with respect to such product group sold to foreign persons and the gross receipts with respect to such product group not sold to foreign persons. The manner in which PRS attributes the cost of goods sold is a reasonable method. DC's distributive share of PRS taxable items is

$100x of gross income and $50x of R&E deductions, and DC's share of PRS's gross receipts from sales of Group AAA products for the taxable year is $200x under § 1.861-17(f)(3).

(*iii*) ***Application of the sales method to allocate and apportion R&E.*** DC applies the sales method to apportion its R&E deductions under § 1.861-17. Neither DC nor PRS licenses or sells its intangible property to controlled or uncontrolled corporations in a manner that necessitates including the sales by such corporations for purposes of apportioning DC's R&E deductions.

(2) ***Analysis*** —

(*i*) ***Determination of gross DEI and gross FDDEI.*** Under paragraph (e)(1) of this section, DC's gross DEI, gross FDDEI, and deductions allocable to those amounts include its distributive share of gross DEI, gross FDDEI, and deductions of PRS. Thus, DC's gross DEI for the year is $490x ($390x attributable to DC and $100x attributable to DC's interest in PRS). DC's gross income from sales of Group AAA products to foreign persons is $30x ($100x of gross receipts minus attributable cost of goods sold of $70x). DC's gross income from sales of Group BBB products to foreign persons is $100x ($400x of gross receipts minus attributable cost of goods sold of $300x). DC's gross FDDEI for the year is $230x ($30x from DC's sale of Group AAA products plus $100x from DC's sale of Group BBB products plus DC's distributive share of PRS's gross FDDEI of $100x).

(*ii*) ***Allocation and apportionment of R&E deductions.*** To determine FDDEI, DC must allocate and apportion its R&E expense of $300x ($250x incurred directly by DC and $50x incurred indirectly through DC's interest in PRS). In accordance with § 1.861-17, R&E expenses are first allocated to a class of gross income related to a three-digit SIC group code. DC's R&E expenses related to products in Group AAA are $90x ($40x incurred directly by DC and $50x incurred indirectly through DC's interest in PRS) and its expenses related to Group BBB are $210x. See paragraph (d)(2)(i) of this section. Accordingly, all R&E expense attributable to a particular SIC group code is apportioned on the basis of the amounts of sales within that SIC group code. Total sales within Group AAA were $500x ($300x directly by DC and $200x attributable to DC's interest in PRS), $300x of which were made to foreign persons ($100x directly by DC and $200x attributable to DC's interest in PRS). Therefore, the $90x of R&E expense related to Group AAA is apportioned $54x to gross FDDEI ($90x × $300x/$500x) and $36x to gross RDEI ($90x × $200x/$500x). Total sales within Group BBB were $1,200x, $400x of which were made to foreign persons. Therefore, the $210x of R&E expense related to products in Group BBB is apportioned $70x to gross FDDEI ($210x × $400x/$1,200x) and $140x to gross RDEI ($210x × $800x/$1,200x). Accordingly, DC's FDDEI for the tax year is $106x ($230x gross FDDEI minus $124x of R&E ($54x + $70x) allocated and apportioned to gross FDDEI).

(e) ***Domestic corporate partners*** —

(1) ***In general.*** A domestic corporation's DEI and FDDEI for a taxable year are determined by taking into account the corporation's share of gross DEI, gross FDDEI, and deductions of any partnership (whether domestic or foreign) in which the corporation is a direct or indirect partner. For purposes of

the preceding sentence, a domestic corporation's share of each such item of a partnership is determined in accordance with the corporation's distributive share of the underlying items of income, gain, deduction, and loss of the partnership that comprise such amounts. See § 1.250(b)-2(g) for rules on calculating the increase to a domestic corporation's QBAI by the corporation's share of partnership QBAI.

(2) ***Reporting requirement for partnership with domestic corporate partners.*** A partnership that has one or more direct partners that are domestic corporations and that is required to file a return under section 6031 must furnish to each such partner on or with such partner's Schedule K-1 (Form 1065 or any successor form) by the due date (including extensions) for furnishing Schedule K-1 the partner's share of the partnership's gross DEI, gross FDDEI, deductions that are properly allocable to the partnership's gross DEI and gross FDDEI, and partnership QBAI (as determined under § 1.250(b)-2(g)) for each taxable year in which the partnership has gross DEI, gross FDDEI, deductions that are properly allocable to the partnership's gross DEI or gross FDDEI, or partnership specified tangible property (as defined in § 1.250(b)-2(g)(5)). In the case of tiered partnerships where one or more partners of an upper-tier partnership are domestic corporations, a lower-tier partnership must report the amount specified in this paragraph (e)(2) to the upper-tier partnership to allow reporting of such information to any partner that is a domestic corporation. To the extent that a partnership cannot determine the information described in the first sentence of this paragraph (e)(2), the partnership must instead furnish to each partner its share of the partnership's attributes that a partner needs to determine the partner's gross DEI, gross FDDEI, deductions that are properly allocable to the partner's gross DEI and gross FDDEI, and the partner's adjusted bases in partnership specified tangible property.

(3) ***Examples.*** The following examples illustrate the application of this paragraph (e).

(i) ***Assumed facts.*** The following facts are assumed for purposes of the examples—

(A) DC, a domestic corporation, is a partner in PRS, a partnership.

(B) FP and FP2 are foreign persons.

(C) FC is a foreign corporation.

(D) The allocations under PRS's partnership agreement satisfy the requirements of section 704.

(E) No partner of PRS is a related party of DC.

(F) DC, PRS, and FC all use the calendar year as their taxable year.

(G) PRS has no items of income, loss, or deduction for its taxable year, except the items of income described.

(ii) ***Examples*** —

(A) ***Example 1: Sale by partnership to foreign person*** —

(*1*) ***Facts.*** Under the terms of the partnership agreement, DC is allocated 50 percent of all income, gain, loss, and deductions of PRS. For the taxable year, PRS recognizes $20x of gross income on the sale of general property (as defined in § 1.250(b)-3(b)(10)) to FP, a foreign person (as determined under § 1.250(b)-4(c)), for a foreign use (as

determined under § 1.250(b)-4(d)). The gross income recognized on the sale of property is not described in section 250(b)(3)(A)(I) through (VI) or paragraphs (c)(15)(i) through (vi) of this section.

(2) ***Analysis.*** PRS's sale of property to FP is a FDDEI sale as described in § 1.250(b)-4(b). Therefore, the gross income derived from the sale ($20x) is included in PRS's gross DEI and gross FDDEI, and DC's share of PRS's gross DEI and gross FDDEI ($10x) is included in DC's gross DEI and gross FDDEI for the taxable year.

(B) ***Example 2: Sale by partnership to foreign person attributable to foreign branch*** —

(1) ***Facts.*** The facts are the same as in paragraph (e)(3)(ii)(A)(*1*) of this section (the facts in *Example 1*), except the income from the sale of property to FP is attributable to a foreign branch of PRS.

(2) ***Analysis.*** PRS's sale of property to FP is excluded from PRS's gross DEI under section 250(b)(3)(A)(VI) and paragraph (c)(15)(vi) of this section. Accordingly, DC's share of PRS's gross income of $10x from the sale is not included in DC's gross DEI or gross FDDEI for the taxable year.

(C) ***Example 3: Partnership with a loss in gross FDDEI*** —

(1) ***Facts.*** The facts are the same as in paragraph (e)(3)(ii)(A)(*1*) of this section (the facts in *Example 1*), except that in the same taxable year, PRS also sells property to FP2, a foreign person (as determined under § 1.250(b)-4(c)), for a foreign use (as determined under § 1.250(b)-4(d)). After taking into account both sales, PRS has a gross loss of $30x.

(2) ***Analysis.*** Both the sale of property to FP and the sale of property to FP2 are FDDEI sales because each sale is described in § 1.250(b)-4(b). DC's share of PRS's gross loss ($15x) from the sales is included in DC's gross DEI and gross FDDEI.

(D) ***Example 4: Sale by partnership to foreign related party of the partnership*** —

(1) ***Facts.*** Under the terms of the partnership agreement, DC has 25 percent of the capital and profits interest in the partnership and is allocated 25 percent of all income, gain, loss, and deductions of PRS. PRS owns 100 percent of the single class of stock of FC. In the taxable year, PRS has $20x of gain on the sale of general property (as defined in § 1.250(b)-3(b)(10)) to FC, and FC makes a physical and material change to the property within the meaning of § 1.250(b)-4(d)(1)(iii)(B) outside the United States before selling the property to customers in the United States.

(2) ***Analysis.*** The sale of property by PRS to FC is described in § 1.250(b)-4(b) without regard to the application of § 1.250(b)-6, since the sale is to a foreign person (as determined under § 1.250(b)-4(c)) for a foreign use (as determined under § 1.250(b)-4(d)). However, FC is a foreign related party of PRS within the meaning of section 250(b)(5)(D) and § 1.250(b)-3(b)(6), because FC and PRS are members of a modified affiliated group within the meaning of paragraph (c)(17) of this section. Therefore, the sale by PRS to FC is a related party sale within the meaning of § 1.250(b)-6(b)(1). Under section 250(b)(5)(C)(i) and § 1.250(b)-6(c), because FC did not sell the property, or use the property in connection with other property sold or the

provision of a service, to a foreign unrelated party before the property was subject to a domestic use, the sale by PRS to FC is not a FDDEI sale. See § 1.250(b)-6(c)(1). Accordingly, the gain from the sale ($20x) is included in PRS's gross DEI but not its gross FDDEI, and DC's share of PRS's gain ($5x) is included in DC's gross DEI but not gross FDDEI. This is the result notwithstanding that FC is not a related party of DC because FC and DC are not members of a modified affiliated group within the meaning of paragraph (c)(17) of this section.

(f) ***Determination of FDII for consolidated groups.*** A member of a consolidated group (as defined in § 1.1502-1(h)) determines its FDII under the rules provided in § 1.1502-50.

(g) ***Determination of FDII for tax-exempt corporations.*** The FDII of a corporation that is subject to the unrelated business income tax under section 511 is determined only by reference to that corporation's items of income, gain, deduction, or loss, and adjusted bases in property, that are taken into account in computing the corporation's unrelated business taxable income (as defined in section 512). For example, if a corporation that is subject to the unrelated business income tax under section 511 has tangible property used in the production of both unrelated business income and gross income that is not unrelated business income, only the portion of the basis of such property taken into account in computing the corporation's unrelated business taxable income is taken into account in determining the corporation's QBAI. Similarly, if a corporation that is subject to the unrelated business income tax under section 511 has tangible property that is used in both the production of gross DEI and the production of gross income that is not gross DEI, only the corporation's unrelated business income is taken into account in determining the corporation's dual use ratio with respect to such property under § 1.250(b)-2(d)(3).

[T.D. 9901, 85 FR 43080, July 15, 2020, as amended by T.D. 9959, 87 FR 324, Jan. 4, 2022]

§ 1.250(b)-2 Qualified business asset investment (QBAI).

(a) ***Scope.*** This section provides general rules for determining the qualified business asset investment of a domestic corporation for purposes of determining its deemed tangible income return under § 1.250(b)-1(c)(4). Paragraph (b) of this section defines qualified business asset investment (QBAI). Paragraph (c) of this section defines tangible property and specified tangible property. Paragraph (d) of this section provides rules for determining the portion of property that is specified tangible property when the property is used in the production of both gross DEI and gross income that is not gross DEI. Paragraph (e) of this section provides rules for determining the adjusted basis of specified tangible property. Paragraph (f) of this section provides rules for determining QBAI of a domestic corporation with a short taxable year. Paragraph (g) of this section provides rules for increasing the QBAI of a domestic corporation by reason of property owned through a partnership. Paragraph (h) of this section provides an anti-avoidance rule that disregards certain transfers when determining the QBAI of a domestic corporation.

(b) ***Definition of qualified business asset investment.*** The term *qualified business asset investment (QBAI)* means the average of a domestic corporation's aggregate adjusted bases as of the close of each quarter of the domestic corporation's taxable year in specified tangible property that is used in a trade or business of the domestic corporation and is of a type with respect to which a deduction is allowable under section 167. In the case of partially depreciable property, only the depreciable portion of the property is of a type with respect to which a deduction is allowable under section 167.

(c) ***Specified tangible property*** —

(1) ***In general.*** The term *specified tangible property* means, with respect to a domestic corporation for a taxable year, tangible property of the domestic corporation used in the production of gross DEI for the taxable year. For purposes of the preceding sentence, tangible property of a domestic corporation is used in the production of gross DEI for a taxable year if some or all of the depreciation or cost recovery allowance with respect to the tangible property is either allocated and apportioned to the gross DEI of the domestic corporation for the taxable year under § 1.250(b)-1(d)(2) or capitalized to inventory or other property held for sale, some or all of the gross income or loss from the sale of which is taken into account in determining DEI of the domestic corporation for the taxable year.

(2) ***Tangible property.*** The term *tangible property* means property for which the depreciation deduction provided by section 167(a) is eligible to be determined under section 168 without regard to section 168(f)(1), (2), or (5), section 168(k)(2)(A)(i)(II), (IV), or (V), and the date placed in service.

(d) ***Dual use property*** —

(1) ***In general.*** The amount of the adjusted basis in dual use property of a domestic corporation for a taxable year that is treated as adjusted basis in specified tangible property for the taxable year is the average of the domestic corporation's adjusted basis in the property multiplied by the dual use ratio with respect to the property for the taxable year.

(2) ***Definition of dual use property.*** The term *dual use property* means, with respect to a domestic corporation and a taxable year, specified tangible property of the domestic corporation that is used in both the production of gross DEI and the production of gross income that is not gross DEI for the taxable year. For purposes of the preceding sentence, specified tangible property of a domestic corporation is used in the production of gross DEI and the production of gross income that is not gross DEI for a taxable year if less than all of the depreciation or cost recovery allowance with respect to the property is either allocated and apportioned to the gross DEI of the domestic corporation for the taxable year under § 1.250(b)-1(d)(2) or capitalized to inventory or other property held for sale, the gross income or loss from the sale of which is taken into account in determining the DEI of the domestic corporation for the taxable year.

(3) ***Dual use ratio.*** The term *dual use ratio* means, with respect to dual use property, a domestic corporation, and a taxable year, a ratio (expressed as a percentage) calculated as—

(i) The sum of—

(A) The depreciation deduction or cost recovery allowance with respect to the property that is allocated and apportioned to the gross DEI of the domestic corporation for the taxable year under § 1.250(b)-1(d)(2); and

(B) The depreciation or cost recovery allowance with respect to the property that is capitalized to inventory or other property held for sale, the gross income or loss from the sale of which is taken into account in determining the DEI of the domestic corporation for the taxable year; divided by

(ii) The sum of—

(A) The total amount of the domestic corporation's depreciation deduction or cost recovery allowance with respect to the property for the taxable year; and

(B) The total amount of the domestic corporation's depreciation or cost recovery allowance with respect to the property capitalized to inventory or other property held for sale, the gross income or loss from the sale of which is taken into account in determining the income or loss of the domestic corporation for the taxable year.

(4) ***Example.*** The following example illustrates the application of this paragraph (d).

(i) ***Facts.*** DC, a domestic corporation, owns a machine that produces both gross DEI and income that is not gross DEI. The average adjusted basis of the machine for the taxable year in the hands of DC is $4,000x. The depreciation with respect to the machine for the taxable year is $400x, $320x of which is capitalized to inventory of Product A, gross income or loss from the sale of which is taken into account in determining DC's gross DEI for the taxable year, and $80x of which is capitalized to inventory of Product B, gross income or loss from the sale of which is not taken into account in determining DC's gross DEI for the taxable year. DC also owns an office building for its administrative functions with an average adjusted basis for the taxable year of $10,000x. DC does not capitalize depreciation with respect to the office building to inventory or other property held for sale. DC's depreciation deduction with respect to the office building is $1,000x for the taxable year, $750x of which is allocated and apportioned to gross DEI under § 1.250(b)-1(d)(2), and $250x of which is allocated and apportioned to income other than gross DEI under § 1.250(b)-1(d)(2).

(ii) ***Analysis —***

(A) ***Dual use property.*** The machine and office building are property for which the depreciation deduction provided by section 167(a) is eligible to be determined under section 168 (without regard to section 168(f)(1), (2), or (5), section 168(k)(2)(A)(i)(II), (IV), or (V), and the date placed in service). Therefore, under paragraph (c)(2) of this section, the machine and office building are tangible property. Furthermore, because the machine and office building are used in the production of gross DEI for the taxable year within the meaning of paragraph (c)(1) of this section, the machine and office building are specified tangible property. Finally, because the machine and office building are used in both the production of gross DEI and the production of gross income that is not gross DEI for the taxable year within the meaning of paragraph (d)(2) of this section, the machine and office building are dual use property. Therefore, under paragraph (d)(1) of this section, the amount of DC's adjusted basis in the machine and office building that is treated as adjusted basis in specified tangible property for the taxable year is determined by multiplying DC's adjusted basis in the machine and office building by DC's dual use ratio with respect to the machine and office building determined under paragraph (d)(3) of this section.

(B) ***Depreciation not capitalized to inventory.*** Because none of the depreciation with respect to the office building is capitalized to inventory or other property held for sale, DC's dual use ratio with respect to the office building is determined entirely by reference to the depreciation deduction with respect to the office building. Therefore, under paragraph (d)(3) of this section, DC's dual use ratio with respect to the office building for Year 1 is 75 percent, which is DC's depreciation deduction with respect to the office building that is allocated and apportioned to gross DEI under § 1.250(b)-1(d)(2) for Year 1 ($750x), divided by the total amount of DC's depreciation deduction with respect to the office building for Year 1 ($1000x). Accordingly, under paragraph (d)(1) of this section, $7,500x ($10,000x × 0.75) of DC's average adjusted bases in the office building is taken into account under paragraph (b) of this section in determining DC's QBAI for the taxable year.

(C) ***Depreciation capitalized to inventory.*** Because all of the depreciation with respect to the machine is capitalized to inventory, DC's dual use ratio with respect to the machine is determined entirely by reference to the depreciation with respect to the machine that is capitalized to inventory and included in cost of goods sold. Therefore, under paragraph (d)(3) of this section, DC's dual use ratio with respect to the machine for the taxable year is 80 percent, which is DC's depreciation with respect to the machine that is capitalized to inventory of Product A, the gross income or loss from the sale of which is taken into account in determining DC's DEI for the taxable year ($320x), divided by DC's depreciation with respect to the machine that is capitalized to inventory, the gross income or loss from the sale of which is taken into account in determining DC's income for Year 1 ($400x). Accordingly, under paragraph (d)(1) of this section, $3,200x ($4,000x × 0.8) of DC's average adjusted basis in the machine is taken into account under paragraph (b) of this section in determining DC's QBAI for the taxable year.

(e) ***Determination of adjusted basis of specified tangible property*** —

(1) ***In general.*** The adjusted basis in specified tangible property for purposes of this section is determined by using the cost capitalization methods of accounting used by the domestic corporation for purposes of determining the gross income and deductions of the domestic corporation and the alternative depreciation system under section 168(g), and by allocating the depreciation deduction with respect to such property for the domestic corporation's taxable year ratably to each day during the period in the taxable year to which such depreciation relates. For purposes of the preceding sentence, the period in the taxable year to which such depreciation relates is determined without regard to the applicable convention under section 168(d).

(2) ***Effect of change in law.*** The adjusted basis in specified tangible property is determined without regard to any provision of law enacted after December 22, 2017, unless such later enacted law specifically and directly amends the definition of QBAI under section 250 or section 951A. For purposes of applying section 250(b)(2)(B) and this paragraph (e), the technical amendment to section 168(g) (to provide a recovery period of 20 years for qualified improvement property for purposes of the alternative depreciation system) enacted in section 2307(a) of the Coronavirus Aid, Relief, and Economic Security Act, Public Law 116-136 (2020) is treated as enacted on December 22, 2017.

(3) ***Specified tangible property placed in service before enactment of section 250.*** The adjusted basis in specified tangible property placed in service before December 22, 2017, is determined using the alternative depreciation system under section 168(g), as if this system had applied from the date that the property was placed in service.

(f) ***Special rules for short taxable years*** —

(1) ***In general.*** In the case of a domestic corporation that has a taxable year that is less than twelve months (a *short taxable year*), the rules for determining the QBAI of the domestic corporation under this section are modified as provided in paragraphs (f)(2) and (3) of this section with respect to the taxable year.

(2) ***Determination of when the quarter closes.*** For purposes of determining when the quarter closes, in determining the QBAI of a domestic corporation for a short taxable year, the quarters of the domestic corporation for purposes of this section are the full quarters beginning and ending within the short taxable year (if any), determining quarter length as if the domestic corporation did not have a short taxable year, plus one or more short quarters (if any).

(3) ***Reduction of qualified business asset investment.*** The QBAI of a domestic corporation for a short taxable year is the sum of—

(i) The sum of the domestic corporation's aggregate adjusted bases in specified tangible property as of the close of each full quarter (if any) in the domestic corporation's taxable year divided by four; plus

(ii) The domestic corporation's aggregate adjusted bases in specified tangible property as of the close of each short quarter (if any) in the domestic corporation's taxable year multiplied by the sum of the number of days in each short quarter divided by 365.

(4) ***Example.*** The following example illustrates the application of this paragraph (f).

(i) ***Facts.*** A, an individual, owns all of the stock of DC, a domestic corporation. A owns DC from the beginning of the taxable year. On July 15 of the taxable year, A sells DC to USP, a domestic corporation that is unrelated to A. DC becomes a member of the consolidated group of which USP is the common parent and as a result, under § 1.1502-76(b)(2)(ii), DC's taxable year is treated as ending on July 15. USP and DC both use the calendar year as their taxable year. DC's aggregate adjusted bases in specified tangible property for the taxable year are $250x as of March 31, $300x as of June 30, $275x as of July 15, $500x as of September 30, and $450x as of December 31.

(ii) ***Analysis*** —

(A) ***Determination of short taxable years and quarters.*** DC has two short taxable years during the year. The first short taxable year is from January 1 to July 15, with two full quarters (January 1 through March 31 and April 1 through June 30) and one short quarter (July 1 through July 15). The second taxable year is from July 16 to December 31, with one short quarter (July 16 through September 30) and one full quarter (October 1 through December 31).

(B) ***Calculation of qualified business asset investment for the first short taxable year.*** Under paragraph (f)(2) of this section, for the first short taxable year, DC has three quarter closes (March 31, June 30, and July 15). Under paragraph (f)(3) of this section, the QBAI of DC for the first short taxable year is $148.80x, the sum of $137.50x (($250x + $300x)/4) attributable to the two full quarters and $11.30x ($275x × 15/365) attributable to the short quarter.

(C) ***Calculation of qualified business asset investment for the second short taxable year.*** Under paragraph (f)(2) of this section, for the second short taxable year, DC has two quarter closes (September 30 and December 31). Under paragraph (f)(3) of this section, the QBAI of DC for the second short taxable year is $217.98x, the sum of $112.50x ($450x/4) attributable to the one full quarter and $105.48x ($500x × 77/365) attributable to the short quarter.

(g) ***Partnership property*** —

(1) ***In general.*** If a domestic corporation holds an interest in one or more partnerships during a taxable year (including indirectly through one or more partnerships that are partners in a lower-tier partnership), the QBAI of the domestic corporation for the taxable year (determined without regard to this paragraph (g)(1)) is increased by the sum of the domestic corporation's partnership QBAI with respect to each partnership for the taxable year.

(2) ***Determination of partnership QBAI.*** For purposes of paragraph (g)(1) of this section, the term *partnership QBAI* means, with respect to a partnership, a domestic corporation, and a taxable year, the sum of the domestic corporation's partner adjusted basis in each partnership specified tangible property of the partnership for each partnership taxable year that ends with or within the taxable year. If a partnership taxable year is less than twelve months, the principles of paragraph (f) of this section apply in determining a domestic corporation's partnership QBAI with respect to the partnership.

(3) ***Determination of partner adjusted basis*** —

(i) ***In general.*** For purposes of paragraph (g)(2) of this section, the term *partner adjusted basis* means the amount described in paragraph (g)(3)(ii) of this section with respect to sole use partnership property or paragraph (g)(3)(iii) of this section with respect to dual use partnership property. The principles of section 706(d) apply to this determination.

(ii) ***Sole use partnership property*** —

(A) ***In general.*** The amount described in this paragraph (g)(3)(ii), with respect to sole use partnership property, a partnership taxable year, and a domestic corporation, is the sum of the domestic corporation's proportionate share of the partnership adjusted basis in the sole use partnership property for the partnership taxable year and the domestic corporation's partner-specific QBAI basis in the sole use partnership property for the partnership taxable year.

(B) ***Definition of sole use partnership property.*** The term *sole use partnership property* means, with respect to a partnership, a partnership taxable year, and a domestic corporation, partnership specified tangible property of the partnership that is used in the production of only gross DEI of the domestic corporation for the taxable year in which or with which the partnership taxable year ends. For purposes of the preceding sentence, partnership specified tangible property of a partnership is used in the production of only gross DEI for a taxable year if all the domestic corporation's distributive share of the partnership's depreciation deduction or cost recovery allowance with respect to the property (if any) for the partnership taxable year that ends with or within the taxable year is allocated and apportioned to the domestic corporation's gross DEI for the taxable year under § 1.250(b)-1(d)(2) and, if any of the partnership's depreciation or cost recovery allowance with respect to the property is capitalized to inventory or other property held for sale, all the domestic corporation's distributive share of the partnership's gross income or loss from the sale of such inventory or other property for the partnership taxable year that ends with or within the taxable year is taken into account in determining the DEI of the domestic corporation for the taxable year.

(iii) ***Dual use partnership property*** —

(A) ***In general.*** The amount described in this paragraph (g)(3)(iii), with respect to dual use partnership property, a partnership taxable year, and a domestic corporation, is the sum of the domestic corporation's proportionate share of the partnership adjusted basis in the property for the partnership taxable year and the domestic corporation's partner-specific QBAI basis in the property for the partnership taxable year, multiplied by the domestic corporation's dual use ratio with respect to the property for the partnership taxable year determined under the principles of paragraph (d)(3) of this section, except that the ratio

described in paragraph (d)(3) of this section is determined by reference to the domestic corporation's distributive share of the amounts described in paragraph (d)(3) of this section.

(B) ***Definition of dual use partnership property.*** The term *dual use partnership property* means partnership specified tangible property other than sole use partnership property.

(4) ***Determination of proportionate share of the partnership's adjusted basis in partnership specified tangible property*** —

(i) ***In general.*** For purposes of paragraph (g)(3) of this section, the domestic corporation's proportionate share of the partnership adjusted basis in partnership specified tangible property for a partnership taxable year is the partnership adjusted basis in the property multiplied by the domestic corporation's proportionate share ratio with respect to the property for the partnership taxable year. Solely for purposes of determining the proportionate share ratio under paragraph (g)(4)(ii) of this section, the partnership's calculation of, and a partner's distributive share of, any income, loss, depreciation, or cost recovery allowance is determined under section 704(b).

(ii) ***Proportionate share ratio.*** The term *proportionate share ratio* means, with respect to a partnership, a partnership taxable year, and a domestic corporation, the ratio (expressed as a percentage) calculated as—

(A) The sum of—

(*1*) The domestic corporation's distributive share of the partnership's depreciation deduction or cost recovery allowance with respect to the property for the partnership taxable year; and

(*2*) The amount of the partnership's depreciation or cost recovery allowance with respect to the property that is capitalized to inventory or other property held for sale, the gross income or loss from the sale of which is taken into account in determining the domestic corporation's distributive share of the partnership's income or loss for the partnership taxable year; divided by

(B) The sum of—

(*1*) The total amount of the partnership's depreciation deduction or cost recovery allowance with respect to the property for the partnership taxable year; and

(*2*) The total amount of the partnership's depreciation or cost recovery allowance with respect to the property capitalized to inventory or other property held for sale, the gross income or loss from the sale of which is taken into account in determining the partnership's income or loss for the partnership taxable year.

(5) ***Definition of partnership specified tangible property.*** The term *partnership specified tangible property* means, with respect to a domestic corporation, tangible property (as defined in paragraph (c)(2) of this section) of a partnership that is—

(i) Used in the trade or business of the partnership;

(ii) Of a type with respect to which a deduction is allowable under section 167; and

(iii) Used in the production of gross income included in the domestic corporation's gross DEI.

(6) ***Determination of partnership adjusted basis.*** For purposes of this paragraph (g), the term *partnership adjusted basis* means, with respect to a partnership, partnership specified tangible property, and a partnership taxable year, the amount equal to the average of the partnership's adjusted basis in the partnership specified tangible property as of the close of each quarter in the partnership taxable year determined without regard to any adjustments under section 734(b) except for adjustments under section 734(b)(1)(B) or section 734(b)(2)(B) that are attributable to distributions of tangible property (as defined in paragraph (c)(2) of this section) and for adjustments under section 734(b)(1)(A) or 734(b)(2)(A). The principles of paragraphs (e) and (h) of this section apply for purposes of determining a partnership's adjusted basis in partnership specified tangible property and the proportionate share of the partnership's adjusted basis in partnership specified tangible property.

(7) ***Determination of partner-specific QBAI basis.*** For purposes of this paragraph (g), the term *partner-specific QBAI basis* means, with respect to a domestic corporation, a partnership, and partnership specified tangible property, the amount that is equal to the average of the basis adjustment under section 743(b) that is allocated to the partnership specified tangible property of the partnership with respect to the domestic corporation as of the close of each quarter in the partnership taxable year. For this purpose, a negative basis adjustment under section 743(b) is expressed as a negative number. The principles of paragraphs (e) and (h) of this section apply for purposes of determining the partner-specific QBAI basis with respect to partnership specified tangible property.

(8) ***Examples.*** The following examples illustrate the rules of this paragraph (g).

(i) ***Assumed facts.*** Except as otherwise stated, the following facts are assumed for purposes of the examples:

(A) DC, DC1, DC2, and DC3 are domestic corporations.

(B) PRS is a partnership and its allocations satisfy the requirements of section 704.

(C) All properties are partnership specified tangible property.

(D) All persons use the calendar year as their taxable year.

(E) There is no partner-specific QBAI basis with respect to any property.

(ii) ***Example 1: Sole use partnership property*** —

(A) ***Facts.*** DC is a partner in PRS. PRS owns two properties, Asset A and Asset B. The average of PRS's adjusted basis as of the close of each quarter of PRS's taxable year in Asset A is $100x and in Asset B is $500x. In Year 1, PRS's section 704(b) depreciation deduction is $10x with respect to Asset A and $5x with respect to Asset B, and DC's section 704(b) distributive share of the depreciation deduction is $8x with respect to Asset A and $1x with respect to Asset B. None of the depreciation with respect to Asset A or Asset B is capitalized to inventory or other property held for sale. DC's entire distributive share of the depreciation deduction with respect to Asset A and Asset B is allocated and apportioned to DC's gross DEI for Year 1 under § 1.250(b)-1(d)(2).

(B) ***Analysis*** —

(*1*) ***Sole use partnership property.*** Because all of DC's distributive share of the depreciation deduction with respect to Asset A and B is allocated and apportioned to gross DEI for Year 1, Asset A and Asset B are sole use partnership property within

the meaning of paragraph (g)(3)(ii)(B) of this section. Therefore, under paragraph (g)(3)(ii)(A) of this section, DC's partner adjusted basis in Asset A and Asset B is equal to the sum of DC's proportionate share of PRS's partnership adjusted basis in Asset A and Asset B for Year 1 and DC's partner-specific QBAI basis in Asset A and Asset B for Year 1, respectively.

(2) ***Proportionate share.*** Under paragraph (g)(4)(i) of this section, DC's proportionate share of PRS's partnership adjusted basis in Asset A and Asset B is PRS's partnership adjusted basis in Asset A and Asset B for Year 1, multiplied by DC's proportionate share ratio with respect to Asset A and Asset B for Year 1, respectively. Because none of the depreciation with respect to Asset A or Asset B is capitalized to inventory or other property held for sale, DC's proportionate share ratio with respect to Asset A and Asset B is determined entirely by reference to the depreciation deduction with respect to Asset A and Asset B. Therefore, DC's proportionate share ratio with respect to Asset A for Year 1 is 80 percent, which is the ratio of DC's section 704(b) distributive share of PRS's section 704(b) depreciation deduction with respect to Asset A for Year 1 ($8x), divided by the total amount of PRS's section 704(b) depreciation deduction with respect to Asset A for Year 1 ($10x). DC's proportionate share ratio with respect to Asset B for Year 1 is 20 percent, which is the ratio of DC's section 704(b) distributive share of PRS's section 704(b) depreciation deduction with respect to Asset B for Year 1 ($1x), divided by the total amount of PRS's section 704(b) depreciation deduction with respect to Asset B for Year 1 ($5x). Accordingly, under paragraph (g)(4)(i) of this section, DC's proportionate share of PRS's partnership adjusted basis in Asset A is $80x ($100x × 0.8), and DC's proportionate share of PRS's partnership adjusted basis in Asset B is $100x ($500x × 0.2).

(3) ***Partner adjusted basis.*** Because DC has no partner-specific QBAI basis with respect to Asset A and Asset B, DC's partner adjusted basis in Asset A and Asset B is determined entirely by reference to its proportionate share of PRS's partnership adjusted basis in Asset A and Asset B. Therefore, under paragraph (g)(3)(ii)(A) of this section, DC's partner adjusted basis in Asset A is $80x, DC's proportionate share of PRS's partnership adjusted basis in Asset A, and DC's partner adjusted basis in Asset B is $100x, DC's proportionate share of PRS's partnership adjusted basis in Asset B.

(4) ***Partnership QBAI.*** Under paragraph (g)(2) of this section, DC's partnership QBAI with respect to PRS is $180x, the sum of DC's partner adjusted basis in Asset A ($80x) and DC's partner adjusted basis in Asset B ($100x). Accordingly, under paragraph (g)(1) of this section, DC increases its QBAI for Year 1 by $180x.

(iii) ***Example 2: Dual use partnership property*** —

(A) ***Facts.*** DC owns a 50 percent interest in PRS. All section 704(b) and tax items are identical and are allocated equally between DC and its other partner. PRS owns three properties, Asset C, Asset D, and Asset E. PRS sells two products, Product A and Product B. All of DC's distributive share of the gross income or loss from the sale of Product A is taken into account in determining DC's DEI, and none of DC's distributive share of the gross income or loss from the sale of Product B is taken into account in determining DC's DEI.

(1) ***Asset C.*** The average of PRS's adjusted basis as of the close of each quarter of PRS's taxable year in Asset C is $100x. In Year 1, PRS's depreciation is $10x with respect to Asset C, none of which is capitalized to inventory or other property held for sale. DC's distributive share of the depreciation deduction with respect to Asset C is $5x ($10x × 0.5), $3x of which is allocated and apportioned to DC's gross DEI under § 1.250(b)-1(d)(2).

(2) ***Asset D.*** The average of PRS's adjusted basis as of the close of each quarter of PRS's taxable year in Asset D is $500x. In Year 1, PRS's depreciation is $50x with respect to Asset D, $10x of which is capitalized to inventory of Product A and $40x is capitalized to inventory of Product B. None of the $10x depreciation with respect to Asset D capitalized to inventory of Product A is capitalized to ending inventory. However, of the $40x capitalized to inventory of Product B, $10x is capitalized to ending inventory. Therefore, the amount of depreciation with respect to Asset D capitalized to inventory of Product A that is taken into account in determining DC's distributive share of the income or loss of PRS for Year 1 is $5x ($10x × 0.5), and the amount of depreciation with respect to Asset D capitalized to inventory of Product B that is taken into account in determining DC's distributive share of the income or loss of PRS for Year 1 is $15x ($30x × 0.5).

(3) ***Asset E.*** The average of PRS's adjusted basis as of the close of each quarter of PRS's taxable year in Asset E is $600x. In Year 1, PRS's depreciation is $60x with respect to Asset E. Of the $60x depreciation with respect to Asset E, $20x is allowed as a deduction, $24x is capitalized to inventory of Product A, and $16x is capitalized to inventory of Product B. DC's distributive share of the depreciation deduction with respect to Asset E is $10x ($20x × 0.5), $8x of which is allocated and apportioned to DC's gross DEI under § 1.250(b)-1(d)(2). None of the $24x depreciation with respect to Asset E capitalized to inventory of Product A is capitalized to ending inventory. However, of the $16x depreciation with respect to Asset E capitalized to inventory of Product B, $10x is capitalized to ending inventory. Therefore, the amount of depreciation with respect to Asset E capitalized to inventory of Product A that is taken into account in determining DC's distributive share of the income or loss of PRS for Year 1 is $12x ($24x × 0.5), and the amount of depreciation with respect to Asset E capitalized to inventory of Product B that is taken into account in determining DC's distributive share of the income or loss of PRS for Year 1 is $3x ($6x × 0.5).

(B) ***Analysis.*** Because Asset C, Asset D, and Asset E are not used in the production of only gross DEI in Year 1 within the meaning of paragraph (g)(3)(ii)(B) of this section, Asset C, Asset D, and Asset E are dual use partnership property within the meaning of paragraph (g)(3)(iii)(B) of this section. Therefore, under paragraph (g)(3)(iii)(A) of this section, DC's partner adjusted basis in Asset C, Asset D, and Asset E is the sum of DC's proportionate share of PRS's partnership adjusted basis in Asset C, Asset D, and Asset E, respectively, for Year 1, and DC's partner-specific QBAI basis in Asset C, Asset D, and Asset E, respectively, for Year 1, multiplied by DC's dual use ratio with respect to Asset C, Asset D, and Asset E, respectively, for Year 1, determined under the principles of paragraph (d)(3) of this section, except that the ratio described in paragraph (d)(3) of this section is determined by reference to DC's distributive share of the amounts described in paragraph (d)(3) of this section.

(1) ***Asset C*** —

(i) ***Proportionate share.*** Under paragraph (g)(4)(i) of this section, DC's proportionate share of PRS's partnership adjusted basis in Asset C is PRS's partnership adjusted basis in Asset C for Year 1, multiplied by DC's proportionate share ratio with respect to Asset C for Year 1. Because none of the depreciation with respect to Asset C is capitalized to inventory or other property held for sale, DC's proportionate share ratio with respect to Asset C is determined entirely by reference to the depreciation deduction with respect to Asset C. Therefore, DC's proportionate share ratio with respect to Asset C is 50 percent, which is the ratio calculated as the amount of DC's section 704(b) distributive share of PRS's section 704(b) depreciation deduction with respect to Asset C for Year 1 ($5x), divided by the total amount of PRS's section 704(b) depreciation deduction with respect to Asset C for Year 1 ($10x). Accordingly, under paragraph (g)(4)(i) of this section, DC's proportionate share of PRS's partnership adjusted basis in Asset C is $50x ($100x × 0.5).

(ii) ***Dual use ratio.*** Because none of the depreciation with respect to Asset C is capitalized to inventory or other property held for sale, DC's dual use ratio with respect to Asset C is determined entirely by reference to the depreciation deduction with respect to Asset C. Therefore, DC's dual use ratio with respect to Asset C is 60 percent, which is the ratio calculated as the amount of DC's distributive share of PRS's depreciation deduction with respect to Asset C that is allocated and apportioned to DC's gross DEI under § 1.250(b)-1(d)(2) for Year 1 ($3x), divided by the total amount of DC's distributive share of PRS's depreciation deduction with respect to Asset C for Year 1 ($5x).

(iii) ***Partner adjusted basis.*** Because DC has no partner-specific QBAI basis with respect to Asset C, DC's partner adjusted basis in Asset C is determined entirely by reference to DC's proportionate share of PRS's partnership adjusted basis in Asset C, multiplied by DC's dual use ratio with respect to Asset C. Under paragraph (g)(3)(iii)(A) of this section, DC's partner adjusted basis in Asset C is $30x, DC's proportionate share of PRS's partnership adjusted basis in Asset C for Year 1 ($50x), multiplied by DC's dual use ratio with respect to Asset C for Year 1 (60 percent).

(2) ***Asset D*** —

(i) ***Proportionate share.*** Under paragraph (g)(4)(i) of this section, DC's proportionate share of PRS's partnership adjusted basis in Asset D is PRS's partnership adjusted basis in Asset D for Year 1, multiplied by DC's proportionate share ratio with respect to Asset D for Year 1. Because all of the depreciation with respect to Asset D is capitalized to inventory, DC's proportionate share ratio with respect to Asset D is determined entirely by reference to the depreciation with respect to Asset D that is capitalized to inventory and included in cost of goods sold. Therefore, DC's proportionate share ratio with respect to Asset D is 50 percent, which is the ratio calculated as the amount of PRS's section 704(b) depreciation with respect to Asset D capitalized to Product A and Product B that is taken into account in determining DC's section 704(b) distributive share of PRS's income or loss for Year 1 ($20x), divided by the total amount of PRS's section 704(b)

depreciation with respect to Asset D capitalized to Product A and Product B that is taken into account in determining PRS's section 704(b) income or loss for Year 1 ($40x). Accordingly, under paragraph (g)(4)(i) of this section, DC's proportionate share of PRS's partnership adjusted basis in Asset D is $250x ($500x × 0.5).

(*ii*) ***Dual use ratio.*** Because all of the depreciation with respect to Asset D is capitalized to inventory, DC's dual use ratio with respect to Asset D is determined entirely by reference to the depreciation with respect to Asset D that is capitalized to inventory and included in cost of goods sold. Therefore, DC's dual use ratio with respect to Asset D is 25 percent, which is the ratio calculated as the amount of depreciation with respect to Asset D capitalized to inventory of Product A and Product B that is taken into account in determining DC's DEI for Year 1 ($5x), divided by the total amount of depreciation with respect to Asset D capitalized to inventory of Product A and Product B that is taken into account in determining DC's income or loss for Year 1 ($20x).

(*iii*) ***Partner adjusted basis.*** Because DC has no partner-specific QBAI basis with respect to Asset D, DC's partner adjusted basis in Asset D is determined entirely by reference to DC's proportionate share of PRS's partnership adjusted basis in Asset D, multiplied by DC's dual use ratio with respect to Asset D. Under paragraph (g)(3)(iii)(A) of this section, DC's partner adjusted basis in Asset D is $62.50x, DC's proportionate share of PRS's partnership adjusted basis in Asset D for Year 1 ($250x), multiplied by DC's dual use ratio with respect to Asset D for Year 1 (25 percent).

(*3*) ***Asset E*** —

(*i*) ***Proportionate share.*** Under paragraph (g)(4)(i) of this section, DC's proportionate share of PRS's partnership adjusted basis in Asset E is PRS's partnership adjusted basis in Asset E for Year 1, multiplied by DC's proportionate share ratio with respect to Asset E for Year 1. Because the depreciation with respect to Asset E is partly deducted and partly capitalized to inventory, DC's proportionate share ratio with respect to Asset E is determined by reference to both the depreciation that is deducted and the depreciation that is capitalized to inventory and included in cost of goods sold. Therefore, DC's proportionate share ratio with respect to Asset E is 50 percent, which is the ratio calculated as the sum ($25x) of the amount of DC's section 704(b) distributive share of PRS's section 704(b) depreciation deduction with respect to Asset E for Year 1 ($10x) and the amount of PRS's section 704(b) depreciation with respect to Asset E capitalized to inventory of Product A and Product B that is taken into account in determining DC's section 704(b) distributive share of PRS's income or loss for Year 1 ($15x), divided by the sum ($50x) of the total amount of PRS's section 704(b) depreciation deduction with respect to Asset E for Year 1 ($20x) and the total amount of PRS's section 704(b) depreciation with respect to Asset E capitalized to inventory of Product A and Product B that is taken into account in determining PRS's section 704(b) income or loss for Year 1 ($30x). Accordingly, under paragraph (g)(4)(i) of this section, DC's proportionate share of PRS's partnership adjusted basis in Asset E is $300x ($600x × 0.5).

(*ii*) ***Dual use ratio.*** Because the depreciation with respect to Asset E is partly deducted and partly capitalized to inventory, DC's dual use ratio with respect to Asset E is determined by reference to the depreciation that is deducted and the depreciation that is capitalized to inventory and included in cost of goods sold. Therefore, DC's dual use ratio with respect to Asset E is 80 percent, which is the ratio calculated as the sum ($20x) of the amount of DC's distributive share of PRS's depreciation deduction with respect to Asset E that is allocated and apportioned to DC's gross DEI under § 1.250(b)-1(d)(2) for Year 1 ($8x) and the amount of depreciation with respect to Asset E capitalized to inventory of Product A and Product B that is taken into account in determining DC's DEI for Year 1 ($12x), divided by the sum ($25x) of the total amount of DC's distributive share of PRS's depreciation deduction with respect to Asset E for Year 1 ($10x) and the total amount of depreciation with respect to Asset E capitalized to inventory of Product A and Product B that is taken into account in determining DC's income or loss for Year 1 ($15x).

(*iii*) ***Partner adjusted basis.*** Because DC has no partner-specific QBAI basis with respect to Asset E, DC's partner adjusted basis in Asset E is determined entirely by reference to DC's proportionate share of PRS's partnership adjusted basis in Asset E, multiplied by DC's dual use ratio with respect to Asset E. Under paragraph (g)(3)(iii)(A) of this section, DC's partner adjusted basis in Asset E is $240x, DC's proportionate share of PRS's partnership adjusted basis in Asset E for Year 1 ($300x), multiplied by DC's dual use ratio with respect to Asset E for Year 1 (80 percent).

(*4*) ***Partnership QBAI.*** Under paragraph (g)(2) of this section, DC's partnership QBAI with respect to PRS is $332.50x, the sum of DC's partner adjusted basis in Asset C ($30x), DC's partner adjusted basis in Asset D ($62.50x), and DC's partner adjusted basis in Asset E ($240x). Accordingly, under paragraph (g)(1) of this section, DC increases its QBAI for Year 1 by $332.50x.

(iv) ***Example 3: Sole use partnership specified tangible property; section 743(b) adjustments*** —

(A) ***Facts.*** The facts are the same as in paragraph (g)(8)(ii)(A) of this section (the facts in *Example 1*), except that there is an average of $40x positive adjustment to the adjusted basis in Asset A as of the close of each quarter of PRS's taxable year with respect to DC under section 743(b) and an average of $20x negative adjustment to the adjusted basis in Asset B as of the close of each quarter of PRS's taxable year with respect to DC under section 743(b).

(B) ***Analysis.*** Under paragraph (g)(3)(ii)(A) of this section, DC's partner adjusted basis in Asset A is $120x, which is the sum of $80x (DC's proportionate share of PRS's partnership adjusted basis in Asset A as illustrated in paragraph (g)(8)(ii)(B)(*2*) of this section (the analysis in *Example 1*)) and $40x (DC's partner-specific QBAI basis in Asset A). Under paragraph (g)(3)(ii)(A) of this section, DC's partner adjusted basis in Asset B is $80x, the sum of $100x (DC's proportionate share of the partnership adjusted basis in the property as illustrated in paragraph (g)(8)(ii)(B)(*2*) of this section (the analysis in *Example 1*)) and

(−$20x) (DC's partner-specific QBAI basis in Asset B). Therefore, under paragraph (g)(2) of this section, DC's partnership QBAI with respect to PRS is $200x ($120x + $80x). Accordingly, under paragraph (g)(1) of this section, DC increases its QBAI for Year 1 by $200x.

(v) ***Example 4: Sale of partnership interest before close of taxable year*** —

(A) ***Facts.*** DC1 owns a 50 percent interest in PRS on January 1 of Year 1. PRS does not have an election under section 754 in effect. On July 1 of Year 1, DC1 sells its entire interest in PRS to DC2. PRS owns Asset G. The average of PRS's adjusted basis as of the close of each quarter of PRS's taxable year in Asset G is $100x. DC1's section 704(b) distributive share of the depreciation deduction with respect to Asset G is 25 percent with respect to PRS's entire year. DC2's section 704(b) distributive share of the depreciation deduction with respect to Asset G is also 25 percent with respect to PRS's entire year. Both DC1's and DC2's entire distributive shares of the depreciation deduction with respect to Asset G are allocated and apportioned under § 1.250(b)-1(d)(2) to DC1's and DC2's gross DEI, respectively, for Year 1. PRS's allocations satisfy section 706(d).

(B) ***Analysis*** —

(*1*) ***DC1.*** Because DC1 owns an interest in PRS during DC1's taxable year and receives a distributive share of partnership items of the partnership under section 706(d), DC1 has partnership QBAI with respect to PRS in the amount determined under paragraph (g)(2) of this section. Under paragraph (g)(3)(i) of this section, DC1's partner adjusted basis in Asset G is $25x, the product of $100x (the partnership's adjusted basis in the property) and 25 percent (DC1's section 704(b) distributive share of depreciation deduction with respect to Asset G). Therefore, DC1's partnership QBAI with respect to PRS is $25x. Accordingly, under paragraph (g)(1) of this section, DC1 increases its QBAI by $25x for Year 1.

(2) ***DC2.*** DC2's partner adjusted basis in Asset G is also $25x, the product of $100x (the partnership's adjusted basis in the property) and 25 percent (DC2's section 704(b) distributive share of depreciation deduction with respect to Asset G). Therefore, DC2's partnership QBAI with respect to PRS is $25x. Accordingly, under paragraph (g)(1) of this section, DC2 increases its QBAI by $25x for Year 1.

(vi) ***Example 5: Partnership adjusted basis; distribution of property in liquidation of partnership interest*** —

(A) ***Facts.*** DC1, DC2, and DC3 are equal partners in PRS, a partnership. DC1 and DC2 each has an adjusted basis of $100x in its partnership interest. DC3 has an adjusted basis of $50x in its partnership interest. PRS has a section 754 election in effect. PRS owns Asset H with a fair market value of $50x and an adjusted basis of $0, Asset I with a fair market value of $100x and an adjusted basis of $100x, and Asset J with a fair market value of $150x and an adjusted basis of $150x. Asset H and Asset J are tangible property, but Asset I is not tangible property. PRS distributes Asset I to DC3 in liquidation of DC3's interest in PRS. None of DC1, DC2, DC3, or PRS recognizes gain on the distribution. Under section 732(b), DC3's adjusted basis in Asset I is $50x. PRS's adjusted basis in Asset H is increased by $50x to $50x under section 734(b)(1)(B), which is the amount by which PRS's adjusted basis in Asset I immediately before the distribution exceeds DC3's adjusted basis in Asset I.

(B) ***Analysis.*** Under paragraph (g)(6) of this section, PRS's adjusted basis in Asset H is determined without regard to any adjustments under section 734(b) except for adjustments under section 734(b)(1)(B) or section 734(b)(2)(B) that are attributable to distributions of tangible property and for adjustments under section 734(b)(1)(A) or 734(b)(2)(A). The adjustment to the adjusted basis in Asset H is under section 734(b)(1)(B) and is attributable to the distribution of Asset I, which is not tangible property. Accordingly, for purposes of applying paragraph (g)(1) of this section, PRS's adjusted basis in Asset H is $0.

(h) ***Anti-avoidance rule for certain transfers of property*** —

(1) ***In general.*** If, with a principal purpose of decreasing the amount of its deemed tangible income return, a domestic corporation transfers specified tangible property (*transferred property*) to a specified related party of the domestic corporation and, within the disqualified period, the domestic corporation or an FDII-eligible related party of the domestic corporation leases the same or substantially similar property from any specified related party, then, solely for purposes of determining the QBAI of the domestic corporation under paragraph (b) of this section, the domestic corporation is treated as owning the transferred property from the later of the beginning of the term of the lease or date of the transfer of the property until the earlier of the end of the term of the lease or the end of the recovery period of the property.

(2) ***Rule for structured arrangements.*** For purposes of paragraph (h)(1) of this section, a transfer of specified tangible property to a person that is not a related party or lease of property from a person that is not a related party is treated as a transfer to or lease from a specified related party if the transfer or lease is pursuant to a structured arrangement. A structured arrangement exists only if either paragraph (h)(2)(i) or (ii) of this section is satisfied.

(i) The reduction in the domestic corporation's deemed tangible income return is priced into the terms of the arrangement with the transferee.

(ii) Based on all the facts and circumstances, the reduction in the domestic corporation's deemed tangible income return is a principal purpose of the arrangement. Facts and circumstances that indicate the reduction in the domestic corporation's deemed tangible income return is a principal purpose of the arrangement include—

(A) Marketing the arrangement as tax-advantaged where some or all of the tax advantage derives from the reduction in the domestic corporation's deemed tangible income return;

(B) Primarily marketing the arrangement to domestic corporations which earn FDDEI;

(C) Features that alter the terms of the arrangement, including the return, in the event the reduction in the domestic corporation's deemed tangible income return is no longer relevant; or

(D) A below-market return absent the tax effects or benefits resulting from the reduction in the domestic corporation's deemed tangible income return.

(3) ***Per se rules for certain transactions.*** For purposes of paragraph (h)(1) of this section, a transfer of property by a domestic corporation to a specified related party (including a party deemed to be a specified related party under paragraph (h)(2) of this section) followed by a lease of the same or substantially similar property by the domestic corporation or an FDII-eligible related party from a specified related party (including a party deemed to be a specified related party under paragraph

(h)(2) of this section) is treated per se as occurring pursuant to a principal purpose of decreasing the amount of the domestic corporation's deemed tangible income return if both the transfer and the lease occur within a six-month period.

(4) ***Definitions related to anti-avoidance rule.*** The following definitions apply for purpose of this paragraph (h).

(i) ***Disqualified period.*** The term *disqualified period* means, with respect to a transfer, the period beginning one year before the date of the transfer and ending the earlier of the end of the remaining recovery period (under the system described in section 951A(d)(3)(A)) of the property or one year after the date of the transfer.

(ii) ***FDII-eligible related party.*** The term *FDII-eligible related party* means, with respect to a domestic corporation, a member of the same consolidated group as the domestic corporation or a partnership with respect to which at least 80 percent of the interests in partnership capital and profits are owned, directly or indirectly, by the domestic corporation or one or more members of the consolidated group that includes the domestic corporation.

(iii) ***Specified related party.*** The term *specified related party* means, with respect to a domestic corporation, a related party other than an FDII-eligible related party.

(iv) ***Transfer.*** The term *transfer* means any disposition, exchange, contribution, or distribution of property, and includes an indirect transfer. For example, a transfer of an interest in a partnership is treated as a transfer of the assets of the partnership. In addition, if paragraph (h)(1) of this section applies to treat a domestic corporation as owning specified tangible property by reason of a lease of property, the termination or lapse of the lease of the property is treated as a transfer of the specified tangible property by the domestic corporation to the lessor.

(5) ***Transactions occurring before March 4, 2019.*** Paragraph (h)(1) of this section does not apply to a transfer of property that occurs before March 4, 2019.

(6) ***Examples.*** The following examples illustrate the application of this paragraph (h).

(i) ***Example 1: Sale-leaseback with a related party*** —

(A) ***Facts.*** DC, a domestic corporation, owns Asset A, which is specified tangible property. DC also owns all the single class of stock of DS, a domestic corporation, and FS1 and FS2, each a controlled foreign corporation. DC and DS are members of the same consolidated group. On January 1, Year 1, DC sells Asset A to FS1. At the time of the sale, Asset A had a remaining recovery period of 10 years under the alternative depreciation system. On February 1, Year 1, FS2 leases Asset B, which is substantially similar to Asset A, to DS for a five-year term ending on January 31, Year 6.

(B) ***Analysis.*** Because DC transfers specified tangible property (Asset A), to a specified related party of DC (FS1), and, within a six month period (January 1, Year 1 to February 1, Year 1), an FDII-eligible related party of DC (DS) leases a substantially similar property (Asset B) from a specified related party (FS2), DC's transfer of Asset A and lease of Asset B are treated as per se occurring pursuant to a principal purpose of decreasing the amount of its deemed tangible income return. Accordingly, for purposes of determining DC's QBAI, DC is treated as owning Asset A from February 1, Year 1, the later of the date of the transfer of Asset A (January 1, Year 1) and the beginning of the term of the lease of Asset

B (February 1, Year 1), until January 31, Year 6, the earlier of the end of the term of the lease of Asset B (January 31, Year 6) or the remaining recovery period of Asset A (December 31, Year 10).

(ii) ***Example 2: Sale-leaseback with a related party; lapse of initial lease*** —

(A) ***Facts.*** The facts are the same as in paragraph (h)(6)(i)(A) of this section (the facts in *Example 1*). In addition, DS allows the lease of Asset B to expire on February 1, Year 6. On June 1, Year 6, DS and FS2 renew the lease for a five-year term ending on May 31, Year 11.

(B) ***Analysis.*** Because DC is treated as owning Asset A under paragraph (h)(1) of this section, the lapse of the lease of Asset B is treated as a transfer of Asset A to FS2 on February 1, Year 6, under paragraph (h)(4)(iv) of this section. Further, because DC is deemed to transfer specified tangible property (Asset A) to a specified related party (FS2) upon the lapse of the lease, and within a six month period (February 1, Year 6 to June 1, Year 6), an FDII-eligible related party of DC (DS) leases a substantially similar property (Asset B), DC's deemed transfer of Asset A under paragraph (h)(4)(iv) of this section and lease of Asset B are treated as per se occurring pursuant to a principal purpose of decreasing the amount of its deemed tangible income return. Accordingly, for purposes of determining DC's QBAI, DC is treated as owning Asset A from June 1, Year 6, the later of the date of the deemed transfer of Asset A (February 1, Year 6) and the beginning of the term of the lease of Asset B (June 1, Year 6), until December 31, Year 10, the earlier of the end of the term of the lease of Asset B (May 31, Year 11) or the remaining recovery period of Asset A (December 31, Year 10).

[T.D. 9901, 85 FR 43080, July 15, 2020, as amended by 85 FR 60910, Sept. 29, 2020; T.D. 9956, 86 FR 52972, Sept. 24, 2021]

§ 1.250(b)-3 Foreign-derived deduction eligible income (FDDEI) transactions.

(a) ***Scope.*** This section provides rules related to the determination of whether a sale of property or provision of a service is a FDDEI transaction. Paragraph (b) of this section provides definitions related to the determination of whether a sale of property or provision of a service is a FDDEI transaction. Paragraph (c) of this section provides rules regarding a sale of property or provision of a service to a foreign government or an agency or instrumentality thereof. Paragraph (d) of this section provides a rule for characterizing a transaction with both sales and services elements. Paragraph (e) of this section provides a rule for determining whether a sale of property or provision of a service to a partnership is a FDDEI transaction. Paragraph (f) of this section provides rules for substantiating certain FDDEI transactions.

(b) ***Definitions.*** This paragraph (b) provides definitions that apply for purposes of this section and §§ 1.250(b)-4 through 1.250(b)-6.

(1) ***Digital content.*** The term *digital content* means a computer program or any other content in digital format. For example, digital content includes books in digital format, movies in digital format, and music in digital format. For purposes of this section, a computer program is a set of statements or instructions to be used directly or indirectly in a computer or other electronic device in order to bring about a certain result, and includes any media, user manuals, documentation, data base, or similar item if the media, user manuals, documentation, data base, or other similar item is incidental to the operation of the computer program.

(2) ***End user.*** Except as modified by § 1.250(b)-4(d)(2)(ii), the term *end user* means the person that ultimately uses or consumes property or a person that acquires property in a foreign retail sale. A person that acquires property for resale or otherwise as an intermediary is not an end user.

(3) ***FDII filing date.*** The term *FDII filing date* means, with respect to a sale of property by a seller or provision of a service by a renderer, the date, including extensions, by which the seller or renderer is required to file an income tax return (or in the case of a seller or renderer that is a partnership, a return of partnership income) for the taxable year in which the gross income from the sale of property or provision of a service is included in the gross income of the seller or renderer.

(4) ***Finished goods.*** The term *finished goods* means general property that is acquired by an end user.

(5) ***Foreign person.*** The term *foreign person* means a person (as defined in section 7701(a)(1)) that is not a United States person and includes a foreign government or an international organization.

(6) ***Foreign related party.*** The term *foreign related party* means, with respect to a seller or renderer, any foreign person that is a related party of the seller or renderer.

(7) ***Foreign retail sale.*** The term *foreign retail sale* means a sale of general property to a recipient that acquires the general property at a physical retail location (such as a store or warehouse) outside the United States.

(8) ***Foreign unrelated party.*** The term *foreign unrelated party* means, with respect to a seller, a foreign person that is not a related party of the seller.

(9) ***Fungible mass of general property.*** The term *fungible mass of general property* means multiple units of property for sale with similar or identical characteristics for which the seller does not know the specific identity of the recipient or the end user for a particular unit.

(10) ***General property.*** The term *general property* means any property other than: Intangible property (as defined in paragraph (b)(11) of this section); a security (as defined in section 475(c)(2)); an interest in a partnership, trust, or estate; a commodity described in section 475(e)(2)(A) that is not a physical commodity; or a commodity described in section 475(e)(2)(B) through (D). A physical commodity described in section 475(e)(2)(A) is treated as general property, including if it is sold pursuant to a forward or option contract (including a contract described in section 475(e)(2)(C), but not a section 1256 contract as defined in section 1256(b) or other similar contract that is traded on a U.S. or non-U.S. regulated exchange and cleared by a central clearing organization in a manner similar to a section 1256 contract) that is physically settled by delivery of the commodity (provided that the taxpayer physically settled the contract pursuant to a consistent practice adopted for business purposes of determining whether to cash or physically settle such contracts under similar circumstances).

(11) ***Intangible property.*** The term *intangible property* has the meaning set forth in section 367(d)(4). For purposes of section 250, intangible property does not include a copyrighted article as defined in § 1.861-18(c)(3).

(12) ***International transportation property.*** The term *international transportation property* means aircraft, railroad rolling stock, vessel, motor vehicle, or similar property that provides a mode of transportation and is capable of traveling internationally.

(13) ***IP address.*** The term *IP address* means a device's internet Protocol address.

(14) ***Recipient.*** The term *recipient* means a person that purchases property or services from a seller or renderer.

(15) ***Renderer.*** The term *renderer* means a person that provides a service to a recipient.

(16) ***Sale.*** The term *sale* means any sale, lease, license, sublicense, exchange, or other disposition of property, and includes any transfer of property in which gain or income is recognized under section 367. In addition, the term *sell* (and any form of the word sell) means any transfer by sale.

(17) ***Seller.*** The term *seller* means a person that sells property to a recipient.

(18) ***United States.*** The term *United States* has the meaning set forth in section 7701(a)(9), as expanded by section 638(1) with respect to mines, oil and gas wells, and other natural deposits.

(19) ***United States person.*** The term *United States person* has the meaning set forth in section 7701(a)(30), except that the term does not include an individual that is a bona fide resident of a United States territory within the meaning of section 937(a).

(20) ***United States territory.*** The term *United States territory* means American Samoa, Guam, the Northern Mariana Islands, Puerto Rico, or the U.S. Virgin Islands.

(c) ***Foreign military sales and services.*** If a sale of property or a provision of a service is made to the United States or an instrumentality thereof pursuant to 22 U.S.C. 2751 *et seq.* under which the United States or an instrumentality thereof purchases the property or service for resale or on-service to a foreign government or agency or instrumentality thereof, then the sale of property or provision of a service is treated as a FDDEI sale or FDDEI service without regard to § 1.250(b)-4 or § 1.250(b)-5.

(d) ***Transactions with multiple elements.*** A transaction is classified according to its overall predominant character for purposes of determining whether the transaction is a FDDEI sale under § 1.250(b)-4 or a FDDEI service under § 1.250(b)-5. For example, whether a transaction that includes both a sales component and a service component is subject to § 1.250(b)-4 or § 1.250(b)-5 is determined based on whether the overall predominant character, taking into account all relevant facts and circumstances, is a sale or service. In addition, whether a transaction that includes both a sale of general property and a sale of intangible property is subject to § 1.250(b)-4(d)(1) or § 1.250(b)-4(d)(2) is determined based on whether the overall predominant character, taking into account all relevant facts and circumstances, is a sale of general property or a sale of intangible property.

(e) ***Treatment of partnerships*** —

(1) ***In general.*** For purposes of determining whether a sale of property to or by a partnership or a provision of a service to or by a partnership is a FDDEI transaction, a partnership is treated as a person. Accordingly, for example, a partnership may be a seller, renderer, recipient, or related party, including a foreign related party (as defined in paragraph (b)(6) of this section).

(2) ***Examples.*** The following examples illustrate the application of this paragraph (e).

(i) ***Example 1: Domestic partner sale to foreign partnership with a foreign branch*** —

(A) ***Facts.*** DC, a domestic corporation, is a partner in PRS, a foreign partnership. DC and PRS are not related parties. PRS has a foreign branch within the meaning of § 1.904-4(f)(3)(iii). DC and PRS both use the calendar year as their taxable year. For the taxable year, DC recognizes $20x of gain on the sale of general property to PRS for a foreign use (as determined under § 1.250(b)-4(d)). During the same taxable year, PRS recognizes $20x of

gain on the sale of other general property to a foreign person for a foreign use (as determined under § 1.250(b)-4(d)). PRS's income on the sale of the property is attributable to its foreign branch.

(B) ***Analysis.*** DC's sale of property to PRS, a foreign partnership, is a FDDEI sale because it is a sale to a foreign person for a foreign use. Therefore, DC's gain of $20x on the sale to PRS is included in DC's gross DEI and gross FDDEI. However, PRS's gain of $20x is not included in the gross DEI or gross FDDEI of PRS because the gain is foreign branch income within the meaning of § 1.250(b)-1(c)(11). Accordingly, none of PRS's gain on the sale of property is included in DC's gross DEI or gross FDDEI under § 1.250(b)-1(e)(1).

(ii) ***Example 2: Domestic partner sale to domestic partnership without a foreign branch*** —

(A) ***Facts.*** The facts are the same as in paragraph (e)(2)(i)(A) of this section (the facts in *Example 1*), except PRS is a domestic partnership that does not have a foreign branch within the meaning of § 1.904-4(f)(3)(iii).

(B) ***Analysis.*** DC's sale of property to PRS, a domestic partnership, is not a FDDEI sale because the sale is to a United States person. Therefore, the gross income from DC's sale to PRS is included in DC's gross DEI but is not included in its gross FDDEI. However, PRS's sale of other general property is a FDDEI sale, and therefore the gain of $20x is included in the gross DEI and gross FDDEI of PRS. Accordingly, DC includes its distributive share of PRS's gain from the sale in determining DC's gross DEI and gross FDDEI for the taxable year under § 1.250(b)-1(e)(1).

(f) ***Substantiation for certain FDDEI transactions*** —

(1) ***In general.*** Except as provided in paragraph (f)(2) of this section, for purposes of § 1.250(b)-4(d)(1)(ii)(C) (foreign use for sale of general property for resale), § 1.250(b)-4(d)(1)(iii) (foreign use for sale of general property subject to manufacturing, assembly, or processing outside the United States), § 1.250(b)-4(d)(2) (foreign use for sale of intangible property), and § 1.250(b)-5(e) (general services provided to business recipients located outside the United States), a transaction is a FDDEI transaction only if the taxpayer substantiates its determination of foreign use (in the case of sales of property) or location outside the United States (in the case of general services provided to a business recipient) as described in the applicable paragraph of § 1.250(b)-4(d)(3) or § 1.250(b)-5(e)(4). The substantiating documents must be in existence as of the FDII filing date with respect to the FDDEI transaction, and a taxpayer must provide the required substantiating documents within 30 days of a request by the Commissioner or another period as agreed between the Commissioner and the taxpayer.

(2) ***Exception for small businesses.*** Paragraph (f)(1) of this section, and the specific substantiation requirements described in the applicable paragraph of § 1.250(b)-4(d)(3) or § 1.250(b)-5(e)(4), do not apply to a taxpayer if the taxpayer and all related parties of the taxpayer, in the aggregate, receive less than $25,000,000 in gross receipts during the taxable year prior to the FDDEI transaction. If the taxpayer's prior taxable year was less than 12 months (a short period), gross receipts are annualized by multiplying the gross receipts for the short period by 365 and dividing the result by the number of days in the short period.

(3) ***Treatment of certain loss transactions*** —

(i) ***In general.*** If a domestic corporation fails to satisfy the substantiation requirements described in the applicable paragraph of § 1.250(b)-4(d)(3) or § 1.250(b)-5(e)(4) with respect to a transaction (including in connection with a related party transaction described in § 1.250(b)-6), the gross income from the transaction will be treated as gross FDDEI if—

(A) In the case of a sale of property, the seller knows or has reason to know that property is sold to a foreign person for a foreign use (within the meaning of § 1.250(b)-4(d)(1) or (2));

(B) In the case of the provision of a general service to a business recipient, the renderer knows or has reason to know that a service is provided to a business recipient located outside the United States; and

(C) Not treating the transaction as a FDDEI transaction would increase the amount of the corporation's FDDEI for the taxable year relative to its FDDEI that would be determined if the transaction were treated as a FDDEI transaction.

(ii) ***Reason to know*** —

(A) ***Sales to a foreign person for a foreign use.*** For purposes of paragraph (f)(3)(i)(A) of this section, a seller has reason to know that a sale is to a foreign person for a foreign use if the information received as part of the sales process contains information that indicates that the recipient is a foreign person or that the sale is for a foreign use, and the seller fails to obtain evidence establishing that the recipient is not in fact a foreign person or that the sale is not in fact for a foreign use. Information that indicates that a recipient is a foreign person or that the sale is for a foreign use includes, but is not limited to, a foreign phone number, billing address, shipping address, or place of residence; and, with respect to an entity, evidence that the entity is incorporated, formed, or managed outside the United States.

(B) ***General services provided to a business recipient located outside the United States.*** For purposes of paragraph (f)(3)(i)(B) of this section, a renderer has reason to know that the provision of a general service is to a business recipient located outside the United States if the information received as part of the sales process contains information that indicates that the recipient is a business recipient located outside the United States and the seller fails to obtain evidence establishing that the recipient is not in fact a business recipient located outside the United States. Information that indicates that a recipient is a business recipient includes, but is not limited to, indicia of a business status (such as “LLC” or “Company,” or similar indicia under applicable domestic or foreign law, in the name) or statements by the recipient indicating that it is a business. Information that indicates that a business recipient is located outside the United States includes, but is not limited to, a foreign phone number, billing address, and evidence that the entity or business is incorporated, formed, or managed outside the United States.

(iii) ***Multiple transactions.*** If a seller or renderer engages in more than one transaction described in paragraph (f)(3)(i) of this section in a taxable year, paragraph (f)(3)(i) of this section applies by comparing the corporation's FDDEI if each such transaction were not treated as a FDDEI transaction to its FDDEI if each such transaction were treated as a FDDEI transaction.

(iv) ***Example.*** The following example illustrates the application of this paragraph (f)(3).

(A) *Facts.* During a taxable year, DC, a domestic corporation, manufactures products A and B in the United States. DC sells product A and product B to Y, a foreign person that is a distributor, for $200x and $800x, respectively. DC knows or has reason to know that all of its sales of product A and product B will ultimately be sold to end users located outside the United States. Y provides DC with a statement that satisfies the substantiation requirement of paragraph (f)(1) of this section and § 1.250(b)-4(d)(3)(ii) that establishes that its sales of product B are for a foreign use but does not obtain substantiation establishing that any sales of product A are for a foreign use. DC's cost of goods sold is $450x. For purposes of determining gross FDDEI, under § 1.250(b)-1(d)(1) DC attributes $250x of cost of goods sold to product A and $200x of cost of goods sold to product B, and then attributes the cost of goods sold for each product ratably between the gross receipts of such product sold to foreign persons and the gross receipts of such product not sold to foreign persons. The manner in which DC attributes the cost of goods sold is a reasonable method. DC has no other items of income, loss, or deduction.

TABLE 1 TO PARAGRAPH (F)(3)(IV)(A)

	Product A	Product B	Total
Gross receipts	$200x	$800x	$1,000x
Cost of Goods Sold	250x	200x	450x
Gross Income (Loss)	(50x)	600x	550x

(B) *Analysis.* By not treating the sales of product A as FDDEI sales, the amount of DC's FDDEI would increase by $50x relative to its FDDEI if the sales of product A were treated as FDDEI sales. Accordingly, because DC knows or has reason to know that its sales of product A are to foreign persons for a foreign use, the sales of product A constitute FDDEI sales under paragraph (f)(3) of this section, and thus the $50x loss from the sale of product A is included in DC's gross FDDEI.

[T.D. 9901, 85 FR 43080, July 15, 2020]

§ 1.250(b)-4 Foreign-derived deduction eligible income (FDDEI) sales.

(a) *Scope.* This section provides rules for determining whether a sale of property is a FDDEI sale. Paragraph (b) of this section defines a FDDEI sale. Paragraph (c) of this section provides rules for determining whether a recipient is a foreign person. Paragraph (d) of this section provides rules for determining whether property is sold for a foreign use. Paragraph (e) of this section provides a special rule for the sale of interests in a disregarded entity. Paragraph (f) of this section provides a rule regarding certain hedging transactions with respect to FDDEI sales.

(b) ***Definition of FDDEI sale.*** Except as provided in § 1.250(b)-6(c), the term *FDDEI sale* means a sale of general property or intangible property to a recipient that is a foreign person (see paragraph (c) of this section for presumption rules relating to determining foreign person status) and that is for a foreign use (as determined under paragraph (d) of this section). A sale of any property other than general property or intangible property is not a FDDEI sale.

(c) ***Presumption of foreign person status*** —

(1) ***In general.*** The sale of property is presumed to be to a recipient that is a foreign person for purposes of paragraph (b) of this section if the sale is described in paragraph (c)(2) of this section. However, this presumption does not apply if the seller knows or has reason to know that the sale is not to a foreign person. A seller has reason to know that a sale is not to a foreign person if the information received as part of the sales process contains information that indicates that the recipient is not a foreign person and the seller fails to obtain evidence establishing that the recipient is in fact a foreign person. Information that indicates that a recipient is not a foreign person include, but are not limited to, a United States phone number, billing address, shipping address, or place of residence; and, with respect to an entity, evidence that the entity is incorporated, formed, or managed in the United States.

(2) ***Sales of property.*** A sale of a property is described in this paragraph (c)(2) if:

(i) The sale is a foreign retail sale;

(ii) In the case of a sale of general property that is not a foreign retail sale and the general property is delivered (such as through a commercial carrier) to the recipient or an end user, the shipping address of the recipient or end user is outside the United States;

(iii) In the case of a sale of general property that is not described in either paragraph (c)(2)(i) or (ii) of this section, the billing address of the recipient is outside the United States; or

(iv) In the case of a sale of intangible property, the billing address of the recipient is outside the United States.

(d) ***Foreign use*** —

(1) ***Foreign use for general property*** —

(i) ***In general.*** The sale of general property is for a foreign use for purposes of paragraph (b) of this section if the seller determines that the sale is for a foreign use under the rules of paragraph (d)(1)(ii) or (iii) of this section and the exception in paragraph (d)(1)(iv) of this section does not apply.

(ii) ***Rules for determining foreign use*** —

(A) ***Sales that are delivered to an end user by a carrier or freight forwarder.*** Except as otherwise provided in this paragraph (d)(1)(ii)(A), a sale of general property (other than a sale of general property described in paragraphs (d)(1)(ii)(D) through (F) of this section) that is delivered through a carrier or freight forwarder to a recipient that is an end user is for a foreign use if the end user receives delivery of the general property outside the United States. However, a sale described in the preceding sentence is not treated as a sale to an end user for a foreign use if the sale is made with a principal purpose of having the property transported from its location outside the United States to a location within the United States for ultimate use or consumption.

(B) ***Sales to an end user without the use of a carrier or freight forwarder.*** With respect to sales that are not delivered through the use of a carrier or freight forwarder, a sale of general property (other than a sale of general property described in paragraphs (d)(1)(ii)(D) through (F) of this section) to a recipient that is an end user is for a foreign use if the property is located outside the United States at the time of the sale (including as part of foreign retail sales).

(C) ***Sales for resale.*** A sale of general property (other than a sale of general property described in paragraphs (d)(1)(ii)(D) through (F) of this section) to a recipient (such as a distributor or retailer) that will resell the general property is for a foreign use if the general property will ultimately be sold to end users outside the United States (including in foreign retail sales) and such sales to end users outside the United States are substantiated under paragraph (d)(3)(ii) of this section. In the case of sales of a fungible mass of general property, the taxpayer may presume that the proportion of its sales that are ultimately sold to end users outside the United States is the same as the proportion of the recipient's resales of that fungible mass to end users outside the United States.

(D) ***Sales of digital content.*** A sale of general property that primarily contains digital content that is transferred electronically rather than in a physical medium is for a foreign use if the end user downloads, installs, receives, or accesses the purchased digital content on the end user's device outside the United States (see § 1.250(b)-5(d)(2) and (e)(2)(iii) for rules that apply in the case of digital content that is not purchased in a sale but is electronically supplied as a service). If information about where the digital content is downloaded, installed, received, or accessed (such as the device's IP address) is unavailable, and the gross receipts from all sales with respect to the end user (which may be a business) are in the aggregate less than $50,000 for the seller's taxable year, a sale of general property described in the preceding sentence is for a foreign use if it is to an end user that has a billing address located outside the United States.

(E) ***Sales of international transportation property used for compensation or hire.*** A sale of international transportation property used for compensation or hire is for a foreign use if the end user registers the property with a foreign jurisdiction.

(F) ***Sales of international transportation property not used for compensation or hire.*** A sale of international transportation property not used for compensation or hire is for a foreign use if the end user registers the property in a foreign jurisdiction and hangars or stores the property primarily outside the United States.

(iii) ***Sales for manufacturing, assembly, or other processing*** —

(A) ***In general.*** A sale of general property is for a foreign use if the sale is to a foreign unrelated party that subjects the property to manufacture, assembly, or other processing outside the United States and such manufacturing, assembly, or other processing outside the United States is substantiated under paragraph (d)(3)(iii) of this section. Property is subject to manufacture, assembly, or other processing only if the property is physically and materially changed (as described in paragraph (d)(1)(iii)(B) of this section) or the property is incorporated as a component into another product (as described in paragraph (d)(1)(iii)(C) of this section).

(B) ***Property subject to a physical and material change.*** The determination of whether general property is subject to a physical and material change is made based on all the relevant facts and circumstances. General property is subject to a physical and material change if it is substantially transformed and is distinguishable from and cannot be readily returned to its original state.

(C) ***Property incorporated into a product as a component.*** General property is a component incorporated into another product if the incorporation of the general property into another product involves activities that are substantial in nature and generally considered to constitute the manufacture, assembly, or processing of property based on all the relevant facts and circumstances. However, general property is not considered a component incorporated into another product if it is subject only to packaging, repackaging, labeling, or minor assembly operations. In addition, general property is treated as a component if the seller expects, using reliable estimates, that the fair market value of the property when it is delivered to the recipient will constitute no more than 20 percent of the fair market value of the finished good into which the general property is directly or indirectly incorporated when the finished good is sold to end users (the "20-percent rule"). If the property could be incorporated into a number of different finished goods, a reliable estimate of the fair market value of the finished good may include the average fair market value of a representative range of such goods. For purposes of the 20-percent rule, all general property that is sold by the seller and incorporated into the finished good is treated as a single item of property if the seller sells the property to the recipient and the seller knows or has reason to know that the components will be incorporated into a single item of property (for example, where multiple components are sold as a kit). A seller knows or has reason to know that the components will be incorporated into a single item of property if the information received as part of the sales process indicates that the components will be included in the same second product or the nature of the components compels inclusion into the second product and the seller fails to obtain evidence to the contrary.

(iv) ***Sales of property subject to manufacturing, assembly, or other processing in the United States.*** If the seller sells general property to a recipient (other than a related party) for manufacturing, assembly, or other processing within the United States, such property is not sold for a foreign use even if the requirements of paragraph (d)(1)(ii) or (iii) of this section are subsequently satisfied. See § 1.250(b)-6(c) for rules governing sales of general property to a foreign person that is a related party. Property is subject to manufacture, assembly, or other processing only if the property is physically and materially changed (as described in paragraph (d)(1)(iii)(B) of this section) or the property is incorporated as a component into another product (as described in paragraph (d)(1)(iii)(C) of this section).

(v) ***Examples.*** The following examples illustrate the application of this paragraph (d)(1).

(A) ***Assumed facts.*** The following facts are assumed for purposes of the examples—

(*1*) DC is a domestic corporation.

(*2*) FP is a foreign person that is a foreign unrelated party with respect to DC.

(*3*) To the extent a sale is for a foreign use, any applicable substantiation requirements described in paragraph (d)(3)(ii) or (iii) of this section are satisfied.

(B) ***Examples*** —

(*1*) ***Example 1: Manufacturing outside the United States*** —

(*i*) ***Facts.*** DC sells batteries for $18x to FP. DC expects that FP will insert the batteries into tablets as part of the process of assembling tablets outside the United States. While the tablets are manufactured in a way that end users would not easily be able to remove the batteries, the batteries could be removed from the tablets and would resemble their original state following the removal. The finished tablets will be sold to end users within and outside the United States. DC's batteries are used in two types of tablets, Tablet A and Tablet B. Based on an economic analysis, DC determines that the fair market value of Tablet A is $90x and the fair market value of Tablet B is $110x. FP informs DC that the number of sales of Tablet A is approximately equal to the number of sales of Tablet B.

(*ii*) ***Analysis.*** Because the batteries could be removed from the tablets and be returned to their original state, the insertion of the batteries into the tablets does not constitute a physical and material change described in paragraph (d)(1)(iii)(B) of this section. However, the average fair market value of a representative range of tablets that incorporate the batteries is $100x (the average of $90x for Tablet A and $110x for Tablet B because their sales are approximately equal), and $18x is less than 20 percent of $100x. Therefore, the batteries are considered components of the tablets and treated as subject to manufacture, assembly, or other processing outside the United States. See paragraphs (d)(1)(iii)(A) and (C) of this section. As a result, notwithstanding that some tablets incorporating the batteries may be sold to an end user in the United States, DC's sale of batteries is considered for a foreign use. Accordingly, DC's sale of batteries to FP is for a foreign use under paragraph (d)(1)(iii)(A) and (C) of this section, and the sale is a FDDEI sale.

(*2*) ***Example 2: Manufacturing outside the United States*** —

(*i*) ***Facts.*** The facts are the same as in paragraph (d)(1)(v)(B)(*1*) of this section (the facts in *Example 1*), except FP purchases the batteries from DC for $25x. In addition, FP purchased other components of tablets from other parties. FP has a substantial investment in machinery and tools that are used to assemble tablets.

(*ii*) ***Analysis.*** Even though the fair market value of the batteries that FP purchases from DC and incorporates into the tablets exceeds 20 percent of the fair market value of the tablets, because the batteries are used by FP in activities that are substantial in nature and generally considered to constitute the manufacture, assembly or other processing of property, the batteries are components of the tablets. As a result, DC's sale of property to FP is still for a foreign use under paragraph (d)(1)(iii)(A) and (C) of this section, and the sale is a FDDEI sale.

(*3*) ***Example 3: Sale of products to distributor outside the United States*** —

(*i*) ***Facts.*** DC sells smartphones to FP, a distributor of electronics located within Country A. The sales contract between DC and FP provides that FP may sell the smartphones it purchases from DC only to specified retailers located within Country A. The specified retailers only sell electronics, including smartphones, in foreign retail sales.

(*ii*) ***Analysis.*** Although FP does not sell the smartphones it purchases from DC to end users, FP sells to retailers that sell the smartphones in foreign retail sales. All of the sales of smartphones from DC to FP are sales of general property for a foreign use under paragraph (d)(1)(ii)(C) of this section because FP is only allowed to sell the smartphones to retailers who sell such property in foreign retail sales. As a result, DC's sales of smartphones to FP are FDDEI sales.

(*4*) ***Example 4: Sale of a fungible mass of products*** —

(*i*) ***Facts.*** DC and persons other than DC sell multiple units of printer paper that is considered fungible general property to FP during the taxable year. FP is a distributor that sells paper to retail stores within and outside the United States. FP informs DC that approximately 25 percent of FP's sales of the paper are to retail stores located outside of the United States for foreign retail sales.

(*ii*) ***Analysis.*** The sale of paper to FP is for a foreign use to the extent that the paper will be sold to end users located outside the United States under paragraph (d)(1)(ii)(C) of this section. Because a portion of DC's sales to FP are not for a foreign use, DC must determine the amount of paper that is sold for a foreign use. Based on the information provided by FP about its own sales, DC determines under paragraph (d)(1)(ii)(C) of this section that 25 percent of the total units of paper that is fungible general property that FP purchased from all persons in the taxable year will ultimately be sold to end users located outside the United States. Accordingly, DC satisfies the test for a foreign use under paragraph (d)(1)(ii)(C) of this section with respect to 25 percent of its sales of the paper to FP.

(*5*) ***Example 5: Limited use license of copyrighted computer software*** —

(*i*) ***Facts.*** DC provides FP with a limited use license to copyrighted computer software in exchange for an annual fee of $100x. The limited use license restricts FP's use of the computer software to 100 of FP's employees, who download the software onto their computers. The limited use license prohibits FP from using the computer software in any way other than as an end user, which includes prohibiting sublicensing, selling, reverse engineering, or modifying the computer software. All of FP's employees download the software onto computers that are physically located outside the United States.

(*ii*) ***Analysis.*** The software licensed to FP is digital content as defined in § 1.250(b)-3(b)(1), and is downloaded by an end user as defined in § 1.250(b)-3(b)(2). Accordingly, because the software is downloaded solely onto computers outside the United States, DC's license to FP is for a foreign use and therefore a FDDEI sale under paragraph (d)(1)(ii)(D) of this section. The entire $100x of the license fee is included in DC's gross FDDEI for the taxable year.

(6) ***Example 6: Limited use license of copyrighted computer software used within and outside the United States*** —

(*i*) ***Facts.*** The facts are the same as in paragraph (d)(1)(v)(B)(*5*) of this section (the facts in *Example 5*), except that FP has offices both within and outside the United States, and DC's internal records indicates that 50 percent of the downloads of the software are onto computers located outside the United States.

(*ii*) ***Analysis.*** Because 50 percent of the downloads of the software are onto computers located outside the United States, a portion of DC's license to FP is for a foreign use and therefore such portion is a FDDEI sale. The $50x of license fee derived with respect to such portion is included in DC's gross FDDEI for the taxable year.

(7) ***Example 7: Sale of a copyrighted article*** —

(*i*) ***Facts.*** DC sells copyrighted music available for download on its website. Once downloaded, the recipient listens to the music on electronic devices that do not need to be connected to the internet. DC has data that an individual accesses the website to purchase a song for download on a device located outside the United States. The terms of the sale permit the recipient to use the song for personal use, but convey no other rights to the copyrighted music to the recipient.

(*ii*) ***Analysis.*** The music acquired through download is digital content as defined in § 1.250(b)-3(b)(1). Because the recipient acquires no ownership in copyright rights to the music, the sale is considered a sale of a copyrighted article, and thus is a sale of general property. See § 1.250(b)-3(b)(10) and (11). As a result, the sale is considered for a foreign use under paragraph (d)(1)(ii)(D) of this section because the digital content was installed, received, or accessed on the end user's device outside the United States. The income derived with respect to the sale of the music is included in DC's gross FDDEI for the taxable year. See § 1.250(b)-5(d)(3) for an example of digital content provided to consumers as a service rather than as a sale.

(2) ***Foreign use for intangible property*** —

(i) ***In general.*** A sale of rights to exploit intangible property solely outside the United States is for a foreign use. A sale of rights to exploit intangible property solely within the United States is not for a foreign use. A sale of rights to exploit intangible property worldwide is partially for a foreign use and partially not for a foreign use. Whether intangible property is exploited within versus outside the United States is determined based on revenue earned from end users located within versus outside the United States. Therefore, a sale of rights to exploit intangible property both within and outside the United States is for a foreign use in proportion to the revenue earned from end users located outside the United States over the total revenue earned from the exploitation of the intangible property. A sale of intangible property will be treated as a FDDEI sale only if the substantiation requirements of paragraph (d)(3)(iv) of this section are

satisfied. For rules specific to determining end users and revenue earned from end users for intangible property used in sales of general property, provision of services, research and development, or consisting of a manufacturing method or process, see paragraph (d)(2)(ii) of this section.

(ii) ***Determination of end users and revenue earned from end users*** —

(A) ***Intangible property embedded in general property or used in connection with the sale of general property.*** If intangible property is embedded in general property that is sold, or used in connection with a sale of general property, then the end user of the intangible property is the end user of the general property. Revenue is earned from the end user of the general property outside the United States to the extent the sale of the general property is for a foreign use under paragraph (d)(1)(ii) or (iii) of this section.

(B) ***Intangible property used in providing a service.*** If intangible property is used to provide a service, then the end user of that intangible property is the recipient, consumer, or business recipient of the service or, in the case of a property service or a transportation service that involves the transportation of property, the end user is the owner of the property on which such service is being performed. Such end users are treated as located outside the United States only to the extent the service qualifies as a FDDEI service under § 1.250(b)-5. Therefore, in the case of a recipient of a sale of intangible property that uses such intangible property to provide a property service that qualifies as a FDDEI service to another person, that person is the end user and is treated as located outside the United States.

(C) ***Intangible property consisting of a manufacturing method or process*** —

(*1*) ***In general.*** Except as provided in paragraph (d)(2)(ii)(C)(*2*) of this section, if intangible property consists of a manufacturing method or process (as defined in paragraph (d)(2)(ii)(C)(*3*) of this section) and is sold to a foreign unrelated party (including in a sale by a foreign related party), then the foreign unrelated party is treated as an end user located outside the United States, unless the seller knows or has reason to know that the manufacturing method or process will be used in the United States, in which case the foreign unrelated party is treated as an end user located within the United States. A seller has reason to know that the manufacturing method or process will be used in the United States if the information received from the recipient as part of the sales process contains information that indicates that the recipient intends to use the manufacturing method or process in the United States and the seller fails to obtain evidence establishing that the recipient does not intend to use the manufacturing method or process in the United States.

(*2*) ***Exception for certain manufacturing arrangements.*** A sale of intangible property consisting of a manufacturing method or process (including a sale by a foreign related party) to a foreign unrelated party for use in manufacturing products for or on behalf of the seller or any person related to the seller does not qualify as a sale to a foreign unrelated party for purposes of determining the end user under paragraph (d)(2)(ii)(C)(*1*) of this section.

(*3*) ***Manufacturing method or process.*** For purposes of this section, a manufacturing method or process consists of a sequence of actions or steps that comprise an overall method or process that is used to manufacture a product or produce a

particular manufacturing result, which may be in the form of a patent or know-how. Intangible property consisting of the right to make and sell an item of property is not a manufacturing method or process, whereas intangible property consisting of the right to apply a series of actions or steps to be performed to achieve a particular manufacturing result is a manufacturing method or process. For example, a utility or design patent on an article of manufacture, machine, composition of matter, design, or providing the right to sell equipment to perform a process is not a manufacturing method or process, whereas a utility patent covering a method or process of manufacturing is a manufacturing method or process for purposes of this section.

(D) ***Intangible property used in research and development.*** If intangible property (primary IP) is used to develop new or modify other intangible property (secondary IP), then the end user of the primary IP is the end user (applying paragraph (d)(2)(ii)(A), (B), or (C) of this section) of the secondary IP.

(iii) ***Determination of revenue for periodic payments versus lump sums*** —

(A) ***Sales in exchange for periodic payments.*** In the case of a sale of intangible property, other than intangible property consisting of a manufacturing method or process that is sold to a foreign unrelated party, to a recipient in exchange for periodic payments, the extent to which the sale is for a foreign use is determined annually based on the actual revenue earned by the recipient from any use of the intangible property for the taxable year in which a periodic payment is received. If actual revenue earned by the recipient cannot be obtained after reasonable efforts, then estimated revenue earned by a recipient that is not a related party of the seller from the use of the intangible property may be used based on the principles of paragraph (d)(2)(iii)(B) of this section.

(B) ***Sales in exchange for a lump sum.*** In the case of a sale of intangible property, other than intangible property consisting of a manufacturing method or process that is sold to a foreign unrelated party, for a lump sum, the extent to which the sale is for a foreign use is determined based on the ratio of the total net present value of revenue the seller would have expected to earn from the exploitation of the intangible property outside the United States to the total net present value of revenue the seller would have expected to earn from the exploitation of the intangible property. In the case of a recipient that is a foreign unrelated party, net present values of revenue that the recipient expected to earn from the exploitation of the intangible property within and outside the United States may also be used if the seller obtained such revenue data from the recipient near the time of the sale and such revenue data was used to negotiate the lump sum price paid for the intangible property. Net present values must be determined using reliable inputs including, but not limited to, reliable revenue, expenses, and discount rates. The extent to which the inputs are used by the parties to determine the sales price agreed to between the seller and a foreign unrelated party purchasing the intangible property will be a factor in determining whether such inputs are reliable. If the intangible property is sold to a foreign related party, the reliability of the inputs used to determine net present values and the net present values are determined under section 482.

(C) ***Sales to a foreign unrelated party of intangible property consisting of a manufacturing method or process.*** In the case of a sale to an unrelated foreign party of intangible property consisting of a manufacturing method or process, the revenue earned from the end user is equal to the amount received from the recipient in exchange for the

manufacturing method or process. In the case of a bundled sale of intangible property consisting of a manufacturing method or process and intangible property not consisting of a manufacturing method or process, the revenue earned from the intangible property consisting of the manufacturing method or process equals the total amount paid for the bundled sale multiplied by the proportion that the value of the manufacturing method or process bears to the total value of the intangible property. The value of the manufacturing method or process to the total value of the intangible property must be determined using the principles of section 482.

(iv) ***Examples.*** The following examples illustrate the application of this paragraph (d)(2).

(A) ***Assumed facts.*** The following facts are assumed for purposes of the examples—

(*1*) DC is a domestic corporation.

(*2*) Except as otherwise provided, FP and FP2 are foreign persons that are foreign unrelated parties with respect to DC.

(*3*) All of DC's income is DEI.

(*4*) Except as otherwise provided, the substantiation requirements described in paragraph (d)(3)(iv) of this section are satisfied.

(*5*) Except as otherwise provided, inputs used to determine the net present values of the revenue are reliable.

(B) ***Examples*** —

(*1*) ***Example 1: License of worldwide rights with actual revenue data from recipient*** —

(*i*) ***Facts.*** DC licenses to FP worldwide rights to the copyright to composition A in exchange for annual royalties of 60 percent of revenue from FP's sales of composition A. FP sells composition A to customers through digital downloads from servers. In the taxable year, FP earns $100x in revenue from sales of copies of composition A to customers, of which $60x is from customers located in the United States and the remaining $40x is from customers located outside the United States. FP provides DC with reliable records showing the amount of revenue earned in the taxable year from sales of composition A to establish the royalties owed to DC. These records also provide DC with the amount of revenue earned from sales of composition A to customers located within the United States.

(*ii*) ***Analysis.*** FP is not the end user of the copyright to composition A under paragraph (d)(2)(ii)(A) of this section because the copyright is used in the sale of general property (the sale of copyrighted articles to customers). The customers that purchase a copy of composition A from FP are the end users (as defined in § 1.250(b)-3(b)(2) and paragraph (d)(2)(ii)(A) of this section) because those customers are the recipients of composition A when sold as general property. Based on the actual revenue earned by FP from sales of composition A, 40 percent ($40x/$100x) of the revenue generated by the copyright during the taxable year is earned outside the United States. Accordingly, a portion of DC's license to FP is for a foreign use under paragraph

(d)(2) of this section and therefore such portion is a FDDEI sale. The $24x of royalty (0.40 x $60x of total royalties owed to DC during the taxable year) derived with respect to such portion is included in DC's gross FDDEI for the taxable year.

(2) ***Example 2: Fixed annual payments for worldwide rights without actual revenue data from recipient*** —

(i) ***Facts.*** The facts are the same as in paragraph (d)(2)(iv)(B)(*1*)(*i*) of this section (the facts in *Example 1*), except FP pays DC a fixed annual payment of $60x each year for the worldwide rights to the copyright to composition A and does not provide DC with data showing how much revenue FP earned from sales of composition A, even after DC requests that FP provide it with such information. DC also is unable to determine how much revenue FP earned from sales of composition A to customers within the United States from the data it has with respect to FP and publicly available data with respect to FP. However, DC's economic analysis of the revenue DC expected it could earn annually from use of composition A as part of determining the annual payments DC would receive from FP from the license of composition A supports a determination that 40 percent of sales of composition A during the tax year would be to customers located outside the United States. During an examination of DC's return for the taxable year, DC provides the IRS with data explaining the economic analysis, inputs, and results from its valuation of composition A used in determining the amount of annual payments agreed to by DC and FP.

(ii) ***Analysis.*** For the same reasons provided in paragraph (d)(2)(iv)(B)(*1*)(*ii*) of this section (the analysis in *Example 1*), the customers that purchase copies of composition A from FP are the end users. DC is allowed to use reliable economic analysis to estimate revenue earned by FP from the use of the copyright to composition A under paragraph (d)(2)(iii)(A) of this section because DC was unable to obtain actual revenue earned by FP from use of the copyright to composition A during the taxable year after reasonable efforts to obtain the actual revenue data. Based on DC's economic analysis, a portion of DC's license to FP is for a foreign use under paragraph (d)(2) of this section and therefore such portion is a FDDEI sale. $24x of the $60x fixed payment to DC (0.40 x $60x) is included in DC's gross FDDEI for the taxable year.

(3) ***Example 3: Sale of patent rights protected in the United States and other countries; use of financial projections in sale to foreign unrelated party*** —

(i) ***Facts.*** DC owns a patent for an active pharmaceutical ingredient (“API”) approved for treatment of disease A (“indication A”) in the United States and in Countries A, B, and C. The patent is registered in the United States and in Countries A, B, and C. DC sells to FP all of its patent rights to the API for indication A for a lump sum payment of $1,000x. DC has no basis in the patent rights. To determine the sales price for the patent rights, DC projected that the net present value of the revenue it would earn from selling a pharmaceutical product incorporating the API for indication A was $5,000x, with 15 percent of

the net present value of revenue earned from sales within the United States and 85 percent of the net present value of revenue earned from sales outside the United States. DC did not obtain revenue projections from the recipient.

(*ii*) ***Analysis.*** FP is not the end user of the patent under paragraph (d)(2)(ii)(A) of this section because the patent is used in the sale of general property (the sale of pharmaceutical products to customers) and FP is not the recipient of that general property. The unrelated party customers that purchase the finished pharmaceutical product from FP are the end users (as defined in § 1.250(b)-3(b)(2) and paragraph (d)(2)(ii)(A) of this section) because those customers are the unrelated party recipients of the pharmaceutical product when sold as general property. Based on the financial projections DC used to determine the sales price of the patent that FP purchased, a portion of DC's sale to FP is for a foreign use under paragraph (d)(2) of this section and such portion is a FDDEI sale. The $850x (85 percent × $1,000x) of gain derived with respect to such portion is included in DC's gross FDDEI for the taxable year.

(*4*) ***Example 4: Sale of patent rights protected in the United States and other countries; use of financial projections in sale to foreign related party*** —

(*i*) ***Facts.*** The facts are the same as in paragraph (d)(2)(iv)(B)(*3*)(*i*) of this section (the facts in *Example 3*), except that FP is a foreign related party with respect to DC, and DC projected that the net present value of the revenue it would earn from selling a pharmaceutical product incorporating the API for indication A would result in 1 percent of the revenue earned from sales within the United States and 99 percent of the revenue earned from sales outside the United States. During the examination of DC's return for the taxable year, the IRS determines that DC's substantiation allocating the projected revenue from sales within the United States and outside the United States does not reflect reliable inputs to determine the net present values of revenues under section 482, but determines that the total lump sum price FP paid for DC's patent rights is an arm's length price. The IRS determines that the most reliable net present values of revenue DC would have earned from sales within the United States and outside the United States is $750x and $4250x, respectively.

(*ii*) ***Analysis.*** For the same reasons provided in paragraph (d)(2)(iv)(B)(*3*)(*ii*) of this section (the analysis in *Example 3*), the customers that purchase the finished pharmaceutical product from FP are the end users. Under paragraph (d)(2)(iii)(B) of this section, the reliability of the inputs DC used to determine the net present values and the net present values are determined under section 482. Based on the sales price of the patent that FP purchased and the IRS-determined net present values of revenue DC would have earned from sales within the United States and outside the United States, a portion of DC's sale to FP is for a foreign use under paragraph (d)(2) of this section and such portion is a FDDEI sale. DC is allowed to include $850x (($4250x divided by $5000x) × $1,000x) of gain in DC's gross FDDEI for the taxable year.

(*5*) ***Example 5: Sale of patent of manufacturing method or process protected in the United States and other countries; foreign unrelated party*** —

(*i*) ***Facts.*** DC owns the worldwide rights to a patent covering a process for refining crude oil. DC sells to FP the right to DC's patented process for refining crude oil for a lump sum payment of $100x. DC has no basis in the patent rights. DC does not know or have reason to know that FP will use the patented process to refine crude oil within the United States or will sell or license the rights to the patent to a person to refine crude oil within the United States.

(*ii*) ***Analysis.*** DC's patent covering a process for refining crude oil is a manufacturing method or process as defined in paragraph (d)(2)(ii)(C)(*3*) of this section. Under paragraph (d)(2)(ii)(C)(*1*) of this section, FP is treated as the end user of the patent, and is treated as located outside the United States because FP is a foreign unrelated party and DC does not know or have reason to know that the patented process will be used in the United States. As a result, all of the sale to FP is for a foreign use under paragraph (d)(2) of this section and therefore is a FDDEI sale. The entire $100x lump sum payment is included in DC's gross FDDEI for the taxable year.

(*6*) ***Example 6: License of intangible property that includes a patented manufacturing method or process protected in the United States and other countries; foreign unrelated party*** —

(*i*) ***Facts.*** DC owns worldwide rights to patents, know-how, and a trademark and tradename for product Z. The patents consist of: a patent covering the right to make, use, and sell product Z (article of manufacture), a patent covering the rights to make, use, and sell a composition of substances used in certain components of product Z (composition of matter), and a patent covering the right to use a manufacturing process consisting of a series of manufacturing steps to manufacture product Z (manufacturing method or process as defined in paragraph (d)(2)(ii)(C)(*3*) of this section) and to sell the product Z that FP manufactures using the manufacturing method or process. The know-how consists entirely of manufacturing know-how used to implement the manufacturing steps that comprise the manufacturing method or process. DC licenses the worldwide rights to the patents, know-how, and the trademark and tradename for product Z to FP in exchange for annual royalties of 60 percent of revenue from sales of product Z. FP manufactures product Z in country X and sells product Z to DC2, a domestic corporation and unrelated party to DC and FP, for resale to customers located within the United States. FP also sells product Z to FP2, a foreign unrelated party with respect to DC and FP, for resale to customers located outside the United States. During the taxable year, FP sells to DC2 $140x of product Z. Also, during the taxable year, FP sells to FP2 $60x of product Z. DC determines under the principles of section 482 that the licensed know-how and the patented manufacturing method or process comprise 10 percent of the arm's length price of the intangible property DC licenses to FP.

(*ii*) ***Analysis*** —

(A) ***End users.*** Under paragraph (d)(2)(ii)(C)(*1*) of this section, FP is treated as the end user of the patent covering the right to use the manufacturing process and the manufacturing know-how used to implement the manufacturing method or process, and is treated as located outside the

United States because FP is a foreign unrelated party and DC does not know or have reason to know that the patented process and know-how will be used in the United States. DC2, FP, and FP2 are not the end users of the remaining intangible property under paragraph (d)(2)(ii)(A) of this section because that intangible property is used in the sale of general property (the sale of product Z) and DC2, FP, and FP2 are not the end users of that general property. The unrelated party customers that purchase product Z from DC2 and FP2 are the end users (as defined in § 1.250(b)-3(b)(2) and paragraph (d)(2)(ii)(A) of this section) because those customers are the unrelated party recipients of product Z.

(B) ***Foreign use.*** Under paragraph (d)(2)(ii)(A) of this section, revenue from royalties paid for the intangible property other than the manufacturing method or process is earned from end users outside the United States to the extent the sale of the general property is for a foreign use under paragraph (d)(1) of this section. FP2 is a reseller of product Z to end users outside the United States, so all sales of product Z to FP2 are for a foreign use under paragraph (d)(1)(ii)(C) of this section. Because DC has determined that 10 percent of the value of the intangible property consists of a manufacturing method or process (as defined in paragraph (d)(2)(ii)(C)(*3*) of this section) used to manufacture product Z, $12x of the $120x royalty FP pays to DC during the taxable year is for foreign use ($120x total royalty × 0.10) based on the location of FP's manufacturing utilizing the know-how or all of the sequence of actions that comprise the manufacturing method or process under paragraph (d)(2)(ii)(C)(*3*) of this section. Based on the sales of product Z within and outside the United States, $32.4x of the royalties FP pays DC for rights to the licensed intangible property during the taxable year (($60x of revenue from sales to FP2 for resale to customers located outside the United States divided by $200x total worldwide sales revenue FP receives from DC2 and FP2) × ($120x total royalties less $12 of those royalties attributable to the manufacturing method or process)) qualifies as income earned from the sale of intangible property for a foreign use under paragraph (d)(2) of this section and therefore such portion is a FDDEI sale. As a result, $44.40x of royalties ($12x + $32.40x) is included in DC's gross FDDEI for the taxable year.

(*7*) ***Example 7: License of intangible property that includes a patented manufacturing method or process protected in the United States and other countries; foreign related party with third-party manufacturer*** —

(*i*) ***Facts.*** The facts are the same as in paragraph (d)(2)(iv)(B)(*6*)(*i*) of this section (the facts in *Example 6*), except that FP is a foreign related party with respect to DC and FP engages FP2, a foreign unrelated party, to manufacture product Z. FP sublicenses to FP2 the rights to the intangible property FP licenses from DC solely to manufacture product Z and sell product Z to FP. FP2 manufactures product Z in country Y and sells all of product Z it manufactures to FP. During

the taxable year, FP sold $80x of product Z to DC2, which DC2 resold to customers located within the United States. Also, during the taxable year, FP sold $120x of product Z to customers located outside the United States.

(*ii*) ***Analysis*** —

(A) ***End users.*** Under paragraph (d)(2)(ii)(C)(*1*) of this section, FP is not treated as the end user of the patent covering the right to use the manufacturing process and the manufacturing know-how used to implement the manufacturing method or process because FP is a foreign related party with respect to DC. Under paragraph (d)(2)(ii)(C)(*2*) of this section, FP2 is also not treated as the end user of the patent covering the right to use the manufacturing process and the manufacturing know-how used to implement the manufacturing method or process because FP2 is using that intangible property to manufacture product Z for FP. DC2 is also not treated as the end user of the patent covering the right to use the manufacturing process and the manufacturing know-how used to implement the manufacturing method or process because DC2 does not use the patent or know-how in manufacturing. DC2, FP, and FP2 are not the end users of the remaining intangible property under paragraph (d)(2)(ii)(A) of this section because that intangible property is used in the sale of general property (the sale of product Z) and DC2, FP, and FP2 are not the end users of that general property. The unrelated party customers that purchase the Product Z from DC2 and FP are the end users (as defined in § 1.250(b)-3(b)(2) and paragraph (d)(2)(ii)(A) of this section) of the intangible property because those customers are the persons that ultimately use or consume product Z.

(B) ***Foreign use.*** Based on the sales of product Z to customers located within and outside the United States, $72x of the royalties FP pays DC for rights to the licensed intangible property during the taxable year (($120x of revenue from sales to customers located outside the United States divided by $200x total worldwide sales revenue) × $120x total royalties) qualifies as income earned from the sale of intangible property for a foreign use under paragraph (d)(2) of this section and therefore such portion is a FDDEI sale. As a result, $72x of royalties is included in DC's gross FDDEI for the taxable year.

(*8*) ***Example 8: Deemed sale in exchange for contingent payments under section 367(d)*** —

(*i*) ***Facts.*** DC owns 100 percent of the stock of FP, a foreign related party with respect to DC. FP manufactures and sells product A. For the taxable year, DC contributes to FP exclusive worldwide rights to patents, trademarks, know-how, customer lists, and goodwill and going concern value (collectively, intangible property) related to product A in an exchange described in section 351. DC is required to report an annual income inclusion on its Federal income tax return based on the productivity, use, or disposition of the contributed intangible property under section 367(d). DC includes a percentage of FP's revenue in its gross income under section 367(d) each year. In the current taxable year, FP earns $1,000x of revenue from sales of product A. Based on reliable sales

records kept by FP for the taxable year, $300x of FP's revenue is earned from sales of product A to customers within the United States, and $700x of its revenue is earned from sales of product A to customers outside the United States.

(*ii*) ***Analysis.*** DC's deemed sale of the intangible property to FP in exchange for payments contingent upon the productivity, use, or disposition of the intangible property related to product A under section 367(d) is a sale for purposes of section 250 and this section. See § 1.250(b)-3(b)(16). Based on FP's sales records for the taxable year, 70 percent of DC's deemed sale to FP is for a foreign use, and 70 percent of DC's income inclusion under section 367(d) derived with respect to such portion is included in DC's gross FDDEI for the taxable year.

(*9*) ***Example 9: License of intangible property followed by a sale of general property in which the intangible property is embedded; unrelated parties*** —

(*i*) ***Facts.*** DC owns the worldwide rights to a patent on a silicon chip used in computers, tablets, and smartphones. The patent does not qualify as a manufacturing method or process (as defined in paragraph (d)(2)(ii)(C)(*3*) of this section). DC licenses the worldwide rights to the patent to FP in exchange for annual royalties of 30 percent of revenue from sales of the silicon chips. During the taxable year, FP manufactures silicon chips protected by the patent and sells all of those chips to FP2 for $1,000x. FP2 also purchases similar silicon chips from other suppliers. FP2 uses the silicon chips in computers, tablets, smartphones, and motherboards that FP2 manufactures in country X and sells to its customers located within the United States and foreign countries. For purposes of this example, FP2's manufacturing qualifies as subjecting the silicon chips to manufacture, assembly, or other processing outside the United States as provided in paragraph (d)(1)(iii) of this section.

(*ii*) ***Analysis.*** FP is not the end user or treated as an end user (as defined in § 1.250(b)-3(b)(2) and paragraph (d)(2)(ii)(A) of this section) because FP is not the unrelated party recipient of the general property in which the patent is embedded, and the patent does not qualify as a manufacturing method or process. Under paragraph (d)(2)(ii)(A) of this section, revenue from royalties paid for the patent is earned from end users outside the United States to the extent the sale of the general property is for a foreign use under paragraph (d)(1) of this section. Because FP2 is subjecting the silicon chips to manufacture, assembly, or other processing outside the United States, the revenue from royalties FP pays to DC qualifies for foreign use based on the location of FP2's manufacturing and qualifies as a FDDEI sale. As a result, the entire $300x of annual royalties paid by FP to DC during the taxable year is included in DC's gross FDDEI for the taxable year.

(*10*) ***Example 10: License of intangible property followed by a sale of general property in which the intangible property is embedded; related parties*** —

(*i*) ***Facts.*** The facts are the same as in paragraph (d)(2)(iv)(B)(*9*)(*i*) of this section (the facts in *Example 9*), except that FP and FP2 are foreign related parties with respect to DC. FP2 sells and ships computers, tablets, and smartphones it

manufactures with the silicon chips it purchases from FP to unrelated party wholesalers located within and outside the United States. The wholesalers within the United States only sell to retailers located within the United States and the wholesalers outside the United States only sell to retailers located outside the United States. The retailers within the United States only sell to customers located within the United States and the retailers located outside the United States only sell to customers located outside the United States. FP2 earns $15,000x of revenue from sales to unrelated party wholesalers located outside the United States and $10,000x of revenue from sales to unrelated party wholesalers located within the United States. FP2 also sells and ships motherboards with the silicon chips it purchases from FP to unrelated party manufacturers located outside the United States. FP2 does not sell motherboards with the silicon chips it purchases from FP to unrelated party manufacturers located within the United States. FP2 earns $5,000x of revenue from the sales of these motherboards to manufacturers located outside the United States. For purposes of this example, these manufacturers subject the motherboards to manufacture, assembly, or other processing outside the United States as provided in paragraph (d)(1)(iii) of this section.

(*ii*) ***Analysis.*** FP is not the end user or treated as an end user (as defined in § 1.250(b)-3(b)(2) and paragraph (d)(2)(ii)(A) of this section) of the intangible property because FP is not the end user of the general property in which the patent is embedded (the silicon chips). FP2 is also not the end user (as defined in § 1.250(b)-3(b)(2) and paragraph (d)(2)(ii)(A) of this section) of the intangible property because FP2 is not the end user of the silicon chips. Under paragraph (d)(2)(ii)(A) of this section, the customers of the retailers that purchase from the unrelated party wholesalers are the end users. Because the wholesalers located outside the United States only sell to retailers located outside the United States that sell to end users located outside the United States, the location of the wholesalers is a reliable basis for determining the location of the end users. Revenue from royalties paid for the patent is earned from end users outside the United States to the extent the sale of the general property is for a foreign use under paragraph (d)(1) of this section. A portion of the sales to the unrelated party wholesalers qualify as foreign use under paragraph (d)(1) of this section and the sales to the unrelated party manufacturers qualify as foreign use under paragraph (d)(1)(iii) of this section. Accordingly, revenue from royalties FP pays to DC is from a FDDEI sale to the extent of such sales to the unrelated party manufacturers and such portion of sales to unrelated party wholesalers that qualify for foreign use. As a result, $200x of annual royalties paid by FP to DC during the taxable year ((($15,000x of sales to wholesalers located outside the United States plus $5,000x of sales to manufacturers located outside the United States) divided by $30,000x total sales) × $300x) is included in DC's gross FDDEI for the taxable year.

(*11*) ***Example 11: License of intangible property followed by a sale of general property that incorporates the intangible property; unrelated parties with manufacturing within the United States —***

(*i*) ***Facts.*** The facts are the same as in paragraph (d)(2)(iv)(B)(*9*)(*i*) of this section (the facts in *Example 9*), except that FP2 manufactures its computers, tablets, smartphones, and motherboards in the United States.

(*ii*) ***Analysis.*** FP is not the end user or treated as an end user (as defined in § 1.250(b)-3(b)(2) and paragraph (d)(2)(ii)(A) of this section) because FP is not the unrelated party recipient of the general property in which the patent is embedded (the silicon chips) and the patent does not qualify as a manufacturing method or process. Under paragraph (d)(2)(ii)(A) of this section, revenue from royalties paid for the patent is earned from end users outside the United States to the extent the sale of the general property is for a foreign use under paragraph (d)(1) of this section. Because FP2 is subjecting the silicon chips to manufacture, assembly, or other processing within the United States, the revenue from royalties FP pays to DC does not qualify as foreign use based on the location of FP2's manufacturing and therefore does not qualify as a FDDEI sale. As a result, none of the $300x of annual royalties paid by FP to DC during the taxable year is included in DC's gross FDDEI for the taxable year.

(*12*) ***Example 12: License of intangible property used to provide a service*** —

(*i*) ***Facts.*** DC licenses to FP worldwide rights to the copyrights on movies in exchange for an annual royalty of $100x. FP also licenses copyrights on movies from persons other than DC. FP provides a streaming service that meets the definition of an electronically supplied service in § 1.250(b)-5(c)(5) to its customers within the United States and foreign countries. FP's streaming service provides its customers a catalog of movies to choose to stream. These movies include the copyrighted movies FP licenses from DC. FP does not provide DC with data showing how much revenue FP earned from streaming services during the taxable year, even after DC requests that FP provide it with such information. DC also is unable to determine how much revenue FP earned from streaming services to customers within the United States from the data it has with respect to FP and publicly available data with respect to FP. However, DC's economic analysis of the revenue DC expected it could earn annually from use of the copyrights as part of determining the annual payments DC would receive from FP from the license of the copyrights supports a determination that $10,000x of revenue would be earned during the taxable year from customers worldwide, and that 40 percent of that revenue would be earned from customers located outside the United States. During an examination of DC's return for the taxable year, DC provides the IRS with data explaining the economic analysis, inputs, and results from its valuation of the copyrights used in determining the amount of annual payments agreed to by DC and FP.

(*ii*) ***Analysis.*** Under paragraph (d)(2)(ii)(B) of this section, FP's customers are the end users of the copyrights FP licenses from DC because FP uses those copyrights to provide the general service to FP's customers. Under paragraph (d)(2)(ii)(B) of this section, revenue from royalties paid for the copyrights is earned from end users outside the United States to the extent the service qualifies as a FDDEI service under § 1.250(b)-5. DC is allowed to use reliable economic analysis to estimate revenue earned by FP from streaming the licensed movies under paragraph (d)(2)(iii)(A) of this section because DC was

unable to obtain actual revenue earned by FP from use of the copyrights during the taxable year after reasonable efforts to obtain the actual revenue data. Based on DC's reliable economic analysis, $40x of the annual royalty payment to DC (0.40 × $100x total annual royalty payment) is included in DC's gross FDDEI for the taxable year.

(13) ***Example 13: License of intangible property used in research and development of other intangible property*** —

(*i*) ***Facts.*** DC owns a patent ("patent A") for an active pharmaceutical ingredient ("API") approved for treatment of disease A in the United States and in foreign countries. DC licenses to FP worldwide rights to patent A for an annual royalty of $100x. FP uses patent A in research and development of a new API for treatment of disease B. Patent A does not consist of a manufacturing method or process (as defined in paragraph (d)(2)(ii)(C)(*3*) of this section). FP's research and development is successful, resulting in FP obtaining both a patent for the new API for treatment of disease B and approval for use in the United States and foreign countries. FP does not earn any revenue from sales of finished pharmaceutical products containing the API during years 1 through 4 of the license of patent A. In year 5 of the license of patent A, FP earns $800x of revenue from sales of finished pharmaceutical products containing the API to customers located within the United States and $200x of revenue from sales to customers located in foreign countries.

(*ii*) ***Analysis.*** FP is not the end user (as defined in § 1.250(b)-3(b)(2) and paragraph (d)(2)(ii)(D) of this section) of patent A because FP is not the end user described in paragraph (d)(2)(ii)(A) of this section of the product in which the API that was developed from patent A is embedded. The unrelated party customers that purchase the finished pharmaceutical product from FP are the end users (as defined in § 1.250(b)-3(b)(2) and paragraph (d)(2)(ii)(D) of this section) because those customers are the end users described in paragraph (d)(2)(ii)(A) of this section of the pharmaceutical product in which the newly developed patent is embedded. During the taxable years that include years 1 through 4 of the license of patent A, FP earns no revenue from sales of the API to a foreign person for a foreign use. Under paragraph (d)(2)(ii)(D) of this section, none of the $100x annual royalty payments to DC for each of the tax years that include years 1 through 4 of the license of patent A is included in DC's gross FDDEI. Based on FP's sales of the API during the tax year that includes year 5 of the license of patent A, $20x of the annual royalty payment to DC ($200x of revenue from sales of API to customers located outside the United States divided by $1,000x total worldwide revenue earned from sales of the API) × $100x annual royalty) is included in DC's gross FDDEI for the taxable year.

(3) ***Foreign use substantiation for certain sales of property*** —

(i) ***In general.*** Except as provided in § 1.250(b)-3(f)(3) (relating to certain loss transactions), a sale of property described in paragraphs (d)(1)(ii)(C) of this section (foreign use for sale of general property for resale), (d)(1)(iii) of this section (foreign use for sale of general property subject to manufacturing, assembly, or processing outside the United States), or (d)(2) of this section

(foreign use for sale of intangible property) is a FDDEI transaction only if the taxpayer satisfies the substantiation requirements described in paragraphs (d)(3)(ii), (iii), or (iv) of this section, as applicable.

(ii) ***Substantiation of foreign use for resale.*** A seller satisfies the substantiation requirements with respect to a sale of property described in paragraph (d)(1)(ii)(C) of this section (sales of general property for resale) only if the seller maintains one or more of the following items—

(A) A binding contract that specifically limits subsequent sales to sales outside the United States;

(B) Proof that property is specifically designed, labeled, or adapted for a foreign market;

(C) Proof that the cost of shipping the property back to the United States relative to the value of the property makes it impractical that the property will be resold in the United States;

(D) Credible evidence obtained or created in the ordinary course of business from the recipient evidencing that property will be sold to an end user outside the United States (or, in the case of sales of fungible mass property, stating what portion of the property will be sold to end users outside the United States); or

(E) A written statement prepared by the seller containing the information described in paragraphs (d)(3)(ii)(E)(*1*) through (*7*) of this section corroborated by evidence that is credible and sufficient to support the information provided.

(*1*) The name and address of the recipient;

(*2*) The date or dates the property was shipped or delivered to the recipient;

(*3*) The amount of gross income from the sale;

(*4*) A full description of the property subject to resale;

(*5*) A description of the method of sales to the end users, such as direct sales by the recipient or sales by the recipient to retail stores;

(*6*) If known, a description of the end users; and

(*7*) A description of how the seller determined that property will be ultimately sold to an end user outside the United States (or, in the case of sales of fungible mass property, of how the taxpayer determined what portion of the property that will ultimately be sold to end users outside the United States).

(iii) ***Substantiation of foreign use for manufacturing, assembly, or other processing outside the United States.*** A seller satisfies the substantiation requirements with respect to a sale of property described in paragraph (d)(1)(iii) of this section (sales of general property subject to manufacturing, assembly, or other processing outside the United States) if the seller maintains one or more of the following items—

(A) Credible evidence that the property has been sold to a foreign unrelated party that is a manufacturer and such property generally cannot be sold to end users without being subject to a physical and material change (for example, the sale of raw materials that cannot be used except in a manufacturing process);

(B) Credible evidence obtained or created in the ordinary course of business from the recipient to support that the product purchased will be subject to manufacture, assembly, or other processing outside the United States within the meaning of paragraph (d)(1)(iii) of this section; or

(C) A written statement prepared by the seller containing the information described in paragraphs (d)(3)(iii)(C)(*1*) through (*7*) of this section corroborated by evidence that is credible and sufficient to support the information provided.

(*1*) The name and address of the manufacturer of the property;

(*2*) The date or dates the property was shipped or delivered to the recipient;

(*3*) The amount of gross income from the sale;

(*4*) A full description of the general property sold and the type or types of finished goods that will incorporate the general property the taxpayer sold;

(*5*) A description of the manufacturing, assembly, or other processing operations, including the location or locations of manufacture, assembly, or other processing; how the general property will be used in the finished good; and the nature of the finished good's manufacturing, assembly, or other processing operations as compared to the process used to make the general property used to make the finished good;

(*6*) A description of how the seller determined the general property was substantially transformed or the activities were substantial in nature within the meaning of paragraph (d)(1)(iii)(B) or (C) of this section, whichever the case may be; and,

(*7*) If the seller is relying on the rule described in paragraph (d)(1)(iii)(C) of this section (that the fair market value of the general property be no more than twenty percent of the fair market value when incorporated into the finished goods sold to end users), an explanation of how the seller satisfies the requirements in that paragraph.

(iv) ***Substantiation of foreign use of intangible property.*** A taxpayer satisfies the substantiation requirements with respect to a sale of property described in paragraph (d)(2) of this section (foreign use for intangible property) if the seller maintains one or more of the following items—

(A) A binding contract that specifically provides that the intangible property can be exploited solely outside the United States;

(B) Credible evidence obtained or created in the ordinary course of business from the recipient establishing the portion of its revenue for a taxable year that was derived from exploiting the intangible property outside the United States; or

(C) A written statement prepared by the seller containing the information described in paragraphs (d)(3)(iv)(C)(*1*) through (*9*) of this section corroborated by evidence that is credible and sufficient to support the information provided.

(*1*) The name and address of the recipient;

(*2*) The date of the sale;

(*3*) The amount of gross income from the sale;

(4) A description of the intangible property;

(5) An explanation of how the intangible property will be used by the recipient (embedded in general property, used to provide a service, used as a manufacturing method or process, or used in research and development);

(6) An explanation of how the seller determined what portion of the sale is a FDDEI sale;

(7) If the intangible property consists of a manufacturing method or process, an explanation of how the elements of paragraph (d)(2)(ii)(C) of this section are satisfied;

(8) If the sale is for periodic payments, an explanation of how the seller determined the extent of foreign use based on the actual revenue earned by the recipient from the use of the intangible property for the taxable year in which a periodic payment is received as required by paragraph (d)(2)(iii)(A) of this section, or, if actual revenue cannot be obtained after reasonable efforts, an explanation of why actual revenue is unavailable and how the seller determined the extent of foreign use based on estimated revenue; and

(9) If the sale is for a lump sum, an explanation of how the seller determined the total net present value of revenue it expected to earn from the exploitation of the intangible property outside the United States and the total net present value of revenue it expected to earn from the exploitation of the intangible property as required by paragraph (d)(2)(iii)(B) of this section.

(v) ***Examples.*** The following examples illustrate the application of this paragraph (d)(3).

(A) ***Assumed facts.*** The following facts are assumed for purposes of the examples—

(1) DC is a domestic corporation.

(2) FP is a foreign person located within Country A that is a foreign unrelated party with respect to DC.

(3) All of DC's income is DEI.

(4) Except as otherwise provided, the substantive rule for foreign use as described in paragraphs (d)(1) and (2) of this section are satisfied.

(B) ***Examples*** —

(1) ***Example 1: Substantiation by seller of sale of products to distributor outside the United States with taxpayer statement and corroborating evidence*** —

(i) ***Facts.*** DC sells smartphones to FP, a distributor of electronics that sells property to end users. As part of their regular business process and pursuant to DC's terms and conditions of sales, DC issues commercial invoices to FP that contain a condition that any subsequent sales must be to end users outside the United States. At or near the time of the FDII filing date, DC prepares a statement containing the information required in paragraph (d)(3)(ii)(E) of this section. During an examination of DC's return for the taxable year, the IRS

requests substantiation information of foreign use. DC submits the commercial invoices issued to FP as supporting information that FP's customers are end users outside the United States and all other corroborating evidence to the IRS.

(*ii*) ***Analysis.*** DC's sale to FP is a sale of general property for resale subject to the substantiation requirements of paragraph (d)(3)(ii) of this section. DC satisfies the substantiation requirement by providing the statement that satisfies the requirements of paragraph (d)(3)(ii)(E) of this section. The commercial invoices issued pursuant to the terms and conditions of sales sufficiently corroborate DC's statement that the smartphones will ultimately be sold to end users outside of the United States.

(2) ***Example 2: Substantiation of sale of products to distributor outside the United States with recipient provided information*** —

(*i*) ***Facts.*** DC sells cameras to FP, a distributor of electronics that sells property to end users outside the United States. FP issues sales invoices to its end users. The invoices contain detailed information about the nature of the subsequent sales of the cameras and the location of the end users for value added tax (VAT) purposes. DC is able to obtain copies of FP's VAT invoices with respect to the camera sales that were maintained and submitted pursuant to Country A law. Rather than prepare a statement described in paragraph (d)(3)(ii)(E) of this section, DC submits FP's invoices to the IRS as substantiation of foreign use.

(*ii*) ***Analysis.*** DC's sale to FP is a sale of general property for resale subject to the substantiation requirements of paragraph (d)(3)(ii) of this section. DC satisfies the substantiation requirements by providing the invoices that satisfy the requirements of paragraph (d)(3)(ii)(D) of this section. The VAT invoices issued by FP pursuant to Country A law constitute credible evidence from FP that ultimate sales are to end users located outside the United States.

(e) ***Sales of interests in a disregarded entity.*** Under Federal income tax principles, the sale of any interest in an entity that is disregarded for Federal income tax purposes is considered the sale of the assets of that entity, and this section applies to the sale of each such asset that is general property or intangible property for purposes of determining whether such sale qualifies as a FDDEI sale.

(f) ***FDDEI sales hedging transactions*** —

(1) ***In general.*** The amount of a corporation's or partnership's gross FDDEI from FDDEI sales of general property in a taxable year is increased by any gain, or decreased by any loss, taken into account in that taxable year with respect to any FDDEI sales hedging transactions (determined by taking into account the applicable Federal income tax accounting rules, including § 1.446-4).

(2) ***FDDEI sales hedging transaction*** —The term *FDDEI sales hedging transaction* means a transaction that meets the requirements of § 1.1221-2(a) through (e) and that is identified in accordance with the requirements of § 1.1221-2(f), except that the transaction must manage risk of price changes or currency fluctuations with respect to ordinary property, as provided in § 1.1221-2(b)(1), and the ordinary property whose price risk is being hedged must be general property that is sold in a FDDEI sale.

[T.D. 9901, 85 FR 43080, July 15, 2020, as amended by 85 FR 60910, Sept. 29, 2020; 85 FR 68249, Oct. 28, 2020]

§ 1.250(b)-5 Foreign-derived deduction eligible income (FDDEI) services.

(a) ***Scope.*** This section provides rules for determining whether a provision of a service is a FDDEI service. Paragraph (b) of this section defines a FDDEI service. Paragraph (c) of this section provides definitions relevant for determining whether a provision of a service is a FDDEI service. Paragraph (d) of this section provides rules for determining whether a general service is provided to a consumer located outside the United States. Paragraph (e) of this section provides rules for determining whether a general service is provided to a business recipient located outside the United States. Paragraph (f) of this section provides rules for determining whether a proximate service is provided to a recipient located outside the United States. Paragraph (g) of this section provides rules for determining whether a service is provided with respect to property located outside the United States. Paragraph (h) of this section provides rules for determining whether a transportation service is provided to a recipient, or with respect to property, located outside the United States.

(b) ***Definition of FDDEI service.*** Except as provided in § 1.250(b)-6(d), the term *FDDEI service* means a provision of a service described in any one of paragraphs (b)(1) through (5) of this section. If only a portion of a service is treated as provided to a person, or with respect to property, outside the United States, the provision of the service is a FDDEI service only to the extent of the gross income derived with respect to such portion.

(1) The provision of a general service to a consumer located outside the United States (as determined under paragraph (d) of this section).

(2) The provision of a general service to a business recipient located outside the United States (as determined under paragraph (e) of this section).

(3) The provision of a proximate service to a recipient located outside the United States (as determined under paragraph (f) of this section).

(4) The provision of a property service with respect to tangible property located outside the United States (as determined under paragraph (g) of this section).

(5) The provision of a transportation service to a recipient, or with respect to property, located outside the United States (as determined under paragraph (h) of this section).

(c) ***Definitions.*** This paragraph (c) provides definitions that apply for purposes of this section and § 1.250(b)-6.

(1) ***Advertising service.*** The term *advertising service* means a general service that consists primarily of transmitting or displaying content (including via the internet) with a purpose to generate revenue based on the promotion of a product or service.

(2) ***Benefit.*** The term *benefit* has the meaning set forth in § 1.482-9(l)(3).

(3) ***Business recipient.*** The term *business recipient* means a recipient other than a consumer and includes all related parties of the recipient. However, if the recipient is a related party of the taxpayer, the term does not include the taxpayer.

(4) ***Consumer.*** The term *consumer* means a recipient that is an individual that purchases a general service for personal use.

(5) ***Electronically supplied service.*** The term *electronically supplied service* means, with respect to a general service other than an advertising service, a service that is delivered primarily over the internet or an electronic network and for which value of the service to the end user is derived

primarily from automation or electronic delivery. Electronically supplied services include the provision of access to digital content (as defined in § 1.250(b)-3), such as streaming content; on-demand network access to computing resources, such as networks, servers, storage, and software; the provision or support of a business or personal presence on a network, such as a website or a web page; online intermediation platform services; services automatically generated from a computer via the internet or other network in response to data input by the recipient; and similar services. Electronically supplied services do not include services that primarily involve the application of human effort by the renderer (not considering the human effort involved in the development or maintenance of the technology enabling the electronically supplied services). Accordingly, electronically supplied services do not include certain services (such as legal, accounting, medical, or teaching services) involving primarily human effort that are provided electronically.

(6) ***General service.*** The term *general service* means any service other than a property service, proximate service, or transportation service. The term *general service* includes advertising services and electronically supplied services.

(7) ***Property service.*** The term *property service* means a service, other than a transportation service, provided with respect to tangible property, but only if substantially all of the service is performed at the location of the property and results in physical manipulation of the property such as through manufacturing, assembly, maintenance, or repair. Substantially all of a service is performed at the location of property only if the renderer spends more than 80 percent of the time providing the service at or near the location of the property.

(8) ***Proximate service.*** The term *proximate service* means a service, other than a property service or a transportation service, provided to a consumer or business recipient, but only if substantially all of the service is performed in the physical presence of the consumer or, in the case of a business recipient, substantially all of the service is performed in the physical presence of persons working for the business recipient such as employees, contractors, or agents. Substantially all of a service is performed in the physical presence of a consumer or persons working for a business recipient only if the renderer spends more than 80 percent of the time providing the service in the physical presence of such persons.

(9) ***Transportation service.*** The term *transportation service* means a service to transport a person or property using aircraft, railroad rolling stock, vessel, motor vehicle, or any other mode of transportation. Transportation services include freight forwarding and similar services.

(d) ***General services provided to consumers*** —

(1) ***In general.*** A general service is provided to a consumer located outside the United States if the consumer of a general service resides outside of the United States when the service is provided. Except as provided in paragraph (d)(2) of this section, if the renderer does not have or cannot after reasonable efforts obtain the consumer's location of residence when the service is provided, the consumer of a general service is treated as residing at the location of the consumer's billing address. However, the rule in the preceding sentence allowing for the use of a consumer's billing address does not apply if the renderer knows or has reason to know that the consumer does not reside outside the United States. A renderer has reason to know that the consumer does not reside outside the United States if the information received as part of the provision of the service indicates that the consumer resides in the United States and the renderer fails to obtain evidence establishing that the consumer resides outside the United States.

(2) ***Electronically supplied services.*** The consumer of an electronically supplied service is deemed to reside at the location of the device used to receive the service. Such location may be determined based on the location of the IP address when the electronically supplied service is provided. However, if the renderer does not have or cannot after reasonable efforts obtain the consumer's device location, then the location of the device is treated as being outside the United States if the renderer's billing address for the consumer is outside of the United States, subject to the knowledge and reason to know standards described in paragraph (d)(1) of this section.

(3) ***Example.*** The following example illustrates the application of paragraph (d) of this section.

(i) ***Facts.*** DC, a domestic corporation, provides a streaming movie service on its website. The terms of the service allow consumers to watch movies over the internet. The terms of the service permit the consumer to view the movies for personal use, but convey no ownership of movies to the consumers.

(ii) ***Analysis.*** The streaming service is a FDDEI service under paragraph (d)(1) of this section to the extent that the service is provided to consumers that reside outside the United States. The service that DC provides is a general service, provided to consumers that is an electronically supplied service under paragraph (c)(5) of this section. Therefore, the consumers are deemed to reside at the location of the devices used to receive the service under paragraph (d)(2) of this section. However, if the renderer cannot reasonably obtain the consumers' device location (such as IP addresses), the device location is treated as being outside the United States if their billing addresses are outside the United States. See § 1.250(b)-4(d)(1)(v)(B)(7) for an example of digital content provided to consumers as a sale rather than a service.

(e) ***General services provided to business recipients*** —

(1) ***In general.*** A general service is provided to a business recipient located outside the United States to the extent that the service confers a benefit on the business recipient's operations outside the United States under the rules in paragraph (e)(2) of this section. The location of residence, incorporation, or formation of a business recipient is not relevant to determining the location of the business recipient's operations that benefit from a general service.

(2) ***Determination of business operations that benefit from the service*** —

(i) ***In general.*** Except as otherwise provided in paragraph (e)(2)(ii) and (iii) of this section, the determination of which operations of the business recipient located outside the United States benefit from a general service, and the extent to which such operations benefit, is made under the principles of § 1.482-9 by treating the taxpayer as one controlled taxpayer, the portions of the business recipient's operations within the United States (if any) that may benefit from the general service as one or more controlled taxpayers, and the portions of the business recipient's operations outside the United States (if any) that may benefit from the general service, each as one or more controlled taxpayers. The extent to which a business recipient's operations within or outside of the United States are treated as one or more separate controlled taxpayers is determined under any reasonable method (for example, separate controlled taxpayers may be determined on a per entity or per country basis, or by aggregating all of the business recipient's operations outside the United States as one controlled taxpayer). The determination of the amount of the benefit conferred on the business recipient's operations that are treated as controlled taxpayers is determined under a reasonable method consistent with the principles of § 1.482-9(k), treating the renderer's gross income from the services provided to the business recipient as if it were a “cost” as that term is used in § 1.482-9(k).

Reasonable methods may include, for example, allocations based on time spent or costs incurred by the renderer or sales, profits, or assets of the business recipient. The determination is made when the service is provided based on information obtained from the business recipient or on the renderer's own records (such as time spent working with the business recipient's offices located outside the United States).

(ii) ***Advertising services.*** With respect to advertising services, the operations of the business recipient that benefit from the advertising service provided by the renderer are deemed to be located where the advertisements are viewed by individuals. If advertising services are displayed via the internet, the advertising services are viewed at the location of the device on which the advertisements are viewed. For this purpose, the IP address may be used to establish the location of a device on which an advertisement is viewed.

(iii) ***Electronically supplied services.*** With respect to an electronically supplied service, the operations of the business recipient that benefit from that service provided by the renderer are deemed to be located where the business recipient (including employees, contractors, or agents) accesses or otherwise uses the service. If it cannot be determined whether the location is within or outside the United States (such as where the location of access cannot be reliably determined using the location of the IP address of the device used to receive the service), and the gross receipts from all services with respect to the business recipient are in the aggregate less than $50,000 for the renderer's taxable year, the operations of the business recipient that benefit from the service provided by the renderer are deemed to be located at the recipient's billing address; otherwise, the operations of the business recipient that benefit are deemed to be located in the United States. If the renderer provides a service that is partially an electronically supplied service and partially a general service that is not an electronically supplied service (such as a service that is performed partially online and partially by mail or in person), the location of the business recipient is determined using the rule for electronically supplied services in this paragraph (e)(2)(iii) if the primary purpose of the service is to provide electronically supplied services; otherwise, the rule for general services described in paragraph (e)(2)(i) of this section applies.

(3) ***Identification of business recipient's operations*** —

(i) ***In general.*** For purposes of this paragraph (e), except with respect to advertising services and electronically supplied services, a business recipient is treated as having operations where it maintains an office or other fixed place of business. In general, an office or other fixed place of business is a fixed facility, that is, a place, site, structure, or other similar facility, through which the business recipient engages in a trade or business. For purposes of making the determination in this paragraph (e)(3)(i), the renderer may make reliable assumptions based on the information available to it.

(ii) ***Advertising services and electronically supplied services.*** The location of a business recipient that receives advertising services or electronically supplied services will be determined under the rules of paragraph (e)(2)(ii) and (iii) of this section, respectively, even if the business recipient does not maintain an office or other fixed place of business in the locations where the advertisements are viewed (in the case of advertising services) or where the general service is accessed (in the case of electronically supplied services).

(iii) ***No office or fixed place of business.*** In the case of general services other than advertising services and other than electronically supplied services, if the business recipient does not have an identifiable office or fixed place of business (including the office of a principal manager or managing owner), the business recipient is deemed to be located at its primary billing address.

(4) ***Substantiation of the location of a business recipient's operations outside the United States.*** Except as provided in § 1.250(b)-3(f)(3) (relating to certain loss transactions), a general service provided to a business recipient is treated as a FDDEI service only if the renderer substantiates its determination of the extent to which the service benefits a business recipient's operations outside the United States. A renderer satisfies the preceding sentence if the renderer maintains one or more of the following items—

(i) Credible evidence obtained or created in the ordinary course of business from the business recipient establishing the extent to which operations of the business recipient outside the United States benefit from the service; or

(ii) A written statement prepared by the renderer containing the information described in paragraphs (e)(4)(ii)(A) through (F) of this section corroborated by evidence that is credible and sufficient to support the information provided.

(A) The name of the business recipient;

(B) The date or dates of the service;

(C) The amount of gross income from the service;

(D) A full description of the service;

(E) A description of how the service will benefit the business recipient; and

(F) An explanation of how the renderer determined what portion of the service will benefit the business recipient's operations located outside the United States.

(5) ***Examples.*** The following examples illustrate the application of this paragraph (e).

(i) ***Assumed facts.*** The following facts are assumed for purposes of the examples—

(A) DC is a domestic corporation.

(B) A and R are not related parties of DC.

(C) Except as otherwise provided, the substantiation requirements described in paragraph (e)(4) of this section are satisfied.

(ii) ***Examples*** —

(A) ***Example 1: Determination of business operations that benefit from the service*** —

(*1*) ***Facts.*** For the taxable year, DC provides a consulting service to R, a company that operates restaurants within and outside of the United States, in exchange for $150x. Fifty percent of the sales earned by R and its related parties are from customers located outside of the United States. However, the consulting service that DC provides relates specifically to a single chain of fast food restaurants that R operates. Sales information that R provides to DC indicates that 70 percent of the sales of the fast food restaurant chain are from locations within the United States

and 30 percent of the sales are from Country X. DC determines that the use of sales is a reasonable method under the principles of § 1.482-9(k) to allocate the benefit of the consulting service among R's fast food operations.

(2) ***Analysis.*** Under paragraph (e)(1) of this section, DC's service is provided to a person located outside the United States to the extent that DC's service confers a benefit to R's operations outside the United States. Under paragraph (e)(2)(i) of this section, DC, R's fast food operations within the United States, and R's fast food operations in Country X, are treated as if they were controlled taxpayers because only these operations may benefit from DC's service. The principles of § 1.482-9(k) apply to determine the amount of DC's service that benefits R's operations outside the United States. DC's gross income is allocated based on the sales of the fast food chain of restaurants that benefits from DC's service because using sales is a reasonable method. Therefore, 30 percent of the provision of the consulting service is treated as the provision of a service to a person located outside the United States and a FDDEI service under paragraph (b)(2) of this section. Accordingly, $45x ($150x × 0.30) of DC's gross income from the provision of the consulting service is included in DC's gross FDDEI for the taxable year.

(B) ***Example 2: Determination of business operations that benefit from the service; alternative facts —***

(*1*) ***Facts.*** The facts are the same as in paragraph (e)(5)(ii)(A)(*1*) of this section (the facts in *Example 1*), except that DC provides an information technology service to R that benefits R's entire business. DC determines that the use of sales is a reasonable method under the principles of § 1.482-9(k) to allocate the benefit of the information technology service among R's entire business.

(2) ***Analysis.*** DC, R's operations within the United States, and R's operations in Country X, are treated as if they were controlled taxpayers because the service that DC provides relates to R's entire business. DC's gross income is allocated based on sales of the entire business because using sales is a reasonable method to determine the amount of DC's service that benefits R's operations outside the United States under the principles of § 1.482-9(k). Therefore, 50 percent of the provision of the information technology service is treated as a service to a person located outside the United States and a FDDEI service under paragraph (b)(2) of this section. Accordingly, $75x ($150x × 0.50) of DC's gross income from the provision of the information technology service is included in DC's gross FDDEI for the taxable year.

(C) ***Example 3: Advertising services —***

(*1*) ***Facts.*** The facts are the same as in paragraph (e)(5)(ii)(A)(*1*) of this section (the facts in *Example 1*), except that DC provides an advertising service to R. DC displays advertisements for R's restaurant chain on its social media website and smartphone application. Based on the IP addresses of the devices on which the advertisements are viewed, 20 percent of the views of the advertisements were from devices located outside the United States.

(2) ***Analysis.*** Because the service that DC provides is an advertising service, under paragraph (e)(2)(i) of this section, as modified by paragraph (e)(2)(ii) of this section, R's operations that benefit from DC's advertising service are deemed to be where the

advertisements are viewed. Therefore, 20 percent of the provision of the advertising service is treated as a service to a person located outside the United States and a FDDEI service under paragraph (b)(2) of this section. Accordingly, $30x ($150x × 0.20) of DC's gross income from the provision of the advertising service is included in DC's gross FDDEI for the taxable year.

(D) ***Example 4: No reliable information about which operations benefit from the service or publicly available information*** —

(1) ***Facts.*** For the taxable year, DC provides a consulting service to R, a business-facing company that does not advertise its business. All of DC's interaction with R is through R's employees that report to an office in the United States. Statements made by R's employees indicate that the service will benefit R's business operations located within and outside the United States, but do not provide information that would allow DC to reliably determine the extent to which its service will confer a benefit on R's business operations located outside the United States.

(2) ***Analysis.*** DC is unable to determine the extent to which its service will confer a benefit on R's business operations located outside the United States under paragraph (e)(2)(i) of this section. Accordingly, DC cannot substantiate a determination of the extent to which the service benefits a business recipient's operations outside the United States under paragraph (e)(4) of this section. Therefore, no portion of DC's service is a FDDEI service.

(E) ***Example 5: Electronically supplied services that are accessed by the business recipient's employees*** —

(1) ***Facts.*** DC provides payroll services for R. As part of this service, DC maintains a website through which R can enter payroll information for its employees and through which R's employees can enter and change their personal information. DC also causes R's employees' paychecks to be directly deposited into their bank accounts and pays R's employment taxes on R's behalf. The primary purpose of the service is to pay R's employees. R has 100 user accounts that access DC's website. Sixty of the user accounts that access DC's website access the website from devices that are located outside the United States and forty of the user accounts access the website from devices that are located inside the United States.

(2) ***Analysis.*** Under paragraph (e)(1) of this section, DC's service is provided to a person located outside the United States to the extent that DC's service confers a benefit to R's operations outside the United States. The service that DC provides to R is an electronically supplied service under paragraph (c)(5) of this section. Accordingly, under paragraph (e)(2)(i) of this section, as modified by paragraph (e)(2)(iii) of this section, R's operations that benefit from DC's services are deemed to be located where R accesses the service, which is where R's employees access the website. See paragraph (e)(2)(iii) of this section. Accordingly, the portion of the payroll service that is treated as a service to a person located outside the United States and a FDDEI service under paragraph (b)(2) of this section is determined based on the extent to which the locations where R accesses the website are located outside the United States. Because 60 percent (60/100) of user accounts access DC's website from

locations outside the United States, 60 percent of the provision of the payroll service is treated as a service to a person located outside the United States and a FDDEI service under paragraph (b)(2) of this section.

(F) ***Example 6: Electronically supplied services that are accessed by the business recipient's customers*** —

(1) ***Facts.*** DC maintains an inventory management website for R, a company that sells consumer goods online. R's offices and all of its employees, who use the website, are located in the United States, but R sells its products to customers both within and outside the United States.

(2) ***Analysis.*** Under paragraph (e)(1) of this section, DC's service is provided to a person located outside the United States to the extent that DC's service confers a benefit to R's operations outside the United States. The service that DC provides to R is an electronically supplied service under paragraph (c)(5) of this section. Accordingly, under paragraph (e)(2)(i) of this section, as modified by paragraph (e)(2)(iii) of this section, R's operations that benefit from DC's services are deemed to be located where the service is accessed by employees. Therefore, none of the provision of the inventory management website is treated as a service to a person located outside the United States and none is a FDDEI service under paragraph (b)(2) of this section.

(G) ***Example 7: Service provided to a domestic person*** —

(1) ***Facts.*** A, a domestic corporation that operates solely in the United States, enters into a services agreement with R, a company that operates solely outside the United States. Under the agreement, A agrees to perform a consulting service for R. A hires DC to provide a service to A that A will use in the provision of a consulting service to R.

(2) ***Analysis.*** Because DC provides a service to A, a person located within the United States, DC's provision of the service to A is not a FDDEI service under paragraph (b)(2) of this section, even though the service is used by A in providing a service to R, a person located outside the United States. See also section 250(b)(5)(B)(ii). However, A's provision of the consulting service to R may be a FDDEI service, in which case A's gross income from the provision of such service would be included in A's gross FDDEI.

(f) ***Proximate services.*** A proximate service is provided to a recipient located outside the United States if the proximate service is performed outside the United States. In the case of a proximate service performed partly within the United States and partly outside of the United States, a proportionate amount of the service is treated as provided to a recipient located outside the United States corresponding to the portion of time the renderer spends providing the service outside of the United States.

(g) ***Property services*** —

(1) ***In general.*** Except as provided in paragraph (g)(2) of this section, a property service is provided with respect to tangible property located outside the United States only if the property is located outside the United States for the duration of the period the service is performed.

(2) ***Exception for services provided with respect to property temporarily in the United States.*** A property service is deemed to be provided with respect to tangible property located outside the United States if the following conditions are satisfied—

(i) The property is temporarily in the United States for the purpose of receiving the property service;

(ii) After the completion of the service, the property will be primarily hangared, stored, or used outside the United States;

(iii) The property is not used to generate revenue in the United States at any point during the duration of the service; and

(iv) The property is owned by a foreign person that resides or primarily operates outside the United States.

(h) ***Transportation services.*** Except as provided in this paragraph (h), a transportation service is provided to a recipient, or with respect to property, located outside the United States only if both the origin and the destination of the service are outside of the United States. However, in the case of a transportation service provided to a recipient, or with respect to property, where either the origin or the destination of the service is outside of the United States, but not both, then 50 percent of the gross income from the transportation service is considered derived from services provided to a recipient, or with respect to property, located outside the United States.

[T.D. 9901, 85 FR 43080, July 15, 2020, as amended by 85 FR 60910, Sept. 29, 2020; 85 FR 68249, Oct. 28, 2020; T.D. 9959, 87 FR 324, Jan. 4, 2022]

§ 1.250(b)-6 Related party transactions.

(a) ***Scope.*** This section provides rules for determining whether a sale of property or a provision of a service to a related party is a FDDEI transaction. Paragraph (b) of this section provides definitions relevant for determining whether a sale of property or a provision of a service to a related party is a FDDEI transaction. Paragraph (c) of this section provides rules for determining whether a sale of general property to a foreign related party is a FDDEI sale. Paragraph (d) of this section provides rules for determining whether the provision of a general service to a business recipient that is a related party is a FDDEI service.

(b) ***Definitions.*** This paragraph (b) provides definitions that apply for purposes of this section.

(1) ***Related party sale.*** The term *related party sale* means a sale of general property to a foreign related party. See § 1.250(b)-1(e)(3)(ii)(D) (*Example 4*) for an illustration of a related party sale in the case of a seller that is a partnership.

(2) ***Related party service.*** The term *related party service* means a provision of a general service to a business recipient that is a related party of the renderer and that is described in § 1.250(b)-5(b)(2) without regard to paragraph (d) of this section.

(3) ***Unrelated party transaction.*** The term *unrelated party transaction* means, with respect to property purchased by a foreign related party (the "purchased property") in a related party sale from a seller—

(i) A sale of the purchased property by the foreign related party in the ordinary course of its business to a foreign unrelated party with respect to the seller;

(ii) A sale of property by the foreign related party to a foreign unrelated party with respect to the seller, if the purchased property is a constituent part of the property sold to the foreign unrelated party;

(iii) A sale of property by the foreign related party to a foreign unrelated party with respect to the seller, if the purchased property is not a constituent part of the product sold to the foreign unrelated party but rather is used in connection with producing the property sold to the foreign unrelated party; or

(iv) A provision of a service by the foreign related party to a foreign unrelated party with respect to the seller, if the purchased property was used in connection with the provision of the service.

(c) *Related party sales* —

(1) *In general.* A related party sale of general property is a FDDEI sale only if the requirements described in either paragraph (c)(1)(i) or (ii) of this section are satisfied with respect to the related party sale. This paragraph (c) does not apply in determining whether a sale of intangible property to a foreign related party is a FDDEI sale.

(i) *Sale of property in an unrelated party transaction.* A related party sale is a FDDEI sale if an unrelated party transaction described in paragraph (b)(3)(i) or (ii) of this section occurs with respect to the property purchased in the related party sale and such unrelated party transaction is described in § 1.250(b)-4(b) (definition of FDDEI sale). The seller in the related party sale may establish that an unrelated party transaction will occur with respect to the property, or what portion of the property will be sold in an unrelated party transaction in the case of sale of a fungible mass of general property, based on contractual terms (including, for example, that the related party is contractually bound to only sell the product to foreign unrelated parties), past practices of the foreign related party (such as practices to only sell products to foreign unrelated parties), a showing that the product sold is designed specifically for a foreign market, or books and records otherwise evidencing that sales will be made to foreign unrelated parties.

(ii) *Use of property in an unrelated party transaction.* A related party sale is a FDDEI sale if one or more unrelated party transactions described in paragraph (b)(3)(iii) or (iv) of this section occurs with respect to the property purchased in the related party sale and such unrelated party transaction or transactions would be described in § 1.250(b)-4(b) or § 1.250(b)-5(b) (definition of FDDEI service). If the property purchased in the related party sale will be used in unrelated party transactions described in the preceding sentence and other transactions, the amount of gross income from the related party sale that is attributable to a FDDEI sale is equal to the gross income from the related party sale multiplied by a fraction, the numerator of which is the revenue that the related party reasonably expects (as of the FDII filing date) to earn from all unrelated party transactions with respect to the property purchased in the related party sale that would be described in § 1.250(b)-4(b) or § 1.250(b)-5(b) and the denominator of which is the total revenue that the related party reasonably expects (as of the FDII filing date) to earn from all transactions with respect to the property purchased in the related party sale.

(2) *Treatment of foreign related party as seller or renderer.* For purposes of determining whether a sale of property or provision of a service by a foreign related party is, or would be, described in § 1.250(b)-4(b) or § 1.250(b)-5(b), the foreign related party that sells the property or provides the service is treated as a seller or renderer, as applicable, and the foreign unrelated party is treated as the recipient.

(3) ***Transactions between related parties.*** For purposes of determining whether an unrelated party sale has occurred and satisfies the requirements of paragraphs (c)(1) or (2) of this section with respect to a sale to a foreign related party (and not for purposes of determining whether a sale is to a foreign person as required by § 1.250(b)-4(b)), the seller and all related parties of the seller are treated as if they are part of a single foreign related party. For purposes of the preceding sentence, in determining whether a United States person is a member of the seller's modified affiliated group, and therefore a related party of the seller, the definition of the term *modified affiliated group* in § 1.250(b)-1(c)(17) applies without the substitution of "more than 50 percent" for "at least 80 percent" each place it appears. Accordingly, if a foreign related party sells or uses property purchased in a related party sale in a transaction with a second related party of the seller, transactions between the second related party and an unrelated party may be treated as an unrelated party transaction for purposes of applying paragraph (c)(1) of this section to a related party sale.

(4) ***Example.*** The following example illustrates the application of this paragraph (c).

(i) ***Facts.*** DC, a domestic corporation, sells a machine to FC, a foreign related party of DC in a transaction described in § 1.250(b)-4(b) (without regard to this paragraph (c)). FC uses the machine solely to manufacture product A. As of the FDII filing date for the taxable year, 75 percent of future revenue from sales by FC to unrelated parties of product A will be from sales that would be described in § 1.250(b)-4(b).

(ii) ***Analysis.*** The sale by DC to FC is a related party sale. Because FC uses the machine to make product A, but the machine is not a constituent part of product A because FC does not undertake further manufacturing with respect to the machine itself, FC's sale of product A is an unrelated party transaction described in paragraph (b)(3)(iii) of this section. Therefore, DC's sale of the machine is only a FDDEI sale if the requirements of paragraph (c)(1)(ii) of this section are satisfied. Because 75 percent of the revenue from future sales of product A will be from unrelated party transactions that would be described in § 1.250(b)-4(b), 75 percent of the revenues from DC's sale of the machine to FC constitute FDDEI sales.

(d) ***Related party services*** —

(1) ***In general.*** Except as provided in this paragraph (d)(1), a related party service is a FDDEI service only if the related party service is not substantially similar to a service that has been provided or will be provided by the related party to a person located within the United States. However, if a related party service is substantially similar to a service provided (in whole or in part) by the related party to a person located in the United States solely by reason of paragraph (d)(2)(ii) of this section, the amount of gross income from the related party service attributable to a FDDEI service is equal to the difference between the gross income from the related party service and the amount of the price paid by persons located within the United States that is attributable to the related party service. Section 250(b)(5)(C)(ii) and this paragraph (d)(1) apply only to a general service provided to a related party that is a business recipient and are not applicable with respect to any other service provided to a related party.

(2) ***Substantially similar services.*** A related party service is substantially similar to a service provided by the related party to a person located within the United States only if the related party service is used by the related party in whole or part to provide a service to a person located within the United States and either—

(i) 60 percent or more of the benefits conferred by the related party service are directly used by the related party to confer benefits on consumers or business recipients located within the United States; or

(ii) 60 percent or more of the price paid by consumers or business recipients located within the United States for the service provided by the related party is attributable to the related party service.

(3) ***Special rules.*** For purposes of paragraph (d) of this section, the rules in paragraphs (d)(3)(i) and (ii) of this section apply.

(i) ***Rules for determining the location of and price paid by recipients of a service provided by a related party.*** The location of a consumer or business recipient with respect to services provided by the related party is determined under § 1.250(b)-5(d) and (e)(2), respectively, but treating the related party as the renderer. Accordingly, if the related party provides a service to a business recipient, the related party is treated as conferring benefits on a person located within the United States to the extent that the service confers a benefit on the business recipient's operations located within the United States. Similarly, for purposes of applying paragraph (d)(2)(ii) of this section with respect to business recipients, the price paid by a business recipient to the related party for services is allocated proportionally based on the locations of the business recipient that benefit from the services provided by the related party.

(ii) ***Rules for allocating the benefits provided by and price paid to the renderer of a related party service.*** For purposes of applying paragraph (d)(2)(i) of this section with respect to benefits that are directly used by the related party to confer benefits on its recipients, the benefits provided by the renderer to the related party are allocated to the related party's consumers or business recipients within the United States based on the proportion of benefits conferred by the related party on consumers or business recipients located within the United States. For purposes of determining the amount of the price paid by persons located within the United States that is attributable to the related party service in applying paragraph (d)(2)(ii) of this section, if the related party provides services that confer benefits on persons located within the United States and outside the United States, the price paid for the related party service by the related party to the renderer is allocated proportionally based on the benefits conferred on each location by the related party to its recipients.

(4) ***Examples.*** The following examples illustrate the application of this paragraph (d).

(i) ***Assumed facts.*** The following facts are assumed for purposes of the examples—

(A) DC is a domestic corporation.

(B) FC is a foreign corporation and a foreign related party of DC that operates solely outside the United States.

(C) The service DC provides to FC is a general service provided to a business recipient located outside the United States as described in § 1.250(b)-5(b)(2) without regard to the application of paragraph (d) of this section.

(D) The benefits conferred by DC's service to FC's customers are not indirect or remote within the meaning of § 1.482-9(l)(3)(ii).

(ii) ***Examples*** —

(A) ***Example 1: Services that are substantially similar services under paragraph (d)(2)(i) of this section —***

(*1*) ***Facts.*** FC enters into a services agreement with R, a company that operates restaurant chains within and outside the United States. Under the agreement, FC agrees to furnish a design for the renovation of a chain of restaurants that R owns; the design will include architectural plans. FC hires DC to provide an architectural service to FC that FC will use in the provision of its design service to R. The architectural service that DC provides to FC will serve no other purpose than to enable FC to provide its service to R. The service that FC provides will benefit only R's operations within the United States. FC pays an arm's length price of $50x to DC for the architectural service and DC recognizes $50x of gross income from the service. FC incurs additional costs to add additional design elements to the plans and charges R a total of $100x for its service.

(*2*) ***Analysis.*** All of the service that DC provides to FC is directly used in the provision of a service to R because FC uses DC's architectural service to provide its design service to R, and the architectural service that DC provides to FC will serve no purpose other than to enable FC to provide its service to R. In addition, FC is treated as conferring benefits only to persons located within the United States under paragraph (d)(3)(i) of this section because only R's operations within the United States benefit from the service provided by FC that used the service provided by DC. Therefore, the service provided by DC to FC is substantially similar to the service provided by FC to R under paragraph (d)(2)(i) of this section. Accordingly, DC's provision of the architectural service to FC is not a FDDEI service under paragraph (d)(1) of this section, and DC's gross income from the architectural service ($50x) is not included in its gross FDDEI.

(B) ***Example 2: Services that are not substantially similar services under paragraph (d)(2)(i) of this section —***

(*1*) ***Facts.*** The facts are the same as paragraph (d)(4)(ii)(A)(*1*) of this section (the facts in *Example 1*), except that 90 percent of R's operations that will benefit from FC's service are located outside the United States.

(*2*) ***Analysis*** —(*i*) *Analysis under paragraph (d)(2)(i) of this section.* All of the service that DC provides to FC is directly used in the provision of a service to R. However, because 90 percent of R's operations that will benefit from FC's service are located outside the United States under paragraph (d)(3)(i) of this section, only 10 percent of the benefits of FC's service are conferred on persons located within the United States. Further, because FC's service confers a benefit on R's operations located within and outside the United States, the benefit provided by DC to FC is allocated proportionately based on the locations of R that benefit from the services provided by FC under paragraph (d)(3)(ii) of this section. Therefore, only 10 percent of DC's architectural service are directly used by FC to confer benefits on persons located within the United States under paragraph (d)(3)(ii) of this section. Therefore, the architectural service provided by DC to FC is not substantially similar to the design service provided by FC to persons located within the United States under paragraph (d)(2)(i) of this section.

(C) ***Example 3: Services that are substantially similar services under paragraph (d)(2)(ii) of this section —***

(*1*) ***Facts.*** The facts are the same as paragraph (d)(4)(ii)(B)(*1*) of this section (the facts in *Example 2*), except that FC pays an arm's length price of $75x to DC for the architectural service and DC recognizes $75x of gross income from the service. As in paragraph (d)(4)(ii)(A)(*1*) and (d)(4)(ii)(B)(*1*) of this section (the facts in *Example 1* and *Example 2*), FC charges R a total of $100x for its service.

(*2*) ***Analysis*** —

(*i*) ***Price paid by persons located within the United States.*** Under paragraph (d)(3)(i) of this section, FC is treated as conferring benefits on a person located within the United States to the extent that R's operations that will benefit from FC's service are located within the United States. Further, because FC's service confers a benefit on R's operations located within and outside the United States, the price paid by R to FC ($100x) is allocated proportionately based on the locations of R that benefit from the services provided by FC under paragraph (d)(3)(i) of this section. Accordingly, because 10 percent of R's operations that will benefit from FC's services are located within the United States, persons located within the United States are treated as paying $10x ($100x × 0.10) for FC's services for purposes of applying the test in paragraph (d)(2)(ii) of this section.

(*ii*) ***Amount attributable to the related party service.*** The service that FC provides to R is attributable in part to DC's service because FC uses the architectural plans that DC provides to provide a service to R. Under paragraph (d)(3)(ii) of this section, because the benefits of the service provided by FC are conferred on persons located within the United States and outside the United States, a proportionate amount (10 percent) of the price paid to DC for the related party service ($75x), or $7.5x, is treated as attributable to the services provided to persons located within the United States.

(*iii*) ***Application of test in paragraph (d)(2)(ii) of this section.*** For purposes of applying the test described in paragraph (d)(2)(ii) of this section, the price paid by persons located within the United States for the service provided by the related party (FC) is $10x, as determined in paragraph (d)(4)(ii)(C)(*2*)(*i*) of this section (the analysis of this *Example 3*). The amount of the price that is attributable to DC's service is $7.5x, as determined in paragraph (d)(4)(ii)(C)(*2*)(*ii*) of this section (the analysis of this *Example 3*). Accordingly, of the price treated as paid to FC by persons located within the United States, 75 percent ($7.5x/$10x) is attributable to the related party service. Because more than 60 percent of the price treated as paid by persons within the United States for FC's service is attributable to DC's service, the service provided by DC to FC is substantially similar to the design service provided by FC to persons located within the United States under paragraph (d)(2)(ii) of this section.

(*iv*) ***Conclusion.*** Under paragraph (d)(1) of this section, because the related party service provided by DC is substantially similar to the service provided by FC to a person located in the United States solely by reason of paragraph (d)(2)(ii) of this section, the difference between DC's gross income from the related party service and the amount of the price paid by persons located within the United

States that is attributable to the related party service is treated as a FDDEI service. Accordingly, $67.5x ($75x—$7.5x) of DC's gross income from the provision of the service to FC is treated as a FDDEI service.

[T.D. 9901, 85 FR 43080, July 15, 2020, as amended by 85 FR 60910, Sept. 29, 2020; 85 FR 68250, Oct. 28, 2020]

ITEMS NOT DEDUCTIBLE

§ 1.261-1 General rule for disallowance of deductions.

In computing taxable income, no deduction shall be allowed, except as otherwise expressly provided in Chapter 1 of the Code, in respect of any of the items specified in Part IX (section 262 and following), Subchapter B, Chapter 1 of the Code, and the regulations thereunder.

§ 1.262-1 Personal, living, and family expenses.

(a) ***In general.*** In computing taxable income, no deduction shall be allowed, except as otherwise expressly provided in chapter 1 of the Code, for personal, living, and family expenses.

(b) ***Examples of personal, living, and family expenses.*** Personal, living, and family expenses are illustrated in the following examples:

(1) Premiums paid for life insurance by the insured are not deductible. See also section 264 and the regulations thereunder.

(2) The cost of insuring a dwelling owned and occupied by the taxpayer as a personal residence is not deductible.

(3) Expenses of maintaining a household, including amounts paid for rent, water, utilities, domestic service, and the like, are not deductible. A taxpayer who rents a property for residential purposes, but incidentally conducts business there (his place of business being elsewhere) shall not deduct any part of the rent. If, however, he uses part of the house as his place of business, such portion of the rent and other similar expenses as is properly attributable to such place of business is deductible as a business expense.

(4) Losses sustained by the taxpayer upon the sale or other disposition of property held for personal, living, and family purposes are not deductible. But see section 165 and the regulations thereunder for deduction of losses sustained to such property by reason of casualty, etc.

(5) Expenses incurred in traveling away from home (which include transportation expenses, meals, and lodging) and any other transportation expenses are not deductible unless they qualify as expenses deductible under section 162 (relating to trade or business expenses), section 170 (relating to charitable contributions), section 212 (relating to expenses for production of income), section 213 (relating to medical expenses), or section 217 (relating to moving expenses), and the regulations under those sections. The taxpayer's costs of commuting to his place of business or employment are personal expenses and do not qualify as deductible expenses. For expenses paid or incurred before October 1, 2014, a taxpayer's expenses for lodging when not traveling away from home (local lodging) are nondeductible personal expenses. However, taxpayers may deduct local lodging expenses that qualify under section 162 and are paid or incurred in taxable years for which the period of limitation on credit or refund under section 6511 has not expired. For expenses paid or incurred on or after October 1, 2014, a taxpayer's local lodging expenses are personal expenses and

are not deductible unless they qualify as deductible expenses under section 162. Except as permitted under section 162 or 212, the costs of a taxpayer's meals not incurred in traveling away from home are nondeductible personal expenses.

(6) Amounts paid as damages for breach of promise to marry, and attorney's fees and other costs of suit to recover such damages, are not deductible.

(7) Generally, attorney's fees and other costs paid in connection with a divorce, separation, or decree for support are not deductible by either the husband or the wife. However, the part of an attorney's fee and the part of the other costs paid in connection with a divorce, legal separation, written separation agreement, or a decree for support, which are properly attributable to the production or collection of amounts includible in gross income under section 71 are deductible by the wife under section 212.

(8) The cost of equipment of a member of the armed services is deductible only to the extent that it exceeds nontaxable allowances received for such equipment and to the extent that such equipment is especially required by his profession and does not merely take the place of articles required in civilian life. For example, the cost of a sword is an allowable deduction in computing taxable income, but the cost of a uniform is not. However, amounts expended by a reservist for the purchase and maintenance of uniforms which may be worn only when on active duty for training for temporary periods, when attending service school courses, or when attending training assemblies are deductible except to the extent that nontaxable allowances are received for such amounts.

(9) Expenditures made by a taxpayer in obtaining an education or in furthering his education are not deductible unless they qualify under section 162 and § 1.162-5 (relating to trade or business expenses).

(c) ***Cross references.*** Certain items of a personal, living, or family nature are deductible to the extent expressly provided under the following sections, and the regulations under those sections:

(1) Section 163 (interest).

(2) Section 164 (taxes).

(3) Section 165 (losses).

(4) Section 166 (bad debts).

(5) Section 170 (charitable, etc., contributions and gifts).

(6) Section 213 (medical, dental, etc., expenses).

(7) Section 214 (expenses for care of certain dependents).

(8) Section 215 (alimony, etc., payments).

(9) Section 216 (amounts representing taxes and interest paid to cooperative housing corporation).

(10) Section 217 (moving expenses).

[T.D. 6500, 25 FR 11402, Nov. 26, 1960, as amended by T.D. 6796, 30 FR 1041, Feb. 2, 1965; T.D. 6918, 32 FR 6681, May 2, 1967; T.D. 7207, 37 FR 20795, Oct. 4, 1972; T.D. 9696, 79 FR 59114, Oct. 1, 2014]

§ 1.263(a)-0 Outline of regulations under section 263(a).

This section lists the paragraphs in §§ 1.263(a)-1 through 1.263(a)-3 and § 1.263(a)-6.

§ 1.263(a)-1 Capital expenditures; in general.

(a) General rule for capital expenditures.

(b) Coordination with other provisions of the Internal Revenue Code.

(c) Definitions.

(1) Amount paid.

(2) Produce.

(d) Examples of capital expenditures.

(e) Amounts paid to sell property.

(1) In general.

(2) Dealer in property.

(3) Examples.

(f) De minimis safe harbor election.

(1) In general.

(i) Taxpayer with applicable financial statement.

(ii) Taxpayer without applicable financial statement.

(iii) Taxpayer with both an applicable financial statement and a non-qualifying financial statement.

(2) Exceptions to de minimis safe harbor.

(3) Additional rules.

(i) Transaction and other additional costs.

(ii) Materials and supplies.

(iii) Sale or disposition.

(iv) Treatment of de minimis amounts.

(v) Coordination with section 263A.

(vi) Written accounting procedures for groups of entities.

(vii) Combined expensing accounting procedures.

(4) Definition of applicable financial statement.

(5) Time and manner of making election.

(6) Anti-abuse rule.

(7) Examples.

(g) Accounting method changes.

(h) Effective/applicability date.

(1) In general.

(2) Early application of this section.

(i) In general.

(ii) Transition rule for de minimis safe harbor election on 2012 or 2013 returns.

(3) Optional application of TD 9564.

§ 1.263(a)-2 Amounts paid to acquire or produce tangible property.

(a) Overview.

(b) Definitions.

(1) Amount paid.

(2) Personal property.

(3) Real property.

(4) Produce.

(c) Coordination with other provisions of the Internal Revenue Code.

(1) In general.

(2) Materials and supplies.

(d) Acquired or produced tangible property.

(1) Requirement to capitalize.

(2) Examples.

(e) Defense or perfection of title to property.

(1) In general.

(2) Examples.

(f) Transaction costs.

(1) In general.

(2) Scope of facilitate.

(i) In general.

(ii) Inherently facilitative amounts.

(iii) Special rule for acquisitions of real property.

(A) In general.

(B) Acquisitions of real and personal property in a single transaction.

(iv) Employee compensation and overhead costs.

(A) In general.

(B) Election to capitalize.

(3) Treatment of transaction costs.

(i) In general.

(ii) Treatment of inherently facilitative amounts allocable to property not acquired.

(iii) Contingency fees.

(4) Examples.

(g) Treatment of capital expenditures.

(h) Recovery of capitalized amounts.

(1) In general.

(2) Examples.

(i) Accounting method changes.

(j) Effective/applicability date.

(1) In general.

(2) Early application of this section.

(i) In general.

(ii) Transition rule for election to capitalize employee compensation and overhead costs on 2012 or 2013 returns.

(3) Optional application of TD 9564.

§ 1.263(a)-3 Amounts paid to improve tangible property.

(a) Overview.

(b) Definitions.

(1) Amount paid.

(2) Personal property.

(3) Real property.

(4) Owner.

(c) Coordination with other provisions of the Internal Revenue Code.

(1) In general.

(2) Materials and supplies.

(3) Example.

(d) Requirement to capitalize amounts paid for improvements.

(e) Determining the unit of property.

(1) In general.

(2) Building.

(i) In general.

(ii) Application of improvement rules to a building.

(A) Building structure.

(B) Building system.

(iii) Condominium.

(A) In general.

(B) Application of improvement rules to a condominium.

(iv) Cooperative.

(A) In general.

(B) Application of improvement rules to a cooperative.

(v) Leased building.

(A) In general.

(B) Application of improvement rules to a leased building.

(*1*) Entire building.

(*2*) Portion of building.

(3) Property other than a building.

(i) In general.

(ii) Plant property.

(A) Definition.

(B) Unit of property for plant property.

(iii) Network assets.

(A) Definition.

(B) Unit of property for network assets.

(iv) Leased property other than buildings.

(4) Improvements to property.

(5) Additional rules.

(i) Year placed in service.

(ii) Change in subsequent taxable year.

(6) Examples.

(f) Improvements to leased property.

(1) In general.

(2) Lessee improvements.

(i) Requirement to capitalize.

(ii) Unit of property for lessee improvements.

(3) Lessor improvements.

(i) Requirement to capitalize.

(ii) Unit of property for lessor improvements.

(4) Examples.

(g) Special rules for determining improvement costs.

(1) Certain costs incurred during an improvement.

(i) In general.

(ii) Exception for individuals' residences.

(2) Removal costs.

(i) In general.

(ii) Examples.

(3) Related amounts.

(4) Compliance with regulatory requirements.

(h) Safe harbor for small taxpayers.

(1) In general.

(2) Application with other safe harbor provisions.

(3) Qualifying taxpayer.

(i) In general.

(ii) Application to new taxpayers.

(iii) Treatment of short taxable year.

(iv) Definition of gross receipts.

(4) Eligible building property.

(5) Unadjusted basis.

(i) Eligible building property owned by the taxpayer.

(ii) Eligible building property leased to the taxpayer.

(6) Time and manner of election.

(7) Treatment of safe harbor amounts.

(8) Safe harbor exceeded.

(9) Modification of safe harbor amounts.

(10) Examples.

(i) Safe harbor for routine maintenance.

(1) In general.

(i) Routine maintenance for buildings.

(ii) Routine maintenance for property other than buildings.

(2) Rotable and temporary spare parts.

(3) Exceptions.

(4) Class life.

(5) Coordination with section 263A.

(6) Examples.

(j) Capitalization of betterments.

(1) In general.

(2) Application of betterment rules.

(i) In general.

(ii) Application of betterment rules to buildings.

(iii) Unavailability of replacement parts.

(iv) Appropriate comparison.

(A) In general.

(B) Normal wear and tear.

(C) Damage to property.

(4) Examples.

(k) Capitalization of restorations.

(1) In general.

(2) Application of restorations to buildings.

(3) Exception for losses based on salvage value.

(4) Restoration of damage from casualty.

(i) Limitation.

(ii) Amounts in excess of limitation.

(5) Rebuild to like-new condition.

(6) Replacement of a major component or substantial structural part.

(i) In general.

(A) Major component.

(B) Substantial structural part.

(ii) Major components and substantial structural parts of buildings.

(7) Examples.

(l) Capitalization of amounts to adapt property to a new or different use.

(1) In general.

(2) Application of adaptation rule to buildings.

(3) Examples.

(m) Optional regulatory accounting method.

(1) In general.

(2) Eligibility for regulatory accounting method.

(3) Description of regulatory accounting method.

(4) Examples.

(n) Election to capitalize repair and maintenance costs.

(1) In general.

(2) Time and manner of election.

(3) Exception.

(4) Examples.

(o) Treatment of capital expenditures.

(p) Recovery of capitalized amounts.

(q) Accounting method changes.

(r) Effective/applicability date.

(1) In general.

(2) Early application of this section.

(i) In general.

(ii) Transition rule for elections on 2012 and 2013 returns.

(3) Optional application of TD 9564.

§ 1.263(a)-4 Amounts paid to acquire or create intangibles.

(a) Overview.

(b) Capitalization with respect to intangibles.

(1) In general.

(2) Published guidance.

(3) Separate and distinct intangible asset.

(i) Definition.

(ii) Creation or termination of contract rights.

(iii) Amounts paid in performing services.

(iv) Creation of computer software.

(v) Creation of package design.

(4) Coordination with other provisions of the Internal Revenue Code.

(i) In general.

(ii) Example.

(c) Acquired intangibles.

(1) In general.

(2) Readily available software.

(3) Intangibles acquired from an employee.

(4) Examples.

(d) Created intangibles.

(1) In general.

(2) Financial interests.

(i) In general.

(ii) Amounts paid to create, originate, enter into, renew or renegotiate.

(iii) Renegotiate.

(iv) Coordination with other provisions of this paragraph (d).

(v) Coordination with § 1.263(a)-5.

(vi) Examples.

(3) Prepaid expenses.

(i) In general.

(ii) Examples.

(4) Certain memberships and privileges.

(i) In general.

(ii) Examples.

(5) Certain rights obtained from a government agency.

(i) In general.

(ii) Examples.

(6) Certain contract rights.

(i) In general.

(ii) Amounts paid to create, originate, enter into, renew or renegotiate.

(iii) Renegotiate.

(iv) Right.

(v) *De minimis* amounts.

(vi) Exception for lessee construction allowances.

(vii) Examples.

(7) Certain contract terminations.

(i) In general.

(ii) Certain break-up fees.

(iii) Examples.

(8) Certain benefits arising from the provision, production, or improvement of real property.

(i) In general.

(ii) Exclusions.

(iii) Real property.

(iv) Impact fees and dedicated improvements.

(v) Examples.

(9) Defense or perfection of title to intangible property.

(i) In general.

(ii) Certain break-up fees.

(iii) Example.

(e) Transaction costs.

(1) Scope of facilitate.

(i) In general.

(ii) Treatment of termination payments.

(iii) Special rule for contracts.

(iv) Borrowing costs.

(v) Special rule for stock redemption costs of open-end regulated investment companies.

(2) Coordination with paragraph (d) of this section.

(3) Transaction.

(4) Simplifying conventions.

(i) In general.

(ii) Employee compensation.

(iii) *De minimis* costs.

(iv) Election to capitalize.

(5) Examples.

(f) 12-month rule.

(1) In general.

(2) Duration of benefit for contract terminations.

(3) Inapplicability to created financial interests and self-created amortizable section 197 intangibles.

(4) Inapplicability to rights of indefinite duration.

(5) Rights subject to renewal.

(i) In general.

(ii) Reasonable expectancy of renewal.

(iii) Safe harbor pooling method.

(6) Coordination with section 461.

(7) Election to capitalize.

(8) Examples.

(g) Treatment of capitalized costs.

(1) In general.

(2) Financial instruments.

(h) Special rules applicable to pooling.

(1) In general.

(2) Method of accounting.

(3) Adopting or changing to a pooling method.

(4) Definition of pool.

(5) Consistency requirement.

(6) Additional guidance pertaining to pooling.

(7) Example.

(i) [Reserved].

(j) Application to accrual method taxpayers.

(k) Treatment of related parties and indirect payments.

(l) Examples.

(m) Amortization.

(n) Intangible interests in land [Reserved]

(o) Effective date.

(p) Accounting method changes.

(1) In general.

(2) Scope limitations.

(3) Section 481(a) adjustment.

§ 1.263(a)-5 Amounts paid or incurred to facilitate an acquisition of a trade or business, a change in the capital structure of a business entity, and certain other transactions.

(a) General rule.

(b) Scope of facilitate.

(1) In general.

(2) Ordering rules.

(c) Special rules for certain costs.

(1) Borrowing costs.

(2) Costs of asset sales.

(3) Mandatory stock distributions.

(4) Bankruptcy reorganization costs.

(5) Stock issuance costs of open-end regulated investment companies.

(6) Integration costs.

(7) Registrar and transfer agent fees for the maintenance of capital stock records.

(8) Termination payments and amounts paid to facilitate mutually exclusive transactions.

(d) Simplifying conventions.

(1) In general.

(2) Employee compensation.

(i) In general.

(ii) Certain amounts treated as employee compensation.

(3) *De minimis* costs.

(i) In general.

(ii) Treatment of commissions.

(4) Election to capitalize.

(e) Certain acquisitive transactions.

(1) In general.

(2) Exception for inherently facilitative amounts.

(3) Covered transactions.

(f) Documentation of success-based fees.

(g) Treatment of capitalized costs.

(1) Tax-free acquisitive transactions [Reserved].

(2) Taxable acquisitive transactions.

(i) Acquirer.

(ii) Target.

(3) Stock issuance transactions [Reserved].

(4) Borrowings.

(5) Treatment of capitalized amounts by option writer.

(h) Application to accrual method taxpayers.

(i) [Reserved].

(j) Coordination with other provisions of the Internal Revenue Code.

(k) Treatment of indirect payments.

(l) Examples.

(m) Effective date.

(n) Accounting method changes.

(1) In general.

(2) Scope limitations.

(3) Section 481(a) adjustment.

§ 1.263(a)-6 Election to deduct or capitalize certain expenditures.

(a) In general.

(b) Election provisions.

(c) Effective/applicability date.

(1) In general.

(2) Early application of this section.

(3) Optional application of TD 9564.

[T.D. 9107, 69 FR 444, Jan. 5, 2004, as amended by T.D. 9564, 76 FR 81100, Dec. 27, 2011; T.D. 9636, 78 FR 57708, Sept. 19, 2013; T.D. 9636, 79 FR 42191, July 21, 2014]

§ 1.263(a)-1 Capital expenditures; in general.

(a) ***General rule for capital expenditures.*** Except as provided in chapter 1 of the Internal Revenue Code, no deduction is allowed for—

(1) Any amount paid for new buildings or for permanent improvements or betterments made to increase the value of any property or estate; or

(2) Any amount paid in restoring property or in making good the exhaustion thereof for which an allowance is or has been made.

(b) ***Coordination with other provisions of the Internal Revenue Code.*** Nothing in this section changes the treatment of any amount that is specifically provided for under any provision of the Internal Revenue Code or the Treasury Regulations other than section 162(a) or section 212 and the regulations under those sections. For example, see section 263A, which requires taxpayers to capitalize the direct and allocable indirect costs to property produced by the taxpayer and property acquired for resale. See also section 195 requiring taxpayers to capitalize certain costs as start-up expenditures.

(c) ***Definitions.*** For purposes of this section, the following definitions apply:

(1) ***Amount paid.*** In the case of a taxpayer using an accrual method of accounting, the terms *amount paid* and *payment* mean a liability incurred (within the meaning of § 1.446-1(c)(1)(ii)). A liability may not be taken into account under this section prior to the taxable year during which the liability is incurred.

(2) ***Produce*** means construct, build, install, manufacture, develop, create, raise, or grow. This definition is intended to have the same meaning as the definition used for purposes of section 263A(g)(1) and § 1.263A-2(a)(1)(i), except that improvements are excluded from the definition in this paragraph (c)(2) and are separately defined and addressed in § 1.263(a)-3.

(d) ***Examples of capital expenditures.*** The following amounts paid are examples of capital expenditures:

(1) An amount paid to acquire or produce a unit of real or personal tangible property. See § 1.263(a)-2.

(2) An amount paid to improve a unit of real or personal tangible property. See § 1.263(a)-3.

(3) An amount paid to acquire or create intangibles. See § 1.263(a)-4.

(4) An amount paid or incurred to facilitate an acquisition of a trade or business, a change in capital structure of a business entity, and certain other transactions. See § 1.263(a)-5.

(5) An amount paid to acquire or create interests in land, such as easements, life estates, mineral interests, timber rights, zoning variances, or other interests in land.

(6) An amount assessed and paid under an agreement between bondholders or shareholders of a corporation to be used in a reorganization of the corporation or voluntary contributions by shareholders to the capital of the corporation for any corporate purpose. See section 118 and § 1.118-1.

(7) An amount paid by a holding company to carry out a guaranty of dividends at a specified rate on the stock of a subsidiary corporation for the purpose of securing new capital for the subsidiary and increasing the value of its stockholdings in the subsidiary. This amount must be added to the cost of the stock in the subsidiary.

(e) ***Amounts paid to sell property*** —

(1) ***In general.*** Commissions and other transaction costs paid to facilitate the sale of property are not currently deductible under section 162 or 212. Instead, the amounts are capitalized costs that reduce the amount realized in the taxable year in which the sale occurs or are taken into account in the taxable year in which the sale is abandoned if a deduction is permissible. These amounts are not added to the basis of the property sold or treated as an intangible asset under § 1.263(a)-4. See § 1.263(a)-5(g) for the treatment of amounts paid to facilitate the disposition of assets that constitute a trade or business.

(2) ***Dealer in property.*** In the case of a dealer in property, amounts paid to facilitate the sale of such property are treated as ordinary and necessary business expenses.

(3) ***Examples.*** The following examples, which assume the sale is not an installment sale under section 453, illustrate the rules of this paragraph (e):

Example 1. Sales costs of real property A owns a parcel of real estate. A sells the real estate and pays legal fees, recording fees, and sales commissions to facilitate the sale. A must capitalize the fees and commissions and, in the taxable year of the sale, must reduce the amount realized from the sale of the real estate by the fees and commissions.

Example 2. Sales costs of dealers Assume the same facts as in *Example 1,* except that A is a dealer in real estate. The commissions and fees paid to facilitate the sale of the real estate may be deducted as ordinary and necessary business expenses under section 162.

Example 3. Sales costs of personal property used in a trade or business B owns a truck for use in B's trade or business. B decides to sell the truck on November 15, Year 1. B pays for an appraisal to determine a reasonable asking price. On February 15, Year 2, B sells the truck to C. In Year 1, B must capitalize the amount paid to appraise the truck, and in Year 2, must reduce the amount realized from the sale of the truck by the amount paid for the appraisal.

Example 4. Costs of abandoned sale of personal property used in a trade or business Assume the same facts as in *Example 3,* except that, instead of selling the truck on February 15, Year 2, B decides on that date not to sell the truck and takes the truck off the market. In Year 1, B must capitalize the amount paid to appraise the truck. However, B may recognize the amount paid to appraise the truck as a loss under section 165 in Year 2, the taxable year when the sale is abandoned.

Example 5. Sales costs of personal property not used in a trade or business Assume the same facts as in *Example 3,* except that B does not use the truck in B's trade or business but instead uses it for personal purposes. In Year 1, B must capitalize the amount paid to appraise the truck, and in Year 2, must reduce the amount realized from the sale of the truck by the amount paid for the appraisal.

Example 6. Costs of abandoned sale of personal property not used in a trade or business Assume the same facts as in *Example 5,* except that, instead of selling the truck on February 15, Year 2, B decides on that date not to sell the truck and takes the truck off the market. In Year 1, B must capitalize the amount paid to appraise the truck. Although B abandons the sale in Year 2, B may not treat the amount paid to appraise the truck as a loss under section 165 because the truck was not used in B's trade or business or in a transaction entered into for profit.

(f) ***De minimis safe harbor election*** —

(1) ***In general.*** Except as otherwise provided in paragraph (f)(2) of this section, a taxpayer electing to apply the de minimis safe harbor under this paragraph (f) may not capitalize under § 1.263(a)-2(d)(1) or § 1.263(a)-3(d) any amount paid in the taxable year for the acquisition or production of a unit of tangible property nor treat as a material or supply under § 1.162-3(a) any amount paid in the taxable year for tangible property if the amount specified under this paragraph (f)(1) meets the requirements of paragraph (f)(1)(i) or (f)(1)(ii) of this section. However, section 263A and the regulations under section 263A require taxpayers to capitalize the direct and allocable indirect costs of property produced by the taxpayer (for example, property improved by the taxpayer) and property acquired for resale.

(i) ***Taxpayer with applicable financial statement.*** A taxpayer electing to apply the de minimis safe harbor may not capitalize under § 1.263(a)-2(d)(1) or § 1.263(a)-3(d) nor treat as a material or supply under § 1.162-3(a) any amount paid in the taxable year for property described in paragraph (f)(1) of this section if—

(A) The taxpayer has an applicable financial statement (as defined in paragraph (f)(4) of this section);

(B) The taxpayer has at the beginning of the taxable year written accounting procedures treating as an expense for non-tax purposes—

(*1*) Amounts paid for property costing less than a specified dollar amount; or

(*2*) Amounts paid for property with an economic useful life (as defined in § 1.162-3(c)(4)) of 12 months or less;

(C) The taxpayer treats the amount paid for the property as an expense on its applicable financial statement in accordance with its written accounting procedures; and

(D) The amount paid for the property does not exceed $5,000 per invoice (or per item as substantiated by the invoice) or other amount as identified in published guidance in the FEDERAL REGISTER or in the Internal Revenue Bulletin (see § 601.601(d)(2)(ii)(*b*) of this chapter).

(ii) ***Taxpayer without applicable financial statement.*** A taxpayer electing to apply the de minimis safe harbor may not capitalize under § 1.263(a)-2(d)(1) or § 1.263(a)-3(d) nor treat as a material or supply under § 1.162-3(a) any amount paid in the taxable year for property described in paragraph (f)(1) of this section if—

(A) The taxpayer does not have an applicable financial statement (as defined in paragraph (f)(4) of this section);

(B) The taxpayer has at the beginning of the taxable year accounting procedures treating as an expense for non-tax purposes—

(*1*) Amounts paid for property costing less than a specified dollar amount; or

(*2*) Amounts paid for property with an economic useful life (as defined in § 1.162-3(c)(4)) of 12 months or less;

(C) The taxpayer treats the amount paid for the property as an expense on its books and records in accordance with these accounting procedures; and

(D) The amount paid for the property does not exceed $500 per invoice (or per item as substantiated by the invoice) or other amount as identified in published guidance in the FEDERAL REGISTER or in the Internal Revenue Bulletin (see § 601.601(d)(2)(ii)(*b*) of this chapter).

(iii) ***Taxpayer with both an applicable financial statement and a non-qualifying financial statement.*** For purposes of this paragraph (f)(1), if a taxpayer has an applicable financial statement defined in paragraph (f)(4) of this section in addition to a financial statement that does not meet requirements of paragraph (f)(4) of this section, the taxpayer must meet the requirements of paragraph (f)(1)(i) of this section to qualify to elect the de minimis safe harbor under this paragraph (f).

(2) ***Exceptions to de minimis safe harbor.*** The de minimis safe harbor in paragraph (f)(1) of this section does not apply to the following:

(i) Amounts paid for property that is or is intended to be included in inventory property;

(ii) Amounts paid for land;

(iii) Amounts paid for rotable, temporary, and standby emergency spare parts that the taxpayer elects to capitalize and depreciate under § 1.162-3(d); and

(iv) Amounts paid for rotable and temporary spare parts that the taxpayer accounts for under the optional method of accounting for rotable parts pursuant to § 1.162-3(e).

(3) ***Additional rules*** —

(i) ***Transaction and other additional costs.*** A taxpayer electing to apply the de minimis safe harbor under paragraph (f)(1) of this section is not required to include in the cost of the tangible property the additional costs of acquiring or producing such property if these costs are not included in the same invoice as the tangible property. However, the taxpayer electing to apply

the de minimis safe harbor under paragraph (f)(1) of this section must include in the cost of such property all additional costs (for example, delivery fees, installation services, or similar costs) if these additional costs are included on the same invoice with the tangible property. For purposes of this paragraph, if the invoice includes amounts paid for multiple tangible properties and such invoice includes additional invoice costs related to these multiple properties, then the taxpayer must allocate the additional invoice costs to each property using a reasonable method, and each property, including allocable labor and overhead, must meet the requirements of paragraph (f)(1)(i) or paragraph (f)(1)(ii) of this section, whichever is applicable. Reasonable allocation methods include, but are not limited to specific identification, a pro rata allocation, or a weighted average method based on the property's relative cost. For purposes of this paragraph (f)(3)(i), additional costs consist of the costs of facilitating the acquisition or production of such tangible property under § 1.263(a)-2(f) and the costs for work performed prior to the date that the tangible property is placed in service under § 1.263(a)-2(d).

(ii) ***Materials and supplies.*** If a taxpayer elects to apply the de minimis safe harbor provided under this paragraph (f), then the taxpayer must also apply the de minimis safe harbor to amounts paid for all materials and supplies (as defined under § 1.162-3) that meet the requirements of § 1.263(a)-1(f). See paragraph (f)(3)(iv) of this section for treatment of materials and supplies under the de minimis safe harbor.

(iii) ***Sale or disposition.*** Property to which a taxpayer applies the de minimis safe harbor contained in this paragraph (f) is not treated upon sale or other disposition as a capital asset under section 1221 or as property used in the trade or business under section 1231.

(iv) ***Treatment of de minimis amounts.*** An amount paid for property to which a taxpayer properly applies the de minimis safe harbor contained in this paragraph (f) is not treated as a capital expenditure under § 1.263(a)-2(d)(1) or § 1.263(a)-3(d) or as a material and supply under § 1.162-3, and may be deducted under § 1.162-1 in the taxable year the amount is paid provided the amount otherwise constitutes an ordinary and necessary expense incurred in carrying on a trade or business.

(v) ***Coordination with section 263A.*** Amounts paid for tangible property described in paragraph (f)(1) of this section may be subject to capitalization under section 263A if the amounts paid for tangible property comprise the direct or allocable indirect costs of other property produced by the taxpayer or property acquired for resale. See, for example, § 1.263A-1(e)(3)(ii)(R) requiring taxpayers to capitalize the cost of tools and equipment allocable to property produced or property acquired for resale.

(vi) ***Written accounting procedures for groups of entities.*** If the taxpayer's financial results are reported on the applicable financial statement (as defined in paragraph (f)(4) of this section) for a group of entities then, for purposes of paragraph (f)(1)(i)(A) of this section, the group's applicable financial statement may be treated as the applicable financial statement of the taxpayer, and for purposes of paragraphs (f)(1)(i)(B) and (f)(1)(i)(C) of this section, the written accounting procedures provided for the group and utilized for the group's applicable financial statement may be treated as the written accounting procedures of the taxpayer.

(vii) ***Combined expensing accounting procedures.*** For purposes of paragraphs (f)(1)(i) and (f)(1)(ii) of this section, if the taxpayer has, at the beginning of the taxable year, accounting procedures treating as an expense for non-tax purposes amounts paid for property costing less than a specified dollar amount and amounts paid for property with an economic useful life (as defined

in § 1.162-3(c)(4)) of 12 months or less, then a taxpayer electing to apply the de minimis safe harbor under this paragraph (f) must apply the provisions of this paragraph (f) to amounts qualifying under either accounting procedure.

(4) ***Definition of applicable financial statement.*** For purposes of this paragraph (f), the taxpayer's applicable financial statement (AFS) is the taxpayer's financial statement listed in paragraphs (f)(4)(i) through (iii) of this section that has the highest priority (including within paragraph (f)(4)(ii) of this section). The financial statements are, in descending priority—

(i) A financial statement required to be filed with the Securities and Exchange Commission (SEC) (the 10-K or the Annual Statement to Shareholders);

(ii) A certified audited financial statement that is accompanied by the report of an independent certified public accountant (or in the case of a foreign entity, by the report of a similarly qualified independent professional) that is used for—

(A) Credit purposes;

(B) Reporting to shareholders, partners, or similar persons; or

(C) Any other substantial non-tax purpose; or

(iii) A financial statement (other than a tax return) required to be provided to the federal or a state government or any federal or state agency (other than the SEC or the Internal Revenue Service).

(5) ***Time and manner of election.*** A taxpayer that makes the election under this paragraph (f) must make the election for all amounts paid during the taxable year for property described in paragraph (f)(1) of this section and meeting the requirements of paragraph (f)(1)(i) or paragraph (f)(1)(ii) of this section, as applicable. A taxpayer makes the election by attaching a statement to the taxpayer's timely filed original Federal tax return (including extensions) for the taxable year in which these amounts are paid. Sections 301.9100-1 through 301.9100-3 of this chapter provide the rules governing extensions of the time to make regulatory elections. The statement must be titled "Section 1.263(a)-1(f) de minimis safe harbor election" and include the taxpayer's name, address, taxpayer identification number, and a statement that the taxpayer is making the de minimis safe harbor election under § 1.263(a)-1(f). In the case of a consolidated group filing a consolidated income tax return, the election is made for each member of the consolidated group by the common parent, and the statement must also include the names and taxpayer identification numbers of each member for which the election is made. In the case of an S corporation or a partnership, the election is made by the S corporation or the partnership and not by the shareholders or partners. An election may not be made through the filing of an application for change in accounting method or, before obtaining the Commissioner's consent to make a late election, by filing an amended Federal tax return. A taxpayer may not revoke an election made under this paragraph (f). The manner of electing the de minimis safe harbor under this paragraph (f) may be modified through guidance of general applicability (see §§ 601.601(d)(2) and 601.602 of this chapter).

(6) ***Anti-abuse rule.*** If a taxpayer acts to manipulate transactions with the intent to achieve a tax benefit or to avoid the application of the limitations provided under paragraphs (f)(1)(i)(B)(*1*), (f)(1)(i)(D), (f)(1)(ii)(B)(*1*), and (f)(1)(ii)(D) of this section, appropriate adjustments will be made to carry out the purposes of this section. For example, a taxpayer is deemed to act to manipulate transactions with an intent to avoid the purposes and requirements of this section if—

(i) The taxpayer applies the de minimis safe harbor to amounts substantiated with invoices created to componentize property that is generally acquired or produced by the taxpayer (or other taxpayers in the same or similar trade or business) as a single unit of tangible property; and

(ii) This property, if treated as a single unit, would exceed any of the limitations provided under paragraphs (f)(1)(i)(B)(*1*), (f)(1)(i)(D), (f)(1)(ii)(B)(*1*), and (f)(1)(ii)(D) of this section, as applicable.

(7) ***Examples.*** The following examples illustrate the application of this paragraph (f). Unless otherwise provided, assume that section 263A does not apply to the amounts described.

Example 1. De minimis safe harbor; taxpayer without AFS. In Year 1, A purchases 10 printers at $250 each for a total cost of $2,500 as indicated by the invoice. Assume that each printer is a unit of property under § 1.263(a)-3(e). A does not have an AFS. A has accounting procedures in place at the beginning of Year 1 to expense amounts paid for property costing less than $500, and A treats the amounts paid for the printers as an expense on its books and records. The amounts paid for the printers meet the requirements for the de minimis safe harbor under paragraph (f)(1)(ii) of this section. If A elects to apply the de minimis safe harbor under this paragraph (f) in Year 1, A may not capitalize the amounts paid for the 10 printers or any other amounts meeting the criteria for the de minimis safe harbor under paragraph (f)(1). Instead, in accordance with paragraph (f)(3)(iv) of this section, A may deduct these amounts under § 1.162-1 in the taxable year the amounts are paid provided the amounts otherwise constitute deductible ordinary and necessary expenses incurred in carrying on a trade or business.

Example 2. De minimis safe harbor; taxpayer without AFS. In Year 1, B purchases 10 computers at $600 each for a total cost of $6,000 as indicated by the invoice. Assume that each computer is a unit of property under § 1.263(a)-3(e). B does not have an AFS. B has accounting procedures in place at the beginning of Year 1 to expense amounts paid for property costing less than $1,000 and B treats the amounts paid for the computers as an expense on its books and records. The amounts paid for the printers do not meet the requirements for the de minimis safe harbor under paragraph (f)(1)(ii) of this section because the amount paid for the property exceeds $500 per invoice (or per item as substantiated by the invoice). B may not apply the de minimis safe harbor election to the amounts paid for the 10 computers under paragraph (f)(1) of this section.

Example 3. De minimis safe harbor; taxpayer with AFS. C is a member of a consolidated group for Federal income tax purposes. C's financial results are reported on the consolidated applicable financial statements for the affiliated group. C's affiliated group has a written accounting policy at the beginning of Year 1, which is followed by C, to expense amounts paid for property costing $5,000 or less. In Year 1, C pays $6,250,000 to purchase 1,250 computers at $5,000 each. C receives an invoice from its supplier indicating the total amount due ($6,250,000) and the price per item ($5,000). Assume that each computer is a unit of property under § 1.263(a)-3(e). The amounts paid for the computers meet the requirements for the de minimis safe harbor under paragraph (f)(1)(i) of this section. If C elects to apply the de minimis safe harbor under this paragraph (f) for Year 1, C may not capitalize the amounts paid for the 1,250 computers or any other amounts meeting the criteria for the de minimis safe harbor under paragraph (f)(1) of this section. Instead, in accordance with paragraph (f)(3)(iv) of this section,

C may deduct these amounts under § 1.162-1 in the taxable year the amounts are paid provided the amounts otherwise constitute deductible ordinary and necessary expenses incurred in carrying on a trade or business.

Example 4. De minimis safe harbor; taxpayer with AFS. D is a member of a consolidated group for Federal income tax purposes. D's financial results are reported on the consolidated applicable financial statements for the affiliated group. D's affiliated group has a written accounting policy at the beginning of Year 1, which is followed by D, to expense amounts paid for property costing less than $15,000. In Year 1, D pays $4,800,000 to purchase 800 elliptical machines at $6,000 each. D receives an invoice from its supplier indicating the total amount due ($4,800,000) and the price per item ($6,000). Assume that each elliptical machine is a unit of property under § 1.263(a)-3(e). D may not apply the de minimis safe harbor election to the amounts paid for the 800 elliptical machines under paragraph (f)(1) of this section because the amount paid for the property exceeds $5,000 per invoice (or per item as substantiated by the invoice).

Example 5. De minimis safe harbor; additional invoice costs. E is a member of a consolidated group for Federal income tax purposes. E's financial results are reported on the consolidated applicable financial statements for the affiliated group. E's affiliated group has a written accounting policy at the beginning of Year 1, which is followed by E, to expense amounts paid for property costing less than $5,000. In Year 1, E pays $45,000 for the purchase and installation of wireless routers in each of its 10 office locations. Assume that each wireless router is a unit of property under § 1.263(a)-3(e). E receives an invoice from its supplier indicating the total amount due ($45,000), including the material price per item ($2,500), and total delivery and installation ($20,000). E allocates the additional invoice costs to the materials on a pro rata basis, bringing the cost of each router to $4,500 ($2,500 materials + $2,000 labor and overhead). The amounts paid for each router, including the allocable additional invoice costs, meet the requirements for the de minimis safe harbor under paragraph (f)(1)(i) of this section. If E elects to apply the de minimis safe harbor under this paragraph (f) for Year 1, E may not capitalize the amounts paid for the 10 routers (including the additional invoice costs) or any other amounts meeting the criteria for the de minimis safe harbor under paragraph (f)(1) of this section. Instead, in accordance with paragraph (f)(3)(iv) of this section, E may deduct these amounts under § 1.162-1 in the taxable year the amounts are paid provided the amounts otherwise constitute deductible ordinary and necessary expenses incurred in carrying on a trade or business.

Example 6. De minimis safe harbor; non-invoice additional costs. F is a corporation that provides consulting services to its customer. F does not have an AFS, but F has accounting procedures in place at the beginning of Year 1 to expense amounts paid for property costing less than $500. In Year 1, F pays $600 to an interior designer to shop for, evaluate, and make recommendations regarding purchasing new furniture for F's conference room. As a result of the interior designer's recommendations, F acquires a conference table for $500 and 10 chairs for $300 each. In Year 1, F receives an invoice from the interior designer for $600 for his services, and F receives a separate invoice from the furniture supplier indicating a total amount due of $500 for the table and $300 for each chair. For Year 1, F treats the amount paid for the table and each chair as an expense on its books and records, and F elects to use the de minimis safe harbor for amounts paid for tangible property that qualify under the safe harbor. The amount paid to the interior designer is a cost of facilitating the acquisition of the table and chairs under § 1.263(a)-2(f). Under paragraph (f)(3)(i) of this section, F is not required to include in the cost of tangible property the additional costs of acquiring such property if these costs are not included in the same invoice as the tangible property. Thus, F is not required to

include a pro rata allocation of the amount paid to the interior designer to determine the application of the de minimis safe harbor to the table and the chairs. Accordingly, the amounts paid by F for the table and each chair meet the requirements for the de minimis safe harbor under paragraph (f)(1)(ii) of this section, and F may not capitalize the amounts paid for the table or each chair under paragraph (f)(1) of this section. In addition, F is not required to capitalize the amounts paid to the interior designer as a cost that facilitates the acquisition of tangible property under § 1.263(a)-2(f)(3)(i). Instead, F may deduct the amounts paid for the table, chairs, and interior designer under § 1.162-1 in the taxable year the amounts are paid provided the amounts otherwise constitute deductible ordinary and necessary expenses incurred in carrying on a trade or business.

Example 7. De minimis safe harbor; 12-month economic useful life. G operates a restaurant. In Year 1, G purchases 10 hand-held point-of-service devices at $300 each for a total cost of $3,000 as indicated by invoice. G also purchases 3 tablet computers at $500 each for a total cost of $1,500 as indicated by invoice. Assume each point-of-service device and each tablet computer has an economic useful life of 12 months or less, beginning when they are used in G's business. Assume that each device and each tablet is a unit of property under § 1.263(a)-3(e). G does not have an AFS, but G has accounting procedures in place at the beginning of Year 1 to expense amounts paid for property costing $300 or less and to expense amounts paid for property with an economic useful life of 12 months or less. Thus, G expenses the amounts paid for the hand-held devices on its books and records because each device costs $300. G also expenses the amounts paid for the tablet computers on its books and records because the computers have an economic useful life of 12 months of less, beginning when they are used. The amounts paid for the hand-held devices and the tablet computers meet the requirements for the de minimis safe harbor under paragraph (f)(1)(ii) of this section. If G elects to apply the de minimis safe harbor under this paragraph (f) in Year 1, G may not capitalize the amounts paid for the hand-held devices, the tablet computers, or any other amounts meeting the criteria for the de minimis safe harbor under paragraph (f)(1) of this section. Instead, in accordance with paragraph (f)(3)(iv) of this section, G may deduct the amounts paid for the hand-held devices and tablet computers under § 1.162-1 in the taxable year the amounts are paid provided the amounts otherwise constitute deductible ordinary and necessary business expenses incurred in carrying on a trade or business.

Example 8. De minimis safe harbor; limitation. Assume the facts as in *Example 7,* except G purchases the 3 tablet computers at $600 each for a total cost of $1,800. The amounts paid for the tablet computers do not meet the de minimis rule safe harbor under paragraphs (f)(1)(ii) and (f)(3)(vii) of this section because the cost of each computer exceeds $500. Therefore, the amounts paid for the tablet computers may not be deducted under the safe harbor.

Example 9. De minimis safe harbor; materials and supplies. H is a corporation that provides consulting services to its customers. H has an AFS and a written accounting policy at the beginning of the taxable year to expense amounts paid for property costing $5,000 or less. In Year 1, H purchases 1,000 computers at $500 each for a total cost of $500,000. Assume that each computer is a unit of property under § 1.263(a)-3(e) and is not a material or supply under § 1.162-3. In addition, H purchases 200 office chairs at $100 each for a total cost of $20,000 and 250 customized briefcases at $80 each for a total cost of $20,000. Assume that each office chair and each briefcase is a material or supply under § 1.162-3(c)(1). H treats the amounts paid for the computers, office chairs, and briefcases as expenses on its AFS. The amounts paid for computers, office chairs, and briefcases meet the requirements for the de minimis safe

harbor under paragraph (f)(1)(i) of this section. If H elects to apply the de minimis safe harbor under this paragraph (f) in Year 1, H may not capitalize the amounts paid for the 1,000 computers, the 200 office chairs, and the 250 briefcases under paragraph (f)(1) of this section. H may deduct the amounts paid for the computers, the office chairs, and the briefcases under § 1.162-1 in the taxable year the amounts are paid provided the amounts otherwise constitute deductible ordinary and necessary expenses incurred in carrying on a trade or business.

Example 10. De minimis safe harbor; coordination with section 263A. J is a member of a consolidated group for Federal income tax purposes. J's financial results are reported on the consolidated AFS for the affiliated group. J's affiliated group has a written accounting policy at the beginning of Year 1, which is followed by J, to expense amounts paid for property costing less than $1,000 or that has an economic useful life of 12 months or less. In Year 1, J acquires jigs, dies, molds, and patterns for use in the manufacture of J's products. Assume each jig, die, mold, and pattern is a unit of property under § 1.263(a)-3(e) and costs less than $1,000. In Year 1, J begins using the jigs, dies, molds and patterns to manufacture its products. Assume these items are materials and supplies under § 1.162-3(c)(1)(iii), and J elects to apply the de minimis safe harbor under paragraph (f)(1)(i) of this section to amounts qualifying under the safe harbor in Year 1. Under paragraph (f)(3)(v) of this section, the amounts paid for the jigs, dies, molds, and patterns may be subject to capitalization under section 263A if the amounts paid for these tangible properties comprise the direct or allocable indirect costs of other property produced by the taxpayer or property acquired for resale.

Example 11. De minimis safe harbor; anti-abuse rule. K is a corporation that provides hauling services to its customers. In Year 1, K decides to purchase a truck to use in its business. K does not have an AFS. K has accounting procedures in place at the beginning of Year 1 to expense amounts paid for property costing less than $500. K arranges to purchase a used truck for a total of $1,500. Prior to the acquisition, K requests the seller to provide multiple invoices for different parts of the truck. Accordingly, the seller provides K with four invoices during Year 1—one invoice of $500 for the cab, one invoice of $500 for the engine, one invoice of $300 for the trailer, and a fourth invoice of $200 for the tires. K treats the amounts paid under each invoice as an expense on its books and records. K elects to apply the de minimis safe harbor under paragraph (f) of this section in Year 1 and does not capitalize the amounts paid for each invoice pursuant to the safe harbor. Under paragraph (f)(6) of this section, K has applied the de minimis rule to amounts substantiated with invoices created to componentize property that is generally acquired as a single unit of tangible property in the taxpayer's type of business, and this property, if treated as single unit, would exceed the limitations provided under the de minimis rule. Accordingly, K is deemed to manipulate the transaction to acquire the truck with the intent to avoid the purposes of this paragraph (f). As a result, K may not apply the de minimis rule to these amounts and is subject to appropriate adjustments.

(g) ***Accounting method changes.*** Except for paragraph (f) of this section (the de minimis safe harbor election), a change to comply with this section is a change in method of accounting to which the provisions of sections 446 and 481 and the accompanying regulations apply. A taxpayer seeking to change to a method of accounting permitted in this section must secure the consent of the Commissioner in accordance with § 1.446-1(e) and follow the administrative procedures issued under § 1.446-1(e)(3)(ii) for obtaining the Commissioner's consent to change its accounting method.

(h) ***Effective/applicability date*** —

(1) ***In general.*** Except for paragraph (f) of this section, this section generally applies to taxable years beginning on or after January 1, 2014. Paragraph (f) of this section applies to amounts paid in taxable years beginning on or after January 1, 2014. Except as provided in paragraph (h)(1) and paragraph (h)(2) of this section, § 1.263(a)-1 as contained in 26 CFR part 1 edition revised as of April 1, 2011, applies to taxable years beginning before January 1, 2014.

(2) ***Early application of this section*** —

(i) ***In general.*** Except for paragraph (f) of this section, a taxpayer may choose to apply this section to taxable years beginning on or after January 1, 2012. A taxpayer may choose to apply paragraph (f) of this section to amounts paid in taxable years beginning on or after January 1, 2012.

(ii) ***Transition rule for de minimis safe harbor election on 2012 or 2013 returns.*** If under paragraph (h)(2)(i) of this section, a taxpayer chooses to make the election to apply the de minimis safe harbor under paragraph (f) of this section for amounts paid in its taxable year beginning on or after January 1, 2012, and ending on or before September 19, 2013 (applicable taxable year), and the taxpayer did not make the election specified in paragraph (f)(5) of this section on its timely filed original Federal tax return for the applicable taxable year, the taxpayer must make the election specified in paragraph (f)(5) of this section for the applicable taxable year by filing an amended Federal tax return for the applicable taxable year on or before 180 days from the due date including extensions of the taxpayer's Federal tax return for the applicable taxable year, notwithstanding that the taxpayer may not have extended the due date.

(3) ***Optional application of TD 9564.*** A taxpayer may choose to apply § 1.263(a)-1T as contained in TD 9564 (76 FR 81060) December 27, 2011, to taxable years beginning on or after January 1, 2012, and before January 1, 2014.

[T.D. 9636, 78 FR 57710, Sept. 19, 2013, as amended by T.D. 9636, 79 FR 42191, July 21, 2014]

§ 1.263(a)-2 Amounts paid to acquire or produce tangible property.

(a) ***Overview.*** This section provides rules for applying section 263(a) to amounts paid to acquire or produce a unit of real or personal property. Paragraph (b) of this section contains definitions. Paragraph (c) of this section contains the rules for coordinating this section with other provisions of the Internal Revenue Code (Code). Paragraph (d) of this section provides the general requirement to capitalize amounts paid to acquire or produce a unit of real or personal property. Paragraph (e) of this section provides the requirement to capitalize amounts paid to defend or perfect title to real or personal property. Paragraph (f) of this section provides the rules for determining the extent to which taxpayers must capitalize transaction costs related to the acquisition of tangible property. Paragraphs (g) and (h) of this section address the treatment and recovery of capital expenditures. Paragraph (i) of this section provides for changes in methods of accounting to comply with this section, and paragraph (j) of this section provides the effective and applicability dates for the rules under this section.

(b) ***Definitions.*** For purposes of this section, the following definitions apply:

(1) ***Amount paid.*** In the case of a taxpayer using an accrual method of accounting, the terms *amount paid* and *payment* mean a liability incurred (within the meaning of § 1.446-1(c)(1)(ii)). A liability may not be taken into account under this section prior to the taxable year during which the liability is incurred.

(2) ***Personal property*** means tangible personal property as defined in § 1.48-1(c).

(3) ***Real property*** means land and improvements thereto, such as buildings or other inherently permanent structures (including items that are structural components of the buildings or structures) that are not personal property as defined in paragraph (b)(2) of this section. Any property that constitutes other tangible property under § 1.48-1(d) is treated as real property for purposes of this section. Local law is not controlling in determining whether property is real property for purposes of this section.

(4) ***Produce*** means construct, build, install, manufacture, develop, create, raise, or grow. This definition is intended to have the same meaning as the definition used for purposes of section 263A(g)(1) and § 1.263A-2(a)(1)(i), except that improvements are excluded from the definition in this paragraph (b)(4) and are separately defined and addressed in § 1.263(a)-3.

(c) ***Coordination with other provisions of the Code*** —

(1) ***In general.*** Nothing in this section changes the treatment of any amount that is specifically provided for under any provision of the Code or the Treasury Regulations other than section 162(a) or section 212 and the regulations under those sections. For example, see section 263A requiring taxpayers to capitalize the direct and allocable indirect costs of property produced by the taxpayer and property acquired for resale. See also section 195 requiring taxpayers to capitalize certain costs as start-up expenditures.

(2) ***Materials and supplies.*** Nothing in this section changes the treatment of amounts paid to acquire or produce property that is properly treated as materials and supplies under § 1.162-3.

(d) ***Acquired or produced tangible property*** —

(1) ***Requirement to capitalize.*** Except as provided in § 1.162-3 (relating to materials and supplies) and in § 1.263(a)-1(f) (providing a de minimis safe harbor election), a taxpayer must capitalize amounts paid to acquire or produce a unit of real or personal property (as determined under § 1.263(a)-3(e)), including leasehold improvements, land and land improvements, buildings, machinery and equipment, and furniture and fixtures. Section 1.263(a)-3(f) provides the rules for determining whether amounts are for leasehold improvements. Amounts paid to acquire or produce a unit of real or personal property include the invoice price, transaction costs as determined under paragraph (f) of this section, and costs for work performed prior to the date that the unit of property is placed in service by the taxpayer (without regard to any applicable convention under section 168(d)). A taxpayer also must capitalize amounts paid to acquire real or personal property for resale.

(2) ***Examples.*** The following examples illustrate the rules of this paragraph (d). Unless otherwise provided, assume that the taxpayer does not elect the de minimis safe harbor under § 1.263(a)-1(f) and that the property is not acquired for resale under section 263A.

Example 1. Acquisition of personal property. A purchases new cash registers for use in its retail store located in leased space in a shopping mall. Assume each cash register is a unit of property as determined under § 1.263(a)-3(e) and is not a material or supply under § 1.162-3. A must capitalize under paragraph (d)(1) of this section the amount paid to acquire each cash register.

Example 2. Acquisition of personal property that is a material or supply; coordination with § 1.162-3. B operates a fleet of aircraft. In Year 1, B acquires a stock of component parts, which it intends to use to maintain and repair its aircraft. Assume that each component part is a material or supply under § 1.162-3(c)(1) and B does not make elections under § 1.162-3(d) to treat the materials

and supplies as capital expenditures. In Year 2, B uses the component parts in the repair and maintenance of its aircraft. Because the parts are materials and supplies under § 1.162-3, B is not required to capitalize the amounts paid for the parts under paragraph (d)(1) of this section. Rather, to determine the treatment of these amounts, B must apply the rules under § 1.162-3, governing the treatment of materials and supplies.

Example 3. Acquisition of unit of personal property; coordination with § 1.162-3. C operates a rental business that rents out a variety of small individual items to customers (rental items). C maintains a supply of rental items on hand to replace worn or damaged items. C purchases a large quantity of rental items to be used in its business. Assume that each of these rental items is a unit of property under § 1.263(a)-3(e). Also assume that a portion of the rental items are materials and supplies under § 1.162-3(c)(1). Under paragraph (d)(1) of this section, C must capitalize the amounts paid for the rental items that are not materials and supplies under § 1.162-3(c)(1). However, C must apply the rules in § 1.162-3 to determine the treatment of the rental items that are materials and supplies under § 1.162-3(c)(1).

Example 4. Acquisition or production cost. D purchases and produces jigs, dies, molds, and patterns for use in the manufacture of D's products. Assume that each of these items is a unit of property as determined under § 1.263(a)-3(e) and is not a material and supply under § 1.162-3(c)(1). D is required to capitalize under paragraph (d)(1) of this section the amounts paid to acquire and produce the jigs, dies, molds, and patterns.

Example 5. Acquisition of land. F purchases a parcel of undeveloped real estate. F must capitalize under paragraph (d)(1) of this section the amount paid to acquire the real estate. See paragraph (f) of this section for the treatment of amounts paid to facilitate the acquisition of real property.

Example 6. Acquisition of building. G purchases a building. G must capitalize under paragraph (d)(1) of this section the amount paid to acquire the building. See paragraph (f) of this section for the treatment of amounts paid to facilitate the acquisition of real property.

Example 7. Acquisition of property for resale and production of property for sale; coordination with section 263A. H purchases goods for resale and produces other goods for sale. H must capitalize under paragraph (d)(1) of this section the amounts paid to acquire and produce the goods. See section 263A for the amounts required to be capitalized to the property produced or to the property acquired for resale.

Example 8. Production of building; coordination with section 263A. J constructs a building. J must capitalize under paragraph (d)(1) of this section the amount paid to construct the building. See section 263A for the costs required to be capitalized to the real property produced by J.

Example 9. Acquisition of assets constituting a trade or business. K owns tangible and intangible assets that constitute a trade or business. L purchases all the assets of K in a taxable transaction. L must capitalize under paragraph (d)(1) of this section the amount paid for the tangible assets of K. See § 1.263(a)-4 for the treatment of amounts paid to acquire or create intangibles and § 1.263(a)-5 for the treatment of amounts paid to facilitate the acquisition of assets that constitute a trade or business. See section 1060 for special allocation rules for certain asset acquisitions.

Example 10. Work performed prior to placing the property in service. In Year 1, M purchases a building for use as a business office. Prior to placing the building in service, M pays amounts to repair cement steps, refinish wood floors, patch holes in walls, and paint the interiors and exteriors of

the building. In Year 2, M places the building in service and begins using the building as its business office. Assume that the work that M performs does not constitute an improvement to the building or its structural components under § 1.263(a)-3. Under § 1.263-3(e)(2)(i), the building and its structural components is a single unit of property. Under paragraph (d)(1) of this section, the amounts paid must be capitalized as amounts to acquire the building unit of property because they were for work performed prior to M's placing the building in service.

Example 11. Work performed prior to placing the property in service. In January Year 1, N purchases a new machine for use in an existing production line of its manufacturing business. Assume that the machine is a unit of property under § 1.263(a)-3(e) and is not a material or supply under § 1.162-3. N pays amounts to install the machine, and after the machine is installed, N pays amounts to perform a critical test on the machine to ensure that it will operate in accordance with quality standards. On November 1, Year 1, the critical test is complete, and N places the machine in service on the production line. N pays amounts to perform periodic quality control testing after the machine is placed in service. Under paragraph (d)(1) of this section, the amounts paid for the installation and the critical test performed before the machine is placed in service must be capitalized by N as amounts to acquire the machine. However, amounts paid for periodic quality control testing after N placed the machine in service are not required to be capitalized as amounts paid to acquire the machine.

(e) ***Defense or perfection of title to property*** —

(1) ***In general.*** Amounts paid to defend or perfect title to real or personal property are amounts paid to acquire or produce property within the meaning of this section and must be capitalized.

(2) ***Examples.*** The following examples illustrate the rule of this paragraph (e):

Example 1. Amounts paid to contest condemnation X owns real property located in County. County files an eminent domain complaint condemning a portion of X's property to use as a roadway. X hires an attorney to contest the condemnation. The amounts that X paid to the attorney must be capitalized because they were to defend X's title to the property.

Example 2. Amounts paid to invalidate ordinance. Y is in the business of quarrying and supplying for sale sand and stone in a certain municipality. Several years after Y establishes its business, the municipality in which it is located passes an ordinance that prohibits the operation of Y's business. Y incurs attorney's fees in a successful prosecution of a suit to invalidate the municipal ordinance. Y prosecutes the suit to preserve its business activities and not to defend Y's title in the property. Therefore, the attorney's fees that Y paid are not required to be capitalized under paragraph (e)(1) of this section.

Example 3. Amounts paid to challenge building line. The board of public works of a municipality establishes a building line across Z's business property, adversely affecting the value of the property. Z incurs legal fees in unsuccessfully litigating the establishment of the building line. The amounts Z paid to the attorney must be capitalized because they were to defend Z's title to the property.

(f) ***Transaction costs*** —

(1) ***In general.*** Except as provided in § 1.263(a)-1(f)(3)(i) (for purposes of the de minimis safe harbor), a taxpayer must capitalize amounts paid to facilitate the acquisition of real or personal property. See § 1.263(a)-5 for the treatment of amounts paid to facilitate the acquisition of assets that constitute a trade or business. See § 1.167(a)-5 for allocations of facilitative costs between depreciable and non-depreciable property.

(2) ***Scope of facilitate*** —

(i) ***In general.*** Except as otherwise provided in this section, an amount is paid to facilitate the acquisition of real or personal property if the amount is paid in the process of investigating or otherwise pursuing the acquisition. Whether an amount is paid in the process of investigating or otherwise pursuing the acquisition is determined based on all of the facts and circumstances. In determining whether an amount is paid to facilitate an acquisition, the fact that the amount would (or would not) have been paid but for the acquisition is relevant but is not determinative. Amounts paid to facilitate an acquisition include, but are not limited to, inherently facilitative amounts specified in paragraph (f)(2)(ii) of this section.

(ii) ***Inherently facilitative amounts.*** An amount is paid in the process of investigating or otherwise pursuing the acquisition of real or personal property if the amount is inherently facilitative. An amount is inherently facilitative if the amount is paid for—

(A) Transporting the property (for example, shipping fees and moving costs);

(B) Securing an appraisal or determining the value or price of property;

(C) Negotiating the terms or structure of the acquisition and obtaining tax advice on the acquisition;

(D) Application fees, bidding costs, or similar expenses;

(E) Preparing and reviewing the documents that effectuate the acquisition of the property (for example, preparing the bid, offer, sales contract, or purchase agreement);

(F) Examining and evaluating the title of property;

(G) Obtaining regulatory approval of the acquisition or securing permits related to the acquisition, including application fees;

(H) Conveying property between the parties, including sales and transfer taxes, and title registration costs;

(I) Finders' fees or brokers' commissions, including contingency fees (defined in paragraph (f)(3)(iii) of this section);

(J) Architectural, geological, survey, engineering, environmental, or inspection services pertaining to particular properties; or

(K) Services provided by a qualified intermediary or other facilitator of an exchange under section 1031.

(iii) ***Special rule for acquisitions of real property*** —

(A) ***In general.*** Except as provided in paragraph (f)(2)(ii) of this section (relating to inherently facilitative amounts), an amount paid by the taxpayer in the process of investigating or otherwise pursuing the acquisition of real property does not facilitate the acquisition if it relates to activities performed in the process of determining whether to acquire real property and which real property to acquire.

(B) ***Acquisitions of real and personal property in a single transaction.*** An amount paid by the taxpayer in the process of investigating or otherwise pursuing the acquisition of personal property facilitates the acquisition of such personal property, even if such property is acquired in a single transaction that also includes the acquisition of real property subject to the special rule set out in paragraph (f)(2)(iii)(A) of this section. A taxpayer may use a reasonable allocation method to determine which costs facilitate the acquisition of personal property and which costs relate to the acquisition of real property and are subject to the special rule of paragraph (f)(2)(iii)(A) of this section.

(iv) ***Employee compensation and overhead costs*** —

(A) ***In general.*** For purposes of paragraph (f) of this section, amounts paid for employee compensation (within the meaning of § 1.263(a)-4(e)(4)(ii)) and overhead are treated as amounts that do not facilitate the acquisition of real or personal property. However, section 263A provides rules for employee compensation and overhead costs required to be capitalized to property produced by the taxpayer or to property acquired for resale.

(B) ***Election to capitalize.*** A taxpayer may elect to treat amounts paid for employee compensation or overhead as amounts that facilitate the acquisition of property. The election is made separately for each acquisition and applies to employee compensation or overhead, or both. For example, a taxpayer may elect to treat overhead, but not employee compensation, as amounts that facilitate the acquisition of property. A taxpayer makes the election by treating the amounts to which the election applies as amounts that facilitate the acquisition in the taxpayer's timely filed original Federal tax return (including extensions) for the taxable year during which the amounts are paid. Sections 301.9100-1 through 301.9100-3 of this chapter provide the rules governing extensions of the time to make regulatory elections. In the case of an S corporation or a partnership, the election is made by the S corporation or by the partnership, and not by the shareholders or partners. A taxpayer may revoke an election made under this paragraph (f)(2)(iv)(B) with respect to each acquisition only by filing a request for a private letter ruling and obtaining the Commissioner's consent to revoke the election. The Commissioner may grant a request to revoke this election if the taxpayer acted reasonably and in good faith and the revocation will not prejudice the interests of Government. See generally § 301.9100-3 of this chapter. The manner of electing and revoking the election to capitalize under this paragraph (f)(2)(iv)(B) may be modified through guidance of general applicability (see §§ 606.601(d)(2) and 601.602 of this section). An election may not be made or revoked through the filing of an application for change in accounting method or, before obtaining the Commissioner's consent to make the late election or to revoke the election, by filing an amended Federal tax return.

(3) ***Treatment of transaction costs*** —

(i) ***In general.*** Except as provided under § 1.263(a)-1(f)(3)(i) (for purposes of the de minimis safe harbor), all amounts paid to facilitate the acquisition of real or personal property are capital expenditures. Facilitative amounts allocable to real or personal property must be included in the basis of the property acquired.

(ii) ***Treatment of inherently facilitative amounts allocable to property not acquired.*** Inherently facilitative amounts allocable to real or personal property are capital expenditures related to such property, even if the property is not eventually acquired. Except for contingency fees as defined in paragraph (f)(3)(iii) of this section, inherently facilitative amounts allocable to real or personal property not acquired may be allocated to those properties and recovered as appropriate in accordance with the applicable provisions of the Code and the Treasury Regulations (for example, sections 165, 167, or 168). See paragraph (h) of this section for the recovery of capitalized amounts.

(iii) ***Contingency fees.*** For purposes of this section, a contingency fee is an amount paid that is contingent on the successful closing of the acquisition of real or personal property. Contingency fees must be included in the basis of the property acquired and may not be allocated to the property not acquired.

(4) ***Examples.*** The following examples illustrate the rules of paragraph (f) of this section. For purposes of these examples, assume that the taxpayer does not elect the de minimis safe harbor under § 1.263(a)-1(f):

Example 1. Broker's fees to facilitate an acquisition A decides to purchase a building in which to relocate its offices and hires a real estate broker to find a suitable building. A pays fees to the broker to find property for A to acquire. Under paragraph (f)(2)(ii)(I) of this section, A must capitalize the amounts paid to the broker because these costs are inherently facilitative of the acquisition of real property.

Example 2. Inspection and survey costs to facilitate an acquisition B decides to purchase Building X and pays amounts to third-party contractors for a termite inspection and an environmental survey of Building X. Under paragraph (f)(2)(ii)(J) of this section, B must capitalize the amounts paid for the inspection and the survey of the building because these costs are inherently facilitative of the acquisition of real property.

Example 3. Moving costs to facilitate an acquisition C purchases all the assets of D and, in connection with the purchase, hires a transportation company to move storage tanks from D's plant to C's plant. Under paragraph (f)(2)(ii)(A) of this section, C must capitalize the amount paid to move the storage tanks from D's plant to C's plant because this cost is inherently facilitative to the acquisition of personal property.

Example 4. Geological and geophysical costs; coordination with other provisions E is in the business of exploring, purchasing, and developing properties in the United States for the production of oil and gas. E considers acquiring a particular property but first incurs costs for the services of an engineering firm to perform geological and geophysical studies to determine if the property is suitable for oil or gas production. Assume that the amounts that E paid to the engineering firm constitute geological and geophysical expenditures under section 167(h). Although the amounts that E paid for the geological and geophysical services are inherently facilitative to the acquisition of real property under paragraph (f)(2)(ii)(J) of this section, E is not required to

include those amounts in the basis of the real property acquired. Rather, under paragraph (c) of this section, E must capitalize these costs separately and amortize such costs as required under section 167(h) (addressing the amortization of geological and geophysical expenditures).

Example 5. Scope of facilitate F is in the business of providing legal services to clients. F is interested in acquiring a new conference table for its office. F hires and incurs fees for an interior designer to shop for, evaluate, and make recommendations to F regarding which new table to acquire. Under paragraphs (f)(1) and (2) of this section, F must capitalize the amounts paid to the interior designer to provide these services because they are paid in the process of investigating or otherwise pursuing the acquisition of personal property.

Example 6. Transaction costs allocable to multiple properties G, a retailer, wants to acquire land for the purpose of building a new distribution facility for its products. G considers various properties on Highway X in State Y. G incurs fees for the services of an architect to advise and evaluate the suitability of the sites for the type of facility that G intends to construct on the selected site. G must capitalize the architect fees as amounts paid to acquire land because these amounts are inherently facilitative to the acquisition of land under paragraph (f)(2)(ii)(J) of this section.

Example 7. Transaction costs; coordination with section 263A H, a retailer, wants to acquire land for the purpose of building a new distribution facility for its products. H considers various properties on Highway X in State Y. H incurs fees for the services of an architect to prepare preliminary floor plans for a building that H could construct at any of the sites. Under these facts, the architect's fees are not facilitative to the acquisition of land under paragraph (f) of this section. Therefore, H is not required to capitalize the architect fees as amounts paid to acquire land. However, the amounts paid for the architect's fees may be subject to capitalization under section 263A if these amounts comprise the direct or allocable indirect cost of property produced by H, such as the building.

Example 8. Special rule for acquisitions of real property J owns several retail stores. J decides to examine the feasibility of opening a new store in City X. In October, Year 1, J hires and incurs costs for a development consulting firm to study City X and perform market surveys, evaluate zoning and environmental requirements, and make preliminary reports and recommendations as to areas that J should consider for purposes of locating a new store. In December, Year 1, J continues to consider whether to purchase real property in City X and which property to acquire. J hires, and incurs fees for, an appraiser to perform appraisals on two different sites to determine a fair offering price for each site. In March, Year 2, J decides to acquire one of these two sites for the location of its new store. At the same time, J determines not to acquire the other site. Under paragraph (f)(2)(iii) of this section, J is not required to capitalize amounts paid to the development consultant in Year 1 because the amounts relate to activities performed in the process of determining whether to acquire real property and which real property to acquire, and the amounts are not inherently facilitative costs under paragraph (f)(2)(ii) of this section. However, J must capitalize amounts paid to the appraiser in Year 1 because the appraisal costs are inherently facilitative costs under paragraph (f)(2)(ii)(B) of this section. In Year 2, J must include the appraisal costs allocable to property acquired in the basis of the property acquired. In addition, J may recover the appraisal costs allocable to the property not acquired in accordance with paragraphs (f)(3)(ii) and (h) of this section. See, for example, § 1.165-2 for losses on the permanent withdrawal of non-depreciable property.

Example 9. Contingency fee K owns several restaurant properties. K decides to open a new restaurant in City X. In October, Year 1, K hires a real estate consultant to identify potential property upon which K may locate its restaurant, and is obligated to compensate the consultant upon the acquisition of property. The real estate consultant identifies three properties, and K decides to acquire one of those properties. Upon closing of the acquisition of that property, K pays the consultant its fee. The amount paid to the consultant constitutes a contingency fee under paragraph (f)(3)(iii) of this section because the payment is contingent on the successful closing of the acquisition of property. Accordingly, under paragraph (f)(3)(iii) of this section, K must include the amount paid to the consultant in the basis of the property acquired. K is not permitted to allocate the amount paid between the properties acquired and not acquired.

Example 10. Employee compensation and overhead L, a freight carrier, maintains an acquisition department whose sole function is to arrange for the purchase of vehicles and aircraft from manufacturers or other parties to be used in its freight carrying business. As provided in paragraph (f)(2)(iv)(A) of this section, L is not required to capitalize any portion of the compensation paid to employees in its acquisition department or any portion of its overhead allocable to its acquisition department. However, under paragraph (f)(2)(iv)(B) of this section, L may elect to capitalize the compensation and/or overhead costs allocable to the acquisition of a vehicle or aircraft by treating these amounts as costs that facilitate the acquisition of that property in its timely filed original Federal tax return for the year the amounts are paid.

(g) ***Treatment of capital expenditures.*** Amounts required to be capitalized under this section are capital expenditures and must be taken into account through a charge to capital account or basis, or in the case of property that is inventory in the hands of a taxpayer, through inclusion in inventory costs.

(h) ***Recovery of capitalized amounts*** —

(1) ***In general.*** Amounts that are capitalized under this section are recovered through depreciation, cost of goods sold, or by an adjustment to basis at the time the property is placed in service, sold, used, or otherwise disposed of by the taxpayer. Cost recovery is determined by the applicable provisions of the Code and regulations relating to the use, sale, or disposition of property.

(2) ***Examples.*** The following examples illustrate the rule of paragraph (h)(1) of this section. For purposes of these examples, assume that the taxpayer does not elect the de minimis safe harbor under § 1.263(a)-1(f).

Example 1. Recovery when property placed in service X owns a 10-unit apartment building. The refrigerator in one of the apartments stops functioning, and X purchases a new refrigerator to replace the old one. X pays for the acquisition, delivery, and installation of the new refrigerator. Assume that the refrigerator is the unit of property, as determined under § 1.263(a)-3(e), and is not a material or supply under § 1.162-3. Under paragraph (d)(1) of this section, X is required to capitalize the amounts paid for the acquisition, delivery, and installation of the refrigerator. Under this paragraph (h), the capitalized amounts are recovered through depreciation, which begins when the refrigerator is placed in service by X.

Example 2. Recovery when property used in the production of property Y operates a plant where it manufactures widgets. Y purchases a tractor loader to move raw materials into and around the plant for use in the manufacturing process. Assume that the tractor loader is a unit of property, as determined under § 1.263(a)-3(e), and is not a material or supply under § 1.162-3. Under paragraph (d)(1) of this section, Y is required to capitalize the amounts paid to acquire the tractor loader. Under this paragraph (h), the capitalized amounts are recovered through

depreciation, which begins when Y places the tractor loader in service. However, because the tractor loader is used in the production of property, under section 263A the cost recovery (that is, the depreciation) may also be capitalized to Y's property produced, and, consequently, recovered through cost of goods sold. See § 1.263A-1(e)(3)(ii)(I).

(i) ***Accounting method changes.*** Unless otherwise provided under this section, a change to comply with this section is a change in method of accounting to which the provisions of sections 446 and 481 and the accompanying regulations apply. A taxpayer seeking to change to a method of accounting permitted in this section must secure the consent of the Commissioner in accordance with § 1.446-1(e) and follow the administrative procedures issued under § 1.446-1(e)(3)(ii) for obtaining the Commissioner's consent to change its accounting method.

(j) ***Effective/applicability date*** —

(1) ***In general.*** Except for paragraphs (f)(2)(iii), (f)(2)(iv), and (f)(3)(ii) of this section, this section generally applies to taxable years beginning on or after January 1, 2014. Paragraphs (f)(2)(iii), (f)(2)(iv), and (f)(3)(ii) of this section apply to amounts paid in taxable years beginning on or after January 1, 2014. Except as provided in paragraphs (j)(1) and (j)(2) of this section, § 1.263(a)-2 as contained in 26 CFR part 1 edition revised as of April 1, 2011, applies to taxable years beginning before January 1, 2014.

(2) ***Early application of this section*** —

(i) ***In general.*** Except for paragraphs (f)(2)(iii), (f)(2)(iv), and (f)(3)(ii) of this section of this section, a taxpayer may choose to apply this section to taxable years beginning on or after January 1, 2012. A taxpayer may choose to apply paragraphs (f)(2)(iii), (f)(2)(iv), and (f)(3)(ii) of this section to amounts paid in taxable years beginning on or after January 1, 2012.

(ii) ***Transition rule for election to capitalize employee compensation and overhead costs on 2012 or 2013 returns.*** If under paragraph (j)(2)(i) of this section, a taxpayer chooses to make the election to capitalize employee compensation and overhead costs under paragraph (f)(2)(iv)(B) of this section for amounts paid in its taxable year beginning on or after January 1, 2012, and ending on or before September 19, 2013 (applicable taxable year), and the taxpayer did not make the election specified in paragraph (f)(2)(iv)(B) of this section on its timely filed original Federal tax return for the applicable taxable year, the taxpayer must make the election specified in paragraph (f)(2)(iv)(B) of this section for the applicable taxable year by filing an amended Federal tax return for the applicable taxable year on or before 180 days from the due date including extensions of the taxpayer's Federal tax return for the applicable taxable year, notwithstanding that the taxpayer may not have extended the due date.

(3) ***Optional application of TD 9564.*** Except for § 1.263(a)-2T(f)(2)(iii), (f)(2)(iv), (f)(3)(ii), and (g), a taxpayer may choose to apply § 1.263(a)-2T as contained in TD 9564 (76 FR 81060) December 27, 2011, to taxable years beginning on or after January 1, 2012, and before January 1, 2014. A taxpayer may choose to apply § 1.263(a)-2T(f)(2)(iii), (f)(2)(iv), (f)(3)(ii) and (g) as contained in TD 9564 (76 FR 81060) December 27, 2011, to amounts paid in taxable years beginning on or after January 1, 2012, and before January 1, 2014.

[T.D. 9636, 78 FR 57714, Sept. 19, 2013, as amended by T.D. 9636, 79 FR 42191, July 21, 2014]

§ 1.263(a)-3 Amounts paid to improve tangible property.

(a) ***Overview.*** This section provides rules for applying section 263(a) to amounts paid to improve tangible property. Paragraph (b) of this section provides definitions. Paragraph (c) of this section provides rules for coordinating this section with other provisions of the Internal Revenue Code (Code). Paragraph (d) of this section provides the requirement to capitalize amounts paid to improve tangible property and provides the general rules for determining whether a unit of property is improved. Paragraph (e) of this section provides the rules for determining the appropriate unit of property. Paragraph (f) of this section provides rules for leasehold improvements. Paragraph (g) of this section provides special rules for determining improvement costs in particular contexts, including indirect costs incurred during an improvement, removal costs, aggregation of related costs, and regulatory compliance costs. Paragraph (h) of this section provides a safe harbor for small taxpayers. Paragraph (i) provides a safe harbor for routine maintenance costs. Paragraph (j) of this section provides rules for determining whether amounts are paid for betterments to the unit of property. Paragraph (k) of this section provides rules for determining whether amounts are paid to restore the unit of property. Paragraph (l) of this section provides rules for amounts paid to adapt the unit of property to a new or different use. Paragraph (m) of this section provides an optional regulatory accounting method. Paragraph (n) of this section provides an election to capitalize repair and maintenance costs consistent with books and records. Paragraphs (o) and (p) of this section provide for the treatment and recovery of amounts capitalized under this section. Paragraphs (q) and (r) of this section provide for accounting method changes and state the effective/applicability date for the rules in this section.

(b) ***Definitions.*** For purposes of this section, the following definitions apply:

(1) ***Amount paid.*** In the case of a taxpayer using an accrual method of accounting, the terms *amounts paid* and *payment* mean a liability incurred (within the meaning of § 1.446-1(c)(1)(ii)). A liability may not be taken into account under this section prior to the taxable year during which the liability is incurred.

(2) ***Personal property*** means tangible personal property as defined in § 1.48-1(c).

(3) ***Real property*** means land and improvements thereto, such as buildings or other inherently permanent structures (including items that are structural components of the buildings or structures) that are not personal property as defined in paragraph (b)(2) of this section. Any property that constitutes other tangible property under § 1.48-1(d) is also treated as real property for purposes of this section. Local law is not controlling in determining whether property is real property for purposes of this section.

(4) ***Owner*** means the taxpayer that has the benefits and burdens of ownership of the unit of property for Federal income tax purposes.

(c) ***Coordination with other provisions of the Code*** —

(1) ***In general.*** Nothing in this section changes the treatment of any amount that is specifically provided for under any provision of the Code or the regulations other than section 162(a) or section 212 and the regulations under those sections. For example, see section 263A requiring taxpayers to capitalize the direct and allocable indirect costs of property produced and property acquired for resale.

(2) ***Materials and supplies.*** A material or supply as defined in § 1.162-3(c)(1) that is acquired and used to improve a unit of tangible property is subject to this section and is not treated as a material or supply under § 1.162-3.

(3) ***Example.*** The following example illustrates the rules of this paragraph (c):

Example. Railroad rolling stock X is a railroad that properly treats amounts paid for the rehabilitation of railroad rolling stock as deductible expenses under section 263(d). X is not required to capitalize the amounts paid because nothing in this section changes the treatment of amounts specifically provided for under section 263(d).

(d) ***Requirement to capitalize amounts paid for improvements.*** Except as provided in paragraph (h) or paragraph (n) of this section or under § 1.263(a)-1(f), a taxpayer generally must capitalize the related amounts (as defined in paragraph (g)(3) of this section) paid to improve a unit of property owned by the taxpayer. However, paragraph (f) of this section applies to the treatment of amounts paid to improve leased property. Section 263A provides the requirement to capitalize the direct and allocable indirect costs of property produced by the taxpayer and property acquired for resale. Section 1016 provides for the addition of capitalized amounts to the basis of the property, and section 168 governs the treatment of additions or improvements for depreciation purposes. For purposes of this section, a unit of property is improved if the amounts paid for activities performed after the property is placed in service by the taxpayer—

(1) Are for a betterment to the unit of property (see paragraph (j) of this section);

(2) Restore the unit of property (see paragraph (k) of this section); or

(3) Adapt the unit of property to a new or different use (see paragraph (l) of this section).

(e) ***Determining the unit of property*** —

(1) ***In general.*** The unit of property rules in this paragraph (e) apply only for purposes of section 263(a) and §§ 1.263(a)-1, 1.263(a)-2, 1.263(a)-3, and 1.162-3. Unless otherwise specified, the unit of property determination is based upon the functional interdependence standard provided in paragraph (e)(3)(i) of this section. However, special rules are provided for buildings (see paragraph (e)(2) of this section), plant property (see paragraph (e)(3)(ii) of this section), network assets (see paragraph (e)(3)(iii) of this section), leased property (see paragraph (e)(2)(v) of this section for leased buildings and paragraph (e)(3)(iv) of this section for leased property other than buildings), and improvements to property (see paragraph (e)(4) of this section). Additional rules are provided if a taxpayer has assigned different MACRS classes or depreciation methods to components of property or subsequently changes the class or depreciation method of a component or other item of property (see paragraph (e)(5) of this section). Property that is aggregated or subject to a general asset account election or accounted for in a multiple asset account (that is, pooled) may not be treated as a single unit of property.

(2) ***Building*** —

(i) ***In general.*** Except as otherwise provided in paragraphs (e)(4), and (e)(5)(ii) of this section, in the case of a building (as defined in § 1.48-1(e)(1)), each building and its structural components (as defined in § 1.48-1(e)(2)) is a single unit of property ("building"). Paragraph (e)(2)(iii) of this section provides the unit of property for condominiums, paragraph (e)(2)(iv) of this section provides the unit of property for cooperatives, and paragraph (e)(2)(v) of this section provides the unit of property for leased buildings.

(ii) ***Application of improvement rules to a building.*** An amount is paid to improve a building under paragraph (d) of this section if the amount is paid for an improvement under paragraphs (j), (k), or paragraph (l) of this section to any of the following:

(A) ***Building structure.*** A building structure consists of the building (as defined in § 1.48-1(e)(1)), and its structural components (as defined in § 1.48-1(e)(2)), other than the structural components designated as buildings systems in paragraph (e)(2)(ii)(B) of this section.

(B) ***Building system.*** Each of the following structural components (as defined in § 1.48-1(e)(2)), including the components thereof, constitutes a building system that is separate from the building structure, and to which the improvement rules must be applied—

(*1*) Heating, ventilation, and air conditioning ("HVAC") systems (including motors, compressors, boilers, furnace, chillers, pipes, ducts, radiators);

(*2*) Plumbing systems (including pipes, drains, valves, sinks, bathtubs, toilets, water and sanitary sewer collection equipment, and site utility equipment used to distribute water and waste to and from the property line and between buildings and other permanent structures);

(*3*) Electrical systems (including wiring, outlets, junction boxes, lighting fixtures and associated connectors, and site utility equipment used to distribute electricity from the property line to and between buildings and other permanent structures);

(*4*) All escalators;

(*5*) All elevators;

(*6*) Fire-protection and alarm systems (including sensing devices, computer controls, sprinkler heads, sprinkler mains, associated piping or plumbing, pumps, visual and audible alarms, alarm control panels, heat and smoke detection devices, fire escapes, fire doors, emergency exit lighting and signage, and fire fighting equipment, such as extinguishers, and hoses);

(*7*) Security systems for the protection of the building and its occupants (including window and door locks, security cameras, recorders, monitors, motion detectors, security lighting, alarm systems, entry and access systems, related junction boxes, associated wiring and conduit);

(*8*) Gas distribution system (including associated pipes and equipment used to distribute gas to and from the property line and between buildings or permanent structures); and

(*9*) Other structural components identified in published guidance in the FEDERAL REGISTER or in the Internal Revenue Bulletin (see § 601.601(d)(2)(ii)(*b*) of this chapter) that are excepted from the building structure under paragraph (e)(2)(ii)(A) of this section and are specifically designated as building systems under this section.

(iii) ***Condominium*** —

(A) ***In general.*** In the case of a taxpayer that is the owner of an individual unit in a building with multiple units (such as a condominium), the unit of property ("condominium") is the individual unit owned by the taxpayer and the structural components (as defined in § 1.48-1(e)(2)) that are part of the unit.

(B) ***Application of improvement rules to a condominium.*** An amount is paid to improve a condominium under paragraph (d) of this section if the amount is paid for an improvement under paragraphs (j), (k), or paragraph (l) of this section to the building structure (as defined in paragraph (e)(2)(ii)(A) of this section) that is part of the condominium or to the portion of any building system (as defined in paragraph (e)(2)(ii)(B) of this section) that is part of the condominium. In the case of the condominium management association, the association must apply the improvement rules to the building structure or to any building system described under paragraphs (e)(2)(ii)(A) and (e)(2)(ii)(B) of this section.

(iv) ***Cooperative*** —

(A) ***In general.*** In the case of a taxpayer that has an ownership interest in a cooperative housing corporation, the unit of property ("cooperative") is the portion of the building in which the taxpayer has possessory rights and the structural components (as defined in § 1.48-1(e)(2)) that are part of the portion of the building subject to the taxpayer's possessory rights (cooperative).

(B) ***Application of improvement rules to a cooperative.*** An amount is paid to improve a cooperative under paragraph (d) of this section if the amount is paid for an improvement under paragraphs (j), (k), or (l) of this section to the portion of the building structure (as defined in paragraph (e)(2)(ii)(A) of this section) in which the taxpayer has possessory rights or to the portion of any building system (as defined in paragraph (e)(2)(ii)(B) of this section) that is part of the portion of the building structure subject to the taxpayer's possessory rights. In the case of a cooperative housing corporation, the corporation must apply the improvement rules to the building structure or to any building system as described under paragraphs (e)(2)(ii)(A) and (e)(2)(ii)(B) of this section.

(v) ***Leased building*** —

(A) ***In general.*** In the case of a taxpayer that is a lessee of all or a portion of a building (such as an office, floor, or certain square footage), the unit of property ("leased building property") is each building and its structural components or the portion of each building subject to the lease and the structural components associated with the leased portion.

(B) ***Application of improvement rules to a leased building.*** An amount is paid to improve a leased building property under paragraphs (d) and (f)(2) of this section if the amount is paid for an improvement, under paragraphs (j), (k), or (l) of this section, to any of the following:

(1) ***Entire building.*** In the case of a taxpayer that is a lessee of an entire building, the building structure (as defined under paragraph (e)(2)(ii)(A) of this section) or any building system (as defined under paragraph (e)(2)(ii)(B) of this section) that is part of the leased building.

(2) ***Portion of a building.*** In the case of a taxpayer that is a lessee of a portion of a building (such as an office, floor, or certain square footage), the portion of the building structure (as defined under paragraph (e)(2)(ii)(A) of this section) subject to the lease or the portion of any building system (as defined under paragraph (e)(2)(ii)(B) of this section) subject to the lease.

(3) ***Property other than building*** —

(i) ***In general.*** Except as otherwise provided in paragraphs (e)(3), (e)(4), (e)(5), and (f)(1) of this section, in the case of real or personal property other than property described in paragraph (e)(2) of this section, all the components that are functionally interdependent comprise a single unit of property. Components of property are functionally interdependent if the placing in service of one component by the taxpayer is dependent on the placing in service of the other component by the taxpayer.

(ii) ***Plant property*** —

(A) ***Definition.*** For purposes of this paragraph (e), the term *plant property* means functionally interdependent machinery or equipment, other than network assets, used to perform an industrial process, such as manufacturing, generation, warehousing, distribution, automated materials handling in service industries, or other similar activities.

(B) ***Unit of property for plant property.*** In the case of plant property, the unit of property determined under the general rule of paragraph (e)(3)(i) of this section is further divided into smaller units comprised of each component (or group of components) that performs a discrete and major function or operation within the functionally interdependent machinery or equipment.

(iii) ***Network assets*** —

(A) ***Definition.*** For purposes of this paragraph (e), the term *network assets* means railroad track, oil and gas pipelines, water and sewage pipelines, power transmission and distribution lines, and telephone and cable lines that are owned or leased by taxpayers in each of those respective industries. The term includes, for example, trunk and feeder lines, pole lines, and buried conduit. It does not include property that would be included as building structure or building systems under paragraphs (e)(2)(ii)(A) and (e)(2)(ii)(B) of this section, nor does it include separate property that is adjacent to, but not part of a network asset, such as bridges, culverts, or tunnels.

(B) ***Unit of property for network assets.*** In the case of network assets, the unit of property is determined by the taxpayer's particular facts and circumstances except as otherwise provided in published guidance in the FEDERAL REGISTER or in the Internal Revenue Bulletin (see § 601.601(d)(2)(ii)(*b*) of this chapter). For these purposes, the functional interdependence standard provided in paragraph (e)(3)(i) of this section is not determinative.

(iv) ***Leased property other than buildings.*** In the case of a taxpayer that is a lessee of real or personal property other than property described in paragraph (e)(2) of this section, the unit of property for the leased property is determined under paragraphs (e)(3)(i),(ii), (iii), and (e)(5) of this section except that, after applying the applicable rules under those paragraphs, the unit of property may not be larger than the property subject to the lease.

(4) ***Improvements to property.*** An improvement to a unit of property generally is not a unit of property separate from the unit of property improved. For the unit of property for lessee improvements, see also paragraph (f)(2)(ii)) of this section. If a taxpayer elects to treat as a capital expenditure under § 1.162-3(d) the amount paid for a rotable spare part, temporary spare part, or standby emergency spare part, and such part is used in an improvement to a unit of property, then for purposes of applying paragraph (d) of this section to the unit of property improved, the part is not a unit of property separate from the unit of property improved.

(5) *Additional rules* —

(i) ***Year placed in service.*** Notwithstanding the unit of property determination under paragraph (e)(3) of this section, a component (or a group of components) of a unit property must be treated as a separate unit of property if, at the time the unit of property is initially placed in service by the taxpayer, the taxpayer has properly treated the component as being within a different class of property under section 168(e) (MACRS classes) than the class of the unit of property of which the component is a part, or the taxpayer has properly depreciated the component using a different depreciation method than the depreciation method of the unit of property of which the component is a part.

(ii) ***Change in subsequent taxable year.*** Notwithstanding the unit of property determination under paragraphs (e)(2), (3), (4), or (5)(i) of this section, in any taxable year after the unit of property is initially placed in service by the taxpayer, if the taxpayer or the Internal Revenue Service changes the treatment of that property (or any portion thereof) to a proper MACRS class or a proper depreciation method (for example, as a result of a cost segregation study or a change in the use of the property), then the taxpayer must change the unit of property determination for that property (or the portion thereof) under this section to be consistent with the change in treatment for depreciation purposes. Thus, for example, if a portion of a unit of property is properly reclassified to a MACRS class different from the MACRS class of the unit of property of which it was previously treated as a part, then the reclassified portion of the property should be treated as a separate unit of property for purposes of this section.

(6) ***Examples.*** The following examples illustrate the application of this paragraph (e) and assume that the taxpayer has not made a general asset account election with regard to property or accounted for property in a multiple asset account. In addition, unless the facts specifically indicate otherwise, assume that the additional rules in paragraph (e)(5) of this section do not apply:

Example 1. Building systems A owns an office building that contains a HVAC system. The HVAC system incorporates ten roof-mounted units that service different parts of the building. The roof-mounted units are not connected and have separate controls and duct work that distribute the heated or cooled air to different spaces in the building's interior. A pays an amount for labor and materials for work performed on the roof-mounted units. Under paragraph (e)(2)(i) of this section, A must treat the building and its structural components as a single unit of property. As provided under paragraph (e)(2)(ii) of this section, an amount is paid to improve a building if it is for an improvement to the building structure or any designated building system. Under paragraph (e)(2)(ii)(B)(*1*) of this section, the entire HVAC system, including all of the roof-mounted units and their components, comprise a building system. Therefore, under paragraph (e)(2)(ii) of this section, if an amount paid by A for work on the roof-mounted units is an improvement (for example, a betterment) to the HVAC system, A must treat this amount as an improvement to the building.

Example 2. Building systems B owns a building that it uses in its retail business. The building contains two elevator banks in different locations in its building. Each elevator bank contains three elevators. B pays an amount for labor and materials for work performed on the elevators. Under paragraph (e)(2)(i) of this section, B must treat the building and its structural components as a single unit of property. As provided under paragraph (e)(2)(ii) of this section, an amount is paid to improve a building if it is for an improvement to the building structure or any designated building system. Under paragraph (e)(2)(ii)(B)(*5*) of this section, all six elevators, including all their components, comprise a building system. Therefore, under paragraph (e)(2)(ii) of this

section, if an amount paid by B for work on the elevators is an improvement (for example, a betterment) to the elevator system, B must treat this amount as an improvement to the building.

Example 3. Building structure and systems; condominium C owns a condominium unit in a condominium office building. C uses the condominium unit in its business of providing medical services. The condominium unit contains two restrooms, each of which contains a sink, a toilet, water and drainage pipes and other bathroom fixtures. C pays an amount for labor and materials to perform work on the pipes, sinks, toilets, and plumbing fixtures that are part of the condominium. Under paragraph (e)(2)(iii) of this section, C must treat the individual unit that it owns, including the structural components that are part of that unit, as a single unit of property. As provided under paragraph (e)(2)(iii)(B) of this section, an amount is paid to improve the condominium if it is for an improvement to the building structure that is part of the condominium or to a portion of any designated building system that is part of the condominium. Under paragraph (e)(2)(ii)(B)(2) of this section, the pipes, sinks, toilets, and plumbing fixtures that are part of C's condominium comprise the plumbing system for the condominium. Therefore, under paragraph (e)(2)(iii) of this section, if an amount paid by C for work on pipes, sinks, toilets, and plumbing fixtures is an improvement (for example, a betterment) to the portion of the plumbing system that is part of C's condominium, C must treat this amount as an improvement to the condominium.

Example 4. Building structure and systems; property other than buildings D, a manufacturer, owns a building adjacent to its manufacturing facility that contains office space and related facilities for D's employees that manage and administer D's manufacturing operations. The office building contains equipment, such as desks, chairs, computers, telephones, and bookshelves that are not building structure or building systems. D pays an amount to add an extension to the office building. Under paragraph (e)(2)(i) of this section, D must treat the building and its structural components as a single unit of property. As provided under paragraph (e)(2)(ii) of this section, an amount is paid to improve a building if it is for an improvement to the building structure or any designated building system. Therefore, under paragraph (e)(2)(ii) of this section, if an amount paid by D for the addition of an extension to the office building is an improvement (for example, a betterment) to the building structure or any of the building systems, D must treat this amount as an improvement to the building. In addition, because the equipment contained within the office building constitutes property other than the building, the units of property for the office equipment are initially determined under paragraph (e)(3)(i) of this section and are comprised of all the components that are functionally interdependent (for example, each desk, each chair, and each book shelf).

Example 5. Plant property; discrete and major function E is an electric utility company that operates a power plant to generate electricity. The power plant includes a structure that is not a building under § 1.48-1(e)(1), and, among other things, one pulverizer that grinds coal, a single boiler that produces steam, one turbine that converts the steam into mechanical energy, and one generator that converts mechanical energy into electrical energy. In addition, the turbine contains a series of blades that cause the turbine to rotate when affected by the steam. Because the plant is composed of real and personal tangible property other than a building, the unit of property for the generating equipment is initially determined under the general rule in paragraph (e)(3)(i) of this section and is comprised of all the components that are functionally interdependent. Under this rule, the initial unit of property is the entire plant because the components of the plant are functionally interdependent. However, because the power plant is

plant property under paragraph (e)(3)(ii) of this section, the initial unit of property is further divided into smaller units of property by determining the components (or groups of components) that perform discrete and major functions within the plant. Under this paragraph, E must treat the structure, the boiler, the turbine, the generator, and the pulverizer each as a separate unit of property because each of these components performs a discrete and major function within the power plant. E may not treat components, such as the turbine blades, as separate units of property because each of these components does not perform a discrete and major function within the plant.

Example 6. Plant property; discrete and major function F is engaged in a uniform and linen rental business. F owns and operates a plant that utilizes many different machines and equipment in an assembly line-like process to treat, launder, and prepare rental items for its customers. F utilizes two laundering lines in its plant, each of which can operate independently. One line is used for uniforms and another line is used for linens. Both lines incorporate a sorter, boiler, washer, dryer, ironer, folder, and waste water treatment system. Because the laundering equipment contained within the plant is property other than a building, the unit of property for the laundering equipment is initially determined under the general rule in paragraph (e)(3)(i) of this section and is comprised of all the components that are functionally interdependent. Under this rule, the initial units of property are each laundering line because each line is functionally independent and is comprised of components that are functionally interdependent. However, because each line is comprised of plant property under paragraph (e)(3)(ii) of this section, F must further divide these initial units of property into smaller units of property by determining the components (or groups of components) that perform discrete and major functions within the line. Under paragraph (e)(3)(ii) of this section, F must treat each sorter, boiler, washer, dryer, ironer, folder, and waste water treatment system in each line as a separate unit of property because each of these components performs a discrete and major function within the line.

Example 7. Plant property; industrial process G operates a restaurant that prepares and serves food to retail customers. Within its restaurant, G has a large piece of equipment that uses an assembly line-like process to prepare and cook tortillas that G serves only to its restaurant customers. Because the tortilla-making equipment is property other than a building, the unit of property for the equipment is initially determined under the general rule in paragraph (e)(3)(i) of this section and is comprised of all the components that are functionally interdependent. Under this rule, the initial unit of property is the entire tortilla-making equipment because the various components of the equipment are functionally interdependent. The equipment is not plant property under paragraph (e)(3)(ii) of this section because the equipment is not used in an industrial process, as it performs a small-scale function in G's restaurant operations. Thus, G is not required to further divide the equipment into separate units of property based on the components that perform discrete and major functions.

Example 8. Personal property H owns locomotives that it uses in its railroad business. Each locomotive consists of various components, such as an engine, generators, batteries, and trucks. H acquired a locomotive with all its components. Because H's locomotive is property other than a building, the initial unit of property is determined under the general rule in paragraph (e)(3)(i) of this section and is comprised of the components that are functionally interdependent. Under paragraph (e)(3)(i) of this section, the locomotive is a single unit of property because it consists entirely of components that are functionally interdependent.

Example 9. Personal property J provides legal services to its clients. J purchased a laptop computer and a printer for its employees to use in providing legal services. Because the computer and printer are property other than a building, the initial units of property are determined under the general rule in paragraph (e)(3)(i) of this section and are comprised of the components that are functionally interdependent. Under paragraph (e)(3)(i) of this section, the computer and the printer are separate units of property because the computer and the printer are not components that are functionally interdependent (that is, the placing in service of the computer is not dependent on the placing in service of the printer).

Example 10. Building structure and systems; leased building K is a retailer of consumer products. K conducts its retail sales in a building that it leases from L. The leased building consists of the building structure (including the floor, walls, and roof) and various building systems, including a plumbing system, an electrical system, an HVAC system, a security system, and a fire protection and prevention system. K pays an amount for labor and materials to perform work on the HVAC system of the leased building. Under paragraph (e)(2)(v)(A) of this section, because K leases the entire building, K must treat the leased building and its structural components as a single unit of property. As provided under paragraph (e)(2)(v)(B) of this section, an amount is paid to improve a leased building property if it is for an improvement (for example, a betterment) to the leased building structure or to any building system within the leased building. Therefore, under paragraphs (e)(2)(v)(B)(*1*) and (e)(2)(ii)(B)(*1*) of this section, if an amount paid by K for work on the HVAC system is for an improvement to the HVAC system in the leased building, K must treat this amount as an improvement to the entire leased building property.

Example 11. Production of real property related to leased property Assume the same facts as in *Example 10,* except that K receives a construction allowance from L, and K uses the construction allowance to build a driveway adjacent to the leased building. Assume that under the terms of the lease, K, the lessee, is treated as the owner of any property that it constructs on or nearby the leased building. Also assume that section 110 does not apply to the construction allowance. Finally, assume that the driveway is not plant property or a network asset. Because the construction of the driveway consists of the production of real property other than a building, all the components of the driveway are functionally interdependent and are a single unit of property under paragraphs (e)(3)(i) and (e)(3)(iv) of this section.

Example 12. Leasehold improvements; construction allowance used for lessor-owned improvements

Assume the same facts as *Example 11,* except that, under the terms of the lease, L, the lessor, is treated as the owner of any property constructed on the leased premises. Because L, the lessor, is the owner of the driveway and the driveway is real property other than a building, all the components of the driveway are functionally interdependent and are a single unit of property under paragraph (e)(3)(i) of this section.

Example 13. Buildings and structural components; leased office space M provides consulting services to its clients. M conducts its consulting services business in two office spaces in the same building, each of which it leases from N under separate lease agreements. Each office space contains a separate HVAC system, which is part of the leased property. Both lease agreements provide that M is responsible for maintaining, repairing, and replacing the HVAC system that is part of the leased property. M pays amounts to perform work on the HVAC system in each office space. Because M leases two separate office spaces subject to two leases, M must treat the portion of the building structure and the structural components subject to each lease as a

separate unit of property under paragraph (e)(2)(v)(A) of this section. As provided under paragraph (e)(2)(v)(B) of this section, an amount is paid to improve a leased building property, if it is for an improvement to the leased portion of the building structure or the portion of any designated building system subject to each lease. Under paragraphs (e)(2)(v)(B)(*1*) and (e)(2)(ii)(B)(*1*) of this section, M must treat the HVAC system associated with each leased office space as a building system of that leased building property. Thus, M must treat the HVAC system associated with the first leased office space as a building system of the first leased office space and the HVAC system associated with the second leased office space as a building system of the second leased office space. Under paragraph (e)(2)(v)(B) of this section, if the amount paid by M for work on the HVAC system in one leased office space is for an improvement (for example, a betterment) to the HVAC system that is part of that leased space, then M must treat the amount as an improvement to that individual leased property.

Example 14. Leased property; personal property N is engaged in the business of transporting passengers on private jet aircraft. To conduct its business, N leases several aircraft from O. Under paragraph (e)(3)(iv) of this section (referencing paragraph (e)(3)(i) of this section), N must treat all of the components of each leased aircraft that are functionally interdependent as a single unit of property. Thus, N must treat each leased aircraft as a single unit of property.

> *Example 15. Improvement property* (i) P is a retailer of consumer products. In Year 1, P purchases a building from Q, which P intends to use as a retail sales facility. Under paragraph (e)(2)(i) of this section, P must treat the building and its structural components as a single unit of property. As provided under paragraph (e)(2)(ii) of this section, an amount is paid to improve a building if it is for an improvement to the building structure or any designated building system.
> (ii) In Year 2, P pays an amount to construct an extension to the building to be used for additional warehouse space. Assume that the extension involves the addition of walls, floors, roof, and doors, but does not include the addition or extension of any building systems described in paragraph (e)(2)(ii)(B) of this section. Also assume that the amount paid to build the extension is a betterment to the building structure under paragraph (j) of this section, and is therefore treated as an amount paid for an improvement to the entire building under paragraph (e)(2)(ii) of this section. Accordingly, P capitalizes the amount paid as an improvement to the building under paragraph (d) of this section. Under paragraph (e)(4) of this section, the extension is not a unit of property separate from the building, the unit of property improved. Thus, to determine whether any future expenditure constitutes an improvement to the building under paragraph (e)(2)(ii) of this section, P must determine whether the expenditure constitutes an improvement to the building structure, including the building extension, or to any of the designated building systems.

Example 16. Additional rules; year placed in service R is engaged in the business of transporting freight throughout the United States. To conduct its business, R owns a fleet of truck tractors and trailers. Each tractor and trailer is comprised of various components, including tires. R purchased a truck tractor with all of its components, including tires. The tractor tires have an

average useful life to R of more than one year. At the time R placed the tractor in service, it treated the tractor tires as a separate asset for depreciation purposes under section 168. R properly treated the tractor (excluding the cost of the tires) as 3-year property and the tractor tires as 5-year property under section 168(e). Because R's tractor is property other than a building, the initial units of property for the tractor are determined under the general rule in paragraph (e)(3)(i) of this section and are comprised of all the components that are functionally interdependent. Under this rule, R must treat the tractor, including its tires, as a single unit of property because the tractor and the tires are functionally interdependent (that is, the placing in service of the tires is dependent upon the placing in service of the tractor). However, under paragraph (e)(5)(i) of this section, R must treat the tractor and tires as separate units of property because R properly treated the tires as being within a different class of property under section 168(e).

Example 17. Additional rules; change in subsequent year S is engaged in the business of leasing nonresidential real property to retailers. In Year 1, S acquired and placed in service a building for use in its retail leasing operation. In Year 5, to accommodate the needs of a new lessee, S incurred costs to improve the building structure. S capitalized the costs of the improvement under paragraph (d) of this section and depreciated the improvement in accordance with section 168(i)(6) as nonresidential real property under section 168(e). In Year 7, S determined that the structural improvement made in Year 5 qualified under section 168(e)(8) as qualified retail improvement property and, therefore, was 15-year property under section 168(e). In Year 7, S changed its method of accounting to use a 15-year recovery period for the improvement. Under paragraph (e)(5)(ii) of this section, in Year 7, S must treat the improvement as a unit of property separate from the building.

Example 18. Additional rules; change in subsequent year In Year 1, T acquired and placed in service a building and parking lot for use in its retail operations. Under § 1.263(a)-2 of the regulations, T capitalized the cost of the building and the parking lot and began depreciating the building and the parking lot as nonresidential real property under section 168(e). In Year 3, T completed a cost segregation study under which it properly determined that the parking lot qualified as 15-year property under section 168(e). In Year 3, T changed its method of accounting for the parking lot to use a 15-year recovery period and the 150-percent declining balance method of depreciation. Under paragraph (e)(5)(ii) of this section, beginning in Year 3, T must treat the parking lot as a unit of property separate from the building.

Example 19. Additional rules; change in subsequent year In Year 1, U acquired and placed in service a building for use in its manufacturing business. U capitalized the costs allocable to the building's wiring separately from the building and depreciated the wiring as 7-year property under section 168(e). U capitalized the cost of the building and all other structural components of the building and began depreciating them as nonresidential real property under section 168(e). In Year 3, U completed a cost segregation study under which it properly determined that the wiring is a structural component of the building and, therefore, should have been depreciated as nonresidential real property. In Year 3, U changed its method of accounting to treat the wiring as nonresidential real property. Under paragraph (e)(5)(ii) of this section, U must change the unit of property for the wiring in a manner that is consistent with the change in treatment for depreciation purposes. Therefore, U must change the unit of property for the wiring to treat it as a structural component of the building, and as part of the building unit of property, in accordance with paragraph (e)(2)(i) of this section.

(f) *Improvements to leased property* —

(1) ***In general.*** Except as provided in paragraph (h) of this section (safe harbor for small taxpayers) and under § 1.263(a)-1(f) (de minimis safe harbor), this paragraph (f) provides the exclusive rules for determining whether amounts paid by a taxpayer are for an improvement to a leased property and must be capitalized. In the case of a leased building or a leased portion of a building, an amount is paid to improve a leased property if the amount is paid for an improvement to any of the properties specified in paragraph (e)(2)(ii) of this section (for lessor improvements) or in paragraph (e)(2)(v)(B) of this section (for lessee improvements, except as provided in paragraph (f)(2)(ii) of this section). Section 1.263(a)-4 does not apply to amounts paid for improvements to leased property or to amounts paid for the acquisition or production of leasehold improvement property.

(2) ***Lessee improvements*** —

(i) ***Requirement to capitalize.*** A taxpayer lessee must capitalize the related amounts, as determined under paragraph (g)(3) of this section, that it pays to improve, as defined under paragraph (d) of this section, a leased property except to the extent that section 110 applies to a construction allowance received by the lessee for the purpose of such improvement or when the improvement constitutes a substitute for rent. See § 1.61-8(c) for the treatment of lessee expenditures that constitute a substitute for rent. A taxpayer lessee must also capitalize the related amounts that a lessor pays to improve, as defined under paragraph (d) of this section, a leased property if the lessee is the owner of the improvement, except to the extent that section 110 applies to a construction allowance received by the lessee for the purpose of such improvement. An amount paid for a lessee improvement under this paragraph (f)(2)(i) is treated as an amount paid to acquire or produce a unit of real or personal property under § 1.263(a)-2(d)(1) of the regulations.

(ii) ***Unit of property for lessee improvements.*** For purposes of determining whether an amount paid by a lessee constitutes a lessee improvement to a leased property under paragraph (f)(2)(i) of this section, the unit of property and the improvement rules are applied to the leased property in accordance with paragraph (e)(2)(v) (leased buildings) or paragraph (e)(3)(iv) (leased property other than buildings) of this section and include previous lessee improvements. However, if a lessee improvement is comprised of an entire building erected on leased property, then the unit of property for the building and the application of the improvement rules to the building are determined under paragraphs (e)(2)(i) and (e)(2)(ii) of this section.

(3) ***Lessor improvements*** —

(i) ***Requirement to capitalize.*** A taxpayer lessor must capitalize the related amounts, as determined under paragraph (g)(3) of this section, that it pays directly, or indirectly through a construction allowance to the lessee, to improve, as defined in paragraph (d) of this section, a leased property when the lessor is the owner of the improvement or to the extent that section 110 applies to the construction allowance. A lessor must also capitalize the related amounts that the lessee pays to improve a leased property, as defined in paragraph (e) of this section, when the lessee's improvement constitutes a substitute for rent. See § 1.61-8(c) for treatment of expenditures by lessees that constitute a substitute for rent. Amounts capitalized by the lessor under this paragraph (f)(3)(i) may not be capitalized by the lessee. If a lessor improvement is comprised of an entire building erected on leased property, then the amount paid for the building is treated as an amount paid by the lessor to acquire or produce a unit of property under § 1.263(a)-2(d)(1). See paragraph (e)(2) of this section for the unit of property for a building and paragraph (e)(3) of this section for the unit of property for real or personal property other than a building.

(ii) ***Unit of property for lessor improvements.*** In general, an amount capitalized as a lessor improvement under paragraph (f)(3)(i) of this section is not a unit of property separate from the unit of property improved. See paragraph (e)(4) of this section. However, if a lessor improvement is comprised of an entire building erected on leased property, then the unit of property for the building and the application of the improvement rules to the building are determined under paragraphs (e)(2)(i) and (e)(2)(ii) of this section.

(4) ***Examples.*** The following examples illustrate the application of this paragraph (f) and do not address whether capitalization is required under another provision of the Code (for example, section 263A). For purposes of the following examples, assume that section 110 does not apply to the lessee and the amounts paid by the lessee are not a substitute for rent.

Example 1. Lessee improvements; additions to building (i) T is a retailer of consumer products. In Year 1, T leases a building from L, which T intends to use as a retail sales facility. The leased building consists of the building structure under paragraph (e)(2)(ii)(A) of this section and various building systems under paragraph (e)(2)(ii)(B) of this section, including a plumbing system, an electrical system, and an HVAC system. Under the terms of the lease, T is permitted to improve the building at its own expense. Under paragraph (e)(2)(v)(A) of this section, because T leases the entire building, T must treat the leased building and its structural components as a single unit of property. As provided under paragraph (e)(2)(v)(B)(*1*) of this section, an amount is paid to improve a leased building property if the amount is paid for an improvement to the leased building structure or to any building system within the leased building. Therefore, under paragraphs (e)(2)(v)(B)(*1*) and (e)(2)(ii) of this section, if T pays an amount that improves the building structure, the plumbing system, the electrical system, or the HVAC system, then T must treat this amount as an improvement to the entire leased building property.
(ii) In Year 2, T pays an amount to construct an extension to the building to be used for additional warehouse space. Assume that this amount is for a betterment (as defined under paragraph (j) of this section) to T's leased building structure and does not affect any building systems. Accordingly, the amount that T pays for the building extension is for a betterment to the leased building structure, and thus, under paragraph (e)(2)(v)(B)(*1*) of this section, is treated as an improvement to the entire leased building under paragraph (d) of this section. Because T, the lessee, paid an amount to improve a leased building property, T is required to capitalize the amount paid for the building extension as a leasehold improvement under paragraph (f)(2)(i) of this section. In addition, paragraph (f)(2)(i) of this section requires T to treat the amount paid for the improvement as the acquisition or production of a unit of property (leasehold improvement property) under § 1.263(a)-2(d)(1).

(iii) In Year 5, T pays an amount to add a large overhead door to the building extension that it constructed in Year 2 to accommodate the loading of larger products into the warehouse space. Under paragraph (f)(2)(ii) of this section, to determine whether the amount paid by T is for a leasehold improvement, the unit of property and the improvement rules are applied in

accordance with paragraph (e)(2)(v) of this section and include T's previous improvements to the leased property. Therefore, under paragraph (e)(2)(v)(A) of this section, the unit of property is the entire leased building, including the extension built in Year 2. In addition, under paragraph (e)(2)(v)(B) of this section, the leased building property is improved if the amount is paid for an improvement to the building structure or any building system. Assume that the amount paid to add the overhead door is for a betterment, under paragraph (j) of this section, to the building structure, which includes the extension. Accordingly, T must capitalize the amounts paid to add the overhead door as a leasehold improvement to the leased building property. In addition, paragraph (f)(2)(i) of this section requires T to treat the amount paid for the improvement as the acquisition or production of a unit of property (leasehold improvement property) under § 1.263(a)-2(d)(1). However, to determine whether a future amount paid by T is for a leasehold improvement to the leased building, the unit of property and the improvement rules are again applied in accordance with paragraph (e)(2)(v) of this section and include the new overhead door.

Example 2. Lessee improvements; additions to certain structural components of buildings
(i) Assume the same facts as *Example 1* except that in Year 2, T also pays an amount to construct an extension of the HVAC system into the building extension. Assume that the extension is a betterment, under paragraph (j) of this section, to the leased HVAC system (a building system under paragraph (e)(2)(ii)(B)(*1*) of this section). Accordingly, the amount that T pays for the extension of the HVAC system is for a betterment to the leased building system, the HVAC system, and thus, under paragraph (e)(2)(v)(B)(*1*) of this section, is treated as an improvement to the entire leased building property under paragraph (d) of this section. Because T, the lessee, pays an amount to improve a leased building property, T is required to capitalize the amount paid as a leasehold improvement under paragraph (f)(2)(i) of this section. Under paragraph (f)(2)(i) of this section, T must treat the amount paid for the HVAC extension as the acquisition and production of a unit of property (leasehold improvement property) under § 1.263(a)-2(d)(1).
(ii) In Year 5, T pays an amount to add an additional chiller to the portion of the HVAC system that it constructed in Year 2 to accommodate the climate control requirements for new product offerings. Under paragraph (f)(2)(ii) of this section, to determine whether the amount paid by T is for a leasehold improvement, the unit of property and the improvement rules are applied in accordance with paragraph (e)(2)(v) of this section and include T's previous improvements to the leased building property. Therefore, under paragraph (e)(2)(v)(B) of this section, the leased building property is improved if the amount is paid for an improvement to the building structure or any building system. Assume that the amount paid to add the chiller is for a betterment, under paragraph (j) of this section, to the HVAC system, which includes the extension of the system in Year 2. Accordingly, T must capitalize the amounts paid to add the chiller as a leasehold improvement to the leased building property. In addition, paragraph (f)(2)(i) of this section requires T to treat the amount paid for the chiller as the acquisition or

production of a unit of property (leasehold improvement property) under § 1.263(a)-2(d)(1). However, to determine whether a future amount paid by T is for a leasehold improvement to the leased building, the unit of property and the improvement rules are again applied in accordance with paragraph (e)(2)(v) of this section and include the new chiller.

Example 3. Lessor Improvements; additions to building (i) T is a retailer of consumer products. In Year 1, T leases a building from L, which T intends to use as a retail sales facility. Pursuant to the lease, L provides a construction allowance to T, which T intends to use to construct an extension to the retail sales facility for additional warehouse space. Assume that the amount paid for any improvement to the building does not exceed the construction allowance and that L is treated as the owner of any improvement to the building. Under paragraph (e)(2)(i) of this section, L must treat the building and its structural components as a single unit of property. As provided under paragraph (e)(2)(ii) of this section, an amount is paid to improve a building if it is paid for an improvement to the building structure or to any building system.
(ii) In Year 2, T uses L's construction allowance to construct an extension to the leased building to provide additional warehouse space in the building. Assume that the extension is a betterment (as defined under paragraph (j) of this section) to the building structure, and therefore, the amount paid for the extension results in an improvement to the building under paragraph (d) of this section. Under paragraph (f)(3)(i) of this section, L, the lessor and owner of the improvement, must capitalize the amounts paid to T to construct the extension to the retail sales facility. T is not permitted to capitalize the amounts paid for the lessor-owned improvement. Finally, under paragraph (f)(3)(ii) of this section, the extension to L's building is not a unit of property separate from the building and its structural components.

Example 4. Lessee property; personal property added to leased building T is a retailer of consumer products. T leases a building from L, which T intends to use as a retail sales facility. Pursuant to the lease, L provides a construction allowance to T, which T uses to acquire and construct partitions for fitting rooms, counters, and shelving. Assume that each partition, counter, and shelving unit is a unit of property under paragraph (e)(3) of this section. Assume that for Federal income tax purposes T is treated as the owner of the partitions, counters, and shelving. T's expenditures for the partitions, counters, and shelving are not improvements to the leased property under paragraph (d) of this section, but rather constitute amounts paid to acquire or produce separate units of personal property under § 1.263(a)-2(d)(1).

Example 5. Lessor property; buildings on leased property L is the owner of a parcel of unimproved real property that L leases to T. Pursuant to the lease, L provides a construction allowance to T of $500,000, which T agrees to use to construct a building costing not more than $500,000 on the leased real property and to lease the building from L after it is constructed. Assume that for Federal income tax purposes, L is treated as the owner of the building that T will construct. T uses the $500,000 to construct the building as required under the lease. The building consists of the building structure and the following building systems: (1) a plumbing system; (2) an electrical system; and (3) an HVAC system. Because L provides a construction allowance to T to construct a building and L is treated as the owner of the building, L must capitalize the

amounts that it pays indirectly to T to construct the building as a lessor improvement under paragraph (f)(3)(i) of this section. In addition, the amounts paid by L for the construction allowance are treated as amounts paid by L to acquire and produce the building under § 1.263(a)-2(d)(1). Further, under paragraph (e)(2)(i) of this section, L must treat the building and its structural components as a single unit of property. Under paragraph (f)(3)(i) of this section, T, the lessee, may not capitalize the amounts paid (with the construction allowance received from L) for construction of the building.

Example 6. Lessee contribution to construction costs Assume the same facts as in *Example 5,* except T spends $600,000 to construct the building. T uses the $500,000 construction allowance provided by L plus $100,000 of its own funds to construct the building that L will own pursuant to the lease. Also assume that the additional $100,000 that T pays is not a substitute for rent. For the reasons discussed in *Example 5,* L must capitalize the $500,000 it paid T to construct the building under § 1.263(a)-2(d)(1). In addition, because T spends its own funds to complete the building, T has a depreciable interest of $100,000 in the building and must capitalize the $100,000 it paid to construct the building as a leasehold improvement under § 1.263(a)-2(d)(1) of the regulations. Under paragraph (e)(2)(i) of this section, L must treat the building as a single unit of property to the extent of its depreciable interest of $500,000. In addition, under paragraphs (f)(2)(ii) and (e)(2)(i) of this section, T must also treat the building as a single unit of property to the extent of its depreciable interest of $100,000.

(g) ***Special rules for determining improvement costs*** —

(1) ***Certain costs incurred during an improvement*** —

(i) ***In general.*** A taxpayer must capitalize all the direct costs of an improvement and all the indirect costs (including, for example, otherwise deductible repair costs) that directly benefit or are incurred by reason of an improvement. Indirect costs arising from activities that do not directly benefit and are not incurred by reason of an improvement are not required to be capitalized under section 263(a), regardless of whether the activities are performed at the same time as an improvement.

(ii) ***Exception for individuals' residences.*** A taxpayer who is an individual may capitalize amounts paid for repairs and maintenance that are made at the same time as capital improvements to units of property not used in the taxpayer's trade or business or for the production of income if the amounts are paid as part of an improvement (for example, a remodeling) of the taxpayer's residence.

(2) ***Removal costs*** —

(i) ***In general.*** If a taxpayer disposes of a depreciable asset, including a partial disposition under Prop. Reg. § 1.168(i)-1(e)(2)(ix) (September 19, 2013), or § 1.168(i)-8(d), for Federal income tax purposes and has taken into account the adjusted basis of the asset or component of the asset in realizing gain or loss, then the costs of removing the asset or component are not required to be capitalized under this section. If a depreciable asset is included in a general asset account under section 168(i)(4), and neither the regulations under section 168(i)(4) and § 1.168(i)-1(e)(3), apply to a disposition of such asset, or a portion of such asset under § 1.168(i)-1(e)(1)(ii), a loss is treated as being realized in the amount of zero upon the disposition of the asset solely for purposes of this paragraph (g)(2)(i). If a taxpayer disposes of a component of a unit of property, but the disposal of the component is not a disposition for Federal tax purposes, then the taxpayer must deduct or capitalize the costs of removing the

component based on whether the removal costs directly benefit or are incurred by reason of a repair to the unit of property or an improvement to the unit of property. But see § 1.280B-1 for the rules applicable to demolition of structures.

(ii) ***Examples.*** Thefollowing examples illustrate the application of paragraph (g)(2)(i) of this section and, unless otherwise stated, do not address whether capitalization is required under another provision of this section or another provision of the Code (for example, section 263A). For purposes of the following examples, assume that § 1.168(i)-1(e) or § 1.168(i)-8, applies and that § 1.280B-1 does not apply.

Example 1. Component removed during improvement; no disposition X owns a factory building with a storage area on the second floor. X pays an amount to remove the original columns and girders supporting the second floor and replace them with new columns and girders to permit storage of supplies with a gross weight 50 percent greater than the previous load-carrying capacity of the storage area. Assume that the replacement of the columns and girders constitutes a betterment to the building structure and is therefore an improvement to the building unit of property under paragraphs (d)(1) and (j) of this section. Assume that X disposes of the original columns and girders and the disposal of these structural components is not a disposition under § 1.168(i)-1(e) or § 1.168(i)-8. Under paragraphs (g)(2)(i) and (j) of this section, the amount paid to remove the columns and girders must be capitalized as a cost of the improvement, because it directly benefits and is incurred by reason of the improvement to the building.

Example 2. Component removed during improvement; disposition Assume the same facts as *Example 1,* except X disposes of the original columns and girders and elects to treat the disposal of these structural components as a partial disposition of the factory building under § 1.168(i)-8(d), taking into account the adjusted basis of the components in realizing loss on the disposition. Under paragraph (g)(2)(i) of this section, the amount paid to remove the columns and girders is not required to be capitalized as part of the cost of the improvement regardless of their relation to the improvement. However, all the remaining costs of replacing the columns and girders must be capitalized as improvements to the building unit of property under paragraphs (d)(1), (j), and (g)(1) of this section.

Example 3. Component removed during repair or maintenance; no disposition Y owns a building in which it conducts its retail business. The roof over Y's building is covered with shingles. Over time, the shingles begin to wear and Y begins to experience leaks into its retail premises. However, the building still functions in Y's business. To eliminate the problems, a contractor recommends that Y remove the original shingles and replace them with new shingles. Accordingly, Y pays the contractor to replace the old shingles with new but comparable shingles. The new shingles are comparable to original shingles but correct the leakage problems. Assume that replacement of old shingles with new shingles to correct the leakage is not a betterment or a restoration of the building structure or systems under paragraph (j) or (k) of this section and does not adapt the building structure or systems to a new or different use under paragraph (l) of this section. Thus, the amounts paid by Y to replace the shingles are not improvements to the building unit of property under paragraph (d) of this section. Under paragraph (g)(2)(i) of this section, the amounts paid to remove the shingles are not required to be capitalized because they directly benefit and are incurred by reason of repair or maintenance to the building structure.

Example 4. Component removed with disposition and restoration Assume the same facts as *Example 3* except Y disposes of the original shingles, and Y elects to treat the disposal of these components as a partial disposition of the building under § 1.168(i)-8(d), and deducts the adjusted basis of the components as a loss on the disposition. Under paragraph (k)(1)(i) of this section, amounts paid for replacement of the shingles constitute a restoration of the building structure because the amounts are paid for the replacement of a component of the structure and the taxpayer has properly deducted a loss for that component. Thus, under paragraphs (d)(2) and (k) of this section, Y is required to capitalize the amounts paid for the replacement of the shingles as an improvement to the building unit of property. However, under paragraph (g)(2)(i) of this section, the amounts paid by Y to remove the original shingles are not required to be capitalized as part of the costs of the improvement, regardless of their relation to the improvement.

(3) ***Related amounts.*** For purposes of paragraph (d) of this section, amounts paid to improve a unit of property include amounts paid over a period of more than one taxable year. Whether amounts are related to the same improvement depends on the facts and circumstances of the activities being performed.

(4) ***Compliance with regulatory requirements.*** For purposes of this section, a Federal, state, or local regulator's requirement that a taxpayer perform certain repairs or maintenance on a unit of property to continue operating the property is not relevant in determining whether the amount paid improves the unit of property.

(h) ***Safe harbor for small taxpayers*** —(1) *In general.* A qualifying taxpayer (as defined in paragraph (h)(3) of this section) may elect to not apply paragraph (d) or paragraph (f) of this section to an eligible building property (as defined in paragraph (h)(4) of this section) if the total amount paid during the taxable year for repairs, maintenance, improvements, and similar activities performed on the eligible building property does not exceed the lesser of—

(i) 2 percent of the unadjusted basis (as defined under paragraph (h)(5) of this section) of the eligible building property; or

(ii) $10,000.

(2) ***Application with other safe harbor provisions.*** For purposes of paragraph (h)(1) of this section, amounts paid for repairs, maintenance, improvements, and similar activities performed on eligible building property include those amounts not capitalized under the de minimis safe harbor election under § 1.263(a)-1(f) and those amounts deemed not to improve property under the safe harbor for routine maintenance under paragraph (i) of this section.

(3) ***Qualifying taxpayer*** —

(i) ***In general.*** For purposes of this paragraph (h), the term *qualifying taxpayer* means a taxpayer whose average annual gross receipts as determined under this paragraph (h)(3) for the three preceding taxable years is less than or equal to $10,000,000.

(ii) ***Application to new taxpayers.*** If a taxpayer has been in existence for less than three taxable years, the taxpayer determines its average annual gross receipts for the number of taxable years (including short taxable years) that the taxpayer (or its predecessor) has been in existence.

(iii) ***Treatment of short taxable year.*** In the case of any taxable year of less than 12 months (a short taxable year), the gross receipts shall be annualized by—

(A) Multiplying the gross receipts for the short period by 12; and

(B) Dividing the product determined in paragraph (h)(3)(iii)(A) of this section by the number of months in the short period.

(iv) ***Definition of gross receipts.*** For purposes of applying paragraph (h)(3)(i) of this section, the term *gross receipts* means the taxpayer's receipts for the taxable year that are properly recognized under the taxpayer's methods of accounting used for Federal income tax purposes for the taxable year. For this purpose, gross receipts include total sales (net of returns and allowances) and all amounts received for services. In addition, gross receipts include any income from investments and from incidental or outside sources. For example, gross receipts include interest (including original issue discount and tax-exempt interest within the meaning of section 103), dividends, rents, royalties, and annuities, regardless of whether such amounts are derived in the ordinary course of the taxpayer's trade of business. Gross receipts are not reduced by cost of goods sold or by the cost of property sold if such property is described in section 1221(a)(1), (3), (4), or (5). With respect to sales of capital assets as defined in section 1221, or sales of property described in section 1221(a)(2) (relating to property used in a trade or business), gross receipts shall be reduced by the taxpayer's adjusted basis in such property. Gross receipts do not include the repayment of a loan or similar instrument (for example, a repayment of the principal amount of a loan held by a commercial lender) and, except to the extent of gain recognized, do not include gross receipts derived from a non-recognition transaction, such as a section 1031 exchange. Finally, gross receipts do not include amounts received by the taxpayer with respect to sales tax or other similar state and local taxes if, under the applicable state or local law, the tax is legally imposed on the purchaser of the good or service, and the taxpayer merely collects and remits the tax to the taxing authority. If, in contrast, the tax is imposed on the taxpayer under the applicable law, then gross receipts include the amounts received that are allocable to the payment of such tax.

(4) ***Eligible building property.*** For purposes of this section, the term *eligible building property* refers to each unit of property defined in paragraph (e)(2)(i) (building), paragraph (e)(2)(iii)(A) (condominium), paragraph (e)(2)(iv)(A) (cooperative), or paragraph (e)(2)(v)(A) (leased building or portion of building) of this section, as applicable, that has an unadjusted basis of $1,000,000 or less.

(5) ***Unadjusted basis*** —

(i) ***Eligible building property owned by taxpayer.*** For purposes of this section, the unadjusted basis of eligible building property owned by the taxpayer means the basis as determined under section 1012, or other applicable sections of Chapter 1, including subchapters O (relating to gain or loss on dispositions of property), C (relating to corporate distributions and adjustments), K (relating to partners and partnerships), and P (relating to capital gains and losses). Unadjusted basis is determined without regard to any adjustments described in section 1016(a)(2) or (3) or to amounts for which the taxpayer has elected to treat as an expense (for example, under sections 179, 179B, or 179C).

(ii) ***Eligible building property leased to the taxpayer.*** For purposes of this section, the unadjusted basis of eligible building property leased to the taxpayer is the total amount of (undiscounted) rent paid or expected to be paid by the lessee under the lease for the entire term of the lease, including renewal periods if all the facts and circumstances in existence during the taxable year

in which the lease is entered indicate a reasonable expectancy of renewal. Section 1.263(a)-4(f)(5)(ii) provides the factors that are significant in determining whether there exists a reasonable expectancy of renewal for purposes of this paragraph.

(6) ***Time and manner of election.*** A taxpayer makes the election described in paragraph (h)(1) of this section by attaching a statement to the taxpayer's timely filed original Federal tax return (including extensions) for the taxable year in which amounts are paid for repairs, maintenance, improvements, and similar activities performed on the eligible building property providing that such amounts qualify under the safe harbor provided in paragraph (h)(1) of this section. Sections 301.9100-1 through 301.9100-3 of this chapter provide the rules governing extensions of the time to make regulatory elections. The statement must be titled, "Section 1.263(a)-3(h) Safe Harbor Election for Small Taxpayers" and include the taxpayer's name, address, taxpayer identification number, and a description of each eligible building property to which the taxpayer is applying the election. In the case of an S corporation or a partnership, the election is made by the S corporation or by the partnership, and not by the shareholders or partners. An election may not be made through the filing of an application for change in accounting method or, before obtaining the Commissioner's consent to make a late election, by filing an amended Federal tax return. A taxpayer may not revoke an election made under this paragraph (h). The time and manner of making the election under this paragraph (h) may be modified through guidance of general applicability (see §§ 601.601(d)(2) and 601.602 of this chapter).

(7) ***Treatment of safe harbor amounts.*** Amounts paid by the taxpayer for repairs, maintenance, improvements, and similar activities to which the taxpayer properly applies the safe harbor under paragraph (h)(1) of this section and for which the taxpayer properly makes the election under paragraph (h)(6) of this section are not treated as improvements under paragraph (d) or (f) of this section and may be deducted under § 1.162-1 or § 1.212-1, as applicable, in the taxable year these amounts are paid, provided the amounts otherwise qualify for a deduction under these sections.

(8) ***Safe harbor exceeded.*** If total amounts paid by a qualifying taxpayer during the taxable year for repairs, maintenance, improvements, and similar activities performed on an eligible building property exceed the safe harbor limitations specified in paragraph (h)(1) of this section, then the safe harbor election is not available for that eligible building property and the taxpayer must apply the general improvement rules under this section to determine whether amounts are for improvements to the unit of property, including the safe harbor for routine maintenance under paragraph (i) of this section. The taxpayer may also elect to apply the de minimis safe harbor under § 1.263(a)-1(f) to amounts qualifying under that safe harbor irrespective of the application of this paragraph (h).

(9) ***Modification of safe harbor amounts.*** The amount limitations provided in paragraphs (h)(1)(i), (h)(1)(ii), and (h)(3) of this section may be modified through published guidance in the FEDERAL REGISTER or in the Internal Revenue Bulletin (see § 601.601(d)(2)(ii)(*b*) of this chapter).

(10) ***Examples.*** The following examples illustrate the rules of this paragraph (h). Assume that § 1.212-1 does not apply to the amounts paid.

Example 1. Safe harbor for small taxpayers applicable A is a qualifying taxpayer under paragraph (h)(3) of this section. A owns an office building in which A provides consulting services. In Year 1, A's building has an unadjusted basis of $750,000 as determined under paragraph (h)(5)(i) of this section. In Year 1, A pays $5,500 for repairs, maintenance, improvements and similar activities to the office building. Because A's building unit of property has an unadjusted basis of $1,000,000 or less, A's building constitutes eligible building property under paragraph (h)(4) of this section. The aggregate amount paid by A during Year 1 for repairs, maintenance,

improvements and similar activities on this eligible building property does not exceed the lesser of $15,000 (2 percent of the building's unadjusted basis of $750,000) or $10,000. Therefore, under paragraph (h)(1) of this section, A may elect to not apply the capitalization rule of paragraph (d) of this section to the amounts paid for repair, maintenance, improvements, or similar activities on the office building in Year 1. If A properly makes the election under paragraph (h)(6) of this section for the office building and the amounts otherwise constitute deductible ordinary and necessary expenses incurred in carrying on a trade or business, A may deduct these amounts under § 1.162-1 in Year 1.

Example 2. Safe harbor for small taxpayers inapplicable Assume the same facts as in *Example 1,* except that A pays $10,500 for repairs, maintenance, improvements, and similar activities performed on its office building in Year 1. Because this amount exceeds $10,000, the lesser of the two limitations provided in paragraph (h)(1) of this section, A may not apply the safe harbor for small taxpayers under paragraph (h)(1) of this section to the total amounts paid for repairs, maintenance, improvements, and similar activities performed on the building. Therefore, A must apply the general improvement rules under this section to determine which of the aggregate amounts paid are for improvements and must be capitalized under paragraph (d) of this section and which of the amounts are for repair and maintenance under § 1.162-4.

Example 3. Safe harbor applied building-by-building (i) B is a qualifying taxpayer under paragraph (h)(3) of this section. B owns two rental properties, Building M and Building N. Building M and Building N are both multi-family residential buildings. In Year 1, each property has an unadjusted basis of $300,000 under paragraph (h)(5) of this section. Because Building M and Building N each have an unadjusted basis of $1,000,000 or less, Building M and Building N each constitute eligible building property in Year 1 under paragraph (h)(4) of this section. In Year 1, B pays $5,000 for repairs, maintenance, improvements, and similar activities performed on Building M. In Year 1, B also pays $7,000 for repairs, maintenance, improvements, and similar activities performed on Building N.
(ii) The total amount paid by B during Year 1 for repairs, maintenance, improvements and similar activities on Building M ($5,000) does not exceed the lesser of $6,000 (2 percent of the building's unadjusted basis of $300,000) or $10,000. Therefore, under paragraph (h)(1) of this section, for Year 1, B may elect to not apply the capitalization rule under paragraph (d) of this section to the amounts it paid for repairs, maintenance, improvements, and similar activities on Building M. If B properly makes the election under paragraph (h)(6) of this section for Building M and the amounts otherwise constitute deductible ordinary and necessary expenses incurred in carrying on B's trade or business, B may deduct these amounts under § 1.162-1.

(iii) The total amount paid by B during Year 1 for repairs, maintenance, improvements and similar activities on Building N ($7,000) exceeds $6,000 (2 percent of the building's unadjusted basis of $300,000), the lesser of the two limitations provided under paragraph (h)(1) of this section. Therefore, B may not apply the safe harbor under paragraph (h)(1) of this section to the total amounts paid for repairs, maintenance,

> improvements, and similar activities performed on Building N. Instead, B must apply the general improvement rules under this section to determine which of the total amounts paid for work performed on Building N are for improvements and must be capitalized under paragraph (d) of this section and which amounts are for repair and maintenance under § 1.162-4.

Example 4. Safe harbor applied to leased building property C is a qualifying taxpayer under paragraph (h)(3) of this section. C is the lessee of a building in which C operates a retail store. The lease is a triple-net lease, and the lease term is 20 years, including reasonably expected renewals. C pays $4,000 per month in rent. In Year 1, C pays $7,000 for repairs, maintenance, improvements, and similar activities performed on the building. Under paragraph (h)(5)(ii) of this section, the unadjusted basis of C's leased unit of property is $960,000 ($4,000 monthly rent × 12 months × 20 years). Because C's leased building has an unadjusted basis of $1,000,000 or less, the building is eligible building property for Year 1 under paragraph (h)(4) of this section. The total amount paid by C during Year 1 for repairs, maintenance, improvements, and similar activities on the leased building ($7,000) does not exceed the lesser of $19,200 (2 percent of the building's unadjusted basis of $960,000) or $10,000. Therefore, under paragraph (h)(1) of this section, for Year 1, C may elect to not apply the capitalization rule under paragraph (d) of this section to the amounts it paid for repairs, maintenance, improvements, and similar activities on the leased building. If C properly makes the election under paragraph (h)(6) of this section for the leased building and the amounts otherwise constitute deductible ordinary and necessary expenses incurred in carrying on C's trade or business, C may deduct these amounts under § 1.162-1.

(i) ***Safe harbor for routine maintenance on property*** —(1) *In general.* An amount paid for routine maintenance (as defined in paragraph (i)(1)(i) or (i)(1)(ii) of this section, as applicable) on a unit of tangible property, or in the case of a building, on any of the properties designated in paragraphs (e)(2)(ii), (e)(2)(iii)(B), (e)(2)(iv)(B), or paragraph (e)(2)(v)(B) of this section, is deemed not to improve that unit of property.

(i) ***Routine maintenance for buildings.*** Routine maintenance for a building unit of property is the recurring activities that a taxpayer expects to perform as a result of the taxpayer's use of any of the properties designated in paragraphs (e)(2)(ii), (e)(2)(iii)(B), (e)(2)(iv)(B), or (e)(2)(v)(B) of this section to keep the building structure or each building system in its ordinarily efficient operating condition. Routine maintenance activities include, for example, the inspection, cleaning, and testing of the building structure or each building system, and the replacement of damaged or worn parts with comparable and commercially available replacement parts. Routine maintenance may be performed any time during the useful life of the building structure or building systems. However, the activities are routine only if the taxpayer reasonably expects to perform the activities more than once during the 10-year period beginning at the time the building structure or the building system upon which the routine maintenance is performed is placed in service by the taxpayer. A taxpayer's expectation will not be deemed unreasonable merely because the taxpayer does not actually perform the maintenance a second time during the 10-year period, provided that the taxpayer can otherwise substantiate that its expectation was reasonable at the time the property was placed in service. Factors to be considered in determining whether maintenance is routine and whether a taxpayer's expectation is reasonable include the recurring nature of the activity, industry practice, manufacturers'

recommendations, and the taxpayer's experience with similar or identical property. With respect to a taxpayer that is a lessor of a building or a part of the building, the taxpayer's use of the building unit of property includes the lessee's use of its unit of property.

(ii) ***Routine maintenance for property other than buildings.*** Routine maintenance for property other than buildings is the recurring activities that a taxpayer expects to perform as a result of the taxpayer's use of the unit of property to keep the unit of property in its ordinarily efficient operating condition. Routine maintenance activities include, for example, the inspection, cleaning, and testing of the unit of property, and the replacement of damaged or worn parts of the unit of property with comparable and commercially available replacement parts. Routine maintenance may be performed any time during the useful life of the unit of property. However, the activities are routine only if, at the time the unit of property is placed in service by the taxpayer, the taxpayer reasonably expects to perform the activities more than once during the class life (as defined in paragraph (i)(4) of this section) of the unit of property. A taxpayer's expectation will not be deemed unreasonable merely because the taxpayer does not actually perform the maintenance a second time during the class life of the unit of property, provided that the taxpayer can otherwise substantiate that its expectation was reasonable at the time the property was placed in service. Factors to be considered in determining whether maintenance is routine and whether the taxpayer's expectation is reasonable include the recurring nature of the activity, industry practice, manufacturers' recommendations, and the taxpayer's experience with similar or identical property. With respect to a taxpayer that is a lessor of a unit of property, the taxpayer's use of the unit of property includes the lessee's use of the unit of property.

(2) *Rotable and temporary spare parts.* Except as provided in paragraph (i)(3) of this section, for purposes of paragraph (i)(1)(ii) of this section, amounts paid for routine maintenance include routine maintenance performed on (and with regard to) rotable and temporary spare parts.

(3) *Exceptions.* Routine maintenance does not include the following:

(i) Amounts paid for a betterment to a unit of property under paragraph (j) of this section;

(ii) Amounts paid for the replacement of a component of a unit of property for which the taxpayer has properly deducted a loss for that component (other than a casualty loss under § 1.165-7) (see paragraph (k)(1)(i) of this section);

(iii) Amounts paid for the replacement of a component of a unit of property for which the taxpayer has properly taken into account the adjusted basis of the component in realizing gain or loss resulting from the sale or exchange of the component (see paragraph (k)(1)(ii) of this section);

(iv) Amounts paid for the restoration of damage to a unit of property for which the taxpayer is required to take a basis adjustment as a result of a casualty loss under section 165, or relating to a casualty event described in section 165, subject to the limitation in paragraph (k)(4) of this section (see paragraph (k)(1)(iii) of this section);

(v) Amounts paid to return a unit of property to its ordinarily efficient operating condition, if the property has deteriorated to a state of disrepair and is no longer functional for its intended use (see paragraph (k)(1)(iv) of this section);

(vi) Amounts paid to adapt a unit of property to a new or different use under paragraph (l) of this section;

(vii) Amounts paid for repairs, maintenance, or improvement of network assets (as defined in paragraph (e)(3)(iii)(A) of this section); or

(viii) Amounts paid for repairs, maintenance, or improvement of rotable and temporary spare parts to which the taxpayer applies the optional method of accounting for rotable and temporary spare parts under § 1.162-3(e).

(4) *Class life.* The class life of a unit of property is the recovery period prescribed for the property under sections 168(g)(2) and (3) for purposes of the alternative depreciation system, regardless of whether the property is depreciated under section 168(g). For purposes of determining class life under this section, section 168(g)(3)(A) (relating to tax-exempt use property subject to lease) does not apply. If the unit of property is comprised of components with different class lives, then the class life of the unit of property is deemed to be the same as the component with the longest class life.

(5) *Coordination with section 263A.* Amounts paid for routine maintenance under this paragraph (i) may be subject to capitalization under section 263A if these amounts comprise the direct or allocable indirect costs of other property produced by the taxpayer or property acquired for resale. See, for example, § 1.263A-1(e)(3)(ii)(O) requiring taxpayers to capitalize the cost of repairing equipment or facilities allocable to property produced or property acquired for resale.

(6) *Examples.* The following examples illustrate the application of this paragraph (i) and, unless otherwise stated, do not address the treatment under other provisions of the Code (for example, section 263A). In addition, unless otherwise stated, assume that the taxpayer has not applied the optional method of accounting for rotable and temporary spare parts under § 1.162-3(e).

> *Example 1. Routine maintenance on component* (i) A is a commercial airline engaged in the business of transporting passengers and freight throughout the United States and abroad. To conduct its business, A owns or leases various types of aircraft. As a condition of maintaining its airworthiness certification for these aircraft, A is required by the Federal Aviation Administration (FAA) to establish and adhere to a continuous maintenance program for each aircraft within its fleet. These programs, which are designed by A and the aircraft's manufacturer and approved by the FAA, are incorporated into each aircraft's maintenance manual. The maintenance manuals require a variety of periodic maintenance visits at various intervals. One type of maintenance visit is an engine shop visit (ESV), which A expects to perform on its aircraft engines approximately every 4 years to keep its aircraft in its ordinarily efficient operating condition. In Year 1, A purchased a new aircraft, which included four new engines attached to the airframe. The four aircraft engines acquired with the aircraft are not materials or supplies under § 1.162-3(c)(1)(i) because they are acquired as part of a single unit of property, the aircraft. In Year 5, A performs its first ESV on the aircraft engines. The ESV includes disassembly, cleaning, inspection, repair, replacement,

reassembly, and testing of the engine and its component parts. During the ESV, the engine is removed from the aircraft and shipped to an outside vendor who performs the ESV. If inspection or testing discloses a discrepancy in a part's conformity to the specifications in A's maintenance program, the part is repaired, or if necessary, replaced with a comparable and commercially available replacement part. After the ESVs, the engines are returned to A to be reinstalled on another aircraft or stored for later installation. Assume that the class life for A's aircraft, including the engines, is 12 years. Assume that none of the exceptions set out in paragraph (i)(3) of this section apply to the costs of performing the ESVs.
(ii) Because the ESVs involve the recurring activities that A expects to perform as a result of its use of the aircraft to keep the aircraft in ordinarily efficient operating condition and consist of maintenance activities that A expects to perform more than once during the 12 year class life of the aircraft, A's ESVs are within the routine maintenance safe harbor under paragraph (i)(1)(ii) of this section. Accordingly, the amounts paid for the ESVs are deemed not to improve the aircraft and are not required to be capitalized under paragraph (d) of this section.

Example 2. Routine maintenance after class life Assume the same facts as in *Example 1,* except that in year 15 A pays amounts to perform an ESV on one of the original aircraft engines after the end of the class life of the aircraft. Because this ESV involves the same routine maintenance activities that were performed on aircraft engines in *Example 1,* this ESV also is within the routine maintenance safe harbor under paragraph (i)(1)(ii) of this section. Accordingly, the amounts paid for this ESV, even though performed after the class life of the aircraft, are deemed not to improve the aircraft and are not required to be capitalized under paragraph (d) of this section.

Example 3. Routine maintenance on rotable spare parts (i) Assume the same facts as in *Example 1,* except that in addition to the four engines purchased as part of the aircraft, A separately purchases four additional new engines that A intends to use in its aircraft fleet to avoid operational downtime when ESVs are required to be performed on the engines previously installed on an aircraft. Later in Year 1, A installs these four engines on an aircraft in its fleet. In Year 5, A performs the first ESVs on these four engines. Assume that these ESVs involve the same routine maintenance activities that were performed on the engines in *Example 1,* and that none of the exceptions set out in paragraph (i)(3) of this section apply to these ESVs. After the ESVs were performed, these engines were reinstalled on other aircraft or stored for later installation.
(ii) The additional aircraft engines are rotable spare parts under § 1.162-3(c)(2) because they were acquired separately from the aircraft, are removable from the aircraft, and are repaired and reinstalled on other aircraft or stored for later installation. Assume the class life of an engine is the same as the airframe, 12 years. Because the ESVs involve the recurring activities that A expects to perform as a result of its use of the engines to keep the engines in ordinarily efficient operating condition, and consist of maintenance activities that A expects to perform more than once during the 12 year class life of the engine, the ESVs fall within the routine maintenance safe harbor under paragraph (i)(1)(ii) of this section. Accordingly, the

amounts paid for the ESVs for the four additional engines are deemed not to improve these engines and are not required to be capitalized under paragraph (d) of this section. For the treatment of amounts paid to acquire the engines, see § 1.162-3(a).

Example 4. Routine maintenance resulting from prior owner's use (i) In January, Year 1, B purchases a used machine for use in its manufacturing operations. Assume that the machine is the unit of property and has a class life of 10 years. B places the machine in service in January, Year 1, and at that time, B expects to perform manufacturer recommended scheduled maintenance on the machine approximately every three years. The scheduled maintenance includes the cleaning and oiling of the machine, the inspection of parts for defects, and the replacement of minor items such as springs, bearings, and seals with comparable and commercially available replacement parts. At the time B purchased the machine, the machine was approaching the end of a three-year scheduled maintenance period. As a result, in February, Year 1, B pays amounts to perform the manufacturer recommended scheduled maintenance. Assume that none of the exceptions set out in paragraph (i)(3) of this section apply to the amounts paid for the scheduled maintenance. (ii) The majority of B's costs do not qualify under the routine maintenance safe harbor in paragraph (i)(1)(ii) of this section because the costs were incurred primarily as a result of the prior owner's use of the property and not B's use. B acquired the machine just before it had received its three-year scheduled maintenance. Accordingly, the amounts paid for the scheduled maintenance resulted from the prior owner's, and not B's, use of the property and must be capitalized if those amounts result in a betterment under paragraph (i) of this section, including the amelioration of a material condition or defect, or otherwise result in an improvement under paragraph (d) of this section.

Example 5. Routine maintenance resulting from new owner's use Assume the same facts as in *Example 4,* except that after B pays amounts for the maintenance in Year 1, B continues to operate the machine in its manufacturing business. In Year 4, B pays amounts to perform the next scheduled manufacturer recommended maintenance on the machine. Assume that the scheduled maintenance activities performed are the same as those performed in *Example 4* and that none of the exceptions set out in paragraph (i)(3) of this section apply to the amounts paid for the scheduled maintenance. Because the scheduled maintenance performed in Year 4 involves the recurring activities that B performs as a result of its use of the machine, keeps the machine in an ordinarily efficient operating condition, and consists of maintenance activities that B expects to perform more than once during the 10-year class life of the machine, B's scheduled maintenance costs are within the routine maintenance safe harbor under paragraph (i)(1)(ii) of this section. Accordingly, the amounts paid for the scheduled maintenance in Year 4 are deemed not to improve the machine and are not required to be capitalized under paragraph (d) of this section.

Example 6. Routine maintenance; replacement of substantial structural part; coordination with section 263A C is in the business of producing commercial products for sale. As part of the production process, C places raw materials into lined containers in which a chemical reaction is used to convert raw materials into the finished product. The lining, which comprises 60 percent of the total physical

structure of the container, is a substantial structural part of the container. Assume that each container, including its lining, is the unit of property and that a container has a class life of 12 years. At the time that C placed the container into service, C was aware that approximately every three years, the container lining would need to be replaced with comparable and commercially available replacement materials. At the end of three years, the container will continue to function, but will become less efficient and the replacement of the lining will be necessary to keep the container in an ordinarily efficient operating condition. In Year 1, C acquired 10 new containers and placed them into service. In Year 4, Year 7, Year 9, and Year 12, C pays amounts to replace the containers' linings with comparable and commercially available replacement parts. Assume that none of the exceptions set out in paragraph (i)(3) of this section apply to the amounts paid for the replacement linings. Because the replacement of the linings involves recurring activities that C expects to perform as a result of its use of the containers to keep the containers in their ordinarily efficient operating condition and consists of maintenance activities that C expects to perform more than once during the 12-year class life of the containers, C's lining replacement costs are within the routine maintenance safe harbor under paragraph (i)(1)(ii) of this section. Accordingly, the amounts that C paid for the replacement of the container linings are deemed not to improve the containers and are not required to be capitalized under paragraph (d) of this section. However, the amounts paid to replace the lining may be subject to capitalization under section 263A if the amounts paid for this maintenance comprise the direct or allocable indirect costs of the property produced by C. See § 1.263A-1(e)(3)(ii)(O).

Example 7. Routine maintenance once during class life D is a Class I railroad that owns a fleet of freight cars. Assume that a freight car, including all its components, is a unit of property and has a class life of 14 years. At the time that D places a freight car into service, D expects to perform cyclical reconditioning to the car every 8 to 10 years to keep the freight car in ordinarily efficient operating condition. During this reconditioning, D pays amounts to disassemble, inspect, and recondition or replace components of the freight car with comparable and commercially available replacement parts. Ten years after D places the freight car in service, D pays amounts to perform a cyclical reconditioning on the car. Because D expects to perform the reconditioning only once during the 14 year class life of the freight car, the amounts D pays for the reconditioning do not qualify for the routine maintenance safe harbor under paragraph (i)(1)(ii) of this section. Accordingly, D must capitalize the amounts paid for the reconditioning of the freight car if these amounts result in an improvement under paragraph (d) of this section.

Example 8. Routine maintenance; reasonable expectation Assume the same facts as *Example 7,* except in Year 1, D acquires and places in service several refrigerated freight cars, which also have a class life of 14 years. Because of the special requirements of these cars, at the time they are placed in service, D expects to perform a reconditioning of the refrigeration components of the freight car every 6 years to keep the freight car in an ordinarily efficient operating condition. During the reconditioning, D pays amounts to disassemble, inspect, and recondition or replace the refrigeration components of the freight car with comparable and commercially available replacement parts. Assume that none of the exceptions set out in paragraph (i)(3) of this section apply to the amounts paid for the reconditioning of these freight cars. In Year 6, D pays amounts to perform a reconditioning on the refrigeration components on one of the freight cars. However, because of changes in the frequency that D utilizes this freight car, D does not perform the second reconditioning on the same freight car until Year 15, after the end of the 14-year class life of the car. Under paragraph (i)(1)(ii) of this section, D's reasonable expectation that it would perform the reconditioning every 6 years will not be deemed unreasonable merely because D did not actually perform the reconditioning a second time during the 14-year class life, provided that D can substantiate that its expectation was reasonable at

the time the property was placed in service. If D can demonstrate that its expectation was reasonable in Year 1 using the factors provided in paragraph (i)(1)(ii) of this section, then the amounts paid by D to recondition the refrigerated freight car components in Year 6 and in Year 15 are within the routine maintenance safe harbor under paragraph (i)(1)(ii) of this section.

Example 9. Routine maintenance on non-rotable part E is a towboat operator that owns and leases a fleet of towboats. Each towboat is equipped with two diesel-powered engines. Assume that each towboat, including its engines, is the unit of property and that a towboat has a class life of 18 years. At the time that E places its towboats into service, E is aware that approximately every three to four years E will need to perform scheduled maintenance on the two towboat engines to keep the engines in their ordinarily efficient operating condition. This maintenance is completed while the engines are attached to the towboat and involves the cleaning and inspecting of the engines to determine which parts are within acceptable operating tolerances and can continue to be used, which parts must be reconditioned to be brought back to acceptable tolerances, and which parts must be replaced. Engine parts replaced during these procedures are replaced with comparable and commercially available replacement parts. Assume the towboat engines are not rotable spare parts under § 1.162-3(c)(2). In Year 1, E acquired a new towboat, including its two engines, and placed the towboat into service. In Year 5, E pays amounts to perform scheduled maintenance on both engines in the towboat. Assume that none of the exceptions set out in paragraph (i)(3) of this section apply to the scheduled maintenance costs. Because the scheduled maintenance involves recurring activities that E expects to perform more than once during the 18-year class life of the towboat, the maintenance results from E's use of the towboat, and the maintenance is performed to keep the towboat in an ordinarily efficient operating condition, the scheduled maintenance on E's towboat is within the routine maintenance safe harbor under paragraph (i)(1)(ii) of this section. Accordingly, the amounts paid for the scheduled maintenance to its towboat engines in Year 5 are deemed not to improve the towboat and are not required to be capitalized under paragraph (d) of this section.

Example 10. Routine maintenance with related betterments Assume the same facts as *Example 9,* except that in Year 9 E's towboat engines are due for another scheduled maintenance visit. At this time, E decides to upgrade the engines to increase their horsepower and propulsion, which would permit the towboats to tow heavier loads. Accordingly, in Year 9, E pays amounts to perform many of the same activities that it would perform during the typical scheduled maintenance activities such as cleaning, inspecting, reconditioning, and replacing minor parts, but at the same time, E incurs costs to upgrade certain engine parts to increase the towing capacity of the boats in excess of the capacity of the boats when E placed them in service. In combination with the replacement of parts with new and upgraded parts, the scheduled maintenance must be completed to perform the horsepower and propulsion upgrade. Thus, the work done on the engines encompasses more than the recurring activities that E expected to perform as a result of its use of the towboats and did more than keep the towboat in its ordinarily efficient operating condition. Rather under paragraph (j) of this section, the amounts paid to increase the horsepower and propulsion of the engines are for a betterment to the towboat, and such amounts are excepted from the routine maintenance safe harbor under paragraph (i)(3)(i) of this section. In addition, under paragraph (g)(1)(i) of this section, the scheduled maintenance procedures directly benefit the upgrades. Therefore, the amounts that E paid in Year 9 for the maintenance and upgrade of the engines do not qualify for the routine maintenance safe harbor described under paragraph (i)(1)(ii) of this section. Rather, E must capitalize the amounts paid for maintenance and upgrades of the engines as an improvement to the towboats under paragraph (d) of this section.

Example 11. Routine maintenance with unrelated improvements Assume the same facts as *Example 9,* except in Year 5, in addition to paying amounts to perform the scheduled engine maintenance on both engines, E also incurs costs to upgrade the communications and navigation systems in the pilot house of the towboat with new state-of-the-art systems. Assume the amounts paid to upgrade the communications and navigation systems are for betterments under paragraph (j) of this section, and therefore result in an improvement to the towboat under paragraph (d) of this section. In contrast with *Example 9,* the amounts paid for the scheduled maintenance on E's towboat engines are not otherwise related to the upgrades to the navigation systems. Because the scheduled maintenance on the towboat engines does not directly benefit and is not incurred by reason of the upgrades to the communication and navigation systems, the amounts paid for the scheduled engine maintenance are not a direct or indirect cost of the improvement under paragraph (g)(1)(i) of this section. Accordingly, the amounts paid for the scheduled maintenance to its towboat engines in Year 5 are routine maintenance deemed not to improve the towboat and are not required to be capitalized under paragraph (d) of this section.

Example 12. Exceptions to routine maintenance F owns and operates a farming and cattle ranch with an irrigation system that provides water for crops. Assume that each canal in the irrigation system is a single unit of property and has a class life of 20 years. At the time F placed the canals into service, F expected to have to perform major maintenance on the canals every three years to keep the canals in their ordinarily efficient operating condition. This maintenance includes draining the canals, and then cleaning, inspecting, repairing, and reconditioning or replacing parts of the canal with comparable and commercially available replacement parts. F placed the canals into service in Year 1 and did not perform any maintenance on the canals until Year 6. At that time, the canals had fallen into a state of disrepair and no longer functioned for irrigation. In Year 6, F pays amounts to drain the canals and do extensive cleaning, repairing, reconditioning, and replacing parts of the canals with comparable and commercially available replacement parts. Although the work performed on F's canals was similar to the activities that F expected to perform, but did not perform, every three years, the costs of these activities do not fall within the routine maintenance safe harbor. Specifically, under paragraph (i)(3)(v) of this section, routine maintenance does not include activities that return a unit of property to its former ordinarily efficient operating condition if the property has deteriorated to a state of disrepair and is no longer functional for its intended use. Accordingly, amounts that F pays for work performed on the canals in Year 6 must be capitalized if they result in improvements under paragraph (d) of this section (for example, restorations under paragraph (k) of this section).

Example 13. Routine maintenance on a building; escalator system In Year 1, G acquires a large retail mall in which it leases space to retailers. The mall contains an escalator system with 40 escalators, which includes landing platforms, trusses, tracks, steps, handrails, and safety brushes. In Year 1, when G placed its building into service, G reasonably expected that it would need to replace the handrails on the escalators approximately every four years to keep the escalator system in its ordinarily efficient operating condition. After a routine inspection and test of the escalator system in Year 4, G determines that the handrails need to be replaced and pays an amount to replace the handrails with comparable and commercially available handrails. The escalator system, including the handrails, is a building system under paragraph (e)(2)(ii)(B)(*4*) of this section. Assume that none of the exceptions in paragraph (i)(3) of this section apply to the scheduled maintenance costs. Because the replacement of the handrails involves recurring activities that G expects to perform as a result of its use of the escalator system to keep the escalator system in an ordinarily efficient operating condition, and G reasonably expects to perform these activities more than once during the 10-year period beginning at the time building system was placed in service, the amounts paid by G for the handrail replacements are within the routine maintenance safe harbor under paragraph (i)(1)(i) of

this section. Accordingly, the amounts paid for the replacement of the handrails in Year 4 are deemed not to improve the building unit of property and are not required to be capitalized under paragraph (d) of this section.

Example 14. Not routine maintenance; escalator system Assume the same facts as in *Example 13,* except that in Year 9, G pays amounts to replace the steps of the escalators. In Year 1, when G placed its building into service, G reasonably expected that approximately every 18 to 20 years G would need to replace the steps to keep the escalator system in its ordinarily efficient operating condition. Because the replacement does not involve recurring activities that G expects to perform more than once during the 10-year period beginning at the time the building structure or the building system was placed in service, the costs of these activities do not fall within the routine maintenance safe harbor. Accordingly, amounts that G pays to replace the steps in Year 9 must be capitalized if they result in improvements under paragraph (d) of this section (for example, restorations under paragraph (k) of this section).

Example 15. Routine maintenance on building; reasonable expectation In Year 1, H acquires a new office building, which it uses to provide services. The building contains an HVAC system, which is a building system under paragraph (e)(2)(ii)(B)(*1*) of this section. In Year 1, when H placed its building into service, H reasonably expected that every four years H would need to pay an outside contractor to perform detailed testing, monitoring, and preventative maintenance on its HVAC system to keep the HVAC system in its ordinarily efficient operating condition. This scheduled maintenance includes disassembly, cleaning, inspection, repair, replacement, reassembly, and testing of the HVAC system and many of its component parts. If inspection or testing discloses a problem with any component, the part is repaired, or if necessary, replaced with a comparable and commercially available replacement part. The scheduled maintenance at these intervals is recommended by the manufacturer of the HVAC system and is routinely performed on similar systems in similar buildings. Assume that none of the exceptions in paragraph (i)(3) of this section apply to the amounts paid for the maintenance on the HVAC system. In Year 4, H pays amounts to a contractor to perform the scheduled maintenance. However, H does not perform this scheduled maintenance on its building again until Year 11. Under paragraph (i)(1)(i) of this section, H's reasonable expectation that it would perform the maintenance every 4 years will not be deemed unreasonable merely because H did not actually perform the maintenance a second time during the 10-year period, provided that H can substantiate that its expectation was reasonable at the time the property was placed in service. If H can demonstrate that its expectation was reasonable in Year 1 using the other factors considered in paragraph (i)(1)(i), then the amounts H paid for the maintenance of the HVAC system in Year 4 and in Year 11 are within the routine maintenance safe harbor under paragraph (i)(1)(i) of this section.

(j) ***Capitalization of betterments*** —

(1) ***In general.*** A taxpayer must capitalize as an improvement an amount paid for a betterment to a unit of property. An amount is paid for a betterment to a unit of property only if it—

(i) Ameliorates a material condition or defect that either existed prior to the taxpayer's acquisition of the unit of property or arose during the production of the unit of property, whether or not the taxpayer was aware of the condition or defect at the time of acquisition or production;

(ii) Is for a material addition, including a physical enlargement, expansion, extension, or addition of a major component (as defined in paragraph (k)(6) of this section) to the unit of property or a material increase in the capacity, including additional cubic or linear space, of the unit of property; or

(iii) Is reasonably expected to materially increase the productivity, efficiency, strength, quality, or output of the unit of property.

(2) *Application of betterment rules* —

(i) ***In general.*** The applicability of each quantitative and qualitative factor provided in paragraphs (j)(1)(ii) and (j)(1)(iii) of this section to a particular unit of property depends on the nature of the unit of property. For example, if an addition or an increase in a particular factor cannot be measured in the context of a specific type of property, this factor is not relevant in the determination of whether an amount has been paid for a betterment to the unit of property.

(ii) ***Application of betterment rules to buildings.*** An amount is paid to improve a building if it is paid for a betterment, as defined under paragraph (j)(1) of this section, to a property specified under paragraph (e)(2)(ii) (building), paragraph (e)(2)(iii)(B) (condominium), paragraph (e)(2)(iv)(B) (cooperative), or paragraph (e)(2)(v)(B) (leased building or leased portion of building) of this section. For example, an amount is paid to improve a building if it is paid for an increase in the efficiency of the building structure or any one of its building systems (for example, the HVAC system).

(iii) ***Unavailability of replacement parts.*** If a taxpayer replaces a part of a unit of property that cannot reasonably be replaced with the same type of part (for example, because of technological advancements or product enhancements), the replacement of the part with an improved, but comparable, part does not, by itself, result in a betterment to the unit of property.

(iv) *Appropriate comparison* —

(A) ***In general.*** In cases in which an expenditure is necessitated by normal wear and tear or damage to the unit of property that occurred during the taxpayer's use of the unit of property, the determination of whether an expenditure is for the betterment of the unit of property is made by comparing the condition of the property immediately after the expenditure with the condition of the property immediately prior to the circumstances necessitating the expenditure.

(B) ***Normal wear and tear.*** If the expenditure is made to correct the effects of normal wear and tear to the unit of property that occurred during the taxpayer's use of the unit of property, the condition of the property immediately prior to the circumstances necessitating the expenditure is the condition of the property after the last time the taxpayer corrected the effects of normal wear and tear (whether the amounts paid were for maintenance or improvements) or, if the taxpayer has not previously corrected the effects of normal wear and tear, the condition of the property when placed in service by the taxpayer.

(C) ***Damage to property.*** If the expenditure is made to correct damage to a unit of property that occurred during the taxpayer's use of the unit of property, the condition of the property immediately prior to the circumstances necessitating the expenditure is the condition of the property immediately prior to damage.

(3) ***Examples.*** The following examples illustrate the application of this paragraph (j) only and do not address whether capitalization is required under another provision of this section or another provision of the Internal Revenue Code (for example, section 263A). Unless otherwise provided, assume that the appropriate comparison in paragraph (j)(2)(iv) of this section is not applicable under the facts.

Example 1. Amelioration of pre-existing material condition or defect In Year 1, A purchases a store located on a parcel of land that contains underground gasoline storage tanks left by prior occupants. Assume that the parcel of land is the unit of property. The tanks had leaked prior to A's purchase, causing soil contamination. A is not aware of the contamination at the time of purchase. In Year 2, A discovers the contamination and incurs costs to remediate the soil. The remediation costs are for a betterment to the land under paragraph (j)(1)(i) of this section because A incurred the costs to ameliorate a material condition or defect that existed prior to A's acquisition of the land.

Example 2. Not amelioration of pre-existing condition or defect B owns an office building that was constructed with insulation that contained asbestos. The health dangers of asbestos were not widely known when the building was constructed. Several years after B places the building into service, B determines that certain areas of asbestos-containing insulation have begun to deteriorate and could eventually pose a health risk to employees. Therefore, B pays an amount to remove the asbestos-containing insulation from the building structure and replace it with new insulation that is safer to employees, but no more efficient or effective than the asbestos insulation. Under paragraphs (e)(2)(ii) and (j)(2)(ii) of this section, an amount is paid to improve a building unit of property if the amount is paid for a betterment to the building structure or any building system. Although the asbestos is determined to be unsafe under certain circumstances, the presence of asbestos insulation in a building, by itself, is not a preexisting material condition or defect of the building structure under paragraph (j)(1)(i) of this section. In addition, the removal and replacement of the asbestos is not for a material addition to the building structure or a material increase in the capacity of the building structure under paragraphs (j)(1)(ii) and (j)(2)(iv) of this section as compared to the condition of the property prior to the deterioration of the insulation. Similarly, the removal and replacement of asbestos is not reasonably expected to materially increase the productivity, efficiency, strength, quality, or output of the building structure under paragraphs (j)(1)(iii) and (j)(2)(iv) of this section as compared to the condition of the property prior to the deterioration of the insulation. Therefore, the amount paid to remove and replace the asbestos insulation is not for a betterment to the building structure or an improvement to the building under paragraph (j) of this section.

Example 3. Not amelioration of pre-existing material condition or defect (i) In January, Year 1, C purchased a used machine for use in its manufacturing operations. Assume that the machine is a unit of property and has a class life of 10 years. C placed the machine in service in January, Year 1 and at that time expected to perform manufacturer recommended scheduled maintenance on the machine every three years. The scheduled maintenance includes cleaning and oiling the machine, inspecting parts for defects, and replacing minor items, such as springs, bearings, and seals, with comparable and commercially available replacement parts. The scheduled maintenance does not include any material additions or materially increase the capacity, productivity, efficiency, strength, quality, or output of the machine. At the time C purchased the machine, it was approaching the end of a three-year scheduled maintenance period. As a result, in February, Year 1, C pays an amount to perform the manufacturer recommended scheduled maintenance to keep the machine in its ordinarily efficient operating condition.

(ii) The amount that C pays does not qualify under the routine maintenance safe harbor in paragraph (i) of this section, because the cost primarily results from the prior owner's use of the property and not the taxpayer's use. C acquired the machine just before it had received its three-year scheduled maintenance. Accordingly, the amount that C pays for the scheduled maintenance results from the prior owner's use of the property and ameliorates conditions or defects that existed prior to C's ownership of the machine. Nevertheless, considering the purpose and minor nature of the work performed, this amount does not ameliorate a material condition or defect in the machine under paragraph (j)(1)(i) of this section, is not for a material addition to or increase in capacity of the machine under paragraph (j)(1)(ii) of this section, and is not reasonably expected to materially increase the productivity, efficiency, strength, quality, or output of the machine under paragraph (j)(1)(iii) of this section. Therefore, C is not required to capitalize the amount paid for the scheduled maintenance as a betterment to the unit of property under this paragraph (j).

Example 4. Not amelioration of pre-existing material condition or defect D purchases a used ice resurfacing machine for use in the operation of its ice skating rink. To comply with local regulations, D is required to routinely monitor the air quality in the ice skating rink. One week after D places the machine into service, during a routine air quality check, D discovers that the operation of the machine is adversely affecting the air quality in the skating rink. As a result, D pays an amount to inspect and retune the machine, which includes replacing minor components of the engine that had worn out prior to D's acquisition of the machine. Assume the resurfacing machine, including the engine, is the unit of property. The routine maintenance safe harbor in paragraph (i) of this section does not apply to the amounts paid, because the activities performed do not relate solely to the taxpayer's use of the machine. The amount that D pays to inspect, retune, and replace minor components of the ice resurfacing machine ameliorates a condition or defect that existed prior to D's acquisition of the equipment. Nevertheless, considering the purpose and minor nature of the work performed, this amount does not ameliorate a material condition or defect in the machine under paragraph (j)(1)(i) of this section. In addition, the amount is not paid for a material addition to the machine or a material increase in the capacity of the machine under paragraph (j)(1)(ii) of this section. Also, the activities are not reasonably expected to materially increase the productivity, efficiency, strength, quality, or output of the machine under paragraph (j)(1)(iii) of this section. Therefore, D is not required to capitalize the amount paid to inspect, retune, and replace minor components of the machine as a betterment under this paragraph (j).

Example 5. Amelioration of material condition or defect (i) E acquires a building for use in its business of providing assisted living services. Before and after the purchase, the building functions as an assisted living facility. However, at the time of the purchase, E is aware that the building is in a condition that is below the standards that E requires for facilities used in its business. Immediately after the acquisition and during the following two years, while E continues to use the building as an assisted living facility, E pays amounts for extensive repairs and maintenance, and the acquisition of new property to bring the facility into the high-quality condition for which E's facilities are

known. The work on E's building includes repairing damaged drywall, repainting, re-wallpapering, replacing windows, repairing and replacing doors, replacing and regrouting tile, repairing millwork, and repairing and replacing roofing materials. The work also involves the replacement of section 1245 property, including window treatments, furniture, and cabinets. The work that E performs affects only the building structure under paragraph (e)(2)(ii)(A) of this section and does not affect any of the building systems described in paragraph (e)(2)(ii)(B) of this section. Assume that each section 1245 property is a separate unit of property.
(ii) Under paragraphs (e)(2)(ii) and (j)(2)(ii) of this section, an amount is paid to improve a building unit of property if the amount is paid for a betterment to the building structure or any building system. Considering the purpose of the expenditure and the effect of the expenditures on the building structure, the amounts that E paid for repairs and maintenance to the building structure comprise a betterment to the building structure under paragraph (j)(1)(i) of this section because the amounts ameliorate material conditions that existed prior to E's acquisition of the building. Therefore, E must treat the amounts paid for the betterment to the building structure as an improvement to the building and must capitalize the amounts under paragraphs (j) and (d)(1) of this section. Moreover, E is required to capitalize the amounts paid to acquire and install each section 1245 property, including each window treatment, each item of furniture, and each cabinet, in accordance with § 1.263(a)-2(d)(1).

Example 6. Not a betterment; building refresh (i) F owns a nationwide chain of retail stores that sell a wide variety of items. To maintain the appearance and functionality of its store buildings after several years of wear, F periodically pays amounts to refresh the look and layout of its stores. The work that F performs during a refresh consists of cosmetic and layout changes to the store's interiors and general repairs and maintenance to the store building to modernize the store buildings and reorganize the merchandise displays. The work to each store consists of replacing and reconfiguring display tables and racks to provide better exposure of the merchandise, making corresponding lighting relocations and flooring repairs, moving one wall to accommodate the reconfiguration of tables and racks, patching holes in walls, repainting the interior structure with a new color scheme to coordinate with new signage, replacing damaged ceiling tiles, cleaning and repairing wood flooring throughout the store building, and power washing building exteriors. The display tables and the racks all constitute section 1245 property. F pays amounts to refresh 50 stores during the taxable year. Assume that each section 1245 property within each store is a separate unit of property. Finally, assume that the work does not ameliorate any material conditions or defects that existed when F acquired the store buildings or result in any material additions to the store buildings.

(ii) Under paragraphs (e)(2)(ii) and (j)(2)(ii) of this section, an amount is paid to improve a building unit of property if the amount is paid for a betterment to the building structure or any building system. Considering the facts and circumstances including the purpose of the expenditure, the physical nature of the work performed, and the effect of the expenditure on the buildings' structure and systems, the amounts paid for the refresh of each building are not for any material additions to, or material increases in the capacity of, the buildings' structure or systems as compared with the condition of the structure or systems after the previous refresh. Moreover, the amounts paid are not reasonably expected to materially increase the productivity, efficiency, strength, quality, or output of any building structure or system under as compared to the condition of the structures or systems after the previous refresh. Rather, the work performed keeps F's store buildings' structures and buildings' systems in their ordinarily efficient operating condition. Therefore, F is not required to treat the amounts paid for the refresh of its store buildings' structures and buildings' systems as betterments under paragraphs (j)(1)(ii), (j)(1)(iii), and (j)(2)(iv) of this section. However, F is required to capitalize the amounts paid to acquire and install each section 1245 property in accordance with § 1.263(a)-2(d)(1).

Example 7. Building refresh; limited improvement (i) Assume the same facts as *Example 6* except, in the course of the refresh to one of its store buildings, F also pays amounts to increase the building's storage space, add a second loading dock, and add a second overhead door. Specifically, at the same time F pays amounts to perform the refresh, F pays additional amounts to construct an addition to the back of the store building, including adding a new overhead door and loading dock to the building. The work also involves upgrades to the electrical system of the building, including the addition of a second service box with increased amperage and new wiring from the service box to provide lighting and power throughout the new space. Although it is performed at the same time, the construction of the additions does not affect, and is not otherwise related to, the refresh of the retail space.
(ii) Under paragraphs (e)(2)(ii) and (j)(2)(ii) of this section, an amount is paid to improve a building unit of property if the amount is paid for a betterment to the building structure or any building system. Under paragraph (j)(1)(ii) of this section, the amounts paid by F to add the storage space, loading dock, overhead door, and expand the electrical system are for betterments to F's building structure and to the electrical system because they are for material additions to, and a material increase in capacity of, the structure and the electrical system of F's store building. Accordingly, F must treat the amounts paid for these betterments as improvements to the building unit of property and capitalize these amounts under paragraphs (d)(1) and (j) of this section. However, for the reasons discussed in *Example 6,* F is not required to treat the amounts paid for the refresh of its store building structure and systems as a betterments under paragraph (j)(1) of this

section. In addition, F is not required under paragraph (g)(1) of this section to capitalize the refresh costs described in *Example 6* because these costs do not directly benefit and are not incurred by reason of the additions to the building structure and electrical system. As in *Example 6,* F is required to capitalize the amounts paid to acquire and install each section 1245 property in accordance with § 1.263(a)-2(d)(1).

Example 8. Betterment; building remodel (i) G owns a large chain of retail stores that sell a variety of items. G determines that due to changes in the retail market, it can no longer compete in its current store class and decides to upgrade its stores to offer higher end products to a different type of customer. To offer these products and attract different types of customers, G must substantially remodel its stores. Thus, G pays amounts to remodel its stores by performing work on the buildings' structures and systems as defined under paragraphs (e)(2)(ii)(A) and (e)(2)(ii)(B) of this section. This work includes replacing large parts of the exterior walls with windows, replacing the escalators with a monumental staircase, adding a new glass enclosed elevator, rebuilding the interior and exterior facades, replacing vinyl floors with ceramic flooring, replacing ceiling tiles with acoustical tiles, and removing and rebuilding walls to move changing rooms and create specialty departments. The work also includes upgrades to increase the capacity of the buildings' electrical system to accommodate the structural changes and the addition of new section 1245 property, such as new product information kiosks and point of sale systems. The work to the electrical system also involves the installation of new more efficient and mood enhancing lighting fixtures. In addition, the work includes remodeling all bathrooms by replacing contractor-grade plumbing fixtures with designer-grade fixtures that conserve water and energy. Finally, G also pays amounts to clean debris resulting from construction during the remodel, patch holes in walls that were made to upgrade the electrical system, repaint existing walls with a new color scheme to match the new interior construction, and to power wash building exteriors to enhance the new exterior facade.
(ii) Under paragraphs (e)(2)(ii) and (j)(2)(ii) of this section, an amount is paid to improve a building unit of property if the amount is paid for a betterment to the building structure or any building system. Considering the facts and circumstances, including the purpose of the expenditure, the physical nature of the work performed, and the effect of the work on the buildings' structures and buildings' systems, the amounts that G pays for the remodeling of its stores result in betterments to the buildings' structures and several of its systems under paragraph (j) of this section. Specifically, the amounts paid to replace large parts of the exterior walls with windows, replace the escalators with a monumental staircase, add a new elevator, rebuild the interior and exterior facades, replace vinyl floors with ceramic flooring, replace the ceiling tiles with acoustical tiles, and to remove and rebuild walls are for material additions, that is the addition of major components, to the building structure under paragraph (j)(1)(ii) of this section and are reasonably

expected to increase the quality of the building structure under paragraph (j)(1)(iii) of this section. Similarly, the amounts paid to upgrade the electrical system are to materially increase the capacity of the electrical system under paragraph (j)(1)(ii) of this section and are reasonably expected to increase the quality of this system under paragraph (j)(1)(iii) of this section. In addition, the amounts paid to remodel the bathrooms with higher grade and more resource-efficient materials are reasonably expected to increase the efficiency and quality of the plumbing system under paragraph (j)(1)(iii) of this section. Finally, the amounts paid to clean debris, patch and repaint existing walls with a new color scheme, and to power wash building exteriors, while not betterments by themselves, directly benefitted and were incurred by reason of the improvements to G's store buildings' structures and electrical systems under paragraph (g)(1) of this section. Therefore, G must treat the amounts paid for betterments to the store buildings' structures and systems, including the costs of cleaning, patching, repairing, and power washing the building, as improvements to G's buildings and must capitalize these amounts under paragraphs (d)(1) and (j) of this section. Moreover, G is required to capitalize the amounts paid to acquire and install each section 1245 property in accordance with § 1.263(a)-2(d)(1). For the treatment of amounts paid to remove components of property, see paragraph (g)(2) of this section.

Example 9. Not betterment; relocation and reinstallation of personal property In Year 1, H purchases new cash registers for use in its retail store located in leased space in a shopping mall. Assume that each cash register is a unit of property as determined under paragraph (e)(3) of this section. In Year 1, H capitalizes the costs of acquiring and installing the new cash registers under § 1.263(a)-2(d)(1). In Year 3, H's lease expires, and H decides to relocate its retail store to a different building. In addition to various other costs, H pays $5,000 to move the cash registers and $1,000 to reinstall them in the new store. The cash registers are used for the same purpose and in the same manner that they were used in the former location. The amounts that H pays to move and reinstall the cash registers into its new store do not result in a betterment to the cash registers under paragraph (j) of this section.

Example 10. Betterment; relocation and reinstallation of equipment J operates a manufacturing facility in Building A, which contains various machines that J uses in its manufacturing business. J decides to expand part of its operations by relocating a machine to Building B to reconfigure the machine with additional components. Assume that the machine is a single unit of property under paragraph (e)(3) of this section. J pays amounts to disassemble the machine, to move the machine to the new location, and to reinstall the machine in a new configuration with additional components. Assume that the reinstallation, including the reconfiguration and the addition of components, is for an increase in capacity of the machine, and therefore is for a betterment to the machine under paragraph (j)(1)(ii) of this section. Accordingly, J must capitalize the costs of reinstalling the machine as an improvement to the machine under paragraphs (j) and (d)(1) of this section. J is also required to capitalize the costs of disassembling and moving the machine to Building B because these costs directly benefit and are incurred by reason of the improvement to the machine under paragraph (g)(1) of this section.

Example 11. Betterment; regulatory requirement K owns a building that it uses in its business. In Year 1, City C passes an ordinance setting higher safety standards for buildings because of the hazardous conditions caused by earthquakes. To comply with the ordinance, K pays an amount to add expansion bolts to its building structure. These bolts anchor the wooden framing of K's building to its cement foundation, providing additional structural support and resistance to seismic forces, making the building more resistant to damage from lateral movement. Under paragraphs (e)(2)(ii) and (j)(2)(ii) of this section, an amount is paid to improve a building unit of property if the amount is paid for a betterment to the building structure or any building system. The framing and foundation are part of the building structure as defined in paragraph (e)(2)(ii)(A) of this section. Prior to the ordinance, the old building was in good condition but did not meet City C's new requirements for earthquake resistance. The amount paid by K for the addition of the expansion bolts met City C's new requirement, but also materially increased the strength of the building structure under paragraph (j)(1)(iii) of this section. Therefore, K must treat the amount paid to add the expansion bolts as a betterment to the building structure and must capitalize this amount as an improvement to building under paragraphs (d)(1) and (j) of this section. Under paragraph (g)(4) of this section, City C's new requirement that K's building meet certain safety standards to continue to operate is not relevant in determining whether the amount paid improved the building.

Example 12. Not a betterment; regulatory requirement L owns a meat processing plant. After operating the plant for many years, L discovers that oil is seeping through the concrete walls of the plant. Federal inspectors advise L that it must correct the seepage problem or shut down its plant. To correct the problem, L pays an amount to add a concrete lining to the walls from the floor to a height of about four feet and also to add concrete to the floor of the plant. Under paragraphs (e)(2)(ii) and (j)(2)(ii) of this section, an amount is paid to improve a building unit of property if the amount is paid for a betterment to the building structure or any building system. The walls are part of the building structure as defined in paragraph (e)(2)(ii)(A) of this section. The condition necessitating the expenditure was the seepage of the oil into the plant. Prior to the seepage, the walls did not leak and were functioning for their intended use. L is not required to treat the amount paid as a betterment under paragraphs (j)(1)(ii) and (j)(2)(iv) of this section because it is not paid for a material addition to, or a material increase in the capacity of, the building's structure as compared to the condition of the structure prior to the seepage of oil. Moreover, the amount paid is not reasonably expected to materially increase the productivity, efficiency, strength, quality, or output of the building structure under paragraphs (j)(1)(iii) and (j)(2)(iv) as compared to the condition of the structure prior to the seepage of the oil Therefore, L is not required to treat the amount paid to correct the seepage as a betterment to the building under paragraph (d)(1) or (j) of this section. The federal inspectors' requirement that L correct the seepage to continue operating the plant is not relevant in determining whether the amount paid improves the plant.

Example 13. Not a betterment; new roof membrane M owns a building that it uses for its retail business. Over time, the waterproof membrane (top layer) on the roof of M's building begins to wear, and M began to experience water seepage and leaks throughout its retail premises. To eliminate the problems, a contractor recommends that M put a new rubber membrane on the worn membrane. Accordingly, M pays the contractor to add the new membrane. The new membrane is comparable to the worn membrane when it was originally placed in service by the taxpayer. Under paragraphs (e)(2)(ii) and (j)(2)(ii) of this section, an amount is paid to improve a building unit of property if the amount is paid for a betterment to the building structure or any building system. The roof is part of the building structure under paragraph (e)(2)(ii)(A) of this

section. The condition necessitating the expenditure was the normal wear of M's roof. Under paragraph (j)(2)(iv) of this section, to determine whether the amounts are for a betterment, the condition of the building structure after the expenditure must be compared to the condition of the structure when M placed the building into service because M has not previously corrected the effects of normal wear and tear. Under these facts, the amount paid to add the new membrane to the roof is not for a material addition or a material increase in the capacity of the building structure under paragraph (j)(1)(ii) of this section as compared to the condition of the structure when it was placed in service. Moreover, the new membrane is not reasonably expected to materially increase the productivity, efficiency, strength, quality, or output of the building structure under paragraph (j)(1)(iii) of this section as compared to the condition of the building structure when it was placed in service. Therefore, M is not required to treat the amount paid to add the new membrane as a betterment to the building under paragraph (d)(1) or (j) of this section.

Example 14. Material increase in capacity; building N owns a factory building with a storage area on the second floor. N pays an amount to reinforce the columns and girders supporting the second floor to permit storage of supplies with a gross weight 50 percent greater than the previous load-carrying capacity of the storage area. Under paragraphs (e)(2)(ii) and (j)(2)(ii) of this section, an amount is paid to improve a building unit of property if the amount is paid for a betterment to the building structure or any building system. The columns and girders are part of the building structure defined under paragraph (e)(2)(ii)(A) of this section. N must treat the amount paid to reinforce the columns and girders as a betterment under paragraphs (j)(1)(ii) and (j)(1)(iii) of this section because it materially increases the load-carrying capacity and the strength of the building structure. Therefore, N must capitalize this amount as an improvement to the building under paragraphs (d)(1) and (j) of this section.

Example 15. Material increase in capacity; channel O owns harbor facilities consisting of a slip for the loading and unloading of barges and a channel leading from the slip to the river. At the time of purchase, the channel was 150 feet wide, 1,000 feet long, and 10 feet deep. Several years after purchasing the harbor facilities, to allow for ingress and egress and for the unloading of larger barges, O decides to deepen the channel to a depth of 20 feet. O pays a contractor to dredge the channel to 20 feet. Assume the channel is the unit of property. O must capitalize the amounts paid for the dredging as an improvement to the channel because they are for a material increase in the capacity of the unit of property under paragraph (j)(1)(ii) of this section.

Example 16. Not a material increase in capacity; channel Assume the same facts as in *Example 15,* except that the channel was susceptible to siltation and, after dredging to 20 feet, the channel depth had been reduced to 18 feet. O pays a contractor to redredge the channel to a depth of 20 feet. The expenditure was necessitated by the siltation of the channel. Both prior to the siltation and after the redredging, the depth of the channel was 20 feet. Applying the comparison rule under paragraph (j)(2)(iv) of this section, the amounts paid by O to redredge the channel are not for a betterment under paragraph (j)(1)(ii) of this section because they are not for a material addition to, or a material increase in the capacity of, the unit of property as compared to the condition of the property prior to the siltation. Similarly, these amounts are not for a betterment under paragraph (j)(1)(iii) of this section because the amounts are not reasonably expected to increase the productivity, efficiency, strength, quality, or output of the unit of property as compared to the condition of the property before the siltation. Therefore, O is not required to capitalize these amounts as improvement under paragraphs (d)(1) and (j) of this section.

Example 17. Material increase in capacity; channel Assume the same facts as in *Example 16* except that after the redredging, there is more siltation, and the channel depth is reduced back to 18 feet. In addition, to allow for additional ingress and egress and for the unloading of even larger barges, O decides to deepen the channel to a depth of 25 feet. O pays a contractor to redredge the channel to 25 feet. O must capitalize the amounts paid for the dredging as an improvement to the channel because the amounts are for a material increase in the capacity of the unit of property under paragraph (j)(1)(ii) of this section as compared to condition of the unit of property before the siltation. As part of this improvement, O is also required to capitalize the portion of the redredge costs allocable to restoring the depth lost to the siltation because, under paragraph (g)(1)(i) of this section, these amounts directly benefit and are incurred by reason of the improvement to the unit of property.

Example 18. Not a material increase in capacity; building P owns a building used in its trade or business. The first floor has a drop-ceiling. To fully expose windows on the first floor, P pays an amount to remove the drop-ceiling and repaint the original ceiling. Under paragraphs (e)(2)(ii) and (j)(2)(ii) of this section, an amount is paid to improve a building unit of property if the amount is paid for a betterment to the building structure or any building system. The ceiling is part of the building structure as defined under paragraph (e)(2)(ii)(A) of this section. P is not required to treat the amount paid to remove the drop-ceiling as a betterment to the building because it was not for a material addition or material increase in the capacity of the building structure under paragraph (j)(1)(ii) of this section and it was not reasonably expected to materially increase to the efficiency, strength, or quality of the building structure under paragraph (j)(1)(iii) of this section. In addition, under paragraph (j)(2)(i) of this section, because the effect on productivity and output of the building structure cannot be measured in this context, these factors are not relevant in determining whether there is a betterment to the building structure.

Example 19. Material increase in capacity; building Q owns a building that it uses in its retail business. The building contains one floor of retail space with very high ceilings. Q pays an amount to add a stairway and a mezzanine for the purposes of adding additional selling space within its building. Under paragraphs (e)(2)(ii) and (j)(2)(ii) of this section, an amount is paid to improve a building unit of property if the amount is paid for a betterment to the building structure or any building system. The stairway and the mezzanine are part of the building structure as defined under paragraph (e)(2)(ii)(A) of this section. Q is required to treat the amount paid to add the stairway and mezzanine as a betterment because it is for a material addition to, and an increase in the capacity of, the building structure under paragraph (j)(1)(ii) of this section. Therefore, Q must capitalize this amount as an improvement to the building unit of property under paragraphs (d)(1) and (j) of this section.

Example 20. Not material increase in efficiency; HVAC system R owns an office building that it uses to provide services to customers. The building contains an HVAC system that incorporates 10 roof-mounted units that provide heating and air conditioning for different parts of the building. The HVAC system also consists of controls for the entire system and duct work that distributes the heated or cooled air to the various spaces in the building's interior. After many years of use of the HVAC system, R begins to experience climate control problems in various offices throughout the office building and consults with a contractor to determine the cause. The contractor recommends that R replace two of the roof-mounted units. R pays an amount to replace the two specified units. The two new units are expected to eliminate the climate control problems and to be 10 percent more energy efficient than the replaced units in their original

condition. No work is performed on the other roof-mounted heating/cooling units, the duct work, or the controls. Under paragraphs (e)(2)(ii) and (j)(2)(ii) of this section, an amount is paid to improve a building unit of property if the amount is paid for a betterment to the building structure or any building system. The HVAC system, including the two-roof mounted units, is a building system under paragraph (e)(2)(ii)(B)(*1*) of this section. The replacement of the two roof-mounted units is not a material addition to or a material increase in the capacity of the HVAC system under paragraphs (j)(1)(ii) and (j)(3)(ii) of this section as compared to the condition of the system prior to the climate control problems. In addition, given the 10 percent efficiency increase in two units of the entire HVAC system, the replacement is not expected to materially increase the productivity, efficiency, strength, quality, or output of the HVAC system under paragraphs (j)(1)(iii) and (j)(2)(iv) of this section as compared to the condition of the system prior to the climate control problems. Therefore, R is not required to capitalize the amounts paid for these replacements as betterments to the building unit of property under paragraphs (d)(1) and (j) of this section.

Example 21. Material increase in efficiency; building S owns a building that it uses in its service business. S conducts an energy assessment and determines that it could significantly reduce its energy costs by adding insulation to its building. S pays an insulation contractor to apply a combination of loose-fill, spray foam, and blanket insulation throughout S's building structure, including within the attic, walls, and crawl spaces. S reasonably expects the new insulation to make the building more energy efficient because the contractor indicated that the new insulation would reduce its annual energy and power costs by approximately 50 percent of its annual costs during the last five years. Under paragraphs (e)(2)(ii) and (j)(2)(ii) of this section, an amount is paid to improve a building if the amount is paid for a betterment to the building structure or any building system. Therefore, under paragraphs (d)(1) and (j) of this section, S must capitalize as a betterment the amount paid to add the insulation because the insulation is reasonably expected to materially increase the efficiency of the building structure under paragraph (j)(1)(iii) of this section.

Example 22. Material addition; building T owns and operates a restaurant, which provides a variety of prepared foods to its customers. To better accommodate its customers and increase customer traffic, T decides to add a drive-through service area. As a result, T pays amounts to partition an area within its restaurant for a drive-through service counter, to construct a service window with necessary security features, to build an overhang for vehicles, and to construct a drive-up menu board. Assume that the drive-up menu board is section 1245 property that is a separate unit of property under paragraph (e)(3) of this section. Under paragraphs (e)(2)(ii) and (j)(2)(ii) of this section, an amount is paid to improve a building unit of property if the amount is paid for a betterment to the building structure or any building system. The amounts paid for the partition, service window and overhang are betterments to the building structure because they comprise a material addition (that is, a physical expansion, extension, and addition of a major component) to the building structure under paragraph (j)(1)(ii) of this section. Accordingly, T must capitalize as an improvement the amounts paid to add the partition, drive-through window, and overhang under paragraphs (d)(1) and (j) of this section. T is also required to capitalize the amounts paid to acquire and install each section 1245 property in accordance with § 1.263(a)-2(d)(1).

Example 23. Costs incurred during betterment U owns a building that it uses in its service business. To accommodate new employees and equipment, U pays amounts to increase the load capacity of its electrical system by adding a second electrical panel with additional circuits and adding

wiring and outlets throughout the electrical system of its building. To complete the upgrades to the electrical system, the contractor makes several holes in walls. As a result, U also incurs costs to patch the holes and repaint several walls. Under paragraphs (e)(2)(ii) and (j)(2)(ii) of this section, an amount is paid to improve a building unit of property if the amount is paid for a betterment to the building structure or any building system. The amounts paid to upgrade the panel and wiring are for betterments to U's electrical system because they increase the capacity of the electrical system under paragraph (j)(1)(ii) of this section and increase the strength and output of the electrical system under paragraph (j)(1)(iii) of this section. Accordingly, U is required to capitalize the costs of the upgrade to the electrical system as an improvement to the building unit of property under paragraphs (d)(1) and (j) of this section. Moreover, under paragraph (g)(1) of this section, U is required to capitalize the amounts paid to patch holes and repaint several walls in its building because these costs directly benefit and are incurred by reason of the improvement to U's building unit of property.

(k) *Capitalization of restorations* —

(1) ***In general.*** A taxpayer must capitalize as an improvement an amount paid to restore a unit of property, including an amount paid to make good the exhaustion for which an allowance is or has been made. An amount restores a unit of property only if it—

(i) Is for the replacement of a component of a unit of property for which the taxpayer has properly deducted a loss for that component, other than a casualty loss under § 1.165-7;

(ii) Is for the replacement of a component of a unit of property for which the taxpayer has properly taken into account the adjusted basis of the component in realizing gain or loss resulting from the sale or exchange of the component;

(iii) Is for the restoration of damage to a unit of property for which the taxpayer is required to take a basis adjustment as a result of a casualty loss under section 165, or relating to a casualty event described in section 165, subject to the limitation in paragraph (k)(4) of this section;

(iv) Returns the unit of property to its ordinarily efficient operating condition if the property has deteriorated to a state of disrepair and is no longer functional for its intended use;

(v) Results in the rebuilding of the unit of property to a like-new condition as determined under paragraph (k)(5) of this section after the end of its class life as defined in paragraph (i)(4) of this section; or

(vi) Is for the replacement of a part or combination of parts that comprise a major component or a substantial structural part of a unit of property as determined under paragraph (k)(6) of this section.

(2) ***Application of restorations to buildings.*** An amount is paid to improve a building if it is paid to restore, as defined under paragraph (k)(1) of this section, a property specified under paragraph (e)(2)(ii) (building), paragraph (e)(2)(iii)(B) (condominium), paragraph (e)(2)(iv)(B) (cooperative), or paragraph (e)(2)(v)(B) (leased building or portion of building) of this section. For example, an amount is paid to improve a building if it is paid for the replacement of a part or combination of parts that comprise a major component or substantial structural part of the building structure or any one of its building systems (for example, the HVAC system). See paragraph (k)(6) of this section.

(3) ***Exception for losses based on salvage value.*** A taxpayer is not required to treat as a restoration amounts paid under paragraph (k)(1)(i) or paragraph (k)(1)(ii) of this section if the unit of property has been fully depreciated and the loss is attributable only to remaining salvage value as computed for federal income tax purposes.

(4) ***Restoration of damage from casualty*** —

(i) ***Limitation.*** For purposes of paragraph (k)(1)(iii) of this section, the amount paid for restoration of damage to the unit of property that must be capitalized under this paragraph (k) is limited to the excess (if any) of—

(A) The amount prescribed by § 1.1011-1 as the adjusted basis of the single, identifiable property (under § 1.167-7(b)(2)(i)) for determining the loss allowable on account of the casualty, over

(B) The amount paid for restoration of damage to the unit of property under paragraph (k)(1)(iii) of this section that also constitutes an improvement under any other provision of paragraph (k)(1) of this section.

(ii) ***Amounts in excess of limitation.*** The amounts paid for restoration of damage to a unit of property as described in paragraph (k)(1)(iii) of this section, but that exceed the limitation provided in paragraph (k)(4)(i) of this section, must be treated in accordance with the provisions of the Internal Revenue Code and regulations that are otherwise applicable. See, for example, § 1.162-4 (repairs and maintenance); § 1.263(a)-2 (costs to acquire and produce units of property); and § 1.263(a)-3 (costs to improve units of property).

(5) ***Rebuild to like-new condition.*** For purposes of paragraph (k)(1)(v) of this section, a unit of property is rebuilt to a like-new condition if it is brought to the status of new, rebuilt, remanufactured, or a similar status under the terms of any federal regulatory guideline or the manufacturer's original specifications. Generally, a comprehensive maintenance program, even though substantial, does not return a unit of property to a like-new condition.

(6) ***Replacement of a major component or a substantial structural part*** —

(i) ***In general.*** To determine whether an amount is for the replacement of a part or a combination of parts that comprise a major component or a substantial structural part of the unit of property under paragraph (k)(1)(vi) of this section, it is appropriate to consider all the facts and circumstances. These facts and circumstances include the quantitative and qualitative significance of the part or combination of parts in relation to the unit of property.

(A) ***Major component.*** A major component is a part or combination of parts that performs a discrete and critical function in the operation of the unit of property. An incidental component of the unit of property, even though such component performs a discrete and critical function in the operation of the unit of property, generally will not, by itself, constitute a major component.

(B) ***Substantial structural part.*** A substantial structural part is a part or combination of parts that comprises a large portion of the physical structure of the unit of property.

(ii) ***Major components and substantial structural parts of buildings.*** In the case of a building, an amount is for the replacement of a major component or a substantial structural part of the building unit of property if—

(A) The replacement includes a part or combination of parts that comprise a major component (as defined in paragraph (k)(6)(i)(A) of this section), or a significant portion of a major component, of any of the properties designated in paragraph (e)(2)(ii) (building), paragraph (e)(2)(iii)(B) (condominium), paragraph (e)(2)(iv)(B) (cooperative), or paragraph (e)(2)(v)(B) (leased building or leased portion of a building) of this section; or

(B) The replacement includes a part or combination of parts that comprises a large portion of the physical structure of any of the properties designated in paragraph (e)(2)(ii) (building), paragraph (e)(2)(iii)(B) (condominium), paragraph (e)(2)(iv)(B) (cooperative), or paragraph (e)(2)(v)(B) (leased building or portion of building) of this section.

(7) ***Examples.*** The following examples illustrate the application of this paragraph (k) only and do not address whether capitalization is required under another provision of this section or another provision of the Code (for example, section 263A). Unless otherwise stated, assume that the taxpayer has not properly deducted a loss for, nor taken into account the adjusted basis on a sale or exchange of, any unit of property, asset, or component of a unit of property that is replaced.

Example 1. Replacement of loss component A owns a manufacturing building containing various types of manufacturing equipment. A does a cost segregation study of the manufacturing building and properly determines that a walk-in freezer in the manufacturing building is section 1245 property as defined in section 1245(a)(3). The freezer is not part of the building structure or the HVAC system under paragraph (e)(2)(i) or (e)(2)(ii)(B)(*1*) of this section. Several components of the walk-in freezer cease to function, and A decides to replace them. A abandons the old freezer components and properly recognizes a loss from the abandonment of the components. A replaces the abandoned freezer components with new components and incurs costs to acquire and install the new components. Under paragraph (k)(1)(i) of this section, A must capitalize the amounts paid to acquire and install the new freezer components because A replaced components for which it had properly deducted a loss.

Example 2. Replacement of sold component Assume the same facts as in *Example 1,* except that A did not abandon the components but instead sold them to another party and properly recognized a loss on the sale. Under paragraph (k)(1)(ii) of this section, A must capitalize the amounts paid to acquire and install the new freezer components because A replaced components for which it had properly taken into account the adjusted basis of the components in realizing a loss from the sale of the components.

Example 3. Restoration after casualty loss B owns an office building that it uses in its trade or business. A storm damages the office building at a time when the building has an adjusted basis of $500,000. B deducts under section 165 a casualty loss in the amount of $50,000, and properly reduces its basis in the office building to $450,000. B hires a contractor to repair the damage to the building, including the repair of the building roof and the removal of debris from the building premises. B pays the contractor $50,000 for the work. Under paragraph (k)(1)(iii) of this section, B must treat the $50,000 amount paid to the contractor as a restoration of the building structure because B properly adjusted its basis in that amount as a result of a casualty loss under section 165, and the amount does not exceed the limit in paragraph (k)(4) of this section. Therefore, B must treat the amount paid as an improvement to the building unit of property and, under paragraph (d)(2) of this section, must capitalize the amount paid.

Example 4. Restoration after casualty event Assume the same facts as in *Example 3,* except that B receives insurance proceeds of $50,000 after the casualty to compensate for its loss. B cannot deduct a casualty loss under section 165 because its loss was compensated by insurance.

However, B properly reduces its basis in the property by the amount of the insurance proceeds. Under paragraph (k)(1)(iii) of this section, B must treat the $50,000 amount paid to the contractor as a restoration of the building structure because B has properly taken a basis adjustment relating to a casualty event described in section 165, and the amount does not exceed the limit in paragraph (k)(4) of this section. Therefore, B must treat the amount paid as an improvement to the building unit of property and, under paragraph (d)(2) of this section, must capitalize the amount paid.

> *Example 5. Restoration after casualty loss; limitation* (i) C owns a building that it uses in its trade or business. A storm damages the building at a time when the building has an adjusted basis of $500,000. C determines that the cost of restoring its property is $750,000, deducts a casualty loss under section 165 in the amount of $500,000, and properly reduces its basis in the building to $0. C hires a contractor to repair the damage to the building and pays the contractor $750,000 for the work. The work involves replacing the entire roof structure of the building at a cost of $350,000 and pumping water from the building, cleaning debris from the interior and exterior, and replacing areas of damaged dry wall and flooring at a cost of $400,000. Although resulting from the casualty event, the pumping, cleaning, and replacing damaged drywall and flooring, does not directly benefit and is not incurred by reason of the roof replacement.
> (ii) Under paragraph (k)(1)(vi) of this section, C must capitalize as an improvement the $350,000 amount paid to the contractor to replace the roof structure because the roof structure constitutes a major component and a substantial structural part of the building unit of property. In addition, under paragraphs (k)(1)(iii) and (k)(4)(i), C must treat as a restoration the remaining costs, limited to the excess of the adjusted basis of the building over the amounts paid for the improvement under paragraph (k)(1)(vi). Accordingly, C must treat as a restoration $150,000 ($500,000—$350,000) of the $400,000 paid for the portion of the costs related to repairing and cleaning the building structure under paragraph (k)(1)(iii) of this section. Thus, in addition to the $350,000 to replace the roof structure, C must also capitalize the $150,000 as an improvement to the building unit of property under paragraph (d)(2) of this section. C is not required to capitalize the remaining $250,000 repair and cleaning costs under paragraph (k)(1)(iii) of this section.

Example 6. Restoration of property in a state of disrepair D owns and operates a farm with several barns and outbuildings. D did not use or maintain one of the outbuildings on a regular basis, and the outbuilding fell into a state of disrepair. The outbuilding previously was used for storage but can no longer be used for that purpose because the building is not structurally sound. D decides to restore the outbuilding and pays an amount to shore up the walls and replace the siding. Under paragraphs (e)(2)(ii) and (k)(2) of this section, an amount is paid to improve a building if the amount is paid to restore the building structure or any building system. The walls and siding are part of the building structure under paragraph (e)(2)(ii)(A) of this section. Under paragraph (k)(1)(iv) of this section, D must treat the amount paid to shore up the walls and replace the siding as a restoration of the building structure because the amounts

return the building structure to its ordinarily efficient operating condition after it had deteriorated to a state of disrepair and was no longer functional for its intended use. Therefore, D must treat the amount paid to shore up the walls and replace the siding as an improvement to the building unit of property and, under paragraph (d)(2) of this section, must capitalize the amount paid.

Example 7. Rebuild of property to like-new condition before end of class life E is a Class I railroad that owns a fleet of freight cars. Assume the freight cars have a recovery period of 7 years under section 168(c) and a class life of 14 years. Every 8 to 10 years, E rebuilds its freight cars. Ten years after E places the freight car in service, E performs a rebuild to the manufacturer's original specification, which includes a complete disassembly, inspection, and reconditioning or replacement of components of the suspension and draft systems, trailer hitches, and other special equipment. E also modifies the car to upgrade various components to the latest engineering standards. The freight car is stripped to the frame, with all of its substantial components either reconditioned or replaced. The frame itself is the longest-lasting part of the car and is reconditioned. The walls of the freight car are replaced or are sandblasted and repainted. New wheels are installed on the car. All the remaining components of the car are restored before they are reassembled. At the end of the rebuild, the freight car has been restored to like-new condition under the manufacturer's specifications. Assume the freight car is the unit of property. E is not required to treat as an improvement and capitalize the amounts paid to rebuild the freight car under paragraph (k)(1)(v) of this section because, although the amounts paid restore the freight car to like-new condition, the amounts were not paid after the end of the class life of the freight car. However, paragraphs (k)(1)(vi) and (k)(6) of this section are applicable for determining whether any amounts must be capitalized because they are paid for the replacement of a major component or a substantial structural part of the unit of property.

Example 8. Rebuild of property to like-new condition after end of class life Assume the same facts as in *Example 7,* except that E rebuilds the freight car 15 years after E places it in service. Under paragraph (k)(1)(v) of this section, E must treat as an improvement and capitalize the amounts paid to rebuild the freight car because the amounts paid restore the freight car to like-new condition after the end of the class life of the freight car.

Example 9. Not a rebuild to a like-new condition F is a commercial airline engaged in the business of transporting freight and passengers. To conduct its business, F owns several aircraft. As a condition of maintaining its airworthiness certificates, F is required by the FAA to establish and adhere to a continuous maintenance program for each aircraft in its fleet. F performs heavy maintenance on its airframes every 8 to 10 years. In Year 1, F purchased an aircraft for $15 million. In Year 16, F paid $2 million for the labor and materials necessary to perform the second heavy maintenance visit on the airframe of an aircraft. To perform the heavy maintenance visit, F extensively disassembles the airframe, removing items such as engines, landing gear, cabin and passenger compartment seats, side and ceiling panels, baggage stowage bins, galleys, lavatories, floor boards, cargo loading systems, and flight control surfaces. As specified by F's maintenance manual for the aircraft, F then performs certain tasks on the disassembled airframe for the purpose of preventing deterioration of the inherent safety and reliability levels of the airframe. These tasks include lubrication and service, operational and visual checks, inspection and functional checks, reconditioning of minor parts and components, and removal, discard, and replacement of certain life-limited single cell parts, such as cartridges, canisters, cylinders, and disks. Reconditioning of parts includes burnishing

corrosion, repairing cracks, dents, gouges, punctures, tightening or replacing loose or missing fasteners, replacing damaged seals, gaskets, or valves, and similar activities. In addition to the tasks described above, to comply with certain FAA airworthiness directives, F inspects specific skin locations, applies doublers over small areas where cracks were found, adds structural reinforcements, and replaces skin panels on a small section of the fuselage. However, the heavy maintenance does not include the replacement of any major components or substantial structural parts of the aircraft with new components. In addition, the heavy maintenance visit does not bring the aircraft to the status of new, rebuilt, remanufactured, or a similar status under FAA guidelines or the manufacturer's original specifications. After the heavy maintenance, the aircraft was reassembled. Assume the aircraft, including the engines, is a unit of property and has a class life of 12 years under section 168(c). Although the heavy maintenance is performed after the end of the class life of the aircraft, F is not required to treat the heavy maintenance as a restoration and improvement of the unit of property under paragraph (k)(1)(v) of this section because, although extensive, the amounts paid do not restore the aircraft to like-new condition. See also paragraph (i)(1)(iii) of this section for the application of the safe harbor for routine maintenance.

Example 10. Replacement of major component or substantial structural part; personal property G is a common carrier that owns a fleet of petroleum hauling trucks. G pays amounts to replace the existing engine, cab, and petroleum tank with a new engine, cab, and tank. Assume the tractor of the truck (which includes the cab and the engine) is a single unit of property and that the trailer (which contains the petroleum tank) is a separate unit of property. The new engine and the cab each constitute a part or combination of parts that comprise a major component of G's tractor, because they perform a discrete and critical function in the operation of the tractor. In addition, the cab constitutes a part or combination of parts that comprise a substantial structural part of G's tractor. Therefore, the amounts paid for the replacement of the engine and the cab must be capitalized under paragraph (k)(1)(vi) of this section. Moreover, the new petroleum tank constitutes a part or combination of parts that comprise a major component and a substantial structural part of the trailer. Accordingly, the amounts paid for the replacement of the tank also must be capitalized under paragraph (k)(1)(vi) of this section.

Example 11. Repair performed during restoration Assume the same facts as in *Example 10,* except that, at the same time the engine and cab of the tractor are replaced, G pays amounts to paint the cab of the tractor with its company logo and to fix a broken taillight on the tractor. The repair of the broken taillight and the painting of the cab generally are deductible expenses under § 1.162-4. However, under paragraph (g)(1)(i) of this section, a taxpayer must capitalize all the direct costs of an improvement and all the indirect costs that directly benefit or are incurred by reason of an improvement. Repairs and maintenance that do not directly benefit or are not incurred by reason of an improvement are not required to be capitalized under section 263(a), regardless of whether they are made at the same time as an improvement. For the amounts paid to paint the logo on the cab, G's need to paint the logo arose from the replacement of the cab with a new cab. Therefore, under paragraph (g)(1)(i) of this section, G must capitalize the amounts paid to paint the cab as part of the improvement to the tractor because these amounts directly benefit and are incurred by reason of the restoration of the tractor. The amounts paid to repair the broken taillight are not for the replacement of a major component, do not directly benefit, and are not incurred by reason of the replacement of the cab or the engine under paragraph (g)(1)(i) of this section, even though the repair was performed at the same time as these replacements. Thus, G is not required to capitalize the amounts paid to repair the broken taillight.

Example 12. Related amounts to replace major component or substantial structural part; personal property (i) H owns a retail gasoline station, consisting of a paved area used for automobile access to the pumps and parking areas, a building used to market gasoline, and a canopy covering the gasoline pumps. The premises also consist of underground storage tanks (USTs) that are connected by piping to the pumps and are part of the gasoline pumping system used in the immediate retail sale of gas. The USTs are components of the gasoline pumping system. To comply with regulations issued by the Environmental Protection Agency, H is required to remove and replace leaking USTs. In Year 1, H hires a contractor to perform the removal and replacement, which consists of removing the old tanks and installing new tanks with leak detection systems. The removal of the old tanks includes removing the paving material covering the tanks, excavating a hole large enough to gain access to the old tanks, disconnecting any strapping and pipe connections to the old tanks, and lifting the old tanks out of the hole. Installation of the new tanks includes placement of a liner in the excavated hole, placement of the new tanks, installation of a leak detection system, installation of an overfill system, connection of the tanks to the pipes leading to the pumps, backfilling of the hole, and replacement of the paving. H also is required to pay a permit fee to the county to undertake the installation of the new tanks.
(ii) H pays the permit fee to the county on October 15, Year 1. On December 15, Year 1, the contractor completes the removal of the old USTs and bills H for the costs of removal. On January 15, Year 2, the contractor completes the installation of the new USTs and bills H for the remainder of the work. Assume that H computes its taxes on a calendar year basis and H's gasoline pumping system is the unit of property. Under paragraph (k)(1)(vi) of this section, H must capitalize the amounts paid to replace the USTs as a restoration to the gasoline pumping system because the USTs are parts or combinations of parts that comprise a major component and substantial structural part of the gasoline pumping system. Moreover, under paragraph (g)(2) of this section, H must capitalize the costs of removing the old USTs because H has not taken a loss on the disposition of the USTs, and the amounts to remove the USTs directly benefit and are incurred by reason of the restoration of, and improvement to, the gasoline pumping system. In addition, under paragraph (g)(1) of this section, H must capitalize the permit fees because they directly benefit and are incurred by reason of the improvement to the gasoline pumping system. Finally, under paragraph (g)(3) of this section, H must capitalize the related amounts paid to improve the gasoline pumping system, including the permit fees, the amount paid to remove the old USTs, and the amount paid to install the new USTs, even though the amounts were separately invoiced, paid to different parties, and incurred in different tax years.

Example 13. Not replacement of major component; incidental J owns a machine shop in which it makes dies used by manufacturers. In Year 1, J purchased a drill press for use in its production process. In Year 3, J discovers that the power switch assembly, which controls the supply of

electric power to the drill press, has become damaged and cannot operate. To correct this problem, J pays amounts to replace the power switch assembly with comparable and commercially available replacement parts. Assume that the drill press is a unit of property under paragraph (e) of this section and the power switch assembly is a small component of the drill press that may be removed and installed with relative ease. The power switch assembly is not a major component of the unit of property under paragraph (k)(6)(i)(A) of this section because, although the power assembly may affect the function of J's drill press by controlling the supply of electric power, the power assembly is an incidental component of the drill press. In addition, the power assembly is not a substantial structural part of J's drill press under paragraph (k)(6)(i)(B) of this section. Therefore, J is not required to capitalize the costs to replace the power switch assembly under paragraph (k)(1)(vi) of this section.

Example 14. Replacement of major component or substantial structural part; roof K owns a manufacturing building. K discovers several leaks in the roof of the building and hires a contractor to inspect and fix the roof. The contractor discovers that a major portion of the decking has rotted and recommends the replacement of the entire roof. K pays the contractor to replace the entire roof, including the decking, insulation, asphalt, and various coatings. Under paragraphs (e)(2)(ii) and (k)(2) of this section, an amount is paid to improve a building if the amount is paid to restore the building structure or any building system. The roof is part of the building structure as defined under paragraph (e)(2)(ii)(A) of this section. Because the entire roof performs a discrete and critical function in the building structure, the roof comprises a major component of the building structure under paragraph (k)(6)(ii)(A) of this section. In addition, because the roof comprises a large portion of the physical structure of the building structure, the roof comprises a substantial structural part of the building structure under paragraph (k)(6)(ii)(B) of this section. Therefore, under either analysis, K must treat the amount paid to replace the roof as a restoration of the building under paragraphs (k)(1)(vi) and (k)(2) of this section and must capitalize the amount paid as an improvement under paragraph (d)(2) of this section.

Example 15. Not replacement of major component or substantial structural part; roof membrane L owns a building in which it conducts its retail business. The roof decking over L's building is covered with a waterproof rubber membrane. Over time, the rubber membrane begins to wear, and L begins to experience leaks into its retail premises. However, the building is still functioning in L's business. To eliminate the problems, a contractor recommends that L replace the membrane on the roof with a new rubber membrane. Accordingly, L pays the contractor to strip the original membrane and replace it with a new rubber membrane. The new membrane is comparable to the original membrane but corrects the leakage problems. Under paragraphs (e)(2)(ii) and (k)(2) of this section, an amount is paid to improve a building if the amount is paid to restore the building structure or any building system. The roof, including the membrane, is part of the building structure as defined under paragraph (e)(2)(ii)(A) of this section. Because the entire roof performs a discrete and critical function in the building structure, the roof comprises a major component of the building structure under paragraph (k)(6)(ii)(A) of this section. Although the replacement membrane may aid in the function of the building structure, it does not, by itself, comprise a significant portion of the roof major component under paragraph (k)(6)(ii)(A) of this section. In addition, the replacement membrane does not comprise a substantial structural part of L's building structure under paragraph (k)(6)(ii)(B) of this section. Therefore, L is not required to capitalize the amount paid to replace the membrane as a restoration of the building under paragraph (k)(1)(vi) of this section.

Example 16. Not a replacement of major component or substantial structural part; HVAC system M owns a building in which it operates an office that provides medical services. The building contains one HVAC system, which is comprised of three furnaces, three air conditioning units, and duct work that runs throughout the building to distribute the hot or cold air throughout the building. One furnace in M's building breaks down, and M pays an amount to replace it with a new furnace. Under paragraphs (e)(2)(ii) and (k)(2) of this section, an amount is paid to improve a building if the amount is paid to restore the building structure or any building system. The HVAC system, including the furnaces, is a building system under paragraph (e)(2)(ii)(B)(*1*) of this section. As the parts that provide the heating function in the system, the three furnaces, together, perform a discrete and critical function in the operation of the HVAC system and are therefore a major component of the HVAC system under paragraph (k)(6)(i)(A) of this section. However, the single furnace is not a significant portion of this major component of the HVAC system under paragraph (k)(6)(ii)(A) of this section, or a substantial structural part of the HVAC system under paragraph (k)(6)(ii)(B) of this section. Therefore, M is not required to treat the amount paid to replace the furnace as a restoration of the building under paragraph (k)(1)(vi) of this section.

Example 17. Replacement of major component or substantial structural part; HVAC system N owns a large office building in which it provides consulting services. The building contains one HVAC system, which is comprised of one chiller unit, one boiler, pumps, duct work, diffusers, air handlers, outside air intake, and a cooling tower. The chiller unit includes the compressor, evaporator, condenser, and expansion valve, and it functions to cool the water used to generate air conditioning throughout the building. N pays an amount to replace the chiller with a comparable unit. Under paragraphs (e)(2)(ii) and (k)(2) of this section, an amount is paid to improve a building if the amount is paid to restore the building structure or any building system. The HVAC system, including the chiller unit, is a building system under paragraph (e)(2)(ii)(B)(*1*) of this section. The chiller unit performs a discrete and critical function in the operation of the HVAC system because it provides the cooling mechanism for the entire system. Therefore, the chiller unit is a major component of the HVAC system under paragraph (k)(6)(ii)(A) of this section. Because the chiller unit comprises a major component of a building system, N must treat the amount paid to replace the chiller unit as a restoration to the building under paragraphs (k)(1)(vi) and (k)(2) of this section and must capitalize the amount paid as an improvement to the building under paragraph (d)(2) of this section.

Example 18. Not replacement of major component or substantial structural part; HVAC system O owns an office building that it uses to provide services to customers. The building contains a HVAC system that incorporates ten roof-mounted units that provide heating and air conditioning for the building. The HVAC system also consists of controls for the entire system and duct work that distributes the heated or cooled air to the various spaces in the building's interior. O begins to experience climate control problems in various offices throughout the office building and consults with a contractor to determine the cause. The contractor recommends that O replace three of the roof-mounted heating and cooling units. O pays an amount to replace the three specified units. No work is performed on the other roof-mounted heating and cooling units, the duct work, or the controls. Under paragraphs (e)(2)(ii) and (k)(2) of this section, an amount is paid to improve a building if the amount restores the building structure or any building system. The HVAC system, including the 10 roof-mounted heating and cooling units, is a building system under paragraph (e)(2)(ii)(B)(*1*) of this section. As the components that generate the heat and the air conditioning in the HVAC system, the 10 roof-mounted units, together, perform a discrete and critical function in the operation of the HVAC system and, therefore, are a major

component of the HVAC system under paragraph (k)(6)(ii)(A) of this section. The three roof-mounted heating and cooling units are not a significant portion of a major component of the HVAC system under (k)(6)(ii)(A) of this section, or a substantial structural part of the HVAC system, under paragraph (k)(6)(ii)(B) of this section. Accordingly, O is not required to treat the amount paid to replace the three roof-mounted heating and cooling units as a restoration of the building under paragraph (k)(1)(iv) of this section.

Example 19. Replacement of major component or substantial structural part; fire protection system P owns a building that it uses to operate its business. P pays an amount to replace the sprinkler system in the building with a new sprinkler system. Under paragraphs (e)(2)(ii) and (k)(2) of this section, an amount is paid to improve a building if the amount restores the building structure or any building system. The fire protection and alarm system, including the sprinkler system, is a building system under paragraph (e)(2)(ii)(B)(*6*) of this section. As the component that provides the fire suppression mechanism in the system, the sprinkler system performs a discrete and critical function in the operation of the fire protection and alarm system and is therefore a major component of the system under paragraph (k)(6)(ii)(A) of this section. Because the sprinkler system comprises a major component of a building system, P must treat the amount paid to replace the sprinkler system as restoration to the building unit of property under paragraphs (k)(1)(vi) and (k)(2) of this section and must capitalize the amount paid as an improvement to the building under paragraph (d)(2) of this section.

Example 20. Replacement of major component or substantial structural part; electrical system Q owns a building that it uses to operate its business. Q pays an amount to replace the wiring throughout the building with new wiring that meets building code requirements. Under paragraphs (e)(2)(ii) and (k)(2) of this section, an amount is paid to improve a building if the amount restores the building structure or any building system. The electrical system, including the wiring, is a building system under paragraph (e)(2)(ii)(B)(*3*) of this section. As the component that distributes the electricity throughout the system, the wiring performs a discrete and critical function in the operation of the electrical system under paragraph (k)(6)(ii)(A) of this section. The wiring also comprises a large portion of the physical structure of the electrical system under paragraph (k)(6)(ii)(B) of this section. Because the wiring comprises a major component and a substantial structural part of a building system, Q must treat the amount paid to replace the wiring as a restoration to the building under paragraphs (k)(1)(vi) and (k)(2) of this section and must capitalize the amount paid as an improvement to the building under paragraph (d)(2) of this section.

Example 21. Not a replacement of major component or substantial structural part; electrical system R owns a building that it uses to operate its business. R pays an amount to replace 30 percent of the wiring throughout the building with new wiring that meets building code requirements. Under paragraphs (e)(2)(ii) and (k)(2) of this section, an amount is paid to improve a building if the amount restores the building structure or any building system. The electrical system, including the wiring, is a building system under paragraph (e)(2)(ii)(B)(*3*) of this section. All the wiring in the building comprises a major component because it performs a discrete and critical function in the operation of the electrical system. However, the portion of the wiring that was replaced is not a significant portion of the wiring major component under paragraph (k)(6)(ii)(A) of this section, nor does it comprise a substantial structural part of the electrical system under paragraph (k)(6)(ii)(B) of this section. Therefore, under paragraph (k)(6) of this section, the

replacement of 30 percent of the wiring is not the replacement of a major component or substantial structural part of the building, and R is not required to treat the amount paid to replace 30 percent of the wiring as a restoration to the building under paragraph (k)(1)(iv) of this section.

Example 22. Replacement of major component or substantial structural part; plumbing system S owns a building in which it conducts a retail business. The retail building has three floors. The retail building has men's and women's restrooms on two of the three floors. S decides to update the restrooms by paying an amount to replace the plumbing fixtures in all of the restrooms, including all the toilets and sinks, with modern style plumbing fixtures of similar quality and function. S does not replace the pipes connecting the fixtures to the building's plumbing system. Under paragraphs (e)(2)(ii) and (k)(2) of this section, an amount is paid to improve a building if the amount restores the building structure or any building system. The plumbing system, including the plumbing fixtures, is a building system under paragraph (e)(2)(ii)(B)(*2*) of this section. All the toilets together perform a discrete and critical function in the operation of the plumbing system, and all the sinks, together, also perform a discrete and critical function in the operation of the plumbing system. Therefore, under paragraph (k)(6)(ii)(A) of this section, all the toilets comprise a major component of the plumbing system, and all the sinks comprise a major component of the plumbing system. Accordingly, S must treat the amount paid to replace all of the toilets and all of the sinks as a restoration of the building under paragraphs (k)(1)(vi) and (k)(2) of this section and must capitalize the amount paid as an improvement to the building under paragraph (d)(2) of this section.

Example 23. Not replacement of major component or substantial structural part; plumbing system Assume the same facts as *Example 22* except that S does not update all the bathroom fixtures. Instead, S only pays an amount to replace 8 of the total of 20 sinks located in the various restrooms. The 8 replaced sinks, by themselves, do not comprise a significant portion of a major component (the 20 sinks) of the plumbing system under paragraph (k)(6)(ii)(A) of this section nor do they comprise a large portion of the physical structure of the plumbing system under paragraph (k)(6)(ii)(B) of this section. Therefore, under paragraph (k)(6) of this section, the replacement of the eight sinks does not constitute the replacement of a major component or substantial structural part of the building, and S is not required to treat the amount paid to replace the eight sinks as a restoration of a building under paragraph (k)(1)(iv) of this section.

Example 24. Replacement of major component or substantial structural part; plumbing system (i) T owns and operates a hotel building. T decides that, to attract customers and to remain competitive, it needs to update the guest rooms in its facility. Accordingly, T pays amounts to replace the bathtubs, toilets, and sinks, and to repair, repaint, and retile the bathroom walls and floors, which is necessitated by the installation of the new plumbing components. The replacement bathtubs, toilets, sinks, and tile are new and in a different style, but are similar in function and quality to the replaced items. T also pays amounts to replace certain section 1245 property, such as the guest room furniture, carpeting, drapes, table lamps, and partition walls separating the bathroom area. T completes this work on two floors at a time, closing those floors and leaving the rest of the hotel open for business. In Year 1, T pays amounts to perform the updates for 4 of the 20 hotel room floors and expects to complete the renovation of the remaining rooms

over the next two years.

(ii) Under paragraphs (e)(2)(ii) and (k)(2) of this section, an amount is paid to improve a building if the amount restores the building structure or any building system. The plumbing system, including the bathtubs, toilets, and sinks, is a building system under paragraph (e)(2)(ii)(B)(2) of this section. All the bathtubs, together, all the toilets, together, and all the sinks together in the hotel building perform discrete and critical functions in the operation of the plumbing system under paragraph (k)(6)(ii)(A) of this section and comprise a large portion of the physical structure of the plumbing system under paragraph (k)(6)(ii)(B) of this section. Therefore, under paragraph (k)(6)(ii) of this section, these plumbing components comprise major components and substantial structural parts of the plumbing system, and T must treat the amount paid to replace these plumbing components as a restoration of, and improvement to, the building under paragraphs (k)(1)(vi) and (k)(2) of this section. In addition, under paragraph (g)(1)(i) of this section, T must treat the costs of repairing, repainting, and retiling the bathroom walls and floors as improvement costs because these costs directly benefit and are incurred by reason of the improvement to the building. Further, under paragraph (g)(3) of this section, T must treat the costs incurred in Years 1, 2, and 3 for the bathroom remodeling as improvement costs, even though they are incurred over a period of several taxable years, because they are related amounts paid to improve the building unit of property. Accordingly, under paragraph (d)(2) of this section, T must treat all the amounts it incurs to update its hotel restrooms as an improvement to the hotel building and capitalize these amounts. In addition, under § 1.263(a)-2 of the regulations, T must capitalize the amounts paid to acquire and install each section 1245 property.

Example 25. Not replacement of major component or substantial structural part; windows U owns a large office building that it uses to provide office space for employees that manage U's operations. The building has 300 exterior windows that represent 25 percent of the total surface area of the building. In Year 1, U pays an amount to replace 100 of the exterior windows that had become damaged. At the time of these replacements, U has no plans to replace any other windows in the near future. Under paragraphs (e)(2)(ii) and (k)(2) of this section, an amount is paid to improve a building if the amount restores the building structure or any building system. The exterior windows are part of the building structure as defined under paragraph (e)(2)(ii)(A) of this section. The 300 exterior windows perform a discrete and critical function in the operation of the building structure and are, therefore, a major component of the building structure under paragraph (k)(6)(i)(A) of this section. However, the 100 windows do not comprise a significant portion of this major component of the building structure under paragraph (k)(6)(ii)(A) of this section or a substantial structural part of the building structure under paragraph (k)(6)(ii)(B) of this section. Therefore, under paragraph (k)(6) of this section, the replacement of the 100 windows does not constitute the replacement of a major component or substantial structural part of the building, and U is not required to treat the amount paid to replace the 100 windows as restoration of the building under paragraph (k)(1)(iv) of this section.

Example 26. Replacement of major component; windows Assume the same facts as *Example 25,* except that that U replaces 200 of the 300 windows on the building. The 300 exterior windows perform a discrete and critical function in the operation of the building structure and are, therefore, a major component of the building structure under paragraph (k)(6)(i)(A) of this section. The 200 windows comprise a significant portion of this major component of the building structure under paragraph (k)(6)(ii)(A) of this section. Therefore, under paragraph (k)(6) of this section, the replacement of the 200 windows comprise the replacement of a major component of the building structure. Accordingly, U must treat the amount paid to replace the 200 windows as a restoration of the building under paragraphs (k)(1)(vi) and (k)(2) of this section and must capitalize the amount paid as an improvement to the building under paragraph (d)(2) of this section.

Example 27. Replacement of substantial structural part; windows Assume the same facts as *Example 25,* except that the building is a modern design and the 300 windows represent 90 percent of the total surface area of the building. U replaces 100 of the 300 windows on the building. The 300 exterior windows perform a discrete and critical function in the operation of the building structure and are, therefore, a major component of the building structure under paragraph (k)(6)(i)(A) of this section. The 100 windows do not comprise a significant portion of this major component of the building structure under paragraph (k)(6)(ii)(A) of this section, however, they do comprise a substantial structural part of the building structure under paragraph (k)(6)(ii)(B) of this section. Therefore, under paragraph (k)(6) of this section, the replacement of the 100 windows comprise the replacement of a substantial structural part of the building structure. Accordingly, U must treat the amount paid to replace the 100 windows as a restoration of the building unit of property under paragraphs (k)(1)(vi) and (k)(2) of this section and must capitalize the amount paid as an improvement to the building under paragraph (d)(2) of this section.

Example 28. Not replacement of major component or substantial structural part; floors V owns and operates a hotel building. V decides to refresh the appearance of the hotel lobby by replacing the floors in the lobby. The hotel lobby comprises less than 10 percent of the square footage of the entire hotel building. V pays an amount to replace the wood flooring in the lobby with new wood flooring of a similar quality. V did not replace any other flooring in the building. Assume that the wood flooring constitutes section 1250 property. Under paragraphs (e)(2)(ii) and (k)(2) of this section, an amount is paid to improve a building if the amount restores the building structure or any building system. The wood flooring is part of the building structure under paragraph (e)(2)(ii)(A) of this section. All the floors in the hotel building comprise a major component of the building structure because they perform a discrete and critical function in the operation of the building structure. However, the lobby floors are not a significant portion of a major component (that is, all the floors) under paragraph (k)(6)(ii)(A) of this section, nor do the lobby floors comprise a substantial structural part of the building structure under paragraph (k)(6)(ii)(B) of this section. Therefore, under paragraph (k)(6) of this section, the replacement of the lobby floors is not the replacement of a major component or substantial structural part of the building unit of property, and V is not required to treat the amount paid for the replacement of the lobby floors as a restoration to the building under paragraph (k)(1)(iv) of this section.

Example 29. Replacement of major component or substantial structural part; floors Assume the same facts as *Example 28,* except that V decides to refresh the appearance of all the public areas of the hotel building by replacing all the floors in the public areas. To that end, V pays an amount to replace all the wood floors in all the public areas of the hotel building with new wood floors.

The public areas include the lobby, the hallways, the meeting rooms, the ballrooms, and other public rooms throughout the hotel interiors. The public areas comprise approximately 40 percent of the square footage of the entire hotel building. All the floors in the hotel building comprise a major component of the building structure because they perform a discrete and critical function in the operation of the building structure. The floors in all the public areas of the hotel comprise a significant portion of a major component (that is, all the building floors) of the building structure. Therefore, under paragraph (k)(6)(ii)(A) of this section, the replacement of all the public area floors constitutes the replacement of a major component of the building structure. Accordingly, V must treat the amount paid to replace the public area floors as a restoration of the building unit of property under paragraphs (k)(1)(vi) and (k)(2) of this section and must capitalize the amounts as an improvement to the building under paragraph (d)(2) of this section.

Example 30. Replacement with no disposition (i) X owns an office building with four elevators serving all floors in the building. X replaces one of the elevators. The elevator is a structural component of the office building. X chooses to apply § 1.168(i)-8 to taxable years beginning on or after January 1, 2012, and before the applicability date of the final regulations. In accordance with § 1.168(i)-8(c)(4)(ii)(A), the office building (including its structural components) is the asset for tax disposition purposes. X also does not make the partial disposition election provided under § 1.168(i)-8(d)(2) for the elevator. Thus, the retirement of the replaced elevator is not a disposition under section 168, and no loss is taken into account for purposes of paragraph (k)(1)(i) of this section. (ii) Under paragraphs (e)(2)(ii) and (k)(2) of this section, an amount is paid to improve a building if the amount restores the building structure or any building system. The elevator system, including all four elevators, is a building system under paragraph (e)(2)(ii)(B)(*5*) of this section. The replacement elevator does not perform a discrete and critical function in the operation of elevator system under paragraph (k)(6)(ii)(A) of this section nor does it comprise a large portion of the physical structure of the elevator system under paragraph (k)(6)(ii)(B) of this section. Therefore, under paragraph (k)(6) of this section, the replacement elevator does not constitute the replacement of a major component or substantial structural part of the elevator system. Accordingly, X is not required to treat the amount paid to replace the elevator as a restoration to the building under either paragraph (k)(1)(i) or paragraph (k)(1)(vi) of this section.

Example 31. Replacement with disposition The facts are the same as in *Example 30,* except X makes the partial disposition election provided under paragraph § 1.168(i)-8(d)(2) for the elevator. Although the office building (including its structural components) is the asset for disposition purposes, the result of X making the partial disposition election for the elevator is that the retirement of the replaced elevator is a disposition. Thus, depreciation for the retired elevator ceases at the time of its retirement (taking into account the applicable convention), and X recognizes a loss upon this retirement. Accordingly, X must treat the amount paid to replace the elevator as a restoration of the building under paragraphs (k)(1)(i) and (k)(2) of this section and must capitalize the amount paid as an improvement to the building under paragraph (d)(2)

of this section. In addition, the replacement elevator is treated as a separate asset for tax disposition purposes pursuant to § 1.168(i)-8(c)(4)(ii)(D), and for depreciation purposes pursuant to section 168(i)(6).

(l) ***Capitalization of amounts to adapt property to a new or different use*** —

(1) ***In general.*** A taxpayer must capitalize as an improvement an amount paid to adapt a unit of property to a new or different use. In general, an amount is paid to adapt a unit of property to a new or different use if the adaptation is not consistent with the taxpayer's ordinary use of the unit of property at the time originally placed in service by the taxpayer.

(2) ***Application of adaption rule to buildings.*** In the case of a building, an amount is paid to improve a building if it is paid to adapt to a new or different use a property specified under paragraph (e)(2)(ii) (building), paragraph (e)(2)(iii)(B) (condominium), paragraph (e)(2)(iv)(B) (cooperative), or paragraph (e)(2)(v)(B) (leased building or leased portion of building) of this section. For example, an amount is paid to improve a building if it is paid to adapt the building structure or any one of its buildings systems to a new or different use.

(3) ***Examples.*** The following examples illustrate the application of this paragraph (l) only and do not address whether capitalization is required under another provision of this section or under another provision of the Code (for example, section 263A). Unless otherwise stated, assume that the taxpayer has not properly deducted a loss for any unit of property, asset, or component of a unit of property that is removed and replaced.

Example 1. New or different use; change in building use A is a manufacturer and owns a manufacturing building that it has used for manufacturing since Year 1, when A placed it in service. In Year 30, A pays an amount to convert its manufacturing building into a showroom for its business. To convert the facility, A removes and replaces various structural components to provide a better layout for the showroom and its offices. A also repaints the building interiors as part of the conversion. When building materials are removed and replaced, A uses comparable and commercially available replacement materials. Under paragraphs (l)(2) and (e)(2)(ii) of this section, an amount is paid to improve A's manufacturing building if the amount adapts the building structure or any designated building system to a new or different use. Under paragraph (l)(1) of this section, the amount paid to convert the manufacturing building into a showroom adapts the building structure to a new or different use because the conversion to a showroom is not consistent with A's ordinary use of the building structure at the time it was placed in service. Therefore, A must capitalize the amount paid to convert the building into a showroom as an improvement to the building under paragraphs (d)(3) and (l) of this section.

Example 2. Not a new or different use; leased building B owns and leases out space in a building consisting of twenty retail spaces. The space was designed to be reconfigured; that is, adjoining spaces could be combined into one space. One of the tenants expands its occupancy by leasing two adjoining retail spaces. To facilitate the new lease, B pays an amount to remove the walls between the three retail spaces. Assume that the walls between spaces are part of the building and its structural components. Under paragraphs (l)(2) and (e)(2)(ii) of this section, an amount is paid to improve B's building if it adapts the building structure or any of the building systems to a new or different use. Under paragraph (l)(1) of this section, the amount paid to convert three retail spaces into one larger space for an existing tenant does not adapt B's building structure to a new or different use because the combination of retail spaces is

consistent with B's intended, ordinary use of the building structure. Therefore, the amount paid by B to remove the walls does not improve the building under paragraph (l) of this section and is not required to be capitalized under paragraph (d)(3) of this section.

Example 3. Not a new or different use; preparing building for sale C owns a building consisting of twenty retail spaces. C decides to sell the building. In anticipation of selling the building, C pays an amount to repaint the interior walls and to refinish the hardwood floors. Under paragraphs (l)(2) and (e)(2)(ii) of this section, an amount is paid to improve C's building to a new or different use if it adapts the building structure or any of the building systems to a new or different use. Preparing the building for sale does not constitute a new or different use for the building structure under paragraph (l)(1) of this section. Therefore, the amount paid by C to prepare the building structure for sale does not improve the building under paragraph (l) of this section and is not required to be capitalized under paragraph (d)(3) of this section.

Example 4. New or different use; land D owns a parcel of land on which it previously operated a manufacturing facility. Assume that the land is the unit of property. During the course of D's operation of the manufacturing facility, the land became contaminated with wastes from its manufacturing processes. D discontinues manufacturing operations at the site and decides to develop the property for residential housing. In anticipation of building residential property, D pays an amount to remediate the contamination caused by D's manufacturing process. In addition, D pays an amount to regrade the land so that it can be used for residential purposes. Amounts that D pays to clean up wastes do not adapt the land to a new or different use, regardless of the extent to which the land was cleaned, because this cleanup merely returns the land to the condition it was in before the land was contaminated in D's operations. Therefore, D is not required to capitalize the amount paid for the cleanup under paragraph (l)(1) of this section. However, the amount paid to regrade the land so that it can be used for residential purposes adapts the land to a new or different use that is inconsistent with D's intended ordinary use of the property at the time it was placed in service. Accordingly, the amounts paid to regrade the land must be capitalized as improvements to the land under paragraphs (d)(3) and (l) of this section.

Example 5. New or different use; part of building (i) E owns a building in which it operates a retail drug store. The store consists of a pharmacy for filling medication prescriptions and various departments where customers can purchase food, toiletries, home goods, school supplies, cards, over-the-counter medications, and other similar items. E decides to create a walk-in medical clinic where nurse practitioners and physicians' assistants diagnose, treat, and write prescriptions for common illnesses and injuries, administer common vaccinations, conduct physicals and wellness screenings, and provide routine lab tests and services for common chronic conditions. To create the clinic, E pays amounts to reconfigure the pharmacy building. E incurs costs to build new walls creating an examination room, lab room, reception area, and waiting area. E installs additional plumbing, electrical wiring, and outlets to support the lab. E also acquires section 1245 property, such as computers, furniture, and equipment necessary for the new clinic. E treats the amounts paid for those units of property as costs of acquiring new units of property under § 1.263(a)-2.

(ii) Under paragraphs (l)(2) and (e)(2)(ii) of this section, an amount is paid to improve E's building if it adapts the building structure or any of the building systems to a new or different use. Under paragraph (l)(1) of this section, the amount paid to convert part of the retail drug store building structure into a medical clinic adapts the building structure to a new and different use, because the use of the building structure to provide clinical medical services is not consistent with E's intended ordinary use of the building structure at the time it was placed in service. Similarly, the amounts paid to add to the plumbing system and the electrical systems to support the new medical services is not consistent with E's intended ordinary use of these systems when the systems were placed in service. Therefore, E must treat the amount paid for the conversion of the building structure, plumbing system, and electrical system as an improvement to the building and capitalize the amount under paragraphs (d)(3) and (l) of this section.

Example 6. Not a new or different use; part of building (i) F owns a building in which it operates a grocery store. The grocery store includes various departments for fresh produce, frozen foods, fresh meats, dairy products, toiletries, and over-the-counter medicines. The grocery store also includes separate counters for deli meats, prepared foods, and baked goods, often made to order. To better accommodate its customers' shopping needs, F decides to add a sushi bar where customers can order freshly prepared sushi from the counter for take-home or to eat at the counter. To create the sushi bar, F pays amounts to add a sushi counter and chairs, add additional wiring and outlets to support the counter, and install additional pipes and a sink, to provide for the safe handling of the food. F also pays amounts to replace flooring and wall coverings in the sushi bar area with decorative coverings to reflect more appropriate décor. Assume the sushi counter and chairs are section 1245 property, and F treats the amounts paid for those units of property as costs of acquiring new units of property under § 1.263(a)-2.
(ii) Under paragraphs (l)(2) and (e)(2)(ii) of this section, an amount is paid to improve F's building if it adapts the building structure or any of the building systems to a new or different use. Under paragraph (l)(1) of this section, the amount paid to convert a part of F's retail grocery into a sushi bar area does not adapt F's building structure, plumbing system, or electrical system to a new or different use, because the sale of sushi is consistent with F's intended, ordinary use of the building structure and these systems in its grocery sales business, which includes selling food to its customers at various specialized counters. Accordingly, the amount paid by F to replace the wall and floor finishes, add wiring, and add plumbing to create the sushi bar space does not improve the building unit of property under paragraph (l) of this section and is not required to be capitalized under paragraph (d)(3) of this section.

Example 7. Not a new or different use; part of building (i) G owns a hospital with

various departments dedicated to the provision of clinical medical care. To better accommodate its patients' needs, G decides to modify the emergency room space to provide both emergency care and outpatient surgery. To modify the space, G pays amounts to move interior walls, add additional wiring and outlets, replace floor tiles and doors, and repaint the walls. To complete the outpatient surgery center, G also pays amounts to install miscellaneous medical equipment necessary for the provision of surgical services. Assume the medical equipment is section 1245 property, and G treats the amounts paid for those units of property as costs of acquiring new units of property under § 1.263(a)-2.

(ii) Under paragraphs (l)(2) and (e)(2)(ii) of this section, an amount is paid to improve G's building if it adapts the building structure or any of the building systems to a new or different use. Under paragraph (l)(1) of this section, the amount paid to convert part of G's emergency room into an outpatient surgery center does not adapt G's building structure or electrical system to a new or different use, because the provision of outpatient surgery is consistent with G's intended, ordinary use of the building structure and these systems in its clinical medical care business. Accordingly, the amounts paid by G to relocate interior walls, add additional wiring and outlets, replace floor tiles and doors, and repaint the walls to create outpatient surgery space do not improve the building under paragraph (l) of this section and are not required to be capitalized under paragraph (d)(3) of this section.

(m) *Optional regulatory accounting method* —

(1) ***In general.*** This paragraph (m) provides an optional simplified method (the regulatory accounting method) for regulated taxpayers to determine whether amounts paid to repair, maintain, or improve tangible property are to be treated as deductible expenses or capital expenditures. A taxpayer that uses the regulatory accounting method described in paragraph (m)(3) of this section must use that method for property subject to regulatory accounting instead of determining whether amounts paid to repair, maintain, or improve property are capital expenditures or deductible expenses under the general principles of sections 162(a), 212, and 263(a). Thus, the capitalization rules in paragraph (d) (and the routine maintenance safe harbor described in paragraph (i)) of this section do not apply to amounts paid to repair, maintain, or improve property subject to regulatory accounting by taxpayers that use the regulatory accounting method under this paragraph (m).

(2) ***Eligibility for regulatory accounting method.*** A taxpayer that is engaged in a trade or business in a regulated industry is a regulated taxpayer and may use the regulatory accounting method under this paragraph (m). For purposes of this paragraph (m), a taxpayer is in a regulated industry only if the taxpayer is subject to the regulatory accounting rules of the Federal Energy Regulatory Commission (FERC), the Federal Communications Commission (FCC), or the Surface Transportation Board (STB).

(3) ***Description of regulatory accounting method.*** Under the regulatory accounting method, a taxpayer must follow the method of accounting for regulatory accounting purposes that it is required to follow for FERC, FCC, or STB (whichever is applicable) in determining whether an amount paid repairs, maintains, or improves property under this section. Therefore, a taxpayer must capitalize for Federal income tax purposes an amount paid that is capitalized as an improvement for regulatory

accounting purposes. A taxpayer may not capitalize for Federal income tax purposes under this section an amount paid that is not capitalized as an improvement for regulatory accounting purposes. A taxpayer that uses the regulatory accounting method must use that method for all of its tangible property that is subject to regulatory accounting rules. The method does not apply to tangible property that is not subject to regulatory accounting rules. The method also does not apply to property for the taxable years in which the taxpayer elected to apply the repair allowance under § 1.167(a)-11(d)(2). The regulatory accounting method is a method of accounting under section 446(a).

(4) ***Examples.*** The following examples illustrate the application of this paragraph (m):

Example 1. Taxpayer subject to regulatory accounting rules of FERC W is an electric utility company that operates a power plant that generates electricity and that owns and operates network assets to transmit and distribute the electricity to its customers. W is subject to the regulatory accounting rules of FERC, and W uses the regulatory accounting method under paragraph (m) of this section. W does not capitalize on its books and records for regulatory accounting purposes the cost of repairs and maintenance performed on its turbines or its network assets. Under the regulatory accounting method, W may not capitalize for Federal income tax purposes amounts paid for repairs performed on its turbines or its network assets.

Example 2. Taxpayer not subject to regulatory accounting rules of FERC X is an electric utility company that operates a power plant to generate electricity. X previously was subject to the regulatory accounting rules of FERC, but currently X is not required to use FERC's regulatory accounting rules. X cannot use the regulatory accounting method provided in this paragraph (m).

Example 3. Taxpayer subject to regulatory accounting rules of FCC Y is a telecommunications company that is subject to the regulatory accounting rules of the FCC. Y uses the regulatory accounting method under this paragraph (m). Y's assets include a telephone central office switching center, which contains numerous switches and various switching equipment. Y capitalizes on its books and records for regulatory accounting purposes the cost of replacing each switch. Under the regulatory accounting method, Y is required to capitalize for Federal income tax purposes amounts paid to replace each switch.

Example 4. Taxpayer subject to regulatory accounting rules of STB Z is a Class I railroad that is subject to the regulatory accounting rules of the STB. Z uses the regulatory accounting method under this paragraph (m). Z capitalizes on its books and records for regulatory accounting purposes the cost of locomotive rebuilds. Under the regulatory accounting method, Z is required to capitalize for Federal income tax purposes amounts paid to rebuild its locomotives.

(n) ***Election to capitalize repair and maintenance costs*** —

(1) ***In general.*** A taxpayer may elect to treat amounts paid during the taxable year for repair and maintenance (as defined under § 1.162-4) to tangible property as amounts paid to improve that property under this section and as an asset subject to the allowance for depreciation if the taxpayer incurs these amounts in carrying on the taxpayer's trade or business and if the taxpayer treats these amounts as capital expenditures on its books and records regularly used in computing income (“books and records”). A taxpayer that elects to apply this paragraph (n) in a taxable year must apply this paragraph to all amounts paid for repair and maintenance to tangible property that it treats as capital expenditures on its books and records in that taxable year. Any amounts for which this election is made shall not be treated as amounts paid for repair or maintenance under § 1.162-4.

(2) ***Time and manner of election.*** A taxpayer makes this election under this paragraph (n) by attaching a statement to the taxpayer's timely filed original Federal tax return (including extensions) for the taxable year in which the taxpayer pays amounts described under paragraph (n)(1) of this paragraph. Sections 301.9100-1 through 301.9100-3 of this chapter provide the rules governing extensions of the time to make regulatory elections. The statement must be titled "Section 1.263(a)-3(n) Election" and include the taxpayer's name, address, taxpayer identification number, and a statement that the taxpayer is making the election to capitalize repair and maintenance costs under § 1.263(a)-3(n). In the case of a consolidated group filing a consolidated income tax return, the election is made for each member of the consolidated group by the common parent, and the statement must also include the names and taxpayer identification numbers of each member for which the election is made. In the case of an S corporation or a partnership, the election is made by the S corporation or partnership and not by the shareholders or partners. A taxpayer making this election for a taxable year must treat any amounts paid for repairs and maintenance during the taxable year that are capitalized on the taxpayer's books and records as improvements to tangible property. The taxpayer must begin to depreciate the cost of such improvements amounts when they are placed in service by the taxpayer under the applicable provisions of the Code and regulations. An election may not be made through the filing of an application for change in accounting method or, before obtaining the Commissioner's consent to make a late election, by filing an amended Federal tax return. The time and manner of electing to capitalize repair and maintenance costs under this paragraph (n) may be modified through guidance of general applicability (see §§ 601.601(d)(2) and 601.602 of this chapter).

(3) ***Exception.*** This paragraph (n) does not apply to amounts paid for repairs or maintenance of rotable or temporary spare parts to which the taxpayer applies the optional method of accounting for rotable and temporary spare parts under § 1.162-3(e).

(4) ***Examples.*** The following examples illustrate the application of this paragraph (n):

> *Example 1. Election to capitalize routine maintenance on non-rotable part* (i) Q is a towboat operator that owns a fleet of towboats that it uses in its trade or business. Each towboat is equipped with two diesel-powered engines. Assume that each towboat, including its engines, is the unit of property and that a towboat has a class life of 18 years. Assume the towboat engines are not rotable spare parts under § 1.162-3(c)(2). In Year 1, Q acquired a new towboat, including its two engines, and placed the towboat into service. In Year 4, Q pays amounts to perform scheduled maintenance on both engines in the towboat. Assume that none of the exceptions set out in paragraph (i)(3) of this section apply to the scheduled maintenance costs and that the scheduled maintenance on Q's towboat is within the routine maintenance safe harbor under paragraph (i)(1)(ii) of this section. Accordingly, the amounts paid for the scheduled maintenance to its towboat engines in Year 4 are deemed not to improve the towboat and are not required to be capitalized under paragraph (d) of this section.
> (ii) On its books and records, Q treats amounts paid for scheduled maintenance on its towboat engines as capital expenditures. For administrative convenience, Q decides to account for these costs in the same way for Federal income tax purposes. Under paragraph (n) of this section, in Year 4, Q may elect to capitalize the amounts paid for the scheduled

maintenance on its towboat engines. If Q elects to capitalize such amounts, Q must capitalize all amounts paid for repair and maintenance to tangible property that Q treats as capital expenditures on its books and records in Year 4.

Example 2. No election to capitalize routine maintenance Assume the same facts as *Example 1,* except in Year 8, Q pays amounts to perform scheduled maintenance for a second time on the towboat engines. On its books and records, Q treats the amounts paid for this scheduled maintenance as capital expenditures. However, in Year 8, Q decides not to make the election to capitalize the amounts paid for scheduled maintenance under paragraph (n) of this section. Because Q does not make the election under paragraph (n) for Year 8, Q may apply the routine maintenance safe harbor under paragraph (i)(1)(ii) of this section to the amounts paid in Year 8, and not treat these amounts as capital expenditures. Because the election is made for each taxable year, there is no effect on the scheduled maintenance costs capitalized by Q on its Federal tax return for Year 4.

Example 3. Election to capitalize replacement of building component (i) R owns an office building that it uses to provide services to customers. The building contains a HVAC system that incorporates ten roof-mounted units that provide heating and air conditioning for different parts of the building. In Year 1, R pays an amount to replace 2 of the 10 units to address climate control problems in various offices throughout the office building. Assume that the replacement of the two units does not constitute an improvement to the HVAC system, and, accordingly, to the building unit of property under paragraph (d) of this section, and that R may deduct these amounts as repairs and maintenance under § 1.162-4.
(ii) On its books and records, R treats amounts paid for the two HVAC components as capital expenditures. R determines that it would prefer to account for these amounts in the same way for Federal income tax purposes. Under this paragraph (n), in Year 1, R may elect to capitalize the amounts paid for the new HVAC components. If R elects to capitalize such amounts, R must capitalize all amounts paid for repair and maintenance to tangible property that R treats as capital expenditures on its books and records in Year 1.

(o) ***Treatment of capital expenditures.*** Amounts required to be capitalized under this section are capital expenditures and must be taken into account through a charge to capital account or basis, or in the case of property that is inventory in the hands of a taxpayer, through inclusion in inventory costs.

(p) ***Recovery of capitalized amounts.*** Amounts that are capitalized under this section are recovered through depreciation, cost of goods sold, or by an adjustment to basis at the time the property is placed in service, sold, used, or otherwise disposed of by the taxpayer. Cost recovery is determined by the applicable Code and regulation provisions relating to the use, sale, or disposition of property.

(q) ***Accounting method changes.*** Except as otherwise provided in this section, a change to comply with this section is a change in method of accounting to which the provisions of sections 446 and 481 and the accompanying regulations apply. A taxpayer seeking to change to a method of accounting permitted in

this section must secure the consent of the Commissioner in accordance with § 1.446-1(e) and follow the administrative procedures issued under § 1.446-1(e)(3)(ii) for obtaining the Commissioner's consent to change its accounting method.

(r) ***Effective/applicability date*** —

(1) ***In general.*** Except for paragraphs (h), (m), and (n) of this section, this section applies to taxable years beginning on or after January 1, 2014. Paragraphs (h), (m), and (n) of this section apply to amounts paid in taxable years beginning on or after January 1, 2014. Except as provided in paragraphs (r)(2) and (r)(3) of this section, § 1.263(a)-3 as contained in 26 CFR part 1 edition revised as of April 1, 2011, applies to taxable years beginning before January 1, 2014.

(2) ***Early application of this section*** —

(i) ***In general.*** Except for paragraphs (h), (m), and (n) of this section, a taxpayer may choose to apply this section to taxable years beginning on or after January 1, 2012. A taxpayer may choose to apply paragraphs (h), (m), and (n) of this section to amounts paid in taxable years beginning on or after January 1, 2012.

(ii) ***Transition rule for certain elections on 2012 or 2013 returns.*** If under paragraph (r)(2)(i) of this section, a taxpayer chooses to make the election to apply the safe harbor for small taxpayers under paragraph (h) of this section or the election to capitalize repair and maintenance costs under paragraph (n) of this section for amounts paid in its taxable year beginning on or after January 1, 2012, and ending on or before September 19, 2013 (applicable taxable year), and the taxpayer did not make the election specified in paragraph (h)(6) or paragraph (n)(2) of this section on its timely filed original Federal tax return for the applicable taxable year, the taxpayer must make the election specified in paragraph (h)(6) or paragraph (n)(2) of this section for the applicable taxable year by filing an amended Federal tax return (including the required statements) for the applicable taxable year on or before 180 days from the due date including extensions of the taxpayer's Federal tax return for the applicable taxable year, notwithstanding that the taxpayer may not have extended the due date.

(3) ***Optional application of TD 9564.*** A taxpayer may choose to apply § 1.263(a)-3T as contained in TD 9564 (76 FR 81060) December 27, 2011, to taxable years beginning on or after January 1, 2012, and before January 1, 2014.

[T.D. 9636, 78 FR 57718, Sept. 19, 2013, as amended by T.D. 9636, 79 FR 42191, July 21, 2014; T.D. 9689, 79 FR 48684, Aug. 18, 2014]

§ 1.263(a)-4 Amounts paid to acquire or create intangibles.

(a) ***Overview.*** This section provides rules for applying section 263(a) to amounts paid to acquire or create intangibles. Except to the extent provided in paragraph (d)(8) of this section, the rules provided by this section do not apply to amounts paid to acquire or create tangible assets. Paragraph (b) of this section provides a general principle of capitalization. Paragraphs (c) and (d) of this section identify intangibles for which capitalization is specifically required under the general principle. Paragraph (e) of this section provides rules for determining the extent to which taxpayers must capitalize transaction costs. Paragraph (f) of this section provides a 12-month rule intended to simplify the application of the general principle to certain payments that create benefits of a brief duration. Additional rules and examples relating to these

provisions are provided in paragraphs (g) through (n) of this section. The applicability date of the rules in this section is provided in paragraph (o) of this section. Paragraph (p) of this section provides rules applicable to changes in methods of accounting made to comply with this section.

(b) ***Capitalization with respect to intangible*** s—

(1) ***In general.*** Except as otherwise provided in this section, a taxpayer must capitalize—

(i) An amount paid to acquire an intangible (see paragraph (c) of this section);

(ii) An amount paid to create an intangible described in paragraph (d) of this section;

(iii) An amount paid to create or enhance a separate and distinct intangible asset within the meaning of paragraph (b)(3) of this section;

(iv) An amount paid to create or enhance a future benefit identified in published guidance in the FEDERAL REGISTER or in the Internal Revenue Bulletin (*see* § 601.601(d)(2)(ii) of this chapter) as an intangible for which capitalization is required under this section; and

(v) An amount paid to facilitate (within the meaning of paragraph (e)(1) of this section) an acquisition or creation of an intangible described in paragraph (b)(1)(i), (ii), (iii) or (iv) of this section.

(2) ***Published guidance.*** Any published guidance identifying a future benefit as an intangible for which capitalization is required under paragraph (b)(1)(iv) of this section applies only to amounts paid on or after the date of publication of the guidance.

(3) ***Separate and distinct intangible asset*** —

(i) ***Definition.*** The term *separate and distinct intangible asset* means a property interest of ascertainable and measurable value in money's worth that is subject to protection under applicable State, Federal or foreign law and the possession and control of which is intrinsically capable of being sold, transferred or pledged (ignoring any restrictions imposed on assignability) separate and apart from a trade or business. In addition, for purposes of this section, a fund (or similar account) is treated as a separate and distinct intangible asset of the taxpayer if amounts in the fund (or account) may revert to the taxpayer. The determination of whether a payment creates a separate and distinct intangible asset is made based on all of the facts and circumstances existing during the taxable year in which the payment is made.

(ii) ***Creation or termination of contract rights.*** Amounts paid to another party to create, originate, enter into, renew or renegotiate an agreement with that party that produces rights or benefits for the taxpayer (and amounts paid to facilitate the creation, origination, enhancement, renewal or renegotiation of such an agreement) are treated as amounts that do not create (or facilitate the creation of) a separate and distinct intangible asset within the meaning of this paragraph (b)(3). Further, amounts paid to another party to terminate (or facilitate the termination of) an agreement with that party are treated as amounts that do not create a separate and distinct intangible asset within the meaning of this paragraph (b)(3). *See* paragraphs (d)(2), (d)(6), and (d)(7) of this section for rules that specifically require capitalization of amounts paid to create or terminate certain agreements.

(iii) ***Amounts paid in performing services.*** Amounts paid in performing services under an agreement are treated as amounts that do not create a separate and distinct intangible asset within the meaning of this paragraph (b)(3), regardless of whether the amounts result in the creation of an income stream under the agreement.

(iv) ***Creation of computer software.*** Except as otherwise provided in the Internal Revenue Code, the regulations thereunder, or other published guidance in the FEDERAL REGISTER or in the Internal Revenue Bulletin (*see* § 601.601(d)(2)(ii) of this chapter), amounts paid to develop computer software are treated as amounts that do not create a separate and distinct intangible asset within the meaning of this paragraph (b)(3).

(v) ***Creation of package design.*** Amounts paid to develop a package design are treated as amounts that do not create a separate and distinct intangible asset within the meaning of this paragraph (b)(3). For purposes of this section, the term *package design* means the specific graphic arrangement or design of shapes, colors, words, pictures, lettering, and other elements on a given product package, or the design of a container with respect to its shape or function.

(4) ***Coordination with other provisions of the Internal Revenue Code*** —

(i) ***In general.*** Nothing in this section changes the treatment of an amount that is specifically provided for under any other provision of the Internal Revenue Code (other than section 162(a) or 212) or the regulations thereunder.

(ii) ***Example.*** The following example illustrates the rule of this paragraph (b)(4):

Example. On January 1, 2004, G enters into an interest rate swap agreement with unrelated counterparty H under which, for a term of five years, G is obligated to make annual payments at 11% and H is obligated to make annual payments at LIBOR on a notional principal amount of $100 million. At the time G and H enter into this swap agreement, the rate for similar on-market swaps is LIBOR to 10%. To compensate for this difference, on January 1, 2004, H pays G a yield adjustment fee of $3,790,786. This yield adjustment fee constitutes an amount paid to create an intangible and would be capitalized under paragraph (d)(2) of this section. However, because the yield adjustment fee is a nonperiodic payment on a notional principal contract as defined in § 1.446-3(c), the treatment of this fee is governed by § 1.446-3 and not this section.

(c) ***Acquired intangibles*** —

(1) ***In general.*** A taxpayer must capitalize amounts paid to another party to acquire any intangible from that party in a purchase or similar transaction. Examples of intangibles within the scope of this paragraph (c) include, but are not limited to, the following (if acquired from another party in a purchase or similar transaction):

(i) An ownership interest in a corporation, partnership, trust, estate, limited liability company, or other entity.

(ii) A debt instrument, deposit, stripped bond, stripped coupon (including a servicing right treated for federal income tax purposes as a stripped coupon), regular interest in a REMIC or FASIT, or any other intangible treated as debt for federal income tax purposes.

(iii) A financial instrument, such as—

(A) A notional principal contract;

(B) A foreign currency contract;

(C) A futures contract;

(D) A forward contract (including an agreement under which the taxpayer has the right and obligation to provide or to acquire property (or to be compensated for such property, regardless of whether the taxpayer provides or acquires the property));

(E) An option (including an agreement under which the taxpayer has the right to provide or to acquire property (or to be compensated for such property, regardless of whether the taxpayer provides or acquires the property)); and

(F) Any other financial derivative.

(iv) An endowment contract, annuity contract, or insurance contract.

(v) Non-functional currency.

(vi) A lease.

(vii) A patent or copyright.

(viii) A franchise, trademark or tradename (as defined in § 1.197-2(b)(10)).

(ix) An assembled workforce (as defined in § 1.197-2(b)(3)).

(x) Goodwill (as defined in § 1.197-2(b)(1)) or going concern value (as defined in § 1.197-2(b)(2)).

(xi) A customer list.

(xii) A servicing right (for example, a mortgage servicing right that is not treated for Federal income tax purposes as a stripped coupon).

(xiii) A customer-based intangible (as defined in § 1.197-2(b)(6)) or supplier-based intangible (as defined in § 1.197-2(b)(7)).

(xiv) Computer software.

(xv) An agreement providing either party the right to use, possess or sell an intangible described in paragraphs (c)(1)(i) through (v) of this section.

(2) ***Readily available software.*** An amount paid to obtain a nonexclusive license for software that is (or has been) readily available to the general public on similar terms and has not been substantially modified (within the meaning of § 1.197-2(c)(4)) is treated for purposes of this paragraph (c) as an amount paid to another party to acquire an intangible from that party in a purchase or similar transaction.

(3) ***Intangibles acquired from an employee.*** Amounts paid to an employee to acquire an intangible from that employee are not required to be capitalized under this section if the amounts are includible in the employee's income in connection with the performance of services under section 61 or 83. For purposes of this section, whether an individual is an employee is determined in accordance with the rules contained in section 3401(c) and the regulations thereunder.

(4) ***Examples.*** The following examples illustrate the rules of this paragraph (c):

Example 1. Debt instrument. X corporation, a commercial bank, purchases a portfolio of existing loans from Y corporation, another financial institution. X pays Y $2,000,000 in exchange for the portfolio. The $2,000,000 paid to Y constitutes an amount paid to acquire an intangible from Y and must be capitalized.

Example 2. Option. W corporation owns all of the outstanding stock of X corporation. Y corporation holds a call option entitling it to purchase from W all of the outstanding stock of X at a certain price per share. Z corporation acquires the call option from Y in exchange for $5,000,000. The $5,000,000 paid to Y constitutes an amount paid to acquire an intangible from Y and must be capitalized.

Example 3. Ownership interest in a corporation. Same as *Example 2,* but assume Z exercises its option and purchases from W all of the outstanding stock of X in exchange for $100,000,000. The $100,000,000 paid to W constitutes an amount paid to acquire an intangible from W and must be capitalized.

Example 4. Customer list. N corporation, a retailer, sells its products through its catalog and mail order system. N purchases a customer list from R corporation. N pays R $100,000 in exchange for the customer list. The $100,000 paid to R constitutes an amount paid to acquire an intangible from R and must be capitalized.

Example 5. Goodwill. Z corporation pays W corporation $10,000,000 to purchase all of the assets of W in a transaction that constitutes an applicable asset acquisition under section 1060(c). Of the $10,000,000 consideration paid in the transaction, $9,000,000 is allocable to tangible assets purchased from W and $1,000,000 is allocable to goodwill. The $1,000,000 allocable to goodwill constitutes an amount paid to W to acquire an intangible from W and must be capitalized.

(d) ***Created intangibles—***

(1) ***In general.*** Except as provided in paragraph (f) of this section (relating to the 12-month rule), a taxpayer must capitalize amounts paid to create an intangible described in this paragraph (d). The determination of whether an amount is paid to create an intangible described in this paragraph (d) is to be made based on all of the facts and circumstances, disregarding distinctions between the labels used in this paragraph (d) to describe the intangible and the labels used by the taxpayer and other parties to the transaction.

(2) ***Financial interests*** —

(i) In general. A taxpayer must capitalize amounts paid to another party to create, originate, enter into, renew or renegotiate with that party any of the following financial interests, whether or not the interest is regularly traded on an established market:

(A) An ownership interest in a corporation, partnership, trust, estate, limited liability company, or other entity.

(B) A debt instrument, deposit, stripped bond, stripped coupon (including a servicing right treated for federal income tax purposes as a stripped coupon), regular interest in a REMIC or FASIT, or any other intangible treated as debt for Federal income tax purposes.

(C) A financial instrument, such as—

(*1*) A letter of credit;

(2) A credit card agreement;

(3) A notional principal contract;

(4) A foreign currency contract;

(5) A futures contract;

(6) A forward contract (including an agreement under which the taxpayer has the right and obligation to provide or to acquire property (or to be compensated for such property, regardless of whether the taxpayer provides or acquires the property));

(7) An option (including an agreement under which the taxpayer has the right to provide or to acquire property (or to be compensated for such property, regardless of whether the taxpayer provides or acquires the property)); and

(8) Any other financial derivative.

(D) An endowment contract, annuity contract, or insurance contract that has or may have cash value.

(E) Non-functional currency.

(F) An agreement providing either party the right to use, possess or sell a financial interest described in this paragraph (d)(2).

(ii) ***Amounts paid to create, originate, enter into, renew or renegotiate.*** An amount paid to another party is not paid to create, originate, enter into, renew or renegotiate a financial interest with that party if the payment is made with the mere hope or expectation of developing or maintaining a business relationship with that party and is not contingent on the origination, renewal or renegotiation of a financial interest with that party.

(iii) ***Renegotiate.*** A taxpayer is treated as renegotiating a financial interest if the terms of the financial interest are modified. A taxpayer also is treated as renegotiating a financial interest if the taxpayer enters into a new financial interest with the same party (or substantially the same parties) to a terminated financial interest, the taxpayer could not cancel the terminated financial interest without the consent of the other party (or parties), and the other party (or parties) would not have consented to the cancellation unless the taxpayer entered into the new financial interest. A taxpayer is treated as unable to cancel a financial interest without the consent of the other party (or parties) if, under the terms of the financial interest, the taxpayer is subject to a termination penalty and the other party (or parties) to the financial interest modifies the terms of the penalty.

(iv) ***Coordination with other provisions of this paragraph (d).*** An amount described in this paragraph (d)(2) that is also described elsewhere in paragraph (d) of this section is treated as described only in this paragraph (d)(2).

(v) ***Coordination with § 1.263(a)-5. See*** § 1.263(a)-5 for the treatment of borrowing costs and the treatment of amounts paid by an option writer.

(vi) ***Examples.*** The following examples illustrate the rules of this paragraph (d)(2):

Example 1. Loan. X corporation, a commercial bank, makes a loan to A in the principal amount of $250,000. The $250,000 principal amount of the loan paid to A constitutes an amount paid to another party to create a debt instrument with that party under paragraph (d)(2)(i)(B) of this section and must be capitalized.

Example 2. Option. W corporation owns all of the outstanding stock of X corporation. Y corporation pays W $1,000,000 in exchange for W's grant of a 3-year call option to Y permitting Y to purchase all of the outstanding stock of X at a certain price per share. Y's payment of $1,000,000 to W constitutes an amount paid to another party to create an option with that party under paragraph (d)(2)(i)(C)(*7*) of this section and must be capitalized.

Example 3. Partnership interest. Z corporation pays $10,000 to P, a partnership, in exchange for an ownership interest in P. Z's payment of $10,000 to P constitutes an amount paid to another party to create an ownership interest in a partnership with that party under paragraph (d)(2)(i)(A) of this section and must be capitalized.

Example 4. Take or pay contract. Q corporation, a producer of natural gas, pays $1,000,000 to R during 2005 to induce R corporation to enter into a 5-year "take or pay" gas purchase contract. Under the contract, R is liable to pay for a specified minimum amount of gas, whether or not R takes such gas. Q's payment of $1,000,000 is an amount paid to another party to induce that party to enter into an agreement providing Q the right and obligation to provide property or be compensated for such property (regardless of whether the property is provided) under paragraph (d)(2)(i)(C)(*6*) of this section and must be capitalized.

Example 5. Agreement to provide property. P corporation pays R corporation $1,000,000 in exchange for R's agreement to purchase 1,000 units of P's product at any time within the three succeeding calendar years. The agreement describes P's $1,000,000 as a sales discount. P's $1,000,000 payment is an amount paid to induce R to enter into an agreement providing P the right and obligation to provide property under paragraph (d)(2)(i)(C)(*6*) of this section and must be capitalized.

Example 6. Customer incentive payment. S corporation, a computer manufacturer, seeks to develop a business relationship with V corporation, a computer retailer. As an incentive to encourage V to purchase computers from S, S enters into an agreement with V under which S agrees that, if V purchases $20,000,000 of computers from S within 3 years from the date of the agreement, S will pay V $2,000,000 on the date that V reaches the $20,000,000 threshold. V reaches the $20,000,000 threshold during the third year of the agreement, and S pays V $2,000,000. S is not required to capitalize its payment to V under this paragraph (d)(2) because the payment does not provide S the right or obligation to provide property and does not create a separate and distinct intangible asset for S within the meaning of paragraph (b)(3)(i) of this section.

(3) ***Prepaid expenses*** —

(i) In general. A taxpayer must capitalize prepaid expenses.

(ii) ***Examples.*** The following examples illustrate the rules of this paragraph (d)(3):

Example 1. Prepaid insurance. N corporation, an accrual method taxpayer, pays $10,000 to an insurer to obtain three years of coverage under a property and casualty insurance policy. The $10,000 is a prepaid expense and must be capitalized under this paragraph (d)(3). Paragraph (d)(2) of this section does not apply to the payment because the policy has no cash value.

Example 2. Prepaid rent. X corporation, a cash method taxpayer, enters into a 24-month lease of office space. At the time of the lease signing, X prepays $240,000. No other amounts are due under the lease. The $240,000 is a prepaid expense and must be capitalized under this paragraph (d)(3).

(4) ***Certain memberships and privileges*** —

(i) ***In general.*** A taxpayer must capitalize amounts paid to an organization to obtain, renew, renegotiate, or upgrade a membership or privilege from that organization. A taxpayer is not required to capitalize under this paragraph (d)(4) an amount paid to obtain, renew, renegotiate or upgrade certification of the taxpayer's products, services, or business processes.

(ii) ***Examples.*** The following examples illustrate the rules of this paragraph (d)(4):

Example 1. Hospital privilege. B, a physician, pays $10,000 to Y corporation to obtain lifetime staff privileges at a hospital operated by Y. B must capitalize the $10,000 payment under this paragraph (d)(4).

Example 2. Initiation fee. X corporation pays a $50,000 initiation fee to obtain membership in a trade association. X must capitalize the $50,000 payment under this paragraph (d)(4).

Example 3. Product rating. V corporation, an automobile manufacturer, pays W corporation, a national quality ratings association, $100,000 to conduct a study and provide a rating of the quality and safety of a line of V's automobiles. V's payment is an amount paid to obtain a certification of V's product and is not required to be capitalized under this paragraph (d)(4).

Example 4. Business process certification. Z corporation, a manufacturer, seeks to obtain a certification that its quality control standards meet a series of international standards known as ISO 9000. Z pays $50,000 to an independent registrar to obtain a certification from the registrar that Z's quality management system conforms to the ISO 9000 standard. Z's payment is an amount paid to obtain a certification of Z's business processes and is not required to be capitalized under this paragraph (d)(4).

(5) ***Certain rights obtained from a governmental agency*** —

(i) ***In general.*** A taxpayer must capitalize amounts paid to a governmental agency to obtain, renew, renegotiate, or upgrade its rights under a trademark, trade name, copyright, license, permit, franchise, or other similar right granted by that governmental agency.

(ii) ***Examples.*** The following examples illustrate the rules of this paragraph (d)(5):

Example 1. Business license. X corporation pays $15,000 to state Y to obtain a business license that is valid indefinitely. Under this paragraph (d)(5), the amount paid to state Y is an amount paid to a government agency for a right granted by that agency. Accordingly, X must capitalize the $15,000 payment.

Example 2. Bar admission. A, an individual, pays $1,000 to an agency of state Z to obtain a license to practice law in state Z that is valid indefinitely, provided A adheres to the requirements governing the practice of law in state Z. Under this paragraph (d)(5), the amount paid to state Z is an amount paid to a government agency for a right granted by that agency. Accordingly, A must capitalize the $1,000 payment.

(6) ***Certain contract rights*** —

(i) ***In general.*** Except as otherwise provided in this paragraph (d)(6), a taxpayer must capitalize amounts paid to another party to create, originate, enter into, renew or renegotiate with that party—

(A) An agreement providing the taxpayer the right to use tangible or intangible property or the right to be compensated for the use of tangible or intangible property;

(B) An agreement providing the taxpayer the right to provide or to receive services (or the right to be compensated for services regardless of whether the taxpayer provides such services);

(C) A covenant not to compete or an agreement having substantially the same effect as a covenant not to compete (except, in the case of an agreement that requires the performance of services, to the extent that the amount represents reasonable compensation for services actually rendered);

(D) An agreement not to acquire additional ownership interests in the taxpayer; or

(E) An agreement providing the taxpayer (as the covered party) with an annuity, an endowment, or insurance coverage.

(ii) ***Amounts paid to create, originate, enter into, renew or renegotiate.*** An amount paid to another party is not paid to create, originate, enter into, renew or renegotiate an agreement with that party if the payment is made with the mere hope or expectation of developing or maintaining a business relationship with that party and is not contingent on the origination, renewal or renegotiation of an agreement with that party.

(iii) ***Renegotiate.*** A taxpayer is treated as renegotiating an agreement if the terms of the agreement are modified. A taxpayer also is treated as renegotiating an agreement if the taxpayer enters into a new agreement with the same party (or substantially the same parties) to a terminated agreement, the taxpayer could not cancel the terminated agreement without the consent of the other party (or parties), and the other party (or parties) would not have consented to the cancellation unless the taxpayer entered into the new agreement. A taxpayer is treated as unable to cancel an agreement without the consent of the other party (or parties) if, under the terms of the agreement, the taxpayer is subject to a termination penalty and the other party (or parties) to the agreement modifies the terms of the penalty.

(iv) ***Right.*** An agreement does not provide the taxpayer a right to use property or to provide or receive services if the agreement may be terminated at will by the other party (or parties) to the agreement before the end of the period prescribed by paragraph (f)(1) of this section. An agreement is not terminable at will if the other party (or parties) to the agreement is economically compelled not to terminate the agreement until the end of the period prescribed by paragraph (f)(1) of this section. All of the facts and circumstances will be considered in determining whether the other party (or parties) to an agreement is economically compelled

not to terminate the agreement. An agreement also does not provide the taxpayer the right to provide services if the agreement merely provides that the taxpayer will stand ready to provide services if requested, but places no obligation on another person to request or pay for the taxpayer's services.

(v) ***De minimis amounts.*** A taxpayer is not required to capitalize amounts paid to another party (or parties) to create, originate, enter into, renew or renegotiate with that party (or those parties) an agreement described in paragraph (d)(6)(i) of this section if the aggregate of all amounts paid to that party (or those parties) with respect to the agreement does not exceed $5,000. If the aggregate of all amounts paid to the other party (or parties) with respect to that agreement exceeds $5,000, then all amounts must be capitalized. For purposes of this paragraph (d)(6), an amount paid in the form of property is valued at its fair market value at the time of the payment. In general, a taxpayer must determine whether the rules of this paragraph (d)(6)(v) apply by accounting for the specific amounts paid with respect to each agreement. However, a taxpayer that reasonably expects to create, originate, enter into, renew or renegotiate at least 25 similar agreements during the taxable year may establish a pool of agreements for purposes of determining the amounts paid with respect to the agreements in the pool. Under this pooling method, the amount paid with respect to each agreement included in the pool is equal to the average amount paid with respect to all agreements included in the pool. A taxpayer computes the average amount paid with respect to all agreements included in the pool by dividing the sum of all amounts paid with respect to all agreements included in the pool by the number of agreements included in the pool. See paragraph (h) of this section for additional rules relating to pooling.

(vi) ***Exception for lessee construction allowances.*** Paragraph (d)(6)(i) of this section does not apply to amounts paid by a lessor to a lessee as a construction allowance to the extent the lessee expends the amount for the tangible property that is owned by the lessor for Federal income tax purposes (*see,* for example, section 110).

(vii) ***Examples.*** The following examples illustrate the rules of this paragraph (d)(6):

Example 1. New lease agreement. V seeks to lease commercial property in a prominent downtown location of city R. V pays Z, the owner of the commercial property, $50,000 in exchange for Z entering into a 10-year lease with V. V's payment is an amount paid to another party to enter into an agreement providing V the right to use tangible property. Because the $50,000 payment exceeds $5,000, no portion of the amount paid to Z is *de minimis* for purposes of paragraph (d)(6)(v) of this section. Under paragraph (d)(6)(i)(A) of this section, V must capitalize the entire $50,000 payment.

Example 2. Modification of lease agreement. Partnership Y leases a piece of equipment for use in its business from Z corporation. When the lease has a remaining term of 3 years, Y requests that Z modify the existing lease by extending the remaining term by 5 years. Y pays $50,000 to Z in exchange for Z's agreement to modify the existing lease. Y's payment of $50,000 is an amount paid to another party to renegotiate an agreement providing Y the right to use property. Because the $50,000 payment exceeds $5,000, no portion of the amount paid to Z is *de minimis* for purposes of paragraph (d)(6)(v) of this section. Under paragraph (d)(6)(i)(A) of this section, Y must capitalize the entire $50,000 payment.

Example 3. Modification of lease agreement. In 2004, R enters into a 5-year, non-cancelable lease of a mainframe computer for use in its business. R subsequently determines that the mainframe computer that R is leasing is no longer adequate for its needs. In 2006, R and P

corporation (the lessor) agree to terminate the 2004 lease and to enter into a new 5-year lease for a different and more powerful mainframe computer. R pays P a $75,000 early termination fee. P would not have agreed to terminate the 2004 lease unless R agreed to enter into the 2006 lease. R's payment of $75,000 is an amount paid to another party to renegotiate an agreement providing R the right to use property. Because the $75,000 payment exceeds $5,000, no portion of the amount paid to P is *de minimis* for purposes of paragraph (d)(6)(v) of this section. Under paragraph (d)(6)(i)(A) of this section, R must capitalize the entire $75,000 payment.

Example 4. Modification of lease agreement. Same as *Example 3,* except the 2004 lease agreement allows R to terminate the lease at any time subject to a $75,000 early termination fee. Because R can terminate the lease without P's approval, R's payment of $75,000 is not an amount paid to another party to renegotiate an agreement. Accordingly, R is not required to capitalize the $75,000 payment under this paragraph (d)(6).

Example 5. Modification of lease agreement. Same as *Example 4,* except P agreed to reduce the early termination fee to $60,000. Because R did not pay an amount to renegotiate the early termination fee, R's payment of $60,000 is not an amount paid to another party to renegotiate an agreement. Accordingly, R is not required to capitalize the $60,000 payment under this paragraph (d)(6).

Example 6. Covenant not to compete. R corporation enters into an agreement with A, an individual, that prohibits A from competing with R for a period of three years. To encourage A to enter into the agreement, R agrees to pay A $100,000 upon the signing of the agreement. R's payment is an amount paid to another party to enter into a covenant not to compete. Because the $100,000 payment exceeds $5,000, no portion of the amount paid to A is *de minimis* for purposes of paragraph (d)(6)(v) of this section. Under paragraph (d)(6)(i)(C) of this section, R must capitalize the entire $100,000 payment.

Example 7. Standstill agreement. During 2004 through 2005, X corporation acquires a large minority interest in the stock of Z corporation. To ensure that X does not take control of Z, Z pays X $5,000,000 for a standstill agreement under which X agrees not to acquire any more stock in Z for a period of 10 years. Z's payment is an amount paid to another party to enter into an agreement not to acquire additional ownership interests in Z. Because the $5,000,000 payment exceeds $5,000, no portion of the amount paid to X is *de minimis* for purposes of paragraph (d)(6)(v) of this section. Under paragraph (d)(6)(i)(D) of this section, Z must capitalize the entire $5,000,000 payment.

Example 8. Signing bonus. Employer B pays a $25,000 signing bonus to employee C to induce C to come to work for B. C can leave B's employment at any time to work for a competitor of B and is not required to repay the $25,000 bonus to B. Because C is not economically compelled to continue his employment with B, B's payment does not provide B the right to receive services from C. Accordingly, B is not required to capitalize the $25,000 payment.

Example 9. Renewal. In 2000, M corporation and N corporation enter into a 5-year agreement that gives M the right to manage N's investment portfolio. In 2005, N has the option of renewing the agreement for another three years. During 2004, M pays $10,000 to send several employees of N to an investment seminar. M pays the $10,000 to help develop and maintain its business relationship with N with the expectation that N will renew its

agreement with M in 2005. Because M's payment is not contingent on N agreeing to renew the agreement, M's payment is not an amount paid to renew an agreement under paragraph (d)(6)(ii) of this section and is not required to be capitalized.

Example 10. De minimis payments. X corporation is engaged in the business of providing wireless telecommunications services to customers. To induce customer B to enter into a 3-year non-cancelable telecommunications contract, X provides B with a free wireless telephone. The fair market value of the wireless telephone is $300 at the time it is provided to B. X's provision of a wireless telephone to B is an amount paid to B to induce B to enter into an agreement providing X the right to provide services, as described in paragraph (d)(6)(i)(B) of this section. Because the amount of the inducement is $300, the amount of the inducement is *de minimis* under paragraph (d)(6)(v) of this section. Accordingly, X is not required to capitalize the amount of the inducement provided to B.

(7) ***Certain contract terminations*** —

(i) ***In general.*** A taxpayer must capitalize amounts paid to another party to terminate—

(A) A lease of real or tangible personal property between the taxpayer (as lessor) and that party (as lessee);

(B) An agreement that grants that party the exclusive right to acquire or use the taxpayer's property or services or to conduct the taxpayer's business (other than an intangible described in paragraph (c)(1)(i) through (iv) of this section or a financial interest described in paragraph (d)(2) of this section); or

(C) An agreement that prohibits the taxpayer from competing with that party or from acquiring property or services from a competitor of that party.

(ii) ***Certain break-up fees.*** Paragraph (d)(7)(i) of this section does not apply to the termination of a transaction described in § 1.263(a)-5(a) (relating to an acquisition of a trade or business, a change in the capital structure of a business entity, and certain other transactions). *See* § 1.263(a)-5(c)(8) for rules governing the treatment of amounts paid to terminate a transaction to which that section applies.

(iii) ***Examples.*** The following examples illustrate the rules of this paragraph (d)(7):

Example 1. Termination of exclusive license agreement. On July 1, 2005, N enters into a license agreement with R corporation under which N grants R the exclusive right to manufacture and distribute goods using N's design and trademarks for a period of 10 years. On June 30, 2007, N pays R $5,000,000 in exchange for R's agreement to terminate the exclusive license agreement. N's payment to terminate its license agreement with R constitutes a payment to terminate an exclusive license to use the taxpayer's property, as described in paragraph (d)(7)(i)(B) of this section. Accordingly, N must capitalize its $5,000,000 payment to R.

Example 2. Termination of exclusive distribution agreement. On March 1, 2005, L, a manufacturer, enters into an agreement with M granting M the right to be the sole distributor of L's products in state X for 10 years. On July 1, 2008, L pays M $50,000 in exchange for M's agreement to terminate the distribution agreement. L's payment to terminate its

agreement with M constitutes a payment to terminate an exclusive right to acquire L's property, as described in paragraph (d)(7)(i)(B) of this section. Accordingly, L must capitalize its $50,000 payment to M.

Example 3. Termination of covenant not to compete. On February 1, 2005, Y corporation enters into a covenant not to compete with Z corporation that prohibits Y from competing with Z in city V for a period of 5 years. On January 31, 2007, Y pays Z $1,000,000 in exchange for Z's agreement to terminate the covenant not to compete. Y's payment to terminate the covenant not to compete with Z constitutes a payment to terminate an agreement that prohibits Y from competing with Z, as described in paragraph (d)(7)(i)(C) of this section. Accordingly, Y must capitalize its $1,000,000 payment to Z.

Example 4. Termination of merger agreement. N corporation and U corporation enter into an agreement under which N agrees to merge into U. Subsequently, N pays U $10,000,000 to terminate the merger agreement. As provided in paragraph (d)(7)(ii) of this section, N's $10,000,000 payment to terminate the merger agreement with U is not required to be capitalized under this paragraph (d)(7). In addition, N's $10,000,000 does not create a separate and distinct intangible asset for N within the meaning of paragraph (b)(3)(i) of this section. (*See* § 1.263(a)-5 for additional rules regarding termination of merger agreements).

(8) ***Certain benefits arising from the provision, production, or improvement of real property*** —

(i) ***In general.*** A taxpayer must capitalize amounts paid for real property if the taxpayer transfers ownership of the real property to another person (except to the extent the real property is sold for fair market value) and if the real property can reasonably be expected to produce significant economic benefits to the taxpayer after the transfer. A taxpayer also must capitalize amounts paid to produce or improve real property owned by another (except to the extent the taxpayer is selling services at fair market value to produce or improve the real property) if the real property can reasonably be expected to produce significant economic benefits for the taxpayer.

(ii) ***Exclusions.*** A taxpayer is not required to capitalize an amount under paragraph (d)(8)(i) of this section if the taxpayer transfers real property or pays an amount to produce or improve real property owned by another in exchange for services, the purchase or use of property, or the creation of an intangible described in paragraph (d) of this section (other than in this paragraph (d)(8)). The preceding sentence does not apply to the extent the taxpayer does not receive fair market value consideration for the real property that is relinquished or for the amounts that are paid by the taxpayer to produce or improve real property owned by another.

(iii) ***Real property.*** For purposes of this paragraph (d)(8), real property includes property that is affixed to real property and that will ordinarily remain affixed for an indefinite period of time, such as roads, bridges, tunnels, pavements, wharves and docks, breakwaters and sea walls, elevators, power generation and transmission facilities, and pollution control facilities.

(iv) ***Impact fees and dedicated improvements.*** Paragraph (d)(8)(i) of this section does not apply to amounts paid to satisfy one-time charges imposed by a State or local government against new development (or expansion of existing development) to finance specific offsite capital improvements for general public use that are necessitated by the new or expanded development. In addition, paragraph (d)(8)(i) of this section does not apply to amounts paid for real property or improvements to real property constructed by the taxpayer where the real property or improvements benefit new development or expansion of existing development, are

immediately transferred to a State or local government for dedication to the general public use, and are maintained by the State or local government. See section 263A and the regulations thereunder for capitalization rules that apply to amounts referred to in this paragraph (d)(8)(iv).

(v) ***Examples.*** The following examples illustrate the rules of this paragraph (d)(8):

Example 1. Amount paid to produce real property owned by another. W corporation operates a quarry on the east side of a river in city Z and a crusher on the west side of the river. City Z's existing bridges are of insufficient capacity to be traveled by trucks in transferring stone from W's quarry to its crusher. As a result, the efficiency of W's operations is greatly reduced. W contributes $1,000,000 to city Z to defray in part the cost of constructing a publicly owned bridge capable of accommodating W's trucks. W's payment to city Z is an amount paid to produce or improve real property (within the meaning of paragraph (d)(8)(iii) of this section) that can reasonably be expected to produce significant economic benefits for W. Under paragraph (d)(8)(i) of this section, W must capitalize the $1,000,000 paid to city Z.

Example 2. Transfer of real property to another. K corporation, a shipping company, uses smaller vessels to unload its ocean-going vessels at port X. There is no natural harbor at port X, and during stormy weather the transfer of freight between K's ocean vessels and port X is extremely difficult and sometimes impossible, which can be very costly to K. Consequently, K constructs a short breakwater at a cost of $50,000. The short breakwater, however, is inadequate, so K persuades the port authority to build a larger breakwater that will allow K to unload its vessels at any time of the year and during all kinds of weather. K contributes the short breakwater and pays $200,000 to the port authority for use in building the larger breakwater. Because the transfer of the small breakwater and $200,000 is reasonably expected to produce significant economic benefits for K, K must capitalize both the adjusted basis of the small breakwater (determined at the time the small breakwater is contributed) and the $200,000 payment under this paragraph (d)(8).

Example 3. Dedicated improvements. X corporation is engaged in the development and sale of residential real estate. In connection with a residential real estate project under construction by X in city Z, X is required by city Z to construct ingress and egress roads to and from its project and immediately transfer the roads to city Z for dedication to general public use. The roads will be maintained by city Z. X pays its subcontractor $100,000 to construct the ingress and egress roads. X's payment is a dedicated improvement within the meaning of paragraph (d)(8)(iv) of this section. Accordingly, X is not required to capitalize the $100,000 payment under this paragraph (d)(8). See section 263A and the regulations thereunder for capitalization rules that apply to amounts referred to in paragraph (d)(8)(iv) of this section.

(9) ***Defense or perfection of title to intangible property*** —

(i) ***In general.*** A taxpayer must capitalize amounts paid to another party to defend or perfect title to intangible property if that other party challenges the taxpayer's title to the intangible property.

(ii) ***Certain break-up fees.*** Paragraph (d)(9)(i) of this section does not apply to the termination of a transaction described in § 1.263(a)-5(a) (relating to an acquisition of a trade or business, a change in the capital structure of a business entity, and certain other transactions). *See* § 1.263(a)-5 for rules governing the treatment of amounts paid to terminate a transaction to

which that section applies. Paragraph (d)(9)(i) of this section also does not apply to an amount paid to another party to terminate an agreement that grants that party the right to purchase the taxpayer's intangible property.

(iii) ***Example.*** The following example illustrates the rules of this paragraph (d)(9):

Example. Defense of title. R corporation claims to own an exclusive patent on a particular technology. U corporation brings a lawsuit against R, claiming that U is the true owner of the patent and that R stole the technology from U. The sole issue in the suit involves the validity of R's patent. R chooses to settle the suit by paying U $100,000 in exchange for U's release of all future claim to the patent. R's payment to U is an amount paid to defend or perfect title to intangible property under paragraph (d)(9) of this section and must be capitalized.

(e) ***Transaction costs*** —

(1) ***Scope of facilitate*** —

(i) ***In general.*** Except as otherwise provided in this section, an amount is paid to facilitate the acquisition or creation of an intangible (the transaction) if the amount is paid in the process of investigating or otherwise pursuing the transaction. Whether an amount is paid in the process of investigating or otherwise pursuing the transaction is determined based on all of the facts and circumstances. In determining whether an amount is paid to facilitate a transaction, the fact that the amount would (or would not) have been paid but for the transaction is relevant, but is not determinative. An amount paid to determine the value or price of an intangible is an amount paid in the process of investigating or otherwise pursuing the transaction.

(ii) ***Treatment of termination payments.*** An amount paid to terminate (or acilitate the termination of) an existing agreement does not facilitate the acquisition or creation of another agreement under this section. See paragraph (d)(6)(iii) of this section for the treatment of termination fees paid to the other party (or parties) of a renegotiated agreement.

(iii) ***Special rule for contracts.*** An amount is treated as not paid in the process of investigating or otherwise pursuing the creation of an agreement described in paragraph (d)(2) or (d)(6) of this section if the amount relates to activities performed before the earlier of the date the taxpayer begins preparing its bid for the agreement or the date the taxpayer begins discussing or negotiating the agreement with another party to the agreement.

(iv) ***Borrowing costs.*** An amount paid to facilitate a borrowing does not facilitate an acquisition or creation of an intangible described in paragraphs (b)(1)(i) through (iv) of this section. *See* §§ 1.263(a)-5 and 1.446-5 for the treatment of an amount paid to facilitate a borrowing.

(v) ***Special rule for stock redemption costs of open-end regulated investment companies.*** An amount paid by an open-end regulated investment company (within the meaning of section 851) to facilitate a redemption of its stock is treated as an amount that does not facilitate the acquisition of an intangible under this section.

(2) ***Coordination with paragraph (d) of this section.*** In the case of an amount paid to facilitate the creation of an intangible described in paragraph (d) of this section, the provisions of this paragraph (e) apply regardless of whether a payment described in paragraph (d) is made.

(3) ***Transaction.*** For purposes of this section, the term *transaction* means all of the factual elements comprising an acquisition or creation of an intangible and includes a series of steps carried out as part of a single plan. Thus, a transaction can involve more than one invoice and more than one intangible. For example, a purchase of intangibles under one purchase agreement constitutes a single transaction, notwithstanding the fact that the acquisition involves multiple intangibles and the amounts paid to facilitate the acquisition are capable of being allocated among the various intangibles acquired.

(4) ***Simplifying conventions*** —

(i) ***In general.*** For purposes of this section, employee compensation (within the meaning of paragraph (e)(4)(ii) of this section), overhead, and *de minimis* costs (within the meaning of paragraph (e)(4)(iii) of this section) are treated as amounts that do not facilitate the acquisition or creation of an intangible.

(ii) ***Employee compensation*** —

(A) ***In general.*** The term *employee compensation* means compensation (including salary, bonuses and commissions) paid to an employee of the taxpayer. For purposes of this section, whether an individual is an employee is determined in accordance with the rules contained in section 3401(c) and the regulations thereunder.

(B) ***Certain amounts treated as employee compensation.*** For purposes of this section, a guaranteed payment to a partner in a partnership is treated as employee compensation. For purposes of this section, annual compensation paid to a director of a corporation is treated as employee compensation. For example, an amount paid to a director of a corporation for attendance at a regular meeting of the board of directors (or committee thereof) is treated as employee compensation for purposes of this section. However, an amount paid to a director for attendance at a special meeting of the board of directors (or committee thereof) is not treated as employee compensation. An amount paid to a person that is not an employee of the taxpayer (including the employer of the individual who performs the services) is treated as employee compensation for purposes of this section only if the amount is paid for secretarial, clerical, or similar administrative support services. In the case of an affiliated group of corporations filing a consolidated Federal income tax return, a payment by one member of the group to a second member of the group for services performed by an employee of the second member is treated as employee compensation if the services provided by the employee are provided at a time during which both members are affiliated.

(iii) ***De minimis costs*** —

(A) ***In general.*** Except as provided in paragraph (e)(4)(iii)(B) of this section, the term *de minimis costs* means amounts (other than employee compensation and overhead) paid in the process of investigating or otherwise pursuing a transaction if, in the aggregate, the amounts do not exceed $5,000 (or such greater amount as may be set forth in published guidance). If the amounts exceed $5,000 (or such greater amount as may be set forth in published guidance), none of the amounts are *de minimis* costs within the meaning of this paragraph (e)(4)(iii)(A). For purposes of this paragraph (e)(4)(iii), an amount paid in the form of property is valued at its fair market value at the time of the payment. In determining the amount of transaction costs paid in the process of investigating or otherwise pursuing a transaction, a taxpayer generally must account for the specific costs

paid with respect to each transaction. However, a taxpayer that reasonably expects to enter into at least 25 similar transactions during the taxable year may establish a pool of similar transactions for purposes of determining the amount of transaction costs paid in the process of investigating or otherwise pursuing the transactions in the pool. Under this pooling method, the amount of transaction costs paid in the process of investigating or otherwise pursuing each transaction included in the pool is equal to the average transaction costs paid in the process of investigating or otherwise pursuing all transactions included in the pool. A taxpayer computes the average transaction costs paid in the process of investigating or otherwise pursuing all transactions included in the pool by dividing the sum of all transaction costs paid in the process of investigating or otherwise pursuing all transactions included in the pool by the number of transactions included in the pool. *See* paragraph (h) of this section for additional rules relating to pooling.

(B) ***Treatment of commissions.*** The term *de minimis costs* does not include commissions paid to facilitate the acquisition of an intangible described in paragraphs (c)(1)(i) through (v) of this section or to facilitate the creation, origination, entrance into, renewal or renegotiation of an intangible described in paragraph (d)(2)(i) of this section.

(iv) ***Election to capitalize.*** A taxpayer may elect to treat employee compensation, overhead, or *de minimis* costs paid in the process of investigating or otherwise pursuing a transaction as amounts that facilitate the transaction. The election is made separately for each transaction and applies to employee compensation, overhead, or *de minimis* costs, or to any combination thereof. For example, a taxpayer may elect to treat overhead and *de minimis* costs, but not employee compensation, as amounts that facilitate the transaction. A taxpayer makes the election by treating the amounts to which the election applies as amounts that facilitate the transaction in the taxpayer's timely filed original Federal income tax return (including extensions) for the taxable year during which the amounts are paid. In the case of an affiliated group of corporations filing a consolidated return, the election is made separately with respect to each member of the group, and not with respect to the group as a whole. In the case of an S corporation or partnership, the election is made by the S corporation or by the partnership, and not by the shareholders or partners. An election made under this paragraph (e)(4)(iv) is revocable with respect to each taxable year for which made only with the consent of the Commissioner.

(5) ***Examples.*** The following examples illustrate the rules of this paragraph (e):

Example 1. Costs to facilitate. In December 2005, R corporation, a calendar year taxpayer, enters into negotiations with X corporation to lease commercial property from X for a period of 25 years. R pays A, its outside legal counsel, $4,000 in December 2005 for services rendered by A during December in assisting with negotiations with X. In January 2006, R and X finalize the terms of the lease and execute the lease agreement. R pays B, another of its outside legal counsel, $2,000 in January 2006 for services rendered by B during January in drafting the lease agreement. The agreement between R and X is an agreement providing R the right to use property, as described in paragraph (d)(6)(i)(A) of this section. R's payments to its outside counsel are amounts paid to facilitate the creation of the agreement. As provided in paragraph (e)(4)(iii)(A) of this section, R must aggregate its transaction costs for purposes of determining whether the transaction costs are *de minimis.* Because R's aggregate transaction costs exceed

$5,000, R's transaction costs are not *de minimis* costs within the meaning of paragraph (e)(4)(iii)(A) of this section. Accordingly, R must capitalize the $4,000 paid to A and the $2,000 paid to B under paragraph (b)(1)(v) of this section.

Example 2. Costs to facilitate. Partnership X leases its manufacturing equipment from Y corporation under a 10-year lease. During 2005, when the lease has a remaining term of 4 years, X enters into a written agreement with Z corporation, a competitor of Y, under which X agrees to lease its manufacturing equipment from Z, subject to the condition that X first successfully terminates its lease with Y. X pays Y $50,000 in exchange for Y's agreement to terminate the equipment lease. Under paragraph (e)(1)(ii), X's $50,000 payment does not facilitate the creation of the new lease with Z. In addition, X's $50,000 payment does not terminate an agreement described in paragraph (d)(7) of this section. Accordingly, X is not required to capitalize the $50,000 termination payment under this section.

Example 3. Costs to facilitate. W corporation enters into a lease agreement with X corporation under which W agrees to lease property to X for a period of 5 years. W pays its outside counsel $7,000 for legal services rendered in drafting the lease agreement and negotiating with X. The agreement between W and X is an agreement providing W the right to be compensated for the use of property, as described in paragraph (d)(6)(i)(A) of this section. Under paragraph (e)(1)(i) of this section, W's payment to its outside counsel is an amount paid to facilitate the creation of that agreement. As provided by paragraph (e)(2) of this section, W must capitalize its $7,000 payment to outside counsel notwithstanding the fact that W made no payment described in paragraph (d)(6)(i) of this section.

Example 4. Costs to facilitate. U corporation, which owns a majority of the common stock of T corporation, votes its controlling interest in favor of a perpetual extension of T's charter. M, a minority shareholder in T, votes against the extension. Under applicable state law, U is required to purchase the stock of T held by M. When U and M are unable to agree on the value of M's shares, U brings an action in state court to appraise the value of M's stock interest. U pays attorney, accountant and appraisal fees of $25,000 for services rendered in connection with the negotiation and litigation with M. Because U's attorney, accountant and appraisal costs help establish the purchase price of M's stock, U's $25,000 payment facilitates the acquisition of stock. Accordingly, U must capitalize the $25,000 payment under paragraph (b)(1)(v) of this section.

Example 5. Costs to facilitate. For several years, H corporation has provided services to J corporation whenever requested by J. H wants to enter into a multiple-year contract with J that would give H the right to provide services to J. On June 10, 2004, H starts to prepare a bid to provide services to J and pays a consultant $15,000 to research potential competitors. On August 10, 2004, H raises the possibility of a multi-year contract with J. On October 10, 2004, H and J enter into a contract giving H the right to provide services to J for five years. During 2004, H pays $7,000 to travel to the city in which J's offices are located to continue providing services to J under their prior arrangement and pays $6,000 for travel to the city in which J's offices are located to further develop H's business relationship with J (for example, to introduce new employees, update J on current developments and take J's executives to dinner). H also pays $8,000 for travel costs to meet with J to discuss and negotiate the contract. Because the contract gives H the right to provide services to J, H must capitalize amounts paid to facilitate the creation of the contract. The $7,000 of travel expenses paid to provide services to J under their prior arrangement does not facilitate the creation of the contract and is not required to be capitalized, regardless of when the travel occurs. The $6,000 of travel expenses paid to further

develop H's business relationship with J is paid in the process of pursuing the contract (and therefore must be capitalized) only to the extent the expenses relate to travel on or after June 10, 2004 (the date H begins to prepare a bid) and before October 11, 2004 (the date after H and J enter into the contract). The $8,000 of travel expenses paid to meet with J to discuss and negotiate the contract is paid in the process of pursuing the contact and must be capitalized. The $15,000 of consultant fees is paid to investigate the contract and also must be capitalized.

Example 6. Costs that do not facilitate. X corporation brings a legal action against Y corporation to recover lost profits resulting from Y's alleged infringement of X's copyright. Y does not challenge X's copyright, but argues that it did not infringe upon X's copyright. X pays its outside counsel $25,000 for legal services rendered in pursuing the suit against Y. Because X's title to its copyright is not in question, X's action against Y does not involve X's defense or perfection of title to intangible property. Thus, the amount paid to outside counsel does not facilitate the creation of an intangible described in paragraph (d)(9) of this section. Accordingly, X is not required to capitalize its $25,000 payment under this section.

Example 7. De minimis rule. W corporation, a commercial bank, acquires a portfolio containing 100 loans from Y corporation. As part of the acquisition, W pays an independent appraiser a fee of $10,000 to appraise the portfolio. The fee is an amount paid to facilitate W's acquisition of an intangible. The acquisition of the loan portfolio is a single transaction within the meaning of paragraph (e)(3) of this section. Because the amount paid to facilitate the transaction exceeds $5,000, the amount is not *de minimis* as defined in paragraph (e)(4)(iii)(A) of this section. Accordingly, W must capitalize the $10,000 fee under paragraph (b)(1)(v) of this section.

Example 8. Compensation and overhead. P corporation, a commercial bank, maintains a loan acquisition department whose sole function is to acquire loans from other financial institutions. As provided in paragraph (e)(4)(i) of this section, P is not required to capitalize any portion of the compensation paid to the employees in its loan acquisition department or any portion of its overhead allocable to the loan acquisition department.

(f) ***12-month rule*** —

(1) ***In general.*** Except as otherwise provided in this paragraph (f), a taxpayer is not required to capitalize under this section amounts paid to create (or to facilitate the creation of) any right or benefit for the taxpayer that does not extend beyond the earlier of—

(i) 12 months after the first date on which the taxpayer realizes the right or benefit; or

(ii) The end of the taxable year following the taxable year in which the payment is made.

(2) ***Duration of benefit for contract terminations.*** For purposes of this paragraph (f), amounts paid to terminate a contract or other agreement described in paragraph (d)(7)(i) of this section prior to its expiration date (or amounts paid to facilitate such termination) create a benefit for the taxpayer that lasts for the unexpired term of the agreement immediately before the date of the termination. If the terms of a contract or other agreement described in paragraph (d)(7)(i) of this section permit the taxpayer to terminate the contract or agreement after a notice period, amounts paid by the taxpayer to terminate the contract or agreement before the end of the notice period create a benefit for the taxpayer that lasts for the amount of time by which the notice period is shortened.

(3) ***Inapplicability to created financial interests and self-created amortizable section 197 intangibles.*** Paragraph (f)(1) of this section does not apply to amounts paid to create (or facilitate the creation of) an intangible described in paragraph (d)(2) of this section (relating to amounts paid to create financial interests) or to amounts paid to create (or facilitate the creation of) an intangible that constitutes an amortizable section 197 intangible within the meaning of section 197(c).

(4) ***Inapplicability to rights of indefinite duration.*** Paragraph (f)(1) of this section does not apply to amounts paid to create (or facilitate the creation of) an intangible of indefinite duration. A right has an indefinite duration if it has no period of duration fixed by agreement or by law, or if it is not based on a period of time, such as a right attributable to an agreement to provide or receive a fixed amount of goods or services. For example, a license granted by a governmental agency that permits the taxpayer to operate a business conveys a right of indefinite duration if the license may be revoked only upon the taxpayer's violation of the terms of the license.

(5) ***Rights subject to renewal*** —

(i) ***In general.*** For purposes of paragraph (f)(1) of this section, the duration of a right includes any renewal period if all of the facts and circumstances in existence during the taxable year in which the right is created indicate a reasonable expectancy of renewal.

(ii) ***Reasonable expectancy of renewal.*** The following factors are significant in determining whether there exists a reasonable expectancy of renewal:

(A) ***Renewal history.*** The fact that similar rights are historically renewed is evidence of a reasonable expectancy of renewal. On the other hand, the fact that similar rights are rarely renewed is evidence of a lack of a reasonable expectancy of renewal. Where the taxpayer has no experience with similar rights, or where the taxpayer holds similar rights only occasionally, this factor is less indicative of a reasonable expectancy of renewal.

(B) ***Economics of the transaction.*** The fact that renewal is necessary for the taxpayer to earn back its investment in the right is evidence of a reasonable expectancy of renewal. For example, if a taxpayer pays $14,000 to enter into a renewable contract with an initial 9-month term that is expected to generate income to the taxpayer of $1,000 per month, the fact that renewal is necessary for the taxpayer to earn back its $14,000 payment is evidence of a reasonable expectancy of renewal.

(C) ***Likelihood of renewal by other party.*** Evidence that indicates a likelihood of renewal by the other party to a right, such as a bargain renewal option or similar arrangement, is evidence of a reasonable expectancy of renewal. However, the mere fact that the other party will have the opportunity to renew on the same terms as are available to others is not evidence of a reasonable expectancy of renewal.

(D) ***Terms of renewal.*** The fact that material terms of the right are subject to renegotiation at the end of the initial term is evidence of a lack of a reasonable expectancy of renewal. For example, if the parties to an agreement must renegotiate price or amount, the renegotiation requirement is evidence of a lack of a reasonable expectancy of renewal.

(E) ***Terminations.*** The fact that similar rights are typically terminated prior to renewal is evidence of a lack of a reasonably expectancy of renewal.

(iii) ***Safe harbor pooling method.*** In lieu of applying the reasonable expectancy of renewal test described in paragraph (f)(5)(ii) of this section to each separate right created during a taxable year, a taxpayer that reasonably expects to enter into at least 25 similar rights during the taxable year may establish a pool of similar rights for which the initial term does not extend beyond the period prescribed in paragraph (f)(1) of this section and may elect to apply the reasonable expectancy of renewal test to that pool. *See* paragraph (h) of this section for additional rules relating to pooling. The application of paragraph (f)(1) of this section to each pool is determined in the following manner:

(A) All amounts (except *de minimis* costs described in paragraph (d)(6)(v) of this section) paid to create the rights included in the pool and all amounts paid to facilitate the creation of the rights included in the pool are aggregated.

(B) If less than 20 percent of the rights in the pool are reasonably expected to be renewed beyond the period prescribed in paragraph (f)(1) of this section, all rights in the pool are treated as having a duration that does not extend beyond the period prescribed in paragraph (f)(1) of this section, and the taxpayer is not required to capitalize under this section any portion of the aggregate amount described in paragraph (f)(5)(iii)(A) of this section.

(C) If more than 80 percent of the rights in the pool are reasonably expected to be renewed beyond the period prescribed in paragraph (f)(1) of this section, all rights in the pool are treated as having a duration that extends beyond the period prescribed in paragraph (f)(1) of this section, and the taxpayer is required to capitalize under this section the aggregate amount described in paragraph (f)(5)(iii)(A) of this section.

(D) If 20 percent or more, but 80 percent or less, of the rights in the pool are reasonably expected to be renewed beyond the period prescribed in paragraph (f)(1) of this section, the aggregate amount described in paragraph (f)(5)(iii)(A) of this section is multiplied by the percentage of the rights in the pool that are reasonably expected to be renewed beyond the period prescribed in paragraph (f)(1) of this section and the taxpayer must capitalize the resulting amount under this section by treating such amount as creating a separate intangible. The amount determined by multiplying the aggregate amount described in paragraph (f)(5)(iii)(A) of this section by the percentage of rights in the pool that are not reasonably expected to be renewed beyond the period prescribed in paragraph (f)(1) of this section is not required to be capitalized under this section.

(6) ***Coordination with section 461.*** In the case of a taxpayer using an accrual method of accounting, the rules of this paragraph (f) do not affect the determination of whether a liability is incurred during the taxable year, including the determination of whether economic performance has occurred with respect to the liability. See § 1.461-4 for rules relating to economic performance.

(7) ***Election to capitalize.*** A taxpayer may elect not to apply the rule contained in paragraph (f)(1) of this section. An election made under this paragraph (f)(7) applies to all similar transactions during the taxable year to which paragraph (f)(1) of this section would apply (but for the election under this paragraph (f)(7)). For example, a taxpayer may elect under this paragraph (f)(7) to capitalize its costs of prepaying insurance contracts for 12 months, but may continue to apply the rule in paragraph (f)(1) to its costs of entering into non-renewable, 12-month service contracts. A taxpayer makes the election by treating the amounts as capital expenditures in its timely filed original federal income tax return (including extensions) for the taxable year during which the amounts are paid. In the case of an affiliated group of corporations filing a consolidated return, the election is made

separately with respect to each member of the group, and not with respect to the group as a whole. In the case of an S corporation or partnership, the election is made by the S corporation or by the partnership, and not by the shareholders or partners. An election made under this paragraph (f)(7) is revocable with respect to each taxable year for which made only with the consent of the Commissioner.

(8) ***Examples.*** The rules of this paragraph (f) are illustrated by the following examples, in which it is assumed (unless otherwise stated) that the taxpayer is a calendar year, accrual method taxpayer that does not have a short taxable year in any taxable year and has not made an election under paragraph (f)(7) of this section:

Example 1. Prepaid expenses. On December 1, 2005, N corporation pays a $10,000 insurance premium to obtain a property insurance policy (with no cash value) with a 1-year term that begins on February 1, 2006. The amount paid by N is a prepaid expense described in paragraph (d)(3) of this section and not paragraph (d)(2) of this section. Because the right or benefit attributable to the $10,000 payment extends beyond the end of the taxable year following the taxable year in which the payment is made, the 12-month rule provided by this paragraph (f) does not apply. N must capitalize the $10,000 payment.

> *Example 2. Prepaid expenses.* (i) Assume the same facts as in *Example 1,* except that the policy has a term beginning on December 15, 2005. The 12-month rule of this paragraph (f) applies to the $10,000 payment because the right or benefit attributable to the payment neither extends more than 12 months beyond December 15, 2005 (the first date the benefit is realized by the taxpayer) nor beyond the end of the taxable year following the taxable year in which the payment is made. Accordingly, N is not required to capitalize the $10,000 payment.
> (ii) Alternatively, assume N capitalizes prepaid expenses for financial accounting and reporting purposes and elects under paragraph (f)(7) of this section not to apply the 12-month rule contained in paragraph (f)(1) of this section. N must capitalize the $10,000 payment for Federal income tax purposes.

Example 3. Financial interests. On October 1, 2005, X corporation makes a 9-month loan to B in the principal amount of $250,000. The principal amount of the loan to B constitutes an amount paid to create or originate a financial interest under paragraph (d)(2)(i)(B) of this section. The 9-month term of the loan does not extend beyond the period prescribed by paragraph (f)(1) of this section. However, as provided by paragraph (f)(3) of this section, the rules of this paragraph (f) do not apply to intangibles described in paragraph (d)(2) of this section. Accordingly, X must capitalize the $250,000 loan amount.

Example 4. Financial interests. X corporation owns all of the outstanding stock of Z corporation. On December 1, 2005, Y corporation pays X $1,000,000 in exchange for X's grant of a 9-month call option to Y permitting Y to purchase all of the outstanding stock of Z. Y's payment to X constitutes an amount paid to create or originate an option with X under paragraph (d)(2)(i)(C)(7) of this section. The 9-month term of the option does not extend beyond the period prescribed by paragraph (f)(1) of this section. However, as provided by paragraph (f)(3) of this section, the rules of this paragraph (f) do not apply to intangibles described in paragraph (d)(2) of this section. Accordingly, Y must capitalize the $1,000,000 payment.

Example 5. License. (i) On July 1, 2005, R corporation pays $10,000 to state X to obtain a license to operate a business in state X for a period of 5 years. The terms of the license require R to pay state X an annual fee of $500 due on July 1, 2005, and each of the succeeding four years. R pays the $500 fee on July 1 as required by the license.
(ii) R's payment of $10,000 is an amount paid to a governmental agency for a license granted by that agency to which paragraph (d)(5) of this section applies. Because R's payment creates rights or benefits for R that extend beyond 12 months after the first date on which R realizes the rights or benefits attributable to the payment and beyond the end of 2006 (the taxable year following the taxable year in which the payment is made), the rules of this paragraph (f) do not apply to R's payment. Accordingly, R must capitalize the $10,000 payment.

(iii) R's payment of each $500 annual fee is a prepaid expense described in paragraph (d)(3) of this section. R is not required to capitalize the $500 fee in each taxable year. The rules of this paragraph (f) apply to each such payment because each payment provides a right or benefit to R that does not extend beyond 12 months after the first date on which R realizes the rights or benefits attributable to the payment and does not extend beyond the end of the taxable year following the taxable year in which the payment is made.

Example 6. Lease. On December 1, 2005, W corporation enters into a lease agreement with X corporation under which W agrees to lease property to X for a period of 9 months, beginning on December 1, 2005. W pays its outside counsel $7,000 for legal services rendered in drafting the lease agreement and negotiating with X. The agreement between W and X is an agreement providing W the right to be compensated for the use of property, as described in paragraph (d)(6)(i)(A) of this section. W's $7,000 payment to its outside counsel is an amount paid to facilitate W's creation of the lease as described in paragraph (e)(1)(i) of this section. The 12-month rule of this paragraph (f) applies to the $7,000 payment because the right or benefit that the $7,000 payment facilitates the creation of neither extends more than 12 months beyond December 1, 2005 (the first date the benefit is realized by the taxpayer) nor beyond the end of the taxable year following the taxable year in which the payment is made. Accordingly, W is not required to capitalize its payment to its outside counsel.

Example 7. Certain contract terminations. V corporation owns real property that it has leased to A for a period of 15 years. When the lease has a remaining unexpired term of 5 years, V and A agree to terminate the lease, enabling V to use the property in its trade or business. V pays A $100,000 in exchange for A's agreement to terminate the lease. V's payment to A to terminate the lease is described in paragraph (d)(7)(i)(A) of this section. Under paragraph (f)(2) of this section, V's payment creates a benefit for V with a duration of 5 years, the remaining unexpired term of the lease as of the date of the termination. Because the benefit attributable to the expenditure extends beyond 12 months after the first date on which V realizes the rights or benefits attributable to the payment and beyond the end of the taxable year following the taxable year in which the payment is made, the rules of this paragraph (f) do not apply to the payment. V must capitalize the $100,000 payment.

Example 8. Certain contract terminations. Assume the same facts as in *Example 7,* except that the lease is terminated when it has a remaining unexpired term of 10 months. Under paragraph (f)(2) of this section, V's payment creates a benefit for V with a duration of 10 months. The 12-month rule of this paragraph (f) applies to the payment because the benefit attributable to the payment neither extends more than 12 months beyond the date of termination (the first date the benefit is realized by V) nor beyond the end of the taxable year following the taxable year in which the payment is made. Accordingly, V is not required to capitalize the $100,000 payment.

Example 9. Certain contract terminations. Assume the same facts as in *Example 7,* except that either party can terminate the lease upon 12 months notice. When the lease has a remaining unexpired term of 5 years, V wants to terminate the lease, however, V does not want to wait another 12 months. V pays A $50,000 for the ability to terminate the lease with one month's notice. V's payment to A to terminate the lease is described in paragraph (d)(7)(i)(A) of this section. Under paragraph (f)(2) of this section, V's payment creates a benefit for V with a duration of 11 months, the time by which the notice period is shortened. The 12-month rule of this paragraph (f) applies to V's $50,000 payment because the benefit attributable to the payment neither extends more than 12 months beyond the date of termination (the first date the benefit is realized by V) nor beyond the end of the taxable year following the taxable year in which the payment is made. Accordingly, V is not required to capitalize the $50,000 payment.

Example 10. Coordination with section 461. (i) U corporation leases office space from W corporation at a monthly rental rate of $2,000. On August 1, 2005, U prepays its office rent expense for the first six months of 2006 in the amount of $12,000. For purposes of this example, it is assumed that the recurring item exception provided by § 1.461-5 does not apply and that the lease between W and U is not a section 467 rental agreement as defined in section 467(d).
(ii) Under § 1.461-4(d)(3), U's prepayment of rent is a payment for the use of property by U for which economic performance occurs ratably over the period of time U is entitled to use the property. Accordingly, because economic performance with respect to U's prepayment of rent does not occur until 2006, U's prepaid rent is not incurred in 2005 and therefore is not properly taken into account through capitalization, deduction, or otherwise in 2005. Thus, the rules of this paragraph (f) do not apply to U's prepayment of its rent.

(iii) Alternatively, assume that U uses the cash method of accounting and the economic performance rules in § 1.461-4 therefore do not apply to U. The 12-month rule of this paragraph (f) applies to the $12,000 payment because the rights or benefits attributable to U's prepayment of its rent do not extend beyond December 31, 2006. Accordingly, U is not required to capitalize its prepaid rent.

Example 11. Coordination with section 461. N corporation pays R corporation, an advertising and marketing firm, $40,000 on August 1, 2005, for advertising and marketing services to be provided to N throughout calendar year 2006. For purposes of this example, it is assumed that the recurring item exception provided by § 1.461-5 does not apply. Under § 1.461-4(d)(2), N's

payment arises out of the provision of services to N by R for which economic performance occurs as the services are provided. Accordingly, because economic performance with respect to N's prepaid advertising expense does not occur until 2006, N's prepaid advertising expense is not incurred in 2005 and therefore is not properly taken into account through capitalization, deduction, or otherwise in 2005. Thus, the rules of this paragraph (f) do not apply to N's payment.

(g) *Treatment of capitalized costs* —

(1) ***In general.*** An amount required to be capitalized by this section is not currently deductible under section 162. Instead, the amount generally is added to the basis of the intangible acquired or created. See section 1012.

(2) ***Financial instruments.*** In the case of a financial instrument described in paragraph (c)(1)(iii) or (d)(2)(i)(C) of this section, notwithstanding paragraph (g)(1) of this section, if under other provisions of law the amount required to be capitalized is not required to be added to the basis of the intangible acquired or created, then the other provisions of law will govern the tax treatment of the amount.

(h) *Special rules applicable to pooling* —

(1) ***In general.*** Except as otherwise provided, the rules of this paragraph (h) apply to the pooling methods described in paragraph (d)(6)(v) of this section (relating to *de minimis* rules applicable to certain contract rights), paragraph (e)(4)(iii)(A) of this section (relating to *de minimis* rules applicable to transaction costs), and paragraph (f)(5)(iii) of this section (relating to the application of the 12-month rule to renewable rights).

(2) ***Method of accounting.*** A pooling method authorized by this section constitutes a method of accounting for purposes of section 446. A taxpayer that adopts or changes to a pooling method authorized by this section must use the method for the year of adoption and for all subsequent taxable years during which the taxpayer qualifies to use the pooling method unless a change to another method is required by the Commissioner in order to clearly reflect income, or unless permission to change to another method is granted by the Commissioner as provided in § 1.446-1(e).

(3) ***Adopting or changing to a pooling method.*** A taxpayer adopts (or changes to) a pooling method authorized by this section for any taxable year by establishing one or more pools for the taxable year in accordance with the rules governing the particular pooling method and the rules prescribed by this paragraph (h), and by using the pooling method to compute its taxable income for the year of adoption (or change).

(4) ***Definition of pool.*** A taxpayer may use any reasonable method of defining a pool of similar transactions, agreements or rights, including a method based on the type of customer or the type of product or service provided under a contract. However, a taxpayer that pools similar transactions, agreements or rights must include in the pool all similar transactions, agreements or rights created during the taxable year. For purposes of the pooling methods described in paragraph (d)(6)(v) of this section (relating to *de minimis* rules applicable to certain contract rights) and paragraph (e)(4)(iii)(A) of this section (relating to *de minimis* rules applicable to transaction costs), an agreement (or a transaction) is treated as not similar to other agreements (or transactions) included in the pool if the amount at issue with respect to that agreement (or transaction) is reasonably expected to differ significantly from the average amount at issue with respect to the other agreements (or transactions) properly included in the pool.

(5) ***Consistency requirement.*** A taxpayer that uses the pooling method described in paragraph (f)(5)(iii) of this section for purposes of applying the 12-month rule to a right or benefit—

(i) Must use the pooling methods described in paragraph (d)(6)(v) of this section (relating to *de minimis* rules applicable to certain contract rights) and paragraph (e)(4)(iii)(A) of this section (relating to *de minimis* rules applicable to transaction costs) for purposes of determining the amount paid to create, or facilitate the creation of, the right or benefit; and

(ii) Must use the same pool for purposes of paragraph (d)(6)(v) of this section and paragraph (e)(4)(iii)(A) of this section as is used for purposes of paragraph (f)(5)(iii) of this section.

(6) ***Additional guidance pertaining to pooling.*** The Internal Revenue Service may publish guidance in the Internal Revenue Bulletin (*see* § 601.601(d)(2) of this chapter) prescribing additional rules for applying the pooling methods authorized by this section to specific industries or to specific types of transactions.

(7) ***Example.*** The following example illustrates the rules of this paragraph (h):

> *Example. Pooling.* (i) In the course of its business, W corporation enters into 3-year non-cancelable contracts that provide W the right to provide services to its customers. W generally pays certain amounts in the process of pursuing an agreement with a customer, including amounts paid to credit reporting agencies to verify the credit history of the potential customer and commissions paid to the independent sales agent who secures the agreement with the customer. In the case of agreements that W enters into with customers who are individuals, the agreements contain substantially similar terms and conditions and W typically pays between $100 and $200 in the process of pursuing each transaction. During 2005, W enters into agreements with 300 individuals. Also during 2005, W enters into an agreement with X corporation containing terms and conditions that are substantially similar to those contained in the agreements W enters into with its customers who are individuals. W pays certain amounts in the process of pursuing the agreement with X that W would not typically incur in the process of pursuing an agreement with its customers who are individuals. For example, W pays amounts to prepare and submit a bid for the agreement with X and amounts to travel to X's headquarters to make a sales presentation to X's management. In the aggregate, W pays $11,000 in the process of obtaining the agreement with X.
> (ii) The agreements between W and its customers are agreements providing W the right to provide services, as described in paragraph (d)(6)(i)(B) of this section. Under paragraph (b)(1)(v) of this section, W must capitalize transaction costs paid to facilitate the creation of these agreements. Because W enters into at least 25 similar transactions during 2005, W may pool its transactions for purposes of determining whether its transaction costs are *de minimis* within the meaning of paragraph (e)(4)(iii)(A) of this section. W adopts a pooling method by establishing one or more pools of similar transactions and by using the pooling method to compute its taxable income beginning in its 2005 taxable year. If W adopts a pooling method, W must include all similar transactions in the pool. Under paragraph (h)(4) of this section, the transaction with X is not similar to the transactions W enters into with its

customers who are individuals. While the agreement with X contains terms and conditions that are substantially similar to those contained in the agreements W enters into with its customers who are individuals, the transaction costs paid in the process of pursuing the agreement with X are reasonably expected to differ significantly from the average transaction costs attributable to transactions with its customers who are individuals. Accordingly, W may not include the transaction with X in the pool of transactions with customers who are individuals.

(i) [Reserved]

(j) ***Application to accrual method taxpayers.*** For purposes of this section, the terms *amount paid* and *payment* mean, in the case of a taxpayer using an accrual method of accounting, a liability incurred (within the meaning of § 1.446-1(c)(1)(ii)). A liability may not be taken into account under this section prior to the taxable year during which the liability is incurred.

(k) ***Treatment of related parties and indirect payments.*** For purposes of this section, references to a party other than the taxpayer include persons related to that party and persons acting for or on behalf of that party (including persons to whom the taxpayer becomes obligated as a result of assuming a liability of that party). For this purpose, persons are related only if their relationship is described in section 267(b) or 707(b) or they are engaged in trades or businesses under common control within the meaning of section 41(f)(1). References to an amount paid to or by a party include an amount paid on behalf of that party.

(l) ***Examples.*** The rules of this section are illustrated by the following examples in which it is assumed that the Internal Revenue Service has not published guidance that requires capitalization under paragraph (b)(1)(iv) of this section (relating to amounts paid to create or enhance a future benefit that is identified in published guidance as an intangible for which capitalization is required):

Example 1. License granted by a governmental unit. (i) X corporation pays $25,000 to state R to obtain a license to sell alcoholic beverages in its restaurant. The license is valid indefinitely, provided X complies with all applicable laws regarding the sale of alcoholic beverages in state R. X pays its outside counsel $4,000 for legal services rendered in preparing the license application and otherwise representing X during the licensing process. In addition, X determines that $2,000 of salaries paid to its employees is allocable to services rendered by the employees in obtaining the license.
(ii) X's payment of $25,000 is an amount paid to a governmental unit to obtain a license granted by that agency, as described in paragraph (d)(5)(i) of this section. The right has an indefinite duration and constitutes an amortizable section 197 intangible. Accordingly, as provided in paragraph (f)(3) of this section, the provisions of paragraph (f) of this section (relating to the 12-month rule) do not apply to X's payment. X must capitalize its $25,000 payment to obtain the license from state R.

(iii) As provided in paragraph (e)(4) of this section, X is not required to capitalize employee compensation because such amounts are treated as amounts that do not facilitate the acquisition or creation of an intangible. Thus, X is not required to capitalize the $2,000 of employee compensation allocable to the transaction.

(iv) X's payment of $4,000 to its outside counsel is an amount paid to facilitate the creation of an intangible, as described in paragraph (e)(1)(i) of this section. Because X's transaction costs do not exceed $5,000, X's transaction costs are *de minimis* within the meaning of paragraph (e)(4)(iii)(A) of this section. Accordingly, X is not required to capitalize the $4,000 payment to its outside counsel under this section.

Example 2. Franchise agreement. (i) R corporation is a franchisor of income tax return preparation outlets. V corporation negotiates with R to obtain the right to operate an income tax return preparation outlet under a franchise from R. V pays an initial $100,000 franchise fee to R in exchange for the franchise agreement. In addition, V pays its outside counsel $4,000 to represent V during the negotiations with R. V also pays $2,000 to an industry consultant to advise V during the negotiations with R.
(ii) Under paragraph (d)(6)(i)(A) of this section, V's payment of $100,000 is an amount paid to another party to enter into an agreement with that party providing V the right to use tangible or intangible property. Accordingly, V must capitalize its $100,000 payment to R. The franchise agreement is a self-created amortizable section 197 intangible within the meaning of section 197(c). Accordingly, as provided in paragraph (f)(3) of this section, the 12-month rule contained in paragraph (f)(1) of this section does not apply.

(iii) V's payment of $4,000 to its outside counsel and $2,000 to the industry consultant are amounts paid to facilitate the creation of an intangible, as described in paragraph (e)(1)(i) of this section. Because V's aggregate transaction costs exceed $5,000, V's transaction costs are not *de minimis* within the meaning of paragraph (e)(4)(iii)(A) of this section. Accordingly, V must capitalize the $4,000 payment to its outside counsel and the $2,000 payment to the industry consultant under this section into the basis of the franchise, as provided in paragraph (g) of this section.

Example 3. Covenant not to compete. (i) On December 1, 2005, N corporation, a calendar year taxpayer, enters into a covenant not to compete with B, a key employee that is leaving the employ of N. The covenant not to compete is not entered into in connection with the acquisition of an interest in a trade or business. The covenant not to compete prohibits B from competing with N for a period of 9 months, beginning December 1, 2005. N pays B $25,000 in full consideration for B's agreement not to compete. In addition, N pays its outside counsel $6,000 to facilitate the creation of the covenant not to compete with B. N does not have a short taxable year in 2005 or 2006.
(ii) Under paragraph (d)(6)(i)(C) of this section, N's payment of $25,000 is an amount paid to another party to induce that party to enter into a covenant not to compete with N. However, because the covenant not to compete has a duration that does not extend beyond 12 months after the first date on which N realizes the rights attributable to its payment (*i.e.,* December 1, 2005) or beyond the end of the taxable year following the taxable year in which payment is made, the

12-month rule contained in paragraph (f)(1) of this section applies. Accordingly, N is not required to capitalize its $25,000 payment to B or its $6,000 payment to facilitate the creation of the covenant not to compete.

Example 4. Demand-side management. (i) X corporation, a public utility engaged in generating and distributing electrical energy, provides programs to its customers to promote energy conservation and energy efficiency. These programs are aimed at reducing electrical costs to X's customers, building goodwill with X's customers, and reducing X's future operating and capital costs. X provides these programs without obligating any of its customers participating in the programs to purchase power from X in the future. Under these programs, X pays a consultant to help industrial customers design energy-efficient manufacturing processes, to conduct “energy efficiency audits” that serve to identify for customers inefficiencies in their energy usage patterns, and to provide cash allowances to encourage residential customers to replace existing appliances with more energy efficient appliances.
(ii) The amounts paid by X to the consultant are not amounts to acquire or create an intangible under paragraph (c) or (d) of this section or to facilitate such an acquisition or creation. In addition, the amounts do not create a separate and distinct intangible asset within the meaning of paragraph (b)(3) of this section. Accordingly, the amounts paid to the consultant are not required to be capitalized under this section. While the amounts may serve to reduce future operating and capital costs and create goodwill with customers, these benefits, without more, are not intangibles for which capitalization is required under this section.

Example 5. Business process re-engineering. (i) V corporation manufactures its products using a batch production system. Under this system, V continuously produces component parts of its various products and stockpiles these parts until they are needed in V's final assembly line. Finished goods are stockpiled awaiting orders from customers. V discovers that this process ties up significant amounts of V's capital in work-in-process and finished goods inventories. V hires B, a consultant, to advise V on improving the efficiency of its manufacturing operations. B recommends a complete re-engineering of V's manufacturing process to a process known as just-in-time manufacturing. Just-in-time manufacturing involves reconfiguring a manufacturing plant to a configuration of “cells” where each team in a cell performs the entire manufacturing process for a particular customer order, thus reducing inventory stockpiles.
(ii) V incurred three categories of costs to convert its manufacturing process to a just-in-time system. First, V paid B, a consultant, $250,000 in professional fees to implement the conversion of V's plant to a just-in-time system. Second, V paid C, a contractor, $100,000 to relocate and reconfigure V's manufacturing equipment from an assembly line layout to a configuration of cells. Third, V paid D, a consultant, $50,000 to train V's employees in the just-in-time manufacturing process.

(iii) The amounts paid by V to B, C, and D are not amounts to acquire or create an intangible under paragraph (c) or (d) of this section or to facilitate such an acquisition or creation. In addition, the amounts do not create a separate and distinct intangible asset within the meaning of paragraph (b)(3) of this section. Accordingly, the amounts paid to B, C, and D are not required to be capitalized under this section. While the amounts produce long term benefits to V in the form of reduced inventory stockpiles, improved product quality, and increased efficiency, these benefits, without more, are not intangibles for which capitalization is required under this section.

Example 6. Defense of business reputation. (i) X, an investment adviser, serves as the fund manager of a money market investment fund. X, like its competitors in the industry, strives to maintain a constant net asset value for its money market fund of $1.00 per share. During 2005, in the course of managing the fund assets, X incorrectly predicts the direction of market interest rates, resulting in significant investment losses to the fund. Due to these significant losses, X is faced with the prospect of reporting a net asset value that is less than $1.00 per share. X is not aware of any investment adviser in its industry that has ever reported a net asset value for its money market fund of less than $1.00 per share. X is concerned that reporting a net asset value of less than $1.00 per share will significantly harm its reputation as an investment adviser, and could lead to litigation by shareholders. X decides to contribute $2,000,000 to the fund in order to raise the net asset value of the fund to $1.00 per share. This contribution is not a loan to the fund and does not give X any ownership interest in the fund.
(ii) The $2,000,000 contribution is not an amount paid to acquire or create an intangible under paragraph (c) or (d) of this section or to facilitate such an acquisition or creation. In addition, the amount does not create a separate and distinct intangible asset within the meaning of paragraph (b)(3) of this section. Accordingly, the amount contributed to the fund is not required to be capitalized under this section. While the amount serves to protect the business reputation of the taxpayer and may protect the taxpayer from litigation by shareholders, these benefits, without more, are not intangibles for which capitalization is required under this section.

Example 7. Product launch costs. (i) R corporation, a manufacturer of pharmaceutical products, is required by law to obtain regulatory approval before selling its products. While awaiting regulatory approval on Product A, R pays to develop and implement a marketing strategy and an advertising campaign to raise consumer awareness of the purported need for Product A. R also pays to train health care professionals and other distributors in the proper use of Product A.
(ii) The amounts paid by R are not amounts paid to acquire or create an intangible under paragraph (c) or (d) of this section or to facilitate such an acquisition or creation. In addition, the amounts do not create a separate and distinct intangible asset within the meaning of paragraph (b)(3) of this section. Accordingly, R is not required to capitalize these amounts under this section. While the amounts may benefit R by creating consumer demand for Product A and increasing awareness of Product A among distributors, these benefits, without more, are not intangibles for which capitalization is required under this section.

Example 8. Stocklifting costs. (i) N corporation is a wholesale distributor of Brand A aftermarket automobile replacement parts. In an effort to induce a retail automobile parts supply store to stock only Brand A parts, N offers to replace all of the store's inventory of other branded parts with Brand A parts, and to credit the store for its cost of other branded parts. The store is under no obligation to continue stocking Brand A parts or to purchase a minimum volume of Brand A parts from N in the future.
(ii) The amount paid by N as a credit to the store for the cost of other branded parts is not an amount paid to acquire or create an intangible under paragraph (c) or (d) of this section or to facilitate such an acquisition or creation. In addition, the amount does not create a separate and distinct intangible asset within the meaning of paragraph (b)(3) of this section. Accordingly, N is not required to capitalize the amount under this section. While the amount may create a hope or expectation by N that the store will continue to stock Brand A parts, this benefit, without more, is not an intangible for which capitalization is required under this section.

(iii) Alternatively, assume that N agrees to credit the store for its cost of other branded parts in exchange for the store's agreement to purchase all of its inventory requirements for such parts from N for a period of at least 3 years. The amount paid by N as a credit to the store for the cost of other branded parts is an amount paid to induce the store to enter into an agreement providing R the right to provide property. Accordingly, R must capitalize its payment.

Example 9. Package design costs. (i) Z corporation manufactures and markets personal care products. Z pays $100,000 to a consultant to develop a package design for Z's newest product, Product A. Z also pays a fee to a government agency to obtain trademark and copyright protection on certain elements of the package design. Z pays its outside legal counsel $10,000 for services rendered in preparing and filing the trademark and copyright applications and for other services rendered in securing the trademark and copyright protection.
(ii) The $100,000 paid by Z to the consultant for development of the package design is not an amount paid to acquire or create an intangible under paragraph (c) or (d) of this section or to facilitate such an acquisition or creation. In addition, as provided in paragraph (b)(3)(v) of this section, amounts paid to develop a package design are treated as amounts that do not create a separate and distinct intangible asset. Accordingly, Z is not required to capitalize the $100,000 payment under this section.

(iii) The amounts paid by Z to the government agency to obtain trademark and copyright protection are amounts paid to a government agency for a right granted by that agency. Accordingly, Z must capitalize the payment. In addition, the $10,000 paid by Z to its outside counsel is an amount paid to facilitate the creation of the trademark and copyright. Because the aggregate amounts paid to facilitate the transaction exceed $5,000, the amounts are not *de minimis* as defined in paragraph (e)(4)(iii)(A) of this section. Accordingly, Z must capitalize the $10,000 payment to its outside counsel under paragraph (b)(1)(v) of this section.

(iv) Alternatively, assume that Z acquires an existing package design for Product A as part of an acquisition of a trade or business that constitutes an applicable asset acquisition within the meaning of section 1060(c). Assume further that $100,000 of the consideration paid by N in the acquisition is properly allocable to the package design for Product A. Under paragraph (c)(1) of this section, Z must capitalize the $100,000 payment.

Example 10. Contract to provide services. (i) Q corporation, a financial planning firm, provides financial advisory services on a fee-only basis. During 2005, Q and several other financial planning firms submit separate bids to R corporation for a contract to become one of three providers of financial advisory services to R's employees. Q pays $2,000 to a printing company to develop and produce materials for its sales presentation to R's management. Q also pays $6,000 to travel to R's corporate headquarters to make the sales presentation, and $20,000 of salaries to its employees for services performed in preparing the bid and making the presentation to R's management. Q's bid is successful and Q enters into an agreement with R in 2005 under which Q agrees to provide financial advisory services to R's employees, and R agrees to pay Q's fee on behalf of each employee who chooses to utilize such services. R enters into similar agreements with two other financial planning firms, and R's employees may choose to use the services of any one of the three firms. Based on its past experience, Q reasonably expects to provide services to at least 5 percent of R's employees.
(ii) Q's agreement with R is not an agreement providing Q the right to provide services, as described in paragraph (d)(6)(i)(B) of this section. Under paragraph (d)(6)(iv) the agreement places no obligation on another person to request or pay for Q's services. Accordingly, Q is not required to capitalize any of the amounts paid in the process of pursuing the agreement with R.

Example 11. Mutual fund distributor. (i) D incurs costs to enter into a distribution agreement with M, a mutual fund. The initial term of the distribution agreement is two years, and afterwards must be approved annually by M. The distribution agreement can be terminated by either party on 60 days notice. Although distribution agreements are rarely terminated in the mutual fund industry, M is not economically compelled to continue D's distribution agreement. Under the distribution agreement, D has the exclusive right to sell shares of M and agrees to use its best efforts to solicit orders for the sale of shares of M. D sells shares in M directly to the general public as well as through brokers. When an investor places an order for M shares with a broker, D pays the broker a commission for selling the shares to the investor. Under the distribution agreement, D receives compensation from M in the form of 12b-1 fees (which equal a percentage of M's net asset value attributable to investors that have held their shares for up to 6 years) and contingent deferred sales charges (which are paid if the investor redeems the purchased shares within 6 years).
(ii) The distribution agreement is not an agreement providing D with the right to provide services, as described in paragraph (d)(6)(i)(B) of this section, because the distribution agreement can be terminated by M at will upon 60 days notice and M is not economically compelled to continue the distribution agreement. Accordingly, D is not required to capitalize the costs of creating (or facilitating the creation of) the distribution agreement under paragraphs (b)(1)(ii) or (v) of this section. In addition, as provided in paragraph (b)(3)(ii) of this section, amounts paid to create an agreement are treated as amounts that do

not create a separate and distinct intangible asset. Accordingly, D also is not required to capitalize the costs of creating (or facilitating the creation of) the distribution agreement under paragraph (b)(1)(iii) or (v) of this section.

(iii) Under paragraph (b)(3)(iii), the broker commissions paid by D in performing services under the distribution agreement do not create (or facilitate the creation of) a separate and distinct intangible asset. In addition, the broker commissions do not create an intangible described in paragraph (d) of this section. Accordingly, D is not required to capitalize the broker commissions under this section.

(m) ***Amortization.*** For rules relating to amortization of certain intangibles, see § 1.167(a)-3.

(n) ***Intangible interests in land.*** [Reserved].

(o) ***Effective date.*** This section applies to amounts paid or incurred on or after December 31, 2003.

(p) ***Accounting method changes*** —

(1) ***In general.*** A taxpayer seeking to change a method of accounting to comply with this section must secure the consent of the Commissioner in accordance with the requirements of § 1.446-1(e). For the taxpayer's first taxable year ending on or after December 31, 2003, the taxpayer is granted the consent of the Commissioner to change its method of accounting to comply with this section, provided the taxpayer follows the administrative procedures issued under § 1.446-1(e)(3)(ii) for obtaining the Commissioner's automatic consent to a change in accounting method (for further guidance, for example, see Rev. Proc. 2002-9 (2002-1 C.B. 327) and § 601.601(d)(2)(ii)(*b*) of this chapter).

(2) ***Scope limitations.*** Any limitations on obtaining the automatic consent of the Commissioner do not apply to a taxpayer seeking to change to a method of accounting to comply with this section for its first taxable year ending on or after December 31, 2003.

(3) ***Section 481(a) adjustment.*** With the exception of a change to a pooling method authorized by this section, the section 481(a) adjustment for a change in method of accounting to comply with this section for a taxpayer's first taxable year ending on or after December 31, 2003 is determined by taking into account only amounts paid or incurred in taxable years ending on or after January 24, 2002. A taxpayer seeking to change to a pooling method authorized by this section on or after the effective date of these regulations must change to the method using a cut-off method.

[T.D. 9107, 69 FR 446, Jan. 5, 2004]

§ 1.263(a)-5 Amounts paid or incurred to facilitate an acquisition of a trade or business, a change in the capital structure of a business entity, and certain other transactions.

(a) ***General rule.*** A taxpayer must capitalize an amount paid to facilitate (within the meaning of paragraph (b) of this section) each of the following transactions, without regard to whether the transaction is comprised of a single step or a series of steps carried out as part of a single plan and without regard to whether gain or loss is recognized in the transaction:

(1) An acquisition of assets that constitute a trade or business (whether the taxpayer is the acquirer in the acquisition or the target of the acquisition).

(2) An acquisition by the taxpayer of an ownership interest in a business entity if, immediately after the acquisition, the taxpayer and the business entity are related within the meaning of section 267(b) or 707(b) (*see* § 1.263(a)-4 for rules requiring capitalization of amounts paid by the taxpayer to acquire an ownership interest in a business entity, or to facilitate the acquisition of an ownership interest in a business entity, where the taxpayer and the business entity are not related within the meaning of section 267(b) or 707(b) immediately after the acquisition).

(3) An acquisition of an ownership interest in the taxpayer (other than an acquisition by the taxpayer of an ownership interest in the taxpayer, whether by redemption or otherwise).

(4) A restructuring, recapitalization, or reorganization of the capital structure of a business entity (including reorganizations described in section 368 and distributions of stock by the taxpayer as described in section 355).

(5) A transfer described in section 351 or section 721 (whether the taxpayer is the transferor or transferee).

(6) A formation or organization of a disregarded entity.

(7) An acquisition of capital.

(8) A stock issuance.

(9) A borrowing. For purposes of this section, a borrowing means any issuance of debt, including an issuance of debt in an acquisition of capital or in a recapitalization. A borrowing also includes debt issued in a debt for debt exchange under § 1.1001-3.

(10) Writing an option.

(b) ***Scope of facilitate*** —

(1) ***In general.*** Except as otherwise provided in this section, an amount is paid to facilitate a transaction described in paragraph (a) of this section if the amount is paid in the process of investigating or otherwise pursuing the transaction. Whether an amount is paid in the process of investigating or otherwise pursuing the transaction is determined based on all of the facts and circumstances. In determining whether an amount is paid to facilitate a transaction, the fact that the amount would (or would not) have been paid but for the transaction is relevant, but is not determinative. An amount paid to determine the value or price of a transaction is an amount paid in the process of investigating or otherwise pursuing the transaction. An amount paid to another party in exchange for tangible or intangible property is not an amount paid to facilitate the exchange. For example, the purchase price paid to the target of an asset acquisition in exchange for its assets is not an amount paid to facilitate the acquisition. Similarly, the purchase price paid by an acquirer to the target's shareholders in exchange for their stock in a stock acquisition is not an amount paid to facilitate the acquisition of the stock. See § 1.263(a)-1, § 1.263(a)-2, and § 1.263(a)-4 for rules requiring capitalization of the purchase price paid to acquire property.

(2) ***Ordering rules.*** An amount paid in the process of investigating or otherwise pursuing both a transaction described in paragraph (a) of this section and an acquisition or creation of an intangible described in § 1.263(a)-4 is subject to the rules contained in this section, and not to the rules contained in § 1.263(a)-4. In addition, an amount required to be capitalized by § 1.263(a)-1, § 1.263(a)-2, or § 1.263(a)-4 does not facilitate a transaction described in paragraph (a) of this section.

(c) *Special rules for certain costs* —

(1) ***Borrowing costs.*** An amount paid to facilitate a borrowing does not facilitate another transaction (other than the borrowing) described in paragraph (a) of this section.

(2) ***Costs of asset sales.*** An amount paid by a taxpayer to facilitate a sale of its assets does not facilitate another transaction (other than the sale) described in paragraph (a) of this section. For example, where a target corporation, in preparation for a merger with an acquiring corporation, sells assets that are not desired by the acquiring corporation, amounts paid to facilitate the sale of the unwanted assets are not required to be capitalized as amounts paid to facilitate the merger.

(3) ***Mandatory stock distributions.*** An amount paid in the process of investigating or otherwise pursuing a distribution of stock by a taxpayer to its shareholders does not facilitate a transaction described in paragraph (a) of this section if the divestiture of the stock (or of properties transferred to an entity whose stock is distributed) is required by law, regulatory mandate, or court order. A taxpayer is not required to capitalize (under this section or § 1.263(a)-4) an amount paid to organize (or facilitate the organization of) an entity if the entity is organized solely to receive properties that the taxpayer is required to divest by law, regulatory mandate, or court order and if the taxpayer distributes the stock of the entity to its shareholders. A taxpayer also is not required to capitalize (under this section or § 1.263(a)-4) an amount paid to transfer property to an entity if the taxpayer is required to divest itself of that property by law, regulatory mandate, or court order and if the stock of the recipient entity is distributed to the taxpayer's shareholders.

(4) ***Bankruptcy reorganization costs.*** An amount paid to institute or administer a proceeding under Chapter 11 of the Bankruptcy Code by a taxpayer that is the debtor under the proceeding constitutes an amount paid to facilitate a reorganization within the meaning of paragraph (a)(4) of this section, regardless of the purpose for which the proceeding is instituted. For example, an amount paid to prepare and file a petition under Chapter 11, to obtain an extension of the exclusivity period under Chapter 11, to formulate plans of reorganization under Chapter 11, to analyze plans of reorganization formulated by another party in interest, or to contest or obtain approval of a plan of reorganization under Chapter 11 facilitates a reorganization within the meaning of this section. However, amounts specifically paid to formulate, analyze, contest or obtain approval of the portion of a plan of reorganization under Chapter 11 that resolves tort liabilities of the taxpayer do not facilitate a reorganization within the meaning of paragraph (a)(4) of this section if the amounts would have been treated as ordinary and necessary business expenses under section 162 had the bankruptcy proceeding not been instituted. In addition, an amount paid by the taxpayer to defend against the commencement of an involuntary bankruptcy proceeding against the taxpayer does not facilitate a reorganization within the meaning of paragraph (a)(4) of this section. An amount paid by the debtor to operate its business during a Chapter 11 bankruptcy proceeding is not an amount paid to institute or administer the bankruptcy proceeding and does not facilitate a reorganization. Such amount is treated in the same manner as it would have been treated had the bankruptcy proceeding not been instituted.

(5) ***Stock issuance costs of open-end regulated investment companies.*** Amounts paid by an open-end regulated investment company (within the meaning of section 851) to facilitate an issuance of its stock are treated as amounts that do not facilitate a transaction described in paragraph (a) of this section unless the amounts are paid during the initial stock offering period.

(6) ***Integration costs.*** An amount paid to integrate the business operations of the taxpayer with the business operations of another does not facilitate a transaction described in paragraph (a) of this section, regardless of when the integration activities occur.

(7) ***Registrar and transfer agent fees for the maintenance of capital stock records.*** An amount paid by a taxpayer to a registrar or transfer agent in connection with the transfer of the taxpayer's capital stock does not facilitate a transaction described in paragraph (a) of this section unless the amount is paid with respect to a specific transaction described in paragraph (a). For example, a taxpayer is not required to capitalize periodic payments to a transfer agent for maintaining records of the names and addresses of shareholders who trade the taxpayer's shares on a national exchange. By comparison, a taxpayer is required to capitalize an amount paid to the transfer agent for distributing proxy statements requesting shareholder approval of a transaction described in paragraph (a) of this section.

(8) ***Termination payments and amounts paid to facilitate mutually exclusive transactions.*** An amount paid to terminate (or facilitate the termination of) an agreement to enter into a transaction described in paragraph (a) of this section constitutes an amount paid to facilitate a second transaction described in paragraph (a) of this section only if the transactions are mutually exclusive. An amount paid to facilitate a transaction described in paragraph (a) of this section is treated as an amount paid to facilitate a second transaction described in paragraph (a) of this section only if the transactions are mutually exclusive.

(d) ***Simplifying conventions*** —

(1) ***In general.*** For purposes of this section, employee compensation (within the meaning of paragraph (d)(2) of this section), overhead, and *de minimis* costs (within the meaning of paragraph (d)(3) of this section) are treated as amounts that do not facilitate a transaction described in paragraph (a) of this section.

(2) ***Employee compensation*** —

(i) ***In general.*** The term *employee compensation* means compensation (including salary, bonuses and commissions) paid to an employee of the taxpayer. For purposes of this section, whether an individual is an employee is determined in accordance with the rules contained in section 3401(c) and the regulations thereunder.

(ii) ***Certain amounts treated as employee compensation.*** For purposes of this section, a guaranteed payment to a partner in a partnership is treated as employee compensation. For purposes of this section, annual compensation paid to a director of a corporation is treated as employee compensation. For example, an amount paid to a director of a corporation for attendance at a regular meeting of the board of directors (or committee thereof) is treated as employee compensation for purposes of this section. However, an amount paid to the director for attendance at a special meeting of the board of directors (or committee thereof) is not treated as employee compensation. An amount paid to a person that is not an employee of the taxpayer (including the employer of the individual who performs the services) is treated as employee compensation for purposes of this section only if the amount is paid for secretarial, clerical, or similar administrative support services (other than services involving the preparation and distribution of proxy solicitations and other documents seeking shareholder approval of a transaction described in paragraph (a) of this section). In the case of an affiliated group of corporations filing a consolidated federal income tax return, a payment by one member of the group to a second member of the group for services performed by an employee of the second member is treated as employee compensation if the services provided by the employee are provided at a time during which both members are affiliated.

(3) ***De minimis costs*** —

(i) ***In general.*** The term *de minimis costs* means amounts (other than employee compensation and overhead) paid in the process of investigating or otherwise pursuing a transaction described in paragraph (a) of this section if, in the aggregate, the amounts do not exceed $5,000 (or such greater amount as may be set forth in published guidance). If the amounts exceed $5,000 (or such greater amount as may be set forth in published guidance), none of the amounts are *de minimis costs* within the meaning of this paragraph (d)(3). For purposes of this paragraph (d)(3), an amount paid in the form of property is valued at its fair market value at the time of the payment.

(ii) ***Treatment of commissions.*** The term *de minimis costs* does not include commissions paid to facilitate a transaction described in paragraph (a) of this section.

(4) ***Election to capitalize.*** A taxpayer may elect to treat employee compensation, overhead, or *de minimis costs* paid in the process of investigating or otherwise pursuing a transaction described in paragraph (a) of this section as amounts that facilitate the transaction. The election is made separately for each transaction and applies to employee compensation, overhead, or *de minimis costs,* or to any combination thereof. For example, a taxpayer may elect to treat overhead and *de minimis costs,* but not employee compensation, as amounts that facilitate the transaction. A taxpayer makes the election by treating the amounts to which the election applies as amounts that facilitate the transaction in the taxpayer's timely filed original federal income tax return (including extensions) for the taxable year during which the amounts are paid. In the case of an affiliated group of corporations filing a consolidated return, the election is made separately with respect to each member of the group, and not with respect to the group as a whole. In the case of an S corporation or partnership, the election is made by the S corporation or by the partnership, and not by the shareholders or partners. An election made under this paragraph (d)(4) is revocable with respect to each taxable year for which made only with the consent of the Commissioner.

(e) ***Certain acquisitive transactions*** —

(1) ***In general.*** Except as provided in paragraph (e)(2) of this section (relating to inherently facilitative amounts), an amount paid by the taxpayer in the process of investigating or otherwise pursuing a covered transaction (as described in paragraph (e)(3) of this section) facilitates the transaction within the meaning of this section only if the amount relates to activities performed on or after the earlier of—

(i) The date on which a letter of intent, exclusivity agreement, or similar written communication (other than a confidentiality agreement) is executed by representatives of the acquirer and the target; or

(ii) The date on which the material terms of the transaction (as tentatively agreed to by representatives of the acquirer and the target) are authorized or approved by the taxpayer's board of directors (or committee of the board of directors) or, in the case of a taxpayer that is not a corporation, the date on which the material terms of the transaction (as tentatively agreed to by representatives of the acquirer and the target) are authorized or approved by the appropriate governing officials of the taxpayer. In the case of a transaction that does not require authorization or approval of the taxpayer's board of directors (or appropriate governing officials in the case of a taxpayer that is not a corporation) the date determined under this paragraph (e)(1)(ii) is the date on which the acquirer and the target execute a binding written contract reflecting the terms of the transaction.

(2) ***Exception for inherently facilitative amounts.*** An amount paid in the process of investigating or otherwise pursuing a covered transaction facilitates that transaction if the amount is inherently facilitative, regardless of whether the amount is paid for activities performed prior to the date determined under paragraph (e)(1) of this section. An amount is inherently facilitative if the amount is paid for—

(i) Securing an appraisal, formal written evaluation, or fairness opinion related to the transaction;

(ii) Structuring the transaction, including negotiating the structure of the transaction and obtaining tax advice on the structure of the transaction (for example, obtaining tax advice on the application of section 368);

(iii) Preparing and reviewing the documents that effectuate the transaction (for example, a merger agreement or purchase agreement);

(iv) Obtaining regulatory approval of the transaction, including preparing and reviewing regulatory filings;

(v) Obtaining shareholder approval of the transaction (for example, proxy costs, solicitation costs, and costs to promote the transaction to shareholders); or

(vi) Conveying property between the parties to the transaction (for example, transfer taxes and title registration costs).

(3) ***Covered transactions.*** For purposes of this paragraph (e), the term *covered transaction* means the following transactions:

(i) A taxable acquisition by the taxpayer of assets that constitute a trade or business.

(ii) A taxable acquisition of an ownership interest in a business entity (whether the taxpayer is the acquirer in the acquisition or the target of the acquisition) if, immediately after the acquisition, the acquirer and the target are related within the meaning of section 267(b) or 707(b).

(iii) A reorganization described in section 368(a)(1)(A), (B), or (C) or a reorganization described in section 368(a)(1)(D) in which stock or securities of the corporation to which the assets are transferred are distributed in a transaction which qualifies under section 354 or 356 (whether the taxpayer is the acquirer or the target in the reorganization).

(f) ***Documentation of success-based fees*** —An amount paid that is contingent on the successful closing of a transaction described in paragraph (a) of this section is an amount paid to facilitate the transaction except to the extent the taxpayer maintains sufficient documentation to establish that a portion of the fee is allocable to activities that do not facilitate the transaction. This documentation must be completed on or before the due date of the taxpayer's timely filed original federal income tax return (including extensions) for the taxable year during which the transaction closes. For purposes of this paragraph (f), documentation must consist of more than merely an allocation between activities that facilitate the transaction and activities that do not facilitate the transaction, and must consist of supporting records (for example, time records, itemized invoices, or other records) that identify—

(1) The various activities performed by the service provider;

(2) The amount of the fee (or percentage of time) that is allocable to each of the various activities performed;

(3) Where the date the activity was performed is relevant to understanding whether the activity facilitated the transaction, the amount of the fee (or percentage of time) that is allocable to the performance of that activity before and after the relevant date; and

(4) The name, business address, and business telephone number of the service provider.

(g) ***Treatment of capitalized costs*** —

(1) ***Tax-free acquisitive transactions.*** [Reserved]

(2) ***Taxable acquisitive transactions*** —

(i) ***Acquirer.*** In the case of an acquisition, merger, or consolidation that is not described in section 368, an amount required to be capitalized under this section by the acquirer is added to the basis of the acquired assets (in the case of a transaction that is treated as an acquisition of the assets of the target for federal income tax purposes) or the acquired stock (in the case of a transaction that is treated as an acquisition of the stock of the target for federal income tax purposes).

(ii) ***Target*** —

(A) ***Asset acquisition.*** In the case of an acquisition, merger, or consolidation that is not described in section 368 and that is treated as an acquisition of the assets of the target for federal income tax purposes, an amount required to be capitalized under this section by the target is treated as a reduction of the target's amount realized on the disposition of its assets.

(B) ***Stock acquisition.*** [Reserved]

(3) ***Stock issuance transactions.*** [Reserved]

(4) ***Borrowings.*** For the treatment of amounts required to be capitalized under this section with respect to a borrowing, see § 1.446-5.

(5) ***Treatment of capitalized amounts by option writer.*** An amount required to be capitalized by an option writer under paragraph (a)(10) of this section is not currently deductible under section 162 or 212. Instead, the amount required to be capitalized generally reduces the total premium received by the option writer. However, other provisions of law may limit the reduction of the premium by the capitalized amount (for example, if the capitalized amount is never deductible by the option writer).

(h) ***Application to accrual method taxpayers.*** For purposes of this section, the terms *amount paid* and *payment* mean, in the case of a taxpayer using an accrual method of accounting, a liability incurred (within the meaning of § 1.446-1(c)(1)(ii)). A liability may not be taken into account under this section prior to the taxable year during which the liability is incurred.

(i) [Reserved]

(j) ***Coordination with other provisions of the Internal Revenue Code.*** Nothing in this section changes the treatment of an amount that is specifically provided for under any other provision of the Internal Revenue Code (other than section 162(a) or 212) or regulations thereunder.

(k) ***Treatment of indirect payments.*** For purposes of this section, references to an amount paid to or by a party include an amount paid on behalf of that party.

(l) ***Examples.*** The following examples illustrate the rules of this section:

Example 1. Costs to facilitate. Q corporation pays its outside counsel $20,000 to assist Q in registering its stock with the Securities and Exchange Commission. Q is not a regulated investment company within the meaning of section 851. Q's payments to its outside counsel are amounts paid to facilitate the issuance of stock. Accordingly, Q must capitalize its $20,000 payment under paragraph (a)(8) of this section (whether incurred before or after the issuance of the stock and whether or not the registration is productive of equity capital).

Example 2. Costs to facilitate. Q corporation seeks to acquire all of the outstanding stock of Y corporation. To finance the acquisition, Q must issue new debt. Q pays an investment banker $25,000 to market the debt to the public and pays its outside counsel $10,000 to prepare the offering documents for the debt. Q's payment of $35,000 facilitates a borrowing and must be capitalized under paragraph (a)(9) of this section. As provided in paragraph (c)(1) of this section, Q's payment does not facilitate the acquisition of Y, notwithstanding the fact that Q incurred the new debt to finance its acquisition of Y. See § 1.446-5 for the treatment of Q's capitalized payment.

Example 3. Costs to facilitate. (i) Z agrees to pay investment banker B $1,000,000 for B's services in evaluating four alternative transactions ($250,000 for each alternative): An initial public offering; a borrowing of funds; an acquisition by Z of a competitor; and an acquisition of Z by a competitor. Z eventually decides to pursue a borrowing and abandons the other options.

(ii) The $250,000 payment to evaluate the possibility of a borrowing is an amount paid in the process of investigating or otherwise pursuing a transaction described in paragraph (a)(9) of this section. Accordingly Z must capitalize that $250,000 payment to B. See § 1.446-5 for the treatment of Z's capitalized payment.

(iii) The $250,000 payment to evaluate the possibility of an initial public offering is an amount paid in the process of investigating or otherwise pursuing a transaction described in paragraph (a)(8) of this section. Accordingly, Z must capitalize that $250,000 payment to B under this section. Because the borrowing and the initial public offering are not mutually exclusive transactions, the $250,000 is not treated as an amount paid to facilitate the borrowing. When Z abandons the initial public offering, Z may recover under section 165 the $250,000 paid to facilitate the initial public offering.

(iv) The $500,000 paid by Z to evaluate the possibilities of an acquisition of Z by a competitor and an acquisition of a competitor by Z are amounts paid in the process of investigating or otherwise pursuing transactions described in paragraphs (a) and (e)(3) of this section. Accordingly, Z is only required to capitalize under this section the portion of the $500,000 payment that relates to inherently facilitative activities under paragraph (e)(2) of this section or to activities performed on or after the date determined under paragraph (e)(1) of this section. Because the borrowing and the possible acquisitions are not mutually exclusive transactions, no portion of the $500,000 is treated as an amount paid to facilitate the borrowing. When Z abandons the acquisition transactions, Z may recover under section 165 any portion of the $500,000 that was paid to facilitate the acquisitions.

Example 4. Corporate acquisition. (i) On February 1, 2005, R corporation decides to investigate the acquisition of three potential targets: T corporation, U corporation, and V corporation. R's consideration of T, U, and V represents the consideration of three distinct transactions, any or all of which R might consummate and has the financial ability to consummate. On March 1, 2005, R enters into an exclusivity agreement with T and stops pursuing U and V. On July 1, 2005, R acquires all of the stock of T in a transaction described in section 368. R pays $1,000,000 to an investment banker and $50,000 to its outside counsel to conduct due diligence on T, U, and V; determine the value of T, U, and V; negotiate and structure the transaction with T; draft the merger agreement; secure shareholder approval; prepare SEC filings; and obtain the necessary regulatory approvals.
(ii) Under paragraph (e)(1) of this section, the amounts paid to conduct due diligence on T, U and V prior to March 1, 2005 (the date of the exclusivity agreement) are not amounts paid to facilitate the acquisition of the stock of T, U or V and are not required to be capitalized under this section. However, the amounts paid to conduct due diligence on T on and after March 1, 2005, are amounts paid to facilitate the acquisition of the stock of T and must be capitalized under paragraph (a)(2) of this section.

(iii) Under paragraph (e)(2) of this section, the amounts paid to determine the value of T, negotiate and structure the transaction with T, draft the merger agreement, secure shareholder approval, prepare SEC filings, and obtain necessary regulatory approvals are inherently facilitative amounts paid to facilitate the acquisition of the stock of T and must be capitalized, regardless of whether those activities occur prior to, on, or after March 1, 2005.

(iv) Under paragraph (e)(2) of this section, the amounts paid to determine the value of U and V are inherently facilitative amounts paid to facilitate the acquisition of U or V and must be capitalized. Because the acquisition of U, V, and T are not mutually exclusive transactions, the costs that facilitate the acquisition of U and V do not facilitate the acquisition of T. Accordingly, the amounts paid to determine the value of U and V may be recovered under section 165 in the taxable year that R abandons the planned mergers with U and V.

Example 5. Corporate acquisition; employee bonus. Assume the same facts as in *Example 4,* except R pays a bonus of $10,000 to one of its corporate officers who negotiated the acquisition of T. As provided by paragraph (d)(1) of this section, Y is not required to capitalize any portion of the bonus paid to the corporate officer.

Example 6. Corporate acquisition; integration costs. Assume the same facts as in *Example 4,* except that, before and after the acquisition is consummated, R incurs costs to relocate personnel and equipment, provide severance benefits to terminated employees, integrate records and information systems, prepare new financial statements for the combined entity, and reduce redundancies in the combined business operations. Under paragraph (c)(6) of this section, these costs do not facilitate the acquisition of T. Accordingly, R is not required to capitalize any of these costs under this section.

Example 7. Corporate acquisition; compensation to target's employees. Assume the same facts as in *Example 4,* except that, prior to the acquisition, certain employees of T held unexercised options issued pursuant to T's stock option plan. These options granted the employees the right to purchase T stock at a fixed option price. The options did not have a readily ascertainable value (within the meaning of § 1.83-7(b)), and thus no amount was included in the employees' income when the options were granted. As a condition of the acquisition, T is required to terminate its stock option plan. T therefore agrees to pay its employees who hold unexercised stock options the difference between the option price and the current value of T's stock in consideration of their agreement to cancel their unexercised options. Under paragraph (d)(1) of this section, T is not required to capitalize the amounts paid to its employees. See section 83 for the treatment of amounts received in cancellation of stock options.

Example 8. Asset acquisition; employee compensation. N corporation owns tangible and intangible assets that constitute a trade or business. M corporation purchases all the assets of N in a taxable transaction. Under paragraph (a)(1) of this section, M must capitalize amounts paid to facilitate the acquisition of the assets of N. Under paragraph (d)(1) of this section, no portion of the salaries of M's employees who work on the acquisition are treated as facilitating the transaction.

Example 9. Corporate acquisition; retainer. Y corporation's outside counsel charges Y $60,000 for services rendered in facilitating the friendly acquisition of the stock of Y corporation by X corporation. Y has an agreement with its outside counsel under which Y pays an annual retainer of $50,000. Y's outside counsel has the right to offset amounts billed for any legal services rendered against the annual retainer. Pursuant to this agreement, Y's outside counsel offsets $50,000 of the legal fees from the acquisition against the retainer and bills Y for the balance of $10,000. The $60,000 legal fee is an amount paid to facilitate the acquisition of an ownership interest in Y as described in paragraph (a)(3) of this section. Y must capitalize the full amount of the $60,000 legal fee.

Example 10. Corporate acquisition; antitrust defense costs. On March 1, 2005, V corporation enters into an agreement with X corporation to acquire all of the outstanding stock of X. On April 1, 2005, federal and state regulators file suit against V to prevent the acquisition of X on the ground that the acquisition violates antitrust laws. V enters into a consent agreement with regulators on May 1, 2005, that allows the acquisition to proceed, but requires V to hold separate the business operations of X pending the outcome of the antitrust suit and subjects V to possible divestiture. V acquires title to all of the outstanding stock of X on June 1, 2005. After June 1, 2005, the regulators pursue antitrust litigation against V seeking rescission of the acquisition. V pays $50,000 to its outside counsel for services rendered after June 1, 2005, to defend against the antitrust litigation. V ultimately prevails in the antitrust litigation. V's costs to defend the antitrust litigation are costs to facilitate its acquisition of the stock of X under paragraph (a)(2) of this section and must be capitalized. Although title to the shares of X passed to V prior to the date V incurred costs to defend the antitrust litigation, the amounts paid by V are paid in the process of pursuing the acquisition of the stock of X because the acquisition was not complete until the antitrust litigation was ultimately resolved. V must capitalize the $50,000 in legal fees.

Example 11. Corporate acquisition; defensive measures. (i) On January 15, 2005, Y corporation, a publicly traded corporation, becomes the target of a hostile takeover attempt by Z corporation. In an effort to defend against the takeover, Y pays legal fees to seek an injunction against the takeover and investment banking fees to locate a potential "white knight" acquirer. Y also pays amounts to complete a defensive recapitalization, and pays

$50,000 to an investment banker for a fairness opinion regarding Z's initial offer. Y's efforts to enjoin the takeover and locate a white knight acquirer are unsuccessful, and on March 15, 2005, Y's board of directors decides to abandon its defense against the takeover and negotiate with Z in an effort to obtain the highest possible price for its shareholders. After Y abandons its defense against the takeover, Y pays an investment banker $1,000,000 for a second fairness opinion and for services rendered in negotiating with Z.
(ii) The legal fees paid by Y to seek an injunction against the takeover are not amounts paid in the process of investigating or otherwise pursuing the transaction with Z. Accordingly, these legal fees are not required to be capitalized under this section.

(iii) The investment banking fees paid to search for a white knight acquirer do not facilitate an acquisition of Y by a white knight because none of Y's costs with respect to a white knight were inherently facilitative amounts and because Y did not reach the date described in paragraph (e)(1) of this section with respect to a white knight. Accordingly, these amounts are not required to be capitalized under this section.

(iv) The amounts paid by Y to investigate and complete the recapitalization must be capitalized under paragraph (a)(4) of this section.

(v) The $50,000 paid to the investment bankers for a fairness opinion during Y's defense against the takeover and the $1,000,000 paid to the investment bankers after Y abandons its defense against the takeover are inherently facilitative amounts with respect to the transaction with Z and must be capitalized under paragraph (a)(3) of this section.

Example 12. Corporate acquisition; acquisition by white knight. (i) Assume the same facts as in *Example 11,* except that Y's investment bankers identify three potential white knight acquirers: U corporation, V corporation, and W corporation. Y pays its investment bankers to conduct due diligence on the three potential white knight acquirers. On March 15, 2005, Y's board of directors approves a tentative acquisition agreement under which W agrees to acquire all of the stock of Y, and the investment bankers stop due diligence on U and V. On June 15, 2005, W acquires all of the stock of Y.
(ii) Under paragraph (e)(1) of this section, the amounts paid to conduct due diligence on U, V, and W prior to March 15, 2005 (the date of board of directors' approval) are not amounts paid to facilitate the acquisition of the stock of Y and are not required to be capitalized under this section. However, the amounts paid to conduct due diligence on W on and after March 15, 2005, facilitate the acquisition of the stock of Y and are required to be capitalized.

Example 13. Corporate acquisition; mutually exclusive costs. (i) Assume the same facts as in *Example 11,* except that Y's investment banker finds W, a white knight. Y and W execute a letter of intent on March 10, 2005. Under the terms of the letter of intent, Y must pay W a $10,000,000 break-up fee if the merger with W does not occur. On April 1, 2005, Z significantly

increases the amount of its offer, and Y decides to accept Z's offer instead of merging with W. Y pays its investment banker $500,000 for inherently facilitative costs with respect to the potential merger with W. Y also pays its investment banker $2,000,000 for due diligence costs with respect to the potential merger with W, $1,000,000 of which relates to services performed on or after March 10, 2005.
(ii) Y's $500,000 payment for inherently facilitative costs and Y's $1,000,000 payment for due diligence activities performed on or after March 10, 2005 (the date the letter of intent with W is entered into) facilitate the potential merger with W. Because Y could not merge with both W and Z, under paragraph (c)(8) of this section the $500,000 and $1,000,000 payments also facilitate the transaction between Y and Z. Accordingly, Y must capitalize the $500,000 and $1,000,000 payments as amounts that facilitate the transaction with Z.

(iii) Similarly, because Y could not merge with both W and Z, under paragraph (c)(8) of this section the $10,000,000 termination payment facilitates the transaction between Y and Z. Accordingly, Y must capitalize the $10,000,000 termination payment as an amount that facilitates the transaction with Z.

Example 14. Break-up fee; transactions not mutually exclusive. N corporation and U corporation enter into an agreement under which U would acquire all the stock or all the assets of N in exchange for U stock. Under the terms of the agreement, if either party terminates the agreement, the terminating party must pay the other party $10,000,000. U decides to terminate the agreement and pays N $10,000,000. Shortly thereafter, U acquires all the stock of V corporation, a competitor of N. U had the financial resources to have acquired both N and V. U's $10,000,000 payment does not facilitate U's acquisition of V. Accordingly, U is not required to capitalize the $10,000,000 payment under this section.

Example 15. Corporate reorganization; initial public offering. Y corporation is a closely held corporation. Y's board of directors authorizes an initial public offering of Y's stock to fund future growth. Y pays $5,000,000 in professional fees for investment banking services related to the determination of the offering price and legal services related to the development of the offering prospectus and the registration and issuance of stock. The investment banking and legal services are performed both before and after board authorization. Under paragraph (a)(8) of this section, the $5,000,000 is an amount paid to facilitate a stock issuance.

Example 16. Auction. (i) N corporation seeks to dispose of all of the stock of its wholly owned subsidiary, P corporation, through an auction process and requests that each bidder submit a non-binding purchase offer in the form of a draft agreement. Q corporation hires an investment banker to assist in the preparation of Q's bid to acquire P and to conduct a due diligence investigation of P. On July 1, 2005, Q submits its draft agreement. On August 1, 2005, N informs Q that it has accepted Q's offer, and presents Q with a signed letter of intent to sell all of the stock of P to Q. On August 5, 2005, Q's board of directors approves the terms of the transaction and authorizes Q to execute the letter of intent. Q executes a binding letter of intent with N on August 6, 2005.

(ii) Under paragraph (e)(1) of this section, the amounts paid by Q to its investment banker that are not inherently facilitative and that are paid for activities performed prior to August 5, 2005 (the date Q's board of directors approves the transaction) are not amounts paid to facilitate the acquisition of P. Amounts paid by Q to its investment banker for activities performed on or after August 5, 2005, and amounts paid by Q to its investment banker that are inherently facilitative amounts within the meaning of paragraph (e)(2) of this section are required to be capitalized under this section.

Example 17. Stock distribution. Z corporation distributes natural gas throughout state Y. The federal government brings an antitrust action against Z seeking divestiture of certain of Z's natural gas distribution assets. As a result of a court ordered divestiture, Z and the federal government agree to a plan of divestiture that requires Z to organize a subsidiary to receive the divested assets and to distribute the stock of the subsidiary to its shareholders. During 2005, Z pays $300,000 to various independent contractors for the following services: studying customer demand in the area to be served by the divested assets, identifying assets to be transferred to the subsidiary, organizing the subsidiary, structuring the transfer of assets to the subsidiary to qualify as a tax-free transaction to Z, and distributing the stock of the subsidiary to the stockholders. Under paragraph (c)(3) of this section, Z is not required to capitalize any portion of the $300,000 payments.

Example 18. Bankruptcy reorganization. (i) X corporation is the defendant in numerous lawsuits alleging tort liability based on X's role in manufacturing certain defective products. X files a petition for reorganization under Chapter 11 of the Bankruptcy Code in an effort to manage all of the lawsuits in a single proceeding. X pays its outside counsel to prepare the petition and plan of reorganization, to analyze adequate protection under the plan, to attend hearings before the Bankruptcy Court concerning the plan, and to defend against motions by creditors and tort claimants to strike the taxpayer's plan.
(ii) X's reorganization under Chapter 11 of the Bankruptcy Code is a reorganization within the meaning of paragraph (a)(4) of this section. Under paragraph (c)(4) of this section, amounts paid by X to its outside counsel to prepare, analyze or obtain approval of the portion of X's plan of reorganization that resolves X's tort liability do not facilitate the reorganization and are not required to be capitalized, provided that such amounts would have been treated as ordinary and necessary business expenses under section 162 had the bankruptcy proceeding not been instituted. All other amounts paid by X to its outside counsel for the services described above (including all amounts paid to prepare the bankruptcy petition) facilitate the reorganization and must be capitalized.

(m) ***Effective date.*** This section applies to amounts paid or incurred on or after December 31, 2003.

(n) ***Accounting method changes*** —

(1) ***In general.*** A taxpayer seeking to change a method of accounting to comply with this section must secure the consent of the Commissioner in accordance with the requirements of § 1.446-1(e). For the taxpayer's first taxable year ending on or after December 31, 2003, the taxpayer is granted the consent of the Commissioner to change its method of accounting to comply with this section,

provided the taxpayer follows the administrative procedures issued under § 1.446-1(e)(3)(ii) for obtaining the Commissioner's automatic consent to a change in accounting method (for further guidance, for example, see Rev. Proc. 2002-9 (2002-1 C.B. 327) and § 601.601(d)(2)(ii)(*b*) of this chapter).

(2) ***Scope limitations.*** Any limitations on obtaining the automatic consent of the Commissioner do not apply to a taxpayer seeking to change to a method of accounting to comply with this section for its first taxable year ending on or after December 31, 2003.

(3) ***Section 481(a) adjustment.*** The section 481(a) adjustment for a change in method of accounting to comply with this section for a taxpayer's first taxable year ending on or after December 31, 2003 is determined by taking into account only amounts paid or incurred in taxable years ending on or after January 24, 2002.

[T.D. 9107, 69 FR 446, Jan. 5, 2004]

§ 1.263(a)-6 Election to deduct or capitalize certain expenditures.

(a) ***In general.*** Under certain provisions of the Internal Revenue Code (Code), taxpayers may elect to treat capital expenditures as deductible expenses or as deferred expenses, or to treat deductible expenses as capital expenditures.

(b) ***Election provisions.*** The sections referred to in paragraph (a) of this section include:

(1) Section 173 (circulation expenditures);

(2) Section 174 (research and experimental expenditures);

(3) Section 175 (soil and water conservation expenditures; endangered species recovery expenditures);

(4) Section 179 (election to expense certain depreciable business assets);

(5) Section 179A (deduction for clean-fuel vehicles and certain refueling property);

(6) Section 179B (deduction for capital costs incurred in complying with environmental protection agency sulfur regulations);

(7) Section 179C (election to expense certain refineries);

(8) Section 179D (energy efficient commercial buildings deduction);

(9) Section 179E (election to expense advanced mine safety equipment);

(10) Section 180 (expenditures by farmers for fertilizer);

(11) Section 181 (treatment of certain qualified film and television productions);

(12) Section 190 (expenditures to remove architectural and transportation barriers to the handicapped and elderly);

(13) Section 193 (tertiary injectants);

(14) Section 194 (treatment of reforestation expenditures);

(15) Section 195 (start-up expenditures);

(16) Section 198 (expensing of environmental remediation costs);

(17) Section 198A (expensing of qualified disaster expenses);

(18) Section 248 (organization expenditures of a corporation);

(19) Section 266 (carrying charges);

(20) Section 616 (development expenditures); and

(21) Section 709 (organization and syndication fees of a partnership).

(c) *Effective/applicability date* —

(1) ***In general.*** This section applies to taxable years beginning on or after January 1, 2014. Except as provided in paragraphs (c)(2) and (c)(3) of this section, § 1.263(a)-3 as contained in 26 CFR part 1 edition revised as of April 1, 2011, applies to taxable years beginning before January 1, 2014. For the effective dates of the enumerated election provisions, see those Code sections and the regulations under those sections.

(2) ***Early application of this section.*** A taxpayer may choose to apply this section to taxable years beginning on or after January 1, 2012.

(3) ***Optional application of TD 9564.*** A taxpayer may choose to apply § 1.263(a)-6T as contained in TD 9564 (76 FR 81060) December 27, 2011, to taxable years beginning on or after January 1, 2012, and before January 1, 2014.

[T.D. 9636, 78 FR 57745, Sept. 19, 2013]

§ 1.263(b)-1 Expenditures for advertising or promotion of good will.

See § 1.162-14 for the rules applicable to a corporation which has elected to capitalize expenditures for advertising or the promotion of good will under the provisions of section 733 or section 451 of the Internal Revenue Code of 1939, in computing its excess profits tax credit under Subchapter E, Chapter 2, or Subchapter D, Chapter 1, of the Internal Revenue Code of 1939.

§ 1.263(c)-1 Intangible drilling and development costs in the case of oil and gas wells.

For rules relating to the option to deduct as expenses intangible drilling and development costs in the case of oil and gas wells, see § 1.612-4.

§ 1.263(e)-1 Expenditures in connection with certain railroad rolling stock.

(a) *Allowance of deduction* —

(1) ***Election.*** Under section 263(e), for any taxable year beginning after December 31, 1969, a taxpayer may elect to treat certain expenditures paid or incurred during such taxable year as deductible repairs under section 162 or 212. This election applies only to expenditures described in paragraph (c) of this section in connection with the rehabilitation of a unit of railroad rolling stock (as defined in paragraph (b)(2) of this section) used by a domestic common carrier by railroad (as defined in paragraph (b) (3) and (4) of this section). However, an election under section 263(e) may not be made with respect to expenditures in connection with any unit of railroad rolling stock for which an election under section 263(f) and the regulations thereunder is in effect. An election made under section 263(e) is an annual election which may be made with respect to one or more of the units of railroad rolling stock owned by the taxpayer.

(2) ***Special 20 percent rule.*** Section 263(e) shall not apply if, under paragraph (d) of this section, expenditures paid or incurred during any period of 12 calendar months in connection with the rehabilitation of a unit exceed 20 percent of the basis (as defined in paragraph (b)(1) of this section) of such unit in the hands of the taxpayer. However, section 263(e) does not constitute a limit on the deduction of expenditures for repairs which are deductible without regard to such section. Accordingly, amounts otherwise deductible as repairs will continue to be deductible even though such amounts exceed 20 percent of the basis of the unit of railroad rolling stock in the hands of the taxpayer.

(3) ***Time and manner of making election.***

(i) An election by a taxpayer under section 263(e) shall be made by a statement to that effect attached to its income tax return or amended income tax return for the taxable year for which the election is made if such return or amended return is filed no later than the time prescribed by law (including extensions thereof) for filing the return for the taxable year of election. An election under section 263(e) may be made with respect to one or more of the units of railroad rolling stock owned by the taxpayer. If an election is not made within the time and in the manner prescribed in this subparagraph, no election may be made (by the filing of an amended return or in any other manner) with respect to the taxable year.

(ii) If the taxpayer has filed a return on or before March 14, 1973, and has claimed a deduction under section 162 or 212 by reason of section 263(e), and if the taxpayer does not desire to make an election under section 263(e) for the taxable year with respect to which such return was filed, the taxpayer shall file an amended return for such taxable year on or before May 14, 1973, and shall pay any additional tax due for such year. The taxpayer shall also file an amended return for each taxable year which is affected by the filing of an amended return under the preceding sentence and shall pay any additional tax due for such year. Nothing in this subdivision shall be construed as extending the time specified in section 6511 within which a claim for credit or refund may be filed.

(iii) If an election under section 263(e) was not made at the time the return for a taxable year was filed, and it is subsequently determined that an expenditure was erroneously treated as an expenditure which was not in connection with rehabilitation (as determined under paragraph (c) of this section), an election under section 263(e) may be made with respect to the unit of railroad rolling stock for which such expenditure was made for such taxable year, notwithstanding any provision in this subparagraph (3) to the contrary. Nothing in this subdivision shall be construed as extending the time specified in section 6511 within which a claim for credit or refund may be filed.

(iv) The statement required by subdivision (i) of this subparagraph shall include the following information:

(*a*) The total number of units of railroad rolling stock with respect to which an election is being made under section 263(e).

(*b*) The aggregate basis (as defined in paragraph (b) (1) of this section) of the units described in (a) of this subdivision (iv), and

(*c*) The total deduction being claimed under section 263(e) for the taxable year.

(b) ***Definitions —***

(1) *Basis.*

(i) In general, for purposes of section 263(e) the basis of a unit of railroad rolling stock shall be the adjusted basis of such unit determined without regard to the adjustments provided in paragraphs (1), (2), and (3) of section 1016(a) and section 1017. Thus, the basis of property would generally be its cost without regard to adjustments to basis such as for depreciation or for capital improvements. If the basis of a unit in the hands of a transferee is determined in whole or in part by reference to its basis in the hands of the transferor, for example, by reason of the application of section 362 (relating to basis to corporations), 374 (relating to gain or loss not recognized in certain railroad reorganizations), or 723 (relating to the basis of property contributed to a partnership), then the basis of such unit in the hands of the transferor for purposes of section 263(e) shall be its basis for purposes of section 263(e) in the hands of the transferee. Similarly, when the basis of a unit of railroad rolling stock in the hands of the taxpayer is determined in whole or in part by reference to the basis of another unit, for example, by reason of the application of the first sentence of section 1033(c) (relating to involuntary conversions), then the basis of the latter unit for purposes of section 263(e) shall be the basis for purposes of section 263(e) of the former unit. The question whether a capital expenditure in connection with a unit of railroad rolling stock results in the retirement of such unit and the creation of another unit of railroad rolling stock shall be determined without regard to rules under the uniform system of accounts prescribed by the Interstate Commerce Commission.

(ii) For example, if a unit of railroad rolling stock has a cost to M of $10,000 and because of depreciation adjustments of $4,000 and capital expenditures of $3,000, such unit has an adjusted basis in the hands of M of $9,000, the basis for purposes of section 263(e) of such unit in the hands of M is $10,000. Further, if M transfers such unit to N in a transaction in which no gain or loss is recognized such as, for example, a transaction to which section 351(a) (relating to a transfer to a corporation controlled by the transferor) applies, the basis of such unit for purposes of section 263(e) is $10,000 in the hands of N.

(2) ***Railroad rolling stock.*** For purposes of this section, the term *unit* or *unit of railroad rolling stock* means a unit of transportation equipment the expenditures for which are of a type chargeable (or in the case of property leased to a domestic common carrier by railroad, would be chargeable) to the equipment investment accounts in the uniform system of accounts for railroad companies prescribed by the Interstate Commerce Commission (49 CFR Part 1201), but only if

(i) such unit exclusively moves on, moves under, or is guided by rail, and

(ii) such unit is not a locomotive. Thus, for example, a unit of railroad rolling stock includes a box car, a gondola car, a passenger car, a car designed to carry truck trailers and containerized freight, a wreck crane, and a bunk car. However, such term does not include equipment which does not exclusively move on, move under, or is not exclusively guided by rail such as, for example, a barge, a tugboat, a container which is used on cars designed to carry containerized freight, a truck trailer, or an automobile. A locomotive is self-propelled equipment, the sole function of which is to push or pull railroad rolling stock. Thus, a self-propelled passenger or freight car is not a locomotive.

(3) ***Domestic common carrier by railroad.*** The term *domestic common carrier by railroad* means a railroad subject to regulation under Part I of the Interstate Commerce Act (49 U.S.C. 1 *et seq.*) or a railroad which would be subject to regulation under Part I of the Interstate Commerce Act if it were engaged in interstate commerce.

(4) ***Use.*** For purposes of this section, a unit of railroad rolling stock is not used by a domestic common carrier by railroad if it is owned by a person other than a domestic common carrier by railroad and

(i) is exclusively used for transportation by the owner or

(ii) is exclusively used for transportation by another person which is not a domestic common carrier by railroad. Thus, for example, a unit of railroad rolling stock which is owned by a person which is not a domestic common carrier by railroad and is leased to a manufacturing company by the owner is not a unit of railroad rolling stock used by a domestic common carrier by railroad.

(c) ***Expenditures considered in connection with rehabilitation.*** For purposes of section 263(e) and this section all expenditures which would be properly chargeable to capital account but for the application of section 263 (e) or (f) shall be considered to be expenditures in connection with the rehabilitation of a unit of railroad rolling stock. Expenditures which are paid or incurred in connection with incidental repairs or maintenance of a unit of railroad rolling stock and which are deductible without regard to section 263 (e) or (f) shall not be included in any determination or computation under section 263(e) and shall not be treated as paid or incurred in connection with the rehabilitation of a unit of railroad rolling stock for purposes of section 263(e). The determination of whether an item would be, but for section 263 (e) or (f), properly chargeable to capital account shall be made in a manner consistent with the principles for classification of expenditures as between capital and expenses under the Internal Revenue Code. See, for example, §§ 1.162-4, 1.263(a)-1, 1.263(a)-2, and paragraph (a)(4) (ii) and (iii) of § 1.446-1. An expenditure shall be classified as capital or as expense without regard to its classification under the uniform system of accounts prescribed by the Interstate Commerce Commission.

(d) ***20-percent limitation*** —

(1) ***In general.*** No expenditures in connection with the rehabilitation of a unit of railroad rolling stock shall be treated as a deductible repair by reason of an election under section 263(e) if, during any period of 12 calendar months in which the month the expenditure is included falls, all such expenditures exceed an amount equal to 20 percent of the basis (as defined in paragraph (b)(1) of this section) of such unit in the hands of the taxpayer. All such expenditures shall be included in the computation of the 20-percent limitation even if such expenditures were deducted under section 263(f) in either the preceding or succeeding taxable year. Solely for purposes of the 20-percent limitation in this paragraph, such expenditures shall be deemed to be included in the month in which a rehabilitation of the unit of railroad rolling stock is completed. For the requirement that expenditures treated as repairs solely by reason of an election under section 263(e) be deducted in the taxable year paid or incurred, see paragraph (a) of this section.

(2) ***12-month period.*** For purposes of this section, any period of 12 calendar months shall consist of any 12 consecutive calendar months except that calendar months prior to the calendar month of January 1970 shall not be included in determining such period.

(3) ***Period for certain corporate acquisitions.*** If a unit of railroad rolling stock to which section 263(e) applies is sold, exchanged, or otherwise disposed of in a transaction in which its basis in the hands of the transferee is determined in whole or in part by reference to its basis in the hands of the transferor (see paragraph (b)(1) of this section), calendar months during which such unit is in the hands of the transferor and in the hands of such transferee shall both be included in the calendar months used by the transferor and the transferee to determine any period of 12 calendar months for purposes of section 263(e).

(4) ***Deduction allowed in year paid or incurred.*** If, based on the information available when the income tax return for a taxable year is filed, an expenditure paid or incurred in such taxable year would be deductible by reason of the application of section 263(e) but for the fact that it cannot be established whether the 20-percent limitation in subparagraph (1) of this paragraph will be exceeded, the expenditure shall be deducted for such taxable year. If by reason of the application of such 20-percent limitation it is subsequently determined that such expenditure is not deductible as a repair, an amended return shall be filed for the year in which such deduction was treated as a deductible repair and additional tax, if any, for such year shall be paid. Appropriate adjustment with respect to the taxpayer's tax liability for any other affected year shall be made. Nothing in this subparagraph shall be construed as extending the time specified in section 6511 within which a claim for credit or refund may be filed.

(e) ***Recordkeeping requirements*** —

(1) ***In general.*** Such records as will enable the accurate determination of the expenditures which may be subject to the treatment provided in section 263(e) shall be maintained. No deduction shall be allowed under section 162 or 212 by reason of section 263(e) with respect to a unit unless the taxpayer substantiates by adequate records that expenditures in connection with such unit of railroad rolling stock meet the requirements and limitations of this section.

(2) ***Separate records.*** A separate section 263(e) record shall be maintained for each unit with respect to which an election under section 263(e) is made. Such record shall:

(i) Identify the unit,

(ii) State the basis (as defined in paragraph (b)(1) of this section) and the date of acquisition of the unit,

(iii) Enumerate for each unit the amount of all expenditures incurred in connection with rehabilitation of such unit which would, but for section 263 (e) or (f), be properly chargeable to capital account (including expenditures incurred by the taxpayer in connection with rehabilitation of such unit undertaken by a person other than the taxpayer) regardless of whether such expenditures during any 12-month period exceed 20 percent of the basis of such unit,

(iv) Describe the nature of the work in connection with each expenditure, and

(v) Specify the calendar month in which the rehabilitation is completed and the taxable year in which each expenditure is paid or incurred.

A section 263(e) record need only be prepared for a unit of railroad rolling stock for the period beginning on the first day of the eleventh calendar month immediately preceding the month in which the rehabilitation of such unit is completed and ending on the last day of the eleventh calendar month immediately succeeding such month. No section 263(e) record need be prepared for calendar months before January 1970.

(3) ***Records for certain expenditures:*** Expenditures determined to be incidental repairs and maintenance (referred to in paragraph (c) of this section) shall not be entered in the section 263(e) record. However, each taxpayer shall maintain records to reflect that such expenditures are properly deductible.

(4) ***Convenience rule.*** In general, expenditures and information maintained in compliance with subparagraphs (1) and (2) of this paragraph shall be recorded in the section 263(e) record of the specific unit with respect to which such expenditures are incurred. However, when a group of units of the same type are rehabilitated in a single project and the expenditure for each unit in the project will approximate the average expenditure per unit for the project, expenditures for the project may be aggregated without regard to the unit in the project with respect to which each expenditure is connected, and an amount equal to the aggregate expenditures for the project divided by the number of units in the project may be entered in the section 263(e) account of each unit in the project.

(f) ***Examples.*** The provisions of this section may be illustrated by the following examples:

Example 1. M Corporation, a domestic common carrier by railroad, uses the calendar year as its taxable year. M owns and uses several gondola cars to which an election under section 263(e) applies for its taxable years 1970-1972. Gondola car No.1 has a basis (defined in paragraph (b)(1) of this section) of $10,000. No expenditures properly chargeable to the section 263(e) record are made on gondola car No. 1 in 1970 and 1971, except in January 1971. In January 1971, M at a cost of $1,500 performed rehabilitation work on gondola car No. 1. Such amount was properly entered in the section 263(e) record for gondola car No.1. Since the expenditures in such record do not exceed an amount equal to 20 percent of the basis of gondola car No. 1 ($2,000) during any period of 12 calendar months in which January 1971 falls, the expenditures during January 1971 shall be treated as a deductible expense regardless of what the treatment would have been if section 263(e) had not been enacted.

Example 2. Assume the same facts as in *Example 1.* Assume further that for 1970, 1971, and 1972, only the following expenditures in connection with rehabilitation which would, but for section 263(e), be properly chargeable to capital account were deemed included for gondola car No. 2:

(a) December 1970	$1,500
(b) November 1971	600
(c) December 1971	400
(d) January 1972	1,050

Assume further that gondola car No. 2 has a basis (as defined in paragraph (b) (1) of this section) equal to $10,000, that M files its tax return by September 15 following each taxable year, and that each rehabilitation was completed in the month in which expenditures in connection with it were incurred. Any expenditures in connection with each gondola car (No. 1 or No. 2) have no effect on the treatment of expenditures in connection with the other gondola car. With respect to gondola car No. 2, the expenditures of December 1970 are treated as deductible repairs at the time M's income tax return for 1970 is filed because, based on the information available when the income tax return for 1970 is filed, such expenditure would be deductible by reason of application of section 263(e) but for the fact that it cannot be established whether the 20-percent limitation in paragraph (d)(1) of this section will be exceeded. Nevertheless, because such expenditures during the period of 12 calendar months including calendar

> months December 1970 and November 1971 exceed $2,000, the December 1970 rehabilitation expenditures are not subject to the provisions of section 263(e). Because such rehabilitation expenditures during the period of 12 calendar months including calendar months February 1971 and January 1972 exceed $2,000, rehabilitation expenditures in 1971 are not subject to the provisions of section 263(e). Similarly, the 1972 rehabilitation expenditures are not subject to the provisions of section 263(e).

[T.D. 7257, 38 FR 4255, Feb. 12, 1973]

§ 1.263(f)-1 Reasonable repair allowance.

(a) For rules regarding the election of the repair allowance authorized by section 263(f), the definition of repair allowance property, and the conditions under which an election may be made, see paragraphs (d)(2) and (f) of § 1.167(a)-11. An election may be made under this section for a taxable year only if the taxpayer makes an election under § 1.167(a)-11 for such taxable year.

(Sec. 263(f), 85 Stat. 509 (26 U.S.C. 263))

[T.D. 7272, 38 FR 9986, Apr. 23, 1973; 38 FR 12919, May 17, 1973, as amended by T.D. 7593, 44 FR 5421, Jan. 26, 1979]

§ 1.263A-0 Outline of regulations under section 263A.

This section lists the paragraphs in §§ 1.263A-1 through 1.263A-4 and §§ 1.263A-7 through 1.263A-15 as follows:

> § 1.263A-1 Uniform Capitalization of Costs.
>
> (a) Introduction.
>
> (1) In general.
>
> (2) Effective dates.
>
> (3) General scope.
>
> (i) Property to which section 263A applies.
>
> (ii) Property produced.
>
> (iii) Property acquired for resale.
>
> (iv) Inventories valued at market.
>
> (v) Property produced in a farming business.
>
> (vi) Creative property.
>
> (vii) Property produced or property acquired for resale by foreign persons.

(b) Exceptions.

(1) Small business taxpayers.

(2) Long-term contracts.

(3) Costs incurred in certain farming businesses.

(4) Costs incurred in raising, harvesting, or growing timber.

(5) Qualified creative expenses.

(6) Certain not-for-profit activities.

(7) Intangible drilling and development costs.

(8) Natural gas acquired for resale.

(i) Cushion gas.

(ii) Emergency gas.

(9) Research and experimental expenditures.

(10) Certain property that is substantially constructed.

(11) Certain property provided incident to services.

(i) In general.

(ii) Definition of services.

(iii) De minimis property provided incident to services.

(12) De minimis rule for certain producers with total indirect costs of $200,000 or less.

(13) Exception for the origination of loans.

(c) General operation of section 263A.

(1) Allocations.

(2) Otherwise deductible.

(3) Capitalize.

(4) Recovery of capitalized costs.

(5) Costs allocable only to property sold.

(d) Definitions.

(1) Self-constructed assets.

(2) Section 471 costs.

(i) In general.

(ii) Inclusion of direct costs.

(A) In general.

(B) Allocation of direct costs.

(iii) Alternative method to determine amounts of section 471 costs by using taxpayer's financial statement.

(A) In general.

(B) Book-to-tax adjustments.

(C) Exclusion of certain financial statement items.

(D) Changes in method of accounting.

(E) Examples.

(iv) De minimis rule exceptions for certain direct costs.

(A) In general.

(B) De minimis rule for certain direct labor costs.

(C) De minimis rule for certain direct material costs.

(D) Taxpayers using a historic absorption ratio.

(E) Examples.

(v) Safe harbor method for certain variances and under or over-applied burdens.

(A) In general.

(B) Consistency requirement.

(C) Allocation of variances and under or over-applied burdens between production and preproduction costs under the modified simplified production method.

(D) Allocation of variances and under or over-applied burdens between storage and handling costs absorption ratio and purchasing costs absorption ratio under the simplified resale method.

(E) Method of accounting.

(vi) Removal of section 471 costs.

(vii) Method changes.

(3) Additional section 263A costs.

(i) In general.

(ii) Negative adjustments.

(A) In general.

(B) Exception for certain taxpayers removing costs from section 471 costs.

(C) No negative adjustments for cash or trade discounts.

(D) No negative adjustments for certain expenses.

(E) Consistency requirement for negative adjustments.

(4) Section 263A costs.

(5) Classification of costs.

(6) Financial statement.

(e) Types of costs subject to capitalization.

(1) In general.

(2) Direct costs.

(i) Producers.

(A) Direct material costs.

(B) Direct labor costs.

(ii) Resellers.

(3) Indirect costs.

(i) In general.

(ii) Examples of indirect costs required to be capitalized.

(A) Indirect labor costs.

(B) Officers' compensation.

(C) Pension and other related costs.

(D) Employee benefit expenses.

(E) Indirect material costs.

(F) Purchasing costs.

(G) Handling costs.

(H) Storage costs.

(I) Cost recovery.

(J) Depletion.

(K) Rent.

(L) Taxes.

(M) Insurance.

(N) Utilities.

(O) Repairs and maintenance.

(P) Engineering and design costs.

(Q) Spoilage.

(R) Tools and equipment.

(S) Quality control.

(T) Bidding costs.

(U) Licensing and franchise costs.

(V) Interest.

(W) Capitalizable service costs.

(iii) Indirect costs not capitalized.

(A) Selling and distribution costs.

(B) Research and experimental expenditures.

(C) Section 179 costs.

(D) Section 165 losses.

(E) Cost recovery allowances on temporarily idle equipment and facilities.

(*1*) In general.

(*2*) Examples.

(F) Taxes assessed on the basis of income.

(G) Strike expenses.

(H) Warranty and product liability costs.

(I) On-site storage costs.

(J) Unsuccessful bidding expenses.

(K) Deductible service costs.

(4) Service costs.

(i) Introduction.

(A) Definition of service costs.

(B) Definition of service departments.

(ii) Various service cost categories.

(A) Capitalizable service costs.

(B) Deductible service costs.

(C) Mixed service costs.

(iii) Examples of capitalizable service costs.

(iv) Examples of deductible service costs.

(f) Cost allocation methods.

(1) Introduction.

(2) Specific identification method.

(3) Burden rate and standard cost methods.

(i) Burden rate method.

(A) In general.

(B) Development of burden rates.

(C) Operation of the burden rate method.

(ii) Standard cost method.

(A) In general.

(B) Treatment of variances.

(4) Reasonable allocation methods.

(g) Allocating categories of costs.

(1) Direct materials.

(2) Direct labor.

(3) Indirect costs.

(4) Service costs.

(i) In general.

(ii) De minimis rule.

(iii) Methods for allocating mixed service costs.

(A) Direct reallocation method.

(B) Step-allocation method.

(C) Examples.

(iv) Illustrations of mixed service cost allocations using reasonable factors or relationships.

(A) Security services.

(B) Legal services.

(C) Centralized payroll services.

(D) Centralized data processing services.

(E) Engineering and design services.

(F) Safety engineering services.

(v) Accounting method change.

(h) Simplified service cost method.

(1) Introduction.

(2) Eligible property.

(i) In general.

(A) Inventory property.

(B) Non-inventory property held for sale.

(C) Certain self-constructed assets.

(D) Self-constructed assets produced on a repetitive basis.

(ii) Election to exclude self-constructed assets.

(3) General allocation formula.

(4) Labor-based allocation ratio.

(5) Production cost allocation ratio.

(6) Definition of total mixed service costs.

(7) Costs allocable to more than one business.

(8) De minimis rule.

(9) Separate election.

(i) [Reserved]

(j) Exemption for certain small business taxpayers.

(1) In general.

(2) Application of the section 448(c) gross receipts test.

(i) In general.

(ii) Gross receipts of individuals, etc.

(iii) Partners and S corporation shareholders.

(iv) Examples.

(A) Example 1

(B) Example 2

(3) Change in method of accounting.

(i) In general.

(ii) Prior section 263A method change.

(k) Special rules

(1) Costs provided by a related person.

(i) In general

(ii) Exceptions

(2) Optional capitalization of period costs.

(i) In general.

(ii) Period costs eligible for capitalization.

(3) Trade or business application

(4) Transfers with a principal purpose of tax avoidance. [Reserved]

(l) Change in method of accounting.

(1) In general.

(2) Scope limitations.

(3) Audit protection.

(4) Section 481(a) adjustment.

(5) Time for requesting change.

(m) Effective/applicability date.

(1) In general.

(2) Mixed service costs; self-constructed tangible personal property produced on a routine and repetitive basis.

(3) Costs allocable to property sold; indirect costs; licensing and franchise costs.

(4) Materials and supplies.

(5) Definitions of section 471 costs and additional section 263A costs.

(6) Exemption for certain small business taxpayers.

§ 1.263A-2 Rules Relating to Property Produced by the Taxpayer.

(a) In general.

(1) Produce.

(i) In general.

(ii) Ownership.

(A) General rule.

(B) Property produced for the taxpayer under a contract.

(*1*) In general.

(*2*) Definition of contract.

(C) Home construction contracts.

(2) Tangible personal property.

(i) General rule.

(ii) Intellectual or creative property.

(A) Intellectual or creative property that is tangible personal property.

(*1*) Books.

(*2*) Sound recordings.

(B) Intellectual or creative property that is not tangible personal property.

(*1*) Evidences of value.

(*2*) Property provided incident to services.

(3) Costs required to be capitalized by producers.

(i) In general.

(ii) Pre-production costs.

(iii) Post-production costs.

(4) Practical capacity concept.

(5) Taxpayers required to capitalize costs under this section.

(b) Simplified production method.

(1) Introduction.

(2) Eligible property.

(i) In general.

(A) Inventory property.

(B) Non-inventory property held for sale.

(C) Certain self-constructed assets.

(D) Self-constructed assets produced on a repetitive basis.

(ii) Election to exclude self-constructed assets.

(3) Simplified production method without historic absorption ratio election.

(i) General allocation formula.

(ii) Definitions.

(A) Absorption ratio.

(*1*) Additional section 263A costs incurred during the taxable year.

(*2*) Section 471 costs incurred during the taxable year.

(B) Section 471 costs remaining on hand at year end.

(C) Costs allocable only to property sold.

(iii) LIFO taxpayers electing the simplified production method.

(A) In general.

(B) LIFO increment.

(C) LIFO decrement.

(iv) De minimis rule for producers with total indirect costs of $200,000 or less.

(A) In general.

(B) Related party and aggregation rules.

(v) Examples.

(4) Simplified production method with historic absorption ratio election.

(i) In general.

(ii) Operating rules and definitions.

(A) Historic absorption ratio.

(B) Test period.

(*1*) In general.

(*2*) Updated test period.

(C) Qualifying period.

(*1*) In general.

(*2*) Extension of qualifying period.

(iii) Method of accounting.

(A) Adoption and use.

(B) Revocation of election.

(iv) Reporting and recordkeeping requirements.

(A) Reporting.

(B) Recordkeeping.

(v) Transition rules.

(A) Transition to elect historic absorption ratio.

(B) Transition to revoke historic absorption ratio.

(vi) Example.

(c) Modified simplified production method.

(1) Introduction.

(2) Eligible property.

(i) In general.

(ii) Election to exclude self-constructed assets.

(3) Modified simplified production method without historic absorption ratio election.

(i) General allocation formula.

(A) In general.

(B) Effect of allocation.

(ii) Definitions.

(A) Direct material costs.

(B) Pre-production absorption ratio.

(*1*) Pre-production additional section 263A costs.

(*2*) Pre-production section 471 costs.

(C) Pre-production section 471 costs remaining on hand at year end.

(D) Production absorption ratio.

(*1*) Production additional section 263A costs.

(*2*) Residual pre-production additional section 263A costs.

(*3*) Production section 471 costs.

(*4*) Direct materials adjustment.

(E) Production section 471 costs remaining on hand at year end.

(F) Costs allocated to property sold.

(iii) Allocable mixed service costs.

(A) In general.

(B) Taxpayer using the simplified service cost method.

(C) De minimis rule.

(iv) LIFO taxpayers electing the modified simplified production method.

(A) In general.

(B) LIFO increment.

(*1*) In general.

(*2*) Combined absorption ratio defined.

(C) LIFO decrement.

(v) De minimis rule for producers with total indirect costs of $200,000 or less.

(vi) Examples.

(4) Modified simplified production method with historic absorption ratio election.

(i) In general.

(ii) Operating rules and definitions.

(A) Pre-production historic absorption ratio.

(B) Production historic absorption ratio.

(iii) LIFO taxpayers making the historic absorption ratio election.

(A) In general.

(B) Combined historic absorption ratio.

(*1*) Total allocable additional section 263A costs incurred during the test period.

(*2*) Total section 471 costs remaining on hand at each year end of the test period.

(iv) Extension of qualifying period.

(v) Examples.

(d) Additional simplified methods for producers.

(e) Cross reference.

(f) Change in method of accounting.

(1) In general.

(2) Scope limitations.

(3) Audit protection.

(4) Section 481(a) adjustment.

(5) Time for requesting change.

(g) Effective/applicability date.

§ 1.263A-3 Rules Relating to Property Acquired for Resale

(a) Capitalization rules for property acquired for resale.

(1) In general.

(2) Resellers with production activities.

(i) In general.

(ii) Exemption for small business taxpayers.

(iii) De minimis production activities.

(A) In general.

(B) Example.

(3) Resellers with property produced under a contract.

(4) Use of the simplified resale method.

(i) In general.

(ii) Resellers with de minimis production activities.

(iii) Resellers with property produced under a contract.

(iv) Application of simplified resale method.

(5) *De minimis* production activities.

(i) In general.

(ii) Definition of gross receipts to determine *de minimis* production activities.

(iii) Example.

(b) [Reserved].

(c) Purchasing, handling, and storage costs.

(1) In general.

(2) Costs attributable to purchasing, handling, and storage.

(3) Purchasing costs.

(i) In general.

(ii) Determination of whether personnel are engaged in purchasing activities.

(A) $^{1}/_{3}$- $^{2}/_{3}$ rule for allocating labor costs.

(B) Example.

(4) Handling costs.

(i) In general.

(ii) Processing costs.

(iii) Assembling costs.

(iv) Repackaging costs.

(v) Transportation costs.

(vi) Costs not considered handling costs.

(A) Distribution costs.

(B) Delivery of custom-ordered items.

(C) Repackaging after sale occurs.

(5) Storage costs.

(i) In general.

(ii) Definitions.

(A) On-site storage facility.

(B) Retail sales facility.

(C) An integral part of a retail sales facility.

(D) On-site sales.

(E) Retail customer.

(*1*) In general.

(*2*) Certain non-retail customers treated as retail customers.

(F) Off-site storage facility.

(G) Dual-function storage facility.

(iii) Treatment of storage costs incurred at a dual-function storage facility.

(A) In general.

(B) Dual-function storage facility allocation ratio.

(*1*) In general.

(*2*) Illustration of ratio allocation.

(*3*) Appropriate adjustments for other uses of a dual-function storage facility.

(C) De minimis 90-10 rule for dual-function storage facilities.

(iv) Costs not attributable to an off-site storage facility.

(v) Examples.

(d) Simplified resale method.

(1) Introduction.

(2) Eligible property.

(3) Simplified resale method without historic absorption ratio election.

(i) General allocation formula.

(A) In general.

(B) Effect of allocation.

(C) Definitions.

(*1*) Combined absorption ratio.

(*2*) Section 471 costs remaining on hand at year end.

(*3*) Costs allocable only to property sold.

(D) Storage and handling costs absorption ratio.

(E) Purchasing costs absorption ratio.

(F) Allocable mixed service costs.

(ii) LIFO taxpayers electing simplified resale method.

(A) In general.

(B) LIFO increment.

(C) LIFO decrement.

(iii) Permissible variations of the simplified resale method.

(iv) Examples.

(4) Simplified resale method with historic absorption ratio election.

(i) In general.

(ii) Operating rules and definitions.

(A) Historic absorption ratio.

(B) Test period.

(*1*) In general.

(*2*) Updated test period.

(C) Qualifying period.

(*1*) In general.

(2) Extension of qualifying period.

(iii) Method of accounting.

(A) Adoption and use.

(B) Revocation of election.

(iv) Reporting and recordkeeping requirements.

(A) Reporting.

(B) Recordkeeping.

(v) Transition rules.

(A) Transition to elect historic absorption ratio.

(B) Transition to revoke historic absorption ratio.

(vi) Example.

(5) Additional simplified methods for resellers.

(e) Cross reference.

(f) Effective/applicability date.

§ 1.263A-4 Rules for property produced in a farming business.

(a) Introduction.

(1) In general.

(2) Exception.

(i) In general.

(ii) Tax shelter.

(A) In general.

(B) Presumption.

(iii) Examples.

(3) Exemption for certain small business taxpayers.

(4) Costs required to be capitalized or inventoried under another provision.

(5) Farming business.

(i) In general.

(A) Plant.

(B) Animal.

(ii) Incidental activities.

(A) In general.

(B) Activities that are not incidental.

(iii) Examples.

(b) Application of section 263A to property produced in a farming business.

(1) In general.

(i) Plants.

(ii) Animals.

(2) Preproductive period.

(i) Plant.

(A) In general.

(B) Applicability of section 263A.

(C) Actual preproductive period.

(*1*) Beginning of the preproductive period.

(*2*) End of the preproductive period.

(*i*) In general.

(*ii*) Marketable quantities.

(D) Examples.

(ii) Animal.

(A) Beginning of the preproductive period.

(B) End of the preproductive period.

(C) Allocation of costs between animal and first yield.

(c) Inventory methods.

(1) In general.

(2) Available for property used in a trade or business.

(3) Exclusion of property to which section 263A does not apply.

(d) Election not to have section 263A apply under section 263A(d)(3).

(1) Introduction.

(2) Availability of the election.

(3) Time and manner of making the election.

(i) Automatic election.

(ii) Nonautomatic election.

(4) Special rules.

(i) Section 1245 treatment.

(ii) Required use of alternative depreciation system.

(iii) Related person.

(A) In general.

(B) Members of family.

(5) Revocation of section 263A(d)(3) election to permit exemption under section 263A(i).

(6) Change from applying exemption under section 263A(i) to making a section 263A(d)(3) election.

(7) Examples.

(e) Exception for certain costs resulting from casualty losses.

(1) In general.

(2) Ownership.

(3) Examples.

(4) Special rule for citrus and almond groves.

(i) In general.

(ii) Example.

(5) Special temporary rule for citrus plants lost by reason of casualty.

(f) Change in method of accounting.

(1) Effective date.

(2) Change in method of accounting.

(g) Effective date.

(1) In general.

(2) Changes made by Tax Cuts and Jobs Act (Pub. L. 115-97).

§ 1.263A-7 Changing a method of accounting under section 263A.

(a) Introduction.

(1) Purpose.

(2) Taxpayers that adopt a method of accounting under section 263A.

(3) Taxpayers that change a method of accounting under section 263A.

(4) Applicability dates.

(i) In general.

(ii) Changes made by Tax Cuts and Jobs Act (Pub. L. 115-97).

(5) Definition of change in method of accounting.

(b) Rules applicable to a change in method of accounting.

(1) General rules.

(2) Special rules.

(i) Ordering rules when multiple changes in method of accounting occur in the year of change.

(A) In general.

(B) Exceptions to the general ordering rule.

(*1*) Change from the LIFO inventory method.

(*2*) Change from the specific goods LIFO inventory method.

(*3*) Change in overall method of accounting.

(*4*) Change in method of accounting for depreciation.

(ii) Adjustment required by section 481(a).

(iii) Base year.

(A) Need for a new base year.

(*1*) Facts and circumstances revaluation method used.

(*2*) 3-year average method used.

(*i*) Simplified method not used.

(*ii*) Simplified method used.

(B) Computing a new base year.

(c) Inventory.

(1) Need for adjustments.

(2) Revaluing beginning inventory.

(i) In general.

(ii) Methods to revalue inventory.

(iii) Facts and circumstances revaluation method.

(A) In general.

(B) Exception.

(C) Estimates and procedures allowed.

(D) Use by dollar-value LIFO taxpayers.

(E) Examples.

(iv) Weighted average method.

(A) In general.

(B) Weighted average method for FIFO taxpayers.

(*1*) In general.

(*2*) Example.

(C) Weighted average method for specific goods LIFO taxpayers.

(*1*) In general.

(*2*) Example.

(D) Adjustments to inventory costs from prior years.

(v) 3-year average method.

(A) In general.

(B) Consecutive year requirement.

(C) Example.

(D) Short taxable years.

(E) Adjustments to inventory costs from prior years.

(*1*) General rule.

(*2*) Examples of costs eligible for restatement adjustment procedure.

(F) Restatement adjustment procedure.

(*1*) In general.

(*2*) Examples of restatement adjustment procedure.

(3) Intercompany items.

(i) Revaluing intercompany transactions.

(ii) Example.

(iii) Availability of revaluation methods.

(4) Anti-abuse rule.

(i) In general.

(ii) Deemed avoidance of this section.

(A) Scope.

(B) General rule.

(iii) Election to use transferor's LIFO layers.

(iv) Tax avoidance intent not required.

(v) Related corporation.

(d) Non-inventory property.

(1) Need for adjustments.

(2) Revaluing property.

§ 1.263A-8 Requirement to capitalize interest.

(a) In general.

(1) General rule.

(2) Treatment of interest required to be capitalized.

(3) Methods of accounting under section 263A(f).

(4) Special definitions.

(i) Related person.

(ii) Placed in service.

(b) Designated property.

(1) In general.

(2) Special rules.

(i) Application of thresholds.

(ii) Relevant activities and costs.

(iii) Production period and cost of production.

(3) Excluded property.

(4) De minimis rule.

(i) In general.

(ii) Determination of total production expenditures.

(c) Definition of real property.

(1) In general.

(2) Unsevered natural products of land.

(3) Inherently permanent structures.

(4) Machinery.

(i) Treatment.

(ii) Certain factors not determinative.

(d) Production.

(1) Definition of produce.

(2) Property produced under a contract.

(i) Customer.

(ii) Contractor.

(iii) Definition of a contract.

(iv) Determination of whether thresholds are satisfied.

(A) Customer.

(B) Contractor.

(v) Exclusion for property subject to long-term contract rules.

(3) Improvements to existing property.

(i) In general.

(ii) Real property.

(iii) Tangible personal property.

§ 1.263A-9 The avoided cost method.

(a) In general.

(1) Description.

(2) Overview.

(i) In general.

(ii) Rules that apply in determining amounts.

(3) Definitions of interest and incurred.

(4) Definition of eligible debt.

(b) Traced debt amount.

(1) General rule.

(2) Identification and definition of traced debt.

(3) Example.

(c) Excess expenditure amount.

(1) General rule.

(2) Interest required to be capitalized.

(3) Example.

(4) Treatment of interest subject to a deferral provision.

(5) Definitions.

(i) Nontraced debt.

(A) Defined.

(B) Example.

(ii) Average excess expenditures.

(A) General rule.

(B) Example.

(iii) Weighted average interest rate.

(A) Determination of rate.

(B) Interest incurred on nontraced debt.

(C) Average nontraced debt.

(D) Special rules if taxpayer has no nontraced debt or rate is contingent.

(6) Examples.

(7) Special rules where the excess expenditure amount exceeds incurred interest.

(i) Allocation of total incurred interest to units.

(ii) Application of related person rules to average excess expenditures.

(iii) Special rule for corporations.

(d) Election not to trace debt.

(1) General rule.

(2) Example.

(e) Election to use external rate.

(1) In general.

(2) Eligible taxpayer.

(f) Selection of computation period and measurement dates and application of averaging conventions.

(1) Computation period.

(i) In general.

(ii) Method of accounting.

(iii) Production period beginning or ending during the computation period.

(2) Measurement dates.

(i) In general.

(ii) Measurement period.

(iii) Measurement dates on which accumulated production expenditures must be taken into account.

(iv) More frequent measurement dates.

(3) Examples.

(g) Special rules.

(1) Ordering rules.

(i) Provisions preempted by section 263A(f).

(ii) Deferral provisions applied before this section.

(2) Application of section 263A(f) to deferred interest.

(i) In general.

(ii) Capitalization of deferral amount.

(iii) Deferred capitalization.

(iv) Substitute capitalization.

(A) General rule.

(B) Capitalization of amount carried forward.

(C) Method of accounting.

(v) Examples.

(3) Simplified inventory method.

(i) In general.

(ii) Segmentation of inventory.

(A) General rule.

(B) Example.

(iii) Aggregate interest capitalization amount.

(A) Computation period and weighted average interest rate.

(B) Computation of the tentative aggregate interest capitalization amount.

(C) Coordination with other interest capitalization computations.

(*1*) In general.

(*2*) Deferred interest.

(*3*) Other coordinating provisions.

(D) Treatment of increases or decreases in the aggregate interest capitalization amount.

(E) Example.

(iv) Method of accounting.

(4) Financial accounting method disregarded.

(5) Treatment of intercompany transactions.

(i) General rule.

(ii) Special rule for consolidated group with limited outside borrowing.

(iii) Example.

(6) Notional principal contracts and other derivatives. [Reserved]

(7) 15-day repayment rule.

§ 1.263A-10 Unit of property.

(a) In general.

(b) Units of real property.

(1) In general.

(2) Functional interdependence.

(3) Common features.

(4) Allocation of costs to unit.

(5) Treatment of costs when a common feature is included in a unit of real property.

(i) General rule.

(ii) Production activity not undertaken on benefitted property.

(A) Direct production activity not undertaken.

(*1*) In general.

(*2*) Land attributable to a benefitted property.

(B) Suspension of direct production activity after clearing and grading undertaken.

(*1*) General rule.

(*2*) Accumulated production expenditures.

(iii) Common feature placed in service before the end of production of a benefitted property.

(iv) Benefitted property sold before production completed on common feature.

(v) Benefitted property placed in service before production completed on common feature.

(6) Examples.

(c) Units of tangible personal property.

(d) Treatment of installations.

§ 1.263A-11 Accumulated production expenditures.

(a) General rule.

(b) When costs are first taken into account.

(1) In general.

(2) Dedication rule for materials and supplies.

(c) Property produced under a contract.

(1) Customer.

(2) Contractor.

(d) Property used to produce designated property.

(1) In general.

(2) Example.

(3) Excluded equipment and facilities.

(e) Improvements.

(f) Mid-production purchases.

(g) Related person costs.

(h) Installation.

§ 1.263A-12 Production period.

(a) In general.

(b) Related person activities.

(c) Beginning of production period.

(1) In general.

(2) Real property.

(3) Tangible personal property.

(d) End of production period.

(1) In general.

(2) Special rules.

(3) Sequential production or delivery.

(4) Examples.

(e) Physical production activities.

(1) In general.

(2) Illustrations.

(f) Activities not considered physical production.

(1) Planning and design.

(2) Incidental repairs.

(g) Suspension of production period.

(1) In general.

(2) Special rule.

(3) Method of accounting.

(4) Example.

§ 1.263A-13 Oil and gas activities.

(a) In general.

(b) Generally applicable rules.

(1) Beginning of production period.

(i) Onshore activities.

(ii) Offshore activities.

(2) End of production period.

(3) Accumulated production expenditures.

(i) Costs included.

(ii) Improvement unit.

(c) Special rules when definite plan not established.

(1) In general.

(2) Oil and gas units.

(i) First productive well unit.

(ii) Subsequent units.

(3) Beginning of production period.

(i) First productive well unit.

(ii) Subsequent wells.

(4) End of production period.

(5) Accumulated production expenditures.

(i) First productive well unit.

(ii) Subsequent well unit.

(6) Allocation of interest capitalized with respect to first productive well unit.

(7) Examples.

§ 1.263A-14 Rules for related persons.

§ 1.263A-15 Effective dates, transitional rules, and anti-abuse rule.

(a) Effective dates.

(b) Transitional rule for accumulated production expenditures.

(1) In general.

(2) Property used to produce designated property.

(c) Anti-abuse rule.

[T.D. 8482, 58 FR 42207, Aug. 9, 1993, as amended by T.D. 8584, 59 FR 67196, Dec. 29, 1994; 60 FR 16574, Mar. 31, 1995; T.D. 8728, 62 FR 42054, Aug. 5, 1997; T.D. 8897, 65 FR 50643, Aug. 21, 2000; T.D. 9636, 78 FR 57745, Sept. 19, 2013; T.D. 9652, 79 FR 2096, Jan. 13, 2014; T.D. 9843, 83 FR 58485, Nov. 20, 2018; T.D, 9942, 86 FR 264, Jan. 5, 2021; 86 FR 32185, June 17, 2021; T.D. 10034, 90 FR 47582, Oct. 2, 2025]

§ 1.263A-1 Uniform capitalization of costs.

(a) ***Introduction*** —

(1) ***In general.*** The regulations under §§ 1.263A-1 through 1.263A-6 provide guidance to taxpayers that are required to capitalize certain costs under section 263A. These regulations generally apply to all costs required to be capitalized under section 263A except for interest that must be capitalized under section 263A(f) and the regulations thereunder. Statutory or regulatory exceptions may provide that section 263A does not apply to certain activities or costs; however, those activities or costs may nevertheless be subject to capitalization requirements under other provisions of the Internal Revenue Code and regulations.

(2) ***Applicability dates.***

(i) In general, this section and §§ 1.263A-2 and 1.263A-3 apply to costs incurred in taxable years beginning after December 31, 1993. In the case of property that is inventory in the hands of the taxpayer, however, these sections are applicable for taxable years beginning after December 31, 1993. The small business taxpayer exception described in paragraph (b)(1) of this section and set forth in paragraph (j) of this section is applicable for taxable years beginning after December 31, 2017. Changes in methods of accounting necessary as a result of the rules in this section and §§ 1.263A-2 and 1.263A-3 must be made under terms and conditions prescribed by the Commissioner. Under these terms and conditions, the principles of § 1.263A-7 must be applied in revaluing inventory property.

(ii) For taxable years beginning before January 1, 1994, taxpayers must take reasonable positions on their federal income tax returns when applying section 263A. For purposes of this paragraph (a)(2)(iii), a reasonable position is a position consistent with the temporary regulations, revenue rulings, revenue procedures, notices, and announcements concerning section 263A applicable in taxable years beginning before January 1, 1994. See § 601.601(d)(2)(ii)(*b*) of this chapter.

(3) ***General scope*** —

(i) ***Property to which section 263A applies.*** Taxpayers subject to section 263A must capitalize all direct costs and certain indirect costs properly allocable to—

(A) Real property and tangible personal property produced by the taxpayer; and

(B) Real property and personal property described in section 1221(1), which is acquired by the taxpayer for resale.

(ii) ***Property produced.*** Taxpayers that produce real property and tangible personal property (producers) must capitalize all the direct costs of producing the property and the property's properly allocable share of indirect costs (described in paragraphs (e)(2)(i) and (3) of this section), regardless of whether the property is sold or used in the taxpayer's trade or business. See § 1.263A-2 for rules relating to producers.

(iii) ***Property acquired for resale.*** Retailers, wholesalers, and other taxpayers that acquire property described in section 1221(1) for resale (resellers) must capitalize the direct costs of acquiring the property and the property's properly allocable share of indirect costs (described in paragraphs (e)(2)(ii) and (3) of this section). See § 1.263A-3 for rules relating to resellers. See also section 263A(b)(2)(B), which excepts from section 263A personal property acquired for resale by a small reseller.

(iv) ***Inventories valued at market.*** Section 263A does not apply to inventories valued at market under either the market method or the lower of cost or market method if the market valuation used by the taxpayer generally equals the property's fair market value. For purposes of this paragraph (a)(3)(iv), the term fair market value means the price at which the taxpayer sells its inventory to its customers (e.g., as in the market value definition provided in § 1.471-4(b)) less, if applicable, the direct cost of disposing of the inventory. However, section 263A does apply in determining the market value of any inventory for which market is determined with reference to replacement cost or reproduction cost. See §§ 1.471-4 and 1.471-5.

(v) ***Property produced in a farming business.*** Section 263A generally requires taxpayers engaged in a farming business to capitalize certain costs. See sections 263A(d) and 263A(e) and § 1.263A-4 for rules relating to taxpayers engaged in a farming business.

(vi) ***Creative property.*** Section 263A generally requires taxpayers engaged in the production and resale of creative property to capitalize certain costs.

(vii) ***Property produced or property acquired for resale by foreign persons.*** Section 263A generally applies to foreign persons.

(b) ***Exceptions*** —

(1) ***Small business taxpayers.*** For taxable years beginning after December 31, 2017, see section 263A(i) and paragraph (j) of this section for an exemption for certain small business taxpayers from the requirements of section 263A.

(2) ***Long-term contracts.*** Except for certain home construction contracts described in section 460(e)(1), section 263A does not apply to any property produced by the taxpayer pursuant to a long-term contract as defined in section 460(f), regardless of whether the taxpayer uses an inventory method to account for such production.

(3) ***Costs incurred in certain farming businesses.*** See section 263A(d) for an exception for costs paid or incurred in certain farming businesses. See § 1.263A-4 for specific rules relating to taxpayers engaged in the trade or business of farming.

(4) ***Costs incurred in raising, harvesting, or growing timber.*** See section 263A(c)(5) for an exception for costs paid or incurred in raising, harvesting, or growing timber and certain ornamental trees. See § 1.263A-4, however, for rules relating to taxpayers producing certain trees to which section 263A applies.

(5) ***Qualified creative expenses.*** See section 263A(h) for an exception for qualified creative expenses paid or incurred by certain free-lance authors, photographers, and artists.

(6) ***Certain not-for-profit activities.*** See section 263A(c)(1) for an exception for property produced by a taxpayer for use by the taxpayer other than in a trade or business or an activity conducted for profit. This exception does not apply, however, to property produced by an exempt organization in connection with its unrelated trade or business activities.

(7) ***Intangible drilling and development costs.*** See section 263A(c)(3) for an exception for intangible drilling and development costs. Additionally, section 263A does not apply to any amount allowable as a deduction under section 59(e) with respect to qualified expenditures under sections 263(c), 616(a), or 617(a).

(8) ***Natural gas acquired for resale.*** Under this paragraph (b)(8), section 263A does not apply to any costs incurred by a taxpayer relating to natural gas acquired for resale to the extent such costs would otherwise be allocable to cushion gas.

(i) ***Cushion gas.*** Cushion gas is the portion of gas stored in an underground storage facility or reservoir that is required to maintain the level of pressure necessary for operation of the facility. However, section 263A applies to costs incurred by a taxpayer relating to natural gas acquired for resale to the extent such costs are properly allocable to emergency gas.

(ii) ***Emergency gas.*** Emergency gas is natural gas stored in an underground storage facility or reservoir for use during periods of unusually heavy customer demand.

(9) ***Research and experimental expenditures.*** See section 263A(c)(2) for an exception for any research and experimental expenditure allowable as a deduction under section 174 or the regulations thereunder. Additionally, section 263A does not apply to any amount allowable as a deduction under section 59(e) with respect to qualified expenditures under section 174.

(10) ***Certain property that is substantially constructed.*** Section 263A does not apply to any property produced by a taxpayer for use in its trade or business if substantial construction occurred before March 1, 1986.

(i) For purposes of this section, substantial construction is deemed to have occurred if the lesser of—

(A) 10 percent of the total estimated costs of construction; or

(B) The greater of $10 million or 2 percent of the total estimated costs of construction, was incurred before March 1, 1986.

(ii) For purposes of the provision in paragraph (b)(10)(i) of this section, the total estimated costs of construction shall be determined by reference to a reasonable estimate, on or before March 1, 1986, of such amount. Assume, for example, that on March 1, 1986, the estimated costs of constructing a facility were $150 million. Assume that before March 1, 1986, $12 million of construction costs had been incurred. Based on the above facts, substantial construction would be deemed to have occurred before March 1, 1986, because $12 million (the costs of construction incurred before such date) is greater than $10 million (the lesser of $15 million; or the greater of $10 million or $3 million). For purposes of this provision, construction costs are defined as those costs incurred after construction has commenced at the site of the property being constructed (unless the property will not be located on land and, therefore, the initial construction of the property must begin at a location other than the intended site). For example, in the case of a building, construction commences when work begins on the building, such as the excavation of the site, the pouring of pads for the building, or the driving of foundation pilings into the ground. Preliminary activities such as project engineering and architectural design do not constitute the commencement of construction, nor are such costs considered construction costs, for purposes of this paragraph (b)(10).

(11) ***Certain property provided incident to services*** —

(i) ***In general.*** Under this paragraph (b)(11), section 263A does not apply to property that is provided to a client (or customer) incident to the provision of services by the taxpayer if the property provided to the client is—

(A) De minimis in amount; and

(B) Not inventory in the hands of the service provider.

(ii) ***Definition of services.*** For purposes of this paragraph (b)(11), services is defined with reference to its ordinary and accepted meaning under federal income tax principles. In determining whether a taxpayer is a bona-fide service provider under this paragraph (b)(11), the nature of the taxpayer's trade or business and the facts and circumstances surrounding the taxpayer's trade or business activities must be considered. Examples of taxpayers qualifying as service providers under this paragraph include taxpayers performing services in the fields of health, law, engineering, architecture, accounting, actuarial science, performing arts, or consulting.

(iii) ***De minimis property provided incident to services.*** In determining whether property provided to a client by a service provider is de minimis in amount, all facts and circumstances, such as the nature of the taxpayer's trade or business and the volume of its service activities in the trade or business, must be considered. A significant factor in making this determination is the relationship between the acquisition or direct materials costs of the property that is provided to clients and the price that the taxpayer charges its clients for its services and the property. For purposes of this paragraph (b)(11), if the acquisition or direct materials cost of the property provided to a client incident to the services is less than or equal to five percent of the price charged to the client for the services and property, the property is de minimis. If the acquisition or direct materials cost of the property exceeds five percent of the price charged for the services and property, the property may be de minimis if additional facts and circumstances so indicate.

(12) ***De minimis rule for certain producers with total indirect costs of $200,000 or less.*** See § 1.263A-2(b)(3)(iv) for a de minimis rule that treats producers with total indirect costs of $200,000 or less as having no additional section 263A costs (as defined in paragraph (d)(3) of this section) for purposes of the simplified production method.

(13) ***Exception for the origination of loans.*** For purposes of section 263A(b)(2)(A), the origination of loans is not considered the acquisition of intangible property for resale. (But section 263A(b)(2)(A) does include the acquisition by a taxpayer of pre-existing loans from other persons for resale.)

(c) ***General operation of section 263A*** —

(1) ***Allocations.*** Under section 263A, taxpayers must capitalize their direct costs and a properly allocable share of their indirect costs to property produced or property acquired for resale. In order to determine these capitalizable costs, taxpayers must allocate or apportion costs to various activities, including production or resale activities. After section 263A costs are allocated to the appropriate production or resale activities, these costs are generally allocated to the items of property produced or property acquired for resale during the taxable year and capitalized to the items that remain on hand at the end of the taxable year. See however, the simplified production method, the modified simplified production method, and the simplified resale method in §§ 1.263A-2(b) and (c) and 1.263A-3(d).

(2) ***Otherwise deductible.***

(i) Any cost which (but for section 263A and the regulations thereunder) may not be taken into account in computing taxable income for any taxable year is not treated as a cost properly allocable to property produced or acquired for resale under section 263A and the regulations thereunder. Thus, for example, if a business meal deduction is limited by section 274(n) to 80 percent of the cost of the meal, the amount properly allocable to property produced or acquired for resale under section 263A is also limited to 80 percent of the cost of the meal.

(ii) The amount of any cost required to be capitalized under section 263A may not be included in inventory or charged to capital accounts or basis any earlier than the taxable year during which the amount is incurred within the meaning of § 1.446-1(c)(1)(ii).

(3) ***Capitalize.*** Capitalize means, in the case of property that is inventory in the hands of a taxpayer, to include in inventory costs and, in the case of other property, to charge to a capital account or basis.

(4) ***Recovery of capitalized costs.*** Costs that are capitalized under section 263A are recovered through depreciation, amortization, cost of goods sold, or by an adjustment to basis at the time the property is used, sold, placed in service, or otherwise disposed of by the taxpayer. Cost recovery is determined by the applicable Internal Revenue Code and regulation provisions relating to use, sale, or disposition of property.

(5) ***Costs allocable to property sold.*** A cost that is allocated under this section, § 1.263A-2, or § 1.263A-3 entirely to property sold must be included in cost of goods sold and may not be included in determining the cost of goods on hand at the end of the taxable year.

(d) ***Definitions*** —

(1) ***Self-constructed assets.*** Self-constructed assets are assets produced by a taxpayer for use by the taxpayer in its trade or business. Self-constructed assets are subject to section 263A.

(2) ***Section 471 costs*** —

(i) ***In general.*** Except as otherwise provided in paragraphs (d)(2)(ii), (iv), (v), and (vi) of this section, for purposes of section 263A, a taxpayer's section 471 costs are the types of costs, other than interest, that a taxpayer capitalizes to property produced or property acquired for resale in its financial statement. Thus, although section 471 applies only to inventories, section 471 costs include any non-inventory costs, other than interest, that a taxpayer capitalizes to, or includes in acquisition or production costs of, property produced or property acquired for resale in its financial statement. Except as otherwise provided in paragraph (d)(2)(iii) of this section, a taxpayer determines the amounts of section 471 costs by using the amounts of such costs that are incurred in the taxable year for federal income tax purposes.

(ii) ***Inclusion of direct costs*** —

(A) ***In general.*** Notwithstanding the last sentence of paragraph (g)(2) of this section, a taxpayer's section 471 costs must include all direct costs of property produced and property acquired for resale, whether or not a taxpayer capitalizes these costs to property produced or property acquired for resale in its financial statement. See paragraph (e)(2) of this section for a description of direct costs of property produced and property acquired for resale.

(B) ***Allocation of direct costs.*** Except for any direct costs that are treated as additional section 263A costs under paragraphs (d)(2)(iv) and (v) of this section, a taxpayer's direct costs of property produced and property acquired for resale must be allocated using a method provided in paragraph (f) of this section.

(iii) ***Alternative method to determine amounts of section 471 costs by using taxpayer's financial statement —***

(A) ***In general.*** In lieu of determining the amounts of section 471 costs under paragraph (d)(2)(i) of this section, a taxpayer described in paragraph (d)(3)(ii)(B) of this section may determine the amounts of section 471 costs by using the amounts of such costs that are incurred in the taxable year in its financial statement using the taxpayer's financial statement methods of accounting if the taxpayer's financial statement is described in paragraph (d)(6)(i), (ii), or (iii) of this section. If the taxpayer's financial statement is described only in paragraph (d)(6)(iv) of this section, the taxpayer may not use the alternative method described in this paragraph (d)(2)(iii) and must use the method described in paragraph (d)(2)(i) of this section to determine its amounts of section 471 costs. A taxpayer using the alternative method described in this paragraph (d)(2)(iii) must remove all section 471 costs described in paragraph (d)(2)(vi) of this section, if any, by including negative adjustments in additional section 263A costs. A taxpayer using the alternative method described in this paragraph (d)(2)(iii) applies the method to all of its section 471 costs, including costs described under paragraphs (d)(2)(ii), (iv), (v), and (vi) of this section.

(B) ***Book-to-tax adjustments.*** A taxpayer using the alternative method described in this paragraph (d)(2)(iii) must include as additional section 263A costs all negative and positive adjustments required to be made as a result of differences in the book and tax amounts of the taxpayer's section 471 costs, including adjustments for direct costs required to be added to section 471 costs under paragraph (d)(2)(ii) of this section, and costs removed from section 471 costs under paragraphs (d)(2)(vi) and (d)(3)(ii)(B) of this section. In addition, the taxpayer must include as additional section 263A costs all negative and positive adjustments required to be made as a result of differences in the book and tax amounts of section 471 costs that are treated as additional section 263A costs (for example, de minimis direct costs described in paragraph (d)(2)(iv) of this section and certain variances and under or over-applied burdens described in paragraph (d)(2)(v) of this section). For purposes of determining the negative and positive adjustments required to be made as a result of differences in book and tax amounts for a taxpayer using the burden rate or standard cost methods described in paragraph (f)(3) of this section, the taxpayer compares the actual amount of the cost incurred in the taxable year for federal income tax purposes to the actual amount of the cost incurred in the taxable year in its financial statement using the taxpayer's financial statement methods of accounting, regardless of how the taxpayer treats its variances or under or over-applied burdens.

(C) ***Exclusion of certain financial statement items.*** A taxpayer that determines the amounts of section 471 costs under this paragraph (d)(2)(iii) may not include any financial statement write-downs, reserves, or other financial statement valuation adjustments when determining the amounts of its section 471 costs.

(D) ***Changes in method of accounting.*** The use of this method to determine the amounts of section 471 costs under this paragraph (d)(2)(iii) is the adoption of, or a change in, a method of accounting under section 446 of the Internal Revenue Code.

(E) ***Examples.*** The following examples illustrate this paragraph (d)(2)(iii):

(1) ***Example 1—Alternative-method taxpayer using de minimis direct labor costs rule.*** Taxpayer P uses the modified simplified production method described in § 1.263A-2(c) and determines its amounts of section 471 costs by using the alternative method under paragraph (d)(2)(iii) of this section. Additionally, P uses the de minimis direct labor costs rule under paragraph (d)(2)(iv)(B) of this section. P does not capitalize vacation pay or holiday pay to property produced or property acquired for resale in its financial statement but does capitalize all other direct labor costs to such property in its financial statement. On its 2018 financial statement, P incurs $3,500,000 of total direct labor costs, including $110,000 of vacation pay costs and $10,000 of holiday pay costs. For federal income tax purposes, P incurs $150,000 of vacation pay costs and $18,000 of holiday pay costs in the taxable year. P's uncapitalized direct labor costs are $120,000 ($110,000 of vacation pay plus $10,000 of holiday pay). For purposes of the five percent test in paragraph (d)(2)(iv)(B) of this section, P's uncapitalized direct labor costs are 3.43% of total direct labor costs ($120,000 divided by $3,500,000). Accordingly, under paragraph (d)(2)(iv)(B) of this section, P includes $120,000 in its additional section 263A costs and excludes that amount from its section 471 costs in the taxable year. Additionally, pursuant to paragraph (d)(2)(iii)(B) of this section, P includes in additional section 263A costs a positive book-to-tax adjustment of $40,000 for vacation pay costs ($150,000 tax amount−$110,000 book amount) and a positive book-to-tax adjustment of $8,000 for holiday pay costs ($18,000 tax amount−$10,000 book amount).

(2) ***Example 2—Alternative-method taxpayer with under and over-applied burdens that uses safe harbor rule for certain variances and under or over-applied burdens.*** Taxpayer X uses the modified simplified production method described in § 1.263A-2(c) and determines its amounts of section 471 costs by using the alternative method under paragraph (d)(2)(iii) of this section. In 2018, X uses a burden rate method for book purposes to allocate costs to Products A and B, and does not capitalize any under or over-applied burdens to property produced or property acquired for resale in its financial statement. X does not allocate costs to any other products using a burden rate method, and X does not allocate costs to any products using a standard cost method. On its 2018 financial statement, using X's burden rate, the total amount of predetermined indirect costs for Product A is $545,000 and the total amount of actual indirect costs incurred for Product A is $550,000; accordingly, X has an under-applied burden of $5,000 for Product A. For federal income tax purposes, the actual indirect costs incurred in 2018 for Product A is $560,000. Additionally, on its 2018 financial statement, using X's burden rate, the total amount of predetermined indirect costs for Product B is $250,000 and the total amount of actual indirect costs incurred for Product B is $225,000; accordingly, X has an over-applied burden of $25,000 for Product B. For federal income tax purposes, the actual indirect costs incurred in 2018 for Product B is $240,000. X uses the safe harbor rule for certain variances and under or over-applied burdens. Prior to the

application of this safe harbor rule, X's total section 471 costs for 2018 for Products A and B (the only items to which X allocates costs using a standard cost method or burden rate method) are $2,000,000, which includes $550,000 actual indirect costs for Product A, $225,000 actual indirect costs for Product B, and $1,225,000 of other section 471 costs for Products A and B that are not allocated under X's burden rate method. For purposes of determining the amount of uncapitalized variances and uncapitalized under or over-applied burdens for the five percent test in paragraph (d)(2)(v)(A) of this section, X's under and over-applied burdens for Products A and B are treated as positive amounts. Consequently, the sum of X's uncapitalized variances and uncapitalized under or over-applied burdens is $30,000 ($5,000 under-applied burden for Product A plus $25,000 over-applied burden for Product B). Accordingly, under paragraph (d)(2)(v)(A) of this section, the sum of X's uncapitalized variances and uncapitalized under or over-applied burdens is 1.5% of X's total section 471 costs for all items to which it allocates costs using a standard cost method or burden rate method ($30,000 divided by $2,000,000), and X includes a positive $5,000 under-applied burden for Product A and a negative $25,000 over-applied burden for Product B in its additional section 263A costs, and excludes those amounts from its section 471 costs. Additionally, pursuant to paragraph (d)(2)(iii)(B) of this section, X includes in its additional section 263A costs a positive book-to-tax adjustment of $10,000 for Product A ($560,000 actual cost tax amount−$550,000 actual cost book amount) and a positive book-to-tax adjustment of $15,000 for Product B ($240,000 actual tax amount cost−$225,000 actual book amount cost) in the taxable year.

(iv) ***De minimis rule exceptions for certain direct costs*** —

(A) ***In general.*** Notwithstanding paragraph (d)(2)(ii) of this section, a taxpayer that uses the simplified resale method, the simplified production method, or the modified simplified production method, and that does not capitalize certain direct costs to property produced or property acquired for resale in its financial statement (uncapitalized direct labor costs or uncapitalized direct material costs), may use either or both the de minimis direct labor costs rule or the de minimis direct material costs rule to include in additional section 263A costs, and exclude from section 471 costs, certain uncapitalized direct labor costs or uncapitalized direct material costs that are incurred in the taxable year as provided in paragraphs (d)(2)(iv)(B) and (C) of this section, respectively. The use of the de minimis rules described in paragraphs (d)(2)(iv)(B) and (C) of this section is the adoption of, or a change in, a method of accounting under section 446 of the Internal Revenue Code.

(B) ***De minimis rule for certain direct labor costs.*** A taxpayer described in paragraph (d)(2)(iv)(A) of this section that uses the de minimis rule described in this paragraph (d)(2)(iv)(B) includes in additional section 263A costs, and excludes from section 471 costs, the sum of the amounts of all of those uncapitalized direct labor costs that are incurred in the taxable year, if that sum is less than five percent of total direct labor costs incurred in the taxable year (whether or not capitalized in the taxpayer's financial statement), or another amount specified in other published guidance (*see* § 601.601(d)(2) of this chapter). For purposes of determining the amount of uncapitalized direct labor costs for this five percent test, any amounts that constitute a reduction to costs are treated as a positive amount. The amounts of uncapitalized direct labor costs used for the five percent test, and the amounts of uncapitalized direct labor costs included in

additional section 263A costs under this paragraph (d)(2)(iv)(B), must not include amounts relating to basic compensation or overtime, or the types of costs included in the taxpayer's standard cost or burden rate methods used for section 471 costs (but see paragraphs (d)(2)(v) and (f)(3)(i)(C) of this section for special rules for certain variances and under or over-applied burdens).

(C) ***De minimis rule for certain direct material costs.*** A taxpayer described in paragraph (d)(2)(iv)(A) of this section that uses the de minimis rule described in this paragraph (d)(2)(iv)(C) includes in additional section 263A costs, and excludes from section 471 costs, the sum of the amounts of all of those uncapitalized direct material costs that are incurred in the taxable year, if that sum is less than five percent of total direct material costs incurred in the taxable year (whether or not capitalized in the taxpayer's financial statement), or another amount specified in other published guidance (*see* § 601.601(d)(2) of this chapter). For purposes of determining the amount of uncapitalized direct material costs for this five percent test, any amounts that constitute a reduction to costs, such as cash and trade discounts, are treated as a positive amount. The amounts of uncapitalized direct material costs used for the five percent test, and the amounts of uncapitalized direct material costs included in additional section 263A costs under this paragraph (d)(2)(iv)(C), must not include the types of costs included in the taxpayer's standard cost method used for section 471 costs (but see paragraphs (d)(2)(v) and (f)(3)(ii)(B) of this section for special rules for certain variances).

(D) ***Taxpayers using a historic absorption ratio.*** A taxpayer that uses the historic absorption ratio provided in § 1.263A-2(b)(4) or (c)(4) or § 1.263A-3(d)(4), and that uses a de minimis rule described in paragraph (d)(2)(iv) of this section during its test period or updated test period, determines whether direct labor costs or direct material costs, as applicable, are included in any of its section 471 costs remaining on hand at year end during its qualifying period or extended qualifying period according to how those direct labor costs or direct material costs, respectively, are identified in at least two of the three years of the taxpayer's applicable test period or updated test period. If a taxpayer described in this paragraph (d)(2)(iv)(D) is required to revise any of its actual absorption ratios for its test period or updated test period as a result of a change in a method of accounting, the taxpayer determines whether direct labor costs or direct material costs, as applicable, are included in any of its section 471 costs on hand at year end during a qualifying period or extended qualifying period according to how those direct labor costs or direct material costs, respectively, are identified in the taxpayer's revised actual absorption ratios during its applicable test period or updated test period.

(E) ***Examples.*** The following examples illustrate this paragraph (d)(2)(iv):

(*1*) ***Example 1—Taxpayer using de minimis direct material costs rule.*** Taxpayer R uses the modified simplified production method described in § 1.263A-2(c) and the de minimis method of accounting under paragraph (d)(2)(iv)(C) of this section. In 2018, R does not capitalize freight-in costs or trade discounts to property produced or property acquired for resale in its financial statement but does capitalize all other direct material costs to such property in its financial statement. R incurs total direct material costs of $3,105,000, which represents invoice price of $3,000,000 on goods purchased, plus $120,000 of freight-in costs, less $15,000 for trade discounts. For purposes of determining the amount of uncapitalized direct material costs for the five percent test in paragraph (d)(2)(iv)(C) of this section, R's trade discounts are

treated as a positive amount. Consequently, R's uncapitalized direct material costs for purposes of the five percent test are $135,000 ($120,000 of freight-in plus $15,000 of trade discounts). Accordingly, under paragraph (d)(2)(iv)(C) of this section, R's uncapitalized direct material costs are 4.35% of total direct material costs ($135,000 divided by $3,105,000), and R includes a positive $120,000 of freight-in and a negative $15,000 of trade discounts in its additional section 263A costs and excludes those amounts from its section 471 costs in the taxable year.

(2) ***Example 2—Taxpayer using de minimis direct labor costs rule and historic absorption ratio.*** Taxpayer S uses the historic absorption ratio provided in § 1.263A-2(c)(4). S uses the de minimis method of accounting under paragraph (d)(2)(iv)(B). S excludes certain uncapitalized direct labor costs from its section 471 costs (and includes them in additional section 263A costs) under paragraph (d)(2)(iv)(B) of this section in Years 1 and 3 of its applicable test period. Because S excluded direct labor costs from its section 471 costs in at least two of the three years of its applicable test period, S must exclude those same costs from its pre-production and production section 471 costs remaining on hand at year end during its qualifying period or extended qualifying period.

(v) ***Safe harbor method for certain variances and under or over-applied burdens*** —

(A) ***In general.*** Notwithstanding paragraphs (d)(2)(i) and (ii), (f)(3)(i)(C), and (f)(3)(ii)(B) of this section, a taxpayer that uses the simplified resale method, the simplified production method, or the modified simplified production method, may use the safe harbor method described in this paragraph (d)(2)(v)(A) for all of its variances and under or over-applied burdens that are not capitalized to property produced or property acquired for resale in its financial statement (uncapitalized variances and uncapitalized under or over-applied burdens). A taxpayer using this safe harbor method must include in additional section 263A costs, and exclude from section 471 costs, the sum of the amounts of all of those uncapitalized variances and uncapitalized under or over-applied burdens for the taxable year, if that sum is less than five percent of the taxpayer's total section 471 costs for all items to which it allocates costs using a standard cost method or burden rate method, or another percentage specified in other published guidance (*see* § 601.601(d)(2) of this chapter). If the sum of uncapitalized variances and uncapitalized under or over-applied burdens is not less than this five percent threshold, the taxpayer may not exclude such uncapitalized variances and uncapitalized under or over-applied burdens from section 471 costs, and must reallocate such uncapitalized variances and uncapitalized under or over-applied burdens to or among the units of property to which the costs are allocable in accordance with paragraphs (f)(3)(i)(C) and (f)(3)(ii)(B) of this section (but see paragraph (d)(2)(v)(B) of this section for a rule that a taxpayer using the safe harbor method described in this paragraph (d)(2)(v)(A) may not use the methods of accounting described in paragraphs (f)(3)(i)(C) and (f)(3)(ii)(B) of this section to treat certain uncapitalized variances and certain uncapitalized under or over-applied burdens as not allocable to property). For purposes of determining the amounts of uncapitalized variances and uncapitalized under or over-applied burdens for this five percent test, all variances and under or over-applied burdens are treated as positive amounts. Additionally, for purposes of this five percent test, a taxpayer's total section 471 costs for all items to which it allocates costs using a standard cost method or burden rate method are determined before application of the safe harbor method described in this paragraph (d)(2)(v)(A), and

therefore this amount must reflect the actual amounts incurred by the taxpayer for those items during the taxable year, which includes variances and under or over-applied burdens. The variances described in this paragraph (d)(2)(v)(A) include any variances on cash or trade discounts, if those discounts are capitalized as part of the taxpayer's standard cost method used for section 471 costs.

(B) ***Consistency requirement.*** A taxpayer using the safe harbor method described in paragraph (d)(2)(v)(A) of this section must use the method consistently for all items to which it allocates costs using a standard cost method or burden rate method and may not use the methods of accounting described in paragraphs (f)(3)(i)(C) and (f)(3)(ii)(B) of this section to treat its uncapitalized variances and uncapitalized under or over-applied burdens that are not significant in amount relative to the taxpayer's total indirect costs incurred with respect to production and resale activities for the year as not allocable to property produced or property acquired for resale.

(C) ***Allocation of variances and under or over-applied burdens between production and preproduction costs under the modified simplified production method.*** In the case of a taxpayer using the modified simplified production method and the safe harbor method described in paragraph (d)(2)(v)(A) of this section, uncapitalized variances and uncapitalized under or over-applied burdens treated as additional section 263A costs under the safe harbor method must be allocated between production additional section 263A costs, as described in § 1.263A-2(c)(3)(ii)(D)(*1*), and pre-production additional section 263A costs, as described in § 1.263A-2(c)(3)(ii)(B)(*1*), using any reasonable method. In the case of a taxpayer using the modified simplified production method and the safe harbor method described in paragraph (d)(2)(v)(A) of this section, uncapitalized variances and uncapitalized under or over-applied burdens that are not excluded from section 471 costs must be allocated between production section 471 costs, as described in § 1.263A-2(c)(3)(ii)(D)(*3*), and pre-production section 471 costs, as described in § 1.263A-2(c)(3)(ii)(B)(*2*) based on the taxpayer's reallocation of such uncapitalized variances and uncapitalized under or over-applied burdens to or among the units of property to which the costs are allocable in accordance with paragraphs (f)(3)(i)(C) and (f)(3)(ii)(B) of this section, as described in paragraph (d)(2)(v)(A) of this section.

(D) ***Allocation of variances and under or over-applied burdens between storage and handling costs absorption ratio and purchasing costs absorption ratio under the simplified resale method.*** In the case of a taxpayer using the simplified resale method, any uncapitalized variances and uncapitalized under or over-applied burdens treated as additional section 263A costs under the safe harbor method described in paragraph (d)(2)(v)(A) of this section must be allocated between storage and handling costs, as described in § 1.263A-3(d)(3)(i)(D)(*2*), and current year's purchasing costs, as described in § 1.263A-3(d)(3)(i)(E)(*2*), using any reasonable method.

(E) ***Method of accounting.*** The use of the safe harbor method described in this paragraph (d)(2)(v) is the adoption of, or a change in, a method of accounting under section 446 of the Internal Revenue Code.

(vi) ***Removal of section 471 costs.*** A taxpayer must remove those costs included in its section 471 costs that are not permitted to be capitalized under either paragraph (c)(2) or (j)(2)(ii) of this section and those costs included in its section 471 costs that are eligible for capitalization under paragraph (j)(2) of this section that the taxpayer does not elect to capitalize under

section 263A. Except as otherwise provided in paragraph (d)(3)(ii)(B) of this section, a taxpayer must remove costs pursuant to this paragraph (d)(2)(vi) by adjusting its section 471 costs and may not remove the costs by including a negative adjustment in its additional section 263A costs. A taxpayer that removes costs pursuant to this paragraph (d)(2)(vi) by adjusting its section 471 costs must use a reasonable method that approximates the manner in which the taxpayer originally capitalized the costs to its property produced or property acquired for resale in its financial statement.

(vii) ***Method changes.*** A taxpayer using the simplified production method, simplified resale method, or the modified simplified production method and that changes its financial statement practices for a cost in a manner that would change its section 471 costs is required to change its method of accounting for federal income tax purposes. A taxpayer may change its method of accounting for determining section 471 costs only with the consent of the Commissioner as required under section 446(e) and the corresponding regulations.

(3) ***Additional section 263A costs*** —

(i) ***In general.*** Additional section 263A costs are the costs, other than interest, that are not included in a taxpayer's section 471 costs but that are required to be capitalized under section 263A. Additional section 263A costs generally do not include the direct costs that are required to be included in a taxpayer's section 471 costs under paragraph (d)(2)(ii) of this section; however, additional section 263A costs must include any direct costs excluded from section 471 costs under paragraphs (d)(2)(iv) and (v) of this section. For a taxpayer using the alternative method described in paragraph (d)(2)(iii) of this section, additional section 263A costs must also include any negative or positive adjustments required to be made as a result of differences in the book and tax amounts of the taxpayer's section 471 costs.

(ii) ***Negative adjustments*** —

(A) ***In general.*** Except as otherwise provided by regulations or other published guidance (*see* § 601.601(d)(2) of this chapter), a taxpayer may not include negative adjustments in additional section 263A costs. However, for a taxpayer using the alternative method described in paragraph (d)(2)(iii) of this section, see paragraph (d)(2)(iii)(B) of this section for negative or positive adjustments required to be made as a result of differences in the book and tax amounts of the taxpayer's section 471 costs.

(B) ***Exception for certain taxpayers removing costs from section 471 costs.*** Notwithstanding paragraphs (d)(2)(vi) and (d)(3)(ii)(A) of this section, and except as otherwise provided in paragraphs (d)(3)(ii)(C) and (D) of this section, the following taxpayers may, but are not required to, include negative adjustments in additional section 263A costs to remove the taxpayer's section 471 costs that are described in paragraph (d)(2)(vi) of this section (costs that are not required to be, or are not permitted to be, capitalized under section 263A):

(*1*) A taxpayer using the simplified production method under § 1.263A-2(b) if the taxpayer's (or its predecessor's) average annual gross receipts for the three previous taxable years (test period) do not exceed $50,000,000, or another amount specified in other published guidance (*see* § 601.601(d)(2) of this chapter). The rules of § 1.263A-1(j) apply for purposes of determining the amount of a taxpayer's gross receipts and the test period;

(*2*) A taxpayer using the modified simplified production method under § 1.263A-2(c); and

(3) A taxpayer using the simplified resale method under § 1.263A-3(d).

(C) ***No negative adjustments for cash or trade discounts.*** A taxpayer may not include negative adjustments in additional section 263A costs for cash or trade discounts described in § 1.471-3(b). However, see paragraph (d)(2)(iv)(C) of this section for a de minimis rule for certain direct material costs that may be included in additional section 263A costs and paragraph (d)(2)(v) of this section for certain variance amounts that may be included in additional section 263A costs.

(D) ***No negative adjustments for certain expenses.*** A taxpayer may not include negative adjustments in additional section 263A costs for an amount which is of a type for which a deduction would be disallowed under section 162(c), (e), (f), or (g) and the regulations thereunder in the case of a business expense.

(E) ***Consistency requirement for negative adjustments.*** A taxpayer that is permitted to include negative adjustments in additional section 263A costs to remove section 471 costs under paragraph (d)(3)(ii)(B) of this section and that includes negative adjustments to remove section 471 costs must use that method of accounting to remove all section 471 costs required to be removed under paragraph (d)(2)(vi) of this section.

(4) ***Section 263A costs.*** Section 263A costs are defined as the costs that a taxpayer must capitalize under section 263A. Thus, section 263A costs are the sum of a taxpayer's section 471 costs, its additional section 263A costs, and interest capitalizable under section 263A(f).

(5) ***Classification of costs.*** A taxpayer must classify section 471 costs, additional section 263A costs, and any permitted adjustments to section 471 or additional section 263A costs, using the narrower of the classifications of costs described in paragraphs (e)(2), (3), and (4) of this section, whether or not the taxpayer is required to maintain inventories, or the classifications of costs used by a taxpayer in its financial statement. If a cost is not described in paragraph (e)(2), (3), or (4) of this section, the cost is to be classified using the classification of costs used in the taxpayer's financial statement.

(6) ***Financial statement.*** For purposes of section 263A, financial statement means the taxpayer's financial statement listed in paragraphs (d)(6)(i) through (iv) of this section that has the highest priority, including within paragraphs (d)(6)(ii) and (iv) of this section. The financial statements are, in descending priority:

(i) A financial statement required to be filed with the Securities and Exchange Commission (SEC) (the 10-K or the Annual Statement to Shareholders);

(ii) A certified audited financial statement that is accompanied by the report of an independent certified public accountant (or in the case of a foreign entity, by the report of a similarly qualified independent professional) that is used for:

(A) Credit purposes;

(B) Reporting to shareholders, partners, or similar persons; or

(C) Any other substantial non-tax purpose;

(iii) A financial statement (other than a tax return) required to be provided to the federal or a state government or any federal or state agency (other than the SEC or the Internal Revenue Service); or

(iv) A financial statement that is used for:

(A) Credit purposes;

(B) Reporting to shareholders, partners, or similar persons; or

(C) Any other substantial non-tax purpose.

(e) *Types of costs subject to capitalization* —

(1) ***In general.*** Taxpayers subject to section 263A must capitalize all direct costs and certain indirect costs properly allocable to property produced or property acquired for resale. This paragraph (e) describes the types of costs subject to section 263A.

(2) *Direct costs* —

(i) ***Producers.*** Producers must capitalize direct material costs and direct labor costs.

(A) ***Direct material costs. Direct materials costs*** include the cost of those materials that become an integral part of specific property produced and those materials that are consumed in the ordinary course of production and that can be identified or associated with particular units or groups of units of property produced. For example, a cost described in § 1.162-3, relating to the cost of a material or supply, may be a direct material cost.

(B) ***Direct labor costs*** include the costs of labor that can be identified or associated with particular units or groups of units of specific property produced. For this purpose, labor encompasses full-time and part-time employees, as well as contract employees and independent contractors. Direct labor costs include all elements of compensation other than employee benefit costs described in paragraph (e)(3)(ii)(D) of this section. Elements of direct labor costs include basic compensation, overtime pay, vacation pay, holiday pay, sick leave pay (other than payments pursuant to a wage continuation plan under section 105(d) as it existed prior to its repeal in 1983), shift differential, payroll taxes, and payments to a supplemental unemployment benefit plan.

(ii) ***Resellers.*** Resellers must capitalize the acquisition costs of property acquired for resale. In the case of inventory, the acquisition cost is the cost described in § 1.471-3(b).

(3) *Indirect costs* —

(i) ***In general.***

(A) Indirect costs are defined as all costs other than direct material costs and direct labor costs (in the case of property produced) or acquisition costs (in the case of property acquired for resale). Taxpayers subject to section 263A must capitalize all indirect costs properly allocable to property produced or property acquired for resale. Indirect costs are properly allocable to property produced or property acquired for resale when the costs directly benefit or are incurred by reason of the performance of production or resale activities. Indirect costs may directly benefit or be incurred by reason of the performance of production or resale activities even if the costs are calculated as a percentage of revenue or gross profit from the sale of inventory, are determined by reference to the number of units of property sold, or are incurred only upon the sale of inventory. Indirect costs may be allocable to both production and resale activities, as well as to other activities that are not subject to section 263A. Taxpayers must make a reasonable allocation of indirect costs between production, resale, and other activities.

(B) ***Example.*** The following example illustrates the provisions of this paragraph (e)(3)(i):

(i) Taxpayer A manufactures tablecloths and other linens. A enters into a licensing agreement with Company L under which A may label its tablecloths with L's trademark if the tablecloths meet certain specified quality standards. In exchange for its right to use L's trademark, the licensing agreement requires A to pay L a royalty of $X for each tablecloth carrying L's trademark that A sells. The licensing agreement does not require A to pay L any minimum or lump-sum royalties.

(ii) The licensing agreement provides A with the right to use L's intellectual property, a trademark. The licensing agreement also requires A to conduct its production activities according to certain standards as a condition of exercising that right. Thus, A's right to use L's trademark under the licensing agreement is directly related to A's production of tablecloths. The royalties the licensing agreement requires A to pay for using L's trademark are the costs A incurs in exchange for these rights. Therefore, although A incurs royalty costs only when A sells a tablecloth carrying L's trademark, the royalty costs directly benefit production activities and are incurred by reason of production activities within the meaning of paragraph (e)(3)(i)(A) of this section.

(ii) ***Examples of indirect costs required to be capitalized.*** The following are examples of indirect costs that must be capitalized to the extent they are properly allocable to property produced or property acquired for resale:

(A) ***Indirect labor costs.*** Indirect labor costs include all labor costs (including the elements of labor costs set forth in paragraph (e)(2)(i) of this section) that cannot be directly identified or associated with particular units or groups of units of specific property produced or property acquired for resale (e.g., factory labor that is not direct labor). As in the case of direct labor, indirect labor encompasses full-time and part-time employees, as well as contract employees and independent contractors.

(B) ***Officers' compensation.*** Officers' compensation includes compensation paid to officers of the taxpayer.

(C) ***Pension and other related costs.*** Pension and other related costs include contributions paid to or made under any stock bonus, pension, profit-sharing or annuity plan, or other plan deferring the receipt of compensation, whether or not the plan qualifies under section 401(a). Contributions to employee plans representing past services must be capitalized in the same manner (and in the same proportion to property currently being acquired or produced) as amounts contributed for current service.

(D) ***Employee benefit expenses.*** Employee benefit expenses include all other employee benefit expenses (not described in paragraph (e)(3)(ii)(C) of this section) to the extent such expenses are otherwise allowable as deductions under chapter 1 of the Internal Revenue Code. These other employee benefit expenses include: worker's compensation; amounts otherwise deductible or allowable in reducing earnings and profits under section 404A; payments pursuant to a wage continuation plan under section 105(d) as it existed prior to its repeal in 1983; amounts includible in the gross income of employees under a method or arrangement of employer contributions or compensation that has the effect of a stock bonus, pension, profit-sharing or annuity plan, or other plan deferring receipt of compensation or providing deferred benefits; premiums on life and health insurance; and

miscellaneous benefits provided for employees such as safety, medical treatment, recreational and eating facilities, membership dues, etc. Employee benefit expenses do not, however, include direct labor costs described in paragraph (e)(2)(i) of this section.

(E) ***Indirect material costs. Indirect material costs*** include the cost of materials that are not an integral part of specific property produced and the cost of materials that are consumed in the ordinary course of performing production or resale activities that cannot be identified or associated with particular units of property. Thus, for example, a cost described in § 1.162-3, relating to the cost of a material or supply, may be an indirect cost.

(F) ***Purchasing costs.*** Purchasing costs include costs attributable to purchasing activities. See § 1.263A-3(c)(3) for a further discussion of purchasing costs.

(G) ***Handling costs.*** Handling costs include costs attributable to processing, assembling, repackaging and transporting goods, and other similar activities. See § 1.263A-3(c)(4) for a further discussion of handling costs.

(H) ***Storage costs.*** Storage costs include the costs of carrying, storing, or warehousing property. See § 1.263A-3(c)(5) for a further discussion of storage costs.

(I) ***Cost recovery.*** Cost recovery includes depreciation, amortization, and cost recovery allowances on equipment and facilities (including depreciation or amortization of self-constructed assets or other previously produced or acquired property to which section 263A or section 263 applies).

(J) ***Depletion.*** Depletion includes allowances for depletion, whether or not in excess of cost. Depletion is, however, only properly allocable to property that has been sold (i.e., for purposes of determining gain or loss on the sale of the property).

(K) ***Rent.*** Rent includes the cost of renting or leasing equipment, facilities, or land.

(L) ***Taxes.*** Taxes include those taxes (other than taxes described in paragraph (e)(3)(iii)(F) of this section) that are otherwise allowable as a deduction to the extent such taxes are attributable to labor, materials, supplies, equipment, land, or facilities used in production or resale activities.

(M) ***Insurance.*** Insurance includes the cost of insurance on plant or facility, machinery, equipment, materials, property produced, or property acquired for resale.

(N) ***Utilities.*** Utilities include the cost of electricity, gas, and water.

(O) ***Repairs and maintenance.*** Repairs and maintenance include the cost of repairing and maintaining equipment or facilities.

(P) ***Engineering and design costs.*** Engineering and design costs include pre-production costs, such as costs attributable to research, experimental, engineering, and design activities (to the extent that such amounts are not research and experimental expenditures as described in section 174 and the regulations thereunder).

(Q) ***Spoilage.*** Spoilage includes the costs of rework labor, scrap, and spoilage.

(R) ***Tools and equipment.*** Tools and equipment include the costs of tools and equipment which are not otherwise capitalized.

(S) ***Quality control.*** Quality control includes the costs of quality control and inspection.

(T) ***Bidding costs.*** Bidding costs are costs incurred in the solicitation of contracts (including contracts pertaining to property acquired for resale) ultimately awarded to the taxpayer. The taxpayer must defer all bidding costs paid or incurred in the solicitation of a particular contract until the contract is awarded. If the contract is awarded to the taxpayer, the bidding costs become part of the indirect costs allocated to the subject matter of the contract. If the contract is not awarded to the taxpayer, bidding costs are deductible in the taxable year that the contract is awarded to another party, or in the taxable year that the taxpayer is notified in writing that no contract will be awarded and that the contract (or a similar or related contract) will not be rebid, or in the taxable year that the taxpayer abandons its bid or proposal, whichever occurs first. Abandoning a bid does not include modifying, supplementing, or changing the original bid or proposal. If the taxpayer is awarded only part of the bid (for example, the taxpayer submitted one bid to build each of two different types of products, and the taxpayer was awarded a contract to build only one of the two types of products), the taxpayer shall deduct the portion of the bidding costs related to the portion of the bid not awarded to the taxpayer. In the case of a bid or proposal for a multi-unit contract, all bidding costs must be included in the costs allocated to the subject matter of the contract awarded to the taxpayer to produce or acquire for resale any of such units. For example, where the taxpayer submits one bid to produce three similar turbines and the taxpayer is awarded a contract to produce only two of the three turbines, all bidding costs must be included in the cost of the two turbines. For purposes of this paragraph (e)(3)(ii)(T), a contract means—

(*1*) In the case of a specific unit of property, any agreement under which the taxpayer would produce or sell property to another party if the agreement is entered into before the taxpayer produces or acquires the specific unit of property to be delivered to the party under the agreement; and

(*2*) In the case of fungible property, any agreement to the extent that, at the time the agreement is entered into, the taxpayer has on hand an insufficient quantity of completed fungible items of such property that may be used to satisfy the agreement (plus any other production or sales agreements of the taxpayer).

(U) ***Licensing and franchise costs.***

(*1*) Licensing and franchise costs include fees incurred in securing the contractual right to use a trademark, corporate plan, manufacturing procedure, special recipe, or other similar right associated with property produced or property acquired for resale. These costs include the otherwise deductible portion (such as amortization) of the initial fees incurred to obtain the license or franchise and any minimum annual payments and any royalties that are incurred by a licensee or a franchisee. These costs also include fees, payments, and royalties otherwise described in this paragraph (e)(3)(ii)(U) that a taxpayer incurs (within the meaning of section 461) only upon the sale of property produced or acquired for resale.

(*2*) If a taxpayer incurs (within the meaning of section 461) a fee, payment, or royalty described in this paragraph (e)(3)(ii)(U) only upon the sale of property produced or acquired for resale and the cost is required to be capitalized under this paragraph (e)(3), the taxpayer may properly allocate the cost entirely to property produced or acquired for resale by the taxpayer that has been sold.

(V) ***Interest.*** Interest includes interest on debt incurred or continued during the production period to finance the production of real property or tangible personal property to which section 263A(f) applies.

(W) ***Capitalizable service costs.*** Service costs that are required to be capitalized include capitalizable service costs and capitalizable mixed service costs as defined in paragraph (e)(4) of this section.

(iii) ***Indirect costs not capitalized.*** The following indirect costs are not required to be capitalized under section 263A:

(A) ***Selling and distribution costs.*** These costs are marketing, selling, advertising, and distribution costs.

(B) ***Research and experimental expenditures.*** Research and experimental expenditures are expenditures described in section 174 and the regulations thereunder.

(C) ***Section 179 costs.*** Section 179 costs are expenses for certain depreciable assets deductible at the election of the taxpayer under section 179 and the regulations thereunder.

(D) ***Section 165 losses.*** Section 165 losses are losses under section 165 and the regulations thereunder.

(E) ***Cost recovery allowances on temporarily idle equipment and facilities*** —*(1) In general.* Cost recovery allowances on temporarily idle equipment and facilities include only depreciation, amortization, and cost recovery allowances on equipment and facilities that have been placed in service but are temporarily idle. Equipment and facilities are temporarily idle when a taxpayer takes them out of service for a finite period. However, equipment and facilities are not considered temporarily idle—

(*i*) During worker breaks, non-working hours, or on regularly scheduled non-working days (such as holidays or weekends);

(*ii*) During normal interruptions in the operation of the equipment or facilities;

(*iii*) When equipment is enroute to or located at a job site; or

(*iv*) When under normal operating conditions, the equipment is used or operated only during certain shifts.

(*2*) *Examples.* The provisions of this paragraph (e)(3)(iii)(E) are illustrated by the following examples:

Example 1. Equipment operated only during certain shifts. Taxpayer A manufactures widgets. Although A's manufacturing facility operates 24 hours each day in three shifts, A only operates its stamping machine during one shift each day. Because A only operates its stamping machine during certain shifts, A's stamping machine is not considered temporarily idle during the two shifts that it is not operated.

Example 2. Facility shut down for retooling. Taxpayer B owns and operates a manufacturing facility. B closes its manufacturing facility for two weeks to retool its assembly line. B's manufacturing facility is considered temporarily idle during this two-week period.

(F) *Taxes assessed on the basis of income.* Taxes assessed on the basis of income include only state, local, and foreign income taxes, and franchise taxes that are assessed on the taxpayer based on income.

(G) *Strike expenses.* Strike expenses include only costs associated with hiring employees to replace striking personnel (but not wages of replacement personnel), costs of security, and legal fees associated with settling strikes.

(H) *Warranty and product liability costs.* Warranty costs and product liability costs are costs incurred in fulfilling product warranty obligations for products that have been sold and costs incurred for product liability insurance.

(I) *On-site storage costs.* On-site storage costs are storage and warehousing costs incurred by a taxpayer at an on-site storage facility, as defined in § 1.263A-3(c)(5)(ii)(A), with respect to property produced or property acquired for resale.

(J) *Unsuccessful bidding expenses.* Unsuccessful bidding costs are bidding expenses incurred in the solicitation of contracts not awarded to the taxpayer.

(K) *Deductible service costs.* Service costs that are not required to be capitalized include deductible service costs and deductible mixed service costs as defined in paragraph (e)(4) of this section.

(4) ***Service costs*** —

(i) ***Introduction.*** This paragraph (e)(4) provides definitions and categories of service costs. Paragraph (g)(4) of this section provides specific rules for determining the amount of service costs allocable to property produced or property acquired for resale. In addition, paragraph (h) of this section provides a simplified method for determining the amount of service costs that must be capitalized.

(A) ***Definition of service costs.*** Service costs are defined as a type of indirect costs (e.g., general and administrative costs) that can be identified specifically with a service department or function or that directly benefit or are incurred by reason of a service department or function.

(B) ***Definition of service departments.*** Service departments are defined as administrative, service, or support departments that incur service costs. The facts and circumstances of the taxpayer's activities and business organization control whether a department is a service department. For example, service departments include personnel, accounting, data processing, security, legal, and other similar departments.

(ii) ***Various service cost categories*** —

(A) ***Capitalizable service costs.*** Capitalizable service costs are defined as service costs that directly benefit or are incurred by reason of the performance of the production or resale activities of the taxpayer. Therefore, these service costs are required to be capitalized under section 263A. Examples of service departments or functions that incur capitalizable service costs are provided in paragraph (e)(4)(iii) of this section.

(B) ***Deductible service costs.*** Deductible service costs are defined as service costs that do not directly benefit or are not incurred by reason of the performance of the production or resale activities of the taxpayer, and therefore, are not required to be capitalized under section 263A. Deductible service costs generally include costs incurred by reason of the taxpayer's overall management or policy guidance functions. In addition, deductible service costs include costs incurred by reason of the marketing, selling, advertising, and distribution activities of the taxpayer. Examples of service departments or functions that incur deductible service costs are provided in paragraph (e)(4)(iv) of this section.

(C) ***Mixed service costs.*** Mixed service costs are defined as service costs that are partially allocable to production or resale activities (capitalizable mixed service costs) and partially allocable to non-production or non-resale activities (deductible mixed service costs). For example, a personnel department may incur costs to recruit factory workers, the costs of which are allocable to production activities, and it may incur costs to develop wage, salary, and benefit policies, the costs of which are allocable to non-production activities.

(iii) ***Examples of capitalizable service costs.*** Costs incurred in the following departments or functions are generally allocated among production or resale activities:

(A) The administration and coordination of production or resale activities (wherever performed in the business organization of the taxpayer).

(B) Personnel operations, including the cost of recruiting, hiring, relocating, assigning, and maintaining personnel records or employees.

(C) Purchasing operations, including purchasing materials and equipment, scheduling and coordinating delivery of materials and equipment to or from factories or job sites, and expediting and follow-up.

(D) Materials handling and warehousing and storage operations.

(E) Accounting and data services operations, including, for example, cost accounting, accounts payable, disbursements, and payroll functions (but excluding accounts receivable and customer billing functions).

(F) Data processing.

(G) Security services.

(H) Legal services.

(iv) ***Examples of deductible service costs.*** Costs incurred in the following departments or functions are not generally allocated to production or resale activities:

(A) Departments or functions responsible for overall management of the taxpayer or for setting overall policy for all of the taxpayer's activities or trades or businesses, such as the board of directors (including their immediate staff), and the chief executive, financial, accounting, and legal officers (including their immediate staff) of the taxpayer, provided that no substantial part of the cost of such departments or functions benefits a particular production or resale activity.

(B) Strategic business planning.

(C) General financial accounting.

(D) General financial planning (including general budgeting) and financial management (including bank relations and cash management).

(E) Personnel policy (such as establishing and managing personnel policy in general; developing wage, salary, and benefit policies; developing employee training programs unrelated to particular production or resale activities; negotiating with labor unions; and maintaining relations with retired workers).

(F) Quality control policy.

(G) Safety engineering policy.

(H) Insurance or risk management policy (but not including bid or performance bonds or insurance related to activities associated with property produced or property acquired for resale).

(I) Environmental management policy (except to the extent that the costs of any system or procedure benefits a particular production or resale activity).

(J) General economic analysis and forecasting.

(K) Internal audit.

(L) Shareholder, public, and industrial relations.

(M) Tax services.

(N) Marketing, selling, or advertising.

(f) *Cost allocation methods* —

(1) ***Introduction.*** This paragraph (f) sets forth various detailed or specific (facts-and-circumstances) cost allocation methods that taxpayers may use to allocate direct and indirect costs to property produced and property acquired for resale. Paragraph (g) of this section provides general rules for applying these allocation methods to various categories of costs (i.e., direct materials, direct labor, and indirect costs, including service costs). In addition, in lieu of a facts-and-circumstances allocation method, taxpayers may use the simplified methods provided in §§ 1.263A-2(b) and (c) and 1.263A-3(d) to allocate direct and indirect costs to eligible property produced or eligible property acquired for resale; see those sections for definitions of eligible property. Paragraph (h) of this section provides a simplified method for determining the amount of mixed service costs required to be capitalized to eligible property. The methodology set forth in paragraph (h) of this section for mixed service costs may be used in conjunction with either a facts-and-circumstances or a simplified method of allocating costs to eligible property produced or eligible property acquired for resale.

(2) ***Specific identification method.*** A specific identification method traces costs to a cost objective, such as a function, department, activity, or product, on the basis of a cause and effect or other reasonable relationship between the costs and the cost objective.

(3) *Burden rate and standard cost meth- ods* —

(i) *Burden rate method* —

(A) ***In gen- eral.*** A burden rate method allocates an appropriate amount of indirect costs to property produced or property acquired for resale during a taxable year using predetermined rates that approximate the actual amount of indirect costs incurred by the taxpayer during the taxable year. Burden rates (such as ratios based on direct costs, hours, or similar items) may be developed by the taxpayer in accordance with acceptable accounting principles and applied in a reasonable manner. A taxpayer may allocate different indirect costs on the basis of different burden rates. Thus, for example, the taxpayer may use one burden rate for allocating the cost of rent and another burden rate for allocating the cost of utilities. Any periodic adjustment to a burden rate that merely reflects current operating conditions, such as increases in automation or changes in operation or prices, is not a change in method of accounting under section 446(e). A change, however, in the concept or base upon which such rates are developed, such as a change from basing the rates on direct labor hours to basing them on direct machine hours, is a change in method of accounting to which section 446(e) applies.

(B) ***Development of burden rates.*** The following factors, among others, may be used in developing burden rates:

(*1*) The selection of an appropriate level of activity and a period of time upon which to base the calculation of rates reflecting operating conditions for purposes of the unit costs being determined.

(*2*) The selection of an appropriate statistical base, such as direct labor hours, direct labor dollars, machine hours, or a combination thereof, upon which to apply the overhead rate.

(*3*) The appropriate budgeting, classification, and analysis of expenses (for example, the analysis of fixed versus variable costs).

(C) ***Operation of the burden rate method.*** The purpose of the burden rate method is to allocate an appropriate amount of indirect costs to production or resale activities through the use of predetermined rates intended to approximate the actual amount of indirect costs incurred. Accordingly, the proper use of the burden rate method under this section requires that any net negative or net positive difference between the total predetermined amount of costs allocated to property and the total amount of indirect costs actually incurred and required to be allocated to such property (i.e., the under or over-applied burden) must be treated as an adjustment to the taxpayer's ending inventory or capital account (as the case may be) in the taxable year in which such difference arises. However, if such adjustment is not significant in amount in relation to the taxpayer's total indirect costs incurred with respect to production or resale activities for the year, such adjustment need not be allocated to the property produced or property acquired for resale unless such allocation is made in the taxpayer's financial statement. The taxpayer must treat both positive and negative adjustments consistently.

(ii) ***Standard cost method*** —

(A) ***In general.*** A standard cost method allocates an appropriate amount of direct and indirect costs to property produced by the taxpayer through the use of preestablished standard allowances, without reference to costs actually incurred during the taxable year. A taxpayer may use a standard cost method to allocate costs, provided variances are treated in accordance with the procedures prescribed in paragraph (f)(3)(ii)(B) of this

section. Any periodic adjustment to standard costs that merely reflects current operating conditions, such as increases in automation or changes in operation or prices, is not a change in method of accounting under section 446(e). A change, however, in the concept or base upon which standard costs are developed is a change in method of accounting to which section 446(e) applies.

(B) ***Treatment of variances.*** For purposes of this section, net positive overhead variance means the excess of total standard indirect costs over total actual indirect costs and net negative overhead variance means the excess of total actual indirect costs over total standard indirect costs. The proper use of a standard cost method requires that a taxpayer must reallocate to property a pro rata portion of any net negative or net positive overhead variances and any net negative or net positive direct cost variances. The taxpayer must apportion such variances to or among the property to which the costs are allocable. However, if such variances are not significant in amount relative to the taxpayer's total indirect costs incurred with respect to production and resale activities for the year, such variances need not be allocated to property produced or property acquired for resale unless such allocation is made in the taxpayer's financial statement. A taxpayer must treat both positive and negative variances consistently.

(4) ***Reasonable allocation methods.*** A taxpayer may use the methods described in paragraph (f) (2) or (3) of this section if they are reasonable allocation methods within the meaning of this paragraph (f)(4). In addition, a taxpayer may use any other reasonable method to properly allocate direct and indirect costs among units of property produced or property acquired for resale during the taxable year. An allocation method is reasonable if, with respect to the taxpayer's production or resale activities taken as a whole—

(i) The total costs actually capitalized during the taxable year do not differ significantly from the aggregate costs that would be properly capitalized using another permissible method described in this section or in §§ 1.263A-2 and 1.263A-3, with appropriate consideration given to the volume and value of the taxpayer's production or resale activities, the availability of costing information, the time and cost of using various allocation methods, and the accuracy of the allocation method chosen as compared with other allocation methods;

(ii) The allocation method is applied consistently by the taxpayer; and

(iii) The allocation method is not used to circumvent the requirements of the simplified methods in this section or in § 1.263A-2, § 1.263A-3, or the principles of section 263A.

(g) ***Allocating categories of costs*** —

(1) ***Direct materials.*** Direct material costs (as defined in paragraph (e)(2) of this section) incurred during the taxable year must be allocated to the property produced or property acquired for resale by the taxpayer using the taxpayer's d of accounting for materials (e.g., specific identification; first-in, first-out (FIFO); or last-in, first-out (LIFO)), or any other reasonable allocation method (as defined under the principles of paragraph (f)(4) of this section).

(2) ***Direct labor.*** Direct labor costs (as defined in paragraph (e)(2) of this section) incurred during the taxable year are generally allocated to property produced or property acquired for resale using a specific identification method, standard cost method, or any other reasonable allocation method (as defined under the principles of paragraph (f)(4) of this section). All elements of compensation, other than basic compensation, may be grouped together and then allocated in proportion to the charge

for basic compensation. Further, a taxpayer is not treated as using an erroneous method of accounting if direct labor costs are treated as indirect costs under the taxpayer's allocation method, provided such costs are capitalized to the extent required by paragraph (g)(3) of this section.

(3) ***Indirect costs.*** Indirect costs (as defined in paragraph (e)(3) of this section) are generally allocated to intermediate cost objectives such as departments or activities prior to the allocation of such costs to property produced or property acquired for resale. Indirect costs are allocated using either a specific identification method, a standard cost method, a burden rate method, or any other reasonable allocation method (as defined under the principles of paragraph (f)(4) of this section).

(4) ***Service costs*** —

(i) ***In general.*** Service costs are a type of indirect costs that may be allocated using the same allocation methods available for allocating other indirect costs described in paragraph (g)(3) of this section. Generally, taxpayers that use a specific identification method or another reasonable allocation method must allocate service costs to particular departments or activities based on a factor or relationship that reasonably relates the service costs to the benefits received from the service departments or activities. For example, a reasonable factor for allocating legal services to particular departments or activities is the number of hours of legal services attributable to each department or activity. See paragraph (g)(4)(iv) of this section for other illustrations. Using reasonable factors or relationships, a taxpayer must allocate mixed service costs under a direct reallocation method described in paragraph (g)(4)(iii)(A) of this section, a step-allocation method described in paragraph (g)(4)(iii)(B) of this section, or any other reasonable allocation method (as defined under the principles of paragraph (f)(4) of this section).

(ii) ***De minimis rule.*** For purposes of administrative convenience, if 90 percent or more of a mixed service department's costs are deductible service costs, a taxpayer may elect not to allocate any portion of the service department's costs to property produced or property acquired for resale. For example, if 90 percent of the costs of an electing taxpayer's industrial relations department benefit the taxpayer's overall policy-making activities, the taxpayer is not required to allocate any portion of these costs to a production activity. Under this election, however, if 90 percent or more of a mixed service department's costs are capitalizable service costs, a taxpayer must allocate 100 percent of the department's costs to the production or resale activity benefitted. For example, if 90 percent of the costs of an electing taxpayer's accounting department benefit the taxpayer's manufacturing activity, the taxpayer must allocate 100 percent of the costs of the accounting department to the manufacturing activity. An election under this paragraph (g)(4)(ii) applies to all of a taxpayer's mixed service departments and constitutes the adoption of a (or a change in) method of accounting under section 446 of the Internal Revenue Code.

(iii) ***Methods for allocating mixed service costs*** —

(A) ***Direct reallocation method.*** Under the direct reallocation method, the total costs (direct and indirect) of all mixed service departments are allocated only to departments or cost centers engaged in production or resale activities and then from those departments to particular activities. This direct reallocation method ignores benefits provided by one mixed service department to other mixed service departments, and also excludes other mixed service departments from the base used to make the allocation.

(B) ***Step-allocation method.***

(*1*) Under a step-allocation method, a sequence of allocations is made by the taxpayer. First, the total costs of the mixed service departments that benefit the greatest number of other departments are allocated to—

(*i*) Other mixed service departments;

(*ii*) Departments that incur only deductible service costs; and

(*iii*) Departments that exclusively engage in production or resale activities.

(*2*) A taxpayer continues allocating mixed service costs in the manner described in paragraph (g)(4)(iii)(B)(*1*) of this section (i.e., from the service departments benefitting the greatest number of departments to the service departments benefitting the least number of departments) until all mixed service costs are allocated to the types of departments listed in this paragraph (g)(4)(iii). Thus, a step-allocation method recognizes the benefits provided by one mixed service department to another mixed service department and also includes mixed service departments that have not yet been allocated in the base used to make the allocation.

(C) ***Examples.*** The provisions of this paragraph (g)(4)(iii) are illustrated by the following examples:

Example 1. Direct reallocation method. (i) Taxpayer E has the following five departments: the Assembling Department, the Painting Department, and the Finishing Department (production departments), and the Personnel Department and the Data Processing Department (mixed service departments). E allocates the Personnel Department's costs on the basis of total payroll costs and the Data Processing Department's costs on the basis of data processing hours.
(ii) Under a direct reallocation method, E allocates the Personnel Department's costs directly to its Assembling, Painting, and Finishing Department, and not to its Data Processing department.

Department	Total dept. costs	Amount of payroll costs	Allocation ratio	Amount allocated
Personnel	$500,000	$50,000		<$500,000>
Data Proc'g	250,000	15,000		
Assembling	250,000	15,000	15,000/ 285,000	26,315
Painting	1,000,000	90,000	90,000/ 285,000	157,895
Finishing	2,000,000	180,000	180,000/ 285,000	315,790

Department	Total dept. costs	Amount of payroll costs	Allocation ratio	Amount allocated
Total	$4,000,000	$350,000		

(iii) After E allocates the Personnel Department's costs, E then allocates the costs of its Data Processing Department in the same manner.

Department	Total dept. cost after initial allocation	Total data proc. hours	Allocation ratio	Amount allocated	Total dept. cost after final allocation
Personnel	0	2,000			0
Data Proc'g	$250,000			<$250,000>	
Assembling	276,315	2,000	2,000/ 10,000	50,000	$326,315
Painting	1,157,895	0	0/10,000	0	1,157,895
Finishing	2,315,790	8,000	8,000/ 10,000	200,000	2,515,790
Total	$4,000,000	12,000			$4,000,000

Example 2. Step-allocation method. (i) Taxpayer F has the following five departments: the Manufacturing Department (a production department), the Marketing Department and the Finance Department (departments that incur only deductible service costs), the Personnel Department and the Data Processing Department (mixed service departments). F uses a step-allocation method and allocates the Personnel Department's costs on the basis of total payroll costs and the Data Processing Department's costs on the basis of data processing hours. F's Personnel Department benefits all four of F's other departments, while its Data Processing Department benefits only three departments. Because F's Personnel Department benefits the greatest number of other departments, F first allocates its Personnel Department's costs to its Manufacturing, Marketing, Finance and Data

Processing departments, as follows:

Department	Total cost of dept.	Total payroll costs	Allocation ratio	Amount allocated
Personnel	$500,000	$50,000		<$500,000>
Data Proc'g	250,000	15,000	15,000/ 300,000	25,000
Finance	250,000	15,000	15,000/ 300,000	25,000
Marketing	1,000,000	90,000	90,000/ 300,000	150,000
Manufac'g	2,000,000	180,000	180,000/ 300,000	300,000
	4,000,000	350,000		

(ii) Under a step-allocation method, the denominator of F's allocation ratio includes the payroll costs of its Manufacturing, Marketing, Finance, and Data Processing departments.

(iii) Next, F allocates the costs of its Data Processing Department on the basis of data processing hours. Because the costs incurred by F's Personnel Department have already been allocated, no allocation is made to the Personnel Department.

Department	Total dept. cost after initial allocation	Total data proc. hours	Allocation ratio		
Personnel	$0	2,000			$0
Data Proc'g	275,000			<$275,000>	0
Finance	275,000	2,000	2,000/ 10,000	55,000	330,000
Marketing	1,150,000	0	0/10,000	0	1,150,000
Manufac'g	2,300,000	8,000	8,000/ 10,000	220,000	2,520,000
	4,000,000	12,000			4,000,000

(iv) Under the second step of F's step-allocation method, the denominator of F's allocation ratio includes the data processing hours of its Manufacturing, Marketing,

> and Finance Departments, but does not include the data processing hours of its Personnel Department (the other mixed service department) because the costs of that department have previously been allocated.

(iv) ***Illustrations of mixed service cost allocations using reasonable factors or relationships.*** This paragraph (g)(4)(iv) illustrates various reasonable factors and relationships that may be used in allocating different types of mixed service costs. Taxpayers, however, are permitted to use other reasonable factors and relationships to allocate mixed service costs. In addition, the factors or relationships illustrated in this paragraph (g)(4)(iv) may be used to allocate other types of service costs not illustrated in this paragraph (g)(4)(iv).

(A) ***Security services.*** The costs of security or protection services must be allocated to each physical area that receives the services using any reasonable method applied consistently (e.g., the size of the physical area, the number of employees in the area, or the relative fair market value of assets located in the area).

(B) ***Legal services.*** The costs of legal services are generally allocable to a particular production or resale activity on the basis of the approximate number of hours of legal service performed in connection with the activity, including research, bidding, negotiating, drafting, reviewing a contract, obtaining necessary licenses and permits, and resolving disputes. Different hourly rates may be appropriate for different services. In determining the number of hours allocable to any activity, estimates are appropriate, detailed time records are not required to be kept, and insubstantial amounts of services provided to an activity by senior legal staff (such as administrators or reviewers) may be ignored. Legal costs may also be allocated to a particular production or resale activity based on the ratio of the total direct costs incurred for the activity to the total direct costs incurred with respect to all production or resale activities. The taxpayer must also allocate directly to an activity the cost incurred for any outside legal services. Legal costs relating to general corporate functions are not required to be allocated to a particular production or resale activity.

(C) ***Centralized payroll services.*** The costs of a centralized payroll department or activity are generally allocated to the departments or activities benefitted on the basis of the gross dollar amount of payroll processed.

(D) ***Centralized data processing services.*** The costs of a centralized data processing department are generally allocated to all departments or activities benefitted using any reasonable basis, such as total direct data processing costs or the number of data processing hours supplied. The costs of data processing systems or applications developed for a particular activity are directly allocated to that activity.

(E) ***Engineering and design services.*** The costs of an engineering or a design department are generally directly allocable to the departments or activities benefitted based on the ratio of the approximate number of hours of work performed with respect to the particular activity to the total number of hours of engineering or design work performed for all activities. Different services may be allocated at different hourly rates.

(F) ***Safety engineering services.*** The costs of a safety engineering departments or activities generally benefit all of the taxpayer's activities and, thus, should be allocated using a reasonable basis, such as: the approximate number of safety inspections made in

connection with a particular activity as a fraction of total inspections, the number of employees assigned to an activity as a fraction of total employees, or the total labor hours worked in connection with an activity as a fraction of total hours. However, in determining the allocable costs of a safety engineering department, costs attributable to providing a safety program relating only to a particular activity must be directly assigned to such activity. Additionally, the cost of a safety engineering department only responsible for setting safety policy and establishing safety procedures to be used in all of the taxpayer's activities is not required to be allocated.

(v) ***Accounting method change.*** A change in the method or base used to allocate service costs (such as changing from an allocation base using direct labor costs to a base using direct labor hours), or a change in the taxpayer's determination of what functions or departments of the taxpayer are to be allocated, is a change in method of accounting to which section 446(e) and the regulations thereunder apply.

(h) ***Simplified service cost method*** —

(1) ***Introduction.*** This paragraph (h) provides a simplified method for determining capitalizable mixed service costs incurred during the taxable year with respect to eligible property (i.e., the aggregate portion of mixed service costs that are properly allocable to the taxpayer's production or resale activities).

(2) ***Eligible property*** —

(i) ***In general.*** Except as otherwise provided in paragraph (h)(2)(ii) of this section, the simplified service cost method, if elected for any trade or business of the taxpayer, must be used for all production and resale activities of the trade or business associated with any of the following categories of property that are subject to section 263A:

(A) ***Inventory property.*** Stock in trade or other property properly includible in the inventory of the taxpayer.

(B) ***Non-inventory property held for sale.*** Non-inventory property held by a taxpayer primarily for sale to customers in the ordinary course of the taxpayer's trade or business.

(C) ***Certain self-constructed assets.*** Self-constructed assets substantially identical in nature to, and produced in the same manner as, inventory property produced by the taxpayer or other property produced by the taxpayer and held primarily for sale to customers in the ordinary course of the taxpayer's trade or business.

(D) ***Self-constructed tangible personal property produced on a routine and repetitive basis—***

(1) ***In general.*** Self-constructed tangible personal property produced by the taxpayer on a routine and repetitive basis in the ordinary course of the taxpayer's trade or business. Self-constructed tangible personal property is produced by the taxpayer on a routine and repetitive basis in the ordinary course of the taxpayer's trade or business when units of tangible personal property (as defined in § 1.263A-10(c)) are mass-produced, that is, numerous substantially identical assets are manufactured within a taxable year using standardized designs and assembly line techniques, and either the applicable recovery period of the property determined under section 168(c) is not longer than 3 years or the property is a material or supply that will be used and consumed within 3 years of being produced. For purposes of this paragraph

(h)(2)(i)(D), the applicable recovery period of the assets will be determined at the end of the taxable year in which the assets are placed in service for purposes of § 1.46-3(d). Subsequent changes to the applicable recovery period after the assets are placed in service will not affect the determination of whether the assets are produced on a routine and repetitive basis for purposes of this paragraph (h)(2)(i)(D).

(2) ***Examples.*** The following examples illustrate this paragraph (h)(2)(i)(D):

Example 1. Y is a manufacturer of automobiles. During the taxable year Y produces numerous substantially identical dies and molds using standardized designs and assembly line techniques. The dies and molds have a 3-year applicable recovery period for purposes of section 168(c). Y uses the dies and molds to produce or process particular automobile components and does not hold them for sale. The dies and molds are produced on a routine and repetitive basis in the ordinary course of Y's business for purposes of this paragraph because the dies and molds are both mass-produced and have a recovery period of not longer than 3 years.

Example 2. Z is an electric utility that regularly manufactures and installs identical poles that are used in transmitting and distributing electricity. The poles have a 20-year applicable recovery period for purposes of section 168(c). The poles are not produced on a routine and repetitive basis in the ordinary course of Z's business for purposes of this paragraph because the poles have an applicable recovery period that is longer than 3 years.

(ii) ***Election to exclude self-constructed assets.*** At the taxpayer's election, the simplified service cost method may be applied within a trade or business to only the categories of inventory property and non-inventory property held for sale described in paragraphs (h)(2)(i)(A) and(B) of this section. Taxpayers electing to exclude the self-constructed assets described in paragraphs (h)(2)(i)(C) and (D) of this section from application of the simplified service cost method must, however, allocate service costs to such property in accordance with paragraph (g)(4) of this section.

(3) ***General allocation formula.***

(i) Under the simplified service cost method, a taxpayer computes its capitalizable mixed service costs using the following formula:

$$\text{Allocation ratio} \times \text{total mixed service costs}$$

(ii) A producer may elect one of two allocation ratios, the labor-based allocation ratio or the production cost allocation ratio. A reseller that satisfies the requirements for using the simplified resale method of § 1.263A-3(d) (whether or not that method is elected) may elect the simplified service cost method, but must use a labor-based allocation ratio. (See § 1.263A-3(d) for labor-based allocation ratios to be used in conjunction with the simplified resale method.) The allocation ratio used by a trade or business of a taxpayer is a method of accounting which must be applied consistently within the trade or business.

(4) ***Labor-based allocation ratio.***

(i) The labor-based allocation ratio is computed as follows:

$$\frac{\text{Section 263A labor costs}}{\text{Total labor costs}}$$

(ii) Section 263A labor costs are defined as the total labor costs (excluding labor costs included in mixed service costs) allocable to property produced and property acquired for resale under section 263A that are incurred in the taxpayer's trade or business during the taxable year. Total labor costs are defined as the total labor costs (excluding labor costs included in mixed service costs) incurred in the taxpayer's trade or business during the taxable year. Total labor costs include labor costs incurred in all parts of the trade or business (i.e., if the taxpayer has both property produced and property acquired for resale, the taxpayer must include labor costs from resale activities as well as production activities). For example, taxpayer G incurs $1,000 of total mixed service costs during the taxable year. G's section 263A labor costs are $5,000 and its total labor costs are $10,000. Under the labor-based allocation ratio, G's capitalizable mixed service costs are $500 (i.e., $1,000 × ($5,000 divided by $10,000)).

(5) ***Production cost allocation ratio.***

(i) Producers may use the production cost allocation ratio, computed as follows:

$$\frac{\text{Section 263A production costs}}{\text{Total costs}}$$

(ii) Section 263A production costs are defined as the total costs (excluding mixed service costs and interest) allocable to property produced (and property acquired for resale if the producer is also engaged in resale activities) under section 263A that are incurred in the taxpayer's trade or business during the taxable year. Total costs are defined as all costs (excluding mixed service costs and interest) incurred in the taxpayer's trade or business during the taxable year. Total costs include all direct and indirect costs allocable to property produced (and property acquired for resale if the producer is also engaged in resale activities) as well as all other costs of the taxpayer's trade or business, including, but not limited to: salaries and other labor costs of all personnel; all depreciation taken for federal income tax purposes; research and experimental expenditures; and selling, marketing, and distribution costs. Such costs do not include, however, taxes described in paragraph (e)(3)(iii)(F) of this section. For example, taxpayer H, a producer, incurs $1,000 of total mixed service costs in the taxable year. H's section 263A production costs are $10,000 and its total costs are $20,000. Under the production cost allocation ratio, H's capitalizable mixed service costs are $500 (i.e., $1,000 × ($10,000 divided by $20,000)).

(6) ***Definition of total mixed service costs.*** Total mixed service costs are defined as the total costs incurred during the taxable year in all departments or functions of the taxpayer's trade or business that perform mixed service activities. See paragraph (e)(4)(ii)(C) of this section which defines mixed service costs. In determining the total mixed service costs of a trade or business, the taxpayer must include all costs incurred in its mixed service departments and cannot exclude any otherwise deductible service costs. For example, if the accounting department within a trade or business is a mixed service department, then in determining the total mixed service costs of the trade or business, the taxpayer cannot exclude the costs of personnel in the accounting department that perform services relating to non-production activities (e.g., accounts receivable or customer billing activities). Instead, the entire cost of the accounting department must be included in the total mixed service costs.

(7) ***Costs allocable to more than one business.*** To the extent mixed service costs, labor costs, or other costs are incurred in more than one trade or business, the taxpayer must determine the amounts allocable to the particular trade or business for which the simplified service cost method is being applied by using any reasonable allocation method consistent with the principles of paragraph (f)(4) of this section.

(8) ***De minimis rule.*** If the taxpayer elects to apply the de minimis rule of paragraph (g)(4)(ii) of this section to any mixed service department, the department is not considered a mixed service department for purposes of the simplified service cost method. Instead, the costs of such department are allocated exclusively to the particular activity satisfying the 90-percent test.

(9) ***Separate election.*** A taxpayer may elect the simplified service cost method in conjunction with any other allocation method used at the trade or business level, including the simplified methods described in §§ 1.263A-2(b) and (c) and 1.263A-3(d). However, the election of the simplified service cost method must be made independently of the election to use those other simplified methods.

(i) [Reserved]

(j) ***Exemption for certain small business taxpayers*** —

(1) ***In general.*** A taxpayer, other than a tax shelter prohibited from using the cash receipts and disbursements method of accounting under section 448(a)(3), that meets the gross receipts test under section 448(c) and § 1.448-2(c) (section 448(c) gross receipts test) for any taxable year (small business taxpayer) is not required to capitalize costs under section 263A to any real or tangible personal property produced, and any real or personal property described in section 1221(a)(1) acquired for resale, during that taxable year. This section 448(c) gross receipts test applies even if the taxpayer is not otherwise subject to section 448(a).

(2) ***Application of the section 448(c) gross receipts test*** —

(i) ***In general.*** In the case of any taxpayer that is not a corporation or a partnership, and except as provided in paragraphs (j)(2)(ii) and (iii) of this section, the section 448(c) gross receipts test is applied in the same manner as if each trade or business of the taxpayer were a corporation or partnership.

(ii) ***Gross receipts of individuals, etc.*** Except when the aggregation rules of section 448(c)(2) apply, the gross receipts of a taxpayer other than a corporation or partnership are the amount derived from all trades or businesses of such taxpayer. Amounts not related to a trade or business are excluded from the gross receipts of the taxpayer. For example, an individual taxpayer's gross receipts do not include inherently personal amounts, such as personal injury awards or settlements with respect to an injury of the individual taxpayer, disability benefits, Social Security benefits received by the taxpayer during the taxable year, and wages received as an employee that are reported on Form W-2.

(iii) ***Partners and S corporation shareholders.*** Except when the aggregation rules of section 448(c)(2) apply, each partner in a partnership includes a share of the partnership's gross receipts in proportion to such partner's distributive share, as determined under section 704, of items of gross income that were taken into account by the partnership under section 703. Similarly, a shareholder of an S corporation includes such shareholder's *pro rata* share of S corporation gross receipts taken into account by the S corporation under section 1363(b).

(iv) ***Examples.*** The operation of this paragraph (j) is illustrated by the following examples:

(A) ***Example 1.*** Taxpayer A is an individual who operates two separate and distinct trades or business that are reported on Schedule C, *Profit or Loss from Business,* of A's Federal income tax return. For 2020, one trade or business has annual average gross receipts of $5 million, and the other trade or business has average annual gross receipts of $35 million. Under paragraph (j)(2)(ii) of this section, for 2020, neither of A's trades or businesses meets the gross receipts test of paragraph (j)(2) of this section ($5 million + $35 million = $40 million, which is greater than the inflation-adjusted gross receipts test amount for 2020, which is $26 million).

(B) ***Example 2.*** Taxpayer B is an individual who operates three separate and distinct trades or business that are reported on Schedule C of B's Federal income tax return. For 2020, Business X is a retail store with average annual gross receipts of $15 million, Business Y is a dance studio with average annual gross receipts of $6 million, and Business Z is a car repair shop with average annual gross receipts of $12 million. Under paragraph (j)(2)(ii) of this section, B's gross receipts are the combined amount derived from all three of B's trades or businesses. Therefore, for 2020, X, Y and Z do not meet the gross receipts test of paragraph (j)(2)(i) of this section ($15 million + $6 million + $12 million = $33 million, which is greater than the inflation-adjusted gross receipts test amount for 2020, which is $26 million).

(3) ***Change in method of accounting*** —

(i) ***In general.*** A change from applying the small business taxpayer exemption under paragraph (j) of this section to not applying the exemption under this paragraph (j), or *vice versa,* is a change in method of accounting under section 446(e) and § 1.446-1(e). A taxpayer changing its method of accounting under paragraph (j) of this section may do so only with the consent of the Commissioner as required under section 446(e) and § 1.446-1. In the case of any taxpayer required by this section to change its method of accounting for any taxable year, the change shall be treated as a change initiated by the taxpayer. For rules relating to the clear reflection of income and the pattern of consistent treatment of an item, see section 446 and § 1.446-1. The amount of the net section 481(a) adjustment and the adjustment period necessary to implement a change in method of accounting required under this section are determined under § 1.446-1(e) and the applicable administrative procedures to obtain the Commissioner's consent to change a method of accounting as published in the Internal Revenue Bulletin (see Revenue Procedure 2015-13 (2015-5 IRB 419) (or successor) (see also § 601.601(d)(2) of this chapter).

(ii) ***Automatic consent for certain method changes.*** Certain changes in method of accounting made under paragraph (j) of this section may be made under the procedures to obtain the automatic consent of the Commissioner to change a method of accounting. See Revenue Procedure 2015-13 (2015-5 IRB 419) (or successor) (see also § 601.601(d)(2) of this chapter)). In certain situations, special terms and conditions may apply.

(k) ***Special rules*** —

(1) ***Costs provided by a related person*** —

(i) ***In general.*** A taxpayer subject to section 263A must capitalize an arm's-length charge for any section 263A costs (e.g., costs of materials, labor, or services) incurred by a related person that are properly allocable to the property produced or property acquired for resale by the taxpayer. Both the taxpayer and the related person must account for the transaction as if an arm's-length

charge had been incurred by the taxpayer with respect to its property produced or property acquired for resale. For purposes of this paragraph (j)(1)(i), a taxpayer is considered related to another person if the taxpayer and such person are described in section 482. Further, for purposes of this paragraph (j)(1)(i), arm's-length charge means the arm's-length charge (or other appropriate charge where permitted and applicable) under the principles of section 482. Any correlative adjustments necessary because of the arm's-length charge requirement of this paragraph (j)(1)(i) shall be determined under the principles of section 482.

(ii) ***Exceptions.*** The provisions of paragraph (j)(1)(i) of this section do not apply if, and to the extent that—

(A) It would be inappropriate under the principles of section 482 for the Commissioner to adjust the income of the taxpayer or the related person with respect to the transaction at issue; or

(B) A transaction is accounted for under an alternative Internal Revenue Code section resulting in the capitalization (or deferral of the deduction) of the costs of the items provided by the related party and the related party does not deduct such costs earlier than the costs would have been deducted by the taxpayer if the costs were capitalized under section 263A. See § 1.1502-13.

(2) ***Optional capitalization of period costs*** —

(i) ***In general.*** Taxpayers are not required to capitalize indirect costs that do not directly benefit or are not incurred by reason of the production of property or acquisition of property for resale (i.e., period costs). A taxpayer may, however, elect to capitalize certain period costs if: The method is consistently applied; is used in computing beginning inventories, ending inventories, and cost of goods sold; and does not result in a material distortion of the taxpayer's income. A material distortion relates to the source, character, amount, or timing of the cost capitalized or any other item affected by the capitalization of the cost. Thus, for example, a taxpayer may not capitalize a period cost under section 263A if capitalization would result in a material change in the computation of the foreign tax credit limitation under section 904. An election to capitalize a period cost is the adoption of (or a change in) a method of accounting under section 446 of the Internal Revenue Code.

(ii) ***Period costs eligible for capitalization.*** The types of period costs eligible for capitalization under this paragraph (j)(2) include only the types of period costs (e.g., under paragraph (e)(3)(iii) of this section) for which some portion of the costs incurred is properly allocable to property produced or property acquired for resale in the year of the election. Thus, for example, marketing or advertising costs, no portion of which are properly allocable to property produced or property acquired for resale, do not qualify for elective capitalization under this paragraph (j)(2).

(3) ***Trade or business application.*** Notwithstanding the references generally to taxpayer throughout this section and §§ 1.263A-2 and 1.263A-3, the methods of accounting provided under section 263A are to be elected and applied independently for each separate and distinct trade or business of the taxpayer in accordance with the provisions of section 446(d) and the regulations thereunder.

(4) ***Transfers with a principal purpose of tax avoidance.*** The District Director may require appropriate adjustments to valuations of inventory and other property subject to section 263A if a transfer of property is made to another person for a principal purpose of avoiding the application of section

263A. Thus, for example, the District Director may require a taxpayer using the simplified production method of § 1.263A-2(b) to apply that method to transferred inventories immediately prior to a transfer under section 351 if a principal purpose of the transfer is to avoid the application of section 263A.

(l) *Change in method of accounting* —

(1) ***In general.*** A change in a taxpayer's treatment of mixed service costs to comply with paragraph (h)(2)(i)(D) of this section is a change in method of accounting to which the provisions of sections 446 and 481 and the regulations under those sections apply. See § 1.263A-7. For a taxpayer's first taxable year ending on or after August 2, 2005, the taxpayer is granted the consent of the Commissioner to change its method of accounting to comply with paragraph (h)(2)(i)(D) of this section, provided the taxpayer follows the administrative procedures, as modified by paragraphs (k)(2) through (4) of this section, issued under § 1.446-1(e)(3)(ii) for obtaining the Commissioner's automatic consent to a change in accounting method (for further guidance, for example, see Rev. Proc. 2002-9 (2002-1 CB 327), as modified and clarified by Announcement 2002-17 (2002-1 CB 561), modified and amplified by Rev. Proc. 2002-19 (2002-1 CB 696), and amplified, clarified, and modified by Rev. Proc. 2002-54 (2002-2 CB 432), and § 601.601(d)(2)(ii)(*b*) of this chapter). For purposes of Form 3115, "Application for Change in Accounting Method," the designated number for the automatic accounting method change authorized by this paragraph (k) is "95." If Form 3115 is revised or renumbered, any reference in this section to that form is treated as a reference to the revised or renumbered form. Alternatively, notwithstanding the provisions of any administrative procedures that preclude a taxpayer from requesting the advance consent of the Commissioner to change a method of accounting that is required to be made pursuant to a published automatic change procedure, for its first taxable year ending on or after August 2, 2005, a taxpayer may request the advance consent of the Commissioner to change its method of accounting to comply with paragraph (h)(2)(i)(D) of this section, provided the taxpayer follows the administrative procedures, as modified by paragraphs (k)(2) through (5) of this section, for obtaining the advance consent of the Commissioner (for further guidance, for example, see Rev. Proc. 97-27 (1997-1 CB 680), as modified and amplified by Rev. Proc. 2002-19 (2002-1 CB 696), as amplified and clarified by Rev. Proc. 2002-54 (2002-2 CB 432), and § 601.601(d)(2)(ii)(*b*) of this chapter). For the taxpayer's second and subsequent taxable years ending on or after August 2, 2005, requests to secure the consent of the Commissioner must be made under the administrative procedures, as modified by paragraphs (k)(3) and (4) of this section, for obtaining the Commissioner's advance consent to a change in accounting method.

(2) ***Scope limitations.*** Any limitations on obtaining the automatic consent or advance consent of the Commissioner do not apply to a taxpayer seeking to change its method of accounting to comply with paragraph (h)(2)(i)(D) of this section for its first taxable year ending on or after August 2, 2005.

(3) ***Audit protection.*** A taxpayer that changes its method of accounting in accordance with this paragraph (k) to comply with paragraph (h)(2)(i)(D) of this section does not receive audit protection if its method of accounting for mixed service costs is an issue under consideration at the time the application is filed with the national office.

(4) ***Section 481(a) adjustment.*** A change in method of accounting to conform to paragraph (h)(2)(i)(D) of this section requires a section 481(a) adjustment. The section 481(a) adjustment period is two taxable years for a net positive adjustment for an accounting method change that is made to conform to paragraph (h)(2)(i)(D) of this section.

(5) ***Time for requesting change.*** Notwithstanding the provisions of § 1.446-1(e)(3)(i) and any contrary administrative procedure, a taxpayer may submit a request for advance consent to change its method of accounting to comply with paragraph (h)(2)(i)(D) of this section for its first taxable year ending on or after August 2, 2005, on or before the date that is 30 days after the end of the taxable year for which the change is requested.

(m) ***Effective/applicability date*** —

(1) ***In general.*** Except as provided in (l)(2), (l)(3), and (l)(4) of this section, the effective dates for this section are provided in paragraph (a)(2) of this section.

(2) ***Mixed service costs; self-constructed tangible personal property produced on a routine and repetitive basis.*** Paragraphs (h)(2)(i)(D), (k), and (l)(2) of this section apply for taxable years ending on or after August 2, 2005.

(3) ***Costs allocable to property sold; indirect costs; licensing and franchise costs.*** Paragraphs (c)(5), (e)(3)(i), and (e)(3)(ii)(U) of this section apply for taxable years ending on or after January 13, 2014.

(4) ***Materials and supplies*** —

(i) ***In general.*** The last sentence of paragraphs (e)(2)(i)(A) and (e)(3)(ii)(E) of this section, and paragraph (l)(4) of this section apply to amounts paid (to acquire or produce property) in taxable years beginning on or after January 1, 2014.

(ii) ***Early application of this section.*** A taxpayer may choose to apply the last sentence of paragraphs (e)(2)(i)(A) and (e)(3)(ii)(E) of this section, and paragraph (l)(4) of this section to amounts paid (to acquire or produce property) in taxable years beginning on or after January 1, 2012.

(iii) ***Optional application of TD 9564.*** A taxpayer may choose to apply § 1.263A-1T(b)(14), the introductory phrase of § 1.263A-1T(c)(4), the last sentence of § 1.263A-1T(e)(2)(i)(A), the last sentence of § 1.263A-1T(e)(3)(ii)(E), § 1.263A-1T(l), and § 1.263A-1T(m)(2), as these provisions are contained in TD 9564 (76 FR 81060) December 27, 2011, to amounts paid (to acquire or produce property) in taxable years beginning on or after January 1, 2012, and before January 1, 2014.

(5) ***Definitions of section 471 costs and additional section 263A costs.*** Paragraphs (d)(2) and (3) of this section apply for taxable years beginning on or after November 20, 2018. For any taxable year that both begins before November 20, 2018 and ends after November 20, 2018, the IRS will not challenge return positions consistent with all of paragraphs (d)(2) and (3) of this section.

(6) ***Exemption for certain small business taxpayers.*** The second and third sentence in paragraph (a)(2)(i), paragraphs (b)(1) and (j) of this section apply to taxable years beginning on or after January 5, 2021. However, for a taxable year beginning after December 31, 2017, and before January 5, 2021, a taxpayer may apply the paragraphs described in the first sentence of this paragraph (m)(6), provided that the taxpayer follows all the applicable rules contained in the regulations under section 263A for such taxable year and all subsequent taxable years.

[T.D. 8482, 58 FR 42209, Aug. 9, 1993]

Editorial Note: For FEDERAL REGISTER citations affecting § 1.263A-1, see the List of CFR Sections Affected, which appears in the Finding Aids section of the printed volume and at *www.govinfo.gov*.

§ 1.263A-2 Rules relating to property produced by the taxpayer.

(a) ***In general.*** Section 263A applies to real property and tangible personal property produced by a taxpayer for use in its trade or business or for sale to its customers. In addition, section 263A applies to property produced for a taxpayer under a contract with another party. The principal terms related to the scope of section 263A with respect to producers are provided in this paragraph (a). See § 1.263A-1(b)(11) for an exception in the case of certain de minimis property provided to customers incident to the provision of services. For taxable years beginning after December 31, 2017, see § 1.263A-1(j) for an exception in the case of a small business taxpayer that meets the gross receipts test of section 448(c) and § 1.448-2(c).

(1) ***Produce*** —

(i) ***In general.*** For purposes of section 263A, produce includes the following: construct, build, install, manufacture, develop, improve, create, raise, or grow.

(ii) ***Ownership*** —

(A) ***General rule.*** Except as provided in paragraphs (a)(1)(ii) (B) and (C) of this section, a taxpayer is not considered to be producing property unless the taxpayer is considered an owner of the property produced under federal income tax principles. The determination as to whether a taxpayer is an owner is based on all of the facts and circumstances, including the various benefits and burdens of ownership vested with the taxpayer. A taxpayer may be considered an owner of property produced, even though the taxpayer does not have legal title to the property.

(B) ***Property produced for the taxpayer under a contract*** —

(*1*) ***In general.*** Property produced for the taxpayer under a contract with another party is treated as property produced by the taxpayer to the extent the taxpayer makes payments or otherwise incurs costs with respect to the property. A taxpayer has made payment under this section if the transaction would be considered payment by a taxpayer using the cash receipts and disbursements method of accounting.

(*2*) ***Definition of a contract*** —

(*i*) ***General rule.*** Except as provided under paragraph (a)(1)(ii)(B)(*2*)(*ii*) of this section, a contract is any agreement providing for the production of property if the agreement is entered into before the production of the property to be delivered under the contract is completed. Whether an agreement exists depends on all the facts and circumstances. Facts and circumstances indicating an agreement include, for example, the making of a prepayment, or an arrangement to make a prepayment, for property prior to the date of the completion of production of the property, or the incurring of significant expenditures for property of specialized design or specialized application that is not intended for self-use.

(*ii*) ***Routine purchase order exception.*** A routine purchase order for fungible property is not treated as a contract for purposes of this section. An agreement will not be treated as a routine purchase order for fungible property, however, if the contractor is required to make more than de minimis modifications to the property to tailor it to the customer's specific needs, or if at the time the

agreement is entered into, the customer knows or has reason to know that the contractor cannot satisfy the agreement within 30 days out of existing stocks and normal production of finished goods.

(C) Home construction contracts. Section 263A applies to a home construction contract unless that contract will be completed within two years of the contract commencement date, and, for contracts entered into after December 31, 2017, in taxable years ending after December 31, 2017, the taxpayer meets the gross receipts test of section 448(c) and § 1.448-2(c) for the taxable year in which such contract is entered into. Except as otherwise provided in this paragraph (a)(1)(ii)(C), section 263A applies to such a contract even if the contractor is not considered the owner of the property produced under the contract under Federal income tax principles.

(2) *Tangible personal property* —

(i) ***General rule.*** In general, section 263A applies to the costs of producing tangible personal property, and not to the costs of producing intangible property. For example, section 263A applies to the costs manufacturers incur to produce goods, but does not apply to the costs financial institutions incur to originate loans.

(ii) ***Intellectual or creative property.*** For purposes of determining whether a taxpayer producing intellectual or creative property is producing tangible personal property or intangible property, the term tangible personal property includes films, sound recordings, video tapes, books, and other similar property embodying words, ideas, concepts, images, or sounds by the creator thereof. Other similar property for this purpose generally means intellectual or creative property for which, as costs are incurred in producing the property, it is intended (or is reasonably likely) that any tangible medium in which the property is embodied will be mass distributed by the creator or any one or more third parties in a form that is not substantially altered. However, any intellectual or creative property that is embodied in a tangible medium that is mass distributed merely incident to the distribution of a principal product or good of the creator is not other similar property for these purposes.

(A) ***Intellectual or creative property that is tangible personal property.*** Section 263A applies to tangible personal property defined in this paragraph (a)(2) without regard to whether such property is treated as tangible or intangible property under other sections of the Internal Revenue Code. Thus, for example, section 263A applies to the costs of producing a motion picture or researching and writing a book even though these assets may be considered intangible for other purposes of the Internal Revenue Code. Tangible personal property includes, for example, the following:

(*1*) ***Books.*** The costs of producing and developing books (including teaching aids and other literary works) required to be capitalized under this section include costs incurred by an author in researching, preparing, and writing the book. (However, see section 263A(h), which provides an exemption from the capitalization requirements of section 263A in the case of certain free-lance authors.) In addition, the costs of producing and developing books include prepublication expenditures incurred by publishers, including payments made to authors (other than commissions for sales of books that have already taken place), as well as costs incurred by publishers in writing, editing, compiling, illustrating, designing, and developing the books. The costs of producing a book also include the costs of producing the underlying manuscript, copyright, or license. (These costs are distinguished from the separately

capitalizable costs of printing and binding the tangible medium embodying the book (e.g., paper and ink).) See § 1.174-2(a)(1), which provides that the term research or experimental expenditures does not include expenditures incurred for research in connection with literary, historical, or similar projects.

(2) ***Sound recordings.*** A sound recording is a work that results from the fixation of a series of musical, spoken, or other sounds, regardless of the nature of the material objects, such as discs, tapes, or other phonorecordings, in which such sounds are embodied.

(B) ***Intellectual or creative property that is not tangible personal property.*** Items that are not considered tangible personal property within the meaning of section 263A(b) and paragraph (a)(2)(ii) of this section include:

(1) ***Evidences of value.*** Tangible personal property does not include property that is representative or evidence of value, such as stock, securities, debt instruments, mortgages, or loans.

(2) ***Property provided incident to services.*** Tangible personal property does not include de minimis property provided to a client or customer incident to the provision of services, such as wills prepared by attorneys, or blueprints prepared by architects. See § 1.263A-1(b)(11).

(3) ***Costs required to be capitalized by producers*** —

(i) ***In general.*** Except as specifically provided in section 263A(f) with respect to interest costs, producers must capitalize direct and indirect costs properly allocable to property produced under section 263A, without regard to whether those costs are incurred before, during, or after the production period (as defined in section 263A(f)(4)(B)).

(ii) ***Pre-production costs.*** If property is held for future production, taxpayers must capitalize direct and indirect costs allocable to such property (e.g., purchasing, storage, handling, and other costs), even though production has not begun. If property is not held for production, indirect costs incurred prior to the beginning of the production period must be allocated to the property and capitalized if, at the time the costs are incurred, it is reasonably likely that production will occur at some future date. Thus, for example, a manufacturer must capitalize the costs of storing and handling raw materials before the raw materials are committed to production. In addition, a real estate developer must capitalize property taxes incurred with respect to property if, at the time the taxes are incurred, it is reasonably likely that the property will be subsequently developed.

(iii) ***Post-production costs.*** Generally, producers must capitalize all indirect costs incurred subsequent to completion of production that are properly allocable to the property produced. Thus, for example, storage and handling costs incurred while holding the property produced for sale after production must be capitalized to the property to the extent properly allocable to the property. However, see § 1.263A-3(c) for exceptions.

(4) ***Practical capacity concept.*** Notwithstanding any provision to the contrary, the use, directly or indirectly, of the practical capacity concept is not permitted under section 263A. For purposes of section 263A, the term practical capacity concept means any concept, method, procedure, or formula (such as the practical capacity concept described in § 1.471-11(d)(4)) whereunder fixed costs are not capitalized because of the relationship between the actual production at the taxpayer's

production facility and the practical capacity of the facility. For purposes of this section, the practical capacity of a facility includes either the practical capacity or theoretical capacity of the facility, as defined in § 1.471-11(d)(4), or any similar determination of productive or operating capacity. The practical capacity concept may not be used with respect to any activity to which section 263A applies (i.e., production or resale activities). A taxpayer shall not be considered to be using the practical capacity concept solely because the taxpayer properly does not capitalize costs described in § 1.263A-1(e)(3)(iii)(E), relating to certain costs attributable to temporarily idle equipment.

(5) ***Taxpayers required to capitalize costs under this section.*** This section generally applies to taxpayers that produce property. If a taxpayer is engaged in both production activities and resale activities, the taxpayer applies the principles of this section as if it read production or resale activities, and by applying appropriate principles from § 1.263A-3. If a taxpayer is engaged in both production and resale activities, the taxpayer may elect the simplified production method or the modified simplified production method provided in this section, but generally may not elect the simplified resale method discussed in § 1.263A-3(d). If elected, the simplified production method or the modified simplified production method must be applied to all eligible property produced and all eligible property acquired for resale by the taxpayer.

(b) ***Simplified production method*** —

(1) ***Introduction.*** This paragraph (b) provides a simplified method for determining the additional section 263A costs properly allocable to ending inventories of property produced and other eligible property on hand at the end of the taxable year.

(2) ***Eligible property*** —

(i) ***In general.*** Except as otherwise provided in paragraph (b)(2)(ii) of this section, the simplified production method, if elected for any trade or business of a producer, must be used for all production and resale activities associated with any of the following categories of property to which section 263A applies:

(A) ***Inventory property.*** Stock in trade or other property properly includible in the inventory of the taxpayer.

(B) ***Non-inventory property held for sale.*** Non-inventory property held by a taxpayer primarily for sale to customers in the ordinary course of the taxpayer's trade or business.

(C) ***Certain self-constructed assets.*** Self-constructed assets substantially identical in nature to, and produced in the same manner as, inventory property produced by the taxpayer or other property produced by the taxpayer and held primarily for sale to customers in the ordinary course of the taxpayer's trade or business.

(D) ***Self-constructed tangible personal property produced on a routine and repetitive basis*—**

(1) ***In general.*** Self-constructed tangible personal property produced by the taxpayer on a routine and repetitive basis in the ordinary course of the taxpayer's trade or business. Self-constructed tangible personal property is produced by the taxpayer on a routine and repetitive basis in the ordinary course of the taxpayer's trade or business when units of tangible personal property (as defined in § 1.263A-10(c)) are mass-produced, that is, numerous substantially identical assets are manufactured within a taxable year using standardized designs and assembly line techniques, and either the applicable recovery period of the property determined under section 168(c) is not

longer than 3 years or the property is a material or supply that will be used and consumed within 3 years of being produced. For purposes of this paragraph (b)(2)(i)(D), the applicable recovery period of the assets will be determined at the end of the taxable year in which the assets are placed in service for purposes of § 1.46-3(d). Subsequent changes to the applicable recovery period after the assets are placed in service will not affect the determination of whether the assets are produced on a routine and repetitive basis for purposes of this paragraph (b)(2)(i)(D).

(2) ***Examples.*** The following examples illustrate this paragraph (b)(2)(i)(D):

Example 1. Y is a manufacturer of automobiles. During the taxable year Y produces numerous substantially identical dies and molds using standardized designs and assembly line techniques. The dies and molds have a 3-year applicable recovery period for purposes of section 168(c). Y uses the dies and molds to produce or process particular automobile components and does not hold them for sale. The dies and molds are produced on a routine and repetitive basis in the ordinary course of Y's business for purposes of this paragraph because the dies and molds are both mass-produced and have a recovery period of not longer than 3 years.

Example 2. Z is an electric utility that regularly manufactures and installs identical poles that are used in transmitting and distributing electricity. The poles have a 20-year applicable recovery period for purposes of section 168(c). The poles are not produced on a routine and repetitive basis in the ordinary course of Z's business for purposes of this paragraph because the poles have an applicable recovery period that is longer than 3 years.

(ii) ***Election to exclude self-constructed assets.*** At the taxpayer's election, the simplified production method may be applied within a trade or business to only the categories of inventory property and non-inventory property held for sale described in paragraphs (b)(2)(i) (A) and (B) of this section. Taxpayers electing to exclude the self- constructed assets, defined in paragraphs (b)(2)(i) (C) and (D) of this section, from application of the simplified production method must, however, allocate additional section 263A costs to such property in accordance with § 1.263A-1 (f).

(3) ***Simplified production method without historic absorption ratio election*** —

(i) ***General allocation formula*** —

(A) ***In general.*** Except as otherwise provided in paragraph (b)(3)(iv) of this section, the additional section 263A costs allocable to eligible property remaining on hand at the close of the taxable year under the simplified production method are computed as follows:

$$\text{Absorption ratio} \times \text{section 471 costs remaining on hand at year end}$$

(B) ***Effect of allocation.*** The absorption ratio generally is multiplied by the section 471 costs remaining in ending inventory or otherwise on hand at the end of each taxable year in which the simplified production method is applied. The resulting product is the additional section 263A costs that are added to the taxpayer's ending section 471 costs to determine the section 263A costs that are capitalized. See, however, paragraph (b)(3)(iii) of this section for special rules applicable to LIFO taxpayers. Except as otherwise provided in this section or in § 1.263A-1 or 1.263A-3, additional section 263A costs that are allocated to

inventories on hand at the close of the taxable year under the simplified production method of this paragraph (b) are treated as inventory costs for all purposes of the Internal Revenue Code.

(ii) ***Definitions*** —

(A) ***Absorption ratio.*** Under the simplified production method, the absorption ratio is determined as follows:

$$\frac{\text{Additional section 263A costs incurred during the taxable year}}{\text{Section 471 costs incurred during the taxable year}}$$

(*1*) ***Additional section 263A costs incurred during the taxable year.*** Additional section 263A costs incurred during the taxable year are defined as the additional section 263A costs described in § 1.263A-1(d)(3) that a taxpayer incurs during its current taxable year.

(*2*) ***Section 471 costs incurred during the taxable year.*** Section 471 costs incurred during the taxable year are defined as the section 471 costs described in § 1.263A-1(d)(2) that a taxpayer incurs during its current taxable year.

(B) ***Section 471 costs remaining on hand at year end.*** Section 471 costs remaining on hand at year end means the section 471 costs, as defined in § 1.263A-1(d)(2), that a taxpayer incurs during its current taxable year which remain in its ending inventory or are otherwise on hand at year end. For LIFO inventories of a taxpayer, the section 471 costs remaining on hand at year end means the increment, if any, for the current year stated in terms of section 471 costs. See paragraph (b)(3)(iii) of this section.

(C) ***Costs allocated to property sold.*** Additional section 263A costs incurred during the taxable year, as defined in paragraph (b)(3)(ii)(A)(*1*) of this section, section 471 costs incurred during the taxable year, as defined in paragraph (b)(3)(ii)(A)(*2*) of this section, and section 471 costs remaining on hand at year end, as defined in paragraph (b)(3)(ii)(B) of this section, do not include costs described in § 1.263A-1(e)(3)(ii) or cost reductions described in § 1.471-3(e) that a taxpayer properly allocates entirely to property that has been sold.

(iii) ***LIFO taxpayers electing the simplified production method*** —

(A) ***In general.*** Under the simplified production method, a taxpayer using a LIFO method must calculate a particular year's index (e.g., under § 1.472-8(e)) without regard to its additional section 263A costs. Similarly, a taxpayer that adjusts current-year costs by applicable indexes to determine whether there has been an inventory increment or decrement in the current year for a particular LIFO pool must disregard the additional section 263A costs in making that determination.

(B) ***LIFO increment.*** If the taxpayer determines there has been an inventory increment, the taxpayer must state the amount of the increment in current-year dollars (stated in terms of section 471 costs). The taxpayer then multiplies this amount by the absorption ratio. The resulting product is the additional section 263A costs that must be added to the taxpayer's increment for the year stated in terms of section 471 costs.

(C) ***LIFO decrement.*** If the taxpayer determines there has been an inventory decrement, the taxpayer must state the amount of the decrement in dollars applicable to the particular year for which the LIFO layer has been invaded. The additional section 263A costs incurred in prior years that are applicable to the decrement are charged to cost of goods sold. The additional section 263A costs that are applicable to the decrement are determined by multiplying the additional section 263A costs allocated to the layer of the pool in which the decrement occurred by the ratio of the decrement (excluding additional section 263A costs) to the section 471 costs in the layer of that pool.

(iv) ***De minimis rule for producers with total indirect costs of $200,000 or less*** —

(A) ***In general.*** If a producer using the simplified production method incurs $200,000 or less of total indirect costs in a taxable year, the additional section 263A costs allocable to eligible property remaining on hand at the close of the taxable year are deemed to be zero. Solely for purposes of this paragraph (b)(3)(iv), taxpayers are permitted to exclude any category of indirect costs (listed in § 1.263A-1(e)(3)(iii)) that is not required to be capitalized (e.g., selling and distribution costs) in determining total indirect costs.

(B) ***Related party and aggregation rules.*** In determining whether the producer incurs $200,000 or less of total indirect costs in a taxable year, the related party and aggregation rules of § 1.263A-3(b)(3) are applied by substituting total indirect costs for gross receipts wherever gross receipts appears.

(v) ***Examples.*** The provisions of this paragraph (b) are illustrated by the following examples.

> *Example 1. FIFO inventory method.* (i) Taxpayer J uses the FIFO method of accounting for inventories. J's beginning inventory for 1994 (all of which is sold during 1994) is $2,500,000 (consisting of $2,000,000 of section 471 costs and $500,000 of additional section 263A costs). During 1994, J incurs $10,000,000 of section 471 costs and $1,000,000 of additional section 263A costs. J's additional section 263A costs include capitalizable mixed service costs computed under the simplified service cost method as well as other allocable costs. J's section 471 costs remaining in ending inventory at the end of 1994 are $3,000,000. J computes its absorption ratio for 1994, as follows:
>
> $$\frac{\text{Additional section 263A costs incurred during 1994}}{\text{Section 471 costs incurred during 1994}} = \frac{\$1{,}000{,}000}{\$10{,}000{,}000} = 10\%$$
>
> (ii) Under the simplified production method, J determines the additional section 263A costs allocable to its ending inventory by multiplying the absorption ratio by the section 471 costs remaining in its ending inventory:
>
> $$\text{Additional section 263A costs} = 10\% \times \$3{,}000{,}000 = \$300{,}000$$
>
> (iii) J adds this $300,000 to the $3,000,000 of section 471 costs remaining in its ending inventory to calculate its total ending inventory of $3,300,000. The balance of J's additional section 263A costs incurred during 1994, $700,000, ($1,000,000 less $300,000) is taken into account in 1994 as part of J's cost of goods sold.

> *Example 2. LIFO inventory method.* (i) Taxpayer K uses a dollar-value LIFO inventory

method. K's beginning inventory for 1994 is $2,500,000 (consisting of $2,000,000 of section 471 costs and $500,000 of additional section 263A costs). During 1994, K incurs $10,000,000 of section 471 costs and $1,000,000 of additional section 263A costs. K's 1994 LIFO increment is $1,000,000 ($3,000,000 of section 471 costs in ending inventory less $2,000,000 of section 471 costs in beginning inventory).
(ii) To determine the additional section 263A costs allocable to its ending inventory, K multiplies the 10% absorption ratio ($1,000,000 of additional section 263A costs divided by $10,000,000 of section 471 costs) by the $1,000,000 LIFO increment. Thus, K's additional section 263A costs allocable to its ending inventory are $100,000 ($1,000,000 multiplied by 10%). This $100,000 is added to the $1,000,000 to determine a total 1994 LIFO increment of $1,100,000. K's ending inventory is $3,600,000 (its beginning inventory of $2,500,000 plus the $1,100,000 increment). The balance of K's additional section 263A costs incurred during 1994, $900,000 ($1,000,000 less $100,000), is taken into account in 1994 as part of K's cost of goods sold.

(iii) In 1995, K sells one-half of the inventory in its 1994 LIFO increment. K must include in its cost of goods sold for 1995 the amount of additional section 263A costs relating to this inventory, $50,000 (one-half of the tional section 263A costs capitalized in 1994 ending inventory, or $100,000).

Example 3. LIFO pools. (i) Taxpayer U begins its business in 1994 and adopts the LIFO inventory method. During 1994, L incurs $10,000 of section 471 costs and $1,000 of additional section 263A costs. At the end of 1994, L's ending inventory includes $3,000 of section 471 costs contained in three LIFO pools (X, Y, and Z) as shown below. Under the simplified production method, L computes its absorption ratio and inventory for 1994 as follows:

$$\frac{\text{Additional section 263A costs incurred during 1994}}{\text{Section 471 costs incurred during 1994}} = \frac{\$1{,}000}{\$10{,}000} = 10\%$$

	Total	X	Y	Z
1994:				
Ending section 471 costs	$3,000	$1,600	$600	$800
Additional section 263A costs (10%)	300	160	60	80
1994 ending inventory	$3,300	$1,760	$660	$880

(ii) During 1995, L incurs $2,000 of section 471 costs as shown below and $400 of additional section 263A costs. Moreover, L sells goods from pools X, Y, and Z having a

total cost of $1,000. L computes its absorption ratio and inventory for 1995:

$$\frac{\text{Additional section 263A costs incurred during 1995}}{\text{Section 471 costs incurred during 1995}} = \frac{\$400}{\$2,000} = 20\%$$

	Total	X	Y	Z
1995:				
Beginning section 471 costs	$3,000	$1,600	$600	$800
1995 section 471 costs	2,000	1,500	300	200
Section 471 cost of goods sold	(1,000)	(300)	(300)	(400)
1995 ending section 471 costs	$4,000	$2,800	$600	$600
Consisting of:				
1994 layer	$2,800	$1,600	$600	$600
1995 layer	1,200	1,200		
	$4,000	$2,800	$600	$600
Additional section 263A costs:				
1994 (10%)	$280	$160	$60	$60
1995 (20%)	240	240		
	$520	$400	$60	$60
1995 ending inventory	$4,520	$3,200	$660	$660

(iii) In 1995, L experiences a $200 decrement in pool Z. Thus, L must charge the additional section 263A costs incurred in prior years applicable to the decrement to 1995's cost of goods sold. To do so, L determines a ratio by dividing the decrement by the section 471 costs in the 1994 layer ($200 divided by $800, or 25%). L then multiplies this ratio (25%) by the additional section 263A costs in the 1994 layer ($80) to determine the additional section 263A costs applicable to the decrement ($20). Therefore, $20 is taken into account by L in 1995 as part of its cost of goods sold ($80 multiplied by 25%).

(4) *Simplified production method with historic absorption ratio election* —

(i) ***In general.*** This paragraph (b)(4) generally permits producers using the simplified production method to elect a historic absorption ratio in determining additional section 263A costs allocable to eligible property remaining on hand at the close of their taxable years. Except as provided in paragraph (b)(4)(v) of this section, a taxpayer may only make a historic absorption ratio election if it has used the simplified production method for three or more consecutive taxable years immediately prior to the year of election and has capitalized additional section 263A costs using an actual absorption ratio (as defined under

paragraph (b)(3)(ii) of this section) for its three most recent consecutive taxable years. This method is not available to a taxpayer that is deemed to have zero additional section 263A costs under paragraph (b)(3)(iv) of this section. The historic absorption ratio is used in lieu of an actual absorption ratio computed under paragraph (b)(3)(ii) of this section and is based on costs capitalized by a taxpayer during its test period. If elected, the historic absorption ratio must be used for each taxable year within the qualifying period described in paragraph (b)(4)(ii)(C) of this section.

(ii) ***Operating rules and definitions*** —

(A) ***Historic absorption ratio.***

(*1*) The historic absorption ratio is equal to the following ratio:

$$\frac{\text{Additional section 263A costs incurred during the test period}}{\text{Section 471 costs incurred during the test period}}$$

(*2*) Additional section 263A costs incurred during the test period are defined as the additional section 263A costs described in § 1.263A-1(d)(3) that the taxpayer incurs during the test period described in paragraph (b)(4)(ii)(B) of this section.

(*3*) Section 471 costs incurred during the test period mean the section 471 costs described in § 1.263A-1(d)(2) that the taxpayer incurs during the test period described in paragraph (b)(4)(ii)(B) of this section.

(*4*) Additional section 263A costs incurred during the test period, as defined in paragraph (b)(4)(ii)(A)(*2*) of this section, and section 471 costs incurred during the test period, as defined in paragraph (b)(4)(ii)(A)(*3*) of this section, do not include costs specifically described in § 1.263A-1(e)(3)(ii) or cost reductions described in § 1.471-3(e) that a taxpayer properly allocates entirely to property that has been sold.

(*B*) ***Test period—***

(1) ***In general.*** The test period is generally the three taxable-year period immediately prior to the taxable year that the historic absorption ratio is elected.

(*2*) ***Updated test period.*** The test period begins again with the beginning of the first taxable year after the close of a qualifying period. This new test period, the updated test period, is the three taxable-year period beginning with the first taxable year after the close of the qualifying period as defined in paragraph (b)(4)(ii)(C) of this section.

(C) ***Qualifying period*** —

(*1*) ***In general.*** A qualifying period includes each of the first five taxable years beginning with the first taxable year after a test period (or an updated test period).

(*2*) ***Extension of qualifying period.*** In the first taxable year following the close of each qualifying period, (e.g., the sixth taxable year following the test period), the taxpayer must compute the actual absorption ratio under the simplified production method. If the actual absorption ratio computed for this taxable year (the recomputation year) is within one-half of one percentage point (plus or minus) of the historic absorption ratio used in determining capitalizable costs for the qualifying period (i.e., the previous five taxable years), the qualifying period is extended to include the recomputation year and the following five taxable years, and the taxpayer must

continue to use the historic absorption ratio throughout the extended qualifying period. If, however, the actual absorption ratio computed for the recomputation year is not within one-half of one percentage point (plus or minus) of the historic absorption ratio, the taxpayer must use actual absorption ratios beginning with the recomputation year under the simplified production method and throughout the updated test period. The taxpayer must resume using the historic absorption ratio (determined with reference to the updated test period) in the third taxable year following the recomputation year.

(iii) ***Method of accounting*** —

(A) ***Adoption and use.*** The election to use the historic absorption ratio is a method of accounting. A taxpayer using the simplified production method may elect the historic absorption ratio in any taxable year if permitted under this paragraph (b)(4), provided the taxpayer has not obtained the Commissioner's consent to revoke the historic absorption ratio election within its prior six taxable years. The election is to be effected on a cut-off basis, and thus, no adjustment under section 481(a) is required or permitted. The use of a historic absorption ratio has no effect on other methods of accounting adopted by the taxpayer and used in conjunction with the simplified production method in determining its section 263A costs. Accordingly, in computing its actual absorption ratios, the taxpayer must use the same methods of accounting used in computing its historic absorption ratio during its most recent test period unless the taxpayer obtains the consent of the Commissioner. Finally, for purposes of this paragraph (b)(4)(iii), the recomputation of the historic absorption ratio during an updated test period and the change from a historic absorption ratio to an actual absorption ratio by reason of the requirements of this paragraph (b)(4) are not considered changes in methods of accounting under section 446(e) and, thus, do not require the consent of the Commissioner or any adjustments under section 481(a).

(B) ***Revocation of election.*** A taxpayer may only revoke its election to use the historic absorption ratio with the consent of the Commissioner in a manner prescribed under section 446(e) and the regulations thereunder. Consent to the change for any taxable year that is included in the qualifying period (or an extended qualifying period) will be granted only upon a showing of unusual circumstances.

(iv) ***Reporting and recordkeeping requirements*** —

(A) ***Reporting.*** A taxpayer making an election under this paragraph (b)(4) must attach a statement to its federal income tax return for the taxable year in which the election is made showing the actual absorption ratios determined under the simplified production method during its first test period. This statement must disclose the historic absorption ratio to be used by the taxpayer during its qualifying period. A similar statement must be attached to the federal income tax return for the first taxable year within any subsequent qualifying period (i.e., after an updated test period).

(B) ***Recordkeeping.*** A taxpayer must maintain all appropriate records and details supporting the historic absorption ratio until the expiration of the statute of limitations for the last year for which the taxpayer applied the particular historic absorption ratio in determining additional section 263A costs capitalized to eligible property.

(v)

(A) ***Transition to elect historic absorption ratio.*** Taxpayers will be permitted to elect a historic absorption ratio in their first, second, or third taxable year beginning after December 31, 1993, under such terms and conditions as may be prescribed by the Commissioner. Taxpayers are eligible to make an election under these transition rules whether or not they previously used the simplified production method. A taxpayer making such an election must recompute (or compute) its additional section 263A costs, and thus, its historic absorption ratio for its first test period as if the rules prescribed in this section and §§ 1.263A-1 and 1.263A-3 had applied throughout the test period.

(B) ***Transition to revoke historic absorption ratio.*** Notwithstanding the requirements provided in paragraph (b)(4)(iii)(B) of this section regarding revocations of the historic absorption ratio during a qualifying period, a taxpayer will be permitted to revoke the historic absorption ratio in their first, second, or third taxable year ending on or after *November 20, 2018,* under such administrative procedures and with terms and conditions prescribed by the Commissioner.

(vi) ***Example.*** The provisions of this paragraph (b)(4) are illustrated by the following example:

Example. (i) Taxpayer M uses the FIFO method of accounting for inventories and for 1994 elects to use the historic absorption ratio with the simplified production method. After recomputing its additional section 263A costs in accordance with the transition rules of paragraph (b)(4)(v) of this section, M identifies the following costs incurred during the test period:
1991:

Add'l section 263A costs—$100
Section 471 costs—$3,000

1992:

Add'l section 263A costs—$200
Section 471 costs—$4,000

1993:

Add'l section 263A costs—$300
Section 471 costs—$5,000

(ii) Therefore, M computes a 5% historic absorption ratio determined as follows:

$$\text{Historic absorption ratio} = \frac{\$100 + 200 + 300}{\$3{,}000 + 4{,}000 + 5{,}000} = \frac{\$600}{\$12{,}000} = 5\%$$

(iii) In 1994, M incurs $10,000 of section 471 costs of which $3,000 remain in inventory at the end of the year. Under the simplified production method using a historic

absorption ratio, M determines the additional section 263A costs allocable to its ending inventory by multiplying its historic absorption ratio (5%) by the section 471 costs remaining in its ending inventory as follows:

$$\text{Additional section 263A costs} = 5\% \times \$3{,}000 = \$150$$

(iv) To determine its ending inventory under section 263A, M adds the additional section 263A costs allocable to ending inventory to its section 471 costs remaining in ending inventory ($3,150 = $150 + $3,000). The balance of M's additional section 263A costs incurred during 1994 is taken into account in 1994 as part of M's cost of goods sold.
(v) M's qualifying period ends with the close of its 1998 taxable year. Therefore, 1999 is a recomputation year in which M must compute its actual absorption ratio. M determines its actual absorption ratio for 1999 to be 5.25% and compares that ratio to its historic absorption ratio (5.0%). Therefore, M must continue to use its historic absorption ratio of 5.0% throughout an extended qualifying period, 1999 through 2004 (the recomputation year and the following five taxable years).

(vi) If, instead, M's actual absorption ratio for 1999 were not between 4.5% and 5.5%, M's qualifying period would end and M would be required to compute a new historic absorption ratio with reference to an updated test period of 1999, 2000, and 2001. Once M's historic absorption ratio is determined for the updated test period, it would be used for a new qualifying period beginning in 2002.

(c) ***Modified simplified production method*** —

(1) ***Introduction.*** This paragraph (c) provides a simplified method for determining the additional section 263A costs properly allocable to ending inventories of property produced and other eligible property on hand at the end of the taxable year.

(2) ***Eligible property*** —

(i) ***In general.*** Except as otherwise provided in paragraph (c)(2)(ii) of this section, the modified simplified production method, if elected for any trade or business of a producer, must be used for all production and resale activities associated with any of the categories of property to which section 263A applies as described in paragraph (b)(2)(i) of this section.

(ii) ***Election to exclude-self-constructed assets.*** A taxpayer using the modified simplified production method may elect to exclude self-constructed assets from application of the modified simplified production method by following the same rules applicable to a taxpayer using the simplified production method provided in paragraph (b)(2)(ii) of this section.

(3) ***Modified simplified production method without historic absorption ratio election*** —

(i) ***General allocation formula*** —

(A) ***In general.*** Except as otherwise provided in paragraph (c)(3)(v) of this section, the additional section 263A costs allocable to eligible property remaining on hand at the close of the taxable year under the modified simplified production method are computed as follows:

$$\left(\text{Pre-production absorption ratio} \times \text{Pre-production section 471 costs remaining on hand at year end}\right) + \left(\text{Production absorption ratio} \times \text{Production section 471 costs remaining on hand at year end}\right)$$

(B) ***Effect of allocation.*** The pre-production and production absorption ratios generally are multiplied by the pre-production and production section 471 costs, respectively, remaining in ending inventory or otherwise on hand at the end of each taxable year in which the modified simplified production method is applied. The sum of the resulting products is the additional section 263A costs that are added to the taxpayer's ending section 471 costs to determine the section 263A costs that are capitalized. See, however, paragraph (c)(3)(iv) of this section for special rules applicable to LIFO taxpayers. Except as otherwise provided in this section or in § 1.263A-1 or § 1.263A-3, additional section 263A costs that are allocated to inventories on hand at the close of the taxable year under the modified simplified production method of this paragraph (c) are treated as inventory costs for all purposes of the Internal Revenue Code.

(ii) ***Definitions —***

(A) ***Direct material costs.*** For purposes of paragraph (c) of this section, direct material costs has the same meaning as described in § 1.263A-1(e)(2)(i)(A). For purposes of paragraph (c) of this section, direct material costs include property produced for the taxpayer under a contract with another party that are direct material costs for the taxpayer to be used in an additional production process of the taxpayer.

(B) ***Pre-production absorption ratio.*** Under the modified simplified production method, the pre-production absorption ratio is determined as follows:

$$\frac{\text{Pre-production additional section 263A costs}}{\text{Pre-production section 471 costs}}$$

(*1*) ***Pre-production additional section 263A costs.*** Pre-production additional section 263A costs are defined as the additional section 263A costs described in § 1.263A-1(d)(3) that are pre-production costs, as described in paragraph (a)(3)(ii) of this section, that a taxpayer incurs during its current taxable year, including capitalizable mixed service costs allocable to pre-production additional section 263A costs, as described in paragraph (c)(3)(iii) of this section, that a taxpayer incurs during its current taxable year:

(*i*) Plus additional section 263A costs properly allocable to property acquired for resale that a taxpayer incurs during its current taxable year; and

(*ii*) Plus additional section 263A costs properly allocable to property produced for the taxpayer under a contract with another party that is treated as property produced by the taxpayer, as described in paragraph (a)(1)(ii)(B) of this section, that a taxpayer incurs during its current taxable year.

(*2*) ***Pre-production section 471 costs.*** Pre-production section 471 costs are defined as the section 471 costs described in § 1.263A-1(d)(2) that are direct material costs that a taxpayer incurs during its current taxable year plus the section 471 costs for property

acquired for resale (*see* § 1.263A-1(e)(2)(ii)) that a taxpayer incurs during its current taxable year, including property produced for the taxpayer under a contract with another party that is acquired for resale.

(C) ***Pre-production section 471 costs remaining on hand at year end.*** Pre-production section 471 costs remaining on hand at year end means the pre-production section 471 costs, as defined in paragraph (c)(3)(ii)(B)(*2*) of this section, that a taxpayer incurs during its current taxable year which remain in its ending inventory or are otherwise on hand at year end, excluding the section 471 costs that are direct material costs that have entered or completed production at year end (for example, direct material costs in ending work-in-process inventory and ending finished goods inventory). For LIFO inventories of a taxpayer, see paragraph (c)(3)(iv) of this section.

(D) ***Production absorption ratio.*** Under the modified simplified production method, the production absorption ratio is determined as follows:

$$\frac{\text{(Production additional section 263A costs + Residual pre-production additional section 263A costs)}}{\text{(Production section 471 costs + Direct materials adjustment)}}$$

(*1*) ***Production additional section 263A costs.*** Production additional section 263A costs are defined as the additional section 263A costs described in § 1.263A-1(d)(3) that are not pre-production additional section 263A costs, as defined in paragraph (c)(3)(ii)(B)(*1*) of this section, that a taxpayer incurs during its current taxable year, including capitalizable mixed service costs not allocable to pre-production additional section 263A costs, as described in paragraph (c)(3)(iii) of this section, that a taxpayer incurs during its current taxable year. For example, production additional section 263A costs include post-production costs, other than post-production costs included in section 471 costs, as described in paragraph (a)(3)(iii) of this section.

(*2*) ***Residual pre-production additional section 263A costs.*** Residual pre-production additional section 263A costs are defined as the pre-production additional section 263A costs, as defined in paragraph (c)(3)(ii)(B)(*1*) of this section, that a taxpayer incurs during its current taxable year less the product of the pre-production absorption ratio, as determined in paragraph (c)(3)(ii)(B) of this section, and the pre-production section 471 costs remaining on hand at year end, as defined in paragraph (c)(3)(ii)(C) of this section.

(*3*) ***Production section 471 costs.*** Production section 471 costs are defined as the section 471 costs described in § 1.263A-1(d)(2) that a taxpayer incurs during its current taxable year less pre-production section 471 costs, as defined in paragraph (c)(3)(ii)(B)(*2*) of this section, that a taxpayer incurs during its current taxable year.

(*4*) ***Direct materials adjustment.*** The direct materials adjustment is defined as the section 471 costs that are direct material costs, including property produced for a taxpayer under a contract with another party that are direct material costs for the taxpayer to be used in an additional production process of the taxpayer, that had not entered production at the beginning of the current taxable year:

(*i*) Plus the section 471 costs that are direct material costs incurred during the current taxable year (that is, direct material purchases); and

(*ii*) Less the section 471 costs that are direct material costs that have not entered production at the end of the current taxable year.

(E) ***Production section 471 costs remaining on hand at year end.*** Production section 471 costs remaining on hand at year end means the section 471 costs, as defined in § 1.263A-1(d)(2), that a taxpayer incurs during its current taxable year which remain in its ending inventory or are otherwise on hand at year end, less the pre-production section 471 costs remaining on hand at year end, as described in paragraph (c)(3)(ii)(C) of this section. For LIFO inventories of a taxpayer, see paragraph (c)(3)(iv) of this section.

(F) ***Costs allocated to property sold.*** The terms defined in paragraph (c)(3)(ii) of this section do not include costs described in § 1.263A-1(e)(3)(ii) or cost reductions described in § 1.471-3(e) that a taxpayer properly allocates entirely to property that has been sold.

(iii) ***Allocable mixed service costs*** —

(A) ***In general.*** If a taxpayer using the modified simplified production method determines its capitalizable mixed service costs using a method described in § 1.263A-1(g)(4), the taxpayer must use a reasonable method to allocate the costs (for example, department or activity costs) between production and pre-production additional section 263A costs. If the taxpayer's § 1.263A-1(g)(4) method allocates costs to a department or activity that is exclusively identified as production or pre-production, those costs must be allocated to production or pre-production additional section 263A costs, respectively.

(B) ***Taxpayer using the simplified service cost method.*** If a taxpayer using the modified simplified production method determines its capitalizable mixed service costs using the simplified service cost method described in § 1.263A-1(h), the amount of capitalizable mixed service costs, as computed using the general allocation formula in § 1.263A-1(h)(3)(i), allocated to and included in pre-production additional section 263A costs in the absorption ratio described in paragraph (c)(3)(ii)(B) of this section is determined based on either of the following: The proportion of direct material costs to total section 471 costs that a taxpayer incurs during its current taxable year or the proportion of pre-production labor costs to total labor costs that a taxpayer incurs during its current taxable year. The taxpayer must include the capitalizable mixed service costs that are not allocated to pre-production additional section 263A costs in production additional section 263A costs in the absorption ratio described in paragraph (c)(3)(ii)(D) of this section. A taxpayer that allocates capitalizable mixed service costs based on labor under this paragraph (c)(3)(iii)(B) must exclude mixed service labor costs from both pre-production labor costs and total labor costs.

(C) ***De minimis rule.*** Notwithstanding paragraphs (c)(3)(iii)(A) and (B) of this section, if 90 percent or more of a taxpayer's capitalizable mixed service costs determined under paragraph (c)(3)(iii)(A) or (B) of this section are allocated to pre-production additional section 263A costs or production additional section 263A costs, the taxpayer may elect to allocate 100 percent of its capitalizable mixed service costs to that amount. For example, if 90 percent of capitalizable mixed service costs are allocated to production additional section 263A costs based on the labor costs that are pre-production costs in total labor costs incurred in the taxpayer's trade or business during the taxable year, then 100 percent of capitalizable mixed service costs may be allocated to production additional section 263A costs. An election to allocate capitalizable mixed service costs under this paragraph (c)(3)(iii)(C) is the adoption of, or a change in, a method of accounting under section 446 of the Internal Revenue Code.

(iv) ***LIFO taxpayers electing the modified simplified production method*** —

(A) ***In general.*** Under the modified simplified production method, a taxpayer using a LIFO method must calculate a particular year's index (for example, under § 1.472-8(e)) without regard to its additional section 263A costs. Similarly, a taxpayer that adjusts current-year costs by applicable indexes to determine whether there has been an inventory increment or decrement in the current year for a particular LIFO pool must disregard the additional section 263A costs in making that determination.

(B) ***LIFO increment*** —

(*1*) ***In general.*** If the taxpayer determines there has been an inventory increment, the taxpayer must state the amount of the increment in terms of section 471 costs in current-year dollars. The taxpayer then multiplies this amount by the combined absorption ratio, as defined in paragraph (c)(3)(iv)(B)(*2*) of this section. The resulting product is the additional section 263A costs that must be added to the taxpayer's increment in terms of section 471 costs in current-year dollars for the taxable year.

(*2*) ***Combined absorption ratio defined.*** For purposes of paragraph (c)(3)(iv)(B)(*1*) of this section, the combined absorption ratio is the additional section 263A costs allocable to eligible property remaining on hand at the close of the taxable year, as described in paragraph (c)(3)(i)(A) of this section, determined on a non-LIFO basis, divided by the pre-production and production section 471 costs remaining on hand at year end, determined on a non-LIFO basis.

(C) ***LIFO decrement.*** If the taxpayer determines there has been an inventory decrement, the taxpayer must state the amount of the decrement in dollars applicable to the particular year for which the LIFO layer has been invaded. The additional section 263A costs incurred in prior years that are applicable to the decrement are charged to cost of goods sold. The additional section 263A costs that are applicable to the decrement are determined by multiplying the additional section 263A costs allocated to the layer of the pool in which the decrement occurred by the ratio of the decrement, excluding additional section 263A costs, to the section 471 costs in the layer of that pool.

(v) ***De minimis rule for producers with total indirect costs of $200,000 or less.*** Paragraph (b)(3)(iv) of this section, which provides that the additional section 263A costs allocable to eligible property remaining on hand at the close of the taxable year are deemed to be zero for producers with total indirect costs of $200,000 or less, applies to the modified simplified production method.

(vi) ***Examples.*** The provisions of this paragraph (c) are illustrated by the following examples:

(A) ***Example 1—FIFO inventory method.***

(*1*) Taxpayer P uses the FIFO method of accounting for inventories valued at cost. P's beginning inventory for 2018 (all of which is sold during 2018) is $2,500,000, consisting of $500,000 of pre-production section 471 costs (including $400,000 of direct material costs and $100,000 of property acquired for resale), $1,500,000 of production section 471 costs, and $500,000 of additional section 263A costs. During 2018, P incurs $2,500,000 of pre-production section 471 costs (including $1,900,000 of direct material costs and $600,000 of property acquired for resale), $7,500,000 of production section 471 costs, $200,000 of pre-production additional section 263A costs, and $800,000 of production additional section 263A costs. P's additional section 263A costs include capitalizable mixed service costs under the simplified service cost method. P's pre-production and production section 471 costs remaining

in ending inventory at the end of 2018 are $1,000,000 (including $800,000 of direct material costs and $200,000 of property acquired for resale) and $2,000,000, respectively. P computes its pre-production absorption ratio for 2018 under paragraph (c)(3)(ii)(B) of this section, as follows:

$$\frac{\text{Pre-production additional section 263A costs}}{\text{Pre-production section 471 costs}} = \frac{\$200,000}{\$2,500,000} = 8.00\%$$

(2) Under paragraph (c)(3)(ii)(D)(2) of this section, P's residual pre-production additional section 263A costs for 2018 are $120,000 ($200,000 of pre-production additional section 263A costs less $80,000 (the product of the 8% pre-production absorption ratio and the $1,000,000 of pre-production section 471 costs remaining on hand at year end)).

(3) Under paragraph (c)(3)(ii)(D)(4) of this section, P's direct materials adjustment for 2018 is $1,500,000 ($400,000 of direct material costs in beginning raw materials inventory, plus $1,900,000 of direct material costs incurred to acquire raw materials during the taxable year, less $800,000 direct material costs in ending raw materials inventory).

(4) P computes its production absorption ratio for 2018 under paragraph (c)(3)(ii)(D) of this section, as follows:

$$\frac{\text{(Production additional section 263A costs + Residual pre-production additional section 263A costs)}}{\text{(Production section 471 costs + Direct materials adjustment)}} = \frac{(\$800,000 + 120,000)}{(\$7,500,000 + 1,500,000)} = 10.22\%$$

(5) Under the modified simplified production method, P determines the additional section 263A costs allocable to its ending inventory under paragraph (c)(3)(i)(A) of this section by multiplying the pre-production absorption ratio by the pre-production section 471 costs remaining on hand at year end and the production absorption ratio by the production section 471 costs remaining on hand at year end, as follows:

Additional section 263A costs = (8% × $1,000,000) + (10.22% × $2,000,000) = $284,400

(6) P adds this $284,400 to the $3,000,000 of section 471 costs remaining on hand at year end to calculate its total ending inventory of $3,284,400. The balance of P's additional section 263A costs incurred during 2018, $715,600 ($1,000,000 less $284,400), is taken into account in 2018 as part of P's cost of goods sold.

(7) P's computation is summarized in the following table:

	Reference	Amount
Beginning Inventory:		
Direct material costs	a	$ 400,000

	Reference	Amount
Property acquired for resale	b	100,000
Pre-production section 471 costs	c = a + b	500,000
Production section 471 costs	d	1,500,000
Additional section 263A costs	e	500,000
Total	f = c d + e	2,500,000
Incurred During 2018:		
Direct material costs	g	1,900,000
Property acquired for resale	h	600,000
Pre-production section 471 costs	i = g + h	2,500,000
Production section 471 costs	j	7,500,000
Pre-production additional section 263A costs	k	200,000
Production additional section 263A costs	l	800,000
Total	m = i + j + k + l	11,000,000
Ending Inventory:		
Direct material costs	n	800,000
Property acquired for resale	o	200,000
Pre-production section 471 costs	p = n + o	1,000,000
Production section 471 costs	q	2,000,000
Section 471 costs	r = p + q	3,000,000
Additional section 263A costs allocable to ending inventory	s = v + z	284,400
Total	t = r + s	3,284,400
Modified Simplified Production Method:		
Pre-production additional section 263A costs	k	200,000
Pre-production section 471 costs	i	2,500,000
Pre-production absorption ratio	u = k / i	8.00%
Pre-production section 471 costs remaining on hand at year end	p	1,000,000
Pre-production additional section 263A costs allocable to ending inventory	v = u * p	80,000
Production additional section 263A costs	l	800,000
Residual pre-production additional section 263A costs	w = k−(u * p)	120,000
Production section 471 costs	j	7,500,000
Direct materials adjustment	x = a + g−n	1,500,000
Production absorption ratio	y = (l + w) / (j + x)	10.22%
Production section 471 costs remaining on hand at year end	q	2,000,000
Production additional section 263A costs allocable to ending inventory	z = y * q	204,400
Summary:		
Pre-production additional section 263A costs allocable to ending	v	80,000

	Reference	Amount
inventory		
Production additional section 263A costs allocable to ending inventory	z	204,400
Additional section 263A costs allocable to ending inventory	s	284,400
Section 471 costs	r	3,000,000
Total Ending Inventory	t	3,284,400

(B) ***Example 2—FIFO inventory method with alternative method to determine amounts of section 471 costs.***

(*1*) The facts are the same as in *Example 1* of paragraph (c)(3)(vi)(A) of this section, except that P uses the alternative method to determine amounts of section 471 costs by using its financial statement under § 1.263A-1(d)(2)(iii) rather than tax amounts under § 1.263A-1(d)(2)(i). In 2018, P's production section 471 costs exclude $40,000 of tax depreciation in excess of financial statement depreciation and include $50,000 of financial statement direct labor in excess of tax direct labor. These are P's only differences in its book and tax amounts.

(*2*) Under § 1.263A-1(d)(2)(iii)(B), the positive $40,000 depreciation adjustment and the negative $50,000 direct labor adjustment must be included in additional section 263A costs. Accordingly, P's production additional section 263A costs are $790,000 ($800,000 plus $40,000 less $50,000).

(*3*) P computes its production absorption ratio for 2018 under paragraph (c)(3)(ii)(D) of this section, as follows:

$$\frac{\text{(Production additional section 263A costs + Residual pre-production additional section 263A costs)}}{\text{(Production section 471 costs + Direct materials adjustment)}} = \frac{(\$790{,}000 + 120{,}000)}{(\$7{,}500{,}000 + 1{,}500{,}000)} = 10.11\%$$

(*4*) Under the modified simplified production method, P determines the additional section 263A costs allocable to its ending inventory under paragraph (c)(3)(i)(A) of this section by multiplying the pre-production absorption ratio by the pre-production section 471 costs remaining on hand at year end and the production absorption ratio by the production section 471 costs remaining on hand at year end, as follows:

Additional section 263A costs = (8.00% × $1,000,000) + (10.11% × $2,000,000) = $282,200

(*5*) P adds this $282,200 to the $3,000,000 of section 471 costs remaining on hand at year end to calculate its total ending inventory of $3,282,200. The balance of P's additional section 263A costs incurred during 2018, $717,800 ($1,000,000 less $282,200), is taken into account in 2018 as part of P's cost of goods sold.

(C) ***Example 3—LIFO inventory method.***

(*1*) The facts are the same as in *Example 1* of paragraph (c)(3)(vi)(A) of this section, except that P uses a dollar-value LIFO inventory method rather than the FIFO method. P's 2018 LIFO increment is $1,500,000.

(*2*) Under paragraph (c)(3)(iv)(B)(*1*) of this section, to determine the additional section 263A costs allocable to its ending inventory, P multiplies the combined absorption ratio by the $1,500,000 of LIFO increment. Under paragraph (c)(3)(iv)(B)(*2*) of this section, the combined absorption ratio is 9.48% ($284,400 additional section 263A costs allocable to ending inventory, determined on a non-LIFO basis, divided by $3,000,000 of section 471 costs on hand at year end, determined on a non-LIFO basis). Thus, P's additional section 263A costs allocable to its ending inventory are $142,200 ($1,500,000 multiplied by 9.48%). This $142,200 is added to the $1,500,000 to determine a total 2018 LIFO increment of $1,642,200. The balance of P's additional section 263A costs incurred during 2018, $857,800 ($1,000,000 less $142,200), is taken into account in 2018 as part of P's cost of goods sold.

(*3*) In 2019, P sells one-half of the inventory in its 2018 increment. P must include in its cost of goods sold for 2019 the amount of additional section 263A costs relating to this inventory, $71,100 (one-half of the $142,200 additional section 263A costs capitalized in 2018 ending inventory).

(D) ***Example 4—Direct materials-based allocation of mixed service costs.***

(*1*) Taxpayer R computes its capitalizable mixed service costs using the simplified service cost method described in § 1.263A-1(h). During 2018, R incurs $200,000 of capitalizable mixed service costs, computed using the general allocation formula in § 1.263A-1(h). During 2018, R also incurs $8,000,000 of total section 471 costs, including $2,000,000 of direct material costs.

(*2*) Under paragraph (c)(3)(iii)(B) of this section, R determines its capitalizable mixed service costs allocable to pre-production additional section 263A costs based on the proportion of direct material costs in total section 471 costs. R's direct material costs are 25% of total section 471 costs ($2,000,000 of direct material costs incurred during the year divided by $8,000,000 of total section 471 costs incurred during the year). Thus, R allocates $50,000 (25% × $200,000) of mixed service costs to pre-production additional section 263A costs. R includes the remaining $150,000 ($200,000 less $50,000) of capitalizable mixed service costs as production additional section 263A costs.

(E) ***Example 5—Labor-based allocation of mixed service costs.***

(*1*) Taxpayer S computes its capitalizable mixed service costs using the simplified service cost method described in § 1.263A-1(h). During 2018, S incurs $200,000 of capitalizable mixed service costs, computed using the general allocation formula in § 1.263A-1(h). During 2018, S also incurs $10,000,000 of total labor costs (excluding any labor costs included in mixed service costs), including $1,000,000 of labor costs that are pre-production costs as described in paragraph (a)(3)(ii) of this section (excluding any labor costs included in mixed service costs).

(*2*) Under paragraph (c)(3)(iii)(B) of this section, S determines its capitalizable mixed service costs allocable to pre-production additional section 263A costs based on the proportion of labor costs that are pre-production costs in labor costs. S's pre-

production labor costs are 10% of labor costs ($1,000,000 of labor costs incurred during the year that are pre-production costs (excluding any labor costs included in mixed service costs), divided by $10,000,000 of total labor costs incurred during the year (excluding any labor costs included in mixed service costs). Thus, S allocates $20,000 (10% × $200,000) of mixed service costs to pre-production additional section 263A costs. S includes the remaining $180,000 ($200,000 less $20,000) of capitalizable mixed service costs as production additional section 263A costs.

(F) ***Example 6—De minimis rule for allocation of mixed service costs.*** The facts are the same as in *Example 5* in paragraph (c)(3)(vi)(E) of this section, except that S uses the de minimis rule for mixed service costs in paragraph (c)(3)(iii)(C) of this section. Because 90% or more of S's capitalizable mixed service costs are allocated to production additional section 263A costs, under the de minimis rule, S allocates all $200,000 of capitalizable mixed service costs to production additional section 263A costs. None of the capitalizable mixed service costs are allocated to pre-production additional section 263A costs.

(4) ***Modified simplified production method with historic absorption ratio election*** —

(i) ***In general.*** This paragraph (c)(4) generally permits taxpayers using the modified simplified production method to elect a historic absorption ratio in determining additional section 263A costs allocable to eligible property remaining on hand at the close of their taxable years. A taxpayer may only make a historic absorption ratio election under this paragraph (c)(4) if it has used the modified simplified production method for three or more consecutive taxable years immediately prior to the year of election and has capitalized additional section 263A costs using an actual pre-production absorption ratio, as defined in paragraph (c)(3)(ii)(B) of this section, and an actual production absorption ratio, as defined in paragraph (c)(3)(ii)(D) of this section, or an actual combined absorption ratio, as defined in paragraph (c)(3)(iv)(B)(*2*) of this section, for its three most recent consecutive taxable years. This method is not available to a taxpayer that is deemed to have zero additional section 263A costs under paragraph (c)(3)(v) of this section. The historic absorption ratio is used in lieu of the actual absorption ratios computed under paragraph (c)(3)(ii) of this section or the actual combined absorption ratio computed under paragraph (c)(3)(iv) and is based on costs capitalized by a taxpayer during its test period. If elected, the historic absorption ratio must be used for each taxable year within the qualifying period described in paragraph (b)(4)(ii)(C) of this section. Except as otherwise provided in this paragraph (c)(4), paragraph (b)(4) of this section applies to the historic absorption ratio election under the modified simplified production method.

(ii) ***Operating rules and definitions*** —

(A) ***Pre-production historic absorption ratio.*** The pre-production historic absorption ratio is computed as follows:

$$\frac{\text{Pre-production additional section 263A costs incurred during the test period}}{\text{Pre-production section 471 costs incurred during the test period}}$$

(*1*) Pre-production additional section 263A costs incurred during the test period are defined as the pre-production additional section 263A costs described in paragraph (c)(3)(ii)(B)(*1*) of this section that the taxpayer incurs during the test period described in paragraph (b)(4)(ii)(B) of this section.

(2) Pre-production section 471 costs incurred during the test period are defined as the pre-production section 471 costs described in paragraph (c)(3)(ii)(B)(2) of this section that the taxpayer incurs during the test period described in paragraph (b)(4)(ii)(B) of this section.

(B) ***Production historic absorption ratio.*** The production historic absorption ratio is computed as follows:

$$\frac{\left(\text{Production additional section 263A costs incurred during the test period} + \text{Residual pre-production additional section 263A costs incurred during the test period}\right)}{\left(\text{Production section 471 costs incurred during the test period} + \text{Direct materials adjustments made during the test period}\right)}$$

(1) Production additional section 263A costs incurred during the test period are defined as the production additional section 263A costs described in paragraph (c)(3)(ii)(D)(1) of this section that the taxpayer incurs during the test period described in paragraph (b)(4)(ii)(B) of this section.

(2) Residual pre-production additional section 263A costs incurred during the test period are defined as the residual pre-production additional section 263A costs described in paragraph (c)(3)(ii)(D)(2) of this section that the taxpayer incurs during the test period described in paragraph (b)(4)(ii)(B) of this section.

(3) Production section 471 costs incurred during the test period are defined as the production section 471 costs described in paragraph (c)(3)(ii)(D)(3) of this section that the taxpayer incurs during the test period described in paragraph (b)(4)(ii)(B) of this section.

(4) Direct materials adjustments made during the test period are defined as the direct materials adjustments described in paragraph (c)(3)(ii)(D)(4) of this section that the taxpayer incurs during the test period described in paragraph (b)(4)(ii)(B) of this section.

(iii) ***LIFO taxpayers making the historic absorption ratio election*** —

(A) ***In general.*** Instead of the pre-production and production historic absorption ratios defined in paragraph (c)(4)(ii) of this section, a LIFO taxpayer making the historic absorption ratio election under the modified simplified production method calculates a combined historic absorption ratio based on costs the taxpayer capitalizes during its test period.

(B) ***Combined historic absorption ratio.*** The combined historic absorption ratio is computed as follows:

$$\frac{\text{Total allocable additional section 263A costs incurred during the test period}}{\text{Total section 471 costs remaining on hand at each year end of the test period}}$$

(1) ***Total allocable additional section 263A costs incurred during the test period.*** Total allocable additional section 263A costs incurred during the test period are the sum of the total additional section 263A costs allocable to eligible property on hand at year end as described in paragraph (c)(3)(i)(A) of this section, determined on a non-LIFO basis, for all taxable years in the test period.

(2) ***Total section 471 costs remaining on hand at each year end of the test period.*** Total section 471 costs remaining on hand at each year end of the test period are the sum of the total pre-production section 471 costs remaining on hand at year end as described in paragraph (c)(3)(ii)(C) of this section and the total production section 471 costs remaining on hand at year end as described in paragraph (c)(3)(ii)(E) of this section, determined on a non-LIFO basis, for all taxable years in the test period.

(iv) ***Extension of qualifying period.*** In the first taxable year following the close of each qualifying period (for example, the sixth taxable year following the test period), a taxpayer must compute the actual absorption ratios under paragraph (c)(3) of this section (pre-production and production absorption ratios or, for LIFO taxpayers, the combined absorption ratio). If the actual combined absorption ratio or both the actual pre-production and production absorption ratios, as applicable, computed for this taxable year (the recomputation year) is within one-half of one percentage point, plus or minus, of the corresponding historic absorption ratio or ratios used in determining capitalizable costs for the qualifying period (the previous five taxable years), the qualifying period is extended to include the recomputation year and the following five taxable years, and the taxpayer must continue to use the historic absorption ratio or ratios throughout the extended qualifying period. If, however, the actual combined historic absorption ratio or either the actual pre-production absorption ratio or production absorption ratio, as applicable, is not within one-half of one percentage point, plus or minus, of the corresponding historic absorption ratio, the taxpayer must use the actual combined absorption ratio or ratios beginning with the recomputation year and throughout the updated test period. The taxpayer must resume using the historic absorption ratio or ratios based on the updated test period in the third taxable year following the recomputation year.

(v) ***Examples.*** The provisions of this paragraph (c)(4) are illustrated by the following examples:

(A) ***Example 1—HAR and FIFO inventory method.***

(1) Taxpayer S uses the FIFO method of accounting for inventories valued at cost and for 2021 elects to use the historic absorption ratio with the modified simplified production method. S identifies the following costs incurred during the test period:

	2018	2019	2020
Pre-production additional section 263A costs	$100	$200	$300
Production additional section 263A costs	200	350	450
Pre-production section 471 costs	2,000	2,500	3,000
Production section 471 costs	2,500	3,500	4,000
Residual pre-production additional section 263A costs	60	136	220
Direct materials adjustments	2,700	3,200	3,700

(2) Under paragraph (c)(4)(ii)(A) of this section, S computes the pre-production historic absorption ratio as follows:

$$\frac{\text{Pre-production additional section 263A costs incurred during the test period}}{\text{Pre-production section 471 costs incurred during the test period}} = \frac{\$100 + 200 + 300}{\$2{,}000 + 2{,}500 + 3{,}000} = \frac{\$600}{\$7{,}500} = 8.00\%$$

(3) Under paragraph (c)(4)(ii)(B) of this section, S computes the production historic absorption ratio as follows:

$$\frac{\left(\text{Production additional section 263A costs incurred during the test period} + \text{Residual pre-production additional section 263A costs incurred during the test period}\right)}{\left(\text{Production section 471 costs incurred during the test period} + \text{Direct materials adjustments made during the test period}\right)}$$

$$= \frac{((\$200+350+450)+(60+136+220))}{((\$2{,}500+3{,}500+4{,}000)+(2{,}700+3{,}200+3{,}700))} = \frac{\$1{,}416}{\$19{,}600} = 7.22\%$$

(4) In 2021, S incurs $10,000 of section 471 costs of which $1,000 pre-production section 471 costs and $2,000 production 471 costs remain in ending inventory. Under the modified simplified production method using a historic absorption ratio, S determines the pre-production additional section 263A costs allocable to its ending inventory by multiplying its pre-production historic absorption ratio (8.00%) by the pre-production section 471 costs remaining on hand at year end ($1,000). Thus, S allocates $80 of pre-production additional section 263A costs to its ending inventory (8.00% × $1,000). S determines the production additional section 263A costs allocable to its ending inventory by multiplying its production historic absorption ratio (7.22%) by the production section 471 costs remaining on hand at year end ($2,000). Thus, S allocates $144 of production additional section 263A costs to its ending inventory (7.22% × $2,000).

(5) Under paragraph (c)(4)(i) of this section, S's total additional section 263A costs allocable to ending inventory in 2021 are $224, which is the sum of the allocable pre-production additional section 263A costs ($80) and the allocable production additional section 263A costs ($144). S's ending inventory in 2021 is $3,224, which is the sum of S's additional section 263A costs allocable to ending inventory and S's section 471 costs remaining in ending inventory ($224 + $3,000). The balance of S's additional section 263A costs incurred during 2021 is taken into account in 2021 as part of S's cost of goods sold.

(B) *Example 2—HAR and LIFO inventory method.*

(1)

(*i*) The facts are the same as in *Example 1* in paragraph (c)(4)(v)(A) of this section, except that S uses a dollar-value LIFO inventory method rather than the FIFO method. S calculates additional section 263A costs incurred during the taxable year and allocable to ending inventory under paragraph (c)(4)(iii) of this section and identifies the following costs incurred during the test period:

	2018	2019	2020
Additional section 263A costs incurred during the taxable year allocable to ending inventory	$90	$137	$167
Section 471 costs incurred during the taxable year that remain in ending inventory	1,000	1,400	2,100

(*ii*) In 2021, the LIFO value of S's increment is $1,500.

(2) Under paragraph (c)(4)(iii) of this section, S computes a combined historic absorption ratio as follows:

$$\frac{\text{Total allocable additional section 263A costs incurred during the test period}}{\text{Total section 471 costs remaining on hand at each year end of the test period}} = \frac{\$90 + 137 + 167}{\$1{,}000 + 1{,}400 + 2{,}100} = \frac{\$394}{\$4{,}500} = 8.76\%$$

(3) S's additional section 263A costs allocable to its 2021 LIFO increment are $131 ($1,500 beginning LIFO increment × 8.76% combined historic absorption ratio). S adds the $131 to the $1,500 LIFO increment to determine a total 2021 LIFO increment of $1,631.

(d) ***Additional simplified methods for producers.*** The Commissioner may prescribe additional elective simplified methods by revenue ruling or revenue procedure.

(e) ***Cross reference.*** See § 1.6001-1(a) regarding the duty of taxpayers to keep such records as are sufficient to establish the amount of gross income, deductions, etc.

(f) ***Change in method of accounting*** —

(1) ***In general.*** A change in a taxpayer's treatment of additional section 263A costs to comply with paragraph (b)(2)(i)(D) of this section is a change in method of accounting to which the provisions of sections 446 and 481 and the regulations under those sections apply. See § 1.263A-7. For a taxpayer's first taxable year ending on or after August 2, 2005, the taxpayer is granted the consent of the Commissioner to change its method of accounting to comply with paragraph (b)(2)(i)(D) of this section, provided the taxpayer follows the administrative procedures, as modified by paragraphs (e)(2) through (4) of this section, issued under § 1.446-1(e)(3)(ii) for obtaining the Commissioner's automatic consent to a change in accounting method (for further guidance, for example, see Rev. Proc. 2002-9 (2002-1 CB 327), as modified and clarified by Announcement 2002-17 (2002-1 CB 561), modified and amplified by Rev. Proc. 2002-19 (2002-1 CB 696), and amplified, clarified, and modified

by Rev. Proc. 2002-54 (2002-2 CB 432), and § 601.601(d)(2)(ii)(*b*) of this chapter). For purposes of Form 3115, "Application for Change in Accounting Method," the designated number for the automatic accounting method change authorized by this paragraph (e) is "95." If Form 3115 is revised or renumbered, any reference in this section to that form is treated as a reference to the revised or renumbered form. Alternatively, notwithstanding the provisions of any administrative procedures that preclude a taxpayer from requesting the advance consent of the Commissioner to change a method of accounting that is required to be made pursuant to a published automatic change procedure, for its first taxable year ending on or after August 2, 2005, a taxpayer may request the advance consent of the Commissioner to change its method of accounting to comply with paragraph (b)(2)(i)(D) of this section, provided the taxpayer follows the administrative procedures, as modified by paragraphs (e)(2) through (5) of this section, for obtaining the advance consent of the Commissioner (for further guidance, for example, see Rev. Proc. 97-27 (1997-1 CB 680), as modified and amplified by Rev. Proc. 2002-19 (2002-1 CB 696), as amplified and clarified by Rev. Proc. 2002-54 (2002-2 CB 432), and § 601.601(d)(2)(ii)(*b*) of this chapter). For the taxpayer's second and subsequent taxable years ending on or after August 2, 2005, requests to secure the consent of the Commissioner must be made under the administrative procedures, as modified by paragraphs (e)(3) and (4) of this section, for obtaining the Commissioner's advance consent to a change in accounting method.

(2) ***Scope limitations.*** Any limitations on obtaining the automatic consent or advance consent of the Commissioner do not apply to a taxpayer seeking to change its method of accounting to comply with paragraph (b)(2)(i)(D) of this section for its first taxable year ending on or after August 2, 2005.

(3) ***Audit protection.*** A taxpayer that changes its method of accounting in accordance with this paragraph (e) to comply with paragraph (b)(2)(i)(D) of this section does not receive audit protection if its method of accounting for additional section 263A costs is an issue under consideration at the time the application is filed with the national office.

(4) ***Section 481(a) adjustment.*** A change in method of accounting to conform to paragraph (b)(2)(i)(D) of this section requires a section 481(a) adjustment. The section 481(a) adjustment period is two taxable years for a net positive adjustment for an accounting method change that is made to conform to paragraph (b)(2)(i)(D) of this section.

(5) ***Time for requesting change.*** Notwithstanding the provisions of § 1.446-1(e)(3)(i) and any contrary administrative procedure, a taxpayer may submit a request for advance consent to change its method of accounting to comply with paragraph (b)(2)(i)D) of this section for its first taxable year ending on or after August 2, 2005, on or before the date that is 30 days after the end of the taxable year for which the change is requested.

(g) ***Applicability dates.***

(1) Paragraphs (b)(2)(i)(D), (e), and (f) of this section apply for taxable years ending on or after August 2, 2005.

(2) Paragraphs (b)(3)(ii)(C) and (b)(4)(ii)(A)(*4*) of this section apply for taxable years ending on or after January 13, 2014.

(3) Paragraph (c) of this section applies for taxable years beginning on or after November 20, 2018. For any taxable year that both begins before November 20, 2018 and ends after November 20, 2018, the IRS will not challenge return positions consistent with all of paragraphs (c) of this section.

(4) The rules set forth in the last sentence of the introductory text of paragraph (a) of this section and in paragraph (a)(1)(ii)(C) of this section apply for taxable years beginning on or after January 5, 2021. However, for a taxable year beginning after December 31, 2017, and before January 5, 2021, a taxpayer may apply the paragraphs described in the first sentence of this paragraph (g)(4), provided that the taxpayer follows all the applicable rules contained in the regulations under section 263A for such taxable year and all subsequent taxable years.

[T.D. 8482, 58 FR 42219, Aug. 9, 1993, as amended by 59 FR 3318, 3319, Jan. 21, 1994; T.D. 8584, 59 FR 67197, Dec. 29, 1994; T.D. 9217, 70 FR 44469, Aug. 3, 2005; T.D. 9318, 72 FR 14677, Mar. 29, 2007; T.D. 9652, 79 FR 2097, Jan. 13, 2014; T.D. 9843, 83 FR 58491, Nov. 20, 2018; T.D. 9942, 86 FR 266, Jan. 5, 2021]

§ 1.263A-3 Rules relating to property acquired for resale.

(a) ***Capitalization rules for property acquired for resale*** —

(1) ***In general.*** Section 263A applies to real property and personal property described in section 1221(1) acquired for resale by a retailer, wholesaler, or other taxpayer (reseller). However, for taxable years beginning after December 31, 2017, a small business taxpayer, as defined in § 1.263A-1(j), is not required to apply section 263A in that taxable year. For this purpose, personal property includes both tangible and intangible property. Property acquired for resale includes stock in trade of the taxpayer or other property which is includible in the taxpayer's inventory if on hand at the close of the taxable year, and property held by the taxpayer primarily for sale to customers in the ordinary course of the taxpayer's trade or business. See, however, § 1.263A-1(b)(11) for an exception for certain de minimis property provided to customers incident to the provision of services.

(2) ***Resellers with production activities*** —

(i) ***In general.*** Generally, a taxpayer must capitalize all direct costs and certain indirect costs associated with real property and tangible personal property it produces. See § 1.263A-2(a). Thus, except as provided in paragraphs (a)(2)(ii) and (3) of this section, a reseller, including a small reseller, that also produces property must capitalize the additional section 263A costs associated with any property it produces.

(ii) ***Exemption for certain small business taxpayers.*** For taxable years beginning after December 31, 2017, see § 1.263A-1(j) for an exception in the case of a small business taxpayer that meets the gross receipts test of section 448(c) and § 1.448-2(c).

(iii) ***De minimis production activities.*** See paragraph (a)(5) of this section for rules relating to an exception for resellers with *de minimis* production activities.

(3) ***Resellers with property produced under contract.*** Generally, property produced for a taxpayer under a contract (within the meaning of § 1.263A-2(a)(1)(ii)(B)(2)) is treated as property produced by the taxpayer. See § 1.263A-2(a)(1)(ii)(B). However, a small business taxpayer is not required to capitalize additional section 263A costs to personal property produced for it under contract with an unrelated person if the contract is entered into incident to the resale activities of the small business taxpayer and the property is sold to its customers. For purposes of this paragraph, persons are related if they are described in section 267(b) or 707(b).

(4) ***Use of the simplified resale method*** —

(i) ***In general.*** Except as provided in paragraphs (a)(4)(ii) and (iii) of this section, a taxpayer may elect the simplified production method, as described in § 1.263A-2(b), or the modified simplified production method, as described in § 1.263A-2(c), but may not elect the simplified resale method, as described in paragraph (d) of this section, if the taxpayer is engaged in both production and resale activities with respect to the items of eligible property listed in § 1.263A-2(b)(2).

(ii) ***Resellers with de minimis production activities.*** A reseller otherwise permitted to use the simplified resale method in paragraph (d) of this section may use the simplified resale method if its production activities with respect to the items of eligible property listed in § 1.263A-2(b)(2) are de minimis (within the meaning of paragraph (a)(5) of this section) and incident to its resale of personal property described in section 1221(1).

(iii) ***Resellers with property produced under a contract.*** A reseller otherwise permitted to use the simplified resale method in paragraph (d) of this section may use the simplified resale method even though it has personal property produced for it (e.g., private label goods) under a contract with an unrelated person if the contract is entered into incident to its resale activities and the property is sold to its customers. For purposes of this paragraph (a)(4)(iii), persons are related if they are described in section 267(b) or 707(b).

(iv) ***Application of simplified resale method.*** A taxpayer that uses the simplified resale method and has de minimis production activities incident to its resale activities or property produced under contract must capitalize all costs allocable to eligible property produced using the simplified resale method.

(5) ***De minimis production activities*** —

(i) ***In general.*** In determining whether a taxpayer's production activities are *de minimis,* all facts and circumstances must be considered. For example, the taxpayer must consider the volume of the production activities in its trade or business. Production activities are presumed *de minimis* if—

(A) The gross receipts from the sale of the property produced by the reseller are less than 10 percent of the total gross receipts of the trade or business; and

(B) The labor costs allocable to the trade or business's production activities are less than 10 percent of the reseller's total labor costs allocable to its trade or business.

(ii) ***Definition of gross receipts to determine de minimis production activities.*** Gross receipts has the same definition as for purposes of the gross receipts test under § 1.448-2(c), except that gross receipts are measured at the trade-or-business level rather than at the single-employer level.

(iii) ***Example: Reseller with de minimis production activities.*** Taxpayer N is in the retail grocery business. In 2019, N's average annual gross receipts for the three previous taxable years are greater than the gross receipts test of section 448(c). Thus, N is not exempt from the requirement to capitalize costs under section 263A. N's grocery stores typically contain bakeries where customers may purchase baked goods produced by N. N produces no other goods in its retail grocery business. N's gross receipts from its bakeries are 5 percent of the entire grocery business. N's labor costs from its bakeries are 3 percent of its total labor costs allocable to the entire grocery business. Because both ratios are less than 10 percent, N's production activities are *de minimis.* Further, because N's production activities are incident to its resale activities, N may use the simplified resale method, as provided in paragraph (a)(4)(ii) of this section.

(b) [Reserved]

(c) ***Purchasing, handling, and storage costs*** —

(1) ***In general.*** Generally, § 1.263A-1(e) describes the types of costs that must be capitalized by taxpayers. Resellers must capitalize the acquisition cost of property acquired for resale, as well as indirect costs described in § 1.263A-1(e)(3), which are properly allocable to property acquired for resale. The indirect costs most often incurred by resellers are purchasing, handling, and storage costs. This paragraph (c) provides additional guidance regarding each of these categories of costs. As provided in § 1.263A-1(e), this paragraph (c) also applies to producers incurring purchasing, handling, and storage costs.

(2) ***Costs attributable to purchasing, handling, and storage.*** The costs attributable to purchasing, handling, and storage activities generally consist of direct and indirect labor costs (including the costs of pension plans and other fringe benefits); occupancy expenses including rent, depreciation, insurance, security, taxes, utilities and maintenance; materials and supplies; rent, maintenance, depreciation, and insurance of vehicles and equipment; tools; telephone; travel; and the general and administrative costs that directly benefit or are incurred by reason of the taxpayer's activities.

(3) ***Purchasing costs*** —

(i) ***In general.*** Purchasing costs are costs associated with operating a purchasing department or office within a trade or business, including personnel costs (e.g., of buyers, assistant buyers, and clerical workers), relating to—

(A) The selection of merchandise;

(B) The maintenance of stock assortment and volume;

(C) The placement of purchase orders;

(D) The establishment and maintenance of vendor contacts; and

(E) The comparison and testing of merchandise.

(ii) ***Determination of whether personnel are engaged in purchasing activities.*** The determination of whether a person is engaged in purchasing activities is based upon the activities performed by that person and not upon the person's title or job classification. Thus, for example, although an employee's job function may be described in such a way as to indicate activities outside the area of purchasing (e.g., a marketing representative), such activities must be analyzed on the basis of the activities performed by that employee. If a person performs both purchasing and non-purchasing activities, the taxpayer must reasonably allocate the person's labor costs between these activities. For example, a reasonable allocation is one based on the amount of time the person spends on each activity.

(A) ***$^{1}/_{3}$- $^{2}/_{3}$ rule for allocating labor costs.*** A taxpayer may elect the $^{1}/_{3}$- $^{2}/_{3}$ rule for allocating labor costs of persons performing both purchasing and non-purchasing activities. If elected, the taxpayer must allocate the labor costs of all such persons using the $^{1}/_{3}$- $^{2}/_{3}$ rule. Under this rule—

(*1*) If less than one-third of a person's activities are related to purchasing, none of that person's labor costs are allocated to purchasing;

(2) If more than two-thirds of a person's activities are related to purchasing, all of that person's labor costs are allocated to purchasing; and

(3) In all other cases, the taxpayer must reasonably allocate labor costs between purchasing and non-purchasing activities.

(B) ***Example.*** The application of paragraph (c)(3)(ii)(A) of this section may be illustrated by the following example:

Example. Taxpayer O is a reseller that employs three persons, A, B, and C, who perform both purchasing and non- purchasing activities. These persons spend the following time performing purchasing activities: A-25 %; B-70 %; and C-50 %. Under the $^{1}/_{3}$- $^{2}/_{3}$ rule, Taxpayer O treats none of A's labor costs as purchasing costs, all of B's labor costs as purchasing costs, and Taxpayer O allocates 50 % of C's labor costs as purchasing costs.

(4) ***Handling costs*** —

(i) ***In general.*** Handling costs include costs attributable to processing, assembling, repackaging, transporting, and other similar activities with respect to property acquired for resale, provided the activities do not come within the meaning of the term produce as defined in § 1.263A-2(a)(1). Handling costs are generally required to be capitalized under section 263A. Under this paragraph (c)(4)(i), however, handling costs incurred at a retail sales facility (as defined in paragraph (c)(5)(ii)(B) of this section) with respect to property sold to retail customers at the facility are not required to be capitalized. Thus, for example, handling costs incurred at a retail sales facility to unload, unpack, mark, and tag goods sold to retail customers at the facility are not required to be capitalized. In addition, handling costs incurred at a dual-function storage facility (as defined in paragraph (c)(5)(ii)(G) of this section) with respect to property sold to customers from the facility are not required to be capitalized to the extent that the costs are incurred with respect to property sold in on-site sales. Handling costs attributable to property sold to customers from a dual-function storage facility in on-site sales are determined by applying the ratio in paragraph (c)(5)(iii)(B) of this section.

(ii) ***Processing costs.*** Processing costs are the costs a reseller incurs in making minor changes or alterations to the nature or form of a product acquired for resale. Minor changes to a product include, for example, monogramming a sweater, altering a pair of pants, and other similar activities.

(iii) ***Assembling costs.*** Generally, assembling costs are costs associated with incidental activities that are necessary in readying property for resale (e.g., attaching wheels and handlebars to a bicycle acquired for resale).

(iv) ***Repackaging costs.*** Repackaging costs are the costs a taxpayer incurs to package property for sale to its customers.

(v) ***Transportation costs.*** Generally, transportation costs are the costs a taxpayer incurs moving or shipping property acquired for resale. These costs include the cost of dispatching trucks; loading and unloading shipments; and sorting, tagging, and marking property. Transportation costs may consist of depreciation on trucks and equipment and the costs of fuel, insurance, labor, and similar costs. Generally, transportation costs required to be capitalized include costs incurred in transporting property—

(A) From the vendor to the taxpayer;

(B) From one of the taxpayer's storage facilities to another of its storage facilities;

(C) From the taxpayer's storage facility to its retail sales facility;

(D) From the taxpayer's retail sales facility to its storage facility; and

(E) From one of the taxpayer's retail sales facilities to another of its retail sales facilities.

(vi) ***Costs not required to be capitalized as handling costs*** —

(A) ***Distribution costs*** —

(1) ***In general.*** Distribution costs are not required to be capitalized. Distribution costs are any transportation costs incurred outside a storage facility in delivering goods to a customer. For this purpose, any costs incurred on a loading dock are treated as incurred outside a storage facility.

(2) ***Costs incurred in transporting goods to a related person.*** Distribution costs do not include costs incurred by a taxpayer in delivering goods to a related person. Thus, for example, when a taxpayer sells goods to a related person, the costs of transporting the goods are included in determining the basis of the goods that are sold, and hence in determining the resulting gain or loss from the sale, for all purposes of the Internal Revenue Code and the regulations thereunder. See, e.g., sections 267, 707, and 1502. For purposes of this provision, persons are related if they are described in section 267(b) or section 707(b).

(B) ***Delivery of custom-ordered items.*** Generally, costs incurred in transporting goods from a taxpayer's storage facility to its retail sales facility must be capitalized. However, costs incurred outside a storage facility in delivering custom-ordered items to a retail sales facility are not required to be capitalized. For this purpose, any costs incurred on a loading dock are treated as incurred outside a storage facility. Delivery of custom-ordered items occurs when a taxpayer can demonstrate that a delivery to the taxpayer's retail sales facility is made to fill an identifiable order of a particular customer (placed by the customer before the delivery of the goods occurs) for the particular goods in question. Factors that may demonstrate the existence of a specific, identifiable delivery include the following—

(1) The customer has paid for the item in advance of the delivery;

(2) The customer has submitted a written order for the item;

(3) The item is not normally available at the retail sales facility for on-site customer purchases; and

(4) The item will be returned to the storage facility (and not held for sale at the retail sales facility) if the customer cancels an order.

(C) ***Pick and pack costs*** —

(1) ***In general.*** Generally, handling costs incurred inside a storage or warehousing facility must be capitalized. However, costs attributable to pick and pack activities inside a storage or warehousing facility are not required to be capitalized. Pick and pack

activities are activities undertaken in preparation for imminent shipment to a particular customer after the customer has ordered the specific goods in question. Examples of pick and pack activities include:

(*i*) Moving specific goods from a storage location in preparation for shipment to the customer;

(*ii*) Packing or repacking those goods for shipment to the customer; and

(*iii*) Staging those goods for shipment to the customer.

(*2*) ***Activities that are not pick and pack activities.*** Pick and pack activities do not include:

(*i*) Unloading goods that are received for storage;

(*ii*) Checking the quantity and quality of goods received;

(*iii*) Comparing the quantity of goods received to the amounts ordered and preparing the receiving documents;

(*iv*) Moving the goods to their storage location, e.g., bins, racks, containers, etc.; and

(*v*) Storing the goods.

(*3*) ***Costs not attributable to pick and pack activities.*** Occupancy costs, such as rent, depreciation, insurance, security, taxes, utilities, and maintenance costs properly allocable to the storage or warehousing facility, are not costs attributable to pick and pack activities.

(5) ***Storage costs*** —

(i) ***In general.*** Generally, storage costs are capitalized under section 263A to the extent they are attributable to the operation of an off-site storage or warehousing facility (an off-site storage facility). However, storage costs attributable to the operation of an on-site storage facility (as defined in paragraph (c)(5)(ii)(A) of this section) are not required to be capitalized under section 263A. Storage costs attributable to a dual-function storage facility (as defined in paragraph (c)(5)(ii)(G) of this section) must be capitalized to the extent that the facility's costs are allocable to off-site storage.

(ii) ***Definitions*** —

(A) ***On-site storage facility.*** An on-site storage facility is defined as a storage or warehousing facility that is physically attached to, and an integral part of, a retail sales facility.

(B) ***Retail sales facility.***

(*1*) A retail sales facility is defined as a facility where a taxpayer sells merchandise exclusively to retail customers in on-site sales. For this purpose, a retail sales facility includes those portions of any specific retail site—

(*i*) Which are customarily associated with and are an integral part of the operations of that retail site;

(*ii*) Which are generally open each business day exclusively to retail customers;

(*iii*) On or in which retail customers normally and routinely shop to select specific items of merchandise; and

(*iv*) Which are adjacent to or in immediate proximity to other portions of the specific retail site.

(*2*) Thus, for example, two lots of an automobile dealership physically separated by an alley or an access road would generally be considered one retail sales facility, provided customers routinely shop on both of the lots to select the specific automobiles that they wish to acquire.

(C) ***An integral part of a retail sales facility.*** A storage facility is considered an integral part of a retail sales facility when the storage facility is an essential and indispensable part of the retail sales facility. For example, if the storage facility is used exclusively for filling orders or completing sales at the retail sales facility, the storage facility is an integral part of the retail sales facility.

(D) ***On-site sales.*** On-site sales are defined as sales made to retail customers physically present at a facility. For example, mail order and catalog sales are made to customers not physically present at the facility, and thus, are not on-site sales.

(E) ***Retail customer*** —

(*1*) ***In general.*** A retail customer is defined as the final purchaser of the merchandise. A retail customer does not include a person who resells the merchandise to others, such as a contractor or manufacturer that incorporates the merchandise into another product for sale to customers.

(*2*) ***Certain non-retail customers treated as retail customers.*** For purposes of this section, a non-retail customer is treated as a retail customer with respect to a particular facility if the following requirements are satisfied—

(*i*) The non-retail customer purchases goods under the same terms and conditions as are available to retail customers (e.g., no special discounts);

(*ii*) The non-retail customer purchases goods in the same manner as a retail customer (e.g., the non-retail customer may not place orders in advance and must come to the facility to examine and select goods);

(*iii*) Retail customers shop at the facility on a routine basis (i.e., on most business days), and no special days or hours are reserved for non-retail customers; and

(*iv*) More than 50 percent of the gross sales of the facility are made to retail customers.

(F) ***Off-site storage facility.*** An off-site storage facility is defined as a storage facility that is not an on-site storage facility.

(G) ***Dual-function storage facility.*** A dual-function storage facility is defined as a storage facility that serves as both an off-site storage facility and an on-site storage facility. For example, a dual-function storage facility would include a regional warehouse that serves the taxpayer's separate retail sales outlets and also contains a sales outlet therein. A dual-function storage facility also includes any facility where sales are made to retail customers in on-site sales and to—

(*1*) Retail customers in sales that are not on-site sales; or

(2) Other customers.

(iii) ***Treatment of storage costs incurred at a dual-function storage facility*** —

(A) ***In general.*** Storage costs associated with a dual-function storage facility must be allocated between the off-site storage function and the on-site storage function. To the extent that the dual-function storage facility's storage costs are allocable to the off-site storage function, they must be capitalized. To the extent that the dual-function storage facility's storage costs are allocable to the on-site storage function, they are not required to be capitalized.

(B) ***Dual-function storage facility allocation ratio*** —

(1) ***In general.*** Storage costs associated with a dual-function storage facility must be allocated between the off-site storage function and the on-site storage function using the ratio of—

(*i*) Gross on-site sales of the facility (i.e., gross sales of the facility made to retail customers visiting the premises in person and purchasing merchandise stored therein); to

(*ii*) Total gross sales of the facility. For this purpose, the total gross sales of the facility include the value of items shipped to other facilities of the taxpayer.

(2) ***Illustration of ratio allocation.*** For example, if a dual-function storage facility's on-site sales are 40 percent of the total gross sales of the facility, then 40 percent of the facility's storage costs are allocable to the on-site storage function and are not required to be capitalized under section 263A.

(3) ***Appropriate adjustments for other uses of a dual-function storage facility.*** Prior to computing the allocation ratio in paragraph (c)(5)(iii)(B) of this section, a taxpayer must apply the principles of paragraph (c)(5)(iv) of this section in determining the portion of the facility that is a dual-function storage facility (and the costs attributable to such portion).

(C) ***De minimis 90-10 rule for dual-function storage facilities.*** If 90 percent or more of the costs of a facility are attributable to the on-site storage function, the entire storage facility is deemed to be an on-site storage facility. In contrast, if 10 percent or less of the costs of a storage facility are attributable to the on-site storage function, the entire storage facility is deemed to be an off-site storage facility.

(iv) ***Costs not attributable to an off-site storage facility.*** To the extent that costs incurred at an off-site storage facility are not properly allocable to the taxpayer's storage function, the costs are not accounted for as off-site storage costs. For example, if a taxpayer has an office attached to its off-site storage facility where work unrelated to the storage function is performed, such as a sales office, costs associated with this office are not off-site storage costs. However, if a taxpayer uses a portion of an off-site storage facility in a manner related to the storage function, for example, to store equipment or supplies that are not offered for sale to customers, costs associated with this portion of the facility are off-site storage costs.

(v) ***Examples.*** The provisions of this paragraph (c)(5) are illustrated by the following examples:

Example 1. Catalog or mail order center. Taxpayer P operates a mail order catalog business. As part of its business, P stores merchandise for shipment to customers who purchase the merchandise through orders placed by telephone or mail. P's storage facility is not an on-site storage facility because no on-site sales are made at the facility.

Example 2. Pooled-stock facility. Taxpayer Q maintains a pooled-stock facility, which functions as a back-up regional storage facility for Q's retail sales outlets in the nearby area. Q's pooled stock facility is an off-site storage facility because it is neither physically attached to nor an integral part of a retail sales facility.

Example 3. Wholesale warehouse. Taxpayer R operates a wholesale warehouse where wholesale sales are made to customers physically present at the facility. R's customers resell the goods they purchase from R to final retail customers. Because no retail sales are conducted at the facility, all storage costs attributable to R's wholesale warehouse must be capitalized.

(d) ***Simplified resale method*** —

(1) ***Introduction.*** This paragraph (d) provides a simplified method for determining the additional section 263A costs properly allocable to property acquired for resale and other eligible property on hand at the end of the taxable year.

(2) ***Eligible property.*** Generally, the simplified resale method is only available to a trade or business exclusively engaged in resale activities. However, certain resellers with property produced as a result of de minimis production activities or property produced under contract may elect the simplified resale method, as described in paragraph (a)(4) of this section. Eligible property for purposes of the simplified resale method, therefore, includes any real or personal property described in section 1221(1) that is acquired for resale and any eligible property (within the meaning of § 1.263A-2(b)(2)) that is described in paragraph (a)(4) of this section.

(3) ***Simplified resale method without historic absorption ratio election*** —

(i) ***General allocation formula*** —

(A) ***In general.*** Under the simplified resale method, the additional section 263A costs allocable to eligible property remaining on hand at the close of the taxable year are computed as follows:

$$\text{Combined absorption ratio} \times \text{section 471 costs remaining on hand at year end}$$

(B) ***Effect of allocation.*** The resulting product under the general allocation formula is the additional section 263A costs that are added to the taxpayer's ending section 471 costs to determine the section 263A costs that are capitalized.

(C) ***Definitions*** —

(*1*) ***Combined absorption ratio.*** The combined absorption ratio is defined as the sum of the storage and handling costs absorption ratio as defined in paragraph (d)(3)(i)(D) of this section and the purchasing costs absorption ratio as defined in paragraph (d)(3)(i)(E) of this section.

(*2*) ***Section 471 costs remaining on hand at year end.*** Section 471 costs remaining on hand at year end mean the section 471 costs, as defined in § 1.263A-1(d)(2), that the taxpayer incurs during its current taxable year, which remain in its ending inventory or

are otherwise on hand at year end. For LIFO inventories of a taxpayer, the section 471 costs remaining on hand at year end means the increment, if any, for the current year stated in terms of section 471 costs. See paragraph (d)(3)(ii) of this section for special rules applicable to LIFO taxpayers. Except as otherwise provided in this section or in § 1.263A-1 or 1.263A-2, additional section 263A costs that are allocated to inventories on hand at the close of the taxable year under the simplified resale method of this paragraph (d) are treated as inventory costs for all purposes of the Internal Revenue Code.

(*3*) ***Costs allocable to property sold.*** Section 471 costs remaining on hand at year end, as defined in paragraph (d)(3)(i)(C)(*2*) of this section, do not include costs that are specifically described in § 1.263A-1(e)(3)(ii) or cost reductions described in § 1.471-3(e) that a taxpayer properly allocates entirely to property that has been sold.

(D) ***Storage and handling costs absorption ratio.***

(*1*) Under the simplified resale method, the storage and handling costs absorption ratio is determined as follows:

$$\frac{\text{Current year's storage and handling costs}}{\text{Beginning inventory plus current year's purchases}}$$

(*2*) Current year's storage and handling costs are defined as the total storage costs plus the total handling costs incurred during the taxable year that relate to the taxpayer's property acquired for resale and other eligible property. See paragraph (c) of this section, which discusses storage and handling costs. Storage and handling costs must include the amount of allocable mixed service costs as described in paragraph (d)(3)(i)(F) of this section. Beginning inventory in the denominator of the storage and handling costs absorption ratio refers to the section 471 costs of any property acquired for resale or other eligible property held by the taxpayer as of the beginning of the taxable year. Current year's purchases generally mean the taxpayer's section 471 costs incurred with respect to purchases of property acquired for resale during the current taxable year. In computing the denominator of the storage and handling costs absorption ratio, a taxpayer using a dollar-value LIFO method of accounting, must state beginning inventory amounts using the LIFO carrying value of the inventory and not current-year dollars.

(*3*) Current year's storage and handling costs, beginning inventory, and current year's purchases, as defined in paragraph (d)(3)(i)(D)(*2*) of this section, do not include costs that are specifically described in § 1.263A-1(e)(3)(ii) or cost reductions described in § 1.471-3(e) that a taxpayer properly allocates entirely to property that has been sold.

(E) ***Purchasing costs absorption ratio.***

(*1*) Under the simplified resale method, the purchasing costs absorption ratio is determined as follows:

$$\frac{\text{Current year's purchasing costs}}{\text{Current year's purchases}}$$

(2) Current year's purchasing costs are defined as the total purchasing costs incurred during the taxable year that relate to the taxpayer's property acquired for resale and eligible property. See paragraph (c)(3) of this section, which discusses purchasing costs. Purchasing costs must include the amount of allocable mixed service costs determined in paragraph (d)(3)(i)(F) of this section. Current year's purchases generally mean the taxpayer's section 471 costs incurred with respect to purchases of property acquired for resale during the current taxable year.

(3) Current year's purchasing costs and current year's purchases, as defined in paragraph (d)(3)(i)(E)(2) of this section, do not include costs that are specifically described in § 1.263A-1(e)(3)(ii) or cost reductions described in § 1.471-3(e) that a taxpayer properly allocates entirely to property that has been sold.

(F) ***Allocable mixed service costs.***

(1) If a taxpayer allocates its mixed service costs to purchasing costs, storage costs, and handling costs using a method described in § 1.263A-1(g)(4), the taxpayer is not required to determine its allocable mixed service costs under this paragraph (d)(3)(i)(F). However, if the taxpayer uses the simplified service cost method, the amount of mixed service costs allocated to and included in purchasing costs, storage costs, and handling costs in the absorption ratios in paragraphs (d)(3)(i) (D) and (E) of this section is determined as follows:

$$\frac{\text{Labor costs allocable to activity}}{\text{Total labor costs}} \times \text{Total mixed service costs}$$

(2) Labor costs allocable to activity are defined as the total labor costs allocable to each particular activity (i.e., purchasing, handling, and storage), excluding labor costs included in mixed service costs. Total labor costs are defined as the total labor costs (excluding labor costs included in mixed service costs) that are incurred in the taxpayer's trade or business during the taxable year. See § 1.263A-1(h)(6) for the definition of total mixed service costs.

(ii) ***LIFO taxpayers electing simplified resale method*** —

(A) ***In general.*** Under the simplified resale method, a taxpayer using a LIFO method must calculate a particular year's index (e.g., under § 1.472-8(e)) without regard its additional section 263A costs. Similarly, a taxpayer that adjusts current-year costs by applicable indexes to determine whether there has been an inventory increment or decrement in the current year for a particular LIFO pool must disregard the additional section 263A costs in making that determination.

(B) ***LIFO increment.*** If the taxpayer determines there has been an inventory increment, the taxpayer must state the amount of the increment in current-year dollars (stated in terms of section 471 costs). The taxpayer then multiplies this amount by the combined absorption ratio. The resulting product is the additional section 263A costs that must be added to the taxpayer's increment for the year stated in terms of section 471 costs.

(C) ***LIFO decrement.*** If the taxpayer determines there has been an inventory decrement, the taxpayer must state the amount of the decrement in dollars applicable to the particular year for which the LIFO layer has been invaded. The additional section 263A costs

incurred in prior years that are applicable to the decrement are charged to cost of goods sold. The additional section 263A costs that are applicable to the decrement are determined by multiplying the additional section 263A costs allocated to the layer of the pool in which the decrement occurred by the ratio of the decrement (excluding additional section 263A costs) to the section 471 costs in the layer of that pool.

(iii) ***Permissible variations of the simplified resale method.*** The following variations of the simplified resale method are permitted:

(A) The exclusion of beginning inventories from the denominator in the storage and handling costs absorption ratio formula in paragraph (d)(3)(i)(D) of this section; or

(B) Multiplication of the storage and handling costs absorption ratio in paragraph (d)(3)(i)(D) of this section by the total of section 471 costs included in a LIFO taxpayer's ending inventory (rather than just the increment, if any, experienced by the LIFO taxpayer during the taxable year) for purposes of determining capitalizable storage and handling costs.

(iv) ***Examples.*** The provisions of this paragraph (d)(3) are illustrated by the following examples:

> *Example 1. FIFO inventory method.* (i) Taxpayer S uses the FIFO method of accounting for inventories. S's beginning inventory for 1994 (all of which was sold during 1994) was $2,100,000 (consisting of $2,000,000 of section 471 costs and $100,000 of additional section 263A costs). During 1994, S makes purchases of $10,000,000. In addition, S incurs purchasing costs of $460,000, storage costs of $110,000, and handling costs of $90,000. S's purchases (section 471 costs) remaining in ending inventory at the end of 1994 are $3,000,000.
> (ii) In 1994, S incurs $400,000 of total mixed service costs and $1,000,000 of total labor costs (excluding labor costs included in mixed service costs). In addition, S incurs the following labor costs (excluding labor costs included in mixed service costs): purchasing—$100,000, storage—$200,000, and handling—$200,000. Accordingly, the following mixed service costs must be included in purchasing costs, storage costs, and handling costs as capitalizable mixed service costs: purchasing—$40,000 ([$100,000 divided by $1,000,000] multiplied by $400,000); storage—$80,000 ([$200,000 divided by $1,000,000] multiplied by $400,000); and handling—$80,000 ([$200,000 divided by $1,000,000] multiplied by $400,000).
>
> (iii) S computes its purchasing costs absorption ratio for 1994 as follows:

$$\frac{\text{1994 purchasing costs}}{\text{1994 purchases}} = \frac{\$460{,}000 + \$40{,}000}{\$10{,}000{,}000}$$

$$= \frac{\$500{,}000}{\$10{,}000{,}000}$$

$$= 5.0\%$$

(iv) S computes its storage and handling costs absorption ratio for 1994 as follows:

$$\frac{\text{Storage and handling costs}}{\text{Beginning inventory plus 1994 purchases}} = \frac{(\$110{,}000 + \$80{,}000) + (\$90{,}000 + \$80{,}000)}{\$2{,}000{,}000 + \$10{,}000{,}000}$$

$$= \frac{\$190{,}000 + \$170{,}000}{\$12{,}000{,}000}$$

$$= \frac{\$360{,}000}{\$12{,}000{,}000}$$

$$= 3.0\%$$

(v) S's combined absorption ratio is 8.0 %, or the sum of the purchasing costs absorption ratio (5.0 %) and the storage and handling costs absorption ratio (3.0 %). Under the simplified resale method, S determines the additional section 263A costs allocable to its ending inventory by multiplying the combined absorption ratio by its section 471 costs with respect to current year's purchases remaining in ending inventory:

$$\text{Additional section 263A costs} = 8.0\% \times \$3{,}000{,}000 = \$240{,}000$$

(vi) S adds this $240,000 to the $3,000,000 of purchases remaining in its ending inventory to determine its total ending FIFO inventory of $3,240,000.

Example 2. LIFO inventory method. (i) Taxpayer T uses a dollar-value LIFO inventory method. T's beginning inventory for 1994 is $2,100,000 (consisting of $2,000,000 of section 471 costs and $100,000 of additional section 263A costs). During 1994, T makes purchases of $10,000,000. In addition, T incurs purchasing costs of $460,000, storage costs of $110,000, and handling costs of $90,000. T's 1994 LIFO increment is $1,000,000 ($3,000,000 of section 471 costs in ending inventory less $2,000,000 of section 471 costs in beginning inventory).

(ii) In 1994, T incurs $400,000 of total mixed service costs and $1,000,000 of total labor costs (excluding labor costs included in mixed service costs). In addition, T incurs the following labor costs (excluding labor costs included in mixed service costs):

purchasing—$100,000, storage—$200,000, and handling—$200,000. Accordingly, the following mixed service costs must be included in purchasing costs, storage costs, and handling costs as capitalizable mixed service costs: purchasing—$40,000 ([$100,000 divided by $1,000,000] multiplied by $400,000); storage—$80,000 ([$200,000 divided by $1,000,000] multiplied by $400,000); and handling—$80,000 ([$200,000 divided by $1,000,000] multiplied by $400,000).

(iii) Based on these facts, T determines that it has a combined absorption ratio of 8.0 %. To determine the additional section 263A costs allocable to its ending inventory, T multiplies its combined absorption ratio (8.0 %) by the $1,000,000 LIFO increment. Thus, T's additional section 263A costs allocable to its ending inventory are $80,000 ($1,000,000 multiplied by 8.0 %). This $80,000 is added to the $1,000,000 to determine a total 1994 LIFO increment of $1,080,000. T's ending inventory is $3,180,000 (its beginning inventory of $2,100,000 plus the $1,080,000 increment).

(iv) In 1995, T sells one-half of the inventory in its 1994 LIFO increment. T must include in its cost of goods sold for 1995 the amount of additional section 263A costs relating to this inventory, i.e., one-half of the $80,000 additional section 263A costs capitalized in 1994 ending inventory, or $40,000.

Example 3. LIFO Pools. (i) Taxpayer U begins its business in 1994, and adopts the LIFO inventory method. During 1994, U makes purchases of $10,000, and incurs $400 of purchasing costs, $350 of storage costs and $250 of handling costs. U's purchasing costs, storage costs, and handling costs include their proper allocable share of mixed service costs.
(ii) U computes its purchasing costs absorption ratio for 1994, as follows:

$$\frac{\text{1994 purchasing costs}}{\text{1994 purchases}} = \frac{\$400}{\$10{,}000}$$

$$= 4.0\%$$

(iii) U computes its storage and handling costs absorption ratio for 1994, as follows:

$$\frac{\text{1994 storage and handling costs}}{\text{Beginning inventory plus 1994 purchases}} = \frac{\$350 + \$250}{\$0 + \$10{,}000}$$

$$= \frac{\$600}{\$10{,}000}$$

$$= 6.0\%$$

(iv) U's combined absorption ratio is 10%, or the sum of the purchasing costs absorption ratio (4.0%) and the storage and handling costs absorption ratio (6.0%). At the end of 1994, U's ending inventory included $3,000 of current year purchases, contained in three LIFO pools (X, Y, and Z) as shown below. Under the simplified resale method, U computes its ending inventory for 1994 as follows:

1994	Total	X	Y	Z
Ending section 471 costs	$3,000	$1,600	$600	$800
Additional section 263A costs (10%)	300	160	60	80
1994 ending inventory	3,300	1,760	660	880

(v) During 1995, U makes purchases of $2,000 as shown below, and incurs $200 of purchasing costs, $325 of storage costs and $175 of handling costs. U's purchasing costs, storage costs, and handling costs include their proper share of mixed service costs. Moreover, U sold goods from pools X, Y, and Z having a total cost of $1,000. U computes its ending inventory for 1995 as follows.

(vi) U computes its purchasing costs absorption ratio for 1995:

$$\frac{\text{1995 purchasing costs}}{\text{1995 purchases}} = \frac{\$200}{\$2{,}000}$$

$$= 10.0\%$$

(vii) U computes its storage and handling costs absorption ratio for 1995:

$$\frac{\text{1995 storage and handling costs}}{\text{Beginning inventory plus 1995 purchases}} = \frac{\$325 + \$175}{\$3{,}000 + \$2{,}000} = \frac{\$500}{\$5{,}000} = 10.0\%$$

(viii) U's combined absorption ratio is 20.0%, or the sum of the purchasing costs absorption ratio (10.0%) and the storage and handling costs absorption ratio (10.0%).

1995	Total	X	Y	Z
Beginning section 471 costs	$3,000	$1,600	$600	$800
1995 section 471 costs	2,000	1,500	300	200
Section 471 cost of goods sold	(1,000)	(300)	(300)	(400)
1995 ending section 471 costs	4,000	2,800	600	600
Consisting of:				
1994 layer	2,800	1,600	600	600
1995 layer	1,200	1,200		
	4,000	2,800	600	600
Additional section 263A costs:				
1994 (10%)	280	160	60	60
1995 (20%)	240	240		
	520	400	60	60
1995 ending inventory	4,520	3,200	660	660

(ix) In 1995, U experiences a $200 decrement in Pool Z. Thus, U must charge the additional section 263A costs incurred in prior years applicable to the decrement to 1995's cost of goods sold. To do so, U determines a ratio by dividing the decrement by the section 471 costs in the 1994 layer ($200 divided by $800, or 25%). U then multiplies this ratio (25%) by the additional section 263A costs in the 1994 layer ($80) to determine the additional section 263A costs applicable to the decrement ($20). Therefore, $20 is taken into account by U in 1995 as part of its cost of goods sold ($80 multiplied by 25%).

(4) *Simplified resale method with historic absorption ratio election* —

(i) *In general.* This paragraph (d)(4) permits resellers using the simplified resale method to elect a historic absorption ratio in determining additional section 263A costs allocable to eligible property remaining on hand at the close of their taxable years. Except as provided in paragraph (d)(4)(v) of this section, a taxpayer may only make a historic absorption ratio election if it has used the simplified resale method for three or more consecutive taxable years immediately

prior to the year of election. The historic absorption ratio is used in lieu of an actual combined absorption ratio computed under paragraph (d)(3)(i)(C)(*1*) of this section and is based on costs capitalized by a taxpayer during its test period. If elected, the historic absorption ratio must be used for the qualifying period described in paragraph (d)(4)(ii)(C) of this section.

(ii) ***Operating rules and definitions*** —

(A) ***Historic absorption ratio.***

(*1*) The historic absorption ratio is equal to the following ratio:

$$\frac{\text{Additional section 263A costs incurred during the test period}}{\text{Section 471 costs incurred during the test period}}$$

(*2*) Additional section 263A costs incurred during the test period are defined as the sum of the products of the combined absorption ratios (defined in paragraph (d)(3)(i)(C)(*1*) of this section) multiplied by a taxpayer's section 471 costs incurred with respect to purchases, for each taxable year of the test period.

(*3*) Section 471 costs incurred during the test period mean the section 471 costs described in § 1.263A-1(d)(2) that a taxpayer incurs generally with respect to its purchases during the test period described in paragraph (d)(4)(ii)(B) of this section.

(B) ***Test period*** —

(*1*) ***In general.*** The test period is generally the three taxable-year period immediately prior to the taxable year that the historic absorption ratio is elected.

(*2*) ***Updated test period.*** The test period begins again with the beginning of the first taxable year after the close of a qualifying period (as defined in paragraph (d)(4)(ii)(C) of this section). This new test period, the updated test period, is the three taxable-year period beginning with the first taxable year after the close of the qualifying period.

(C) ***Qualifying period*** —

(*1*) ***In general.*** A qualifying period includes each of the first five taxable years beginning with the first taxable year after a test period (or updated test period).

(*2*) ***Extension of qualifying period.*** In the first taxable year following the close of each qualifying period (e.g., the sixth taxable year following the test period), the taxpayer must compute the actual combined absorption ratio under the simplified resale method. If the actual combined absorption ratio computed for this taxable year (the recomputation year) is within one-half of one percentage point (plus or minus) of the historic absorption ratio used in determining capitalizable costs for the qualifying period (i.e., the previous five taxable years), the qualifying period must be extended to include the recomputation year and the following five taxable years, and the taxpayer must continue to use the historic absorption ratio throughout the extended qualifying period. If, however, the actual combined absorption ratio computed for the recomputation year is not within one-half of one percentage point (plus or minus) of the historic absorption ratio, the taxpayer must use actual combined absorption ratios beginning with the recomputation year under the simplified resale method and

throughout the updated test period. The taxpayer must resume using the historic absorption ratio (determined with reference to the updated test period) in the third taxable year following the recomputation year.

(iii) *Method of accounting* —

(A) ***Adoption and use.*** The election to use the historic absorption ratio is a method of accounting. A taxpayer using the simplified resale method may elect the historic absorption ratio in any taxable year if permitted under this paragraph (d)(4), provided the taxpayer has not obtained the Commissioner's consent to revoke the historic absorption ratio election within its prior six taxable years. The election is to be effected on a cut-off basis, and thus, no adjustment under section 481(a) is required or permitted. The use of a historic absorption ratio has no effect on other methods of accounting adopted by the taxpayer and used in conjunction with the simplified resale method in determining its section 263A costs. Accordingly, in computing its actual combined absorption ratios, the taxpayer must use the same methods of accounting used in computing its historic absorption ratio during its most recent test period unless the taxpayer obtains the consent of the Commissioner. Finally, for purposes of this paragraph (d)(4)(iii)(A), the recomputation of the historic absorption ratio during an updated test period and the change from a historic absorption ratio to an actual combined absorption ratio during an updated test period by reason of the requirements of this paragraph (d)(4) are not considered changes in methods of accounting under section 446(e) and, thus, do not require the consent of the Commissioner or any adjustments under section 481(a).

(B) ***Revocation of election.*** A taxpayer may only revoke its election to use the historic absorption ratio with the consent of the Commissioner in a manner prescribed under section 446(e) and the regulations thereunder. Consent to the change for any taxable year that is included in the qualifying period (or an extended qualifying period) will be granted only upon a showing of unusual circumstances.

(iv) *Reporting and recordkeeping requirements* —

(A) ***Reporting.*** A taxpayer making an election under this paragraph (d)(4) must attach a statement to its federal income tax return for the taxable year in which the election is made showing the actual combined absorption ratios determined under the simplified resale method during its first test period. This statement must disclose the historic absorption ratio to be used by the taxpayer during its qualifying period. A similar statement must be attached to the federal income tax return for the first taxable year within any subsequent qualifying period (i.e., after an updated test period).

(B) ***Recordkeeping.*** A taxpayer must maintain all appropriate records and details supporting the historic absorption ratio until the expiration of the statute of limitations for the last year for which the taxpayer applied the particular historic absorption ratio in determining additional section 263A costs capitalized to eligible property.

(v)

(A) ***Transition to elect historic absorption ratio.*** Taxpayers will be permitted to elect a historic absorption ratio in their first, second, or third taxable year beginning after December 31, 1993, under such terms and conditions as may be prescribed by the Commissioner. Taxpayers are eligible to make an election under these transition rules whether or not they previously used the simplified resale method. A taxpayer making such an election must

recompute (or compute) its additional section 263A costs, and thus, its historic absorption ratio for its first test period as if the rules prescribed in this section and §§ 1.263A-1 and 1.263A-2 had applied throughout the test period.

(B) ***Transition to revoke historic absorption ratio.*** Notwithstanding the requirements provided in paragraph (d)(4)(iii)(B) of this section regarding revocations of the historic absorption ratio during a qualifying period, a taxpayer will be permitted to revoke the historic absorption ratio in their first, second, or third taxable year ending on or after *November 20, 2018,* under such administrative procedures and with terms and conditions prescribed by the Commissioner.

(vi) ***Example.*** The provisions of this paragraph (d)(4) are illustrated by the following example:

Example. (i) Taxpayer V uses the FIFO method of accounting for inventories and in 1994 elects to use the historic absorption ratio with the simplified resale method. After recomputing its additional section 263A costs in accordance with the transition rules of paragraph (d)(4)(v) of this section, V identifies the following costs incurred during the test period:
1991:

Add'l section 263A costs—$100
Section 471 costs—$3,000

1992:

Add'l section 263A costs—$200
Section 471 costs—$4,000

1993:

Add'l section 263A costs—$300
Section 471 costs—$5,000

(ii) Therefore, V computes a 5% historic absorption ratio determined as follows:

$$\text{Historic absorption ratio} = \frac{\$100 + 200 + 300}{\$3000 + 4{,}000 + 5{,}000} = \frac{\$600}{\$12{,}000} = 5\%$$

(iii) In 1994, V incurs $10,000 of section 471 costs of which $3,000 remain in inventory at the end of the year. Under the simplified resale method using a historic absorption ratio, V determines the additional section 263A costs allocable to its ending inventory by multiplying its historic ratio (5%) by the section 471 costs remaining in its ending inventory:

$$\text{Additional section 263A costs} = 5\% \times \$3{,}000 = \$150$$

(iv) To determine its ending inventory under section 263A, V adds the additional section 263A costs allocable to ending inventory to its section 471 costs remaining in ending inventory ($3,150 = $150 + $3,000). The balance of V's additional section 263A costs incurred during 1994 is taken into account in 1994 as part of V's cost of goods sold.
(v) V's qualifying period ends as of the close of its 1998 taxable year. Therefore, 1999 is a recomputation year in which V must compute its actual combined absorption ratio. V determines its actual absorption ratio for 1999 to be 5.25% and compares that ratio to its historic absorption ratio (5.0%). Therefore, V must continue to use its historic absorption ratio of 5.0% throughout an extended qualifying period, 1999 through 2004 (the recomputation year and the following five taxable years).

(vi) If, instead, V's actual combined absorption ratio for 1999 were not between 4.5% and 5.5%, V's qualifying period would end and V would be required to compute a new historic absorption ratio with reference to an updated test period of 1999, 2000, and 2001. Once V's historic absorption ratio is determined for the updated test period, it would be used for a new qualifying period beginning in 2002.

(5) ***Additional simplified methods for resellers.*** The Commissioner may prescribe additional elective simplified methods by revenue ruling or revenue procedure.

(e) ***Cross reference.*** See § 1.6001-1(a) regarding the duty of taxpayers to keep such records as are sufficient to establish the amount of gross income, deductions, etc.

(f) ***Applicability dates.***

(1) Paragraphs (d)(3)(i)(C)(*3*), (d)(3)(i)(D)(*3*), and (d)(3)(i)(E)(*3*) of this section apply for taxable years ending on or after January 13, 2014.

(2) The rules set forth in the second sentence of paragraph (a)(1) of this section, paragraphs (a)(2)(ii) and (iii) of this section, the third sentence of paragraph (a)(3) of this section, and paragraphs (a)(4)(ii) and (a)(5) of this section apply for taxable years beginning on or after January 5, 2021 . However, for a taxable year beginning after December 31, 2017, and before January 5, 2021, a taxpayer may apply the paragraphs described in the first sentence of this paragraph (f)(2), provided the taxpayer follows all the applicable rules contained in the regulations under section 263A for such taxable year and all subsequent taxable years.

[T.D. 8482, 58 FR 42224, Aug. 9, 1993; 58 FR 47784, Sept. 10, 1993; 59 FR 3319, Jan. 21, 1994, as amended by T.D. 8559, 59 FR 39962, Aug. 5, 1994, T.D. 9652, 79 FR 2097, Jan. 13, 2014; T.D. 9843, 83 FR 58498, Nov. 20, 2018; T.D. 9942, 86 FR 266, Jan. 5, 2021]

§ 1.263A-4 Rules for property produced in a farming business.

(a) ***Introduction*** —

(1) ***In general.*** This section provides guidance with respect to the application of section 263A to property produced in a farming business as defined in paragraph (a)(5) of this section. Except as otherwise provided by the rules of this section, the general rules of §§ 1.263A-1 through 1.263A-3 and §§ 1.263A-7 through 1.263A-15 apply to property produced in a farming business. A taxpayer that engages in the raising or growing of any agricultural or horticultural commodity, including both plants and animals, is engaged in the production of property. Section 263A generally requires the capitalization of the direct costs and an allocable portion of the indirect costs that directly benefit or are incurred by reason of the production of this property. The direct and indirect costs of producing plants or animals generally include preparatory costs allocable to the plant or animal and preproductive period costs of the plant or animal. Except as provided in paragraphs (a)(2), (a)(3), and (e) of this section, taxpayers must capitalize the costs of producing all plants and animals unless the election described in paragraph (d) of this section is made.

(2) ***Exception*** —

(i) ***In general.*** Section 263A does not apply to the costs of producing plants with a preproductive period of 2 years or less or the costs of producing animals in a farming business, if the taxpayer is not—

(A) A corporation or partnership required to use an accrual method of accounting (accrual method) under section 447 in computing its taxable income from farming; or

(B) A tax shelter prohibited from using the cash receipts and disbursements method of accounting (cash method) under section 448(a)(3).

(ii) ***Tax shelter*** —

(A) ***In general.*** A farming business is considered a tax shelter, and thus a taxpayer prohibited from using the cash method under section 448(a)(3), if the farming business is—

(*1*) A farming syndicate as defined in section 461(k); or

(*2*) A tax shelter, within the meaning of section 6662(d)(2)(C)(iii).

(B) ***Presumption.*** Marketed arrangements in which persons carry on farming activities using the services of a common managerial or administrative service will be presumed to have the principal purpose of tax avoidance, within the meaning of section 6662(d)(2)(C)(iii), if such persons prepay a substantial portion of their farming expenses with borrowed funds.

(iii) ***Examples.*** The following examples illustrate the provisions of this paragraph (a)(2):

Example 1. Farmer A grows trees that have a preproductive period in excess of 2 years, and that produce an annual crop. Farmer A is not required by section 447 to use an accrual method or prohibited by section 448(a)(3) from using the cash method. Accordingly, Farmer A qualifies for the exception described in this paragraph (a)(2). Since the trees have a preproductive period in excess of 2 years, Farmer A must capitalize the direct costs and an allocable portion of the indirect costs that directly benefit or are incurred by reason of the production of the trees. Since the annual crop has a preproductive period of 2 years or less, Farmer A is not required to capitalize the costs of producing the crops.

Example 2. Assume the same facts as *Example 1,* except that Farmer A is required by section 447 to use an accrual method or prohibited by 448(a)(3) from using the cash method. Farmer A does not qualify for the exception described in this paragraph (a)(2). Farmer A is required to capitalize the direct costs and an allocable portion of the indirect costs that directly benefit or are incurred by reason of the production of the trees and crops.

(3) ***Exemption for certain small business taxpayers.*** For taxable years beginning after December 31, 2017, see § 1.263A-1(j) for an exception in the case of a small business taxpayer that meets the gross receipts test of section 448(c) and § 1.448-2(c).

(4) ***Costs required to be capitalized or inventoried under another provision.*** The exceptions from capitalization provided in paragraphs (a)(2), (a)(3), (d) and (e) of this section do not apply to any cost that is required to be capitalized or inventoried under another Internal Revenue Code or regulatory provision, such as section 263 or 471.

(5) ***Farming business*** —

(i) ***In general.*** A farming business means a trade or business involving the cultivation of land or the raising or harvesting of any agricultural or horticultural commodity. Examples include the trade or business of operating a nursery or sod farm; the raising or harvesting of trees bearing fruit, nuts, or other crops; the raising of ornamental trees (other than evergreen trees that are more than 6 years old at the time they are severed from their roots); and the raising, shearing, feeding, caring for, training, and management of animals. For purposes of this section, the term harvesting does not include contract harvesting of an agricultural or horticultural commodity grown or raised by another. Similarly, merely buying and reselling plants or animals grown or raised entirely by another is not raising an agricultural or horticultural commodity. A taxpayer is engaged in raising a plant or animal, rather than the mere resale of a plant or animal, if the plant or animal is held for further cultivation and development prior to sale. In determining whether a plant or animal is held for further cultivation and development prior to sale, consideration will be given to all of the facts and circumstances, including: the value added by the taxpayer to the plant or animal through agricultural or horticultural processes; the length of time between the taxpayer's acquisition of the plant or animal and the time that the taxpayer makes the plant or animal available for sale; and in the case of a plant, whether the plant is kept in the container in which purchased, replanted in the ground, or replanted in a series of larger containers as it is grown to a larger size.

(A) ***Plant.*** A plant produced in a farming business includes, but is not limited to, a fruit, nut, or other crop bearing tree, an ornamental tree, a vine, a bush, sod, and the crop or yield of a plant that will have more than one crop or yield raised by the taxpayer. Sea plants are produced in a farming business if they are tended and cultivated as opposed to merely harvested.

(B) ***Animal.*** An animal produced in a farming business includes, but is not limited to, any stock, poultry or other bird, and fish or other sea life raised by the taxpayer. Thus, for example, the term animal may include a cow, chicken, emu, or salmon raised by the taxpayer. Fish and other sea life are produced in a farming business if they are raised on a fish farm. A fish farm is an area where fish or other sea life are grown or raised as opposed to merely caught or harvested.

(ii) ***Incidental activities*** —

(A) ***In general.*** A farming business includes processing activities that are normally incident to the growing, raising, or harvesting of agricultural or horticultural products. For example, a taxpayer in the trade or business of growing fruits and vegetables may harvest, wash, inspect, and package the fruits and vegetables for sale. Such activities are normally incident to the raising of these crops by farmers. The taxpayer will be considered to be in the trade or business of farming with respect to the growing of fruits and vegetables and the processing activities incident to their harvest.

(B) ***Activities that are not incidental.*** Farming business does not include the processing of commodities or products beyond those activities that are normally incident to the growing, raising, or harvesting of such products.

(iii) ***Examples.*** The following examples illustrate the provisions of this paragraph (a)(5):

Example 1. Individual A operates a retail nursery. Individual A has three categories of plants. The first category is comprised of plants that Individual A grows from seeds or cuttings. The second category is comprised of plants that Individual A purchases in containers and grows for a period of from several months to several years. Individual A replants some of these plants in the ground. The others are replanted in a series of larger containers as they grow. The third category is comprised of plants that are purchased by Individual A in containers. Individual A does not grow these plants to a larger size before making them available for resale. Instead, Individual A makes these plants available for resale, in the container in which purchased, shortly after receiving them. Thus, no value is added to these plants by Individual A through horticultural processes. Individual A also sells soil, mulch, chemicals, and yard tools. Individual A is producing property in the farming business with respect to the first two categories of plants because these plants are held for further cultivation and development prior to sale. The plants in the third category are not held for further cultivation and development prior to sale and, therefore, are not regarded as property produced in a farming business for purposes of section 263A. Accordingly, Individual A must account for the third category of plants, along with the soil, mulch, chemicals, and yard tools, as property acquired for resale. If Individual A's average annual gross receipts are less than $10 million,

Example 2. Individual B is in the business of growing and harvesting wheat and other grains. Individual B also processes grain that Individual B has harvested in order to produce breads, cereals, and other similar food products, which Individual B then sells to customers in the course of its business. Although Individual B is in the farming business with respect to the growing and harvesting of grain, Individual B is not in the farming business with respect to the processing of such grain to produce the food products.

Example 3. Individual C is in the business of raising poultry and other livestock. Individual C also operates a meat processing operation in which the poultry and other livestock are slaughtered, processed, and packaged or canned. The packaged or canned meat is sold to Individual C's customers. Although Individual C is in the farming business with respect to the raising of poultry and other livestock, Individual C is not in the farming business with respect to the slaughtering, processing, packaging, and canning of such animals to produce the food products.

(b) ***Application of section 263A to property produced in a farming business*** —

(1) ***In general.*** Unless otherwise provided in this section, section 263A requires the capitalization of the direct costs and an allocable portion of the indirect costs that directly benefit or are incurred by reason of the production of any property in a farming business (including animals and plants without regard to the length of their preproductive period). Section 1.263A-1(e) describes the types of direct and indirect costs that generally must be capitalized by taxpayers under section 263A and paragraphs (b)(1)(i) and (ii) of this section provide specific examples of the types of costs typically incurred in the trade or business of farming. For purposes of this section, soil and water conservation expenditures that a taxpayer has elected to deduct under section 175 and fertilizer that a taxpayer has elected to deduct under section 180 are not subject to capitalization under section 263A, except to the extent these costs are required to be capitalized as a preproductive period cost of a plant or animal.

(i) ***Plants.*** The costs of producing a plant typically required to be capitalized under section 263A include the costs incurred so that the plant's growing process may begin (preparatory costs), such as the acquisition costs of the seed, seedling, or plant, and the costs of planting, cultivating, maintaining, or developing the plant during the preproductive period (preproductive period costs). Preproductive period costs include, but are not limited to, management, irrigation, pruning, soil and water conservation (including costs that the taxpayer has elected to deduct under section 175), fertilizing (including costs that the taxpayer has elected to deduct under section 180), frost protection, spraying, harvesting, storage and handling, upkeep, electricity, tax depreciation and repairs on buildings and equipment used in raising the plants, farm overhead, taxes (except state and Federal income taxes), and interest required to be capitalized under section 263A(f).

(ii) ***Animals.*** The costs of producing an animal typically required to be capitalized under section 263A include the costs incurred so that the animal's raising process may begin (preparatory costs), such as the acquisition costs of the animal, and the costs of raising or caring for such animal during the preproductive period (preproductive period costs). Preproductive period costs include, but are not limited to, management, feed (such as grain, silage, concentrates, supplements, haylage, hay, pasture and other forages), maintaining pasture or pen areas (including costs that the taxpayer has elected to deduct under sections 175 or 180), breeding, artificial insemination, veterinary services and medicine, livestock hauling, bedding, fuel, electricity, hired labor, tax depreciation and repairs on buildings and equipment used in raising the animals (for example, barns, trucks, and trailers), farm overhead, taxes (except state and Federal income taxes), and interest required to be capitalized under section 263A(f).

(2) ***Preproductive period*** —

(i) ***Plant*** —

(A) ***In general.*** The preproductive period of property produced in a farming business means—

(*1*) In the case of a plant that will have more than one crop or yield (for example, an orange tree), the period before the first marketable crop or yield from such plant;

(*2*) In the case of the crop or yield of a plant that will have more than one crop or yield (for example, the orange), the period before such crop or yield is disposed of; or

(*3*) In the case of any other plant, the period before such plant is disposed of.

(B) ***Applicability of section 263A.*** For purposes of determining whether a plant has a preproductive period in excess of 2 years, the preproductive period of plants grown in commercial quantities in the United States is based on the nationwide weighted average preproductive period for such plant. The Commissioner will publish a noninclusive list of plants with a nationwide weighted average preproductive period in excess of 2 years. In the case of other plants grown in commercial quantities in the United States, the nationwide weighted average preproductive period must be determined based on available statistical data. For all other plants, the taxpayer is required, at or before the time the seed or plant is acquired or planted, to reasonably estimate the preproductive period of the plant. If the taxpayer estimates a preproductive period in excess of 2 years, the taxpayer must capitalize the costs of producing the plant. If the estimate is reasonable, based on the facts in existence at the time it is made, the determination of whether section 263A applies is not modified at a later time even if the actual length of the preproductive period differs from the estimate. The actual length of the preproductive period will, however, be considered in evaluating the reasonableness of the taxpayer's future estimates. The nationwide weighted average preproductive period or the estimated preproductive period is only used for purposes of determining whether the preproductive period of a plant is greater than 2 years.

(C) ***Actual preproductive period.*** The plant's actual preproductive period is used for purposes of determining the period during which a taxpayer must capitalize preproductive period costs with respect to a particular plant.

(*1*) ***Beginning of the preproductive period.*** The actual preproductive period of a plant begins when the taxpayer first incurs costs that directly benefit or are incurred by reason of the plant. Generally, this occurs when the taxpayer plants the seed or plant. In the case of a taxpayer that acquires plants that have already been permanently planted, or plants that are tended by the taxpayer or another prior to permanent planting, the actual preproductive period of the plant begins upon acquisition of the plant by the taxpayer. In the case of the crop or yield of a plant that will have more than one crop or yield, the actual preproductive period begins when the plant has become productive in marketable quantities and the crop or yield first appears, for example, in the form of a sprout, bloom, blossom, or bud.

(*2*) ***End of the preproductive period*** —

(i) ***In general.*** In the case of a plant that will have more than one crop or yield, the actual preproductive period ends when the plant first becomes productive in marketable quantities. In the case of any other plant (including the crop or yield of a plant that will have more than one crop or yield), the actual preproductive period ends when the plant, crop, or yield is sold or otherwise disposed of. Field costs, such as irrigating, fertilizing, spraying and pruning, that are incurred after the harvest of a crop or yield but before the crop or yield is sold or otherwise disposed of are not required to be included in the preproductive period costs of the harvested crop or yield because they do not benefit and are unrelated to the harvested crop or yield.

(ii) ***Marketable quantities.*** A plant that will have more than one crop or yield becomes productive in marketable quantities once a crop or yield is produced in sufficient quantities to be harvested and marketed in the ordinary course of the

taxpayer's business. Factors that are relevant to determining whether a crop or yield is produced in sufficient quantities to be harvested and marketed in the ordinary course include: whether the crop or yield is harvested that is more than *de minimis,* although it may be less than expected at the maximum bearing stage, based on a comparison of the quantities per acre harvested in the year in question to the quantities per acre expected to be harvested when the plant reaches full maturity; and whether the sales proceeds exceed the costs of harvest and make a reasonable contribution to an allocable share of farm expenses.

(D) ***Examples.*** The following examples illustrate the provisions of this paragraph (b)(2):

Example 1. (i) Farmer A, a taxpayer that qualifies for the exception in paragraph (a)(2) of this section, grows plants that will have more than one crop or yield. The plants are grown in commercial quantities in the United States. Farmer A acquires 1 year-old plants by purchasing them from an unrelated party, Corporation B, and plants them immediately. The nationwide weighted average preproductive period of the plant is 4 years. The particular plants grown by Farmer A do not begin to produce in marketable quantities until 3 years and 6 months after they are planted by Farmer A.
(ii) Since the plants are deemed to have a preproductive period in excess of 2 years, Farmer A is required to capitalize the costs of producing the plants. See paragraphs (a)(2) and (b)(2)(i)(B) of this section. In accordance with paragraph (b)(2)(i)(C)(*1*) of this section, Farmer A must begin to capitalize the preproductive period costs when the plants are planted. In accordance with paragraph (b)(2)(i)(C)(*2*) of this section, Farmer A must continue to capitalize preproductive period costs to the plants until the plants begin to produce in marketable quantities. Thus, Farmer A must capitalize the preproductive period costs for a period of 3 years and 6 months (that is, until the plants are 4 years and 6 months old), notwithstanding the fact that the plants, in general, have a nationwide weighted average preproductive period of 4 years.

Example 2. (i) Farmer B, a taxpayer that qualifies for the exception in paragraph (a)(2) of this section, grows plants that will have more than one crop or yield. The plants are grown in commercial quantities in the United States. The nationwide weighted average preproductive period of the plant is 2 years and 5 months. Farmer B acquires 1 month-old plants by purchasing them from an unrelated party, Corporation B. Farmer B enters into a contract with Corporation B under which Corporation B will retain and tend the plants for 7 months following the sale. At the end of 7 months, Farmer B takes possession of the plants and plants them in the permanent orchard. The plants become productive in marketable quantities 1 year and 11 months after they are planted by Farmer B.

(ii) Since the plants are deemed to have a preproductive period in excess of 2 years, Farmer B is required to capitalize the costs of producing the plants. See paragraphs (a)(2) and (b)(2)(i)(B) of this section. In accordance with paragraph (b)(2)(i)(C)(*1*) of this section, Farmer B must begin to capitalize the preproductive period costs when the purchase occurs. In accordance with paragraph (b)(2)(i)(C)(*2*) of this section, Farmer B must continue to capitalize the preproductive period costs to the plants until the plants begin to produce in marketable quantities. Thus, Farmer B must capitalize the preproductive period costs of the plants for a period of 2 years and 6 months (the 7 months the plants are tended by Corporation B and the 1 year and 11 months after the plants are planted by Farmer B), that is, until the plants are 2 years and 7 months old, notwithstanding the fact that the plants, in general, have a nationwide weighted average preproductive period of 2 years and 5 months.

Example 3. (i) Assume the same facts as in *Example 2,* except that Farmer B acquires the plants by purchasing them from Corporation B when the plants are 8 months old and that the plants are planted by Farmer B upon acquisition.
(ii) Since the plants are deemed to have a preproductive period in excess of 2 years, Farmer B is required to capitalize the costs of producing the plants. See paragraphs (a)(2) and (b)(2)(i)(B) of this section. In accordance with paragraph (b)(2)(i)(C)(*1*) of this section, Farmer B must begin to capitalize the preproductive period costs when the plants are planted. In accordance with paragraph (b)(2)(i)(C)(*2*) of this section, Farmer B must continue to capitalize the preproductive period costs to the plants until the plants begin to produce in marketable quantities. Thus, Farmer B must capitalize the preproductive period costs of the plants for a period of 1 year and 11 months.

Example 4. (i) Farmer C, a taxpayer that qualifies for the exception in paragraph (a)(2) of this section, grows plants that will have more than one crop or yield. The plants are grown in commercial quantities in the United States. Farmer C acquires 1 month-old plants from an unrelated party and plants them immediately. The nationwide weighted average preproductive period of the plant is 2 years and 3 months. The particular plants grown by Farmer C begin to produce in marketable quantities 1 year and 10 months after they are planted by Farmer C.
(ii) Since the plants are deemed to have a nationwide weighted average preproductive period in excess of 2 years, Farmer C is required to capitalize the costs of producing the plants, notwithstanding the fact that the particular plants grown by Farmer C become productive in less than 2 years. See paragraph (b)(2)(i)(B) of this section. In accordance with paragraph (b)(2)(i)(C)(*1*) of this section, Farmer C must begin to capitalize the preproductive period costs when it plants the plants. In accordance with paragraph (b)(2)(i)(C)(*2*) of this section,

Farmer C properly ceases capitalization of preproductive period costs when the plants become productive in marketable quantities (that is, 1 year and 10 months after they are planted, which is when they are 1 year and 11 months old).

Example 5. (i) Farmer D, a taxpayer that qualifies for the exception in paragraph (a)(2) of this section, grows plants that will have more than one crop or yield. The plants are not grown in commercial quantities in the United States. Farmer D acquires and plants the plants when they are 1 year old and estimates that they will become productive in marketable quantities 3 years after planting. Thus, at the time the plants are acquired and planted Farmer D reasonably estimates that the plants will have a preproductive period of 4 years. The actual plants grown by Farmer D do not begin to produce in marketable quantities until 3 years and 6 months after they are planted by Farmer D.
(ii) Since the plants have an estimated preproductive period in excess of 2 years, Farmer D is required to capitalize the costs of producing the plants. See paragraph (b)(2)(i)(B) of this section. In accordance with paragraph (b)(2)(i)(C)(*1*) of this section, Farmer D must begin to capitalize the preproductive period costs when it acquires and plants the plants. In accordance with paragraph (b)(2)(i)(C)(*2*) of this section, Farmer D must continue to capitalize the preproductive period costs until the plants begin to produce in marketable quantities. Thus, Farmer D must capitalize the preproductive period costs of the plants for a period of 3 years and 6 months (that is, until the plants are 4 years and 6 months old), notwithstanding the fact that Farmer D estimated that the plants would become productive after 4 years.

Example 6. (i) Farmer E, a taxpayer that qualifies for the exception in paragraph (a)(2) of this section grows plants from seed. The plants are not grown in commercial quantities in the United States. The plants do not have more than 1 crop or yield. At the time the seeds are planted Farmer E reasonably estimates that the plants will have a preproductive period of 1 year and 10 months. The actual plants grown by Farmer E are not ready for harvesting and disposal until 2 years and 2 months after the seeds are planted by Farmer E.
(ii) Because Farmer E's estimate of the preproductive period (which was 2 years or less) was reasonable at the time made based on the facts, Farmer E will not be required to capitalize the costs of producing the plants under section 263A, notwithstanding the fact that the actual preproductive period of the plants exceeded 2 years. See paragraph (b)(2)(i)(B) of this section. However, Farmer E must take the actual preproductive period of the plants into consideration when making future estimates of the preproductive period of such plants.

Example 7. (i) Farmer F, a calendar year taxpayer that does not qualify for the exception in paragraph (a)(2) of this section, grows trees that will have more than one crop. Farmer F acquires and plants the trees in April, Year 1. On October 1, Year 6, the trees become productive in marketable quantities.
(ii) The costs of producing the plant, including the preproductive period costs incurred by Farmer F on or before October 1, Year 6, are capitalized to the trees. Preproductive period costs incurred after October 1, Year 6, are capitalized to a crop when incurred during the preproductive period of the crop and deducted as a cost of maintaining the tree when incurred between the disposal of one crop and the appearance of the next crop. See paragraphs (b)(2)(i)(A), (b)(2)(i)(C)(*1*) and (b)(2)(i)(C)(*2*) of this section.

Example 8. (i) Farmer G, a taxpayer that qualifies for the exception in paragraph (a)(2) of this section, produces fig trees on 10 acres of land. The fig trees are grown in commercial quantities in the United States and have a nationwide weighted average preproductive period in excess of 2 years. Farmer G acquires and plants the fig trees in their permanent grove during Year 1. When the fig trees are mature, Farmer G expects to harvest 10x tons of figs per acre. At the end of Year 4, Farmer G harvests .5x tons of figs per acre that it sells for $100x. During Year 4, Farmer G incurs expenses related to the fig operation of: $50x to harvest the figs and transport them to market and other direct and indirect costs related to the fig operation in the amount of $1000x.
(ii) Since the fig trees have a preproductive period in excess of 2 years, Farmer G is required to capitalize the costs of producing the fig trees. See paragraphs (a)(2) and (b)(2)(i)(B) of this section. In accordance with paragraph (b)(2)(i)(C)(*2*) of this section, Farmer G must continue to capitalize preproductive period costs to the trees until they become productive in marketable quantities. The following factors weigh in favor of a determination that the fig trees did not become productive in Year 4: the quantity of harvested figs is *de minimis* based on the fact that the yield is only 5 percent of the expected yield at maturity and the proceeds from the sale of the figs are sufficient, after covering the costs of harvesting and transporting the figs, to cover only a negligible portion of the allocable farm expenses. Based on these facts and circumstances, the fig trees did not become productive in marketable quantities in Year 4.

(ii) ***Animal.*** An animal's actual preproductive period is used to determine the period that the taxpayer must capitalize preproductive period costs with respect to a particular animal.

(A) ***Beginning of the preproductive period.*** The preproductive period of an animal begins at the time of acquisition, breeding, or embryo implantation.

(B) ***End of the preproductive period.*** In the case of an animal that will be used in the trade or business of farming (for example, a dairy cow), the preproductive period generally ends when the animal is (or would be considered) placed in service for purposes of section 168 (without regard to the applicable convention). However, in the case of an animal that will have more than one yield (for example, a breeding cow), the preproductive period ends when the animal produces (for example, gives birth to) its first yield. In the case of any other animal, the preproductive period ends when the animal is sold or otherwise disposed of.

(C) ***Allocation of costs between animal and yields.*** In the case of an animal that will have more than one yield, the costs incurred after the beginning of the preproductive period of the first yield but before the end of the preproductive period of the animal must be allocated between the animal and the yield using any reasonable method. Any depreciation allowance on the animal may be allocated entirely to the yield. Costs incurred after the beginning of the preproductive period of the second yield, but before the first yield is weaned from the animal must be allocated between the first and second yield using any reasonable method. However, a taxpayer may elect to allocate these costs entirely to the second yield. An allocation method used by a taxpayer is a method of accounting that must be used consistently and is subject to the rules of section 446 and the regulations thereunder.

(c) ***Inventory methods*** —

(1) ***In general.*** Except as otherwise provided, the costs required to be allocated to any plant or animal under this section may be determined using reasonable inventory valuation methods such as the farm-price method or the unit-livestock-price method. See § 1.471-6. Under the unit-livestock-price method, unit prices must include all costs required to be capitalized under section 263A. A taxpayer using the unit-livestock-price method may elect to use the cost allocation methods in § 1.263A-1(f) or 1.263A-2(b) to allocate its direct and indirect costs to the property produced in the business of farming. In such a situation, section 471 costs are the costs taken into account by the taxpayer under the unit-livestock-price method using the taxpayer's standard unit price as modified by this paragraph (c)(1). Tax shelters, as defined in paragraph (a)(2)(ii) of this section, that use the unit-livestock-price method for inventories must include in inventory the annual standard unit price for all animals that are acquired during the taxable year, regardless of whether the purchases are made during the last 6 months of the taxable year. Taxpayers required by section 447 to use an accrual method or prohibited by section 448(a)(3) from using the cash method that use the unit-livestock-price method must modify the annual standard price in order to reasonably reflect the particular period in the taxable year in which purchases of livestock are made, if such modification is necessary in order to avoid significant distortions in income that would otherwise occur through operation of the unit-livestock-price method.

(2) ***Available for property used in a trade or business.*** The farm-price method or the unit-livestock-price method may be used by any taxpayer to allocate costs to any plant or animal under this section, regardless of whether the plant or animal is held or treated as inventory property by the taxpayer. Thus, for example, a taxpayer may use the unit-livestock-price method to account for the costs of raising livestock that will be used in the trade or business of farming (for example, a breeding animal or a dairy cow) even though the property in question is not inventory property.

(3) ***Exclusion of property to which section 263A does not apply.*** Notwithstanding a taxpayer's use of the farm-price method with respect to farm property to which the provisions of section 263A apply, that taxpayer is not required, solely by such use, to use the farm-price method with respect to farm property to which the provisions of section 263A do not apply. Thus, for example, assume Farmer A raises fruit trees that have a preproductive period in excess of 2 years and to which the provisions of section 263A, therefore, apply. Assume also that Farmer A raises cattle and is not required to use an accrual method by section 447 or prohibited from using the cash method by section 448(a)(3). Because Farmer A qualifies for the exception in paragraph (a)(2) of this section, Farmer A is not required to capitalize the costs of raising the cattle. Although Farmer A may use the farm-price method with respect to the fruit trees, Farmer A is not required to use the farm-price method with respect to the cattle. Instead, Farmer A's accounting for the cattle is determined under other provisions of the Code and regulations.

(d) ***Election not to have section 263A apply under section 263A(d)(3)*** —

(1) ***Introduction.*** This paragraph (d) permits certain taxpayers to make an election not to have the rules of this section apply to any plant produced in a farming business conducted by the electing taxpayer. Except as provided in paragraph (d)(5) and (6) of this section, the election is a method of accounting under section 446. An election made under section 263A(d)(3) and this paragraph (d) is revocable only with the consent of the Commissioner.

(2) ***Availability of the election.*** The election described in this paragraph (d) is available to any taxpayer that produces plants in a farming business, except that no election may be made by a corporation, partnership, or tax shelter required to use an accrual method under section 447 or prohibited from using the cash method by section 448(a)(3). Moreover, the election does not apply to the costs of planting, cultivation, maintenance, or development of a citrus or almond grove (or any part thereof) incurred prior to the close of the fourth taxable year beginning with the taxable year in which the trees were planted in the permanent grove (including costs incurred prior to the permanent planting). If a citrus or almond grove is planted in more than one taxable year, the portion of the grove planted in any one taxable year is treated as a separate grove for purposes of determining the year of planting.

(3) ***Time and manner of making the election*** —

(i) ***Automatic election.*** A taxpayer makes the election under this paragraph (d) by not applying the rules of section 263A to determine the capitalized costs of plants produced in a farming business and by applying the special rules in paragraph (d)(4) of this section on its original return for the first taxable year in which the taxpayer is otherwise required to capitalize section 263A costs. Thus, in order to be treated as having made the election under this paragraph (d), it is necessary to report both income and expenses in accordance with the rules of this paragraph (d) (for example, it is necessary to use the alternative depreciation system as provided in paragraph (d)(4)(ii) of this section). For example, a farmer who deducts costs that are otherwise required to be capitalized under section 263A but fails to use the alternative depreciation system under section 168(g)(2) for applicable property placed in service has not made an election under this paragraph (d) and is not in compliance with the provisions of section 263A.

(ii) ***Nonautomatic election.*** Except as provided in paragraphs (d)(5) and (6) of this section, a taxpayer that does not make the election under this paragraph (d) as provided in paragraph (d)(3)(i) of this section must obtain the consent of the Commissioner to make the election by filing a Form 3115, *Application for Change in Method of Accounting,* in accordance with § 1.446-1(e)(3).

(4) ***Special rules.*** If the election under this paragraph (d) is made, the taxpayer is subject to the special rules in this paragraph (d)(4).

(i) ***Section 1245 treatment.*** The plant produced by the taxpayer is treated as section 1245 property and any gain resulting from any disposition of the plant is recaptured (that is, treated as ordinary income) to the extent of the total amount of the deductions that, but for the election, would have been required to be capitalized with respect to the plant. In calculating the amount of gain that is recaptured under this paragraph (d)(4)(i), a taxpayer may use the farm-price method or another simplified method permitted under these regulations in determining the deductions that otherwise would have been capitalized with respect to the plant.

(ii) ***Required use of alternative depreciation system.*** If the taxpayer or a related person makes an election under this paragraph (d), the alternative depreciation system (as defined in section 168(g)(2)) must be applied to all property used predominantly in any farming business of the taxpayer or related person and placed in service in any taxable year during which the election is in effect. The requirement to use the alternative depreciation system by reason of an election under this paragraph (d) will not prevent a taxpayer from making an election under section 179 to deduct certain depreciable business assets.

(iii) ***Related person*** —

(A) ***In general.*** For purposes of this paragraph (d)(4), related person means—

(*1*) The taxpayer and members of the taxpayer's family;

(*2*) Any corporation (including an S corporation) if 50 percent or more of the stock (in value) is owned directly or indirectly (through the application of section 318) by the taxpayer or members of the taxpayer's family;

(*3*) A corporation and any other corporation that is a member of the same controlled group (within the meaning of section 1563(a)(1)); and

(*4*) Any partnership if 50 percent or more (in value) of the interests in such partnership is owned directly or indirectly by the taxpayer or members of the taxpayer's family.

(B) ***Members of family.*** For purposes of this paragraph (d)(4)(iii), the terms “members of the taxpayer's family”, and “members of family” (for purposes of applying section 318(a)(1)), means the spouse of the taxpayer (other than a spouse who is legally separated from the individual under a decree of divorce or separate maintenance) and any of the taxpayer's children (including legally adopted children) who have not reached the age of 18 as of the last day of the taxable year in question.

(5) ***Revocation of section 263A(d)(3) election to permit exemption under section 263A(i).*** A taxpayer that elected under section 263A(d)(3) and paragraph (d)(3) of this section not to have section 263A apply to any plant produced in a farming business that wants to revoke its section 263A(d)(3) election, and in the same taxable year, apply the small business taxpayer exemption under section 263A(i) and § 1.263A-1(j) may revoke the election in accordance with the applicable administrative guidance as

published in the Internal Revenue Bulletin (*see* § 601.601(d)(2)(ii)(b) of this chapter). A revocation of the taxpayer's section 263A(d)(3) election under this paragraph (d)(5) is not a change in method of accounting under sections 446 and 481 and §§ 1.446-1 and 1.481-1 through 1.481-5.

(6) ***Change from applying exemption under section 263A(i) to making a section 263A(d)(3) election.*** A taxpayer whose method of accounting is to not capitalize costs under section 263A based on the exemption under section 263A(i), that becomes ineligible to use the exemption under section 263A(i), and is eligible and wants to elect under section 263A(d)(3) for this same taxable year to not capitalize costs under section 263A for any plant produced in the taxpayer's farming business, must make the election in accordance with the applicable administrative guidance as published in the Internal Revenue Bulletin (*see* § 601.601(d)(2)(ii)(b) of this chapter). An election under section 263A(d)(3) made in accordance with this paragraph (d)(6) is not a change in method of accounting under sections 446 and 481 and §§ 1.446-1 and 1.481-1 through 1.481-5.

(7) ***Examples.*** The following examples illustrate the provisions of this paragraph (d):

> *Example 1.* (i) Farmer A, an individual, is engaged in the trade or business of farming. Farmer A grows apple trees that have a preproductive period greater than 2 years. In addition, Farmer A grows and harvests wheat and other grains. Farmer A elects under this paragraph (d) not to have the rules of section 263A apply to the costs of growing the apple trees.
> (ii) In accordance with paragraph (d)(4) of this section, Farmer A is required to use the alternative depreciation system described in section 168(g)(2) with respect to all property used predominantly in any farming business in which Farmer A engages (including the growing and harvesting of wheat) if such property is placed in service during a year for which the election is in effect. Thus, for example, all assets and equipment (including trees and any equipment used to grow and harvest wheat) placed in service during a year for which the election is in effect must be depreciated as provided in section 168(g)(2).

Example 2. Assume the same facts as in *Example 1,* except that Farmer A and members of Farmer A's family (as defined in paragraph (d)(4)(iii)(B) of this section) also own 51 percent (in value) of the interests in Partnership P, which is engaged in the trade or business of growing and harvesting corn. Partnership P is a related person to Farmer A under the provisions of paragraph (d)(4)(iii) of this section. Thus, the requirements to use the alternative depreciation system under section 168(g)(2) also apply to any property used predominantly in a trade or business of farming which Partnership P places in service during a year for which an election made by Farmer A is in effect.

(e) ***Exception for certain costs resulting from casualty losses*** —

(1) ***In general.*** Section 263A does not require the capitalization of costs that are attributable to the replanting, cultivating, maintaining, and developing of any plants bearing an edible crop for human consumption (including, but not limited to, plants that constitute a grove, orchard, or vineyard) that were lost or damaged while owned by the taxpayer by reason of freezing temperatures, disease, drought, pests, or other casualty (replanting costs). Such replanting costs may be incurred with respect to property other than the property on which the damage or loss occurred to the extent the acreage of the property with respect to which the replanting costs are incurred is not in excess of the acreage of the property on which the damage or loss occurred. This paragraph (e) applies only to the

replanting of plants of the same type as those lost or damaged. This paragraph (e) applies to plants replanted on the property on which the damage or loss occurred or property of the same or lesser acreage in the United States irrespective of differences in density between the lost or damaged and replanted plants. Plants bearing crops for human consumption are those crops normally eaten or drunk by humans. Thus, for example, costs incurred with respect to replanting plants bearing jojoba beans do not qualify for the exception provided in this paragraph (e) because that crop is not normally eaten or drunk by humans.

(2) ***Ownership.*** Replanting costs described in paragraph (e)(1) of this section generally must be incurred by the taxpayer that owned the property at the time the plants were lost or damaged. Paragraph (e)(1) of this section will apply, however, to costs incurred by a person other than the taxpayer that owned the plants at the time of damage or loss if—

(i) The taxpayer that owned the plants at the time the damage or loss occurred owns an equity interest of more than 50 percent in such plants at all times during the taxable year in which the replanting costs are paid or incurred; and

(ii) Such other person owns any portion of the remaining equity interest and materially participates in the replanting, cultivating, maintaining, or developing of such plants during the taxable year in which the replanting costs are paid or incurred. A person will be treated as materially participating for purposes of this provision if such person would otherwise meet the requirements with respect to material participation within the meaning of section 2032A(e)(6).

(3) ***Examples.*** The following examples illustrate the provisions of this paragraph (e):

> *Example 1.* (i) Farmer A grows cherry trees that have a preproductive period in excess of 2 years and produce an annual crop. These cherries are normally eaten by humans. Farmer A grows the trees on a 100 acre parcel of land (parcel 1) and the groves of trees cover the entire acreage of parcel 1. Farmer A also owns a 150 acre parcel of land (parcel 2) that Farmer A holds for future use. Both parcels are in the United States. In 2000, the trees and the irrigation and drainage systems that service the trees are destroyed in a casualty (within the meaning of paragraph (e)(1) of this section). Farmer A installs new irrigation and drainage systems on parcel 1, purchases young trees (seedlings), and plants the seedlings on parcel 1. (ii) The costs of the irrigation and drainage systems and the seedlings must be capitalized. In accordance with paragraph (e)(1) of this section, the costs of planting, cultivating, developing, and maintaining the seedlings during their preproductive period are not required to be capitalized by section 263A.

> *Example 2.* (i) Assume the same facts as in *Example 1* except that Farmer A decides to replant the seedlings on parcel 2 rather than on parcel 1. Accordingly, Farmer A installs the new irrigation and drainage systems on 100 acres of parcel 2 and plants seedlings on those 100 acres.

(ii) The costs of the irrigation and drainage systems and the seedlings must be capitalized. Because the acreage of the related portion of parcel 2 does not exceed the acreage of the destroyed orchard on parcel 1, the costs of planting, cultivating, developing, and maintaining the seedlings during their preproductive period are not required to be capitalized by section 263A. See paragraph (e)(1) of this section.

Example 3. (i) Assume the same facts as in *Example 1* except that Farmer A replants the seedlings on parcel 2 rather than on parcel 1, and Farmer A additionally decides to expand its operations by growing 125 rather than 100 acres of trees. Accordingly, Farmer A installs new irrigation and drainage systems on 125 acres of parcel 2 and plants seedlings on those 125 acres.
(ii) The costs of the irrigation and drainage systems and the seedlings must be capitalized. The costs of planting, cultivating, developing, and maintaining 100 acres of the trees during their preproductive period are not required to be capitalized by section 263A. The costs of planting, cultivating, maintaining, and developing the additional 25 acres are, however, subject to capitalization under section 263A. See paragraph (e)(1) of this section.

(4) ***Special rule for citrus and almond groves*** —

(i) ***In general.*** The exception in this paragraph (e) is available with respect to replanting costs of a citrus or almond grove incurred prior to the close of the fourth taxable year after replanting, notwithstanding the taxpayer's election to have section 263A not apply (described in paragraph (d) of this section).

(ii) ***Example.*** The following example illustrates the provisions of this paragraph (e)(4):

Example. (i) Farmer A, an individual, is engaged in the trade or business of farming. Farmer A grows citrus trees that have a preproductive period of 5 years. Farmer A elects, under paragraph (d) of this section, not to have section 263A apply. This election, however, is unavailable with respect to the costs of producing a citrus grove incurred within the first 4 years beginning with the year the trees were planted. See paragraph (d)(2) of this section. In year 10, after the citrus grove has become productive in marketable quantities, the citrus grove is destroyed by a casualty within the meaning of paragraph (e)(1) of this section. In year 10, Farmer A acquires and plants young citrus trees in the same grove to replace those destroyed by the casualty.
(ii) Farmer A must capitalize the costs of producing the citrus grove incurred before the close of the fourth taxable year beginning with the year in which the trees were permanently planted. As a result of the election not to have section 263A apply, Farmer A may deduct the preproductive period costs incurred in the fifth year. In year 10, Farmer A must capitalize the acquisition cost of the young trees. However, the costs of planting, cultivating, developing, and maintaining the young trees that replace those destroyed by the casualty are exempted from capitalization under this paragraph (e).

(5) ***Special temporary rule for citrus plants lost by reason of casualty.*** Section 263A(d)(2)(A) provides that if plants bearing an edible crop for human consumption were lost or damaged while in the hands of the taxpayer by reason of freezing temperatures, disease, drought, pests, or casualty, section 263A does not apply to any costs of the taxpayer of replanting plants bearing the same type of crop (whether on the same parcel of land on which such lost or damaged plants were located or any other parcel of land of the same acreage in the United States). The rules of this paragraph (e)(5) apply to certain costs that are paid or incurred after December 22, 2017, and on or before December 22, 2027, to replant citrus plants after the loss or damage of citrus plants. Notwithstanding paragraph (e)(2) of this section, in the case of replanting citrus plants after the loss or damage of citrus plants by reason of freezing temperatures, disease, drought, pests, or casualty, section 263A does not apply to replanting costs paid or incurred by a taxpayer other than the owner described in section 263A(d)(2)(A) if—

(i) The owner described in section 263A(d)(2)(A) has an equity interest of not less than 50 percent in the replanted citrus plants at all times during the taxable year in which such amounts were paid or incurred and the taxpayer holds any part of the remaining equity interest; or

(ii) The taxpayer acquired the entirety of the equity interest in the land of that owner described in section 263A(d)(2)(A) and on which land the lost or damaged citrus plants were located at the time of such loss or damage, and the replanting is on such land.

(f) ***Change in method of accounting.*** Except as provided in paragraphs (d)(5) and (6) of this section, any change in a taxpayer's method of accounting necessary to comply with this section is a change in method of accounting to which the provisions of sections 446 and 481 and § 1.446-1 through 1.446-7 and § 1.481-1 through § 1.481-3 apply.

(g) ***Applicability dates*** —

(1) ***In general.*** In the case of property that is not inventory in the hands of the taxpayer, this section is applicable to costs incurred after August 21, 2000 in taxable years ending after August 21, 2000. In the case of inventory property, this section is applicable to taxable years beginning after August 21, 2000.

(2) ***Changes made by Tax Cuts and Jobs Act (Pub. L. 115-97).*** Paragraphs (a)(3), (d)(5), (d)(6), and (e)(5) of this section apply for taxable years beginning on or after January 5, 2021. However, for a taxable year beginning after December 31, 2017, and before January 5, 2021, a taxpayer may apply the paragraphs described in the first sentence of this paragraph (g)(2), provided that the taxpayer follows all the applicable rules contained in the regulations under section 263A for such taxable year and all subsequent taxable years.

[T.D. 8897, 65 FR 50644, Aug. 21, 2000; 65 FR 61092, Oct. 16, 2000; T.D. 9942, 86 FR 267, Jan. 5, 2021; 86 FR 32186, June 17, 2021]

§ 1.263A-5 Exception for qualified creative expenses incurred by certain free-lance authors, photographers, and artists. [Reserved]

§ 1.263A-6 Rules for foreign persons. [Reserved]

§ 1.263A-7 Changing a method of accounting under section 263A.

(a) ***Introduction*** —

(1) ***Purpose.*** These regulations provide guidance to taxpayers changing their methods of accounting for costs subject to section 263A. The principal purpose of these regulations is to provide guidance regarding how taxpayers are to revalue property on hand at the beginning of the taxable year in which they change their method of accounting for costs subject to section 263A. Paragraph (c) of this section provides guidance regarding how items or costs included in beginning inventory in the year of change must be revalued. Paragraph (d) of this section provides guidance regarding how non-inventory property should be revalued in the year of change.

(2) ***Taxpayers that adopt a method of accounting under section 263A.*** Taxpayers may adopt a method of accounting for costs subject to section 263A in the first taxable year in which they engage in resale or production activities. For purposes of this section, the adoption of a method of accounting has the same meaning as provided in § 1.446-1(e)(1). Taxpayers are not subject to the provisions of these regulations to the extent they adopt, as opposed to change, a method of accounting.

(3) ***Taxpayers that change a method of accounting under section 263A.*** Taxpayers changing their method of accounting for costs subject to section 263A are subject to the revaluation and other provisions of this section. Taxpayers subject to these regulations include, but are not limited to—

(i) For taxable years beginning after December 31, 2017, resellers of real or personal property or producers of real or tangible personal property whose average annual gross receipts for the immediately preceding 3-taxable-year period, or lesser period if the taxpayer was not in existence for the three preceding taxable years, annualized as required, exceed the gross receipts test of section 448(c) and the accompanying regulations where the taxpayer was not subject to section 263A in the prior taxable year;

(ii) Resellers of real or personal property that are using a method that fails to comply with section 263A and desire to change to a method of accounting that complies with section 263A;

(iii) Producers of real or tangible personal property that are using a method that fails to comply with section 263A and desire to change to a method of accounting that complies with section 263A; and

(iv) Resellers and producers that desire to change from one permissible method of accounting for costs subject to section 263A to another permissible method.

(4) ***Applicability dates*** —

(i) ***In general.*** The provisions of this section are effective for taxable years beginning on or after August 5, 1997. For taxable years beginning before August 5, 1997, the rules of § 1.263A-7T contained in the 26 CFR part 1 edition revised as of April 1, 1997, as modified by other administrative guidance, will apply.

(ii) ***Changes made by Tax Cuts and Jobs Act (Pub. L. 115-97).*** Paragraph (a)(3)(i) of this section applies to taxable years beginning on or after January 5, 2021. However, for a taxable year beginning after December 31, 2017, and before January 5, 2021, a taxpayer may apply the paragraph described in the first sentence of this paragraph (a)(4)(ii), provided that the taxpayer follows all the applicable rules contained in the regulations under section 263A for such taxable year and all subsequent taxable years.

(5) ***Definition of change in method of accounting.*** For purposes of this section, a change in method of accounting has the same meaning as provided in § 1.446-1(e)(2)(ii). Changes in method of accounting for costs subject to section 263A include changes to methods required or permitted by

section 263A and the regulations thereunder. Changes in method of accounting may be described in the preceding sentence irrespective of whether the taxpayer's previous method of accounting resulted in the capitalization of more (or fewer) costs than the costs required to be capitalized under section 263A and the regulations thereunder, and irrespective of whether the taxpayer's previous method of accounting was a permissible method under the law in effect when the method was being used. However, changes in method of accounting for costs subject to section 263A do not include changes relating to factors other than those described therein. For example, a change in method of accounting for costs subject to section 263A does not include a change from one inventory identification method to another inventory identification method, such as a change from the last-in, first-out (LIFO) method to the first-in, first-out (FIFO) method, or vice versa, or a change from one inventory valuation method to another inventory valuation method under section 471, such as a change from valuing inventory at cost to valuing the inventory at cost or market, whichever is lower, or vice versa. In addition, a change in method of accounting for costs subject to section 263A does not include a change within the LIFO inventory method, such as a change from the double extension method to the link-chain method, or a change in the method used for determining the number of pools. Further, a change from the modified resale method set forth in Notice 89-67 (1989-1 C.B. 723), see § 601.601(d)(2) of this chapter, to the simplified resale method set forth in § 1.263A-3(d) is not a change in method of accounting within the meaning of § 1.446-1(e)(2)(ii) and is therefore not subject to the provisions of this section. However, a change from the simplified resale method set forth in former § 1.263A-1T(d)(4) to the simplified resale method set forth in § 1.263A-3(d) is a change in method of accounting within the meaning of § 1.446-1(e)(2)(ii) and is subject to the provisions of this section.

(b) ***Rules applicable to a change in method of accounting*** —

(1) ***General rules.*** All changes in method of accounting for costs subject to section 263A are subject to the rules and procedures provided by the Code, regulations, and administrative procedures applicable to such changes. The Internal Revenue Service has issued specific revenue procedures that govern certain accounting method changes for costs subject to section 263A. Where a specific revenue procedure is not applicable, changes in method of accounting for costs subject to section 263A are subject to the same rules and procedures that govern other accounting method changes. See Revenue Procedure 2015-13 (2015-5 IRB 419) and § 601.601(d)(2) of this chapter.

(2) ***Special rules*** —

(i) ***Ordering rules when multiple changes in method of accounting occur in the year of change*** —

(A) ***In general.*** A change in method of accounting for costs subject to section 263A is generally deemed to occur (including the computation of the adjustment under section 481(a)) before any other change in method of accounting is deemed to occur for that same taxable year.

(B) ***Exceptions to the general ordering rule*** —

(*1*) ***Change from the LIFO inventory method.*** In the case of a taxpayer that is discontinuing its use of the LIFO inventory method in the same taxable year it is changing its method of accounting for costs subject to section 263A, the change from the LIFO method may be made before the change in method of accounting (and the computation of the corresponding adjustment under section 481 (a)) under section 263A is made.

(2) ***Change from the specific goods LIFO inventory method.*** In the case of a taxpayer that is changing from the specific goods LIFO inventory method to the dollar-value LIFO inventory method in the same taxable year it is changing its method of accounting for costs subject to section 263A, the change from the specific goods LIFO inventory method may be made before the change in method of accounting under section 263A is made.

(3) ***Change in overall method of accounting.*** In the case of a taxpayer that is changing its overall method of accounting from the cash receipts and disbursements method to an accrual method in the same taxable year it is changing its method of accounting for costs subject to section 263A, the taxpayer must change to an accrual method for capitalizable costs (see § 1.263A-1(c)(2)(ii)) before the change in method of accounting (and the computation of the corresponding adjustment under section 481(a)) under section 263A is made.

(4) ***Change in method of accounting for depreciation.*** In the case of a taxpayer that is changing its method of accounting for depreciation in the same taxable year it is changing its method of accounting for costs subject to section 263A and any portion of the depreciation is subject to section 263A, the change in method of accounting for depreciation must be made before the change in method of accounting (and the computation of the corresponding adjustment under section 481(a)) under section 263A is made.

(ii) ***Adjustment required by section 481(a).*** In the case of any taxpayer required or permitted to change its method of accounting for any taxable year under section 263A and the regulations thereunder, the change will be treated as initiated by the taxpayer for purposes of the adjustment required by section 481(a). The taxpayer must take the net section 481(a) adjustment into account over the section 481(a) adjustment period as determined under the applicable administrative procedures issued under § 1.446-1(e)(3)(ii) for obtaining the Commissioner's consent to a change in accounting method (for example, see Revenue Procedure 2015-13, 2015-5 IRB 419 (or successor) (also see § 601.601(d)(2) of this chapter)). This paragraph applies to taxable years ending on or after June 16, 2004.

(iii) ***Base year*** —

(A) ***Need for a new base year.*** Certain dollar-value LIFO taxpayers (whether using double extension or link-chain) must establish a new base year when they revalue their inventories under section 263A.

(1) ***Facts and circumstances revaluation method used.*** A dollar-value LIFO taxpayer that uses the facts and circumstances revaluation method is permitted, but not required, to establish a new base year.

(2) ***3-year average method used*** —

(i) ***Simplified method not used.*** A dollar-value LIFO taxpayer using the 3-year average method but not the simplified production method or the simplified resale method to revalue its inventory is required to establish a new base year.

(*ii*) ***Simplified method used.*** A dollar-value LIFO taxpayer using the 3-year average method and the simplified production method, the modified simplified production method, or the simplified resale method to revalue its inventory is permitted, but not required, to establish a new base year.

(B) ***Computing a new base year.*** For purposes of determining future indexes, the year of change becomes the new base year (that is, the index at the beginning of the year of change generally must be 1.00) and all costs are restated in new base year costs for purposes of extending such costs in future years. However, when a new base year is established, costs associated with old layers retain their separate identity within the base year, with such layers being restated in terms of the new base year index. For example, for purposes of determining whether a particular layer has been invaded, each layer must retain its separate identity. Thus, if a decrement in an inventory pool occurs, layers accumulated in more recent years must be viewed as invaded first, in order of priority.

(c) ***Inventory*** —

(1) ***Need for adjustments.*** When a taxpayer changes its method of accounting for costs subject to section 263A, the taxpayer generally must, in computing its taxable income for the year of change, take into account the adjustments required by section 481(a). The adjustments required by section 481(a) relate to revaluations of inventory property, whether the taxpayer produces the inventory or acquires it for resale. See paragraph (d) of this section in regard to the adjustments required by section 481(a) that relate to non-inventory property.

(2) ***Revaluing beginning inventory*** —

(i) ***In general.*** If a taxpayer changes its method of accounting for costs subject to section 263A, the taxpayer must revalue the items or costs included in its beginning inventory in the year of change as if the new method (that is, the method to which the taxpayer is changing) had been in effect during all prior years. In revaluing inventory costs under this procedure, all of the capitalization provisions of section 263A and the regulations thereunder apply to all inventory costs accumulated in prior years. The necessity to revalue beginning inventory as if these capitalization rules had been in effect for all prior years includes, for example, the revaluation of costs or layers incurred in taxable years preceding the transition period to the full absorption method of inventory costing as described in § 1.471-11(e), regardless of whether a taxpayer employed a cut-off method under those regulations. The difference between the inventory as originally valued using the former method (that is, the method from which the taxpayer is changing) and the inventory as revalued using the new method is equal to the amount of the adjustment required under section 481(a).

(ii) ***Methods to revalue inventory.*** There are three methods available to revalue inventory. The first method, the facts and circumstances revaluation method, may be used by all taxpayers. Under this method, a taxpayer determines the direct and indirect costs that must be assigned to each item of inventory based on all the facts and circumstances. This method is described in paragraph (c)(2)(iii) of this section. The second method, the weighted average method, is available only in certain situations to taxpayers using the FIFO inventory method or the specific goods LIFO inventory method. This method is described in paragraph (c)(2)(iv) of this section. The third method, the 3-year average method, is available to all taxpayers using the dollar-value LIFO inventory method of accounting. This method is described in paragraph (c)(2)(v) of this section. The weighted average method and the 3-year average method revalue inventory

through processes of estimation and extrapolation, rather than based on the facts and circumstances of a particular year's data. All three methods are available regardless of whether the taxpayer elects to use a simplified method to capitalize costs under section 263A.

(iii) ***Facts and circumstances revaluation method*** —

(A) ***In general.*** Under the facts and circumstances revaluation method, a taxpayer generally is required to revalue inventories by applying the capitalization rules of section 263A and the regulations thereunder to the production and resale activities of the taxpayer, with the same degree of specificity as required of inventory manufacturers under the law immediately prior to the effective date of the Tax Reform Act of 1986 (Pub. L. 99-514, 100 Stat. 2085, 1986-3 C.B. (Vol. 1)). Thus, for example, with respect to any prior year that is relevant in determining the total amount of the revalued balance as of the beginning of the year of change, the taxpayer must analyze the production and resale data for that particular year and apply the rules and principles of section 263A and the regulations thereunder to determine the appropriate revalued inventory costs. However, under the facts and circumstances revaluation method, a taxpayer may utilize reasonable estimates and procedures in valuing inventory costs if—

(*1*) The taxpayer lacks, and is not able to reconstruct from its books and records, actual financial and accounting data which is required to apply the capitalization rules of section 263A and the regulations thereunder to the relevant facts and circumstances surrounding a particular item of inventory or cost; and

(*2*) The total amounts of costs for which reasonable estimates and procedures are employed are not significant in comparison to the total restated value (including costs previously capitalized under the taxpayer's former method) of the items or costs for the period in question.

(B) ***Exception.*** A taxpayer that is not able to comply with the requirement of paragraph (c)(2)(iii)(A)(2) of this section because of the existence of a significant amount of costs that would require the use of estimates and procedures must revalue its inventories under the procedures provided in paragraph (c)(2) (iv) or (v) of this section.

(C) ***Estimates and procedures allowed.*** The estimates and procedures of this paragraph (c)(2)(iii) include—

(*1*) The use of available information from more recent years to estimate the amount and nature of inventory costs applicable to earlier years; and

(*2*) The use of available information with respect to comparable items of inventory produced or acquired during the same year in order to estimate the costs associated with other items of inventory.

(D) ***Use by dollar-value LIFO taxpayers.*** Generally, a dollar-value LIFO taxpayer must recompute its LIFO inventory for each taxable year that the LIFO inventory method was used.

(E) ***Examples.*** The provisions of this paragraph (c)(2)(iii) are illustrated by the following three examples. The principles set forth in these examples are applicable both to production and resale activities and the year of change in all three examples is 1997. The examples read as follows:

Example 1. Taxpayer X lacks information for the years 1993 and earlier, regarding the amount of costs incurred in transporting finished goods from X's factory to X's warehouse and in storing those goods at the warehouse until their sale to customers. X determines that, for 1994 and subsequent years, these transportation and storage costs constitute 4 percent of the total costs of comparable goods under X's method of accounting for such years. Under this paragraph (c)(2)(iii), X may assume that transportation and storage costs for the years 1993 and earlier constitute 4 percent of the total costs of such goods.

> *Example 2.* Assume the same facts as in *Example 1,* except that for the year 1993 and earlier, X used a different method of accounting for inventory costs whereunder significantly fewer costs were capitalized than amounts capitalized in later years. Thus, the application of transportation and storage based on a percentage of costs for 1994 and later years would not constitute a reasonable estimate for use in earlier years. X may use the information from 1994 and later years, if appropriate adjustments are made to reflect the differences in inventory costs for the applicable years, including, for example—
> (i) Increasing the percentage of costs that are intended to represent transportation and storage costs to reflect the aggregate differences in capitalized amounts under the two methods of accounting; or
>
> (ii) Taking the absolute dollar amount of transportation and storage costs for comparable goods in inventory and applying that amount (adjusted for changes in general price levels, where appropriate) to goods associated with 1993 and prior periods.

Example 3. Taxpayer Z lacks information for certain years with respect to factory administrative costs, subject to capitalization under section 263A and the regulations thereunder, incurred in the production of inventory in factory A. Z does have sufficient information to determine factory administrative costs with respect to production of inventory in factory B, wherein inventory items were produced during the same years as factory A. Z may use the information from factory B to determine the appropriate amount of factory administrative costs to capitalize as inventory costs for comparable items produced in factory A during the same years.

(iv) ***Weighted average method*** —

(A) ***In general.*** A taxpayer using the FIFO method or the specific goods LIFO method of accounting for inventories may use the weighted average method as provided in this paragraph (c)(2)(iv) to estimate the change in the amount of costs that must be allocated to inventories for prior years. The weighted average method under this paragraph (c)(2)(iv) is only available to a taxpayer that lacks sufficient data to revalue its inventory costs under the facts and circumstances revaluation method provided for in paragraph (c)(2)(iii) of this section. Moreover, a taxpayer that qualifies for the use of the weighted average method under this paragraph (c)(2)(iv) must utilize such method only with respect to items or costs for which it lacks sufficient information to revalue under the facts and

circumstances revaluation method. Particular items or costs must be revalued under the facts and circumstances revaluation method if sufficient information exists to make such a revaluation. If a taxpayer lacks sufficient information to otherwise apply the weighted average method under this paragraph (c)(2)(iv) (for example, the taxpayer is unable to revalue the costs of any of its items in inventory due to a lack of information), then the taxpayer must use reasonable estimates and procedures, as described in the facts and circumstances revaluation method, to whatever extent is necessary to allow the taxpayer to apply the weighted average method.

(B) ***Weighted average method for FIFO taxpayers*** —

(*1*) ***In general.*** This paragraph (c)(2)(iv)(B) sets forth the mechanics of the weighted average method as applicable to FIFO taxpayers. Under the weighted average method, an item in ending inventory for which sufficient data is not available for revaluation under section 263A and the regulations thereunder must be revalued by using the weighted average percentage increase or decrease with respect to such item for the earliest subsequent taxable year for which sufficient data is available. With respect to an item for which no subsequent data exists, such item must be revalued by using the weighted average percentage increase or decrease with respect to all reasonably comparable items in the taxpayer's inventory for the same year or the earliest subsequent taxable year for which sufficient data is available.

(*2*) ***Example.*** The provisions of this paragraph (c)(2)(iv)(B) are illustrated by the following example. The principles set forth in this example are applicable both to production and resale activities and the year of change in the example is 1997. The example reads as follows:

Example. Taxpayer A manufactures bolts and uses the FIFO method to identify inventories. Under A's former method, A did not capitalize all of the costs required to be capitalized under section 263A. A maintains inventories of bolts, two types of which it no longer produces. Bolt A was last produced in 1994. The revaluation of the costs of Bolt A under this section for bolts produced in 1994 results in a 20 percent increase of the costs of Bolt A. A portion of the inventory of Bolt A, however, is attributable to 1993. A does not have sufficient data for revaluation of the 1993 cost for Bolt A. With respect to Bolt A, A may apply the 20 percent increase determined for 1994 to the 1993 production as an acceptable estimate. Bolt B was last produced in 1992 and no data exists that would allow revaluation of the inventory cost of Bolt B. The inventories of all other bolts for which information is available are attributable to 1994 and 1995. Revaluation of the costs of these other bolts using available data results in an average increase in inventory costs of 15 percent for 1994 production. With respect to Bolt B, the overall 15 percent increase for A's inventory for 1994 may be used in revaluing the cost of Bolt B.

(C) ***Weighted average method for specific goods LIFO taxpayers*** —

(*1*) ***In general.*** This paragraph (c)(2)(iv)(C) sets forth the mechanics of the weighted average method as applicable to LIFO taxpayers using the specific goods method of valuing inventories. Under the weighted average method, the inventory layers with respect to an item for which data is available are revalued under this section and the increase or decrease in amount for each layer is expressed as a percentage of

change from the cost in the layer as originally valued. A weighted average of the percentage of change for all layers for each type of good is computed and applied to all earlier layers for each type of good that lack sufficient data to allow for revaluation. In the case of earlier layers for which sufficient data exists, such layers are to be revalued using actual data. In cases where sufficient data is not available to make a weighted average estimate with respect to a particular item of inventory, a weighted average increase or decrease is to be determined using all other inventory items revalued by the taxpayer in the same specific goods grouping. This percentage increase or decrease is then used to revalue the cost of the item for which data is lacking. If the taxpayer lacks sufficient data to revalue any of the inventory items contained in a specific goods grouping, then the weighted average increase or decrease of substantially similar items (as determined by principles similar to the rules applicable to dollar-value LIFO taxpayers in § 1.472-8(b)(3)) must be applied in the revaluation of the items in such grouping. If insufficient data exists with respect to all the items in a specific goods grouping and to all items that are substantially similar (or such items do not exist), then the weighted average for all revalued items in the taxpayer's inventory must be applied in revaluing items for which data is lacking.

(2) ***Example.*** The provisions of this paragraph (c)(2)(iv)(C) are illustrated by the following example. The principles set forth in this example are applicable both to production and resale activities and the year of change in the example is 1997. The example reads as follows:

Example. (i) Taxpayer M is a manufacturer that produces two different parts. Under M's former method, M did not capitalize all of the costs required to be capitalized under section 263A. Work-in-process inventory is recorded in terms of equivalent units of finished goods. M's records show the following at the end of 1996 under the specific goods LIFO inventory method:

LIFO Product and layer	Number	Cost	Carrying values
Product #1:			
1993	150	$5.00	$750
1994	100	6.00	600
1995	100	6.50	650
1996	50	7.00	350
			$2,350
Product #2:			
1993	200	$4.00	$800
1994	200	4.50	900
1995	100	5.00	500

LIFO Product and layer	Number	Cost	Carrying values
1996	100	6.00	600
			2,800
Total carrying value of Products #1 and #2 under M's former method			5,150

(ii) M has sufficient data to revalue the unit costs of Product #1 using its new method for 1994, 1995 and 1996. These costs are: $7.00 in 1994, $7.75 in 1995, and $9.00 in 1996. This data for Product #1 results in a weighted average percentage change of 20.31 percent ((100 × ($7.00−$6.00)) + (100 × ($7.75−$6.50)) + (50 × ($9.00−$7.00)) divided by (100 × $6.00) + (100 × $6.50) + (50 × $7.00)]. M has sufficient data to revalue the unit costs of Product #2 only in 1995 and 1996. These costs are: $6.00 in 1995 and $7.00 in 1996. This data for Product #2 results in a weighted average percentage change of 18.18 percent [(100 × ($6.00−$5.00)) + (100 × ($7.00−$6.00)) divided by (100 × $5.00) + (100 × $6.00)].
(iii) M can estimate its revalued costs for Product #1 for 1993 by applying the weighted average increase computed for Product #1 (20.31 percent) to the unit costs originally carried on M's records for 1993 under M's former method. The estimated revalued unit cost of Product #1 would be $6.02 ($5.00 × 1.2031). M estimates its revalued costs for Product #2 for 1993 and 1994 in a similar fashion. M applies the weighted average increase determined for Product #2 (18.18 percent) to the unit costs of $4.00 and $4.50 for 1993 and 1994 respectively. The revalued unit costs of Product #2 are $4.73 for 1993 ($4.00 × 1.1818) and $5.32 for 1994 ($4.50 × 1.1818).

(iv) M's inventory would be revalued as follows:

LIFO product and layer	Number	Cost	Carrying values
Product #1:			
1993	150	$6.02	$903
1994	100	7.00	700
1995	100	7.75	775
1996	50	9.00	450

LIFO product and layer	Number	Cost	Carrying values
			$2,828
Product #2:			
1993	200	4.73	946
1994	200	5.32	1,064
1995	100	6.00	600
1996	100	7.00	700
			3,310
Total value of Products #1 and #2 as revalued under M's new method			6,138
Total amount of adjustment required under section 481(a) [$6,138−$5,150]			988

(D) ***Adjustments to inventory costs from prior years.*** For special rules applicable when a revaluation using the weighted average method includes costs not incurred in prior years, see paragraph (c)(2)(v)(E) of this section.

(v) ***3-year average method*** —

(A) ***In general.*** A taxpayer using the dollar-value LIFO method of accounting for inventories may revalue all existing LIFO layers of a trade or business based on the 3-year average method as provided in this paragraph (c)(2)(v). The 3-year average method is based on the average percentage change (the 3-year revaluation factor) in the current costs of inventory for each LIFO pool based on the three most recent taxable years for which the taxpayer has sufficient information (typically, the three most recent taxable years of such trade or business). The 3-year revaluation factor is applied to all layers for each pool in beginning inventory in the year of change. The 3-year average method is available to any dollar-value taxpayer that complies with the requirements of this paragraph (c)(2)(v) regardless of whether such taxpayer lacks sufficient data to revalue its inventory costs under the facts and circumstances revaluation method prescribed in paragraph (c)(2)(iii) of this section. The 3-year average method must be applied with respect to all inventory in a taxpayer's trade or business. A taxpayer is not permitted to apply the method for the revaluation of some, but not all, inventory costs on the basis of pools, business units, or other measures of inventory amounts that do not constitute a separate trade or business. Generally, a taxpayer revaluing its inventory using the 3-year average method must establish a new base year. See, paragraph (b)(2)(iii)(A)(*2*)(*i*) of this section. However, a dollar-value LIFO taxpayer using the 3-year average method and either the simplified production method or the simplified resale method to revalue its inventory is permitted, but not required, to establish a new base year. See, paragraph (b)(2)(iii)(A)(*2*)(*ii*) of this section. If a taxpayer lacks sufficient information to otherwise apply the 3-year average method under this paragraph (c)(2)(v) (for example, the taxpayer is unable to revalue the costs of any of its LIFO pools for three years due to a lack of information), then the taxpayer must use

reasonable estimates and procedures, as described in the facts and circumstances revaluation method under paragraph (c)(2)(iii) of this section, to whatever extent is necessary to allow the taxpayer to apply the 3-year average method.

(B) ***Consecutive year requirement.*** Under the 3-year average method, if sufficient data is available to calculate the revaluation factor for more than three years, the taxpayer may use data from such additional years in determining the average percentage increase or decrease only if the additional years are consecutive to and prior to the year of change. The requirement under the preceding sentence to use consecutive years is applicable under this method regardless of whether any inventory costs in beginning inventory as of the year of change are viewed as incurred in, or attributable to, those consecutive years under the LIFO inventory method. Thus, the requirement to use data from consecutive years may result in using information from a year in which no LIFO increment occurred. For example, if a taxpayer is changing its method of accounting in 1997 and has sufficient data to revalue its inventory for the years 1991 through 1996, the taxpayer may calculate the revaluation factor using all six years. If, however, the taxpayer has sufficient data to revalue its inventory for the years 1990 through 1992, and 1994 through 1996, only the three years consecutive to the year of change, that is, 1994 through 1996, may be used in determining the revaluation factor. Similarly, for example, a taxpayer with LIFO increments in 1995, 1993, and 1992 may not calculate the revaluation factor based on the data from those years alone, but instead must use the data from consecutive years for which the taxpayer has information.

(C) ***Example.*** The provisions of this paragraph (c)(2)(v) are illustrated by the following example. The principles set forth in this example are applicable both to production and resale activities and the year of change in the example is 1997. The example reads as follows:

Example. (i) Taxpayer G, a calendar year taxpayer, is a reseller that is required to change its method of accounting under section 263A. G will not use either the simplified production method or the simplified resale method. G adopted the dollar-value LIFO inventory method in 1991, using a single pool and the double extension method. G's beginning LIFO inventory as of January 1, 1997, computed using its former method, for the year of change is as follows:

	Base year costs	Index	LIFO carrying value
Base layer	$14,000	1.00	$14,000
1991 layer	4,000	1.20	4,800
1992 layer	5,000	1.30	6,500
1993 layer	2,000	1.35	2,700
1994 layer	0	1.40	0
1995 layer	4,000	1.50	6,000
1996 layer	5,000	1.60	8,000

	Base year costs	Index	LIFO carrying value
Total	34,000		42,000

(ii) G is able to recompute total inventoriable costs incurred under its new method for the three preceding taxable years as follows:

	Current cost as recorded (former method)	Current cost as adjusted (new method)	Percentage change
1994	$35,000	$45,150	.29
1995	43,500	54,375	.25
1996	54,400	70,720	.30
Total	132,900	170,245	.28

(iii) Applying the average revaluation factor of .28 to each layer, G's inventory is restated as follows:

	Restated base year costs	Index	Restated LIFO carrying value
Base layer	$17,920	1.00	$17,920
1991 layer	5,120	1.20	6,144
1992 layer	6,400	1.30	8,320
1993 layer	2,560	1.35	3,456
1994 layer	0	1.40	0
1995 layer	5,120	1.50	7,680
1996 layer	6,400	1.60	10,240
Total	43,520		53,760

(iv) The adjustment required by section 481(a) is $11,760. This amount may be computed by multiplying the average percentage of .28 by the LIFO carrying value of G's inventory valued using its former method ($42,000). Alternatively, the adjustment required by section 481(a) may be computed by the difference between—

(A) The revalued costs of the taxpayer's inventory under its new method ($53,760), and

(B) The costs of the taxpayer's inventory using its former method ($42,000).

(v) In addition, the inventory as of the first day of the year of change (January 1, 1997) becomes the new base year cost for purposes of determining the LIFO index in future years. See, paragraphs (b)(2)(iii)(A)(*2*)(*i*) and (b)(2)(iii)(B) of this section. This requires that layers in years prior to the base year be restated in terms of the new base year index. The current year cost of G's inventory, as adjusted, is $70,720. Such cost must be apportioned to each layer in proportion to the restated base year cost of that layer to total restated base year costs ($43,520), as follows:

	Restated base year costs	Restated index	Restated LIFO carrying value
Old base layer	$29,120	.615	$17,920
1991 layer	8,320	.738	6,144
1992 layer	10,400	.80	8,320
1993 layer	4,160	.831	3,456
1994 layer	0		0
1995 layer	8,320	.923	7,680
1996 layer	10,400	.985	10,240
Total	70,720		53,760

(D) ***Short taxable years.*** A short taxable year is treated as a full 12 months.

(E) ***Adjustments to inventory costs from prior years*** —

(*1*) ***General rule.***

(*i*) The use of the revaluation factor, based on current costs, to estimate the revaluation of prior inventory layers under the 3-year average method, as described in paragraph (c)(2)(v) of this section, may result in an allocation of costs that include amounts attributable to costs not incurred during the year in which the layer arose. To the extent a taxpayer can demonstrate that costs that contributed to the determination of the revaluation factor could not have affected a prior year, the revaluation factor as applied to that year may be adjusted under the restatement adjustment procedure, as described in paragraph (c)(2)(v)(F) of this section. The determination that a cost could not have affected a prior year must be made by a taxpayer only upon showing that the type of cost incurred during the years used to calculate the revaluation factor (revaluation years) was not present during such prior year. An item of cost will not be eligible for the restatement adjustment procedure simply because the cost varies in amount from year to year or the same type of cost is described or referred to by a different name from year to year. Thus, the

restatement adjustment procedure allowed under paragraph (c)(2)(v)(F) of this section is not available in a prior year with respect to a particular cost if the same type of cost was incurred both in the revaluation years and in such prior year, although the amount of such cost and the name or description thereof may vary.

(*ii*) The provisions of this paragraph (c)(2)(v)(E) are also applicable to taxpayers using the weighted average method in revaluing inventories under paragraph (c)(2)(iv) of this section. Thus, to the extent a taxpayer can demonstrate that costs that contributed to the determination of the restatement of a particular year or item could not have affected a prior year or item, the taxpayer may adjust the revaluation of that prior year or item accordingly under the weighted average method. All the requirements and definitions, however, applicable to the restatement adjustment procedure under this paragraph (c)(2)(v)(E) fully apply to a taxpayer using the weighted average method to revalue inventories.

(*2*) ***Examples of costs eligible for restatement adjustment procedure.*** The provisions of this paragraph (c)(2)(v)(E) are illustrated by the following four examples. The principles set forth in these examples are applicable both to production and resale activities and the year of change in the four examples is 1997. The examples read as follows:

Example 1. Taxpayer A is a reseller that introduced a defined benefit pension plan in 1994, and made the plan available to personnel whose labor costs were (directly or indirectly) properly allocable to resale activities. A determines the revaluation factor based on data available for the years 1994 through 1996, for which the pension plan was in existence. Based on these facts, the costs of the pension plan in the revaluation years are eligible for the restatement adjustment procedure for years prior to 1994.

Example 2. Assume the same facts as in *Example 1,* except that a defined contribution plan was available, during prior years, to personnel whose labor costs were properly allocable to resale activities. The defined contribution plan was terminated before the introduction of the defined benefit plan in 1994. Based on these facts, the costs of the defined benefit pension plan in the revaluation years are not eligible for the restatement adjustment procedure with respect to years for which the defined contribution plan existed.

Example 3. Taxpayer C is a manufacturer that established a security department in 1995 to patrol and safeguard its production and warehouse areas used in C's trade or business. Prior to 1995, C had not been required to utilize security personnel in its trade or business; C established the security department in 1995 in response to increasing vandalism and theft at its plant locations. Based on these facts, the costs of the security department are eligible for the restatement adjustment procedure for years prior to 1995.

Example 4. Taxpayer D is a reseller that established a payroll department in 1995 to process the company's weekly payroll. In the years 1991 through 1994, D engaged the services of an outside vendor to process the company's payroll. Prior to 1991, D's payroll processing was done by D's accounting department, which was responsible for payroll processing as well as for other accounting functions. Based on these

facts, the costs of the payroll department are not eligible for the restatement adjustment procedure. D was incurring the same type of costs in earlier years as D was incurring in the payroll department in 1995 and subsequent years, although these costs were designated by a different name or description.

(F) ***Restatement adjustment procedure*** —

(*1*) ***In general.***

(*i*) This paragraph (c)(2)(v)(F) provides a restatement adjustment procedure whereunder a taxpayer may adjust the restatement of inventory costs in prior taxable years in order to produce a different restated value than the value that would otherwise occur through application of the revaluation factor to such prior taxable years.

(*ii*) Under the restatement adjustment procedure as applied to a particular prior year, a taxpayer must determine the particular items of cost that are eligible for the restatement adjustment with respect to such prior year. The taxpayer must then recompute, using reasonable estimates and procedures, the total inventoriable costs that would have been incurred for each revaluation year under the taxpayer's former method and the taxpayer's new method by making appropriate adjustments in the data for such revaluation year to reflect the particular costs eligible for adjustment.

(*iii*) The taxpayer must then compute the total percentage change with respect to each revaluation year, using the revised estimates of total inventoriable costs for such year as described in paragraph (c)(2)(v)(F)(*1*)(*ii*) of this section. The percentage change must be determined by calculating the ratio of the revised total of the inventoriable costs for such revaluation year under the taxpayer's new method to the revised total of the inventoriable costs for such revaluation year under the taxpayer's former method.

(*iv*) An average of the resulting percentage change for all revaluation years is then calculated, and the resulting average is applied to the prior year in issue.

(*2*) ***Examples of restatement adjustment procedure.*** The provisions of this paragraph (c)(2)(v)(F) are illustrated by the following two examples. The principles set forth in these examples are applicable both to production and resale activities and the year of change in the two examples is 1997. The examples read as follows:

Example 1. Taxpayer A is a reseller that is eligible to make a restatement adjustment by reason of the costs of a defined benefit pension plan that was introduced in 1994, during the revaluation period. The revaluation factor, before adjustment of data to reflect the pension costs, is as provided in the example in paragraph (c)(2)(v)(C) of this section. Thus, for example, with respect to the year 1994, the total inventoriable costs under A's former method is $35,000, the total inventoriable costs under A's new method is $45,150, and the percentage change is .29. Under the method of accounting used by A during 1994 (the former method), none of the pension costs were included as inventoriable costs. Thus, under the restatement adjustment procedure, the total inventoriable cost under A's former method would remain at $35,000 if the pension plan had not been in existence. Similarly, A determines that the total inventoriable costs for 1994 under A's new method, if the pension plan had not been in existence, would have been $42,000. The restatement adjustment for 1994 determined under this paragraph

(c)(2)(v)(F) would then be equal to .20 ([$42,000-$35,000]/$35,000). A would make similar calculations with respect to 1995 and 1996. The average of such amounts for each of the three years in the revaluation period would then be determined as in the example in paragraph (c)(2)(v)(C) of this section. Such average would be used to revalue cost layers for years for which the pension plan was not in existence. Such revalued layers would then be viewed as restated in compliance with the requirements of this paragraph. With respect to cost layers incurred during years for which the pension plan was in existence, no adjustment of the revaluation factor would occur.

Example 2. Assume the same facts as in *Example 1,* except that a portion of the pension costs were included as inventoriable costs under the method used by A during 1994 (the former method). Under the restatement adjustment procedure, A determines that the total inventoriable costs for 1994 under the former method, if the pension plan had not been in existence, would have been $34,000. Similarly, A determines that the total inventoriable costs for 1994 under A's new method, if the pension plan had not been in existence, would have been $42,000. The restatement adjustment for 1994 determined under this paragraph (c)(2)(v)(F) would then be equal to .24 ([$42,000-$34,000]/$34,000). A would make similar calculations with respect to 1995 and 1996. The average of such amounts for each of the three years in the revaluation period would then be determined as in the example in paragraph (c)(2)(v)(C) of this section. Such average would be used to revalue cost layers for years for which the pension plan was not in existence.

(3) ***Intercompany items*** —

(i) ***Revaluing intercompany transactions.*** Pursuant to any change in method of accounting for costs subject to section 263A, taxpayers are required to revalue the amount of any intercompany item resulting from the sale or exchange of inventory property in an intercompany transaction to an amount equal to the intercompany item that would have resulted, had the cost of goods sold for that inventory property been determined under the taxpayer's new method. The requirement of the preceding sentence applies with respect to both inventory produced by a taxpayer and inventory acquired by the taxpayer for resale. In addition, the requirements of this paragraph (c)(3) apply only to any intercompany item of the taxpayer as of the beginning of the year of change in method of accounting. See § 1.1502-13(b)(2)(ii). A taxpayer must revalue the amount of any intercompany item only if the inventory property sold in the intercompany transaction is held as inventory by a buying member as of the date the taxpayer changes its method of accounting under section 263A. Corresponding changes to the adjustment required under section 481(a) must be made with respect to any adjustment of the intercompany item required under this paragraph (c)(3). Moreover, the requirements of this paragraph (c)(3) apply regardless of whether the taxpayer has any items in beginning inventory as of the year of change in method of accounting. See § 1.1502-13 for the definition of intercompany transaction.

(ii) ***Example.*** The provisions of this paragraph (c)(3) are illustrated by the following example. The principles set forth in this example are applicable both to production and resale activities and the year of change in the example is 1997. The example reads as follows:

> *Example.* (i) Assume that S, a member of a consolidated group filing its federal income tax return on a calendar year, manufactures and sells inventory property to B, a member of the same consolidated group, in 1996. The sale between S and B is an intercompany

transaction as defined under § 1.1502-13(b)(1). The gain from the intercompany transaction is an intercompany item to S under § 1.1502-13(b)(2). As of the beginning of the year of change in method of accounting (January 1, 1997), the inventory property is still held by B based on the particular inventory method of accounting used by B for federal income tax purposes (for example, the LIFO or FIFO inventory method). The property was sold by S to B in 1996 for $150; the cost of goods sold with respect to the property under the method in effect at the time the inventory was produced was $100, resulting in an intercompany item of $50 to S under § 1.1502-13. As of January 1, 1997, S still has an intercompany item of $50.

(ii) S is required to revalue the amount of its intercompany item to an amount equal to what the intercompany item would have been had the cost of goods sold for that inventory property been determined under S's new method. Assume that the cost of the inventory under this method would have been $110, had the method applied to S's manufacture of the property in 1996. Thus, S is required to revalue the amount of its intercompany item to $40 (that is, $150 less $110), necessitating a negative adjustment to the intercompany item of $10. Moreover, S is required to increase its adjustment under section 481(a) by $10 in order to prevent the omission of such amount by virtue of the decrease in the intercompany item.

(iii) ***Availability of revaluation methods.*** In revaluing the amount of any intercompany item resulting from the sale or exchange of inventory property in an intercompany transaction to an amount equal to the intercompany item that would have resulted had the cost of goods sold for that inventory property been determined under the taxpayer's new method, a taxpayer may use the other methods and procedures otherwise properly available to that particular taxpayer in revaluing inventory under section 263A and the regulations thereunder, including, if appropriate, the various simplified methods provided in section 263A and the regulations thereunder and the various procedures described in this paragraph (c).

(4) ***Anti-abuse rule*** —

(i) ***In general.*** Section 263A(i)(1) provides that the Secretary shall prescribe such regulations as may be necessary or appropriate to carry out the purposes of section 263A, including regulations to prevent the use of related parties, pass-thru entities, or intermediaries to avoid the application of section 263A and the regulations thereunder. One way in which the application of section 263A and the regulations thereunder would be otherwise avoided is through the use of entities described in the preceding sentence in such a manner as to effectively avoid the necessity to restate beginning inventory balances under the change in method of accounting required or permitted under section 263A and the regulations thereunder.

(ii) ***Deemed avoidance of this section*** —

(A) ***Scope.*** For purposes of this paragraph (c), the avoidance of the application of section 263A and the regulations thereunder will be deemed to occur if a taxpayer using the LIFO method of accounting for inventories, transfers inventory property to a related corporation in a transaction described in section 351, and such transfer occurs:

(1) On or before the beginning of the transferor's taxable year beginning in 1987; and

(2) After September 18, 1986.

(B) ***General rule.*** Any transaction described in paragraph (c)(4)(ii)(A) of this section will be treated in the following manner:

(1) Notwithstanding any provision to the contrary (for example, section 381), the transferee corporation is required to revalue the inventories acquired from the transferor under the provisions of this paragraph (c) relating to the change in method of accounting and the adjustment required by section 481(a), as if the inventories had never been transferred and were still in the hands of the transferor; and

(2) Absent an election as described in paragraph (c)(4)(iii) of this section, the transferee must account for the inventories acquired from the transferor by treating such inventories as if they were contained in the transferee's LIFO layer(s).

(iii) ***Election to use transferor's LIFO layers.*** If a transferee described in paragraph (c)(4)(ii) of this section so elects, the transferee may account for the inventories acquired from the transferor by allocating such inventories to LIFO layers corresponding to the layers to which such properties were properly allocated by the transferor, prior to their transfer. The transferee must account for such inventories for all subsequent periods with reference to such layers to which the LIFO costs were allocated. Any such election is to be made on a statement attached to the timely filed federal income tax return of the transferee for the first taxable year for which section 263A and the regulations thereunder applies to the transferee.

(iv) ***Tax avoidance intent not required.*** The provisions of paragraph (c)(4)(ii) of this section will apply to any transaction described therein, without regard to whether such transaction was consummated with an intention to avoid federal income taxes.

(v) ***Related corporation.*** For purposes of this paragraph (c)(4), a taxpayer is related to a corporation if—

(A) the relationship between such persons is described in section 267(b)(1), or

(B) such persons are engaged in trades or businesses under common control (within the meaning of paragraphs (a) and (b) of section 52).

(d) ***Non-inventory property*** —

(1) ***Need for adjustments.*** A taxpayer that changes its method of accounting for costs subject to section 263A with respect to non-inventory property must revalue the non-inventory property on hand at the beginning of the year of change as set forth in paragraph (d)(2) of this section, and compute an adjustment under section 481(a). The adjustment under section 481(a) will equal the difference between the adjusted basis of the property as revalued using the taxpayer's new method and the adjusted basis of the property as originally valued using the taxpayer's former method.

(2) ***Revaluing property.*** A taxpayer must revalue its non-inventory property as of the beginning of the year of change in method of accounting. The facts and circumstances revaluation method of paragraph (c)(2)(iii) of this section must be used to revalue this property. In revaluing non-inventory property, however, the only additional section 263A costs that must be taken into account are those additional

section 263A costs incurred after the later of December 31, 1986, or the date the taxpayer first becomes subject to section 263A, in taxable years ending after that date. See § 1.263A-1(d)(3) for the definition of additional section 263A costs.

[T.D. 8728, 62 FR 42054, Aug. 5, 1997, as amended by T.D. 9131, 69 FR 33572, June 16, 2004; T.D. 9843, 83 FR 58498, Nov. 20, 2018; T.D. 9942, 86 FR 268, Jan. 5, 2021]

§ 1.263A-8 Requirement to capitalize interest.

(a) ***In general*** —

(1) ***General rule.*** Capitalization of interest under the avoided cost method described in § 1.263A-9 is required with respect to the production of designated property described in paragraph (b) of this section. However, a taxpayer, other than a tax shelter prohibited from using the cash receipts and disbursements method of accounting under section 448(a)(3), that meets the gross receipts test of section 448(c) for the taxable year is not required to capitalize costs, including interest, under section 263A. See § 1.263A-1(j).

(2) ***Treatment of interest required to be capitalized.*** In general, interest that is capitalized under this section is treated as a cost of the designated property and is recovered in accordance with § 1.263A-1(c)(4). Interest capitalized by reason of assets used to produce designated property (within the meaning of § 1.263A-11(d)) is added to the basis of the designated property rather than the bases of the assets used to produce the designated property. Interest capitalized with respect to designated property that includes both components subject to an allowance for depreciation or depletion and components not subject to an allowance for depreciation or depletion is ratably allocated among, and is treated as a cost of, components that are subject to an allowance for depreciation or depletion.

(3) ***Methods of accounting under section 263A(f).*** Except as otherwise provided, methods of accounting and other computations under §§ 1.263A-8 through 1.263A-15 are applied on a taxpayer, as opposed to a separate and distinct trade or business, basis.

(4) ***Special definitions*** —

(i) ***Related person.*** Except as otherwise provided, for purposes of §§ 1.263A-8 through 1.263A-15, a person is related to a taxpayer if their relationship is described in section 267(b) or 707(b).

(ii) ***Placed in service.*** For purposes of §§ 1.263A-8 through 1.263A-15, *placed in service* has the same meaning as set forth in § 1.46-3(d).

(b) ***Designated property*** —

(1) ***In general.*** Except as provided in paragraphs (b)(3) and (b)(4) of this section, *designated property* means any property that is produced and that is either:

(i) Real property; or

(ii) Tangible personal property (as defined in § 1.263A-2(a)(2)) which meets any of the following criteria:

(A) Property with a class life of 20 years or more under section 168 (long-lived property), but only if the property is not property described in section 1221(l) in the hands of the taxpayer or a related person,

(B) Property with an estimated production period (as defined in § 1.263A-12) exceeding 2 years (2-year property), or

(C) Property with an estimated production period exceeding 1 year and an estimated cost of production exceeding $1,000,000 (1-year property).

(2) *Special rules* —

(i) ***Application of thresholds.*** The thresholds described in paragraphs (b)(l)(ii)(A), (B), and (C) of this section are applied separately for each unit of property (as defined in § 1.263A-10).

(ii) ***Relevant activities and costs.*** For purposes of determining whether property is designated property, all activities and costs are taken into account if they are performed or incurred by, or for, the taxpayer or any related persons and they directly benefit or are incurred by reason of the production of the property.

(iii) ***Production period and cost of production.*** For purposes of applying the classification thresholds under paragraphs (b)(l)(ii) (B) and (C) of this section to a unit of property, the taxpayer is required, at the beginning of the production period, to reasonably estimate the production period and the total cost of production for the unit of property. The taxpayer must maintain contemporaneous written records supporting the estimates and classification. If the estimates are reasonable based on the facts in existence at the beginning of the production period, the taxpayer's classification of the property is not modified in subsequent periods, even if the actual length of the production period or the actual cost of production differs from the estimates. To be considered reasonable, estimates of the production period and the total cost of production must include anticipated expense and time for delay, rework, change orders, and technological, design or other problems. To the extent that several distinct activities related to the production of the property are expected to occur simultaneously, the period during which these distinct activities occur is not counted more than once. The bases of assets used to produce a unit of property (within the meaning of § 1.263A-11(d)) and any interest that would be required to be capitalized if a unit of property were designated property are disregarded in making estimates of the total cost of production for purposes of this paragraph (b)(2)(iii).

(3) ***Excluded property.*** Designated property does not include:

(i) Timber and evergreen trees that are more than 6 years old when severed from the roots, or

(ii) Property produced by the taxpayer for use by the taxpayer other than in a trade or business or an activity conducted for profit.

(4) *De minimis rule* —

(i) ***In general.*** Designated property does not include property for which—

(A) The production period does not exceed 90 days; and

(B) The total production expenditures do not exceed $1,000,000 divided by the number of days in the production period.

(ii) ***Determination of total production expenditures.*** For purposes of determining whether the condition of paragraph (b)(4)(i)(B) of this section is met with respect to property, the cost of land, the adjusted basis of property used to produce property, and interest that would be capitalized with respect to property if it were designated property are excluded from total production expenditures.

(c) *Definition of real property* —

(1) ***In general.*** Real property includes land, unsevered natural products of land, buildings, and inherently permanent structures. Any interest in real property of a type described in this paragraph (c), including fee ownership, co-ownership, a leasehold, an option, or a similar interest is real property under this section. Real property includes the structural components of both buildings and inherently permanent structures, such as walls, partitions, doors, wiring, plumbing, central air conditioning and heating systems, pipes and ducts, elevators and escalators, and other similar property. Tenant improvements to a building that are inherently permanent or otherwise classified as real property within the meaning of this paragraph (c)(1) are real property under this section. However, property produced for sale that is not real property in the hands of the taxpayer or a related person, but that may be incorporated into real property by an unrelated buyer, is not treated as real property by the producing taxpayer (e.g., bricks, nails, paint, and windowpanes).

(2) ***Unsevered natural products of land.*** Unsevered natural products of land include growing crops and plants, mines, wells, and other natural deposits. Growing crops and plants, however, are real property only if the preproductive period of the crop or plant exceeds 2 years.

(3) ***Inherently permanent structures.*** Inherently permanent structures include property that is affixed to real property and that will ordinarily remain affixed for an indefinite period of time, such as swimming pools, roads, bridges, tunnels, paved parking areas and other pavements, special foundations, wharves and docks, fences, inherently permanent advertising displays, inherently permanent outdoor lighting facilities, railroad tracks and signals, telephone poles, power generation and transmission facilities, permanently installed telecommunications cables, broadcasting towers, oil and gas pipelines, derricks and storage equipment, grain storage bins and silos. For purposes of this section, affixation to real property may be accomplished by weight alone. Property may constitute an inherently permanent structure even though it is not classified as a building for purposes of former section 48(a)(1)(B) and § 1.48-1. Any property not othewise described in this paragraph (c)(3) that constitutes other tangible property under the principles of former section 48(a)(1)(B) and § 1.48-1(d) is treated for the purposes of this section as an inherently permanent structure.

(4) *Machinery* —

(i) ***Treatment.*** A structure that is property in the nature of machinery or is essentially an item of machinery or equipment is not an inherently permanent structure and is not real property. In the case, however, of a building or inherently permanent structure that includes property in the nature of machinery as a structural component, the property in the nature of machinery is real property.

(ii) ***Certain factors not determinative.*** A structure may be an inherently permanent structure, and not property in the nature of machinery or essentially an item of machinery, even if the structure is necessary to operate or use, supports, or is otherwise associated with, machinery.

(d) *Production* —

(1) ***Definition of produce. Produce*** is defined as provided in section 263A(g) and § 1.263A-2(a)(1)(i).

(2) *Property produced under a contract* —

(i) ***Customer.*** A taxpayer is treated as producing any property that is produced for the taxpayer (the customer) by another party (the contractor) under a contract with the taxpayer or an intermediary. Property produced under a contract is designated property to the customer if it is

real property or tangible personal property that satisfies the classification thresholds described in paragraph (b)(1)(ii) of this section. If property produced under a contract will become part of a unit of designated property produced by the customer in the customer's hands, the property produced under the contract is designated property to the customer.

(ii) ***Contractor.*** Property produced under a contract is designated property to the contractor if it is real property, 2-year property, or 1-year property and the property produced under the contract is not excluded by reason of paragraph (d)(2)(v) of this section.

(iii) ***Definition of a contract.*** For purposes of this paragraph (d)(2), *contract* has the same meaning as under § 1.263A-2(a)(1)(ii)(B)(2).

(iv) ***Determination of whether thresholds are satisfied.*** In the case of tangible personal property produced under a contract, the customer and the contractor each determine under this paragraph (d)(2), whether the property satisfies the classification thresholds described in paragraph (b)(1)(ii) of this section. Thus, tangible personal property may be designated property with respect to either, or both, the customer and the contractor. The provisions of paragraph (b)(2)(iii) of this section are modified as set forth in this paragraph (d)(2)(iv) for purposes of determining whether tangible personal property produced under a contract is 2-year property or 1-year property.

(A) ***Customer.*** In determining a customer's estimated cost of production, the customer takes into account costs and payments that are reasonably expected to be incurred by the customer, but does not take into account costs incurred (or to be incurred) by an unrelated contractor. In determining the customer's estimated length of the production period, the production period is treated as beginning on the earlier of the date the contract is executed or the date that the customer's accumulated production expenditures for the unit are at least 5 percent of the customer's total estimated production expenditures for the unit. The customer, however, may elect to treat the production period as beginning on the date the sum of the accumulated production expenditures of the contractor (or contractors if more than one contractor is producing components for the unit of property) and of the customer are at least 5 percent of the customer's estimated production expenditures for the unit.

(B) ***Contractor.*** In determining a contractor's estimated cost of production, the contractor takes into account only the costs that are reasonably expected to be incurred by the contractor, without any reduction for payments from the customer. In determining the contractor's estimated length of the production period, the production period is treated as beginning on the date the contractor's accumulated production expenditures (without any reduction for payments from the customer) are at least 5 percent of the contractor's total estimated accumulated production expenditures.

(v) ***Exclusion for property subject to long-term contract rules.*** Property described in paragraph (b) of this section is designated property with respect to a contractor only if—

(A) The contract is not a long-term contract (within the meaning of section 460(f)); or

(B) The contract is a home construction contract (within the meaning of section 460(e)(6)(A)) with respect to which the requirements of section 460(e)(1)(B) (i) and (ii) are not met.

(3) ***Improvements to existing property*** —

(i) ***In general.*** Any improvement to real or tangible personal property under § 1.263(a)-3, or any improvement to tangible personal property as defined in § 1.263A-2(a)(2)(ii), constitutes the production of property. Generally, any improvement to designated property constitutes the production of designated property. An improvement is not treated as the production of designated property, however, if the de minimis exception described in paragraph (b)(4) of this section applies to the improvement. Paragraph (d)(3)(iii) of this section provides an exception for certain improvements to tangible personal property. In addition, improvements to designated property under this paragraph (d)(3)(i) do not include repairs and maintenance described in § 1.162-4(a).

(ii) ***Real property.*** The rehabilitation or preservation of a standing building, the clearing of raw land prior to sale, and the drilling of an oil well are activities constituting improvements to real property and, therefore, the production of designated property. Similarly, the demolition of a standing building generally constitutes an activity that is an improvement to real property and, therefore, the production of designated property. See the exceptions, however, in paragraphs (b)(3) and (b)(4) of this section.

(iii) ***Tangible personal property.*** If the taxpayer has treated a unit of tangible personal property as designated property under this section, an improvement to such property constitutes the production of designated property regardless of the remaining useful life of the improved property (or the improvement) and, except as provided in paragraph (b)(4) of this section, regardless of the estimated length of the production period or the estimated cost of the improvement. If the taxpayer has not treated a unit of tangible personal property as designated property under this section, an improvement to such property constitutes the production of designated property only if the improvement independently meets the classification thresholds described in paragraph (b)(1)(ii) of this section.

[T.D. 8584, 59 FR 67198, Dec. 29, 1994; 60 FR 16574, Mar. 31, 1995; T.D. 9942, 86 FR 268, Jan. 5, 2021; T.D. 10034, 90 FR 47582, Oct. 2, 2025]

§ 1.263A-9 The avoided cost method.

(a) ***In general*** —

(1) ***Description.*** The avoided cost method described in this section must be used to calculate the amount of interest required to be capitalized under section 263A(f). Generally, any interest that the taxpayer theoretically would have avoided if accumulated production expenditures (as defined in § 1.263A-11) had been used to repay or reduce the taxpayer's outstanding debt must be capitalized under the avoided cost method. The application of the avoided cost method does not depend on whether the taxpayer actually would have used the amounts expended for production to repay or reduce debt. Instead, the avoided cost method is based on the assumption that debt of the taxpayer would have been repaid or reduced without regard to the taxpayer's subjective intentions or to restrictions (including legal, regulatory, contractual, or other restrictions) against repayment or use of the debt proceeds.

(2) ***Overview*** —

(i) ***In general.*** For each unit of designated property (within the meaning of § 1.263A-8(b)), the avoided cost method requires the capitalization of—

(A) The traced debt amount under paragraph (b) of this section, and

(B) The excess expenditure amount under paragraph (c) of this section.

(ii) ***Rules that apply in determining amounts.*** The traced debt and excess expenditure amounts are determined for each taxable year or shorter computation period that includes the production period (as defined in § 1.263A-12) of a unit of designated property. Paragraph (d) of this section provides an election not to trace debt to specific units of designated property. Paragraph (f) of this section provides rules for selecting the computation period, for calculating averages, and for determining measurement dates within the computation period. Special rules are in paragraph (g) of this section.

(3) ***Definitions of interest and incurred.*** Except as provided in the case of certain expenses that are treated as a substitute for interest under paragraphs (c)(2)(iii) and (g)(2)(iv) of this section, *interest* refers to all amounts that are characterized as interest expense under any provision of the Code, including, for example, sections 482, 483, 1272, 1274, and 7872. *Incurred* refers to the amount of interest that is properly accruable during the period of time in question determined by taking into account the loan agreement and any applicable provisions of the Internal Revenue laws and regulations such as section 163, § 1.446-2, and sections 1271 through 1275.

(4) ***Definition of eligible debt.*** Except as provided in this paragraph (a)(4), *eligible debt* includes all outstanding debt (as evidenced by a contract, bond, debenture, note, certificate, or other evidence of indebtedness). Eligible debt does not include—

(i) Debt (or the portion thereof) bearing interest that is disallowed under a provision described in § 1.163-8T(m)(7)(ii);

(ii) Debt, such as accounts payable and other accrued items, that bears no interest, except to the extent that such debt is traced debt (as defined in paragraph (b)(2) of this section);

(iii) Debt that is borrowed directly or indirectly from a person related to the taxpayer and that bears a rate of interest that is less than the applicable Federal rate in effect under section 1274(d) on the date of issuance;

(iv) Debt (or the portion thereof) bearing personal interest within the meaning of section 163(h)(2);

(v) Debt (or the portion thereof) bearing qualified residence interest within the meaning of section 163(h)(3);

(vi) Debt incurred by an organization that is exempt from Federal income tax under section 501(a), except to the extent interest on such debt is directly attributable to an unrelated trade or business of the organization within the meaning of section 512;

(vii) Reserves, deferred tax liabilities, and similar items that are not treated as debt for Federal income tax purposes, regardless of the extent to which the taxpayer's applicable financial accounting or other regulatory reporting principles require or support treating these items as debt;

(viii) Federal, State, and local income tax liabilities, deferred tax liabilities under section 453A, and hypothetical tax liabilities under the look-back method of section 460(b) or similar provisions; and

(ix) **A purchase money obligation given by the lessor to the lessee (or a party that is related to the lessee) in a sale and leaseback transaction involving an agreement qualifying as a lease under § 5c.168(f)(8)-1 through § 5c.168(f)(8)-11 of this chapter.** *See* § 5c.168(f)(8)-1(e) *Example (2)* of this chapter.

(b) *Traced debt amount* —

(1) ***General rule.*** Interest must be capitalized with respect to a unit of designated property in an amount (the traced debt amount) equal to the total interest incurred on the traced debt during each measurement period (as defined in paragraph (f)(2)(ii) of this section) that ends on a measurement date described in paragraph (f)(2)(iii) of this section. See the example in paragraph (b)(3) of this section. If any interest incurred on the traced debt is not taken into account for the taxable year that includes the measurement period because of a deferral provision, see paragraph (g)(2) of this section for the time and manner for capitalizing and recovering that amount. This paragraph (b)(1) does not apply if the taxpayer elects under paragraph (d) of this section not to trace debt.

(2) ***Identification and definition of traced debt.*** On each measurement date described in paragraph (f)(2)(iii) of this section, the taxpayer must identify debt that is traced debt with respect to a unit of designated property. On each such date, traced debt with respect to a unit of designated property is the outstanding eligible debt (as defined in paragraph (a)(4) of this section) that is allocated, on that date, to accumulated production expenditures with respect to the unit of designated property under the rules of § 1.163-8T. Traced debt also includes unpaid interest that has been capitalized with respect to such unit under paragraph (b)(1) of this section and that is included in accumulated production expenditures on the measurement date.

(3) ***Example.*** The provisions of paragraphs (b)(1) and (b)(2) of this section are illustrated by the following example.

Example. Corporation X, a calendar year taxpayer, is engaged in the production of a single unit of designated property during 1995 (unit A). Corporation X adopts a taxable year computation period and quarterly measurement dates. Production of unit A starts on January 14, 1995, and ends on June 16, 1995. On March 31, 1995 and on June 30, 1995, Corporation X has outstanding a $1,000,000 loan that is allocated under the rules of § 1.163-8T to production expenditures with respect to unit A. During the period January 1, 1995, through June 30, 1995, Corporation X incurs $50,000 of interest related to the loan. Under paragraph (b)(1) of this section, the $50,000 of interest Corporation X incurs on the loan during the period January 1, 1995, through June 30, 1995, must be capitalized with respect to unit A.

(c) *Excess expenditure amount* —

(1) ***General rule.*** If there are accumulated production expenditures in excess of traced debt with respect to a unit of designated property on any measurement date described in paragraph (f)(2)(iii) of this section, the taxpayer must, for the computation period that includes the measurement date, capitalize with respect to this unit the excess expenditure amount calculated under this paragraph (c)(1). However, if the sum of the excess expenditure amounts for all units of designated property of a taxpayer exceeds the total interest described in paragraph (c)(2) of this section, only a prorata amount (as determined under paragraph (c)(7) of this section) of such interest must be capitalized with respect to each unit. For each unit of designated property, the excess expenditure amount for a computation period equals the product of—

(i) The average excess expenditures (as determined under paragraph (c)(5)(ii) of this section) for the unit of designated property for that period, and

(ii) The weighted average interest rate (as determined under paragraph (c)(5)(iii) of this section) for that period.

(2) ***Interest required to be capitalized.*** With respect to an excess expenditure amount, interest incurred during the computation period is capitalized from the following sources and in the following sequence but not in excess of the excess expenditure amount for all units of designated property:

(i) Interest incurred on nontraced debt (as defined in paragraph (c)(5)(i) of this section);

(ii) Interest incurred on borrowings described in paragraph (a)(4)(iii) of this section (relating to certain borrowings from related persons); and

(iii) In the case of a partnership, guaranteed payments for the use of capital (within the meaning of section 707(c)) that would be deductible by the partnership if section 263A(f) did not apply.

(3) ***Example.*** The provisions of paragraph (c)(1) and (2) of this section are illustrated by the following example.

> *Example.* (i) P, a partnership owned equally by Corporation A and Individual B, is engaged in the construction of an office building during 1995. Average excess expenditures for the office building for 1995 are $2,000,000. When P was formed, A and B agreed that A would be entitled to an annual guaranteed payment of $70,000 in exchange for A's capital contribution. The only borrowing of P, A, and B for 1995 is a loan to P from an unrelated lender of $1,000,000 (loan #1). The loan is nontraced debt and bears interest at an annual rate of 10 percent. Thus, P's weighted average interest rate (determined under paragraph (c)(5)(iii) of this section) is 10 percent and interest incurred during 1995 is $100,000.
> (ii) In accordance with paragraph (c)(1) of this section, the excess expenditure amount is $200,000 ($2,000,000 × 10%). The interest capitalized under paragraph (c)(2) of this section is $170,000 ($100,000 of interest plus $70,000 of guaranteed payments).

(4) ***Treatment of interest subject to a deferral provision.*** If any interest described in paragraph (c)(2) of this section is not taken into account for the taxable year that includes the computation period because of a deferral provision described in paragraph (g)(1)(ii) of this section, paragraph (c)(2) of this section is first applied without regard to the amount of the deferred interest. After applying paragraph (c)(2) without regard to the deferred interest, if the amount of interest capitalized with respect to all units of designated property for the computation period is less than the amount that would have been capitalized if a deferral provision did not apply, see paragraph (g)(2) of this section for the time and manner for capitalizing and recovering the difference (the shortfall amount).

(5) ***Definitions*** —

(i) ***Nontraced debt*** —

(A) ***Defined. Nontraced debt*** means all eligible debt on a measurement date other than any debt that is treated as traced debt with respect to any unit of designated property on that measurement date. For example, nontraced debt includes eligible debt that is allocated to expenditures that are not capitalized under section 263A(a) (*e.g.,* expenditures deductible under section 174(a) or 263(c)). Similarly, even if eligible debt is allocated to a production expenditure for a unit of designated property, the debt is included in nontraced debt on

measurement dates before the first or after the last measurement date for that unit of designated property. Thus, nontraced debt may include debt that was previously treated as traced debt or that will be treated as traced debt on a future measurement date.

(B) ***Example.*** The provisions of paragraph (c)(5)(i)(A) of this section are illustrated by the following example.

Example. In 1995, Corporation X begins, but does not complete, the construction of two office buildings that are separate units of designated property as defined in § 1.263A-10 (Property D and Property E). At the beginning of 1995, X borrows $2,500,000 (the $2,500,000 loan), which will be used exclusively to finance production expenditures for Property D. Although interest is paid currently, the entire principal amount of the loan remains outstanding at the end of 1995. Corporation X also has outstanding during all of 1995 a long-term loan with a principal amount of $2,000,000 (the $2,000,000 loan). The proceeds of the $2,000,000 loan were used exclusively to finance the production of Property C, a unit of designated property that was completed in 1994. Under the rules of paragraph (b)(2) of this section, the portion of the $2,500,000 loan allocated to accumulated production expenditures for property D at each measurement date during 1995 is treated as traced debt for that measurement date. The excess, if any, of $2,500,000 over the amount treated as traced debt at each measurement date during 1995 is treated as nontraced debt for that measurement date, even though it is expected that the entire $2,500,000 will be treated as traced debt with respect to Property D on subsequent measurement dates as more of the proceeds of the loan are used to finance additional production expenditures. In addition, the entire principal amount of the $2,000,000 loan is treated as nontraced debt for 1995, even though it was treated as traced debt with respect to Property C in a previous period.

(ii) ***Average excess expenditures*** —

(A) ***General rule.*** The average excess expenditures for a unit of designated property for a computation period are computed by—

(*1*) Determining the amount (if any) by which accumulated production expenditures exceed traced debt at each measurement date during the computation period; and

(*2*) Dividing the sum of these amounts by the number of measurement dates during the computation period.

(B) ***Example.*** The provisions of paragraph (c)(5)(ii)(A) of this section are illustrated by the following example.

Example. Corporation X, a calendar year taxpayer, is engaged in the production of a single unit of designated property during 1995 (unit A). Corporation X adopts the taxable year as the computation period and quarterly measurement dates. The production period for unit A begins on January 14, 1995, and ends on June 16, 1995. On March 31, 1995, and on June 30, 1995, Corporation X has outstanding $1,000,000 of traced debt with respect to unit A. Accumulated production expenditures for unit A on March 31, 1995, are $1,400,000 and on June 30, 1995, are $1,600,000. Accumulated production expenditures in excess of traced debt for unit A on March 31, 1995, are $400,000 and on June 30, 1995, are $600,000. Average excess expenditures for unit A during 1995 are therefore $250,000 ([$400,000 + $600,000 + $0 + $0] ÷ 4).

(iii) ***Weighted average interest rate*** —

(A) ***Determination of rate.*** The weighted average interest rate for a computation period is determined by dividing interest incurred on nontraced debt during the period by average nontraced debt for the period.

(B) ***Interest incurred on nontraced debt.*** Interest incurred on nontraced debt during the computation period is equal to the total amount of interest incurred during the computation period on all eligible debt minus the amount of interest incurred during the computation period on traced debt. Thus, all interest incurred on nontraced debt during the computation period is included in the numerator of the weighted average interest rate, even if the underlying nontraced debt is repaid before the end of a measurement period and excluded from nontraced debt outstanding for measurement dates after repayment, in determining the denominator of the weighted average interest rate. However, see paragraph (g)(7) of this section for an election to treat eligible debt that is repaid within the 15-day period immediately preceding a quarterly measurement date as outstanding on that measurement date. See paragraph (a)(3) of this section for the definitions of interest and incurred.

(C) ***Average nontraced debt.*** The average nontraced debt for a computation period is computed by—

(*1*) Determining the amount of nontraced debt outstanding on each measurement date during the computation period; and

(*2*) Dividing the sum of these amounts by the number of measurement dates during the computation period.

(D) ***Special rules if taxpayer has no nontraced debt or rate is contingent.*** If the taxpayer does not have nontraced debt outstanding during the computation period, the weighted average interest rate for purposes of applying paragraphs (c)(1) and (c)(2) of this section is the highest applicable Federal rate in effect under section 1274(d) during the computation period. If interest is incurred at a rate that is contingent at the time the return for the year that includes the computation period is filed, the amount of interest is determined using the higher of the fixed rate of interest (if any) on the underlying debt or the applicable Federal rate in effect under section 1274(d) on the date of issuance.

(6) ***Examples.*** The following examples illustrate the principles of this paragraph (c):

> *Example 1.* (i) W, a calendar year taxpayer, is engaged in the production of a unit of designated property during 1995. For purposes of applying the avoided cost method of this section, W uses the taxable year as the computation period. During 1995, W's only debt is a $1,000,000 loan bearing interest at a rate of 7 percent from Y, a person that is related to W. Assuming the applicable Federal rate in effect under section 1274(d) on the date of issuance of the loan is 10 percent, the loan is not eligible debt under paragraph (a)(4) of this section. However, even though W has no eligible debt, W incurs $70,000 ($1,000,000 × 7%) of interest during the computation period. This interest is described in paragraph (c)(2) of this section and must be capitalized under paragraph (c)(1) of this section to the extent it does not exceed W's excess expenditure amount for the unit of property.

(ii) W determines, under paragraph (c)(5)(ii) of this section, that average excess expenditures for the unit of property are $600,000. Assuming the highest applicable Federal rate in effect under section 1274(d) during the computation period is 10 percent, W uses 10 percent as the weighted average interest rate for purposes of determining the excess expenditure amount. See paragraph (c)(5)(iii)(D) of this section. In accordance with paragraph (c)(1) of this section, the excess expenditure amount is therefore $60,000. Because this amount does not exceed the total amount of interest described in paragraph (c)(2) of this section ($70,000), W is required to capitalize $60,000 of interest with respect to the unit of designated property for the 1995 computation period.

Example 2. (i) Corporation X, a calendar year taxpayer, is engaged in the production of a single unit of designated property during 1955 (unit A). Corporation X adopts the taxable year as the computation period and quarterly measurement dates. Production of unit A begins in 1994 and ends on June 30, 1995. On March 31, 1995, and on June 30, 1995, Corporation X has outstanding $1,000,000 of eligible debt (loan #1) that is allocated under the rules of § 1.163-8T to production expenditures for unit A. During each of the first two quarters of 1995, $30,000 of interest is incurred on loan #1. The loan is repaid on July 1, 1995. Throughout 1995, Corporation X also has outstanding $2,000,000 of eligible debt (loan #2) which is not allocated under the rules of § 1.163-8T to the production of unit A. During 1995, $200,000 of interest is incurred on this nontraced debt. Accumulated production expenditures on March 31, 1995, are $1,400,000 and on June 30, 1995, are $1,600,000. Accumulated production expenditures in excess of traced debt on March 31, 1995, are $400,000 and on June 30, 1995, are $600,000.
(ii) Under paragraph (b)(1) of this section, the amount of interest capitalized with respect to traced debt is $60,000 ($30,000 for the measurement period ending March 31, 1995, and $30,000 for the measurement period ending June 30, 1995). Under paragraph (c)(5)(ii) of this section, average excess expenditures for unit A are $250,000 ([($1,400,000−$1,000,000) + ($1,600,000−$1,000,000) + $0 + $0] ÷ 4). Under paragraph (c)(5)(iii)(C) of this section, average nontraced debt is $2,000,000 ([$2,000,000 + $2,000,000 + $2,000,000 + $2,000,000] ÷ 4). Under paragraph (c)(5)(iii)(B) of this section, interest incurred on nontraced debt is $200,000 ($260,000 of interest incurred on all eligible debt less $60,000 of interest incurred on traced debt). Under paragraph (c)(5)(iii)(A) of this section, the weighted average interest rate is 10 percent ($200,000 ÷ $2,000,000). Under paragraph (c)(1) of this section, Corporation X capitalizes the excess expenditure amount of $25,000 ($250,000 × 10%), because it does not exceed the total amount of interest subject to capitalization under paragraph (c)(2) of this section ($200,000). Thus, the total interest capitalized with respect to unit A during 1995 is $85,000 ($60,000 + $25,000).

(7) ***Special rules where the excess expenditure amount exceeds incurred interest*** —

(i) ***Allocation of total incurred interest to units.*** For a computation period in which the sum of the excess expenditure amounts under paragraph (c)(1) of this section for all units of designated property exceeds the total amount of interest (including deferred interest) available for capitalization, as determined under paragraph (c)(2) of this section, the amount of interest that is allocated to a unit of designated property is equal to the product of—

(A) The total amount of interest (including deferred interest) available for capitalization, as determined under paragraph (c)(2) of this section; and

(B) A fraction, the numerator of which is the average excess expenditures for the unit of designated property and the denominator of which is the sum of the average excess expenditures for all units of designated property.

(ii) ***Application of related person rules to average excess expenditure.*** Certain excess expenditures must be taken into account by the persons (if any) required to capitalize interest with respect to production expenditures of the taxpayer under applicable related person rules. For each computation period, the amount of average excess expenditures that must be taken into account by such persons for each unit of the taxpayer's property is computed by—

(A) Determining, for the computation period, the amount (if any) by which the excess expenditure amount for the unit exceeds the amount of interest allocated to the unit under paragraph (c)(7)(i) of this section; and

(B) Dividing the excess by the weighted average interest rate for the period.

(iii) ***Special rule for corporations.*** If a corporation is related to another person for the purposes of the applicable related party rules, the District Director upon examination may require that the corporation apply this paragraph (c)(7) and other provisions of the regulations by excluding deferred interest from the total interest available for capitalization.

(d) ***Election not to trace debt*** —

(1) ***General rule.*** Taxpayers may elect not to trace debt. If the election is made, the average excess expenditures and weighted average interest rate under paragraph (c)(5) of this section are determined by treating all eligible debt as nontraced debt. For this purpose, debt specified in paragraph (a)(4)(ii) of this section (e.g., accounts payable) may be included in eligible debt, provided it would be treated as traced debt but for an election under this paragraph (d). The election not to trace debt is a method of accounting that applies to the determination of capitalized interest for all designated property of the taxpayer. The making or revocation of the election is a change in method of accounting requiring the consent of the Commissioner under section 446(e) and § 1.446-1(e).

(2) ***Example.*** The provisions of paragraph (d)(1) of this section are illustrated by the following example.

> *Example.* (i) Corporation X, a calendar year taxpayer, is engaged in the production of a single unit of designated property during 1995 (unit A). Corporation X adopts the taxable year as the computation period and quarterly measurement dates. At each measurement date (March 31, June 30, September 30, and December 31) Corporation X has the following

outstanding indebtedness:

Noninterest-bearing accounts payable traced to unit A	$100,000
Noninterest-bearing accounts payable that are not traced to unit A	$300,000
Interest-bearing loans that are eligible debt within the meaning of paragraph (a)(4) of this section	$900,000

(ii) Corporation X elects under this paragraph (d) not to trace debt. Eligible debt at each measurement date for purposes of calculating the weighted average interest rate under paragraph (c)(5)(iii) of this section is $1,000,000 ($100,000 + $900,000).

(e) ***Election to use external rate*** —

(1) ***In general.*** An eligible taxpayer may elect to use the highest applicable Federal rate (AFR) under section 1274(d) in effect during the computation period plus 3 percentage points (AFR plus 3) as a substitute for the weighted average interest rate determined under paragraph (c)(5)(iii) of this section. A taxpayer that makes this election may not trace debt. The use of the AFR plus 3 as provided under this paragraph (e)(1) constitutes a method of accounting. A taxpayer makes the election to use the AFR plus 3 method by using the AFR plus 3 as the taxpayer's weighted average interest rate, and any change to the AFR plus 3 method by a taxpayer that has never previously used the method does not require the consent of the Commissioner. Any other change to or from the use of the AFR plus 3 method under this paragraph (e)(1) (other than by reason of a taxpayer ceasing to be an eligible taxpayer) is a change in method of accounting requiring the consent of the Commissioner under section 446(e) and § 1.446-1(e). All changes to or from the AFR plus 3 method are effected on a cut-off basis.

(2) ***Eligible taxpayer.*** A taxpayer is an eligible taxpayer for a taxable year for purposes of this paragraph (e) if the average annual gross receipts of the taxpayer for the three previous taxable years do not exceed $10,000,000 (the $10,000,000 gross receipts test) and the taxpayer has met the $10,000 gross receipts for all prior taxable years beginning after December 31, 1994. For purposes of this paragraph (e)(2), the principles of section 263A(b)(2)(B) and (C) and § 1.263A-3(b) apply in determining whether a taxpayer is an eligible taxpayer for a taxable year. A taxpayer is an eligible taxpayer for a taxable year for purposes of this paragraph (e) if the taxpayer is a small business taxpayer, as defined in § 1.263A-1(j).

(f) ***Selection of computation period and measurement dates and application of averaging conventions*** —

(1) ***Computation period*** —

(i) ***In general.*** A taxpayer may (but is not required to) make the avoided cost calculation on the basis of a full taxable year. If the taxpayer uses the taxable year as the computation period, a single avoided cost calculation is made for each unit of designated property for the entire taxable year. If the taxpayer uses a computation period that is shorter than the full taxable year, an avoided cost calculation is made for each unit of designated property for each shorter computation period within the taxable year. If the taxpayer uses a shorter computation period, the computation period may not include portions of more than one taxable year and, except as

provided in the case of short taxable years, each computation period within a taxable year must be the same length. In the case of a short taxable year, a taxpayer may treat a period shorter than the taxpayer's regular computation period as the first or last computation period, or as the only computation period for the year if the year is shorter than the taxpayer's regular computation period. A taxpayer must use the same computation periods for all designated property produced during a single taxable year.

(ii) ***Method of accounting.*** The choice of a computation period is a method of accounting. Any change in the computation period is a change in method of accounting requiring the consent of the Commissioner under section 446(e) and § 1.446-1(e).

(iii) ***Production period beginning or ending during the computation period.*** The avoided cost method applies to the production of a unit of designated property on the basis of a full computation period, regardless of whether the production period for the unit of designated property begins or ends during the computation period.

(2) ***Measurement dates*** —

(i) ***In general.*** If a taxpayer uses the taxable year as the computation period, measurement dates must occur at quarterly or more frequent regular intervals. If the taxpayer uses computation periods that are shorter than the taxable year, measurement dates must occur at least twice during each computation period and at least four times during the taxable year (or consecutive 12-month period in the case of a short taxable year). The taxpayer must use the same measurement dates for all designated property produced during a computation period. Except in the case of a computation period that differs from the taxpayer's regular computation period by reason of a short taxable year (see paragraph (f)(1)(i) of this section), measurement dates must occur at equal intervals during each computation period that falls within a single taxable year. For any computation period that differs from the taxpayer's regular computation period by reason of a short taxable year, the measurement dates used by the taxpayer during that period must be consistent with the principles and purposes of section 263A(f). A taxpayer is permitted to modify the frequency of measurement dates from year to year.

(ii) ***Measurement period.*** For purposes of this section, *measurement period* means the period that begins on the first day following the preceding measurement date and that ends on the measurement date.

(iii) ***Measurement dates on which accumulated production expenditures must be taken into account.*** The first measurement date on which accumulated production expenditures must be taken into account with respect to a unit of designated property is the first measurement date following the beginning of the production period for the unit of designated property. The final measurement date on which accumulated production expenditures with respect to a unit of designated property must be taken into account is the first measurement date following the end of the production period for the unit of designated property. Accumulated production expenditures with respect to a unit of designated property must also be taken into account on all intervening measurement dates. See § 1.263A-12 to determine when the production period begins and ends.

(iv) ***More frequent measurement dates.*** When in the opinion of the District Director more frequent measurement dates are necessary to determine capitalized interest consistent with the principles and purposes of section 263A(f) for a particular computation period, the District Director may require the use of more frequent measurement dates. If a significant segment of

the taxpayer's production activities (the first segment) requires more frequent measurement dates than another significant segment of the taxpayer's production activities, the taxpayer may request a ruling from the Internal Revenue Service permitting, for a taxable year and all subsequent taxable years, a segregation of the two segments and, notwithstanding paragraph (f)(2)(i) of this section, the use of the more frequent measurement dates for only the first segment. The request for a ruling must be made in accordance with any applicable rules relating to submissions of ruling requests. The request must be filed on or before the due date (including extensions) of the original Federal income tax return for the first taxable year to which it will apply.

(3) ***Examples.*** The following examples illustrate the principles of this paragraph (f):

Example 1. Corporation X, a calendar year taxpayer, is engaged in the production of designated property during 1995. Corporation X adopts the taxable year as the computation period and quarterly measurement dates. Corporation X must identify traced debt, accumulated production expenditures, and nontraced debt at each quarterly measurement date (March 31, June 30, September 30, and December 31). Under paragraph (c)(5)(ii) of this section, Corporation X must calculate average excess expenditures for each unit of designated property by determining the amount by which accumulated production expenditures exceed traced debt for each unit at the end of each quarter and dividing the sum of these amounts by four. Under paragraph (c)(5)(iii) (C) of this section, Corporation X must calculate average nontraced debt by determining the amount of nontraced debt outstanding at the end of each quarter and dividing the sum of these amounts by four.

Example 2. Corporation X, a calendar year taxpayer, is engaged in the production of designated property during 1995. Corporation X adopts a 6-month computation period with two measurement dates within each computation period. Corporation X must identify traced debt, accumulated production expenditures, and nontraced debt at each measurement date (March 31 and June 30 for the first computation period and September 30 and December 31 for the second computation period). Under paragraph (c)(5)(ii) of this section, Corporation X must, for each computation period, calculate average excess expenditures for each unit of designated property by determining the amount by which accumulated production expenditures exceed traced debt for each unit at each measurement date during the period and dividing the sum of these amounts by two. Under paragraph (c)(5)(iii)(C) of this section, Corporation X must calculate average nontraced debt for each computation period by determining the amount of nontraced debt outstanding at each measurement date during the period and dividing the sum of these amounts by two.

Example 3. (i) Corporation X, a calendar year taxpayer, is engaged in the production of two units of designated property during 1995. Production of Unit A starts in 1994 and ends on June 20, 1995. Production of Unit B starts on April 15, 1995, but does not end until 1996. Corporation X adopts the taxable year as its computation period and does not elect under paragraph (d) of this section not to trace debt. Corporation X uses quarterly measurement dates and pays all interest on eligible debt in the quarter in which the interest is incurred. During 1995, Corporation X has two items of eligible debt.

The debt and the manner in which it is used are as follows:

No.	Principal	Annual rate (percent)	Period outstanding	Use of proceeds
1	$1,000,000	9	1/01-9/01	Unit A.
2	2,000,000	11	6/01-12/31	Nontraced.

(ii) Based on the annual 9 percent rate of interest, Corporation X incurs $7,500 of interest during each month that Loan #1 is outstanding.
(iii) Accumulated production expenditures at the end of each quarter during 1995 are as follows:

Measurement date	Unit A	Unit B
March 31	$1,200,000	$0
June 30	1,800,000	500,000
Sept. 30	0	1,000,000
Dec. 31	0	1,600,000

(iv) Corporation X must first determine the amount of interest incurred on traced debt and capitalize the interest incurred on this debt (the traced debt amount). Loan #1 is allocated to Unit A on the March 31 and June 30 measurement dates. Accordingly, Loan #1 is treated as traced debt with respect to unit A for the measurement periods beginning January 1 and ending June 30. The interest incurred on Loan #1 during the period that Loan #1 is treated as traced debt must be capitalized with respect to Unit A. Thus, $45,000 ($7,500 per month for 6 months) is capitalized with respect to Unit A.
(v) Second, Corporation X must determine average excess expenditures for Unit A and Unit B. For Unit A, this amount is $250,000 ([$200,000 + $800,000 + $0 + $0] ÷ 4). For Unit B, this amount is $775,000 ([$0 + $500,000 + $1,000,000 + $1,600,000] ÷ 4).

(vi) Third, Corporation X must determine the weighted average interest rate and apply that rate to the average excess expenditures for Units A and B. The rate is equal to the total amount of interest incurred on nontraced debt (i.e., interest incurred on all eligible debt reduced by interest incurred on traced debt) divided by the average nontraced debt. The interest incurred on nontraced debt equals $143,333 ([$1,000,000 × 9% × $^{8}/_{12}$] + [$2,000,000 × 11% × $^{7}/_{12}$] − $45,000). The average nontraced debt equals $1,500,000 ([$0

+ $2,000,000 + $2,000,000 + $2,000,000] ÷ 4). The weighted average interest rate of 9.56 percent ($143,333 ' $1,500,000), is then applied to average excess expenditures for Units A and B. Accordingly, Corporation X capitalizes an additional $23,900 ($250,000 × 9.56%) with respect to Unit A and $74,090 ($775,000 × 9.56%) with respect to Unit B (the excess expenditure amounts).

(g) *Special rules* —

(1) *Ordering rules* —

(i) ***Provisions preempted by section 263A(f).*** Interest must be capitalized under section 263A(f) before the application of section 163(d) (regarding the investment interest limitation), section 163(j) (regarding the limitation on business interest expense), section 266 (regarding the election to capitalize carrying charges), section 469 (regarding the limitation on passive losses), and section 861 (regarding the allocation of interest to United States sources). Any interest that is capitalized under section 263A(f) is not taken into account as interest under those sections. However, in applying section 263A(f) with respect to the excess expenditure amount, the taxpayer must capitalize all interest that is neither investment interest under section 163(d), business interest expense under section 163(j), nor passive interest under section 469 before capitalizing any interest that is either investment interest, business interest expense, or passive interest. Any interest that is not required to be capitalized after the application of section 263A(f) is then taken into account as interest subject to sections 163(d), 163(j), 266, 469, and 861. If, after the application of section 263A(f), interest is deferred under sections 163(d), 163(j), 266, or 469, that interest is not subject to capitalization under section 263A(f) in any subsequent taxable year.

(ii) ***Deferral provisions applied before this section.*** Interest (including contingent interest) that is subject to a deferral provision described in this paragraph (g)(1)(ii) is subject to capitalization under section 263A(f) only in the taxable year in which it would be deducted if section 263A(f) did not apply. Deferral provisions include sections 163(e)(3), 267, 446, and 461, and all other deferral or limitation provisions that are not described in paragraph (g)(1)(i) of this section. In contrast to the provisions of paragraph (g)(1)(i) of this section, deferral provisions are applied before the application of section 263A(f).

(2) *Application of section 263A(f) to deferred interest* —

(i) ***In general.*** This paragraph (g)(2) describes the time and manner of capitalizing and recovering the deferral amount. The deferral amount for any computation period equals the sum of—

(A) The amount of interest that is incurred on traced debt that is deferred during the computation period and is not deductible for the taxable year that includes the computation period because of a deferral provision described in paragraph (g)(1)(ii) of this section, and

(B) The shortfall amount described in paragraph (c)(4) of this section.

(ii) ***Capitalization of deferral amount.*** The rules described in paragraph (g)(2)(iii) of this section apply to the deferral amount unless the taxpayer elects under paragraph (g)(2)(iv) of this section to capitalize substitute costs.

(iii) ***Deferred capitalization.*** If the taxpayer does not elect under paragraph (g)(2)(iv) of this section to capitalize substitute costs, deferred interest to which the deferral amount is attributable (determined under any reasonable method) is capitalized in the year or years in which the deferred interest would have been deductible but for the application of section 263A(f) (the capitalization year). For this purpose, any interest that is deferred from a prior computation period is taken into account in subsequent capitalization years in the same order in which the interest was deferred. If a unit of designated property to which previously deferred interest relates is sold before the capitalization year, the deferred interest applicable to that unit of property is taken into account in the capitalization year and treated as if recovered from the sale of the property. If the taxpayer continues to hold, throughout the capitalization year, a unit of depreciable property to which previously deferred interest relates, the adjusted basis and applicable recovery percentages for the unit of property are redetermined for the capitalization year and subsequent years so that the increase in basis is accounted for over the remaining recovery periods beginning with the capitalization year. See *Example 2* of paragraph (g)(2)(v) of this section.

(iv) ***Substitute capitalization*** —

(A) ***General rule.*** In lieu of deferred capitalization under paragraph (g)(2)(iii) of this section, the taxpayer may elect the substitute capitalization method described in this paragraph (g)(2)(iv). Under this method, the taxpayer capitalizes for the computation period in which interest is incurred and deferred (the deferral period) costs that would be deducted but for this paragraph (g)(2)(iv) (substitute costs). The taxpayer must capitalize an amount of substitute costs equal to the deferral amount for each unit of designated property, or if less, a prorata amount (determined in accordance with the principles of paragraph (c)(7)(i) of this section) of the total substitute costs that would be deducted but for this paragraph (g)(2)(iv) during the deferral period. If the entire deferral amount is capitalized pursuant to this paragraph (g)(2)(iv) in the deferral period, any interest incurred and deferred in the deferral period is neither capitalized nor deducted during the deferral period and, unless subsequently capitalized as a substitute cost under this paragraph (g)(2)(iv), is deductible in the appropriate subsequent period without regard to section 263A(f).

(B) ***Capitalization of amount carried forward.*** If the taxpayer has an insufficient amount of substitute costs in the deferral period, the amount by which substitute costs are insufficient with respect to each unit of designated property is a deferral amount carryforward to succeeding computation periods beginning with the next computation period. In any carryforward year, the taxpayer must capitalize an amount of substitute costs equal to the deferral amount carryforward or, if less, a prorata amount (determined in accordance with the principles of paragraph (c)(7)(i) of this section) of the total substitute costs that would be deducted during the carryforward year or years (the carryforward capitalization year) but for this paragraph (g)(2)(iv) (after applying the substitute cost method of this paragraph (g)(2)(iv) to the production of designated property in the carryforward period). If a unit of designated property to which the deferral amount carryforward relates is sold prior to the carryforward capitalization year, substitute costs applicable to that unit of property are taken into account in the carryforward capitalization year and treated as if recovered from the sale of the property. If the taxpayer continues to hold, throughout the capitalization year, a unit of depreciable property to which a deferral amount carryforward relates, the adjusted basis and applicable recovery percentages for the unit of property are redetermined for the carryforward capitalization

year and subsequent years so that the increase in basis is accounted for over the remaining recovery periods beginning with the carryforward capitalization year. See *Example 2* of paragraph (g)(2)(v) of this section.

(C) ***Method of accounting.*** The substitute capitalization method under this paragraph (g)(2)(iv) is a method of accounting that applies to all designated property of the taxpayer. A change to or from the substitute capitalization method is a change in method of accounting requiring the consent of the Commissioner under section 446(e) and § 1.446-1(e).

(v) ***Examples.*** The following examples illustrate the application of the avoided cost method when interest is subject to a deferral provision:

> *Example 1.* (i) Corporation X is a calendar year taxpayer and uses the taxable year as it computation period. During 1995, X is engaged in the construction of a warehouse which X will use in its storage business. The warehouse is completed and placed in service in December 1995. X's average excess expenditures for 1995 equal $1,000,000. Throughout 1995, X's only outstanding debt is nontraced debt of $900,000 and $1,200,000, bearing interest at 15 percent and 9 percent, respectively, per year. Of the $243,000 interest incurred during the year ([$900,000 × 15%] + [$1,200,000 × 9%] = [$135,000 + $108,000]), $75,000 is deferred under section 267(a)(2).
> (ii) X must first determine the amount of interest required to be capitalized under paragraph (c)(1) of this section for 1995 (the deferral period) without applying section 267(a)(2). The weighted average interest rate is 11.6 percent ([$135,000 + $108,000] ÷ $2,100,000), and the excess expenditure amount under paragraph (c)(1) of this section is $116,000 ($1,000,000 × 11.6%). Under paragraph (c)(4) of this section, X must then determine the amount of interest that would be capitalized by applying paragraph (c)(2) of this section without regard to the amount of deferred interest. Disregarding deferred interest, the amount of interest available for capitalization is $168,000 ([$900,000 × 15%] + [$1,200,000 × 9%]− $75,000). Thus, the full excess expenditure amount ($116,000) is capitalized from interest that is not deferred under section 267(a)(2) and there is no shortfall amount.

> *Example 2.* (i) The facts are the same as in *Example 1,* except that $140,000 of interest is deferred under section 267 (a)(2) in 1995. The taxpayer does not elect to use the substitute capitalization method. This interest is also deferred in 1996 but would be deducted in 1997 if section 263A(f) did not apply. As in *Example 1,* the excess expenditure amount is $116,000. However, the amount of interest available for capitalization after excluding the amount of deferred interest is $103,000 ([$900,000 × 15%] + [$1,200,000 × 9%]− $140,000). Thus, only $103,000 of interest is capitalized with respect to the warehouse in 1995. Since $116,000 of interest would be capitalized if section 267(a)(2) did not apply, the deferral amount determined under paragraphs (c)(2) and (g)(2)(i) of this section is $13,000 ($116,000 −$103,000), and $13,000 of deferred

interest must be capitalized in the year in which it would be deducted if section 263A(f) did not apply.
(ii) The $140,000 of interest deferred under section 267(a)(2) in 1995 would be deducted in 1997 if section 263A(f) did not apply. X is therefore required to capitalize an additional $13,000 of interest with respect to the warehouse in 1997 and must redetermine its basis and recovery percentage.

(3) *Simplified inventory method* —

(i) ***In general.*** This paragraph (g)(3) provides a simplified method of capitalizing interest expense with respect to designated property that is inventory. Under this method, the taxpayer determines beginning and ending inventory and cost of goods sold applying all other capitalization provisions, including, for example, the simplified production method of § 1.263A-2(b), but without regard to the capitalization of interest with respect to inventory. The taxpayer must establish a separate capital asset, however, in an amount equal to the aggregate interest capitalization amount (as defined in paragraph (g)(3)(iii)(C) of this section). Under the simplified inventory method, increases in the aggregate interest capitalization amount from one year to the next generally are treated as reductions in interest expense, and decreases in the aggregate interest capitalization amount from one year to the next are treated as increases to cost of goods sold.

(ii) *Segmentation of inventory* —

(A) ***General rule.*** Under the simplified inventory method, the taxpayer first separates its total ending inventory value into segments that are equal to the total ending inventory value divided by the inverse inventory turnover rate. Each inventory segment is then assigned an age starting with one year and increasing by one year for each additional segment. The inverse inventory turnover rate is determined by finding the average of beginning and ending inventory, dividing the average by the cost of goods sold for the year, and rounding the result to the nearest whole number. Beginning and ending inventory amounts are determined using total current cost of inventory for the year (rather than carrying value). Cost of goods sold, however, may be determined using either total current cost or the taxpayer's inventory method. In addition, for purposes of this paragraph (g)(3)(ii), current costs for a year (and, if applicable, the cost of goods sold for the year under the taxpayer's inventory method) are determined without regard to the capitalization of interest with respect to inventory.

(B) ***Example.*** The provisions of paragraph (g)(3)(ii)(A) of this section are illustrated by the following example.

Example. X, a taxpayer using the FIFO inventory method, determines that total cost of goods sold for 1995 equals $900, and the cost of both beginning and ending inventory equals $3,000. Thus, X's inverse inventory turnover rate equals 3 (3.33 rounded to the nearest whole number). Total ending inventory of $3,000 is divided into three segments of $1,000 each. One segment is treated as 3-year-old inventory, one segment is treated as 2-year-old inventory, and one segment is treated as 1-year-old inventory.

(iii) *Aggregate interest capitalization amount* —

(A) ***Computation period and weighted average interest rate.*** If a taxpayer elects the simplified inventory method, the taxpayer must use the taxable year as its computation period and use the weighted average interest rate determined under this paragraph (g)(3)(iii)(A) in determining the aggregate interest capitalization amount defined in paragraph (g)(3)(iii)(C) of this section and in determining the amount of interest capitalized with respect to any designated property that is not inventory. Under the simplified inventory method, the taxpayer determines the weighted average interest rate in accordance with paragraph (c)(5)(iii) of this section, treating all eligible debt (other than debt traced to noninventory property in the case of a taxpayer tracing debt) as nontraced debt (i.e., without tracing debt to inventory). A taxpayer that has elected under paragraph (e) of this section to use an external rate as a substitute for the weighted average interest rate determined under paragraph (c)(5)(iii) of this section uses the rate described in paragraph (e)(1) as the weighted average interest rate.

(B) ***Computation of the tentative aggregate interest capitalization amount.*** The weighted average interest rate is compounded annually by the number of years assigned to a particular inventory segment to produce an interest factor (applicable interest factor) for that segment. The amounts determined by multiplying the value of each inventory segment by its applicable interest factor are then combined to produce a tentative aggregate interest capitalization amount.

(C) ***Coordination with other interest capitalization computations*** —

(*1*) ***In general.*** If the tentative aggregate interest capitalization amount for a year exceeds the aggregate interest capitalization amount (defined in paragraph (g)(3)(iii)(D) of this section) as of the close of the preceding year, then, for purposes of applying the rules of paragraph (c)(7) of this section, the excess is treated as an excess expenditure amount and the inventory to which the simplified inventory method of this paragraph (g)(3) applies is treated as a single unit of designated property. If, after these modifications, no paragraph (c)(7) interest allocation is necessary (i.e., the excess expenditure amounts for all units of designated property do not exceed the total amount of interest (including deferred interest) available for capitalization), the aggregate interest capitalization amount generally equals the tentative aggregate interest capitalization amount. If, on the other hand, a paragraph (c)(7) allocation is necessary, the tentative aggregate interest capitalization amount is generally adjusted to reflect the results of that allocation (i.e., the increase in the aggregate interest capitalization amount is limited to the amount of interest allocated to inventory, reduced, however, by any substitute costs that are capitalized with respect to inventory under applicable related party rules).

(*2*) ***Deferred interest.*** In determining the aggregate interest capitalization amount, the tentative aggregate interest capitalization amount is adjusted (after the application of paragraph (c)(7) of this section) as appropriate to reflect the deferred interest rules of paragraph (g)(2) of this section. The tentative aggregate interest capitalization amount would be reduced, for example, by the amount of a taxpayer's deferred interest for a taxable year unless the taxpayer has elected the substitute capitalization method under paragraph (g)(2)(iv).

(3) ***Other coordinating provisions.*** The Commissioner may prescribe, by revenue ruling or revenue procedure, additional provisions to coordinate the election and use of the simplified inventory method with other interest capitalization requirements and methods. See § 601.601(d)(2)(ii)(*b*) of this chapter.

(D) ***Treatment of increases or decreases in the aggregate interest capitalization amount.*** Except as otherwise provided in this paragraph (g)(3)(iii)(D), increases in the aggregate interest capitalization amount from one year to the next are treated as reductions in interest expense, and decreases in the aggregate interest capitalization amount from one year to the next are treated as increases to cost of goods sold. To the extent a taxpayer capitalizes substitute costs under either applicable related party rules or the deferred interest rules in paragraph (g)(2) of this section, increases in the aggregate interest capitalization amount are treated as reductions in applicable substitute costs, rather than interest expense.

(E) ***Example.*** The provisions of this paragraph (g)(3)(iii) are illustrated by the following example.

Example. The facts are the same as in the example in paragraph (g)(3)(ii)(B) of this section, and, in addition, X determines that its weighted average interest rate for 1995 is 10 percent. Additionally, assume that X has no deferred interest in 1995 or 1996 and no deferral amount carryforward to either 1995 or 1996. (See paragraph (g)(2) of this section.) Also assume that no allocation is necessary under paragraph (c)(7) of this section in either 1995 or 1996. Under the rules of paragraph (g)(3)(ii) of this section, X divides ending inventory into segments of $1,000 each. One segment is 1-year old inventory, one segment is 2-year old inventory, and one segment is 3-year old inventory. Under paragraph (g)(3)(iii)(B) of this section, X must compute the applicable interest factor for each segment. The applicable interest factor for the 1-year old inventory is not compounded. The applicable interest factor for the 2-year old inventory is compounded for 1 year. The applicable interest factor for the 3-year old inventory is compounded for 2 years. The interest factor applied to the 1-year old inventory segment is .1. The interest factor applied to the 2-year old inventory segment is .21 [(1.1 × 1.1)−1]. The interest factor applied to the 3-year old inventory is .331 [(1.1 × 1.1 × 1.1)−1]. Thus, the tentative aggregate interest capitalization amount for 1995 is $641 (1,000 × [.1 + .21 + .331]). Because X has no deferred interest in 1995, no deferral amount carryforward to 1995, and no required allocation under paragraph (c)(7) of this section in 1995, X's aggregate interest capitalization amount equals its $641 tentative aggregate interest capitalization amount. If, in 1996, X computes an aggregate interest capitalization amount of $750, the $109 increase in the amount from 1995 to 1996 would be treated as a reduction in interest expense for 1996.

(iv) ***Method of accounting.*** The simplified inventory method is a method of accounting that must be elected for and applied to all inventory within a single trade or business of the taxpayer (within the meaning of section 446(d) and § 1.446-1(d)). This method may be elected only if the inventory in that trade or business consists only of designated property and only if the taxpayer's inverse inventory turnover rate for that trade or business (as defined in paragraph (g)(3)(ii)(A) of this section) is greater than or equal to one. A change from or to the simplified inventory method is a change in method of accounting requiring the consent of the Commissioner under section 446(e) and § 1.446-(1)(e).

(4) ***Financial accounting method disregarded.*** The avoided cost method is applied under this section without regard to any financial or regulatory accounting principles for the capitalization of interest. For example, this section determines the amount of interest that must be capitalized without regard to Financial Accounting Standards Board (FASB) Statement Nos. 34, 71, and 90, issued by the Financial Accounting Standards Board, Norwalk, CT 06856-5116. Similarly, taxpayers are not permitted to net interest income and interest expense in determining the amount of interest that must be capitalized under this section with respect to certain restricted tax-exempt borrowings even though netting is permitted under FASB Statement No. 62.

(5) ***Treatment of intercompany transactions*** —

(i) ***General rule.*** If interest capitalized under section 263A(f) by a member of a consolidated group (within the meaning of § 1.1502-1(h)) with respect to a unit of designated property is attributable to a loan from another member of the group (the lending member), the intercompany transaction provisions of the consolidated return regulations do not apply to the lending member's interest income with respect to that loan, except as provided in paragraph (g)(5)(ii) of this section. For this purpose, the capitalized interest expense that is attributable to a loan from another member is determined under any method that reasonably reflects the principles of the avoided cost method, including the traced and nontraced concepts. For purposes of this paragraph (g)(5)(i) and paragraph (g)(5)(ii) of this section, in order for a method to be considered reasonable it must be consistently applied.

(ii) ***Special rule for consolidated group with limited outside borrowing.*** If, for any year, the aggregate amount of interest income described in paragraph (g)(5)(i) of this section for all members of the group with respect to all units of designated property exceeds the total amount of interest that is deductible for that year by all members of the group with respect to debt of a member owed to nonmembers (group deductible interest) after applying section 263A(f), the intercompany transaction provisions of the consolidated return regulations are applied to the excess, and the amount of interest income that must be taken into account by the group under paragraph (g)(5)(i) of this section is limited to the amount of the group deductible interest. The amount to which the intercompany transaction provisions of the consolidated return regulations apply by reason of this paragraph (g)(5)(ii) is allocated among the lending members under any method that reasonably reflects each member's share of interest income described in paragraph (g)(5)(i) of this section. If a lending member has interest income that is attributable to more than one unit of designated property, the amount to which the intercompany transaction provisions of the consolidated return regulations apply by reason of this paragraph (g)(5)(ii) with respect to the member is allocated among the units in accordance with the principles of paragraph (c)(7)(i) of this section.

(iii) ***Example.*** The provisions of paragraph (g)(5)(ii) of this section are illustrated by the following example.

> *Example.* (i) P and S1 are the members of a consolidated group. In 1995, S1 begins and completes the construction of a shopping center and is required to capitalize interest with respect to the construction. S1's average excess expenditures for 1995 are $5,000,000. Throughout 1995, S1's only borrowings include a $6,000,000 loan from P bearing interest at an annual rate of 10 percent ($600,000 per year). Under the avoided cost method, S1 is required to capitalize interest in the amount of $500,000 ([$600,000 ÷

> $6,000,000 × 5,000,000).
> (ii) P's only borrowing from unrelated lenders is a $2,000,000 loan bearing interest at an annual rate of 10 percent ($200,000 per year). Under the principles of paragraph (g)(5)(ii) of this section, because the aggregate amount of interest described in paragraph (g)(5)(i) of this section ($500,000) exceeds the aggregate amount of currently deductible interest of the group ($200,000), the intercompany transaction provisions of the consolidated return regulations apply to the excess of $300,000 and the amount of P's interest income that is subject to current inclusion by reason of paragraph (g)(5)(i) of this section is limited to $200,000.

(6) ***Notional principal contracts and other derivatives.*** [Reserved]

(7) ***15-day repayment rule.*** A taxpayer may elect to treat any eligible debt that is repaid within the 15-day period immediately preceding a quarterly measurement date as outstanding as of that measurement date for purposes of determining traced debt, average nontraced debt, and the weighted average interest rate. This election may be made or discontinued for any computation period and is not a method of accounting.

[T.D. 8584, 59 FR 67200, Dec. 29, 1994; 60 FR 16574, Mar. 31, 1995, as amended by T.D. 8584, 60 FR 47053, Sept. 11, 1995; T.D. 9129, 69 FR 29067, May 20, 2004; T.D. 9179, 70 FR 8730, Feb. 23, 2005; T.D. 9905, 85 FR 56832, Sept. 14, 2020; T.D. 9942, 86 FR 268, Jan. 5, 2021]

§ 1.263A-10 Unit of property.

(a) ***In general.*** The unit of property as defined in this section is used as the basis to determine accumulated production expenditures under § 1.263A-11 and the beginning and end of the production period under § 1.263A-12. Whether property is 1-year or 2-year property under § 1.263A-8(b)(1)(ii) is also determined separately with respect to each unit of property as defined in this section.

(b) ***Units of real property*** —

(1) ***In general.*** A unit of real property includes any components of real property owned by the taxpayer or a related person that are functionally interdependent and an allocable share of any common feature owned by the taxpayer or a related person that is real property even though the common feature does not meet the functional interdependence test. When the production period begins with respect to any functionally interdependent component or any common feature of the unit of real property, the production period has begun for the entire unit of real property. See, however, paragraph (b)(5) of this section for rules under which the costs of a common feature or benefitted property are excluded from accumulated production expenditures for one or more measurement dates. The portion of land included in a unit of real property includes land on which real property (including a common feature) included in the unit is situated, land subject to setback restrictions with respect to such property, and any other contiguous portion of the tract of land other than land that the taxpayer holds for a purpose unrelated to the unit being produced (e.g., investment purposes, personal use purposes, or specified future development as a separate unit of real property).

(2) ***Functional interdependence.*** Components of real property produced by, or for, the taxpayer, for use by the taxpayer or a related person are functionally interdependent if the placing in service of one component is dependent on the placing in service of the other component by the taxpayer or a

related person. In the case of property produced for sale, components of real property are functionally interdependent if they are customarily sold as a single unit. For example, the real property components of a single-family house (e.g., the land, foundation, and walls) are functionally interdependent. In contrast, components of real property that are expected to be separately placed in service or held for resale are not functionally interdependent. Thus, dwelling units within a multi-unit building that are separately placed in service or sold (within the meaning of § 1.263A-12(d)(1)) are treated as functionally independent of any other units, even though the units are located in the same building.

(3) ***Common features.*** For purposes of this section, a common feature generally includes any real property (as defined in § 1.263A-8(c)) that benefits real property produced by, or for, the taxpayer or a related person, and that is not separately held for the production of income. A common feature need not be physically contiguous to the real property that it benefits. Examples of common features include streets, sidewalks, playgrounds, clubhouses, tennis courts, sewer lines, and cables that are not held for the production of income separately from the units of real property that they benefit.

(4) ***Allocation of costs to unit.*** Except as provided in paragraph (b)(5) of this section, the accumulated production expenditures for a unit of real property include, in all cases, the costs that directly benefit, or are incurred by reason of the production of, the unit of real property. Accumulated production expenditures also include the adjusted basis of property used to produce the unit of real property. The accumulated costs of a common feature or land that benefits more than one unit of real property, or that benefits designated property and property other than designated property, is apportioned among the units of designated property, or among the designated property and property other than designated property, in determining accumulated production expenditures. The apportionment of the accumulated costs of the common feature (allocable share) or land (attributable land costs) generally may be made using any method that is applied on a consistent basis and that reasonably reflects the benefits provided. For example, an apportionment based on relative costs to be incurred, relative space to be occupied, or relative fair market values may be reasonable.

(5) ***Treatment of costs when a common feature is included in a unit of real property*** —

(i) ***General rule.*** Except as provided in this paragraph (b)(5), the accumulated production expenditures of a unit of real property include the costs of functionally interdependent components (benefitted property) and an allocable share of the cost of common features throughout the entire production period of the unit. See § 1.263A-12, relating to the production period of a unit of property.

(ii) ***Production activity not undertaken on benefitted property*** —

(A) ***Direct production activity not undertaken—***

(1) ***In general.*** The costs of land attributable to a benefitted property may be treated as not included in accumulated production expenditures for a unit of real property for measurement dates prior to the first date a production activity (direct production activity), including the clearing and grading of land, has been undertaken with respect to the land attributable to the benefitted property. Thus, the costs of land attributable to a benefitted property (as opposed to land attributable to the common features) with respect to which no direct production activities have been undertaken may be

treated as not included in the accumulated production expenditures of a unit of real property even though a production activity has begun on a common feature allocable to the unit.

(2) ***Land attributable to a benefitted property.*** For purposes of this paragraph (b)(5)(ii), land attributable to a benefitted property includes all land in the unit of real property that includes the benefitted property other than land for a common feature. (Thus, land attributable to a benefitted property does not include land attributable to a common feature.)

(B) ***Suspension of direct production activity after clearing and grading undertaken—***

(1) ***General rule.*** This paragraph (b)(5)(ii)(B) may be used to determine the accumulated production expenditures for a unit of real property, if the only production activity with respect to a benefitted property has been clearing and grading and no further direct production activity is undertaken with respect to the benefitted property for at least 120 consecutive days (i.e., direct production activity has ceased). Under this paragraph (b)(5)(ii)(B), the accumulated production expenditures attributable to a benefitted property qualifying under this paragraph (b)(5)(ii)(B) may be excluded from the accumulated production expenditures of the unit of real property even though production continues on a common feature allocable to the unit. For purposes of this paragraph (b)(5)(ii)(B), production activity is considered to occur during any time which would not qualify as a cessation of production activities under the suspension period rules of § 1.263A-12(g).

(2) ***Accumulated production expenditures.*** If this paragraph (b)(5)(ii)(B) applies, accumulated production expenditures attributable to the benefitted property of the unit of real property may be treated as not included in the accumulated production expenditures for the unit starting with the first measurement period beginning after the first day of the 120 consecutive day period, but must be included in the accumulated production expenditures for the unit beginning in the measurement period in which direct production activity has resumed on the benefitted property. Accumulated production expenditures with respect to common features allocable to the unit of real property may not be excluded under this paragraph (b)(5)(ii)(B).

(iii) ***Common feature placed in service before the end of production of a benefitted property.*** To the extent that a common feature with respect to which all production activities to be undertaken by, or for, a taxpayer or a related person are completed is placed in service before the end of the production period of a unit that includes an allocable share of the costs of the common feature, the costs of the common feature are not treated as included in accumulated production expenditures of the unit for measurement periods beginning after the date the common feature is placed in service.

(iv) ***Benefitted property sold before production completed on common feature.*** If a unit of real property is sold before common features included in the unit are completed, the production period of the unit ends on the date of sale. Thus, common feature costs actually incurred and properly allocable to the unit as of the date of sale are excluded from accumulated production expenditures for measurement periods beginning after the date of sale. Common feature costs properly allocable to the unit and actually incurred after the sale are not taken into account in determining accumulated production expenditures.

(v) ***Benefitted property placed in service before production completed on common feature.*** Where production activities remain to be undertaken on a common feature allocable to a unit of real property that includes benefitted property, the costs of the benefitted property are not treated as included in the accumulated production expenditures for the unit for measurement periods beginning after the date the benefitted property is placed in service and all production activities reasonably expected to be undertaken by, or for, the taxpayer or a related person with respect to the benefitted property are completed.

(6) ***Examples.*** The principles of paragraph (b) of this section are illustrated by the following examples:

Example 1. B, an individual, is in the trade or business of constructing custom-built houses for sale. B owns a 10-acre tract upon which B intends to build four houses on 2-acre lots. In addition, on the remaining 2 acres B plans to construct a perimeter road that benefits the four houses and is not held for the production of income separately from the sale of the houses. In 1995, B begins constructing the perimeter road and clears the land for one house. Under the principles of paragraph (b)(1) of this section, each planned house (including attributable land) is part of a separate unit of real property (house unit). Under the principles of paragraph (b)(3) of this section, the perimeter road (including attributable land) constitutes a common feature with respect to each planned house (i.e., benefitted property). In accordance with paragraph (b)(1), the production period for all four house units begins when production commences on the perimeter road in 1995. In addition, under the principles of paragraph (b)(4) of this section, the accumulated production expenditures for the four house units include the allocable costs of the road. In addition, for the house with respect to which B has cleared the land, the accumulated production expenditures for the house unit include the land costs attributable to the house. See paragraph (b)(5)(i) of this section. However, the accumulated production expenditures for each of the three house units that include a house for which B has not yet undertaken a direct production activity do not include the land costs attributable to the house. See paragraph (b)(5)(ii) of this section.

Example 2. Assume the same facts as *Example 1,* except that B undertakes no further direct production activity with respect to the house for which the land was cleared for a period of at least 120 days but continues constructing the perimeter road during this period. In accordance with paragraph (b)(5)(ii)(B) of this section, B may exclude the accumulated production expenditures attributable to the benefitted property from the accumulated production expenditures of the house unit starting with the first measurement period that begins after the first day of the 120 consecutive day period. B must include the accumulated production expenditures attributable to the benefitted property in the accumulated production expenditures for the house unit beginning with the measurement period in which direct production resumes on the benefitted property. The house unit will continue to include the accumulated production expenditures attributable to the perimeter road during the period in which direct production activity was suspended on the benefitted property.

Example 3. (i) D, a corporation, is in the trade or business of developing commercial real property. D owns a 20-acre tract upon which D intends to build a shopping center with 150 stores. D intends to lease the stores. D will also provide on the 20 acres a 1500-car parking lot, which is not held by D for the production of income separately from the stores in the shopping center. Additionally, D will not produce any other common features as part of the project. D intends to complete the shopping center in phases and

expects that each store will be placed in service independently of any other store.
(ii) Under paragraphs (b)(1) and (b)(2) of this section, each store (including attributable land) is part of a separate unit of real property (store unit). The 1500-car parking lot is a common feature benefitting each store, and D must include an allocable share of the parking lots in each store unit. See paragraphs (b)(1) and (b)(3). In accordance with paragraph (b)(5)(i), D includes in the accumulated production expenditures for each store unit during each store unit's production period: the costs capitalized with respect to the store (including attributable land costs in accordance with paragraph (b)(5) of this section) and an allocable share of the parking lot costs (including attributable land costs in accordance with paragraph (b)(5) of this section). Under paragraph (b)(4), the portion of the parking lot costs that is included in the accumulated production expenditures of a store unit is determined using a reasonable method of allocation.

Example 4. X, a real estate developer, begins a project to construct a condominium building and a convenience store for the benefit of the condominium. X intends to separately lease the convenience store. Because the convenience store is held for the production of income separately from the condominium units that it benefits, the convenience store is not a common feature with respect to the condominium building. Instead, the convenience store is a separate unit of property with a separate production period and for which a separate determination of accumulated production expenditures must be made.

Example 5. (i) In 1995, X, a real estate developer, begins a project consisting of a condominium building and a common swimming pool that is not held for the production of income separately from the condominium sales. The condominium building consists of 10 stories, and each story is occupied by a single condominium. Production of the swimming pool begins in January. No direct production activity is undertaken on any condominium until September, when direct production activity commences on each condominium. On December 31, 1995, 1 condominium that was completed in December has been sold, 3 condominiums that were completed in December have not been sold, and 6 condominiums are only partially complete; additionally, the swimming pool is completed. X is a calendar year taxpayer that uses a full taxable year as the computation period, and quarterly measurement dates.
(ii) Under paragraphs (b)(1) and (b)(2) of this section, each condominium (including attributable land) is part of a separate unit of real property. Under the principles of paragraph (b)(3) of this section, the swimming pool is a common feature with respect to each condominium and under paragraph (b)(4) of this section the cost of the swimming pool is allocated equally among the condominiums.

(iii) Under paragraph (b)(1) of this section, the production period of each of the 10 condominium units begins in January when production of the swimming pool begins. On X's March 31, 1995, and June 30, 1995, measurement dates, the accumulated production expenditures for each condominium unit include the allocable costs of the

swimming pool, but not the land costs attributable to the condominium because no direct production activity has been undertaken on the condominium. See paragraph (b)(5)(ii)(A) of this section. On X's September 30, 1995, and December 31, 1995, measurement dates, the accumulated production expenditures for each unit include the allocable costs of the swimming pool, and the costs of the condominium (including attributable land costs) because a direct production activity has commenced on the condominium. See paragraph (b)(5)(i) of this section.

(iv) The production period for the condominium unit that includes the condominium that is sold as of the end of 1995 ends on the date the condominium is sold. See paragraph (b)(5)(iv) of this section. The production period of each unit that is ready to be held for sale ends when all production activities have been completed on the unit, in this case on December 31, 1995, the date that the swimming pool included in the unit is completed. See § 1.263A-12(d). Accordingly, interest capitalization ceases for each such unit that is sold or ready to be held for sale as of the end of 1995 (including each unit's allocable share of the completed swimming pool).

(v) The production periods for the condominium units that include the condominiums that are only partially complete at the end of 1995 continue after 1995. The accumulated production expenditures for each partially completed condominium unit continue to include the costs of the condominium (including attributable land costs) in addition to the costs of an allocable share of the completed swimming pool (including attributable land costs).

Example 6. Assume the same facts as in *Example 5,* except that the swimming pool is only partially complete as of the end of 1995. Under these facts, X capitalizes no interest during 1996 for the 1 unit that includes the condominium sold during 1995 (including the costs of the allocable share of the swimming pool). See paragraph (b)(5)(iv) of this section. However, with respect to the 6 condominiums that are partially complete and the 3 condominiums that are completed but unsold, interest capitalization continues after the end of 1995. The accumulated production expenditures for each of these 9 units include the costs of an allocable share of the swimming pool. See paragraph (b)(5)(i) of this section. In determining the costs of an allocable share of the swimming pool included in the accumulated production expenditures for each of the 9 units, X includes all costs of the swimming pool properly allocable to each unit, including those cost incurred as of the date of the sale of unit 1 that may have been used under applicable administrative procedures (e.g., Rev. Proc. 92-29, 1992-1 C.B. 748) in determining the basis of unit 1 solely for purposes of computing gain or loss on the sale of unit 1. See § 601.601(d)(2)(ii)(*b*) of this chapter.

Example 7. (i) Assume the same facts as in *Example 5,* except that X intends to lease rather than sell the condominiums and the completed swimming pool is placed in service for depreciation purposes on December 31, 1995. Additionally, assume that all 10 condominiums are partially completed at the end of 1995.

(ii) Under these facts, because the swimming pool is a common feature that is placed in service separately from the condominiums that it benefits, under paragraph (b)(5)(iii) of this section, the accumulated production expenditures of each of the condominium units do not include the costs of the allocable share of the swimming pool after 1995.

(c) ***Units of tangible personal property.*** Components of tangible personal property are a single unit of property if the components are functionally interdependent. Components of tangible personal property that are produced by, or for, the taxpayer, for use by the taxpayer or a related person, are functionally interdependent if the placing in service of one component is dependent on the placing in service of the other component by the taxpayer or a related person. In the case of tangible personal property produced for sale, components of tangible personal property are functionally interdependent if they are customarily sold as a single unit. For example, if an aircraft manufacturer customarily sells completely assembled aircraft, the unit of property includes all components of a completely assembled aircraft. If the manufacturer also customarily sells aircraft engines separately, any engines that are reasonably expected to be sold separately are treated as single units of property.

(d) ***Treatment of installations.*** If the taxpayer produces or is treated as producing any property that is installed on or in other property, the production activity and installation activity relating to each unit of property generally are not aggregated for purposes of this section. However, if the taxpayer is treated as producing and installing any property for use by the taxpayer or a related person or if the taxpayer enters into a contract requiring the taxpayer to install property for use by a customer, the production activity and installation activity are aggregated for purposes of this section.

[T.D. 8584, 59 FR 67207, Dec. 29, 1994; 60 FR 16574, 16575, Mar. 31, 1995]

§ 1.263A-11 Accumulated production expenditures.

(a) ***General rule. Accumulated production expenditures*** generally means the cumulative amount of direct and indirect costs described in section 263A(a) that are required to be capitalized with respect to the unit of property (as defined in § 1.263A-10), including interest capitalized in prior computation periods, plus the adjusted bases of any assets described in paragraph (d) of this section that are used to produce the unit of property during the period of their use. Accumulated production expenditures may also include the basis of any property received by the taxpayer in a nontaxable transaction.

(b) ***When costs are first taken into account*** —

(1) ***In general.*** Except as provided in paragraph (c)(1) of this section, costs are taken into account in the computation of accumulated production expenditures at the time and to the extent they would otherwise be taken into account under the taxpayer's method of accounting (e.g., after applying the requirements of section 461, including the economic performance requirement of section 461(h)). Costs that have been incurred and capitalized with respect to a unit of property prior to the beginning of the production period are taken into account as accumulated production expenditures beginning on the date on which the production period of the property begins (as defined in § 1.263A-12(c)). Thus, for example, the cost of raw land acquired for development, the cost of a leasehold in mineral properties acquired for development, and the capitalized cost of planning and design activities are taken into account as accumulated production expenditures beginning on the first day of the production period. For purposes of determining accumulated production expenditures on any measurement date during a computation period, the interest required to be capitalized for the computation period is deemed to be capitalized on the day immediately following the end of the

computation period. For any subsequent measurement dates and computation periods, that interest is included in accumulated production expenditures. If the cost of land or common features is allocated among planned units of property that are completed in phases, any portion of the cost properly allocated to completed units is not reallocated to any incomplete units of property.

(2) ***Dedication rule for materials and supplies.*** The costs of raw materials, supplies, or similar items are taken into account as accumulated production expenditures when they are incurred and dedicated to production of a unit of property. *Dedicated* means the first date on which the raw materials, supplies, or similar items are specifically associated with the production of any unit of property, including by record, assignment to the specific job site, or physical incorporation. In contrast, in the case of a component or subassembly that is reasonably expected to be become a part of (e.g., be incorporated into) any unit of property, costs incurred (including dedicated raw materials) for the component or subassembly are taken into account as accumulated production expenditures during the production of any portion of the component or subassembly and prior to its connection with (e.g., incorporation into) any specific unit of property. For purposes of the preceding sentence, components and subassemblies must be aggregated at each measurement date in a reasonable manner that is consistent with the purposes of section 263A(f).

(c) ***Property produced under a contract*** —

(1) ***Customer.*** If a unit of property produced under a contract is designated property under § 1.263A-8(d)(2)(i) with respect to the customer, the customer's accumulated production expenditures include any payments under the contract that represent part of the purchase price of the unit of designated property or, to the extent costs are incurred earlier than payments are made (determined on a cumulative basis for each unit of designated property), any part of such price for which the requirements of section 461 have been satisfied. The customer has made a payment under this section if the transaction would be considered a payment by a taxpayer using the cash receipts and disbursements method of accounting. The customer's accumulated production expenditures also include any other costs incurred by the customer, such as interest, or any other direct or indirect costs that are required to be capitalized under section 263A(a) and the regulations thereunder with respect to the production of the unit of designated property.

(2) ***Contractor.*** If a unit of property produced under a contract is designated property under § 1.263A-8(d)(2)(ii) with respect to the contractor, the contractor must treat the cumulative amount of payments made by the customer under the contract attributable to the unit of property as a reduction in the contractor's accumulated production expenditures. The customer has made a payment under this section if the transaction would be considered a payment by a taxpayer using the cash receipts and disbursements method of accounting.

(d) ***Property used to produce designated property*** —

(1) ***In general.*** Accumulated production expenditures include the adjusted bases (or portion thereof) of any equipment, facilities, or other similar assets, used in a reasonably proximate manner for the production of a unit of designated property during any measurement period in which the asset is so used. Examples of assets used in a reasonably proximate manner include machinery and equipment used directly or indirectly in the production process, such as assembly-line structures, cranes, bulldozers, and buildings. A taxpayer apportions the adjusted basis of an asset used in the production of more than one unit of designated property in a measurement period among such units of designated property using reasonable criteria corresponding to the use of the asset, such as machine hours, mileage, or units of production. If an asset used in a reasonably proximate manner for the production of a unit of designated property is temporarily idle (within the meaning of §

1.263A-1(e)(3)(iii)(E)) for an entire measurement period, the adjusted basis of the asset is excluded from the accumulated production expenditures for the unit during that measurement period. Notwithstanding this paragraph (d)(1), the portion of the depreciation allowance for equipment, facilities, or any other asset that is capitalized with respect to a unit of designated property in accordance with § 1.263A-1(e)(3)(ii)(I) is included in accumulated production expenditures without regard to the extent of use under this paragraph (d)(1) (i.e., without regard to whether the asset is used in a reasonably proximate manner for the production of the unit of designated property).

(2) ***Example.*** The following example illustrates how the basis of an asset is allocated on the basis of time:

Example. In 1995, X uses a bulldozer exclusively to clear the land on several adjacent real estate development projects, A, B, and C. A, B, and C are treated as separate units of property under the principles of § 1.263A-10. X decides to allocate the basis of the bulldozer among the three projects on the basis of time. At the end of the first quarter of 1995, the production period has commenced for all three projects. The bulldozer was operated for 30 hours on project A, 80 hours on project B, and 10 hours on project C, for a total of 120 hours for the entire period. For purposes of determining accumulated production expenditures as of the end of the first quarter, $^{1}/_{4}$ of the adjusted basis of the bulldozer is allocated to project A, $^{2}/_{3}$ to project B, and $^{1}/_{12}$ to project C. Nonworking hours, regularly scheduled nonworking days, or other periods in which the bulldozer is temporarily idle (within the meaning of § 1.263A-1(e)(3)(iii)(E)) during the measurement period are not taken into account in allocating the basis of the bulldozer.

(3) ***Excluded equipment and facilities.*** The adjusted bases of equipment, facilities, or other assets that are not used in a reasonably proximate manner to produce a unit of property are not included in the computation of accumulated production expenditures. For example, the adjusted bases of equipment and facilities, including buildings and other structures, used in service departments performing administrative, purchasing, personnel, legal, accounting, or similar functions, are excluded from the computation of accumulated production expenditures under this paragraph (d)(3).

(e) ***Improvements.*** If an improvement constitutes the production of designated property under § 1.263A-8(d)(3), accumulated production expenditures with respect to the improvement consist of all direct and indirect costs required to be capitalized with respect to the improvement. *See* § 1.263A-12(d)(1) to determine when the production period for a unit of property has ended.

(f) ***Mid-production purchases.*** If a taxpayer purchases a unit of property for further production before the purchased unit of property is placed in service, the taxpayer's accumulated production expenditures include the full purchase price of the purchased unit of property plus all the additional direct and indirect production costs incurred by the taxpayer that are required to be capitalized with respect to the purchased unit of property.

(g) ***Related person costs.*** The activities of a related person are taken into account in applying the classification thresholds under § 1.263A-8(b)(1)(ii)(B) and (C), and in determining the production period of a unit of designated property under § 1.263A-12. However, only those costs incurred by the taxpayer are taken into account in the taxpayer's accumulated production expenditures under this section because the related person includes its own capitalized costs in the related person's accumulated production expenditures with respect to any unit of designated property upon which the parties engage in mutual production activities. For purposes of the preceding sentence, the accumulated production expenditures of any property transferred to a taxpayer in a nontaxable transaction are treated as accumulated production expenditures incurred by the taxpayer.

(h) ***Installation.*** If the taxpayer installs property that is purchased by the taxpayer, accumulated production expenditures include the cost of the property that is installed in addition to the direct and indirect costs of installation.

[T.D. 8584, 59 FR 67210, Dec. 29, 1994; 60 FR 16575, Mar. 31, 1995, as amended by T.D. 10034, 90 FR 47582, Oct. 2, 2025]

§ 1.263A-12 Production period.

(a) ***In general.*** Capitalization of interest is required under § 1.263A-9 for computation periods (within the meaning of § 1.263A-9(f)(1)) that include the production period of a unit of designated property. In contrast, section 263A(a) requires the capitalization of all other direct or indirect costs, such as insurance, taxes, and storage, that directly benefit or are incurred by reason of the production of property without regard to whether they are incurred during a period in which production activity occurs.

(b) ***Related person activities.*** Activities performed and costs incurred by a person related to the taxpayer that directly benefit or are incurred by reason of the taxpayer's production of designated property are taken into account in determining the taxpayer's production period (regardless of whether the related person is performing only a service or is producing a subassembly or component that the related person is required to treat as an item of designated property). These activities and the related person's costs are also taken into account in determining whether tangible personal property produced by the taxpayer is 1-year or 2-year property under § 1.263A-8(b)(1)(ii) (B) and (C).

(c) ***Beginning of production period*** —

(1) ***In general.*** A separate production period is determined for each unit of property defined in § 1.263A-10. The production period begins on the date that production of the unit of property begins.

(2) ***Real property.*** The production period of a unit of real property begins on the first date that any physical production activity (as defined in paragraph (e) of this section) is performed with respect to a unit of real property. See § 1.263A-10(b)(1). The production period of a unit of real property produced under a contract begins for the contractor on the date the contractor begins physical production activity on the property. The production period of a unit of real property produced under a contract begins for the customer on the date either the customer or the contractor begins physical production activity on the property.

(3) ***Tangible personal property.*** The production period of a unit of tangible personal property begins on the first date by which the taxpayer's accumulated production expenditures, including planning and design expenditures, are at least 5 percent of the taxpayer's total estimated accumulated production expenditures for the property unit. Thus, the beginning of the production period is determined without regard to whether physical production activity has commenced. The production period of a unit of tangible personal property produced under a contract begins for the contractor when the contractor's accumulated production expenditures, without any reduction for payments from the customer, are at least 5 percent of the contractor's total estimated accumulated production expenditures. The production period for a unit of tangible personal property produced under a contract begins for the customer when the customer's accumulated production expenditures are at least 5 percent of the customer's total estimated accumulated production expenditures.

(d) ***End of production period*** —

(1) ***In general.*** The production period for a unit of property produced for self use ends on the date that the unit is placed in service and all production activities reasonably expected to be undertaken by, or for, the taxpayer or a related person are completed. The production period for a unit of property produced for sale ends on the date that the unit is ready to be held for sale and all production activities reasonably expected to be undertaken by, or for, the taxpayer or a related person are completed. See, however, § 1.263A-10(b)(5)(iv) providing an exception for common features in the case of a benefitted property that is sold. In the case of a unit of property produced under a contract, the production period for the customer ends when the property is placed in service by the customer and all production activities reasonably expected to be undertaken are complete (i.e., generally, no earlier than when the customer takes delivery). In the case of property that is customarily aged (such as tobacco, wine, or whiskey) before it is sold, the production period includes the aging period.

(2) ***Special rules.*** The production period does not end for a unit of property prior to the completion of physical production activities by the taxpayer even though the property is held for sale or lease, since all production activities reasonably expected to be undertaken by the taxpayer with respect to such property have not in fact been completed. See, however, § 1.263A-10(b)(5) regarding separation of certain common features.

(3) ***Sequential production or delivery.*** The production period ends with respect to each unit of property (as defined in § 1.263A-10) and its associated accumulated production expenditures as the unit of property is completed within the meaning of paragraph (d)(1) of this section, without regard to the production activities or costs of any other units of property. Thus, for example, in the case of separate apartments in a multi-unit building, each of which is a separate unit of property within the meaning of § 1.263A-10, the production period ends for each separate apartment when it is ready to be held for sale or placed in service within the meaning of paragraph (d)(1) of this section. In the case of a single unit of property that merely undergoes separate and distinct stages of production, the production period ends at the same time (i.e., when all separate stages of production are completed with respect to the entire amount of accumulated production expenditures for the property).

(4) ***Examples.*** The provisions of paragraph (d) of this section are illustrated by the following examples:

Example 1. E is engaged in the original construction of a high-rise office building with two wings. At the end of 1995, Wing #1, but not Wing #2, is placed in service. Moreover, at the end of 1995, all production activities reasonably expected to be undertaken on Wing #1 are completed. In accordance with § 1.263A-10(b)(1), Wing #1 and Wing #2 are separate units of designated property. E may stop capitalizing interest on Wing #1 but not on Wing #2.

Example 2. F is in the business of constructing finished houses. F generally paints and finishes the interior of the house, although this does not occur until a potential buyer is located. Because F reasonably expects to undertake production activity (painting and finishing), the production period of each house does not end until these activities are completed.

(e) ***Physical production activities*** —

(1) ***In general.*** The term *physical production activities* includes any physical activity that constitutes production within the meaning of § 1.263A-8(d)(1). The production period begins and interest must be capitalized with respect to real property if any physical production activities are undertaken, whether alone or in preparation for the construction of buildings or other structures, or with respect to the improvement of existing structures. For example, the clearing of raw land constitutes the production of designated property, even if only cleared prior to resale.

(2) ***Illustrations.*** The following is a partial list of activities any one of which constitutes a physical production activity with respect to the production of real property:

(i) Clearing, grading, or excavating of raw land;

(ii) Demolishing a building or gutting a standing building;

(iii) Engaging in the construction of infrastructure, such as roads, sewers, sidewalks, cables, and wiring;

(iv) Undertaking structural, mechanical, or electrical activities with respect to a building or other structure; or

(v) Engaging in landscaping activities.

(f) ***Activities not considered physical production.*** The activities described in paragraphs (f)(1) and (f)(2) of this section are not considered physical production activities:

(1) ***Planning and design.*** Soil testing, preparing architectural blueprints or models, or obtaining building permits.

(2) ***Incidental repairs.*** Physical activities of an incidental nature that may be treated as repairs under § 1.162-4.

(g) ***Suspension of production period*** —

(1) ***In general.*** If production activities related to the production of a unit of designated property cease for at least 120 consecutive days (cessation period), a taxpayer may suspend the capitalization of interest with respect to the unit of designated property starting with the first measurement period that begins after the first day in which production ceases. The taxpayer must resume the capitalization of interest with respect to a unit beginning with the measurement period during which production activities resume. In addition, production activities are not considered to have ceased if they cease because of circumstances inherent in the production process, such as normal adverse weather conditions, scheduled plant shutdowns, or delays due to design or construction flaws, the obtaining of a permit or license, or the settlement of groundfill to construct property. Interest incurred on debt that is traced debt with respect to a unit of designated property during the suspension period is subject to capitalization with respect to the production of other units of designated property as interest on nontraced debt. See § 1.263A-9(c)(5)(i) of this section. For applications of the avoided cost method after the end of the suspension period, the accumulated production expenditures for the unit include the balance of accumulated production expenditures as of the beginning of the suspension period, plus any additional capitalized costs incurred during the suspension period. No further suspension of interest capitalization may occur unless the requirements for a new suspension period are satisfied.

(2) ***Special rule.*** If a cessation period spans more than one taxable year, the taxpayer may suspend the capitalization of interest with respect to a unit beginning with the first measurement period of the taxable year in which the 120-day period is satisfied.

(3) ***Method of accounting.*** An election to suspend interest capitalization under paragraph (g)(1) of this section is a method of accounting that must be consistently applied to all units that satisfy the requirements of paragraph (g)(1) of this section. However, the special rule in paragraph (g)(2) of this section is applied on an annual basis to all units of an electing taxpayer that satisfy the requirements of paragraph (g)(2) of this section.

(4) ***Example.*** The provisions of paragraph (g)(1) of this section are illustrated by the following example.

> *Example.* (i) D, a calendar-year taxpayer, began production of a residential housing development on January 1, 1995. D, in applying the avoided cost method, chose a taxable year computation period and quarterly measurement dates. On April 10, 1995, all production activities ceased with respect to the units in the development until December 1, 1996. The cessation, which occurred for a period of at least 120 consecutive days, was not attributable to circumstances inherent in the production process. With respect to the units in the development, D incurred production expenditures of $2,000,000 from January 1, 1995 through April 10, 1995. D incurred interest of $100,000 on traced debt with respect to the units for the period beginning January 1, 1995, and ending June 30, 1995. D did not incur any production expenditures for the more than 20-month cessation beginning April 10, 1995, and ending December 1, 1996, but incurred $200,000 of production expenditures from December 1, 1996, through December 31, 1996.
> (ii) D is required to capitalize the $100,000 interest on traced debt incurred during the two measurement periods beginning January 1, 1995, and ending June 30, 1995. Because D satisfied the 120-day rule under this paragraph (g), D is not required to capitalize interest with respect to the accumulated production expenditures for the units for the measurement period beginning July 1, 1995, and ending September 30, 1995, which is the first measurement period that begins after the date production activities cease. D is rquired to resume interest capitalization with respect to the $2,300,000 (2,000,000 + 100,000 + 200,000) of accumulated production expenditures for the units for the measurement period beginning October 1, 1996, and ending December 31, 1996 (the measurement period during which production activities resume). Accordingly, D may suspend the capitalization of interest with respect to the units from July 1, 1995, through September 30, 1996.

[T.D. 8584, 59 FR 67212, Dec. 29, 1994; 60 FR 16575, Mar. 31, 1995]

§ 1.263A-13 Oil and gas activities.

(a) ***In general.*** This section provides rules that are to be applied in tandem with §§ 1.263A-8 through 1.263A-12, 1.263A-14, and 1.263A-15 in capitalizing interest with respect to the development (within the meaning of section 263A(g)) of oil or gas property. For this purpose, oil or gas property consists of each separate operating mineral interest in oil or gas as defined in section 614(a), or, if a taxpayer makes an election under section 614(b), the aggregate of two or more separate operating mineral interests in oil or gas as described in section 614(b) (section 614 property). Thus, an oil or gas property is designated property unless the de minimis rule applies. A taxpayer must apply the rules in paragraph (c) of this section if the taxpayer cannot establish, at the beginning of the production period of the first well drilled on the property, a definite plan that identifies the number and location of other wells planned with respect to the property. If a taxpayer can establish such a plan at the beginning of the production period of the first well drilled on the property, the taxpayer may either apply the rules of paragraph (c) of this section or treat each of the planned wells as a separate unit and partition the leasehold acquisition costs and costs of common features based on the number of planned well units.

(b) ***Generally applicable rules*** —

(1) ***Beginning of production period*** —

(i) ***Onshore activities.*** In the case of onshore oil or gas development activities, the production period for a unit begins on the first date physical site preparation activities (such as building an access road, leveling a site for a drilling rig, or excavating a mud pit) are undertaken with respect to the unit.

(ii) ***Offshore activities.*** In the case of offshore development activities, the production period for a unit begins on the first date physical site preparation activities, other than activities undertaken with respect to expendable wells, are undertaken with respect to the unit. For purposes of the preceding sentence, the first physical site preparation activity undertaken with respect to a section 614 property is generally the first activity undertaken with respect to the anchoring of a platform (e.g., drilling to drive the piles). For purposes of this section, an expendable well is a well drilled solely to determine the location and delineation of offshore hydrocarbon deposits.

(2) ***End of production period.*** The production period ends for a productive well unit on the date the well is placed in service and all production activities reasonably expected to be undertaken by, or for, the taxpayer or a related person are completed. See § 1.263A-12(d).

(3) ***Accumulated production expenditures*** —

(i) ***Costs included.*** Accumulated production expenditures for a well unit include the following costs (to the extent they are not intangible drilling and development costs allowable as a deduction under section 263(c), 263(i), or 291(b)(2)): the costs of acquiring the section 614 leasehold and the costs of taxes and similar items that are required to be capitalized under section 263A(a) with respect to the section 614 leasehold; the cost of real property associated with developing the section 614 property (e.g., casing); the basis of real property that constitutes a common feature within the meaning of § 1.263A-10(b)(3); and the adjusted basis of property used to produce property (such as a mobile rig, drilling ship, or an offshore drilling platform).

(ii) ***Improvement unit.*** To the extent section 614 costs are allocated to a well unit, the undepleted portion of those section 614 costs must also be included in the accumulated production expenditures for any improvement unit (within the meaning of § 1.263A-8(d)(3)) with respect to that well unit.

(c) ***Special rules when definite plan not established*** —

(1) ***In general.*** The special rules of this paragraph (c) must be applied by a taxpayer that cannot establish, at the beginning of the production period of the first well drilled on the property, a definite plan that identifies the number and location of the wells planned with respect to the property. A taxpayer than can establish such a plan is permitted, but not required, to apply the rules of this paragraph (c), provided the rules of this paragraph (c) are consistently applied for all the taxpayer's oil or gas properties for which a definite plan can be established.

(2) ***Oil and gas units*** —

(i) ***First productive well unit.*** Until the first productive well is placed in service and all production activities reasonably expected to be undertaken by, or for, the taxpayer or a related person are completed, a first productive well unit includes the section 614 property and all real property associated with the development of the section 614 property. Thus, for example, a first productive well unit includes the section 614 property and real property associated with any nonproductive well drilled on the section 614 property on or before the date the first productive well is placed in service and all production activities reasonably expected to be undertaken by, or for, the taxpayer or a related person are completed. For purposes of this section, a

productive well is a well that produces in commercial quantities. See paragraph (c)(5) of this section, which provides a special rule whereby the costs of a section 614 property and common feature costs for a section 614 property generally are included only in the accumulated production expenditures for the first productive well unit.

(ii) ***Subsequent units.*** Generally, real property associated with each productive or nonproductive well with respect to which production activities begin after the date the first productive well is placed in service and all production activities reasonably expected to be undertaken by, or for, the taxpayer or a related person are completed, constitutes a unit of real property. Additionally, a productive or nonproductive well that is included in a first productive well unit and for which development continues after the date the first productive well is placed in service and all production activities reasonably expected to be undertaken by, or for, the taxpayer or a related person are completed, generally is treated as a separate unit of property after that date. See, however, paragraph (c)(5) of this section, which provides rules for the treatment of costs included in the accumulated production expenditures of a first productive well unit.

(3) ***Beginning of production period*** —

(i) ***First productive well unit.*** The beginning of the production period of the first productive well unit is determined as provided in paragraph (b) of this section.

(ii) ***Subsequent wells.*** In applying paragraph (b) of this section to subsequent well units (as described in paragraph (c)(2)(ii) of this section), any activities occurring prior to the date the production period ends for the first productive well unit are not taken into account in determining the beginning of the production period for the subsequent well units.

(4) ***End of production period.*** The end of the production period for both the first productive well unit and subsequent productive well units is determined as provided in paragraph (b)(2) of this section. See § 1.263A-12(d). Nonproductive wells included in the first productive well unit need not be plugged and abandoned for the production period to end for a first productive well unit.

(5) ***Accumulated production expenditures*** —

(i) ***First productive well unit.*** The accumulated production expenditures for a first productive well unit include all costs incurred with respect to the section 614 property and associated real property at any time through the end of the production period for the first productive well unit. Thus, the costs of acquiring the section 614 property, the costs of taxes and similar items that are required to be capitalized under section 263A(a) with respect to the section 614 property, and the costs of common features, that are incurred at any time through the end of the production period of the first productive well unit (section 614 costs) are included in the accumulated production expenditures for the first productive well unit.

(ii) ***Subsequent well unit.*** The accumulated production expenditures for a subsequent well do not include any costs included in the accumulated production expenditures for a first productive well unit. In the event that section 614 costs or common feature costs with respect to a section 614 property are incurred subsequent to the end of the production period of the first productive well unit, those common feature costs and undepleted section 614 costs are allocated among the accumulated production expenditures of wells being drilled as of the date such costs are incurred.

(6) ***Allocation of interest capitalized with respect to first productive well unit.*** Interest attributable to any productive or nonproductive well included in the first productive well unit (within the meaning of paragraph (c)(2)(ii) of this section) is allocated among and capitalized to the basis of the property associated with the first productive well unit. See § 1.263A-8(a)(2).

(7) ***Example.*** The provisions of this paragraph (c) are illustrated by the following example.

> *Example.* (i) Corporation Z, an oil company, acquired a section 614 property in an onshore tract, Tract B, for development. In 1995, Corporation Z began site preparation activities on Tract B and also commenced drilling Well 1 on Tract B. Corporation Z was unable to establish, as provided in paragraph (a) of this section, a definite plan identifying the number and location of other wells planned on Tract B. In 1996, Corporation Z began drilling Well 2. On May 1, 1997, Well 2, a productive well, was placed in service and all production activities reasonably expected to be undertaken with respect to Well 2 were completed. By that date, also, Well 1 was abandoned.
> (ii) Well 2 is a first productive well (within the meaning of paragraph (c)(2)(i) of this section). Well 1 is a nonproductive well drilled prior to a first productive well. Under paragraph (c) of this section, Corporation Z must treat both Well 1 and Well 2 as part of the first productive well unit on the section 614 property. In accordance with paragraphs (c)(3) and (c)(4) of this section, the production period of the first productive well unit begins on the date physical site preparation activities are undertaken with respect to Well 1 in 1995 and ends on May 1, 1997, the date that Well 2 is placed in service and all production activities reasonably expected to be undertaken are completed. In accordance with paragraph (c)(5) of this section, the accumulated production expenditures for the first productive well unit include, among other capitalized costs, the entire section 614 property costs capitalized with respect to Tract B and all common feature costs incurred with respect to the section 614 property through May 1, 1997.
>
> (iii) Any well that Corporation Z begins after May 1, 1997, is a separate unit of property. See paragraph (c)(2)(ii) of this section. Under paragraph (c)(3)(ii) of this section, the production period for any such well unit begins on the first day after May 1, 1997, on which Corporation Z undertakes physical site preparation activities with respect to the well unit. Moreover, Corporation Z does not include any of the section 614 property costs in the accumulated production expenditures for any well unit begun after May 1, 1997.

[T.D. 8584, 59 FR 67213, Dec. 29, 1994; 60 FR 16575, Mar. 31, 1995]

§ 1.263A-14 Rules for related persons.

Taxpayers must account for average excess expenditures allocated to related persons under applicable administrative pronouncements interpreting section 263A(f). See § 601.601(d)(2)(ii)(*b*) of this chapter.

[T.D. 8584, 59 FR 67215, Dec. 29, 1994]

§ 1.263A-15 Effective dates, transitional rules, and anti-abuse rule.

(a) ***Effective dates*** —

(1) Sections 1.263A-8 through 1.263A-15 generally apply to interest incurred in taxable years beginning on or after January 1, 1995. In the case of property that is inventory in the hands of the taxpayer, however, these sections are effective for taxable years beginning on or after January 1, 1995. Changes in methods of accounting necessary as a result of the rules in §§ 1.263A-8 through 1.263A-15 must be made under the terms and conditions prescribed by the Commissioner. Under these terms and conditions, the principles of § 1.263A-7 must be applied in revaluing inventory property.

(2) For taxable years beginning before January 1, 1995, taxpayers must take reasonable positions on their federal income tax returns when applying section 263A(f). For purposes of this paragraph (a)(2), a reasonable position is a position consistent with the temporary regulations, revenue rulings, revenue procedures, notices, and announcements concerning section 263A applicable in taxable years beginning before January 1, 1995. See § 601.601(d)(2)(ii)(*b*) of this chapter. For this purpose, Notice 88-99, 1988-2 C.B. 422, applies to taxable years beginning after August 17, 1988, in the case of inventory, and to interest incurred in taxable years beginning after August 17, 1988, in all other cases. Finally, under administrative procedures issued by the Commissioner, taxpayers may elect early application of §§ 1.263A-8 through 1.263A-15 to taxable years beginning on or after January 1, 1994, in the case of inventory property, and to interest incurred in taxable years beginning on or after January 1, 1994, in the case of property that is not inventory in the hands of the taxpayer.

(3) Section 1.263A-9(a)(4)(ix) generally applies to interest incurred in taxable years beginning on or after May 20, 2004. In the case of property that is inventory in the hands of the taxpayer, § 1.263A-9(a)(4)(ix) applies to taxable years beginning on or after May 20, 2004. Taxpayers may elect to apply § 1.263A-9(a)(4)(ix) to interest incurred in taxable years beginning on or after January 1, 1995, or, in the case of property that is inventory in the hands of the taxpayer, to taxable years beginning on or after January 1, 1995. A change in a taxpayer's treatment of interest to a method consistent with § 1.263A-9(a)(4)(ix) is a change in method of accounting to which sections 446 and 481 apply.

(4) Section 1.263A-9(g)(1)(i) applies to taxable years beginning on or after November 13, 2020. However, taxpayers and their related parties, within the meaning of sections 267(b) and 707(b)(1), may choose to apply the rules of that section to a taxable year beginning after December 31, 2017, so long as the taxpayers and their related parties consistently apply the rules of the section 163(j) regulations (as defined in § 1.163(j)-1(b)(37)), and, if applicable, §§ 1.381(c)(20)-1, 1.382-1, 1.382-2, 1.382-5, 1.382-6, 1.382-7, 1.383-0, 1.383-1, 1.469-9, 1.469-11, 1.704-1, 1.882-5, 1.1362-3, 1.1368-1, 1.1377-1, 1.1502-13, 1.1502-21, 1.1502-36, 1.1502-79, 1.1502-91 through 1.1502-99 (to the extent they effectuate the rules of §§ 1.382-2, 1.382-5, 1.382-6, and 1.383-1), and 1.1504-4, to that taxable year.

(5) The last sentence of each of § 1.263A-8(a)(1) and § 1.263A-9(e)(2) apply to taxable years beginning on or after January 5, 2021. However, for a taxable year beginning after December 31, 2017, and before January 5, 2021, a taxpayer may apply the last sentence of each of § 1.263A-8(a)(1) and § 1.263A-9(e)(2), provided that the taxpayer follows all the applicable rules contained in the regulations under section 263A for such taxable year and all subsequent taxable years.

(6) Sections 1.263A-8(d)(3) and 1.263A-11(e) and (f) apply to taxable years beginning after October 2, 2025. A change in a taxpayer's treatment of interest to a method consistent with §§ 1.263A-8(d)(3) and 1.263A-11(e) and (f), as applicable, is a change in method of accounting to which sections 446 and 481 of the Internal Revenue Code apply.

(b) ***Transitional rule for accumulated production expenditures*** —

(1) ***In general.*** Except as provided in paragraph (b)(2) of this section, costs incurred before the effective date of section 263A are included in accumulated production expenditures (within the meaning of § 1.263A-11) with respect to noninventory property only to the extent those costs were required to be capitalized under section 263 when incurred and would have been taken into account in determining the amount of interest required to be capitalized under former section 189 (relating to the capitalization of real property interest and taxes) or pursuant to an election that was in effect under section 266 (relating to the election to capitalize certain carrying charges).

(2) ***Property used to produce designated property.*** The basis of property acquired prior to 1987 and used to produce designated noninventory property after December 31, 1986, is included in accumulated production expenditures in accordance with § 1.263A-11(d) without regard to whether the basis would have been taken into account under former section 189 or section 266.

(c) ***Anti-abuse rule.*** The interest capitalization rules contained in §§ 1.263A-8 through 1.263A-15 must be applied by the taxpayer in a manner that is consistent with and reasonably carries out the purposes of section 263A(f). For example, in applying § 1.263A-10, regarding the definition of a unit of property, taxpayers may not divide a single unit of property to avoid property classifying the property as designated property. Similarly, taxpayers may not use loans in lieu of advance payments, tax-exempt parties, loan restructurings at measurement dates, or obligations bearing an unreasonably low rate of interest (even if such rate equals or exceeds the applicable Federal rate under section 1274(d)) to avoid the purposes of section 263A(f). For purposes of this paragraph (c), the presence of back-to-back loans with different rates of interest, and other uses of related parties to facilitate an avoidance of interest capitalization, evidences abuse. In such cases, the District Director may, based upon all the facts and circumstances, determine the amount of interest that must be capitalized in a manner that is consistent with and reasonably carries out the purposes of section 263A(f).

[T.D. 8584, 59 FR 67215, Dec. 29, 1994, as amended by T.D. 8728, 62 FR 42062, Aug. 5, 1997; T.D. 9179, 70 FR 8730, Feb. 23, 2005; T.D. 9905, 85 FR 56832, Sept. 14, 2020; 86 FR 32186, June 17, 2021; T.D. 10034, 90 FR 47583, Oct. 2, 2025]

§ 1.264-1 Premiums on life insurance taken out in a trade or business.

(a) ***When premiums are not deductible.*** Premiums paid by a taxpayer on a life insurance policy are not deductible from the taxpayer's gross income, even though they would otherwise be deductible as trade or business expenses, if they are paid on a life insurance policy covering the life of any officer or employee of the taxpayer, or any person (including the taxpayer) who is financially interested in any trade or business carried on by the taxpayer, when the taxpayer is directly or indirectly a beneficiary of the policy. For additional provisions relating to the nondeductibility of premiums paid on life insurance policies (whether under section 162 or any other section of the Code), see section 262, relating to personal, living, and family expenses, and section 265, relating to expenses allocable to tax-exempt income.

(b) ***When taxpayer is a beneficiary.*** If a taxpayer takes out a policy for the purpose of protecting himself from loss in the event of the death of the insured, the taxpayer is considered a beneficiary directly or indirectly under the policy. However, if the taxpayer is not a beneficiary under the policy, the premiums so paid will not be disallowed as deductions merely because the taxpayer may derive a benefit from the increased efficiency of the officer or employee insured. See section 162 and the regulations thereunder. A taxpayer is considered a beneficiary under a policy where, for example, he, as a principal member of a partnership, takes out an insurance policy on his own life irrevocably designating his partner as the sole beneficiary in

order to induce his partner to retain his investment in the partnership. Whether or not the taxpayer is a beneficiary under a policy, the proceeds of the policy paid by reason of the death of the insured may be excluded from gross income whether the beneficiary is an individual or a corporation, except in the case of

(1) certain transferees, as provided in section 101(a)(2);

(2) portions of amounts of life insurance proceeds received at a date later than death under the provisions of section 101(d); and

(3) life insurance policy proceeds which are includible in the gross income of a husband or wife under section 71 (relating to alimony) or section 682 (relating to income of an estate or trust in case of divorce, etc.). (See section 101(e).) For further reference, see, generally, section 101 and the regulations thereunder.

§ 1.264-2 Single premium life insurance, endowment, or annuity contracts.

Amounts paid or accrued on indebtedness incurred or continued, directly or indirectly, to purchase or to continue in effect a single premium life insurance or endowment contract, or to purchase or to continue in effect a single premium annuity contract purchased (whether from the insurer, annuitant, or any other person) after March 1, 1954, are not deductible under section 163 or any other provision of chapter 1 of the Code. This prohibition applies even though the insurance is not on the life of the taxpayer and regardless of whether or not the taxpayer is the annuitant or payee of such annuity contract. A contract is considered a single premium life insurance, endowment, or annuity contract, for the purposes of this section, if substantially all the premiums on the contract are paid within four years from the date on which the contract was purchased, or if an amount is deposited after March 1, 1954, with the insurer for payment of a substantial number of future premiums on the contract.

§ 1.264-3 Effective date; taxable years ending after March 1, 1954, subject to the Internal Revenue Code of 1939.

Pursuant to section 7851(a)(1)(C), the regulations prescribed in § 1.264-2, to the extent that they relate to amounts paid or accrued on indebtedness incurred or continued to purchase or carry a single premium annuity contract purchased after March 1, 1954, and to the extent they consider a contract a single premium life insurance, endowment, or annuity contract if an amount is deposited after March 1, 1954, with the insurer for payment of a substantial number of future premiums on the contract, shall also apply to taxable years beginning before January 1, 1954, and ending after March 1, 1954, and to taxable years beginning after December 31, 1953, and ending after March 1, 1954, but before August 17, 1954, although such years are subject to the Internal Revenue Code of 1939.

§ 1.264-4 Other life insurance, endowment, or annuity contracts.

(a) ***General rule.*** Except as otherwise provided in paragraphs (d) and (e) of this section, no deduction shall be allowed under section 163 or any other provision of chapter 1 of the Code for any amount (determined under paragraph (b) of this section) paid or accrued during the taxable year on indebtedness incurred or continued to purchase or continue in effect a life insurance, endowment, or annuity contract (other than a single premium contract or a contract treated as a single premium contract) if such indebtedness is incurred pursuant to a plan of purchase which contemplates the systematic direct or indirect borrowing of part or all of the increases in the cash value of such contract (either from the insurer or otherwise). For the purposes of the preceding sentence, the term *of purchase* includes the payment of part or all of the premiums on a contract, and not merely payment of the premium due upon inital issuance of the contract. The rule of this paragraph applies whether or not the taxpayer is the insured, payee, or annuitant under the

contract. the rule of this paragraph does not apply to contracts purchased by the taxpayer on or before August 6, 1963, even though there is a substantial increase in premiums after such date. The rule of this paragraph does not apply to any amount paid or accrued on indebtedness incurred or continued to purchase or carry a single premium life insurance, endowment, or annuity contract (including a contract treated as a single premium contract); the treatment of such amounts is governed by § 1.264-2.

(b) ***Determination of amount not allowed.*** The amount not allowed as a deduction under paragraph (a) of this section is determined with reference to the entire amount of borrowing to purchase or carry the contract, and is not limited with reference to the amount of borrowing of increases in the cash value. The rule of this paragraph may be illustrated by the following example:

Example. A, a calendar year taxpayer using the cash receipts and disbursements method of accounting, on January 1, 1964, purchases from a life insurance company a policy in the amount of $100,000 with an annual gross premium of $2,200. For the first policy year, A pays the annual premium by means other than by borrowing. For the second, third, fourth, and fifth policy years, A continues the policy in effect by incurring indebtedness pursuant to a plan referred to in paragraph (a) of this section. The years and amounts applicable to the policy are as follows:

Years	Cumulative cash value of contract	Total loan outstanding	Interest paid at 4.8 percent
1964	$370	0	0
1965	2,175	$2,200	$105.60
1966	4,000	4,400	211.20
1967	5,865	6,600	316.80
1968	7,745	8,800	422.40

On these facts (assuming that none of the exceptions contained in paragraph (d) of this section are applicable), no deduction is allowed for the interest paid during the year 1968. Moreover, the interest deduction will be disallowed for the taxable years 1965 through 1967 if such taxable years are not closed by reason of the statute of limitations or other rule of law.

(c) ***Special rules.*** For purposes of this section:

(1) ***Determination of existence of a plan which contemplates systematic borrowing —***

(i) ***In general.*** The determination of whether indebtedness is incurred or continued pursuant to a plan referred to in paragraph (a) of this section shall be made on the basis of all the facts and circumstances in each case. Unless the taxpayer shows otherwise, in the case of borrowing in connection with premiums for more than three years, the existence of a plan referred to in paragraph (a) of this section will be presumed. The mere fact that a taxpayer does not borrow to pay a premium in a particular year does not in and of itself preclude the existence of a plan referred to in paragraph (a) of this section. A plan referred to in paragraph (a) of this section

need not exist at the time the contract is entered into, but may come into existence at any time during the 7-year period following the taxpayer's purchase of the contract or following a substantial increase (referred to in paragraph (d)(1) of this section) in premiums on the contract.

(ii) ***Premium attributable to more than one year.*** For purposes of subdivision (i) of this subparagraph, if the stated annual premiums due on a contract vary in amount, borrowing in connection with any premium, the amount of which exceeds the amount of any other premium, on such contract may be considered borrowing to pay premiums for more than one year. The preceding sentence shall not apply where the borrowing is in connection with a substantially increased premium within the meaning of paragraph (d)(1) of this section.

(2) ***Direct or indirect.*** A plan referred to in paragraph (a) of this section may contemplate direct or indirect borrowing of increases in cash value of the contract directly or indirectly to pay premiums and many contemplate borrowing either from an insurance carrier, from a bank, or from any other person. Thus, for example, if a taxpayer borrows $100,000 from a bank and uses the funds to purchase securities, later borrows $100,000 from a second bank and uses the funds to repay the first bank, later sells the securities and uses the funds as a part of a plan referred to in paragraph (a) of this section to pay premiums on a contract of cash value life insurance, the deduction for interest paid in continuing the loan from the second bank shall not be allowed (assuming that none of the exceptions contained in paragraph (d) of this section are applicable). Moreover, a plan referred to in paragraph (a) of this section need not involve a pledge of the contract, but may contemplate unsecured borrowing or the use of other property.

(d) ***Exceptions.*** No deduction shall be denied under paragraph (a) of this section with respect to any amount paid or accrued during a taxable year on indebtedness incurred or continued as part of a plan referred to in paragraph (a) of this section if any of the following exceptions apply.

(1) ***The 7-year exception*** —

(i) ***In general.*** No part of 4 of the annual premiums due during the 7-year period (beginning with the date the first premium on the contract to which such plan relates was paid) is paid under such plan by means of indebtedness. For purposes of this exception, in the event of a substantial increase in any annual premium on a contract, a new 7-year period begins on the date such increased premium is paid. If premiums on a contract are payable other than on an annual basis (for example, monthly), the annual premium is the aggregate of premiums due for the year. See paragraph (c)(1)(ii) of this section for cases where one premium on a contract paid by means of indebtedness may be considered as more than one annual premium.

(ii) ***Application of borrowings.*** For purposes of subdivision (i) of this subparagraph, if during a 7-year period referred to in such subdivision the taxpayer, directly or indirectly, borrows with respect to more than one annual premium on a contract, such borrowing shall be considered first attributable to the premium for the current policy year (within the meaning of subdivision (iii) of this subparagraph) and then attributable to premiums for prior policy years beginning with the most recent prior policy year (but not including any prior policy year to the extent that such taxpayer has indebtedness outstanding with respect to the premium for such prior policy year). If such borrowing exceeds the premiums paid for the current policy year and for prior policy years and the taxpayer has, with respect to the current policy year, deposited premiums in advance of the due date of such premiums, such excess borrowing shall be considered

indebtedness incurred to carry the contract which is attributable to the premiums deposited for succeeding policy years beginning with the premium for the next succeeding policy year. The preceding sentence shall not apply to a single premium contract referred to in § 1.264-2.

(iii) ***Current policy year.*** For purposes of subdivision (ii) of this subparagraph, the term *current policy year* refers to the policy year which begins with or within the taxable year of the taxpayer.

(iv) ***Illustrations.*** The provisions of subdivision (ii) of this subparagraph may be illustrated by the following examples:

Example 1. A, a calendar year taxpayer using the cash receipts and disbursements method of accounting, on January 1, 1964, purchases from a life insurance company a policy in the amount of $100,000 with an annual gross premium of $2,200. For the first four policy years, A initially pays the annual premium by means other than borrowing. On January 1, 1968, pursuant to a plan referred to in paragraph (a) of this section, A borrows $10,000 with respect to the policy. Such borrowing is considered first attributable to paying the premium for the year 1968 and then attributable to paying the premiums for the years 1967, 1966, 1965, and 1964 (in part). No deduction is allowed for the interest paid by A on the $10,000 indebtedness during the year 1968.

Example 2. The facts are the same as in *Example 1,* except that on January 1, 1964, A pays the first annual premium and deposits an amount equal to the second and third annual premiums, all such amounts initially being paid or deposited by means other than borrowing. On January 1, 1965, A deposits an amount equal to the fourth, fifth, and sixth annual premiums, and borrows $4,400 pursuant to a plan referred to in paragraph (a) of this section. Such borrowing is considered attributable to the premiums paid for the policy years 1965 and 1964. On January 1, 1966, A deposits an amount equal to the seventh, eighth, and ninth annual premiums, and borrows $6,600 pursuant to such plan. Such borrowing is considered attributable to the premium paid for the policy year 1966 and deposited for the policy years 1967 and 1968. No deduction is allowed for interest paid by A on the $11,000 indebtedness during 1966. Moreover, the interest deduction will be disallowed for the taxable year 1965. However, if this contract is treated as a single premium contract under § 1.264-2 (by reason of deposit with the insurer of an amount for payment of a substantial number of future premiums), the deduction for interest on indebtedness incurred or continued to purchase or carry the contract would be denied without reference to this section.

(2) ***The $100 exception.*** The total amount paid or accrued during the taxable year by the taxpayer who has entered one or more plans referred to in paragraph (a) of this section for which (without regard to this subparagraph) no deduction would be allowable under paragraph (a) of this section does not exceed $100. Where the amount so paid or accrued during the taxable year exceeds $100, the entire amount shall be subject to the general rule of paragraph (a) of this section.

(3) ***The unforeseen events exception.*** The amount is paid or accrued by the taxpayer on indebtedness incurred because of an unforeseen substantial loss of such taxpayer's income or an unforeseen substantial increase in such taxpayer's financial obligations. A loss of income or increase in financial obligations is not unforeseen, within the meaning of this subparagraph, if at the time of the purchase of the contract such event was or could have been foreseen. College education expenses are foreseeable; however, if college expenses substantially increase, then to the extent that such increases are unforeseen, this exception will apply. This exception applies only if the plan referred to in paragraph (a) of this section arises because of the unforeseen event. Thus, for example, if a taxpayer or his family incur substantial unexpected medical expenses or the taxpayer is laid off from

his job, and for that reason systematically borrows against the cash value of a previously purchased contract, the deduction for the interest paid on the loan will not be denied, whether or not the loan is used to pay a premium on the contract.

(4) ***The trade or business exception.*** The indebtedness is incurred by the taxpayer in connection with his trade or business. To be within this exception, the indebtedness must be incurred to finance business obligations rather than to finance cash value life insurance. Thus, if a taxpayer pledges a life insurance, endowment, or annuity contract as part of the collateral for a loan to finance the expansion of inventory or capital improvements for his business, no part of the deduction for interest on such loan will be denied under paragraph (a) of this section. Borrowing by a business taxpayer to finance business life insurance such as under so-called keyman, split dollar, or stock retirement plans is not considered to be incurred in connection with the taxpayer's trade or business within the meaning of this subparagraph. The determination of whether the indebtedness is incurred in connection with the taxpayer's trade or business, within the meaning of this exception, rather than to finance cash value life insurance shall be made on the basis of all the facts and circumstances. The provisions of this subparagraph may be illustrated by the following examples:

Example 1. Corporation M each year borrows substantial sums to carry on its business. Corporation M agrees to provide a retirement plan for its employees and purchases level premium life insurance to fund its obligation under the plan. The mere fact that M Corporation purchases a cash value life insurance policy will not cause its deduction for interest paid on its normal indebtedness to be denied even though the policy is later used as part of the collateral for its normal indebtedness.

Example 2. Corporation R has $200,000 of bonds outstanding and purchases cash value life insurance policies on several of its key employees. Such purchase by R Corporation will not, of itself, cause its deduction for interest on its bonded indebtedness to be denied. If, however, the premiums on the life insurance policies are $10,000 each year, the cash value increases by $8,000 each year, and R Corporation increases its indebtedness by $10,000 each year, its deduction for interest on such indebtedness will not be allowed under the rule of paragraph (a) of this section. On the other hand, the absence of such a directly parallel increase will not of itself establish that the deduction for interest is allowable.

(e) ***Applicability of section.*** The rules of this section apply with respect to taxable years beginning after December 31, 1963, but only with respect to contracts purchased after August 6, 1963. With respect to contracts entered into on or before August 6, 1963, but purchased or acquired whether from the insurer, insured, or any other person (other than by gift, bequest, or inheritance, or in a transaction to which section 381(a) of the Code applies) after such date, the rules of this section apply after such purchase or acquisition.

[T.D. 6773, 29 FR 15751, Nov. 24, 1964]

§ 1.265-1 Expenses relating to tax-exempt income.

(a) ***Nondeductibility of expenses allocable to exempt income.***

(1) No amount shall be allowed as a deduction under any provision of the Code for any expense or amount which is otherwise allowable as a deduction and which is allocable to a class or classes of exempt income other than a class or classes of exempt interest income.

(2) No amount shall be allowed as a deduction under section 212 (relating to expenses for production of income) for any expense or amount which is otherwise allowable as a deduction and which is allocable to a class or classes of exempt interest income.

(b) ***Exempt income and nonexempt income.***

(1) As used in this section, the term *class of exempt income* means any class of income (whether or not any amount of income of such class is received or accrued) wholly exempt from the taxes imposed by Subtitle A of the Code. For purposes of this section, a class of income which is considered as wholly exempt from the taxes imposed by subtitle A includes any class of income which is:

(i) Wholly excluded from gross income under any provision of Subtitle A, or

(ii) Wholly exempt from the taxes imposed by Subtitle A under the provisions of any other law.

(2) As used in this section the term *nonexempt income* means any income which is required to be included in gross income.

(c) ***Allocation of expenses to a class or classes of exempt income.*** Expenses and amounts otherwise allowable which are directly allocable to any class or classes of exempt income shall be allocated thereto; and expenses and amounts directly allocable to any class or classes of nonexempt income shall be allocated thereto. If an expense or amount otherwise allowable is indirectly allocable to both a class of nonexempt income and a class of exempt income, a reasonable proportion thereof determined in the light of all the facts and circumstances in each case shall be allocated to each.

(d) ***Statement of classes of exempt income; records.***

(1) A taxpayer receiving any class of exempt income or holding any property or engaging in any activity the income from which is exempt shall submit with his return as a part thereof an itemized statement, in detail, showing

(i) the amount of each class of exempt income, and

(ii) the amount of expenses and amounts otherwise allowable allocated to each such class (the amount allocated by apportionment being shown separately) as required by paragraph (c) of this section. If an item is apportioned between a class of exempt income and a class of nonexempt income, the statement shall show the basis of the apportionment. Such statement shall also recite that each deduction claimed in the return is not in any way attributable to a class of exempt income.

(2) The taxpayer shall keep such records as will enable him to make the allocations required by this section. See section 6001 and the regulations thereunder.

§ 1.265-2 Interest relating to tax exempt income.

(a) ***In general.*** No amount shall be allowed as a deduction for interest on any indebtedness incurred or continued to purchase or carry obligations, the interest on which is wholly exempt from tax under subtitle A of the Code, such as municipal bonds, Panama Canal loan 3-percent bonds, or obligations of the United States, the interest on which is wholly exempt from tax under Subtitle A, and which were issued after September 24, 1917, and not originally subscribed for by the taxpayer. Interest paid or accrued within the taxable year on indebtedness incurred or continued to purchase or carry

(1) obligations of the United States issued after September 24, 1917, the interest on which is not wholly exempt from the taxes imposed under Subtitle A of the Code, or

(2) obligations of the United States issued after September 24, 1917, and originally subscribed for by the taxpayer, the interest on which is wholly exempt from the taxes imposed by Subtitle A of the Code, is deductible. For rules as to the inclusion in gross income of interest on certain governmental obligations, see section 103 and the regulations thereunder.

(b) *Special rule for certain financial institutions.*

(1) No deduction shall be disallowed, for taxable years ending after February 26, 1964, under section 265(2) for interest paid or accrued by a financial institution which is a face-amount certificate company registered under the Investment Company Act of 1940 (15 U.S.C. 80a-1 and following) and which is subject to the banking laws of the State in which it is incorporated, on face-amount certificates (as defined in section 2(a)(15) of the Investment Company Act of 1940) issued by such institution and on amounts received for the purchase of such certificates to be issued by the institution, if the average amount of obligations, the interest on which is wholly exempt from the taxes imposed by Subtitle A of the Code, held by such institution during the taxable year, does not exceed 15 percent of the average amount of the total assets of such institution during such year. See subparagraph (3) of this paragraph for treatment of interest paid or accrued on face-amount certificates where the figure is in excess of 15 percent. Interest expense other than that paid or accrued on face-amount certificates or on amounts received for the purchase of such certificates does not come within the rules of this paragraph.

(2) This subparagraph is prescribed under the authority granted the Secretary or his delegate under section 265(2) to prescribe regulations governing the determination of the average amount of tax-exempt obligations and of the total assets held during an institution's taxable year. The average amount of tax-exempt obligations held during an institution's taxable year shall be the average of the amounts of tax-exempt obligations held at the end of each month ending within such taxable year. The average amount of total assets for a taxable year shall be the average of the total assets determined at the beginning and end of the institution's taxable year. If the Commissioner, however, determines that any such amount is not fairly representative of the average amount of tax-exempt obligations or total assets, as the case may be, held by such institution during such taxable year, then the Commissioner shall determine the amount which is fairly representative of the average amount of tax-exempt obligations or total assets, as the case may be. The percentage which the average amount of tax-exempt obligations is of the average amount of total assets is determined by dividing the average amount of tax-exempt obligations by the average amount of total assets, and multiplying by 100. The amount of tax-exempt obligations means that portion of the total assets of the institution which consists of obligations the interest on which is wholly exempt from tax under Subtitle A of the Code, and valued at their adjusted basis, appropriately adjusted for amortization of premium or discount. Total assets means the sum of the money, plus the aggregate of the adjusted basis of the property other than money held by the taxpayer in good faith for the purpose of the business. Such adjusted basis for any asset is its adjusted basis for determining gain upon sale or exchange for Federal income tax purposes.

(3) If the percentage computation required by subparagraph (2) of this paragraph results in a figure in excess of 15 percent for the taxable year, there is interest that does not come within the special rule for certain financial institutions contained in section 265(2). The amount of such interest is obtained by multiplying the total interest paid or accrued for the taxable year on face-amount certificates and on amounts received for the purchase of such certificates by the percentage figure equal to the

excess of the percentage figure computed under subparagraph (2) of this paragraph over 15 percent. See paragraph (a) for the disallowance of interest on indebtedness incurred or continued to purchase or carry obligations the interest on which is wholly exempt from tax under Subtitle A of the Code.

(4) Every financial institution claiming the benefits of the special rule for certain financial institutions contained in section 265(2) shall file with its return for the taxable year:

(i) A statement showing that it is a face-amount certificate company registered under the Investment Company Act of 1940 (15 U.S.C. 80a-1 and following) and that it is subject to the banking laws of the State in which it is incorporated.

(ii) A detailed schedule showing the computation of the average amount of tax-exempt obligations, the average amount of total assets of such institutions, and the total amount of interest paid or accrued on face-amount certificates and on amounts received for the purchase of such certificates for the taxable year.

[T.D. 6927, 32 FR 13221, Sept. 19, 1967]

§ 1.265-3 Nondeductibility of interest relating to exempt-interest dividends.

(a) ***In general.*** No deduction is allowed to a shareholder of a regulated investment company for interest on indebtedness that relates to exempt-interest dividends distributed by the company to the shareholder during the shareholder's taxable year.

(b) ***Interest relating to exempt-interest dividends.***

(1) All or a portion of the interest on an indebtedness relates to exempt-interest dividends if the indebtedness is either incurred or continued to purchase or carry shares of stock of a regulated investment company that distributes exempt-interest dividends (as defined in section 852(b)(5) of the Code) to the holder of the shares during the shareholder's taxable year.

(2) To determine the amount of interest that relates to the exempt-interest dividends the total amount of interest paid or accrued on the indebtedness is multiplied by a fraction. The numerator of the fraction is the amount of exempt-interest dividends received by the shareholder. The denominator of the fraction is the sum of the exempt-interest dividends and taxable dividends received by the shareholder (excluding capital gain dividends received by the shareholder and capital gains required to be included in the shareholder's computation of long-term capital gains under section 852(b)(3)(D)).

[T.D. 7601, 44 FR 16013, Mar. 16, 1979]

§ 1.266-1 Taxes and carrying charges chargeable to capital account and treated as capital items.

(a)

(1) ***In general.*** In accordance with section 266, items enumerated in paragraph (b)(1) of this section may be capitalized at the election of the taxpayer. Thus, taxes and carrying charges with respect to property of the type described in this section are chargeable to capital account at the election of the taxpayer, notwithstanding that they are otherwise expressly deductible under provisions of Subtitle A of the Code. No deduction is allowable for any items so treated.

(2) See §§ 1.263A-8 through 1.263A-15 for rules regarding the requirement to capitalize interest, that apply prior to the application of this section. After applying §§ 1.263A-8 through 1.263A-15, a taxpayer may elect to capitalize interest under section 266 with respect to designated property within the meaning of § 1.263A-8(b), provided a computation under any provision of the Internal Revenue Code is not thereby materially distorted, including computations relating to the source of deductions.

(b) *Taxes and carrying charges.*

(1) The taxpayer may elect, as provided in paragraph (c) of this section, to treat the items enumerated in this subparagraph which are otherwise expressly deductible under the provisions of Subtitle A of the Code as chargeable to capital account either as a component of original cost or other basis, for the purposes of section 1012, or as an adjustment to basis, for the purposes of section 1016(a)(1). The items thus chargeable to capital account are:

(i) In the case of unimproved and unproductive real property: Annual taxes, interest on a mortgage, and other carrying charges.

(ii) In the case of real property, whether improved or unimproved and whether productive or unproductive:

(*a*) Interest on a loan (but not theoretical interest of a taxpayer using his own funds),

(*b*) Taxes of the owner of such real property measured by compensation paid to his employees,

(*c*) Taxes of such owner imposed on the purchase of materials, or on the storage, use, or other consumption of materials, and

(*d*) Other necessary expenditures,

paid or incurred for the development of the real property or for the construction of an improvement or additional improvement to such real property, up to the time the development or construction work has been completed. The development or construction work with respect to which such items are incurred may relate to unimproved and unproductive real estate whether the construction work will make the property productive of income subject to tax (as in the case of a factory) or not (as in the case of a personal residence), or may relate to property already improved or productive (as in the case of a plant addition or improvement, such as the construction of another floor on a factory or the installation of insulation therein).

(iii) In the case of personal property:

(*a*) Taxes of an employer measured by compensation for services rendered in transporting machinery or other fixed assets to the plant or installing them therein,

(*b*) Interest on a loan to purchase such property or to pay for transporting or installing the same, and

(*c*) Taxes of the owner thereof imposed on the purchase of such property or on the storage, use, or other consumption of such property,

paid or incurred up to the date of installation or the date when such property is first put into use by the taxpayer, whichever date is later.

(iv) Any other taxes and carrying charges with respect to property, otherwise deductible, which in the opinion of the Commissioner are, under sound accounting principles, chargeable to capital account.

(2) The sole effect of section 266 is to permit the items enumerated in subparagraph (1) of this paragraph to be chargeable to capital account notwithstanding that such items are otherwise expressly deductible under the provisions of Subtitle A of the Code. An item not otherwise deductible may not be capitalized under section 266.

(3) In the absence of a provision in this section for treating a given item as a capital item, this section has no effect on the treatment otherwise accorded such item. Thus, items which are otherwise deductible are deductible notwithstanding the provisions of this section, and items which are otherwise treated as capital items are to be so treated. Similarly, an item not otherwise deductible is not made deductible by this section. Nor is the absence of a provision in this section for treating a given item as a capital item to be construed as withdrawing or modifying the right now given to the taxpayer under any other provisions of subtitle A of the Code, or of the regulations thereunder, to elect to capitalize or to deduct a given item.

(c) ***Election to charge taxes and carrying charges to capital account.***

(1) If for any taxable year there are two or more items of the type described in paragraph (b)(1) of this section, which relate to the same project to which the election is applicable, the taxpayer may elect to capitalize any one or more of such items even though he does not elect to capitalize the remaining items or to capitalize items of the same type relating to other projects. However, if expenditures for several items of the same type are incurred with respect to a single project, the election to capitalize must, if exercised, be exercised as to all items of that type. For purposes of this section, a *project* means, in the case of items described in paragraph (b)(1)(ii) of this section, a particular development of, or construction of an improvement to, real property, and in the case of items described in paragraph (b)(1)(iii) of this section, the transportation and installation of machinery or other fixed assets.

(2)

(i) An election with respect to an item described in paragraph (b)(1)(i) of this section is effective only for the year for which it is made.

(ii) An election with respect to an item described in:

(*a*) Paragraph (b)(1)(ii) of this section is effective until the development or construction work described in that subdivision has been completed;

(*b*) Paragraph (b)(1)(iii) of this section is effective until the later of either the date of installation of the property described in that subdivision, or the date when such property is first put into use by the taxpayer;

(*c*) Paragraph (b)(1)(iv) of this section is effective as determined by the Commissioner.

Thus, an item chargeable to capital account under this section must continue to be capitalized for the entire period described in this subdivision applicable to such election although such period may consist of more than one taxable year.

(3) If the taxpayer elects to capitalize an item or items under this section, such election shall be exercised by filing with the original return for the year for which the election is made a statement indicating the item or items (whether with respect to the same project or to different projects) which the taxpayer elects to treat as chargeable to capital account. Elections filed for taxable years beginning before January 1, 1954, and for taxable years ending before August 17, 1954, under section 24(a)(7) of the Internal Revenue Code of 1939, and the regulations thereunder, shall have the same effect as if they were filed under this section. See section 7807(b)(2).

(d) The following examples are illustrative of the application of the provisions of this section:

Example 1. In 1956 and 1957 A pays annual taxes and interest on a mortgage on a piece of real property. During 1956, the property is vacant and unproductive, but throughout 1957 A operates the property as a parking lot. A may capitalize the taxes and mortgage interest paid in 1956, but not the taxes and mortgage interest paid in 1957.

Example 2. In February 1957, B began the erection of an office building for himself. B in 1957, in connection with the erection of the building, paid $6,000 social security taxes, which in his 1957 return he elected to capitalize. B must continue to capitalize the social security taxes paid in connection with the erection of the building until its completion.

Example 3. Assume the same facts as in *Example 2* except that in November 1957, B also begins to build a hotel. In 1957 B pays $3,000 social security taxes in connection with the erection of the hotel. B's election to capitalize the social security taxes paid in erecting the office building started in February 1957 does not bind him to capitalize the social security taxes paid in erecting the hotel; he may deduct the $3,000 social security taxes paid in erecting the hotel.

Example 4. In 1957, M Corporation began the erection of a building for itself, which will take three years to complete. M Corporation in 1957 paid $4,000 social security taxes and $8,000 interest on a building loan in connection with this building. M Corporation may elect to capitalize the social security taxes although it deducts the interest charges.

Example 5. C purchases machinery in 1957 for use in his factory. He pays social security taxes on the labor for transportation and installation of the machinery, as well as interest on a loan to obtain funds to pay for the machinery and for transportation and installation costs. C may capitalize either the social security taxes or the interest, or both, up to the date of installation or until the machinery is first put into use by him, whichever date is later.

(e) ***Allocation.*** If any tax or carrying charge with respect to property is in part a type of item described in paragraph (b) of this section and in part a type of item or items with respect to which no election to treat as a capital item is given, a reasonable proportion of such tax or carrying charge, determined in the light of all the facts and circumstances in each case, shall be allocated to each item. The rule of this paragraph may be illustrated by the following example:

Example. N Corporation, the owner of a factory in New York on which a new addition is under construction, in 1957 pays its general manager, B, a salary of $10,000 and also pays a New York State unemployment insurance tax of $81 on B's salary. B spends nine-tenths of his time in the general business of the firm and the remaining one-tenth in supervising the construction work. N Corporation treats as expenses $9,000 of B's salary, and charges the remaining $1,000 to capital account. N Corporation may elect to capitalize $8.10 of the $81 New York State unemployment insurance tax paid in 1957 since such tax is deductible under section 164.

[T.D. 6500, 25 FR 11402, Nov. 26, 1960; 25 FR 14021, Dec. 31, 1960, as amended by T.D. 8584, 59 FR 67215, Dec. 29, 1994]

§ 1.267A-1 Disallowance of certain interest and royalty deductions.

(a) ***Scope.*** This section and §§ 1.267A-2 through 1.267A-5 provide rules regarding when a deduction for any interest or royalty paid or accrued is disallowed under section 267A. Section 1.267A-2 describes hybrid and branch arrangements. Section 1.267A-3 provides rules for determining income inclusions and provides that certain amounts are not amounts for which a deduction is disallowed. Section 1.267A-4 provides an imported mismatch rule. Section 1.267A-5 sets forth definitions and special rules that apply for purposes of section 267A. Section 1.267A-6 illustrates the application of section 267A through examples. Section 1.267A-7 provides applicability dates.

(b) ***Disallowance of deduction.*** This paragraph (b) sets forth the exclusive circumstances in which a deduction is disallowed under section 267A. Except as provided in paragraph (c) of this section, a specified party's deduction for any interest or royalty paid or accrued (the amount paid or accrued with respect to the specified party, a *specified payment*) is disallowed under section 267A to the extent that the specified payment is described in this paragraph (b). *See also* § 1.267A-5(b)(5) (treating structured payments as interest paid or accrued for purposes of section 267A and the regulations in this part under section 267A). A specified payment is described in this paragraph (b) to the extent that it is—

(1) A disqualified hybrid amount, as described in § 1.267A-2 (hybrid and branch arrangements);

(2) A disqualified imported mismatch amount, as described in § 1.267A-4 (payments offset by a hybrid deduction); or

(3) A specified payment for which the requirements of the anti-avoidance rule of § 1.267A-5(b)(6) are satisfied.

(c) ***De minimis exception.*** Paragraph (b) of this section does not apply to a specified party for a taxable year in which the sum of the specified party's specified payments that but for this paragraph (c) would be described in paragraph (b) of this section is less than $50,000. For purposes of this paragraph (c), specified parties that are related (within the meaning of § 1.267A-5(a)(14)) are treated as a single specified party.

[T.D. 9896, 85 FR 19836, Apr. 8, 2020]

§ 1.267A-2 Hybrid and branch arrangements.

(a) ***Payments pursuant to hybrid transactions*** —

(1) ***In general.*** If a specified payment is made pursuant to a hybrid transaction, then, subject to § 1.267A-3(b) (amounts included or includible in income), the payment is a disqualified hybrid amount to the extent that—

(i) A specified recipient of the payment does not include the payment in income, as determined under § 1.267A-3(a) (to such extent, a *no-inclusion*); and

(ii) The specified recipient's no-inclusion is a result of the payment being made pursuant to the hybrid transaction. For purposes of this paragraph (a)(1)(ii), the specified recipient's no-inclusion is a result of the specified payment being made pursuant to the hybrid transaction to the extent that the no-inclusion would not occur were the specified recipient's tax law to treat the payment as interest or a royalty, as applicable. See § 1.267A-6(c)(1) and (2) for examples illustrating the application of paragraph (a) of this section.

(2) ***Definition of hybrid transaction*** —

(i) ***In general.*** The term *hybrid transaction* means any transaction, series of transactions, agreement, or instrument one or more payments with respect to which are treated as interest or royalties for U.S. tax purposes but are not so treated for purposes of the tax law of a specified recipient of the payment. Examples of a hybrid transaction include an instrument a payment with respect to which is treated as interest for U.S. tax purposes but, for purposes of a specified recipient's tax law, is treated as a distribution with respect to equity or a recovery of principal with respect to indebtedness.

(ii) ***Special rules*** —

(A) ***Long-term deferral.*** A specified payment is deemed to be made pursuant to a hybrid transaction if the taxable year in which a specified recipient of the payment takes the payment into account in income under its tax law (or, based on all the facts and circumstances, is reasonably expected to take the payment into account in income under its tax law) ends more than 36 months after the end of the taxable year in which the specified party would be allowed a deduction for the payment under U.S. tax law. In addition, if the tax law of a specified recipient of the specified payment does not impose an income tax, then such tax law does not cause the payment to be deemed to be made pursuant to a hybrid transaction under this paragraph (a)(2)(ii)(A). See § 1.267A-6(c)(8) for an example illustrating the application of this paragraph (a)(2)(ii)(A) in the context of the imported mismatch rule.

(B) ***Royalties treated as payments in exchange for property under foreign law.*** In the case of a specified payment that is a royalty for U.S. tax purposes and for purposes of the tax law of a specified recipient of the payment is consideration received in exchange for property, the tax law of the specified recipient is not treated as causing the payment to be made pursuant to a hybrid transaction.

(C) ***Coordination with disregarded payment rule.*** A specified payment is not considered made pursuant to a hybrid transaction if the payment is a disregarded payment, as described in paragraph (b)(2) of this section.

(3) ***Payments pursuant to securities lending transactions, sale-repurchase transactions, or similar transactions.*** This paragraph (a)(3) applies if a specified payment is made pursuant to a repo transaction and is not regarded under a foreign tax law, but another amount connected to the payment (the *connected amount*) is regarded under such foreign tax law. For purposes of this paragraph (a)(3), a *repo transaction* means a transaction one or more payments with respect to which are treated as interest (as defined in § 1.267A-5(a)(12)) or a structured payment (as defined in § 1.267A-5(b)(5)(ii)) for U.S. tax purposes and that is a securities lending transaction or sale-repurchase transaction (including as described in § 1.861-2(a)(7)), or other similar transaction or series of related transactions in which legal title to property is transferred and the property (or similar property, such as securities of the same class and issue) is reacquired or expected to be reacquired. For example, this paragraph (a)(3) applies if a specified payment arising from characterizing a repo transaction of stock in accordance with its substance (that is, characterizing the specified payment as interest) is not regarded as such under a foreign tax law but an amount consistent with the form of the transaction (such as a dividend) is regarded under such foreign tax law. When this paragraph (a)(3) applies, the determination of the identity of a specified recipient of the specified payment under the foreign tax law is made with respect to the connected amount. In addition, if the specified recipient includes the connected amount in income (as determined under § 1.267A-3(a), by treating the connected amount as the specified payment), then the amount of the

specified recipient's no-inclusion with respect to the specified payment is correspondingly reduced. Further, the principles of this paragraph (a)(3) apply to cases similar to repo transactions in which a foreign tax law does not characterize the transaction in accordance with its substance. See § 1.267A-6(c)(2) for an example illustrating the application of this paragraph (a)(3).

(4) ***Payments pursuant to interest-free loans and similar arrangements.*** In the case of a specified payment that is interest for U.S. tax purposes, the following special rules apply:

(i) The payment is deemed to be made pursuant to a hybrid transaction to the extent that—

(A) Under U.S. tax law, the payment is imputed (for example, under section 482 or 7872, including because the instrument pursuant to which it is made is indebtedness but the terms of the instrument provide for an interest rate equal to or less than the risk-free rate or the rate on sovereign debt with similar terms in the relevant foreign currency); and

(B) A tax resident or taxable branch to which the payment is made does not take the payment into account in income under its tax law because such tax law does not impute any interest. The rules of paragraph (b)(4) of this section apply for purposes of determining whether the specified payment is made indirectly to a tax resident or taxable branch.

(ii) A tax resident or taxable branch the tax law of which causes the payment to be deemed to be made pursuant to a hybrid transaction under paragraph (a)(4)(i) of this section is deemed to be a specified recipient of the payment for purposes of paragraph (a)(1) of this section.

(b) ***Disregarded payments*** —

(1) ***In general.*** Subject to § 1.267A-3(b) (amounts included or includible in income), the excess (if any) of the sum of a specified party's disregarded payments for a taxable year over its dual inclusion income for the taxable year is a disqualified hybrid amount. See § 1.267A-6(c)(3) and (4) for examples illustrating the application of paragraph (b) of this section.

(2) ***Definition of disregarded payment*** —

(i) ***In general.*** The term *disregarded payment* means a specified payment to the extent that, under the tax law of a tax resident or taxable branch to which the payment is made, the payment is not regarded (for example, because under such tax law it is a payment involving a single taxpayer or members of a group) and, were the payment to be regarded (and treated as interest or a royalty, as applicable) under such tax law, the tax resident or taxable branch would include the payment in income, as determined under § 1.267A-3(a).

(ii) ***Special rules*** —

(A) ***Foreign consolidation and similar regimes.*** A disregarded payment includes a specified payment that, under the tax law of a tax resident or taxable branch to which the payment is made, is a payment that gives rise to a deduction or similar offset allowed to the tax resident or taxable branch (or group of entities that include the tax resident or taxable branch) under a foreign consolidation, fiscal unity, group relief, loss sharing, or any similar regime.

(B) ***Certain payments of a U.S. taxable branch.*** In the case of a specified payment of a U.S. taxable branch, the payment is not a disregarded payment to the extent that under the tax law of the tax resident to which the payment is made the payment is otherwise taken into account. See paragraph (c)(2) of this section for an example of when an amount may be otherwise taken into account.

(C) ***Coordination with other hybrid and branch arrangements.*** A disregarded payment does not include a deemed branch payment described in paragraph (c)(2) of this section, a specified payment pursuant to a repo transaction or similar transaction described in paragraph (a)(3) of this section, or a specified payment pursuant to an interest-free loan or similar transaction described in paragraph (a)(4) of this section.

(3) ***Definition of dual inclusion income*** —

(i) ***In general.*** With respect to a specified party, the term *dual inclusion income* means the excess, if any, of—

(A) The sum of the specified party's items of income or gain for U.S. tax purposes that are included in the specified party's income, as determined under § 1.267A-3(a) (by treating the items of income or gain as the specified payment; and, in the case of a specified party that is a CFC, by treating U.S. tax law as the CFC's tax law), to the extent the items of income or gain are included in the income of the tax resident or taxable branch to which the disregarded payments are made, as determined under § 1.267A-3(a) (by treating the items of income or gain as the specified payment); over

(B) The sum of the specified party's items of deduction or loss for U.S. tax purposes (other than deductions for disregarded payments), to the extent the items of deduction or loss are allowable (or have been or will be allowable during a taxable year that ends no more than 36 months after the end of the specified party's taxable year) under the tax law of the tax resident or taxable branch to which the disregarded payments are made.

(ii) ***Special rule for certain dividends.*** An item of income or gain of a specified party that is included in the specified party's income but not included in the income of the tax resident or taxable branch to which the disregarded payments are made is considered described in paragraph (b)(3)(i)(A) of this section to the extent that, under the tax resident's or taxable branch's tax law, the item is a dividend that would have been included in the income of the tax resident or taxable branch but for an exemption, exclusion, deduction, credit, or other similar relief particular to the item, provided that the party paying the item is not allowed a deduction or other tax benefit for it under its tax law. Similarly, an item of income or gain of a specified party that is included in the income of the tax resident or taxable branch to which the disregarded payments are made but not included in the specified party's income is considered described in paragraph (b)(3)(ii)(A) of this section to the extent that, under U.S. tax law, the item is a dividend that would have been included in the income of the specified party but for a dividends received deduction with respect to the dividend (for example, a deduction under section 245A(a)), provided that the party paying the item is not allowed a deduction or other tax benefit for it under its tax law. See § 1.267A-6(c)(3)(iv) for an example illustrating the application of this paragraph (b)(3)(ii).

(4) ***Payments made indirectly to a tax resident or taxable branch.*** A specified payment made to an entity an interest of which is directly or indirectly (determined under the rules of section 958(a) without regard to whether an intermediate entity is foreign or domestic, or under substantially similar rules

under a tax resident's or taxable branch's tax law) owned by a tax resident or taxable branch is considered made to the tax resident or taxable branch to the extent that, under the tax law of the tax resident or taxable branch, the entity to which the payment is made is fiscally transparent (and all intermediate entities, if any, are also fiscally transparent).

(c) ***Deemed branch payments*** —

(1) ***In general.*** If a specified payment is a deemed branch payment, then the payment is a disqualified hybrid amount if the tax law of the home office provides an exclusion or exemption for income attributable to the branch. See § 1.267A-6(c)(4) for an example illustrating the application of this paragraph (c).

(2) ***Definition of deemed branch payment.*** The term *deemed branch payment* means, with respect to a U.S. taxable branch that is a U.S. permanent establishment of a treaty resident eligible for benefits under an income tax treaty between the United States and the treaty country, any amount of interest or royalties allowable as a deduction in computing the business profits of the U.S. permanent establishment, to the extent the amount is deemed paid to the home office (or other branch of the home office), is not regarded (or otherwise taken into account) under the home office's tax law (or the other branch's tax law), and, were the payment to be regarded (and treated as interest or a royalty, as applicable) under the home office's tax law (or other branch's tax law), the home office (or other branch) would include the payment in income, as determined under § 1.267A-3(a). An amount may be otherwise taken into account for purposes of this paragraph (c)(2) if, for example, under the home office's tax law a corresponding amount of interest or royalties is allocated and attributable to the U.S. permanent establishment and is therefore not deductible.

(d) ***Payments to reverse hybrids*** —

(1) ***In general.*** If a specified payment is made to a reverse hybrid, then, subject to § 1.267A-3(b) (amounts included or includible in income), the payment is a disqualified hybrid amount to the extent that—

(i) An investor, the tax law of which treats the reverse hybrid as not fiscally transparent, does not include the payment in income, as determined under § 1.267A-3(a) (to such extent, a *no-inclusion*); and

(ii) The investor's no-inclusion is a result of the payment being made to the reverse hybrid. For purposes of this paragraph (d)(1)(ii), the investor's no-inclusion is a result of the specified payment being made to the reverse hybrid to the extent that the no-inclusion would not occur were the investor's tax law to treat the reverse hybrid as fiscally transparent (and treat the payment as interest or a royalty, as applicable). See § 1.267A-6(c)(5) for an example illustrating the application of paragraph (d) of this section.

(2) ***Definition of reverse hybrid.*** The term *reverse hybrid* means an entity (regardless of whether domestic or foreign) that is fiscally transparent under the tax law of the country in which it is created, organized, or otherwise established but not fiscally transparent under the tax law of an investor of the entity.

(3) ***Payments made indirectly to a reverse hybrid.*** A specified payment made to an entity an interest of which is directly or indirectly (determined under the rules of section 958(a) without regard to whether an intermediate entity is foreign or domestic, or under substantially similar rules under a tax resident's or taxable branch's tax law) owned by a reverse hybrid is considered made to the reverse

hybrid to the extent that, under the tax law of an investor of the reverse hybrid, the entity to which the payment is made is fiscally transparent (and all intermediate entities, if any, are also fiscally transparent).

(4) ***Exception for inclusion by taxable branch in establishment country.*** Paragraph (d)(1) of this section does not apply to a specified payment made to a reverse hybrid to the extent that a taxable branch located in the country in which the reverse hybrid is created, organized, or otherwise established (and the activities of which are carried on by one or more investors of the reverse hybrid) includes the payment in income, as determined under § 1.267A-3(a).

(e) ***Branch mismatch payments*** —

(1) ***In general.*** If a specified payment is a branch mismatch payment, then, subject to § 1.267A-3(b) (amounts included or includible in income), the payment is a disqualified hybrid amount to the extent that—

(i) A home office, the tax law of which treats the payment as income attributable to a branch of the home office, does not include the payment in income, as determined under § 1.267A-3(a) (to such extent, a *no-inclusion*); and

(ii) The home office's no-inclusion is a result of the payment being a branch mismatch payment. For purposes of this paragraph (e)(1)(ii), the home office's no-inclusion is a result of the specified payment being a branch mismatch payment to the extent that the no-inclusion would not occur were the home office's tax law to treat the payment as income that is not attributable a branch of the home office (and treat the payment as interest or a royalty, as applicable). See § 1.267A-6(c)(6) for an example illustrating the application of paragraph (e) of this section.

(2) ***Definition of branch mismatch payment.*** The term *branch mismatch payment* means a specified payment for which the following requirements are satisfied:

(i) Under a home office's tax law, the payment is treated as income attributable to a branch of the home office; and

(ii) Either—

(A) The branch is not a taxable branch; or

(B) Under the branch's tax law, the payment is not treated as income attributable to the branch.

(f) ***Relatedness or structured arrangement limitation.*** A specified recipient, a tax resident or taxable branch to which a specified payment is made, an investor, or a home office is taken into account for purposes of paragraphs (a), (b), (d), and (e) of this section, respectively, only if the specified recipient, the tax resident or taxable branch, the investor, or the home office, as applicable, is related (as defined in § 1.267A-5(a)(14)) to the specified party or is a party to a structured arrangement (as defined in § 1.267A-5(a)(20)) pursuant to which the specified payment is made.

[T.D. 9896, 85 FR 19836, Apr. 8, 2020]

§ 1.267A-3 Income inclusions and amounts not treated as disqualified hybrid amounts.

(a) ***Income inclusions*** —

(1) ***General rule.*** For purposes of section 267A, a tax resident or taxable branch includes in income a specified payment to the extent that, under the tax law of the tax resident or taxable branch—

(i) It takes the payment into account (or has taken the payment into account, or, based on all the facts and circumstances, is reasonably expected to take the payment into account during a taxable year that ends no more than 36 months after the end of the specified party's taxable year) in its income or tax base at the full marginal rate imposed on ordinary income (or, if different, the full marginal rate imposed on interest or a royalty, as applicable); and

(ii) The payment is not reduced or offset by an exemption, exclusion, deduction, credit (other than for withholding tax imposed on the payment), or other similar relief particular to such type of payment. Examples of such reductions or offsets include a participation exemption, a dividends received deduction, a deduction or exclusion with respect to a particular category of income (such as income attributable to a branch, or royalties under a patent box regime), a credit for underlying taxes paid by a corporation from which a dividend is received, and a recovery of basis with respect to stock or a recovery of principal with respect to indebtedness. A specified payment is not considered reduced or offset by a deduction or other similar relief particular to the type of payment if it is offset by a generally applicable deduction or other tax attribute, such as a deduction for depreciation or a net operating loss. For purposes of this paragraph (a)(1)(ii), a deduction may be treated as being generally applicable even if it arises from a transaction related to the specified payment (for example, if the deduction and payment are in connection with a back-to-back financing arrangement).

(2) ***Coordination with foreign hybrid mismatch rules.*** Whether a tax resident or taxable branch includes in income a specified payment is determined without regard to any defensive or secondary rule contained in hybrid mismatch rules, if any, under the tax law of the tax resident or taxable branch. For purposes of this paragraph (a)(2), a defensive or secondary rule means a provision of hybrid mismatch rules that requires a tax resident or taxable branch to include an amount in income if a deduction for the amount is not disallowed under the payer's tax law. However, a defensive or secondary rule does not include a rule pursuant to which a participation exemption or similar relief particular to a dividend is inapplicable as to a dividend for which the payer is allowed a deduction or other tax benefit under its tax law. Thus, a defensive or secondary rule does not include a rule consistent with recommendation 2.1 in Chapter 2 of OECD/G-20, *Neutralising the Effects of Hybrid Mismatch Arrangements, Action 2: 2015 Final Report* (October 2015).

(3) ***Inclusions with respect to reverse hybrids.*** With respect to a tax resident or taxable branch that is an investor of a reverse hybrid, whether the investor includes in income a specified payment made to the reverse hybrid is determined without regard to a distribution from the reverse hybrid (or the right to a distribution from the reverse hybrid triggered by the payment). However, if the reverse hybrid distributes all of its income during a taxable year, then, for that year, the determination of whether an investor includes in income a specified payment made to the reverse hybrid is made with regard to one or more distributions from the reverse hybrid during the year, by treating a portion of the specified payment as relating to each distribution during the year. For purposes of this paragraph (a)(3), the portion of the specified payment that is considered to relate to a distribution is the lesser of—

(i) The specified payment multiplied by a fraction, the numerator of which is the amount of the distribution and the denominator of which is the aggregate amount of distributions from the reverse hybrid during the taxable year; and

(ii) The amount of the distribution multiplied by a fraction, the numerator of which is the specified payment and the denominator of which is the sum of all specified payments made to the reverse hybrid during the taxable year.

(4) ***Inclusions with respect to certain payments pursuant to hybrid transactions.*** This paragraph (a)(4) applies to a specified payment that is interest and that is made pursuant to a hybrid transaction, to the extent that, under the tax law of a specified recipient of the payment, the payment is a recovery of basis with respect to stock or a recovery of principal with respect to indebtedness such that, but for this paragraph (a)(4), a no-inclusion would occur with respect to the specified recipient. In such a case, an amount that is a repayment of principal for U.S. tax purposes and that is or has been paid (or, based on all the facts and circumstances, is reasonably expected to be paid) by the specified party pursuant to the hybrid transaction (such amount, the *principal payment*) is, to the extent included in the income of the specified recipient, treated as correspondingly reducing the specified recipient's no-inclusion with respect to the specified payment. For purposes of this paragraph (a)(4), whether the specified recipient includes the principal payment in income is determined under paragraph (a)(1) of this section, by treating the principal payment as the specified payment and the taxable year period described in paragraph (a)(1) as being composed of taxable years of the specified recipient ending no more than 36 months after the end of the specified party's taxable year during which the specified payment is made (as opposed to, for example, being composed of taxable years of the specified recipient ending no more than 36 months after the end of the specified party's taxable year during which the principal payment is reasonably expected to be made). Moreover, once a principal payment reduces a no-inclusion with respect to a specified payment, it is not again taken into account for purposes of applying this paragraph (a)(4) to another specified payment. See § 1.267A-6(c)(1)(vi) for an example illustrating the application of this paragraph (a)(4).

(5) ***Deemed full inclusions and de minimis inclusions.*** A preferential rate, exemption, exclusion, deduction, credit, or similar relief particular to a type of payment that reduces or offsets 90 percent or more of the payment is considered to reduce or offset 100 percent of the payment. In addition, a preferential rate, exemption, exclusion, deduction, credit, or similar relief particular to a type of payment that reduces or offsets 10 percent or less of the payment is considered to reduce or offset none of the payment.

(b) ***Certain amounts not treated as disqualified hybrid amounts to extent included or includible in income for U.S. tax purposes —***

(1) ***In general.*** A specified payment, to the extent that but for this paragraph (b) it would be a disqualified hybrid amount (such amount, a *tentative disqualified hybrid amount*), is reduced under the rules of paragraphs (b)(2) through (4) of this section, as applicable. The tentative disqualified hybrid amount, as reduced under such rules, is the disqualified hybrid amount. See § 1.267A-6(c)(3) and (7) for examples illustrating the application of paragraph (b) of this section.

(2) ***Included in income of United States tax resident or U.S. taxable branch.*** A tentative disqualified hybrid amount is reduced to the extent that a specified recipient that is a tax resident of the United States or a U.S. taxable branch takes the tentative disqualified hybrid amount into account in determining its gross income.

(3) ***Includible in income under section 951(a)(1)(A).*** A tentative disqualified hybrid amount is reduced to the extent that the tentative disqualified hybrid amount is received by a CFC and includible under section 951(a)(1)(A) (determined without regard to properly allocable deductions of the CFC, qualified deficits under section 952(c)(1)(B), and the earnings and profits limitation under § 1.952-1(c)) in the gross income of a United States shareholder of the CFC. However, if the United

States shareholder is a domestic partnership, then the amount includible under section 951(a)(1)(A) in the gross income of the United States shareholder reduces the tentative disqualified hybrid amount only to the extent that a tax resident of the United States would take into account the amount.

(4) ***Includible in income under section 951A(a).*** A tentative disqualified hybrid amount is reduced to the extent that the tentative disqualified hybrid amount increases a United States shareholder's pro rata share of tested income (as determined under §§ 1.951A-1(d)(2) and 1.951A-2(b)(1)) with respect to a CFC, reduces the shareholder's pro rata share of tested loss (as determined under §§ 1.951A-1(d)(4) and 1.951A-2(b)(2)) of the CFC, or both. However, to the extent that a deduction for the tentative disqualified hybrid amount would be allowed to a tax resident of the United States or a U.S. taxable branch, or would be allowed to a CFC but would be allocated and apportioned to gross income of the CFC that is gross income taken into account in determining subpart F income (as described in section 952) or gross income that is effectively connected (or treated as effectively connected) with the conduct of a trade or business in the United States (as described in § 1.882-4(a)(1)), the reduction provided under this paragraph (b)(4) is equal to the reduction that would be provided under this paragraph (b)(4) but for this sentence multiplied by the difference of 100 percent and the percentage described in section 250(a)(1)(B).

(5) ***Includible in income under section 1293.*** A tentative disqualified hybrid amount is reduced to the extent that the tentative disqualified hybrid amount is received by a qualified electing fund (as described in section 1295) and is includible under section 1293 in the gross income of a United States person that owns stock of that fund. However, if the United States person is a domestic partnership, then the amount includible under section 1293 in the gross income of the United States person reduces the tentative disqualified hybrid amount only to the extent that a tax resident of the United States would take into account the amount.

[T.D. 9896, 85 FR 19836, Apr. 8, 2020]

§ 1.267A-4 Disqualified imported mismatch amounts.

(a) ***Disqualified imported mismatch amounts*** —

(1) ***Rule.*** An imported mismatch payment is a disqualified imported mismatch amount to the extent that, under the set-off rules of paragraph (c) of this section, the income attributable to the payment is directly or indirectly offset by a hybrid deduction incurred by a foreign tax resident or foreign taxable branch that is related to the imported mismatch payer (or that is a party to a structured arrangement pursuant to which the payment is made). See § 1.267A-6(c)(8) through (12) for examples illustrating the application of this section.

(2) ***Definitions of certain terms.*** The following definitions apply for purposes of this section:

(i) A *foreign tax resident* means a tax resident that is not a tax resident of the United States.

(ii) A *foreign taxable branch* means a taxable branch that is not a U.S. taxable branch.

(iii) An *imported mismatch payee* means, with respect to an imported mismatch payment, a foreign tax resident or foreign taxable branch that includes the payment in income, as determined under § 1.267A-3(a).

(iv) An *imported mismatch payer* means, with respect to an imported mismatch payment, the specified party.

(v) An *imported mismatch payment* means a specified payment to the extent that it is neither a disqualified hybrid amount nor included or includible in income in the United States. For purposes of this paragraph (a)(2)(v), a specified payment is included or includible in income in the United States to the extent that, if the payment were a tentative disqualified hybrid amount (as described in § 1.267A-3(b)(1)), it would be reduced under the rules of § 1.267A-3(b)(2) through (5).

(b) ***Hybrid deduction*** —

(1) ***In general.*** A *hybrid deduction* means any of the following:

(i) A deduction allowed to a foreign tax resident or foreign taxable branch under its tax law for an amount paid or accrued that is interest (including an amount that would be a structured payment under the principles of § 1.267A-5(b)(5)(ii)) or royalty under such tax law, to the extent that a deduction for the amount would be disallowed if such tax law contained rules substantially similar to those under §§ 1.267A-1 through 1.267A-3 and 1.267A-5. Such a deduction is a hybrid deduction regardless of whether or how the amount giving rise to the deduction would be recognized under U.S. tax law.

(ii) A deduction allowed to a foreign tax resident or foreign taxable branch under its tax law with respect to equity (including deemed equity), such as a notional interest deduction (or similar deduction determined with respect to the foreign tax resident's or foreign taxable branch's equity). However, a deduction allowed to a foreign tax resident or foreign taxable branch with respect to equity is a hybrid deduction only to the extent that an investor of the foreign tax resident, or the home office of the foreign taxable branch, would include the amount in income if, for purposes of the investor's or home office's tax law, the amount were interest paid by the foreign tax resident ratably (by value) with respect to the interests of the foreign tax resident, or interest paid by the foreign taxable branch to the home office. For purposes of this paragraph (b)(1)(ii), the rules of § 1.267A-3(a) apply to determine the extent that an investor or home office would include an amount in income, by treating the amount as the specified payment.

(2) ***Special rules*** —

(i) ***Foreign tax law contains hybrid mismatch rules.*** In the case of a foreign tax resident or foreign taxable branch the tax law of which contains hybrid mismatch rules, only the following deductions allowed to the foreign tax resident or foreign taxable branch under its tax law are hybrid deductions:

(A) A deduction described in paragraph (b)(1)(i) of this section, to the extent that the deduction would be disallowed if the foreign tax resident's or foreign taxable branch's tax law—

(*1*) Contained a rule substantially similar to § 1.267A-2(a)(4) (payments pursuant to interest-free loans and similar arrangements); or

(*2*) Did not permit an inclusion in income in a third country to discharge the application of its hybrid mismatch rules as to the amount giving rise to the deduction when the amount is not included in income in another country as a result of a hybrid or branch arrangement.

(B) A deduction described in paragraph (b)(1)(ii) of this section (deductions with respect to equity).

(ii) ***Dual inclusion income used to determine hybrid deductions arising from deemed branch payments in certain cases.*** In the case of a foreign taxable branch the tax law of which permits a loss of the foreign taxable branch to be shared with a tax resident or taxable branch (without regard to whether it is in fact so shared or whether there is a tax resident or taxable branch with which the loss can be shared), a deduction allowed to the foreign taxable branch for an amount that would be a deemed branch payment were such tax law to contain a provision substantially similar to § 1.267A-2(c) is a hybrid deduction to the extent of the excess (if any) of the sum of all such amounts over the foreign taxable branch's dual inclusion income (as determined under the principles of § 1.267A-2(b)(3)). The rule in this paragraph (b)(2)(ii) applies without regard to whether the tax law of the home office provides an exclusion or exemption for income attributable to the branch.

(iii) ***Certain deductions are hybrid deductions only if allowed for an accounting period beginning on or after December 20, 2018.*** A deduction described in paragraph (b)(1)(ii) of this section (deductions with respect to equity), or a deduction that would be disallowed if the foreign tax resident's or foreign taxable branch's tax law contained a rule substantially similar to § 1.267A-2(a)(4) (payments pursuant to interest-free loans and similar arrangements), is a hybrid deduction only if allowed for an accounting period beginning on or after December 20, 2018.

(iv) ***Certain deductions of a CFC are not hybrid deductions.*** A deduction that but for this paragraph (b)(2)(iv) would be a hybrid deduction is not a hybrid deduction to the extent that the amount paid or accrued giving rise to the deduction is—

(A) A disqualified hybrid amount (but subject to the special rule of paragraph (g) of this section); or

(B) Included or includible in income in the United States. For purposes of this paragraph (b)(2)(iv)(B), an amount is included or includible in income in the United States to the extent that, if the amount were a tentative disqualified hybrid amount (as described in § 1.267A-3(b)(1)), it would be reduced under the rules of § 1.267A-3(b)(2) through (5).

(v) ***Loss carryovers.*** A hybrid deduction for a particular accounting period includes a loss carryover from another accounting period, but only to the extent that a hybrid deduction incurred in an accounting period ending on or after December 20, 2018, comprises the loss carryover.

(c) ***Set-off rules*** —

(1) ***In general.*** In the order described in paragraph (c)(2) of this section, a hybrid deduction directly or indirectly offsets the income attributable to an imported mismatch payment to the extent that, under paragraph (c)(3) of this section, the payment directly or indirectly funds the hybrid deduction. The rules of paragraphs (c)(2) and (3) of this section are applied by taking into account the application of paragraph (c)(4) of this section (adjustments to ensure that amounts not taken into account more than once).

(2) ***Ordering rules.*** The following ordering rules apply for purposes of determining the extent that a hybrid deduction directly or indirectly offsets income attributable to imported mismatch payments.

(i) First, the hybrid deduction offsets income attributable to a factually-related imported mismatch payment that directly or indirectly funds the hybrid deduction. For purposes of this paragraph (c)(2)(i), a *factually-related imported mismatch payment* means an imported mismatch payment that is made pursuant to a transaction, agreement, or instrument entered into pursuant to the same plan or series of related transactions that includes the transaction, agreement, or

instrument pursuant to which the hybrid deduction is incurred, provided that a design of the plan or series of related transactions was for the hybrid deduction to offset income attributable to the payment (as determined under the principles of § 1.267A-5(a)(20)(i), by treating the offset as the "hybrid mismatch" described in § 1.267A-5(a)(20)(i)).

(ii) Second, to the extent remaining, the hybrid deduction offsets income attributable to an imported mismatch payment (other than a factually-related imported mismatch payment) that directly funds the hybrid deduction.

(iii) Third, to the extent remaining, the hybrid deduction offsets income attributable to an imported mismatch payment (other than a factually-related imported mismatch payment) that indirectly funds the hybrid deduction.

(3) ***Funding rules.*** The following funding rules apply for purposes of determining the extent that an imported mismatch payment directly or indirectly funds a hybrid deduction.

(i) The imported mismatch payment directly funds a hybrid deduction to the extent that the imported mismatch payee incurs the hybrid deduction.

(ii) The imported mismatch payment indirectly funds a hybrid deduction to the extent that the imported mismatch payee is allocated the hybrid deduction, and provided that the imported mismatch payee is related to the imported mismatch payer (or is a party to a structured arrangement pursuant to which the imported mismatch payment is made).

(iii) The imported mismatch payee is allocated a hybrid deduction to the extent that the imported mismatch payee directly or indirectly makes a funded taxable payment to the foreign tax resident or foreign taxable branch that incurs the hybrid deduction.

(iv) An imported mismatch payee indirectly makes a funded taxable payment to the foreign tax resident or foreign taxable branch that incurs a hybrid deduction to the extent that a chain of funded taxable payments connects the imported mismatch payee, each intermediary foreign tax resident or foreign taxable branch, and the foreign tax resident or foreign taxable branch that incurs the hybrid deduction, and provided that each intermediary foreign tax resident or foreign taxable branch is related to the imported mismatch payer (or is a party to a structured arrangement pursuant to which the imported mismatch payment is made).

(v) The term *funded taxable payment* means an amount paid or accrued by a foreign tax resident or foreign taxable branch under its tax law (other than an amount that gives rise to a hybrid deduction), to the extent that—

(A) The amount is deductible (but, if such tax law contains hybrid mismatch rules, determined without regard to a provision substantially similar to this section);

(B) Another foreign tax resident or foreign taxable branch includes the amount in income, as determined under § 1.267A-3(a) (by treating the amount as the specified payment); and

(C) The amount is neither a disqualified hybrid amount (but subject to the special rule of paragraph (g) of this section) nor included or includible in income in the United States. For purposes of this paragraph (c)(3)(v)(C), an amount is included or includible in income in the United States to the extent that, if the amount were a tentative disqualified hybrid amount (as described in § 1.267A-3(b)(1)), it would be reduced under the rules of § 1.267A-3(b)(2) through (5).

(vi) If a deduction or loss that is not incurred by a foreign tax resident or foreign taxable branch is directly or indirectly made available to offset income of the foreign tax resident or foreign taxable branch under its tax law, then, for purposes of this paragraph (c), the foreign tax resident or foreign taxable branch to which the deduction or loss is made available and the foreign tax resident or foreign taxable branch that incurs the deduction or loss are treated as a single foreign tax resident or foreign taxable branch. For example, if a deduction or loss of one foreign tax resident is made available to offset income of another foreign tax resident under a tax consolidation, fiscal unity, group relief, loss sharing, or any similar regime, then the foreign tax residents are treated as a single foreign tax resident for purposes of this paragraph (c).

(vii) An imported mismatch payee that directly makes a funded taxable payment to the foreign tax resident or foreign taxable branch that incurs a hybrid deduction is allocated the hybrid deduction before the hybrid deduction (to the extent remaining) is allocated to an imported mismatch payee that indirectly makes a funded taxable payment to the foreign tax resident or foreign taxable branch that incurs the hybrid deduction.

(viii) An imported mismatch payee that, through a chain of funded taxable payments consisting of a particular number of funded taxable payments, indirectly makes a funded taxable payment to the foreign tax resident or foreign taxable branch that incurs a hybrid deduction is allocated the hybrid deduction before the hybrid deduction (to the extent remaining) is allocated to an imported mismatch payee that, through a chain of funded taxable payments consisting of a greater number of funded taxable payments, indirectly makes a funded taxable payment to the foreign tax resident or foreign taxable branch that incurs the hybrid deduction.

(4) ***Adjustments to ensure amounts not taken into account more than once.*** To the extent that the income attributable to an imported mismatch payment is directly or indirectly offset by a hybrid deduction, the imported mismatch payment, the hybrid deduction, and, if applicable, each funded taxable payment comprising the chain of funded taxable payments connecting the imported mismatch payee, each intermediary foreign tax resident or foreign taxable branch, and the foreign tax resident or foreign taxable branch that incurs the hybrid deduction is correspondingly reduced; as a result, such amounts are not again taken into account under this section.

(d) ***Calculations based on aggregate amounts during accounting period.*** For purposes of this section, amounts are determined on an accounting period basis. Thus, for example, the amount of imported mismatch payments made by an imported mismatch payer to a particular imported mismatch payee is equal to the aggregate amount of all such payments made by the imported mismatch payer during the accounting period.

(e) ***Pro rata adjustments.*** Amounts are allocated on a pro rata basis if there would otherwise be more than one permissible manner in which to allocate the amounts. Thus, for example, if multiple imported mismatch payers make an imported mismatch payment to a single imported mismatch payee, the sum of such payments exceeds the hybrid deduction incurred by the imported mismatch payee, and the payments are not factually-related imported mismatch payments, then a pro rata portion of each imported mismatch payer's payment is considered to directly fund the hybrid deduction. See § 1.267A-6(c)(9) and (12) for examples illustrating the application of this paragraph (e).

(f) ***Special rules regarding manner in which this section is applied*** —

(1) ***Initial application of this section.*** This section is first applied without regard to paragraph (f)(2) of this section and by taking into account only the following hybrid deductions:

(i) A hybrid deduction described in paragraph (b)(1)(i) of this section, to the extent that—

(A) The deduction would be disallowed if the foreign tax resident's or foreign taxable branch's tax law contained a rule substantially similar to § 1.267A-2(a)(4) (payments pursuant to interest-free loans and similar arrangements); or

(B) The paid or accrued amount giving rise to the deduction is included in income in a third country but is not included in income in another country as a result of a hybrid or branch arrangement.

(ii) A hybrid deduction described in paragraph (b)(1)(ii) of this section (deductions with respect to equity).

(2) ***Subsequent application of this section takes into account certain amounts deemed to be imported mismatch payments.*** After this section is applied pursuant to the rules of paragraph (f)(1) of this section, the section is then applied by taking into account only hybrid deductions other than those described in paragraph (f)(1) of this section. In addition, when applying this section in the manner described in the previous sentence, for purposes of determining the extent to which the income attributable to an imported mismatch payment is directly or indirectly offset by a hybrid deduction, an amount paid or accrued by a foreign tax resident or foreign taxable branch that is not a specified party is deemed to be an imported mismatch payment (and such foreign tax resident or foreign taxable branch and a foreign tax resident or foreign taxable branch that includes the amount in income, as determined under § 1.267A-3(a), by treating the amount as the specified payment, are deemed to be an imported mismatch payer and an imported mismatch payee, respectively) to the extent that—

(i) The tax law of such foreign tax resident or foreign taxable branch contains hybrid mismatch rules; and

(ii) The amount is subject to disallowance under a provision of the hybrid mismatch rules substantially similar to this section. See § 1.267A-6(c)(10) and (12) for examples illustrating the application of paragraph (f)(2) of this section.

(g) ***Special rule regarding extent to which a disqualified hybrid amount of a CFC prevents a hybrid deduction or a funded taxable payment.*** A disqualified hybrid amount of a CFC is taken into account for purposes of paragraph (b)(2)(iv)(A) or (c)(3)(v)(C) of this section (certain deductions not hybrid deductions or funded taxable payments to the extent the amount giving rise to the deduction is a disqualified hybrid amount) only to the extent of the excess (if any) of the disqualified hybrid amount over the sum of the amounts described in paragraphs (g)(1) through (3) of this section. See § 1.267A-6(c)(11) for an example illustrating the application of this paragraph (g).

(1) The disqualified hybrid amount to the extent that, if allowed as a deduction, it would be allocated and apportioned to residual CFC gross income (as described in § 1.951A-2(c)(5)(iii)(B)) of the CFC.

(2) The disqualified hybrid amount to the extent that, if allowed as a deduction, it would be allocated and apportioned (under the rules of section 954(b)(5)) to gross income that is taken into account in determining the CFC's subpart F income (as described in section 952 and § 1.952-1), multiplied by the difference of 100 percent and the percentage of stock (by value) of the CFC that, for purposes of sections 951 and 951A, is owned (within the meaning of section 958(a), and determined by treating a domestic partnership as foreign) by one or more tax residents of the United States that are United States shareholders of the CFC.

(3) The disqualified hybrid amount to the extent that, if allowed as a deduction, it would be allocated and apportioned (under the rules of § 1.951A-2(c)(3)) to gross tested income of the CFC (as described in section 951A(c)(2)(A) and § 1.951A-2(c)(1)), multiplied by the difference of 100 percent and the percentage of stock (by value) of the CFC that, for purposes of sections 951 and 951A, is owned (within the meaning of section 958(a), and determined by treating a domestic partnership as foreign) by one or more tax residents of the United States that are United States shareholders of the CFC.

[T.D. 9896, 85 FR 19836, Apr. 8, 2020]

§ 1.267A-5 Definitions and special rules.

(a) ***Definitions.*** For purposes of §§ 1.267A-1 through 1.267A-7 the following definitions apply.

(1) The term *accounting period* means a taxable year, or a period of similar length over which, under a provision of hybrid mismatch rules substantially similar to § 1.267A-4, computations similar to those under § 1.267A-4 are made under a foreign tax law.

(2) The term *branch* means a taxable presence of a tax resident in a country other than its country of residence as determined under either the tax resident's tax law or such other country's tax law.

(3) The term *branch mismatch payment* has the meaning provided in § 1.267A-2(e)(2).

(4) The term *controlled foreign corporation* (or *CFC*) has the meaning provided in section 957.

(5) The term *deemed branch payment* has the meaning provided in § 1.267A-2(c)(2).

(6) The term *disregarded payment* has the meaning provided in § 1.267A-2(b)(2).

(7) The term *entity* means any person as described in section 7701(a)(1), including an entity that under §§ 301.7701-1 through 301.7701-3 of this chapter is disregarded as an entity separate from its owner, other than an individual.

(8) The term *fiscally transparent* means, with respect to an entity, fiscally transparent with respect to an item of income as determined under the principles of § 1.894-1(d)(3)(ii) and (iii), without regard to whether a tax resident (either the entity or interest holder in the entity) that derives the item of income is a resident of a country that has an income tax treaty with the United States. In addition, the following special rules apply with respect to an item of income received by an entity:

(i) The entity is fiscally transparent with respect to the item under the tax law of the country in which the entity is created, organized, or otherwise established if, under that tax law, the entity does not take the item into account in its income (without regard to whether such tax law requires an investor of the entity, wherever resident, to separately take into account on a current basis the investor's respective share of the item), and the effect under that tax law is that an investor of the entity is required to take the item into account in its income as if the item were realized directly from the source from which realized by the entity, whether or not distributed.

(ii) The entity is fiscally transparent with respect to the item under the tax law of an investor of the entity if, under that tax law, an investor of the entity takes the item into account in its income (without regard to whether such tax law requires the investor to separately take into account on a current basis the investor's respective share of the item) as if the item were realized directly from the source from which realized by the entity, whether or not distributed.

(iii) The entity is fiscally transparent with respect to the item under the tax law of the country in which the entity is created, organized, or otherwise established if—

(A) That tax law imposes a corporate income tax; and

(B) Under that tax law, neither the entity is required to take the item into account in its income nor an investor of the entity is required to take the item into account in its income as if the item were realized directly from the source from which realized by the entity, whether or not distributed.

(9) The term *home office* means a tax resident that has a branch.

(10) The term *hybrid mismatch rules* means rules, regulations, or other tax guidance substantially similar to section 267A, and includes rules the purpose of which is to neutralize the deduction/no-inclusion outcome of hybrid and branch mismatch arrangements. Examples of such rules would include rules based on, or substantially similar to, the recommendations contained in OECD/G-20, *Neutralising the Effects of Hybrid Mismatch Arrangements, Action 2: 2015 Final Report* (October 2015), and OECD/G-20, *Neutralising the Effects of Branch Mismatch Arrangements, Action 2: Inclusive Framework on BEPS* (July 2017).

(11) The term *hybrid transaction* has the meaning provided in § 1.267A-2(a)(2).

(12) The term *interest* means any amount described in paragraph (a)(12)(i) or (ii) of this section that is paid or accrued, or treated as paid or accrued, for the taxable year or that is otherwise designated as interest expense in paragraph (a)(12)(i) or (ii) of this section.

(i) ***In general.*** Interest is an amount paid, received, or accrued as compensation for the use or forbearance of money under the terms of an instrument or contractual arrangement, including a series of transactions, that is treated as a debt instrument for purposes of section 1275(a) and § 1.1275-1(d), and not treated as stock under § 1.385-3, or an amount that is treated as interest under other provisions of the Internal Revenue Code (Code) or the regulations in this part. Thus, interest includes, but is not limited to, the following—

(A) Original issue discount (OID);

(B) Qualified stated interest, as adjusted by the issuer for any bond issuance premium;

(C) OID on a synthetic debt instrument arising from an integrated transaction under § 1.1275-6;

(D) Repurchase premium to the extent deductible by the issuer under § 1.163-7(c);

(E) Deferred payments treated as interest under section 483;

(F) Amounts treated as interest under a section 467 rental agreement;

(G) Forgone interest under section 7872;

(H) De minimis OID taken into account by the issuer;

(I) Amounts paid in connection with a sale-repurchase agreement treated as indebtedness under Federal tax principles;

(J) Redeemable ground rent treated as interest under section 163(c); and

(K) Amounts treated as interest under section 636.

(ii) *Swaps with significant nonperiodic payments* —

(A) ***In general.*** Except as provided in paragraphs (a)(12)(ii)(B) and (C) of this section, a swap with significant nonperiodic payments is treated as two separate transactions consisting of an on-market, level payment swap and a loan. The loan must be accounted for by the parties to the contract independently of the swap. The time value component associated with the loan, determined in accordance with § 1.446-3(f)(2)(iii)(A), is recognized as interest expense to the payor.

(B) ***Exception for cleared swaps.*** Paragraph (a)(12)(ii)(A) of this section does not apply to a cleared swap. The term *cleared swap* means a swap that is cleared by a derivatives clearing organization, as such term is defined in section 1a of the Commodity Exchange Act (7 U.S.C. 1a), or by a clearing agency, as such term is defined in section 3 of the Securities Exchange Act of 1934 (15 U.S.C. 78c), that is registered as a derivatives clearing organization under the Commodity Exchange Act or as a clearing agency under the Securities Exchange Act of 1934, respectively, if the derivatives clearing organization or clearing agency requires the parties to the swap to post and collect margin or collateral.

(C) ***Exception for non-cleared swaps subject to margin or collateral requirements.*** Paragraph (a)(12)(ii)(A) of this section does not apply to a non-cleared swap that requires the parties to meet the margin or collateral requirements of a Federal regulator or that provides for margin or collateral requirements that are substantially similar to a cleared swap or a non-cleared swap subject to the margin or collateral requirements of a Federal regulator. For purposes of this paragraph (a)(12)(ii)(C), the term *Federal regulator* means the Securities and Exchange Commission (SEC), the Commodity Futures Trading Commission (CFTC), or a prudential regulator, as defined in section 1a(39) of the Commodity Exchange Act (7 U.S.C. 1a), as amended by section 721 of the Dodd-Frank Wall Street Reform and Consumer Protection Act of 2010, Public Law 111-203, 124 Stat. 1376, Title VII.

(13) The term *investor* means, with respect to an entity, any tax resident or taxable branch that directly or indirectly (determined under the rules of section 958(a) without regard to whether an intermediate entity is foreign or domestic, or under substantially similar rules under a tax resident's or taxable branch's tax law) owns an interest in the entity.

(14) The term *related* has the meaning provided in this paragraph (a)(14). A tax resident or taxable branch is related to a specified party if the tax resident or taxable branch is a related person within the meaning of section 954(d)(3), determined by treating the specified party as the “controlled foreign corporation” referred to in section 954(d)(3) and the tax resident or taxable branch as the “person” referred to in section 954(d)(3). In addition, for the purposes of this paragraph (a)(14), a tax resident that under §§ 301.7701-1 through 301.7701-3 of this chapter is disregarded as an entity separate from its owner for U.S. tax purposes, as well as a taxable branch, is treated as a corporation. *See also* § 1.954-1(f)(2)(iv)(B)(*1*) (neither section 318(a)(3), nor § 1.958-2(d) or the principles thereof, applies to attribute stock or other interests).

(15) The term *reverse hybrid* has the meaning provided in § 1.267A-2(d)(2).

(16) The term *royalty* includes amounts paid or accrued as consideration for the use of, or the right to use—

(i) Any copyright, including any copyright of any literary, artistic, scientific or other work (including cinematographic films and software);

(ii) Any patent, trademark, design or model, plan, secret formula or process, or other similar property (including goodwill); or

(iii) Any information concerning industrial, commercial or scientific experience, but does not include—

(A) Amounts paid or accrued for after-sales services;

(B) Amounts paid or accrued for services rendered by a seller to the purchaser under a warranty;

(C) Amounts paid or accrued for pure technical assistance; or

(D) Amounts paid or accrued for an opinion given by an engineer, lawyer or accountant.

(17) The term *specified party* means a tax resident of the United States, a CFC (other than a CFC with respect to which there is not a tax resident of the United States that, for purposes of sections 951 and 951A, owns (within the meaning of section 958(a), and determined by treating a domestic partnership as foreign) at least ten percent (by vote or value) of the stock of the CFC), and a U.S. taxable branch. Thus, an entity that is fiscally transparent for U.S. tax purposes is not a specified party, though an owner of the entity may be a specified party. For example, in the case of a payment by a partnership, a domestic corporation that is a partner of the partnership is a specified party and a deduction for its allocable share of the payment is subject to disallowance under section 267A.

(18) The term *specified payment* has the meaning provided in § 1.267A-1(b).

(19) The term *specified recipient* means, with respect to a specified payment, any tax resident that derives the payment under its tax law or any taxable branch to which the payment is attributable under its tax law (or any tax resident that, based on all the facts and circumstances, is reasonably expected to derive the payment under its tax law, or any taxable branch to which, based on all the facts and circumstances, the payment is reasonably expected to be attributable under its tax law). The principles of § 1.894-1(d)(1) apply for purposes of determining whether a tax resident derives (or is reasonably expected to derive) a specified payment under its tax law, without regard to whether the tax resident is a resident of a country that has an income tax treaty with the United States. There may be more than one specified recipient with respect to a specified payment.

(20) The terms *structured arrangement* and *party to a structured arrangement* have the meaning set forth in this paragraph (a)(20).

(i) ***Structured arrangement.*** A structured arrangement means an arrangement with respect to which one or more specified payments would be a disqualified hybrid amount (or a disqualified imported mismatch amount) without regard to the relatedness limitation in § 1.267A-2(f) (or without regard to the phrase "that is related to the specified party" in § 1.267A-4(a)) (either such outcome, a *hybrid mismatch*), provided that, based on all the facts and circumstances (including the terms of the arrangement), the arrangement is designed to produce the hybrid mismatch. Facts and circumstances that indicate the arrangement is designed to produce the hybrid mismatch include the following:

(A) The hybrid mismatch is priced into the terms of the arrangement, including—

(*1*) The pricing of the arrangement is different from what the pricing would have been absent the hybrid mismatch;

(2) Features that alter the terms of the arrangement, including its return if the hybrid mismatch is no longer available; or

(3) A below-market return absent the tax effects or benefits resulting from the hybrid mismatch.

(B) The arrangement is marketed as tax-advantaged where some or all of the tax advantage derives from the hybrid mismatch.

(C) The arrangement is marketed to tax residents of a country the tax law of which enables the hybrid mismatch.

(ii) ***Party to a structured arrangement.*** A party to a structured arrangement means a tax resident, a taxable branch, or an entity that participates in the structured arrangement. For purposes of this paragraph (a)(20)(ii), in the case of an entity, the entity's participation in a structured arrangement is imputed to its investors. However, a tax resident, a taxable branch or an entity (the *relevant party*) is considered to participate in the structured arrangement only if—

(A) The relevant party (or a related tax resident or taxable branch, determined under paragraph (a)(14) of this section by treating the relevant party as a specified party) could, based on all the facts and circumstances, reasonably be expected to be aware of the hybrid mismatch; and

(B) The relevant party or one or more of its investors (or a related tax resident or taxable branch, determined under paragraph (a)(14) of this section by treating the relevant party or an investor as a specified party) shares in the value of the tax benefit resulting from the hybrid mismatch.

(21) The term *tax law* of a country includes statutes, regulations, administrative or judicial rulings, and income tax treaties of the country. If a country has an income tax treaty with the United States that applies to taxes imposed by a political subdivision or other local authority of that country, then the tax law of the political subdivision or other local authority is deemed to be a tax law of a country. When used with respect to a tax resident or branch, tax law refers to—

(i) In the case of a tax resident, the tax law of the country or countries where the tax resident is resident; and

(ii) In the case of a branch, the tax law of the country where the branch is located.

(22) The term *taxable branch* means a branch that has a taxable presence under its tax law.

(23) The term *tax resident* means either of the following:

(i) A body corporate or other entity or body of persons liable to tax under the tax law of a country as a resident. For purposes of this paragraph (a)(23)(i), an entity that is created, organized, or otherwise established under the tax law of a country that does not impose a corporate income tax is treated as liable to tax under the tax law of such country as a resident if under the corporate or commercial laws of such country the entity is treated as a body corporate or a company. A body corporate or other entity or body of persons may be a tax resident of more than one country.

(ii) An individual liable to tax under the tax law of a country as a resident. An individual may be a tax resident of more than one country.

(24) The term *United States shareholder* has the meaning provided in section 951(b).

(25) The term *U.S. taxable branch* means a trade or business carried on in the United States by a tax resident of another country, except that if an income tax treaty applies, the term means a permanent establishment of a tax treaty resident eligible for benefits under an income tax treaty between the United States and the treaty country. Thus, for example, a U.S. taxable branch includes a U.S. trade or business of a foreign corporation taxable under section 882(a) or a U.S. permanent establishment of a tax treaty resident.

(b) ***Special rules.*** For purposes of §§ 1.267A-1 through 1.267A-7, the following special rules apply.

(1) ***Coordination with other provisions*** —

(i) ***In general.*** Except as provided in paragraph (b)(1)(ii) of this section, a specified payment is subject to section 267A after the application of any other applicable provisions of the Code and regulations in this part. Thus, the determination of whether a deduction for a specified payment is disallowed under section 267A is made with respect to the taxable year for which a deduction for the payment would otherwise be allowed for U.S. tax purposes. *See, for example,* sections 163(e)(3) and 267(a)(3) for rules that may defer the taxable year for which a deduction is allowed. *See also* § 1.882-5(a)(5) (providing that provisions that disallow interest expense apply after the application of § 1.882-5). In addition, provisions that characterize amounts paid or accrued as something other than interest or royalties, such as § 1.894-1(d)(2), govern the treatment of such amounts and therefore such amounts would not be treated as specified payments. Moreover, to the extent that a specified payment is not described in § 1.267A-1(b) when it is subject to section 267A, the payment is not again subject to section 267A at a later time. For example, if for the taxable year in which a specified payment is paid the payment is not described in § 1.267A-1(b) but under section 163(j) a deduction for the payment is deferred, the payment is not again subject to section 267A in the taxable year for which section 163(j) no longer defers the deduction.

(ii) ***Section 267A applied before certain provisions.*** In addition to the extent provided in any other applicable provision of the Code or regulations in this part, section 267A applies before the application of sections 163(j), 461(l), 465, and 469.

(iii) ***Coordination with capitalization and recovery provisions.*** To the extent a specified payment is described in § 1.267A-1(b), a deduction for the payment is considered permanently disallowed for all purposes of the Code and regulations in this part and, therefore, the payment is not taken into account for purposes of computing costs that are required to be capitalized and recovered through depreciation, amortization, cost of goods sold, adjustment to basis, or similar forms of recovery under any applicable provision of the Code or in regulations in this part. Thus, for example, to the extent an interest or royalty payment is a specified payment described in § 1.267A-1(b), the payment is not capitalized and included in inventory cost or added to basis under section 263A. As an additional example, to the extent that a debt issuance cost is a specified payment described in § 1.267A-1(b), it is neither capitalized under section 263 or the regulations in this part under section 263 nor recoverable under § 1.446-5.

(iv) ***Specified payments arising in taxable years beginning before January 1, 2018.*** Section 267A does not apply to a specified payment that is paid or accrued in a taxable year beginning before January 1, 2018, regardless of whether under a provision of the Code or regulations in this part (for example, section 267(a)(3)) a deduction for the payment is deferred to a taxable year

beginning after December 31, 2017, or whether the payment is carried over to another taxable year and under another provision of the Code (for example, section 163(j)) is considered paid or accrued in such taxable year.

(2) ***Foreign currency gain or loss.*** Except as set forth in this paragraph (b)(2), section 988 gain or loss is not taken into account under section 267A. Foreign currency gain or loss recognized with respect to a specified payment is taken into account under section 267A to the extent that a deduction for the specified payment is disallowed under section 267A, provided that the foreign currency gain or loss is described in § 1.988-2(b)(4) (relating to exchange gain or loss recognized by the issuer of a debt instrument with respect to accrued interest) or § 1.988-2(c) (relating to items of expense or gross income or receipts which are to be paid after the date accrued). If a deduction for a specified payment is disallowed under section 267A, then a proportionate amount of foreign currency loss under section 988 with respect to the specified payment is also disallowed, and a proportionate amount of foreign currency gain under section 988 with respect to the specified payment reduces the amount of the disallowance. For purposes of this paragraph (b)(2), the proportionate amount is the amount of the foreign currency gain or loss under section 988 with respect to the specified payment multiplied by a fraction, the numerator of which is the amount of the specified payment for which a deduction is disallowed under section 267A and the denominator of which is the total amount of the specified payment.

(3) ***U.S. taxable branch payments*** —

(i) ***Amounts considered paid or accrued by a U.S. taxable branch.*** For purposes of section 267A, a U.S. taxable branch is considered to pay or accrue an amount of interest or royalty equal to either—

(A) The amount of interest or royalty allocable to effectively connected income of the U.S. taxable branch under section 873(a) or 882(c)(1), as applicable; or

(B) In the case of a U.S. taxable branch that is a U.S. permanent establishment of a treaty resident eligible for benefits under an income tax treaty between the United States and the treaty country, the amount of interest or royalty allowable in computing the business profits attributable to the U.S. permanent establishment.

(ii) ***Treatment of U.S. taxable branch payments*** —

(A) ***Interest.*** Interest considered paid or accrued by a U.S. taxable branch of a foreign corporation under paragraph (b)(3)(i) of this section (the "U.S. taxable branch interest payment") is treated as a payment directly to the person to which the interest is payable, to the extent it is paid or accrued with respect to a liability described in § 1.882-5(a)(1)(ii)(A) or (B) (resulting in directly allocable interest) or with respect to a U.S. booked liability, as described in § 1.882-5(d)(2). If the U.S. taxable branch interest payment exceeds in the aggregate the interest paid or accrued on the U.S. taxable branch's directly allocable interest and interest paid or accrued on U.S. booked liabilities, the excess amount is treated as paid or accrued by the U.S. taxable branch on a pro-rata basis to the same persons and pursuant to the same terms that the home office paid or accrued interest, excluding any directly allocable interest or interest paid or accrued on a U.S. booked liability. The rules of this paragraph (b)(3)(ii) for determining to whom interest is paid or accrued apply without regard to whether the U.S. taxable branch interest payment is determined under the method described in § 1.882-5(b) through (d) or the method described in § 1.882-5(e).

(B) ***Royalties.*** Royalties considered paid or accrued by a U.S. taxable branch under paragraph (b)(3)(i) of this section are treated solely for purposes of section 267A as paid or accrued on a pro-rata basis by the U.S. taxable branch to the same persons and pursuant to the same terms that the home office paid or accrued such royalties.

(C) ***Permanent establishments and interbranch payments.*** If a U.S. taxable branch is a permanent establishment in the United States, the principles of the rules in paragraphs (b)(3)(ii)(A) and (B) of this section apply with respect to interest and royalties allowed in computing the business profits of a treaty resident eligible for treaty benefits. This paragraph (b)(3)(ii)(C) does not apply to interbranch interest or royalty payments allowed as deduction under certain U.S. income tax treaties (as described in § 1.267A-2(c)(2)).

(4) ***Effect on earnings and profits.*** The disallowance of a deduction under section 267A does not affect whether the amount paid or accrued that gave rise to the deduction reduces earnings and profits of a corporation. However, for purposes of section 952(c)(1) and § 1.952-1(c), a CFC's earnings and profits are not reduced by a specified payment a deduction for which is disallowed under section 267A, if a principal purpose of the transaction pursuant to which the payment is made is to reduce or limit the CFC's subpart F income.

(5) ***Application to structured payments*** —

(i) ***In general.*** For purposes of section 267A and the regulations in this part under section 267A, a structured payment (as defined in paragraph (b)(5)(ii) of this section) is treated as interest. Thus, a structured payment is treated as subject to section 267A and the regulations in this part under section 267A to the same extent as if the payment were an amount of interest paid or accrued.

(ii) ***Structured payment.*** A structured payment means any amount described in paragraph (b)(5)(ii)(A) or (B) of this section.

(A) ***Substitute interest payments.*** A substitute interest payment described in § 1.861-2(a)(7) is treated as a structured payment for purposes of section 267A, unless the payment relates to a sale-repurchase agreement or a securities lending transaction that is entered into by the payor in the ordinary course of the payor's business. This paragraph (b)(5)(ii)(A) does not apply to an amount described in paragraph (a)(12)(i)(I) of this section.

(B) ***Amounts economically equivalent to interest*** —

(*1*) ***Principal purpose to reduce interest expense.*** Any expense or loss economically equivalent to interest is treated as a structured payment for purposes of section 267A if a principal purpose of structuring the transaction(s) is to reduce an amount incurred by the taxpayer that otherwise would have been described in paragraph (a)(12) or (b)(5)(ii)(A) of this section. For purposes of this paragraph (b)(5)(ii)(B)(*1*), the fact that the taxpayer has a business purpose for obtaining the use of funds does not affect the determination of whether the manner in which the taxpayer structures the transaction(s) is with a principal purpose of reducing the taxpayer's interest expense. In addition, the fact that the taxpayer has obtained funds at a lower pre-tax cost based on the structure of the transaction(s) does not affect the determination of whether the manner in which the taxpayer structures the transaction(s) is with a principal purpose of reducing the taxpayer's interest expense. For purposes of this paragraph (b)(5)(ii)(B), any expense or loss is economically equivalent to interest to the extent that the expense or loss is—

(*i*) Deductible by the taxpayer;

(*ii*) Incurred by the taxpayer in a transaction or series of integrated or related transactions in which the taxpayer secures the use of funds for a period of time;

(*iii*) Substantially incurred in consideration of the time value of money; and

(*iv*) Not described in paragraph (a)(12) or (b)(5)(ii)(A) of this section.

(*2*) ***Principal purpose.*** Whether a transaction or a series of integrated or related transactions is entered into with a principal purpose described in paragraph (b)(5)(ii)(B)(*1*) of this section depends on all the facts and circumstances related to the transaction(s). A purpose may be a principal purpose even though it is outweighed by other purposes (taken together or separately). Factors to be taken into account in determining whether one of the taxpayer's principal purposes for entering into the transaction(s) include the taxpayer's normal borrowing rate in the taxpayer's functional currency, whether the taxpayer would enter into the transaction(s) in the ordinary course of the taxpayer's trade or business, whether the parties to the transaction(s) are related persons (within the meaning of section 267(b) or 707(b)), whether there is a significant and bona fide business purpose for the structure of the transaction(s), whether the transactions are transitory, for example, due to a circular flow of cash or other property, and the substance of the transaction(s).

(6) ***Anti-avoidance rule.*** A specified party's deduction for a specified payment is disallowed to the extent that both of the following requirements are satisfied:

(i) The payment (or income attributable to the payment) is not included in the income of a tax resident or taxable branch, as determined under § 1.267A-3(a) (but without regard to the deemed full inclusion rule in § 1.267A-3(a)(5)).

(ii) A principal purpose of the terms or structure of the arrangement (including the form and the tax laws of the parties to the arrangement) is to avoid the application of the regulations in this part under section 267A in a manner that is contrary to the purposes of section 267A and the regulations in this part under section 267A.

[T.D. 9896, 85 FR 19836, Apr. 8, 2020, as amended by 85 FR 48651, Aug. 12, 2020]

§ 1.267A-6 Examples.

(a) ***Scope.*** This section provides examples that illustrate the application of §§ 1.267A-1 through 1.267A-5.

(b) ***Presumed facts.*** For purposes of the examples in this section, unless otherwise indicated, the following facts are presumed:

(1) US1, US2, and US3 are domestic corporations that are tax residents solely of the United States.

(2) FW, FX, and FZ are bodies corporate established in, and tax residents of, Country W, Country X, and Country Z, respectively. They are not fiscally transparent under the tax law of any country. They are not specified parties.

(3) Under the tax law of each country, interest and royalty payments are deductible.

(4) The tax law of each country provides a 100 percent participation exemption for dividends received from non-resident corporations.

(5) The tax law of each country, other than the United States, provides an exemption for income attributable to a branch.

(6) Except as provided in paragraphs (b)(4) and (5) of this section, all amounts derived (determined under the principles of § 1.894-1(d)(1)) by a tax resident, or attributable to a taxable branch, are included in income, as determined under § 1.267A-3(a).

(7) Only the tax law of the United States contains hybrid mismatch rules.

(c) *Examples* —

(1) *Example 1. Payment pursuant to a hybrid financial instrument* —

(i) ***Facts.*** FX holds all the interests of US1. FX also holds an instrument issued by US1 that is treated as equity for Country X tax purposes and indebtedness for U.S. tax purposes (the FX-US1 instrument). On date 1, US1 pays $50x to FX pursuant to the instrument. The amount is treated as an excludible dividend for Country X tax purposes (by reason of the Country X participation exemption) and as interest for U.S. tax purposes.

(ii) ***Analysis.*** US1 is a specified party and thus a deduction for its $50x specified payment is subject to disallowance under section 267A. As described in paragraphs (c)(1)(ii)(A) through (C) of this section, the entire $50x payment is a disqualified hybrid amount under the hybrid transaction rule of § 1.267A-2(a) and, as a result, a deduction for the payment is disallowed under § 1.267A-1(b)(1).

(A) US1's payment is made pursuant to a hybrid transaction because a payment with respect to the FX-US1 instrument is treated as interest for U.S. tax purposes but not for purposes of Country X tax law (the tax law of FX, a specified recipient that is related to US1). *See* § 1.267A-2(a)(2) and (f). Therefore, § 1.267A-2(a) applies to the payment.

(B) For US1's payment to be a disqualified hybrid amount under § 1.267A-2(a), a no-inclusion must occur with respect to FX. *See* § 1.267A-2(a)(1)(i). As a consequence of the Country X participation exemption, FX includes $0 of the payment in income and therefore a $50x no-inclusion occurs with respect to FX. *See* § 1.267A-3(a)(1). The result is the same regardless of whether, under the Country X participation exemption, the $50x payment is simply excluded from FX's taxable income or, instead, is reduced or offset by other means, such as a $50x dividends received deduction. *See* § 1.267A-3(a)(1).

(C) Pursuant to § 1.267A-2(a)(1)(ii), FX's $50x no-inclusion gives rise to a disqualified hybrid amount to the extent that it is a result of US1's payment being made pursuant to the hybrid transaction. FX's $50x no-inclusion is a result of the payment being made pursuant to the hybrid transaction because, were the payment to be treated as interest for Country X tax purposes, FX would include $50x in income and, consequently, the no-inclusion would not occur.

(iii) ***Alternative facts—multiple specified recipients.*** The facts are the same as in paragraph (c)(1)(i) of this section, except that FX holds all the interests of FZ, which is fiscally transparent for Country X tax purposes, and FZ holds all of the interests of US1. Moreover, the FX-US1 instrument is held by FZ (rather than by FX) and US1 makes its $50x payment to FZ (rather than to FX); the payment is derived by FZ under its tax law and by FX under its tax law and,

accordingly, both FZ and FX are specified recipients of the payment. Further, the payment is treated as interest for Country Z tax purposes and FZ includes it in income. For the reasons described in paragraph (c)(1)(ii) of this section, FX's no-inclusion causes the payment to be a disqualified hybrid amount. FZ's inclusion in income (regardless of whether Country Z has a low or high tax rate) does not affect the result, because the hybrid transaction rule of § 1.267A-2(a) applies if any no-inclusion occurs with respect to a specified recipient of the payment as a result of the payment being made pursuant to the hybrid transaction.

(iv) ***Alternative facts—preferential rate.*** The facts are the same as in paragraph (c)(1)(i) of this section, except that for Country X tax purposes US1's payment is treated as a dividend subject to a 4% tax rate, whereas the marginal rate imposed on ordinary income is 20%. FX includes $10x of the payment in income, calculated as $50x multiplied by 0.2 (.04, the rate at which the particular type of payment (a dividend for Country X tax purposes) is subject to tax in Country X, divided by 0.2, the marginal tax rate imposed on ordinary income). *See* § 1.267A-3(a)(1). Thus, a $40x no-inclusion occurs with respect to FX ($50x less $10x). The $40x no-inclusion is a result of the payment being made pursuant to the hybrid transaction because, were the payment to be treated as interest for Country X tax purposes, FX would include the entire $50x in income at the full marginal rate imposed on ordinary income (20%) and, consequently, the no-inclusion would not occur. Accordingly, $40x of US1's payment is a disqualified hybrid amount.

(v) ***Alternative facts—no-inclusion not the result of hybridity.*** The facts are the same as in paragraph (c)(1)(i) of this section, except that Country X has a pure territorial regime (that is, Country X only taxes income with a domestic source). Although US1's payment is pursuant to a hybrid transaction and a $50x no-inclusion occurs with respect to FX, FX's no-inclusion is not a result of the payment being made pursuant to the hybrid transaction. This is because if Country X tax law were to treat the payment as interest, FX would include $0 in income and, consequently, the $50x no-inclusion would still occur. Accordingly, US1's payment is not a disqualified hybrid amount. *See* § 1.267A-2(a)(1)(ii). The result would be the same if Country X instead did not impose a corporate income tax.

(vi) ***Alternative facts—indebtedness under both tax laws but different ordering rules give rise to hybrid transaction; reduction of no-inclusion by reason of inclusion of a principal payment.*** The facts are the same as in paragraph (c)(1)(i) of this section, except that the FX-US1 instrument is indebtedness for both U.S. and Country X tax purposes. In addition, the $50x date 1 payment is treated as interest for U.S. tax purposes and a repayment of principal for Country X tax purposes. On date 1, based on all the facts and circumstances (including the terms of the FX-US1 instrument, the tax laws of the United States and Country X, and an absence of a plan pursuant to which FX would dispose of the FX-US1 instrument), it is reasonably expected that on date 2 (a date that is within 36 months after the end of the taxable year of US1 that includes date 1), US1 will pay a total of $200x to FX and that, for U.S. tax purposes, $25x will be treated as interest and $175x as a repayment of principal, and, for Country X tax purposes, $75x will be treated as interest (and included in FX's income) and $125x as a repayment of principal. US1's $50x specified payment is made pursuant to a hybrid transaction and, but for § 1.267A-3(a)(4), a $50x no-inclusion would occur with respect to FX. *See* §§ 1.267A-2(a)(2) and 1.267A-3(a)(1). However, pursuant to § 1.267A-3(a)(4), FX's inclusion in income with respect to $50x of the date 2 amount that is a repayment of principal for U.S. tax purposes is treated as correspondingly reducing FX's no-inclusion with respect to the specified payment. As a result,

as to US1's $50x specified payment, a no-inclusion does not occur with respect to FX. *See* § 1.267A-3(a)(4). Therefore, US1's $50x specified payment is not a disqualified hybrid amount. *See* § 1.267A-2(a)(1)(i).

(2) ***Example 2. Payment pursuant to a repo transaction*** —

(i) ***Facts.*** FX holds all the interests of US1, and US1 holds all the interests of US2. On date 1, US1 and FX enter into a sale and repurchase transaction. Pursuant to the transaction, US1 transfers shares of preferred stock of US2 to FX in exchange for $1,000x, subject to a binding commitment of US1 to reacquire those shares on date 3 for an agreed price, which represents a repayment of the $1,000x plus a financing or time value of money return reduced by the amount of any distributions paid with respect to the preferred stock between dates 1 and 3 that are retained by FX. On date 2, US2 pays a $100x dividend on its preferred stock to FX. For Country X tax purposes, FX is treated as owning the US2 preferred stock and therefore is the beneficial owner of the dividend. For U.S. tax purposes, the transaction is treated as a loan from FX to US1 that is secured by the US2 preferred stock. Thus, for U.S. tax purposes, US1 is treated as owning the US2 preferred stock and is the beneficial owner of the dividend. In addition, for U.S. tax purposes, US1 is treated as paying $100x of interest to FX (an amount corresponding to the $100x dividend paid by US2 to FX). Further, the marginal tax rate imposed on ordinary income under Country X tax law is 25%. Moreover, instead of a participation exemption, Country X tax law provides its tax residents a credit for underlying foreign taxes paid by a non-resident corporation from which a dividend is received; with respect to the $100x dividend received by FX from US2, the credit is $10x.

(ii) ***Analysis.*** US1 is a specified party and thus a deduction for its $100x specified payment is subject to disallowance under section 267A. As described in paragraphs (c)(2)(ii)(A) through (D) of this section, $40x of the payment is a disqualified hybrid amount under the hybrid transaction rule of § 1.267A-2(a) and, as a result, $40x of the deduction is disallowed under § 1.267A-1(b)(1).

(A) Although US1's $100x interest payment is not regarded under Country X tax law, a connected amount (US2's dividend payment) is regarded and derived by FX under such tax law. Thus, FX is considered a specified recipient with respect to US1's interest payment. *See* § 1.267A-2(a)(3).

(B) US1's payment is made pursuant to a hybrid transaction because a payment with respect to the sale and repurchase transaction is treated as interest for U.S. tax purposes but not for purposes of Country X tax law (the tax law of FX, a specified recipient that is related to US1), which does not regard the payment. *See* § 1.267A-2(a)(2) and (f). Therefore, § 1.267A-2(a) applies to the payment.

(C) For US1's payment to be a disqualified hybrid amount under § 1.267A-2(a), a no-inclusion must occur with respect to FX. *See* § 1.267A-2(a)(1)(i). As a consequence of Country X tax law not regarding US1's payment, FX includes $0 of the payment in income and therefore a $100x no-inclusion occurs with respect to FX. *See* § 1.267A-3(a). However, FX includes $60x of a connected amount (US2's dividend payment) in income, calculated as $100x (the amount of the dividend) less $40x (the portion of the connected amount that is not included in income in Country X due to the foreign tax credit, determined by dividing the amount of the credit, $10x, by 0.25, the tax rate in Country X). *See* § 1.267A-3(a). Pursuant to § 1.267A-2(a)(3), FX's inclusion in income with respect to the connected amount

correspondingly reduces the amount of its no-inclusion with respect to US1's payment. Therefore, for purposes of § 1.267A-2(a), FX's no-inclusion with respect to US1's payment is $40x ($100x less $60x). *See* § 1.267A-2(a)(3).

(D) Pursuant to § 1.267A-2(a)(1)(ii), FX's $40x no-inclusion gives rise to a disqualified hybrid amount to the extent that FX's no-inclusion is a result of US1's payment being made pursuant to the hybrid transaction. FX's $40x no-inclusion is a result of US1's payment being made pursuant to the hybrid transaction because, were the sale and repurchase transaction to be treated as a loan from FX to US1 for Country X tax purposes, FX would include US1's $100x interest payment in income (because it would not be entitled to a foreign tax credit) and, consequently, the no-inclusion would not occur.

(iii) ***Alternative facts—structured arrangement.*** The facts are the same as in paragraph (c)(2)(i) of this section, except that FX is a bank that is unrelated to US1. In addition, the sale and repurchase transaction is a structured arrangement and FX is a party to the structured arrangement. The result is the same as in paragraph (c)(2)(ii) of this section. That is, even though FX is not related to US1, it is taken into account with respect to the determinations under § 1.267A-2(a) because it is a party to a structured arrangement pursuant to which the payment is made. *See* § 1.267A-2(f).

(3) ***Example 3. Disregarded payment*** —

(i) ***Facts.*** FX holds all the interests of US1. For Country X tax purposes, US1 is a disregarded entity of FX. During taxable year 1, US1 pays $100x to FX pursuant to a debt instrument. The amount is treated as interest for U.S. tax purposes but is disregarded for Country X tax purposes as a transaction involving a single taxpayer. During taxable year 1, US1's only other items of income, gain, deduction, or loss are $125x of gross income (the entire amount of which is included in US1's income) and a $60x item of deductible expense. The $125x item of gross income is included in FX's income, and the $60x item of deductible expense is allowable for Country X tax purposes.

(ii) ***Analysis.*** US1 is a specified party and thus a deduction for its $100x specified payment is subject to disallowance under section 267A. As described in paragraphs (c)(3)(ii)(A) and (B) of this section, $35x of the payment is a disqualified hybrid amount under the disregarded payment rule of § 1.267A-2(b) and, as a result, $35x of the deduction is disallowed under § 1.267A-1(b)(1).

(A) US1's $100x payment is not regarded under the tax law of Country X (the tax law of FX, a related tax resident to which the payment is made) because under such tax law the payment involves a single taxpayer. *See* § 1.267A-2(b)(2) and (f). In addition, were the tax law of Country X to regard the payment (and treat it as interest), FX would include it in income. Therefore, the payment is a disregarded payment to which § 1.267A-2(b) applies. *See* § 1.267A-2(b)(2).

(B) Under § 1.267A-2(b)(1), the excess (if any) of US1's disregarded payments for taxable year 1 ($100x) over its dual inclusion income for the taxable year is a disqualified hybrid amount. US1's dual inclusion income for taxable year 1 is $65x, calculated as $125x (the amount of US1's gross income that is included in FX's income) less $60x (the amount of US1's deductible expenses, other than deductions for disregarded payments, that are allowable for Country X tax purposes). *See* § 1.267A-2(b)(3). Therefore, $35x is a disqualified hybrid amount ($100x less $65x). *See* § 1.267A-2(b)(1).

(iii) ***Alternative facts—non-dual inclusion income arising from hybrid transaction.*** The facts are the same as in paragraph (c)(3)(i) of this section, except that US1 holds all the interests of FZ (a specified party that is a CFC) and US1's only item of income, gain, deduction, or loss during taxable year 1 (other than the $100x payment to FX) is $80x paid to US1 by FZ pursuant to an instrument treated as indebtedness for U.S. and Country Z tax purposes and equity for Country X tax purposes (the US1-FZ instrument). The $80x is treated as interest for Country Z and U.S. tax purposes (the entire amount of which is included in US1's income) and is treated as an excludible dividend for Country X tax purposes (by reason of the Country X participation exemption). Paragraphs (c)(3)(iii)(A) and (B) of this section describe the extent to which the specified payments by FZ and US1, each of which is a specified party, are disqualified hybrid amounts.

(A) The hybrid transaction rule of § 1.267A-2(a) applies to FZ's payment because the payment is made pursuant to a hybrid transaction, as a payment with respect to the US1-FZ instrument is treated as interest for U.S. tax purposes but not for purposes of Country X's tax law (the tax law of FX, a specified recipient that is related to FZ). As a consequence of the Country X participation exemption, an $80x no-inclusion occurs with respect to FX, and such no-inclusion is a result of the payment being made pursuant to the hybrid transaction. Thus, but for § 1.267A-3(b), the entire $80x of FZ's payment would be a disqualified hybrid amount. However, because US1 (a tax resident of the United States that is also a specified recipient of the payment) takes the entire $80x payment into account in its gross income, no portion of the payment is a disqualified hybrid amount. *See* § 1.267A-3(b)(2).

(B) The disregarded payment rule of § 1.267A-2(b) applies to US1's $100x payment to FX, for the reasons described in paragraph (c)(3)(ii)(A) of this section. In addition, US1 has no dual inclusion income for taxable year 1 because, as a result of the Country X participation exemption, no portion of FZ's $80x payment to US1 (which is derived by FX under its tax law) is included in FX's income. *See* §§ 1.267A-2(b)(3) and 1.267A-3(a). Therefore, the entire $100x payment from US1 to FX is a disqualified hybrid amount, calculated as $100x (the amount of the payment) less $0 (the amount of dual inclusion income). *See* § 1.267A-2(b)(1).

(iv) ***Alternative facts—dual inclusion income despite participation exemption.*** The facts are the same as in paragraph (c)(3)(iii) of this section, except that the US1-FZ instrument is treated as indebtedness for U.S. tax purposes and equity for Country Z and Country X tax purposes. In addition, the $80x paid to US1 by FZ is treated as interest for U.S. tax purposes (the entire amount of which is included in US1's income), a dividend for Country Z tax purposes (for which FZ is not allowed a deduction or other tax benefit), and an excludible dividend for Country X tax purposes (by reason of the Country X participation exemption). For the reasons described in paragraph (c)(3)(iii)(A) of this section, the hybrid transaction rule of § 1.267A-2(a) applies to FZ's payment but no portion of the payment is a disqualified hybrid amount. In addition, the disregarded payment rule of § 1.267A-2(b) applies to US1's $100x payment to FX, for the reasons described in paragraph (c)(3)(ii)(B) of this section. US1's dual inclusion income for taxable year 1 is $80x. This is because the $80x paid to US1 by FZ is included in US1's income and, although not included in FX's income, it is a dividend for Country X tax purposes that would have been included in FX's income but for the Country X participation exemption, and FZ is not

allowed a deduction or other tax benefit for it under Country Z tax law. *See* § 1.267A-2(b)(3)(ii). Therefore, $20x of US1's $100x payment is a disqualified hybrid amount ($100x less $80x). *See* § 1.267A-2(b)(1).

(4) ***Example 4. Payment allocable to a U.S. taxable branch*** —

(i) ***Facts.*** FX1 and FX2 are foreign corporations that are bodies corporate established in and tax residents of Country X. FX1 holds all the interests of FX2, and FX1 and FX2 file a consolidated return under Country X tax law. FX2 has a U.S. taxable branch ("USB"). During taxable year 1, FX2 pays $50x to FX1 pursuant to an instrument (the "FX1-FX2 instrument"). The amount paid pursuant to the instrument is treated as interest for U.S. tax purposes but, as a consequence of the Country X consolidation regime, is treated as a disregarded transaction between group members for Country X tax purposes. Also during taxable year 1, FX2 pays $100x of interest to an unrelated bank that is not a party to a structured arrangement (the instrument pursuant to which the payment is made, the "bank-FX2 instrument"). FX2's only other item of income, gain, deduction, or loss for taxable year 1 is $200x of gross income. Under Country X tax law, the $200x of gross income is attributable to USB, but is not included in FX2's income because Country X tax law exempts income attributable to a branch. Under U.S. tax law, the $200x of gross income is effectively connected income of USB. Further, under section 882(c)(1), $75x of interest is, for taxable year 1, allocable to USB's effectively connected income. USB has neither liabilities that are directly allocable to it, as described in § 1.882-5(a)(1)(ii)(A), nor U.S. booked liabilities, as defined in § 1.882-5(d)(2).

(ii) ***Analysis.*** USB is a specified party and thus any interest or royalty allowable as a deduction in determining its effectively connected income is subject to disallowance under section 267A. Pursuant to § 1.267A-5(b)(3)(i)(A), USB is treated as paying $75x of interest, and such interest is thus a specified payment. Of that $75x, $25x is treated as paid to FX1, calculated as $75x (the interest allocable to USB under section 882(c)(1)) multiplied by $^1/_3$ ($50x, FX2's payment to FX1, divided by $150x, the total interest paid by FX2). *See* § 1.267A-5(b)(3)(ii)(A). As described in paragraphs (c)(4)(ii)(A) and (B) of this section, the $25x of the specified payment treated as paid by USB to FX1 is a disqualified hybrid amount under the disregarded payment rule of § 1.267A-2(b) and, as a result, a deduction for that amount is disallowed under § 1.267A-1(b)(1).

(A) USB's $25x payment to FX1 is not regarded under the tax law of Country X (the tax law of FX1, a related tax resident to which the payment is made) because under such tax law it is a disregarded transaction between group members. *See* § 1.267A-2(b)(2) and (f). In addition, were the tax law of Country X to regard the payment (and treat it as interest), FX1 would include it in income. Therefore, the payment is a disregarded payment to which § 1.267A-2(b) applies. *See* § 1.267A-2(b)(2).

(B) Under § 1.267A-2(b)(1), the excess (if any) of USB's disregarded payments for taxable year 1 ($25x) over its dual inclusion income for the taxable year is a disqualified hybrid amount. USB's dual inclusion income for taxable year 1 is $0. This is because, as a result of the Country X exemption for income attributable to a branch, no portion of USB's $200x item of gross income is included in FX2's income. *See* § 1.267A-2(b)(3). Therefore, the entire $25x of the specified payment treated as paid by USB to FX1 is a disqualified hybrid amount, calculated as $25x (the amount of the payment) less $0 (the amount of dual inclusion income). *See* § 1.267A-2(b)(1).

(iii) ***Alternative facts—deemed branch payment.*** The facts are the same as in paragraph (c)(4)(i) of this section, except that FX2 does not pay any amounts during taxable year 1 (thus, it does not pay the $50x to FX1 or the $100x to the bank). However, under an income tax treaty between the United States and Country X, USB is a U.S. permanent establishment and, for taxable year 1, $25x of royalties is allowable as a deduction in computing the business profits of USB and is deemed paid to FX2. Under Country X tax law, the $25x is not regarded. Accordingly, the $25x is a specified payment that is a deemed branch payment. *See* §§ 1.267A-2(c)(2) and 1.267A-5(b)(3)(i)(B). In addition, the entire $25x is a disqualified hybrid amount for which a deduction is disallowed because the tax law of Country X provides an exclusion or exemption for income attributable to a branch. *See* § 1.267A-2(c)(1).

(5) ***Example 5. Payment to a reverse hybrid*** —

(i) ***Facts.*** FX holds all the interests of US1 and FY, and FY holds all the interests of FV. FY is an entity established in Country Y, and FV is an entity established in Country V. FY is fiscally transparent for Country Y tax purposes but is not fiscally transparent for Country X tax purposes. FV is fiscally transparent for Country X tax purposes. On date 1, US1 pays $100x to FY. The payment is treated as interest for U.S. tax purposes and Country X tax purposes.

(ii) ***Analysis.*** US1 is a specified party and thus a deduction for its $100x specified payment is subject to disallowance under section 267A. As described in paragraphs (c)(5)(ii)(A) through (C) of this section, the entire $100x payment is a disqualified hybrid amount under the reverse hybrid rule of § 1.267A-2(d) and, as a result, a deduction for the payment is disallowed under § 1.267A-1(b)(1).

(A) US1's payment is made to a reverse hybrid because FY is fiscally transparent under the tax law of Country Y (the tax law of the country in which it is established) but is not fiscally transparent under the tax law of Country X (the tax law of FX, an investor that is related to US1). *See* § 1.267A-2(d)(2) and (f). Therefore, § 1.267A-2(d) applies to the payment. The result would be the same if the payment were instead made to FV. *See* § 1.267A-2(d)(3).

(B) For US1's payment to be a disqualified hybrid amount under § 1.267A-2(d), a no-inclusion must occur with respect to FX, an investor the tax law of which treats FY as not fiscally transparent. *See* § 1.267A-2(d)(1)(i). Because FX does not derive the $100x payment under Country X tax law (as FY is not fiscally transparent under such tax law), FX includes $0 of the payment in income and therefore a $100x no-inclusion occurs with respect to FX. *See* § 1.267A-3(a).

(C) Pursuant to § 1.267A-2(d)(1)(ii), FX's $100x no-inclusion gives rise to a disqualified hybrid amount to the extent that it is a result of US1's payment being made to the reverse hybrid. FX's $100x no-inclusion is a result of the payment being made to the reverse hybrid because, were FY to be treated as fiscally transparent for Country X tax purposes, FX would include $100x in income and, consequently, the no-inclusion would not occur. The result would be the same if Country X tax law instead viewed US1's payment as a dividend, rather than interest. *See* § 1.267A-2(d)(1)(ii).

(iii) ***Alternative facts—inclusion under anti-deferral regime.*** The facts are the same as in paragraph (c)(5)(i) of this section, except that, under a Country X anti-deferral regime, FX takes into account $100x attributable to the $100x payment received by FY. If under the rules of § 1.267A-3(a) FX includes the entire attributed amount in income (that is, if FX takes the amount into account in its income at the full marginal rate imposed on ordinary income and the amount

is not reduced or offset by certain relief particular to the amount), then a no-inclusion does not occur with respect to FX. As a result, in such a case, no portion of US1's payment would be a disqualified hybrid amount under § 1.267A-2(d).

(iv) ***Alternative facts—multiple investors.*** The facts are the same as in paragraph (c)(5)(i) of this section, except that FX holds all the interests of FZ, which is fiscally transparent for Country X tax purposes; FZ holds all the interests of FY, which is fiscally transparent for Country Z tax purposes; and FZ includes the $100x payment in income. Thus, each of FZ and FX is an investor of FY, as each directly or indirectly holds an interest of FY. *See* § 1.267A-5(a)(13). A $100x no-inclusion occurs with respect to FX, an investor the tax law of which treats FY as not fiscally transparent. FX's no-inclusion is a result of the payment being made to the reverse hybrid because, were FY to be treated as fiscally transparent for Country X tax purposes, then FX would include $100x in income (as FZ is fiscally transparent for Country X tax purposes). Accordingly, FX's no-inclusion is a result of US1's payment being made to the reverse hybrid and, consequently, the entire $100x payment is a disqualified hybrid amount. However, if instead FZ were not fiscally transparent for Country X tax purposes, then FX's no-inclusion would not be a result of US1's payment being made to the reverse hybrid and, therefore, the payment would not be a disqualified hybrid amount under § 1.267A-2(d).

(v) ***Alternative facts—portion of no-inclusion not the result of hybridity.*** The facts are the same as in paragraph (c)(5)(i) of this section, except that the $100x is viewed as a royalty for U.S. tax purposes and Country X tax purposes, and Country X tax law contains a patent box regime that provides an 80% deduction with respect to certain royalty income. If the royalty payment would qualify for the Country X patent box deduction were FY to be treated as fiscally transparent for Country X tax purposes, then only $20x of FX's $100x no-inclusion would be the result of the payment being paid to a reverse hybrid, calculated as $100x (the no-inclusion with respect to FX that actually occurs) less $80x (the no-inclusion with respect to FX that would occur if FY were to be treated as fiscally transparent for Country X tax purposes). *See* § 1.267A-2(d)(1)(ii) and 1.267A-3(a)(1)(ii). Accordingly, in such a case, only $20x of US1's payment would be a disqualified hybrid amount under § 1.267A-2(d).

(vi) ***Alternative facts—payment to a discretionary trust*** —

(A) ***Facts.*** The facts are the same as in paragraph (c)(5)(i) of this section, except that FY is a discretionary trust established in, and a tax resident of, Country Y (and as a result, FY is generally not fiscally transparent for Country Y tax purposes under the principles of § 1.894-1(d)(3)(ii)). In general, under Country Y tax law, FX, an investor of FY, is not required to separately take into account in its income US1's $100x payment received by FY; instead, FY is required to take the payment into account in its income. However, under the trust agreement, the trustee of FY may, with respect to certain items of income received by FY, allocate such an item to FY's beneficiary, FX. When this occurs, then, for Country Y tax purposes, FY does not take the item into account in its income, and FX is required to take the item into account in its income as if it received the item directly from the source from which realized by FY. For Country X tax purposes, FX in all cases does not take into account in its income any item of income received by FY. With respect to the $100x paid from US1 to FY, the trustee allocates the $100x to FX.

(B) ***Analysis.*** FY is fiscally transparent with respect to US1's $100x payment under the tax law of Country Y (the tax law of the country in which FY is established). *See* § 1.267A-5(a)(8)(i). In addition, FY is not fiscally transparent with respect to US1's $100x

payment under the tax law of Country X (the tax law of FX, the investor of FY). *See* § 1.267A-5(a)(8)(ii). Thus, FY is a reverse hybrid with respect to the payment. *See* § 1.267A-2(d)(2) and (f). Therefore, for reasons similar to those discussed in paragraphs (c)(5)(ii)(B) and (C) of this section, the entire $100x payment is a disqualified hybrid amount.

(6) ***Example 6. Branch mismatch payment*** —

(i) ***Facts.*** FX holds all the interests of US1 and FZ. FZ owns BB, a Country B branch that gives rise to a taxable presence in Country B under Country Z tax law but not under Country B tax law. On date 1, US1 pays $50x to FZ. The amount is treated as a royalty for U.S. tax purposes and Country Z tax purposes. Under Country Z tax law, the amount is treated as income attributable to BB and, as a consequence of County Z tax law exempting income attributable to a branch, is excluded from FZ's income.

(ii) ***Analysis.*** US1 is a specified party and thus a deduction for its $50x specified payment is subject to disallowance under section 267A. As described in paragraphs (c)(6)(ii)(A) through (C) of this section, the entire $50x payment is a disqualified hybrid amount under the branch mismatch rule of § 1.267A-2(e) and, as a result, a deduction for the payment is disallowed under § 1.267A-1(b)(1).

(A) US1's payment is a branch mismatch payment because under Country Z tax law (the tax law of FZ, a home office that is related to US1) the payment is treated as income attributable to BB, and BB is not a taxable branch (that is, under Country B tax law, BB does not give rise to a taxable presence). *See* § 1.267A-2(e)(2) and (f). Therefore, § 1.267A-2(e) applies to the payment. The result would be the same if instead BB were a taxable branch and, under Country B tax law, US1's payment were treated as income attributable to FZ, the home office, and not BB. *See* § 1.267A-2(e)(2).

(B) For US1's payment to be a disqualified hybrid amount under § 1.267A-2(e), a no-inclusion must occur with respect to FZ. *See* § 1.267A-2(e)(1)(i). As a consequence of the Country Z branch exemption, FZ includes $0 of the payment in income and therefore a $50x no-inclusion occurs with respect to FZ. *See* § 1.267A-3(a).

(C) Pursuant to § 1.267A-2(e)(1)(ii), FZ's $50x no-inclusion gives rise to a disqualified hybrid amount to the extent that it is a result of US1's payment being a branch mismatch payment. FZ's $50x no-inclusion is a result of the payment being a branch mismatch payment because, were the payment to not be treated as income attributable to BB for Country Z tax purposes, FZ would include $50x in income and, consequently, the no-inclusion would not occur.

(7) ***Example 7. Reduction of disqualified hybrid amount for certain amounts includible in income*** —

(i) ***Facts.*** US1 and FW hold 60% and 40%, respectively, of the interests of FX, and FX holds all the interests of FZ. Each of FX and FZ is a specified party that is a CFC. FX holds an instrument issued by FZ that it is treated as equity for Country X tax purposes and as indebtedness for U.S. tax purposes (the FX-FZ instrument). On date 1, FZ pays $100x to FX pursuant to the FX-FZ instrument. The amount is treated as a dividend for Country X tax purposes and as interest for U.S. tax purposes. In addition, pursuant to section 954(c)(6), the amount is not foreign personal holding company income of FX and, under section 951A, the amount is gross tested income (as described in § 1.951A-2(c)(1)) of FX. Further, were FZ allowed a deduction for the amount, it would be allocated and apportioned to gross tested income (as described in § 1.951A-2(c)(1))

of FZ. Lastly, Country X tax law provides an 80% participation exemption for dividends received from nonresident corporations and, as a result of such participation exemption, FX includes $20x of FZ's payment in income.

(ii) ***Analysis.*** FZ, a CFC, is a specified party and thus a deduction for its $100x specified payment is subject to disallowance under section 267A. But for § 1.267A-3(b), $80x of FZ's payment would be a disqualified hybrid amount (such amount, a "tentative disqualified hybrid amount"). *See* §§ 1.267A-2(a) and 1.267A-3(b)(1). Pursuant to § 1.267A-3(b), the tentative disqualified hybrid amount is reduced by $48x. *See* § 1.267A-3(b)(4). The $48x is the tentative disqualified hybrid amount to the extent that it increases US1's pro rata share of tested income with respect to FX under section 951A (calculated as $80x multiplied by 60%). *See* § 1.267A-3(b)(4). Accordingly, $32x of FZ's payment ($80x less $48x) is a disqualified hybrid amount under § 1.267A-2(a) and, as a result, $32x of the deduction is disallowed under § 1.267A-1(b)(1).

(iii) ***Alternative facts—United States shareholder is a domestic partnership.*** The facts are the same as in paragraph (c)(7)(i) of this section, except that US1 is a domestic partnership, 90% of the interests of which are held by US2 and the remaining 10% of which are held by an individual that is a nonresident alien (as defined in section 7701(b)(1)(B)). Thus, although each of US1 and US2 is a United States shareholder of FX, only US2 has a pro rata share of any tested item of FX. *See* § 1.951A-1(e). In addition, $43.2x of the $80x tentative disqualified hybrid amount increases US2's pro rata share of the tested income of FX (calculated as $80x multiplied by 60% multiplied by 90%). Thus, $36.8x of FZ's payment ($80x less $43.2x) is a disqualified hybrid amount under § 1.267A-2(a). *See* § 1.267A-3(b)(4).

(8) ***Example 8. Imported mismatch rule—direct offset*** —

(i) ***Facts.*** FX holds all the interests of FW, and FW holds all the interests of US1. FX holds an instrument issued by FW that is treated as equity for Country X tax purposes and indebtedness for Country W tax purposes (the FX-FW instrument). FW holds an instrument issued by US1 that is treated as indebtedness for Country W and U.S. tax purposes (the FW-US1 instrument). In accounting period 1, FW pays $100x to FX pursuant to the FX-FW instrument. The amount is treated as an excludible dividend for Country X tax purposes (by reason of the Country X participation exemption) and as interest for Country W tax purposes. Also in accounting period 1, US1 pays $100x to FW pursuant to the FW-US1 instrument. The amount is treated as interest for Country W and U.S. tax purposes and is included in FW's income. The FX-FW instrument was not entered into pursuant to the same plan or series of related transactions pursuant to which the FW-US1 instrument was entered into.

(ii) ***Analysis.*** US1 is a specified party and thus a deduction for its $100x specified payment is subject to disallowance under section 267A. US1's $100x payment is neither a disqualified hybrid amount nor included or includible in income in the United States. *See* § 1.267A-4(a)(2)(v). In addition, FW's $100x deduction is a hybrid deduction because it is a deduction allowed to FW that results from an amount paid that is interest under Country W tax law, and were Country W law to have rules substantially similar to those under §§ 1.267A-1 through 1.267A-3 and 1.267A-5, a deduction for the payment would be disallowed (because under such rules the payment would be pursuant to a hybrid transaction and FX's no-inclusion would be a result of the hybrid transaction). *See* §§ 1.267A-2(a) and 1.267A-4(b). Under § 1.267A-4(a)(2), US1's payment is an imported mismatch payment, US1 is an imported mismatch payer, and FW (the foreign tax resident that includes the imported mismatch payment in income) is an imported mismatch payee. The imported mismatch payment is a

disqualified imported mismatch amount to the extent that the income attributable to the payment is directly or indirectly offset by the hybrid deduction incurred by FW (a foreign tax resident that is related to US1). *See* § 1.267A-4(a)(1). Under § 1.267A-4(c)(1), the $100x hybrid deduction directly or indirectly offsets the income attributable to US1's imported mismatch payment to the extent that the payment directly or indirectly funds the hybrid deduction. The entire $100x of US1's payment directly funds the hybrid deduction because FW (the imported mismatch payee) incurs at least that amount of the hybrid deduction. *See* § 1.267A-4(c)(3)(i). Accordingly, the entire $100x payment is a disqualified imported mismatch amount under § 1.267A-4(a)(1) and, as a result, a deduction for the payment is disallowed under § 1.267A-1(b)(2).

(iii) ***Alternative facts—long-term deferral.*** The facts are the same as in paragraph (c)(8)(i) of this section, except that the FX-FW instrument is treated as indebtedness for Country X and Country W tax purposes, and FW does not pay any amounts pursuant to the instrument during accounting period 1. In addition, under Country W tax law, FW is allowed to deduct interest under the FX-FW instrument as it accrues, whereas under Country X tax law FX does not take into account in its income interest under the FX-FW instrument until the interest is paid. Further, FW accrues $100x of interest during accounting period 1, and FW will not pay such amount to FX for more than 36 months after the end of accounting period 1. The results are the same as in paragraph (c)(8)(ii) of this section. That is, FW's $100x deduction for the accrued interest is a hybrid deduction, *see* §§ 1.267A-2(a), 1.267A-3(a), and 1.267A-4(b), and the income attributable to US1's $100x imported mismatch payment is offset by the hybrid deduction for the reasons described in paragraph (c)(8)(ii) of this section. As a result, a deduction for the payment is disallowed under § 1.267A-1(b)(2). The result would be the same even if the FX-FW instrument is expected to be redeemed or capitalized before the $100x of interest is paid such that FX will never take into account in its income (and therefore will not include in income) the $100x of interest.

(iv) ***Alternative facts—notional interest deduction.*** The facts are the same as in paragraph (c)(8)(i) of this section, except that there is no FX-FW instrument and thus FW does not pay any amounts to FX during accounting period 1. However, during accounting period 1, FW is allowed a $100x notional interest deduction with respect to its equity under Country W tax law. Pursuant to § 1.267A-4(b)(1)(ii), FW's notional interest deduction is a hybrid deduction. The results are the same as in paragraph (c)(8)(ii) of this section. That is, the income attributable to US1's $100x imported mismatch payment is offset by FW's hybrid deduction for the reasons described in paragraph (c)(8)(ii) of this section. As a result, a deduction for the payment is disallowed under § 1.267A-1(b)(2). The result would be the same if the tax law of Country W contains hybrid mismatch rules because FW's deduction is a deduction with respect to equity. *See* § 1.267A-4(b)(2)(i).

(v) ***Alternative facts—foreign hybrid mismatch rules prevent hybrid deduction.*** The facts are the same as in paragraph (c)(8)(i) of this section, except that the tax law of Country W contains hybrid mismatch rules, and under such rules FW is not allowed a deduction for the $100x that it pays to FX pursuant to the FX-FW instrument. The $100x paid by FW therefore does not give rise to a hybrid deduction. *See* § 1.267A-4(b). Accordingly, because the income attributable to US1's payment to FW is not directly or indirectly offset by a hybrid deduction, the payment is not a disqualified imported mismatch amount. Therefore, a deduction for the payment is not disallowed under § 1.267A-1(b)(2).

(9) ***Example 9. Imported mismatch rule—indirect offsets and pro rata allocations*** —

(i) ***Facts.*** FX holds all the interests of FZ, and FZ holds all the interests of US1 and US2. FX has a Country B branch that, for Country X and Country B tax purposes, gives rise to a taxable presence in Country B and is therefore a taxable branch ("BB"). Under the Country B-Country X income tax treaty, BB is a permanent establishment entitled to deduct expenses properly attributable to BB for purposes of computing its business profits under the treaty. In addition, BB is deemed to pay a royalty to FX for the right to use intangibles developed by FX equal to cost plus y%. The deemed royalty is a deductible expense properly attributable to BB under the Country B-Country X income tax treaty. For Country X tax purposes, any transactions between BB and X are disregarded. The deemed royalty is $80x for accounting period 1. Country B tax law does not permit a loss of a taxable branch to be shared with a tax resident or another taxable branch. In addition, an instrument issued by FZ to FX is properly reflected as an asset on the books and records of BB (the FX-FZ instrument). The FX-FZ instrument is treated as indebtedness for Country X, Country Z, and Country B tax purposes. In accounting period 1, FZ pays $80x to FX pursuant to the FX-FZ instrument; the amount is treated as interest for Country X, Country Z, and Country B tax purposes, and is treated as income attributable to BB for Country X and Country B tax purposes (but, for Country X tax purposes, is excluded from FX's income as a consequence of the Country X exemption for income attributable to a branch). Further, in accounting period 1, US1 and US2 pay $60x and $40x, respectively, to FZ pursuant to instruments that are treated as indebtedness for Country Z and U.S. tax purposes; the amounts are treated as interest for Country Z and U.S. tax purposes and are included in FZ's income. Lastly, neither the instrument pursuant to which US1 pays the $60x nor the instrument pursuant to which US2 pays the $40x was entered into pursuant to a plan or series of related transactions that includes the transaction or agreement giving rise to BB's deduction for the deemed royalty.

(ii) ***Analysis.*** US1 and US2 are specified parties and thus deductions for their specified payments are subject to disallowance under section 267A. Neither of the payments is a disqualified hybrid amount, nor is either of the payments included or includible in income in the United States. *See* § 1.267A-4(a)(2)(v). In addition, BB's $80x deduction for the deemed royalty is a hybrid deduction because it is a deduction allowed to BB that results from an amount paid that is treated as a royalty under Country B tax law (regardless of whether a royalty deduction would be allowed under U.S. law), and were Country B tax law to have rules substantially similar to those under §§ 1.267A-1 through 1.267A-3 and 1.267A-5, a deduction for the payment would be disallowed because under such rules the payment would be a deemed branch payment and Country X has an exclusion for income attributable to a branch. *See* §§ 1.267A-2(c) and 1.267A-4(b). Under § 1.267A-4(a)(2), each of US1's and US2's payments is an imported mismatch payment, US1 and US2 are imported mismatch payers, and FZ (the foreign tax resident that includes the imported mismatch payments in income) is an imported mismatch payee. The imported mismatch payments are disqualified imported mismatch amounts to the extent that the income attributable to the payments is directly or indirectly offset by the hybrid deduction incurred by BB (a foreign taxable branch that is related to US1 and US2). *See* § 1.267A-4(a). Under § 1.267A-4(c)(1), the $80x hybrid deduction directly or indirectly offsets the income attributable to the imported mismatch payments to the extent that the payments directly or indirectly fund the hybrid deduction. Paragraphs (c)(9)(ii)(A) and (B) of this section describe the extent to which the imported mismatch payments directly or indirectly fund the hybrid deduction.

(A) Neither US1's nor US2's payment directly funds the hybrid deduction because FZ (the imported mismatch payee) does not incur the hybrid deduction. *See* § 1.267A-4(c)(3)(i). To determine the extent to which the payments indirectly fund the hybrid deduction, the amount of the hybrid deduction that is allocated to FZ must be determined. *See* § 1.267A-4(c)(3)(ii). FZ is allocated the hybrid deduction to the extent that it directly or indirectly makes a funded taxable payment to BB (the foreign taxable branch that incurs the hybrid deduction). *See* § 1.267A-4(c)(3)(iii). The $80x that FZ pays pursuant to the FX-FZ instrument is a funded taxable payment of FZ to BB. *See* § 1.267A-4(c)(3)(v). Therefore, because FZ makes a funded taxable payment to BB that is at least equal to the amount of the hybrid deduction, FZ is allocated the entire amount of the hybrid deduction. *See* § 1.267A-4(c)(3)(iii).

(B) But for US2's imported mismatch payment, the entire $60x of US1's imported mismatch payment would indirectly fund the hybrid deduction because FZ is allocated at least that amount of the hybrid deduction. *See* § 1.267A-4(c)(3)(ii). Similarly, but for US1's imported mismatch payment, the entire $40x of US2's imported mismatch payment would indirectly fund the hybrid deduction because FZ is allocated at least that amount of the hybrid deduction. *See* § 1.267A-4(c)(3)(ii). However, because the sum of US1's and US2's imported mismatch payments to FZ ($100x) exceeds the hybrid deduction allocated to FZ ($80x), pro rata adjustments must be made. *See* § 1.267A-4(e). Thus, $48x of US1's imported mismatch payment is considered to indirectly fund the hybrid deduction, calculated as $80x (the amount of the hybrid deduction) multiplied by 60% ($60x, the amount of US1's imported mismatch payment to FZ, divided by $100x, the sum of the imported mismatch payments that US1 and US2 make to FZ). Similarly, $32x of US2's imported mismatch payment is considered to indirectly fund the hybrid deduction, calculated as $80x (the amount of the hybrid deduction) multiplied by 40% ($40x, the amount of US2's imported mismatch payment to FZ, divided by $100x, the sum of the imported mismatch payments that US1 and US2 make to FZ). Accordingly, $48x of US1's imported mismatch payment, and $32x of US2's imported mismatch payment, are disqualified imported mismatch amounts under § 1.267A-4(a)(1) and, as a result, deductions for such amounts are disallowed under § 1.267A-1(b)(2).

(iii) ***Alternative facts—loss made available through foreign group relief regime.*** The facts are the same as in paragraph (c)(9)(i) of this section, except that FZ holds all the interests in FZ2, a body corporate that is a tax resident of Country Z, FZ2 (rather than FZ) holds all the interests of US1 and US2, and US1 and US2 make their respective $60x and $40x payments to FZ2 (rather than to FZ). Further, in accounting period 1, a $10x loss of FZ is made available to offset income of FZ2 through a Country Z foreign group relief regime. Pursuant to § 1.267A-4(c)(3)(vi), FZ and FZ2 are treated as a single foreign tax resident for purposes of § 1.267A-4(c) because a loss that is not incurred by FZ2 (FZ's $10x loss) is made available to offset income of FZ2 under the Country Z group relief regime. Accordingly, the results are the same as in paragraph (c)(9)(ii) of this section. That is, by treating FZ and FZ2 as a single foreign tax resident for purposes of § 1.267A-4(c), BB's hybrid deduction offsets the income attributable to US1's and US2's imported mismatch payments to the same extent as described in paragraph (c)(9)(ii) of this section.

(10) ***Example 10. Imported mismatch rule—ordering rules and rule deeming certain payments to be imported mismatch payments*** —

(i) ***Facts.*** FX holds all the interests of FW, and FW holds all the interests of US1, US2, and FZ. FZ holds all the interests of US3. FX transfers cash to FW in exchange for an instrument that is treated as equity for Country X tax purposes and indebtedness for Country W tax purposes (the FX-FW instrument). FW transfers cash to US1 in exchange for an instrument that is treated as indebtedness for Country W and U.S. tax purposes (the FW-US1 instrument). The FX-FW instrument and the FW-US1 instrument were entered into pursuant to a plan a design of which was for deductions incurred by FW pursuant to the FX-FW instrument to offset income attributable to payments by US1 pursuant to the FW-US1 instrument. In accounting period 1, FW pays $125x to FX pursuant to the FX-FW instrument; the amount is treated as an excludible dividend for Country X tax purposes (by reason of the Country X participation exemption regime) and as interest for Country W tax purposes. Also in accounting period 1, US1 pays $50x to FW pursuant to the FW-US1 instrument; US2 pays $50x to FW pursuant to an instrument treated as indebtedness for Country W and U.S. tax purposes (the FW-US2 instrument); US3 pays $50x to FZ pursuant to an instrument treated as indebtedness for Country Z and U.S. tax purposes (the FZ-US3 instrument); and FZ pays $50x to FW pursuant to an instrument treated as indebtedness for Country W and Country Z tax purposes (FW-FZ instrument). The amounts paid by US1, US2, US3, and FZ are treated as interest for purposes of the relevant tax laws and are included in the income of FW (in the case of US1's, US2's and FZ's payment) or FZ (in the case of US3's payment). Lastly, neither the FW-US2 instrument, the FW-FZ instrument, nor the FZ-US3 instrument was entered into pursuant to a plan or series of related transactions that includes the transaction pursuant to which the FX-FW instrument was entered into.

(ii) ***Analysis.*** US1, US2, and US3 are specified parties (but FZ is not a specified party, see § 1.267A-5(a)(17)) and thus deductions for US1's, US2's, and US3's specified payments are subject to disallowance under section 267A. None of the specified payments is a disqualified hybrid amount, nor is any of the payments included or includible in income in the United States. *See* § 1.267A-4(a)(2)(v). Under § 1.267A-4(a)(2), each of the payments is an imported mismatch payment, US1, US2, and US3 are imported mismatch payers, and FW and FZ (the foreign tax residents that include the imported mismatch payments in income) are imported mismatch payees. The imported mismatch payments are disqualified imported mismatch amounts to the extent that the income attributable to the payments is directly or indirectly offset by FW's $125x hybrid deduction. *See* § 1.267A-4(a)(1) and (b). Under § 1.267A-4(c)(1), the $125x hybrid deduction directly or indirectly offsets the income attributable to the imported mismatch payments to the extent that the payments directly or indirectly fund the hybrid deduction. Paragraphs (c)(10)(ii)(A) through (C) of this section describe the extent to which the imported mismatch payments directly or indirectly fund the hybrid deduction and are therefore disqualified hybrid amounts for which a deduction is disallowed under § 1.267A-1(b)(2).

(A) First, the $125x hybrid deduction offsets the income attributable to US1's imported mismatch payment, a factually-related imported mismatch payment that directly funds the hybrid deduction. *See* § 1.267A-4(c)(2)(i). The entire $50x of US1's payment directly funds the hybrid deduction because FW (the imported mismatch payee) incurs at least that amount of the hybrid deduction. *See* § 1.267A-4(c)(3)(i). Accordingly, the entire $50x of the payment is a disqualified imported mismatch amount under § 1.267A-4(a)(1).

(B) Second, the remaining $75x hybrid deduction offsets the income attributable to US2's imported mismatch payment, a factually-unrelated imported mismatch payment that directly funds the remaining hybrid deduction. *See* § 1.267A-4(c)(2)(ii). The entire $50x of US2's payment directly funds the remaining hybrid deduction because FW (the imported

mismatch payee) incurs at least that amount of the remaining hybrid deduction. *See* § 1.267A-4(c)(3)(i). Accordingly, the entire $50x of the payment is a disqualified imported mismatch amount under § 1.267A-4(a)(1).

(C) Third, the remaining $25x hybrid deduction offsets the income attributable to US3's imported mismatch payment, a factually-unrelated imported mismatch payment that indirectly funds the remaining hybrid deduction. *See* § 1.267A-4(c)(2)(iii). The imported mismatch payment indirectly funds the remaining hybrid deduction to the extent that FZ (the imported mismatch payee) is allocated the remaining hybrid deduction. *See* § 1.267A-4(c)(3)(ii). FZ is allocated the remaining hybrid deduction to the extent that it directly or indirectly makes a funded taxable payment to FW (the tax resident that incurs the hybrid deduction). *See* § 1.267A-4(c)(3)(iii). The $50x that FZ pays to FW pursuant to the FW-FZ instrument is a funded taxable payment of FZ to FW. *See* § 1.267A-4(c)(3)(v). Therefore, because FZ makes a funded taxable payment to FW that is at least equal to the amount of the remaining hybrid deduction, FZ is allocated the remaining hybrid deduction. *See* § 1.267A-4(c)(3)(iii). Accordingly, $25x of US3's payment indirectly funds the $25x remaining hybrid deduction and, consequently, $25x of US3's payment is a disqualified imported mismatch amount under § 1.267A-4(a)(2).

(iii) ***Alternative facts—amount deemed to be an imported mismatch payment.*** The facts are the same as in paragraph (c)(10)(i) of this section, except that US1 is not a domestic corporation but instead is a body corporate that is only a tax resident of Country E (hereinafter, "FE") (thus, for purposes of this paragraph (c)(10)(iii), the FW-US1 instrument is instead issued by FE and is the "FW-FE instrument"). In addition, the tax law of Country E contains hybrid mismatch rules and the $50x FE pays to FW pursuant to the FW-FE instrument is subject to disallowance under a provision of the hybrid mismatch rules substantially similar to § 1.267A-4. Pursuant to § 1.267A-4(f)(2), the $50x that FE pays to FW pursuant to the FW-FE instrument is deemed to be an imported mismatch payment for purposes of determining the extent to which the income attributable to an imported mismatch payment is offset by FW's hybrid deduction (a hybrid deduction other than one described in § 1.267A-4(f)(1)). The results are the same as in paragraphs (c)(10)(ii)(B) and (C) of this section. That is, by treating the $50x that FE pays to FW as an imported mismatch payment, and for reasons similar to those described in paragraphs (c)(10)(ii)(A) through (C) of this section, $50x of FW's $125x hybrid deduction offsets income attributable to FE's imported mismatch payment, $50x of the remaining $75x hybrid deduction offsets income attributable to US2's imported mismatch payment, and the remaining $25x hybrid deduction offsets income attributable to US3's imported mismatch payment. Accordingly, the entire $50x of US2's payment is a disqualified imported mismatch amount, and $25x of US3's payment is a disqualified imported mismatch amount.

(iv) ***Alternative facts—amount deemed to be an imported mismatch payment and "waterfall" approach.*** The facts are the same as in paragraph (c)(10)(i) of this section, except that FZ holds all of the interests of US3 indirectly through FE, a body corporate that is only a tax resident of Country E (hereinafter, "FE"), and US3 makes its $50x payment to FE (rather than to FZ); such amount is treated as interest for Country E tax purposes and is included in FE's income. In addition, during accounting period 1, FE pays $50x to FZ pursuant to an instrument; such amount is treated as interest for Country E and Country Z tax purposes, and is included in FZ's income. Further, the tax law of Country E contains hybrid mismatch rules and the $50x FE pays to FZ pursuant to the instrument is subject to disallowance under a provision of the hybrid mismatch rules substantially similar to § 1.267A-4. For purposes of determining the extent to

which the income attributable to an imported mismatch payment is directly or indirectly offset by a hybrid deduction, the $50x that FE pays to FZ is deemed to be an imported mismatch payment (and FE and FZ are deemed to be an imported mismatch payer and imported mismatch payee, respectively). *See* § 1.267A-4(f)(2). With respect to US1 and US2, the results are the same as described in paragraphs (c)(10)(ii)(A) and (B) of this section. No portion of US3's payment is a disqualified imported mismatch amount because, by treating the $50x that FE pays to FZ as an imported mismatch payment, the remaining $25x of FW's hybrid deduction offsets income attributable to FE's imported mismatch payment. This is because the remaining $25x of FW's hybrid deduction is indirectly funded solely by FE's imported mismatch payment (as opposed to also being funded by US3's imported mismatch payment), as FZ (the imported mismatch payee with respect to FE's payment) directly makes a funded taxable payment to FW, whereas FE (the imported mismatch payee with respect to US3's payment) indirectly makes a funded taxable payment to FW. *See* § 1.267A-4(c)(3)(ii) through (v) and (vii).

(11) ***Example 11. Imported mismatch rule—hybrid deduction of a CFC*** —

(i) ***Facts.*** FX holds all the interests of US1, and FX and US1 hold 80% and 20%, respectively, of the interests of FZ, a specified party that is a CFC. US1 also holds all the interests of US2, and FX also holds all the interests of FY. FY is an entity established in Country Y, and is fiscally transparent for Country Y tax purposes but is not fiscally transparent for Country X tax purposes. In accounting period 1, US2 pays $100x to FZ pursuant to an instrument (the FZ-US2 instrument). The amount is treated as interest for U.S. tax purposes and Country Z tax purposes, and is included in FZ's income; in addition, for U.S. tax purposes, the amount is foreign personal holding company income of FZ. Also in accounting period 1, FZ pays $100x to FY pursuant to an instrument (the FY-FZ instrument). The amount is treated as interest for U.S. tax purposes and Country Z tax purposes, and none of the amount is included in FX's income. Under Country Z tax law, FZ is allowed a deduction for its entire $100x payment. Under § 1.267A-2(d), the entire $100x of FZ's payment is a disqualified hybrid amount (by reason of being made to a reverse hybrid) and, as a result, a deduction for the payment is disallowed under § 1.267A-1(b)(1); in addition, if a deduction were allowed for the $100x, it would be allocated and apportioned (under the rules of section 954(b)(5)) to gross subpart F income of FZ. Lastly, the FZ-US2 instrument was not entered into pursuant to a plan or series of related transactions that includes the transaction pursuant to which the FY-FZ instrument was entered into.

(ii) ***Analysis.*** US2 is a specified party and thus a deduction for its $100x specified payment is subject to disallowance under section 267A. As described in paragraphs (c)(11)(ii)(A) through (C) of this section, $80x of US2's payment is a disqualified imported mismatch amount for which a deduction is disallowed under § 1.267A-1(b)(2).

(A) $80x of US2's specified payment is an imported mismatch payment, calculated as $100x (the amount of the payment) less $0 (the disqualified hybrid amount with respect to the payment) less $20 (the amount of the payment that is included or includible in income in the United States). *See* § 1.267A-4(a)(2)(v). US2 is an imported mismatch payer and FZ (a foreign tax resident that includes the imported mismatch in income) is an imported mismatch payee. *See* § 1.267A-4(a)(2).

(B) But for § 1.267A-4(b)(2)(iv), the entire $100x deduction allowed to FZ under its tax law would be a hybrid deduction. *See* §§ 1.267A-2(d) and 1.267A-4(b)(1). However, pursuant to § 1.267A-4(b)(2)(iv), only $80x of the deduction is a hybrid deduction, calculated as

$100x (the deduction to the extent that it would be a hybrid deduction but for § 1.267A-4(b)(2)(iv)) less $20x (the extent that FZ's payment giving rise to the deduction is a disqualified hybrid amount that is taken into account for purposes of § 1.267A-4(b)(2)(iv)(A)), less $0 (the extent that FZ's payment giving rise to the deduction is included or includible in income in the United States). *See* § 1.267A-4(b)(2)(iv). The $20x disqualified hybrid amount that is taken into account for purposes of § 1.267A-4(b)(2)(iv)(A) is calculated as $100x (the extent that FZ's payment is a disqualified hybrid amount) less $80x ($100x, the disqualified hybrid amount to the extent that, if allowed as a deduction, it would be allocated and apportioned to gross subpart F income, multiplied by 80%, the difference of 100% and the percentage of the stock (by value) of FZ that is owned by US1)). *See* § 1.267A-4(g).

(C) The $80x hybrid deduction offsets the income attributable to US2's imported mismatch payment, an imported mismatch payment that directly funds the hybrid deduction. *See* § 1.267A-4(c)(2)(ii). The entire $80x of US2's imported mismatch payment directly funds the hybrid deduction because FZ (the imported mismatch payee) incurs at least that amount of the hybrid deduction. *See* § 1.267A-4(c)(3)(i). Accordingly, the entire $80x of US2's imported mismatch payment is a disqualified imported mismatch amount under § 1.267A-4(a)(1).

(12) ***Example 12. Imported mismatch rule—application first with respect to certain hybrid deductions, then with respect to other hybrid deductions*** —

(i) ***Facts.*** FX holds all the interests of FZ, and FZ holds all the interests of each of US1 and FE. The tax law of Country E contains hybrid mismatch rules. FX holds an instrument issued by FZ that is treated as equity for Country X tax purposes and indebtedness for Country Z tax purposes (the FX-FZ instrument). In accounting period 1, FZ pays $10x to FX pursuant to the FX-FZ instrument. The amount is treated as an excludible dividend for Country X tax purposes (by reason of the Country X participation exemption) and as interest for Country Z tax purposes. Also in accounting period 1, FZ is allowed a $90x notional interest deduction with respect to its equity under Country Z tax law. In addition, in accounting period 1, US1 pays $100x to FZ pursuant to an instrument (the FZ-US1 instrument); the amount is treated as interest for U.S. tax purposes and Country Z tax purposes, and is included in FZ's income. Further, in accounting period 1, FE pays $40x to FZ pursuant to an instrument (the FZ-FE instrument); the amount is treated as interest for Country E and Country Z tax purposes, is included in FZ's income, and is subject to disallowance under a provision of Country E hybrid mismatch rules substantially similar to § 1.267A-4. Lastly, neither the FZ-US1 instrument nor the FZ-FE instrument was entered into pursuant to a plan or series of related transactions that includes the transaction pursuant to which the FX-FZ instrument was entered into.

(ii) ***Analysis.*** US1 is a specified party and thus a deduction for its $100x specified payment is subject to disallowance under section 267A. As described in paragraphs (c)(12)(ii)(A) through (D) of this section, $92x of US1's payment is a disqualified imported mismatch amount for which a deduction is disallowed under § 1.267A-1(b)(2).

(A) The entire $100x of US1's specified payment is an imported mismatch payment. *See* § 1.267A-4(a)(2)(v). US1 is an imported mismatch payer and FZ (a foreign tax resident that includes the imported mismatch payment in income) is an imported mismatch payee. *See* § 1.267A-4(a)(2).

(B) FZ has $100x of hybrid deductions (the $10x deduction for the payment pursuant to the FX-FZ instrument plus the $90x notional interest deduction). *See* § 1.267A-4(b). Pursuant to § 1.267A-4(f)(1), § 1.267A-4 is first applied by taking into account only the $90x hybrid deduction consisting of the notional interest deduction; in addition, for purposes of applying § 1.267A-4 in this manner, FE's $40x payment is not treated as an imported mismatch payment. Thus, the $90x hybrid deduction offsets the income attributable to US1's imported mismatch payment, an imported mismatch payment that directly funds the hybrid deduction. *See* § 1.267A-4(c)(2)(ii). Moreover, $90x of US1's imported mismatch payment directly funds the hybrid deduction because FZ (the imported mismatch payee) incurs at least that amount of the hybrid deduction. *See* § 1.267A-4(c)(3)(i).

(C) Section § 1.267A-4 is next applied by taking into account only the $10x hybrid deduction consisting of the deduction for the payment pursuant to the FX-FZ instrument. *See* § 1.267A-4(f)(2). When applying § 1.267A-4 in this manner, and for purposes of determining the extent to which the income attributable to an imported mismatch payment is directly or indirectly offset by a hybrid deduction, FE's $40x payment is treated as an imported mismatch payment. *See* § 1.267A-4(f)(2). In addition, US1's imported mismatch payment is reduced from $100x to $10x. *See* § 1.267A-4(c)(4). But for FE's imported mismatch payment, the entire $10x of US1's imported mismatch payment would directly fund the $10x hybrid deduction because FZ incurred at least that amount of the hybrid deduction. *See* § 1.267A-4(c)(3)(i). Similarly, but for US1's imported mismatch payment, the entire $40x of FE's imported mismatch payment would directly fund the $10x hybrid deduction because FZ incurred at least that amount of the hybrid deduction. *See* § 1.267A-4(c)(3)(i). However, because the sum of US1's and FE's imported mismatch payments to FZ ($50x) exceeds the hybrid deduction incurred by FZ ($10x), pro rata adjustments must be made. *See* § 1.267A-4(e). Thus, $2x of US1's imported mismatch payment is considered to directly fund the hybrid deduction, calculated as $10x (the amount of the hybrid deduction) multiplied by 20% ($10x, the amount of US1's imported mismatch payment to FZ, divided by $50x, the sum of the imported mismatch payments that US1 and FE make to FZ). Similarly, $8x of FE's imported mismatch payment is considered to directly fund the hybrid deduction, calculated as $10x (the amount of the hybrid deduction) multiplied by 80% ($40x, the amount of FE's imported mismatch payment to FZ, divided by $50x, the sum of the imported mismatch payments that US1 and FE make to FZ). Accordingly, $2x of FZ's $10x hybrid deduction offsets income attributable to US1's $10x imported mismatch payment, and $8x of the hybrid deduction offsets income attributable to FE's $40x imported mismatch payment.

(D) Therefore, $92x of US1's imported mismatch payment is a disqualified imported mismatch amount, calculated as $90x (the amount that is a disqualified imported mismatch amount determined by applying § 1.267A-4 in the manner set forth in § 1.267A-4(f)(1)) plus $2x (the amount that is a disqualified imported mismatch amount determined by applying § 1.267A-4 in the manner set forth in § 1.267A-4(f)(2)). *See* § 1.267A-4(a)(1) and (f).

(iii) ***Alternative facts—amount deemed to be an imported mismatch payment solely funds hybrid instrument deduction.*** The facts are the same as in paragraph (c)(12)(i) of this section, except that FZ holds all of the interests of US1 indirectly through FE, and US1 makes its $100x payment to FE (rather than to FZ); such amount is treated as interest for U.S. and Country E tax purposes, and is included in FE's income. Moreover, FE pays $100x to FZ (rather than $40x);

such amount is included in FZ's income, and is subject to disallowance under a provision of Country E hybrid mismatch rules substantially similar to § 1.267A-4. As described in paragraphs (c)(12)(iii)(A) through (D) of this section, $90x of US1's payment is a disqualified imported mismatch amount for which a deduction is disallowed under § 1.267A-1(b)(2).

(A) The entire $100x of US1's specified payment is an imported mismatch payment. *See* § 1.267A-4(a)(2)(v). US1 is an imported mismatch payer and FE (a foreign tax resident that includes the imported mismatch payment in income) is an imported mismatch payee. *See* § 1.267A-4(a)(2).

(B) FZ has $100x of hybrid deductions. *See* § 1.267A-4(b). Pursuant to § 1.267A-4(f)(1), § 1.267A-4 is first applied by taking into account only the $90x hybrid deduction consisting of the notional interest deduction; in addition, for purposes of applying § 1.267A-4 in this manner, FE's $100x payment is not treated as an imported mismatch payment. Thus, the $90x hybrid deduction offsets the income attributable to US1's imported mismatch payment, an imported mismatch payment that indirectly funds the hybrid deduction. *See* § 1.267A-4(c)(2)(iii). The imported mismatch payment indirectly funds the hybrid deduction because FE (the imported mismatch payee) is allocated the deduction, as FE makes a funded taxable payment (the $100x payment to FZ) that is at least equal to the amount of the deduction. *See* § 1.267A-4(c)(3)(ii), (iii), and (v).

(C) Section § 1.267A-4 is next applied by taking into account only the $10x hybrid deduction consisting of the deduction for the payment pursuant to the FX-FZ instrument. *See* § 1.267A-4(f)(2). For purposes of applying § 1.267A-4 in this manner, FE's $100x payment is reduced from $100x to $10x, and similarly US1's imported mismatch payment is reduced from $100x to $10x. *See* § 1.267A-4(c)(4). Further, FE's $10x payment is treated as an imported mismatch payment. *See* § 1.267A-4(f)(2). The entire $10x of FE's imported mismatch payment directly funds the hybrid deduction because FZ (the imported mismatch payee with respect to FE's imported mismatch payment) incurs at least that amount of the hybrid deduction. *See* § 1.267A-4(c)(3)(i). Accordingly, the $10x hybrid deduction offsets the income attributable to FE's imported mismatch payment, and none of the income attributable to US1's imported mismatch payment.

(D) Therefore, $90x of US1's imported mismatch payment is a disqualified imported mismatch amount, calculated as $90x (the amount that is a disqualified imported mismatch amount determined by applying § 1.267A-4 in the manner set forth in § 1.267A-4(f)(1)) plus $0 (the amount that is a disqualified imported mismatch amount determined by applying § 1.267A-4 in the manner set forth in § 1.267A-4(f)(2)). *See* § 1.267A-4(a)(1) and (f).

[T.D. 9896, 85 FR 19836, Apr. 8, 2020]

§ 1.267A-7 Applicability dates.

(a) ***General rule.*** Except as provided in paragraph (b) of this section, §§ 1.267A-1 through 1.267A-6 apply to taxable years ending on or after December 20, 2018, provided that such taxable years begin after December 31, 2017. However, taxpayers may apply the regulations in §§ 1.267A-1 through 1.267A-6 in their entirety (including by taking into account paragraph (b) of this section) for taxable years beginning after December 31, 2017, and ending before December 20, 2018. In lieu of applying the regulations in §§ 1.267A-1 through 1.267A-6 (including paragraph (b) of this section), taxpayers may apply the provisions

matching §§ 1.267A-1 through 1.267A-6 (including by taking into account the provision matching paragraph (b) of this section) from the Internal Revenue Bulletin (IRB) 2019-03 (*https://www.irs.gov/pub/irs-irbs/irb19-03.pdf*) in their entirety for all taxable years ending on or before April 8, 2020.

(b) ***Special rules.*** The following special rules apply regarding applicability dates:

(1) Sections 1.267A-2(a)(4) (payments pursuant to interest-free loans and similar arrangements), (b) (disregarded payments), (c) (deemed branch payments), and (e) (branch mismatch transactions), 1.267A-4 (imported mismatch rule), and 1.267A-5(b)(5) (structured payments), except as provided in paragraph (b)(5) of this section, apply to taxable years beginning on or after December 20, 2018.

(2) Section 1.267A-5(a)(20) (defining structured arrangement), as well as the portions of §§ 1.267A-1 through 1.267A-3 that relate to structured arrangements and that are not otherwise described in paragraph (b) of this section, apply to taxable years beginning on or after December 20, 2018. However, in the case of a specified payment made pursuant to an arrangement entered into before December 22, 2017, § 1.267A-5(a)(20), and the portions of §§ 1.267A-1 through 1.267A-3 that relate to structured arrangements and that are not otherwise described in paragraph (b) of this section, apply to taxable years beginning after December 31, 2020.

(3) Except as provided in paragraph (b)(4) of this section, the rules provided in § 1.267A-5(a)(12)(ii) (swaps with significant nonperiodic payments) apply to notional principal contracts entered into on or after April 8, 2021. However, taxpayers may apply the rules provided in § 1.267A-5(a)(12)(ii) to notional principal contracts entered into before April 8, 2021.

(4) For a notional principal contract entered into before April 8, 2021, the interest equivalent rules provided in § 1.267A-5(b)(5)(ii)(B) (applied without regard to the references to § 1.267A-5(a)(12)(ii)) apply to a notional principal contract entered into on or after April 8, 2020.

(5) Section 1.267A-5(b)(5)(ii)(B) (interest equivalent rules) applies to transactions entered into on or after April 8, 2020.

[T.D. 9896, 85 FR 19836, Apr. 8, 2020, as amended by 85 FR 48651, Aug. 12, 2020]

§ 1.267(a)-1 Deductions disallowed.

(a) ***Losses.*** Except in cases of distributions in corporate liquidations, no deduction shall be allowed for losses arising from direct or indirect sales or exchanges of property between persons who, on the date of the sale or exchange, are within any one of the relationships specified in section 267(b). See § 1.267(b)-1.

(b) ***Unpaid expenses and interest.***

(1) No deduction shall be allowed a taxpayer for trade or business expenses otherwise deductible under section 162, for expenses for production of income otherwise deductible under section 212, or for interest otherwise deductible under section 163:

(i) If, at the close of the taxpayer's taxable year within which such items are accrued by the taxpayer or at any time within $2^1/_2$ months thereafter, both the taxpayer and the payee are persons within any one of the relationships specified in section 267(b) (see § 1.267(b)-1); and

(ii) If the payee is on the cash receipts and disbursements method of accounting with respect to such items of gross income for his taxable year in which or with which the taxable year of accrual by the debtor-taxpayer ends; and

(iii) If, within the taxpayer's taxable year within which such items are accrued by the taxpayer and $2^1/_2$ months after the close thereof, the amount of such items is not paid and the amount of such items is not otherwise (under the rules of constructive receipt) includible in the gross income of the payee.

(2) The provisions of section 267(a)(2) and this paragraph do not otherwise affect the general rules governing the allowance of deductions under an accrual method of accounting. For example, if the accrued expenses or interest are paid after the deduction has become disallowed under section 267(a)(2), no deduction would be allowable for the taxable year in which payment is made, since an accrual item is deductible only in the taxable year in which it is properly accruable.

(3) The expenses and interest specified in section 267(a)(2) and this paragraph shall be considered as paid for purposes of that section to the extent of the fair market value on the date of issue of notes or other instruments of similar effect received in payment of such expenses or interest if such notes or other instruments were issued in such payment by the taxpayer within his taxable year or within $2^1/_2$ months after the close thereof. The fair market value on the date of issue of such notes or other instruments of similar effect is includible in the gross income of the payee for the taxable year in which he receives the notes or other instruments.

(4) The provisions of this paragraph may be illustrated by the following example:

Example. A, an individual, is the holder and owner of an interest-bearing note of the M Corporation, all the stock of which was owned by him on December 31, 1956. A and the M Corporation make their income tax returns for a calendar year. The M Corporation uses an accrual method of accounting. A uses a combination of accounting methods permitted under section 446(c)(4) in which he uses the cash receipts and disbursements method in respect of items of gross income. The M Corporation does not pay any interest on the note to A during the calendar year 1956 or within $2^1/_2$ months after the close of that year, nor does it credit any interest to A's account in such a manner that it is subject to his unqualified demand and thus is constructively received by him. M Corporation claims a deduction for the year 1956 for the interest accruing on the note in that year. Since A is on the cash receipts and disbursements method in respect of items of gross income, the interest is not includible in his return for the year 1956. Under the provisions of section 267(a)(2) and this paragraph, no deduction for such interest is allowable in computing the taxable income of the M Corporation for the taxable year 1956 or for any other taxable year. However, if the interest had actually been paid to A on or before March 15, 1957, or if it had been made available to A before that time (and thus had been constructively received by him), the M Corporation would be allowed to deduct the amount of the payment in computing its taxable income for 1956.

(c) ***Scope of section.*** Section 267(a) requires that deductions for losses or unpaid expenses or interest described therein be disallowed even though the transaction in which such losses, expenses, or interest were incurred was a bona fide transaction. However, section 267 is not exclusive. No deduction for losses or unpaid expenses or interest arising in a transaction which is not bona fide will be allowed even though section 267 does not apply to the transaction.

§ 1.267(a)-2T Temporary regulations; questions and answers arising under the Tax Reform Act of 1984 (temporary).

(a) ***Introduction*** —

(1) ***Scope.*** This section prescribes temporary question and answer regulations under section 267(a) and related provisions as amended by section 174 of the Tax Reform Act of 1984, Pub. L. No. 98-369.

(2) ***Effective date.*** Except as otherwise provided by *Answer 2* or *Answer 3* in paragraph (c) of this section, the effective date set forth in section 174(c) of the Tax Reform Act of 1984 applies to this section.

(b) ***Questions applying section 267(a)(2) and (b) generally.*** The following questions and answers deal with the application of section 267(a)(2) and (b) generally:

Question 1: Does section 267(a)(2) ever apply to defer the deduction of an otherwise deductible amount if the person to whom the payment is to be made properly uses the completed contract method of accounting with respect to such amount?

Answer 1: No. Section 267(a)(2) applies only if an otherwise deductible amount is owed to a related person under whose method of accounting such amount is not includible in income unless paid to such person. Regardless of when payment is made, an amount owed to a contractor using the completed contract method of accounting is includible in the income of the contractor in accordance with § 1.451-3(d) in the year in which the contract is completed or in which certain disputes are resolved.

Question 2: Does section 267(a)(2) ever apply to defer the deduction of otherwise deductible original issue discount as defined in sections 163(e) and 1271 through 1275 ("the OID rules")?

Answer 2. No. Regardless of when payment is made, an amount owed to a lender that constitutes original issue discount is included in the income of the lender periodically in accordance with the OID rules. Similarly, section 267(a)(2) does not apply to defer an otherwise deductible amount to the extent section 467 or section 7872 requires periodic inclusion of such amount in the income of the person to whom payment is to be made, even though payment has not been made.

Question 3: Does section 267(a)(2) ever apply to defer the deduction of otherwise deductible unstated interest determined to exist under section 483?

Answer 3: Yes. If section 483 recharacterizes any amount as unstated interest and the other requirements of section 267(a)(2) are met, a deduction for such unstated interest will be deferred under section 267.

Question 4: Does section 267(a)(2) ever apply to defer the deduction of otherwise deductible cost recovery, depreciation, or amortization?

Answer 4: Yes, in certain cases. In general, section 267(a)(2) does not apply to defer the deduction of otherwise deductible cost recovery, depreciation, or amortization. Notwithstanding this general rule, if the other requirements of section 267(a)(2) are met, section 267(a)(2) does apply to defer deductions for cost recovery, depreciation, or amortization of an amount owed to a related person for interest or rent or for the performance or nonperformance of services, which amount the taxpayer payor capitalized or treated as a deferred expense (unless the taxpayer payor elected to capitalize or defer the amount and section 267(a)(2) would not have deferred the deduction of such amount if the taxpayer payor had not so elected). Amounts owed for services that may be subject to this provision include, for example, amounts owed for acquisition, development, or organizational services or for covenants not to compete. In applying this rule, payments made between persons described in any of the paragraphs of section 267(b) (as modified by section 267(e)) will be closely scrutinized to determine whether they are made in respect of capitalized costs (or costs treated as deferred expenses) that are subject to deferral under section 267(a)(2), or in respect of other capitalized costs not so subject.

Question 5: If a deduction in respect of an otherwise deductible amount is deferred by section 267(a)(2) and, prior to the time the amount is includible in the gross income of the person to whom payment is to be made, such person and the payor taxpayer cease to be persons specified in any of the paragraphs of section 267(b) (as modified by section 267(e)), is the deduction allowable as of the day on which the relationship ceases?

Answer 5: No. The deduction is not allowable until the day as of which the amount is includible in the gross income of the person to whom payment of the amount is made, even though the relationship ceases to exist at an earlier time.

Question 6: Do references in other sections to persons described in section 267(b) incorporate changes made to section 267(b) by section 174 of the Tax Reform Act of 1984?

Answer 6: Yes. References in other sections to persons described in section 267(b) take into account changes made to section 267(b) by section 174 of the Tax Reform Act of 1984 (without modification by section 267(e)(1)). For example, a transfer after December 31, 1983 (the effective date of the new section 267(b)(3) relationship added by the Tax Reform Act of 1984) of section 1245 class property placed in service before January 1, 1981, from one corporation to another corporation, 11 percent of the stock of which is owned by the first corporation, will not constitute recovery property (as defined in section 168) in the hands of the second corporation by reason of section 168(e)(4) (A)(i) and (D).

(c) ***Questions applying section 267(a) to partnerships.*** The following questions and answers deal with the application of section 267(a) to partnerships:

Question 1: Does section 267(a) disallow losses and defer otherwise deductible amounts at the partnership (entity) level?

Answer 1: Yes. If a loss realized by a partnership from a sale or exchange of property is disallowed under section 267(a)(1), that loss shall not enter into the computation of the partnership's taxable income. If an amount that otherwise would be deductible by a partnership is deferred by section 267(a)(2), that amount shall not enter into the computation of the partnership's taxable income until the taxable year of the partnership in which falls the day on which the amount is includible in the gross income of the person to whom payment of the amount is made.

Question 2: Does section 267(a)(1) ever apply to disallow a loss if the sale or exchange giving rise to the loss is between two partnerships even though the two partnerships are not persons specified in any of the paragraphs of section 267(b)?

Answer 2: Yes. If the other requirements of section 267(a)(1) are met, section 267(a)(1) applies to such losses arising as a result of transactions entered into after December 31, 1984 between partnerships not described in any of the paragraphs of section 267(b) as follows, and § 1.267(b)-1(b) does not apply. If the two partnerships have one or more common partners (*i.e.,* if any person owns directly, indirectly, or constructively any capital or profits interest in each of such partnerships), or if any partner in either partnership and one or more partners in the other partnership are persons specified in any of the paragraphs of section 267(b) (without modification by section 267(e)), a portion of the selling partnership's loss will be disallowed under section 267(a)(1). The amount disallowed under this rule is the greater of:

(1) The amount that would be disallowed if the transaction giving rise to the loss had occurred between the selling partnership and the separate partners of the purchasing partnership (in proportion to their respective interests in the purchasing partnership); or

(2) the amount that would be disallowed if such transaction had occurred between the separate partners of the selling partnership (in proportion to their respective interests in the selling partnership) and the purchasing partnership. Notwithstanding the general rule of this paragraph (c) *Answer 2,* no disallowance shall occur if the amount that would be disallowed pursuant to the immediately preceding sentence is less than 5 percent of the loss arising from the sale or exchange.

Question 3: Does section 267(a)(2) ever apply to defer an otherwise deductible amount if the taxpayer payor is a partnership and the person to whom payment of such amount is to be made is a partnership even though the two partnerships are not persons specified in any of the paragraphs of section 267(b) (as modified by section 267(e))?

Answer 3: Yes. If the other requirements of section 267(a)(2) are met, section 267(a)(2) applies to such amounts arising as a result of transactions entered into after December 31, 1984 between partnerships not described in any of the paragraphs of section 267(b) (as modified by section 267(e)) as follows, and § 1.267(b)-1(b) does not apply. If the two partnerships have one or more common partners (*i.e.,* if any person owns directly, indirectly, or constructively any capital or profits interest in each of such partnerships), or if any partner in either partnership and one or more partners in the other partnership are persons specified in any of the paragraphs of section 267(b) (without modification by section 267(e)), a portion of the payor partnership's otherwise allowable deduction will be deferred under section 267(a)(2). The amount deferred under this rule is the greater of:

(1) The amount that would be deferred if the transaction giving rise to the otherwise allowable deduction had occurred between the payor partnership and the separate partners of the payee partnership (in proportion to their respective interests in the payee partnership); or

(2) the amount that would be deferred if such transaction had occurred between the separate partners of the payor partnership (in proportion to their respective interests in the payor partnership) and the payee partnership. Notwithstanding the general rule of this paragraph (c) *Answer 3,* no deferral shall occur if the amount that would be deferred pursuant to the immediately preceding sentence is less than 5 percent of the otherwise allowable deduction.

Example. On May 1, 1985, partnership AB enters into a transaction whereby it accrues an otherwise deductible amount to partnership AC. AC is on the cash receipts and disbursements method of accounting. A holds a 5 percent capital and profits interest in AB and a 49 percent capital and profits interest in AC, and A's interest in each item of the income, gain, loss, deduction, and credit of each partnership is 5 percent and 49 percent, respectively. B and C are not related. Notwithstanding that AB and AC are not persons specified in section 267(b), 49 percent of the deduction in respect of such amount will be deferred under section 267(a)(2). The result would be the same if A held a 49 percent interest in AB and a 5 percent interest in AC. However, if A held more than 50 percent of the capital or profits interest of either AB or AC, the entire deduction in respect of such amount would be deferred under section 267(a)(2).

Question 4: What does the phrase *incurred at an annual rate not in excess of 12 percent* mean as used in section 267(e)(5)(C)(ii)?

Answer 4: The phrase refers to interest that accrues but is not includible in the income of the person to whom payment is to be made during the taxable year of the payor. Thus, in determining whether the requirements of section 267(e)(5) (providing an exception to certain provisions of section 267 for certain expenses and interest of partnerships owning low income housing) are met with respect to a

transaction, the requirement of section 267(e)(5)(C)(ii) will be satisfied, even though the total interest (both stated and unstated) paid or accrued in any taxable year of the payor taxpayer exceeds 12 percent, if the interest in excess of 12 percent per annum, compounded semi-annually, on the outstanding loan balance (principal and accrued but unpaid interest) is includible in the income of the person to whom payment is to be made no later than the last day of such taxable year of the payor taxpayer.

(98 Stat. 704, 26 U.S.C. 267; 98 Stat. 589, 26 U.S.C. 706; 68A Stat. 367, 26 U.S.C. 1502; 68A Stat. 917, 26 U.S.C. 7805)

[T.D. 7991, 49 FR 46995, Nov. 30, 1984]

§ 1.267(a)-3 Deduction of amounts owed to related foreign persons.

(a) ***Purpose and scope.*** This section provides rules under section 267(a) (2) and (3) governing when an amount owed to a related foreign person that is otherwise deductible under Chapter 1 may be deducted. Paragraph (b) of this section provides the general rules, and paragraph (c) of this section provides exceptions and special rules.

(b) ***Deduction of amount owed to related foreign person*** —

(1) ***In general.*** Except as provided in paragraph (c) of this section, section 267(a)(3) requires a taxpayer to use the cash method of accounting with respect to the deduction of amounts owed to a related foreign person. An amount that is owed to a related foreign person and that is otherwise deductible under Chapter 1 thus may not be deducted by the taxpayer until such amount is paid to the related foreign person. For purposes of this section, a related foreign person is any person that is not a United States person within the meaning of section 7701(a)(30), and that is related (within the meaning of section 267(b)) to the taxpayer at the close of the taxable year in which the amount incurred by the taxpayer would otherwise be deductible. Section 267(f) defines *controlled group* for purposes of section 267(b) without regard to the limitations of section 1563(b). An amount is treated as paid for purposes of this section if the amount is considered paid for purposes of section 1441 or section 1442 (including an amount taken into account pursuant to section 884(f)).

(2) ***Amounts covered.*** This section applies to otherwise deductible amounts that are of a type described in section 871(a)(1) (A), (B) or (D), or in section 881(a) (1), (2) or (4). The rules of this section also apply to interest that is from sources outside the United States. Amounts other than interest that are from sources outside the United States, and that are not income of a related foreign person effectively connected with the conduct by such related foreign person of a trade or business within the United States, are not subject to the rules of section 267(a) (2) or (3) or this section. See paragraph (c) of this section for rules governing the treatment of amounts that are income of a related foreign person effectively connected with the conduct of a trade or business within the United States by such related foreign person.

(3) ***Change in method of accounting.*** A taxpayer that uses a method of accounting other than that required by the rules of this section must change its method of accounting to conform its method to the rules of this section. The taxpayer's change in method must be made pursuant to the rules of section 446(e), the regulations thereunder, and any applicable administrative procedures prescribed by the Commissioner. Because the rules of this section prescribe a method of accounting, these rules apply in the determination of taxpayer's earnings and profits pursuant to § 1.1312-6(a).

(4) ***Examples.*** The provisions of this paragraph (b) may be illustrated by the following examples:

Example 1. (i) FC, a corporation incorporated in Country X, owns 100 percent of the stock of C, a domestic corporation. C uses the accrual method of accounting in computing its income and deductions, and is a calendar year taxpayer. In Year 1, C accrues an amount owed to FC for interest. C makes an actual payment of the amount owed to FC in Year 2.
(ii) Regardless of its source, the interest owed to FC is an amount to which this section applies. Pursuant to the rules of this paragraph (b), the amount owed to FC by C will not be allowable as a deduction in Year 1. Section 267 does not preclude the deduction of this amount in Year 2.

Example 2. (i) RS, a domestic corporation, is the sole shareholder of FSC, a foreign sales corporation. Both RS and FSC use the accrual method of accounting. In Year 1, RS accrues $z owed to FSC for commissions earned by FSC in Year 1. Pursuant to the foreign sales company provisions, sections 921 through 927, a portion of this amount, $x, is treated as effectively connected income of FSC from sources outside the United States. Accordingly, the rules of section 267(a)(3) and paragraph (b) of this section do not apply. See paragraph (c) of this section for the rules governing the treatment of amounts that are effectively connected income of FSC.
(ii) The remaining amount of the commission, $y, is classified as exempt foreign trade income under section 923(a)(3) and is treated as income of FSC from sources outside the United States that is not effectively connected income. This amount is one to which the provisions of this section do not apply, since it is an amount other than interest from sources outside the United States and is not effectively connected income. Therefore, a deduction for $y is allowable to RS as of the day on which it accrues the otherwise deductible amount, without regard to section 267 (a)(2) and (a)(3) and the regulations thereunder.

(c) ***Exceptions and special rules*** —

(1) ***Effectively connected income subject to United States tax.*** The provisions of section 267(a)(2) and the regulations thereunder, and not the provisions of paragraph (b) of this section, apply to an amount that is income of the related foreign person that is effectively connected with the conduct of a United States trade or business of such related foreign person. An amount described in this paragraph (c)(1) thus is allowable as a deduction as of the day on which the amount is includible in the gross income of the related foreign person as effectively connected income under sections 872(a)(2) or 882(b) (or, if later, as of the day on which the deduction would be so allowable but for section 267(a)(2)). However, this paragraph (c)(1) does not apply if the related foreign person is exempt from United States income tax on the amount owed, or is subject to a reduced rate of tax, pursuant to a treaty obligation of the United States (such as under an article relating to the taxation of business profits).

(2) ***Items exempt from tax by treaty.*** Except with respect to interest, neither paragraph (b) of this section nor section 267 (a)(2) applies to any amount that is income of a related foreign person with respect to which the related foreign person is exempt from United States taxation on the amount owed pursuant to a treaty obligation of the United States (such as under an article relating to the taxation of business profits). Interest that is effectively connected income of the related foreign person under

sections 872(a)(2) or 882(b) is an amount covered by paragraph (c)(1) of this section. Interest that is not effectively connected income of the related foreign person is an amount covered by paragraph (b) of this section, regardless of whether the related foreign person is exempt from United States taxation on the amount owed pursuant to a treaty obligation of the United States.

(3) ***Items subject to reduced rate of tax by treaty.*** Paragraph (b) of this section applies to amounts that are income of a related foreign person with respect to which the related foreign person claims a reduced rate of United States income tax on the amount owed pursuant to a treaty obligation of the United States (such as under an article relating to the taxation of royalties).

(4) ***Certain amounts owed to certain controlled foreign corporations.*** An amount that is income of a related foreign person is exempt from the application of section 267(a)(3)(B)(i) if the related foreign person is a controlled foreign corporation that does not have any United States shareholders (as defined in section 951(b)) that own (within the meaning of section 958(a)) stock of the controlled foreign corporation. However, in this case, the amount is subject to the application of section 267(a)(3)(A) in the same manner as if the related foreign person were a foreign corporation that is not a controlled foreign corporation.

(d) ***Effective date.*** The rules of this section are effective with respect to interest that is allowable as a deduction under chapter 1 (without regard to the rules of this section) in taxable years beginning after December 31, 1983, but are not effective with respect to interest that is incurred with respect to indebtedness incurred on or before September 29, 1983, or incurred after that date pursuant to a contract that was binding on that date and at all times thereafter (unless the indebtedness or the contract was renegotiated, extended, renewed, or revised after that date). Except as otherwise provided in this paragraph (d), the regulations in this section issued under section 267 apply to all other deductible amounts that are incurred after July 31, 1989, but do not apply to amounts that are incurred pursuant to a contract that was binding on September 29, 1983, and at all times thereafter (unless the contract was renegotiated, extended, renewed, or revised after that date). Paragraph (c)(2) of this section applies to payments accrued on or after October 22, 2004. For payments accrued before October 22, 2004, see § 1.267(a)-3(c)(2), as contained in 26 CFR part 1, revised as of April 1, 2004. Paragraph (c)(4) of this section applies to payments accrued on or after October 1, 2019. For payments accrued before October 1, 2019, a taxpayer may apply paragraph (c)(4) of this section for payments accrued during the last taxable year of a foreign corporation beginning before January 1, 2018, and each subsequent taxable year of the foreign corporation, provided that the taxpayer and United States persons that are related (within the meaning of section 267 or 707) to the taxpayer consistently apply such paragraph with respect to all foreign corporations. For payments accrued before October 22, 2004, see § 1.267(a)-3(c)(4), as contained in 26 CFR part 1, revised as of April 1, 2004.

[T.D. 8465, 58 FR 237, Jan. 5, 1993, as amended by T.D 9908, 85 FR 59430, Sept. 22, 2020]

§ 1.267(b)-1 Relationships.

(a) ***In general.***

(1) The persons referred to in section 267(a) and § 1.267 (a)-1 are specified in section 267(b).

(2) Under section 267(b)(3), it is not necessary that either of the two corporations be a personal holding company or a foreign personal holding company for the taxable year in which the sale or exchange occurs or in which the expenses or interest are properly accruable, but either one of them must be such a company for the taxable year next preceding the taxable year in which the sale or exchange occurs or in which the expenses or interest are accrued.

(3) Under section 267(b)(9), the control of certain educational and charitable organizations exempt from tax under section 501 includes any kind of control, direct or indirect, by means of which a person in fact controls such an organization, whether or not the control is legally enforceable and regardless of the method by which the control is exercised or exercisable. In the case of an individual, control possessed by the individual's family, as defined in section 267(c)(4) and paragraph (a)(4) of § 1.267 (c)-1, shall be taken into account.

(b) *Partnerships.*

(1) Since section 267 does not include members of a partnership and the partnership as related persons, transactions between partners and partnerships do not come within the scope of section 267. Such transactions are governed by section 707 for the purposes of which the partnership is considered to be an entity separate from the partners. See section 707 and § 1.707-1. Any transaction described in section 267(a) between a partnership and a person other than a partner shall be considered as occurring between the other person and the members of the partnership separately. Therefore, if the other person and a partner are within any one of the relationships specified in section 267(b), no deductions with respect to such transactions between the other person and the partnership shall be allowed:

(i) To the related partner to the extent of his distributive share of partnership deductions for losses or unpaid expenses or interest resulting from such transactions, and

(ii) To the other person to the extent the related partner acquires an interest in any property sold to or exchanged with the partnership by such other person at a loss, or to the extent of the related partner's distributive share of the unpaid expenses or interest payable to the partnership by the other person as a result of such transaction.

(2) The provisions of this paragraph may be illustrated by the following examples:

Example 1. A, an equal partner in the ABC partnership, personally owns all the stock of M Corporation. B and C are not related to A. The partnership and all the partners use an accrual method of accounting, and are on a calendar year. M Corporation uses the cash receipts and disbursements method of accounting and is also on a calendar year. During 1956 the partnership borrowed money from M Corporation and also sold property to M Corporation, sustaining a loss on the sale. On December 31, 1956, the partnership accrued its interest liability to the M Corporation and on April 1, 1957 (more than $2^1/_2$ months after the close of its taxable year), it paid the M Corporation the amount of such accrued interest. Applying the rules of this paragraph, the transactions are considered as occurring between M Corporation and the partners separately. The sale and interest transactions considered as occurring between A and the M Corporation fall within the scope of section 267 (a) and (b), but the transactions considered as occurring between partners B and C and the M Corporation do not. The latter two partners may, therefore, deduct their distributive shares of partnership deductions for the loss and the accrued interest. However, no deduction shall be allowed to A for his distributive shares of these partnership deductions. Furthermore, A's adjusted basis for his partnership interest must be decreased by the amount of his distributive share of such deductions. See section 705(a)(2).

Example 2. Assume the same facts as in *Example 1* of this subparagraph except that the partnership and all the partners use the cash receipts and disbursements method of accounting, and that M Corporation uses an accrual method. Assume further, that during 1956 M Corporation borrowed money from the partnership and that on a sale of property to the partnership during that year M Corporation sustained a loss. On December 31, 1956, the M Corporation accrued its interest liability on the borrowed money and on April 1, 1957 (more than $2^1/_2$ months after the close of its taxable year) it paid the accrued interest to the partnership. The corporation's deduction for the accrued interest is not allowed to the extent of A's distributive share (one-third) of such interest income. M Corporation's deduction for the loss on the sale of the property to the partnership is not allowed to the extent of A's one-third interest in the purchased property.

§ 1.267(c)-1 Constructive ownership of stock.

(a) ***In general.***

(1) The determination of stock ownership for purposes of section 267(b) shall be in accordance with the rules in section 267(c).

(2) For an individual to be considered under section 267(c)(2) as constructively owning the stock of a corporation which is owned, directly or indirectly, by or for members of his family it is not necessary that he own stock in the corporation either directly or indirectly. On the other hand, for an individual to be considered under section 267(c)(3) as owning the stock of a corporation owned either actually, or constructively under section 267(c)(1), by or for his partner, such individual must himself actually own, or constructively own under section 267(c)(1), stock of such corporation.

(3) An individual's constructive ownership, under section 267(c) (2) or (3), of stock owned directly or indirectly by or for a member of his family, or by or for his partner, is not to be considered as actual ownership of such stock, and the individual's constructive ownership of the stock is not to be attributed to another member of his family or to another partner. However, an individual's constructive ownership, under section 267(c)(1), of stock owned directly or indirectly by or for a corporation, partnership, estate, or trust shall be considered as actual ownership of the stock, and the individual's ownership may be attributed to a member of his family or to his partner.

(4) The family of an individual shall include only his brothers and sisters, spouse, ancestors, and lineal descendants. In determining whether any of these relationships exist, full effect shall be given to a legal adoption. The term *ancestors* includes parents and grandparents, and the term *lineal descendants* includes children and grandchildren.

(b) ***Examples.*** The application of section 267(c) may be illustrated by the following examples:

Example 1. On July 1, 1957, A owned 75 percent, and AW, his wife, owned 25 percent, of the outstanding stock of the M Corporation. The M Corporation in turn owned 80 percent of the outstanding stock of the O Corporation. Under section 267(c)(1), A and AW are each considered as owning an amount of the O Corporation stock actually owned by M Corporation in proportion to their respective ownership of M Corporation stock. Therefore, A constructively owns 60 percent (75 percent of 80 percent) of the O Corporation stock and AW constructively owns 20 percent (25 percent of 80 percent) of such stock. Under the family ownership rule of section 267(c)(2), an individual is considered as constructively owning the stock actually owned by his spouse. A and AW, therefore, are each considered as constructively owning the M Corporation stock actually

owned by the other. For the purpose of applying this family ownership rule, A's and AW's constructive ownership of O Corporation stock is considered as actual ownership under section 267(c)(5). Thus, A constructively owns the 20 percent of the O Corporation stock constructively owned by AW, and AW constructively owns the 60 percent of the O Corporation stock constructively owned by A. In addition, the family ownership rule may be applied to make AWF, AW's father, the constructive owner of the 25 percent of the M Corporation stock actually owned by AW. As noted above, AW's constructive ownership of 20 percent of the O Corporation stock is considered as actual ownership for purposes of applying the family ownership rule, and AWF is thereby considered the constructive owner of this stock also. However, AW's constructive ownership of the stock constructively and actually owned by A may not be considered as actual ownership for the purpose of again applying the family ownership rule to make AWF the constructive owner of these shares. The ownership of the stock in the M and O Corporations may be tabulated as follows:

Person	Stock ownership in M Corporation		Total under Section 267 (Percent)	Stock ownsership in O Corporation		Total under Section 267 (Percent)
	Actual (Percent)	Constructive (Percent)		Actual (Percent)	Constructive (Percent)	
A	75	25	100		60	
				None		80
					20	
A W (A's wife)	25	75	100		20	
				None		80
					60	
A W F (AW's father)	None	25	25	None	20	20
M Corporation				80	None	80
O Corporation	None	None	None			

Assuming that the M Corporation and the O Corporation make their income tax returns for calendar years, and that there was no distribution in liquidation of the M or O Corporation, and further assuming that other corporation was a personal holding company under section 542 for the calendar year 1956, no deduction is allowable with respect to losses from sales or exchanges of property made on July 1, 1957, between the two corporations. Moreover, whether or not either corporation was a personal holding company, no loss would be allowable on a sale or exchange

> between A or AW and either corporation. A deduction would be allowed, however, for a loss sustained in an arm's length sale or exchange between A and AWF, and between AWF and the M or O Corporation.

Example 2. On June 15, 1957, all of the stock of the N Corporation was owned in equal proportions by A and his partner, AP. Except in the case of distributions in liquidation by the N Corporation, no deduction is allowable with respect to losses from sales or exchanges of property made on June 15, 1957, between A and the N Corporation or AP and the N Corporation since each partner is considered as owning the stock owned by the other; therefore, each is considered as owning more than 50 percent in value of the outstanding stock of the N Corporation.

Example 3. On June 7, 1957, A owned no stock in X Corporation, but his wife, AW, owned 20 percent in value of the outstanding stock of X, and A's partner, AP, owned 60 percent in value of the outstanding stock of X. The partnership firm of A and AP owned no stock in X Corporation. The ownership of AW's stock is attributed to A, but not that of AP since A does not own any X Corporation stock either actually, or constructively under section 267(c)(1). A's constructive ownership of AW's stock is not the ownership required for the attribution of AP's stock. Therefore, deductions for losses from sales or exchanges of property made on June 7, 1957, between X Corporation and A or AW are allowable since neither person owned more than 50 percent in value of the outstanding stock of X, but deductions for losses from sales or exchanges between X Corporation and AP would not be allowable by section 267(a) (except for distributions in liquidation of X Corporation).

§ 1.267(d)-1 Amount of gain where loss previously disallowed.

(a) ***General rule.***

(1) If a taxpayer acquires property by purchase or exchange from a transferor who, on the transaction, sustained a loss not allowable as a deduction by reason of section 267(a)(1) (or by reason of section 24(b) of the Internal Revenue Code of 1939), then any gain realized by the taxpayer on a sale or other disposition of the property after December 31, 1953, shall be recognized only to the extent that the gain exceeds the amount of such loss as is properly allocable to the property sold or otherwise disposed of by the taxpayer.

(2) The general rule is also applicable to a sale or other disposition of property by a taxpayer when the basis of such property in the taxpayer's hands is determined directly or indirectly by reference to other property acquired by the taxpayer from a transferor through a sale or exchange in which a loss sustained by the transferor was not allowable. Therefore, section 267(d) applies to a sale or other disposition of property after a series of transactions if the basis of the property acquired in each transaction is determined by reference to the basis of the property transferred, and if the original property was acquired in a transaction in which a loss to a transferor was not allowable by reason of section 267(a)(1) (or by reason of section 24(b) of the Internal Revenue Code of 1939).

(3) The benefit of the general rule is available only to the original transferee but does not apply to any original transferee (for example, a donee or a person acquiring property from a decedent where the basis of property is determined under section 1014 or 1022) who acquired the property in any manner other than by purchase or exchange.

(4) The application of the provisions of this paragraph may be illustrated by the following examples:

Example 1. H sells to his wife, W, for $500, certain corporate stock with an adjusted basis for determining loss to him of $800. The loss of $300 is not allowable to H by reason of section 267(a)(1) and paragraph (a) of § 1.267 (a)-1. W later sells this stock for $1,000. Although W's realized gain is $500 ($1,000 minus $500, her basis), her recognized gain under section 267(d) is only $200, the excess of the realized gain of $500 over the loss of $300 not allowable to H. In determining capital gain or loss W's holding period commences on the date of the sale from H to W.

Example 2. Assume the same facts as in *Example 1* except that W later sells her stock for $300 instead of $1,000. Her recognized loss is $200 and not $500 since section 267(d) applies only to the nonrecognition of gain and does not affect basis.

Example 3. Assume the same facts as in *Example 1* except that W transfers her stock as a gift to X. The basis of the stock in the hands of X for the purpose of determining gain, under the provisions of section 1015, is the same as W's, or $500. If X later sells the stock for $1,000 the entire $500 gain is taxed to him.

Example 4. H sells to his wife, W, for $5,500, farmland, with an adjusted basis for determining loss to him of $8,000. The loss of $2,500 is not allowable to H by reason of section 267(a)(1) and paragraph (a) of § 1.267 (a)-1. W exchanges the farmland, held for investment purposes, with S, an unrelated individual, for two city lots, also held for investment purposes. The basis of the city lots in the hands of W ($5,500) is a substituted basis determined under section 1031(d) by reference to the basis of the farmland. Later W sells the city lots for $10,000. Although W's realized gain is $4,500 (10,000 minus $5,500), her recognized gain under section 267(d) is only $2,000, the excess of the realized gain of $4,500 over the loss of $2,500 not allowable to H.

(b) ***Determination of basis and gain with respect to divisible property*** —

(1) ***Taxpayer's basis.*** When the taxpayer acquires divisible property or property that consists of several items or classes of items by a purchase or exchange on which loss is not allowable to the transferor, the basis in the taxpayer's hands of a particular part, item, or class of such property shall be determined (if the taxpayer's basis for that part is not known) by allocating to the particular part, item, or class a portion of the taxpayer's basis for the entire property in the proportion that the fair market value of the particular part, item, or class bears to the fair market value of the entire property at the time of the taxpayer's acquisition of the property.

(2) ***Taxpayer's recognized gain.*** Gain realized by the taxpayer on sales or other dispositions after December 31, 1953, of a part, item, or class of the property shall be recognized only to the extent that such gain exceeds the amount of loss attributable to such part, item, or class of property not allowable to the taxpayer's transferor on the latter's sale or exchange of such property to the taxpayer.

(3) ***Transferor's loss not allowable.***

(i) The transferor's loss on the sale or exchange of a part, item, or class of the property to the taxpayer shall be the excess of the transferor's adjusted basis for determining loss on the part, item, or class of the property over the amount realized by the transferor on the sale or exchange of the part, item, or class. The amount realized by the transferor on the part, item, or class shall be determined (if such amount is not known) in the same manner that the taxpayer's basis for such part, item, or class is determined. See subparagraph (1) of this paragraph.

(ii) If the transferor's basis for determining loss on the part, item, or class cannot be determined, the transferor's loss on the particular part, item, or class transferred to the taxpayer shall be determined by allocating to the part, item, or class a portion of his loss on the entire property in the proportion that the fair market value of such part, item, or class bears to the fair market value of the entire property on the date of the taxpayer's acquisition of the entire property.

(4) ***Examples.*** The application of the provisions of this paragraph may be illustrated by the following examples:

Example 1. During 1953, H sold class A stock which had cost him $1,100, and common stock which had cost him $2,000, to his wife W for a lump sum of $1,500. Under section 24(b)(1)(A) of the 1939 Code, the loss of $1,600 on the transaction was not allowable to H. At the time the stocks were purchased by W, the fair market value of class A stock was $900 and the fair market value of common stock was $600. In 1954, W sold the class A stock for $2,500. W's recognized gain is determined as follows:

Amount realized by W on sale of class A stock		$2,500
Less: Basis allocated to class A stock—$900/$1,500 × $1,500		900
Realized gain on transaction		1,600
Less: Loss sustained by H on sale of class A stock to W not allowable as a deduction:		
Basis to H of class A stock	$1,100	
Amount realized by H on class A stock—$900/ $1,500 × $1,500	900	
Unallowable loss to H on sale of class A stock		200
Recognized gain on sale of class A stock by W		1,400

Example 2. Assume the same facts as those stated in *Example 1* of this subparagraph except that H originally purchased both classes of stock for a lump sum of $3,100. The unallowable loss to H on the sale of all the stock to W is $1,600 ($3,100 minus $1,500). An exact determination of the unallowable loss sustained by H on sale to W of class A stock cannot be made because H's basis for class A stock cannot be determined. Therefore, a determination of the unallowable loss is made by allocating to class A stock a portion of H's loss on the entire property transferred to W in the proportion that the fair market value of class A stock at the time acquired by W ($900) bears to the fair market value of both classes of stock at that time ($1,500). The allocated portion is $900/$1,500 × $1,600, or $960. W's recognized gain is, therefore, $640 (W's realized gain of $1,600 minus $960).

(c) ***Special rules.***

(1) Section 267(d) does not affect the basis of property for determining gain. Depreciation and other items which depend on such basis are also not affected.

(2) The provisions of section 267(d) shall not apply if the loss sustained by the transferor is not allowable to the transferor as a deduction by reason of section 1091, or section 118 of the Internal Revenue Code of 1939, which relate to losses from wash sales of stock or securities.

(3) In determining the holding period in the hands of the transferee of property received in an exchange with a transferor with respect to whom a loss on the exchange is not allowable by reason of section 267, section 1223(2) does not apply to include the period during which the property was held by the transferor. In determining such holding period, however, section 1223(1) may apply to include the period during which the transferee held the property which he exchanged where, for example, he exchanged a capital asset in a transaction which, as to him, was nontaxable under section 1031 and the property received in the exchange has the same basis as the property exchanged.

[T.D. 6500, 25 FR 11402, Nov. 26, 1960, as amended by T.D. 9811, 82 FR 6237, Jan. 19, 2017]

§ 1.267(d)-2 Effective/applicability dates.

Pursuant to section 7851(a)(1)(C), the regulations prescribed in § 1.267(d)-1, to the extent that they relate to determination of gain resulting from the sale or other disposition of property after December 31, 1953, with respect to which property a loss was not allowable to the transferor by reason of section 267(a)(1) (or by reason of section 24(b) of the Internal Revenue Code of 1939), shall also apply to taxable years beginning before January 1, 1954, and ending after December 31, 1953, and taxable years beginning after December 31, 1953, and ending before August 17, 1954, which years are subject to the Internal Revenue Code of 1939. The provisions of § 1.267(d)-1(a)(3) relating to section 1022 are effective on and after January 19, 2017.

[T.D. 6500, 25 FR 11402, Nov. 26, 1960, as amended by T.D. 9811, 82 FR 6237, Jan. 19, 2017]

§ 1.267(f)-1 Controlled groups.

(a) ***In general*** —

(1) ***Purpose.*** This section provides rules under section 267(f) to defer losses and deductions from certain transactions between members of a controlled group (intercompany sales). The purpose of this section is to prevent members of a controlled group from taking into account a loss or deduction solely as the result of a transfer of property between a selling member (S) and a buying member (B).

(2) ***Application of consolidated return principles.*** Under this section, S's loss or deduction from an intercompany sale is taken into account under the *timing* principles of § 1.1502-13 (intercompany transactions between members of a consolidated group), treating the intercompany sale as an intercompany transaction. For this purpose:

(i) The matching and acceleration rules of § 1.1502-13 (c) and (d), the definitions and operating rules of § 1.1502-13 (b) and (j), and the simplifying rules of § 1.1502-13(e)(1) apply with the adjustments in paragraphs (b) and (c) of this section to reflect that this section—

(A) Applies on a controlled group basis rather than consolidated group basis; and

(B) Generally affects only the *timing* of a loss or deduction, and not *it's attributes* (*e.g., its source* and *character*) or the holding period of property.

(ii) The special rules under § 1.1502-13(f) (stock of members) and (g) (obligations of members) apply under this section only to the extent the transaction is also an intercompany transaction to which § 1.1502-13 applies.

(iii) Any election under § 1.1502-13 to take items into account on a separate entity basis does not apply under this section. See § 1.1502-13(e)(3).

(3) ***Other law.*** The rules of this section apply in addition to other applicable law (including nonstatutory authorities). For example, to the extent a loss or deduction deferred under this section is from a transaction that is also an intercompany transaction under § 1.1502-13(b)(1), attributes of the loss or deduction are also subject to recharacterization under § 1.1502-13. See also, sections 269 (acquisitions to evade or avoid income tax) and 482 (allocations among commonly controlled taxpayers). Any loss or deduction taken into account under this section can be deferred, disallowed, or eliminated under other applicable law. See, for example, section 1091 (loss eliminated on wash sale).

(b) ***Definitions and operating rules.*** The definitions in § 1.1502-13(b) and the operating rules of § 1.1502-13(j) apply under this section with appropriate adjustments, including the following:

(1) ***Intercompany sale.*** An intercompany sale is a sale, exchange, or other transfer of property between members of a controlled group, if it would be an intercompany transaction under the principles of § 1.1502-13, determined by treating the references to a consolidated group as references to a controlled group and by disregarding whether any of the members join in filing consolidated returns.

(2) ***S's losses or deductions.*** Except to the extent the intercompany sale is also an intercompany transaction to which § 1.1502-13 applies, S's losses or deductions subject to this section are determined on a separate entity basis. For example, the principles of § 1.1502-13(b)(2)(iii) (treating certain amounts not yet recognized as items to be taken into account) do not apply. A loss or deduction is from an intercompany sale whether it is directly or indirectly from the intercompany sale.

(3) ***Controlled group; member.*** For purposes of this section, a controlled group is defined in section 267(f). Thus, a controlled group includes a FSC (as defined in section 922) and excluded members under section 1563(b)(2), but does not include a DISC (as defined in section 992). Corporations remain members of a controlled group as long as they remain in a controlled group relationship with each other. For example, corporations become nonmembers with respect to each other when they cease to be in a controlled group relationship with each other, rather than by having a separate return year (described in § 1.1502-13(j)(7)). Further, the principles of § 1.1502-13(j)(6) (former common parent treated as continuation of group) apply to any corporation if, immediately before it becomes a nonmember, it is both the selling member and the owner of property with respect to which a loss or deduction is deferred (whether or not it becomes a member of a different controlled group filing consolidated or separate returns). Thus, for example, if S and B merge together in a transaction described in section 368(a)(1)(A), the surviving corporation is treated as the successor to the other corporation, and the controlled group relationship is treated as continuing.

(4) ***Consolidated taxable income.*** References to consolidated taxable income (and consolidated tax liability) include references to the combined taxable income of the members (and their combined tax liability). For corporations filing separate returns, it ordinarily will not be necessary to actually combine their taxable incomes (and tax liabilities) because the taxable income (and tax liability) of one corporation does not affect the taxable income (or tax liability) of another corporation.

(c) ***Matching and acceleration principles of § 1.1502-13*** —

(1) ***Adjustments to the timing rules.*** Under this section, S's losses and deductions are deferred until they are taken into account under the timing principles of the matching and acceleration rules of § 1.1502-13(c) and (d) with appropriate adjustments. For example, if S sells depreciable property to B at a loss, S's loss is deferred and taken into account under the principles of the matching rule of § 1.1502-13(c) to reflect the difference between B's depreciation taken into account with respect to the property and the depreciation that B would take into account if S and B were divisions of a single corporation; if S and B subsequently cease to be in a controlled group relationship with each other, S's remaining loss is taken into account under the principles of the acceleration rule of § 1.1502-13(d). For purposes of this section, the adjustments to § 1.1502-13 (c) and (d) include the following:

(i) ***Application on controlled group basis.*** The matching and acceleration rules apply on a controlled group basis, rather than a consolidated group basis. Thus if S and B are wholly-owned members of a consolidated group and 21% of the stock of S is sold to an unrelated person, S's loss continues to be deferred under this section because S and B continue to be members of a controlled group even though S is no longer a member of the consolidated group. Similarly, S's loss would continue to be deferred if S and B remain in a controlled group relationship after both corporations become nonmembers of their former consolidated group.

(ii) ***Different taxable years.*** If S and B have different taxable years, the taxable years that include a December 31 are treated as the same taxable years. If S or B has a short taxable year that does not include a December 31, the short year is treated as part of the succeeding taxable year that does include a December 31.

(iii) ***Transfer to a section 267(b) or 707(b) related person.*** To the extent S's loss or deduction from an intercompany sale of property is taken into account under this section as a result of B's transfer of the property to a nonmember that is a person related to any member, immediately after the transfer, under sections 267(b) or 707(b), or as a result of S or B becoming a nonmember that is related to any member under section 267(b), the loss or deduction is taken into account but allowed only to the extent of any income or gain taken into account as a result of the transfer. The balance not allowed is treated as a loss referred to in section 267(d) if it is from a sale or exchange by B (rather than from a distribution).

(iv) ***B's item is excluded from gross income or noncapital and nondeductible.*** To the extent S's loss would be redetermined to be a noncapital, nondeductible amount under the principles of § 1.1502-13, but is not redetermined under paragraph (c)(2) of this section (which generally renders the attribute redetermination rule inapplicable to sales between members of a controlled group), S's loss continues to be deferred. For purposes of this paragraph, stock held by S, stock held by B, stock held by all members of S's consolidated group, stock held by any member of a controlled group of which S is a member that was acquired from a member of S's consolidated group, and stock issued by T to a member of the controlled group must be taken into account in determining whether a loss would be redetermined to be a noncapital, nondeductible amount under the principles of § 1.1502-13. If the loss remains deferred, it is taken into account when S and B (including their successors) are no longer in a controlled group relationship. (If, however, the property is transferred to certain related persons, paragraph (c)(1)(iii) of this section will cause the loss to be permanently disallowed.) For example, if S sells all of the T stock to B at a loss (in a transaction that is treated as a sale or exchange for Federal income tax purposes), and T subsequently liquidates in an unrelated transaction that qualifies under section 332, S's loss is deferred until S and B are no longer in a controlled group relationship. Similarly, if S owns all of the T stock and sells 30 percent of T's stock to B at a loss

(in a transaction that is treated as a sale or exchange for Federal income tax purposes), and T subsequently liquidates, S's loss on the sale is deferred until S and B (including their successors) are no longer in a controlled group relationship.

(v) ***Circularity of references.*** References to deferral or elimination under the Internal Revenue Code or regulations do not include references to section 267(f) or this section. See, e.g., § 1.1502-13(a)(4) (applicability of other law).

(2) ***Attributes generally not affected.*** The matching and acceleration rules are not applied under this section to affect the attributes of S's intercompany item, or cause it to be taken into account before it is taken into account under S's separate entity method of accounting. However, the attributes of S's intercompany item may be redetermined, or an item may be taken into account earlier than under S's separate entity method of accounting, to the extent the transaction is also an intercompany transaction to which § 1.1502-13 applies. Similarly, except to the extent the transaction is also an intercompany transaction to which § 1.1502-13 applies, the matching and acceleration rules do not apply to affect the timing or attributes of B's corresponding items.

(d) ***Intercompany sales of inventory involving foreign persons*** —

(1) ***General rule.*** Section 267(a)(1) and this section do not apply to an intercompany sale of property that is inventory (within the meaning of section 1221(1)) in the hands of both S and B, if—

(i) The intercompany sale is in the ordinary course of S's trade or business;

(ii) S or B is a foreign corporation; and

(iii) Any income or loss realized on the intercompany sale by S or B is not income or loss that is recognized as effectively connected with the conduct of a trade or business within the United States within the meaning of section 864 (unless the income is exempt from taxation pursuant to a treaty obligation of the United States).

(2) ***Intercompany sales involving related partnerships.*** For purposes of paragraph (d)(1) of this section, a partnership and a foreign corporation described in section 267(b)(10) are treated as members, provided that the income or loss of the foreign corporation is described in paragraph (d)(1)(iii) of this section.

(3) ***Intercompany sales in ordinary course.*** For purposes of this paragraph (d), whether an intercompany sale is in the ordinary course of business is determined under all the facts and circumstances.

(e) ***Treatment of a creditor with respect to a loan in nonfunctional currency.*** Sections 267(a)(1) and this section do not apply to an exchange loss realized with respect to a loan of nonfunctional currency if—

(1) The loss is realized by a member with respect to nonfunctional currency loaned to another member;

(2) The loan is described in § 1.988-1(a)(2)(i);

(3) The loan is not in a hyperinflationary currency as defined in § 1.988-1(f); and

(4) The transaction does not have as a significant purpose the avoidance of Federal income tax.

(f) ***Receivables.*** If S acquires a receivable from the sale of goods or services to a nonmember at a gain, and S sells the receivable at fair market value to B, any loss or deduction of S from its sale to B is not deferred under this section to the extent it does not exceed S's income or gain from the sale to the nonmember that has been taken into account at the time the receivable is sold to B.

(g) ***Earnings and profits.*** A loss or deduction deferred under this section is not reflected in S's earnings and profits before it is taken into account under this section. See, e.g., §§ 1.312-6(a), 1.312-7, and 1.1502-33(c)(2).

(h) ***Anti-avoidance rule.*** If a transaction is engaged in or structured with a principal purpose to avoid the purposes of this section (including, for example, by avoiding treatment as an intercompany sale or by distorting the timing of losses or deductions), adjustments must be made to carry out the purposes of this section.

(i) [Reserved]

(j) ***Examples.*** For purposes of the examples in this paragraph (j), unless otherwise stated, corporation P owns 75% of the only class of stock of subsidiaries S and B, X is a person unrelated to any member of the P controlled group, the taxable year of all persons is the calendar year, all persons use the accrual method of accounting, tax liabilities are disregarded, the facts set forth the only activity, and no member has a special status. If a member acts as both a selling member and a buying member (e.g., with respect to different aspects of a single transaction, or with respect to related transactions), the member is referred as to M (rather than as S or B). This section is illustrated by the following examples.

> *Example 1. Matching and acceleration rules.* (a) *Facts.* S holds land for investment with a basis of $130. On January 1 of Year 1, S sells the land to B for $100. On a separate entity basis, S's loss is long-term capital loss. B holds the land for sale to customers in the ordinary course of business. On July 1 of Year 3, B sells the land to X for $110.
> (b) *Matching rule.* Under paragraph (b)(1) of this section, S's sale of land to B is an intercompany sale. Under paragraph (c)(1) of this section, S's $30 loss is taken into account under the timing principles of the matching rule of § 1.1502-13(c) to reflect the difference for the year between B's corresponding items taken into account and the recomputed corresponding items. If S and B were divisions of a single corporation and the intercompany sale were a transfer between the divisions, B would succeed to S's $130 basis in the land and would have a $20 loss from the sale to X in Year 3. Consequently, S takes no loss into account in Years 1 and 2, and takes the entire $30 loss into account in Year 3 to reflect the $30 difference in that year between the $10 gain B takes into account and its $20 recomputed loss. The attributes of S's intercompany items and B's corresponding items are determined on a separate entity basis. Thus, S's $30 loss is long-term capital loss and B's $10 gain is ordinary income.
>
> (c) *Acceleration resulting from sale of B stock.* The facts are the same as in paragraph (a) of this *Example 1*, except that on July 1 of Year 3 P sells all of its B stock to X (rather than B's selling the land to X). Under paragraph (c)(1) of this section, S's $30 loss is taken into account under the timing principles of the acceleration rule of § 1.1502-13(d) immediately before the effect of treating S and B as divisions of a single corporation cannot be produced. Because the effect cannot be produced once B becomes a nonmember, S takes its $30 loss into account in Year 3 immediately before B becomes a nonmember. S's loss is long-term capital loss.

(d) *Subgroup principles applicable to sale of S and B stock.* The facts are the same as in paragraph (a) of this *Example 1*, except that on July 1 of Year 3 P sells all of its S and B stock to X (rather than B's selling the land to X). Under paragraph (b)(3) of this section, S and B are considered to remain members of a controlled group as long as they remain in a controlled group relationship with each other (whether or not in the original controlled group). P's sale of their stock does not affect the controlled group relationship of S and B with each other. Thus, S's loss is not taken into account as a result of P's sale of the stock. Instead, S's loss is taken into account based on subsequent events (e.g., B's sale of the land to a nonmember).

Example 2. Distribution of loss property. (a) *Facts.* S holds land with a basis of $130 and value of $100. On January 1 of Year 1, S distributes the land to P in a transaction to which section 311 applies. On July 1 of Year 3, P sells the land to X for $110.
(b) *No loss taken into account.* Under paragraph (b)(2) of this section, because P and S are not members of a consolidated group, § 1.1502-13(f)(2)(iii) does not apply to cause S to recognize a $30 loss under the principles of section 311(b). Thus, S has no loss to be taken into account under this section. (If P and S were members of a consolidated group, § 1.1502-13(f)(2)(iii) would apply to S's loss in addition to the rules of this section, and the loss would be taken into account in Year 3 as a result of P's sale to X.)

Example 3. Loss not yet taken into account under separate entity accounting method. (a) *Facts.* S holds land with a basis of $130. On January 1 of Year 1, S sells the land to B at a $30 loss but does not take into account the loss under its separate entity method of accounting until Year 4. On July 1 of Year 3, B sells the land to X for $110.
(b) *Timing.* Under paragraph (b)(2) of this section, S's loss is determined on a separate entity basis. Under paragraph (c)(1) of this section, S's loss is not taken into account before it is taken into account under S's separate entity method of accounting. Thus, although B takes its corresponding gain into account in Year 3, S has no loss to take into account until Year 4. Once S's loss is taken into account in Year 4, it is not deferred under this section because B's corresponding gain has already been taken into account. (If S and B were members of a consolidated group, S would be treated under § 1.1502-13(b)(2)(iii) as taking the loss into account in Year 3.)

Example 4. Consolidated groups. (a) *Facts.* P owns all of the stock of S and B, and the P group is a consolidated group. S holds land for investment with a basis of $130. On January 1 of Year 1, S sells the land to B for $100. B holds the land for sale to customers in the ordinary course of business. On July 1 of Year 3, P sells 25% of B's stock to X. As a result of P's sale, B becomes a nonmember of the P consolidated group but S and B remain in a controlled group relationship with each other for purposes of section 267(f). Assume that if S and B were divisions of a single corporation, the items of S and B from the land would be ordinary by reason of B's activities.
(b) *Timing and attributes.* Under paragraph (a)(3) of this section, S's sale to B is subject to both § 1.1502-13 and this section. Under § 1.1502-13, S's loss is redetermined to be an ordinary loss by reason of B's activities. Under paragraph (b)(3) of this section, because S and B remain in a

controlled group relationship with each other, the loss is not taken into account under the acceleration rule of § 1.1502-13(d) as modified by paragraph (c) of this section. See § 1.1502-13(a)(4). Nevertheless, S's loss is redetermined by § 1.1502-13 to be an ordinary loss, and the character of the loss is not further redetermined under this section. Thus, the loss continues to be deferred under this section, and will be taken into account as ordinary loss based on subsequent events (e.g., B's sale of the land to a nonmember).

(c) *Resale to controlled group member.* The facts are the same as in paragraph (a) of this *Example 4,* except that P owns 75% of X's stock, and B resells the land to X (rather than P's selling any B stock). The results for S's loss are the same as in paragraph (b) of this *Example 4.* Under paragraph (b) of this section, X is also in a controlled group relationship, and B's sale to X is a second intercompany sale. Thus, S's loss continues to be deferred and is taken into account under this section as ordinary loss based on subsequent events (e.g., X's sale of the land to a nonmember).

Example 5. Intercompany sale followed by installment sale. (a) *Facts.* S holds land for investment with a basis of $130x. On January 1 of Year 1, S sells the land to B for $100x. B holds the land for investment. On July 1 of Year 3, B sells the land to X in exchange for X's $110x note. The note bears a market rate of interest in excess of the applicable Federal rate, and provides for principal payments of $55x in Year 4 and $55x in Year 5. Section 453A applies to X's note.
(b) *Timing and attributes.* Under paragraph (c) of this section, S's $30x loss is taken into account under the timing principles of the matching rule of § 1.1502-13(c) to reflect the difference in each year between B's gain taken into account and its recomputed loss. Under section 453, B takes into account $5x of gain in Year 4 and in Year 5. Therefore, S takes $20x of its loss into account in Year 3 to reflect the $20x difference in that year between B's $0 loss taken into account and its $20x recomputed loss. In addition, S takes $5x of its loss into account in Year 4 and in Year 5 to reflect the $5x difference in each year between B's $5x gain taken into account and its $0 recomputed gain. Although S takes into account a loss and B takes into account a gain, the attributes of B's $10x gain are determined on a separate entity basis, and therefore the interest charge under section 453A(c) applies to B's $10x gain on the installment sale beginning in Year 3.

Example 6. Section 721 transfer to a related nonmember. (a) *Facts.* S owns land with a basis of $130. On January 1 of Year 1, S sells the land to B for $100. On July 1 of Year 3, B transfers the land to a partnership in exchange for a 40% interest in capital and profits in a transaction to which section 721 applies. P also owns a 25% interest in the capital and profits of the partnership.
(b) *Timing.* Under paragraph (c)(1)(iii) of this section, because the partnership is a nonmember that is a related person under sections 267(b) and 707(b), S's $30 loss is taken into account in Year 3, but only to the extent of any income or gain taken into account as a result of the transfer. Under section 721, no gain or loss is taken into account as a result of the transfer to the partnership, and thus none of S's loss is taken into account. Any subsequent gain recognized by

the partnership with respect to the property is limited under section 267(d). (The results would be the same if the P group were a consolidated group, and S's sale to B were also subject to § 1.1502-13.)

Example 7. Receivables. (a) *Controlled group.* S owns goods with a $60 basis. In Year 1, S sells the goods to X for X's $100 note. The note bears a market rate of interest in excess of the applicable Federal rate, and provides for payment of principal in Year 5. S takes into account $40 of income in Year 1 under its method of accounting. In Year 2, the fair market value of X's note falls to $90 due to an increase in prevailing market interest rates, and S sells the note to B for its $90 fair market value.
(b) *Loss not deferred.* Under paragraph (f) of this section, S takes its $10 loss into account in Year 2. (If the sale were not at fair market value, paragraph (f) of this section would not apply and none of S's $10 loss would be taken into account in Year 2.)

(c) *Consolidated group.* Assume instead that P owns all of the stock of S and B, and the P group is a consolidated group. In Year 1, S sells to X goods having a basis of $90 for X's $100 note (bearing a market rate of interest in excess of the applicable Federal rate, and providing for payment of principal in Year 5), and S takes into account $10 of income in Year 1. In Year 2, S sells the receivable to B for its $85 fair market value. In Year 3, P sells 25% of B's stock to X. Although paragraph (f) of this section provides that $10 of S's loss (i.e., the extent to which S's $15 loss does not exceed its $10 of income) is not deferred under this section, S's entire $15 loss is subject to § 1.1502-13 and none of the loss is taken into account in Year 2 under the matching rule of § 1.1502-13(c). See paragraph (a)(3) of this section (continued deferral under § 1.1502-13). P's sale of B stock results in B becoming a nonmember of the P consolidated group in Year 3. Thus, S's $15 loss is taken into account in Year 3 under the acceleration rule of § 1.1502-13(d). Nevertheless, B remains in a controlled group relationship with S and paragraph (f) of this section permits only $10 of S's loss to be taken into account in Year 3. See § 1.1502-13(a)(4) (continued deferral under section 267). The remaining $5 of S's loss continues to be deferred under this section and taken into account under this section based on subsequent events (e.g., B's collection of the note or P's sale of the remaining B stock to a nonmember).

Example 8. Selling member ceases to be a member. (a) *Facts.* P owns all of the stock of S and B, and the P group is a consolidated group. S has several historic assets, including land with a basis of $130 and value of $100. The land is not essential to the operation of S's business. On January 1 of Year 1, S sells the land to B for $100. On July 1 of Year 3, P transfers all of S's stock to newly formed X in exchange for a 20% interest in X stock as part of a transaction to which section 351 applies. Although X holds many other assets, a principal purpose for P's transfer is to accelerate taking S's $30 loss into account. P has no plan or intention to dispose of the X stock.
(b) *Timing.* Under paragraph (c) of this section, S's $30 loss ordinarily is taken into account immediately before P's transfer of the S stock, under the timing principles of the acceleration rule of § 1.1502-13(d). Although taking S's loss into account results in a $30 negative stock basis

adjustment under § 1.1502-32, because P has no plan or intention to dispose of its X stock, the negative adjustment will not immediately affect taxable income. P's transfer accelerates a loss that otherwise would be deferred, and an adjustment under paragraph (h) of this section is required. Thus, S's loss is never taken into account, and S's stock basis and earnings and profits are reduced by $30 under §§ 1.1502-32 and 1.1502-33 immediately before P's transfer of the S stock.

(c) Nonhistoric assets. Assume instead that, with a principal purpose to accelerate taking into account any further loss that may accrue in the value of the land without disposing of the land outside of the controlled group, P forms M with a $100 contribution on January 1 of Year 1 and S sells the land to M for $100. On December 1 of Year 1, when the value of the land has decreased to $90, M sells the land to B for $90. On July 1 of Year 3, while B still owns the land, P sells all of M's stock to X and M becomes a nonmember. Under paragraph (c) of this section, M's $10 loss ordinarily is taken into account under the timing principles of the acceleration rule of § 1.1502-13(d) immediately before M becomes a nonmember. (S's $30 loss is not taken into account under the timing principles of § 1.1502-13(c) or § 1.1502-13(d) as a result of M becoming a nonmember, but is taken into account based on subsequent events such as B's sale of the land to a nonmember or P's sale of the stock of S or B to a nonmember.) The land is not an historic asset of M and, although taking M's loss into account reduces P's basis in the M stock under § 1.1502-32, the negative adjustment only eliminates the $10 duplicate stock loss. Under paragraph (h) of this section, M's loss is never taken into account. M's stock basis, and the earnings and profits of M and P, are reduced by $10 under §§ 1.1502-32 and 1.1502-33 immediately before P's sale of the M stock.

Example 9. Sale of stock by consolidated group member to controlled group member. (a) *Facts.* P1, a domestic corporation, owns 75% of the outstanding stock of P, the common parent of a consolidated group. P owns all of the outstanding stock of subsidiaries M and S, which are members of P's consolidated group. M and S each own 50% of the only class of stock of L, a nonmember life insurance company. On January 1 of Year 1, S sells 25% of L's stock to P1 for $50 cash. At the time of the sale, S's aggregate basis in the L shares transferred to P1 was $80, and S recognizes a $30 loss. On February 18 of Year 3, at a time when the L shares held by P1 are worth $60, L liquidates. As a result of the liquidation, P1 recognizes a $10 gain.
(b) *Timing.* Under paragraph (a)(2) of this section, S's loss on the sale of the L stock to P1 is deferred. Under paragraph (c)(1)(iv) of this section, upon the liquidation of L, to the extent S's loss would be redetermined to be a noncapital, nondeductible amount under the principles of § 1.1502-13, S's loss continues to be deferred. Under the principles of § 1.1502-13, S's loss is not redetermined to be a noncapital, nondeductible amount to the extent of P1's $10 of gain recognized. Accordingly, S takes into account $10 of loss as a result of the liquidation. In determining whether the remainder of S's $20 loss would be redetermined to be a noncapital, nondeductible amount, under paragraph (c)(1)(iv) of this section, stock held by P1, stock held by M, and stock held by S is taken into account. Accordingly, under the principles of § 1.1502-13, the

liquidation of L would be treated as a liquidation qualifying under section 332, and the remainder of S's loss would be redetermined to be a noncapital, nondeductible amount. Thus, under paragraph (c)(1)(iv), S's remaining $20 loss continues to be deferred until S and P1 are no longer in a controlled group relationship.

Example 10. Issuance of stock to controlled group member. (a) *Facts.* FP is a foreign corporation that owns all the stock of FS, a foreign corporation, and all the stock of P, a domestic corporation. P owns all of the single class of outstanding common stock of T. In Year 1, FS contributes cash to T in exchange for newly issued stock of T that constitutes 40 percent of T's outstanding stock. In Year 2, when the value of the T stock owned by P is less than its basis in P's hands, P sells all of its T stock to FP. In Year 3, in a transaction unrelated to the issuance of the T stock in Year 1, T converts under state law to a limited liability company that is treated as a partnership for Federal income tax purposes.
(b) *Timing.* Under paragraph (a)(2) of this section, P's loss on the sale of its T stock is deferred. Under paragraph (c)(1)(iv) of this section, upon the conversion of T, to the extent P's loss would be redetermined to be a noncapital, nondeductible amount under the principles of § 1.1502-13, P's loss continues to be deferred. In determining whether the loss would be redetermined to be a noncapital, nondeductible amount, stock held by FS (which was acquired from T) and stock held by FP (the buyer of the T stock from P and a member of P's controlled group) is taken into account. Accordingly, under the principles of § 1.1502-13 the deemed liquidation of T resulting from the conversion of T would be treated as a liquidation qualifying under section 332, and P's loss would be redetermined to be a noncapital, nondeductible amount. Thus, under paragraph (c)(1)(iv), P's loss continues to be deferred until P and FP are no longer in a controlled group relationship.

(k) ***Cross-reference.*** For additional rules applicable to the disposition, deconsolidation, or transfer of the stock of members of consolidated groups, see §§ 1.337(d)-2, 1.1502-13(f)(6), 1.1502-35, and 1.1502-36.

(l) ***Effective dates*** —

(1) ***In general.*** This section applies with respect to transactions occurring in S's years beginning on or after July 12, 1995. If both this section and prior law apply to a transaction, or neither applies, with the result that items are duplicated, omitted, or eliminated in determining taxable income (or tax liability), or items are treated inconsistently, prior law (and not this section) applies to the transaction.

(2) ***Avoidance transactions.*** This paragraph (l)(2) applies if a transaction is engaged in or structured on or after April 8, 1994, with a principal purpose to avoid the rules of this section (and instead to apply prior law). If this paragraph (l)(2) applies, appropriate adjustments must be made in years beginning on or after July 12, 1995, to prevent the avoidance, duplication, omission, or elimination of any item (or tax liability), or any other inconsistency with the rules of this section.

(3) ***Effective/applicability date.*** Paragraph (c)(1)(iv) of this section applies to a loss that continues to be deferred pursuant to that paragraph if the event that would cause the loss to be redetermined as a noncapital nondeductible amount under the principles of § 1.1502-13 occurs on or after April 16, 2012.

(4) ***Prior law.*** For transactions occurring in S's years beginning before July 12, 1995 see the applicable regulations issued under sections 267 and 1502. See, e.g., §§ 1.267(f)-1, 1.267(f)-1T, 1.267(f)-2T, 1.267(f)-3, 1.1502-13, 1.1502-13T, 1.1502-14, 1.1502-14T, and 1.1502-31 (as contained in the 26 CFR part 1 edition revised as of April 1, 1995).

[T.D. 8597, 60 FR 36680, July 18, 1995, as amended by T.D. 8660, 61 FR 10499, Mar. 14, 1996; 62 FR 12097, Mar. 14, 1997; T.D. 9048, 68 FR 12290, Mar. 14, 2003; T.D. 9187, 70 FR 10327, Mar. 3, 2005; T.D. 9254, 71 FR 13018, Mar. 14, 2006; T.D. 9424, 73 FR 53986, Sept. 17, 2008; T.D. 9583, 77 FR 22482, Apr. 16, 2012]

§ 1.268-1 Items attributable to an unharvested crop sold with the land.

In computing taxable income no deduction shall be allowed in respect of items attributable to the production of an unharvested crop which is sold, exchanged, or involuntarily converted with the land and which is considered as property used in the trade or business under section 1231(b)(4). Such items shall be so treated whether or not the taxable year involved is that of the sale, exchange, or conversion of such crop and whether they are for expenses, depreciation, or otherwise. If the taxable year involved is not that of the sale, exchange, or conversion of such crop, a recomputation of the tax liability for such year shall be made; such recomputation should be in the form of an "amended return" if necessary. For the adjustments to basis as a result of such disallowance, see section 1016(a)(11) and the regulations thereunder.

§ 1.269-1 Meaning and use of terms.

As used in section 269 and §§ 1.269-2 through 1.269-7:

(a) ***Allowance.*** The term *allowance* refers to anything in the internal revenue laws which has the effect of diminishing tax liability. The term includes, among other things, a deduction, a credit, an adjustment, an exemption, or an exclusion.

(b) ***Evasion or avoidance.*** The phrase *evasion or avoidance* is not limited to cases involving criminal penalties, or civil penalties for fraud.

(c) ***Control.*** The term *control* means the ownership of stock possessing at least 50 percent of the total combined voting power of all classes of stock entitled to vote, or at least 50 percent of the total value of shares of all classes of stock of the corporation. For control to be "acquired on or after October 8, 1940", it is not necessary that all of such stock be acquired on or after October 8, 1940. Thus, if A, on October 7, 1940, and at all times thereafter, owns 40 percent of the stock of X Corporation and acquires on October 8, 1940, an additional 10 percent of such stock, an acquisition within the meaning of such phrase is made by A on October 8, 1940. Similarly, if B, on October 7, 1940, owns certain assets and transfers on October 8, 1940, such assets to a newly organized Y Corporation in exchange for all the stock of Y Corporation, an acquisition within the meaning of such phrase is made by B on October 8, 1940. If, under the facts stated in the preceding sentence, B is a corporation, all of whose stock is owned by Z Corporation, then an acquisition within the meaning of such phrase is also made by Z Corporation on October 8, 1940, as well as by the shareholders of Z Corporation taken as a group on such date, and by any of such shareholders if such shareholders as a group own 50 percent of the stock of Z on such date.

(d) ***Person.*** The term *person* includes an individual, a trust, an estate, a partnership, an association, a company or a corporation.

[T.D. 6595, 27 FR 3596, Apr. 14, 1962, as amended by T.D. 8388, 57 FR 345, Jan. 6, 1992]

§ 1.269-2 Purpose and scope of section 269.

(a) ***General.*** Section 269 is designed to prevent in the instances specified therein the use of the sections of the Internal Revenue Code providing deductions, credits, or allowances in evading or avoiding Federal income tax. See § 1.269-3.

(b) ***Disallowance of deduction, credit, or other allowance.*** Under the Code, an amount otherwise constituting a deduction, credit, or other allowance becomes unavailable as such under certain circumstances. Characteristic of such circumstances are those in which the effect of the deduction, credit, or other allowance would be to distort the liability of the particular taxpayer when the essential nature of the transaction or situation is examined in the light of the basic purpose or plan which the deduction, credit, or other allowance was designed by the Congress to effectuate. The distortion may be evidenced, for example, by the fact that the transaction was not undertaken for reasons germane to the conduct of the business of the taxpayer, by the unreal nature of the transaction such as its sham character, or by the unreal or unreasonable relation which the deduction, credit, or other allowance bears to the transaction. The principle of law making an amount unavailable as a deduction, credit, or other allowance in cases in which the effect of making an amount so available would be to distort the liability of the taxpayer, has been judicially recognized and applied in several cases. Included in these cases are Gregory v. Helvering (1935) (293 U.S. 465; Ct. D. 911, C.B. XIV-1, 193); Griffiths v. Helvering (1939) (308 U.S. 355; Ct. D. 1431, C.B. 1940-1, 136); Higgins v. Smith (1940) (308 U.S. 473; Ct. D. 1434, C.B. 1940-1, 127); and J. D. & A. B. Spreckles Co. v. Commissioner (1940) (41 B.T.A. 370). In order to give effect to such principle, but not in limitation thereof, several provisions of the Code, for example, section 267 and section 270, specify with some particularity instances in which disallowance of the deduction, credit, or other allowance is required. Section 269 is also included in such provisions of the Code. The principle of law and the particular sections of the Code are not mutually exclusive and in appropriate circumstances they may operate together or they may operate separately. See, for example, § 1.269-6.

[T.D. 6595, 27 FR 3596, Apr. 14, 1962]

§ 1.269-3 Instances in which section 269(a) disallows a deduction, credit, or other allowance.

(a) ***Instances of disallowance.*** Section 269 specifies two instances in which a deduction, credit, or other allowance is to be disallowed. These instances, described in paragraphs (1) and (2) of section 269(a), are those in which:

(1) Any person or persons acquire, or acquired on or after October 8, 1940, directly or indirectly, control of a corporation, or

(2) Any corporation acquires, or acquired on or after October 8, 1940, directly or indirectly, property of another corporation (not controlled, directly or indirectly, immediately before such acquisition by such acquiring corporation or its stockholders), the basis of which property in the hands of the acquiring corporation is determined by reference to the basis in the hands of the transferor corporation.

In either instance the principal purpose for which the acquisition was made must have been the evasion or avoidance of Federal income tax by securing the benefit of a deduction, credit, or other allowance which such person, or persons, or corporation, would not otherwise enjoy. If this requirement is satisfied, it is immaterial by what method or by what conjunction of events the benefit was sought. Thus, an acquiring person or corporation can secure the benefit of a deduction, credit, or other allowance within the meaning of section 269 even though it is the acquired corporation that is entitled to such deduction,

credit, or other allowance in the determination of its tax. If the purpose to evade or avoid Federal income tax exceeds in importance any other purpose, it is the principal purpose. This does not mean that only those acquisitions fall within the provisions of section 269 which would not have been made if the evasion or avoidance purpose was not present. The determination of the purpose for which an acquisition was made requires a scrutiny of the entire circumstances in which the transaction or course of conduct occurred, in connection with the tax result claimed to arise therefrom.

(b) ***Acquisition of control; transactions indicative of purpose to evade or avoid tax.*** If the requisite acquisition of control within the meaning of paragraph (1) of section 269(a) exists, the transactions set forth in the following subparagraphs are among those which, in the absence of additional evidence to the contrary, ordinarily are indicative that the principal purpose for acquiring control was evasion or avoidance of Federal income tax:

(1) A corporation or other business enterprise (or the interest controlling such corporation or enterprise) with large profits acquires control of a corporation with current, past, or prospective credits, deductions, net operating losses, or other allowances and the acquisition is followed by such transfers or other action as is necessary to bring the deduction, credit, or other allowance into conjunction with the income (see further § 1.269-6). This subparagraph may be illustrated by the following example:

Example. Individual A acquires all of the stock of L Corporation which has been engaged in the business of operating retail drug stores. At the time of the acquisition, L Corporation has net operating loss carryovers aggregating $100,000 and its net worth is $100,000. After the acquisition, L Corporation continues to engage in the business of operating retail drug stores but the profits attributable to such business after the acquisition are not sufficient to absorb any substantial portion of the net operating loss carryovers. Shortly after the acquisition, individual A causes to be transferred to L Corporation the assets of a hardware business previously controlled by A which business produces profits sufficient to absorb a substantial portion of L Corporation's net operating loss carryovers. The transfer of the profitable business, which has the effect of using net operating loss carryovers to offset gains of a business unrelated to that which produced the losses, indicates that the principal purpose for which the acquisition of control was made is evasion or avoidance of Federal income tax.

(2) A person or persons organize two or more corporations instead of a single corporation in order to secure the benefit of multiple surtax exemptions (see section 11(c)) or multiple minimum accumulated earnings credits (see section 535(c)(2) and (3)).

(3) A person or persons with high earning assets transfer them to a newly organized controlled corporation retaining assets producing net operating losses which are utilized in an attempt to secure refunds.

(c) ***Acquisition of property; transactions indicative of purpose to evade or avoid tax.*** If the requisite acquisition of property within the meaning of paragraph (2) of section 269(a) exists, the transactions set forth in the following subparagraphs are among those which, in the absence of additional evidence to the contrary, ordinarily are indicative that the principal purpose for acquiring such property was evasion or avoidance of Federal income tax:

(1) A corporation acquires property having in its hands an aggregate carryover basis which is materially greater than its aggregate fair market value at the time of such acquisition and utilizes the property to create tax-reducing losses or deductions.

(2) A subsidiary corporation, which has sustained large net operating losses in the operation of business X and which has filed separate returns for the taxable years in which the losses were sustained, acquires high earning assets, comprising business Y, from its parent corporation. The acquisition occurs at a time when the parent would not succeed to the net operating loss carryovers of the subsidiary if the subsidiary were liquidated, and the profits of business Y are sufficient to offset a substantial portion of the net operating loss carryovers attributable to business X (see further *Example 3* of § 1.269-6).

(d) ***Ownership changes to which section 382(l)(5) applies; transactions indicative of purpose to evade or avoid tax —***

(1) ***In general.*** Absent strong evidence to the contrary, a requisite acquisition of control or property in connection with an ownership change to which section 382(l)(5) applies is considered to be made for the principal purpose of evasion or avoidance of Federal income tax unless the corporation carries on more than an insignificant amount of an active trade or business during and subsequent to the title 11 or similar case (as defined in section 382(l)(5)(G)). The determination of whether the corporation carries on more than an insignificant amount of an active trade or business is made without regard to the continuity of business enterprise set forth in § 1.368-1(d). The determination is based on all the facts and circumstances, including, for example, the amount of business assets that continue to be used, or the number of employees in the work force who continue employment, in an active trade or business (although not necessarily the historic trade or business). Where the corporation continues to utilize a significant amount of its business assets or work force, the requirement of carrying on more than an insignificant amount of an active trade or business may be met even though all trade or business activities temporarily cease for a period of time in order to address business exigencies.

(2) ***Effective date.*** The presumption under paragraph (d) of this section applies to acquisitions of control or property effected pursuant to a plan of reorganization confirmed by a court in a title 11 or similar case (within the meaning of section 368(a)(3)(A)) after August 14, 1990.

(e) ***Relationship of section 269 to 11 U.S.C. 1129(d).*** In determining for purposes of section 269 of the Internal Revenue Code whether an acquisition pursuant to a plan of reorganization in a case under title 11 of the United States Code was made for the principal purpose of evasion or avoidance of Federal income tax, the fact that a governmental unit did not seek a determination under 11 U.S.C. 1129(d) is not taken into account and any determination by a court under 11 U.S.C. 1129(d) that the principal purpose of the plan is not avoidance of taxes is not controlling.

[T.D. 6595, 27 FR 3596, Apr. 14, 1962, as amended by T.D. 8388, 57 FR 345, Jan. 6, 1992]

§ 1.269-4 Power of district director to allocate deduction, credit, or allowance in part.

The district director is authorized by section 269(b) to allow a part of the amount disallowed by section 269(a), but he may allow such part only if and to the extent that he determines that the amount allowed will not result in the evasion or avoidance of Federal income tax for which the acquisition was made. The district director is also authorized to use other methods to give effect to part of the amount disallowed under section 269(a), but only to such extent as he determines will not result in the evasion or avoidance of Federal income tax for which the acquisition was made. Whenever appropriate to give proper effect to the deduction, credit, or other allowance, or such part of it which may be allowed, this authority includes the distribution, apportionment, or allocation of both

the gross income and the deductions, credits, or other allowances the benefit of which was sought, between or among the corporations, or properties, or parts thereof, involved, and includes the disallowance of any such deduction, credit, or other allowance to any of the taxpayers involved.

[T.D. 6595, 27 FR 3597, Apr. 14, 1962]

§ 1.269-5 Time of acquisition of control.

(a) ***In general.*** For purposes of section 269, an acquisition of control occurs when one or more persons acquire beneficial ownership of stock possessing at least 50 percent of the total combined voting power of all classes of stock entitled to vote or at least 50 percent of the total value of share of all classes of stock of the corporation.

(b) ***Application of general rule to certain creditor acquisitions.***

(1) For purposes of section 269, creditors of an insolvent or bankrupt corporation (by themselves or in conjunction with other persons) acquire control of the corporation when they acquire beneficial ownership of the requisite amount of stock. Although insolvency or bankruptcy may cause the interests of creditors to predominate as a practical matter, creditor interests do not constitute beneficial ownership of the corporation's stock. Solely for purposes of section 269, creditors of a bankrupt corporation are treated as acquiring beneficial ownership of stock of the corporation no earlier than the time a bankruptcy court confirms a plan of reorganization.

(2) The provisions of this section are illustrated by the following example.

Example. Corporation *L* files a petition under chapter 11 of the Bankruptcy Code on January 5, 1987. A creditors' committee is formed. On February 22, 1987, and upon the request of the creditors, the bankruptcy court removes the debtor-in-possession from business management and operations and appoints a trustee. The trustee consults regularly with the creditors' committee in formulating both short-term and long-term management decisions. After three years, the creditors approve a plan of reorganization in which the outstanding stock of Corporation *L* is canceled and its creditors receive shares of stock constituting all of the outstanding shares. The bankruptcy court confirms the plan of reorganization on March 23, 1990, and the plan is put into effect on May 25, 1990. For purposes of section 269, the creditors acquired control of Corporation *L* than March 23, 1990. Similarly, the determination of whether the creditors acquired control of Corporation *L* no earlier with the principal purpose of evasion or avoidance of Federal income tax is made by reference to the creditors' purposes as of no earlier than March 23, 1990.

[T.D. 8388, 57 FR 346, Jan. 6, 1992]

§ 1.269-6 Relationship of section 269 to section 382 before the Tax Reform Act of 1986.

Section 269 and §§ 1.269-1 through 1.269-5 may be applied to disallow a net operating loss carryover even though such carryover is not disallowed (in whole or in part) under section 382 and the regulations thereunder. This section may be illustrated by the following examples:

Example 1. L Corporation has computed its taxable income on a calendar year basis and has sustained heavy net operating losses for a number of years. Assume that A purchases all of the stock of L Corporation on December 31, 1955, for the principal purpose of utilizing its net operating loss carryovers by changing its business to a profitable new business. Assume further that A makes no attempt to revitalize the business

of L Corporation during the calendar year 1956 and that during January 1957 the business is changed to an entirely new and profitable business. The carryovers will be disallowed under the provisions of section 269(a) without regard to the application of section 382.

Example 2. L Corporation has sustained heavy net operating losses for a number of years. In a merger under State law, P Corporation acquires all of the assets of L Corporation for the principal purpose of utilizing the net operating loss carryovers of L Corporation against the profits of P Corporation's business. As a result of the merger, the former stockholders of L Corporation own, immediately after the merger, 12 percent of the fair market value of the outstanding stock of P Corporation. If the merger qualifies as a reorganization to which section 381(a) applies, the entire net operating loss carryovers will be disallowed under the provisions of section 269(a) without regard to the application of section 382.

Example 3. L Corporation has been sustaining net operating losses for a number of years. P Corporation, a profitable corporation, on December 31, 1955, acquires all the stock of L Corporation for the purpose of continuing and improving the operation of L Corporation's business. Under the provisions of sections 334(b)(2) and 381(a)(1), P Corporation would not succeed to L Corporation's net operating loss carryovers if L Corporation were liquidated pursuant to a plan of liquidation adopted within two years after the date of the acquisition. During 1956, P Corporation transfers a profitable business to L Corporation for the principal purpose of using the profits of such business to absorb the net operating loss carryovers of L Corporation. The transfer is such as to cause the basis of the transferred assets in the hands of L Corporation to be determined by reference to their basis in the hands of P Corporation. L Corporation's net operating loss carryovers will be disallowed under the provisions of section 269(a) without regard to the application of section 382.

[T.D. 6595, 27 FR 3597, Apr. 14, 1962, as amended by T.D. 8388, 57 FR 346, Jan. 6, 1992]

§ 1.269-7 Relationship of section 269 to sections 382 and 383 after the Tax Reform Act of 1986.

Section 269 and §§ 1.269-1 through 1.269-5 may be applied to disallow a deduction, credit, or other allowance notwithstanding that the utilization or amount of a deduction, credit, or other allowance is limited or reduced under section 382 or 383 and the regulations thereunder. However, the fact that the amount of taxable income or tax that may be offset by a deduction, credit, or other allowance is limited under section 382(a) or 383 and the regulations thereunder is relevant to the determination of whether the principal purpose of an acquisition is the evasion or avoidance of Federal income tax.

[T.D. 8388, 57 FR 346, Jan. 6, 1992]

§ 1.269B-1 Stapled foreign corporations.

(a) ***Treatment as a domestic corporation*** —

(1) ***General rule.*** Except as otherwise provided, if a foreign corporation is a stapled foreign corporation within the meaning of paragraph (b)(1) of this section, such foreign corporation will be treated as a domestic corporation for U.S. Federal income tax purposes. Accordingly, for example, the worldwide income of such corporation will be subject to the tax imposed by section 11. For application of the branch profits tax under section 884, and application of sections 871(a), 881, 1441, and 1442 to dividends and interest paid by a stapled foreign corporation, see §§ 1.884-1(h) and 1.884-4(d).

(2) ***Foreign owned exception.*** Paragraph (a)(1) of this section will not apply if a foreign corporation and a domestic corporation are stapled entities (as provided in paragraph (b) of this section) and such foreign and domestic corporations are foreign owned within the meaning of this paragraph (a)(2). A corporation will be treated as foreign owned if it is established to the satisfaction of the Commissioner that United States persons hold directly (or indirectly applying section 958(a)(2) and

(3) and section 318(a)(4)) less than 50 percent of the total combined voting power of all classes of stock entitled to vote and less than 50 percent of the total value of the stock of such corporation. For the consequences of a stapled foreign corporation becoming or ceasing to be foreign owned, therefore converting its status as either a foreign or domestic corporation within the meaning of this paragraph (a)(2), see paragraph (c) of this section.

(b) ***Definition of a stapled foreign corporation*** —

(1) ***General rule.*** A foreign corporation is a stapled foreign corporation if such foreign corporation and a domestic corporation are stapled entities. A foreign corporation and a domestic corporation are stapled entities if more than 50 percent of the aggregate value of each corporation's beneficial ownership consists of interests that are stapled. In the case of corporations with more than one class of stock, it is not necessary for a class of stock representing more than 50 percent of the beneficial ownership of the foreign corporation to be stapled to a class of stock representing more than 50 percent of the beneficial ownership of the domestic corporation, provided that more than 50 percent of the aggregate value of each corporation's beneficial ownership (taking into account all classes of stock) are in fact stapled. Interests are stapled if a transferor of one or more interests in one entity is required, by form of ownership, restrictions on transfer, or other terms or conditions, to transfer interests in the other entity. The determination of whether interests are stapled for this purpose is based on the relevant facts and circumstances, including, but not limited to, the corporations' by-laws, articles of incorporation or association, and stock certificates, shareholder agreements, agreements between the corporations, and voting trusts with respect to the corporations. For the consequences of a foreign corporation becoming or ceasing to be a stapled foreign corporation (*e.g.*, a corporation that is no longer foreign owned) under this paragraph (b)(1), see paragraph (c) of this section.

(2) ***Related party ownership rule.*** For purposes of determining whether a foreign corporation is a stapled foreign corporation, the Commissioner may, at his discretion, treat interests that otherwise would be stapled interests as not being stapled if the same person or related persons (within the meaning of section 267(b) or 707(b)) hold stapled interests constituting more than 50 percent of the beneficial ownership of both corporations, and a principal purpose of the stapling of those interests is the avoidance of U.S. income tax. A stapling of interests may have a principal purpose of tax avoidance even though the tax avoidance purpose is outweighed by other purposes when taken together.

(3) ***Example.*** The principles of paragraph (b)(1) of this section are illustrated by the following example:

Example. USCo, a domestic corporation, and FCo, a foreign corporation, are publicly traded companies, each having two classes of stock outstanding. USCo's class A shares, which constitute 75% of the value of all beneficial ownership in USCo, are stapled to FCo's class B shares, which constitute 25% of the value of all beneficial ownership in F Co. USCo's class B shares, which constitute 25% of the value of all beneficial ownership in USCo, are stapled to FCo class A shares, which constitute 75% of the value of all beneficial ownership in FCo. Because more than 50% of the aggregate value of the stock of each corporation is stapled to the stock of the other corporation, USCo and FCo are stapled entities within the meaning of section 269B(c)(2).

(c) ***Changes in domestic or foreign status.*** The deemed conversion of a foreign corporation to a domestic corporation under section 269B is treated as a reorganization under section 368(a)(1)(F). Similarly, the deemed conversion of a corporation that is treated as a domestic corporation under section 269B to a foreign corporation is treated as a reorganization under section 368(a)(1)(F). For the consequences of a deemed conversion, including the closing of a corporation's taxable year, see §§ 1.367(a)-1(e), (f) and 1.367(b)-2(f).

(d) ***Includible corporation*** —

(1) Except as provided in paragraph (d)(2) of this section, a stapled foreign corporation treated as a domestic corporation under section 269B nonetheless is treated as a foreign corporation in determining whether it is an includible corporation within the meaning of section 1504(b). Thus, for example, a stapled foreign corporation is not eligible to join in the filing of a consolidated return under section 1501, and a dividend paid by such corporation is not a qualifying dividend under section 243(b), unless a valid section 1504(d) election is made with respect to such corporation.

(2) A stapled foreign corporation is treated as a domestic corporation in determining whether it is an includible corporation under section 1504(b) for purposes of applying §§ 1.904(i)-1 and 1.861-11T(d)(6).

(e) ***U.S. treaties*** —

(1) A stapled foreign corporation that is treated as a domestic corporation under section 269B may not claim an exemption from U.S. income tax or a reduction in U.S. tax rates by reason of any treaty entered into by the United States.

(2) The principles of this paragraph (e) are illustrated by the following example:

Example. FCo, a Country X corporation, is a stapled foreign corporation that is treated as a domestic corporation under section 269B. FCo qualifies as a resident of Country X pursuant to the income tax treaty between the United States and Country X. Under such treaty, the United States is permitted to tax business profits of a Country X resident only to the extent that the business profits are attributable to a permanent establishment of the Country X resident in the United States. While FCo earns income from sources within and without the United States, it does not have a permanent establishment in the United States within the meaning of the relevant treaty. Under paragraph (e)(1) of this section, however, FCo is subject to U.S. Federal income tax on its income as a domestic corporation without regard to the provisions of the U.S.-Country X treaty and therefore without regard to the fact that FCo has no permanent establishment in the United States.

(f) ***Tax assessment and collection procedures*** —

(1) ***In general.***

(i) Any income tax imposed on a stapled foreign corporation by reason of its treatment as a domestic corporation under section 269B (whether such income tax is shown on the stapled foreign corporation's U.S. Federal income tax return or determined as a deficiency in income tax) shall be assessed as the income tax liability of such stapled foreign corporation.

(ii) Any income tax assessed as a liability of a stapled foreign corporation under paragraph (f)(1)(i) of this section shall be considered as having been properly assessed as an income tax liability of the stapled domestic corporation (as defined in paragraph (f)(4)(i) of this section) and all 10-percent shareholders of the stapled foreign corporation (as defined in paragraph (f)(4)(ii) of this section). The date of such deemed assessment shall be the date the income tax liability of

the stapled foreign corporation was properly assessed. The Commissioner may collect such income tax from the stapled domestic corporation under the circumstances set forth in paragraph (f)(2) of this section and may collect such income tax from any 10-percent shareholders of the stapled foreign corporation under the circumstances set forth in paragraph (f)(3) of this section.

(2) ***Collection from domestic stapled corporation.*** If the stapled foreign corporation does not pay its income tax liability that was properly assessed, the unpaid balance of such income tax or any portion thereof may be collected from the stapled domestic corporation, provided that the following conditions are satisfied—

(i) The Commissioner has issued a notice and demand for payment of such income tax to the stapled foreign corporation in accordance with § 301.6303-1 of this Chapter;

(ii) The stapled foreign corporation has failed to pay the income tax by the date specified in such notice and demand;

(iii) The Commissioner has issued a notice and demand for payment of the unpaid portion of such income tax to the stapled domestic corporation in accordance with § 301.6303-1 of this Chapter.

(3) ***Collection from 10-percent shareholders of the stapled foreign corporation.*** The unpaid balance of the stapled foreign corporation's income tax liability may be collected from a 10-percent shareholder of the stapled foreign corporation, limited to each such shareholder's income tax liability as determined under paragraph (f)(4)(iv) of this section, provided the following conditions are satisfied—

(i) The Commissioner has issued a notice and demand to the stapled domestic corporation for the unpaid portion of the stapled foreign corporation's income tax liability, as provided in paragraph (f)(2)(iii) of this section;

(ii) The stapled domestic corporation has failed to pay the income tax by the date specified in such notice and demand;

(iii) The Commissioner has issued a notice and demand for payment of the unpaid portion of such income tax to such 10-percent shareholder of the stapled foreign corporation in accordance with § 301.6303-1 of this Chapter.

(4) ***Special rules and definitions.*** For purposes of this paragraph (f), the following rules and definitions apply:

(i) ***Stapled domestic corporation.*** A domestic corporation is a *stapled domestic corporation* with respect to a stapled foreign corporation if such domestic corporation and the stapled foreign corporation are stapled entities as described in paragraph (b)(1) of this section.

(ii) ***10-percent shareholder.*** A *10-percent shareholder* of a stapled foreign corporation is any person that owned directly 10 percent or more of the total value or total combined voting power of all classes of stock in the stapled foreign corporation for any day of the stapled foreign corporation's taxable year with respect to which the income tax liability relates.

(iii) ***10-percent shareholder in the case of indirect ownership of stapled foreign corporation stock.*** [Reserved]

(iv) ***Determination of a 10-percent shareholder's income tax liability.*** The income tax liability of a 10-percent shareholder of a stapled foreign corporation, for the income tax of the stapled foreign corporation under section 269B and this section, is determined by assigning an equal portion of the total income tax liability of the stapled foreign corporation for the taxable year to each day in such corporation's taxable year, and then dividing that portion ratably among the shares outstanding for that day on the basis of the relative values of such shares. The liability of any 10-percent shareholder for this purpose is the sum of the income tax liability allocated to the shares held by such shareholder for each day in the taxable year.

(v) ***Income tax.*** The term *income tax* means any income tax liability imposed on a domestic corporation under title 26 of the United States Code, including additions to tax, additional amounts, penalties, and interest related to such income tax liability.

(g) ***Effective dates*** —

(1) Except as provided in this paragraph (g), the provisions of this section are applicable for taxable years that begin after July 29, 2005.

(2) Paragraphs (d)(1) and (f) of this section (except as applied to the collection of tax from any 10-percent shareholder of a stapled foreign corporation that is a foreign person) are applicable beginning on—

(i) July 18, 1984, for any foreign corporation that became stapled to a domestic corporation after June 30, 1983; and

(ii) January 1, 1987, for any foreign corporation that was stapled to a domestic corporation as of June 30, 1983.

(3) Paragraph (d)(2) of this section is applicable for taxable years beginning after July 22, 2003, except that in the case of a foreign corporation that becomes stapled to a domestic corporation on or after July 22, 2003, paragraph (d)(2) of this section applies for taxable years ending on or after July 22, 2003.

(4) Paragraph (e) of this section is applicable beginning on July 18, 1984, except as provided in paragraph (g)(5) of this section.

(5) In the case of a foreign corporation that was stapled to a domestic corporation as of June 30, 1983, which was entitled to claim benefits under an income tax treaty as of that date, and which remains eligible for such treaty benefits, paragraph (e) of this section will not apply to such foreign corporation and for all purposes of the Internal Revenue Code such corporation will continue to be treated as a foreign entity. The prior sentence will continue to apply even if such treaty is subsequently modified by protocol, or superseded by a new treaty, so long as the stapled foreign corporation continues to be eligible to claim such treaty benefits. If the treaty benefits to which the stapled foreign corporation was entitled as of June 30, 1983, are terminated, then a deemed conversion of the foreign corporation to a domestic corporation shall occur pursuant to paragraph (c) of this section as of the date of such termination.

[T.D. 9216, 70 FR 43758, July 29, 2005, as amended by T.D. 9739, 80 FR 56912, Sept. 21, 2015]

§ 1.270-1 Limitation on deductions allowable to individuals in certain cases.

(a) ***Recomputation of taxable income.***

(1) Under certain circumstances, section 270 limits the deductions (other than certain deductions described in subsection (b) thereof) attributable to a trade or business carried on by an individual which are otherwise allowable to such individual under the provisions of chapter 1 of the Code or the corresponding provisions of prior revenue laws. If, in each of five consecutive taxable years (including at least one taxable year beginning after December 31, 1953, and ending after August 16, 1954), the deductions attributable to a trade or business carried on by an individual (other than the specially treated deductions described in paragraph (b) of this section) exceed the gross income derived from such trade or business by more than $50,000, the taxable income computed under section 63 (or the net income computed under the corresponding provisions of prior revenue laws) of such individual shall be recomputed for each of such taxable years.

(2) In recomputing the taxable income (or the net income, in the case of taxable years which are otherwise subject to the Internal Revenue Code of 1939) for each of the five taxable years, the deductions (other than the specially treated deductions described in paragraph (b) of this section with the exception of the net operating loss deduction) attributable to the trade or business carried on by the individual shall be allowed only to the extent of

(i) the gross income derived from such trade or business, plus

(ii) $50,000. The specially treated deductions described in paragraph (b) of this section (other than the net operating loss deduction) shall each be allowed in full. The net operating loss deduction, to the extent attributable to such trade or business, shall be disallowed in its entirety. Thus, a carryover or a carryback of a net operating loss so attributable, either from a year within the period of five consecutive taxable years or from a taxable year outside of such period, shall be ignored in making the recomputation of taxable income or net income, as the case may be.

(3) The limitations on deductions provided by section 270 are also applicable in determining under section 172, or the corresponding provisions of prior revenue laws, the amount of any net operating loss carryover or carryback from any year which falls within the provisions of section 270 to any year which does not fall within such provisions. Also, in determining under section 172, or the corresponding provisions of prior revenue laws, the amount of any net operating loss carryover from a year which falls within the provisions of section 270 to a year which does not fall within such provisions, the amount of net operating loss is to be reduced by the taxable income or net income, as the case may be (computed as provided in § 1.172-5, or 26 CFR (1939) 39.122-4(c) (Regulations 118), as the case may be and, in the case of any taxable year which falls within the provisions of section 270, determined after the application of section 270), of any taxable year preceding or succeeding the taxable year of the net operating loss to which such loss must first be carried back or carried over under the provisions of section 172(b), or the corresponding provisions of prior revenue laws, even though the net operating loss deduction is not an allowable deduction for such preceding or succeeding taxable year.

(4) If an individual carries on several trades or businesses, the deductions attributable to such trades or businesses and the gross income derived therefrom shall not be aggregated in determining whether the deductions (other than the specially treated deductions) exceed the gross income derived from such trades or businesses by more than $50,000 in any taxable year. For the purposes of section 270, each trade or business shall be considered separately. However, where a particular business of an individual is conducted in one or more forms such as a partnership, joint venture, or individual proprietorship, the individual's share of the profits and losses from each business unit must be aggregated to determine the applicability of section 270. See paragraphs (a)(8)(ii) and (b) of § 1.702-1, relating to applicability of section 270 to a partner. Where it is established that for tax

purposes a husband and wife are partners in the same trade or business or that each is participating independently of the other in the same trade or business with his and her own money, the husband's gross income and deductions from that trade or business shall be considered separately from the wife's gross income and deductions from that trade or business even though they file a joint return. Where a taxpayer is engaged in a trade or business in a community property State under circumstances such that the income therefrom is considered to be community income, the taxpayer and his spouse are treated for purposes of section 270 as two individuals engaged separately in the same trade or business and the gross income and deductions attributable to the trade or business are allocated one-half to the taxpayer and one-half to the spouse. Where several business activities emanate from a single commodity, such as oil or gas or a tract of land, it does not necessarily follow that such activities are one business for the purposes of section 270. However, in order to be treated separately, it must be established that such business activities are actually conducted separately and are not closely interrelated with each other. For the purposes of section 270, the trade or business carried on by an individual must be the same in each of the five consecutive years in which the deductions (other than the specially treated deductions) exceed the gross income derived from such trade or business by more than $50,000.

(5) For the purposes of section 270, a taxable year may be part of two or more periods of five consecutive taxable years. Thus, if the deductions (other than the specially treated deductions) attributable to a trade or business carried on by an individual exceed the gross income therefrom by more than $50,000 for each of six consecutive taxable years, the fifth year of such six consecutive taxable years shall be considered to be a part both of a five-year period beginning with the first and ending with the fifth taxable year and of a five-year period beginning with the second and ending with the sixth taxable year.

(6) For the purposes of section 270, a short taxable year required to effect a change in accounting period constitutes a taxable year. In determining the applicability of section 270 in the case of a short taxable year, items of income and deduction are not annualized.

(b) ***Specially treated deductions.***

(1) For the purposes of section 270 and paragraph (a) of this section, the specially treated deductions are:

(i) Taxes,

(ii) Interest,

(iii) Casualty and abandonment losses connected with a trade or business deductible under section 165(c)(1) or the corresponding provisions of prior revenue laws,

(iv) Losses and expenses of the trade or business of farming which are directly attributable to drought,

(v) The net operating loss deduction allowed by section 172, or the corresponding provisions of prior revenue laws, and

(vi) Expenditures as to which a taxpayer is given the option, under law or regulations, either (*a*) to deduct as expenses when incurred, or (*b*) to defer or capitalize.

(2) For the purpose of subparagraph (1)(iv) of this paragraph, an individual is engaged in the "trade or business of farming" if he cultivates, operates, or manages a farm for gain or profit, either as owner or tenant. An individual who receives a rental (either in cash or in kind) which is based upon farm

production is engaged in the trade or business of farming. However, an individual who receives a fixed rental (without reference to production) is engaged in the trade or business of farming only if he participates to a material extent in the operation or management of the farm. An individual engaged in forestry or the growing of timber is not thereby engaged in the trade or business of farming. An individual cultivating or operating a farm for recreation or pleasure rather than a profit is not engaged in the trade or business of farming. The term *farm* is used in its ordinarily accepted sense and includes stock, dairy, poultry, fruit, crop, and truck farms, and also plantations, ranches, ranges, and orchards. An individual is engaged in the trade or business of farming if he is a member of a partnership engaged in the trade or business of farming.

(3) In order for losses and expenses of the trade or business of farming to qualify as specially treated deductions under subparagraph (1)(iv) of this paragraph such losses and expenses must be directly attributable to drought conditions and not to other causes such as faulty management or unfavorable market conditions. In general, the following are the types of losses and expenses which, if otherwise deductible, may qualify as specially treated deductions under subparagraph (1)(iv) of this paragraph:

(i) Losses for damages to or destruction of property as a result of drought conditions, if such property is used in the trade or business of farming or is purchased for resale in the trade or business of farming;

(ii) Expenses directly related to raising crops or livestock which are destroyed or damaged by drought. Included in this category are, for example, payments for labor, fertilizer, and feed used in raising such crops or livestock. If such crops or livestock to which the expenditures relate are only partially destroyed or damaged by drought then only a proportionate part of the expenditures is regarded as specially treated deductions; and

(iii) Expenses which would not have been incurred in the absence of drought conditions, such as expenses for procuring pasture or additional supplies of water or feed.

(4) The expenditures referred to in subparagraph (1)(vi) of this paragraph include, but are not limited to, intangible drilling and development costs in the case of oil and gas wells as provided in section 263(c) and the regulations thereunder, and expenditures for the development of a mine or other natural deposit (other than an oil or gas well) as provided in section 616 and the regulations thereunder.

(5) The provisions of section 270(b) do not operate to make an expenditure a deductible item if it is not otherwise deductible under the law applicable to the particular year in which it was incurred. Thus, for example, if it is necessary, pursuant to the provisions of section 270, to recompute the taxable or net income of an individual for the taxable years 1950 through 1954, the individual in making the recomputation may not deduct expenditures paid or incurred in the years 1950 through 1953 which must be capitalized under the law applicable to those years, even though the expenditures are deductible under the Code.

(c) ***Applicability to taxable years otherwise subject to the Internal Revenue Code of 1939.*** The net income of a taxable year otherwise subject to the Internal Revenue Code of 1939 shall be recomputed pursuant to section 270 if (i) such taxable year is included in a period of five consecutive taxable years which includes at least one taxable year beginning after December 31, 1953, and ending after August 16, 1954, and (ii) the deductions (other than the specially treated deductions specified in section 270(b)) for each taxable year in such five-year period exceed the $50,000 limitation specified in section 270. As described in paragraph (a)(5) of this section, a taxable year may be part of two or more periods of five consecutive

taxable years, one meeting the requirements for recomputation pursuant to section 130 of the Internal Revenue Code of 1939 and the other meeting the requirements for recomputation pursuant to section 270 of the Internal Revenue Code of 1954, then the recomputation for such taxable year shall be made pursuant to section 270. For example, if a calendar year taxpayer sustains a loss from a trade or business for each of the years 1949 through 1954, the years 1950, 1951, 1952, and 1953 may be a part of two such periods of five consecutive taxable years. If, however, a taxable year is part of a period of five consecutive taxable years which meets the requirements for recomputation pursuant to section 130 of the Internal Revenue Code of 1939, but is not part of a period which meets the requirements for recomputation, pursuant to section 270, then a recomputation of net income for such taxable year must be made pursuant to section 130.

(d) ***Redetermination of tax.*** The tax imposed by Chapter 1 of the Code, or by the corresponding provisions of prior revenue laws, for each of the five consecutive taxable years specified in paragraph (a) of this section shall be redetermined upon the basis of the taxable income or net income of the individual, as the case may be, recomputed in the manner described in paragraph (a) of this section. If the assessment of a deficiency is prevented (except for the provisions of Part II (section 1311 and following), Subchapter Q, Chapter 1 of the Code, relating to the effect of limitations and other provisions in income tax cases) by the operation of any provision of law (e.g., sections 6501 and 6502, or the corresponding provisions of prior revenue laws, relating to the period of limitations upon assessment and collection) except section 7122, or the corresponding provisions of prior revenue laws, relating to compromises, or by any rule of law (e.g., res judicata), then the excess of the tax for such year as recomputed over the tax previously determined for such year shall be considered a deficiency for the purposes of section 270. The term *tax previously determined* shall have the same meaning as that assigned to such term by section 1314(a). See § 1.1314 (a)-1.

(e) ***Assessment of tax.*** Any amount determined as a deficiency in the manner described in paragraph (d) of this section in respect of any taxable year of the five consecutive taxable years specified in paragraph (a) of this section may be assessed and collected as if on the date of the expiration of the period of limitation for the assessment of a deficiency for the fifth taxable year of such five consecutive taxable years, one year remained before the expiration of the period of limitation upon assessment for the taxable year in respect of which the deficiency is determined. If the taxable year is one in respect of which an assessment could be made without regard to section 270, the amount of the actual deficiency as defined in section 6211(a) (whether it is greater than, equal to, or less than the deficiency determined under section 270(c)) shall be assessed and collected. However, if the assessment of a deficiency for such taxable year would be prevented by any provision of law (e.g., the period of limitation upon the assessment of tax) except section 7122, or the corresponding provision of prior revenue laws, relating to compromises, or by the operation of any rule of law (e.g., res judicata), then the excess of the tax recomputed as described in paragraph (d) of this section over the tax previously determined may be assessed and collected even though in fact there is no actual deficiency, as defined in section 6211(a), in respect of the given taxable year.

(f) ***Effective date; cross reference.*** The provisions of section 270 and this section apply to taxable years beginning before January 1, 1970. Thus, for instance, if the taxpayer had a profit of $2,000 attributable to a trade or business in 1965, section 270 and this section would not apply to the taxable years 1966 through 1970, even though he had losses of more than $50,000 in each of the 5 years ending with 1970. For provisions relating to activities not engaged in for profit applicable to taxable years beginning after December 31, 1969, see section 183 and the regulations thereunder.

[T.D. 6500, 25 FR 11402, Nov. 26, 1960; 25 FR 14021, Dec. 31, 1960, as amended by T.D. 7198, 37 FR 13685, July 13, 1972]

§ 1.271-1 Debts owed by political parties.

(a) ***General rule.*** In the case of a taxpayer other than a bank (as defined in section 581 and the regulations thereunder), no deduction shall be allowed under section 166 (relating to bad debts) or section 165(g) (relating to worthlessness of securities) by reason of the worthlessness of any debt, regardless of how it arose, owed by a political party. For example, it is immaterial that the debt may have arisen as a result of services rendered or goods sold or that the taxpayer included the amount of the debt in income. In the case of a bank, no deduction shall be allowed unless, under the facts and circumstances, it appears that the bad debt was incurred to or purchased by, or the worthless security was acquired by, the taxpayer in accordance with its usual commercial practices. Thus, if a bank makes a loan to a political party not in accordance with its usual commercial practices but solely because the president of the bank has been active in the party no bad debt deduction will be allowed with respect to the loan.

(b) ***Definitions*** —

(1) ***Political party.*** For purposes of this section and § 1.276-1, the term *political party* means a political party (as commonly understood), a National, State, or local committee thereof, or any committee, association, or organization, whether incorporated or not, which accepts contributions (as defined in subparagraph (2) of this paragraph) or makes expenditures (as defined in subparagraph (3) of this paragraph) for the purpose of influencing or attempting to influence the election of presidential or vice-presidential electors, or the selection, nomination, or election of any individual to any Federal, State, or local elective public office, whether or not such individual or electors are selected, nominated, or elected. Accordingly, a political party includes a committee or other group which accepts contributions or makes expenditures for the purpose of promoting the nomination of an individual for an elective public office in a primary election, or in any convention, meeting, or caucus of a political party. It is immaterial whether the contributions or expenditures are accepted or made directly or indirectly. Thus, for example, a committee or other group, is considered to be a political party, if, although it does not expend any funds, it turns funds over to another organization, which does expend funds for the purpose of attempting to influence the nomination of an individual for an elective public office. An organization which engages in activities which are truly nonpartisan in nature will not be considered a political party merely because it conducts activities with respect to an election campaign if, under all the facts and circumstances, it is clear that its efforts are not directed to the election of the candidates of any particular party or parties or to the selection, nomination or election of any particular candidate. For example, a committee or group will not be treated as a political party if it is organized merely to inform the electorate as to the identity and experience of all candidates involved, to present on a nonpreferential basis the issues or views of the parties or candidates as described by the parties or candidates, or to provide a forum in which the candidates are freely invited on a nonpreferential basis to discuss or debate the issues.

(2) ***Contributions.*** For purposes of this section and § 1.276-1, the term *contributions* includes a gift, subscription, loan, advance, or deposit, of money or anything of value, and includes a contract, promise, or agreement to make a contribution, whether or not legally enforceable.

(3) ***Expenditures.*** For purposes of this section and § 1.276-1, the term *expenditures* includes a payment, distribution, loan, advance, deposit, or gift, of money or anything of value, and includes a contract, promise, or agreement to make an expenditure, whether or not legally enforceable.

[T.D. 6996, 34 FR 832, Jan. 18, 1969]

§ 1.272-1 Expenditures relating to disposal of coal or domestic iron ore.

(a) ***Introduction.*** Section 272 provides special treatment for certain expenditures paid or incurred by a taxpayer in connection with a contract (hereafter sometimes referred to as a "coal royalty contract" or "iron ore royalty contract") for the disposal of coal or iron ore the gain or loss from which is treated under section 631(c) as a section 1231 gain or loss on the sale of coal or iron ore. See paragraph (e) of § 1.631-3 for special rules relating to iron ore. The expenditures covered by section 272 are those which are attributable to the making and administering of such a contract or to the preservation of the economic interest retained under the contract. For examples of such expenditures, see paragraph (d) of this section. For a taxable year in which gross royalty income is realized under the contract of disposal, such expenditures shall not be allowed as a deduction. Instead, they are to be added to the adjusted depletion basis of the coal or iron ore disposed of in the taxable year in computing gain or loss under section 631(c). However, where no gross royalty income is realized under the contract of disposal in a particular taxable year, such expenditure shall be treated without regard to section 272.

(b) ***In general.***

(1) Where the disposal of coal or iron ore is covered by section 631(c), the provisions of section 272 and this section shall be applicable for a taxable year in which there is income under the contract of disposal. (For purposes of section 272 and this section, the term *income* means gross amounts received or accrued which are royalties or bonuses in connection with a contract to which section 631(c) applies.) All expenditures paid or incurred by the taxpayer during the taxable year which are attributable to the making and administering of the contract disposing of the coal or iron ore and all expenditures paid or incurred during the taxable year in order to preserve the owner's economic interest retained under the contract shall be disallowed as deductions in computing taxable income for the taxable year. The sum of such expenditures and the adjusted depletion basis of the coal or iron ore disposed of in the taxable year shall be used in determining the amount of gain or loss with respect to the disposal. See § 1.631-3. For special rule in case of loss, see paragraph (c) of this section. Section 272 and this section do not apply to capital expenditures, and such expenditures are not taken into account in computing gain or loss under section 631(c) except to the extent they are properly part of the depletable basis of the coal or iron ore.

(2) The expenditures covered under section 272 and this section are disallowed as a deduction only with respect to a taxable year in which income is realized under the coal royalty contract (or iron ore royalty contract) to which such expenditures are attributable. Where no income is realized under the contract in a taxable year, these expenditures shall be deducted as expenses for the production of income, or as a business expense, or they may be treated under section 266 (relating to taxes and carrying charges) if applicable.

(3) The provisions of section 272 and this section apply to a taxable year in which income from the disposal by the owner of coal or iron ore held by him for more than 1 year (6 months for taxable years beginning before 1977; 9 months for taxable years beginning in 1977) is subject to the provisions of section 631(c) even though the actual mining of coal or iron ore under the coal royalty contract (or iron ore royalty contract) does not take place during the taxable year. Where the right under the contract to mine coal or iron ore for which advance payment has been made expires, terminates, or is abandoned before the coal or iron ore is mined, and paragraph (c) of § 1.631-3 requires the owner to recompute his tax with respect to such payment, the recomputation must be made without applying the provisions of section 272 and this section.

(c) ***Losses.*** If, in any taxable year, the expenditures referred to in section 272 and this section plus the adjusted depletion basis (as defined in paragraph (b)(2) of § 1.631-3) of the coal or iron ore disposed of during the taxable year exceed the amount realized under the contract which is subject to section 631(c) during the taxable year, such excess shall be considered under section 1231 as a loss from the sale of property used in the trade or business and, to the extent not availed of as a reduction of gain under that section, shall be a loss deductible under section 165(a) (relating to the deduction of losses generally).

(d) ***Examples of expenditures.***

(1) The expenditures referred to in section 272 include, but are not limited to, the following items, if such items are attributable to the making or administering of the contract or preserving the economic interest therein: Ad valorem taxes imposed by State or local authorities, costs of fire protection, costs of insurance (other than liability insurance), costs incurred in administering the contract (including costs of bookkeeping and technical supervision), interest on loans, expenses of flood control, legal and technical expenses, and expenses of measuring and checking quantities of coal or iron ore disposed of under the contract. Whether the interest on loans is attributable to the making or administering of the contract or preserving the economic interest therein will depend upon the use to which the borrowed monies are put.

(2) Any expenditure referred to in this section which is applicable to more than one coal royalty contract or iron ore royalty contract shall be reasonably apportioned to each of such contracts. Furthermore, if an expenditure applies only in part to the making or administering of the contract or the preservation of the economic interest, then only such part shall be treated under section 272. The apportionment of the expenditure shall be made on a reasonable basis. For example, where a taxpayer has other income (such as income from oil or gas royalties, rentals, right of way fees, interest, or dividends) as well as income under section 631(c), and where the salaries of some of its employees or other expenses relate to both classes of income, such expenses shall be allocated reasonably between the income subject to section 631(c) and the other income. Where a taxpayer has more than one coal royalty contract or iron ore royalty contract, expenditures under this section relating to a contract from which no income has been received in the taxable year may not be allocated to income from another contract from which income has been received in the taxable year.

(3) The taxpayer may have expenses which are not attributable even partly to making and administering a coal royalty contract or iron ore royalty contract or to the preservation of the economic interest retained under the contract and, accordingly, are not included in the expenditures described in section 272. These include such items as ad valorem taxes imposed by State or local authorities on property not covered by the contract, salaries, wages, or other expenses entirely incident to the ownership and protection of such property and depreciation of improvements thereon, fire insurance on such property, charitable contributions, and similar expenses unrelated to the making or to the administering of coal royalty contracts or iron ore royalty contracts or preserving the taxpayer's economic interest retained therein.

(e) ***Nonapplication of section.*** For purposes of section 543, the provisions of section 272 shall have no application. For example, the taxpayer may, for the purposes of section 543(a)(3)(C) or the corresponding provisions of prior income tax laws, include in the sum of the deductions which are allowable under section 162 an amount paid to an attorney as compensation for legal services rendered in connection with the making of a coal royalty contract or iron ore royalty contract (assuming the expenditure otherwise qualifies under section 162 as an ordinary and necessary expense incurred in the taxpayer's trade or business), even though such expenditure is disallowed as a deduction under section 272.

[T.D. 6841, 30 FR 9304, July 27, 1965, as amended by T.D. 7728, 45 FR 72650, Nov. 3, 1980]

§ 1.273-1 Life or terminable interests.

(a) ***In general.*** Amounts paid as income to the holder of a life or a terminable interest acquired by gift, bequest, or inheritance shall not be subject to any deduction for shrinkage (whether called by depreciation or any other name) in the value of such interest due to the lapse of time. In other words, the holder of such an interest so acquired may not set up the value of the expected future payments as corpus or principal and claim deduction for shrinkage or exhaustion thereof due to the passage of time. For the treatment generally of distributions to beneficiaries of an estate or trust, see Subparts A, B, C, and D (section 641 and following), Subchapter J, Chapter 1 of the Code, and the regulations thereunder. For basis of property acquired from a decedent and by gifts and transfers in trust, see sections 1014, 1015, and 1022, and the regulations thereunder.

(b) ***Effective/applicability date.*** The provisions in this section are applicable for taxable years beginning on or after September 16, 1958. The provisions of this section relating to section 1022 are effective on and after January 19, 2017.

[T.D. 9811, 82 FR 6237, Jan. 19, 2017]

§ 1.274-1 Disallowance of certain entertainment, gift and travel expenses.

Section 274 disallows in whole, or in part, certain expenditures for entertainment, gifts and travel which would otherwise be allowable under Chapter 1 of the Code. The requirements imposed by section 274 are in addition to the requirements for deductibility imposed by other provisions of the Code. If a deduction is claimed for an expenditure for entertainment, gifts, or travel, the taxpayer must first establish that it is otherwise allowable as a deduction under Chapter 1 of the Code before the provisions of section 274 become applicable. An expenditure for entertainment, to the extent it is lavish or extravagant, shall not be allowable as a deduction. The taxpayer should then substantiate such an expenditure in accordance with the rules under section 274(d). See § 1.274-5. Section 274 is a disallowance provision exclusively, and does not make deductible any expense which is disallowed under any other provision of the Code. Similarly, section 274 does not affect the includability of an item in, or the excludability of an item from, the gross income of any taxpayer. For specific provisions with respect to the deductibility of expenditures: for an activity of a type generally considered to constitute entertainment, amusement, or recreation, and for a facility used in connection with such an activity, as well as certain travel expenses of a spouse, etc., see § 1.274-2; for expenses for gifts, see § 1.274-3; for expenses for foreign travel, see § 1.274-4; for expenditures deductible without regard to business activity, see § 1.274-6; and for treatment of personal portion of entertainment facility, see § 1.274-7.

[T.D. 6659, 28 FR 6499, June 25, 1963, as amended by T.D. 8666, 61 FR 27006, May 30, 1996]

§ 1.274-2 Disallowance of deductions for certain expenses for entertainment, amusement, recreation, or travel.

(a) *General rules* —

(1) ***Entertainment activity.*** Except as provided in this section, no deduction otherwise allowable under Chapter 1 of the Code shall be allowed for any expenditure with respect to entertainment unless the taxpayer establishes:

(i) That the expenditure was directly related to the active conduct of the taxpayer's trade or business, or

(ii) In the case of an expenditure directly preceding or following a substantial and bona fide business discussion (including business meetings at a convention or otherwise), that the expenditure was associated with the active conduct of the taxpayer's trade or business.

Such deduction shall not exceed the portion of the expenditure directly related to (or in the case of an expenditure described in subdivision (ii) of this subparagraph, the portion of the expenditure associated with) the active conduct of the taxpayer's trade or business.

(2) *Entertainment facilities* —

(i) ***Expenditures paid or incurred after December 31, 1978, and not with respect to a club.*** Except as provided in this section with respect to a club, no deduction otherwise allowable under chapter 1 of the Code shall be allowed for any expenditure paid or incurred after December 31, 1978, with respect to a facility used in connection with entertainment.

(ii) ***Expenditures paid or incurred before January 1, 1979, with respect to entertainment facilities, or paid or incurred before January 1, 1994, with respect to clubs*** —

(*a*) ***Requirements for deduction.*** Except as provided in this section, no deduction otherwise allowable under chapter 1 of the Internal Revenue Code shall be allowed for any expenditure paid or incurred before January 1, 1979, with respect to a facility used in connection with entertainment, or for any expenditure paid or incurred before January 1, 1994, with respect to a club used in connection with entertainment, unless the taxpayer establishes—

(*1*) That the facility or club was used primarily for the furtherance of the taxpayer's trade or business; and

(*2*) That the expenditure was directly related to the active conduct of that trade or business.

(*b*) ***Amount of deduction.*** The deduction allowable under paragraph (a)(2)(ii)(*a*) of this section shall not exceed the portion of the expenditure directly related to the active conduct of the taxpayer's trade or business.

(iii) ***Expenditures paid or incurred after December 31, 1993, with respect to a club*** —

(*a*) ***In general.*** No deduction otherwise allowable under chapter 1 of the Internal Revenue Code shall be allowed for amounts paid or incurred after December 31, 1993, for membership in any club organized for business, pleasure, recreation, or other social purpose. The purposes and activities of a club, and not its name, determine whether it is organized for business, pleasure, recreation, or other social purpose. Clubs organized for business, pleasure, recreation, or other social purpose include any membership organization if a principal purpose of the organization is to conduct entertainment activities for members of the organization or their guests or to provide members or their guests with access to entertainment facilities within the meaning of paragraph (e)(2) of this section. Clubs organized for business, pleasure, recreation, or other social purpose include, but are not limited to, country clubs, golf and athletic clubs, airline clubs, hotel clubs, and clubs operated to provide meals under circumstances generally considered to be conducive to business discussion.

(*b*) ***Exceptions.*** Unless a principal purpose of the organization is to conduct entertainment activities for members or their guests or to provide members or their guests with access to entertainment facilities, business leagues, trade associations, chambers of commerce, boards of trade, real estate boards, professional organizations (such as bar associations and medical associations), and civic or public service organizations will not be treated as clubs organized for business, pleasure, recreation, or other social purpose.

(3) ***Cross references.*** For definition of the term *entertainment,* see paragraph (b)(1) of this section. For the disallowance of deductions for the cost of admission to a dinner or program any part of the proceeds of which inures to the use of a political party or political candidate, and cost of admission to an inaugural event or similar event identified with any political party or political candidate, see § 1.276-1. For rules and definitions with respect to:

(i) "Directly related entertainment", see paragraph (c) of this section,

(ii) "Associated entertainment", see paragraph (d) of this section,

(iii) "Expenditures paid or incurred before January 1, 1979, with respect to entertainment facilities or before January 1, 1994, with respect to clubs", see paragraph (e) of this section, and

(iv) "Specific exceptions" to the disallowance rules of this section, see paragraph (f) of this section.

(b) ***Definitions*** —

(1) ***Entertainment defined*** —

(i) ***In general.*** For purposes of this section, the term *entertainment* means any activity which is of a type generally considered to constitute entertainment, amusement, or recreation, such as entertaining at night clubs, cocktail lounges, theaters, country clubs, golf and athletic clubs, sporting events, and on hunting, fishing, vacation and similar trips, including such activity relating solely to the taxpayer or the taxpayer's family. The term *entertainment* may include an activity, the cost of which is claimed as a business expense by the taxpayer, which satisfies the personal, living, or family needs of any individual, such as providing food and beverages, a hotel suite, or an automobile to a business customer or his family. The term *entertainment* does not include activities which, although satisfying personal, living, or family needs of an individual, are clearly not regarded as constituting entertainment, such as

(*a*) supper money provided by an employer to his employee working overtime,

(*b*) a hotel room maintained by an employer for lodging of his employees while in business travel status, or

(*c*) an automobile used in the active conduct of trade or business even though used for routine personal purposes such as commuting to and from work. On the other hand, the providing of a hotel room or an automobile by an employer to his employee who is on vacation would constitute entertainment of the employee.

(ii) ***Objective test.*** An objective test shall be used to determine whether an activity is of a type generally considered to constitute entertainment. Thus, if an activity is generally considered to be entertainment, it will constitute entertainment for purposes of this section and section 274(a) regardless of whether the expenditure can also be described otherwise, and even though the expenditure relates to the taxpayer alone. This objective test precludes arguments such as that *entertainment* means only entertainment of others or that an expenditure for

entertainment should be characterized as an expenditure for advertising or public relations. However, in applying this test the taxpayer's trade or business shall be considered. Thus, although attending a theatrical performance would generally be considered entertainment, it would not be so considered in the case of a professional theater critic, attending in his professional capacity. Similarly, if a manufacturer of dresses conducts a fashion show to introduce his products to a group of store buyers, the show would not be generally considered to constitute entertainment. However, if an appliance distributor conducts a fashion show for the wives of his retailers, the fashion show would be generally considered to constitute entertainment.

(iii) ***Special definitional rules—***

(a) ***In general.*** Except as otherwise provided in (*b*) or (*c*) of this subdivision, any expenditure which might generally be considered either for a gift or entertainment, or considered either for travel or entertainment, shall be considered an expenditure for entertainment rather than for a gift or travel.

(*b*) ***Expenditures deemed gifts.*** An expenditure described in (*a*) of this subdivision shall be deemed for a gift to which this section does not apply if it is:

(*1*) An expenditure for packaged food or beverages transferred directly or indirectly to another person intended for consumption at a later time.

(*2*) An expenditure for tickets of admission to a place of entertainment transferred to another person if the taxpayer does not accompany the recipient to the entertainment unless the taxpayer treats the expenditure as entertainment. The taxpayer may change his treatment of such an expenditure as either a gift or entertainment at any time within the period prescribed for assessment of tax as provided in section 6501 of the Code and the regulations thereunder.

(*3*) Such other specific classes of expenditure generally considered to be for a gift as the Commissioner, in his discretion, may prescribe.

(*c*) ***Expenditures deemed travel.*** An expenditure described in (*a*) of this subdivision shall be deemed for travel to which this section does not apply if it is:

(*1*) With respect to a transportation type facility (such as an automobile or an airplane), even though used on other occasions in connection with an activity of a type generally considered to constitute entertainment, to the extent the facility is used in pursuit of a trade or business for purposes of transportation not in connection with entertainment. See also paragraph (e)(3)(iii)(*b*) of this section for provisions covering nonentertainment expenditures with respect to such facilities.

(*2*) Such other specific classes of expenditure generally considered to be for travel as the Commissioner, in his discretion, may prescribe.

(2) ***Other definitions —***

(i) ***Expenditure.*** The term *expenditure* as used in this section shall include expenses paid or incurred for goods, services, facilities, and items (including items such as losses and depreciation).

(ii) ***Expenses for production of income.*** For purposes of this section, any reference to *trade or business* shall include any activity described in section 212.

(iii) ***Business associate.*** The term *business associate* as used in this section means a person with whom the taxpayer could reasonably expect to engage or deal in the active conduct of the taxpayer's trade or business such as the taxpayer's customer, client, supplier, employee, agent, partner, or professional adviser, whether established or prospective.

(c) ***Directly related entertainment*** —

(1) ***In general.*** Except as otherwise provided in paragraph (d) of this section (relating to associated entertainment) or under paragraph (f) of this section (relating to business meals and other specific exceptions), no deduction shall be allowed for any expenditure for entertainment unless the taxpayer establishes that the expenditure was directly related to the active conduct of his trade or business within the meaning of this paragraph.

(2) ***Directly related entertainment defined.*** Any expenditure for entertainment, if it is otherwise allowable as a deduction under chapter 1 of the Code, shall be considered directly related to the active conduct of the taxpayer's trade or business if it meets the requirements of any one of subparagraphs (3), (4), (5), or (6) of this paragraph.

(3) ***Directly related in general.*** Except as provided in subparagraph (7) of this paragraph, an expenditure for entertainment shall be considered directly related to the active conduct of the taxpayer's trade or business if it is established that it meets all of the requirements of subdivisions (i), (ii), (iii) and (iv) of this subparagraph.

(i) At the time the taxpayer made the entertainment expenditure (or committed himself to make the expenditure), the taxpayer had more than a general expectation of deriving some income or other specific trade or business benefit (other than the goodwill of the person or persons entertained) at some indefinite future time from the making of the expenditure. A taxpayer, however, shall not be required to show that income or other business benefit actually resulted from each and every expenditure for which a deduction is claimed.

(ii) During the entertainment period to which the expenditure related, the taxpayer actively engaged in a business meeting, negotiation, discussion, or other bona fide business transaction, other than entertainment, for the purpose of obtaining such income or other specific trade or business benefit (or, at the time the taxpayer made the expenditure or committed himself to the expenditure, it was reasonable for the taxpayer to expect that he would have done so, although such was not the case solely for reasons beyond the taxpayer's control).

(iii) In light of all the facts and circumstances of the case, the principal character or aspect of the combined business and entertainment to which the expenditure related was the active conduct of the taxpayer's trade or business (or at the time the taxpayer made the expenditure or committed himself to the expenditure, it was reasonable for the taxpayer to expect that the active conduct of trade or business would have been the principal character or aspect of the entertainment, although such was not the case solely for reasons beyond the taxpayer's control). It is not necessary that more time be devoted to business than to entertainment to meet this requirement. The active conduct of trade or business is considered not to be the principal character or aspect of combined business and entertainment activity on hunting or fishing trips or on yachts and other pleasure boats unless the taxpayer clearly establishes to the contrary.

(iv) The expenditure was allocable to the taxpayer and a person or persons with whom the taxpayer engaged in the active conduct of trade or business during the entertainment or with whom the taxpayer establishes he would have engaged in such active conduct of trade or business if it were not for circumstances beyond the taxpayer's control. For expenditures closely connected with directly related entertainment, see paragraph (d)(4) of this section.

(4) ***Expenditures in clear business setting.*** An expenditure for entertainment shall be considered directly related to the active conduct of the taxpayer's trade or business if it is established that the expenditure was for entertainment occurring in a clear business setting directly in furtherance of the taxpayer's trade or business. Generally, entertainment shall not be considered to have occurred in a clear business setting unless the taxpayer clearly establishes that any recipient of the entertainment would have reasonably known that the taxpayer had no significant motive, in incurring the expenditure, other than directly furthering his trade or business. Objective rather than subjective standards will be determinative. Thus, entertainment which occurred under any circumstances described in subparagraph (7)(ii) of this paragraph ordinarily will not be considered as occurring in a clear business setting. Such entertainment will generally be considered to be socially rather than commercially motivated. Expenditures made for the furtherance of a taxpayer's trade or business in providing a “hospitality room” at a convention (described in paragraph (d)(3)(i)(*b*) of this section) at which goodwill is created through display or discussion of the taxpayer's products, will, however, be treated as directly related. In addition, entertainment of a clear business nature which occurred under circumstances where there was no meaningful personal or social relationship between the taxpayer and the recipients of the entertainment may be considered to have occurred in a clear business setting. For example, entertainment of business representatives and civic leaders at the opening of a new hotel or theatrical production, where the clear purpose of the taxpayer is to obtain business publicity rather than to create or maintain the goodwill of the recipients of the entertainment, would generally be considered to be in a clear business setting. Also, entertainment which has the principal effect of a price rebate in connection with the sale of the taxpayer's products generally will be considered to have occurred in a clear business setting. Such would be the case, for example, if a taxpayer owning a hotel were to provide occasional free dinners at the hotel for a customer who patronized the hotel.

(5) ***Expenditures for services performed.*** An expenditure shall be considered directly related to the active conduct of the taxpayer's trade or business if it is established that the expenditure was made directly or indirectly by the taxpayer for the benefit of an individual (other than an employee), and if such expenditure was in the nature of compensation for services rendered or was paid as a prize or award which is required to be included in gross income under section 74 and the regulations thereunder. For example, if a manufacturer of products provides a vacation trip for retailers of his products who exceed sales quotas as a prize or award which is includible in gross income, the expenditure will be considered directly related to the active conduct of the taxpayer's trade or business.

(6) ***Club dues, etc., allocable to business meals.*** An expenditure shall be considered directly related to the active conduct of the taxpayer's trade or business if it is established that the expenditure was with respect to a facility (as described in paragraph (e) of this section) used by the taxpayer for the furnishing of food or beverages under circumstances described in paragraph (f)(2)(i) of this section (relating to business meals and similar expenditures), to the extent allocable to the furnishing of such food or beverages. This paragraph (c)(6) applies to club dues paid or incurred before January 1, 1987.

(7) ***Expenditures generally considered not directly related.*** Expenditures for entertainment, even if connected with the taxpayer's trade or business, will generally be considered not directly related to the active conduct of the taxpayer's trade or business, if the entertainment occurred under circumstances where there was little or no possibility of engaging in the active conduct of trade or business. The following circumstances will generally be considered circumstances where there was little or no possibility of engaging in the active conduct of a trade or business:

(i) The taxpayer was not present;

(ii) The distractions were substantial, such as:

(*a*) A meeting or discussion at night clubs, theaters, and sporting events, or during essentially social gatherings such as cocktail parties, or

(*b*) A meeting or discussion, if the taxpayer meets with a group which includes persons other than business associates, at places such as cocktail lounges, country clubs, golf and athletic clubs, or at vacation resorts.

An expenditure for entertainment in any such case is considered not to be directly related to the active conduct of the taxpayer's trade or business unless the taxpayer clearly establishes to the contrary.

(d) ***Associated entertainment*** —

(1) ***In general.*** Except as provided in paragraph (f) of this section (relating to business meals and other specific exceptions) and subparagraph (4) of this paragraph (relating to expenditures closely connected with directly related entertainment), any expenditure for entertainment which is not directly related to the active conduct of the taxpayer's trade or business will not be allowable as a deduction unless:

(i) It was associated with the active conduct of trade or business as defined in subparagraph (2) of this paragraph, and

(ii) The entertainment directly preceded or followed a substantial and bona fide business discussion as defined in subparagraph (3) of this paragraph.

(2) ***Associated entertainment defined.*** Generally, any expenditure for entertainment, if it is otherwise allowable under Chapter 1 of the Code, shall be considered associated with the active conduct of the taxpayer's trade or business if the taxpayer establishes that he had a clear business purpose in making the expenditure, such as to obtain new business or to encourage the continuation of an existing business relationship. However, any portion of an expenditure allocable to a person who was not closely connected with a person who engaged in the substantial and bona fide business discussion (as defined in subparagraph (3)(i) of this paragraph) shall not be considered associated with the active conduct of the taxpayer's trade or business. The portion of an expenditure allocable to the spouse of a person who engaged in the discussion will, if it is otherwise allowable under chapter 1 of the Code, be considered associated with the active conduct of the taxpayer's trade or business.

(3) ***Directly preceding or following a substantial and bona fide business discussion defined*** —

(i) ***Substantial and bona fide business discussion*** —

(*a*) ***In general.*** Whether any meeting, negotiation or discussion constitutes a "substantial and bona fide business discussion" within the meaning of this section depends upon the facts and circumstances of each case. It must be established, however, that the taxpayer actively engaged in a business meeting, negotiation, discussion, or other bona fide business transaction, other than entertainment, for the purpose of obtaining income or other specific trade or business benefit. In addition, it must be established that such a business meeting, negotiation, discussion, or transaction was substantial in relation to the entertainment. This requirement will be satisfied if the principal character or aspect of the combined entertainment and business activity was the active conduct of business. However, it is not necessary that more time be devoted to business than to entertainment to meet this requirement.

(*b*) ***Meetings at conventions, etc.*** Any meeting officially scheduled in connection with a program at a convention or similar general assembly, or at a bona fide trade or business meeting sponsored and conducted by business or professional organizations, shall be considered to constitute a substantial and bona fide business discussion within the meaning of this section provided:

(*1*) ***Expenses necessary to taxpayer's attendance.*** The expenses necessary to the attendance of the taxpayer at the convention, general assembly, or trade or business meeting, were ordinary and necessary within the meaning of section 162 or 212;

(*2*) ***Convention program.*** The organization which sponsored the convention, or trade or business meeting had scheduled a program of business activities (including committee meetings or presentation of lectures, panel discussions, display of products, or other similar activities), and that such program was the principal activity of the convention, general assembly, or trade or business meeting.

(ii) ***Directly preceding or following.*** Entertainment which occurs on the same day as a substantial and bona fide business discussion (as defined in subdivision (i) of this subparagraph) will be considered to directly precede or follow such discussion. If the entertainment and the business discussion do not occur on the same day, the facts and circumstances of each case are to be considered, including the place, date and duration of the business discussion, whether the taxpayer or his business associates are from out of town, and, if so, the date of arrival and departure, and the reasons the entertainment did not take place on the day of the business discussion. For example, if a group of business associates comes from out of town to the taxpayer's place of business to hold a substantial business discussion, the entertainment of such business guests and their wives on the evening prior to, or on the evening of the day following, the business discussion would generally be regarded as directly preceding or following such discussion.

(4) ***Expenses closely connected with directly related entertainment.*** If any portion of an expenditure meets the requirements of paragraph (c)(3) of this section (relating to directly related entertainment in general), the remaining portion of the expenditure, if it is otherwise allowable under Chapter 1 of the Code, shall be considered associated with the active conduct of the taxpayer's trade or business to the extent allocable to a person or persons closely connected with a person referred to in paragraph (c)(3)(iv) of this section. The spouse of a person referred to in paragraph(c)(3)(iv) of this section will be considered closely connected to such a person for purposes of this subparagraph. Thus, if a taxpayer and his wife entertain a business customer and the customer's wife under circumstances where the entertainment of the customer is considered directly related to the active

conduct of the taxpayer's trade or business (within the meaning of paragraph (c)(3) of this section) the portion of the expenditure allocable to both wives will be considered associated with the active conduct of the taxpayer's trade or business under this subparagraph.

(e) ***Expenditures paid or incurred before January 1, 1979, with respect to entertainment facilities or before January 1, 1994, with respect to clubs*** —

(1) ***In general.*** Any expenditure paid or incurred before January 1, 1979, with respect to a facility, or paid or incurred before January 1, 1994, with respect to a club, used in connection with entertainment shall not be allowed as a deduction except to the extent it meets the requirements of paragraph (a)(2)(ii) of this section.

(2) ***Facilities used in connection with entertainment*** —

(i) ***In general.*** Any item of personal or real property owned, rented, or used by a taxpayer shall (unless otherwise provided under the rules of subdivision (ii) of this subparagraph) be considered to constitute a facility used in connection with entertainment if it is used during the taxable year for, or in connection with, entertainment (as defined in paragraph (b)(1) of this section). Examples of facilities which might be used for, or in connection with, entertainment include yachts, hunting lodges, fishing camps, swimming pools, tennis courts, bowling alleys, automobiles, airplanes, apartments, hotel suites, and homes in vacation resorts.

(ii) ***Facilities used incidentally for entertainment.*** A facility used only incidentally during a taxable year in connection with entertainment, if such use is insubstantial, will not be considered a "facility used in connection with entertainment" for purposes of this section or for purposes of the recordkeeping requirements of section 274(d). See § 1.274-5(c)(6)(iii).

(3) ***Expenditures with respect to a facility used in connection with entertainment*** —

(i) ***In general.*** The phrase *expenditures with respect to a facility used in connection with entertainment* includes depreciation and operating costs, such as rent and utility charges (for example, water or electricity), expenses for the maintenance, preservation or protection of a facility (for example, repairs, painting, insurance charges), and salaries or expenses for subsistence paid to caretakers or watchmen. In addition, the phrase includes losses realized on the sale or other disposition of a facility.

(ii) ***Club dues*** —

(a) ***Club dues paid or incurred before January 1, 1994.*** Dues or fees paid before January 1, 1994, to any social, athletic, or sporting club or organization are considered expenditures with respect to a facility used in connection with entertainment. The purposes and activities of a club or organization, and not its name, determine its character. Generally, the phrase *social, athletic, or sporting club or organization* has the same meaning for purposes of this section as that phrase had in section 4241 and the regulations thereunder, relating to the excise tax on club dues, prior to the repeal of section 4241 by section 301 of Public Law 89-44. However, for purposes of this section only, clubs operated solely to provide lunches under circumstances of a type generally considered to be conducive to business discussion, within the meaning of paragraph (f)(2)(i) of this section, will not be considered social clubs.

(*b*) ***Club dues paid or incurred after December 31, 1993.*** See paragraph (a)(2)(iii) of this section with reference to the disallowance of deductions for club dues paid or incurred after December 31, 1993.

(iii) ***Expenditures not with respect to a facility.*** The following expenditures shall not be considered to constitute expenditures with respect to a facility used in connection with entertainment:

(*a*) ***Out of pocket expenditures.*** Expenses (exclusive of operating costs and other expenses referred to in subdivision (i) of this subparagraph) incurred at the time of an entertainment activity, even though in connection with the use of facility for entertainment purposes, such as expenses for food and beverages, or expenses for catering, or expenses for gasoline and fishing bait consumed on a fishing trip;

(*b*) ***Non-entertainment expenditures.*** Expenses or items attributable to the use of a facility for other than entertainment purposes such as expenses for an automobile when not used for entertainment; and

(*c*) ***Expenditures otherwise deductible.*** Expenses allowable as a deduction without regard to their connection with a taxpayer's trade or business such as taxes, interest, and casualty losses. The provisions of this subdivision shall be applied in the case of a taxpayer which is not an individual as if it were an individual. See also § 1.274-6.

(iv) ***Cross reference.*** For other rules with respect to treatment of certain expenditures for entertainment-type facilities, see § 1.274-7.

(4) ***Determination of primary use*** —

(i) ***In general.*** A facility used in connection with entertainment shall be considered as used primarily for the furtherance of the taxpayer's trade or business only if it is established that the primary use of the facility during the taxable year was for purposes considered ordinary and necessary within the meaning of sections 162 and 212 and the regulations thereunder. All of the facts and circumstances of each case shall be considered in determining the primary use of a facility. Generally, it is the actual use of the facility which establishes the deductibility of expenditures with respect to the facility; not its availability for use and not the taxpayer's principal purpose in acquiring the facility. Objective rather than subjective standards will be determinative. If membership entitles the member's entire family to use of a facility, such as a country club, their use will be considered in determining whether business use of the facility exceeds personal use. The factors to be considered include the nature of each use, the frequency and duration of use for business purposes as compared with other purposes, and the amount of expenditures incurred during use for business compared with amount of expenditures incurred during use for other purposes. No single standard of comparison, or quantitative measurement, as to the significance of any such factor, however, is necessarily appropriate for all classes or types of facilities. For example, an appropriate standard for determining the primary use of a country club during a taxable year will not necessarily be appropriate for determining the primary use of an airplane. However, a taxpayer shall be deemed to have established that a facility was used primarily for the furtherance of his trade or business if he establishes such primary use in accordance with subdivision (ii) or (iii) of this subparagraph. Subdivisions (ii) and (iii) of this subparagraph shall not preclude a taxpayer from otherwise establishing the primary use of a facility under the general provisions of this subdivision.

(ii) ***Certain transportation facilities.*** A taxpayer shall be deemed to have established that a facility of a type described in this subdivision was used primarily for the furtherance of his trade or business if:

(*a*) ***Automobiles.*** In the case of an automobile, the taxpayer establishes that more than 50 percent of mileage driven during the taxable year was in connection with travel considered to be ordinary and necessary within the meaning of section 162 or 212 and the regulations thereunder.

(*b*) ***Airplanes.*** In the case of an airplane, the taxpayer establishes that more than 50 percent of hours flown during the taxable year was in connection with travel considered to be ordinary and necessary within the meaning of section 162 or 212 and the regulations thereunder.

(iii) ***Entertainment facilities in general.*** A taxpayer shall be deemed to have established that:

(*a*) A facility used in connection with entertainment, such as a yacht or other pleasure boat, hunting lodge, fishing camp, summer home or vacation cottage, hotel suite, country club, golf club or similar social, athletic, or sporting club or organization, bowling alley, tennis court, or swimming pool, or,

(*b*) A facility for employees not falling within the scope of section 274(e) (2) or (5) was used primarily for the furtherance of his trade or business if he establishes that more than 50 percent of the total calendar days of use of the facility by, or under authority of, the taxpayer during the taxable year were days of business use. Any use of a facility (of a type described in this subdivision) during one calendar day shall be considered to constitute a "day of business use" if the primary use of the facility on such day was ordinary and necessary within the meaning of section 162 or 212 and the regulations thereunder. For the purposes of this subdivision, a facility shall be deemed to have been primarily used for such pruposes on any one calendar day if the facility was used for the conduct of a substantial and bona fide business discussion (as defined in paragraph (d)(3)(i) of this section) notwithstanding that the facility may also have been used on the same day for personal or family use by the taxpayer or any member of the taxpayer's family not involving entertainment of others by, or under the authority of, the taxpayer.

(f) ***Specific exceptions to application of this section —***

(1) ***In general.*** The provisions of paragraphs (a) through (e) of this section (imposing limitations on deductions for entertainment expenses) are not applicable in the case of expenditures set forth in subparagraph (2) of this paragraph. Such expenditures are deductible to the extent allowable under chapter 1 of the Code. This paragraph shall not be construed to affect the allowability or nonallowability of a deduction under section 162 or 212 and the regulations thereunder. The fact that an expenditure is not covered by a specific exception provided for in this paragraph shall not be determinative of the allowability or nonallowability of the expenditure under paragraphs (a) through (e) of this section. Expenditures described in subparagraph (2) of this paragraph are subject to the substantiation requirements of section 274(d) to the extent provided in § 1.274-5.

(2) ***Exceptions.*** The expenditures referred to in subparagraph (1) of this paragraph are set forth in subdivisions (i) through (ix) of this subparagraph.

(i) ***Business meals and similar expenditures paid or incurred before January 1, 1987 —***

(*a*) ***In general.*** Any expenditure for food or beverages furnished to an individual under circumstances of a type generally considered conducive to business discussion (taking into account the surroundings in which furnished, the taxpayer's trade, business, or income-producing activity, and the relationship to such trade, business or activity of the persons to whom the food or beverages are furnished) is not subject to the limitations on allowability of deductions provided for in paragraphs (a) through (e) of this section. There is no requirement that business actually be discussed for this exception to apply.

(*b*) ***Surroundings.*** The surroundings in which the food or beverages are furnished must be such as would provide an atmosphere where there are no substantial distractions to discussion. This exception applies primarily to expenditures for meals and beverages served during the course of a breakfast, lunch or dinner meeting of the taxpayer and his business associates at a restaurant, hotel dining room, eating club or similar place not involving distracting influences such as a floor show. This exception also applies to expenditures for beverages served apart from meals if the expenditure is incurred in surroundings similarly conducive to business discussion, such as an expenditure for beverages served during the meeting of the taxpayer and his business associates at a cocktail lounge or hotel bar not involving distracting influences such as a floor show. This exception may also apply to expenditures for meals or beverages served in the taxpayer's residence on a clear showing that the expenditure was commercially rather than socially motivated. However, this exception, generally, is not applicable to any expenditure for meals or beverages furnished in circumstances where there are major distractions not conducive to business discussion, such as at night clubs, sporting events, large cocktail parties, sizeable social gatherings, or other major distracting influences.

(*c*) ***Taxpayer's trade or business and relationship of persons entertained.*** The taxpayer's trade, business, or income-producing activity and the relationship of the persons to whom the food or beverages are served to such trade, business or activity must be such as will reasonably indicate that the food or beverages were furnished for the primary purpose of furthering the taxpayer's trade or business and did not primarily serve a social or personal purpose. Such a business purpose would be indicated, for example, if a salesman employed by a manufacturing supply company meets for lunch during a normal business day with a purchasing agent for a manufacturer which is a prospective customer. Such a purpose would also be indicated if a life insurance agent meets for lunch during a normal business day with a client.

(*d*) ***Business programs.*** Expenditures for business luncheons or dinners which are part of a business program, or banquets officially sponsored by business or professional associations, will be regarded as expenditures to which the exception of this subdivision (i) applies. In the case of such a business luncheon or dinner it is not always necessary that the taxpayer attend the luncheon or dinner himself. For example, if a dental equipment supplier purchased a table at a dental association banquet for dentists who are actual or prospective customers for his equipment, the cost of the table would not be disallowed under this section. See also paragraph (c)(4) of this section relating to expenditures made in a clear business setting.

(ii) ***Food and beverages for employees.*** Any expenditure by a taxpayer for food and beverages (or for use of a facility in connection therewith) furnished on the taxpayer's business premises primarily for his employees is not subject to the limitations on allowability of deductions provided for in paragraphs (a) through (e) of this section. This exception applies not only to

expenditures for food or beverages furnished in a typical company cafeteria or an executive dining room, but also to expenditures with respect to the operation of such facilities. This exception applies even though guests are occasionally served in the cafeteria or dining room.

(iii) ***Certain entertainment and travel expenses treated as compensation*** —(A) *In general.* Any expenditure by a taxpayer for entertainment (or for use of a facility in connection therewith) or for travel described in section 274(m)(3), if an employee is the recipient of the entertainment or travel, is not subject to the limitations on allowability of deductions provided for in paragraphs (a) through (e) of this section to the extent that the expenditure is treated by the taxpayer—

(*1*) On the taxpayer's income tax return as originally filed, as compensation paid to the employee; and

(*2*) As wages to the employee for purposes of withholding under chapter 24 (relating to collection of income tax at source on wages).

(B) *Expenses includible in income of persons who are not employees.* Any expenditure by a taxpayer for entertainment (or for use of a facility in connection therewith), or for travel described in section 274(m)(3), is not subject to the limitations on allowability of deductions provided for in paragraphs (a) through (e) of this section to the extent the expenditure is includible in gross income as compensation for services rendered, or as a prize or award under section 74, by a recipient of the expenditure who is not an employee of the taxpayer. The preceding sentence shall not apply to any amount paid or incurred by the taxpayer if such amount is required to be included (or would be so required except that the amount is less that $600) in any information return filed by such taxpayer under part III of subchapter A of chapter 61 and is not so included. See section 274(e)(9).

(C) *Example.* The following example illustrates the provisions this paragraph (f):

Example. If an employer rewards the employee (and the employee's spouse) with an expense paid vacation trip, the expense is deductible by the employer (if otherwise allowable under section 162 and the regulations thereunder) to the extent the employer treats the expenses as compensation and as wages. On the other hand, if a taxpayer owns a yacht which the taxpayer uses for the entertainment of business customers, the portion of salary paid to employee members of the crew which is allocable to use of the yacht for entertainment purposes (even though treated on the taxpayer's tax return as compensation and treated as wages for withholding tax purposes) would not come within this exception since the members of the crew were not recipients of the entertainment. If an expenditure of a type described in this subdivision properly constitutes a dividend paid to a shareholder or if it constitutes unreasonable compensation paid to an employee, nothing in this exception prevents disallowance of the expenditure to the taxpayer under other provisions of the Internal Revenue Code.

(iv) ***Reimbursed entertainment, food, or beverage expenses*** —(A) *Introduction.* In the case of any expenditure for entertainment, amusement, recreation, food, or beverages made by one person in performing services for another person (whether or not the other person is an employer) under a reimbursement or other expense allowance arrangement, the limitations on deductions in paragraphs (a) through (e) of this section and section 274(n)(1) apply either to the person who makes the expenditure or to the person who actually bears the expense, but not to both. If an expenditure of a type described in this paragraph (f)(2)(iv) properly constitutes a dividend

paid to a shareholder, unreasonable compensation paid to an employee, a personal expense, or other nondeductible expense, nothing in this exception prevents disallowance of the expenditure to the taxpayer under other provisions of the Code.

(B) *Reimbursement arrangements involving employees.* In the case of an employee's expenditure for entertainment, amusement, recreation, food, or beverages in performing services as an employee under a reimbursement or other expense allowance arrangement with a payor (the employer, its agent, or a third party), the limitations on deductions in paragraphs (a) through (e) of this section and section 274(n)(1) apply—

(*1*) To the employee to the extent the employer treats the reimbursement or other payment of the expense on the employer's income tax return as originally filed as compensation paid to the employee and as wages to the employee for purposes of withholding under chapter 24 (relating to collection of income tax at source on wages); or

(*2*) To the payor to the extent the reimbursement or other payment of the expense is not treated as compensation and wages paid to the employee in the manner provided in paragraph (f)(2)(iv)(B)(*1*) of this section (however, see paragraph (f)(2)(iv)(C) of this section if the payor receives a payment from a third party that may be treated as a reimbursement arrangement under that paragraph).

(C) *Reimbursement arrangements involving persons that are not employees.* In the case of an expense for entertainment, amusement, recreation, food, or beverages of a person who is not an employee (referred to as an independent contractor) in performing services for another person (a client or customer) under a reimbursement or other expense allowance arrangement with the person, the limitations on deductions in paragraphs (a) through (e) of this section and section 274(n)(1) apply to the party expressly identified in an agreement between the parties as subject to the limitations. If an agreement between the parties does not expressly identify the party subject to the limitations, the limitations apply—

(*1*) To the independent contractor (which may be a payor described in paragraph (f)(2)(iv)(B) of this section) to the extent the independent contractor does not account to the client or customer within the meaning of section 274(d) and the associated regulations; or

(*2*) To the client or customer if the independent contractor accounts to the client or customer within the meaning of section 274(d) and the associated regulations. See also § 1.274-5.

(D) *Reimbursement or other expense allowance arrangement.* The term *reimbursement or other expense allowance arrangement* means—

(*1*) For purposes of paragraph (f)(2)(iv)(B) of this section, an arrangement under which an employee receives an advance, allowance, or reimbursement from a payor (the employer, its agent, or a third party) for expenses the employee pays or incurs; and

(*2*) For purposes of paragraph (f)(2)(iv)(C) of this section, an arrangement under which an independent contractor receives an advance, allowance, or reimbursement from a client or customer for expenses the independent contractor pays or incurs if either—

(*a*) A written agreement between the parties expressly states that the client or customer will reimburse the independent contractor for expenses that are subject to the limitations on deductions in paragraphs (a) through (e) of this section and section 274(n)(1); or

(*b*) A written agreement between the parties expressly identifies the party subject to the limitations.

(E) *Examples.* The following examples illustrate the application of this paragraph (f)(2)(iv).

Example 1. (i) Y, an employee, performs services under an arrangement in which L, an employee leasing company, pays Y a per diem allowance of $10x for each day that Y performs services for L's client, C, while traveling away from home. The per diem allowance is a reimbursement of travel expenses for food and beverages that Y pays in performing services as an employee. L enters into a written agreement with C under which C agrees to reimburse L for any substantiated reimbursements for travel expenses, including meals, that L pays to Y. The agreement does not expressly identify the party that is subject to the deduction limitations. Y performs services for C while traveling away from home for 10 days and provides L with substantiation that satisfies the requirements of section 274(d) of $100x of meal expenses incurred by Y while traveling away from home. L pays Y $100x to reimburse those expenses pursuant to their arrangement. L delivers a copy of Y's substantiation to C. C pays L $300x, which includes $200x compensation for services and $100x as reimbursement of L's payment of Y's travel expenses for meals. Neither L nor C treats the $100x paid to Y as compensation or wages.
(ii) Under paragraph (f)(2)(iv)(D)(*1*) of this section, Y and L have established a reimbursement or other expense allowance arrangement for purposes of paragraph (f)(2)(iv)(B) of this section. Because the reimbursement payment is not treated as compensation and wages paid to Y, under section 274(e)(3)(A) and paragraph (f)(2)(iv)(B)(*1*) of this section, Y is not subject to the section 274 deduction limitations. Instead, under paragraph (f)(2)(iv)(B)(*2*) of this section, L, the payor, is subject to the section 274 deduction limitations unless L can meet the requirements of section 274(e)(3)(B) and paragraph (f)(2)(iv)(C) of this section.

(iii) Because the agreement between L and C expressly states that C will reimburse L for substantiated reimbursements for travel expenses that L pays to Y, under paragraph (f)(2)(iv)(D)(*2*)(*a*) of this section, L and C have established a reimbursement or other expense allowance arrangement for purposes of paragraph (f)(2)(iv)(C) of this section. L accounts to C for C's reimbursement in the manner required by section 274(d) by delivering to C a copy of the substantiation L received from Y. Therefore, under section 274(e)(3)(B) and paragraph (f)(2)(iv)(C)(*2*) of this section, C and not L is subject to the section 274 deduction limitations.

Example 2. (i) The facts are the same as in *Example 1* except that, under the arrangements between Y and L and between L and C, Y provides the substantiation of the expenses directly to C, and C pays the per diem directly to Y.

(ii) Under paragraph (f)(2)(iv)(D)(*1*) of this section, Y and C have established a reimbursement or other expense allowance arrangement for purposes of paragraph (f)(2)(iv)(C) of this section. Because Y substantiates directly to C and the reimbursement payment was not treated as compensation and wages paid to Y, under section 274(e)(3)(A) and paragraph (f)(2)(iv)(C)(*1*) of this section Y is not subject to the section 274 deduction limitations. Under paragraph (f)(2)(iv)(C)(*2*) of this section, C, the payor, is subject to the section 274 deduction limitations.

Example 3. (i) The facts are the same as in *Example 1*, except that the written agreement between L and C expressly provides that the limitations of this section will apply to C.
(ii) Under paragraph (f)(2)(iv)(D)(*2*)(*b*) of this section, L and C have established a reimbursement or other expense allowance arrangement for purposes of paragraph (f)(2)(iv)(C) of this section. Because the agreement provides that the 274 deduction limitations apply to C, under section 274(e)(3)(B) and paragraph (f)(2)(iv)(C) of this section, C and not L is subject to the section 274 deduction limitations.

Example 4. (i) The facts are the same as in *Example 1*, except that the agreement between L and C does not provide that C will reimburse L for travel expenses.
(ii) The arrangement between L and C is not a reimbursement or other expense allowance arrangement within the meaning of section 274(e)(3)(B) and paragraph (f)(2)(iv)(D)(*2*) of this section. Therefore, even though L accounts to C for the expenses, L is subject to the section 274 deduction limitations.

(F) *Effective/applicability date.* This paragraph (f)(2)(iv) applies to expenses paid or incurred in taxable years beginning after August 1, 2013.

(v) ***Recreational expenses for employees generally.*** Any expenditure by a taxpayer for a recreational, social, or similar activity (or for use of a facility in connection therewith), primarily for the benefit of his employees generally, is not subject to the limitations on allowability of deductions provided for in paragraphs (a) through (e) of this section. This exception applies only to expenditures made primarily for the benefit of employees of the taxpayer other than employees who are officers, shareholders on other owners who own a 10-percent or greater interest in the business, or other highly compensated employees. For purposes of the preceding sentence, an employee shall be treated as owning any interest owned by a member of his family (within the meaning of section 267(c)(4) and the regulations thereunder). Ordinarily, this exception applies to usual employee benefit programs such as expenses of a taxpayer

(*a*) in holding Christmas parties, annual picnics, or summer outings, for his employees generally, or

(*b*) of maintaining a swimming pool, baseball diamond, bowling alley, or golf course available to his employees generally. Any expenditure for an activity which is made under circumstances which discriminate in favor of employees who are officers, shareholders or other owners, or highly compensated employees shall not be considered made primarily

for the benefit of employees generally. On the other hand, an expenditure for an activity will not be considered outside of this exception merely because, due to the large number of employees involved, the activity is intended to benefit only a limited number of such employees at one time, provided the activity does not discriminate in favor of officers, shareholders, other owners, or highly compensated employees.

(vi) ***Employee, stockholder, etc., business meetings.*** Any expenditure by a taxpayer for entertainment which is directly related to bona fide business meetings of the taxpayer's employees, stockholders, agents, or directors held principally for discussion of trade or business is not subject to the limitations on allowability of deductions provided for in paragraphs (a) through (e) of this section. For purposes of this exception, a partnership is to be considered a taxpayer and a member of a partnership is to be considered an agent. For example, an expenditure by a taxpayer to furnish refreshments to his employees at a bona fide meeting, sponsored by the taxpayer for the principal purpose of instructing them with respect to a new procedure for conducting his business, would be within the provisions of this exception. A similar expenditure made at a bona fide meeting of stockholders of the taxpayer for the election of directors and discussion of corporate affairs would also be within the provisions of this exception. While this exception will apply to bona fide business meetings even though some social activities are provided, it will not apply to meetings which are primarily for social or nonbusiness purposes rather than for the transaction of the taxpayer's business. A meeting under circumstances where there was little or no possibility of engaging in the active conduct of trade or business (as described in paragraph (c)(7) of this section) generally will not be considered a business meeting for purposes of this subdivision. This exception will not apply to a meeting or convention of employees or agents, or similar meeting for directors, partners or others for the principal purpose of rewarding them for their services to the taxpayer. However, such a meeting or convention of employees might come within the scope of subdivisions (iii) or (v) of this subparagraph.

(vii) ***Meetings of business leagues, etc.*** Any expenditure for entertainment directly related and necessary to attendance at bona fide business meetings or conventions of organizations exempt from taxation under section 501(c)(6) of the Code, such as business leagues, chambers of commerce, real estate boards, boards of trade, and certain professional associations, is not subject to the limitations on allowability of deductions provided in paragraphs (a) through (e) of this section.

(viii) ***Items available to the public.*** Any expenditure by a taxpayer for entertainment (or for a facility in connection therewith) to the extent the entertainment is made available to the general public is not subject to the limitations on allowability of deductions provided for in paragraphs (a) through (e) of this section. Expenditures for entertainment of the general public by means of television, radio, newspapers and the like, will come within this exception, as will expenditures for distributing samples to the general public. Similarly, expenditures for maintaining private parks, golf courses and similar facilities, to the extent that they are available for public use, will come within this exception. For example, if a corporation maintains a swimming pool which it makes available for a period of time each week to children participating in a local public recreational program, the portion of the expense relating to such public use of the pool will come within this exception.

(ix) ***Entertainment sold to customers.*** Any expenditure by a taxpayer for entertainment (or for use of a facility in connection therewith) to the extent the entertainment is sold to customers in a bona fide transaction for an adequate and full consideration in money or money's worth is not

subject to the limitations on allowability of deductions provided for in paragraphs (a) through (e) of this section. Thus, the cost of producing night club entertainment (such as salaries paid to employees of night clubs and amounts paid to performers) for sale to customers or the cost of operating a pleasure cruise ship as a business will come within this exception.

(g) ***Additional provisions of section 274—travel of spouse, dependent or others.*** Section 274(m)(3) provides that no deduction shall be allowed under this chapter (except section 217) for travel expenses paid or incurred with respect to a spouse, dependent, or other individual accompanying the taxpayer (or an officer or employee of the taxpayer) on business travel, unless certain conditions are met. As provided in section 274(m)(3), the term *other individual* does not include a business associate (as defined in paragraph (b)(2)(iii) of this section) who otherwise meets the requirements of sections 274(m)(3)(B) and (C).

[T.D. 6659, 28 FR 6499, June 25, 1963, as amended by T.D. 6996, 34 FR 835, Jan. 18, 1969; T.D. 8051, 50 FR 36576, Sept. 9, 1985; T.D. 8601, 60 FR 36994, July 19, 1995; T.D. 8666, 61 FR 27006, May 30, 1996; T.D. 9625, 78 FR 46503, Aug. 1, 2013]

§ 1.274-3 Disallowance of deduction for gifts.

(a) ***In general.*** No deduction shall be allowed under section 162 or 212 for any expense for a gift made directly or indirectly by a taxpayer to any individual to the extent that such expense, when added to prior expenses of the taxpayer for gifts made to such individual during the taxpayer's taxable year, exceeds $25.

(b) ***Gift defined*** —

(1) ***In general.*** Except as provided in subparagraph (2) of this paragraph the term *gift,* for purposes of this section, means any item excludable from the gross income of the recipient under section 102 which is not excludable from his gross income under any other provision of chapter 1 of the Code. Thus, a payment by an employer to a deceased employee's widow is not a gift, for purposes of this section, to the extent the payment constitutes an employee's death benefit excludable by the recipient under section 101(b). Similarly, a scholarship which is excludable from a recipient's gross income under section 117, and a prize or award which is excludable from a recipient's gross income under section 74(b), are not subject to the provisions of this section.

(2) ***Items not treated as gifts.*** The term *gift,* for purposes of this section, does not include the following:

(i) An item having a cost to the taxpayer not in excess of $4.00 on which the name of the taxpayer is clearly and permanently imprinted and which is one of a number of identical items distributed generally by such a taxpayer.

(ii) A sign, display rack, or other promotional material to be used on the business premises of the recipient, or

(iii) In the case of a taxable year of a taxpayer ending on or after August 13, 1981, an item of tangible personal property which is awarded before January 1, 1987, to an employee of the taxpayer by reason of the employee's length of service (including an award upon retirement), productivity, or safety achievement, but only to the extent that—

(A) The cost of the item to the taxpayer does not exceed $400; or

(B) The item is a qualified plan award (as defined in paragraph (d) of this section); or

(iv) In the case of a taxable year of a taxpayer ending before August 13, 1981, an item of tangible personal property having a cost to the taxpayer not in excess of $100 which is awarded to an employee of the taxpayer by reason of the employee's length of service (including an award upon retirement) or safety achievement.

For purposes of paragraphs (b)(2) (iii) and (iv) of this section, the term *tangible personal property* does not include cash or any gift certificate other than a nonnegotiable gift certificate conferring only the right to receive tangible personal property. Thus, for example, if a nonnegotiable gift certificate entitles an employee to choose between selecting an item of merchandise or receiving cash or reducing the balance due on his account with the issuer of the gift certificate, the gift certificate is not tangible personal property for purposes of this section. To the extent that an item is not treated as a gift for purposes of this section, the deductibility of the expense of the item is not governed by this section, and the taxpayer need not take such item into account in determining whether the $25 limitation on gifts to any individual has been exceeded. For example, if an employee receives by reason of his length of service a gift of an item of tangible personal property that costs the employer $450, the deductibility of only $50 ($450 minus $400) is governed by this section, and the employer takes the $50 into account for purposes of the $25 limitation on gifts to that employee. The fact that an item is wholly or partially excepted from the applicability of this section has no effect in determining whether the value of the item is includible in the gross income of the recipient. For rules relating to the taxability to the recipient of any item described in this subparagraph, see sections 61, 74, and 102 and the regulations thereunder. For rules relating to the deductibility of employee achievement awards awarded after December 31, 1986, see section 274 (j).

(c) ***Expense for a gift.*** For purposes of this section, the term *expense for a gift* means the cost of the gift to the taxpayer, other than incidental costs such as for customary engraving on jewelry, or for packaging, insurance, and mailing or other delivery. A related cost will be considered “incidental” only if it does not add substantial value to the gift. Although the cost of customary gift wrapping will be considered an incidental cost, the purchase of an ornamental basket for packaging fruit will not be considered an incidental cost of packaging if the basket has a value which is substantial in relation to the value of the fruit.

(d) ***Qualified plan award*** —

(1) ***In general.*** Except as provided in subparagraph (2) of this paragraph the term *qualified plan award,* for purposes of this section, means an item of tangible personal property that is awarded to an employee by reason of the employee's length of service (including retirement), productivity, or safety achievement, and that is awarded pursuant to a permanent, written award plan or program of the taxpayer that does not discriminate as to eligibility or benefits in favor of employees who are officers, shareholders, or highly compensated employees. The “permanency” of an award plan shall be determined from all the facts and circumstances of the particular case, including the taxpayer's ability to continue to make the awards as required by the award plan. Although the taxpayer may reserve the right to change or to terminate an award plan, the actual termination of the award plan for any reason other than business necessity within a few years after it has taken effect may be evidence that the award plan from its inception was not a “permanent” award plan. Whether or not an award plan is discriminatory shall be determined from all the facts and circumstances of the particular case. An award plan may fail to qualify because it is discriminatory in its actual operation even though the written provisions of the award plan are not discriminatory.

(2) ***Items not treated as qualified plan awards.*** The term *qualified plan award,* for purposes of this section, does not include an item qualifying under paragraph (d)(1) of this section to the extent that the cost of the item exceeds $1,600. In addition, that term does not include any items qualifying under paragraph (d)(1) of this section if the average cost of all items (whether or not tangible personal property) awarded during the taxable year by the taxpayer under any plan described in paragraph (d)(1) of this section exceeds $400. The average cost of those items shall be computed by dividing

(i) the sum of the costs for those items (including amounts in excess of the $1,600 limitation) by

(ii) the total number of those items.

(e) ***Gifts made indirectly to an individual*** —

(1) ***Gift to spouse or member of family.*** If a taxpayer makes a gift to the wife of a man who has a business connection with the taxpayer, the gift generally will be considered as made indirectly to the husband. However, if the wife has a bona fide business connection with the taxpayer independently of her relationship to her husband, a gift to her generally will not be considered as made indirectly to her husband unless the gift is intended for his eventual use or benefit. Thus, if a taxpayer makes a gift to a wife who is engaged with her husband in the active conduct of a partnership business, the gift to the wife will not be considered an indirect gift to her husband unless it is intended for his eventual use or benefit. The same rules apply to gifts to any other member of the family of an individual who has a business connection with the taxpayer.

(2) ***Gift to corporation or other business entity.*** If a taxpayer makes a gift to a corporation or other business entity intended for the eventual personal use or benefit of an individual who is an employee, stockholder, or other owner of the corporation or business entity, the gift generally will be considered as made indirectly to such individual. Thus, if a taxpayer provides theater tickets to a closely held corporation for eventual use by any one of the stockholders of the corporation, and if such tickets are gifts, the gifts will be considered as made indirectly to the individual who eventually uses such ticket. On the other hand, a gift to a business organization of property to be used in connection with the business of the organization (for example, a technical manual) will not be considered as a gift to an individual, even though, in practice, the book will be used principally by a readily identifiable individual employee. A gift for the eventual personal use or benefit of some undesignated member of a large group of individuals generally will not be considered as made indirectly to the individual who eventually uses, or benefits from, such gifts unless, under the circumstances of the case, it is reasonably practicable for the taxpayer to ascertain the ultimate recipient of the gift. Thus, if a taxpayer provides several baseball tickets to a corporation for the eventual use by any one of a large number of employees or customers of the corporation, and if such tickets are gifts, the gifts generally will not be treated as made indirectly to the individuals who use such tickets.

(f) ***Special rules*** —

(1) ***Partnership.*** In the case of a gift by a partnership, the $25 annual limitation contained in paragraph (a) of this section shall apply to the partnership as well as to each member of the partnership. Thus, in the case of a gift made by a partner with respect to the business of the partnership, the $25 limitation will be applied at the partnership level as well as at the level of the individual partner. Consequently, deductions for gifts made with respect to partnership business will not exceed $25 annually for each recipient, regardless of the number of partners.

(2) ***Husband and wife.*** For purposes of applying the $25 annual limitation contained in paragraph (a) of this section, a husband and wife shall be treated as one taxpayer. Thus, in the case of gifts to an individual by a husband and wife, the spouses will be treated as one donor; and they are limited to a deduction of $25 annually for each recipient. This rule applies regardless of whether the husband and wife file a joint return or whether the husband and wife make separate gifts to an individual with respect to separate businesses. Since the term *taxpayer* in paragraph (a) of this section refers only to the donor of a gift, this special rule does not apply to treat a husband and wife as one individual where each is a recipient of a gift. See paragraph (e)(1) of this section.

(g) ***Cross reference.*** For rules with respect to whether this section or § 1.274-2 applies, see § 1.274-2(b)(1)(iii).

[T.D. 6659, 28 FR 6505, June 25, 1963, as amended by T.D. 8230, 53 FR 36451, Sept. 20, 1988]

§ 1.274-4 Disallowance of certain foreign travel expenses.

(a) ***Introductory.*** Section 274(c) and this section impose certain restrictions on the deductibility of travel expenses incurred in the case of an individual who, while traveling outside the United States away from home in the pursuit of trade or business (hereinafter termed “business activity”), engages in substantial personal activity not attributable to such trade or business (hereinafter termed “nonbusiness activity”). Section 274(c) and this section are limited in their application to individuals (whether or not an employee or other person traveling under a reimbursement or other expense allowance arrangement) who engage in nonbusiness activity while traveling outside the United States away from home, and do not impose restrictions on the deductibility of travel expenses incurred by an employer or client under an advance, reimbursement, or other arrangement with the individual who engages in nonbusiness activity. For purposes of this section, the term *United States* includes only the States and the District of Columbia, and any reference to “trade or business” or “business activity” includes any activity described in section 212. For rules governing the determination of travel outside the United States away from home, see paragraph (e) of this section. For rules governing the disallowance of travel expense to which this section applies, see paragraph (f) of this section.

(b) ***Limitations on application of section.*** The restrictions on deductibility of travel expenses contained in paragraph (f) of this section are applicable only if:

(1) The travel expense is otherwise deductible under section 162 or 212 and the regulations thereunder,

(2) The travel expense is for travel outside the United States away from home which exceeds 1 week (as determined under paragraph (c) of this section), and

(3) The time outside the United States away from home attributable to nonbusiness activity (as determined under paragraph (d) of this section) constitutes 25 percent or more of the total time on such travel.

(c) ***Travel in excess of 1 week.*** This section does not apply to an expense of travel unless the expense is for travel outside the United States away from home which exceeds 1 week. For purposes of this section, 1 week means 7 consecutive days. The day in which travel outside the United States away from home begins shall not be considered, but the day in which such travel ends shall be considered, in determining whether a taxpayer is outside the United States away from home for more than 7 consecutive days. For example, if a taxpayer departs on travel outside the United States away from home on a Wednesday morning and ends such travel the following Wednesday evening, he shall be considered as being outside the United States away from home only 7 consecutive days. In such a case, this section would not apply

because the taxpayer was not outside the United States away from home for more than 7 consecutive days. However, if the taxpayer travels outside the United States away from home for more than 7 consecutive days, both the day such travel begins and the day such travel ends shall be considered a "business day" or a "nonbusiness day", as the case may be, for purposes of determining whether nonbusiness activity constituted 25 percent or more of travel time under paragraph (d) of this section and for purposes of allocating expenses under paragraph (f) of this section. For purposes of determining whether travel is outside the United States away from home, see paragraph (e) of this section.

(d) ***Nonbusiness activity constituting 25 percent or more of travel time*** —

(1) ***In general.*** This section does not apply to any expense of travel outside the United States away from home unless the portion of time outside the United States away from home attributable to nonbusiness activity constitutes 25 percent or more of the total time on such travel.

(2) ***Allocation on per day basis.*** The total time traveling outside the United States away from home will be allocated on a day-by-day basis to (i) days of business activity or (ii) days of nonbusiness activity (hereinafter termed "business days" or "nonbusiness days" respectively) unless the taxpayer establishes that a different method of allocation more clearly reflects the portion of time outside the United States away from home which is attributable to nonbusiness activity. For purposes of this section, a day spent outside the United States away from home shall be deemed entirely a business day even though spent only in part on business activity if the taxpayer establishes:

(i) ***Transportation days.*** That on such day the taxpayer was traveling to or returning from a destination outside the United States away from home in the pursuit of trade or business. However, if for purposes of engaging in nonbusiness activity, the taxpayer while traveling outside the United States away from home does not travel by a reasonably direct route, only that number of days shall be considered business days as would be required for the taxpayer, using the same mode of transportation, to travel to or return from the same destination by a reasonably direct route. Also, if, while so traveling, the taxpayer interrupts the normal course of travel by engaging in substantial diversions for nonbusiness reasons of his own choosing, only that number of days shall be considered business days as equals the number of days required for the taxpayer, using the same mode of transportation, to travel to or return from the same destination without engaging in such diversion. For example, if a taxpayer residing in New York departs on an evening on a direct flight to Quebec for a business meeting to be held in Quebec the next morning, for purposes of determining whether nonbusiness activity constituted 25 percent or more of his travel time, the entire day of his departure shall be considered a business day. On the other hand, if a taxpayer travels by automobile from New York to Quebec to attend a business meeting and while en route spends 2 days in Ottawa and 1 day in Montreal on nonbusiness activities of his personal choice, only that number of days outside the United States shall be considered business days as would have been required for the taxpayer to drive by a reasonably direct route to Quebec, taking into account normal periods for rest and meals.

(ii) ***Presence required.*** That on such day his presence outside the United States away from home was required at a particular place for a specific and bona fide business purpose. For example, if a taxpayer is instructed by his employer to attend a specific business meeting, the day of the meeting shall be considered a business day even though, because of the scheduled length of the meeting, the taxpayer spends more time during normal working hours of the day on nonbusiness activity than on business activity.

(iii) ***Days primarily business.*** That during hours normally considered to be appropriate for business activity, his principal activity on such day was the pursuit of trade or business.

(iv) ***Circumstances beyond control.*** That on such day he was prevented from engaging in the conduct of trade or business as his principal activity due to circumstances beyond his control.

(v) ***Weekends, holidays, etc.*** That such day was a Saturday, Sunday, legal holiday, or other reasonably necessary standby day which intervened during that course of the taxpayer's trade or business while outside the United States away from home which the taxpayer endeavored to conduct with reasonable dispatch. For example, if a taxpayer travels from New York to London to take part in business negotiations beginning on a Wednesday and concluding on the following Tuesday, the intervening Saturday and Sunday shall be considered business days whether or not business is conducted on either of such days. Similarly, if in the above case the meetings which concluded on Tuesday evening were followed by business meetings with another business group in London on the immediately succeeding Thursday and Friday, the intervening Wednesday will be deemed a business day. However, if at the conclusion of the business meetings on Friday, the taxpayer stays in London for an additional week for personal purposes, the Saturday and Sunday following the conclusion of the business meeting will not be considered business days.

(e) ***Domestic travel excluded*** —

(1) ***In general.*** For purposes of this section, travel outside the United States away from home does not include any travel from one point in the United States to another point in the United States. However, travel which is not from one point in the United States to another point in the United States shall be considered travel outside the United States. If a taxpayer travels from a place within the United States to a place outside the United States, the portion, if any, of such travel which is from one point in the United States to another point in the United States is to be disregarded for purposes of determining:

(i) Whether the taxpayer's travel outside the United States away from home exceeds 1 week (see paragraph (c) of this section),

(ii) Whether the time outside the United States away from home attributable to nonbusiness activity constitutes 25 percent or more of the total time on such travel (see paragraph (d) of this section), or

(iii) The amount of travel expense subject to the allocation rules of this section (see paragraph (f) of this section).

(2) ***Determination of travel from one point in the United States to another point in the United States.*** In the case of the following means of transportation, travel from one point in the United States to another point in the United States shall be determined as follows:

(i) ***Travel by public transportation.*** In the case of travel by public transportation, any place in the United States at which the vehicle makes a scheduled stop for the purpose of adding or discharging passengers shall be considered a point in the United States.

(ii) ***Travel by private automobile.*** In the case of travel by private automobile, any such travel which is within the United States shall be considered travel from one point in the United States to another point in the United States.

(iii) ***Travel by private airplane.*** In the case of travel by private airplane, any flight, whether or not constituting the entire trip, where both the takeoff and the landing are within the United States shall be considered travel from one point in the United States to another point in the United States.

(3) ***Examples.*** The provisions of subparagraph (2) may be illustrated by the following examples:

Example 1. Taxpayer A flies from Los Angeles to Puerto Rico with a brief scheduled stopover in Miami for the purpose of adding and discharging passengers and A returns by airplane nonstop to Los Angeles. The travel from Los Angeles to Miami is considered travel from one point in the United States to another point in the United States. The travel from Miami to Puerto Rico and from Puerto Rico to Los Angeles is not considered travel from one point in the United States to another point in the United States and, thus, is considered to be travel outside the United States away from home.

Example 2. Taxpayer B travels by train from New York to Montreal. The travel from New York to the last place in the United States where the train is stopped for the purpose of adding or discharging passengers is considered to be travel from one point in the United States to another point in the United States.

Example 3. Taxpayer C travels by automobile from Tulsa to Mexico City and back. All travel in the United States is considered to be travel from one point in the United States to another point in the United States.

Example 4. Taxpayer D flies nonstop from Seattle to Juneau. Although the flight passes over Canada, the trip is considered to be travel from one point in the United States to another point in the United States.

Example 5. If in *Example 4* above, the airplane makes a scheduled landing in Vancouver, the time spent in traveling from Seattle to Juneau is considered to be travel outside the United States away from home. However, the time spent in Juneau is not considered to be travel outside the United States away from home.

(f) ***Application of disallowance rules —***

(1) ***In general.*** In the case of expense for travel outside the United States away from home by an individual to which this section applies, except as otherwise provided in subparagraph (4) or (5) of this paragraph, no deduction shall be allowed for that amount of travel expense specified in subparagraph (2) or (3) of this paragraph (whichever is applicable) which is obtained by multiplying the total of such travel expense by a fraction:

(i) The numerator of which is the number of nonbusiness days during such travel, and

(ii) The denominator of which is the total number of business days and nonbusiness days during such travel.

For determination of “business days” and “nonbusiness days”, see paragraph (d)(2) of this section.

(2) ***Nonbusiness activity at, near, or beyond business destination.*** If the place at which the individual engages in nonbusiness activity (hereinafter termed “nonbusiness destination”) is at, near, or beyond the place to which he travels in the pursuit of a trade or business (hereinafter termed “business destination”), the amount of travel expense referred to in subparagraph (1) of this paragraph shall be the amount of travel expense, otherwise allowable as a deduction under section 162 or section 212,

which would have been incurred in traveling from the place where travel outside the United States away from home begins to the business destination, and returning. Thus, if the individual travels from New York to London on business, and then takes a vacation in Paris before returning to New York, the amount of the travel expense subject to allocation is the expense which would have been incurred in traveling from New York to London and returning.

(3) ***Nonbusiness activity on the route to or from business destination.*** If the nonbusiness destination is on the route to or from the business destination, the amount of the travel expense referred to in subparagraph (1) of this paragraph shall be the amount of travel expense, otherwise allowable as a deduction under section 162 or 212, which would have been incurred in traveling from the place where travel outside the United States away from home begins to the nonbusiness destination and returning. Thus, if the individual travels on business from Chicago to Rio de Janeiro, Brazil with a scheduled stop in New York for the purpose of adding and discharging passengers, and while en route stops in Caracas, Venezuela for a vacation and returns to Chicago from Rio de Janeiro with another scheduled stop in New York for the purpose of adding and discharging passengers, the amount of travel expense subject to allocation is the expense which would have been incurred in traveling from New York to Caracas and returning.

(4) ***Other allocation method.*** If a taxpayer establishes that a method other than allocation on a day-by-day basis (as determined under paragraph (d)(2) of this section) more clearly reflects the portion of time outside the United States away from home which is attributable to nonbusiness activity, the amount of travel expense for which no deduction shall be allowed shall be determined by such other method.

(5) ***Travel expense deemed entirely allocable to business activity.*** Expenses of travel shall be considered allocable in full to business activity, and no portion of such expense shall be subject to disallowance under this section, if incurred under circumstances provided for in subdivision (i) or (ii) of this subparagraph.

(i) ***Lack of control over travel.*** Expenses of travel otherwise deductible under section 162 or 212 shall be considered fully allocable to business activity if, considering all the facts and circumstances, the individual incurring such expenses did not have substantial control over the arranging of the business trip. A person who is required to travel to a business destination will not be considered to have substantial control over the arranging of the business trip merely because he has control over the timing of the trip. Any individual who travels on behalf of his employer under a reimbursement or other expense allowance arrangement shall be considered not to have had substantial control over the arranging of his business trip, provided the employee is not:

(*a*) A managing executive of the employer for whom he is traveling (and for this purpose the term *managing executive* includes only an employee who, by reason of his authority and responsibility, is authorized, without effective veto procedures, to decide upon the necessity for his business trip), or

(*b*) Related to his employer within the meaning of section 267(b) but for this purpose the percentage referred to in section 267(b)(2) shall be 10 percent.

(ii) ***Lack of major consideration to obtain a vacation.*** Any expense of travel, which qualifies for deduction under section 162 or 212, shall be considered fully allocable to business activity if the individual incurring such expenses can establish that, considering all the facts and circumstances, he did not have a major consideration, in determining to make the trip, of

obtaining a personal vacation or holiday. If such a major consideration were present, the provisions of subparagraphs (1) through (4) of this paragraph shall apply. However, if the trip were primarily personal in nature, the traveling expenses to and from the destination are not deductible even though the taxpayer engages in business activities while at such destination. See paragraph (b) of § 1.162-2.

(g) ***Examples.*** The application of this section may be illustrated by the following examples:

Example 1. Individual A flew from New York to Paris where he conducted business for 1 day. He spent the next 2 days sightseeing in Paris and then flew back to New York. The entire trip, including 2 days for travel en route, took 5 days. Since the time outside the United States away from home during the trip did not exceed 1 week, the disallowance rules of this section do not apply.

Example 2. Individual B flew from Tampa to Honolulu (from one point in the United States to another point in the United States) for a business meeting which lasted 3 days and for personal matters which took 10 days. He then flew to Melbourne, Australia where he conducted business for 2 days and went sightseeing for 1 day. Immediately thereafter he flew back to Tampa, with a scheduled landing in Honolulu for the purpose of adding and discharging passengers. Although the trip exceeded 1 week, the time spent outside the United States away from home, including 2 days for traveling from Honolulu to Melbourne and return, was 5 days. Since the time outside the United States away from home during the trip did not exceed 1 week, the disallowance rules of this section do not apply.

Example 3. Individual C flew from Los Angeles to New York where he spent 5 days. He then flew to Brussels where he spent 14 days on business and 5 days on personal matters. He then flew back to Los Angeles by way of New York. The entire trip, including 4 days for travel en route, took 28 days. However, the 2 days spent traveling from Los Angeles to New York and return, and the 5 days spent in New York are not considered travel outside the United States away from home and, thus, are disregarded for purposes of this section. Although the time spent outside the United States away from home exceeded 1 week, the time outside the United States away from home attributable to nonbusiness activities (5 days out of 21) was less than 25 percent of the total time outside the United States away from home during the trip. Therefore, the disallowance rules of this section do not apply.

Example 4. D, an employee of Y Company, who is neither a managing executive of, nor related to, Y Company within the meaning of paragraph (f)(5)(i) of this section, traveled outside the United States away from home on behalf of his employer and was reimbursed by Y for his traveling expense to and from the business destination. The trip took more than a week and D took advantage of the opportunity to enjoy a personal vacation which exceeded 25 percent of the total time on the trip. Since D, traveling under a reimbursement arrangement, is not a managing executive of, or related to, Y Company, he is not considered to have substantial control over the arranging of the business trip, and the travel expenses shall be considered fully allocable to business activity.

Example 5. E, a managing executive and principal shareholder of X Company, travels from New York to Stockholm, Sweden, to attend a series of business meetings. At the conclusion of the series of meetings, which last 1 week, E spends 1 week on a personal vacation in Stockholm. If E establishes either that he did not have substantial control over the arranging of the trip or that a major consideration in his determining to make the trip was not to provide an opportunity for taking a personal vacation, the entire travel expense to and from Stockholm shall be considered fully allocable to business activity.

Example 6. F, a self-employed professional man, flew from New York to Copenhagen, Denmark, to attend a convention sponsored by a professional society. The trip lasted 3 weeks, of which 2 weeks were spent on vacation in Europe. F generally would be regarded as having substantial control over arranging this business trip. Unless F can establish that obtaining a vacation was not a major consideration in determining to make the trip, the disallowance rules of this section apply.

Example 7. Taxpayer G flew from Chicago to New York where he spent 6 days on business. He then flew to London where he conducted business for 2 days. G then flew to Paris for a 5 day vacation after which he flew back to Chicago, with a scheduled landing in New York for the purpose of adding and discharging passengers. G would not have made the trip except for the business he had to conduct in London. The travel outside the United States away from home, including 2 days for travel en route, exceeded a week and the time devoted to nonbusiness activities was not less than 25 percent of the total time on such travel. The 2 days spent traveling from Chicago to New York and return, and the 6 days spent in New York are disregarded for purposes of determining whether the travel outside the United States away from home exceeded a week and whether the time devoted to nonbusiness activities was less than 25 percent of the total time outside the United States away from home. If G is unable to establish either that he did not have substantial control over the arranging of the business trip or that an opportunity for taking a personal vacation was not a major consideration in his determining to make the trip, 5/9ths (5 days devoted to nonbusiness activities out of a total 9 days outside the United States away from home on the trip) of the expenses attributable to transportation and food from New York to London and from London to New York will be disallowed (unless G establishes that a different method of allocation more clearly reflects the portion of time outside the United States away from home which is attributable to nonbusiness activity).

(h) ***Cross reference.*** For rules with respect to whether an expense is travel or entertainment, see paragraph (b)(1)(iii) of § 1.274-2.

[T.D. 6758, 29 FR 12768, Sept. 10, 1964]

§ 1.274-5 Substantiation requirements.

(a)-(b) [Reserved]. For further guidance, see § 1.274-5T(a) and (b).

(c) ***Rules of substantiation*** —

(1) [Reserved]. For further guidance, see § 1.274-5T(c)(1).

(2) ***Substantiation by adequate records*** —(i) and

(ii) [Reserved]. For further guidance, see § 1.274-5T(c)(2)(i) and (ii).

(iii) ***Documentary evidence*** —

(A) Except as provided in paragraph (c)(2)(iii)(B), documentary evidence, such as receipts, paid bills, or similar evidence sufficient to support an expenditure, is required for—

(*1*) Any expenditure for lodging while traveling away from home, and

(*2*) Any other expenditure of $75 or more except, for transportation charges, documentary evidence will not be required if not readily available.

(B) The Commissioner, in his or her discretion, may prescribe rules waiving the documentary evidence requirements in circumstances where it is impracticable for such documentary evidence to be required. Ordinarily, documentary evidence will be considered adequate to support an expenditure if it includes sufficient information to establish the amount, date, place, and the essential character of the expenditure. For example, a hotel receipt is sufficient to support expenditures for business travel if it contains the following: name, location, date, and separate amounts for charges such as for lodging, meals, and telephone. Similarly, a restaurant receipt is sufficient to support an expenditure for a business meal if it contains the following: name and location of the restaurant, the date and amount of the expenditure, the number of people served, and, if a charge is made for an item other than meals and beverages, an indication that such is the case. A document may be indicative of only one (or part of one) element of an expenditure. Thus, a cancelled check, together with a bill from the payee, ordinarily would establish the element of cost. In contrast, a cancelled check drawn payable to a named payee would not by itself support a business expenditure without other evidence showing that the check was used for a certain business purpose.

(iv)-(v) [Reserved]. For further guidance, see § 1.274-5T(c)(2)(iv) and (v).

(3)-(7) [Reserved]. For further guidance, see § 1.274-5T(c)(3) through (7).

(d)-(e) [Reserved]. For further guidance, see § 1.274-5T(d) and (e).

(f) ***Reporting and substantiation of expenses of certain employees for travel, entertainment, gifts, and with respect to listed property*** —

(1) through (3) [Reserved]. For further guidance, see § 1.274-5T(f)(1) through (3).

(4) ***Definition of an adequate accounting to the employer*** —

(i) ***In general.*** For purposes of this paragraph (f) an *adequate accounting* means the submission to the employer of an account book, diary, log, statement of expense, trip sheet, or similar record maintained by the employee in which the information as to each element of an expenditure or use (described in paragraph (b) of this section) is recorded at or near the time of the expenditure or use, together with supporting documentary evidence, in a manner that conforms to all the adequate records requirements of paragraph (c)(2) of this section. An adequate accounting requires that the employee account for all amounts received from the employer during the taxable year as advances, reimbursements, or allowances (including those charged directly or indirectly to the employer through credit cards or otherwise) for travel, entertainment, gifts, and the use of listed property. The methods of substantiation allowed under paragraph (c)(4) or (c)(5) of this section also will be considered to be an adequate accounting if the employer accepts an employee's substantiation and establishes that such substantiation meets the requirements of paragraph (c)(4) or (c)(5). For purposes of an adequate accounting, the method of substantiation allowed under paragraph (c)(3) of this section will not be permitted.

(ii) ***Procedures for adequate accounting without documentary evidence.*** The Commissioner may, in his or her discretion, prescribe rules under which an employee may make an adequate accounting to an employer by submitting an account book, log, diary, etc., alone, without submitting documentary evidence.

(iii) ***Employer.*** For purposes of this section, the term *employer* includes an agent of the employer or a third party payor who pays amounts to an employee under a reimbursement or other expense allowance arrangement.

(5) [Reserved]. For further guidance, see § 1.274-5T(f)(5).

(g) ***Substantiation by reimbursement arrangements or per diem, mileage, and other traveling allowances*** —

(1) ***In general.*** The Commissioner may, in his or her discretion, prescribe rules in pronouncements of general applicability under which allowances for expenses described in paragraph (g)(2) of this section will, if in accordance with reasonable business practice, be regarded as equivalent to substantiation by adequate records or other sufficient evidence, for purposes of paragraph (c) of this section, of the amount of the expenses and as satisfying, with respect to the amount of the expenses, the requirements of an adequate accounting to the employer for purposes of paragraph (f)(4) of this section. If the total allowance received exceeds the deductible expenses paid or incurred by the employee, such excess must be reported as income on the employee's return. See paragraph (j)(1) of this section relating to the substantiation of meal expenses while traveling away from home, and paragraph (j)(2) of this section relating to the substantiation of expenses for the business use of a vehicle.

(2) ***Allowances for expenses described.*** An allowance for expenses is described in this paragraph (g)(2) if it is a—

(i) Reimbursement arrangement covering ordinary and necessary expenses of traveling away from home (exclusive of transportation expenses to and from destination);

(ii) Per diem allowance providing for ordinary and necessary expenses of traveling away from home (exclusive of transportation costs to and from destination); or

(iii) Mileage allowance providing for ordinary and necessary expenses of local transportation and transportation to, from, and at the destination while traveling away from home.

(h) [Reserved]. For further guidance, see § 1.274-5T(h).

(i) [Reserved]

(j) ***Authority for optional methods of computing certain expenses*** —

(1) ***Meal expenses while traveling away from home.*** The Commissioner may establish a method under which a taxpayer may use a specified amount or amounts for meals while traveling away from home in lieu of substantiating the actual cost of meals. The taxpayer will not be relieved of the requirement to substantiate the actual cost of other travel expenses as well as the time, place, and business purpose of the travel. See paragraphs (b)(2) and (c) of this section.

(2) ***Use of mileage rates for vehicle expenses.*** The Commissioner may establish a method under which a taxpayer may use mileage rates to determine the amount of the ordinary and necessary expenses of using a vehicle for local transportation and transportation to, from, and at the destination while traveling away from home in lieu of substantiating the actual costs. The method may include appropriate limitations and conditions in order to reflect more accurately vehicle expenses over the entire period of usage. The taxpayer will not be relieved of the requirement to substantiate the amount of each business use (i.e., the business mileage), or the time and business purpose of each use. See paragraphs (b)(2) and (c) of this section.

(3) ***Incidental expenses while traveling away from home.*** The Commissioner may establish a method under which a taxpayer may use a specified amount or amounts for incidental expenses paid or incurred while traveling away from home in lieu of substantiating the actual cost of incidental expenses. The taxpayer will not be relieved of the requirement to substantiate the actual cost of other travel expenses as well as the time, place, and business purpose of the travel.

(k) ***Exceptions for qualified nonpersonal use vehicles*** —

(1) ***In general.*** The substantiation requirements of section 274(d) and this section do not apply to any qualified nonpersonal use vehicle (as defined in paragraph (k)(2) of this section).

(2) ***Qualified nonpersonal use vehicle*** —

(i) ***In general.*** For purposes of section 274(d) and this section, the term *qualified nonpersonal use vehicle* means any vehicle which, by reason of its nature (that is, design), is not likely to be used more than a de minimis amount for personal purposes.

(ii) ***List of vehicles.*** Vehicles which are qualified nonpersonal use vehicles include the following:

(A) Clearly marked police, fire, and public safety officer vehicles (as defined and to the extent provided in paragraph (k)(3) of this section).

(B) Ambulances used as such or hearses used as such.

(C) Any vehicle designed to carry cargo with a loaded gross vehicle weight over 14,000 pounds.

(D) Bucket trucks (cherry pickers).

(E) Cement mixers.

(F) Combines.

(G) Cranes and derricks.

(H) Delivery trucks with seating only for the driver, or only for the driver plus a folding jump seat.

(I) Dump trucks (including garbage trucks).

(J) Flatbed trucks.

(K) Forklifts.

(L) Passenger buses used as such with a capacity of at least 20 passengers.

(M) Qualified moving vans (as defined in paragraph (k)(4) of this section).

(N) Qualified specialized utility repair trucks (as defined in paragraph (k)(5) of this section).

(O) Refrigerated trucks.

(P) School buses (as defined in section 4221(d)(7)(c)).

(Q) Tractors and other special purpose farm vehicles.

(R) Unmarked vehicles used by law enforcement officers (as defined in paragraph (k)(6) of this section) if the use is officially authorized.

(S) Unmarked firefighter, rescue squad, or ambulance crew vehicles (as defined in paragraph (k)(7) of this section).

(T) Such other vehicles as the Commissioner may designate.

(3) ***Clearly marked police, fire, or public safety officer vehicles.*** A police, fire, or public safety officer vehicle is a vehicle, owned or leased by a governmental unit, or any agency or instrumentality thereof, that is required to be used for commuting by a police officer, fire fighter, or public safety officer (as defined in section 402(l)(4)(C) of this chapter) who, when not on a regular shift, is on call at all times, provided that any personal use (other than commuting) of the vehicle outside the limit of the police officer's arrest powers or the fire fighter's or public safety officer's obligation to respond to an emergency is prohibited by such governmental unit. A police, fire, or public safety officer vehicle is clearly marked if, through painted insignia or words, it is readily apparent that the vehicle is a police, fire, or public safety officer vehicle. A marking on a license plate is not a clear marking for purposes of this paragraph (k).

(4) ***Qualified moving van.*** The term *qualified moving van* means any truck or van used by a professional moving company in the trade or business of moving household or business goods if—

(i) No personal use of the van is allowed other than for travel to and from a move site (or for de minimis personal use, such as a stop for lunch on the way between two move sites);

(ii) Personal use for travel to and from a move site is an irregular practice (that is, not more than five times a month on average); and

(iii) Personal use is limited to situations in which it is more convenient to the employer, because of the location of the employee's residence in relation to the location of the move site, for the van not to be returned to the employer's business location.

(5) ***Qualified specialized utility repair truck.*** The term *qualified specialized utility repair truck* means any truck (not including a van or pickup truck) specifically designed and used to carry heavy tools, testing equipment, or parts if—

(i) The shelves, racks, or other permanent interior construction which has been installed to carry and store such heavy items is such that it is unlikely that the truck will be used more than a de minimis amount for personal purposes; and

(ii) The employer requires the employee to drive the truck home in order to be able to respond in emergency situations for purposes of restoring or maintaining electricity, gas, telephone, water, sewer, or steam utility services.

(6) ***Unmarked law enforcement vehicles*** —

(i) ***In general.*** The substantiation requirements of section 274(d) and this section do not apply to officially authorized uses of an unmarked vehicle by a “law enforcement officer”. To qualify for this exception, any personal use must be authorized by the Federal, State, county, or local governmental agency or department that owns or leases the vehicle and employs the officer, and must be incident to law-enforcement functions, such as being able to report directly from home to a stakeout or surveillance site, or to an emergency situation. Use of an unmarked vehicle for vacation or recreation trips cannot qualify as an authorized use.

(ii) ***Law enforcement officer.*** The term *law enforcement officer* means an individual who is employed on a full-time basis by a governmental unit that is responsible for the prevention or investigation of crime involving injury to persons or property (including apprehension or detention of persons for such crimes), who is authorized by law to carry firearms, execute search warrants, and to make arrests (other than merely a citizen's arrest), and who regularly carries firearms (except when it is not possible to do so because of the requirements of undercover work). The term "law enforcement officer" may include an arson investigator if the investigator otherwise meets the requirements of this paragraph (k)(6)(ii), but does not include Internal Revenue Service special agents.

(7) ***Unmarked firefighter, rescue squad, or ambulance crew vehicles*** —

(i) ***In general.*** The substantiation requirements of section 274(d) and this section do not apply to an unmarked firefighter, rescue squad, or ambulance crew vehicle required to be used for commuting by the firefighter or member of a rescue squad or ambulance crew, who, when not on a regular shift, is on call at all times. Personal use (other than commuting) of the vehicle outside the firefighter's or rescue squad or ambulance crew member's obligation to respond to an emergency must be prohibited by the governmental unit, or any agency or instrumentality thereof, that owns or leases the vehicle and employs the firefighter, member of a rescue squad, or ambulance crew member.

(ii) ***Unmarked firefighter, rescue squad, or ambulance crew vehicle defined.*** An *unmarked firefighter, rescue squad, or ambulance crew vehicle* is an unmarked vehicle used by a firefighter, or member of a rescue squad or ambulance crew, that is owned or leased by a governmental unit, or any agency or instrumentality thereof, and that is specially outfitted to allow firefighters or members of rescue squads and ambulance crews to travel safely and efficiently to the scene of an emergency and provide emergency services. Onboard equipment on the vehicles includes but is not limited to lights and sirens, medical emergency equipment, life-saving devices such as defibrillators, and radios that assist firefighters, rescue squads, or ambulance crews in communicating with a central source or other emergency response crews regarding, for example, traffic or hospital capacity. Onboard equipment may also include items such as personal protective equipment (*e.g.,* helmet, coat, boots), emergency oxygen tanks, reference manuals, and laptop computers that enable workers to access important information related to the emergency. A license plate marking or insignia does not disqualify a vehicle from being an unmarked firefighter, rescue squad, or ambulance crew vehicle for purposes of this paragraph (k)(7).

(iii) ***Firefighter.*** The term *firefighter* means an individual who is employed by a governmental unit, or any agency or instrumentality thereof, that is responsible for firefighting, rescue activity, or the provision of emergency medical care, and other related emergency services to prevent injury to persons or property and has the official authority to engage in fire suppression and provide related emergency services.

(iv) ***Member of a rescue squad or ambulance crew.*** For purposes of this paragraph (k)(7), the term *member of a rescue squad or ambulance crew* has the same meaning as in 34 U.S.C. 10284(10)(A).

(8) ***Trucks and vans.*** The substantiation requirements of section 274(d) and this section apply generally to any pickup truck or van, unless the truck or van has been specially modified with the result that it is not likely to be used more than a de minimis amount for personal purposes. For example, a van that has only a front bench for seating, in which permanent shelving that fills most of the cargo area

has been installed, that constantly carries merchandise or equipment, and that has been specially painted with advertising or the company's name, is a vehicle not likely to be used more than a de minimis amount for personal purposes.

(9) ***Examples.*** The following examples illustrate the provisions of paragraph (k)(3) and (6) of this section:

(i) ***Example 1.*** Detective C, who is a “law enforcement officer” employed by a state police department, headquartered in City M, is provided with an unmarked vehicle (equipped with radio communication) for use during off-duty hours because C must be able to communicate with headquarters and be available for duty at any time (for example, to report to a surveillance or crime site). The police department generally has officially authorized personal use of the vehicle by C but has prohibited use of the vehicle for recreational purposes or for personal purposes outside the state. Thus, C's use of the vehicle for commuting between headquarters or a surveillance site and home and for personal errands is authorized personal use as described in paragraph (k)(6)(i) of this section. With respect to these authorized uses the vehicle is not subject to the substantiation requirements of section 274(d) and the value of these uses is not included in C's gross income.

(ii) ***Example 2.*** Detective T is a “law enforcement officer” employed by City M. T is authorized to make arrests only within M's city limits. T, along with all other officers of the force, is ordinarily on duty for eight hours each work day and on call during the other sixteen hours. T is provided with the use of a clearly marked police vehicle in which T is required to commute to his home in City M. The police department's official policy regarding marked police vehicles prohibits its personal use (other than commuting) of the vehicles outside the city limits. When not using the vehicle on the job, T uses the vehicle only for commuting, personal errands on the way between work and home, and personal errands within City M. All use of the vehicle by T conforms to the requirements of paragraph (k)(3) of this section. Therefore, the value of that use is excluded from T's gross income as a working condition fringe and the vehicle is not subject to the substantiation requirements of section 274(d).

(iii) ***Example 3.*** Director C is employed by City M as the director of the City's rescue squad and is provided with a vehicle for use in responding to emergencies. Director C is trained in rescue activity and has the legal authority and legal responsibility to engage in rescue activity. The city's rescue squad is not a part of City M's police or fire departments. The director's vehicle is a sedan which is painted with insignia and words identifying the vehicle as being owned by the City's rescue squad. C, when not on a regular shift, is on call at all times. The City's official policy regarding clearly marked public safety officer vehicles prohibits personal use (other than for commuting) of the vehicle outside of the limits of the public safety officer's obligation to respond to an emergency. When not using the vehicle to respond to emergencies, City M authorizes C to use the vehicle only for commuting, personal errands on the way between work and home, and personal errands within the limits of C's obligation to respond to emergencies. With respect to these authorized uses, the vehicle is not subject to the substantiation requirements of section 274(d) and the value of these uses is not includable in C's gross income.

(iv) ***Example 4.*** Coroner D is employed by County N to investigate and determine the cause, time, and manner of certain deaths occurring in the County. Coroner D also safeguards the property of the deceased, notifies the next of kin, conducts inquests, and arranges for the burial of indigent persons. D is provided with a vehicle for use by County N. The vehicle is to be used in

County N business and for commuting. Personal use other than for commuting purposes is forbidden. D is trained in rescue activity but has no legal authority or legal responsibility to engage in rescue activity. D's vehicle is a sedan which is painted with insignia and words identifying it as a County N vehicle. D, when not on a regular shift, is on call at all times. D does not satisfy the criteria of a public safety officer under 28 CFR 32.3 (2008). Thus, D's vehicle cannot qualify as a clearly marked public safety officer vehicle. Accordingly, business use of the vehicle is subject to the substantiation requirements of section 274(d), and the value of any personal use of the vehicle, such as commuting, is includable in D's gross income.

(v) ***Example 5.*** Emergency medical technician, X, is a *member of a rescue squad* employed by City M. X is provided with an unmarked vehicle (equipped with sirens and medical equipment) for use in responding to emergencies. X, along with other members of the rescue squad, is ordinarily on duty for a regular shift and on call during the other hours of the day. X is required to use the unmarked rescue squad vehicle to commute to X's home in City M. The rescue squad's official policy regarding unmarked rescue squad vehicles prohibits personal use (other than commuting) of the vehicles outside the city limits. When not using the vehicle on the job, X uses the vehicle only for commuting, personal errands while commuting, and personal errands within City M. All use of the vehicle by X conforms to the requirements of paragraph (k)(7) of this section. Therefore, the value of that use is excluded from X's gross income as a working condition fringe and the vehicle is not subject to the substantiation requirements of section 274(d).

(l) ***Definitions.*** For purposes of section 274(d) and this section, the terms *automobile* and *vehicle* have the same meanings as prescribed in § 1.61-21(d)(1)(ii) and (e)(2), respectively. Also, for purposes of section 274(d) and this section, the terms *employer, employee* and *personal use* have the same meanings as prescribed in § 1.274-6T(e).

(m) ***Applicability date.*** This section applies to expenses paid or incurred after December 31, 1997. However, paragraph (j)(3) of this section applies to expenses paid or incurred after September 30, 2002, and paragraph (k) of this section applies to clearly marked public safety officer vehicles, as defined in paragraph (k)(3) of this section, only with respect to uses occurring after May 19, 2010. The rules of paragraphs (k)(2)(ii)(S), (k)(7) and (k)(9)(v) of this section apply to taxable years ending on or after March 20, 2026.

[T.D. 8864, 65 FR 4122, Jan. 26, 2000; 65 FR 15547, Mar. 23, 2000, as amended by T.D. 9020, 67 FR 68513, Nov. 12, 2002; T.D. 9064, 68 FR 39011, July 1, 2003; T.D. 9483, 75 FR 27936, May 19, 2010; T.D. 10043, 91 FR 13502, Mar. 20, 2026]

§ 1.274-5T Substantiation requirements (temporary).

(a) ***In general.*** For taxable years beginning on or after January 1, 1986, no deduction or credit shall be allowed with respect to—

(1) Traveling away from home (including meals and lodging),

(2) Any activity which is of a type generally considered to constitute entertainment, amusement, or recreation, or with respect to a facility used in connection with such an activity, including the items specified in section 274(e),

(3) Gifts defined in section 274(b), or

(4) Any listed property (as defined in section 280F(d)(4) and § 1.280F-6T(b)), unless the taxpayer substantiates each element of the expenditure or use (as described in paragraph (b) of this section) in the manner provided in paragraph (c) of this section. This limitation supersedes the doctrine found in *Cohan v. Commissioner,* 39 F. 2d 540 (2d Cir. 1930). The decision held that, where the evidence indicated a taxpayer incurred deductible travel or entertainment expenses but the exact amount could not be determined, the court should make a close approximation and not disallow the deduction entirely. Section 274(d) contemplates that no deduction or credit shall be allowed a taxpayer on the basis of such approximations or unsupported testimony of the taxpayer. For purposes of this section, the term *entertainment* means entertainment, amusement, or recreation, and use of a facility therefor; and the term *expenditure* includes expenses and items (including items such as losses and depreciation).

(b) ***Elements of an expenditure or use*** —

(1) ***In general.*** Section 274(d) and this section contemplate that no deduction or credit shall be allowed for travel, entertainment, a gift, or with respect to listed property unless the taxpayer substantiates the requisite elements of each expenditure or use as set forth in this paragraph (b).

(2) ***Travel away from home.*** The elements to be provided with respect to an expenditure for travel away from home are—

(i) ***Amount.*** Amount of each separate expenditure for traveling away from home, such as cost of transportation or lodging, except that the daily cost of the traveler's own breakfast, lunch, and dinner and of expenditures incidental to such travel may be aggregated, if set forth in reasonable categories, such as for meals, for gasoline and oil, and for taxi fares;

(ii) ***Time.*** Dates of departure and return for each trip away from home, and number of days away from home spent on business;

(iii) ***Place.*** Destinations or locality of travel, described by name of city or town or other similar designation; and

(iv) ***Business purpose.*** Business reason for travel or nature of the business benefit derived or expected to be derived as a result of travel.

(3) ***Entertainment in general.*** The elements to be proved with respect to an expenditure for entertainment are—

(i) ***Amount.*** Amount of each separate expenditure for entertainment, except that such incidental items as taxi fares or telephone calls may be aggregated on a daily basis;

(ii) ***Time.*** Date of entertainment;

(iii) ***Place.*** Name, if any, address or location, and destination of type of entertainment, such as dinner or theater, if such information is not apparent from the designation of the place;

(iv) ***Business purpose.*** Business reason for the entertainment or nature of business benefit derived or expected to be derived as a result of the entertainment and, except in the case of business meals described in section 274(e)(1), the nature of any business discussion or activity;

(v) ***Business relationship.*** Occupation or other information relating to the person or persons entertained, including name, title, or other designation, sufficient to establish business relationship to the taxpayer.

(4) ***Entertainment directly preceding or following a substantial and bona fide business discussion.*** If a taxpayer claims a deduction for entertainment directly preceding or following a substantial and bona fide business discussion on the ground that such entertainment was associated with the active conduct of the taxpayer's trade or business, the elements to be proved with respect to such expenditure, in addition to those enumerated in paragraph (b)(3) (i), (ii), (iii), and (v) of this section are—

(i) ***Time.*** Date and duration of business discussion;

(ii) ***Place.*** Place of business discussion;

(iii) ***Business purpose.*** Nature of business discussion, and business reason for the entertainment or nature of business benefit derived or expected to be derived as the result of the entertainment.

(iv) ***Business relationship.*** Identification of those persons entertained who participated in the business discussion.

(5) ***Gifts.*** The elements to be proved with respect to an expenditure for a gift are—

(i) ***Amount.*** Cost of the gift to the taxpayer;

(ii) ***Time.*** Date of the gift;

(iii) ***Description.*** Description of the gift;

(iv) ***Business purpose.*** Business reason for the gift or nature of business benefit derived or expected to be derived as a result of the gift; and

(v) ***Business relationship.*** Occupation or other information relating to the recipient of the gift, including name, title, or other designation, sufficient to establish business relationship to the taxpayer.

(6) ***Listed property.*** The elements to be proved with respect to any listed property are—

(i) ***Amount*** —

(A) ***Expenditures.*** The amount of each separate expenditure with respect to an item of listed property, such as the cost of acquisition, the cost of capital improvements, lease payments, the cost of maintenance and repairs, or other expenditures, and

(B) ***Uses.*** The amount of each business/investment use (as defined in § 1.280F-6T (d)(3) and (e)), based on the appropriate measure (i.e., mileage for automobiles and other means of transportation and time for other listed property, unless the Commissioner approves an alternative method), and the total use of the listed property for the taxable period.

(ii) ***Time.*** Date of the expenditure or use with respect to listed property, and

(iii) ***Business or investment purpose.*** The business purpose for an expenditure or use with respect to any listed property (see § 1.274-5T(c)(6)(i) (B) and (C) for special rules for the aggregation of expenditures and business use and § 1.280F-6T(d)(2) for the distinction between qualified business use and business/investment use).

See also § 1.274-5T(e) relating to the substantiation of business use of employer-provided listed property and § 1.274-6T for special rules for substantiating the business/investment use of certain types of listed property.

(c) *Rules of substantiation* —

(1) ***In general.*** Except as otherwise provided in this section and § 1.274-6T, a taxpayer must substantiate each element of an expenditure or use (described in paragraph (b) of this section) by adequate records or by sufficient evidence corroborating his own statement. Section 274(d) contemplates that a taxpayer will maintain and produce such substantiation as will constitute proof of each expenditure or use referred to in section 274. Written evidence has considerably more probative value than oral evidence alone. In addition, the probative value of written evidence is greater the closer in time it relates to the expenditure or use. A contemporaneous log is not required, but a record of the elements of an expenditure or of a business use of listed property made at or near the time of the expenditure or use, supported by sufficient documentary evidence, has a high degree of credibility not present with respect to a statement prepared subsequent thereto when generally there is a lack of accurate recall. Thus, the corroborative evidence required to support a statement not make at or near the time of the expenditure or use must have a high degree of probative value to elevate such statement and evidence to the level of credibility reflected by a record made at or near the time of the expenditure or use supported by sufficient documentary evidence. The substantiation requirements of section 274(d) are designed to encourage taxpayers to maintain the records, together with documentary evidence, as provided in paragraph (c)(2) of this section.

(2) *Substantiation by adequate records* —

(i) ***In general.*** To meet the "adequate records" requirements of section 274(d), a taxpayer shall maintain an account book, diary, log, statement of expense, trip sheets, or similar record (as provided in paragraph (c)(2)(ii) of this section), and documentary evidence (as provided in paragraph (c)(2)(iii) of this section) which, in combination, are sufficient to establish each element of an expenditure or use specified in paragraph (b) of this section. It is not necessary to record information in an account book, diary, log, statement of expense, trip sheet, or similar record which duplicates information reflected on a receipt so long as the account book, etc. and receipt complement each other in an orderly manner.

(ii) ***Account book, diary, etc.*** An account book, diary, log, statement of expense, trip sheet, or similar record must be prepared or maintained in such manner that each recording of an element of an expenditure or use is made at or near the time of the expenditure or use.

(A) ***Made at or near the time of the expenditure or use.*** For purposes of this section, the phrase *made at or near the time of the expenditure or use* means the element of an expenditure or use are recorded at a time when, in relation to the use or making of an expenditure, the taxpayer has full present knowledge of each element of the expenditure or use, such as the amount, time, place, and business purpose of the expenditure and business relationship. An expense account statement which is a transcription of an account book, diary, log, or similar record prepared or maintained in accordance with the provisions of this paragraph (c)(2)(ii) shall be considered a record prepared or maintained in the manner prescribed in the preceding sentence if such expense account statement is submitted by an employee to his employer or by an independent contractor to his client or customer in the regular course of good business practice. For example, a log maintained on a weekly basis, which accounts for use during the week, shall be considered a record made at or near the time of such use.

(B) ***Substantiation of business purpose.*** In order to constitute an adequate record of business purpose within the meaning of section 274(d) and this paragraph (c)(2), a written statement of business purpose generally is required. However, the degree of

substantiation necessary to establish business purpose will vary depending upon the facts and circumstances of each case. Where the business purpose is evident from the surrounding facts and circumstances, a written explanation of such business purpose will not be required. For example, in the case of a salesman calling on customers on an established sales route, a written explanation of the business purpose of such travel ordinarily will not be required. Similarly, in the case of a business meal described in section 274(e)(1), if the business purpose of such meal is evident from the business relationship to the taxpayer of the persons entertained and other surrounding circumstances, a written explanation of such business purpose will not be required.

(C) ***Substantiation of business use of listed property*** —

(1) ***Degree of substantiation.*** In order to constitute an adequate record (within the meaning of section 274(d) and this paragraph (c)(2)(ii)), which substantiates business/investment use of listed property (as defined in § 1.280F-6T(d)(3)), the record must contain sufficient information as to each element of every business/investment use. However, the level of detail required in an adequate record to substantiate business/investment use may vary depending upon the facts and circumstances. For example, a taxpayer who uses a truck for both business and personal purposes and whose only business use of a truck is to make deliveries to customers on an established route may satisfy the adequate record requirement by recording the total number miles driven during the taxable year, the length of the delivery route once, and the date of each trip at or near the time of the trips. Alternatively, the taxpayer may establish the date of each trip with a receipt, record of delivery, or other documentary evidence.

(2) ***Written record.*** Generally, an adequate record must be written. However, a record of the business use of listed property, such as a computer or automobile, prepared in a computer memory device with the aid of a logging program will constitute an adequate record.

(D) ***Confidential information.*** If any information relating to the elements of an expenditure or use, such as place, business purpose, or business relationship, is of a confidential nature, such information need not be set forth in the account book, diary, log, statement of expense, trip sheet, or similar record, provided such information is recorded at or near the time of the expenditure or use and is elsewhere available to the district director to substantiate such element of the expenditure or use.

(iii) [Reserved]. For further guidance, see § 1.274-5(c)(2)(iii).

(iv) ***Retention of written evidence.*** The Commissioner may, in his discretion, prescribe rules under which an employer may dispose of the adequate records and documentary evidence submitted to him by employees who are required to, and do, make an adequate accounting to the employer (within the meaning of paragraph (f)(4) of this section) if the employer maintains adequate accounting procedures with respect to such employees (within the meaning of paragraph (f)(5) of this section.

(v) ***Substantial compliance.*** If a taxpayer has not fully substantiated a particular element of an expenditure or use, but the taxpayer establishes to the satisfaction of the district director that he has substantially complied with the "adequate records" requirements of this paragraph (c)(2) with respect to the expenditure or use, the taxpayer may be permitted to establish such element by evidence which the district director shall deem adequate.

(3) ***Substantiation by other sufficient evidence*** —

(i) ***In general.*** If a taxpayer fails to establish to the satisfaction of the district director that he has substantially complied with the "adequate records" requirements of paragraph (c)(2) of this section with respect to an element of an expenditure or use, then, except as otherwise provided in this paragraph, the taxpayer must establish such element—

(A) By his own statement, whether written or oral, containing specific information in detail as to such element; and

(B) By other corrobative evidence sufficient to establish such element.

If such element is the description of a gift, or the cost or amount, time, place, or date of an expenditure or use, the corrobative evidence shall be direct evidence, such as a statement in writing or the oral testimony of persons entertained or other witnesses setting forth detailed information about such element, or the documentary evidence described in paragraph (c)(2) of this section. If such element is either the business relationship to the taxpayer of persons entertained, or the business purpose of an expenditure, the corrobative evidence may be circumstantial evidence.

(ii) ***Sampling*** —

(A) ***In general.*** Except as provided in paragraph (c)(3)(ii)(B) of this section, a taxpayer may maintain an adequate record for portions of a taxable year and use that record to substantiate the business/investment use of listed property for all or a portion of the taxable year if the taxpayer can demonstrate by other evidence that the periods for which an adequate record is maintained are representative of the use for the taxable year or a portion thereof.

(B) ***Exception for pooled vehicles.*** The sampling method of paragraph (c)(3)(ii)(A) of this section may not be used to substantiate the business/investment use of an automobile or other vehicle of an employer that is made available for use by more than one employee for all or a portion of a taxable year.

(C) ***Examples.*** The following examples illustrate this paragraph (c)(3)(ii).

Example 1. A, a sole proprietor and calendar year taxpayer, operates an interior decorating business out of her home. A uses an automobile for local business travel to visit the homes or offices of clients, to meet with suppliers and other subcontractors, and to pick up and deliver certain items to clients when feasible. There is no other business use of the automobile but A and other members of her family also use the automobile for personal purposes. A maintains adequate records for the first three months of 1986 that indicate that 75 percent of the use of the automobile was in A's business. Invoices from subcontractors and paid bills indicate that A's business continued at approximately the same rate for the remainder of 1986. If other

circumstances do not change (e.g., A does not obtain a second car for exclusive use in her business), the determination that the business/investment use of the automobile for the taxable year is 75 percent is based on sufficient corroborative evidence.

Example 2. The facts are the same as in *Example 1,* except that A maintains adequate records during the first week of every month, which indicate that 75 percent of the use of the automobile is in A's business. The invoices from A's business indicate that A's business continued at the same rate during the subsequent weeks of each month so that A's weekly records are representative of each month's business use of the automobile. Thus, the determination that the business/investment use of the automobile for the taxable year is 75 percent is based on sufficient corroborative evidence.

Example 3. B, a sole proprietor and calendar year taxpayer, is a salesman in a large metropolitan area for a company that manufactures household products. For the first three weeks of each month, B uses his own automobile occasionally to travel within the metropolitan area on business. During these three weeks, B's use of the automobile for business purposes does not follow a consistent pattern from day to day or week to week. During the fourth week of each month, B delivers to his customers all the orders taken during the previous month. B's use of his automobile for business purposes, as substantiated by adequate records, is 70 percent of the total use during that fourth week. In this example, a determination based on the records maintained during that fourth week that the business/investment use of the automobile for the taxable year is 70 percent is not based on sufficient corroborative evidence because use during this week is not representative of use during other periods.

(iii) ***Special rules.*** See § 1.274-6T for special rules for substantiation by sufficient corroborating evidence with respect to certain listed property.

(4) ***Substantiation in exceptional circumstances.*** If a taxpayer establishes that, by reason of the inherent nature of the situation—

(i) He was unable to obtain evidence with respect to an element of the expenditure or use which conforms fully to the "adequate records" requirements of paragraph (c)(2) of this section,

(ii) He is unable to obtain evidence with respect to such element which conforms fully to the "other sufficient evidence" requirements of paragraph (c)(3) of this section, and

(iii) He has presented other evidence, with respect to such element, which possesses the highest degree of probative value possible under the circumstances, such other evidence shall be considered to satisfy the substantiation requirements of section 274(d) and this paragraph.

(5) ***Loss of records due to circumstances beyond control of the taxpayer.*** Where the taxpayer establishes that the failure to produce adequate records is due to the loss of such records through circumstances beyond the taxpayer's control, such as destruction by fire, flood, earthquake, or other casualty, the taxpayer shall have a right to substantiate a deduction by reasonable reconstruction of his expenditures or use.

(6) ***Special rules*** —

(i) *Separate expenditure or use* —

(A) ***In general.*** For the purposes of this section, each separate payment or use by the taxpayer shall ordinarily be considered to constitute a separate expenditure. However, concurrent or repetitious expenses or uses may be substantiated as a single item. To illustrate the above rules, where a taxpayer entertains a business guest at dinner and thereafter at the theater, the payment for dinner shall be considered to constitute one expenditure and the payment for the tickets for the theater shall be considered to constitute a separate expenditure. Similarly, if during a day of business travel a taxpayer makes separate payments for breakfast, lunch, and dinner, he shall be considered to have made three separate expenditures. However, if during entertainment at a cocktail lounge the taxpayer pays separately for each serving of refreshments, the total amount expended for the refreshments will be treated as a single expenditure. A tip may be treated as a separate expenditure.

(B) ***Aggregation of expenditures.*** Except as otherwise provided in this section, the account book, diary, log, statement of expense, trip sheet, or similar record required by paragraph (c)(2)(ii) of this section shall be maintained with respect to each separate expenditure and not with respect to aggregate amounts for two or more expenditures. Thus, each expenditure for such items as lodging and air or rail travel shall be recorded as a separate item and not aggregated. However, at the option of the taxpayer, amounts expended for breakfast, lunch, or dinner, may be aggregated. A tip or gratuity which is related to an underlying expense may be aggregated with such expense. In addition, amounts expended in connection with the use of listed property during a taxable year, such as for gasoline or repairs for an automobile, may be aggregated. If these expenses are aggregated, the taxpayer must establish the date and amount, but need not prove the business purpose of each expenditure. Instead, the taxpayer may prorate the expenses based on the total business use of the listed property. For other provisions permitting recording of aggregate amounts in an account book, diary, log, statement of expense, trip sheet, or similar record, see paragraphs (b)(2)(i) and (b)(3) of this section (relating to incidental costs of travel and entertainment).

(C) ***Aggregation of business use.*** Uses which may be considered part of a single use, for example, a round trip or uninterrupted business use, may be accounted for by a single record. For example, use of a truck to make deliveries at several different locations which begins and ends at the business premises and which may include a stop at the business premises in between two deliveries may be accounted for by a single record of miles driven. In addition, use of a passenger automobile by a salesman for a business trip away from home over a period of time may be accounted for by a single record of miles traveled. De minimis personal use (such as a stop for lunch on the way between two business stops) is not an interruption of business use.

(ii) ***Allocation of expenditure.*** For purposes of this section, if a taxpayer has established the amount of an expenditure, but is unable to establish the portion of such amount which is attributable to each person participating in the event giving rise to the expenditure, such amount shall ordinarily be allocated to each participant on a pro rata basis, if such determination is material. Accordingly, the total number of persons for whom a travel or entertainment expenditure is incurred must be established in order to compute the portion of the expenditure allocable to such person.

(iii) ***Primary use of a facility.*** Section 274(a) (1)(B) and (2)(C) deny a deduction for any expenditure paid or incurred before January 1, 1979, with respect to a facility, or paid or incurred before January 1, 1994, with respect to a club, used in connection with an entertainment activity unless the taxpayer establishes that the facility (including a club) was used primarily for the furtherance of the taxpayer's trade or business. A determination whether a facility before January 1, 1979, or a club before January 1, 1994, was used primarily for the furtherance of the taxpayer's trade or business will depend upon the facts and circumstances of each case. In order to establish that a facility was used primarily for the furtherance of his trade or business, the taxpayer shall maintain records of the use of the facility, the cost of using the facility, mileage or its equivalent (if appropriate), and such other information as shall tend to establish such primary use. Such records of use shall contain—

(A) For each use of the facility claimed to be in furtherance of the taxpayer's trade or business, the elements of an expenditure specified in paragraph (b)(3) of this section, and

(B) For each use of the facility not in furtherance of the taxpayer's trade or business, an appropriate description of such use, including cost, date, number of persons entertained, nature of entertainment and, if applicable, information such as mileage or its equivalent. A notation such as “personal use” or “family use” would, in the case of such use, be sufficient to describe the nature of entertainment.

If a taxpayer fails to maintain adequate records concerning a facility which is likely to serve the personal purposes of the taxpayer, it shall be presumed that the use of such facility was primarily personal.

(iv) ***Additional information.*** In a case where it is necessary to obtain additional information, either—

(A) To clarify information contained in records, statements, testimony, or documentary evidence submitted by a taxpayer under the provisions of paragraph (c)(2) or (c)(3) of this section, or

(B) To establish the reliability or accuracy of such records, statements, testimony, or documentary evidence, the district director may, notwithstanding any other provision of this section, obtain such additional information by personal interview or otherwise as he determines necessary to implement properly the provisions of section 274 and the regulations thereunder.

(7) ***Specific exceptions.*** Except as otherwise prescribed by the Commissioner, substantiation otherwise required by this paragraph is not required for—

(i) Expenses described in section 274(e)(2) relating to food and beverages for employees, section 274(e)(3) relating to expenses treated as compensation, section 274(e)(8) relating to items available to the public, and section 274(e)(9) relating to entertainment sold to customers, and

(ii) Expenses described in section 274(e)(5) relating to recreational, etc., expenses for employees, except that a taxpayer shall keep such records or other evidence as shall establish that such expenses were for activities (or facilities used in connection therewith) primarily for the benefit of employees other than employees who are officers, shareholders or other owners (as defined in section 274(e)(5)), or highly compensated employees.

(d) ***Disclosure on returns*** —

(1) ***In general.*** The Commissioner may, in his discretion, prescribe rules under which any taxpayer claiming a deduction or credit for entertainment, gifts, travel, or with respect to listed property, or any other person receiving advances, reimbursements, or allowances for such items, shall make disclosure on his tax return with respect to such items. The provisions of this paragraph shall apply notwithstanding the provisions of paragraph (f) of this section.

(2) ***Business use of passenger automobiles and other vehicles.***

(i) On returns for taxable years beginning after December 31, 1984, taxpayers that claim a deduction or credit with respect to any vehicle are required to answer certain questions providing information about the use of the vehicle. The information required on the tax return relates to mileage (total, business, commuting, and other personal mileage), percentage of business use, date placed in service, use of other vehicles, after-work use, whether the taxpayer has evidence to support the business use claimed on the return, and whether or not the evidence is written.

(ii) Any employer that provides the use of a vehicle to an employee must obtain information from the employee sufficient to complete the employer's tax return. Any employer that provides more than five vehicles to its employees need not include any information on its return. The employer, instead, must obtain the information from its employees, indicate on its return that it has obtained the information, and retain the information received. Any employer—

(A) That can satisfy the requirements of § 1.274-6T(a)(2), relating to vehicles not used for personal purposes,

(B) That can satisfy the requirements of § 1.274-6T(a)(3), relating to vehicles not used for personal purposes other than commuting, or

(C) That treats all use of vehicles by employees as personal use need not obtain information with respect to those vechicles, but instead must indicate on its return that it has vehicles exempt from the requirements of this paragraph (d)(2).

(3) ***Business use of other listed property.*** On returns for taxable years beginning after December 31, 1984, taxpayers that claim a deduction or credit with respect to any listed property other than a vehicle (for example, a yacht, airplane, or certain computers) are required to provide the following information:

(i) The date that the property was placed in service,

(ii) The percentage of business use,

(iii) Whether evidence is available to support the percentage of business use claimed on the return, and

(iv) Whether the evidence is written.

(e) ***Substantiation of the business use of listed property made available by an employer for use by an employee —***

(1) ***Employee —***

(i) ***In general.*** An employee may not exclude from gross income as a working condition fringe any amount of the value of the availability of listed property provided by an employer to the employee, unless the employee substantiates for the period of availability the amount of the exclusion in accordance with the requirements of section 274(d) and either this section or § 1.274-6T.

(ii) ***Vehicles treated as used entirely for personal purposes.*** If an employer includes the value of the availability of a vehicle (as defined in § 1.61-21(e)(2)) in an employee's gross income without taking into account any exclusion for a working condition fringe allowable under section 132 and the regulations thereunder with respect to the vehicle, the employee must substantiate any deduction claimed under §§ 1.162-25 and 1.162-25T for the business/investment use of the vehicle in accordance with the requirements of section 274(d) and either this section or § 1.274-6T.

(2) ***Employer*** —

(i) ***In general.*** An employer substantiates its business/investment use of listed property by showing either—

(A) That, based on evidence that satisfies the requirements of section 274(d) or statements submitted by employees that summarize such evidence, all or a portion of the use of the listed property is by employees in the employer's trade or business and, if any employee used the property for personal purposes, the employer included an appropriate amount in the employee's income, or

(B) In the case of a vehicle, the employer treats all use by employees as personal use and includes an appropriate amount in the employees' income.

(ii) ***Reliance on employee records.*** For purposes of substantiating the business/investment use of listed property that an employer provides to an employee and for purposes of the information required by paragraph (d)(2) and (3) of this section, the employer may rely on adequate records maintained by the employee or on the employee's own statement if corroborated by other sufficient evidence unless the employer knows or has reason to know that the statement, records, or other evidence are not accurate. The employer must retain a copy of the adequate records maintained by the employee or the other sufficient evidence, if available. Alternatively, the employer may rely on a statement submitted by the employee that provides sufficient information to allow the employer to determine the business/investment use of the property unless the employer knows or has reason to know that the statement is not based on adequate records or on the employee's own statement corroborated by other sufficient evidence. If the employer relies on the employee's statement, the employer must retain only a copy of the statement. The employee must retain a copy of the adequate records or other evidence.

(f) ***Reporting and substantiation of expenses of certain employees for travel, entertainment, gifts, and with respect to listed property*** —

(1) ***In general.*** The purpose of this paragraph is to provide rules for reporting and substantiation of certain expenses paid or incurred by employees in connection with the performance of services as employees. For purposes of this paragraph, the term *business expenses* means ordinary and necessary expenses for travel, entertainment, gifts, or with respect to listed property which are deductible under section 162, and the regulations thereunder, to the extent not disallowed by section 262, 274(c), and 280F. Thus, the term *business expenses* does not include personal, living, or family expenses disallowed by section 262, travel expenses disallowed by section 274(c), or cost recovery

deductions and credits with respect to listed property disallowed by section 280F(d)(3) because the use of such property is not for the convenience of the employer and required as a condition of employment. Except as provided in paragraph (f)(2), advances, reimbursements, or allowances for such expenditures must be reported as income by the employee.

(2) ***Reporting of expenses for which the employee is required to make an adequate accounting to his employer*** —

(i) ***Reimbursements equal to expenses.*** For purposes of computing tax liability, an employee need not report on his tax return business expenses for travel, transportation, entertainment, gifts, or with respect to listed property, paid or incurred by him solely for the benefit of his employer for which he is required to, and does, make an adequate accounting to his employer (as defined in paragraph (f)(4) of this section) and which are charged directly or indirectly to the employer (for example, through credit cards) or for which the employee is paid through advances, reimbursements, or otherwise, provided that the total amount of such advances, reimbursements, and charges is equal to such expenses.

(ii) ***Reimbursements in excess of expenses.*** In case the total of the amounts charged directly or indirectly to the employer or received from the employer as advances, reimbursements, or otherwise, exceeds the business expenses paid or incurred by the employee and the employee is required to, and does, make an adequate accounting to his employer for such expenses, the employee must include such excess (including amounts received for expenditures not deductible by him) in income.

(iii) ***Expenses in excess of reimbursements.*** If an employee incurs deductible business expenses on behalf of his employer which exceed the total of the amounts charged directly or indirectly to the employer and received from the employer as advances, reimbursements, or otherwise, and the employee makes an adequate accounting to his employer, the employee must be able to substantiate any deduction for such excess with such records and supporting evidence as will substantiate each element of an expenditure (described in paragraph (b) of this section) in accordance with paragraph (c) of this section.

(3) ***Reporting of expenses for which the employee is not required to make an adequate accounting to his employer.*** If the employee is not required to make an adequate accounting to his employer for his business expenses or, though required, fails to make an adequate accounting for such expenses, he must submit, as a part of his tax return, the appropriate form issued by the Internal Revenue Service for claiming deductions for employee business expenses (e.g., Form 2106, Employee Business Expenses, for 1985) and provide the information requested on that form, including the information required by paragraph (d)(2) and (3) of this section if the employee's business expenses are with respect to the use of listed property. In addition, the employee must maintain such records and supporting evidence as will substantiate each element of an expenditure or use (described in paragraph (b) of this section) in accordance with paragraph (c) of this section.

(4) [Reserved]. For further guidance, see § 1.274-5(f)(4).

(5) ***Substantiation of expenditures by certain employees.*** An employee who makes an adequate accounting to his employer within the meaning of this paragraph will not again be required to substantiate such expense account information except in the following cases:

(i) An employee whose business expenses exceed the total of amounts charged to his employer and amounts received through advances, reimbursements or otherwise and who claims a deduction on his return for such excess,

(ii) An employee who is related to his employer within the meaning of section 267(b), but for this purpose the percentage referred to in section 267(b)(2) shall be 10 percent, and

(iii) Employees in cases where it is determined that the accounting procedures used by the employer for the reporting and substantiation of expenses by such employees are not adequate, or where it cannot be determined that such procedures are adequate. The district director will determine whether the employer's accounting procedures are adequate by considering the facts and circumstances of each case, including the use of proper internal controls. For example, an employer should require that an expense account be verified and approved by a reasonable person other than the person incurring such expenses. Accounting procedures will be considered inadequate to the extent that the employer does not require an adequate accounting from his employees as defined in paragraph (f)(4) of this section, or does not maintain such substantiation. To the extent an employer fails to maintain adequate accounting procedures he will thereby obligate his employees to substantiate separately their expense account information.

(g) [Reserved]. For further guidance, see § 1.274-5(g).

(h) ***Reporting and substantiation of certain reimbursements of persons other than employees*** —

(1) ***In general.*** The purpose of this paragraph is to provide rules for the reporting and substantiation of certain expenses for travel, entertainment, gifts, or with respect to listed property paid or incurred by one person (hereinafter termed “independent contractor”) in connection with services performed for another person other than an employer (hereinafter termed “client or customer”) under a reimbursement or other expense allowance arrangement with such client or customer. For purposes of this paragraph, the term *business expenses* means ordinary and necessary expenses for travel, entertainment, gifts, or with respect to listed property which are deductible under section 162, and the regulations thereunder, to the extent not disallowed by sections 262 and 274(c). Thus, the term *business expenses* does not include personal, living, or family expenses disallowed by section 262 or travel expenses disallowed by section 274(c), and reimbursements for such expenditures must be reported as income by the independent contractor. For purposes of this paragraph, the term *reimbursements* means advances, allowances, or reimbursements received by an independent contractor for travel, entertainment, gifts, or with respect to listed property in connection with the performance by him of services for his client or customer, under a reimbursement or other expense allowance arrangement with his client or customer, and includes amounts charged directly or indirectly to the client or customer through credit card systems or otherwise. See paragraph (j) of this section relating to the substantiation of meal expenses while traveling away from home.

(2) ***Substantiation by independent contractors.*** An independent contractor shall substantiate, with respect to his reimbursements, each element of an expenditure (described in paragraph (b) of this section) in accordance with the requirements of paragraph (c) of this section; and, to the extent he does not so substantiate, he shall include such reimbursements in income. An independent contractor shall so substantiate a reimbursement for entertainment regardless of whether he accounts (within the meaning of paragraph (h)(3) of this section) for such entertainment.

(3) ***Accounting to a client or customer under section 274(e)(4)(B).*** Section 274(e)(4)(B) provides that section 274(a) (relating to disallowance of expenses for entertainment) shall not apply to expenditures for entertainment for which an independent contractor has been reimbursed if the independent contractor accounts to his client or customer, to the extent provided by section 274(d). For purposes of section 274(e)(4)(B), an independent contractor shall be considered to account to his client or customer for an expense paid or incurred under a reimbursement or other expense

allowance arrangement with his client or customer if, with respect to such expense for entertainment, he submits to his client or customer adequate records or other sufficient evidence conforming to the requirements of paragraph (c) of this section.

(4) ***Substantiation by client or customer.*** A client or customer shall not be required to substantiate, in accordance with the requirements of paragraph (c) of this section, reimbursements to an independent contractor for travel and gifts, or for entertainment unless the independent contractor has accounted to him (within the meaning of section 274(e)(4)(B) and paragraph (h)(3) of this section) for such entertainment. If an independent contractor has so accounted to a client or customer for entertainment, the client or customer shall substantiate each element of the expenditure (as described in paragraph (b) of this section) in accordance with the requirements of paragraph (c) of this section.

(i) [Reserved]

(j) [Reserved]. For further guidance, *see* § 1.274-5(j).

(k) and

(l) [Reserved] For further guidance, see § 1.274-5(k) and (l).

(m) ***Effective date.*** Section 274(d), as amended by the Tax Reform Act of 1984 and Public Law 99-44, and this section (except as provided in paragraph (d)(2) and (3) of this section) apply with respect to taxable years beginning after December 31, 1985. Section 274(d) and this section apply to any deduction or credit claimed in a taxable year beginning after December 31, 1985, with respect to any listed property, regardless of the taxable year in which the property was placed in service. However, except as provided in § 1.132-5(h) with respect to qualified nonpersonal use vehicles, the substantiation requirements of section 274(d) and this section do not apply to the determination of an employee's working condition fringe exclusion or to the determination under § 1.162-25(b) of an employee's deduction before the date that those requirements apply, under this paragraph (m), to the employer, if the employer is taxable. Paragraph (j)(3) of this section applies to expenses paid or incurred after September 30, 2002.

[T.D. 8061, 50 FR 46014, Nov. 6, 1985, as amended by T.D. 8063, 50 FR 52312, Dec. 23, 1985; T.D. 8276, 54 FR 51027, Dec. 12, 1989; T.D. 8451, 57 FR 57669, Dec. 7, 1992; T.D. 8601, 60 FR 36995, July 19, 1995; T.D. 8715, 62 FR 13990, Mar. 25, 1997; T.D. 8864, 65 FR 4123, Jan. 26, 2000; T.D. 9020, 67 FR 68513, Nov. 12, 2002; T.D. 9020, 67 FR 72273, Dec. 4, 2002; T.D. 9064, July 1, 2003; T.D. 9483, 75 FR 27937, May 19, 2010]

§ 1.274-6 Expenditures deductible without regard to trade or business or other income producing activity.

The provisions of §§ 1.274-1 through 1.274-5, inclusive, do not apply to any deduction allowable to the taxpayer without regard to its connection with the taxpayer's trade or business or other income producing activity. Examples of such items are interest, taxes such as real property taxes, and casualty losses. Thus, if a taxpayer owned a fishing camp, the taxpayer could still deduct mortgage interest and real property taxes in full even if deductions for its use are not allowable under section 274(a) and § 1.274-2. In the case of a taxpayer which is not an individual, the provisions of this section shall be applied as if it were an individual. Thus, if a corporation sustains a casualty loss on an entertainment facility used in its trade or business, it could deduct the loss even though deductions for the use of the facility are not allowable.

[T.D. 8051, 50 FR 36576, Sept. 9, 1985]

§ 1.274-6T Substantiation with respect to certain types of listed property for taxable years beginning after 1985 (temporary).

(a) *Written policy statements as to vehicles* —

(1) *In general.* Two types of written policy statements satisfying the conditions described in paragraph (a)(2) and (3) of this section, if initiated and kept by an employer to implement a policy of no personal use, or no personal use except for commuting, of a vehicle provided by the employer, qualify as sufficient evidence corroborating the taxpayer's own statement and therefore will satisfy the employer's substantiation requirements under section 274(d). Therefore, the employee need not keep a separate set of records for purposes of the employer's substantiation requirements under section 274(d) with respect to use of a vehicle satisfying these written policy statement rules. A written policy statement adopted by a governmental unit as to employee use of its vehicles is eligible for these exceptions to the section 274(d) substantiation rules. Thus, a resolution of a city council or a provision of state law or a state constitution would qualify as a written policy statement, as long as the conditions described in paragraph (a)(2) and (3) of this section are met.

(2) *Vehicles not used for personal purposes* —

(i) *Employers.* A policy statement that prohibits personal use by an employee satisfies an employer's substantiation requirements under section 274(d) if all the following conditions are met—

(A) The vehicle is owned or leased by the employer and is provided to one or more employees for use in connection with the employer's trade or business,

(B) When the vehicle is not used in the employer's trade or business, it is kept on the employer's business premises, unless it is temporarily located elsewhere, for example, for maintenance or because of a mechanical failure,

(C) No employee using the vehicle lives at the employer's business premises,

(D) Under a written policy of the employer, neither an employee, nor any individual whose use would be taxable to the employee, may use the vehicle for personal purposes, except for de minimis personal use (such as a stop for lunch between two business deliveries), and

(E) The employer reasonably believes that, except for de minimis use, neither the employee, nor any individual whose use would be taxable to the employee, uses the vehicle for any personal purpose.

There must also be evidence that would enable the Commissioner to determine whether the use of the vehicle meets the preceding five conditions.

(ii) *Employees.* An employee, in lieu of substantiating the business/investment use of an employer-provided vehicle under § 1.274-5T, may treat all use of the vehicle as business/investment use if the following conditions are met—

(A) The vehicle is owned or leased by the employer and is provided to one or more employees for use in connection with the employer's trade or business,

(B) When the vehicle is not used in the employer's trade or business, it is kept on the employer's business premises, unless it is temporarily located elsewhere, for example, for maintenance or because of a mechanical failure,

(C) No employee using the vehicle lives at the employer's business premises,

(D) Under a written policy of the employer, neither the employee, nor any individual whose use would be taxable to the employee, may use the vehicle for personal purposes, except for de minimis personal use (such as a stop for lunch between two business deliveries), and

(E) Except for de minimis personal use, neither the employee, nor any individual whose use would be taxable to the employee, uses the vehicle for any personal purpose.

There must also be evidence that would enable the Commissioner to determine whether the use of the vehicle meets the preceding five conditions.

(3) ***Vehicles not used for personal purposes other than commuting*** —

(i) ***Employers.*** A policy statement that prohibits personal use by an employee, other than commuting, satisfies an employer's substantiation requirements under section 274(d) if all the following conditions are met—

(A) The vehicle is owned or leased by the employer and is provided to one or more employees for use in connection with the employer's trade or business and is used in the employer's trade or business,

(B) For bona fide noncompensatory business reasons, the employer requires the employee to commute to and/or from work in the vehicle,

(C) The employer has established a written policy under which neither the employee, nor any individual whose use would be taxable to the employee, may use the vehicle for personal purposes, other than for commuting or de minimis personal use (such as a stop for a personal errand on the way between a business delivery and the employee's home),

(D) The employer reasonably believes that, except for de minimis personal use, neither the employee, nor any individual whose use would be taxable to the employee, uses the vehicle for any personal purpose other than commuting,

(E) The employee required to use the vehicle for commuting is not a control employee (as defined in § 1.61-21(f)(5) and (6)) required to use an automobile (as defined in § 1.61-21(d)(1)(ii)), and

(F) The employer accounts for the commuting use by including in the employee's gross income the commuting value provided in § 1.61-21(f)(3) (to the extent not reimbursed by the employee).

There must be evidence that would enable the Commissioner to determine whether the use of the vehicle met the preceding six conditions.

(ii) ***Employees.*** An employee, in lieu of substantiating the business/investment use of an employer-provided vehicle under § 1.274-5T, may substantiate any exclusion allowed under section 132 for a working condition fringe by including in income the commuting value of the vehicle (determined by the employer pursuant to § 1.61-21(f)(3)) if all the following conditions are met:

(A) The vehicle is owned or leased by the employer and is provided to one or more employees for use in connection with the employer's trade or business and is used in the employer's trade or business,

(B) For bona fide noncompensatory business reasons, the employer requires the employee to commute to and/or from work in the vehicle,

(C) Under a written policy of the employer, neither the employee, nor any individual whose use would be taxable to the employee, may use the vehicle for personal purposes, other than for commuting or de minimis personal use (such as a stop for a personal errand on the way between a business delivery and the employee's home),

(D) Except for de minimis personal use, neither the employee, nor any individual whose use would be taxable to the employee, uses the vehicle for any personal purpose other than commuting,

(E) The employee required to use the vehicle for commuting is not a control employee (as defined in § 1.61-21(f)(5) and (6) required to use an automobile (as defined in § 1.61-21(d)(1)(ii)), and

(F) The employee includes in gross income the commuting value determined by the employer as provided in § 1.61-21(f)(3)(to the extent that the employee does not reimburse the employer for the commuting use).

There must also be evidence that would enable the Commissioner to determine whether the use of the vehicle met the preceding six conditions.

(b) ***Vehicles used in connection with the business of farming*** —

(1) ***In general.*** If, during a taxable year or shorter period, a vehicle, not otherwise described in section 274(i), § 1.274-5T(k), or paragraph (a) (2) or (3) of this section, is owned or leased by an employer and used during most of a normal business day directly in connection with the business of farming (as defined in paragraph (b)(2) of this section), the employer, in lieu of substantiating the use of the vehicle as prescribed in § 1.274-5T(b)(6)(i)(B), may determine any deduction or credit with respect to the vehicle as if the business/investment use (as defined in § 1.280F-6T(d)(3)(i)) and the qualified business use (as defined in § 1.280F-6T(d)(2)) of the vehicle in the business of farming for the taxable year or shorter period were 75 percent plus that percentage, if any, attributable to an amount included in an employee's gross income. If the vehicle is also available for personal use by employees, the employer must include the value of that personal use in the gross income of the employees, allocated among them in the manner prescribed in § 1.132-5(g).

(2) ***Directly in connection with the business of farming.*** The phrase *directly in connection with the business of farming* means that the vehicle must be used directly in connection with the business of operating a farm (i.e., cultivating land or raising or harvesting any agricultural or horticultural commodity, or the raising, shearing, feeding, caring for, training, and management of animals) or incidental thereto (for example, trips to the feed and supply store).

(3) ***Substantiation by employees.*** If an employee is provided with the use of a vehicle to which this paragraph (b) applies, the employee may, in lieu of substantiating the business/investment use of the vehicle in the manner prescribed in § 1.274-5T, substantiate any exclusion allowed under section 132 for a working condition fringe as if the business/investment use of the vehicle were 75 percent, plus that percentage, if any, determined by the employer to be attributable to the use of the vehicle by individuals other than the employee, provided that the employee includes in gross income the amount determined by the employer as includible in the employee's gross income. *See* § 1.132-5(g)(3) for examples illustrating the allocation of use of a vehicle among employees.

(c) ***Vehicles treated as used entirely for personal purposes.*** An employer may satisfy the substantiation requirements under section 274(d) for a taxable year or shorter period with respect to the business use of a vehicle that is provided to an employee by including the value of the availability of the vehicle during the relevant period in the employee's gross income without any exclusion for a working condition fringe with respect to the vehicle and, if required, by withholding any taxes. Under these circumstances, the employer's business/investment use of the vehicle during the relevant period is 100 percent. The employer's qualified business use of the vehicle is dependent upon the relationship of the employee to the employer (*see* § 1.280F-6T(d)(2)).

(d) ***Limitation.*** If a taxpayer chooses to satisfy the substantiation requirements of section 274(d) and § 1.274-5T by using one of the methods prescribed in paragraphs (a) (2) or (3), (b), or (c) of this section and files a return with the Internal Revenue Service for a taxable year consistent with such choice, the taxpayer may not later use another of these methods. Similarly, if a taxpayer chooses to satisfy the substantiation requirements of section 274(d) in the manner prescribed in § 1.274-5T and files a return with the Internal Revenue Service for a taxable year consistent with such choice, the taxpayer may not later use a method prescribed in paragraph (a) (2) or (3), (b), or (c) of this section. This rule applies to an employee for purposes of substantiating any working condition fringe exclusion as well as to an employer. For example, if an employee excludes on his federal income tax return for a taxable year 90 percent of the value of the availability of an employer-provided automobile on the basis of records that allegedly satisfy the "adequate records" requirement of § 1.274-5T(c)(2), and that requirement is not satisfied, then the employee may not satisfy the substantiation requirements of section 274(d) for the taxable year by any method prescribed in this section, but may present other corroborative evidence as prescribed in § 1.274-5T(c)(3).

(e) ***Definitions*** —

(1) ***In general.*** The definitions provided in this paragraph (e) apply for purposes of section 274(d), § 1.274-5T, and this section.

(2) ***Employer and employee.*** The terms *employer* and *employee* include the following:

(i) A sole proprietor shall be treated as both an employer and employee,

(ii) A partnership shall be treated as an employer of its partners, and

(iii) A partner shall be treated as an employee of the partnership.

(3) ***Automobile.*** The term *automobile* has the same meaning as prescribed in § 1.61-21(d)(1)(ii).

(4) ***Vehicle.*** The term *vehicle* has the same meaning as prescribed in § 1.61-21(e)(2).

(5) ***Personal use. Personal use*** by an employee of an employer-provided vehicle includes use in any trade or business other than the trade or business of being the employee of the employer providing the vehicle.

(f) ***Effective date.*** This section is effective for taxable years beginning after December 31, 1985.

[T.D. 8061, 50 FR 46037, Nov. 6, 1985, as amended by T.D. 8063, 50 FR 52312, Dec. 23, 1985; T.D. 9849, 84 FR 9233, Mar. 14, 2019]

§ 1.274-7 Treatment of certain expenditures with respect to entertainment-type facilities.

If deductions are disallowed under § 1.274-2 with respect to any portion of a facility, such portion shall be treated as an asset which is used for personal, living, and family purposes (and not as an asset used in a trade or business). Thus, the basis of such a facility will be adjusted for purposes of computing depreciation deductions and determining gain or loss on the sale of such facility in the same manner as other property (for example, a residence) which is regarded as used partly for business and partly for personal purposes.

[T.D. 6659, 28 FR 6507, June 25, 1963]

§ 1.274-8 Effective/applicability date.

Except as provided in §§ 1.274-2(a), 1.274-2(e), 1.274-2(f)(2)(iv)(F), and 1.274-5, §§ 1.274-1 through 1.274-7 apply to taxable years ending after December 31, 1962.

[T.D. 9625, 78 FR 46504, Aug. 1, 2013]

§ 1.274-9 Entertainment provided to specified individuals.

(a) ***In general.*** Paragraphs (e)(2) and (e)(9) of section 274 provide exceptions to the disallowance of section 274(a) for expenses for entertainment, amusement, or recreation activities, or for an entertainment facility. In the case of a specified individual (as defined in paragraph (b) of this section), the exceptions of paragraphs (e)(2) and (e)(9) of section 274 apply only to the extent that the expenses do not exceed the amount of the expenses treated as compensation (under section 274(e)(2)) or as income (under section 274(e)(9)) to the specified individual. The amount disallowed is reduced by any amount that the specified individual reimburses a taxpayer for the entertainment.

(b) ***Specified individual defined.***

(1) A specified individual is an individual who is subject to section 16(a) of the Securities Act of 1934 in relation to the taxpayer, or an individual who would be subject to section 16(a) if the taxpayer were an issuer of equity securities referred to in that section. Thus, for example, a specified individual is an officer, director, or more than 10 percent owner of a corporation taxed under subchapter C or subchapter S or a personal service corporation. A specified individual includes every individual who—

(i) Is the direct or indirect beneficial owner of more than 10 percent of any class of any registered equity (other than an exempted security);

(ii) Is a director or officer of the issuer of the security;

(iii) Would be the direct or indirect beneficial owner of more than 10 percent of any class of a registered security if the taxpayer were an issuer of equity securities; or

(iv) Is comparable to an officer or director of an issuer of equity securities.

(2) For partnership purposes, a specified individual includes any partner that holds more than a 10 percent equity interest in the partnership, or any general partner, officer, or managing partner of a partnership.

(3) For purposes of this section, *officer* has the same meaning as in 17 CFR § 240.16a-1(f).

(4) A specified individual includes a director or officer of a tax-exempt entity.

(5) A specified individual of a taxpayer includes a specified individual of a party related to the taxpayer within the meaning of section 267(b) or section 707(b).

(c) ***Specified individual treated as recipient of entertainment provided to others.*** For purposes of section 274(a), a specified individual is treated as the recipient of entertainment provided to another individual because of the relationship of the other individual to the specified individual if the entertainment is a fringe benefit to the specified individual under section 61(a)(1) (without regard to any exclusions from gross income). Thus, expenses allocable to entertainment provided to the other individual are attributed to the specified individual for purposes of determining the amount of disallowed expenses.

(d) ***Entertainment use of aircraft by specified individuals.*** For rules relating to entertainment use of aircraft by specified individuals, see § 1.274-10.

(e) ***Effective/applicability date.*** This section applies to taxable years beginning after August 1, 2012.

[T.D. 9597, 77 FR 45483, Aug. 1, 2012]

§ 1.274-10 Special rules for aircraft used for entertainment.

(a) ***Use of an aircraft for entertainment*** —

(1) ***In general.*** Section 274(a) disallows a deduction for certain expenses for entertainment, amusement, or recreation activities, or for an entertainment facility. Under section 274(a) and this section, no deduction otherwise allowable under chapter 1 is allowed for expenses for the use of a taxpayer-provided aircraft for entertainment, except as provided in paragraph (a)(2) of this section.

(2) ***Exceptions*** —

(i) ***In general.*** Paragraph (a)(1) of this section does not apply to deductions for expenses for business entertainment air travel or to deductions for expenses that meet the exceptions of section 274(e), § 1.274-2(f), and this section. Section 274(e)(2) and (e)(9) provides certain exceptions to the disallowance of section 274(a) for expenses for goods, services, and facilities for entertainment, recreation, or amusement.

(ii) ***Expenses treated as compensation*** —

(A) ***Employees who are not specified individuals.*** Section 274(a), § 1.274-2(a) through (d), and paragraph (a)(1) of this section, in accordance with section 274(e)(2)(A), do not apply to expenses for entertainment air travel provided to an employee who is not a specified individual to the extent that a taxpayer—

(*1*) Properly treats the expenses relating to the recipient of entertainment as compensation to an employee under chapter 1 and as wages to the employee for purposes of chapter 24; and

(*2*) Treats the proper amount as compensation to the employee under § 1.61-21.

(B) ***Persons who are not employees and are not specified individuals.*** Section 274(a), § 1.274-2(a) through (d), and paragraph (a)(1) of this section, in accordance with section 274(e)(9), do not apply to expenses for entertainment air travel provided to a person who is not an employee and is not a specified individual to the extent that the expenses are

includible in the income of that person. This exception does not apply to any amount paid or incurred by the taxpayer that is required to be included in any information return filed by the taxpayer under part III of subchapter A of chapter 61 and is not so included.

(C) ***Specified individuals.*** Section 274(a), § 1.274-2(a) through (d), and paragraph (a)(1) of this section, in accordance with section 274(e)(2)(B), do not apply to expenses for entertainment air travel of a specified individual to the extent that the amount of the expenses do not exceed the sum of—

(*1*) The amount treated as compensation to or included in the income of the specified individual in the manner specified under paragraph (a)(2)(ii)(A)(1) of this section (if the specified individual is an employee) or under paragraph (a)(2)(ii)(B) of this section (if the specified individual is not an employee); and

(*2*) Any amount the specified individual reimburses the taxpayer.

(iii) ***Travel on regularly scheduled commercial airlines.*** Section 274(a), § 1.274-2(a) through (d), and paragraph (a)(1) of this section do not apply to expenses for entertainment air travel that a taxpayer that is a commercial passenger airline provides to specified individuals of the taxpayer on the taxpayer's regularly scheduled flights on which at least 90 percent of the seats are available for sale to the public to the extent the expenses are includible in the income of the recipient of the entertainment in the manner specified under paragraph (a)(2)(ii)(A)(1) of this section (if the specified individual is an employee) or under paragraph (a)(2)(ii)(B) of this section (if the specified individual is not an employee).

(b) ***Definitions.*** The definitions in this paragraph (b) apply for purposes of this section.

(1) ***Entertainment.*** For the definition of *entertainment* for purposes of this section, see § 1.274-2(b)(1). Entertainment does not include personal travel that is not for entertainment purposes. For example, travel to attend a family member's funeral is not entertainment.

(2) ***Entertainment air travel. Entertainment air travel*** is any travel aboard a taxpayer-provided aircraft for entertainment purposes.

(3) ***Business entertainment air travel. Business entertainment air travel*** is any entertainment air travel aboard a taxpayer-provided aircraft that is directly related to the active conduct of the taxpayer's trade or business or related to an expenditure directly preceding or following a substantial and bona fide business discussion and associated with the active conduct of the taxpayer's trade or business. See § 1.274-2(a)(1)(i) and (ii). Air travel is not business entertainment air travel merely because a taxpayer-provided aircraft is used for the travel as a result of a bona fide security concern under § 1.132-5(m).

(4) ***Taxpayer-provided aircraft.*** A *taxpayer-provided aircraft* is any aircraft owned by, leased to, or chartered to, a taxpayer or any party related to the taxpayer (within the meaning of section 267(b) or section 707(b)).

(5) ***Specified individual.*** For rules relating to the definition of a specified individual, see § 1.274-9.

(c) ***Amount disallowed.*** Except as otherwise provided, the amount disallowed under this section for an entertainment flight by a specified individual is the amount of expenses allocable to the entertainment flight of the specified individual under paragraph (e)(2), (e)(3), or (f)(3) of this section, reduced (but not

below zero) by the amount the taxpayer treats as compensation or reports as income under paragraph (a)(2)(ii)(C)(1) of this section to the specified individual, plus any amount the specified individual reimburses the taxpayer.

(d) ***Expenses subject to disallowance under this section —***

(1) ***Definition of expenses.*** In determining the amount of expenses subject to disallowance under this section, a taxpayer must include all of the expenses of operating the aircraft, including all fixed and variable expenses the taxpayer deducts in the taxable year. These expenses include, but are not limited to, salaries for pilots, maintenance personnel, and other personnel assigned to the aircraft; meal and lodging expenses of flight personnel; take-off and landing fees; costs for maintenance flights; costs of on-board refreshments, amenities and gifts; hangar fees (at home or away); management fees; costs of fuel, tires, maintenance, insurance, registration, certificate of title, inspection, and depreciation; interest on debt secured by or properly allocated (within the meaning of § 1.163-8T) to an aircraft; and all costs paid or incurred for aircraft leased or chartered to the taxpayer.

(2) ***Leases or charters to third parties.*** Expenses allocable to a lease or charter of a taxpayer's aircraft to an unrelated (as determined under section 267(b) or 707(b)) third-party in a bona-fide business transaction for adequate and full consideration are excluded from the definition of expenses in paragraph (d)(1) of this section. Only expenses allocable to the lease or charter period are excluded under this paragraph (d)(2).

(3) ***Straight-line method permitted for determining depreciation disallowance under this section —***

(i) ***In general.*** In lieu of the amount of depreciation deducted in the taxable year, solely for purposes of paragraph (d)(1) of this section, a taxpayer may elect to treat as its depreciation deduction the amount that would result from using the straight-line method of depreciation over the class life (as defined by section 168(i)(1) and using the applicable convention under section 168(d)) of an aircraft, even if the taxpayer uses a different methodology to calculate depreciation for the aircraft under other sections of the Internal Revenue Code (for example, section 168). If the property qualifies for the additional first-year depreciation deduction provided by, for example, section 168(k), 168(n), 1400L(b), or 1400N(d), depreciation for purposes of this straight-line election is determined on the unadjusted depreciable basis (as defined in § 1.168(b)-1(a)(3)) of the property. However, the amount of depreciation disallowed as a result of this paragraph (d)(3) for any taxable year cannot exceed a taxpayer's allowable depreciation for that taxable year. For purposes of this section, a taxpayer that elects to use the straight-line method and class life under this paragraph (d)(3) for any aircraft it operates must use that methodology for all depreciable aircraft it operates and must continue to use the methodology for the entire period the taxpayer uses any depreciable aircraft.

(ii) ***Aircraft placed in service in earlier taxable years.*** The amount of depreciation for purposes of this paragraph (d)(3) for aircraft placed in service in taxable years before the taxable year of the election is determined by applying the straight-line method of depreciation to the unadjusted depreciable basis (or, for property acquired in an exchange to which section 1031 applies, the basis of the aircraft as determined under section 1031(d)) and over the class life (using the applicable convention under section 168(d)) of the aircraft as though the taxpayer used that methodology from the year the aircraft was placed in service.

(iii) ***Manner of making and revoking election.*** A taxpayer makes the election under this paragraph (d)(3) by filing an income tax return for the taxable year that determines the taxpayer's expenses for purposes of paragraph (d)(1) of this section by computing depreciation under this paragraph (d)(3). A taxpayer may revoke an election only for compelling circumstances upon consent of the Commissioner by private letter ruling.

(4) ***Aggregation of aircraft*** —

(i) ***In general.*** A taxpayer may aggregate the expenses of aircraft of similar cost profiles for purposes of calculating disallowed expenses under paragraph (c) of this section.

(ii) ***Similar cost profiles.*** Aircraft are of similar cost profiles if their operating costs per mile or per hour of flight are comparable. Aircraft must have the same engine type (jet or propeller) and the same number of engines to have similar cost profiles. Other factors to be considered in determining whether aircraft have similar cost profiles include, but are not limited to, maximum take-off weight, payload, passenger capacity, fuel consumption rate, age, maintenance costs, and depreciable basis.

(5) ***Authority for establishing safe harbors for determining expenses.*** The Commissioner may establish in published guidance, see § 601.601(d)(2) of this chapter, one or more safe harbor methods under which a taxpayer may determine the amount of expenses paid or incurred for entertainment flights.

(e) ***Allocation of expenses*** —

(1) ***General rule.*** For purposes of determining the expenses allocated to entertainment air travel of a specified individual under paragraph (a)(2)(ii)(C) of this section, a taxpayer must use either the occupied seat hours or miles method of paragraph (e)(2) of this section or the flight-by-flight method of paragraph (e)(3) of this section. A taxpayer must use the chosen method for all flights of all aircraft for the taxable year.

(2) ***Occupied seat hours or miles method*** —

(i) ***In general.*** The occupied seat hours or miles method determines the amount of expenses allocated to a particular entertainment flight of a specified individual based on the occupied seat hours or miles for an aircraft for the taxable year. Under this method, a taxpayer may choose to use either occupied seat hours or miles for the taxable year to determine the amount of expenses allocated to entertainment flights of specified individuals, but must use occupied seat hours or miles consistently for all flights of all aircraft for the taxable year.

(ii) ***Computation under the occupied seat hours or miles method.*** The amount of expenses allocated to an entertainment flight taken by a specified individual is computed under the occupied seat hours or miles method by determining—

(A) The total expenses for the year under paragraph (d) of this section for the aircraft or group of aircraft (if aggregated under paragraph (d)(4) of this section), as applicable;

(B) The number of occupied seat hours or miles for the taxable year for the aircraft or group of aircraft by totaling the occupied seat hours or miles of all flights in the taxable year flown by the aircraft or group of aircraft, as applicable. The occupied seat hours or miles for a flight is the number of hours or miles flown for the flight multiplied by the number of seats occupied on that flight. For example, a flight of 6 hours with three passengers results in 18 occupied seat hours;

(C) The cost per occupied seat hour or mile for the aircraft or group of aircraft, as applicable, by dividing the total expenses under paragraph (e)(2)(ii)(A) of this section by the total number of occupied seat hours or miles under paragraph (e)(2)(ii)(B) of this section; and

(D) The amount of expenses allocated to an entertainment flight taken by a specified individual by multiplying the number of hours or miles of the flight by the cost per occupied hour or mile for that aircraft or group of aircraft, as applicable, as determined under paragraph (e)(2)(ii)(C) of this section.

(iii) ***Allocation of expenses of multi-leg trips involving both business and entertainment legs.*** A taxpayer that uses the occupied seat hours or miles allocation method must allocate the expenses of a trip by a specified individual that involves at least one segment for business and one segment for entertainment between the business travel and the entertainment travel unless none of the expenses for the entertainment segment are disallowed. The entertainment cost of a multi-leg trip is the total cost of the flights (by occupied seat hours or miles) minus the cost of the flights that would have been taken without the entertainment segment or segments.

(iv) ***Examples.*** The following examples illustrate the provisions of this paragraph (e)(2):

Example 1. (i) A taxpayer-provided aircraft is used for Flights 1, 2, and 3, of 5 hours, 5 hours, and 4 hours, respectively, during the Taxpayer's taxable year. Each flight carries four passengers. On Flight 1, none of the passengers is a specified individual. On Flight 2, passengers A and B are specified individuals traveling for entertainment purposes and passengers C and D are not specified individuals. For Flight 2, Taxpayer treats $1,200 as compensation to A, and B reimburses Taxpayer $500. On Flight 3, all four passengers (A, B, E, and F) are specified individuals traveling for entertainment purposes. For Flight 3, Taxpayer treats $1,300 each as compensation to A, B, E, and F. Taxpayer incurs $56,000 in expenses for the operation of the aircraft for the taxable year. The aircraft is operated for 56 occupied seat hours for the period (four passengers times 5 hours (20 occupied seat hours) for Flight 1, plus four passengers times 5 hours (20 occupied seat hours) for Flight 2, plus four passengers times 4 hours (16 occupied seat hours) for Flight 3. The cost per occupied seat hour is $1,000 ($56,000/56 hours).
(ii) For purposes of determining the amount disallowed (to the extent not treated as compensation or reimbursed) for entertainment provided to specified individuals, $5,000 ($1,000 × 5 hours) each is allocable to A and B for Flight 2, and $4,000 ($1,000 × 4 hours) each is allocable to A, B, E, and F for Flight 3.

(iii) For Flight 2, because Taxpayer treats $1,200 as compensation to A, and B reimburses Taxpayer $500, Taxpayer may deduct $1,700 of the cost of Flight 2 allocable to A and B. The deduction for the remaining $8,300 cost allocable to entertainment provided to A and B on Flight 2 is disallowed (for A, $5,000 less the $1,200 treated as compensation, and for B, $5,000 less the $500 reimbursed).

(iv) For Flight 3, because Taxpayer treats $1,300 each as compensation to A, B, E, and F, Taxpayer may deduct $5,200 of the cost of Flight 3. The deduction for the remaining $10,800 cost allocable to entertainment provided to A, B, E, and F on Flight 3 is disallowed ($4,000 less the $1,300 treated as compensation to each specified individual).

Example 2. (i) G, a specified individual, is the sole passenger on an aircraft that makes three flights. First, G travels on a two-hour flight from City A to City B for business purposes. G then travels on a three-hour flight from City B to City C for entertainment purposes, and returns from City C to City A on a four-hour flight. G's flights have resulted in nine occupied seat hours (two for the first segment, plus three for the second segment, plus four for the third segment). If G had returned directly to City A from City B, the flights would have resulted in four occupied seat hours.
(ii) Under paragraph (e)(2)(iii) of this section, five occupied seat hours are allocable to G's entertainment (nine total occupied seat hours minus the four occupied seat hours that would have resulted if the travel had been a roundtrip business trip without the entertainment segment). If Taxpayer's cost per occupied seat hour for the year is $1,000, $5,000 is allocated to G's entertainment use of the aircraft ($1,000 × five occupied seat hours). The amount disallowed is $5,000 minus the total of any amount the Taxpayer treats as compensation to G plus any amount that G reimburses Taxpayer.

(3) ***Flight-by-flight method*** —

(i) ***In general.*** The flight-by-flight method determines the amount of expenses allocated to a particular entertainment flight of a specified individual on a flight-by-flight basis by allocating expenses to individual flights and then to a specified individual traveling for entertainment purposes on that flight.

(ii) ***Allocation of expenses.*** A taxpayer using the flight-by-flight method must combine all expenses (as defined in paragraph (d)(1) of this section) for the taxable year for the aircraft or group of aircraft (if aggregated under paragraph (d)(4) of this section), as applicable, and divide the total amount of expenses by the number of flight hours or miles for the taxable year for that aircraft or group of aircraft, as applicable, to determine the cost per hour or mile. Expenses are allocated to each flight by multiplying the number of miles for the flight by the cost per mile or the number of hours for the flight by the cost per hour. The expenses for the flight then are allocated to the passengers on the flight per capita. Thus, if five passengers are traveling on a flight, and the total expense allocated to the flight is $10,000, the expense allocable to each passenger is $2,000.

(f) ***Special rules*** —

(1) ***Determination of basis.***

(i) If any deduction for depreciation is disallowed under this section, the rules of § 1.274-7 apply. In that case, the basis of an aircraft is not reduced for the amount of depreciation disallowed under this section.

(ii) The provisions of this paragraph (f)(1) are illustrated by the following examples:

Example 1. (i) B Co. is a calendar-year taxpayer that owns an aircraft not used in commercial or contract carrying of passengers or freight. The aircraft is placed in service on July 1 of Year 1 and has an unadjusted depreciable basis of $1,000,000. The class life of the aircraft for depreciation purposes is 6 years. For determining depreciation under section 168, B Co. uses the optional depreciation table that corresponds with the general depreciation system, the 200 percent declining balance method of depreciation, a 5-year recovery period, and the half-year convention. For determining the depreciation disallowance for each year under paragraph (d)(3) of this section, B Co. elects to use the straight-line method of depreciation and the class life of 6 years and, therefore, uses the optional depreciation table for purposes of section 168 that corresponds with the straight-line method of depreciation, a recovery period of 6 years, and the half-year convention. In each year, the aircraft entertainment use subject to disallowance under this section is 10 percent of the total use.
(ii) B Co. calculates the depreciation and basis of the aircraft as follows:

	200 Percent declining balance depreciation amount	Straight line depreciation amount	Depreciation disallowance under section 274	Depreciation deduction	§ 1.274-7 Basis of aircraft	Suspended basis.
Year 1	200,000	83,300	8,330. (.10 × 83,300)	191,670 (200,000 minus 8,330)	808,330 (1,000,000 minus 191,670)	8,330.
Year 2	320,000	166,700	16,670 (.10 × 166,700)	303,330 (320,000 minus 16,670)	505,000 (808,330 minus 303,330)	25,000 (8,300 plus 16,670).
Year 3	192,000	166,700	16,670 (.10 × 166,700)	175,330 (192,000 minus 16,670)	329,670 (505,000 minus 175,330)	41,670 (25,000 plus 16,670).
Year 4	115,200	166,700	16,670 (.10 × 166,700)	98,530 (115,200 minus 16,670)	231,140 (329,670 minus 98,530)	58,340 (41,670 plus 16,670).
Year 5	115,200	166,600	16,660 (.10 × 166,600)	98,540 (115,200 minus	132,600 (231,140 minus	75,000 (58,340 plus

	200 Percent declining balance depreciation amount	Straight line depreciation amount	Depreciation disallowance under section 274	Depreciation deduction	§ 1.274-7 Basis of aircraft	Suspended basis.
				16,660)	98,540)	16,660).
Year 6	57,600	166,700	16,670 (.10 × 166,700)	40,930 (57,600 minus 16,670)	91,670 (132,600 minus 40,930)	91,670 (75,000 plus 16,670).
Year 7		83,300	8,330 (.10 × 83,300)		91,670	91,670.

(iii) In Year 7, there is no further deduction for depreciation of the aircraft, therefore, under paragraph (d)(3) of this section, no depreciation expense is disallowed. Under § 1.274-7 and this paragraph (f)(1), basis is not reduced for disallowed depreciation. Therefore, at the end of Year 7, the basis of the aircraft for purposes of § 1.274-7 is $91,670, which is the total amount of disallowed depreciation in Years 1 through 6. B Co.'s deductions for depreciation total $908,330, which added to $91,670 equals $1,000,000.

Example 2. (i) The facts are the same as in *Example 1,* except that B Co. does not elect to use the straight-line method of depreciation under paragraph (d)(3) of this section until Year 3.
(ii) B Co. calculates the depreciation and basis of the aircraft as follows:

	200 Percent declining balance depreciation amount	Straight line depreciation amount	Depreciation disallowance under section 274	Depreciation deduction	§ 1.274 Basis of aircraft	Suspended basis.
Year 1	200,000		20,000 (.10 × 200,000)	180,000	820,000 (1,000,000 minus 180,000)	20,000.
Year 2	320,000		32,000 (.10 × 320,000)	288,000 (320,000 minus 32,000)	532,000 (820,000 minus 288,000)	52,000 (20,000 plus 32,000).

	200 Percent declining balance depreciation amount	Straight line depreciation amount	Depreciation disallowance under section 274	Depreciation deduction	§ 1.274 Basis of aircraft	Suspended basis.
Year 3	192,000	166,700	16,670 (.10 × 166,700)	175,330 (192,000 minus 16,670)	356,670 (532,000 minus 175,330)	68,670 (52,000 plus 16,670).
Year 4	115,200	166,700	16,670 (.10 × 166,700)	98,530 (115,200 minus 16,670)	258,140 (356,670 minus 98,530)	85,340 (68,670 plus 16,670).
Year 5	115,200	166,600	16,660 (.10 × 166,600)	98,540 (115,200 minus 16,660)	159,600 (258,140 minus 98,540)	102,000 (85,340 plus 16,660).
Year 6	57,600	166,700	16,670 (.10 × 166,700)	40,930 (57,600 minus 16,670)	118,670 (159,600 minus 40,930)	118,670 (102,000 plus 16,670).
Year 7		83,300	8,330 (.10 × 83,300)	0	118,670	118,670.

(iii) In Year 7, there is no further deduction for depreciation of the aircraft, therefore, under paragraph (d)(3) of this section, no depreciation expense is disallowed. Under § 1.274-7 and this paragraph (f)(1), basis is not reduced for disallowed depreciation. Therefore, at the end of Year 7, the basis of the aircraft for purposes of § 1.274-7 is $118,670, which is the total amount of disallowed depreciation in Years 1 through 6. B Co.'s deductions for depreciation total $881,330, which added to $118,670 equals $1,000,000.

(2) ***Pro rata disallowance.***

(i) The amount of disallowed expenses, and any amounts reimbursed or treated as compensation, under this section are applied on a pro rata basis to all of the categories of expenses subject to disallowance under this section.

(ii) The provisions of this paragraph (f)(2) are illustrated by the following example:

Example. (i) C Co. owns an aircraft that it uses for business and other purposes. The expenses of operating the aircraft in the current year total $1,000,000. This amount includes $250,000 for depreciation (25 percent of total expenses).

(ii) In the same year, the aircraft entertainment use subject to disallowance under this section is 20 percent of the total use and C Co. treats $80,000 as compensation to specified individuals. Thus, the amount of the disallowance under this section is $120,000 ($1,000,000 × 20 percent ($200,000) less $80,000).

(iii) Under paragraph (f)(2) of this section, C Co. may calculate the amount by which a category of expense, such as depreciation, is disallowed by multiplying the total disallowance of $120,000 by the ratio of the amount of the expense to total expenses. Thus, $30,000 of the $120,000 total disallowed expenses is depreciation ($250,000/$1,000,000 (25 percent) × $120,000).

(iv) The result is the same if C Co. separately calculates the amount of depreciation in total disallowed expenses and in the amount treated as compensation and nets the result. Depreciation is 25 percent of total expenses, thus, the amount of depreciation in disallowed expenses is $50,000 (25 percent × $200,000 total disallowed expenses) and the amount of depreciation treated as compensation is $20,000 (25 percent × $80,000). Disallowed depreciation is $50,000 less $20,000, or $30,000.

(3) ***Deadhead flights.***

(i) For purposes of this section, an aircraft returning without passengers after discharging passengers or flying without passengers to pick up passengers (deadheading) is treated as having the same number and character of passengers as the leg of the trip on which passengers are aboard for purposes of allocating expenses under paragraphs (e)(2) or (e)(3) of this section. For example, when an aircraft travels from point A to point B and then back to point A, and one of the legs is a deadhead flight, for determination of disallowed expenses, the aircraft is treated as having made both legs of the trip with the same passengers aboard for the same purposes.

(ii) When a deadhead flight does not occur within a roundtrip flight, but occurs between two unrelated flights involving more than two destinations (such as an occupied flight from point A to point B, followed by a deadhead flight from point B to point C, and then an occupied flight from point C to point A), the allocation of passengers and expenses to the deadhead flight occurring between the two occupied trips must be based solely on the number of passengers on board for the two occupied legs of the flight, the character of the travel of the passengers on board (entertainment or nonentertainment) and the length in hours or miles of the two occupied legs of the flight.

(iii) The provisions of this paragraph (f)(3) are illustrated by the following examples:

Example 1. (i) Aircraft flies from City A to City B, a 6-hour trip, with 12 passengers aboard. Eight of the passengers are traveling for business and four of the passengers are specified individuals traveling for entertainment purposes. The aircraft flies empty (deadheads) from City B to City C, a 4-hour trip. At City C it picks up 12 passengers, six of whom are traveling for business and six of whom are specified individuals traveling

for entertainment purposes, for a 2-hour trip to City A. The taxpayer uses the occupied seat hour method of allocating expenses.
(ii) The two legs of the trip on which the aircraft is occupied comprise 96 occupied seat hours (12 passengers × 6 hours (72) for the first leg plus 12 passengers × 2 hours (24) for the third leg). Sixty occupied seat hours are for business (8 passengers × 6 hours (48) for the first leg plus 6 passengers × 2 (12) hours for the third leg) and 36 occupied seat hours are for entertainment purposes (4 passengers × 6 hours (24) for the first leg plus 6 passengers × 2 (12) hours for the third leg). Dividing the 36 occupied seat entertainment hours by 96 total occupied seat hours, 37.5 percent of the total occupied seat hours of the two occupied flights are for entertainment.

(iii) The 4-hour deadhead leg comprises one-third of the total flight time of 12 hours. Therefore, the deadhead flight is deemed to have provided one-third of the total 96 occupied seat hours, or 32 occupied seat hours (96 × $^{1}/_{3}$ = 32). Of the 32 deemed occupied seat hours, 37.5 percent, or 12 deemed occupied seat hours, are treated as entertainment under paragraph (f)(3)(ii) of this section. The 32 deemed occupied seat hours for the deadhead flight are included in the calculation under paragraph (e)(2)(ii)(B) of this section and expenses are allocated under paragraph (e)(2)(ii)(D) of this section to the 12 deemed occupied seat hours treated as entertainment.

Example 2. (i) The facts are the same as for *Example 1,* but the taxpayer uses the flight-by-flight method of allocation.
(ii) Of the 24 passengers on the occupied flights, 10 passengers, or 41.7 percent, are traveling for entertainment purposes. If the annual cost per flight hour calculated under paragraph (e)(3)(ii) of this section is $1,000, $4,000 is allocated to the 4-hour deadhead leg. Under paragraph (f)(3)(ii) of this section, 41.7 percent of the $4,000, or $1,667, is treated as an expense for entertainment. The calculation of the cost per mile or hour for the year under paragraph (e)(3)(ii) of this section includes the expenses and number of miles or hours flown for the deadhead leg.

(g) ***Effective/applicability date.*** This section applies to taxable years beginning after August 1, 2012.

[T.D. 9597, 77 FR 45483, Aug. 1, 2012]

§ 1.274-11 Disallowance of deductions for certain entertainment, amusement, or recreation expenditures paid or incurred after December 31, 2017.

(a) ***In general.*** Except as provided in this section, no deduction otherwise allowable under chapter 1 of the Internal Revenue Code (Code) is allowed for any expenditure with respect to an activity that is of a type generally considered to be entertainment, or with respect to a facility used in connection with an entertainment activity. For this purpose, dues or fees to any social, athletic, or sporting club or

organization are treated as items with respect to facilities and, thus, are not deductible. In addition, no deduction otherwise allowable under chapter 1 of the Code is allowed for amounts paid or incurred for membership in any club organized for business, pleasure, recreation, or other social purpose.

(b) ***Definitions*** —

(1) ***Entertainment*** —

(i) ***In general.*** For section 274 purposes, the term *entertainment* means any activity which is of a type generally considered to constitute entertainment, amusement, or recreation, such as entertaining at bars, theaters, country clubs, golf and athletic clubs, sporting events, and on hunting, fishing, vacation and similar trips, including such activity relating solely to the taxpayer or the taxpayer's family. These activities are treated as entertainment under this section, subject to the objective test, regardless of whether the expenditure for the activity is related to or associated with the active conduct of the taxpayer's trade or business. The term *entertainment* may include an activity, the cost of which otherwise is a business expense of the taxpayer, which satisfies the personal, living, or family needs of any individual, such as providing a hotel suite or an automobile to a business customer or the customer's family. The term *entertainment* does not include activities which, although satisfying personal, living, or family needs of an individual, are clearly not regarded as constituting entertainment, such as the providing of a hotel room maintained by an employer for lodging of employees while in business travel status or an automobile used in the active conduct of a trade or business even though used for routine personal purposes such as commuting to and from work. On the other hand, the providing of a hotel room or an automobile by an employer to an employee who is on vacation would constitute entertainment of the employee.

(ii) ***Food or beverages.*** Under this section, the term *entertainment* does not include food or beverages unless the food or beverages are provided at or during an entertainment activity. Food or beverages provided at or during an entertainment activity generally are treated as part of the entertainment activity. However, in the case of food or beverages provided at or during an entertainment activity, the food or beverages are not considered entertainment if the food or beverages are purchased separately from the entertainment, or the cost of the food or beverages is stated separately from the cost of the entertainment on one or more bills, invoices, or receipts. The amount charged for food or beverages on a bill, invoice, or receipt must reflect the venue's usual selling cost for those items if they were to be purchased separately from the entertainment or must approximate the reasonable value of those items. If the food or beverages are not purchased separately from the entertainment, or the cost of the food or beverages is not stated separately from the cost of the entertainment on one or more bills, invoices, or receipts, no allocation between entertainment and food or beverage expenses may be made and, except as further provided in this section and section 274(e), the entire amount is a nondeductible entertainment expenditure under this section and section 274(a).

(iii) ***Objective test.*** An objective test is used to determine whether an activity is of a type generally considered to be entertainment. Thus, if an activity is generally considered to be entertainment, it will be treated as entertainment for purposes of this section and section 274(a) regardless of whether the expenditure can also be described otherwise, and even though the expenditure relates to the taxpayer alone. This objective test precludes arguments that *entertainment* means only entertainment of others or that an expenditure for entertainment should be characterized as an expenditure for advertising or public relations. However, in applying this test the taxpayer's trade or business is considered. Thus, although attending a theatrical

performance generally would be considered entertainment, it would not be so considered in the case of a professional theater critic attending in a professional capacity. Similarly, if a manufacturer of dresses conducts a fashion show to introduce its products to a group of store buyers, the show generally would not be considered entertainment. However, if an appliance distributor conducts a fashion show, the fashion show generally would be considered to be entertainment.

(2) ***Expenditure.*** The term *expenditure* as used in this section includes amounts paid or incurred for goods, services, facilities, and other items, including items such as losses and depreciation.

(3) ***Expenditures for production of income.*** For purposes of this section, any reference to *trade or business* includes an activity described in section 212.

(c) ***Exceptions.*** Paragraph (a) of this section does not apply to any expenditure described in section 274(e)(1), (2), (3), (4), (5), (6), (7), (8), or (9).

(d) ***Examples.*** The following examples illustrate the application of paragraphs (a) and (b) of this section. In each example, assume that the taxpayer is engaged in a trade or business for purposes of section 162 and that neither the taxpayer nor any business associate is engaged in a trade or business that relates to the entertainment activity. Also assume that none of the exceptions under section 274(e) and paragraph (c) of this section apply.

(1) ***Example 1.*** Taxpayer A invites, B, a business associate, to a baseball game to discuss a proposed business deal. A purchases tickets for A and B to attend the game. The baseball game is entertainment as defined in § 1.274-11(b)(1) and thus, the cost of the game tickets is an entertainment expenditure and is not deductible by A.

(2) ***Example 2.*** The facts are the same as in paragraph (d)(1) of this section (*Example 1),* except that A also buys hot dogs and drinks for A and B from a concession stand. The cost of the hot dogs and drinks, which are purchased separately from the game tickets, is not an entertainment expenditure and is not subject to the disallowance under § 1.274-11(a) and section 274(a)(1). Therefore, A may deduct 50 percent of the expenses associated with the hot dogs and drinks purchased at the game if the expenses meet the requirements of section 162 and § 1.274-12.

(3) ***Example 3.*** Taxpayer C invites D, a business associate, to a basketball game. C purchases tickets for C and D to attend the game in a suite, where they have access to food and beverages. The cost of the basketball game tickets, as stated on the invoice, includes the food or beverages. The basketball game is entertainment as defined in § 1.274-11(b)(1), and, thus, the cost of the game tickets is an entertainment expenditure and is not deductible by C. The cost of the food and beverages, which are not purchased separately from the game tickets, is not stated separately on the invoice. Thus, the cost of the food and beverages is an entertainment expenditure that is subject to disallowance under section 274(a)(1) and paragraph (a) of this section, and C may not deduct the cost of the tickets or the food and beverages associated with the basketball game.

(4) ***Example 4.*** The facts are the same as in paragraph (d)(3) of this section (*Example 3*), except that the invoice for the basketball game tickets separately states the cost of the food and beverages and reflects the venue's usual selling price if purchased separately. As in paragraph (d)(3) of this section (*Example 3*), the basketball game is entertainment as defined in § 1.274-11(b)(1), and, thus, the cost of the game tickets, other than the cost of the food and beverages, is an entertainment expenditure and is not deductible by C. However, the cost of the food and beverages, which is stated separately on the invoice for the game tickets and reflects the venue's usual selling price of the food and beverages if purchased separately, is not an entertainment expenditure and is not subject to the

disallowance under section 274(a)(1) and paragraph (a) of this section. Therefore, C may deduct 50 percent of the expenses associated with the food and beverages provided at the game if the expenses meet the requirements of section 162 and § 1.274-12.

(e) ***Applicability date.*** This section applies for taxable years that begin on or after October 9, 2020.

[T.D. 9925, 85 FR 64033, Oct. 9, 2020]

§ 1.274-12 Limitation on deductions for certain food or beverage expenses paid or incurred after December 31, 2017.

(a) ***Food or beverage expenses*** —

(1) ***In general.*** Except as provided in this section, no deduction is allowed for the expense of any food or beverages provided by the taxpayer (or an employee of the taxpayer) unless—

(i) The expense is not lavish or extravagant under the circumstances;

(ii) The taxpayer, or an employee of the taxpayer, is present at the furnishing of such food or beverages; and

(iii) The food or beverages are provided to the taxpayer or a business associate.

(2) ***Only 50 percent of food or beverage expenses allowed as deduction.*** Except as provided in this section, the amount allowable as a deduction for any food or beverage expense described in paragraph (a)(1) of this section may not exceed 50 percent of the amount of the expense that otherwise would be allowable.

(3) ***Examples.*** The following examples illustrate the application of paragraph (a)(1) and (2) of this section. In each example, assume that the food or beverage expenses are ordinary and necessary expenses under section 162(a) that are paid or incurred during the taxable year in carrying on a trade or business and are not lavish or extravagant under the circumstances. Also assume that none of the exceptions in paragraph (c) of this section apply.

(i) ***Example 1.*** Taxpayer A takes client B out to lunch. Under section 274(k) and (n) and paragraph (a) of this section, A may deduct 50 percent of the food or beverage expenses.

(ii) ***Example 2.*** Taxpayer C takes employee D out to lunch. Under section 274(k) and (n) and paragraph (a) of this section, C may deduct 50 percent of the food or beverage expenses.

(iii) ***Example 3.*** Taxpayer E holds a business meeting at a hotel during which food and beverages are provided to attendees. Expenses for the business meeting, other than the cost of food and beverages, are not subject to the deduction limitations in section 274 and are deductible if they meet the requirements for deduction under section 162. Under section 274(k) and (n) and paragraph (a) of this section, E may deduct 50 percent of the food and beverage expenses.

(iv) ***Example 4.*** The facts are the same as in paragraph (a)(3)(iii) of this section (Example 3), except that all the attendees of the meeting are employees of E. Expenses for the business meeting, other than the cost of food and beverages, are not subject to the deduction limitations in section 274 and are deductible if they meet the requirements for deduction under section 162. Under section 274(k) and (n) and paragraph (a) of this section, E may deduct 50 percent of the food and beverage expenses. The exception in section 274(e)(5) does not apply to food and beverage expenses under section 274(k) and (n).

(4) ***Special rules for travel meals.***

(i) ***In general.*** Food or beverage expenses paid or incurred while traveling away from home in pursuit of a trade or business generally are subject to the deduction limitations in section 274(k) and (n) and paragraph (a)(1) and (2) of this section, as well as the substantiation requirements in section 274(d). In addition, travel expenses generally are subject to the limitations in section 274(m)(1), (2), and (3).

(ii) ***Substantiation.*** Except as provided in this section, no deduction is allowed for the expense of any food or beverages paid or incurred while traveling away from home in pursuit of a trade or business unless the taxpayer meets the substantiation requirements in section 274(d).

(iii) ***Travel meal expenses of spouse, dependent or others.*** No deduction is allowed under chapter 1 of the Internal Revenue Code (Code), except under section 217 for certain members of the Armed Forces of the United States, for the expense of any food or beverages paid or incurred with respect to a spouse, dependent, or other individual accompanying the taxpayer, or an officer or employee of the taxpayer, on business travel, unless—

(A) The spouse, dependent, or other individual is an employee of the taxpayer;

(B) The travel of the spouse, dependent, or other individual is for a bona fide business purpose of the taxpayer; and

(C) The expenses would otherwise be deductible by the spouse, dependent or other individual.

(D) ***Example.*** The following example illustrates the application of paragraph (a)(4)(iii) of this section:

(*1*) ***Example.*** Taxpayer F, a sole proprietor, and Taxpayer F's spouse travel from New York to Boston to attend a series of business meetings related to F's trade or business. F's spouse is not an employee of F, does not travel to Boston for a bona fide business purpose of F, and the expenses would not otherwise be deductible. While in Boston, F and F's spouse go out to dinner. Under section 274(m)(3) and paragraph (a)(4)(iii) of this section, the expenses associated with the food and beverages consumed by F's spouse are not deductible. Therefore, the cost of F's spouse's dinner is not deductible. F may deduct 50 percent of the expense associated with the food and beverages F consumed while on business travel if F meets the requirements in sections 162 and 274, including section 274(k) and (d).

(*2*) [Reserved]

(b) ***Definitions.*** Except as otherwise provided in this section, the following definitions apply for purposes of section 274(k) and (n), § 1.274-11(b)(1)(ii) and (d), and this section:

(1) ***Food or beverages. Food or beverages*** means all food and beverage items, regardless of whether characterized as meals, snacks, or other types of food and beverages, and regardless of whether the food and beverages are treated as *de minimis* fringes under section 132(e).

(2) ***Food or beverage expenses. Food or beverage expenses*** mean the full cost of food or beverages, including any delivery fees, tips, and sales tax. In the case of employer-provided meals furnished at an eating facility on the employer's business premises, *food or beverage expenses* do not include expenses for the operation of the eating facility such as salaries of employees preparing and serving meals and other overhead costs.

(3) ***Business associate. Business associate*** means a person with whom the taxpayer could reasonably expect to engage or deal in the active conduct of the taxpayer's trade or business such as the taxpayer's customer, client, supplier, employee, agent, partner, or professional adviser, whether established or prospective.

(4) ***Independent contractor.*** For purposes of the reimbursement or other expense allowance arrangements described in paragraph (c)(2)(ii) of this section, *independent contractor* means a person who is not an employee of the payor.

(5) ***Client or customer.*** For purposes of the reimbursement or other expense allowance arrangements described in paragraph (c)(2)(ii) of this section, *client* or *customer* of an independent contractor means a person who receives services from an independent contractor and enters into a reimbursement or other expense allowance arrangement with the independent contractor.

(6) ***Payor.*** For purposes of the reimbursement or other expense allowance arrangements described in paragraph (c)(2)(ii) of this section, *payor* means a person that enters into a reimbursement or other expense allowance arrangement with an employee and may include an employer, its agent, or a third party.

(7) ***Reimbursement or other expense allowance arrangement.*** For purposes of the reimbursement or other expense allowance arrangements described in paragraph (c)(2)(ii) of this section, *reimbursement or other expense allowance arrangement* means—

(i) For purposes of paragraph (c)(2)(ii)(B) of this section, an arrangement under which an employee receives an advance, allowance, or reimbursement from a payor for expenses the employee pays or incurs; and

(ii) For purposes of paragraph (c)(2)(ii)(C) of this section, an arrangement under which an independent contractor receives an advance, allowance, or reimbursement from a client or customer for expenses the independent contractor pays or incurs if either—

(A) A written agreement between the parties expressly states that the client or customer will reimburse the independent contractor for expenses that are subject to the limitations on deductions described in paragraph (a) of this section; or

(B) A written agreement between the parties expressly identifies the party subject to the limitations.

(8) ***Primarily consumed.*** For purposes of paragraph (c)(2)(iv) of this section, *primarily consumed* means greater than 50 percent of actual or reasonably estimated consumption.

(9) ***General public.*** For purposes of paragraph (c)(2)(iv) of this section, the *general public* includes, but is not limited to, customers, clients, and visitors. The *general public* does not include employees, partners, 2-percent shareholders of S corporations (as defined in section 1372(b)), or independent contractors of the taxpayer. Also, the guests on an exclusive list of guests are not the *general public*.

(c) ***Exceptions*** —

(1) ***In general.*** The limitations on the deduction of food or beverage expenses in paragraph (a) of this section do not apply to any expense described in paragraph (c)(2) of this section. These expenses are deductible to the extent allowable under chapter 1 of the Code (chapter 1).

(2) ***Exceptions*** —

(i) *Expenses treated as compensation* —

(A) ***Expenses includible in income of persons who are employees and are not specified individuals.*** In accordance with section 274(e)(2)(A), and except as provided in paragraph (c)(2)(i)(D) of this section, an expense paid or incurred by a taxpayer for food or beverages, if an employee who is not a specified individual is the recipient of the food or beverages, is not subject to the deduction limitations in paragraph (a) of this section to the extent that the taxpayer—

(*1*) Properly treats the expense relating to the recipient of food or beverages as compensation to an employee under chapter 1 and as wages to the employee for purposes of chapter 24 of the Code (chapter 24).; and

(*2*) Treats the proper amount as compensation to the employee under § 1.61-21.

(B) ***Expenses includible in income of persons who are not employees and are not specified individuals.*** In accordance with section 274(e)(9), and except as provided in paragraph (c)(2)(i)(D) of this section, an expense paid or incurred by a taxpayer for food or beverages is not subject to the deduction limitations in paragraph (a) of this section to the extent that the expenses are properly included in income as compensation for services rendered by, or as a prize or award under section 74 to, a recipient of the expense who is not an employee of the taxpayer and is not a specified individual. The preceding sentence does not apply to any amount paid or incurred by the taxpayer if the amount is required to be included, or would be so required except that the amount is less than $600, in any information return filed by such taxpayer under part III of subchapter A of chapter 61 of the Code and is not so included.

(C) ***Specified Individuals.*** In accordance with section 274(e)(2)(B), in the case of a specified individual (as defined in section 274(e)(2)(B)(ii)), the deduction limitations in paragraph (a) of this section do not apply to an expense for food or beverages of the specified individual to the extent that the amount of the expense does not exceed the sum of—

(*1*) The amount treated as compensation to the specified individual under chapter 1 and as wages to the specified individual for purposes of chapter 24 (if the specified individual is an employee) or as compensation for services rendered by, or as a prize or award under section 74 to, a recipient of the expense (if the specified individual is not an employee); and

(*2*) Any amount the specified individual reimburses the taxpayer.

(D) ***Expenses for which an amount is excluded from income or is less than the proper amount.*** Notwithstanding paragraphs (c)(2)(i)(A) and (B) of this section, in the case of an expense paid or incurred by a taxpayer for food or beverages for which an amount is wholly or partially excluded from a recipients' income under any section of subtitle A of the Code (other than because the amount is reimbursed by the recipient), or for which an amount included in compensation and wages to an employee (or as income to a nonemployee) is less than the amount required to be included under § 1.61-21, the deduction limitations in paragraph (a) of this section do not apply to the extent that the amount of the expense does not exceed the sum of—

(*1*) The amount treated as compensation to the employee under chapter 1 (or as income to a nonemployee) and as wages to the employee for purposes of chapter 24; and

(2) Any amount the recipient reimburses the taxpayer.

(E) ***Examples.*** The following examples illustrate the application of paragraph (c)(2)(i) of this section. In each example, assume that the food or beverage expenses are ordinary and necessary expenses under section 162(a) that are paid or incurred during the taxable year in carrying on a trade or business.

(*1*) ***Example 1.*** Employer G provides food and beverages to its non-specified individual employees without charge at a company cafeteria on its premises. The food and beverages do not meet the definition of a *de minimis* fringe under section 132(e). Thus, G treats the full fair market value of the food and beverage expenses as compensation and wages, and properly determines this amount under § 1.61-21. Under section 274(e)(2) and paragraph (c)(2)(i)(A) of this section, the expenses associated with the food and beverages provided to the employees are not subject to the 50 percent deduction limitation in paragraph (a) of this section. Thus, G may deduct 100 percent of the food and beverage expenses.

(*2*) ***Example 2.*** The facts are the same as in paragraph (c)(2)(i)(E)(*1*) of this section (*Example 1),* except that each employee pays $8 per day for the food and beverages. The fair market value of the food and beverages is $10 per day, per employee. G incurs $9 per day, per employee for the food and beverages. G treats the food and beverage expenses as compensation and wages, and properly determines the amount of the inclusion under § 1.61-21 to be $2 per day, per employee ($10 fair market value−$8 reimbursed by the employee = $2). Therefore, under paragraph (c)(2)(i)(A) of this section, G may deduct 100 percent of the food and beverage expenses, or $9 per day, per employee.

(*3*) ***Example 3.*** Employer H provides meals to its employees without charge. The meals are properly excluded from the employees' income under section 119 as meals provided for the convenience of the employer. Under § 1.61-21(b)(1), an employee must include in gross income the amount by which the fair market value of a fringe benefit exceeds the sum of the amount, if any, paid for the benefit by or on behalf of the recipient, and the amount, if any, specifically excluded from gross income by some other section of subtitle A of the Code. Because the entire value of the employees' meals is excluded from the employees' income under section 119, the fair market value of the fringe benefit does not exceed the amount excluded from gross income under subtitle A of the Code, so there is nothing to be included in the employees' income under § 1.61-21. Thus, the exception in section 274(e)(2) and paragraph (c)(2)(i) of this section does not apply and, assuming no other exceptions provided under section 274(n)(2) and paragraph (c)(2) of this section apply, H may deduct only 50 percent of the expenses for the food and beverages provided to employees. In addition, the limitations in section 274(k)(1) and paragraph (a)(1) of this section apply because none of the exceptions in section 274(k)(2) and paragraph (c)(2) of this section apply.

(ii) ***Reimbursed food or beverage expenses*** —

(A) ***In general.*** In accordance with section 274(e)(3), in the case of expenses for food or beverages paid or incurred by one person in connection with the performance of services for another person, whether or not the other person is an employer, under a reimbursement or other expense allowance arrangement, the deduction limitations in

paragraph (a) of this section apply either to the person who makes the expenditure or to the person who actually bears the expense, but not to both. If an expense of a type described in paragraph (c)(2)(ii) of this section properly constitutes a dividend paid to a shareholder, unreasonable compensation paid to an employee, a personal expense, or other nondeductible expense, nothing in this exception prevents disallowance of the deduction to the taxpayer under other provisions of the Code.

(B) ***Reimbursement arrangements involving employees.*** In the case of expenses paid or incurred by an employee for food or beverages in performing services as an employee under a reimbursement or other expense allowance arrangement with a payor, the limitations on deductions in paragraph (a) of this section apply—

(*1*) To the employee to the extent the employer treats the reimbursement or other payment of the expense on the employer's income tax return as originally filed as compensation paid to the employee and as wages to the employee for purposes of withholding under chapter 24 relating to collection of income tax at source on wages; or

(*2*) To the payor to the extent the reimbursement or other payment of the expense is not treated as compensation and wages paid to the employee in the manner provided in paragraph (c)(2)(ii)(B)(*1*) of this section. However, see paragraph (c)(2)(ii)(C) of this section if the payor receives a payment from a third party that may be treated as a reimbursement arrangement under that paragraph.

(C) ***Reimbursement arrangements involving persons that are not employees.*** In the case of expenses for food or beverages paid or incurred by an independent contractor in connection with the performance of services for a client or customer under a reimbursement or other expense allowance arrangement with the independent contractor, the limitations on deductions in paragraph (a) of this section apply to the party expressly identified in an agreement between the parties as subject to the limitations. If an agreement between the parties does not expressly identify the party subject to the limitations, then the deduction limitations in paragraph (a) of this section apply—

(*1*) To the independent contractor (which may be a payor) to the extent the independent contractor does not account to the client or customer within the meaning of section 274(d); or

(*2*) To the client or customer if the independent contractor accounts to the client or customer within the meaning of section 274(d).

(D) ***Section 274(d) substantiation.*** If the reimbursement or other expense allowance arrangement involves persons who are not employees and the agreement between the parties does not expressly identify the party subject to the limitations on deductions in paragraph (a) of this section, the limitations on deductions in paragraph (a) of this section apply to the independent contractor unless the independent contractor accounts to the client or customer with substantiation that satisfies the requirements of section 274(d).

(E) ***Examples.*** The following examples illustrate the application of paragraph (c)(2)(ii) of this section.

(*1*) ***Example 1.***

(*i*) Employee I performs services under an arrangement in which J, an employee leasing company, pays I a per diem allowance of $10x for each day that I performs services for J's client, K, while traveling away from home. The per diem allowance is a reimbursement of travel expenses for food or beverages that I pays in performing services as an employee. J enters into a written agreement with K under which K agrees to reimburse J for any substantiated reimbursements for travel expenses, including meal expenses, that J pays to I. The agreement does not expressly identify the party that is subject to the limitations on deductions in paragraph (a) of this section. I performs services for K while traveling away from home for 10 days and provides J with substantiation that satisfies the requirements of section 274(d) of $100x of meal expenses incurred by I while traveling away from home. J pays I $100x to reimburse those expenses pursuant to their arrangement. J delivers a copy of I's substantiation to K. K pays J $300x, which includes $200x compensation for services and $100x as reimbursement of J's payment of I's travel expenses for meals. Neither J nor K treats the $100x paid to I as compensation or wages.

(*ii*) Under paragraph (b)(7)(i) of this section, I and J have established a reimbursement or other expense allowance arrangement for purposes of paragraph (c)(2)(ii)(B) of this section. Because the reimbursement payment is not treated as compensation and wages paid to I, under section 274(e)(3)(A) and paragraph (c)(2)(ii)(B)(*1*) of this section, I is not subject to the limitations on deductions in paragraph (a) of this section. Instead, under paragraph (c)(2)(ii)(B)(*2*) of this section, J, the payor, is subject to limitations on deductions in paragraph (a) of this section unless J can meet the requirements of section 274(e)(3)(B) and paragraph (c)(2)(ii)(C) of this section.

(*iii*) Because the agreement between J and K expressly states that K will reimburse J for substantiated reimbursements for travel expenses that J pays to I, under paragraph (b)(7)(ii)(A) of this section, J and K have established a reimbursement or other expense allowance arrangement for purposes of paragraph (c)(2)(ii)(C) of this section. J accounts to K for K's reimbursement in the manner required by section 274(d) by delivering to K a copy of the substantiation J received from I. Therefore, under section 274(e)(3)(B) and paragraph (c)(2)(ii)(C)(*2*) of this section, K and not J is subject to the deduction limitations in paragraph (a) of this section.

(*2*) ***Example 2.***

(*i*) The facts are the same as in paragraph (c)(2)(ii)(E)(*1*) of this section (*Example 1)* except that, under the arrangements between I and J and between J and K, I provides the substantiation of the expenses directly to K, and K pays the per diem directly to I.

(*ii*) Under paragraph (b)(7)(i) of this section, I and K have established a reimbursement or other expense allowance arrangement for purposes of paragraph (c)(2)(ii)(C) of this section. Because I substantiates directly to K and the reimbursement payment was not treated as compensation and wages paid to I, under section 274(e)(3)(A) and paragraph (c)(2)(ii)(C)(*1*) of this section, I is

not subject to the limitations on deductions in paragraph (a) of this section. Under paragraph (c)(2)(ii)(C)(*2*) of this section, K, the payor, is subject to the limitations on deductions in paragraph (a) of this section.

(*3*) ***Example 3.***

(*i*) The facts are the same as in paragraph (c)(2)(ii)(E)(*1*) of this section (*Example 1),* except that the written agreement between J and K expressly provides that the limitations of this section will apply to K.

(*ii*) Under paragraph (b)(7)(ii)(B) of this section, J and K have established a reimbursement or other expense allowance arrangement for purposes of paragraph (c)(2)(ii)(C) of this section. Because the agreement provides that the 274 deduction limitations apply to K, under section 274(e)(3)(B) and paragraph (c)(2)(ii)(C) of this section, K and not J is subject to the limitations on deductions in paragraph (a) of this section.

(*4*) ***Example 4.***

(*i*) The facts are the same as in (c)(2)(ii)(E)(*1*) of this section (*Example 1),* except that the agreement between J and K does not provide that K will reimburse J for travel expenses.

(*ii*) The arrangement between J and K is not a reimbursement or other expense allowance arrangement within the meaning of section 274(e)(3)(B) and paragraph (b)(7)(ii) of this section. Therefore, even though J accounts to K for the expenses, J is subject to the limitations on deductions in paragraph (a) of this section.

(iii) ***Recreational expenses for employees*** —

(A) ***In general.*** In accordance with section 274(e)(4), any food or beverage expense paid or incurred by a taxpayer for a recreational, social, or similar activity, primarily for the benefit of a taxpayer's employees (other than employees who are highly compensated employees (within the meaning of section 414(q))) is not subject to the deduction limitations in paragraph (a) of this section. For purposes of this paragraph (c)(2)(iii), an employee owning less than a 10-percent interest in the taxpayer's trade or business is not considered a shareholder or other owner, and for such purposes an employee is treated as owning any interest owned by a member of the employee's family (within the meaning of section 267(c)(4)). Any expense for food or beverages that is made under circumstances which discriminate in favor of highly compensated employees is not considered to be made primarily for the benefit of employees generally. An expense for food or beverages is not to be considered outside of the exception of this paragraph (c)(2)(iii) merely because, due to the large number of employees involved, the provision of food or beverages is intended to benefit only a limited number of employees at one time, provided the provision of food or beverages does not discriminate in favor of highly compensated employees. This exception applies to expenses paid or incurred for events such as holiday parties, annual picnics, or summer outings. This exception does not apply to expenses for meals the value of which is excluded from employees' income under section 119 because the meals are provided for the convenience of the employer and are therefore not primarily for the benefit of the taxpayer's employees.

(B) ***Examples.*** The following examples illustrate the application of this paragraph (c)(2)(iii). In each example, assume that the food or beverage expenses are ordinary and necessary expenses under section 162(a) that are paid or incurred during the taxable year in carrying on a trade or business.

(*1*) ***Example 1.*** Employer L invites all employees to a holiday party in a hotel ballroom that includes a buffet dinner and an open bar. Under section 274(e)(4), this paragraph (c)(2)(iii), and § 1.274-11(c), the cost of the party, including food and beverage expenses, is not subject to the deduction limitations in paragraph (a) of this section because the holiday party is a recreational, social, or similar activity primarily for the benefit of non-highly compensated employees. Thus, L may deduct 100 percent of the cost of the party.

(*2*) ***Example 2.*** The facts are the same as in paragraph (c)(2)(iii)(B)(*1*) of this section (*Example 1),* except that Employer L invites only highly-compensated employees to the holiday party, and the invoice provided by the hotel lists the costs for food and beverages separately from the cost of the rental of the ballroom. The costs reflect the venue's usual selling price for food or beverages. The exception in this paragraph (c)(2)(iii) does not apply to the rental of the ballroom or the food and beverage expenses because L invited only highly-compensated employees to the holiday party. However, under § 1.274-11(b)(1)(ii), the food and beverage expenses are not treated as entertainment. Therefore, L is not subject to the full disallowance for its separately stated food and beverage expense under section 274(a)(1) and § 1.274-11(a). Unless another exception in section 274(n)(2) and paragraph (c)(2) of this section applies, L may deduct only 50 percent of the food and beverage costs under paragraph (a)(2) of this section. In addition, the limitations in section 274(k)(1) and paragraph (a)(1) of this section apply because none of the exceptions in section 274(k)(2) and paragraph (c)(2) of this section apply.

(*3*) ***Example 3.*** Employer M provides free coffee, soda, bottled water, chips, donuts, and other snacks in a break room available to all employees. A break room is not a recreational, social, or similar activity primarily for the benefit of the employees, even if some socializing related to the food and beverages provided occurs. Thus, the exception in section 274(e)(4) and this paragraph (c)(2)(iii) does not apply and unless another exception in section 274(n)(2) and paragraph (c)(2) of this section applies, M may deduct only 50 percent of the expenses for food and beverages provided in the break room under paragraph (a)(2) of this section. In addition, the limitations in section 274(k)(1) and paragraph (a)(1) of this section apply because none of the exceptions in section 274(k)(2) and paragraph (c)(2) of this section apply.

(*4*) ***Example 4.*** Employer N has a written policy that employees in a certain medical services-related position must be available for emergency calls due to the nature of the position that requires frequent emergency responses. Because these emergencies can and do occur during meal periods, N furnishes food and beverages to employees in this position without charge in a cafeteria on N's premises. N excludes food and beverage expenses from the employees' income as meals provided for the convenience of the employer excludable under section 119. Because these food and beverages are furnished for the employer's convenience, and therefore are not primarily for the benefit of the employees, the exception in section

274(e)(4) and this paragraph (c)(2)(iii) does not apply, even if some socializing related to the food and beverages provided occurs. Further, the exception in section 274(e)(2) and paragraph (c)(2)(i) of this section does not apply. Thus, unless another exception in section 274(n)(2) and paragraph (c)(2) of this section applies, N may deduct only 50 percent of the expenses for food and beverages provided to employees in the cafeteria under paragraph (a)(2) of this section. In addition, the limitations in section 274(k)(1) and paragraph (a)(1) of this section apply because none of the exceptions in section 274(k)(2) and paragraph (c)(2) of this section apply.

(5) ***Example 5.*** Employer O invites an employee and a client to dinner at a restaurant. Because it is the birthday of the employee, O orders a special dessert in celebration. Because the meal is a business meal, and therefore not primarily for the benefit of the employee, the exception in section 274(e)(4) and this paragraph (c)(2)(iii) does not apply, even though an employee social activity in the form of a birthday celebration occurred during the meal. Thus, unless another exception in section 274(n)(2) and paragraph (c)(2) of this section applies, O may deduct only 50 percent of the meal expense. In addition, the limitations in section 274(k)(1) and paragraph (a)(1) of this section apply because none of the exceptions in section 274(k)(2) and paragraph (c)(2) of this section apply.

(iv) ***Items available to the public*** —

(A) ***In general.*** In accordance with section 274(e)(7), any expense paid or incurred by a taxpayer for food or beverages to the extent the food or beverages are made available to the general public is not subject to the deduction limitations in paragraph (a) of this section. If a taxpayer provides food or beverages to employees, this exception applies to the entire amount of expenses for those food or beverages if the same type of food or beverages is provided to, and are primarily consumed by, the general public.

(B) ***Examples.*** The following examples illustrate the application of this paragraph (c)(2)(iv). In each example, assume that the food and beverage expenses are ordinary and necessary expenses under section 162(a) that are paid or incurred during the taxable year in carrying on a trade or business.

(1) ***Example 1.*** Employer P is a real estate agent and provides refreshments at an open house for a home available for sale to the public. The refreshments are consumed by P's employees, potential buyers of the property, and other real estate agents. Under section 274(e)(7) and this paragraph (c)(2)(iv), the expenses associated with the refreshments are not subject to the deduction limitations in paragraph (a) of this section if P determines that over 50 percent of the food and beverages are actually or reasonably estimated to be consumed by potential buyers and other real estate agents. If more than 50 percent of the food and beverages are not actually or reasonably estimated to be consumed by the general public, only the costs attributable to the food and beverages provided to the general public are excepted under section 274(e)(7) and this paragraph (c)(2)(iv). In addition, the limitations in section 274(k)(1) and paragraph (a)(1) of this section apply to the expenses associated with the refreshments that are not excepted under section 274(e)(7) and this paragraph (c)(2)(iv).

(2) ***Example 2.*** Employer Q is an automobile service center and provides refreshments in its waiting area. The refreshments are consumed by Q's employees and customers, and Q reasonably estimates that more than 50 percent of the refreshments are consumed by customers. Under section 274(e)(7) and this paragraph (c)(2)(iv), the expenses associated with the refreshments are not subject to the deduction limitations provided for in paragraph (a) of this section because the food and beverages are primarily consumed by customers. Thus, Q may deduct 100 percent of the food and beverage expenses.

(3) ***Example 3.*** Employer R operates a summer camp open to the general public for children and provides breakfast and lunch, as part of the fee to attend camp, both to camp counselors, who are employees, and to camp attendees, who are customers. There are 20 camp counselors and 100 camp attendees. The same type of meal is available to each counselor and attendee, and attendees consume more than 50 percent of the food and beverages. Under section 274(e)(7) and this paragraph (c)(2)(iv), the expenses associated with the food and beverages are not subject to the deduction limitations in paragraph (a) of this section, because over 50 percent of the food and beverages are consumed by camp attendees and the food and beverages are therefore primarily consumed by the general public. Thus, R may deduct 100 percent of the food and beverage expenses.

(4) ***Example 4.*** Employer S provides food and beverages to its employees without charge at a company cafeteria on its premises. Occasionally, customers or other visitors also eat without charge in the cafeteria. The occasional consumption of food and beverages at the company cafeteria by customers and visitors is less than 50 percent of the total amount of food and beverages consumed at the cafeteria. Therefore, the food and beverages are not primarily consumed by the general public, and only the costs attributable to the food and beverages provided to the general public are excepted under section 274(e)(7) and this paragraph (c)(2)(iv). In addition, the limitations in section 274(k)(1) and paragraph (a)(1) of this section apply to the expenses associated with the food and beverages that are not excepted under section 274(e)(7) and this paragraph (c)(2)(iv).

(v) ***Goods or services sold to customers*** —

(A) ***In general.*** In accordance with section 274(e)(8), an expense paid or incurred for food or beverages, to the extent the food or beverages are sold to customers in a bona fide transaction for an adequate and full consideration in money or money's worth, is not subject to the deduction limitations in paragraph (a) of this section. However, *money or money's worth* does not include payment through services provided. Under this paragraph (c)(2)(v), a restaurant or catering business may deduct 100 percent of its costs for food or beverage items, purchased in connection with preparing and providing meals to its paying customers, which are also consumed at the worksite by employees who work in the employer's restaurant or catering business. In addition, for purposes of this paragraph (c)(2)(v), the term *customer* includes anyone, including an employee of the taxpayer, who is sold food or beverages in a bona fide transaction for an adequate and full consideration in money or money's worth.

(B) ***Example.*** The following example illustrates the application of this paragraph (c)(2)(v):

Example. Employer T operates a restaurant. T provides food and beverages to its food service employees before, during, and after their shifts for no consideration. Under section 274(e)(8) and this paragraph (c)(2)(v), the expenses associated with the food and beverages provided to the employees are not subject to the 50 percent deduction limitation in paragraph (a) of this section because the restaurant sells food and beverages to customers in a bona fide transaction for an adequate and full consideration in money or money's worth. Thus, T may deduct 100 percent of the food and beverage expenses.

(d) ***Applicability date.*** This section applies for taxable years that begin on or after October 9, 2020.

[T.D. 9925, 85 FR 64035, Oct. 9, 2020]

§ 1.274-13 Disallowance of deductions for certain qualified transportation fringe expenditures.

(a) ***In general.*** Except as provided in this section, no deduction otherwise allowable under chapter 1 of the Internal Revenue Code (Code) is allowed for any expense of any qualified transportation fringe as defined in paragraph (b)(1) of this section.

(b) ***Definitions.*** The following definitions apply for purposes of this section:

(1) ***Qualified transportation fringe.*** The term *qualified transportation fringe* means any of the following provided by an employer to an employee:

(i) Transportation in a commuter highway vehicle if such transportation is in connection with travel between the employee's residence and place of employment (as described in sections 132(f)(1)(A) and 132(f)(5)(B));

(ii) Any transit pass (as described in sections 132(f)(1)(B) and 132(f)(5)(A)); or

(iii) Qualified parking (as described in sections 132(f)(1)(C) and 132(f)(5)(C)).

(2) ***Employee.*** The term *employee* means a common law employee or other statutory employee, such as an officer of a corporation, who is currently employed by the taxpayer. See § 1.132-9 Q/A-5. Partners, 2-percent shareholders of S corporations (as defined in section 1372(b)), sole proprietors, and independent contractors are not employees of the taxpayer for purposes of this section. See § 1.132-9 Q/A-24.

(3) ***General public.***

(i) ***In general.*** The term *general public* includes, but is not limited to, customers, clients, visitors, individuals delivering goods or services to the taxpayer, students of an educational institution, and patients of a health care facility. The term general public does not include individuals that are employees, partners, 2-percent shareholders of S corporations (as defined in section 1372(b)), sole proprietors, or independent contractors of the taxpayer. Also, an exclusive list of guests of a taxpayer is not the general public. Parking spaces that are available to the general public but empty are treated as provided to the general public. Parking spaces that are used to park vehicles owned by the general public while the vehicles await repair or service by the taxpayer are also treated as provided to the general public.

(ii) ***Multi-tenant building.*** If a taxpayer owns or leases space in a multi-tenant building, the term *general public* includes employees, partners, 2-percent shareholders of S corporations (as defined in section 1372(b)), sole proprietors, independent contractors, clients, or customers of unrelated tenants in the building.

(4) ***Parking facility.*** The term *parking facility* includes indoor and outdoor garages and other structures, as well as parking lots and other areas, where a taxpayer provides qualified parking (as defined in section 132(f)(5)(C)) to one or more of its employees. The term *parking facility* may include one or more parking facilities but does not include parking spaces on or near property used by an employee for residential purposes.

(5) ***Geographic location.*** The term *geographic location* means contiguous tracts or parcels of land owned or leased by the taxpayer. Two or more tracts or parcels of land are contiguous if they share common boundaries or would share common boundaries but for the interposition of a road, street, railroad, stream, or similar property. Tracts or parcels of land which touch only at a common corner are not contiguous.

(6) ***Total parking spaces.*** The term *total parking spaces* means the total number of parking spaces, or the taxpayer's portion thereof, in the parking facility.

(7) ***Reserved employee spaces.*** The term *reserved employee spaces* means the spaces in the parking facility, or the taxpayer's portion thereof, exclusively reserved for the taxpayer's employees. Employee spaces in the parking facility, or portion thereof, may be exclusively reserved for employees by a variety of methods, including, but not limited to, specific signage (for example, “Employee Parking Only”) or a separate facility or portion of a facility segregated by a barrier to entry or limited by terms of access. Inventory/unusable spaces are not included in *reserved employee spaces.*

(8) ***Reserved nonemployee spaces.*** The term *reserved nonemployee spaces* means the spaces in the parking facility, or the taxpayer's portion thereof, exclusively reserved for nonemployees. Such parking spaces may include, but are not limited to, spaces reserved exclusively for visitors, customers, partners, sole proprietors, 2-percent shareholders of S corporations (as defined in section 1372(b)), vendor deliveries, and passenger loading/unloading. Nonemployee spaces in the parking facility, or portion thereof, may be exclusively reserved for nonemployees by a variety of methods, including, but not limited to, specific signage (for example, “Customer Parking Only”) or a separate facility, or portion of a facility, segregated by a barrier to entry or limited by terms of access. Inventory/unusable spaces are not included in *reserved nonemployee spaces.*

(9) ***Inventory/unusable spaces.*** The term *inventory/unusable spaces* means the spaces in the parking facility, or the taxpayer's portion thereof, exclusively used or reserved for inventoried vehicles, qualified nonpersonal use vehicles described in § 1.274-5(k), or other fleet vehicles used in the taxpayer's business, or that are otherwise not usable for parking by employees or the general public. Examples of such parking spaces include, but are not limited to, parking spaces for vehicles that are intended to be sold or leased at a car dealership or car rental agency, parking spaces for vehicles owned by an electric utility used exclusively to maintain electric power lines, or parking spaces occupied by trash dumpsters (or similar property). Taxpayers may use any reasonable methodology to determine the number of inventory/unusable spaces in the parking facility. A reasonable methodology may include using the average of monthly inventory counts.

(10) ***Available parking spaces.*** The term *available parking spaces* means the total parking spaces, less reserved employee spaces and less inventory/unusable spaces, that are available to employees and the general public.

(11) ***Primary use.*** The term *primary use* means greater than 50 percent of actual or estimated usage of the available parking spaces in the parking facility.

(12) ***Total parking expenses*** —

(i) ***In general.*** The term *total parking expenses* means all expenses of the taxpayer related to total parking spaces in a parking facility including, but not limited to, repairs, maintenance, utility costs, insurance, property taxes, interest, snow and ice removal, leaf removal, trash removal, cleaning, landscape costs, parking lot attendant expenses, security, and rent or lease payments or a portion of a rent or lease payment (if not broken out separately). A taxpayer may use any reasonable methodology to allocate mixed parking expenses to a parking facility. A deduction for an allowance for depreciation on a parking facility owned by a taxpayer and used for parking by the taxpayer's employees is an allowance for the exhaustion, wear and tear, and obsolescence of property, and not included in *total parking expenses* for purposes of this section. Expenses paid or incurred for nonparking facility property, including items related to property next to the parking facility, such as landscaping or lighting, also are not included in *total parking expenses.*

(ii) ***Optional rule for allocating certain mixed parking expenses.*** A taxpayer may choose to allocate 5 percent of any the following mixed parking expenses to a parking facility: Lease or rental agreement expenses, property taxes, interest expense, and expenses for utilities and insurance.

(13) ***Mixed parking expense.*** The term *mixed parking expense* means a single expense amount paid or incurred by a taxpayer that includes both parking facility and nonparking facility expenses for a property that a taxpayer owns or leases.

(14) ***Peak demand period*** —

(i) ***In general.*** The term *peak demand period* refers to the period of time on a typical business day during the taxable year when the greatest number of the taxpayer's employees are utilizing parking spaces in the taxpayer's parking facility. If a taxpayer's employees work in shifts, the *peak demand period* would take into account the shift during which the largest number of employees park in the taxpayer's parking facility. However, a brief transition period during which two shifts overlap in their use of parking spaces, as one shift of employees is getting ready to leave and the next shift is reporting to work, may be disregarded. Taxpayers may use any reasonable methodology to determine the total number of spaces used by employees during the *peak demand period* on a typical business day. A reasonable methodology may include periodic inspections or employee surveys.

(ii) ***Optional rule for federally declared disasters.*** If a taxpayer owns or leases a parking facility that is located in a federally declared disaster area, as defined in section 165(i)(5), the taxpayer may choose to identify a typical business day for the taxable year in which the disaster occurred by reference to a typical business day in that taxable year prior to the date that the taxpayer's operations were impacted by the federally declared disaster. Alternatively, a taxpayer may choose to identify a typical business day during the month(s) of the taxable year in which the disaster occurred by reference to a typical business day during the same month(s) of the taxable year immediately preceding the taxable year in which the disaster first occurred. For

purposes of applying the optional rule for federally declared disasters, the taxable year in which the disaster occurs is determined without regard to whether an election under section 165(i) is made with respect to the disaster.

(c) ***Optional aggregation rule for calculating total parking spaces; taxpayer owned or leased parking facilities.*** For purposes of determining total parking spaces in calculating the disallowance of deductions for qualified transportation fringe parking expenses under the general rule in paragraph (d)(2)(i) of this section, the primary use methodology in paragraph (d)(2)(ii)(B) of this section, or the cost per space methodology in paragraph (d)(2)(ii)(C) of this section, a taxpayer that owns or leases more than one parking facility in a single geographic location may aggregate the number of spaces in those parking facilities. For example, parking spaces at an office park or an industrial complex in the geographic location may be aggregated. However, a taxpayer may not aggregate parking spaces in parking facilities that are in different geographic locations. A taxpayer that chooses to aggregate its parking spaces under this paragraph (c) must determine its total parking expenses, including the allocation of mixed parking expenses, as if the aggregated parking spaces constitute one parking facility.

(d) ***Calculation of disallowance of deductions for qualified transportation fringe expenses*** —

(1) ***Taxpayer pays a third party for parking qualified transportation fringe.*** If a taxpayer pays a third party an amount for its employees' parking qualified transportation fringe, the section 274(a)(4) disallowance generally is calculated as the taxpayer's total annual cost of employee parking qualified transportation fringes paid to the third party.

(2) ***Taxpayer provides parking qualified transportation fringe at a parking facility it owns or leases.*** If a taxpayer owns or leases all or a portion of one or more parking facilities where its employees park, the section 274(a)(4) disallowance may be calculated using the general rule in paragraph (d)(2)(i) of this section or any of the simplified methodologies in paragraph (d)(2)(ii) of this section. A taxpayer may choose to use the general rule or any of the following methodologies for each taxable year and for each parking facility.

(i) ***General rule.*** A taxpayer that uses the general rule in this paragraph (d)(2)(i) must calculate the disallowance of deductions for qualified transportation fringe parking expenses for each employee receiving the qualified transportation fringe based on a reasonable interpretation of section 274(a)(4). A taxpayer that uses the general rule in this paragraph (d)(2)(i) may use the aggregation rule in paragraph (c) of this section for determining total parking spaces. An interpretation of section 274(a)(4) is not reasonable unless the taxpayer applies the following rules when calculating the disallowance under this paragraph (d)(2)(i).

(A) ***A taxpayer must not use value to determine expense.*** A taxpayer may not use the value of employee parking to determine expenses allocable to employee parking that is either owned or leased by the taxpayer because section 274(a)(4) disallows a deduction for the expense of providing a qualified transportation fringe, regardless of its value.

(B) ***A taxpayer must not deduct expenses related to reserved employee spaces.*** A taxpayer must determine the allocable portion of total parking expenses that relate to any reserved employee spaces. No deduction is allowed for the parking expenses that relate to reserved employee spaces.

(C) ***A taxpayer must not improperly apply the exception for qualified parking made available to the public.*** A taxpayer must not improperly apply the exception in section 274(e)(7) or paragraph (e)(2)(ii) of this section to parking facilities, for example, by treating a parking facility regularly used by employees as available to the general public merely because the general public has access to the parking facility.

(ii) ***Additional simplified methodologies.*** Instead of using the general rule in paragraph (d)(2)(i) of this section for a taxpayer owned or leased parking facility, a taxpayer may use a simplified methodology under paragraph (d)(2)(ii)(A), (B), or (C) of this section.

(A) ***Qualified parking limit methodology.*** A taxpayer that uses the qualified parking limit methodology in this paragraph (d)(2)(ii)(A) must calculate the disallowance of deductions for qualified transportation fringe parking expenses by multiplying the total number of spaces used by employees during the peak demand period, or the total number of taxpayer's employees, by the section 132(f)(2) monthly per employee limitation on exclusion (adjusted for inflation), for each month in the taxable year. The result is the amount of the taxpayer's expenses that are disallowed under section 274(a)(4). In applying this methodology, a taxpayer calculates the disallowed amount as required under this paragraph (d)(2)(ii)(A), regardless of the actual amount of the taxpayer's total parking expenses. This methodology may be used only if the taxpayer includes the value of the qualified transportation fringe in excess of the sum of the amount, if any, paid by the employee for the qualified transportation fringe and the applicable statutory monthly limit in section 132(f)(2) as compensation paid to the employee under chapter 1 of the Code (chapter 1) and as wages to the employee for purposes of withholding under chapter 24 of the Code (chapter 24), relating to collection of Federal income tax at source on wages. In addition, the exception to the disallowance for amounts treated as employee compensation provided for in section 274(e)(2) and in paragraph (e)(2)(i) of this section cannot be applied to reduce a section 274(a)(4) disallowance calculated using this methodology. A taxpayer using this methodology may not use the aggregation rule in paragraph (c) of this section.

(B) ***Primary use methodology.*** A taxpayer that uses the primary use methodology in this paragraph (d)(2)(ii)(B) must use the following four-step methodology to calculate the disallowance of deductions for qualified transportation fringe parking expenses for each parking facility for which the taxpayer uses the primary use methodology. A taxpayer using this methodology may use the aggregation rule in paragraph (c) of this section for determining total parking spaces.

(*1*) ***Step 1—Calculate the disallowance for reserved employee spaces.*** A taxpayer must identify the total parking spaces in the parking facility, or the taxpayer's portion thereof, exclusively reserved for the taxpayer's employees. The taxpayer must then determine the percentage of reserved employee spaces in relation to total parking spaces and multiply that percentage by the taxpayer's total parking expenses for the parking facility. The product is the amount of the deduction for total parking expenses that is disallowed under section 274(a)(4) for reserved employee spaces. There is no disallowance for reserved employee spaces if the following conditions are met:

(*i*) The primary use (as defined in paragraphs (b)(11) and (d)(2)(ii)(B)(*2*) of this section) of the available parking spaces is to provide parking to the general public;

(*ii*) There are five or fewer reserved employee spaces in the parking facility; and

(*iii*) The reserved employee spaces are 5 percent or less of the total parking spaces.

(*2*) ***Step 2—Determine the primary use of available parking spaces.*** A taxpayer must identify the available parking spaces in the parking facility and determine whether their primary use is to provide parking to the general public. If the primary use of the available parking spaces in the parking facility is to provide parking to the general public, then total parking expenses allocable to available parking spaces at the parking facility are excepted from the section 274(a)(4) disallowance by the general public exception under section 274(e)(7) and paragraph (e)(2)(ii) of this section. Primary use of available parking spaces is based on the number of available parking spaces used by employees during the peak demand period.

(*3*) ***Step 3—Calculate the allowance for reserved nonemployee spaces.*** If the primary use of a taxpayer's available parking spaces is not to provide parking to the general public, the taxpayer must identify the number of available parking spaces in the parking facility, or the taxpayer's portion thereof, exclusively reserved for nonemployees. A taxpayer that has no reserved nonemployee spaces may proceed to Step 4 in paragraph (d)(2)(ii)(B)(*4*) of this section. If the taxpayer has reserved nonemployee spaces, it may determine the percentage of reserved nonemployee spaces in relation to remaining total parking spaces and multiply that percentage by the taxpayer's remaining total parking expenses. The product is the amount of the deduction for remaining total parking expenses that is not disallowed because the spaces are not available for employee parking.

(*4*) ***Step 4—Determine remaining use of available parking spaces and allocable expenses.*** If a taxpayer completes Steps 1—3 in paragraph (d)(2)(ii)(B) of this section and has any remaining total parking expenses not specifically categorized as deductible or nondeductible, the taxpayer must reasonably allocate such expenses by determining the total number of available parking spaces used by employees during the peak demand period.

(C) ***Cost per space methodology.*** A taxpayer using the cost per space methodology in this paragraph (d)(2)(ii)(C) must calculate the disallowance of deductions for qualified transportation fringe parking expenses by multiplying the cost per space by the number of total parking spaces used by employees during the peak demand period. The product is the amount of the deduction for total parking expenses that is disallowed under section 274(a)(4). A taxpayer may calculate cost per space by dividing total parking expenses by total parking spaces. This calculation may be performed on a monthly basis. A taxpayer using this methodology may use the aggregation rule in paragraph (c) of this section for determining total parking spaces.

(3) ***Expenses for transportation in a commuter highway vehicle or transit pass.*** If a taxpayer pays a third party an amount for its employees' commuter highway vehicle or a transit pass qualified transportation fringe, the section 274(a)(4) disallowance generally is equal to the taxpayer's total annual cost of employee commuter highway vehicle or a transit pass qualified transportation fringes

paid to the third party. If a taxpayer provides transportation in a commuter highway vehicle or transit pass qualified transportation fringes in kind directly to its employees, the taxpayer must calculate the disallowance of deductions for expenses for such fringes based on a reasonable interpretation of section 274(a)(4). However, a taxpayer may not use the value of the qualified commuter highway vehicle or transit pass fringe to the employee to determine expenses allocable to such fringe because section 274(a)(4) disallows a deduction for the expense of providing a qualified transportation fringe, regardless of its value to the employee.

(e) ***Specific exceptions to disallowance of deduction for qualified transportation fringe expenses*** —

(1) ***In general.*** The provisions of section 274(a)(4) and paragraph (a) of this section (imposing limitations on deductions for qualified transportation fringe expenses) are not applicable in the case of expenditures set forth in paragraph (e)(2) of this section. Such expenditures are deductible to the extent allowable under chapter 1 of the Code. This paragraph (e) cannot be construed to affect whether a deduction under section 162 or 212 is allowed or allowable. The fact that an expenditure is not covered by a specific exception provided for in this paragraph (e) is not determinative of whether a deduction for the expenditure is disallowed under section 274(a)(4) and paragraph (a) of this section.

(2) ***Exceptions to disallowance.*** The expenditures referred to in paragraph (e)(1) of this section are set forth in paragraphs (e)(2)(i) through (iii) of this section.

(i) ***Certain qualified transportation fringe expenses treated as compensation*** —

(A) ***Expenses includible in income of persons who are employees and are not specified individuals.*** In accordance with section 274(e)(2)(A), and except as provided in paragraph (e)(2)(i)(C) of this section, an expense paid or incurred by a taxpayer for a qualified transportation fringe, if an employee who is not a specified individual is the recipient of the qualified transportation fringe, is not subject to the disallowance of deductions provided for in paragraph (a) of this section to the extent that the taxpayer—

(*1*) Properly treats the expense relating to the recipient of the qualified transportation fringe as compensation to an employee under chapter 1 and as wages to the employee for purposes of chapter 24; and

(*2*) Treats the proper amount as compensation to the employee under § 1.61-21.

(B) ***Specified Individuals.*** In accordance with section 274(e)(2)(B), in the case of a specified individual (as defined in section 274(e)(2)(B)(ii)), the disallowance of deductions provided for in paragraph (a) of this section does not apply to an expense for a qualified transportation fringe of the specified individual to the extent that the amount of the expense does not exceed the sum of—

(*1*) The amount treated as compensation to the specified individual under chapter 1 and as wages to the specified individual for purposes of chapter 24; and

(*2*) Any amount the specified individual reimburses the taxpayer.

(C) ***Expenses for which an amount is excluded from income or is less than the proper amount.*** Notwithstanding paragraph (e)(2)(i)(A) of this section, in the case of an expense paid or incurred by a taxpayer for a qualified transportation fringe for which an amount is wholly or partially excluded from a recipient's income under subtitle A of the Code (other than because the amount is reimbursed by the recipient), or for which an amount included in

compensation and wages to an employee is less than the amount required to be included under § 1.61-21, the disallowance of deductions provided for in paragraph (a) of this section does not apply to the extent that the amount of the expense does not exceed the sum of—

(1) The amount treated as compensation to the recipient under chapter 1 and as wages to the recipient for purposes of chapter 24; and

(2) Any amount the recipient reimburses the taxpayer.

(ii) ***Expenses for transportation in a commuter highway vehicle, transit pass, or parking made available to the public.*** Under section 274(e)(7) and this paragraph (e)(2)(ii), any expense paid or incurred by a taxpayer for transportation in a commuter highway vehicle, a transit pass, or parking that otherwise qualifies as a qualified transportation fringe is not subject to the disallowance of deductions provided for in paragraph (a) of this section to the extent that such transportation, transit pass, or parking is made available to the general public. With respect to parking, this exception applies to the entire amount of the taxpayer's parking expense, less any expenses specifically attributable to employees (for example, expenses allocable to reserved employee spaces), if the primary use of the parking is by the general public. If the primary use of the parking is not by the general public, this exception applies only to the costs attributable to the parking used by the general public.

(iii) ***Expenses for transportation in a commuter highway vehicle, transit pass, or parking sold to customers.*** Under section 274(e)(8) and this paragraph (e)(2)(iii), any expense paid or incurred by a taxpayer for transportation in a commuter highway vehicle, a transit pass, or parking that otherwise qualifies as a qualified transportation fringe to the extent such transportation, transit pass, or parking is sold to customers in a bona fide transaction for an adequate and full consideration in money or money's worth, is not subject to the disallowance of deductions provided for in paragraph (a) of this section. For purposes of this paragraph (e)(2)(iii), the term *customer* includes an employee of the taxpayer who purchases transportation in a commuter highway vehicle, a transit pass, or parking in a bona fide transaction for an adequate and full consideration in money or money's worth. If in a bona fide transaction, the adequate and full consideration for qualified parking is zero, the exception in this paragraph (e)(2)(iii) applies even though the taxpayer does not actually sell the parking to its employees. To apply the exception in this case, the taxpayer bears the burden of proving that the fair market value of the qualified parking is zero. However, solely for purposes of this paragraph (e)(2)(iii), a taxpayer will be treated as satisfying this burden if the qualified parking is provided in a rural, industrial, or remote area in which no commercial parking is available and an individual other than an employee ordinarily would not pay to park in the parking facility.

(f) ***Examples.*** The following examples illustrate the provisions of this section related to parking expenses for qualified transportation fringes. For each example, unless otherwise stated, assume the parking expenses are otherwise deductible expenses paid or incurred during the 2020 taxable year; all or some portion of the expenses relate to a qualified transportation fringe under section 132(f); the section 132(f)(2) monthly per employee limitation on an employee's exclusion is $270; the fair market value of the qualified parking is not $0; all taxpayers are calendar-year taxpayers; and the length of the 2020 taxable year is 12 months.

(1) ***Example 1.*** Taxpayer A pays B, a third party who owns a parking garage adjacent to A's place of business, $100 per month per parking space for each of A's 10 employees to park in B's garage, or $12,000 for parking in 2020 (($100 × 10) × 12 = $12,000). The $100 per month paid for each of A's 10 employees for parking is excludible from the employees' gross income under section 132(a)(5), and

none of the exceptions in section 274(e) or paragraph (e) of this section are applicable. Thus, the entire $12,000 is subject to the section 274(a)(4) disallowance under paragraphs (a) and (d)(1) of this section.

(2) *Example 2.*

(i) Assume the same facts as in paragraph (f)(1) of this section (*Example 1*), except A pays B $300 per month for each parking space, or $36,000 for parking for 2020 (($300 × 10) × 12 = $36,000). Of the $300 per month paid for parking for each of 10 employees, $270 is excludible under section 132(a)(5) for 2020 and none of the exceptions in section 274(e) or paragraph (e) of this section are applicable to this amount. A properly treats the excess amount of $30 ($300−$270) per employee per month as compensation and wages. Thus, $32,400 (($270 × 10) × 12 = $32,400) is subject to the section 274(a)(4) disallowance under paragraphs (a) and (d)(1) of this section.

(ii) The excess amount of $30 per employee per month is not excludible under section 132(a)(5). As a result, the exceptions in section 274(e)(2) and paragraph (e)(2)(i) of this section are applicable to this amount. Thus, $3,600 ($36,000−$32,400 = $3,600) is not subject to the section 274(a)(4) disallowance and remains deductible.

(3) *Example 3.*

(i) Taxpayer C leases from a third party a parking facility that includes 200 parking spaces at a rate of $500 per space, per month in 2020. C's annual lease payment for the parking spaces is $1,200,000 ((200 × $500) × 12 = $1,200,000). The number of available parking spaces used by C's employees during the peak demand period is 200.

(ii) C uses the qualified parking limit methodology described in paragraph (d)(2)(ii)(A) of this section to determine the disallowance under section 274(a)(4). Under this methodology, the section 274(a)(4) disallowance is calculated by multiplying the number of available parking spaces used by employees during the peak demand period, 200, the section 132(f)(2) monthly per employee limitation on exclusion, $270, and 12, the number of months in the applicable taxable year. The amount subject to the section 274(a)(4) disallowance is $648,000 (200 × $270 × 12 = $648,000). This amount is excludible from C's employees' gross incomes under section 132(a)(5) and none of the exceptions in section 274(e) or paragraph (e) of this section are applicable to this amount. The excess $552,000 ($1,200,000−$648,000) for which C is not disallowed a deduction under 274(a)(4) is included in C's employees' gross incomes because it exceeds the section 132(f)(2) monthly per employee limitation on exclusion.

(4) *Example 4.*

(i) ***Facts.*** Taxpayer D, a big box retailer, owns a surface parking facility adjacent to its store. D incurs $10,000 of total parking expenses for its store in the 2020 taxable year. D's parking facility has 510 spaces that are used by its customers, employees, and its fleet vehicles. None of D's parking spaces are reserved. The number of available parking spaces used by D's employees during the peak demand period is 50. Approximately 30 nonreserved parking spaces are empty during D's peak demand period. D's fleet vehicles occupy 10 parking spaces.

(ii) ***Methodology.*** D uses the primary use methodology in paragraph (d)(2)(ii)(B) of this section to determine the amount of parking expenses that are disallowed under section 274(a)(4).

(iii) ***Step 1.*** Because none of D's parking spaces are exclusively reserved for employees, there is no amount to be specifically allocated to reserved employee spaces under paragraph (d)(2)(ii)(B)(*1*) of this section.

(iv) ***Step 2.*** D's number of available parking spaces is the total parking spaces reduced by the number of reserved employee spaces and inventory/unusable spaces or 500 (510−0−10 = 500). The number of available parking spaces used by D's employees during the peak demand period is 50. Of the 500 available parking spaces, 450 are used to provide parking to the general public, including the 30 empty nonreserved parking spaces that are treated as provided to the general public. The primary use of D's available parking spaces is to provide parking to the general public because 90% (450/500 = 90%) of the available parking spaces are used by the general public under paragraph (d)(2)(ii)(B)(*2*) of this section. Because the primary use of the available parking spaces is to provide parking to the general public, the exception in section 274(e)(7) and paragraph (e)(2)(ii) of this section applies and none of the $10,000 of total parking expenses is subject to the section 274(a)(4) disallowance.

(5) ***Example 5.***

(i) ***Facts.*** Taxpayer E, a manufacturer, owns a surface parking facility adjacent to its plant. E incurs $10,000 of total parking expenses in 2020. E's parking facility has 500 spaces that are used by its visitors and employees. E reserves 25 of these spaces for nonemployee visitors. The number of available parking spaces used by E's employees during the peak demand period is 400.

(ii) ***Methodology.*** E uses the primary use methodology in paragraph (d)(2)(ii)(B) of this section to determine the amount of parking expenses that are disallowed under section 274(a)(4).

(iii) ***Step 1.*** Because none of E's parking spaces are exclusively reserved for employees, there is no amount to be specifically allocated to reserved employee spaces under paragraph (d)(2)(ii)(B)(*1*) of this section.

(iv) ***Step 2.*** The primary use of E's parking facility is not to provide parking to the general public because 80% (400/500 = 80%) of the available parking spaces are used by its employees. Thus, expenses allocable to those spaces are not excepted from the section 274(a) disallowance by section 274(e)(7) and paragraph (e)(2)(ii) of this section under the primary use test in paragraph (d)(2)(ii)(B)(*2*) of this section.

(v) ***Step 3.*** Because 5% (25/500 = 5%) of E's available parking spaces are reserved nonemployee spaces, up to $9,500 ($10,000 × 95% = $9,500) of E's total parking expenses are subject to the section 274(a)(4) disallowance under this step as provided in paragraph (d)(2)(ii)(B)(*3*) of this section. The remaining $500 ($10,000 × 5% = $500) of expenses allocable to reserved nonemployee spaces is excepted from the section 274(a) disallowance and continues to be deductible.

(vi) ***Step 4.*** E must reasonably determine the employee use of the remaining parking spaces by using the number of available parking spaces used by E's employees during the peak demand period and determine the expenses allocable to employee parking spaces under paragraph (d)(2)(ii)(B)(*4*) of this section.

(6) ***Example 6.***

(i) ***Facts.*** Taxpayer F, a manufacturer, owns a surface parking facility adjacent to its plant. F incurs $10,000 of total parking expenses in 2020. F's parking facility has 500 spaces that are used by its visitors and employees. F reserves 50 spaces for management. All other employees park in nonreserved spaces in F's parking facility; the number of available parking spaces used by F's employees during the peak demand period is 400. Additionally, F reserves 10 spaces for nonemployee visitors.

(ii) ***Methodology.*** F uses the primary use methodology in paragraph (d)(2)(ii)(B) of this section to determine the amount of parking expenses that are disallowed under section 274(a)(4).

(iii) ***Step 1.*** Because F reserved 50 spaces for management, $1,000 ((50/500) × $10,000 = $1,000) is the amount of total parking expenses that is nondeductible for reserved employee spaces under section 274(a)(4) and paragraphs (a) and (d)(2)(ii)(B)(*1*) of this section. None of the exceptions in section 274(e) or paragraph (e) of this section are applicable to this amount.

(iv) ***Step 2.*** The primary use of the remainder of F's parking facility is not to provide parking to the general public because 89% (400/450 = 89%) of the available parking spaces in the facility are used by its employees. Thus, expenses allocable to these spaces are not excepted from the section 274(a)(4) disallowance by section 274(e)(7) and paragraph (e)(2)(ii) of this section under the primary use test in paragraph (d)(2)(ii)(B)(*2*) of this section.

(v) ***Step 3.*** Because 2% (10/450 = 2.22%) of F's available parking spaces are reserved nonemployee spaces, the $180 allocable to those spaces (($10,000−$1,000) × 2%) is not subject to the section 274(a)(4) disallowance and continues to be deductible under paragraph (d)(2)(ii)(B)(*3*) of this section.

(vi) ***Step 4.*** F must reasonably determine the employee use of the remaining parking spaces by using the number of available parking spaces used by F's employees during the peak demand period and determine the expenses allocable to employee parking spaces under paragraph (d)(2)(ii)(B)(*4*) of this section.

(7) ***Example 7.***

(i) ***Facts.*** Taxpayer G, a financial services institution, owns a multi-level parking garage adjacent to its office building. G incurs $10,000 of total parking expenses in 2020. G's parking garage has 1,000 spaces that are used by its visitors and employees. However, one floor of the parking garage is segregated by an electronic barrier that can only be accessed with a card provided by G to its employees. The segregated parking floor contains 100 spaces. The other floors of the parking garage are not used by employees for parking during the peak demand period.

(ii) ***Methodology.*** G uses the primary use methodology in paragraph (d)(2)(ii)(B) of this section to determine the amount of parking expenses that are disallowed under section 274(a)(4).

(iii) ***Step 1.*** Because G has 100 reserved spaces for employees, $1,000 ((100/1,000) × $10,000 = $1,000) is the amount of total parking expenses that is nondeductible for reserved employee spaces under section 274(a)(4) and paragraph (d)(2)(ii)(B)(*1*) of this section. None of the exceptions in section 274(e) or paragraph (e) of this section are applicable to this amount.

(iv) *Step 2.* The primary use of the available parking spaces in G's parking facility is to provide parking to the general public because 100% (900/900 = 100%) of the available parking spaces are used by the public. Thus, expenses allocable to those spaces, $9,000, are excepted from the section 274(a)(4) disallowance by section 274(e)(7) and paragraph (e)(2)(ii) of this section under the primary use test in paragraph (d)(2)(ii)(B)(*2*).

(8) *Example 8.*

(i) *Facts.* Taxpayer H, an accounting firm, leases a parking facility adjacent to its office building. H incurs $10,000 of total parking expenses related to the lease payments in 2020. H's leased parking facility has 100 spaces that are used by its clients and employees. None of the parking spaces are reserved. The number of available parking spaces used by H's employees during the peak demand period is 60.

(ii) *Methodology.* H uses the primary use methodology in paragraph (d)(2)(ii)(B) of this section to determine the amount of parking expenses that are disallowed under section 274(a)(4).

(iii) *Step 1.* Because none of H's leased parking spaces are exclusively reserved for employees, there is no amount to be specifically allocated to reserved employee spaces under paragraph (d)(2)(ii)(B)(*1*) of this section.

(iv) *Step 2.* The primary use of H's leased parking facility under paragraph (d)(2)(ii)(B)(*2*) of this section is not to provide parking to the general public because 60% (60/100 = 60%) of the lot is used by its employees. Thus, H may not utilize the general public exception from the section 274(a)(4) disallowance provided by section 274(e)(7) and paragraph (e)(2)(ii) of this section.

(v) *Step 3.* Because none of H's parking spaces are exclusively reserved for nonemployees, there is no amount to be specifically allocated to reserved nonemployee spaces under paragraph (d)(2)(ii)(B)(*3*) of this section.

(vi) *Step 4.* H must reasonably determine the use of the parking spaces and the related expenses allocable to employee parking. Because the number of available parking spaces used by H's employees during the peak demand period is 60, H reasonably determines that 60% (60/100 = 60%) of H's total parking expenses or $6,000 ($10,000 × 60% = $6,000) is subject to the section 274(a)(4) disallowance under paragraph (d)(2)(ii)(B)(*4*) of this section.

(9) *Example 9.*

(i) *Facts.* Taxpayer I, a large manufacturer, owns multiple parking facilities adjacent to its manufacturing plant, warehouse, and office building at its complex in the city of X. All of I's tracts or parcels of land at its complex in city X are located in a single geographic location. I owns parking facilities in other cities. I incurs $50,000 of total parking expenses related to the parking facilities at its complex in city X in 2020. I's parking facilities at its complex in city X have 10,000 total parking spaces that are used by its visitors and employees of which 500 are reserved for management. All other spaces at parking facilities in I's complex in city X are nonreserved. The number of nonreserved spaces used by I's employees other than management during the peak demand period at I's parking facilities in city X is 8,000.

(ii) *Methodology.* I uses the primary use methodology in paragraph (d)(2)(ii)(B) of this section to determine the amount of parking expenses that are disallowed under section 274(a)(4). I chooses to apply the aggregation rule in paragraph (c) of this section to aggregate all parking

facilities in the geographic location that comprises its complex in city X. However, I may not aggregate parking facilities in other cities with its parking facilities in city X because they are in different geographic locations.

(iii) ***Step 1.*** Because 500 spaces are reserved for management, $2,500 ((500/10,000) × $50,000 = $2,500) is the amount of total parking expenses that is nondeductible for reserved employee spaces for I's parking facilities in city X under section 274(a)(4) and paragraphs (a) and (d)(2)(ii)(B)(*1*) of this section.

(iv) ***Step 2.*** The primary use of the remainder of I's parking facility is not to provide parking to the general public because 84% (8,000/9,500 = 84%) of the available parking spaces in the facility are used by its employees. Thus, expenses allocable to these spaces are not excepted from the section 274(a)(4) disallowance by section 274(e)(7) or paragraph (e)(2)(ii) of this section under the primary use test in paragraph (d)(2)(ii)(B)(*2*) of this section.

(v) ***Step 3.*** Because none of I's parking spaces in its parking facilities in city X are exclusively reserved for nonemployees, there is no amount to be specifically allocated to reserved nonemployee spaces under paragraph (d)(2)(ii)(B)(*3*) of this section.

(vi) ***Step 4.*** I must reasonably determine the use of the remaining parking spaces and the related expenses allocable to employee parking for its parking facilities in city X. Because the number of available parking spaces used by I's employees during the peak demand period in city X during an average workday is 8,000, I reasonably determines that 84.2% (8,000/9,500 = 84.2%) of I's remaining parking expense or $39,900 (($50,000−$2,500) × 84% = $39,900) is subject to the section 274(a)(4) disallowance under paragraph (d)(2)(ii)(B)(*4*) of this section.

(10) ***Example 10.***

(i) Taxpayer J, a manufacturer, owns a parking facility and incurs the following mixed parking expenses (along with other parking expenses): Property taxes, utilities, insurance, security expenses, and snow removal expenses. In accordance with paragraph (b)(12)(i) and (ii) of this section, J determines its total parking expenses by allocating 5% of its property tax, utilities, and insurance expenses to its parking facility. J uses a reasonable methodology to allocate to its parking facility an applicable portion of its security and snow removal expenses. J determines that it incurred $100,000 of total parking expenses in 2020. J's parking facility has 500 spaces that are used by its visitors and employees. The number of total parking spaces used by J's employees during the peak demand period is 475.

(ii) J uses the cost per space methodology described in paragraph (d)(2)(ii)(C) of this section to determine the amount of parking expenses that are disallowed under section 274(a)(4). Under this methodology, J multiplies the cost per space by the number of total parking spaces used by J's employees during the peak demand period. J calculates the cost per space by dividing total parking expenses by the number of total parking spaces ($100,000/500 = $200). J determines that $95,000 ($200 × 475 = $95,000) of J's total parking expenses is subject to the section 274(a)(4) disallowance and none of the exceptions in section 274(e) or paragraph (e) of this section are applicable.

(11) ***Example 11.*** Taxpayer K operates an industrial plant with a parking facility in a rural area in which no commercial parking is available. K provides qualified parking at the plant to its employees free of charge. Further, an individual other than an employee ordinarily would not consider paying any amount to park in the plant's parking facility. Although K does not charge its employees for the qualified parking, the exception in section 274(e)(8) and this paragraph (e)(3)(iii) will apply to K's

total parking expenses if in a bona fide transaction, the adequate and full consideration for the qualified parking is zero. In order to treat the adequate and full consideration as zero, K bears the burden of proving that the parking has no objective value. K is treated as satisfying this burden because the parking is provided in a rural area in which no commercial parking is available and in which an individual other than an employee ordinarily would not consider paying any amount to park in the parking facility. Therefore, the exception in paragraph (e)(2)(iii) of this section applies to K's total parking expenses and a deduction for the expenses is not disallowed by reason of section 274(a)(4).

(g) ***Applicability date.*** This section applies to taxable years beginning on or after December 16, 2020. However, taxpayers may choose to apply § 1.274-13(b)(14)(ii) to taxable years ending after December 31, 2019.

[T.D. 9939, 85 FR 81402, Dec. 16, 2020, as amended by 86 FR 22345, Apr. 28, 2021]

§ 1.274-14 Disallowance of deductions for certain transportation and commuting benefit expenditures.

(a) ***General rule.*** Except as provided in this section, no deduction is allowed for any expense incurred for providing any transportation, or any payment or reimbursement, to an employee of the taxpayer in connection with travel between the employee's residence and place of employment. The disallowance is not subject to the exceptions provided in section 274(e). The disallowance applies regardless of whether the travel between the employee's residence and place of employment includes more than one mode of transportation, and regardless of whether the taxpayer provides, or pays or reimburses the employee for, all modes of transportation used during the trip. For example, the disallowance applies if an employee drives a personal vehicle to a location where a different mode of transportation is used to complete the trip to the place of employment, even though the taxpayer may not incur any expense for the portion of travel in the employee's personal vehicle. The rules in section 274(l) and this section do not apply to business expenses under section 162(a)(2) paid or incurred while traveling away from home. The rules in section 274(l) and this section also do not apply to any expenditure for any qualified transportation fringe (as defined in section 132(f)) provided to an employee of the taxpayer. All qualified transportation fringe expenses are required to be analyzed under section 274(a)(4) and § 1.274-13.

(b) ***Exception.*** The disallowance for the deduction for expenses incurred for providing any transportation or commuting in paragraph (a) of this section does not apply if the transportation or commuting expense is necessary for ensuring the safety of the employee. The transportation or commuting expense is necessary for ensuring the safety of the employee if unsafe conditions, as described in § 1.61-21(k)(5), exist for the employee.

(c) ***Definitions.*** The following definitions apply for purposes of this section:

(1) ***Employee.*** The term *employee* means an employee of the taxpayer as defined in section 3121(d)(1) and (2) (that is, officers of a corporate taxpayer and employees of the taxpayer under the common law rules).

(2) ***Residence.*** The term *residence* means a residence as defined in § 1.121-1(b)(1). An employee's residence is not limited to the employee's principal residence.

(3) ***Place of employment.*** The term *place of employment* means the employee's regular or principal (if more than one regular) place of business. An employee's place of employment does not include temporary or occasional places of employment. An employee must have at least one regular or principal place of business.

(d) ***Applicability date.*** This section applies to taxable years beginning on or after December 16, 2020.

[T.D. 9939, 85 FR 81408, Dec. 16, 2020]

§ 1.275-1 Deduction denied in case of certain taxes.

For description of the taxes for which a deduction is denied under section 275, see paragraphs (a), (b), (c), (e), and (h) of § 1.164-2.

[T.D. 6780, 29 FR 18148, Dec. 22, 1964, as amended by T.D. 7767, 46 FR 11264, Feb. 6, 1981]

§ 1.276-1 Disallowance of deductions for certain indirect contributions to political parties.

(a) ***In general.*** Notwithstanding any other provision of law, no deduction shall be allowed for income tax purposes in respect of any amount paid or incurred after March 15, 1966, in a taxable year of the taxpayer beginning after December 31, 1965, for any expenditure to which paragraph (b)(1), (c), (d), or (e) of this section is applicable. Section 276 is a disallowance provision exclusively and does not make deductible any expenses which are not otherwise allowed under the Code. For certain other rules in respect of deductions for expenditures for political purposes, see §§ 1.162-15(b), 1.162-20, and 1.271-1.

(b) ***Advertising in convention program*** —

(1) ***General rule.***

(i) Except as provided in subparagraph (2) of this paragraph, no deduction shall be allowed for an expenditure for advertising in a convention program of a political party. For purposes of this subparagraph it is immaterial who publishes the convention program or to whose use the proceeds of the program inure (or are intended to inure). A convention program is any written publication (as defined in paragraph (c) of this section) which is distributed or displayed in connection with or at a political convention, conclave, or meeting. Under certain conditions payments to a committee organized for the purpose of bringing a political convention to an area are deductible under paragraph (b) of § 1.162-15. This rule is not affected by the provisions of this section. For example, such payments may be deductible notwithstanding the fact that the committee purchases from a political party the right to publish a pamphlet in connection with a convention and that the deduction of costs of advertising in the pamphlet is prohibited under this section.

(ii) The application of the provisions of this subparagraph may be illustrated by the following example:

Example. M Corporation publishes the convention program of the Y political party for a convention not described in subparagraph (2) of this paragraph. The corporation makes no payment of any kind to or on behalf of the party or any of its candidates and no part of the proceeds of the publication and sale of the program inures directly or indirectly to the benefit of any political party or candidate. P Corporation purchases an advertisement in the program. P Corporation may not deduct the cost of such advertisement.

(2) ***Amounts paid or incurred on or after January 1, 1968, for advertising in programs of certain national political conventions.***

(i) Subject to the limitations in subdivision (ii) of this subparagraph, a deduction may be allowed for any amount paid or incurred on or after January 1, 1968, for advertising in a convention program of a political party distributed in connection with a convention held for the purpose of nominating candidates for the offices of President and Vice President of the United States, if the proceeds from the program are actually used solely to defray the costs of conducting the convention (or are set aside for such use at the next convention of the party held for such purpose) and if the amount paid or incurred for the advertising is reasonable. If such amount is not reasonable or if any part of the proceeds is used for a purpose other than that of defraying such convention costs, no part of the amount is deductible. Whether or not an amount is reasonable shall be determined in light of the business the taxpayer may expect to receive either directly as a result of the advertising or as a result of the convention being held in an area in which the taxpayer has a principal place of business. For these purposes, an amount paid or incurred for advertising will not be considered as reasonable if it is greater than the amount which would be paid for comparable advertising in a comparable convention program of a nonpolitical organization. Institutional advertising (e.g., advertising of a type not designed to sell specific goods or services to persons attending the convention) is not advertising which may be expected to result directly in business for the taxpayer sufficient to make the expenditures reasonable. Accordingly, an amount spent for institutional advertising in a convention program may be deductible only if the taxpayer has a principal place of business in the area where the convention is held. An official statement made by a political party after a convention as to the use made of the proceeds from its convention program shall constitute prima facie evidence of such use.

(ii) No deduction may be taken for any amount described in this subparagraph which is not otherwise allowable as a deduction under section 162, relating to trade or business expenses. Therefore, in order for any such amount to be deductible, it must first satisfy the requirements of section 162, and, in addition, it must also satisfy the more restrictive requirements of this subparagraph.

(c) ***Advertising in publication other than convention program.*** No deduction shall be allowed for an expenditure for advertising in any publication other than a convention program if any part of the proceeds of such publication directly or indirectly inures (or is intended to inure) to or for the use of a political party or a political candidate. For purposes of this paragraph, a publication includes a book, magazine, pamphlet, brochure, flier, almanac, newspaper, newsletter, handbill, billboard, menu, sign, scorecard, program, announcement, radio or television program or announcement, or any similar means of communication. For the definition of inurement of proceeds to a political party or a political candidate, see paragraph (f)(3) of this section.

(d) ***Admission to dinner or program.*** No deduction shall be allowed for an expenditure for admission to any dinner or program, if any part of the proceeds of such event directly or indirectly inures (or is intended to inure) to or for the use of a political party or a political candidate. For purposes of this paragraph, a dinner or program includes a gala, dance, ball, theatrical or film presentation, cocktail or other party, picnic, barbecue, sporting event, brunch, tea, supper, auction, bazaar, reading, speech, forum, lecture, fashion show, concert, opening, meeting, gathering, or any similar event. For the definition of inurement of proceeds to a political party or a political candidate and of admission to a dinner or program, see paragraph (f) of this section.

(e) ***Admission to inaugural event.***

(1) No deduction shall be allowed for an expenditure for admission to an inaugural ball, inaugural gala, inaugural parade, or inaugural concert, or to any similar event (such as a dinner or program, as defined in paragraph (d) of this section), in connection with the inauguration or installation in office of any official, or any equivalent event for an unsuccessful candidate, if the event is identified with a political party or a political candidate. For purposes of this paragraph, the sponsorship of the event and the use to which the proceeds of the event are or may be put are irrelevant, except insofar as they may tend to identify the event with a political party or a political candidate. For the definition of admission to an inaugural event, see paragraph (f)(4) of this section.

(2) The application of the provisions of this paragraph may be illustrated by the following example:

Example. An inaugural reception for A, a prominent member of Y party who has been recently elected judge of the municipal court of F city, is held with the proceeds going to the city treasury. The price of admission to such affair is not deductible.

(f) ***Definitions*** —

(1) ***Political party.*** For purposes of this section the term *political party* has the same meaning as that provided for in paragraph (b)(1) of § 1.271-1.

(2) ***Political candidate.*** For purposes of this section, the term *political candidate* is to be construed in accordance with the purpose of section 276 to deny tax deductions for certain expenditures which may be used directly or indirectly to finance political campaigns. The term includes a person who, at the time of the event or publication with respect to which the deduction is being sought, has been selected or nominated by a political party for any elective office. It also includes an individual who is generally believed, under the facts and circumstances at the time of the event or publication, by the persons making expenditures in connection therewith to be an individual who is or who in the reasonably foreseeable future will be seeking selection, nomination, or election to any public office. For purposes of the preceding sentence, the facts and circumstances to be considered include, but are not limited to, the purpose of the event or publication and the disposition to be made of the proceeds. In the absence of evidence to the contrary it shall be presumed that persons making expenditures in connection with an event or publication generally believe that an incumbent of an elective public office will run for reelection to his office or for election to some other public office.

(3) ***Inurement of proceeds to political party or political candidate*** —

(i) ***In general.*** Subject to the special rules presented in subdivision (iii) of this subparagraph (relating to a political candidate), proceeds directly or indirectly inure to or for the use of a political party or a political candidate (*a*) if the party or candidate may order the disposition of any part of such proceeds, regardless of what use is actually made thereof, or (*b*) if any part of such proceeds is utilized by any person for the benefit of the party or candidate. These conditions are equally applicable in determining whether the proceeds are intended to inure. Accordingly, it is immaterial whether the event or publication operates at a loss if, had there been a profit, any part of the proceeds would have inured to or for the use of a political party or a political candidate. Moreover, it shall be presumed that where a dinner, program, or publication is sponsored by or identified with a political party or political candidate, the proceeds of such dinner, program, or publication directly or indirectly inure (or are intended to inure) to or for the use of the party or candidate. On the other hand, proceeds are not considered to directly or indirectly inure to the benefit of a political party or political candidate if the benefit derived is so remote as to be negligible or merely a coincidence of the relationship

of a political candidate to a trade or business profiting from an expenditure of funds. For example, the proceeds of expenditures made by a taxpayer in the ordinary course of his trade or business for advertising in a publication, such as a newspaper or magazine, are not considered as inuring to the benefit of a political party or political candidate merely because the publication endorses a particular political candidate or candidates of a particular political party, the publisher independently contributes to the support of a political party or candidate out of his own personal funds, or the principal stockholder of the publishing firm is a candidate for public office.

(ii) ***Proceeds to political party.*** If a political party may order the disposition of any part of the proceeds of a publication or event described in paragraph (c) or (d) of this section, such proceeds inure to the use of the party regardless of what the proceeds are to be used for or that their use is restricted to a particular purpose unrelated to the election of specific candidates for public office. Accordingly, where a political party holds a dinner for the purpose of raising funds to be used in a voter registration drive, voter education program, or nonprofit political research program, partisan or nonpartisan, the proceeds are considered to directly or indirectly inure to or for the use of the political party. Proceeds may inure to or for the use of a political party even though they are to be used for purposes which may not be directly related to any particular election (such as to pay office rent for its permanent quarters, salaries to permanent employees, or utilities charges, or to pay the cost of an event such as a dinner or program as defined in paragraph (d) of this section).

(iii) ***Proceeds to political candidate.*** Proceeds directly or indirectly inure (or are intended to inure) to or for the use of a political candidate if, in addition to meeting the conditions described in subdivision (i) of this subparagraph, (*a*) some part of the proceeds is or may be used directly or indirectly for the purpose of furthering his candidacy for selection, nomination, or election to any elective public office, and (*b*) they are not received by him in the ordinary course of a trade or business (other than the trade or business of holding public office). Proceeds may so inure whether or not the expenditure sought to be deducted was paid or incurred before the commencement of political activities with respect to the selection, nomination, or election referred to in (*a*) of this subdivision, or after such selection, nomination, or election has been made or has taken place. For example, proceeds of an event which may be used by an individual who, under the facts and circumstances at the time of the event, the persons making expenditures in connection therewith generally believe will in the reasonably foreseeable future run for a public office, and which may be used in furtherance of such individual's candidacy, generally will be deemed to inure (or to be intended to inure) to or for the use of a political candidate for the purpose of furthering such individual's candidacy. Or, as another example, proceeds of an event occurring after an election, which may be used by a candidate in that election to repay loans incurred in directly or indirectly furthering his candidacy, or in reimbursement of expenses incurred in directly or indirectly furthering his candidacy, will be deemed to directly or indirectly inure (or to be intended to inure) to or for the use of a political candidate for the purpose of furthering his candidacy. For purposes of this subdivision, if the proceeds received by a candidate exceed substantially the fair market value of the goods furnished or services rendered by him, the proceeds are not received by the candidate in the ordinary course of his trade or business.

(iv) The application of the provisions of this subparagraph may be illustrated by the following examples:

Example 1. Corporation O pays the Y political party $100,000 per annum for the right to publish the Y News, and retains the entire proceeds from the sale of the publication. Amounts paid or incurred for advertising in the Y News are not deductible because a part of the proceeds thereof indirectly inures to or for the use of a political party.

Example 2. The X political party holds a highly publicized ball honoring one of its active party members and admission tickets are offered to all. The guest of honor is a prominent national figure and a former incumbent of a high public office. The price of admission is designed to cover merely the cost of entertainment, food, and the ballroom, and all proceeds are paid to the hotel where the function is held, with the political party bearing the cost of any deficit. No deduction may be taken for the price of admission to the ball since the proceeds thereof inure to or for the use of a political party.

Example 3. Taxpayer A, engaged in a trade or business, purchases a number of tickets for admission to a fundraising affair held on behalf of political candidate B. The funds raised by this affair can be used by B for the purpose of furthering his candidacy. These expenditures are not deductible by A notwithstanding that B donates the proceeds of the affair to a charitable organization.

Example 4. A, an individual taxpayer who publishes a newspaper, is a candidate for elective public office. X Corporation advertises its products in A's newspaper, paying substantially more than the normal rate for such advertising. X Corporation may not deduct any portion of the cost of that advertising.

(4) ***Admission to dinners, programs, inaugural events.*** For purposes of this section, the cost of admission to a dinner, program, or inaugural event includes all charges, whether direct or indirect, for attendance and participation at such function. Thus, for example, amounts spent to be eligible for door prizes, for the privilege of sitting at the head table, or for transportation furnished as part of such an event, or any separate charges for food or drink, are amounts paid for admission.

[T.D. 6996, 34 FR 833, Jan. 18, 1969, as amended by T.D. 7010, 34 FR 7145, May 1, 1969]

§ 1.278-1 Capital expenditures incurred in planting and developing citrus and almond groves.

(a) ***General rule.***

(1)

(i) Except as provided in subparagraph (2)(iii) of this paragraph and paragraph (b) of this section, there shall be charged to capital account any amount (allowable as a deduction without regard to section 278 or this section) which is attributable to the planting, cultivation, maintenance, or development of any citrus or almond grove (or part thereof), and which is incurred before the close of the fourth taxable year beginning with the taxable year in which the trees were planted. For purposes of section 278 and this section, such an amount shall be considered as "incurred" in accordance with the taxpayer's regular tax accounting method used in reporting income and expenses connected with the citrus or almond grove operation. For purposes of this paragraph, the portion of a citrus or almond grove planted in 1 taxable year shall be treated separately from the portion of such grove planted in another taxable year. The provisions of section 278 and this section apply to taxable years beginning after December 31, 1969, in the case of a citrus grove, and to taxable years beginning after January 12, 1971, in the case of an almond grove.

(ii) The provisions of this subparagraph may be illustrated by the following examples:

Example 1. T, a fiscal year taxpayer plants a citrus grove 5 weeks before the close of his taxable year ending in 1971. T is required to capitalize any amount (allowable as a deduction without regard to section 278 or this section) attributable to the planting, cultivation, maintenance, or development of such grove until the close of his taxable year ending in 1974.

Example 2. Assume the same facts as in *Example 1,* except that T plants one portion of such grove 5 weeks before the close of his taxable year ending in 1971 and another portion of such grove at the beginning of his taxable year ending in 1972. The required capitalization period for expenses attributable to the first portion of such grove shall run until the close of T's taxable year ending in 1974. The required capitalization period for expenses attributable to the second portion of such grove shall run until the close of T's taxable year ending in 1975.

(2)

(i) For purposes of section 278 and this section a *citrus grove* is defined as one or more trees of the rue family, often thorny and bearing large fruit with hard, usually thick peel and pulpy flesh, such as the orange, grapefruit, lemon, lime, citron, tangelo, and tangerine.

(ii) For purposes of section 278 and this section, an *almond grove* is defined as one or more trees of the species *Prunus amygdalus.*

(iii) An amount attributable to the cultivation, maintenance, or development of a citrus or almond grove (or part thereof) shall include, but shall not be limited to, the following developmental or cultural practices expenditures: Irrigation, cultivation, pruning, fertilizing, management fees, frost protection, spraying, and upkeep of the citrus or almond grove. The provisions of section 278(a) and this paragraph shall apply to expenditures for fertilizer and related materials notwithstanding the provisions of section 180, but shall not apply to expenditures attributable to real estate taxes or interest, to soil and water conservation expenditures allowable as a deduction under section 175, or to expenditures for clearing land allowable as a deduction under section 182. Further, the provisions of section 278(a) and this paragraph apply only to expenditures allowable as deductions without regard to section 278 and have no application to expenditures otherwise chargeable to capital account, such as the cost of the land and preparatory expenditures incurred in connection with the citrus or almond grove.

(iv) For purposes of section 278 and this section, a citrus or almond tree shall be considered to be “planted” on the date on which the tree is placed in the permanent grove from which production is expected.

(3)

(i) The period during which expenditures described in section 278(a) and this paragraph are required to be capitalized shall, once determined, be unaffected by a sale or other disposition of the citrus or almond grove. Such period shall, in all cases, be computed by reference to the taxable years of the owner of the grove at the time that the citrus or almond trees were planted. Therefore, if a citrus or almond grove subject to the provisions of section 278 or this paragraph is sold or otherwise transferred by the original owner of the grove before the close of his fourth taxable year beginning with the taxable year in which the trees were planted, expenditures described in section 278(a) or this paragraph made by the purchaser or other transferee of the citrus or almond grove from the date of his acquisition until the close of the original holder's fourth such taxable year are required to be capitalized.

(ii) The provisions of this subparagraph may be illustrated by the following example:

Example. T, a fiscal year taxpayer, plants a citrus grove at the beginning of his taxable year ending in 1971. At the beginning of his taxable year ending in 1972, T sells the grove to X. The required period during which expenditures described in section 278 (a) are required to be capitalized runs from the date on which T planted the grove until the end of T's taxable year ending in 1974. Therefore, X must capitalize any such expenditures incurred by him from the time he purchased the grove from T until the end of T's taxable year ending in 1974.

(b) ***Exceptions.***

(1) Paragraph (a) of this section shall not apply to amounts allowable as deductions (without regard to section 278 or this section) and attributable to a citrus or almond grove (or part thereof) which is replanted by a taxpayer after having been lost or damaged (while in the hands of such taxpayer) by reason of freeze, disease, drought, pests, or casualty.

(2)

(i) Paragraph (a) of this section shall not apply to amounts allowable as deductions (without regard to section 278 or this section), and attributable to a citrus grove (or part thereof) which was planted or replanted prior to December 30, 1969, or to an almond grove (or part thereof) which was planted or replanted prior to December 30, 1970.

(ii) The provisions of this subparagraph may be illustrated by the following examples:

Example 1. T, a fiscal year taxpayer with a taxable year of July 1, 1969, through v June 30, 1970, plants a citrus grove on August 1, 1969. Since the grove was planted prior to December 30, 1969, no expenses incurred with respect to the grove shall be subject to the provisions of paragraph (a).

Example 2. Assume the same facts as in *Example 1,* except that T plants the grove on March 1, 1970. Since the grove was planted after December 30, 1969, all amounts allowable as deductions (without regard to section 278 or this section) and attributable to the grove shall be subject to the provisions of paragraph (a). However, since paragraph (a) applies only to taxable years beginning after December 31, 1969, T must capitalize only those amounts incurred during his taxable years ending in 1971, 1972, and 1973.

[T.D. 7098, 36 FR 5214, Mar. 18, 1971, as amended by T.D. 7136, 36 FR 14731, Aug. 11, 1971]

§ 1.279-1 General rule; purpose.

An obligation issued to provide a consideration directly or indirectly for a corporate acquisition, although constituting a debt under section 385, may have characteristics which make it more appropriate that the participation in the corporation which the obligation represents be treated for purposes of the deduction of interest as if it were a stockholder interest rather than a creditors interest. To deal with such cases, section 279 imposes certain limitations on the deductibility of interest paid or incurred on obligations which have certain equity characteristics and are classified as corporate acquisition indebtedness. Generally, section 279 provides that no deduction will be allowed for any interest paid or incurred by a corporation during the taxable year with respect to its corporate acquisition indebtedness to the extent such interest exceeds $5 million. However, the $5 million limitation is reduced by the amount of interest paid or incurred on obligations issued under the circumstances described in section 279(a)(2) but which are not corporate acquisition indebtedness. Section 279(b) provides that an obligation will be corporate acquisition indebtedness if it was issued under certain circumstances and meets the four tests enumerated therein. Although an obligation may satisfy the conditions referred to in the preceding sentence, it may still escape classification as corporate acquisition indebtedness if the conditions as described in sections 279(d)

(3), (4), and (5), 279(f), or 279(i) are present. However, no inference should be drawn from the rules of section 279 as to whether a particular instrument labeled a bond, debenture, note, or other evidence of indebtedness is in fact a debt. Before the determination as to whether the deduction for payments pursuant to an obligation as described in this section is to be disallowed, the obligation must first qualify as debt in accordance with section 385. If the obligation is not debt under section 385, it will be unnecessary to apply section 279 to any payments pursuant to such obligation.

[T.D. 7262, 38 FR 5844, Mar. 5, 1973]

§ 1.279-2 Amount of disallowance of interest on corporate acquisition indebtedness.

(a) ***In general.*** Under section 279(a), no deduction is allowed for any interest paid or incurred by a corporation during the taxable year with respect to its corporate acquisition indebtedness to the extent that such interest exceeds:

(1) $5 million, reduced by

(2) The amount of interest paid or incurred by such corporation during such year on any obligation issued after December 31, 1967, to provide consideration directly or indirectly for an acquisition described in section 279(b)(1) but which is not corporate acquisition indebtedness. Such an obligation is not corporate acquisition indebtedness if it:

(i) Was issued prior to October 10, 1969, or

(ii) Was issued after October 9, 1969, but does not meet any one or more of the tests of section 279(b) (2), (3), or (4), or

(iii) Was originally deemed to be corporate acquisition indebtedness but is no longer so treated by virtue of the application of paragraphs (3) or (4) of section 279(d) or

(iv) Is specifically excluded from treatment as corporate acquisition indebtedness by virtue of sections 279(d)(5), (f), or (i).

The computation of the amount by which the $5 million limitation described in this paragraph is to be reduced with respect to any taxable year is to be made as of the last day of the taxable year in which an acquisition described in section 279(b)(1) occurs. In no case shall the $5 million limitation be reduced below zero.

(b) ***Certain terms defined.*** When used in section 279 and the regulations thereunder:

(1) The term *issued* includes the giving of a note or other evidence of indebtedness to a bank or other lender as well as an issuance of a bond or debenture. In the case of obligations which are registered with the Securities and Exchange Commission, the date of issue is the date on which the issue is first offered to the public. In the case of obligations which are not so registered, the date of issue is the date on which the obligation is sold to the first purchaser.

(2) The term *interest* includes both stated interest and unstated interest (such as original issue discount as defined in paragraph (a)(1) of § 1.163-4 and amounts treated as interest under section 483).

(3) The term *money* means cash and its equivalent.

(4) The term *control* shall have the meaning assigned to such term by section 368(c).

(5) The term *affiliated group* shall have the meaning assigned to such term by section 1504(a), except that all corporations other than the acquired corporation shall be treated as includible corporations (without any exclusion under section 1504(b)) and the acquired corporation shall not be treated as an includible corporation. This definition shall apply whether or not some or all of the members of the affiliated group file a consolidated return.

(c) ***Examples.*** The provisions of paragraph (a) of this section may be illustrated by the following examples:

Example 1. On March 4, 1973, X Corporation, a calendar year taxpayer, issues an obligation which satisfies the test of section 279(b)(1) but fails to satisfy either of the tests of section 279(b) (2) or (3). Since at least one of the tests of section 279(b) is not satisfied the obligation is not corporate acquisition indebtedness. However, since the test of section 279(b)(1) is satisfied, the interest on the obligation will reduce the $5 million limitation provided by section 279 (a)(1).

Example 2. On January 1, 1969, X Corporation, a calendar year taxpayer, issues an obligation, which satisfies all the tests of section 279(b), requiring it to pay $3.5 million of interest each year. Since the obligation was issued before October 10, 1969, the obligation cannot be corporate acquisition indebtedness, and a deduction for the $3.5 million of interest attributable to such obligation is not subject to disallowance under section 279(a). However, since the obligation was issued after December 31, 1967, in an acquisition described in section 279(b)(1), under section 279(a)(2) the $3.5 million of interest attributable to such obligation reduces the $5 million limitation provided by section 279(a)(1) to $1.5 million.

Example 3. Assume the same facts as in *Example 2.* Assume further that on January 1, 1970, X Corporation issues more obligations which are classified as corporate acquisition indebtedness and which require X Corporation to pay $4 million of interest each year. For 1970 the amount of interest paid or accrued on corporate acquisition indebtedness, which may be deducted is $1.5 million ($5 million maximum provided by section 279(a)(1) less $3.5 million, the reduction required under section 279(a)(2)). Thus, $2.5 million of the $4 million interest incurred on a corporate acquisition indebtedness is subject to disallowance under section 279(a) for the taxable year 1970.

Example 4. Assume the same facts as in *Example 3.* Assume further that on the last day of each of the taxable years 1971, 1972, and 1973 of X Corporation neither of the conditions described in section 279(b)(4) was present. Under these circumstances, such obligations for all taxable years after 1973 are not corporate acquisition indebtedness under section 279(d)(4). Therefore, the $2.5 million of interest previously not deductible is not deductible for all taxable years after 1973. Although such obligations are no longer treated as corporate acquisition indebtedness, the interest attributable thereto must be applied in further reduction of the $5 million limitation. The $5 million limitation of section 279(a)(1) is therefore reduced to zero. While the limitation is at the zero level any interest paid or incurred on corporate acquisition indebtedness will be disallowed.

[T.D. 7262, 38 FR 5844, Mar. 5, 1973]

§ 1.279-3 Corporate acquisition indebtedness.

(a) ***Corporate acquisition indebtedness.*** For purposes of section 279, the term *corporate acquisition indebtedness* means any obligation evidenced by a bond, debenture, note, or certificate or other evidence of indebtedness issued after October 9, 1969, by a corporation (referred to in section 279 and the regulations thereunder as “issuing corporation”) if the obligation is issued to provide consideration directly or indirectly for the acquisition of stock in, or certain assets of, another corporation (as described

in paragraph (b) of this § 1.279-3), is "subordinated" (as described in paragraph (c) of this § 1.279-3), is "convertible" (as described in paragraph (d) of this § 1.279-3), and satisfies either the ratio of debt to equity test (as described in paragraph (f) of § 1.279-5) or the projected earnings test (as described in paragraph (d) of § 1.279-5).

(b) ***Acquisition of stock or assets.***

(1) Section 279(b)(1) describes one of the tests to be satisfied if an obligation is to be classified as corporate acquisition indebtedness. Under section 279(b)(1), the obligation must be issued to provide consideration directly or indirectly for the acquisition of:

(i) Stock (whether voting or nonvoting) in another corporation (referred to in section 279 and the regulations thereunder as "acquired corporation"), or

(ii) Assets of another corporation (referred to in section 279 and the regulations thereunder as "acquired corporation") pursuant to a plan under which at least two-thirds (in value) of all the assets (excluding money) used in trades or businesses carried on by such corporation are acquired.

The fact that the corporation that issues the obligation is not the same corporation that acquires the acquired corporation does not prevent the application of section 279. For example, if X Corporation acquires all the stock of Y Corporation through the utilization of an obligation of Z Corporation, a wholly owned subsidiary of X Corporation, this section will apply.

(2) ***Direct or indirect consideration.*** Obligations are issued to provide direct consideration for an acquisition within the meaning of section 279(b)(1) where the obligations are issued to the shareholders of an acquired corporation in exchange for stock in such acquired corporation or where the obligations are issued to the acquired corporation in exchange for its assets. The application of the provisions of this subsection relating to indirect consideration for an acquisition of stock or assets depends upon the facts and circumstances surrounding the acquisition and the issuance of the obligations. Obligations are issued to provide indirect consideration for an acquisition of stock or assets within the meaning of section 279(b)(1) where

(i) at the time of the issuance of the obligations the issuing corporation anticipated the acquisition of such stock or assets and the obligations would not have been issued if the issuing corporation had not so anticipated such acquisition, or where

(ii) at the time of the acquisition the issuing corporation foresaw or reasonably should have foreseen that it would be required to issue obligations, which it would not have otherwise been required to issue if the acquisition had not occurred, in order to meet its future economic needs.

(3) ***Stock acquisition.***

(i) For purposes of section 279, an acquisition in which the issuing corporation issues an obligation to provide consideration directly or indirectly for the acquisition of stock in the acquired corporation shall be treated as a stock acquisition within the meaning of section 279(b)(1)(A). Where the stock of one corporation is acquired from another corporation and such stock constitutes at least two-thirds (in value) of all the assets (excluding money) of the latter corporation, such acquisition shall be deemed an asset acquisition as described in section 279(b)(1)(B) and subparagraph (4) of this section. If the issuing corporation acquires less than two-thirds (in value) of all the assets (excluding money) used in trades or businesses

carried on by the acquired corporation within the meaning of section 279(b)(1)(B) and subparagraph (4) of this paragraph and such assets include stock of another corporation, the acquisition of such stock is a stock acquisition within the meaning of section 279(b)(1)(A) and of this subparagraph. In such a case the amount of the obligation which is characterized as corporate acquisition indebtedness shall bear the same relationship to the total amount of the obligation issued as the fair market value of the stock acquired bears to the total of the fair market value of the assets acquired and stock acquired, as of the date of acquisition. For rules with respect to acquisitions of stock, where the total amount of stock of the acquired corporation held by the issuing corporation never exceeded 5 percent of the total combined voting power of all classes of stock of the acquired corporation entitled to vote, see § 1.279-4(b)(1).

(ii) If the issuing corporation acquired stock of an acquired corporation in an acquisition described in section 279(b)(1)(A), and liquidated the acquired corporation under section 334(b)(2) and the regulations thereunder before the last day of the taxable year in which such stock acquisition is made, such obligation issued to provide consideration directly or indirectly to acquire such stock of the acquired corporation shall be considered as issued in an acquisition described in section 279(b)(1)(B).

(4) ***Asset acquisition.***

(i) For purposes of section 279, an acquisition in which the issuing corporation issues an obligation to provide consideration directly or indirectly for the acquisition of assets of an acquired corporation pursuant to a plan under which at least two-thirds of the gross value of all the assets (excluding money) used in trades and businesses carried on by such acquired corporation are acquired shall be treated as an asset acquisition within the meaning of section 279(b)(1)(B). For purposes of section 279(b)(1)(B), the gross value of any acquired asset shall be its fair market value as of the day of its acquisition. In determining the fair market value of an asset, no reduction shall be made for any liabilities, mortgages, liens, or other encumbrances to which the asset or any part thereof may be subjected. For purposes of this subparagraph, an asset which has been actually used in the trades and businesses of a corporation but which is temporarily not being used in such trades and businesses shall be treated as if it is being used in such manner. For purposes of this paragraph, the day of acquisition will be determined by reference to the facts and circumstances surrounding the transaction.

(ii) For purposes of the two-thirds test described in section 279(b)(1)(B), the stock of any corporation which is controlled by the acquired corporation shall be considered as an asset used in the trades and businesses of such acquired corporation.

(5) ***Certain nontaxable transactions.***

(i) Under section 279(e), an acquisition of stock of a corporation of which the issuing corporation is in control in a transaction in which gain or loss is not recognized shall be deemed an acquisition described in section 279(b)(1)(A) only if immediately before such transaction the acquired corporation was in existence, and the issuing corporation was not in control of such corporation. If the issuing corporation is a member of an affiliated group, then in accordance with section 279(g), the affiliated group shall be treated as the issuing corporation. Thus, any stock of the acquired corporation, owned by members of the affiliated group, shall be aggregated in determining whether the issuing corporation was in control of the acquired corporation.

(ii) The $5 million limitation provided by section 279(a)(1) is not reduced by the interest on an obligation issued in a transaction which, under section 279 (e), is deemed not to be an acquisition described in section 279(b)(1).

(iii) The provisions of this subparagraph may be illustrated by the following examples:

Example 1. On January 1, 1973, W Corporation, a calendar year taxpayer, issues to the public 10,000 10 year convertible bonds each with a principal of $1,000 for $9 million. On June 6, 1973, W Corporation transfers the $9 million proceeds of such bond issue to X Corporation in exchange for X Corporation's common stock in a transaction that satisfies the provisions of section 351(a). On December 31, 1973, W Corporation's ratio of debt to equity is $1^1/_2$ to 1 and its project earnings exceed three times the annual interest to be paid or incurred. Immediately prior to the transaction between the two corporations W Corporation owned no stock in X Corporation which had been in existence for several years. However, immediately after this transaction W Corporation is in control of X Corporation. Since X Corporation, the acquired corporation, was in existence and W Corporation, the issuing corporation, was not in control of X Corporation immediately before the section 351 transaction (a transaction in which gain or loss is not recognized) and since W Corporation is now in control of X Corporation, the acquisition of X Corporation's common stock by W Corporation is not protected from treatment as an acquisition described in section 279(b)(1)(A). However, the obligation will not be deemed to be corporate acquisition indebtedness since the test of section 279(b)(4) is not met. The interest on the obligation will reduce the $5 million limitation of section 279(a).

Example 2. Assume the facts are the same as described in *Example 1,* except that X Corporation was not in existence prior to June 6, 1973, but rather is newly created by W Corporation on such date. Since X Corporation, the acquired corporation, was not in existence before June 6, 1973, the date on which W Corporation, the issuing corporation, acquired control of X Corporation in a transaction on which gain or loss is not recognized, the acquisition is not deemed to be an acquisition described in section 279(b)(1)(A). Thus, under the provisions of subdivision (ii) of this subparagraph, the $5 million limitation provided by section 279(a)(1) will not be reduced by the yearly interest incurred on the convertible bonds issued by W Corporation.

Example 3. Assume that the facts are the same as described in *Example 1,* except that W Corporation was in control of X Corporation immediately before the transaction. Since W Corporation was in control of X Corporation immediately before the section 351(a) transaction and is in control of X Corporation after such transaction, the result will be the same as in *Example 2.*

(c) ***Subordinated obligation*** —

(1) ***In general.*** An obligation which is issued to provide consideration for an acquisition described in section 279(b)(1) is subordinated within the meaning of section 279(b)(2) if it is either:

(i) Subordinated to the claims of trade creditors of the issuing corporation generally, or

(ii) Expressly subordinated in right of payment to the payment of any substantial amount of unsecured indebtedness, whether outstanding or subsequently issued, of the issuing corporation, irrespective of whether such subordination relates to payment of interest, or principal, or both. In applying section 279 (b)(2) and this paragraph in any case where the issuing corporation is a member of an affiliated group of corporations, the affiliated group shall be treated as the issuing corporation.

(2) ***Expressly subordinated obligation.*** In applying subparagraph (1)(ii) of this paragraph, an obligation is considered expressly subordinated whether the terms of the subordination are provided in the evidence of indebtedness itself, or in another agreement between the parties to such obligation. An obligation shall be considered to be expressly subordinated within the meaning of subparagraph (1)(ii) of this paragraph if such obligation by its terms can become subordinated in right of payment to the payment of any substantial amount of unsecured indebtedness which is outstanding or which may be issued subsequently. However, an obligation shall not be considered expressly subordinated if such subordination occurs solely by operation of law, such as in the case of bankruptcy laws. For purposes of this paragraph, the term *substantial amount of unsecured indebtedness* means an amount of unsecured indebtedness equal to 5 percent or more of the face amount of the obligations issued within the meaning of section 279(b)(1).

(d) ***Convertible obligation.*** An obligation which is issued to provide consideration directly or indirectly for an acquisition described in section 279 (b)(1) is convertible within the meaning of section 279(b)(3) if it is either—

(1) Convertible directly or indirectly into stock of the issuing corporation, or

(2) Part of an investment unit or other arrangement which includes, in addition to such bond or other evidence of indebtedness, an option to acquire directly or indirectly stock in the issuing corporation. Stock warrants or convertible preferred stock included as part of an investment unit constitute options within the meaning of the preceding sentence. Indebtedness is indirectly convertible if the conversion feature gives the holder the right to convert into another bond of the issuing corporation which is then convertible into the stock of the issuing corporation. In any case where the corporation which in fact issues an obligation to provide consideration for an acquisition described in section 279(b)(1) is a member of an affiliated group, the provisions of section 279(b)(3) and this paragraph are deemed satisfied if the stock into which either the obligation or option which is part of an investment unit or other arrangement is convertible, directly or indirectly, is stock of any member of the affiliated group.

(e) ***Ratio of debt to equity and projected earnings test.*** For rules with respect to the application of section 279(b)(4) (relating to the ratio of debt to equity and the ratio of projected earnings to annual interest to be paid or incurred), see paragraphs (d), (e), and (f) of § 1.279-5.

(f) ***Certain obligations issued after October 9, 1969*** —

(1) ***In general.*** Under section 279(i), an obligation shall not be corporate acquisition indebtedness if such obligation is issued after October 9, 1969, to provide consideration for the acquisition of:

(i) Stock or assets pursuant to a binding written contract which was in effect on October 9, 1969, and at all times thereafter before such acquisition, or

(ii) Stock in any corporation where the issuing corporation, on October 9, 1969, and at all times thereafter before such acquisition, owned at least 50 percent of the total combined voting power of all classes of stock entitled to vote of the acquired corporation.

Subdivision (ii) of this subparagraph shall cease to apply when (at any time on or after October 9, 1969) the issuing corporation has acquired control of the acquired corporation. The interest attributable to any obligation which satisfies the conditions stated in the first sentence of this subparagraph shall reduce the $5 million limitation of section 279(a)(1).

(2) ***Examples.*** The provisions of this paragraph may be illustrated by the following examples:

Example 1. On September 5, 1969, M Corporation, a calendar year taxpayer, entered into a binding written contract with N Corporation to purchase 20 percent of the voting stock of N Corporation. The contract was in effect on October 9, 1969, and at all times thereafter before the acquisition of the stock on January 1, 1970. Pursuant to such contract M Corporation issued on January 1, 1970, to N Corporation an obligation which satisfies the tests of section 279(b) requiring it to pay $1 million of interest each year. However, under the provisions of subparagraph (1)(i) of this paragraph, such obligation is not corporate acquisition indebtedness since it was issued to provide consideration for the acquisition of stock pursuant to a binding written contract which was in effect on October 9, 1969, and at all times thereafter before such acquisition. The $1 million of yearly interest on the obligation reduces the $5 million limitation provided for in section 279(a)(1) to $4 million since such interest is attributable to an obligation which was issued to provide consideration for the acquisition of stock in an acquired corporation.

Example 2. On October 9, 1969, O Corporation, a calendar year taxpayer, owned 50 percent of the total combined voting power of all classes of stock entitled to vote of P Corporation. P Corporation has no other class of stock. On January 1, 1970, while still owning such voting stock O Corporation issued to the shareholders of P Corporation to provide consideration for an additional 40 percent of P Corporation's voting stock an obligation which satisfied the tests of section 279(b) requiring it to pay $4 million of interest each year. Hence, O Corporation acquired control of P Corporation, and the provisions of subparagraph (1)(ii) of this paragraph ceased to apply to O Corporation. Thus, 75 percent of the obligation issued by O Corporation to provide consideration for the stock of P Corporation is not corporate acquisition indebtedness (that is, of the 40 percent of the voting stock of P Corporation which was acquired, only 30 percent was needed to give O Corporation control). Since 25 percent of the obligation is corporate acquisition indebtedness, $1 million of interest attributable to such obligation is subject to disallowance under section 279(a) for the taxable year 1970. The remaining $3 million of interest attributable to the obligation will reduce the $5 million limitation provided by in section 279(a)(1).

(g) ***Exemptions for certain acquisitions of foreign corporations*** —

(1) ***In general.*** Under section 279(f), the term *corporate acquisition indebtedness* does not include any indebtedness issued to any person to provide consideration directly or indirectly for the acquisition of stock in, or assets of, any foreign corporation substantially all the income of which, for the 3-year period ending with the date of such acquisition or for such part of such period as the foreign corporation was in existence, is from sources without the United States. The interest attributable to any obligation excluded from treatment as corporate acquisition indebtedness by reason of this paragraph shall reduce the $5 million limitation of 279(a)(1).

(2) ***Foreign corporation.*** For purposes of this paragraph, the term *foreign corporation* shall have the same meaning as in section 7701(a)(5).

(3) ***Income from sources without the United States.*** For purposes of this paragraph, the term *income from sources without the United States* shall be determined in accordance with sections 862 and 863. If more than 80 percent of a foreign corporation's gross income is derived from sources without the United States, such corporation shall be considered to be deriving substantially all of its income from sources without the United States.

[T.D. 7262, 38 FR 5845, Mar. 5, 1973]

§ 1.279-4 Special rules.

(a) ***Special 3-year rule.*** Under section 279(d)(4), if an obligation which has been deemed to be corporate acquisition indebtedness for any taxable year would not be such indebtedness for each of any 3 consecutive taxable years thereafter if the ratio of debt to equity and the ratio of projected earnings to annual interest to be paid or incurred of section 279 (b)(4) were applied as of the close of each of such 3 years, then such obligation shall not be corporate acquisition indebtedness for any taxable years after such 3 consecutive taxable years. The test prescribed by section 279(b)(4) shall be applied as of the close of any taxable year whether or not the issuing corporation issues any obligation to provide consideration for an acquisition described in section 279(b)(1) in such taxable year. Thus, for example, if a corporation, reporting income on a calendar year basis, has an obligation outstanding as of December 31, 1975, which was classified as a corporate acquisition indebtedness as of the close of 1972 and such obligation would not have been classified as corporate acquisition indebtedness as of the close of 1973, 1974, and 1975 because neither of the conditions of section 279(b)(4) were present as of such dates, then such obligation shall not be corporate acquisition indebtedness for 1976 and all taxable years thereafter. Such obligation shall not be reclassified as corporate acquisition indebtedness in any taxable year following 1975, even if the issuing corporation issues more obligations (whether or not found to be corporate acquisition indebtedness) in such later years to provide consideration for the acquisition of additional stock in, or assets of, the same acquired corporation with respect to which the original obligation was issued. The interest attributable to such obligation shall reduce the $5 million limitation provided by section 279(a)(1) for 1976 and all taxable years thereafter.

(b) ***Five percent stock rule*** —

(1) ***In general.*** Under section 279(d)(5), if an obligation issued to provide consideration for an acquisition of stock in another corporation meets the tests of section 279(b), such obligation shall be corporate acquisition indebtedness for a taxable year only if at sometime after October 9, 1969, and before the close of such year the issuing corporation owns or has owned 5 percent or more of the total combined voting power of all classes of stock entitled to vote in the acquired corporation. If the issuing corporation is a member of an affiliated group, then in accordance with section 279(g) the affiliated group shall be treated as the issuing corporation. Thus, any stock of the acquired corporation owned by members of the affiliated group shall be aggregated to determine if the percentage limitation provided by this subparagraph is exceeded. Once an obligation is deemed to be corporate acquisition indebtedness such obligation will continue to be deemed corporate acquisition indebtedness for all taxable years thereafter unless the provisions of section 279(d) (3) or (4) apply, notwithstanding the fact that the issuing corporation owns less than 5 percent of the combined voting power of all classes of stock entitled to vote of the acquired corporation in any or all taxable years thereafter.

(2) ***Examples.*** The provisions of this paragraph may be illustrated by the following examples:

Example 1. Corporation Y uses the calendar year as its taxable year and has only one class of stock outstanding. On June 1, 1972, X Corporation which is also a calendar year taxpayer and which has never been a shareholder of Y Corporation acquires from the shareholders of Y Corporation 4 percent of the stock of Y Corporation in exchange for obligations which satisfy the conditions of section 279(b). At no time during 1972 does X Corporation own 5 percent or more of the stock of Y Corporation. Accordingly, under the provisions of subparagraph (1) of this paragraph, for 1972 the obligations issued by X Corporation to provide consideration for the acquisition of Y Corporation's stock do not constitute corporate acquisition indebtedness.

Example 2. Assume the same facts as in *Example 1.* Assume further that on February 24, 1973, X Corporation acquires from the shareholders of Y Corporation an additional 7 percent of the stock of Y Corporation in exchange for obligations which satisfy all of the tests of section 279(b). On December 28, 1973, X Corporation sells all of its stock in Y Corporation. For 1973, the obligations issued by X Corporation in 1972 and in 1973 constitute corporate acquisition indebtedness since X Corporation at some time after October 9, 1969, and before the close of 1973 owned 5 percent or more of the voting stock of Y Corporation. Furthermore, such obligations shall be corporate acquisition indebtedness for all taxable years thereafter unless the special provisions of section 279(d) (3) or (4) could apply.

(c) ***Changes in obligation*** —

(1) ***In general.*** Under section 279(h), for purposes of section 279:

(i) Any extension, renewal, or refinancing of an obligation evidencing a preexisting indebtedness shall not be deemed to be the issuance of a new obligation, and

(ii) Any obligation which is corporate acquisition indebtedness of the issuing corporation is also corporate acquisition indebtedness of any corporation which in any transaction or by operation of law assumes liability for such obligation or becomes liable for such obligation as guarantor, endorser, or indemnitor.

(2) ***Examples.*** The provisions of this paragraph may be illustrated by the following examples:

Example 1. On January 1, 1971, X Corporation, which files its return on the basis of a calendar year, issues an obligation, which satisfies the tests of section 279(b), and is deemed to be corporate acquisition indebtedness. On January 1, 1973, an agreement is concluded between X Corporation and the holder of the obligation whereby the maturity date of such obligation is extended until December 31, 1979. Under the provisions of subparagraph (1)(i) of this paragraph such extended obligation is not deemed to be a new obligation, and still constitutes corporate acquisition indebtedness.

Example 2. On June 12, 1971, X Corporation, a calendar year taxpayer, issued convertible and subordinated obligations to acquire the stock of Z Corporation. The obligations were deemed corporate acquisition indebtedness on December 31, 1971. On March 4, 1973, X Corporation and Y Corporation consolidated to form XY Corporation in accordance with State law. Corporation XY is liable for the obligations issued by X Corporation by operation of law and the obligations continue to be corporate acquisition indebtedness. In 1975 XY Corporation exchanges its own nonconvertible obligations for the obligations X Corporation issued. The obligations of XY Corporation issued in exchange for those of X Corporation will be deemed to be corporate acquisition indebtedness.

[T.D. 7262, 38 FR 5847, Mar. 5, 1973; 38 FR 6893, Mar. 14, 1973]

§ 1.279-5 Rules for application of section 279(b).

(a) ***Taxable years to which applicable*** —

(1) ***First year of disallowance.*** Under section 279(d)(1), the deduction of interest on any obligation shall not be disallowed under section 279(a) before the first taxable year of the issuing corporation as of the last day of which the application of either section 279(b)(4) (A) or (B) results in such obligation being classified as corporate acquisition indebtedness. See section 279(c)(1) and paragraph (b)(2) of this section for the time when an obligation is subjected to the test of section 279(b)(4).

(2) ***General rule for succeeding years.*** Under section 279(d)(2), except as provided in paragraphs (3), (4), and (5) of section 279(d), if an obligation is determined to be corporate acquisition indebtedness as of the last day of any taxable year of the issuing corporation, such obligation shall be corporate acquisition indebtedness for such taxable year and all subsequent taxable years.

(b) ***Time of determination*** —

(1) ***In general.*** The determination of whether an obligation meets the conditions of section 279(b) (1), (2), and (3) shall be made as of the day on which the obligation is issued.

(2) ***Ratio of debt to equity, projected earnings, and annual interest to be paid or incurred.***

(i) Under section 279(c)(1), the determination of whether an obligation meets the conditions of section 279(b)(4) is first to be made as of the last day of the taxable year of the issuing corporation in which it issues the obligation to provide consideration directly or indirectly for an acquisition described in section 279(b)(1) of stock in, or assets of, the acquired corporation. An obligation which is not corporate acquisition indebtedness only because it does not satisfy the test of section 279(b)(4) in the taxable year of the issuing corporation in which the obligation is issued for stock in, or assets of, the acquired corporation may be subjected to the test of section 279(b)(4) again. A retesting will occur in any subsequent taxable year of the issuing corporation in which the issuing corporation issues any obligation to provide consideration directly or indirectly for an acquisition described in section 279(b)(1) with respect to the same acquired corporation, irrespective of whether such subsequent obligation is itself classified as corporate acquisition indebtedness. If the issuing corporation is a member of an affiliated group, then in accordance with section 279(g) the affiliated group shall be treated as the issuing corporation. Thus, if any member of the affiliated group issues an obligation to acquire additional stock in, or assets of, the acquired corporation, this paragraph shall apply.

(ii) For purposes of section 279(b)(4) and this paragraph, in any case where the issuing corporation is a member of an affiliated group (see section 279(g) and § 1.279-6 for rules regarding application of section 279 to certain affiliated groups) which does not file a consolidated return and all the members of which do not have the same taxable year, determinations with respect to the ratio of debt to equity of, and projected earnings of, and annual interest to be paid or incurred by, any member of the affiliated group shall be made as of the last day of the taxable year of the corporation which in fact issues the obligation to provide consideration for an acquisition described in section 279(b)(1).

(3) ***Redetermination where control or substantially all the properties have been acquired.*** Under section 279(d)(3), if an obligation is determined to be corporate acquisition indebtedness as of the close of a taxable year of the issuing corporation in which section 279(c)(3)(A)(i) (relating to the projected earnings of the issuing corporation only) applied, but would not be corporate acquisition indebtedness if the determination were made as of the close of the first taxable year of such corporation thereafter in which section 279(c)(3)(A)(ii) (relating to the projected earnings of both the issuing corporation and the acquired corporation) could apply, such obligation shall be considered not to be corporate acquisition indebtedness for such later taxable year and all taxable years

thereafter. Where an obligation ceases to be corporate acquisition indebtedness as a result of the application of this paragraph, the interest on such obligation shall not be disallowed under section 279(a) as a deduction for the taxable year in which the obligation ceases to be corporate acquisition indebtedness and all taxable years thereafter. However, under section 279(a)(2) the interest paid or incurred on such obligation which is allowed as a deduction will reduce the $5 million limitation provided by section 279(a)(1).

(4) ***Examples.*** The provisions of this paragraph may be illustrated by the following examples:

Example 1. In 1971, X Corporation, which files its Federal income tax return on the basis of a calendar year, issues its obligations to provide consideration for the acquisition of 15 percent of the voting stock of both Y Corporation and Z Corporation. Y Corporation and Z Corporation each have only one class of stock. When issued, such obligations satisfied the tests prescribed in section 279(b) (1), (2), and (3) and would have constituted corporate acquisition indebtedness but for the test prescribed in section 279(b)(4). On December 31, 1971, the application of section 279(b)(4) results in X Corporation's obligations issued in 1971 not being treated as corporate acquisition indebtedness for that year.

Example 2. Assume the same facts as in *Example 1,* except that in 1972, X Corporation issues more obligations which come within the tests of section 279(b) (1), (2), and (3) to acquire an additional 10 percent of the voting stock of Y Corporation. No stock of Z Corporation is acquired after 1971. The application of section 279(b)(4)(B) (relating to the projected earnings of X Corporation) as of the end of 1972 results in the obligations issued in 1972 to provide consideration for the acquisition of the stock of Y Corporation being treated as corporate acquisition indebtedness. Since X Corporation during 1972 did issue obligations to acquire more stock of Y Corporation, under the provisions of section 279(c)(1) and subparagraph (2) of this paragraph the obligations issued by X Corporation in 1971 to acquire stock in Y Corporation are again tested to determine whether the test of section 279(b)(4) with respect to such obligations is satisfied for 1972. Thus, since such obligations issued by X Corporation to acquire Y Corporation's stock in 1971 previously came within the provisions of section 279(b) (1), (2), and (3) and the projected earnings test of section 279(b)(4)(B) is satisfied for 1972, all of such obligations are to be deemed to constitute corporate acquisition indebtedness for 1972 and subsequent taxable years. The obligations issued in 1971 to acquire stock in Z Corporation continue not to constitute corporate acquisition indebtedness.

Example 3. Assume the same facts as in *Examples 1* and *2.* In 1973, X Corporation issues more obligations which come within the tests of section 279(b) (1), (2), and (3) to acquire more stock (but not control) in Y Corporation. On December 31, 1973, it is determined with respect to X Corporation that neither of the conditions described in section 279(b)(4) are present. Thus, the obligations issued in 1973 do not constitute corporate acquisition indebtedness. However, the obligations issued in 1971 and 1972 by X Corporation to acquire stock in Y Corporation continue to be treated as corporate acquisition indebtedness.

Example 4. Assume the same facts as in *Example 3,* except that X Corporation acquires control of Y Corporation in 1973. Since X Corporation has acquired control of Y Corporation, the average annual earnings (as defined in section 279(c)(3)(B) and the annual interest to be paid or incurred (as provided by section 279(c)(4)) of both X Corporation and Y Corporation under section 279(c)(3)(A)(ii) are taken into account in computing for 1973 the ratio of projected earnings to annual interest to be paid or incurred described in section 279(b)(4)(B). Assume further that after applying section 279(b)(4)(B) the obligations issued in 1973 escape treatment

as corporate acquisition indebtedness for 1973. Under section 279(d)(3), all of the obligations issued by X Corporation to acquire stock in Y Corporation in 1971 and 1972 are removed from classification as corporate acquisition indebtedness for 1973 and all subsequent taxable years.

Example 5. In 1975, M Corporation, which files its Federal income tax return on the basis of a calendar year, issues its obligations to acquire 30 percent of the voting stock of N Corporation. N Corporation has only one class of stock. Such obligations satisfy the tests prescribed in section 279(b) (1), (2), and (3). Additionally, as of the close of 1975, M Corporation's ratio of debt to equity exceeds the ratio of 2 to 1 and its projected earnings do not exceed three times the annual interest to be paid or incurred. The obligations issued by M Corporation are corporate acquisition indebtedness for 1975 since all the provisions of section 279(b) are satisfied. In 1976 M Corporation issues its obligations to acquire from the shareholders of N Corporation an additional 60 percent of the voting stock of N Corporation, thereby acquiring control of N Corporation. However, with respect to the obligations issued by M Corporation in 1975, there is no redetermination under section 279(d)(3) and subparagraph (3) of this paragraph as to whether such obligations may escape classification as corporate acquisition indebtedness because in 1975 it was the ratio of debt to equity test which caused such obligations to be corporate acquisition indebtedness. If in 1975, M Corporation met the conditions of section 279(b)(4) solely because of the ratio of projected earnings to annual interest to be paid or incurred described in section 279(b)(4)(B), its obligation issued in 1975 could be retested in 1976.

(c) ***Acquisition of stock or assets of several corporations.*** An issuing corporation which acquires stock in, or assets of, more than one corporation during any taxable year must apply the tests described in section 279(b) (1), (2), and (3) separately with respect to each obligation issued to provide consideration for the acquisition of the stock in, or assets of, each such acquired corporation. Thus, if an acquisition is made with obligations of the issuing corporation that satisfy the tests described in section 279(b) (2) and (3) and obligations that fail to satisfy such tests, only those obligations satisfying such tests need be further considered to determine whether they constitute corporate acquisition indebtedness. Those obligations which meet the test of section 279(b)(1) but which are not deemed corporate acquisition indebtedness shall be taken into account for purposes of determining the reduction in the $5 million limitation of section 279(a)(1).

(d) ***Ratio of debt to equity and projected earnings*** —

(1) ***In general.*** One of the four tests to determine whether an obligation constitutes corporate acquisition indebtedness is contained in section 279(b)(4). An obligation will meet the test of section 279(b)(4) if, as of a day determined under section 279(c)(1) and paragraph (b)(2) of this section, either:

(i) The ratio of debt to equity (as defined in paragraph (f) of this section) of the issuing corporation exceeds 2 to 1, or

(ii) The projected earnings (as defined in subparagraph (2) of this paragraph) of the issuing corporation, or of both the issuing corporation and acquired corporation in any case where subparagraph (2)(ii) of this paragraph is applicable, do not exceed three times the annual interest to be paid or incurred (as defined in paragraph (e) of this section) by such issuing corporation, or, where applicable, by such issuing corporation and acquired corporation. Where paragraphs (d)(2)(ii) and (e)(1)(ii) of this section are applicable in computing projected

earnings and annual interest to be paid or incurred, 100 percent of the acquired corporation's projected earnings and annual interest to be paid or incurred shall be included in such computation, even though less than all of the stock or assets of the acquired corporation have been acquired.

(2) ***Projected earnings.*** The term *projected earnings* means the "average annual earnings" (as defined in subparagraph (3) of this paragraph) of:

(i) The issuing corporation only, if subdivision (ii) of this subparagraph, does not apply, or

(ii) Both the issuing corporation and the acquired corporation, in any case where the issuing corporation as of the close of its taxable year has acquired control, or has acquired substantially all of the properties, of the acquired corporation.

For purposes of subdivision (ii) of this subparagraph, an acquisition of "substantially all of the properties" of the acquired corporation means the acquisition of assets representing at least 90 percent of the fair market value of the net assets and at least 70 percent of the fair market value of the gross assets held by the acquired corporation immediately prior to the acquisition.

(3) ***Average annual earnings.***

(i) The term *average annual earnings* referred to in subparagraph (2) of this paragraph is, for any corporation, the amount of its earnings and profits for any 3-year period ending with the last day of a taxable year of the issuing corporation in which it issues any obligation to provide consideration for an acquisition described in section 279(b)(1), computed without reduction for:

(*a*) Interest paid or incurred,

(*b*) Depreciation or amortization allowed under Chapter 1 of the Code,

(*c*) Liability for tax under Chapter 1 of the Code, and

(*d*) Distributions to which section 301(c)(1) apply (other than such distributions from the acquired corporation to the issuing corporation), and reduced to an annual average for such 3-year period. For the rules to determine the amount of earnings and profits of any corporation, see section 312 and the regulations thereunder.

(ii) Except as provided for in subdivision (iii) of this subparagraph, for purposes of subdivision (i) of this subparagraph in the case of any corporation, the earnings and profits for such 3-year period shall be reduced to an annual average by dividing such earnings and profits by 36 and multiplying the quotient by 12. If a corporation was not in existence during the entire 36-month period as of the close of the taxable year referred to in subdivision (i) of this subparagraph, its average annual earnings shall be determined by dividing its earnings and profits for the period of its existence by the number of whole calendar months in such period and multiplying the quotient by 12.

(iii) Where the issuing corporation acquires substantially all of the properties of an acquired corporation, the computation of earnings and profits of such acquired corporation shall be made for the period of such corporation beginning with the first day of the 3-year period of the issuing corporation and ending with the last day prior to the date on which substantially all of the properties were acquired. In determining the number of whole calendar months for such acquired corporation where the period for determining its earnings and profits includes 2

months which are not whole calendar months and the total number of days in such 2 fractional months exceeds 30 days, the number of whole calendar months for such period shall be increased by one. Where the number of days in the 2 fractional months total 30 days or less such fractional months shall be disregarded. After the number of whole calendar months is determined, the calculation for average annual earnings shall be made in the same manner as described in the last sentence of subdivision (ii) of this subparagraph.

(e) ***Annual interest to be paid or incurred*** —

(1) ***In general.*** For purposes of section 279(b)(4)(B), the term *annual interest to be paid or incurred* means:

(i) If subdivision (ii) of this subparagraph does not apply, the annual interest to be paid or incurred by the issuing corporation only, for the taxable year beginning immediately after the day described in section 279(c)(1), determined by reference to its total indebtedness outstanding as of such day, or

(ii) If projected earnings are determined under paragraph (d)(2)(ii) of this section, the annual interest to be paid or incurred by both the issuing corporation and the acquired corporation for 1 year beginning immediately after the day described in section 279(c)(1), determined by reference to their combined total indebtedness outstanding as of such day. However, where the issuing corporation acquires substantially all of the properties of the acquired corporation, the annual interest to be paid or incurred will be determined by reference to the total indebtedness outstanding of the issuing corporation only (including any indebtedness it assumed in the acquisition) as of the day described in section 279(c)(1).

The term *annual interest to be paid or incurred* refers to both actual interest and unstated interest. Such unstated interest includes original issue discount as defined in paragraph (a)(1) of § 1.163-4 and amounts treated as interest under section 483. For purposes of this paragraph and paragraph (f) of this section (relating to the ratio of debt to equity), the indebtedness of any corporation shall be determined in accordance with generally accepted accounting principles. Thus, for example, the indebtedness of a corporation includes short-term liabilities, such as accounts payable to suppliers, as well as long-term indebtedness. Contingent liabilities, such as those arising out of discounted notes, the assignment of accounts receivable, or the guarantee of the liability of another, shall be included in the determination of the indebtedness of a corporation if the contingency is likely to become a reality. In addition, the indebtedness of a corporation includes obligations issued by the corporation, secured only by property of the corporation, and with respect to which the corporation is not personally liable. See section 279(g) and § 1.279-6 for rules with respect to the computation of annual interest to be paid or incurred in regard to members of an affiliated group of corporations.

(2) ***Examples.*** The provisions of these paragraphs may be illustrated by the following examples:

Example 1. Corporation X's earnings and profits calculated in accordance with section 279(c)(3)(B) for 1972, 1971, and 1970 respectively were $29 million, $23 million, and $20 million. The interest to be paid or incurred during the calendar year of 1973 as determined by reference to the issuing corporation's total outstanding indebtedness as of December 31, 1972, was $10 million. By dividing the sum of the earnings and profits for the 3 years by 36 (the number of whole calendar months in the 3-year period) and multiplying the quotient by 12, the average annual earnings for X Corporation is $24 million. Since the projected earnings of X Corporation do not exceed by three times the annual interest to be paid or incurred (they exceed by only 2.4 times), one of the circumstances described in section 279(b)(4) is present.

Example 2. On March 1, 1972, W Corporation acquires substantially all of the properties of Z Corporation in exchange for W Corporation's bonds which satisfy the tests of section 279(b) (2) and (3). W Corporation files its income tax returns on the basis of fiscal years ending June 30. Z Corporation, which was formed on September 1, 1969, is a calendar year taxpayer. The earnings and profits of W Corporation for the last 3 fiscal years ending June 30, 1972, calculated in accordance with the provisions of section 279(c)(3)(B) were $300 million, $400 million, and $380 million, respectively. The average annual earnings of W Corporation is $360 million ($1,080 million ÷ 36 × 12). The earnings and profits of Z Corporation calculated in accordance with the provisions of section 279(c)(3)(B) were $4 million for the period of September 1, 1969 to December 31, 1969, $10 million and $14 million for the calendar years of 1970 and 1971, respectively, and $2 million for the period of January 1, 1972, through February 29, 1972, or a total of $30 million. To arrive at the average annual earnings, the sum of the earnings and profits, $30 million, must be divided by 30 (the number of whole calendar months that Z Corporation was in existence during W Corporation's 3-year period ending with the day prior to the date substantially all the assets were acquired) and the quotient is multiplied by 12, which results in an average annual earnings of $12 million ($30 million ÷ 30 × 12) for Z Corporation. The combined average annual earnings of W Corporation and Z Corporation is $372 million. The interest for the fiscal year ending June 30, 1973, to be paid or incurred by W Corporation on its outstanding indebtedness as of June 30, 1972, is $110 million. Since the projected earnings exceed the annual interest to be paid or incurred by more than three times, the obligation will not be corporate acquisition indebtedness, unless the issuing corporation's debt to equity ratio exceeds 2 to 1.

(f) ***Ratio of debt to equity*** —

(1) ***In general.*** The condition described in section 279(b)(4)(A) is present if the ratio of debt to equity of the issuing corporation exceeds 2 to 1. Under section 279(c)(2), the term *ratio of debt to equity* means the ratio which the total indebtedness of the issuing corporation bears to the sum of its money and all its other assets (in an amount equal to adjusted basis for determining gain) less such total indebtedness. For the meaning of the term *indebtedness,* see paragraph (e)(1) of this section. See section 279(g) and § 1.279-6 for rules with respect to the computation of the ratio of debt to equity in regard to an affiliated group of corporations.

(2) ***Examples.*** The provisions of section 279(b)(4)(A) and this paragraph may be illustrated by the following example:

[$5 million interest to be paid or incurred × $80 million owed to X Bank by its customers/$100 million total indebtedness]

Example 1. On June 1, 1971, X Corporation, which files its federal income tax returns on a calendar year basis, issues an obligation for $45 million to the shareholders of Y Corporation to provide consideration for the acquisition of all of the stock of Y Corporation. Such obligation has the characteristics of corporate acquisition indebtedness described in section 279(b) (2) and (3). The projected earnings of X Corporation and Y Corporation exceed 3 times the annual interest to be paid or incurred by those corporations and, accordingly, the condition described in section 279(b)(4)(B) is not present. Also, on December 31, 1971, X Corporation has total assets with an adjusted basis of $150 million (including the newly acquired stock of Y Corporation having a basis of $45 million) and total indebtedness of $90 million. Hence, X Corporation's equity is $60 million computed by subtracting its $90 million of total indebtedness from its $150 million of total assets. Since X Corporation's ratio of debt to equity of 1.5 to 1 ($90 million of total indebtedness over $60 million

equity) does not exceed 2 to 1, the condition described in section 279(b)(4)(A) is not present. Therefore, X Corporation's obligation for $45 million is not corporate acquisition indebtedness because on December 31, 1971, neither of the conditions specified in section 279(b)(4) existed.

(g) ***Special rules for banks and lending or finance companies*** —

(1) ***Debt to equity and projected earnings.*** Under section 279(c)(5), with respect to any corporation which is a bank (as defined in section 581) or is primarily engaged in a lending or finance business, the following rules are to be applied:

(i) In determining under paragraph (f) of this section the ratio of debt to equity of such corporation (or of the affiliated group of which such corporation is a member), the total indebtedness of such corporation (and the assets of such corporation) shall be reduced by an amount equal to the total indebtedness owed to such corporation which arises out of the banking business of such corporation, or out of the lending or finance business of such corporation, as the case may be;

(ii) In determining under paragraph (e) of this section the annual interest to be paid or incurred by such corporation (or by the issuing corporation and acquired corporation referred to in section 279(c)(4)(B) or by the affiliated group of corporations of which such corporation is a member), the amount of such interest (determined without regard to this subparagraph) shall be reduced by an amount which bears the same ratio to the amount of such interest as the amount of the reduction for the taxable year under subdivision (i) of this subparagraph bears to the total indebtedness of such corporation; and

(iii) In determining under section 279(c)(3)(B) the average annual earnings, the amount of the earnings and profits for the 3-year period shall be reduced by the sum of the reductions under subdivision (ii) of this subparagraph for such period.

For purposes of this paragraph, the term *lending or finance business* means a business of making loans or purchasing or discounting accounts receivable, notes, or installment obligations. Additionally, the rules stated in this paragraph regarding the application of the ratio of debt to equity, the determination of the annual interest to be paid or incurred, and the determination of the average annual earnings also apply if the bank or lending or finance company is a member of an affiliated group of corporations. However, the rules are to be applied only for purposes of determining the debt, equity, projected earnings and annual interest of the bank or lending or finance company which then are taken into account in determining the debt to equity ratio and ratio of projected earnings to annual interest to be paid or incurred by the affiliated group as a whole. Thus, these rules are to be applied to reduce the bank's or lending or finance corporation's indebtedness, annual interest to be paid or incurred, and average annual earnings which are taken into account with respect to the group, but are not to reduce the indebtedness of, annual interest to be paid or incurred by, and average annual earnings of, any corporation in the affiliated group which is not a bank or a lending or finance company. In determining whether any corporation which is a member of an affiliated group is primarily engaged in a lending or finance business, only the activities of such corporation, and not those of the whole group, are to be taken into account. See § 1.279-6 for the application of section 279 to certain affiliated groups of corporations.

(2) ***Examples.*** The provisions of this paragraph may be illustrated by the following examples:

Example 1. As of the close of the taxable year, X Bank has a total indebtedness of $100 million, total assets of $115 million, and $80 million is owed to X Bank by its customers. Bank X's indebtedness is $20 million ($100 million total indebtedness less $80 million owed to the X

Bank by its customers) and its assets are $35 million ($115 million total assets less $80 million owed to the bank by its customers). If its annual interest to be paid or incurred is $5 million, such amount is reduced by $4 million. Thus, X Bank's annual interest to be paid or incurred is $1 million.

Example 2. Assume the same facts as in *Example 1.* X Bank has earnings and profits of $23 million for the 3-year period used to determine projected earnings. In computing the average annual earnings, the $23 million amount will be reduced by $12 million (three times the $4 million reduction of interest in *Example 1,* assuming that the reduction was the same for each year). Thus X Bank's earnings and profits for such 3-year period are $11 million ($23 million total earnings and profits less $12 million reduction).

[T.D. 7262, 38 FR 5847, Mar. 7, 1973, as amended by T.D. 9264, 71 FR 30593, May 30, 2006]

§ 1.279-6 Application of section 279 to certain affiliated groups.

(a) ***In general.*** Under section 279(g), in any case in which the issuing corporation is a member of an affiliated group, the application of section 279 shall be determined by treating all of the members of the affiliated group in the aggregate as the issuing corporation, except that the ratio of debt to equity of, projected earnings of, and the annual interest to be paid or incurred by any corporation (other than the issuing corporation determined without regard to this paragraph) shall be included in the determinations required under section 279(b)(4) as of any day only if such corporation is a member of the affiliated group on such day, and, in determining projected earnings of such corporation under section 279(c)(3), there shall be taken into account only the earnings and profits of such corporation for the period during which it was a member of the affiliated group. The total amount of an affiliated member's assets, indebtedness, projected earnings, and interest to be paid or incurred will enter into the computation required by this section, irrespective of any minority ownership in such member.

(b) ***Aggregate money and other assets.*** In determining the aggregate money and all the other assets of the affiliated group, the money and all the other assets of each member of such group shall be separately computed and such separately computed amounts shall be added together, except that adjustments shall be made, as follows:

(1) There shall be eliminated from the aggregate money and all the other assets of the affiliated group intercompany receivables as of the date described in section 279(c)(1);

(2) There shall be eliminated from the total assets of the affiliated group any amount which represents stock ownership in any member of such group;

(3) In any case where gain or loss is not recognized on transactions between members of an affiliated group under paragraph (d)(3) of this section, the basis of any asset involved in such transaction shall be the transferor's basis;

(4) The basis of property in a transaction to which § 1.1502-13 applies is the basis of the property determined under that section; and

(5) There shall be eliminated from the money and all the other assets of the affiliated group any other amount which, if included, would result in a duplication of amounts in the aggregate money and all the other assets of the affiliated group.

(c) ***Aggregate indebtedness.*** For purposes of applying section 279(c), in determining the aggregate indebtedness of an affiliated group of corporations the total indebtedness of each member of such group shall be separately determined, and such separately determined amounts shall be added together, except that there shall be eliminated from such total indebtedness as of the date described in section 279(c)(1):

(1) The amount of intercompany accounts payable,

(2) The amount of intercompany bonds or other evidences of indebtedness, and

(3) The amount of any other indebtedness which, if included, would result in a duplication of amounts in the aggregate indebtedness of such affiliated group.

(d) ***Aggregate projected earnings.*** In the case of an affiliated group of corporations (whether or not such group files a consolidated return under section 1501), the aggregate projected earnings of such group is computed by separately determining the projected earnings of each member of such group under paragraph (d) of § 1.279-5, and then adding together such separately determined amounts, except that—

(1) A dividend (a distribution which is described in section 301(c)(1) other than a distribution described in section 243(c)(1)) distributed by one member to another member is eliminated;

(2) In determining the earnings and profits of any member of an affiliated group, there is eliminated any amount of interest income received or accrued, and of interest expense paid or incurred, which is attributable to intercompany indebtedness; and

(3) No gain or loss is recognized in any transaction between members of the affiliated group.

(e) ***Aggregate interest to be paid or incurred.*** For purposes of section 279(c)(4), in determining the aggregate annual interest to be paid or incurred by an affiliated group of corporations, the annual interest to be paid or incurred by each member of such affiliated group shall be separately calculated under paragraph (e) of § 1.279-5, and such separately calculated amounts shall be added together, except that any amount of annual interest to be paid or incurred on any intercompany indebtedness shall be eliminated from such aggregate interest.

[T.D. 7262, 38 FR 5850, Mar. 5, 1973, as amended by T.D. 8560, 59 FR 41675, Aug. 15, 1994; T.D. 8597, 60 FR 36679, July 18, 1995; T.D. 10018, 89 FR 106851, Dec. 30, 2024]

§ 1.279-7 Effect on other provisions.

Under section 279(j), no inference is to be drawn from any provision in section 279 and the regulations thereunder that any instrument designated as a bond, debenture, note, or certificate or other evidence of indebtedness by its issuer represents an obligation or indebtedness of such issuer in applying any other provision of this title. Thus, for example, an instrument, the interest on which is not subject to disallowance under section 279 could, under section 385 and the regulations thereunder, be found to constitute a stock interest, so that any amounts paid or payable thereon would not be deductible.

[T.D. 7262, 38 FR 5851, Mar. 5, 1973]

§ 1.280B-1 Demolition of structures.

(a) ***In general.*** Section 280B provides that, in the case of the demolition of any structure, no deduction otherwise allowable under chapter 1 of subtitle A shall be allowed to the owner or lessee of such structure for any amount expended for the demolition or any loss sustained on account of the demolition, and that the expenditure or loss shall be treated as properly chargeable to the capital account with respect to the land on which the demolished structure was located.

(b) ***Definition of structure.*** For purposes of section 280B, the term *structure* means a building, as defined in § 1.48-1(e)(1), including the structural components of that building, as defined in § 1.48-1(e)(2).

(c) ***Effective date.*** This section is effective for demolitions commencing on or after December 30, 1997.

[T.D. 8745, 62 FR 67726, Dec. 30, 1997]

§ 1.280C-1 Disallowance of certain deductions for wage or salary expenses.

If an employer elects to claim the targeted jobs credit under section 44B (as amended by the Revenue Act of 1978), or elects to claim the new jobs credit under section 44B (as in effect prior to enactment of the Revenue Act of 1978), the employer must reduce its deduction for wage or salary expenses paid or incurred in the year the credit is earned by the amount allowable as credit (determined without regard to the provisions of section 53). In the case in which wages and salaries are capitalized the amount subject to depreciation must be reduced by an amount equal to the amount of the credit (determined without regard to the provisions of section 53) in determining the depreciation deduction. In the case of an employer who uses the full absorption method of inventory costing under § 1.471-11, the portion of the basis of the inventory attributable to the wage or salary expenses giving rise to the credit and paid or incurred in the year the credit is earned must be reduced by the amount of the credit allowable (determined without regard to the provisions of section 53). If the employer is an organization that is under common control (as described in § 1.52-1), it must reduce its deduction for wage or salary expenses by the amount of the credit apportioned to it under § 1.52-1 (a) or (b). The deduction for wage and salary expenses must be reduced in the year the credit is earned, even if the employer is unable to use the credit in that year because of the limitations imposed by section 53.

(Secs. 44B, 381, and 7805 of the Internal Revenue Code of 1954, 92 Stat. 2834 (28 U.S.C. 44B); 91 Stat. 148 (26 U.S.C. 381(c)(26)); 68A Stat. 917 (28 U.S.C. 7805))

[T.D. 7921, 48 FR 52908, Nov. 23, 1983]

§ 1.280C-3 Disallowance of certain deductions for qualified clinical testing expenses when section 28 credit is allowable.

(a) ***In general.*** If a taxpayer is entitled to a credit under section 28 for qualified clinical testing expenses (as defined in section 28(b)), it must reduce the amount of any deduction for qualified clinical testing expenses paid or incurred in the year the credit is earned by the amount allowable as credit for such expenses (determined without regard to section 28(d)(2)).

(b) ***Capitalization of qualified clinical testing expenses.*** In a case in which qualified clinical testing expenses are capitalized, the amount chargeable to the capital account for a taxable year must be reduced by the excess of the amount of the credit allowable for the taxable year under section 28 (determined without

regard to section 28(d)(2)) over the amount allowable as a deduction for qualified clinical testing expenses (determined without regard to paragraph (a) of this section) for the taxable year. See section 174 and the regulations thereunder.

(c) ***Controlled group of corporations; organizations under common control.*** In the case of a taxpayer described in paragraph (d)(5) of § 1.28-1 of this chapter (relating to controlled groups of corporations and organizations under common control), paragraphs (a) and (b) of this section shall be applied in accordance with the rules prescribed for aggregation of expenditures under that paragraph.

(d) ***Example.*** The following example illustrates the application of paragraphs (a) and (b) of this section:

Example. A incurs $1,000 in clinical testing expenses for which a $500 credit is allowable under section 28. A also elects under section 174 of the Code to amortize these expenses over a 5-year period beginning in the year the credit is claimed. Under paragraph (a), the current year amortization deduction of $200 ($1,000 ÷ 5) is disallowed. Moreover, the amount which would otherwise be capitalized, $800, is reduced by the excess of the amount of the section 28 credit claimed for the taxable year over the amount of the allowable section 174 amortization deduction for the taxable year, or $300 ($500-$200). Thus, the amount chargeable to the capital account for the taxable year is $500 ($800-$300). A is entitled to amortize $500 over the remaining amortization period resulting in a deduction of $125 for each of the remaining four years.

[T.D. 8232, 53 FR 38715, Oct. 3, 1988]

§ 1.280C-4 Credit for increasing research activities.

(a) ***In general.*** An election under section 280C(c)(3) to have the provisions of section 280C(c)(1) and (c)(2) not apply and elect the reduced research credit under section 280C(c)(3)(B) shall be made on Form 6765, “Credit for Increasing Research Activities” (or any successor form). In order for the election to be effective, the Form 6765 must clearly indicate the taxpayer's intent to make the section 280C(c)(3) election, and must be filed with an original return for the taxable year filed on or before the due date (including extensions) for filing the income tax return for such year, regardless of whether any research credits are claimed on the original return. An election, once made for any taxable year, is irrevocable for that taxable year.

(b) ***Controlled groups of corporations; trades or businesses under common control*** —

(1) ***In general.*** A member of a controlled group of corporations (within the meaning of section 41(f)(5)), or a trade or business which is treated as being under common control with other trades or businesses (within the meaning of section 41(f)(1)(B)), may make the election under section 280C(c)(3). However, only the common parent (within the meaning of § 1.1502-77(a)(1)(i)) of a consolidated group may make the election on behalf of the members of a consolidated group. A member or trade or business shall make the election on Form 6765 and by the time prescribed in paragraph (a) of this section.

(2) ***Example.*** The following example illustrates an application of paragraph (b) of this section: A, B, and C, all of which are calendar year taxpayers, are members of a controlled group of corporations (within the meaning of section 41(f)(5)). A, B, and C each attach a statement to the 2012 Form 6765, “Credit for Increasing Research Activities,” showing A and C were the only members of the controlled group to have qualified research expenses when calculating the group credit. A and C report their allocated portions of the group credit on the 2012 Form 6765 and B reports no research credit on Form 6765. Pursuant to paragraph (a) of this section, A and B, but not C, each make an election for

the reduced credit under section 280C(c)(3)(B) on the 2012 Form 6765. In December 2013, B determines it had qualified research expenses in 2012 resulting in an increased group credit. On an amended 2012 Form 6765, A, B, and C each report their allocated portions of the group credit. B reports its credit as a regular credit under section 41(a) and reduces the credit under section 280C(c)(3)(B). C may not reduce its credit under section 280C(c)(3)(B) because C did not make an election for the reduced credit with its original return.

(c)

(1) ***Effective/applicability date.*** This section applies to taxable years ending on or after July 27, 2011.

(2) ***Taxable years beginning after December 31, 2011.*** Paragraphs (b)(2) and (c)(2) and (3) of this section apply to taxable years beginning on or after April 2, 2018. For taxable years ending before April 2, 2018, see § 1.280C-4T as contained in 26 CFR part 1, as revised April 1, 2017.

(3) ***For taxable years ending before January 1, 2012.*** See § 1.280C-4 as contained in 26 CFR part 1, revised April 1, 2014.

[T.D. 9539, 76 FR 44801, July 27, 2011, as amended by T.D. 9717, 80 FR 18099, Apr. 3, 2015; T.D. 9832, 83 FR 13185, Mar. 28, 2018]

§ 1.280F-1T Limitations on investment tax credit and recovery deductions under section 168 for passenger automobiles and certain other listed property; overview of regulations (temporary).

(a) ***In general.*** Section 280F(a) limits the amount of investment tax credit determined under section 46(a) and recovery deductions under section 168 for passenger automobiles. Section 280F(b) denies the investment tax credit and requires use of the straight line method of recovery for listed property that is not predominantly used in a qualified business use. In certain circumstances, section 280F(b) requires the recapture of an amount of cost recovery deductions previously claimed by the taxpayer. Section 280F(c) provides that lessees are to be subject to restrictions substantially equivalent to those imposed on owners of such property under section 280F (a) and (b). Section 280F(d) provides definitions and special rules; note that section 280F(d) (2) and (3) apply with respect to all listed property, even if the other provisions of section 280F do not affect the treatment of the property.

(b) ***Key to Code provisions.*** The following table identifies the provisions of section 280F under which regulations are provided, and lists each provision below with its corresponding regulation section:

Section 1.280F-2T	Section 1.280F-3T	Section 1.280F-4T	Sections 1.280F-5T and 1.280F-7	Section 1.280F-6
(a)	(b)	(d)(2)	(c)	(d)(3)
(d)(1)	(d)(1)			(d)(4)
(d)(8)				(d)(5)
(d)(10)				(d)(6)

Sections 1.280F-2T(f) and 1.280F-4T(b) also provide special rules for improvements to passenger automobiles and other listed property that qualify as capital expenditures.

(c) ***Effective dates —***

(1) ***In general.*** This section and §§ 1.280F-2T through 1.280F-6 apply to property placed in service or leased after June 18, 1984, in taxable years ending after that date. Section 1.280F-7 applies to property leased after December 31, 1986, in taxable years ending after that date.

(2) ***Exception.*** This section and §§ 1.280F-2T through 1.280F-6 shall not apply to any property:

(i) Acquired pursuant to a binding contract in effect on June 18, 1984, and at all times thereafter, or under construction by the taxpayer on that date, but only if the property is placed in service before January 1, 1985 (January 1, 1987, in the case of 15-year real property), or

(ii) Leased pursuant to a binding contract in effect on June 18, 1984, and at all times thereafter, but only if the lessee first uses such property under the lease before January 1, 1985 (January 1, 1987, in the case of 15-year real property).

(3) ***Leased passenger automobiles.*** Section 1.280F-5T(e) generally applies to passenger automobiles leased after April 2, 1985, and before January 1, 1987, in taxable years ending after April 2, 1985. Section 1.280F-5T(e) generally applies to passenger automobiles leased after April 2, 1985, in taxable years ending after that date. Section 1.280F-5T(e) does not apply to any passenger automobile that is leased pursuant to a binding contract, which is entered into no later than April 2, 1985, and which is in effect at all times thereafter, but only if the automobile is used under the lease before August 1, 1985. If § 1.280F-5T(e) does not apply to a passenger automobile, *see* paragraph (c) (1) and (2) of this section. Section 1.280F-7(a) applies to passenger automobiles leased after December 31, 1986, in taxable years ending after that date.

[T.D. 7986, 49 FR 42704, Oct. 24, 1984, as amended by T.D. 8061, 50 FR 46038, Nov. 6, 1985; T.D. 8218, 53 FR 29881, Aug. 9, 1988; T.D. 8473, 58 FR 19060, Apr. 12, 1993; T.D. 9133, 69 FR 35514, June 25, 2004]

§ 1.280F-2T Limitations on recovery deductions and the investment tax credit for certain passenger automobiles (temporary).

(a) ***Limitation on amount of investment tax credit*** —

(1) ***General rule.*** The amount of the investment tax credit determined under section 46(a) for any passenger automobile shall not exceed $1,000. For a passenger automobile placed in service after December 31, 1984, the $1,000 amount shall be increased by the automobile price inflation adjustment (as defined in section 280F(d)(7)) for the calendar year in which the automobile is placed in service.

(2) ***Election of reduced investment tax credit.*** If the taxpayer elects under section 48(q)(4) to reduce the amount of the investment tax credit in lieu of adjusting the basis of the passenger automobile under section 48(q)(1), the amount of the investment tax credit for any passenger automobile shall not exceed two-thirds of the amount determined under paragraph (a)(1) of this section.

(b) ***Limitations on allowable recovery deductions*** —

(1) ***Recovery deduction for year passenger automobile is placed in service.*** For the taxable year that a taxpayer places a passenger automobile in service, the allowable recovery deduction under section 168(a) shall not exceed $4,000. See paragraph (b)(3) of this section for the adjustment to this limitation.

(2) ***Recovery deduction for remaining taxable years during the recovery period.*** For any taxable year during the recovery period remaining after the year that the property is placed in service, the allowable recovery deduction under section 168(a) shall not exceed $6,000. See paragraph (b)(3) of this section for the adjustment to this limitation.

(3) ***Adjustment to limitation by reason of automobile price inflation adjustment.*** The limitations on the allowable recovery deductions prescribed in paragraph (b) (1) and (2) of this section are increased by the automobile price inflation adjustment (as defined in section 280F(d)(7)) for the calendar year in which the automobile is placed in service.

(4) ***Coordination with section 179.*** For purposes of section 280F(a) and this section, any deduction allowable under section 179 (relating to the election to expense certain depreciable trade or business assets) is treated as if that deduction were a recovery deduction under section 168. Thus, the amount of the section 179 deduction is subject to the limitations described in paragraph (b) (1) and (2) of this section.

(c) ***Disallowed recovery deductions allowed for years subsequent to the recovery period*** —

(1) ***In general.***

(i) Except as otherwise provided in this paragraph (c), the "unrecovered basis" (as defined in paragraph (c)(1)(ii) of this section) of any passenger automobile is treated as a deductible expense in the first taxable year succeeding the end of the recovery period.

(ii) The term *unrecovered basis* means the excess (if any) of:

(A) The unadjusted basis (as defined in section 168(d)(1)(A), except that there is no reduction by reason of an election to expense a portion of the basis under section 179) of the passenger automobile, over

(B) The amount of the recovery deductions (including any section 179 deduction elected by the taxpayer) which would have been allowable for taxable years in the recovery period (determined after the application of section 280F (a) and paragraph (b) of this section and as if all use during the recovery period were used described in section 168(c)(1)).

(2) ***Special rule when taxpayer elects to use the section 168(b)(3) optional recovery percentages.*** If the taxpayer elects to use the optional recovery percentages under section 168(b)(3) or must use the straight line method over the earnings and profits life (as defined and described in § 1.280F-3T(f)), the second succeeding taxable year after the end of the recovery period is treated as the first succeeding taxable year after the end of the recovery period for purposes of this paragraph (c) because of the half-year convention. For example, assume a calendar-year taxpayer places in service on July 1, 1984, a passenger automobile (*i.e.,* 3-year recovery property) and elects under section 168(b)(3) to recover its cost over 5 years using the straight line optional percentages. Based on these facts, calendar year 1990 is treated as the first succeeding taxable year after the end of the recovery period.

(3) ***Deduction limited to $6,000 for any taxable year.*** The amount that may be treated as a deductible expense under this paragraph (c) in the first taxable year succeeding the recovery period shall not exceed $6,000. Any excess shall be treated as an expense for the succeeding taxable years. However, in no event may any deduction in a succeeding taxable year exceed $6,000. The limitation

on amounts deductible as an expense under this paragraph (c) with respect to any passenger automobile is increased by the automobile price inflation adjustment (as defined in section 280F(d)(7)) for the calendar year in which such automobile is placed in service.

(4) ***Deduction treated as a section 168 recovery deduction.*** Any amount allowable as an expense in a taxable year after the recovery period by reason of this paragraph (c) shall be treated as a recovery deduction allowable under section 168. However, a deduction is allowable by reason of this paragraph (c) with respect to any passenger automobile for a taxable year only to the extent that a deduction under section 168 would be allowable with respect to the automobile for that year. For example, no recovery deduction is allowable for a year during which a passenger automobile is disposed of or is used exclusively for personal purposes.

(d) ***Additional reduction in limitations by reason of personal use of passenger automobile or by reason of a short taxable year.*** See paragraph (i) of this section for rules regarding the additional reduction in the limitations prescribed by paragraphs (a) through (c) of this section by reason of the personal use of a passenger automobile or by reason of a short taxable year.

(e) ***Examples.*** The provisions of paragraphs (a) through (c) of this section may be illustrated by the following examples. For purposes of these examples, assume that all taxpayers use the calendar year and that no short taxable years are involved.

Example 1. (i) On July 1, 1984, B purchases for $45,000 and places in service a passenger automobile which is 3-year recovery property under section 168. In 1984, B does not elect under section 179 to expense a portion of the cost of the automobile. The automobile is used exclusively in B's business during taxable years 1984 through 1990.
(ii) The maximum amount of B's investment tax credit is $1,000 (*i.e.,* the lesser of $1,000 or .06 × $45,000). B's unadjusted basis for purposes of section 168 is $44,500 (*i.e.,* $45,000 reduced under section 48(q)(1) by $500). B selects the use of the accelerated recovery percentages under section 168(b)(1).

(iii) The maximum amount of B's recovery deduction for 1984 is $4,000 (*i.e,* the lesser of $4,000 or .25 × $44,500); for 1985, $6,000 (*i.e.,* the lesser of $6,000 or .38 × $44,500); and for 1986, $6,000 (*i.e.,* the lesser of $6,000 or .37 × $44,500).

(iv) At the beginning of taxable year 1987, B's unrecovered basis in the automobile is $28,500 (*i.e.,* $44,500−$16,000). Under paragraph (c) of this section, B may expense $6,000 of the unrecovered basis in the automobile in 1987. This expense is treated as a recovery deduction under section 168. For taxable years 1988 through 1990, B may deduct $6,000 of the unrecovered basis per year. At the beginning of 1991, B's unrecovered basis in the automobile is $4,500. During that year, B disposes of the automobile. B is not allowed a deduction for 1991 because no deduction would be allowable under section 168 based on these facts.

Example 2. (i) On July 1, 1984, C purchases for $50,000 and places in service a passenger automobile which is 3-year recovery property under section 168. The automobile is used exclusively in C's business during taxable years 1984 through 1992. In 1984, C does not elect

under section 179 to expense a portion of the automobile's cost. C elects under section 48(q)(4) to take a reduced investment tax credit in lieu of the section 48(q)(1) basis adjustment.
(ii) The maximum amount of C's investment tax credit is $666.67 (*i.e.,* the lesser of $^{2}/_{3}$ of $1,000 or .04 × $50,000). C's unadjusted basis for purposes of section 168 is $50,000. C elects to use the optional recovery percentages under section 168(b)(3) based on a 5-year recovery period.

(iii) The maximum amount of C's recovery deduction for 1984 is $4,000 (*i.e.,* the lesser of $4,000 or .10 × $50,000); for taxable years 1985 through 1988, $6,000 per year (*i.e.,* the lesser of $6,000 or .20 of $50,000). C's recovery deduction for 1989 is $5,000 (*i.e.,* the lesser of .10 × $50,000 or $6,000).

(iv) At the beginning of taxable year 1990, C's unrecovered basis in the automobile is $17,000. Under paragraph (c) of this section, C may expense $6,000 of the unrecovered basis in the automobile in 1990. this expense is treated as a recovery deduction under section 168. For taxable years 1991 and 1992, C may deduct $6,000, and $5,000, respectively of the unrecovered basis per year.

Example 3. Assume the same facts as in *Example 2,* except that C disposes of the passenger automobile on July 1, 1990. Under paragraph (c) of this section, C is not allowed a deduction for 1990 or for any succeeding taxable year because no deduction would be allowable under section 168 based on these facts.

Example 4. (i) On July 1, 1984, G purchases for $15,000 and places in service a passenger automobile which is 3-year recovery property under section 168. The automobile is used exclusively in G's business during taxable years 1984 through 1987. In 1984, G elects under section 179 to expense $5,000 of the cost of the property.
(ii) The maximum amount of G's investment tax credit is $600 (*i.e.,* the lesser of .06 × $10,000 or $1,000).

(iii) G's unadjusted basis for purposes of section 168 is $9,700 (*i.e.,* $15,000 minus the sum of $5,000 (the amount of the expense elected under section 179) and $300 (one-half of the investment tax credit under section 48(q)(1))). Under paragraph (b)(4) of this section, the allowable deduction under section 179 is treated as a recovery deduction under section 168 for purposes of this section. Thus, the maximum amount of G's section 179 deduction is $4,000 (*i.e.,* the lesser of $4,000 or $5,000 + .25 × $9,700). G is entitled to no further recovery deduction under section 168 for 1984. The amount of G's 1985 and 1986 recovery deductions are $3,686 (*i.e.,* the lesser of .38 × $9,700 or $6,000) and $3,589 (*i.e.,* the lesser of .37 × $9,700 or $6,000), respectively. At the beginning of 1987, G's unrecovered basis in the automobile is $3,425 (*i.e.,* $14,700 − $11,275). Under paragraph (c) of this section, G may expense the remaining $3,425 in 1987.

Example 5. (i) On July 1, 1984, D purchases for $55,000 and places in service a passenger automobile which is 3-year recovery property under section 168. The automobile is used exclusvely in D's business during taxable years 1984 through 1993. In 1984, D elects under section 179 to expense $5,000 of the cost of the property.
(ii) The maximum amount of D's investment tax credit is $1,000 (*i.e.,* the lesser of $1,000 or .06 × $50,000).

(iii) D's unadjusted basis for purposes of section 168 is $49,500 (*i.e.,* $55,000 minus the sum of $5,000 (the amount of the expense elected under section 179) and $500 (one-half of the investment tax credit under section 48 (q)(1))). Under paragraph (b)(4) of this section, the allowable deduction under section 179 is treated as a recovery deduction under section 168 for purposes of this section. Thus, the maximum amount of D's section 179 deduction is $4,000 (*i.e.,* the lesser of $4,000 or $5,000 + .25 × $49,500). D is entitled to no further recovery deduction under section 168 for 1984. The maximum amount of D's 1985 recovery deduction is $6,000 (*i.e.,* the lesser of $6,000 or .38 × $49,500); and for 1986, $6,000 (*i.e.,* the lesser of $6,000 or .37 of $49,500).

(iv) At the beginning of 1987, D's unrecovered basis is $38,500. D may expense the remaining unrecovered basis at the rate of $6,000 per year through 1992 and $2,500 in 1993.

Example 6. Assume the same facts as in *Example 5,* except that in 1993, D uses the automobile only 60 percent in his business. Under paragraph (c)(4) of this section for 1993, D may expense $1,500 (*i.e.,* .60 × $2,500). D is entitled to no further deductions with respect to the automobile in any later year.

Example 7. (i) On July 1, 1984, F purchases for $44,500 and places in service a passenger automobile which is 3-year recovery property under section 168. The automobile is used exclusively in F's business during taxable years 1984 through 1992. In 1984, F elects under section 179 to expense $5,000 of the cost of the property.
(ii) F elects under section 48(q)(4) to take a reduced investment tax credit in lieu of the section 48(q)(1) basis adjustment. The maximum amount of F's investment tax credit is $666.67 (*i.e.,* the lesser of $^{2}/_{3}$ of $1,000 or .04 × $39,500).

(iii) F's unadjusted basis for purposes of section 168 is $39,500 (*i.e.,* $44,500 − $5,000 (the amount of the expense elected under section 179)). F elects to use the optional recovery percentage under section 168(b)(3) based on a 5-year recovery period. Under paragraph (b)(4) of this section, the allowable section 179 deduction is treated as a recovery deduction under section 168 for purposes of this section. Thus, the maximum amount of F's section 179 deduction is $4,000 (*i.e.,* the lesser of $4,000 or $5,000 + .10 × $39,500). F is entitled to no further recovery deduction under section 168 for 1984. The maximum amounts of F's recovery deductions for 1985 through 1988 are $6,000 per year (*i.e.,* the lesser of $6,000 or

.20 × $39,500). F's recovery deduction for 1989 (the first taxable year after the 5-year recovery period but the sixth recovery year for purposes of section 168) is $3,950 (*i.e.,* the lesser of .10 × $39,500 or $6,000).

(iv) Under paragraph (c), taxable year 1990 is considered to be the first taxable year succeeding the end of the recovery period. At the beginning of taxable year 1990, F's unrecovered basis in the automobile is $12,550 (*i.e.,* $44,500 − $31,950). Under paragraph (c), F may expense $6,000 of his unrecovered basis in the automobile in 1990 and in 1991. This expense is treated as a recovery deduction under section 168. For taxable year 1992, F may expense the remaining $550 of his unrecovered basis in the automobile.

(f) ***Treatment of improvements that qualify as capital expenditures.*** An improvement to a passenger automobile that qualifies as a capital expenditure under section 263 is treated as a new item of recovery property placed in service in the year the improvement is made. However, the limitations in paragraph (b) of this section on the amount of recovery deductions allowable are determined by taking into account as a whole both the improvement and the property of which the improvement is a part. If that improvement also qualifies as an investment in new section 38 property under section 48(b) and § 1.48-2(b)(2), the limitation in paragraph (a)(1) of this section on the amount of the investment tax credit for that improvement is determined by taking into account any investment tax credit previously allowed for the passenger automobile (including any prior improvement considered part of the passenger automobile). Thus, the maximum credit allowable for the automobile (including the improvement) will be $1,000 (or $^{2}/_{3}$ of $1,000, in the case of an election to take a reduced credit under section 48(q)(4)) (adjusted under section 280F(d)(7) to reflect the automobile price inflation adjustment for the year the property of which the improvement is a part is placed in service).

(g) ***Treatment of section 1031 or section 1033 transactions*** —

(1) ***Treatment of exchanged passenger automobile.*** For a taxable year in which a transaction described in section 1031 or section 1033 occurs, the unadjusted basis of an exchanged or converted passenger automobile shall cease to be taken into account in determining any recovery deductions allowable under section 168 as of the beginning of the taxable year in which the exchange or conversion occurs. Thus, no recovery deduction is allowable for the exchanged or converted automobile in the year of the exchange or conversion.

(2) ***Treatment of acquired passenger automobile*** —

(i) ***In general.*** The acquired automobile is treated as new property placed in service in the year of the exchange (or in the replacement year) and that year is its first recovery year.

(ii) ***Limitations on recovery deductions.*** If the exchanged (or converted) automobile was acquired after the effective date of section 280F (as set out in § 1.280F-1(c)), the basis of that automobile as determined under section 1031(d) or section 1033(b) (whichever is applicable) must be reduced for purposes of computing recovery deductions with respect to the acquired automobile (but not for purposes of determining the amount of the investment tax credit and gain or loss on the sale or other disposition of the property) by the excess (if any) of:

(A) The sum of the amounts that would have been allowable as recovery deductions with respect to the exchanged (or converted) automobile during taxable years preceding the year of the exchange (or conversion) if all of the use of the automobile during those years was use described in section 168(c), over

(B) The sum of the amounts allowable as recovery deductions during those years.

(3) ***Examples.*** The provisions of this paragraph (g) may be illustrated by the following examples:

Example 1. (i) In 1982, F purchases and places in service a passenger automobile which is 3-year recovery property under section 168. The automobile is used exclusively in F's business.
(ii) On July 1, 1984, F exchanges the passenger automobile and $1,000 cash for a new passenger automobile ("like kind" property). Under paragraph (g)(1) of this section, no recovery deduction is allowed in 1984 for the exchanged automobile. Any investment tax credit claimed with respect to that automobile is subject to recapture under section 47.

(iii) F's basis in the acquired property (as determined under section 1031(d) and F's qualified investment are $20,000. Under the provisions of paragraph (g)(2)(i) of this section, the acquired property is treated as new recovery property placed in service in 1984 to the extent of the full $20,000 of basis. The maximum amount of F's investment tax credit is limited to $1,000 (*i.e.,* the lesser of $1,000 or .06 × $20,000). Cost recovery deductions are computed pursuant to paragraph (b) of this section.

Example 2. (i) On July 1, 1984, E purchases for $30,000 and places in service a passenger automobile which is 3-year recovery property under section 168. In 1984, E's business use percentage is 80 percent and such use constitutes his total business/investment use.
(ii) E elects under section 48(q)(4) to take a reduced investment tax credit in lieu of the section 48 (q)(1) basis adjustment. The maximum amount of E's investment tax credit is $533.33 (*i.e.,* the lesser of $^{2}/_{3}$ of $1,000 × .80 or .80 × .04 × $30,000).

(iii) E's unadjusted basis for purposes of section 168 is $30,000. E selects the use of the accelerated recovery percentages under section 168(b)(1). The maximum amount of E's recovery deduction for 1984 is $3,200 (*i.e.,* the lesser of .80 × $4,000 or .80 × .25 × $30,000).

(iv) On June 10, 1985, E exchanges the passenger automobile and $1,000 cash for a new passenger automobile ("like kind" property). Under paragraph (g)(1) of this section, no recovery deduction is allowable in 1985 for the exchanged automobile. The investment tax credit claimed is subject to recapture under section 47. Under paragraph (g)(2)(ii) of this section, E's basis in the acquired property for purposes of computing recovery deductions under section 280F is $27,000 (*i.e.,* $27,800 (section 1031(d) basis) − $800). The acquired automobile is used exclusively in F's business during taxable years 1985 through 1988. Under paragraph (g)(2) of this section, the acquired property is treated as new recovery property

> placed in service in 1985. Assume that the automobile price inflation adjustment (as described under section 280F(d)(7)) is zero. E's qualified investment in the property, as determined under § 1.46-3(c)(1), is $27,800. The maximum amount of E's investment tax credit is $1,000 (*i.e.,* the lesser of $1,000 or .06 × $27,800). E's unadjusted basis for purposes of section 168 is $26,500 (*i.e.,* $27,000 reduced under section 48(q)(1) by $500). Cost recovery deductions are computed pursuant to paragraph (b) of this section.

(h) ***Other nonrecognition transactions.*** [Reserved]

(i) ***Limitation under this section applies before other limitations*** —

(1) ***Personal use.*** The limitations imposed upon the maximum amount of the allowable investment tax credit and the allowable recovery deductions (as described in paragraphs (a) through (c) of this section) must be adjusted during any taxable year in which a taxpayer makes any use of a passenger automobile other than for business/investment use (as defined in § 1.280F-6(d)(3)). The limitations on the amount of the allowable investment tax credit (as described in paragraph (a) of this section) and the allowable cost recovery deductions (as described in paragraphs (b) and (c) of this section) are redetermined by multiplying the limitations by the percentage of business/investment use (determined on an annual basis) during the taxable year.

(2) ***Short taxable year.*** The limitations imposed upon the maximum amount of the allowable recovery deductions (as described in paragraphs (a) through (c) of this section) must be adjusted during any taxable year in which a taxpayer has a short taxable year. In this case, the limitation is adjusted by multiplying the limitation that would have been applied if the taxable year were not a short taxable year by a fraction, the numerator of which is the number of months and part-months in the short taxable year and the denominator of which is 12.

(3) ***Examples.*** The provisions of this paragraph (i) may be illustrated by the following examples:

Example 1. On July 1, 1984, A purchases and places in service a passenger automobile and uses it 80 percent for business/investment use during 1984. Under paragraph (i)(1) of this section, the maximum amount of the investment tax credit that A may claim for the automobile is $800 (*i.e.,* .80 × $1,000).

Example 2. Assume the same facts as in *Example 1,* except that A elects under section 48(q)(4) to take a reduced investment tax credit in lieu of the section 48(q)(1) basis adjustment. Under paragraph (i)(1) of this section, the maximum amount of the investment tax credit that A may claim for the automobile is $533.33 (*i.e.,* .80 × $^{2}/_{3}$ × $1,000).

Example 3. On July 1, 1984, B purchases and places in service a passenger automobile and uses it 60 percent for business/investment use during 1984. Under paragraph (i)(1) of this section, the maximum amount of the investment tax credit that B may claim for the automobile is $600 (*i.e.,* .60 × $1,000). B uses the car 70 percent for business/investment use during 1985 and 80 percent during 1986. Under paragraph (i)(1) of this section, the maximum amount of recovery deductions that B may claim for 1984, 1985, and 1986 are $2,400 (*i.e.,* .60 × $4,000), $4,200 (*i.e.,* .70 × $6,000), and $4,800 (*i.e.,* .80 × $6,000), respectively.

Example 4. Assume the same facts as in *Example 3* with the added facts that B's unrecovered basis at the beginning of 1987 is $6,000 and that B uses the automobile 85 percent for business/ investment use during 1987. Under paragraph (i)(1) of this section, the maximum amount that B may claim as an expense for 1987 is $5,000 (*i.e.,* .85 × $6,000).

Example 5. On August 1, 1984, C purchases and places in service a passenger automobile and uses it exclusively for business. Taxable year 1984 for C is a short taxable year which consists of 6 months. Under paragraph (i)(2) of this section, the maximum amount that C may claim as a recovery deduction for 1984 is $2,000 (*i.e.,* $^{6}/_{12}$ × $4,000).

Example 6. Assume the same facts as in *Example 5,* except that C uses the passenger automobile 70 percent for business/investment use during 1984. Under paragraph (i) (1) and (2) of this section, the maximum amount that C may claim as a recovery deduction for 1984 is $1,400 (*i.e.,* .70 × $^{6}/_{12}$ × $4,000).

(98 Stat. 494, 26 U.S.C. 280F; 68A Stat. 917, 26 U.S.C. 7805)

[T.D. 7986, 49 FR 42704, Oct. 24, 1984, as amended by T.D. 9133, 69 FR 35514, June 25, 2004]

§ 1.280F-3T Limitations on recovery deductions and the investment tax credit when the business use percentage of listed property is not greater than 50 percent (temporary).

(a) ***In general.*** Section 280F(b), generally, imposes limitations with respect to the amount allowable as an investment tax credit under section 46(a) and the amount allowable as a recovery deduction under section 168 in the case of listed property (as defined in § 1.280F-6(b)) if certain business use of the property (referred to as "qualified business use") does not exceed 50 percent during a taxable year. *Qualified business use* generally means use in a trade or business, rather than use in an investment or other activity conducted for the production of income within the meaning of section 212. See § 1.280F-6(d) for the distinction between "business/ investment use" and "qualified business use."

(b) ***Limitation on the amount of investment tax credit*** —

(1) ***Denial of investment tax credit when business use percentage not greater than 50 percent.*** Listed property is not treated as section 38 property to any extent unless the business use percentage (as defined in section 280F(d)(6) and § 1.280F-6(d)(1)) is greater than 50 percent. For example, if a taxpayer uses listed property in a trade or business in the taxable year in which it is placed in service, but the business use percentage is not greater than 50 percent, no investment tax credit is allowed for that listed property. If, in the taxable year in which listed property is placed in service, the only business/investment use (as defined in § 1.280F-6(d)(3)) of that property is qualified business use (as defined in § 1.280F-6(d)(2)(i)), and the business use percentage is 55 percent, the investment tax credit is allowed for the 55 percent of the listed property that is treated as section 38 property. The credit allowed is unaffected by any increase in the business use percentage in a subsequent taxable year.

(2) ***Recapture of investment tax credit.*** Listed property ceases to be section 38 property to the extent that the business/investment use (as defined in § 1.280F-6(d)(3)) for any taxable year is less than the business/investment use for the taxable year in which the property is placed in service. *See* § 1.47-2(c). If the business use percentage (as defined in § 1.280F-6(d)(1)) of listed property is greater than 50 percent for the taxable year in which the property is placed in service, and less than or equal to 50 percent for any subsequent taxable year, that property ceases to be section 38 property in its

entirety in that subsequent taxable year. Under § 1.47-1(c)(1)(ii)(*b*), the property (or a portion thereof) is treated as ceasing to be section 38 property on the first day of the taxable year in which the cessation occurs.

(c) ***Limitation on the method of cost recovery under section 168 when business use of property not greater than 50 percent*** —

(1) ***Year of acquisition.*** If any listed property (as defined in § 1.280F-6(b)) is not predominantly used in a qualified business use (as defined in § 1.280F-6(d)(4)) in the year it is acquired, the recovery deductions allowed under section 168 for the property for that taxable year and for succeeding taxable years are to be determined using the straight line method over its earnings and profits life (as defined in paragraph (f) of this section). Additionally, the taxpayer is not entitled to make any election under section 179 with respect to the property for that year.

(2) ***Subsequent years.*** If any listed property is not subject to paragraph (c)(1) of this section because such property is predominantly used in a qualified business use (as defined in § 1.280F-6(d)(4)) during the year it is acquired but is not predominantly used in a qualified business use during a subsequent taxable year, the rules of this paragraph (c)(2) apply. In such a case, the taxpayer must determine the recovery deductions allowed under section 168 for the taxable year that the listed property is not predominantly used in a qualified business use and for any subsequent taxable year as if such property was not predominantly used in a qualified business use in the year in which it was acquired and there had been no section 179 election with respect to the property. Thus, the recovery deductions allowable under section 168 for the remaining taxable years are computed by determining the applicable recovery percentage that would apply if the taxpayer had used the straight line method over the property's earnings and profits life beginning with the year the property was placed in service.

(3) ***Effect of rule on recovery property that is not listed property.*** The mandatory use of the straight line method over the property's earnings and profits life under paragraphs (d) (1) and (2) of this section does not have any effect on the proper method of cost recovery for other recovery property of that same class placed in service in the same taxable year by the taxpayer and does not constitute an election to use an optional recovery period under section 168(b)(3).

(d) ***Recapture of excess recovery deductions claimed*** —

(1) ***In general.*** If paragraph (c)(2) of this section is applicable, any excess depreciation (as defined in paragraph (d)(2) of this section) must be included in the taxpayer's gross income and added to the property's adjusted basis for the first taxable year in which the property is not predominantly used in a qualified business use (as defined in § 1.280F-6(d)(4)).

(2) ***Definition of excess depreciation.*** For purposes of this section, the term *excess depreciation* means the excess (if any) of:

(i) The amount of the recovery deductions allowable with respect to the property for taxable years before the first taxable year in which the property was not predominantly used in a qualified business use, over

(ii) The amount of the recovery deductions which would have been allowable for those years if the property had not been predominantly used in a qualified business use for the year it was acquired and there had been no section 179 election with respect to the property.

For purposes of paragraph (d)(2)(i), any deduction allowable under section 179 (relating to the election to expense certain depreciable trade or business assets) is treated as if that deduction was a recovery deduction under section 168.

(3) ***Recordkeeping requirement.*** A taxpayer must be able to substantiate the use of any listed property, as prescribed in section 274(d)(4) and § 1.274-5T or § 1.274-6T, for any taxable year for which recapture under section 280F(b)(3) and paragraph (d) (1) and (2) of this section may occur even if the taxpayer has fully depreciated (or expensed) the listed property in a prior year. For example, in the case of 3-year recovery property, the taxpayer shall maintain a log, journal, etc. for six years even though the taxpayer fully depreciated the property in the first three years.

(e) ***Earnings and profits life*** —

(1) ***Definition.*** The earnings and profits life with respect to any listed property is generally the following:

In the case of—	The applicable recovery period is—
3-year property	5 years.
5-year property	12 years.
10-year property	25 years.
18-year real property and low-income housing	40 years.
15-year public utility property	35 years.

However, if the recovery period applicable to any recovery property under section 168 is longer than the above assigned recovery period, such longer recovery period shall be used. For example, generally, the recovery period for recovery property used predominantly outside the United States is the property's present class life (as defined in section 168(g)(2)). In many cases, a property's present class life is longer than the recovery period assigned to the property under the above table. Pursuant to this paragraph (e)(1), the property's recovery period is its present class life.

(2) ***Applicable recovery percentages.*** If the applicable recovery period is determined pursuant to the table prescribed in paragraph (e)(1) of this section, the applicable recovery percentage is:

(i) For property other than 18-year real property or low-income housing:

If the recovery year is—	And the recovery period is—			
	5	12	25	35
1	10	4	2	1
2	20	9	4	3
3	20	9	4	3
4	20	9	4	3
5	10	8	4	3
7		8	4	3

If the recovery year is—	And the recovery period is—			
	5	12	25	35
8		8	4	3
9		8	4	3
10		8	4	3
11		8	4	3
12		8	4	3
13		4	4	3
14			4	3
15			4	3
16			4	3
17			4	3
18			4	3
19			4	3
20			4	3
21			4	3
22			4	3
23			4	3
24			4	3
25			4	3
26			2	3
27				3
28				3
29				3
30				3
31				3
32				2
33				2
34				2
35				2
36				1

(ii) For 18-year real property: [Reserved]

(iii) For low-income housing: [Reserved]

(f) ***Examples.*** The provisions of this section may be illustrated by the following examples. For purposes of these examples, assume that all taxpayers use the calendar year and that no short taxable years are involved.

Example 1. On July 1, 1984, B purchases for $50,000 and places in service an item of listed property (other than a passenger automobile) which is 3-year recovery property under section 168. For the first taxable year that the property is in service, B used the property 40 percent in a trade or business, 40

percent for the production of income, and 20 percent for personal purposes. Although B's total business/investment use is greater than 50 percent, the business use percentage for that taxable year is only 40 percent. Under paragraph (b)(1) of this section, no investment tax credit is allowed for the property.

> *Example 2.* (i) On January 1, 1985, C purchases for $40,000 and places in service an item of listed property (other than a passenger automobile) that is 3-year recovery property under section 168. Seventy percent of the use of the property is in C's trade or business and 30 percent of the use is for personal purposes. C does not elect a reduced investment tax credit under section 48(q)(4). The amount of C's investment tax credit is $1,680 (*i.e.,* $40,000 × .60 × .10 × .70).
> (ii) In addition, in 1986, only 55 percent of the use of the property is in C's trade or business and 45 percent of the use is for personal purposes. Under paragraph (b)(2) of this section, the property ceases to be section 38 property to the extent that the use in a trade or business decreased below 70 percent. As a result, a portion of the investment tax credit must be recaptured as an increase in tax liability for 1986 under the rules of section 47 (relating to the recapture of investment tax credit). *See* section 47(a)(5) and § 1.47-2(e) for rules relating to the computation of the recapture amount.

Example 3. On July 1, 1984, B purchases and places in service an item of listed property (other than a passenger automobile) that is 3-year recovery property. B elects to take a reduced investment tax credit under section 48(q)(4). In 1984, B uses the property exclusively in his business. Assume that B's 1984 allowable recovery deduction is $12,500. In 1985 and 1986, the property is not predominantly used in a qualified business use. The investment tax credit claimed is subject to recapture in full under section 47 in 1985 since the property ceases to be section 38 property in its entirety on January 1, 1985. Under paragraph (c)(2) of this section, B must treat the property for 1985 and subsequent taxable years as if he recovered its cost over a 5-year recovery period (*i.e.,* its earnings and profits life) using the straight line method (with the half-year convention) from the time it was placed in service. Therefore, taxable year 1985 is treated as the property's second recovery year (of its 5-year recovery period) and the applicable recovery deduction using the straight line method must be used to determine the recovery deduction. Under paragraph (d) of this section, B must recapture any excess depreciation claimed for taxable year 1984. If B had used the straight line method over a 5-year recovery period his recovery deduction for 1984 would have been $5,000. Under paragraph (d)(2) of this section, B's excess depreciation is $7,500 (*i.e.,* $12,500 − $5,000) and that amount must be included in B's 1985 gross income and added to the property's basis. The taxable years 1986 through 1989 are the property's second through sixth recovery years, respectively, of such property's 5-year recovery period.

Example 4. Assume the same facts as in *Example 3,* except that in 1986 B used the property exclusively in his business. B is entitled to no investment tax credit with respect to the property in 1986 and must continue to recover the property's cost over a 5-year recovery period using the straight line method.

Example 5. On July 1, 1984, H purchases and places in service listed property (other than a passenger automobile) which is 3-year recovery property under section 168. H selects the use of the accelerated recovery percentages under section 168. In 1984 through 1986, H uses the property exclusively for business. In 1987, the property is not predominantly used in a qualified business use.

Under paragraph (c)(2) of this section, H must compute his 1987 and subsequent taxable year's recovery deductions using the straight line method over a 5-year recovery period with 1987 treated as the fourth recovery year. Under paragraph (d) of this section, H must recapture any excess depreciation claimed for taxable years 1984 through 1986 even though by 1987 the full cost of the property had already been recovered.

Example 6. Assume the same facts as in *Example 5,* except that H uses the property exclusively for personal purposes in 1987. Under paragraph (d) of this section, H must recapture any excess depreciation claimed for taxable years 1984 through 1986. H is entitled to no cost recovery deduction under the 5-year straight line method for 1987. Assume further that in 1988 H uses the property 70 percent in his business. Thus, H's business use percentage for that year is 70 percent. Under paragraph (c)(2) of this section, H must compute his 1988 cost recovery deduction using the straight line method over a 5-year recovery period with 1988 treated as the fifth recovery year.

Example 7. (i) On July 1, 1984, F purchases for $70,000 and places in service listed property (other than a passenger automobile) which is 3-year recovery property under section 168. F's business use percentage for 1984 through 1986 is 60 percent. F elects under section 179 to expense $5,000 of the cost of the property.
(ii) F elects a reduced investment tax credit under section 48(q)(4). The maximum amount of F's investment tax credit is $1,560 (*i.e.,* $65,000 × .04 × .60).

(iii) F's unadjusted basis for purposes of section 168 is $65,000 (*i.e.,* $70,000 reduced by the $5,000 section 179 expense). F selects the use of the accelerated recovery percentages under section 168(b)(1). F's recovery deduction for 1984 is $9,750 (*i.e.,* $65,000 × .25 × .60).

(iv) In 1985, the property is not predominantly used in a qualified business use. The investment tax credit claimed is subject to recapture in full under section 47 in 1985 since the property ceases to be section 38 property in its entirety on January 1, 1985. Under paragraph (c)(2) of this section, F must treat the property for 1985 and subsequent taxable years as if he recovered its cost over a 5-year recovery period (*i.e.,* its earnings and profits life) using the straight line method (with the half year convention) from the time it was placed in service. Under paragraph (d) of this section, F must recapture any excess depreciation claimed for taxable year 1984. F's excess depreciation is $10,550 [*i.e.,* ($65,000 × .25 × .60 + $5,000)−($70,000 × .10 × .60)]. This amount must be included in F's 1985 gross income and added to the property's adjusted basis.

Example 8. (i) On July 1, 1984, G purchases for $60,000 and places in service a passenger automobile which is 3-year recovery property under section 168.
(ii) In 1984, G's business use percentage is 80 percent and such use constitutes his total business/investment use. G elects under section 48(q)(4) to take a reduced investment tax credit in lieu of the basis adjustment under section 48(q)(1). The maximum amount of G's investment tax credit is $533.33 (*i.e.,* the lesser of .80 × $^{2}/_{3}$ × $1,000 or $60,000 × .80 × .04).

(iii) In 1984, G does not elect under section 179 to expense a portion of the automobile's cost. G selects the use of the accelerated recovery percentages under section 168. G's unadjusted basis for purposes of section 168 is $60,000. The maximum amount of G's 1984 recovery deduction is $3,200 (*i.e.,* the lesser of .80 × $4,000 or .80 × .25 × $60,000).

(iv) In 1985, G's business use percentage is 80 percent and such use constitutes his total business/investment use. The maximum amount of G's 1985 recovery deduction is $4,800 (*i.e.,* the lesser of .80 × $6,000 or .80 × .38 × $60,000).

(v) In 1986, G's business use percentage is 45 percent and such use constitutes his total business/investment use. Under paragraph (b)(2) of this section, as a result of the decline in the business use percentage to 50 percent or less, the automobile ceases to be section 38 property in its entirety and G must recapture (pursuant to §§ 1.47-1(c) and 1.47-2(e)) the investment tax credit previously claimed. Since G's business use percentage in 1986 is not greater than 50 percent, under the provisions of paragraph (d) of this section, G must recompute (for recapture purposes) his recovery deductions for 1984 and 1985 using the straight line method over a 5-year recovery period (*i.e.,* earnings and profits life for 3-year recovery property using the half-year convention) to determine if any excess depreciation must be included in his 1986 taxable income. G's recomputed recovery deductions for 1984 and 1985 are $3,200 (*i.e.,* the lesser of .80 × $4,000 or .80 × .10 × $60,000), and $4,800 (*i.e.,* the lesser of .80 × $6,000 or .80 × .20 × $60,000), respectively. G does not have to recapture any excess depreciation since his recovery deductions for 1984 and 1985 computed using the straight line method over a 5-year recovery period are the same as the amounts actually claimed during those years.

(vi) Under paragraph (c)(2) of this section, for 1986 and succeeding taxable years G must compute his remaining recovery deductions using the straight line method over a 5-year recovery period beginning with the third recovery year. The maximum amount of G's 1986 recovery deduction is $2,700 (*i.e.,* the lesser of .45 × $6,000 or .45 × .20 × $60,000). For taxable years 1987 through 1993, G's business use percentage is 55 percent and such use constitutes his total business/investment use. G's 1987 and 1988 recovery deductions are $3,300 per year (*i.e.,* the lesser of .55 × $6,000 or .55 × .20 × $60,000). For taxable year 1989 (the last recovery year), G's recovery deduction is $3,300 (*i.e.,* .55 × .10 × $60,000 or .55 × $6,000).

(vii) As of the beginning of 1990, G will have claimed a total of $20,600 of recovery deductions. Under § 1.280F-2T(c), G may expense his remaining unrecovered basis (up to a certain amount per year) in the first succeeding taxable year after the end of the recovery period and in taxable years thereafter. If G had used his automobile for 100 percent business use in taxable years 1984 through 1989, G could have claimed a recovery deduction of $4,000 in 1984 and a recovery deduction of $6,000 in each of those remaining years. At the beginning of 1990, therefore, G's unrecovered basis (as defined in section 280F(d)(8)) is $26,000 (*i.e.,* $60,000−$34,000). The maximum amount of G's 1990 recovery deduction is $3,300 (*i.e.,* .55 × $6,000). At the beginning of 1991, G's unrecovered basis is $20,000 (*i.e.,* $26,000 adjusted under section 280F(d)(2) and § 1.280F-4T(a) to account for the amount that would have been claimed in 1990 for 100 percent

> business/investment use during that year). The maximum amount of G's 1991 recovery deduction is $3,300 (*i.e.,* .55 × $6,000) and his unrecovered basis as of the beginning of 1992 is $14,000 (*i.e.,* $20,000−$6,000). In 1992, G disposes of the automobile. G is not allowed a recovery deduction for 1992.

(98 Stat. 494, 26 U.S.C. 280F; 68A Stat. 917, 26 U.S.C. 7805)

[T.D. 7986, 49 FR 42707, Oct. 24, 1984, as amended by T.D. 8061, 50 FR 46038, Nov. 6, 1985; T.D. 9133, 69 FR 35514, June 25, 2004]

§ 1.280F-4T Special rules for listed property (temporary).

(a) ***Limitations on allowable recovery deductions in subsequent taxable years*** —

(1) ***Subsequent taxable years affected by reason of personal use in prior years.*** For purposes of computing the amount of the recovery deduction for "listed property" for a subsequent taxable year, the amount that would have been allowable as a recovery deduction during an earlier taxable year if all of the use of the property was use described in section 168(c) is treated as the amount of the recovery deduction allowable during that earlier taxable year. The preceding sentence applies with respect to all earlier taxable years, beginning with the first taxable year in which some or all use of the "listed property" is use described in section 168(c). For example, on July 1, 1984, B purchases and places in service listed property (other than a passenger automobile) which is 5-year recovery property under section 168. B selects the use of the accelerated percentages under section 168. B's business/investment use of the property (all of which is qualified business use as defined in section 280F(d)(6)(B) and § 1.280F-6(d)(2)) in 1984 through 1988 is 80 percent, 70 percent, 60 percent, and 55 percent, respectively, and B claims recovery deductions for those years based on those percentages. B's qualified business use for the property for 1989 and taxable years thereafter increases to 100 percent. Pursuant to this rule, B may not claim a recovery deduction in 1989 (or for any subsequent taxable year) for the increase in business use because there is no adjusted basis remaining to be recovered for cost recovery purposes after 1988.

(2) ***Special rule for passenger automobiles.*** In the case of a passenger automobile that is subject to the limitations of § 1.280F-2T, the amount treated as the amount that would have been allowable as a recovery deduction if all of the use of the automobile was use described in section 168(c) shall not exceed $4,000 for the year the passenger automobile is placed in service and $6,000 for each succeeding taxable year (adjusted to account for the automobile price inflation adjustment, if any, under section 280F(d)(7) and for short taxable year under § 1.280F-2T(i)(2)). *See.* § 1.280F-3T(g). *Example 8.*

(b) ***Treatment of improvements that qualify as capital expenditures*** —

(1) ***In general.*** In the case of any improvement that qualifies as a capital expenditure under section 263 made to any listed property other than a passenger automobile, the rules of this paragraph (b) apply. See § 1.280F-2T(f) for the treatment of an improvement made to a passenger automobile.

(2) ***Investment tax credit allowed for the improvement.*** If the improvement qualifies as an investment in new section 38 property under section 48(b) and § 1.48-2(b), the investment tax credit for that improvement is limited by paragraph (b)(1) of § 1.280F-3T, as applied to the item of listed property as a whole.

(3) ***Cost recovery of the improvement.*** The improvement is treated as a new item of recovery property. The method of cost recovery with respect to that improvement is limited by § 1.280F-3T(c), as applied to the item of listed property as a whole.

(98 Stat. 494, 26 U.S.C. 280F; 68A Stat. 917, 26 U.S.C. 7805)

[T.D. 7986, 49 FR 42710, Oct. 24, 1984, as amended by T.D. 9133, 69 FR 35514, June 25, 2004]

§ 1.280F-5T Leased property (temporary).

(a) ***In general.*** Except as otherwise provided in this section, the limitation on cost recovery deductions and the investment tax credit provided in section 280F (a) and (b) and §§ 1.280F-2T and 1.280F-3T do not apply to any listed property leased or held for leasing by any person regularly engaged in the business of leasing listed property. If a person is not regularly engaged in the business of leasing listed property, the limitations on cost recovery deductions and the investment tax credit provided in section 280F and §§ 1.280F-2T and 1.280F-3T apply to such property leased or held for leasing by such person. The special rules for lessees set out in this section apply with respect to all lessees of listed property, even those whose lessors are not regularly engaged in the business of leasing listed property. For rules on determining inclusion amounts with respect to passenger automobiles, see paragraphs (d), (e) and (g) of this section, and see § 1.280F-7(a). For rules on determining inclusion amounts with respect to other listed property, see paragraphs (f) and (g) of this section, and see § 1.280F-7(b).

(b) ***Section 48(d) election.*** If a lessor elects under section 48(d) with respect to any listed property to treat the lessee as having acquired such property, the amount of the investment tax credit allowed to the lessee is subject to the limitation prescribed in § 1.280F-3T(b) (1) and (2). If a lessor elects under section 48(d) with respect to any passenger automobile to treat the lessee as having acquired such automobile, the amount of the investment tax credit allowed to the lessee is also subject to the limitations prescribed in § 1.280F-2T (a) and (i).

(c) ***Regularly engaged in the business of leasing.*** For purposes of paragraph (a) of this section, a person shall be considered regularly engaged in the business of leasing listed property only if contracts to lease such property are entered into with some frequency over a continuous period of time. The determination shall be made on the basis of the facts and circumstances in each case, taking into account the nature of the person's business in its entirety. Occasional or incidental leasing activity is insufficient. For example, a person leasing only one passenger automobile during a taxable year is not regularly engaged in the business of leasing automobiles. In addition, an employer that allows an employee to use the employer's property for personal purposes and charges such employee for the use of the property is not regularly engaged in the business of leasing with respect to the property used by the employee.

(d) ***Inclusions in income of lessees of passenger automobiles leased after June 18, 1984, and before April 3, 1985 —***

(1) ***In general.*** If a taxpayer leases a passenger automobile after June 18, 1984, but before April 3, 1985, for each taxable year (except the last taxable year) during which the taxpayer leases the automobile, the taxpayer must include in gross income an inclusion amount (prorated for the number of days of the lease term included in that taxable year), determined under this paragraph (d)(1), and multiplied by the business/investment use (as defined in § 1.280F-6(d)(3)(i)) for the particular taxable year. The inclusion amount:

(i) Is 7.5 percent of the excess (if any) of the automobile's fair market value over $16,500 for each of the first three taxable years during which a passenger automobile is leased.

(ii) Is 6 percent of the excess (if any) of the automobile's fair market value over $22,500 for the fourth taxable year during which a passenger automobile is leased.

(iii) Is 6 percent of the excess (if any) of the automobile's fair market value over $28,500 for the fifth taxable year during which a passenger automobile is leased.

(iv) Is 6 percent of the excess (if any) of the automobile's fair market value over $34,500 for the sixth taxable year during which a passenger automobile is leased.

For the seventh and subsequent taxable years during which a passenger automobile is leased, the inclusion amount is 6 percent of the excess (if any) of the automobile's fair market value over the sum of (A) $16,500 and (B) $6,000 multiplied by the number of such taxable years in excess of three years. *See* paragraph (g)(2) of this section for the definition of fair market value.

(2) ***Additional inclusion amount when less than predominant use in a qualified business use.***

(i) If a passenger automobile, which is leased after June 18, 1984, and before April 3, 1985, is not used predominantly in a qualified business use during a taxable year, the lessee must add to gross income in the first taxable year that the automobile is not so used (and only in that year) an inclusion amount determined under this paragraph (d)(2). This inclusion amount is in addition to the amount required to be included in gross income under paragraph (d)(1) of this section.

(ii) If the fair market value (as defined in paragraph (h)(2) of this section) of the automobile is greater than $16,500, the inclusion amount is determined by multiplying the average of the business/investment use (as defined in paragraph (h)(3) of this section) by the appropriate dollar amount from the table in paragraph (d)(2)(iii) of this section. If the fair market value (as defined in paragraph (h)(2) of this section) of the automobile is $16,500 or less, the inclusion amount is the product of the fair market value of the automobile, the average business/investment use, and the applicable percentage from the table in paragraph (d)(2)(iv) of this section.

(iii) The dollar amount is determined under the following table:

If a passenger automobile is not predominantly used in a qualified business use during—	**The dollar amount:**			
	Lease term (years)			
	1	**2**	**3**	**4 or more**
The first taxable year of the lease term	$350	$700	$1,350	$1,850
The second taxable year of the lease term			650	1,250

If a passenger automobile is not predominantly used in a qualified business use during—	The dollar amount:			
	Lease term (years)			
	1	2	3	4 or more
The third taxable year of the lease term				650

(iv) The applicable percentage is determined under the following table:

If a passenger automobile is not predominantly used in a qualified business use during—	The applicable percentage:			
	Lease term (years)			
	1	2	3	4 or more
The first taxable year of the lease term	3.0	6.0	10.2	13.2
The second taxable year of the lease term		1.25	6.2	10.4
The third taxable year of the lease term			2.25	6.5
The fourth taxable year of the lease term				1.7
The fifth taxable year of the lease term				0.5

(e) *Inclusions in income of lessees of passenger automobiles leased after April 2, 1985, and before January 1, 1987* —

(1) ***In general.*** For any passenger automobile that is leased after April 2, 1985, and before January 1, 1987, for each taxable year (except the last taxable year) during which the taxpayer leases the automobile, the taxpayer must include in gross income an inclusion amount determined under subparagraphs (2) through (5) of this paragraph (e). Additional inclusion amounts when a passenger automobile is not used predominantly in a qualified business use during a taxable year are determined under paragraph (e)(6) of this section. *See* paragraph (h)(2) of this section for the definition of fair market value.

(2) ***Fair market value not greater than $50,000: years one through three.*** For any passenger automobile that has a fair market value not greater than $50,000, the inclusion amount for each of the first three taxable years during which the automobile is leased is determined as follows:

(i) For the appropriate range of fair market values in the table in paragraph (e)(2)(iv) of this section, select the dollar amount from the column for the quarter of the taxable year in which the automobile is first used under the lease,

(ii) Prorate the dollar amount for the number of days of the lease term included in the taxable year, and

(iii) Multiply the prorated dollar amount by the business/investment use for the taxable year.

(iv) *Dollar amounts: Years 1-3:*

Dollar Amounts: Years 1-3

Fair market value		Taxable year quarter			
Greater than—	But not greater than—	4th	3d	2d	1st
$11,250	$11,500	$8	$7	$6	$6
11,500	11,750	24	21	19	17
11,750	12,000	40	35	32	29
12,000	12,250	56	49	44	40
12,250	12,500	72	64	57	52
12,500	12,750	88	78	70	63
12,750	13,000	104	92	83	75
13,000	13,250	120	106	95	86
13,250	13,500	144	128	115	104
13,500	13,750	172	153	137	124
13,750	14,000	200	177	159	145
14,000	14,250	228	202	182	165
14,250	14,500	256	227	204	185
14,500	14,750	284	252	226	206
14,750	15,000	312	277	249	226
15,000	15,250	340	302	271	246
15,250	15,500	369	327	293	266
15,500	15,750	397	352	316	287
15,750	16,000	425	377	338	307
16,000	16,250	453	402	360	327
16,250	16,500	481	426	383	348
16,500	16,750	509	451	405	368
16,750	17,000	537	476	428	388
17,000	17,500	579	514	461	419
17,500	18,000	635	563	506	459
18,000	18,500	691	613	550	500
18,500	19,000	748	663	595	541
19,000	19,500	804	713	640	581
19,500	20,000	860	763	685	622
20,000	20,500	916	812	729	662
20,500	21,000	972	862	774	703
21,000	21,500	1,028	912	819	744
21,500	22,000	1,084	962	863	784
22,000	23,000	1,169	1,036	930	845

Fair market value		Taxable year quarter			
Greater than—	But not greater than—	4th	3d	2d	1st
23,000	24,000	1,281	1,136	1,020	926
24,000	25,000	1,393	1,236	1,109	1,007
25,000	26,000	1,506	1,335	1,199	1,089
26,000	27,000	1,618	1,435	1,288	1,170
27,000	28,000	1,730	1,534	1,377	1,251
28,000	29,000	1,842	1,634	1,467	1,332
29,000	30,000	1,955	1,734	1,556	1,413
30,000	31,000	2,067	1,833	1,646	1,495
31,000	32,000	2,179	1,933	1,735	1,576
32,000	33,000	2,292	2,032	1,824	1,657
33,000	34,000	2,404	2,132	1,914	1,738
34,000	35,000	2,516	2,232	2,003	1,819
35,000	36,000	2,629	2,331	2,093	1,901
36,000	37,000	2,741	2,431	2,182	1,982
37,000	38,000	2,853	2,530	2,271	2,063
38,000	39,000	2,965	2,630	2,361	2,144
39,000	40,000	3,078	2,730	2,450	2,225
40,000	41,000	3,190	2,829	2,540	2,307
41,000	42,000	3,302	2,929	2,629	2,388
42,000	43,000	3,415	3,028	2,718	2,469
43,000	44,000	3,527	3,128	2,808	2,550
44,000	45,000	3,639	3,228	2,897	2,631
45,000	46,000	3,752	3,327	2,987	2,713
46,000	47,000	3,864	3,427	3,076	2,794
47,000	48,000	3,976	3,526	3,165	2,875
48,000	49,000	4,088	3,626	3,255	2,956
49,000	50,000	4,201	3,726	3,344	3,037

(3) ***Fair market value not greater than $50,000: years four through six.*** For any passenger automobile that has a fair market value greater than $18,000, but not greater than $50,000, the inclusion amount for the fourth, fifth, and sixth taxable years during which the automobile is leased is determined as follows:

(i) For the appropriate range of fair market values in the table in paragraph (e)(3)(iv) of this section, select the dollar amount from the column for the taxable year in which the automobile is used under the lease,

(ii) Prorate the dollar amount for the number of days of the lease term included in the taxable year, and

(iii) Multiply this dollar amount by the business/investment use for the taxable year.

(iv) Dollar Amounts: Years 4-6:

DOLLAR AMOUNTS: YEARS 4-6

Fair market value		Year		
Greater than—	But not greater than—	4	5	6
$18,000	$18,500	$15		
18,500	19,000	45		
19,000	19,500	75		
19,500	20,000	105		
20,000	20,500	135		
20,500	21,000	165		
21,000	21,500	195		
21,500	22,000	225		
22,000	23,000	270		
23,000	24,000	330	$42	
24,000	25,000	390	102	
25,000	26,000	450	162	
26,000	27,000	510	222	
27,000	28,000	570	282	
28,000	29,000	630	342	$54
29,000	30,000	690	402	114
30,000	31,000	750	462	174
31,000	32,000	810	522	234
32,000	33,000	870	582	294
33,000	34,000	930	642	354
34,000	35,000	990	702	414
35,000	36,000	1,050	762	474
36,000	37,000	1,110	822	534
37,000	38,000	1,170	882	594
38,000	39,000	1,230	942	654
39,000	40,000	1,290	1,002	714
40,000	41,000	1,350	1,062	774
41,000	42,000	1,410	1,122	834
42,000	43,000	1,470	1,182	894
43,000	44,000	1,530	1,242	954
44,000	45,000	1,590	1,302	1,014
45,000	46,000	1,650	1,362	1,074
46,000	47,000	1,710	1,422	1,134
47,000	48,000	1,770	1,482	1,194

Fair market value		Year		
Greater than—	But not greater than—	4	5	6
48,000	49,000	1,830	1,542	1,254
49,000	50,000	11,890	1,602	1,314

(4) *Fair market value greater than $50,000: years one through six.*

(i) For any passenger automobile that has a fair market value greater than $50,000, the inclusion amount for the first six taxable years during which the automobile is leased is determined as follows:

(A) Determine the dollar amount by using the appropriate formula in paragraph (e)(4)(ii) of this section,

(B) Prorate the dollar amount for the number of days of the lease term included in the taxable year, and

(C) Multiply this dollar amount by the business/investment use for the taxable year.

(ii) The dollar amount is computed as follows:

(A) If the automobile is first used under the lease in the fourth quarter of a taxable year, the dollar amount for each of the first three taxable years during which the automobile is leased is the sum of—

(*1*) $124, and

(*2*) 11 percent of the excess of the automobile's fair market value over $13,200.

(B) If the automobile is first used under the lease in the third quarter of a taxable year, the dollar amount for each of the first three taxable years during which the automobile is leased is the sum of—

(*1*) $110, and

(*2*) 10 percent of the excess of the automobile's fair market value over $13,200.

(C) If the automobile is first used under the lease in the second quarter of a taxable year, the dollar amount for each of the first three taxable years during which the automobile is leased is the sum of—

(*1*) $100, and

(*2*) 9 percent of the excess of the automobile's fair market value over $13,200.

(D) If the automobile is first used under the lease in the first quarter of a taxable year, the dollar amount for each of the first three taxable years during which the automobile is leased is the sum of—

(*1*) $90, and

(*2*) 8 percent of the excess of the automobile's fair market value over $13,200.

(E) For the fourth taxable year during which the automobile is leased, the dollar amount is 6 percent of the excess of the automobile's fair market value over $18,000.

(F) For the fifth taxable year during which the automobile is leased, the dollar amount is 6 percent of the excess of the automobile's fair market value over $22,800.

(G) For the sixth taxable year during which the automobile is leased, the dollar amount is 6 percent of the excess of the automobile's fair market value over $27,600.

(5) ***Seventh and subsequent taxable years.***

(i) For any passenger automobile that has a fair market value less than or equal to $32,400, the inclusion amount for the seventh and subsequent taxable years during which the automobile is leased is zero.

(ii) For any passenger automobile that has a fair market value greater than $32,400, the inclusion amount for the seventh and subsequent taxable years during which the automobile is leased is 6 percent of—

(A) The excess (if any) of the automobile's fair market value, over

(B) The sum of—

(*1*) $13,200 and

(*2*) $4,800 multiplied by the number of taxable years in excess of three years.

(6) ***Additional inclusion amount when less than predominant use in a qualified business use.***

(i) If a passenger automobile, which is leased after April 2, 1985, and before January 1, 1987, is not predominantly used in a qualified business use during a taxable year, the lessee must add to gross income in the first taxable year that the automobile is not so used (and only in that year) an inclusion amount determined under this paragraph (e)(6). This inclusion amount is in addition to the amount required to be included in gross income under paragraph (e) (2), (3), (4), and (5) of this section.

(ii) If the fair market value (as defined in paragraph (h)(2) of this section) of the automobile is greater than $11,250, the inclusion amount is determined by multiplying the average of the business/investment use (as defined in paragraph (h)(3) of this section) by the appropriate dollar amount from the table in paragraph (e)(6)(iii) of this section. If the fair market value of the automobile is $11,250 or less, the inclusion amount is the product of the fair market value of the automobile, the average business/investment use, and the applicable percentage from the table in paragraph (e)(6)(iv) of this section.

(iii) The dollar amount is determined under the following table:

If a passenger automobile is not predominantly used in a qualified business use during—	The dollar amount is: Lease term (years)—			
	1	2	3	4 or more
The first taxable year of the lease term	$350	$700	$1,150	$1,500
The second taxable year of the lease term		150	700	1,200
The third taxable year of the lease term			250	750

(iv) The applicable percentage is determined under the following table:

If a passenger automobile is not predominantly used in a qualified business use during—	The applicable percentage: Lease term (years)—			
	1	2	3	4 or more
The first taxable year of the lease term	3.0	6.0	10.2	13.2
The second taxable year of the lease term		1.25	6.2	10.4
The third taxable year of the lease term			2.25	6.5
The fourth taxable year of the lease term				1.7
The fifth taxable year of the lease term				0.5

(f) *Inclusions in income of lessees of listed property other than passenger automobiles* —

(1) ***In general.*** If listed property other than a passenger automobile is not used predominantly in a qualified business use in any taxable year in which such property is leased, the lessee must add an inclusion amount to gross income in the first taxable year in which such property is not so predominantly used (and only in that year). This inclusion amount is determined under paragraph (f)(2) of this section for property leased after June 18, 1984, and before January 1, 1987. The inclusion amount is determined under § 1.280F-7(b) for property leased after December 31, 1986.

(2) ***Inclusion amount for property leased after June 18, 1984, and before January 1, 1987.*** The inclusion amount for property leased after June 18, 1984, and before January 1, 1987, is the product of the following amounts:

(i) The fair market value (as defined in paragraph (h)(2) of this section) of the property,

(ii) The average business/investment use (as defined in paragraph (h)(3) of this section), and

(iii) The applicable percentage (as determined under paragraph (f)(3) of this section).

(3) *Applicable percentages.* The applicable percentages for 3-, 5-, and 10-year recovery property are determined according to the following tables:

(i) In the case of 3-year recovery property:

Taxable year during lease term	For the first taxable year in which the business use percentage is 50 percent or less, the applicable percentage for such taxable year is—					
	1	2	3	4	5	6 and later
For a lease term of:						
1 year	3.0					
2 years	6.0	1.25				
3 years	10.2	6.2	2.25			
4 or more years	13.2	10.4	6.5	1.7	0.5	0

(ii) In the case of 5-year recovery property:

Taxable year during lease term	For the first taxable year in which the business use percentage is 50 percent or less, the applicable percentage for such taxable year is—											
	1	2	3	4	5	6	7	8	9	10	11	12
For a lease term of:												
1 year	2.7											
2 years	5.3	1.2										
3 years	9.9	6.1	1.6									
4 years	14.4	11.1	7.3	2.3								
5 years	18.4	15.7	12.4	8.2	3.0							
6 or more years	21.8	19.6	16.7	13.5	9.6	5.25	4.4	3.6	2.8	1.8	1.0	0

(iii) In the case of 10-year recovery property:

Taxable year during lease term	For the first taxable year in which the business use percentage is 50 pct or less, the applicable percentage for such taxable year is—														
	1	2	3	4	5	6	7	8	9	10	11	12	13	14	15
For a lease term of:															
1 year	2.5														
2 years	5.1	.6													
3 years	9.8	5.6	1.0												
4 years	14.0	10.3	6.2	1.4											
5 years	17.9	14.5	10.9	6.7	1.8										
6 years	21.3	18.3	15.1	11.4	7.1	2.1									
7 years	21.9	19.0	15.9	12.4	8.4	3.9	2.4								
8 years	22.4	19.6	16.7	13.4	9.7	5.5	4.5	2.7							
9 years	22.9	20.2	17.4	14.3	10.9	7.0	6.4	5.1	3.0						
10 years	23.5	20.9	18.2	15.2	11.9	8.3	8.1	7.2	5.7	3.3					
11 years	23.9	21.4	18.8	16.0	12.8	9.3	9.4	8.9	7.7	5.9	3.1				
12 years	24.3	21.9	19.3	16.5	13.4	10.1	10.3	10.0	9.3	7.8	5.5	2.9			
13 years	24.7	22.2	19.7	16.9	14.0	10.7	11.1	11.0	10.4	9.2	7.4	5.2	2.7		
14 years	25.0	22.5	20.1	17.3	14.4	11.1	11.6	11.7	11.3	10.3	8.8	6.9	4.8	2.5	
15 or more years	25.3	22.8	20.3	17.5	14.7	11.5	12.0	12.2	11.9	11.1	9.8	8.2	6.5	4.5	2.3

(g) ***Special rules applicable to inclusions in income of lessees.*** This paragraph (g) applies to the inclusions in gross income of lessees prescribed under paragraphs (d)(2), (e)(6), or (f) of this section, or prescribed under § 1.280F-7(b).

(1) ***Lease term commences within 9 months of the end of lessee's taxable year.*** If:

(i) The lease term commences within 9 months before the close of the lessee's taxable year,

(ii) The property is not predominantly used in a qualified business use during that portion of the taxable year, and

(iii) The lease term continues into the lessee's subsequent taxable year, then the inclusion amount is added to gross income in the lessee's subsequent taxable year and the amount is determined by taking into account the average of the business/investment use for both taxable years and the applicable percentage for the taxable year in which the lease term begins (or, in the case of a passenger automobile with a fair market value greater than $16,500, the appropriate dollar amount for the taxable year in which the lease term begins).

(2) ***Lease term less than one year.*** If the lease term is less than one year, the amount which must be added to gross income is an amount that bears the same ratio to the inclusion amount determined before the application of this paragraph (g)(2) as the number of days in the lease term bears to 365.

(3) ***Maximum inclusion amount.*** The inclusion amount shall not exceed the sum of all deductible amounts in connection with the use of the listed property properly allocable to the lessee's taxable year in which the inclusion amount must be added to gross income.

(h) ***Definitions —***

(1) ***Lease term.*** In determining the term of any lease for purposes of this section, the rules of section 168(i)(3)(A) shall apply.

(2) ***Fair market value.*** For purposes of this section, the fair market value of listed property is such value on the first day of the lease term. If the capitalized cost of listed property is specified in the lease agreement, the lessee shall treat such amount as the fair market value of the property.

(3) ***Average business/investment use.*** For purposes of this section, the average business/investment use of any listed property is the average of the business/investment use for the first taxable year in which the business use percentage is 50 percent or less and all preceding taxable years in which such property is leased. See paragraph (g)(1) of this section for special rule when lease term commences within 9 months before the end of the lessee's taxable year.

(i) ***Examples.*** This section may be illustrated by the following examples.

Example 1. On January 1, 1985, A, a calendar year taxpayer, leases and places in service a passenger automobile with a fair market value of $55,000. The lease is to be for a period of four years. During taxable years 1985 and 1986, A uses the automobile exclusively in a trade or business. Under paragraph (d)(1) of this section, A must include in gross income in both 1985 and 1986, $2,887.50 (*i.e.,* ($55,000−$16,500) × 7.5%).

Example 2. The facts are the same as in *Example 1,* and in addition, A uses the automobile only 45 percent in a trade or business during 1987. Under paragraph (d)(1) of this section for 1987, A must include in gross income $1,299.38 (*i.e.,* ($55,000−$16,500) × 7.5% × 45%). In addition, under paragraph (d)(2) of this section, A must also include in gross income in 1987, $530.85 (*i.e.,* $650 × 81.67%, average business/investment use).

Example 3. On August 1, 1985, B, a calendar year taxpayer, leases and places in service an item of listed property which is 5-year recovery property, with a fair market value of $10,000. The lease is to be for a period of 5 years. B's qualified business use of the property is 40 percent in 1985, 100 percent in 1986, and 90 percent in 1987. Under paragraphs (f)(1) and (g)(1) of this section, before the application of paragraph (g)(3) of this section, B must include in gross income in 1986, $1,288.00 (*i.e.,* $10,000 × 70% × 18.4%, the product of the fair market value, the average business use for both taxable years, and the applicable percentage for year one from the table in paragraph (f)(3)(iii) of this section).

Example 4. On October 1, 1985, C, a calendar year taxpayer, leases and places in service an item of listed property which is 3-year recovery property with a fair market value of $15,000. The lease term is 6 months (ending March 31, 1986) during which C uses the property 45 percent in a trade or business, the only business/investment use. Under paragraphs (f)(1) and (g) (1) and (2) of this section, before the application of paragraph (g)(3) of this section, C must include in gross income in 1986, $100.97 (*i.e.,* $15,000 × 45% × 3% × 182/365, the product of the fair market value, the average business use for both taxable years, and the applicable percentage for year one from the table in paragraph (f)(3)(i) of this section, prorated for the length of the lease term).

Example 5. On July 15, 1985, A, a calendar year taxpayer, leases and places in service a passenger automobile with a fair market value of $45,300. The lease is for a period of 5 years, during which A uses the automobile exclusively in a trade or business. Under paragraph (e) (2) and (3) of this section, for taxable years 1985 through 1989, A must include the following amounts in gross income:

Taxable year	Dollar amount	Proration	Business use (percent)	Inclusion
1985	$3,327	170/365	100	$1,550
1986	3,327	365/365	100	3,327
1987	3,327	365/365	100	3,327
1988	1,650	366/366	100	1,650
1989	1,362	365/365	100	1,362

Example 6. The facts are the same as in *Example 1,* except that A uses the automobile only 45 percent in a trade or business during 1987 through 1990. Under § 1.280F-5T(e)(6), A must include in gross income for taxable year 1987, the first taxable year in which the automobile is not used predominantly in a trade or business, an additional amount based on the average business/investment use for taxable years 1985 through 1987. For taxable years 1985 through 1989, A must include the following amounts in gross

income:

Taxable year	Dollar amount	Proration	Business use (percent)	Inclusion
1985	$3,327	170/365	100	$1,550
1986	3,327	365/365	100	3,327
1987	3,327	365/365	45	1,497
	750		81.67	612
1988	1,650	366/366	45	743
1989	1,362	365/365	45	613

(98 Stat. 494, 26 U.S.C. 280F; 68A Stat. 917, 26 U.S.C. 7805)

[T.D. 7986, 49 FR 42710, Oct. 24, 1984, as amended by T.D. 8061, 50 FR 46038, Nov. 6, 1985; T.D. 8218, 53 FR 29881, Aug. 9, 1988; T.D. 8473, 58 FR 19060, Apr. 12, 1993; T.D. 9133, 69 FR 35514, June 25, 2004]

§ 1.280F-6 Special rules and definitions.

(a) ***Deductions of employee*** —

(1) ***In general.*** Employee use of listed property shall not be treated as business/investment use (as defined in paragraph (d)(3) of this section) for purposes of determining the amount of any recovery deduction allowable (including any deduction under section 179) to the employee unless that use is for the convenience of the employer and required as a condition of employment.

(2) ***"Convenience of the employer" and "condition of employment" requirements*** —

(i) ***In general.*** The terms *convenience of the employer* and *condition of employment* generally have the same meaning for purposes of section 280F as they have for purposes of section 119 (relating to the exclusion from gross income for meals or lodging furnished for the convenience of the employer).

(ii) ***"Condition of employment."*** In order to satisfy the "condition of employment" requirement, the use of the property must be required in order for the employee to perform the duties of his or her employment properly. Whether the use of the property is so required depends on all the facts and circumstances. Thus, the employer need not explicitly require the employee to use the property. Similarly, a mere statement by the employer that the use of the property is a condition of employment is not sufficient.

(iii) ***"Convenience of employer".*** [Reserved]

(3) ***Employee use.*** For purposes of this section, the term *employee use* means any use in connection with the performance of services by the employee as an employee.

(4) ***Examples.*** The principles of this paragraph are illustrated in the following examples:

Example 1. A is employed as a courier with W, which provides local courier services. A owns and uses a motorcycle to deliver packages to downtown offices for W. W does not provide delivery vehicles and explicitly requires all of its couriers to own a car or motorcycle for use in their employment with the company. A's use of the motorcycle for delivery purposes is for the convenience of W and is required as a condition of employment.

Example 2. B is an inspector for X, a construction company with many construction sites in the local area. B is required to travel to the various construction sites on a regular basis; B uses her automobile to make these trips. Although X does not furnish B an automobile, X does not explicitly require B to use here own automobile. However, X reimburses B for any costs she incurs in traveling to the various job sites. B's use of here automobile in here employment is for the convenience of X and is required as a condition of employment.

Example 3. Assume the same facts as in *Example 2,* except that X makes an automobile available to B who chooses to use her own automobile and receive reimbursement. B's use of her own automobile is not for the convenience of X and is not required as a condition of employment.

Example 4. C is a pilot for Y, a small charter airline. Y requires its pilots to obtain x hours of flight time annually in addition to the number of hours of flight time spent with the airline. Pilots can usually obtain these hours by flying with a military reserve unit or by flying part-time with another airline. C owns his own airplane. C's use of his airplane to obtain the required flight hours is not for the convenience of the employer and is not required as a condition of employment.

Example 5. D is employed as an engineer with Z, an engineering contracting firm. D occasionally takes work home at night rather than working late in the office. D owns and uses a computer which is virtually identical to the one she uses at the office to complete her work at home. D's use of the computer is not for the convenience of here employer and is not required as a condition of employment.

(b) ***Listed property*** —

(1) ***In general.*** Except as otherwise provided in paragraph (b)(5) of this section, the term *listed property* means:

(i) Any passenger automobile (as defined in paragraph (c) of this section),

(ii) Any other property used as a means of transportation (as defined in paragraph (b)(2) of this section),

(iii) Any property of a type generally used for purposes of entertainment, recreation, or amusement, and

(iv) Any computer or peripheral equipment (as defined in section 168(i)(2)(B)), and

(v) Any other property specified in paragraph (b)(4) of this section.

(2) ***Means of transportation*** —

(i) ***In general.*** Except as otherwise provided in paragraph (b)(2)(ii) of this section, property used as a *means of transportation* includes trucks, buses, trains, boats, airplanes, motorcycles, and any other vehicles for transporting persons or goods.

(ii) ***Exception.*** The term "listed property" does not include any vehicle that is a qualified nonpersonal use vehicle as defined in section 274(i) and § 1.274-5(k).

(3) ***Property used for entertainment, etc.*** —

(i) ***In general.*** Property of a type generally used for purposes of entertainment, recreation, or amusement includes property such as photographic, phonographic, communication, and video recording equipment.

(ii) ***Exception.*** The term *listed property* does not include any photographic, phonographic, communication, or video recording equipment of a taxpayer if the equipment is use either exclusively at the taxpayer's regular business establishment or in connection with the taxpayer's principal trade or business.

(iii) ***Regular business establishment.*** The regular business establishment of an employee is the regular business establishment of the employer of the employee. For purposes of this paragraph (b)(3), a portion of a dwelling unit is treated as a regular business establishment if the requirements of section 280A(c)(1) are met with respect to that portion.

(4) ***Other property.*** [Reserved]

(5) ***Exception for computers.*** The term *listed property* shall not include any computer (including peripheral equipment) used exclusively at a regular business establishment. For purposes of the preceding sentence, a portion of a dwelling unit shall be treated as a regular business establishment if (and only if) the requirements of section 280A(c)(1) are met with respect to that portion.

(c) ***Passenger automobile*** —

(1) ***In general.*** Except as provided in paragraph (c)(3) of this section, the term *passenger automobile* means any 4-wheeled vehicle which is:

(i) Manufactured primarily for use on public streets, roads, and highways, and

(ii) Rated at 6,000 pounds gross vehicle weight or less.

(2) ***Parts, etc. of automobile.*** The term *passenger automobile* includes any part, component, or other item that is physically attached to the automobile or is traditionally included in the purchase price of an automobile. The term does not include repairs that are not capital expenditures within the meaning of section 263.

(3) ***Exception for certain vehicles.*** The term *passenger automobile* shall not include any:

(i) Ambulance, hearse, or combination ambulance-hearse used by the taxpayer directly in a trade or business,

(ii) Vehicle used by the taxpayer directly in the trade or business of transporting persons or property for compensation or hire, or

(iii) Truck or van that is a qualified nonpersonal use vehicle as defined under § 1.274-5T(k).

(d) ***Business use percentage*** —

(1) ***In general.*** The term *business use percentage* means the percentage of the use of any listed property which is qualified business use as described in paragraph (d)(2) of this section.

(2) ***Qualified business use*** —

(i) ***In general.*** Except as provided in paragraph (d)(2)(ii) of this section, the term *qualified business use* means any use in a trade or business of the taxpayer. The term *qualified business use* does not include use for which a deduction is allowable under section 212. Whether the amount of qualified business use exceeds 50 percent is determinative of whether the investment tax credit and the accelerated percentages under section 168 are available for listed property (or must be recaptured). *See* § 1.280F-3T.

(ii) ***Exception for certain use by 5-percent owners and related persons*** —

(A) ***In general.*** The term *qualified business use* shall not include:

(*1*) Leasing property to any 5-percent owner or related person,

(*2*) Use of property provided as compensation for the performance of services by a 5-percent owner or related person, or

(*3*) Use of property provided as compensation for the performance of services by any person not described in paragraph (d)(2)(ii)(A)(*2*) of this section unless an amount is properly reported by the taxpayer as income to such person and, where required, there was withholding under chapter 24.

Paragraph (d)(2)(ii)(A)(*1*) of this section shall apply only to the extent that the use of the listed property is by an individual who is a related party or a 5-percent owner with respect to the owner or lessee of the property.

(B) ***Special rule for aircraft.*** Paragraph (d)(2)(ii)(A) of this section shall not apply with respect to any aircraft if at least 25 percent of the total use of the aircraft during the taxable year consists of qualified business use not described in paragraph (d)(2)(ii)(A).

(C) ***Definitions.*** For purposes of this paragraph:

(*1*) ***5-percent owner.*** The term *5-percent owner* means any person who is a 5-percent owner with respect to the taxpayer (as defined in section 416 (i)(1)(B)(i)).

(*2*) ***Related person.*** The term *related person* means any person related to the taxpayer (within the meaning of section 267(b)).

(3) ***Business/investment use*** —

(i) ***In general.*** The term *business/investment use* means the total business or investment use of listed property that may be taken into account for purposes of computing (without regard to section 280F(b)) the percentage of cost recovery deduction for a passenger automobile or other listed property for the taxable year. Whether the accelerated percentages under section 168 (as opposed to use of the straight line method of cost recovery) are available with respect to listed property or must be recaptured is determined, however, by reference to qualified business use (as defined in paragraph (d)(2) of this section) rather than by reference to business/investment use. Whether a particular use of property is a business or investment use shall generally be determined under the rules of section 162 or 212.

(ii) ***Entertainment use.*** The use of listed property for entertainment, recreation, or amusement purposes shall be treated as business use to the extent that expenses (other than interest and property tax expenses) attributable to that use are deductible after application of section 274.

(iii) ***Employee use.*** See paragraph (a) of this section for requirements to be satisfied for employee use of listed property to be considered business/investment use of the property.

(iv) ***Use of taxpayer's automobile by another person.*** Any use of the taxpayer's automobile by another person shall not be treated, for purposes of section 280F, as use in a trade or business under section 162 unless that use:

(A) Is directly connected with the business of the taxpayer,

(B) Is properly reported by the taxpayer as income to the other person and, where required, there was withholding under chapter 24, or

(C) Results in a payment of fair market rent.

For purposes of this paragraph (d)(4)(iv)(C), payment to the owner of the automobile in connection with such use is treated as the payment of rent.

(4) ***Predominantly used in qualified business use*** —

(i) ***Definition.*** Property is predominantly used in a qualified business use for any taxable year if the business use percentage (as defined in paragraph (d)(1) of this section) is greater than 50 percent.

(ii) ***Special rule for transfers at death.*** Property does not cease to be used predominantly in a qualified business use by reason of a transfer at death.

(iii) ***Other dispositions of property.*** [Reserved]

(5) ***Examples.*** The following examples illustrate the principles set forth in this paragraph.

Example 1. E uses a home computer 50 percent of the time to manage her investments. The computer is listed property within the meaning of section 280F(d)(4). E also uses the computer 40 percent of the time in her part-time consumer research business. Because E's business use percentage for the computer does not exceed 50 percent, the computer is not predominantly used in a qualified business use for the taxable year. Her aggregate business/investment use for purposes of determining the percent of the total allowable straight line depreciation that she can claim is 90 percent.

Example 2. Assume that E in *Example 1* uses the computer 30 percent of the time to manage her investments and 60 percent of the time in her consumer research business. E's business use percentage exceeds 50 percent. Her aggregrate business/investment use for purposes of determining her allowable investment tax credit and cost recovery deductions is 90 percent.

Example 3. F is the proprietor of a plumbing contracting business. F's brother is employed with F's company. As part of his compensation, F's brother is allowed to use one of the company automobiles for personal use. The use of the company automobiles by F's brother is not a qualified business use because F and F's brother are related parties within the meaning of section 267(b).

Example 4. F, in *Example 3,* allows employees unrelated to him to use company automobiles as part of their compensation. F, however, does not include the value of these automobiles in the employees' gross income and F does not withhold with respect to the use of these automobiles. The use of the company automobiles by the employees in this case is not business/investment use.

Example 5. X Corporation owns several automobiles which its employees use for business purposes. The employees are also allowed to take the automobiles home at night. However, the fair market value of the use of the automobile for any personal purpose, *e.g.,* commuting to work, is reported by X as income to the employee and is withheld upon by X. The use of the automobile by the employee, even for personal purposes, is a qualified business use the respect to X.

(e) ***Method of allocating use of property*** —

(1) ***In general.*** For purposes of section 280F, the taxpayer shall allocate the use of any listed property that is used for more than one purpose during the taxable year to the various uses in the manner prescribed in paragraph (e) (2) and (3) of this section.

(2) ***Passenger automobiles and other means of transportation.*** In the case of a passenger automobile or any other means of transportation, the taxpayer shall allocate the use of the property on the basis of mileage. Thus, the percentage of use in a trade or business for the year shall be determined by dividing the number of miles the vehicle is driven for purposes of that trade or business during the year by the total number of miles the vehicle is driven during the year for any purpose.

(3) ***Other listed property.*** In the case of other listed property, the taxpayer shall allocate the use of that property on the basis of the most appropriate unit of time the property is actually used (rather than merely being available for use). For example, the percentage of use of a computer in a trade or business for a taxable year is determined by dividing the number of hours the computer is used for business purposes during the year by the total number of hours the computer is used for any purpose during the year.

(f) ***Effective date*** —

(1) ***In general.*** Except as provided in paragraph (f)(2) of this section, this section applies to property placed in service by a taxpayer on or after July 7, 2003. For regulations applicable to property placed in service before July 7, 2003, see § 1.280F-6T as in effect prior to July 7, 2003 (§ 1.280F-6T as contained in 26 CFR part 1, revised as of April 1, 2003).

(2) ***Property placed in service before July 7, 2003.*** The following rules apply to property that is described in paragraph (c)(3)(iii) of this section, was placed in service by the taxpayer before July 7, 2003, and was treated by the taxpayer as a passenger automobile under § 1.280F-6T as in effect prior to July 7, 2003 (pre-effective date vehicle):

(i) Except as provided in paragraphs (f)(2)(ii), (iii), and (iv) of this section, a pre-effective date vehicle will be treated as a passenger automobile to which section 280F(a) applies.

(ii) A pre-effective date vehicle will be treated as property to which section 280F(a) does not apply if the taxpayer adopts that treatment in determining depreciation deductions on the taxpayer's original return for the year in which the vehicle is placed in service.

(iii) A pre-effective date vehicle will be treated, to the extent provided in this paragraph (f)(2)(iii), as property to which section 280F(a) does not apply if the taxpayer adopts that treatment on an amended Federal tax return in accordance with this paragraph (f)(2)(iii). This paragraph (f)(2)(iii) applies only if, on or before December 31, 2004, the taxpayer files, for all applicable taxable years, amended Federal tax returns (or qualified amended returns, if applicable (for further guidance, see Rev. Proc. 94-69 (1994-2 C.B. 804) and § 601.601(d)(2)(ii)(*b*) of this chapter)) treating the vehicle as property to which section 280F(a) does not apply. The applicable taxable years for this purpose are the taxable year in which the vehicle was placed in

service by the taxpayer (or, if the period of limitation for assessment under section 6501 has expired for such year or any subsequent year (a closed year), the first taxable year following the most recent closed year) and all subsequent taxable years in which the vehicle was treated on the taxpayer's return as property to which section 280F(a) applies. If the earliest applicable taxable year is not the year in which the vehicle was placed in service, the adjusted depreciable basis of the property as of the beginning of the first applicable taxable year is recovered over the remaining recovery period. If the remaining recovery period as of the beginning of the first applicable taxable year is less than 12 months, the entire adjusted depreciable basis of the property as of the beginning of the first applicable taxable year is recovered in that year.

(iv) A pre-effective date vehicle will be treated, to the extent provided in this paragraph (f)(2)(iv), as property to which section 280F(a) does not apply if the taxpayer adopts that treatment on Form 3115, Application for Change in Accounting Method, in accordance with this paragraph (f)(2)(iv). The taxpayer must follow the applicable administrative procedures issued under § 1.446-1(e)(3)(ii) for obtaining the Commissioner's automatic consent to a change in method of accounting (for further guidance, for example, see Rev. Proc. 2002-9 (2002-1 C.B. 327) and § 601.601(d)(2)(ii)(*b*) of this chapter). If the taxpayer files a Form 3115 treating the vehicle as property to which section 280F(a) does not apply, the taxpayer will be permitted to treat the change as a change in method of accounting under section 446(e) of the Internal Revenue Code and to take into account the section 481 adjustment resulting from the method change. For purposes of Form 3115, the designated number for the automatic accounting method change authorized for this paragraph (f)(2)(iv) is 89.

[T.D. 7986, 49 FR 42713, Oct. 24, 1984, as amended by T.D. 8061, 50 FR 46041, Nov. 6, 1985; T.D. 9069, 68 FR 40130, July 7, 2003; T.D. 9133, 69 FR 35514, June 25, 2004; T.D. 9483, 75 FR 27937, May 19, 2010]

§ 1.280F-7 Property leased after December 31, 1986.

(a) ***Inclusions in income of lessees of passenger automobiles leased after December 31, 1986*** —

(1) ***In general.*** If a taxpayer leases a passenger automobile after December 31, 1986, the taxpayer must include in gross income an inclusion amount determined under this paragraph (a), for each taxable year during which the taxpayer leases the automobile. This paragraph (a) applies only to passenger automobiles for which the taxpayer's lease term begins after December 31, 1986. See §§ 1.280F-5T(d) and 1.280F-5T(e) for rules on determining inclusion amounts for passenger automobiles for which the taxpayer's lease term begins before January 1, 1987. See § 1.280F-5T(h)(2) for the definition of fair market value.

(2) ***Inclusion Amount.*** For any passenger automobile leased after December 31, 1986, the inclusion amount for each taxable year during which the automobile is leased is determined as follows:

(i) For the appropriate range of fair market values in the applicable table, select the dollar amount from the column for the taxable year in which the automobile is used under the lease (but for the last taxable year during any lease that does not begin and end in the same taxable year, use the dollar amount for the preceding taxable year).

(ii) Prorate the dollar amount for the number of days of the lease term included in the taxable year.

(iii) Multiply the prorated dollar amount by the business/investment use (as defined in § 1.280F-6(d)(3)(i)) for the taxable year.

(iv) The following table is the applicable table in the case of a passenger automobile leased after December 31, 1986, and before January 1, 1989:

Dollar Amounts for Automobiles With a Lease Term Beginning in Calendar Year 1987 or 1988

Fair market value of automobile		Taxable year during lease				
		1st	2nd	3rd	4th	5 and later
Over	Not over					
$12,800	$13,100	$2	$5	$7	$8	$9
13,100	13,400	6	14	20	24	28
13,400	13,700	10	23	34	41	47
13,700	14,000	15	32	47	57	65
14,000	14,300	19	41	61	73	84
14,300	14,600	23	50	74	89	103
14,600	14,900	27	59	88	105	122
14,900	15,200	31	68	101	122	140
15,200	15,500	35	77	115	138	159
15,500	15,800	40	87	128	154	178
15,800	16,100	44	96	142	170	196
16,100	16,400	48	105	155	186	215
16,400	16,700	52	114	169	203	234
16,700	17,000	56	123	182	219	253
17,000	17,500	62	135	200	240	277
17,500	18,000	69	150	223	267	309
18,000	18,500	76	166	246	294	340
18,500	19,000	83	181	268	321	371
19,000	19,500	90	196	291	348	402
19,500	20,000	97	211	313	375	433
20,000	20,500	104	226	336	402	465
20,500	21,000	111	242	358	429	496
21,000	21,500	117	257	381	456	527
21,500	22,000	124	272	403	483	558
22,000	23,000	135	295	437	524	605
23,000	24,000	149	325	482	578	667
24,000	25,000	163	356	527	632	729
25,000	26,000	177	386	572	686	792
26,000	27,000	190	416	617	740	854
27,000	28,000	204	447	662	794	917
28,000	29,000	218	477	707	848	979

Fair market value of automobile	Taxable year during lease					
	1st	2nd	3rd	4th	5 and later	
29,000	30,000	232	507	752	902	1,041
30,000	31,000	246	538	797	956	1,104
31,000	32,000	260	568	842	1,010	1,166
32,000	33,000	274	599	887	1,064	1,228
33,000	34,000	288	629	933	1,118	1,291
34,000	35,000	302	659	978	1,172	1,353
35,000	36,000	316	690	1,023	1,226	1,415
36,000	37,000	329	720	1,068	1,280	1,478
37,000	38,000	343	751	1,113	1,334	1,540
38,000	39,000	357	781	1,158	1,388	1,602
39,000	40,000	371	811	1,203	1,442	1,665
40,000	41,000	385	842	1,248	1,496	1,727
41,000	42,000	399	872	1,293	1,550	1,789
42,000	43,000	413	902	1,338	1,604	1,852
43,000	44,000	427	933	1,383	1,658	1,914
44,000	45,000	441	963	1,428	1,712	1,976
45,000	46,000	455	994	1,473	1,766	2,039
46,000	47,000	468	1,024	1,518	1,820	2,101
47,000	48,000	482	1,054	1,563	1,874	2,164
48,000	49,000	496	1,085	1,608	1,928	2,226
49,000	50,000	510	1,115	1,653	1,982	2,288
50,000	51,000	524	1,146	1,698	2,036	2,351
51,000	52,000	538	1,176	1,743	2,090	2,413
52,000	53,000	552	1,206	1,788	2,144	2,475
53,000	54,000	566	1,237	1,834	2,198	2,538
54,000	55,000	580	1,267	1,879	2,252	2,600
55,000	56,000	594	1,297	1,924	2,306	2,662
56,000	57,000	607	1,328	1,969	2,360	2,725
57,000	58,000	621	1,358	2,014	2,414	2,787
58,000	59,000	635	1,389	2,059	2,468	2,849
59,000	60,000	649	1,419	2,104	2,522	2,912
60,000	62,000	670	1,465	2,171	2,603	3,005
62,000	64,000	698	1,525	2,262	2,711	3,130
64,000	66,000	726	1,586	2,352	2,819	3,255
66,000	68,000	753	1,647	2,442	2,927	3,379
68,000	70,000	781	1,708	2,532	3,035	3,504
70,000	72,000	809	1,768	2,622	3,143	3,629
72,000	74,000	837	1,829	2,712	3,251	3,753

Fair market value of automobile	Taxable year during lease					
	1st	2nd	3rd	4th	5 and later	
74,000	76,000	865	1,890	2,802	3,359	3,878
76,000	78,000	892	1,951	2,892	3,468	4,003
78,000	80,000	920	2,012	2,982	3,576	4,128
80,000	85,000	969	2,118	3,140	3,765	4,346
85,000	90,000	1,038	2,270	3,365	4,035	4,658
90,000	95,000	1,108	2,422	3,590	4,305	4,969
95,000	100,000	1,177	2,574	3,816	4,575	5,281
100,000	110,000	1,282	2,802	4,154	4,980	5,749
110,000	120,000	1,421	3,105	4,604	5,520	6,372
120,000	130,000	1,560	3,409	5,055	6,060	6,996
130,000	140,000	1,699	3,713	5,505	6,600	7,619
140,000	150,000	1,838	4,017	5,956	7,140	8,243
150,000	160,000	1,977	4,321	6,406	7,680	8,866
160,000	170,000	2,116	4,625	6,857	8,221	9,490
170,000	180,000	2,255	4,929	7,307	8,761	10,113
180,000	190,000	2,394	5,232	7,758	9,301	10,737
190,000	200,000	2,533	5,536	8,208	9,841	11,360

(v) The applicable table in the case of a passenger automobile first leased after December 31, 1988, will be contained in a revenue ruling or revenue procedure published in the Internal Revenue Bulletin.

(3) ***Example.*** The following example illustrates the application of this paragraph (a):

> *Example.* On April 1, 1987, A, a calendar year taxpayer, leases and places in service a passenger automobile with a fair market value of $31,500. The lease is to be for a period of three years. During taxable years 1987 and 1988, A uses the automobile exclusively in a trade or business. During 1989 and 1990, A's business/investment use is 45 percent. The appropriate dollar amounts from the table in paragraph (a)(2)(iv) of this section are $260 for 1987 (first taxable year during the lease), $568 for 1988 (second taxable year during the lease), $842 for 1989 (third taxable year during the lease), and $842 for 1990. Since 1990 is the last taxable year during the lease, the dollar amount for the preceding year (the third year) is used, rather than the dollar amount for the fourth year. For taxable years 1987 through

1990, A's inclusion amounts are determined as follows:

Tax year	Dollar amount	Proration	Business use (percent)	Inclusion amount
1987	$260	275/365	100	$196
1988	568	366/366	100	568
1989	842	365/365	45	379
1990	842	90/365	45	93

(b) ***Inclusions in income of lessees of listed property (other than passenger automobiles) leased after December 31, 1986*** —

(1) ***In general.*** If listed property other than a passenger automobile is not used predominantly in a qualified business use in any taxable year in which such property is leased, the lessee must add an inclusion amount to gross income in the first taxable year in which such property is not so predominantly used (and only in that year). This year is the first taxable year in which the business use percentage (as defined in § 1.280F-6(d)(1)) of the property is 50 percent or less. This inclusion amount is determined under this paragraph (b) for property for which the taxpayer's lease term begins after December 31, 1986 (and under § 1.280F-5T(f) for property for which the taxpayer's lease term begins before January 1, 1987). See also § 1.280F-5T(g).

(2) ***Inclusion amount.*** The inclusion amount for any listed property (other than a passenger automobile) leased after December 31, 1986, is the sum of the amounts determined under subdivisions (i) and (ii) of this subparagraph (2).

(i) The amount determined under this subdivision (i) is the product of the following amounts:

(A) The fair market value (as defined in § 1.280F-5T(h)(2)) of the property,

(B) The business/investment use (as defined in § 1.280F-6(d)(3)(i)) for the first taxable year in which the business use percentage (as defined in § 1.280F-6(d)(1)) is 50 percent or less, and

(C) The applicable percentage from the following table:

Type of property	First taxable year during lease in which business use percentage is 50% or less											
	1	2	3	4	5	6	7	8	9	10	11	12 and Later
Property with a recovery period of less than 7 years under the alternative depreciation system (such as computers, trucks and airplanes)	2.1	−7.2	−19.8	−20.1	−12.4	−12.4	−12.4	−12.4	−12.4	−12.4	−12.4	−12.4
Property with a 7- to 10-year recovery period under the alternative depreciation system (such as recreation property)	3.9	−3.8	−17.7	−25.1	−27.8	−27.2	−27.1	−27.6	−23.7	−14.7	−14.7	−14.7
Property with a recovery period of more than 10 years under the alternative depreciation system (such as certain property with no class life)	6.6	−1.6	−16.9	−25.6	−29.9	−31.1	−32.8	−35.1	−33.3	−26.7	−19.7	−12.2

(ii) The amount determined under this subdivision (ii) is the product of the following amounts:

(A) The fair market value of the property,

(B) The average of the business/investment use for all taxable years (in which such property is leased) that precede the first taxable year in which the business use percentage is 50 percent or less, and

(C) The applicable percentage from the following table:

Type of property	First taxable year during lease in which business use percentage is 50% or less											
	1	2	3	4	5	6	7	8	9	10	11	12 and Later
Property with a recovery period of less than 7 years under the alternative depreciation system (Such as computers, trucks and airplanes)	0.0	10.0	22.0	21.2	12.7	12.7	12.7	12.7	12.7	12.7	12.7	12.7
Property with a 7- to 10-year recovery period under the alternative depreciation system (such as recreation property)	0.0	9.3	23.8	31.3	33.8	32.7	31.6	30.5	25.0	15.0	15.0	15.0
Property with a recovery period of more than 10 years under the alternative depreciation system (such as certain property with no class life)	0.0	10.1	26.3	35.4	39.6	40.2	40.8	41.4	37.5	29.2	20.8	12.5

(3) ***Example.*** The following example illustrates the application of this paragraph (b):

Example. On February 1, 1987, B, a calendar year taxpayer, leases and places in service a computer with a fair market value of $3,000. The lease is to be for a period of two years. B's qualified business use of the property, which is the only business/investment use, is 80 percent in taxable year 1987, 40 percent in taxable year 1988, and 35 percent in taxable year 1989. B must add an inclusion amount to gross income for taxable year 1988, the first taxable year in which B does not use the computer predominantly for business (*i.e.,* the first taxable year in which B's business use percentage is 50 percent or less). Since 1988 is the second taxable year during the lease, and since the computer has a 5-year recovery period under the General and Alternative Depreciation Systems, the applicable percentage from the table in subdivision

(i) of paragraph (b)(2) is −7.2%, and the applicable percentage from the table in subdivision

(ii) is 10%. B's inclusion amount is $154, which is the sum of the amounts determined under subdivisions (i) and (ii) of subparagraph (b)(2) of this paragraph. The amount determined under subdivision (i) is −$86 [$3,000 × 40% × (−7.2%)], and the amount determined under subdivision (ii) is $240 [$3,000 × 80% × 10%].

[T.D. 8218, 53 FR 29881, Aug. 9, 1988; 53 FR 32821, Aug. 26, 1988, as amended by T.D. 8298, 55 FR 13370, Apr. 12, 1990; Redesignated and amended at T.D. 8473, 58 FR 19060, Apr. 12, 1993; T.D. 9133, 69 FR 35515, June 25, 2004; T.D. 9483, 75 FR 27937, May 19, 2010]

§ 1.280G-1 Golden parachute payments.

The following questions and answers relate to the treatment of golden parachute payments under section 280G of the Internal Revenue Code of 1986, as added by section 67 of the Tax Reform Act of 1984 (Pub. L. No. 98-369; 98 Stat. 585) and amended by section 1804(j) of the Tax Reform Act of 1986 (Pub. L. No. 99-514; 100 Stat. 2807), section 1018(d)(6)-(8) of the Technical and Miscellaneous Revenue Act of 1988 (Pub. L. No. 100-647; 102 Stat. 3581), and section 1421 of the Small Business Job Protection Act of 1996 (Pub. L. No. 104-188; 110 Stat. 1755). The following is a table of subjects covered in this section:

Overview

Effect of section 280G—Q/A-1

Meaning of “parachute payment”—Q/A-2

Meaning of “excess parachute payment”—Q/A-3

Effective date of section 280G—Q/A-4

Exempt Payments

Exempt payments generally—Q/A-5

Exempt payments with respect to certain corporations—Q/A-6

Shareholder approval requirements—Q/A-7

Exempt payments under a qualified plan—Q/A-8

Exempt payments of reasonable compensation—Q/A-9

Payor of Parachute Payments—Q/A-10

Payments in the Nature of Compensation

The nature of compensation—Q/A-11

Property transfers—Q/A-12

Stock options—Q/A-13

Reduction of amount of payment by consideration paid—Q/A-14

Disqualified Individuals

Meaning of “disqualified individual”—Q/A-15

Personal service corporation treated as individual—Q/A-16

Meaning of “shareholder”—Q/A-17

Meaning of “officer”—Q/A-18

Meaning of “highly-compensated individual”—Q/A-19

Meaning of “disqualified individual determination period”—Q/A-20

Meaning of “compensation”—Q/A-21

Contingent on Change in Ownership or Control

General rules for determining payments contingent on change—Q/A-22

Payments under agreement entered into after change—Q/A-23

Amount of payment contingent on change—Q/A-24

Presumption that payment is contingent on change—Q/A-25, 26

Change in ownership or control—Q/A-27, 28, 29

Three-Times-Base-Amount Test for Parachute Payments

Three-times-base-amount test—Q/A-30

Determination of present value—Q/A-31, 32, 33

Meaning of “base amount”—Q/A-34

Meaning of “base period”—Q/A-35

Special rule for determining base amount—Q/A-36

Securities Violation Parachute Payments—Q/A-37

Computation and Reduction of Excess Parachute Payments

Computation of excess parachute payments—Q/A-38

Reduction by reasonable compensation—Q/A-39

Determination of Reasonable Compensation

General criteria for determining reasonable compensation—Q/A-40

Types of payments generally considered reasonable compensation—Q/A-41, 42, 43

Treatment of severance payments—Q/A-44

Miscellaneous Rules

Definition of corporation—Q/A-45

Treatment of affiliated group as one corporation—Q/A-46

Effective Date

General effective date of section 280G—Q/A-47

Effective date of regulations—Q/A-48

Overview

Q-1: What is the effect of Internal Revenue Code section 280G?

A-1: (a) Section 280G disallows a deduction for any excess parachute payment paid or accrued. For rules relating to the imposition of a nondeductible 20-percent excise tax on the recipient of any excess parachute payment, see Internal Revenue Code sections 4999, 275(a)(6), and 3121(v)(2)(A).

(b) The disallowance of a deduction under section 280G is not contingent on the imposition of the excise tax under section 4999. The imposition of the excise tax under section 4999 is not contingent on the disallowance of a deduction under section 280G. Thus, for example, because the imposition of the excise tax under section

4999 is not contingent on the disallowance of a deduction under section 280G, a payee may be subject to the 20-percent excise tax under section 4999 even though the disallowance of the deduction for the excess parachute payment may not directly affect the federal taxable income of the payor.

Q-2: What is a parachute payment for purposes of section 280G?

A-2: (a) The term *parachute payment* means any payment (other than an exempt payment described in Q/A-5) that—

(1) Is in the nature of compensation;

(2) Is made or is to be made to (or for the benefit of) a disqualified individual;

(3) Is contingent on a change—

(i) In the ownership of a corporation;

(ii) In the effective control of a corporation; or

(iii) In the ownership of a substantial portion of the assets of a corporation; and

(4) Has (together with other payments described in paragraphs (a)(1), (2), and (3) of this A-2 with respect to the same disqualified individual) an aggregate present value of at least 3 times the individual's base amount.

(b) Hereinafter, a change referred to in paragraph (a)(3) of this A-2 is generally referred to as a change in ownership or control. For a discussion of the application of paragraph (a)(1), *see* Q/A-11 through Q/A-14; paragraph (a)(2), Q/A-15 through Q/A-21; paragraph (a)(3), Q/A-22 through Q/A-29; and paragraph (a)(4), Q/A-30 through Q/A-36.

(c) The term *parachute payment* also includes any payment in the nature of compensation to (or for the benefit of) a disqualified individual that is pursuant to an agreement that violates a generally enforced securities law or regulation. This type of parachute payment is referred to in this section as a securities violation parachute payment. *See* Q/A-37 for the definition and treatment of securities violation parachute payments.

Q-3: What is an excess parachute payment for purposes of section 280G?

A-3: The term *excess parachute payment* means an amount equal to the excess of any parachute payment over the portion of the base amount allocated to such payment. Subject to certain exceptions and limitations, an excess parachute payment is reduced by any portion of the payment which the taxpayer establishes by clear and convincing evidence is reasonable compensation for personal services actually rendered by the disqualified individual before the date of the change in ownership or control. For a discussion of the nonreduction of a securities violation parachute payment by reasonable compensation, *see* Q/A-37. For a discussion of the computation of excess parachute payments and their reduction by reasonable compensation, *see* Q/A-38 through Q/A-44.

Q-4: What is the effective date of section 280G and this section?

A-4: In general, section 280G applies to payments under agreements entered into or renewed after June 14, 1984. Section 280G also applies to certain payments under agreements entered into on or before June 14, 1984, and amended or supplemented in significant relevant respect after that date. This section applies to any payment that is contingent on a change in ownership or control and the change in ownership or control occurs on or after January 1, 2004. For a discussion of the application of the effective date, *see* Q/A-47 and Q/A-48.

Exempt Payments

Q-5: Are some types of payments exempt from the definition of the term *parachute payment?*

A-5: (a) Yes, the following five types of payments are exempt from the definition of *parachute payment*—

(1) Payments with respect to a small business corporation (described in Q/A-6 of this section);

(2) Certain payments with respect to a corporation no stock in which is readily tradeable on an established securities market (or otherwise) (described in Q/A-6 of this section);

(3) Payments to or from a qualified plan (described in Q/A-8 of this section);

(4) Certain payments made by a corporation undergoing a change in ownership or control that is described in any of the following sections of the Internal Revenue Code: section 501(c) (but only if such organization is subject to an express statutory prohibition against inurement of net earnings to the benefit of any private shareholder or individual, or if the organization is described in section 501(c)(1) or section 501(c)(21)), section 501(d), or section 529, collectively referred to as *tax-exempt organizations* (described in Q/A-6 of this section); and

(5) Certain payments of reasonable compensation for services to be rendered on or after the change in ownership or control (described in Q/A-9 of this section).

(b) Deductions for payments exempt from the definition of *parachute payment* are not disallowed by section 280G, and such exempt payments are not subject to the 20-percent excise tax of section 4999. In addition, such exempt payments are not taken into account in applying the 3-times-base-amount test of Q/A-30 of this section.

Q-6: Which payments with respect to a corporation referred to in paragraph (a)(1), (a)(2), or (a)(4) of Q/A-5 of this section are exempt from the definition of *parachute payment?*

A-6: (a) The term *parachute payment* does not include—

(1) Any payment to a disqualified individual with respect to a corporation which (immediately before the change in ownership or control) would qualify as a small business corporation (as defined in section 1361(b) but without regard to section 1361(b)(1)(C) thereof), without regard to whether the corporation had an election to be treated as a corporation under section 1361 in effect on the date of the change in ownership or control;

(2) Any payment to a disqualified individual with respect to a corporation (other than a small business corporation described in paragraph (a)(1) of this A-6) if—

(i) Immediately before the change in ownership or control, no stock in such corporation was readily tradeable on an established securities market or otherwise; and

(ii) The shareholder approval requirements described in Q/A-7 of this section are met with respect to such payment; or

(3) Any payment to a disqualified individual made by a corporation which is a tax-exempt organization (as defined in paragraph (a)(4) of Q/A-5 of this section), but only if the corporation meets the definition of a tax-exempt organization both immediately before and immediately after the change in ownership or control.

(b) For purposes of paragraph (a)(1) of this A-6, the members of an affiliated group are not treated as one corporation.

(c) The requirements of paragraph (a)(2)(i) of this A-6 are not met with respect to a corporation if a substantial portion of the assets of any entity consists (directly or indirectly) of stock in such corporation and any ownership interest in such entity is readily tradeable on an established securities market or otherwise. For this purpose, such stock constitutes a substantial portion of the assets of an entity if the total fair market value of the stock is equal to or exceeds one third of the total gross fair market value of all of the assets of the entity. For this purpose, *gross fair market value* means the value of the assets of the entity, determined without regard to any liabilities associated with such assets. If a corporation is a member of an affiliated group (which group is treated as one corporation under A-46 of this section), the requirements of paragraph (a)(2)(i) of this A-6 are not met if any stock in any member of such group is readily tradeable on an established securities market or otherwise.

(d) For purposes of paragraph (a)(2)(i) of this A-6, the term *stock* does not include stock described in section 1504(a)(4) if the payment does not adversely affect the redemption and liquidation rights of any shareholder owning such stock.

(e) For purposes of paragraph (a)(2)(i) of this A-6, stock is treated as readily tradeable if it is regularly quoted by brokers or dealers making a market in such stock.

(f) For purposes of paragraph (a)(2)(i) of this A-6, the term *established securities market* means an established securities market as defined in § 1.897-1(m).

(g) The following examples illustrate the application of this exemption:

Example 1. A small business corporation (within the meaning of paragraph (a)(1) of this A-6) operates two businesses. The corporation sells the assets of one of its businesses, and these assets represent a substantial portion of the assets of the corporation. Because of the sale, the corporation terminates its employment relationship with persons employed in the business the assets of which are sold. Several of these employees are highly-compensated individuals to whom the owners of the corporation make severance payments in excess of 3 times each employee's base amount. Since the corporation is a small business corporation immediately before the change in ownership or control, the payments are not parachute payments.

Example 2. Assume the same facts as in *Example 1,* except that the corporation is not a small business corporation within the meaning of paragraph (a)(1) of this A-6. If no stock in the corporation is readily tradeable on an established securities market (or otherwise) immediately before the change in ownership or control and the shareholder approval requirements described in Q/A-7 of this section are met, the payments are not parachute payments.

Example 3. Stock of Corporation S is owned by Corporation P, stock in which is readily tradeable on an established securities market. The Corporation S stock equals or exceeds one third of the total gross fair market value of the assets of Corporation P, and thus, represents a substantial portion of the assets of Corporation P. Corporation S makes severance payments to several of its highly-compensated individuals that are parachute payments under section 280G and Q/A-2 of this section. Because stock in Corporation P is readily tradeable on an established securities market, the payments are not exempt from the definition of *parachute payments* under this A-6.

Example 4. A is a corporation described in section 501(c)(3), and accordingly, its net earnings are prohibited from inuring to the benefit of any private shareholder or individual. A transfers substantially all of its assets to another corporation resulting in a change in ownership or control. Contingent on the change in ownership or control, A makes a payment that, but for the potential application of the exemption described in A-5(a)(4), would constitute a *parachute payment.* However, one or more aspects of the transaction that constitutes the change in ownership or control causes A to fail to be described in section 501(c)(3). Accordingly, A fails to meet the definition of a *tax-exempt organization* both immediately before and immediately after the change in ownership or control, as required by this A-6. As a result, the payment made by A that was contingent on the change in ownership or control is not exempt from the definition of parachute payment under this A-6.

Example 5. B is a corporation described in section 501(c)(15). B does not meet the definition of a *tax-exempt organization* because section 501(c)(15) does not expressly prohibit inurement of B's net earnings to the benefit of any private shareholder or individual. Accordingly, if B has a change in ownership or control and makes a payment that would otherwise meet the definition of a *parachute payment,* such payment is not exempt from the definition of the term *parachute payment* for purposes of this A-6.

Q-7: How are the shareholder approval requirements referred to in paragraph (a)(2)(ii) of Q/A-6 of this section met?

A-7: (a) *General rule.* The shareholder approval requirements referred to in paragraph (a)(2)(ii) of Q/A-6 of this section are met with respect to any payment if—

(1) Such payment is approved by more than 75 percent of the voting power of all outstanding stock of the corporation entitled to vote (as described in this A-7) immediately before the change in ownership or control; and

(2) Before the vote, there was adequate disclosure to all persons entitled to vote (as described in this A-7) of all material facts concerning all material payments which (but for Q/A-6 of this section) would be parachute payments with respect to a disqualified individual.

(b) *Voting requirements*—(1) *General rule.* The vote described in paragraph (a)(1) of this A-7 must determine the right of the disqualified individual to receive the payment, or, in the case of a payment made before the vote, the right of the disqualified individual to retain the payment. Except as otherwise provided in this A-7, the normal voting rules of the corporation are applicable. Thus, for example, an optionholder is generally not permitted to vote for purposes of this A-7. For purposes of this A-7, the vote can be on less than the full amount of the payment(s) to be made. Shareholder approval can be a single vote on all payments to any one disqualified individual, or on all payments to more than one disqualified individual. The total payment(s) submitted for shareholder approval, however, must be separately approved by the shareholders. The requirements of this paragraph (b)(1) are not satisfied if approval of the change in ownership or control is contingent, or otherwise conditioned, on the approval of any payment to a disqualified individual that would be a parachute payment but for Q/A-6 of this section.

(2) *Special rule.* A vote to approve the payment does not fail to be a vote of the outstanding stock of the corporation entitled to vote immediately before the change in ownership or control merely because the determination of the shareholders entitled to vote on the payment is based on the shareholders of record as of any day within the six-month period immediately prior to and ending on date of the change in ownership or control, provided the disclosure requirements described in paragraph (c) of this A-7 are met.

(3) *Entity shareholder.* (i) Approval of a payment by any shareholder that is not an individual (an entity shareholder) generally must be made by the person authorized by the entity shareholder to approve the payment. See paragraph (b)(4) of this A-7 if the person so authorized by the entity shareholder is a disqualified individual who would receive a parachute payment if the shareholder approval requirements of this A-7 are not met.

(ii) However, if a substantial portion of the assets of an entity shareholder consists (directly or indirectly) of stock in the corporation undergoing the change in ownership or control, approval of the payment by that entity shareholder must be made by a separate vote of the persons who hold, immediately before the change in ownership or control, more than 75 percent of the voting power of the entity shareholder entitled to vote. The preceding sentence does not apply if the value of the stock of the corporation owned, directly or indirectly, by or for the entity shareholder does not exceed 1 percent of the total value of the outstanding stock of the corporation undergoing a change in ownership or control. Where approval of a payment by an entity shareholder must be made by a separate vote of the owners of the entity shareholder, the normal voting rights of the entity shareholder determine which owners shall vote. For purposes of this (b)(3)(ii), stock represents a substantial portion of the assets of an entity shareholder if the total fair market value of the stock held by the entity shareholder in the corporation undergoing the change in ownership or control is equal to or exceeds one third of the total gross fair market value of all of the assets of the entity shareholder. For this purpose, *gross fair market value* means the value of the assets of the entity, determined without regard to any liabilities associated with such assets.

(4) *Disqualified individuals and attribution of stock ownership.* In determining the persons entitled to vote referred to in paragraph (a)(1) or (b)(3) of this A-7, stock that would otherwise be entitled to vote is not counted as outstanding stock and is not considered in determining whether the more than 75 percent vote has been obtained under this A-7 if the stock is actually owned or constructively owned under section 318(a) by or for a

disqualified individual who receives (or is to receive) payments that would be parachute payments if the shareholder approval requirements described in paragraph (a) of this A-7 are not met. Likewise, stock is not counted as outstanding stock if the owner is considered under section 318(a) to own any part of the stock owned directly or indirectly by or for a disqualified individual described in the preceding sentence. In addition, if the person authorized to vote the stock of an entity shareholder is a disqualified individual who would receive a parachute payment if the shareholder approval requirements described in this A-7 are not met, such person is not permitted to vote such shares, but the entity shareholder is permitted to appoint an equity interest holder in the entity shareholder, or in the case of a trust another person eligible to vote on behalf of the trust, to vote the otherwise eligible shares. However, if all persons who hold voting power in the corporation undergoing the change in ownership or control are disqualified individuals or related persons described in this paragraph (b)(4), then such stock is counted as outstanding stock and votes by such persons are considered in determining whether the more than 75 percent vote has been obtained.

(c) *Adequate disclosure.* To be adequate disclosure for purposes of paragraph (a)(2) of this A-7, disclosure must be full and truthful disclosure of the material facts and such additional information as is necessary to make the disclosure not materially misleading at the time the disclosure is made. Disclosure of such information must be made to every shareholder of the corporation entitled to vote under this A-7. For each disqualified individual, material facts that must be disclosed include, but are not limited to, the event triggering the payment or payments, the total amount of the payments that would be parachute payments if the shareholder approval requirements described in paragraph (a) of this A-7 are not met, and a brief description of each payment (*e.g.,* accelerated vesting of options, bonus, or salary). An omitted fact is considered a material fact if there is a substantial likelihood that a reasonable shareholder would consider it important.

(d) *Corporation without shareholders.* If a corporation does not have shareholders, the exemption described in Q/A-6(a)(2) of this section and the shareholder approval requirements described in this A-7 do not apply. Solely for purposes of this paragraph (d), a shareholder does not include a member in an association, joint stock company, or insurance company.

(e) *Examples.* The following examples illustrate the application of this A-7:

Example 1. Corporation S has two shareholders—Corporation P, which owns 76 percent of the stock of Corporation S, and A, a disqualified individual who would receive a parachute payment if the shareholder approval requirements of this A-7 are not met. No stock of Corporation P or S is readily tradeable on an established securities market (or otherwise). The value of the stock of Corporation S equals or exceeds one third of the gross fair market value of the assets of Corporation P, and thus, represents a substantial portion of the assets of Corporation P. All of the stock of Corporation S is sold to Corporation M. Contingent on the change in ownership of Corporation S, severance payments are made to certain officers of Corporation S in excess of 3 times each officer's base amount. If the payments are approved by a separate vote of the persons who hold, immediately before the sale, more than 75 percent of the voting power of the outstanding stock entitled to vote of Corporation P and the disclosure rules of paragraph (a)(2) of this A-7 are complied with, the shareholder approval requirements of this A-7 are met, and the payments are exempt from the definition of *parachute payment* pursuant to A-6 of this section.

Example 2. (i) Stock of Corporation X, none of which is traded on an established market, is acquired by Corporation Y. In the voting ballot concerning the sale, the Corporation X shareholders are asked to vote either “yes” on the sale and “yes” to paying parachute payments to A, a disqualified individual with respect to Corporation A, or “no” on the sale and “no” to paying parachute payments to A.
(ii) Because the approval of the change in ownership or control is conditioned on the approval of the payments to A, the shareholder approval requirements of this A-7 are not satisfied. If the payments are made to A, the payments are not exempt from the definition of *parachute payment* pursuant to Q/A-6 of this section.

(iii) Assume the same facts as in paragraph (i) of this *Example 2,* except that the acquisition agreement between Corporation X and Corporation Y states that the acquisition is approved only if there are no parachute payments made to A. If the shareholder approval and the disclosure requirements described in this A-7 are met, the payments will not be parachute payments. Alternatively, if the shareholders do not approve the payments, the payments cannot be made (or retained). Thus, the transaction is not conditioned on the approval of the parachute payments. If the payments are made and the requirements of this A-7 are met, the payments are exempt from the definition of *parachute payment* pursuant to Q/A-6 of this section.

Example 3. Corporation M is wholly owned by Partnership P. No interest in either M or P is readily tradeable on an established securities market (or otherwise). The value of the stock of Corporation M equals or exceeds one third of the gross fair market value of the assets of Partnership P, and thus, represents a substantial portion of the assets of Partnership P. Corporation M undergoes a change in ownership or control. Partnership P has one general partner and 200 limited partners. The general partner is not a disqualified individual. None of the limited partners are entitled to vote on issues involving the management of the partnership investments. If the payments that would be parachute payments if the shareholder approval requirements of this A-7 are not met are approved by the general partner and the disclosure rules of paragraph (a)(2) of this A-7 are complied with, the shareholder approval requirements of this A-7 are met, and the payments are exempt from the definition of *parachute payment* pursuant to A-6 of this section.

Example 4. Corporation A has several shareholders including X and Y, who are disqualified individuals with respect to Corporation A and would receive parachute payments if the shareholder approval requirements of this A-7 are not met. No stock of Corporation A is readily tradeable on an established securities market (or otherwise). Corporation A undergoes a change in ownership or control. Contingent on the change in ownership or control, severance payments are payable to X and Y that are in excess of 3 times each individual's base amount. To determine whether the shareholder approval requirements of paragraph (a)(1) of this A-7 are satisfied regarding the payments to X and Y, the stock of X and Y is not considered outstanding, and X and Y are not entitled to vote.

Example 5. Assume the same facts as in *Example 4,* except that after adequate disclosure of all material facts (within the meaning of paragraph (a)(2) of this A-7) to all shareholders entitled to vote, 60 percent of the shareholders who are entitled to vote approve the payments to X and Y. Because more than 75 percent of the shareholders holding outstanding stock who were entitled to vote did not approve the payments to X and Y, the payments cannot be made.

Example 6. Assume the same facts as in *Example 4* except that disclosure of all the material facts (within the meaning of paragraph (a)(2) of this A-7) regarding the payments to X and Y is made to two of Corporation A's shareholders, who collectively own 80 percent of Corporation A's stock entitled to vote and approve the payment. Both shareholders approve the payments. Assume further that no adequate disclosure of the material facts regarding the payments to X and Y is made to other Corporation A shareholders who are entitled to vote within the meaning of this A-7. Notwithstanding that 80 percent of the shareholders entitled to vote approve the payments, because disclosure regarding the payments to X and Y is not made to all of Corporation A's shareholders who were entitled to vote, the disclosure requirements of paragraph (a)(2) of this A-7 are not met, and the payments are not exempt from the definition of *parachute payment* pursuant to Q/A-6.

Example 7. Corporation C has three shareholders—Partnership, which owns 20 percent of the stock of Corporation C; A, an individual who owns 60 percent of the stock of Corporation C; and B, an individual who owns 20 percent of Corporation C. Stock of Corporation C does not represent a substantial portion of the assets of Partnership. No interest in either Partnership or Corporation C is readily tradeable on an established securities market (or otherwise). P, a one-third partner in Partnership, is a disqualified individual with respect to Corporation C. Corporation C undergoes a change in ownership or control. Contingent on the change, a severance payment is payable to P in excess of 3 times P's base amount. To determine the persons who are entitled to vote referred to in paragraph (a)(1) of this A-7, one-third of the stock held by Partnership is not considered outstanding stock. If P is the person authorized by Partnership to approve the payment, none of the shares of Partnership are considered outstanding stock. However, Partnership is permitted to appoint an equity interest holder in Partnership (who is not a disqualified individual who would receive a parachute payment if the requirements of this A-7 are not met), to vote the two-thirds of the shares held by Partnership that are otherwise entitled to be voted.

Example 8. X, Y, and Z are all employees and disqualified individuals with respect to Corporation E. No stock in Corporation E is readily tradeable on an established securities market (or otherwise). Each individual has a base amount of $100,000. Corporation E undergoes a change in ownership or control. Contingent on the change, a severance payment of $400,000 is payable to X; $600,000 is payable to Y; and $1,000,000 is payable to Z. Corporation E provides each Corporation E shareholder entitled to vote (as determined under this A-7) with a ballot listing and describing the payments of $400,000 to X; $600,000 to Y; and $1,000,000 to Z and the triggering event that generated the

payments. Next to each name and corresponding amount on the ballot, Corporation E requests approval (with a “yes” and “no” box) of each total payment to be made to each individual and states that if the payment is not approved the payment will not be made. Adequate disclosure, within the meaning of this A-7 is made to each shareholder entitled to vote under this A-7. More than 75 percent of the Corporation E shareholders who are entitled to vote under paragraph (a)(1) of this A-7 approve each payment to each individual. The shareholder approval requirements of this A-7 are met, and the payments are exempt from the definition of *parachute* payment pursuant to A-6 of this section.

Example 9. Assume the same facts as in Example 8 except that the ballot does not request approval of each total payment to each individual separately. Instead, the ballot states that $2,000,000 in payments will be made to X, Y, and Z and requests approval of the $2,000,000 payments. Assuming the triggering event and amount of the payments to X, Y, and Z are separately described to the shareholders entitled to vote under this A-7, the shareholder approval requirements of paragraph (a)(1) of this A-7 are met, and the payments are exempt from the definition of *parachute payment* pursuant to A-6 of this section.

Example 10. B, an employee of Corporation X, is a disqualified individual with respect to Corporation X. Stock of Corporation X is not readily tradeable on an established securities market (or otherwise). Corporation X undergoes a change in ownership or control. B's base amount is $205,000. Under B's employment agreement with Corporation X, in the event of a change in ownership or control, B's stock options will vest and B will receive severance and bonus payments. Contingent on the change in ownership or control, B's stock options with a fair market value of $500,000 immediately vest, $200,000 of which is contingent on the change, and B will receive a $200,000 bonus payment and a $400,000 severance payment. Corporation X distributes a ballot to every shareholder of Corporation X who immediately before the change is entitled to vote as described in this A-7. The ballot contains adequate disclosure of all material facts and lists the following payments to be made to B: The contingent payment of $200,000 attributable to options, a $200,000 bonus payment, and a $400,000 severance payment. The ballot requests shareholder approval of the $200,000 bonus payment to B and states that whether or not the $200,000 bonus payment is approved, B will receive $200,000 attributable to options and a $400,000 severance payment. More than 75 percent of the shareholders entitled to vote as described by this A-7 approve the $200,000 bonus payment to B. The shareholder approval requirements of this A-7 are met, and the $200,000 payment is exempt from the definition of *parachute payment* pursuant to A-6 of this section.

Q-8: Which payments under a qualified plan are exempt from the definition of *parachute payment?*

A-8: The term *parachute payment* does not include any payment to or from—

(a) A plan described in section 401(a) which includes a trust exempt from tax under section 501(a);

(b) An annuity plan described in section 403(a);

(c) A simplified employee pension (as defined in section 408(k)); or

(d) A simple retirement account (as defined in section 408(p)).

Q-9: Which payments of reasonable compensation are exempt from the definition of *parachute payment?*

A-9: Except in the case of securities violation *parachute payment*s, the term parachute payment does not include any payment (or portion thereof) which the taxpayer establishes by clear and convincing evidence is reasonable compensation for personal services to be rendered by the disqualified individual on or after the date of the change in ownership or control. See Q/A-37 of this section for the definition and treatment of securities violation parachute payments. See Q/A-40 through Q/A-44 of this section for rules on determining amounts of reasonable compensation.

Payor of Parachute Payments

Q-10: Who may be the payor of parachute payments?

A-10: Parachute payments within the meaning of Q/A-2 of this section may be paid, directly or indirectly, by—

(i) The corporation referred to in paragraph (a)(3) of Q/A-2 of this section;

(ii) A person acquiring ownership or effective control of that corporation or ownership of a substantial portion of that corporation's assets; or

(iii) Any person whose relationship to such corporation or other person is such as to require attribution of stock ownership between the parties under section 318(a).

Payments in the Nature of Compensation

Q-11: What types of payments are in the nature of compensation?

A-11: (a) *General rule.* For purposes of this section, all payments—in whatever form—are payments in the nature of compensation if they arise out of an employment relationship or are associated with the performance of services. For this purpose, the performance of services includes holding oneself out as available to perform services and refraining from performing services (such as under a covenant not to compete or similar arrangement). Payments in the nature of compensation include (but are not limited to) wages and salary, bonuses, severance pay, fringe benefits, life insurance, pension benefits, and other deferred compensation (including any amount characterized by the parties as interest thereon). A payment in the nature of compensation also includes cash when paid, the value of the right to receive cash, (including the value of accelerated vesting under Q/A-24(c), or a transfer of property. However, payments in the nature of compensation do not include attorney's fees or court costs paid or incurred in connection with the payment of any amount described in paragraphs (a)(1), (2), and (3) of Q/A-2 of this section or a reasonable rate of interest accrued on any amount during the period the parties contest whether a payment will be made.

(b) *When payment is considered to be made.* Except as otherwise provided in A-11 through Q/A-13 of this section, a payment in the nature of compensation is considered made (and is subject to the excise tax under section 4999) in the taxable year in which it is includible in the disqualified individual's gross income or, in the case of fringe benefits and other benefits excludible from income, in the taxable year the benefits are received.

(c) *Prepayment rule.* Notwithstanding the general rule described in paragraph (b) of this A-11, a disqualified individual may, in the year of the change in ownership or control, or any later year, prepay the excise tax under section 4999, provided that the payor and disqualified individual treat the payment of the excise tax consistently and the payor satisfies its obligations under section 4999(c) in the year of prepayment. The prepayment of the excise tax for purposes of section 4999 must be based on the present value of the excise tax that would be due in the year the excess parachute payment would actually be paid (calculated using the discount rate equal to 120 percent of the applicable Federal rate (determined under section 1274(d) and regulations thereunder; *see* Q/A-32)). For purposes of projecting the future value of a payment that provides for interest to be credited at a variable interest rate, it is permissible to make a reasonable assumption regarding this variable rate. A disqualified individual is not required to adjust the excise tax paid under this paragraph (c) merely because the interest rates in the future are not the same as the rate used for purposes of projecting the future value of the payment. However, a disqualified individual may not apply this paragraph (c) of this A-11 to a payment to be made in cash if the present value of the payment would be considered not reasonably ascertainable under section 3121(v) and § 31.3121(v)(2)-1(e)(4) of this Chapter or to a payment related to health benefits or coverage. The Commissioner may provide additional guidance regarding the applicability of this paragraph (c) to certain payments in published guidance of general applicability under § 601.601(d)(2) of this Chapter.

(d) *Transfers of property.* Transfers of property are treated as payments for purposes of this A-11. See Q/A-12 of this section for rules on determining when such payments are considered made and the amount of such payments. *See* Q/A-13 of this section for special rules on transfers of stock options.

(e) The following example illustrates the principles of this A-11:

Example. D is a disqualified individual with respect to Corporation X. D has a base amount of $100,000 and is entitled to receive two parachute payments, one of $200,000 and the other of $400,000. A change in ownership or control of Corporation X occurs on May 1, 2005, and the $200,000 payment is made to D at the time of the change in ownership or control. The $400,000 payment is to be made on October 1, 2010. Corporation X and D agree that D will prepay the excise tax and X will satisfy its obligations under section 4999(c) with respect to the $400,000 payment. Using discount rate determined under Q/A-32, Corporation X and D determine that the present value of the $400,000 payment is $300,000 on the date of the change in ownership or control. The portions of the base amount allocated to these payments are $40,000 (($200,000/$500,000) × $100,000) and $60,000 (($300,000/$500,000 × $100,000), respectively. Thus, the amount of the first excess parachute payment is $160,000 ($200,000−$40,000) and that of the second excess parachute payment is $340,000 ($400,000−$60,000). The excise tax on the $400,000 payment is $68,000 ($340,000 × 20 percent). Assume the present value (calculated in accordance with paragraph (c) of this A-11) of $68,000 is $50,000. To prepay the excise tax due on the $400,000 payment, Corporation X must satisfy its obligations under section 4999 with respect to the $50,000, in addition to the $32,000

withholding required with respect to the $200,000 payment.

Q-12: If a property transfer to a disqualified individual is a payment in the nature of compensation, when is the payment considered made (or to be made), and how is the amount of the payment determined?

A-12: (a) Except as provided in this A-12 and Q/A-13 of this section, a transfer of property is considered a payment made (or to be made) in the taxable year in which the property transferred is includible in the gross income of the disqualified individual under section 83 and the regulations thereunder. Thus, in general, such a payment is considered made (or to be made) when the property is transferred (as defined in § 1.83-3(a)) to the disqualified individual and becomes substantially vested (as defined in § 1.83-3(b) and (j)) in such individual. The amount of the payment is determined under section 83 and the regulations thereunder. Thus, in general, the amount of the payment is equal to the excess of the fair market value of the transferred property (determined without regard to any lapse restriction, as defined in § 1.83-3(i)) at the time that the property becomes substantially vested, over the amount (if any) paid for the property.

(b) An election made by a disqualified individual under section 83(b) with respect to transferred property will not apply for purposes of this A-12. Thus, even if such an election is made with respect to a property transfer that is a payment in the nature of compensation, for purposes of this section, the payment is generally considered made (or to be made) when the property is transferred to and becomes substantially vested in such individual.

(c) *See* Q/A-13 of this section for rules on applying this A-12 to transfers of stock options.

(d) The following example illustrates the principles of this A-12:

Example. On January 1, 2006, Corporation M gives to A, a disqualified individual, a bonus of 100 shares of Corporation M stock in connection with the performance of services to Corporation M. Under the terms of the bonus arrangement A is obligated to return the Corporation M stock to Corporation M unless the earnings of Corporation M double by January 1, 2009, or there is a change in ownership or control of Corporation M before that date. A's rights in the stock are treated as substantially nonvested (within the meaning of § 1.83-3(b)) during that period because A's rights in the stock are subject to a substantial risk of forfeiture (within the meaning of § 1.83-3(c)) and are nontransferable (within the meaning of § 1.83-3(d)). On January 1, 2008, a change in ownership or control of Corporation M occurs. On that day, the fair market value of the Corporation M stock is $250 per share. Because A's rights in the Corporation M stock become substantially vested (within the meaning of § 1.83-3(b)) on that day, the payment is considered made on that day, and the amount of the payment for purposes of this section is equal to $25,000 (100 × $250). *See* Q/A-38 through 41 for rules relating to the reduction of the excess parachute payment by the portion of the payment which is established to be reasonable compensation for personal services actually rendered before the date of a change in ownership or control.

Q-13: How are transfers of statutory and nonstatutory stock options treated?

A-13: (a) For purposes of this section, an option (including an option to which section 421 applies) is treated as property that is transferred when the option becomes vested (regardless of whether the option has a readily ascertainable fair market value as defined in § 1.83-7(b)). For purposes of this A-13, *vested* means substantially vested within the meaning of § 1.83-3(b) and (j) or the right to the payment is not otherwise subject to a substantial risk of forfeiture within the meaning of section 83(c). Thus, for purposes of this section, the vesting of such an option is treated as a payment in the nature of compensation. The value of an option at the time the option vests is determined under all the facts and circumstances in the particular case. Factors relevant to such a determination include, but are not limited to: The difference between the option's exercise price and the value of the property subject to the option at the time of vesting; the probability of the value of such property increasing or decreasing; and the length of the period during which the option can be exercised. Thus, an option is treated as a payment in the nature of compensation on the date of grant or vesting, as applicable, without regard to whether such option has an ascertainable fair market value. For purposes of this A-13, valuation may be determined by any method prescribed by the Commissioner in published guidance of general applicability under § 601.601(d)(2) of this Chapter.

(b) Any money or other property transferred to the disqualified individual on the exercise, or as consideration on the sale or other disposition, of an option described in paragraph (a) of this A-13 after the time such option vests is not treated as a payment in the nature of compensation to the disqualified individual under Q/A-11 of this section. Nonetheless, the amount of the otherwise allowable deduction under section 162 or 212 with respect to such transfer is reduced by the amount of the payment described in paragraph (a) of this A-13 treated as an excess parachute payment.

Q-14: Are payments in the nature of compensation reduced by consideration paid by the disqualified individual?

A-14: Yes, to the extent not otherwise taken into account under Q/A-12 and Q/A-13 of this section, the amount of any payment in the nature of compensation is reduced by the amount of any money or the fair market value of any property (owned by the disqualified individual without restriction) that is (or will be) transferred by the disqualified individual in exchange for the payment. For purposes of the preceding sentence, the fair market value of property is determined as of the date the property is transferred by the disqualified individual.

Disqualified Individuals

Q-15: Who is a disqualified individual?

A-15: (a) For purposes of this section, an individual is a disqualified individual with respect to a corporation if, at any time during the *disqualified individual determination period* (as defined in Q/A-20 of this section), the individual is an employee or independent contractor of the corporation and is, with respect to the corporation—

(1) A shareholder (but *see* Q/A-17 of this section);

(2) An officer (*see* Q/A-18 of this section); or

(3) A highly-compensated individual (*see* Q/A-19 of this section).

(b) For purposes of this A-15, a director is a disqualified individual with respect to a corporation if, at any time during the *disqualified individual determination period,* the director is, with respect to the corporation, a shareholder (*see* Q/A-17 of this section), an officer (*see* Q/A-18 of this section), or a highly-compensated individual (*see* Q/A-19 of this section).

(c) For purposes of this A-15, an individual who is an employee or independent contractor of a corporation other than the corporation undergoing a change in ownership or control is disregarded for purposes of determining who is a disqualified individual if such individual is employed by the corporation undergoing the change in ownership or control only on the last day of the disqualified individual determination period. Thus, for example, assume that E is an employee of Corporation X, that Y is acquired by Corporation X, and that Y undergoes a change in ownership or control. If E becomes an employee of Y on the date of the acquisition, in determining the disqualified individuals with respect to Y, E is disregarded under this paragraph (c).

Q-16: Is a personal service corporation treated as an individual?

A-16: (a) Yes. For purposes of this section, a personal service corporation (as defined in section 269A(b)(1)), or a noncorporate entity that would be a personal service corporation if it were a corporation, is treated as an individual.

(b) The following example illustrates the principles of this A-16:

> *Example.* Corporation N, a personal service corporation (as defined in section 269A(b)(1)), has a single individual as its sole shareholder and employee. Corporation N performs personal services for Corporation M. The compensation paid to Corporation N by Corporation M puts Corporation N within the group of highly-compensated individuals of Corporation M as determined under A-19 of this section. Thus, Corporation N is treated as a highly-compensated individual with respect to Corporation M.

Q-17: Are all shareholders of a corporation considered shareholders for purposes of paragraphs (a)(1) and (b) of Q/A-15 of this section?

A-17: (a) No. Only an individual who owns stock of a corporation with a fair market value that exceeds 1 percent of the fair market value of the outstanding shares of all classes of the corporation's stock is treated as a disqualified individual with respect to the corporation by reason of stock ownership. An individual who owns a lesser amount of stock may, however, be a disqualified individual with respect to the corporation if such individual is an officer (*see* Q/A-18) or highly-compensated individual (see Q/A-19) with respect to the corporation.

(b) For purposes of determining the amount of stock owned by an individual for purposes of paragraph (a) of this A-17, the constructive ownership rules of section 318(a) apply. Stock underlying a vested option is considered owned by an individual who holds the vested option (and the stock underlying an unvested option is not considered owned by an individual who holds the unvested option). For purposes of the preceding sentence, however, if the option is exercisable for stock that is not substantially vested (as defined by §§ 1.83-3(b) and (j)), the stock underlying the option is not treated as owned by the individual who holds the option. Solely for purposes of determining the amount of stock owned by an individual for purposes of this A-17, mutual and cooperative corporations are treated as having stock.

(c) The following examples illustrates the principles of this A-17:

Example 1. E, an employee of Corporation A, received options under Corporation A's Stock Option Plan. E's stock options vest three years after the date of grant. E is not an officer or highly compensated individual during the disqualified individual determination period. E does not own, and is not considered to own under section 318, any other Corporation A stock. Two years after the options are granted to E, all of Corporation A's stock is acquired by Corporation B. Under Corporation A's Stock Option Plan, E's options are converted to Corporation B options and the vesting schedule remains the same. Under paragraph (b) of this A-17, the stock underlying the unvested options held by E on the date of the change in ownership or control is not considered owned by E. Because E is not considered to own Corporation A stock with a fair market value exceeding 1 percent of the total fair market value of all of the outstanding shares of all classes of Corporation A and E is not an officer or highly-compensated individual during the disqualified individual determination period, E is not a disqualified individual within the meaning of Q&A-15 of this section with respect to Corporation A.

Example 2. Assume the same facts as in *Example* 1, except that Corporation A's Stock Option Plan provides that all unvested options will vest immediately on a change in ownership or control. Under paragraph (b) of this A-17, the stock underlying the options that vest on the change in ownership or control is considered owned by E. If the stock considered owned by E exceeds 1 percent of the total fair market value of all of the outstanding shares of all classes of Corporation A stock (including for this purpose, all stock owned or constructively owned by all shareholders, provided that no share of stock is counted more than once), E is a disqualified individual within the meaning of Q/A-15 of this section with respect to Corporation A.

Example 3. Assume the same facts as in *Example 1* except that E received nonstatutory stock options that are exercisable for stock subject to a substantial risk of forfeiture under section 83. Assume further that under Corporation A's Stock Option Plan, the nonstatutory options will vest on a change in ownership or control. Under paragraph (b) of this A-17, E is not considered to own the stock underlying the options that vest on the change in ownership or control because the options are exercisable for stock subject to a substantial risk of forfeiture within the meaning of section 83. Because E is not considered to own Corporation A stock with a fair market value exceeding 1 percent of the total fair market value of all of the outstanding shares of all classes of Corporation A stock and E is not an officer or highly compensated individual during the disqualified individual determination period, E is not a disqualified individual within the meaning of Q/A-15 of this section with respect to Corporation A.

Q-18: Who is an officer?

A-18: (a) For purposes of this section, whether an individual is an officer with respect to a corporation is determined on the basis of all the facts and circumstances in the particular case (such as the source of the individual's authority, the term for which the individual is elected or appointed, and the nature and extent of the individual's duties). Any individual who has the title of officer is presumed to be an officer unless the facts and circumstances demonstrate that the individual does not have the authority of an officer. However, an individual who does not have the title of officer may nevertheless be considered an officer if the facts and circumstances demonstrate that the individual has the authority of an officer. Generally, the term officer means an administrative executive who is in regular and continued service. The term officer implies continuity of service and excludes those employed for a special and single transaction.

(b) An individual who is an officer with respect to any member of an affiliated group that is treated as one corporation pursuant to Q/A-46 of this section is treated as an officer of such one corporation.

(c) No more than 50 employees (or, if less, the greater of 3 employees, or 10 percent of the employees (rounded up to the nearest integer)) of the corporation (in the case of an affiliated group treated as one corporation, each member of the affiliated group) are treated as disqualified individuals with respect to a corporation by reason of being an officer of the corporation. For purposes of the preceding sentence, the number of employees of the corporation is the greatest number of employees the corporation has during the disqualified individual determination period (as defined in Q/A-20 of this section). If the number of officers of the corporation exceeds the number of employees who may be treated as officers under the first sentence of this paragraph (c), then the employees who are treated as officers for purposes of this section are the highest paid 50 employees (or, if less, the greater of 3 employees, or 10 percent of the employees (rounded up to the nearest integer)) of the corporation when ranked on the basis of compensation (as determined under Q/A-21 of this section) paid during the disqualified individual determination period.

(d) In determining the total number of employees of a corporation for purposes of this A-18, employees are not counted if they normally work less than $17^{1}/_{2}$ hours per week (as defined in section 414(q)(5)(B) and the regulations thereunder) or if they normally work during not more than 6 months during any year (as defined in section 414(q)(5)(C) and the regulations thereunder). However, an employee who is not counted for purposes of the preceding sentence may still be an officer.

Q-19: Who is a highly-compensated individual?

A-19: (a) For purposes of this section, a highly-compensated individual with respect to a corporation is any individual who is, or would be if the individual were an employee, a member of the group consisting of the lesser of the highest paid 1 percent of the employees of the corporation (rounded up to the nearest integer), or the highest paid 250 employees of the corporation, when ranked on the basis of compensation (as determined under Q/A-21 of this section) earned during the disqualified individual determination period (as defined in Q/A-20 of this section). For purposes of the preceding sentence, the number of employees of the corporation is the greatest number of employees the corporation has during the disqualified individual determination period (as defined in Q/A-20 of this section). However, no individual whose annualized compensation during the disqualified individual determination period is less than the amount described in section 414(q)(1)(B)(i) for the year in which the change in ownership or control occurs will be treated as a highly-compensated individual.

(b) An individual who is not an employee of the corporation is not treated as a highly-compensated individual with respect to the corporation on account of compensation received for performing services (such as brokerage, legal, or investment banking services) in connection with a change in ownership or control of the corporation, if the services are performed in the ordinary course of the individual's trade or business and the individual performs similar services for a significant number of clients unrelated to the corporation.

(c) The total number of employees of a corporation for purposes of this A-19 is determined in accordance with Q/A-18(d) of this section. However, an employee who is not counted for purposes of the preceding sentence may still be a highly-compensated individual.

Q-20: What is the disqualified individual determination period?

A-20: The disqualified individual determination period is the twelve-month period prior to and ending on the date of the change in ownership or control of the corporation.

Q-21: How is *compensation* defined for purposes of determining who is a disqualified individual?

A-21: (a) For purposes of determining who is a disqualified individual, the term *compensation* means the compensation which was earned by the individual for services performed for the corporation with respect to which the change in ownership or control occurs (changed corporation), for a predecessor entity, or for a related entity. Such compensation is determined without regard to sections 125, 132(f)(4), 402(e)(3), and 402(h)(1)(B). Thus, for example, compensation includes elective or salary reduction contributions to a cafeteria plan, cash or deferred arrangement or tax-sheltered annuity, and amounts credited under a nonqualified deferred compensation plan.

(b) For purposes of this A-21, a predecessor entity is any entity which, as a result of a merger, consolidation, purchase or acquisition of property or stock, corporate separation, or other similar business transaction transfers some or all of its employees to the changed corporation or to a related entity or to a predecessor entity of the changed corporation. The term *related entity* includes—

(1) All members of a controlled group of corporations (as defined in section 414(b)) that includes the changed corporation or a predecessor entity;

(2) All trades or businesses (whether or not incorporated) that are under common control (as defined in section 414(c)) if such group includes the changed corporation or a predecessor entity;

(3) All members of an affiliated service group (as defined in section 414(m)) that includes the changed corporation or a predecessor entity; and

(4) Any other entities required to be aggregated with the changed corporation or a predecessor entity pursuant to section 414(o) and the regulations thereunder (except leasing organizations as defined in section 414(n)).

(c) For purposes of Q/A-18 and Q/A-19 of this section, compensation that was contingent on the change in ownership or control and that was payable in the year of the change is not treated as compensation.

Contingent on Change in Ownership or Control

Q-22: When is a payment contingent on a change in ownership or control?

A-22: (a) In general, a payment is treated as contingent on a change in ownership or control if the payment would not, in fact, have been made had no change in ownership or control occurred, even if the payment is also conditioned on the occurrence of another event. A payment generally is treated as one which would not, in fact, have been made in the absence of a change in ownership or control unless it is substantially certain, at the time of the change, that the payment would have been made whether or not the change occurred. (But *see* Q/A-23 of this section regarding payments under agreements entered into after a change in ownership or control.) A payment that becomes vested as a result of a change in ownership or control is not treated as a payment which was substantially certain to have been made whether or not the change occurred. For purposes of this A-22, *vested* means the payment is substantially vested within the meaning of § 1.83-3(b) and (j) or the right to the payment is not otherwise subject to a substantial risk of forfeiture as defined by section 83(c).

(b)(1) For purposes of paragraph (a), a payment is treated as contingent on a change in ownership or control if—

(i) The payment is contingent on an event that is closely associated with a change in ownership or control;

(ii) A change in ownership or control actually occurs; and

(iii) The event is materially related to the change in ownership or control.

(2) For purposes of paragraph (b)(1)(i) of this A-22, a payment is treated as contingent on an event that is closely associated with a change in ownership or control unless it is substantially certain, at the time of the event, that the payment would have been made whether or not the event occurred. An event is considered closely associated with a change in ownership or control if the event is of a type often preliminary or subsequent to, or otherwise closely associated with, a change in ownership or control. For example, the following events are considered closely associated with a change in the ownership or control of a corporation: The onset of a tender offer with respect to the corporation; a substantial increase in the market price of the corporation's stock that occurs within a short period (but only if such increase occurs prior to a change in ownership or control); the cessation of the listing of the corporation's stock on an established securities market; the acquisition of more than 5 percent of the corporation's stock by a person (or more than one person acting as a group) not in control of the corporation; the voluntary or involuntary termination of the disqualified individual's employment; a significant reduction in the disqualified individual's job responsibilities; and a change in ownership or control as defined in the disqualified individual's employment agreement (or elsewhere) that does not meet the definition of a change in ownership or control described in Q/A-27, 28, or 29 of this section. Whether other events are treated as closely associated with a change in ownership or control is based on all the facts and circumstances of the particular case.

(3) For purposes of determining whether an event (as described in paragraph (b)(2) of this A-22) is materially related to a change in ownership or control, the event is presumed to be materially related to a change in ownership or control if such event occurs within the period beginning one year before and ending one year after the date of the change in ownership or control. If such event occurs outside of the period beginning one year before and ending one year after the date of change in ownership or control, the event is presumed not materially related to the change in ownership or control. A payment does not fail to be contingent on a change in ownership or control merely because it is also contingent on the occurrence of a second event (without

regard to whether the second event is closely associated with or materially related to a change in ownership or control). Similarly, a payment that is treated as contingent on a change in ownership or control because it is contingent on a closely associated event does not fail to be treated as contingent on a change in ownership or control merely because it is also contingent on the occurrence of a second event (without regard to whether the second event is closely associated with or materially related to a change in ownership or control).

(c) A payment that would in fact have been made had no change in ownership or control occurred is treated as contingent on a change in ownership or control if the change in ownership or control (or the occurrence of an event that is closely associated with and materially related to a change in ownership or control within the meaning of paragraph (b)(1) of this A-22), accelerates the time at which the payment is made. Thus, for example, if a change in ownership or control accelerates the time of payment of deferred compensation that is vested without regard to the change in ownership or control, the payment may be treated as contingent on the change. *See* Q/A-24 of this section regarding the portion of a payment that is so treated. *See also* Q/A-8 of this section regarding the exemption for certain payments under qualified plans and Q/A-40 of this section regarding the treatment of a payment as reasonable compensation.

(d) A payment is treated as contingent on a change in ownership or control even if the employment or independent contractor relationship of the disqualified individual is not terminated (voluntarily or involuntarily) as a result of the change.

(e) The following examples illustrate the principles of this A-22:

Example 1. A corporation grants a stock appreciation right to a disqualified individual, A, more than one year before a change in ownership or control. After the stock appreciation right vests and becomes exercisable, a change in ownership or control of the corporation occurs, and A exercises the right. Assuming neither the granting nor the vesting of the stock appreciation right is contingent on a change in ownership or control, the payment made on exercise is not contingent on the change in ownership or control.

Example 2. A contract between a corporation and B, a disqualified individual, provides that a payment will be made to B if the corporation undergoes a change in ownership or control and B's employment with the corporation is terminated at any time over the succeeding 5 years. Eighteen months later, a change in the ownership of the corporation occurs. Two years after the change in ownership, B's employment is terminated and the payment is made to B. Because it was not substantially certain that the corporation would have made the payment to B on B's termination of employment if there had not been a change in ownership, the payment is treated as contingent on the change in ownership under paragraph (a) of this A-22. This is true even though B's termination of employment is presumed not to be, and in fact may not be, materially related to the change in ownership or control.

Example 3. A contract between a corporation and C, a disqualified individual, provides that a payment will be made to C if C's employment is terminated at any time over the succeeding 3 years (without regard to whether or not there is a change in ownership or control). Eighteen months after the

contract is entered into, a change in the ownership or control of the corporation occurs. Six months after the change in ownership or control, C's employment is terminated and the payment is made to C. Termination of employment is considered an event closely associated with a change in ownership or control. Because the termination occurred within one year after the date of the change in ownership or control, the termination of C's employment is presumed to be materially related to the change in ownership or control under paragraph (b)(3) of this A-22. If this presumption is not successfully rebutted, the payment will be treated as contingent on the change in ownership or control under paragraph (b) of this A-22.

Example 4. A contract between a corporation and a disqualified individual, D, provides that a payment will be made to D upon the onset of a tender offer for shares of the corporation's stock. A tender offer is made on December 1, 2008, and the payment is made to D. Although the tender offer is unsuccessful, it leads to a negotiated merger with another entity on June 1, 2009, which results in a change in the ownership or control of the corporation. It was not substantially certain, at the time of the onset of the tender offer, that the payment would have been made had no tender offer taken place. The onset of a tender offer is considered closely associated with a change in ownership or control. Because the tender offer occurred within one year before the date of the change in ownership or control of the corporation, the onset of the tender offer is presumed to be materially related to the change in ownership or control. If this presumption is not rebutted, the payment will be treated as contingent on the change in ownership or control. If no change in ownership or control had occurred, the payment would not be treated as contingent on a change in ownership or control; however, the payment still could be a parachute payment under Q/A-37 of this section if the contract violated a generally enforced securities law or regulation.

Example 5. A contract between a corporation and a disqualified individual, E, provides that a payment will be made to E if the corporation's level of product sales or profits reaches a specified level. At the time the contract was entered into, the parties had no reason to believe that such an increase in the corporation's level of product sales or profits would be preliminary or subsequent to, or otherwise closely associated with, a change in ownership or control of the corporation. Eighteen months later, a change in the ownership or control of the corporation occurs and within one year after the date of the change of ownership or control, the corporation's level of product sales or profits reaches the specified level. Under these facts and circumstances (and in the absence of contradictory evidence), the increase in product sales or profits of the corporation is not an event closely associated with the change in ownership or control of the corporation. Accordingly, even if the increase is materially related to the change in ownership or control, the payment will not be treated as contingent on a change in ownership or control.

Q-23: May a payment be treated as contingent on a change in ownership or control if the payment is made under an agreement entered into after the change?

A-23: (a) No. Payments are not treated as contingent on a change in ownership or control if they are made (or are to be made) pursuant to an agreement entered into after the change (a post-change agreement). For this purpose, an agreement that is executed after a change in ownership or control pursuant to a legally enforceable agreement that was entered into before the change is considered to have been entered into before the change. (*See* Q/A-9 of this section regarding the exemption for reasonable compensation for services rendered on or after a change in ownership or control.) If an individual has a right to receive a payment that would be a parachute payment if made under an agreement entered into prior to a change in ownership or control (pre-change agreement) and gives up that right as bargained-for consideration for benefits under a post-change agreement, the agreement is treated as a post-change agreement only to the extent the value of the payments under the agreement exceed the value of the payments under the pre-change agreement. To the extent payments under the agreement have the same value as the payments under the pre-change agreement, such payments retain their character as parachute payments subject to this section.

(b) The following examples illustrate the principles of this A-23:

Example 1. Assume that a disqualified individual is an employee of a corporation. A change in ownership or control of the corporation occurs, and thereafter the individual enters into an employment agreement with the acquiring company. Because the agreement is entered into after the change in ownership or control occurs, payments to be made under the agreement are not treated as contingent on the change.

Example 2. Assume the same facts as in *Example 1,* except that the agreement between the disqualified individual and the acquiring company is executed after the change in ownership or control, pursuant to a legally enforceable agreement entered into before the change. Payments to be made under the agreement may be treated as contingent on the change in ownership or control pursuant to Q/A-22 of this section. However, see Q/A-9 of this section regarding the exemption from the definition of parachute payment for certain amounts of reasonable compensation.

Example 3. Assume the same facts as in *Example 1,* except that prior to the change in ownership or control, the individual and corporation enter into an agreement under which the individual will receive parachute payments in the event of a change in ownership or control of the corporation. After the change, the individual agrees to give up the right to payments under the pre-change agreement that would be parachute payments if made, in exchange for compensation under a new agreement with the acquiring corporation. Because the individual gave up the right to parachute payments under the pre-change agreement in exchange for other payments under the post-change agreement, payments in an amount equal to the parachute payments under the pre-change agreement are treated as contingent on the change in ownership or control under this A-23. Because the post-change agreement was entered into after the change, payments in excess of this amount are not treated as parachute payments.

Q-24: If a payment is treated as contingent on a change in ownership or control, is the full amount of the payment so treated?

A-24: (a)(1) *General rule.* Yes. If the payment is a transfer of property, the amount of the payment is determined under Q/A-12 or Q/A-13 of this section. For all other payments, the amount of the payment is determined under Q/A-11 of this section. However, in certain circumstances, described in paragraphs (b) and (c) of this A-24, only a portion of the payment is treated as contingent on the change. Paragraph (b) of this A-24 applies to a payment that is vested, without regard to the change in ownership or control, and is treated as contingent on the change in ownership or control because the change accelerates the time at which the payment is made. Paragraph (c) of this A-24 applies to a payment that becomes vested as a result of the change in ownership or control if, without regard to the change in ownership or control, the payment was contingent only on the continued performance of services for the corporation for a specified period of time and if the payment is attributable, at least in part, to services performed before the date the payment becomes vested. Paragraph (b) or (c) does not apply to any payment (or portion thereof) if the payment is treated as contingent on the change in ownership or control pursuant to Q/A-25 of this section. For purposes of this A-24, vested has the same meaning as provided in Q/A-22(a).

(2) *Reduction by reasonable compensation.* The amount of a payment under paragraph (a)(1) of this A-24 is reduced by any portion of such payment that the taxpayer establishes by clear and convincing evidence is reasonable compensation for personal services rendered by the disqualified individual on or after the date of the change of control. *See* Q/A-9 and Q/A-38 through 44 of this section for rules concerning reasonable compensation. The portion of an amount treated as contingent under paragraph (b) or (c) of this A-24 may not be reduced by reasonable compensation.

(b) *Vested payments.* This paragraph (b) applies if a payment is vested, without regard to the change in ownership or control, and is treated as contingent on the change in ownership or control because the change accelerates the time at which the payment is made. In such a case, the portion of the payment, if any, that is treated as contingent on the change in ownership or control is the amount by which the amount of the accelerated payment exceeds the present value of the payment absent the acceleration. If the value of such a payment absent the acceleration is not reasonably ascertainable, and the acceleration of the payment does not significantly increase the present value of the payment absent the acceleration, the present value of the payment absent the acceleration is treated as equal to the amount of the accelerated payment. If the value of the payment absent the acceleration is not reasonably ascertainable, but the acceleration significantly increases the present value of the payment, the future value of such payment is treated as equal to the amount of the accelerated payment. For rules on determining present value, *see* paragraph (e) of this A-24, Q/A-32, and Q/A-33 of this section.

(c)(1) *Nonvested payments.* This paragraph (c) applies to a payment that becomes vested as a result of the change in ownership or control to the extent that—

(i) Without regard to the change in ownership or control, the payment was contingent only on the continued performance of services for the corporation for a specified period of time; and

(ii) The payment is attributable, at least in part, to the performance of services before the date the payment is made or becomes certain to be made.

(2) The portion of the payment subject to paragraph (c) of this A-24 that is treated as contingent on the change in ownership or control is the amount described in paragraph (b) of this A-24, plus an amount, as determined in paragraph (c)(4) of this A-24, to reflect the lapse of the obligation to continue to perform services. In no event

can the portion of the payment treated as contingent on the change in ownership or control under this paragraph (c) exceed the amount of the accelerated payment, or, if the payment is not accelerated, the present value of the payment.

(3) For purposes of this paragraph (c) of this A-24, the acceleration of the vesting of a stock option or the lapse of a restriction on restricted stock is considered to significantly increase the value of a payment.

(4) The amount reflecting the lapse of the obligation to continue to perform services (described in paragraph (c)(2) of this A-24) is 1 percent of the amount of the accelerated payment multiplied by the number of full months between the date that the individual's right to receive the payment is vested and the date that, absent the acceleration, the payment would have been vested. This paragraph (c)(4) applies to the accelerated vesting of a payment in the nature of compensation even if the time at which the payment is made is not accelerated. In such a case, the amount reflecting the lapse of the obligation to continue to perform services is 1 percent of the present value of the future payment multiplied by the number of full months between the date that the individual's right to receive the payment is vested and the date that, absent the acceleration, the payment would have been vested.

(d) *Application of this A-24 to certain payments*—(1) *Benefits under a nonqualified deferred compensation plan.* In the case of a payment of benefits under a nonqualified deferred compensation plan, paragraph (b) of this A-24 applies to the extent benefits under the plan are vested without regard to the change in ownership or control. Paragraph (c) of this A-24 applies to the extent benefits under the plan become vested as a result of the change in ownership or control and are attributable, at least in part, to the performance of services prior to vesting. Any other payment of benefits under a nonqualified deferred compensation plan is a payment in the nature of compensation subject to the general rule of paragraph (a) of this A-24 and the rules in Q/A-11 of this section.

(2) *Employment agreements.* The general rule of paragraph (a) of this A-24 (and not the rules in paragraphs (b) or (c)) applies to the payment of amounts due under an employment agreement on a termination of employment or a change in ownership or control that otherwise would be attributable to the performance of services (or refraining from the performance of services) during any period that begins after the date of termination of employment or change in ownership or control, as applicable. For purposes of this paragraph (d)(2) of this A-24, an employment agreement means an agreement between an employee or independent contractor and employer or service recipient which describes, among other things, the amount of compensation or remuneration payable to the employee or independent contractor. *See* Q/A-42(b) and 44 of this section for the treatment of the remaining amounts of salary under an employment agreement.

(3) *Vesting due to an event other than services.* Neither paragraph (b) nor (c) of this A-24 applies to a payment if (without regard to the change in ownership or control) vesting of the payment depends on an event other than the performance of services, such as the attainment of a performance goal, and the event does not occur prior to the change in ownership or control. In such circumstances, the full amount of the accelerated payment is treated as contingent on the change in ownership or control under paragraph (a) of this A-24. However, *see* Q/A-39 of this section for rules relating to the reduction of the excess parachute payment by the portion of the payment which is established to be reasonable compensation for personal services actually rendered before the date of a change in ownership or control.

(e) *Present value.* For purposes of this A-24, the present value of a payment is determined as of the date on which the accelerated payment is made.

(f) *Examples.* The following examples illustrate the principles of this A-24:

Example 1. (i) Corporation maintains a qualified plan and a nonqualified supplemental retirement plan (SERP) for its executives. Benefits under the SERP are not paid to participants until retirement. E, a disqualified individual with respect to Corporation, has a vested account balance of $500,000 under the SERP. A change in ownership or control of Corporation occurs. The SERP provides that in the event of a change in ownership or control, all vested accounts will be paid to SERP participants.
(ii) Because E was vested in $500,000 of benefits under the SERP prior to the change in ownership or control and the change merely accelerated the time at which the payment was made to E, only a portion of the payment, as determined under paragraph (b) of this A-24, is treated as contingent on the change. Thus, the portion of the payment that is treated as contingent on the change is the amount by which the amount of the accelerated payment ($500,000) exceeds the present value of the payment absent the acceleration.

(iii) Assume the same facts as in paragraph (i) of this *Example 1,* except that E's account balance of $500,000 is not vested. Instead, assume that E will vest in E's account balance of $500,000 in 2 years if E continues to perform services for the next 2 years. Assume further that the SERP provides that all unvested SERP benefits vest immediately on a change in ownership or control and are paid to the participants. Because the vesting of the SERP payment, without regard to the change, depends only on the performance of services for a specified period of time and the payment is attributable, in part, to the performance of services before the change in ownership or control, only a portion of the $500,000 payment, as determined under paragraph (c) of this A-24, is treated as contingent on the change. The portion of the payment that is treated as contingent on the change is the lesser of the amount of the accelerated payment or the amount by which the accelerated payment exceeds the present value of the payment absent the acceleration, plus an amount to reflect the lapse of the obligation to continue to perform services.

(iv) Assume the same facts as in paragraph (i) of this *Example 1,* except that in addition to the pay out of the vested account balance of $500,000 on the change in ownership or control, an additional $70,000 will be credited to E's account and included in the payment to E. Because the $500,000 was vested without regard to the change in ownership or control, paragraph (b) of this A-24 applies to the $500,000 payment. Because the $70,000 is not vested, without regard to the change, and is not attributable to the performance of services prior to the change, the entire $70,000 payment is contingent on the change in ownership or control under paragraph (a) of this A-24.

(v) Assume the same facts as in paragraph (i) of this *Example 1,* except that the benefit under the SERP is calculated using a percentage of final average compensation multiplied by years of service. If, contingent on the change in ownership or control, E is credited with additional years of service, an adjustment to final average compensation, or an increase in the applicable percentage, any increase in

the benefit payable under the SERP is not attributable to the performance of services prior to the change, and the entire increase in the benefit is contingent on the change in ownership or control under paragraph (a) of this A-24.

Example 2. As a result of a change in the effective control of a corporation D, a disqualified individual with respect to the corporation, receives accelerated payment of D's vested account balance in a nonqualified deferred compensation account plan. Actual interest and other earnings on the plan assets are credited to each account as earned before distribution. Investment of the plan assets is not restricted in such a manner as would prevent the earning of a market rate of return on the plan assets. The date on which D would have received D's vested account balance absent the change in ownership or control is uncertain, and the rate of earnings on the plan assets is not fixed. Thus, the amount of the payment absent the acceleration is not reasonably ascertainable. Under these facts, acceleration of the payment does not significantly increase the present value of the payment absent the acceleration, and the present value of the payment absent the acceleration is treated as equal to the amount of the accelerated payment. Accordingly, no portion of the payment is treated as contingent on the change.

Example 3. (i) On January 15, 2006, a corporation and a disqualified individual, F, enter into a contract providing for a retention bonus of $500,000 to be paid to F on January 15, 2011. The payment of the bonus will be forfeited by F if F does not remain employed by the corporation for the entire 5-year period. However, the contract provides that the full amount of the payment will be made immediately on a change in ownership or control of the corporation during the 5-year period. On January 15, 2009, a change in ownership or control of the corporation occurs and the full amount of the payment ($500,000) is made on that date to F. Under these facts, the payment of $500,000 was contingent only on F's performance of services for a specified period and is attributable, in part, to the performance of services before the change in ownership or control. Therefore, only a portion of the payment, as determined under paragraph (c) of this A-24 is treated as contingent on the change. The portion of the payment that is treated as contingent on the change is the amount by which the amount of the accelerated payment (*i.e.,* $500,000, the amount paid to the individual because of the change in ownership) exceeds the present value of the payment that was expected to have been made absent the acceleration (*i.e.,* $406,838, the present value on January 15, 2009, of a $500,000 payment on January 15, 2011), plus $115,000 (1 percent × 23 months × $500,000) which is the amount reflecting the lapse of the obligation to continue to perform services. Accordingly, the amount of the payment treated as contingent on the change in ownership or control is $208,162, the sum of $93,162 ($500,000−$406,838) + $115,000). This result does not change if F actually remains employed until the end of the 5-year period.
(ii) Assume the same facts as in paragraph (i) of this *Example 3,* except that the retention bonus will vest on the change in ownership or control, but will not be paid until January 15, 2011 (the original date in the contract). Because the payment of $500,000 was contingent only on F's performance of services for a specified period and is attributable, in part, to the performance of services before the

change in ownership or control, only a portion of the $500,000 payment is treated as contingent on the change in ownership or control as determined under paragraph (c) of this A-24. Because there is accelerated vesting of the bonus, the portion of the payment treated as contingent on the change is the amount described in paragraph (b) of this A-27, which is $0 under these facts, plus an amount reflecting the lapse of the obligation to continue to perform services which is $93,573 (1 percent × 23 months × $406,838 (the present value of a $500,000 payment).

Example 4. (i) On January 15, 2006, a corporation gives to a disqualified individual, in connection with her performance of services to the corporation, a bonus of 1,000 shares of the corporation's stock. Under the terms of the bonus arrangement, the individual is obligated to return the stock to the corporation if she terminates her employment for any reason prior to January 15, 2011. However, if there is a change in the ownership or effective control of the corporation prior to January 15, 2011, she ceases to be obligated to return the stock. The individual's rights in the stock are treated as substantially nonvested (within the meaning of § 1.83-3(b) and (j)) during that period. On January 15, 2009, a change in the ownership of the corporation occurs. On that day, the fair market value of the stock is $500,000.
(ii) Under these facts, the payment was contingent only on performance of services for a specified period and is attributable, in part, to the performance of services before the change in ownership or control. Thus, only a portion of the payment, as determined under paragraph (c) of this A-24, is treated as contingent on the change in ownership or control. The portion of the payment that is treated as contingent on the change is the amount by which the present value of the accelerated payment on January 15, 2009 ($500,000), exceeds the present value of the payment that was expected to have been made on January 15, 2011, plus an amount reflecting the lapse of the obligation to continue to perform services. At the time of the change, it cannot be reasonably ascertained what the value of the stock would have been on January 15, 2011. The acceleration of the lapse of a restriction on stock is treated as significantly increasing the value of the payment. Therefore, the value of such stock on January 15, 2011, is deemed to be $500,000, the amount of the accelerated payment. The present value on January 15, 2009, of a $500,000 payment to be made on January 15, 2011, is $406,838. Thus, the portion of the payment treated as contingent on the change is $208,162, the sum of $93,162 ($500,000−$406,838), plus $115,000 (1 percent × 23 months × $500,000), the amount reflecting the lapse of the obligation to continue to perform services.

Example 5. (i) On January 15, 2006, a corporation grants to a disqualified individual nonqualified stock options to purchase 30,000 shares of the corporation's stock. The options will be forfeited by the individual if he fails to perform personal services for the corporation until January 15, 2009. The options will, however, vest in the individual at an earlier date if there is a change in ownership or control of the corporation. On January 16, 2008, a change in the ownership or control of the corporation occurs and the options become vested in the individual. The value of the options on January 16, 2008, determined in accordance with Q/A-13, is $600,000.

(ii) The payment of the options to purchase 30,000 shares was contingent only on performance of services for the corporation until January 15, 2009, and is attributable, in part, to the performance of services before the change in ownership or control. Therefore, only a portion of the payment is treated as contingent on the change. The portion of the payment that is treated as contingent on the change is the amount by which the accelerated payment on January 16, 2008 ($600,000) exceeds the present value on January 16, 2008, of the payment that was expected to have been made on January 15, 2009, absent the acceleration, plus an amount reflecting the lapse of the obligation to continue to perform services. At the time of the change, it cannot be reasonably ascertained what the value of the options would have been on January 15, 2009. The acceleration of vesting in the options is treated as significantly increasing the value of the payment. Therefore, the value of such options on January 15, 2009, is deemed to be $600,000, the amount of the accelerated payment. The present value on January 16, 2008, of a $600,000 payment to be made on January 15, 2009, is $549,964. Thus, the portion of the payment treated as contingent on the change is $116,036, the sum of $50,036 ($600,000−$549,964), plus an amount reflecting the lapse of the obligation to continue to perform services which is $66,000 (1 percent × 11 months × $600,000).

Example 6. (i) Assume the same facts as in *Example 5,* except that the options become vested periodically (absent a change in ownership or control), with one-third of the options vesting on January 15, 2007, 2008, and 2009, respectively. Thus, options to purchase 20,000 shares vest independently of the January 16, 2008, change in ownership or control and the options to purchase the remaining 10,000 shares vest as a result of the change in ownership or control.
(ii) The payment of the options to purchase 10,000 shares was contingent only on performance of services for the corporation until January 15, 2009, and is attributable, in part, to the performance of services before the change in ownership or control. Therefore, only a portion of the payment as determined under paragraph (c) of this A-24 is treated as contingent on the change in ownership or control. The portion of the payment that is treated as contingent on the change in ownership or control is the amount by which the accelerated payment on January 16, 2008 ($200,000) exceeds the present value on January 16, 2008, of the payment that was expected to have been made on January 15, 2009, absent the acceleration, plus an amount reflecting the lapse of the obligation to perform services. At the time of the change in ownership or control, it cannot be reasonably ascertained what the value of the options would have been on January 15, 2009. The acceleration of vesting in the options is treated as significantly increasing the value of the payment. Therefore, the value of such options on January 15, 2009, is deemed to be $200,000, the amount of the accelerated payment. The present value on January 16, 2008, of a $200,000 payment to be made on January 15, 2009, is $183,328.38. Thus, the portion of the payment treated as contingent on the change is $38,671.62, the sum of $16,671.62 ($200,000−$183,328.38), plus an amount reflecting the lapse of the obligation to continue to perform services which is $22,000 (1 percent × 11 months × $200,000).

Example 7. Assume the same facts as in *Example 5,* except that the option agreement provides that the options will vest either on the corporation's level of profits reaching a specified level, or if

earlier, on the date on which there is a change in ownership or control of the corporation. The corporation's level of profits do not reach the specified level prior to January 16, 2008. In such case, the full amount of the payment, $600,000, is treated as contingent on the change in ownership or control under paragraph (a) of this A-24. Because the payment was not contingent only on the performance of services for the corporation for a specified period, the rules of paragraph (b) and (c) of this A-24 do not apply. See Q/A-39 of this section for rules relating to the reduction of the excess parachute payment by the portion of the payment which is established to be reasonable compensation for personal services actually rendered before the date of a change in ownership or control.

Example 8. On January 1, 2005, E, a disqualified individual with respect to Corporation X, enters into an employment agreement with Corporation X under which E will be paid wages of $200,000 each year during the 5-year employment agreement. The employment agreement provides that if a change in ownership or control of Corporation X occurs, E will be paid the present value of the remaining salary under the employment agreement. On January 1, 2006, a change in ownership or control of Corporation X occurs, E is terminated, and E receives a payment of the present value of $200,000 for each of the 4 years remaining under the employment agreement. Because the payment represents future salary under an employment agreement (*i.e.,* amounts otherwise attributable to the performance of services for periods that begin after the termination of employment), the general rule of paragraph (a) of this A-24 applies to the payment and not the rules of paragraphs (b) and (c) of this A-24. See Q/A-42(c) and 44 of this section for the treatment of the remaining payments under an employment agreement.

Presumption That Payment Is Contingent on Change

Q-25: Is there a presumption that certain payments are contingent on a change in ownership or control?

A-25: Yes, for purposes of this section, any payment is presumed to be contingent on such a change unless the contrary is established by clear and convincing evidence if the payment is made pursuant to—

(a) An agreement entered into within one year before the date of a change in ownership or control; or

(b) An amendment that modifies a previous agreement in any significant respect, if the amendment is made within one year before the date of a change in ownership or control. In the case of an amendment described in paragraph (b) of this A-25, only the portion of any payment that exceeds the amount of such payment that would have been made in the absence of the amendment is presumed, by reason of the amendment, to be contingent on the change in ownership or control.

Q-26: How may the presumption described in Q/A-25 of this section be rebutted?

A-26: (a) To rebut the presumption described in Q/A-25 of this section, the taxpayer must establish by clear and convincing evidence that the payment is not contingent on the change in ownership or control. Whether the payment is contingent on such change is determined on the basis of all the facts and circumstances of the

particular case. Factors relevant to such a determination include, but are not limited to, the content of the agreement or amendment and the circumstances surrounding the execution of the agreement or amendment, such as whether it was entered into at a time when a takeover attempt had commenced and the degree of likelihood that a change in ownership or control would actually occur. However, even if the presumption is rebutted with respect to an agreement, some or all of the payments under the agreement may still be contingent on the change in ownership or control pursuant to Q/A-22 of this section.

(b) In the case of an agreement described in Q/A-25 of this section, clear and convincing evidence that the agreement is one of the three following types will generally rebut the presumption that payments under the agreement are contingent on the change in ownership or control—

(1) A *nondiscriminatory employee plan or program as defined* in paragraph (c) of this A-26;

(2) A contract between a corporation and an individual that replaces a prior contract entered into by the same parties more than one year before the change in ownership or control, if the new contract does not provide for increased payments (apart from normal increases attributable to increased responsibilities or cost of living adjustments), accelerate the payment of amounts due at a future time, or modify (to the individual's benefit) the terms or conditions under which payments will be made; or

(3) A contract between a corporation and an individual who did not perform services for the corporation prior to the one year period before the change in ownership or control occurs, if the contract does not provide for payments that are significantly different in amount, timing, terms, or conditions from those provided under contracts entered into by the corporation (other than contracts that themselves were entered into within one year before the change in ownership or control and in contemplation of the change) with individuals performing comparable services.

(c) For purposes of this section, the term *nondiscriminatory employee plan or program* means: a group term life insurance plan that meets the requirements of section 79(d); a self insured medical reimbursement plan that meets the requirements of section 105(h); a cafeteria plan (within the meaning of section 125); an educational assistance program (within the meaning of section 127); a dependent care assistance program (within the meaning of section 129); a no-additional-cost service (within the meaning of section 132(b)) or qualified employee discount (within the meaning of section 132(c)); a qualified retirement planning services program under section 132(m); an adoption assistance program (within the meaning of section 137); and such other items as provided by the Commissioner in published guidance of general applicability under § 601.601(d)(2). Payments under certain other plans are exempt from the definition of *parachute payment* under Q/A-8 of this section.

(d) The following examples illustrate the application of the presumption:

Example 1. A corporation and a disqualified individual who is an employee of the corporation enter into an employment contract. The contract replaces a prior contract entered into by the same parties more than one year before the change in ownership or control and the new contract does not provide for any increased payments other than a cost of living adjustment, does not accelerate the payment of amounts due at a future time, and does not modify (to the individual's benefit) the terms or conditions under which payments will be made. Clear and convincing evidence of these facts rebuts the presumption described in A-25 of this section. However, payments under the contract still may be

contingent on the change in ownership or control pursuant to Q/A-22 of this section.

Example 2. Assume the same facts as in *Example 1,* except that the contract is entered into after a tender offer for the corporation's stock had commenced and it was likely that a change in ownership or control would occur and the contract provides for a substantial bonus payment to the individual upon his signing the contract. The individual has performed services for the corporation for many years, but previous employment contracts between the corporation and the individual did not provide for a similar signing bonus. One month after the contract is entered into, a change in the ownership or control of the corporation occurs. All payments under the contract are presumed to be contingent on the change in ownership or control even though the bonus payment would have been legally required even if no change had occurred. Clear and convincing evidence of these facts rebuts the presumption described in A-25 of this section with respect to all of the payments under the contract with the exception of the bonus payment (which is treated as contingent on the change). However, payments other than the bonus under the contract still may be contingent on the change in ownership or control pursuant to Q/A-22 of this section.

Example 3. A corporation and a disqualified individual, who is an employee of the corporation, enter into an employment contract within one year of a change in ownership or control of the corporation. Under the contract, in the event of a change in ownership or control and subsequent termination of employment, certain payments will be made to the individual. A change in ownership or control occurs, but the individual is not terminated until 2 years after the change in ownership or control. If clear and convincing evidence does not rebut the presumption described in A-25 of this section, because the payment is made pursuant to an agreement entered into within one year of the date of the change in ownership or control, the payment is presumed contingent on the change under A-25 of this section. This is true even though A's termination of employment is presumed not to be materially related to the change in ownership or control under Q/A-22 of this section.

Change in Ownership or Control

Q-27: When does a change in the ownership of a corporation occur?

A-27: (a) For purposes of this section, a change in the ownership of a corporation occurs on the date that any one person, or more than one person acting as a group (as defined in paragraph (b) of this A-27), acquires ownership of stock of the corporation that, together with stock held by such person or group, has more than 50 percent of the total fair market value or total voting power of the stock of such corporation. However, if any one person, or more than one person acting as a group, is considered to own more than 50 percent of the total fair market value or total voting power of the stock of a corporation, the acquisition of additional stock by the same person or persons is not considered to cause a change in the ownership of the corporation (or to cause a change in the effective control of the corporation (within the meaning of Q/A-28 of this section)). An increase in the percentage of stock owned by any one person, or persons acting as a group, as a result of a transaction in which the corporation acquires its stock in exchange for property will be treated as an acquisition of stock

for purposes of this section. This A-27 applies only when there is a transfer of stock of a corporation (or issuance of stock of a corporation) and stock in such corporation remains outstanding after the transaction. (*See* Q/A-29 for rules regarding the transfer of assets of a corporation).

(b) For purposes of paragraph (a) of this A-27, persons will not be considered to be acting as a group merely because they happen to purchase or own stock of the same corporation at the same time, or as a result of the same public offering. However, persons will be considered to be acting as a group if they are owners of a corporation that enters into a merger, consolidation, purchase or acquisition of stock, or similar business transaction with the corporation. If a person, including an entity shareholder, owns stock in both corporations that enter into a merger, consolidation, purchase or acquisition of stock, or similar transaction, such shareholder is considered to be acting as a group with other shareholders in a corporation only with respect to the ownership in that corporation prior to the transaction giving rise to the change and not with respect to the ownership interest in the other corporation.

(c) For purposes of this A-27 (and Q/A-28 and 29), section 318(a) applies to determine stock ownership. Stock underlying a vested option is considered owned by the individual who holds the vested option (and the stock underlying an unvested option is not considered owned by the individual who holds the unvested option). For purposes of the preceding sentence, however, if the option is exercisable for stock that is not substantially vested (as defined by sections 1.83-3(b) and (j)), the stock underlying the option is not treated as owned by the individual who holds the option. In addition, mutual and cooperative corporations are treated as having stock for purposes of this A-27.

(d) The following examples illustrate the principles of this A-27:

Example 1. Corporation M has owned stock with a fair market value equal to 19 percent of the value of the stock of Corporation N (an otherwise unrelated corporation) for many years prior to 2006. Corporation M acquires additional stock with a fair market value equal to 15 percent of the value of the stock of Corporation N on January 1, 2006, and an additional 18 percent on February 21, 2007. As of February 21, 2007, Corporation M has acquired stock with a fair market value greater than 50 percent of the value of the stock of Corporation N. Thus, a change in the ownership of Corporation N is considered to occur on February 21, 2007 (assuming that Corporation M did not have effective control of Corporation N immediately prior to the acquisition on that date).

Example 2. All of the corporation's stock is owned by the founders of the corporation. The board of directors of the corporation decides to offer shares of the corporation to the public. After the public offering, the founders of the corporation own a total of 40 percent of the corporation's stock, and members of the public own 60 percent. If no one person (or more than one person acting as a group) owns more than 50 percent of the corporation's stock (by value or voting power) after the public offering, there is no change in the ownership of the corporation.

Example 3. Corporation P merges into Corporation O (a previously unrelated corporation). In the merger, the shareholders of Corporation P receive Corporation O stock in exchange for their Corporation P stock. Immediately after the merger, the former shareholders of Corporation P own

stock with a fair market value equal to 60 percent of the value of the stock of Corporation O, and the former shareholders of Corporation O own stock with a fair market value equal to 40 percent of the value of the stock of Corporation O. The former shareholders of Corporation P will be treated as acting as a group in their acquisition of Corporation O stock. Thus, a change in the ownership of Corporation O occurs on the date of the merger. See Q/A-29, *Example 3,* regarding whether there is a change in ownership or control of P.

Example 4. Assume the same facts as in *Example 3,* except that immediately after the change, the former shareholders of Corporation P own stock with a fair market value of 51 percent of the value of Corporation O stock and the former shareholders of Corporation O own stock with a fair market value equal to 49 percent of the value of Corporation O stock. Assume further that prior to the merger several Corporation O shareholders also owned Corporation P stock (overlapping shareholders). In the merger, those O shareholders received additional O stock by virtue of their ownership of P stock with a fair market value of 5 percent of the value of Corporation O stock. Including the O stock attributable to the P shares, the O shareholders hold 54 percent of O after the transaction. However, those overlapping shareholders that owned both Corporation O stock and Corporation P stock prior to the merger are treated as acting as a group with the Corporation O shareholders only with respect to their ownership interest in Corporation O prior to the transaction. Therefore, because the Corporation O shareholders owned 49 percent of the value of Corporation O stock, a change in the ownership of Corporation O occurs on the date of the merger. See Q/A-29, *Example 3,* regarding whether there is a change in ownership or control of P.

Example 5. A, an individual, owns stock with a fair market value equal to 20 percent of the value of the stock of Corporation Q. On January 1, 2007, Corporation Q acquires in a redemption for cash all of the stock held by shareholders other than A. Thus, A is left as the sole shareholder of Corporation O. A change in ownership of Corporation O is considered to occur on January 1, 2007 (assuming that A did not have effective control of Corporation Q immediately prior to the redemption).

Example 6. Assume the same facts as in *Example 5,* except that A owns stock with a fair market value equal to 51 percent of the value of all the stock of Corporation Q immediately prior to the redemption. There is no change in the ownership of Corporation Q as a result of the redemption.

Q-28: When does a change in the effective control of a corporation occur?

A-28: (a) Notwithstanding that a corporation has not undergone a change in ownership under Q/A-27, for purposes of this section, a change in the effective control of a corporation is presumed to occur on the date that either—

(1) Any one person, or more than one person acting as a group (as determined under paragraph (e) of this A-28), acquires (or has acquired during the 12-month period ending on the date of the most recent acquisition by such person or persons) ownership of stock of the corporation possessing 20 percent or more of the total voting power of the stock of such corporation; or

(2) A majority of members of the corporation's board of directors is replaced during any 12-month period by directors whose appointment or election is not endorsed by a majority of the members of the corporation's board of directors prior to the date of the appointment or election.

(b) The presumption of paragraph (a) of this A-28 may be rebutted by establishing that such acquisition or acquisitions of the corporation's stock, or such replacement of the majority of the members of the corporation's board of directors, does not transfer the power to control (directly or indirectly) the management and policies of the corporation from any one person (or more than one person acting as a group) to another person (or group). For purposes of this section, in the absence of an event described in paragraph (a)(1) or (2) of this A-28, a change in the effective control of a corporation is presumed not to have occurred.

(c) In no event does a change in effective control under this A-28 occur in any transaction in which either of the two corporations involved in the transaction has a change in ownership or control under Q/A-27 or 29 of this section. Thus, for example, assume Corporation P transfers more than one-third of the total gross fair market value of its assets to Corporation O in exchange for 20 percent of O's stock. Because P has undergone a change in ownership of a substantial portion of its assets under Q/A-29 of this section, O does not have a change in effective control under Q/A-28.

(d) If any one person, or more than one person acting as a group, is considered to effectively control a corporation (within the meaning of this A-28), the acquisition of additional control of the corporation by the same person or persons is not considered to cause a change in the effective control of the corporation (or to cause a change in the ownership of the corporation within the meaning of Q/A-27 of this section).

(e) For purposes of this A-28, persons will not be considered to be acting as a group merely because they happen to purchase or own stock of the same corporation at the same time, or as a result of the same public offering. However, persons will be considered to be acting as a group if they are owners of a corporation that enters into a merger, consolidation, purchase or acquisition of stock, or similar business transaction with the corporation. If a person, including an entity shareholder, owns stock in both corporations that enter into a merger, consolidation, purchase or acquisition of stock, or similar transaction, such shareholder is considered to be acting as a group with other shareholders in a corporation only with respect to the ownership in that corporation prior to the transaction giving rise to the change and not with respect to the ownership interest in the other corporation.

(f) For purposes of determining stock ownership, *see* Q/A-27(c).

(g) The following examples illustrate the principles of this A-28:

Example 1. Shareholder A acquired the following percentages of the voting stock of Corporation M (an otherwise unrelated corporation) on the following dates: 16 percent on January 1, 2005; 10 percent on January 10, 2006; 8 percent on February 10, 2006; 11 percent on March 1, 2007; and 8 percent on March 10, 2007. Thus, on March 10, 2007, A owns a total of 53 percent of M's voting stock.

Because A did not acquire 20 percent or more of M's voting stock during any 12-month period, there is no presumption of a change in effective control pursuant to paragraph (a)(1) of this A-28. In addition, under these facts there is a presumption that no change in the effective control of Corporation M occurred. If this presumption is not rebutted (and thus no change in effective control of Corporation M is treated as occurring prior to March 10, 2007), a change in the ownership of Corporation M is treated as having occurred on March 10, 2007 (pursuant to Q/A-27 of this section) because A had acquired more than 50 percent of Corporation M's voting stock as of that date.

Example 2. A minority group of shareholders of a corporation opposes the practices and policies of the corporation's current board of directors. A proxy contest ensues. The minority group presents its own slate of candidates for the board at the next annual meeting of the corporation's shareholders, and candidates of the minority group are elected to replace a majority of the current members of the board. A change in the effective control of the corporation is presumed to have occurred on the date the election of the new board of directors becomes effective.

Q-29: When does a change in the ownership of a substantial portion of a corporation's assets occur?

A-29: (a) For purposes of this section, a change in the ownership of a substantial portion of a corporation's assets occurs on the date that any one person, or more than one person acting as a group (as determined in paragraph (c) of this A-29), acquires (or has acquired during the 12-month period ending on the date of the most recent acquisition by such person or persons) assets from the corporation that have a total gross fair market value equal to or more than one-third of the total gross fair market value of all of the assets of the corporation immediately prior to such acquisition or acquisitions. For this purpose, *gross fair market value* means the value of the assets of the corporation, or the value of the assets being disposed of, determined without regard to any liabilities associated with such assets. This A-29 applies in any situation other than one involving the transfer of stock (or issuance of stock) in a parent corporation and stock in such corporation remains outstanding after the transaction. Thus, this A-29 applies to the sale of stock in a subsidiary (when that subsidiary is treated as a single corporation with the parent pursuant to Q/A-46) and to mergers involving the creation of a new corporation or with respect to the corporation that is not surviving entity.

(b) (1) There is no change in ownership or control under this A-29 when there is a transfer to an entity that is controlled by the shareholders of the transferring corporation immediately after the transfer, as provided in this paragraph (b). A transfer of assets by a corporation is not treated as a change in the ownership of such assets if the assets are transferred to—

(i) A shareholder of the corporation (immediately before the asset transfer) in exchange for or with respect to its stock;

(ii) An entity, 50 percent or more of the total value or voting power of which is owned, directly or indirectly, by the corporation;

(iii) A person, or more than one person acting as a group, that owns, directly or indirectly, 50 percent or more of the total value or voting power of all the outstanding stock of the corporation; or

(iv) An entity, at least 50 percent of the total value or voting power is owned, directly or indirectly, by a person described in paragraph (b)(1)(iii) of this A-29.

(2) For purposes of paragraph (b) and except as otherwise provided, a person's status is determined immediately after the transfer of the assets. For example, a transfer to a corporation in which the transferor corporation has no ownership interest in before the transaction, but which is a majority-owned subsidiary of the transferor corporation after the transaction is not treated as a change in the ownership of the assets of the transferor corporation.

(c) For purposes of this A-29, persons will not be considered to be acting as a group merely because they happen to purchase assets of the same corporation at the same time, or as a result of the same public offering. However, persons will be considered to be acting as a group if they are owners of a corporation that enters into a merger, consolidation, purchase or acquisition of assets, or similar business transaction with the corporation. If a person, including an entity shareholder, owns stock in both corporations that enter into a merger, consolidation, purchase or acquisition of stock, or similar transaction, such shareholder is considered to be acting as a group with other shareholders in a corporation only to the extent of the ownership in that corporation prior to the transaction giving rise to the change and not with respect to the ownership interest in the other corporation.

(d) For purposes of determining stock ownership, see Q/A-27(c).

(e) The following examples illustrate the principles of this A-29:

Example 1. Corporation M acquires assets having a gross fair market value of $500,000 from Corporation N (an unrelated corporation) on January 1, 2006. The total gross fair market value of Corporation N's assets immediately prior to the acquisition was $3 million. Since the value of the assets acquired by Corporation M is less than one-third of the total gross fair market value of Corporation N's total assets immediately prior to the acquisition, the acquisition does not represent a change in the ownership of a substantial portion of Corporation N's assets.

Example 2. Assume the same facts as in *Example 1.* Also assume that on November 1, 2006, Corporation M acquires from Corporation N additional assets having a fair market value of $700,000. Thus, Corporation M has acquired from Corporation N assets worth a total of $1.2 million during the 12-month period ending on November 1, 2006. Since $1.2 million is more than one-third of the total gross fair market value of all of Corporation N's assets immediately prior to the earlier of these acquisitions ($3 million), a change in the ownership of a substantial portion of Corporation N's assets is considered to have occurred on November 1, 2006.

Example 3. (i) All of the assets of Corporation P are transferred to Corporation O (an unrelated corporation). In exchange, the shareholders of Corporation P receive Corporation O stock. Immediately after the transfer, the former shareholders of Corporation P own 60 percent of the fair market value of the outstanding stock of Corporation O and the former shareholders of Corporation O own 40 percent of the fair market value of the outstanding stock of Corporation O. Because Corporation O is an entity

> more than 50 percent of the fair market value of the outstanding stock of which is owned by the former shareholders of Corporation P (based on ownership of Corporation P prior the change), the transfer of assets is not treated as a change in ownership of a substantial portion of the assets of Corporation P. However, a change in the ownership (within the meaning of Q/A-27) of Corporation O occurs.

(ii) The result in paragraph (i) would be the same if immediately after the change, the former shareholders of Corporation P own stock with a fair market value of 51 percent of the value of Corporation O stock because Corporation O is an entity more than 50 percent of the fair market value of the outstanding stock of which is owned by the former shareholders of Corporation P. See Q/A-27, *Example 4,* regarding whether there is a change in ownership or control of O.

> *Example 4.* Corporation P sells all of the stock of its wholly-owned subsidiary, S, to Corporation Y. The fair market value of the affiliated group, determined without regard to its liabilities, is $210 million. The fair market value of S, determined without regard to its liabilities, is $80 million. Because there is a change in more than one-third of the gross fair market value of the total assets of the affiliated group, there is a change in the ownership of a substantial portion of the assets of the affiliated group.

Three-Times-Base-Amount Test for Parachute Payments

Q-30: Are all payments that are in the nature of compensation, are made to a disqualified individual, and are contingent on a change in ownership or control, parachute payments?

A-30: (a) No. To determine whether such payments are parachute payments, they must be tested against the individual's *base amount* (as defined in Q/A-34 of this section). To do this, the aggregate present value of all payments in the nature of compensation that are made or to be made to (or for the benefit of) the same disqualified individual and are contingent on the change in ownership or control must be determined. If this aggregate present value equals or exceeds the amount equal to 3 times the individual's base amount, the payments are parachute payments. If this aggregate present value is less than the amount equal to 3 times the individual's base amount, no portion of the payment is a parachute payment. See Q/A-31, Q/A-32, and Q/A-33 of this section for rules on determining present value. Parachute payments that are securities violation parachute payments are not included in the foregoing computation if they are not contingent on a change in ownership or control. See Q/A-37 of this section for the definition and treatment of securities violation parachute payments.

(b) The following examples illustrate the principles of this A-30:

> *Example 1.* A is a disqualified individual with respect to Corporation M. A's base amount is $100,000. Payments in the nature of compensation that are contingent on a change in the ownership or control of Corporation M totaling $400,000 are made to A on the date of the change in ownership or control. The payments are parachute payments because they have an aggregate present value at least equal to 3 times A's base amount of $100,000 (3 × x$100,000 = $300,000).

Example 2. Assume the same facts as in *Example 1,* except that the payments contingent on the change in the ownership or control of Corporation M total $290,000. Because the payments do not have an aggregate present value at least equal to 3 times A's base amount, no portion of the payments is a parachute payment.

Q-31: As of what date is the present value of a payment determined?

A-31: (a) Except as provided in this section, the present value of a payment is determined as of the date on which the change in ownership or control occurs, or, if a payment is made prior to such date, the date on which the payment is made.

(b)(1) For purposes of determining whether a payment is a parachute payment, if a payment in the nature of compensation is the right to receive payments in a year (or years) subsequent to the year of the change in ownership or control, the value of the payment is the present value of such payment (or payments) calculated in accordance with Q/A-32 of this section and based on reasonable actuarial assumptions.

(2) If the payment in the nature of compensation is an obligation to provide health care, then for purposes of this A-31 and for applying the 3-times-base-amount test under Q/A-30 of this section, the present value of such obligation should be calculated in accordance with generally accepted accounting principles. For purposes of Q/A-30 and this A-31, the obligation to provide health care is permitted to be measured by projecting the cost of premiums for purchased health care insurance, even if no health care insurance is actually purchased. If the obligation to provide health care is made in coordination with a health care plan that the corporation makes available to a group, then the premiums used for this purpose may be group premiums.

Q-32: What discount rate is to be used to determine present value?

A-32: For purposes of this section, present value generally is determined by using a discount rate equal to 120 percent of the applicable Federal rate (determined under section 1274(d) and the regulations thereunder) compounded semiannually. The applicable Federal rate to be used for this purpose is the Federal rate that is in effect on the date as of which the present value is determined, using the period until the payment would have been made without regard to the change in ownership or control as the term of the debt instrument under section 1274(d). See Q/A-24 and 31 of this section. However, for any payment, the corporation and the disqualified individual may elect to use the applicable Federal rate that is in effect on the date that the contract which provides for the payment is entered into, if such election is made in the contract.

Q-33: If the present value of a payment to be made in the future is contingent on an uncertain future event or condition, how is the present value of the payment determined?

A-33: (a) In certain cases, it may be necessary to apply the 3-times-base-amount test of Q/A-30 of this section, or to allocate a portion of the base amount to a payment described in paragraphs (a)(1), (2), and (3) of Q/A-2 of this section, at a time when the aggregate present value of all such payments cannot be determined with certainty because the time, amount, or right to receive one or more such payments is contingent on the occurrence of an uncertain future event or condition. For example, a disqualified individual's right to receive a payment may be contingent on the involuntary termination of such individual's employment with the corporation. In such a case, it must be reasonably estimated whether the payment will be made. If it is reasonably estimated that there is a 50-percent or greater probability that the payment will be made, the full

amount of the payment is considered for purposes of the 3-times-base-amount test and the allocation of the base amount. Conversely, if it is reasonably estimated that there is a less than 50-percent probability that the payment will be made, the payment is not considered for either purpose.

(b) If the estimate made under paragraph (a) of this A-33 is later determined to be incorrect, the 3-times-base-amount test described in Q/A-30 of this section must be reapplied (and the portion of the base amount allocated to previous payments must be reallocated (if necessary) to such payments) to reflect the actual time and amount of the payment. Whenever the 3-times-base-amount test is applied (or whenever the base amount is allocated), the aggregate present value of the payments received or to be received by the disqualified individual is redetermined as of the date described in A-31 of this section, using the discount rate described in A-32 of this section. This redetermination may affect the amount of any excess parachute payment for a prior taxable year. Alternatively, if, based on the application of the 3-times-base-amount test without regard to the payment described in paragraph (a) of this A-33, a disqualified individual is determined to have an excess parachute payment or payments, then the 3-times-base-amount test does not have to be reapplied when a payment described in paragraph (a) of this A-33 is made (or becomes certain to be made) if no base amount is allocated to such payment.

(c) To the extent provided in published guidance of general applicability under § 601.601(d)(2) of this Chapter, an initial estimate of the value of an option subject to Q/A-13 of this section is permitted to be made, with the valuation subsequently re-determined, and the 3-times-base-amount test reapplied.

(d) The following examples illustrate the principles of this A-33:

Example 1. A, a disqualified individual with respect to Corporation M, has a base amount of $100,000. Under A's employment agreement with Corporation M, A is entitled to receive a payment in the nature of compensation in the amount of $250,000 contingent on a change in ownership or control of Corporation M. In addition, the agreement provides that if A's employment is terminated within 1 year after the change in ownership or control, A will receive an additional payment in the nature of compensation in the amount of $150,000, payable 1 year after the date of the change in ownership or control. A change in ownership or control of Corporation M occurs and A receives the first payment of $250,000. Corporation M reasonably estimates that there is a 50-percent probability that, as a result of the change, A's employment will be terminated within 1 year of the date of the change. For purposes of applying the 3-times-base-amount test (and if the first payment is determined to be a parachute payment, for purposes of allocating a portion of A's base amount to that payment), because M reasonably estimates that there is a 50-percent or greater probability that, as a result of the change, A's employment will be terminated within 1 year of the date of the change, Corporation M must assume that the $150,000 payment will be made to A as a result of the change in ownership or control. The present value of the additional payment is determined under Q/A-31 and Q/A-32 of this section.

Example 2. Assume the same facts as in *Example 1,* except that Corporation M reasonably estimates that there is a less than 50-percent probability that, as a result of the change, A's employment will be terminated within 1 year of the date of the change. For purposes of applying the

3-times-base-amount test, because Corporation M reasonably estimates that there is a less than 50-percent probability that, as a result of the change, A's employment will be terminated within 1 year of the date of the change, Corporation M must assume that the $150,000 payment will not be made to A as a result of the change in ownership or control.

Example 3. B, a disqualified individual with respect to Corporation P, has a base amount of $200,000. Under B's employment agreement with Corporation P, if there is a change in ownership or control of Corporation P, B will receive a severance payment of $600,000 and a bonus payment of $400,000. In addition, the agreement provides that if B's employment is terminated within 1 year after the change, B will receive an additional payment in the nature of compensation of $500,000. A change in ownership or control of Corporation P occurs, and B receives the $600,000 and $400,000 payments. At the time of the change in ownership or control, Corporation P reasonably estimates that there is a less than 50-percent probability that B's employment will be terminated within 1 year of the change. For purposes of applying the 3-times-base-amount test, because Corporation P reasonably estimates that there is a less than 50-percent probability that B's employment will be terminated within 1 year of the date of the change, Corporation P assumes that the $500,000 payment will not be made to B. Eleven months after the change in ownership or control, B's employment is terminated, and the $500,000 payment is made to B. Because B was determined to have excess parachute payments without regard to the $500,000 payment, the 3-times-base-amount test is not reapplied and the base amount is not reallocated to include the $500,000 payment. The entire $500,000 payment is treated as an excess parachute payment.

Q-34: What is the base amount?

A-34: (a) The base amount of a disqualified individual is the average annual compensation for services performed for the corporation with respect to which the change in ownership or control occurs (or for a predecessor entity or a related entity as defined in Q/A-21 of this section) which was includible in the gross income of such individual for taxable years in the base period (including amounts that were excluded under section 911), or which would have been includible in such gross income if such person had been a United States citizen or resident. *See* Q/A-35 of this section for the definition of base period and for examples of base amount computations.

(b) If the base period of a disqualified individual includes a short taxable year or less than all of a taxable year, compensation for such short or incomplete taxable year must be annualized before determining the average annual compensation for the base period. In annualizing compensation, the frequency with which payments are expected to be made over an annual period must be taken into account. Thus, any amount of compensation for such a short or incomplete taxable year that represents a payment that will not be made more often than once per year is not annualized.

(c) Because the base amount includes only compensation that is includible in gross income, the base amount does not include certain items that constitute parachute payments. For example, payments in the form of excludible fringe benefits are not included in the base amount but may be treated as parachute payments.

(d) The base amount includes the amount of compensation included in income under section 83(b) during the base period. *See* Q/A-35 for the definition of base period.

(e) The following example illustrates the principles of this A-34:

> *Example.* A disqualified individual, D, receives an annual salary of $500,000 per year during the 5-year base period. D defers $100,000 of D's salary each year under the corporation's nonqualified deferred compensation plan. D's base amount is $400,000 ($400,000 × (5/5)).

Q-35: What is the base period?

A-35: (a) The base period of a disqualified individual is the most recent 5 taxable years of the individual ending before the date of the change in ownership or control. For this purpose, the date of the change in ownership or control is the date the corporation experiences one of the events described in Q/A-27, Q/A-28, or Q/A-29 of this section. However, if the disqualified individual was not an employee or independent contractor of the corporation with respect to which the change in ownership or control occurs (or a predecessor entity or a related entity as defined in Q/A-21 of this section) for this entire 5-year period, the individual's base period is the portion of such 5-year period during which the individual performed personal services for the corporation or predecessor entity or related entity.

(b) The following examples illustrate the principles of Q/A-34 of this section and this Q/A-35:

> *Example 1.* A disqualified individual, D, was employed by a corporation for 2 years and 4 months preceding the taxable year in which a change in ownership or control of the corporation occurs. D's includible compensation income from the corporation was $30,000 for the 4-month period, $120,000 for the first full year, and $150,000 for the second full year. D's base amount is $120,000, ((3 × $30,000) + $120,000 + $150,000)/3.

> *Example 2.* Assume the same facts as in *Example 1,* except that D also received a $60,000 signing bonus when D's employment with the corporation commenced at the beginning of the 4-month period. D's base amount is $140,000, (($60,000 + (3 × $30,000)) + $120,000 + $150,000) / 3. Since the bonus will not be paid more often than once per year, the amount of the bonus is not increased in annualizing D's compensation for the 4-month period.

> *Example 3.* E is a disqualified individual with respect to Corporation X who was not an employee or independent contractor for the full 5-year base period. In 2004 and 2005, E is a director of X and receives $30,000 per year for E's services. In 2006, E becomes an officer of X. E's includible compensation from Corporation X is $250,000 for 2006 and 2007, and $300,000 for 2008. In 2008, X undergoes a change in ownership or control. E's base amount is $140,000 ((2 × $250,000) + (2 × $30,000) / 4).

Q-36: How is the base amount determined in the case of a disqualified individual who did not perform services for the corporation (or a predecessor entity or a related entity as defined in Q/A-21 of this section), prior to the individual's taxable year in which the change in ownership or control occurs?

A-36: (a) In such a case, the individual's base amount is the annualized compensation for services performed for the corporation (or a predecessor entity or related entity) which—

(1) Was includible in the individual's gross income for that portion, prior to such change, of the individual's taxable year in which the change occurred (including amounts that were excluded under section 911), or would have been includible in such gross income if such person had been a United States citizen or resident;

(2) Was not contingent on the change in ownership or control; and

(3) Was not a securities violation parachute payment.

(b) The following examples illustrate the principles of this A-36:

Example 1. On January 1, 2006, A, an individual whose taxable year is the calendar year, enters into a 4-year employment contract with Corporation M as an officer of the corporation. A has not previously performed services for Corporation M (or any predecessor entity or related entity as defined in Q/A-21 of this section). Under the employment contract, A is to receive an annual salary of $120,000 for each of the 4 years that he remains employed by Corporation M with any remaining unpaid balance to be paid immediately in the event that A's employment is terminated without cause. On July 1, 2006, after A has received compensation of $60,000, a change in the ownership or control of Corporation M occurs. Because of the change, A's employment is terminated without cause, and he receives a payment of $420,000. It is established by clear and convincing evidence that the $60,000 in compensation is not contingent on the change in ownership or control, but the presumption that the $420,000 payment is contingent on the change is not rebutted. Thus, the payment of $420,000 is treated as contingent on the change in ownership or control of Corporation M. In this case, A's base amount is $120,000 (2 × $60,000). Since the present value of the payment which is contingent on the change in ownership of Corporation M ($420,000) is more than 3 times A's base amount of $120,000 (3 × $120,000 = $360,000), the payment is a parachute payment.

Example 2. Assume the same facts as in *Example 1,* except that A also receives a signing bonus of $50,000 from Corporation M on January 1, 2006. It is established by clear and convincing evidence that the bonus is not contingent on the change in ownership or control. When the change in ownership or control occurs on July 1, 2006, A has received compensation of $110,000 (the $50,000 bonus plus $60,000 in salary). In this case, A's base amount is $170,000 ($50,000 + (2 × $60,000)). Because the $50,000 bonus will not be paid more than once per year, the amount of the bonus is not increased in annualizing A's compensation. The present value of the potential parachute payment ($420,000) is less than 3 times A's base amount of $170,000 (3 × $170,000 = $510,000), and therefore no portion of the payment is a parachute payment.

Securities Violation Parachute Payments

Q-37: Must a payment be contingent on a change in ownership or control in order to be a parachute payment?

A-37: (a) No, the term *parachute payment* also includes any payment (other than a payment exempted under Q/A-6 or Q/A-8 of this section) that is in the nature of compensation and is to (or for the benefit of) a disqualified individual, if such payment is a securities violation payment. A securities violation payment is a payment made or to be made—

(1) Pursuant to an agreement that violates any generally enforced Federal or state securities laws or regulations; and

(2) In connection with a potential or actual change in ownership or control.

(b) A violation is not taken into account under paragraph (a)(1) of this A-37 if it is merely technical in character or is not materially prejudicial to shareholders or potential shareholders. Moreover, a violation will be presumed not to exist unless the existence of the violation has been determined or admitted in a civil or criminal action (or an administrative action by a regulatory body charged with enforcing the particular securities law or regulation) which has been resolved by adjudication or consent. Parachute payments described in this A-37 are referred to in this section as securities violation payments.

(c) Securities violation parachute payments that are not contingent on a change in ownership or control within the meaning of Q/A-22 of this section are not taken into account in applying the 3-times-base-amount test of Q/A-30 of this section. Such payments are considered parachute payments regardless of whether such test is met with respect to the disqualified individual (and are included in allocating base amount under Q/A-38 of this section). Moreover, the amount of a securities violation parachute payment treated as an excess parachute payment shall not be reduced by the portion of such payment that is reasonable compensation for personal services actually rendered before the date of a change in ownership or control if such payment is not contingent on such change. Likewise, the amount of a securities violation parachute payment includes the portion of such payment that is reasonable compensation for personal services to be rendered on or after the date of a change in ownership or control if such payment is not contingent on such change.

(d) The rules in paragraph (b) of this A-37 also apply to securities violation parachute payments that are contingent on a change in ownership or control if the application of these rules results in greater total excess parachute payments with respect to the disqualified individual than would result if the payments were treated simply as payments contingent on a change in ownership or control (and hence were taken into account in applying the 3-times-base-amount test and were reduced by, or did not include, any applicable amount of reasonable compensation).

(e) The following examples illustrate the principles of this A-37:

> *Example 1.* A, a disqualified individual with respect to Corporation M, receives two payments in the nature of compensation that are contingent on a change in the ownership or control of Corporation M. The present value of the first payment is equal to A's base amount and is not a securities violation parachute payment. The present value of the second payment is equal to 1.5 times A's base amount and is a securities violation parachute payment. Neither payment includes any

reasonable compensation. If the second payment is treated simply as a payment contingent on a change in ownership or control, the amount of A's total excess parachute payments is zero because the aggregate present value of the payments does not equal or exceed 3 times A's base amount. If the second payment is treated as a securities violation parachute payment subject to the rules of paragraph (b) of this A-37, the amount of A's total excess parachute payments is 0.5 times A's base amount. Thus, the second payment is treated as a securities violation parachute payment.

Example 2. Assume the same facts as in *Example 1,* except that the present value of the first payment is equal to 2 times A's base amount. If the second payment is treated simply as a payment contingent on a change in ownership or control, the total present value of the payments is 3.5 times A's base amount, and the amount of A's total excess parachute payments is 2.5 times A's base amount. If the second payment is treated as a securities violation parachute payment, the amount of A's total excess parachute payments is 0.5 times A's base amount. Thus, the second payment is treated simply as a payment contingent on a change in ownership or control.

Example 3. B, a disqualified individual with respect to Corporation N, receives two payments in the nature of compensation that are contingent on a change in the control of Corporation N. The present value of the first payment is equal to 4 times B's base amount and is a securities violation parachute payment. The present value of the second payment is equal to 2 times B's base amount and is not a securities violation parachute payment. B establishes by clear and convincing evidence that the entire amount of the first payment is reasonable compensation for personal services to be rendered after the change in ownership or control. If the first payment is treated simply as a payment contingent on a change in ownership or control, it is exempt from the definition of *parachute payment* pursuant to Q/A-9 of this section. Thus, the amount of B's total excess parachute payment is zero because the present value of the second payment does not equal or exceed 3 times B's base amount. However, if the first payment is treated as a securities violation parachute payment, the amount of B's total excess parachute payments is 3 times B's base amount. Thus, the first payment is treated as a securities violation parachute payment.

Example 4. Assume the same facts as in *Example 3,* except that B does not receive the second payment and B establishes by clear and convincing evidence that the first payment is reasonable compensation for services actually rendered before the change in the control of Corporation N. If the payment is treated simply as a payment contingent on a change in ownership or control, the amount of B's excess parachute payment is zero because the amount treated as an excess parachute payment is reduced by the amount that B establishes as reasonable compensation. However, if the payment is treated as a securities violation parachute payment, the amount of B's excess parachute payment is 3 times B's base amount. Thus, the payment is treated as a securities violation parachute payment.

Computation and Reduction of Excess Parachute Payments

Q-38: How is the amount of an excess parachute payment computed?

A-38: (a) The amount of an excess parachute payment is the excess of the amount of any parachute payment over the portion of the disqualified individual's base amount that is allocated to such payment. For this purpose, the portion of the base amount allocated to any parachute payment is the amount that bears the same ratio to the base amount as the present value of such parachute payment bears to the aggregate present value of all parachute payments made or to be made to (or for the benefit of) the same disqualified individual. Thus, the portion of the base amount allocated to any parachute payment is determined by multiplying the base amount by a fraction, the numerator of which is the present value of such parachute payment and the denominator of which is the aggregate present value of all such payments. *See* Q/A-31, Q/A-32, and Q/A-33 of this section for rules on determining present value and Q/A-34 of this section for the definition of *base amount*.

(b) The following example illustrates the principles of this A-38:

> *Example.* An individual with a base amount of $100,000 is entitled to receive two parachute payments, one of $200,000 and the other of $400,000. The $200,000 payment is made at the time of the change in ownership or control, and the $400,000 payment is to be made at a future date. The present value of the $400,000 payment is $300,000 on the date of the change in ownership or control. The portions of the base amount allocated to these payments are $40,000 (($200,000/$500,000) × $100,000) and $60,000 (($300,000/$500,000) × $100,000), respectively. Thus, the amount of the first excess parachute payment is $160,000 ($200,000−$40,000) and that of the second is $340,000 ($400,000−$60,000).

Q-39: May the amount of an excess parachute payment be reduced by reasonable compensation for personal services actually rendered before the change in ownership or control?

A-39: (a) Generally, yes. Except in the case of payments treated as securities violation parachute payments or when the portion of a payment that is treated as contingent on the change in ownership or control is determined under paragraph (b) or (c) of Q/A-24 of this section, the amount of an excess parachute payment is reduced by any portion of the payment that the taxpayer establishes by clear and convincing evidence is reasonable compensation for personal services actually rendered by the disqualified individual before the date of the change in ownership or control. Services reasonably compensated for by payments that are not parachute payments (for example, because the payments are not contingent on a change in ownership or control and are not securities violation parachute payments, or because the payments are exempt from the definition of parachute payment under Q/A-6 through Q/A-9 of this section) are not taken into account for this purpose. The portion of any parachute payment that is established as reasonable compensation is first reduced by the portion of the disqualified individual's base amount that is allocated to such parachute payment; any remaining portion of the parachute payment established as reasonable compensation then reduces the excess parachute payment.

(b) The following examples illustrate the principles of this A-39:

> *Example 1.* Assume that a parachute payment of $600,000 is made to a disqualified individual,

and the portion of the individual's base amount that is allocated to the parachute payment is $100,000. Also assume that $300,000 of the $600,000 parachute payment is established as reasonable compensation for personal services actually rendered by the disqualified individual before the date of the change in ownership or control. Before the reasonable compensation is taken into account, the amount of the excess parachute payment is $500,000 ($600,000—$100,000). In reducing the excess parachute payment by reasonable compensation, the portion of the parachute payment that is established as reasonable compensation ($300,000) is first reduced by the portion of the disqualified individual's base amount that is allocated to the parachute payment ($100,000), and the remainder ($200,000) then reduces the excess parachute payment. Thus, in this case, the excess parachute payment of $500,000 is reduced by $200,000 of reasonable compensation.

Example 2. Assume the same facts as in *Example 1,* except that the full amount of the $600,000 parachute payment is established as reasonable compensation. In this case, the excess parachute payment of $500,000 is reduced to zero by $500,000 of reasonable compensation. As a result, no portion of any deduction for the payment is disallowed by section 280G, and no portion of the payment is subject to the 20-percent excise tax of section 4999.

Determination of Reasonable Compensation

Q-40: How is it determined whether payments are reasonable compensation?

A-40: (a) In general, whether payments are reasonable compensation for personal services actually rendered, or to be rendered, by the disqualified individual is determined on the basis of all the facts and circumstances of the particular case. Factors relevant to such a determination include, but are not limited to, the following—

(1) The nature of the services rendered or to be rendered;

(2) The individual's historic compensation for performing such services; and

(3) The compensation of individuals performing comparable services in situations where the compensation is not contingent on a change in ownership or control.

(b) For purposes of section 280G, reasonable compensation for personal services includes reasonable compensation for holding oneself out as available to perform services and refraining from performing services (such as under a covenant not to compete).

Q-41: Is any particular type of evidence generally considered clear and convincing evidence of reasonable compensation for personal services?

A-41: Yes. A showing that payments are made under a nondiscriminatory employee plan or program (as defined in Q/A-26 of this section) generally is considered to be clear and convincing evidence that the payments are reasonable compensation. This is true whether the personal services for which the payments are made are actually rendered before, or are to be rendered on or after, the date of the change in ownership or

control. Q/A-46 of this section (relating to the treatment of an affiliated group as one corporation) does not apply for purposes of this A-41. No determination of reasonable compensation is needed for payments under qualified plans to be exempt from the definition of *parachute payment* under Q/A-8 of this section.

Q-42: Is any particular type of evidence generally considered clear and convincing evidence of reasonable compensation for personal services to be rendered on or after the date of a change in ownership or control?

A-42: (a) Yes, if payments are made or to be made to (or on behalf of) a disqualified individual for personal services to be rendered on or after the date of a change in ownership or control, a showing of the following generally is considered to be clear and convincing evidence that the payments are reasonable compensation for services to be rendered on or after the date of the change in ownership or control—

(1) The payments were made or are to be made only for the period the individual actually performs such personal services; and

(2) If the individual's duties and responsibilities are substantially the same after the change in ownership or control, the individual's annual compensation for such services is not significantly greater than such individual's annual compensation prior to the change in ownership or control, apart from normal increases attributable to increased responsibilities or cost of living adjustments. If the scope of the individual's duties and responsibilities are not substantially the same, the annual compensation after the change is not significantly greater than the annual compensation customarily paid by the employer or by comparable employers to persons performing comparable services. However, except as provided in paragraph (b) and (c) of this A-42, such clear and convincing evidence will not exist if the individual does not, in fact, perform the services contemplated in exchange for the compensation.

(b) Generally, an agreement under which the disqualified individual must refrain from performing services (*e.g.,* a covenant not to compete) is an agreement for the performance of personal services for purposes of this A-42 to the extent that it is demonstrated by clear and convincing evidence that the agreement substantially constrains the individual's ability to perform services and there is a reasonable likelihood that the agreement will be enforced against the individual. In the absence of clear and convincing evidence, payments under the agreement are treated as severance payments under Q/A-44 of this section.

(c) If the employment of a disqualified individual is involuntarily terminated before the end of a contract term and the individual is paid damages for breach of contract, a showing of the following factors generally is considered clear and convincing evidence that the payment is reasonable compensation for personal services to be rendered on or after the date of change in ownership or control—

(1) The contract was not entered into, amended, or renewed in contemplation of the change in ownership or control;

(2) The compensation the individual would have received under the contract would have qualified as reasonable compensation under section 162;

(3) The damages do not exceed the present value (determined as of the date of receipt) of the compensation the individual would have received under the contract if the individual had continued to perform services for the employer until the end of the contract term;

(4) The damages are received because an offer to provide personal services was made by the disqualified individual but was rejected by the employer (including involuntary termination or constructive discharge); and

(5) The damages are reduced by mitigation. Mitigation will be treated as occurring when such damages are reduced (or any payment of such damages is returned) to the extent of the disqualified individual's earned income (within the meaning of section 911(d)(2)(A)) during the remainder of the period in which the contract would have been in effect. See Q/A-44 of this section for rules regarding damages for a failure to make severance payments.

(d) The following examples illustrate the principles of this A-42:

Example 1. A, a disqualified individual, has a three-year employment contract with Corporation M, a publicly traded corporation. Under this contract, A is to receive a salary for $100,000 for the first year of the contract and, for each succeeding year, an annual salary that is 10 percent higher than the prior year's salary. During the third year of the contract, Corporation N acquires all the stock of Corporation M. Prior to the change in ownership, Corporation N arranges to retain A's services by entering into an employment contract with A that is essentially the same as A's contract with Corporation M. Under the new contract, Corporation N is to fulfill Corporation M's obligations for the third year of the old contract, and, for each of the succeeding years, pay A an annual salary that is 10 percent higher than A's prior year's salary. Amounts are payable under the new contract only for the portion of the contract term during which A remains employed by Corporation N. A showing of the facts described above (and in the absence of contradictory evidence) is regarded as clear and convincing evidence that all payments under the new contract are reasonable compensation for personal services to be rendered on or after the date of the change in ownership. Therefore, the payments under this agreement are exempt from the definition of *parachute payment* pursuant to Q/A-9 of this section.

Example 2. Assume the same facts as in *Example 1,* except that A does not perform the services described in the new contract, but receives payment under the new contract. Because services were not rendered after the change, the payments under this contract are not exempt from the definition of *parachute payment* pursuant to Q/A-9 of this section.

Example 3. Assume the same facts as in *Example 1,* except that under the new contract A agrees to perform consulting services to Corporation N, when and if Corporation N requires A's services. Assume further that when Corporation N does not require A's services, the contract provides that A must not perform services for any other competing company. Corporation N previously enforced similar contracts against former employees of Corporation N. Because A is substantially constrained under this contract and Corporation N is reasonably likely to enforce the contract against A, the agreement is an agreement for the performance of services under paragraph (b) of this A-42. Assuming the requirements of paragraph (a) of this A-42 are met and there is clear and convincing evidence that all payments under the new contract are reasonable compensation for personal services to be rendered on or after the date of the change in ownership, the payments under this contract are

exempt from the definition of *parachute payment* pursuant to Q/A-9 of this section.

Example 4. Assume the same facts as in *Example 1,* except that instead of agreeing not to compete with Corporation N, under the new agreement A agrees not to disparage either Corporation M or Corporation N. Because the nondisparagement agreement does not substantially constrain A's ability to perform services, no amount of the payments under this contract are reasonable compensation for the nondisparagement agreement.

Example 5. Assume the same facts as in *Example 1,* except that the employment contract with Corporation N does not provide that amounts are payable under the contract only for the portion of the term for which A remains employed by Corporation N. Shortly after the change in ownership, and despite A's request to remain employed by Corporation N, A's employment with Corporation N is involuntarily terminated. Shortly thereafter, A obtains employment with Corporation O. A commences a civil action against Corporation N, alleging breach of the employment contract. In settlement of the litigation, A receives an amount equal to the present value of the compensation A would have received under the contract with Corporation N, reduced by the amount of compensation A otherwise receives from Corporation O during the period that the contract would have been in effect. A showing of the facts described above (and in the absence of contradictory evidence) is regarded as clear and convincing evidence that the amount A receives as damages is reasonable compensation for personal services to be rendered on or after the date of the change in ownership. Therefore, the amount received by A is exempt from the definition of *parachute payment* pursuant to Q/A-9 of this section.

Q-43: Is any particular type of payment generally considered reasonable compensation for personal services actually rendered before the date of a change in ownership or control?

A-43: Yes, payments of compensation earned before the date of a change in ownership or control generally are considered reasonable compensation for personal services actually rendered before the date of a change in ownership or control if they qualify as reasonable compensation under section 162.

Q-44: May severance payments be treated as reasonable compensation?

A-44: (a) No, severance payments are not treated as reasonable compensation for personal services actually rendered before, or to be rendered on or after, the date of a change in ownership or control. Moreover, any damages paid for a failure to make severance payments are not treated as reasonable compensation for personal services actually rendered before, or to be rendered on or after, the date of such change. For purposes of this section, the term *severance payment* means any payment that is made to (or for the benefit of) a disqualified individual on account of the termination of such individual's employment prior to the end of a contract term, but does not include any payment that otherwise would be made to (or for the benefit of) such individual on the termination of such individual's employment, whenever occurring.

(b) The following example illustrates the principles of this A-44:

> *Example.* A, a disqualified individual, has a three-year employment contract with Corporation X. Under the contract, A will receive a salary of $200,000 for the first year of the contract, and for each succeeding year, an annual salary that is $100,000 higher than the previous year. In the event of A's termination of employment following a change in ownership or control, the contract provides that A will receive the remaining salary due under the employment contract. At the beginning of the second year of the contract, Corporation Y acquires all of the stock of Corporation X, A's employment is terminated, and A receives $700,000 ($300,000 for the second year of the contract plus $400,000 for the third year of the contract) representing the remaining salary due under the employment contract. Because the $700,000 payment is treated as a severance payment, it is not reasonable compensation for personal services on or after the date of the change in ownership or control. Thus, the full amount of the $700,000 is a parachute payment.

Miscellaneous Rules

Q-45: How is the term *corporation* defined?

A-45: For purposes of this section, the term *corporation* has the meaning prescribed by section 7701(a)(3) and § 301.7701-2(b) of this Chapter. For example, a *corporation,* for purposes of this section, includes a publicly traded partnership treated as a corporation under section 7704(a); an entity described in § 301.7701-3(c)(1)(v)(A) of this Chapter; a real estate investment trust under section 856(a); a corporation that has mutual or cooperative (rather than stock) ownership, such as a mutual insurance company, a mutual savings bank, or a cooperative bank (as defined in section 7701(a)(32)), and a foreign corporation as defined under section 7701(a)(5).

Q-46: How is an affiliated group treated?

A-46: For purposes of this section, and except as otherwise provided in this section, all members of the same affiliated group (as defined in section 1504, determined without regard to section 1504(b)) are treated as one corporation. Rules affected by this treatment of an affiliated group include (but are not limited to) rules relating to exempt payments of certain corporations (Q/A-6, Q/A-7 of this section (except as provided therein)), payor of parachute payments (Q/A-10 of this section), disqualified individuals (Q/A-15 through Q/A-21 of this section (except as provided therein)), rebuttal of the presumption that payments are contingent on a change (Q/A-26 of this section (except as provide therein)), change in ownership or control (Q/A-27, 28, and 29 of this section), and reasonable compensation (Q/A-42, 43, and 44 of this section).

Effective Date

Q-47: What is the general effective date of section 280G?

A-47: (a) Generally, section 280G applies to payments under agreements entered into or renewed after June 14, 1984. Any agreement that is entered into before June 15, 1984, and is renewed after June 14, 1984, is treated as a new contract entered into on the day the renewal takes effect.

(b) For purposes of paragraph (a) of this A-47, a contract that is terminable or cancellable unconditionally at will by either party to the contract without the consent of the other, or by both parties to the contract, is treated as a new contract entered into on the date any such termination or cancellation, if made, would be effective. However, a contract is not treated as so terminable or cancellable if it can be terminated or cancelled only by terminating the employment relationship or independent contractor relationship of the disqualified individual.

(c) Section 280G applies to payments under a contract entered into on or before June 14, 1984, if the contract is amended or supplemented after June 14, 1984, in significant relevant respect. For this purpose, a *supplement* to a contract is defined as a new contract entered into after June 14, 1984, that affects the trigger, amount, or time of receipt of a payment under an existing contract.

(d)(1) Except as otherwise provided in paragraph (e) of this A-47, a contract is considered to be amended or supplemented in significant relevant respect if provisions for payments contingent on a change in ownership or control (parachute provisions), or provisions in the nature of parachute provisions, are added to the contract, or are amended or supplemented to provide significant additional benefits to the disqualified individual. Thus, for example, a contract generally is treated as amended or supplemented in significant relevant respect if it is amended or supplemented—

(i) To add or modify, to the disqualified individual's benefit, a change in ownership or control trigger;

(ii) To increase amounts payable that are contingent on a change in ownership or control (or, where payment is to be made under a formula, to modify the formula to the disqualified individual's advantage); or

(iii) To accelerate, in the event of a change in ownership or control, the payment of amounts otherwise payable at a later date.

(2) For purposes of paragraph (a) of this A-47, a payment is not treated as being accelerated in the event of a change in ownership or control if the acceleration does not increase the present value of the payment.

(e) A contract entered into on or before June 14, 1984, is not treated as amended or supplemented in significant relevant respect merely by reason of normal adjustments in the terms of employment relationship or independent contractor relationship of the disqualified individual. Whether an adjustment in the terms of such a relationship is considered normal for this purpose depends on all of the facts and circumstances of the particular case. Relevant factors include, but are not limited to, the following—

(1) The length of time between the adjustment and the change in ownership or control;

(2) The extent to which the corporation, at the time of the adjustment, viewed itself as a likely takeover candidate;

(3) A comparison of the adjustment with historical practices of the corporation;

(4) The extent of overlap between the group receiving the benefits of the adjustment and those members of that group who are the beneficiaries of pre-June 15, 1984, parachute contracts; and

(5) The size of the adjustment, both in absolute terms and in comparison with the benefits provided to other members of the group receiving the benefits of the adjustment.

Q-48: What is the effective date of this section?

A-48: This section applies to any payments that are contingent on a change in ownership or control if the change in ownership or control occurs on or after January 1, 2004. Taxpayers may rely on these regulations after August 4, 2003, for the treatment of any parachute payment.

[T.D. 9083, 68 FR 45750, Aug. 4, 2003; T.D. 9083, 68 FR 59114, Oct. 14, 2003]

§ 1.280H-0T Table of contents (temporary).

This section lists the captions that appear in the temporary regulations under section 280H.

§ 1.280H-1T Limitation on certain amounts paid to employee-owners by personal service corporations electing alternative taxable years (temporary).

(a) Introduction.

(b) Limitations on certain deductions of a personal service corporation.

(1) In general.

(2) Carryover of nondeductible amounts.

(3) Disallowance inapplicable for certain purposes.

(4) Definition of applicable amount.

(i) In general.

(ii) Special rule for certain indirect payments.

(iii) Examples.

(c) Minimum distribution requirement.

(1) Determination of whether requirement satisfied.

(i) In general.

(ii) Employee-owner defined.

(2) Preceding year test.

(i) In general.

(ii) Example.

(3) 3-year average test.

(i) In general.

(ii) Applicable percentage.

(iii) Adjusted taxable income.

(A) In general.

(B) Determination of adjusted taxable income for the deferral period of the applicable election year.

(C) NOL carryovers.

(D) Examples.

(d) Maximum deductible amount.

(1) In general.

(2) Example.

(e) Special rules and definition.

(1) Newly organized personal service corporations.

(2) Existing corporations that become personal service corporations.

(3) Disallowance of NOL carryback.

(4) Deferral period.

(5) Examples.

(f) Effective date.

[T.D. 8205, 53 FR 19711, May 27, 1988]

§ 1.280H-1T Limitation on certain amounts paid to employee-owners by personal service corporations electing alternative taxable years (temporary).

(a) ***Introduction.*** This section applies to any taxable year that a personal service corporation has a section 444 election in effect (an "applicable election year"). For purposes of this section, the term *personal service corporation* has the same meaning given such term in § 1.441-3(c).

(b) ***Limitation on certain deductions of personal service corporations*** —

(1) ***In general.*** If, for any applicable election year, a personal service corporation does not satisfy the minimum distribution requirement in paragraph (c) of this section, the deduction otherwise allowable under chapter 1 of the Internal Revenue Code of 1986 (the Code) for applicable amounts, as defined in paragraph (b)(4) of this section, shall not exceed the maximum deductible amount, as defined in paragraph (d) of this section.

(2) ***Carryover of nondeductible amounts.*** Any amount not allowed as a deduction in an applicable election year under paragraph (b)(1) of this section shall be allowed as a deduction in the succeeding taxable year.

(3) ***Disallowance inapplicable for certain purposes.*** The disallowance of deductions under paragraph (b)(1) of this section shall not apply for purposes of subchapter G of chapter 1 of the Code (relating to corporations used to avoid income tax on shareholders) nor for determining whether the compensation of employee-owners is reasonable. Thus, for example, in determining whether a personal service corporation is subject to the accumulated earnings tax imposed by section 531, deductions disallowed under paragraph (b)(1) of this section are treated as allowed in computing accumulated taxable income.

(4) ***Definition of applicable amount*** —

(i) ***In general.*** For purposes of section 280H and the regulations thereunder, the term *applicable amount* means, with respect to a taxable year, any amount that is otherwise deductible by a personal service corporation in such year and includable at any time, directly or indirectly, in the gross income of a taxpayer that during such year is an employee-owner. Thus, an amount includable in the gross income of an employee-owner will be considered an applicable amount even though such employee owns no stock of the corporation on the date the employee includes the amount in income. See *Example 1* in paragraph (b)(4)(iii) of this section.

(ii) ***Special rule for certain indirect payments.*** For purposes of paragraph (b)(4)(i) of this section, amounts are indirectly includable in the gross income of an employee-owner of a personal service corporation that has made a section 444 election (an electing personal service corporation) if the amount is includable in the gross income of—

(A) The spouse (other than a spouse who is legally separated from the partner or shareholder under a decree of divorce or separate maintenance) or child (under age 14) of such employee-owner, or

(B) A corporation more than 50 percent (measured by fair market value) of which is owned in the aggregate by employee-owners (and individuals related under paragraph (b)(4)(ii)(A) of this section to such employee-owners), of the electing personal service corporation, or

(C) A partnership more than 50 percent of the profits and capital of which is owned by employee-owners (and individuals related under paragraph (b)(4)(ii)(A) of this section to such employee-owners) of the electing personal service corporation, or

(D) A trust more than 50 percent of the beneficial ownership of which is owned in the aggregate by employee-owners (and individuals related under paragraph (b)(4)(ii)(A) of this section to any such employee-owners), of the electing personal service corporation.

For purposes of this paragraph (b)(4)(ii), ownership by any person described in this paragraph (b)(4)(ii) shall be treated as ownership by the employee-owners of the electing personal service corporation. Paragraph (b)(4)(ii)(B) of this section will not apply if the corporation has made a

section 444 election to use the same taxable year as that of the electing personal service corporation. Similarly, paragraph (b)(4)(ii)(C) of this section will not apply if the partnership has made a section 444 election to use the same taxable year as that of the electing personal service corporation. Notwithstanding the general effective date provision of paragraph (f) of this section, this paragraph (b)(4)(ii) is effective for amounts deductible on or after June 1, 1988.

(iii) ***Example.*** The provisions of paragraph (b)(4) of this section may be illustrated by the following examples.

Example 1. A is an employee of P, an accrual basis personal service corporation with a taxable year ending September 30. P makes a section 444 election for its taxable year beginning October 1, 1987. On October 1, 1987, A owns no stock of P; However, on March 31, 1988, A acquires 10 of the 200 outstanding shares of P stock. During the period October 1, 1987 to March 31, 1988, A earned $40,000 of compensation as an employee of P. During the period April 1, 1988 to September 30 1988, A earned $60,000 of compensation as an employee-owner of P. If paragraph (b) of this section does not apply, P would deduct for its taxable year ended September 30, 1988 the $100,000 earned by A during such year. Based upon these facts, the $100,000 otherwise deductable amount is considered an applicable amount under this section.

Example 2. I1 and I2, calendar year individuals, are employees of PSC1, a personal service corporation that has historically used a taxable year ending January 31. I1 and I2 also own all the stock, and are employees, of PSC2, a calendar year personal service corporation. For its taxable years beginning February 1, 1987, 1988, and 1989, PSC1 has a section 444 election in effect to use a January 31 taxable year. During its taxable years beginning February 1, 1986, 1987, and 1988, PSC1 deducted $10,000, $11,000, and $12,000, respectively, that was included in PSC2's gross income. Furthermore, of the $12,000 deducted by PSC1 for its taxable year beginning February 1, 1988, $7,000 was deducted during the period June 1, 1988 to January 31, 1989. Pursuant to paragraph (b)(4)(ii)(B) of this section, the $7,000 deducted by PSC1 on or after June 1, 1988, and included in PSC2's gross income is considered an applicable amount for PSC1's taxable year beginning February 1, 1988. Amounts deducted by PSC1 prior to June 1, 1988, are not subject to paragraph (b)(4)(ii)(B) of this section.

Example 3. The facts are the same as in *Example 2,* except that for its taxable years beginning February 1, 1987, 1988, and 1989, PSC2 has a section 444 election in effect to use a January 31 taxable year. Since both PSC1 and PSC2 have the same taxable year and both have section 444 elections in effect, paragraph (b)(4)(ii)(B) of this section does not apply to the $7,000 deducted by PSC1 for its taxable year beginning February 1, 1988.

(c) ***Minimum distribution requirement*** —

(1) ***Determination of whether requirement satisfied*** —

(i) ***In general.*** A personal service corporation meets the minimum distribution requirement of this paragraph (c) for an applicable election year if, during the deferral period of such taxable year, the applicable amounts (determined without regard to paragraph (b)(2) of this section) for all employee-owners in the aggregate equal or exceed the lesser of—

(A) The amount determined under the “preceding year test” (see paragraph (c)(2) of this section), or

(B) The amount determined under the "3-year average test" (see paragraph (c)(3) of this section).

The following example illustrates the application of this paragraph (c)(1)(i).

Example. Q, an accrual-basis personal service corporation, makes a section 444 election to retain a year ending January 31 for its taxable year beginning February 1, 1987. Q has 4 employee-owners, B, C, D, and E. For Q's applicable election year beginning February 1, 1987 and ending January 31, 1988, B earns $6,000 a month plus a $45,000 bonus on January 15, 1988; C earns $5,000 a month plus a $40,000 bonus on January 15, 1988; D and E each earn $4,500 a month plus a $4,000 bonus on January 15, 1988. Q meets the minimum distribution requirement for such applicable election year if the applicable amounts during the deferral period (*i.e.,* $220,000) equal or exceed the amount determined under the preceding year test or the 3-year average test.

(ii) ***Employee-owner defined.*** For purposes of section 280H and the regulations thereunder, a person is an employee-owner of a corporation for a taxable year if—

(A) On any day of the corporation's taxable year, the person is an employee of the corporation or performs personal services for or on behalf of the corporation, even if the legal form of that person's relationship to the corporation is that of an independent contractor, and

(B) On any day of the corporation's taxable year, the person owns any outstanding stock of the corporation.

(2) ***Preceding year test*** —

(i) ***In general.*** The amount determined under the preceding year test is the product of—

(A) The applicable amounts during the taxable year preceding the applicable election year (the "preceding taxable year"), divided by the number of months (but not less than one) in the preceding taxable year, multiplied by

(B) The number of months in the deferral period of the applicable election year.

(ii) ***Example.*** The provisions of paragraph (c)(2) of this section may be illustrated by the following example.

Example. R, a personal service corporation, has historically used a taxable year ending January 31. For its taxable year beginning February 1, 1987, R makes a section 444 election to retain its January 31 taxable year. R is an accrual basis taxpayer and has one employee-owner, F. For R's taxable year ending January 31, 1987, F earns $5,000 a month plus a $40,000 bonus on January 15, 1987. The amount determined under the preceding year test for R's applicable election year beginning February 1, 1987 is $91,667 ($100,000, the applicable amounts during R's taxable year ending January 31, 1987, divided by 12, the number of months in R's taxable year ending January 31, 1987, multiplied by 11, the number of months in R's deferral period for such year).

(3) ***3-year average test*** —

(i) ***In general.*** The amount determined under the 3-year average test is the applicable percentage multiplied by the adjusted taxable income for the deferral period of the applicable election year.

(ii) ***Applicable percentage.*** The term *applicable percentage* means the percentage (not in excess of 95 percent) determined by dividing—

(A) The applicable amounts during the 3 taxable years of the corporation (or, if fewer, the taxable years the corporation has been in existence) immediately preceding the applicable election year, by

(B) The adjusted taxable income of such corporation for such 3 taxable years (or, if fewer, the taxable years of existence).

(iii) ***Adjusted taxable income*** —

(A) ***In general.*** The term *adjusted taxable income* means taxable income determined without regard to applicable amounts.

(B) ***Determination of adjusted taxable income for the deferral period of the applicable election year.*** Adjusted taxable income for the deferral period of the applicable election year equals the adjusted taxable income that would result if the personal service corporation filed an income tax return for the deferral period of the applicable election year under its normal method of accounting. However, a personal service corporation may make a reasonable estimate of such amount.

(C) ***NOL carryovers.*** For purposes of determining adjusted taxable income for any period, any NOL carryover shall be reduced by the amount of such carryover that is attributable to the deduction of applicable amounts. The portion of the NOL carryover attributable to the deduction of applicable amounts is the difference between the NOL carryover computed with the deduction of such amounts and the NOL carryover computed without the deduction of such amounts. For purposes of determining the adjusted taxable income for the deferral period, an NOL carryover to the applicable election year, reduced as provided in this paragraph (c)(3)(iii)(C), shall be allowed first against the income of the deferral period.

(D) ***Examples.*** The provisons of this paragraph (c)(3)(iii) may be illustrated by the following examples.

Example 1. S is a personal service corporation that has historically used a taxable year ending January 31. For its taxable year beginning February 1, 1987, S makes a section 444 election to retain its taxable year ending January 31. S does not satisfy the minimum distribution requirement for its first applicable election year, and the applicable amounts for that year exceed the maximum deductible amount by $54,000. Under paragraph (b)(2) of this section, the $54,000 excess is carried over to S's taxable year beginning February 1, 1988. Furthermore, if S continues its section 444 election for its taxable year beginning February 1, 1988, and desires to use the 3-year average test provided in this paragraph for such year, pursuant to paragraph (c)(3)(iii)(A) of this section the $54,000 will not be allowed to reduce adjusted taxable income for such year. See also section 280H(e) regarding the disallowance of net operating loss carrybacks to (or from) any taxable year of a corporation personal service election under section 444 applies.

Example 2. T, a personal service corporation with a section 444 election in effect, is determining whether it satisfies the 3-year average test for its second applicable election year. T had a net operating loss (NOL) for its first applicable election year of

$45,000. The NOL resulted from $150,000 of gross income less the sum of $96,000 of salary, $45,000 of other expenses, and $54,000 of deductible applicable amounts. Pursuant to paragraph (c)(3)(iii)(C) of this section, the entire amount of the $45,000 NOL is attributable to applicable amounts since the applicable amounts deducted in arriving at the NOL (*i.e.,* $54,000) were greater than the NOL (*i.e.,* $45,000). Thus, for purposes of computing the adjusted taxable income for the deferral period of T's second applicable election year, the NOL carryover to that year is $0 ($45,000 NOL less $45,000 amount of NOL attributable to applicable amounts).

(d) ***Maximum deductible amount*** —

(1) ***In general.*** For purposes of this section, the term *maximum deductible amount* means the sum of—

(i) The applicable amounts during the deferral period of the applicable election year, plus

(ii) An amount equal to the product of—

(A) The amount determined under paragraph (d)(1)(i) of this section divided by the number of months in the deferral period of the applicable election year, multiplied by

(B) The number of months in the nondeferral period of the applicable election year. For purposes of the preceding sentence, the term *nondeferral period* means the portion of the applicable election year that occurs after the portion of such year constituting the deferral period.

(2) ***Example.*** The provisions of paragraph (d)(1) of this section may be illustrated by the following example.

Example. U, an accrual basis personal service corporation with a taxable year ending January 31, makes a section 444 election to retain a year ending January 31 for its taxable year beginning February 1, 1987. For its applicable election year beginning February 1, 1987, U does not satisfy the minimum distribution requirement in paragraph (c) of this section. Furthermore, U has 3 employee-owners, G, H, and I. G and H have been employee-owners of U for 10 years. Although I has been an employee of U for 4 years, I did not become an employee-owner until December 1, 1987, when I acquired 5 of the 20 outstanding shares of U stock. For U's applicable election year beginning February 1, 1987, G earns $5,000 a month plus a $40,000 bonus on January 15, 1988, and H and I each earn $4,000 a month plus a $32,000 bonus on January 15, 1988. Thus, the total of the applicable amounts during the deferral period of the applicable election year beginning February 1, 1987 is $143,000. Based on these facts, U's deduction for applicable amounts is limited to $156,000, determined as follows—$143,000 (applicable amounts during the deferral period) plus $13,000 (applicable amounts during the deferral period, divided by the number of months in the deferral period, multiplied by the number of months in the nondeferral period).

(e) ***Special rules and definition*** —

(1) ***Newly organized personal service corporations.*** A personal service corporation is deemed to satisfy the preceding year test and the 3-year average test for the first year of the corporation's existence.

(2) ***Existing corporations that become personal service corporations.*** If an existing corporation becomes a personal service corporation and makes a section 444 election, the determination of whether the corporation satisfies the preceding year test and the 3-year average test is made by treating the corporation as though it were a personal service corporation for each of the 3 years preceding the applicable election year.

(3) ***Disallowance of NOL carryback.*** No net operating loss carryback shall be allowed to (or from) any applicable election year of a personal service corporation.

(4) ***Deferral period.*** For purposes of section 280H and the regulations thereunder, the term *deferral period* has the same meaning as under § 1.444-1T(b)(4).

(5) ***Examples.*** The provisions of this paragraph (e) may be illustrated by the following examples.

Example 1. V is a personal service corporation with a taxable year ending September 30. V makes a section 444 election for its taxable year beginning October 1, 1987, and incurs a net operating loss (NOL) for such year. Because an NOL is not allowed to be carried back from an applicable election year, V may not carry back the NOL from its first applicable election year to reduce its 1985, 1986, or 1987 taxable income.

Example 2. W, a personal service corporation, commences operations on July 1, 1990. Furthermore, for its taxable year beginning July 1, 1990, W makes a section 444 election to use a year ending September 30. Pursuant to paragraph (e)(1) of this section, W satisfies the preceding year test and the 3-year average test for its first year in existence. Thus, W may deduct, without limitation under this section, any applicable amounts for its taxable year beginning July 1, 1990.

Example 3. The facts are the same as in *Example 2.* For its taxable year beginning October 1, 1990, W incurs an NOL and is not a personal service corporation. Furthermore, W desires to carry back the NOL to its preceding taxable year (a year that was an applicable election year). Pursuant to paragraph (e)(3) of this section, W may not carry back an NOL "to" its taxable year beginning July 1, and ending September 30, 1990, because such year was an applicable election year.

(f) ***Effective date.*** The provisions of this section are effective for taxable years beginning after December 31, 1986.

[T.D. 8205, 53 FR 19711, May 27, 1988]

TAXABLE YEARS BEGINNING PRIOR TO JANUARY 1, 1986

§ 1.274-5A Substantiation requirements.

(a) ***In general.*** No deduction shall be allowed for any expenditure with respect to:

(1) Traveling away from home (including meals and lodging) deductible under section 162 or 212,

(2) Any activity which is of a type generally considered to constitute entertainment, amusement, or recreation, or with respect to a facility used in connection with such an activity, including the items specified in section 274(e), or

(3) Gifts defined in section 274, unless the taxpayer substantiates such expenditure as provided in paragraph (c) of this section. This limitation supersedes with respect to any such expenditure the doctrine of Cohan v. Commissioner (C.C.A. 2d 1930) 39 F. 2d 540. The decision held that, where the evidence indicated a taxpayer incurred deductible travel or entertainment expense but the exact

amount could not be determined, the court should make a close approximation and not disallow the deduction entirely. Section 274(d) contemplates that no deduction shall be allowed a taxpayer for such expenditures on the basis of such approximations or unsupported testimony of the taxpayer. For purposes of this section, the term *entertainment* means entertainment, amusement, or recreation, and use of a facility therefore; and the term *expenditure* includes expenses and items (including items such as losses and depreciation).

(b) ***Elements of an expenditure*** —

(1) ***In general.*** Section 274(d) and this section contemplate that no deduction shall be allowed for any expenditure for travel, entertainment, or a gift unless the taxpayer substantiates the following elements for each such expenditure:

(i) Amount;

(ii) Time and place of travel or entertainment (or use of a facility with respect to entertainment), or date and description of a gift;

(iii) Business purpose; and

(iv) Business relationship to the taxpayer of each person entertained, using an entertainment facility or receiving a gift.

(2) ***Travel.*** The elements to be proved with respect to an expenditure for travel are:

(i) ***Amount.*** Amount of each separate expenditure for traveling away from home, such as cost of transportation or lodging, except that the daily cost of the traveler's own breakfast, lunch, and dinner and of expenditures incidental to such travel may be aggregated, if set forth in reasonable categories, such as for meals, for gasoline and oil, and for taxi fares;

(ii) ***Time.*** Dates of departure and return for each trip away from home, and number of days away from home spent on business;

(iii) ***Place.*** Destinations or locality of travel, described by name of city or town or other similar designation; and

(iv) ***Business purpose.*** Business reason for travel or nature of the business benefit derived or expected to be derived as a result of travel.

(3) ***Entertainment in general.*** Elements to be proved with respect to an expenditure for entertainment are:

(i) ***Amount.*** Amount of each separate expenditure for entertainment, except that such incidental items as taxi fares or telephone calls may be aggregated on a daily basis;

(ii) ***Time.*** Date of entertainment;

(iii) ***Place.*** Name, if any, address or location, and designation of type of entertainment, such as dinner or theater, if such information is not apparent from the designation of the place;

(iv) ***Business purpose.*** Business reason for the entertainment or nature of business benefit derived or expected to be derived as a result of the entertainment and, except in the case of business meals described in section 274(e)(1), the nature of any business discussion or activity;

(v) ***Business relationship.*** Occupation or other information relating to the person or persons entertained, including name, title, or other designation, sufficient to establish business relationship to the taxpayer.

(4) ***Entertainment directly preceding or following a substantial and bona fide business discussion.*** If a taxpayer claims a deduction for entertainment directly preceding or following a substantial and bona fide business discussion on the ground that such entertainment was associated with the active conduct of the taxpayer's trade or business, the elements to be proved with respect to such expenditure, in addition to those enumerated in subparagraph (3)(i), (ii), (iii), and (v) of this paragraph, are:

(i) ***Time.*** Date and duration of business discussion;

(ii) ***Place.*** Place of business discussion;

(iii) ***Business purpose.*** Nature of business discussion, and business reason for the entertainment or nature of business benefit derived or expected to be derived as the result of the entertainment;

(iv) ***Business relationship.*** Identification of those persons entertained who participated in the business discussion.

(5) ***Gifts.*** Elements to be proved with respect to an expenditure for a gift are:

(i) ***Amount.*** Cost of the gift to the taxpayer;

(ii) ***Time.*** Date of the gift;

(iii) ***Description.*** Description of the gift;

(iv) ***Business purpose.*** Business reason for the gift or nature of business benefit derived or expected to be derived as a result of the gift; and

(v) ***Business relationship.*** Occupation or other information relating to the recipient of the gift, including name, title, or other designation, sufficient to establish business relationship to the taxpayer.

(c) ***Rules for substantiation*** —

(1) ***In general.*** A taxpayer must substantiate each element of an expenditure (described in paragraph (b) of this section) by adequate records or by sufficient evidence corroborating his own statement except as otherwise provided in this section. Section 274(d) contemplates that a taxpayer will maintain and produce such substantiation as will constitute clear proof of an expenditure for travel, entertainment, or gifts referred to in section 274. A record of the elements of an expenditure made at or near the time of the expenditure, supported by sufficient documentary evidence, has a high degree of credibility not present with respect to a statement prepared subsequent thereto when generally there is a lack of accurate recall. Thus, the corroborative evidence required to support a statement not made at or near the time of the expenditure must have a high degree of probative value to elevate such statement and evidence to the level of credibility reflected by a record made at or near the time of the expenditure supported by sufficient documentary evidence. The substantiation requirements of section 274(d) are designed to encourage taxpayers to maintain the records, together with documentary evidence, as provided in subparagraph (2) of this paragraph. To obtain a deduction for an expenditure for travel, entertainment, or gifts, a taxpayer must substantiate, in accordance with the provisions of this paragraph, each element of such an expenditure.

(2) ***Substantiation by adequate records*** —

(i) ***In general.*** To meet the "adequate records" requirements of section 274(d), a taxpayer shall maintain an account book, diary, statement of expense or similar record (as provided in subdivision (ii) of this subparagraph) and documentary evidence (as provided in subdivision (iii) of this subparagraph) which, in combination, are sufficient to establish each element of an expenditure specified in paragraph (b) of this section. It is not necessary to record information in an account book, diary, statement of expense or similar record which duplicates information reflected on a receipt so long as such account book and receipt complement each other in an orderly manner.

(ii) ***Account book, diary, etc.*** An account book, diary, statement of expense or similar record must be prepared or maintained in such manner that each recording of an element of an expenditure is made at or near the time of the expenditure.

(*a*) ***Made at or near the time of the expenditure.*** For purposes of this section, the phrase *made at or near the time of the expenditure* means the elements of an expenditure are recorded at a time when, in relation to the making of an expenditure, the taxpayer has full present knowledge of each element of the expenditure, such as the amount, time, place and business purpose of the expenditure and business relationship to the taxpayer of any person entertained. An expense account statement which is a transcription of an account book, diary, or similar record prepared or maintained in accordance with the provisions of this subdivision shall be considered a record prepared or maintained in the manner prescribed in the preceding sentence if such expense account statement is submitted by an employee to his employer or by an independent contractor to his client or customer in the regular course of good business practice.

(*b*) ***Substantiation of business purpose.*** In order to constitute an adequate record of business purpose within the meaning of section 274(d) and this subparagraph, a written statement of business purpose generally is required. However, the degree of substantiation necessary to establish business purpose will vary depending upon the facts and circumstances of each case. Where the business purpose of an expenditure is evident from the surrounding facts and circumstances, a written explanation of such business purpose will not be required. For example, in the case of a salesman calling on customers on an established sales route, a written explanation of the business purpose of such travel ordinarily will not be required. Similarly, in the case of a business meal described in section 274(e)(1), if the business purpose of such meal is evident from the business relationship to the taxpayer of the persons entertained and other surrounding circumstances, a written explanation of such business purpose will not be required.

(*c*) ***Confidential information.*** If any information relating to the elements of an expenditure, such as place, business purpose or business relationship, is of a confidential nature, such information need not be set forth in the account book, diary, statement of expense or similar record, provided such information is recorded at or near the time of the expenditure and is elsewhere available to the district director to substantiate such element of the expenditure.

(iii) ***Documentary evidence.*** Documentary evidence, such as receipts, paid bills, or similar evidence sufficient to support an expenditure shall be required for:

(*a*) Any expenditure for lodging while traveling away from home, and

(*b*) Any other expenditure of $25 or more, except, for transportation charges, documentary evidence will not be required if not readily available.

Provided, however, that the Commissioner, in his discretion, may prescribe rules waiving such requirements in circumstances where he determines it is impracticable for such documentary evidence to be required. Ordinarily, documentary evidence will be considered adequate to support an expenditure if it includes sufficient information to establish the amount, date, place, and the essential character of the expenditure. For example, a hotel receipt is sufficient to support expenditures for business travel if it contains the following: name, location, date, and separate amounts for charges such as for lodging, meals, and telephone. Similarly, a restaurant receipt is sufficient to support an expenditure for a business meal if it contains the following: name and location of the restaurant, the date and amount of the expenditure, and, if a charge is made for an item other than meals and beverages, an indication that such is the case. A document may be indicative of only one (or part of one) element of an expenditure. Thus, a cancelled check, together with a bill from the payee, ordinarily would establish the element of cost. In contrast, a cancelled check drawn payable to a named payee would not by itself support a business expenditure without other evidence showing that the check was used for a certain business purpose.

(iv) ***Retention of documentary evidence.*** The Commissioner may, in his discretion, prescribe rules under which an employer may dispose of documentary evidence submitted to him by employees who are required to, and do, make an adequate accounting to the employer (within the meaning of paragraph (e)(4) of this section) if the employer maintains adequate accounting procedures with respect to such employees (within the meaning of paragraph (e)(5) of this section).

(v) ***Substantial compliance.*** If a taxpayer has not fully substantiated a particular element of an expenditure, but the taxpayer establishes to the satisfaction of the district director that he has substantially complied with the *adequate records* requirements of this subparagraph with respect to the expenditure, the taxpayer may be permitted to establish such element by evidence which the district director shall deem adequate.

(3) ***Substantiation by other sufficient evidence.*** If a taxpayer fails to establish to the satisfaction of the district director that he has substantially complied with the “adequate records” requirements of subparagraph (2) of this paragraph with respect to an element of an expenditure, then, except as otherwise provided in this paragraph, the taxpayer must establish such element:

(i) By his own statement, whether written or oral, containing specific information in detail as to such element; and

(ii) By other corroborative evidence sufficient to establish such element.

If such element is the description of a gift, or the cost, time, place, or date of an expenditure, the corroborative evidence shall be direct evidence, such as a statement in writing or the oral testimony of persons entertained or other witness setting forth detailed information about such element, or the documentary evidence described in subparagraph (2) of this paragraph. If such element is either the business relationship to the taxpayer of persons entertained or the business purpose of an expenditure, the corroborative evidence may be circumstantial evidence.

(4) ***Substantiation in exceptional circumstances.*** If a taxpayer establishes that, by reason of the inherent nature of the situation in which an expenditure was made:

(i) He was unable to obtain evidence with respect to an element of the expenditure which conforms fully to the "adequate records" requirements of subparagraph (2) of this paragraph,

(ii) He is unable to obtain evidence with respect to such element which conforms fully to the "other sufficient evidence" requirements of subparagraph (3) of this paragraph, and

(iii) He has presented other evidence, with respect to such element, which possesses the highest degree of probative value possible under the circumstances, such other evidence shall be considered to satisfy the substantiation requirements of section 274(d) and this paragraph.

(5) ***Loss of records due to circumstances beyond control of taxpayer.*** Where the taxpayer establishes that the failure to produce adequate records is due to the loss of such records through circumstances beyond the taxpayer's control, such as destruction by fire, flood, earthquake, or other casualty, the taxpayer shall have a right to substantiate a deduction by reasonable reconstruction of his expenditures.

(6) ***Special rules*** —

(i) ***Separate expenditure*** —

(*a*) ***In general.*** For the purposes of this section, each separate payment by the taxpayer shall ordinarily be considered to constitute a separate expenditure. However, concurrent or repetitious expenses of a similar nature occurring during the course of a single event shall be considered a single expenditure. To illustrate the above rules, where a taxpayer entertains a business guest at dinner and thereafter at the theater, the payment for dinner shall be considered to constitute one expenditure and the payment for the tickets for the theater shall be considered to constitute a separate expenditure. Similarly, if during a day of business travel a taxpayer makes separate payments for breakfast, lunch, and dinner, he shall be considered to have made three separate expenditures. However, if during entertainment at a cocktail lounge the taxpayer pays separately for each serving of refreshments, the total amount expended for the refreshments will be treated as a single expenditure. A tip may be treated as a separate expenditure.

(*b*) ***Aggregation.*** Except as otherwise provided in this section, the account book, diary, statement of expense, or similar record required by subparagraph (2)(ii) of this paragraph shall be maintained with respect to each separate expenditure and not with respect to aggregate amounts for two or more expenditures. Thus, each expenditure for such items as lodging and air or rail travel shall be recorded as a separate item and not aggregated. However, at the option of the taxpayer, amounts expended for breakfast, lunch, or dinner, may be aggregated. A tip or gratuity which is related to an underlying expense may be aggregated with such expense. For other provisions permitting recording of aggregate amounts in an account book, diary, statement of expense or similar record see paragraph (b)(2)(i) and (b)(3) of this section (relating to incidental costs of travel and entertainment).

(ii) ***Allocation of expenditure.*** For purposes of this section, if a taxpayer has established the amount of an expenditure, but is unable to establish the portion of such amount which is attributable to each person participating in the event giving rise to the expenditure, such amount shall ordinarily be allocated to each participant on a pro rata basis, if such determination is material. Accordingly, the total number of persons for whom a travel or entertainment expenditure is incurred must be established in order to compute the portion of the expenditure allocable to each such person.

(iii) ***Primary use of a facility.*** Section 274(a) (1)(B) and (2)(C) denies a deduction for any expenditure paid or incurred before January 1, 1979, with respect to a facility, or paid or incurred at any time with respect to a club, used in connection with an entertainment activity unless the taxpayer establishes that the facility (including a club) was used primarily for the furtherance of his trade or business. A determination whether a facility before January 1, 1979, or a club at any time was used primarily for the futherance of the taxpayer's trade or business will depend upon the facts and circumstances of each case. In order to establish that a facility was used primarily for the furtherance of his trade or business, the taxpayer shall maintain records of the use of the facility, the cost of using the facility, mileage or its equivalent (if appropriate), and such other information as shall tend to establish such primary use. Such records of use shall contain:

(*a*) For each use of the facility claimed to be in furtherance of the taxpayer's trade or business, the elements of an expenditure specified in paragraph (b) of this section, and

(*b*) For each use of the facility not in furtherance of the taxpayer's trade or business, an appropriate description of such use, including cost, date, number of persons entertained, nature of entertainment and, if applicable, information such as mileage or its equivalent. A notation such as “personal use” or “family use” would, in the case of such use, be sufficient to describe the nature of entertainment.

If a taxpayer fails to maintain adequate records concerning a facility which is likely to serve the personal purposes of the taxpayer, it shall be presumed that the use of such facility was primarily personal.

(iv) ***Additional information.*** In a case where it is necessary to obtain additional information, either:

(*a*) To clarify information contained in records, statements, testimony, or documentary evidence submitted by a taxpayer under the provisions of paragraph (c)(2) or (c)(3) of this section, or

(*b*) To establish the reliability or accuracy of such records, statements, testimony, or documentary evidence, the district director may, notwithstanding any other provision of this section, obtain such additional information as he determines necessary to properly implement the provisions of section 274 and the regulations thereunder by personal interview or otherwise.

(7) ***Specific exceptions.*** Except as otherwise prescribed by the Commissioner, substantiation otherwise required by this paragraph is not required for:

(i) Expenses described in section 274 (e)(2) relating to food and beverages for employees, section 274(e)(3) relating to expenses treated as compensation, section 274(e)(8) relating to items available to the public, and section 274(e)(9) relating to entertainment sold to customers, and

(ii) Expenses described in section 274(e)(5) relating to recreational, etc., expenses for employees, except that a taxpayer shall keep such records or other evidence as shall establish that such expenses were for activities (or facilities used in connection therewith) primarily for the benefit of employees other than employees who are officers, shareholders or other owners (as defined in section 274(e)(5)), or highly compensated employees.

(d) ***Disclosure on returns.*** The Commissioner may, in his discretion, prescribe rules under which any taxpayer claiming a deduction for entertainment, gifts, or travel or any other person receiving advances, reimbursements, or allowances for such items, shall make disclosure on his tax return with respect to such items. The provisions of this paragraph shall apply notwithstanding the provisions of paragraph (e) of this section.

(e) ***Reporting and substantiation of expenses of certain employees for travel, entertainment, and gifts*** —

(1) ***In general.*** The purpose of this paragraph is to provide rules for reporting and substantiation of certain expenses paid or incurred by taxpayers in connection with the performance of services as employees. For purposes of this paragraph, the term *business expenses* means ordinary and necessary expenses for travel, entertainment, or gifts which are deductible under section 162, and the regulations thereunder, to the extent not disallowed by section 274(c). Thus, the term *business expenses* does not include personal, living or family expenses disallowed by section 262 or travel expenses disallowed by section 274(c), and advances, reimbursements, or allowances for such expenditures must be reported as income by the employee.

(2) ***Reporting of expenses for which the employee is required to make an adequate accounting to his employer*** —

(i) ***Reimbursements equal to expenses.*** For purposes of computing tax liability, an employee need not report on his tax return business expenses for travel, transportation, entertainment, gifts, and similar purposes, paid or incurred by him solely for the benefit of his employer for which he is required to, and does, make an adequate accounting to his employer (as defined in subparagraph (4) of this paragraph) and which are charged directly or indirectly to the employer (for example, through credit cards) or for which the employee is paid through advances, reimbursements, or otherwise, provided that the total amount of such advances, reimbursements, and charges is equal to such expenses.

(ii) ***Reimbursements in excess of expenses.*** In case the total of the amounts charged directly or indirectly to the employer or received from the employer as advances, reimbursements, or otherwise, exceeds the business expenses paid or incurred by the employee and the employee is required to, and does, make an adequate accounting to his employer for such expenses, the employee must include such excess (including amounts received for expenditures not deductible by him) in income.

(iii) ***Expense in excess of reimbursements.*** If an employee incurs deductible business expenses on behalf of his employer which exceed the total of the amounts charged directly or indirectly to the employer and received from the employer as advances, reimbursements, or otherwise, and the employee wishes to claim a deduction for such excess, he must:

(*a*) Submit a statement as part of his tax return showing all of the information required by subparagraph (3) of this paragraph, and,

(*b*) Maintain such records and supporting evidence as will substantiate each element of an expenditure (described in paragraph (b) of this section) in accordance with paragraph (c) of this section.

(3) ***Reporting of expenses for which the employee is not required to make an adequate accounting to his employer.*** If the employee is not required to make an adequate accounting to his employer for his business expenses or, though required, fails to make an adequate accounting for such expenses, he must submit, as a part of his tax return, a statement showing the following information:

(i) The total of all amounts received as advances or reimbursements from his employer, including amounts charged directly or indirectly to the employer through credit cards or otherwise; and

(ii) The nature of his occupation, the number of days away from home on business, and the total amount of business expenses paid or incurred by him (including those charged directly or indirectly to the employer through credit cards or otherwise) broken down into such categories as transportation, meals and lodging while away from home overnight, entertainment, gifts, and other business expenses.

In addition, he must maintain such records and supporting evidence as will substantiate each element of an expenditure (described in paragraph (b) of this section) in accordance with paragraph (c) of this section.

(4) ***Definition of an "adequate accounting" to the employer.*** For purposes of this paragraph an adequate accounting means the submission to the employer of an account book, diary, statement of expense, or similar record maintained by the employee in which the information as to each element of an expenditure (described in paragraph (b) of this section) is recorded at or near the time of the expenditure, together with supporting documentary evidence, in a manner which conforms to all the "adequate records" requirements of paragraph (c)(2) of this section. An adequate accounting requires that the employee account for all amounts received from his employer during the taxable year as advances, reimbursements, or allowances (including those charged directly or indirectly to the employer through credit cards or otherwise) for travel, entertainment, and gifts. The methods of substantiation allowed under paragraph (c)(4) or (c)(5) of this section also will be considered to be an adequate accounting if the employer accepts an employee's substantiation and establishes that such substantiation meets the requirements of such paragraph (c)(4) or (c)(5). For purposes of an adequate accounting the method of substantiation allowed under paragraph (c)(3) of this section will not be permitted.

(5) ***Substantiation of expenditures by certain employees.*** An employee who makes an adequate accounting to his employer within the meaning of this paragraph will not again be required to substantiate such expense account information except in the following cases:

(i) An employee whose business expenses exceed the total of amounts charged to his employer and amounts received through advances, reimbursements or otherwise and who claims a deduction on his return for such excess;

(ii) An employee who is related to his employer within the meaning of section 267(b) but for this purpose the percentage referred to in section 267(b)(2) shall be 10 percent; and

(iii) Employees in cases where it is determined that the accounting procedures used by the employer for the reporting and substantiation of expenses by such employees are not adequate, or where it cannot be determined that such procedures are adequate. The district director will determine whether the employer's accounting procedures are adequate by considering the facts and circumstances of each case, including the use of proper internal controls. For example, an employer should require that an expense account must be verified and approved by a responsible person other than the person incurring such expenses. Accounting procedures will be considered inadequate to the extent that the employer does not require an adequate accounting from his employees as defined in subparagraph (4) of this paragraph, or does not maintain such substantiation. To the extent an employer fails to maintain adequate accounting procedures he will thereby obligate his employees to separately substantiate their expense account information.

(f) ***Substantiation by reimbursement arrangements or per diem, mileage, and other traveling allowances.*** The Commissioner may, in his discretion, prescribe rules under which:

(1) Reimbursement arrangements covering ordinary and necessary expenses of traveling away from home (exclusive of transportation expenses to and from destination),

(2) Per diem allowances providing for ordinary and necessary expenses of traveling away from home (exclusive of transportation costs to and from destination), and

(3) Mileage allowances providing for ordinary and necessary expenses of transportation while traveling away from home, will, if in accordance with reasonable business practice, be regarded as equivalent to substantiation by adequate records or other sufficient evidence for purposes of paragraph (c) of this section of the amount of such traveling expenses and as satisfying, with respect to the amount of such traveling expenses, the requirements of an adequate accounting to the employer for purposes of paragraph (e)(4) of this section. If the total travel allowance received exceeds the deductible traveling expenses paid or incurred by the employee, such excess must be reported as income on the employee's return. See paragraph (h) of this section relating to the substantiation of meal expenses while traveling.

(g) ***Reporting and substantiation of certain reimbursements of persons other than employees*** —

(1) ***In general.*** The purpose of this paragraph is to provide rules for the reporting and substantiation of certain expenses for travel, entertainment, and gifts paid or incurred by one person (hereinafter termed “independent contractor”) in connection with services performed for another person other than an employer (hereinafter termed “client or customer”) under a reimbursement or other expense allowance arrangement with such client or customer. For purposes of this paragraph, the term *business expenses* means ordinary and necessary expenses for travel, entertainment, or gifts which are deductible under section 162, and the regulations thereunder, to the extent not disallowed by section 274(c). Thus, the term *business expenses* does not include personal, living or family expenses disallowed by section 262 or travel expenses disallowed by section 274(c), and reimbursements for such expenditures must be reported as income by the independent contractor. For purposes of this paragraph, the term *reimbursements* means advances, allowances, or reimbursements received by an independent contractor for travel, entertainment, or gifts, in connection with the performance by him of services for his client or customer, under a reimbursement or other expense allowance arrangement with his client or customer, and includes amounts charged directly or indirectly to the client or customer through credit card systems or otherwise. See paragraph (h) of this section relating to the substantiation of meal expenses while traveling.

(2) ***Substantiation by independent contractors.*** An independent contractor shall substantiate, with respect to his reimbursements, each element of an expenditure (described in paragraph (b) of this section) in accordance with the requirements of paragraph (c) of this section; and, to the extent he does not so substantiate, he shall include such reimbursements in income. An independent contractor shall so substantiate a reimbursement for entertainment regardless of whether he accounts (within the meaning of subparagraph (3) of this paragraph) for such entertainment.

(3) ***Accounting to a client or customer under section 274(e)(4)(B).*** Section 274(e)(4)(B) provides that section 274(a) (relating to disallowance of expenses for entertainment) shall not apply to expenditures for entertainment for which an independent contractor has been reimbursed if the independent contractor accounts to his client or customer to the extent provided by section 274(d). For purposes of section 274(e)(4)(B), an independent contractor shall be considered to account to

his client or customer for an expense paid or incurred under a reimbursement or other expense allowance arrangement with his client or customer if, with respect to such expense for entertainment, he submits to his client or customer adequate records or other sufficient evidence conforming to the requirements of paragraph (c) of this section.

(4) ***Substantiation by client or customer.*** A client or customer shall not be required to substantiate, in accordance with the requirements of paragraph (c) of this section, reimbursements to an independent contractor for travel and gifts, or for entertainment unless the independent contractor has accounted to him (within the meaning of section 274(e)(4)(B) and subparagraph (3) of this paragraph) for such entertainment. If an independent contractor has so accounted to a client or customer for entertainment, the client or customer shall substantiate each element of the expenditure (as described in paragraph (b) of this section) in accordance with the requirements of paragraph (c) of this section.

(h) ***Authority for an optional method of computing meal expenses while traveling.*** The Commissioner may establish a method under which a taxpayer may elect to use a specified amount or amounts for meals while traveling in lieu of substantiating the actual cost of meals. The taxpayer would not be relieved of substantiating the actual cost of other travel expenses as well as the time, place, and business purpose of the travel. See paragraph (b)(2) and (c) of this section.

(i) ***Effective date*** —

(1) ***In general.*** Section 274(d) and this section apply with respect to taxable years ending after December 31, 1962, but only with respect to period after that date.

(2) ***Certain meal expenses.*** Paragraph (h) of this section is effective for expenses paid or incurred after December 31, 1982.

[T.D. 6630, 27 FR 12931, Dec. 29, 1972, as amended by T.D. 7226, 37 FR 26711, Dec. 15, 1972; T.D. 7909, 48 FR 40370, Sept. 7, 1983; 48 FR 41017, Sept. 13, 1983; T.D. 8051, 50 FR 36576, Sept. 9, 1985. Redesignated by T.D. 8715, 62 FR 13990, Mar. 25, 1997; T.D. 8996, 67 FR 35008, May 17, 2002]

TERMINAL RAILROAD CORPORATIONS AND THEIR SHAREHOLDERS

§ 1.281-1 In general.

Section 281 provides special rules for the computation of the taxable incomes of a terminal railroad corporation and its shareholders when the terminal railroad corporation, as a result of taking related terminal income into account, reduces a charge which was made or which would be made for related terminal services furnished to a railroad corporation. Section 281 and paragraphs (a) and (b) of § 1.281-2 provide that the “reduced amount” described in paragraph (c) of § 1.281-2 is not includable in gross income of the terminal railroad corporation, is not treated as a dividend or other distribution to its railroad shareholders, and is not treated as an amount paid -or incurred by the railroad shareholders to the terminal railroad corporation. Section 281 and paragraph (a)(2) of § 1.281-2 provide that no deduction otherwise allowable to a terminal railroad corporation shall be disallowed as a result of the “reduced amount” described in paragraph (c) of § 1.281-2. Section 1.281-3 defines the terms *terminal railroad corporation, related terminal income, related terminal services, agreement,* and *railroad corporation.* Section 1.281-4 describes the effective dates and special rules for application of section 281 to taxable years ending before October 23, 1962.

[T.D. 7356, 40 FR 23732, June 2, 1975]

§ 1.281-2 Effect of section 281 upon the computation of taxable income.

(a) *Computation of taxable income of terminal railroad corporations* —

(1) ***Income not considered received or accrued.*** A terminal railroad corporation (as defined in paragraph (a) of § 1.281-3) shall not be considered to have received or accrued the "reduced amount" described in paragraph (c) of this section in the computation of its taxable income. Thus, income is not to be considered accrued or actually or constructively received by a terminal railroad corporation where, in the manner described in paragraph (c) of this section,

(i) a charge which would be made to any railroad corporation for related terminal services is not made, or

(ii) a portion of any liability payable by any railroad corporation with respect to related terminal services is discharged.

(2) ***Deduction not disallowed.*** In the computation of the taxable income of a terminal railroad corporation, a deduction relating to a "reduced amount", described in paragraph (c) of this section, which is otherwise allowable to it under chapter 1 of the Code (without regard to sec. 277) shall not be disallowed by reason of section 281. Thus, deductions for expenses attributable to services rendered to a shareholder are not to be disallowed to a terminal railroad corporation merely because, in the manner described in paragraph (c) of this section,

(i) a charge which would be made to any railroad corporation for related terminal services is not made, or

(ii) a portion of any liability payable by any railroad corporation with respect to related terminal services is discharged. To the extent that section 281 applies to a deduction relating to a "reduced amount", such deduction shall not be disallowed under section 277.

(b) *Computation of taxable income of shareholders* —

(1) ***Income not considered received or accrued.*** A shareholder of a terminal railroad corporation shall not be considered to have received or accrued any "reduced amount" (described in paragraph (c) of this section) in the computation of the shareholder's taxable income. Thus a dividend is not to be considered actually or constructively received by a shareholder of a terminal railroad corporation merely because, in the manner described in paragraph (c) of this section,

(i) a charge which would be made to the shareholder or any other railroad corporation for related terminal services is not made, or

(ii) a portion of any liability payable by it or any other railroad corporation with respect to related terminal services is discharged.

(2) ***Expenses not considered paid or incurred.*** In the computation of the taxable income of a shareholder of a terminal railroad corporation, the shareholder shall not be considered to have paid or incurred any "reduced amount" (described in paragraph (c) of this section). Thus, a shareholder of the terminal railroad corporation may not deduct as an expense for related terminal services (as defined in paragraph (c) of § 1.281-3) an amount in excess of the net cost to it of such services.

(c) *Amounts to which section 281 applies* —

(1) ***Reduced amount.*** For purposes of this section, the term *reduced amount* means, subject to the limitation of paragraph (c)(4) of this section, the amount by which:

(i) A charge which would be made by a terminal railroad corporation for its taxable year for related terminal services provided to a railroad corporation; or

(ii) A liability of a railroad corporation, resulting from a charge made by a terminal railroad corporation for its taxable year, with respect to related terminal services provided by the terminal railroad corporation, is reduced by reason of the terminal railroad corporation's taking into account, pursuant to an agreement (as defined in paragraph (d) of § 1.281-3), related terminal income (as defined in paragraph (b) of § 1.281-3) received or accrued (without regard to section 281) during such taxable year.

(2) ***Charge which would be made.*** For purposes of this section, a "charge which would be made" by a terminal railroad corporation is the amount that would be charged to any railroad corporation for related terminal services provided if the terminal railroad corporation made the charge without taking related terminal income into account.

(3) ***Reduction resulting from related terminal income.*** For purposes of subparagraph (1) of this section, a charge or a liability is reduced by taking related terminal income into account to the extent that:

(i) Related terminal income is received or accrued (without regard to section 281) by the terminal railroad corporation for its taxable year in which the charge or liability is reduced; and

(ii) The charge or liability in question would have been larger than it is had such income not been received or accrued (without regard to section 281).

The reduction must be made (directly or indirectly) on the books of the terminal railroad corporation, and in fact, for the same taxable year for which the charge would be made or for which the liability is incurred. The reduction of the charge or liability must be taken into account by the terminal railroad corporation in ascertaining the income, profit, or loss for such taxable year for the purpose of reports to shareholders and the Interstate Commerce Commission, and for credit purposes.

(4) ***Limitation.*** To the extent that a reduced amount (as described in paragraph (c)(1) of this section but without regard to the limitation under this subparagraph) would operate either to create or to increase a net operating loss for the terminal railroad corporation, this section shall not apply. Therefore, if a portion of a liability is discharged (in the manner described in this paragraph) and the discharged portion of the liability exceeds an amount equal to the terminal railroad corporation's gross income minus the deductions allowed by chapter 1 of the Code (computed with regard to the modifications specified in section 172(d) but without regard to section 281 and this section), then section 281 and this section shall not apply to such excess. The limitation described in this subparagraph shall apply only to taxable years of terminal railroad corporations ending after October 23, 1962.

(d) ***Examples.*** The provisions of this section may be illustrated by the following examples. In these examples, references to "before the application of section 281", "after the application of section 281", "taxable income", and "allowable deductions" take no account of section 277, which may apply to deductions to which section 281 does not apply.

> *Example 1.* (i) *Facts.* The T Company is a terminal railroad corporation which charges its three equal shareholders, the X, Y, and Z railroad corporations, a rental calculated monthly on a wheelage or user basis for the use of its services and facilities. The T Company and each of its shareholders report income on the calendar year basis. A written lease agreement to which all of

the shareholders were parties was entered into in 1947. The agreement provides that at the end of each year the liabilities of each of the shareholders resulting from charges for rental obligations with respect to related terminal services shall be reduced by the shareholder's one-third share of the net income from each source of revenue that produced income (computed before reduction for Federal income taxes). For the calendar year 1973, the T Company's charges to its shareholders include the following charges for related terminal services: $35,000 to the X Company, $25,000 to the Y Company, and $20,000 to the Z Company. Thus, prior to reduction, total shareholder liabilities to the T Company for related terminal services are $80,000 at the end of 1973. The T Company's net income from all sources (before reduction of liabilities pursuant to the 1947 agreement and before reduction for Federal income taxes) and its taxable income, before the application of section 281, for 1973 are $36,000 determined as follows:

Source	Gross income	Allowable deductions	Income (or loss)
Related terminal services performed:			
For shareholders	$80,000	$65,000	$15,000
For nonshareholders	46,000	37,000	9,000
Related terminal income	126,000	102,000	24,000
Nonrelated terminal income	30,000	18,000	12,000
Total	156,000	120,000	36,000

The liability of each shareholder is, pursuant to the agreement, discharged in part by the T Company crediting $12,000 against the rental due from each shareholder for a total discharge of liabilities of $36,000 (the net income from all sources), resulting in net shareholder liabilities owing to the T Company at the end of 1973 of $44,000 ($80,000 less $36,000): $23,000 from the X Company, $13,000 from the Y Company, and $8,000 from the Z Company.

(ii) *Effect on terminal railroad corporation.* The reduced amount to which this section applies is $24,000 (related terminal income of $9,000 from nonshareholders and $15,000 from shareholders). Thus, to the extent of $24,000, the T Company is not considered to have received or accrued income from the discharged liabilities of $36,000. Similarly, to the extent of the same $24,000, the T Company is not disallowed deductions for expenses merely by reason of the discharge. The T Company's taxable income for 1973 after application of section 281 is $12,000,

computed as follows:

Gross income ($156,000 less $24,000)	$132,000
Less allowable deductions	120,000
Taxable income	12,000

(iii) *Effect on shareholders*—The reduced amount of $24,000 shall not be deemed to constitute either a dividend to the shareholders of the T Company or an expense paid or incurred by them. Thus, under the facts described, neither the X Company, the Y Company, nor the Z Company shall be considered to have received or accrued a dividend of $8,000, or to have paid or incurred an expense of $8,000. Assuming the X Company's taxable income for 1973 before the application of section 281 would have been $43,200, computed in the following manner, its taxable income for 1973 after the application of section 281 is $50,000, determined as follows:

	Before the application of sec. 281	After the application of sec. 281
Gross income:		
From sources other than T Co	$146,000	$146,000
Dividend considered received because of T Co.'s discharge of liabilities of $12,000	12,000	4,000
Total	158,000	150,000
Less allowable deductions:		
From sources other than T Co	69,600	69,600
85 percent dividend received deduction under sec. 243 attributable to dividend considered received because of T Co.'s discharge of liabilities	10,200	3,400
Expenses for accrued charges for related terminal services performed by T Co	35,000	27,000
	114,800	100,000
Taxable income	43,200	50,000

Example 2. Assume the same facts as in *Example 1,* except that the charges to each of the shareholders for related terminal services for 1973 were as follows: $35,000 to the X Company, $40,000 to the Y Company, and $5,000 to the Z Company. Assume further that the Z Company, prior to the reduction in liabilities at the end of 1973, owed the T Company an additional $4,000 resulting from charges for 1972 for related terminal services and $6,000 resulting from the purchase of equipment. Since only $21,000 (X Company $8,000, Y Company $8,000, Z Company $5,000) of the liabilities which were

discharged resulted from charges made for 1973 for related terminal services, the reduced amount to which this section applies is $21,000 (instead of $24,000 as in *Example 1*). Thus, the T Company's taxable income for 1973 would be $15,000 ($36,000 less $21,000 reduced amount) and the amount which shall be considered not to have been received or accrued as a dividend nor paid or incurred as an expense of each shareholder is $8,000 for the X Company, $8,000 for the Y Company, and $5,000 for the Z Company.

Example 3. Assume the same facts as in *Example 1,* except that the allowable deductions with respect to nonrelated terminal activities were $39,000 instead of $18,000. The T Company's net income from all sources (before reduction for Federal income taxes) and its taxable income, before the application of section 281, is therefore $15,000, determined as follows:

Source	Gross income	Allowable deductions	Income (or loss)
Related terminal income	$126,000	$102,000	$24,000
Nonrelated terminal income	30,000	39,000	(9,000)
Total	156,000	141,000	15,000

The liability of each shareholder is nevertheless discharged in part, pursuant to the agreement, by the T Company crediting $8,000 against the rental due from each shareholder for a total discharge of liabilities of $24,000 (the net income from each source of revenue that produced income). Assume further that none of the modifications specified in section 172(d) apply. If the limitation under paragraph (c)(4) of this section were not applied, the reduced amount for the purposes of this section would be $24,000, and the operation of this section would result in a net operating loss of $9,000, since the allowable deductions of $141,000 would exceed the gross income of $132,000 ($156,000 less discharged liabilities of $24,000) by that amount. Because of the limitation under paragraph (c)(4) of this section, however, $9,000 is not included in the reduced amount to which this section applies. Accordingly, the reduced amount is $15,000 (instead of $24,000 as in *Example 1*). Thus, the T Company's taxable income for 1973 would be zero ($15,000 less the $15,000 reduced amount), and the amount which each shareholder shall be considered not to have received or accrued as a dividend nor paid or incurred as an expense is $5,000.

Example 4. Assume the same facts as in *Example 1,* except that under the agreement income from the terminal parking lot would not reduce the shareholders' liabilities. Assume further that such income amounted to $3,000 of the total related terminal income of $24,000 for the taxable year 1973. The liability of each shareholder therefore is discharged by crediting $11,000 against its rental due for a total discharge of liabilities of $33,000. The reduced amount to which this section applies is $21,000 ($24,000 less $3,000) since only to the extent of $21,000 would there have been no such reduction under the agreement if there were no related terminal income.

Example 5. Assume the same facts as in *Example 1,* except that, pursuant to the agreement, the A Company, a nonshareholder railroad corporation, is to have its liabilities resulting from charges for rental obligations reduced equally with each of the shareholders. Assume further that the T Company's charges to the A Company for the calendar year 1973 included $15,000 for related terminal services and that the liability of each shareholder and the A Company is discharged in part pursuant to the agreement by the T Company crediting $9,000 against the rental due from each. The reduced amount to which this section applies is $24,000. Thus, the T Company's taxable income for 1973 is $12,000, and each shareholder shall not be considered to have received or accrued as a dividend nor paid or incurred as an expense $6,000 ($24,000/ $36,000 × $9,000) merely because of the discharge of its own liability. Similarly, each shareholder shall not be considered to have received or accrued as a dividend nor paid or incurred as an expense $2,000 (1/3 × ($24,000/$36,000 × $9,000)) merely because of the discharge of the liability of the A Company. Section 281 does not apply to the determination of the tax consequences of the transaction to the A Company. Similarly, the section does not apply to the determination of the tax consequences to the shareholders resulting from that portion of the discharge of the liability of the A Company which is attributable to the application of income which is not related terminal income ($3,000). Hence, such consequences shall be determined under the sections of the Internal Revenue Code which govern in the absence of section 281.

Example 6. (i) *Facts.* The TR Company is a terminal railroad corporation with three equal shareholders, the M, N, and O Railroad Corporations. The TR Company and each of its shareholders report income on the calendar year basis. Pursuant to a written agreement entered into in 1947 to which all shareholders were parties, the TR Company makes one annual charge to each of the three shareholders at the end of each year for the difference between the cost of operations, allocated on a wheelage or user basis for the use of its services and facilities provided to the shareholder during the year, and one-third of its net income from all other sources (computed before reduction for Federal income taxes). The TR Company's taxable income, before the application of section 281, for 1973 is $21,000 determined as follows:

Source	Gross income	Allowable deductions	Income (or loss)
Related terminal services performed:			
For shareholders	$65,000	$65,000	0
For nonshareholders	46,000	37,000	$9,000
Related terminal income	111,000	102,000	9,000
Nonrelated terminal income from nonshareholders	30,000	18,000	12,000
Total	141,000	120,000	21,000

For the calendar year 1973, the TR company's charges to its shareholders are $23,000 ($30,000 less $7,000) to the M company, $13,000 ($20,000 less $7,000) to the N company, and $8,000 ($15,000 less $7,000) to the O company for a total of $44,000 for related terminal services.

(ii) *Effect on terminal railroad corporation.* The reduced amount to which this section applies is $9,000. The TR company is not considered to have received or accrued income of $9,000 (related terminal income) merely because the charge of $21,000 (net income from all sources other than shareholders) was not made. Similarly, to the extent of $9,000, the TR company is not disallowed deductions for expenses merely because the full cost of services was not charged. The TR company's taxable income for 1973 after application of section 281, is $12,000, computed as follows:

Gross income ($141,000 less $9,000 charges not made)	$132,000
Less allowable deductions	120,000
Taxable income	12,000

(iii) *Effect on shareholders.* Neither the M company, the N company, nor the O company shall be considered to have received or accrued a dividend of $3,000 nor to have paid or incurred an expense of $3,000 merely by reason of the reduced charges. Thus, assuming the M company's taxable income for 1973 before the application of section 281 would have been $47,450, computed in the following manner, its taxable income for 1973 after the application of section 281 is $50,000, determined as follows:

	Before the application of sec. 281	After the application of sec. 281
Gross income:		
From sources other than TR Co	$146,000	$146,000
Dividend considered received because of TR Co.'s reduction of charges	7,000	4,000
Total	153,000	150,000
Less allowable deductions:		
From sources other than TR Co	69,600	69,600
85 percent dividend received deduction under sec. 243 attributable to dividend considered received because of TR Co.'s reduction of charges	5,950	3,400
Expenses for accrued charges for related terminal services performed by TR Co	30,000	27,000
	105,550	100,000
Taxable income	47,450	50,000

[T.D. 7356, 40 FR 23733, June 2, 1975]

§ 1.281-3 Definitions.

(a) ***Terminal railroad corporation.*** The term *terminal railroad corporation* means a corporation which, in the taxable year, meets all of the following conditions:

(1) The corporation and each of its shareholders must be domestic corporations. Thus, all of the shareholders of the corporation, as well as the corporation itself, must be corporations which were organized or created in the United States, including only the States and the District of Columbia, or under the law of the United States or of any State or territory.

(2) All of the shareholders must be railroad corporations which are subject to Part I of the Interstate Commerce Act. Thus, if any shareholder of the corporation, regardless of the class or percentage of stock owned, is not subject to the jurisdiction of the Interstate Commerce Commission under part I of that Act, the corporation cannot qualify as a terminal railroad corporation.

(3) The corporation must not be a member of an affiliated group of corporations (as defined in section 1504), other than as a common parent corporation. For this purpose it is immaterial whether or not the affiliated group has ever made a consolidated income tax return. Thus, if the X railroad corporation owns 80 percent of all of the outstanding stock of the Y railroad corporation, the X railroad corporation may qualify, but the Y railroad corporation cannot qualify, as a terminal railroad corporation.

(4) The primary business of the corporation must be that of providing to domestic railroad corporations subject to Part I of the Interstate Commerce Act and to the shippers and passengers of such railroad corporations one or more of the following facilities or services:

(i) Railroad terminal facilities,

(ii) railroad switching facilities,

(iii) railroad terminal services, or

(iv) railroad switching services. The designated facilities and services include the furnishing of terminal trackage, the operation of stockyards or a union passenger or freight station, and the operation of railroad bridges and ferries. The providing of the designated facilities includes the leasing of those facilities. A corporation shall be considered as having established that its primary business is that of providing the designated facilities and services if more than 50 percent of its gross income (computed without regard to section 281, and excluding dividends and gains and losses from the disposition of capital assets or property described in section 1231(b)) for the taxable year is derived from those sources. The fact that income from a service or facility is included within the definition of related terminal income is immaterial for purposes of determining whether that service or facility is one which is designated in this subparagraph. Thus, although income from the operation of a commuter railroad line may be related terminal income, a corporation whose primary business is the operation of that facility is not a terminal railroad corporation, since its primary business is not the providing of the designated facilities or services.

(5) A substantial part of the services rendered by the corporation for the taxable year must be rendered to one or more of its shareholders. For purposes of this requirement, providing the use of facilities shall be considered the rendering of services.

(6) Each shareholder of the corporation must compute its taxable income on the basis of a taxable year which either begins or ends on the same day as the taxable year of the corporation.

(b) *Related terminal income* —

(1) ***In general.*** Related terminal income is, generally, the type of income normally earned from the operation of a railroad terminal. The term *related terminal income* means the taxable income (computed without regard to sections 172, 277, or 281) which the terminal railroad corporation derives for the taxable year from the sources enumerated in paragraph (b)(2) of this section. Related terminal income must be derived from direct provision of the specified facilities or services by the terminal corporation itself. Thus, income consisting of rent from a lease of a terminal facility by a terminal corporation to a railroad user would qualify; but dividends from a corporation in which the terminal corporation owned stock and which provided such facilities or services to others would not qualify. The term does not include gain or loss derived from the sale, exchange, or other disposition of capital assets or section 1231 assets, whether or not section 1245 or section 1250 applies to part or all of that gain. For example, the term does not apply to gain from the sale of a terminal building or terminal equipment. All direct and indirect expenses and other deductible items attributable to related terminal services or facilities shall be deducted in determining related terminal income. Attribution shall be determined in accordance with customary railroad accounting practices accepted by the Interstate Commerce Commission, except that interest paid with respect to the indebtedness of a terminal railroad corporation shall be deducted from related terminal income to the extent that the proceeds from the indebtedness were directly or indirectly applied to facilities or activities producing such income. The district director may either accept the use of the taxpayer's method of determining the application of the proceeds of all indebtedness of such corporation or prescribe the use of another method which, under all the facts and circumstances, appears to reflect more accurately the probable application of such proceeds.

(2) ***Sources of related terminal income.*** The term *related terminal income* includes only income derived from one or more of the following sources:

(i) From services or facilities of a character ordinarily and regularly provided by terminal railroad corporations for railroad corporations or for the employees, passengers, or shippers of railroad corporations. Whether the services or facilities are of a character ordinarily and regularly provided by terminal railroad corporations is to be determined by accepted industry practice. The fact that nonterminal businesses may also provide such services or facilities is immaterial. However, there must be a direct relationship between the service or facility provided and the operation of the terminal, including the operation of its trackage and switching facilities. Thus, the term *related terminal income* includes income derived from operating or leasing switching facilities and terminal facilities, such as income from charges to railroad corporations for the use of a union passenger or freight station. Also included for this purpose is income derived from charges to railroad shippers, including express companies and freight forwarders, for the use of sheds or warehouses, even though not directly intended for railroad use. The term includes income derived from leasing or operating restaurants, drugstores, barbershops, newsstands, ticket agencies, banking facilities, car rental facilities, or other similar facilities for passengers, in waiting rooms or along passenger concourses. Similarly, the term includes income derived from operating or leasing passenger parking facilities, and from renting taxicab space, located on or adjacent to the terminal premises. Although the term does include income derived from the operation of a small hotel operated primarily for and usually occupied primarily by the employees of the railroad corporations, it does not include income derived from the operation of a hotel for passengers or other persons.

(ii) From any railroad corporation for services or facilities provided by the terminal railroad corporation in connection with railroad operations. A service or a facility is provided in connection with railroad operations if it is of a character ordinarily and regularly availed of by railroad corporations. For purposes of this subdivision, the income must be derived from railroad corporations. Thus, in addition to the income derived from sources described in paragraph (b)(2)(i) of this section, the term *related terminal income* includes income derived from switching facilities or leasing to any railroad corporation, or operating for the benefit of such corporation, a beltline or bypass railroad leading to or from the terminal premises. Also included are income derived from the rental of office space (whether or not services are provided to the occupants) in the terminal building to any railroad corporation for that corporation's administrative or operating divisions, and income derived from tolls charged to any railroad corporation for the use of a railroad bridge or ferry.

(iii) From the use by persons other than railroad corporations of a portion of a facility, or of a service, which is used primarily for railroad purposes. A facility or service is used primarily for railroad purposes if the predominant reason for its continued operation or provision is the furnishing of facilities or services described in either subdivision (i) or (ii) of this subparagraph. The determination required by this subdivision is to be made independently for each separate facility or service. Two substantial portions of a single structure may be considered separate facilities, depending upon the respective uses made of each. Moreover, any substantial addition, constructed after October 23, 1962, to a facility shall be considered a separate facility.

The term *related terminal income* includes income produced by operating a commuter service or by renting tracks and facilities for a commuter service to an independent operator. The term also includes the sale or rental of advertising space at a terminal facility. If the conditions described in this subdivision are satisfied, the term *related terminal income* may include income which has no connection with the operation of the terminal. Thus, if a terminal railroad corporation operates a railroad bridge primarily to provide railroad corporations a means of crossing a river and the lower level of the bridge contains a roadway for similar use by automobiles, the term includes income derived from the tolls charged to the automobiles for the use of the bridge roadway. However, upon the discontinuance of operations of the railroad level of the bridge, the term would cease to include the automobile tolls. If excess steam from a steam plant operated primarily to supply steam to the terminal is sold to another business in the neighborhood, the term would include the income derived from such sale. However, because an oil or gas well or a mine constitutes a separate facility, the term *related terminal income* does not include income derived in any form from a deposit of oil, natural gas, or any other mineral located on property owned or leased by the terminal railroad corporation.

Similarly, while the term includes income derived from the rental of a small number of offices located in the terminal building (whether or not the lessees are railroad corporations), it does not include income derived from the leasing or operation, for the use of the general public, of a large number of offices or a large number of rooms for lodging, whether or not the space is physically part of the same structure as the terminal. Moreover, the term does not include income derived from the rental of offices to the general public in an addition to the terminal building constructed after October 23, 1962, unless the addition is primarily used for railroad purposes and the offices rented to the general public do not constitute a separate facility in the addition. Whether or not income from the addition is determined to be related terminal income, the income from the small number of offices which were included in the terminal building before the addition was constructed shall continue to be related terminal income.

(iv) From the United States in payment for facilities or services in connection with mail handling. The income must be derived directly from the U.S. Government, or any agency thereof (including for this purpose the U.S. Postal Service), through the receipt of payments for mail-handling facilities or services. Thus, the term would include income derived from the rental of space for a post office for use by the general public on the terminal premises or from the sorting of mail in a railroad box car.

(3) ***Illustration.*** The provisions of this paragraph may be illustrated by the following example:

Example. For its calendar year 1973, the R Company, a terminal railroad corporation, has taxable income of $36,000, before the application of section 281 and taking no account of section 277, determined as follows:

Gross income:	
Switching charges	$50,000
Express companies	2,000
Commuter line	4,000
U.S. mail handling	4,000
Railroad bridge tolls:	
From railroads	2,000
From automobiles	1,000
Total	3,000
Station and train charges	47,000
Terminal parking lot	4,000
Rent from terminal building:	
Passenger facilities (ground level)	8,000
Offices leased to railroads (2d floor)	3,000
Offices leased to others (2d floor)	1,000
Hotel open to public (3d through 6th floors)	14,000
Total	26,000
Interest received from bond investments	1,500
Dividends received from wholly owned subsidiary	10,000
Amount realized from sale of equipment	6,000
Less:	
Adjusted basis	1,000
Expenses of sale	500
	1,500
	4,500
	156,000
Allowable deductions:	
Dividend received deduction	8,500

Interest paid:	
On loan for hotel furnishings	1,500
On loan for rolling stock	2,000
	3,500
Maintenance, depreciation, management and other expenses:	
Attributable to hotel	3,000
Attributable to parking lot	1,000
Attributable to U.S. mail handling	1,000
All other	98,000
	103,000
Loss from sale of securities	3,000
Charitable contribution	500
Net operating loss deduction	1,500
	120,000
Taxable income before the application of sec. 281	36,000

The R Co.'s related terminal income for 1973 is $24,000, computed as follows:

Taxable income (before the application of sec. 281)	36,000
Less:	
Dividend received	10,000
Minus dividend received deduction	8,500
	1,500
Interest received	1,500
Amount realized from sale of equipment	6,000
Less:	
Adjusted basis	1,000
Expense of sale	500
	1,500
	4,500
Hotel income	14,000
Less:	
Interest paid on loan for hotel	1,500
Other hotel expenses	3,000
	4,500
	9,500
	17,000
	19,000
Add:	
Loss from sale of securities	3,000
Charitable contribution	500
Net operating loss deduction	1,500

	5,000
Related terminal income	24,000

(c) ***Related terminal services.*** The term *related terminal services* means only the services or the use of facilities, provided by the terminal railroad corporation, which are taken into account in computing related terminal income. Thus, the term includes the providing of terminal and switching services, the furnishing of terminal and switching facilities including the furnishing of terminal trackage, and the operation of bridges and ferries for railroad purposes. For example, upon the facts of the example in the preceding paragraph, the charges for related terminal services are $126,000, determined as follows:

Switching charges	$50,000
Express companies	2,000
Commuter line	4,000
U.S. mail handling	4,000
Railroad bridge tolls	3,000
Station and train charges	47,000
Terminal parking lot	4,000
Rent from:	
Passenger facilities	8,000
Offices	4,000
Total	126,000

(d) ***Agreement.*** As used in section 281 and § 1.281-2 the term *agreement* means a written contract, entered into before the beginning of the terminal railroad corporation's taxable year in question, to which all shareholders of the terminal railroad corporation are parties. The fact that other railroad corporations or persons are also parties will not disqualify an agreement. Section 281 applies only if, and to the extent that, the reduction of the liability or charge that would be made, as described in paragraph (c) of § 1.281-2, results from the agreement. Thus, where the other conditions of the statute are met, section 281 applies if a written agreement, to which all of the shareholders were parties and which was entered into prior to the beginning of the terminal railroad corporation's taxable year, provides that the net revenues of the terminal railroad corporation are to be applied as a reduction of what would otherwise be the charge for the taxable year for related terminal services provided to the shareholders. Similarly, section 281 applies, where its other requirements are fulfilled, if the agreement provides that the net revenues are to be credited against rental obligations resulting from related terminal services furnished to shareholders. However, section 281 does not apply where the agreement provides that the net revenues are to be divided among the shareholders and distributed to them in cash or held subject to their unconditional right of withdrawal instead of being applied to the computation of charges, or in reduction of liabilities incurred, for related terminal services.

(e) ***Railroad corporation.*** For purposes of section 281, § 1.281-2, and this section, the term *railroad corporation* means any corporation (regardless of whether it is a shareholder of the terminal railroad corporation) that is engaged as a common carrier in the furnishing or sale of transportation by railroad, or is a lessor of railroad equipment or facilities. For purposes of the preceding sentence, a corporation is a lessor of railroad equipment or facilities only if

(1) it is subject to part I of the Interstate Commerce Act,

(2) substantially all of its railroad properties have been leased to a railroad corporation or corporations,

(3) each lease is for a term of more than 20 years, and (4) 80 percent or more of its gross income for the taxable year is derived for such leases.

[T.D. 7356, 40 FR 23735, June 2, 1975]

§ 1.281-4 Taxable years affected.

(a) ***In general.*** Except as provided in paragraph (b) of this section, the provisions of section 281 and §§ 1.281-2 and 1.281-3 shall apply to all taxable years to which either the Internal Revenue Code of 1954 or the Internal Revenue Code of 1939 apply.

(b) ***Taxable years ending before October 23, 1962.***

(1)

(i) In the case of a taxable year of a terminal railroad corporation ending before October 23, 1962, section 281 (a) shall apply only to the extent that the terminal railroad corporation (*a*) computed its taxable income on its return for such taxable year as if the “reduced amount”, described in paragraph (c) of § 1.281-2, were not received or accrued, and (*b*) did not decrease its otherwise allowable deductions for such taxable year on account of that “reduced amount”. Similarly, in the case of a taxable year of a shareholder of a terminal railroad corporation ending before October 23, 1962, section 281(b) shall apply only to the extent that such shareholder computed its taxable income on its return for such taxable year as if the shareholder had neither received or accrued as a dividend nor paid or incurred as an expense the “reduced amount” described in paragraph (c) of § 1.281-2. Such return must have been filed on or before the due date (including the period of any extension of time) for filing the return for the applicable taxable year. The fact that an amended return or claim for refund or credit of overpayment was subsequently filed, or a deficiency subsequently assessed, based upon a computation of taxable income which is inconsistent with the manner in which the taxable income was computed on the timely filed return, is immaterial.

(ii) The provisions of this paragraph may be illustrated by the following examples:

Example 1. The G Company is a terminal railroad corporation which in 1960 reduced the liabilities resulting from charges to its shareholders, pursuant to a 1947 written agreement, by its income from nonshareholder sources. For the calendar year 1960, the G Company's related terminal income was $24,000, of which $3,000 is attributable to income from the United States in payment for facilities and services in connection with mail handling. Although the shareholders' liabilities were reduced by $24,000 as a result of taking related terminal income earned during the taxable year into account, on its timely filed 1960 income tax return the G Company treated the $3,000 of liabilities which were reduced on account of income from mail handling as gross income received or accrued during the year. Assuming that the provisions of § 1.281-2

otherwise apply, their application to the determination of the 1960 tax liability of the G Company shall not extend to the entire "reduced amount" of $24,000, but shall be limited to $21,000 of that amount.

Example 2. Assume the same facts as in *Example 1,* and the following additional facts. The G Company had three shareholders in 1960, and an equal discharge of liability of $8,000 resulted for each of them on account of related terminal income. Each shareholder treated, on its timely filed 1960 income tax return, $1,000 of its liabilities, which were so reduced and were attributable to income from the United States in payment for facilities and services in connection with mail handling, as if it had received $1,000 from the G Company as a dividend and paid that $1,000 to the G Company for services. Each shareholder treated the remaining $7,000 of its liabilities which were so reduced as if the liabilities which were reduced had never been incurred. Assuming that the provisions of § 1.281-2 otherwise apply, each shareholder shall not be considered to have received or accrued as a dividend, nor to have paid or incurred as an expense $7,000 (instead of $8,000).

(2) For any taxable year of a terminal railroad corporation ending before October 23, 1962, a claim for refund or credit of overpayment of income tax based upon section 281 may be filed, even though such refund or credit of overpayment was otherwise barred by operation of any law or rule of law on October 23, 1962, subject to the conditions set forth in paragraph (b)(2)(i) through (v) of this section.

(i) The claim for refund or credit of overpayment must not have been barred by a closing agreement (under either section 3760 of the Internal Revenue Code of 1939 or section 7121 of the Internal Revenue Code of 1954), or by a compromise (under section 3761 of the Internal Revenue Code of 1939 or section 7122 of the Internal Revenue Code of 1954);

(ii) The claim for refund or credit of overpayment shall be allowed only to the extent that the overpayment of income tax results from the recomputation of the terminal railroad corporation's taxable income in the manner described in paragraph (a) of § 1.281-2;

(iii) The claim for refund or credit of the overpayment must have been filed prior to October 23, 1963;

(iv) The claim for refund or credit of overpayment shall be allowed only to the extent that the manner in which the terminal railroad corporation's taxable income is recomputed is the manner in which the terminal railroad corporation's taxable income was computed on its timely filed income tax return for such taxable year; and

(v) Each railroad corporation which was a shareholder of the terminal railroad corporation during such taxable year must consent in writing to the assessment, within such period as may be agreed upon with the district director, of any deficiency for any year (even though assessment of the deficiency would otherwise be prevented by the operation of any law or rule of law at the time of filing the consent) to the extent that:

(A) The deficiency is attributable to the recomputation of the shareholder's taxable income in the manner described in paragraph (b) of § 1.281-2, and

(B) The deficiency results from the shareholder's allocable portion of the "reduced amount" (described in paragraph (c) of § 1.281-2) which gives rise to the refund or credit granted to the terminal railroad corporation under this subparagraph.

[T.D. 7356, 40 FR 23737, June 2, 1975]

§§ 1.282-1.300 [Reserved]

CORPORATE DISTRIBUTIONS AND ADJUSTMENTS

DISTRIBUTIONS BY CORPORATIONS

EFFECTS ON RECIPIENTS

§ 1.301-1 Rules applicable with respect to distributions of money and other property.

(a) ***General.*** Section 301 provides the general rule for the treatment of distributions made in taxable years beginning after December 31, 1986, of property by a corporation to a shareholder with respect to its stock. The term *property* is defined in section 317(a). Except as otherwise provided in chapter 1 of the Internal Revenue Code (Code), such distributions are treated as provided in section 301(c). Under section 301(c), distributions may be included in gross income to the extent the amount distributed is considered a dividend under section 316, applied against and reduces the adjusted basis of the stock, treated as gain from the sale or exchange of property, or exempt from Federal income tax in the case of certain distributions out of increase in value accrued before March 1, 1913. The amount of a distribution to which section 301 applies is determined in accordance with the provisions of section 301(b). The basis of property received in a distribution to which section 301 applies is the fair market value of the property, as provided in section 301(d).

(b) ***Amount of distribution and determination of fair market value.*** The amount of a distribution to which section 301 applies is the amount of money received in the distribution, plus the fair market value of other property received in the distribution. The fair market value of any property distributed is determined as of the date of the distribution.

(c) ***Time of inclusion in gross income and time of determination of fair market value.*** A distribution made by a corporation to its shareholders is included in the gross income of the distributees when the cash or other property is unqualifiedly made subject to their demands, without regard to whether such date is the same as that on which the corporation made the distribution. For example, if a corporation distributes a taxable dividend in property on December 30, 2021, that is received by, or unqualifiedly made subject to the demands of, its shareholders on January 3, 2022, the amount to be included in the gross income of the shareholders will be the fair market value of such property on December 30, 2021, determined under paragraph (b) of this section, although such amount will not be includible in the gross income of the shareholders until January 3, 2022.

(d) ***Application of section to shareholders.*** Section 301 is not applicable to an amount paid by a corporation to a shareholder unless the amount is paid to the shareholder in the shareholder's capacity as such.

(e) ***Example.*** Corporation M, formed in 1998, has never been an acquiring corporation in a transaction to which section 381(a) applies. On January 1, 2021, A, an individual, owned all of the stock of Corporation M, consisting of a single share with an adjusted basis of $2,000. During 2021, A received distributions from Corporation M totaling $30,000, consisting of $10,000 in cash and listed securities having a basis in the hands of Corporation M and a fair market value on the date distributed of $20,000. Corporation M's taxable year is the calendar year. As of December 31, 2020, Corporation M had accumulated earnings and profits in the amount of $26,000, and it had no earnings and profits and no deficit for 2021. Of the $30,000 received by A, $26,000 is treated as an ordinary dividend; of the remaining $4,000, $2,000 is applied against and reduces the adjusted basis of A's stock under section 301(c)(2), and the $2,000 in excess of

the adjusted basis of A's stock is treated as gain from the sale or exchange of property under section 301(c)(3)(A). If A immediately sells the stock in Corporation M, the basis for determining gain or loss on the sale will be zero.

(f) ***Reduction for liabilities*** —

(1) ***General rule.*** For purposes of section 301(b)(2), no reduction in the amount of a distribution is made for the amount of any liability, except to the extent the liability is assumed by the shareholder within the meaning of section 357(d).

(2) ***No reduction below zero.*** Any reduction pursuant to paragraph (f)(1) of this section does not cause the amount of the distribution to be reduced below zero.

(3) ***Applicability dates*** —

(i) ***In general.*** This paragraph (f) applies to distributions occurring after January 4, 2001.

(ii) ***Retroactive application.*** For distributions made on or before January 4, 2001, see § 1.301-1(g) as contained in 26 CFR part 1 revised April 1, 2021.

(g) ***Basis.*** The basis of property received in a distribution to which section 301 applies is the fair market value of such property. See paragraph (b) of this section.

(h) ***Transfers for less than fair market value.*** If property is transferred by a corporation to a shareholder for an amount less than its fair market value in a sale or exchange, such shareholder is treated as having received a distribution to which section 301 applies. In such case, the amount of the distribution is the excess of the fair market value of the property over the amount paid for such property at the time of the transfer. For example, on January 3, 2021, A, a shareholder of Corporation X, purchased property from X for $20 when the fair market value of such property was $100. The amount of the distribution to A determined under section 301(b) is $80.

(i) [Reserved]

(j) ***Transactions treated as distributions.*** A distribution to shareholders with respect to their stock is within the terms of section 301, although it takes place at the same time as another transaction, if the distribution is in substance a separate transaction (whether or not connected in a formal sense). This situation is most likely to occur in the case of a recapitalization, a reincorporation, or a merger of a corporation with a newly organized corporation having substantially no property. For example, if a corporation having only common stock outstanding exchanges one share of newly issued common stock and one bond with a principal amount of $10 for each share of outstanding common stock, the distribution of the bond will be a distribution of property (to the extent of its fair market value) to which section 301 applies, even though the exchange of common stock for common stock may be pursuant to a plan of reorganization under the terms of section 368(a)(1)(E) (recapitalization) and may result in the shareholder not recognizing any gain or loss on the exchange by reason of section 354.

(k) ***Cancellation of indebtedness.*** The cancellation of indebtedness of a shareholder by a corporation is treated as a distribution of property.

(l) ***Cross-references.*** For certain rules relating to adjustments to earnings and profits and for determining the extent to which a distribution is a dividend, see sections 312 and 316 of the Code and the regulations in this part under sections 312 and 316.

(m) ***Split-dollar and other life insurance arrangements*** —

(1) *Split-dollar life insurance arrangements* —

(i) ***Distribution of economic benefits.*** The provision by a corporation to its shareholder pursuant to a split-dollar life insurance arrangement, as defined in § 1.61-22(b)(1) or (2), of economic benefits described in § 1.61-22(d), or of amounts described in § 1.61-22(e), is treated as a distribution of property, the amount of which is determined under § 1.61-22(d) and (e), respectively.

(ii) ***Distribution of entire contract or undivided interest therein.*** A transfer (within the meaning of § 1.61-22(c)(3)) of the ownership of a life insurance contract (or an undivided interest therein) that is part of a split-dollar life insurance arrangement is a distribution of property, the amount of which is determined pursuant to § 1.61-22(g)(1) and (2).

(2) ***Other life insurance arrangements.*** A payment by a corporation on behalf of a shareholder of premiums on a life insurance contract or an undivided interest therein that is owned by the shareholder constitutes a distribution of property, even if such payment is not part of a split-dollar life insurance arrangement under § 1.61-22(b).

(3) *When distribution is made* —

(i) ***In general.*** Except as provided in paragraph (m)(3)(ii) of this section, paragraph (c) of this section applies to determine when a distribution described in paragraph (m)(1) or (2) of this section is taken into account by a shareholder.

(ii) ***Exception.*** Notwithstanding paragraph (c) of this section, a distribution described in paragraph (m)(1)(ii) of this section is treated as made by a corporation to its shareholder at the time that the life insurance contract, or an undivided interest therein, is transferred (within the meaning of § 1.61-22(c)(3)) to the shareholder.

(4) *Applicability date* —

(i) ***General rule.*** This paragraph (m) applies to split-dollar and other life insurance arrangements entered into after September 17, 2003. For purposes of this paragraph (m)(4), a split-dollar life insurance arrangement is entered into as determined under § 1.61-22(j)(1)(ii).

(ii) ***Modified arrangements treated as new arrangements.*** If a split-dollar life insurance arrangement entered into on or before September 17, 2003, is materially modified (within the meaning of § 1.61-22(j)(2)) after September 17, 2003, the arrangement is treated as a new arrangement entered into on the date of the modification.

(n) ***Applicability date.*** Paragraphs (a) through (c), (e), (g), and (h) of this section apply to distributions under section 301 made after September 22, 2021.

[T.D. 9954, 86 FR 52613, Sept. 22, 2021]

§ 1.302-1 General.

(a) Under section 302(d), unless otherwise provided in subchapter C, chapter 1 of the Code, a distribution in redemption of stock shall be treated as a distribution of property to which section 301 applies if the distribution is not within any of the provisions of section 302(b). A distribution in redemption of stock shall be considered a distribution in part or full payment in exchange for the stock under section 302(a) provided paragraph (1), (2), (3), or (4) of section 302(b) applies. Section 318(a) (relating to constructive ownership of stock) applies to all redemptions under section 302 except that in the termination of a

shareholder's interest certain limitations are placed on the application of section 318(a)(1) by section 302(c)(2). The term *redemption of stock* is defined in section 317(b). Section 302 does not apply to that portion of any distribution which qualifies as a distribution in partial liquidation under section 346. For special rules relating to redemption of stock to pay death taxes see section 303. For special rules relating to redemption of section 306 stock see section 306. For special rules relating to redemption of stock in partial or complete liquidation see section 331.

(b) If, in connection with a partial liquidation under the terms of section 346, stock is redeemed in an amount in excess of the amount specified by section 331(a)(2), section 302(b) shall first apply as to each shareholder to which it is applicable without limitation because of section 331(a)(2). That portion of the total distribution which is used in all redemptions from specific shareholders which are within the terms of section 302(a) shall be excluded in determining the application of sections 346 and 331(a)(2). For example, Corporation X has $50,000 which is attributable to the sale of one of two active businesses and which, if distributed in redemption of stock, would qualify as a partial liquidation under the terms of section 346(b). Corporation X distributes $60,000 to its shareholders in redemption of stock, $20,000 of which is in redemption of all of the stock of shareholder A within the meaning of section 302(b)(3). The $20,000 distributed in redemption of the stock of shareholder A will be excluded in determining the application of sections 346 and 331(a)(2). The entire $60,000 will be treated as in part or full payment for stock ($20,000 qualifying under section 302(a) and $40,000 qualifying under sections 346 and 331(a)(2)).

§ 1.302-2 Redemptions not taxable as dividends.

(a) ***In general.*** The fact that a redemption fails to meet the requirements of paragraph (2), (3) or (4) of section 302(b) shall not be taken into account in determining whether the redemption is not essentially equivalent to a dividend under section 302(b)(1). See, however, paragraph (b) of this section. For example, if a shareholder owns only nonvoting stock of a corporation which is not section 306 stock and which is limited and preferred as to dividends and in liquidation, and one-half of such stock is redeemed, the distribution will ordinarily meet the requirements of paragraph (1) of section 302(b) but will not meet the requirements of paragraph (2), (3) or (4) of such section. The determination of whether or not a distribution is within the phrase “essentially equivalent to a dividend” (that is, having the same effect as a distribution without any redemption of stock) shall be made without regard to the earnings and profits of the corporation at the time of the distribution. For example, if A owns all the stock of a corporation and the corporation redeems part of his stock at a time when it has no earnings and profits, the distribution shall be treated as a distribution under section 301 pursuant to section 302(d).

(b) ***Redemption not essentially equivalent to a dividend*** —

(1) ***In general.*** The question whether a distribution in redemption of stock of a shareholder is not essentially equivalent to a dividend under section 302(b)(1) depends upon the facts and circumstances of each case. One of the facts to be considered in making this determination is the constructive stock ownership of such shareholder under section 318(a). All distributions in pro rata redemptions of a part of the stock of a corporation generally will be treated as distributions under section 301 if the corporation has only one class of stock outstanding. However, for distributions in partial liquidation, see section 302(e). The redemption of all of one class of stock (except section 306 stock) either at one time or in a series of redemptions generally will be considered as a distribution under section 301 if all classes of stock outstanding at the time of the redemption are held in the same proportion. Distributions in redemption of stock may be treated as distributions under section 301 regardless of the provisions of the stock certificate and regardless of whether all stock being redeemed was acquired by the stockholders from whom the stock was redeemed by purchase or otherwise.

(2) ***Statement.*** Unless § 1.331-1(d) applies, every significant holder that transfers stock to the issuing corporation in exchange for property from such corporation must include on or with such holder's return for the taxable year of such exchange a statement entitled, "STATEMENT PURSUANT TO § 1.302-2(b)(2) BY [INSERT NAME AND TAXPAYER IDENTIFICATION NUMBER (IF ANY) OF TAXPAYER], A SIGNIFICANT HOLDER OF THE STOCK OF [INSERT NAME AND EMPLOYER IDENTIFICATION NUMBER (IF ANY) OF ISSUING CORPORATION]." If a significant holder is a controlled foreign corporation (within the meaning of section 957), each United States shareholder (within the meaning of section 951(b)) with respect thereto must include this statement on or with its return. The statement must include—

(i) The fair market value and basis of the stock transferred by the significant holder to the issuing corporation; and

(ii) A description of the property received by the significant holder from the issuing corporation.

(3) ***Definitions.*** For purposes of this section:

(i) ***Significant holder*** means any person that, immediately before the exchange—

(A) Owned at least five percent (by vote or value) of the total outstanding stock of the issuing corporation if the stock owned by such person is publicly traded; or

(B) Owned at least one percent (by vote or value) of the total outstanding stock of the issuing corporation if the stock owned by such person is not publicly traded.

(ii) ***Publicly traded stock*** means stock that is listed on—

(A) A national securities exchange registered under section 6 of the Securities Exchange Act of 1934 (15 U.S.C. 78f); or

(B) An interdealer quotation system sponsored by a national securities association registered under section 15A of the Securities Exchange Act of 1934 (15 U.S.C. 78o-3).

(iii) ***Issuing corporation*** means the corporation that issued the shares of stock, some or all of which were transferred by a significant holder to such corporation in the exchange described in paragraph (b)(2) of this section.

(4) ***Cross reference.*** See section 6043 of the Internal Revenue Code for requirements relating to a return by a liquidating corporation.

(c) ***Basis adjustments.*** In any case in which an amount received in redemption of stock is treated as a distribution of a dividend, proper adjustment of the basis of the remaining stock will be made with respect to the stock redeemed. (For adjustments to basis required for certain redemptions of corporate shareholders that are treated as extraordinary dividends, see section 1059 and the regulations thereunder.) The following examples illustrate the application of this rule:

Example 1. A, an individual, purchased all of the stock of Corporation X for $100,000. In 1955 the corporation redeems half of the stock for $150,000, and it is determined that this amount constitutes a dividend. The remaining stock of Corporation X held by A has a basis of $100,000.

Example 2. H and W, husband and wife, each own half of the stock of Corporation X. All of the stock was purchased by H for $100,000 cash. In 1950 H gave one-half of the stock to W, the stock transferred having a value in excess of $50,000. In 1955 all of the stock of H is redeemed for $150,000, and it is

determined that the distribution to H in redemption of his shares constitutes the distribution of a dividend. Immediately after the transaction, W holds the remaining stock of Corporation X with a basis of $100,000.

Example 3. The facts are the same as in *Example (2)* with the additional facts that the outstanding stock of Corporation X consists of 1,000 shares and all but 10 shares of the stock of H is redeemed. Immediately after the transaction, H holds 10 shares of the stock of Corporation X with a basis of $50,000, and W holds 500 shares with a basis of $50,000.

(d) ***Effective/applicability date.*** Paragraphs (b)(2), (b)(3) and (b)(4) of this section apply to any taxable year beginning on or after May 30, 2006. However, taxpayers may apply paragraphs (b)(2), (b)(3) and (b)(4) of this section to any original Federal income tax return (including any amended return filed on or before the due date (including extensions) of such original return) timely filed on or after May 30, 2006. For taxable years beginning before May 30, 2006, see § 1.302-2 as contained in 26 CFR part 1 in effect on April 1, 2006.

[T.D. 6500, 25 FR 11607, Nov. 26, 1960, as amended by T.D. 8724, 62 FR 38028, July 26, 1997; T.D. 9264, 71 FR 30593, May 30, 2006; T.D. 9329, 72 FR 32796, June 14, 2007]

§ 1.302-3 Substantially disproportionate redemption.

(a) Section 302(b)(2) provides for the treatment of an amount received in redemption of stock as an amount received in exchange for such stock if—

(1) Immediately after the redemption the shareholder owns less than 50 percent of the total combined voting power of all classes of stock as provided in section 302(b)(2)(B),

(2) The redemption is a substantially disproportionate redemption within the meaning of section 302(b)(2)(C), and

(3) The redemption is not pursuant to a plan described in section 302(b)(2)(D).

Section 318(a) (relating to constructive ownership of stock) shall apply both in making the disproportionate redemption test and in determining the percentage of stock ownership after the redemption. The requirements under section 302(b)(2) shall be applied to each shareholder separately and shall be applied only with respect to stock which is issued and outstanding in the hands of the shareholders. Section 302(b)(2) only applies to a redemption of voting stock or to a redemption of both voting stock and other stock. Section 302(b)(2) does not apply to the redemption solely of nonvoting stock (common or preferred). However, if a redemption is treated as an exchange to a particular shareholder under the terms of section 302(b)(2), such section will apply to the simultaneous redemption of nonvoting preferred stock (which is not section 306 stock) owned by such shareholder and such redemption will also be treated as an exchange. Generally, for purposes of this section, stock which does not have voting rights until the happening of an event, such as a default in the payment of dividends on preferred stock, is not voting stock until the happening of the specified event. Subsection 302(b)(2)(D) provides that a redemption will not be treated as substantially disproportionate if made pursuant to a plan the purpose or effect of which is a series of redemptions which result in the aggregate in a distribution which is not substantially disproportionate. Whether or not such a plan exists will be determined from all the facts and circumstances.

(b) The application of paragraph (a) of this section is illustrated by the following example:

Example. Corporation M has outstanding 400 shares of common stock of which A, B, C and D each own 100 shares or 25 percent. No stock is considered constructively owned by A, B, C or D under section 318. Corporation M redeems 55 shares from A, 25 shares from B, and 20 shares from C. For the redemption to be disproportionate as to any shareholder, such shareholder must own after the redemptions less than 20 percent (80 percent of 25 percent) of the 300 shares of stock then outstanding. After the redemptions, A owns 45 shares (15 percent), B owns 75 shares (25 percent), and C owns 80 shares ($26^{2}/_{3}$ percent). The distribution is disproportionate only with respect to A.

§ 1.302-4 Termination of shareholder's interest.

Section 302(b)(3) provides that a distribution in redemption of all of the stock of the corporation owned by a shareholder shall be treated as a distribution in part or full payment in exchange for the stock of such shareholder. In determining whether all of the stock of the shareholder has been redeemed, the general rule of section 302(c)(1) requires that the rules of constructive ownership provided in section 318(a) shall apply. Section 302(c)(2), however, provides that section 318(a)(1) (relating to constructive ownership of stock owned by members of a family) shall not apply where the specific requirements of section 302(c)(2) are met. The following rules shall be applicable in determining whether the specific requirements of section 302(c)(2) are met:

(a) ***Statement.*** The agreement specified in section 302(c)(2)(A)(iii) shall be in the form of a statement entitled, "STATEMENT PURSUANT TO SECTION 302(c)(2)(A)(iii) BY [INSERT NAME AND TAXPAYER IDENTIFICATION NUMBER (IF ANY) OF TAXPAYER OR RELATED PERSON, AS THE CASE MAY BE], A DISTRIBUTEE (OR RELATED PERSON) OF [INSERT NAME AND EMPLOYER IDENTIFICATION NUMBER (IF ANY) OF DISTRIBUTING CORPORATION]." The distributee must include such statement on or with the distributee's first return for the taxable year in which the distribution described in section 302(b)(3) occurs. If the distributee is a controlled foreign corporation (within the meaning of section 957), each United States shareholder (within the meaning of section 951(b)) with respect thereto must include this statement on or with its return. The distributee must represent in the statement—

(1) THE DISTRIBUTEE (OR RELATED PERSON) HAS NOT ACQUIRED, OTHER THAN BY BEQUEST OR INHERITANCE, ANY INTEREST IN THE CORPORATION (AS DESCRIBED IN SECTION 302(c)(2)(A)(i)) SINCE THE DISTRIBUTION; and

(2) THE DISTRIBUTEE (OR RELATED PERSON) WILL NOTIFY THE INTERNAL REVENUE SERVICE OF ANY ACQUISITION, OTHER THAN BY BEQUEST OR INHERITANCE, OF SUCH AN INTEREST IN THE CORPORATION WITHIN 30 DAYS AFTER THE ACQUISITION, IF THE ACQUISITION OCCURS WITHIN 10 YEARS FROM THE DATE OF THE DISTRIBUTION.

(b) ***Substantiation information.*** The distributee who files an agreement under section 302(c)(2)(A)(iii) shall retain copies of income tax returns and any other records indicating fully the amount of tax which would have been payable had the redemption been treated as a distribution subject to section 301.

(c) ***Stock of parent, subsidiary or successor corporation redeemed.*** If stock of a parent corporation is redeemed, section 302(c)(2)(A), relating to acquisition of an interest in the corporation within 10 years after termination shall be applied with reference to an interest both in the parent corporation and any subsidiary of such parent corporation. If stock of a parent corporation is sold to a subsidiary in a transaction described in section 304, section 302(c)(2)(A) shall be applicable to the acquisition of an interest in such subsidiary corporation or in the parent corporation. If stock of a subsidiary corporation is

redeemed, section 302(c)(2)(A) shall be applied with reference to an interest both in such subsidiary corporation and its parent. Section 302(c)(2)(A) shall also be applied with respect to an interest in a corporation which is a successor corporation to the corporation the interest in which has been terminated.

(d) ***Redeemed shareholder as creditor.*** For the purpose of section 302(c)(2)(A)(i), a person will be considered to be a creditor only if the rights of such person with respect to the corporation are not greater or broader in scope than necessary for the enforcement of his claim. Such claim must not in any sense be proprietary and must not be subordinate to the claims of general creditors. An obligation in the form of a debt may thus constitute a proprietary interest. For example, if under the terms of the instrument the corporation may discharge the principal amount of its obligation to a person by payments, the amount or certainty of which are dependent upon the earnings of the corporation, such a person is not a creditor of the corporation. Furthermore, if under the terms of the instrument the rate of purported interest is dependent upon earnings, the holder of such instrument may not, in some cases, be a creditor.

(e) ***Acquisition of assets pursuant to creditor's rights.*** In the case of a distributee to whom section 302(b)(3) is applicable, who is a creditor after such transaction, the acquisition of the assets of the corporation in the enforcement of the rights of such creditor shall not be considered an acquisition of an interest in the corporation for purposes of section 302(c)(2) unless stock of the corporation, its parent corporation, or, in the case of a redemption of stock of a parent corporation, of a subsidiary of such corporation is acquired.

(f) ***Constructive ownership rules applicable.*** In determining whether an entire interest in the corporation has been terminated under section 302(b)(3), under all circumstances paragraphs (2), (3), (4), and (5) of section 318(a) (relating to constructive ownership of stock) shall be applicable.

(g) ***Avoidance of Federal income tax.*** Section 302(c)(2)(B) provides that section 302(c)(2)(A) shall not apply—

(1) If any portion of the stock redeemed was acquired directly or indirectly within the 10-year period ending on the date of the distribution by the distributee from a person, the ownership of whose stock would (at the time of distribution) be attributable to the distributee under section 318(a), or

(2) If any person owns (at the time of the distribution) stock, the ownership of which is attributable to the distributee under section 318(a), such person acquired any stock in the corporation directly or indirectly from the distributee within the 10-year period ending on the date of the distribution, and such stock so acquired from the distributee is not redeemed in the same transaction,unless the acquisition (described in subparagraph (1) of this paragraph) or the disposition by the distributee (described in subparagraph (2) of this paragraph) did not have as one of its principal purposes the avoidance of Federal income tax. A transfer of stock by the transferor, within the 10-year period ending on the date of the distribution, to a person whose stock would be attributable to the transferor shall not be deemed to have as one of its principal purposes the avoidance of Federal income tax merely because the transferee is in a lower income tax bracket than the transferor.

(h) ***Effective/applicability date.*** Paragraph (a) of this section applies to any taxable year beginning on or after May 30, 2006. However, taxpayers may apply paragraph (a) of this section to any original Federal income tax return (including any amended return filed on or before the due date (including extensions) of such original return) timely filed on or after May 30, 2006. For taxable years beginning before May 30, 2006, see § 1.302-4 as contained in 26 CFR part 1 in effect on April 1, 2006.

(Sec. 302(c)(2)(A)(iii) (68A Stat. 87; 26 U.S.C. 302 (c)(2)(A)(iii)))

[T.D. 7535, 43 FR 10686, Mar. 15, 1978, as amended by T.D. 9264, 71 FR 30594, 30607, May 30, 2006; T.D. 9329, 72 FR 32796, 32808, June 14, 2007]

§ 1.303-1 General.

Section 303 provides that in certain cases a distribution in redemption of stock, the value of which is included in determining the value of the gross estate of a decedent, shall be treated as a distribution in full payment in exchange for the stock so redeemed.

§ 1.303-2 Requirements.

(a) Section 303 applies only where the distribution is with respect to stock of a corporation the value of whose stock in the gross estate of the decedent for Federal estate tax purposes is an amount in excess of (1) 35 percent of the value of the gross estate of such decedent, or (2) 50 percent of the taxable estate of such decedent. For the purposes of such 35 percent and 50 percent requirements, stock of two or more corporations shall be treated as the stock of a single corporation if more than 75 percent in value of the outstanding stock of each such corporation is included in determining the value of the decedent's gross estate. For the purpose of the 75 percent requirement, stock which, at the decedent's death, represents the surviving spouse's interest in community property shall be considered as having been included in determining the value of the decedent's gross estate.

(b) For the purpose of section 303(b)(2)(A)(i), the term *gross estate* means the gross estate as computed in accordance with section 2031 (or, in the case of the estate of a decedent nonresident not a citizen of the United States, in accordance with section 2103). For the purpose of section 303(b)(2)(A)(ii), the term *taxable estate* means the taxable estate as computed in accordance with section 2051 (or, in the case of the estate of a decedent nonresident not a citizen of the United States, in accordance with section 2106). In case the value of an estate is determined for Federal estate tax purposes under section 2032 (relating to alternate valuation), then, for purposes of section 303(b)(2), the value of the gross estate, the taxable estate, and the stock shall each be determined on the applicable date prescribed in section 2032.

(c)

(1) In determining whether the estate of the decedent is comprised of stock of a corporation of sufficient value to satisfy the percentage requirements of section 303(b)(2)(A) and section 303(b)(2)(B), the total value, in the aggregate, of all classes of stock of the corporation includible in determining the value of the gross estate is taken into account. A distribution under section 303(a) may be in redemption of the stock of the corporation includible in determining the value of the gross estate, without regard to the class of such stock.

(2) The above may be illustrated by the following example:

> *Example.* The gross estate of the decedent has a value of $1,000,000, the taxable estate is $700,000, and the sum of the death taxes and funeral and administration expenses is $275,000. Included in determining the gross estate of the decedent is stock of three corporations which, for Federal estate tax purposes, is valued as follows:

Corporation A:	
Common stock	$100,000
Preferred stock	100,000

Corporation B:	
Common stock	50,000
Preferred stock	350,000
Corporation C: Common stock	200,000

The stock of Corporation A and Corporation C included in the estate of the decedent constitutes all of the outstanding stock of both corporations. The stock of Corporation A and the stock of Corporation C, treated as the stock of a single corporation under section 303(b)(2)(B), has a value in excess of $350,000 (35 percent of the gross estate or 50 percent of the taxable estate). Likewise, the stock of Corporation B has a value in excess of $350,000. The distribution by one or more of the above corporations, within the period prescribed in section 303(b)(1), of amounts not exceeding, in the aggregate, $275,000, in redemption of preferred stock or common stock of such corporation or corporations, will be treated as in full payment in exchange for the stock so redeemed.

(d) If stock includible in determining the value of the gross estate of a decedent is exchanged for new stock, the basis of which is determined by reference to the basis of the old stock, the redemption of the new stock will be treated the same under section 303 as the redemption of the old stock would have been. Thus section 303 shall apply with respect to a distribution in redemption of stock received by the estate of a decedent

(1) in connection with a reorganization under section 368,

(2) in a distribution or exchange under section 355 (or so much of section 356 as relates to section 355),

(3) in an exchange under section 1036 or

(4) in a distribution to which section 305(a) applies. Similarly, a distribution in redemption of stock will qualify under section 303, notwithstanding the fact that the stock redeemed is section 306 stock to the extent that the conditions of section 303 are met.

(e) Section 303 applies to distributions made after the death of the decedent and

(1) before the expiration of the 3-year period of limitations for the assessment of estate tax provided in section 6501(a) (determined without the application of any provisions of law extending or suspending the running of such period of limitations), or within 90 days after the expiration of such period, or

(2) if a petition for redetermination of a deficiency in such estate tax has been filed with the Tax Court within the time prescribed in section 6213, at any time before the expiration of 60 days after the decision of the Tax Court becomes final. The extension of the period of distribution provided in section 303(b)(1)(B) has reference solely to bona fide contests in the Tax Court and will not apply in the case of a petition for redetermination of a deficiency which is initiated solely for the purpose of extending the period within which section 303 would otherwise be applicable.

(f) While section 303 will most frequently have application in the case where stock is redeemed from the executor or administrator of an estate, the section is also applicable to distributions in redemption of stock included in the decedent's gross estate and held at the time of the redemption by any person who acquired the stock by any of the means comprehended by part III, subchapter A, chapter 11 of the Code, including the heir, legatee, or donee of the decedent, a surviving joint tenant, surviving spouse, appointee, or taker in default of appointment, or a trustee of a trust created by the decedent. Thus section 303 may apply with respect to a distribution in redemption of stock from a donee to whom the decedent has transferred stock in contemplation of death where the value of such stock is included in the decedent's gross estate under section 2035. Similarly, section 303 may apply to the redemption of stock from a beneficiary of the estate to whom an executor has distributed the stock pursuant to the terms of the will of the decedent. However, section 303 is not applicable to the case where stock is redeemed from a stockholder who has acquired the stock by gift or purchase from any person to whom such stock has passed from the decedent. Nor is section 303 applicable to the case where stock is redeemed from a stockholder who has acquired the stock from the executor in satisfaction of a specific monetary bequest.

(g)

(1) The total amount of the distributions to which section 303 may apply with respect to redemptions of stock included in the gross estate of a decedent may not exceed the sum of the estate, inheritance, legacy, and succession taxes (including any interest collected as a part of such taxes) imposed because of the decedent's death and the amount of funeral and administration expenses allowable as deductions to the estate. Where there is more than one distribution in redemption of stock described in section 303(b)(2) during the period of time prescribed in section 303(b)(1), the distributions shall be applied against the total amount which qualifies for treatment under section 303 in the order in which the distributions are made. For this purpose, all distributions in redemption of such stock shall be taken into account, including distributions which under another provision of the Code are treated as in part or full payment in exchange for the stock redeemed.

(2) Subparagraph (1) of this paragraph may be illustrated by the following example:

> *Example.* (i) The gross estate of the decedent has a value of $800,000, the taxable estate is $500,000, and the sum of the death taxes and funeral and administrative expenses is $225,000. Included in determining the gross estate of the decedent is the stock of a corporation which for Federal estate tax purposes is valued at $450,000. During the first year of administration, one-third of such stock is distributed to a legatee and shortly thereafter this stock is redeemed by the corporation for $150,000. During the second year of administration, another one-third of such stock includible in the estate is redeemed for $150,000.
> (ii) The first distribution of $150,000 is applied against the $225,000 amount that qualifies for treatment under section 303, regardless of whether the first distribution was treated as in payment in exchange for stock under section 302(a). Thus, only $75,000 of the second distribution may be treated as in full payment in exchange for stock under section 303. The tax treatment of the remaining $75,000 would be determined under other provisions of the Code.

(h) For the purpose of section 303, the estate tax or any other estate, inheritance, legacy, or succession tax shall be ascertained after the allowance of any credit, relief, discount, refund, remission or reduction of tax.

[T.D. 6500, 25 FR 11607, Nov. 26, 1960, as amended by T.D. 6724, 29 FR 5343, Apr. 21, 1964; T.D. 7346, 40 FR 10669, Mar. 7, 1975]

§ 1.303-3 Application of other sections.

(a) The sole effect of section 303 is to exempt from tax as a dividend a distribution to which such section is applicable when made in redemption of stock includible in a decedent's gross estate. Such section does not, however, in any other manner affect the principles set forth in sections 302 and 306. Thus, if stock of a corporation is owned equally by A, B, and the C Estate, and the corporation redeems one-half of the stock of each shareholder, the determination of whether the distributions to A and B are essentially equivalent to dividends shall be made without regard to the effect which section 303 may have upon the taxability of the distribution to the C Estate.

(b) See section 304 relative to redemption of stock through the use of related corporations.

§ 1.304-1 General.

(a) Except as provided in paragraph (b) of this section, section 304 is applicable where a shareholder sells stock of one corporation to a related corporation as defined in section 304. Sales to which section 304 is applicable shall be treated as redemptions subject to sections 302 and 303.

(b) In the case of—

(1) Any acquisition of stock described in section 304 which occurred before June 22, 1954, and

(2) Any acquisition of stock described in section 304 which occurred on or after June 22, 1954, and on or before December 31, 1958, pursuant to a contract entered into before June 22, 1954.

The extent to which the property received in return for such acquisition shall be treated as a dividend shall be determined as if the Internal Revenue Code of 1939 continued to apply in respect of such acquisition and as if the Internal Revenue Code of 1954 had not been enacted. See section 391. In cases to which this paragraph applies, the basis of the stock received by the acquiring corporation shall be determined as if the Internal Revenue Code of 1939 continued to apply in respect of such acquisition and as if the Internal Revenue Code of 1954 had not been enacted.

[T.D. 6533, 26 FR 401, Jan. 19, 1961]

§ 1.304-2 Acquisition by related corporation (other than subsidiary).

(a) If a corporation, in return for property, acquires stock of another corporation from one or more persons, and the person or persons from whom the stock was acquired were in control of both such corporations before the acquisition, then such property shall be treated as received in redemption of stock of the acquiring corporation. The stock received by the acquiring corporation shall be treated as a contribution to the capital of such corporation. See section 362(a) for determination of the basis of such stock. The transferor's basis for his stock in the acquiring corporation shall be increased by the basis of the stock surrendered by him. (But see below in this paragraph for subsequent reductions of basis in certain cases.) As to each person transferring stock, the amount received shall be treated as a distribution of property under section 302(d), unless as to such person such amount is to be treated as received in exchange for the stock under the terms of section 302(a) or section 303. In applying section 302(b), reference shall be had to the shareholder's ownership of stock in the issuing corporation and not to his ownership of stock in the acquiring corporation (except for purposes of applying section 318(a)). In determining control and applying section 302(b), section 318(a) (relating to the constructive ownership of stock) shall be applied without regard to the 50-percent limitation contained in section 318(a)(2)(C) and (3)(C). A series of redemptions referred to in section 302(b)(2)(D) shall include acquisitions by either of

the corporations of stock of the other and stock redemptions by both corporations. If section 302(d) applies to the surrender of stock by a shareholder, his basis for his stock in the acquiring corporation after the transaction (increased as stated above in this paragraph) shall not be decreased except as provided in section 301. If section 302(d) does not apply, the property received shall be treated as received in a distribution in payment in exchange for stock of the acquiring corporation under section 302(a), which stock has a basis equal to the amount by which the shareholder's basis for his stock in the acquiring corporation was increased on account of the contribution to capital as provided for above in this paragraph. Accordingly, such amount shall be applied in reduction of the shareholder's basis for his stock in the acquiring corporation. Thus, the basis of each share of the shareholder's stock in the acquiring corporation will be the same as the basis of such share before the entire transaction. The holding period of the stock which is considered to have been redeemed shall be the same as the holding period of the stock actually surrendered.

(b) In any case in which two or more persons, in the aggregate, control two corporations, section 304(a)(1) will apply to sales by such persons of stock in either corporation to the other (whether or not made simultaneously) provided the sales by each of such persons are related to each other. The determination of whether the sales are related to each other shall be dependent upon the facts and circumstances surrounding all of the sales. For this purpose, the fact that the sales may occur during a period of one or more years (such as in the case of a series of sales by persons who together control each of such corporations immediately prior to the first of such sales and immediately subsequent to the last of such sales) shall be disregarded, provided the other facts and circumstances indicate related transactions.

(c) The application of section 304(a)(1) may be illustrated by the following examples:

Example 1. Corporation X and corporation Y each have outstanding 200 shares of common stock. One-half of the stock of each corporation is owned by an individual, A, and one-half by another individual, B, who is unrelated to A. On or after August 31, 1964, A sells 30 shares of corporation X stock to corporation Y for $50,000, such stock having an adjusted basis of $10,000 to A. After the sale, A is considered as owning corporation X stock as follows: (i) 70 shares directly, and (ii) 15 shares constructively, since by virtue of his 50-percent ownership of Y he constructively owns 50 percent of the 30 shares owned directly by Y. Since A's percentage of ownership of X's voting stock after the sale (85 out of 200 shares, or 42.5%) is not less than 80 percent of his percentage of ownership of X's voting stock before the sale (100 out of 200 shares, or 50%), the transfer is not “substantially disproportionate” as to him as provided in section 302(b)(2). Under these facts, and assuming that section 302(b)(1) is not applicable, the entire $50,000 is treated as a dividend to A to the extent of the earnings and profits of corporation Y. The basis of the corporation X stock to corporation Y is $10,000, its adjusted basis to A. The amount of $10,000 is added to the basis of the stock of corporation Y in the hands of A.

Example 2. The facts are the same as in *Example (1)* except that A sells 80 shares of corporation X stock to corporation Y, and the sale occurs before August 31, 1964. After the sale, A is considered as owning corporation X stock as follows: (i) 20 shares directly, and (ii) 90 shares indirectly, since by virtue of his 50-percent ownership of Y he constructively owns 50 percent of the 80 shares owned directly by Y and 50 percent of the 100 shares attributed to Y because they are owned by Y's stockholder, B. Since after the sale A owns a total of more than 50 percent of the voting power of all of the outstanding stock of X (110 out of 200 shares, or 55%), the transfer is not “substantially disproportionate” as to him as provided in section 302(b)(2).

Example 3. Corporation X and corporation Y each have outstanding 100 shares of common stock. A, an individual, owns one-half the stock of corporation X, and C owns one-half the stock of corporation Y. A, B, and C are unrelated. A sells 30 shares of the stock of corporation X to corporation Y for $50,000, such stock having an adjusted basis of $10,000 to him. After the sale, A is considered as owning 35 shares of the stock of corporation X (20 shares directly and 15 constructively because one-half of the 30 shares owned by corporation Y are attributed to him). Since before the sale he owned 50 percent of the stock of corporation X and after the sale he owned directly and constructively only 35 percent of such stock, the redemption is substantially disproportionate as to him pursuant to the provisions of section 302(b)(2). He, therefore, realizes a gain of $40,000 ($50,000 minus $10,000). If the stock surrendered is a capital asset, such gain is long-term or short-term capital gain depending on the period of time that such stock was held. The basis to A for the stock of corporation Y is not changed as a result of the entire transaction. The basis to corporation Y for the stock of corporation X is $50,000, i.e., the basis of the transferor ($10,000), increased in the amount of gain recognized to the transferor ($40,000) on the transfer.

Example 4. Corporation X and corporation Y each have outstanding 100 shares of common stock. H, an individual, W, his wife, S, his son, and G, his grandson, each own 25 shares of stock of each corporation. H sells all of his 25 shares of stock of corporation X to corporation Y. Since both before and after the transaction H owned directly and constructively 100 percent of the stock of corporation X, and assuming that section 302(b)(1) is not applicable, the amount received by him for his stock of corporation X is treated as a dividend to him to the extent of the earnings and profits of corporation Y.

[T.D. 6500, 25 FR 11607, Nov. 26, 1960, as amended by T.D. 6969, 33 FR 11997, Aug. 23, 1968]

§ 1.304-3 Acquisition by a subsidiary.

(a) If a subsidiary acquires stock of its parent corporation from a shareholder of the parent corporation, the acquisition of such stock shall be treated as though the parent corporation had redeemed its own stock. For the purpose of this section, a corporation is a parent corporation if it meets the 50 percent ownership requirements of section 304(c). The determination whether the amount received shall be treated as an amount received in payment in exchange for the stock shall be made by applying section 303, or by applying section 302(b) with reference to the stock of the issuing parent corporation. If such distribution would have been treated as a distribution of property (pursuant to section 302(d)) under section 301, the entire amount of the selling price of the stock shall be treated as a dividend to the seller to the extent of the earnings and profits of the parent corporation determined as if the distribution had been made to it of the property that the subsidiary exchanged for the stock. In such cases, the transferor's basis for his remaining stock in the parent corporation will be determined by including the amount of the basis of the stock of the parent corporation sold to the subsidiary.

(b) Section 304(a)(2) may be illustrated by the following example:

Example. Corporation M has outstanding 100 shares of common stock which are owned as follows: B, 75 shares, C, son of B, 20 shares, and D, daughter of B, 5 shares. Corporation M owns the stock of Corporation X. B sells his 75 shares of Corporation M stock to Corporation X. Under section 302(b)(3) this is a termination of B's entire interest in Corporation M and the full amount received from the sale of his stock will be treated as payment in exchange for this stock, provided he fulfills the requirements of section 302(c)(2) (relating to an acquisition of an interest in the corporations).

§ 1.304-4 Special rules for the use of related corporations to avoid the application of section 304.

(a) ***Scope and purpose.*** This section applies to determine the amount of a property distribution constituting a dividend (and the source thereof) under section 304(b)(2), for certain transactions involving controlled corporations. The purpose of this section is to prevent the avoidance of the application of section 304 to a controlled corporation.

(b) ***Amount and source of dividend.*** For purposes of determining the amount constituting a dividend (and source thereof) under section 304(b)(2), the following rules shall apply:

(1) ***Deemed acquiring corporation.*** A corporation (deemed acquiring corporation) shall be treated as acquiring for property the stock of a corporation (issuing corporation) acquired for property by another corporation (acquiring corporation) that is controlled by the deemed acquiring corporation, if a principal purpose for creating, organizing, or funding the acquiring corporation by any means (including through capital contributions or debt) is to avoid the application of section 304 to the deemed acquiring corporation. See paragraph (c) *Example 1* of this section for an illustration of this paragraph.

(2) ***Deemed issuing corporation.*** The acquiring corporation shall be treated as acquiring for property the stock of a corporation (deemed issuing corporation) controlled by the issuing corporation if, in connection with the acquisition for property of stock of the issuing corporation by the acquiring corporation, the issuing corporation acquired stock of the deemed issuing corporation with a principal purpose of avoiding the application of section 304 to the deemed issuing corporation. See paragraph (c) *Example 2* of this section for an illustration of this paragraph.

(c) ***Examples.*** The rules of this section are illustrated by the following examples:

> *Example 1.* (i) *Facts.* P, a domestic corporation, wholly owns CFC1, a controlled foreign corporation with substantial accumulated earnings and profits. CFC1 is organized in Country X, which imposes a high rate of tax on the income of CFC1. P also wholly owns CFC2, a controlled foreign corporation with accumulated earnings and profits of $200x. CFC2 is organized in Country Y, which imposes a low rate of tax on the income of CFC2. P wishes to own all of its foreign corporations in a direct chain and to repatriate the cash of CFC2. In order to avoid having to obtain Country X approval for the acquisition of CFC1 (a Country X corporation) by CFC2 (a Country Y corporation) and to avoid the dividend distribution from CFC2 to P that would result if CFC2 were the acquiring corporation, P causes CFC2 to form CFC3 in Country X and to contribute $100x to CFC3. CFC3 then acquires all of the stock of CFC1 from P for $100x.
> (ii) *Result.* Because a principal purpose for creating, organizing, or funding CFC3 (acquiring corporation) is to avoid the application of section 304 to CFC2 (deemed acquiring corporation), under paragraph (b)(1) of this section, for purposes of determining the amount of the $100x distribution constituting a dividend (and source thereof) under section 304(b)(2), CFC2 shall be treated as acquiring the stock of CFC1 (issuing corporation) from P for $100x. As a result, P receives a $100x distribution out of the earnings and profits of CFC2 to which section 301(c)(1) applies.

Example 2. (i) *Facts.* P, a domestic corporation, wholly owns CFC1, a controlled foreign corporation with substantial accumulated earnings and profits. The CFC1 stock has a basis of $100x. CFC1 is organized in Country X. P also wholly owns CFC2, a controlled foreign corporation with zero accumulated earnings and profits. CFC2 is organized in Country Y. P wishes to own all of its foreign corporations in a direct chain and to repatriate the cash of CFC2. In order to avoid having to obtain Country X approval for the acquisition of CFC1 (a Country X corporation) by CFC2 (a Country Y corporation) and to avoid a dividend distribution from CFC1 to P, P forms a new corporation (CFC3) in Country X and transfers the stock of CFC1 to CFC3 in exchange for CFC3 stock. P then transfers the stock of CFC3 to CFC2 in exchange for $100x.
(ii) *Result.* Because a principal purpose for the transfer of the stock of CFC1 (deemed issuing corporation) by P to CFC3 (issuing corporation) is to avoid the application of section 304 to CFC1, under paragraph (b)(2) of this section, for purposes of determining the amount of the $100x distribution constituting a dividend (and source thereof) under section 304(b)(2), CFC2 (acquiring corporation) shall be treated as acquiring the stock of CFC1 from P for $100x . As a result, P receives a $100x distribution out of the earnings and profits of CFC1 to which section 301(c)(1) applies.

(d) ***Effective/applicability date.*** This section applies to acquisitions of stock occurring on or after December 29, 2009.

[T.D. 9606, 77 FR 75845, Dec. 26, 2012]

§ 1.304-5 Control.

(a) ***Control requirement in general.*** Section 304(c)(1) provides that, for purposes of section 304, control means the ownership of stock possessing at least 50 percent of the total combined voting power of all classes of stock entitled to vote or at least 50 percent of the total value of shares of all classes of stock. Section 304(c)(3) makes section 318(a) (relating to constructive ownership of stock), as modified by section 304(c)(3)(B), applicable to section 304 for purposes of determining control under section 304(c)(1).

(b) ***Effect of section 304(c)(2)(B)*** —

(1) ***In general.*** In determining whether the control test with respect to both the issuing and acquiring corporations is satisfied, section 304(a)(1) considers only the person or persons that—

(i) Control the issuing corporation before the transaction;

(ii) Transfer issuing corporation stock to the acquiring corporation for property; and

(iii) Control the acquiring corporation thereafter.

(2) ***Application.*** Section 317 defines property to include money, securities, and any other property except stock (or stock rights) in the distributing corporation. However, section 304(c)(2)(B) provides a special rule to extend the relevant group of persons to be tested for control of both the issuing and acquiring corporations to include the person or persons that do not acquire property, but rather solely stock from the acquiring corporation in the transaction. Section 304(c)(2)(B) provides that if two or more persons in control of the issuing corporation transfer stock of such corporation to the

acquiring corporation, and if the transferors are in control of the acquiring corporation after the transfer, the person or persons in control of each corporation include each of those transferors. Because the purpose of section 304(c)(2)(B) is to include in the relevant control group the person or persons that retain or acquire acquiring corporation stock in the transaction, only the person or persons transferring stock of the issuing corporation that retain or acquire any proprietary interest in the acquiring corporation are taken into account for purposes of applying section 304(c)(2)(B).

(3) ***Example.*** This section may be illustrated by the following example.

> *Example.* (a) A, the owner of 20% of T's only class of stock, transfers that stock to P solely in exchange for all of the P stock. Pursuant to the same transaction, P, solely in exchange for cash, acquires the remaining 80% of the T stock from T's other shareholder, B, who is unrelated to A and P.
> (b) Although A and B together were in control of T (the issuing corporation) before the transaction and A and B each transferred T stock to P (the acquiring corporation), sections 304(a)(1) and (c)(2)(B) do not apply to B because B did not retain or acquire any proprietary interest in P in the transaction. Section 304(a)(1) also does not apply to A because A (or any control group of which A was a member) did not control T before the transaction and P after the transaction.

(c) ***Effective date.*** This section is effective on January 20, 1994.

[T.D. 8515, 59 FR 2960, Jan. 20, 1994]

§ 1.304-6 Amount constituting a dividend. [Reserved]

§ 1.304-7 Certain acquisitions by foreign acquiring corporations.

(a) ***Scope.*** This section provides rules regarding the application of section 304(b)(5)(B) to an acquisition of stock described in section 304 by an acquiring corporation that is foreign (foreign acquiring corporation). Paragraph (b) of this section provides the rule for determining which earnings and profits are taken into account for purposes of applying section 304(b)(5)(B). Paragraph (c) of this section provides rules addressing the use of a partnership, option (or similar interest), or other arrangement. Paragraph (d) of this section provides examples that illustrate the rules of this section. Paragraph (e) of this section provides the applicability date.

(b) ***Earnings and profits taken into account.*** For purposes of applying section 304(b)(5)(B), only the earnings and profits of the foreign acquiring corporation are taken into account in determining whether more than 50 percent of the dividends arising from the acquisition (determined without regard to section 304(b)(5)(B)) would neither be subject to tax under chapter 1 of subtitle A of the Internal Revenue Code for the taxable year in which the dividends arise (subject to tax) nor be includible in the earnings and profits of a controlled foreign corporation (includible by a controlled foreign corporation). For purposes of this section, a controlled foreign corporation has the meaning provided in section 957 and without regard to section 953(c), determined without applying subparagraphs (A), (B), and (C) of section 318(a)(3) so as to consider a United States person as owning stock which is owned by a person who is not a United States person.

(c) ***Use of a partnership, option (or similar interest), or other arrangement.*** If a partnership, option (or similar interest), or other arrangement, is used with a principal purpose of avoiding the application of this section (for example, to treat a transferor as a controlled foreign corporation), then the partnership, option (or similar interest), or other arrangement will be disregarded for purposes of applying this section.

(d) ***Examples.*** The following examples illustrate the rules of this section. For purposes of the examples, assume the following facts in addition to the facts stated in the examples:

(1) FA is a foreign corporation that is not a controlled foreign corporation;

(2) FA wholly owns DT, a domestic corporation;

(3) DT wholly owns FS1, a controlled foreign corporation; and

(4) No portion of a dividend from FS1 would be treated as from sources within the United States under section 861.

> *Example 1—* (i) *Facts.* DT has earnings and profits of $51x, and FS1 has earnings and profits of $49x. FA transfers DT stock with a fair market value of $100x to FS1 in exchange for $100x of cash.
> (ii) *Analysis.* Under section 304(a)(2), the $100x of cash is treated as a distribution in redemption of the stock of DT. The redemption of the DT stock is treated as a distribution to which section 301 applies pursuant to section 302(d), which ordinarily would be sourced first from FS1 under section 304(b)(2)(A). Without regard to the application of section 304(b)(5)(B), more than 50 percent of the dividend arising from the acquisition, taking into account only the earnings and profits of FS1 pursuant to paragraph (b) of this section, would neither be subject to tax nor includible by a controlled foreign corporation. In particular, no portion of a dividend from FS1 would be subject to tax or includible by a controlled foreign corporation. Accordingly, section 304(b)(5)(B) and paragraph (b) of this section apply to the transaction, and no portion of the distribution of $100x is treated under section 301(c)(1) as a dividend out of the earnings and profits of FS1. Furthermore, the $100x of cash is treated as a dividend to the extent of the earnings and profits of DT ($51x).

> *Example 2—* (i) *Facts.* FA and DT own 40 percent and 60 percent, respectively, of the capital and profits interests of PRS, a foreign partnership. PRS wholly owns FS2, a controlled foreign corporation. The FS2 stock has a fair market value of $100x. FS1 has earnings and profits of $150x. PRS transfers all of its FS2 stock to FS1 in exchange for $100x of cash. DT enters into a gain recognition agreement that complies with the requirements set forth in section 4.01 of Notice 2012-15, 2012-9 I.R.B 424, with respect to the portion (60 percent) of the FS2 stock that DT is deemed to transfer to FS1 in an exchange described in section 367(a)(1). See § 1.367(a)-1T(c)(3)(i)(A).
> (ii) *Analysis.* Under section 304(a)(1), PRS and FS1 are treated as if PRS transferred its FS2 stock to FS1 in an exchange described in section 351(a) solely for FS1 stock, and, in turn, FS1 redeemed such FS1 stock in exchange for $100x of cash. The redemption of the FS1 stock is treated as a distribution to which section 301 applies pursuant to section 302(d). Without

> regard to the application of section 304(b)(5)(B), more than 50 percent of a dividend arising from the acquisition, taking into account only the earnings and profits of FS1 pursuant to paragraph (b) of this section, would be subject to tax. In particular, 60 percent of a dividend from FS1 would be included in DT's distributive share of PRS's partnership income and therefore would be subject to tax. Accordingly, section 304(b)(5)(B) does not apply, and the entire distribution of $100x is treated under section 301(c)(1) as a dividend out of the earnings and profits of FS1.

(e) ***Applicability date.*** This section applies to acquisitions that are completed on or after September 22, 2014.

[T.D. 9834, 83 FR 32532, July 12, 2018]

§ 1.305-1 Stock dividends.

(a) ***In general.*** Under section 305, a distribution made by a corporation to its shareholders in its stock or in rights to acquire its stock is not included in gross income except as provided in section 305(b) and the regulations promulgated under the authority of section 305(c). A distribution made by a corporation to its shareholders in its stock or rights to acquire its stock which would not otherwise be included in gross income by reason of section 305 shall not be so included merely because such distribution was made out of Treasury stock or consisted of rights to acquire Treasury stock. See section 307 for rules as to basis of stock and stock rights acquired in a distribution.

(b) ***Amount of distribution.***

(1) **In general, where a distribution of stock or rights to acquire stock of a corporation is treated as a distribution of property to which section 301 applies by reason of section 305(b), the amount of the distribution, in accordance with section 301(b) and § 1.301-1, is the fair market value of such stock or rights on the date of distribution. See *Example (1)* of § 1.305-2(b).**

(2) **Where a corporation which regularly distributes its earnings and profits, such as a regulated investment company, declares a dividend pursuant to which the shareholders may elect to receive either money or stock of the distributing corporation of equivalent value, the amount of the distribution of the stock received by any shareholder electing to receive stock will be considered to equal the amount of the money which could have been received instead. See *Example (2)* of § 1.305-2(b).**

(3) **For rules for determining the amount of the distribution where certain transactions, such as changes in conversion ratios or periodic redemptions, are treated as distributions under section 305(c), see *Examples (6), (8), (9), and (15)* of § 1.305-3(e).**

(c) ***Adjustment in purchase price.*** A transfer of stock (or rights to acquire stock) or an increase or decrease in the conversion ratio or redemption price of stock which represents an adjustment of the price to be paid by the distributing corporation in acquiring property (within the meaning of section 317(a)) is not within the purview of section 305 because it is not a distribution with respect to its stock. For example, assume that on January 1, 1970, pursuant to a reorganization, corporation X acquires all the stock of corporation Y solely in exchange for its convertible preferred class B stock. Under the terms of the class B stock, its conversion ratio is to be adjusted in 1976 under a formula based upon the earnings of corporation Y over the 6-year period ending on December 31, 1975. Such an adjustment in 1976 is not covered by section 305.

(d) ***Definitions.***

(1) For purposes of this section and §§ 1.305-2 through 1.305-7, the term *stock* includes rights or warrants to acquire such stock.

(2) For purposes of §§ 1.305-2 through 1.305-7, the term *shareholder* includes a holder of rights or warrants or a holder of convertible securities.

[T.D. 7281, 38 FR 18532, July 12, 1973; 38 FR 19910, July 25, 1973]

§ 1.305-2 Distributions in lieu of money.

(a) ***In general.*** Under section 305(b)(1), if any shareholder has the right to an election or option with respect to whether a distribution shall be made either in money or any other property, or in stock or rights to acquire stock of the distributing corporation, then, with respect to all shareholders, the distribution of stock or rights to acquire stock is treated as a distribution of property to which section 301 applies regardless of—

(1) Whether the distribution is actually made in whole or in part in stock or in stock rights;

(2) Whether the election or option is exercised or exercisable before or after the declaration of the distribution;

(3) Whether the declaration of the distribution provides that the distribution will be made in one medium unless the shareholder specifically requests payment in the other;

(4) Whether the election governing the nature of the distribution is provided in the declaration of the distribution or in the corporate charter or arises from the circumstances of the distribution; or

(5) Whether all or part of the shareholders have the election.

(b) ***Examples.*** The application of section 305(b)(1) may be illustrated by the following examples:

> *Example 1.* (i) Corporation X declared a dividend payable in additional shares of its common stock to the holders of its outstanding common stock on the basis of two additional shares for each share held on the record date but with the provision that, at the election of any shareholder made within a specified period prior to the distribution date, he may receive one additional share for each share held on the record date plus $12 principal amount of securities of corporation Y owned by corporation X. The fair market value of the stock of corporation X on the distribution date was $10 per share. The fair market value of $12 principal amount of securities of corporation Y on the distribution date was $11 but such securities had a cost basis to corporation X of $9.
> (ii) The distribution to all shareholders of one additional share of stock of corporation X (with respect to which no election applies) for each share outstanding is not a distribution to which section 301 applies.
>
> (iii) The distribution of the second share of stock of corporation X to those shareholders who do not elect to receive securities of corporation Y is a distribution of property to which section 301 applies, whether such shareholders are individuals or corporations. The amount of the distribution to which section 301 applies is $10 per share of stock of corporation X held on the record date (the fair market value of the stock of corporation X on the distribution date).

(iv) The distribution of securities of corporation Y in lieu of the second share of stock of corporation X to the shareholders of corporation X whether individuals or corporations, who elect to receive such securities, is also a distribution of property to which section 301 applies.

(v) In the case of the individual shareholders of corporation X who elects to receive such securities, the amount of the distribution to which section 301 applies is $11 per share of stock of corporation X held on the record date (the fair market value of the $12 principal amount of securities of corporation Y on the distribution date).

(vi) In the case of the corporate shareholders of corporation X electing to receive such securities, the amount of the distribution to which section 301 applies is $9 per share of stock of corporation X held on the record date (the basis of the securities of corporation Y in the hands of corporation X).

Example 2. On January 10, 1970, corporation X, a regulated investment company, declared a dividend of $1 per share on its common stock payable on February 11, 1970, in cash or in stock of corporation X of equivalent value determined as of January 22, 1970, at the election of the shareholder made on or before January 22, 1970. The amount of the distribution to which section 301 applies is $1 per share whether the shareholder elects to take cash or stock and whether the shareholder is an individual or a corporation. Such amount will also be used in determining the dividend paid deduction of corporation X and the reduction in earnings and profits of corporation X.

[T.D. 7281, 38 FR 18532, July 12, 1973]

§ 1.305-3 Disproportionate distributions.

(a) ***In general.*** Under section 305(b)(2), a distribution (including a deemed distribution) by a corporation of its stock or rights to acquire its stock is treated as a distribution of property to which section 301 applies if the distribution (or a series of distributions of which such distribution is one) has the result of

(1) the receipt of money or other property by some shareholders, and

(2) an increase in the proportionate interests of other shareholders in the assets or earnings and profits of the corporation. Thus, if a corporation has two classes of common stock outstanding and cash dividends are paid on one class and stock dividends are paid on the other class, the stock dividends are treated as distributions to which section 301 applies.

(b) ***Special rules.***

(1) As used in section 305(b)(2), the term *a series of distributions* encompasses all distributions of stock made or deemed made by a corporation which have the result of the receipt of cash or property by some shareholders and an increase in the proportionate interests of other shareholders.

(2) In order for a distribution of stock to be considered as one of a series of distributions it is not necessary that such distribution be pursuant to a plan to distribute cash or property to some shareholders and to increase the proportionate interests of other shareholders. It is sufficient if there is an actual or deemed distribution of stock (of which such distribution is one) and as a result of such distribution or distributions some shareholders receive cash or property and other

shareholders increase their proportionate interests. For example, if a corporation pays quarterly stock dividends to one class of common shareholders and annual cash dividends to another class of common shareholders the quarterly stock dividends constitute a series of distributions of stock having the result of the receipt of cash or property by some shareholders and an increase in the proportionate interests of other shareholders. This is so whether or not the stock distributions and the cash distributions are steps in an overall plan or are independent and unrelated. Accordingly, all the quarterly stock dividends are distributions to which section 301 applies.

(3) There is no requirement that both elements of section 305(b)(2) (i.e., receipt of cash or property by some shareholders and an increase in proportionate interests of other shareholders) occur in the form of a distribution or series of distributions as long as the result of a distribution or distributions of stock is that some shareholders' proportionate interests increase and other shareholders in fact receive cash or property. Thus, there is no requirement that the shareholders receiving cash or property acquire the cash or property by way of a corporate distribution with respect to their shares, so long as they receive such cash or property in their capacity as shareholders, if there is a stock distribution which results in a change in the proportionate interests of some shareholders and other shareholders receive cash or property. However, in order for a distribution of property to meet the requirement of section 305(b)(2), such distribution must be made to a shareholder in his capacity as a shareholder, and must be a distribution to which section 301, 356(a)(2), 871(a)(1)(A), 881(a)(1), 852(b), or 857(b) applies. (Under section 305(d)(2), the payment of interest to a holder of a convertible debenture is treated as a distribution of property to a shareholder for purposes of section 305(b)(2).) For example if a corporation makes a stock distribution to its shareholders and, pursuant to a prearranged plan with such corporation, a related corporation purchases such stock from those shareholders who want cash, in a transaction to which section 301 applies by virtue of section 304, the requirements of section 305(b)(2) are satisfied. In addition, a distribution of property incident to an isolated redemption of stock (for example, pursuant to a tender offer) will not cause section 305(b)(2) to apply even though the redemption distribution is treated as a distribution of property to which section 301, 871(a)(1)(A), 881(a)(1), or 356(a)(2) applies.

(4) Where the receipt of cash or property occurs more than 36 months following a distribution or series of distributions of stock, or where a distribution or series of distributions of stock is made more than 36 months following the receipt of cash or property, such distribution or distributions will be presumed not to result in the receipt of cash or property by some shareholders and an increase in the proportionate interest of other shareholders, unless the receipt of cash or property and the distribution or series of distributions of stock are made pursuant to a plan. For example, if, pursuant to a plan, a corporation pays cash dividends to some shareholders on January 1, 1971 and increases the proportionate interests of other shareholders on March 1, 1974, such increases in proportionate interests are distributions to which section 301 applies.

(5) In determining whether a distribution or a series of distributions has the result of a disproportionate distribution, there shall be treated as outstanding stock of the distributing corporation

(i) any right to acquire such stock (whether or not exercisable during the taxable year), and

(ii) any security convertible into stock of the distributing corporation (whether or not convertible during the taxable year).

(6) In cases where there is more than one class of stock outstanding, each class of stock is to be considered separately in determining whether a shareholder has increased his proportionate interest in the assets or earnings and profits of a corporation. The individual shareholders of a class of stock will be deemed to have an increased interest if the class of stock as a whole has an increased interest in the corporation.

(c) ***Distributions of cash in lieu of fractional shares.***

(1) Section 305(b)(2) will not apply if—

(i) A corporation declares a dividend payable in stock of the corporation and distributes cash in lieu of fractional shares to which shareholders would otherwise be entitled, or

(ii) Upon a conversion of convertible stock or securities a corporation distributes cash in lieu of fractional shares to which shareholders would otherwise be entitled.

Provided the purpose of the distribution of cash is to save the corporation the trouble, expense, and inconvenience of issuing and transferring fractional shares (or scrip representing fractional shares), or issuing full shares representing the sum of fractional shares, and not to give any particular group of shareholders an increased interest in the assets or earnings and profits of the corporation. For purposes of paragraph (c)(1)(i) of this section, if the total amount of cash distributed in lieu of fractional shares is 5 percent or less of the total fair market value of the stock distributed (determined as of the date of declaration), the distribution shall be considered to be for such valid purpose.

(2) In a case to which subparagraph (1) of this paragraph applies, the transaction will be treated as though the fractional shares were distributed as part of the stock distribution and then were redeemed by the corporation. The treatment of the cash received by a shareholder will be determined under section 302.

(d) ***Adjustment in conversion ratio.***

(1)

(i) Except as provided in subparagraph (2) of this paragraph, if a corporation has convertible stock or convertible securities outstanding (upon which it pays or is deemed to pay dividends or interest in money or other property) and distributes a stock dividend (or rights to acquire such stock) with respect to the stock into which the convertible stock or securities are convertible, an increase in proportionate interest in the assets or earnings and profits of the corporation by reason of such stock dividend shall be considered to have occurred unless a full adjustment in the conversion ratio or conversion price to reflect such stock dividend is made. Under certain circumstances, however, the application of an adjustment formula which in effect provides for a “credit” where stock is issued for consideration in excess of the conversion price may not satisfy the requirement for a “full adjustment.” Thus, if under a “conversion price” antidilution formula the formula provides for a “credit” where stock is issued for consideration in excess of the conversion price (in effect as an offset against any decrease in the conversion price which would otherwise be required when stock is subsequently issued for consideration below the conversion price) there may still be an increase in proportionate interest by reason of a stock dividend after application of the formula, since any downward adjustment of the conversion price that would otherwise be required to reflect the stock dividend may be offset, in whole or in part, by the effect of prior sales made at prices above the conversion price. On the other hand, if there were no prior sales of stock above the conversion price then a full adjustment would

occur upon the application of such an adjustment formula and there would be no change in proportionate interest. Similarly, if consideration is to be received in connection with the issuance of stock, such as in the case of a rights offering or a distribution of warrants, the fact that such consideration is taken into account in making the antidilution adjustment will not preclude a full adjustment. See paragraph (*b*) of the example in this subparagraph for a case where the application of an adjustment formula with a cumulative feature does not result in a full adjustment and where a change in proportionate interest therefore occurs. See paragraph (*c*) for a case where the application of an adjustment formula with a cumulative feature does result in a full adjustment and where no change in proportionate interest therefore occurs. See paragraph (*d*) for an application of an antidilution formula in the case of a rights offering. See paragraph (*e*) for a case where the application of a noncumulative type adjustment formula will in all cases prevent a change in proportionate interest from occurring in the case of a stock dividend, because of the omission of the cumulative feature.

(ii) The principles of this subparagraph may be illustrated by the following example.

Example. (a) Corporation S has two classes of securities outstanding, convertible debentures and common stock. At the time of issuance of the debentures the corporation had 100 shares of common stock outstanding. Each debenture is interest-paying and is convertible into common stock at a conversion price of $2. The debenture's conversion price is subject to reduction pursuant to the following formula:
(Number of common shares outstanding at date of issue of debentures times initial conversion price) *plus* (Consideration received upon issuance of additional common shares) *divided by* (Number of common shares outstanding at date of issue of debentures) *plus* (Number of additional common shares issued)
Under the formula, common stock dividends are treated as an issue of common stock for zero consideration. If the computation results in a figure which is less than the existing conversion price the conversion price is reduced. However, under the formula, the existing conversion price is never increased. The formula works upon a cumulative basis since the numerator includes the consideration received upon the issuance of all common shares subsequent to the issuance of the debentures, and the reduction effected by the formula because of a sale or issuance of common stock below the existing conversion price is thus limited by any prior sales made above the existing conversion price.

(b) In 1972 corporation S sells 100 common shares at $3 per share. In 1973 the corporation declares a stock dividend of 20 shares to all holders of common stock. Under the antidilution formula no adjustment will be made to the conversion price of the debentures to reflect the stock dividend to common stockholders since the prior sale of common stock in excess of the conversion price in 1972 offsets the reduction in the conversion price which would otherwise result, as follows:
100 × $2 + $300 ÷ 100 + 120 = $500 ÷ 220 = $2.27

Since $2.27 is greater than the existing conversion price of $2 no adjustment is required. As a result, there is an increase in proportionate interest of the common stockholders by reason of the stock dividend and the additional shares of common stock will be treated, pursuant to section 305(b)(2), as a distribution of property to which section 301 applies.

(c) Assume the same facts as above, but instead of selling 100 common shares at $3 per share in 1972, assume corporation S sold no shares. Application of the antidilution formula would give rise to an adjustment in the conversion price as follows:
100 × $2 + $0 ÷ 100 + 20 = $200 ÷ 120 = $1.67

The conversion price, being reduced from $2 to $1.67, fully reflects the stock dividend distributed to the common stockholders. Hence, the distribution of common stock is not treated under section 305(b)(2) as one to which section 301 applies because the distribution does not increase the proportionate interests of the common shareholders as a class.

(d) Corporation S distributes to its shareholders rights entitling the shareholders to purchase a total of 20 shares at $1 per share. Application of the antidilution formula would produce an adjustment in the conversion price as follows:
100 × $2 + 20 × $1 ÷ 100 + 20 = $220 ÷ 120 = $1.83

The conversion price, being reduced from $2 to $1.83, fully reflects the distribution of rights to purchase stock at a price lower than the conversion price. Hence, the distribution of the rights is not treated under section 305(b)(2) as one to which section 301 applies because the distribution does not increase the proportionate interests of the common shareholders as a class.

(e) Assume the same facts as in (b) above, but instead of using a “conversion price” antidilution formula which operates on a cumulative basis, assume corporation S has employed a formula which operates as follows with respect to all stock dividends: The conversion price in effect at the opening of business on the day following the dividend record date is reduced by multiplying such conversion price by a fraction the numerator of which is the number of shares of common stock outstanding at the close of business on the record date and the denominator of which is the sum of such shares so outstanding and the number of shares constituting the stock dividend. Under such a formula the following adjustment would be made to the conversion price upon the declaration of a stock dividend of 20 shares in 1973:
200 ÷ 200 + 20 = 200 ÷ 220 × $2 = $1.82

> The conversion price, being reduced from $2 to $1.82, fully reflects the stock dividend distributed to the common stockholders. Hence, the distribution of common stock is not treated under section 305(b)(2) as one to which section 301 applies because the distribution does not increase the proportionate interests of the common shareholders as a class.

(2)

(i) A distributing corporation either must make the adjustment required by subparagraph (1) of this paragraph as of the date of the distribution of the stock dividend, or must elect (in the manner provided in subdivision (iii) of this subparagraph) to make such adjustment within the time provided in subdivision (ii) of this subparagraph.

(ii) If the distributing corporation elects to make such adjustment, such adjustment must be made no later than the earlier of (*a*) 3 years after the date of the stock dividend, or (*b*) that date as of which the aggregate stock dividends for which adjustment of the conversion ratio has not previously been made total at least 3 percent of the issued and outstanding stock with respect to which such stock dividends were distributed.

(iii) The election provided by subdivision (ii) of this subparagraph shall be made by filing with the income tax return for the taxable year during which the stock dividend is distributed—

(*a*) A statement that an adjustment will be made as provided by that subdivision, and

(*b*) A description of the antidilution provisions under which the adjustment will be made.

(3) Notwithstanding the preceding subparagraph, if a distribution has been made before July 12, 1973, and the adjustment required by subparagraph (1) or the election to make such adjustment was not made before such date, the adjustment or the election to make such adjustment, as the case may be, shall be considered valid if made no later than 15 days following the date of the first annual meeting of the shareholders after July 12, 1973, or July 12, 1974, whichever is earlier. If the election is made within such period, and, if the income tax return has been filed before the time of such election, the statement of adjustment and the description of the antidilution provisions required by subparagraph (2)(iii) shall be filed with the Internal Revenue Service Center with which the income tax return was filed.

(4) See § 1.305-7(b) for a discussion of antidilution adjustments in connection with the application of section 305(c) in conjunction with section 305(b).

(e) ***Examples.*** The application of section 305(b)(2) to distributions of stock and section 305(c) to deemed distributions of stock may be illustrated by the following examples:

Example 1. Corporation X is organized with two classes of common stock, class A and class B. Each share of stock is entitled to share equally in the assets and earnings and profits of the corporation. Dividends may be paid in stock or in cash on either class of stock without regard to the medium of payment of dividends on the other class. A dividend is declared on the class A stock payable in additional shares of class A stock and a dividend is declared on class B stock payable in cash. Since the class A shareholders as a class will have increased their proportionate interests in the assets and earnings and profits of the corporation and the class B shareholders will have received cash, the

additional shares of class A stock are distributions of property to which section 301 applies. This is true even with respect to those shareholders who may own class A stock and class B stock in the same proportion.

Example 2. Corporation Y is organized with two classes of stock, class A common, and class B, which is nonconvertible and limited and preferred as to dividends. A dividend is declared upon the class A stock payable in additional shares of class A stock and a dividend is declared on the class B stock payable in cash. The distribution of class A stock is not one to which section 301 applies because the distribution does not increase the proportionate interests of the class A shareholders as a class.

Example 3. Corporation K is organized with two classes of stock, class A common, and class B, which is nonconvertible preferred stock. A dividend is declared upon the class A stock payable in shares of class B stock and a dividend is declared on the class B stock payable in cash. Since the class A shareholders as a class have an increased interest in the assets and earnings and profits of the corporation, the stock distribution is treated as a distribution to which section 301 applies. If, however, a dividend were declared upon the class A stock payable in a new class of preferred stock that is subordinated in all respects to the class B stock, the distribution would not increase the proportionate interests of the class A shareholders in the assets or earnings and profits of the corporation and would not be treated as a distribution to which section 301 applies.

Example 4. (i) Corporation W has one class of stock outstanding, class A common. The corporation also has outstanding interest paying securities convertible into class A common stock which have a fixed conversion ratio that is not subject to full adjustment in the event stock dividends or rights are distributed to the class A shareholders. Corporation W distributes to the class A shareholders rights to acquire additional shares of class A stock. During the year, interest is paid on the convertible securities.
(ii) The stock rights and convertible securities are considered to be outstanding stock of the corporation and the distribution increases the proportionate interests of the class A shareholders in the assets and earnings and profits of the corporation. Therefore, the distribution is treated as a distribution to which section 301 applies. The same result would follow if, instead of convertible securities, the corporation had outstanding convertible stock. If, however, the conversion ratio of the securities or stock were fully adjusted to reflect the distribution of rights to the class A shareholders, the rights to acquire class A stock would not increase the proportionate interests of the class A shareholders in the assets and earnings and profits of the corporation and would not be treated as a distribution to which section 301 applies.

Example 5. (i) Corporation S is organized with two classes of stock, class A common and class B convertible preferred. The class B is fully protected against dilution in the event of a stock dividend or stock split with respect to the class A stock; however, no adjustment in the conversion ratio is required to be made until the stock dividends equal 3 percent of the common stock issued and outstanding on the date of the first such stock dividend except that such adjustment must be made no later than 3 years after the date of the stock dividend. Cash dividends are paid annually on the class B stock.

(ii) Corporation S pays a 1 percent stock dividend on the class A stock in 1970. In 1971, another 1 percent stock dividend is paid and in 1972 another 1 percent stock dividend is paid. The conversion ratio of the class B stock is increased in 1972 to reflect the three stock dividends paid on the class A stock. The distributions of class A stock are not distributions to which section 301 applies because they do not increase the proportionate interests of the class A shareholders in the assets and earnings and profits of the corporation.

Example 6. (i) Corporation M is organized with two classes of stock outstanding, class A and class B. Each class B share may be converted, at the option of the holder, into class A shares. During the first year, the conversion ratio is one share of class A stock for each share of class B stock. At the beginning of each subsequent year, the conversion ratio is increased by 0.05 share of class A stock for each share of class B stock. Thus, during the second year, the conversion ratio would be 1.05 shares of class A stock for each share of class B stock, during the third year, the ratio would be 1.10 shares, etc.
(ii) M pays an annual cash dividend on the class A stock. At the beginning of the second year, when the conversion ratio is increased to 1.05 shares of class A stock for each share of class B stock, a distribution of 0.05 shares of class A stock is deemed made under section 305(c) with respect to each share of class B stock, since the proportionate interests of the class B shareholders in the assets or earnings and profits of M are increased and the transaction has the effect described in section 305(b)(2). Accordingly, sections 305(b)(2) and 301 apply to the transaction.

Example 7. (i) Corporation N has two classes of stock outstanding, class A and class B. Each class B share is convertible into class A stock. However, in accordance with a specified formula, the conversion ratio is decreased each time a cash dividend is paid on the class B stock to reflect the amount of the cash dividend. The conversion ratio is also adjusted in the event that cash dividends are paid on the class A stock to increase the number of class A shares into which the class B shares are convertible to compensate the class B shareholders for the cash dividend paid on the class A stock.
(ii) In 1972, a $1 cash dividend per share is declared and paid on the class B stock. On the date of payment, the conversion ratio of the class B stock is decreased. A distribution of stock is deemed made under section 305(c) to the class A shareholders, since the proportionate interest of the class A shareholders in the assets or earnings and profits of the corporation is increased and the transaction has the effect described in section 305(b)(2). Accordingly, sections 305(b)(2) and 301 apply to the transaction.

(iii) In the following year a cash dividend is paid on the class A stock and none is paid on the class B stock. The increase in conversion rights of the class B shares is deemed to be a distribution under section 305(c) to the class B shareholders since their proportionate

interest in the assets or earnings and profits of the corporation is increased and since the transaction has the effect described in section 305(b)(2). Accordingly, sections 305(b)(2) and 301 apply to the transaction.

Example 8. Corporation T has 1,000 shares of stock outstanding. C owns 100 shares. Nine other shareholders each owns 100 shares. Pursuant to a plan for periodic redemptions, T redeems up to 5 percent of each shareholder's stock each year. During the year, each of the nine other shareholders has 5 shares of his stock redeemed for cash. Thus, C's proportionate interest in the assets and earnings and profits of T is increased. Assuming that the cash received by the nine other shareholders is taxable under section 301, C is deemed under section 305(c) to have received a distribution under section 305(b)(2) of 5.25 shares of T stock to which section 301 applies. The amount of C's distribution is measured by the fair market value of the number of shares which would have been distributed to C had the corporation sought to increase his interest by 0.47 percentage points (C owned 10 percent of the T stock immediately before the redemption and 10.47 percent immediately thereafter) and the other shareholders continued to hold 900 shares (i.e.,
(a) 100 ÷ 955 = 10.47% (percent of C's ownership after redemption)

(b) 100 + x ÷ 1000 + x = 10.47%; x = 5.25 (additional shares considered to be distributed to C)).

Since in computing the amount of additional shares deemed to be distributed to C the redemption of shares is disregarded, the redemption of shares will be similarly disregarded in determining the value of the stock of the corporation which is deemed to be distributed. Thus, in the example, 1,005.25 shares of stock are considered as outstanding after the redemption. The value of each share deemed to be distributed to C is then determined by dividing the 1,005.25 shares into the aggregate fair market value of the actual shares outstanding (955) after the redemption.

Example 9. (i) Corporation O has a stock redemption program under which, instead of paying out earnings and profits to its shareholders in the form of dividends, it redeems the stock of its shareholders up to a stated amount which is determined by the earnings and profits of the corporation. If the stock tendered for redemption exceeds the stated amount, the corporation redeems the stock on a pro rata basis up to the stated amount.
(ii) During the year corporation O offers to distribute $10,000 in redemption of its stock. At the time of the offering, corporation O has 1,000 shares outstanding of which E and F each owns 150 shares and G and H each owns 350 shares. The corporation redeems 15 shares from E and 35 shares from G. F and H continue to hold all of their stock.

(iii) F and H have increased their proportionate interests in the assets and earnings and profits of the corporation. Assuming that the cash E and G receive is taxable under section 301, F will be deemed under section 305(c) to have received a distribution under section 305(b)(2) of 16.66 shares of stock to which section 301 applies and H will be deemed under section 305(c) to have received a distribution under section 305(b)(2) of 38.86 shares of stock to which section 301 applies. The amount of the distribution to F and H is measured by the number of shares which would have been distributed to F and H had the corporation sought to increase the interest of F by 0.79 percentage points (F owned 15 percent of the stock immediately before the redemption and 15.79 percent immediately thereafter) and the interest of H by 1.84 percentage points (H owned 35 percent of the stock immediately before the redemption and 36.84 percent immediately thereafter) and E and G had continued to hold 150 shares and 350 shares, respectively (i.e.,

(a) 150 ÷ 950 + 350 ÷ 950 = 52.63% (percent of F and H's ownership after redemption)

(b) 500 + y ÷ 1000 + y = 52.63%; y = 55.52 (additional shares considered to be distributed to F and H)

(c)(1) 150 ÷ 500 × 55.52 = 16.66 (shares considered to be distributed to F)

(2) 350 ÷ 500 × 55.52 = 38.86 (shares considered to be distributed to H)).

Since in computing the amount of additional shares deemed to be distributed to F and H the redemption of shares is disregarded, the redemption of shares will be similarly disregarded in determining the value of the stock of the corporation which is deemed to be distributed. Thus, in the example, 1,055.52 shares of stock are considered as outstanding after the redemption. The value of each share deemed to be distributed to F and H is then determined by dividing the 1,055.52 shares into the aggregate fair market value of the actual shares outstanding (950) after the redemption.

Example 10. Corporation P has 1,000 shares of stock outstanding. T owns 700 shares of the P stock and G owns 300 shares of the P stock. In a single and isolated redemption to which section 301 applies, the corporation redeems 150 shares of T's stock. Since this is an isolated redemption and is not a part of a periodic redemption plan, G is not treated as having received a deemed distribution under section 305(c) to which sections 305(b)(2) and 301 apply even though he has an increased proportionate interest in the assets and earnings and profits of the corporation.

Example 11. Corporation Q is a large corporation whose sole class of stock is widely held. However, the four largest shareholders are officers of the corporation and each owns 8 percent of the outstanding stock. In 1974, in a distribution to which section 301 applies, the corporation redeems 1.5 percent of the stock from each of the four largest shareholders in preparation for their retirement. From 1970 through 1974, the corporation distributes annual stock dividends to its shareholders. No other distributions were made to these shareholders. Since the 1974 redemptions are isolated and are not part of a plan for periodically redeeming the stock of the corporation, the shareholders receiving

stock dividends will not be treated as having received a distribution under section 305(b)(2) even though they have an increased proportionate interest in the assets and earnings and profits of the corporation and whether or not the redemptions are treated as distributions to which section 301 applies.

Example 12. Corporation R has 2,000 shares of class A stock outstanding. Five shareholders own 300 shares each and five shareholders own 100 shares each. In preparation for the retirement of the five major shareholders, corporation R, in a single and isolated transaction, has a recapitalization in which each share of class A stock may be exchanged either for five shares of new class B nonconvertible preferred stock plus 0.4 share of new class C common stock, or for two shares of new class C common stock. As a result of the exchanges, each of the five major shareholders receives 1,500 shares of class B nonconvertible preferred stock and 120 shares of class C common stock. The remaining shareholders each receives 200 shares of class C common stock. None of the exchanges are within the purview of section 305.

Example 13. Corporation P is a widely-held company whose shares are listed for trading on a stock exchange. P distributes annual cash dividends to its shareholders. P purchases shares of its common stock directly from small stockholders (holders of record of 100 shares or less) or through brokers where the holders may not be known at the time of purchase. Where such purchases are made through brokers, they are pursuant to the rules and regulations of the Securities and Exchange Commission. The shares are purchased for the purpose of issuance to employee stock investment plans, to holders of convertible stock or debt, to holders of stock options, or for future acquisitions. Provided the purchases are not pursuant to a plan to increase the proportionate interest of some shareholders and distribute property to other shareholders, the remaining shareholders of P are not treated as having received a deemed distribution under section 305(c) to which section 305(b)(2) and 301 apply, even though they have an increased proportionate interest in the assets and earnings and profits of the corporation.

Example 14. Corporation U is a large manufacturing company whose products are sold through independent dealers. In order to assist individuals who lack capital to become dealers, the corporation has an established investment plan under which it provides 75 percent of the capital necessary to form a dealership corporation and the individual dealer provides the remaining 25 percent. Corporation U receives class A stock and a note representing its 75 percent interest. The individual dealer receives class B stock representing his 25 percent interest. The class B stock is nonvoting until all the class A shares are redeemed. At least 70 percent of the earnings and profits of the dealership corporation must be used each year to retire the note and to redeem the class A stock. The class A stock is redeemed at a fixed price. The individual dealer has no control over the redemption of stock and has no right to have his stock redeemed during the period the plan is in existence. U's investment is thus systematically eliminated and the individual becomes the sole owner of the dealership corporation. Since this type of plan is akin to a security arrangement, the redemptions of the class A stock will not be deemed under section 305(c) as distributions taxable under sections 305(b)(2) and 301 during the years in which the class A stock is redeemed.

Example 15. (i) *Facts.* Corporation V is organized with two classes of stock, class A common and class B convertible preferred. The class B stock is issued for $100 per share and is convertible at the holder's option into class A at a fixed ratio that is not subject to full adjustment in the event stock dividends or rights are distributed to the class A shareholders. The class B stock pays no dividends but it is mandatorily redeemable in 10 years for $200. Under sections 305(c) and 305(b)(4), the entire redemption premium (i.e.,

the excess of the redemption price over the issue price) is deemed to be a distribution of preferred stock on preferred stock which is taxable as a distribution of property under section 301. This amount is considered to be distributed over the 10-year period under principles similar to the principles of section 1272(a). During the year, the corporation declares a dividend on the class A stock payable in additional shares of class A stock.

(ii) *Analysis.* The distribution on the class A stock is a distribution to which sections 305(b)(2) and 301 apply since it increases the proportionate interests of the class A shareholders in the assets and earnings and profits of the corporation and the class B shareholders have received property (i.e., the constructive distribution described above). If, however, the conversion ratio of the class B stock were subject to full adjustment to reflect the distribution of stock to class A shareholders, the distribution of stock dividends on the class A stock would not increase the proportionate interest of the class A shareholders in the assets and earnings and profits of the corporation and such distribution would not be a distribution to which section 301 applies.

(iii) *Effective date.* This *Example 15* applies to stock issued on or after December 20, 1995. For previously issued stock, see § 1.305-3(e) *Example (15)* (as contained in the 26 CFR part 1 edition revised April 1, 1995).

[T.D. 7281, 38 FR 18532, July 12, 1973; 38 FR 19910, 19911, July 25, 1973, as amended by T.D. 7329, 39 FR 36860, Oct. 15, 1974; T.D. 8643, 60 FR 66136, Dec. 21, 1995]

§ 1.305-4 Distributions of common and preferred stock.

(a) ***In general.*** Under section 305(b)(3), a distribution (or a series of distributions) by a corporation which results in the receipt of preferred stock whether or not convertible into common stock) by some common shareholders and the receipt of common stock by other common shareholders is treated as a distribution of property to which section 301 applies. For the meaning of the term *a series of distribution,* see subparagraphs (1) through (6) of § 1.305-3(b).

(b) ***Examples.*** The application of section 305(b)(3) may be illustrated by the following examples:

Example 1. Corporation X is organized with two classes of common stock, class A and class B. Dividends may be paid in stock or in cash on either class of stock without regard to the medium of payment of dividends on the other class. A dividend is declared on the class A stock payable in additional shares of class A stock and a dividend is declared on class B stock payable in newly authorized class C stock which is nonconvertible and limited and preferred as to dividends. Both the distribution of class A shares and the distribution of new class C shares are distributions to which section 301 applies.

Example 2. Corporation Y is organized with one class of stock, class A common. During the year the corporation declares a dividend on the class A stock payable in newly authorized class B preferred stock which is convertible into class A stock no later than 6 months from the date of distribution at a price that is only slightly higher than the market price of class A stock on the date of distribution. Taking into account the dividend rate, redemption provisions, the marketability of the convertible stock, and the conversion price, it is reasonable to anticipate that within a relatively short period of time some shareholders will exercise their conversion rights and some will not. Since the distribution

can reasonably be expected to result in the receipt of preferred stock by some common shareholders and the receipt of common stock by other common shareholders, the distribution is a distribution of property to which section 301 applies.

[T.D. 7281, 38 FR 18536, July 12, 1973]

§ 1.305-5 Distributions on preferred stock.

(a) ***In general.*** Under section 305(b)(4), a distribution by a corporation of its stock (or rights to acquire its stock) made (or deemed made under section 305(c)) with respect to its preferred stock is treated as a distribution of property to which section 301 applies unless the distribution is made with respect to convertible preferred stock to take into account a stock dividend, stock split, or any similar event (such as the sale of stock at less than the fair market value pursuant to a rights offering) which would otherwise result in the dilution of the conversion right. For purposes of the preceding sentence, an adjustment in the conversion ratio of convertible preferred stock made solely to take into account the distribution by a closed end regulated investment company of a capital gain dividend with respect to the stock into which such stock is convertible shall not be considered a "similar event." The term *preferred stock* generally refers to stock which, in relation to other classes of stock outstanding, enjoys certain limited rights and privileges (generally associated with specified dividend and liquidation priorities) but does not participate in corporate growth to any significant extent. The distinguishing feature of *preferred stock* for the purposes of section 305(b)(4) is not its privileged position as such, but that such privileged position is limited, and that such stock does not participate in corporate growth to any significant extent. However, a right to participate which lacks substance will not prevent a class of stock from being treated as preferred stock. Thus, stock which enjoys a priority as to dividends and on liquidation but which is entitled to participate, over and above such priority, with another less privileged class of stock in earnings and profits and upon liquidation, may nevertheless be treated as preferred stock for purposes of section 305 if, taking into account all the facts and circumstances, it is reasonable to anticipate at the time a distribution is made (or is deemed to have been made) with respect to such stock that there is little or no likelihood of such stock actually participating in current and anticipated earnings and upon liquidation beyond its preferred interest. Among the facts and circumstances to be considered are the prior and anticipated earnings per share, the cash dividends per share, the book value per share, the extent of preference and of participation of each class, both absolutely and relative to each other, and any other facts which indicate whether or not the stock has a real and meaningful probability of actually participating in the earnings and growth of the corporation. The determination of whether stock is preferred for purposes of section 305 shall be made without regard to any right to convert such stock into another class of stock of the corporation. The term *preferred stock,* however, does not include convertible debentures.

(b) ***Redemption premium*** —

(1) ***In general.*** If a corporation issues preferred stock that may be redeemed under the circumstances described in this paragraph (b) at a price higher than the issue price, the difference (the redemption premium) is treated under section 305(c) as a constructive distribution (or series of constructive distributions) of additional stock on preferred stock that is taken into account under principles similar to the principles of section 1272(a). However, constructive distribution treatment does not result under this paragraph (b) if the redemption premium does not exceed a de minimis amount, as determined under the principles of section 1273(a)(3). For purposes of this paragraph (b), preferred stock that may be acquired by a person other than the issuer (the third person) is deemed to be redeemable under the circumstances described in this paragraph (b), and references to the issuer include the third person, if—

(i) This paragraph (b) would apply to the stock if the third person were the issuer; and

(ii) Either—

(A) The acquisition of the stock by the third person would be treated as a redemption for federal income tax purposes (under section 304 or otherwise); or

(B) The third person and the issuer are members of the same affiliated group (having the meaning for this purpose given the term by section 1504(a), except that section 1504(b) shall not apply) and a principal purpose of the arrangement for the third person to acquire the stock is to avoid the application of section 305 and paragraph (b)(1) of this section.

(2) ***Mandatory redemption or holder put.*** Paragraph (b)(1) of this section applies to stock if the issuer is required to redeem the stock at a specified time or the holder has the option (whether or not currently exercisable) to require the issuer to redeem the stock. However, paragraph (b)(1) of this section will not apply if the issuer's obligation to redeem or the holder's ability to require the issuer to redeem is subject to a contingency that is beyond the legal or practical control of either the holder or the holders as a group (or through a related party within the meaning of section 267(b) or 707(b)), and that, based on all of the facts and circumstances as of the issue date, renders remote the likelihood of redemption. For purposes of this paragraph, a contingency does not include the possibility of default, insolvency, or similar circumstances, or that a redemption may be precluded by applicable law which requires that the issuer have a particular level of capital, surplus, or similar items. A contingency also does not include an issuer's option to require earlier redemption of the stock. For rules applicable if stock may be redeemed at more than one time, see paragraph (b)(4) of this section.

(3) ***Issuer call*** —

(i) ***In general.*** Paragraph (b)(1) of this section applies to stock by reason of the issuer's right to redeem the stock (even if the right is immediately exercisable), but only if, based on all of the facts and circumstances as of the issue date, redemption pursuant to that right is more likely than not to occur. However, even if redemption is more likely than not to occur, paragraph (b)(1) of this section does not apply if the redemption premium is solely in the nature of a penalty for premature redemption. A redemption premium is not a penalty for premature redemption unless it is a premium paid as a result of changes in economic or market conditions over which neither the issuer nor the holder has legal or practical control.

(ii) ***Safe harbor.*** For purposes of this paragraph (b)(3), redemption pursuant to an issuer's right to redeem is not treated as more likely than not to occur if—

(A) The issuer and the holder are not related within the meaning of section 267(b) or 707(b) (for purposes of applying sections 267(b) and 707(b) (including section 267(f)(1)), the phrase “20 percent” shall be substituted for the phrase “50 percent”);

(B) There are no plans, arrangements, or agreements that effectively require or are intended to compel the issuer to redeem the stock (disregarding, for this purpose, a separate mandatory redemption obligation described in paragraph (b)(2) of this section); and

(C) Exercise of the right to redeem would not reduce the yield of the stock, as determined under principles similar to the principles of section 1272(a) and the regulations under sections 1271 through 1275.

(iii) ***Effect of not satisfying safe harbor.*** The fact that a redemption right is not described in paragraph (b)(3)(ii) of this section does not affect the determination of whether a redemption pursuant to the right to redeem is more likely than not to occur.

(4) ***Coordination of multiple redemption provisions.*** If stock may be redeemed at more than one time, the time and price at which redemption is most likely to occur must be determined based on all of the facts and circumstances as of the issue date. Any constructive distribution under paragraph (b)(1) of this section will result only with respect to the time and price identified in the preceding sentence. However, if redemption does not occur at that identified time, the amount of any additional premium payable on any later redemption date, to the extent not previously treated as distributed, is treated as a constructive distribution over the period from the missed call or put date to that later date, to the extent required under the principles of this paragraph (b).

(5) ***Consistency.*** The issuer's determination as to whether there is a constructive distribution under this paragraph (b) is binding on all holders of the stock, other than a holder that explicitly discloses that its determination as to whether there is a constructive distribution under this paragraph (b) differs from that of the issuer. Unless otherwise prescribed by the Commissioner, the disclosure must be made on a statement attached to the holder's timely filed federal income tax return for the taxable year that includes the date the holder acquired the stock. The issuer must provide the relevant information to the holder in a reasonable manner. For example, the issuer may provide the name or title and either the address or telephone number of a representative of the issuer who will make available to holders upon request the information required for holders to comply with this provision of this paragraph (b).

(c) ***Cross reference.*** For rules for applying sections 305(b)(4) and 305(c) to recapitalizations, see § 1.305-7(c).

(d) ***Examples.*** The application of sections 305(b)(4) and 305(c) may be illustrated by the following examples:

> *Example 1.* (i) Corporation T has outstanding 1,000 shares of $100 par 5-percent cumulative preferred stock and 10,000 shares of no-par common stock. The corporation is 4 years in arrears on dividends to the preferred shareholders. The issue price of the preferred stock is $100 per share. Pursuant to a recapitalization under section 368(a)(1)(E), the preferred shareholders exchange their preferred stock, including the right to dividend arrearages, on the basis of one old preferred share for 1.20 newly authorized class A preferred shares. Immediately following the recapitalization, the new class A shares are traded at $100 per share. The class A shares are entitled to a liquidation preference of $100. The preferred shareholders have increased their proportionate interest in the assets or earnings and profits of corporation T since the fair market value of 1.20 shares of class A preferred stock ($120) exceeds the issue price of the old preferred stock ($100). Accordingly, the preferred shareholders are deemed under section 305(c) to receive a distribution in the amount of $20 on each share of old preferred stock and the distribution is one to which sections 305(b)(4) and 301 apply.
> (ii) The same result would occur if the fair market value of the common stock immediately following the recapitalization were $20 per share and each share of preferred stock were exchanged for one share of the new class A preferred stock and one share of common stock.

Example 2. Corporation A, a publicly held company whose stock is traded on a securities exchange (or in the over-the-counter market) has two classes of stock outstanding, common and cumulative preferred. Each share of preferred stock is convertible into .75 shares of common stock. There are no dividend arrearages. At the time of issue of the preferred stock, there was no plan or prearrangement by which it was to be exchanged for common stock. The issue price of the preferred stock is $100 per share. In order to retire the preferred stock, corporation A recapitalizes in a transaction to which section 368(a)(1)(E) applies and each share of preferred stock is exchanged for one share of common stock. Immediately after the recapitalization the common stock has a fair market value of $110 per share. Notwithstanding the fact that the fair market value of the common stock received in the exchange (determined immediately following the recapitalization) exceeds the issue price of the preferred stock surrendered, the recapitalization is not deemed under section 305(c) to result in a distribution to which sections 305(b)(4) and 301 apply since the recapitalization is not pursuant to a plan to periodically increase a shareholder's proportionate interest in the assets or earnings and profits and does not involve dividend arrearages.

Example 3. Corporation V is organized with two classes of stock, 1,000 shares of class A common and 1,000 shares of class B convertible preferred. Each share of class B stock may be converted into two shares of class A stock. Pursuant to a recapitalization under section 368(a)(1)(E), the 1,000 shares of class A stock are surrendered in exchange for 500 shares of new class A common and 500 shares of newly authorized class C common. The conversion right of class B stock is changed to one share of class A stock and one share of class C stock for each share of class B stock. The change in the conversion right is not deemed under section 305(c) to be a distribution on preferred stock to which sections 305(b)(4) and 301 apply.

Example 4. (i) *Facts.* Corporation X is a domestic corporation with only common stock outstanding. In connection with its acquisition of Corporation T, X issues 100 shares of its 4% preferred stock to the shareholders of T, who are unrelated to X both before and after the transaction. The issue price of the preferred stock is $40 per share. Each share of preferred stock is convertible at the shareholder's election into three shares of X common stock. At the time the preferred stock is issued, the X common stock has a value of $10 per share. The preferred stock does not provide for its mandatory redemption or for redemption at the option of the holder. It is callable at the option of X at any time beginning three years from the date of issuance for $100 per share. There are no other plans, arrangements, or agreements that effectively require or are intended to compel X to redeem the stock.
(ii) *Analysis.* The preferred stock is described in the safe harbor rule of paragraph (b)(3)(ii) of this section because X and the former shareholders of T are unrelated, there are no plans, arrangements, or agreements that effectively require or are intended to compel X to redeem the stock, and calling the stock for $100 per share would not reduce the yield of the preferred stock. Therefore, the $60 per share call premium is not treated as a constructive distribution to the shareholders of the preferred stock under paragraph (b) of this section.

Example 5. (i) *Facts*—(A) Corporation Y is a domestic corporation with only common stock outstanding. On January 1, 1996, Y issues 100 shares of its 10% preferred stock to a holder. The holder is unrelated to Y both before and after the stock issuance. The issue price of the

preferred stock is $100 per share. The preferred stock is—
(1) Callable at the option of Y on or before January 1, 2001, at a price of $105 per share plus any accrued but unpaid dividends; and

(2) Mandatorily redeemable on January 1, 2006, at a price of $100 per share plus any accrued but unpaid dividends.

(B) The preferred stock provides that if Y fails to exercise its option to call the preferred stock on or before January 1, 2001, the holder will be entitled to appoint a majority of Y's directors. Based on all of the facts and circumstances as of the issue date, Y is likely to have the legal and financial capacity to exercise its right to redeem. There are no other facts and circumstances as of the issue date that would affect whether Y will call the preferred stock on or before January 1, 2001.

(ii) *Analysis.* Under paragraph (b)(3)(i) of this section, paragraph (b)(1) of this section applies because, by virtue of the change of control provision and the absence of any contrary facts, it is more likely than not that Y will exercise its option to call the preferred stock on or before January 1, 2001. The safe harbor rule of paragraph (b)(3)(ii) of this section does not apply because the provision that failure to call will cause the holder to gain control of the corporation is a plan, arrangement, or agreement that effectively requires or is intended to compel Y to redeem the preferred stock. Under paragraph (b)(4) of this section, the constructive distribution occurs over the period ending on January 1, 2001. Redemption is most likely to occur on that date, because that is the date on which the corporation minimizes the rate of return to the holder while preventing the holder from gaining control. The de minimis exception of paragraph (b)(1) of this section does not apply because the $5 per share difference between the redemption price and the issue price exceeds the amount determined under the principles of section 1273(a)(3) (5 × .0025 × $105 = $1.31). Accordingly, $5 per share, the difference between the redemption price and the issue price, is treated as a constructive distribution received by the holder on an economic accrual basis over the five-year period ending on January 1, 2001, under principles similar to the principles of section 1272(a).

Example 6. Corporation A, a publicly held company whose stock is traded on a securities exchange (or in the over-the-counter market) has two classes of stock outstanding, common and preferred. The preferred stock is nonvoting and nonconvertible, limited and preferred as to dividends, and has a fixed liquidation preference. There are no dividend arrearages. At the time of issue of the preferred stock, there was no plan or prearrangement by which it was to be exchanged for common stock. In order to retire the preferred stock, corporation A recapitalizes in a transaction to which section 368(a)(1)(E) applies and the preferred stock is exchanged for common stock. The transaction is not deemed to be a distribution under section 305(c) and sections 305(b) and 301 do not apply to the transaction. The same result would follow if the preferred stock was exchanged in any reorganization described in section 368(a)(1) for a new preferred stock having substantially the same market value and having no greater call price or liquidation preference than the old preferred

stock, whether the new preferred stock has voting rights or is convertible into common stock of corporation A at a fixed ratio subject to change solely to take account of stock dividends, stock splits, or similar transactions with respect to the stock into which the preferred stock is convertible.

Example 7. (i) *Facts*—(A) Corporation Z is a domestic corporation with only common stock outstanding. On January 1, 1996, Z issues 100 shares of its 10% preferred stock to C, an individual unrelated to Z both before and after the stock issuance. The issue price of the preferred stock is $100 per share. The preferred stock is—
(1) Not callable for a period of 5 years from the issue date;

(2) Callable at the option of Z on January 1, 2001, at a price of $110 per share plus any accrued but unpaid dividends;

(3) Callable at the option of Z on July 1, 2002, at a price of $120 per share plus any accrued but unpaid dividends; and

(4) Mandatorily redeemable on January 1, 2004, at a price of $150 per share plus any accrued but unpaid dividends.

(B) There are no other plans, arrangements, or agreements between Z and C concerning redemption of the stock. Moreover, there are no other facts and circumstances as of the issue date that would affect whether Z will call the preferred stock on either January 1, 2001, or July 1, 2002.

(ii) *Analysis.* This stock is described in paragraph (b)(2) of this section because it is mandatorily redeemable. It is also potentially described in paragraph (b)(3)(i) of this section because it is callable at the option of the issuer. The safe harbor rule of paragraph (b)(3)(ii) of this section does not apply to the option to call on January 1, 2001, because the call would reduce the yield of the stock when compared to the yield produced by the January 1, 2004, mandatory redemption feature. Moreover, absent any other facts indicating a contrary result, the fact that redemption on January 1, 2001, would produce the lowest yield indicates that redemption is most likely to occur on that date. Under paragraph (b)(4) of this section, paragraph (b)(1) of this section applies with respect to the issuer's right to call on January 1, 2001, because redemption is most likely to occur on January 1, 2001, for $110 per share. The de minimis exception of paragraph (b)(1) of this section does not apply because the $10 per share difference between the redemption price payable in 2001 and the issue price exceeds the amount determined under the principles of section 1273(a)(3) (5 × .0025 × $110 = $1.38). Accordingly, $10 per share, the difference between the redemption price and the issue price, is treated as a constructive distribution received by the holder on an economic accrual basis over the five-year period ending January 1, 2001, under principles similar to the principles of section 1272(a).

(iii) *Coordination rules*—(A) If Z does not exercise its option to call the preferred stock on January 1, 2001, paragraph (b)(4) of this section provides that the principles of paragraph (b) of this section must be applied to determine if any remaining constructive distribution occurs. Under paragraphs (b)(3)(i) and (b)(4) of this section, paragraph (b)(1) of this section applies because, absent any other facts indicating a contrary result, the fact that redemption on July 1, 2002, would produce a lower yield than the yield produced by the mandatory redemption feature indicates that redemption on that date is most likely to occur. The safe harbor rule of paragraph (b)(3)(ii) of this section does not apply to the option to call on July 1, 2002, because, as of January 1, 2001, a call by Z on July 1, 2002, for $120 would reduce the yield of the stock. The de minimis exception of paragraph (b)(1) of this section does not apply because the $10 per share difference between the redemption price and the issue price (revised as of the missed call date as provided by paragraph (b)(4) of this section) exceeds the amount determined under the principles of section 1273(a)(3) (1 × .0025 × $120 = $.30). Accordingly, the $10 per share of additional redemption premium that is payable on July 1, 2002, is treated as a constructive distribution received by the holder on an economic accrual basis over the period between January 1, 2001, and July 1, 2002, under principles similar to the principles of section 1272(a).

(B) If Z does not exercise its second option to call the preferred stock on July 1, 2002, then the $30 additional redemption premium that is payable on January 1, 2004, is treated as a constructive distribution under paragraphs (b)(2) and (b)(1) of this section. The de minimis exception of paragraph (b)(1) of this section does not apply because the $30 per share difference between the redemption price and the issue price (revised as of the second missed call date) exceeds the amount determined under the principles of section 1273(a)(3) (1 × .0025 × $150 = $.38). The holder is treated as receiving the constructive distribution on an economic accrual basis over the period between July 1, 2002, and January 1, 2004, under principles similar to the principles of section 1272(a).

Example 8. (i) *Facts.* The facts are the same as in paragraph (i) of Example 7, except that, based on all of the facts and circumstances as of the issue date (including an expected lack of funds on the part of Z), it is unlikely that Z will exercise the right to redeem on either January 1, 2001, or July 1, 2002.
(ii) *Analysis.* The safe harbor rule of paragraph (b)(3)(ii) of this section does not apply to the option to call on either January 1, 2001, or July 1, 2002, because each call would reduce the yield of the stock. Under paragraph (b)(3)(i) of this section, neither option to call is more likely than not to occur, because, based on all of the facts and circumstances as of the issue date (including an expected lack of funds on the part of Z), it is not more likely than not that Z will exercise either option. However, the $50 per share redemption premium that is payable on January 1, 2004, is treated as a constructive distribution under paragraphs (b)(1) and (2) of this section, regardless of whether Z is anticipated to have sufficient funds to redeem on that date, because Z is required to redeem the stock on that date. The de minimis exception of

paragraph (b)(1) of this section does not apply because the $50 per share difference between the redemption price and the issue price exceeds the amount determined under the principles of section 1273(a)(3)(8 × .0025 × $150 = $3).

Example 9. Corporation Q is organized with 10,000 shares of class A stock and 1,000 shares of class B stock. The terms of the class B stock require that the class B have a preference of $5 per share with respect to dividends and $100 per share with respect to liquidation. In addition, upon a distribution of $10 per share to the class A stock, class B participates equally in any additional dividends. The terms also provide that upon liquidation the class B stock participates equally after the class A stock receives $100 per share. Corporation Q has no accumulated earnings and profits. In 1971 it earned $10,000, the highest earnings in its history. The corporation is in an industry in which it is reasonable to anticipate a growth in earnings of 5 percent per year. In 1971 the book value of corporation Q's assets totalled $100,000. In that year the corporation paid a dividend of $5 per share to the class B stock and $.50 per share to the class A. In 1972 the corporation had no earnings and in lieu of a $5 dividend distributed one share of class B stock for each outstanding share of class B. No distribution was made to the class A stock. Since, in 1972, it was not reasonable to anticipate that the class B stock would participate in the current and anticipated earnings and growth of the corporation beyond its preferred interest, the class B stock is preferred stock and the distribution of class B shares to the class B shareholders is a distribution to which sections 305(b)(4) and 301 apply.

Example 10. Corporation P is organized with 10,000 shares of class A stock and 1,000 shares of class B stock. The terms of the class B stock require that the class B have a preference of $5 per share with respect to dividends and $100 per share with respect to liquidation. In addition, upon a distribution of $5 per share to the class A stock, class B participates equally in any additional dividends. The terms also provide that upon liquidation the class B stock participates equally after the class A receives $100 per share. Corporation P has accumulated earnings and profits of $100,000. In 1971 it earned $75,000. The corporation is in an industry in which it is reasonable to anticipate a growth in earnings of 10 percent per year. In 1971 the book value of corporation P's assets totalled $5 million. In that year the corporation paid a dividend of $5 per share to the class B stock, $5 per share to the class A stock, and it distributed an additional $1 per share to both class A and class B stock. In 1972 the corporation had earnings of $82,500. In that year it paid a dividend of $5 per share to the class B stock and $5 per share to the class A stock. In addition, the corporation declared stock dividends of one share of class B stock for every 10 outstanding shares of class B and one share of class A stock for every 10 outstanding shares of class A. Since, in 1972, it was reasonable to anticipate that both the class B stock and the class A stock would participate in the current and anticipated earnings and growth of the corporation beyond their preferred interests, neither class is preferred stock and the stock dividends are not distributions to which section 305(b)(4) applies.

(e) ***Effective date.*** The rules of paragraph (b) of this section and *Examples 4, 5, 7,* and *8* of paragraph (d) of this section apply to stock issued on or after December 20, 1995. For rules applicable to previously issued stock, see § 1.305-5 (b) and (d) *Examples (4), (5),* and (*7*) (as contained in the 26 CFR part 1 edition revised April 1, 1995). Although the rules of paragraph (b) of this section and the revised examples do not apply to stock issued before December 20, 1995, the rules of sections 305(c)(1), (2), and (3) apply to stock described therein issued on or after October 10, 1990, except as provided in section 11322(b)(2) of the Revenue Reconciliation Act of 1990 (Public Law 101-508 Stat.). Moreover, except as provided in section 11322(b)(2) of the Revenue Reconciliation Act of 1990 (Public Law 101-508 Stat.), with respect to stock issued on or after October 10, 1990, and issued before December 20, 1995, the economic accrual

rule of section 305(c)(3) will apply to the entire call premium on stock that is not described in paragraph (b)(2) of this section if the premium is considered to be unreasonable under the principles of § 1.305-5(b) (as contained in the 26 CFR part 1 edition revised April 1, 1995). A call premium described in the preceding sentence will be accrued over the period of time during which the preferred stock cannot be called for redemption.

[T.D. 7281, 38 FR 18536, July 12, 1973, as amended by T.D. 7329, 39 FR 36860, Oct. 15, 1974; T.D. 8643, 60 FR 66136, Dec. 21, 1995]

§ 1.305-6 Distributions of convertible preferred.

(a) ***In general.***

(1) Under section 305(b)(5), a distribution by a corporation of its convertible preferred stock or rights to acquire such stock made or considered as made with respect to its stock is treated as a distribution of property to which section 301 applies unless the corporation establishes that such distribution will not result in a disproportionate distribution as described in § 1.305-3.

(2) The distribution of convertible preferred stock is likely to result in a disproportionate distribution when both of the following conditions exist:

(i) The conversion right must be exercised within a relatively short period of time after the date of distribution of the stock; and

(ii) taking into account such factors as the dividend rate, the redemption provisions, the marketability of the convertible stock, and the conversion price, it may be anticipated that some shareholders will exercise their conversion rights and some will not. On the other hand, where the conversion right may be exercised over a period of many years and the dividend rate is consistent with market conditions at the time of distribution of the stock, there is no basis for predicting at what time and the extent to which the stock will be converted and it is unlikely that a disproportionate distribution will result.

(b) ***Examples.*** The application of section 305(b)(5) may be illustrated by the following examples:

Example 1. Corporation Z is organized with one class of stock, class A common. During the year the corporation declares a dividend on the class A stock payable in newly authorized class B preferred stock which is convertible into class A stock for a period of 20 years from the date of issuance. Assuming dividend rates are normal in light of existing conditions so that there is no basis for predicting the extent to which the stock will be converted, the circumstances will ordinarily be sufficient to establish that a disproportionate distribution will not result since it is impossible to predict the extent to which the class B stock will be converted into class A stock. Accordingly, the distribution of class B stock is not one to which section 301 applies.

Example 2. Corporation X is organized with one class of stock, class A common. During the year the corporation declares a dividend on the class A stock payable in newly authorized redeemable class C preferred stock which is convertible into class A common stock no later than 4 months from the date of distribution at a price slightly higher than the market price of class A stock on the date of distribution. By prearrangement with corporation X, corporation Y, an insurance company, agrees to purchase class C stock from any shareholder who does not wish to convert. By reason of this prearrangement, it is anticipated that the shareholders will either sell the class C stock to the insurance company (which expects to retain the shares for investment purposes) or will convert. As

a result, some of the shareholders exercise their conversion privilege and receive additional shares of class A stock, while other shareholders sell their class C stock to corporation Y and receive cash. The distribution is a distribution to which section 301 applies since it results in the receipt of property by some shareholders and an increase in the proportionate interests of other shareholders.

[T.D. 7281, 38 FR 18538, July 12, 1973]

§ 1.305-7 Certain transactions treated as distributions.

(a) ***In general.*** Under section 305(c), a change in conversion ratio, a change in redemption price, a difference between redemption price and issue price, a redemption which is treated as a distribution to which section 301 applies, or any transaction (including a recapitalization) having a similar effect on the interest of any shareholder may be treated as a distribution with respect to any shareholder whose proportionate interest in the earnings and profits or assets of the corporation is increased by such change, difference, redemption, or similar transaction. In general, such change, difference, redemption, or similar transaction will be treated as a distribution to which sections 305(b) and 301 apply where—

(1) The proportionate interest of any shareholder in the earnings and profits or assets of the corporation deemed to have made such distribution is increased by such change, difference, redemption, or similar transaction; and

(2) Such distribution has the result described in paragraph (2), (3), (4), or (5) of section 305(b).

Where such change, difference, redemption, or similar transaction is treated as a distribution under the provisions of this section, such distribution will be deemed made with respect to any shareholder whose interest in the earnings and profits or assets of the distributing corporation is increased thereby. Such distribution will be deemed to be a distribution of the stock of such corporation made by the corporation to such shareholder with respect to his stock. Depending upon the facts presented, the distribution may be deemed to be made in common or preferred stock. For example, where a redemption premium exists with respect to a class of preferred stock under the circumstances described in § 1.305-5(b) and the other requirements of this section are also met, the distribution will be deemed made with respect to such preferred stock, in stock of the same class. Accordingly, the preferred shareholders are considered under sections 305(b)(4) and 305(c) to have received a distribution of preferred stock to which section 301 applies. See the examples in §§ 1.305-3(e) and 1.305-5(d) for further illustrations of the application of section 305(c).

(b) ***Antidilution provisions.***

(1) For purposes of applying section 305(c) in conjunction with section 305(b), a change in the conversion ratio or conversion price of convertible preferred stock (or securities), or in the exercise price of rights or warrants, made pursuant to a bona fide, reasonable, adjustment formula (including, but not limited to, either the so-called “market price” or “conversion price” type of formulas) which has the effect of preventing dilution of the interest of the holders of such stock (or securities) will not be considered to result in a deemed distribution of stock. An adjustment in the conversion ratio or price to compensate for cash or property distributions to other shareholders that are taxable under section 301, 356(a)(2), 871(a)(1)(A), 881(a)(1), 852(b), or 857(b) will not be considered as made pursuant to a bona fide adjustment formula.

(2) The principles of this paragraph may be illustrated by the following example:

> *Example.* (i) Corporation U has two classes of stock outstanding, class A and class B. Each

> class B share is convertible into class A stock. In accordance with a bonafide, reasonable, antidilution provision, the conversion price is adjusted if the corporation transfers class A stock to anyone for a consideration that is below the conversion price.
> (ii) The corporation sells class A stock to the public at the current market price but below the conversion price. Pursuant to the antidilution provision, the conversion price is adjusted downward. Such a change in conversion price will not be deemed to be a distribution under section 305(c) for the purposes of section 305(b).

(c) ***Recapitalizations.***

(1) A recapitalization (whether or not an isolated transaction) will be deemed to result in a distribution to which section 305(c) and this section apply if—

(i) It is pursuant to a plan to periodically increase a shareholder's proportionate interest in the assets or earnings and profits of the corporation, or

(ii) A shareholder owning preferred stock with dividends in arrears exchanges his stock for other stock and, as a result, increases his proportionate interest in the assets or earnings and profits of the corporation. An increase in a preferred shareholder's proportionate interest occurs in any case where the fair market value or the liquidation preference, whichever is greater, of the stock received in the exchange (determined immediately following the recapitalization), exceeds the issue price of the preferred stock surrendered.

(2) In a case to which subparagraph (1)(ii) of this paragraph applies, the amount of the distribution deemed under section 305(c) to result from the recapitalization is the lesser of

(i) the amount by which the fair market value or the liquidation preference, whichever is greater, of the stock received in the exchange (determined immediately following the recapitalization) exceeds the issue price of the preferred stock surrendered, or

(ii) the amount of the dividends in arrears.

(3) For purposes of applying subparagraphs (1) and (2) of this paragraph with respect to stock issued before July 12, 1973, the term *issue price of the preferred stock surrendered* shall mean the greater of the issue price or the liquidation preference (not including dividends in arrears) of the stock surrendered.

(4) **For an illustration of the application of this paragraph, see *Example* (12) of § 1.305-3(e) and *Examples (1), (2), (3), and (6)*** of § 1.305-5(d).

(5) For rules relating to redemption premiums on preferred stock, see § 1.305-5(b).

[T.D. 7281, 38 FR 18538, July 12, 1973, as amended by T.D. 8643, 60 FR 66138, Dec. 21, 1995]

§ 1.305-8 Effective dates.

(a) ***In general.*** Section 421(b) of the Tax Reform Act of 1969 (83 Stat. 615) provides as follows:

> (b) *Effective dates.* (1) Except as otherwise provided in this subsection, the amendment made by subsection (a) shall apply with respect to distributions (or deemed distributions) made after January 10, 1969, in taxable years ending after such date.

(2)(A) Section 305(b)(2) of the Internal Revenue Code of 1954 (as added by subsection (a) shall not apply to a distribution (or deemed distribution) of stock made before January 1, 1991, with respect to stock (i) outstanding on January 10, 1969, (ii) issued pursuant to a contract binding on January 10, 1969, on the distributing corporation, (iii) which is additional stock of that class of stock which (as of January 10, 1969) had the largest fair market value of all classes of stock of the corporation (taking into account only stock outstanding on January 10, 1969, or issued pursuant to a contract binding on January 10, 1969), (iv) described in subparagraph (c)(iii), or (v) issued in a prior distribution described in clause (i), (ii), (iii), or (iv).

(B) Subparagraph (A) shall apply only if—

(i) The stock as to which there is a receipt of property was outstanding on January 10, 1969 (or was issued pursuant to a contract binding on January 10, 1969, on the distributing corporation), and

(ii) If such stock and any stock described in subparagraph (A)(i) were also outstanding on January 10, 1968, a distribution of property was made on or before January 10, 1969, with respect to such stock, and a distribution of stock was made on or before January 10, 1969, with respect to such stock described in subparagraph (A)(i).

(C) Subparagraph (A) shall cease to apply when at any time after October 9, 1969, the distributing corporation issues any of its stock (other than in a distribution of stock with respect to stock of the same class) which is not—

(i) Nonconvertible preferred stock,

(ii) Additional stock of that class of stock which meets the requirements of subparagraph (A)(iii), or

(iii) Preferred stock which is convertible into stock which meets the requirements of subparagraph (A)(iii) at a fixed conversion ratio which takes account of all stock dividends and stock splits with respect to the stock into which such convertible stock is convertible.

(D) For purposes of this paragraph, the term *stock* includes rights to acquire such stock.

(3) In cases to which Treasury Decision 6990 (promulgated January 10, 1969) would not have applied, in applying paragraphs (1) and (2) April 22, 1969, shall be substituted for January 10, 1969.

(4) Section 305(b)(4) of the Internal Revenue Code of 1954 (as added by subsection (a)) shall not apply to any distribution (or deemed distribution) with respect to preferred stock (including any increase in the conversation ratio of convertible stock) made before January 1, 1991, pursuant to the terms relating to the issuance of such stock which were in effect on January 10, 1969.

(5) With respect to distributions made or considered as made after January 10, 1969, in taxable years ending after such date, to the extent that the amendment made by subsection (a) does not apply by reason of paragraph (2), (3), or (4) of this subsection, section 305 of the Internal Revenue Code of 1954 (as in effect before the amendment made by subsection (a)) shall continue to apply.

(b) ***Rules of application.***

(1) The rules contained in section 421(b)(2) of the Tax Reform Act of 1969 (83 Stat. 615), hereinafter called "the Act", shall apply with respect to the application of section 305(b)(2), section 305(b)(3), and section 305(b)(5). Thus, for example, section 305(b)(5) of the Code will not apply to a distribution of convertible preferred stock made before January 1, 1991, with respect to stock outstanding on January 10, 1969 (or which was issued pursuant to a contract binding on the distributing corporation on January 10, 1969), provided the distribution is pursuant to the terms relating to the issuance of such stock which were in effect on January 10, 1969.

(2)

(i) For purposes of section 421(b)(2)(A), (B)(i), and (C) of the Act, stock is considered as outstanding on January 10, 1969, if it could be acquired on such date or some future date by the exercise of a right or conversion privilege in existence on such date (including a right or conversion privilege with respect to stock issued pursuant to a contract binding, on January 10, 1969, on the distributing corporation). Thus, if on January 10, 1969, corporation X has outstanding 1,000 shares of class A common stock and 3,000 shares of class B common stock which are convertible on a one-to-one basis into class A stock, corporation X is considered for purposes of section 421(b)(2)(A), (B)(i), and (C) of the Act to have outstanding on January 10, 1969, 4,000 shares of class A stock (1,000 shares actually outstanding and 3,000 shares that could be acquired by the exercise of the conversion privilege contained in the class B stock) and 3,000 shares of class B stock.

(ii) For the purposes of section 421(b)(2)(A) (other than for the purpose of determining under section 421(b)(2)(A)(iii) that class of stock which as of January 10, 1969, had the largest fair market value of all classes of stock of the corporation), (B)(i), and (C) of the Act, stock will be considered as outstanding on January 10, 1969, if it is issued pursuant to a conversion privilege contained in stock issued, mediately or immediately, as a stock dividend with respect to stock outstanding on January 10, 1969.

(3) If, after applying subparagraph (2) of this paragraph, the class of stock which as of January 10, 1969, had the largest fair market value of all classes of stock of the corporation is a class of stock which is convertible into another class of nonconvertible stock, then for purposes of section 421(b)(2)(C)(ii) of the Act stock issued upon conversion of any such convertible stock (whether or not outstanding on January 10, 1969) into stock of such other class shall be deemed to be stock which meets the requirements of section 421(b)(2)(A)(iii) of the Act.

(4) For purposes of section 421(b) of the Act, stock of a corporation held in its treasury will not be considered as outstanding and a distribution of such stock will be considered to be an issuance of such stock on the date of distribution. Stock of a parent corporation held by its subsidiary is not considered treasury stock.

(5) The following stock shall not be taken into account for purposes of applying section 421(b)(2)(B)(i) of the Act:

(i) Stock issued after January 10, 1969, and before October 10, 1969 (other than stock which was issued pursuant to a contract binding on January 10, 1969, on the distributing corporation);

(ii) stock described in section 421(b)(2)(C)(i), (ii), or (iii) of the Act; and (iii) stock issued, mediately or immediately, as a stock dividend with respect to stock of the same class outstanding on January 10, 1969. For example, if on June 1, 1970, corporation Y issues additional stock of that class of stock which as of January 10, 1969, had the largest fair market value of all classes of stock of the corporation, such additional stock will not be taken into account for the purpose of

meeting the requirement under section 421(b)(2)(B)(i) of the Act that the stock as to which there is a receipt of property must have been outstanding on January 10, 1969, and thus subparagraph (A) of section 421(b)(2) of the Act will not, where otherwise applicable, cease to apply.

(6) Section 421(b)(2)(A) of the Act, if otherwise applicable, will not cease to apply if the distributing corporation issues after October 9, 1969, securities which are convertible into stock that meets the requirements of section 421(b)(2)(A)(iii) of the Act at a fixed conversion ratio which takes account of all stock dividends and stock splits with respect to the stock into which the securities are convertible.

(7) Under section 421(b)(4) of the Act, section 305(b)(4) does not apply to any distribution (or deemed distribution) by a corporation with respect to preferred stock made before January 1, 1991, if such distribution is pursuant to the terms relating to the issuance of such stock which were in effect on January 10, 1969. For example, if as of January 10, 1969, a corporation had followed the practice of paying stock dividends on preferred stock (or of periodically increasing the conversion ratio of convertible preferred stock) or if the preferred stock provided for a redemption price in excess of the issue price, then section 305(b)(4) would not apply to any distribution of stock made (or which would be considered made if section 305(b)(4) applied) before January 1, 1991, pursuant to such practice.

(8) If section 421(b)(2) is not applicable and, for that reason, a distribution (or deemed distribution) is treated as a distribution to which section 301 applies by virtue of the application of section 305(b)(2), (b)(3), or (b)(5), it is irrelevant that, by reason of the application of section 421(b)(4) of such Act, section 305(b)(4) is not applicable to the distribution.

[T.D. 7281, 38 FR 18539, July 12, 1973]

§ 1.306-1 General.

(a) Section 306 provides, in general, that the proceeds from the sale or redemption of certain stock (referred to as “section 306 stock”) shall be treated either as ordinary income or as a distribution of property to which section 301 applies. Section 306 stock is defined in section 306(c) and is usually preferred stock received either as a nontaxable dividend or in a transaction in which no gain or loss is recognized. Section 306(b) lists certain circumstances in which the special rules of section 306(a) shall not apply.

(b)

(1) If a shareholder sells or otherwise disposes of section 306 stock (other than by redemption or within the exceptions listed in section 306(b)), the entire proceeds received from such disposition shall be treated as ordinary income to the extent that the fair market value of the stock sold, on the date distributed to the shareholder, would have been a dividend to such shareholder had the distributing corporation distributed cash in lieu of stock. Any excess of the amount received over the sum of the amount treated as ordinary income plus the adjusted basis of the stock disposed of, shall be treated as gain from the sale of a capital asset or noncapital asset as the case may be. No loss shall be recognized. No reduction of earnings and profits results from any disposition of stock other than a redemption. The term *disposition* under section 306(a)(1) includes, among other things, pledges of stock under certain circumstances, particularly where the pledgee can look only to the stock itself as its security.

(2) Section 306(a)(1) may be illustrated by the following examples:

Example 1. On December 15, 1954, A and B owned equally all of the stock of Corporation X which files its income tax return on a calendar year basis. On that date Corporation X distributed pro rata 100 shares of preferred stock as a dividend on its outstanding common stock. On December 15, 1954, the preferred stock had a fair market value of $10,000. On December 31, 1954, the earnings and profits of Corporation X were $20,000. The 50 shares of preferred stock so distributed to A had an allocated basis to him of $10 per share or a total of $500 for the 50 shares. Such shares had a fair market value of $5,000 when issued. A sold the 50 shares of preferred stock on July 1, 1955, for $6,000. Of this amount $5,000 will be treated as ordinary income; $500 ($6,000 minus $5,500) will be treated as gain from the sale of a capital or noncapital asset as the case may be.

Example 2. The facts are the same as in *Example 1* except that A sold his 50 shares of preferred stock for $5,100. Of this amount $5,000 will be treated as ordinary income. No loss will be allowed. There will be added back to the basis of the common stock of Corporation X with respect to which the preferred stock was distributed, $400, the allocated basis of $500 reduced by the $100 received.

Example 3. The facts are the same as in *Example 1* except that A sold 25 of his shares of preferred stock for $2,600. Of this amount $2,500 will be treated as ordinary income. No loss will be allowed. There will be added back to the basis of the common stock of Corporation X with respect to which the preferred stock was distributed, $150, the allocated basis of $250 reduced by the $100 received.

(c) The entire amount received by a shareholder from the redemption of section 306 stock shall be treated as a distribution of property under section 301. See also section 303 (relating to distribution in redemption of stock to pay death taxes).

[T.D. 6500, 25 FR 11607, Nov. 26, 1960, as amended by T.D. 7556, 43 FR 34128, Aug. 3, 1978]

§ 1.306-2 Exception.

(a) If a shareholder terminates his entire stock interest in a corporation—

(1) By a sale or other disposition within the requirements of section 306(b)(1)(A), or

(2) By redemption under section 302(b)(3) (through the application of section 306(b)(1)(B)),

the amount received from such disposition shall be treated as an amount received in part or full payment for the stock sold or redeemed. In the case of a sale, only the stock interest need be terminated. In determining whether an entire stock interest has been terminated under section 306(b)(1)(A), all of the provisions of section 318(a) (relating to constructive ownership of stock) shall be applicable. In determining whether a shareholder has terminated his entire interest in a corporation by a redemption of his stock under section 302(b)(3), all of the provisions of section 318(a) shall be applicable unless the shareholder meets the requirements of section 302(c)(2) (relating to termination of all interest in the corporation). If the requirements of section 302(c)(2) are met, section 318(a)(1) (relating to members of a family) shall be inapplicable. Under all circumstances paragraphs (2), (3), (4), and (5) of section 318(a) shall be applicable.

(b) Section 306(a) does not apply to—

(1) Redemptions of section 306 stock pursuant to a partial or complete liquidation of a corporation to which part II (section 331 and following), subchapter C, chapter 1 of the Code applies,

(2) Exchanges of section 306 stock solely for stock in connection with a reorganization or in an exchange under section 351, 355, or section 1036 (relating to exchanges of stock for stock in the same corporation) to the extent that gain or loss is not recognized to the shareholder as the result of the exchange of the stock (see paragraph (d) of § 1.306-3 relative to the receipt of other property), and

(3) A disposition or redemption, if it is established to the satisfaction of the Commissioner that the distribution, and the disposition or redemption, was not in pursuance of a plan having as one of its principal purposes the avoidance of Federal income tax. However, in the case of a prior or simultaneous disposition (or redemption) of the stock with respect to which the section 306 stock disposed of (or redeemed) was issued, it is not necessary to establish that the distribution was not in pursuance of such a plan. For example, in the absence of such a plan and of any other facts the first sentence of this subparagraph would be applicable to the case of dividends and isolated dispositions of section 306 stock by minority shareholders. Similarly, in the absence of such a plan and of any other facts, if a shareholder received a distribution of 100 shares of section 306 stock on his holdings of 100 shares of voting common stock in a corporation and sells his voting common stock before he disposes of his section 306 stock, the subsequent disposition of his section 306 stock would not ordinarily be considered a disposition one of the principal purposes of which is the avoidance of Federal income tax.

[T.D. 6500, 25 FR 11607, Nov. 26, 1960, as amended by T.D. 6969, 33 FR 11998, Aug. 23, 1968]

§ 1.306-3 Section 306 stock defined.

(a) For the purpose of subchapter C, chapter 1 of the code, the term *section 306 stock* means stock which meets the requirements of section 306(c)(1). Any class of stock distributed to a shareholder in a transaction in which no amount is includible in the income of the shareholder or no gain or loss is recognized may be section 306 stock, if a distribution of money by the distributing corporation in lieu of such stock would have been a dividend in whole or in part. However, except as provided in section 306(g), if no part of a distribution of money by the distributing corporation in lieu of such stock would have been a dividend, the stock distributed will not constitute section 306 stock.

(b) For the purpose of section 306, rights to acquire stock shall be treated as stock. Such rights shall not be section 306 stock if no part of the distribution would have been a dividend if money had been distributed in lieu of the rights. When stock is acquired by the exercise of rights which are treated at section 306 stock, the stock acquired is section 306 stock. Upon the disposition of such stock (other than by redemption or within the exceptions listed in section 306(b)), the proceeds received from the disposition shall be treated as ordinary income to the extent that the fair market value of the stock rights, on the date distributed to the shareholder, would have been a dividend to the shareholder had the distributing corporation distributed cash in lieu of stock rights. Any excess of the amount realized over the sum of the amount treated as ordinary income plus the adjusted basis of the stock, shall be treated as gain from the sale of the stock.

(c) Section 306(c)(1)(A) provides that section 306 stock is any stock (other than common issued with respect to common) distributed to the shareholder selling or otherwise disposing thereof if, under section 305(a) (relating to distributions of stock and stock rights) any part of the distribution was not included in the gross income of the distributee.

(d) Section 306(c)(1)(B) includes in the definition of section 306 stock any stock except common stock, which is received by a shareholder in connection with a reorganization under section 368 or in a distribution or exchange under section 355 (or so much of section 356 as relates to section 355) provided the effect of the transaction is substantially the same as the receipt of a stock dividend, or the stock is received in exchange for section 306 stock. If, in a transaction to which section 356 is applicable, a shareholder exchanges section 306 stock for stock and money or other property, the entire amount of such money and of the fair market value of the other property (not limited to the gain recognized) shall be treated as a distribution of property to which section 301 applies. Common stock received in exchange for section 306 stock in a recapitalization shall not be considered section 306 stock. Ordinarily, section 306 stock includes stock which is not common stock received in pursuance of a plan of reorganization (within the meaning of section 368(a)) or received in a distribution or exchange to which section 355 (or so much of section 356 as relates to section 355) applies if cash received in lieu of such stock would have been treated as a dividend under section 356(a)(2) or would have been treated as a distribution to which section 301 applies by virtue of section 356(b) or section 302(d). The application of the preceding sentence is illustrated by the following examples:

Example 1. Corporation A, having only common stock outstanding, is merged in a statutory merger (qualifying as a reorganization under section 368(a)) with Corporation B. Pursuant to such merger, the shareholders of Corporation A received both common and preferred stock in Corporation B. The preferred stock received by such shareholders is section 306 stock.

Example 2. X and Y each own one-half of the 2,000 outstanding shares of preferred stock and one-half of the 2,000 outstanding shares of common stock of Corporation C. Pursuant to a reorganization within the meaning of section 368(a)(1)(E) (recapitalization) each shareholder exchanges his preferred stock for preferred stock of a new issue which is not substantially different from the preferred stock previously held. Unless the preferred stock exchanged was itself section 306 stock the preferred stock received is not section 306 stock.

(e) Section 306(c)(1)(C) includes in the definition of section 306 stock any stock (except as provided in section 306(c)(1)(B)) the basis of which in the hands of the person disposing of such stock, is determined by reference to section 306 stock held by such shareholder or any other person. Under this paragraph common stock can be section 306 stock. Thus, if a person owning section 306 stock in Corporation A transfers it to Corporation B which is controlled by him in exchange for common stock of Corporation B in a transaction to which section 351 is applicable, the common stock so received by him would be section 306 stock and subject to the provisions of section 306(a) on its disposition. In addition, the section 306 stock transferred is section 306 stock in the hands of Corporation B, the transferee. Section 306 stock transferred by gift remains section 306 stock in the hands of the donee. Stock received in exchange for section 306 stock under section 1036(a) (relating to exchange of stock for stock in the same corporation) or under so much of section 1031(b) as relates to section 1036(a) becomes section 306 stock and acquires, for purposes of section 306, the characteristics of the section 306 stock exchanged. The entire amount of the fair market value of the other property received in such transaction shall be considered as received upon a disposition (other than a redemption) to which section 306(a) applies. Section 306 stock ceases to be so classified if the basis of such stock is determined by reference to its fair market value on the date of the decedent-stockholder's death under section 1014 or the optional valuation date under section 2032. Section 306 stock continues to be so classified if the basis of such stock is determined under section 1022.

(f) If section 306 stock which was distributed with respect to common stock is exchanged for common stock in the same corporation (whether or not such exchange is pursuant to a conversion privilege contained in section 306 stock), such common stock shall not be section 306 stock. This paragraph applies to

exchanges not coming within the purview of section 306(c)(1)(B). Common stock which is convertible into stock other than common stock or into property, shall not be considered common stock. It is immaterial whether the conversion privilege is contained in the stock or in some type of collateral agreement.

(g) If there is a substantial change in the terms and conditions of any stock, then, for the purpose of this section—

(1) The fair market value of such stock shall be the fair market value at the time of distribution or the fair market value at the time of such change, whichever is higher;

(2) Such stock's ratable share of the amount which would have been a dividend if money had been distributed in lieu of stock shall be determined by reference to the time of distribution or by reference to the time of such change, whichever ratable share is higher; and

(3) Section 306(c)(2) shall be inapplicable if there would have been a dividend to any extent if money had been distributed in lieu of the stock either at the time of the distribution or at the time of such change.

(h) When section 306 stock is disposed of, the amount treated under section 306(a)(1)(A) as ordinary income, for the purposes of part I, subchapter N, chapter 1 of the Code, be treated as derived from the same source as would have been the source if money had been received from the corporation as a dividend at the time of the distribution of such stock. If the amount is determined to be derived from sources within the United States, the amount shall be considered to be fixed or determinable annual or periodic gains, profits, and income within the meaning of section 871(a) or section 881(a), relating, respectively, to the tax on nonresident alien individuals and on foreign corporations not engaged in business in the United States.

(i) Section 306 shall be inapplicable to stock received before June 22, 1954, and to stock received on or after June 22, 1954, in transactions subject to the provisions of the Internal Revenue Code of 1939.

[T.D. 6500, 25 FR 11607, Nov. 26, 1960, as amended by T.D. 7281, 38 FR 18540, July 12, 1973; T.D. 7556, 43 FR 34128, Aug. 3, 1978; T.D. 9811, 82 FR 6237, Jan. 19, 2017]

§ 1.306-4 Effective/applicability date.

The provisions of §§ 1.306-1 through 1.306-3 are applicable on or after June 22, 1954. The provisions of § 1.306-3 relating to section 1022 are effective on and after January 19, 2017.

[T.D. 9811, 82 FR 6237, Jan. 19, 2017]

§ 1.307-1 General.

(a) If a shareholder receives stock or stock rights as a distribution on stock previously held and under section 305 such distribution is not includible in gross income then, except as provided in section 307(b) and § 1.307-2, the basis of the stock with respect to which the distribution was made shall be allocated between the old and new stocks or rights in proportion to the fair market values of each on the date of distribution. If a shareholder receives stock or stock rights as a distribution on stock previously held and pursuant to section 305 part of the distribution is not includible in gross income, then (except as provided in section 307(b) and § 1.307-2) the basis of the stock with respect to which the distribution is made shall be allocated between

(1) the old stock and

(2) that part of the new stock or rights which is not includible in gross income, in proportion to the fair market values of each on the date of distribution. The date of distribution in each case shall be the date the stock or the rights are distributed to the stockholder and not the record date. The general rule will apply with respect to stock rights only if such rights are exercised or sold.

(b) The application of paragraph (a) of this section is illustrated by the following example:

Example. A taxpayer in 1947 purchased 100 shares of common stock at $100 per share and in 1954 by reason of the ownership of such stock acquired 100 rights entitling him to subscribe to 100 additional shares of such stock at $90 a share. Immediately after the issuance of the rights, each of the shares of stock in respect of which the rights were acquired had a fair market value, ex-rights, of $110 and the rights had a fair market value of $19 each. The basis of the rights and the common stock for the purpose of determining the basis for gain or loss on a subsequent sale or exercise of the rights or a sale of the old stock is computed as follows: 100 (shares) × $100 = $10,000, cost of old stock (stock in respect of which the rights were acquired). 100 (shares) × $110 = $11,000, market value of old stock. 100 (rights) × $19 = $1,900, market value of rights. 11,000/12,900 of $10,000 = $8,527.13, cost of old stock apportioned to such stock. 1,900/12,900 of $10,000 = $1,472.87, cost of old stock apportioned to rights. If the rights are sold, the basis for determining gain or loss will be $14.7287 per right. If the rights are exercised, the basis of the new stock acquired will be the subscription price paid therefor ($90) plus the basis of the rights exercised ($14.7287 each) or $104.7287 per share. The remaining basis of the old stock for the purpose of determining gain or loss on a subsequent sale will be $85.2713 per share.

§ 1.307-2 Exception.

The basis of rights to buy stock which are excluded from gross income under section 305(a), shall be zero if the fair market value of such rights on the date of distribution is less than 15 percent of the fair market value of the old stock on that date, unless the shareholder elects to allocate part of the basis of the old stock to the rights as provided in paragraph (a) of § 1.307-1. The election shall be made by a shareholder with respect to all the rights received by him in a particular distribution in respect of all the stock of the same class owned by him in the issuing corporation at the time of such distribution. Such election to allocate basis to rights shall be in the form of a statement attached to the shareholder's return for the year in which the rights are received. This election, once made, shall be irrevocable with respect to the rights for which the election was made. Any shareholder making such an election shall retain a copy of the election and of the tax return with which it was filed, in order to substantiate the use of an allocated basis upon a subsequent disposition of the stock acquired by exercise.

EFFECTS ON CORPORATION

§ 1.312-1 Adjustment to earnings and profits reflecting distributions by corporations.

(a) In general, on the distribution of property by a corporation with respect to its stock, its earnings, and profits (to the extent thereof) shall be decreased by—

(1) The amount of money,

(2) The principal amount of the obligations of such corporation issued in such distribution, and

(3) The adjusted basis of other property.

For special rule with respect to distributions to which section 312(e) applies, see § 1.312-5.

(b) The adjustment provided in section 312(a)(3) and paragraph (a)(3) of this section with respect to a distribution of property (other than money or its own obligations) shall be made notwithstanding the fact that such property has appreciated or depreciated in value since acquisition.

(c) The application of paragraphs (a) and (b) of this section may be illustrated by the following examples:

Example 1. Corporation A distributes to its sole shareholder property with a value of $10,000 and a basis of $5,000. It has $12,500 in earnings and profits. The reduction in earnings and profits by reason of such distribution is $5,000. Such is the reduction even though the amount of $10,000 is includible in the income of the shareholder (other than a corporation) as a dividend.

Example 2. The facts are the same as in *Example (1)* above except that the property has a basis of $15,000 and the earnings and profits of the corporation are $20,000. The reduction in earnings and profits is $15,000. Such is the reduction even though only the amount of $10,000 is includible in the income of the shareholder as a dividend.

(d) In the case of a distribution of stock or rights to acquire stock a portion of which is includible in income by reason of section 305(b), the earnings and profits shall be reduced by the fair market value of such portion. No reduction shall be made if a distribution of stock or rights to acquire stock is not includible in income under the provisions of section 305.

(e) No adjustment shall be made in the amount of the earnings and profits of the issuing corporation upon a disposition of section 306 stock unless such disposition is a redemption.

§ 1.312-2 Distribution of inventory assets.

Section 312(b) provides for the increase and the decrease of the earnings and profits of a corporation which distributes, with respect to its stock, inventory assets as defined in section 312(b)(2), where the fair market value of such assets exceeds their adjusted basis. The rules provided in section 312(b) (relating to distributions of certain inventory assets) shall be applicable without regard to the method used in computing inventories for the purpose of the computation of taxable income. Section 312(b) does not apply to distributions described in section 312(e).

§ 1.312-3 Liabilities.

The amount of any reductions in earnings and profits described in section 312 (a) or (b) shall be (a) reduced by the amount of any liability to which the property distributed was subject and by the amount of any other liability of the corporation assumed by the shareholder in connection with such distribution, and (b) increased by the amount of gain recognized to the corporation under section 311 (b), (c), or (d), or under section 341(f), 617(d), 1245(a), 1250(a), 1251(c), 1252(a), or 1254(a).

[T.D. 7209, 37 FR 20804, Oct. 5, 1972, as amended by T.D. 8586, 60 FR 2500, Jan. 10, 1995]

§ 1.312-4 Examples of adjustments provided in section 312(c).

The adjustments provided in section 312(c) may be illustrated by the following examples:

Example 1. On December 2, 1954, Corporation X distributed to its sole shareholder, A, an individual, as a dividend in kind a vacant lot which was not an inventory asset. On that date, the lot had a fair market value of $5,000 and was subject to a mortgage of $2,000. The adjusted basis of the lot was $3,100. The amount of

the earnings and profits was $10,000. The amount of the dividend received by A is $3,000 ($5,000, the fair market value, less $2,000, the amount of the mortgage) and the reduction in the earnings and profits of Corporation X is $1,100 ($3,100, the basis, less $2,000, the amount of mortgage).

Example 2. The facts are the same as in *Example*

(1) above with the exception that the amount of the mortgage to which the property was subject was $4,000. The amount of the dividend received by A is $1,000, and there is no reduction in the earnings and profits of the corporation as a result of the distribution (disregarding such reduction as may result from an increase in tax to Corporation X because, of gain resulting from the distribution). There is a gain of $900 recognized to Corporation X, the difference between the basis of the property ($3,100) and the amount of the mortgage ($4,000), under section 311(c) and an increase in earnings and profits of $900.

Example 3. Corporation A, having accumulated earnings and profits of $100,000, distributed in kind to its shareholders, not in liquidation, inventory assets which had a basis to it on the "Lifo" method (section 472) of $46,000 and on the basis of cost or market (section 471) of $50,000. The inventory had a fair market value of $55,000 and was subject to a liability of $35,000. This distribution results in a net decrease in earnings and profits of Corporation A of $11,000, (without regard to any tax on Corporation A) computed as follows:

"Fifo" basis of inventory	$50,000	
Less: "Lifo" basis of inventory	46,000	
Gain recognized—addition to earnings and profits (section 311(b))		$4,000
Adjustment to earnings and profits required by section 312(b)(1)(A):		
Fair market value of inventory	$55,000	
Less: "Lifo" basis plus adjustment under section 311(b)	50,000	5,000
Total increase in earnings and profits		9,000
Decrease in earnings and profits—under section 312(b)(1)(B)(i)	$55,000	
Less: Liability assumed	35,000	
Net amount of distribution (decrease in earnings)		20,000
Net decrease in earnings and profits		11,000

§ 1.312-5 Special rule for partial liquidations and certain redemptions.

The part of the distribution properly chargeable to capital account within the provisions of section 312(e) shall not be considered a distribution of earnings and profits within the meaning of section 301 for the purpose of determining taxability of subsequent distributions by the corporation.

§ 1.312-6 Earnings and profits.

(a) In determining the amount of earnings and profits (whether of the taxable year, or accumulated since February 28, 1913, or accumulated before March 1, 1913) due consideration must be given to the facts, and, while mere bookkeeping entries increasing or decreasing surplus will not be conclusive, the amount of the earnings and profits in any case will be dependent upon the method of accounting properly employed in computing taxable income (or net income, as the case may be). For instance, a corporation keeping its books and filing its income tax returns under subchapter E, chapter 1 of the Code, on the cash receipts and disbursements basis may not use the accrual basis in determining earnings and profits; a corporation computing income on the installment basis as provided in section 453 shall, with respect to the installment transactions, compute earnings and profits on such basis; and an insurance company subject to taxation under section 831 shall exclude from earnings and profits that portion of any premium which is unearned under the provisions of section 832(b)(4) and which is segregated accordingly in the unearned premium reserve.

(b) Among the items entering into the computation of corporate earnings and profits for a particular period are all income exempted by statute, income not taxable by the Federal Government under the Constitution, as well as all items includible in gross income under section 61 or corresponding provisions of prior revenue acts. Gains and losses within the purview of section 1002 or corresponding provisions of prior revenue acts are brought into the earnings and profits at the time and to the extent such gains and losses are recognized under that section. Interest on State bonds and certain other obligations, although not taxable when received by a corporation, is taxable to the same extent as other dividends when distributed to shareholders in the form of dividends.

(c)

(1) In the case of a corporation in which depletion or depreciation is a factor in the determination of income, the only depletion or depreciation deductions to be considered in the computation of the total earnings and profits are those based on cost or other basis without regard to March 1, 1913, value. In computing the earnings and profits for any period beginning after February 28, 1913, the only depletion or depreciation deductions to be considered are those based on

(i) cost or other basis, if the depletable or depreciable asset was acquired subsequent to February 28, 1913, or

(ii) adjusted cost or March 1, 1913, value, whichever is higher, if acquired before March 1, 1913. Thus, discovery or percentage depletion under all revenue acts for mines and oil and gas wells is not to be taken into consideration in computing the earnings and profits of a corporation. Similarly, where the basis of property in the hands of a corporation is a substituted basis, such basis, and not the fair market value of the property at the time of the acquisition by the corporation, is the basis for computing depletion and depreciation for the purpose of determining earnings and profits of the corporation.

(2) The application of subparagraph (1) of this paragraph may be illustrated by the following example:

Example. Oil producing property which A had acquired in 1949 at a cost of $28,000 was transferred to Corporation Y in December 1951, in exchange for all of its capital stock. The fair market value of the stock and of the property as of the date of the transfer was $247,000. Corporation Y, after four years' operation, effected in 1955 a cash distribution to A in the amount of $165,000. In determining the extent to which the earnings and profits of Corporation Y available for dividend distributions have

been increased as the result of production and sale of oil, the depletion to be taken into account is to be computed upon the basis of $28,000 established in the nontaxable exchange in 1951 regardless of the fair market value of the property or of the stock issued in exchange therefor.

(d) A loss sustained for a year before the taxable year does not affect the earnings and profits of the taxable year. However, in determining the earnings and profits accumulated since February 28, 1913, the excess of a loss sustained for a year subsequent to February 28, 1913, over the undistributed earnings and profits accumulated since February 28, 1913, and before the year for which the loss was sustained, reduces surplus as of March 1, 1913, to the extent of such excess. If the surplus as of March 1, 1913, was sufficient to absorb such excess, distributions to shareholders after the year of the loss are out of earnings and profits accumulated since the year of the loss to the extent of such earnings.

(e) With respect to the effect on the earnings and profits accumulated since February 28, 1913, of distributions made on or after January 1, 1916, and before August 6, 1917, out of earnings or profits accumulated before March 1, 1913, which distributions were specifically declared to be out of earnings and profits accumulated before March 1, 1913, see section 31(b) of the Revenue Act of 1916, as added by section 1211 of the Revenue Act of 1917 (40 Stat. 336).

§ 1.312-7 Effect on earnings and profits of gain or loss realized after February 28, 1913.

(a) In order to determine the effect on earnings and profits of gain or loss realized from the sale or other disposition (after February 28, 1913) of property by a corporation, section 312(f)(1) prescribed certain rules for—

(1) The computation of the total earnings and profits of the corporation of most frequent application in determining invested capital; and

(2) The computation of earnings and profits of the corporation for any period beginning after February 28, 1913, of most frequent application in determining the source of dividend distributions.

Such rules are applicable whenever under any provision of subtitle A of the Code it is necessary to compute either the total earnings and profits of the corporation or the earnings and profits for any period beginning after February 28, 1913. For example, since the earnings and profits accumulated after February 28, 1913, or the earnings and profits of the taxable year, are earnings and profits for a period beginning after February 28, 1913, the determination of either must be in accordance with the regulations prescribed by this section for the ascertainment of earnings and profits for any period beginning after February 28, 1913. Under subparagraph (1) of this paragraph, such gain or loss is determined by using the adjusted basis (under the law applicable to the year in which the sale or other disposition was made) for determining gain, but disregarding value as of March 1, 1913. Under subparagraph (2) of this paragraph, there is used such adjusted basis for determining gain, giving effect to the value as of March 1, 1913, whenever applicable. In both cases the rules are the same as those governing depreciation and depletion in computing earnings and profits (see § 1.312-6). Under both subparagraphs (1) and (2) of this paragraph, the adjusted basis is subject to the limitations of the third sentence of section 312(f)(1) requiring the use of adjustments proper in determining earnings and profits. The proper adjustments may differ under section 312(f)(1)(A) and (B) depending upon the basis to which the adjustments are to be made. If the application of section 312(f)(1)(B) results in a loss and if the application of section 312(f)(1)(A) to the same transaction reaches a different result, then the loss under section 312(f)(1)(B) will be subject to the adjustment thereto required by section 312(g)(2). (See § 1.312-9.)

(b)

(1) The gain or loss so realized increases or decreases the earnings and profits to, but not beyond, the extent to which such gain or loss was recognized in computing taxable income (or net income, as the case may be) under the law applicable to the year in which such sale or disposition was made. As used in this paragraph, the term “recognized” has reference to that kind of realized gain or loss which is recognized for income tax purposes by the statute applicable to the year in which the gain or loss was realized. For example, see section 356. A loss (other than a wash sale loss with respect to which a deduction is disallowed under the provisions of section 1091 or corresponding provisions of prior revenue laws) may be recognized though not allowed as a deduction (by reason, for example, of the operation of sections 267 and 1211 and corresponding provisions of prior revenue laws) but the mere fact that it is not allowed does not prevent decrease in earnings and profits by the amount of such disallowed loss. Wash sale losses, however, disallowed under section 1091 and corresponding provisions of prior revenue laws, are deemed nonrecognized losses and do not reduce earnings or profits. The *recognized* gain or loss for the purpose of computing earnings and profits is determined by applying the recognition provisions to the realized gain or loss computed under the provisions of section 312(f)(1) as distinguished from the realized gain or loss used in computing taxable income (or net income, as the case may be).

(2) The application of subparagraph (1) of this paragraph may be illustrated by the following examples:

Example 1. Corporation X on January 1, 1952, owned stock in Corporation Y which it had acquired from Corporation Y in December 1951, in an exchange transaction in which no gain or loss was recognized. The adjusted basis to Corporation X of the property exchanged by it for the stock in Corporation Y was $30,000. The fair market value of the stock in Corporation Y when received by Corporation X was $930,000. On April 9, 1955, Corporation X made a cash distribution of $900,000 and, except for the possible effect of the transaction in 1951, had no earnings or profits accumulated after February 28, 1913, and had no earnings or profits for the taxable year. The amount of $900,000 representing the excess of the fair market value of the stock of Corporation Y over the adjusted basis of the property exchanged therefor was not recognized gain to Corporation X under the provisions of section 112 of the Internal Revenue Code of 1939. Accordingly, the earnings and profits of Corporation X are not increased by $900,000, the amount of the gain realized but not recognized in the exchange, and the distribution was not a taxable dividend. The basis in the hands of Corporation Y of the property acquired by it from Corporation X is $30,000. If such property is thereafter sold by Corporation Y, gain or loss will be computed on such basis of $30,000, and earnings and profits will be increased or decreased accordingly.

Example 2. On January 2, 1910, Corporation M acquired nondepreciable property at a cost of $1,000. On March 1, 1913, the fair market value of such property in the hands of Corporation M was $2,200. On December 31, 1952, Corporation M transfers such property to Corporation N in exchange for $1,900 in cash and all Corporation N's stock, which has a fair market value of $1,100. For the purpose of computing the total earnings and profits of Corporation M, the gain on such transaction is $2,000 (the sum of $1,900 in cash and stock worth $1,100 minus $1,000, the adjusted basis for computing gain, determined without regard to March 1, 1913, value), $1,900 of which is recognized under section 356, since this was the amount of money received, although for the purpose of computing net income the gain is only $800 (the sum of $1,900 in cash and stock worth $1,100, minus $2,200, the adjusted basis for computing gain determined by giving effect to March 1, 1913, value). Such earnings and profits will therefore be increased by only $800 as a reputing the earnings and profits of Corporation M for any period beginning after February 28, 1913, however, the gain arising from the transaction, like the taxable gain, is only $800, all of which is recognized under section 112(c) of the Internal Revenue Code of 1939, the money received being in excess of such amount. Such earnings

and profits will therefore be increased by only $800 as a result of the transaction. For increase in that part of the earnings and profits consisting of increase in value of property accrued before, but realized on or after March 1, 1913, see § 1.312-9.

Example 3. On July 31, 1955, Corporation R owned oil-producing property acquired after February 28, 1913, at a cost of $200,000, but having an adjusted basis (by reason of taking percentage depletion) of $100,000 for determining gain. However, the adjusted basis of such property to be used in computing gain or loss for the purpose of earnings and profits is, because of the provisions of the third sentence of section 312(f)(1), $150,000. On such day Corporation R transferred such property to Corporation S in exchange for $25,000 in cash and all of the stock of Corporation S, which had a fair market value of $100,000. For the purpose of computing taxable income, Corporation R has realized a gain of $25,000 as a result of this transaction, all of which is recognized under section 356. For the purpose of computing earnings and profits, however, Corporation R has realized a loss of $25,000, none of which is recognized owing to the provisions of section 356(c). The earnings and profits of Corporation R are therefore neither increased nor decreased as a result of the transaction. The adjusted basis of the Corporation S stock in the hands of Corporation R for purposes of computing earnings and profits, however, will be $125,000 (though only $100,000 for the purpose of computing taxable income), computed as follows:

Basis of property transferred	$200,000
Less money received on exchange	25,000
Plus gain or minus loss recognized on exchange	None
Basis of stock	175,000
Less adjustments (same as those used in determining adjusted basis of property transferred)	50,000
Adjusted basis of stock	125,000

If, therefore, Corporation R should subsequently sell the Corporation S stock for $100,000, a loss of $25,000 will again be realized for the purpose of computing earnings and profits, all of which will be recognized and will be applied to decrease the earnings and profits of Corporation R.

(c)

(1) The third sentence of section 312(f)(1) provides for cases in which the adjustments, prescribed in section 1016, to the basis indicated in section 312(f)(1)(A) or (B), as the case may be, differ from the adjustments to such basis proper for the purpose of determining earnings or profits. The adjustments provided by such third sentence reflect the treatment provided by §§ 1.312-6 and

1.312-15 relative to cases where the deductions for depletion and depreciation in computing taxable income (or net income, as the case may be) differ from the deductions proper for the purpose of computing earnings and profits.

(2) The effect of the third sentence of section 312(f)(1) may be illustrated by the following examples:

Example 1. Corporation X purchased on January 2, 1931, an oil lease at a cost of $10,000. The lease was operated only for the years 1931 and 1932. The deduction for depletion in each of the years 1931 and 1932 amounted to $2,750, of which amount $1,750 represented percentage depletion in excess of depletion based on cost. The lease was sold in 1955 for $15,000. Under section 1016(a)(2), in determining the gain or loss from the sale of the property, the basis must be adjusted for cost depletion of $1,000 in 1931 and percentage depletion of $2,750 in 1932. However, the adjustment of such basis, proper for the determination of earnings and profits, is $1,000 for each year, or $2,000. Hence, the cost is to be adjusted only to the extent of $2,000, leaving an adjusted basis of $8,000 and the earnings and profits will be increased by $7,000, and not by $8,750. The difference of $1,750 is equal to the amount by which the percentage depletion for the year 1932 ($2,750) exceeds the depletion on cost for that year ($1,000) and has already been applied in the computation of earnings and profits for the year 1932 by taking into account only $1,000 instead of $2,750 for depletion in the computation of such earnings and profits. (See § 1.316-1.)

Example 2. If, in *Example (1),* above, the property, instead of being sold, is exchanged in a transaction described in section 1031 for like property having a fair market value of $7,750 and cash of $7,250, then the increase in earnings and profits amounts to $7,000, that is, $15,000 ($7,750 plus $7,250) minus the basis of $8,000. However, in computing taxable income of Corporation X, the gain is $8,750, that is, $15,000 minus $6,250 ($10,000 less depletion of $3,750), of which only $7,250 is recognized because the recognized gain cannot exceed the sum of money received in the transaction. See section 1031(b) and the corresponding provisions of prior revenue laws. If, however, the cash received was only $2,250 and the value of the property received was $12,750, then the increase in earnings and profits would be $2,250, that amount being the gain recognized under section 1031.

Example 3. On January 1, 1973, corporation X purchased for $10,000 a depreciable asset with an estimated useful life of 20 years and no salvage value. In computing depreciation on the asset, corporation X used the declining balance method with a rate twice the straight line rate. On December 31, 1976, the asset was sold for $9,000. Under section 1016(a)(2), the basis of the asset is adjusted for depreciation allowed for the years 1973 through 1976, or a total of $3,439. Thus, X realizes a gain of $2,439 (the excess of the amount realized, $9,000, over the adjusted basis, $6,561). However, the proper adjustment to basis for the purpose of determining earnings and profits is only $2,000, i.e., the total amount which, under § 1.312-15, was applied in the computation of earnings and profits for the years 1973-76. Hence, upon sale of the asset, earnings and profits are increased by only $1,000, i.e., the excess of the amount realized, $9,000, over the adjusted basis for earnings and profits purposes, $8,000.

(d) For adjustment and allocation of the earnings and profits of the transferor as between the transferor and the transferee in cases where the transfer of property by one corporation to another corporation results in the nonrecognition in whole or in part of gain or loss, see § 1.312-10; and see section 381 for earnings and profits of successor corporations in certain transactions.

[T.D. 6500, 25 FR 11607, Nov. 26, 1960, as amended by T.D. 7221, 37 FR 24746, Nov. 21, 1972]

§ 1.312-8 Effect on earnings and profits of receipt of tax-free distributions requiring adjustment or allocation of basis of stock.

(a) In order to determine the effect on earnings and profits, where a corporation receives (after February 28, 1913) from a second corporation a distribution which (under the law applicable to the year in which the distribution was made) was not a taxable dividend to the shareholders of the second corporation, section 312(f) prescribes certain rules. It provides that the amount of such distribution shall not increase the earnings and profits of the first or receiving corporation in the following cases:

(1) No such increase shall be made in respect of the part of such distribution which (under the law applicable to the year in which the distribution was made) is directly applied in reduction of the basis of the stock in respect of which the distribution was made and

(2) no such increase shall be made if (under the law applicable to the year in which the distribution was made) the distribution causes the basis of the stock in respect of which the distribution was made to be allocated between such stock and the property received (or such basis would but for section 307(b) be so allocated). Where, therefore, the law (applicable to the year in which the distribution was made, as, for example, a distribution in 1934 from earnings and profits accumulated before March 1, 1913) requires that the amount of such distribution shall be applied against and reduce the basis of the stock with respect to which the distribution was made, there is no increase in the earnings and profits by reason of the receipt of such distribution. Similarly, where there is received by a corporation a distribution from another corporation in the form of a stock dividend and the law applicable to the year in which such distribution was made requires the allocation, as between the old stock and the stock received as a dividend, of the basis of the old stock (or such basis would but for section 307(b) be so allocated), then there is no increase in the earnings and profits by reason of the receipt of such stock dividend even though such stock dividend constitutes income within the meaning of the sixteenth amendment to the Constitution.

(b) The principles set forth in paragraph (a) of this section may be illustrated by the following examples:

Example 1. Corporation X in 1955 distributed to Corporation Y, one of its shareholders, $10,000 which was out of earnings or profits accumulated before March 1, 1913, and did not exceed the adjusted basis of the stock in respect of which the distribution was made. This amount of $10,000 was, therefore, a tax-free distribution and under the provisions of section 301(c)(2) must be applied against and reduce the adjusted basis of the stock in respect of which the distribution was made. The earnings and profits of Corporation Y are not increased by reason of the receipt of this distribution.

Example 2. Corporation Z in 1955 had outstanding common and preferred stock of which Corporation Y held 100 shares of the common and no preferred. The stock had a cost basis to Corporation Y of $100 per share, or a total cost of $10,000. In December of that year it received a dividend of 100 shares of the preferred stock of Corporation Z. Such distribution is a stock dividend which, under section 305, was not taxable and was accordingly not included in the gross income of Corporation Y. The original cost of $10,000 is allocated to the 200 shares of Corporation Z none of which has been sold or otherwise disposed of by Corporation Y. See section 307 and § 1.307-1. The earnings and profits of Corporation Y are not increased by reason of the receipt of such stock dividend.

§ 1.312-9 Adjustments to earnings and profits reflecting increase in value accrued before March 1, 1913.

(a) In order to determine, for the purpose of ascertaining the source of dividend distributions, that part of the earnings and profits which is represented by increase in value of property accrued before, but realized on or after, March 1, 1913, section 312(g) prescribes certain rules.

(b)

(1) Section 312(g)(1) sets forth the general rule with respect to computing the increase to be made in that part of the earnings and profits consisting of increase in value of property accrued before, but realized on or after, March 1, 1913.

(2) The effect of section 312(g)(1) may be illustrated by the following examples:

Example 1. Corporation X acquired nondepreciable property before March 1, 1913, at a cost of $10,000. Its fair market value as of March 1, 1913, was $12,000 and it was sold in 1955 for $15,000. The increase in earnings and profits based on the value as of March 1, 1913, representing earnings and profits accumulated since February 28, 1913, is $3,000. If the basis is determined without regard to the value as of March 1, 1913, there would be an increase in earnings and profits of $5,000. The difference of $2,000 ($5,000 minus $3,000) represents the increase to be made in that part of the earnings and profits of Corporation X consisting of the increase in value of property accrued before, but realized on or after, March 1, 1913.

Example 2. Corporation Y acquired depreciable property in 1908 at a cost of $100,000. Assuming no additions or betterments, and that the depreciation sustained before March 1, 1913, was $10,000, the adjusted cost as of that date was $90,000. Its fair market value as of March 1, 1913, was $94,000 and on February 28, 1955, it was sold for $25,000. For the purpose of determining gain from the sale, the basis of the property is the fair market value of $94,000 as of March 1, 1913, adjusted for depreciation for the period subsequent to February 28, 1913, computed on such fair market value. If the amount of the depreciation deduction allowed after February 28, 1913, and properly allowable for each of such years to the date of the sale in 1955 is the aggregate sum of $81,467, the adjusted basis for determining gain in 1955 ($94,000 less $81,467) is $12,533 and the gain would be $12,467 ($25,000 less $12,533). The increase in earnings and profits accumulated since February 28, 1913, by reason of the sale, based on the value as of March 1, 1913, adjusted for depreciation is $12,467. If the depreciation since February 28, 1913, had been based on the adjusted cost of $90,000 ($100,000 less $10,000) instead of the March 1, 1913, value of $94,000, the depreciation sustained from that date to the date of sale would have been $78,000 instead of $81,467 and the actual gain on the sale based on the cost of $100,000 adjusted by depreciation on such cost to $12,000 ($100,000 reduced by the sum of $10,000 and $78,000) would be $13,000 ($25,000 less $12,000). If the adjusted basis of the property was determined without regard to the value as of March 1, 1913, there would be an increase in earnings and profits of $13,000. The difference of $533 ($13,000 minus $12,467) represents the increase to be made in that part of the earnings and profits of Corporation Y consisting of the increase in value of property accrued before, but realized on or after, March 1, 1913 (assuming that the proper increase in such surplus had been made each year for the difference between depreciation based on cost and the depreciation based on March 1, 1913, value). Thus, the total increase in that part of earnings and profits consisting of the increase in value of property accrued before, but realized on or after, March 1, 1913, is $4,000 ($94,000 less $90,000).

(c)

(1) Section 312(g)(2) is an exception to the general rule in section 312(g)(1) and also operates as a limitation on the application of section 312(f). It provides that, if the application of section 312(f)(1)(B) to a sale or other disposition after February 28, 1913, results in a loss which is to be applied in decrease of earnings and profits for any period beginning after February 28, 1913, then, notwithstanding section 312(f) and in lieu of the rule provided in section 312(g)(1), the amount of such loss so to be applied shall be reduced by the amount, if any, by which the adjusted basis of the property used in determining the loss, exceeds the adjusted basis computed without regard to the fair market value of the property on March 1, 1913. If the amount so applied in reduction of the loss exceeds such loss, the excess over such loss shall increase that part of the earnings and profits consisting of increase in value of property accrued before, but realized on or after March 1, 1913.

(2) The application of section 312(g)(2) may be illustrated by the following examples:

Example 1. Corporation Y acquired nondepreciable property before March 1, 1913, at a cost of $8,000. Its fair market value as of March 1, 1913, was $13,000, and it was sold in 1955 for $10,000. Under section 312(f)(1)(B) the adjusted basis would be $13,000 and there would be a loss of $3,000. The application of section 312(f)(1)(B) would result in a loss from the sale in 1955 to be applied in decrease of earnings and profits for that year. Section 312(g)(2), however, applies and the loss of $3,000 is reduced by the amount by which the adjusted basis of $13,000 exceeds the cost of $8,000 (the adjusted basis computed without regard to the value on March 1, 1913), namely $5,000. The amount of the loss is, accordingly, reduced from $3,000 to zero and there is no decrease in earnings and profits of Corporation Y for the year 1955 as a result of the sale. The amount applied in reduction of the decrease, namely, $5,000, exceeds $3,000. Accordingly, as a result of the sale the excess of $2,000 increases that part of the earnings and profits of Corporation Y consisting of increase in value of property accrued before, but realized on or after March 1, 1913.

Example 2. Corporation Z acquired nondepreciable property before March 1, 1913, at a cost of $10,000. Its fair market value as of March 1, 1913, was $12,000, and it was sold in 1955 for $8,000. Under section 312(f)(1)(B) the adjusted basis would be $12,000 and there would be a loss of $4,000. The application of section 312(f)(1)(B) would result in a loss from the sale in 1955 to be applied in decrease of earnings and profits for that year. Section 312(g)(2), however, applies and the loss of $4,000 is reduced by the amount by which the adjusted basis of $12,000 exceeds the cost of $10,000 (the adjusted basis computed without regard to the value on March 1, 1913), namely, $2,000. The amount of the loss is, accordingly, reduced from $4,000 to $2,000 and the decrease in earnings and profits of Corporation Z for the year 1955 as a result of the sale is $2,000 instead of $4,000. The amount applied in reduction of the decrease, namely, $2,000, does not exceed $4,000. Accordingly, as a result of the sale there is no increase in that part of the earnings and profits of Corporation Z consisting of increase in value of property accrued before, but realized on or after, March 1, 1913.

§ 1.312-10 Allocation of earnings in certain corporate separations.

(a) If one corporation transfers part of its assets constituting an active trade or business to another corporation in a transaction to which section 368(a)(1)(4) applies and immediately thereafter the stock and securities of the controlled corporation are distributed in a distribution or exchange to which section 355 (or so much of section 356 as relates to section 355) applies, the earnings and profits of the distributing corporation immediately before the transaction shall be allocated between the distributing corporation and the controlled corporation. In the case of a newly created controlled corporation, such allocation generally shall be made in proportion to the fair market value of the business or businesses (and interests in any other properties) retained by the distributing corporation and the business or businesses (and interests in any other properties) of the controlled corporation immediately after the

transaction. In a proper case, allocation shall be made between the distributing corporation and the controlled corporation in proportion to the net basis of the assets transferred and of the assets retained or by such other method as may be appropriate under the facts and circumstances of the case. The term *net basis* means the basis of the assets less liabilities assumed or liabilities to which such assets are subject. The part of the earnings and profits of the taxable year of the distributing corporation in which the transaction occurs allocable to the controlled corporation shall be included in the computation of the earnings and profits of the first taxable year of the controlled corporation ending after the date of the transaction.

(b) If a distribution or exchange to which section 355 applies (or so much of section 356 as relates to section 355) is not in pursuance of a plan meeting the requirements of a reorganization as defined in section 368(a)(1)(D), the earnings and profits of the distributing corporation shall be decreased by the lesser of the following amounts:

(1) The amount by which the earnings and profits of the distributing corporation would have been decreased if it had transferred the stock of the controlled corporation to a new corporation in a reorganization to which section 368(a)(1)(D) applied and immediately thereafter distributed the stock of such new corporation or,

(2) The net worth of the controlled corporation. (For this purpose the term *net worth* means the sum of the basis of all of the properties plus cash minus all liabilities.)

If the earnings and profits of the controlled corporation immediately before the transaction are less than the amount of the decrease in earnings and profits of the distributing corporation (including a case in which the controlled corporation has a deficit) the earnings and profits of the controlled corporation, after the transaction, shall be equal to the amount of such decrease. If the earnings and profits of the controlled corporation immediately before the transaction are more than the amount of the decrease in the earnings and profits of the distributing corporation, they shall remain unchanged.

(c) In no case shall any part of a deficit of a distributing corporation within the meaning of section 355 be allocated to a controlled corporation.

§ 1.312-11 Effect on earnings and profits of certain other tax-free exchanges, tax-free distributions, and tax-free transfers from one corporation to another.

(a) In a transfer described in section 381(a), the acquiring corporation, as defined in § 1.381(a)-1(b)(2), and only that corporation, succeeds to the earnings and profits of the distributor or transferor corporation (within the meaning of § 1.381(a)-1(a)). Except as provided in § 1.312-10, in all other cases in which property is transferred from one corporation to another, no allocation of the earnings and profits of the transferor is made to the transferee.

(b) The general rule provided in section 316 that every distribution is made out of earnings or profits to the extent thereof and from the most recently accumulated earnings or profits does not apply to:

(1) The distribution, in pursuance of a plan of reorganization, by or on behalf of a corporation a party to the reorganization, or in a transaction subject to section 355, to its shareholders—

(i) Of stock or securities in such corporation or in another corporation a party to the reorganization in any taxable year beginning before January 1, 1934, without the surrender by the distributees of stock or securities in such corporation (see section 112(g) of the Revenue Act of 1932 (47 Stat. 197)); or

(ii) Of stock (other than preferred stock) in another corporation which is a party to the reorganization without the surrender by the distributees of stock in the distributing corporation if the distribution occurs after October 20, 1951, and is subject to section 112(b)(11) of the Internal Revenue Code of 1939; or

(iii) Of stock or securities in such corporation or in another corporation a party to the reorganization in any taxable year beginning before January 1, 1939, or on or after such date, in exchange for its stock or securities in a transaction to which section 112(b)(3) of the Internal Revenue Code of 1939 was applicable; or

(iv) Of stock or securities in such corporation or in another corporation in exchange for its stock or securities in a transaction subject to section 354 or 355,

if no gain to the distributees from the receipt of such stock or securities was recognized by law.

(2) The distribution in any taxable year (beginning before January 1, 1939, or on or after such date) of stock or securities, or other property or money, to a corporation in complete liquidation of another corporation, under the circumstances described in section 112(b)(6) of the Revenue Act of 1936 (49 Stat. 1679), the Revenue Act of 1938 (52 Stat. 485), of the Internal Revenue Code of 1939, or section 332 of the Internal Revenue Code of 1954.

(3) The distribution in any taxable year (beginning after December 31, 1938), of stock or securities, or other property or money, in the case of an exchange or distribution described in section 371 of the Internal Revenue Code of 1939 or in section 1081 of the Internal Revenue Code of 1954 (relating to exchanges and distributions in obedience to orders of the Securities and Exchange Commission), if no gain to the distributee from the receipt of such stock, securities, or other property or money was recognized by law.

(4) A stock dividend which was not subject to tax in the hands of the distributee because either it did not constitute income to him within the meaning of the sixteenth amendment to the Constitution or because exempt to him under section 115(f) of the Revenue Act of 1934 (48 Stat. 712) or a corresponding provision of a prior Revenue Act, or section 305 of the Code.

(5) The distribution, in a taxable year of the distributee beginning after December 31, 1931, by or on behalf of an insolvent corporation, in connection with a section 112(b)(10) reorganization under the Internal Revenue Code of 1939, or in a transaction subject to section 371 of the Internal Revenue Code of 1954, of stock or securities in a corporation organized or made use of to effectuate the plan of reorganization, if under section 112(e) of the Internal Revenue Code of 1939 or section 371 of the Internal Revenue Code of 1954 no gain to the distributee from the receipt of such stock or securities was recognized by law.

(c) A distribution described in paragraph (b) of this section does not diminish the earnings or profits of any corporation. In such cases, the earnings or profits remain intact and available for distribution as dividends by the corporation making such distribution, or by another corporation to which the earnings or profits are transferred upon such reorganization or other exchange. In the case, however, of amounts distributed in liquidation (other than a taxfree liquidation or reorganization described in paragraph (b)(1), (2), (3), or (5) of this section) the earnings or profits of the corporation making the distribution are diminished by the portion of such distribution properly chargeable to earnings or profits accumulated after February 28, 1913, after first deducting from the amount of such distribution the portion thereof allocable to capital account.

(d) For the purposes of this section, the terms *reorganization* and *party to the reorganization* shall, for any taxable year beginning before January 1, 1934, have the meanings assigned to such terms in section 112 of the Revenue Act of 1932 (47 Stat. 196); for any taxable year beginning after December 31, 1933, and before January 1, 1936, have the meanings assigned to such terms in section 112 of the Revenue Act of 1934 (48 Stat. 704); for any taxable year beginning after December 31, 1935, and before January 1, 1938, have the meanings assigned to such terms in section 112 of the Revenue Act of 1936 (49 Stat. 1678); for any taxable year beginning after December 31, 1937, and before January 1, 1939, have the meanings assigned to such terms in section 112 of the Revenue Act of 1938 (52 Stat. 485); and for any taxable year beginning after December 31, 1938, and ending before June 22, 1954, providing no election is made under section 393(b)(2) of the Internal Revenue Code of 1954, have the meanings assigned to such terms in section 112(g)(1) of the Internal Revenue Code of 1939.

(e) ***Effective/applicability date.*** Paragraph (a) of this section applies to transactions occurring on or after November 10, 2014.

[T.D. 6500, 25 FR 11607, Nov. 26, 1960; 25 FR 14021, Dec. 31, 1960, as amended by T.D. 9700, 79 FR 66617, Nov. 10, 2014]

§ 1.312-12 Distributions of proceeds of loans guaranteed by the United States.

(a) The provisions of section 312(j) are applicable with respect to a loan, any portion of which is guaranteed by an agency of the United States Government without regard to the percentage of such loan subject to such guarantee.

(b) The application of section 312(j) is illustrated by the following example:

Example. Corporation A borrowed $1,000,000 for the purpose of construction of an apartment house, the cost and adjusted basis of which was $900,000. This loan was guaranteed by an agency of the United States Government. One year after such loan was made and after the completion of construction of the building (but before such corporation had received any income) it distributed $100,000 cash to its shareholders. The earnings and profits of the taxable year of such corporation are increased (pursuant to section 312(j)) by $100,000 immediately prior to such distribution and are decreased by $100,000 immediately after such distribution. Such decrease, however, does not reduce the earnings and profits below zero. Two years later, it has no accumulated earnings and has earnings of the taxable year of $100,000. Before it has made any payments on the loan, it distributes $200,000 to its shareholders. The earnings and profits of the taxable year of the corporation ($100,000) are increased by $100,000, the excess of the amount of the guaranteed loan over the adjusted basis of the apartment house (calculated without adjustment for depreciation). The entire amount of each distribution is treated as a distribution out of earnings and profits and, accordingly, as a taxable dividend.

§ 1.312-15 Effect of depreciation on earnings and profits.

(a) ***Depreciation for taxable years beginning after June 30, 1972*** —

(1) ***In general.*** Except as provided in subparagraph (2) of this paragraph and paragraph (c) of this section, for purposes of computing the earnings and profits of a corporation (including a real estate investment trust as defined in section 856) for any taxable year beginning after June 30, 1972, the allowance for depreciation (and amortization, if any) shall be deemed to be the amount which would be allowable for such year if the straight line method of depreciation had been used for all property for which depreciation is allowable for each taxable year beginning after June 30, 1972. Thus, for taxable years beginning after June 30, 1972, in determining the earnings and profits of a corporation, depreciation must be computed under the straight line method, notwithstanding that in determining

taxable income the corporation uses an accelerated method of depreciation described in subparagraph (A), (B), or (C) of section 312(m)(2) or elects to amortize the basis of property under section 169, 184, 187, or 188, or any similar provision. See § 1.168(k)-1(f)(7) with respect to the treatment of the additional first year depreciation deduction allowable under section 168(k) for qualified property or 50-percent bonus depreciation property, and § 1.1400L(b)-1(f)(7) with respect to the treatment of the additional first year depreciation deduction allowable under section 1400L(b) for qualified New York Liberty Zone property, for purposes of computing the earnings and profits of a corporation. Further, see § 1.168(k)-2(g)(7) with respect to the treatment of the additional first year depreciation deduction allowable under section 168(k), as amended by the Tax Cuts and Jobs Act, Public Law 115-97 (131 Stat. 2054 (December 22, 2017)), for purposes of computing the earnings and profits of a corporation.

(2) ***Exception.***

(i) If, for any taxable year beginning after June 30, 1972, a method of depreciation is used by a corporation in computing taxable income which the Secretary or his delegate has determined results in a reasonable allowance under section 167(a) and which is not a declining balance method of depreciation (described in § 1.167(b)-2), the sum of the years-digits method (described in § 1.167(b)-3), or any other method allowed solely by reason of the application of subsection (b)(4) or (j)(1)(C) of section 167, then the adjustment to earnings and profits for depreciation for such year shall be determined under the method so used (in lieu of the straight line method).

(ii) The Commissioner has determined that the “unit of production” (see § 1.167(b)-0(b)), and the “machine hour” methods of depreciation, when properly used under appropriate circumstances, meet the requirements of subdivision (i) of this subparagraph. Thus, the adjustment to earnings and profits for depreciation (for the taxable year for which either of such methods is properly used under appropriate circumstances) shall be determined under whichever of such methods is used to compute taxable income.

(3) ***Determinations under straight line method.***

(i) In the case of property with respect to which an allowance for depreciation is claimed in computing taxable income, the determination of the amount which would be allowable under the straight line method shall be based on the manner in which the corporation computes depreciation in determining taxable income. Thus, if an election under § 1.167(a)-11 is in effect with respect to the property, the amount of depreciation which would be allowable under the straight line method shall be determined under § 1.167(a)-11(g)(3). On the other hand, if property is not depreciated under the provisions of § 1.167(a)-11, the amount of depreciation which would be allowable under the straight line method shall be determined under § 1.167(b)-1. Any election made under section 167(f), with respect to reducing the amount of salvage value taken into account in computing the depreciation allowance for certain property, or any convention adopted under § 1.167(a)-10(b) or § 1.167(a)-11(c)(2), with respect to additions and retirements from multiple asset accounts, which is used in computing depreciation for taxable income shall be used in computing depreciation for earnings and profits purposes.

(ii) In the case of property with respect to which an election to amortize is in effect under section 169, 184, 187, or 188, or any similar provision, the amount which would be allowable under the straight line method of depreciation shall be determined under the provisions of § 1.167(b)-1. Thus, the cost or other basis of the property, less its estimated salvage value, is to be deducted

in equal annual amounts over the period of the estimated useful life of the property. In computing the amount of depreciation for earnings and profits purposes, a taxpayer may utilize the provisions of section 167(f) (relating to the reduction in the amount of salvage value taken into account in computing the depreciation allowance for certain property) and any convention which could have been adopted for such property under § 1.167(a)-10(b) (relating to additions and retirements from multiple asset accounts).

(b) *Transitional rules* —

(1) ***Depreciation.*** If, for the taxable year which includes June 30, 1972,

(i) the allowance for depreciation of any property is computed under a method other than the straight line method or a method described in paragraph (a)(2) of this section, and

(ii) paragraph (a)(1) of this section applies to such property for the first taxable year beginning after June 30, 1972, then adjustments to earnings and profits for depreciation of such property for taxable years beginning after June 30, 1972, shall be determined as if the corporation changed to the straight line method with respect to such property as of the first day of the first taxable year beginning after June 30, 1972. Thus, if an election under § 1.167 (a)-11 is in effect with respect to the property, the change shall be made under the provisions of § 1.167(a)-11(c)(1)(iii), except that no statement setting forth the vintage accounts for which the change is made shall be furnished with the income tax return of the year of change if the change is only for purposes of computing earnings and profits. In all other cases, the unrecovered cost or other basis of the property (less a reasonable estimate for salvage) as of such first day shall be recovered through equal annual allowances over the estimated remaining useful life determined in accordance with the circumstances existing at that time. See paragraph (a)(3)(i) of this section for rules relating to the applicability of section 167(f) in determining salvage value.

(2) ***Amortization.*** If, for the taxable year which includes June 30, 1972, the basis of any property is amortized under section 169, 184, 187, or 188, or any similar provision, then adjustments to earnings and profits for depreciation or amortization of such property for taxable years beginning after June 30, 1972, shall be determined as if the unrecovered cost or other basis of the property (less a reasonable estimate for salvage) as of the first day of the first taxable year beginning after June 30, 1972, were recovered through equal annual allowances over the estimated remaining useful life of the property determined in accordance with the circumstances existing at that time. See paragraph (a)(3)(ii) of this section for rules relating to the applicability of section 167(f).

(c) ***Certain foreign corporations.*** Paragraphs (a) and (b) of this section shall not apply in computing the earnings and profits of a foreign corporation for any taxable year for which less than 20 percent of the gross income from all sources of such corporation is derived from sources within the United States.

(d) ***Books and records.*** Wherever different methods of depreciation are used for taxable income and earnings and profits purposes, records shall be maintained which show the depreciation taken for earnings and profits purposes each year and which will allow computation of the adjusted basis of the property in each account using the depreciation taken for earnings and profits purposes.

(e) ***Applicability date of qualified property.*** The last sentence of paragraph (a)(1) of this section applies to the taxpayer's taxable years ending on or after September 24, 2019. However, a taxpayer may choose to apply the last sentence in paragraph (a)(1) of this section for the taxpayer's taxable years ending on or after September 28, 2017. A taxpayer may rely on the last sentence in paragraph (a)(1) of this section in

regulation project REG-104397-18 (2018-41 I.R.B. 558) (see § 601.601(d)(2)(ii)(b) of this chapter) for the taxpayer's taxable years ending on or after September 28, 2017, and ending before the taxpayer's taxable year that includes September 24, 2019.

[T.D. 7221, 37 FR 24746, Nov. 21, 1972, as amended by T.D. 9283, 71 FR 51746, Aug. 31, 2006; T.D. 9874, 84 FR 50149, Sept. 24, 2019]

DEFINITIONS; CONSTRUCTIVE OWNERSHIP OF STOCK

§ 1.316-1 Dividends.

(a)

(1) The term *dividend* for the purpose of subtitle A of the Code (except when used in subchapter L, chapter 1 of the Code, in any case where the reference is to dividends and similar distributions of insurance companies paid to policyholders as such) comprises any distribution of property as defined in section 317 in the ordinary course of business, even though extraordinary in amount, made by a domestic or foreign corporation to its shareholders out of either—

(i) Earnings and profits accumulated since February 28, 1913, or

(ii) Earnings and profits of the taxable year computed without regard to the amount of the earnings and profits (whether of such year or accumulated since February 28, 1913) at the time the distribution was made.

The earnings and profits of the taxable year shall be computed as of the close of such year, without diminution by reason of any distributions made during the taxable year. For the purpose of determining whether a distribution constitutes a dividend, it is unnecessary to ascertain the amount of the earnings and profits accumulated since February 28, 1913, if the earnings and profits of the taxable year are equal to or in excess of the total amount of the distributions made within such year.

(2) Where a corporation distributes property to its shareholders on or after June 22, 1954, the amount of the distribution which is a dividend to them may not exceed the earnings and profits of the distributing corporation.

(3) The rule of (2) above may be illustrated by the following example:

Example. X and Y, individuals, each own one-half of the stock of Corporation A which has earnings and profits of $10,000. Corporation A distributes property having a basis of $6,000 and a fair market value of $16,000 to its shareholders, each shareholder receiving property with a basis of $3,000 and with a fair market value of $8,000 in a distribution to which section 301 applies. The amount taxable to each shareholder as a dividend under section 301(c) is $5,000.

(b)

(1) In the case of a corporation which, under the law applicable to the taxable year in which a distribution is made, is a personal holding company or which, for the taxable year in respect of which a distribution is made under section 563 (relating to dividends paid within $2^1/_2$ months after the close of the taxable year), or section 547 (relating to deficiency dividends), or corresponding provisions of a prior income tax law, was under the applicable law a personal holding company, the term *dividend,* in addition to the meaning set forth in the first sentence of section 316, also means a distribution to its shareholders as follows: A distribution within a taxable year of the corporation, or of a

shareholder, is a dividend to the extent of the corporation's undistributed personal holding company income (determined under section 545 without regard to distributions under section 316(b)(2)) for the taxable year in which, or, in the case of a distribution under section 563 or section 547, the taxable year in respect of which, the distribution was made. This subparagraph does not apply to distributions in partial or complete liquidation of a personal holding company. In the case of certain complete liquidations of a personal holding company see subparagraph (2) of this paragraph.

(2) In the case of a corporation which, under the law applicable to the taxable year in which a distribution is made, is a personal holding company or which, for the taxable year in respect of which a distribution is made under section 563, or section 547, or corresponding provisions of a prior income tax law, was under the applicable law a personal holding company, the term *dividend,* in addition to the meaning set forth in the first sentence of section 316, also means, in the case of a complete liquidation occurring within 24 months after the adoption of a plan of liquidation, a distribution of property to its shareholders within such period, but—

(i) Only to the extent of the amounts distributed to distributees other than corporate shareholders, and

(ii) Only to the extent that the corporation designates such amounts as a dividend distribution and duly notifies such distributees in accordance with subparagraph (5) of this paragraph, but

(iii) Not in excess of the sum of such distributees' allocable share of the undistributed personal holding company income for such year (determined under section 545 without regard to sections 562(b) and 316(b)(2)(B)).

Section 316(b)(2)(B) and this subparagraph apply only to distributions made in any taxable year of the distributing corporation beginning after December 31, 1963. The amount designated with respect to a noncorporate distributee may not exceed the amount actually distributed to such distributee. For purposes of determining a noncorporate distributee's gain or loss on liquidation, amounts distributed in complete liquidation to such distributee during a taxable year are reduced by the amounts designated as a dividend with respect to such distributee for such year. For purposes of section 333(e)(1), a shareholder's ratable share of the earnings and profits of the corporation accumulated after February 28, 1913, shall be reduced by the amounts designated as a dividend with respect to such shareholder (even though such designated amounts are distributed during the 1-month period referred to in section 333).

(3) For purposes of subparagraph (2)(iii) of this paragraph—

(i) Except as provided in subdivision (ii) of this subparagraph, the sum of the noncorporate distributees' allocable share of undistributed personal holding company income for the taxable year in which, or in respect of which, the distribution was made (computed without regard to sections 562(b) and 316(b)(2)(B)) shall be determined by multiplying such undistributed personal holding company income by the ratio which the aggregate value of the stock held by all noncorporate shareholders immediately before the record date of the last liquidating distribution in such year bears to the total value of all stock outstanding on such date. For rules applicable in a case where the distributing corporation has more than one class of stock, see subdivision (iii) of this subparagraph.

(ii) If more than one liquidating distribution was made during the year, and if, after the record date of the first distribution but before the record date of the last distribution, there was a change in the relative shareholdings as between noncorporate shareholders and corporate shareholders, then the sum of the noncorporate distributees' allocable share of undistributed personal

holding company income for the taxable year in which, or in respect of which, the distributions were made (computed without regard to sections 562(b) and 316(b)(2)(B)) shall be determined as follows:

(*a*) First, allocate the corporation's undistributed personal holding company income among the distributions made during the taxable year by reference to the ratio which the aggregate amount of each distribution bears to the total amount of all distributions during such year;

(*b*) Second, determine the noncorporate distributees' allocable share of the corporation's undistributed personal holding company income for each distribution by multiplying the amount determined under (*a*) of this subdivision (ii) for each distribution by the ratio which the aggregate value of the stock held by all noncorporate shareholders immediately before the record date of such distribution bears to the total value of all stock outstanding on such date; and

(*c*) Last, determine the sum of the noncorporate distributees' allocable share of the corporation's undistributed personal holding company income for all such distributions.

For rules applicable in a case where the distributing corporation has more than one class of stock, see subdivision (iii) of this subparagraph.

(iii) Where the distributing corporation has more than one class of stock—

(*a*) The undistributed personal holding company income for the taxable year in which, or in respect of which the distribution was made shall be treated as a fund from which dividends may properly be paid and shall be allocated between or among the classes of stock in a manner consistent with the dividend rights of such classes under local law and the pertinent governing instruments, such as, for example, the distributing corporation's articles or certificate of incorporation and bylaws;

(*b*) The noncorporate distributees' allocable share of the undistributed personal holding company income for each class of stock shall be determined separately in accordance with the rules set forth in subdivisions (i) or (ii) of this subparagraph, as if each class of stock were the only class of stock outstanding; and

(*c*) The sum of the noncorporate distributees' allocable share of the undistributed personal holding company income for the taxable year in which, or in respect of which, the distribution was made shall be the sum of the noncorporate distributees' allocable share of the undistributed personal holding company income for all classes of stock.

(iv) For purposes of this subparagraph, in any case where the record date of a liquidating distribution cannot be ascertained, the record date of the distribution shall be the date on which the liquidating distribution was actually made.

(4) The amount designated as a dividend to a noncorporate distributee for any taxable year of the distributing corporation may not exceed an amount equal to the sum of the noncorporate distributees' allocable share of undistributed personal holding company income (as determined under subparagraph (3) of this paragraph) for such year multiplied by the ratio which the aggregate value of the stock held by such distributee immediately before the record date of the liquidating distribution or, if the record date cannot be ascertained, immediately before the date on which the liquidating distribution was actually made, bears to the aggregate value of stock outstanding held by

all noncorporate distributees on such date. In any case where more than one liquidating distribution is made during the taxable year, the aggregate amount which may be designated as a dividend to a noncorporate distributee for such year may not exceed the aggregate of the amounts determined by applying the principle of the preceding sentence to the amounts determined under subparagraphs (3)(ii)(*a*) and (*b*) of this paragraph for each distribution. Where the distributing corporation has more than one class of stock, the limitation on the amount which may be designated as a dividend to a noncorporate distributee for any taxable year shall be determined by applying the rules of this subparagraph separately with respect to the noncorporate distributees' allocable share of the undistributed personal holding company income for each class of stock (as determined under subparagraphs (3)(iii)(*a*) and (*b*) of this paragraph).

(5) A corporation may designate as a dividend to a shareholder all or part of a distribution in complete liquidation described in section 316(b)(2)(B) of this paragraph by:

(i) Claiming a dividends paid deduction for such amount in its return for the year in which, or in respect of which, the distribution is made,

(ii) Including such amount as a dividend in Form 1099 filed in respect of such shareholder pursuant to section 6042(a) and the regulations thereunder and in a written statement of dividend payments furnished to such shareholder pursuant to section 6042(c) and § 1.6042-4, and

(iii) Indicating on the written statement of dividend payments furnished to such shareholder the amount included in such statement which is designated as a dividend under section 316(b)(2)(B) and this paragraph.

If a corporation complies with the procedure prescribed in the preceding sentence, it satisfies both the designation and notification requirements of section 316(b)(2)(B)(ii) and paragraph (b)(2)(ii) of this section. An amount designated as a dividend shall not be included as a distribution in liquidation on Form 1099L filed pursuant to § 1.6043-2 (relating to returns of information respecting distributions in liquidation). If a corporation designates a dividend in accordance with this subparagraph, it shall attach to the return in which it claims a deduction for such designated dividend a schedule indicating all facts necessary to determine the sum of the noncorporate distributees' allocable share of undistributed personal holding company income (determined in accordance with subparagraph (3) of this paragraph) for the year in which, or in respect of which, the distribution is made.

(c) Except as provided in section 316(b)(1), the term *dividend* includes any distribution of property to shareholders to the extent made out of accumulated or current earnings and profits. See, however, section 331 (relating to distributions in complete or partial liquidation), section 301(e) (relating to distributions by personal service corporations), section 302(b) (relating to redemptions treated as amounts received from the sale or exchange of stock), and section 303 (relating to distributions in redemption of stock to pay death taxes). See also section 305(b) for certain distributions of stock or stock rights treated as distributions of property.

(d) In the case of a corporation which, under the law applicable to the taxable year in respect of which a distribution is made under section 860 (relating to deficiency dividends), was a regulated investment company (within the meaning of section 851), or a real estate investment trust (within the meaning of section 856), the term *dividend,* in addition to the meaning set forth in paragraphs (a) and (b) of section 316, means a distribution of property to its shareholders which constitutes a “deficiency dividend” as defined in section 860(f).

(e) The application of section 316 may be illustrated by the following examples:

Example 1. At the beginning of the calendar year 1955, Corporation M had an operating deficit of $200,000 and the earnings and profits for the year amounted to $100,000. Beginning on March 16, 1955, the corporation made quarterly distributions of $25,000 during the taxable year to its shareholders. Each distribution is a taxable dividend in full, irrespective of the actual or the pro rata amount of the earnings and profits on hand at any of the dates of distribution, since the total distributions made during the year ($100,000) did not exceed the total earnings and profits of the year ($100,000).

Example 2. At the beginning of the calendar year 1955, Corporation N, a personal holding company, had no accumulated earnings and profits. During that year it made no earnings and profits but, due to the disallowance of certain deductions, its undistributed personal holding company income (determined under section 545 without regard to distributions under section 316(b)(2)) was $16,000. It distributed to shareholders on December 15, 1955, $15,000, and on February 1, 1956, $1,000, the latter amount being claimed as a deduction under section 563 in its personal holding company schedule for 1955 filed with its return for 1955 on March 15, 1956. Both distributions are taxable dividends in full, since they do not exceed the undistributed personal holding company income (determined without regard to such distributions) for 1955, the taxable year in which the distribution of $15,000 was made and with respect to which the distribution of $1,000 was made. It is immaterial whether Corporation N is a personal holding company for the taxable year 1956 or whether it had any income for that year.

Example 3. In 1959, a deficiency in personal holding company tax was established against Corporation O for the taxable year 1955 in the amount of $35,500 based on an undistributed personal holding company income of $42,000. Corporation O complied with the provisions of section 547 and in December 1959 distributed $42,000 to its stockholders as "deficiency dividends." The distribution of $42,000 is a taxable dividend since it does not exceed $42,000 (the undistributed personal holding company income for 1955, the taxable year with respect to which the distribution was made). It is immaterial whether Corporation O is a personal holding company for the taxable year 1959 or whether it had any income for that year.

Example 4. At the beginning of the taxable year 1955, Corporation P, a personal holding company, had a deficit in earnings and profits of $200,000. During that year it made earnings and profits of $90,000. For that year, however, it had an undistributed personal holding income (determined under section 545 without regard to distributions under section 316(b)(2)) of $80,000. During such taxable year it distributed to its shareholders $100,000. The distribution of $100,000 is a taxable dividend to the extent of $90,000 since its earnings and profits for that year, $90,000, exceed $80,000, the undistributed personal holding company income determined without regard to such distribution.

Example 5. Corporation O, a calendar year taxpayer, is completely liquidated on December 31, 1964, pursuant to a plan of liquidation adopted July 1, 1964. No distributions in liquidation were made pursuant to the plan of liquidation adopted July 1, 1964, until the distribution in complete liquidation on December 31, 1964. Corporation O has undistributed personal holding company income of $300,000 for the year 1964 (computed without regard to section 562(b) or section 316(b)(2)(B)). On December 31, 1964, immediately before the record date of the distribution in complete liquidation, individual A owns 200 shares of Corporation O's outstanding stock and Corporation P owns the remaining 100 shares of outstanding stock. All shares are equal in value. The noncorporate distributees' allocable share of undistributed personal holding company income for 1964 is $200,000 200 shares ÷ 300 shares × $300,000. If at least $200,000 is distributed to A in the liquidation, then Corporation O may designate $200,000 to A as a dividend in accordance with paragraph (b)(5) of this section, and, if such amount is designated, then A must treat $200,000 as a dividend to which section 301 applies. For an example of the treatment of the distribution to Corporation P see paragraph (b)(2)(iii) of § 1.562-1.

Example 6. Corporation Q, a calendar year taxpayer, is completely liquidated on December 31, 1964, pursuant to a plan of liquidation adopted July 1, 1964. No distributions in liquidation were made pursuant to the plan of liquidation adopted July 1, 1964, until the distribution in complete liquidation on December 31, 1964. Corporation Q has undistributed personal holding company income of $40,000 for the year 1964 (computed without regard to section 562(b) or section 316(b)(2)(B)). On December 31, 1964, immediately before the record date of the distribution in complete liquidation, Corporation Q has outstanding 300 shares of common stock and 100 shares of noncumulative preferred stock. Corporation Q's articles of incorporation provide that the preferred stock is entitled to dividends of $10 per share per year. Of Corporation Q's stock, individual B owns 200 shares of the common stock and 50 shares of the preferred stock, and Corporation R owns all remaining shares. All of the common shares are equal in value, and all of the preferred shares are equal in value. No dividends had been paid on the preferred stock during the year 1964. Of the $40,000 of undistributed personal holding company income, $1,000 must be allocated to the preferred stock because of the rights of the holders of such stock, under Q's articles of incorporation, to receive that amount in dividends for the year 1964. The noncorporate distributees' allocable share of undistributed personal holding company income for 1964 is $26,500. 50 preferred shares ÷ 100 preferred shares × $1,000 + 200 common shares ÷ 300 common shares × $39,000 If at least $26,500 is distributed to B in the liquidation, then corporation Q may designate $26,500 to B as a dividend in accordance with paragraph (b)(5) of this section, and, if such amount is designated, then B must treat $26,500 as a dividend to which section 301 applies.

Example 7. In 1979, a deficiency of $46,000 in the tax on real estate investment trust taxable income is established against corporation R for the taxable year 1977, based on an increase in real estate investment trust taxable income of $100,000. Corporation R complied with the provisions of section 860 and in December 1979 distributed to its stockholders $100,000, which qualified as "deficiency dividends" under section 860. The distribution of $100,000 is a taxable dividend. It is immaterial whether corporation R is a real estate investment trust for the taxable year 1979 or whether it had accumulated or current earnings and profits in 1979. See section 316(b)(3).

(Sec. 860(l) (92 Stat. 2849, 26 U.S.C. 860(l)); sec. 860(g) (92 Stat. 2850, 26 U.S.C. 860(g)); and sec. 7805 (68A Stat. 917, 26 U.S.C. 7805))

[T.D. 6500, 25 FR 11607, Nov. 26, 1960, as amended by T.D. 6625, 27 FR 12541, Dec. 19, 1962; T.D. 6949, 33 FR 5519, Apr. 9, 1968; T.D. 7767, 46 FR 11264, Feb. 6, 1981; T.D. 7936, 49 FR 2105, Jan. 18, 1984]

§ 1.316-2 Sources of distribution in general.

(a) For the purpose of income taxation every distribution made by a corporation is made out of earnings and profits to the extent thereof and from the most recently accumulated earnings and profits. In determining the source of a distribution, consideration should be given first, to the earnings and profits of the taxable year; second, to the earnings and profits accumulated since February 28, 1913, only in the case where, and to the extent that, the distributions made during the taxable year are not regarded as out of the earnings and profits of that year; third, to the earnings and profits accumulated before March 1, 1913, only after all the earnings and profits of the taxable year and all the earnings and profits accumulated since February 28, 1913, have been distributed; and, fourth, to sources other than earnings and profits only after the earnings and profits have been distributed.

(b) If the earnings and profits of the taxable year (computed as of the close of the year without diminution by reason of any distributions made during the year and without regard to the amount of earnings and profits at the time of the distribution) are sufficient in amount to cover all the distributions made during that year, then each distribution is a taxable dividend. See § 1.316-1. If the distributions made during the taxable

year exceed the earnings and profits of such year, then that proportion of each distribution which the total of the earnings and profits of the year bears to the total distributions made during the year shall be regarded as out of the earnings and profits of that year. The portion of each such distribution which is not regarded as out of earnings and profits of the taxable year shall be considered a taxable dividend to the extent of the earnings and profits accumulated since February 28, 1913, and available on the date of the distribution. In any case in which it is necessary to determine the amount of earnings and profits accumulated since February 28, 1913, and the actual earnings and profits to the date of a distribution within any taxable year (whether beginning before January 1, 1936, or, in the case of an operating deficit, on or after that date) cannot be shown, the earnings and profits for the year (or accounting period, if less than a year) in which the distribution was made shall be prorated to the date of the distribution not counting the date on which the distribution was made.

(c) The provisions of the section may be illustrated by the following example:

Example. At the beginning of the calendar year 1955, Corporation M had $12,000 in earnings and profits accumulated since February 28, 1913. Its earnings and profits for 1955 amounted to $30,000. During the year it made quarterly cash distributions of $15,000 each. Of each of the four distributions made, $7,500 (that portion of $15,000 which the amount of $30,000, the total earnings and profits of the taxable year, bears to $60,000, the total distributions made during the year) was paid out of the earnings and profits of the taxable year; and of the first and second distributions, $7,500 and $4,500, respectively, were paid out of the earnings and profits accumulated after February 28, 1913, and before the taxable year, as follows:

Distributions during 1955		Portion out of earnings and profits of the taxable year	Portion out of earnings accumulated since Feb. 28, 1913, and before the taxable year	Taxable amt. of each distribution
Date	Amount			
March 10	$15,000	$7,500	$7,500	$15,000
June 10	15,000	7,500	4,500	12,000
September 10	15,000	7,500		7,500
December 10	15,000	7,500		7,500
Total amount taxable as dividends				42,000

(d) Any distribution by a corporation out of earnings and profits accumulated before March 1, 1913, or out of increase in value of property accrued before March 1, 1913 (whether or not realized by sale or other disposition, and, if realized, whether before, on, or after March 1, 1913), is not a dividend within the meaning of subtitle A of the Code.

(e) A reserve set up out of gross income by a corporation and maintained for the purpose of making good any loss of capital assets on account of depletion or depreciation is not a part of surplus out of which ordinary dividends may be paid. A distribution made from a depletion or a depreciation reserve based upon the cost or other basis of the property will not be considered as having been paid out of earnings and profits, but the amount thereof shall be applied against and reduce the cost or other basis of the stock upon which declared. If such a distribution is in excess of the basis, the excess shall be taxed as a gain from the sale or other disposition of property as provided in section 301(c)(3)(A). A distribution from a depletion reserve based upon discovery value to the extent that such reserve represents the excess of the discovery value over the cost or other basis for determining gain or loss, is, when received by the shareholders, taxable as an ordinary dividend. The amount by which a corporation's percentage depletion allowance for any year exceeds depletion sustained on cost or other basis, that is, determined without regard to discovery or percentage depletion allowances for the year of distribution or prior years, constitutes a part of the corporation's "earnings and profits accumulated after February 28, 1913," within the meaning of section 316, and, upon distribution to shareholders, is taxable to them as a dividend. A distribution made from that portion of a depletion reserve based upon a valuation as of March 1, 1913, which is in excess of the depletion reserve based upon cost, will not be considered as having been paid out of earnings and profits, but the amount of the distribution shall be applied against and reduce the cost or other basis of the stock upon which declared. See section 301. No distribution, however, can be made from such a reserve until all the earnings and profits of the corporation have first been distributed.

[T.D. 6500, 25 FR 11607, Nov. 26, 1960, as amended by T.D. 9914, 85 FR 66476, Oct. 20, 2020]

§ 1.317-1 Property defined.

The term *property,* for purposes of part 1, subchapter C, chapter 1 of the Code, means any property (including money, securities, and indebtedness to the corporation) other than stock, or rights to acquire stock, in the corporation making the distribution.

§ 1.318-1 Constructive ownership of stock; introduction.

(a) For the purposes of certain provisions of chapter 1 of the Code, section 318(a) provides that stock owned by a taxpayer includes stock constructively owned by such taxpayer under the rules set forth in such section. An individual is considered to own the stock owned, directly or indirectly, by or for his spouse (other than a spouse who is legally separated from the individual under a decree of divorce or separate maintenance), and by or for his children, grandchildren, and parents. Under section 318(a)(2) and (3), constructive ownership rules are established for partnerships and partners, estates and beneficiaries, trusts and beneficiaries, and corporations and stockholders. If any person has an option to acquire stock, such stock is considered as owned by such person. The term *option* includes an option to acquire such an option and each of a series of such options.

(b) In applying section 318(a) to determine the stock ownership of any person for any one purpose—

(1) A corporation shall not be considered to own its own stock by reason of section 318(a)(3)(C);

(2) In any case in which an amount of stock owned by any person may be included in the computation more than one time, such stock shall be included only once, in the manner in which it will impute to the person concerned the largest total stock ownership; and

(3) In determining the 50-percent requirement of section 318(a)(2)(C) and (3)(C), all of the stock owned actually and constructively by the person concerned shall be aggregated.

[T.D. 6969, 33 FR 11999, Aug. 23, 1968]

§ 1.318-2 Application of general rules.

(a) The application of paragraph (b) of § 1.318-1 may be illustrated by the following examples:

Example 1. H, an individual, owns all of the stock of corporation A. Corporation A is not considered to own the stock owned by H in corporation A.

Example 2. H, an individual, his wife, W, and his son, S, each own one-third of the stock of the Green Corporation. For purposes of determining the amount of stock owned by H, W, or S for purposes of section 318(a)(2)(C) and (3)(C), the amount of stock held by the other members of the family shall be added pursuant to paragraph (b)(3) of § 1.318-1 in applying the 50-percent requirement of such section. H, W, or S, as the case may be, is for this purpose deemed to own 100 percent of the stock of the Green Corporation.

(b) The application of section 318(a)(1), relating to members of a family, may be illustrated by the following example:

Example. An individual, H, his wife, W, his son, S, and his grandson (S's son), G, own the 100 outstanding shares of stock of a corporation, each owning 25 shares. H, W, and S are each considered as owning 100 shares. G is considered as owning only 50 shares, that is, his own and his father's.

(c) The application of section 318(a)(2) and (3), relating to partnerships, trusts and corporations, may be illustrated by the following examples:

Example 1. A, an individual, has a 50 percent interest in a partnership. The partnership owns 50 of the 100 outstanding shares of stock of a corporation, the remaining 50 shares being owned by A. The partnership is considered as owning 100 shares. A is considered as owning 75 shares.

Example 2. A testamentary trust owns 25 of the outstanding 100 shares of stock of a corporation. A, an individual, who holds a vested remainder in the trust having a value, computed actuarially equal to 4 percent of the value of the trust property, owns the remaining 75 shares. Since the interest of A in the trust is a vested interest rather than a contingent interest (whether or not remote), the trust is considered as owning 100 shares. A is considered as owning 76 shares.

Example 3. The facts are the same as in (2), above, except that A's interest in the trust is a contingent remainder. A is considered as owning 76 shares. However, since A's interest in the trust is a remote contingent interest, the trust is not considered as owning any of the shares owned by A.

Example 4. A and B, unrelated individuals, own 70 percent and 30 percent, respectively, in value of the stock of Corporation M. Corporation M owns 50 of the 100 outstanding shares of stock of Corporation O, the remaining 50 shares being owned by A. Corporation M is considered as owning 100 shares of Corporation O, and A is considered as owning 85 shares.

Example 5. A and B, unrelated individuals, own 70 percent and 30 percent, respectively, of the stock of corporation M. A, B, and corporation M all own stock of corporation O. Since B owns less than 50 percent in value of the stock of corporation M, neither B nor corporation M constructively owns the stock of corporation O owned by the other. However, for purposes of certain sections of the Code, such as sections 304 and 856(d), the 50-percent limitation of section 318(a)(2)(C) and (3)(C) is disregarded or is reduced to less than 30 percent. For such purposes, B constructively owns his proportionate share of the stock of corporation O owned directly by corporation M, and corporation M constructively owns the stock of corporation O owned by B.

[T.D. 6500, 25 FR 11607, Nov. 26, 1960, as amended by T.D. 6969, 33 FR 11999, Aug. 23, 1968]

§ 1.318-3 Estates, trusts, and options.

(a) For the purpose of applying section 318(a), relating to estates, property of a decedent shall be considered as owned by his estate if such property is subject to administration by the executor or administrator for the purpose of paying claims against the estate and expenses of administration notwithstanding that, under local law, legal title to such property vests in the decedent's heirs, legatees or devisees immediately upon death. The term *beneficiary* includes any person entitled to receive property of a decedent pursuant to a will or pursuant to laws of descent and distribution. A person shall no longer be considered a beneficiary of an estate when all the property to which he is entitled has been received by him, when he no longer has a claim against the estate arising out of having been a beneficiary, and when there is only a remote possibility that it will be necessary for the estate to seek the return of property or to seek payment from him by contribution or otherwise to satisfy claims against the estate or expenses of administration. When, pursuant to the preceding sentence, a person ceases to be a beneficiary, stock owned by him shall not thereafter be considered owned by the estate, and stock owned by the estate shall not thereafter be considered owned by him. The application of section 318(a) relating to estates may be illustrated by the following examples:

> *Example 1.* (a) A decedent's estate owns 50 of the 100 outstanding shares of stock of corporation X. The remaining shares are owned by three unrelated individuals, A, B, and C, who together own the entire interest in the estate. A owns 12 shares of stock of corporation X directly and is entitled to 50 percent of the estate. B owns 18 shares directly and has a life estate in the remaining 50 percent of the estate. C owns 20 shares directly and also owns the remainder interest after B's life estate.
> (b) If section 318(a)(5)(C) applies (see paragraph (c)(3) of § 1.318-4), the stock of corporation X is considered to be owned as follows: the estate is considered as owning 80 shares, 50 shares directly, 12 shares constructively through A, and 18 shares constructively through B; A is considered as owning 37 shares, 12 shares directly, and 25 shares constructively (50 percent of the 50 shares owned directly by the estate); B is considered as owning 43 shares, 18 shares directly and 25 shares constructively (50 percent of the 50 shares owned directly by the estate); C is considered as owning 20 shares directly and no shares constructively. C is not considered a beneficiary of the estate under section 318(a) since he has no direct present interest in the property held by the estate nor in the income produced by such property.
>
> (c) If section 318(a)(5)(C) does not apply, A is considered as owning nine additional shares (50 percent of the 18 shares owned constructively by the estate through B), and B is considered as owning six additional shares (50 percent of the 12 shares owned constructively by the estate through A).

Example 2. Under the will of A, Blackacre is left to B for life, remainder to C, an unrelated individual. The residue of the estate consisting of stock of a corporation is left to D. B and D are beneficiaries of the estate under section 318(a). C is not considered a beneficiary since he has no direct present interest in Blackacre nor in the income produced by such property. The stock owned by the estate is considered as owned proportionately by B and D.

(b) For the purpose of section 318(a)(2)(B) stock owned by a trust will be considered as being owned by its beneficiaries only to the extent of the interest of such beneficiaries in the trust. Accordingly, the interest of income beneficiaries, remainder beneficiaries, and other beneficiaries will be computed on an actuarial basis. Thus, if a trust owns 100 percent of the stock of Corporation A, and if, on an actuarial basis, W's life interest in the trust is 15 percent, Y's life interest is 25 percent, and Z's remainder interest is 60 percent, under this provision W will be considered to be the owner of 15 percent of the stock of Corporation A, Y will be considered to be the owner of 25 percent of such stock, and Z will be considered to be the owner of 60 percent of such stock. The factors and methods prescribed in § 20.2031-7 of this chapter (Estate Tax Regulations) for use in ascertaining the value of an interest in property for estate tax purposes shall be used in determining a beneficiary's actuarial interest in a trust for purposes of this section. See § 20.2031-7 of this chapter (Estate Tax Regulations) for examples illustrating the use of these factors and methods.

(c) The application of section 318(a) relating to options may be illustrated by the following example:

Example. A and B, unrelated individuals, own all of the 100 outstanding shares of stock of a corporation, each owning 50 shares. A has an option to acquire 25 of B's shares and has an option to acquire a further option to acquire the remaining 25 of B's shares. A is considered as owning the entire 100 shares of stock of the corporation.

[T.D. 6500, 25 FR 11607, Nov. 26, 1960, as amended by T.D. 6969, 33 FR 11999, Aug. 23, 1968]

§ 1.318-4 Constructive ownership as actual ownership; exceptions.

(a) ***In general.*** Section 318(a)(5)(A) provides that, except as provided in section 318(a)(5) (B) and (C), stock constructively owned by a person by reason of the application of section 318(a) (1), (2), (3), or (4) shall be considered as actually owned by such person for purposes of applying section 318(a) (1), (2), (3), and (4). For example, if a trust owns 50 percent of the stock of corporation X, stock of corporation Y owned by corporation X which is attributed to the trust may be further attributed to the beneficiaries of the trust.

(b) ***Constructive family ownership.*** Section 318(a)(5)(B) provides that stock constructively owned by an individual by reason of ownership by a member of his family shall not be considered as owned by him for purposes of making another family member the constructive owner of such stock under section 318(a)(1). For example, if F and his two sons, A and B, each own one-third of the stock of a corporation, under section 318(a)(1), A is treated as owning constructively the stock owned by his father but is not treated as owning the stock owned by B. Section 318(a)(5)(B) prevents the attribution of the stock of one brother through the father to the other brother, an attribution beyond the scope of section 318(a)(1) directly.

(c) ***Reattribution.***

(1) Section 318(a)(5)(C) provides that stock constructively owned by a partnership, estate, trust, or corporation by reason of the application of section 318(a)(3) shall not be considered as owned by it for purposes of applying section 318(a)(2) in order to make another the constructive owner of such stock. For example, if two unrelated individuals are beneficiaries of the same trust, stock held by one

which is attributed to the trust under section 318(a)(3) is not reattributed from the trust to the other beneficiary. However, stock constructively owned by reason of section 318(a)(2) may be reattributed under section 318(a)(3). Thus, for example, if all the stock of corporations X and Y is owned by A, stock of corporation Z held by X is attributed to Y through A.

(2) Section 318(a)(5)(C) does not prevent reattribution under section 318(a)(2) of stock constructively owned by an entity under section 318(a)(3) if the stock is also constructively owned by the entity under section 318(a)(4). For example, if individuals A and B are beneficiaries of a trust and the trust has an option to buy stock from A, B is considered under section 318(a)(2)(B) as owning a proportionate part of such stock.

(3) Section 318(a)(5)(C) is effective on and after August 31, 1964, except that for purposes of sections 302 and 304 it does not apply with respect to distributions in payment for stock acquisitions or redemptions if such acquisitions or redemptions occurred before August 31, 1964.

[T.D. 6969, 33 FR 11999, Aug. 23, 1968]

Corporate Liquidations

EFFECTS ON RECIPIENTS

§ 1.331-1 Corporate liquidations.

(a) ***In general.*** Section 331 contains rules governing the extent to which gain or loss is recognized to a shareholder receiving a distribution in complete or partial liquidation of a corporation. Under section 331(a)(1), it is provided that amounts distributed in complete liquidation of a corporation shall be treated as in full payment in exchange for the stock. Under section 331(a)(2), it is provided that amounts distributed in partial liquidation of a corporation shall be treated as in full or part payment in exchange for the stock. For this purpose, the term *partial liquidation* shall have the meaning ascribed in section 346. If section 331 is applicable to the distribution of property by a corporation, section 301 (relating to the effects on a shareholder of distributions of property) has no application other than to a distribution in complete liquidation to which section 316(b)(2)(B) applies. See paragraph (b)(2) of § 1.316-1.

(b) ***Gain or loss.*** The gain or loss to a shareholder from a distribution in partial or complete liquidation is to be determined under section 1001 by comparing the amount of the distribution with the cost or other basis of the stock. The gain or loss will be recognized to the extent provided in section 1002 and will be subject to the provisions of parts I, II, and III (section 1201 and following), subchapter P, chapter 1 of the Code.

(c) ***Recharacterization.*** A liquidation which is followed by a transfer to another corporation of all or part of the assets of the liquidating corporation or which is preceded by such a transfer may, however, have the effect of the distribution of a dividend or of a transaction in which no loss is recognized and gain is recognized only to the extent of "other property." See sections 301 and 356.

(d) ***Reporting requirement*** —

(1) ***General rule.*** Every significant holder that transfers stock to the issuing corporation in exchange for property from such corporation must include on or with such holder's return for the year of such exchange the statement described in paragraph (d)(2) of this section unless—

(i) The property is part of a distribution made pursuant to a corporate resolution reciting that the distribution is made in complete liquidation of the corporation; and

(ii) The issuing corporation is completely liquidated and dissolved within one year after the distribution.

(2) ***Statement.*** If required by paragraph (d)(1) of this section, a significant holder must include on or with such holder's return a statement entitled, "STATEMENT PURSUANT TO § 1.331-1(d) BY [INSERT NAME AND TAXPAYER IDENTIFICATION NUMBER (IF ANY) OF TAXPAYER], A SIGNIFICANT HOLDER OF THE STOCK OF [INSERT NAME AND EMPLOYER IDENTIFICATION NUMBER (IF ANY) OF ISSUING CORPORATION]." If a significant holder is a controlled foreign corporation (within the meaning of section 957), each United States shareholder (within the meaning of section 951(b)) with respect thereto must include this statement on or with its return. The statement must include—

(i) The fair market value and basis of the stock transferred by the significant holder to the issuing corporation; and

(ii) A description of the property received by the significant holder from the issuing corporation.

(3) ***Definitions.*** For purposes of this section:

(i) ***Significant holder*** means any person that, immediately before the exchange—

(A) Owned at least five percent (by vote or value) of the total outstanding stock of the issuing corporation if the stock owned by such person is publicly traded; or

(B) Owned at least one percent (by vote or value) of the total outstanding stock of the issuing corporation if the stock owned by such person is not publicly traded.

(ii) ***Publicly traded stock*** means stock that is listed on—

(A) A national securities exchange registered under section 6 of the Securities Exchange Act of 1934 (15 U.S.C. 78f); or

(B) An interdealer quotation system sponsored by a national securities association registered under section 15A of the Securities Exchange Act of 1934 (15 U.S.C. 78o-3).

(iii) ***Issuing corporation*** means the corporation that issued the shares of stock, some or all of which were transferred by a significant holder to such corporation in the exchange described in paragraph (d)(1) of this section.

(4) ***Cross reference.*** See section 6043 of the Code for requirements relating to a return by a liquidating corporation.

(e) ***Example.*** The provisions of this section may be illustrated by the following example:

Example. A, an individual who makes his income tax returns on the calendar year basis, owns 20 shares of stock of the P Corporation, a domestic corporation, 10 shares of which were acquired in 1951 at a cost of $1,500 and the remainder of 10 shares in December 1954 at a cost of $2,900. He receives in April 1955 a distribution of $250 per share in complete liquidation, or $2,500 on the 10 shares acquired in 1951, and $2,500 on the 10 shares acquired in December 1954. The gain of $1,000 on the shares acquired in 1951 is a long-term capital gain to be treated as provided in parts I, II, and III (section 1201 and following), subchapter P, chapter 1 of the Code. The loss of $400 on the shares acquired in 1954 is a short-term capital loss to be treated as provided in parts I, II, and III (section 1201 and following), subchapter P, chapter 1 of the Code.

(f) ***Effective/applicability date.*** Paragraph (d) of this section applies to any taxable year beginning on or after May 30, 2006. However, taxpayers may apply paragraph (d) of this section to any original Federal income tax return (including any amended return filed on or before the due date (including extensions) of such original return) timely filed on or after May 30, 2006. For taxable years beginning before May 30, 2006, see § 1.331-1 as contained in 26 CFR part 1 in effect on April 1, 2006.

[T.D. 6500, 25 FR 11607, Nov. 26, 1960, as amended by T.D. 6949, 33 FR 5521, Apr. 9, 1968; T.D. 9264, 71 FR 30594, May 30, 2006; T.D. 9329, 72 FR 32797, June 14, 2007]

§ 1.332-1 Distributions in liquidation of subsidiary corporation; general.

Under the general rule prescribed by section 331 for the treatment of distributions in liquidation of a corporation, amounts received by one corporation in complete liquidation of another corporation are treated as in full payment in exchange for stock in such other corporation, and gain or loss from the receipt of such amounts is to be determined as provided in section 1001. Section 332 excepts from the general rule property received, under certain specifically described circumstances, by one corporation as a distribution in complete liquidation of the stock of another corporation and provides for the nonrecognition of gain or loss in those cases which meet the statutory requirements. Section 367 places a limitation on the application of section 332 in the case of foreign corporations. See section 334(b) for the basis for determining gain or loss from the subsequent sale of property received upon complete liquidations such as described in this section. See section 453(d)(4)(A) relative to distribution of installment obligations by subsidiary.

§ 1.332-2 Requirements for nonrecognition of gain or loss.

(a) The nonrecognition of gain or loss under section 332 is limited to the receipt of property by a corporation that is the actual owner of stock (in the liquidating corporation) meeting the requirements of section 1504(a)(2). The recipient corporation must have been the owner of the specified amount of such stock on the date of the adoption of the plan of liquidation and have continued so to be at all times until the receipt of the property. If the recipient corporation does not continue qualified with respect to the ownership of stock of the liquidating corporation and if the failure to continue qualified occurs at any time prior to the completion of the transfer of all the property, the provisions for the nonrecognition of gain or loss do not apply to any distribution received under the plan.

(b) Section 332 applies only to those cases in which the recipient corporation receives at least partial payment for the stock which it owns in the liquidating corporation. If section 332 is not applicable, see section 165(g) relative to allowance of losses on worthless securities.

(c) To constitute a distribution in complete liquidation within the meaning of section 332, the distribution must be

(1) made by the liquidating corporation in complete cancellation or redemption of all of its stock in accordance with a plan of liquidation, or

(2) one of a series of distributions in complete cancellation or redemption of all its stock in accordance with a plan of liquidation. Where there is more than one distribution, it is essential that a status of liquidation exist at the time the first distribution is made under the plan and that such status continue until the liquidation is completed. Liquidation is completed when the liquidating corporation and the receiver or trustees in liquidation are finally divested of all the property (both tangible and intangible). A status of liquidation exists when the corporation ceases to be a going concern and its activities are merely for the purpose of winding up its affairs, paying its debts, and distributing any

remaining balance to its shareholders. A liquidation may be completed prior to the actual dissolution of the liquidating corporation. However, legal dissolution of the corporation is not required. Nor will the mere retention of a nominal amount of assets for the sole purpose of preserving the corporation's legal existence disqualify the transaction. (See 26 CFR (1939) 39.22(a)-20 (Regulations 118).)

(d) If a transaction constitutes a distribution in complete liquidation within the meaning of the Internal Revenue Code of 1954 and satisfies the requirements of section 332, it is not material that it is otherwise described under the local law. If a liquidating corporation distributes all of its property in complete liquidation and if pursuant to the plan for such complete liquidation a corporation owning the specified amount of stock in the liquidating corporation receives property constituting amounts distributed in complete liquidation within the meaning of the Code and also receives other property attributable to shares not owned by it, the transfer of the property to the recipient corporation shall not be treated, by reason of the receipt of such other property, as not being a distribution (or one of a series of distributions) in complete cancellation or redemption of all of the stock of the liquidating corporation within the meaning of section 332, even though for purposes of those provisions relating to corporate reorganizations the amount received by the recipient corporation in excess of its ratable share is regarded as acquired upon the issuance of its stock or securities in a tax-free exchange as described in section 361 and the cancellation or redemption of the stock not owned by the recipient corporation is treated as occurring as a result of a taxfree exchange described in section 354.

(e) The application of these rules may be illustrated by the following example:

Example. On September 1, 1954, the M Corporation had outstanding capital stock consisting of 3,000 shares of common stock, par value $100 a share, and 1,000 shares of preferred stock, par value $100 a share, which preferred stock was limited and preferred as to dividends and had no voting rights. On that date, and thereafter until the date of dissolution of the M Corporation, the O Corporation owned 2,500 shares of common stock of the M Corporation. By statutory merger consummated on October 1, 1954, pursuant to a plan of liquidation adopted on September 1, 1954, the M Corporation was merged into the O Corporation, the O Corporation under the plan issuing stock which was received by the other holders of the stock of the M Corporation. The receipt by the O Corporation of the properties of the M Corporation is a distribution received by the O Corporation in complete liquidation of the M Corporation within the meaning of section 332, and no gain or loss is recognized as the result of the receipt of such properties.

(f) ***Applicability date.*** The first sentence of paragraph (a) of this section applies to plans of complete liquidation adopted after March 28, 1985, except as specified in section 1804(e)(6)(B)(ii) and (iii) of Public Law 99-514.

[T.D. 6500, 25 FR 11607, Nov. 26, 1960; 25 FR 14021, Dec. 31, 1960, as amended by T.D. 9759, 81 FR 17071, Mar. 28, 2016]

§ 1.332-3 Liquidations completed within one taxable year.

If in a liquidation completed within one taxable year pursuant to a plan of complete liquidation, distributions in complete liquidation are received by a corporation which owns the specified amount of stock in the liquidating corporation and which continues qualified with respect to the ownership of such stock until the transfer of all the property within such year is completed (see paragraph (a) of § 1.332-2), then no gain or loss shall be recognized with respect to the distributions received by the recipient corporation. In such case no waiver or bond is required of the recipient corporation under section 332.

§ 1.332-4 Liquidations covering more than one taxable year.

(a) If the plan of liquidation is consummated by a series of distributions extending over a period of more than one taxable year, the nonrecognition of gain or loss with respect to the distributions in liquidation shall, in addition to the requirements of § 1.332-2, be subject to the following requirements:

(1) In order for the distribution in liquidation to be brought within the exception provided in section 332 to the general rule for computing gain or loss with respect to amounts received in liquidation of a corporation, the entire property of the corporation shall be transferred in accordance with a plan of liquidation, which plan shall include a statement showing the period within which the transfer of the property of the liquidating corporation to the recipient corporation is to be completed. The transfer of all the property under the liquidation must be completed within three years from the close of the taxable year during which is made the first of the series of distributions under the plan.

(2) For each of the taxable years which falls wholly or partly within the period of liquidation, the recipient corporation shall, at the time of filing its return, file with the district director of internal revenue a waiver of the statute of limitations on assessment. The waiver shall be executed on such form as may be prescribed by the Commissioner and shall extend the period of assessment of all income and profits taxes for each such year to a date not earlier than one year after the last date of the period for assessment of such taxes for the last taxable year in which the transfer of the property of such liquidating corporation to the controlling corporation may be completed in accordance with section 332. Such waiver shall also contain such other terms with respect to assessment as may be considered by the Commissioner to be necessary to insure the assessment and collection of the correct tax liability for each year within the period of liquidation.

(3) For each of the taxable years which falls wholly or partly within the period of liquidation, the recipient corporation may be required to file a bond, the amount of which shall be fixed by the district director. The bond shall contain all terms specified by the Commissioner, including provisions unequivocally assuring prompt payment of the excess of income and profits taxes (plus penalty, if any, and interest) as computed by the district director without regard to the provisions of sections 332 and 334(b) over such taxes computed with regard to such provisions, regardless of whether such excess may or may not be made the subject of a notice of deficiency under section 6212 and regardless of whether it may or may not be assessed. Any bond required under section 332 shall have such surety or sureties as the Commissioner may require. However, see 6 U.S.C. 15, providing that where a bond is required by law or regulations, in lieu of surety or sureties there may be deposited bonds or notes of the United States. Only surety companies holding certificates of authority from the Secretary as acceptable sureties on Federal bonds will be approved as sureties. The bonds shall be executed in triplicate so that the Commissioner, the taxpayer, and the surety or the depositary may each have a copy. On and after September 1, 1953, the functions of the Commissioner with respect to such bonds shall be performed by the district director for the internal revenue district in which the return was filed and any bond filed on or after such date shall be filed with such district director.

(b) Pending the completion of the liquidation, if there is a compliance with paragraph (a) (1), (2), and (3) of this section and § 1.332-2 with respect to the nonrecognition of gain or loss, the income and profits tax liability of the recipient corporation for each of the years covered in whole or in part by the liquidation shall be determined without the recognition of any gain or loss on account of the receipt of the distributions in liquidation. In such determination, the basis of the property or properties received by the recipient corporation shall be determined in accordance with section 334(b). However, if the transfer of the property is not completed within the three-year period allowed by section 332 or if the recipient corporation does not continue qualified with respect to the ownership of stock of the liquidating

corporation as required by that section, gain or loss shall be recognized with respect to each distribution and the tax liability for each of the years covered in whole or in part by the liquidation shall be recomputed without regard to the provisions of section 332 or section 334(b) and the amount of any additional tax due upon such recomputation shall be promptly paid.

§ 1.332-5 Distributions in liquidation as affecting minority interests.

Upon the liquidation of a corporation in pursuance of a plan of complete liquidation, the gain or loss of minority shareholders shall be determined without regard to section 332, since it does not apply to that part of distributions in liquidation received by minority shareholders.

§ 1.332-6 Records to be kept and information to be filed with return.

(a) ***Statement filed by recipient corporation.*** If any recipient corporation received a liquidating distribution from the liquidating corporation pursuant to a plan (whether or not that recipient corporation has received or will receive other such distributions from the liquidating corporation in other tax years as part of the same plan) during the current tax year, such recipient corporation must include a statement entitled, "STATEMENT PURSUANT TO SECTION 332 BY [INSERT NAME AND EMPLOYER IDENTIFICATION NUMBER (IF ANY) OF TAXPAYER], A CORPORATION RECEIVING A LIQUIDATING DISTRIBUTION," on or with its return for such year. If any recipient corporation is a controlled foreign corporation (within the meaning of section 957), each United States shareholder (within the meaning of section 951(b)) with respect thereto must include this statement on or with its return. The statement must include—

(1) The name and employer identification number (if any) of the liquidating corporation;

(2) The date(s) of all distribution(s) (whether or not pursuant to the plan) by the liquidating corporation during the current tax year;

(3) The fair market value and basis of assets of the liquidating corporation that have been or will be transferred to any recipient corporation, aggregated as follows:

(i) Importation property distributed in a loss importation transaction, as defined in § 1.362-3(c)(2) and (3) (except that "section 332 liquidation" is substituted for "section 362 transaction"), respectively;

(ii) Property with respect to which gain or loss was recognized on the distribution;

(iii) Property not described in paragraph (a)(3)(i) or (ii) of this section;

(4) The date and control number of any private letter ruling(s) issued by the Internal Revenue Service in connection with the liquidation;

(5) The following representation: THE PLAN OF COMPLETE LIQUIDATION WAS ADOPTED ON [INSERT DATE (mm/dd/yyyy)]; and

(6) A representation by such recipient corporation either that—

(i) THE LIQUIDATION WAS COMPLETED ON [INSERT DATE (mm/dd/yyyy)]; or

(ii) THE LIQUIDATION IS NOT COMPLETE AND THE TAXPAYER HAS TIMELY FILED [INSERT EITHER FORM 952, "Consent To Extend the Time to Assess Tax Under Section 332(b)," OR NUMBER AND NAME OF THE SUCCESSOR FORM].

(b) ***Filings by the liquidating corporation.*** The liquidating corporation must timely file Form 966, "Corporate Dissolution or Liquidation," (or its successor form) and its final Federal corporate income tax return. See also section 6043 of the Code.

(c) ***Definitions.*** For purposes of this section:

(1) ***Plan*** means the plan of complete liquidation within the meaning of section 332.

(2) ***Recipient corporation*** means the corporation described in section 332(b)(1).

(3) ***Liquidating corporation*** means the corporation that makes a distribution of property to a recipient corporation pursuant to the plan.

(4) ***Liquidating distribution*** means a distribution of property made by the liquidating corporation to a recipient corporation pursuant to the plan.

(d) ***Substantiation information.*** Under § 1.6001-1(e), taxpayers are required to retain their permanent records and make such records available to any authorized Internal Revenue Service officers and employees. In connection with a liquidation described in this section, these records should specifically include information regarding the amount, basis, and fair market value of all distributed property, and relevant facts regarding any liabilities assumed or extinguished as part of such liquidation.

(e) ***Effective/applicability date.*** This section applies to any taxable year beginning on or after May 30, 2006. However, taxpayers may apply this section to any original Federal income tax return (including any amended return filed on or before the due date (including extensions) of such original return) timely filed on or after May 30, 2006. For taxable years beginning before May 30, 2006, see § 1.332-6 as contained in 26 CFR part 1 in effect on April 1, 2006. Paragraph (a)(3) of this section applies with respect to liquidations under section 332 occurring on or after March 28, 2016, and also with respect to liquidations under section 332 occurring before such date as a result of an entity classification election under § 301.7701-3 of this chapter filed on or after March 28, 2016, unless such liquidation is pursuant to a binding agreement that was in effect prior to March 28, 2016 and at all times thereafter.

[T.D. 9329, 72 FR 32797, June 14, 2007, as amended by T.D. 9759, 81 FR 17071, Mar. 28, 2016]

§ 1.332-7 Indebtedness of subsidiary to parent.

If section 332(a) is applicable to the receipt of the subsidiary's property in complete liquidation, then no gain or loss shall be recognized to the subsidiary upon the transfer of such properties even though some of the properties are transferred in satisfaction of the subsidiary's indebtedness to its parent. See section 337(b)(1). However, any gain or loss realized by the parent corporation on such satisfaction of indebtedness, shall be recognized to the parent corporation at the time of the liquidation. For example, if the parent corporation purchased its subsidiary's bonds at a discount and upon liquidation of the subsidiary the parent corporation receives payment for the face amount of such bonds, gain shall be recognized to the parent corporation. Such gain shall be measured by the difference between the cost or other basis of the bonds to the parent and the amount received in payment of the bonds.

[T.D. 6500, 25 FR 11607, Nov. 26, 1960; 25 FR 14021, Dec. 31, 1960, as amended by T.D. 9759, 81 FR 17071, Mar. 28, 2016]

§ 1.332-8 Recognition of gain on liquidation of certain holding companies.

(a) ***Definition of controlled foreign corporation.*** For purposes of section 332(d)(3), a controlled foreign corporation has the meaning provided in section 957, determined without applying section 318(a)(3)(A), (B), and (C) so as to consider a United States person as owning stock which is owned by a person who is not a United States person.

(b) ***Applicability date.*** This section applies to distributions in complete liquidation occurring on or after October 1, 2019, and to distributions in complete liquidation occurring before October 1, 2019, that result from an entity classification election made under § 301.7701-3 of this chapter that is filed on or after October 1, 2019. For distributions in complete liquidation occurring before October 1, 2019, other than distributions in complete liquidation occurring before October 1, 2019, that result from an entity classification election made under § 301.7701-3 of this chapter that is filed on or after October 1, 2019, a taxpayer may apply this section to distributions in complete liquidation occurring during the last taxable year of a distributee foreign corporation beginning before January 1, 2018, and each subsequent taxable year of the foreign corporation, provided that the taxpayer and United States persons that are related (within the meaning of section 267 or 707) to the taxpayer consistently apply this section with respect to all foreign corporations.

[T.D. 9908, 85 FR 59431, Sept. 22, 2020]

§ 1.334-1 Basis of property received in liquidations.

(a) ***In general.*** Section 334 sets forth rules for determining a distributee's basis in property received in a distribution in complete liquidation of a corporation. The general rule is set forth in section 334(a) and provides that, if property is received in a distribution in complete liquidation of a corporation and if gain or loss is recognized on the receipt of the property, then the distributee's basis in the property is the fair market value of the property at the time of the distribution. However, if property is received in a complete liquidation to which section 332 applies, including property received in satisfaction of an indebtedness described in section 337(b)(1), see section 334(b)(1) and paragraph (b) of this section.

(b) ***Liquidations under section 332*** —

(1) ***General rule.*** Except as otherwise provided in paragraph (b)(2) or (3) of this section, if a corporation (P) meeting the ownership requirements of section 332(b)(1) receives property from a subsidiary (S) in a complete liquidation to which section 332 applies (section 332 liquidation), including property received in a transfer in satisfaction of indebtedness that satisfies the requirements of section 337(b)(1), P's basis in the property received is the same as S's basis in the property immediately before the property was distributed. However, see § 1.460-4(k)(3)(iv)(B)(*2*) for rules relating to adjustments to the basis of certain contracts accounted for using a long-term contract method of accounting that are acquired in a section 332 liquidation.

(2) ***Basis in property with respect to which gain or loss was recognized.*** Except as otherwise provided in Subtitle A of the Internal Revenue Code (Code) and this subchapter of the Income Tax Regulations, if S recognizes gain or loss on the distribution of property to P in a section 332 liquidation, P's basis in that property is the fair market value of the property at the time of the distribution. Section 334(b)(1)(A) (certain tax-exempt distributions under section 337(b)(2)); see also, for example, § 1.367(e)-2(b)(3)(i).

(3) ***Basis in importation property received in loss importation transaction*** —

(i) ***Purpose.*** The purpose of section 334(b)(1)(B) and this paragraph (b)(3) is to modify the application of this section to prevent P from importing a net built-in loss in a transaction described in section 332. See paragraph (b)(3)(iii)(A) of this section for definitions of terms used in this paragraph (b)(3).

(ii) ***Determination of basis.*** Notwithstanding paragraph (b)(1) of this section, if a section 332 liquidation is a loss importation transaction, P's basis in each importation property received from S in the liquidation is an amount that is equal to the value of the property. The basis of property received in a section 332 liquidation that is not importation property received in a loss importation transaction is determined under generally applicable basis rules without regard to whether the liquidation also involves the receipt of importation property in a loss importation transaction.

(iii) ***Operating rules*** —

(A) ***In general.*** For purposes of section 334(b)(1)(B) and this paragraph (b)(3), the provisions of § 1.362-3 (basis of importation property received in a loss importation transaction) apply, adjusted as appropriate to apply to section 332 liquidations. Thus, when used in this paragraph (b)(3), the terms "importation property," "loss importation transaction," and "value" have the same meaning as in § 1.362-3(c)(2), (3), and (4), respectively, except that "the section 332(b)(1) distributee corporation" is substituted for "Acquiring" and "section 332 liquidation" is substituted for "section 362 transaction." Similarly, when gain or loss on property would be owned or treated as owned by multiple persons, the provisions of § 1.362-3(d)(2) apply to tentatively divide the property in applying this section, substituting "section 332 liquidation" for "section 362 transaction" and making such other adjustments as necessary.

(B) ***Time for making determinations.*** For purposes of section 334(b)(1)(B) and this paragraph (b)(3)—

(*1*) ***P's basis in distributed property.*** P's basis in each property S distributes to P in the section 332 liquidation is determined immediately after S distributes each such property;

(*2*) ***Value of distributed property.*** The value of each property S distributes to P in the section 332 liquidation is determined immediately after S distributes the property;

(*3*) ***Importation property.*** The determination of whether each property distributed by S is importation property is made as of the time S distributes each such property;

(*4*) ***Loss importation transaction.*** The determination of whether a section 332 liquidation is a loss importation transaction is made immediately after S makes the final liquidating distribution to P.

(C) ***Effect of basis determination under this paragraph (b)(3)*** —

(*1*) ***Determination by reference to transferor's basis.*** A determination of basis under section 334(b)(1)(B) and this paragraph (b)(3) is a determination by reference to the transferor's basis, including for purposes of sections 1223(2) and 7701(a)(43). However, solely for purposes of applying section 755, a determination of basis under this paragraph (b)(3) is treated as a determination not by reference to the transferor's basis.

(2) ***Not tax-exempt income or noncapital, nondeductible expense.*** The application of this paragraph (b)(3) does not give rise to an item treated as tax-exempt income under § 1.1502-32(b)(2)(ii) or as a noncapital, nondeductible expense under § 1.1502-32(b)(2)(iii).

(3) ***No effect on earnings and profits.*** Any determination of basis under this paragraph (b)(3) does not reduce or otherwise affect the calculation of the all earnings and profits amount provided in § 1.367(b)-2(d).

(iv) ***Examples.*** The examples in this paragraph (b)(3)(iv) illustrate the application of section 334(b)(1)(B) and the provisions of this paragraph (b)(3). Unless the facts indicate otherwise, the examples use the following nomenclature and assumptions: USP is a domestic corporation that has not elected to be an S corporation within the meaning of section 1361(a)(1); FC, CFC1, and CFC2 are controlled foreign corporations within the meaning of section 957(a), which are not engaged in a U.S. trade or business, have no U.S. real property interests, and have no other relationships, activities, or interests that would cause their property to be subject to any tax imposed under subtitle A of the Code (federal income tax); there is no applicable income tax treaty; and all persons and transactions are unrelated. All other relevant facts are set forth in the examples:

Example 1. Basic application of this paragraph (b)(3). (i) *Distribution of importation property in a loss importation transaction.* (A) *Facts.* USP owns the sole outstanding share of FC stock. FC owns three assets, A1 (basis $40, value $50), A2 (basis $120, value $30), and A3 (basis $140, value $20). On Date 1, FC distributes A1, A2, and A3 to USP in a complete liquidation that qualifies under section 332.
(B) *Importation property.* Under § 1.362-3(d)(2), the fact that any gain or loss recognized by a CFC may affect an income inclusion under section 951(a) does not alone cause gain or loss recognized by the CFC to be treated as taken into account in determining a federal income tax liability for purposes of this section. Thus, if FC had sold either A1, A2, or A3 immediately before the transaction, no gain or loss recognized on the sale would have been taken into account in determining a federal income tax liability. Further, if USP had sold A1, A2, or A3 immediately after the transaction, USP would take into account any gain or loss recognized on the sale in determining its federal income tax liability. Therefore, A1, A2, and A3 are all importation properties. See paragraph (b)(3)(iii)(A) of this section and § 1.362-3(c)(2).

(C) *Loss importation transaction.* Immediately after the distribution, USP's aggregate basis in the importation properties, A1, A2, and A3, would, but for section 334(b)(1)(B) and this section, be $300 ($40 + $120 + $140) and the properties' aggregate value would be $100 ($50 + $30 + $20). Therefore, the importation properties' aggregate basis would exceed their aggregate value and the distribution is a loss importation transaction. See paragraph (b)(3)(iii)(A) of this section and § 1.362-3(c)(3).

(D) *Basis of importation property distributed in loss importation transaction.* Because the importation properties, A1, A2, and A3, were transferred in a loss importation transaction, the basis in each of the importation properties received is equal to its value immediately after FC distributes the property. Accordingly, USP's basis in A1 is $50; USP's basis in A2 is $30; and USP's basis in A3 is $20.

(ii) *Distribution of both importation and non-importation property in a loss importation transaction.* (A) *Facts.* The facts are the same as in paragraph (i)(A) of this *Example 1* except that FC is engaged in a U.S. trade or business and A3 is used in that U.S. trade or business.

(B) *Importation property.* A1 and A2 are importation properties for the reasons set forth in paragraph (i)(B) of this *Example 1.* However, if FC had sold A3 immediately before the transaction, FC would take into account any gain or loss recognized on the sale in determining its federal income tax liability. Therefore, A3 is not importation property. See paragraph (b)(3)(iii)(A) of this section and § 1.362-3(c)(2).

(C) *Loss importation transaction.* Immediately after the distribution, USP's aggregate basis in the importation properties, A1 and A2, would, but for section 334(b)(1)(B) and this section, be $160 ($40 + $120). Further, the properties' aggregate value would be $80 ($50 + $30). Therefore, the importation properties' aggregate basis would exceed their aggregate value and the distribution is a loss importation transaction. See paragraph (b)(3)(iii)(A) of this section and § 1.362-3(c)(3).

(D) *Basis of importation property distributed in loss importation transaction.* Because the importation properties, A1 and A2, were transferred in a loss importation transaction, the basis in each of the importation properties received is equal to its value immediately after FC distributes the property. Accordingly, USP's basis in A1 is $50 and USP's basis in A2 is $30.

(E) *Basis of other property.* Because A3 is not importation property distributed in a loss importation transaction, USP's basis in A3 is determined under generally applicable basis rules. Accordingly, USP's basis in A3 is $140, the adjusted basis that FC had in the property immediately before the distribution. See section 334(b)(1).

(iii) *FC not wholly owned.* The facts are the same as in paragraph (i)(A) of this *Example 1* except that USP owns only 80% of the sole outstanding class of FC stock and the remaining 20% is owned by individual X. Further, on Date 1 and pursuant to the plan of liquidation, FC distributes A1 and A2 to USP and A3 to X. A1 and A2 are importation

properties, the distribution to USP is a loss importation transaction, and USP's bases in A1 and A2 are equal to their value ($50 and $30, respectively) for the reasons set forth in paragraphs (ii)(C) and (D) of this *Example 1.* Under section 334(a), X's basis in A3 is $20.

(iv) *Importation property, no net built in loss.* (A) *Facts.* The facts are the same as in paragraph (i)(A) of this *Example 1* except that the value of A2 is $230.

(B) *Importation property.* A1, A2, and A3, are importation properties for the reasons set forth in paragraph (i)(B) of this *Example 1*.

(C) *Loss importation transaction.* Immediately after the distribution, USP's aggregate basis in the importation properties, A1, A2, and A3, would, but for section 334(b)(1)(B) and this section, be $300 ($40 + $120 + $140). However, the properties' aggregate value would also be $300 ($50 + $230 + $20). Therefore, the importation properties' aggregate basis would not exceed their aggregate value and the distribution is not a loss importation transaction. See paragraph (b)(3)(iii)(A) of this section and § 1.362-3(c)(3).

(D) *Basis of importation property not distributed in loss importation transaction.* Because the importation properties, A1, A2, and A3, were not distributed in a loss importation transaction, the basis of each of the importation properties is determined under the generally applicable basis rules. Accordingly, immediately after the distribution, USP's basis in A1 is $40, USP's basis in A2 is $120, and USP's basis in A3 is $140, the adjusted bases that FC had in the properties immediately before the distribution. See section 334(b)(1).

(v) *CFC stock as importation property distributed in loss importation transaction.* (A) *Facts.* USP owns the sole outstanding share of FC stock. FC owns the sole outstanding share of CFC1 stock (basis $80, value $100) and the sole outstanding share of CFC2 stock (basis $100, value $5). On Date 1, FC distributes its shares of CFC1 and CFC2 stock to USP in a complete liquidation that qualifies under section 332.

(B) *Importation property.* No special rule applies to the treatment of property that is the stock of a CFC. Thus, if FC had sold either the CFC1 share or the CFC2 share immediately before the transaction, no gain or loss recognized on the sale would have been taken into account in determining a federal income tax liability. Further, if USP had sold either the CFC1 share or the CFC2 share immediately after the transaction, USP would take into account any gain or loss recognized on the sale in determining its federal income tax liability. Thus, the CFC1 share and the CFC2 share are importation property. See paragraph (b)(3)(iii)(A) of this section and § 1.362-3(c)(2).

(C) *Loss importation transaction.* Immediately after the distribution, USP's aggregate basis in importation property (the CFC1 share and the CFC2 share) would, but for section 334(b)(1)(B) and this section, be $180 ($80 + $100) and the shares' aggregate value is $105 ($100 + $5). Therefore, the importation property's aggregate basis would exceed their aggregate value and the distribution is a loss importation transaction. See paragraph (b)(3)(iii)(A) of this section and § 1.362-3(c)(3).

(D) *Basis of importation property distributed in loss importation transaction.* Because the importation property (the CFC1 share and the CFC2 share) was transferred in a loss importation transaction, USP's basis in each of the shares received is equal to its value immediately after FC distributes the shares. Accordingly, USP's basis in the CFC1 share is $100 and USP's basis in the CFC2 share is $5.

Example 2. *Multiple step liquidation.* (i) *Facts.* USP owns the sole outstanding share of FC stock. On January 1 of year 1, FC adopts a plan of liquidation. FC makes the following distributions to USP in a transaction that qualifies as a complete liquidation under section 332. In year 1, FC distributes A1 and, immediately before the distribution, FC's basis in A1 is $100 and A1's value is $120. In Year 2, FC distributes A2, and, immediately before the distribution, FC's basis in A2 is $100 and A2's value is $120. In year 3, in its final liquidating distribution, FC distributes A3 and, immediately before the distribution, FC's basis in A3 is $100 and A3's value is $120. As of the time of the final distribution, USP had depreciated the bases of A1 and A2 to $90 and $95, respectively; the value of A1 had appreciated to $160; and, the value of A2 has declined to $0.
(ii) *Importation property.* If FC had sold either A1, A2, or A3 immediately before it was distributed, no gain or loss recognized on the sale would have been taken into account in determining a federal income tax liability. Further, if USP had sold either A1, A2, or A3 immediately after it was distributed, USP would take into account any gain or loss recognized on the sale in determining its federal income tax liability. Therefore, A1, A2, and A3 are all importation properties. See paragraph (b)(3)(iii)(A) of this section and § 1.362-3(c)(2).

(iii) *Loss importation transaction.* Immediately after it was distributed, USP's basis in each of the importation properties, A1, A2, and A3, would, but for section 334(b)(1)(B) and this section, have been $100. Further, immediately after each such property was distributed, its value was $120. Thus, the properties' aggregate basis, $300, would not have exceeded the properties' aggregate value, $360. Accordingly, the distribution is not a loss importation transaction irrespective of the fact that, when the liquidation was completed, the properties' aggregate basis was $285 and the properties' aggregate value was $280. See paragraph (b)(3)(iii)(B) of this section and § 1.362-3(c)(3).

(iv) *Basis of importation property not distributed in loss importation transaction.* Because the importation properties, A1, A2, and A3, were not distributed in a loss importation transaction, the basis of each of the importation properties is determined under the generally applicable basis rules. Accordingly, USP takes each of the properties with a basis of $100 and, immediately after the final distribution, has an adjusted basis of $90 in A1 (USP's $100 basis less the $10 depreciation), $95 in A2 (USP's $100 basis less the $5 depreciation), and $100 in A3. See section 334(b).

(c) ***Applicability date.*** This section applies with respect to liquidations occurring on or after March 28, 2016, and also with respect to liquidations occurring before such date as a result of an entity classification election under § 301.7701-3 of this chapter filed on or after March 28, 2016, unless such liquidation is pursuant to a binding agreement that was in effect prior to March 28, 2016 and at all times thereafter. In addition, taxpayers may apply this section to any section 332 liquidation occurring after October 22, 2004.

[T.D. 9759, 81 FR 17071, Mar. 28, 2016]

§ 1.336-0 Table of contents.

This section lists captions contained in §§ 1.336-1, 1.336-2, 1.336-3, 1.336-4, and 1.336-5.

§ 1.336-1 General principles, nomenclature, and definitions for a section 336(e) election.

(a) Overview.

(1) In general.

(2) Consistency rules.

(b) Definitions.

(1) Seller.

(2) Purchaser.

(3) Target; S corporation target; old target; new target.

(4) S corporation shareholders.

(5) Disposed of; disposition.

(i) In general.

(ii) Exception for disposition of stock in certain section 355 transactions.

(iii) Transactions with related persons.

(iv) No consideration paid.

(v) Disposed of stock reacquired by certain persons.

(6) Qualified stock disposition.

(i) In general.

(ii) Overlap with qualified stock purchase.

(A) In general.

(B) Exception.

(7) 12-month disposition period.

(8) Disposition date.

(9) Disposition date assets.

(10) Domestic corporation.

(11) Section 336(e) election.

(12) Related persons.

(13) Liquidation.

(14) Deemed asset disposition.

(15) Deemed disposition tax consequences.

(16) 80-percent purchaser.

(17) Recently disposed stock.

(18) Nonrecently disposed stock.

(c) Nomenclature.

§ 1.336-2 Availability, mechanics, and consequences of section 336(e) election.

(a) Availability of election.

(b) Deemed transaction.

(1) Dispositions not described in section 355(d)(2) or (e)(2).

(i) Old target—deemed asset disposition.

(A) In general.

(B) Gains and losses.

(*1*) Gains.

(*2*) Losses.

(*i*) In general.

(*ii*) Stock distributions.

(*iii*) Amount and allocation of disallowed loss.

(*iv*) Tiered targets.

(*3*) Examples.

(C) Tiered targets.

(ii) New target—deemed purchase.

(iii) Old target and seller—deemed liquidation.

(A) In general.

(B) Tiered targets.

(iv) Seller—distribution of target stock.

(v) Seller—retention of target stock.

(2) Dispositions described in section 355(d)(2) or (e)(2).

(i) Old target—deemed asset disposition.

(A) In general.

(*1*) Old target not deemed to liquidate.

(*2*) Exception.

(B) Gains and losses.

(*1*) Gains.

(*2*) Losses.

(*i*) In general.

(*ii*) Stock distributions.

(*iii*) Amount and allocation of disallowed loss.

(*iv*) Tiered targets.

(*3*) Examples.

(C) Tiered targets.

(ii) Old target—deemed purchase.

(A) In general.

(B) Tiered targets.

(C) Application of section 197(f)(9), section 1091, and other provisions to old target.

(iii) Seller—distribution of target stock.

(A) In general.

(B) Tiered targets.

(iv) Seller—retention of target stock.

(v) Qualification under section 355.

(vi) Earnings and profits.

(c) Purchaser.

(d) Minority shareholders.

(1) In general.

(2) Sale, exchange, or distribution of target stock by a minority shareholder.

(3) Retention of target stock by a minority shareholder.

(e) Treatment consistent with an actual asset disposition.

(f) Treatment of target under other provisions of the Internal Revenue Code.

(g) Special rules.

(1) Target as two corporations.

(2) Treatment of members of a consolidated group.

(3) International provisions.

(i) Source and foreign tax credit.

(ii) Allocation of foreign taxes.

(A) General rule.

(B) Taxes imposed on partnerships and disregarded entities.

(iii) Disallowance of foreign tax credits under section 901(m).

(h) Making the section 336(e) election.

(1) Consolidated group.

(2) Non-consolidated/non-S corporation target.

(3) S corporation target.

(4) Tiered targets.

(5) Section 336(e) election statement.

(i) In general.

(ii) Target subsidiaries.

(6) Contents of section 336(e) election statement.

(7) Asset Allocation Statement.

(8) Examples.

(i) [Reserved]

(j) Protective section 336(e) election.

(k) Examples.

§ 1.336-3 Aggregate deemed asset disposition price; various aspects of taxation of the deemed asset disposition.

(a) Scope.

(b) Determination of ADADP.

(1) General rule.

(2) Time and amount of ADADP.

(i) Original determination.

(ii) Redetermination of ADADP.

(c) Grossed-up amount realized on the disposition of recently disposed stock of target.

(1) Determination of amount.

(2) Example.

(d) Liabilities of old target.

(1) In general.

(2) Time and amount of liabilities.

(e) Deemed disposition tax consequences.

(f) Other rules apply in determining ADADP.

(g) Examples.

§ 1.336-4 Adjusted grossed-up basis.

(a) Scope.

(b) Modifications to the principles in § 1.338-5.

(1) Purchasing corporation; purchaser.

(2) Acquisition date; disposition date.

(3) Section 338 election; section 338(h)(10) election; section 336(e) election.

(4) New target; old target.

(5) Recently purchased stock; recently disposed stock.

(6) Nonrecently purchased stock; nonrecently disposed stock.

(c) Gain recognition election.

(1) In general.

(2) 80-percent purchaser.

(3) Non-80-percent purchaser.

(4) Gain recognition election statement.

(d) Examples.

§ 1.336-5 Effective/applicability date.

[T.D. 9619, 78 FR 28474, May 15, 2013]

§ 1.336-1 General principles, nomenclature, and definitions for a section 336(e) election.

(a) ***Overview*** —

(1) ***In general.*** Section 336(e) authorizes the promulgation of regulations under which, in certain circumstances, a sale, exchange, or distribution of the stock of a corporation may be treated as an asset sale. This section and §§ 1.336-2 through 1.336-5 provide the rules for and consequences of making such election. This section provides the definitions and nomenclature. Generally, except to the extent inconsistent with section 336(e), the results of section 336(e) should coincide with those of section 338(h)(10). Accordingly, to the extent not inconsistent with section 336(e) or these regulations, the principles of section 338 and the regulations under section 338 apply for purposes of these regulations. For example, § 1.338(h)(10)-1(d)(8), concerning the availability of the section 453 installment method, may apply with respect to section 336(e).

(2) ***Consistency rules.*** In general, the principles of § 1.338-8, concerning asset and stock consistency, apply with respect to section 336(e). However, for this purpose, the application of § 1.338-8(b)(1) is modified such that § 1.338-8(b)(1)(iii) applies to an asset if the asset is owned, immediately after its acquisition and on the disposition date, by a person or by a related person (as defined in § 1.336-1(b)(12)) to a person that acquires, by sale, exchange, distribution, or any combination thereof, five percent or more, by value, of the stock of target in the qualified stock disposition.

(b) ***Definitions.*** For purposes of §§ 1.336-1 through 1.336-5 (except as otherwise provided):

(1) ***Seller.*** The term *seller* means any domestic corporation that makes a qualified stock disposition of stock of another corporation. Seller includes both a transferor and a distributor of target stock. Generally, all members of a consolidated group that dispose of target stock are treated as a single seller. See § 1.336-2(g)(2).

(2) ***Purchaser.*** The term *purchaser* means one or more persons that acquire or receive the stock of another corporation in a qualified stock disposition. A purchaser includes both a transferee and a distributee of target stock.

(3) ***Target; S corporation target; old target; new target.*** The term *target* means any domestic corporation the stock of which is sold, exchanged, or distributed in a qualified stock disposition. An *S corporation target* is a target that is an S corporation immediately before the disposition date; any other target is a *non-S corporation target.* Except as the context otherwise requires, a reference to target includes a reference to an S corporation target. In the case of a transaction not described in section 355(d)(2) or (e)(2), *old target* refers to target for periods ending on or before the close of target's disposition date and *new target* refers to target for subsequent periods. In the case of a transaction described in section 355(d)(2) or (e)(2), *old target* refers to target for periods ending on or before the disposition date as well as for subsequent periods.

(4) ***S corporation shareholders. S corporation shareholders*** are the S corporation target's shareholders. Unless otherwise provided, a reference to S corporation shareholders refers both to S corporation shareholders who dispose of and those who do not dispose of their S corporation target stock.

(5) ***Disposed of; disposition*** —

(i) ***In general.*** The term *disposed of* refers to a transfer of stock in a disposition. The term *disposition* means any sale, exchange, or distribution of stock, but only if—

(A) The basis of the stock in the hands of the purchaser is not determined in whole or in part by reference to the adjusted basis of such stock in the hands of the person from whom the stock is acquired, is not determined under section 1014(a) (relating to property acquired from a decedent), or is not determined under section 1022 (relating to the basis of property acquired from certain decedents who died in 2010);

(B) Except as provided in paragraph (b)(5)(ii) of this section, the stock is not sold, exchanged, or distributed in a transaction to which section 351, 354, 355, or 356 applies and is not sold, exchanged, or distributed in any transaction described in regulations in which the transferor does not recognize the entire amount of the gain or loss realized in the transaction; and

(C) The stock is not sold, exchanged, or distributed to a related person.

(ii) ***Exception for disposition of stock in certain section 355 transactions.*** Notwithstanding paragraph (b)(5)(i)(B) of this section, a distribution of stock to a person who is not a related person in a transaction in which the full amount of stock gain would be recognized pursuant to section 355(d)(2) or (e)(2) shall be considered a disposition.

(iii) ***Transactions with related persons.*** In determining whether stock is sold, exchanged, or distributed to a related person, the principles of section 338(h)(3)(C) and § 1.338-3(b)(3) shall apply.

(iv) ***No consideration paid.*** Stock in target may be considered disposed of if, under general principles of tax law, seller is considered to sell, exchange, or distribute stock of target notwithstanding that no amount may be paid for (or allocated to) the stock.

(v) ***Disposed of stock reacquired by certain persons.*** Stock disposed of by seller to another person under this section that is reacquired by seller or a member of seller's consolidated group during the 12-month disposition period shall not be considered as disposed of. Similarly, stock disposed of by an S corporation shareholder to another person under this section that is reacquired by the S corporation shareholder or by a person related (within the meaning of paragraph (b)(12) of this section) to the S corporation shareholder during the 12-month disposition period shall not be considered as disposed of.

(6) ***Qualified stock disposition*** —

(i) ***In general.*** The term *qualified stock disposition* means any transaction or series of transactions in which stock meeting the requirements of section 1504(a)(2) of a domestic corporation is either sold, exchanged, or distributed, or any combination thereof, by another domestic corporation or by the S corporation shareholders in a disposition, within the meaning of paragraph (b)(5) of this section, during the 12-month disposition period.

(ii) ***Overlap with qualified stock purchase*** —

(A) ***In general.*** Except as provided in paragraph (b)(6)(ii)(B) of this section, a transaction satisfying the definition of a qualified stock disposition under paragraph (b)(6)(i) of this section, which also qualifies as a qualified stock purchase (as defined in section 338(d)(3)), will not be treated as a qualified stock disposition.

(B) ***Exception.*** If, as a result of the deemed sale of old target's assets pursuant to a section 336(e) election, there would be, but for paragraph (b)(6)(ii)(A) of this section, a qualified stock disposition of the stock of a subsidiary of target, then paragraph (b)(6)(ii)(A) shall not apply to the disposition of the stock of the subsidiary.

(7) ***12-month disposition period.*** The term *12-month disposition period* means the 12-month period beginning with the date of the first sale, exchange, or distribution of stock included in a qualified stock disposition.

(8) ***Disposition date.*** The term *disposition date* means, with respect to any corporation, the first day on which there is a qualified stock disposition with respect to the stock of such corporation.

(9) ***Disposition date assets. Disposition date assets*** are the assets of target held at the beginning of the day after the disposition date (but see § 1.338-1(d) (regarding certain transactions on the disposition date)).

(10) ***Domestic corporation.*** The term *domestic corporation* has the same meaning as in § 1.338-2(c)(9).

(11) ***Section 336(e) election.*** A section 336(e) election is an election to apply section 336(e) to target. A section 336(e) election is made by making an election for target under § 1.336-2(h).

(12) ***Related persons.*** Two persons are related if stock of a corporation owned by one of the persons would be attributed under section 318(a), other than section 318(a)(4), to the other. However, neither section 318(a)(2)(A) nor section 318(a)(3)(A) apply to attribute stock ownership from a partnership to a partner, or from a partner to a partnership, if such partner owns, directly or indirectly, interests representing less than five percent of the value of the partnership.

(13) ***Liquidation.*** Any reference to a liquidation is treated as a reference to the transfer described in § 1.336-2(b)(1)(iii) notwithstanding its ultimate characterization for Federal income tax purposes.

(14) ***Deemed asset disposition.*** The deemed sale of old target's assets is, without regard to its characterization for Federal income tax purposes, referred to as the deemed asset disposition.

(15) ***Deemed disposition tax consequences.*** Deemed disposition tax consequences refers to, in the aggregate, the Federal income tax consequences (generally, the income, gain, deduction, and loss) of the deemed asset disposition. Deemed disposition tax consequences also refers to the Federal income tax consequences of the transfer of a particular asset in the deemed asset disposition.

(16) ***80-percent purchaser.*** An 80-percent purchaser is any purchaser that, after application of the attribution rules of section 318(a), other than section 318(a)(4), owns 80 percent or more of the voting power or value of target stock.

(17) ***Recently disposed stock.*** The term *recently disposed stock* means any stock in target that is not held by seller, a member of seller's consolidated group, or an S corporation shareholder immediately after the close of the disposition date and that was disposed of by seller, a member of seller's consolidated group, or an S corporation shareholder during the 12-month disposition period.

(18) ***Nonrecently disposed stock.*** The term *nonrecently disposed stock* means stock in target that is held on the disposition date by a purchaser or a person related (as described in § 1.336-1(b)(12)) to the purchaser who owns, on the disposition date, with the application of section 318(a), other than section 318(a)(4), at least 10 percent of the total voting power or value of the stock of target and that is not recently disposed stock.

(c) ***Nomenclature.*** For purposes of §§ 1.336-1 through 1.336-5, except as otherwise provided, Parent, Seller, Target, Sub, S Corporation Target, and Target Subsidiary are domestic corporations and A, B, C, and D are individuals, none of whom are related to Parent, Seller, Target, Sub, S Corporation Target, Target Subsidiary, or each other.

[T.D. 9619, 78 FR 28474, May 15, 2013, as amended by T.D. 9811, 82 FR 6237, Jan. 19, 2017]

§ 1.336-2 Availability, mechanics, and consequences of section 336(e) election.

(a) ***Availability of election.*** A section 336(e) election is available if seller or S corporation shareholder(s) dispose of stock of another corporation (target) in a qualified stock disposition (as defined in § 1.336-1(b)(6)). A section 336(e) election is irrevocable. A section 336(e) election is not available for transactions described in section 336(e) that do not constitute qualified stock dispositions.

(b) ***Deemed transaction*** —

(1) ***Dispositions not described in section 355(d)(2) or (e)(2)*** —

(i) ***Old target—deemed asset disposition*** —

(A) ***In general.*** This paragraph (b)(1) provides the Federal income tax consequences of a section 336(e) election made with respect to a qualified stock disposition not described, in whole or in part, in section 355(d)(2) or (e)(2). For the Federal income tax consequences of a section 336(e) election made with respect to a qualified stock disposition described, in whole or in part, in section 355(d)(2) or (e)(2), see paragraph (b)(2) of this section. In general, if a section 336(e) election is made, seller (or S corporation shareholders) are treated as not having sold, exchanged, or distributed the

stock disposed of in the qualified stock disposition. Instead, old target is treated as selling its assets to an unrelated person in a single transaction at the close of the disposition date (but before the deemed liquidation described in paragraph (b)(1)(iii) of this section) in exchange for the aggregate deemed asset disposition price (ADADP) as determined under § 1.336-3. ADADP is allocated among the disposition date assets in the same manner as the aggregate deemed sale price (ADSP) is allocated under §§ 1.338-6 and 1.338-7 in order to determine the amount realized from each of the sold assets. Old target realizes the deemed disposition tax consequences from the deemed asset disposition before the close of the disposition date while old target is owned by seller or the S corporation shareholders. If old target is an S corporation target, old target's S election continues in effect through the close of the disposition date (including the time of the deemed asset disposition and the deemed liquidation) notwithstanding section 1362(d)(2)(B). Also, if old target is an S corporation target (but not a qualified subchapter S subsidiary), any direct or indirect subsidiaries of old target that old target has elected to treat as qualified subchapter S subsidiaries under section 1361(b)(3) remain qualified subchapter S subsidiaries through the close of the disposition date.

(B) ***Gains and losses*** —

(*1*) ***Gains.*** Except as provided in § 1.338(h)(10)-1(d)(8) (regarding the installment method), old target shall recognize all of the gains realized on the deemed asset disposition.

(*2*) ***Losses*** —

(*i*) ***In general.*** Except as provided in paragraphs (b)(1)(i)(B)(*2*)(*ii*), (*iii*), and (*iv*) of this section, old target shall recognize all of the losses realized on the deemed asset disposition.

(*ii*) ***Stock distributions.*** Notwithstanding paragraphs (b)(1)(i)(A) and (b)(1)(iii)(A) of this section, for purposes of determining the amount of target's losses that are disallowed on the deemed asset disposition, seller is still treated as selling, exchanging, or distributing its target stock disposed of in the 12-month disposition period. If target's losses realized on the deemed sale of all of its assets exceed target's gains realized (a net loss), the portion of such net loss attributable to a distribution of target stock during the 12-month disposition period is disallowed. The total amount of disallowed loss and the allocation of disallowed loss is determined in the manner provided in paragraphs (b)(1)(i)(B)(*2*)(*iii*) and (*iv*) of this section.

(*iii*) ***Amount and allocation of disallowed loss.*** The total disallowed loss pursuant to paragraph (b)(1)(i)(B)(*2*)(*ii*) of this section shall be determined by multiplying the net loss realized on the deemed asset disposition by the disallowed loss fraction. The numerator of the disallowed loss fraction is the value of target stock, determined on the disposition date, distributed by seller during the 12-month disposition period, whether or not a part of the qualified stock disposition (for example, stock distributed to a related person), and the denominator of the disallowed loss fraction is the sum of the value of target stock, determined on the disposition date, disposed of by sale or exchange in the qualified stock disposition during the 12-month disposition period and the value of target stock, determined on the disposition date, distributed by seller

during the 12-month disposition period, whether or not a part of the qualified stock disposition. The amount of the disallowed loss allocated to each asset disposed of in the deemed asset disposition is determined by multiplying the total amount of the disallowed loss by the loss allocation fraction. The numerator of the loss allocation fraction is the amount of loss realized with respect to the asset and the denominator of the loss allocation fraction is the sum of the amount of losses realized with respect to each loss asset disposed of in the deemed asset disposition. To the extent old target's losses from the deemed asset disposition are not disallowed under this paragraph, such losses may be disallowed under other provisions of the Internal Revenue Code or general principles of tax law, in the same manner as if such assets were actually sold to an unrelated person.

(*iv*) ***Tiered targets.*** If an asset of target is the stock of a subsidiary corporation of target for which a section 336(e) election is made, any gain or loss realized on the deemed sale of the stock of the subsidiary corporation is disregarded in determining the amount of disallowed loss. For purposes of determining the amount of disallowed loss on the deemed asset disposition by a subsidiary of target for which a section 336(e) election is made, the amount of subsidiary stock deemed sold in the deemed asset disposition of target's assets multiplied by the disallowed loss fraction with respect to the corporation that is deemed to have disposed of stock of the subsidiary is considered to have been distributed. In determining the disallowed loss fraction with respect to the deemed asset disposition of any subsidiary of target, disregard any sale, exchange, or distribution of its stock that was made after the disposition date if such stock was included in the deemed asset disposition of the corporation deemed to have disposed of the subsidiary stock.

(*3*) ***Examples.*** The following examples illustrate this paragraph (b)(1)(i)(B).

Example 1. (i) *Facts.* Parent owns 60 of the 100 outstanding shares of the common stock of Seller, Seller's only class of stock outstanding. The remaining 40 shares of the common stock of Seller are held by shareholders unrelated to Seller or each other. Seller owns 95 of the 100 outstanding shares of Target common stock, and all 100 shares of Target preferred stock that is described in section 1504(a)(4). The remaining 5 shares of Target common stock are owned by A. On January 1 of Year 1, Seller sells 72 shares of Target common stock to B for $3,520. On July 1 of Year 1, Seller distributes 12 shares of Target common stock to Parent and 8 shares to its unrelated shareholders in a distribution described in section 301. Seller retains 3 shares of Target common stock and all 100 shares of Target preferred stock immediately after July 1. The value of Target common stock on July 1 is $60 per share. The value of Target preferred stock on July 1 is $36 per share. Target has three assets, Asset 1, a Class IV asset, with a basis of $1,776 and a fair market value of $2,000, Asset 2, a Class V asset, with a basis of $2,600 and a fair market

value of $2,750, and Asset 3, a Class V asset, with a basis of $3,900 and a fair market value of $3,850. Seller incurred no selling costs on the sale of the 72 shares of Target common stock to B. Target has no liabilities. A section 336(e) election is made.

(ii) *Consequences—Deemed Asset Sale.* Because at least 80 percent ((72 + 8)/100) of Target stock, other than stock described in section 1504(a)(4), was disposed of (within the meaning of § 1.336-1(b)(5)) by Seller during the 12-month disposition period, a qualified stock disposition occurred. July 1 of Year 1, the first day on which there was a qualified stock disposition with respect to Target stock, is the disposition date. Accordingly, pursuant to the section 336(e) election, for Federal income tax purposes, Seller generally is not treated as selling the 72 shares of Target common stock sold to B or distributing the 8 shares of Target common stock distributed to its unrelated shareholders. However, Seller is still treated as distributing the 12 shares of Target common stock distributed to Parent because Seller and Parent are related persons within the meaning of § 1.336-1(b)(12) and accordingly the 12 shares are not part of the qualified stock disposition. Target is treated as if, on July 1, it sold all of its assets to an unrelated person in exchange for the ADADP, $8,000, which is allocated $2,000 to Asset 1, $2,500 to Asset 2, and $3,500 to Asset 3 (see *Example 1* of § 1.336-3(g) for the determination and allocation of ADADP).

(iii) *Consequences—Amount and Allocation of Disallowed Loss.* Old Target realized a net loss of $276 on the deemed asset disposition ($224 gain realized on Asset 1, $100 loss realized on Asset 2, and $400 loss realized on Asset 3). However, 20 shares of Target common stock were distributed by Seller during the 12-month disposition period (8 shares distributed to Seller's unrelated shareholders in the qualified stock disposition plus 12 shares distributed to Parent that were not part of the qualified stock disposition). Therefore, because there was a net loss realized on the deemed asset disposition and a portion of the stock of Target was distributed during the 12-month disposition period, a portion of the loss on the deemed sale of each of Target's loss assets is disallowed. The total amount of disallowed loss equals $60 ($276 net loss realized on the deemed disposition of Assets 1, 2, and 3 multiplied by the disallowed loss fraction, the numerator of which is $1,200, the value on July 1, the disposition date, of the 20 shares of Target common stock distributed during the 12-month disposition period, and the denominator of which is $5,520, the sum of $4,320, the value on July 1 of the 72 shares of Target common stock sold to B and $1,200, the value on July 1 of the 20 shares of Target common stock distributed during the 12-month disposition period). The portion of the disallowed loss allocated to Asset 2 is

$12 ($60 total disallowed loss multiplied by the loss allocation fraction, the numerator of which is $100, the loss realized on the deemed disposition of Asset 2 and the denominator of which is $500, the sum of the losses realized on the deemed disposition of Assets 2 and 3). The portion of the disallowed loss allocated to Asset 3 is $48 ($60 total disallowed loss multiplied by the loss allocation fraction, the numerator of which is $400, the loss realized on the deemed disposition of Asset 3 and the denominator of which is $500, the sum of the losses realized on the deemed disposition of Assets 2 and 3). Accordingly, Old Target recognizes $224 of gain on Asset 1, recognizes $88 of loss on Asset 2 (realized loss of $100 less allocated disallowed loss of $12), and recognizes $352 of loss on Asset 3 (realized loss of $400 less allocated disallowed loss of $48) or a recognized net loss of $216 on the deemed asset disposition.

Example 2. (i) *Facts.* The facts are the same as in *Example 1* except that Asset 2 is the stock of Target Subsidiary, a corporation of which Target owns 100 of the 110 shares of common stock, the only outstanding class of Target Subsidiary stock. The remaining 10 shares of Target Subsidiary stock are owned by D. The value of Target Subsidiary stock on July 1 is $27.50 per share. Target Subsidiary has two assets, Asset 4, a Class IV asset, with a basis of $800 and a fair market value of $1,000, and Asset 5, a Class IV asset, with a basis of $2,200 and a fair market value of $2,025. Target Subsidiary has no liabilities. A section 336(e) election with respect to Target Subsidiary is also made.
(ii) *Consequences—Target.* The ADADP on the deemed sale of Target's assets is determined and allocated in the same manner as in *Example 1.* However, Target's loss realized on the deemed sale of Target Subsidiary is disregarded in determining the amount of disallowed loss on the deemed asset disposition of Target's assets. Thus, the net loss is only $176 ($224 gain realized on Asset 1 and $400 loss realized on Asset 3), and the amount of disallowed loss equals $38.26 ($176 net loss multiplied by the disallowed loss fraction with respect to Target stock, $1,200/$5,520). The entire disallowed loss is allocated to Asset 3.

(iii) *Consequences—Target Subsidiary.* The deemed sale of the stock of Target Subsidiary is disregarded and instead Target Subsidiary is deemed to sell all of its assets to an unrelated person. The ADADP on the deemed asset disposition of Target Subsidiary is $2,750, which is allocated $909 to Asset 4 and $1,841 to Asset 5 (see *Example 2* of § 1.336-3(g) for the determination and allocation of ADADP). Old Target Subsidiary realized $109 of gain on Asset 4 and realized $359 of loss on Asset 5 in the deemed asset disposition. Although Old Target

Subsidiary realized a net loss of $250 on the deemed asset disposition ($109 gain on Asset 4 and $359 loss on Asset 5), a portion of this net loss is disallowed because a portion of Target stock was distributed during the 12-month disposition period. For purposes of determining the amount of disallowed loss on the deemed sale of the assets of Target Subsidiary, the portion of the 100 shares of Target Subsidiary stock deemed sold by Target pursuant to the section 336(e) election for Target Subsidiary multiplied by the disallowed loss fraction with respect to Target stock is treated as having been distributed. Thus, for purposes of determining the amount of disallowed loss on the deemed asset disposition of Target Subsidiary's assets, 21.74 shares of Target Subsidiary stock (100 shares of Target Subsidiary stock owned by Target multiplied by the disallowed loss fraction with respect to Target stock, $1,200/$5,520) are treated as having been distributed by Target during the 12-month disposition period. The total amount of disallowed loss with respect to the deemed asset disposition of Target Subsidiary's assets equals $54 ($250 net loss realized on the deemed disposition of Assets 4 and 5 multiplied by the disallowed loss fraction with respect to Target Subsidiary, the numerator of which is $598, the value on July 1, the disposition date, of the 21.74 shares of Target Subsidiary stock deemed distributed during the 12-month disposition period (21.74 shares × $27.50) and the denominator of which is $2,750 (the sum of $2,152, the value on July 1 of the 78.26 shares of Target Subsidiary stock deemed sold in the qualified stock disposition pursuant to the section 336(e) election for Target Subsidiary (78.26 shares × $27.50) and $598, the value on July 1 of the 21.74 shares of Target Subsidiary stock deemed distributed during the 12-month disposition period)). (The 10 shares of Target Subsidiary owned by D are not part of the qualified stock disposition and therefore are not included in the denominator of the disallowed loss fraction.) All of the disallowed loss is allocated to Asset 5, the only loss asset. Accordingly, Old Target Subsidiary recognizes $109 of gain on Asset 4 and recognizes $305 of loss on Asset 5 (realized loss of $359 less disallowed loss of $54) or a net loss of $196 on the deemed asset disposition.

Example 3. (i) *Facts.* The facts are the same as in *Example 2* except that on August 1 of Year 1, Target sells 50 of its shares of Target Subsidiary stock and distributes the remaining 50 shares.
(ii) *Consequences.* Because the 100 shares of Target Subsidiary stock that were sold and distributed on August 1 were deemed disposed of on July 1 in the deemed asset disposition of Target, the August 1 sale and distribution of Target Subsidiary stock are disregarded in determining the amount of disallowed loss. Accordingly, the consequences are the same as in *Example 2.*

(C) ***Tiered targets.*** In the case of parent-subsidiary chains of corporations making section 336(e) elections, the deemed asset disposition of a higher-tier subsidiary is considered to precede the deemed asset disposition of a lower-subsidiary.

(ii) ***New target—deemed purchase.*** New target is treated as acquiring all of its assets from an unrelated person in a single transaction at the close of the disposition date (but before the deemed liquidation) in exchange for an amount equal to the adjusted grossed-up basis (AGUB) as determined under § 1.336-4. New target allocates the consideration deemed paid in the transaction in the same manner as new target would under §§ 1.338-6 and 1.338-7 in order to determine the basis in each of the purchased assets. If new target qualifies as a small business corporation within the meaning of section 1361(b) and wants to be an S corporation, a new election under section 1362(a) must be made. Notwithstanding paragraph (b)(1)(iii) of this section (deemed liquidation of old target), new target remains liable for the tax liabilities of old target (including the tax liability for the deemed disposition tax consequences). For example, new target remains liable for the tax liabilities of the members of any consolidated group that are attributable to taxable years in which those corporations and old target joined in the same consolidated return. See § 1.1502-6(a).

(iii) ***Old target and seller—deemed liquidation*** —

(A) ***In general.*** If old target is an S corporation, S corporation shareholders (whether or not they sell or exchange their stock) take their pro rata share of the deemed disposition tax consequences into account under section 1366 and increase or decrease their basis in target stock under section 1367. Old target and seller (or S corporation shareholders) are treated as if, before the close of the disposition date, after the deemed asset disposition described in paragraph (b)(1)(i)(A) of this section, and while target is owned by seller or S corporation shareholders, old target transferred all of the consideration deemed received from new target in the deemed asset disposition to seller or S corporation shareholders, any S corporation election for old target terminated, and old target ceased to exist. The transfer from old target to seller or S corporation shareholders is characterized for Federal income tax purposes in the same manner as if the parties had actually engaged in the transactions deemed to occur because of this section and taking into account other transactions that actually occurred or are deemed to occur. For example, the transfer may be treated as a distribution in pursuance of a plan of reorganization, a distribution in complete cancellation or redemption of all of its stock, one of a series of distributions in complete cancellation or redemption of all of its stock in accordance with a plan of liquidation, or part of a circular flow of cash. In most cases, the transfer will be treated as a distribution in complete liquidation to which sections 331 or 332 and sections 336 or 337 apply.

(B) ***Tiered targets.*** In the case of parent-subsidiary chains of corporations making section 336(e) elections, the deemed liquidation of a lower-tier subsidiary corporation is considered to precede the deemed liquidation of a higher-tier subsidiary.

(iv) ***Seller—distribution of target stock.*** In the case of a distribution of target stock in a qualified stock disposition, seller (the distributor) is deemed to purchase from an unrelated person, on the disposition date, immediately after the deemed liquidation of old target, the amount of stock distributed in the qualified stock disposition (new target stock) and to have distributed such new target stock to its shareholders. Seller recognizes no gain or loss on the distribution of such stock.

(v) ***Seller—retention of target stock.*** If seller or an S corporation shareholder retains any target stock after the disposition date, seller or the S corporation shareholder is treated as purchasing the stock so retained from an unrelated person (new target stock) on the day after the disposition date for its fair market value. The holding period for the retained stock starts on the day after the disposition date. For purposes of this paragraph (b)(1)(v), the fair market value of all of the target stock equals the grossed-up amount realized on the sale, exchange, or distribution of recently disposed stock of target (see § 1.336-3(c)).

(2) ***Dispositions described in section 355(d)(2) or (e)(2)*** —

(i) ***Old target—deemed asset disposition*** —

(A) ***In general.*** This paragraph (b)(2) provides the Federal income tax consequences of a section 336(e) election made with respect to a qualified stock disposition resulting, in whole or in part, from a disposition described in section 355(d)(2) or (e)(2). Old target is treated as selling its assets to an unrelated person in a single transaction at the close of the disposition date in exchange for the ADADP as determined under § 1.336-3. ADADP is allocated among the disposition date assets in the same manner as ADSP is allocated under §§ 1.338-6 and 1.338-7 in order to determine the amount realized from each of the sold assets. Old target realizes the deemed disposition tax consequences from the deemed asset disposition before the close of the disposition date while old target is owned by seller.

(*1*) ***Old target not deemed to liquidate.*** In general, unlike a section 338(h)(10) election or a section 336(e) election made with respect to a qualified stock disposition not described, in whole or in part, in section 355(d)(2) or (e)(2), old target is not deemed to liquidate after the deemed asset disposition.

(*2*) ***Exception.*** If an election is made under § 1.1502-13(f)(5)(ii)(E), then solely for purposes of § 1.1502-13(f)(5)(ii)(C), immediately after the deemed asset disposition of old target, old target is deemed to liquidate into seller.

(B) ***Gains and losses*** —

(*1*) ***Gains.*** Except as provided in § 1.338(h)(10)-1(d)(8) (regarding the installment method), old target shall recognize all of the gains realized on the deemed asset disposition.

(*2*) ***Losses*** —

(*i*) ***In general.*** Except as provided in paragraphs (b)(2)(i)(B)(*2*)(*ii*), (*iii*), and (*iv*) of this section, old target shall recognize all of the losses realized on the deemed asset disposition.

(*ii*) ***Stock distributions.*** If target's losses realized on the deemed sale of all of its assets exceed target's gains realized (a net loss), the portion of such net loss attributable to a distribution of target stock during the 12-month disposition period is disallowed. The total amount of disallowed loss and the allocation of disallowed loss is determined in the manner provided in paragraphs (b)(2)(i)(B)(*2*)(*iii*) and (*iv*) of this section.

(*iii*) ***Amount and allocation of disallowed loss.*** The total disallowed loss pursuant to paragraph (b)(2)(i)(B)(*2*)(*ii*) of this section shall be determined by multiplying the net loss realized on the deemed asset disposition by the disallowed loss fraction. The numerator of the disallowed loss fraction is the value of target stock, determined on the disposition date, distributed by seller during the 12-month disposition period, whether or not a part of the qualified stock disposition (for example, stock distributed to a related person), and the denominator of the disallowed loss fraction is the sum of the value of target stock, determined on the disposition date, disposed of by sale or exchange in the qualified stock disposition during the 12-month disposition period and the value of target stock, determined on the disposition date, distributed by seller during the 12-month disposition period, whether or not a part of the qualified stock disposition. The amount of the disallowed loss allocated to each asset disposed of in the deemed asset disposition is determined by multiplying the total amount of the disallowed loss by the loss allocation fraction. The numerator of the loss allocation fraction is the amount of loss realized with respect to the asset and the denominator of the loss allocation fraction is the sum of the amount of losses realized with respect to each loss asset disposed of in the deemed asset disposition. To the extent old target's losses from the deemed asset disposition are not disallowed under this paragraph, such losses may be disallowed under other provisions of the Internal Revenue Code or general principles of tax law, in the same manner as if such assets were actually sold to an unrelated person.

(*iv*) ***Tiered targets.*** If an asset of target is the stock of a subsidiary corporation of target for which a section 336(e) election is made, any gain or loss realized on the deemed sale of the stock of the subsidiary corporation is disregarded in determining the amount of disallowed loss. For purposes of determining the amount of disallowed loss on the deemed asset disposition by a subsidiary of target for which a section 336(e) election is made, see paragraph (b)(1)(i)(B)(*2*) of this section.

(*3*) ***Examples.*** The following examples illustrate this paragraph (b)(2)(i)(B).

> *Example 1.* (i) *Facts.* Seller owns 90 of the 100 outstanding shares of Target common stock, the only class of Target stock outstanding. The remaining 10 shares of Target common stock are owned by C. On January 1 of Year 1, Seller sells 10 shares of Target common stock to D for $910. On July 1, in an unrelated transaction, Seller distributes its remaining 80 shares of Target common stock to its unrelated shareholders in a distribution described in section 355(d)(2) or (e)(2). On July 1, the value of Target common stock is $100 per share. Target has three assets, Asset 1 with a basis of $1,220, Asset 2 with a basis of $3,675, and Asset 3 with a basis of $5,725. Seller incurred no selling costs on the sale of the 10 shares of Target common stock to D. Target has no liabilities. A section 336(e) election is made.

(ii) *Consequences.* Because at least 80 percent of Target stock ((10 + 80)/100) was disposed of (within the meaning of § 1.336-1(b)(5)) by Seller during the 12-month disposition period, a qualified stock disposition occurred. July 1 of Year 1, the first day on which there was a qualified stock disposition with respect to Target, is the disposition date. Accordingly, pursuant to the section 336(e) election, for Federal income tax purposes, Target is treated as if, on July 1, it sold all of its assets to an unrelated person in exchange for the ADADP, $9,900, as determined under § 1.336-3. Assume that the ADADP is allocated $2,000 to Asset 1, $3,300 to Asset 2, and $4,600 to Asset 3 under § 1.336-3. Old Target realized a net loss of $720 on the deemed asset disposition ($780 gain realized on Asset 1, $375 loss realized on Asset 2, and $1,125 loss realized on Asset 3). However, because a portion of Target stock was distributed during the 12-month disposition period and there was a net loss on the deemed asset disposition, a portion of the loss on each of the loss assets is disallowed. The total amount of disallowed loss equals $640 ($720 net loss realized on the deemed disposition of Assets 1, 2, and 3 multiplied by the disallowed loss fraction, the numerator of which is $8,000, the value on July 1, the disposition date, of the 80 shares of Target common stock distributed by Seller during the 12-month disposition period, and the denominator of which is $9,000, the sum of $1,000, the value on July 1 of the 10 shares of Target common stock sold to D, and $8,000, the value on July 1 of the 80 shares of Target common stock distributed by Seller during the 12-month disposition period). The portion of the disallowed loss allocated to Asset 2 is $160 ($640 total disallowed loss on the deemed asset disposition multiplied by the loss allocation fraction, the numerator of which is $375, the loss realized on the deemed disposition of Asset 2, and the denominator of which is $1,500, the sum of the losses realized on the deemed disposition of Assets 2 and 3). The portion of the disallowed loss allocated to Asset 3 is $480 ($640 total disallowed loss on the deemed asset disposition multiplied by the loss allocation fraction, the numerator of which is $1,125, the loss realized on the deemed disposition of Asset 3, and the denominator of which is $1,500, the sum of the losses realized on the deemed disposition of Assets 2 and 3). Accordingly, Old Target recognizes $780 of gain on Asset 1, recognizes $215 of loss on Asset 2 (realized loss of $375 less allocated disallowed loss of $160), and recognizes $645 of loss on Asset 3 (realized loss of $1,125 less allocated disallowed loss of $480) or a recognized net loss of $80 on the deemed asset disposition.

Example 2. (i) *Facts.* The facts are the same as in *Example 1* except that Asset 2 is 100 shares of common stock of Target Subsidiary, a wholly-owned subsidiary of Target. The value of Target Subsidiary common stock on July 1 is

$40 per share. Target Subsidiary has two assets, Asset 4 with a basis of $500 and Asset 5 with a basis of $3,000. Target Subsidiary has no liabilities. A section 336(e) election is also made with respect to Target Subsidiary.
(ii) *Consequences—Target.* The ADADP on the deemed sale of Target's assets is determined and allocated in the same manner as in *Example 1.* However, Old Target's loss realized on the deemed sale of Target Subsidiary is disregarded in determining the amount of the disallowed loss on the deemed asset disposition of Old Target's assets. Thus, the realized net loss is only $345 ($780 gain on Asset 1 and $1,125 loss on Asset 3), and the amount of disallowed loss equals $307, the $345 realized net loss multiplied by the disallowed loss fraction with respect to Target stock, $8,000/$9,000. The entire disallowed loss is allocated to Asset 3. Accordingly, Old Target recognizes $780 of gain on Asset 1 and recognizes $818 of loss on Asset 3 (realized loss of $1,125 less allocated disallowed loss of $307) or a recognized net loss of $38 on the deemed asset disposition.

(iii) *Consequences—Target Subsidiary.* Because the deemed sale of Target Subsidiary is not a transaction described in section 355(d)(2) or (e)(2), the tax consequences of the deemed sale of Target Subsidiary are determined under paragraph (b)(1) of this section and not this paragraph (b)(2). The deemed sale of the stock of Target Subsidiary is disregarded and instead Target Subsidiary is deemed to sell all of its assets to an unrelated person. The ADADP on the deemed asset disposition of Target Subsidiary as determined under § 1.336-3 is $3,300. Assume that the ADADP is allocated $900 to Asset 4 and $2,400 to Asset 5 under § 1.336-3. Old Target Subsidiary realized a net loss of $200 on the deemed asset disposition ($400 gain realized on Asset 4 and $600 loss realized on Asset 5). However, because a portion of Target stock was distributed during the 12-month disposition period, for purposes of determining the amount of disallowed loss on the deemed sale of the assets of Target Subsidiary, the portion of the 100 shares of Target Subsidiary stock deemed sold pursuant to the section 336(e) election for Target Subsidiary multiplied by the disallowed loss fraction with respect to Target stock are treated as having been distributed. Thus, for purposes of determining the amount of disallowed loss on the deemed asset disposition of Target Subsidiary's assets, 88.89 shares of Target Subsidiary common stock (100 shares owned by Target multiplied by the disallowed loss fraction with respect to Target stock, $8,000/$9,000) are treated as distributed during the 12-month disposition period. The total amount of disallowed loss with respect to the deemed asset disposition of Target Subsidiary's assets equals $177.78 ($200 net loss realized on the deemed disposition of Assets 4 and 5 multiplied by the disallowed loss fraction with respect to Target Subsidiary, the numerator of

which is $3,556, the value on July 1, the disposition date, of the 88.89 shares of Target Subsidiary common stock deemed distributed during the 12-month disposition period (88.89 shares × $40) and the denominator of which is $4,000 (the sum of $444, the value on July 1 of the 11.11 shares of Target Subsidiary common stock deemed sold in the qualified stock disposition pursuant to the section 336(e) election for Target Subsidiary (11.11 shares × $40) and $3,556, the value on July 1 of the 88.89 shares of Target Subsidiary common stock deemed distributed during the 12-month disposition period)). All of the disallowed loss is allocated to Asset 5, the only loss asset. Accordingly, Old Target Subsidiary recognizes $400 of gain on Asset 4 and recognizes $422.22 of loss on Asset 5 (realized loss of $600 less allocated disallowed loss of $177.78) or a recognized net loss of $22.22 on the deemed asset disposition.

(C) ***Tiered targets.*** In the case of parent-subsidiary chains of corporations making section 336(e) elections, the deemed asset disposition of a higher-tier subsidiary is considered to precede the deemed asset disposition of a lower-tier subsidiary.

(ii) ***Old target—deemed purchase*** —

(A) ***In general.*** Immediately after the deemed asset disposition described in paragraph (b)(2)(i)(A) of this section, old target is treated as acquiring all of its assets from an unrelated person in a single, separate transaction at the close of the disposition date (but before the distribution described in paragraph (b)(2)(iii)(A) of this section) in exchange for an amount equal to the AGUB as determined under § 1.336-4. Old target allocates the consideration deemed paid in the transaction in the same manner as new target would under §§ 1.338-6 and 1.338-7 in order to determine the basis in each of the purchased assets.

(B) ***Tiered targets.*** In the case of parent-subsidiary chains of corporations making section 336(e) elections with respect to a qualified stock disposition described, in whole or in part, in section 355(d)(2) or (e)(2), old target's deemed purchase of all its assets is considered to precede the deemed asset disposition of a lower-tier subsidiary.

(C) ***Application of section 197(f)(9), section 1091, and other provisions to old target.*** Solely for purposes of section 197(f)(9), section 1091, and any other provision designated in the Internal Revenue Bulletin by the Internal Revenue Service (see § 601.601(d)(2)(ii) of this chapter), old target, in its capacity as seller of assets in the deemed asset disposition described in paragraph (b)(2)(i)(A) of this section, shall be treated as a separate and distinct taxpayer from, and unrelated to, old target in its capacity as acquirer of assets in the deemed purchase described in paragraph (b)(2)(ii)(A) of this section and for subsequent periods.

(iii) ***Seller—distribution of target stock*** —

(A) ***In general.*** Immediately after old target's deemed purchase of its assets described in paragraph (b)(2)(ii) of this section, seller is treated as distributing the stock of old target actually distributed to its shareholders in the qualified stock disposition. No gain or loss is

recognized by seller on the distribution. Additionally, if stock of target is sold, exchanged, or distributed outside of the section 355 transaction but still as part of a qualified stock disposition described, in whole or in part, in section 355(d)(2) or (e)(2), no gain or loss is recognized by seller on such sale, exchange, or distribution.

(B) ***Tiered targets.*** In the case of parent-subsidiary chains of corporations making section 336(e) elections with respect to a qualified stock disposition described, in whole or in part, in section 355(d)(2) or (e)(2), the Federal income tax consequences of the section 336(e) election for a subsidiary of target shall be determined under paragraph (b)(1) of this section unless the stock of the subsidiary of target is actually disposed of in a qualified stock disposition described, in whole or in part, in section 355(d)(2) or (e)(2). The deemed liquidation of a lower-tier subsidiary pursuant to paragraph (b)(1)(iii) of this section is considered to precede the deemed liquidation of a higher-tier subsidiary. The deemed liquidation of the highest tier subsidiary of target is considered to precede the distribution of old target stock described in paragraph (b)(2)(iii)(A) of this section.

(iv) ***Seller—retention of target stock.*** If seller retains any target stock after the disposition date, seller is treated as having disposed of the old target stock so retained, on the disposition date, in a transaction in which no gain or loss is recognized, and then, on the day after the disposition date, purchasing the stock so retained from an unrelated person for its fair market value. The holding period for the retained stock starts on the day after the disposition date. For purposes of this paragraph (b)(2)(iv), the fair market value of all of the target stock equals the grossed-up amount realized on the sale, exchange, or distribution of recently disposed stock of target (see § 1.336-3(c)).

(v) ***Qualification under section 355.*** Old target's deemed sale of all its assets to an unrelated person and old target's deemed purchase of all its assets from an unrelated person will not cause the distribution of old target to fail to satisfy the requirements of section 355. Similarly, any deemed transactions under paragraph (b)(1) or (b)(2) of this section that a subsidiary of target is treated as engaging in will not cause the distribution of old target to fail to satisfy the requirements of section 355. For purposes of applying section 355(a)(1)(D), seller is treated as having disposed of any stock disposed of in the qualified stock disposition on the date seller actually sold, exchanged, or distributed such stock. Further, seller's deemed disposition of retained old target stock under paragraph (b)(2)(iv) of this section is disregarded for purposes of applying section 355(a)(1)(D).

(vi) ***Earnings and profits.*** The earnings and profits of seller and target shall be determined pursuant to § 1.312-10 and, if applicable, § 1.1502-33(e). For this purpose, target will not be treated as a newly created controlled corporation and any increase or decrease in target's earnings and profits pursuant to the deemed asset disposition will increase or decrease, as the case may be, target's earnings and profits immediately before the allocation described in § 1.312-10.

(c) ***Purchaser.*** Generally, the making of a section 336(e) election will not affect the Federal income tax consequences to which purchaser would have been subject with respect to the acquisition of target stock if a section 336(e) election was not made. Thus, notwithstanding §§ 1.336-2(b)(1)(i)(A), 1.336-2(b)(1)(iv), and 1.336-2(b)(2)(iii)(A), purchaser will still be treated as having purchased, received in an exchange, or received in a distribution, the stock of target so acquired on the date actually acquired. However, see section 1223(1)(B) with respect to the holding period for stock acquired pursuant to a distribution qualifying under section 355 (or so much of section 356 that relates to section 355). The Federal income tax consequences of the deemed asset disposition and liquidation of target may affect purchaser's

consequences. For example, if seller distributes the stock of target to its shareholders in a qualified stock disposition for which a section 336(e) election is made, any increase in seller's earnings and profits as a result of old target's deemed asset disposition and liquidation into seller may increase the amount of a distribution to the shareholders constituting a dividend under section 301(c)(1).

(d) *Minority shareholders* —

(1) ***In general.*** This paragraph (d) describes the treatment of shareholders of old target other than seller, a member of seller's consolidated group, and S corporation shareholders (whether or not they sell or exchange their stock of target). A shareholder to which this paragraph (d) applies is referred to as a minority shareholder.

(2) ***Sale, exchange, or distribution of target stock by a minority shareholder.*** A minority shareholder recognizes gain or loss (as permitted under the general principles of tax law) on its sale, exchange, or distribution of target stock.

(3) ***Retention of target stock by a minority shareholder.*** A minority shareholder who retains its target stock does not recognize gain or loss under this section with respect to its shares of target stock. The minority shareholder's basis and holding period for that target stock are not affected by the section 336(e) election. Notwithstanding this treatment of the minority shareholder, if a section 336(e) election is made, target will still be treated as disposing of all of its assets in the deemed asset disposition.

(e) ***Treatment consistent with an actual asset disposition.*** Except as otherwise provided, no provision in this section shall produce a Federal income tax result under subtitle A of the Internal Revenue Code that would not occur if the parties had actually engaged in the transactions deemed to occur because of this section, taking into account other transactions that actually occurred or are deemed to occur. See § 1.338-1(a)(2) regarding the application of other rules of law.

(f) ***Treatment of target under other provisions of the Internal Revenue Code.*** The provisions § 1.338-1(b) apply with respect to the treatment of new target after a section 336(e) election, treating any reference to section 338 or 338(h)(10) as a reference to section 336(e).

(g) *Special rules* —

(1) ***Target as two corporations.*** Although target is a single corporation under corporate law, if a section 336(e) election is made, then, except with respect to a distribution described in section 355(d)(2) or (e)(2) and as provided in § 1.338-1(b)(2), two separate corporations, old target and new target, generally are considered to exist for purposes of subtitle A of the Internal Revenue Code.

(2) ***Treatment of members of a consolidated group.*** For purposes of §§ 1.336-1 through 1.336-5, all members of seller's consolidated group are treated as a single seller, regardless of which member or members actually dispose of any stock. Accordingly, any dispositions of stock made by members of the same consolidated group shall be treated as made by one corporation, and any stock owned by members of the same consolidated group and not disposed of will be treated as stock retained by seller.

(3) *International provisions* —

(i) ***Source and foreign tax credit.*** The principles of section 338(h)(16) apply to section 336(e) elections for targets with foreign operations to ensure that the source and foreign tax credit limitation are properly determined.

(ii) *Allocation of foreign income taxes* —

(A) ***General rule.*** Except as provided in paragraph (g)(3)(ii)(B) of this section, if a section 336(e) election is made for target and target's taxable year under foreign law (if any) does not close at the end of the disposition date, foreign income tax as defined in § 1.960-1(b) (other than a withholding tax as defined in section 901(k)(1)(B)) paid or accrued by new target with respect to such foreign taxable year is allocated between old target and new target. If there is more than one section 336(e) election with respect to target during target's foreign taxable year, foreign income tax paid or accrued with respect to that foreign taxable year is allocated among all old targets and new targets. The allocation is made based on the respective portions of the taxable income (as determined under foreign law) for the foreign taxable year that are attributable under the principles of § 1.1502-76(b) to the period of existence of each old target and new target during the foreign taxable year.

(B) ***Foreign income taxes imposed on partnerships and disregarded entities.*** If a section 336(e) election is made for target and target holds an interest in a disregarded entity (as described in § 301.7701-2(c)(2)(i) of this chapter) or partnership, the rules of § 1.901-2(f)(4) and (5) apply to determine the person who is considered for Federal income tax purposes to pay foreign income tax imposed at the entity level on the income of the disregarded entity or partnership.

(iii) ***Disallowance of foreign tax credits under section 901(m).*** For rules that may apply to disallow foreign tax credits by reason of a section 336(e) election, see section 901(m) and §§ 1.901(m)-1 through 1.901(m)-8.

(h) *Making the section 336(e) election* —

(1) ***Consolidated group.*** If seller(s) and target are members of the same consolidated group, a section 336(e) election is made by completing the following requirements:

(i) Seller(s) and target must enter into a written, binding agreement, on or before the due date (including extensions) of the consolidated group's consolidated Federal income tax return for the taxable year that includes the disposition date, to make a section 336(e) election;

(ii) The common parent of the consolidated group must retain a copy of the written agreement;

(iii) The common parent of the consolidated group must attach the section 336(e) election statement, described in paragraphs (h)(5) and (6) of this section, to the group's timely filed (including extensions) consolidated Federal income tax return for the taxable year that includes the disposition date; and

(iv) The common parent of the consolidated group must provide a copy of the section 336(e) election statement to target on or before the due date (including extensions) of the consolidated group's consolidated Federal income tax return.

(2) ***Non-consolidated/non-S corporation target.*** If target is neither a member of the same consolidated group as seller nor an S corporation, a section 336(e) election is made by completing the following requirements:

(i) Seller and target must enter into a written, binding agreement, on or before the due date (including extensions) of seller's or target's Federal income tax return for the taxable year that includes the disposition date, whichever is earlier, to make a section 336(e) election;

(ii) Seller and target each must retain a copy of the written agreement; and

(iii) Seller and target each must attach the section 336(e) election statement, described in paragraphs (h)(5) and (6) of this section, to its timely filed (including extensions) Federal income tax return for the taxable year that includes the disposition date. However, seller's section 336(e) election statement may disregard paragraph (h)(6)(xii) of this section (concerning a gain recognition election).

(3) ***S corporation target.*** A section 336(e) election for an S corporation target is made by completing the following requirements:

(i) All of the S corporation shareholders, including those who do not dispose of any stock in the qualified stock disposition, and the S corporation target must enter into a written, binding agreement, on or before the due date (including extensions) of the Federal income tax return of the S corporation target for the taxable year that includes the disposition date, to make a section 336(e) election;

(ii) S corporation target must retain a copy of the written agreement; and

(iii) S corporation target must attach the section 336(e) election statement, described in paragraphs (h)(5) and (6) of this section, to its timely filed (including extensions) Federal income tax return for the taxable year that includes the disposition date.

(4) ***Tiered targets.*** In the case of parent-subsidiary chains of corporations making section 336(e) elections, in order to make a section 336(e) election for a lower-tier target (target subsidiary), the requirements described in paragraph (h)(1) or (h)(2), of this section, whichever is applicable to the qualified stock disposition of target subsidiary, must be satisfied. The written agreement described in paragraph (h)(1) or (h)(2) of this section for the section 336(e) election with respect to target subsidiary may be either a separate written agreement between target subsidiary and the corporation deemed to dispose of the stock of target subsidiary or may be included in the written agreement between seller(s) (or the S corporation shareholders) and target.

(5) ***Section 336(e) election statement*** —

(i) ***In general.*** The section 336(e) election statement must be entitled "THIS IS AN ELECTION UNDER SECTION 336(e) TO TREAT THE DISPOSITION OF THE STOCK OF [insert name and employer identification number of target] AS A DEEMED SALE OF SUCH CORPORATION'S ASSETS." The section 336(e) election statement must include the information described in paragraph (h)(6) of this section. The relevant information for each S corporation shareholder and, notwithstanding paragraph (g)(2) of this section, each consolidated group member that disposes of or retains target stock must be set forth individually, not in the aggregate.

(ii) ***Target subsidiaries.*** In the case of a section 336(e) election for a target subsidiary, a separate statement must be filed for each target subsidiary. In preparing the section 336(e) election statement with respect to a target subsidiary, any reference to seller in paragraph (h)(6) of this section should be considered a reference to the corporation deemed to dispose of the stock of the target subsidiary and any reference to target in paragraphs (h)(5)(i) and (h)(6) of this section should be considered a reference to the target subsidiary.

(6) ***Contents of section 336(e) election statement.*** The section 336(e) election statement must include:

(i) The name, address, taxpayer identifying number (TIN), taxable year, and state of incorporation (if any) of the seller(s) or the S corporation shareholder(s);

(ii) The name, address, employer identification number (EIN), taxable year, and state of incorporation of the common parent, if any, of seller(s);

(iii) The name, address, EIN, taxable year, and state of incorporation of target;

(iv) The name, address, TIN, taxable year, and state of incorporation (if any) of any 80-percent purchaser;

(v) The name, address, TIN, taxable year, and state of incorporation (if any) of any purchaser that holds nonrecently disposed stock within the meaning of § 1.336-1(b)(18);

(vi) The disposition date;

(vii) The percentage of target stock that was disposed of by each seller or S corporation shareholder in the qualified stock disposition;

(viii) The percentage of target stock that was disposed of by each seller or S corporation shareholder in the qualified stock disposition on or before the disposition date;

(ix) A statement regarding whether target realized a net loss on the deemed asset disposition;

(x) If target realized a net loss on the deemed asset disposition, a statement regarding whether any stock of target or that of any higher-tier corporation up through the highest-tier corporation for which a section 336(e) election was made by any seller(s) or S corporation shareholder(s) was distributed during the 12-month disposition period. If so, also provide a statement regarding whether any stock of target or that of any higher-tier corporation up through the highest-tier corporation for which a section 336(e) election was made was actually sold or exchanged (rather than deemed sold in a deemed asset disposition) by any seller(s) or S corporation shareholder(s) in a qualified stock disposition;

(xi) The percentage of target stock that was retained by each seller or S corporation shareholder after the disposition date;

(xii) The name, address, and TIN of any purchaser that made a gain recognition election pursuant to § 1.336-4(c). A copy of the gain recognition election statement must be retained by the filer of the section 336(e) election statement designated as the appropriate party in § 1.336-4(c)(3); and

(xiii) A statement that each of the seller(s) or S corporation shareholder(s) (as applicable) and target have executed a written, binding agreement to make a section 336(e) election.

(7) ***Asset Allocation Statement.*** Old target and new target must report information concerning the deemed sale of target's assets on Form 8883, “Asset Allocation Statement Under Section 338,” (making appropriate adjustments to report the results of the section 336(e) election), or on any successor form prescribed by the Internal Revenue Service, in accordance with forms, instructions, or other appropriate guidance provided by the Internal Revenue Service. In addition, in the case of a section 336(e) election as the result of a transaction described in section 355(d)(2) or (e)(2), old target should file two Forms 8883, (or successor forms), one in its capacity as the seller of the assets in the deemed asset disposition described in paragraph (b)(2)(i) of this section and one in its capacity as the purchaser of the assets in the deemed purchase described in paragraph (b)(2)(ii) of this section.

(8) ***Examples.*** The following examples illustrate the provisions of paragraph (h) of this section.

Example 1. (i) *Facts.* Seller owns all of the stock of Target and Target owns all of the stock of Target Subsidiary. Seller is the common parent of a consolidated group that includes Target. However, Target Subsidiary is not included in the consolidated group pursuant to section 1504(a)(3). On Date 1, Seller sells 80 percent of its Target stock to A and distributes the remaining 20 percent of Target stock to Seller's unrelated shareholders.
(ii) *Making of election for Target.* Because Seller and Target are members of a consolidated group, in order to make a section 336(e) election for the qualified stock disposition of Target, the requirements of paragraph (h)(1) of this section must be satisfied. On or before the due date of Seller group's consolidated Federal income tax return that includes Date 1, Seller and Target must enter into a written, binding agreement to make a section 336(e) election; Seller must retain a copy of the written agreement; Seller must attach the section 336(e) election statement to the group's timely filed consolidated return for the taxable year that includes Date 1, and Seller must provide a copy of the section 336(e) election statement to Target on or before the due date (including extensions) of the consolidated return.

(iii) *Making of election for Target Subsidiary.* Because Target and Target Subsidiary do not join in the filing of a consolidated Federal income tax return and Target Subsidiary is not an S corporation, in order to make a section 336(e) election for the qualified stock disposition of Target Subsidiary, the requirements of paragraph (h)(2) of this section must be satisfied. On or before the due date of Seller group's consolidated Federal income tax return that includes Date 1, or Target Subsidiary's Federal income tax return that includes Date 1, whichever is earlier, either Target Subsidiary must join in the written agreement described in paragraph (ii) of this *Example 1* to make a section 336(e) election with respect to the qualified stock disposition of Target Subsidiary or Target and Target Subsidiary must enter into a separate written, binding agreement to make a section 336(e) election with respect to the qualified stock disposition of Target Subsidiary; Seller (as agent of the consolidated group that includes Target) and Target Subsidiary each must retain a copy of the written agreement; and Seller (as agent of the consolidated group that includes Target) and Target Subsidiary each must attach the section 336(e) election statement with respect to the qualified stock disposition of Target Subsidiary to its timely filed Federal income tax return for the taxable year that includes Date 1. In preparing the section 336(e) election statement, paragraph (i) of the statement should include the relevant information for Target, paragraph (ii) of the statement should include the relevant information for Seller, paragraph (iii) of the statement should include the relevant information for Target Subsidiary, paragraphs (vii) through (xi) of the statement should provide information for both Seller's actual sale and distribution of Target stock as well as information for Target's deemed sale of Target Subsidiary stock, and paragraph (xiii) of the statement should include a statement that Seller, Target, and Target Subsidiary, or Target and Target Subsidiary, whichever is appropriate, have executed a written, binding agreement to make a section 336(e) election with respect to the qualified stock disposition of Target Subsidiary.

Example 2. (i) *Facts.* A and B each own 45 percent and C owns the remaining 10 percent of the stock of S Corporation Target, an S corporation. S Corporation Target owns 80 percent of the stock of Target Subsidiary and D owns the remaining 20 percent. On Date 1, A and B each sell all of their S Corporation Target stock to an unrelated individual. C retains his 10 percent of the stock of S Corporation Target.
(ii) *Making of election for S Corporation Target.* Because S Corporation Target is an S Corporation Target, in order to make a section 336(e) election for the qualified stock disposition of S Corporation Target, the requirements of paragraph (h)(3) of this section must be satisfied. On or before the due date of S Corporation Target's Federal income tax return that includes Date 1, A, B, C, and S Corporation Target must enter into a written, binding agreement to make a section 336(e) election; S Corporation Target must retain a copy of the written agreement; and S Corporation Target must attach the section 336(e) election statement to its timely filed Federal income tax return for the taxable year that includes Date 1.

(iii) *Making of election for Target Subsidiary.* Because Target Subsidiary is neither a member of the same consolidated group as S Corporation Target nor is an S corporation, in order to make a section 336(e) election for the qualified stock disposition of Target Subsidiary, the requirements of paragraph (h)(2) of this section must be satisfied. On or before the due date of S Corporation Target's Federal income tax return that includes Date 1, or Target Subsidiary's Federal income tax return that includes Date 1, whichever is earlier, either Target Subsidiary must join in the written agreement described in paragraph (ii) of this *Example 2* to make a section 336(e) election with respect to the qualified stock disposition of Target Subsidiary or S Corporation Target and Target Subsidiary must enter into a separate written, binding agreement to make a section 336(e) election with respect to the qualified stock disposition of Target Subsidiary; S Corporation Target and Target Subsidiary each must retain a copy of the written agreement; and S Corporation Target and Target Subsidiary each must attach the section 336(e) election statement to its timely filed Federal income tax return for the taxable year that includes Date 1. In preparing the section 336(e) election statement, paragraph (i) of the statement should include the relevant information for S Corporation Target, paragraph (iii) of the statement should include the relevant information for Target Subsidiary, paragraphs (vii) through (xi) of the statement should provide information for both A's and B's actual sale and C's actual retention of S Corporation Target stock as well as information for S Corporation Target's deemed sale of Target Subsidiary stock, and paragraph (xiii) of the statement should include a statement that A, B, C, S Corporation Target, and Target Subsidiary, or S Corporation Target and Target Subsidiary, whichever is appropriate, have executed a written, binding agreement to make a section 336(e) election with respect to the qualified stock disposition of Target Subsidiary.

(i) [Reserved]

(j) ***Protective section 336(e) election.*** Taxpayers may make a protective election under section 336(e) in connection with a transaction. Such an election will have no effect if the transaction does not constitute a qualified stock disposition, as defined in § 1.336-1(b)(6), but will otherwise be binding and irrevocable.

(k) ***Examples.*** The following examples illustrate the provisions of this section.

Example 1. Sale of 100 percent of Target stock. (i) *Facts.* Parent owns all 100 shares of Target's only class of stock. Target's only assets are two parcels of land. Parcel 1 has a basis of $5,000 and Parcel 2 has a basis of $4,000. Target has no liabilities. On July 1 of Year 1, Parent sells all 100 shares of Target stock to A for $100 per share. Parent incurs no selling costs and A incurs no acquisition costs. On July 1, the value of Parcel 1 is $7,000 and the value of Parcel 2 is $3,000. A section 336(e) election is made.
(ii) *Consequences.* The sale of Target stock constitutes a qualified stock disposition. July 1 of Year 1 is the disposition date. Accordingly, pursuant to the section 336(e) election, for Federal income tax purposes, rather than treating Parent as selling the stock of Target to A, the following events are deemed to occur. Target is treated as if, on July 1, it sold all of its assets to an unrelated person in exchange for the ADADP of $10,000, which is allocated $7,000 to Parcel 1 and $3,000 to Parcel 2 (see §§ 1.336-3 and 1.338-6 for determination of amount and allocation of ADADP). Target recognizes gain of $2,000 on Parcel 1 and loss of $1,000 on Parcel 2. New Target is then treated as acquiring all its assets from an unrelated person in a single transaction in exchange for the amount of the AGUB of $10,000, which is allocated $7,000 to Parcel 1 and $3,000 to Parcel 2 (see §§ 1.336-4, 1.338-5, and 1.338-6 for determination of amount and allocation of AGUB). Old Target is treated as liquidating into Parent immediately thereafter, distributing the $10,000 deemed received in exchange for Parcel 1 and Parcel 2 in a transaction qualifying under section 332. Parent recognizes no gain or loss on the liquidation. A's basis in New Target stock is $100 per share, the amount paid for the stock.

Example 2. Sale of 80 percent of Target stock. (i) *Facts.* The facts are the same as in *Example 1* except that Parent only sells 80 shares of its Target stock to A and retains the other 20 shares.
(ii) *Consequences.* The results are the same as in *Example 1* except that Parent also is treated as purchasing from an unrelated person on July 2, the day after the disposition date, the 20 shares of Target stock (New Target stock) not sold to A, for their fair market value as determined under § 1.336-2(b)(1)(v) of $2,000 ($100 per share).

Example 3. Distribution of 100 percent of Target stock. (i) *Facts.* The facts are the same as in *Example 1* except that instead of on July 1 Parent selling 100 shares of Target stock to A, Parent distributes 100 shares to its shareholders, all of whom are unrelated to Parent, in a transaction that does not qualify under section 355. The value of Target stock on July 1 is $100 per share.
(ii) *Consequences.* The distribution of Target stock constitutes a qualified stock disposition. July 1 of Year 1 is the disposition date. Accordingly, pursuant to the section 336(e) election, for Federal income tax purposes, rather than treating Parent as distributing the stock of Target to its shareholders, the following events are deemed to occur. Target is treated as if, on July 1, it sold all of its assets to an unrelated person in exchange for the ADADP of $10,000, which is allocated $7,000 to Parcel 1 and $3,000 to Parcel 2 (see §§ 1.336-3 and 1.338-6 for determination of amount and allocation of ADADP). Target recognizes gain of

$2,000 on Parcel 1 and loss of $1,000 on Parcel 2. Because Target's losses realized on the deemed asset disposition do not exceed Target's gains realized on the deemed asset disposition, Target can recognize all of the losses from the deemed asset disposition (see § 1.336-2(b)(1)(i)(B)). New Target is then treated as acquiring all its assets from an unrelated person in a single transaction in exchange for the amount of the AGUB of $10,000, which is allocated $7,000 to Parcel 1 and $3,000 to Parcel 2 (see §§ 1.336-4, 1.338-5, and 1.338-6 for determination of amount and allocation of AGUB). Old Target is treated as liquidating into Parent immediately thereafter, distributing the $10,000 deemed received in exchange for Parcel 1 and Parcel 2 in a transaction qualifying under section 332. Parent recognizes no gain or loss on the liquidation. On July 1, immediately after the deemed liquidation of Target, Parent is deemed to purchase from an unrelated person 100 shares of New Target stock and distribute those New Target shares to its shareholders. Parent recognizes no gain or loss on the deemed distribution of the shares under § 1.336-2(b)(1)(iv). The shareholders receive New Target stock as a distribution pursuant to section 301 and their basis in New Target stock received is its fair market value pursuant to section 301(d).

Example 4. Distribution of 80 percent of Target stock. (i) *Facts.* The facts are the same as in *Example 3* except that Parent distributes only 80 shares of Target stock to its shareholders and retains the other 20 shares.
(ii) *Consequences.* The results are the same as in *Example 3* except that Parent is treated as purchasing on July 1 only 80 shares of New Target stock and as distributing only 80 shares of New Target stock to its shareholders and then as purchasing (and retaining) on July 2, the day after the disposition date, 20 shares of New Target stock at their fair market value as determined under § 1.336-2(b)(1)(v), $2,000 ($100 per share).

Example 5. Part sale, part distribution. (i) *Facts.* Parent owns all 100 shares of Target's only class of stock. Target has two assets, both of which are buildings used in its business. Building 1 has a basis of $6,000 and Building 2 has a basis of $5,100. Target has no liabilities. On January 1 of Year 1, Parent sells 50 shares of Target to A for $88 per share. Parent incurred no selling costs with respect to the sale of Target stock and A incurred no acquisition costs with respect to the purchase. On July 1 of Year 1, when the value of Target stock is $120 per share, Parent distributes 30 shares of Target to Parent's unrelated shareholders. Parent retains the remaining 20 shares. On July 1, the value of Building 1 is $7,800 and the value of Building 2 is $4,200. A section 336(e) election is made.
(ii) *Consequences.* Because the sale of the 50 shares and the distribution of the 30 shares occurred within a 12-month disposition period, the 80 shares of Target stock sold and distributed were disposed of in a qualified stock disposition. July 1 of Year 1 is the disposition date. On July 1, Target is treated as if it sold its assets to an unrelated person in exchange for the ADADP, $10,000 ($8,000 ((50 shares × $88) + (30 shares × $120))/.80 ($9,600 (80 shares × $120)/$12,000 (100 shares × $120))), which is allocated to Buildings 1 and 2 in proportion to their fair market values, $6,500 to Building 1 and $3,500 to Building 2 (see §§ 1.336-3 and 1.338-6 for determination of amount and allocation of ADADP). Target realizes a gain of $500 on the deemed sale of Building 1 ($6,500-$6,000). Target realizes a loss of $1,600 on the deemed sale of Building 2 ($3,500-$5,100). Target recognizes all of its gains on the deemed asset disposition. However, because 30 shares of Target stock were distributed during the 12-month disposition period and

there was a net loss of $1,100 realized on the deemed disposition of Buildings 1 and 2, $413 of the loss on the deemed sale is disallowed (see § 1.336-2(b)(1)(i)(B)(2) for the determination of the disallowed loss amount). New Target is then treated as acquiring all its assets from an unrelated person in a single transaction in exchange for the amount of the AGUB, $10,000 ($8,000 ((50 shares × $88) + (30 shares × $120)) × 1.25 ((100-0)/80)), which is allocated to Buildings 1 and 2 in proportion to their fair market values, $6,500 to Building 1 and $3,500 to Building 2 (see §§ 1.336-4, 1.338-5, and 1.338-6 for determination of amount and allocation of AGUB). Old Target is treated as liquidating into Parent immediately after the deemed asset disposition, distributing the $10,000 deemed received in exchange for its assets in a transaction qualifying under section 332. Parent recognizes no gain or loss on the liquidation. Parent is then deemed to purchase 30 shares of New Target stock from an unrelated person on July 1, and to distribute those 30 New Target shares to its shareholders. Parent recognizes no gain or loss on the deemed distribution of the 30 shares under § 1.336-2(b)(1)(iv). Parent is then deemed to purchase (and retain) on July 2, the day after the disposition date, 20 shares of New Target stock at their fair market value as determined under § 1.336-2(b)(1)(v), $2,000 ($100 per share (20 shares multiplied by $100 fair market value per share ($10,000 grossed-up amount realized on the sale and distribution of 80 shares of target stock divided by 100 shares)). A is treated as having purchased the 50 shares of New Target stock on January 1 of Year 1 at a cost of $88 per share, the same as if no section 336(e) election had been made. Parent's shareholders are treated as receiving New Target stock on July 1 of Year 1 as a distribution pursuant to section 301 and their basis in New Target stock received is $120 per share, its fair market value, pursuant to section 301(d), the same as if no section 336(e) election had been made.

Example 6. Sale of Target stock by consolidated group members. (i) *Facts.* Parent owns all of the stock of Sub and 50 of the 100 outstanding shares of Target stock. Sub owns the remaining 50 shares of Target stock. Target's assets have an aggregate basis of $9,000. Target has no liabilities. Parent, Sub, and Target file a consolidated Federal income tax return. On February 1 of Year 1, Parent sells 30 shares of its Target stock to A for $2,400. On March 1 of Year 1, Sub sells all 50 shares of its Target stock to B for $5,600. Neither Parent nor Sub incurred any selling costs. Neither A nor B incurred any acquisition costs. A section 336(e) election is made.
(ii) *Consequences.* Because Parent and Sub are members of the same consolidated group, their sale of Target stock is treated as made by one seller (see paragraph (g)(2) of this section), and the sales of Target stock constitute a qualified stock disposition. March 1 of Year 1 is the disposition date. For Federal income tax purposes, Parent and Sub are not treated as selling the stock of Target to A and B, respectively. Instead, the following events are deemed to occur. Old Target is treated as if, on March 1, it sold all its assets to unrelated person in exchange for the ADADP, $10,000 (see § 1.336-3 for determination of ADADP), recognizing a net gain of $1,000. New Target is then treated as acquiring all its assets from an unrelated person in a single transaction in exchange for the amount of the AGUB, $10,000 (see §§ 1.336-4 and 1.338-5 for the determination of AGUB). Old Target is treated as liquidating into Parent and Sub immediately thereafter, distributing the $10,000 deemed received in exchange for its assets in a transaction qualifying under section 332 (see § 1.1502-34). Neither Parent nor Sub recognizes gain or loss on the liquidation. Parent is then treated as purchasing from an unrelated person on March 2, the day after the disposition date, the 20 shares of Target stock (New Target stock) retained for their fair market value

as determined under § 1.336-2(b)(1)(v), $2,000 ($100 per share). A is treated as having purchased 30 shares of New Target stock on February 1 of Year 1 at a cost of $2,400 ($80 per share), the same as if no section 336(e) election had been made. B is treated as having purchased 50 shares of New Target stock on March 1 of Year 1 at a cost of $5,600 ($112 per share), the same as if no section 336(e) election had been made.

Example 7. Sale of Target stock by non-consolidated group members. (i) *Facts.* The facts are the same as in *Example 6* except that Parent, Sub, and Target do not join in the filing of a consolidated Federal income tax return.
(ii) *Consequences.* Because Parent and Sub do not join in the filing of a consolidated Federal income tax return and no single seller sells, exchanges, or distributes Target stock meeting the requirements of section 1504(a)(2), the transaction does not constitute a qualified stock disposition. The section 336(e) election made with respect to the disposition of Target stock has no effect.

Example 8. Distribution of 80 percent of Target stock in complete redemption of a greater-than-50-percent shareholder. (i) *Facts.* A and B own 51 and 49 shares, respectively, of Seller's only class of stock. Seller owns all 100 shares of Target's only class of stock. Seller distributes 80 shares of Target stock to A in complete redemption of A's 51 shares of Seller in a transaction that does not qualify under section 355. A section 336(e) election is made.
(ii) *Consequences.* Prior to the redemption, Seller and A would be related persons because, under section 318(a)(2)(C), any stock of a corporation that is owned by Seller would be attributed to A because A owns 50 percent or more of the value of the stock of Seller. However, for purposes of §§ 1.336-1 through 1.336-5, the determination of whether Seller and A are related is made immediately after the redemption of A's stock. See §§ 1.336-1(b)(5)(iii) and 1.338-3(b)(3)(ii)(A). After the redemption, A no longer owns any stock of Seller. Accordingly, A and Seller are not related persons, as defined in § 1.336-1(b)(12), and the distribution of Target stock constitutes a qualified stock disposition. For Federal income tax purposes, rather than Seller distributing the stock of Target to A, the following is deemed to occur. Old Target is treated as if it sold its assets to an unrelated person. New Target is then treated as acquiring all its assets from an unrelated person in a single transaction. Immediately thereafter, Old Target is treated as liquidating into Seller in a transaction qualifying under section 332. Seller recognizes no gain or loss on the liquidation. Seller is then treated as purchasing 80 shares of New Target stock from an unrelated person and then distributing the 80 shares of New Target stock to A in exchange for A's 51 shares of Seller stock. Seller recognizes no gain or loss on the distribution of New Target stock pursuant to § 1.336-2(b)(1)(iv). Seller is then treated as purchasing from an unrelated person on the day after the disposition date the 20 shares of Target stock (New Target stock) retained for their fair market value as determined under § 1.336-2(b)(1)(v). The Federal income tax consequences to A are the same as if no section 336(e) election had been made.

Example 9. Pro-rata distribution of 80 percent of Target stock. (i) *Facts.* A and B own 60 and 40 shares, respectively, of Seller's only class of stock. Seller owns all 100 shares of Target's only class of stock. Seller distributes 48 shares of Target stock to A and 32 shares of Target stock to B in a transaction that does not

qualify under section 355. A section 336(e) election is made.
(ii) *Consequences.* Any stock of a corporation that is owned by Seller would be attributed to A under section 318(a)(2)(C) because, after the distribution, A owns 50 percent or more of the value of the stock of Seller. Therefore, after the distribution, A and Seller are related persons, as defined in § 1.336-1(b)(12), and the distribution of Target stock to A is not a disposition. Because only 32 percent of Target stock was sold, exchanged, or distributed to unrelated persons, there has not been a qualified stock disposition. Accordingly, the section 336(e) election made with respect to the distribution of Target stock has no effect.

[T.D. 9619, 78 FR 28474, May 15, 2013; 78 FR 53027, Aug. 28, 2013, as amended by T.D. 9959, 87 FR 324, Jan. 4, 2022]

§ 1.336-3 Aggregate deemed asset disposition price; various aspects of taxation of the deemed asset disposition.

(a) ***Scope.*** This section provides rules under section 336(e) to determine the aggregate deemed asset disposition price (ADADP) for Target. ADADP is the amount for which old Target is deemed to have sold all of its assets in the deemed asset disposition. ADADP is allocated among Target's assets in the same manner as the aggregate deemed sale price (ADSP) is allocated under § 1.338-6 to determine the amount for which each asset is deemed to have been sold. If a subsequent increase or decrease is required under general principles of tax law with respect to an element of ADADP, the redetermined ADADP is allocated among Target's assets in the same manner as redetermined ADSP is allocated under § 1.338-7.

(b) ***Determination of ADADP*** —

(1) ***General rule.*** ADADP is the sum of—

(i) The grossed-up amount realized on the sale, exchange, or distribution of recently disposed stock of Target; and

(ii) The liabilities of old Target.

(2) ***Time and amount of ADADP*** —

(i) ***Original determination.*** ADADP is initially determined at the beginning of the day after the disposition date of Target. General principles of tax law apply in determining the timing and amount of the elements of ADADP.

(ii) ***Redetermination of ADADP.*** ADADP is redetermined at such time and in such amount as an increase or decrease would be required, under general principles of tax law, for the elements of ADADP. For example, ADADP is redetermined because of an increase or decrease in the amount realized on the sale or exchange of recently disposed stock of Target or because liabilities not originally taken into account in determining ADADP are subsequently taken into account. Increases or decreases with respect to the elements of ADADP result in the reallocation of ADADP among Target's assets in the same manner as ADSP under § 1.338-7.

(c) ***Grossed-up amount realized on the disposition of recently disposed stock of Target*** —

(1) ***Determination of amount.*** The grossed-up amount realized on the disposition of recently disposed stock of Target is an amount equal to—

(i) The sum of —

(A) With respect to recently disposed of stock of Target that is not distributed in the qualified stock disposition, the amount realized on the sale or exchange of such recently disposed stock of Target, determined as if seller or S corporation shareholders were required to use old Target's accounting methods and characteristics and the installment method were not available and determined without regard to the selling costs taken into account under paragraph (c)(1)(iii) of this section, and

(B) With respect to recently disposed of stock of Target that is distributed in the qualified stock disposition, the fair market value of such recently disposed stock of Target determined on the date of each distribution;

(ii) Divided by the percentage of Target stock (by value, determined on the disposition date) attributable to the recently disposed stock;

(iii) Less the selling costs incurred by seller or S corporation shareholders in connection with the sale or exchange of recently disposed stock that reduce its amount realized on the sale or exchange of the stock (for example, brokerage commissions and any similar costs to sell the stock).

(2) ***Example.*** The following example illustrates this paragraph (c):

Example. Target has two classes of stock outstanding, voting common stock and preferred stock described in section 1504(a)(4). Seller owns all 100 shares of each class of stock. On March 1 of Year 1, Seller sells 10 shares of Target voting common stock to A for $75. On April 1 of Year 2, Seller distributes 15 shares of Target voting common stock with a fair market value of $120 to B. On May 1 of Year 2, Seller distributes 10 shares of Target voting common stock with a fair market value of $110 to C. On July 1 of Year 2, Seller sells 55 shares of Target voting common stock to D for $550. On July 1 of Year 2, the fair market value of all the Target voting common stock is $1,000 ($10 per share) and the fair market value of all the preferred stock is $600 ($6 per share). Seller incurs $20 of selling costs with respect to the sale to A and $60 of selling costs with respect to the sale to D. The grossed-up amount realized on the sale, exchange, or distribution of recently disposed stock of Target is calculated as follows: The sum of the amount realized on the sale or exchange of recently disposed stock sold or exchanged (without regard to selling costs) and the fair market value of the recently disposed stock distributed is $780 ($120 + $110 + $550) (the 10 shares sold to A on March 1 of Year 1 is not recently disposed stock because it was not disposed of during the 12-month disposition period). The percentage of Target stock by value on the disposition date attributable to recently disposed stock equals 50% ($800 (80 shares of recently disposed stock × $10, the fair market value of each share of Target common stock on the disposition date)/$1,600 ($1,000 (the total value of Target's common stock on the disposition date) + $600 (the total value of Target's preferred stock on the disposition date))). The grossed-up amount realized equals $1,500 (($780/.50)−$60 selling costs).

(d) ***Liabilities of old Target*** —

(1) ***In general.*** In general, the liabilities of old Target are measured as of the beginning of the day after the disposition date. However, if a Target for which a section 336(e) election is made engages in a transaction outside the ordinary course of business on the disposition date after the event resulting in the qualified stock disposition of Target or a higher-tier corporation, Target and all persons related thereto (either before or after the qualified stock disposition) under section 267(b) or section 707 must treat the transaction for all Federal income tax purposes as occurring at the beginning of the

day following the transaction and after the deemed disposition by old Target. In order to be taken into account in ADADP, a liability must be a liability of Target that is properly taken into account in amount realized under general principles of tax law that would apply if old Target had sold its assets to an unrelated person for consideration that included the discharge of its liabilities. See § 1.1001-2(a). Such liabilities may include liabilities for the tax consequences resulting from the deemed asset disposition.

(2) ***Time and amount of liabilities.*** The time for taking into account liabilities of old Target in determining ADADP and the amount of the liabilities taken into account is determined as if old Target had sold its assets to an unrelated person for consideration that included the discharge of the liabilities by the unrelated person. For example, if no amount of a Target liability is properly taken into account in amount realized as of the beginning of the day after the disposition date, the liability is not initially taken into account in determining ADADP, but it may be taken into account at some later date.

(e) ***Deemed disposition tax consequences.*** Gain or loss on each asset in the deemed asset disposition is computed by reference to the ADADP allocated to that asset. ADADP is allocated in the same manner as is ADSP under § 1.338-6. Although deemed disposition tax consequences may increase or decrease ADADP by creating or reducing a tax liability, the amount of the tax liability itself may be a function of the size of the deemed disposition tax consequences. Thus, these determinations may require trial and error computations.

(f) ***Other rules apply in determining ADADP.*** ADADP may not be applied in such a way as to contravene other applicable rules. For example, a capital loss cannot be applied to reduce ordinary income in calculating the tax liability on the deemed asset disposition for purposes of determining ADADP.

(g) ***Examples.*** The following examples illustrate this section.

Example 1. (i) *Facts.* The facts are the same as in *Example 1* of § 1.336-2(b)(1)(i)(B)(*3*), that is, Parent owns 60 of the 100 outstanding shares of the common stock of Seller, Seller's only class of stock outstanding. The remaining 40 shares of the common stock of Seller are held by shareholders unrelated to Seller or each other. Seller owns 95 of the 100 outstanding shares of Target common stock, and all 100 shares of Target preferred stock that is described in section 1504(a)(4). The remaining 5 shares of Target common stock are owned by A. On January 1 of Year 1, Seller sells 72 shares of Target common stock to B for $3,520. On July 1 of Year 1, Seller distributes 12 shares of Target common stock to Parent and 8 shares to its unrelated shareholders in a distribution described in section 301. Seller retains 3 shares of Target common stock and all 100 shares of Target preferred stock immediately after July 1. The value of Target common stock on July 1 is $60 per share. The value of Target preferred stock on July 1 is $36 per share. Target has three assets, Asset 1, a Class IV asset, with a basis of $1,776 and a fair market value of $2,000, Asset 2, a Class V asset, with a basis of $2,600 and a fair market value of $2,750, and Asset 3, a Class V asset, with a basis of $3,900 and a fair market value of $3,850. Seller incurred no selling costs on the sale of the 72 shares of Target common stock to B. Target has no liabilities. A section 336(e) election is made.
(ii) *Determination of ADADP.* The ADADP on the deemed asset disposition of Target is determined as follows. The grossed-up amount realized on the sale, exchange, or distribution of recently disposed stock of Target is $8,000, the sum of $3,520, the amount realized on the sale to B of the 72 shares of Target common stock and $480, the fair market value on the date distributed of the 8 shares of Target common stock distributed to Seller's unrelated shareholders in the qualified stock disposition, divided by .50, the

percentage of Target stock by value, determined on the disposition date, attributable to the recently disposed stock ($4,800 (80 shares of Target common stock disposed of in the qualified stock disposition × $60, the value of a share of Target common stock on the disposition date) divided by $9,600 ((100, the total number of shares of Target common stock × $60, the value of a share of Target common stock on the disposition date) + (100, the total number of shares of Target preferred stock × $36, the value of a share of Target preferred stock on the disposition date))), minus $0, Seller's selling costs in connection with the sale of the 72 shares of Target common stock sold to B. The $8,000 grossed-up amount realized on the sale, exchange, or distribution of recently disposed stock of Target is then added to the liabilities of Old Target, $0, to arrive at the ADADP, $8,000.

(iii) *Allocation of ADADP.* The ADADP of $8,000 is allocated first to Asset 1, the Class IV asset, but not in excess of Asset 1's fair market value, $2,000. The remaining ADADP of $6,000 is allocated between Assets 2 and 3, both Class V assets, in proportion to their fair market values, but not in excess of their fair market values. Because the total fair market value of Assets 2 and 3, $6,600, exceeds the ADADP remaining after allocation of a portion of the ADADP to Asset 1, the $6,000 remaining ADADP is allocated to Assets 2 and 3 in proportion to their respective fair market values. Accordingly, $2,500 is allocated to Asset 2 ($6,000 × ($2,750/($2,750 + $3,850))) and $3,500 is allocated to Asset 3 ($6,000 × ($3,850/($2,750 + $3,850))).

Example 2. (i) *Facts.* The facts are the same as in *Example 1* except that Asset 2 is the stock of Target Subsidiary, a corporation of which Target owns 100 of the 110 shares of common stock, the only outstanding class of Target Subsidiary stock. The remaining 10 shares of Target Subsidiary stock are owned by D. The value of Target Subsidiary stock on July 1 is $27.50 per share. Target Subsidiary has two assets, Asset 4, a Class IV asset, with a basis of $800 and a fair market value of $1,000, and Asset 5, a Class IV asset, with a basis of $2,200 and a fair market value of $2,025. Target Subsidiary has no liabilities. A section 336(e) election with respect to Target Subsidiary is also made.
(ii) *Determination of ADADP.* The ADADP on the deemed asset disposition of Target Subsidiary is determined as follows. The grossed-up amount realized on the sale, exchange, or distribution of recently disposed stock of Target Subsidiary is $2,750, ($2,500 ADADP allocable to Asset 2, the 100 shares of the stock of Target Subsidiary owned by Target, divided by .909, the percentage of Target Subsidiary stock by value, determined on the disposition date, attributable to the recently disposed stock ($2,750 (100 shares of the stock of Target Subsidiary deemed disposed in the qualified stock disposition × $27.50, the value of a share of Target Subsidiary stock on the disposition date) divided by $3,025 (110, the total number of shares of Target Subsidiary stock × $27.50, the value of a share of Target Subsidiary stock on the disposition date)), minus $0, Seller's selling costs in connection with the deemed sale of the 100 shares of Target Subsidiary stock). The $2,750 grossed-up amount realized on the sale, exchange, or distribution of recently disposed stock of Target Subsidiary is then added to the liabilities of Old Target Subsidiary, $0, to arrive at the ADADP of Target Subsidiary, $2,750.

(iii) *Allocation of ADADP.* Because Assets 4 and 5 are each assets of the same class, and the total fair market value of Assets 4 and 5 exceeds the $2,750 ADADP of Target Subsidiary, the $2,750 ADADP is allocated to Assets 4 and 5 in proportion to their respective fair market values. Accordingly, $909 is allocated to Asset 4 ($2,750 × ($1,000/($1,000 + $2,025))) and $1,841 is allocated to Asset 5 ($2,750 × ($2,025/($1,000 + $2,025))).

Example 3. (i) Seller owns all 100 of the outstanding shares of the common stock of Target, the only class of Target stock outstanding. On January 1 of Year 1, Seller sells 10 shares of Target stock to A for $6,000 ($600 per share). On August 1 of Year 1, Seller distributes the remaining 90 shares of Target stock to its unrelated shareholders in a transaction described in section 355(d)(2) or (e)(2). The value of Target stock on August 1 is $560 per share. Target has two assets, Asset 1, which is stock in trade of Target, a Class IV asset, with a basis of $15,000 and a value of $50,000, and Asset 2, which is stock in a publicly traded, unrelated corporation, a Class II asset, with a basis of $38,000 and a value of $16,000. Target has no liabilities other than any liabilities for Federal tax on account of the deemed asset disposition. Assume Target's Federal tax rate for any gain or income on the deemed asset disposition is 34 percent. Seller had no selling costs in connection with its sale of the 10 shares of Target stock. A section 336(e) election is made.
(ii) Because at least 80 percent of Target stock was disposed of (within the meaning of § 1.336-1(b)(5)) by Seller during the 12-month disposition period, a qualified stock disposition occurred. August 1 of Year 1 is the disposition date. Accordingly, pursuant to the section 336(e) election, for Federal income tax purposes, Target is treated as if, on August 1, it sold all of its assets to an unrelated person in exchange for the ADADP.

(iii) Under these facts, although a portion of the qualified stock disposition was the result of a stock distribution, because the grossed-up amount realized on the disposition of recently disposed stock of Target, $56,400 (($6,000 + ($560 × 90))/1) exceeds Target's total basis in its assets, none of the losses realized on the deemed asset disposition are disallowed under § 1.336-2(b)(2)(i)(B)(2). Because the grossed-up amount realized on the disposition of recently disposed stock of Target exceeds the value of Asset 2, the ADADP allocated to Asset 2 equals the value of Asset 2, $16,000, and Target realizes a $22,000 loss on the deemed disposition of Asset 2. None of this loss is disallowed under section 1091. See § 1.336-2(b)(2)(ii)(C). Accordingly, Target recognizes a $22,000 loss on the deemed disposition of Asset 2.

(iv) The ADADP allocated to Asset 1 is determined as follows (for purposes of this *Example 3,* TotADADP is the total ADADP for the deemed asset disposition, A1ADADP is the tentative amount of the total ADADP allocated to Asset 1, A2ADADP is the amount of the total ADADP allocated to Asset 2, G is the grossed-up amount realized on the disposition of recently disposed stock of Target, L is Target's liabilities other than Target's tax liability for the deemed disposition tax consequences, T_R is the applicable tax rate, and B1 is the adjusted basis of Asset 1 and B2 is the adjusted basis of Asset 2):

$$TotADADP = G + L + (T_R \times (TotADADP - B1 - B2))$$

A1ADADP = TotADADP−A2ADADP

A2ADADP = $16,000

A1ADADP = TotADADP−$16,000

G = ($6,000 + ($560 × 90))/1

G = $56,400

TotADADP = $56,400 + 0 + (.34 × (TotADADP−$15,000−$38,000))

TotADADP = $56,400 + .34TotADADP−$18,020

.66TotADADP = $38,380

TotADADP = $58,152

A1ADADP = $42,152

(v) Because A1ADADP, $42,152, does not exceed the value of Asset 1, $50,000, the entire A1ADADP is allocated to Asset 1. Old Target thus realizes and recognizes a gain of $27,152 on the deemed disposition of Asset 1 ($42,152−$15,000).

[T.D. 9619, 78 FR 28474, May 15, 2013]

§ 1.336-4 Adjusted grossed-up basis.

(a) ***Scope.*** Except as provided in paragraphs (b) and (c) of this section or as the context otherwise requires, the principles of paragraphs (b) through (g) of § 1.338-5 apply in determining the adjusted grossed-up basis (AGUB) for target and the consequences of a gain recognition election. AGUB is the amount for which new target is deemed to have purchased all of its assets in the deemed purchase under § 1.336-2(b)(1)(ii) or the amount for which old target is deemed to have purchased all of its assets in the deemed purchase under § 1.336-2(b)(2)(ii). AGUB is allocated among target's assets in accordance with § 1.338-6 to determine the price at which the assets are deemed to have been purchased. If a subsequent increase or decrease with respect to an element of AGUB is required under general principles of tax law, redetermined AGUB is allocated among target's assets in accordance with § 1.338-7.

(b) ***Modifications to the principles in § 1.338-5.*** Solely for purposes of applying §§ 1.336-1 through 1.336-4, the principles of § 1.338-5 are modified as follows—

(1) ***Purchasing corporation; purchaser.*** Any reference to the *purchasing corporation* shall be treated as a reference to a purchaser, as defined in § 1.336-1(b)(2).

(2) ***Acquisition date; disposition date.*** Any reference to the *acquisition date* shall be treated as a reference to the disposition date, as defined in § 1.336-1(b)(8).

(3) ***Section 338 election; section 338(h)(10) election; section 336(e) election.*** Any reference to a *section 338 election* or a *section 338(h)(10) election* shall be treated as a reference to a section 336(e) election, as defined in § 1.336-1(b)(11).

(4) ***New target; old target.*** In the case of a disposition described in section 355(d)(2) or (e)(2), any reference to *new target* shall be treated as a reference to *old target* in its capacity as the purchaser of assets pursuant to the section 336(e) election.

(5) ***Recently purchased stock; recently disposed stock.*** Any reference to *recently purchased stock* shall be treated as a reference to recently disposed stock, as defined in § 1.336-1(b)(17). In the case of a distribution of stock, for purposes of determining the purchaser's grossed-up basis of recently disposed stock, the purchaser's basis in recently disposed stock shall be deemed to be such stock's fair market value on the date it was acquired.

(6) ***Nonrecently purchased stock; nonrecently disposed stock.*** Any reference to *nonrecently purchased stock* shall be treated as a reference to nonrecently disposed stock, as defined in § 1.336-1(b)(18).

(c) ***Gain recognition election*** —

(1) ***In general.*** Any holder of nonrecently disposed stock of target may make a gain recognition election. The gain recognition election is irrevocable. Each owner of nonrecently disposed stock determines its basis amount, and therefore the gain recognized pursuant to the gain recognition election, by applying §§ 1.338-5(c) and 1.338-5(d)(3)(ii) by reference to its own recently disposed stock and nonrecently disposed stock, and not by reference to all recently disposed stock and nonrecently disposed stock.

(2) ***80-percent purchaser.*** If a section 336(e) election is made for target, any 80-percent purchaser and all persons related to the 80-percent purchaser are automatically deemed to have made a gain recognition election for its nonrecently disposed target stock.

(3) ***Non-80-percent purchaser.*** If not automatically deemed made under paragraph (c)(2) of this section, a gain recognition election is made by a non-80-percent purchaser providing, on or before the due date for filing the section 336(e) election statement by the appropriate party, a gain recognition election statement, as described in paragraph (c)(4) of this section, to the appropriate party. If seller and target are members of the same consolidated group, seller is the appropriate party and the common parent of the consolidated group must retain the gain recognition election statement. If seller and target are members of the same affiliated group but do not join in the filing of a consolidated Federal income tax return, or if target is an S corporation, target is the appropriate party and target must retain the gain recognition election statement. If a non-80-percent purchaser makes a gain recognition election, all related persons to the non-80-percent purchaser must also make a gain recognition election. Otherwise, the gain recognition election for the non-80-percent purchaser will have no effect.

(4) ***Gain recognition election statement.*** A gain recognition election statement must include the following declarations (or substantially similar declarations):

(i) [Insert name, address, and taxpayer identifying number of person for whom gain recognition election is actually being made] has elected to recognize gain under § 1.336-4(c) with respect to [his, hers, or its] nonrecently disposed stock.

(ii) [Insert name of person for whom gain recognition election is actually being made] agrees to report any gain under the gain recognition election on [his, hers, or its] Federal income tax return (including an amended return, if necessary) for the taxable year that includes the disposition date of [insert name and employer identification number of target].

(d) ***Examples.*** The following examples illustrate the provisions of this section.

Example 1. On January 1 of Year 1, Seller owns 85 shares of Target stock, A owns 8 shares, B owns 4 shares, and C owns the remaining 3 shares. Each of A's 8 shares, B's 4 shares, and C's 3 shares have a $5 basis. Assume that Target has no liabilities. On July 1 of Year 2, Seller sells 70 shares of Target stock to A for $10 per share. On September 1 of Year 2, Seller sells 5 shares of Target stock to B and 5 shares of Target stock to C for $14 per share. A section 336(e) election is made. A does not make a gain recognition election. A incurs $25 of acquisition costs and B and C each incur $10 of acquisition costs in connection with their respective Year 2 purchases. These costs are capitalized in the basis of Target stock. September 1 of Year 2 is the disposition date. Because A owns at least 10 percent of Target stock on September 1, the disposition date, and A's original 8 shares of Target stock owned on January 1 of Year 1 were not disposed of in the qualified stock disposition, A's original 8 shares of Target stock are nonrecently disposed stock. Although B's original 4 shares and C's original 3 shares were not disposed of in the qualified stock disposition, because neither B nor C owns, with the application of section 318(a), other than section 318(a)(4), at least 10 percent of the total voting power or value of Target stock on the disposition date, their original shares are not nonrecently disposed stock. The grossed-up basis of recently disposed Target stock is $1,011, determined as follows: The purchasers' (A, B, and C) aggregate basis in the recently disposed target stock, determined without regard to acquisition costs, is $840 ((70 × $10) + (5 × $14) + (5 × $14)). This amount is multiplied by a fraction, the numerator of which is 100 minus 8, the percentage of Target stock that is nonrecently disposed stock, and the denominator of which is 80, the percentage of Target stock attributable to recently disposed stock ($840 × 92/80 = $966). This amount is then increased by the $45 of acquisition costs incurred by A, B, and C to arrive at the $1,011 grossed-up basis of recently disposed Target stock ($966 + $45 = $1,011). New Target's AGUB is $1,051, the sum of $1,011, the grossed-up basis of recently disposed Target stock and $40 (8 × $5), A's basis in his nonrecently disposed Target stock.

Example 2. The facts are the same as in *Example 1* except that A makes a gain recognition election. Pursuant to the gain recognition election, A is treated as if he sold on September 1 of Year 2, the disposition date, his 8 shares of nonrecently disposed Target stock for the basis amount, and A's basis in nonrecently disposed target stock immediately after the deemed sale is the basis amount. A's basis amount equals his basis in his recently disposed Target stock without regard to acquisition costs, $700 (70 × $10), multiplied by a fraction, the numerator of which is 100 minus 8, the percentage of Target stock, by value, determined on the disposition date, which is A's nonrecently disposed Target stock, and the denominator of which is 70, the percentage of Target stock, by value, determined on the disposition date, which is A's recently disposed stock, which is then multiplied by a fraction, the numerator of which is 8, the percentage of Target stock, by value, determined on the disposition date, attributable to A's nonrecently disposed Target stock and the denominator of which is 100 minus the numerator amount. Accordingly, A's basis amount is $80 ($700 × 92/70 × 8/92). A therefore recognizes gain of $40 under the gain recognition election ($80 basis amount minus A's $40 basis in his nonrecently disposed stock prior to the gain recognition election). New Target's AGUB is $1,091, the sum of $1,011, the grossed-up basis of all recently disposed Target stock and $80, A's basis in his nonrecently disposed Target stock pursuant to the gain recognition election.

Example 3. (i) The facts are the same as in *Example 3* of § 1.336-3(g), that is, Seller owns all 100 of the outstanding shares of the common stock of Target, the only class of Target stock outstanding. On January 1 of Year 1, Seller sells 10 shares of Target stock to A for $6,000 ($600 per share). On August 1 of Year 1, Seller distributes the remaining 90 shares of Target stock to its unrelated shareholders in a transaction described in section 355(d)(2) or (e)(2). The value of Target stock on August 1 is $560 per share. Target has two assets, Asset 1, which is stock in trade of Target, a Class IV asset, with a basis of $15,000 and a value of $50,000, and Asset 2, which is stock in a publicly traded, unrelated corporation, a Class II asset, with a basis of $38,000 and a value of $16,000. Target has no liabilities other than any liabilities for Federal tax on account of the deemed asset disposition. Assume Target's Federal tax rate for any gain or income on the deemed asset disposition is 34 percent. Seller had no selling costs in connection with its sale of the 10 shares of Target stock. A section 336(e) election is made. In addition, A incurred $100 of acquisition costs with respect to the purchase of the 10 shares of Target stock. Target's AGUB in the assets deemed acquired pursuant to § 1.336-2(b)(2)(ii)(B) is determined as follows (for purposes of this *Example 3,* GRD is the grossed-up basis of recently disposed stock, BND is the basis in nonrecently disposed stock, TotL is Target's total liabilities, including Target's tax liability, and X is the A's total acquisition costs):
AGUB = GRD + BND + TotL

GRD = ($6,000 + ($560 × 90)) × ((100 − 0)/100) + X

GRD = ($6,000 + $50,400) × (100/100) + $100

GRD = $56,500

BND = $0

TotL = .34 × ($27,152 (Target's gain recognized on deemed disposition of Asset 1) − $22,000 (Target's loss recognized on deemed disposition of Asset 2)) (see *Example 3* of § 1.336-3(g) for determination of Target's gain and loss recognized on deemed disposition of Assets 1 and 2)

TotL = $1,752

AGUB = $56,500 + $0 + $1,752

AGUB = $58,252

(ii) The AGUB allocated to Asset 2 is $16,000, the value of Asset 2. Because the excess of the total AGUB, $58,252, over the portion of the AGUB allocated to Asset 2, $16,000, does not exceed the value of Asset 1, the AGUB allocated to Asset 1 is such excess, $42,252.

[T.D. 9619, 78 FR 28474, May 15, 2013]

§ 1.336-5 Applicability dates.

Except as otherwise provided in this section, the provisions of §§ 1.336-1 through 1.336-4 apply to any qualified stock disposition for which the disposition date is on or after May 15, 2013. The provisions of § 1.336-1(b)(5)(i)(A) relating to section 1022 apply on and after January 19, 2017. The provisions of § 1.336-2(g)(3)(ii) and (iii) apply to foreign income taxes paid or accrued in taxable years beginning on or after December 28, 2021.

[T.D. 9959, 87 FR 324, Jan. 4, 2022]

EFFECTS ON CORPORATION

§ 1.337-1 Nonrecognition for property distributed to parent in complete liquidation of subsidiary.

(a) ***General rule.*** If sections 332(a) and 337 are applicable with respect to the receipt of a subsidiary`s property in complete liquidation, no gain or loss is recognized to the liquidating subsidiary with respect to such property (including property distributed with respect to indebtedness, see section 337(b)(1) and § 1.332-7), except as provided in section 337(b)(2) (distributions to certain tax-exempt distributees), section 367(e)(2) (distributions to foreign corporations), and section 897(d) (distributions of U.S. real property interests by foreign corporations).

(b) ***Applicability date.*** This section applies to any taxable year beginning on or after March 28, 2016.

[T.D. 9759, 81 FR 17074, Mar. 28, 2016]

§ 1.337(d)-1 Transitional loss limitation rule.

(a) ***Loss limitation rule for transitional subsidiary*** —

(1) ***General rule.*** No deduction is allowed for any loss recognized by a member of a consolidated group with respect to the disposition of stock of a transitional subsidiary. However, for transactions involving loss shares of subsidiary stock occurring on or after September 17, 2008, see § 1.1502-36. Further, this section does not apply to a transaction that is subject to § 1.1502-36.

(2) ***Allowable loss*** —

(i) ***In general.*** Paragraph (a)(1) of this section does not apply to the extent the taxpayer establishes that the loss is not attributable to the recognition of built-in gain by any transitional subsidiary on the disposition of an asset (including stock and securities) after January 6, 1987.

(ii) ***Statement of allowable loss.*** Paragraph (a)(2)(i) of this section applies only if a separate statement entitled “Allowable Loss Under § 1.337(d)-1(a)” is filed with the taxpayer's return for the year of the stock disposition. If the separate statement is required to be filed with a return the due date (including extensions) of which is before January 16, 1991, or with a return due (including extensions) after January 15, 1991 but filed before that date, the statement may be filed with an amended return for the year of the disposition or with the taxpayer's first subsequent return the due date (including extensions) of which is after January 15, 1991.

(iii) ***Contents of statement.*** The statement required under paragraph (a)(2)(ii) of this section must contain—

(A) The name and employer identification number (E.I.N.) of the transitional subsidiary.

(B) The basis of the stock of the transitional subsidiary immediately before the disposition.

(C) The amount realized on the disposition.

(D) The amount of the deduction not disallowed under paragraph (a)(1) of this section by reason of this paragraph (a)(2).

(E) The amount of loss disallowed under paragraph (a)(1) of this section.

(3) ***Coordination with loss deferral and other disallowance rules.***

(i) For purposes of this section, the rules of § 1.1502-20(a)(3) apply, with appropriate adjustments to reflect differences between the approach of this section and that of § 1.1502-20.

(ii) ***Other loss deferral rules.*** If paragraph (a)(1) of this section applies to a loss subject to deferral or disallowance under any other provision of the Code or the regulations, the other provision applies to the loss only to the extent it is not disallowed under paragraph (a)(1).

(4) ***Definitions.*** For purposes of this section—

(i) The definitions in § 1.1502-1 apply.

(ii) ***Transitional subsidiary*** means any corporation that became a subsidiary of the group (whether or not the group was a consolidated group) after January 6, 1987. Notwithstanding the preceding sentence, a subsidiary is not a transitional subsidiary if the subsidiary (and each predecessor) was a member of the group at all times after the subsidiary's (and each predecessor's) organization.

(iii) ***Built-in gain*** of a transitional subsidiary means gain attributable, directly or indirectly, in whole or in part, to any excess of value over basis, determined immediately before the transitional subsidiary became a subsidiary, with respect to any asset owned directly or indirectly by the transitional subsidiary at that time.

(iv) ***Disposition*** means any event in which gain or loss is recognized, in whole or in part.

(v) ***Value*** means fair market value.

(5) ***Examples.*** For purposes of the examples in this section, unless otherwise stated, the group files consolidated returns on a calendar year basis, the facts set forth the only corporate activity, and all sales and purchases are with unrelated buyers or sellers. The basis of each asset is the same determining earnings and profits adjustments and taxable income. Tax liability and its effect on basis, value, and earnings and profits are disregarded. *Investment adjustment system* means the rules of § 1.1502-32. The principles of this paragraph (a) are illustrated by the following examples:

> *Example 1. Loss attributable to recognized built-in gain.* (i) P buys all the stock of T for $100 on February 1, 1987, and T becomes a member of the P group. T has an asset with a value of $100 and basis of $0. T sells the asset in 1989 and recognizes $100 of built-in gain on the sale (*i.e.,* the asset's value exceeded its basis by $100 at the time T became a member of the P group). Under the investment adjustment system, P's basis in the T stock increases to $200. P sells all the stock of T on December 31, 1989, and recognizes a loss of $100. Under paragraph (a)(1) of this section, no deduction is allowed to P for the $100 loss.

(ii) Assume that, after T sells its asset but before P sells the T stock, T issues additional stock to unrelated persons and ceases to be a member of the P group. P then sells all its stock of T in 1997. Although T ceases to be a subsidiary within the meaning of § 1.1502-1, T continues to be a transitional subsidiary within the meaning of this section. Consequently, under paragraph (a)(1) of this section, no deduction is allowed to P for its $100 loss.

Example 2. Loss attributable to post-acquisition loss. P buys all the stock of T for $100 on February 1, 1987, and T becomes a member of the P group. T has $50 cash and an asset with $50 of built-in gain. During 1988, T retains the asset but loses $40 of the cash. The P group is unable to use the loss, and the loss becomes a net operating loss carryover attributable to T. Under the investment adjustment system, P's basis in the stock of T remains $100. P sells all the stock of T on December 31, 1988, for $60 and recognizes a $40 loss. Under paragraph (a)(2)(i) of this section, P establishes that it did not dispose of the built-in gain asset. None of P's loss is disallowed under paragraph (a)(1) if P satisfies the requirements of paragraph (a)(2)(ii) of this section.

Example 3. Stacking rules—postacquisition loss offsets postacquisition gain. (i) P buys all the stock of T for $100 on February 1, 1987, and T becomes a member of the P group. T has 2 assets. Asset 1 has a basis and value of $50, and asset 2 has a basis of $0 and a value of $50. During 1989, asset 1 declines in value to $0, and T sells asset 2 for $50, and reinvests the proceeds in asset 3. The value of asset 3 appreciates to $90. Under the investment adjustment system, P's basis in the stock of T increases from $100 to $150 as a result of the gain recognized on the sale of asset 2 but is unaffected by the unrealized post-acquisition decline in the value of asset 1. On December 31, 1989, P sells all the stock of T for $90 and recognizes a $60 loss.
(ii) Although T incurred a $50 post-acquisition loss of built-in gain because of the decline in the value of asset 1, T also recognized $50 of built-in gain. Under paragraph (a)(2) of this section, any loss on the sale of stock is treated first as attributable to recognized built-in gain. Thus, for purposes of determining under paragraph (a)(2) of this section whether P's $60 loss on the disposition of the T stock is attributable to the recognition of built-in gain on the disposition of an asset, T's unrealized post-acquisition gain of $40 offsets $40 of the $50 of unrealized post-acquisition loss. Therefore, $50 of the $60 loss is attributable to the recognition of built-in gain on the disposition of an asset and is disallowed under paragraph (a)(1) of this section.

Example 4. Stacking rules—built-in loss offsets built-in gain. (i) P buys all the stock of T for $50 on February 1, 1987, and T becomes a member of the P group. T has 2 assets. Asset 1 has a basis of $50 and a value of $0, and asset 2 has a basis of $0 and a value of $50. During 1989, T sells asset 1 for $0 and asset 2 for $50, and reinvests the $50 proceeds in asset 3. The value of asset 3 declines to $40. Under the investment adjustment system, P's basis in the stock of T remains $50 as a result of the offsetting gain and loss recognized on the sale of assets 1 and 2 and is unaffected by the

unrealized post-acquisition decline in the value of asset 3. On December 31, 1989, P sells all the stock of T for $40 and recognizes a $10 loss.
(ii) Although T recognized a $50 built-in gain on the sale of asset 2, T also recognized a $50 built-in loss on the sale of asset 1. For purposes of determining under paragraph (a)(2) of this section whether P's $10 loss on the disposition of the T stock is attributable to the recognition of built-in gain on the disposition of an asset, T's recognized built-in gain is offset by its recognized built-in loss. Thus none of P's $10 loss is attributable to the recognition of built-in gain on the disposition of an asset.

(iii) The result would be the same if, instead of a $50 built-in loss in asset 2, T has a $50 net operating loss carryover when P buys the T stock, and the net operating loss carryover is used to offset the built-in gain.

Example 5. Outside basis partially corresponds to inside basis. (i) Individual A owns all the stock of T, for which A has a basis of $60. On February 1, 1987, T owns 1 asset with a basis of $0 and a value of $100, P acquires all the stock of T from A in an exchange to which section 351(a) applies, and T becomes a member of the P group. P has a carryover basis of $60 in the T stock. During 1988, T sells the asset and recognizes $100 of gain. Under the investment adjustment system, P's basis in the T stock increases from $60 to $160. T reinvests the $100 proceeds in another asset, which declines in value to $90. On January 1, 1989, P sells all the stock of T for $90 and recognizes a loss of $70.
(ii) Although P's basis in the T stock was increased by $100 as a result of the recognition of built-in gain on the disposition of T's asset, only $60 of the $70 loss on the sale of the stock is attributable under paragraph (a)(2) of this section to the recognition of built-in gain from the disposition of the asset. (Had T's asset not declined in value to $90, the T stock would have been sold for $100, and a $60 loss would have been attributable to the recognition of the built-in gain.) Therefore, $60 of the $70 loss is disallowed under paragraph (a)(2), and $10 is not disallowed if P satisfies the requirements of paragraph (a)(2). If P had sold the stock of T for $95 because T's other assets had unrealized appreciation of $5, $60 of the $65 loss would still be attributable to T's recognition of built-in gain on the disposition of assets.

Example 6. Creeping acquisition. P owns 60 percent of the stock of S on January 6, 1987. On February 1, 1987, P buys an additional 20 percent of the stock of S, and S becomes a member of the P group. P sells all the S stock on March 1, 1989 and recognizes a loss of $100. All 80 percent of the stock of S owned by P is subject to the rules of this section and, under paragraph (a) (1) and (2) of this section, P is not allowed to deduct the $100 loss, except to the extent P establishes the loss is not attributable to the recognition by S of built-in gain on the disposition of assets.

Example 7. Effect of post-acquisition appreciation. P buys all the stock of T for $100, and T becomes a member of the P group. T has an asset with a basis of $0 and a value of $100. T sells the asset for $100. Under the investment adjustment system, P's basis in the T stock increases to $200. T reinvests the proceeds of the sale in an asset that appreciates in value to $180. Five years after the sale, P sells all the stock of T for $180 and recognizes a $20 loss. Under paragraph (a)(1) of this section, no deduction is allowed to P for the $20 loss.

Example 8. Deferred loss and recognized gain. (i) P is the common parent of a consolidated group, S is a wholly owned subsidiary of P, and T is a wholly owned subsidiary of S. S purchased all of the T stock on February 1, 1987 for $100, and T has an asset with a basis of $40 and a value of $100. T sells the asset for $100, recognizing $60 of gain. Under the investment adjustment system, S's basis in the T stock increases from $100 to $160. S sells its T stock to P for $100 in a deferred intercompany transaction, recognizing a $60 loss that is deferred under section 267(f) and § 1.1502-13. P subsequently sells all the stock of T for $100 to X, a member of the same controlled group (as defined in section 267(f)) as P but not a member of the P consolidated group.
(ii) Under paragraph (a)(3) of this section, the application of paragraph (a)(1) of this section to S's $60 loss is deferred, because S's loss is deferred under section 267(f) and § 1.1502-13. Although P's sale of the T stock to X would cause S's deferred loss to be taken into account under § 1.1502-13, § 1.267(f)-1 provides that the loss is not taken into account because X is a member of the same controlled group as P and S. Nevertheless, under paragraph (a)(3) of this section, because the T stock ceases to be owned by a member of the P consolidated group, S's deferred loss is disallowed immediately before the sale and is never taken into account under section 267(f).

(b) ***Indirect disposition of transitional subsidiary*** —

(1) ***Loss limitation rule for transitional parent.*** No deduction is allowed for any loss recognized by a member of a consolidated group with respect to the disposition of stock of a transitional parent.

(2) ***Allowable loss*** —

(i) ***In general.*** Paragraph (b)(1) of this section does not apply to the extent the taxpayer establishes that the loss exceeds the amount that would be disallowed under paragraph (a) of this section if each highest tier transitional subsidiary's stock in which the transitional parent has a direct or indirect interest had been sold immediately before the disposition of the transitional parent's stock. In applying the preceding sentence, appropriate adjustments shall be made to take into account circumstances where less than all the stock of a transitional parent owned by members of a consolidated group is disposed of in the same transaction, or the stock of a transitional subsidiary or a transitional parent is directly owned by more than 1 member.

(ii) ***Statement of allowable loss.*** Paragraph (b)(2)(i) of this section applies only if a separate statement entitled "Allowable Loss Under Section 1.337(d)-1(b)" is filed with the taxpayer's return for the year of the stock disposition. If the separate statement is required to be filed with a return the due date (including extensions) of which is before January 16, 1991, or with a

return due (including extensions) after January 15, 1991 but filed before that date, the statement may be filed with an amended return for the year of the disposition or with the taxpayer's first subsequent return the due date (including extensions) of which is after January 15, 1991.

(iii) ***Contents of statement.*** The statement required under paragraph (b)(2)(ii) of this section must contain—

(A) The name and employer identification number (E.I.N.) of the transitional parent.

(B) The basis of the stock of the transitional parent immediately before the disposition.

(C) The amount realized on the disposition.

(D) The amount of the deduction not disallowed under paragraph (b)(1) of this section by reason of this paragraph (b)(2).

(E) The amount of loss disallowed under paragraph (b)(1) of this section.

(3) ***Coordination with loss deferral and other disallowance rules.***

(i) For purposes of this section, the rules of § 1.1502-20(a)(3) apply, with appropriate adjustments to reflect differences between the approach of this section and that of § 1.1502-20.

(ii) ***Other loss deferral rules.*** If paragraph (b)(1) of this section applies to a loss subject to deferral or disallowance under any other provision of the Code or the regulations, the other provision applies to the loss only to the extent it is not disallowed under paragraph (b)(1).

(4) ***Definitions.*** For purposes of this section—

(i) ***Transitional parent*** means any subsidiary, other than a transitional subsidiary, that owned at any time after January 6, 1987, a direct or indirect interest in the stock of a corporation that is a transitional subsidiary.

(ii) ***Highest tier transitional subsidiary*** means the transitional subsidiary (or subsidiaries) in which the transitional parent has a direct or indirect interest and that is the highest transitional subsidiary (or subsidiaries) in a chain of members.

(5) ***Examples.*** The principles of this paragraph (b) are illustrated by the following examples:

> *Example 1. Ownership of chain of transitional subsidiaries.* (i) P forms S with $200 on January 1, 1985, and S becomes a member of the P group. On February 1, 1987, S buys all the stock of T, and T buys all the stock of T1, and both T and T1 become members of the P group. On January 1, 1988, P sells all the stock of S and recognizes a $90 loss on the sale.
> (ii) Under paragraph (a)(4)(ii) of this section, both T and T1 are transitional subsidiaries, because they became members of the P group after January 6, 1987. Under paragraph (b)(4)(i) of this section, S is a transitional parent, because it owns a direct interest in stock of transitional subsidiaries and is not itself a transitional subsidiary.
>
> (iii) Under paragraph (b) (1) and (2) of this section, because S is a transitional parent, no deduction is allowed to P for its $90 loss except to the extent the loss exceeds the amount of S's loss that would have been disallowed if S had sold all the stock of T, S's highest tier

transitional subsidiary, immediately before P's sale of all the S stock. Assume all the T stock would have been sold for a $90 loss and that all the loss would be attributable to the recognition of built-in gain from the disposition of assets. Because in that case $90 of loss would be disallowed, all of P's loss on the sale of the S stock is disallowed under paragraph (b).

Example 2. Ownership of brother-sister transitional subsidiaries. (i) P forms S with $200 on January 1, 1985, and S becomes a member of the P group. On February 1, 1987, S buys all the stock of both T and T1, and T and T1 become members of the P group. On January 1, 1988, P sells all the stock of S and recognizes a $90 loss on the sale.
(ii) Under paragraph (b) (1) and (2) of this section, no deduction is allowed to P for its $90 loss except to the extent P establishes that the loss exceeds the amount of S's stock losses that would be disallowed if S sold all the stock of T and T1, S's highest tier transitional subsidiaries, immediately before P's sale of all the S stock. Assume that all the T stock would have been sold for a $50 loss, all the T1 stock of a $40 loss, and that the entire amount of each loss would be attributable to the recognition of built-in gain on the disposition of assets. Because $90 of loss would be disallowed with respect to the sale of S's T and T1 stock, P's $90 loss on the sale of all the S stock is disallowed under paragraph (b).

(c) ***Successors*** —

(1) ***General rule.*** This section applies, to the extent necessary to effectuate the purposes of this section, to—

(i) Any property owned by a member or former member, the basis of which is determined, directly or indirectly, in whole or in part, by reference to the basis in a subsidiary's stock, and

(ii) Any property owned by any other person whose basis in the property is determined, directly or indirectly, in whole or in part, by reference to a member's (or former member's) basis in a subsidiary's stock.

(2) ***Examples.*** The principles of this paragraph (c) are illustrated by the following examples:

Example 1. Merger into grandfathered subsidiary. P, the common parent of a group, owns all the stock of T, a transitional subsidiary. On January 1, 1989, T merges into S, a wholly owned subsidiary of P that is not a transitional subsidiary. Under paragraph (c)(1) of this section, all the stock of S is treated as stock of a transitional subsidiary. As a result, no deduction is allowed for any loss recognized by P on the disposition of any S stock, except to the extent the P group establishes under paragraph (a)(2) that the loss is not attributable to the recognition of built-in gain on the disposition of assets of T.

Example 2. Nonrecognition exchange of transitional stock. (i) P, the common parent of a group, owns all the stock of T, a transitional subsidiary. On January 1, 1989, P transfers the stock of T to X, a corporation that is not a member of the P group, in exchange for 20 percent of its stock in a transaction to which section 351(a) applies. T and X file separate returns.

(ii) Under paragraph (c)(1) of this section, all the stock of X owned by P is treated as stock of a transitional subsidiary because P's basis for the X stock is determined by reference to its basis for the T stock. As a result, no deduction is allowed to P for any loss recognized on the disposition of the X stock, except to the extent permitted under paragraph (a) of this section.

(iii) Under paragraph (c)(1), X is treated as a member subject to paragraph (a) of this section with respect to the T stock because X's basis for the stock is determined by reference to P's basis for the stock. Moreover, all of the T stock owned by X continues to be stock of a transitional subsidiary. As a result, no deduction is allowed to X for any loss recognized on the disposition of any T stock, except to the extent permitted under paragraph (a) of this section.

(d) *Investment adjustments and earnings and profits* —

(1) ***In general.*** For purposes of determining investment adjustments under § 1.1502-32 and earnings and profits under § 1.1502-33(c) with respect to a member of a consolidated group that owns stock in a subsidiary, any deduction that is disallowed under this section is treated as a loss arising and absorbed by the member in the tax year in which the disallowance occurs.

(2) ***Example.***

(i) In 1986, P forms S with a contribution of $100, and S becomes a member of the P group. On February 1, 1987, S buys all the stock of T for $100. T has an asset with a basis of $0 and a value of $100. In 1988, T sells the asset for $100. Under the investment adjustment system, S's basis in the T stock increases to adjustment system, S's basis in the T stock increases to $200, P's basis in the S stock increases to $200, and P's earnings and profits and S's earnings and profits increase by $100. In 1989, S sells all of the T stock for $100, and S's recognized loss of $100 is disallowed under paragraph (a)(1) of this section.

(ii) Under paragraph (d)(1) of this section, S's earnings and profits for 1989 are reduced by $100, the amount of the loss disallowed under paragraph (a)(1). As a result, P's basis in the S stock is reduced from $200 to $100 under the investment adjustment system. P's earnings and profits for 1989 are correspondingly reduced by $100.

(e) *Effective dates* —

(1) ***General rule.*** This section applies with respect to dispositions after January 6, 1987. For dispositions on or after November 19, 1990, however, this section applies only if the stock was deconsolidated (as that term is defined in § 1.337(d)-2(b)(2)) before November 19, 1990, and only to the extent the disposition is not subject to § 1.337(d)-2 or § 1.1502-20.

(2) ***Binding contract rule.*** For purposes of this paragraph (e), if a corporation became a subsidiary pursuant to a binding written contract entered into before January 6, 1987, and in continuous effect until the corporation became a subsidiary, or a disposition was pursuant to a binding written contract entered into before March 9, 1990, and in continuous effect until the disposition, the date the contract became binding shall be treated as the date the corporation became a subsidiary or as the date of disposition.

(3) *Application of § 1.1502-20T to certain transactions* —

(i) ***In general.*** If a group files the certification described in paragraph (e)(3)(ii) of this section, it may apply § 1.1502-20T (as contained in the CFR edition revised as of April 1, 1990), to all of its members with respect to all dispositions and deconsolidations by the certifying group to which § 1.1502-20T otherwise applied by its terms occurring—

(A) On or after March 9, 1990 (but only if not pursuant to a binding contract described in § 1.337(d)-1T(e)(2) (as contained in the CFR edition revised as of April 1, 1990) that was entered into before March 9, 1990); and

(B) Before November 19, 1990 (or thereafter, if pursuant to a binding contract described in § 1.1502-20T(g)(3) that was entered into on or after March 9, 1990 and before November 19, 1990).

The certification under this paragraph (e)(3)(i) with respect to the application of § 1.1502-20T to any transaction described in this paragraph (e)(3)(i) may not be withdrawn and, if the certification is filed, § 1.1502-20T must be applied to all such transactions on all returns (including amended returns) on which such transactions are included.

(ii) ***Time and manner of filing certification.*** The certification described in paragraph (e)(3)(i) of this section must be made in a separate statement entitled "[insert name and employer identification number of common parent] hereby certifies under § 1.337(d)-1 (e)(3) that the group of which it is the common parent is applying § 1.1502-20T to all transactions to which that section otherwise applied by it terms." The statement must be signed by the common parent and filed with the group's income tax return for the taxable year of the first disposition or deconsolidation to which the certification applies. If the separate statement required under this paragraph (e)(3) is to be filed with a return the due date (including extensions) of which is before November 16, 1991, the statement may be filed with an amended return for the year of the disposition or deconsolidation that is filed within 180 days after September 13, 1991. Any other filings required under § 1.1502-20T, such as the statement required under § 1.1502-20T(f)(5), may be made with the amended return, regardless of whether § 1.1502-20T permits such filing by amended return.

[T.D. 8319, 55 FR 49031, Nov. 26, 1990, as amended by T.D. 8364, 56 FR 47389, Sept. 19, 1991; 57 FR 53550, Nov. 12, 1992; T.D. 8560, 59 FR 41674, 41675, Aug. 15, 1994; T.D. 8597, 60 FR 36679, July 18, 1995; T.D. 9424, 73 FR 53947, Sept. 17, 2008]

§ 1.337(d)-1T [Reserved]

§ 1.337(d)-2 Loss limitation rules.

(a) ***Loss disallowance*** —

(1) ***General rule.*** No deduction is allowed for any loss recognized by a member of a consolidated group with respect to the disposition of stock of a subsidiary. However, for transactions involving loss shares of subsidiary stock occurring on or after September 17, 2008, see § 1.1502-36. Further, this section does not apply to a transaction that is subject to § 1.1502-36.

(2) ***Definitions.*** For purposes of this section:

(i) The definitions in § 1.1502-1 apply.

(ii) ***Disposition*** means any event in which gain or loss is recognized, in whole or in part.

(3) ***Coordination with loss deferral and other disallowance rules.*** For purposes of this section, the rules of § 1.1502-20(a)(3) apply, with appropriate adjustments to reflect differences between the approach of this section and that of § 1.1502-20.

(4) ***Netting.*** Paragraph (a)(1) of this section does not apply to loss with respect to the disposition of stock of a subsidiary, to the extent that, as a consequence of the same plan or arrangement, gain is taken into account by members with respect to stock of the same subsidiary having the same material terms. If the gain to which this paragraph applies is less than the amount of the loss with respect to the disposition of the subsidiary's stock, the gain is applied to offset loss with respect to each share disposed of as a consequence of the same plan or arrangement in proportion to the amount of the loss deduction that would have been disallowed under paragraph (a)(1) of this section with respect to such share before the application of this paragraph (a)(4). If the same item of gain could be taken into account more than once in limiting the application of paragraphs (a)(1) and (b)(1) of this section, the item is taken into account only once.

(b) ***Basis reduction on deconsolidation*** —

(1) ***General rule.*** If the basis of a member of a consolidated group in a share of stock of a subsidiary exceeds its value immediately before a deconsolidation of the share, the basis of the share is reduced at that time to an amount equal to its value. If both a disposition and a deconsolidation occur with respect to a share in the same transaction, paragraph (a) of this section applies and, to the extent necessary to effectuate the purposes of this section, this paragraph (b) applies following the application of paragraph (a) of this section.

(2) ***Deconsolidation. Deconsolidation*** means any event that causes a share of stock of a subsidiary that remains outstanding to be no longer owned by a member of any consolidated group of which the subsidiary is also a member.

(3) ***Value. Value*** means fair market value.

(4) ***Netting.*** Paragraph (b)(1) of this section does not apply to reduce the basis of stock of a subsidiary, to the extent that, as a consequence of the same plan or arrangement, gain is taken into account by members with respect to stock of the same subsidiary having the same material terms. If the gain to which this paragraph applies is less than the amount of basis reduction with respect to shares of the subsidiary's stock, the gain is applied to offset basis reduction with respect to each share deconsolidated as a consequence of the same plan or arrangement in proportion to the amount of the reduction that would have been required under paragraph (b)(1) of this section with respect to such share before the application of this paragraph (b)(4).

(c) ***Allowable loss*** —

(1) ***Application.*** This paragraph (c) applies with respect to stock of a subsidiary only if a separate statement entitled *§ 1.337(d)-2(c) statement* is included with the return in accordance with paragraph (c)(3) of this section.

(2) ***General rule.*** Loss is not disallowed under paragraph (a)(1) of this section and basis is not reduced under paragraph (b)(1) of this section to the extent the taxpayer establishes that the loss or basis is not attributable to the recognition of built-in gain, net of directly related expenses, on the disposition of an asset (including stock and securities). Loss or basis may be attributable to the recognition of built-in gain on the disposition of an asset by a prior group. For purposes of this section, gain recognized on the disposition of an asset is built-in gain to the extent attributable, directly or indirectly, in whole or in part, to any excess of value over basis that is reflected, before the

disposition of the asset, in the basis of the share, directly or indirectly, in whole or in part, after applying section 1503(e) and other applicable provisions of the Internal Revenue Code and regulations. Federal income taxes may be directly related to built-in gain recognized on the disposition of an asset only to the extent of the excess (if any) of the group's income tax liability actually imposed under Subtitle A of the Internal Revenue Code for the taxable year of the disposition of the asset over the group's income tax liability for the taxable year redetermined by not taking into account the built-in gain recognized on the disposition of the asset. For this purpose, the group's income tax liability actually imposed and its redetermined income tax liability are determined without taking into account the foreign tax credit under section 27(a) of the Internal Revenue Code.

(3) ***Contents of statement and time of filing.*** The statement required under paragraph (c)(1) of this section must be included with or as part of the taxpayer's return for the year of the disposition or deconsolidation and must contain—

(i) The name and employer identification number (E.I.N.) of the subsidiary; and

(ii) The amount of the loss not disallowed under paragraph (a)(1) of this section by reason of this paragraph (c) and the amount of basis not reduced under paragraph (b)(1) of this section by reason of this paragraph (c).

(4) ***Example.*** The principles of paragraphs (a), (b), and (c) of this section are illustrated by the examples in §§ 1.337(d)-1(a)(5) and 1.1502-20(a)(5) (other than *Examples 3, 4,* and *5*) and (b), with appropriate adjustments to reflect differences between the approach of this section and that of § 1.1502-20, and by the following example. For purposes of the examples in this section, unless otherwise stated, the group files consolidated returns on a calendar year basis, the facts set forth the only corporate activity, and all sales and purchases are with unrelated buyers or sellers. The basis of each asset is the same for determining earnings and profits adjustments and taxable income. Tax liability and its effect on basis, value, and earnings and profits are disregarded. *Investment adjustment system* means the rules of § 1.1502-32. The example reads as follows:

> *Example. Loss offsetting built-in gain in a prior group.* (i) P buys all the stock of T for $50 in Year 1, and T becomes a member of the P group. T has 2 assets. Asset 1 has a basis of $50 and a value of $0, and asset 2 has a basis of $0 and a value of $50. T sells asset 2 during Year 3 for $50 and recognizes a $50 gain. Under the investment adjustment system, P's basis in the T stock increased to $100 as a result of the recognition of gain. In Year 5, all of the stock of P is acquired by the P1 group, and the former members of the P group become members of the P1 group. T then sells asset 1 for $0, and recognizes a $50 loss. Under the investment adjustment system, P's basis in the T stock decreases to $50 as a result of the loss. T's assets decline in value from $50 to $40. P then sells all the stock of T for $40 and recognizes a $10 loss.
> (ii) P's basis in the T stock reflects both T's unrecognized gain and unrecognized loss with respect to its assets. The gain T recognizes on the disposition of asset 2 is built-in gain with respect to both the P and P1 groups for purposes of paragraph (c)(2) of this section. In addition, the loss T recognizes on the disposition of asset 1 is built-in loss with respect to the P and P1 groups for purposes of paragraph (c)(2) of this section. T's recognition of the built-in loss while a member of the P1 group offsets the effect on T's stock basis of T's recognition

of the built-in gain while a member of the P group. Thus, P's $10 loss on the sale of the T stock is not attributable to the recognition of built-in gain, and the loss is therefore not disallowed under paragraph (c)(2) of this section.

(iii) The result would be the same if, instead of having a $50 built-in loss in asset 1 when it becomes a member of the P group, T has a $50 net operating loss carryover and the carryover is used by the P group.

(d) ***Successors.*** For purposes of this section, the rules and examples of § 1.1502-20(d) apply, with appropriate adjustments to reflect differences between the approach of this section and that of § 1.1502-20.

(e) ***Anti-avoidance rules.*** For purposes of this section, the rules and examples of § 1.1502-20(e) apply, with appropriate adjustments to reflect differences between the approach of this section and that of § 1.1502-20.

(f) ***Investment adjustments.*** For purposes of this section, the rules and examples of § 1.1502-20(f) apply, with appropriate adjustments to reflect differences between the approach of this section and that of § 1.1502-20.

(g) ***Effective dates.*** This section applies with respect to dispositions and deconsolidations on or after March 3, 2005. In addition, this section applies to dispositions and deconsolidations for which an election is made under § 1.1502-20(i)(2) to determine allowable loss under this section. If loss is recognized because stock of a subsidiary became worthless, the disposition with respect to the stock is treated as occurring on the date the stock became worthless. For dispositions and deconsolidations after March 6, 2002 and before March 3, 2005, see § 1.337(d)-2T as contained in the 26 CFR part 1 in effect on March 2, 2005.

[T.D. 9787, 70 FR 10322, Mar. 3, 2005, as amended by T.D. 9424, 73 FR 53947, Sept. 17, 2008]

§ 1.337(d)-3 Gain recognition upon certain partnership transactions involving a partner's stock.

(a) ***Purpose.*** The purpose of this section is to prevent corporate taxpayers from using a partnership to circumvent gain required to be recognized under section 311(b) or section 336(a). The rules of this section, including the determination of the amount of gain, must be applied in a manner that is consistent with and reasonably carries out this purpose.

(b) ***In general.*** This section applies when a partnership, either directly or indirectly, owns, acquires, or distributes Stock of the Corporate Partner (within the meaning of paragraph (c)(2) of this section). Under paragraphs (d) or (e) of this section, a Corporate Partner (within the meaning of paragraph (c)(1) of this section) is required to recognize gain when a transaction has the effect of the Corporate Partner acquiring or increasing an interest in its own stock in exchange for appreciated property in a manner that contravenes the purpose of this section as set forth in paragraph (a) of this section. Paragraph (f) of this section sets forth exceptions under which a Corporate Partner does not recognize gain.

(c) ***Definitions.*** The following definitions apply for purposes of this section:

(1) ***Corporate Partner.*** A *Corporate Partner* is a person that is classified as a corporation for federal income tax purposes and holds or acquires an interest in a partnership.

(2) ***Stock of the Corporate Partner*** —

(i) ***In general.*** With respect to a Corporate Partner, *Stock of the Corporate Partner* includes the Corporate Partner's stock, or other equity interests, including options, warrants, and similar interests, in the Corporate Partner or a corporation that controls the Corporate Partner within the meaning of section 304(c) (except that section 318(a)(1) and (3) shall not apply). *Stock of the Corporate Partner* also includes interests in any entity to the extent that the value of the interest is attributable to Stock of the Corporate Partner.

(ii) ***Affiliated partner exception.*** Stock of the Corporate Partner does not include any stock or other equity interests held or acquired by a partnership if all interests in the partnership's capital and profits are held by members of an affiliated group as defined in section 1504(a) that includes the Corporate Partner.

(3) ***Section 337(d) Transaction.*** A *Section 337(d) Transaction* is a transaction (or series of transactions) that has the effect of an exchange by a Corporate Partner of its interest in appreciated property for an interest in Stock of the Corporate Partner owned, acquired, or distributed by a partnership. For example, a Section 337(d) Transaction may occur when —

(i) A Corporate Partner contributes appreciated property to a partnership that owns Stock of the Corporate Partner;

(ii) A partnership acquires Stock of the Corporate Partner;

(iii) A partnership that owns Stock of the Corporate Partner distributes appreciated property to a partner other than a Corporate Partner;

(iv) A partnership distributes Stock of the Corporate Partner to the Corporate Partner; or

(v) A partnership agreement is amended in a manner that increases a Corporate Partner's interest in Stock of the Corporate Partner (including in connection with a contribution to, or distribution from, a partnership).

(4) ***Gain Percentage.*** A Corporate Partner's *Gain Percentage* equals a fraction, the numerator of which is the Corporate Partner's interest (by value) in appreciated property effectively exchanged for Stock of the Corporate Partner under the test described in paragraphs (d)(1) and (2) of this section, and the denominator of which is the Corporate Partner's interest (by value) in that appreciated property immediately before the Section 337(d) Transaction. Paragraph (d) of this section requires a partnership to multiply the Gain Percentage by the Corporate Partner's aggregate gain in appreciated property to determine gain recognized under this section.

(d) ***Deemed redemption rule*** —

(1) ***In general.*** A Corporate Partner in a partnership that engages in a Section 337(d) Transaction recognizes gain at the time, and to the extent, that the Corporate Partner's interest in appreciated property (other than Stock of the Corporate Partner) is reduced in exchange for an increased interest in Stock of the Corporate Partner, as determined under paragraph (d)(2) of this section. This section does not apply to the extent a transaction has the effect of an exchange by a Corporate Partner of non-appreciated property for Stock of the Corporate Partner, or has the effect of an exchange by a Corporate Partner for property other than Stock of the Corporate Partner.

(2) ***Corporate Partner's interest in partnership property.*** The Corporate Partner's interest with respect to both Stock of the Corporate Partner and the appreciated property that is the subject of the exchange is determined based on all facts and circumstances, including the allocation and distribution rights set forth in the partnership agreement. The Corporate Partner's interest in an identified share of Stock of the Corporate Partner will never be less than the Corporate Partner's largest interest (by value) in that share of Stock of the Corporate Partner that was taken into account when the partnership previously determined whether there had been a Section 337(d) Transaction with respect to such share (regardless of whether the Corporate Partner recognized gain in the earlier transaction). See *Example 7* of paragraph (h) of this section. However, this limitation will not apply if any reduction in the Corporate Partner's interest in the identified share of Stock of the Corporate Partner occurred as part of a plan or arrangement to circumvent the purpose of this section. See *Example 8* of paragraph (h) of this section.

(3) ***Amount and character of gain recognized on the exchange*** —

(i) ***Amount of gain.*** The amount of gain the Corporate Partner recognizes under paragraph (d)(1) of this section equals the product of the Corporate Partner's Gain Percentage and the gain from the appreciated property that is the subject of the exchange that the Corporate Partner would recognize if, immediately before the Section 337(d) Transaction, all assets of the partnership and any assets contributed to the partnership in the Section 337(d) Transaction were sold in a fully taxable transaction for cash in an amount equal to the fair market value of such property (taking into account section 7701(g)), reduced, but not below zero, by any gain the Corporate Partner is required to recognize with respect to the appreciated property in the Section 337(d) Transaction under any other provision of this chapter. This gain is computed taking into account allocations of tax items applying the principles of section 704(c), including any remedial allocations under § 1.704-3(d), and also taking into account any basis adjustments including adjustments made pursuant to section 743(b).

(ii) ***Character of gain.*** The character of the gain that the Corporate Partner recognizes under paragraph (d)(1) of this section from the appreciated property that is the subject of the exchange shall be the character of the gain that the Corporate Partner would recognize if, immediately before the Section 337(d) Transaction, the Corporate Partner had disposed of the appreciated property that is the subject of the exchange in a fully taxable transaction for cash in an amount equal to the fair market value of such property (taking into account section 7701(g)).

(4) ***Basis adjustments*** —

(i) ***Corporate Partner's basis in the partnership interest.*** The basis of the Corporate Partner's interest in the partnership is increased by the amount of gain that the Corporate Partner recognizes under this paragraph (d).

(ii) ***Partnership's basis in partnership property.*** The partnership's adjusted tax basis in the appreciated property that is treated as the subject of the exchange under this paragraph (d) is increased by the amount of gain recognized with respect to that property by the Corporate Partner as a result of that exchange, regardless of whether the partnership has an election in effect under section 754. For basis recovery purposes, this basis increase is treated as property that is placed in service by the partnership in the taxable year of the Section 337(d) Transaction.

(e) ***Distribution of Stock of the Corporate Partner*** —

(1) ***In general.*** This paragraph (e) applies to distributions to the Corporate Partner of Stock of the Corporate Partner to which section 732(f) does not apply and that have previously been the subject of a Section 337(d) Transaction or become the subject of a Section 337(d) Transaction as a result of the distribution. Upon the distribution of Stock of the Corporate Partner to the Corporate Partner, paragraph (d) of this section will apply as though immediately before the distribution the partners amended the partnership agreement to allocate to the Corporate Partner a 100 percent interest in that portion of the Stock of the Corporate Partner that is distributed, and to allocate an appropriately reduced interest in other partnership property away from the Corporate Partner.

(2) ***Basis rules*** —

(i) ***Basis allocation on distributions of stock and other property.*** If, as part of the same transaction, a partnership distributes Stock of the Corporate Partner and other property (other than cash) to the Corporate Partner, see § 1.732-1(c)(1)(iii) for a rule allocating basis first to the Stock of the Corporate Partner before the distribution of the other property.

(ii) ***Computation of basis.*** For purposes of determining the basis of property distributed to a partner in a transaction that includes the distribution of Stock of the Corporate Partner (other than the basis of the Corporate Partner in its own stock), the basis of the partner's remaining partnership interest, and the partnership's basis in undistributed Stock of the Corporate Partner, and for purposes of computing gain under paragraph (e)(3) of this section, the partnership's basis of Stock of the Corporate Partner distributed to the partner equals the greater of—

(A) The partnership's basis of that distributed Stock of the Corporate Partner immediately before the distribution; or

(B) The fair market value of that distributed Stock of the Corporate Partner immediately before the distribution less the partner's allocable share of gain from all of the Stock of the Corporate Partner if the partnership sold all of its assets in a fully taxable transaction for cash in an amount equal to the fair market value of such property (taking into account section 7701(g)) immediately before the distribution.

(iii) ***Section 732(f) basis reduction.*** For purposes of determining the amount of the decrease to the basis of property held by a distributed corporation pursuant to section 732(f), the amount of this decrease shall be reduced by the amount of gain that a Corporate Partner has recognized under this section in the same Section 337(d) Transaction or in a prior Section 337(d) Transaction involving the property.

(3) ***Gain recognition.*** The Corporate Partner will recognize gain on a distribution of Stock of the Corporate Partner to the Corporate Partner to the extent that the partnership's adjusted basis in the distributed Stock of the Corporate Partner (as determined under paragraph (e)(2)(ii) of this section) immediately before the distribution exceeds the Corporate Partner's adjusted basis in its partnership interest immediately after the distribution.

(f) ***Exceptions*** —

(1) ***De minimis rule*** —

(i) ***In general.*** Unless Stock of the Corporate Partner is acquired as part of a plan to circumvent the purpose of this section, this section does not apply to a Corporate Partner if at the time that the partnership acquires Stock of the Corporate Partner or at the time of a revaluation event as described in § 1.704-1(b)(2)(iv)(*f*) (without regard to whether or not the partnership revalues its assets)—

(A) The Corporate Partner and any persons related to the Corporate Partner under section 267(b) or section 707(b) own in the aggregate less than 5 percent of the partnership;

(B) The partnership holds Stock of the Corporate Partner with a value of less than 2 percent of the partnership's gross assets (including the Stock of the Corporate Partner); and

(C) The partnership has never, at any point in time, held in the aggregate—

(*1*) Stock of the Corporate Partner with a fair market value greater than $1,000,000; or

(*2*) More than 2 percent of any particular class of Stock of the Corporate Partner.

(ii) ***De minimis rule ceases to apply.*** If a partnership satisfies the conditions of the de minimis rule of paragraph (f)(1) of this section upon an acquisition of Stock of the Corporate Partner or revaluation event as described in § 1.704-1(b)(2)(iv)(*f*), but later fails to satisfy the conditions of the de minimis rule upon a subsequent acquisition or revaluation event, then solely for purposes of paragraph (d) of this section, the Corporate Partner may compute its gain on the subsequent acquisition or revaluation event as if it had already recognized gain at the previous event. Neither the Corporate Partner nor the partnership increases its basis by the gain the Corporate Partner would have recognized if the de minimis rule of paragraph (f)(1) of this section did not apply to the prior acquisition or revaluation event.

(2) ***Certain dispositions of stock.*** Unless acquired as part of a plan to circumvent the purpose of this section, this section does not apply to Stock of the Corporate Partner that—

(i) Is disposed of (by sale or distribution) by the partnership before the due date (including extensions) of its federal income tax return for the taxable year during which the Stock of the Corporate Partner is acquired (or for the taxable year in which the Corporate Partner becomes a partner, whichever is applicable); and

(ii) Is not distributed to the Corporate Partner or a corporation that controls the Corporate Partner within the meaning of section 304(c), except that section 318(a)(1) and (3) shall not apply.

(g) ***Tiered partnerships.*** The rules of this section shall apply to tiered partnerships in a manner that is consistent with the purpose set forth in paragraph (a) of this section.

(h) ***Examples.*** The following examples illustrate the principles of this section. All amounts in the following examples are reported in millions of dollars:

> *Example 1. Deemed redemption rule—contribution of Stock of the Corporate Partner.* (i) In Year 1, X, a corporation, and A, an individual, form partnership AX as equal partners in all respects. X contributes Asset 1 with a fair market value of $100 and a basis of $20. A contributes X stock, which is Stock of the Corporate Partner, with a basis and fair market value of $100.

(ii) Because A and X are equal partners in AX in all respects, the partnership formation causes X's interest in X stock to increase from $0 to $50 and its interest in Asset 1 to decrease from $100 to $50. Thus, the partnership formation is a Section 337(d) Transaction because the formation has the effect of an exchange by X of $50 of Asset 1 for $50 of X stock.

(iii) X must recognize gain under paragraph (d) of this section with respect to Asset 1 to prevent the circumvention of section 311(b) principles. X's gain equals the product of X's Gain Percentage and the gain from Asset 1 that X would recognize (decreased, but not below zero, by any gain that X recognized with respect to Asset 1 in the Section 337(d) Transaction under any other provision of this chapter) if, immediately before the Section 337(d) Transaction, all assets were sold in a fully taxable transaction for cash in an amount equal to the fair market value of such property. If Asset 1 had been sold in a fully taxable transaction immediately before the formation of partnership AX, X's allocable share of gain would have been $80. X's Gain Percentage is 50 percent (equal to a fraction, the numerator of which is X's $50 interest in Asset 1 effectively exchanged for X stock, and the denominator of which is X's $100 interest in Asset 1 immediately before the Section 337(d) Transaction). Thus, X recognizes $40 of gain ($80 multiplied by 50 percent) under the deemed redemption rule in paragraph (d) of this section. Under paragraph (d)(4)(i) of this section, X's basis in its AX partnership interest increases from $20 to $60. Under paragraph (d)(4)(ii) of this section, AX's basis in Asset 1 increases from $20 to $60 because Asset 1 is the appreciated property treated as the subject of the exchange.

Example 2. Deemed redemption rule—contribution of stock in a corporation that controls the Corporate Partner. (i) In Year 1, X, a corporation, and A, an individual, form partnership AX as equal partners in all respects. X contributes Asset 1 with a fair market value of $100 and a basis of $20. A contributes stock in P, with a basis and fair market value of $100. P is the sole owner of X. P's interest in X constitutes 10 percent of P's total assets.
(ii) Because P controls X within the meaning of section 304(c), stock in P is Stock of the Corporate Partner under paragraph (c)(2)(i) of this section.

(iii) Because A and X are equal partners in AX in all respects, the partnership formation causes X's interest in Stock of the Corporate Partner stock to increase from $0 to $50 and its interest in Asset 1 to decrease from $100 to $50. Thus, the partnership formation is a Section 337(d) Transaction because the formation has the effect of an exchange by X of $50 of Asset 1 for $50 of Stock of the Corporate Partner.

(iv) X must recognize gain under paragraph (d) of this section with respect to Asset 1 to prevent the circumvention of section 311(b) principles. X's gain equals the product of X's Gain Percentage and the gain from Asset 1 that X would recognize (decreased, but not below zero, by any gain that X recognized with respect to Asset 1 in the Section 337(d) Transaction under any other provision of this chapter) if, immediately before the Section 337(d) Transaction, all assets were sold in a fully taxable transaction for cash in an amount equal to the fair market value of such property. If

Asset 1 had been sold in a fully taxable transaction immediately before the formation of partnership AX, X's allocable share of gain would have been $80. X's Gain Percentage is 50 percent (equal to a fraction, the numerator of which is X's $50 interest in Asset 1 effectively exchanged for Stock of the Corporate Partner, and the denominator of which is X's $100 interest in Asset 1 immediately before the Section 337(d) Transaction). Thus, X recognizes $40 of gain ($80 multiplied by 50 percent) under the deemed redemption rule in paragraph (d) of this section. Under paragraph (d)(4)(i) of this section, X's basis in its AX partnership interest increases from $20 to $60. Under paragraph (d)(4)(ii) of this section, AX's basis in Asset 1 increases from $20 to $60 because Asset 1 is the appreciated property treated as the subject of the exchange.

Example 3. Distribution of Stock of the Corporate Partner—pro rata distribution. (i) The facts are the same as in *Example 1(i)* of this paragraph (h). AX liquidates in Year 9, when Asset 1 and the X stock each have a fair market value of $200. X and A each receive 50 percent of Asset 1 and 50 percent of the X stock in the liquidation. At the time AX liquidates, X's basis in its AX partnership interest is $60 and A's basis in its AX partnership interest is $100.
(ii) When AX liquidates, X's interests in its stock and in Asset 1 do not change. Thus, the liquidation is not a Section 337(d) Transaction because it does not have the effect of an exchange by X of appreciated property for Stock of the Corporate Partner.

(iii) Paragraph (e) of this section applies because the distributed X stock was the subject of a previous Section 337(d) Transaction and because section 732(f) does not apply. Under § 1.732-1(c)(1)(iii), the distribution to X of X stock is deemed to immediately precede the distribution of 50 percent of Asset 1 to X for purposes of determining X's basis in the distributed property. For purposes of determining X's basis in Asset 1 and X's gain on distribution, the basis of the distributed X stock is treated as $50, the greater of $50 (50 percent of the stock's $100 basis in the hands of the partnership), or $50, the fair market value of that distributed X stock ($100) less X's allocable share of gain from the distributed X stock if AX had sold all of its assets in a fully taxable transaction for cash in an amount equal to the fair market value of such property immediately before the distribution ($50). Thus, X reduces its basis in its partnership interest by $50 prior to the distribution of Asset 1. Accordingly, X's basis in the distributed portion of Asset 1 is $10. Because AX's basis in the distributed X stock immediately before the distribution ($50) does not exceed X's basis in its AX partnership interest immediately before the distribution ($60), X recognizes no gain under paragraph (e)(3) of this section.

Example 4. Distribution of Stock of the Corporate Partner—non pro rata distribution. (i) The facts are the same as *Example 3(i)* of this paragraph (h), except that when AX liquidates, X receives 75 percent of the X stock and 25 percent of Asset 1 and A receives 25 percent of the X stock and 75 percent of Asset 1.

(ii) The liquidation of AX causes X's interest in X stock to increase from $100 to $150 and its interest in Asset 1 to decrease from $100 to $50. Thus, AX's liquidating distributions of X stock and Asset 1 to X are a Section 337(d) Transaction because the distributions have the effect of an exchange by X of $50 of Asset 1 for $50 of X stock.

(iii)(A) X must recognize gain with respect to Asset 1 to prevent the circumvention of section 311(b) principles. Under paragraph (e)(1) of this section, paragraph (d) of this section is applied as if X and A amended the AX partnership agreement to allocate to X a 100 percent interest in the distributed portion of the X stock. X must recognize gain equal to the product of X's Gain Percentage and the gain from Asset 1 that X would have recognized (decreased, but not below zero, by any gain X recognized with respect to Asset 1 in the Section 337(d) Transaction under any other provision of this chapter) if, immediately before the Section 337(d) Transaction, AX had sold all of its assets in a fully taxable transaction for cash in an amount equal to the fair market value of such property.

(B) If Asset 1 had been sold in a fully taxable transaction immediately before the amendment of the AX partnership agreement, X's allocable share of gain would have been $90, or the sum of X's $40 remaining gain under section 704(c) and $50 of the $100 post-contribution appreciation. X's Gain Percentage is 50 percent (equal to a fraction, the numerator of which is X's $50 interest in Asset 1 effectively exchanged for X stock, and the denominator of which is X's $100 interest in Asset 1 immediately before the Section 337(d) Transaction). Thus, X recognizes $45 of gain ($90 multiplied by 50 percent) under the deemed redemption rule in paragraph (d) of this section. Under paragraph (d)(4)(i) of this section, X's basis in its AX partnership interest increases from $60 to $105. Under paragraph (d)(4)(ii) of this section, AX's basis in Asset 1 increases from $60 to $105 because Asset 1 is the appreciated property treated as the subject of the exchange.

(iv)(A) Paragraph (e) of this section applies because the distributed X stock was the subject of a previous Section 337(d) Transaction and because section 732(f) does not apply. Under § 1.732-1(c)(1)(iii), AX is treated as first distributing the X stock to X before the distribution of 25 percent of Asset 1. For purposes of determining X's basis in Asset 1 and X's gain on distribution, the basis of the distributed X stock is treated as $100, the greater of $75 (75 percent of the stock's $100 basis in the hands of the partnership) or $100, the fair market value of the distributed X stock ($150) less X's allocable share of gain if the partnership had sold all of the X stock immediately before the distribution for cash in an amount equal to its fair market value ($50). Thus, X will reduce its basis in its partnership interest by $100 prior to the distribution of Asset 1. Accordingly, X's basis in the distributed portion of Asset 1 is $5. Because AX's basis in the distributed X stock immediately before the distribution as computed for purposes of this section ($100) does not exceed X's basis in its AX partnership interest immediately before the distribution ($105), X recognizes no additional gain under paragraph (e)(3) of this section.

(B) For purposes of determining A's basis in Asset 1 and A's gain on distribution, the basis of the distributed X stock is treated as $25, the greater of $25 (25 percent of the stock's $100 basis in the hands of the partnership) or $0, the fair market value of the distributed X stock ($50) less A's allocable share of gain if the partnership had sold all of the X stock immediately before the distribution for cash in an amount equal to its fair market value ($50). Thus, A will reduce its basis in its partnership interest by $25 prior to the distribution of Asset 1. Accordingly, A's basis in the distributed portion of Asset 1 is $75. Because AX's basis in the distributed X stock immediately before the distribution as computed for purposes of this section ($100) does not exceed A's basis in its AX partnership interest immediately before the distribution ($100), A recognizes no additional gain under paragraph (e)(3) of this section.

Example 5. Deemed redemption rule—subsequent purchase of Stock of the Corporate Partner. The facts are the same as *Example 1(i)* of this paragraph (h), except that A contributes cash of $100 instead of X stock. In a later year, when the value of Asset 1 has not changed, AX uses the contributed cash to purchase X stock for $100. AX's purchase of X stock has the effect of an exchange by X of appreciated property for X stock, and thus, is a Section 337(d) Transaction. X must recognize gain at the time, and to the extent, that X's share of appreciated property (other than X stock) is reduced in exchange for X stock. Thus, the consequences of the partnership's purchase of X stock are the same as those described in *Example 1(ii)* and (*iii*) of this paragraph (h), resulting in X recognizing $40 of gain.

Example 6. Change in allocation ratios—amendment of partnership agreement. (i) The facts are the same as *Example 3(i)* of this paragraph (h), except that in Year 9, AX does not liquidate, and the AX partnership agreement is amended to allocate to X 80 percent of the income, gain, loss, and deduction from the X stock and to allocate to A 80 percent of the income, gain, loss, and deduction from Asset 1. If AX had sold the partnership assets immediately before the change to the partnership agreement, X would have been allocated $90 of gain from Asset 1 and $50 of gain from the X stock.
(ii) The amendment to the AX partnership agreement causes X's interest in its stock to increase from $100 (50 percent of the stock value immediately before the amendment of the agreement) to $160 (80 percent of stock value immediately following amendment of agreement) and its interest in Asset 1 to decrease from $100 to $40. Thus, the amendment of the partnership agreement is a Section 337(d) Transaction because the amendment has the effect of an exchange by X of $60 of Asset 1 for $60 of its stock.

(iii) X must recognize gain equal to the product of X's Gain Percentage and the gain from Asset 1 that X would have recognized (decreased, but not below zero, by any gain X recognized with respect to Asset 1 in the Section 337(d) Transaction under any other provision of this chapter) if, immediately before the Section 337(d) Transaction, AX had sold all of its assets in a fully taxable transaction for cash in an amount equal to the fair market value of such property. If Asset 1 had been sold in a fully taxable transaction immediately before the amendment of the AX partnership agreement, X's allocable share of gain would

have been $90, or the sum of X's $40 remaining gain under section 704(c) and 50 percent of the $100 post-contribution appreciation. X's Gain Percentage is 60 percent (equal to a fraction, the numerator of which is X's $60 interest in Asset 1 effectively exchanged for X stock, and the denominator of which is X's $100 interest in Asset 1 immediately before the Section 337(d) Transaction). Thus, X recognizes $54 of gain ($90 multiplied by 60 percent) under the deemed redemption rule in paragraph (d) of this section. Under paragraph (d)(4)(i) of this section, X's basis in its AX partnership interest increases from $60 to $114. Under paragraph (d)(4)(ii) of this section, AX's basis in Asset 1 increases from $60 to $114 because Asset 1 is the appreciated property treated as the subject of the exchange.

Example 7. Change in allocation ratios—admission and exit of a partner. (i) The facts are the same as *Example 1(i)* of this paragraph (h). In addition, in Year 2, when the values of Asset 1 and the X stock have not changed, B contributes $100 of cash to AX in exchange for a one-third interest in the partnership. Upon the admission of B as a partner, X's interest in Asset 1 decreases from $50 to $33.33, and its interest in B's contributed cash increases. B's admission is not a Section 337(d) Transaction because it does not have the effect of an exchange by X of its interest in Asset 1 for X stock. Accordingly, X does not recognize gain under paragraph (d) of this section.
(ii) In Year 9, when the values of Asset 1 and the X stock have not changed, the partnership distributes $50 of cash and 50 percent of Asset 1 (valued at $50) to B in liquidation of B's interest. X and A are equal partners in all respects after the distribution. Upon the liquidation of B's interest, X's interest in Asset 1 decreases from $33.33 to $25, and its interest in X stock increases from $33.33 to $50. AX's liquidation of B's interest has the effect of an exchange by X of appreciated property for X stock, and thus, is a Section 337(d) Transaction.

(iii) Pursuant to paragraph (d)(2) of this section, X's interest in X stock and other appreciated property held by the partnership is determined based on all facts and circumstances, including allocation and distribution rights in the partnership agreement. However, paragraph (d)(2) of this section also requires that X's interest in its stock for purposes of paragraph (d) will never be less than the Corporate Partner's largest interest (by value) in those shares of Stock of the Corporate Partner taken into account when the partnership previously determined whether there had been a Section 337(d) Transaction (regardless of whether the Corporate Partner recognized gain in the earlier transaction). Although X's interest in X stock increases to $50 upon AX's liquidation of B's interest, X's largest interest previously taken into account under paragraph (d)(1) of this section was $50. Thus, X's interest in its stock is not considered to be increased, and X therefore recognizes no gain under paragraph (d) of this section, provided that the transactions did not occur as part of a plan or arrangement to circumvent the purpose of this section.

Example 8. Change in allocation ratios—plan to circumvent purpose of this section. (i) In Year 1, X, a corporation, and A, an individual, contribute $99 and $1, respectively, to newly-formed

partnership AX, with X receiving a 99 percent interest in AX and A receiving a 1 percent interest in AX. AX borrows $100,000 from a third-party lender and uses the proceeds to purchase X stock, which is Stock of the Corporate Partner. Later, as part of a plan or arrangement to circumvent the purposes of this section, A contributes $99,999 of cash, which AX uses to repay the loan, and X contributes Asset 1 with a fair market value of $99,901 and basis of $20,000. After these contributions, A and X are equal partners in AX in all respects.
(ii) Pursuant to paragraph (d)(2) of this section, X's interest in X stock and other appreciated property held by the partnership is determined based on all facts and circumstances, including allocation and distribution rights in the partnership agreement. Generally, pursuant to paragraph (d)(2) of this section, X's interest in X stock for purposes of paragraph (d) of this section will never be less than the Corporate Partner's largest interest (by value) in those shares of Stock of the Corporate Partner taken into account when the partnership previously determined whether there had been a Section 337(d) Transaction (regardless of whether the Corporate Partner recognized gain in the earlier transaction). This limitation does not apply, however, if the reduction in X's interest in X's stock occurred as part of a plan or arrangement to circumvent the purpose of this section. Because the transactions described in this example are part of a plan or arrangement to circumvent the purpose of this section, the limitation in paragraph (d)(2) of this section does not apply. Accordingly, the deemed redemption rule under paragraph (d) of this section applies to the transactions with the consequences described in *Example 1(iii)* of this paragraph (h), resulting in X recognizing $39,950.50 of gain.

Example 9. *Tiered partnership.* (i) In Year 1, X, a corporation, and A, an individual, form partnership UTP. X contributes Asset 1 with a fair market value of $80 and a basis of $0 in exchange for an 80 percent interest in UTP. A contributes $20 of cash in exchange for a 20 percent interest in UTP. UTP and B, an individual, form partnership LTP as equal partners. UTP contributes Asset 1 and $20 of cash. B contributes X stock, which is Stock of the Corporate Partner, with a basis and fair market value of $100.
(ii) Pursuant to paragraph (g) of this section, the rules of this section shall apply to tiered partnerships in a manner that is consistent with the purpose set forth in paragraph (a) of this section. Pursuant to paragraph (d)(1) of this section, if X is in a partnership that engages in a Section 337(d) Transaction, X must recognize gain at the time, and to the extent, that X's share of appreciated property is reduced in exchange for X stock. The formation of LTP causes X's interest in X stock to increase from $0 to $40 and its interest in Asset 1 to decrease from $64 to $32. Thus, LTP's formation is a Section 337(d) Transaction because the formation has the effect of an exchange by X of $32 of Asset 1 for $32 of X stock.

(iii) X must recognize gain with respect to Asset 1 to prevent the circumvention of section 311(b) principles. X must recognize gain equal to the product of X's Gain Percentage and the gain from Asset 1 (decreased, but not below zero, by any gain X recognized with respect to Asset 1 in the Section 337(d) Transaction under any other provision of this chapter) that X

would recognize if, immediately before the Section 337(d) Transaction, all assets were sold in a fully taxable transaction for cash in an amount equal to the fair market value of such property. If Asset 1 had been sold in a fully taxable transaction immediately before LTP's formation, X's allocable share of gain would have been $80 pursuant to section 704(c). X's Gain Percentage is 50 percent (equal to a fraction, the numerator of which is X's $32 interest in Asset 1 effectively exchanged for X stock, and the denominator of which is X's $64 interest in Asset 1 immediately before the Section 337(d) Transaction). Thus, X recognizes $40 of gain ($80 multiplied by 50 percent) under the deemed redemption rule in paragraph (d) of this section. Under paragraphs (d)(4)(i) and (ii) of this section, X's basis in its UTP partnership interest increases from $0 to $40, UTP's basis in its LTP partnership interest increases from $20 to $60, and LTP's basis in Asset 1 increases from $0 to $40 pursuant to paragraph (g) of this section.

(i) ***Applicability date.*** This section applies to transactions occurring on or after June 12, 2015.

[T.D. 9833, 83 FR 26588, June 8, 2018]

§ 1.337(d)-4 Taxable to tax-exempt.

(a) ***Gain or loss recognition*** —

(1) ***General rule.*** Except as provided in paragraph (b) of this section, if a taxable corporation transfers all or substantially all of its assets to one or more tax-exempt entities, the taxable corporation must recognize gain or loss immediately before the transfer as if the assets transferred were sold at their fair market values. But see section 267 and paragraph (d) of this section concerning limitations on the recognition of loss.

(2) ***Change in corporation's tax status treated as asset transfer.*** Except as provided in paragraphs (a)(3) and (b) of this section, a taxable corporation's change in status to a tax-exempt entity will be treated as if it transferred all of its assets to a tax-exempt entity immediately before the change in status becomes effective in a transaction to which paragraph (a)(1) of this section applies. For example, if a State, a political subdivision thereof, or an entity any portion of whose income is excluded from gross income under section 115, acquires the stock of a taxable corporation and thereafter any of the taxable corporation's income is excluded from gross income under section 115, the taxable corporation will be treated as if it transferred all of its assets to a tax-exempt entity immediately before the stock acquisition.

(3) ***Exceptions for certain changes in status*** —

(i) ***To whom available.*** Paragraph (a)(2) of this section does not apply to the following corporations—

(A) A corporation previously tax-exempt under section 501(a) which regains its tax-exempt status under section 501(a) within three years from the later of a final adverse adjudication on the corporation's tax exempt status, or the filing by the corporation, or by the Secretary or his delegate under section 6020(b), of a federal income tax return of the type filed by a taxable corporation;

(B) A corporation previously tax-exempt under section 501(a) or that applied for but did not receive recognition of exemption under section 501(a) before January 15, 1997, if such corporation is tax-exempt under section 501(a) within three years from January 28, 1999;

(C) A newly formed corporation that is tax-exempt under section 501(a) (other than an organization described in section 501(c)(7)) within three taxable years from the end of the taxable year in which it was formed;

(D) A newly formed corporation that is tax-exempt under section 501(a) as an organization described in section 501(c)(7) within seven taxable years from the end of the taxable year in which it was formed;

(E) A corporation previously tax-exempt under section 501(a) as an organization described in section 501(c)(12), which, in a given taxable year or years prior to again becoming tax-exempt, is a taxable corporation solely because less than 85 percent of its income consists of amounts collected from members for the sole purpose of meeting losses and expenses; if, in a taxable year, such a corporation would be a taxable corporation even if 85 percent or more of its income consists of amounts collected from members for the sole purpose of meeting losses and expenses (a non-85 percent violation), paragraph (a)(3)(i)(A) of this section shall apply as if the corporation became a taxable corporation in its first taxable year that a non-85 percent violation occurred; or

(F) A corporation previously taxable that becomes tax-exempt under section 501(a) as an organization described in section 501(c)(15) if during each taxable year in which it is described in section 501(c)(15) the organization is the subject of a court supervised rehabilitation, conservatorship, liquidation, or similar state proceeding; if such a corporation continues to be described in section 501(c)(15) in a taxable year when it is no longer the subject of a court supervised rehabilitation, conservatorship, liquidation, or similar state proceeding, paragraph (a)(2) of this section shall apply as if the corporation first became tax-exempt for such taxable year.

(ii) ***Application for recognition.*** An organization is deemed to have or regain tax-exempt status within one of the periods described in paragraph (a)(3)(i)(A), (B), (C), or (D) of this section if it files an application for recognition of exemption with the Commissioner within the applicable period and the application either results in a determination by the Commissioner or a final adjudication that the organization is tax-exempt under section 501(a) during any part of the applicable period. The preceding sentence does not require the filing of an application for recognition of exemption by any organization not otherwise required, such as by §§ 1.501(a)-1, 1.505(c)-1T, and 1.508-1(a), to apply for recognition of exemption.

(iii) ***Anti-abuse rule.*** This paragraph (a)(3) does not apply to a corporation that, with a principal purpose of avoiding the application of paragraph (a)(1) or (a)(2) of this section, acquires all or substantially all of the assets of another taxable corporation and then changes its status to that of a tax-exempt entity.

(4) ***Related transactions.*** This section applies to any series of related transactions having an effect similar to any of the transactions to which this section applies.

(b) ***Exceptions.*** Paragraph (a) of this section does not apply to—

(1) Any assets transferred to a tax-exempt entity to the extent that the assets are used in an activity the income from which is subject to tax under section 511(a) (referred to hereinafter as a "section 511(a) activity"). However, if assets used to any extent in a section 511(a) activity are disposed of by the tax-exempt entity, then, notwithstanding any other provision of law (except section 1031 or section 1033), any gain (not in excess of the amount not recognized by reason of the preceding sentence) shall be included in the tax-exempt entity's unrelated business taxable income. To the extent that the tax-exempt entity ceases to use the assets in a section 511(a) activity, the entity will be treated for purposes of this paragraph (b)(1) as having disposed of the assets on the date of the cessation for their fair market value. For purposes of paragraph (a)(1) of this section and this paragraph (b)(1)—

(i) If during the first taxable year following the transfer of an asset or the corporation's change to tax-exempt status the asset will be used by the tax-exempt entity partly or wholly in a section 511(a) activity, the taxable corporation will recognize an amount of gain or loss that bears the same ratio to the asset's built-in gain or loss as 100 percent reduced by the percentage of use for such taxable year in the section 511(a) activity bears to 100 percent. For purposes of determining the gain or loss, if any, to be recognized, the taxable corporation may rely on a written representation from the tax-exempt entity estimating the percentage of the asset's anticipated use in a section 511(a) activity for such taxable year, using a reasonable method of allocation, unless the taxable corporation has reason to believe that the tax-exempt entity's representation is not made in good faith;

(ii) If for any taxable year the percentage of an asset's use in a section 511(a) activity decreases from the estimate used in computing gain or loss recognized under paragraph (b)(1)(i) of this section, adjusted for any decreases taken into account under this paragraph (b)(1)(ii) in prior taxable years, the tax-exempt entity shall recognize an amount of gain or loss that bears the same ratio to the asset's built-in gain or loss as the percentage point decrease in use in the section 511(a) activity for the taxable year bears to 100 percent;

(iii) If property on which all or a portion of the gain or loss is not recognized by reason of the first sentence of paragraph (b)(1) of this section is disposed of in a transaction that qualifies for nonrecognition treatment under section 1031 or section 1033, the tax-exempt entity must treat the replacement property as remaining subject to paragraph (b)(1) of this section to the extent that the exchanged or involuntarily converted property was so subject;

(iv) The tax-exempt entity must use the same reasonable method of allocation for determining the percentage that it uses the assets in a section 511(a) activity as it uses for other tax purposes, such as determining the amount of depreciation deductions. The tax-exempt entity also must use this same reasonable method of allocation for each taxable year that it holds the assets; and

(v) An asset's built-in gain or loss is the amount that would be recognized under paragraph (a)(1) of this section except for this paragraph (b)(1);

(2) Any transfer of assets to the extent gain or loss otherwise is recognized by the taxable corporation on the transfer. See, for example, sections 336, 337(b)(2), 367, and 1001;

(3) Any transfer of assets to the extent the transaction qualifies for nonrecognition treatment under section 1031 or section 1033; or

(4) Any forfeiture of a taxable corporation's assets in a criminal or civil action to the United States, the government of a possession of the United States, a state, the District of Columbia, the government of a foreign country, or a political subdivision of any of the foregoing; or any expropriation of a taxable corporation's assets by the government of a foreign country.

(c) ***Definitions.*** For purposes of this section:

(1) ***Taxable corporation.*** A *taxable corporation* is any corporation that is not a tax-exempt entity as defined in paragraph (c)(2) of this section.

(2) ***Tax-exempt entity.*** A *tax-exempt entity* is—

(i) Any entity that is exempt from tax under section 501(a) or section 529;

(ii) A charitable remainder annuity trust or charitable remainder unitrust as defined in section 664(d);

(iii) The United States, the government of a possession of the United States, a state, the District of Columbia, the government of a foreign country, or a political subdivision of any of the foregoing;

(iv) An Indian Tribal Government as defined in section 7701(a)(40), a subdivision of an Indian Tribal Government determined in accordance with section 7871(d), or an agency or instrumentality of an Indian Tribal Government or subdivision thereof;

(v) An Indian Tribal Corporation organized under section 17 of the Indian Reorganization Act of 1934, 25 U.S.C. 477, or section 3 of the Oklahoma Welfare Act, 25 U.S.C. 503;

(vi) An international organization as defined in section 7701(a)(18);

(vii) An entity any portion of whose income is excluded under section 115; or

(viii) An entity that would not be taxable under the Internal Revenue Code for reasons substantially similar to those applicable to any entity listed in this paragraph (c)(2) unless otherwise explicitly made exempt from the application of this section by statute or by action of the Commissioner.

(3) ***Substantially all.*** The term *substantially all* has the same meaning as under section 368(a)(1)(C).

(d) ***Loss limitation rule.*** For purposes of determining the amount of gain or loss recognized by a taxable corporation on the transfer of its assets to a tax-exempt entity under paragraph (a) of this section, if assets are acquired by the taxable corporation in a transaction to which section 351 applied or as a contribution to capital, or assets are distributed from the taxable corporation to a shareholder or another member of the taxable corporation's affiliated group, and in either case such acquisition or distribution is made as part of a plan a principal purpose of which is to recognize loss by the taxable corporation on the transfer of such assets to the tax-exempt entity, the losses recognized by the taxable corporation on such assets transferred to the tax-exempt entity will be disallowed. For purposes of the preceding sentence, the principles of section 336(d)(2) apply.

(e) ***Effective date.*** This section is applicable to transfers of assets as described in paragraph (a) of this section occurring after January 28, 1999, unless the transfer is pursuant to a written agreement which is (subject to customary conditions) binding on or before January 28, 1999.

[T.D. 8802, 63 FR 71594, Dec. 29, 1998]

§ 1.337(d)-5 Old transitional rules imposing tax on property owned by a C corporation that becomes property of a RIC or REIT

(a) *Treatment of C corporations* —

(1) ***Scope.*** This section applies to the net built-in gain of C corporation assets that become assets of a RIC or REIT by—

(i) The qualification of a C corporation as a RIC or REIT; or

(ii) The transfer of assets of a C corporation to a RIC or REIT in a transaction in which the basis of such assets are determined by reference to the C corporation's basis (a carryover basis).

(2) ***Net built-in gain.*** Net built-in gain is the excess of aggregate gains (including items of income) over aggregate losses.

(3) ***General rule.*** Unless an election is made pursuant to paragraph (b) of this section, the C corporation will be treated, for all purposes including recognition of net built-in gain, as if it had sold all of its assets at their respective fair market values on the deemed liquidation date described in paragraph (a)(7) of this section and immediately liquidated.

(4) ***Loss.*** Paragraph (a)(3) of this section shall not apply if its application would result in the recognition of net built-in loss.

(5) ***Basis adjustment.*** If a corporation is subject to corporate-level tax under paragraph (a)(3) of this section, the bases of the assets in the hands of the RIC or REIT will be adjusted to reflect the recognized net built-in gain. This adjustment is made by taking the C corporation's basis in each asset, and, as appropriate, increasing it by the amount of any built-in gain attributable to that asset, or decreasing it by the amount of any built-in loss attributable to that asset.

(6) *Exception* —

(i) ***In general.*** Paragraph (a)(3) of this section does not apply to any C corporation that—

(A) Immediately prior to qualifying to be taxed as a RIC was subject to tax as a C corporation for a period not exceeding one taxable year; and

(B) Immediately prior to being subject to tax as a C corporation was subject to the RIC tax provisions for a period of at least one taxable year.

(ii) ***Additional requirement.*** The exception described in paragraph (a)(6)(i) of this section applies only to assets acquired by the corporation during the year when it was subject to tax as a C corporation in a transaction that does not result in its basis in the asset being determined by reference to a corporate transferor's basis.

(7) *Deemed liquidation date* —

(i) ***Conversions.*** In the case of a C corporation that qualifies to be taxed as a RIC or REIT, the deemed liquidation date is the last day of its last taxable year before the taxable year in which it qualifies to be taxed as a RIC or REIT.

(ii) ***Carryover basis transfers.*** In the case of a C corporation that transfers property to a RIC or REIT in a carryover basis transaction, the deemed liquidation date is the day before the date of the transfer.

(b) *Section 1374 treatment* —

(1) ***In general.*** Paragraph (a) of this section will not apply if the transferee RIC or REIT elects (as described in paragraph (b)(3) of this section) to be subject to the rules of section 1374, and the regulations thereunder. The electing RIC or REIT will be subject to corporate-level taxation on the built-in gain recognized during the 10-year period on assets formerly held by the transferor C corporation. The built-in gains of electing RICs and REITs, and the corporate-level tax imposed on such gains, are subject to rules similar to the rules relating to net income from foreclosure property of REITs. See sections 857(a)(1)(A)(ii), and 857(b)(2)(B), (D), and (E). An election made under this paragraph (b) shall be irrevocable.

(2) ***Ten-year recognition period.*** In the case of a C corporation that qualifies to be taxed as a RIC or REIT, the 10-year recognition period described in section 1374(d)(7) begins on the first day of the RIC's or REIT's taxable year for which the corporation qualifies to be taxed as a RIC or REIT. In the case of a C corporation that transfers property to a RIC or REIT in a carryover basis transaction, the 10-year recognition period begins on the day the assets are acquired by the RIC or REIT.

(3) ***Making the election.*** A RIC or REIT validly makes a section 1374 election with the following statement: "[Insert name and employer identification number of electing RIC or REIT] elects under paragraph (b) of this section to be subject to the rules of section 1374 and the regulations thereunder with respect to its assets which formerly were held by a C corporation, [insert name and employer identification number of the C corporation, if different from name and employer identification number of RIC or REIT]." This statement must be signed by an official authorized to sign the income tax return of the RIC or REIT and attached to the RIC's or REIT's Federal income tax return for the first taxable year in which the assets of the C corporation become assets of the RIC or REIT.

(c) ***Special rule.*** In cases where the first taxable year in which the assets of the C corporation become assets of the RIC or REIT ends after June 10, 1987 but before March 8, 2000, the section 1374 election may be filed with the first Federal income tax return filed by the RIC or REIT after March 8, 2000.

(d) ***Effective date.*** In the case of carryover basis transactions involving the transfer of property of a C corporation to a RIC or REIT, the regulations apply to transactions occurring on or after June 10, 1987, and before January 2, 2002. In the case of a C corporation that qualifies to be taxed as a RIC or REIT, the regulations apply to such qualifications that are effective for taxable years beginning on or after June 10, 1987, and before January 2, 2002. However, RICs and REITs that are subject to section 1374 treatment under this section may not rely on paragraph (b)(1) of this section, but must apply paragraphs (c)(1)(i), (c)(2)(i), (c)(2)(ii), and (c)(3) of § 1.337(d)-6, with respect to built-in gains and losses recognized in taxable years beginning on or after January 2, 2002. In lieu of applying this section, taxpayers may rely on § 1.337(d)-6 to determine the tax consequences (for all taxable years) of any conversion transaction. For transactions and qualifications that occur on or after January 2, 2002, see § 1.337(d)-7.

[T.D. 8872, 65 FR 5776, Feb. 7, 2000, as amended by T.D. 8975, 67 FR 12, Jan. 2, 2002. Redesignated and amended by T.D. 9047, 68 FR 12819, Mar. 19, 2003]

§ 1.337(d)-6 New transitional rules imposing tax on property owned by a C corporation that becomes property of a RIC or REIT.

(a) *General rule* —

(1) ***Property owned by a C corporation that becomes property of a RIC or REIT.*** If property owned by a C corporation (as defined in paragraph (a)(2)(i) of this section) becomes the property of a RIC or REIT (the converted property) in a conversion transaction (as defined in paragraph (a)(2)(ii) of this section), then deemed sale treatment will apply as described in paragraph (b) of this section, unless the RIC or REIT elects section 1374 treatment with respect to the conversion transaction as provided in paragraph (c) of this section. See paragraph (d) of this section for exceptions to this paragraph (a).

(2) ***Definitions*** —

(i) ***C corporation.*** For purposes of this section, the term *C corporation* has the meaning provided in section 1361(a)(2) except that the term does not include a RIC or REIT.

(ii) ***Conversion transaction.*** For purposes of this section, the term *conversion transaction* means the qualification of a C corporation as a RIC or REIT or the transfer of property owned by a C corporation to a RIC or REIT.

(b) ***Deemed sale treatment*** —

(1) ***In general.*** If property owned by a C corporation becomes the property of a RIC or REIT in a conversion transaction, then the C corporation recognizes gain and loss as if it sold the converted property to an unrelated party at fair market value on the deemed sale date (as defined in paragraph (b)(3) of this section). This paragraph (b) does not apply if its application would result in the recognition of a net loss. For this purpose, *net loss* is the excess of aggregate losses over aggregate gains (including items of income), without regard to character.

(2) ***Basis adjustment.*** If a corporation recognizes a net gain under paragraph (b)(1) of this section, then the converted property has a basis in the hands of the RIC or REIT equal to the fair market value of such property on the deemed sale date.

(3) ***Deemed sale date*** —

(i) ***RIC or REIT qualifications.*** If the conversion transaction is a qualification of a C corporation as a RIC or REIT, then the deemed sale date is the end of the last day of the C corporation's last taxable year before the first taxable year in which it qualifies to be taxed as a RIC or REIT.

(ii) ***Other conversion transactions.*** If the conversion transaction is a transfer of property owned by a C corporation to a RIC or REIT, then the deemed sale date is the end of the day before the day of the transfer.

(4) ***Example.*** The rules of this paragraph (b) are illustrated by the following example:

> *Example.* Deemed sale treatment on merger into RIC. (i) X, a calendar-year taxpayer, has qualified as a RIC since January 1, 1991. On May 31, 1994, Y, a C corporation and calendar-year taxpayer, transfers all of its property to X in a transaction that qualifies as a reorganization under section 368(a)(1)(C). X does not elect section 1374 treatment under paragraph (c) of this section and chooses not to rely on § 1.337(d)-5. As a result of the transfer, Y is subject to deemed sale treatment under this paragraph (b) on its tax return for the short taxable year ending May 31, 1994. On May 31, 1994, Y's only assets are Capital Asset, which has a fair market value of $100,000 and a basis of $40,000 as of the end of May

30, 1994, and $50,000 cash. Y also has an unrestricted net operating loss carryforward of $12,000 and accumulated earnings and profits of $50,000. Y has no taxable income for the short taxable year ending May 31, 1994, other than gain recognized under this paragraph (b). In 1997, X sells Capital Asset for $110,000. Assume the applicable corporate tax rate is 35%. (ii) Under this paragraph (b), Y is treated as if it sold the converted property (Capital Asset and $50,000 cash) at fair market value on May 30, 1994, recognizing $60,000 of gain ($150,000 amount realized—$90,000 basis). Y must report the gain on its tax return for the short taxable year ending May 31, 1994. Y may offset this gain with its $12,000 net operating loss carryforward and will pay tax of $16,800 (35% of $48,000).

(iii) Under section 381, X succeeds to Y's accumulated earnings and profits. Y's accumulated earnings and profits of $50,000 increase by $60,000 and decrease by $16,800 as a result of the deemed sale. Thus, the aggregate amount of subchapter C earnings and profits that must be distributed to satisfy section 852(a)(2)(B) is $93,200 ($50,000 + $60,000 − $16,800). X's basis in Capital Asset is $100,000. On X's sale of Capital Asset in 1997, X recognizes $10,000 of gain, which is taken into account in computing X's net capital gain for purposes of section 852(b)(3).

(c) ***Election of section 1374 treatment —***

(1) ***In general —***

(i) ***Property owned by a C corporation that becomes property of a RIC or REIT.*** Paragraph (b) of this section does not apply if the RIC or REIT that was formerly a C corporation or that acquired property from a C corporation makes the election described in paragraph (c)(4) of this section. A RIC or REIT that makes such an election will be subject to tax on the net built-in gain in the converted property under the rules of section 1374 and the regulations thereunder, as modified by this paragraph (c), as if the RIC or REIT were an S corporation.

(ii) ***Property subject to the rules of section 1374 owned by a RIC, REIT, or S corporation that becomes property of a RIC or REIT.*** If property subject to the rules of section 1374 owned by a RIC, a REIT, or an S corporation (the predecessor) becomes the property of a RIC or REIT (the successor) in a continuation transaction, the rules of section 1374 apply to the successor to the same extent that the predecessor was subject to the rules of section 1374 with respect to such property, and the 10-year recognition period of the successor with respect to such property is reduced by the portion of the 10-year recognition period of the predecessor that expired before the date of the continuation transaction. For this purpose, a continuation transaction means the qualification of the predecessor as a RIC or REIT or the transfer of property from the predecessor to the successor in a transaction in which the successor's basis in the transferred property is determined, in whole or in part, by reference to the predecessor's basis in that property.

(2) ***Modification of section 1374 treatment —***

(i) ***Net recognized built-in gain for REITs —***

(A) ***Prelimitation amount.*** The prelimitation amount determined as provided in § 1.1374-2(a)(1) is reduced by the portion of such amount, if any, that is subject to tax under section 857(b)(4), (5), (6), or (7). For this purpose, the amount of a REIT's recognized built-in gain that is subject to tax under section 857(b)(5) is computed as follows:

(*1*) Where the tax under section 857(b)(5) is computed by reference to section 857(b)(5)(A), the amount of a REIT's recognized built-in gain that is subject to tax under section 857(b)(5) is the tax imposed by section 857(b)(5) multiplied by a fraction the numerator of which is the amount of recognized built-in gain (without regard to recognized built-in loss and recognized built-in gain from prohibited transactions) that is not derived from sources referred to in section 856(c)(2) and the denominator of which is the gross income (without regard to gross income from prohibited transactions) of the REIT that is not derived from sources referred to in section 856(c)(2).

(*2*) Where the tax under section 857(b)(5) is computed by reference to section 857(b)(5)(B), the amount of a REIT's recognized built-in gain that is subject to tax under section 857(b)(5) is the tax imposed by section 857(b)(5) multiplied by a fraction the numerator of which is the amount of recognized built-in gain (without regard to recognized built-in loss and recognized built-in gain from prohibited transactions) that is not derived from sources referred to in section 856(c)(3) and the denominator of which is the gross income (without regard to gross income from prohibited transactions) of the REIT that is not derived from sources referred to in section 856(c)(3).

(B) ***Taxable income limitation.*** The taxable income limitation determined as provided in § 1.1374-2(a)(2) is reduced by an amount equal to the tax imposed under sections 857(b)(5), (6), and (7).

(ii) ***Loss carryforwards, credits and credit carryforwards*** —

(A) ***Loss carryforwards.*** Consistent with paragraph (c)(1)(i) of this section, net operating loss carryforwards and capital loss carryforwards arising in taxable years for which the corporation that generated the loss was not subject to subchapter M of chapter 1 of the Internal Revenue Code are allowed as a deduction against net recognized built-in gain to the extent allowed under section 1374 and the regulations thereunder. Such loss carryforwards must be used as a deduction against net recognized built-in gain for a taxable year to the greatest extent possible before such losses can be used to reduce other investment company taxable income for purposes of section 852(b) or other real estate investment trust taxable income for purposes of section 857(b) for that taxable year.

(B) ***Credits and credit carryforwards.*** Consistent with paragraph (c)(1)(i) of this section, minimum tax credits and business credit carryforwards arising in taxable years for which the corporation that generated the credit was not subject to subchapter M of chapter 1 of the Internal Revenue Code are allowed to reduce the tax imposed on net recognized built-in gain under this paragraph (c) to the extent allowed under section 1374 and the regulations thereunder. Such credits and credit carryforwards must be used to reduce the tax imposed under this paragraph (c) on net recognized built-in gain for a taxable year to the greatest extent possible before such credits and credit carryforwards can be used to

reduce the tax, if any, on other investment company taxable income for purposes of section 852(b) or on other real estate investment trust taxable income for purposes of section 857(b) for that taxable year.

(iii) ***10-year recognition period.*** In the case of a conversion transaction that is a qualification of a C corporation as a RIC or REIT, the 10-year recognition period described in section 1374(d)(7) begins on the first day of the RIC's or REIT's first taxable year. In the case of other conversion transactions, the 10-year recognition period begins on the day the property is acquired by the RIC or REIT.

(3) ***Coordination with subchapter M rules*** —

(i) ***Recognized built-in gains and losses subject to subchapter M.*** Recognized built-in gains and losses of a RIC or REIT are included in computing investment company taxable income for purposes of section 852(b)(2), real estate investment trust taxable income for purposes of section 857(b)(2), capital gains for purposes of sections 852(b)(3) and 857(b)(3), gross income derived from sources within any foreign country or possession of the United States for purposes of section 853, and the dividends paid deduction for purposes of sections 852(b)(2)(D), 852(b)(3)(A), 857(b)(2)(B), and 857(b)(3)(A). In computing such income and deduction items, capital loss carryforwards and net operating loss carryforwards that are used by the RIC or REIT to reduce recognized built-in gains are allowed as a deduction, but only to the extent that they are otherwise allowable as a deduction against such income under the Internal Revenue Code (including section 852(b)(2)(B)).

(ii) ***Treatment of tax imposed.*** The amount of tax imposed under this paragraph (c) on net recognized built-in gain for a taxable year is treated as a loss sustained by the RIC or the REIT during such taxable year. The character of the loss is determined by allocating the tax proportionately (based on recognized built-in gain) among the items of recognized built-in gain included in net recognized built-in gain. With respect to RICs, the tax imposed under this paragraph (c) on net recognized built-in gain is treated as attributable to the portion of the RIC's taxable year occurring after October 31.

(4) ***Making the section 1374 election*** —

(i) ***In general.*** A RIC or REIT makes a section 1374 election with the following statement: "[Insert name and employer identification number of electing RIC or REIT] elects under § 1.337-6(c) to be subject to the rules of section 1374 and the regulations thereunder with respect to its property that formerly was held by a C corporation, [insert name and employer identification number of the C corporation, if different from name and employer identification number of the RIC or REIT]." However, a RIC or REIT need not file an election under this paragraph (c), but will be deemed to have made such an election if it can demonstrate that it informed the Internal Revenue Service prior to January 2, 2002 of its intent to make a section 1374 election. An election under this paragraph (c) is irrevocable.

(ii) ***Time for making the election.*** An election under this paragraph (c) may be filed by the RIC or REIT with any Federal income tax return filed by the RIC or REIT on or before September 15, 2003, provided that the RIC or REIT has reported consistently with such election for all periods.

(5) ***Example.*** The rules of this paragraph (c) are illustrated by the following example:

> *Example. Section 1374 treatment on REIT election.* (i) X, a C corporation that is a calendar-

year taxpayer, elects to be taxed as a REIT on its 1994 tax return, which it files on March 15, 1995. As a result, X is a REIT for its 1994 taxable year and would be subject to deemed sale treatment under paragraph (b) of this section but for X's timely election of section 1374 treatment under this paragraph (c). X chooses not to rely on § 1.337(d)-5. As of the beginning of the 1994 taxable year, X's property consisted of Real Property, which is not section 1221(a)(1) property and which had a fair market value of $100,000 and an adjusted basis of $80,000, and $25,000 cash. X also had accumulated earnings and profits of $25,000, unrestricted capital loss carryforwards of $3,000, and unrestricted business credit carryforwards of $2,000. On July 1, 1997, X sells Real Property for $110,000. For its 1997 taxable year, X has no other income or deduction items. Assume the highest corporate tax rate is 35%.
(ii) Upon its election to be taxed as a REIT, X retains its $80,000 basis in Real Property and its $25,000 accumulated earnings and profits. X retains its $3,000 of capital loss carryforwards and its $2,000 of business credit carryforwards. To satisfy section 857(a)(2)(B), X must distribute $25,000, an amount equal to its earnings and profits accumulated in non-REIT years, to its shareholders by the end of its 1994 taxable year.

(iii) Upon X's sale of Real Property in 1997, X recognizes gain of $30,000 ($110,000—$80,000). X's recognized built-in gain for purposes of applying section 1374 is $20,000 ($100,000 fair market value as of the beginning of X's first taxable year as a REIT—$80,000 basis). Because X's $30,000 of net income for the 1997 taxable year exceeds the net recognized built-in gain of $20,000, the taxable income limitation does not apply. X, therefore, has $20,000 net recognized built-in gain for the year. Assuming that X has not used its $3,000 of capital loss carryforwards in a prior taxable year and that their use is allowed under section 1374(b)(2) and § 1.1374-5, X is allowed a $3,000 deduction against the $20,000 net recognized built-in gain. X would owe tax of $5,950 (35% of $17,000) on its net recognized built-in gain, except that X may use its $2,000 of business credit carryforwards to reduce this tax, assuming that X has not used the credit carryforwards in a prior taxable year and that their use is allowed under section 1374(b)(3) and § 1.1374-6. Thus, X owes tax of $3,950 under this paragraph (c).

(iv) For purposes of subchapter M of chapter 1 of the Internal Revenue Code, X's earnings and profits for the year increase by $26,050 ($30,000 capital gain on the sale of Real Property—$3,950 tax under this paragraph (c)). For purposes of section 857(b)(2) and (b)(3), X's net capital gain for the year is $23,050 ($30,000 capital gain reduced by $3,000 capital loss carryforward and further reduced by $3,950 tax).

(d) *Exceptions* —

(1) ***Gain otherwise recognized.*** Paragraph (a) of this section does not apply to any conversion transaction to the extent that gain or loss otherwise is recognized on such conversion transaction. See, for example, sections 336, 351(b), 351(e), 356, 357(c), 367, 368(a)(2)(F), and 1001.

(2) *Re-election of RIC or REIT status* —

(i) ***Generally.*** Except as provided in paragraphs (d)(2)(ii) and (iii) of this section, paragraph (a)(1) of this section does not apply to any corporation that—

(A) Immediately prior to qualifying to be taxed as a RIC or REIT was subject to tax as a C corporation for a period not exceeding two taxable years; and

(B) Immediately prior to being subject to tax as a C corporation was subject to tax as a RIC or REIT for a period of at least one taxable year.

(ii) ***Property acquired from another corporation while a C corporation.*** The exception described in paragraph (d)(2)(i) of this section does not apply to property acquired by the corporation while it was subject to tax as a C corporation from any person in a transaction that results in the acquirer's basis in the property being determined by reference to a C corporation's basis in the property.

(iii) ***RICs and REITs previously subject to section 1374 treatment.*** If the RIC or REIT had property subject to paragraph (c) of this section before the RIC or REIT became subject to tax as a C corporation as described in paragraph (d)(2)(i) of this section, then paragraph (c) of this section applies to the RIC or REIT upon its requalification as a RIC or REIT, except that the 10-year recognition period with respect to such property is reduced by the portion of the 10-year recognition period that expired before the RIC or REIT became subject to tax as a C corporation and by the period of time that the corporation was subject to tax as a C corporation.

(e) ***Effective date.*** This section applies to conversion transactions that occur on or after June 10, 1987, and before January 2, 2002. In lieu of applying this section, taxpayers generally may apply § 1.337(d)-5 to determine the tax consequences (for all taxable years) of any conversion transaction that occurs on or after June 10, 1987 and before January 2, 2002, except that RICs and REITs that are subject to section 1374 treatment with respect to a conversion transaction may not rely on § 1.337(d)-5(b)(1), but must apply paragraphs (c)(1)(i), (c)(2)(i), (c)(2)(ii), and (c)(3) of this section, with respect to built-in gains and losses recognized in taxable years beginning on or after January 2, 2002. Taxpayers are not prevented from relying on § 1.337(d)-5 merely because they elect section 1374 treatment in the manner described in paragraph (c)(4) of this section instead of in the manner described in § 1.337(d)-5(b)(3) and (c). For conversion transactions that occur on or after January 2, 2002, *see* § 1.337(d)-7.

[T.D. 9047, 68 FR 12820, Mar. 18, 2003]

§ 1.337(d)-7 Tax on property owned by a C corporation that becomes property of a RIC or REIT.

(a) *General rule* —

(1) ***Property owned by a C corporation that becomes property of a RIC or a REIT.*** If property owned by a C corporation (as defined in paragraph (a)(2)(i) of this section) becomes the property of a RIC or a REIT in a conversion transaction (as defined in paragraph (a)(2)(ii) of this section), then section 1374 treatment will apply as described in paragraph (b) of this section, unless the C corporation elects, or is treated as electing, deemed sale treatment with respect to the conversion transaction as provided in paragraph (c) of this section. See paragraph (d) of this section for exceptions to this paragraph (a).

(2) ***Definitions.*** For purposes of this section:

(i) ***C corporation.*** The term *C corporation* has the meaning provided in section 1361(a)(2) except that the term does not include a RIC or a REIT.

(ii) ***Conversion transaction.*** The term *conversion transaction* means the qualification of a C corporation as a RIC or REIT or the transfer of property owned by a C corporation to a RIC or REIT.

(iii) ***RIC.*** The term *RIC* means a regulated investment company within the meaning of section 851(a).

(iv) ***REIT.*** The term *REIT* means a real estate investment trust within the meaning of section 856(a).

(v) ***S corporation.*** The term *S corporation* has the meaning provided in section 1361(a)(1).

(vi) ***Section 355 distribution.*** The term *section 355 distribution* means any distribution to which section 355 (or so much of section 356 as relates to section 355) applies, including a distribution on which the distributing corporation recognizes gain pursuant to sections 355(d) or 355(e).

(vii) ***Converted property.*** The term *converted property* means—

(A) Property owned by a C corporation that becomes the property of a RIC or a REIT; and

(B) Any other property of a RIC or a REIT the basis of which is determined, directly or indirectly, in whole or in part, by reference to the basis of property described in paragraph (a)(2)(vii)(A) of this section.

(viii) ***Distribution property.*** The term *distribution property* means—

(A) Property owned immediately after a section 355 distribution by the distributing corporation, a controlled corporation (as those terms are defined in section 355(a)(1)), or a member of a separate affiliated group (as defined in section 355(b)(3)(B)) of which the distributing corporation or a controlled corporation is the common parent (but no formulation of the step transaction doctrine will be used to determine whether property acquired after the distribution is distribution property pursuant to this paragraph (a)(2)(viii)(A)); and

(B) Property with a basis determined, directly or indirectly, in whole or in part, by reference to property described in paragraph (a)(2)(viii)(A) of this section.

(b) ***Section 1374 treatment*** —

(1) ***In general*** —

(i) ***Property owned by a C corporation that becomes property of a RIC or REIT.*** If property owned by a C corporation becomes the property of a RIC or REIT in a conversion transaction, then the RIC or REIT will be subject to tax on the net built-in gain in the converted property under the rules of section 1374 and the regulations thereunder, as modified by this paragraph (b), as if the RIC or REIT were an S corporation.

(ii) ***Property subject to the rules of section 1374 owned by a RIC, REIT, or S corporation that becomes property of a RIC or REIT.*** If property subject to the rules of section 1374 owned by a RIC, a REIT, or an S corporation (the predecessor) becomes the property of a RIC or REIT (the successor) in a continuation transaction, the rules of section 1374 apply to the successor to the same extent that the predecessor was subject to the rules of section 1374 with respect to such property,

and the recognition period of the successor with respect to such property is reduced by the portion of the recognition period of the predecessor that expired before the date of the continuation transaction. For this purpose, a continuation transaction means the qualification of the predecessor as a RIC or REIT or the transfer of property from the predecessor to the successor in a transaction in which the successor's basis in the transferred property is determined, in whole or in part, by reference to the predecessor's basis in that property.

(2) ***Modification of section 1374 treatment*** —

(i) ***Net recognized built-in gain for REITs*** —

(A) ***Prelimitation amount.*** The prelimitation amount determined as provided in § 1.1374-2(a)(1) is reduced by the portion of such amount, if any, that is subject to tax under section 857(b)(4), (5), (6), or (7). For this purpose, the amount of a REIT's recognized built-in gain that is subject to tax under section 857(b)(5) is computed as follows:

(*1*) Where the tax under section 857(b)(5) is computed by reference to section 857(b)(5)(A), the amount of a REIT's recognized built-in gain that is subject to tax under section 857(b)(5) is the tax imposed by section 857(b)(5) multiplied by a fraction the numerator of which is the amount of recognized built-in gain (without regard to recognized built-in loss and recognized built-in gain from prohibited transactions) that is not derived from sources referred to in section 856(c)(2) and the denominator of which is the gross income (without regard to gross income from prohibited transactions) of the REIT that is not derived from sources referred to in section 856(c)(2).

(*2*) Where the tax under section 857(b)(5) is computed by reference to section 857(b)(5)(B), the amount of a REIT's recognized built-in gain that is subject to tax under section 857(b)(5) is the tax imposed by section 857(b)(5) multiplied by a fraction the numerator of which is the amount of recognized built-in gain (without regard to recognized built-in loss and recognized built-in gain from prohibited transactions) that is not derived from sources referred to in section 856(c)(3) and the denominator of which is the gross income (without regard to gross income from prohibited transactions) of the REIT that is not derived from sources referred to in section 856(c)(3).

(B) ***Taxable income limitation.*** The taxable income limitation determined as provided in § 1.1374-2(a)(2) is reduced by an amount equal to the tax imposed under section 857(b)(5), (6), and (7).

(ii) ***Loss carryforwards, credits and credit carryforwards*** —

(A) ***Loss carryforwards.*** Consistent with paragraph (b)(1)(i) of this section, net operating loss carryforwards and capital loss carryforwards arising in taxable years for which the corporation that generated the loss was not subject to subchapter M of chapter 1 of the Internal Revenue Code are allowed as a deduction against net recognized built-in gain to the extent allowed under section 1374 and the regulations thereunder. Such loss carryforwards must be used as a deduction against net recognized built-in gain for a taxable year to the greatest extent possible before such losses can be used to reduce other investment company taxable income for purposes of section 852(b) or other real estate investment trust taxable income for purposes of section 857(b) for that taxable year.

(B) ***Credits and credit carryforwards.*** Consistent with paragraph (b)(1)(i) of this section, minimum tax credits and business credit carryforwards arising in taxable years for which the corporation that generated the credit was not subject to subchapter M of chapter 1 of the Internal Revenue Code are allowed to reduce the tax imposed on net recognized built-in gain under this paragraph (b) to the extent allowed under section 1374 and the regulations thereunder. Such credits and credit carryforwards must be used to reduce the tax imposed under this paragraph (b) on net recognized built-in gain for a taxable year to the greatest extent possible before such credits and credit carryforwards can be used to reduce the tax, if any, on other investment company taxable income for purposes of section 852(b) or on other real estate investment trust taxable income for purposes of section 857(b) for that taxable year.

(iii) ***Recognition period.*** For purposes of applying the rules of section 1374 and the regulations thereunder, as modified by paragraph (b) of this section, the term *recognition period* means the recognition period described in section 1374(d)(7), beginning—

(A) In the case of a conversion transaction that is a qualification of a C corporation as a RIC or a REIT, on the first day of the RIC's or the REIT's first taxable year; and

(B) In the case of other conversion transactions, on the day the RIC or the REIT acquires the property.

(3) ***Coordination with subchapter M rules*** —

(i) ***Recognized built-in gains and losses subject to subchapter M.*** Recognized built-in gains and losses of a RIC or REIT are included in computing investment company taxable income for purposes of section 852(b)(2), real estate investment trust taxable income for purposes of section 857(b)(2), capital gains for purposes of sections 852(b)(3) and 857(b)(3), gross income derived from sources within any foreign country or possession of the United States for purposes of section 853, and the dividends paid deduction for purposes of sections 852(b)(2)(D), 852(b)(3)(A), 857(b)(2)(B), and 857(b)(3)(A). In computing such income and deduction items, capital loss carryforwards and net operating loss carryforwards that are used by the RIC or REIT to reduce recognized built-in gains are allowed as a deduction, but only to the extent that they are otherwise allowable as a deduction against such income under the Internal Revenue Code (including section 852(b)(2)(B)).

(ii) ***Treatment of tax imposed.*** The amount of tax imposed under this paragraph (b) on net recognized built-in gain for a taxable year is treated as a loss sustained by the RIC or the REIT during such taxable year. The character of the loss is determined by allocating the tax proportionately (based on recognized built-in gain) among the items of recognized built-in gain included in net recognized built-in gain. With respect to RICs, the tax imposed under this paragraph (b) on net recognized built-in gain is treated as attributable to the portion of the RIC's taxable year occurring after October 31.

(4) ***Section 355 distribution following a conversion transaction*** —

(i) ***In general.*** If a REIT is described in paragraph (f)(1) of this section and the related section 355 distribution (as defined in paragraph (f)(1)(i) of this section) follows a conversion transaction, then for the taxable year in which the related section 355 distribution occurs, § 1.1374-2(a)(1) and (2) (as modified by paragraph (b)(2)(i) of this section) do not apply, and the REIT's net recognized built-in gain for such taxable year is the amount of its net unrealized built-in gain limitation (as defined in § 1.1374-2(a)(3)) for such taxable year.

(ii) ***Basis adjustment*** —

(A) ***In general.*** If a REIT recognizes gain under paragraph (b)(4)(i) of this section, the aggregate basis of the converted property held by the REIT at the end of the taxable year in which the related section 355 distribution occurs shall be increased by an amount equal to the amount of gain so recognized, increased by the amount of the REIT's recognized built-in loss for such taxable year, and reduced by the amount of the REIT's recognized built-in gain and recognized built-in gain carryover for such taxable year.

(B) ***Allocation of basis increase.*** The aggregate increase in basis by reason of paragraph (b)(4)(ii)(A) of this section shall be allocated among the converted property in proportion to their respective built-in gains on the date of the conversion transaction.

(5) ***Example.*** The rules of this paragraph (b) are illustrated by the following example:

> *Example. Section 1374 treatment on REIT election.* (i) X, a C corporation that is a calendar-year taxpayer, elects to be taxed as a REIT on its 2004 tax return, which it files on March 15, 2005. As a result, X is a REIT for its 2004 taxable year and is subject to section 1374 treatment under this paragraph (b). X does not elect deemed sale treatment under paragraph (c) of this section. As of the beginning of the 2004 taxable year, X's property consisted of Real Property, which is not section 1221(a)(1) property and which had a fair market value of $100,000 and an adjusted basis of $80,000, and $25,000 cash. X also had accumulated earnings and profits of $25,000, unrestricted capital loss carryforwards of $3,000, and unrestricted business credit carryforwards of $2,000. On July 1, 2007, X sells Real Property for $110,000. For its 2007 taxable year, X has no other income or deduction items. Assume the highest corporate tax rate is 35%.
> (ii) Upon its election to be taxed as a REIT, X retains its $80,000 basis in Real Property and its $25,000 accumulated earnings and profits. X retains its $3,000 of capital loss carryforwards and its $2,000 of business credit carryforwards. To satisfy section 857(a)(2)(B), X must distribute $25,000, an amount equal to its earnings and profits accumulated in non-REIT years, to its shareholders by the end of its 2004 taxable year.
>
> (iii) Upon X's sale of Real Property in 2007, X recognizes gain of $30,000 ($110,000—$80,000). X's recognized built-in gain for purposes of applying section 1374 is $20,000 ($100,000 fair market value as of the beginning of X's first taxable year as a REIT—$80,000 basis). Because X's $30,000 of net income for the 2007 taxable year exceeds the net recognized built-in gain of $20,000, the taxable income limitation does not apply. X, therefore, has $20,000 net recognized built-in gain for the year. Assuming that X has not used its $3,000 of capital loss carryforwards in a prior taxable year and that their use is allowed under section 1374(b)(2) and § 1.1374-5, X is allowed a $3,000 deduction against the $20,000 net recognized built-in gain. X would owe tax of $5,950 (35% of $17,000) on its net recognized built-in gain, except that X may use its $2,000 of business credit carryforwards to

reduce the tax, assuming that X has not used the credit carryforwards in a prior taxable year and that their use is allowed under section 1374(b)(3) and § 1.1374-6. Thus, X owes tax of $3,950 under this paragraph (b).

(iv) For purposes of subchapter M of chapter 1 of the Internal Revenue Code, X's earnings and profits for the year increase by $26,050 ($30,000 capital gain on the sale of Real Property—$3,950 tax under this paragraph (b)). For purposes of section 857(b)(2) and (b)(3), X's net capital gain for the year is $23,050 ($30,000 capital gain reduced by $3,000 capital loss carryforward and further reduced by $3,950 tax).

(c) ***Election of deemed sale treatment*** —

(1) ***In general.*** Paragraph (b) of this section does not apply if the C corporation that qualifies as a RIC or a REIT or transfers property to a RIC or a REIT makes the election described in paragraph (c)(5) of this section or is treated as making such election under paragraph (c)(6) of this section, except to the extent permitted by paragraph (c)(6)(ii) of this section. A C corporation that makes, or that is treated as making, such an election recognizes gain and loss as if it sold the converted property to an unrelated party at fair market value on the deemed sale date (as defined in paragraph (c)(3) of this section). See paragraph (c)(4) of this section concerning limitations on the use of loss in computing gain. Paragraph (c) of this section does not apply if its application would result in the recognition of a net loss. For this purpose, net loss is the excess of aggregate losses over aggregate gains (including items of income), without regard to character.

(2) ***Basis adjustment.*** If a corporation recognizes a net gain under paragraph (c)(1) of this section, then the converted property has a basis in the hands of the RIC or REIT equal to the fair market value of such property on the deemed sale date.

(3) ***Deemed sale date*** —

(i) ***RIC or REIT qualifications.*** If the conversion transaction is a qualification of a C corporation as a RIC or REIT, then the deemed sale date is the end of the last day of the C corporation's last taxable year before the first taxable year in which it qualifies to be taxed as a RIC or REIT.

(ii) ***Other conversion transactions.*** If the conversion transaction is a transfer of property owned by a C corporation to a RIC or REIT, then the deemed sale date is the end of the day before the day of the transfer.

(4) ***Anti-stuffing rule.*** A C corporation must disregard converted property in computing gain or loss recognized on the conversion transaction under this paragraph (c), if—

(i) The converted property was acquired by the C corporation in a transaction to which section 351 applied or as a contribution to capital;

(ii) Such converted property had an adjusted basis immediately after its acquisition by the C corporation in excess of its fair market value on the date of acquisition; and

(iii) The acquisition of such converted property by the C corporation was part of a plan a principal purpose of which was to reduce gain recognized by the C corporation in connection with the conversion transaction. For purposes of this paragraph (c)(4), the principles of section 336(d)(2) apply.

(5) ***Making the deemed sale election.*** A C corporation (or a partnership to which the principles of this section apply under paragraph (e) of this section) makes the deemed sale election with the following statement: "[Insert name and employer identification number of electing corporation or partnership] elects deemed sale treatment under § 1.337(d)-7(c) with respect to its property that was converted to property of, or transferred to, a RIC or REIT, [insert name and employer identification number of the RIC or REIT, if different from the name and employer identification number of the C corporation or partnership]." This statement must be attached to the Federal income tax return of the C corporation or partnership for the taxable year in which the deemed sale occurs. An election under this paragraph (c) is irrevocable.

(6) ***Conversion transaction following a section 355 distribution*** —

(i) ***In general.*** Except as provided in paragraph (c)(6)(ii) of this section, a C corporation described in paragraph (f)(1) of this section is treated as having made the election under paragraph (c)(5) of this section with respect to a conversion transaction if the conversion transaction occurs following the related section 355 distribution (as defined in paragraph (f)(1)(i) of this section) and the C corporation has not made such an election.

(ii) ***Limitation.*** A C corporation treated as having made the election under paragraph (c)(5) of this section as a result of paragraph (c)(6)(i) of this section is not treated as having made the election with respect to property that the taxpayer establishes is not distribution property with respect to the related section 355 distribution. For purposes of this paragraph (c)(6)(ii), any property with an adjusted basis in excess of its fair market value as of the date of the conversion transaction will not be treated as distribution property unless the taxpayer establishes that it owned such asset immediately after the related section 355 distribution. Paragraph (b) of this section will apply to property with respect to which the taxpayer is not treated as having made the election under paragraph (c)(5) of this section as a result of this paragraph (c)(6)(ii).

(7) ***Examples.*** The rules of this paragraph (c) are illustrated by the following examples:

> *Example 1. Deemed sale treatment on merger into RIC.* (i) X, a calendar-year taxpayer, has qualified as a RIC since January 1, 2001. On May 31, 2004, Y, a C corporation and calendar-year taxpayer, transfers all of its property to X in a transaction that qualifies as a reorganization under section 368(a)(1)(C). As a result of the transfer, Y would be subject to section 1374 treatment under paragraph (b) of this section but for its timely election of deemed sale treatment under this paragraph (c). As a result of such election, Y is subject to deemed sale treatment on its tax return for the short taxable year ending May 31, 2004. On May 31, 2004, Y's only assets are Capital Asset, which has a fair market value of $100,000 and a basis of $40,000 as of the end of May 30, 2004, and $50,000 cash. Y also has an unrestricted net operating loss carryforward of $12,000 and accumulated earnings and profits of $50,000. Y has no taxable income for the short taxable year ending May 31, 2004, other than gain recognized under this paragraph (c). In 2007, X sells Capital Asset for $110,000. Assume the applicable corporate tax rate is 35%.

(ii) Under this paragraph (c), Y is treated as if it sold the converted property (Capital Asset and $50,000 cash) at fair market value on May 30, 2004, recognizing $60,000 of gain ($150,000 amount realized—$90,000 basis). Y must report the gain on its tax return for the short taxable year ending May 31, 2004. Y may offset this gain with its $12,000 net operating loss carryforward and will pay tax of $16,800 (35% of $48,000).

(iii) Under section 381, X succeeds to Y's accumulated earnings and profits. Y's accumulated earnings and profits of $50,000 increase by $60,000 and decrease by $16,800 as a result of the deemed sale. Thus, the aggregate amount of subchapter C earnings and profits that must be distributed to satisfy section 852(a)(2)(B) is $93,200 ($50,000 + $60,000−$16,800). X's basis in Capital Asset is $100,000. On X's sale of Capital Asset in 2007, X recognizes $10,000 of gain which is taken into account in computing X's net capital gain for purposes of section 852(b)(3).

Example 2. Loss limitation. (i) Assume the facts are the same as those described in *Example 1*, but that, prior to the reorganization, a shareholder of Y contributed to Y a capital asset, Capital Asset 2, which has a fair market value of $10,000 and a basis of $20,000, in a section 351 transaction.
(ii) Assuming that Y's acquisition of Capital Asset 2 was made pursuant to a plan a principal purpose of which was to reduce the amount of gain that Y would recognize in connection with the conversion transaction, Capital Asset 2 would be disregarded in computing the amount of Y's net gain on the conversion transaction.

(d) ***Exceptions*** —

(1) ***Gain otherwise recognized.*** Paragraph (a)(1) of this section does not apply to any conversion transaction to the extent that gain or loss otherwise is recognized on such conversion transaction by the C corporation that either qualifies as a RIC or a REIT or that transfers property to a RIC or REIT. See, for example, sections 311(b), 336(a), 351(b), 351(e), 356, 357(c), 367, 368(a)(2)(F), 1001, 1031(b), and 1033(a)(2).

(2) ***Re-election of RIC or REIT status*** —

(i) ***Generally.*** Except as provided in paragraphs (d)(2)(ii) and (iii) of this section, paragraph (a)(1) of this section does not apply to any corporation that—

(A) Immediately prior to qualifying to be taxed as a RIC or REIT was subject to tax as a C corporation for a period not exceeding two taxable years; and

(B) Immediately prior to being subject to tax as a C corporation was subject to tax as a RIC or REIT for a period of at least one taxable year.

(ii) ***Property acquired from another corporation while a C corporation.*** The exception described in paragraph (d)(2)(i) of this section does not apply to property acquired by the corporation while it was subject to tax as a C corporation from any person in a transaction that results in the acquirer's basis in the property being determined by reference to a C corporation's basis in the property.

(iii) ***RICs and REITs previously subject to section 1374 treatment.*** If the RIC or REIT had property subject to paragraph (b) of this section before the RIC or REIT became subject to tax as a C corporation as described in paragraph (d)(2)(i) of this section, then paragraph (b) of this section applies to the RIC or REIT upon its requalification as a RIC or REIT, except that the recognition period with respect to such property is reduced by the portion of the recognition period that expired before the RIC or REIT became subject to tax as a C corporation and by the period of time that the corporation was subject to tax as a C corporation.

(3) ***Special rules for like-kind exchanges and involuntary conversions*** —

(i) ***In general.*** Paragraph (a)(1) of this section does not apply to a conversion transaction to the extent that a C corporation transfers property with a built-in gain to a RIC or REIT, and the C corporation's gain is not recognized by reason of either section 1031 or 1033.

(ii) ***Clarification regarding exchanged property previously subject to section 1374 treatment.*** Notwithstanding paragraph (d)(3)(i) of this section, if, in a transaction described in paragraph (d)(3)(i) of this section, a RIC or REIT surrenders property that was subject to section 1374 treatment immediately prior to the transaction, the rules of section 1374(d)(6) will apply to continue section 1374 treatment to the replacement property acquired by the RIC or REIT in the transaction.

(iii) ***Examples.*** The rules of this paragraph (d)(3) are illustrated by the following examples. In each of the examples, X is a REIT, Y is a C corporation, and X and Y are not related.

> *Example 1. Section 1031(a) exchange.* (i) *Facts.* X owned a building that it leased for commercial use (Property A). Y owned a building leased for commercial use (Property B). On January 1, Year 3, Y transferred Property B to X in exchange for Property A in a nonrecognition transaction under section 1031(a). Immediately before the exchange, Properties A and B each had a value of $100, X had an adjusted basis of $60 in Property A, Y had an adjusted basis of $70 in Property B, and X was not subject to section 1374 treatment with respect to Property A.
> (ii) *Analysis.* The transfer of property (Property B) by Y (a C corporation) to X (a REIT) is a conversion transaction within the meaning of paragraph (a)(2)(ii) of this section. The conversion transaction is a nonrecognition transaction under section 1031(a) as to Y; thus, Y does not recognize any of its $30 gain. Therefore, the conversion transaction is not subject to paragraph (a)(1) of this section by reason of paragraph (d)(3)(i) of this section.

> *Example 2. Section 1031(a) exchange of section 1374 property.* (i) *Facts.* The facts are the same as in *Example 1,* except that X had acquired Property A in a conversion transaction in Year 2, and immediately before the Year 3 exchange X was subject to section 1374 treatment with respect to $25 of net built-in gain in Property A.
> (ii) *Analysis.* The Year 3 transfer of Property B by Y to X is a conversion transaction within the meaning of paragraph (a)(2)(ii) of this section. The conversion transaction is a nonrecognition transaction under section 1031(a) as to Y; thus, Y does not recognize any of its $30 gain. Therefore, the Year 3 transfer is not subject to paragraph (a)(1) of this

section by reason of paragraph (d)(3)(i) of this section. However, X had been subject to section 1374 treatment with respect to $25 of net built-in gain in Property A immediately before the Year 3 transfer, and X's basis in Property B is determined (in whole or in part) by reference to its adjusted basis in Property A. Accordingly, the rules of section 1374(d)(6) apply and X is subject to section 1374 treatment on Property B with respect to the $25 net built-in gain. See paragraph (d)(3)(ii) of this section.

Example 3. Section 1031(b) exchange. (i) *Facts.* The facts are the same as in *Example 1,* except that immediately before the Year 3 exchange Property A had a value of $92, and X transferred Property A and $8 to Y in exchange for Property B in a nonrecognition transaction under section 1031(b).
(ii) *Analysis.* The transfer of Property B by Y to X is a conversion transaction within the meaning of paragraph (a)(2)(ii) of this section. Pursuant to section 1031(b), Y recognizes $8 of its gain. Paragraph (a)(1) of this section does not apply to the transaction to the extent of the $8 gain recognized by Y by reason of paragraph (d)(1) of this section, or to the extent of the $22 gain realized but not recognized by Y by reason of paragraph (d)(3)(i) of this section.

Example 4. Section 1033(a) involuntary conversion of property held by a C corporation transferor. (i) *Facts.* Y owned uninsured, improved property (Property 1) that was involuntarily converted (within the meaning of section 1033(a)) in a fire. Y sold Property 1 for $100 to X, which owned an adjacent property and wanted Property 1 for use as a parking lot. Y had a $70 basis in Property 1 immediately before the sale. Y elected to defer gain recognition under section 1033(a)(2), and purchased qualifying replacement property (Property 2) for $100 from an unrelated party prior to the expiration of the period described in section 1033(a)(2)(B).
(ii) *Analysis.* The transfer of Property 1 by Y to X is a conversion transaction within the meaning of paragraph (a)(2)(ii) of this section. The conversion transaction (combined with Y's purchase of Property 2) is a nonrecognition transaction under section 1033(a) as to Y; thus, Y does not recognize any of its $30 gain. Therefore, the conversion transaction is not subject to paragraph (a)(1) of this section by reason of paragraph (d)(3)(i) of this section.

Example 5. Section 1033(a) involuntary conversion of property held by a REIT. (i) *Facts.* X owned property (Property 1). On January 1, Year 2, Property 1 had a fair market value of $100 and a basis of $70, and X was not subject to section 1374 treatment with respect to Property 1. On that date, when Property 1 was under a threat of condemnation, X sold Property 1 to an unrelated party for $100 (First Transaction). X elected to defer gain recognition under section 1033(a)(2), and purchased qualifying replacement property (Property 2) for $100 from Y (Second Transaction) prior to the

expiration of the period described in section 1033(a)(2)(B).
(ii) *Analysis.* The transfer of Property 2 by Y to X in the Second Transaction is a conversion transaction within the meaning of paragraph (a)(2)(ii) of this section. The Second Transaction (combined with the First Transaction) is a nonrecognition transaction under section 1033(a) as to X, but not as to Y. Assume no nonrecognition provision applied to Y; thus, Y recognized gain or loss on its sale of Property 2 in the Second Transaction, and the Second Transaction is not subject to paragraph (a)(1) of this section by reason of paragraph (d)(1) of this section.

(4) ***Special rule if C corporation is a tax-exempt entity.*** Paragraph (a)(1) of this section does not apply to a conversion transaction in which the C corporation that owned the converted property is a tax-exempt entity described in § 1.337(d)-4(c)(2) to the extent that gain (if any) would not be subject to tax under Title 26 of the United States Code if a deemed sale election under paragraph (c)(5) of this section were made.

(e) ***Special rule for partnerships*** —

(1) ***In general.*** The principles of this section apply to property transferred by a partnership to a RIC or REIT to the extent of any gain or loss in the converted property that would be allocated directly or indirectly, through one or more partnerships, to a C corporation if the partnership sold the converted property to an unrelated party at fair market value on the deemed sale date (as defined in paragraph (c)(3) of this section). If the partnership were to elect deemed sale treatment under paragraph (c) of this section in lieu of section 1374 treatment under paragraph (b) of this section with respect to such transfer, then any net gain recognized by the partnership on the deemed sale must be allocated to the C corporation partner, but does not increase the capital account of any partner. Any adjustment to the partnership's basis in the RIC or REIT stock as a result of deemed sale treatment under paragraph (c) of this section shall constitute an adjustment to the basis of that stock with respect to the C corporation partner only. The principles of section 743 apply to such basis adjustment.

(2) ***Example; Transfer by partnership of property to REIT.***

(i) ***Facts.*** PRS, a partnership for Federal income tax purposes, has three partners: TE, a C corporation (within the meaning of paragraph (a)(2)(i) of this section) that is also a tax-exempt entity (within the meaning of § 1.337(d)-4(c)(2)), owns 50 percent of the capital and profits of PRS; A, an individual, owns 30 percent of the capital and profits of PRS; and Y, a C corporation (within the meaning of paragraph (a)(2)(i) of this section), owns the remaining 20 percent. PRS owns a building that it leases for commercial use (Property 1). On January 1, Year 2, when PRS has an adjusted basis in Property 1 of $100 and Property 1 has a fair market value of $500, PRS transfers Property 1 to X, a REIT, in exchange for stock of X in an exchange described in section 351. PRS does not elect deemed sale treatment under paragraph (c) of this section. TE would not be subject to tax with respect to any gain that would be allocated to it if PRS had sold Property 1 to an unrelated party at fair market value.

(ii) ***Analysis.*** The transfer of Property 1 by PRS to X is a conversion transaction within the meaning of paragraph (a)(2)(ii) of this section to the extent of any gain or loss that would be allocated to any C corporation partner if PRS sold Property 1 at fair market value to an unrelated party on the deemed sale date. TE and Y are C corporations, but A is not a C corporation within the meaning of paragraph (a)(2)(i) of this section. Therefore, the transfer of Property 1 by PRS to X

is a conversion transaction within the meaning of paragraph (a)(2)(ii) of this section to the extent of the gain in Property 1 that would be allocated to TE and Y. Pursuant to paragraph (d)(4) of this section, paragraph (a)(1) of this section does not apply to the extent of the gain that would be allocated to TE if PRS had sold Property 1 to an unrelated party at fair market value on the deemed sale date. If PRS were to sell Property 1 to an unrelated party at fair market value on the deemed sale date, PRS would allocate $80 of built-in gain to Y. Thus, X is subject to section 1374 treatment on Property 1 with respect to $80 of built-in gain.

(f) ***Conversion transaction preceding or following a section 355 distribution*** —

(1) ***In general.*** A C corporation or a REIT is described in this paragraph (f)(1) if—

(i) The C corporation or the REIT engages in a conversion transaction involving a REIT during the twenty-year period beginning on the date that is ten years before the date of a section 355 distribution (the *related section 355 distribution*); and

(ii) The C corporation or the REIT engaging in the related section 355 distribution is either—

(A) The distributing corporation or the controlled corporation, as those terms are defined in section 355(a)(1); or

(B) A member of the separate affiliated group (as defined in section 355(b)(3)(B)) of the distributing corporation or the controlled corporation.

(2) ***Predecessors and successors.*** For purposes of this paragraph (f), any reference to a controlled corporation, a distributing corporation, or a member of the separate affiliated group of a distributing corporation or a controlled corporation includes a reference to any predecessor or successor of such corporation. Successors include corporations which succeed to and take into account items described in section 381(c) of the distributing corporation or the controlled corporation. Predecessors include corporations having such items to which the distributing corporation or the controlled corporation succeeded and took into account.

(3) ***Exclusion of certain conversion transactions.*** A C corporation or a REIT is not described in paragraph (f)(1) of this section if—

(i) The distributing corporation and the controlled corporation are both REITs immediately after the related section 355 distribution (including by reason of elections under section 856(c)(1) made after the related section 355 distribution that are effective before the related section 355 distribution) and at all times during the two years thereafter;

(ii) Section 355(h)(1) does not apply to the related section 355 distribution by reason of section 355(h)(2)(B); or

(iii) The related section 355 distribution occurred before December 7, 2015, or is described in a ruling request referred to in section 311(c) of Division Q of the Consolidated Appropriations Act, 2016, Public Law 114-113, 129 Stat. 2422.

(g) ***Effective/Applicability date*** —

(1) ***In general.*** Except as provided in paragraph (g)(2) of this section, this section applies to conversion transactions that occur on or after January 2, 2002. For conversion transactions that occurred on or after June 10, 1987, and before January 2, 2002, see §§ 1.337(d)-5 and 1.337(d)-6.

(2) ***Special rules*** —

(i) ***Conversion transactions occurring on or after August 2, 2013 and certain prior conversion transactions.*** Paragraphs (a)(2)(i) through (v), (d)(1), (d)(3), (d)(4), and (e) of this section apply to conversion transactions that occur on or after August 2, 2013. However, taxpayers may apply paragraphs (a)(2)(i) through (v), (d)(1), (d)(3), (d)(4), and (e) of this section to conversion transactions that occurred before August 2, 2013. For conversion transactions that occurred on or after January 2, 2002 and before August 2, 2013, see § 1.337(d)-7 as contained in 26 CFR part 1 in effect on April 1, 2013.

(ii) ***Conversion transactions occurring on or after June 7, 2019, and certain prior conversion transactions.*** Paragraphs (a)(1), (a)(2)(vi), (vii), and (viii), (b)(4), (c)(1) and (6), and (f) of this section apply to conversion transactions occurring on or after June 7, 2019, and to conversion transactions and related section 355 distributions for which the conversion transaction occurs before, and the related section 355 distribution occurs on or after, June 7, 2019. For conversion transactions that occurred on or after June 7, 2016, and before June 7, 2019 (other than conversion transactions and related section 355 distributions for which the conversion transaction occurs before, and the related section 355 distribution occurs on or after, June 7, 2019), see §§ 1.337(d)-7 and 1.337(d)-7T as contained in 26 CFR part 1 in effect on April 1, 2019.

(iii) ***Recognition period.*** Paragraphs (b)(1)(ii) and (d)(2)(iii) of this section apply to conversion transactions that occur on or after August 8, 2016. Paragraph (b)(2)(iii) of this section applies to conversion transactions that occur after February 17, 2017. For conversion transactions that occurred on or after August 8, 2016 and on or before February 17, 2017, see § 1.337(d)-7T(b)(2)(iii) in effect on August 8, 2016. However, taxpayers may apply paragraph (b)(2)(iii) of this section to conversion transactions that occurred on or after August 8, 2016 and on or before February 17, 2017. For conversion transactions that occurred on or after January 2, 2002 and before August 8, 2016, see § 1.337(d)-7 as contained in 26 CFR part 1 in effect on April 1, 2016.

[T.D. 9047, 68 FR 12822, Mar. 18, 2003, as amended by T.D. 9626, 78 FR 46806, Aug. 2, 2013; T.D. 9770, 81 FR 36797, June 8, 2016; T.D. 9810, 82 FR 5388, Jan. 18, 2017; T.D. 9862, 84 FR 26563, June 7, 2019]

§ 1.338-0 Outline of topics.

This section lists the captions contained in the regulations under section 338 as follows:

§ 1.338-1 General principles; status of old target and new target.

(a) In general.

(1) Deemed transaction.

(2) Application of other rules of law.

(3) Overview.

(b) Treatment of target under other provisions of the Internal Revenue Code.

(1) General rule for subtitle A.

(2) Exceptions for subtitle A.

(3) General rule for other provisions of the Internal Revenue Code.

(c) Anti-abuse rule.

(1) In general.

(2) Examples.

(d) Next day rule for post-closing transactions.

(e) Effective/applicability date.

§ 1.338-2 Nomenclature and definitions; mechanics of the section 338 election.

(a) Scope.

(b) Nomenclature.

(c) Definitions.

(1) Acquisition date.

(2) Acquisition date assets.

(3) Affiliated group.

(4) Common parent.

(5) Consistency period.

(6) Deemed asset sale.

(7) Deemed sale tax consequences.

(8) Deemed sale return.

(9) Domestic corporation.

(10) Old target's final return.

(11) Purchasing corporation.

(12) Qualified stock purchase.

(13) Related persons.

(14) Section 338 election.

(15) Section 338(h)(10) election.

(16) Selling group.

(17) Target; old target; new target.

(18) Target affiliate.

(19) 12-month acquisition period.

(d) Time and manner of making election.

(e) Special rules for foreign corporations or DISCs.

(1) Elections by certain foreign purchasing corporations.

(i) General rule.

(ii) Qualifying foreign purchasing corporation.

(iii) Qualifying foreign target.

(iv) Triggering event.

(v) Subject to United States tax.

(2) Acquisition period.

(3) Statement of section 338 may be filed by United States shareholders in certain cases.

(4) Notice requirement for U.S. persons holding stock in foreign target.

(i) General rule.

(ii) Limitation.

(iii) Form of notice.

(iv) Timing of notice.

(v) Consequence of failure to comply.

(vi) Good faith effort to comply.

§ 1.338-3 Qualification for the section 338 election.

(a) Scope.

(b) Rules relating to qualified stock purchases.

(1) Purchasing corporation requirement.

(2) Purchase.

(3) Acquisitions of stock from related corporations.

(i) In general.

(ii) Time for testing relationship.

(iii) Cases where section 338(h)(3)(C) applies—acquisitions treated as purchases.

(iv) Examples.

(4) Acquisition date for tiered targets.

(i) Stock sold in deemed asset sale.

(ii) Examples.

(5) Effect of redemptions.

(i) General rule.

(ii) Redemptions from persons unrelated to the purchasing corporation.

(iii) Redemptions from the purchasing corporation or related persons during 12-month acquisition period.

(A) General rule.

(B) Exception for certain redemptions from related corporations.

(iv) Examples.

(c) Effect of post-acquisition events on eligibility for section 338 election.

(1) Post-acquisition elimination of target.

(2) Post-acquisition elimination of the purchasing corporation.

(d) Consequences of post-acquisition elimination of target where section 338 election not made.

(1) Scope.

(2) Continuity of interest.

(3) Control requirement.

(4) Solely for voting stock requirement.

(5) Example.

§ 1.338-4 Aggregate deemed sale price; various aspects of taxation of the deemed asset sale.

(a) Scope.

(b) Determination of ADSP.

(1) General rule.

(2) Time and amount of ADSP.

(i) Original determination.

(ii) Redetermination of ADSP.

(iii) Example.

(c) Grossed-up amount realized on the sale to the purchasing corporation of the purchasing corporation's recently purchased target stock.

(1) Determination of amount.

(2) Example.

(d) Liabilities of old target.

(1) In general.

(2) Time and amount of liabilities.

(e) Deemed sale tax consequences.

(f) Other rules apply in determining ADSP.

(g) Examples.

(h) Deemed sale of target affiliate stock.

(1) Scope.

(2) In general.

(3) Deemed sale of foreign target affiliate by a domestic target.

(4) Deemed sale producing effectively connected income.

(5) Deemed sale of insurance company target affiliate electing under section 953(d).

(6) Deemed sale of DISC target affiliate.

(7) Anti-stuffing rule.

(8) Examples.

§ 1.338-5 Adjusted grossed-up basis.

(a) Scope.

(b) Determination of AGUB.

(1) General rule.

(2) Time and amount of AGUB.

(i) Original determination.

(ii) Redetermination of AGUB.

(iii) Examples.

(c) Grossed-up basis of recently purchased stock.

(d) Basis of nonrecently purchased stock; gain recognition election.

(1) No gain recognition election.

(2) Procedure for making gain recognition election.

(3) Effect of gain recognition election.

(i) In general.

(ii) Basis amount.

(iii) Losses not recognized.

(iv) Stock subject to election.

(e) Liabilities of new target.

(1) In general.

(2) Time and amount of liabilities.

(3) Interaction with deemed sale tax consequences.

(f) Adjustments by the Internal Revenue Service.

(g) Examples.

(h) Effective/applicability date.

§ 1.338-6 Allocation of ADSP and AGUB among target assets.

(a) Scope.

(1) In general.

(2) Fair market value.

(i) In general.

(ii) Transaction costs.

(iii) Internal Revenue Service authority.

(b) General rule for allocating ADSP and AGUB.

(1) Reduction in the amount of consideration for Class I assets.

(2) Other assets.

(i) In general.

(ii) Class II assets.

(iii) Class III assets.

(iv) Class IV assets.

(v) Class V assets.

(vi) Class VI assets.

(vii) Class VII assets.

(3) Other items designated by the Internal Revenue Service.

(c) Certain limitations and other rules for allocation to an asset.

(1) Allocation not to exceed fair market value.

(2) Allocation subject to other rules.

(3) Special rule for allocating AGUB when purchasing corporation has nonrecently purchased stock.

(i) Scope.

(ii) Determination of hypothetical purchase price.

(iii) Allocation of AGUB.

(4) Liabilities taken into account in determining amount realized on subsequent disposition.

(5) Allocation to certain nuclear decommissioning funds.

(d) Examples.

§ 1.338-7 Allocation of redetermined ADSP and AGUB among target assets.

(a) Scope.

(b) Allocation of redetermined ADSP and AGUB.

(c) Special rules for ADSP.

(1) Increases or decreases in deemed sale tax consequences taxable notwithstanding old target ceases to exist.

(2) Procedure for transactions in which section 338(h)(10) is not elected.

(i) Deemed sale tax consequences included in new target's return.

(ii) Carryovers and carrybacks.

(A) Loss carryovers to new target taxable years.

(B) Loss carrybacks to taxable years of old target.

(C) Credit carryovers and carrybacks.

(3) Procedure for transactions in which section 338(h)(10) is elected.

(d) Special rules for AGUB.

(1) Effect of disposition or depreciation of acquisition date assets.

(2) Section 38 property.

(e) Examples.

§ 1.338-8 Asset and stock consistency.

(a) Introduction.

(1) Overview.

(2) General application.

(3) Extension of the general rules.

(4) Application where certain dividends are paid.

(5) Application to foreign target affiliates.

(6) Stock consistency.

(b) Consistency for direct acquisitions.

(1) General rule.

(2) Section 338(h)(10) elections.

(c) Gain from disposition reflected in basis of target stock.

(1) General rule.

(2) Gain not reflected if section 338 election made for target.

(3) Gain reflected by reason of distributions.

(4) Controlled foreign corporations.

(5) Gain recognized outside the consolidated group.

(d) Basis of acquired assets.

(1) Carryover basis rule.

(2) Exceptions to carryover basis rule for certain assets.

(3) Exception to carryover basis rule for de minimis assets.

(4) Mitigation rule.

(i) General rule.

(ii) Time for transfer.

(e) Examples.

(1) In general.

(2) Direct acquisitions.

(f) Extension of consistency to indirect acquisitions.

(1) Introduction.

(2) General rule.

(3) Basis of acquired assets.

(4) Examples.

(g) Extension of consistency if dividends qualifying for 100 percent dividends received deduction are paid.

(1) General rule for direct acquisitions from target.

(2) Other direct acquisitions having same effect.

(3) Indirect acquisitions.

(4) Examples.

(h) Consistency for target affiliates that are controlled foreign corporations.

(1) In general.

(2) Income or gain resulting from asset dispositions.

(i) General rule.

(ii) Basis of controlled foreign corporation stock.

(iii) Operating rule.

(iv) Increase in asset or stock basis.

(3) Stock issued by target affiliate that is a controlled foreign corporation.

(4) Certain distributions.

(i) General rule.

(ii) Basis of controlled foreign corporation stock.

(iii) Increase in asset or stock basis.

(5) Examples.

(i) [Reserved]

(j) Anti-avoidance rules.

(1) Extension of consistency period.

(2) Qualified stock purchase and 12-month acquisition period.

(3) Acquisitions by conduits.

(i) Asset ownership.

(A) General rule.

(B) Application of carryover basis rule.

(ii) Stock acquisitions.

(A) Purchase by conduit.

(B) Purchase of conduit by corporation.

(C) Purchase of conduit by conduit.

(4) Conduit.

(5) Existence of arrangement.

(6) Predecessor and successor.

(i) Persons.

(ii) Assets.

(7) Examples.

§ 1.338-9 International aspects of section 338.

(a) Scope.

(b) Application of section 338 to foreign targets.

(1) In general.

(2) Ownership of FT stock on the acquisition date.

(3) Carryover FT stock.

(i) Definition.

(ii) Carryover of earnings and profits.

(iii) Cap on carryover of earnings and profits.

(iv) Post-acquisition date distribution of old FT earnings and profits.

(v) Old FT earnings and profits unaffected by post-acquisition date deficits.

(vi) Character of FT stock as carryover FT stock eliminated upon disposition.

(4) Passive foreign investment company stock.

(c) Dividend treatment under section 1248(e).

(d) Allocation of foreign taxes.

(e) Operation of section 338(h)(16). [Reserved]

(f) Examples.

§ 1.338-10 Filing of returns.

(a) Returns including tax liability from deemed asset sale.

(1) In general.

(2) Old target's final taxable year otherwise included in consolidated return of selling group.

(i) General rule.

(ii) Separate taxable year.

(iii) Carryover and carryback of tax attributes.

(iv) Old target is a component member of purchasing corporation's controlled group.

(3) Old target is an S corporation.

(4) Combined deemed sale return.

(i) General rule.

(ii) Gain and loss offsets.

(iii) Procedure for filing a combined return.

(iv) Consequences of filing a combined return.

(5) Deemed sale excluded from purchasing corporation's consolidated return.

(6) Due date for old target's final return.

(i) General rule.

(ii) Application of § 1.1502-76(c).

(A) In general.

(B) Deemed extension.

(C) Erroneous filing of deemed sale return.

(D) Erroneous filing of return for regular tax year.

(E) Last date for payment of tax.

(7) Examples.

(b) Waiver.

(1) Certain additions to tax.

(2) Notification.

(3) Elections or other actions required to be specified on a timely filed return.

(i) In general.

(ii) New target in purchasing corporation's consolidated return.

(4) Examples.

(c) Effective/applicability date.

§ 1.338-11 Effect of section 338 election on insurance company targets.

(a) In general.

(b) Computation of ADSP and AGUB.

(1) Reserves taken into account as a liability.

(2) Allocation of ADSP and AGUB to specific insurance contracts.

(c) Application of assumption reinsurance principles.

(1) In general.

(2) Reinsurance premium.

(3) Ceding commission.

(4) Examples.

(d) Reserve increases by new target after the deemed asset sale.

(1) In general.

(2) Exceptions.

(3) Amount of additional premium.

(i) In general.

(ii) Increases in unpaid loss reserves.

(iii) Increases in other reserves.

(4) Limitation on additional premium.

(5) Treatment of additional premium under section 848.

(6) Examples.

(7) Effective/applicability date.

(i) In general.

(ii) Application to pre-effective date increases to reserves.

(e) Effect of section 338 election on section 846(e) election.

(1) In general.

(2) Revocation of existing section 846(e) election.

(f) Effect of section 338 election on old target's capitalization amounts under section 848.

(1) Determination of net consideration for specified insurance contracts.

(2) Determination of capitalization amount.

(3) Section 381 transactions.

(g) Effect of section 338 election on policyholders surplus account.

(h) Effect of section 338 election on section 847 special estimated tax payments.

§ 1.338-11T Effect of section 338 election on insurance company targets (temporary).

(a) through (c) [Reserved]

(d) Reserve increases by new target after the deemed asset sale.

(1) In general.

(2) Exceptions.

(3) Amount of additional premium.

(i) In general.

(ii) Increases in unpaid loss reserves.

(iii) Increases in other reserves.

(4) Limitation on additional premium.

(5) Treatment of additional premium under section 848.

(6) Examples.

(7) Effective dates.

(i) In general.

(ii) Application to pre-effective date increases to reserves.

(e) Effect of section 338 election on section 846(e) election.

(1) In general.

(2) Revocation of existing section 846(e) election.

(f) through (h) [Reserved]

§ 1.338(h)(10)-1 Deemed asset sale and liquidation.

(a) Scope.

(b) Definitions.

(1) Consolidated target.

(2) Selling consolidated group.

(3) Selling affiliate; affiliated target.

(4) S corporation target.

(5) S corporation shareholders.

(6) Liquidation.

(c) Section 338(h)(10) election.

(1) In general.

(2) Simultaneous joint election requirement.

(3) Irrevocability.

(4) Effect of invalid election.

(d) Certain consequences of section 338(h)(10) election.

(1) P.

(2) New T.

(3) Old T—deemed sale.

(i) In general.

(ii) Tiered targets.

(4) Old T and selling consolidated group, selling affiliate, or S corporation shareholders—deemed liquidation; tax characterization.

(i) In general.

(ii) Tiered targets.

(5) Selling consolidated group, selling affiliate, or S corporation shareholders.

(i) In general.

(ii) Basis and holding period of T stock not acquired.

(iii) T stock sale.

(6) Nonselling minority shareholders other than nonselling S corporation shareholders.

(i) In general.

(ii) T stock sale.

(iii) T stock not acquired.

(7) Consolidated return of selling consolidated group.

(8) Availability of the section 453 installment method.

(i) In deemed asset sale.

(ii) In deemed liquidation.

(9) Treatment consistent with an actual asset sale.

(e) Examples.

(f) Inapplicability of provisions.

(g) Required information.

§ 1.338(i)-1 >Effective dates.

(a) In general.

(b) Section 338(h)(10) elections for S corporation targets.

(c) Section 338 elections for insurance company targets.

(1) In general.

(2) New target election for retroactive election.

(i) Availability of election.

(ii) Time and manner of making the election for new target.

(3) Old target election for retroactive election.

(i) Availability of election.

(ii) Time and manner of making the election for old target.

[T.D. 8940, 66 FR 9929, Feb. 13, 2001, as amended by T.D. 9158, 70 FR 55741, Sept. 16, 2004; T.D. 9257, 71 FR 17999, Apr. 10, 2006; T.D. 9264, 71 FR 30595, May 30, 2006; T.D. 9358, 72 FR 51705, Sept. 11, 2007; T.D. 9377, 73 FR 3871, Jan. 23, 2008; T.D. 9619, 78 FR 28489, May 15, 2013]

§ 1.338-1 General principles; status of old target and new target.

(a) ***In general*** —

(1) ***Deemed transaction.*** Elections are available under section 338 when a purchasing corporation acquires the stock of another corporation (the target) in a qualified stock purchase. One type of election, under section 338(g), is available to the purchasing corporation. Another type of election, under section 338(h)(10), is, in more limited circumstances, available jointly to the purchasing corporation and the sellers of the stock. (Rules concerning eligibility for these elections are contained in §§ 1.338-2, 1.338-3, and 1.338(h)(10)-1.) However, if, as a result of the deemed purchase of old target's assets pursuant to a section 336(e) election, there would be both a qualified stock purchase and a qualified stock disposition (as defined in § 1.336-1(b)(6)) of the stock of a subsidiary of target, neither a section 338(g) election nor a section 338(h)(10) election may be made with respect to the qualified stock purchase of the subsidiary. Instead, a section 336(e) election may be made with respect to such purchase. See § 1.336-1(b)(6)(ii). Although target is a single corporation under corporate law, if a section 338 election is made, then two separate corporations, old target and new target, generally are considered to exist for purposes of subtitle A of the Internal Revenue Code. Old target is treated as transferring all of its assets to an unrelated person in

exchange for consideration that includes the discharge of its liabilities (see § 1.1001-2(a)), and new target is treated as acquiring all of its assets from an unrelated person in exchange for consideration that includes the assumption of those liabilities. (Such transaction is, without regard to its characterization for Federal income tax purposes, referred to as the deemed asset sale and the income tax consequences thereof as the deemed sale tax consequences.) If a section 338(h)(10) election is made, old target is deemed to liquidate following the deemed asset sale.

(2) ***Application of other rules of law.*** Other rules of law apply to determine the tax consequences to the parties as if they had actually engaged in the transactions deemed to occur under section 338 and the regulations thereunder except to the extent otherwise provided in those regulations. See also § 1.338-6(c)(2). Other rules of law may characterize the transaction as something other than or in addition to a sale and purchase of assets; however, the transaction between old and new target must be a taxable transaction. For example, if the target is an insurance company for which a section 338 election is made, the deemed asset sale results in an assumption reinsurance transaction for the insurance contracts deemed transferred from old target to new target. See, generally, § 1.817-4(d), and for special rules regarding the acquisition of insurance company targets, § 1.338-11. See also § 1.367(a)-8(k)(13) for a rule applicable to gain recognition agreements (filed under §§ 1.367(a)-3(b)(1)(ii) and 1.367(a)-8) and deemed asset sales as a result of an election under section 338(g).

(3) ***Overview.*** Definitions and special nomenclature and rules for making the section 338 election are provided in § 1.338-2. Qualification for the section 338 election is addressed in § 1.338-3. The amount for which old target is treated as selling all of its assets (the aggregate deemed sale price, or ADSP) is addressed in § 1.338-4. The amount for which new target is deemed to have purchased all its assets (the adjusted grossed-up basis, or AGUB) is addressed in § 1.338-5. Section 1.338-6 addresses allocation both of ADSP among the assets old target is deemed to have sold and of AGUB among the assets new target is deemed to have purchased. Section 1.338-7 addresses allocation of ADSP or AGUB when those amounts subsequently change. Asset and stock consistency are addressed in § 1.338-8. International aspects of section 338 are covered in § 1.338-9. Rules for the filing of returns are provided in § 1.338-10. Section 1.338-11 provides special rules for insurance company targets. Eligibility for and treatment of section 338(h)(10) elections is addressed in § 1.338(h)(10)-1.

(b) ***Treatment of target under other provisions of the Internal Revenue Code*** —

(1) ***General rule for subtitle A.*** Except as provided in this section, new target is treated as a new corporation that is unrelated to old target for purposes of subtitle A of the Internal Revenue Code. Thus—

(i) New target is not considered related to old target for purposes of section 168 and may make new elections under section 168 without taking into account the elections made by old target; and

(ii) New target may adopt, without obtaining prior approval from the Commissioner, any taxable year that meets the requirements of section 441 and any method of accounting that meets the requirements of section 446. Notwithstanding § 1.441-1T(b)(2), a new target may adopt a taxable year on or before the last day for making the election under section 338 by filing its first return for the desired taxable year on or before that date.

(2) ***Exceptions for subtitle A.*** New target and old target are treated as the same corporation for purposes of—

(i) The rules applicable to employee benefit plans (including those plans described in sections 79, 104, 105, 106, 125, 127, 129, 132, 137, and 220), qualified pension, profit-sharing, stock bonus and annuity plans (sections 401(a) and 403(a)), simplified employee pensions (section 408(k)), tax qualified stock option plans (sections 422 and 423), welfare benefit funds (sections 419, 419A, 512(a)(3), and 4976), voluntary employees' beneficiary associations (section 501(c)(9) and the regulations thereunder), and tax on excess tax-exempt organization executive compensation (section 4960) and the regulations in part 53 under section 4960;

(ii) Sections 1311 through 1314 (relating to the mitigation of the effect of limitations), if a section 338(h)(10) election is not made for target;

(iii) Section 108(e)(5) (relating to the reduction of purchase money debt);

(iv) Section 45A (relating to the Indian Employment Credit), section 51 (relating to the Work Opportunity Credit), section 51A (relating to the Welfare to Work Credit), and section 1396 (relating to the Empowerment Zone Act);

(v) Sections 401(h) and 420 (relating to medical benefits for retirees);

(vi) Section 414 (relating to definitions and special rules); and

(vii) Section 846(e) (relating to an election to use an insurance company's historical loss payment pattern).

(viii) Any other provision designated in the Internal Revenue Bulletin by the Internal Revenue Service. See § 601.601(d)(2)(ii) of this chapter. See, for example, § 1.1001-3(e)(4)(i)(F) providing that an election under section 338 does not result in the substitution of a new obligor on target's debt. See also, for example, § 1.1502-77(c)(8), providing that an election under section 338 does not result in a deemed termination of target's existence for purposes of the rules applicable to the agent for a consolidated group.

(3) ***General rule for other provisions of the Internal Revenue Code.*** Except as provided in the regulations under section 338 or in the Internal Revenue Bulletin by the Internal Revenue Service (see § 601.601(d)(2)(ii) of this chapter), new target is treated as a continuation of old target for purposes other than subtitle A of the Internal Revenue Code. For example—

(i) New target is liable for old target's Federal income tax liabilities, including the tax liability for the deemed sale tax consequences and those tax liabilities of the other members of any consolidated group that included old target that are attributable to taxable years in which those corporations and old target joined in the same consolidated return (see § 1.1502-6(a));

(ii) Wages earned by the employees of old target are considered wages earned by such employees from new target for purposes of sections 3101 and 3111 (Federal Insurance Contributions Act) and section 3301 (Federal Unemployment Tax Act); and

(iii) Old target and new target must use the same employer identification number.

(c) ***Anti-abuse rule*** —

(1) ***In general.*** The rules of this paragraph (c) apply for purposes of applying the regulations under sections 336(e), 338, and 1060. The Commissioner is authorized to treat any property (including cash) transferred by old target in connection with the transactions resulting in the application of the residual method (and not held by target at the close of the acquisition date) as, nonetheless, property of target at the close of the acquisition date if the property so transferred is, within 24

months after the deemed asset sale, owned by new target, or is owned, directly or indirectly, by a member of the affiliated group of which new target is a member and continues after the acquisition date to be held or used primarily in connection with one or more of the activities of new target. In addition, the Commissioner is authorized to treat any property (including cash) transferred to old target in connection with the transactions resulting in the application of the residual method (and held by target at the close of the acquisition date) as, nonetheless, not being property of target at the close of the acquisition date if the property so transferred is, within 24 months after the deemed asset sale, not owned by new target but owned, directly or indirectly, by a member of the affiliated group of which new target is a member, or owned by new target but held or used primarily in connection with an activity conducted, directly or indirectly, by another member of the affiliated group of which new target is a member in combination with other property retained by or acquired, directly or indirectly, from the transferor of the property (or a member of the same affiliated group) to old target. For purposes of this paragraph (c)(1), an interest in an entity is considered held or used in connection with an activity if property of the entity is so held or used. The authority of the Commissioner under this paragraph (c)(1) includes the making of any appropriate correlative adjustments (avoiding, to the extent possible, the duplication or omission of any item of income, gain, loss, deduction, or basis).

(2) ***Examples.*** The following examples illustrate this paragraph (c):

Example 1. Prior to a qualified stock purchase under section 338, target transfers one of its assets to a related party. The purchasing corporation then purchases the target stock and also purchases the transferred asset from the related party. After its purchase of target, the purchasing corporation and target are members of the same affiliated group. A section 338 election is made. Under an arrangement with the purchaser, the separately transferred asset is used primarily in connection with target's activities. Applying the anti-abuse rule of this paragraph (c), the Commissioner may consider target to own the transferred asset for purposes of applying the residual method under section 338.

Example 2. T owns all the stock of T1. T1 leases intellectual property to T, which T uses in connection with its own activities. P, a purchasing corporation, wishes to buy the T-T1 chain of corporations. P, in connection with its planned purchase of the T stock, contracts to consummate a purchase of all the stock of T1 on March 1 and of all the stock of T on March 2. Section 338 elections are thereafter made for both T and T1. Immediately after the purchases, P, T and T1 are members of the same affiliated group. T continues to lease the intellectual property from T1 and that is the primary use of the intellectual property. Thus, an asset of T, the T1 stock, was removed from T's own assets prior to the qualified stock purchase of the T stock, T1's own assets are used after the deemed asset sale in connection with T's own activities, and the T1 stock is after the deemed asset sale owned by P, a member of the same affiliated group of which T is a member. Applying the anti-abuse rule of this paragraph (c), the Commissioner may, for purposes of application of the residual method under section 338 both to T and to T1, consider P to have bought only the stock of T, with T at the time of the qualified stock purchases of both T and T1 (the qualified stock purchase of T1 being triggered by the deemed sale under section 338 of T's assets) owning T1. The Commissioner accordingly would allocate consideration to T's assets as though the T1 stock were one of those assets, and then allocate consideration within T1 based on the amount allocated to the T1 stock at the T level.

(d) ***Next day rule for post-closing transactions.*** If a target corporation for which an election under section 338 is made engages in a transaction outside the ordinary course of business on the acquisition date after the event resulting in the qualified stock purchase of the target or a higher tier corporation, the target and all

persons related thereto (either before or after the qualified stock purchase) under section 267(b) or section 707 must treat the transaction for all Federal income tax purposes as occurring at the beginning of the day following the transaction and after the deemed purchase by new target.

(e) ***Effective/applicability date.*** Paragraphs (a)(1) and (c)(1) of this section are applicable to any qualified stock disposition for which the disposition date (as defined in § 1.336-1(b)(8)) is on or after May 15, 2013.

[T.D. 8940, 66 FR 9929, Feb. 13, 2001, as amended by T.D. 9002, 67 FR 43540, June 28, 2002; T.D. 9257, 71 FR 18000, Apr. 10, 2006; T.D. 9377, 73 FR 3871, Jan. 23, 2008; T.D. 9446, 74 FR 6957, Feb. 11, 2009; T.D. 9619, 78 FR 28489, May 15, 2013; T.D. 9715, 80 FR 17317, Apr. 1, 2015; T.D. 9932, 85 FR 86511, Dec. 30, 2020; T.D. 9938, 86 FR 6219, Jan. 19, 2021]

§ 1.338-2 Nomenclature and definitions; mechanics of the section 338 election.

(a) ***Scope.*** This section prescribes rules relating to elections under section 338.

(b) ***Nomenclature.*** For purposes of the regulations under section 338 (except as otherwise provided):

(1) T is a domestic target corporation that has only one class of stock outstanding. Old T refers to T for periods ending on or before the close of T's acquisition date; new T refers to T for subsequent periods.

(2) P is the purchasing corporation.

(3) The P group is an affiliated group of which P is a member.

(4) P1, P2, etc., are domestic corporations that are members of the P group.

(5) T1, T2, etc., are domestic corporations that are target affiliates of T. These corporations (T1, T2, etc.) have only one class of stock outstanding and may also be targets.

(6) S is a domestic corporation (unrelated to P and B) that owns T prior to the purchase of T by P. (S is referred to in cases in which it is appropriate to consider the effects of having all of the outstanding stock of T owned by a domestic corporation.)

(7) A, a U.S. citizen or resident, is an individual (unrelated to P and B) who owns T prior to the purchase of T by P. (A is referred to in cases in which it is appropriate to consider the effects of having all of the outstanding stock of T owned by an individual who is a U.S. citizen or resident. Ownership of T by A and ownership of T by S are mutually exclusive circumstances.)

(8) B, a U.S. citizen or resident, is an individual (unrelated to T, S, and A) who owns the stock of P.

(9) F, used as a prefix with the other terms in this paragraph (b), connotes foreign, rather than domestic, status. For example, FT is a foreign corporation (as defined in section 7701(a)(5)) and FA is an individual other than a U.S. citizen or resident.

(10) CFC, used as a prefix with the other terms in this paragraph (b) referring to a corporation, connotes a controlled foreign corporation (as defined in section 957, taking into account section 953(c)). A corporation identified with the prefix F may be a controlled foreign corporation. (The prefix CFC is used when the corporation's status as a controlled foreign corporation is significant.)

(c) ***Definitions.*** For purposes of the regulations under section 338 (except as otherwise provided):

(1) ***Acquisition date.*** The term *acquisition date* has the same meaning as in section 338(h)(2).

(2) ***Acquisition date assets. Acquisition date assets*** are the assets of the target held at the beginning of the day after the acquisition date (but see § 1.338-1(d) (regarding certain transactions on the acquisition date)).

(3) ***Affiliated group.*** The term *affiliated group* has the same meaning as in section 338(h)(5). Corporations are affiliated on any day they are members of the same affiliated group.

(4) ***Common parent.*** The term *common parent* has the same meaning as in section 1504.

(5) ***Consistency period.*** The *consistency period* is the period described in section 338(h)(4)(A) unless extended pursuant to § 1.338-8(j)(1).

(6) ***Deemed asset sale.*** The *deemed asset sale* is the transaction described in § 1.338-1(a)(1) that is deemed to occur for purposes of subtitle A of the Internal Revenue Code if a section 338 election is made.

(7) ***Deemed sale tax consequences. Deemed sale tax consequences*** refers to, in the aggregate, the Federal income tax consequences (generally, the income, gain, deduction, and loss) of the deemed asset sale. Deemed sale tax consequences also refers to the Federal income tax consequences of the transfer of a particular asset in the deemed asset sale.

(8) ***Deemed sale return.*** The *deemed sale return* is the return on which target's deemed sale tax consequences are reported that does not include any other items of target. Target files a deemed sale return when a section 338 election (but not a section 338(h)(10) election) is filed for target and target is a member of a selling group (defined in paragraph (c)(16) of this section) that files a consolidated return for the period that includes the acquisition date. See § 1.338-10. If target is an S corporation for the period that ends on the day before the acquisition date and a section 338 election (but not a section 338(h)(10) election) is filed for target, see § 1.338-10(a)(3).

(9) ***Domestic corporation.*** A *domestic corporation* is a corporation—

(i) That is domestic within the meaning of section 7701(a)(4) or that is treated as domestic for purposes of subtitle A of the Internal Revenue Code (e.g., to which an election under section 953(d) or 1504(d) applies); and

(ii) That is not a DISC, a corporation described in section 1248(e), or a corporation to which an election under section 936 applies.

(10) ***Old target's final return. Old target's final return*** is the income tax return of old target for the taxable year ending at the close of the acquisition date that includes the deemed sale tax consequences. However, if a deemed sale return is filed for old target, the deemed sale return is considered old target's final return.

(11) ***Purchasing corporation.*** The term *purchasing corporation* has the same meaning as in section 338(d)(1). The purchasing corporation may also be referred to as purchaser. Unless otherwise provided, any reference to the purchasing corporation is a reference to all members of the affiliated group of which the purchasing corporation is a member. See sections 338(h)(5) and (8). Also, unless otherwise provided, any reference to the purchasing corporation is, with respect to a deemed purchase of stock under section 338(a)(2), a reference to new target with respect to its own deemed purchase of stock in another target.

(12) ***Qualified stock purchase.*** The term *qualified stock purchase* has the same meaning as in section 338(d)(3).

(13) ***Related persons.*** Two persons are related if stock in a corporation owned by one of the persons would be attributed under section 318(a) (other than section 318(a)(4)) to the other.

(14) ***Section 338 election.*** A *section 338 election* is an election to apply section 338(a) to target. A section 338 election is made by filing a statement of section 338 election pursuant to paragraph (d) of this section. The form on which this statement is filed is referred to in the regulations under section 338 as the Form 8023, "Elections Under Section 338 For Corporations Making Qualified Stock Purchases."

(15) ***Section 338(h)(10) election.*** A *section 338(h)(10) election* is an election to apply section 338(h)(10) to target. A section 338(h)(10) election is made by making a joint election for target under § 1.338(h)(10)-1 on Form 8023.

(16) ***Selling group.*** The *selling group* is the affiliated group (as defined in section 1504) eligible to file a consolidated return that includes target for the taxable period in which the acquisition date occurs. However, a selling group is not an affiliated group of which target is the common parent on the acquisition date.

(17) ***Target; old target; new target. Target*** is the target corporation as defined in section 338(d)(2). *Old target* refers to target for periods ending on or before the close of target's acquisition date. *New target* refers to target for subsequent periods.

(18) ***Target affiliate.*** The term *target affiliate* has the same meaning as in section 338(h)(6) (applied without section 338(h)(6)(B)(i)). Thus, a corporation described in section 338(h)(6)(B)(i) is considered a target affiliate for all purposes of section 338. If a target affiliate is acquired in a qualified stock purchase, it is also a target.

(19) ***12-month acquisition period.*** The *12-month acquisition period* is the period described in section 338(h)(1), unless extended pursuant to § 1.338-8(j)(2).

(d) ***Time and manner of making election.*** The purchasing corporation makes a section 338 election for target by filing a statement of section 338 election on Form 8023 in accordance with the instructions to the form. The section 338 election must be made not later than the 15th day of the 9th month beginning after the month in which the acquisition date occurs. A section 338 election is irrevocable. See § 1.338(h)(10)-1(c)(2) for section 338(h)(10) elections.

(e) ***Special rules for foreign corporations or DISCs*** —

(1) ***Elections by certain foreign purchasing corporations*** —

(i) ***General rule.*** A qualifying foreign purchasing corporation is not required to file a statement of section 338 election for a qualifying foreign target before the earlier of 3 years after the acquisition date and the 180th day after the close of the purchasing corporation's taxable year within which a triggering event occurs.

(ii) ***Qualifying foreign purchasing corporation.*** A purchasing corporation is a *qualifying foreign purchasing corporation* only if, during the acquisition period of a qualifying foreign target, all the corporations in the purchasing corporation's affiliated group are foreign corporations that are not subject to United States tax.

(iii) ***Qualifying foreign target.*** A target is a *qualifying foreign target* only if target and its target affiliates are foreign corporations that, during target's acquisition period, are not subject to United States tax (and will not become subject to United States tax during such period because

of a section 338 election). A target affiliate is taken into account for purposes of the preceding sentence only if, during target's 12-month acquisition period, it is or becomes a member of the affiliated group that includes the purchasing corporation.

(iv) ***Triggering event.*** A *triggering event* occurs in the taxable year of the qualifying foreign purchasing corporation in which either that corporation or any corporation in its affiliated group becomes subject to United States tax.

(v) ***Subject to United States tax.*** For purposes of this paragraph (e)(1), a foreign corporation is considered subject to United States tax—

(A) For the taxable year for which that corporation is required under § 1.6012-2(g) (other than § 1.6012-2(g)(2)(i)(B)(2)) to file a United States income tax return; or

(B) For the period during which that corporation is a controlled foreign corporation, a passive foreign investment company for which an election under section 1295 is in effect, a foreign investment company, or a foreign corporation the stock ownership of which is described in section 552(a)(2).

(2) ***Acquisition period.*** For purposes of this paragraph (e), the term *acquisition period* means the period beginning on the first day of the 12-month acquisition period and ending on the acquisition date.

(3) ***Statement of section 338 election may be filed by United States shareholders in certain cases.*** The United States shareholders (as defined in section 951(b)) of a foreign purchasing corporation that is a controlled foreign corporation (as defined in section 957 (taking into account section 953(c))) may file a statement of section 338 election on behalf of the purchasing corporation if the purchasing corporation is not required under § 1.6012-2(g) (other than § 1.6012-2(g)(2)(i)(B)(2)) to file a United States income tax return for its taxable year that includes the acquisition date. Form 8023 must be filed as described in the form and its instructions and also must be attached to the Form 5471, “Information Returns of U.S. Persons With Respect to Certain Foreign Corporations,” filed with respect to the purchasing corporation by each United States shareholder for the purchasing corporation's taxable year that includes the acquisition date (or, if paragraph (e)(1)(i) of this section applies to the election, for the purchasing corporation's taxable year within which it becomes a controlled foreign corporation). The provisions of § 1.964-1(c) (including § 1.964-1(c)(7)) do not apply to an election made by the United States shareholders.

(4) ***Notice requirement for U.S. persons holding stock in foreign target*** —

(i) ***General rule.*** If a target subject to a section 338 election was a controlled foreign corporation, a passive foreign investment company, or a foreign personal holding company at any time during the portion of its taxable year that ends on its acquisition date, the purchasing corporation must deliver written notice of the election (and a copy of Form 8023, its attachments and instructions) to—

(A) Each U.S. person (other than a member of the affiliated group of which the purchasing corporation is a member (the purchasing group member)) that, on the acquisition date of the foreign target, holds stock in the foreign target; and

(B) Each U.S. person (other than a purchasing group member) that sells stock in the foreign target to a purchasing group member during the foreign target's 12-month acquisition period.

(ii) ***Limitation.*** The notice requirement of this paragraph (e)(4) applies only where the section 338 election for the foreign target affects income, gain, loss, deduction, or credit of the U.S. person described in paragraph (e)(4)(i) of this section under section 551, 951, 1248, or 1293.

(iii) ***Form of notice.*** The notice to U.S. persons must be identified prominently as a notice of section 338 election and must—

(A) Contain the name, address, and employer identification number (if any) of, and the country (and, if relevant, the lesser political subdivision) under the laws of which are organized the purchasing corporation and the relevant target (i.e., the target the stock of which the particular U.S. person held or sold under the circumstances described in paragraph (e)(4)(i) of this section);

(B) Identify those corporations as the purchasing corporation and the foreign target, respectively; and

(C) Contain the following declaration (or a substantially similar declaration):

> THIS DOCUMENT SERVES AS NOTICE OF AN ELECTION UNDER SECTION 338 FOR THE ABOVE CITED FOREIGN TARGET THE STOCK OF WHICH YOU EITHER HELD OR SOLD UNDER THE CIRCUMSTANCES DESCRIBED IN TREASURY REGULATIONS SECTION 1.338-2(e)(4). FOR POSSIBLE UNITED STATES FEDERAL INCOME TAX CONSEQUENCES UNDER SECTION 551, 951, 1248, OR 1293 OF THE INTERNAL REVENUE CODE OF 1986 THAT MAY APPLY TO YOU, SEE TREASURY REGULATIONS SECTION 1.338-9(b). YOU MAY BE REQUIRED TO ATTACH THE INFORMATION ATTACHED TO THIS NOTICE TO CERTAIN RETURNS.

(iv) ***Timing of notice.*** The notice required by this paragraph (e)(4) must be delivered to the U.S. person on or before the later of the 120th day after the acquisition date of the particular target or the day on which Form 8023 is filed. The notice is considered delivered on the date it is mailed to the proper address (or an address similar enough to complete delivery), unless the date it is mailed cannot be reasonably determined. The date of mailing will be determined under the rules of section 7502. For example, the date of mailing is the date of U.S. postmark or the applicable date recorded or marked by a designated delivery service.

(v) ***Consequence of failure to comply.*** A statement of section 338 election is not valid if timely notice is not given to one or more U.S. persons described in this paragraph (e)(4). If the form of notice fails to comply with all requirements of this paragraph (e)(4), the section 338 election is valid, but the waiver rule of § 1.338-10(b)(1) does not apply.

(vi) ***Good faith effort to comply.*** The purchasing corporation will be considered to have complied with this paragraph (e)(4), even though it failed to provide notice or provide timely notice to each person described in this paragraph (e)(4), if the Commissioner determines that the purchasing corporation made a good faith effort to identify and provide timely notice to those U.S. persons.

[T.D. 8940, 66 FR 9929, Feb. 13, 2001]

§ 1.338-3 Qualification for the section 338 election.

(a) ***Scope.*** This section provides rules on whether certain acquisitions of stock are qualified stock purchases and on other miscellaneous issues under section 338.

(b) ***Rules relating to qualified stock purchases*** —

(1) ***Purchasing corporation requirement.*** An individual cannot make a qualified stock purchase of target. Section 338(d)(3) requires, as a condition of a qualified stock purchase, that a corporation purchase the stock of target. If an individual forms a corporation (new P) to acquire target stock, new P can make a qualified stock purchase of target if new P is considered for tax purposes to purchase the target stock. Facts that may indicate that new P does not purchase the target stock include new P's merging downstream into target, liquidating, or otherwise disposing of the target stock following the purported qualified stock purchase.

(2) ***Purchase.*** The term *purchase* has the same meaning as in section 338(h)(3). Stock in a target (or target affiliate) may be considered purchased if, under general principles of tax law, the purchasing corporation is considered to own stock of the target (or target affiliate) meeting the requirements of section 1504(a)(2), notwithstanding that no amount may be paid for (or allocated to) the stock.

(3) ***Acquisitions of stock from related corporations*** —

(i) ***In general.*** Stock acquired by a purchasing corporation from a related corporation (R) is generally not considered acquired by purchase. See section 338(h)(3)(A)(iii).

(ii) ***Time for testing relationship.*** For purposes of section 338(h)(3)(A)(iii), a purchasing corporation is treated as related to another person if the relationship specified in section 338(h)(3)(A)(iii) exists—

(A) In the case of a single transaction, immediately after the purchase of target stock;

(B) In the case of a series of acquisitions otherwise constituting a qualified stock purchase within the meaning of section 338(d)(3), immediately after the last acquisition in such series; and

(C) In the case of a series of transactions effected pursuant to an integrated plan to dispose of target stock, immediately after the last transaction in such series.

(iii) ***Cases where section 338(h)(3)(C) applies—acquisitions treated as purchases.*** If section 338(h)(3)(C) applies and the purchasing corporation is treated as acquiring stock by purchase from R, solely for purposes of determining when the stock is considered acquired, target stock acquired from R is considered to have been acquired by the purchasing corporation on the day on which the purchasing corporation is first considered to own that stock under section 318(a) (other than section 318(a)(4)).

(iv) ***Examples.*** The following examples illustrate this paragraph (b)(3):

> *Example 1.* (i) S is the parent of a group of corporations that are engaged in various businesses. Prior to January 1, Year 1, S decided to discontinue its involvement in one line of business. To accomplish this, S forms a new corporation, Newco, with a nominal amount of cash. Shortly thereafter, on January 1, Year 1, S transfers all the stock of the subsidiary conducting the unwanted business (T) to Newco in exchange for 100 shares of Newco common stock and a Newco promissory note. Prior to January 1, Year 1, S and Underwriter (U) had entered into a binding agreement pursuant to which U would purchase 60 shares of Newco common stock from S and then sell those shares in an

Initial Public Offering (IPO). On January 6, Year 1, the IPO closes.
(ii) Newco's acquisition of T stock is one of a series of transactions undertaken pursuant to one integrated plan. The series of transactions ends with the closing of the IPO and the transfer of all the shares of stock in accordance with the agreements. Immediately after the last transaction effected pursuant to the plan, S owns 40 percent of Newco, which does not give rise to a relationship described in section 338(h)(3)(A)(iii). See § 1.338-3(b)(3)(ii)(C). Accordingly, S and Newco are not related for purposes of section 338(h)(3)(A)(iii).

(iii) Further, because Newco's basis in the T stock is not determined by reference to S's basis in the T stock and because the transaction is not an exchange to which section 351, 354, 355, or 356 applies, Newco's acquisition of the T stock is a purchase within the meaning of section 338(h)(3).

Example 2. (i) On January 1 of Year 1, P purchases 75 percent in value of the R stock. On that date, R owns 4 of the 100 shares of T stock. On June 1 of Year 1, R acquires an additional 16 shares of T stock. On December 1 of Year 1, P purchases 70 shares of T stock from an unrelated person and 12 of the 20 shares of T stock held by R.
(ii) Of the 12 shares of T stock purchased by P from R on December 1 of Year 1, 3 of those shares are deemed to have been acquired by P on January 1 of Year 1, the date on which 3 of the 4 shares of T stock held by R on that date were first considered owned by P under section 318(a)(2)(C) (i.e., 4 × .75). The remaining 9 shares of T stock purchased by P from R on December 1 of Year 1 are deemed to have been acquired by P on June 1 of Year 1, the date on which an additional 12 of the 20 shares of T stock owned by R on that date were first considered owned by P under section 318(a)(2)(C) (i.e., (20 × .75)−3). Because stock acquisitions by P sufficient for a qualified stock purchase of T occur within a 12-month period (i.e., 3 shares constructively on January 1 of Year 1, 9 shares constructively on June 1 of Year 1, and 70 shares actually on December 1 of Year 1), a qualified stock purchase is made on December 1 of Year 1.

Example 3. (i) On February 1 of Year 1, P acquires 25 percent in value of the R stock from B (the sole shareholder of P). That R stock is not acquired by purchase. See section 338(h)(3)(A)(iii). On that date, R owns 4 of the 100 shares of T stock. On June 1 of Year 1, P purchases an additional 25 percent in value of the R stock, and on January 1 of Year 2, P purchases another 25 percent in value of the R stock. On June 1 of Year 2, R acquires an additional 16 shares of the T stock. On December 1 of Year 2, P purchases 68 shares of the T stock from an unrelated person and 12 of the 20 shares of the T stock held by R.
(ii) Of the 12 shares of the T stock purchased by P from R on December 1 of Year 2, 2 of those shares are deemed to have been acquired by P on June 1 of Year 1, the date on which 2 of the 4 shares of the T stock held by R on that date were first considered

owned by P under section 318(a)(2)(C) (i.e., 4 × .5). For purposes of this attribution, the R stock need not be acquired by P by purchase. See section 338(h)(1). (By contrast, the acquisition of the T stock by P from R does not qualify as a purchase unless P has acquired at least 50 percent in value of the R stock by purchase. Section 338(h)(3)(C)(i).) Of the remaining 10 shares of the T stock purchased by P from R on December 1 of Year 2, 1 of those shares is deemed to have been acquired by P on January 1 of Year 2, the date on which an additional 1 share of the 4 shares of the T stock held by R on that date was first considered owned by P under section 318(a)(2)(C) (i.e., (4 × .75)−2). The remaining 9 shares of the T stock purchased by P from R on December 1 of Year 2, are deemed to have been acquired by P on June 1 of Year 2, the date on which an additional 12 shares of the T stock held by R on that date were first considered owned by P under section 318(a)(2)(C) (i.e., (20 × .75)−3). Because a qualified stock purchase of T by P is made on December 1 of Year 2 only if all 12 shares of the T stock purchased by P from R on that date are considered acquired during a 12-month period ending on that date (so that, in conjunction with the 68 shares of the T stock P purchased on that date from the unrelated person, 80 of T's 100 shares are acquired by P during a 12-month period) and because 2 of those 12 shares are considered to have been acquired by P more than 12 months before December 1 of Year 2 (i.e., on June 1 of Year 1), a qualified stock purchase is not made. (Under § 1.338-8(j)(2), for purposes of applying the consistency rules, P is treated as making a qualified stock purchase of T if, pursuant to an arrangement, P purchases T stock satisfying the requirements of section 1504(a)(2) over a period of more than 12 months.)

Example 4. Assume the same facts as in *Example 3,* except that on February 1 of Year 1, P acquires 25 percent in value of the R stock by purchase. The result is the same as in *Example 3*.

(4) ***Acquisition date for tiered targets*** —

(i) ***Stock sold in deemed asset sale.*** If an election under section 338 is made for target, old target is deemed to sell target's assets and new target is deemed to acquire those assets. Under section 338(h)(3)(B), new target's deemed purchase of stock of another corporation is a purchase for purposes of section 338(d)(3) on the acquisition date of target. If new target's deemed purchase causes a qualified stock purchase of the other corporation and if a section 338 election is made for the other corporation, the acquisition date for the other corporation is the same as the acquisition date of target. However, the deemed sale and purchase of the other corporation's assets is considered to take place after the deemed sale and purchase of target's assets.

(ii) ***Example.*** The following example illustrates this paragraph (b)(4):

Example. A owns all of the T stock. T owns 50 of the 100 shares of X stock. The other 50 shares of X stock are owned by corporation Y, which is unrelated to A, T, or P. On January 1 of Year 1, P makes a qualified stock purchase of T from A and makes a section 338 election for T. On December 1 of Year 1, P purchases the 50 shares of X stock held by Y. A qualified stock purchase of X is made on December 1 of Year 1, because the deemed purchase of

50 shares of X stock by new T because of the section 338 election for T and the actual purchase of 50 shares of X stock by P are treated as purchases made by one corporation. Section 338(h)(8). For purposes of determining whether those purchases occur within a 12-month acquisition period as required by section 338(d)(3), T is deemed to purchase its X stock on T's acquisition date, i.e., January 1 of Year 1.

(5) ***Effect of redemptions*** —

(i) ***General rule.*** Except as provided in this paragraph (b)(5), a qualified stock purchase is made on the first day on which the percentage ownership requirements of section 338(d)(3) are satisfied by reference to target stock that is both—

(A) Held on that day by the purchasing corporation; and

(B) Purchased by the purchasing corporation during the 12-month period ending on that day.

(ii) ***Redemptions from persons unrelated to the purchasing corporation.*** Target stock redemptions from persons unrelated to the purchasing corporation that occur during the 12-month acquisition period are taken into account as reductions in target's outstanding stock for purposes of determining whether target stock purchased by the purchasing corporation in the 12-month acquisition period satisfies the percentage ownership requirements of section 338(d)(3).

(iii) ***Redemptions from the purchasing corporation or related persons during 12-month acquisition period*** —

(A) ***General rule.*** For purposes of the percentage ownership requirements of section 338(d)(3), a redemption of target stock during the 12-month acquisition period from the purchasing corporation or from any person related to the purchasing corporation is not taken into account as a reduction in target's outstanding stock.

(B) ***Exception for certain redemptions from related corporations.*** A redemption of target stock during the 12-month acquisition period from a corporation related to the purchasing corporation is taken into account as a reduction in target's outstanding stock to the extent that the redeemed stock would have been considered purchased by the purchasing corporation (because of section 338(h)(3)(C)) during the 12-month acquisition period if the redeemed stock had been acquired by the purchasing corporation from the related corporation on the day of the redemption. See paragraph (b)(3) of this section.

(iv) ***Examples.*** The following examples illustrate this paragraph (b)(5):

Example 1. QSP on stock purchase date; redemption from unrelated person during 12-month period. A owns all 100 shares of T stock. On January 1 of Year 1, P purchases 40 shares of the T stock from A. On July 1 of Year 1, T redeems 25 shares from A. On December 1 of Year 1, P purchases 20 shares of the T stock from A. P makes a qualified stock purchase of T on December 1 of Year 1, because the 60 shares of T stock purchased by P within the 12-month period ending on that date satisfy the 80-percent ownership requirements of section 338(d)(3) (i.e., 60/75 shares), determined by taking into account the redemption of 25 shares.

Example 2. QSP on stock redemption date; redemption from unrelated person during 12-month period. The facts are the same as in *Example 1,* except that P purchases 60 shares of T stock on January 1 of Year 1 and none on December 1 of Year 1. P makes a qualified stock purchase of T on July 1 of Year 1, because that is the first day on which the T stock purchased by P within the preceding 12-month period satisfies the 80-percent ownership requirements of section 338(d)(3) (i.e., 60/75 shares), determined by taking into account the redemption of 25 shares.

Example 3. Redemption from purchasing corporation not taken into account. On December 15 of Year 1, T redeems 30 percent of its stock from P. The redeemed stock was held by P for several years and constituted P's total interest in T. On December 1 of Year 2, P purchases the remaining T stock from A. P does not make a qualified stock purchase of T on December 1 of Year 2. For purposes of the 80-percent ownership requirements of section 338(d)(3), the redemption of P's T stock on December 15 of Year 1 is not taken into account as a reduction in T's outstanding stock.

Example 4. Redemption from related person taken into account. On January 1 of Year 1, P purchases 60 of the 100 shares of X stock. On that date, X owns 40 of the 100 shares of T stock. On April 1 of Year 1, T redeems X's T stock and P purchases the remaining 60 shares of T stock from an unrelated person. For purposes of the 80-percent ownership requirements of section 338(d)(3), the redemption of the T stock from X (a person related to P) is taken into account as a reduction in T's outstanding stock. If P had purchased the 40 redeemed shares from X on April 1 of Year 1, all 40 of the shares would have been considered purchased (because of section 338(h)(3)(C)(i)) during the 12-month period ending on April 1 of Year 1 (24 of the 40 shares would have been considered purchased by P on January 1 of Year 1 and the remaining 16 shares would have been considered purchased by P on April 1 of Year 1). See paragraph (b)(3) of this section. Accordingly, P makes a qualified stock purchase of T on April 1 of Year 1, because the 60 shares of T stock purchased by P on that date satisfy the 80-percent ownership requirements of section 338(d)(3) (i.e., 60/60 shares), determined by taking into account the redemption of 40 shares.

(c) ***Effect of post-acquisition events on eligibility for section 338 election*** —

(1) ***Post-acquisition elimination of target.***

(i) The purchasing corporation may make an election under section 338 for target even though target is liquidated on or after the acquisition date. If target liquidates on the acquisition date, the liquidation is considered to occur on the following day and immediately after new target's deemed purchase of assets. The purchasing corporation may also make an election under section 338 for target even though target is merged into another corporation, or otherwise disposed of by the purchasing corporation provided that, under the facts and circumstances, the purchasing corporation is considered for tax purposes as the purchaser of the target stock. See § 1.338(h)(10)-1(c)(2) for special rules concerning section 338(h)(10) elections in certain multi-step transactions.

(ii) The following examples illustrate this paragraph (c)(1):

Example 1. On January 1 of Year 1, P purchases 100 percent of the outstanding common stock of T. On June 1 of Year 1, P sells the T stock to an unrelated person. Assuming that P is considered for tax purposes as the purchaser of the T stock, P remains eligible, after June 1 of Year 1, to make a section 338 election for T that results in a deemed asset sale of T's assets on January 1 of Year 1.

Example 2. On January 1 of Year 1, P makes a qualified stock purchase of T. On that date, T owns the stock of T1. On March 1 of Year 1, T sells the T1 stock to an unrelated person. On April 1 of Year 1, P makes a section 338 election for T. Notwithstanding that the T1 stock was sold on March 1 of Year 1, the section 338 election for T on April 1 of Year 1 results in a qualified stock purchase by T of T1 on January 1 of Year 1. See paragraph (b)(4)(i) of this section.

(2) ***Post-acquisition elimination of the purchasing corporation.*** An election under section 338 may be made for target after the acquisition of assets of the purchasing corporation by another corporation in a transaction described in section 381(a), provided that the purchasing corporation is considered for tax purposes as the purchaser of the target stock. The acquiring corporation in the section 381(a) transaction may make an election under section 338 for target.

(d) ***Consequences of post-acquisition elimination of target where section 338 election not made*** —

(1) ***Scope.*** The rules of this paragraph (d) apply to the transfer of target assets to the purchasing corporation (or another member of the same affiliated group as the purchasing corporation) (the transferee) following a qualified stock purchase of target stock, if the purchasing corporation does not make a section 338 election for target. Notwithstanding the rules of this paragraph (d), section 354(a) (and so much of section 356 as relates to section 354) cannot apply to any person other than the purchasing corporation or another member of the same affiliated group as the purchasing corporation unless the transfer of target assets is pursuant to a reorganization as determined without regard to this paragraph (d).

(2) ***Continuity of interest.*** By virtue of section 338, in determining whether the continuity of interest requirement of § 1.368-1(b) is satisfied on the transfer of assets from target to the transferee, the purchasing corporation's target stock acquired in the qualified stock purchase represents an interest on the part of a person who was an owner of the target's business enterprise prior to the transfer that can be continued in a reorganization.

(3) ***Control requirement.*** By virtue of section 338, the acquisition of target stock in the qualified stock purchase will not prevent the purchasing corporation from qualifying as a shareholder of the target transferor for the purpose of determining whether, immediately after the transfer of target assets, a shareholder of the transferor is in control of the corporation to which the assets are transferred within the meaning of section 368(a)(1)(D).

(4) ***Solely for voting stock requirement.*** By virtue of section 338, the acquisition of target stock in the qualified stock purchase for consideration other than voting stock will not prevent the subsequent transfer of target assets from satisfying the solely for voting stock requirement for purposes of determining if the transfer of target assets qualifies as a reorganization under section 368(a)(1)(C).

(5) ***Example.*** The following example illustrates this paragraph (d):

Example. (i) *Facts.* P, T, and X are domestic corporations. T and X each operate a trade or business. A and K, individuals unrelated to P, own 85 and 15 percent, respectively, of the stock of T. P owns all of the stock of X. The total adjusted basis of T's property exceeds the sum of T's liabilities plus the amount of liabilities

to which T's property is subject. P purchases all of A's T stock for cash in a qualified stock purchase. P does not make an election under section 338(g) with respect to its acquisition of T stock. Shortly after the acquisition date, and as part of the same plan, T merges under applicable state law into X in a transaction that, but for the question of continuity of interest, satisfies all the requirements of section 368(a)(1)(A). In the merger, all of T's assets are transferred to X. P and K receive X stock in exchange for their T stock. P intends to retain the stock of X indefinitely.
(ii) *Status of transfer as a reorganization.* By virtue of section 338, for the purpose of determining whether the continuity of interest requirement of § 1.368-1(b) is satisfied, P's T stock acquired in the qualified stock purchase represents an interest on the part of a person who was an owner of T's business enterprise prior to the transfer that can be continued in a reorganization through P's continuing ownership of X. Thus, the continuity of interest requirement is satisfied and the merger of T into X is a reorganization within the meaning of section 368(a)(1)(A). Moreover, by virtue of section 338, the requirement of section 368(a)(1)(D) that a target shareholder control the transferee immediately after the transfer is satisfied because P controls X immediately after the transfer. In addition, all of T's assets are transferred to X in the merger and P and K receive the X stock exchanged therefor in pursuance of the plan of reorganization. Thus, the merger of T into X is also a reorganization within the meaning of section 368(a)(1)(D).

(iii) *Treatment of T and X.* Under section 361(a), T recognizes no gain or loss in the merger. Under section 362(b), X's basis in the assets received in the merger is the same as the basis of the assets in T's hands. X succeeds to and takes into account the items of T as provided in section 381.

(iv) *Treatment of P.* By virtue of section 338, the transfer of T assets to X is a reorganization. Pursuant to that reorganization, P exchanges its T stock solely for stock of X, a party to the reorganization. Because P is the purchasing corporation, section 354 applies to P's exchange of T stock for X stock in the merger of T into X. Thus, P recognizes no gain or loss on the exchange. Under section 358, P's basis in the X stock received in the exchange is the same as the basis of P's T stock exchanged therefor.

(v) *Treatment of K.* Because K is not the purchasing corporation (or an affiliate thereof), section 354 cannot apply to K's exchange of T stock for X stock in the merger of T into X unless the transfer of T's assets is pursuant to a reorganization as determined without regard to this paragraph (d). Under general principles of tax law applicable to reorganizations, the continuity of interest requirement is not satisfied because P's stock purchase and the merger of T into X are pursuant to an integrated transaction in which A, the owner of 85 percent of the stock of T, received solely cash in exchange for A's T stock. See, e.g., § 1.368-1(e)(1)(i); *Yoc Heating* v. *Commissioner,* 61 T.C. 168 (1973); *Kass* v. *Commissioner,* 60 T.C. 218 (1973), aff'd, 491 F.2d 749 (3d Cir. 1974). Thus, the requisite continuity of interest under § 1.368-1(b) is lacking and section 354 does not apply to K's exchange of T stock for X stock. K recognizes gain or loss, if any, pursuant to section 1001(c) with respect to its T stock.

[T.D. 8940, 66 FR 9929, Feb. 13, 2001; 66 FR 17363, Mar. 30, 2001, as amended by T.D. 9071, 68 FR 40768, July 9, 2003; T.D. 9271, 71 FR 38075, July 5, 2006]

§ 1.338-4 Aggregate deemed sale price; various aspects of taxation of the deemed asset sale.

(a) ***Scope.*** This section provides rules under section 338(a)(1) to determine the aggregate deemed sale price (ADSP) for target. ADSP is the amount for which old target is deemed to have sold all of its assets in the deemed asset sale. ADSP is allocated among target's assets in accordance with § 1.338-6 to determine the amount for which each asset is deemed to have been sold. When a subsequent increase or decrease is required under general principles of tax law with respect to an element of ADSP, the redetermined ADSP is allocated among target's assets in accordance with § 1.338-7. This § 1.338-4 also provides rules regarding the recognition of gain or loss on the deemed sale of target affiliate stock. Notwithstanding section 338(h)(6)(B)(ii), stock held by a target affiliate in a foreign corporation or in a corporation that is a DISC or that is described in section 1248(e) is not excluded from the operation of section 338.

(b) ***Determination of ADSP*** —

(1) ***General rule.*** ADSP is the sum of—

(i) The grossed-up amount realized on the sale to the purchasing corporation of the purchasing corporation's recently purchased target stock (as defined in section 338(b)(6)(A)); and

(ii) The liabilities of old target.

(2) ***Time and amount of ADSP*** —

(i) ***Original determination.*** ADSP is initially determined at the beginning of the day after the acquisition date of target. General principles of tax law apply in determining the timing and amount of the elements of ADSP.

(ii) ***Redetermination of ADSP.*** ADSP is redetermined at such time and in such amount as an increase or decrease would be required, under general principles of tax law, for the elements of ADSP. For example, ADSP is redetermined because of an increase or decrease in the amount realized for recently purchased stock or because liabilities not originally taken into account in determining ADSP are subsequently taken into account. Increases or decreases with respect to the elements of ADSP result in the reallocation of ADSP among target's assets under § 1.338-7.

(iii) ***Example.*** The following example illustrates this paragraph (b)(2):

Example. In Year 1, T, a manufacturer, purchases a customized delivery truck from X with purchase money indebtedness having a stated principal amount of $100,000. P acquires all of the stock of T in Year 3 for $700,000 and makes a section 338 election for T. Assume T has no liabilities other than its purchase money indebtedness to X. In Year 4, when T is neither insolvent nor in a title 11 case, T and X agree to reduce the amount of the purchase money indebtedness to $80,000. Assume further that the reduction would be a purchase price reduction under section 108(e)(5). T and X's agreement to reduce the amount of the purchase money indebtedness would not, under general principles of tax law that would apply if the deemed asset sale had actually occurred, change the amount of liabilities of old target taken into account in determining its amount realized. Accordingly, ADSP is not redetermined at the time of the reduction. See § 1.338-5(b)(2)(iii) *Example 1* for the effect on AGUB.

(c) ***Grossed-up amount realized on the sale to the purchasing corporation of the purchasing corporation's recently purchased target stock*** —

(1) ***Determination of amount.*** The grossed-up amount realized on the sale to the purchasing corporation of the purchasing corporation's recently purchased target stock is an amount equal to—

(i) The amount realized on the sale to the purchasing corporation of the purchasing corporation's recently purchased target stock determined as if the selling shareholder(s) were required to use old target's accounting methods and characteristics and the installment method were not available and determined without regard to the selling costs taken into account under paragraph (c)(1)(iii) of this section;

(ii) Divided by the percentage of target stock (by value, determined on the acquisition date) attributable to that recently purchased target stock;

(iii) Less the selling costs incurred by the selling shareholders in connection with the sale to the purchasing corporation of the purchasing corporation's recently purchased target stock that reduce their amount realized on the sale of the stock (e.g., brokerage commissions and any similar costs to sell the stock).

(2) ***Example.*** The following example illustrates this paragraph (c):

Example. T has two classes of stock outstanding, voting common stock and preferred stock described in section 1504(a)(4). On March 1 of Year 1, P purchases 40 percent of the outstanding T stock from S1 for $500, 20 percent of the outstanding T stock from S2 for $225, and 20 percent of the outstanding T stock from S3 for $275. On that date, the fair market value of all the T voting common stock is $1,250 and the preferred stock $750. S1, S2, and S3 incur $40, $35, and $25 respectively of selling costs. S1 continues to own the remaining 20 percent of the outstanding T stock. The grossed-up amount realized on the sale to P of P's recently purchased T stock is calculated as follows: The total amount realized (without regard to selling costs) is $1,000 (500 + 225 + 275). The percentage of T stock by value on the acquisition date attributable to the recently purchased T stock is 50% (1,000/(1,250 + 750)). The selling costs are $100 (40 + 35 + 25). The grossed-up amount realized is $1,900 (1,000/.5 − 100).

(d) ***Liabilities of old target*** —

(1) ***In general.*** In general, the liabilities of old target are measured as of the beginning of the day after the acquisition date. (But see § 1.338-1(d) (regarding certain transactions on the acquisition date).) In order to be taken into account in ADSP, a liability must be a liability of target that is properly taken into account in amount realized under general principles of tax law that would apply if old target had sold its assets to an unrelated person for consideration that included the discharge of its liabilities. See § 1.1001-2(a). Such liabilities may include liabilities for the tax consequences resulting from the deemed sale.

(2) ***Time and amount of liabilities.*** The time for taking into account liabilities of old target in determining ADSP and the amount of the liabilities taken into account is determined as if old target had sold its assets to an unrelated person for consideration that included the discharge of the liabilities by the unrelated person. For example, if no amount of a target liability is properly taken into account in amount realized as of the beginning of the day after the acquisition date, the liability is not initially taken into account in determining ADSP (although it may be taken into account at some later date).

(e) ***Deemed sale tax consequences.*** Gain or loss on each asset in the deemed sale is computed by reference to the ADSP allocated to that asset. ADSP is allocated under the rules of § 1.338-6. Though deemed sale tax consequences may increase or decrease ADSP by creating or reducing a tax liability, the amount of the tax liability itself may be a function of the size of the deemed sale tax consequences. Thus, these determinations may require trial and error computations.

(f) ***Other rules apply in determining ADSP.*** ADSP may not be applied in such a way as to contravene other applicable rules. For example, a capital loss cannot be applied to reduce ordinary income in calculating the tax liability on the deemed sale for purposes of determining ADSP.

(g) ***Examples.*** The following examples illustrate this section. For purposes of the examples in this paragraph (g), unless otherwise stated, T is a calendar year taxpayer that files separate returns and that has no loss, tax credit, or other carryovers to Year 1. Depreciation for Year 1 is not taken into account. T has no liabilities other than the Federal income tax liability resulting from the deemed asset sale, and the T shareholders have no selling costs. Assume that T's tax rate for any ordinary income or net capital gain resulting from the deemed sale of assets is 34 percent and that any capital loss is offset by capital gain. On July 1 of Year 1, P purchases all of the stock of T and makes a section 338 election for T. The examples are as follows:

Example 1. One class. (i) On July 1 of Year 1, T's only asset is an item of section 1245 property with an adjusted basis to T of $50,400, a recomputed basis of $80,000, and a fair market value of $100,000. P purchases all of the T stock for $75,000, which also equals the amount realized for the stock determined as if the selling shareholder(s) were required to use old target's accounting methods and characteristics.

(ii) ADSP is determined as follows (for purposes of this section (g), G is the grossed-up amount realized on the sale to P of P's recently purchased T stock, L is T's liabilities other than T's tax liability for the deemed sale tax consequences, T_R is the applicable tax rate, and B is the adjusted basis of the asset deemed sold):

$$ADSP = G + L + T_R \times (ADSP - B)$$

$$ADSP = ($75,000/1) + $0 + .34 \times (ADSP - $50,400)$$

$$ADSP = $75,000 + .34ADSP - $17,136 \quad .66ADSP = $57,864$$

$$ADSP = $87,672.72$$

(iii) Because ADSP for T ($87,672.72) does not exceed the fair market value of T's asset ($100,000), a Class V asset, T's entire ADSP is allocated to that asset. Thus, T's deemed sale results in $37,272.72 of taxable income (consisting of $29,600 of ordinary income and $7,672.72 of capital gain).

(iv) The facts are the same as in paragraph (i) of this *Example 1,* except that on July 1 of Year 1, P purchases only 80 of the 100 shares of T stock for $60,000. The grossed-up amount realized on the sale to P of P's recently purchased T stock (G) is $75,000 ($60,000/.8). Consequently, ADSP and the deemed sale tax consequences are the same as in paragraphs (ii) and (iii) of this *Example 1.*

(v) The facts are the same as in paragraph (i) of this *Example 1,* except that T also has goodwill (a Class VII asset) with an appraised value of $10,000. The results are the same as in paragraphs (ii) and (iii) of this *Example 1.* Because ADSP does not exceed the fair market value of the Class V asset, no amount is allocated to the Class VII asset (goodwill).

Example 2. More than one class. (i) P purchases all of the T stock for $140,000, which also equals the amount realized for the stock determined as if the selling shareholder(s) were required to use old target's accounting methods and characteristics. On July 1 of Year 1, T has liabilities (not including the tax liability for the deemed sale tax consequences) of $50,000, cash (a Class I asset) of $10,000, actively traded securities (a Class II asset) with a basis of $4,000 and a fair market value of $10,000, goodwill (a Class VII asset) with a basis of $3,000, and the following Class V assets:

Asset	*Basis*	*FMV*	*Ratio of asset FMV to total Class V FMV*
Land	$5,000	$35,000	.14
Building	10,000	50,000	.20
Equipment A (Recomputed basis $80,000)	5,000	90,000	.36
Equipment B (Recomputed basis $20,000)	10,000	75,000	.30
Totals	$30,000	$250,000	1.00

(ii) ADSP exceeds $20,000. Thus, $10,000 of ADSP is allocated to the cash and $10,000 to the actively traded securities. The amount allocated to an asset (other than a Class VII asset) cannot exceed its fair market value (however, the fair market value of any property subject to nonrecourse indebtedness is treated as being not less than the amount of such indebtedness; see § 1.338-6(a)(2)). See § 1.338-6(c)(1) (relating to fair market value limitation).
(iii) The portion of ADSP allocable to the Class V assets is preliminarily determined as follows (in the formula, the amount allocated to the Class I assets is referred to as I and the amount allocated to the Class II assets as II):

$$ADSP_V = (G-(I + II)) + L + T_R \times [(II - B_{II}) + (ADSP_V - B_V)]$$

$ADSP_V$ = ($140,000 − ($10,000 + $10,000)) + $50,000 + .34 × [($10,000 − $4,000) + ($ADSP_V$ − ($5,000 + $10,000 + $5,000 + $10,000))]

$ADSP_V$ = $161,840 + .34$ADSP_V$

.66 $ADSP_V$ = $161,840

$ADSP_V$ = $245,212.12

(iv) Because, under the preliminary calculations of ADSP, the amount to be allocated to the Class I, II, III, IV, V, and VI assets does not exceed their aggregate fair market value, no ADSP amount is allocated to goodwill. Accordingly, the deemed sale of the goodwill results in a capital loss of $3,000. The portion of ADSP allocable to the Class V assets is finally determined by taking into account this loss as follows:
$ADSP_V = (G - (I + II)) + L + T_R \times [(II - B_{II}) + (ADSP_V - B_V) + (ADSP_{VII} - B_{VII})]$

$ADSP_V$ = ($140,000 − ($10,000 + $10,000)) + $50,000 + .34 × [($10,000 − $4,000) + ($ADSP_V$ − $30,000) + ($0 − $3,000)]

$ADSP_V$ = $160,820 + .34$ADSP_V$

.66 $ADSP_V$ = $160,820

$ADSP_V$ = $243,666.67

(v) The allocation of $ADSP_V$ among the Class V assets is in proportion to their fair market values, as follows:

Asset	*ADSP*	*Gain*
Land	$34,113.33	$29,113.33 (capital gain).
Building	48,733.34	38,733.34 (capital gain).
Equipment A	87,720.00	82,720.00 (75,000 ordinary income 7,720 capital gain).
Equipment B	73,100.00	63,100.00 (10,000 ordinary income 53,100 capital gain).
Totals	243,666.67	213,666.67.

Example 3. More than one class. (i) The facts are the same as in *Example 2,* except that P purchases the T stock for $150,000, rather than $140,000. The amount realized for the stock determined as if the selling shareholder(s) were required to use old target's accounting methods and characteristics is also $150,000.

(ii) As in *Example 2,* ADSP exceeds $20,000. Thus, $10,000 of ADSP is allocated to the cash and $10,000 to the actively traded securities.

(iii) The portion of ADSP allocable to the Class V assets as preliminarily determined under the formula set forth in paragraph (iii) of *Example 2* is $260,363.64. The amount allocated to the Class V assets cannot exceed their aggregate fair market value ($250,000). Thus, preliminarily, the ADSP amount allocated to Class V assets is $250,000.

(iv) Based on the preliminary allocation, the ADSP is determined as follows (in the formula, the amount allocated to the Class I assets is referred to as I, the amount allocated to the Class II assets as II, and the amount allocated to the Class V assets as V):

$ADSP = G + L + T_R \times [(II - B_{II}) + (V - B_V) + (ADSP - (I + II + V + B_{VII}))]$

ADSP = $150,000 + $50,000 + .34 × [($10,000 − $4,000) + ($250,000 − $30,000) + (ADSP − ($10,000 + $10,000 + $250,000 + $3,000))]

ADSP = $200,000 + .34ADSP − $15,980

.66ADSP = $184,020

ADSP = $278,818.18

(v) Because ADSP as determined exceeds the aggregate fair market value of the Class I, II, III, IV, V, and VI assets, the $250,000 amount preliminarily allocated to the Class V assets is appropriate. Thus, the amount of ADSP allocated to Class V assets equals their aggregate fair market value ($250,000), and the allocated ADSP amount for each Class V asset is its fair market value. Further, because there are no Class VI assets, the allocable ADSP amount for the Class VII asset (goodwill) is $8,818.18 (the excess of ADSP over the aggregate ADSP amounts for the Class I, II, III, IV, V and VI assets).

Example 4. Amount allocated to T1 stock. (i) The facts are the same as in *Example 2,* except that T owns all of the T1 stock (instead of the building), and T1's only asset is the building. The T1 stock and the building each have a fair market value of $50,000, and the building has a basis of $10,000. A section 338 election is made for T1 (as well as T), and T1 has no liabilities other than the tax liability for the deemed sale tax consequences. T is the common parent of a consolidated group filing a final consolidated return described in § 1.338-10(a)(1).
(ii) ADSP exceeds $20,000. Thus, $10,000 of ADSP is allocated to the cash and $10,000 to the actively traded securities.

(iii) Because T does not recognize any gain on the deemed sale of the T1 stock under paragraph (h)(2) of this section, appropriate adjustments must be made to reflect accurately the fair market value of the T and T1 assets in determining the allocation of ADSP among T's Class V assets (including the T1 stock). In preliminarily calculating $ADSP_V$ in this case, the T1 stock can be disregarded and, because T owns all of the T1 stock, the T1 asset can be treated as a T asset. Under this assumption, $ADSP_V$ is $243,666.67. See paragraph (iv) of *Example 2.*

(iv) Because the portion of the preliminary ADSP allocable to Class V assets ($243,666.67) does not exceed their fair market value ($250,000), no amount is allocated to Class VII assets for T. Further, this amount ($243,666.67) is allocated among T's Class V assets in proportion to their fair market values. See paragraph (v) of *Example 2.* Tentatively, $48,733.34 of this amount is allocated to the T1 stock.

(v) The amount tentatively allocated to the T1 stock, however, reflects the tax incurred on the deemed sale of the T1 asset equal to $13,169.34 (.34 × ($48,733.34−$10,000)). Thus, the ADSP allocable to the Class V assets of T, and the ADSP allocable to the T1 stock, as preliminarily calculated, each must be reduced by $13,169.34. Consequently, these amounts, respectively, are $230,497.33 and $35,564.00. In determining ADSP for T1, the grossed-up amount realized on the deemed sale to new T of new T's recently purchased T1 stock is $35,564.00.

(vi) The facts are the same as in paragraph (i) of this *Example 4,* except that the T1 building has a $12,500 basis and a $62,500 value, all of the outstanding T1 stock has a $62,500 value, and T owns 80 percent of the T1 stock. In preliminarily calculating $ADSP_V$, the T1 stock can be disregarded but, because T owns only 80 percent of the T1 stock, only 80 percent of T1 asset basis and value should be taken into account in calculating T's ADSP. By taking into account 80 percent of these amounts, the remaining calculations and results are the same as in paragraphs (ii), (iii), (iv), and (v) of this *Example 4,* except that the grossed-up amount realized on the sale of the recently purchased T1 stock is $44,455.00 ($35,564.00/0.8).

(h) ***Deemed sale of target affiliate stock*** —

(1) ***Scope.*** This paragraph (h) prescribes rules relating to the treatment of gain or loss realized on the deemed sale of stock of a target affiliate when a section 338 election (but not a section 338(h)(10) election) is made for the target affiliate. For purposes of this paragraph (h), the definition of domestic corporation in § 1.338-2(c)(9) is applied without the exclusion therein for DISCs, corporations described in section 1248(e), and corporations to which an election under section 936 applies.

(2) ***In general.*** Except as otherwise provided in this paragraph (h), if a section 338 election is made for target, target recognizes no gain or loss on the deemed sale of stock of a target affiliate having the same acquisition date and for which a section 338 election is made if—

(i) Target directly owns stock in the target affiliate satisfying the requirements of section 1504(a)(2);

(ii) Target and the target affiliate are members of a consolidated group filing a final consolidated return described in § 1.338-10(a)(1); or

(iii) Target and the target affiliate file a combined return under § 1.338-10(a)(4).

(3) ***Deemed sale of foreign target affiliate by a domestic target.*** A domestic target recognizes gain or loss on the deemed sale of stock of a foreign target affiliate. For the proper treatment of such gain or loss, see, e.g., sections 1246, 1248, 1291 *et seq.,* and 338(h)(16) and § 1.338-9.

(4) ***Deemed sale producing effectively connected income.*** A foreign target recognizes gain or loss on the deemed sale of stock of a foreign target affiliate to the extent that such gain or loss is effectively connected (or treated as effectively connected) with the conduct of a trade or business in the United States.

(5) ***Deemed sale of insurance company target affiliate electing under section 953(d).*** A domestic target recognizes gain (but not loss) on the deemed sale of stock of a target affiliate that has in effect an election under section 953(d) in an amount equal to the lesser of the gain realized or the earnings and profits described in section 953(d)(4)(B).

(6) ***Deemed sale of DISC target affiliate.*** A foreign or domestic target recognizes gain (but not loss) on the deemed sale of stock of a target affiliate that is a DISC or a former DISC (as defined in section 992(a)) in an amount equal to the lesser of the gain realized or the amount of accumulated DISC income determined with respect to such stock under section 995(c). Such gain is included in gross income as a dividend as provided in sections 995(c)(2) and 996(g).

(7) ***Anti-stuffing rule.*** If an asset the adjusted basis of which exceeds its fair market value is contributed or transferred to a target affiliate as transferred basis property (within the meaning of section 7701(a)(43)) and a purpose of such transaction is to reduce the gain (or increase the loss) recognized on the deemed sale of such target affiliate's stock, the gain or loss recognized by target on the deemed sale of stock of the target affiliate is determined as if such asset had not been contributed or transferred.

(8) ***Examples.*** The following examples illustrate this paragraph (h):

Example 1. (i) P makes a qualified stock purchase of T and makes a section 338 election for T. T's sole asset, all of the T1 stock, has a basis of $50 and a fair market value of $150. T's deemed purchase of the T1 stock results in a qualified stock purchase of T1 and a section 338 election is made for T1. T1's assets have a basis of $50 and a fair market value of $150. (ii) T realizes $100 of gain on the deemed sale of the T1 stock, but the gain is not recognized because T directly owns stock in T1 satisfying the requirements of section 1504(a)(2) and a section 338 election is made for T1.

(iii) T1 recognizes gain of $100 on the deemed sale of its assets.

Example 2. The facts are the same as in *Example 1,* except that P does not make a section 338 election for T1. Because a section 338 election is not made for T1, the $100 gain realized by T on the deemed sale of the T1 stock is recognized.

Example 3. (i) P makes a qualified stock purchase of T and makes a section 338 election for T. T owns all

of the stock of T1 and T2. T's deemed purchase of the T1 and T2 stock results in a qualified stock purchase of T1 and T2 and section 338 elections are made for T1 and T2. T1 and T2 each own 50 percent of the vote and value of T3 stock. The deemed purchases by T1 and T2 of the T3 stock result in a qualified stock purchase of T3 and a section 338 election is made for T3. T is the common parent of a consolidated group and all of the deemed asset sales are reported on the T group's final consolidated return. See § 1.338-10(a)(1).
(ii) Because T, T1, T2 and T3 are members of a consolidated group filing a final consolidated return, no gain or loss is recognized by T, T1 or T2 on their respective deemed sales of target affiliate stock.

Example 4. (i) T's sole asset, all of the FT1 stock, has a basis of $25 and a fair market value of $150. FT1's sole asset, all of the FT2 stock, has a basis of $75 and a fair market value of $150. FT1 and FT2 each have $50 of accumulated earnings and profits for purposes of section 1248(c) and (d). FT2's assets have a basis of $125 and a fair market value of $150, and their sale would not generate subpart F income under section 951. The sale of the FT2 stock or assets would not generate income effectively connected with the conduct of a trade or business within the United States. FT1 does not have an election in effect under section 953(d) and neither FT1 nor FT2 is a passive foreign investment company.
(ii) P makes a qualified stock purchase of T and makes a section 338 election for T. T's deemed purchase of the FT1 stock results in a qualified stock purchase of FT1 and a section 338 election is made for FT1. Similarly, FT1's deemed purchase of the FT2 stock results in a qualified stock purchase of FT2 and a section 338 election is made for FT2.

(iii) T recognizes $125 of gain on the deemed sale of the FT1 stock under paragraph (h)(3) of this section. FT1 does not recognize $75 of gain on the deemed sale of the FT2 stock under paragraph (h)(2) of this section. FT2 recognizes $25 of gain on the deemed sale of its assets. The $125 gain T recognizes on the deemed sale of the FT1 stock is included in T's income as a dividend under section 1248, because FT1 and FT2 have sufficient earnings and profits for full recharacterization ($50 of accumulated earnings and profits in FT1, $50 of accumulated earnings and profits in FT2, and $25 of deemed sale earnings and profits in FT2). Section 1.338-9(b). For purposes of sections 901 through 908, the source and foreign tax credit limitation basket of $25 of the recharacterized gain on the deemed sale of the FT1 stock is determined under section 338(h)(16).

[T.D. 8940, 66 FR 9929, Feb. 13, 2001; 66 FR 17466, Mar. 30, 2001]

§ 1.338-5 Adjusted grossed-up basis.

(a) ***Scope.*** This section provides rules under section 338(b) to determine the adjusted grossed-up basis (AGUB) for target. AGUB is the amount for which new target is deemed to have purchased all of its assets in the deemed purchase under section 338(a)(2). AGUB is allocated among target's assets in accordance with § 1.338-6 to determine the price at which the assets are deemed to have been purchased. When a subsequent increase or decrease with respect to an element of AGUB is required under general principles of tax law, redetermined AGUB is allocated among target's assets in accordance with § 1.338-7.

(b) ***Determination of AGUB*** —

(1) ***General rule.*** AGUB is the sum of—

(i) The grossed-up basis in the purchasing corporation's recently purchased target stock;

(ii) The purchasing corporation's basis in nonrecently purchased target stock; and

(iii) The liabilities of new target.

(2) ***Time and amount of AGUB*** —

(i) ***Original determination.*** AGUB is initially determined at the beginning of the day after the acquisition date of target. General principles of tax law apply in determining the timing and amount of the elements of AGUB.

(ii) ***Redetermination of AGUB.*** AGUB is redetermined at such time and in such amount as an increase or decrease would be required, under general principles of tax law, with respect to an element of AGUB. For example, AGUB is redetermined because of an increase or decrease in the amount paid or incurred for recently purchased stock or nonrecently purchased stock or because liabilities not originally taken into account in determining AGUB are subsequently taken into account. An increase or decrease to one element of AGUB also may cause an increase or decrease to another element of AGUB. For example, if there is an increase in the amount paid or incurred for recently purchased stock after the acquisition date, any increase in the basis of nonrecently purchased stock because a gain recognition election was made is also taken into account when AGUB is redetermined. Increases or decreases with respect to the elements of AGUB result in the reallocation of AGUB among target's assets under § 1.338-7.

(iii) ***Examples.*** The following examples illustrate this paragraph (b)(2):

Example 1. In Year 1, T, a manufacturer, purchases a customized delivery truck from X with purchase money indebtedness having a stated principal amount of $100,000. P acquires all of the stock of T in Year 3 for $700,000 and makes a section 338 election for T. Assume T has no liabilities other than its purchase money indebtedness to X. In Year 4, when T is neither insolvent nor in a title 11 case, T and X agree to reduce the amount of the purchase money indebtedness to $80,000. Assume that the reduction would be a purchase price reduction under section 108(e)(5). T and X's agreement to reduce the amount of the purchase money indebtedness would, under general principles of tax law that would apply if the deemed asset sale had actually occurred, change the amount of liabilities of old target taken into account in determining its basis. Accordingly, AGUB is redetermined at the time of the reduction. See paragraph (e)(2) of this section. Thus the purchase price reduction affects the basis of the truck only indirectly, through the mechanism of §§ 1.338-6 and 1.338-7. See § 1.338-4(b)(2)(iii) *Example* for the effect on ADSP.

Example 2. T, an accrual basis taxpayer, is a chemical manufacturer. In Year 1, T is obligated to remediate environmental contamination at the site of one of its plants. Assume that all the events have occurred that establish the fact of the liability and the amount of the liability can be determined with reasonable accuracy but economic performance has not occurred with respect to the liability within the meaning of section 461(h). P acquires all of the stock of T in Year 1 and makes a section 338 election for T. Assume that, if a corporation unrelated to T had actually purchased T's assets and assumed T's obligation to remediate the contamination, the corporation would not satisfy the economic performance requirements until Year 5. Under section 461(h), the assumed liability would

not be treated as incurred and taken into account in basis until that time. The incurrence of the liability in Year 5 under the economic performance rules is an increase in the amount of liabilities properly taken into account in basis and results in the redetermination of AGUB. (Respecting ADSP, compare § 1.461-4(d)(5), which provides that economic performance occurs for old T as the amount of the liability is properly taken into account in amount realized on the deemed asset sale. Thus ADSP is not redetermined when new T satisfies the economic performance requirements.)

(c) ***Grossed-up basis of recently purchased stock.*** The purchasing corporation's grossed-up basis of recently purchased target stock (as defined in section 338(b)(6)(A)) is an amount equal to—

(1) The purchasing corporation's basis in recently purchased target stock at the beginning of the day after the acquisition date determined without regard to the acquisition costs taken into account in paragraph (c)(3) of this section;

(2) Multiplied by a fraction, the numerator of which is 100 minus the number that is the percentage of target stock (by value, determined on the acquisition date) attributable to the purchasing corporation's nonrecently purchased target stock, and the denominator of which is the number equal to the percentage of target stock (by value, determined on the acquisition date) attributable to the purchasing corporation's recently purchased target stock;

(3) Plus the acquisition costs the purchasing corporation incurred in connection with its purchase of the recently purchased stock that are capitalized in the basis of such stock (e.g., brokerage commissions and any similar costs incurred by the purchasing corporation to acquire the stock).

(d) ***Basis of nonrecently purchased stock; gain recognition election*** —

(1) ***No gain recognition election.*** In the absence of a gain recognition election under section 338(b)(3) and this section, the purchasing corporation retains its basis in the nonrecently purchased stock.

(2) ***Procedure for making gain recognition election.*** A gain recognition election may be made for nonrecently purchased stock of target (or a target affiliate) only if a section 338 election is made for target (or the target affiliate). The gain recognition election is made by attaching a gain recognition statement to a timely filed Form 8023 for target. The gain recognition statement must contain the information specified in the form and its instructions. The gain recognition election is irrevocable. If a section 338(h)(10) election is made for target, see § 1.338(h)(10)-1(d)(1) (providing that the purchasing corporation is automatically deemed to have made a gain recognition election for its nonrecently purchased T stock).

(3) ***Effect of gain recognition election*** —

(i) ***In general.*** If the purchasing corporation makes a gain recognition election, then for all purposes of the Internal Revenue Code—

(A) The purchasing corporation is treated as if it sold on the acquisition date the nonrecently purchased target stock for the basis amount determined under paragraph (d)(3)(ii) of this section; and

(B) The purchasing corporation's basis on the acquisition date in nonrecently purchased target stock immediately following the deemed sale in paragraph (d)(3)(i)(A) of this section is the basis amount.

(ii) ***Basis amount.*** The basis amount is equal to the amount in paragraphs (c)(1) and (2) of this section (the purchasing corporation's grossed-up basis in recently purchased target stock at the beginning of the day after the acquisition date determined without regard to the acquisition costs taken into account in paragraph (c)(3) of this section) multiplied by a fraction the numerator of which is the percentage of target stock (by value, determined on the acquisition date) attributable to the purchasing corporation's nonrecently purchased target stock and the denominator of which is 100 percent minus the numerator amount. Thus, if target has a single class of outstanding stock, the purchasing corporation's basis in each share of nonrecently purchased target stock after the gain recognition election is equal to the average price per share of the purchasing corporation's recently purchased target stock.

(iii) ***Losses not recognized.*** Only gains (unreduced by losses) on the nonrecently purchased target stock are recognized.

(iv) ***Stock subject to election.*** The gain recognition election applies to—

(A) All nonrecently purchased target stock; and

(B) Any nonrecently purchased stock in a target affiliate having the same acquisition date as target if such target affiliate stock is held by the purchasing corporation on such date.

(e) ***Liabilities of new target*** —

(1) ***In general.*** The liabilities of new target are the liabilities of target as of the beginning of the day after the acquisition date (but see § 1.338-1(d) (regarding certain transactions on the acquisition date)). In order to be taken into account in AGUB, a liability must be a liability of target that is properly taken into account in basis under general principles of tax law that would apply if new target had acquired its assets from an unrelated person for consideration that included discharge of the liabilities of that unrelated person. Such liabilities may include liabilities for the tax consequences resulting from the deemed sale.

(2) ***Time and amount of liabilities.*** The time for taking into account liabilities of old target in determining AGUB and the amount of the liabilities taken into account is determined as if new target had acquired its assets from an unrelated person for consideration that included the discharge of its liabilities.

(3) ***Interaction with deemed sale tax consequences.*** In general, see § 1.338-4(e). Although ADSP and AGUB are not necessarily linked, if an increase in the amount realized for recently purchased stock of target is taken into account after the acquisition date, and if the tax on the deemed sale tax consequences is a liability of target, any increase in that liability is also taken into account in redetermining AGUB.

(f) ***Adjustments by the Internal Revenue Service.*** In connection with the examination of a return, the Commissioner may increase (or decrease) AGUB under the authority of section 338(b)(2) and allocate such amounts to target's assets under the authority of section 338(b)(5) so that AGUB and the basis of target's assets properly reflect the cost to the purchasing corporation of its interest in target's assets. Such items may include distributions from target to the purchasing corporation, capital contributions from the purchasing corporation to target during the 12-month acquisition period, or acquisitions of target stock by the purchasing corporation after the acquisition date from minority shareholders. See also § 1.338-1(d) (regarding certain transactions on the acquisition date).

(g) ***Examples.*** The following examples illustrate this section. For purposes of the examples in this paragraph (g), T has no liabilities other than the tax liability for the deemed sale tax consequences, T shareholders incur no costs in selling the T stock, and P incurs no costs in acquiring the T stock. The examples are as follows:

Example 1. (i) Before July 1 of Year 1, P purchases 10 of the 100 shares of T stock for $5,000. On July 1 of Year 2, P purchases 80 shares of T stock for $60,000 and makes a section 338 election for T. As of July 1 of Year 2, T's only asset is raw land with an adjusted basis to T of $50,400 and a fair market value of $100,000. T has no loss or tax credit carryovers to Year 2. T's marginal tax rate for any ordinary income or net capital gain resulting from the deemed asset sale is 34 percent. The 10 shares purchased before July 1 of Year 1 constitute nonrecently purchased T stock with respect to P's qualified stock purchase of T stock on July 1 of Year 2.
(ii) The ADSP formula as applied to these facts is the same as in § 1.338-4(g) *Example 1*. Accordingly, the ADSP for T is $87,672.72. The existence of nonrecently purchased T stock is irrelevant for purposes of the ADSP formula, because that formula treats P's nonrecently purchased T stock in the same manner as T stock not held by P.

(iii) The total tax liability resulting from T's deemed asset sale, as calculated under the ADSP formula, is $12,672.72.

(iv) If P does not make a gain recognition election, the AGUB of new T's assets is $85,172.72, determined as follows (In the following formula below, GRP is the grossed-up basis in P's recently purchased T stock, BNP is P's basis in nonrecently purchased T stock, L is T's liabilities, and X is P's acquisition costs for the recently purchased T stock):

AGUB = GRP + BNP + L + X

AGUB = $60,000 × [(1 − .1)/.8] + $5,000 + $12,672.72 + 0

AGUB = $85,172.72

(v) If P makes a gain recognition election, the AGUB of new T's assets is $87,672.72, determined as follows:
AGUB = $60,000 × [(1 − .1)/.8] + $60,000 × [(1 − .1)/.8] × [.1/(1 − .1)] + $12,672.72

AGUB = $87,672.72

(vi) The calculation of AGUB if P makes a gain recognition election may be simplified as follows:
AGUB = $60,000/.8 + $12,672.72

AGUB = $87,672.72

(vii) As a result of the gain recognition election, P's basis in its nonrecently purchased T stock is increased from $5,000 to $7,500 (i.e., $60,000 × [(1 − .1)/.8] × [.1/(1 − .1)]). Thus, P recognizes a gain in Year 2 with respect to its nonrecently purchased T stock of $2,500 (i.e., $7,500 − $5,000).

Example 2. On January 1 of Year 1, P purchases one-third of the T stock. On March 1 of Year 1, T distributes a dividend to all of its shareholders. On April 15 of Year 1, P purchases the remaining T stock and makes a section 338 election for T. In appropriate circumstances, the Commissioner may decrease the AGUB of T to take into account the payment of the dividend and properly reflect the fair market value of T's assets deemed purchased.

Example 3. (i) T's sole asset is a building worth $100,000. At this time, T has 100 shares of stock outstanding. On August 1 of Year 1, P purchases 10 of the 100 shares of T stock for $8,000. On June 1 of Year 2, P purchases 50 shares of T stock for $50,000. On June 15 of Year 2, P contributes a tract of land to the capital of T and receives 10 additional shares of T stock as a result of the contribution. Both the basis and fair market value of the land at that time are $10,800. On June 30 of Year 2, P purchases the remaining 40 shares of T stock for $40,000 and makes a section 338 election for T. The AGUB of T is $108,800.
(ii) To prevent the shifting of basis from the contributed property to other assets of T, the Commissioner may allocate $10,800 of the AGUB to the land, leaving $98,000 to be allocated to the building. See paragraph (f) of this section. Otherwise, applying the allocation rules of § 1.338-6 would, on these facts, result in an allocation to the recently contributed land of an amount less than its value of $10,800, with the difference being allocated to the building already held by T.

(h) ***Effective/applicability date.*** Paragraph (d)(3)(ii) of this section is applicable to any qualified stock purchase or qualified stock disposition (as defined in § 1.336-1(b)(6)) for which the acquisition date or disposition date (as defined in § 1.336-1(b)(8)), respectively, is on or after May 15, 2013.

[T.D. 8940, 66 FR 9929, Feb. 13, 2001, as amended by T.D. 9619, 78 FR 28489, May 15, 2013]

§ 1.338-6 Allocation of ADSP and AGUB among target assets.

(a) ***Scope*** —

(1) ***In general.*** This section prescribes rules for allocating ADSP and AGUB among the acquisition date assets of a target for which a section 338 election is made.

(2) ***Fair market value*** —

(i) ***In general.*** Generally, the fair market value of an asset is its gross fair market value (i.e., fair market value determined without regard to mortgages, liens, pledges, or other liabilities). However, for purposes of determining the amount of old target's deemed sale tax consequences, the fair market value of any property subject to a nonrecourse indebtedness will be treated as being not less than the amount of such indebtedness. (For purposes of the

preceding sentence, a liability that was incurred because of the acquisition of the property is disregarded to the extent that such liability was not taken into account in determining old target's basis in such property.)

(ii) ***Transaction costs.*** Transaction costs are not taken into account in allocating ADSP or AGUB to assets in the deemed sale (except indirectly through their effect on the total ADSP or AGUB to be allocated).

(iii) ***Internal Revenue Service authority.*** In connection with the examination of a return, the Internal Revenue Service may challenge the taxpayer's determination of the fair market value of any asset by any appropriate method and take into account all factors, including any lack of adverse tax interests between the parties.

(b) ***General rule for allocating ADSP and AGUB*** —

(1) ***Reduction in the amount of consideration for Class I assets.*** Both ADSP and AGUB, in the respective allocation of each, are first reduced by the amount of Class I assets. Class I assets are cash and general deposit accounts (including savings and checking accounts) other than certificates of deposit held in banks, savings and loan associations, and other depository institutions. If the amount of Class I assets exceeds AGUB, new target will immediately realize ordinary income in an amount equal to such excess. The amount of ADSP or AGUB remaining after the reduction is to be allocated to the remaining acquisition date assets.

(2) ***Other assets*** —

(i) ***In general.*** Subject to the limitations and other rules of paragraph (c) of this section, ADSP and AGUB (as reduced by the amount of Class I assets) are allocated among Class II acquisition date assets of target in proportion to the fair market values of such Class II assets at such time, then among Class III assets so held in such proportion, then among Class IV assets so held in such proportion, then among Class V assets so held in such proportion, then among Class VI assets so held in such proportion, and finally to Class VII assets. If an asset is described below as includible in more than one class, then it is included in such class with the lower or lowest class number (for instance, Class III has a lower class number than Class IV).

(ii) ***Class II assets.*** Class II assets are actively traded personal property within the meaning of section 1092(d)(1) and § 1.1092(d)-1 (determined without regard to section 1092(d)(3)). In addition, Class II assets include certificates of deposit and foreign currency even if they are not actively traded personal property. Class II assets do not include stock of target affiliates, whether or not of a class that is actively traded, other than actively traded stock described in section 1504(a)(4). Examples of Class II assets include U.S. government securities and publicly traded stock.

(iii) ***Class III assets.*** Class III assets are assets that the taxpayer marks to market at least annually for Federal income tax purposes and debt instruments (including accounts receivable). However, Class III assets do not include—

(A) Debt instruments issued by persons related at the beginning of the day following the acquisition date to the target under section 267(b) or 707;

(B) Contingent debt instruments subject to § 1.1275-4, § 1.483-4, or section 988, unless the instrument is subject to the non-contingent bond method of § 1.1275-4(b) or is described in § 1.988-2(b)(2)(i)(B)(*2*); and

(C) Debt instruments convertible into the stock of the issuer or other property.

(iv) ***Class IV assets.*** Class IV assets are stock in trade of the taxpayer or other property of a kind that would properly be included in the inventory of taxpayer if on hand at the close of the taxable year, or property held by the taxpayer primarily for sale to customers in the ordinary course of its trade or business.

(v) ***Class V assets.*** Class V assets are all assets other than Class I, II, III, IV, VI, and VII assets.

(vi) ***Class VI assets.*** Class VI assets are all section 197 intangibles, as defined in section 197, except goodwill and going concern value.

(vii) ***Class VII assets.*** Class VII assets are goodwill and going concern value (whether or not the goodwill or going concern value qualifies as a section 197 intangible).

(3) ***Other items designated by the Internal Revenue Service.*** Similar items may be added to any class described in this paragraph (b) by designation in the Internal Revenue Bulletin by the Internal Revenue Service (see § 601.601(d)(2) of this chapter).

(c) ***Certain limitations and other rules for allocation to an asset*** —

(1) ***Allocation not to exceed fair market value.*** The amount of ADSP or AGUB allocated to an asset (other than Class VII assets) cannot exceed the fair market value of that asset at the beginning of the day after the acquisition date.

(2) ***Allocation subject to other rules.*** The amount of ADSP or AGUB allocated to an asset is subject to other provisions of the Internal Revenue Code or general principles of tax law in the same manner as if such asset were transferred to or acquired from an unrelated person in a sale or exchange. For example, if the deemed asset sale is a transaction described in section 1056(a) (relating to basis limitation for player contracts transferred in connection with the sale of a franchise), the amount of AGUB allocated to a contract for the services of an athlete cannot exceed the limitation imposed by that section. As another example, section 197(f)(5) applies in determining the amount of AGUB allocated to an amortizable section 197 intangible resulting from an assumption-reinsurance transaction.

(3) ***Special rule for allocating AGUB when purchasing corporation has nonrecently purchased stock*** —

(i) ***Scope.*** This paragraph (c)(3) applies if at the beginning of the day after the acquisition date—

(A) The purchasing corporation holds nonrecently purchased stock for which a gain recognition election under section 338(b)(3) and § 1.338-5(d) is not made; and

(B) The hypothetical purchase price determined under paragraph (c)(3)(ii) of this section exceeds the AGUB determined under § 1.338-5(b).

(ii) ***Determination of hypothetical purchase price.*** Hypothetical purchase price is the AGUB that would result if a gain recognition election were made.

(iii) ***Allocation of AGUB.*** Subject to the limitations in paragraphs (c)(1) and (2) of this section, the portion of AGUB (after reduction by the amount of Class I assets) to be allocated to each Class II, III, IV, V, VI, and VII asset of target held at the beginning of the day after the acquisition date is determined by multiplying—

(A) The amount that would be allocated to such asset under the general rules of this section were AGUB equal to the hypothetical purchase price; by

(B) A fraction, the numerator of which is actual AGUB (after reduction by the amount of Class I assets) and the denominator of which is the hypothetical purchase price (after reduction by the amount of Class I assets).

(4) ***Liabilities taken into account in determining amount realized on subsequent disposition.*** In determining the amount realized on a subsequent sale or other disposition of property deemed purchased by new target, § 1.1001-2(a)(3) shall not apply to any liability that was taken into account in AGUB.

(5) ***Allocation to certain nuclear decommissioning funds*** —

(i) ***General rule.*** For purposes of allocating ADSP or AGUB among the acquisition date assets of a target (and for no other purpose), a taxpayer may elect to treat a nonqualified nuclear decommissioning fund (as defined in paragraph (c)(5)(ii) of this section) of the target as if—

(A) Such fund were an entity classified as a corporation;

(B) The stock of the corporation were among the acquisition date assets of the target and a Class V asset;

(C) The corporation owned the assets of the fund;

(D) The corporation bore the responsibility for decommissioning one or more nuclear power plants to the extent assets of the fund are expected to be used for that purpose; and

(E) A section 338(h)(10) election were made for the corporation (regardless of whether the requirements for a section 338(h)(10) election are otherwise satisfied).

(ii) ***Definition of nonqualified nuclear decommissioning fund.*** A *nonqualified nuclear decommissioning fund* means a trust, escrow account, Government fund or other type of agreement—

(A) That is established in writing by the owner or licensee of a nuclear generating unit for the exclusive purpose of funding the decommissioning of one or more nuclear power plants;

(B) That is described to the Nuclear Regulatory Commission in a report described in 10 CFR 50.75(b) as providing assurance that funds will be available for decommissioning;

(C) That is not a Nuclear Decommissioning Reserve Fund, as described in section 468A;

(D) That is maintained at all times in the United States; and

(E) The assets of which are to be used only as permitted by 10 CFR 50.82(a)(8).

(iii) ***Availability of election.*** P may make the election described in this paragraph (c)(5) regardless of whether the selling consolidated group (or the selling affiliate or the S corporation shareholders) also makes the election. In addition, the selling consolidated group (or the selling affiliate or the S corporation shareholders) may make the election regardless of whether P also makes the election. If T is an S corporation, all of the S corporation shareholders, including those that do not sell their stock, must consent to the election for the election to be effective as to any S corporation shareholder.

(iv) ***Time and manner of making election.*** The election described in this paragraph (c)(5) is made by taking a position on an original or amended tax return for the taxable year of the qualified stock purchase that is consistent with having made the election. Such tax return must be filed no later than the later of 30 days after the date on which the section 338 election is due or the day the original tax return for the taxable year of the qualified stock purchase is due (with extensions).

(v) ***Irrevocability of election.*** An election made pursuant to this paragraph (c)(5) is irrevocable.

(vi) ***Effective/applicability date.*** This paragraph (c)(5) applies to qualified stock purchases occurring on or after September 11, 2007. For qualified stock purchases occurring before September 11, 2007 and on or after September 15, 2004, see § 1.338-6T as contained in 26 CFR part 1 in effect on April 1, 2007. For qualified stock purchases occurring before September 15, 2004, see § 1.338-6 as contained in 26 CFR part 1 in effect on April 1, 2004.

(d) ***Examples.*** The following examples illustrate §§ 1.338-4, 1.338-5, and this section:

Example 1. (i) T owns 90 percent of the outstanding T1 stock. P purchases 100 percent of the outstanding T stock for $2,000. There are no acquisition costs. P makes a section 338 election for T and, as a result, T1 is considered acquired in a qualified stock purchase. A section 338 election is made for T1. The grossed-up basis of the T stock is $2,000 (i.e., $2,000 + 1/1).
(ii) The liabilities of T as of the beginning of the day after the acquisition date (including the tax liability for the deemed sale tax consequences) that would, under general principles of tax law, properly be taken into account at that time, are as follows:

Liabilities (nonrecourse mortgage plus unsecured liabilities)	$700
Taxes Payable	300
Total	1,000

(iii) The AGUB of T is determined as follows:

Grossed-up basis	$2,000
Total liabilities	1,000
AGUB	3,000

(iv) Assume that ADSP is also $3,000.

(v) Assume that, at the beginning of the day after the acquisition date, T's cash and the fair market values of T's Class II, III, IV, and V assets are as follows:

Asset class	Asset	Fair market value
I	Cash	* $200
II	Portfolio of actively traded securities	300
III	Accounts receivable	600
IV	Inventory	300
V	Building	800
V	Land	200
V	Investment in T1	450
	Total	2,850

**Amount.*

(vi) Under paragraph (b)(1) of this section, the amount of ADSP and AGUB allocable to T's Class II, III, IV, and V assets is reduced by the amount of cash to $2,800, i.e., $3,000—$200. $300 of ADSP and of AGUB is then allocated to actively traded securities. $600 of ADSP and of AGUB is then allocated to accounts receivable. $300 of ADSP and of AGUB is then allocated to the inventory. Since the remaining amount of ADSP and of AGUB is $1,600 (i.e., $3,000—($200 + $300 + $600 + $300)), an amount which exceeds the sum of the fair market values of T's Class V assets, the amount of ADSP and of AGUB allocated to each Class V asset is its fair market value:

Building	$800
Land	200
Investment in T1	450
Total	1,450

(vii) T has no Class VI assets. The amount of ADSP and of AGUB allocated to T's Class VII assets (goodwill and going concern value) is $150, i.e., $1,600-$1,450.
(viii) The grossed-up basis of the T1 stock is $500, i.e., $450 × 1/.9.

(ix) The liabilities of T1 as of the beginning of the day after the acquisition date (including the tax liability for the deemed sale tax consequences) that would, under general principles of tax law, properly be taken into account at that time, are as follows:

General Liabilities	$100
Taxes Payable	20
Total	120

(x) The AGUB of T1 is determined as follows:

Grossed-up basis of T1 Stock	$ 500
Liabilities	120
AGUB	620

(xi) Assume that ADSP is also $620.
(xii) Assume that at the beginning of the day after the acquisition date, T1's cash and the fair market values of its Class IV and VI assets are as follows:

Asset class	Asset	Fair market value
I	Cash	*$50
IV	Inventory	200
VI	Patent	350
	Total	600

** Amount.*

(xiii) The amount of ADSP and of AGUB allocable to T1's Class IV and VI assets is first reduced by the $50 of cash.
(xiv) Because the remaining amount of ADSP and of AGUB ($570) is an amount which exceeds the fair market value of T1's only Class IV asset, the inventory, the amount allocated to the inventory is its fair market value ($200). After that, the remaining amount of ADSP and of AGUB ($370) exceeds the fair market value of T1's only Class VI asset, the patent. Thus, the amount of ADSP and of AGUB allocated to the patent is its fair market value ($350).

(xv) The amount of ADSP and of AGUB allocated to T1's Class VII assets (goodwill and going concern value) is $20, i.e., $570-$550.

Example 2. (i) Assume that the facts are the same as in *Example 1* except that P has, for five years, owned 20 percent of T's stock, which has a basis in P's hands at the beginning of the day after the acquisition date of $100, and P purchases the remaining 80 percent of T's stock for $1,600. P does not make a gain recognition election under section 338(b)(3).
(ii) Under § 1.338-5(c), the grossed-up basis of recently purchased T stock is $1,600, i.e., $1,600 × (1−.2)/.8.

(iii) The AGUB of T is determined as follows:

Grossed-up basis of recently purchased stock as determined under § 1.338-5(c) ($1,600 × (1−.2)/.8)	$1,600
Basis of nonrecently purchased stock	100
Liabilities	1,000
AGUB	2,700

(iv) Since P holds nonrecently purchased stock, the hypothetical purchase price of the T stock must be computed and is determined as follows:

Grossed-up basis of recently purchased stock as determined under § 1.338-5(c) ($1,600 × (1−.2)/.8)	$1,600
Basis of nonrecently purchased stock as if the gain recognition election under § 1.338-5(d)(2) had been made ($1,600 × .2/(1−.2))	400
Liabilities	1,000
Total	3,000

(v) Since the hypothetical purchase price ($3,000) exceeds the AGUB ($2,700) and no gain recognition election is made under section 338(b)(3), AGUB is allocated under paragraph (c)(3) of this section.
(vi) First, an AGUB amount equal to the hypothetical purchase price ($3,000) is allocated among the assets under the general rules of this section. The allocation is set forth in the column below entitled *Original Allocation.* Next, the allocation to each asset in Class II through Class VII is multiplied by a fraction having

a numerator equal to the actual AGUB reduced by the amount of Class I assets ($2,700−$200 = $2,500) and a denominator equal to the hypothetical purchase price reduced by the amount of Class I assets ($3,000−$200 = $2,800), or 2,500/2,800. This produces the *Final Allocation:*

Class	Asset	Original allocation	Final allocation
I	Cash	$200	$200
II	Portfolio of actively traded securities	300	*268
III	Accounts receivable	600	536
IV	Inventory	300	268
V	Building	800	714
V	Land	200	178
V	Investment in T1	450	402
VII	Goodwill and going concern value	150	134
	Total	3,000	2,700

** All numbers rounded for convenience.*

[T.D. 8940, 66 FR 9929, Feb. 13, 2001; 66 FR 17363, Mar. 30, 2001; T.D. 9158, 69 FR 55742, Sept. 16, 2004; T.D. 9358, 72 FR 51706, Sept. 11, 2007]

§ 1.338-7 Allocation of redetermined ADSP and AGUB among target assets.

(a) ***Scope.*** ADSP and AGUB are redetermined at such time and in such amount as an increase or decrease would be required under general principles of tax law for the elements of ADSP or AGUB. This section provides rules for allocating redetermined ADSP or AGUB.

(b) ***Allocation of redetermined ADSP and AGUB.*** When ADSP or AGUB is redetermined, a new allocation of ADSP or AGUB is made by allocating the redetermined ADSP or AGUB amount under the rules of § 1.338-6. If the allocation of the redetermined ADSP or AGUB amount under § 1.338-6 to a given asset is different from the original allocation to it, the difference is added to or subtracted from the original allocation to the asset, as appropriate. (See paragraph (d) of this section for new target's treatment of the amount so allocated.) Amounts allocable to an acquisition date asset (or with respect to a disposed-of acquisition date asset) are subject to all the asset allocation rules (for example, the fair market value limitation in § 1.338-6(c)(1)) as if the redetermined ADSP or AGUB were the ADSP or AGUB on the acquisition date.

(c) ***Special rules for ADSP —***

(1) ***Increases or decreases in deemed sale tax consequences taxable notwithstanding old target ceases to exist.*** To the extent general principles of tax law would require a seller in an actual asset sale to account for events relating to the sale that occur after the sale date, target must make such an accounting. Target is not precluded from realizing additional deemed sale tax consequences because the target is treated as a new corporation after the acquisition date.

(2) ***Procedure for transactions in which section 338(h)(10) is not elected —***

(i) ***Deemed sale tax consequences included in new target's return.*** If an election under section 338(h)(10) is not made, any additional deemed sale tax consequences of old target resulting from an increase or decrease in the ADSP are included in new target's income tax return for new target's taxable year in which the increase or decrease is taken into account. For example, if after the acquisition date there is an increase in the allocable ADSP of section 1245 property for which the recomputed basis (but not the adjusted basis) exceeds the portion of the ADSP allocable to that particular asset on the acquisition date, the additional gain is treated as ordinary income to the extent it does not exceed such excess amount. See paragraph (c)(2)(ii) of this section for the special treatment of old target's carryovers and carrybacks. Although included in new target's income tax return, the deemed sale tax consequences are separately accounted for as an item of old target and may not be offset by income, gain, deduction, loss, credit, or other amount of new target. The amount of tax on income of old target resulting from an increase or decrease in the ADSP is determined as if such deemed sale tax consequences had been recognized in old target's taxable year ending at the close of the acquisition date. However, because the income resulting from the increase or decrease in ADSP is reportable in new target's taxable year of the increase or decrease, not in old target's taxable year ending at the close of the acquisition date, there is not a resulting underpayment of tax in that past taxable year of old target for purposes of calculation of interest due.

(ii) ***Carryovers and carrybacks*** —

(A) ***Loss carryovers to new target taxable years.*** A net operating loss or net capital loss of old target may be carried forward to a taxable year of new target, under the principles of section 172 or 1212, as applicable, but is allowed as a deduction only to the extent of any recognized income of old target for such taxable year, as described in paragraph (c)(2)(i) of this section. For this purpose, however, taxable years of new target are not taken into account in applying the limitations in section 172(b)(1) or 1212(a)(1)(B) (or other similar limitations). In applying sections 172(b) and 1212(a)(1), only income, gain, loss, deduction, credit, and other amounts of old target are taken into account. Thus, if old target has an unexpired net operating loss at the close of its taxable year in which the deemed asset sale occurred that could be carried forward to a subsequent taxable year, such loss may be carried forward until it is absorbed by old target's income.

(B) ***Loss carrybacks to taxable years of old target.*** An ordinary loss or capital loss accounted for as a separate item of old target under paragraph (c)(2)(i) of this section may be carried back to a taxable year of old target under the principles of section 172 or 1212, as applicable. For this purpose, taxable years of new target are not taken into account in applying the limitations in section 172(b) or 1212(a) (or other similar limitations).

(C) ***Credit carryovers and carrybacks.*** The principles described in paragraphs (c)(2)(ii)(A) and (B) of this section apply to carryovers and carrybacks of amounts for purposes of determining the amount of a credit allowable under part IV, subchapter A, chapter 1 of the Internal Revenue Code. Thus, for example, credit carryovers of old target may offset only income tax attributable to items described in paragraph (c)(2)(i) of this section.

(3) ***Procedure for transactions in which section 338(h)(10) is elected.*** If an election under section 338(h)(10) is made, any changes in the deemed sale tax consequences caused by an increase or decrease in the ADSP are accounted for in determining the taxable income (or other amount) of the

member of the selling consolidated group, the selling affiliate, or the S corporation shareholders to which such income, loss, or other amount is attributable for the taxable year in which such increase or decrease is taken into account.

(d) *Special rules for AGUB* —

(1) ***Effect of disposition or depreciation of acquisition date assets.*** If an acquisition date asset has been disposed of, depreciated, amortized, or depleted by new target before an amount is added to the original allocation to the asset, the increased amount otherwise allocable to such asset is taken into account under general principles of tax law that apply when part of the cost of an asset not previously taken into account in basis is paid or incurred after the asset has been disposed of, depreciated, amortized, or depleted. A similar rule applies when an amount is subtracted from the original allocation to the asset. For purposes of the preceding sentence, an asset is considered to have been disposed of to the extent that its allocable portion of the decrease in AGUB would reduce its basis below zero.

(2) ***Section 38 property.*** Section 1.47-2(c) applies to a reduction in basis of section 38 property under this section.

(e) ***Examples.*** The following examples illustrate this section. Any amount described in the following examples is exclusive of interest. For rules characterizing deferred contingent payments as principal or interest, see §§ 1.483-4, 1.1274-2(g), and 1.1275-4(c). The examples are as follows:

Example 1. (i)(A) T's assets other than goodwill and going concern value, and their fair market values at the beginning of the day after the acquisition date, are as follows:

Asset class	Asset	Fair market value
V	Building	$ 100
V	Stock of X (not a target)	200
	Total	300

(B) T has no liabilities other than a contingent liability that would not be taken into account under general principles of tax law in an asset sale between unrelated parties when the buyer assumed the liability or took property subject to it.

(ii)(A) On September 1, 2000, P purchases all of the outstanding stock of T for $270 and makes a section 338 election for T. The grossed-up basis of the T stock and T's AGUB are both $270. The AGUB is ratably allocated among T's Class V assets in proportion to their fair market values as follows:

Asset	Basis
Building ($270 × 100/300)	$90

Asset	Basis
Stock ($270 × 200/300)	180
Total	270

(B) No amount is allocated to the Class VII assets. New T is a calendar year taxpayer. Assume that the X stock is a capital asset in the hands of new T.
(iii) On January 1, 2001, new T sells the X stock and uses the proceeds to purchase inventory.

(iv) Pursuant to events on June 30, 2002, the contingent liability of old T is at that time properly taken into account under general principles of tax law. The amount of the liability is $60.

(v) T's AGUB increases by $60 from $270 to $330. This $60 increase in AGUB is first allocated among T's acquisition date assets in accordance with the provisions of § 1.338-6. Because the redetermined AGUB for T ($330) exceeds the sum of the fair market values at the beginning of the day after the acquisition date of the Class V acquisition date assets ($300), AGUB allocated to those assets is limited to those fair market values under § 1.338-6(c)(1). As there are no Class VI assets, the remaining AGUB of $30 is allocated to goodwill and going concern value (Class VII assets). The amount of increase in AGUB allocated to each acquisition date asset is determined as follows:

Asset	Original AGUB	Redetermined AGUB	Increase
Building	$90	$100	$10
X Stock	180	200	20
Goodwill and going concern value	0	30	30
Total	270	330	60

(vi) Since the X stock was disposed of before the contingent liability was properly taken into account for tax purposes, no amount of the increase in AGUB attributable to such stock may be allocated to any T asset. Rather, such amount ($20) is allowed as a capital loss to T for the taxable year 2002 under the principles of *Arrowsmith* v. *Commissioner,* 344 U.S. 6 (1952). In addition, the $10 increase in AGUB allocated to the building and the $30 increase in AGUB allocated to the goodwill and going concern value are treated as basis redeterminations in 2002. See paragraph (d)(1) of this section.

Example 2. (i) On January 1, 2002, P purchases all of the outstanding stock of T and makes a section 338 election for T. Assume that ADSP and AGUB of T are both $500 and are allocated among T's acquisition

date assets as follows:

Asset Class	Asset	Basis
V	Machinery	$150
V	Land	250
VII	Goodwill and going concern value	100
	Total	500

(ii) On September 30, 2004, P filed a claim against the selling shareholders of T in a court of appropriate jurisdiction alleging fraud in the sale of the T stock.
(iii) On January 1, 2007, the former shareholders refund $140 of the purchase price to P in a settlement of the lawsuit. Assume that, under general principles of tax law, both the seller and the buyer properly take into account such refund when paid. Assume also that the refund has no effect on the tax liability for the deemed sale tax consequences. This refund results in a decrease of T's ADSP and AGUB of $140, from $500 to $360.

(iv) The redetermined ADSP and AGUB of $360 is allocated among T's acquisition date assets. Because ADSP and AGUB do not exceed the fair market value of the Class V assets, the ADSP and AGUB amounts are allocated to the Class V assets in proportion to their fair market values at the beginning of the day after the acquisition date. Thus, $135 ($150 × ($360/($150 + $250))) is allocated to the machinery and $225 ($250 × ($360/($150 + $250))) is allocated to the land. Accordingly, the basis of the machinery is reduced by $15 ($150 original allocation—$135 redetermined allocation) and the basis of the land is reduced by $25 ($250 original allocation—$225 redetermined allocation). No amount is allocated to the Class VII assets. Accordingly, the basis of the goodwill and going concern value is reduced by $100 ($100 original allocation—$0 redetermined allocation).

(v) Assume that, as a result of deductions under section 168, the adjusted basis of the machinery immediately before the decrease in AGUB is zero. The machinery is treated as if it were disposed of before the decrease is taken into account. In 2007, T recognizes income of $15, the character of which is determined under the principles of *Arrowsmith* v. *Commissioner* and the tax benefit rule. No adjustment to the basis of T's assets is made for any tax paid on this amount. Assume also that, as a result of amortization deductions, the adjusted basis of the goodwill and going concern value immediately before the decrease in AGUB is $40. A similar adjustment to income is made in 2007 with respect to the $60 of previously amortized goodwill and going concern value.

(vi) In summary, the basis of T's acquisition date assets, as of January 1, 2007, is as follows:

Asset	Basis
Machinery	$0
Land	225
Goodwill and going concern value	0

Example 3. (i) Assume that the facts are the same as § 1.338-6(d) *Example 2* except that the recently purchased stock is acquired for $1,600 plus additional payments that are contingent upon T's future earnings. Assume that, under general principles of tax law, such later payments are properly taken into account when paid. Thus, T's AGUB, determined as of the beginning of the day after the acquisition date (after reduction by T's cash of $200), is $2,500 and is allocated among T's acquisition date assets under § 1.338-6(c)(3)(iii) as follows:

Class	Asset	Final allocation
I	Cash	$200
II	Portfolio of actively traded securities	*268
III	Accounts receivable	536
IV	Inventory	268
V	Building	714
V	Land	178
V	Investment in T1	402
VII	Goodwill and going concern value	134
	Total	2,700

** All numbers rounded for convenience.*

(ii) At a later point in time, P pays an additional $200 for its recently purchased T stock. Assume that the additional consideration paid would not increase T's tax liability for the deemed sale tax consequences. (iii) T's AGUB increases by $200, from $2,700 to $2,900. This $200 increase in AGUB is accounted for in accordance with the provisions of § 1.338-6(c)(3)(iii).

(iv) The hypothetical purchase price of the T stock is redetermined as follows:

Grossed-up basis of recently purchased stock as determined under § 1.338-5(c) ($1,800 × (1− .2)/.8)	$1,800
Basis of nonrecently purchased stock as if the gain recognition election under § 1.338-5(d)(2) had been made ($1,800 × .2/(1− .2))	450
Liabilities	1,000
Total	3,250

(v) Since the redetermined hypothetical purchase price ($3,250) exceeds the redetermined AGUB ($2,900) and no gain recognition election was made under section 338(b)(3), the rules of § 1.338-6(c)(3)(iii) are reapplied using the redetermined hypothetical purchase price and the redetermined AGUB.
(vi) First, an AGUB amount equal to the redetermined hypothetical purchase price ($3,250) is allocated among the assets under the general rules of § 1.338-6. The allocation is set forth in the column below entitled *Hypothetical Allocation.* Next, the allocation to each asset in Class II through Class VII is multiplied by a fraction with a numerator equal to the actual redetermined AGUB reduced by the amount of Class I assets ($2,900 − $200 = $2,700) and a denominator equal to the redetermined hypothetical purchase price reduced by the amount of Class I assets ($3,250 − $200 = $3,050), or 2,700/3,050. This produces the *Final Allocation:*

Class	Asset	Hypothetical allocation	Final allocation
I	Cash	$200	$200
II	Portfolio of actively traded securities	300	*266
III	Accounts receivable	600	531
IV	Inventory	300	266
V	Building	800	708
V	Land	200	177
V	Investment in T1	450	398
VII	Goodwill and going concern value	400	354
	Total	3,250	2900

** All numbers rounded for convenience.*

(vii) As illustrated by this example, reapplying § 1.338-6(c)(3) results in a basis increase for some assets and a basis decrease for other assets. The amount of redetermined AGUB allocated to each acquisition

date asset is determined as follows:

Asset	Original (c)(3) allocation	Redetermined (c)(3) allocation	Increase (decrease)
Portfolio of actively traded securities	$268	$266	$(2)
Accounts receivable	536	531	(5)
Inventory	268	266	(2)
Building	714	708	(6)
Land	178	177	(1)
Investment in T1	402	398	(4)
Goodwill and going concern value	134	354	220
Total	2,500	2,700	200

Example 4. (i) On January 1, 2001, P purchases all of the outstanding T stock and makes a section 338 election for T. P pays $700 of cash and promises also to pay a maximum $300 of contingent consideration at various times in the future. Assume that, under general principles of tax law, such later payments are properly taken into account by P when paid. Assume also, however, that the current fair market value of the contingent payments is reasonably ascertainable. The fair market value of T's assets (other than goodwill and going concern value) as of the beginning of the following day is as follows:

Asset class	Assets	Fair market value
V	Equipment	$200
V	Non-actively traded securities	100
V	Building	500
	Total	800

(ii) T has no liabilities. The AGUB is $700. In calculating ADSP, assume that, under § 1.1001-1, the current amount realized attributable to the contingent consideration is $200. ADSP is therefore $900 ($700 cash plus $200).

(iii) (A) The AGUB of $700 is ratably allocated among T's Class V acquisition date assets in proportion to their fair market values as follows:

Asset	Basis
Equipment ($700 × 200/800)	$175.00
Non-actively traded securities ($700 × 100/800)	87.50
Building ($700 × 500/800)	437.50
Total	700.00

(B) No amount is allocated to goodwill or going concern value.

(iv) (A) The ADSP of $900 is ratably allocated among T's Class V acquisition date assets in proportion to their fair market values as follows:

Asset	Basis
Equipment	$200
Non-actively traded securities	100
Building	500
Total	800

(B) The remaining ADSP, $100, is allocated to goodwill and going concern value (Class VII).

(v) P and T file a consolidated return for 2001 and each following year with P as the common parent of the affiliated group.

(vi) In 2004, a contingent amount of $120 is paid by P. For old T, this payment has no effect on ADSP, because the payment is accounted for as a separate transaction. We have assumed that, under general principles of tax law, the payment is properly taken into account by P at the time made. Therefore, in 2004, there is an increase in new T's AGUB of $120. The amount of the increase allocated to each acquisition date asset is determined as follows:

Asset	Original AGUB	Redetermined AGUB	Increase
Equipment	$175.00	$200.00	$25.00
Land	87.50	100.00	12.50
Building	437.50	500.00	62.50

Asset	Original AGUB	Redetermined AGUB	Increase
Goodwill and going concern value	0.00	20.00	20.00
Total	700.00	820.00	120.00

[T.D. 8940, 66 FR 9929, Feb. 13, 2001]

§ 1.338-8 Asset and stock consistency.

(a) ***Introduction*** —

(1) ***Overview.*** This section implements the consistency rules of sections 338(e) and (f). Under this section, no election under section 338 is deemed made or required with respect to target or any target affiliate. Instead, the person acquiring an asset may have a carryover basis in the asset.

(2) ***General application.*** The consistency rules generally apply if the purchasing corporation acquires an asset directly from target during the target consistency period and target is a subsidiary in a consolidated group. In such a case, gain from the sale of the asset is reflected under the investment adjustment provisions of the consolidated return regulations in the basis of target stock and may reduce gain from the sale of the stock. See § 1.1502-32 (investment adjustment provisions). Under the consistency rules, the purchasing corporation generally takes a carryover basis in the asset, unless a section 338 election is made for target. Similar rules apply if the purchasing corporation acquires an asset directly from a lower-tier target affiliate if gain from the sale is reflected under the investment adjustment provisions in the basis of target stock.

(3) ***Extensions of the general rules.*** If an arrangement exists, paragraph (f) of this section generally extends the carryover basis rule to certain cases in which the purchasing corporation acquires assets indirectly from target (or a lower-tier target affiliate). To prevent avoidance of the consistency rules, paragraph (j) of this section also may extend the consistency period or the 12-month acquisition period and may disregard the presence of conduits.

(4) ***Application where certain dividends are paid.*** Paragraph (g) of this section extends the carryover basis rule to certain cases in which dividends are paid to a corporation that is not a member of the same consolidated group as the distributing corporation. Generally, this rule applies where a 100 percent dividends received deduction is used in conjunction with asset dispositions to achieve an effect similar to that available under the investment adjustment provisions of the consolidated return regulations.

(5) ***Application to foreign target affiliates.*** Paragraph (h) of this section extends the carryover basis rule to certain cases involving target affiliates that are controlled foreign corporations.

(6) ***Stock consistency.*** This section limits the application of the stock consistency rules to cases in which the rules are necessary to prevent avoidance of the asset consistency rules. Following the general treatment of a section 338(h)(10) election, a sale of a corporation's stock is treated as a sale of the corporation's assets if a section 338(h)(10) election is made. Because gain from this asset sale may be reflected in the basis of the stock of a higher-tier target, the carryover basis rule may apply to the assets.

(b) ***Consistency for direct acquisitions*** —

(1) ***General rule.*** The basis rules of paragraph (d) of this section apply to an asset if—

(i) The asset is disposed of during the target consistency period;

(ii) The basis of target stock, as of the target acquisition date, reflects gain from the disposition of the asset (see paragraph (c) of this section); and

(iii) The asset is owned, immediately after its acquisition and on the target acquisition date, by a corporation that acquires stock of target in the qualified stock purchase (or by an affiliate of an acquiring corporation).

(2) ***Section 338(h)(10) elections.*** For purposes of this section, if a section 338(h)(10) election is made for a corporation acquired in a qualified stock purchase—

(i) The acquisition is treated as an acquisition of the corporation's assets (see § 1.338(h)(10)-1); and

(ii) The corporation is not treated as target.

(c) ***Gain from disposition reflected in basis of target stock.*** For purposes of this section:

(1) ***General rule.*** Gain from the disposition of an asset is reflected in the basis of a corporation's stock if the gain is taken into account under § 1.1502-32, directly or indirectly, in determining the basis of the stock, after applying section 1503(e) and other provisions of the Internal Revenue Code.

(2) ***Gain not reflected if section 338 election made for target.*** Gain from the disposition of an asset that is otherwise reflected in the basis of target stock as of the target acquisition date is not considered reflected in the basis of target stock if a section 338 election is made for target.

(3) ***Gain reflected by reason of distributions.*** Gain from the disposition of an asset is not considered reflected in the basis of target stock merely by reason of the receipt of a distribution from a target affiliate that is not a member of the same consolidated group as the distributee. See paragraph (g) of this section for the treatment of dividends eligible for a 100 percent dividends received deduction.

(4) ***Controlled foreign corporations.*** For a limitation applicable to gain of a target affiliate that is a controlled foreign corporation, see paragraph (h)(2) of this section.

(5) ***Gain recognized outside the consolidated group.*** Gain from the disposition of an asset by a person other than target or a target affiliate is not reflected in the basis of a corporation's stock unless the person is a conduit, as defined in paragraph (j)(4) of this section.

(d) ***Basis of acquired assets*** —

(1) ***Carryover basis rule.*** If this paragraph (d) applies to an asset, the asset's basis immediately after its acquisition is, for all purposes of the Internal Revenue Code, its adjusted basis immediately before its disposition.

(2) ***Exceptions to carryover basis rule for certain assets.*** The carryover basis rule of paragraph (d)(1) of this section does not apply to the following assets—

(i) Any asset disposed of in the ordinary course of a trade or business (see section 338(e)(2)(A));

(ii) Any asset the basis of which is determined wholly by reference to the adjusted basis of the asset in the hands of the person that disposed of the asset (see section 338(e)(2)(B));

(iii) Any debt or equity instrument issued by target or a target affiliate (*see* paragraph (h)(3) of this section for an exception relating to the stock of a target affiliate that is a controlled foreign corporation);

(iv) Any asset the basis of which immediately after its acquisition would otherwise be less than its adjusted basis immediately before its disposition; and

(v) Any asset identified by the Internal Revenue Service in a revenue ruling or revenue procedure.

(3) ***Exception to carryover basis rule for de minimis assets.*** The carryover basis rules of this section do not apply to an asset if the asset is not disposed of as part of the same arrangement as the acquisition of target and the aggregate amount realized for all assets otherwise subject to the carryover basis rules of this section does not exceed $250,000.

(4) ***Mitigation rule*** —

(i) ***General rule.*** If the carryover basis rules of this section apply to an asset and the asset is transferred to a domestic corporation in a transaction to which section 351 applies or as a contribution to capital and no gain is recognized, the transferor's basis in the stock of the transferee (but not the transferee's basis in the asset) is determined without taking into account the carryover basis rules of this section.

(ii) ***Time for transfer.*** This paragraph (d)(4) applies only if the asset is transferred before the due date (including extensions) for the transferor's income tax return for the year that includes the last date for which a section 338 election may be made for target.

(e) ***Examples*** —

(1) ***In general.*** For purposes of the examples in this section, unless otherwise stated, the basis of each asset is the same for determining earnings and profits and taxable income, the exceptions to paragraph (d)(1) of this section do not apply, the taxable year of all persons is the calendar year, and the following facts apply: S is the common parent of a consolidated group that includes T, T1, T2, and T3; S owns all of the stock of T and T3; and T owns all of the stock of T1, which owns all of the stock of T2. B is unrelated to the S group and owns all of the stock of P, which owns all of the stock of P1. Y and Y1 are partnerships that are unrelated to the S group but may be related to the P group. Z is a corporation that is not related to any of the other parties.

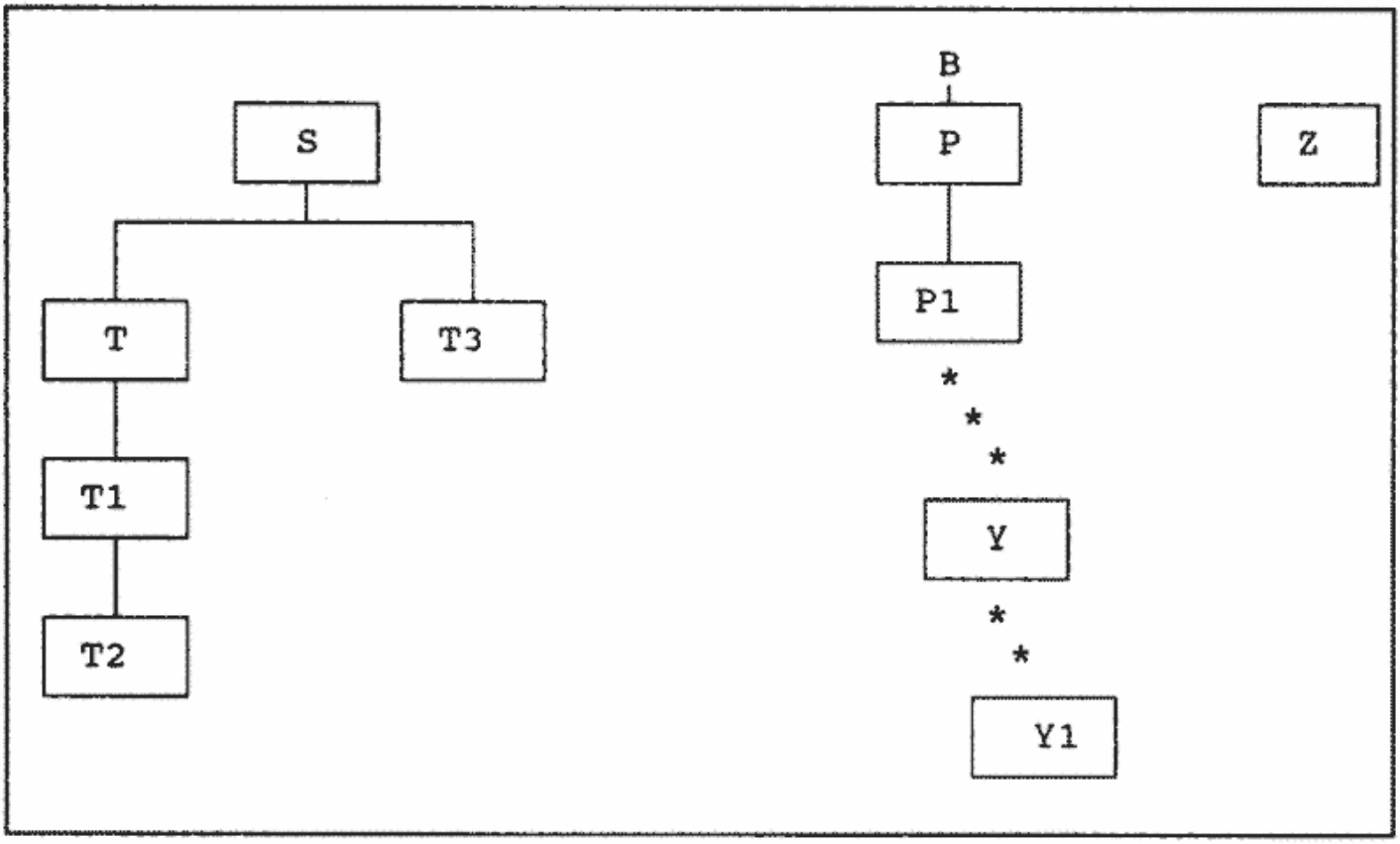

(2) ***Direct acquisitions.*** Paragraphs (b), (c), and (d) of this section may be illustrated by the following examples:

> *Example 1. Asset acquired from target by purchasing corporation.* (a) On February 1 of Year 1, T sells an asset to P1 and recognizes gain. T's gain from the disposition of the asset is taken into account under § 1.1502-32 in determining S's basis in the T stock. On January 1 of Year 2, P1 makes a qualified stock purchase of T from S. No section 338 election is made for T.
> (b) T disposed of the asset during its consistency period, gain from the asset disposition is reflected in the basis of the T stock as of T's acquisition date (January 1 of Year 2), and the asset is owned both immediately after the asset disposition (February 1 of Year 1) and on T's acquisition date by P1, the corporation that acquired T stock in the qualified stock purchase. Consequently, under paragraph (b) of this section, paragraph (d)(1) of this section applies to the asset and P1's basis in the asset is T's adjusted basis in the asset immediately before the sale to P1.

> *Example 2. Gain from section 338(h)(10) election reflected in stock basis.* (a) On February 1 of Year 1, P1 makes a qualified stock purchase of T2 from T1. A section 338(h)(10) election is made for T2 and T2 recognizes gain on each of its assets. T2's gain is taken into account under § 1.1502-32 in determining S's basis in the T stock. On January 1 of Year 2, P1 makes a qualified stock purchase of T from S. No section 338 election is made for T.

(b) Under paragraph (b)(2) of this section, the acquisition of the T2 stock is treated as an acquisition of T2's assets on February 1 of Year 1, because a section 338(h)(10) election is made for T2. The gain recognized by T2 under section 338(h)(10) is reflected in S's basis in the T stock as of T's acquisition date. Because the other requirements of paragraph (b) of this section are satisfied, paragraph (d)(1) of this section applies to the assets and new T2's basis in its assets is old T2's adjusted basis in the assets immediately before the disposition.

Example 3. Corporation owning asset ceases affiliation with corporation purchasing target before target acquisition date. (a) On February 1 of Year 1, T sells an asset to P1 and recognizes gain. On December 1 of Year 1, P disposes of all of the P1 stock while P1 still owns the asset. On January 1 of Year 2, P makes a qualified stock purchase of T from S. No section 338 election is made for T.
(b) Immediately after T's disposition of the asset, the asset is owned by P1 which is affiliated on that date with P, the corporation that acquired T stock in the qualified stock purchase. However, the asset is owned by a corporation (P1) that is no longer affiliated with P on T's acquisition date. Although the other requirements of paragraph (b) of this section are satisfied, the requirements of paragraph (b)(1)(iii) of this section are not satisfied. Consequently, the basis rules of paragraph (d) of this section do not apply to the asset by reason of P1's acquisition.

(c) If P acquires all of the Z stock and P1 transfers the asset to Z on or before T's acquisition date (January 1 of Year 2), the asset is owned by an affiliate of P both on February 1 of Year 1 (P1) and on January 1 of Year 2 (Z). Consequently, all of the requirements of paragraph (b) of this section are satisfied and paragraph (d)(1) of this section applies to the asset and P1's basis in the asset is T's adjusted basis in the asset immediately before the sale to P1.

Example 4. Gain reflected in stock basis notwithstanding offsetting loss or distribution. (a) On April 1 of Year 1, T sells an asset to P1 and recognizes gain. In Year 1, T distributes an amount equal to the gain. On March 1 of Year 2, P makes a qualified stock purchase of T from S. No section 338 election is made for T.
(b) Although, as a result of the distribution, there is no adjustment with respect to the T stock under § 1.1502-32 for Year 1, T's gain from the disposition of the asset is considered reflected in S's basis in the T stock. The gain is considered to have been taken into account under § 1.1502-32 in determining the adjustments to S's basis in the T stock because S's basis in the T stock is different from what it would have been had there been no gain.

(c) If T distributes an amount equal to the gain on February 1 of Year 2, rather than in Year 1, the results would be the same because S's basis in the T stock is different from what it would have been had there been no gain. If the distribution in Year 2 is by reason of an election under § 1.1502-32(f)(2), the results would be the same.

(d) If, in Year 1, T does not make a distribution and the S group does not file a consolidated return, but, in Year 2, the S group does file a consolidated return and makes an election under § 1.1502-32(f)(2) for T, the results would be the same. S's basis in the T stock is different from what it would have been had there been no gain. Paragraph (c)(3) of this section (gain not considered reflected by reason of distributions) does not apply to the deemed distribution under the election because S and T are members of the same consolidated group. If T distributes an amount equal to the gain in Year 2 and no election is made under § 1.1502-32(f)(2), the results would be the same.

(e) If, in Year 1, T incurs an unrelated loss in an amount equal to the gain, rather than distributing an amount equal to the gain, the results would be the same because the gain is taken into account under § 1.1502-32 in determining S's basis in the T stock.

Example 5. Gain of a target affiliate reflected in stock basis after corporate reorganization. (a) On February 1 of Year 1, T3 sells an asset to P1 and recognizes gain. On March 1 of Year 1, S contributes the T3 stock to T in a transaction qualifying under section 351. On January 15 of Year 2, P1 makes a qualified stock purchase of T from S. No section 338 election is made for T.
(b) T3's gain from the asset sale is taken into account under § 1.1502-32 in determining S's basis in the T3 stock. Under section 358, the gain that is taken into account under § 1.1502-32 in determining S's basis in the T3 stock is also taken into account in determining S's basis in the T stock following S's contribution of the T3 stock to T. Consequently, under paragraph (b) of this section, paragraph (d)(1) of this section applies to the asset and P1's basis in the asset is T3's adjusted basis in the asset immediately before the sale to P1.

(c) If on March 1 of Year 1, rather than S contributing the T3 stock to T, S causes T3 to merge into T in a transaction qualifying under section 368(a)(1)(D), the results would be the same.

Example 6. Gain not reflected if election under section 338 made. (a) On February 1 of Year 1, T1 sells an asset to P1 and recognizes gain. On January 1 of Year 2, P1 makes a qualified stock purchase of T1 from T. A section 338 election (but not a section 338(h)(10) election) is made for T1.
(b) Under paragraph (c)(2) of this section, because a section 338 election is made for T1, T's basis in the T1 stock is considered not to reflect gain from the disposition. Consequently, the requirement of paragraph (b)(1)(ii) of this section is not satisfied. Thus, P1's basis in the asset is not determined under paragraph (d) of this section. Although the section 338 election for T1 results in a qualified stock purchase of T2, the requirement of paragraph (b)(1)(ii) of this section is not satisfied with respect to T2, whether or not a section 338 election is made for T2.

(c) If, on January 1 of Year 2, P1 makes a qualified stock purchase of T from S and a section 338 election for T, rather than T1, S's basis in the T stock is considered not to reflect gain from T1's disposition of the asset. However, the section 338 election for T results in a qualified stock purchase of T1. Because the gain is reflected in T's basis in the T1 stock, the requirements of paragraph (b) of this section are satisfied. Consequently, P1's basis in the asset is determined under paragraph (d)(1) of this section unless a section 338 election is also made for T1.

(f) ***Extension of consistency to indirect acquisitions*** —

(1) ***Introduction.*** If an arrangement exists (see paragraph (j)(5) of this section), this paragraph (f) generally extends the consistency rules to indirect acquisitions that have the same effect as direct acquisitions. For example, this paragraph (f) applies if, pursuant to an arrangement, target sells an asset to an unrelated person who then sells the asset to the purchasing corporation.

(2) ***General rule.*** This paragraph (f) applies to an asset if, pursuant to an arrangement—

(i) The asset is disposed of during the target consistency period;

(ii) The basis of target stock as of, or at any time before, the target acquisition date reflects gain from the disposition of the asset; and

(iii) The asset ownership requirements of paragraph (b)(1)(iii) of this section are not satisfied, but the asset is owned, at any time during the portion of the target consistency period following the target acquisition date, by—

(A) A corporation—

(*1*) The basis of whose stock, as of, or at any time before, the target acquisition date, reflects gain from the disposition of the asset; and

(*2*) That is affiliated, at any time during the target consistency period, with a corporation that acquires stock of target in the qualified stock purchase; or

(B) A corporation that at the time it owns the asset is affiliated with a corporation described in paragraph (f)(2)(iii)(A) of this section.

(3) ***Basis of acquired assets.*** If this paragraph (f) applies to an asset, the principles of the basis rules of paragraph (d) of this section apply to the asset as of the date, following the disposition with respect to which gain is reflected in the basis of target's stock, that the asset is first owned by a corporation described in paragraph (f)(2)(iii) of this section. If the principles of the carryover basis rule of paragraph (d)(1) of this section apply to an asset, the asset's basis also is reduced (but not below zero) by the amount of any reduction in its basis occurring after the disposition with respect to which gain is reflected in the basis of target's stock.

(4) ***Examples.*** This paragraph (f) may be illustrated by the following examples:

Example 1. Acquisition of asset from unrelated party by purchasing corporation. (a) On February 1 of Year 1, T sells an asset to Z and recognizes gain. On February 15 of Year 1, P1 makes a qualified stock purchase of T from S. No section 338 election is made for T. P1 buys the asset from Z on March 1 of Year 1, before Z has reduced the basis of the asset through

depreciation or otherwise.
(b) Paragraph (b) of this section does not apply to the asset because the asset ownership requirements of paragraph (b)(1)(iii) of this section are not satisfied. However, the asset ownership requirements of paragraph (f)(2)(iii) of this section are satisfied because, during the portion of T's consistency period following T's acquisition date, the asset is owned by P1 while it is affiliated with T. Consequently, paragraph (f) of this section applies to the asset if there is an arrangement for T to dispose of the asset during T's consistency period, for the gain to be reflected in S's basis in the T stock as of T's acquisition date, and for P1 to own the asset during the portion of T's consistency period following T's acquisition date. If the arrangement exists, under paragraph (f)(3) of this section, P1's basis in the asset is determined as of March 1 of Year 1, under the principles of paragraph (d) of this section. Consequently, P1's basis in the asset is T's adjusted basis in the asset immediately before the sale to Z.

(c) If P1 acquires the asset from Z on January 15 of Year 2 (rather than on March 1 of Year 1), and Z's basis in the asset has been reduced through depreciation at the time of the acquisition, P1's basis in the asset as of January 15 of Year 2 would be T's adjusted basis in the asset immediately before the sale to Z, reduced (but not below zero) by the amount of the depreciation. Z's basis and depreciation are determined without taking into account the basis rules of paragraph (d) of this section.

(d) If P, rather than P1, acquires the asset from Z, the results would be the same.

(e) If, on March 1 of Year 1, P1 acquires the Z stock, rather than acquiring the asset from Z, paragraph (f) of this section would apply to the asset if an arrangement exists. However, under paragraph (f)(3) of this section, Z's basis in the asset would be determined as of February 1 of Year 1, the date the asset is first owned by a corporation (Z) described in paragraph (f)(2)(iii) of this section. Consequently, Z's basis in the asset as of February 1 of Year 1, determined under the principles of paragraph (d) of this section, would be T's adjusted basis in the asset immediately before the sale to Z.

Example 2. Acquisition of asset from target by target affiliate. (a) On February 1 of Year 1, T contributes an asset to T1 in a transaction qualifying under section 351 and in which T recognizes gain under section 351(b) that is deferred under § 1.1502-13. On March 1 of Year 1, P1 makes a qualified stock purchase of T from S and, pursuant to § 1.1502-13, the deferred gain is taken into account by T immediately before T ceases to be a member of the S group. No section 338 election is made for T.
(b) Paragraph (b) of this section does not apply to the asset because the asset ownership requirements of paragraph (b)(1)(iii) of this section are not satisfied.

(c) T1 is not described in paragraph (f)(2)(iii)(A) of this section because the basis of the T1 stock does not reflect gain from the disposition of the asset. Although, under section 358(a)(1)(B)(ii), T's basis in the T1 stock is increased by the amount of the gain, the gain is not taken into account directly or indirectly under § 1.1502-32 in determining T's basis in the T1 stock.

(d) T1 is described in paragraph (f)(2)(iii)(B) of this section because, during the portion of T's consistency period following T's acquisition date, T1 owns the asset while it is affiliated with T, a corporation described in paragraph (f)(2)(iii)(A) of this section. Consequently, paragraph (f) of this section applies to the asset if there is an arrangement. Under paragraph (j)(5) of this section, the fact that, at the time T1 acquires the asset from T, T1 is related (within the meaning of section 267(b)) to T indicates that an arrangement exists.

Example 3. Acquisition of asset from target and indirect acquisition of target stock. (a) On February 1 of Year 1, T sells an asset to P1 and recognizes gain. On March 1 of Year 1, Z makes a qualified stock purchase of T from S. No section 338 election is made for T. On January 1 of Year 2, P1 acquires the T stock from Z other than in a qualified stock purchase. (b) The asset ownership requirements of paragraph (b)(1)(iii) of this section are not satisfied because the asset was never owned by Z, the corporation that acquired T stock in the qualified stock purchase (or by a corporation that was affiliated with Z at the time it owned the asset). However, because the asset is owned by P1 while it is affiliated with T during the portion of T's consistency period following T's acquisition date, paragraph (f) of this section applies to the asset if there is an arrangement. If there is an arrangement, the principles of the carryover basis rule of paragraph (d)(1) of this section apply to determine P1's basis in the asset unless Z makes a section 338 election for T. See paragraph (c)(2) of this section.

(c) If P1 also makes a qualified stock purchase of T from Z, the results would be the same. If there is an arrangement, the principles of the carryover basis rule of paragraph (d)(1) of this section apply to determine P1's basis in the asset unless Z makes a section 338 election for T. However, these principles apply to determine P1's basis in the asset if P1, but not Z, makes a section 338 election for T. The basis of the T stock no longer reflects, as of T's acquisition date by P1, the gain from the disposition of the asset.

(d) Assume Z purchases the T stock other than in a qualified stock purchase and P1 makes a qualified stock purchase of T from Z. Paragraph (b) of this section does not apply to the asset because gain from the disposition of the asset is not reflected in the basis of T's stock as of T's acquisition date (January 1 of Year 2). However, because the gain is reflected in S's basis in the T stock before T's acquisition date and the asset is owned by P1 while it is affiliated with T during the portion of T's consistency period following T's acquisition date, paragraph (f) of this section applies to the asset if there is an arrangement. If there is an arrangement, the principles of the carryover basis rule of paragraph (d)(1) of this section

apply to determine P1's basis in the asset even if P1 makes a section 338 election for T. The basis of the T stock no longer reflects, as of T's acquisition date, the gain from the disposition of the asset.

Example 4. Asset acquired from target affiliate by corporation that becomes its affiliate. (a) On February 1 of Year 1, T1 sells an asset to P1 and recognizes gain. On February 15 of Year 1, Z makes a qualified stock purchase of T from S. No section 338 election is made for T. On June 1 of Year 1, P1 acquires the T1 stock from T, other than in a qualified stock purchase.
(b) The asset ownership requirements of paragraph (b)(1)(iii) of this section are not satisfied because the asset was never owned by Z, the corporation that acquired T stock in the qualified stock purchase (or by a corporation that was affiliated with Z at the time it owned the asset).

(c) P1 is not described in paragraph (f)(2)(iii)(A) of this section because gain from the disposition of the asset is not reflected in the basis of the P1 stock.

(d) P1 is described in paragraph (f)(2)(iii)(B) of this section because the asset is owned by P1 while P1 is affiliated with T1 during the portion of T's consistency period following T's acquisition date. T1 becomes affiliated with Z, the corporation that acquired T stock in the qualified stock purchase, during T's consistency period, and, as of T's acquisition date, the basis of T1's stock reflects gain from the disposition of the asset. Consequently, paragraph (f) of this section applies to the asset if there is an arrangement.

Example 5. De minimis rules. (a) On February 1 of Year 1, T sells an asset to P and recognizes gain. On February 15 of Year 1, T1 sells an asset to Z and recognizes gain. The aggregate amount realized by T and T1 on their respective sales of assets is not more than $250,000. On March 1 of Year 1, T3 sells an asset to P and recognizes gain. On April 1 of Year 1, P makes a qualified stock purchase of T from S. No section 338 election is made for T. On June 1 of Year 1, P1 buys from Z the asset sold by T1.
(b) Under paragraph (b) of this section, the basis rules of paragraph (d) of this section apply to the asset sold by T. Under paragraph (f) of this section, the principles of the basis rules of paragraph (d) of this section apply to the asset sold by T1 if there is an arrangement. Because T3's gain is not reflected in the basis of the T stock, the basis rules of this section do not apply to the asset sold by T3.

(c) The de minimis rule of paragraph (d)(3) of this section applies to an asset if the asset is not disposed of as part of the same arrangement as the acquisition of T and the aggregate amount realized for all assets otherwise subject to the carryover basis rules does not exceed $250,000. The aggregate amount realized by T and T1 does not exceed $250,000. (The asset

sold by T3 is not taken into account for purposes of the de minimis rule.) Thus, the de minimis rule applies to the asset sold by T if the asset is not disposed of as part of the same arrangement as the acquisition of T.

(d) If, under paragraph (f) of this section, the principles of the carryover basis rules of paragraph (d)(1) of this section otherwise apply to the asset sold by T1 because of an arrangement, the de minimis rules of this section do not apply to the asset because of the arrangement.

(e) Assume on June 1 of Year 1, Z acquires the T1 stock from T, other than in a qualified stock purchase, rather than P1 buying the T1 asset, and paragraph (f) of this section applies because there is an arrangement. Because the asset was disposed of and the T1 stock was acquired as part of the arrangement, the de minimis rules of this section do not apply to the asset.

(g) ***Extension of consistency if dividends qualifying for 100 percent dividends received deduction are paid*** —

(1) ***General rule for direct acquisitions from target.*** Unless a section 338 election is made for target, the basis rules of paragraph (d) of this section apply to an asset if—

(i) Target recognizes gain (whether or not deferred) on disposition of the asset during the portion of the target consistency period that ends on the target acquisition date;

(ii) The asset is owned, immediately after the asset disposition and on the target acquisition date, by a corporation that acquires stock of target in the qualified stock purchase (or by an affiliate of an acquiring corporation); and

(iii) During the portion of the target consistency period that ends on the target acquisition date, the aggregate amount of dividends paid by target, to which section 243(a)(3) applies, exceeds the greater of—

(A) $250,000; or

(B) 125 percent of the yearly average amount of dividends paid by target, to which section 243(a)(3) applies, during the three calendar years immediately preceding the year in which the target consistency period begins (or, if shorter, the period target was in existence).

(2) ***Other direct acquisitions having same effect.*** The basis rules of paragraph (d) of this section also apply to an asset if the effect of a transaction described in paragraph (g)(1) of this section is achieved through any combination of disposition of assets and payment of dividends to which section 243(a)(3) applies (or any other dividends eligible for a 100 percent dividends received deduction). See paragraph (h)(4) of this section for additional rules relating to target affiliates that are controlled foreign corporations.

(3) ***Indirect acquisitions.*** The principles of paragraph (f) of this section also apply for purposes of this paragraph (g).

(4) ***Examples.*** This paragraph (g) may be illustrated by the following examples:

Example 1. Asset acquired from target paying dividends to which section 243(a)(3) applies.

(a) The S group does not file a consolidated return. In Year 1, Year 2, and Year 3, T pays dividends to S to which section 243(a)(3) applies of $200,000, $250,000, and $300,000, respectively. On February 1 of Year 4, T sells an asset to P and recognizes gain. On January 1 of Year 5, P makes a qualified stock purchase of T from S. No section 338 election is made for T. During the portion of T's consistency period that ends on T's acquisition date, T pays S dividends to which section 243(a)(3) applies of $1,000,000.
(b) Under paragraph (g)(1) of this section, paragraph (d) of this section applies to the asset. T recognizes gain on disposition of the asset during the portion of T's consistency period that ends on T's acquisition date, the asset is owned by P immediately after the disposition and on T's acquisition date, and T pays dividends described in paragraph (g)(1)(iii) of this section. Consequently, under paragraph (d)(1) of this section, P's basis in the asset is T's adjusted basis in the asset immediately before the sale to P.

(c) If T is a controlled foreign corporation, the results would be the same if T pays dividends in the amount described in paragraph (g)(1)(iii) of this section that qualify for a 100 percent dividends received deduction. See sections 243(e) and 245.

(d) If S and T3 file a consolidated return in which T, T1, and T2 do not join, the results would be the same because the dividends paid by T are still described in paragraph (g)(1)(iii) of this section.

(e) If T, T1, and T2 file a consolidated return in which S and T3 do not join, the results would be the same because the dividends paid by T are still described in paragraph (g)(1)(iii) of this section.

Example 2. Asset disposition by target affiliate achieving same effect. (a) The S group does not file a consolidated return. On February 1 of Year 1, T2 sells an asset to P and recognizes gain. T pays dividends to S described in paragraph (g)(1)(iii) of this section. On January 1 of Year 2, P makes a qualified stock purchase of T from S. No section 338 election is made for T.
(b) Paragraph (g)(1) of this section does not apply to the asset because T did not recognize gain on the disposition of the asset. However, under paragraph (g)(2) of this section, because the asset disposition by T2 and the dividends paid by T achieve the effect of a transaction described in paragraph (g)(1) of this section, the carryover basis rule of paragraph (d)(1) of this section applies to the asset. The effect was achieved because T2 is a lower-tier affiliate of T and the dividends paid by T to S reduce the value to S of T and its lower-tier affiliates.

(c) If T2 is a controlled foreign corporation, the results would be the same because T2 is a lower-tier affiliate of T and the dividends paid by T to S reduce the value to S of T and its lower-tier affiliates.

(d) If P buys an asset from T3, rather than T2, the asset disposition and the dividends do not achieve the effect of a transaction described in paragraph (g)(1) of this section because T3 is not a lower-tier affiliate of T. Thus, the basis rules of paragraph (d) of this section do not apply to the asset. The results would be the same whether or not P also acquires the T3 stock (whether or not in a qualified stock purchase).

Example 3. Dividends by target affiliate achieving same effect. (a) The S group does not file a consolidated return. On February 1 of Year 1, T1 sells an asset to P and recognizes gain. On January 1 of Year 2, P makes a qualified stock purchase of T from S. No section 338 election is made for T. T does not pay dividends to S described in paragraph (g)(1)(iii) of this section. However, T1 pays dividends to T that would be described in paragraph (g)(1)(iii) of this section if T1 were a target.
(b) Paragraph (g)(1) of this section does not apply to the asset because T did not recognize gain on the disposition of the asset and did not pay dividends described in paragraph (g)(1)(iii) of this section. Further, paragraph (g)(2) of this section does not apply because the dividends paid by T1 to T do not reduce the value to S of T and its lower-tier affiliates.

(c) If both S and T own T1 stock and T1 pays dividends to S that would be described in paragraph (g)(1)(iii) of this section if T1 were a target, paragraph (g)(2) of this section would apply because the dividends paid by T1 to S reduce the value to S of T and its lower-tier affiliates. If T, rather than T1, sold the asset to P, the results would be the same. Further, if T and T1 pay dividends to S that, only when aggregated, would be described in paragraph (g)(1)(iii) of this section (if they were all paid by T), the results would be the same.

Example 4. Gain reflected by reason of dividends. (a) S and T file a consolidated return in which T1 and T2 do not join. On February 1 of Year 1, T1 sells an asset to P and recognizes gain. On January 1 of Year 2, P makes a qualified stock purchase of T from S. No section 338 election is made for T. T1 pays dividends to T that would be described in paragraph (g)(1)(iii) of this section if T1 were a target.
(b) The requirements of paragraph (b) of this section are not satisfied because, under paragraph (c)(3) of this section, gain from T1's sale is not reflected in S's basis in the T stock by reason of the dividends paid by T1 to T.

(c) Although the dividends paid by T1 to T do not reduce the value to S of T and its lower-tier affiliates, paragraph (g)(2) of this section applies because the dividends paid by T1 to T are taken into account under § 1.1502-32 in determining S's basis in the T stock. Consequently, the carryover basis rule of paragraph (d)(1) of this section applies to the asset.

(h) ***Consistency for target affiliates that are controlled foreign corporations*** —

(1) ***In general.*** This paragraph (h) applies only if target is a domestic corporation. For additional rules that may apply with respect to controlled foreign corporations, see paragraph (g) of this section. The definitions and nomenclature of § 1.338-2(b) and (c) and paragraph (e) of this section apply for purposes of this section.

(2) ***Income or gain resulting from asset dispositions*** —

(i) ***General rule.*** Income or gain of a target affiliate that is a controlled foreign corporation from the disposition of an asset is not reflected in the basis of target stock under paragraph (c) of this section unless the income or gain results in an inclusion under section 951(a)(1)(A), 951(a)(1)(C), 1291 or 1293.

(ii) ***Basis of controlled foreign corporation stock.*** If, by reason of paragraph (h)(2)(i) of this section, the carryover basis rules of this section apply to an asset, no increase in basis in the stock of a controlled foreign corporation under section 961(a) or 1293(d)(1), or under regulations issued pursuant to section 1297(b)(5), is allowed to target or a target affiliate to the extent the increase is attributable to income or gain described in paragraph (h)(2)(i) of this section. A similar rule applies to the basis of any property by reason of which the stock of the controlled foreign corporation is considered owned under section 958(a)(2) or 1297(a).

(iii) ***Operating rule.*** For purposes of this paragraph (h)(2)—

(A) If there is an income inclusion under section 951 (a)(1)(A) or (C), the shareholder's income inclusion is first attributed to the income or gain of the controlled foreign corporation from the disposition of the asset to the extent of the shareholder's pro rata share of such income or gain; and

(B) Any income or gain under section 1293 is first attributed to the income or gain from the disposition of the asset to the extent of the shareholder's pro rata share of the income or gain.

(iv) ***Increase in asset or stock basis*** —

(A) If the carryover basis rules under paragraph (h)(2)(i) of this section apply to an asset, and the purchasing corporation disposes of the asset to an unrelated party in a taxable transaction and recognizes and includes in its U.S. gross income or the U.S. gross income of its shareholders the greater of the income or gain from the disposition of the asset by the selling controlled foreign corporation that was reflected in the basis of the target stock under paragraph (c) of this section, or the gain recognized on the asset by the purchasing corporation on the disposition of the asset, then the purchasing corporation or the target or a target affiliate, as appropriate, shall increase the basis of the selling controlled foreign corporation stock subject to paragraph (h)(2)(ii) of this section, as of the date of the disposition of the asset by the purchasing corporation, by the amount of the basis increase that was denied under paragraph (h)(2)(ii) of this section. The preceding sentence shall apply only to the extent that the controlled foreign corporation stock is owned (within the meaning of section 958(a)) by a member of the purchasing corporation's affiliated group.

(B) If the carryover basis rules under paragraph (h)(2)(i) of this section apply to an asset, and the purchasing corporation or the target or a target affiliate, as appropriate, disposes of the stock of the selling controlled foreign corporation to an unrelated party in a taxable transaction and recognizes and includes in its U.S. gross income or the U.S. gross income

of its shareholders the greater of the gain equal to the basis increase that was denied under paragraph (h)(2)(ii) of this section, or the gain recognized in the stock by the purchasing corporation or by the target or a target affiliate, as appropriate, on the disposition of the stock, then the purchasing corporation shall increase the basis of the asset, as of the date of the disposition of the stock of the selling controlled foreign corporation by the purchasing corporation or by the target or a target affiliate, as appropriate, by the amount of the basis increase that was denied pursuant to paragraph (h)(2)(i) of this section. The preceding sentence shall apply only to the extent that the asset is owned (within the meaning of section 958(a)) by a member of the purchasing corporation's affiliated group.

(3) ***Stock issued by target affiliate that is a controlled foreign corporation.*** The exception to the carryover basis rules of this section provided in paragraph (d)(2)(iii) of this section does not apply to stock issued by a target affiliate that is a controlled foreign corporation. After applying the carryover basis rules of this section to the stock, the basis in the stock is increased by the amount treated as a dividend under section 1248 on the disposition of the stock (or that would have been so treated but for section 1291), except to the extent the basis increase is attributable to the disposition of an asset in which a carryover basis is taken under this section.

(4) ***Certain distributions*** —

(i) ***General rule.*** In the case of a target affiliate that is a controlled foreign corporation, paragraph (g) of this section applies with respect to the target affiliate by treating any reference to a dividend to which section 243(a)(3) applies as a reference to any amount taken into account under § 1.1502-32 in determining the basis of target stock that is—

(A) A dividend;

(B) An amount treated as a dividend under section 1248 (or that would have been so treated but for section 1291); or

(C) An amount included in income under section 951(a)(1)(B).

(ii) ***Basis of controlled foreign corporation stock.*** If the carryover basis rules of this section apply to an asset, the basis in the stock of the controlled foreign corporation (or any property by reason of which the stock is considered owned under section 958(a)(2)) is reduced (but not below zero) by the sum of any amounts that are treated, solely by reason of the disposition of the asset, as a dividend, amount treated as a dividend under section 1248 (or that would have been so treated but for section 1291), or amount included in income under section 951(a)(1)(B). For this purpose, any dividend, amount treated as a dividend under section 1248 (or that would have been so treated but for section 1291), or amount included in income under section 951(a)(1)(B) is considered attributable first to earnings and profits resulting from the disposition of the asset.

(iii) ***Increase in asset or stock basis*** —

(A) If the carryover basis rules under paragraphs (g) and (h)(4)(i) of this section apply to an asset, and the purchasing corporation disposes of the asset to an unrelated party in a taxable transaction and recognizes and includes in its U.S. gross income or the U.S. gross income of its shareholders the greater of the gain equal to the basis increase denied in the asset pursuant to paragraphs (g) and (h)(4)(i) of this section, or the gain recognized on the asset by the purchasing corporation on the disposition of the asset, then the

purchasing corporation or the target or a target affiliate, as appropriate, shall increase the basis of the selling controlled foreign corporation stock subject to paragraph (h)(4)(ii) of this section, as of the date of the disposition of the asset by the purchasing corporation, by the amount of the basis reduction under paragraph (h)(4)(ii) of this section. The preceding sentence shall apply only to the extent that the controlled foreign corporation stock is owned (within the meaning of section 958(a)) by a member of the purchasing corporation's affiliated group.

(B) If the carryover basis rules under paragraphs (g) and (h)(4)(i) of this section apply to an asset, and the purchasing corporation or the target or a target affiliate, as appropriate, disposes of the stock of the selling controlled foreign corporation to an unrelated party in a taxable transaction and recognizes and includes in its U.S. gross income or the U.S. gross income of its shareholders the greater of the amount of the basis reduction under paragraph (h)(4)(ii) of this section, or the gain recognized in the stock by the purchasing corporation or by the target or a target affiliate, as appropriate, on the disposition of the stock, then the purchasing corporation shall increase the basis of the asset, as of the date of the disposition of the stock of the selling controlled foreign corporation by the purchasing corporation or by the target or a target affiliate, as appropriate, by the amount of the basis increase that was denied pursuant to paragraphs (g) and (h)(4)(i) of this section. The preceding sentence shall apply only to the extent that the asset is owned (within the meaning of section 958(a)) by a member of the purchasing corporation's affiliated group.

(5) ***Examples.*** This paragraph (h) may be illustrated by the following examples:

> *Example 1. Stock of target affiliate that is a CFC.* (a) The S group files a consolidated return; however, T2 is a controlled foreign corporation. On December 1 of Year 1, T1 sells the T2 stock to P and recognizes gain. On January 2 of Year 2, P makes a qualified stock purchase of T from S. No section 338 election is made for T.
> (b) Under paragraph (b)(1) of this section, paragraph (d) of this section applies to the T2 stock. Under paragraph (h)(3) of this section, paragraph (d)(2)(iii) of this section does not apply to the T2 stock. Consequently, paragraph (d)(1) of this section applies to the T2 stock. However, after applying paragraph (d)(1) of this section, P's basis in the T2 stock is increased by the amount of T1's gain on the sale of the T2 stock that is treated as a dividend under section 1248. Because P has a carryover basis in the T2 stock, the T2 stock is not considered purchased within the meaning of section 338(h)(3) and no section 338 election may be made for T2.

> *Example 2. Stock of target affiliate CFC; inclusion under subpart F.* (a) The S group files a consolidated return; however, T2 is a controlled foreign corporation. On December 1 of Year 1, T2 sells an asset to P and recognizes subpart F income that results in an inclusion in T1's gross income under section 951(a)(1)(A). On January 2 of Year 2, P makes a qualified stock purchase of T from S. No section 338 election is made for T.

(b) Because gain from the disposition of the asset results in an inclusion under section 951(a)(1)(A), the gain is reflected in the basis of the T stock as of T's acquisition date. See paragraph (h)(2)(i) of this section. Consequently, under paragraph (b)(1) of this section, paragraph (d)(1) of this section applies to the asset. In addition, under paragraph (h)(2)(ii) of this section, T1's basis in the T2 stock is not increased under section 961(a) by the amount of the inclusion that is attributable to the sale of the asset.

(c) If, in addition to making a qualified stock purchase of T, P acquires the T2 stock from T1 on January 1 of Year 2, the results are the same for the asset sold by T2. In addition, under paragraph (h)(2)(ii) of this section, T1's basis in the T2 stock is not increased by the amount of the inclusion that is attributable to the gain on the sale of the asset. Further, under paragraph (h)(3) of this section, paragraph (d)(1) of this section applies to the T2 stock. However, after applying paragraph (d)(1) of this section, P's basis in the T2 stock is increased by the amount of T1's gain on the sale of the T2 stock that is treated as a dividend under section 1248. Finally, because P has a carryover basis in the T2 stock, the T2 stock is not considered purchased within the meaning of section 338(h)(3) and no section 338 election may be made for T2.

(d) If P makes a qualified stock purchase of T2 from T1, rather than of T from S, and T1's gain on the sale of T2 is treated as a dividend under section 1248, under paragraph (h)(1) of this section, paragraphs (h)(2) and (3) of this section do not apply because there is no target that is a domestic corporation. Consequently, the carryover basis rules of paragraph do not apply to the asset sold by T2 or the T2 stock.

Example 3. Gain reflected by reason of section 1248 dividend; gain from non-subpart F asset. (a) The S group files a consolidated return; however, T2 is a controlled foreign corporation. In Years 1 through 4, T2 does not pay any dividends to T1 and no amount is included in T1's income under section 951(a)(1)(B). On December 1 of Year 4, T2 sells an asset with a basis of $400,000 to P for $900,000. T2's gain of $500,000 is not subpart F income. On December 15 of Year 4, T1 sells T2, in which it has a basis of $600,000, to P for $1,600,000. Under section 1248, $800,000 of T1's gain of $1,000,000 is treated as a dividend. However, in the absence of the sale of the asset by T2 to P, only $300,000 would have been treated as a dividend under section 1248. On December 30 of Year 4, P makes a qualified stock purchase of T1 from T. No section 338 election is made for T1.
(b) Under paragraph (h)(4) of this section, paragraph (g)(2) of this section applies by reference to the amount treated as a dividend under section 1248 on the disposition of the T2 stock. Because the amount treated as a dividend is taken into account in determining T's basis in the T1 stock under § 1.1502-32, the sale of the T2 stock and the deemed dividend have the effect of a transaction described in paragraph (g)(1) of this section. Consequently, paragraph (d)(1) of this section applies to the asset sold by T2 to P and P's basis in the asset is $400,000 as of December 1 of Year 4.

(c) Under paragraph (h)(3) of this section, paragraph (d)(1) of this section applies to the T2 stock and P's basis in the T2 stock is $600,000 as of December 15 of Year 4. Under paragraphs (h)(3) and (4)(ii) of this section, however, P's basis in the T2 stock is increased by $300,000 (the amount of T1's gain treated as a dividend under section 1248 ($800,000), other than the amount treated as a dividend solely as a result of the sale of the asset by T2 to P ($500,000)) to $900,000.

(i) [Reserved]

(j) ***Anti-avoidance rules.*** For purposes of this section—

(1) ***Extension of consistency period.*** The target consistency period is extended to include any continuous period that ends on, or begins on, any day of the consistency period during which a purchasing corporation, or any person related, within the meaning of section 267(b) or 707(b)(1), to a purchasing corporation, has an arrangement—

(i) To purchase stock of target; or

(ii) To own an asset to which the carryover basis rules of this section apply, taking into account the extension.

(2) ***Qualified stock purchase and 12-month acquisition period.*** The 12-month acquisition period is extended if, pursuant to an arrangement, a corporation acquires by purchase stock of another corporation satisfying the requirements of section 1504(a)(2) over a period of more than 12 months.

(3) ***Acquisitions by conduits*** —

(i) ***Asset ownership*** —

(A) ***General rule.*** A corporation is treated as owning any portion of an asset attributed to the corporation from a conduit under section 318(a) (treating any asset as stock for this purpose), for purposes of—

(*1*) The asset ownership requirements of this section; and

(*2*) Determining whether a controlled foreign corporation is a target affiliate for purposes of paragraph (h) of this section.

(B) ***Application of carryover basis rule.*** If the basis rules of this section apply to the asset, the basis rules of this section apply to the entire asset (not just the portion for which ownership is attributed).

(ii) ***Stock acquisitions*** —

(A) ***Purchase by conduit.*** A corporation is treated as purchasing stock of another corporation attributed to the corporation from a conduit under section 318(a) on the day the stock is purchased by the conduit. The corporation is not treated as purchasing the stock, however, if the conduit purchased the stock more than two years before the date the stock is first attributed to the corporation.

(B) ***Purchase of conduit by corporation.*** If a corporation purchases an interest in a conduit (treating the interest as stock for this purpose), the corporation is treated as purchasing on that date any stock owned by a conduit on that date and attributed to the corporation under section 318(a) with respect to the interest in the conduit that was purchased.

(C) ***Purchase of conduit by conduit.*** If a conduit (the *first* conduit) purchases an interest in a second conduit (treating the interest as stock for this purpose), the first conduit is treated as purchasing on that date any stock owned by a conduit on that date and attributed to the first conduit under section 318(a) with respect to the interest in the second conduit that was purchased.

(4) ***Conduit.*** A person (other than a corporation) is a conduit as to a corporation if—

(i) The corporation would be treated under section 318(a)(2)(A) and (B) (attribution from partnerships, estates, and trusts) as owning any stock owned by the person; and

(ii) The corporation, together with its affiliates, would be treated as owning an aggregate of at least 50 percent of the stock owned by the person.

(5) ***Existence of arrangement.*** The existence of an arrangement is determined under all the facts and circumstances. For an arrangement to exist, there need not be an enforceable, written, or unconditional agreement, and all the parties to the transaction need not have participated in each step of the transaction. One factor indicating the existence of an arrangement is the participation of a related party. For this purpose, persons are related if they are related within the meaning of section 267(b) or 707(b)(1).

(6) ***Predecessor and successor*** —

(i) ***Persons.*** A reference to a person (including target, target affiliate, and purchasing corporation) includes, as the context may require, a reference to a predecessor or successor. For this purpose, a predecessor is a transferor or distributor of assets to a person (the successor) in a transaction—

(A) To which section 381(a) applies; or

(B) In which the successor's basis for the assets is determined, directly or indirectly, in whole or in part, by reference to the basis of the transferor or distributor.

(ii) ***Assets.*** A reference to an asset (the first asset) includes, as the context may require, a reference to any asset the basis of which is determined, directly or indirectly, in whole or in part, by reference to the first asset.

(7) ***Examples.*** This paragraph (j) may be illustrated by the following examples:

> *Example 1. Asset owned by conduit treated as owned by purchaser of target stock.* (a) P owns a 60-percent interest in Y. On March 1 of Year 1, T sells an asset to Y and recognizes gain. On January 1 of Year 2, P makes a qualified stock purchase of T from S. No section 338 election is made for T.
> (b) Under paragraph (j)(4) of this section, Y is a conduit with respect to P. Consequently, under paragraph (j)(3)(i)(A) of this section, P is treated as owning 60% of the asset on March 1 of Year 1 and January 1 of Year 2. Because P is treated as owning part or all of the asset both immediately after the asset disposition

and on T's acquisition date, paragraph (b) of this section applies to the asset. Consequently, paragraph (d)(1) of this section applies to the asset and Y's basis in the asset is T's adjusted basis in the asset immediately before the sale to Y.

Example 2. Corporation whose stock is owned by conduit treated as affiliate. (a) P owns an 80-percent interest in Y. Y owns all of the stock of Z. On March 1 of Year 1, T sells an asset to Z and recognizes gain. On January 1 of Year 2, P makes a qualified stock purchase of T from S. No section 338 election is made for T.
(b) Under paragraph (j)(4) of this section, Y is a conduit with respect to P. Consequently, under paragraph (j)(3)(i)(A) of this section, P is treated as owning 80% of the Z stock and Z is therefore treated as an affiliate of P for purposes of applying the asset ownership requirements of paragraph (b)(1)(iii) of this section. Because Z, an affiliate of P, owns the asset both immediately after the asset disposition and on T's acquisition date, paragraph (b) of this section applies to the asset, and the asset's basis is determined under paragraph (d) of this section.

(c) If, instead of owning an 80-percent interest in Y, P owned a 79-percent interest in Y, Z would not be treated as an affiliate of P and paragraph (b) of this section would not apply to the asset.

Example 3. Qualified stock purchase by reason of stock purchase by conduit. (a) P owns a 90-percent interest in Y. Y owns a 60-percent interest in Y1. On February 1 of Year 2, T sells an asset to P and recognizes gain. On January 1 of Year 3, P purchases 70% of the T stock from S and Y1 purchases the remaining 30% of the T stock from S.
(b) Under paragraph (j)(3)(ii)(A) of this section, P is treated as purchasing on January 1 of Year 3, the 16.2% of the T stock that is attributed to P from Y and Y1 under section 318(a). Thus, for purposes of this section, P is treated as making a qualified stock purchase of T on January 1 of Year 3, paragraph (b) of this section applies to the asset, and the asset's basis is determined under paragraph (d) of this section. However, because P is not treated as having made a qualified stock purchase of T for purposes of making an election under section 338, no election can be made for T.

(c) If Y1 purchases 20% of the T stock from S on December 1 of Year 1, rather than 30% on January 1 of Year 3, P would be treated as purchasing 10.8% of the T stock on December 1 of Year 1. Thus, if paragraph (j)(2) of this section (relating to extension of the 12-month acquisition period) does not apply, P would not be treated as making a qualified stock purchase of T, because P is not treated as purchasing T stock satisfying the requirements of section 1504(a)(2) within a 12-month period.

Example 4. Successor asset. (a) On February 1 of Year 1, T sells stock of X to P1 and recognizes gain. On December 1 of Year 1, P1 exchanges its X stock for stock in new X in a reorganization qualifying under section 368(a)(1)(F). On January 1 of Year 2, P1 makes a qualified stock purchase of T from S. No section 338 election is made for T.

(b) The asset ownership requirements of paragraph (b)(1)(iii) of this section are satisfied because, under paragraph (j)(6)(ii) of this section, P1 is treated as owning the X stock on T's acquisition date. P1 is treated as owning the X stock on that date because P1 owns the new X stock and P1's basis in the new X stock is determined by reference to P1's basis in the X stock. Consequently, under paragraph (d)(1) of this section, P1's basis in the X stock on February 1 of Year 1 is T's adjusted basis in the X stock immediately before the sale to P1.

[T.D. 8515, 59 FR 2972, Jan. 20, 1994, as amended by T.D. 8597, 60 FR 36679, July 18, 1995; T.D. 8710, 62 FR 3459, Jan. 23, 1997. Redesignated by T.D. 8858, 65 FR 1246, Jan. 7, 2000, as amended by T.D. 8940, 66 FR 9929, Feb. 13, 2001; 66 FR 17466, Mar. 30, 2001]

§ 1.338-9 International aspects of section 338.

(a) ***Scope.*** This section provides guidance regarding international aspects of section 338. As provided in § 1.338-2(c)(18), a foreign corporation, a DISC, or a corporation for which a section 936 election has been made is considered a target affiliate for all purposes of section 338. In addition, stock described in section 338(h)(6)(B)(ii) held by a target affiliate is not excluded from the operation of section 338.

(b) ***Application of section 338 to foreign targets*** —

(1) ***In general.*** For purposes of subtitle A, the deemed sale tax consequences, as defined in § 1.338-2(c)(7), of a foreign target for which a section 338 election is made (FT), and the corresponding earnings and profits, are taken into account in determining the taxation of FT and FT's direct and indirect shareholders. See, however, section 338(h)(16). For example, the income and earnings and profits of FT are determined, for purposes of sections 551, 951, 1248, and 1293, by taking into account the deemed sale tax sentence consequences.

(2) ***Ownership of FT stock on the acquisition date.*** A person who transfers FT stock to the purchasing corporation on FT's acquisition date is considered to own the transferred stock at the close of FT's acquisition date. See, e.g., § 1.951-1(f) (relating to determination of holding period for purposes of sections 951 through 964). If on the acquisition date the purchasing corporation owns a block of FT stock that was acquired before FT's acquisition date, the purchasing corporation is considered to own such block of stock at the close of the acquisition date.

(3) ***Carryover FT stock*** —

(i) ***Definition.*** FT stock is carryover FT stock if—

(A) FT was a controlled foreign corporation within the meaning of section 957 (taking into account section 953(c)) at any time during the portion of the 12-month acquisition period that ends on the acquisition date; and

(B) Such stock is owned as of the beginning of the day after FT's acquisition date by a person other than a purchasing corporation, or by a purchasing corporation if the stock is nonrecently purchased and is not subject to a gain recognition election under § 1.338-5(d).

(ii) ***Carryover of earnings and profits.*** The earnings and profits of old FT (and associated foreign taxes) attributable to the carryover FT stock (adjusted to reflect deemed sale tax sentence consequences) carry over to new FT solely for purposes of—

(A) Characterizing an actual distribution with respect to a share of carryover FT stock as a dividend;

(B) Characterizing gain on a post-acquisition date transfer of a share of carryover FT stock as a dividend under section 1248 (if such section is otherwise applicable);

(C) Characterizing an investment of earnings in United States property as income under sections 951(a)(1)(B) and 956 (if such sections are otherwise applicable); and

(D) Determining foreign taxes deemed paid under sections 902 and 960 with respect to the amount treated as a dividend or income by virtue of this paragraph (b)(3)(ii) (subject to the operation of section 338(h)(16)).

(iii) ***Cap on carryover of earnings and profits.*** The amount of earnings and profits of old FT taken into account with respect to a share of carryover FT stock is limited to the amount that would have been included in gross income of the owner of such stock as a dividend under section 1248 if—

(A) The shareholder transferred that share to the purchasing corporation on FT's acquisition date for a consideration equal to the fair market value of that share on that date; or

(B) In the case of nonrecently purchased FT stock treated as carryover FT stock, a gain recognition election under section 338(b)(3)(A) applied to that share. For purposes of the preceding sentence, a shareholder that is a controlled foreign corporation is considered to be a United States person, and the principle of section 1248(c)(2)(D)(ii) (concerning a United States person's indirect ownership of stock in a foreign corporation) applies in determining the correct holding period.

(iv) ***Post-acquisition date distribution of old FT earnings and profits.*** A post-acquisition date distribution with respect to a share of carryover FT stock is considered to be derived first from earnings and profits derived after FT's acquisition date and then from earnings and profits derived on or before FT's acquisition date.

(v) ***Old FT earnings and profits unaffected by post-acquisition date deficits.*** The carryover amount for a share of carryover FT stock is not reduced by deficits in earnings and profits incurred by new FT. This rule applies for purposes of determining the amount of foreign taxes deemed paid regardless of the fact that there are no accumulated earnings and profits. For example, a distribution by new FT with respect to a share of carryover FT stock is treated as a dividend by the distributee to the extent of the carryover amount for that share notwithstanding that new FT has no earnings and profits.

(vi) ***Character of FT stock as carryover FT stock eliminated upon disposition.*** A share of FT stock is not considered carryover FT stock after it is disposed of provided that all gain realized on the transfer is recognized at the time of the transfer, or that, if less than all of the realized gain is recognized, the recognized amount equals or exceeds the remaining carryover amount for that share.

(4) ***Passive foreign investment company stock.*** Stock that is owned as of the beginning of the day after FT's acquisition date by a person other than a purchasing corporation, or by a purchasing corporation if the FT stock is nonrecently purchased stock not subject to a gain recognition election under § 1.338-5(d), is treated as passive foreign investment company stock to the extent provided in section 1297(b)(1).

(c) ***Dividend treatment under section 1248(e).*** The principles of this paragraph (b) apply to shareholders of a domestic corporation subject to section 1248(e).

(d) ***Allocation of foreign income taxes*** —

(1) ***In general.*** Except as provided in paragraph (d)(3) of this section, if a section 338 election is made for target (whether foreign or domestic), and target's taxable year under foreign law (if any) does not close at the end of the acquisition date, foreign income tax as defined in § 1.901-2(a)) (other than a withholding tax as defined in section 901(k)(1)(B)) paid or accrued by new target with respect to such foreign taxable year is allocated between old target and new target. If there is more than one section 338 election with respect to target during target's foreign taxable year, foreign income tax paid or accrued with respect to that foreign taxable year is allocated among all old targets and new targets. The allocation is made based on the respective portions of the taxable income (as determined under foreign law) for the foreign taxable year that are attributable under the principles of § 1.1502-76(b) to the period of existence of each old target and new target during the foreign taxable year.

(2) ***Foreign income taxes imposed on partnerships and disregarded entities.*** If a section 338 election is made for target and target holds an interest in a disregarded entity (as described in § 301.7701-2(c)(2)(i) of this chapter) or partnership, the rules of § 1.901-2(f)(4) and (5) apply to determine the person who is considered for Federal income tax purposes to pay foreign income tax imposed at the entity level on the income of the disregarded entity or partnership.

(3) ***Disallowance of foreign tax credits under section 901(m).*** For rules that may apply to disallow foreign tax credits by reason of a section 338 election, see section 901(m) and §§ 1.901(m)-1 through 1.901(m)-8.

(4) ***Applicability date.*** This paragraph (d) applies to foreign income taxes paid or accrued in taxable years beginning on or after December 28, 2021.

(e) ***Operation of section 338(h)(16).*** [Reserved]

(f) ***Examples.***

(1) Except as otherwise provided, all corporations use the calendar year as the taxable year, have no earnings and profits (or deficit) accumulated for any taxable year, and have only one class of outstanding stock.

(2) This section may be illustrated by the following examples:

> *Example 1. Gain recognition election for carryover FT stock.* (a) A has owned 90 of the 100 shares of CFCT stock since CFCT was organized on March 13, 1989. P has owned the remaining 10 shares of CFCT stock since CFCT was organized. Those 10 shares constitute nonrecently purchased stock in P's hands within the meaning of section 338(b)(6)(B). On November 1, 1994, P purchases A's 90 shares of CFCT stock for $90,000 and makes a section 338 election for CFCT. P also makes a gain recognition election under section 338(b)(3)(A) and § 1.338-5(d).
> (b) CFCT's earnings and profits for its short taxable year ending on November 1, 1994, are $50,000, determined without taking into account the deemed asset sale. Assume A recognizes gain of $81,000 on the sale of the CFCT stock. Further, assume that CFCT recognizes gain of $40,000 by reason of its deemed sale of assets under section 338(a)(1).

(c) A's sale of CFCT stock to P is a transfer to which section 1248 and paragraphs (b)(1) and (2) of this section apply. For purposes of applying section 1248(a) to A, the earnings and profits of CFCT for its short taxable year ending on November 1, 1994, are $90,000 (the earnings and profits for that taxable year as determined under § 1.1248-2(e) ($50,000) plus earnings from the deemed sale ($40,000)). Thus, A's entire gain is characterized as a dividend under section 1248 (but see section 338(h)(16)).

(d) Assume that P recognizes a gain of $9,000 with respect to the 10 shares of nonrecently purchased CFCT stock by reason of the gain recognition election. Because P is treated as selling the nonrecently purchased stock for all purposes of the Internal Revenue Code, section 1248 applies. Thus, under § 1.1248-2(e), $9,000 of the $90,000 of earnings and profits for 1994 are attributable to the block of 10 shares of CFCT stock deemed sold by P at the close of November 1, 1994 ($90,000 × 10/100). Accordingly, P's entire gain on the deemed sale of 10 shares of CFCT stock is included under section 1248(a) in P's gross income as a dividend (but see section 338(h)(16)).

Example 2. No gain recognition election for carryover FT stock. (a) Assume the same facts as in *Example 1*, except that P does not make a gain recognition election.
(b) The 10 shares of nonrecently purchased CFCT stock held by P is carryover FT stock under paragraph (b)(3) of this section. Accordingly, the earnings and profits (and attributable foreign taxes) of old CFCT carry over to new CFCT solely for purposes of that block of 10 shares. The amount of old CFCT's earnings and profits taken into account with respect to that block in the event, for example, of a distribution by new CFCT with respect to that block is the amount of the section 1248 dividend that P would have recognized with respect to that block had it made a gain recognition election under section 338(b)(3)(A). Under the facts of *Example 1*, P would have recognized a gain of $9,000 with respect to that block, all of which would have been a section 1248 dividend ($90,000 × 10/100). Accordingly, the carryover amount for the block of 10 shares of nonrecently purchased CFCT stock is $9,000.

Example 3. Sale of controlled foreign corporation stock prior to and on the acquisition date. (a) X and Y, both U.S. corporations, have each owned 50% of the CFCT stock since 1986. Among CFCT's assets are assets the sale of which would generate subpart F income. On December 31, 1994, X sells its CFCT stock to P. On June 30, 1995, Y sells its CFCT stock to P. P makes a section 338 election for CFCT. In both 1994 and 1995, CFCT has subpart F income resulting from operations.
(b) For taxable year 1994, X and Y are United States shareholders on the last day of CFCT's taxable year, so pursuant to section 951(a)(1)(A) each must include in income its pro rata share of CFCT's subpart F income for 1994. Because P's holding period in the CFCT stock acquired from X does not begin until January 1, 1995, P is not a United States shareholder on the last day of 1994 for purposes of section 951(a)(1)(A) (see § 1.951-1(f)). X must then determine the extent to which section 1248 recharacterizes its gain on the sale of CFCT stock as a dividend.

(c) For the short taxable year ending June 30, 1995, Y is considered to own the CFCT stock sold to P at the close of CFCT's acquisition date. Because the acquisition date is the last day of CFCT's taxable year, Y and P are United States shareholders on the last day of CFCT's taxable year. Pursuant to section 951(a)(1)(A),

each must include its pro rata share of CFCT's subpart F income for the short taxable year ending June 30, 1995. This includes any income generated on the deemed sale of CFCT's assets. Y must then determine the extent to which section 1248 recharacterizes its gain on the sale of the CFCT stock as a dividend, taking into account any increase in CFCT's earnings and profits due to the deemed sale of assets.

Example 4. Acquisition of control for purposes of section 951 prior to the acquisition date. FS owns 100% of the FT stock. On July 1, 1994, P buys 60% of the FT stock. On December 31, 1994, P buys the remaining 40% of the FT stock and makes a section 338 election for FT. For tax year 1994, FT has earnings and profits of $1,000 (including earnings resulting from the deemed sale). The section 338 election results in $500 of subpart F income. As a result of the section 338 election, P must include in gross income the following amount under section 951(a)(1)(A) (see § 1.951-(b)(2)):

FT's subpart F income for 1994	$500.00
Less: reduction under section 951(a)(2)(A) for period (1-1-94 through 7-1-94) during which FT is not a controlled foreign corporation ($500 × 182/365)	249.32
Subpart F income as limited by section 951 (a)(2)(A)	250.68
P's pro rata share of subpart F income as determined under section 951(a)(2)(A) (60% × 250.68)	150.41

Example 5. Coordination with section 936. (a) T is a corporation for which a section 936 election has been made. P makes a qualified stock purchase of T and makes a section 338 election for T.
(b) T's deemed sale of assets under section 338 constitutes a sale for purposes of subtitle A of the Internal Revenue Code, including section 936(a)(1)(A)(ii). To the extent that the assets deemed sold are used in the conduct of an active trade or business in a possession for purposes of section 936(a)(1)(A)(i), and assuming all the other conditions of section 936 are satisfied, the income from the deemed sale qualifies for the credit granted by section 936(a). The source of income from the deemed sale is determined as if the assets had actually been sold and is not affected for purposes of section 936 by section 338(h)(16).

(c) Because new T is treated a new corporation for purposes of subtitle A of the Internal Revenue Code, the three year testing period in section 936(a)(2)(A) begins again for new T on the day following T's acquisition date. Thus, if the character or source of old T's gross income disqualified it for the credit under section 936, a fresh start is allowed by a section 338 election.

[T.D. 8515, 59 FR 2978, Jan. 20, 1994. Redesignated by T.D. 8858, 65 FR 1246, Jan. 7, 2000, as amended by T.D. 8940, 66 FR 9929, Feb. 13, 2001; 66 FR 17466, Mar. 30, 2001; T.D. 9959, 87 FR 324, Jan. 4, 2022; 87 FR 45019, July 27, 2022]

§ 1.338-10 Filing of returns.

(a) ***Returns including tax liability from deemed asset sale —***

(1) ***In general.*** Except as provided in paragraphs (a)(2) and (3) of this section, any deemed sale tax consequences are reported on the final return of old target filed for old target's taxable year that ends at the close of the acquisition date. Paragraphs (a)(2), (3) and (4) of this section do not apply to elections under section 338(h)(10). If old target is the common parent of an affiliated group, the final return may be a consolidated return (any such consolidated return must also include any deemed sale tax consequences of any members of the consolidated group that are acquired by the purchasing corporation on the same acquisition date as old target).

(2) ***Old target's final taxable year otherwise included in consolidated return of selling group*** —

(i) ***General rule.*** If the selling group files a consolidated return for the period that includes the acquisition date, old target is disaffiliated from that group immediately before the deemed asset sale and must file a deemed sale return separate from the group, which includes only the deemed sale tax consequences and the carryover items specified in paragraph (a)(2)(iii) of this section. The deemed asset sale occurs at the close of the acquisition date and is the last transaction of old target and the only transaction reported on the separate return. Except as provided in § 1.338-1(d) (regarding certain transactions on the acquisition date), any transactions of old target occurring on the acquisition date other than the deemed asset sale are included in the selling group's consolidated return. A deemed sale return includes a combined deemed sale return as defined in paragraph (a)(4) of this section.

(ii) ***Separate taxable year.*** The deemed asset sale included in the deemed sale return under this paragraph (a)(2) occurs in a separate taxable year, except that old target's taxable year of the sale and the consolidated year of the selling group that includes the acquisition date are treated as the same year for purposes of determining the number of years in a carryover or carryback period.

(iii) ***Carryover and carryback of tax attributes.*** Target's attributes may be carried over to, and carried back from, the deemed sale return under the rules applicable to a corporation that ceases to be a member of a consolidated group.

(iv) ***Old target is a component member of purchasing corporation's controlled group.*** For purposes of its deemed sale return, target is a component member of the controlled group of corporations including the purchasing corporation unless target is treated as an excluded member under section 1563(b)(2).

(4) ***Combined deemed sale return*** —

(i) ***General rule.*** Under section 338(h)(15), a combined deemed sale return (combined return) may be filed for all targets from a single selling consolidated group (as defined in § 1.338(h)(10)-1(b)(3)) that are acquired by the purchasing corporation on the same acquisition date and that otherwise would be required to file separate deemed sale returns. The combined return must include all such targets. For example, T and T1 may be included in a combined return if—

(A) T and T1 are directly owned subsidiaries of S;

(B) S is the common parent of a consolidated group; and

(C) P makes qualified stock purchases of T and T1 on the same acquisition date.

(ii) ***Gain and loss offsets.*** Gains and losses recognized on the deemed asset sales by targets included in a combined return are treated as the gains and losses of a single target. In addition, loss carryovers of a target that were not subject to the separate return limitation year restrictions (SRLY restrictions) of the consolidated return regulations while that target was a member of the selling consolidated group may be applied without limitation to the gains of other targets included in the combined return. If, however, a target has loss carryovers that were subject to the SRLY restrictions while that target was a member of the selling consolidated group, the use of those losses in the combined return continues to be subject to those restrictions, applied in the same manner as if the combined return were a consolidated return. A similar rule applies, when appropriate, to other tax attributes.

(iii) ***Procedure for filing a combined return.*** A combined return is made by filing a single corporation income tax return in lieu of separate deemed sale returns for all targets required to be included in the combined return. The combined return reflects the deemed asset sales of all targets required to be included in the combined return. If the targets included in the combined return constitute a single affiliated group within the meaning of section 1504(a), the income tax return is signed by an officer of the common parent of that group. Otherwise, the return must be signed by an officer of each target included in the combined return. Rules similar to the rules in § 1.1502-75(j) apply for purposes of preparing the combined return. The combined return must include a statement entitled, "ELECTION TO FILE A COMBINED RETURN UNDER SECTION 338(h)(15)." The statement must include—

(A) The name, address, and employer identification number of each target required to be included in the combined return; and

(B) The following declaration: EACH TARGET IDENTIFIED IN THIS ELECTION TO FILE A COMBINED RETURN CONSENTS TO THE FILING OF A COMBINED RETURN.

(iv) ***Consequences of filing a combined return.*** Each target included in a combined return is severally liable for any tax associated with the combined return. See § 1.338-1(b)(3).

(5) ***Deemed sale excluded from purchasing corporation's consolidated return.*** Old target may not be considered a member of any affiliated group that includes the purchasing corporation with respect to its deemed asset sale.

(6) ***Due date for old target's final return*** —

(i) ***General rule.*** Old target's final return is generally due on the 15th day of the third calendar month following the month in which the acquisition date occurs. See section 6072 (time for filing income tax returns).

(ii) ***Application of § 1.1502-76(c)*** —

(A) ***In general.*** Section 1.1502-76(c) applies to old target's final return if old target was a member of a selling group that did not file consolidated returns for the taxable year of the common parent that precedes the year that includes old target's acquisition date. If the selling group has not filed a consolidated return that includes old target's taxable period that ends on the acquisition date, target may, on or before the final return due date (including extensions), either—

(*1*) File a deemed sale return on the assumption that the selling group will file the consolidated return; or

(2) File a return for so much of old target's taxable period as ends at the close of the acquisition date on the assumption that the consolidated return will not be filed.

(B) ***Deemed extension.*** For purposes of applying § 1.1502-76(c)(2), an extension of time to file old target's final return is considered to be in effect until the last date for making the election under section 338.

(C) ***Erroneous filing of deemed sale return.*** If, under this paragraph (a)(6)(ii), target files a deemed sale return but the selling group does not file a consolidated return, target must file a substituted return for old target not later than the due date (including extensions) for the return of the common parent with which old target would have been included in the consolidated return. The substituted return is for so much of old target's taxable year as ends at the close of the acquisition date. Under § 1.1502-76(c)(2), the deemed sale return is not considered a return for purposes of section 6011 (relating to the general requirement of filing a return) if a substituted return must be filed.

(D) ***Erroneous filing of return for regular tax year.*** If, under this paragraph (a)(6)(ii), target files a return for so much of old target's regular taxable year as ends at the close of the acquisition date but the selling group files a consolidated return, target must file an amended return for old target not later than the due date (including extensions) for the selling group's consolidated return. (The amended return is a deemed sale return.)

(E) ***Last date for payment of tax.*** If either a substituted or amended final return of old target is filed under this paragraph (a)(6)(ii), the last date prescribed for payment of tax is the final return due date (as defined in paragraph (a)(6)(i) of this section).

(7) ***Examples.*** The following examples illustrate this paragraph (a):

Example 1. (i) S is the common parent of a consolidated group that includes T. The S group files calendar year consolidated returns. At the close of June 30 of Year 1, P makes a qualified stock purchase of T from S. P makes a section 338 election for T, and T's deemed asset sale occurs as of the close of T's acquisition date (June 30).
(ii) T is considered disaffiliated for purposes of reporting the deemed sale tax consequences. Accordingly, T is included in the S group's consolidated return through T's acquisition date except that the tax liability for the deemed sale tax consequences is reported in a separate deemed sale return of T. Provided that T is not treated as an excluded member under section 1563(b)(2), T is a component member of P's controlled group for the taxable year of the deemed asset sale, and the taxable income bracket amounts available in calculating tax on the deemed sale return must be limited accordingly.

(iii) If P purchased the stock of T at 10 a.m. on June 30 of Year 1, the results would be the same. See paragraph (a)(2)(i) of this section.

Example 2. The facts are the same as in *Example 1,* except that the S group does not file consolidated returns. T must file a separate return for its taxable year ending on June 30 of Year 1, which return includes the deemed asset sale.

(b) ***Waiver —***

(1) ***Certain additions to tax.*** An addition to tax or additional amount (addition) under subchapter A of chapter 68 of the Internal Revenue Code arising on or before the last day for making the election under section 338 because of circumstances that would not exist but for an election under section 338 is waived if—

(i) Under the particular statute the addition is excusable upon a showing of reasonable cause; and

(ii) Corrective action is taken on or before the last day.

(2) ***Notification.*** The Internal Revenue Service should be notified at the time of correction (e.g., by attaching a statement to a return that constitutes corrective action) that the waiver rule of this paragraph (b) is being asserted.

(3) ***Elections or other actions required to be specified on a timely filed return*** —

(i) ***In general.*** If paragraph (b)(1) of this section applies or would apply if there were an underpayment, any election or other action that must be specified on a timely filed return for the taxable period covered by the late filed return described in paragraph (b)(1) of this section is considered timely if specified on a late-filed return filed on or before the last day for making the election under section 338.

(ii) ***New target in purchasing corporation's consolidated return.*** If new target is includible for its first taxable year in a consolidated return filed by the affiliated group of which the purchasing corporation is a member on or before the last day for making the election under section 338, any election or other action that must be specified in a timely filed return for new target's first taxable year (but which is not specified in the consolidated return) is considered timely if specified in an amended return filed on or before such last day, at the place where the consolidated return was filed.

(4) ***Examples.*** The following examples illustrate this paragraph (b):

Example 1. T is an unaffiliated corporation with a tax year ending March 31. At the close of September 20 of Year 1, P makes a qualified stock purchase of T. P does not join in filing a consolidated return. P makes a section 338 election for T on or before June 15 of Year 2, which causes T's taxable year to end as of the close of September 20 of Year 1. An income tax return for T's taxable period ending on September 20 of Year 1 was due on December 15 of Year 1. Additions to tax for failure to file a return and to pay tax shown on a return will not be imposed if T's return is filed and the tax paid on or before June 15 of Year 2. (This waiver applies even if the acquisition date coincides with the last day of T's former taxable year, i.e., March 31 of Year 2.) Interest on any underpayment of tax for old T's short taxable year ending September 20 of Year 1 runs from December 15 of Year 1. A statement indicating that the waiver rule of this paragraph is being asserted should be attached to T's return.

Example 2. Assume the same facts as in *Example 1.* Assume further that new T adopts the calendar year by filing, on or before June 15 of Year 2, its first return (for the period beginning on September 21 of Year 1 and ending on December 31 of Year 1) indicating that a calendar year is chosen. See § 1.338-1(b)(1). Any additions to tax or amounts described in this paragraph (b) that arise because of the late filing of a return for the period ending on December 31 of Year 1 are waived, because they are based on circumstances that would not exist but for the section 338 election. Notwithstanding this waiver, however, the return is still considered due March 15 of Year 2, and interest on any underpayment runs from that date.

Example 3. Assume the same facts as in *Example 2,* except that T's former taxable year ends on October 31. Although prior to the election old T had a return due on January 15 of Year 2 for its year ending October 31 of Year 1, that return need not be filed because a timely election under section 338 was made. Instead, old T must file a final return for the period ending on September 20 of Year 1, which is due on December 15 of Year 1.

(c) ***Effective/applicability date.*** Paragraph (a)(4)(iii) of this section applies to any taxable year beginning on or after May 30, 2006. However, taxpayers may apply paragraph (a)(4)(iii) of this section to any original Federal income tax return (including any amended return filed on or before the due date (including extensions) of such original return) timely filed on or after May 30, 2006. For taxable years beginning before May 30, 2006, see § 1.338-10 as contained in 26 CFR part 1 in effect on April 1, 2006.

[T.D. 8940, 66 FR 9948, Feb. 13, 2001, as amended by T.D. 9264, 71 FR 30596, May 30, 2006; T.D. 9329, 72 FR 32798, June 14, 2007]

§ 1.338-11 Effect of section 338 election on insurance company targets.

(a) ***In general.*** This section provides rules that apply when an election under section 338 is made for a target that is an insurance company. The rules in this section apply in addition to those generally applicable upon the making of an election under section 338. In the case of a conflict between the provisions of this section and other provisions of the Internal Revenue Code or regulations, the rules set forth in this section determine the Federal income tax treatment of the parties and the transaction when a section 338 election is made for an insurance company target.

(b) ***Computation of ADSP and AGUB*** —

(1) ***Reserves taken into account as a liability. Old target's tax reserves*** are the reserves for Federal income tax purposes for any insurance, annuity, and reinsurance contracts deemed sold by old target to new target in the deemed asset sale. The amount of old target's tax reserves is the amount that is properly taken into account by old target for the contracts at the close of the taxable year that includes the deemed sale tax consequences (before giving effect to the deemed asset sale and assumption reinsurance transaction). Old target's tax reserves are a liability of old target taken into account in determining ADSP under § 1.338-4 and a liability of new target taken into account in determining AGUB under § 1.338-5.

(2) ***Allocation of ADSP and AGUB to specific insurance contracts.*** For purposes of allocating AGUB and ADSP under §§ 1.338-6 and 1.338-7, the fair market value of a specific insurance, reinsurance or annuity contract or group of insurance, reinsurance or annuity contracts (*insurance contracts*) is the amount of the ceding commission a willing reinsurer would pay a willing ceding company in an arm's length transaction for the reinsurance of the contracts if the gross reinsurance premium for the contracts were equal to old target's tax reserves for the contracts. See § 1.197-2(g)(5) for rules concerning the treatment of the amount allocable to insurance contracts acquired in the deemed asset sale.

(c) ***Application of assumption reinsurance principles*** —

(1) ***In general.*** If a target is an insurance company, the deemed sale of insurance contracts is treated for Federal income tax purposes as an assumption reinsurance transaction between old target, as the reinsured or ceding company, and new target, as the reinsurer or acquiring company, at the close of

the acquisition date. The Federal income tax treatment of the assumption reinsurance transaction is determined under the applicable provisions of subchapter L, chapter 1, subtitle A of the Internal Revenue Code, as modified by the rules set forth in this section.

(2) ***Reinsurance premium.*** Old target is deemed to pay a gross amount of premium in the assumption reinsurance transaction equal to the amount of old target's tax reserves for the insurance contracts that are acquisition date assets (*acquired contracts*). New target is deemed to receive a reinsurance premium in the amount of old target's tax reserves for the acquired contracts. See paragraph (d) of this section for circumstances in which new target is deemed to receive additional premium. See § 1.817-4(d)(2) for old target's and new target's treatment of the premium.

(3) ***Ceding commission.*** Old target is deemed to receive a ceding commission in an amount equal to the amount of ADSP allocated to the acquired contracts, as determined under §§ 1.338-6 and 1.338-7 and paragraph (b) of this section. New target is deemed to pay a ceding commission in an amount equal to the amount of AGUB allocated to the acquired contracts, as determined under §§ 1.338-6 and 1.338-7 and paragraph (b) of this section. See § 1.817-4(d)(2) for old target's and new target's treatment of the ceding commission.

(4) ***Examples.*** The following examples illustrate this paragraph (c):

Example 1. (i) *Facts.* On January 1, 2003, T, an insurance company, has the following assets with the following fair market values: $10 cash, $30 of securities, $10 of equipment, a life insurance contract having a value, under paragraph (b)(2) of this section, of $17, and goodwill and going concern value. T has tax reserves of $50 and no other liabilities. On January 1, 2003, P purchases all of the stock of T for $16 and makes a section 338 election for T. For purposes of the capitalization requirements of section 848, assume new T has $20 of general deductions in its first taxable year ending on December 31, 2003, and earns no other premiums during the year.
(ii) *Analysis.* (A) For Federal income tax purposes, the section 338 election results in a deemed sale of the assets of old T to new T. Old T's ADSP is $66 ($16 amount realized for the T stock plus $50 liabilities). New T's AGUB also is $66 ($16 basis for the T stock plus $50 liabilities). See paragraph (b)(1) of this section. Each of the AGUB and ADSP is allocated under the residual method of § 1.338-6 to determine the purchase or sale price of each asset transferred. Each of the AGUB and ADSP is allocated as follows: $10 to cash (Class I), $30 to the securities (Class II), $10 to equipment (Class V), $16 to the life insurance contract (Class VI), and $0 to goodwill and going concern value (Class VII).

(B) Under section 1001, old T's amount realized for the securities is $30 and for the equipment is $10. As a result of the deemed asset sale, there is an assumption reinsurance transaction between old T (as ceding company) and new T (as reinsurer) at the close of the acquisition date for the life insurance contract issued by old T. See paragraph (c)(1) of this section. Although the assumption reinsurance transaction results in a $50 decrease in old T's reserves, which is taxable income to old T, the reinsurance premium paid by old T is deductible by old T. Under paragraph (c)(2) of this section, old T is deemed to pay a reinsurance premium equal to the reserve for the life insurance contract immediately before

the deemed asset sale ($50) and is deemed to receive a ceding commission from new T. Under paragraph (c)(3) of this section, the portion of the ADSP allocated to the life insurance contract is $16; thus, the ceding commission is $16. Old T, therefore, is deemed to pay new T a reinsurance premium of $34 ($50 − $16 = $34). Old T also has $34 of net negative consideration for purposes of section 848. See paragraph (f) of this section for rules relating to the effect of a section 338 election on the capitalization of amounts under section 848.

(C) New T obtains an initial basis of $30 in the securities and $10 in the equipment. New T is deemed to receive a reinsurance premium from old T in an amount equal to the $50 of reserves for the life insurance contract and to pay old T a $16 ceding commission for the contract. See paragraphs (c)(2) and (3) of this section. Accordingly, new T includes $50 of premium in income and deducts $50 for its increase in reserves. For purposes of section 848, new T has $34 of net positive consideration for the deemed assumption reinsurance transaction. Because the only contract involved in the deemed assumption reinsurance transaction is a life insurance contract, new T must capitalize $2.62 ($34 × 7.7% = $2.62) under section 848. New T will amortize the $2.62 as provided under section 848. New T's adjusted basis in the life insurance contract, which is an amortizable section 197 intangible, is $13.38, the excess of the $16 ceding commission over the $2.62 capitalized under section 848. See section 197 and § 1.197-2(g)(5). New T deducts the $2.62 of the ceding commission that is not amortizable under section 197 because it is reflected in the amount capitalized under section 848 and also deducts the remaining $17.38 of its general deductions.

Example 2. (i) *Facts.* Assume the same facts as in *Example 1,* except the life insurance contract has a value of $0 and the fair market value of T's securities are $60. Thus, to reinsure the contract in an arm's length transaction, T would have to pay the reinsurer a reinsurance premium in excess of T's $50 of tax reserves for the contract.
(ii) *Analysis.* (A) For Federal income tax purposes, the section 338 election results in a deemed sale of the assets of old T to new T. Old T's ADSP is $66 ($16 amount realized for the T stock plus $50 liabilities). New T's AGUB also is $66 ($16 basis for the T stock plus $50 liabilities). See paragraph (b)(1) of this section. Each of the AGUB and ADSP is allocated under the residual method of § 1.338-6 to determine the purchase or sale price of each asset transferred. Each of the AGUB and ADSP is allocated as follows: $10 to cash (Class I), $56 to the securities (Class II), $0 to the equipment (Class V), $0 to the life insurance contract (Class VI), and $0 to goodwill and going concern value (Class VII).

(B) Under section 1001, old T's amount realized for the securities is $56 and for the equipment is $0. As a result of the deemed asset sale, there is an assumption reinsurance transaction between old T (as ceding company) and new T (as reinsurer) at the close of the acquisition date for the life insurance contract issued by old T. See paragraph (c)(1) of this section. Although the assumption reinsurance transaction results in a $50 decrease in old T's

reserves, which is taxable income to old T, the reinsurance premium deemed paid by old T to new T is deductible by old T. Under paragraph (c)(2) of this section, old T is deemed to pay a reinsurance premium equal to the reserve for the life insurance contract immediately before the deemed asset sale ($50), and is deemed to receive from new T a ceding commission equal to the amount of AGUB allocated to the life insurance contract ($0), as provided in paragraph (c)(3) of this section. Old T also has $50 of net negative consideration for purposes of section 848. See paragraph (f) of this section for rules relating to the effect of a section 338 election on capitalization amounts under section 848.

(C) New T obtains an initial basis of $56 in the securities (with a fair market value of $60) and $0 in the equipment (with a fair market value of $10). New T is deemed to receive a reinsurance premium from old T in an amount equal to the $50 of reserves for the life insurance contract. Accordingly, new T includes $50 of premium in income and deducts $50 for its increase in reserves. For purposes of section 848, new T has $50 of net positive consideration for the deemed assumption reinsurance transaction. Because the only contract involved in the assumption reinsurance transaction is a life insurance contract, new T must capitalize $3.85 ($50 × 7.7%) under section 848 from the transaction and deducts the remaining $16.15 of its general deductions. Because new T allocates $0 of the AGUB to the insurance contract, no amount is amortizable under section 197 with respect to the insurance contract. See § 1.338-11T(d) for rules on adjustments required if new T increases its reserves for, or reinsures at a loss, the acquired life insurance contract.

(d) ***Reserve increases by new target after the deemed asset sale*** —

(1) ***In general.*** If in new target's first taxable year or any subsequent year, new target increases its reserves for any acquired contracts, new target is treated as receiving an additional premium, which is computed under paragraph (d)(3) of this section, in the assumption reinsurance transaction described in paragraph (c)(1) of this section. New target includes the additional premium in gross income for the taxable year in which new target increases its reserves for acquired contracts. New target's increase in reserves for the insurance contracts acquired in the deemed asset sale is a liability of new target not originally taken into account in determining AGUB that is subsequently taken into account. Thus, AGUB is increased by the amount of the additional premium included in new target's gross income. See §§ 1.338-5(b)(2)(ii) and 1.338-7. Old target has no deduction under this paragraph (d) and makes no adjustments under §§ 1.338-4(b)(2)(ii) and 1.338-7.

(2) ***Exception.*** New target is not treated as receiving additional premium under paragraph (d)(1) of this section if it is under state receivership as of the close of the taxable year for which the increase in reserves occurs.

(3) ***Amount of additional premium*** —

(i) ***In general.*** The additional premium taken into account under this paragraph (d) is an amount equal to the sum of the positive amounts described in paragraphs (d)(3)(ii) through (iv) of this section. However, the additional premium cannot exceed the limitation described in paragraph (d)(4) of this section.

(ii) ***Increases in unpaid loss reserves.*** The positive amount with respect to unpaid loss reserves is computed using the formula A/B × (C−[D + E]) where—

(A) A equals old target's discounted unpaid losses (determined under section 846) included in AGUB under paragraph 11(b)(1) of this section;

(B) B equals old target's undiscounted unpaid losses (determined under section 846(b)(1)) as of the close of the acquisition date;

(C) C equals new target's undiscounted unpaid losses (determined under section 846(b)(1)) at the end of the taxable year that are attributable to losses incurred by old target on or before the acquisition date;

(D) D (which may be a negative number) equals old target's undiscounted unpaid losses as of the close of the acquisition date, reduced by the cumulative amount of losses, loss adjustment expenses, and reinsurance premiums paid by new target through the end of the taxable year for losses incurred by old target on or before the acquisition date; and

(E) E equals the amount obtained by dividing the cumulative amount of reserve increases taken into account under this paragraph (d) in prior taxable years by A/B.

(iii) ***Increases in section 807(c) reserves.*** The positive amount with respect to the items referred to in section 807(c) other than discounted unpaid loss reserves is the sum of the net increases in such items that are required to be taken into account under section 807(f).

(iv) ***Increases in other reserves.*** The positive amount with respect to reserves other than discounted unpaid loss reserves and other items referred to in section 807(c) is the net increase of those reserves due to changes in estimate, methodology, or other assumptions used to compute the reserves (including the adoption by new target of a methodology or assumptions different from those used by old target).

(4) ***Limitation on additional premium.*** The additional premium taken into account by new target under paragraph (d)(1) of this section is limited to the excess, if any, of—

(i) The fair market value of old target's assets acquired by new target in the deemed asset sale (other than Class VI and Class VII assets); over

(ii) The AGUB allocated to those assets (including increases in AGUB allocated to those assets as the result of reserve increases by new target in prior taxable years).

(5) ***Treatment of additional premium under section 848.*** If a portion of the positive amounts described in paragraphs (d)(3)(ii) and (iii) of this section are attributable to an increase in reserves for specified insurance contracts (as defined in section 848(e)), new target takes an allocable portion of the additional premium in determining its specified policy acquisition expenses under section 848(c) for the taxable year of the reserve increase.

(6) ***Examples.*** The following examples illustrate this paragraph (d):

> *Example 1.* (i) *Facts.* On January 1, 2006, P purchases all of the stock of T, a non-life insurance company, for $120 and makes a section 338 election for T. On the acquisition date, old T has total reserve liabilities under state law of $725, consisting of undiscounted unpaid losses of $625 and unearned premiums of $100. Old T's tax reserves on the acquisition date

are $580, which consist of discounted unpaid losses (as defined in section 846) of $500 and unearned premiums (as computed under section 832(b)(4)(B)) of $80. Old T has Class I through Class V assets with a fair market value of $800. Old T also has a Class VI asset with a fair market value of $75, consisting of the future profit stream of certain insurance contracts. During 2006, new T makes loss and loss adjustment expense payments of $200 with respect to the unpaid losses incurred by old T before the acquisition date. As of December 31, 2006, new T reports undiscounted unpaid losses of $475 attributable to losses incurred before the acquisition date. The related amount of discounted unpaid losses (as defined in section 846) for those losses is $390.
(ii) *Computation and allocation of AGUB.* Under § 1.338-5 and paragraph (b)(1) of this section, as of the acquisition date, AGUB is $700, reflecting the sum of the amount paid for old T's stock ($120) and the tax reserves assumed by new T in the transaction ($580). The fair market value of old T's Class I through V assets is $800, whereas the AGUB available for such assets under § 1.338-6 is $700. There is no AGUB available for old T's Class VI assets, even though such assets have a fair market value of $75 on the acquisition date.

(iii) *Adjustments for increases in reserves for unpaid losses.* Under paragraph (d) of this section, new T must determine whether there are any amounts by which it increased its unpaid loss reserves that will be treated as an additional premium and an increase in AGUB. New T applies the formula of paragraph (d)(3) of this section, where A equals $500, B equals $625, C equals $475, D equals $425 ($625 − $200), and E equals $0. Under this formula, new T is treated as having increased its reserves for discounted unpaid losses attributable to losses incurred by old T by $40 ($500/$625 × ($475 − [$425 + 0]). The limitation under paragraph (d)(5) of this section based on the difference between the fair market value of old T's Class I through Class V assets and the AGUB allocated to such assets is $100. Accordingly, new T includes an additional premium of $40 in gross income for 2006, and increases the AGUB allocated to old T's Class I through Class V assets to reflect this additional premium.

Example 2. (i) *Facts.* Assume the same facts as in *Example 1.* Further assume that during 2007 new T deducts total loss and loss expense payments of $375 with respect to losses incurred by old T before the acquisition date. On December 31, 2007, new T reports undiscounted unpaid losses of $150 with respect to losses incurred before the acquisition date. The related amount of discounted unpaid losses (as defined in section 846) for those unpaid losses is $125.
(ii) *Analysis.* New T must determine whether any amounts by which it increased its unpaid losses during 2007 will be treated as an additional premium in paragraph (d)(3) of this section. New T applies the formula under paragraph (d)(3) of this section, where A equals $500, B equals $625, C equals $150, D equals $50 ($625 − $575), and E equals $50 ($40 divided by .8). In paragraph (d)(3) of this section, new T is treated as increasing its reserves

for discounted unpaid losses by $40 during 2007 with respect to losses incurred by old T ($500/$625 × ($150−[$50 + $50]). New T determines the limitation of paragraph (d)(5) of this section by comparing the $800 fair market value of the Class I through V assets on the acquisition date to the $740 AGUB allocated to such assets (which includes the $40 addition to AGUB included during 2006). Thus, new T recognizes $40 of additional premium as a result of the increase in reserves during 2007, and adjusts the AGUB allocable to the Class I through V assets acquired from old T to reflect such additional premium.

Example 3. (i) *Facts.* The facts are the same as *Example 2*, except that on January 1, 2008, new T reinsures the outstanding liability with respect to losses incurred by old T before the acquisition date through a portfolio reinsurance transaction with R, another non-life insurance company. R agrees to assume any remaining liability relating to losses incurred by old T before the acquisition date in exchange for a reinsurance premium of $200. Accordingly, as of December 31, 2008, new T reports no undiscounted unpaid losses with respect to losses incurred by old T before the acquisition date.
(ii) *Analysis.* New T must determine whether any amount by which it increased its unpaid loss reserves will be treated as an additional premium under paragraph (d) of this section. New T applies the formula of paragraph (d)(3) of this section, where A equals $500, B equals $625, C equals $0, and D equals −$150 ($625 − ($575 + $200), and E equals $100 ($80 divided by .8). Thus, new T is treated as having increased its discounted unpaid losses by $40 in 2008 with respect to losses incurred by old T before the acquisition date ($500/$625 × (0 −[−$150 + $100]). New T includes this positive amount in gross income, subject to the limitation of paragraph (d)(4) of this section. The limitation of paragraph (d)(4) of this section equals $20, which is computed by comparing the $800 fair market value of the Class I through V assets acquired from old T with the $780 AGUB allocated to such assets (which includes the $40 addition to AGUB in 2006 and the $40 addition to AGUB in 2007). Thus, New T includes $20 in additional premium, and increases the AGUB allocated to the Class I through V assets acquired from old T by $20. As a result of these adjustments, the limitation under paragraph (d)(4) of this section is reduced to zero.

(7) ***Effective/applicability date*** —

(i) ***In general.*** This section applies to increases to reserves made by new target after a deemed asset sale occurring on or after April 10, 2006.

(ii) ***Application to pre-effective date increases to reserves.*** If either new target makes an election under § 1.338(i)-1(c)(2) or old target makes an election under § 1.338(i)-1(c)(3) to apply the rules of this section, in whole, to a qualified stock purchase occurring before April 10, 2006, then the rules contained in this section shall apply in whole to the qualified stock purchase.

(iii) ***Application of paragraphs (d)(2) and (3) of this section.*** Paragraphs (d)(2) and (3) of this section apply to taxable years beginning after *October 13, 2020.* For taxable years beginning on or before such date, see paragraph (d) of this section as contained in 26 CFR part 1 revised as of April 1, 2020.

(e) ***Effect of section 338 election on section 846(e) election*** —

(1) ***In general.*** New target and old target are treated as the same corporation for purposes of an election by old target to use its historical loss payment pattern under section 846(e). See § 1.338-1(b)(2)(vii). Therefore, if old target has a section 846(e) election in effect on the acquisition date, new target will continue to use the historical loss payment pattern of old target to discount unpaid losses incurred in accident years covered by the election, unless new target elects to revoke the section 846(e) election. In addition, new target may consider old target's historical loss payment pattern when determining whether to make the section 846(e) election for a determination year that includes or is subsequent to the acquisition date.

(2) ***Revocation of existing section 846(e) election.*** New target may revoke old target's section 846(e) election to use its historical loss payment pattern to discount unpaid losses. If new target elects to revoke old target's section 846(e) election, new target will use the industry-wide patterns determined by the Secretary to discount unpaid losses incurred in accident years beginning on or after the acquisition date through the subsequent determination year. New target may revoke old target's section 846(e) election by attaching a statement to new target's original tax return for its first taxable year.

(f) ***Effect of section 338 election on old target's capitalization amounts under section 848*** —

(1) ***Determination of net consideration for specified insurance contracts.*** For purposes of applying section 848 and § 1.848-2(f) to the deemed assumption reinsurance transaction, old target's net consideration (either positive or negative) for each category of specified insurance contracts is an amount equal to—

(i) The allocable portion of the ceding commission (if any) relating to contracts in that category; less

(ii) The amount by which old target's tax reserves for contracts in that category has been reduced as a result of the deemed assumption reinsurance transaction.

(2) ***Determination of capitalization amount.*** Except as provided in § 1.381(c)(22)-1(b)(13)—

(i) If, after the deemed asset sale, old target has an amount otherwise required to be capitalized under section 848 for the taxable year or an unamortized balance of specified policy acquisition expenses from prior taxable years, then old target deducts such remaining amount or unamortized balance as an expense incurred in the taxable year that includes the deemed sale tax consequences; and

(ii) If, after the deemed asset sale, the negative capitalization amount resulting from the reinsurance transaction exceeds the amount that old target can deduct under section 848(f)(1), then old target's capitalization amount is treated as zero at the close of the taxable year that includes the deemed sale tax consequences.

(3) ***Section 381 transactions.*** For transactions described in section 381, see § 1.381(c)(22)-1(b)(13).

(g) ***Effect of section 338 election on policyholders surplus account.*** Except as specifically provided in § 1.381(c)(22)-1(b)(7), the deemed asset sale effects a distribution of old target's policyholders surplus account to the extent the grossed-up amount realized on the sale to the purchasing corporation of the purchasing corporation's recently purchased target stock (as defined in § 1.338-4(c)) exceeds old target's shareholders surplus account under section 815(c).

(h) ***Effect of section 338 election on section 847 special estimated tax payments.*** If old target had elected to claim an additional deduction under section 847 for the taxable year that includes the deemed sale tax consequences or any earlier years, the amount remaining in old target's special loss discount account under section 847(3) must be reduced to the extent it relates to contracts transferred to new target and the amount of such reduction must be included in old target's gross income for the taxable year that includes the deemed sale tax consequences. Old target may apply the balance of its special estimated tax account as a credit against any tax resulting from such inclusion in gross income. Any special estimated tax payments remaining after this credit are voided and, therefore, are not available for credit or refund. Under section 847(1), new target is permitted to claim a section 847 deduction for losses incurred before the deemed asset sale, subject to the general requirement that new target makes timely special estimated tax payments equal to the tax benefit resulting from this deduction. See § 1.381(c)(22)-1(c)(14) regarding the carryover of the special loss discount account attributable to contracts transferred in a section 381 transaction.

[T.D. 9257, 71 FR 18000, Apr. 10, 2006, as amended by T.D. 9377, 73 FR 3872, Jan. 23, 2008; T.D. 9911, 85 FR 64392, Oct. 13, 2020]

§ 1.338(h)(10)-1 Deemed asset sale and liquidation.

(a) ***Scope.*** This section prescribes rules for qualification for a section 338(h)(10) election and for making a section 338(h)(10) election. This section also prescribes the consequences of such election. The rules of this section are in addition to the rules of §§ 1.338-1 through 1.338-10 and, in appropriate cases, apply instead of the rules of §§ 1.338-1 through 1.338-10.

(b) ***Definitions*** —

(1) ***Consolidated target.*** A *consolidated target* is a target that is a member of a consolidated group within the meaning of § 1.1502-1(h) on the acquisition date and is not the common parent of the group on that date.

(2) ***Selling consolidated group.*** A *selling consolidated group* is the consolidated group of which the consolidated target is a member on the acquisition date.

(3) ***Selling affiliate; affiliated target.*** A *selling affiliate* is a domestic corporation that owns on the acquisition date an amount of stock in a domestic target, which amount of stock is described in section 1504(a)(2), and does not join in filing a consolidated return with the target. In such case, the target is an *affiliated target*.

(4) ***S corporation target.*** An *S corporation target* is a target that is an S corporation immediately before the acquisition date.

(5) ***S corporation shareholders. S corporation shareholders*** are the S corporation target's shareholders. Unless otherwise indicated, a reference to S corporation shareholders refers both to S corporation shareholders who do and those who do not sell their target stock.

(6) ***Liquidation.*** Any reference in this section to a *liquidation* is treated as a reference to the transfer described in paragraph (d)(4) of this section notwithstanding its ultimate characterization for Federal income tax purposes.

(c) ***Section 338(h)(10) election*** —

(1) ***In general.*** A section 338(h)(10) election may be made for T if P acquires stock meeting the requirements of section 1504(a)(2) from a selling consolidated group, a selling affiliate, or the S corporation shareholders in a qualified stock purchase.

(2) ***Availability of section 338(h)(10) election in certain multi-step transactions.*** Notwithstanding anything to the contrary in § 1.338-3(c)(1)(i), a section 338(h)(10) election may be made for T where P's acquisition of T stock, viewed independently, constitutes a qualified stock purchase and, after the stock acquisition, T merges or liquidates into P (or another member of the affiliated group that includes P), whether or not, under relevant provisions of law, including the step transaction doctrine, the acquisition of the T stock and the merger or liquidation of T qualify as a reorganization described in section 368(a). If a section 338(h)(10) election is made in a case where the acquisition of T stock followed by a merger or liquidation of T into P qualifies as a reorganization described in section 368(a), for all Federal tax purposes, P's acquisition of T stock is treated as a qualified stock purchase and is not treated as part of a reorganization described in section 368(a).

(3) ***Simultaneous joint election requirement.*** A section 338(h)(10) election is made jointly by P and the selling consolidated group (or the selling affiliate or the S corporation shareholders) on Form 8023 in accordance with the instructions to the form. S corporation shareholders who do not sell their stock must also consent to the election. The section 338(h)(10) election must be made not later than the 15th day of the 9th month beginning after the month in which the acquisition date occurs.

(4) ***Irrevocability.*** A section 338(h)(10) election is irrevocable. If a section 338(h)(10) election is made for T, a section 338 election is deemed made for T.

(5) ***Effect of invalid election.*** If a section 338(h)(10) election for T is not valid, the section 338 election for T is also not valid.

(d) ***Certain consequences of section 338(h)(10) election.*** For purposes of subtitle A of the Internal Revenue Code (except as provided in § 1.338-1(b)(2)), the consequences to the parties of making a section 338(h)(10) election for T are as follows:

(1) ***P.*** P is automatically deemed to have made a gain recognition election for its nonrecently purchased T stock, if any. The effect of a gain recognition election includes a taxable deemed sale by P on the acquisition date of any nonrecently purchased target stock. See § 1.338-5(d).

(2) ***New T.*** The AGUB for new T's assets is determined under § 1.338-5 and is allocated among the acquisition date assets under §§ 1.338-6 and 1.338-7. Notwithstanding paragraph (d)(4) of this section (deemed liquidation of old T), new T remains liable for the tax liabilities of old T (including the tax liability for the deemed sale tax consequences). For example, new T remains liable for the tax liabilities of the members of any consolidated group that are attributable to taxable years in which those corporations and old T joined in the same consolidated return. See § 1.1502-6(a).

(3) ***Old T—deemed sale*** —

(i) ***In general.*** Old T is treated as transferring all of its assets to an unrelated person in exchange for consideration that includes the discharge of its liabilities in a single transaction at the close of the acquisition date (but before the deemed liquidation). See § 1.338-1(a) regarding the tax characterization of the deemed asset sale. Except as provided in § 1.338(h)(10)-1(d)(8) (regarding the installment method), old T recognizes all of the gain realized on the deemed transfer of its assets in consideration for the ADSP. ADSP for old T is determined under § 1.338-4 and allocated among the acquisition date assets under §§ 1.338-6 and 1.338-7. Old T realizes the deemed sale tax consequences from the deemed asset sale before the close of the

acquisition date while old T is a member of the selling consolidated group (or owned by the selling affiliate or owned by the S corporation shareholders). If T is an affiliated target, or an S corporation target, the principles of §§ 1.338-2(c)(10) and 1.338-10(a)(1), (5), and (6)(i) apply to the return on which the deemed sale tax consequences are reported. When T is an S corporation target, T's S election continues in effect through the close of the acquisition date (including the time of the deemed asset sale and the deemed liquidation) notwithstanding section 1362(d)(2)(B). Also, when T is an S corporation target (but not a qualified subchapter S subsidiary), any direct and indirect subsidiaries of T which T has elected to treat as qualified subchapter S subsidiaries under section 1361(b)(3) remain qualified subchapter S subsidiaries through the close of the acquisition date.

(ii) ***Tiered targets.*** In the case of parent-subsidiary chains of corporations making elections under section 338(h)(10), the deemed asset sale of a parent corporation is considered to precede that of its subsidiary. See § 1.338-3(b)(4)(i).

(4) ***Old T and selling consolidated group, selling affiliate, or S corporation shareholders—deemed liquidation; tax characterization*** —

(i) ***In general.*** Old T is treated as if, before the close of the acquisition date, after the deemed asset sale in paragraph (d)(3) of this section, and while old T is a member of the selling consolidated group (or owned by the selling affiliate or owned by the S corporation shareholders), it transferred all of its assets to members of the selling consolidated group, the selling affiliate, or S corporation shareholders and ceased to exist. The transfer from old T is characterized for Federal income tax purposes in the same manner as if the parties had actually engaged in the transactions deemed to occur because of this section and taking into account other transactions that actually occurred or are deemed to occur. For example, the transfer may be treated as a distribution in pursuance of a plan of reorganization, a distribution in complete cancellation or redemption of all its stock, one of a series of distributions in complete cancellation or redemption of all its stock in accordance with a plan of liquidation, or part of a circular flow of cash. In most cases, the transfer will be treated as a distribution in complete liquidation to which section 336 or 337 applies.

(ii) ***Tiered targets.*** In the case of parent-subsidiary chains of corporations making elections under section 338(h)(10), the deemed liquidation of a subsidiary corporation is considered to precede the deemed liquidation of its parent.

(5) ***Selling consolidated group, selling affiliate, or S corporation shareholders*** —

(i) ***In general.*** If T is an S corporation target, S corporation shareholders (whether or not they sell their stock) take their pro rata share of the deemed sale tax consequences into account under section 1366 and increase or decrease their basis in T stock under section 1367. Members of the selling consolidated group, the selling affiliate, or S corporation shareholders are treated as if, after the deemed asset sale in paragraph (d)(3) of this section and before the close of the acquisition date, they received the assets transferred by old T in the transaction described in paragraph (d)(4)(i) of this section. In most cases, the transfer will be treated as a distribution in complete liquidation to which section 331 or 332 applies.

(ii) ***Basis and holding period of T stock not acquired.*** A member of the selling consolidated group (or the selling affiliate or an S corporation shareholder) retaining T stock is treated as acquiring the stock so retained on the day after the acquisition date for its fair market value. The holding

period for the retained stock starts on the day after the acquisition date. For purposes of this paragraph, the fair market value of all of the T stock equals the grossed-up amount realized on the sale to P of P's recently purchased target stock. See § 1.338-4(c).

(iii) ***T stock sale.*** Members of the selling consolidated group (or the selling affiliate or S corporation shareholders) recognize no gain or loss on the sale or exchange of T stock included in the qualified stock purchase (although they may recognize gain or loss on the T stock in the deemed liquidation).

(6) ***Nonselling minority shareholders other than nonselling S corporation shareholders*** —

(i) ***In general.*** This paragraph (d)(6) describes the treatment of shareholders of old T other than the following: Members of the selling consolidated group, the selling affiliate, S corporation shareholders (whether or not they sell their stock), and P. For a description of the treatment of S corporation shareholders, see paragraph (d)(5) of this section. A shareholder to which this paragraph (d)(6) applies is called a minority shareholder.

(ii) ***T stock sale.*** A minority shareholder recognizes gain or loss on the shareholder's sale or exchange of T stock included in the qualified stock purchase.

(iii) ***T stock not acquired.*** A minority shareholder does not recognize gain or loss under this section with respect to shares of T stock retained by the shareholder. The shareholder's basis and holding period for that T stock is not affected by the section 338(h)(10) election.

(7) ***Consolidated return of selling consolidated group.*** If P acquires T in a qualified stock purchase from a selling consolidated group—

(i) The selling consolidated group must file a consolidated return for the taxable period that includes the acquisition date;

(ii) A consolidated return for the selling consolidated group for that period may not be withdrawn on or after the day that a section 338(h)(10) election is made for T; and

(iii) Permission to discontinue filing consolidated returns cannot be granted for, and cannot apply to, that period or any of the immediately preceding taxable periods during which consolidated returns continuously have been filed.

(8) ***Availability of the section 453 installment method.*** Solely for purposes of applying sections 453, 453A, and 453B, and the regulations thereunder (the installment method) to determine the consequences to old T in the deemed asset sale and to old T (and its shareholders, if relevant) in the deemed liquidation, the rules in paragraphs (d)(1) through (7) of this section are modified as follows:

(i) ***In deemed asset sale.*** Old T is treated as receiving in the deemed asset sale new T installment obligations, the terms of which are identical (except as to the obligor) to P installment obligations issued in exchange for recently purchased stock of T. Old T is treated as receiving in cash all other consideration in the deemed asset sale other than the assumption of, or taking subject to, old T liabilities. For example, old T is treated as receiving in cash any amounts attributable to the grossing-up of amount realized under § 1.338-4(c). The amount realized for recently purchased stock taken into account in determining ADSP is adjusted (and, thus, ADSP is redetermined) to reflect the amounts paid under an installment obligation for the stock when the total payments under the installment obligation are greater or less than the amount realized.

(ii) ***In deemed liquidation.*** Old T is treated as distributing in the deemed liquidation the new T installment obligations that it is treated as receiving in the deemed asset sale. The members of the selling consolidated group, the selling affiliate, or the S corporation shareholders are treated as receiving in the deemed liquidation the new T installment obligations that correspond to the P installment obligations they actually received individually in exchange for their recently purchased stock. The new T installment obligations may be recharacterized under other rules. See for example § 1.453-11(a)(2) which, in certain circumstances, treats the new T installment obligations deemed distributed by old T as if they were issued by new T in exchange for the stock in old T owned by members of the selling consolidated group, the selling affiliate, or the S corporation shareholders. The members of the selling consolidated group, the selling affiliate, or the S corporation shareholders are treated as receiving all other consideration in the deemed liquidation in cash.

(9) ***Treatment consistent with an actual asset sale.*** No provision in section 338(h)(10) or this section shall produce a Federal income tax result under subtitle A of the Internal Revenue Code that would not occur if the parties had actually engaged in the transactions deemed to occur because of this section and taking into account other transactions that actually occurred or are deemed to occur. See, however, § 1.338-1(b)(2) for certain exceptions to this rule.

(e) ***Examples.*** The following examples illustrate the provisions of this section:

Example 1. (i) S1 owns all of the T stock and T owns all of the stock of T1 and T2. S1 is the common parent of a consolidated group that includes T, T1, and T2. P makes a qualified stock purchase of all of the T stock from S1. S1 joins with P in making a section 338(h)(10) election for T and for the deemed purchase of T1. A section 338 election is not made for T2.
(ii) S1 does not recognize gain or loss on the sale of the T stock and T does not recognize gain or loss on the sale of the T1 stock because section 338(h)(10) elections are made for T and T1. Thus, for example, gain or loss realized on the sale of the T or T1 stock is not taken into account in earnings and profits. However, because a section 338 election is not made for T2, T must recognize any gain or loss realized on the deemed sale of the T2 stock. See § 1.338-4(h).

(iii) The results would be the same if S1, T, T1, and T2 are not members of any consolidated group, because S1 and T are selling affiliates.

Example 2. (i) S and T are solvent corporations. S owns all of the outstanding stock of T. S and P agree to undertake the following transaction: T will distribute half its assets to S, and S will assume half of T's liabilities. Then, P will purchase the stock of T from S. S and P will jointly make a section 338(h)(10) election with respect to the sale of T. The corporations then complete the transaction as agreed.
(ii) Under section 338(a), the assets present in T at the close of the acquisition date are deemed sold by old T to new T. Under paragraph (d)(4) of this section, the transactions described in paragraph (d) of this section are treated in the same manner as if they had actually occurred. Because S and P had agreed that, after T's actual distribution to S of part of its assets, S would sell T to P pursuant to an election under section 338(h)(10), and because paragraph (d)(4) of this

section deems T subsequently to have transferred all its assets to its shareholder, T is deemed to have adopted a plan of complete liquidation under section 332. T's actual transfer of assets to S is treated as a distribution pursuant to that plan of complete liquidation.

Example 3. (i) S1 owns all of the outstanding stock of both T and S2. All three are corporations. S1 and P agree to undertake the following transaction. T will transfer substantially all of its assets and liabilities to S2, with S2 issuing no stock in exchange therefor, and retaining its other assets and liabilities. Then, P will purchase the stock of T from S1. S1 and P will jointly make a section 338(h)(10) election with respect to the sale of T. The corporations then complete the transaction as agreed.
(ii) Under section 338(a), the remaining assets present in T at the close of the acquisition date are deemed sold by old T to new T. Under paragraph (d)(4) of this section, the transactions described in this section are treated in the same manner as if they had actually occurred. Because old T transferred substantially all of its assets to S2, and is deemed to have distributed all its remaining assets and gone out of existence, the transfer of assets to S2, taking into account the related transfers, deemed and actual, qualifies as a reorganization under section 368(a)(1)(D). Section 361(c)(1) and not section 332 applies to T's deemed liquidation.

Example 4. (i) T owns two assets: an actively traded security (Class II) with a fair market value of $100 and an adjusted basis of $100, and inventory (Class IV) with a fair market value of $100 and an adjusted basis of $100. T has no liabilities. S is negotiating to sell all the stock in T to P for $100 cash and contingent consideration. Assume that under generally applicable tax accounting rules, P's adjusted basis in the T stock immediately after the purchase would be $100, because the contingent consideration is not taken into account. Thus, under the rules of § 1.338-5, AGUB would be $100. Under the allocation rules of § 1.338-6, the entire $100 would be allocated to the Class II asset, the actively traded security, and no amount would be allocated to the inventory. P, however, plans immediately to cause T to sell the inventory, but not the actively traded security, so it requests that, prior to the stock sale, S cause T to create a new subsidiary, Newco, and contribute the actively traded security to the capital of Newco. Because the stock in Newco, which would not be actively traded, is a Class V asset, under the rules of § 1.338-6 $100 of AGUB would be allocated to the inventory and no amount of AGUB would be allocated to the Newco stock. Newco's own AGUB, $0 under the rules of § 1.338-5, would be allocated to the actively traded security. When P subsequently causes T to sell the inventory, T would realize no gain or loss instead of realizing gain of $100.
(ii) Assume that, if the T stock had not itself been sold but T had instead sold both its inventory and the Newco stock to P, T would for tax purposes be deemed instead to have sold both its inventory and actively traded security directly to P, with P deemed then to have created Newco and contributed the actively traded security to the capital of Newco. Section 338, if elected, generally recharacterizes a stock sale as a deemed sale of assets. However, paragraph (d)(9) of this section states, in general, that no provision of section 338(h)(10) or the regulations thereunder shall

produce a Federal income tax result under subtitle A of the Internal Revenue Code that would not occur if the parties had actually engaged in the transactions deemed to occur by virtue of the section 338(h)(10) election, taking into account other transactions that actually occurred or are deemed to occur. Hence, the deemed sale of assets under section 338(h)(10) should be treated as one of the inventory and actively traded security themselves, not of the inventory and Newco stock. The anti-abuse rule of § 1.338-1(c) does not apply, because the substance of the deemed sale of assets is a sale of the inventory and the actively traded security themselves, not of the inventory and the Newco stock. Otherwise, the anti-abuse rule might apply.

Example 5. (i) T, a member of a selling consolidated group, has only one class of stock, all of which is owned by S1. On March 1 of Year 2, S1 sells its T stock to P for $80,000, and joins with P in making a section 338(h)(10) election for T. There are no selling costs or acquisition costs. On March 1 of Year 2, T owns land with a $50,000 basis and $75,000 fair market value and equipment with a $30,000 adjusted basis, $70,000 recomputed basis, and $60,000 fair market value. T also has a $40,000 liability. S1 pays old T's allocable share of the selling group's consolidated tax liability for Year 2 including the tax liability for the deemed sale tax consequences (a total of $13,600).
(ii) ADSP of $120,000 ($80,000 + $40,000 + 0) is allocated to each asset as follows:

Assets	Basis	FMV	Fraction	Allocable ADSP
Land	$50,000	$75,000	5/9	$66,667
Equipment	30,000	60,000	4/9	53,333
Total	80,000	135,000	1	120,000

(iii) Under paragraph (d)(3) of this section, old T has gain on the deemed sale of $40,000 (consisting of $16,667 of capital gain and $23,333 of ordinary income).
(iv) Under paragraph (d)(5)(iii) of this section, S1 recognizes no gain or loss upon its sale of the old T stock to P. S1 also recognizes no gain or loss upon the deemed liquidation of T. See paragraph (d)(4) of this section and section 332.

(v) P's basis in new T stock is P's cost for the stock, $80,000. See section 1012.

(vi) Under § 1.338-5, the AGUB for new T is $120,000, i.e., P's cost for the old T stock ($80,000) plus T's liability ($40,000). This AGUB is allocated as basis among the new T assets under §§ 1.338-6 and 1.338-7.

Example 6. (i) The facts are the same as in *Example 5,* except that S1 sells 80 percent of the old T stock to P for $64,000, rather than 100 percent of the old T stock for $80,000.

(ii) The consequences to P, T, and S1 are the same as in *Example 5,* except that:

(A) P's basis for its 80-percent interest in the new T stock is P's $64,000 cost for the stock. See section 1012.

(B) Under § 1.338-5, the AGUB for new T is $120,000 (i.e., $64,000/.8 + $40,000 + $0).

(C) Under paragraph (d)(4) of this section, S1 recognizes no gain or loss with respect to the retained stock in T. See section 332.

(D) Under paragraph (d)(5)(ii) of this section, the basis of the T stock retained by S1 is $16,000 (i.e., $120,000 − $40,000 (the ADSP amount for the old T assets over the sum of new T's liabilities immediately after the acquisition date) " .20 (the proportion of T stock retained by S1)).

Example 7. (i) The facts are the same as in *Example 6,* except that K, a shareholder unrelated to T or P, owns the 20 percent of the T stock that is not acquired by P in the qualified stock purchase. K's basis in its T stock is $5,000.
(ii) The consequences to P, T, and S1 are the same as in *Example 6.*

(iii) Under paragraph (d)(6)(iii) of this section, K recognizes no gain or loss, and K's basis in its T stock remains at $5,000.

Example 8. (i) The facts are the same as in *Example 5,* except that the equipment is held by T1, a wholly-owned subsidiary of T, and a section 338(h)(10) election is also made for T1. The T1 stock has a fair market value of $60,000. T1 has no assets other than the equipment and no liabilities. S1 pays old T's and old T1's allocable shares of the selling group's consolidated tax liability for Year 2 including the tax liability for T and T1's deemed sale tax consequences.
(ii) ADSP for T is $120,000, allocated $66,667 to the land and $53,333 to the stock. Old T's deemed sale results in $16,667 of capital gain on its deemed sale of the land. Under paragraph (d)(5)(iii) of this section, old T does not recognize gain or loss on its deemed sale of the T1 stock. See section 332.

(iii) ADSP for T1 is $53,333 (i.e., $53,333 + $0 + $0). On the deemed sale of the equipment, T1 recognizes ordinary income of $23,333.

(iv) Under paragraph (d)(5)(iii) of this section, S1 does not recognize gain or loss upon its sale of the old T stock to P.

Example 9. (i) The facts are the same as in *Example 8,* except that P already owns 20 percent of the T stock, which is nonrecently purchased stock with a basis of $6,000, and that P purchases the remaining 80 percent of the T stock from S1 for $64,000.

(ii) The results are the same as in *Example 8,* except that under paragraph (d)(1) of this section and § 1.338-5(d), P is deemed to have made a gain recognition election for its nonrecently purchased T stock. As a result, P recognizes gain of $10,000 and its basis in the nonrecently purchased T stock is increased from $6,000 to $16,000. P's basis in all the T stock is $80,000 (i.e., $64,000 + $16,000). The computations are as follows:

(A) P's grossed-up basis for the recently purchased T stock is $64,000 (i.e., $64,000 (the basis of the recently purchased T stock) × (1−.2)/(.8) (the fraction in section 338(b)(4))).

(B) P's basis amount for the nonrecently purchased T stock is $16,000 (i.e., $64,000 (the grossed-up basis in the recently purchased T stock) × (.2)/(1.0−.2) (the fraction in section 338(b)(3)(B))).

(C) The gain recognized on the nonrecently purchased stock is $10,000 (i.e., $16,000−$6,000).

Example 10. (i) T is an S corporation whose sole class of stock is owned 40 percent each by A and B and 20 percent by C. T, A, B, and C all use the cash method of accounting. A and B each has an adjusted basis of $10,000 in the stock. C has an adjusted basis of $5,000 in the stock. A, B, and C hold no installment obligations to which section 453A applies. On March 1 of Year 1, A sells its stock to P for $40,000 in cash and B sells its stock to P for a $25,000 note issued by P and real estate having a fair market value of $15,000. The $25,000 note, due in full in Year 7, is not publicly traded and bears adequate stated interest. A and B have no selling expenses. T's sole asset is real estate, which has a value of $110,000 and an adjusted basis of $35,000. Also, T's real estate is encumbered by long-outstanding purchase-money indebtedness of $10,000. The real estate does not have built-in gain subject to section 1374. A, B, and C join with P in making a section 338(h)(10) election for T.
(ii) Solely for purposes of application of sections 453, 453A, and 453B, old T is considered in its deemed asset sale to receive back from new T the $25,000 note (considered issued by new T) and $75,000 of cash (total consideration of $80,000 paid for all the stock sold, which is then divided by .80 in the grossing-up, with the resulting figure of $100,000 then reduced by the amount of the installment note). Absent an election under section 453(d), gain is reported by old T under the installment method.

(iii) In applying the installment method to old T's deemed asset sale, the contract price for old T's assets deemed sold is $100,000, the $110,000 selling price reduced by the indebtedness of $10,000 to which the assets are subject. (The $110,000 selling price is itself the sum of the $80,000 grossed-up in paragraph (ii) above to $100,000 and the $10,000 liability.) Gross profit is $75,000 ($110,000 selling price − old T's basis of $35,000). Old T's gross profit ratio is 0.75 (gross profit of $75,000 ÷ $100,000 contract price). Thus, $56,250 (0.75 × the $75,000 cash old T is deemed to receive in Year 1) is Year 1 gain attributable to the sale, and $18,750 ($75,000 − $56,250) is recovery of basis.

(iv) In its liquidation, old T is deemed to distribute the $25,000 note to B, since B actually sold the stock partly for that consideration. To the extent of the remaining liquidating distribution to B, it is deemed to receive, along with A and C, the balance of old T's liquidating assets in the form of cash. Under section

453(h), B, unless it makes an election under section 453(d), is not required to treat the receipt of the note as a payment for the T stock; P's payment of the $25,000 note in Year 7 to B is a payment for the T stock. Because section 453(h) applies to B, old T's deemed liquidating distribution of the note is, under section 453B(h), not treated as a taxable disposition by old T.

(v) Under section 1366, A reports 40 percent, or $22,500, of old T's $56,250 gain recognized in Year 1. Under section 1367, this increases A's $10,000 adjusted basis in the T stock to $32,500. Next, in old T's deemed liquidation, A is considered to receive $40,000 for its old T shares, causing it to recognize an additional $7,500 gain in Year 1.

(vi) Under section 1366, B reports 40 percent, or $22,500, of old T's $56,250 gain recognized in Year 1. Under section 1367, this increases B's $10,000 adjusted basis in its T stock to $32,500. Next, in old T's deemed liquidation, B is considered to receive the $25,000 note and $15,000 of other consideration. Applying section 453, including section 453(h), to the deemed liquidation, B's selling price and contract price are both $40,000. Gross profit is $7,500 ($40,000 selling price − B's basis of $32,500). B's gross profit ratio is 0.1875 (gross profit of $7,500 ÷ $40,000 contract price). Thus, $2,812.50 (0.1875 × $15,000) is Year 1 gain attributable to the deemed liquidation. In Year 7, when the $25,000 note is paid, B has $4,687.50 (0.1875 × $25,000) of additional gain.

(vii) Under section 1366, C reports 20 percent, or $11,250, of old T's $56,250 gain recognized in Year 1. Under section 1367, this increases C's $5,000 adjusted basis in its T stock to $16,250. Next, in old T's deemed liquidation, C is considered to receive $20,000 for its old T shares, causing it to recognize an additional $3,750 gain in Year 1. Finally, under paragraph (d)(5)(ii) of this section, C is considered to acquire its stock in T on the day after the acquisition date for $20,000 (fair market value = grossed-up amount realized of $100,000 × 20%). C's holding period in the stock deemed received in new T begins at that time.

Example 11. Stock acquisition followed by upstream merger—without section 338(h)(10) election. (i) P owns all the stock of Y, a newly formed subsidiary. S owns all the stock of T. Each of P, S, T and Y is a domestic corporation. P acquires all of the T stock in a statutory merger of Y into T, with T surviving. In the merger, S receives consideration consisting of 50% P voting stock and 50% cash. Viewed independently of any other step, P's acquisition of T stock constitutes a qualified stock purchase. As part of the plan that includes P's acquisition of the T stock, T subsequently merges into P. Viewed independently of any other step, T's merger into P qualifies as a liquidation described in section 332. Absent the application of paragraph (c)(2) of this section, the step transaction doctrine would apply to treat P's acquisition of the T stock and T's merger into P as an acquisition by P of T's assets in a reorganization described in section 368(a). P and S do not make a section 338(h)(10) election with respect to P's purchase of the T stock.
(ii) Because P and S do not make an election under section 338(h)(10) for T, P's acquisition of the T stock and T's merger into P is treated as part of a reorganization described in section 368(a).

Example 12. Stock acquisition followed by upstream merger—with section 338(h)(10) election. (i) The

facts are the same as in *Example 11* except that P and S make a joint election under section 338(h)(10) for T.
(ii) Pursuant to paragraph (c)(2) of this section, as a result of the election under section 338(h)(10), for all Federal tax purposes, P's acquisition of the T stock is treated as a qualified stock purchase and P's acquisition of the T stock is not treated as part of a reorganization described in section 368(a).

Example 13. Stock acquisition followed by brother-sister merger—with section 338(h)(10) election. (i) The facts are the same as in *Example 12,* except that, following P's acquisition of the T stock, T merges into X, a domestic corporation that is a wholly owned subsidiary of P. Viewed independently of any other step, T's merger into X qualifies as a reorganization described in section 368(a). Absent the application of paragraph (c)(2) of this section, the step transaction doctrine would apply to treat P's acquisition of the T stock and T's merger into X as an acquisition by X of T's assets in a reorganization described in section 368(a).
(ii) Pursuant to paragraph (c)(2) of this section, as a result of the election under section 338(h)(10), for all Federal tax purposes, P's acquisition of T stock is treated as a qualified stock purchase and P's acquisition of T stock is not treated as part of a reorganization described in section 368(a).

Example 14. Stock acquisition that does not qualify as a qualified stock purchase followed by upstream merger. (i) The facts are the same as in *Example 11,* except that, in the statutory merger of Y into T, S receives only P voting stock.
(ii) Pursuant to § 1.338-3(c)(1)(i) and paragraph (c)(2) of this section, no election under section 338(h)(10) can be made with respect to P's acquisition of the T stock because, pursuant to relevant provisions of law, including the step transaction doctrine, that acquisition followed by T's merger into P is treated as a reorganization described in section 368(a)(1)(A), and that acquisition, viewed independently of T's merger into P, does not constitute a qualified stock purchase under section 338(d)(3). Accordingly, P's acquisition of the T stock and T's merger into P is treated as a reorganization described in section 368(a).

(f) ***Inapplicability of provisions.*** The provisions of section 6043, §§ 1.331-1(d) and 1.332-6 (relating to information returns and recordkeeping requirements for corporate liquidations) do not apply to the deemed liquidation of old T under paragraph (d)(4) of this section.

(g) ***Required information.*** The Commissioner may exercise the authority granted in section 338(h)(10)(C)(iii) to require provision of any information deemed necessary to carry out the provisions of section 338(h)(10) by requiring submission of information on any tax reporting form.

(h) ***Effective date.*** This section is applicable to stock acquisitions occurring on or after July 5, 2006. For stock acquisitions occurring before July 5, 2006, see § 1.338(h)(10)-1T as contained in the edition of 26 CFR part 1, revised as of April 1, 2006.

[T.D. 8940, 66 FR 9954, Feb. 13, 2001, as amended by T.D. 9071, 68 FR 40768, July 9, 2003; T.D. 9264, 71 FR 30607, May 30, 2006; T.D. 9271, 71 FR 38075, July 5, 2006; T.D. 9329, 72 FR 32808, June 14, 2007]

§ 1.338(i)-1 Effective/applicability date.

(a) ***In general.*** The provisions of §§ 1.338-1 through 1.338-7, 1.338-10 and 1.338(h)(10)-1 apply to any qualified stock purchase occurring after March 15, 2001. For rules applicable to qualified stock purchases on or before March 15, 2001, see §§ 1.338-1T through 1.338-7T, 1.338-10T, 1.338(h)(10)-1T and 1.338(i)-1T in effect prior to March 16, 2001 (see 26 CFR part 1 revised April 1, 2000).

(b) ***Section 338(h)(10) elections for S corporation targets.*** The requirements of §§ 1.338(h)(10)-1T(c)(2) and 1.338(h)(10)-1(c)(2) that S corporation shareholders who do not sell their stock must also consent to an election under section 338(h)(10) will not invalidate an otherwise valid election made on the September 1997 revision of Form 8023, "Elections Under Section 338 For Corporations Making Qualified Stock Purchases," not signed by the nonselling shareholders, provided that the S corporation and all of its shareholders (including nonselling shareholders) report the tax consequences consistently with the results under section 338(h)(10).

(c) ***Section 338 elections for insurance company targets*** —

(1) ***In general.*** The rules of § 1.338-11 apply to qualified stock purchases occurring on or after April 10, 2006.

(2) ***New target election for retroactive application*** —

(i) ***Availability of election.*** New target may make an irrevocable election to apply the rules in §§ 1.338-11 (including the applicable provisions in §§ 1.197-2(g)(5), 381(c)(22)-1, and 846) in whole, but not in part, to a qualified stock purchase occurring before April 10, 2006 for which a section 338 election is made, provided that new target's first taxable year and all subsequent affected taxable years are years for which an assessment of deficiency or a refund for overpayment is not prevented by any law or rule of law. In the case of a section 338 election for which a section 338(h)(10) election is made (or a section 338 election for a foreign target), new target may make the election to apply the regulations retroactively without regard to whether old target makes the election. In the case of a section 338 election for a domestic target for which no section 338(h)(10) election is made, new target may make the election to apply the regulations retroactively only if old target also makes the election. Paragraph (c)(2)(ii) of this section prescribes the time and manner of the election for new target.

(ii) ***Time and manner of making the election for new target.*** New target may make an election described in paragraph (c)(2)(i) of this section by attaching a statement to its original or amended income tax return for its first taxable year. The statement must be entitled "Election to Retroactively Apply the Rules in §§ 1.338-11 (including the applicable provisions in §§ 1.197-2(g)(5), 1.381(c)(22)-1 and 846) in whole to a transaction completed before April 10, 2006" and must include the following information—

(A) The name and E.I.N. for new target; and

(B) The following declaration (or a substantially similar declaration): New target has amended its income tax returns for its first taxable year and for all affected subsequent years to reflect the rules in §§ 1.338-11 (including the applicable provisions in §§ 197-2(g)(5), 1.381(c)(22)-1 and 846). All other parties whose income tax liabilities are affected by new target's election have amended their income tax returns for all affected years to reflect the rules in §§ 1.338-11 (including the applicable provisions in §§ 1.197-2(g)(5), 1.381(c)(22)-1 and 846).

(3) *Old target election for retroactive application* —

(i) ***Availability of election.*** Old target may make an irrevocable election to apply the rules in §§ 1.338-11 (including the applicable provisions in §§ 1.197-2(g)(5), 1.381(c)(22)-1 and 846) in whole, but not in part, to a qualified stock purchase occurring before April 10, 2006 for which a section 338 election is made, provided that old target's taxable year that includes the deemed sale tax consequences and all subsequent affected taxable years are years for which an assessment of deficiency or a refund for overpayment is not prevented by any law or rule of law. In the case of a section 338 election for which a section 338(h)(10) election is made (or a section 338 election for a foreign target), old target may make the election to apply the regulations retroactively without regard to whether new target makes the election. In the case of a section 338 election for a domestic target for which no section 338(h)(10) election is made, old target may make the election to apply the regulations retroactively only if new target also makes the election. Paragraph (c)(3)(ii) of this section prescribes the time and manner of the election for old target.

(ii) ***Time and manner of making the election for old target.*** Old target may make an election described in paragraph (c)(3)(i) of this section by attaching a statement to each affected party's original or amended income tax return for the taxable year that includes the deemed sale tax consequences. The statement must be entitled "Election to Retroactively Apply the Rules in §§ 1.338-11 (including the applicable provisions in §§ 1.197-2(g)(5), 1.381(c)(22)-1 and 846) to a transaction completed before April 10, 2006" and must include the following information—

(A) The name and E.I.N. for old target; and

(B) The following declaration (or a substantially similar declaration): Old target has amended its income tax returns for the taxable year that includes the deemed sale tax consequences and for all affected subsequent years to reflect the rules in §§ 1.338-11 (including the applicable provisions in §§ 1.197-2(g)(5), 1.381(c)(22)-1 and 846). All other parties whose income tax liabilities are affected by old target's election have amended their income tax returns for all affected years to reflect the rules in §§ 1.338-11 (including the applicable provisions in §§ 1.197-2(g)(5), 1.381(c)(22)-1 and 846).

[T.D. 8940, 66 FR 9954, Feb. 13, 2001, as amended by T.D. 9257, 71 FR 18003, Apr. 10, 2006; T.D. 9377, 73 FR 3873, 3874, Jan. 23, 2008]

DEFINITION

§ 1.346-1 Partial liquidation.

(a) ***General.*** This section defines a partial liquidation. If amounts are distributed in partial liquidation such amounts are treated under section 331(a)(2) as received in part or full payment in exchange for the stock. A distribution is treated as in partial liquidation of a corporation if:

(1) The distribution is one of a series of distributions in redemption of all of the stock of the corporation pursuant to a plan of complete liquidation, or

(2) The distribution:

(i) Is not essentially equivalent to a dividend,

(ii) Is in redemption of a part of the stock of the corporation pursuant to a plan, and

(iii) Occurs within the taxable year in which the plan is adopted or within the succeeding taxable year.

An example of a distribution which will qualify as a partial liquidation under subparagraph (2) of this paragraph and section 346(a) is a distribution resulting from a genuine contraction of the corporate business such as the distribution of unused insurance proceeds recovered as a result of a fire which destroyed part of the business causing a cessation of a part of its activities. On the other hand, the distribution of funds attributable to a reserve for an expansion program which has been abandoned does not qualify as a partial liquidation within the meaning of section 346(a). A distribution to which section 355 applies (or so much of section 356 as relates to section 355) is not a distribution in partial liquidation within the meaning of section 346(a).

(b) ***Special requirements on termination of business.*** A distribution which occurs within the taxable year in which the plan is adopted or within the succeeding taxable year and which meets the requirements of subsection (b) of section 346 falls within paragraph (a)(2) of this section and within section 346(a)(2). The requirements which a distribution must meet to fall within subsection (b) of section 346 are:

(1) Such distribution is attributable to the corporation's ceasing to conduct, or consists of assets of, a trade or business which has been actively conducted throughout the five-year period immediately before the distribution, which trade or business was not acquired by the corporation within such period in a transaction in which gain or loss was recognized in whole or in part, and

(2) Immediately after such distribution by the corporation it is actively engaged in the conduct of a trade or business, which trade or business was actively conducted throughout the five-year period ending on the date of such distribution and was not acquired by the corporation within such period in a transaction in which gain or loss was recognized in whole or in part.

A distribution shall be treated as having been made in partial liquidation pursuant to section 346(b) if it consists of the proceeds of the sale of the assets of a trade or business which has been actively conducted for the five-year period and has been terminated, or if it is a distribution in kind of the assets of such a business, or if it is a distribution in kind of some of the assets of such a business and of the proceeds of the sale of the remainder of the assets of such a business. In general, a distribution which will qualify under section 346(b) may consist of, but is not limited to:

(i) Assets (other than inventory or property described in subdivision (ii) of this subparagraph) used in the trade or business throughout the five-year period immediately before the distribution (for this purpose an asset shall be considered used in the trade or business during the period of time the asset which it replaced was so used), or

(ii) Proceeds from the sale of assets described in subdivision (i) of this subparagraph, and, in addition,

(iii) The inventory of such trade or business or property held primarily for sale to customers in the ordinary course of business, if:

(*a*) The items constituting such inventory or such property were substantially similar to the items constituting such inventory or property during the five-year period immediately before the distribution, and

(*b*) The quantity of such items on the date of distribution was not substantially in excess of the quantity of similar items regularly on hand in the conduct of such business during such five-year period, or

(iv) Proceeds from the sale of inventory or property described in subdivision (iii) of this subparagraph, if such inventory or property is sold in bulk in the course of termination of such trade or business and if with respect to such inventory the conditions of subdivision (iii)(*a*) and (*b*) of this subparagraph would have been met had such inventory or property been distributed on the date of such sale.

(c) ***Active conduct of a trade or business.*** For the purpose of section 346(b)(1), a corporation shall be deemed to have actively conducted a trade or business immediately before the distribution, if:

(1) In the case of a business the assets of which have been distributed in kind, the business was operated by such corporation until the date of distribution, or

(2) In the case of a business the proceeds of the sale of the assets of which are distributed, such business was actively conducted until the date of sale and the proceeds of such sale were distributed as soon thereafter as reasonably possible.

The term *active conduct of a trade or business* shall have the same meaning in this section as in paragraph (c) of § 1.355-1.

§ 1.346-2 Treatment of certain redemptions.

If a distribution in a redemption of stock qualifies as a distribution in part or full payment in exchange for the stock under both section 302(a) and this section, then only this section shall be applicable. None of the limitations of section 302 shall be applicable to such redemption.

§ 1.346-3 Effect of certain sales.

The determination of whether assets sold in connection with a partial liquidation are sold by the distributing corporation or by the shareholder is a question of fact to be determined under the facts and circumstances of each case.

Corporate Organizations and Reorganizations

CORPORATE ORGANIZATIONS

§ 1.351-1 Transfer to corporation controlled by transferor.

(a) ***In general*** —

(1) ***Nonrecognition of gain or loss.*** Section 351(a) provides, in general, for the nonrecognition of gain or loss upon the transfer by one or more persons of property to a corporation solely in exchange for stock of such corporation if, immediately after the exchange, such person or persons are in control of the corporation to which the property was transferred. As used in section 351, the phrase “one or more persons” includes individuals, trusts, estates, partnerships, associations, companies, or corporations (see section 7701(a)(1)). To be in control of the transferee corporation, such person or persons must own immediately after the transfer stock possessing at least 80 percent of the total combined voting power of all classes of stock entitled to vote and at least 80 percent of the total

number of shares of all other classes of stock of such corporation (see section 368(c)). In determining control under this section, the fact that any corporate transferor distributes part or all of the stock which it receives in the exchange to its shareholders shall not be taken into account. The phrase "immediately after the exchange" does not necessarily require simultaneous exchanges by two or more persons, but comprehends a situation where the rights of the parties have been previously defined and the execution of the agreement proceeds with an expedition consistent with orderly procedure. For purposes of this section, stock rights and stock warrants are not included in the term *stock.* In addition, for purposes of this section—

(i) Stock will not be treated as issued for property if it is issued for services rendered or to be rendered to or for the benefit of the issuing corporation; and

(ii) Stock will not be treated as issued for property if it is issued for property which is of relatively small value in comparison to the value of the stock already owned (or to be received for services) by the person who transferred such property and the primary purpose of the transfer is to qualify under this section the exchanges of property by other persons transferring property.

(2) ***Application.*** The application of section 351(a) is illustrated by the following examples:

Example 1. C owns a patent right worth $25,000 and D owns a manufacturing plant worth $75,000. C and D organize the R Corporation with an authorized capital stock of $100,000. C transfers his patent right to the R Corporation for $25,000 of its stock and D transfers his plant to the new corporation for $75,000 of its stock. No gain or loss to C or D is recognized.

Example 2. B owns certain real estate which cost him $50,000 in 1930, but which has a fair market value of $200,000 in 1955. He transfers the property to the N Corporation in 1955 for 78 percent of each class of stock of the corporation having a fair market value of $200,000, the remaining 22 percent of the stock of the corporation having been issued by the corporation in 1940 to other persons for cash. B realized a taxable gain of $150,000 on this transaction.

Example 3. E, an individual, owns property with a basis of $10,000 but which has a fair market value of $18,000. E also had rendered services valued at $2,000 to Corporation F. Corporation F has outstanding 100 shares of common stock all of which are held by G. Corporation F issues 400 shares of its common stock (having a fair market value of $20,000) to E in exchange for his property worth $18,000 and in compensation for the services he has rendered worth $2,000. Since immediately after the transaction, E owns 80 percent of the outstanding stock of Corporation F, no gain is recognized upon the exchange of the property for the stock. However, E realized $2,000 of ordinary income as compensation for services rendered to Corporation F.

(3) ***Underwritings of stock*** —

(i) ***In general.*** For the purpose of section 351, if a person acquires stock of a corporation from an underwriter in exchange for cash in a qualified underwriting transaction, the person who acquires stock from the underwriter is treated as transferring cash directly to the corporation in exchange for stock of the corporation and the underwriter is disregarded. A qualified underwriting transaction is a transaction in which a corporation issues stock for cash in an underwriting in which either the underwriter is an agent of the corporation or the underwriter's ownership of the stock is transitory.

(ii) ***Effective date.*** This paragraph (a)(3) is effective for qualified underwriting transactions occurring on or after May 1, 1996.

(b) *Multiple transferors* —

(1) ***Disproportionate transfers.*** When property is transferred to a corporation by two or more persons in exchange for stock, as described in paragraph (a) of this section, and the stock received is disproportionate to the transferor's prior interest in such property, the entire transaction will be given tax effect in accordance with its true nature, and the transaction may be treated as if the stock had first been received in proportion and then some of such stock had been used to make gifts (section 2501 and following), to pay compensation (sections 61(a)(1) and 83(a)), or to satisfy obligations of the transferor of any kind.

(2) ***Application.*** The application of paragraph (b)(1) of this section may be illustrated as follows:

Example 1. Individuals A and B, father and son, organize a corporation with 100 shares of common stock to which A transfers property worth $8,000 in exchange for 20 shares of stock, and B transfers property worth $2,000 in exchange for 80 shares of stock. No gain or loss will be recognized under section 351. However, if it is determined that A in fact made a gift to B, such gift will be subject to tax under section 2501 and following. Similarly, if B had rendered services to A (such services having no relation to the assets transferred or to the business of the corporation) and the disproportion in the amount of stock received constituted the payment of compensation by A to B, B will be taxable upon the fair market value of the 60 shares of stock received as compensation for services rendered, and A will realize gain or loss upon the difference between the basis to him of the 60 shares and their fair market value at the time of the exchange.

Example 2. Individuals C and D each transferred, to a newly organized corporation, property having a fair market value of $4,500 in exchange for the issuance by the corporation of 45 shares of its capital stock to each transferor. At the same time, the corporation issued to E, an individual, 10 shares of its capital stock in payment for organizational and promotional services rendered by E for the benefit of the corporation. E transferred no property to the corporation. C and D were under no obligation to pay for E's services. No gain or loss is recognized to C or D. E received compensation taxable as ordinary income to the extent of the fair market value of the 10 shares of stock received by him.

(c)

(1) The general rule of section 351 does not apply, and consequently gain or loss will be recognized, where property is transferred to an investment company after June 30, 1967. A transfer of property after June 30, 1967, will be considered to be a transfer to an investment company if—

(i) The transfer results, directly or indirectly, in diversification of the transferors' interests, and

(ii) The transferee is (*a*) a regulated investment company, (*b*) a real estate investment trust, or (*c*) a corporation more than 80 percent of the value of whose assets (excluding cash and nonconvertible debt obligations from consideration) are held for investment and are readily marketable stocks or securities, or interests in regulated investment companies or real estate investment trusts.

(2) The determination of whether a corporation is an investment company shall ordinarily be made by reference to the circumstances in existence immediately after the transfer in question. However, where circumstances change thereafter pursuant to a plan in existence at the time of the transfer, this determination shall be made by reference to the later circumstances.

(3) Stocks and securities will be considered readily marketable if (and only if) they are part of a class of stock or securities which is traded on a securities exchange or traded or quoted regularly in the over-the-counter market. For purposes of subparagraph (1)(ii)(*c*) of this paragraph, the term “readily marketable stocks or securities” includes convertible debentures, convertible preferred stock, warrants, and other stock rights if the stock for which they may be converted or exchanged is readily marketable. Stocks and securities will be considered to be held for investment unless they are

(i) held primarily for sale to customers in the ordinary course of business, or

(ii) used in the trade or business of banking, insurance, brokerage, or a similar trade or business.

(4) In making the determination required under subparagraph (1)(ii)(*c*) of this paragraph, stock and securities in subsidiary corporations shall be disregarded and the parent corporation shall be deemed to own its ratable share of its subsidiaries' assets. A corporation shall be considered a subsidiary if the parent owns 50 percent or more of

(i) the combined voting power of all classes of stock entitled to vote, or

(ii) the total value of shares of all classes of stock outstanding.

(5) A transfer ordinarily results in the diversification of the transferors' interests if two or more persons transfer nonidentical assets to a corporation in the exchange. For this purpose, if any transaction involves one or more transfers of nonidentical assets which, taken in the aggregate, constitute an insignificant portion of the total value of assets transferred, such transfers shall be disregarded in determining whether diversification has occurred. If there is only one transferor (or two or more transferors of identical assets) to a newly organized corporation, the transfer will generally be treated as not resulting in diversification. If a transfer is part of a plan to achieve diversification without recognition of gain, such as a plan which contemplates a subsequent transfer, however delayed, of the corporate assets (or of the stock or securities received in the earlier exchange) to an investment company in a transaction purporting to qualify for nonrecognition treatment, the original transfer will be treated as resulting in diversification.

(6)

(i) For purposes of paragraph (c)(5) of this section, a transfer of stocks and securities will not be treated as resulting in a diversification of the transferors' interests if each transferor transfers a diversified portfolio of stocks and securities. For purposes of this paragraph (c)(6), a portfolio of stocks and securities is diversified if it satisfies the 25 and 50-percent tests of section 368(a)(2)(F)(ii), applying the relevant provisions of section 368(a)(2)(F). However, Government securities are included in total assets for purposes of the denominator of the 25 and 50-percent tests (unless the Government securities are acquired to meet the 25 and 50-percent tests), but are not treated as securities of an issuer for purposes of the numerator of the 25 and 50-percent tests.

(ii) Paragraph (c)(6)(i) of this section is effective for transfers completed on or after May 2, 1996. Transfers of diversified (within the meaning of paragraph (c)(6)(i) of this section), but nonidentical, portfolios of stocks and securities completed before May 2, 1996, may be treated either—

(A) Consistent with paragraph (c)(6)(i) of this section; or

(B) As resulting in diversification of the transferors' interests.

(7) The application of subparagraph (5) of this paragraph may be illustrated as follows:

Example 1. Individuals A, B, and C organize a corporation with 101 shares of common stock. A and B each transfers to it $10,000 worth of the only class of stock of corporation X, listed on the New York Stock Exchange, in exchange for 50 shares of stock. C transfers $200 worth of readily marketable securities in corporation Y for one share of stock. In determining whether or not diversification has occurred, C's participation in the transaction will be disregarded. There is, therefore, no diversification, and gain or loss will not be recognized.

Example 2. A, together with 50 other transferors, organizes a corporation with 100 shares of stock. A transfers $10,000 worth of stock in corporation X, listed on the New York Stock Exchange, in exchange for 50 shares of stock. Each of the other 50 transferors transfers $200 worth of readily marketable securities in corporations other than X in exchange for one share of stock. In determining whether or not diversification has occurred, all transfers will be taken into account. Therefore, diversification is present, and gain or loss will be recognized.

(d) ***Applicability date.*** Paragraphs (a)(1) and (b)(1) of this section apply to transfers after October 2, 1989, for tax years ending after such date, except as specified in section 7203(c)(2) and (3) of Public Law 101-239.

[T.D. 6500, 25 FR 11607, Nov. 26, 1960, as amended by T.D. 6942, 32 FR 20977, Dec. 29, 1967; T.D. 8665, 61 FR 19189, May 1, 1996; T.D. 8663, 61 FR 19545, May 2, 1996; T.D. 9759, 81 FR 17074, Mar. 28, 2016]

§ 1.351-2 Receipt of property.

(a) If an exchange would be within the provisions of section 351(a) if it were not for the fact that the property received in exchange consists not only of property permitted by such subsection to be received without the recognition of gain, but also of other property or money, then the gain, if any, to the recipient shall be recognized, but in an amount not in excess of the sum of such money and the fair market value of such other property. No loss to the recipient shall be recognized.

(b) See section 357 and the regulations pertaining to that section for applicable rules as to the treatment of liabilities as “other property” in cases subject to section 351, where another party to the exchange assumes a liability, or acquires property subject to a liability.

(c) See sections 358 and 362 and the regulations pertaining to those sections for applicable rules with respect to the determination of the basis of stock, securities, or other property received in exchanges subject to section 351.

(d) See part I (section 301 and following), subchapter C, chapter 1 of the Code, and the regulations thereunder for applicable rules with respect to the taxation of dividends where a distribution by a corporation of its stock or securities in connection with an exchange subject to section 351(a) has the effect of the distribution of a taxable dividend.

(e) See § 1.356-7(a) for the applicability of the definition of nonqualified preferred stock in section 351(g)(2) for stock issued prior to June 9, 1997, and for stock issued in transactions occurring after June 8, 1997, that are described in section 1014(f)(2) of the Taxpayer Relief Act of 1997, Public Law 105-34 (111 Stat. 788, 921). See § 1.356-7(c) for the treatment of preferred stock received in certain exchanges for common or preferred stock described in section 351(g)(2)(C)(i)(II).

[T.D. 6500, 25 FR 11607, Nov. 26, 1960; 25 FR 14021, Dec. 31, 1960, as amended by T.D. 8904, 65 FR 58650, Oct. 2, 2000]

§ 1.351-3 Records to be kept and information to be filed.

(a) ***Significant transferor.*** Every significant transferor must include a statement entitled, "STATEMENT PURSUANT TO § 1.351-3(a) BY [INSERT NAME AND TAXPAYER IDENTIFICATION NUMBER (IF ANY) OF TAXPAYER], A SIGNIFICANT TRANSFEROR," on or with such transferor's income tax return for the taxable year of the section 351 exchange. If a significant transferor is a controlled foreign corporation (within the meaning of section 957), each United States shareholder (within the meaning of section 951(b)) with respect thereto must include this statement on or with its return. The statement must include—

(1) The name and employer identification number (if any) of the transferee corporation;

(2) The date(s) of the transfer(s) of assets;

(3) The fair market value and basis of the property transferred by such transferor in the exchange, determined immediately before the transfer and aggregated as follows:

(i) Importation property transferred in a loss importation transaction, as defined in § 1.362-3(c)(2) and (3), respectively;

(ii) Loss duplication property as defined in § 1.362-4(g)(1);

(iii) Property with respect to which any gain or loss was recognized on the transfer (without regard to whether such property is also identified in paragraph (a)(3)(i) or (ii) of this section); and

(iv) Property not described in paragraph (a)(3)(i), (ii), or (iii) of this section.

(4) The date and control number of any private letter ruling(s) issued by the Internal Revenue Service in connection with the section 351 exchange.

(b) ***Transferee corporation.*** Except as provided in paragraph (c) of this section, every transferee corporation must include a statement entitled, "STATEMENT PURSUANT TO § 1.351-3(b) BY [INSERT NAME AND EMPLOYER IDENTIFICATION NUMBER (IF ANY) OF TAXPAYER], A TRANSFEREE CORPORATION," on or with its income tax return for the taxable year of the exchange. If the transferee corporation is a controlled foreign corporation (within the meaning of section 957), each United States shareholder (within the meaning of section 951(b)) with respect thereto must include this statement on or with its return. The statement must include—

(1) The name and taxpayer identification number (if any) of every significant transferor;

(2) The date(s) of the transfer(s) of assets;

(3) The fair market value and basis of property received in the exchange, determined immediately before the transfer and aggregated as follows:

(i) Importation property transferred in a loss importation transaction, as defined in § 1.362-3(c)(2) and (3), respectively;

(ii) Loss duplication property as defined in § 1.362-4(g)(1);

(iii) Property with respect to which any gain or loss was recognized on the transfer (without regard to whether such property is also identified in paragraph (b)(3)(ii) of this section);

(iv) Property not described in paragraph (b)(3)(i), (ii), or (iii) of this section; and

(4) The date and control number of any private letter ruling(s) issued by the Internal Revenue Service in connection with the section 351 exchange.

(c) ***Exception for certain transferee corporations.*** The transferee corporation is not required to file a statement under paragraph (b) of this section if all of the information that would be included in the statement described in paragraph (b) of this section is included in any statement(s) described in paragraph (a) of this section that is attached to the same return for the same section 351 exchange.

(d) ***Definitions.*** For purposes of this section:

(1) ***Significant transferor*** means a person that transferred property to a corporation and received stock of the transferee corporation in an exchange described in section 351 if, immediately after the exchange, such person—

(i) Owned at least five percent (by vote or value) of the total outstanding stock of the transferee corporation if the stock owned by such person is publicly traded, or

(ii) Owned at least one percent (by vote or value) of the total outstanding stock of the transferee corporation if the stock owned by such person is not publicly traded.

(2) ***Publicly traded stock*** means stock that is listed on—

(i) A national securities exchange registered under section 6 of the Securities Exchange Act of 1934 (15 U.S.C. 78f); or

(ii) An interdealer quotation system sponsored by a national securities association registered under section 15A of the Securities Exchange Act of 1934 (15 U.S.C. 78o-3).

(e) ***Substantiation information.*** Under § 1.6001-1(e), taxpayers are required to retain their permanent records and make such records available to any authorized Internal Revenue Service officers and employees. In connection with the exchange described in this section, these records should specifically include information regarding the amount, basis, and fair market value of all transferred property, and relevant facts regarding any liabilities assumed or extinguished as part of such exchange.

(f) ***Effective/applicability date.*** This section applies to any taxable year beginning on or after May 30, 2006. However, taxpayers may apply this section to any original Federal income tax return (including any amended return filed on or before the due date (including extensions) of such original return) timely filed on or after May 30, 2006. For taxable years beginning before May 30, 2006, see § 1.351-3 as contained in 26 CFR part 1 in effect on April 1, 2006. Paragraphs (a)(3) and (b)(3) of this section apply with respect to exchanges under section 351 occurring on or after March 28, 2016, and also with respect to exchanges under section 351 occurring before such date as a result of an entity classification election under § 301.7701-3 of this chapter filed on or after March 28, 2016, unless such exchange is pursuant to a binding agreement that was in effect prior to March 28, 2016 and at all times thereafter.

[T.D. 9329, 72 FR 32798, June 14, 2007, as amended by T.D. 9759, 81 FR 17074, Mar. 28, 2016]

EFFECTS ON SHAREHOLDERS AND SECURITY HOLDERS

§ 1.354-1 Exchanges of stock and securities in certain reorganizations.

(a) Section 354 provides that under certain circumstances no gain or loss is recognized to a shareholder who surrenders his stock in exchange for other stock or to a security holder who surrenders his securities in exchange for stock. Section 354 also provides that under certain circumstances a security holder may surrender securities and receive securities in the same principal amount or in a lesser principal amount without the recognition of gain or loss to him. The exchanges to which section 354 applies must be

pursuant to a plan of reorganization as provided in section 368(a) and the stock and securities surrendered as well as the stock and securities received must be those of a corporation which is a party to the reorganization. Section 354 does not apply to exchanges pursuant to a reorganization described in section 368(a)(1)(D) unless the transferor corporation—

(1) Transfers all or substantially all of its assets to a single corporation, and

(2) Distributes all of its remaining properties (if any) and the stock, securities and other properties received in the exchange to its shareholders or security holders in pursuance of the plan of reorganization. The fact that properties retained by the transferor corporation, or received in exchange for the properties transferred in the reorganization, are used to satisfy existing liabilities not represented by securities and which were incurred in the ordinary course of business before the reorganization does not prevent the application of section 354 to an exchange pursuant to a plan of reorganization defined in section 368(a)(1)(D).

(b) Except as provided in section 354 (c) and (d), section 354 is not applicable to an exchange of stock or securities if a greater principal amount of securities is received than the principal amount of securities the recipient surrenders, or if securities are received and the recipient surrenders no securities. See, however, section 356 and regulations pertaining to such section. See also section 306 with respect to the receipt of preferred stock in a transaction to which section 354 is applicable.

(c) An exchange of stock or securities shall be subject to section 354(a)(1) even though—

(1) Such exchange is not pursuant to a plan of reorganization described in section 368(a), and

(2) The principal amount of the securities received exceeds the principal amount of the securities surrendered or if securities are received and no securities are surrendered—

if such exchange is pursuant to a plan of reorganization for a railroad corporation as defined in section 77(m) of the Bankruptcy Act (11 U.S.C. 205(m)) and is approved by the Interstate Commerce Commission under section 77 of such act or under section 20b of the Interstate Commerce Act (49 U.S.C. 20b) as being in the public interest. Section 354 is not applicable to such exchanges if there is received property other than stock or securities. See, however, section 356 and regulations pertaining to such section.

(d) The rules of section 354 may be illustrated by the following examples:

Example 1. Pursuant to a reorganization under section 368(a) to which Corporations T and W are parties, A, a shareholder in Corporation T, surrenders all his common stock in Corporation T in exchange for common stock of Corporation W. No gain or loss is recognized to A.

Example 2. Pursuant to a reorganization under section 368(a) to which Corporations X and Y (which are not railroad corporations) are parties, B, a shareholder in Corporation X, surrenders all his stock in X for stock and securities in Y. Section 354 does not apply to this exchange. See, however, section 356.

Example 3. C, a shareholder in Corporation Z (which is not a railroad corporation), surrenders all his stock in Corporation Z in exchange for securities in Corporation Z. Whether or not this exchange is in connection with a recapitalization under section 368(a)(1)(E), section 354 does not apply. See, however, section 302.

Example 4. The facts are the same as in *Example 3* of this paragraph (d), except that C receivies solely rights to acquire stock in Corporation Z. Section 354 does not apply.

(e) Except as provided in § 1.356-6, for purposes of section 354, the term *securities* includes rights issued by a party to the reorganization to acquire its stock. For purposes of this section and section 356(d)(2)(B), a right to acquire stock has no principal amount. For this purpose, rights to acquire stock has the same meaning as it does under sections 305 and 317(a). Other Internal Revenue Code provisions governing the treatment of rights to acquire stock may also apply to certain exchanges occurring in connection with a reorganization. See, for example, sections 83 and 421 through 424 and the regulations thereunder. This paragraph (e) applies to exchanges occurring on or after March 9, 1998.

(f) See § 1.356-7(a) and (b) for the treatment of nonqualified preferred stock (as defined in section 351(g)(2)) received in certain exchanges for nonqualified preferred stock or preferred stock. See § 1.356-7(c) for the treatment of preferred stock received in certain exchanges for common or preferred stock described in section 351(g)(2)(C)(i)(II).

[T.D. 6500, 25 FR 11607, Nov. 26, 1960, as amended by T.D. 7616, 44 FR 26869, May 8, 1979; T.D. 8752, 63 FR 410, Jan. 6, 1998; T.D. 8882, 65 FR 31078, May 16, 2000; T.D. 8904, 65 FR 58651, Oct. 2, 2000]

§ 1.355-0 Outline of sections.

In order to facilitate the use of §§ 1.355-1 through 1.355-8, this section lists the major paragraphs in those sections as follows:

§ 1.355-1 DISTRIBUTION OF STOCK AND SECURITIES OF A CONTROLLED CORPORATION.

(a) Effective date of certain sections.

(b) Application of section.

§ 1.355-2 LIMITATIONS.

(a) Property distributed.

(b) Independent business purpose.

(1) Independent business purpose requirement.

(2) Corporate business purpose.

(3) Business purpose for distribution.

(4) Business purpose as evidence of nondevice.

(5) Examples.

(c) Continuity of interest requirement.

(1) Requirement.

(2) Examples.

(d) Device for distribution of earnings and profits.

(1) In general.

(2) Device factors.

(i) In general.

(ii) Pro rata distribution.

(iii) Subsequent sale or exchange of stock.

(A) In general.

(B) Sale or exchange negotiated or agreed upon before the distribution.

(C) Sale or exchange not negotiated or agreed upon before the distribution.

(D) Negotiated or agreed upon before the distribution.

(E) Exchange in pursuance of a plan of reorganization.

(iv) Nature and use of assets.

(A) In general.

(B) Assets not used in a trade or business meeting the requirement of section 355(b).

(C) Related function.

(3) Nondevice factors.

(i) In general.

(ii) Corporate business purpose.

(iii) Distributing corporation publicly traded and widely held.

(iv) Distribution to domestic corporate shareholders.

(4) Examples.

(5) Transactions ordinarily not considered as a device.

(i) In general.

(ii) Absence of earnings and profits.

(iii) Section 303(a) transactions.

(iv) Section 302(a) transactions.

(v) Examples.

(e) Stock and securities distributed.

(1) In general.

(2) Additional rules.

(f) Principal amount of securities.

(1) Securities received.

(2) Only stock received.

(g) Recently acquired controlled stock under section 355(a)(3)(B).

(1) Other property.

(2) Exceptions.

(3) DSAG.

(4) Taxable transaction.

(5) Examples.

(h) Active conduct of a trade or business.

(i) Effective/applicability date.

§ 1.355-3 Active conduct of a trade or business.

(a) General requirements.

(1) Application of section 355.

(2) Examples.

(b) Active conduct of a trade or business defined.

(1) In general.

(2) Active conduct or a trade or business immediately after distribution.

(i) In general.

(ii) Trade or business.

(iii) Active conduct.

(iv) Limitations.

(3) Active conduct for five-year period preceding distribution.

(4) Special rules for acquisition of a trade or business (Prior to the Revenue Act of 1987 and Technical and Miscellaneous Revenue Act of 1988).

(i) In general.

(ii) Example.

(iii) Gain or loss recognized in certain transactions.

(iv) Affiliated group.

(5) Special rules for acquisition of a trade or business (After the Revenue Act of 1987 and Technical and Miscellaneous Revenue Act of 1988).

(c) Examples.

§ 1.355-4 Non pro rata distributions, etc.

§ 1.355-5 Records to be kept and information to be filed.

(a) Distributing corporation.

(1) In general.

(2) Special rule when an asset transfer precedes a stock distribution.

(b) Significant distributee.

(c) Definitions.

(1) Significant distributee.

(2) Publicly traded stock.

(d) Substantiation information.

(e) Effective/applicability date.

§ 1.355-6 Recognition of gain on certain distributions of stock or securities in controlled corporation.

(a) Conventions.

(1) Examples.

(2) Five-year period.

(3) Distributing securities.

(4) Marketable securities.

(b) General rules and purposes of section 355(d).

(1) Disqualified distributions in general.

(2) Disqualified stock.

(i) In general.

(ii) Purchase.

(iii) Exceptions.

(A) Purchase eliminated.

(B) Deemed purchase eliminated.

(C) Elimination of basis.

(*1*) General rule.

(*2*) Special rule for transferred and exchanged basis property.

(*3*) Special rule for Split-offs and Split-ups.

(D) Special rule if basis allocated between two corporations.

(3) Certain distributions not disqualified distributions because purposes of section 355(d) not violated.

(i) In general.

(ii) Disqualified person.

(iii) Purchased basis.

(iv) Increase in interest because payment of cash in lieu of fractional shares.

(v) Other exceptions.

(vi) Examples.

(4) Anti-avoidance rule.

(i) In general.

(ii) Example.

(c) Whether a person holds a 50 percent or greater interest.

(1) In general.

(2) Valuation.

(3) Effect of options, warrants, convertible obligations, and other similar interests.

(i) Application.

(ii) General rule.

(iii) Options deemed newly issued and substituted options.

(A) Exchange, adjustment, or alteration of existing option.

(B) Certain compensatory options.

(C) Substituted options.

(iv) Effect of treating an option as exercised.

(A) In general.

(B) Stock purchase agreement or similar arrangement.

(v) Instruments treated as options.

(vi) Instruments generally not treated as options.

(A) Escrow, pledge, or other security agreements.

(B) Compensatory options.

(*1*) General rule.

(*2*) Exception.

(C) Certain stock conversion features.

(D) Options exercisable only upon death, disability, mental incompetency, or separation from service.

(E) Rights of first refusal.

(F) Other enumerated instruments.

(vii) Reasonably certain that the option will be exercised.

(A) In general.

(B) Stock purchase agreement or similar arrangement.

(viii) Examples.

(4) Plan or arrangement.

(i) In general.

(ii) Understanding.

(iii) Examples.

(iv) Exception.

(A) Subsequent disposition.

(B) Example.

(d) Purchase.

(1) In general.

(i) Definition of purchase under section 355(d)(5)(A).

(ii) Section 355 distributions.

(iii) Example.

(2) Exceptions to definition of purchase under section 355(d)(5)(A).

(i) Acquisition of stock in a transaction which includes other property or money.

(A) Transferors and shareholders of transferor or distributing corporations.

(*1*) In general.

(*2*) Exception.

(B) Transferee corporations.

(*1*) In general.

(*2*) Exception.

(C) Examples.

(ii) Acquisition of stock in a distribution to which section 305(a) applies.

(iii) Section 1036(a) exchange.

(iv) Section 338 elections.

(A) In general.

(B) Example.

(v) Partnership distributions.

(A) Section 732(b).

(B) Section 734(b).

(3) Certain section 351 exchanges treated as purchases.

(i) In general.

(A) Treatment of stock received by transferor.

(B) Multiple classes of stock.

(ii) Cash item, marketable stock.

(iii) Exception for certain acquisitions.

(A) In general.

(B) Example.

(iv) Exception for assets transferred as part of an active trade or business.

(A) In general.

(B) Active conduct of a trade or business.

(C) Reasonable needs of the trade or business.

(D) Consideration of all facts and circumstances.

(E) Successive transfers.

(v) Exception for transfer between members of the same affiliated group.

(A) In general.

(B) Examples.

(4) Triangular asset reorganizations.

(i) Definition.

(ii) Treatment.

(iii) Example.

(5) Reverse triangular reorganizations other than triangular asset reorganizations.

(i) In general.

(ii) Letter ruling and closing agreement.

(iii) Example.

(6) Treatment of group structure changes.

(i) In general.

(ii) Adjustments to basis of higher-tier members.

(iii) Example.

(7) Special rules for triangular asset reorganizations, other reverse triangular reorganizations, and group structure changes.

(e) Deemed purchase and timing rules.

(1) Attribution and aggregation.

(i) In general.

(ii) Purchase of additional interest.

(iii) Purchase between persons treated as one person.

(iv) Purchase by a person already treated as holding stock under section 355(d)(8)(A).

(v) Examples.

(2) Transferred basis rule.

(3) Exchanged basis rule.

(i) In general.

(ii) Example.

(4) Certain section 355 or section 305 distributions.

(i) Section 355.

(ii) Section 305.

(5) Substantial diminution of risk.

(i) In general.

(ii) Property to which suspension applies.

(iii) Risk of loss substantially diminished.

(iv) Special class of stock.

(f) Duty to determine stockholders.

(1) In general.

(2) Deemed knowledge of contents of securities filings.

(3) Presumptions as to securities filings.

(4) Presumption as to less-than-five-percent shareholders.

(5) Examples.

(g) Effective date.

§ 1.355-7 Recognition of gain on certain distributions of stock or securities in connection with an acquisition.

(a) In general.

(b) Plan.

(1) In general.

(2) Certain post-distribution acquisitions.

(3) Plan factors.

(4) Non-plan factors.

(c) Operating rules.

(1) Internal discussions and discussions with outside advisors evidence of business purpose.

(2) Takeover defense.

(3) Effect of distribution on trading in stock.

(4) Consequences of section 355(e) disregarded for certain purposes.

(5) Multiple acquisitions.

(d) Safe harbors.

(1) Safe Harbor I.

(2) Safe Harbor II.

(i) In general.

(ii) Special rule.

(3) Safe Harbor III.

(4) Safe Harbor IV.

(i) In general.

(ii) Special rules.

(5) Safe Harbor V.

(i) In general.

(ii) Special rules.

(6) Safe Harbor VI.

(7) Safe Harbor VII.

(i) In general.

(ii) Special rules.

(8) Safe Harbor VIII.

(i) In general.

(ii) Special rule.

(9) Safe Harbor IX.

(i) In general.

(ii) Special rule.

(e) Options, warrants, convertible obligations, and other similar interests.

(1) Treatment of options.

(i) General rule.

(ii) Agreement, understanding, or arrangement to write, transfer, or modify an option.

(iii) Substantial negotiations related to options.

(2) Stock acquired pursuant to options.

(3) Instruments treated as options.

(4) Instruments generally not treated as options.

(i) Escrow, pledge, or other security agreements.

(ii) Options exercisable only upon death, disability, mental incompetency, or separation from service.

(iii) Rights of first refusal.

(iv) Other enumerated instruments.

(f) Multiple controlled corporations.

(g) Valuation.

(h) Definitions.

(1) Agreement, understanding, arrangement, or substantial negotiations.

(2) Controlled corporation.

(3) Controlling shareholder.

(4) Coordinating group.

(5) Disclosure event.

(6) Discussions.

(7) Established market.

(8) Five-percent shareholder.

(9) Implicit permission.

(10) Public announcement.

(11) Public offering.

(12) Similar acquisition (not involving a public offering).

(13) Similar acquisition involving a public offering.

(i) One public offering.

(ii) More than one public offering.

(iii) Potential acquisition involving a public offering.

(14) Ten-percent shareholder.

(i) [Reserved]

(j) Examples.

(k) Effective dates.

§ 1.355-8 Definition of predecessor and successor and limitations on gain recognition under section 355(e) and section 355(f).

(a) In general.

(1) Scope.

(2) Overview.

(i) Purposes and conceptual overview.

(ii) References to and definitions of terms used in this section.

(iii) Special rules and examples.

(3) Purposes of section; Predecessor of Distributing overview.

(i) Purposes.

(ii) Predecessor of Distributing overview.

(A) Relevant Property transferred to Controlled.

(B) Relevant Property includes Controlled Stock.

(4) References.

(i) References to Distributing or Controlled.

(ii) References to Plan or Distribution.

(iii) Plan Period.

(5) List of definitions.

(b) Predecessor of Distributing.

(1) Definition.

(i) In general.

(ii) Pre-Distribution requirements.

(A) Relevant Property requirement.

(B) Reflection of basis requirement.

(iii) Post-Distribution requirement.

(2) Additional definitions and rules related to paragraph (b)(1) of this section.

(i) References to Distributing and Controlled.

(ii) Potential Predecessor.

(A) Potential Predecessor definition.

(B) Expanded Affiliated Group definition.

(iii) Successors of Potential Predecessors.

(iv) Relevant Property; Relevant Equity.

(A) In general.

(B) Property held by Distributing.

(C) F reorganizations.

(v) Stock of Distributing as Relevant Property.

(A) In general.

(B) Certain reorganizations.

(vi) Substitute Asset.

(A) In general.

(B) Controlled stock received by Distributing.

(*1*) In general.

(*2*) Exception.

(C) Treatment as Relevant Property.

(vii) Separated Property.

(viii) Underlying Property.

(ix) Multiple Predecessors of Distributing.

(x) Deemed exchanges.

(c) Additional definitions.

(1) Predecessor of Controlled.

(2) Successors.

(i) In general.

(ii) Determination of Successor status.

(3) Section 381 Transaction.

(d) Special acquisition rules.

(1) Deemed acquisitions of stock in Section 381 Transactions.

(i) Rule.

(ii) Example.

(2) Deemed acquisitions of stock after Section 381 Transactions.

(3) Separate counting for Distributing and each Predecessor of Distributing.

(e) Special rules for limiting gain recognition.

(1) Overview.

(i) Gain limitation.

(ii) Multiple Planned 50-percent Acquisitions.

(iii) Statutory Recognition Amount limit; Section 336(e).

(2) Planned 50-percent Acquisition of a Predecessor of Distributing.

(i) In general.

(ii) Operating rules.

(A) Separated Property other than Controlled stock.

(B) Controlled stock that is Separated Property.

(C) Anti-duplication rule.

(3) Planned 50-percent Acquisition of Distributing.

(4) Gain recognition limited to Statutory Recognition Amount.

(5) Section 336(e) election.

(f) Predecessor or Successor as a member of the affiliated group.

(g) Inapplicability of section 355(f) to certain intra-group Distributions.

(1) In general.

(2) Alternative application of section 355(f).

(h) Examples.

(i) Applicability date.

[T.D. 8238, 54 FR 289, Jan. 5, 1989, as amended by T.D. 8913, 65 FR 79722, Dec. 20, 2000; T.D. 8960, 66 FR 40591, Aug. 3, 2001; T.D. 8988, 67 FR 20636, Apr. 26, 2002; 67 FR 38200, June 3, 2002; T.D. 9198, 70 FR 20283, Apr. 19, 2005; T.D. 9264, 71 FR 30597, May 30, 2006; T.D. 9329, 72 FR 32799, June 14, 2007; T.D. 9435, 73 FR 75950, Dec. 15, 2008; T.D. 9548, 76 FR 65111, Oct. 20, 2011; T.D. 9805, 81 FR 91747, Dec. 19, 2016; T.D. 9888, 84 FR 69316, Dec. 18, 2019]

§ 1.355-1 Distribution of stock and securities of a controlled corporation.

(a) ***Effective/applicability date of certain sections.*** Except as otherwise provided, this section and §§ 1.355-2 through 1.355-4 apply to transactions occurring after February 6, 1989. For transactions occurring on or before that date, see 26 CFR 1.355-1 through 1.355-4 (revised as of April 1, 1987). This section and §§ 1.355-2 through 1.355-4, other than § 1.355-2(g) and (i), do not reflect the amendments to section 355 made by the Revenue Act of 1987, the Technical and Miscellaneous Revenue Act of 1988, and the Tax Technical Corrections Act of 2007. For the applicability date of §§ 1.355-2(g), 1.355-5, 1.355-6, and 1.355-7, see §§ 1.355-2(i), 1.355-5(e), 1.355-6(g), and 1.355-7(k), respectively.

(b) ***Application of section.*** Section 355 provides for the separation, without recognition of gain or loss to (or the inclusion in income of) the shareholders and security holders, of one or more existing businesses formerly operated, directly or indirectly, by a single corporation (the "distributing corporation"). It applies only to the separation of existing businesses that have been in active operation for at least five years (or a business that has been in active operation for at least five years into separate businesses), and which, in general, have been owned, directly or indirectly, for at least five years by the distributing corporation. A separation is achieved through the distribution by the distributing corporation of stock, or stock and securities, of one or more subsidiaries (the "controlled corporations") to its shareholders with respect to its stock or to its security holders in exchange for its securities. The controlled corporations may be preexisting or newly created subsidiaries. Throughout the regulations under section 355, the term *distribution* refers to a distribution by the distributing corporation of stock, or stock and securities, of one or more controlled corporations, unless the context indicates otherwise. Section 355 contemplates the continued operation of the business or businesses existing prior to the separation. See § 1.355-4 for types of distributions that may qualify under section 355, including pro rata distributions and non pro rata distributions.

(c) ***Stock rights.*** Except as provided in § 1.356-6, for purposes of section 355, the term *securities* includes rights issued by the distributing corporation or the controlled corporation to acquire the stock of that corporation. For purposes of this section and section 356(d)(2)(B), a right to acquire stock has no principal amount. For this purpose, rights to acquire stock has the same meaning as it does under sections 305 and 317(a). Other Internal Revenue Code provisions governing the treatment of rights to acquire stock may also apply to certain distributions occurring in connection with a transaction described in section 355. See, for example, sections 83 and 421 through 424 and the regulations thereunder. This paragraph (c) applies to distributions occurring on or after March 9, 1998.

(d) ***Nonqualified preferred stock.*** See § 1.356-7(a) and (b) for the treatment of nonqualified preferred stock (as defined in section 351(g)(2)) received in certain exchanges for (or in certain distributions with respect to) nonqualified preferred stock or preferred stock. See § 1.356-7(c) for the treatment of the receipt of preferred stock in certain exchanges for (or in certain distributions with respect to) common or preferred stock described in section 351(g)(2)(C)(i)(II).

[T.D. 8238, 54 FR 289, Jan. 5, 1989, as amended by T.D. 8752, 63 FR 410, Jan. 6, 1998; T.D. 8882, 65 FR 31078, May 16, 2000; T.D. 8904, 65 FR 58651, Oct. 2, 2000; T.D. 9435, 73 FR 75950, Dec. 15, 2008; 74 FR 3420, Jan. 21, 2009; T.D. 9548, 76 FR 65111, Oct. 20, 2011]

§ 1.355-2 Limitations.

(a) ***Property distributed.*** Section 355 applies to a distribution only if the property distributed consists solely of stock, or stock and securities, of a controlled corporation. If additional property (including an excess principal amount of securities received over securities surrendered) is received, see section 356.

(b) ***Independent business purpose*** —

(1) ***Independent business purpose requirement.*** Section 355 applies to a transaction only if it is carried out for one or more corporate business purposes. A transaction is carried out for a corporate business purpose if it is motivated, in whole or substantial part, by one or more corporate business purposes. The potential for the avoidance of Federal taxes by the distributing or controlled corporations (or a corporation controlled by either) is relevant in determining the extent to which an existing corporate business purpose motivated the distribution. The principal reason for this business purpose requirement is to provide nonrecognition treatment only to distributions that are

incident to readjustments of corporate structures required by business exigencies and that effect only readjustments of continuing interests in property under modified corporate forms. This business purpose requirement is independent of the other requirements under section 355.

(2) ***Corporate business purpose.*** A corporate business purpose is a real and substantial non Federal tax purpose germane to the business of the distributing corporation, the controlled corporation, or the affiliated group (as defined in § 1.355-3(b)(4)(iv)) to which the distributing corporation belongs. A purpose of reducing non Federal taxes is not a corporate business purpose if

(i) the transaction will effect a reduction in both Federal and non Federal taxes because of similarities between Federal tax law and the tax law of the other jurisdiction and

(ii) **the reduction of Federal taxes is greater than or substantially coextensive with the reduction of non Federal taxes. See *Examples (7)*** *and (8) of paragraph (b)(5) of this section. A shareholder purpose (for example, the personal planning purposes of a shareholder) is not a corporate business purpose. Depending upon the facts of a particular case, however, a shareholder purpose for a transaction may be so nearly coextensive with a corporate business purpose as to preclude any distinction between them. In such a case, the transaction is carried out for one or more corporate business purposes. See Example (2)* of paragraph (b)(5) of this section.

(3) ***Business purpose for distribution.*** **The distribution must be carried out for one or more corporate business purposes. See *Example* (3) of paragraph (b)(5) of this section. If a corporate business purpose can be achieved through a nontaxable transaction that does not involve the distribution of stock of a controlled corporation and which is neither impractical nor unduly expensive, then, for purposes of paragraph (b)(1) of this section, the separation is not carried out for that corporate business purpose. See *Examples (3)*** and (*4*) of paragraph (b)(5) of this section. For rules with respect to the requirement of a business purpose for a transfer of assets to a controlled corporation in connection with a reorganization described in section 368(a)(1)(D), *See* § 1.368-1(b).

(4) ***Business purpose as evidence of nondevice.*** The corporate business purpose or purposes for a transaction are evidence that the transaction was not used principally as a device for the distribution of earnings and profits within the meaning of section 355(a)(1)(B). *See* paragraph (d)(3)(ii) of this section.

(5) ***Examples.*** The provisions of this paragraph (b) may be illustrated by the following examples:

Example 1. Corporation X is engaged in the production, transportation, and refining of petroleum products. In 1985, X acquires all of the properties of corporation Z, which is also engaged in the production, transportation, and refining of petroleum products. In 1991, as a result of antitrust litigation, X is ordered to divest itself of all of the properties acquired from Z. X transfers those properties to new corporation Y and distributes the stock of Y pro rata to X's shareholders. In view of the divestiture order, the distribution is carried out for a corporate business purpose. See paragraph (b)(1) of this section.

Example 2. Corporation X is engaged in two businesses: The manufacture and sale of furniture and the sale of jewelry. The businesses are of equal value. The outstanding stock of X is owned equally by unrelated individuals A and B. A is more interested in the furniture business, while B is more interested in the jewelry business. A and B decide to split up the businesses and go their separate ways. A and B anticipate that the operations of each business will be enhanced by the separation because each shareholder will be able to devote his undivided attention to the business in which he is more interested and more proficient. Accordingly, X transfers the

jewelry business to new corporation Y and distributes the stock of Y to B in exchange for all of B's stock in X. The distribution is carried out for a corporate business purpose, notwithstanding that it is also carried out in part for shareholder purposes. See paragraph (b)(2) of this section.

Example 3. Corporation X is engaged in the manufacture and sale of toys and the manufacture and sale of candy. The shareholders of X wish to protect the candy business from the risks and vicissitudes of the toy business. Accordingly, X transfers the toy business to new corporation Y and distributes the stock of Y to X's shareholders. Under applicable law, the purpose of protecting the candy business from the risks and vicissitudes of the toy business is achieved as soon as X transfers the toy business to Y. Therefore, the distribution is not carried out for a corporate business purpose. See paragraph (b)(3) of this section.

Example 4. Corporation X is engaged in a regulated business in State T. X owns all of the stock of corporation Y, a profitable corporation that is not engaged in a regulated business. Commission C sets the rates that X may charge its customers, based on its total income. C has recently adopted rules according to which the total income of a corporation includes the income of a business if, and only if, the business is operated, directly or indirectly, by the corporation. Total income, for this purpose, includes the income of a wholly owned subsidiary corporation but does not include the income of a parent or "brother/sister" corporation. Under C's new rule, X's total income includes the income of Y, with the result that X has suffered a reduction of the rates that it may charge its customers. It would not be impractical or unduly expensive to create in a nontaxable transaction (such as a transaction qualifying under section 351) a holding company to hold the stock of X and Y. X distributes the stock of Y to X's shareholders. The distribution is not carried out for the purpose of increasing the rates that X may charge its customers because that purpose could be achieved through a nontaxable transaction, the creation of a holding company, that does not involve the distribution of stock of a controlled corporation and which is neither impractical nor unduly expensive. See paragraph (b)(3) of this section.

Example 5. The facts are the same as in *Example (4),* except that C has recently adopted rules according to which the total income of a corporation includes not only the income included in *Example (3),* but also the income of any member of the affiliated group to which the corporation belongs. In order to avoid a reduction in the rates that it may charge its customers, X distributes the stock of Y to X's shareholders. The distribution is carried out for a corporate business purpose. See paragraph (b)(3) of this section.

Example 6. (i) Corporation X owns all of the one class of stock of corporation Y. X distributes the stock of Y pro rata to its five shareholders, all of whom are individuals, for the sole purpose of enabling X and/or Y to elect to become an S corporation. The distribution does not meet the corporate business purpose requirement. See paragraph (b)(1) and (2) of this section.
(ii) The facts are the same as in *Example 6(i),* except that the business of Y is operated as a division of X. X transfers this division to new corporation Y and distributes the stock of Y pro rata to its shareholders, all of whom are individuals, for the sole purpose of enabling X and/or Y to elect to become an S corporation. The distribution does not meet the corporate business purpose requirement. See paragraph (b)(1) and (2) of this section.

Example 7. The facts are the same as in *Example (6)(i),* except that the distribution is made to enable X to elect to become an S corporation both for Federal tax purposes and for purposes of the income tax imposed by State M. State M has tax law provisions similar to subchapter S of the Internal Revenue Code of 1986. An election to be an S corporation for Federal tax purposes will effect a substantial reduction in Federal taxes that is greater than the reduction of State M taxes pursuant to an election to be an S corporation for State M purposes. The purpose of reducing State M taxes is not a corporate business purpose. The distribution does not meet the corporate business purpose requirements. See paragraph (b)(1) and (2) of this section.

Example 8. The facts are the same as *Example (7),* except that the distribution also is made to enable *A,* a key employee of Y, to acquire stock of Y without investing in X. A is considered to be critical to the success of Y and he has indicated that he will seriously consider leaving the company if he is not given the opportunity to purchase a significant amount of stock of Y. As a matter of state law, Y could not issue stock to the employee while it was a subsidiary of X. As in *Example (7),* the purpose of reducing State M taxes is not a corporate business purpose. In order to determine whether the issuance of stock to the key employee, in fact, motivated the distribution of the Y stock, the potential avoidance of Federal taxes is a relevant factor to take into account. If the facts and circumstances establish that the distribution was substantially motivated by the need to issue stock to the employee, the distribution will meet the corporate business purpose requirement.

(c) ***Continuity of interest requirement*** —

(1) ***Requirement.*** Section 355 applies to a separation that effects only a readjustment of continuing interests in the property of the distributing and controlled corporations. In this regard section 355 requires that one or more persons who, directly or indirectly, were the owners of the enterprise prior to the distribution or exchange own, in the aggregate, an amount of stock establishing a continuity of interest in each of the modified corporate forms in which the enterprise is conducted after the separation. This continuity of interest requirement is independent of the other requirements under section 355.

(2) ***Examples.***

Example 1. For more than five years, corporation X has been engaged directly in one business, and indirectly in a different business through its wholly owned subsidiary, S. The businesses are equal in value. At all times, the outstanding stock of X has been owned equally by unrelated individuals A and B. For valid business reasons, A and B cause X to distribute all of the stock of S to B in exchange for all of B's stock in X. After the transaction, A owns all the stock of X and B owns all the stock of S. The continuity of interest requirement is met because one or more persons who were the owners of X prior to the distribution (A and B) own, in the aggregate, an amount of stock establishing a continuity of interest in each of X and S after the distribution.

Example 2. Assume the same facts as in *Example (1),* except that pursuant to a plan to acquire a stock interest in X without acquiring, directly or indirectly, an interest in S, C purchased one-half of the X stock owned by A and immediately thereafter X distributed all of the S stock to B in exchange for all of B's stock in X. After the transactions, A owns 50 percent of X and B owns 100 percent of S. The distribution by X of all of the stock of S to B in exchange for all of B's stock in X will satisfy the continuity of interest requirement for section 355 because one or more persons who were the owners of X prior to the distribution (A and B) own, in the aggregate, an amount of stock establishing a continuity of interest in each of X and S after the distribution.

Example 3. Assume the same facts as in *Examples (1) and (2),* except that C purchased all of the X stock owned by A. After the transactions, neither A nor B own any of the stock of X, and B owns all the stock of S. The continuity of interest requirement is not met because the owners of X prior to the distribution (A and B) do not, in the aggregate, own an amount of stock establishing a continuity of interest in each of X and S after the distribution, *i.e.,* although A and B collectively have retained 50 percent of their equity interest in the former combined enterprise, they have failed to continue to own the minimum stock interest in the distributing corporation, X, that would be required in order to meet the continuity of interest requirement.

Example 4. Assume the same facts as in *Examples (1) and (2),* except that C purchased 80 percent of the X stock owned by A. After the transactions, A owns 20 percent of the stock of X, B owns no X stock, and B owns 100 percent of the S stock. The continuity of interest requirement is not met because the owners of X prior to the distribution (A and B) do not, in the aggregate, have a continuity of interest in each of X and S after the distribution, *i.e.,* although A and B collectively have retained 60 percent of their equity interest in the former combined enterprise, the 20 percent interest of A in X is less than the minimum equity interest in the distributing corporation, X, that would be required in order to meet the continuity of interest requirement.

(d) ***Device for distribution of earnings and profits*** —

(1) ***In general.*** Section 355 does not apply to a transaction used principally as a device for the distribution of the earnings and profits of the distributing corporation, the controlled corporation, or both (a "device"). Section 355 recognizes that a tax-free distribution of the stock of a controlled corporation presents a potential for tax avoidance by facilitating the avoidance of the dividend provisions of the Code through the subsequent sale or exchange of stock of one corporation and the retention of the stock of another corporation. A device can include a transaction that effects a recovery of basis. In this paragraph (d), "exchange" includes transactions, such as redemptions, treated as exchanges under the Code. Generally, the determination of whether a transaction was used principally as a device will be made from all of the facts and circumstances, including, but not limited to, the presence of the device factors specified in paragraph (d)(2) of this section ("evidence of device"), and the presence of the nondevice factors specified in paragraph (d)(3) of this section ("evidence of nondevice"). However, if a transaction is specified in paragraph (d)(5) of this section, then it is ordinarily considered not to have been used principally as a device.

(2) ***Device factors*** —

(i) ***In general.*** The presence of any of the device factors specified in this subparagraph (2) is evidence of device. The strength of this evidence depends on the facts and circumstances.

(ii) ***Pro rata distribution.*** A distribution that is pro rata or substantially pro rata among the shareholders of the distributing corporation presents the greatest potential for the avoidance of the dividend provisions of the Code and, in contrast to other types of distributions, is more likely to be used principally as a device. Accordingly, the fact that a distribution is pro rata or substantially pro rata is evidence of device.

(iii) ***Subsequent sale or exchange of stock*** —

(A) ***In general.*** A sale or exchange of stock of the distributing or the controlled corporation after the distribution (a "subsequent sale or exchange") is evidence of device. Generally, the greater the percentage of the stock sold or exchanged after the distribution, the stronger the evidence of device. In addition, the shorter the period of time between the distribution and the sale or exchange, the stronger the evidence of device.

(B) ***Sale or exchange negotiated or agreed upon before the distribution.*** A subsequent sale or exchange pursuant to an arrangement negotiated or agreed upon before the distribution is substantial evidence of device.

(C) ***Sale or exchange not negotiated or agreed upon before the distribution.*** A subsequent sale or exchange not pursuant to an arrangement negotiated or agreed upon before the distribution is evidence of device.

(D) ***Negotiated or agreed upon before the distribution.*** For purposes of this subparagraph (2), a sale or exchange is always pursuant to an arrangement negotiated or agreed upon before the distribution if enforceable rights to buy or sell existed before the distribution. If a sale or exchange was discussed by the buyer and the seller before the distribution and was reasonably to be anticipated by both parties, then the sale or exchange will ordinarily be considered to be pursuant to an arrangement negotiated or agreed upon before the distribution.

(E) ***Exchange in pursuance of a plan of reorganization.*** For purposes of this subparagraph (2), if stock is exchanged for stock in pursuance of a plan of reorganization, and either no gain or loss or only an insubstantial amount of gain is recognized on the exchange, then the exchange is not treated as a subsequent sale or exchange, but the stock received in the exchange is treated as the stock surrendered in the exchange. For this purpose, gain treated as a dividend pursuant to sections 356(a)(2) and 316 shall be disregarded.

(iv) ***Nature and use of assets*** —

(A) ***In general.*** The determination of whether a transaction was used principally as a device will take into account the nature, kind, amount, and use of the assets of the distributing and the controlled corporations (and corporations controlled by them) immediately after the transaction.

(B) ***Assets not used in a trade or business meeting the requirement of section 355(b).*** The existence of assets that are not used in a trade or business that satisfies the requirements of section 355(b) is evidence of device. For this purpose, assets that are not used in a trade or business that satisfies the requirements of section 355(b) include, but are not limited to, cash and other liquid assets that are not related to the reasonable needs of a business satisfying such section. The strength of the evidence of device depends on all the facts and circumstances, including, but not limited to, the ratio for each corporation of the value of assets not used in a trade or business that satisfies the requirements of section 355(b) to the value of its business that satisfies such requirements. A difference in the ratio described in the preceding sentence for the distributing and controlled corporation is ordinarily not evidence of device if the distribution is not pro rata among the shareholders of the distributing corporation and such difference is attributable to a need to equalize the value of the stock distributed and the value of the stock or securities exchanged by the distributees.

(C) ***Related function.*** There is evidence of device if a business of either the distributing or controlled corporation (or a corporation controlled by it) is

(*1*) a “secondary business” that continues as a secondary business for a significant period after the separation, and

(2) can be sold without adversely affecting the business of the other corporation (or a corporation controlled by it). A secondary business is a business of either the distributing or controlled corporation, if its principal function is to serve the business of the other corporation (or a corporation controlled by it). A secondary business can include a business transferred to a newly-created subsidiary or a business which serves a business transferred to a newly-created subsidiary. The activities of the secondary business may consist of providing property or performing services. Thus, in *Example* (11) of § 1.355-3(c), evidence of device would be presented if the principal function of the coal mine (satisfying the requirements of the steel business) continued after the separation and the coal mine could be sold without adversely affecting the steel business. Similarly, in *Example (10)* of § 1.355-3(c), evidence of device would be presented if the principal function of the sales operation after the separation is to sell the output from the manufacturing operation and the sales operation could be sold without adversely affecting the manufacturing operation.

(3) *Nondevice factors* —

(i) ***In general.*** The presence of any of the nondevice factors specified in this subparagraph (3) is evidence of nondevice. The strength of this evidence depends on all of the facts and circumstances.

(ii) ***Corporate business purpose.*** The corporate business purpose for the transaction is evidence of nondevice. The stronger the evidence of device (such as the presence of the device factors specified in paragraph (d)(2) of this section), the stronger the corporate business purpose required to prevent the determination that the transaction was used principally as a device. Evidence of device presented by the transfer or retention of assets not used in a trade or business that satisfies the requirements of section 355(b) can be outweighed by the existence of a corporate business purpose for those transfers or retentions. The assessment of the strength of a corporate business purpose will be based on all of the facts and circumstances, including, but not limited to, the following factors:

(A) The importance of achieving the purpose to the success of the business;

(B) The extent to which the transaction is prompted by a person not having a proprietary interest in either corporation, or by other outside factors beyond the control of the distributing corporation; and

(C) The immediacy of the conditions prompting the transaction.

(iii) ***Distributing corporation publicly traded and widely held.*** The fact that the distributing corporation is publicly traded and has no shareholder who is directly or indirectly the beneficial owner of more than five percent of any class of stock is evidence of nondevice.

(iv) ***Distribution to domestic corporate shareholders.*** The fact that the stock of the controlled corporation is distributed to one or more domestic corporations that, if section 355 did not apply, would be entitled to a deduction under section 243(a)(1) available to corporations meeting the stock ownership requirements of section 243(c), or a deduction under section 243(a)(2) or (3) or 245(b) is evidence of nondevice.

(4) ***Examples.*** The provisions of paragraph (d)(1) through (3) of this section may be illustrated by the following examples:

Example 1. Individual A owns all of the stock of corporation X, which is engaged in the warehousing business. X owns all of the stock of corporation Y, which is engaged in the transportation business. X employs individual B, who is extremely knowledgeable of the warehousing business in general and the operations of X in particular. B has informed A that he will seriously consider leaving the company if he is not given the opportunity to purchase a significant amount of stock of X. Because of his knowledge and experience, the loss of B would seriously damage the business of X. B cannot afford to purchase any significant amount of stock of X as long as X owns Y. Accordingly, X distributes the stock of Y to A and A subsequently sells a portion of his X stock to B. However, X could have issued additional shares to B sufficient to give B an equivalent ownership interest in X. There is no other evidence of device or evidence of nondevice. In light of the fact that X could have issued additional shares to B, the sale of X stock by A is substantial evidence of device. The transaction is considered to have been used principally as a device. See paragraph (d)(1), (2)(ii), (iii)(A), (B) and (D), and (3)(i) and (ii) of this section.

Example 2. Corporation X owns and operates a fast food restaurant in State M and owns all of the stock of corporation Y, which owns and operates a fast food restaurant in State N. X and Y operate their businesses under franchises granted by D and E, respectively. X owns cash and marketable securities that exceed the reasonable needs of its business but whose value is small relative to the value of its business. E has recently changed its franchise policy and will no longer grant or renew franchises to subsidiaries (or other members of the same affiliated group) of corporations operating businesses under franchises granted by its competitors. Thus, Y will lose its franchise if it remains a subsidiary of X. The franchise is about to expire. Accordingly, X distributes the stock of Y pro rata among X's shareholders. X retains its business and transfers cash and marketable securities to Y in an amount proportional to the value of Y's business. There is no other evidence of device or evidence of nondevice. The transfer by X to Y and the retention by X of cash and marketable securities is relatively weak evidence of device because after the transfer X and Y hold cash and marketable securities in amounts proportional to the values of their businesses. The fact that the distribution is pro rata is evidence of device. A strong corporate business purpose is relatively strong evidence of nondevice. Accordingly, the transaction is considered not to have been used principally as a device. See paragraph (d)(1), (2)(ii), (iv)(A), and (B) and (3)(i) and (ii)(A), (B) and (C) of this section.

Example 3. Corporation X is engaged in a regulated business in State M and owns all of the stock of corporation Y, which is not engaged in a regulated business in State M. State M has recently amended its laws to provide that affiliated corporations operating in M may not conduct both regulated and unregulated businesses. X transfers cash not related to the reasonable needs of the business of X or Y to Y and then distributes the stock of Y pro rata among X's shareholders. As a result of the transfer of cash, the ratio of the value of its assets not used in a trade or business that satisfies the requirements of section 355(b) to the value of its business is substantially greater for Y than for X. There is no other evidence of device or evidence of nondevice. The transfer of cash by X to Y is relatively strong evidence of device because after the transfer Y holds disproportionately many assets that are not used in a trade or business that satisfies the requirements of section 355(b). The fact that the distribution is pro rata is evidence of device. The strong business purpose is relatively strong evidence of nondevice, but it does not pertain to the transfer. Accordingly, the transaction is considered to have been used principally as a device. See paragraph (d)(1), (2)(ii), (iv)(A) and (B), and (3) and (i) and (ii) of this section.

Example 4. The facts are the same as in *Example (3),* except that, instead of transferring cash to Y, X purchases operating assets unrelated to the business of Y and transfers them to Y prior to the distribution. There is no other evidence of device or evidence of nondevice. The transaction is considered to have been used principally as a device. See paragraph (d)(1), (2)(ii), (iv)(A) and (B), and (3)(i) and (ii) of this section.

(5) ***Transactions ordinarily not considered as a device*** —

(i) ***In general.*** This subparagraph (5) specifies three distributions that ordinarily do not present the potential for tax avoidance described in paragraph (d)(1) of this section. Accordingly, such distributions are ordinarily considered not to have been used principally as a device, notwithstanding the presence of any of the device factors described in paragraph (d)(2) of this section. A transaction described in paragraph (d)(5)(iii) or (iv) of this section is not protected by this subparagraph (5) from a determination that it was used principally as a device if it involves the distribution of the stock of more than one controlled corporation and facilitates the avoidance of the dividend provisions of the Code through the subsequent sale or exchange of stock of one corporation and the retention of the stock of another corporation.

(ii) ***Absence of earnings and profits.*** A distribution is ordinarily considered not to have been used principally as a device if—

(A) The distributing and controlled corporations have no accumulated earnings and profits at the beginning of their respective taxable years,

(B) The distributing and controlled corporations have no current earnings and profits as of the date of the distribution, and

(C) No distribution of property by the distributing corporation immediately before the separation would require recognition of gain resulting in current earnings and profits for the taxable year of the distribution.

(iii) ***Section 303(a) transactions.*** A distribution is ordinarily considered not to have been used principally as a device if, in the absence of section 355, with respect to each shareholder distributee, the distribution would be a redemption to which section 303(a) applied.

(iv) ***Section 302(a) transactions.*** A distribution is ordinarily considered not to have been used principally as a device if, in the absence of section 355, with respect to each shareholder distributee, the distribution would be a redemption to which section 302(a) applied. For purposes of the preceding sentence, section 302(c)(2)(A)(ii) and (iii) shall not apply.

(v) ***Examples.*** The provisions of this subparagraph (5) may be illustrated by the following examples:

Example 1. The facts are the same as in *Example (3)* of paragraph (d)(4) of this section, except that X and Y had no accumulated earnings and profits at the beginning of its taxable year, X and Y have no current earnings and profits as of the date of the distribution, and no distribution of property by X immediately before the separation would require recognition of gain that would result in earnings and profits for the taxable year of the distribution. The transaction is considered not to have been used principally as a device. See paragraph (d)(5)(i) and (ii) of this section.

Example 2. Corporation X is engaged in three businesses: a hotel business, a restaurant business, and a rental real estate business. Individuals A, B, and C own all of the stock of X. X transfers the restaurant business to new corporation Y and transfers the rental real

estate business to new corporation Z. X then distributes the stock of Y and Z pro rata between B and C in exchange for all of their stock in X. In the absence of section 355, the distribution would be a redemption to which section 302(a) applied. Since this distribution involves the stock of more than one controlled corporation and facilitates the avoidance of the dividend provisions of the Code through the subsequent sale or exchange of stock in one corporation and the retention of the stock of another corporation, it is not protected by paragraph (d)(5)(i) and (iv) of this section from a determination that it was used principally as a device. Thus, the determination of whether the transaction was used principally as a device must be made from all the facts and circumstances, including the presence of the device factors and nondevice factors specified in paragraph (d)(2) and (3) of this section.

(e) ***Stock and securities distributed*** —

(1) ***In general.*** Section 355 applies to a distribution only if the distributing corporation distributes—

(i) All of the stock and securities of the controlled corporation that it owns, or

(ii) At least an amount of the stock of the controlled corporation that constitutes control as defined in section 368(c). In such a case, all, or any part, of the securities of the controlled corporation may be distributed, and paragraph (e)(2) of this section shall apply.

(2) ***Additional rules.*** Where a part of either the stock or the securities of the controlled corporation is retained under paragraph (e)(1)(ii) of this section, it must be established to the satisfaction of the Commissioner that the retention by the distributing corporation was not in pursuance of a plan having as one of its principal purposes the avoidance of Federal income tax. Ordinarily, the corporate business purpose or purposes for the distribution will require the distribution of all of the stock and securities of the controlled corporation. If the distribution of all of the stock and securities of a controlled corporation would be treated to any extent as a distribution of "other property" under section 356, this fact tends to establish that the retention of stock or securities is in pursuance of a plan having as one of its principal purposes the avoidance of Federal income tax.

(f) ***Principal amount of securities*** —

(1) ***Securities received.*** Section 355 does not apply to a distribution if, with respect to any shareholder or security holder, the principal amount of securities received exceeds the principal amount of securities surrendered, or securities are received but no securities are surrendered. In such cases, see section 356.

(2) ***Only stock received.*** If only stock is received in a distribution to which section 355(a)(1)(A) applies, the principal amount of the securities surrendered, if any, and the par value or stated value of the stock surrendered, if any, are not relevant to the application of that section.

(g) ***Recently acquired controlled stock under section 355(a)(3)(B)*** —

(1) ***Other property.*** Except as provided in paragraph (g)(2) of this section, for purposes of section 355(a)(1)(A), section 355(c), and so much of section 356 as relates to section 355, stock of a controlled corporation acquired by the DSAG in a taxable transaction (as defined in paragraph (g)(4) of this section) within the five-year period ending on the date of the distribution (pre-distribution period) shall not be treated as stock of the controlled corporation but shall be treated as "other

property." Transfers of controlled corporation stock that is owned by the DSAG immediately before and immediately after the transfer are disregarded and are not acquisitions for purposes of this paragraph (g)(1).

(2) ***Exceptions.*** Paragraph (g)(1) of this section does not apply to an acquisition of stock of the controlled corporation—

(i) If the controlled corporation is a DSAG member at any time after the acquisition (but prior to the distribution); or

(ii) Described in § 1.355-3(b)(4)(iii).

(3) ***DSAG.*** For purposes of this paragraph (g), a *DSAG* is the distributing corporation's separate affiliated group (the affiliated group which would be determined under section 1504(a) if such corporation were the common parent and section 1504(b) did not apply) that consists of the distributing corporation as the common parent and all corporations affiliated with the distributing corporation through stock ownership described in section 1504(a)(1)(B) (regardless of whether the corporations are includible corporations under section 1504(b)). For purposes of paragraph (g)(1) of this section, any reference to the DSAG is a reference to the distributing corporation if it is not the common parent of a separate affiliated group.

(4) ***Taxable transaction*** —

(i) ***Generally.*** For purposes of this paragraph (g), a *taxable transaction* is a transaction in which gain or loss was recognized in whole or in part.

(ii) ***Dunn Trust and predecessor issues.*** [Reserved]

(5) ***Examples.*** The following examples illustrate this paragraph (g). Assume that C, D, P, and S are corporations, X is an unrelated individual, each of the transactions is unrelated to any other transaction and, but for the issue of whether C stock is treated as "other property" under section 355(a)(3)(B), the distributions satisfy all of the requirements of section 355. No inference should be drawn from any of these examples as to whether any requirements of section 355 other than section 355(a)(3)(B), as specified, are satisfied. Furthermore, the following definitions apply:

(i) ***Purchase*** is an acquisition that is a taxable transaction.

(ii) ***Section 368(c) stock*** is stock constituting control within the meaning of section 368(c).

(iii) ***Section 1504(a)(2) stock*** is stock meeting the requirements of section 1504(a)(2).

Example 1. Hot stock. For more than five years, D has owned section 368(c) stock but not section 1504(a)(2) stock of C. In year 6, D purchases additional C stock from X. However, D does not own section 1504(a)(2) stock of C after the year 6 purchase. If D distributes all of its C stock within five years after the year 6 purchase, for purposes of section 355(a)(1)(A), section 355(c), and so much of section 356 as relates to section 355, the C stock purchased in year 6 would be treated as "other property." See paragraph (g)(1) of this section.

Example 2. C becomes a DSAG member. For more than five years, D has owned section 368(c) stock but not section 1504(a)(2) stock of C. In year 6, D purchases additional C stock from X such that D's total ownership of C is section 1504(a)(2) stock. If D distributes all of its C stock within five years after the year 6 purchase, the distribution of the C stock purchased in year 6 would not be treated as "other property" because C becomes a DSAG member.

See paragraph (g)(2)(i) of this section. The result would be the same if D did not own any C stock prior to year 6 and D purchased all of the C stock in year 6. See paragraph (g)(2)(i) of this section. Similarly, if D did not own any C stock prior to year 6, D purchased 20 percent of the C stock in year 6, and then acquired all of the remaining C stock in year 7, the C stock purchased in year 6 and the C stock acquired in year 7 (even if purchased) would not be treated as "other property" because C becomes a DSAG member. See paragraph (g)(2)(i) of this section.

Example 3. Intra-SAG transaction. For more than five years, D has owned all of the stock of S. D and S, in the aggregate, have owned section 368(c) stock but not section 1504(a)(2) stock of C. Therefore, D and S are DSAG members, but C is not. In year 6, D purchases S's C stock. If D distributes all of its C stock within five years after the year 6 purchase, the distribution of the C stock purchased in year 6 would not be treated as "other property." D's purchase of the C stock from S is disregarded for purposes of paragraph (g)(1) of this section because that C stock was owned by the DSAG immediately before and immediately after the purchase. See paragraph (g)(1) of this section.

Example 4. Affiliate exception. For more than five years, P has owned 90 percent of the sole outstanding class of the stock of D and a portion of the stock of C, and X has owned the remaining 10 percent of the D stock. Throughout this period, D has owned section 368(c) stock but not section 1504(a)(2) stock of C. In year 6, D purchases P's C stock. However, D does not own section 1504(a)(2) stock of C after the year 6 purchase. If D distributes all of its C stock to X in exchange for X's D stock within five years after the year 6 purchase, the distribution of the C stock purchased in year 6 would not be treated as "other property" because the C stock was purchased from a member (P) of the affiliated group (as defined in § 1.355-3(b)(4)(iv)) of which D is a member, and P did not purchase that C stock within the pre-distribution period. See paragraph (g)(2)(ii) of this section.

(h) ***Active conduct of a trade or business.*** Section 355 applies to a distribution only if the requirements of § 1.355-3 (relating to the active conduct of a trade or business) are satisfied.

(i) ***Effective/applicability date.*** Paragraphs (g)(1) through (g)(5) of this section apply to distributions occurring after October 20, 2011. For rules regarding distributions occurring on or before October 20, 2011, see § 1.355-2T(i), as contained in 26 CFR part 1, revised as of April 1, 2011.

[T.D. 8238, 54 FR 290, Jan. 5, 1989; 54 FR 5577, Feb. 3, 1989; 57 FR 28463, June 25, 1992; T.D. 9435, 73 FR 75950, Dec. 15, 2008; T.D. 9548, 76 FR 65111, Oct. 20, 2011]

§ 1.355-3 Active conduct of a trade or business.

(a) ***General requirements*** —

(1) ***Application of section 355.*** Under section 355(b)(1), a distribution of stock, or stock and securities, of a controlled corporation qualifies under section 355 only if—

(i) The distributing and the controlled corporations are each engaged in the active conduct of a trade or business immediately after the distribution (section 355(b)(1)(A)), or

(ii) Immediately before the distribution, the distributing corporation had no assets other than stock or securities of the controlled corporations, and each of the controlled corporations is engaged in the active conduct of a trade or business immediately after the distribution (section 355(b)(1)(B)). A *de minimis* amount of assets held by the distributing corporation shall be disregarded for purposes of this paragraph (a)(1)(ii).

(2) ***Examples.*** Paragraph (a)(1) of this section may be illustrated by the following examples:

Example 1. Prior to the distribution, corporation X is engaged in the active conduct of a trade or business and owns all of the stock of corporation Y, which also is engaged in the active conduct of a trade or business. X distributes all of the stock of Y to X's shareholders, and each corporation continues the active conduct of its trade or business. The active business requirement of section 355(b)(1)(A) is satisfied.

Example 2. The facts are the same as in *Example (1),* except that X transfers all of its assets other than the stock of Y to a new corporation in exchange for all of the stock of the new corporation and then distributes the stock of both controlled corporations to X's shareholders. The active business requirement of section 355(b)(1)(B) is satisfied.

(b) ***Active conduct of a trade or business defined*** —

(1) ***In general.*** Section 355(b)(2) provides rules for determining whether a corporation is treated as engaged in the active conduct of a trade or business for purposes of section 355(b)(1). Under section 355(b)(2)(A), a corporation is treated as engaged in the active conduct of a trade or business if it is itself engaged in the active conduct of a trade or business or if substantially all of its assets consist of the stock, or stock and securities, of a corporation or corporations controlled by it (immediately after the distribution) each of which is engaged in the active conduct of a trade or business.

(2) ***Active conduct of a trade or business immediately after distribution*** —

(i) ***In general.*** For purposes of section 355(b), a corporation shall be treated as engaged in the "active conduct of a trade or business" immediately after the distribution if the assets and activities of the corporation satisfy the requirements and limitations described in paragraph (b)(2)(ii), (iii), and (iv) of this section.

(ii) ***Trade or business.*** A corporation shall be treated as engaged in a trade or business immediately after the distribution if a specific group of activities are being carried on by the corporation for the purpose of earning income or profit, and the activities included in such group include every operation that forms a part of, or a step in, the process of earning income or profit. Such group of activities ordinarily must include the collection of income and the payment of expenses.

(iii) ***Active conduct.*** For purposes of section 355(b), the determination whether a trade or business is actively conducted will be made from all of the facts and circumstances. Generally, the corporation is required itself to perform active and substantial management and operational functions. Generally, activities performed by the corporation itself do not include activities performed by persons outside the corporation, including independent contractors. A corporation may satisfy the requirements of this subdivision (iii) through the activities that it performs itself, even though some of its activities are performed by others. Separations of real property all or substantially all of which is occupied prior to the distribution by the distributing

or the controlled corporation (or by any corporation controlled directly or indirectly by either of those corporations) will be carefully scrutinized with respect to the requirements of section 355(b) and this § 1.355-3.

(iv) ***Limitations.*** The active conduct of a trade or business does not include—

(A) The holding for investment purposes of stock, securities, land, or other property, or

(B) The ownership and operation (including leasing) of real or personal property used in a trade or business, unless the owner performs significant services with respect to the operation and management of the property.

(3) ***Active conduct for five-year period preceding distribution.*** Under section 355(b)(2)(B), a trade or business that is relied upon to meet the requirements of section 355(b) must have been actively conducted throughout the five-year period ending on the date of the distribution. For purposes of this subparagraph (3)—

(i) Activities which constitute a trade or business under the tests described in paragraph (b)(2) of this section shall be treated as meeting the requirement of the preceding sentence if such activities were actively conducted throughout the 5-year period ending on the date of distribution, and

(ii) The fact that a trade or business underwent change during the five-year period preceding the distribution (for example, by the addition of new or the dropping of old products, changes in production capacity, and the like) shall be disregarded, provided that the changes are not of such a character as to constitute the acquisition of a new or different business. In particular, if a corporation engaged in the active conduct of one trade or business during that five-year period purchased, created, or otherwise acquired another trade or business in the same line of business, then the acquisition of that other business is ordinarily treated as an expansion of the original business, all of which is treated as having been actively conducted during that five-year period, unless that purchase, creation, or other acquisition effects a change of such a character as to constitute the acquisition of a new or different business.

(4) ***Special rules for acquisition of a trade or business (Prior to the Revenue Act of 1987 and Technical and Miscellaneous Revenue Act of 1988)*** —

(i) ***In general.*** Under section 355(b)(2)(C), a trade or business relied upon to meet the requirements of section 355(b) must not have been acquired by the distributing corporation, the controlled corporation, or another member of the affiliated group during the five-year period ending on the date of the distribution unless it was acquired in a transaction in which no gain or loss was recognized. Similarly, under section 355(b)(2)(D), the trade or business must not have been indirectly acquired by any of those corporations (or a predecessor in interest of any of those corporations) during that five-year period in a transaction in which gain or loss was recognized in whole or in part and which consisted of the acquisition of control of the corporation directly engaged in the trade or business, or the indirect acquisition of control of that corporation through the direct or indirect acquisition of control of one or more other corporations. A trade or business acquired, directly or indirectly, within the five-year period ending on the date of the distribution in a transaction in which the basis of the assets acquired was not determined in whole or in part by reference to the transferor's basis does not qualify under section 355(b)(2), even though no gain or loss was recognized by the transferor.

(ii) ***Example.*** Paragraph (b)(4)(i) of this section may be illustrated by the following example:

Example. In 1985, corporation X, which operates a business and has cash and other liquid assets, purchases all of the stock of corporation Y, which is engaged in the active conduct of a trade or business. Later in the same year, X merges into Y in a "downstream" statutory merger. In 1986, Y transfers the business assets formerly owned by X to a new subsidiary, corporation Z, and then distributes the stock of Z to Y's shareholders. Section 355 does not apply to the distribution of the stock of Z because the trade or business of Y was indirectly acquired by X, a predecessor in interest of Y, during the five-year period preceding the distribution.

(iii) ***Gain or loss recognized in certain transactions.*** The requirements of section 355(b)(2)(C) and (D) are intended to prevent the direct or indirect acquisition of a trade or business by a corporation in anticipation of a distribution by the corporation of that trade of business in a distribution to which section 355 would otherwise apply. A direct or indirect acquisition of a trade or business by one member of an affiliated group from another member of the group is not the type of transaction to which section 355(b)(2)(C) and (D) is intended to apply. Therefore, in applying section 355(b)(2)(C) or (D), such an acquisition, even though taxable, shall be disregarded.

(iv) ***Affiliated group.*** For purposes of this subparagraph (4), the term *affiliated group* means an affiliated group as defined in section 1504(a) (without regard to section 1504(b)), except that the term *stock* includes nonvoting stock described in section 1504(a)(4).

(5) ***Special rules for acquisition of a trade or business (After the Revenue Act of 1987 and Technical and Miscellaneous Revenue Act of 1988).*** [Reserved]

(c) ***Examples.*** The following examples illustrate section 355(b)(2)(A) and (B) and paragraph (b)(1), (2), and (3) of this section. However, a transaction that satisfies these active business requirements will qualify under section 355 only if it satisfies the other requirements of section 355 (a) and (b).

Example 1. Corporation X is engaged in the manufacture and sale of soap and detergents and also owns investment securities. X transfers the investment securities to new subsidiary Y and distributes the stocks of Y to X's shareholders. Y does not satisfy the requirements of section 355(b) because the holding of investment securities does not constitute the active conduct of a trade or business. See paragraph (b)(2)(iv)(A) of this section.

Example 2. Corporation X owns, manages, and derives rental income from an office building and also owns vacant land. X transfers the land to new subsidiary Y and distributes the stock of Y to X's shareholders. Y will subdivide the land, install streets and utilities, and sell the developed lots to various homebuilders. Y does not satisfy the requirements of section 355(b) because no significant development activities were conducted with respect to the land during the five-year period ending on the date of the distribution. See paragraph (b)(3) of this section.

Example 3. Corporation X owns land on which it conducts a ranching business. Oil has been discovered in the area, and it is apparent that oil may be found under the land on which the ranching business is conducted. X has engaged in no significant activities in connection with its mineral rights. X transfers its mineral rights to new subsidiary Y and distributes the stock of Y to X's shareholders. Y will actively pursue the development of the oil producing potential of the property. Y does not satisfy the requirements of section 355(b) because X engaged in no significant exploitation activities with respect to the mineral rights during the five-year period ending on the date of the distribution. See paragraph (b)(3) of this section.

Example 4. For more than five years, corporation X has conducted a single business of constructing sewage disposal plants and other facilities. X transfers one-half of its assets to new subsidiary Y. These assets include a contract for the construction of a sewage disposal plant in State M, construction equipment, cash, and other tangible assets. X retains a contract for the construction of a sewage disposal plant in State N, construction equipment, cash, and other intangible assets. X then distributes the stock of Y to one of X's shareholders in exchange for all of his stock of X. X and Y both satisfy the requirements of section 355(b). See paragraph (b)(3)(i) of this section.

Example 5. For the past six years, corporation X has owned and operated two factories devoted to the production of edible pork skins. The entire output of one factory is sold to one customer, C, while the output of the second factory is sold to C and a number of other customers. To eliminate errors in packaging, X opens a new factory. Thereafter, orders from C are processed and packaged at the two original factories, while the new factory handles only orders from other customers. Eight months after opening the new factory, X transfers it and related business assets to new subsidiary Y and distributes the stock of Y to X's shareholders. X and Y both satisfy the requirements of section 355(b). See paragraph (b)(3)(i) and (ii) of this section.

Example 6. Corporation X has owned and operated a men's retail clothing store in the downtown area of the City of G for nine years and has owned and operated another men's retail clothing store in a suburban area of G for seven years. X transfers the store building, fixtures, inventory, and other assets related to the operations of the suburban store to new subsidiary Y. X also transfers to Y the delivery trucks and delivery personnel that formerly served both stores. Henceforth, X will contract with a local public delivery service to make its deliveries. X retains the warehouses that formerly served both stores. Henceforth, Y will lease warehouse space from an unrelated public warehouse company. X then distributes the stock of Y to X's shareholders. X and Y both satisfy the requirements of section 355(b). See paragraph (b)(3)(i) of this section.

Example 7. For the past nine years, corporation X has owned and operated a department store in the downtown area of the City of G. Three years ago, X acquired a parcel of land in a suburban area of G and constructed a new department store on it. X transfers the suburban store and related business assets to new subsidiary Y and distributes the stock of Y to X's shareholders. After the distribution, each store has its own manager and is operated independently of the other store. X and Y both satisfy the requirements of section 355(b). See paragraph (b)(3)(i) and (ii) of this section.

Example 8. For the past six years, corporation X has owned and operated hardware stores in several states. Two years ago, X purchased all of the assets of a hardware store in State M, where X had not previously conducted business. X transfers the State M store and related business assets to new subsidiary Y and distributes the stock of Y to X's shareholders. After the distribution, the State M store has its own manager and is operated independently of the other stores. X and Y both satisfy the requirements of section 355(b). See paragraph (b)(3)(i) and (ii) of this section.

Example 9. For the past eight years, corporation X has engaged in the manufacture and sale of household products. Throughout this period, X has maintained a research department for use in connection with its manufacturing activities. The research department has 30 employees actively engaged in the development of new products. X transfers the research department to new subsidiary Y and distributes the stock of Y to X's shareholders. After the distribution, Y continues its research operations on a contractual basis with several corporations, including X. X and Y both satisfy the requirements of section 355(b). See paragraph (b)(3)(i) of this section. The result in this example is

the same if, after the distribution, Y continues its research operations but furnishes its services only to X. See paragraph (b)(3)(i) of this section. However, see § 1.355-2 (d)(2)(iv)(C) (related function device factor) for possible evidence of device.

Example 10. For the past six years, corporation X has processed and sold meat products. X derives income from no other source. X separates the sales function from the processing function by transferring the business assets related to the sales function and cash for working capital to new subsidiary Y. X then distributes the stock of Y to X's shareholders. After the distribution, Y purchases for resale the meat products processed by X. X and Y both satisfy the requirements of section 355(b). See paragraph (b)(3)(i) of this section. However, see § 1.355-2(d)(2)(iv)(C) (related function device factor) for possible evidence of device.

Example 11. For the past eight years, corporation X has been engaged in the manufacture and sale of steel and steel products. X owns all of the stock of corporation Y, which, for the past six years, has owned and operated a coal mine for the sole purpose of supplying X's coal requirements in the manufacture of steel. X distributes the stock of Y to X's shareholders. X and Y both satisfy the requirements of section 355 (b). See paragraph (b)(3)(i) of this section. However, see § 1.355-2 (d)(2)(iv)(C) (related function device factor) for possible evidence of device.

Example 12. For the past seven years, corporation X, a bank, has owned an eleven-story office building, the ground floor of which X has occupied in the conduct of its banking business. The remaining ten floors are rented to various tenants. Throughout this seven-year period, the building has been managed and maintained by employees of the bank. X transfers the building to new subsidiary Y and distributes the stock of Y to X's shareholders. Henceforth, Y will manage the building, negotiate leases, seek new tenants, and repair and maintain the building. X and Y both satisfy the requirements of section 355 (b). See paragraph (b)(3) of this section.

Example 13. For the past nine years, corporation X, a bank, has owned a two-story building, the ground floor and one half of the second floor of which X has occupied in the conduct of its banking business. The other half of the second floor has been rented as storage space to a neighboring retail merchant. X transfers the building to new subsidiary Y and distributes the stock of Y to X's shareholders. After the distribution, X leases from Y the space in the building that it formerly occupied. Under the lease, X will repair and maintain its portion of the building and pay property taxes and insurance. Y does not satisfy the requirements of section 355 (b) because it is not engaged in the active conduct of a trade or business immediately after the distribution. See paragraph (b)(2)(iv)(A) of this section. This example does not address the question of whether the activities of X with respect to the building prior to the separation would constitute the active conduct of a trade or business.

[T.D. 8238, 54 FR 294, Jan. 5, 1989]

§ 1.355-4 Non pro rata distributions, etc.

Section 355 provides for nonrecognition of gain or loss with respect to a distribution whether or not (a) the distribution is pro rata with respect to all of the shareholders of the distributing corporation, (b) the distribution is pursuant to a plan of reorganization within the meaning of section 368 (a) (1)(D), or (c) the shareholder surrenders stock in the distributing corporation. Under section 355, the stock of a controlled corporation may consist of common stock or preferred stock. (See, however, section 306 and the regulations thereunder.) Section 355 does not apply, however, if the substance of a transaction is merely an exchange between shareholders or security holders of stock or securities in one corporation for stock or securities in another corporation. For example, if two individuals,

A and B, each own directly 50 percent of the stock of corporation X and 50 percent of the stock of corporation Y, section 355 would not apply to a transaction in which A and B transfer all of their stock of X and Y to a new corporation Z, for all of the stock of Z, and Z then distributes the stock of X to A and the stock of Y to B.

[T.D. 8238, 54 FR 296, Jan. 5, 1989]

§ 1.355-5 Records to be kept and information to be filed.

(a) ***Distributing corporation*** —

(1) ***In general.*** Every corporation that makes a distribution (the distributing corporation) of stock or securities of a controlled corporation, as described in section 355 (or so much of section 356 as relates to section 355), must include a statement entitled, "STATEMENT PURSUANT TO § 1.355-5(a) BY [INSERT NAME AND EMPLOYER IDENTIFICATION NUMBER (IF ANY) OF TAXPAYER], A DISTRIBUTING CORPORATION," on or with its return for the year of the distribution. If the distributing corporation is a controlled foreign corporation (within the meaning of section 957), each United States shareholder (within the meaning of section 951(b)) with respect thereto must include this statement on or with its return. The statement must include—

(i) The name and employer identification number (if any) of the controlled corporation;

(ii) The name and taxpayer identification number (if any) of every significant distributee;

(iii) The date of the distribution of the stock or securities of the controlled corporation;

(iv) The aggregate fair market value and basis, determined immediately before the distribution or exchange, of the stock, securities, or other property (including money) distributed by the distributing corporation in the transaction; and

(v) The date and control number of any private letter ruling(s) issued by the Internal Revenue Service in connection with the transaction.

(2) ***Special rule when an asset transfer precedes a stock distribution.*** If the distributing corporation transferred property to the controlled corporation in a transaction described in section 351 or 368, as part of a plan to then distribute the stock or securities of the controlled corporation in a transaction described in section 355 (or so much of section 356 as relates to section 355), then, unless paragraph (a)(1)(v) of this section applies, the distributing corporation must also include on or with its return for the year of the distribution the statement required by § 1.351-3(a) or 1.368-3(a). If the distributing corporation is a controlled foreign corporation (within the meaning of section 957), each United States shareholder (within the meaning of section 951(b)) with respect thereto must include the statement required by § 1.351-3(a) or 1.368-3(a) on or with its return.

(b) ***Significant distributee.*** Every significant distributee must include a statement entitled, "STATEMENT PURSUANT TO § 1.355-5(b) BY [INSERT NAME AND TAXPAYER IDENTIFICATION NUMBER (IF ANY) OF TAXPAYER], A SIGNIFICANT DISTRIBUTEE," on or with such distributee's return for the year in which such distribution is received. If a significant distributee is a controlled foreign corporation (within the meaning of section 957), each United States shareholder (within the meaning of section 951(b)) with respect thereto must include this statement on or with its return. The statement must include—

(1) The names and employer identification numbers (if any) of the distributing and controlled corporations;

(2) The date of the distribution of the stock or securities of the controlled corporation; and

(3) The aggregate basis, determined immediately before the exchange, of any stock or securities transferred by the significant distributee in the exchange, and the aggregate fair market value, determined immediately before the distribution or exchange, of the stock, securities or other property (including money) received by the significant distributee in the distribution or exchange.

(c) ***Definitions.*** For purposes of this section:

(1) ***Significant distributee*** means—

(i) A holder of stock of a distributing corporation that receives, in a transaction described in section 355 (or so much of section 356 as relates to section 355), stock of a corporation controlled by the distributing corporation if, immediately before the distribution or exchange, such holder—

(A) Owned at least five percent (by vote or value) of the total outstanding stock of the distributing corporation if the stock owned by such holder is publicly traded; or

(B) Owned at least one percent (by vote or value) of the stock of the distributing corporation if the stock owned by such holder is not publicly traded; or

(ii) A holder of securities of a distributing corporation that receives, in a transaction described in section 355 (or so much of section 356 as relates to section 355), stock or securities of a corporation controlled by the distributing corporation if, immediately before the distribution or exchange, such holder owned securities in such distributing corporation with a basis of $1,000,000 or more.

(2) ***Publicly traded stock*** means stock that is listed on—

(i) A national securities exchange registered under section 6 of the Securities Exchange Act of 1934 (15 U.S.C. 78f); or

(ii) An interdealer quotation system sponsored by a national securities association registered under section 15A of the Securities Exchange Act of 1934 (15 U.S.C. 78o-3).

(d) ***Substantiation information.*** Under § 1.6001-1(e), taxpayers are required to retain their permanent records and make such records available to any authorized Internal Revenue Service officers and employees. In connection with the distribution or exchange described in this section, these records should specifically include information regarding the amount, basis, and fair market value of all property distributed or exchanged, and relevant facts regarding any liabilities assumed or extinguished as part of such distribution or exchange.

(e) ***Effective/applicability date.*** This section applies to any taxable year beginning on or after May 30, 2006. However, taxpayers may apply this section to any original Federal income tax return (including any amended return filed on or before the due date (including extensions) of such original return) timely filed on or after May 30, 2006. For taxable years beginning before May 30, 2006, see § 1.355-5 as contained in 26 CFR part 1 in effect on April 1, 2006.

[T.D. 9329, 72 FR 32799, June 14, 2007]

§ 1.355-6 Recognition of gain on certain distributions of stock or securities in controlled corporation.

(a) ***Conventions*** —

(1) ***Examples.*** For purposes of the examples in this section, unless otherwise stated, assume that P, S, T, X, Y, N, HC, D, D1, D2, D3, and C are corporations, A and B are individuals, shareholders are not treated as one person under section 355(d)(7), stock has been owned for more than five years and section 355(d)(6) and paragraph (e)(4) of this section do not apply, no election under section 338 (if available) is made, and all transactions described are respected under general tax principles, including the step transaction doctrine. No inference should be drawn from any example as to whether any requirements of section 355 other than those of section 355(d), as specified, are satisfied.

(2) ***Five-year period.*** For purposes of this section, the term five-year period means the five-year period (determined after applying section 355(d)(6) and paragraph (e)(4) of this section) ending on the date of the distribution, but in no event beginning earlier than October 10, 1990.

(3) ***Distributing securities.*** For purposes of determining if stock of any controlled corporation received in the distribution is disqualified stock described in section 355(d)(3)(B)(ii)(II) (relating to a distribution of controlled corporation stock on any securities in the distributing corporation acquired by purchase during the five-year period), references in this section to stock of a corporation that is or becomes a distributing corporation includes securities of the corporation. Similarly, a reference to stock in paragraph (c)(4) of this section (relating to a plan or arrangement) includes securities.

(4) ***Marketable securities.*** Unless otherwise stated, any reference in this section to marketable stock includes marketable securities.

(b) ***General rules and purposes of section 355(d)*** —

(1) ***Disqualified distributions in general.*** In the case of a disqualified distribution, any stock or securities in the controlled corporation shall not be treated as qualified property for purposes of section 355(c)(2) or 361(c)(2). In general, a disqualified distribution is any distribution to which section 355 (or so much of section 356 as relates thereto) applies if, immediately after the distribution—

(i) Any person holds disqualified stock in the distributing corporation that constitutes a 50 percent or greater interest in such corporation; or

(ii) Any person holds disqualified stock in the controlled corporation (or, if stock of more than one controlled corporation is distributed, in any controlled corporation) that constitutes a 50 percent or greater interest in such corporation.

(2) ***Disqualified stock*** —

(i) ***In general. Disqualified stock*** is—

(A) Any stock in the distributing corporation acquired by purchase during the five-year period; and

(B) Any stock in any controlled corporation—

(*1*) Acquired by purchase during the five-year period; or

(*2*) Received in the distribution to the extent attributable to distributions on any stock in the distributing corporation acquired by purchase during the five-year period.

(ii) ***Purchase.*** For the definition of a purchase for purposes of section 355(d) and this section, see section 355(d)(5) and paragraph (d) of this section.

(iii) ***Exceptions*** —

(A) ***Purchase eliminated.*** Stock (or an interest in another entity) that is acquired by purchase (including stock (or another interest) that is treated as acquired by purchase under paragraph (e)(2), (3), or (4) of this section) ceases to be acquired by that purchase if (and when) the basis resulting from the purchase is eliminated. For purposes of this paragraph (b)(2)(iii), basis resulting from the purchase is basis in the stock (or in an interest in another entity) that is directly purchased during the five-year period or that is treated as acquired by purchase during such period under paragraph (e)(2), (3), or (4) of this section.

(B) ***Deemed purchase eliminated.*** Stock (or an interest in another entity) that is deemed purchased under section 355(d)(8) or paragraph (e)(1) of this section shall cease to be treated as purchased if (and when) the basis resulting from the purchase that effects the deemed purchase is eliminated.

(C) ***Elimination of basis*** —(*1*) *General rule.* Basis in the stock of a corporation (or in an interest in another entity) is eliminated if (and when) it would no longer be taken into account by any person in determining gain or loss on a sale or exchange of any stock of such corporation (or an interest in the other entity). Basis is not eliminated, however, if it is allocated between stock of two corporations under § 1.358-2(a).

(*2*) *Special rule for transferred and exchanged basis property.* Basis of stock (or an interest in another entity) resulting from a purchase (the first purchase) is eliminated if (and when) such stock (or other interest) is subsequently transferred to another person in an exchange or other transfer to which paragraph (e)(2) or (3) of this section applies (the second purchase). The elimination of basis in stock (or in another interest) resulting from the first purchase, however, does not eliminate the basis resulting from the second purchase in the stock (or other interest) that is treated as acquired by purchase by the acquirer in a transaction to which paragraph (e)(2) of this section applies or by the person making the exchange in a transaction to which paragraph (e)(3) of this section applies.

(*3*) *Special rule for Split-offs and Split-ups.* Under section 355(d)(3)(B)(ii) and paragraph (b)(2)(i)(B)(*2*) of this section, disqualified stock includes controlled corporation stock received in exchange for distributing corporation stock acquired by purchase. Solely for purposes of determining whether controlled corporation stock received in a distribution in exchange for distributing corporation stock is disqualified stock described in that section and paragraph immediately after the distribution, paragraph (b)(2)(iii)(C)(*2*) of this section does not apply to the exchange to eliminate basis resulting from a purchase of that distributing corporation stock (notwithstanding that paragraph (e)(3) of this section applies to the exchange).

(D) ***Special rule if basis allocated between two corporations.*** If the shareholder of a distributing corporation, pursuant to § 1.358-2, allocates basis resulting from a purchase between the stock of two or more corporations then, following such allocation, the determination of whether such basis has been eliminated shall be made separately with respect to the stock of each such corporation.

(3) ***Certain distributions not disqualified distributions because purposes of section 355(d) not violated*** —

(i) ***In general.*** Notwithstanding the provisions of section 355(d)(2) and this paragraph (b), a distribution is not a disqualified distribution if the distribution does not violate the purposes of section 355(d) as provided in this paragraph (b)(3). A distribution does not violate the purposes of section 355(d) if the effect of the distribution is neither—

(A) To increase ownership (combined direct and indirect) in the distributing corporation or any controlled corporation by a disqualified person; nor

(B) To provide a disqualified person with a purchased basis in the stock of any controlled corporation.

(ii) ***Disqualified person.*** A disqualified person is any person (taking into account section 355(d)(7) and paragraph (c)(4) of this section) that, immediately after a distribution, holds (directly or indirectly under section 355(d)(8) and paragraph (e)(1) of this section) disqualified stock in the distributing corporation or controlled corporation that—

(A) The person—

(*1*) Acquired by purchase under section 355(d)(5) or (8) and paragraphs (d) and (e) of this section during the five-year period, or

(*2*) Received in the distribution to the extent attributable to distributions on any stock in the distributing corporation acquired by purchase under section 355(d)(5) or (8) and paragraphs (d) and (e) of this section by that person during the five-year period; and

(B) Constitutes a 50 percent or greater interest in such corporation (under section 355(d)(4) and paragraph (c) of this section).

(iii) ***Purchased basis.*** In general, a purchased basis is basis in controlled corporation stock that is disqualified stock. However, basis in controlled corporation stock that is disqualified stock will not be treated as purchased basis if the controlled corporation stock and any distributing corporation stock with respect to which the controlled corporation stock is distributed are treated as acquired by purchase solely under the attribution rules of section 355(d)(8) and paragraph (e)(1) of this section. The prior sentence will not apply, however, if the distributing corporation stock is treated as acquired by purchase under the attribution rules as a result of the acquisition of an interest in a partnership (the purchased partnership), and following the distribution, the controlled corporation stock is directly held by the purchased partnership (or a chain of partnerships that includes the purchased partnership).

(iv) ***Increase in interest because of payment of cash in lieu of fractional shares.*** Any increase in direct or indirect ownership in the distributing corporation or any controlled corporation by a disqualified person because of a payment of cash in lieu of issuing fractional shares will be disregarded for purposes of paragraph (b)(3)(i)(A) of this section if the payment of the cash is solely to avoid the expense and inconvenience of issuing fractional share interests, and does not represent separately bargained for consideration.

(v) ***Other exceptions.*** The Commissioner may provide by guidance published in the Internal Revenue Bulletin that other distributions are not disqualified distributions because they do not violate the purposes of section 355(d).

(vi) ***Examples.*** The following examples illustrate this paragraph (b)(3):

Example 1. Stock distributed in spin-off; no purchased basis. D owns all of the stock of D1, and D1 owns all the stock of C. A purchases 60 percent of the D stock for cash. Within five years of A's purchase, D1 distributes the C stock to D. A is treated as having purchased 60 percent of the stock of both D1 and C on the date A purchases 60 percent of the D stock under the attribution rules of section 355(d)(8) and paragraph (e)(1) of this section. The C

stock received by D is attributable to a distribution on purchased D1 stock under section 355(d)(3)(B)(ii). Accordingly, the D1 and C stock each is disqualified stock under section 355(d)(3) and paragraph (b)(2) of this section, and A is a disqualified person under paragraph (b)(3)(ii) of this section. However, the purposes of section 355(d) under paragraph (b)(3)(i) of this section are not violated. A did not increase direct or indirect ownership in D1 or C. In addition, D's basis in the C stock is not a purchased basis under paragraph (b)(3)(iii) of this section because both the D1 and the C stock are treated as acquired by purchase solely under the attribution rules of section 355(d)(8) and paragraph (e)(1) of this section. Accordingly, D1's distribution of the C stock to D is not a disqualified distribution under section 355(d)(2) and paragraph (b)(1) of this section.

Example 2. Stock distributed in spin-off; purchased basis. The facts are the same as *Example 1,* except that D immediately further distributes the C stock to its shareholders (including A) pro rata. The D and C stock each is disqualified stock under section 355(d)(3) and paragraph (b)(2) of this section, and A is a disqualified person under paragraph (b)(3)(ii) of this section. The purposes of section 355(d) under paragraph (b)(3)(i) of this section are violated. A did not increase direct or indirect ownership in D or C. However, A's basis in the C stock is a purchased basis under paragraph (b)(3)(iii) of this section because the D stock is not treated as acquired by purchase solely under the attribution rules of section 355(d)(8) and paragraph (e)(1) of this section. Accordingly, the further distribution is a disqualified distribution under section 355(d)(2) and paragraph (b)(1) of this section.

Example 3. Stock distributed in split-off with ownership increase; purchased basis. The facts are the same as *Example 1,* except that D immediately further distributes the C stock to A in exchange for A's purchased stock in D. The C stock received by A is attributable to a distribution on purchased D stock under section 355(d)(3)(B)(ii), and A's basis in the C stock is determined by reference to the adjusted basis of A's purchased D stock under paragraph (e)(3) of this section. (Under paragraph (b)(2)(iii)(B)(3) of this section, the basis resulting from A's purchase of D stock is not eliminated solely for purposes of determining if the C stock acquired by A is disqualified stock immediately after the distribution, notwithstanding that paragraph (e)(3) of this section applies to the exchange.) Accordingly, the D stock and the C stock each is disqualified stock under section 355(d)(3) and paragraph (b)(2) of this section, and A is a disqualified person under paragraph (b)(3)(ii) of this section. The purposes of section 355(d) under paragraph (b)(3)(i) of this section are violated because A increased its ownership in C from a 60 percent indirect interest to a 100 percent direct interest, and because A's basis in the C stock is a purchased basis under paragraph (b)(3)(iii) of this section. Accordingly, the further distribution is a disqualified distribution under section 355(d)(2) and paragraph (b)(1) of this section.

Example 4. Stock distributed in spin-off; purchased basis. D1 owns all the stock of C. D purchases all of the stock of D1 for cash. Within five years of D's purchase of D1, P acquires all of the stock of D1 from D in a section 368(a)(1)(B) reorganization that is not a reorganization under section 368(a)(1)(A) by reason of section 368(a)(2)(E), and D1 distributes all of its C stock to P. P is treated as having acquired the D1 stock by purchase on the date D acquired it under the transferred basis rule of section 355(d)(5)(C) and paragraph (e)(2) of this section. P is treated as having purchased all of the C stock on the date D purchased the D1 stock under the attribution rules of section 355(d)(8) and paragraph (e)(1) of this section, and the C stock received by P is attributable to a distribution on purchased D1

stock under section 355(d)(3)(B)(ii). Accordingly, the D1 and C stock each is disqualified stock under section 355(d)(3) and paragraph (b)(2) of this section, and P is a disqualified person under paragraph (b)(3)(ii) of this section. The purposes of section 355(d) under paragraph (b)(3)(i) of this section are violated. P did not increase direct or indirect ownership in D1 or C. However, P's basis in the C stock is a purchased basis under paragraph (b)(3)(iii) of this section because the D1 stock is not treated as acquired by purchase solely under the attribution rules of section 355(d)(8) and paragraph (e)(1) of this section. Accordingly, D1's distribution of the C stock to P is a disqualified distribution under section 355(d)(2) and paragraph (b)(1) of this section.

Example 5. Stock distributed in split-off with ownership increase; no purchased basis. P owns 50 percent of the stock of D, the remaining D stock is owned by unrelated persons, D owns all the stock of C, and A purchases all of the P stock from the P shareholders. Within five years of A's purchase, D distributes all of the C stock to P in exchange for P's D stock. A is treated as having purchased 50 percent of the stock of both D and C on the date A purchases the P stock under the attribution rules of section 355(d)(8) and paragraph (e)(1) of this section. The C stock received by P is attributable to a distribution on purchased D stock under section 355(d)(3)(B)(ii). Accordingly, the D stock and the C stock each is disqualified stock under section 355(d)(3) and paragraph (b)(2) of this section, and A is a disqualified person under paragraph (b)(3)(ii) of this section. The purposes of section 355(d) under paragraph (b)(3)(i) of this section are violated because, even though P's basis in the C stock is not a purchased basis under paragraph (b)(3)(iii) of this section, A increased its direct or indirect ownership in C from a 50 percent indirect interest to a 100 percent indirect interest. Accordingly, D's distribution of the C stock to P is a disqualified distribution under section 355(d)(2) and paragraph (b)(1) of this section.

Example 6. Stock distributed in split-off with no ownership increase; no purchased basis. A purchases all of the stock of T. T later merges into D in a section 368(a)(1)(A) reorganization and A exchanges its purchased T stock for 60 percent of the stock of D. D owns all of the stock of D1 and D2, D1 and D2 each owns 50 percent of the stock of D3, and D3 owns all of the stock of C. Within five years of A's purchase of the T stock, D3 distributes the C stock to D1 in exchange for all of D1's D3 stock. A is treated as having acquired 60 percent of the D stock by purchase on the date A purchases the T stock under paragraph (e)(3) of this section. A is treated as having purchased 60 percent of the stock of D1, D2, D3, and C on the date A purchases the T stock under the attribution rules of section 355(d)(8) and paragraph (e)(1) of this section. The C stock received by D1 is attributable to a distribution on purchased D3 stock under section 355(d)(3)(B)(ii). Accordingly, the D3 stock and the C stock each is disqualified stock under section 355(d)(3) and paragraph (b)(2) of this section, and A is a disqualified person under paragraph (b)(3)(ii) of this section. However, the purposes of section 355(d) under paragraph (b)(3)(i) of this section are not violated. A did not increase direct or indirect ownership in D3 or C, and D1's basis in the C stock is not a purchased basis under paragraph (b)(3)(iii) of this section because the D3 stock is treated as acquired by purchase solely under the attribution rules of section 355(d)(8) and paragraph (e)(1) of this section. Accordingly, D3's distribution of the C stock to D1 is not a disqualified distribution under section 355(d)(2) and paragraph (b)(1) of this section.

Example 7. Purchased basis eliminated by liquidation; stock distributed in spin-off. P owns 30 percent of the stock of D, D owns all of the stock of D1, and D1 owns all of the stock of C. P purchases the remaining 70 percent of the D stock for cash. Within five years of P's purchase, P liquidates D in a transaction qualifying under sections 332 and 337(a), and D1 then distributes the stock of C to P. Prior to the liquidation, P is treated as having purchased 70 percent of the stock of D1 and C on the date P purchases the D stock under the attribution rules of section 355(d)(8)(B) and paragraph (e)(1) of this section. After the liquidation, however, under paragraph (b)(2)(iii) of this section, P is not treated as having acquired by purchase the D1 or the C stock under section 355(d)(8)(B) and paragraph (e)(1) of this section because P's basis in the D stock is eliminated in the liquidation of D. Under section 334(b)(1), P's basis in the D1 stock is determined by reference to D's basis in the D1 stock and not by reference to P's basis in D. Paragraph (d)(2)(i)(B) of this section does not treat the D1 stock as newly purchased in P's hands because no gain or loss was recognized by D in the liquidation. Accordingly, neither the D1 stock nor the C stock is disqualified stock under section 355(d)(3) and paragraph (b)(2) of this section in P's hands, and the distribution is not a disqualified distribution under section 355(d)(2) and paragraph (b)(1) of this section.

Example 8. Purchased basis eliminated by upstream merger; stock distributed in spin-off. D owns all of the stock of D1, and D1 owns all of the stock of C. P purchases 60 percent of the D stock for cash. Within five years of P's purchase, D merges into P in a section 368(a)(1)(A) reorganization, with the D shareholders other than P receiving solely P stock in exchange for their D stock, and D1 then distributes the stock of C to P. Prior to the merger, P is treated as having purchased 60 percent of the stock of D1 and C on the date P purchases the D stock under the attribution rules of section 355(d)(8) and paragraph (e)(1) of this section. After the merger, however, under paragraph (b)(2)(iii) of this section, P is not treated as having acquired by purchase the D1 or the C stock under section 355(d)(8)(B) and paragraph (e)(1) of this section because P's basis in the D stock is eliminated in the merger. Under section 362(b), P's basis in the D1 stock is determined by reference to D's basis in the D1 stock and not by reference to P's basis in D. Paragraph (d)(2)(i)(B) of this section does not treat the D1 stock as newly purchased in P's hands because no gain or loss was recognized by D in the merger. Accordingly, neither the D1 stock nor the C stock is disqualified stock under section 355(d)(3) and paragraph (b)(2) of this section in P's hands, and the distribution is not a disqualified distribution under section 355(d)(2) and paragraph (b)(1) of this section.

Example 9. Purchased basis eliminated by distribution; stock distributed in spin-off. A purchases all the stock of C for cash on Date 1. D acquires all of the stock of C from A in a section 368(a)(1)(B) reorganization that is not a reorganization under section 368(a)(1)(A) by reason of section 368(A)(1)(E). A receives ten percent of the D stock in the transaction. The remaining D stock is owned by B. Within five years of A's purchase of the C stock, D distributes all the stock of C pro rata to A and B. Under the transferred basis rule of paragraph (e)(2) of this section, D is treated as having purchased all of the C stock on the date A acquired it. Under the exchanged basis rule of paragraph (e)(3) of this section, A is treated as having purchased its D stock on Date 1 and A is treated as having purchased ten percent of the C stock on Date 1 under the attribution rules of section 355(d)(8) and paragraph (e)(3) of this section. Moreover, under paragraph (b)(2)(iii)(C) of this section, A's basis in the C stock resulting from A's Date 1 purchase of C stock is eliminated. After the distribution, A's and B's bases in their C stock are determined by reference to the bases of

their D stock under § 1.358-2(a)(2) (and not by reference to D's basis in the C stock). D's basis in the stock of C resulting from its deemed purchase of that stock under paragraph (e)(2) of this section is eliminated by the distribution of the C stock because it would no longer be taken into account by any person in determining gain or loss on the sale of C stock. Therefore, the C stock distributed to A and B is not disqualified stock as a result of D's purchase of C. However, A's basis in its D stock resulting from its deemed purchase of that stock under paragraph (e)(3) of this section is not eliminated. Therefore, A's ten percent interest in the stock of D is disqualified stock. Furthermore, A's ten percent interest in the stock of C is disqualified stock because the distribution of the C stock is attributable to A's D stock that was acquired by purchase. However, there has not been a disqualified distribution because no person, immediately after the distribution, holds disqualified stock in either D or C that constitutes a 50 percent or greater interest in such corporation.

Example 10. Allocation of purchased basis analyzed separately. —(i) P owns all the stock of D. D purchases all the stock of D1 for cash on Date 1. D1 owns all the stock of C (which owns all the stock of C1) and S. Within five years of Date 1, D1 distributes all the stock of C to D. The D1 and C stock each is disqualified stock under section 355(d)(3) and paragraph (b)(2) of this section, and D is a disqualified person under paragraph (b)(3)(ii) of this section. The purposes of section 355(d) under paragraph (b)(3)(i) of this section are violated. D did not increase direct or indirect ownership in D1 or C. However, D's basis in the C stock is a purchased basis under paragraph (b)(3)(iii) of this section because the D1 stock is not treated as acquired by purchase solely under the attribution rules of section 355(d)(8) and paragraph (e)(1) of this section. Accordingly, the distribution is a disqualified distribution under section 355(d) and paragraph (b)(1) of this section. D's basis in the D1 stock is allocated pursuant to § 1.358-2 between the D1 stock and the C stock. Therefore, under paragraph (e)(4) of this section, the C stock is deemed to be acquired by purchase on Date 1, the date D purchased all the stock of D1. If thereafter, and within five years of Date 1, C were to distribute all the stock of C1 to D, that distribution would also be a disqualified distribution because of D's deemed purchase of the stock of C.

(ii) Following the distribution of the stock of C by D1, and within five years of Date 1, D distributes all the stock of D1 to P. Under paragraph (b)(2)(iii)(D) of this section, the determination of whether D's basis in D1 has been eliminated shall be made without regard to D's allocated basis in C. After the distribution, P's basis in the D1 stock is determined by reference to its basis in its D stock under § 1.358-2(a)(2) (and not by reference to D's basis in the D1 stock). D's basis in the D1 stock resulting from the purchase of that stock is eliminated by the distribution of the D1 stock because it would no longer be taken into account by any person in determining gain or loss on the sale of D1 stock. Therefore, the D1 stock distributed to P is not disqualified stock as a result of D's purchase of D1. Moreover, a

> subsequent distribution of the S stock by D1 to P would not be a disqualified distribution because both the D1 and S stock would cease to be treated as purchased when D's basis in D1 has been eliminated.

(4) ***Anti-avoidance rule*** —

(i) ***In general.*** Notwithstanding any provision of section 355(d) or this section, the Commissioner may treat any distribution as a disqualified distribution under section 355(d)(2) and paragraph (b)(1) of this section if the distribution or another transaction or transactions are engaged in or structured with a principal purpose to avoid the purposes of section 355(d) or this section with respect to the distribution. Without limiting the preceding sentence, the Commissioner may determine that the existence of a related person, intermediary, pass-through entity, or similar person (an intermediary) should be disregarded, in whole or in part, if the intermediary is formed or availed of with a principal purpose to avoid the purposes of section 355(d) or this section.

(ii) ***Example.*** The following example illustrates this paragraph (b)(4):

Example. Post-distribution redemption. B wholly owns D, which wholly owns C. With a principal purpose to avoid the purposes of section 355(d), A, B, D, and C engage in the following transactions. A purchases 45 of 100 shares of the only class of D stock. Within five years after A's purchase, D distributes all of its 100 shares in C to A and B pro rata. D then redeems 20 shares of B's D stock, and C redeems 20 shares of B's C stock. After the redemption, A owns 45 shares and B owns 35 shares in each of D and C. Under paragraph (b)(4)(i) of this section, the Commissioner may treat A as owning disqualified stock in D and C that constitutes a 50 percent or greater interest in D and C immediately after the distribution. Under that treatment, the distribution is a disqualified distribution under section 355(d)(2) and paragraph (b)(1) of this section.

(c) ***Whether a person holds a 50 percent or greater interest*** —

(1) ***In general.*** Under section 355(d)(4), 50 percent or greater interest means stock possessing at least 50 percent of the total combined voting power of all classes of stock entitled to vote or at least 50 percent of the total value of shares of all classes of stock.

(2) ***Valuation.*** For purposes of section 355(d)(4) and this section, all shares of stock within a single class are considered to have the same value. But see paragraph (c)(3)(vii)(A) of this section (determination of whether it is reasonably certain that an option will be exercised).

(3) ***Effect of options, warrants, convertible obligations, and other similar interests*** —

(i) ***Application.*** This paragraph (c)(3) provides rules to determine when an option is treated as exercised for purposes of section 355(d) (other than section 355(d)(6)). Except as provided in this paragraph (c)(3), an option is not treated as exercised for purposes of section 355(d). This paragraph (c)(3) does not affect the determination of whether an instrument is an option or stock under general principles of tax law (such as substance over form).

(ii) ***General rule.*** In determining whether a person has acquired by purchase a 50 percent or greater interest under section 355(d)(4), an option to acquire stock (as described in paragraphs (c)(3)(v) and (vi) of this section) that has not been exercised when a distribution occurs is treated as exercised on the date it was issued or most recently transferred if—

(A) Its exercise (whether by itself or in conjunction with the deemed exercise of one or more other options) would cause a person to become a disqualified person; and

(B) Immediately after the distribution, it is reasonably certain (as described in paragraph (c)(3)(vii) of this section) that the option will be exercised.

(iii) ***Options deemed newly issued and substituted options*** —

(A) ***Exchange, adjustment, or alteration of existing option.*** For purposes of this paragraph (c)(3), each of the following is treated as a new issuance or transfer of an existing option only if it materially increases the likelihood that an option will be exercised—

(*1*) An exchange of an option for another option or options;

(*2*) An adjustment to the terms of an option (including an adjustment pursuant to the terms of the option);

(*3*) An adjustment to the terms of the underlying stock (including an adjustment pursuant to the terms of the stock);

(*4*) A change to the capital structure of the issuing corporation; and

(*5*) An alteration to the fair market value of issuing corporation stock through an asset transfer (other than regular, ordinary dividends) or through any other means.

(B) *Certain compensatory options.* An option described in paragraph (c)(3)(vi)(B)(*2*) of this section is treated as issued on the date it becomes transferable.

(C) *Substituted options.* If an option (existing option) is exchanged for another option or options (substituted option or options) and paragraph (c)(3)(iii)(A) of this section does not apply to treat such exchange as a new issuance or transfer of the existing option, the substituted option or options will be treated as issued or most recently transferred on the date that the existing option was issued or most recently transferred.

(iv) ***Effect of treating an option as exercised*** —

(A) ***In general.*** For purposes of section 355(d), an option that is treated as exercised under this paragraph (c)(3) is treated as exercised both for purposes of determining the percentage of the voting power of stock owned by the holder and for purposes of determining the percentage of the value of stock owned by the holder.

(B) ***Stock purchase agreement or similar arrangement.*** If a stock purchase agreement or similar arrangement is deemed exercised, the purchaser is treated as having purchased the stock under the terms of the agreement or arrangement as though all covenants had been satisfied and all contingencies met. The agreement or arrangement is deemed to have been exercised as of the date it is entered into or most recently assigned.

(v) ***Instruments treated as options.*** For purposes of this paragraph (c)(3), except to the extent provided in paragraph (c)(3)(vi) of this section, the following are treated as options: A call option, warrant, convertible obligation, the conversion feature of convertible stock, put option, redemption agreement (including a right to cause the redemption of stock), notional principal contract (as defined in § 1.446-3(c)) that provides for the payment of amounts in stock, stock purchase agreement or similar arrangement, or any other instrument that provides for the right to purchase, issue, redeem, or transfer stock (including an option on an option).

(vi) ***Instruments generally not treated as options.*** For purposes of this paragraph (c)(3), the following are not treated as options, unless issued, transferred, or listed with a principal purpose to avoid the application of section 355(d) or this section:

(A) ***Escrow, pledge, or other security agreements.*** An option that is part of a security arrangement in a typical lending transaction (including a purchase money loan), if the arrangement is subject to customary commercial conditions. For this purpose, a security arrangement includes, for example, an agreement for holding stock in escrow or under a pledge or other security agreement, or an option to acquire stock contingent upon a default under a loan.

(B) ***Compensatory options*** —(1) *General rule.* An option to acquire stock in a corporation with customary terms and conditions, provided to an employee, director, or independent contractor in connection with the performance of services for the corporation or a person related to it under section 355(d)(7)(A) (and that is not excessive by reference to the services performed) and that—

(*i*) Is nontransferable within the meaning of § 1.83-3(d); and

(*ii*) Does not have a readily ascertainable fair market value as defined in § 1.83-7(b).

(*2*) *Exception.* Paragraph (c)(3)(vi)(B)(*1*) of this section ceases to apply to an option that becomes transferable.

(C) ***Certain stock conversion features.*** The conversion feature of convertible stock, provided that—

(*1*) The stock is not convertible for at least five years after issuance or transfer; and

(*2*) The terms of the conversion feature do not require the tender of any consideration other than the stock being converted.

(D) ***Options exercisable only upon death, disability, mental incompetency, or separation from service.*** Any option entered into between stockholders of a corporation (or a stockholder and the corporation) with respect to the stock of either stockholder that is exercisable only upon the death, disability, mental incompetency of the stockholder, or, in the case of stock acquired in connection with the performance of services for the corporation or a person related to it under section 355(d)(7)(A) (and that is not excessive by reference to the services performed), the stockholder's separation from service.

(E) ***Rights of first refusal.*** A bona fide right of first refusal regarding the corporation's stock with customary terms, entered into between stockholders of a corporation (or between the corporation and a stockholder).

(F) ***Other enumerated instruments.*** Any other instruments specified in regulations, a revenue ruling, or a revenue procedure. See § 601.601(d)(2) of this chapter.

(vii) ***Reasonably certain that the option will be exercised*** —

(A) ***In general.*** The determination of whether, immediately after the distribution, an option is reasonably certain to be exercised is based on all the facts and circumstances. In applying the previous sentence, the fair market value of stock underlying an option is determined by taking into account control premiums and minority and blockage discounts.

(B) ***Stock purchase agreement or similar arrangement.*** A stock purchase agreement or similar arrangement is treated as reasonably certain to be exercised if the parties' obligations to complete the transaction are subject only to reasonable closing conditions.

(viii) ***Examples.*** The following examples illustrate this paragraph (c)(3):

Example 1. D owns all of the stock of C. A purchases 40 percent of D's only class of stock and an option to purchase D stock from D, that if deemed exercised, would result in A owning a total of 60 percent of the stock of D. Assume that no control premium or minority or blockage discount applies to the D stock underlying the option. The option permits A to acquire the D stock at $30 per share, and D's stock has a fair market value of $27 per share on the date the option is issued. The option is subject to no contingencies or restrictive covenants, may be exercised within five years after its issuance, and is not described in paragraph (c)(3)(vi) of this section (regarding instruments generally not treated as options). Within five years of A's purchase of the D stock and option, D distributes the stock of its subsidiary C pro rata and A receives 40 percent of the C stock in the distribution. Immediately after the distribution, D's stock has a fair market value of $30 per share and C's stock has a fair market value of $15 per share. At the time of the distribution, A exchanges A's option for an option to purchase 20 percent of the D stock at $20 per share and an option to purchase 20 percent of the C stock at $10 per share. The exchange of the options in D for options in D and C did not materially increase the likelihood that the options would be exercised. Nonetheless, based on all the facts and circumstances, it is reasonably certain, immediately after the distribution, that A will exercise its options. Under paragraph (c)(3)(iii)(C) of this section, the substituted options are treated as issued on the date the original option was issued. Accordingly, the options are treated as exercised by A on the date that A purchased the original option. A is treated as owning 60 percent of the D stock and 60 percent of the C stock that is disqualified stock, and the distribution is a disqualified distribution under section 355(d)(2) and paragraph (b)(1) of this section.

Example 2. D owns all of the stock of C. A purchases 37 percent of D's only class of stock. B owns 38 percent of the D stock, and the remaining 25 percent is owned by 20 individuals, each of whom owns less than five percent of D's stock. A purchases an option to purchase an additional 14 percent of the D stock from shareholders other than B for $50 per share. The option is subject to no contingencies or restrictive covenants, may be exercised within five years after its issuance, and is not described in paragraph (c)(3)(vi) of this section. Within five years of A's purchase of the option and 37 percent interest in D, D distributes the stock of its subsidiary C pro rata and A receives 37 percent of the C stock in the distribution. At the time of the distribution, A exchanges its option for an option to purchase 14 percent of the D stock at $25 per share and an option to purchase 14 percent of the C stock at $25 per share. Assume that, although a shareholder that owned no D or C stock would pay only $20 per share for D or C stock immediately after the distribution, a shareholder in A's position would pay $30 per share for 14 percent of the stock of D or C because of the control premium which attaches to the shares. The control premium is taken into account under paragraph (c)(3)(vii)(A) of this section to determine whether A is reasonably certain to exercise the options. The exchange of the options in D for options in D and C did not materially increase the likelihood that the options would be exercised. Nonetheless, based on all the facts and circumstances, it is reasonably certain, immediately after the distribution, that A will exercise its options. Under paragraph

(c)(3)(iii)(C) of this section, the substituted options are treated as issued on the date the original option was issued. Accordingly, the options are treated as exercised by A on the date that A purchased the original option. Under paragraph (c)(2) of this section, all shares of D and C are considered to have the same value to determine the amount of stock A is treated as purchasing under the options. A is treated as owning 51 percent of the D stock and 51 percent of the C stock that is disqualified stock, and the distribution is a disqualified distribution under section 355(d)(2).

(4) *Plan or arrangement*—(i) *In general.* Under section 355(d)(7)(B), if two or more persons act pursuant to a plan or arrangement with respect to acquisitions of stock in the distributing corporation or controlled corporation, those persons are treated as one person for purposes of section 355(d).

(ii) *Understanding.* For purposes of section 355(d)(7)(B), two or more persons who are (or will after an acquisition become) shareholders (or are treated as shareholders under paragraph (c)(3)(ii) of this section) act pursuant to a plan or arrangement with respect to an acquisition of stock only if they have a formal or informal understanding among themselves to make a coordinated acquisition of stock. A principal element in determining if such an understanding exists is whether the investment decision of each person is based on the investment decision of one or more other existing or prospective shareholders. However, the participation by creditors in formulating a plan for an insolvency workout or a reorganization in a title 11 or similar case (whether as members of a creditors' committee or otherwise) and the receipt of stock by creditors in satisfaction of indebtedness pursuant to the workout or reorganization do not cause the creditors to be considered as acting pursuant to a plan or arrangement.

(iii) *Examples.* The following examples illustrate paragraph (c)(4)(ii) of this section:

Example 1. D has 1,000 shares of common stock outstanding. A group of 20 unrelated individuals who previously owned no D stock (the Group) agree among themselves to acquire 50 percent or more of D's stock. The Group is not a person under section 7701(a)(1). Subsequently, pursuant to their understanding, the members of the Group purchase 600 shares of D common stock from the existing D shareholders (a total of 60 percent of the D stock), with each member purchasing 30 shares. Under paragraph (c)(4)(ii) of this section, the members of the Group have a formal or informal understanding among themselves to make a coordinated acquisition of stock. Their interests are therefore aggregated under section 355(d)(7)(B), and they are treated as one person that purchased 600 shares of D's stock for purposes of section 355(d).

Example 2. D has 1,000 shares of outstanding stock owned by unrelated individuals. D's management is concerned that D may become subject to a takeover bid. In separate meetings, D's management meets with potential investors who own no stock and are friendly to management to convince them to acquire D's stock based on an understanding that D will assemble a group that in the aggregate will acquire more than 50 percent of D's stock. Subsequently, 15 of these investors each purchases four percent of D's outstanding stock. Under paragraph (c)(4)(ii) of this section, the 15 investors have a formal or informal understanding among themselves to make a coordinated acquisition of stock. Their interests are therefore aggregated under section 355(d)(7)(B), and they are treated as one person that purchased 600 shares of D stock for purposes of section 355(d).

Example 3. (i) D has 1,000 shares of outstanding stock owned by unrelated individuals. An investment advisor advises its clients that it believes D's stock is undervalued and recommends

that they acquire D stock. Acting on the investment advisor's recommendation, 20 unrelated individuals each purchases 30 shares of the outstanding D stock. Each client's decision was not based on the investment decisions made by one or more other clients. Because there is no formal or informal understanding among the clients to make a coordinated acquisition of D stock, their interests are not aggregated under section 355(d)(7)(B) and they are treated as making separate purchases.

(ii) The facts are the same as in paragraph (i) of this *Example 3,* except that the investment advisor is also the underwriter (without regard to whether it is a firm commitment or best efforts underwriting) for a primary or secondary offering of D stock. The result is the same.

(iii) The facts are the same as in paragraph (i) of this *Example 3,* except that, instead of an investment advisor recommending that clients purchase D stock, the trustee of several trusts qualified under section 401(a) sponsored by unrelated corporations causes each trust to purchase the D stock. The result is the same, provided that the trustee's investment decision made on behalf of each trust was not based on the investment decision made on behalf of one or more of the other trusts.

(iv) *Exception*—(A) *Subsequent disposition.* If two or more persons do not act pursuant to a plan or arrangement within the meaning of this paragraph (c)(4) with respect to an acquisition of stock in a corporation (the first corporation), a subsequent acquisition in which such persons exchange their stock in the first corporation for stock in another corporation (the second corporation) in a transaction in which the basis of the second corporation's stock in the hands of such persons is determined in whole or in part by reference to the basis of their stock in the first corporation, will not result in such persons being treated as one person, even if the acquisition of the second corporation's stock is pursuant to a plan or arrangement.

(B) *Example.* The following example illustrates this paragraph (c)(4)(iv):

Example. In an initial public offering of D stock on Date 1, 100 investors independently purchase one percent each of the D stock. Two years later, D merges into P (in a reorganization described in section 368(a)(1)(A)) and, pursuant to the plan of reorganization, the D shareholders exchange their D stock for 50 percent of the stock of P. The D shareholders approve the plan by a two-thirds vote, as required by state law. Under section 358(a), each shareholder's basis in its P stock is determined by reference to the basis of the D stock it purchased. Under paragraph (e)(3) of this section, the former D shareholders are treated as purchasing their P stock on Date 1. The investors do not become a single person under paragraph (c)(4) of this section with respect to the deemed purchase of the P stock on Date 1 by virtue of their acquisition of the P stock pursuant to the merger on Date 2.

(d) ***Purchase*** —

(1) ***In general*** —

(i) ***Definition of purchase under section 355(d)(5)(A).*** Under section 355(d)(5)(A), except as otherwise provided in section 355(d)(5)(B) and (C), a *purchase* means any acquisition, but only if—

(A) The basis of the property acquired in the hands of the acquirer is not determined—

(*1*) In whole or in part by reference to the adjusted basis of such property in the hands of the person from whom acquired; or

(*2*) Under section 1014(a) or 1022; and

(B) The property is not acquired in an exchange to which section 351, 354, 355, or 356 applies.

(ii) ***Section 355 distributions.*** Paragraph (d)(1)(i)(B) of this section includes all section 355 distributions, whether in exchange (in whole or in part) for stock or pro rata.

(iii) ***Example.*** The following example illustrates this paragraph (d)(1):

Example. Section 304(a)(1) acquisition. A, who owns all of the stock of P and T, sells the T stock to P for cash. The T stock is not marketable stock under section 355(d)(5)(B)(ii) and paragraph (d)(3)(ii) of this section. A is treated under section 304(a)(1) as receiving a distribution in redemption of the P stock. Under section 302(d), the deemed redemption is treated as a section 301 distribution. Assume that under sections 304(b)(2) and 301(c)(1), all of the distribution is a dividend. A and P are treated in the same manner as if A had transferred the T stock to P in exchange for stock of P in a transaction to which section 351(a) applies, and P had then redeemed the stock P was treated as issuing in the transaction. Under section 362(a), P's basis in the T stock is determined by reference to A's adjusted basis in the T stock, and there is no basis increase in the T stock because A recognizes no gain on the deemed transfer. Accordingly, P's acquisition of the T stock from A is not a purchase by P under section 355(d)(5)(A)(i)(I) and paragraphs (d)(1)(i)(A)(*1*) and (d)(2)(i)(B) of this section.

(2) ***Exceptions to definition of purchase under section 355(d)(5)(A).*** The following acquisitions are not treated as purchases under section 355(d)(5)(A):

(i) ***Acquisition of stock in a transaction which includes other property or money*** —

(A) ***Transferors and shareholders of transferor or distributing corporations*** —(*1*) *In general.* An acquisition of stock permitted to be received by a transferor of property without the recognition of gain under section 351(a), or permitted to be received without the recognition of gain under section 354, 355, or 356 is not a purchase to the extent section 358(a)(1) applies to determine the recipient's basis in the stock received, whether or not the recipient recognizes gain under section 351(b) or 356. But see paragraph (e)(3) of this section (interest received in exchange for purchased interest in exchanged basis transaction treated as purchased).

(*2*) *Exception.* To the extent there is received in the exchange or distribution, in addition to stock described in paragraph (d)(2)(i)(A)(*1*) of this section, stock that is other property under section 351(b) or 356(a)(1), the stock is treated as purchased on the date of the exchange or distribution for purposes of section 355(d).

(B) ***Transferee corporations*** —(*1*) *In general.* An acquisition of stock by a corporation is not a purchase to the extent section 334(b) or 362(a) or (b) applies to determine the corporation's basis in the stock received. But see section 355(d)(5)(C) and paragraph (e)(2) of this section (purchased property transferred in transferred basis transaction is treated as purchased by transferee).

(*2*) *Exception.* If a corporation acquires stock, the stock is treated as purchased on the date of the stock acquisition for purposes of section 355(d)—

(*i*) If the liquidating corporation recognizes gain or loss with respect to the transferred stock as described in section 334(b)(1); or

(*ii*) To the extent the basis of the transferred stock is increased through the recognition of gain by the transferor under section 362(a) or (b).

(C) ***Examples.*** The following examples illustrate this paragraph (d)(2)(i):

> *Example 1.* (i) A owns all the stock of T. T merges into D in a transaction qualifying under section 368(a)(1)(A), with A exchanging all of the T stock for D stock and $100 cash. Under section 356(a)(1), A recognizes $100 of the realized gain on the transaction. Under section 358(a)(1), A's basis in the D stock equals A's basis in the T stock, decreased by the $100 received and increased by the gain recognized, also $100. Under paragraph (d)(2)(i)(A) of this section, A is not treated as having purchased the D stock for purposes of section 355(d)(5).
> (ii) The facts are the same as in paragraph (i) of this *Example 1,* except that rather than D stock and $100 cash, A receives D stock and stock in C, a corporation not a party to the reorganization, with a fair market value of $100. Under section 358(a)(2), A's basis in the C stock is its fair market value, or $100. Under paragraph (d)(2)(i)(A)(2) of this section, A is treated as having purchased the C stock, but not the D stock, for purposes of section 355(d)(5).

Example 2. A purchases all of the stock of D, which is not marketable stock, on Date 1 for $90. Within five years of A's purchase, on Date 2, A contributes the D stock to P in exchange for P stock worth $90 and $10 cash in a transaction qualifying under section 351. A recognizes a gain of $10 as a result of the transfer. Under section 362(a), P's basis in D is $100. P is treated as having purchased 90 percent ($90 worth) of the D stock on Date 1 under section 355(d)(5)(C) and paragraph (e)(2) of this section and as having purchased 10 percent ($10 worth) of the D stock on Date 2 under paragraph (d)(2)(i)(B)(*2*)(*ii*) of this section.

(ii) ***Acquisition of stock in a distribution to which section 305(a) applies.*** An acquisition of stock in a distribution qualifying under section 305(a) is not a purchase to the extent section 307(a) applies to determine the recipient's basis. However, to the extent the distribution is of rights to acquire stock, see paragraph (c)(3) of this section for rules regarding options, warrants, convertible obligations, and other similar interests.

(iii) ***Section 1036(a) exchange.*** An exchange of stock qualifying under section 1036(a) is not a purchase by either party to the exchange to the extent the basis of the property acquired equals that of the property exchanged under section 1031(d).

(iv) ***Section 338 elections*** —

(A) ***In general.*** Stock acquired in a qualified stock purchase with respect to which a section 338 election (or a section 338(h)(10) election) is made is not treated as a purchase for purposes of section 355(d)(5)(A). However, any stock (or an interest in another entity) held by old target that is treated as purchased by new target is treated as acquired by purchase

for purposes of section 355(d)(5)(A) unless a section 338 election or section 338(h)(10) election also is made for that stock. See § 1.338-2T(c) for the definitions of section 338 election, section 338(h)(10) election, old target, and new target.

(B) ***Example.*** The following example illustrates this paragraph (d)(2)(iv):

Example. T owns all of the stock of S and no other assets. X acquires all of the T stock from the T shareholders for cash and makes an election under section 338. Under section 338(a) and (b), T, as Old T, is treated as having sold all of its assets at fair market value and purchased the assets as a new corporation, New T, as of the beginning of the day after the acquisition date. Under paragraph (d)(2)(iv)(A) of this section, X is not treated as having purchased the T stock. Absent a section 338 election or a section 338(h)(10) election with respect to S, New T is treated as having purchased all of the S stock under section 355(d)(5)(A).

(v) ***Partnership distributions*** —

(A) ***Section 732(b).*** An acquisition of stock (or an interest in another entity) in a liquidation of a partner's interest in a partnership in which basis is determined pursuant to section 732(b) is a purchase at the time of the liquidation.

(B) ***Section 734(b).*** If the adjusted basis of stock (or an interest in another entity) held by a partnership is increased under section 734(b), a proportionate amount of the stock (or other interest) will be treated as purchased at the time of the basis adjustment, determined by reference to the amount of the basis adjustment (but not in excess of the fair market value of the stock (or other interest) at the time of the adjustment) over the fair market value of the stock (or other interest) at the time of the adjustment.

(3) ***Certain section 351 exchanges treated as purchases*** —

(i) ***In general*** —

(A) ***Treatment of stock received by transferor.*** Under section 355(d)(5)(B), a purchase includes any acquisition of property in an exchange to which section 351 applies to the extent the property is acquired in exchange for any cash or cash item, any marketable stock, or any debt of the transferor. The property treated as acquired by purchase is the property received by the transferor in the exchange.

(B) ***Multiple classes of stock.*** If the transferor in a transaction described in section 355(d)(5)(B) receives stock or securities of more than one class, or receives both stock and securities, then the amount of stock or securities purchased is determined in a manner that corresponds to the allocation of basis to the stock or securities under section 358. See § 1.358-2(b).

(ii) ***Cash item, marketable stock.*** For purposes of section 355(d)(5)(B) and this paragraph (d)(3), either or both of the terms cash item and marketable stock include personal property within the meaning of section 1092(d)(1) and § 1.1092(d)-1, without giving effect to section 1092(d)(3).

(iii) ***Exception for certain acquisitions*** —

(A) ***In general.*** Except to the extent provided in paragraph (e)(3) of this section (interest received in exchange for purchased interest in exchanged basis transaction treated as purchased), an acquisition of stock in a corporation in a section 351 transaction by one or

more persons in exchange for an amount of stock in another corporation (the transferred corporation) that meets the requirements of section 1504(a)(2) is not a purchase by the transferor or transferors, regardless of whether the stock of the transferred corporation is marketable stock under section 355(d)(5)(B)(ii) and paragraph (d)(3)(ii) of this section.

(B) ***Example.*** The following example illustrates this paragraph (d)(3)(iii):

Example. D's two classes of stock, voting common and nonvoting preferred, are both widely held and publicly traded. The nonvoting preferred stock is stock described in section 1504(a)(4). Assume that all of the D stock is marketable stock under section 355(d)(5)(B)(ii) and paragraph (d)(3)(ii) of this section. D's board of directors proposes that, for valid business purposes, D's common stock should be held by a holding company, HC, but its preferred stock should not be transferred to HC. As proposed, the D common shareholders exchange their D stock solely for HC common stock in a section 351(a) transaction. The D preferred shareholders retain their stock. HC acquires an amount of D stock that meets the requirements of section 1504(a)(2). Although the D common stock was marketable stock in the hands of the D shareholders immediately before the transfer, and the D nonvoting preferred stock is marketable stock after the transfer, the D shareholders are not treated as having acquired the HC stock by purchase (except to the extent the exchanged basis rule of paragraph (e)(3) of this section may apply to treat HC stock as purchased on the date the exchanged D stock was purchased).

(iv) ***Exception for assets transferred as part of an active trade or business*** —

(A) ***In general.*** Except to the extent provided in paragraph (e)(3) of this section, an acquisition not described in paragraph (d)(3)(iii) of this section of stock in exchange for any cash or cash item, any marketable stock, or any debt of the transferor in a section 351 transaction is not a purchase if—

(*1*) The transferor is engaged in the active conduct of a trade or business under paragraph (d)(3)(iv)(B) of this section and the transferred items (including debt incurred in the ordinary course of the trade or business) are used in the trade or business;

(*2*) The transferred items do not exceed the reasonable needs of the trade or business under paragraph (d)(3)(iv)(C) of this section;

(*3*) The transferor transfers the items as part of the trade or business; and

(*4*) The transferee continues the active conduct of the trade or business.

(B) ***Active conduct of a trade or business.*** For purposes of this paragraph (d)(3)(iv), whether, with respect to the trade or business at issue, the transferor and transferee are engaged in the active conduct of a trade or business is determined under § 1.355-3(b)(2) and (3), except that—

(*1*) Conduct is tested before the transfer (with respect to the transferor) and after the transfer (with respect to the transferee) rather than immediately after a distribution; and

(*2*) The trade or business need not have been conducted for five years before its transfer, but it must have been conducted for a sufficient period of time to establish that it is a viable and ongoing trade or business.

(C) ***Reasonable needs of the trade or business.*** For purposes of this paragraph (d)(3)(iv), the reasonable needs of the trade or business include only the amount of cash or cash items, marketable stock, or debt of the transferor that a prudent business person apprised of all relevant facts would consider necessary for the present and reasonably anticipated future needs of the business. Transferred items may be considered necessary for reasonably anticipated future needs only if the transferor and transferee have specific, definite, and feasible plans for their use. Those plans must require that items intended for anticipated future needs rather than present needs be used as expeditiously as possible consistent with the business purpose for retention of the items. Future needs are not reasonably anticipated if they are uncertain or vague or where the execution of the plan for their use is substantially postponed. The reasonable needs of a trade or business are generally its needs at the time of the transfer of the business including the items. However, for purposes of applying section 355(d) to a distribution, events and conditions after the transfer and through the date immediately after the distribution (including whether plans for the use of transferred items have been consummated or substantially postponed) may be considered to determine whether at the time of the transfer the items were necessary for the present and reasonably anticipated future needs of the business.

(D) ***Consideration of all facts and circumstances.*** All facts and circumstances are considered in determining whether this paragraph (d)(3)(iv) applies.

(E) ***Successive transfers.*** A transfer of assets does not fail to meet the requirements of paragraph (d)(3)(iv)(A)(*4*) of this section solely because the transferee transfers the assets directly (or indirectly through other members) to another member of the transferee's affiliated group, as defined in § 1.355-3(b)(4)(iv) (the final transferee), if the requirements of paragraphs (d)(3)(iv)(A)(*1*), (*2*), (*3*) and (*4*) of this section would be met if the transferor had transferred the assets directly to the final transferee.

(v) ***Exception for transfer between members of the same affiliated group*** —

(A) ***In general.*** Except to the extent provided in paragraph (e)(3) of this section, an acquisition of stock (whether actual or constructive) not described in paragraphs (d)(3)(iii) and (iv) of this section in exchange for any cash or cash item, marketable stock, or debt of the transferor in a section 351 transaction is not a purchase if—

(*1*) The transferor corporation or corporations and the transferee corporation (whether formed in the transaction or already existing) are members of the same affiliated group as defined in section 1504(a) before the section 351 transaction (if the transferee corporation is in existence before the transaction);

(*2*) The cash or cash item, marketable stock or debt of the transferor are not included in assets that are acquired (or treated as acquired) by the transferor (or another member of the transferor's affiliated group) from a nonmember in a related transaction in which section 362(a) or (b) applies to determine the basis in the acquired assets; and

(*3*) The transferor corporation or corporations, the transferee corporation, and any distributed controlled corporation of the transferee corporation do not cease to be members of such affiliated group in any transaction pursuant to a plan that includes the section 351 transaction (including any distribution of a controlled corporation by the transferee corporation). But see paragraph (b)(4) of this section where the transfer is made for a principal purpose to avoid the purposes of section 355(d).

(B) ***Examples.*** The following examples illustrate this paragraph (d)(3)(v):

Example 1. Publicly traded P has wholly owned S since 1990. S is engaged in the telecommunications business and the business of computer software development. S is developing new software for use in the managed health care industry. Over a period of four years beginning on January 31, 2000, P contributes a substantial amount of cash to S solely for the purpose of funding the software development. On completion of the software in January of 2004, 60 percent of the value of the S stock is attributable to the cash contributions made within the last four years. The P group's primary lender requires that S separately incorporate the software and related assets and distribute the new subsidiary to P as a condition of providing required funding to market the software. Accordingly, on February 1, 2004, S forms N, contributes the software and related assets to N, and distributes all of the N stock to P in a transaction intended to qualify under section 355(a). P, S, and N will not leave the affiliated group in any transaction related to the cash contributions. Under paragraph (d)(3)(v)(A) of this section, P's cash contributions to S are not treated as purchases of additional S stock, and the distribution of N from S to P is not a disqualified distribution under section 355(d)(2) and paragraph (b)(1) of this section.

Example 2. On Date 1, P contributes cash to its subsidiary S with a principal purpose to increase its stock basis in S. Sixty percent of the value of P's S stock is attributable to the cash contribution. Under paragraph (b)(4) of this section (anti-avoidance rule), 60 percent of the S stock is treated as purchased under section 355(d)(5)(B), notwithstanding paragraph (d)(3)(v)(A) of this section. Accordingly, any distribution of a subsidiary of S to P within the five-year period after Date 1 will be a disqualified distribution, regardless of whether P, S, and any distributed S subsidiary remain affiliated after the distribution and any transactions related to the cash contribution.

(4) ***Triangular asset reorganizations*** —

(i) ***Definition. A triangular asset reorganization*** is a reorganization that qualifies under—

(A) Section 368(a)(1)(A) or (G) by reason of section 368(a)(2)(D);

(B) Section 368(a)(1)(A) by reason of section 368(a)(2)(E) (regardless of whether section 368(a)(3)(E) applies), unless the transaction also qualifies as either a section 351 transfer or a reorganization under section 368(a)(1)(B); or

(C) Section 368(a)(1)(C), and stock of the controlling corporation rather than the acquiring corporation is exchanged for the acquired corporation's properties.

(ii) ***Treatment.*** Notwithstanding section 355(d)(5)(A), for purposes of section 355(d), the controlling corporation in a triangular asset reorganization is treated as having—

(A) Acquired the assets of the acquired corporation (and as having assumed any liabilities assumed by the controlling corporation's subsidiary corporation or to which the acquired corporation's assets were subject (the acquired liabilities)) in a transaction in which the controlling corporation's basis in the acquired corporation's assets was determined under section 362(b); and

(B) Transferred the acquired assets and acquired liabilities to its subsidiary corporation in a section 351 transfer.

(iii) ***Example.*** The following example illustrates this paragraph (d)(4):

Example. Forward triangular reorganization. P forms S with $25 of cash and T merges into S in a reorganization qualifying under section 368(a)(1)(A) by reason of section 368(a)(2)(D) in which the T shareholders receive $70 of P stock and $15 of cash in exchange for their T stock. T is not a common parent of a consolidated group of corporations. The remaining $10 of cash with which P formed S will not be used in the acquired business. T's assets consist only of assets part of and used in its business with a value of $80, and $5 of cash that is not part of or used in T's business. T has no liabilities. S will use T's business assets in T's business (which will become S's business), but will invest the $5 of cash in an unrelated passive investment. Under paragraph (d)(4)(ii) of this section, P is treated as acquiring the T assets in a transaction in which P's basis in the T assets was determined under section 362(b) and contributing them to S in a section 351 transfer. Under paragraph (d)(3)(v) of this section, $10 (of the total $25) of cash contributed by P to S upon S's formation is not treated as a purchase of S stock. The $15 (of the total $25) of cash contributed by P to S upon S's formation that is paid to T's shareholders is not treated as a purchase of S stock. The exception in paragraph (d)(3)(v) of this section does not apply to the $5 of cash from T's business because P is treated as having acquired T's assets in a related transaction in which section 362(b) applies to determine P's basis in such assets. Accordingly, P is treated under section 355(d)(5)(B) and paragraph (d)(3)(iv) of this section as having purchased $5 of the S stock, but is not deemed to have purchased the remaining $80 of the S stock.

(5) ***Reverse triangular reorganizations other than triangular asset reorganizations*** —

(i) ***In general.*** Except as provided in paragraph (d)(5)(ii) of this section, if a transaction qualifies as a reorganization under section 368(a)(1)(A) by reason of section 368(a)(2)(E) and also as either a reorganization under section 368(a)(1)(B) or a section 351 transfer, then either section 355(d)(5)(B) (and paragraphs (d)(3)(i) through (iv) of this section) or 355(d)(5)(C) (and paragraph (e)(2) of this section) applies. Regardless of which method the controlling corporation employs to determine its basis in the surviving corporation stock under § 1.358-6(c)(2)(ii) or § 1.1502-30(b), the total amount of surviving corporation stock treated as purchased by the controlling corporation will equal the higher of—

(A) The amount of surviving corporation stock that would be treated as purchased (on the date of the deemed section 351 transfer) by the controlling corporation if the controlling corporation acquired the surviving corporation's assets and assumed its liabilities in a transaction in which the controlling corporation's basis in the surviving corporation assets was determined under section 362(b), and then transferred the acquired assets and liabilities to the surviving corporation in a section 351 transfer (see §§ 1.358-6(c)(1) and (2)(ii)(A), and 1.1502-30(b)); or

(B) The amount of surviving corporation stock that would be treated as purchased (on the date the surviving corporation shareholders purchased their surviving corporation stock) if the controlling corporation acquired the stock of the surviving corporation in a transaction in which the basis in the surviving corporation's stock was determined under section 362(b) (see §§ 1.358-6(c)(2)(ii)(B) and 1.1502-30(b)).

(ii) ***Letter ruling and closing agreement.*** If a controlling corporation obtains a letter ruling and enters into a closing agreement under section 7121 in which it agrees to determine its basis in surviving corporation stock under § 1.358-6(c)(2)(ii)(A), or under § 1.1502-30(b) by applying § 1.358-6(c)(2)(ii)(A) (deemed asset acquisition and transfer by controlling corporation), then section 355(d)(5)(B) and paragraphs (d)(3)(i) through (iv) of this section apply, and section 355(d)(5)(C) and paragraph (e)(2) of this section do not apply. If a controlling corporation obtains a letter ruling and enters into a closing agreement under section 7121 under which it agrees to determine its basis in surviving corporation stock under § 1.358-6(c)(2)(ii)(B), or under § 1.1502-30(b) by applying § 1.358-6(c)(2)(ii)(B) (deemed stock acquisition), then section 355(d)(5)(C) and paragraph (e)(2) of this section apply, and section 355(d)(5)(B) and paragraphs (d)(3)(i) through (iv) of this section do not apply.

(iii) ***Example.*** The following example illustrates this paragraph (d)(5):

> *Example. Reverse triangular reorganization; purchase.* (i) A purchases 60 percent of the stock of D on Date 1. D owns no cash items, marketable stock, or transferor debt, but holds cash that is not part of or used in D's trade or business under paragraph (d)(3)(iv) of this section and that represents 20 percent of D's value. On Date 2, P forms S, and S merges into D in a reorganization qualifying under section 368(a)(1)(B) and under section 368(a)(1)(A) by reason of section 368(a)(2)(E). In the reorganization, P acquires all of the D stock in exchange solely for P stock. After Date 2, and within five years after Date 1, D distributes its wholly owned subsidiary C to P. P does not obtain a letter ruling and enter into a closing agreement under paragraph (d)(5)(ii) of this section. P would acquire 20 percent of the D stock by purchase on Date 2 under paragraph (d)(5)(i)(A) of this section by operation of section 355(d)(5)(B) and paragraph (d)(3)(iv) of this section. The exception in paragraph (d)(3)(v) of this section does not apply because D was not affiliated with P before the transaction in which the section 351 transfer is deemed to occur and D's assets are treated as acquired by P in a related transaction in which section 362(b) applies to determine P's basis in the D assets. P would acquire 60 percent of the D stock by purchase on Date 1 under paragraph (d)(5)(i)(B) of this section because, under the transferred basis rule of section 355(d)(5)(C) and paragraph (e)(2) of this section, P is treated as though P purchased the D stock on the date A purchased it. Accordingly, under paragraph (d)(5)(i) of this section, P is treated as acquiring the higher amount (60 percent) by purchase on Date 1. D's distribution of C to P is a disqualified distribution under section 355(d)(2) and paragraph (b)(1) of this section. In addition, A is treated as acquiring the P stock by purchase on Date 1 under paragraph (e)(3) of this section because A's basis in the P stock is determined by reference to A's basis in the D stock.

(ii) The facts are the same as in paragraph (i) of this *Example,* except that P obtains a letter ruling and enters into a closing agreement under which it agrees to determine its basis in the D stock under § 1.358-6(c)(2)(ii)(A). Under paragraph (d)(5)(ii) of this section, section 355(d)(5)(B) (and paragraphs (d)(3)(i) through (iv) of this section) applies, and section 355(d)(5)(C) (and paragraph (e)(2) of this section) does not apply. Accordingly, P is treated as acquiring only 20 percent of the D stock by purchase on Date 2. D's distribution of C to P is not a disqualified distribution under section 355(d)(2) and paragraph (b)(1) of this section.

(6) ***Treatment of group structure changes*** —

(i) ***In general.*** Notwithstanding section 355(d)(5)(A), for purposes of section 355(d), if a corporation succeeds another corporation as the common parent of a consolidated group in a group structure change to which § 1.1502-31 applies, the new common parent is treated as having acquired the assets and assumed the liabilities of the former common parent in a transaction in which the new common parent's basis in the former common parent's assets was determined under section 362(b), and then transferred the acquired assets and liabilities to the former common parent (or, if the former common parent does not survive, to the new common parent's subsidiary) in a section 351 transfer, with the new common parent and former common parent being treated as not in the same affiliated group at the time of the transfer for purposes of applying paragraph (d)(3)(v) of this section (notwithstanding § 1.1502-31(c)(2)).

(ii) ***Adjustments to basis of higher-tier members.*** A higher-tier member that indirectly owns all or part of the former common parent's stock after a group structure change is treated as having purchased the stock of an immediate subsidiary to the extent that the higher-tier member's basis in the subsidiary is increased under § 1.1502-31(d)(4).

(iii) ***Example.*** The following example illustrates this paragraph (d)(6):

Example. P is the common parent of a consolidated group, and T is the common parent of another group. P has owned S for more than five years, and the fair market value of the S stock is $50. T's assets consist only of non-marketable stock of direct and indirect wholly owned subsidiaries with a value of $50, assets used in its business with a value of $50, and $50 of marketable stock that is not part of or used in T's business. T has no liabilities. T merges into S with the T shareholders receiving solely P stock with a value of $150 in exchange for their T stock in a section 368(a)(2)(D) reorganization. S will use T's business assets in T's business (which will become S's business), but will hold the $50 of marketable stock for investment purposes. Assume that the transaction is a reverse acquisition under § 1.1502-75(d)(3) because the T shareholders, as a result of owning T stock, own more than 50 percent of the value of P's stock immediately after the transaction. Thus, the transaction is a group structure change under § 1.1502-33(f)(1). Under paragraph (d)(6) of this section, P is treated as having acquired the assets of T in a transaction in which P's basis in the T assets was determined under section 362(b), and then transferred the acquired assets to S in a section 351 transfer, with P and T being treated as not in the same affiliated group at the time of the transfer solely for purposes of paragraph (d)(3)(v) of this section. The exception in paragraph (d)(3)(v) of this section (transfers within an affiliated group) does not apply. Accordingly, P is treated under

section 355(d)(5)(B) and paragraph (d)(3)(iv) of this section as having purchased $50 of the S stock (attributable to the marketable stock), but is not deemed to have purchased the remaining $150 of the S stock.

(7) ***Special rules for triangular asset reorganizations, other reverse triangular reorganizations, and group structure changes.*** The amount of acquiring subsidiary, surviving corporation, or former common parent stock that is treated as purchased under paragraph (c)(4), (5)(i)(A), or (6) of this section (by operation of section 355(d)(5)(B) and paragraphs (d)(3)(i) through (iv) of this section) is adjusted to reflect any basis adjustment under—

(i) Section 1.358-6(c)(2)(i)(B) and (C) (reduction of basis adjustment in reverse triangular reorganization where controlling corporation acquires less than all of the surviving corporation stock), § 1.1502-30(b) (applying § 1.358-6(c)(2)(i)(B) and (C) to a consolidated group), and § 1.1502-31(d)(2)(ii) (reduction of basis adjustment in group structure change where new common parent acquires less than all of the former common parent stock); or

(ii) Section 1.358-6(d) (reduction of basis adjustment in any triangular reorganization to the extent controlling corporation does not provide consideration), § 1.1502-30(b) (applying § 1.358-6(d) (except § 1.358-6(d)(2)) to a consolidated group), and § 1.1502-31(d)(1) (reduction of basis adjustment in group structure change to the extent new common parent does not provide consideration).

(e) ***Deemed purchase and timing rules*** —

(1) ***Attribution and aggregation*** —

(i) ***In general.*** Under section 355(d)(8)(B), if any person acquires by purchase an interest in any entity, and the person is treated under section 355(d)(8)(A) as holding any stock by reason of holding the interest, the stock shall be treated as acquired by purchase on the later of the date of the purchase of the interest in the entity or the date the stock is acquired by purchase by such entity.

(ii) ***Purchase of additional interest.*** If a person and an entity are treated as a single person under section 355(d)(7), and the person later purchases an additional interest in the entity, the person is treated as purchasing on the date of the later purchase the amount of stock attributed from the entity to the person under section 355(d)(8)(A) as a result of the additional interest.

(iii) ***Purchase between persons treated as one person.*** If two persons are treated as one person under section 355(d)(7), and one later purchases stock from the other, the date of the later purchase is used for purposes of determining when the five-year period commences.

(iv) ***Purchase by a person already treated as holding stock under section 355(d)(8)(A).*** If a person who is already treated as holding stock under section 355(d)(8)(A) later directly purchases such stock, the date of the later direct purchase is used for purposes of determining when the five-year period commences.

(v) ***Examples.*** The following examples illustrate this paragraph (e)(1):

Example 1. On Date 1, A purchases 10 percent of the stock of P, which has held 100 percent of the stock of T for more than five years at the time of A's purchase. A is deemed to have purchased 10 percent of P's T stock on Date 1. If A later purchases an additional 41 percent of the stock of P on Date 2, A is deemed to have purchased an additional 41 percent of P's T stock on Date 2. Because A and P are now related persons under section

267(b), they are treated as one person under section 355(d)(7)(A), and A is treated as owning all of P's T stock. A is treated as acquiring 51 percent of the T stock by purchase at the times of A's respective purchases of P stock on Date 1 and Date 2. The remaining 49 percent of T stock is treated as acquired when P acquired the T stock, more than five years before Date 1. If P distributes T after Date 2 and within five years after Date 1, the distribution will be a disqualified distribution under section 355(d)(2) and paragraph (b)(1) of this section.

Example 2. A has owned 60 percent of the stock of P for more than five years, and P has owned 40 percent of the stock of T for more than five years. A and P are treated as one person, and A is treated as owning 40 percent of the stock of T for more than five years. If P later purchases an additional 20 percent of the stock of T on Date 1, A is treated as acquiring by purchase the additional 20 percent of T stock on Date 1. If A then purchases an additional 10 percent of the stock of P on Date 2, under paragraph (e)(1)(i) of this section, A is deemed to have purchased on Date 2 an additional four percent of the T stock (10 percent of the 40 percent that P originally owned). In addition, even though A and P were already treated as one person under section 355(d)(7)(A), A also is deemed to have purchased two percent of the T stock on Date 2 (10 percent of the 20 percent of the T stock that it was treated as purchasing on Date 1). A is still treated as owning all 60 percent of the T stock owned by P. However, of the 60 percent, A is treated as having purchased 18 percent of the T stock on Date 1 and 6 percent of the T stock on Date 2, for a total of 24 percent purchased stock.

Example 3. A purchases a 20 percent interest in partnership M on Date 1. M has owned 30 percent of the stock and 25 percent of the securities of P for more than five years. P has owned 40 percent of the stock and 100 percent of the securities of T for more than five years. Under section 318(a)(2)(C) as modified by section 355(d)(8)(A), M is deemed to own 12 percent of the stock (30 percent of the 40 percent P owns) and 30 percent of the securities (30 percent of the 100 percent P owns) of T. Under sections 318(a)(2)(A) and 355(d)(8)(B), A is deemed to have purchased 2.4 percent of the stock (20 percent of the 12 percent M is deemed to own) and 6 percent of the securities (20 percent of the 30 percent M is deemed to own) of T on Date 1. Similarly, A is deemed to have purchased 6 percent of the stock (20 percent of the 30 percent M owns) and five percent of the securities (20 percent of the 25 percent M owns) of P on Date 1. If M later purchases an additional 10 percent of P stock on Date 2, M is deemed to have purchased four percent of the stock (10 percent of the 40 percent P owns) and 10 percent of the securities (10 percent of the 100 percent P owns) of T on Date 2. A is deemed to have purchased two percent of the stock of P on Date 2 (20 percent of the 10 percent M purchased). A is also deemed to have purchased 0.8 percent of the stock (20 percent of the four percent M is deemed to have purchased) and two percent of the securities (20 percent of the 10 percent M is deemed to have purchased) of T on Date 2.

Example 4. A and B are brother and sister. For more than five years, A has owned 75 percent of the stock of P, and B has owned 25 percent of the stock of P. A and B are treated as one person under section 267(b), and the stock of each is treated as purchased on the date it was purchased by A and B, respectively. If B later purchases 50 percent of the P stock from A on Date 1, A and B are still treated as one person. However, under paragraph (e)(3)(iii) of this section, the 50 percent of P stock that B purchased from A is treated as purchased on Date 1.

(2) ***Transferred basis rule.*** If any person acquires property from another person who acquired the property by purchase (determined with regard to section 355(d)(5) and paragraphs (d) and (e)(2), (3) and (4) of this section, but without regard to section 355(d)(8) and paragraph (e)(1) of this section), and the adjusted basis of the property in the hands of the acquirer is determined in whole or in part by reference to the adjusted basis of the property in the hands of the other person, the acquirer is treated as having acquired the property by purchase on the date it was so acquired by the other person. The rule in this paragraph (e)(2) applies, for example, where stock of a corporation acquired by purchase is subsequently acquired in a section 351 transfer or a reorganization qualifying under section 368(a)(1)(B), but does not apply if the stock of a former common parent is acquired in a group structure change to which § 1.1502-31 applies. But see paragraph (d)(2)(i)(B)(2) of this section for situations where the stock is treated as purchased on the date of a transfer.

(3) ***Exchanged basis rule*** —

(i) ***In general.*** If any person acquires an interest in an entity (the first interest) by purchase (determined with regard to section 355(d)(5) and paragraphs (d) and (e)(2), (3) and (4) of this section, but without regard to section 355(d)(8) and paragraph (e)(1) of this section), and the first interest is exchanged for an interest in the same or another entity (the second interest) where the adjusted basis of the second interest is determined in whole or in part by reference to the adjusted basis of the first interest, then the second interest is treated as having been purchased on the date the first interest was purchased. The rule in this paragraph (e)(3) applies only to exchanges that are not otherwise treated as purchases under section 355(d)(5) and paragraph (d) of this section. The rule in this paragraph (e)(3) applies, for example, where stock of a corporation acquired by purchase is subsequently exchanged for other stock in a section 351, 354, or 1036(a) exchange. But see paragraph (d)(2)(i)(A)(2) of this section for situations where the stock is treated as purchased on the date of an exchange or distribution.

(ii) ***Example.*** The following example illustrates this paragraph (e)(3):

Example. A purchases 50 percent of the stock of T on Date 1. On Date 2, T merges into D in a section 368(a)(1)(A) reorganization, with A exchanging all of the T stock solely for stock of D. Under section 358(a), A's basis in the D stock is determined by reference to the basis of the T stock it purchased. Accordingly, A is treated as having purchased the D stock on Date 1, and has a purchased basis in the D stock under paragraph (b)(3)(iii) of this section.

(4) ***Certain section 355 or section 305 distributions*** —

(i) ***Section 355.*** If a distributing corporation distributes any stock of a controlled corporation with respect to recently purchased distributing stock in a distribution that qualifies under section 355 (or so much of section 356 as relates to section 355), such controlled corporation stock is deemed to be acquired by purchase by the distributee on the date the distributee acquired the recently purchased distributing stock. Recently purchased distributing stock is stock in the distributing corporation acquired by purchase (determined with regard to section 355(d)(5) and paragraphs (d) and (e)(2), (3), and (4) of this section, but without regard to section 355(d)(8) and paragraph (e)(1) of this section) by the distributee during the five-year period with respect to that distribution.

(ii) ***Section 305.*** If a corporation distributes its stock in a distribution that qualifies under section 305(a), the stock received in the distribution (to the extent section 307(a) applies to determine the recipient's basis) is deemed to be acquired by purchase by the recipient on the date (if any)

that the recipient acquired by purchase (determined with regard to section 355(d)(5) and paragraphs (d) and (e)(2), (3), and (4) of this section), the stock with respect to which the distribution is made.

(5) ***Substantial diminution of risk*** —

(i) ***In general.*** If section 355(d)(6) applies to any stock for any period, the running of any five-year period set forth in section 355(d)(3) is suspended during such period.

(ii) ***Property to which suspension applies.*** Section 355(d)(6) applies to any stock for any period during which the holder's risk of loss with respect to such stock, or with respect to any portion of the activities of the corporation, is (directly or indirectly) substantially diminished by an option, a short sale, any special class of stock, or any other device or transaction.

(iii) ***Risk of loss substantially diminished.*** Whether a holder's risk of loss is substantially diminished under section 355(d)(6) and paragraph (e)(5)(ii) of this section will be determined based on all facts and circumstances relating to the stock, the corporate activities, and arrangements for holding the stock.

(iv) ***Special class of stock.*** For purposes of section 355(d)(6) and paragraph (e)(5)(ii) of this section, the term special class of stock includes a class of stock that grants particular rights to, or bears particular risks for, the holder or the issuer with respect to the earnings, assets, or attributes of less than all the assets or activities of a corporation or any of its subsidiaries. The term includes, for example, tracking stock and stock (or any related instruments or arrangements) the terms of which provide for the distribution (whether or not at the option of any party or in the event of any contingency) of any controlled corporation or other specified assets to the holder or to one or more persons other than the holder.

(f) ***Duty to determine stockholders*** —

(1) ***In general.*** In determining whether section 355(d) applies to a distribution of controlled corporation stock, a distributing corporation must determine whether a disqualified person holds its stock or the stock of any distributed controlled corporation. This paragraph (f) provides rules regarding this determination and the extent to which a distributing corporation must investigate whether a disqualified person holds stock.

(2) ***Deemed knowledge of contents of securities filings.*** A distributing corporation is deemed to have knowledge of the existence and contents of all schedules, forms, and other documents filed with or under the rules of the Securities and Exchange Commission, including without limitation any Schedule 13D or 13G (or any similar schedules) and amendments, with respect to any relevant corporation.

(3) ***Presumption as to securities filings.*** Absent actual knowledge to the contrary, in determining whether section 355(d) applies to a distribution, a distributing corporation may presume, with respect to stock that is reporting stock (while such stock is reporting stock), that every shareholder or other person required to file a schedule, form, or other document with or under the rules of the Securities and Exchange Commission as of a given date has filed the schedule, form, or other document as of that date and that the contents of filed schedules, forms, or other documents are accurate and complete. Reporting stock is stock that is described in Rule 13d-1(i) of Regulation 13D (17 CFR 240.13d-1(i)) (or any rule or regulation to generally the same effect) promulgated by the Securities and Exchange Commission under the Securities Exchange Act of 1934 (15 U.S.C. 78a *et seq.*).

(4) ***Presumption as to less-than-five-percent shareholders.*** Absent actual knowledge (or deemed knowledge under paragraph (f)(2) of this section) immediately after the distribution to the contrary with regard to a particular shareholder, a distributing corporation may presume that no less-than-five-percent shareholder of a corporation acquired stock or securities by purchase under section 355(d)(5) or (8) and paragraphs (d) and (e) of this section during the five-year period. For purposes of this paragraph (f), a less-than-five-percent shareholder is a person that, at no time during the five-year period, holds directly (or by application of paragraph (c)(3)(ii) of this section, but not by application of section 355(d)(7) or (8)) stock possessing five percent or more of the total combined voting power of all classes of stock entitled to vote or the total value of shares of all classes of stock of a corporation. However, this presumption does not apply to any less-than-five-percent shareholder that, at any time during the five-year period—

(i) Is related under section 355(d)(7)(A) to a shareholder in the corporation that is, at any time during the five-year period, not a less-than-five-percent shareholder;

(ii) Acted pursuant to a plan or arrangement, with respect to acquisitions of the corporation's stock or securities under section 355(d)(7)(B) and paragraph (c)(4) of this section, with a shareholder in the corporation that is, at any time during the five-year period, not a less-than-five-percent shareholder; or

(iii) Holds stock or securities that is attributed under section 355(d)(8)(A) to a shareholder in the corporation that is, at any time during the five-year period, not a less-than-five-percent shareholder.

(5) ***Examples.*** The following examples illustrate this paragraph (f):

Example 1. Publicly traded corporation; no schedules filed. D is a widely held and publicly traded corporation with a single class of reporting stock and no other class of stock. Assume that applicable federal law requires any person that directly holds five percent or more of the D stock to file a schedule with the Securities and Exchange Commission within 10 days after an acquisition. D distributes its wholly owned subsidiary C pro rata. D determines that no schedule, form, or other document has been filed with respect to its stock or the stock of any other relevant corporation during the five-year period or within 10 days after the distribution. Immediately after the distribution, D has no knowledge that any of its shareholders are (or were at any time during the five-year period) not less-than-five-percent shareholders, or that any particular shareholder acquired D stock by purchase under section 355(d)(5) or (8) and paragraphs (d) and (e) of this section during the five-year period. Under paragraph (f)(3) of this section, D may presume it has no shareholder that is or was not a less-than-five-percent shareholder during the five-year period due to the absence of any filed schedules, forms, or other documents. Under paragraph (f)(4) of this section, D may presume that none of its less-than-five-percent shareholders acquired D's stock by purchase during the five-year period. Accordingly, D may presume that section 355(d) does not apply to the distribution of C.

Example 2. Publicly traded corporation; schedule filed. The facts are the same as those in *Example 1,* except that D determines that, as of 10 days after the distribution, only one schedule has been filed with respect to its stock. That schedule discloses that X acquired 15 percent of the D stock one year before the distribution. Absent contrary knowledge, D may rely on the presumptions in paragraph (f)(3) of this section and so may presume that X is its only shareholder that is or was not a less-than-five-percent shareholder during the five-year period. D may not rely on the presumption in paragraph (f)(4) of this section with respect to X. In addition, D may not rely on the presumption in paragraph (f)(4) of this section with respect to

any less-than-five-percent shareholder that, at any time during the five-year period, is related to X under section 355(d)(7)(A), acted pursuant to a plan or arrangement with X under section 355(d)(7)(B) and paragraph (c)(4) of this section with respect to acquisitions of D stock, or holds stock that is attributed to X under section 355(d)(8)(A). Accordingly, under paragraph (f)(1) of this section, to determine whether section 355(d) applies, D must determine: whether X acquired its directly held D stock by purchase under section 355(d)(5) and paragraphs (d) and (e)(2) and (3) of this section during the five-year period; whether X is treated as having purchased any additional D stock under section 355(d)(8) and paragraph (e)(1) of this section during the five-year period; and whether X is related to, or acquired its D stock pursuant to a plan or arrangement with, one or more of D's other shareholders during the five-year period under section 355(d)(7)(A) or (B) and paragraph (c)(4) of this section, and if so, whether those shareholders acquired their D stock by purchase under section 355(d)(5) or (8) and paragraphs (d) and (e) of this section during the five-year period.

Example 3. Acquisition of publicly traded corporation. The facts are the same as those in *Example 1,* except that P acquires all of the D stock in a section 368(a)(1)(B) reorganization that is not also a reorganization under section 368(a)(1)(A) by reason of section 368(a)(2)(E), and D distributes C to P one year later. Because D was widely held, P applies statistical sampling procedures that involve less than 50% of D's outstanding shares, to estimate the basis of all shares acquired, instead of surveying each shareholder. Under the deemed purchase rule of section 355(d)(5)(C) and paragraph (e)(2) of this section, P is treated as having acquired the D stock by purchase on the date the D shareholders acquired the D stock by purchase. Even though D has no less-than-five-percent shareholder immediately after the distribution, D may rely on the presumptions in paragraphs (f)(3) and (4) of this section to determine whether and to what extent the D stock is treated as purchased during the five-year period in P's hands under the deemed purchase rule of section 355(d)(5)(C) and paragraph (e)(2) of this section. Accordingly, D may presume that section 355(d) does not apply to the distribution of C to P. This result would not change even if the statistical sampling that involves less than 50 percent of D's outstanding shares indicated that more than 50% of D's shares were acquired by purchase during the five-year period.

Example 4. Non-publicly traded corporation. D is owned by 20 shareholders and has a single class of stock that is not reporting stock. D knows that A owns 40 percent of the D stock, and D does not know that any other shareholder has owned as much as five percent of the D stock at any time during the five-year period. D may not rely on the presumption in paragraph (f)(3) of this section because its stock is not reporting stock. D may not rely on the presumption in paragraph (f)(4) of this section with respect to A. In addition, D may not rely on the presumption in paragraph (f)(4) of this section for any less-than-five-percent shareholder that, at any time during the five-year period, is related to A under section 355(d)(7)(A), acted pursuant to a plan or arrangement with A under section 355(d)(7)(B) and paragraph (c)(4) of this section with respect to acquisitions of D stock, or holds stock that is attributed to A under section 355(d)(8)(A). D may rely on the presumption in paragraph (f)(4) of this section for less-than-five-percent shareholders that during the five-year period are not related to A, did not act pursuant to a plan or arrangement with A, and do not hold stock attributed to A. Accordingly, under paragraph (f)(1) of this section, to determine whether section 355(d) applies, D must determine: that A is its only shareholder that is (or was at any time during the five-year period) not a less-than-five-percent shareholder; whether A acquired its directly held D stock by purchase under section 355(d)(5) and paragraphs (d) and (e)(2) and (3) of this section during the five-year period; whether A is treated as having purchased any additional D stock under section 355(d)(8) and paragraph (e)(1) of this section during the five-year period; and whether A

is related to, or acquired its D stock pursuant to a plan or arrangement with, one or more of D's other shareholders during the five-year period under section 355(d)(7)(A) or (B) and paragraph (c)(4) of this section, and if so, whether those shareholders acquired their D stock by purchase under section 355(d)(5) or (8) and paragraphs (d) and (e) of this section during the five-year period.

(g) ***Effective/applicability dates.*** This section applies to distributions occurring after December 20, 2000, except that they do not apply to any distributions occurring pursuant to a written agreement that is (subject to customary conditions) binding on December 20, 2000, and at all later times. The provisions of paragraph (d)(1)(i)(A)(2) of this section relating to section 1022 are effective on and after January 19, 2017.

[T.D. 8913, 65 FR 79723, Dec. 20, 2000; 66 FR 9034, Feb. 6, 2001, as amended by T.D. 9811, 82 FR 6237, Jan. 19, 2017]

§ 1.355-7 Recognition of gain on certain distributions of stock or securities in connection with an acquisition.

(a) ***In general.*** Except as provided in section 355(e) and in this section, section 355(e) applies to any distribution—

(1) To which section 355 (or so much of section 356 as relates to section 355) applies; and

(2) That is part of a plan (or series of related transactions) (hereinafter, plan) pursuant to which 1 or more persons acquire directly or indirectly stock representing a 50-percent or greater interest in the distributing corporation (Distributing) or any controlled corporation (Controlled).

(b) ***Plan*** —

(1) ***In general.*** Whether a distribution and an acquisition are part of a plan is determined based on all the facts and circumstances. The facts and circumstances to be considered in demonstrating whether a distribution and an acquisition are part of a plan include, but are not limited to, the facts and circumstances set forth in paragraphs (b)(3) and (4) of this section. In general, the weight to be given each of the facts and circumstances depends on the particular case. Whether a distribution and an acquisition are part of a plan does not depend on the relative number of facts and circumstances set forth in paragraph (b)(3) that evidence that a distribution and an acquisition are part of a plan as compared to the relative number of facts and circumstances set forth in paragraph (b)(4) that evidence that a distribution and an acquisition are not part of a plan.

(2) ***Certain post-distribution acquisitions.*** In the case of an acquisition (other than involving a public offering) after a distribution, the distribution and the acquisition can be part of a plan only if there was an agreement, understanding, arrangement, or substantial negotiations regarding the acquisition or a similar acquisition at some time during the two-year period ending on the date of the distribution. In the case of an acquisition (other than involving a public offering) after a distribution, the existence of an agreement, understanding, arrangement, or substantial negotiations regarding the acquisition or a similar acquisition at some time during the two-year period ending on the date of the distribution tends to show that the distribution and the acquisition are part of a plan. See paragraph (b)(3)(i) of this section. However, all facts and circumstances must be considered to determine whether the distribution and the acquisition are part of a plan. For example, in the case of an acquisition (other than involving a public offering) after a distribution, if the distribution was motivated in whole or substantial part by a corporate business purpose (within the meaning of § 1.355-2(b)) other than a business purpose to facilitate the acquisition or a similar acquisition of

Distributing or Controlled (see paragraph (b)(4)(v) of this section) and would have occurred at approximately the same time and in similar form regardless of whether the acquisition or a similar acquisition was effected (see paragraph (b)(4)(vi) of this section), the taxpayer may be able to establish that the distribution and the acquisition are not part of a plan.

(3) ***Plan factors.*** Among the facts and circumstances tending to show that a distribution and an acquisition are part of a plan are the following:

(i) In the case of an acquisition (other than involving a public offering) after a distribution, at some time during the two-year period ending on the date of the distribution, there was an agreement, understanding, arrangement, or substantial negotiations regarding the acquisition or a similar acquisition. The weight to be accorded this fact depends on the nature, extent, and timing of the agreement, understanding, arrangement, or substantial negotiations. The existence of an agreement, understanding, or arrangement at the time of the distribution is given substantial weight.

(ii) In the case of an acquisition involving a public offering after a distribution, at some time during the two-year period ending on the date of the distribution, there were discussions by Distributing or Controlled with an investment banker regarding the acquisition or a similar acquisition. The weight to be accorded this fact depends on the nature, extent, and timing of the discussions.

(iii) In the case of an acquisition (other than involving a public offering) before a distribution, at some time during the two-year period ending on the date of the acquisition, there were discussions by Distributing or Controlled with the acquirer regarding a distribution. The weight to be accorded this fact depends on the nature, extent, and timing of the discussions. In addition, in the case of an acquisition (other than involving a public offering) before a distribution, the acquirer intends to cause a distribution and, immediately after the acquisition, can meaningfully participate in the decision regarding whether to make a distribution.

(iv) In the case of an acquisition involving a public offering before a distribution, at some time during the two-year period ending on the date of the acquisition, there were discussions by Distributing or Controlled with an investment banker regarding a distribution. The weight to be accorded this fact depends on the nature, extent, and timing of the discussions.

(v) In the case of an acquisition either before or after a distribution, the distribution was motivated by a business purpose to facilitate the acquisition or a similar acquisition.

(4) ***Non-plan factors.*** Among the facts and circumstances tending to show that a distribution and an acquisition are not part of a plan are the following:

(i) In the case of an acquisition involving a public offering after a distribution, during the two-year period ending on the date of the distribution, there were no discussions by Distributing or Controlled with an investment banker regarding the acquisition or a similar acquisition.

(ii) In the case of an acquisition after a distribution, there was an identifiable, unexpected change in market or business conditions occurring after the distribution that resulted in the acquisition that was otherwise unexpected at the time of the distribution.

(iii) In the case of an acquisition (other than involving a public offering) before a distribution, during the two-year period ending on the date of the earlier to occur of the acquisition or the first public announcement regarding the distribution, there were no discussions by Distributing or

Controlled with the acquirer regarding a distribution. Paragraph (b)(4)(iii) of this section does not apply to an acquisition where the acquirer intends to cause a distribution and, immediately after the acquisition, can meaningfully participate in the decision regarding whether to make a distribution.

(iv) In the case of an acquisition before a distribution, there was an identifiable, unexpected change in market or business conditions occurring after the acquisition that resulted in a distribution that was otherwise unexpected.

(v) In the case of an acquisition either before or after a distribution, the distribution was motivated in whole or substantial part by a corporate business purpose (within the meaning of § 1.355-2(b)) other than a business purpose to facilitate the acquisition or a similar acquisition.

(vi) In the case of an acquisition either before or after a distribution, the distribution would have occurred at approximately the same time and in similar form regardless of the acquisition or a similar acquisition.

(c) ***Operating rules.*** The operating rules contained in this paragraph (c) apply for all purposes of this section.

(1) ***Internal discussions and discussions with outside advisors evidence of business purpose.*** Discussions by Distributing or Controlled with outside advisors and internal discussions may be indicative of one or more business purposes for the distribution and the relative importance of such purposes.

(2) ***Takeover defense.*** If Distributing engages in discussions with a potential acquirer regarding an acquisition of Distributing or Controlled and distributes Controlled stock intending, in whole or substantial part, to decrease the likelihood of the acquisition of Distributing or Controlled by separating it from another corporation that is likely to be acquired, Distributing will be treated as having a business purpose to facilitate the acquisition of the corporation that was likely to be acquired.

(3) ***Effect of distribution on trading in stock.*** The fact that the distribution made all or a part of the stock of Controlled available for trading or made Distributing's or Controlled's stock trade more actively is not taken into account in determining whether the distribution and an acquisition of Distributing or Controlled stock were part of a plan.

(4) ***Consequences of section 355(e) disregarded for certain purposes.*** For purposes of determining the intentions of the relevant parties under this section, the consequences of the application of section 355(e), and the existence of any contractual indemnity by Controlled for tax resulting from the application of section 355(e) caused by an acquisition of Controlled, are disregarded.

(5) ***Multiple acquisitions.*** All acquisitions of stock of Distributing or Controlled that are considered to be part of a plan with a distribution pursuant to paragraph (b) of this section will be aggregated for purposes of the 50-percent test of paragraph (a)(2) of this section.

(d) ***Safe harbors*** —

(1) ***Safe Harbor I.*** A distribution and an acquisition occurring after the distribution will not be considered part of a plan if—

(i) The distribution was motivated in whole or substantial part by a corporate business purpose (within the meaning of § 1.355-2(b)), other than a business purpose to facilitate an acquisition of the acquired corporation (Distributing or Controlled); and

(ii) The acquisition occurred more than six months after the distribution and there was no agreement, understanding, arrangement, or substantial negotiations concerning the acquisition or a similar acquisition during the period that begins one year before the distribution and ends six months thereafter.

(2) *Safe Harbor II* —

(i) ***In general.*** A distribution and an acquisition occurring after the distribution will not be considered part of a plan if—

(A) The distribution was not motivated by a business purpose to facilitate the acquisition or a similar acquisition;

(B) The acquisition occurred more than six months after the distribution and there was no agreement, understanding, arrangement, or substantial negotiations concerning the acquisition or a similar acquisition during the period that begins one year before the distribution and ends six months thereafter; and

(C) No more than 25 percent of the stock of the acquired corporation (Distributing or Controlled) was either acquired or the subject of an agreement, understanding, arrangement, or substantial negotiations during the period that begins one year before the distribution and ends six months thereafter.

(ii) ***Special rule.*** For purposes of paragraph (d)(2)(i)(C) of this section, acquisitions of stock that are treated as not part of a plan pursuant to Safe Harbor VII, Safe Harbor VIII, or Safe Harbor IX are disregarded.

(3) ***Safe Harbor III.*** If an acquisition occurs after a distribution, there was no agreement, understanding, or arrangement concerning the acquisition or a similar acquisition at the time of the distribution, and there was no agreement, understanding, arrangement, or substantial negotiations concerning the acquisition or a similar acquisition within one year after the distribution, the acquisition and the distribution will not be considered part of a plan.

(4) *Safe Harbor IV* —

(i) ***In general.*** A distribution and an acquisition (other than involving a public offering) occurring before the distribution will not be considered part of a plan if the acquisition occurs before the date of the first disclosure event regarding the distribution.

(ii) ***Special rules.***

(A) Paragraph (d)(4)(i) of this section does not apply to a stock acquisition if the acquirer or a coordinating group of which the acquirer is a member is a controlling shareholder or a ten-percent shareholder of the acquired corporation (Distributing or Controlled) at any time during the period beginning immediately after the acquisition and ending on the date of the distribution.

(B) Paragraph (d)(4)(i) of this section does not apply to an acquisition that occurs in connection with a transaction in which the aggregate acquisitions are of stock possessing 20 percent or more of the total voting power of the stock of the acquired corporation (Distributing or Controlled) or stock having a value of 20 percent or more of the total value of the stock of the acquired corporation (Distributing or Controlled).

(5) *Safe Harbor V* —

(i) *In general.* A distribution that is pro rata among the Distributing shareholders and an acquisition (other than involving a public offering) of Distributing stock occurring before the distribution will not be considered part of a plan if—

(A) The acquisition occurs after the date of a public announcement regarding the distribution; and

(B) There were no discussions by Distributing or Controlled with the acquirer regarding a distribution on or before the date of the first public announcement regarding the distribution.

(ii) *Special rules.*

(A) Paragraph (d)(5)(i) of this section does not apply to a stock acquisition if the acquirer or a coordinating group of which the acquirer is a member is a controlling shareholder or a ten-percent shareholder of Distributing at any time during the period beginning immediately after the acquisition and ending on the date of the distribution.

(B) Paragraph (d)(5)(i) of this section does not apply to an acquisition that occurs in connection with a transaction in which the aggregate acquisitions are of stock possessing 20 percent or more of the total voting power of the stock of Distributing or stock having a value of 20 percent or more of the total value of the stock of Distributing.

(6) *Safe Harbor VI.* A distribution and an acquisition involving a public offering occurring before the distribution will not be considered part of a plan if the acquisition occurs before the date of the first disclosure event regarding the distribution in the case of an acquisition of stock that is not listed on an established market immediately after the acquisition, or before the date of the first public announcement regarding the distribution in the case of an acquisition of stock that is listed on an established market immediately after the acquisition.

(7) *Safe Harbor VII* —

(i) *In general.* An acquisition (other than involving a public offering) of Distributing or Controlled stock that is listed on an established market is not part of a plan if, immediately before or immediately after the transfer, none of the transferor, the transferee, and any coordinating group of which either the transferor or the transferee is a member is—

(A) The acquired corporation (Distributing or Controlled);

(B) A corporation that the acquired corporation (Distributing or Controlled) controls within the meaning of section 368(c);

(C) A member of a controlled group of corporations within the meaning of section 1563 of which the acquired corporation (Distributing or Controlled) is a member;

(D) A controlling shareholder of the acquired corporation (Distributing or Controlled); or

(E) A ten-percent shareholder of the acquired corporation (Distributing or Controlled).

(ii) *Special rules.*

(A) Paragraph (d)(7)(i) of this section does not apply to a transfer of stock by or to a person if the corporation the stock of which is being transferred knows, or has reason to know, that the person or a coordinating group of which such person is a member intends to become

a controlling shareholder or a ten-percent shareholder of the acquired corporation (Distributing or Controlled) at any time after the acquisition and before the date that is two years after the distribution.

(B) If a transfer of stock to which paragraph (d)(7)(i) of this section applies results immediately, or upon a subsequent event or the passage of time, in an indirect acquisition of voting power by a person other than the transferee, paragraph (d)(7)(i) of this section does not prevent an acquisition of stock (with the voting power such stock represents after the transfer to which paragraph (d)(7)(i) of this section applies) by such other person from being treated as part of a plan.

(8) *Safe Harbor VIII* —

(i) ***In general.*** If, in a transaction to which section 83 or section 421(a) or (b) applies, stock of Distributing or Controlled is acquired by a person in connection with such person's performance of services as an employee, director, or independent contractor for Distributing, Controlled, a related person, a corporation the assets of which Distributing, Controlled, or a related person acquires in a reorganization under section 368(a), or a corporation that acquires the assets of Distributing or Controlled in such a reorganization (and the stock acquired is not excessive by reference to the services performed), the acquisition and the distribution will not be considered part of a plan. For purposes of this paragraph (d)(8)(i), a related person is a person related to Distributing or Controlled under section 355(d)(7)(A).

(ii) ***Special rule.*** Paragraph (d)(8)(i) of this section does not apply to a stock acquisition if the acquirer or a coordinating group of which the acquirer is a member is a controlling shareholder or a ten-percent shareholder of the acquired corporation (Distributing or Controlled) immediately after the acquisition.

(9) *Safe Harbor IX* —

(i) ***In general.*** If stock of Distributing or Controlled is acquired by a retirement plan of Distributing or Controlled (or a retirement plan of any other person that is treated as the same employer as Distributing or Controlled under section 414(b), (c), (m), or (o)) that qualifies under section 401(a) or 403(a), the acquisition and the distribution will not be considered part of a plan.

(ii) ***Special rule.*** Paragraph (d)(9)(i) of this section does not apply to the extent that the stock acquired pursuant to acquisitions by all of the qualified plans of the persons described in paragraph (d)(9)(i) of this section during the four-year period beginning two years before the distribution, in the aggregate, represents more than ten percent of the total combined voting power of all classes of stock entitled to vote, or more than ten percent of the total value of shares of all classes of stock, of the acquired corporation (Distributing or Controlled).

(e) *Options, warrants, convertible obligations, and other similar interests* —

(1) *Treatment of options* —

(i) ***General rule.*** For purposes of this section, if stock of Distributing or Controlled is acquired pursuant to an option that is written by Distributing, Controlled, or a person that is a controlling shareholder of Distributing or Controlled at the time the option is written, or that is acquired by a person that is a controlling shareholder of Distributing or Controlled immediately after the option is written, the option will be treated as an agreement, understanding, or arrangement to acquire the stock on the earliest of the following dates: the date that the option is written, if the

option was more likely than not to be exercised as of such date; the date that the option is transferred if, immediately before or immediately after the transfer, the transferor or transferee was Distributing, Controlled, a corporation that Distributing or Controlled controls within the meaning of section 368(c), a member of a controlled group of corporations within the meaning of section 1563 of which Distributing or Controlled is a member, or a controlling shareholder or a ten-percent shareholder of Distributing or Controlled and the option was more likely than not to be exercised as of such date; and the date that the option is modified in a manner that materially increases the likelihood of exercise, if the option was more likely than not to be exercised as of such date; provided, however, if the writing, transfer, or modification had a principal purpose of avoiding section 355(e), the option will be treated as an agreement, understanding, arrangement, or substantial negotiations to acquire the stock on the date of the distribution. The determination of whether an option was more likely than not to be exercised is based on all the facts and circumstances, taking control premiums and minority and blockage discounts into account in determining the fair market value of stock underlying an option.

(ii) ***Agreement, understanding, or arrangement to write, transfer, or modify an option.*** If there is an agreement, understanding, or arrangement to write an option, the option will be treated as written on the date of the agreement, understanding, or arrangement. If there is an agreement, understanding, or arrangement to transfer an option, the option will be treated as transferred on the date of the agreement, understanding, or arrangement. If there is an agreement, understanding, or arrangement to modify an option in a manner that materially increases the likelihood of exercise, the option will be treated as so modified on the date of the agreement, understanding, or arrangement.

(iii) ***Substantial negotiations related to options.*** If an option is treated as an agreement, understanding, or arrangement to acquire the stock on the date that the option is written, substantial negotiations to acquire the option will be treated as substantial negotiations to acquire the stock subject to such option. If an option is treated as an agreement, understanding, or arrangement to acquire the stock on the date that the option is transferred, substantial negotiations regarding the transfer of the option will be treated as substantial negotiations to acquire the stock subject to such option. If an option is treated as an agreement, understanding, or arrangement to acquire the stock on the date that the option is modified in a manner that materially increases the likelihood of exercise, substantial negotiations regarding such modifications to the option will be treated as substantial negotiations to acquire the stock subject to such option.

(2) ***Stock acquired pursuant to options.*** For purposes of this section, if an option is issued for cash, the terms of the acquisition of the option and the terms of the option are established by the corporation the stock of which is subject to the option (Distributing or Controlled) or the writer with the involvement of one or more investment bankers, and the potential acquirers of the option have no opportunity to negotiate the terms of the acquisition of the option or the terms of the option, then an acquisition pursuant to such option shall be treated as an acquisition involving a public offering occurring after the distribution if the option is exercised after the distribution or an acquisition involving a public offering before a distribution if the option is exercised before the distribution. Otherwise, an acquisition pursuant to an option shall be treated as an acquisition not involving a public offering.

(3) ***Instruments treated as options.*** For purposes of this section, except to the extent provided in paragraph (e)(4) of this section, call options, warrants, convertible obligations, the conversion feature of convertible stock, put options, redemption agreements (including rights to cause the

redemption of stock), any other instruments that provide for the right or possibility to issue, redeem, or transfer stock (including an option on an option), or any other similar interests are treated as options.

(4) ***Instruments generally not treated as options.*** For purposes of this section, the following are not treated as options unless (in the case of paragraphs (e)(4)(i), (ii), and (iii) of this section) written, transferred (directly or indirectly), modified, or listed with a principal purpose of avoiding the application of section 355(e) or this section.

(i) ***Escrow, pledge, or other security agreements.*** An option that is part of a security arrangement in a typical lending transaction (including a purchase money loan), if the arrangement is subject to customary commercial conditions. For this purpose, a security arrangement includes, for example, an agreement for holding stock in escrow or under a pledge or other security agreement, or an option to acquire stock contingent upon a default under a loan.

(ii) ***Options exercisable only upon death, disability, mental incompetency, or separation from service.*** Any option entered into between shareholders of a corporation (or a shareholder and the corporation) that is exercisable only upon the death, disability, or mental incompetency of the shareholder, or, in the case of stock acquired in connection with the performance of services for the corporation or a person related to it under section 355(d)(7)(A) (and that is not excessive by reference to the services performed), the shareholder's separation from service.

(iii) ***Rights of first refusal.*** A bona fide right of first refusal regarding the corporation's stock with customary terms, entered into between shareholders of a corporation (or between the corporation and a shareholder).

(iv) ***Other enumerated instruments.*** Any other instrument the Commissioner may designate in revenue procedures, notices, or other guidance published in the Internal Revenue Bulletin (see § 601.601(d)(2) of this chapter).

(f) ***Multiple controlled corporations.*** Only the stock or securities of a controlled corporation in which one or more persons acquire directly or indirectly stock representing a 50-percent or greater interest as part of a plan involving the distribution of that corporation will be treated as not qualified property under section 355(e)(1) if—

(1) The stock or securities of more than one controlled corporation are distributed in distributions to which section 355 (or so much of section 356 as relates to section 355) applies; and

(2) One or more persons do not acquire, directly or indirectly, stock representing a 50-percent or greater interest in Distributing pursuant to a plan involving any of those distributions.

(g) ***Valuation.*** Except as provided in paragraph (e)(1)(i) of this section, for purposes of section 355(e) and this section, all shares of stock within a single class are considered to have the same value. Thus, control premiums and minority and blockage discounts within a single class are not taken into account.

(h) ***Definitions.*** For purposes of this section, the following definitions shall apply:

(1) ***Agreement, understanding, arrangement, or substantial negotiations.***

(i) An agreement, understanding, or arrangement generally requires either—

(A) An agreement, understanding, or arrangement by one or more officers or directors acting on behalf of Distributing or Controlled, by controlling shareholders of Distributing or Controlled, or by another person or persons with the implicit or explicit permission of one or more of such officers, directors, or controlling shareholders, with the acquirer or with a person or persons with the implicit or explicit permission of the acquirer; or

(B) An agreement, understanding, or arrangement by an acquirer that is a controlling shareholder of Distributing or Controlled immediately after the acquisition that is the subject of the agreement, understanding, or arrangement, or by a person or persons with the implicit or explicit permission of such acquirer, with the transferor or with a person or persons with the implicit or explicit permission of the transferor.

(ii) In the case of an acquisition by a corporation, an agreement, understanding, or arrangement with the acquiring corporation generally requires an agreement, understanding, or arrangement with one or more officers or directors acting on behalf of the acquiring corporation, with controlling shareholders of the acquiring corporation, or with another person or persons with the implicit or explicit permission of one or more of such officers, directors, or controlling shareholders.

(iii) Whether an agreement, understanding, or arrangement exists depends on the facts and circumstances. The parties do not necessarily have to have entered into a binding contract or have reached agreement on all significant economic terms to have an agreement, understanding, or arrangement. However, an agreement, understanding, or arrangement clearly exists if a binding contract to acquire stock exists.

(iv) Substantial negotiations in the case of an acquisition (other than involving a public offering) generally require discussions of significant economic terms, *e.g.*, the exchange ratio in a reorganization, either—

(A) By one or more officers or directors acting on behalf of Distributing or Controlled, by controlling shareholders of Distributing or Controlled, or by another person or persons with the implicit or explicit permission of one or more of such officers, directors, or controlling shareholders, with the acquirer or with a person or persons with the implicit or explicit permission of the acquirer; or

(B) If the acquirer is a controlling shareholder of Distributing or Controlled immediately after the acquisition that is the subject of substantial negotiations, by the acquirer or by a person or persons with the implicit or explicit permission of the acquirer, with the transferor or with a person or persons with the implicit or explicit permission of the transferor.

(v) In the case of an acquisition (other than involving a public offering) by a corporation, substantial negotiations generally require discussions of significant economic terms with one or more officers or directors acting on behalf of the acquiring corporation, with controlling shareholders of the acquiring corporation, or with another person or persons with the implicit or explicit permission of one or more of such officers, directors, or controlling shareholders.

(vi) In the case of an acquisition involving a public offering, the existence of an agreement, understanding, arrangement, or substantial negotiations will be based on discussions by one or more officers or directors acting on behalf of Distributing or Controlled, by controlling

shareholders of Distributing or Controlled, or by another person or persons with the implicit or explicit permission of one or more of such officers, directors, or controlling shareholders, with an investment banker.

(2) ***Controlled corporation.*** A controlled corporation is a corporation the stock of which is distributed in a distribution to which section 355 (or so much of section 356 as relates to section 355) applies.

(3) ***Controlling shareholder.***

(i) A controlling shareholder of a corporation the stock of which is listed on an established market is a five-percent shareholder who actively participates in the management or operation of the corporation. For purposes of this paragraph (h)(3)(i), a corporate director will be treated as actively participating in the management of the corporation.

(ii) A controlling shareholder of a corporation the stock of which is not listed on an established market is any person that owns stock possessing voting power representing a meaningful voice in the governance of the corporation. For purposes of determining whether a person owns stock possessing voting power representing a meaningful voice in the governance of the corporation, the person shall be treated as owning the stock that such person owns actually and constructively under the rules of section 318 (without regard to section 318(a)(4)). In addition, if the exercise of an option (whether by itself or in conjunction with the deemed exercise of one or more other options) would cause the holder to own stock possessing voting power representing a meaningful voice in the governance of the corporation, then the option will be treated as exercised.

(iii) If a distribution precedes an acquisition, Controlled's controlling shareholders immediately after the distribution and Distributing are included among Controlled's controlling shareholders at the time of the distribution.

(4) ***Coordinating group.*** A coordinating group includes two or more persons that, pursuant to a formal or informal understanding, join in one or more coordinated acquisitions or dispositions of stock of Distributing or Controlled. A principal element in determining if such an understanding exists is whether the investment decision of each person is based on the investment decision of one or more other existing or prospective shareholders. A coordinating group is treated as a single shareholder for purposes of determining whether the coordinating group is treated as a controlling shareholder, a five-percent shareholder, or a ten-percent shareholder.

(5) ***Disclosure event.*** A disclosure event regarding the distribution means any communication by an officer, director, controlling shareholder, or employee of Distributing, Controlled, or a corporation related to Distributing or Controlled, or an outside advisor of any of those persons (where such advisor makes the communication on behalf of such person), regarding the distribution, or the possibility thereof, to the acquirer or any other person (other than an officer, director, controlling shareholder, or employee of Distributing, Controlled, or a corporation related to Distributing or Controlled, or an outside advisor of any of those persons). For purposes of this paragraph (h)(5), a corporation is related to Distributing or Controlled if it is a member of an affiliated group (as defined in section 1504(a) without regard to section 1504(b)) that includes either Distributing or Controlled or it is a member of a qualified group (as defined in § 1.368-1(d)(4)(ii)) that includes either Distributing or Controlled.

(6) ***Discussions.*** Discussions by Distributing or Controlled generally require discussions by one or more officers or directors acting on behalf of Distributing or Controlled, by controlling shareholders of Distributing or Controlled, or by another person or persons with the implicit or explicit permission of

one or more of such officers, directors, or controlling shareholders. Discussions with the acquirer generally require discussions with the acquirer or with a person or persons with the implicit or explicit permission of the acquirer. In the case of an acquisition by a corporation, discussions with the acquiring corporation generally require discussions with one or more officers or directors acting on behalf of the acquiring corporation, with controlling shareholders of the acquiring corporation, or with another person or persons with the implicit or explicit permission of one or more of such officers, directors, or controlling shareholders.

(7) ***Established market.*** An established market is—

(i) A national securities exchange registered under section 6 of the Securities Exchange Act of 1934 (15 U.S.C. 78f);

(ii) An interdealer quotation system sponsored by a national securities association registered under section 15A of the Securities Act of 1934 (15 U.S.C. 78o-3); or

(iii) Any additional market that the Commissioner may designate in revenue procedures, notices, or other guidance published in the Internal Revenue Bulletin (see § 601.601(d)(2) of this chapter).

(8) ***Five-percent shareholder.*** A person will be considered a five-percent shareholder of a corporation the stock of which is listed on an established market if the person owns five percent or more of any class of stock of the corporation whose stock is transferred. For purposes of determining whether a person owns five percent or more of any class of stock of the corporation whose stock is transferred, the person shall be treated as owning the stock that such person owns actually and constructively under the rules of section 318 (without regard to section 318(a)(4)). In addition, if the exercise of an option (whether by itself or in conjunction with the deemed exercise of one or more other options) would cause the holder to become a five-percent shareholder, then the option will be treated as exercised. Absent actual knowledge that a person is a five-percent shareholder, a corporation can rely on Schedules 13D and 13G (or any similar schedules) filed with the Securities and Exchange Commission to identify its five-percent shareholders.

(9) ***Implicit permission.*** A corporation is treated as having the implicit permission of its shareholders when it engages in discussions or negotiations, or enters into an agreement, understanding, or arrangement.

(10) ***Public announcement.*** A public announcement regarding the distribution means any communication by Distributing or Controlled regarding Distributing's intention to effect the distribution where the communication is generally available to the public.

(11) ***Public offering.*** An acquisition involving a public offering means an acquisition of stock for cash where the terms of the acquisition are established by the acquired corporation (Distributing or Controlled) or the seller with the involvement of one or more investment bankers and the potential acquirers have no opportunity to negotiate the terms of the acquisition. For example, a public offering includes an underwritten offering of registered stock for cash.

(12) ***Similar acquisition (not involving a public offering).*** In general, an actual acquisition (other than involving a public offering) is similar to another potential acquisition if the actual acquisition effects a direct or indirect combination of all or a significant portion of the same business operations as the combination that would have been effected by such other potential acquisition. Thus, an actual acquisition may be similar to another acquisition even if the timing or terms of the actual acquisition are different from the timing or terms of the other acquisition. For example, an actual acquisition of Distributing by shareholders of another corporation in connection with a merger of such other

corporation with and into Distributing is similar to another acquisition of Distributing by merger into such other corporation or into a subsidiary of such other corporation. However, in general, an actual acquisition (other than involving a public offering) is not similar to another acquisition if the ultimate owners of the business operations with which Distributing or Controlled is combined in the actual acquisition are substantially different from the ultimate owners of the business operations with which Distributing or Controlled was to be combined in such other acquisition.

(13) ***Similar acquisition involving a public offering*** —

(i) ***One public offering.*** In general, an actual acquisition involving a public offering may be similar to a potential acquisition involving a public offering, even though there are changes in the terms of the stock, the class of stock being offered, the size of the offering, the timing of the offering, the price of the stock, or the participants in the offering.

(ii) ***More than one public offering.*** More than one actual acquisition involving a public offering may be similar to a potential acquisition involving a public offering. If there is an actual acquisition involving a public offering (the first public offering) that is the same as, or similar to, a potential acquisition involving a public offering, then another actual acquisition involving a public offering (the second public offering) cannot be similar to the potential acquisition unless the purpose of the second public offering is similar to that of the potential acquisition and occurs close in time to the first public offering.

(iii) ***Potential acquisition involving a public offering.*** For purposes of paragraph (h)(13)(i) and (ii) of this section, as the context may require, a potential acquisition involving a public offering means a potential acquisition involving a public offering that was discussed by Distributing or Controlled with an investment banker, that motivated the distribution, or that was the subject of an agreement, understanding, arrangement, or substantial negotiations.

(14) ***Ten-percent shareholder.*** A person will be considered a ten-percent shareholder of a corporation the stock of which is listed on an established market if the person owns, actually or constructively under the rules of section 318 (without regard to section 318(a)(4)), ten percent or more of any class of stock of the corporation whose stock is transferred. A person will be considered a ten-percent shareholder of a corporation the stock of which is not listed on an established market if the person owns stock possessing ten percent or more of the total voting power of the stock of the corporation whose stock is transferred or stock having a value equal to ten percent or more of the total value of the stock of the corporation whose stock is transferred. For purposes of determining whether a person owns ten percent or more of the total voting power or value of the stock of the corporation whose stock is transferred, the person shall be treated as owning the stock that such person owns actually and constructively under the rules of section 318 (without regard to section 318(a)(4)). In addition, if the exercise of an option (whether by itself or in conjunction with the deemed exercise of one or more other options) would cause the holder to become a ten-percent shareholder, then the option will be treated as exercised. Absent actual knowledge that a person is a ten-percent shareholder, a corporation the stock of which is listed on an established market can rely on Schedules 13D and 13G (or any similar schedules) filed with the Securities and Exchange Commission to identify its ten-percent shareholders.

(i) [Reserved]

(j) ***Examples.*** The following examples illustrate paragraphs (a) through (h) of this section. Throughout these examples, assume that Distributing (D) owns all of the stock of Controlled (C). Assume further that D distributes the stock of C in a distribution to which section 355 applies and to which section 355(d) does

not apply. Unless otherwise stated, assume the corporations do not have controlling shareholders. No inference should be drawn from any example concerning whether any requirements of section 355 other than those of section 355(e) are satisfied. The examples are as follows:

Example 1. Unwanted assets. (i) D is in business 1. C is in business 2. D is relatively small in its industry. D wants to combine with X, a larger corporation also engaged in business 1. X and D begin negotiating for X to acquire D, but X does not want to acquire C. To facilitate the acquisition of D by X, D agrees to distribute all the stock of C pro rata before the acquisition. Prior to the distribution, D and X enter into a contract for D to merge into X subject to several conditions. One month after D and X enter into the contract, D distributes C and, on the day after the distribution, D merges into X. As a result of the merger, D's former shareholders own less than 50 percent of the stock of X.
(ii) The issue is whether the distribution of C and the merger of D into X are part of a plan. No Safe Harbor applies to this acquisition. To determine whether the distribution of C and the merger of D into X are part of a plan, D must consider all the facts and circumstances, including those described in paragraph (b) of this section.

(iii) The following tends to show that the distribution of C and the merger of D into X are part of a plan: X and D had an agreement regarding the acquisition during the two-year period ending on the date of the distribution (paragraph (b)(3)(i) of this section), and the distribution was motivated by a business purpose to facilitate the merger (paragraph (b)(3)(v) of this section). Because the merger was agreed to at the time of the distribution, the fact described in paragraph (b)(3)(i) of this section is given substantial weight.

(iv) None of the facts and circumstances listed in paragraph (b)(4) of this section, tending to show that a distribution and an acquisition are not part of a plan, exist in this case.

(v) The distribution of C and the merger of D into X are part of a plan under paragraph (b) of this section.

Example 2. Public offering. (i) D's managers, directors, and investment banker discuss the possibility of offering D stock to the public. They decide a public offering of 20 percent of D's stock with D as a stand-alone corporation would be in D's best interest. One month later, to facilitate a stock offering by D of 20 percent of its stock, D distributes all the stock of C pro rata to D's shareholders. D issues new shares amounting to 20 percent of its stock to the public in a public offering seven months after the distribution.
(ii) The issue is whether the distribution of C and the public offering by D are part of a plan. No Safe Harbor applies to this acquisition. Safe Harbor VII, relating to public trading, does not apply to public offerings (see paragraph (d)(7)(i) of this section). To determine whether the distribution of C and the public offering by D are part of a plan, D must consider all the facts and circumstances, including those described in paragraph (b) of this section.

(iii) The following tends to show that the distribution of C and the public offering by D are part of a plan: D discussed the public offering with its investment banker during the two-year period ending on the date of the distribution (paragraph (b)(3)(ii) of this section), and the distribution was motivated by a business purpose to facilitate the public offering (paragraph (b)(3)(v) of this section).

(iv) None of the facts and circumstances listed in paragraph (b)(4) of this section, tending to show that a distribution and an acquisition are not part of a plan, exist in this case.

(v) The distribution of C and the public offering by D are part of a plan under paragraph (b) of this section.

Example 3. Hot market. (i) D is a widely-held corporation the stock of which is listed on an established market. D announces a distribution of C and distributes C pro rata to D's shareholders. By contract, C agrees to indemnify D for any imposition of tax under section 355(e) caused by the acts of C. The distribution is motivated by a desire to improve D's access to financing at preferred customer interest rates, which will be more readily available if D separates from C. At the time of the distribution, although neither D nor C has been approached by any potential acquirer of C, it is reasonably certain that soon after the distribution either an acquisition of C will occur or there will be an agreement, understanding, arrangement, or substantial negotiations regarding an acquisition of C. Corporation Y acquires C in a merger described in section 368(a)(1)(A) by reason of section 368(a)(2)(E) within six months after the distribution. The C shareholders receive less than 50 percent of the stock of Y in the exchange.
(ii) The issue is whether the distribution of C and the acquisition of C by Y are part of a plan. No Safe Harbor applies to this acquisition. Under paragraph (b)(2) of this section, because prior to the distribution neither D nor C and Y had an agreement, understanding, arrangement, or substantial negotiations regarding the acquisition or a similar acquisition, the distribution of C by D and the acquisition of C by Y are not part of a plan under paragraph (b) of this section.

Example 4. Unexpected opportunity. (i) D, the stock of which is listed on an established market, makes a public announcement that it will distribute all the stock of C pro rata to D's shareholders. After the public announcement but before the distribution, widely-held X becomes available as an acquisition target. There were no discussions by D or C with X before the date of the public announcement. D negotiates with X and X merges into D before the distribution. In the merger, X's shareholders receive ten percent of D's stock. D distributes the stock of C pro rata within six months after the acquisition of X. No shareholder of X was a controlling shareholder or a ten-percent shareholder of D at any time during the period beginning immediately after the merger and ending on the date of the distribution

(ii) The issue is whether the acquisition of X by D and the distribution of C are part of a plan. Safe Harbor V applies to this acquisition because the distribution is pro rata among D's shareholders, the acquisition occurs after the date of a public announcement regarding the distribution, there were no discussions by D or C with X on or before the date of the public announcement, no acquirer was a controlling shareholder or a ten-percent shareholder of D during the period beginning immediately after the merger and ending on the date of the distribution, and not more than 20 percent of D's stock was acquired by the X shareholders in the merger.

Example 5. Vote shifting transaction. (i) D is in business 1. C is in business 2. D wants to combine with X, which is also engaged in business 1. The stock of X is closely held. X and D begin negotiating for D to acquire X, but the X shareholders do not want to acquire an indirect interest in C. To facilitate the acquisition of X by D, D agrees to distribute all the stock of C pro rata before the acquisition of X. D and X enter into a contract for X to merge into D subject to several conditions. Among those conditions is that D will amend its corporate charter to provide for two classes of stock: Class A and Class B. Under all circumstances, each share of Class A stock will be entitled to ten votes in the election of each director on D's board of directors. Upon issuance, each share of Class B stock will be entitled to ten votes in the election of each director on D's board of directors; however, a disposition of such share by its original holder will result in such share being entitled to only one vote, rather than ten votes, in the election of each director. Immediately after the merger, the Class B shares will be listed on an established market. One month after D and X enter into the contract, D distributes C. Immediately after the distribution, the shareholders of D exchange their D stock for the new Class B shares. On the day after the distribution, X merges into D. In the merger, the former shareholders of X exchange their X stock for Class A shares of D. Immediately after the merger, D's historic shareholders own stock of D representing 51 percent of the total combined voting power of all classes of stock of D entitled to vote and more than 50 percent of the total value of all classes of stock of D. During the 30-day period following the merger, none of the Class A shares are transferred, but a number of D's historic shareholders sell their Class B stock of D in public trading with the result that, at the end of that 30-day period, the Class A shares owned by the former X shareholders represent 52 percent of the total combined voting power of all classes of stock of D entitled to vote.
(ii) *X acquisition.* (A) The issue is whether the distribution of C and the merger of X into D are part of a plan. No Safe Harbor applies to this acquisition. To determine whether the distribution of C and the merger of X into D are part of a plan, D must consider all the facts and circumstances, including those described in paragraph (b) of this section.

(B) The following tends to show that the distribution of C and the merger of X into D are part of a plan: X and D had an agreement regarding the acquisition during the two-year period ending on the date of the distribution (paragraph (b)(3)(i) of this section), and the distribution was motivated by

a business purpose to facilitate the merger (paragraph (b)(3)(v) of this section). Because the merger was agreed to at the time of the distribution, the fact described in paragraph (b)(3)(i) of this section is given substantial weight.

(C) None of the facts and circumstances listed in paragraph (b)(4) of this section, tending to show that a distribution and an acquisition are not part of a plan, exist in this case.

(D) The distribution of C and the merger of X into D are part of a plan under paragraph (b) of this section.

(iii) *Public trading of Class B shares.* (A) Assuming that each of the transferors and the transferees of the Class B stock of D in public trading is not one of the prohibited transferors or transferees listed in paragraph (d)(7)(i), Safe Harbor VII will apply to the acquisitions of the Class B stock during the 30-day period following the merger such that the distribution and those acquisitions will not be treated as part of a plan. However, to the extent that those acquisitions result in an indirect acquisition of voting power by a person other than the acquirer of the transferred stock, Safe Harbor VII does not prevent the acquisition of the D stock (with the voting power such stock represents after those acquisitions) by the former X shareholders from being treated as part of a plan.

(B) To the extent that the transfer of the Class B shares causes the voting power of D to shift to the Class A stock acquired by the former X shareholders, such shifted voting power will be treated as attributable to the stock acquired by the former X shareholders as part of a plan that includes the distribution and the X acquisition.

Example 6. Acquisition not involving a public offering that is not similar. (i) D, X, and Y are each corporations the stock of which is publicly traded and widely held. Each of D, X, and Y is engaged in the manufacture and sale of trucks. C is engaged in the manufacture and sale of buses. D and X engage in substantial negotiations concerning X's acquisition of the stock of D from the D shareholders in exchange for stock of X. D and X do not reach an agreement regarding that acquisition. Three months after D and X first began negotiations regarding that acquisition, D distributes the stock of C pro rata to its shareholders. Three months after the distribution, Y acquires the stock of D from the D shareholders in exchange for stock of Y. The ultimate owners of Y are substantially different from the ultimate owners of X.
(ii) Although both X and Y engage in the manufacture and sale of trucks, X's truck business and Y's truck business are not the same business operations. Therefore, because Y's acquisition of D does not effect a combination of the same business operations as X's acquisition of D would have effected, and because the ultimate owners of Y are substantially different from the ultimate owners of X, Y's acquisition of D is not similar to X's potential acquisition of D that was the subject of earlier negotiations.

Example 7. Acquisition not involving a public offering that is similar. (i) D is engaged in the business of writing custom software for several industries (industries 1 through 6). The software business of D related to industries 4, 5, and 6 is significant relative to the software business of D related to industries 3, 4, 5, and 6. X, an unrelated corporation, is engaged in the business of writing software and the business of manufacturing and selling hardware devices. X's business of writing software is significant relative to its total businesses. X and D engage in substantial negotiations regarding X's acquisition of D stock from the D shareholders in exchange for stock of X. Because X does not want to acquire the software businesses related to industries 1 and 2, these negotiations relate to an acquisition of D stock where D owns the software businesses related only to industries 3, 4, 5, and 6. Thereafter, D concludes that the intellectual property licenses central to the software business related to industries 1 and 2 are not transferable and that a separation of the software business related to industry 3 from the software business related to industry 2 is not desirable. One month after D begins negotiating with X, D contributes the software businesses related to industries 4, 5, and 6 to C, and distributes the stock of C pro rata to its shareholders. In addition, X sells its hardware businesses for cash. After the distribution, C and X negotiate for X's acquisition of the C stock from the C shareholders in exchange for X stock, and X acquires the stock of C.
(ii) Although D and C are different corporations, C does not own the custom software business related to industry 3, and X sold its hardware business prior to the acquisition of C, because X's acquisition of C involves a combination of a significant portion of the same business operations as the combination that would have been effected by the acquisition of D that was the subject of negotiations between D and X, X's acquisition of C is the same as, or similar to, X's potential acquisition of D that was the subject of earlier negotiations.

Example 8. Acquisitions involving public offerings with different purposes. (i) D's managers, directors, and investment banker discuss the possibility of offering D stock to the public for the purpose of funding the acquisition of the assets of X. They decide a public offering of 20 percent of D's stock with D as a stand-alone corporation would allow D to raise the capital needed to effect the acquisition of X's assets. One month later, to facilitate a stock offering by D of 20 percent of its stock, D distributes all the stock of C pro rata to D's shareholders. Two months after the distribution, D issues new shares amounting to 20 percent of its stock to the public in a public offering (the first public offering). Four months after the distribution, D acquires the assets of X. Seven months after the distribution, D's managers, directors, and investment banker discuss the possibility of offering D stock to the public solely for the purpose of funding the acquisition of the assets of Y, a corporation unrelated to X. One year after the distribution, D issues new shares amounting to 40 percent of its stock to the public in a public offering (the second public offering). One month after the second public offering, D acquires the assets of Y.

(ii) The first public offering is the same as the potential acquisition that D's managers, directors, and investment banker discussed prior to the distribution. The purpose of the second public offering (funding the acquisition of the assets of Y) is not similar to that of the potential acquisition (funding the acquisition of the assets of X). Therefore, the second public offering is not similar to the potential acquisition.

Example 9. Acquisitions involving public offerings that are close in time. (i) D's managers, directors, and investment banker discuss the possibility of offering D stock to the public for the purpose of raising funds for general corporate purposes. They decide a public offering of 20 percent of D's stock with D as a stand-alone corporation would allow D to raise such funds. One month later, to facilitate a stock offering by D of 20 percent of its stock, D distributes all the stock of C pro rata to D's shareholders. Two months after the distribution, D issues new shares amounting to 20 percent of its stock to the public in a public offering (the first public offering). After the first public offering, D's managers, directors, and investment banker discuss the possibility of another offering of D stock to the public for the purpose of raising additional funds for general corporate purposes. Eight months after the distribution, D issues new shares amounting to ten percent of its stock to the public in a public offering (the second public offering). (ii) The first public offering is the same as the potential acquisition that D's managers, directors, and investment banker discussed prior to the distribution. The purpose of the second public offering (raising funds for general corporate purposes) is the same as that of the potential acquisition. In addition, the second public offering is close in time to the first public offering. Therefore, the second public offering is similar to the potential acquisition.

Example 10. Acquisitions involving public offerings that are not close in time. The facts are the same as those in *Example 9*, except that the second public offering occurs fourteen months after the distribution. Although the purpose of the second public offering is the same as that of the potential acquisition, the second public offering is not close in time to the first public offering. Therefore, the second public offering is not similar to the potential acquisition.

(k) ***Effective dates.*** This section applies to distributions occurring after April 19, 2005. For distributions occurring on or before April 19, 2005, and after April 26, 2002, see § 1.355-7T as contained in 26 CFR part 1 revised as of April 1, 2003; however, taxpayers may apply these regulations, in whole, but not in part, to such distributions. For distributions occurring on or before April 26, 2002, and after August 3, 2001, see § 1.355-7T as contained in 26 CFR part 1 revised as of April 1, 2002; however, taxpayers may apply, in whole, but not in part, either these regulations or § 1.355-7T as contained in 26 CFR part 1 revised as of April 1, 2003, to such distributions. For distributions occurring on or before August 3, 2001, and after April 16, 1997, taxpayers may apply, in whole, but not in part, either these regulations or § 1.355-7T as contained in 26 CFR part 1 revised as of April 1, 2003, to such distributions.

[T.D. 9198, 70 FR 20283, Apr. 19, 2005]

§ 1.355-8 Definition of predecessor and successor and limitations on gain recognition under section 355(e) and section 355(f).

(a) *In general* —

(1) ***Scope.*** For purposes of section 355(e), this section provides rules under section 355(e)(4)(D) to determine whether a corporation is treated as a predecessor or successor of a distributing corporation (Distributing) or a controlled corporation (Controlled) with respect to a distribution by Distributing of stock (or stock and securities) of Controlled that qualifies under section 355(a) (or so much of section 356 as relates to section 355) (Distribution). This section also provides rules limiting the amount of Distributing's gain recognized under section 355(e) on a Distribution if section 355(e) applies to an acquisition by one or more persons, as part of a Plan, of stock that in the aggregate represents a 50-percent or greater interest (Planned 50-percent Acquisition) of a Predecessor of Distributing, or a Planned 50-percent Acquisition of Distributing. In addition, this section provides rules regarding the application of section 336(e) to a Distribution to which this section applies. This section also provides rules regarding the application of section 355(f) to a Distribution in certain cases.

(2) *Overview* —

(i) ***Purposes and conceptual overview.*** Paragraph (a)(3) of this section summarizes the two principal purposes of this section and sets forth a brief conceptual overview of the scenarios in which a corporation may be a Predecessor of Distributing.

(ii) ***References to and definitions of terms used in this section.*** Paragraph (a)(4) of this section provides rules regarding references to the terms *Distributing, Controlled, Distribution, Plan,* and *Plan Period* for purposes of section 355(e), § 1.355-7, and this section. Paragraph (a)(5) of this section lists the terms used in this section and indicates where each term is defined. Paragraph (b) of this section defines the term *Predecessor of Distributing* and several related terms. Paragraph (c) of this section defines the terms *Predecessor of Controlled, Successor* (of Distributing or Controlled), and *Section 381 Transaction.*

(iii) ***Special rules and examples.*** Paragraph (d) of this section provides guidance with regard to acquisitions and deemed acquisitions of stock if there is a Predecessor of Distributing or a Successor of either Distributing or Controlled. Paragraph (e) of this section provides two rules that may limit the amount of Distributing's gain on a Distribution if there is a Predecessor of Distributing, as well as an overall gain limitation. Paragraph (e) of this section also provides guidance with respect to the application of section 336(e). Regardless of whether there is a Predecessor of Distributing, Predecessor of Controlled, or Successor of either Distributing or Controlled, paragraph (f) of this section provides a special rule relating to section 355(e)(2)(C), which provides that section 355(e) does not apply to certain transactions within an Expanded Affiliated Group. Paragraph (g) of this section provides rules coordinating the application of section 355(f) with the rules of this section. Paragraph (h) of this section contains examples that illustrate the rules of this section.

(3) *Purposes of section; Predecessor of Distributing overview* —

(i) ***Purposes.*** The rules in this section have two principal purposes. The first is to ensure that section 355(e) applies to a Distribution if, as part of a Plan, some of the assets of a Predecessor of Distributing are transferred directly or indirectly to Controlled without full recognition of gain, and the Distribution accomplishes a division of the assets of the

Predecessor of Distributing. The second is to ensure that section 355(e) applies when there is a Planned 50-percent Acquisition of a Successor of Distributing or Successor of Controlled. The rules of this section must be interpreted and applied in a manner that is consistent with and reasonably carries out the purposes of this section.

(ii) ***Predecessor of Distributing overview.*** The term Predecessor of Distributing is defined in paragraph (b) of this section. Only a Potential Predecessor can be a Predecessor of Distributing. See paragraph (b)(1)(i) of this section. A Potential Predecessor can be a Predecessor of Distributing only if, as part of a Plan, the Distribution accomplishes a division of the assets of the Potential Predecessor. See paragraph (b)(1)(iii) of this section. Accordingly, in the absence of that Plan, a Predecessor of Distributing cannot exist for purposes of section 355(e). The detailed rules set forth in paragraph (b) of this section provide that a Potential Predecessor the assets of which are divided as part of a Plan may be a Predecessor of Distributing in either of the following two scenarios:

(A) ***Relevant Property transferred to Controlled.*** As part of the Plan, one or more of the Potential Predecessor's assets were transferred to Controlled in one or more tax-deferred transactions prior to the Distribution.

(B) ***Relevant Property includes Controlled Stock.*** The Potential Predecessor's assets included Controlled stock that, as part of the Plan, was transferred to Distributing in one or more tax-deferred transactions prior to the Distribution.

(4) ***References*** —

(i) ***References to Distributing or Controlled.*** For purposes of section 355(e), except as otherwise provided in this section, any reference to Distributing or Controlled includes, as the context may require, a reference to any Predecessor of Distributing or any Predecessor of Controlled, respectively, or any Successor of Distributing or Controlled, respectively. However, except as otherwise provided in this section, a reference to a Predecessor of Distributing or to a Successor of Distributing does not include a reference to Distributing, and a reference to a Predecessor of Controlled or to a Successor of Controlled does not include a reference to Controlled.

(ii) ***References to Plan or Distribution.*** Except as otherwise provided in this section, references to a *Plan* in this section are references to a plan within the meaning of § 1.355-7. References to a distribution in § 1.355-7 include a reference to a Distribution and other related pre-Distribution transactions that together effect a division of the assets of a Predecessor of Distributing. In determining whether a Distribution and a Planned 50-percent Acquisition of a Predecessor of Distributing, Distributing (including any Successor thereof), or Controlled (including any Successor thereof) are part of a Plan, the rules of § 1.355-7 apply. In applying those rules, references to Distributing or Controlled in § 1.355-7 generally include references to any Predecessor of Distributing and any Successor of Distributing, or any Successor of Controlled, as appropriate. However, with regard to any possible Planned 50-percent Acquisition of a Predecessor of Distributing, any agreement, understanding, arrangement, or substantial negotiations with regard to the acquisition of the stock of the Predecessor of Distributing is analyzed under § 1.355-7 with regard to the actions of officers or directors of Distributing or Controlled, controlling shareholders (as defined in § 1.355-7(h)(3)) of Distributing or Controlled, or a person acting with permission of one of those parties. For purposes of the preceding sentence, references in § 1.355-7 to Distributing do not include references to a Predecessor of Distributing. Therefore, the actions of officers, directors, or controlling shareholders of a

Predecessor of Distributing, or of a person acting with the implicit or explicit permission of one of those parties, are not considered unless those parties otherwise would be treated as acting on behalf of Distributing or Controlled under § 1.355-7 (for example, if a Predecessor of Distributing is a controlling shareholder of Distributing).

(iii) ***Plan Period.*** For purposes of this section, the term *Plan Period* means the period that ends immediately after the Distribution and begins on the earliest date on which any pre-Distribution step that is part of the Plan is agreed to or understood, arranged, or substantially negotiated by one or more officers or directors acting on behalf of Distributing or Controlled, by controlling shareholders of Distributing or Controlled, or by another person or persons with the implicit or explicit permission of one or more of such officers, directors, or controlling shareholders. For purposes of the preceding sentence, references to Distributing and Controlled do not include references to any Predecessor of Distributing, Predecessor of Controlled, or Successor of Distributing or Controlled.

(5) ***List of definitions.*** This section uses the following terms, which are defined where indicated—

(i) ***Acquiring Owner.*** Paragraph (d)(1)(i) of this section.

(ii) ***Controlled.*** Paragraph (a)(1) of this section.

(iii) ***Distributing.*** Paragraph (a)(1) of this section.

(iv) ***Distributing Gain Limitation Rule.*** Paragraph (e)(1)(ii) of this section.

(v) ***Distribution.*** Paragraph (a)(1) of this section.

(vi) ***Division of Relevant Property Requirement.*** Paragraph (b)(1)(iii) of this section.

(vii) ***Expanded Affiliated Group.*** Paragraph (b)(2)(ii)(B) of this section.

(viii) ***Hypothetical Controlled.*** Paragraph (e)(2)(i) of this section.

(ix) ***Hypothetical D/355(e) Reorganization.*** Paragraph (e)(2)(i) of this section.

(x) ***Plan.*** Paragraph (a)(4)(ii) of this section.

(xi) ***Plan Period.*** Paragraph (a)(4)(iii) of this section.

(xii) ***Planned 50-percent Acquisition.*** Paragraph (a)(1) of this section.

(xiii) ***POD Gain Limitation Rule.*** Paragraph (e)(1)(ii) of this section.

(xiv) ***Potential Predecessor.*** Paragraph (b)(2)(ii)(A) of this section.

(xv) ***Predecessor of Controlled.*** Paragraph (c)(1) of this section.

(xvi) ***Predecessor of Distributing.*** Paragraph (b)(1) of this section.

(xvii) ***Reflection of Basis Requirement.*** Paragraph (b)(1)(ii)(B) of this section.

(xviii) ***Relevant Equity.*** Paragraph (b)(2)(iv)(A) of this section.

(xix) ***Relevant Property.*** Paragraph (b)(2)(iv)(A) of this section.

(xx) ***Relevant Property Requirement.*** Paragraph (b)(1)(ii)(A) of this section.

(xxi) ***Section 381 Transaction.*** Paragraph (c)(3) of this section.

(xxii) ***Separated Property.*** Paragraph (b)(2)(vii) of this section.

(xxiii) ***Statutory Recognition Amount.*** Paragraph (e)(1)(i) of this section.

(xxiv) ***Substitute Asset.*** Paragraph (b)(2)(vi)(A) of this section.

(xxv) ***Successor.*** Paragraph (c)(2)(i) of this section.

(xxvi) ***Successor Transaction.*** Paragraph (c)(2)(i) of this section.

(xxvii) ***Underlying Property.*** Paragraph (b)(2)(viii) of this section.

(b) ***Predecessor of Distributing*** —

(1) ***Definition*** —

(i) ***In general.*** For purposes of section 355(e), a Potential Predecessor is a predecessor of Distributing (Predecessor of Distributing) if, taking into account the special rules of paragraph (b)(2) of this section—

(A) Both pre-Distribution requirements of paragraph (b)(1)(ii) of this section are satisfied; and

(B) The post-Distribution requirement of paragraph (b)(1)(iii) of this section is satisfied.

(ii) ***Pre-Distribution requirements*** —

(A) ***Relevant Property requirement.*** The requirement set forth in this paragraph (b)(1)(ii)(A) (Relevant Property Requirement) is satisfied if, before the Distribution, and as part of a Plan, either—

(*1*) Any Controlled stock distributed in the Distribution was directly or indirectly acquired (or deemed acquired under the rules set forth in paragraph (b)(2)(x) of this section) by Distributing in exchange for any direct or indirect interest in Relevant Property—

(*i*) That is held directly or indirectly by Controlled immediately before the Distribution; and

(*ii*) The gain on which (if any) was not recognized in full at any point during the Plan Period; or

(*2*) Any Controlled stock that is distributed in the Distribution is Relevant Property of the Potential Predecessor.

(B) ***Reflection of basis requirement.*** The requirement set forth in this paragraph (b)(1)(ii)(B) (Reflection of Basis Requirement) is satisfied if any Controlled stock that satisfies the Relevant Property Requirement—

(*1*) Either—

(*i*) Had a basis prior to the Distribution that was determined in whole or in part by reference to the basis of any Separated Property; or

(*ii*) Is Relevant Property of the Potential Predecessor; and

(*2*) During the Plan Period prior to the Distribution, was neither distributed in a distribution to which section 355(e) applied nor transferred in a transaction in which the gain (if any) on that Controlled stock was recognized in full.

(iii) ***Post-Distribution requirement.*** The requirement set forth in this paragraph (b)(1)(iii) (Division of Relevant Property Requirement) is satisfied if, immediately after the Distribution, and as part of a Plan, direct or indirect ownership of the Potential Predecessor's Relevant Property has been divided between Controlled on the one hand, and Distributing or the Potential Predecessor (or a successor to the Potential Predecessor) on the other hand. For purposes of this paragraph (b)(1)(iii), if Controlled stock that is distributed in the Distribution is Relevant Property of a Potential Predecessor, then Controlled is deemed to have received Relevant Property of the Potential Predecessor.

(2) ***Additional definitions and rules related to paragraph (b)(1) of this section*** —

(i) ***References to Distributing and Controlled.*** For purposes of the Relevant Property Requirement, the Reflection of Basis Requirement, and the Division of Relevant Property Requirement, references to Distributing and Controlled do not include references to any Predecessor of Distributing, Predecessor of Controlled, or Successor of Distributing or Controlled.

(ii) ***Potential Predecessor*** —

(A) ***Potential Predecessor definition.*** The term *Potential Predecessor* means a corporation, other than Distributing or Controlled, if—

(*1*) As part of a Plan, the corporation transfers property to a Potential Predecessor, Distributing, or a member of the same Expanded Affiliated Group as Distributing in a Section 381 Transaction; or

(*2*) Immediately after completion of the Plan, the corporation is a member of the same Expanded Affiliated Group as Distributing.

(B) ***Expanded Affiliated Group definition.*** The term *Expanded Affiliated Group* means an affiliated group (as defined in section 1504 without regard to section 1504(b)).

(iii) ***Successors of Potential Predecessors.*** For purposes of the Division of Relevant Property Requirement, if a Potential Predecessor transfers property in a Section 381 Transaction to a corporation (other than Distributing or Controlled) during the Plan Period, the corporation is a successor to the Potential Predecessor.

(iv) ***Relevant Property; Relevant Equity*** —

(A) ***In general.*** Except as otherwise provided in this paragraph (b)(2)(iv) or in paragraph (b)(2)(v) of this section, the term *Relevant Property* means any property that was held, directly or indirectly, by the Potential Predecessor during the Plan Period. The term *Relevant Equity* means Relevant Property that is an equity interest in a corporation or a partnership.

(B) ***Property held by Distributing.*** Except as provided in paragraph (b)(2)(iv)(C) of this section, property held directly or indirectly by Distributing (including Controlled stock) is Relevant Property of a Potential Predecessor only to the extent that the property was transferred directly or indirectly to Distributing during the Plan Period, and it was Relevant Property of the Potential Predecessor before the direct or indirect transfer(s). For example, if during the Plan Period a subsidiary corporation of a Potential Predecessor merges into

Controlled in a reorganization under section 368(a)(1)(A) and (2)(D), and, as a result, the Potential Predecessor directly or indirectly owns Distributing stock received in the merger, the subsidiary's assets held by Controlled are Relevant Property of that Potential Predecessor.

(C) ***F reorganizations.*** For purposes of paragraph (b)(2)(iv)(B) of this section, the transferor and transferee in any reorganization described in section 368(a)(1)(F) (F reorganization) are treated as a single corporation. Therefore, for example, Relevant Property acquired during the Plan Period by a corporation that is a transferor (as to a later F reorganization) is treated as having been acquired directly (and from the same source) by the transferee (as to the later F reorganization) during the Plan Period. In addition, any transfer (or deemed transfer) of assets to Distributing in an F reorganization will not cause the transferred assets to be treated as Relevant Property.

(v) ***Stock of Distributing as Relevant Property*** —

(A) ***In general.*** For purposes of the Division of Relevant Property Requirement, except as provided in paragraph (b)(2)(v)(B) of this section, stock of Distributing is not Relevant Property (and thus is not Relevant Equity) to the extent that the Potential Predecessor becomes, as part of a Plan, the direct or indirect owner of that stock as the result of the transfer to Distributing of direct or indirect interests in the Potential Predecessor's Relevant Property. For example, stock of Distributing is not Relevant Property if it is acquired by a Potential Predecessor as part of a Plan in an exchange to which section 351(a) applies.

(B) ***Certain reorganizations.*** For purposes of the Division of Relevant Property Requirement, stock of Distributing is Relevant Property (and thus Relevant Equity) to the extent that the Potential Predecessor becomes, as part of the Plan, the direct or indirect owner of that stock as the result of a transaction described in section 368(a)(1)(E).

(vi) ***Substitute Asset*** —

(A) ***In general.*** Subject to paragraph (b)(2)(vi)(B) of this section, the term *Substitute Asset* means any property that is held directly or indirectly by Distributing during the Plan Period and was received, during the Plan Period, in exchange for Relevant Property that was acquired directly or indirectly by Distributing if all gain on the transferred Relevant Property is not recognized on the exchange. For example, property received by Controlled in exchange for Relevant Property in a transaction qualifying under section 1031 is a Substitute Asset. In addition, stock received by Distributing in a distribution qualifying under section 305(a) or section 355(a) on Relevant Equity is a Substitute Asset.

(B) ***Controlled stock received by Distributing*** —

(*1*) ***In general.*** Except as provided in paragraph (b)(2)(vi)(B)(*2*) of this section, stock of Controlled received in exchange for a direct or indirect transfer of Relevant Property by Distributing is not a Substitute Asset.

(*2*) ***Exception.*** If the basis in Controlled stock received or deemed received in an exchange described in paragraph (b)(2)(vi)(B)(*1*) of this section is determined in whole or in part by reference to the basis of Relevant Equity the issuer of which ceases to exist for Federal income tax purposes under the Plan, that Controlled stock constitutes a Substitute Asset. See paragraph (b)(2)(x) of this section.

(C) ***Treatment as Relevant Property.*** For purposes of this section, a Substitute Asset is treated as Relevant Property with the same ownership and transfer history as the Relevant Property for which (or with respect to which) it was received.

(vii) ***Separated Property.*** The term *Separated Property* means each item of Relevant Property that is described in the Relevant Property Requirement (regardless of whether the fair market value of the Relevant Property exceeds its adjusted basis). However, if Relevant Equity is Separated Property, Underlying Property associated with that Relevant Equity is not treated as Separated Property. In addition, if Distributing directly or indirectly acquires Relevant Equity in a transaction in which gain is recognized in full, Underlying Property associated with that Relevant Equity is not treated as Separated Property.

(viii) ***Underlying Property.*** The term *Underlying Property* means property directly or indirectly held by a corporation or partnership any equity interest in which is Relevant Equity.

(ix) ***Multiple Predecessors of Distributing.*** If there are multiple Potential Predecessors that satisfy the pre-Distribution requirements and post-Distribution requirement of paragraph (b)(1) of this section, each of those Potential Predecessors is a Predecessor of Distributing. For example, a Potential Predecessor that transfers property to a Predecessor of Distributing without full recognition of gain (and that otherwise meets the requirements of paragraph (b)(1) of this section) is also a Predecessor of Distributing if the applicable transfer occurred as part of a Plan that existed at the time of such transfer.

(x) ***Deemed exchanges.*** For purposes of paragraph (b)(1)(ii) of this section (regarding the Relevant Property Requirement and the Reflection of Basis Requirement) and paragraph (b)(2)(vi) of this section (regarding Substitute Assets), Distributing is treated as acquiring Controlled stock in exchange for a direct or indirect interest in Relevant Property if the basis of Distributing in that Controlled stock, immediately after a transfer of the Relevant Property, is determined in whole or in part by reference to the basis of that Relevant Property immediately before the transfer. For example, if a corporation transfers Relevant Property to Controlled in exchange for Distributing stock in a transaction that qualifies as a reorganization under section 368(a)(1)(C), then, for purposes of paragraphs (b)(1)(ii) and (b)(2)(vi) of this section, Distributing is treated as acquiring Controlled stock in exchange for a direct or indirect interest in Relevant Property. See § 1.358-6(c)(1).

(c) ***Additional definitions —***

(1) ***Predecessor of Controlled.*** Solely for purposes of applying paragraph (f) of this section, a corporation is a predecessor of Controlled (Predecessor of Controlled) if, before the Distribution, it transfers property to Controlled in a Section 381 Transaction as part of a Plan. Other than for the purpose described in the preceding sentence, no corporation can be a Predecessor of Controlled. If multiple corporations satisfy the requirements of this paragraph (c)(1), each of those corporations is a Predecessor of Controlled. For example, a corporation that transfers property to a Predecessor of Controlled in a Section 381 Transaction is also a Predecessor of Controlled if the Section 381 Transaction occurred as part of a Plan that existed at the time of such transaction.

(2) ***Successors —***

(i) ***In general.*** For purposes of section 355(e), a successor (Successor) of Distributing or of Controlled is a corporation to which Distributing or Controlled, respectively, transfers property in a Section 381 Transaction after the Distribution (Successor Transaction).

(ii) ***Determination of Successor status.*** More than one corporation may be a Successor of Distributing or Controlled. For example, if Distributing transfers property to another corporation (X) in a Section 381 Transaction, and X transfers property to another corporation (Y) in a Section 381 Transaction, then each of X and Y is a Successor of Distributing. In this case, the determination of whether Y is a Successor of Distributing is made after the determination of whether X is a Successor of Distributing.

(3) ***Section 381 Transaction.*** The term *Section 381 Transaction* means a transaction to which section 381 applies.

(d) ***Special acquisition rules*** —

(1) ***Deemed acquisitions of stock in Section 381 Transactions*** —

(i) ***Rule.*** This paragraph (d)(1)(i) applies to each shareholder of the acquiring corporation immediately before a Section 381 Transaction (Acquiring Owner). Each Acquiring Owner is treated for purposes of this section as acquiring, in the Section 381 Transaction, stock representing an interest in the distributor or transferor corporation, to the extent that the Acquiring Owner's interest in the acquiring corporation immediately after the Section 381 Transaction exceeds the Acquiring Owner's direct or indirect interest in the distributor or transferor corporation immediately before the Section 381 Transaction.

(ii) ***Example.*** The example set forth in this paragraph (d)(1)(ii) illustrates the application of the deemed acquisition rule in paragraph (d)(1)(i) of this section. Assume that A held all of the stock of Distributing, Distributing held a 25-percent interest in a Predecessor of Distributing, and A held no direct interest, or other indirect interest, in the Predecessor of Distributing immediately before a Section 381 Transaction in which the Predecessor of Distributing transfers its assets to Distributing. In the Section 381 Transaction, the Predecessor of Distributing's shareholders (other than Distributing) collectively receive a 10-percent interest in Distributing (reducing A's interest in Distributing to 90 percent). Under paragraph (d)(1)(i) of this section, A is treated as acquiring in the Section 381 Transaction stock representing a 65-percent interest in the Predecessor of Distributing. This is because A's 90-percent interest in Distributing (the acquiring corporation in the Section 381 Transaction) immediately after the Section 381 Transaction exceeds A's 25-percent interest (held indirectly through Distributing) in the Predecessor of Distributing (the transferor corporation in the Section 381 Transaction) immediately before the Section 381 Transaction by 65 percent. Similarly, each Acquiring Owner of a Successor of Distributing is treated as acquiring, in the Successor Transaction, stock of Distributing, to the extent that the Acquiring Owner's interest in the Successor of Distributing immediately after the Successor Transaction exceeds the Acquiring Owner's direct or indirect interest in Distributing immediately before the Successor Transaction.

(2) ***Deemed acquisitions of stock after Section 381 Transactions.*** For purposes of this section, after a Section 381 Transaction (including a Successor Transaction), an acquisition of stock of an acquiring corporation (including a deemed stock acquisition under paragraph (d)(1)(i) of this section) is treated also as an acquisition of an interest in the stock of the distributor or transferor corporation. For example, an acquisition of the stock of Distributing that occurs after a Section 381 Transaction is treated not only as an acquisition of the stock of Distributing, but also as an acquisition of the stock of any Predecessor of Distributing whose assets were acquired by Distributing in the prior Section 381 Transaction. Similarly, an acquisition of the stock of a Successor of Distributing that occurs after the Successor Transaction is treated not only as an acquisition of the stock of the Successor of Distributing, but also as an acquisition of the stock of Distributing.

(3) ***Separate counting for Distributing and each Predecessor of Distributing.*** The measurement of whether one or more persons have acquired stock of any specific corporation in a Planned 50-percent Acquisition is made separately from the measurement of any potential Planned 50-percent Acquisition of any other corporation. Therefore, there may be a Planned 50-percent Acquisition of a Predecessor of Distributing even if there is no Planned 50-percent Acquisition of Distributing. Similarly, there may be a Planned 50-percent Acquisition of Distributing even if there is no Planned 50-percent Acquisition of a Predecessor of Distributing.

(e) ***Special rules for limiting gain recognition*** —

(1) ***Overview*** —

(i) ***Gain limitation.*** This paragraph (e) provides rules that limit the amount of gain that must be recognized by Distributing by reason of section 355(e) to an amount that is less than the amount that Distributing otherwise would be required to recognize under section 355(c)(2) or section 361(c)(2) (Statutory Recognition Amount) in certain cases involving one or more Predecessors of Distributing.

(ii) ***Multiple Planned 50-percent Acquisitions.*** If there are Planned 50-percent Acquisitions of multiple corporations (for example, two Predecessors of Distributing), Distributing must recognize the Statutory Recognition Amount with respect to each such corporation, subject to the limitations in paragraph (e)(2) of this section relating to a Planned 50-percent Acquisition of a Predecessor of Distributing (POD Gain Limitation Rule) and paragraph (e)(3) of this section relating to a Planned 50-percent Acquisition of Distributing (Distributing Gain Limitation Rule), if applicable. The POD Gain Limitation Rule and the Distributing Gain Limitation Rule are applied separately to the Planned 50-percent Acquisition of each such corporation to determine the amount of gain required to be recognized.

(iii) ***Statutory Recognition Amount limit; Section 336(e).*** Paragraph (e)(4) of this section sets forth an overall gain limitation based on the Statutory Recognition Amount. Paragraph (e)(5) of this section clarifies the availability of an election under section 336(e) with regard to certain Distributions.

(2) ***Planned 50-percent Acquisition of a Predecessor of Distributing*** —

(i) ***In general.*** If there is a Planned 50-percent Acquisition of a Predecessor of Distributing, the amount of gain recognized by Distributing by reason of section 355(e) as a result of the Planned 50-percent Acquisition is limited to the amount of gain, if any, that Distributing would have recognized if, immediately before the Distribution, Distributing had engaged in the following transaction: Distributing transferred all Separated Property received from the Predecessor of Distributing to a newly formed corporation (Hypothetical Controlled) in exchange solely for stock of Hypothetical Controlled in a reorganization under section 368(a)(1)(D) and then distributed the stock of Hypothetical Controlled to the shareholders of Distributing in a transaction to which section 355(e) applied (Hypothetical D/355(e) Reorganization). The computation in this paragraph (e)(2)(i) is applied regardless of whether Distributing actually directly held the Separated Property.

(ii) ***Operating rules.*** For purposes of applying paragraph (e)(2)(i) of this section, the following rules apply:

(A) ***Separated Property other than Controlled stock.*** Each of the basis and the fair market value of Separated Property other than stock of Controlled treated as transferred by Distributing to a Hypothetical Controlled in a Hypothetical D/355(e) Reorganization equals the basis and the fair market value, respectively, of such property in the hands of Controlled immediately before the Distribution.

(B) ***Controlled stock that is Separated Property.*** Each of the basis and the fair market value of the stock of Controlled that is Separated Property treated as transferred by Distributing to a Hypothetical Controlled in a Hypothetical D/355(e) Reorganization equals the basis and the fair market value, respectively, of such stock in the hands of Distributing immediately before the Distribution.

(C) ***Anti-duplication rule.*** A Predecessor of Distributing's Separated Property is taken into account for purposes of applying this paragraph (e)(2) only to the extent such property was not taken into account by Distributing in a Hypothetical D/355(e) Reorganization with respect to another Predecessor of Distributing. Further, appropriate adjustments must be made to prevent other duplicative inclusions of section 355(e) gain under this paragraph (e) reflecting the same economic gain.

(3) ***Planned 50-percent Acquisition of Distributing.*** This paragraph (e)(3) applies if there is a Planned 50-percent Acquisition of Distributing. In that case, the amount of gain recognized by Distributing by reason of section 355(e) as a result of the Planned 50-percent Acquisition is limited to the excess, if any, of the Statutory Recognition Amount over the amount of gain, if any, that Distributing would have been required to recognize under paragraphs (e)(1)(ii) and (e)(2) of this section if there had been a Planned 50-percent Acquisition of every Predecessor of Distributing, but not of Distributing or Controlled. For purposes of this paragraph (e)(3), references to Distributing are not references to a Predecessor of Distributing.

(4) ***Gain recognition limited to Statutory Recognition Amount.*** The sum of the amounts required to be recognized by Distributing under section 355(e) (taking into account the POD Gain Limitation Rule and the Distributing Gain Limitation Rule) with regard to a single Distribution cannot exceed the Statutory Recognition Amount. In addition, Distributing may choose not to apply the POD Gain Limitation Rule or the Distributing Gain Limitation Rule to a Distribution, and instead may recognize the Statutory Recognition Amount. Distributing indicates its choice to apply the preceding sentence by reporting the Statutory Recognition Amount on its original or amended Federal income tax return for the year of the Distribution.

(5) ***Section 336(e) election.*** Distributing is not eligible to make a section 336(e) election (as defined in § 1.336-1(b)(11)) with respect to a Distribution to which this section applies unless Distributing would, absent the making of a section 336(e) election, recognize the Statutory Recognition Amount with respect to the Distribution (taking into account the POD Gain Limitation Rule and the Distributing Gain Limitation Rule) without regard to the final two sentences of paragraph (e)(4) of this section. See §§ 1.336-1 through 1.336-5 for additional requirements with regard to a section 336(e) election.

(f) ***Predecessor or Successor as a member of the affiliated group.*** For purposes of section 355(e)(2)(C), if a corporation transfers its assets to a member of the same Expanded Affiliated Group in a Section 381 Transaction, the transferor will be treated as continuing in existence within the same Expanded Affiliated Group.

(g) ***Inapplicability of section 355(f) to certain intra-group Distributions*** —

(1) ***In general.*** Section 355(f) does not apply to a Distribution if there is a Planned 50-percent Acquisition of a Predecessor of Distributing (but not of Distributing, Controlled, or their Successors), except as provided in paragraph (g)(2) of this section. Therefore, except as provided in paragraph (g)(2) of this section, section 355 (or so much of section 356 as relates to section 355) and the regulations under sections 355 and 356, including the POD Gain Limitation Rule, apply, without regard to section 355(f), to a Distribution within an affiliated group (as defined in section 1504(a)) if the Distribution and the Planned 50-percent Acquisition of the Predecessor of Distributing are part of a Plan. For purposes of this paragraph (g)(1), references to a Distribution (and Distributing and Controlled) include references to a distribution (and Distributing and Controlled) to which section 355 would apply but for the application of section 355(f).

(2) ***Alternative application of section 355(f).*** Distributing may choose not to apply paragraph (g)(1) of this section to each Distribution (that occurs under a Plan) to which section 355(f) would otherwise apply absent paragraph (g)(1) of this section. Instead, Distributing may apply section 355(f) to all such Distributions according to its terms, but only if all members of the same Expanded Affiliated Group report consistently the Federal income tax consequences of the Distributions that are part of the Plan (determined without regard to section 355(f)). In such a case, neither the POD Gain Limitation Rule nor the Distributing Gain Limitation Rule is available with regard to any applicable Distribution. Distributing indicates its choice to apply section 355(f) consistently to all applicable Distributions by reporting the Federal income tax consequences of each Distribution in accordance with section 355(f) on its Federal income tax return for the year of the Distribution.

(h) ***Examples.*** The following examples illustrate the principles of this section. Unless the facts indicate otherwise, assume throughout these examples that: Distributing (D) owns all the stock of Controlled (C), and none of the shares of C held by D has a built-in loss; D distributes the stock of C in a Distribution to which section 355(d) does not apply; X, Y, and Z are individuals; each of D, D1, C, P, P1, P2, and R is a corporation having one class of stock outstanding, and none is a member of a consolidated group; and each transaction that is part of a Plan defined in this section is respected as a separate transaction under general Federal income tax principles. No inference should be drawn from any example concerning whether any requirements of section 355 are satisfied other than those of section 355(e) or whether any general Federal income tax principles (including the step transaction doctrine) are implicated by the example:

(1) ***Example 1: Predecessor of D and Planned 50-Percent Acquisition of P —***

(i) ***Facts.*** X owns 100% of the stock of P, which holds multiple assets. Y owns 100% of the stock of D. The following steps occur as part of a Plan: P merges into D in a reorganization under section 368(a)(1)(A). Immediately after the merger, X and Y own 10% and 90%, respectively, of the stock of D. D then contributes to C one of the assets (Asset 1) acquired from P in the merger. At the time of the contribution, Asset 1 has a basis of $40x and a fair market value of $110x. In exchange for Asset 1, D receives additional C stock and $10x. D distributes the stock of C (but not the cash) to X and Y, pro rata. The contribution and Distribution constitute a reorganization under section 368(a)(1)(D), and D recognizes $10x of gain under section 361(b) on the contribution. Immediately before the Distribution, taking into account the $10x of gain recognized by D on the contribution, Asset 1 has an adjusted basis of $50x under section 362(b) and a fair market value of $110x, and the stock of C held by D has a basis of $100x and a fair market value of $200x.

(ii) ***Analysis —***

(A) ***P is a Predecessor of D.*** Under paragraph (b)(1) of this section, P is a Predecessor of D. First, P is a Potential Predecessor because, as part of a Plan, P transferred property to D in a Section 381 Transaction. See paragraph (b)(2)(ii)(A)(*1*) of this section. Second, both of the pre-Distribution requirements and the post-Distribution requirement are satisfied. The Relevant Property Requirement is satisfied because, immediately before the Distribution and as part of a Plan, C holds P Relevant Property (Asset 1) the gain on which was not recognized in full at any point during the Plan Period, and some of the C stock distributed in the Distribution was acquired by D in exchange for Asset 1. See paragraph (b)(1)(ii)(A)(*1*) of this section. The Reflection of Basis Requirement is satisfied because that C stock had a basis prior to the Distribution that was determined in whole or in part by reference to the basis of Separated Property (Asset 1), and was neither distributed in a distribution to which section 355(e) applied nor transferred in a transaction in which the gain on that C stock was recognized in full during the Plan Period prior to the Distribution. See paragraph (b)(1)(ii)(B) of this section. The Division of Relevant Property Requirement is satisfied because immediately after the Distribution, D continues to hold Relevant Property of P, and therefore, as part of a Plan, P's Relevant Property has been divided between C and D. See paragraph (b)(1)(iii) of this section.

(B) ***Planned 50-percent Acquisition of P.*** Under paragraph (d)(1)(i) of this section, Y is treated as acquiring stock representing 90% of the voting power and value of P as a result of the merger of P into D. Accordingly, there has been a Planned 50-percent Acquisition of P.

(C) ***Gain limited.*** Without regard to the limitations in paragraph (e) of this section, D would be required to recognize $100x of gain ($200x of aggregate fair market value minus $100x of aggregate basis of the C stock held by D), the Statutory Recognition Amount described in section 361(c)(2). However, under the POD Gain Limitation Rule, D's gain recognized by reason of the Planned 50-percent Acquisition of P will not exceed $60x, an amount equal to the amount of gain D would have recognized had D transferred Asset 1 (Separated Property) to a newly formed corporation (C1) solely for C1 stock and distributed the C1 stock to D's shareholders in a Hypothetical D/355(e) Reorganization. See paragraph (e)(2)(i) of this section. For purposes of the computation in this paragraph (h)(1)(ii)(C), the basis and fair market value of Asset 1 equal the basis and fair market value of Asset 1 in the hands of C immediately before the Distribution. See paragraph (e)(2)(ii)(A) of this section. Under section 361(c)(2), D would recognize $60x of gain, an amount equal to the gain in the hypothetical C1 stock (excess of the $110x fair market value over the $50x basis). Therefore, D recognizes $60x of gain (in addition to the $10x of gain recognized under section 361(b)).

(iii) ***Plan not in existence at time of acquisition of Potential Predecessor's property.*** The facts are the same as in paragraph (h)(1)(i) of this section (*Example 1*) except that the merger of P into D occurred before the existence of a Plan. Even though D transferred P property (Asset 1) to C, Asset 1 was not Relevant Property of P because P did not hold Asset 1 during the Plan Period. See paragraphs (b)(2)(iv) and (a)(4)(iii) of this section. Because Asset 1 is not Relevant Property, D did not receive C stock distributed in the Distribution in exchange for Relevant Property when it contributed Asset 1 to C, none of the distributed C stock had a basis prior to the Distribution that was determined in whole or in part by reference to the basis of Separated Property, and C did not hold Relevant Property immediately before the Distribution. Further, Relevant Property of P has not been divided. Therefore, P is not a Predecessor of D.

(2) ***Example 2: Planned 50-percent Acquisition of D, but not Predecessor of D*** —

(i) ***Facts.*** X owns 100% of the stock of P, which holds multiple assets. Y owns 100% of the stock of D. The following steps occur as part of a Plan: P merges into D in a reorganization under section 368(a)(1)(A). Immediately after the merger, X and Y own 90% and 10%, respectively, of the stock of D. D then contributes to C one of the assets (Asset 1) acquired from P in the merger. In exchange for Asset 1, D receives additional C stock. D distributes the stock of C to X and Y, pro rata. The contribution and Distribution constitute a reorganization under section 368(a)(1)(D). Immediately before the Distribution, Asset 1 has a basis of $50x and a fair market value of $110x, and the stock of C held by D has a basis of $120x and a fair market value of $200x.

(ii) ***Analysis*** —

(A) ***P is a Predecessor of D.*** Under paragraph (b)(1) of this section, P is a Predecessor of D. First, P is a Potential Predecessor because, as part of a Plan, P transferred property to D in a Section 381 Transaction. See paragraph (b)(2)(ii)(A)(*1*) of this section. Second, both of the pre-Distribution requirements and the post-Distribution requirement are satisfied. The Relevant Property Requirement is satisfied because, immediately before the Distribution and as part of a Plan, C holds P Relevant Property (Asset 1) the gain on which was not recognized in full at any point during the Plan Period, and some of the C stock distributed in the Distribution was acquired by D in exchange for Asset 1. See paragraph (b)(1)(ii)(A)(*1*) of this section. The Reflection of Basis Requirement is satisfied because that C stock had a basis prior to the Distribution that was determined in whole or in part by reference to the basis of Separated Property (Asset 1), and was neither distributed in a distribution to which section 355(e) applied nor transferred in a transaction in which the gain on that C stock was recognized in full during the Plan Period prior to the Distribution. See paragraph (b)(1)(ii)(B) of this section. The Division of Relevant Property Requirement is satisfied because immediately after the Distribution, D continues to hold Relevant Property of P, and therefore, as part of a Plan, P's Relevant Property has been divided between C and D. See paragraph (b)(1)(iii) of this section.

(B) ***Planned 50-percent Acquisition of D.*** Under paragraph (d)(1)(i) of this section, Y is treated as acquiring stock representing 10% of the voting power and value of P as a result of the merger of P into D. The 10% acquisition of P stock does not cause section 355(e) gain recognition or cause application of the POD Gain Limitation Rule because there has not been a Planned 50-percent Acquisition of P. X acquires 90% of the voting power and value of D as a result of the merger of P into D. Accordingly, there has been a Planned 50-percent Acquisition of D. This Planned 50-percent Acquisition implicates section 355(e) and results in gain recognition, subject to the rules of paragraph (e) of this section.

(C) ***Gain limited.*** Without regard to the limitations in paragraph (e) of this section, D would be required to recognize $80x of gain ($200x of fair market value minus $120x of basis of the C stock held by D), the Statutory Recognition Amount described in section 361(c)(2). However, under the Distributing Gain Limitation Rule, D's gain recognized by reason of the Planned 50-percent Acquisition of D will not exceed $20x, the excess of the Statutory Recognition Amount ($80x) over the amount of gain that D would have been required to recognize under the POD Gain Limitation Rule if there had been a Planned 50-percent Acquisition of P but not D or C ($60x). See paragraph (e)(3) of this section. The hypothetical gain limitation under the POD Gain Limitation Rule equals the amount D would have recognized had it transferred Asset 1 (Separated Property) to a newly formed corporation (C1) solely for stock and distributed the C1 stock in a Hypothetical D/355(e)

Reorganization. See paragraph (e)(2)(i) of this section. Under section 361(c)(2), D would recognize $60x of gain, an amount equal to the gain in the hypothetical C1 stock (excess of the $110x fair market value over the $50x basis). Therefore, D recognizes $20x of gain ($80x−$60x).

(3) *Example 3: Predecessor of D owns C stock* —

(i) ***Facts.*** X owns 100% of the stock of P, which holds multiple assets, including Asset 2. Y owns 100% of the stock of D. P owns 35% of the stock of C (Block 1), and D owns the remaining 65% of the C stock (Block 2). The following steps occur as part of a Plan: P merges into D in a reorganization under section 368(a)(1)(A), and D immediately thereafter distributes all of the C stock to X and Y pro rata. Immediately after the merger, X and Y own 10% and 90%, respectively, of the D stock, and, prior to the Distribution, D owns Block 1 with a basis of $30x and a fair market value of $35x, and Block 2 with a basis of $10x and a fair market value of $65x. D continues to hold Asset 2.

(ii) *Analysis* —

(A) ***P is a Predecessor of D.*** Under paragraph (b)(1) of this section, P is a Predecessor of D. First, P is a Potential Predecessor because, as part of a Plan, P transferred property to D in a Section 381 Transaction. See paragraph (b)(2)(ii)(A)(*1*) of this section. Second, both of the pre-Distribution requirements and the post-Distribution requirement are satisfied. The Relevant Property Requirement is satisfied because some of the C stock distributed in the Distribution (Block 1) was Relevant Property of P. See paragraph (b)(1)(ii)(A)(*2*) of this section. The Reflection of Basis Requirement is satisfied because Block 1 of the C stock is Relevant Property of P, and was neither distributed in a distribution to which section 355(e) applied nor transferred in a transaction in which the gain on that C stock was recognized in full during the Plan Period prior to the Distribution. See paragraph (b)(1)(ii)(B) of this section. The Division of Relevant Property Requirement is satisfied because some of the C stock distributed in the Distribution was Relevant Property of P, and therefore C is deemed to have received Relevant Property of P, and D continues to hold Relevant Property of P immediately after the Distribution. See paragraph (b)(1)(iii) of this section. Therefore, as part of a Plan, P's Relevant Property has been divided between C and D.

(B) ***Planned 50-percent Acquisition of P.*** Under paragraph (d)(1)(i) of this section, Y is treated as acquiring stock representing 90% of the voting power and value of P as a result of the merger of P into D. Accordingly, there has been a Planned 50-percent Acquisition of P.

(C) ***Gain limited.*** Without regard to the limitations in paragraph (e) of this section, D would be required to recognize $60x of gain ($100x of fair market value minus $40x of basis of the C stock held by D), the Statutory Recognition Amount under section 355(c)(2). However, under the POD Gain Limitation Rule, D's gain recognized by reason of the Planned 50-percent Acquisition of P will not exceed $5x, an amount equal to the amount D would have recognized had it transferred Block 1 of the C stock (Separated Property) to a newly formed corporation (C1) solely for stock and distributed the C1 stock to D shareholders in a Hypothetical D/355(e) Reorganization. See paragraph (e)(2)(i) of this section. Because Relevant Equity (Block 1 of the C stock) is Separated Property, Underlying Property associated with that Relevant Equity is not treated as Separated Property. See paragraph (b)(2)(vii) of this section. For purposes of the computation in this paragraph (h)(3)(ii)(C), the basis and fair market value of the Block 1 C stock equal its basis and fair market value

in the hands of D immediately before the Distribution. See paragraph (e)(2)(ii)(A) of this section. Under section 361(c)(2), D would recognize $5x of gain, an amount equal to the gain in the hypothetical C1 stock ($35x fair market value−$30x basis). Therefore, D recognizes $5x of gain.

(4) *Example 4: C stock as Substitute Asset* —

(i) ***Facts.*** X owns 100% of the stock of P, which owns multiple assets, including 100% of the stock of R and Asset 2. Y owns 100% of the stock of D. The following steps occur as part of a Plan: P merges into D in a reorganization under section 368(a)(1)(A) (P-D reorganization). Immediately after the merger, X and Y own 10% and 90%, respectively, of the stock of D. D then causes R to transfer all of its assets to C and liquidate in a reorganization under section 368(a)(1) (R-C reorganization). At the time of the P-D reorganization, the R stock has a basis of $40x and a fair market value of $110x. D distributes the stock of C to X and Y, pro rata. D continues to directly hold Asset 2. Immediately before the Distribution, the C stock held by D that was deemed received in the R-C reorganization (Block 1) has a basis of $40x and a fair market value of $110x, and all of the stock of C held by D has a basis of $100x and a fair market value of $200x.

(ii) *Analysis* —

(A) ***P is a Predecessor of D.*** Under paragraph (b)(1) of this section, P is a Predecessor of D. First, P is a Potential Predecessor because, as part of a Plan, P transferred property to D in a Section 381 Transaction. See paragraph (b)(2)(ii)(A)(*1*) of this section. Second, both pre-Distribution requirements and the post-Distribution requirement are satisfied. The Relevant Property Requirement is satisfied because, for the following two reasons, some of the C stock distributed in the Distribution (Block 1) was Relevant Property of P. D is treated as acquiring Block 1 of the C stock in exchange for a direct or indirect interest in R stock (that is, Relevant Property) in the R-C reorganization because the basis of D in that C stock immediately after a transfer of the R stock (in the liquidation of R) is determined in whole or in part by reference to the basis of the R stock immediately before the transfer. See paragraph (b)(2)(x) of this section. Further, because the basis in Block 1 of the C stock is determined in whole or in part by reference to the basis of Relevant Equity (the R stock) the issuer of which ceases to exist for Federal income tax purposes under the Plan, Block 1 of the C stock is a Substitute Asset, and is therefore treated as Relevant Property with the same ownership and transfer history as the R stock. See paragraph (b)(2)(vi)(B)(*2*) of this section. The Reflection of Basis Requirement is satisfied because Block 1 of the C stock is Relevant Property of P, and was neither distributed in a distribution to which section 355(e) applied nor transferred in a transaction in which the gain on that C stock was recognized in full during the Plan Period prior to the Distribution. See paragraph (b)(1)(ii)(B) of this section. The Division of Relevant Property Requirement is satisfied because some of the C stock distributed in the Distribution was Relevant Property of P, and therefore C is deemed to have received Relevant Property of P, and immediately after the Distribution, D continues to hold Asset 2, which is Relevant Property of P. See paragraph (b)(1)(iii) of this section. Therefore, as part of a Plan, P's Relevant Property has been divided between C and D.

(B) ***Planned 50-percent Acquisition of P.*** Under paragraph (d)(1)(i) of this section, Y is treated as acquiring stock representing 90% of the voting power and value of P as a result of the P-D reorganization. Accordingly, there has been a Planned 50-percent Acquisition of P.

(C) ***Gain limited.*** Without regard to the limitations in paragraph (e) of this section, D would be required to recognize $100x of gain ($200x of fair market value minus $100x of basis of all C stock held by D), the Statutory Recognition Amount described in section 355(c)(2). However, under the POD Gain Limitation Rule, D's gain recognized by reason of the Planned 50-percent Acquisition of P will not exceed $70x, an amount equal to the amount D would have recognized had it transferred Block 1 of the C stock (Separated Property) to a newly formed corporation (C1) solely for stock and distributed the C1 stock to D shareholders in a Hypothetical D/355(e) Reorganization. See paragraph (e)(2)(i) of this section. Because Relevant Equity (Block 1 of the C stock) is Separated Property, Underlying Property associated with that Relevant Equity is not treated as Separated Property. See paragraph (b)(2)(vii) of this section. Under section 361(c)(2), D would recognize $70x of gain, an amount equal to the gain in the hypothetical C1 stock (excess of the $110x fair market value over the $40x basis). Therefore, D recognizes $70x of gain.

(5) ***Example 5: Section 351 transaction*** —

(i) ***Facts.*** X owns 100% of the stock of P, which holds multiple assets, including Asset 1, Asset 2, and Asset 3. Y owns 100% of the stock of D. The following steps occur as part of a Plan: P transfers Asset 1 and Asset 2 to D and Y transfers property to D in an exchange qualifying under section 351. Immediately after the exchange, P and Y own 10% and 90%, respectively, of the stock of D. D then contributes Asset 1 to C in exchange for additional C stock. D distributes all of the stock of C to P and Y, pro rata. D continues to directly hold Asset 2, and P continues to directly hold Asset 3. The contribution and Distribution constitute a reorganization under section 368(a)(1)(D). Immediately before the Distribution, Asset 1 has a basis of $40x and a fair market value of $110x, and the stock of C held by D has a basis of $100x and a fair market value of $200x. Following the Distribution, and as part of the same Plan, Z acquires 51% of the P stock.

(ii) ***Analysis*** —*P is not a Predecessor of D.* Under paragraph (b)(1) of this section, P is not a Predecessor of D. P is not a Potential Predecessor because P did not transfer property to a Potential Predecessor, D, or a member of the same Expanded Affiliated Group as D in a Section 381 Transaction and P is not a member of the same Expanded Affiliated Group as D immediately after completion of the Plan. See paragraph (b)(2)(ii) of this section. Thus, P cannot be a Predecessor of D. See paragraph (b)(1)(i) of this section.

(6) ***Example 6: Section 351 transaction after an acquisition of P*** —

(i) ***Facts.*** X owns 100% of the stock of P, which holds multiple assets, including Asset 1 and Asset 2. Y owns 100% of the stock of D, D owns 100% of the stock of D1, and D1 owns 100% of the stock of C. D files a consolidated return for the affiliated group of which it is the common parent. The following steps occur as part of a Plan: D acquires 100% of the stock of P from X. P transfers Asset 1 and Asset 2 to D1 for D1 stock in an exchange qualifying under section 351. See § 1.1502-34. D1 contributes Asset 1 to C in exchange for additional C stock. D1 distributes all of the stock of C to D in exchange for D1 stock (First Distribution). D then distributes all of the stock of C to Y (Second Distribution). D1 continues to directly hold Asset 2. Immediately before the First Distribution, Asset 1 has a basis of $10x and a fair market value of $60x, and the stock of C held by D1 has a basis of $100x and a fair market value of $200x.

(ii) ***Analysis*** —

(A) ***P is a Predecessor of D1.*** Under paragraph (b)(1) of this section, P is a Predecessor of D1. First, P is a Potential Predecessor of D1 because P is a member of the same Expanded Affiliated Group as D1 immediately after completion of the Plan. See paragraph (b)(2)(ii)(A)(*2*) of this section. The Relevant Property Requirement is satisfied because, immediately before the First Distribution and as part of a Plan, C holds P Relevant Property (Asset 1) the gain on which was not recognized in full at any point during the Plan Period, and some of the C stock distributed in the First Distribution was acquired by D1 in exchange for Asset 1. See paragraph (b)(1)(ii)(A)(*1*) of this section. The Reflection of Basis Requirement is satisfied because that C stock had a basis prior to the First Distribution that was determined in whole or in part by reference to the basis of Separated Property (Asset 1), and was neither distributed in a distribution to which section 355(e) applied nor transferred in a transaction in which the gain on that C stock was recognized in full prior to the First Distribution. See paragraph (b)(1)(ii)(B) of this section. The Division of Relevant Property Requirement is satisfied because immediately after the First Distribution, each of C, on the one hand, and P or D1, on the other hand, continues to hold Relevant Property of P, and therefore, as part of a Plan, P's Relevant Property has been divided between C and D1. See paragraph (b)(1)(iii) of this section.

(B) ***Planned 50-percent Acquisition of P.*** D has acquired stock representing 100% of the voting power and value of P. Accordingly, there has been a Planned 50-percent Acquisition of P.

(C) ***Gain on First Distribution.*** Because there is a Planned 50-percent Acquisition of a Predecessor of Distributing (but not of Distributing, Controlled, or their Successors), section 355(f) will not apply to the First Distribution unless D and D1 choose to have section 355(f) apply. See paragraph (g) of this section. As a result, section 355, including the POD Gain Limitation Rule, will apply to the First Distribution. Under the POD Gain Limitation Rule, D1's gain recognized by reason of the Planned 50-percent Acquisition of P will not exceed $50x, an amount equal to the amount D1 would have recognized had it transferred Asset 1 (Separated Property) to a newly formed corporation (C1) solely for stock and distributed the C1 stock to D1 shareholders in a Hypothetical D/355(e) Reorganization. See paragraph (e)(2)(i) of this section. Under section 361(c)(2), D1 would recognize $50x of gain, an amount equal to the gain in the hypothetical C1 stock (excess of the $60x fair market value over the $10x basis). Therefore, D1 recognizes $50x of gain. Under paragraph (g)(2) of this section, however, D and D1 may choose to apply section 355(f) to the First Distribution as an exception to the general application of paragraph (g)(1) of this section. By application of section 355(f), section 355 (including the POD Gain Limitation Rule) would not apply to the First Distribution. Therefore, D1 would be required to recognize $100x of gain (excess of the $200x fair market value over the $100x basis of C stock held by D1) under section 311(b), and D would be treated under section 302(d) as receiving a distribution of $200x to which section 301 applies.

(D) ***P is not a Predecessor of D.*** Under paragraph (b)(1) of this section, P is not a Predecessor of D. First, P is a Potential Predecessor of D because P is a member of the same Expanded Affiliated Group as D immediately after completion of the Plan. See paragraph (b)(2)(ii)(A)(*2*) of this section. However, although the Relevant Property Requirement is satisfied, the Reflection of Basis Requirement is not satisfied. The Relevant Property Requirement is satisfied because, immediately before the Second Distribution and as part of a Plan, C holds P Relevant Property (Asset 1) the gain on which was not recognized in full at any point during the Plan Period, and some of the C stock distributed in the Second

Distribution was indirectly acquired by D in exchange for Asset 1. See paragraph (b)(1)(ii)(A)(*1*) of this section. However, regardless of whether D and D1 choose under paragraph (g)(2) of this section to have section 355(f) apply to the First Distribution, the Reflection of Basis Requirement cannot be satisfied. If section 355(f) applies to the First Distribution, then all of the C stock will have been transferred in a transaction in which the gain on the C stock was recognized in full during the Plan Period prior to the Second Distribution. If section 355(f) does not apply to the First Distribution, then all of the C stock will have been transferred in a distribution to which section 355(e) applied during the Plan Period prior to the Second Distribution. Because not all of the pre-Distribution and post-Distribution requirements are satisfied, P cannot be a Predecessor of D.

(7) ***Example 7: Sequential Predecessors*** —

(i) ***Facts.*** X owns 100% of P1, which holds multiple assets, including Asset 1 and Asset 2. Y owns 100% of P2, which holds Asset 3, and Z owns 100% of D. The following steps occur as part of a Plan: P1 merges into P2 in a reorganization under 368(a)(1)(A) (P1-P2 reorganization). Immediately after the merger, X and Y own 10% and 90%, respectively, of the stock of P2. P2 then merges into D in a reorganization under 368(a)(1)(A) (P2-D reorganization). Immediately after the merger, X, Y, and Z own 1%, 9%, and 90%, respectively, of the stock of D. D then contributes Asset 1 to C in exchange for additional C stock, and retains Asset 2 and Asset 3. D distributes all of the stock of C to X, Y, and Z, pro rata. Immediately before the Distribution, Asset 1 has a basis of $40x and a fair market value of $100x, and the stock of C held by D has a basis of $100x and a fair market value of $200x.

(ii) ***Analysis*** —

(A) ***P2 is a Predecessor of D.*** Under paragraph (b)(1) of this section, P2 is a Predecessor of D. First, P2 is a Potential Predecessor because, as part of a Plan, P2 transferred property to D in a Section 381 Transaction. See paragraph (b)(2)(ii)(A)(*1*) of this section. Second, both pre-Distribution requirements and the post-Distribution requirement are satisfied. The Relevant Property Requirement is satisfied because, immediately before the Distribution and as part of a Plan, C holds P2 Relevant Property (Asset 1) the gain on which was not recognized in full at any point during the Plan Period, and some of the C stock distributed in the Distribution was acquired by D in exchange for Asset 1. See paragraph (b)(1)(ii)(A)(*1*) of this section. The Reflection of Basis Requirement is satisfied because that C stock had a basis prior to the Distribution that was determined in whole or in part by reference to the basis of Separated Property (Asset 1), and was neither distributed in a distribution to which section 355(e) applied nor transferred in a transaction in which the gain on that C stock was recognized in full during the Plan Period prior to the Distribution. See paragraph (b)(1)(ii)(B) of this section. The Division of Relevant Property Requirement is satisfied because immediately after the Distribution, D continues to hold P2 Relevant Property (Asset 2 and Asset 3), and therefore, as part of a Plan, P2's Relevant Property has been divided between C and D. See paragraph (b)(1)(iii) of this section.

(B) ***P1 is a Predecessor of D.*** Under paragraph (b)(1) of this section, P1 is a Predecessor of D. First, P1 is a Potential Predecessor because, as part of a Plan, P1 transferred property to a Potential Predecessor (P2) in a Section 381 Transaction. See paragraph (b)(2)(ii)(A)(*1*) of this section. Second, both pre-Distribution requirements and the post-Distribution requirement are satisfied. The Relevant Property Requirement is satisfied because, immediately before the Distribution and as part of a Plan, C holds P1 Relevant Property

(Asset 1) the gain on which was not recognized in full at any point during the Plan Period, and some of the C stock distributed in the Distribution was acquired by D in exchange for Asset 1. See paragraph (b)(1)(ii)(A)(*1*) of this section. The Reflection of Basis Requirement is satisfied because that C stock had a basis prior to the Distribution that was determined in whole or in part by reference to the basis of Separated Property (Asset 1), and was neither distributed in a distribution to which section 355(e) applied nor transferred in a transaction in which the gain on that C stock was recognized in full during the Plan Period prior to the Distribution. See paragraph (b)(1)(ii)(B) of this section. The Division of Relevant Property Requirement is satisfied because immediately after the Distribution, D continues to hold Relevant Property of P1 (Asset 2), and therefore, as part of a Plan, P1's Relevant Property has been divided between C and D. See paragraph (b)(1)(iii) of this section.

(C) ***Planned 50-percent Acquisitions of P1 and P2.*** Under paragraph (d)(1)(i) of this section, Y is treated as acquiring stock representing 90% of the voting power and value of P1 as a result of the P1-P2 merger. In addition, under paragraph (d)(1)(i) of this section, Z is treated as acquiring stock representing 90% of the voting power and value of P2 in the P2-D merger. Accordingly, there have been Planned 50-percent Acquisitions of P1 and P2.

(D) ***Gain limited.*** Without regard to the limitations in paragraph (e) of this section, D would be required to recognize $100x of gain ($200x of aggregate fair market value minus $100x of aggregate basis of the C stock held by D), the Statutory Recognition Amount described in section 361(c)(2), because there have been Planned 50-percent Acquisitions of P1 and P2, both Predecessors of D. However, under paragraph (e) of this section, D's gain recognized by reason of the Planned 50-percent Acquisitions of P1 and P2 will not exceed $60x, an amount equal to the amount D would have recognized had it transferred Asset 1 (Separated Property) to a newly formed corporation (C1) solely for stock and distributed the C1 stock to D shareholders in a Hypothetical D/355(e) Reorganization. Under section 361(c)(2), D would recognize $60x, an amount equal to the gain in the hypothetical C1 stock (excess of the $100x fair market value over the $40x basis). Paragraph (e)(1)(ii) of this section provides that if there are Planned 50-percent Acquisitions of multiple corporations, Distributing must recognize the Statutory Recognition Amount with respect to each such corporation, subject to the POD Gain Limitation Rule and the Distributing Gain Limitation Rule, if applicable. In this case, the POD Gain Limitation Rule limits the amount of gain required to be recognized by D with respect to each of the Planned 50-percent Acquisitions of P1 and P2 to $60x. See paragraph (e)(2)(i) of this section. Ordinarily, each $60x limitation would be added together, and the total gain limitation provided by paragraph (e) of this section would be $120x. However, the anti-duplication rule set forth in paragraph (e)(2)(ii)(C) of this section provides that, for purposes of applying the POD Gain Limitation Rule, a Predecessor of Distributing's Separated Property is taken into account only to the extent such property was not taken into account with respect to another Predecessor of Distributing. Thus, Asset 1 may not be taken into account more than once in determining the total gain limitation. Therefore, D recognizes $60x of gain.

(8) ***Example 8: Multiple Predecessors of D*** —

(i) ***Facts.*** X owns 100% of the stock of P1, which holds multiple assets, including Asset 1 and Asset 3. Y owns 100% of the stock of P2, which holds multiple assets, including Asset 2 and Asset 4. Z owns 100% of the stock of D. The following steps occur as part of a Plan: Each of P1

and P2 merges into D in a reorganization under section 368(a)(1)(A). Immediately after the mergers, each of X and Y owns 10%, and Z owns 80%, of the stock of D. D then contributes to C Asset 1 (acquired from P1), and Asset 2 (acquired from P2). In exchange for Asset 1 and Asset 2, D receives additional C stock. D distributes the stock of C to X, Y, and Z, pro rata. D's contribution of Asset 1 and Asset 2 and the Distribution constitute a reorganization under section 368(a)(1)(D). D continues to hold Asset 3 and Asset 4. Immediately before the Distribution, Asset 1 has a basis of $50x and a fair market value of $110x, Asset 2 has a basis of $70x and a fair market value of $90x, and the stock of C held by D has a basis of $130x and a fair market value of $220x.

(ii) ***Analysis*** —

(A) ***P1 and P2 are Predecessors of D.*** Under paragraph (b)(1) of this section, each of P1 and P2 is a Predecessor of D. First, each of P1 and P2 is a Potential Predecessor because, as part of a Plan, each of P1 and P2 transferred property to D in a Section 381 Transaction. See paragraph (b)(2)(ii)(A)(*1*) of this section. Second, both pre-Distribution requirements and the post-Distribution requirement are satisfied. The Relevant Property Requirement is satisfied because, immediately before the Distribution and as part of a Plan, C holds P1 Relevant Property (Asset 1) and P2 Relevant Property (Asset 2), the gain on each of which was not recognized in full at any point during the Plan Period, and some of the C stock distributed in the Distribution was acquired by D in exchange for each of Asset 1 and Asset 2. See paragraph (b)(1)(ii)(A)(*1*) of this section. The Reflection of Basis Requirement is satisfied because that C stock had a basis prior to the Distribution that was determined in whole or in part by reference to the basis of Separated Property (Asset 1 and Asset 2, respectively), and was neither distributed in a distribution to which section 355(e) applied nor transferred in a transaction in which the gain on that C stock was recognized in full during the Plan Period prior to the Distribution. See paragraph (b)(1)(ii)(B) of this section. The Division of Relevant Property Requirement is satisfied because immediately after the Distribution, D continues to hold Relevant Property of P1 and P2, and therefore, as part of a Plan, each of P1's and P2's Relevant Property has been divided between C and D. See paragraph (b)(1)(iii) of this section.

(B) ***Planned 50-percent Acquisitions of P1 and P2.*** Under paragraph (d)(1)(i) of this section, Z is treated as acquiring stock representing 80% of the voting power and value of each of P1 and P2 as a result of the mergers of P1 and P2 into D. Accordingly, there have been Planned 50-percent Acquisitions of P1 and P2.

(C) ***Gain limited.*** Without regard to the limitations in paragraph (e) of this section, D would be required to recognize $90x of gain ($220x of fair market value minus $130x of basis of the C stock held by D), the Statutory Recognition Amount under section 361(c)(2). However, under the POD Gain Limitation Rule, D's gain recognized by reason of the Planned 50-percent Acquisition of P1 will not exceed $60x ($110x fair market value minus $50x basis), an amount equal to the amount D would have recognized had it transferred Asset 1 (Separated Property) to a newly formed corporation (C1) solely for stock and distributed the C1 stock to D shareholders in a Hypothetical D/355(e) Reorganization. See paragraph (e)(2)(i) of this section. In addition, under the POD Gain Limitation Rule, D's gain recognized by reason of the deemed acquisition of P2 stock will not exceed $20x ($90x fair market value minus $70x basis), an amount equal to the amount D would have recognized had it transferred Asset 2 (Separated Property) to a second newly formed

corporation (C2) solely for stock and distributed the C2 stock to D shareholders in a Hypothetical D/355(e) Reorganization. See paragraph (e)(2)(i) of this section. Therefore, D recognizes $80x of gain ($60x + $20x). See paragraph (e)(1)(ii) of this section.

(9) *Example 9: Successor of C* —

(i) ***Facts.*** X owns 100% of the stock of each of D and R. The following steps occur as part of a Plan: D distributes all of its C stock to X. Immediately before the Distribution, D's C stock has a basis of $10x and a fair market value of $30x. C then merges into R in a reorganization under section 368(a)(1)(D). Immediately after the merger, X owns all of the R stock. As part of the same Plan, Z acquires 51% of the stock of R from X.

(ii) *Analysis* —

(A) ***R is a Successor of C.*** Under paragraph (c)(2)(i) of this section, R is a Successor of C because, after the Distribution, C transfers property to R in a Section 381 Transaction.

(B) ***Planned 50-percent Acquisition of C.*** Under paragraph (d)(2) of this section, Z's acquisition of stock of R is treated as an acquisition of stock of C. Therefore, Z is treated as acquiring 51% of the stock of C. Accordingly, there has been a Planned 50-percent Acquisition of C.

(C) ***Gain not limited.*** Section 355(e) applies to the Distribution because there has been a Planned 50-percent Acquisition of C. Neither the POD Gain Limitation Rule nor the Distributing Gain Limitation Rule applies because there has been no Planned 50-percent Acquisition of a Predecessor of D, and no Planned 50-percent Acquisition of D. Therefore, D recognizes $20x of gain ($30x fair market value minus $10x basis of the C stock held by D) under section 355(c)(2).

(10) *Example 10: Multiple Successors* —

(i) ***Facts.*** X owns 100% of the stock of both D and R. Y owns 100% of the stock of S. The following steps occur as part of a Plan: D distributes all of the C stock to X. Immediately after the Distribution, D merges into R in a reorganization under section 368(a)(1)(A) (D-R merger). Following the D-R merger, R merges into S in a reorganization under section 368(a)(1)(A) (R-S merger). Immediately after the R-S merger, X and Y own 10% and 90%, respectively, of the S stock. Immediately before the Distribution, D's C stock has a basis of $10x and a fair market value of $30x.

(ii) *Analysis* —

(A) ***R and S are Successors of D.*** Under paragraph (c)(2)(i) of this section, R is a Successor of D because, after the Distribution, D transfers property to R in a Section 381 Transaction. Under paragraph (c)(2)(ii) of this section, S is also a Successor of D because R (a Successor of D) transfers property to S in a Section 381 Transaction.

(B) ***Planned 50-percent Acquisition of D.*** Under paragraph (d)(1)(i) of this section, there is no deemed acquisition of D stock as a result of the D-R merger because X wholly owns the stock of D before the merger and wholly owns the stock of R after the merger. Under paragraph (d)(1)(i) of this section, Y is treated as acquiring stock representing 90% of the voting power and value of R (a Successor of D) as a result of the R-S merger. Under paragraph (d)(2) of this section, an acquisition of R stock is also treated as an acquisition of D stock. Accordingly, there has been a Planned 50-percent Acquisition of D.

(C) ***Gain not limited.*** Section 355(e) applies to the Distribution because there has been a Planned 50-percent Acquisition of D. The POD Gain Limitation Rule does not apply because there has been no Planned 50-percent Acquisition of a Predecessor of D. The Distributing Gain Limitation Rule applies because there has been a Planned 50-percent Acquisition of D. However, the gain limitation under the Distributing Gain Limitation Rule equals the Statutory Recognition Amount, because there is no Predecessor of D (and thus no Separated Property). Therefore, D recognizes $20x of gain ($30x fair market value minus $10x basis of the C stock held by D) under section 355(c)(2).

(i) ***Applicability date.*** This section applies to Distributions occurring after December 15, 2019. For Distributions occurring on or before December 15, 2019, see § 1.355-8T as contained in 26 CFR part 1 revised as of April 1, 2019.

[T.D. 9888, 84 FR 69317, Dec. 18, 2019; 85 FR 15060, Mar. 17, 2020]

§ 1.356-1 Receipt of additional consideration in connection with an exchange.

(a) If in any exchange to which the provisions of section 354 or section 355 would apply except for the fact that there is received by the shareholders or security holders other property (in addition to property permitted to be received without recognition of gain by such sections) or money, then—

(1) The gain, if any, to the taxpayer shall be recognized in an amount not in excess of the sum of the money and the fair market value of the other property, but,

(2) The loss, if any, to the taxpayer from the exchange or distribution shall not be recognized to any extent.

(b) For purposes of computing the gain, if any, recognized pursuant to section 356 and paragraph (a)(1) of this section, to the extent the terms of the exchange specify the other property or money that is received in exchange for a particular share of stock or security surrendered or a particular class of stock or securities surrendered, such terms shall control provided that such terms are economically reasonable. To the extent the terms of the exchange do not specify the other property or money that is received in exchange for a particular share of stock or security surrendered or a particular class of stock or securities surrendered, a pro rata portion of the other property and money received shall be treated as received in exchange for each share of stock and security surrendered, based on the fair market value of such surrendered share of stock or security.

(c) If the distribution of such other property or money by or on behalf of a corporation has the effect of the distribution of a dividend, then there shall be chargeable to each distributee (either an individual or a corporation)—

(1) As a dividend, such an amount of the gain recognized as is not in excess of the distributee's ratable share of the undistributed earnings and profits of the corporation accumulated after February 28, 1913, and

(2) As a gain from the exchange of property, the remainder of the gain so recognized.

(d) The rules of this section may be illustrated by the following examples:

> *Example 1.* In an exchange to which the provisions of section 356 apply and to which section 354 would apply but for the receipt of property not permitted to be received without the recognition of

gain or loss, A (either an individual or a corporation), received the following in exchange for a share of stock having an adjusted basis to A of $85:

One share of stock worth	$100
Cash	25
Other property (basis $25) fair market value	50
Total fair market value of consideration received	175
Adjusted basis of stock surrendered in exchange	85
Total gain	90
Gain to be recognized, limited to cash and other property received	75
A's pro rata share of earnings and profits accumulated after February 28, 1913 (taxable dividend)	30
Remainder to be treated as a gain from the exchange of property	45

Example 2. If, in *Example 1,* A's stock had an adjusted basis to A of $200, A would have realized a loss of $25 on the exchange, which loss would not be recognized.

Example 3. (i) *Facts.* J, an individual, acquired 10 shares of Class A stock of Corporation X on Date 1 for $3 each and 10 shares of Class B stock of Corporation X on Date 2 for $9 each. On Date 3, Corporation Y acquires the assets of Corporation X in a reorganization under section 368(a)(1)(A). Pursuant to the terms of the plan of reorganization, J surrenders all of J's shares of Corporation X stock for 10 shares of Corporation Y stock and $100 of cash. On the date of the exchange, the fair market value of each share of Class A stock of Corporation X is $10, the fair market value of each share of Class B stock of Corporation X is $10, and the fair market value of each share of Corporation Y stock is $10. The terms of the exchange do not specify that shares of Corporation Y stock or cash are received in exchange for particular shares of Class A stock or Class B stock of Corporation X.
(ii) *Analysis.* Under paragraph (b) of this section, because the terms of the exchange do not specify that the cash is received in exchange for shares of Class A or Class B stock of Corporation X, a pro rata portion of the cash received is treated as received in exchange for each share of Class A stock of Corporation X and each share of Class B stock of Corporation X based on the fair market value of the surrendered shares. Therefore, J is treated as receiving shares of Corporation Y stock with a fair market value of $50 and $50 of cash in exchange for its shares of Class A stock of Corporation X and shares of Corporation Y stock with a fair market value of $50 and $50 of cash in exchange for its shares of Class B stock of Corporation X. J realizes a gain of $70 on the exchange of shares of Class A stock, $50 of which is recognized under section 356 and paragraph (a) of this section, and J realizes a gain of $10 on the exchange of shares of Class B stock of Corporation X, all of which is recognized

> under section 356 and paragraph (a) of this section. Assuming that J's gain recognized is not treated as a dividend under section 356(a)(2), such gain shall be treated as gain from the exchange of property.

> *Example 4.* (i) *Facts.* The facts are the same as in *Example 3,* except that the terms of the plan of reorganization specify that J receives 10 shares of stock of Corporation Y in exchange for J's shares of Class A stock of Corporation X and $100 of cash in exchange for J's shares of Class B stock of Corporation X.
> (ii) *Analysis.* Under paragraph (b) of this section, because the terms of the exchange specify that J receives 10 shares of stock of Corporation Y in exchange for J's shares of Class A stock of Corporation X and $100 of cash in exchange for J's shares of Class B stock of Corporation X and such terms are economically reasonable, such terms control. J realizes a gain of $70 on the exchange of shares of Class A stock, none of which is recognized under section 356 and paragraph (a) of this section, and J realizes a gain of $10 on the exchange of shares of Class B stock of Corporation X, all of which is recognized under section 356 and paragraph (a) of this section.

(e) Section 301(b)(1)(B) and section 301(d)(2) do not apply to a distribution of "other property" to a corporate shareholder if such distribution is within the provisions of section 356.

(f) See § 1.301-1(j) for certain transactions that are not within the scope of section 356.

(g) This section applies to exchanges and distributions of stock and securities occurring on or after January 23, 2006.

[T.D. 9244, 71 FR 4268, Jan. 26, 2006, as amended by T.D. 9954, 86 FR 52614, Sept. 22, 2021]

§ 1.356-2 Receipt of additional consideration not in connection with an exchange.

(a) If, in a transaction to which section 355 would apply except for the fact that a shareholder (individual or corporate) receives property permitted by section 355 to be received without the recognition of gain, together with other property or money, without the surrender of any stock or securities of the distributing corporation, then the sum of the money and the fair market value of the other property as of the date of the distribution shall be treated as a distribution of property to which the rules of section 301 (other than section 301(b) and section 301(d)) apply. See section 358 for determination of basis of such other property.

(b) Paragraph (a) of this section may be illustrated by the following examples:

Example 1. Individuals A and B each own 50 of the 100 outstanding shares of common stock of Corporation X. Corporation X owns all of the stock of Corporation Y, 100 shares. Corporation X distributes to each shareholder 50 shares of the stock of Corporation Y plus $100 cash without requiring the surrender of any shares of its own stock. The $100 cash received by each is treated as a distribution of property to which the rules of section 301 apply.

Example 2. If, in the above example, Corporation X distributes 50 shares of stock of Corporation Y to A and 30 shares of such stock plus $100 cash to B without requiring the surrender of any of its own stock, the amount of cash received by B is treated as a distribution of property to which the rules of section 301 apply.

§ 1.356-3 Rules for treatment of securities as "other property".

(a) As a general rule, for purposes of section 356, the term *other property* includes securities. However, it does not include securities permitted under section 354 or section 355 to be received tax free. Thus, when securities are surrendered in a transaction to which section 354 or section 355 is applicable, the characterization of the securities received as "other property" does not include securities received where the principal amount of such securities does not exceed the principal amount of securities surrendered in the transaction. If a greater principal amount of securities is received in an exchange described in section 354 (other than subsection (c) or (d) thereof) or section 355 over the principal amount of securities surrendered, the term *other property* includes the fair market value of such excess principal amount as of the date of the exchange. If no securities are surrendered in exchange, the term *other property* includes the fair market value, as of the date of receipt, of the entire principal amount of the securities received.

(b) Except as provided in § 1.356-6, for purposes of this section, a right to acquire stock that is treated as a security for purposes of section 354 or 355 has no principal amount. Thus, such right is not other property when received in a transaction to which section 356 applies (regardless of whether securities are surrendered in the exchange). This paragraph (b) applies to transactions occurring on or after March 9, 1998.

(c) In the examples in this paragraph (c), stock means common stock and *warrants* means rights to acquire common stock. The following examples illustrate the rules of paragraph (a) of this section:

Example 1. A, an individual, exchanged 100 shares of stock for 100 shares of stock and a security in the principal amount of $1,000 with a fair market value of $990. The amount of $990 is treated as "other property."

Example 2. B, an individual, exchanged 100 shares of stock and a security in the principal amount of $1,000 for 300 shares of stock and a security in the principal amount of $1,500. The security had a fair market value on the date of receipt of $1,575. The fair market value of the excess principal amount, or $525, is treated as "other property."

Example 3. C, an individual, exchanged a security in the principal amount of $1,000 for 100 shares of stock and a security in the principal amount of $900. No part of the security received is treated as "other property."

Example 4. D, an individual, exchanged a security in the principal amount of $1,000 for 100 shares of stock and a security in the principal amount of $1,200 with a fair market value of $1,100. The fair market value of the excess principal amount, or $183.33, is treated as "other property."

Example 5. E, an individual, exchanged a security in the principal amount of $1,000 for another security in the principal amount of $1,200 with a fair market value of $1,080. The fair market value of the excess principal amount, or $180, is treated as "other property."

Example 6. F, an individual, exchanged a security in the principal amount of $1,000 for two different securities each in the principal amount of $750. One of the securities had a fair market value of $750, the other had a fair market value of $600. One-third of the fair market value of each security ($250 and $200) is treated as "other property."

Example 7. G, an individual, exchanged stock for stock and a warrant. The warrant had no principal amount. Thus, G received no excess principal amount within the meaning of section 356(d).

Example 8. H, an individual, exchanged a warrant for stock and a warrant. The warrants had no principal amount. Thus, H received no excess principal amount within the meaning of section 356(d).

Example 9. I, an individual, exchanged a warrant for stock and a debt security. The warrant had no principal amount. The debt security had a $100 principal amount. I received $100 of excess principal amount within the meaning of section 356(d).

[T.D. 6500, 25 FR 11607, Nov. 26, 1960, as amended by T.D. 7616, 44 FR 26869, May 8, 1979; T.D. 8752, 63 FR 410, Jan. 6, 1998; T.D. 8882, 65 FR 31078, May 16, 2000]

§ 1.356-4 Exchanges for section 306 stock.

If, in a transaction to which section 356 is applicable, other property or money is received in exchange for section 306 stock, an amount equal to the fair market value of the property plus the money, if any, shall be treated as a distribution of property to which section 301 is applicable. The determination of whether section 306 stock is surrendered for other property (including money) is a question of fact to be decided under all of the circumstances of each case. Ordinarily, the other property (including money) received will first be treated as received in exchange for any section 306 stock owned by a shareholder prior to such transaction. For example, if a shareholder who owns a share of common stock (having a basis to him of $100) and a share of preferred stock which is section 306 stock (having a basis to him of $100) surrenders both shares in a transaction to which section 356 is applicable for one share of common stock having a fair market value of $80 and one $100 bond having a fair market value of $100, the bond will be deemed received in exchange for the section 306 stock and it will be treated as a distribution to which section 301 is applicable to the extent of its entire fair market value ($100).

§ 1.356-5 Transactions involving gift or compensation.

With respect to transactions described in sections 354, 355, or 356, but which—

(a) Result in a gift, see section 2501 and following, and the regulations pertaining thereto, or

(b) Have the effect of the payment of compensation, see section 61(a)(1), and the regulations pertaining thereto.

§ 1.356-6 Rules for treatment of nonqualified preferred stock as other property.

(a) ***In general.*** For purposes of §§ 1.354-1(e), 1.355-1(c), and 1.356-3(b), the terms *stock* and *securities* do not include—

(1) Nonqualified preferred stock, as defined in section 351(g)(2), received in exchange for (or in a distribution with respect to) stock, or a right to acquire stock, other than nonqualified preferred stock; or

(2) A right to acquire such nonqualified preferred stock, received in exchange for (or in a distribution with respect to) stock, or a right to acquire stock, other than nonqualified preferred stock.

(b) ***Exceptions.*** The following exceptions apply:

(1) ***Certain recapitalizations.*** Paragraph (a) of this section does not apply in the case of a recapitalization under section 368(a)(1)(E) of a family-owned corporation as described in section 354(a)(2)(C)(ii)(II).

(2) ***Transition rule.*** Paragraph (a) of this section does not apply to a transaction described in section 1014(f)(2) of the Taxpayer Relief Act of 1997 (111 Stat. 921).

(c) ***Effective date.*** This section applies to nonqualified preferred stock, or a right to acquire such stock, received in connection with a transaction occurring on or after March 9, 1998.

[T.D. 8753, 63 FR 411, Jan. 6, 1998. Redesignated by T.D. 8882, 65 FR 31078, May 16, 2000]

§ 1.356-7 Rules for treatment of nonqualified preferred stock and other preferred stock received in certain transactions.

(a) ***Stock issued prior to effective date.*** Stock described in section 351(g)(2) is nonqualified preferred stock (NQPS) regardless of the date on which the stock is issued. However, sections 351(g), 354(a)(2)(C), 355(a)(3)(D), 356(e), and 1036(b) do not apply to any transaction occurring prior to June 9, 1997, or to any transaction occurring after June 8, 1997, that is described in section 1014(f)(2) of the Taxpayer Relief Act of 1997, Public Law 105-34 (111 Stat. 788, 921). For purposes of this section, preferred stock that is not NQPS is referred to as Qualified Preferred Stock (QPS).

(b) ***Receipt of preferred stock in exchange for (or distribution on) substantially identical preferred stock*** —

(1) ***General rule.*** For purposes of sections 354(a)(2)(C)(i), 355(a)(3)(D), and 356(e)(2), preferred stock is QPS, even though it is described in section 351(g)(2), if it is received in exchange for (or in a distribution with respect to) preferred stock (the original preferred stock) that is QPS, provided—

(i) The original preferred stock is QPS solely because, on its issue date, either a right or obligation described in clause (i), (ii), or (iii) of section 351(g)(2)(A) was not exercisable until after a 20-year period beginning on the issue date, or the right or obligation was exercisable within the 20-year period beginning on the issue date but was subject to a contingency which made remote the likelihood of the redemption or purchase, or the issuer's (or a related party's) right to redeem or purchase the stock was not more likely than not to be exercised within a 20-year period beginning on the issue date, or because of any combination of these reasons; and

(ii) The stock received is substantially identical to the original preferred stock.

(2) ***Substantially identical.*** The stock received is substantially identical to the original preferred stock if—

(i) The stock received does not contain any term or terms that, in relation to any term or terms of the original preferred stock, either decrease the period in which a right or obligation described in clause (i), (ii), or (iii) of section 351(g)(2)(A) can be exercised, or increase the likelihood that such a right or obligation will be exercised, or accelerate the timing of the returns from the stock instrument, including the timing of actual or deemed dividends or other distributions received on the stock; and

(ii) As a result of the exchange or distribution, exercise of the right or obligation does not become more likely than not to occur within a 20-year period beginning on the issue date of the original preferred stock.

(3) ***Treatment of stock received.*** The stock received will continue to be treated as QPS in subsequent transactions involving such stock, and the principles of this paragraph (b) apply to such transactions as though the stock received is the original preferred stock issued on the same date as the original preferred stock.

(c) ***Stock transferred for services.*** For purposes of sections 351(g)(1), 354(a)(2)(C)(i), 355(a)(3)(D), and 356(e)(2), preferred stock containing a right or obligation described in clause (i), (ii) or (iii) of section 351(g)(2)(A) that is exercisable only upon the holder's separation from service from the issuer or a related person (as described in section 351(g)(3)(B)) will be treated as transferred in connection with the performance of services (and representing reasonable compensation) within the meaning of section 351(g)(2)(C)(i)(II), if such preferred stock is received in exchange for (or in a distribution with respect to) existing stock containing a similar right or obligation (exercisable only upon separation from service) and the existing stock was transferred in connection with the performance of services for the issuer or a related person (and represented reasonable compensation when transferred). In applying the rules relating to NQPS, the preferred stock received will continue to be treated as transferred in connection with the performance of services (and representing reasonable compensation) in subsequent transactions involving such stock, and the principles of this paragraph (c) apply to such transactions.

(d) ***Rights to acquire stock.*** For purposes of § 1.356-6, the principles of paragraphs (a), (b), and (c) of this section apply.

(e) ***Examples.*** In the examples in this paragraph (e), T and P are corporations, A is a shareholder of T, and A surrenders and receives (in addition to the stock exchanged in the examples) common stock in the reorganizations described. The following examples illustrate paragraphs (a), (b), and (c) of this section:

Example 1. In 1995, A transfers property to T and receives T preferred stock that is described in section 351(g)(2) in a transaction under section 351. In 2002, pursuant to a reorganization under section 368(a)(1)(B), A surrenders the T preferred stock in exchange for P NQPS. Under paragraph (a) of this section, the T preferred stock issued to A in 1995 is NQPS. However, because section 351(g) does not apply to transactions occurring before June 9, 1997, the T NQPS was not “other property” within the meaning of section 351(b) when issued in 1995. Under sections 354(a)(2)(C) and 356(e)(2), the P NQPS received by A in 2002 is not “other property” within the meaning of section 356(a)(1)(B) because it is received in exchange for NQPS.

Example 2. T issues QPS to A on January 1, 2000 that is not NQPS solely because the holder cannot require T to redeem the stock until January 1, 2022. In 2007, pursuant to a reorganization under section 368(a)(1)(A) in which T merges into P, A surrenders the T preferred stock in exchange for P preferred stock with terms that are identical to the terms of the T preferred stock, including the term that the holder cannot require the redemption of the stock until January 1, 2022. Because the P stock and the T stock have identical terms, and because the redemption did not become more likely than not to occur within the 20-year period that begins on January 1, 2000 (which is the issue date of the T preferred stock) as a result of the exchange, under paragraph (b) of this section, the P preferred stock received by A is treated as QPS. Thus, the P preferred stock received is not “other property” within the meaning of section 356(a)(1)(B).

Example 3. The facts are the same as in *Example 2,* except that, in addition, in 2010, pursuant to a recapitalization of P under section 368(a)(1)(E), A exchanges the P preferred stock above for P NQPS that permits the holder to require P to redeem the stock in 2020. Under paragraph (b) of this section, the P preferred stock surrendered by A is treated as QPS. Because the P preferred stock received by A in the recapitalization is not substantially identical to the P preferred stock surrendered, the P preferred stock received by A is not treated as QPS. Thus, the P preferred stock received is “other property” within the meaning of section 356(a)(1)(B).

Example 4. T issues preferred stock to A on January 1, 2000 that permits the holder to require T to redeem the stock on January 1, 2018, or at any time thereafter, but which is not NQPS solely because, as of the issue date, the holder's right to redeem is subject to a contingency that makes remote the

likelihood of redemption on or before January 1, 2020. In 2007, pursuant to a reorganization under section 368(a)(1)(A) in which T merges into P, A surrenders the T preferred stock in exchange for P preferred stock with terms that are identical to the terms of the T preferred stock. Immediately before the exchange, the contingency to which the holder's right to cause redemption of the T stock is subject makes remote the likelihood of redemption before January 1, 2020, but the P stock, although subject to the same contingency, is more likely than not to be redeemed before January 1, 2020. Because, as a result of the exchange of T stock for P stock, the exercise of the redemption right became more likely than not to occur within the 20-year period beginning on the issue date of the T preferred stock, the P preferred stock received by A is not substantially identical to the T stock surrendered, and is not treated as QPS. Thus, the P preferred stock received is "other property" within the meaning of section 356(a)(1)(B).

Example 5. The facts are the same as in *Example 4,* except that, immediately before the merger of T into P in 2007, the contingency to which the holder's right to cause redemption of the T stock is subject makes it more likely than not that the T stock will be redeemed before January 1, 2020. Because exercise of the redemption right did not become more likely than not to occur within the 20-year period beginning on the issue date of the T preferred stock as a result of the exchange, the P preferred stock received by A is substantially identical to the T stock surrendered, and is treated as QPS. Thus, the P preferred stock received is not "other property" within the meaning of section 356(a)(1)(B).

Example 6. A is an employee of T. In connection with A's performance of services for T, T transfers to A in 2000 an amount of T common stock that represents reasonable compensation. The T common stock contains a term granting A the right to require T to redeem the common stock, but only upon A's separation from service from T. In 2005, pursuant to a reorganization under section 368(a)(1)(A) in which T merges into P, A receives, in exchange for A's T common stock, P preferred stock granting a similar redemption right upon A's separation from P's service. Under paragraph (c) of this section, the P preferred stock received by A is treated as transferred in connection with the performance of services (and representing reasonable compensation) within the meaning of section 351(g)(2)(C)(i)(II). Thus, the P preferred stock received by A is QPS.

(f) ***Effective dates.*** This section applies to transactions occurring on or after October 2, 2000.

[T.D. 8904, 65 FR 58651, Oct. 2, 2000]

§ 1.357-1 Assumption of liability.

(a) ***General rule.*** Section 357(a) does not affect the rule that liabilities assumed are to be taken into account for the purpose of computing the amount of gain or loss realized under section 1001 upon an exchange. Section 357(a) provides, subject to the exceptions and limitations specified in section 357 (b) and (c), that—

(1) Liabilities assumed are not to be treated as "other property or money" for the purpose of determining the amount of realized gain which is to be recognized under section 351, 361, 371, or 374, if the transactions would, but for the receipt of "other property or money" have been exchanges of the type described in any one of such sections; and

(2) If the only type of consideration received by the transferor in addition to that permitted to be received by section 351, 361, 371, or 374, consists of an assumption of liabilities, the transaction, if otherwise qualified, will be deemed to be within the provisions of section 351, 361, 371, or 374.

(b) ***Application of general rule.*** The application of paragraph (a) of this section may be illustrated by the following example:

> *Example.* A, an individual, transfers to a controlled corporation property with an adjusted basis of $10,000 in exchange for stock of the corporation with a fair market value of $8,000, $3,000 cash, and the assumption by the corporation of indebtedness of A amounting to $4,000. A's gain is $5,000, computed as follows:
>
> | | |
> |---|---|
> | Stock received, fair market value | $8,000 |
> | Cash received | 3,000 |
> | Liability assumed by transferee | 4,000 |
> | Total consideration received | 15,000 |
> | Less: Adjusted basis of property transferred | 10,000 |
> | Gain realized | 5,000 |
>
> Assuming that the exchange falls within section 351 as a transaction in which the gain to be recognized is limited to “other property or money” received, the gain recognized to A will be limited to the $3,000 cash received, since, under the general rule of section 357(a), the assumption of the $4,000 liability does not constitute “other property.”

(c) ***Tax avoidance purpose.*** The benefits of section 357(a) do not extend to any exchange involving an assumption of liabilities where it appears that the principal purpose of the taxpayer with respect to such assumption was to avoid Federal income tax on the exchange, or, if not such purpose, was not a bona fide business purpose. In such cases, the total amount of liabilities assumed or acquired pursuant to such exchange (and not merely a particular liability with respect to which the tax avoidance purpose existed) shall, for the purpose of determining the amount of gain to be recognized upon the exchange in which the liabilities are assumed or acquired, be treated as money received by the taxpayer upon the exchange. Thus, if in the example set forth in paragraph (b) of this section, the principal purpose of the assumption of the $4,000 liability was to avoid tax on the exchange, or was not a bona fide business purpose, then the amount of gain recognized would be $5,000. In any suit or proceeding where the burden is on the taxpayer to prove that an assumption of liabilities is not to be treated as “other property or money” under section 357, which is the case if the Commissioner determines that the taxpayer's purpose with respect thereto was a purpose to avoid Federal income tax on the exchange or was not a bona fide business purpose, and the taxpayer contests such determination by litigation, the taxpayer must sustain such burden by the clear preponderance of the evidence. Thus, the taxpayer must prove his case by such a clear preponderance of all the evidence that the absence of a purpose to avoid Federal income tax on the exchange, or the presence of a bona fide business purpose, is unmistakable.

[T.D. 6500, 25 FR 11607, Nov. 26, 1960, as amended by T.D. 6528, 26 FR 399, Jan. 19, 1961]

§ 1.357-2 Liabilities in excess of basis.

(a) Section 357(c) provides in general that in an exchange to which section 351 (relating to a transfer to a corporation controlled by the transferor) is applicable, or to which section 361 (relating to the nonrecognition of gain or loss to corporations) is applicable by reason of a section 368(a)(1)(D) reorganization, if the sum of the amount of liabilities assumed plus the amount of liabilities to which the property is subject exceeds the total of the adjusted basis of the property transferred pursuant to such exchange, then such excess shall be considered as a gain from the sale or exchange of a capital asset or of property which is not a capital asset as the case may be. Thus, if an individual transfers, under section 351, properties having a total basis in his hands of $20,000, one of which has a basis of $10,000 but is subject to a mortgage of $30,000, to a corporation controlled by him, such individual will be subject to tax with respect to $10,000, the excess of the amount of the liability over the total adjusted basis of all the properties in his hands. The same result will follow whether or not the liability is assumed by the transferee. The determination of whether a gain resulting from the transfer of capital assets is long-term or short-term capital gain shall be made by reference to the holding period to the transferor of the assets transferred. An exception to the general rule of section 357(c) is made

(1) for any exchange as to which under section 357(b) (relating to assumption of liabilities for tax-avoidance purposes) the entire amount of the liabilities is treated as money received and

(2) for an exchange to which section 371 (relating to reorganizations in certain receivership and bankruptcy proceedings) or section 374 (relating to gain or loss not recognized in certain railroad reorganizations) is applicable.

(b) The application of paragraph (a) of this section may be illustrated by the following examples:

Example 1. If all such assets transferred are capital assets and if half the assets (ascertained by reference to their fair market value at the time of the transfer) have been held for less than 1 year (6 months for taxable years beginning before 1977; 9 months for taxable years beginning in 1977), and the remaining half for more than 1 year (6 months for taxable years beginning before 1977; 9 months for taxable years beginning in 1977), half the excess of the amount of the liability over the total of the adjusted basis of the property transferred pursuant to the exchange shall be treated as short-term capital gain, and the remaining half shall be treated as long-term capital gain.

Example 2. If half of the assets (ascertained by reference to their fair market value at the time of the transfer) transferred are capital assets and half are assets other than capital assets, then half of the excess of the amount of the liability over the total of the adjusted basis of the property transferred pursuant to the exchange shall be treated as capital gain, and the remaining half shall be treated as gain from the sale or exchange of assets other than capital assets.

[T.D. 6500, 25 FR 11607, Nov. 26, 1960, as amended by T.D. 6528, 26 FR 399, Jan. 19, 1961; T.D. 7728, 45 FR 72650, Nov. 3, 1980]

§ 1.358-1 Basis to distributees.

(a) In the case of an exchange to which section 354 or 355 applies in which, under the law applicable to the year in which the exchange is made, only nonrecognition property is received, immediately after the transaction, the sum of the basis of all of the stock and securities received in the transaction shall be the same as the basis of all the stock and securities in such corporation surrendered in the transaction, allocated in the manner described in § 1.358-2. In the case of a distribution to which section 355 applies in which, under the law applicable to the year in which the distribution is made, only nonrecognition property is received, immediately after the transaction, the sum of the basis of all of the stock and

securities with respect to which the distribution is made plus the basis of all stock and securities received in the distribution with respect to such stock and securities shall be the same as the basis of the stock and securities with respect to which the distribution is made immediately before the transaction, allocated in the manner described in § 1.358-2. In the case of an exchange to which section 351 or 361 applies in which, under the law applicable to the year in which the exchange was made, only nonrecognition property is received, the basis of all the stock and securities received in the exchange shall be the same as the basis of all property exchanged therefor. If in an exchange or distribution to which section 351, 356, or 361 applies both nonrecognition property and "other property" are received, the basis of all the property except "other property" held after the transaction shall be determined as described in the preceding three sentences decreased by the sum of the money and the fair market value of the "other property" (as of the date of the transaction) and increased by the sum of the amount treated as a dividend (if any) and the amount of the gain recognized on the exchange, but the term gain as here used does not include any portion of the recognized gain that was treated as a dividend. In any case in which a taxpayer transfers property with respect to which loss is recognized, such loss shall be reflected in determining the basis of the property received in the exchange. The basis of the "other property" is its fair market value as of the date of the transaction. See § 1.460-4(k)(3)(iv)(A) for rules relating to stock basis adjustments required where a contract accounted for using a long-term contract method of accounting is transferred in a transaction described in section 351 or a reorganization described in section 368(a)(1)(D) with respect to which the requirements of section 355 (or so much of section 356 as relates to section 355) are met.

(b) The application of paragraph (a) of this section may be illustrated by the following example:

Example. A purchased a share of stock in Corporation X in 1935 for $150. Since that date A has received distributions out of other than earnings and profits (as defined in section 316) totaling $60, so that A's adjusted basis for the stock is $90. In a transaction qualifying under section 356, A exchanged this share for one share in Corporation Y, worth $100, cash in the amount of $10, and other property with a fair market value of $30. The exchange had the effect of the distribution of a dividend. A's ratable share of the earnings and profits of Corporation X accumulated after February 28, 1913, was $5. A realized a gain of $50 on the exchange, but the amount recognized is limited to $40, the sum of the cash received and the fair market value of the other property. Of the gain recognized, $5 is taxable as a dividend, and $35 is taxable as a gain from the exchange of property. The basis to A of the one share of stock of Corporation Y is $90, that is, the adjusted basis of the one share of stock of Corporation X ($90), decreased by the sum of the cash received ($10) and the fair market value of the other property received ($30) and increased by the sum of the amount treated as a dividend ($5) and the amount treated as a gain from the exchange of property ($35). The basis of the other property received is $30.

(c) This section applies to exchanges and distributions of stock and securities occurring on or after January 23, 2006.

[T.D. 9244, 71 FR 4269, Jan. 26, 2006; 71 FR 19118, Apr. 13, 2006; 71 FR 62556, Oct. 26, 2006]

§ 1.358-2 Allocation of basis among nonrecognition property.

(a) ***Allocation of basis in exchanges or distributions to which section 354, 355, or 356 applies.***

(1) As used in this paragraph the term *stock* means stock which is not "other property" under section 356. The term *securities* means securities (including, where appropriate, fractional parts of securities) which are not "other property" under section 356. Stock, or securities, as the case may be,

which differ either because they are in different corporations or because the rights attributable to them differ (although they are in the same corporation) are considered different classes of stock or securities, as the case may be, for purposes of this section.

(2)

(i) If a shareholder or security holder surrenders a share of stock or a security in an exchange under the terms of section 354, 355, or 356, the basis of each share of stock or security received in the exchange shall be the same as the basis of the share or shares of stock or security or securities (or allocable portions thereof) exchanged therefor (as adjusted under § 1.358-1). If more than one share of stock or security is received in exchange for one share of stock or one security, the basis of the share of stock or security surrendered shall be allocated to the shares of stock or securities received in the exchange in proportion to the fair market value of the shares of stock or securities received. If one share of stock or security is received in exchange for more than one share of stock or security or if a fraction of a share of stock or security is received, then the basis of the shares of stock or securities surrendered must be allocated to the shares of stock or securities (or allocable portions thereof) received in a manner that reflects, to the greatest extent possible, that a share of stock or security received is received in respect of shares of stock or securities that were acquired on the same date and at the same price. To the extent it is not possible to allocate basis in this manner, the basis of the shares of stock or securities surrendered must be allocated to the shares of stock or securities (or allocable portions thereof) received in a manner that minimizes the disparity in the holding periods of the surrendered shares of stock or securities whose basis is allocated to any particular share of stock or security received.

(ii) If a shareholder or security holder surrenders a share of stock or a security in an exchange under the terms of section 354, 355, or 356, and receives shares of stock or securities of more than one class, or receives “other property” or money in addition to shares of stock or securities, then, to the extent the terms of the exchange specify that shares of stock or securities of a particular class or “other property” or money is received in exchange for a particular share of stock or security or a particular class of stock or securities, for purposes of applying the rules of this section, such terms shall control provided such terms are economically reasonable. To the extent the terms of the exchange do not specify that shares of stock or securities of a particular class or “other property” or money is received in exchange for a particular share of stock or security or a particular class of stock or securities, then, for purposes of applying the rules of paragraph (a)(2)(i) of this section, a pro rata portion of the shares of stock and securities of each class received and a pro rata portion of the “other property” and money received shall be treated as received in exchange for each share of stock and security surrendered, based on the fair market value of the stock and securities surrendered.

(iii)

(A) For purposes of this section, if a shareholder or security holder surrenders a share of stock or a security in a transaction under the terms of section 354 (or so much of section 356 as relates to section 354) in which the shareholder or security holder receives no property or property (including property permitted by section 354 to be received without the recognition of gain or “other property” or money) with a fair market value less than that of the stock or securities surrendered in the transaction:

(*1*) Such shareholder or security holder shall be treated as receiving the stock, securities, other property, and money actually received by the shareholder or security holder in the transaction and an amount of stock of the issuing corporation (as defined in § 1.368-1(b)) that has a value equal to the excess of the value of the stock or securities the shareholder or security holder surrendered in the transaction over the value of the stock, securities, other property, and money the shareholder or security holder actually received in the transaction. If the shareholder owns only one class of stock of the issuing corporation the receipt of which would be consistent with the economic rights associated with each class of stock of the issuing corporation, the stock deemed received by the shareholder pursuant to the previous sentence shall be stock of such class. If the shareholder owns multiple classes of stock of the issuing corporation the receipt of which would be consistent with the economic rights associated with each class of stock of the issuing corporation, the stock deemed received by the shareholder shall be stock of each such class owned by the shareholder immediately prior to the transaction, in proportion to the value of the stock of each such class owned by the shareholder at that time. The basis of each share of stock or security of the issuing corporation deemed received and actually received shall be determined under the rules of this section. If and to the extent necessary to reflect the actual ownership of the issuing corporation immediately after the exchange to which section 354 (or so much of section 356 as relates to section 354) applies, an appropriate amount of the stock of the issuing corporation treated as issued to the shareholder or security holder in the exchange is deemed further transferred in accordance with § 1.368-2(l) to reflect the actual ownership of the issuing corporation. Paragraph (a)(2)(iii)(A)(*2*) of this section is only applied to any shareholder of the issuing corporation after all of the deemed transfers pursuant to § 1.368-2(l) are completed. The transferred shares' basis shall be adjusted for all deemed transfers required by § 1.368-2(l).

(*2*) A direct shareholder of the issuing corporation that receives the shares deemed issued as part of the transaction, as described in paragraph (a)(2)(iii)(A)(*1*) of this section, shall then be treated as surrendering all of its shares of stock and securities in the issuing corporation, including those shares of stock or securities held immediately prior to the transaction, those shares of stock or securities actually received in the transaction, and those shares of stock deemed received as described in paragraph (a)(2)(iii)(A)(*1*) of this section, in a reorganization under section 368(a)(1)(E) in exchange for the shares of stock and securities of the issuing corporation that the shareholder or security holder actually holds immediately after the transaction. The basis of each share of stock and security deemed received in the reorganization under section 368(a)(1)(E) shall be determined under the rules of this section.

(B) For purposes of this section, if an actual shareholder of the issuing corporation is deemed to receive a nominal share of stock of the issuing corporation as provided in § 1.368-2(l), then that shareholder must, after allocating and adjusting the basis of the nominal share in accordance with the rules of this section and § 1.358-1, designate the share of stock of the issuing corporation that it owns to which the basis, if any, of the nominal share will attach. If the shareholder does not actually own any shares of stock in the issuing corporation immediately after the exchange to which section 354 (or so much of section 356 as relates to section 354) applies, the nominal share of stock of the issuing

corporation received by the shareholder in the exchange is deemed further transferred in accordance with § 1.368-2(l) without applying the designation rule set forth in the first sentence of this paragraph until it is transferred to a person that actually owns stock in the issuing corporation. The transferred share's basis shall be adjusted for all deemed transfers required by § 1.368-2(l).

(iv) If a shareholder or security holder receives one or more shares of stock or one or more securities in a distribution under the terms of section 355 (or so much of section 356 as relates to section 355), the basis of each share of stock or security of the distributing corporation (as defined in § 1.355-1(b)), as adjusted under § 1.358-1, shall be allocated between the share of stock or security of the distributing corporation with respect to which the distribution is made and the share or shares of stock or security or securities (or allocable portions thereof) received with respect to the share of stock or security of the distributing corporation in proportion to their fair market values. If one share of stock or security is received with respect to more than one share of stock or security or if a fraction of a share of stock or security is received, then the basis of each share of stock or security of the distributing corporation must be allocated to the shares of stock or securities (or allocable portions thereof) received in a manner that reflects that, to the greatest extent possible, a share of stock or security received is received with respect to shares of stock or securities acquired on the same date and at the same price. To the extent it is not possible to allocate basis in this manner, the basis of each share of stock or security of the distributing corporation must be allocated to the shares of stock or securities (or allocable portions thereof) received in a manner that minimizes the disparity in the holding periods of the shares of stock or securities with respect to which such shares of stock or securities are received.

(v) If a shareholder or security holder receives shares of stock or securities of more than one class, or receives “other property” or money in addition to stock or securities in a distribution under the terms of section 355 (or so much of section 356 as relates to section 355), then, to the extent the terms of the distribution specify that shares of stock or securities of a particular class or “other property” or money is received with respect to a particular share of stock or security of the distributing corporation or a particular class of stock or securities of the distributing corporation, for purposes of applying the rules of this section, such terms shall control provided that such terms are economically reasonable. To the extent the terms of the distribution do not specify that shares of stock or securities of a particular class or “other property” or money is received with respect to a particular share of stock or security of the distributing corporation or a particular class of stock or securities of the distributing corporation, then, for purposes of applying the rules of this section, a pro rata portion of the shares of stock and securities of each class received and a pro rata portion of the “other property” and money received shall be treated as received with respect to each share of stock and security of the distributing corporation with respect to which the distribution is made, based on the fair market value of each such share of stock or security.

(vi) If a share of stock or a security is received in exchange for, or with respect to, more than one share of stock or security and such shares or securities were acquired on different dates or at different prices, the share of stock or security received shall be divided into segments based on the relative fair market values of the shares of stock or securities surrendered in exchange for such share or security or the relative fair market values of the shares of stock or securities with respect to which the share of stock or security is received in a distribution under the terms of

section 355 (or so much of section 356 as relates to section 355)). Each segment shall have a basis determined under the rules of paragraph (a)(2) of this section and a corresponding holding period.

(vii) If a shareholder or security holder that purchased or acquired shares of stock or securities in a corporation on different dates or at different prices exchanges such shares of stock or securities under the terms of section 354, 355, or 356, or receives a distribution of shares of stock or securities under the terms of section 355 (or so much of section 356 as relates to section 355), and the shareholder or security holder is not able to identify which particular share of stock or security (or allocable portion of a share of stock or security) is received (or deemed received) in exchange for, or with respect to, a particular share of stock or security, the shareholder or security holder may designate which share of stock or security is received in exchange for, or with respect to, a particular share of stock or security, provided that such designation is consistent with the terms of the exchange or distribution (or an exchange deemed to have occurred pursuant to paragraph (a)(2)(iii) of this section), and the other rules of this section. In the case of an exchange under the terms of section 354 or 356 (including a deemed exchange as a result of the application of paragraph (a)(2)(iii) of this section), the designation must be made on or before the first date on which the basis of a share of stock or a security received (or deemed received in the reorganization under section 368(a)(1)(E) in the case of a transaction to which paragraph (a)(2)(iii) of this section applies) is relevant. In the case of an exchange or distribution under the terms of section 355 (or so much of section 356 as relates to section 355), the designation must be made on or before the first date on which the basis of a share of stock or a security of the distributing corporation or the controlled corporation (as defined in § 1.355-1(b)) is relevant. The basis of the shares or securities received in an exchange under the terms of section 354 or section 356, for example, is relevant when such shares or securities are sold or otherwise transferred. The designation will be binding for purposes of determining the Federal tax consequences of any sale or transfer of, or distribution with respect to, the shares or securities received. If the shareholder fails to make a designation in a case in which the shareholder is not able to identify which share of stock is received in exchange for, or with respect to, a particular share of stock, then the shareholder will not be able to identify which shares are sold or transferred for purposes of determining the basis of property sold or transferred under section 1012 and § 1.1012-1(c) and, instead, will be treated as selling or transferring the share received in respect of the earliest share purchased or acquired.

(viii) This paragraph (a)(2) shall not apply to determine the basis of a share of stock or security received by a shareholder or security holder in an exchange described in both section 351 and either section 354 or 356, if, in connection with the exchange—

(A) The shareholder or security holder exchanges property for stock or securities in an exchange to which neither section 354 nor section 356 applies;

(B) The shareholder or security holder exchanges property for stock or securities in a transaction for which an election to apply section 362(e)(2)(C) is in effect; or

(C) Liabilities of the shareholder or security holder are assumed.

(ix) This paragraph (a)(2) shall apply to determine the basis of a share of stock or security received by a shareholder or security holder in an exchange described in both section 1036 and section 354 or section 356.

(b) ***Allocation of basis in exchanges to which section 351 or 361 applies.***

(1) As used in this paragraph (b), the term *stock* refers only to stock which is not "other property" under section 351 or 361 and the term *securities* refers only to securities which are not "other property" under section 351 or 361.

(2) If in an exchange to which section 351 or 361 applies property is transferred to a corporation and the transferor receives stock or securities of more than one class or receives both stock and securities, then the basis of the property transferred (as adjusted under § 1.358-1) shall be allocated among all of the stock and securities received in proportion to the fair market values of the stock of each class and the securities of each class.

(c) ***Examples.*** The application of paragraphs (a) and (b) of this section is illustrated by the following examples:

> *Example 1.* (i) *Facts.* J, an individual, acquired 20 shares of Corporation X stock on Date 1 for $3 each and 10 shares of Corporation X stock on Date 2 for $6 each. On Date 3, Corporation Y acquires the assets of Corporation X in a reorganization under section 368(a)(1)(A). Pursuant to the terms of the plan of reorganization, J receives 2 shares of Corporation Y stock in exchange for each share of Corporation X stock. Therefore, J receives 60 shares of Corporation Y stock. Pursuant to section 354, J recognizes no gain or loss on the exchange. J is not able to identify which shares of Corporation Y stock are received in exchange for each share of Corporation X stock.
> (ii) *Analysis.* Under paragraph (a)(2)(i) of this section, J has 40 shares of Corporation Y stock each of which has a basis of $1.50 and is treated as having been acquired on Date 1 and 20 shares of Corporation Y stock each of which has a basis of $3 and is treated as having been acquired on Date 2. Under paragraph (a)(2)(vii) of this section, on or before the date on which the basis of a share of Corporation Y stock received becomes relevant, J may designate which of the shares of Corporation Y stock have a basis of $1.50 and which have a basis of $3.

> *Example 2.* (i) *Facts.* The facts are the same as in *Example 1*, except that instead of receiving 2 shares of Corporation Y stock in exchange for each share of Corporation X stock, J receives $1^1/_2$ shares of Corporation Y stock in exchange for each share of Corporation X stock. Therefore, J receives 45 shares of Corporation Y stock. Again, J is not able to identify which shares (or portions of shares) of Corporation Y stock are received in exchange for each share of Corporation X stock.
> (ii) *Analysis.* Under paragraph (a)(2)(i) of this section, J has 30 shares of Corporation Y stock each of which has a basis of $2 and is treated as having been acquired on Date 1 and 15 shares of Corporation Y stock each of which has a basis of $4 and is treated as having been acquired on Date 2. Under paragraph (a)(2)(vii) of this section, on or before the date on which the basis of a share of Corporation Y stock received becomes relevant, J may designate which of the shares of Corporation Y stock received have a basis of $2 and which have a basis of $4.

> *Example 3.* (i) *Facts.* J, an individual, acquired 10 shares of Class A stock of Corporation X on Date 1 for $3 each, 10 shares of Class A stock of Corporation X on Date 2 for $9 each, and 10

shares of Class B stock of Corporation X on Date 3 for $3 each. On Date 4, J surrenders all of J's shares of Class A stock in exchange for 20 shares of new Class C stock and 20 shares of new Class D stock in a reorganization under section 368(a)(1)(E). Pursuant to section 354, J recognizes no gain or loss on the exchange. On the date of the exchange, the fair market value of each share of Class A stock is $6, the fair market value of each share of Class C stock is $2, and the fair market value of each share of Class D stock is $4. The terms of the exchange do not specify that shares of Class C stock or shares of Class D stock of Corporation X are received in exchange for particular shares of Class A stock of Corporation X.

(ii) *Analysis.* Under paragraph (a)(2)(ii) of this section, because the terms of the exchange do not specify that shares of Class C stock or shares of Class D stock of Corporation X are received in exchange for particular shares of Class A stock of Corporation X, a pro rata portion of the shares of Class C stock and shares of Class D stock received will be treated as received in exchange for each share of Class A stock based on the fair market value of the surrendered shares of Class A stock. Therefore, J is treated as receiving one share of Class C stock and one share of Class D stock in exchange for each share of Class A stock. Under paragraph (a)(2)(i) of this section, J has 10 shares of Class C stock, each of which has a basis of $1 and is treated as having been acquired on Date 1 and 10 shares of Class C stock, each of which has a basis of $3 and is treated as having been acquired on Date 2. In addition, J has 10 shares of Class D stock, each of which has a basis of $2 and is treated as having been acquired on Date 1 and 10 shares of Class D stock, each of which has a basis of $6 and is treated as having been acquired on Date 2. J's basis in each share of Class B stock remains $3. Under paragraph (a)(2)(vii) of this section, on or before the date on which the basis of a share of Class C stock or Class D stock received becomes relevant, J may designate which of the shares of Class C stock have a basis of $1 and which have a basis of $3, and which of the shares of Class D stock have a basis of $2 and which have a basis of $6.

Example 4. (i) *Facts.* J, an individual, acquired 10 shares of Class A stock of Corporation X on Date 1 for $2 each, 10 shares of Class A stock of Corporation X on Date 2 for $4 each, and 20 shares of Class B stock of Corporation X on Date 3 for $6 each. On Date 4, Corporation Y acquires the assets of Corporation X in a reorganization under section 368(a)(1)(A). Pursuant to the terms of the plan of reorganization, J surrenders all of J's shares of Corporation X stock for 40 shares of Corporation Y stock and $200 of cash. On the date of the exchange, the fair market value of each share of Class A stock of Corporation X is $10, the fair market value of each share of Class B stock of Corporation X is $10, and the fair market value of each share of Corporation Y stock is $5. The terms of the exchange do not specify that shares of Corporation Y stock or cash are received in exchange for particular shares of Class A stock or Class B stock of Corporation X.

(ii) *Analysis.* Under paragraph (a)(2)(ii) of this section and under § 1.356-1(b), because the terms of the exchange do not specify that shares of Corporation Y stock or cash are received in exchange for particular shares of Class A stock or Class B stock of Corporation X, a pro rata portion of the shares of Corporation Y stock and cash received will be treated as received in exchange for each share of Class A stock and Class B stock of Corporation X surrendered based

on the fair market value of such stock. Therefore, J is treated as receiving one share of Corporation Y stock and $5 of cash in exchange for each share of Class A stock of Corporation X and one share of Corporation Y stock and $5 of cash in exchange for each share of Class B stock of Corporation X. J realizes a gain of $140 on the exchange of shares of Class A stock of Corporation X, $100 of which is recognized under § 1.356-1(a). J realizes a gain of $80 on the exchange of Class B stock of Corporation X, all of which is recognized under § 1.356-1(a). Under paragraph (a)(2)(i) of this section, J has 10 shares of Corporation Y stock, each of which has a basis of $2 and is treated as having been acquired on Date 1, 10 shares of Corporation Y stock, each of which has a basis of $4 and is treated as having been acquired on Date 2, and 20 shares of Corporation Y stock, each of which has a basis of $5 and is treated as having been acquired on Date 3. Under paragraph (a)(2)(vii) of this section, on or before the date on which the basis of a share of Corporation Y stock received becomes relevant, J may designate which of the shares of Corporation Y stock received have a basis of $2, which have a basis of $4, and which have a basis of $5.

Example 5. (i) *Facts.* The facts are the same as in *Example 4*, except that the terms of the plan of reorganization specify that J receives 40 shares of stock of Corporation Y in exchange for J's shares of Class A stock of Corporation X and $200 of cash in exchange for J's shares of Class B stock of Corporation X.
(ii) *Analysis.* Under paragraph (a)(2)(ii) of this section and under § 1.356-1(b), because the terms of the exchange specify that J receives 40 shares of stock of Corporation Y in exchange for J's shares of Class A stock of Corporation X and $200 of cash in exchange for J's shares of Class B stock of Corporation X and such terms are economically reasonable, such terms control. J realizes a gain of $140 on the exchange of shares of Class A stock of Corporation X, none of which is recognized under § 1.356-1(a). J realizes a gain of $80 on the exchange of shares of Class B stock of Corporation X, all of which is recognized under § 1.356-1(a). Under paragraph (a)(2)(i) of this section, J has 20 shares of Corporation Y stock, each of which has a basis of $1 and is treated as having been acquired on Date 1, and 20 shares of Corporation Y stock, each of which has a basis of $2 and is treated as having been acquired on Date 2. Under paragraph (a)(2)(vii) of this section, on or before the date on which the basis of a share of Corporation Y stock received becomes relevant, J may designate which of the shares of Corporation Y stock received have a basis of $1 and which have a basis of $2.

Example 6. (i) *Facts.* J, an individual, acquired 10 shares of stock of Corporation X on Date 1 for $2 each, and a security issued by Corporation X to J on Date 2 with a principal amount of $100 and a basis of $100. On Date 3, Corporation Y acquires the assets of Corporation X in a reorganization under section 368(a)(1)(A). Pursuant to the terms of the plan of reorganization, J surrenders all of J's shares of Corporation X stock in exchange for 10 shares of Corporation Y stock and surrenders J's Corporation X security in exchange for a Corporation Y security. On the date of the exchange, the fair market value of each share of stock of Corporation X is $10, the fair market value of J's Corporation X security is $100, the fair market value of each share of

Corporation Y stock is $10, and the fair market value and principal amount of the Corporation Y security received by J is $100.
(ii) *Analysis.* Under paragraph (a)(2)(ii) of this section and under § 1.354-1(a), because the terms of the exchange specify that J receives 10 shares of stock of Corporation Y in exchange for J's shares of Class A stock of Corporation X and a Corporation Y security in exchange for its Corporation X security and such terms are economically reasonable, such terms control. Pursuant to section 354, J recognizes no gain on either exchange. Under paragraph (a)(2)(i) of this section, J has 10 shares of Corporation Y stock, each of which has a basis of $2 and is treated as having been acquired on Date 1, and a security that has a basis of $100 and is treated as having been acquired on Date 2.

Example 7. (i) *Facts.* J, an individual, acquired 10 shares of Corporation X stock on Date 1 for $2 each and 10 shares of Corporation X stock on Date 2 for $5 each. On Date 3, Corporation Y acquires the stock of Corporation X in a reorganization under section 368(a)(1)(B). Pursuant to the terms of the plan of reorganization, J receives one share of Corporation Y stock in exchange for every 2 shares of Corporation X stock. Pursuant to section 354, J recognizes no gain or loss on the exchange. J is not able to identify which portion of each share of Corporation Y stock is received in exchange for each share of Corporation X stock.
(ii) *Analysis.* Under paragraph (a)(2)(i) of this section, J has 5 shares of Corporation Y stock each of which has a basis of $4 and is treated as having been acquired on Date 1 and 5 shares of Corporation Y stock each of which has a basis of $10 and is treated as having been acquired on Date 2. Under paragraph (a)(2)(vii) of this section, on or before the date on which the basis of a share of Corporation Y stock received becomes relevant, J may designate which of the shares of Corporation Y stock received have a basis of $4 and which have a basis of $10.

Example 8. (i) *Facts.* The facts are the same as in *Example 7*, except that, in addition to transferring the stock of Corporation X to Corporation Y, J transfers land to Corporation Y. In addition, after the transaction, J owns stock of Corporation Y satisfying the requirements of section 368(c). J's transfer of the Corporation X stock to Corporation Y is an exchange described in sections 351 and 354. J's transfer of land to Corporation Y is an exchange described in section 351.
(ii) *Analysis.* Under paragraph (a)(2)(viii) of this section, because neither section 354 nor section 356 applies to the transfer of land to Corporation Y, the rules of paragraph (a)(2) of this section do not apply to determine J's basis in the Corporation Y stock received in the transaction.

Example 9. (i) *Facts.* J, an individual, acquired 10 shares of Corporation X stock on Date 1 for $3 each and 10 shares of Corporation X stock on Date 2 for $6 each. On Date 3, Corporation Z, a newly formed, wholly owned subsidiary of Corporation Y, merges with and into Corporation X with Corporation X surviving. As part of the plan of merger, J receives one share of Corporation Y stock in exchange for each share of Corporation X stock. In connection with the transaction, Corporation

Y assumes a liability of J. In addition, after the transaction, J owns stock of Corporation Y satisfying the requirements of section 368(c). J's transfer of the Corporation X stock to Corporation Y is an exchange described in sections 351 and 354.
(ii) *Analysis.* Under paragraph (a)(2)(viii) of this section, because, in connection with the transfer of the Corporation X stock to Corporation Y, Corporation Y assumed a liability of J, the rules of paragraph (a)(2) of this section do not apply to determine J's basis in the Corporation Y stock received in the transaction.

Example 10. (i) *Facts.* Each of Corporation X and Corporation Y has a single class of stock outstanding, all of which is owned by J, an individual. J acquired 100 shares of Corporation X stock on Date 1 for $1 each and 100 shares of Corporation Y stock on Date 2 for $2 each. On Date 3, Corporation Y acquires the assets of Corporation X in a reorganization under section 368(a)(1)(D). Pursuant to the terms of the plan of reorganization, J surrenders J's 100 shares of Corporation X stock but does not receive any additional Corporation Y stock. Immediately before the effective time of the reorganization, the fair market value of each share of Corporation X stock and each share of Corporation Y stock is $1. Pursuant to section 354, J recognizes no gain or loss.
(ii) *Analysis.* Under paragraph (a)(2)(iii) of this section, J is deemed to have received shares of Corporation Y stock with an aggregate fair market value of $100 in exchange for J's Corporation X shares. Given the number of outstanding shares of stock of Corporation Y and their value immediately before the effective time of the reorganization, J is deemed to have received 100 shares of stock of Corporation Y in the reorganization. Under paragraph (a)(2)(i) of this section, each of those shares has a basis of $1 and is treated as having been acquired on Date 1. Then, the stock of Corporation Y is deemed to be recapitalized in a reorganization under section 368(a)(1)(E) in which J receives 100 shares of Corporation Y stock in exchange for those shares of Corporation Y stock that J held immediately prior to the reorganization and those shares J is deemed to have received in the reorganization. Under paragraph (a)(2)(i), immediately after the reorganization, J holds 50 shares of Corporation Y stock each of which has a basis of $2 and is treated as having been acquired on Date 1 and 50 shares of Corporation Y stock each of which has a basis of $4 and is treated as having been acquired on Date 2. Under paragraph (a)(2)(vii) of this section, on or before the date on which the basis of any share of J's Corporation Y stock becomes relevant, J may designate which of the shares of Corporation Y have a basis of $2 and which have a basis of $4.

Example 11. (i) *Facts.* Corporation X has a single class of stock outstanding, all of which is owned by J, an individual. J acquired 100 shares of Corporation X stock on Date 1 for $1 each. Corporation Y has two classes of stock outstanding, common stock and nonvoting preferred stock. On Date 2, J acquired 100 shares of Corporation Y common stock for $2 each and 100 shares of Corporation Y preferred stock for $4 each. On Date 3, Corporation Y acquires the assets of Corporation X in a reorganization under section 368(a)(1)(D). Pursuant to the terms of the plan of reorganization, J surrenders J's 100 shares of Corporation X stock but does not receive any additional Corporation Y stock. Immediately before the effective time of the reorganization, the fair market value of each share of Corporation X stock is $10, the fair market value of each share of Corporation Y common stock is $10, and the fair market value of each

share of Corporation Y preferred stock is $20. Pursuant to section 354, J recognizes no gain or loss.
(ii) *Analysis.* Under paragraph (a)(2)(iii) of this section, J is deemed to have received shares of Corporation Y stock with an aggregate fair market value of $1,000 in exchange for J's Corporation X shares. Consistent with the economics of the transaction and the rights associated with each class of stock of Corporation Y owned by J, J is deemed to receive additional shares of Corporation Y common stock. Because the value of the common stock indicates that the liquidation preference associated with the Corporation Y preferred stock could be satisfied even if the reorganization did not occur, it is not appropriate to deem the issuance of additional Corporation Y preferred stock. Given the number of outstanding shares of common stock of Corporation Y and their value immediately before the effective time of the reorganization, J is deemed to have received 100 shares of common stock of Corporation Y in the reorganization. Under paragraph (a)(2)(i) of this section, each of those shares has a basis of $1 and is treated as having been acquired on Date 1. Then, the common stock of Corporation Y is deemed to be recapitalized in a reorganization under section 368(a)(1)(E) in which J receives 100 shares of Corporation Y common stock in exchange for those shares of Corporation Y common stock that J held immediately prior to the reorganization and those shares of Corporation Y common stock that J is deemed to have received in the reorganization. Under paragraph (a)(2)(i), immediately after the reorganization, J holds 50 shares of Corporation Y common stock, each of which has a basis of $2 and is treated as having been acquired on Date 1, and 50 shares of Corporation Y common stock, each of which has a basis of $4 and is treated as having been acquired on Date 2. Under paragraph (a)(2)(vii) of this section, on or before the date on which the basis of any share of J's Corporation Y common stock becomes relevant, J may designate which of those shares have a basis of $2 and which have a basis of $4.

Example 12. (i) *Facts.* J, an individual, acquired 5 shares of Corporation X stock on Date 1 for $4 each and 5 shares of Corporation X stock on Date 2 for $8 each. Corporation X owns all of the outstanding stock of Corporation Y. The fair market value of the stock of Corporation X is $1800. The fair market value of the stock of Corporation Y is $900. In a distribution to which section 355 applies, Corporation X distributes all of the stock of Corporation Y pro rata to its shareholders. No stock of Corporation X is surrendered in connection with the distribution. In the distribution, J receives 2 shares of Corporation Y stock with respect to each share of Corporation X stock. Pursuant to section 355, J recognizes no gain or loss on the receipt of the shares of Corporation Y stock. J is not able to identify which share of Corporation Y stock is received in respect of each share of Corporation X stock.
(ii) *Analysis.* Under paragraph (a)(2)(iv) of this section, because J receives 2 shares of Corporation Y stock with respect to each share of Corporation X stock, the basis of each share of Corporation X stock is allocated between such share of Corporation X stock and two shares of Corporation Y stock in proportion to the fair market value of those shares. Therefore, each of the 5 shares of Corporation X stock acquired on Date 1 will have a basis of $2 and each of the 10 shares of Corporation Y stock received with respect to those shares will have a basis of $1. In addition, each of the 5 shares of Corporation X stock acquired on Date 2 will have a basis of $4 and each of the 10 shares of Corporation Y stock received with respect to those shares will have a basis of $2. Under paragraph (a)(2)(vii) of this section, on or before the date on which the basis of a share of Corporation Y stock received becomes relevant, J may designate which of the shares of Corporation Y stock have a basis of $1 and which have a basis of $2.

Example 13. (i) *Facts.* J, an individual, acquired 20 shares of Corporation X stock on Date 1 for $2 each and 20 shares of Corporation X stock on Date 2 for $4 each. Corporation X has 80 shares of stock outstanding. Corporation X owns 40 shares of stock of Corporation Y, which represents all of the outstanding stock of Corporation Y. The fair market value of the stock of Corporation X is $80. The fair market value of the stock of Corporation Y is $40. Corporation X distributes all of the stock of Corporation Y in a transaction to which section 355 applies. In the transaction, J surrenders 20 shares of stock of Corporation X in exchange for 20 shares of stock of Corporation Y. J retains 20 shares of Corporation X stock. Pursuant to section 355, J recognizes no gain or loss on the receipt of the shares of Corporation Y stock. J is not able to identify which shares of Corporation X stock are surrendered. In addition, J is not able to identify which shares of Corporation Y stock are received in exchange for each surrendered share of Corporation X stock.
(ii) *Analysis.* Under paragraph (a)(2)(i) of this section, J has 20 shares of Corporation Y stock each of which is treated as received in exchange for one share of Corporation X stock. The basis of the 20 shares of Corporation X stock that are retained by J will remain unchanged. Under paragraph (a)(2)(vii) of this section, on or before the date on which the basis of a share of Corporation X or Corporation Y stock becomes relevant, J may designate which shares of Corporation X stock J surrendered in the exchange and which share of the Corporation Y stock received is received for each share of Corporation X stock surrendered. Therefore, it is possible that a share of Corporation Y stock would have a basis of $2 and be treated as having been acquired on Date 1, or would have a basis of $4 and be treated as having been acquired on Date 2.

Example 14. (i) *Facts.* J, an individual, acquired 10 shares of Corporation X stock on Date 1 for $3 each, 10 shares of Corporation X stock on Date 2 for $18 each, 10 shares of Corporation X stock on Date 3 for $6 each, and 10 shares of Corporation X stock on Date 4 for $9 each. On Date 5, Corporation Y acquires the assets of Corporation X in a reorganization under section 368(a)(1)(A). Pursuant to the terms of the plan of reorganization, J receives a $^{3}/_{4}$ share of Corporation Y stock in exchange for each share of Corporation X stock. Therefore, J receives 30 shares of Corporation X stock. Pursuant to section 354, J recognizes no gain or loss on the exchange. J is not able to identify which shares of Corporation Y stock are received in exchange for each share (or portions of shares) of Corporation X stock.
(ii) *Analysis.* Under paragraph (a)(2)(i) of this section, J has 7 shares of Corporation Y stock each of which has a basis of $4 and is treated as having been acquired on Date 1, 7 shares of Corporation Y stock each of which has a basis of $24 and is treated as having been acquired on Date 2, 7 shares of Corporation Y stock each of which has a basis of $8 and is treated as having been acquired on Date 3, and 7 shares of Corporation Y stock each of which has a basis of $12 and is treated as having been acquired on Date 4. In addition, J has two shares of Corporation Y stock, each of which is divided into two equal segments under paragraph (a)(2)(vi) of this section. The first of those two shares has one segment with a basis of $2 that is treated as having been acquired on Date 1 and a second segment with a basis of $12 that is treated as having been acquired on Date 2. The second of those two shares has one segment with a basis of $4 that is treated as having been acquired on Date 3 and a second segment with a basis of $6 that is treated as having been acquired on Date 4. Under paragraph (a)(2)(vii), on or before the date on which a share of

Corporation Y stock received becomes relevant, J may designate which of the shares of Corporation Y stock have a basis of $4, which have a basis of $24, which have a basis of $8, which have a basis of $12, and which share has a split basis of $2 and $12, and which share has a split basis of $4 and $6.

Example 15. (i) *Facts.* Each of Corporation X and Corporation Y has a single class of stock outstanding, all of which is owned by J, an individual. J purchased 100 shares of Corporation X stock on Date 1 for $1.50 each, resulting in J having an aggregate basis in the stock of Corporation X of $150. On Date 2, Corporation Y acquires the assets of Corporation X for $100 of cash, their fair market value, in a transaction described in § 1.368-2(l). Pursuant to the terms of the exchange, Corporation X does not receive any Corporation Y stock. Corporation X distributes the $100 of cash to J and retains no assets.
(ii) *Analysis.* Pursuant to § 1.368-2(l), Corporation Y will be deemed to issue a nominal share of Corporation Y stock to Corporation X in addition to the $100 of cash actually exchanged for the Corporation X assets. Corporation X will then be deemed to distribute the nominal share of Corporation Y stock to J in addition to the $100 of cash actually distributed to J. Pursuant to § 1.368-2(l), J, the actual shareholder of Corporation Y, the issuing corporation, is deemed to receive the nominal share of Corporation Y stock described in § 1.368-2(l). J will have a basis of $50 in the nominal share of Corporation Y stock under section 358(a)(1). Therefore, under paragraph (a)(2)(iii)(B) of this section, J must designate a share of Corporation Y stock to which J's basis of $50 in the nominal share of Corporation Y stock will attach.

Example 16. (i) *Facts.* Each of Corporation X and Corporation Y has a single class of stock outstanding, all of which is owned by Corporation P. Corporation T has a single class of stock outstanding, all of which is owned by Corporation X. The corporations do not join in the filing of a consolidated return. Corporation X purchased 100 shares of Corporation T stock on Date 1 for $1.50 each, resulting in Corporation X having an aggregate basis in the stock of Corporation T of $150. On Date 2, Corporation Y acquires the assets of Corporation T for $100 of cash, their fair market value, in a transaction described in § 1.368-2(l). Pursuant to the terms of the exchange, Corporation T does not receive any Corporation Y stock. Corporation T distributes the $100 of cash to Corporation X and retains no assets.
(ii) *Analysis.* Pursuant to § 1.368-2(l), Corporation Y will be deemed to issue a nominal share of Corporation Y stock to Corporation T in addition to the $100 of cash actually exchanged for the Corporation T assets. Corporation T will be deemed to distribute the nominal share of Corporation Y stock to Corporation X in addition to the $100 of cash actually distributed. Corporation X will have a basis of $50 in the nominal share of Corporation Y stock under section 358(a). However, Corporation X is not an actual shareholder of Corporation Y, the issuing corporation. Therefore, Corporation X cannot designate any share of Corporation Y stock under paragraph (a)(2)(iii)(B) of this section to which the basis of the nominal share of Corporation Y stock will attach and Corporation X will be deemed to distribute the nominal share of Corporation Y stock to Corporation P as required by § 1.368-2(l). Corporation X does not recognize the loss on the deemed distribution of the nominal share to Corporation P under section 311(a). Corporation P's

basis in the nominal share it receives is zero, its fair market value, under section 301(d). Under paragraph (a)(2)(iii)(B) of this section, Corporation P must designate a share of Corporation Y stock to which the nominal share's zero basis will attach.

(d) ***Effective/applicability date.*** This section generally applies to exchanges and distributions of stock and securities occurring on or after January 23, 2006. However, paragraph (a)(2)(iii) and Examples 15 and 16 of paragraph (c) of this section apply to exchanges and distributions of stock and securities occurring on or after November 12, 2014. See § 1.358-2T(a)(2)(iii) and § 1.358-2T(c), Examples 15 and 16, as contained in 26 CFR part 1, revised April 1, 2014, for exchanges and distributions of stock and securities occurring on or after November 21, 2011 and before November 12, 2014; see § 1.358-2(a)(2)(iii), as contained in 26 CFR part 1, revised as of April 1, 2011, for exchanges and distributions of stock and securities occurring on or after January 23, 2006 and before November 21, 2011.

[T.D. 6500, 25 FR 11607, Nov. 26, 1960, as amended by T.D. 7616, 44 FR 26869, May 8, 1979; T.D. 8648, 60 FR 66079, Dec. 21, 1995; T.D. 9244, 71 FR 4270, Jan. 26, 2006; 71 FR 19118, Apr. 13, 2006; 71 FR 62556, Oct. 26, 2006; T.D. 9475, 74 FR 67057, Dec. 18, 2009; T.D. 9558, 76 FR 71879, Nov. 21, 2011; T.D. 9633, 78 FR 54160, Sept. 3, 2013; T.D. 9702, 79 FR 67062, Nov. 12, 2014]

§ 1.358-3 Treatment of assumption of liabilities.

(a) For purposes of section 358, where a party to the exchange assumes a liability of a distributee or acquires from him property subject to a liability, the amount of such liability is to be treated as money received by the distributee upon the exchange, whether or not the assumption of liabilities resulted in a recognition of gain or loss to the taxpayer under the law applicable to the year in which the exchange was made.

(b) The application of paragraph (a) of this section may be illustrated by the following examples:

Example 1. A, an individual, owns property with an adjusted basis of $100,000 on which there is a purchase money mortgage of $25,000. On December 1, 1945, A organizes Corporation X to which he transfers the property in exchange for all the stock of Corporation X and the assumption by Corporation X of the mortgage. The capital stock of the Corporation X has a fair market value of $150,000. Under sections 351 and 357, no gain or loss is recognized to A. The basis in A's hands of the stock of Corporation X is $75,000, computed as follows:

Adjusted basis of property transferred	$100,000
Less: Amount of money received (amount of liabilities assumed)	—25,000
Basis of Corporation X stock to A	75,000

Example 2. A, an individual, owns property with an adjusted basis of $25,000 on which there is a mortgage of $50,000. On December 1, 1954, A organizes Corporation X to which he transfers the property in exchange for all the stock of Corporation X and the assumption by Corporation X of the mortgage. The stock of Corporation X has a fair market value of $50,000. Under sections 351 and 357, gain is recognized to A in the amount of $25,000. The basis in A's hands of the stock of Corporation X is zero, computed as

follows:

Adjusted basis of property transferred	$25,000
Less: Amount of money received (amount of liabilities)	—50,000
Plus: Amount of gain recognized to taxpayer	25,000
Basis of Corporation X stock to A	0

§ 1.358-4 Exceptions.

(a) ***Plan of reorganization adopted after October 22, 1968.*** In the case of a plan of reorganization adopted after October 22, 1968, section 358 does not apply in determining the basis of property acquired by a corporation in connection with such reorganization by the exchange of its stock or securities (or by the exchange of stock or securities of a corporation which is in control of the acquiring corporation) as the consideration in whole or in part for the transfer of the property to it. See section 362 and the regulations pertaining to that section for rules relating to basis to corporations of property acquired in such cases.

(b) ***Plan of reorganization adopted before October 23, 1968.*** In the case of a plan of reorganization adopted before October 23, 1968, section 358 does not apply in determining the basis of property acquired by a corporation in connection with such reorganization by the issuance of stock or securities of such corporation (or by the issuance of stock or securities of another corporation which is in control of such corporation) as the consideration in whole or in part for the transfer of the property to it. The term *issuance of stock or securities* includes any transfer of stock or securities, including stock or securities which were purchased or were acquired as a contribution to capital. See section 362 and the regulations pertaining to that section for rules relating to basis to corporations of property acquired in such cases.

[T.D. 7422, 41 FR 26569, June 28, 1976]

§ 1.358-5 Special rules for assumption of liabilities.

(a) ***In general.*** Section 358(h)(2)(B) does not apply to an exchange occurring on or after May 9, 2008.

(b) ***Effective/Applicability date.*** For exchanges occurring on or after June 24, 2003, and before May 9, 2008, see § 1.358-5T as contained in 26 CFR part 1 in effect on April 1, 2007.

[T.D. 9397, 73 FR 26322, May 9, 2008]

§ 1.358-6 Stock basis in certain triangular reorganizations.

(a) ***Scope.*** This section provides rules for computing the basis of a controlling corporation in the stock of a controlled corporation as the result of certain reorganizations involving the stock of the controlling corporation as described in paragraph (b) of this section. The rules of this section are in addition to rules under other provisions of the Internal Revenue Code and principles of law. See, e.g., section 1001 for the recognition of gain or loss by the controlled corporation on the exchange of property for the assets or stock of a target corporation in a reorganization described in section 368. See also sections 362(e)(1) and 362(e)(2) for further adjustments to basis that may be necessary under either or both of those sections.

(b) *Triangular reorganizations* —

(1) ***Nomenclature.*** For purposes of this section—

(i) ***P*** is a corporation—

(A) That is a party to a reorganization,

(B) That is in control (within the meaning of section 368(c)) of another party to the reorganization, and

(C) Whose stock is transferred pursuant to the reorganization.

(ii) ***S*** is a corporation—

(A) That is a party to the reorganization, and

(B) That is controlled by *P.*

(iii) ***T*** is a corporation that is another party to the reorganization.

(2) ***Definitions of triangular reorganizations.*** This section applies to the following reorganizations (which are referred to collectively as *triangular reorganizations*):

(i) ***Forward triangular merger.*** A forward triangular merger is a statutory merger of *T* and *S,* with *S* surviving, that qualifies as a reorganization under section 368(a)(1)(A) or (G) by reason of the application of section 368(a)(2)(D).

(ii) ***Triangular C reorganization.*** A triangular C reorganization is an acquisition by *S* of substantially all of *T*'s assets in exchange for *P* stock in a transaction that qualifies as a reorganization under section 368(a)(1)(C).

(iii) ***Reverse triangular merger.*** A reverse triangular merger is a statutory merger of *S* and *T,* with *T* surviving, that qualifies as a reorganization under section 368(a)(1)(A) by reason of the application of section 368(a)(2)(E).

(iv) ***Triangular B reorganization.*** A triangular B reorganization is an acquisition by *S* of *T* stock in exchange for P stock in a transaction that qualifies as a reorganization under section 368(a)(1)(B).

(v) ***Triangular G reorganization.*** A triangular G reorganization is an acquisition by S (other than by statutory merger) of substantially all of T's assets in a title 11 or similar case in exchange for P stock in a transaction that qualifies as a reorganization under section 368(a)(1)(G) by reason of the application of section 368(a)(2)(D).

(c) ***General rules.*** Subject to the special rule provided in paragraph (d) of this section, *P*'s basis in the stock of *S* or *T,* as applicable, as a result of a triangular reorganization, is adjusted under the following rules—

(1) *Forward triangular merger or triangular C reorganization* —

(i) ***In general.*** In a forward triangular merger or a triangular C reorganization, *P*'s basis in its *S* stock is adjusted as if—

(A) ***P*** acquired the *T* assets acquired by *S* in the reorganization (and *P* assumed any liabilities which *S* assumed or to which the *T* assets acquired by *S* were subject) directly from *T* in a transaction in which *P*'s basis in the *T* assets was determined under section 362(b); and

(B) *P* transferred the *T* assets (and liabilities which *S* assumed or to which the *T* assets acquired by *S* were subject) to *S* in a transaction in which *P*'s basis in *S* stock was determined under section 358.

(ii) ***Limitation.*** If, in applying section 358, the amount of *T* liabilities assumed by *S* or to which the *T* assets acquired by *S* are subject equals or exceeds *T*'s aggregate adjusted basis in its assets, the amount of the adjustment under paragraph (c)(1)(i) of this section is zero. *P* recognizes no gain under section 357(c) as a result of a triangular reorganization.

(2) ***Reverse triangular merger*** —

(i) ***In general*** —

(A) ***Treated as a forward triangular merger.*** Except as otherwise provided in this paragraph (c)(2), *P*'s basis in its *T* stock acquired in a reverse triangular merger equals its basis in its *S* stock immediately before the transaction adjusted as if *T* had merged into *S* in a forward triangular merger to which paragraph (c)(1) of this section applies.

(B) ***Allocable share.*** If *P* acquires less than all of the *T* stock in the transaction, the basis adjustment described in paragraph (c)(2)(i)(A) of this section is reduced in proportion to the percentage of *T* stock not acquired in the transaction. The percentage of *T* stock not acquired in the transaction is determined by taking into account the fair market value of all classes of *T* stock.

(C) ***Special rule if P owns T stock before the transaction.*** Solely for purposes of paragraphs (c)(2)(i)(A) and (B) of this section, if *P* owns *T* stock before the transaction, *P* may treat that stock as acquired in the transaction or not, without regard to the form of the transaction.

(ii) ***Reverse triangular merger that qualifies as a section 351 transfer or section 368(a)(1)(B) reorganization.*** Notwithstanding paragraph (c)(2)(i) of this section, if a reorganization qualifies as both a reverse triangular merger and as a section 351 transfer or as both a reverse triangular merger and a reorganization under section 368(a)(1)(B), *P* can—

(A) Determine the basis in its *T* stock as if paragraph (c)(2)(i) of this section applies; or

(B) Determine the basis in the *T* stock acquired as if *P* acquired such stock from the former *T* shareholders in a transaction in which *P*'s basis in the *T* stock was determined under section 362(b).

(3) ***Triangular B reorganization.*** In a triangular B reorganization, *P*'s basis in its *S* stock is adjusted as if—

(i) *P* acquired the *T* stock acquired by *S* in the reorganization directly from the *T* shareholders in a transaction in which *P*'s basis in the *T* stock was determined under section 362(b); and

(ii) *P* transferred the *T* stock to *S* in a transaction in which *P*'s basis in its *S* stock was determined under section 358.

(4) ***Examples.*** The rules of this paragraph (c) are illustrated by the following examples. For purposes of these examples, P, S, and T are domestic corporations, the property transferred is not importation property within the meaning of § 1.362-3(c)(2) or loss duplication property within the meaning of § 1.362-4(g)(1), P and S do not file consolidated returns, P owns all of the shares of the only class of S stock, the P stock exchanged in the transaction satisfies the requirements of the applicable triangular reorganization provisions, and the facts set forth the only corporate activity.

Example 1. Forward triangular merger. (a) *Facts.* T has assets with an aggregate basis of $60 and fair market value of $100 and no liabilities. Pursuant to a plan, *P* forms *S* with $5 cash (which S retains), and *T* merges into *S.* In the merger, the *T* shareholders receive *P* stock worth $100 in exchange for their *T* stock. The transaction is a reorganization to which sections 368(a)(1)(A) and (a)(2)(D) apply.
(b) *Basis adjustment.* Under § 1.358-6(c)(1), *P*'s $5 basis in its *S* stock is adjusted as if *P* acquired the *T* assets acquired by *S* in the reorganization directly from *T* in a transaction in which *P*'s basis in the *T* assets was determined under section 362(b). Under section 362(b), *P* would have an aggregate basis of $60 in the *T* assets. *P* is then treated as if it transferred the *T* assets to *S* in a transaction in which *P*'s basis in the *S* stock was determined under section 358. Under section 358, *P*'s $5 basis in its *S* stock would be increased by the $60 basis in the *T* assets deemed transferred. Consequently, *P* has a $65 basis in its *S* stock as a result of the reorganization.

(c) *Use of pre-existing S.* The facts are the same as paragraph (a) of this *Example 1,* except that *S* is an operating company with substantial assets that has been in existence for several years. *P* has a $110 basis in the *S* stock. Under § 1.358-6(c)(1), *P*'s $110 basis in its *S* stock is increased by the $60 basis in the *T* assets deemed transferred. Consequently, *P* has a $170 basis in its *S* stock as a result of the reorganization.

(d) *Mixed consideration.* The facts are the same as paragraph (a) of this *Example 1,* except that the *T* shareholders receive *P* stock worth $80 and $20 cash from *P.* Under section 358, *P*'s $5 basis in its *S* stock is increased by the $60 basis in the *T* assets deemed transferred. Consequently, *P* has a $65 basis in its *S* stock as a result of the reorganization.

(e) *Liabilities.* The facts are the same as paragraph (a) of this *Example 1,* except that *T*'s assets are subject to $50 of liabilities, and the *T* shareholders receive $50 of *P* stock in exchange for their *T* stock. Under section 358, *P*'s basis in its *S* stock is increased by the $60 basis in the *T* assets deemed transferred and decreased by the $50 of liabilities to which the *T* assets acquired by *S* are subject. Consequently, *P* has a net basis adjustment of $10, and a $15 basis in its *S* stock as a result of the reorganization. For certain triangular reorganizations where the surviving corporation (S or T) is foreign, see § 1.367(b)-13.

(f) *Liabilities in excess of basis.* The facts are the same as in paragraph (a) of this *Example 1,* except that *T*'s assets are subject to liabilities of $90, and the *T* shareholders receive $10 of *P* stock in exchange for their *T* stock in the reorganization. Under § 1.358-6(c)(1)(ii), the adjustment under § 1.358-6(c) is zero if the amount of the liabilities which *S* assumed or to which the *T* assets acquired by *S* are subject exceeds the aggregate adjusted basis in *T*'s assets. Consequently, *P* has no adjustment in its *S* stock, and *P* has a $5 basis in its *S* stock as a result of the reorganization.

Example 2. Reverse triangular merger. (a) *Facts. T* has assets with an aggregate basis of $60 and a fair market value of $100 and no liabilities. *P* has a $110 basis in its *S* stock. Pursuant to a plan, *S* merges into *T* with *T* surviving. In the merger, the *T* shareholders receive $10 cash from *P* and *P* stock worth $90 in exchange for their *T* stock. The transaction is a reorganization to which sections 368(a)(1)(A) and (a)(2)(E) apply.
(b) *Basis adjustment.* Under § 1.358-6(c)(2)(i)(A), *P*'s basis in the *T* stock acquired is *P*'s $110 basis in its *S* stock before the transaction, adjusted as if *T* had merged into *S* in a forward triangular merger to which § 1.358-6(c)(1) applies. In such a case, *P*'s $110 basis in its *S* stock before the transaction would have been increased by the $60 basis of the *T* assets deemed transferred. Consequently, *P* has a $170 basis in its *T* stock immediately after the transaction.

(c) *Reverse triangular merger that also qualifies under section 368(a)(1)(B).* The facts relating to *T* are the same as in paragraph (a) of this *Example 2. P,* however, forms *S* pursuant to the plan of reorganization. The *T* shareholders receive $100 worth of *P* stock (and no cash) in exchange for their *T* stock. The *T* shareholders have an aggregate basis in their *T* stock of $85 immediately before the reorganization. The reorganization qualifies as both a reverse triangular merger and a reorganization under section 368(a)(1)(B). Under § 1.358-6(c)(2)(ii), *P* may determine its basis in its *T* stock either as if § 1.358-6(c)(2)(i) applied to the *T* stock acquired, or as if *P* acquired the *T* stock from the former *T* shareholders in a transaction in which *P*'s basis in the *T* stock was determined under section 362(b). Accordingly, *P* may determine a basis in its *T* stock of $60 (*T*'s net asset basis) or $85 (the *T* shareholders' aggregate basis in the *T* stock immediately before the reorganization).

(d) *Allocable share in a reverse triangular merger.* The facts are the same as in paragraph (a) of this *Example 2,* except that *X,* a 10% shareholder of *T,* does not participate in the transaction. The remaining *T* shareholders receive $10 cash from *P* and *P* stock worth $80 for their *T* stock. *P* owns 90% of the *T* stock after the transaction. Under § 1.358-6(c)(2)(i)(A), *P*'s basis in its *T* stock is *P*'s $110 basis in its *S* stock before the reorganization, adjusted as if *T* had merged into *S* in a forward triangular merger. In such a case, *P*'s basis would have been adjusted by the $60 basis in the *T* assets deemed transferred. Under § 1.358-6(c)(2)(i)(B), however, the basis adjustment determined under § 1.358-6(c)(2)(i)(A) is reduced in proportion to the percentage of *T* stock not acquired by *P* in the transaction. The percentage of *T* stock not acquired in the transaction is 10%. Therefore, *P* reduces its $60 basis adjustment by 10%, resulting in a net basis adjustment of $54. Consequently, *P* has a $164 basis in its *T* stock as a result of the transaction.

(e) *P's ownership of T stock.* The facts are the same as in paragraph (a) of this *Example 2,* except that *P* owns 10% of the *T* stock before the transaction. *P*'s basis in that *T* stock is $8. All the *T* shareholders other than *P* surrender their *T* stock for $10 cash from *P* and *P* stock worth $80. *P* does not surrender the stock in the transaction. Under § 1.358-6(c)(2)(i)(C), *P*

may treat its *T* stock owned before the transaction as acquired in the transaction or not. If *P* treats that *T* stock as acquired in the transaction, *P*'s basis in that *T* stock and the *T* stock actually acquired in the transaction equals *P*'s $110 basis in its *S* stock before the transaction, adjusted by the $60 basis of the *T* assets deemed transferred, for a total basis of $170. If *P* treats its *T* stock as not acquired, *P* retains its $8 pre-transaction basis in that stock. *P*'s basis in its other *T* shares equals *P*'s $110 basis in its *S* stock before the transaction, adjusted by $54 (the $60 basis in the *T* assets deemed transferred, reduced by 10%), for a total basis of $164 in those shares. See § 1.358-6(c)(2)(i)(A) and (B). Consequently, if *P* treats its *T* shares as not acquired, *P*'s total basis in all of its *T* shares is $172.

Example 3. Triangular B reorganization. (a) *Facts. T* has assets with a fair market value of $100 and no liabilities. The *T* shareholders have an aggregate basis in their *T* stock of $85 immediately before the reorganization. Pursuant to a plan, *P* forms *S* with $5 cash and *S* acquires all of the *T* stock in exchange for $100 of *P* stock. The transaction is a reorganization to which section 368(a)(1)(B) applies.
(b) *Basis adjustment.* Under § 1.358-6(c)(3), *P* adjusts its $5 basis in its *S* stock by treating *P* as if it acquired the *T* stock acquired by *S* in the reorganization directly from the *T* shareholders in exchange for the *P* stock in a transaction in which *P*'s basis in the *T* stock was determined under section 362(b). Under section 362(b), *P* would have an aggregate basis of $85 in the *T* stock received by *S* in the reorganization. *P* is then treated as if it transferred the *T* stock to *S* in a transaction in which *P*'s basis in the *S* stock was determined under section 358. Under section 358, *P*'s basis in its *S* stock would be increased by the $85 basis in the *T* stock deemed transferred. Consequently, *P* has a $90 basis in its *S* stock as a result of the reorganization.

(d) ***Special rule for consideration not provided by P —***

(1) ***In general.*** The amount of *P*'s adjustment to basis in its *S* or *T* stock, as applicable, described in paragraph (c) of this section is decreased by the fair market value of any consideration (including *P* stock in which gain or loss is recognized, see § 1.1032-2(c)) that is exchanged in the reorganization and that is not provided by *P* pursuant to the plan of reorganization. This paragraph (d) does not apply to the amount of *T* liabilities assumed by *S* or to which the *T* assets acquired by *S* are subject under paragraph (c)(1) of this section (or deemed assumed or taken subject to by *S* under paragraph (c)(2)(i) of this section).

(2) ***Limitation. P*** makes no adjustment to basis under this section if the decrease required under paragraph (d)(1) of this section equals or exceeds the amount of the adjustment described in paragraph (c) of this section.

(3) ***Example.*** The rules of this paragraph (d) are illustrated by the following example. For purposes of this example, *P, S,* and *T* are domestic corporations, *P* and *S* do not file consolidated returns, *P* owns all of the only class of *S* stock, the *P* stock exchanged in the transaction satisfies the requirements of the applicable triangular reorganization provisions, and the facts set forth the only corporate activity.

Example. (a) *Facts.* T has assets with an aggregate basis of $60 and fair market value of $100 and no liabilities. *S* is an operating company with substantial assets that has been in existence for several years. *P* has a $100 basis in its *S* stock. Pursuant to a plan, *T* merges into *S* and the *T* shareholders receive $70 of *P* stock provided by *P* pursuant to the plan and $30 of cash provided by *S* in exchange for their *T* stock. The transaction is a reorganization to which sections 368(a)(1)(A) and (a)(2)(D) apply.
(b) *Basis adjustment.* Under § 1.358-6(c)(1), *P*'s $100 basis in its *S* stock is increased by the $60 basis in the *T* assets deemed transferred. Under § 1.358-6(d)(1), the $60 adjustment is decreased by the $30 of cash provided by *S* in the reorganization. Consequently, *P* has a net adjustment of $30 in its *S* stock, and *P* has a $130 basis in its *S* stock as a result of the reorganization.

(c) *Appreciated asset.* The facts are the same as in paragraph (a) of this *Example,* except that in the reorganization *S* provides an asset with a $20 adjusted basis and $30 fair market value instead of $30 of cash. The basis results are the same as in paragraph (b) of this *Example.* In addition, *S* recognizes $10 of gain under section 1001 on its disposition of the asset in the reorganization.

(d) *Depreciated asset.* The facts are the same as in paragraph (c) of this *Example,* except that *S* has a $60 adjusted basis in the asset. The basis results are the same as in paragraph (b) of this *Example.* In addition, *S* recognizes $30 of loss under section 1001 on its disposition of the asset in the reorganization.

(e) *P stock.* The facts are the same as in paragraph (a) of this *Example,* except that in the reorganization *S* provides *P* stock with a fair market value of $30 instead of $30 of cash. *S* acquired the *P* stock in an unrelated transaction several years before the reorganization. *S* has a $20 adjusted basis in the *P* stock. The basis results are the same as in paragraph (b) of this *Example.* In addition, *S* recognizes $10 of gain on its disposition of the *P* stock in the reorganization. See § 1.1032-2(c).

(e) ***Cross-references*** —

(1) ***Triangular reorganizations involving members of a consolidated group.*** For rules relating to stock basis adjustments made as a result of a triangular reorganization in which P and S, or P and T, as applicable, are, or become, members of a consolidated group, see § 1.1502-30. However, if a transaction is a group structure change, stock basis adjustments are determined under § 1.1502-31 and not under § 1.1502-30, even if the transaction also qualifies as a reorganization otherwise subject to § 1.1502-30.

(2) ***Triangular reorganizations involving certain foreign corporations.*** For rules relating to stock basis adjustments made as a result of triangular reorganizations involving certain foreign corporations, see §§ 1.367(b)-4(b), 1.367(b)-10, and 1.367(b)-13.

(f) ***Effective/applicability dates*** —

(1) ***General rule.*** Except as otherwise provided in this paragraph (f), this section applies to triangular reorganizations occurring on or after December 23, 1994.

(2) ***Special rule for reverse triangular mergers.*** For a reverse triangular merger occurring before December 23, 1994, *P* may—

(i) Determine the basis in its *T* stock as if paragraph (c)(2)(i) of this section applied; or

(ii) Determine the basis in its *T* stock acquired as if *P* acquired such stock from the former *T* shareholders in a transaction in which *P*'s basis in the *T* stock was determined under section 362(b).

(3) ***Triangular G reorganization and special rule for triangular reorganizations involving members of a consolidated group.*** Paragraph (e)(1) of this section shall apply to triangular reorganizations occurring on or after September 17, 2008. However, taxpayers may apply paragraph (b)(2)(v) of this section to triangular reorganizations occurring before September 17, 2008 and on or after December 23, 1994.

(4) ***Triangular reorganizations involving importation property acquired in loss importation transaction or loss duplication transaction; triangular reorganizations involving certain foreign corporations.*** Paragraphs (a) and (e)(2) of this section apply to triangular reorganizations occurring after October 22, 2004 unless effected to a binding agreement that was in effect prior to that date and at all times thereafter.

[T.D. 8648, 60 FR 66079, Dec. 21, 1995; 61 FR 11547, Mar. 21, 1996; T.D. 9243, 71 FR 4282, Jan. 26, 2006; T.D. 9424, 73 FR 53947, Sept. 17, 2008; 73 FR 62204, Oct. 20, 2008; T.D. 9759, 81 FR 17074, Mar. 28, 2016]

§ 1.358-7 Transfers by partners and partnerships to corporations.

(a) ***Transfers by partners of partnership interests.*** For purposes of section 358(h), a transfer of a partnership interest to a corporation is treated as a transfer of the partner's share of each of the partnership's assets and an assumption by the corporation of the partner's share of partnership liabilities (including section 358(h) liabilities, as defined in paragraph (d) of this section). See paragraph (e) *Example 2* of this section.

(b) ***Transfers by partnerships.*** If a corporation assumes a section 358(h) liability from a partnership in an exchange to which section 358(a) applies, then, for purposes of applying section 705 (determination of basis of partner's interest) and § 1.704-1(b), any reduction, under section 358(h)(1), in the partnership's basis in corporate stock received in the transaction is treated as an expenditure of the partnership described in section 705(a)(2)(B). See paragraph (e) *Example 1* of this section. This expenditure must be allocated among the partners in accordance with section 704(b) and (c) and § 1.752-7(c). If a partner's share of the reduction, under section 358(h)(1), in the partnership's basis in corporate stock exceeds the partner's basis in the partnership interest, then the partner recognizes gain equal to the excess, which is treated as gain from the sale or exchange of a partnership interest. This paragraph does not apply to the extent that § 1.752-7(j)(4) applies to the assumption of the § 1.752-7 liability by the corporation.

(c) ***Assumption of section 358(h) liability by partnership followed by transfer of partnership interest or partnership property to a corporation—trade or business exception.*** Where a partnership assumes a section 358(h) liability from a partner and, subsequently, the partner transfers all or part of the partner's partnership interest to a corporation in an exchange to which section 358(a) applies, then, for purposes of applying section 358(h)(2), the section 358(h) liability is treated as associated only with the contribution

made to the partnership by that partner. See paragraph (e) *Example 2* of this section. Similar rules apply where a partnership assumes a section 358(h) liability of a partner and a corporation subsequently assumes that section 358(h) liability from the partnership in an exchange to which section 358(a) applies.

(d) ***Section 358(h) liabilities defined.*** For purposes of this section, section 358(h) liabilities are liabilities described in section 358(h)(3).

(e) ***Examples.*** The following examples illustrate the provisions of this section. Assume, for purposes of these examples, that the obligation assumed by the corporation does not reduce the shareholder's basis in the corporate stock under section 358(d). The examples are as follows:

Example 1. Transfer of partnership property to corporation. In 2004, in an exchange to which section 351(a) applies, PRS, a cash basis taxpayer, transfers $2,000,000 cash to Corporation X, also a cash basis taxpayer, in exchange for Corporation X shares and the assumption by Corporation X of $1,000,000 of accounts payable incurred by PRS. At the time of the exchange, PRS has two partners, A, a 90% partner, who has a $2,000,000 basis in the PRS interest, and B, a 10% partner, who has a $50,000 basis in the PRS interest. Assume that, under section 358(h)(1), PRS's basis in the Corporation X stock is reduced by the accounts payable assumed by Corporation X ($1,000,000). Under paragraph (b) of this section, A's and B's bases in PRS must be reduced, but not below zero, by their respective shares of the section 358(h)(1) basis reduction. If either partner's share of the section 358(h)(1) basis reduction exceeds the partner's basis in the partnership interest, then the partner recognizes gain equal to the excess. A's share of the section 358(h) basis reduction is $900,000 (90% of $1,000,000). Therefore, A's basis in the PRS interest is reduced to $1,100,000 ($2,000,000 − $900,000). B's share of the section 358(h) basis reduction is $100,000 (10% of $1,000,000). Because B's share of the section 358(h) basis reduction ($100,000) exceeds B's basis in the PRS interest ($50,000), B's basis in the PRS interest is reduced to $0 and B recognizes $50,000 of gain. This gain is treated as gain from the sale of the PRS interest.

Example 2. Transfer of partnership interest to corporation. In 2004, A contributes undeveloped land with a value and basis of $4,000,000 in exchange for a 50% interest in PRS and an assumption by PRS of $2,000,000 of pension liabilities from a separate business that A conducts. A's basis in the PRS interest immediately after the contribution is A's basis in the land, $4,000,000, unreduced by the amount of the pension liabilities. PRS develops the land as a landfill. Before PRS has economically performed with respect to the pension liabilities, A transfers A's interest in PRS to Corporation X, in an exchange to which section 351 applies. At the time of the exchange, the value of A's PRS interest is $2,000,000, A's basis in PRS is $4,000,000, and A has no share of partnership liabilities other than the pension liabilities. For purposes of applying section 358(h), the transfer of the PRS interest to Corporation X is treated as a transfer to Corporation X of A's share of PRS assets and an assumption by Corporation X of A's share of the pension liabilities of PRS ($2,000,000). Because the pension liabilities were not assumed by PRS from A in an exchange in which the trade or business associated with the liability was transferred to PRS, the transfer of the PRS interest to Corporation X is not excepted from section 358(h) under section 358(h)(2). See paragraph (c) of this section. Under section 358(h), A's basis in the Corporation X stock is reduced by the $2,000,000 of pension liabilities.

(f) ***Effective date.*** This section applies to assumptions of liabilities by a corporation occurring on or after June 24, 2003.

[T.D. 9207, 70 FR 30341, May 26, 2005]

EFFECTS ON CORPORATION

§ 1.361-1 Nonrecognition of gain or loss to corporations.

Section 361 provides the general rule that no gain or loss shall be recognized if a corporation, a party to a reorganization, exchanges property in pursuance of the plan of reorganization solely for stock or securities in another corporation, a party to the reorganization. This provision includes only stock and securities received in connection with a reorganization defined in section 368(a). It also includes nonvoting stock and securities in a corporation, a party to a reorganization, received in a transaction to which section 368(a)(1)(C) is applicable only by reason of section 368(a)(2)(B).

§ 1.362-1 Basis to corporations.

(a) ***In general.*** Section 362 provides, as a general rule, that if property was acquired on or after June 22, 1954, by a corporation

(1) in connection with a transaction to which section 351 (relating to transfer of property to corporation controlled by transferor) applies,

(2) as paid-in surplus or as a contribution to capital, or

(3) in connection with a reorganization to which part III, subchapter C, chapter 1 of the Code applies, then the basis shall be the same as it would be in the hands of the transferor, increased in the amount of gain recognized to the transferor on such transfer. (See also § 1.362-2.) See § 1.460-4(k)(3)(iv)(B)(*2*) for rules relating to adjustments to the basis of certain contracts accounted for using a long-term contract method of accounting that are acquired in certain transfers described in section 351 and certain reorganizations described in section 368(a).

(b) ***Exceptions.***

(1) In the case of a plan of reorganization adopted after October 22, 1968, section 362 does not apply if the property acquired in connection with such reorganization consists of stock or securities in a corporation a party to the reorganization, unless acquired by the exchange of stock or securities of the transferee (or of a corporation which is in control of the transferee) as the consideration in whole or in part for the transfer.

(2) In the case of a plan of reorganization adopted before October 23, 1968, section 362 does not apply if the property acquired in connection with such reorganization consists of stock or securities in a corporation a party to the reorganization, unless acquired by the issuance of stock or securities of the transferee (or, in the case of transactions occurring after December 31, 1963, of a corporation which is in control of the transferee) as the consideration in whole or in part for the transfer. The term *issuance of stock or securities* includes any transfer of stock or securities, including stock or securities which were purchased or were acquired as a contribution to capital.

[T.D. 7422, 41 FR 26569, June 28, 1976, as amended by T.D. 8995, 67 FR 34605, May 15, 2002]

§ 1.362-2 Certain contributions to capital.

The following regulations shall be used in the application of section 362(c):

(a) Property deemed to be acquired with contributed money shall be that property, if any, the acquisition of which was the purpose motivating the contribution;

(b) In the case of an excess of the amount of money contributed over the cost of the property deemed to be acquired with such money (as defined in paragraph (a) of this section) such excess shall be applied to the reduction of the basis (but not below zero) of other properties held by the corporation, on the last day of the 12-month period beginning on the day the contribution is received, in the following order—

(1) All property of a character subject to an allowance for depreciation (not including any properties as to which a deduction for amortization is allowable),

(2) Property with respect to which a deduction for amortization is allowable,

(3) Property with respect to which a deduction for depletion is allowable under section 611 but not under section 613, and

(4) All other remaining properties.

The reduction of the basis of each of the properties within each of the above categories shall be made in proportion to the relative bases of such properties.

(c) With the consent of the Commissioner, the taxpayer may, however, have the basis of the various units of property within a particular category adjusted in a manner different from the general rule set forth in paragraph (b) of this section. Variations from such rule may, for example, involve adjusting the basis of only certain units of the taxpayer's property within a given category. A request for variations from the general rule should be filed by the taxpayer with its return for the taxable year for which the transfer of the property has occurred.

§ 1.362-3 Basis of importation property acquired in loss importation transaction.

(a) ***Purpose.*** The purpose of section 362(e)(1) and this section is to modify the application of section 362(a) (section 351 transfers, contributions to capital, or paid-in surplus) and section 362(b) (reorganizations) to prevent a corporation (Acquiring) from importing a net built-in loss in a transaction described in either section. See paragraph (c) of this section for definitions of terms used in this section.

(b) ***Basis determinations under this section*** —

(1) ***Basis of importation property received in loss importation transaction.*** Notwithstanding the general rules of section 362(a) and (b), Acquiring's basis in importation property (as defined in paragraph (c)(2) of this section) acquired in a loss importation transaction (as defined in paragraph (c)(3) of this section) is equal to the value of the property immediately after the transaction.

(2) ***Adjustment to basis of subsidiary stock in triangular reorganizations.*** If a corporation (P) computes its basis in stock of a subsidiary (whether S or T) under § 1.358-6 (stock basis in certain triangular reorganizations), P's basis in property treated as acquired by P in § 1.358-6(c) is determined under section 362(e)(1) and this section to the extent such property, if actually acquired by P, would be importation property acquired in a loss importation transaction. See § 1.358-6(c)(1)(i)(A), (c)(2)(ii)(B), and (c)(3)(i). The subsidiary's basis in the property actually acquired in the transaction is determined under applicable law (including this section), without regard to the amount of any adjustment to P's basis in the subsidiary's stock. Thus, the basis of the property in S's or T's hands may differ from the amount of the adjustment to P's basis in its stock of S or T.

(3) ***Acquiring's basis in other property transferred.*** In general, Acquiring's basis in property received in a section 362 transaction (as defined in paragraph (c)(1) of this section) that is not determined under section 362(e)(1) and this section is determined under section 362(a) or section 362(b). However, if the transaction is described in section 362(a) (without regard to whether it is also described in any other section), further adjustment may be required under section 362(e)(2). See § 1.362-4.

(4) ***Other effects of basis determination under this section*** —

(i) ***Determination by reference to transferor's basis.*** A determination of basis under this section is a determination by reference to the transferor's basis, including for purposes of sections 1223(2) and 7701(a)(43). However, solely for purposes of applying section 755, a determination of basis under this section is treated as a determination not by reference to the transferor's basis.

(ii) ***Not tax-exempt income or noncapital, nondeductible expense.*** The application of this section does not give rise to an item treated as tax-exempt income under § 1.1502-32(b)(2)(ii) or as a noncapital, nondeductible expense under § 1.1502-32(b)(2)(iii).

(iii) ***No effect on earnings and profits.*** Any determination of basis under this section does not reduce or otherwise affect the calculation of the all earnings and profits amount provided in § 1.367(b)-2(d).

(c) ***Definitions.*** For purposes of this section, the following definitions apply:

(1) ***Section 362 transaction.*** The term *section 362 transaction* means any transaction described in section 362(a) or in section 362(b).

(2) ***Importation property*** —

(i) ***General rule.*** The term *importation property* means any property (including separate portions determined under paragraph (d)(4) of this section and separate portions of property tentatively divided under paragraph (e)(2) of this section) with respect to which—

(A) Any gain or loss that would be recognized on its sale by the transferor immediately before the transaction (the transferor's hypothetical sale) would not be subject to tax imposed under any provision of subtitle A of the Internal Revenue Code (federal income tax) (taking into account the provisions of paragraph (d) of this section); and

(B) Any gain or loss that would be recognized on its sale by Acquiring immediately after the transaction (Acquiring's hypothetical sale) would be subject to federal income tax (taking into account the provisions of paragraph (d) of this section).

(ii) ***Special rules for applying this paragraph (c)(2).*** See paragraph (d) of this section for rules for determining whether gain or loss on a hypothetical sale would be taken into account in determining a federal income tax liability and paragraph (e) of this section for rules applicable when more than one person would take such gain or loss into account.

(3) ***Loss importation transaction.*** The term *loss importation transaction* means any section 362 transaction in which Acquiring's aggregate basis in all importation property received from all transferors in the transaction would exceed the aggregate value of such property immediately after the transaction. For this purpose, Acquiring's basis in property received is determined without regard to this section or section 362(e)(2).

(4) ***Value*** —

(i) ***General rule.*** The term *value* means fair market value.

(ii) ***Special rule for transfers of partnership interests.*** Notwithstanding the general rule in paragraph (c)(4)(i) of this section, when referring to a partnership interest, for purposes of this section, the term *value* means the sum of the cash that Acquiring would receive for the interest, assuming an exchange between a willing buyer and a willing seller (neither being under any compulsion to buy or sell and both having reasonable knowledge of relevant facts), increased by any § 1.752-1 liabilities (as defined in § 1.752-1(a)(4)) of the partnership allocated to Acquiring with regard to such transferred interest under section 752 immediately after the transfer to Acquiring. If a partnership has elected under section 754, or if section 743(b) would require a downward basis adjustment to the partnership property, the partnership must apply the rules of § 1.743-1 to determine the amount of the basis adjustment to the partnership property.

(d) ***Rules for determining whether gain or loss would be taken into account in determining a federal income tax liability*** —

(1) ***General rule.*** In general, any gain or loss that would be recognized on a hypothetical sale described in paragraph (c)(2) of this section is considered to be subject to federal income tax if, taking into account all relevant facts and circumstances, such gain or loss would affect or be taken into account in determining the federal income tax liability of the transferor or Acquiring, respectively. This determination is made without regard to whether such person has or would have any actual federal income tax liability for the taxable year of the transaction.

(2) ***Look-through rule in the case of certain pass-through entities.*** Notwithstanding the general rule in paragraph (d)(1) of this section, the determination of whether any gain or loss on a hypothetical sale would be treated as subject to federal income tax is made by reference to the person that would be required to include such gain or loss in its taxable income if the hypothetical seller is—

(i) A trust treated as owned by its grantors or others (see section 671);

(ii) A partnership (see section 701); or

(iii) An S corporation (see sections 1363 and 1366).

(3) ***Controlled foreign corporation (CFC), passive foreign investment company (PFIC).*** For purposes of this section, gain or loss that would be recognized by a CFC (as defined in section 957(a)) or a PFIC (as defined in section 1297(a)) is not deemed taken into account in determining a federal income tax liability solely because it could affect an inclusion under section 951(a) or section 1293(a).

(4) ***Special rule for debt-financed property subject to section 512.*** If property is debt-financed property (as defined in section 514(b)) owned by an organization subject to the unrelated business income tax described in section 511(a)(2) and, as a result, a portion of any gain or loss on a sale of the property would be included in unrelated taxable business income (UBTI) under section 512, such property is treated as divided into separate portions in proportion to the amount of such gain or loss that would be includible in UBTI. The rules of paragraph (e) of this section apply to determine the characterization of such portions (as includible in the determination of a federal income tax liability or not), and the tax treatment and consequences of the transaction in which such portions are transferred.

(5) ***Look-through treatment in the case of certain avoidance transactions*** —

(i) ***Application of this paragraph (d)(5).*** This paragraph (d)(5) applies if—

(A) The transferor is a domestic entity that is a trust (other than a trust described in paragraph (d)(2)(i) of this section), estate, regulated investment company (as defined in section 851(a)), a real estate investment trust (as defined in section 856(a)), or a cooperative (as described in section 1381); and

(B) The transferor transfers, directly or indirectly, property that was transferred to or acquired by it as part of a plan (whether of transferor, Acquiring, or any other person) to avoid the application of section 362(e)(1) and this section to a section 362 transaction.

(ii) ***Effect of application of this paragraph (d)(5).*** Notwithstanding paragraph (d)(1) of this section, if a transferor is described in both paragraphs (d)(5)(i)(A) and (B) of this section—

(A) The transferor is treated as though it distributes the proceeds of the hypothetical sale (which, for this purpose, are presumed to be an amount greater than zero);

(B) To the fullest extent possible under the transferor's organizing instrument, the deemed distribution is treated as made to a distributee or distributees that would not take distributions from the transferor into account in determining a federal income tax liability; and

(C) The determination of whether the gain or loss on the hypothetical sale is treated as subject to federal income tax is made by reference to the deemed distributee or distributees.

(iii) ***Tiered entities.*** If a deemed distributee is an entity described in paragraph (d)(5)(i)(A) of this section, the determination of whether gain or loss on the hypothetical sale is taken into account in determining a federal income tax liability is made by treating the deemed distributee, and any successive such deemed distributees, as a transferor and applying the rules in paragraphs (d)(5)(i) and (ii) of this section to its deemed distribution (and to all successive deemed distributions), until no deemed distributee or successive deemed distributee is an entity described in paragraph (d)(5)(i)(A) of this section.

(e) ***Special rules for gain or loss that would be taken into account by multiple persons*** —

(1) ***In general.*** If gain or loss from a disposition of property would be includible in income by more than one person, the property is treated as tentatively divided into separate portions in proportion to the amount of gain or loss recognized with respect to the property that would be allocated to each such person. If an entity's organizing instrument specially allocates gain and loss, the tentative division of property under this paragraph (e) must reflect the manner in which gain or loss on the disposition of such property would be allocated under the terms of the organizing instrument and any applicable rules of law, taking into account the net gain or loss actually recognized by the entity in that tax year.

(2) ***Application of section.*** The rules of this section apply independently to each tentatively divided portion to determine if the portion is importation property. Each tentatively divided portion that is determined to be importation property is included with all other importation property in the determination of whether the transaction is a loss importation transaction.

(3) ***Acquiring's basis in property tentatively divided into separate portions.*** Immediately after the application of section 362(e)(1) and this section and before the application of section 362(e)(2), each property treated as tentatively divided into separate portions for purposes of applying section 362(e)(1) and this section ceases to be treated as tentatively divided and Acquiring has a single, undivided basis in such property that is equal to the sum of—

(i) The value of each tentatively divided portion that is importation property, if the transaction is a loss importation transaction; and

(ii) Acquiring's basis in each tentatively divided portion that is not importation property received in a loss importation transaction, as determined under section 362(a) or section 362(b), as applicable, and without regard to any potential application of section 362(e)(2).

(f) ***Examples.*** The examples in this paragraph (f) illustrate the application of section 362(e)(1) and the provisions of this section. Unless otherwise indicated, the examples use the following nomenclature and assumptions: A and B are U.S. citizens. DC, DC1, and P are domestic corporations that have not elected to be S corporations within the meaning of section 1361(a)(1) and that are not members of a consolidated group. F is a foreign individual. FP is a foreign partnership. FC, FC1, and FC2 are foreign corporations. Unless the facts indicate otherwise, the foreign individuals, corporations, and partnerships are not engaged in a U.S. trade or business, have no U.S. real property interests, and have no other relationships, activities, or interests that would cause them, their shareholders, their partners, or their property to be subject to federal income tax. There is no applicable income tax treaty, all persons' tax years are calendar years, and all persons and transactions are unrelated unless the facts indicate otherwise.

Example 1. *Basic application of section.* (i) *Section 351 transfer of importation property in a loss importation transaction.* (A) *Facts.* FC owns three assets, A1 (basis $40, value $150), A2 (basis $120, value $30), and A3 (basis $140, value $20). On Date 1, FC transfers A1, A2, and A3 to DC in a transaction to which section 351 applies.
(B) *Importation property.* If FC had sold A1, A2, or A3 immediately before the transaction, no gain or loss recognized on the sale would have been taken into account in determining a federal income tax liability. Further, if DC had sold A1, A2, or A3 immediately after the transaction, DC would take into account any gain or loss recognized on the sale in determining its federal income tax liability. Therefore, A1, A2, and A3 are all importation properties. See paragraph (c)(2) of this section.

(C) *Loss importation transaction.* FC's transfer of A1, A2, and A3 is a section 362 transaction. Furthermore, but for section 362(e)(1) and this section and section 362(e)(2), DC's aggregate basis in the importation properties, A1, A2, and A3, would be $300 ($40 + $120 + $140) under section 362(a) and the properties' aggregate value would be $200 ($150 + $30 + $20). Therefore, the importation properties' aggregate basis would exceed their aggregate value and the transaction is a loss importation transaction. See paragraph (c)(3) of this section.

(D) *Application of section 362(e)(1) and this section to importation property received in loss importation transaction.* Because the importation properties, A1, A2, and A3, were transferred in a loss importation transaction, paragraph (b)(1) of this section applies and DC's basis in A1, A2, and A3 will each be equal to the property's value ($150, $30, and $20, respectively) immediately after the transfer.

(E) *Basis of property received in transaction.* Following the application of section 362(e)(1) and this section, the provisions of section 362(e)(2) must be taken into account because the transfer is a section 362(a) transaction. Taking into account the application of section 362(e)(1) and this

section, DC's aggregate basis in the transferred properties would not exceed their aggregate value immediately after the transfer. Therefore, FC does not have a net built-in loss, FC's transfer is not a loss duplication transaction, and section 362(e)(2) does not apply to this transaction. DC's bases in A1, A2, and A3, as determined under paragraph (i)(D) of this *Example 1,* are $150, $30, and $20, respectively. Under section 358(a), FC receives the DC stock with a basis of $300 (the sum of FC's bases in A1, A2, and A3 immediately before the exchange).

(ii) *Reorganization.* The facts are the same as in paragraph (i)(A) of this *Example 1* except that, instead of transferring property to DC in a section 351 exchange, FC merges with and into DC in a transaction described in section 368(a)(1)(A). The analysis and results are the same as set forth in paragraphs (i)(B), (C), and (D) of this *Example 1.* However, the analysis in paragraph (i)(E) of this *Example 1* does not apply to these facts because the transaction is not subject to 362(e)(2) and § 1.362-4. Under section 358(a), FC's shareholders will take the DC stock with a basis determined by reference to their FC stock basis.

(iii) *FC's property used in U.S. trade or business.* (A) *Facts.* The facts are the same as in paragraph (i)(A) of this *Example 1,* except that FC is engaged in a U.S. trade or business and uses all the properties in that U.S. trade or business. In this case, none of the properties would be importation property because FC would take any gain or loss on the disposition of the properties into account in determining its federal income tax liability. Accordingly, this section does not apply to the transaction.

(B) *Basis of property received in transaction.* Following the application of section 362(e)(1) and this section, the provisions of section 362(e)(2) must be taken into account because the transfer is a section 362(a) transaction. Taking into account the application of section 362(e)(1) and this section but without taking into account the provisions of section 362(e)(2), DC's aggregate basis in the transferred properties would be $300 ($40 + $120 + $140) under section 362(a) and the properties' aggregate value immediately after the transfer would be $200 ($150 + $30 + $20). Therefore, FC has a net built-in loss and FC's transfer of A1, A2, and A3 is a loss duplication transaction. Accordingly, under the general rule of section 362(e)(2), FC's $100 net built-in loss ($300 aggregate basis over $200 aggregate value) would be allocated proportionately (by the amount of built-in loss in each property) to reduce DC's basis in the loss properties, A2 and A3. See § 1.362-4. As a result, DC's basis in A2 would be $77.14 ($120 basis under section 362(a) reduced by $42.86, A2's proportionate share of FC's net built-in loss, computed as $90/$210 × $100) and DC's basis in A3 would be $82.86 ($140 basis under section 362(a) reduced by $57.14, A3's proportionate share of FC's net built-in loss, computed as $120/$210 x $100). However, if FC and DC were to elect under section 362(e)(2)(C) to apply the $100 basis reduction to FC's basis in the DC stock received in the transaction, DC's bases in A2 and A3 would remain their section 362(a) bases of $120 and $140, respectively. Under section 362(a), DC's basis in A1 is $40 (irrespective of whether the section 362(e)(2)(C) election is made). If FC and DC do not make a

section 362(e)(2)(C) election, FC's basis in the DC stock received in the exchange will be $300; if FC and DC do make the election, FC's basis in the DC stock will be $200 ($300−$100 net built-in loss). See § 1.362-4(b).

Example 2. *Multiple transferors.* (i) *Facts.* The facts are the same as in paragraph (i)(A) of *Example 1* of this paragraph (f), except that FC only owns A1 (basis $40, value $150) and A2 (basis $120, value $30) and F owns A3 (basis $140, value $20). On Date 1, FC transfers A1 and A2, and F transfers A3, to DC in a single transaction described in section 351.
(ii) *Importation property.* A1 and A2 are importation properties for the reasons set forth in paragraph (i)(B) of *Example 1* of this paragraph (f). A3 is also an importation property because, if F had sold A3 immediately before the transaction, no gain or loss recognized on the sale would have been taken into account in determining a federal income tax liability, and, further, if DC had sold A3 immediately after the transaction, DC would take into account any gain or loss recognized on the sale in determining its federal income tax liability.

(iii) *Loss importation transaction.* The transfers by FC and F are a section 362 transaction. The transaction is a loss importation transaction for the reasons set forth in paragraph (i)(C) of *Example 1* of this paragraph (f) (notwithstanding that one of the transferors, FC, did not transfer a net built-in loss). See paragraph (c)(3) of this section.

(iv) *Application of section 362(e)(1) and this section to importation property received in loss importation transaction.* Because the importation properties, A1, A2, and A3, were transferred in a loss importation transaction, paragraph (b)(1) of this section applies and DC's basis in A1, A2, and A3 will each be equal to the property's value ($150, $30, and $20, respectively) immediately after the transfer.

(v) *Basis of property received in transaction.* Following the application of section 362(e)(1) and this section, the provisions of section 362(e)(2) must be taken into account because the transfer is a section 362(a) transaction. The application of section 362(e)(2) is determined separately for each transferor. See § 1.362-4(b). Taking into account the application of section 362(e)(1) and this section, neither DC's aggregate basis in FC's properties nor DC's basis in F's property would exceed the properties' respective values immediately after the transaction. Therefore neither FC nor F has a net built-in loss, neither transfer is a loss duplication transaction, and section 362(e)(2) does not apply to either transfer. DC's bases in A1, A2, and A3, as determined under paragraph (iv) of this *Example 2,* are $150, $30, and $20, respectively. Under section 358(a), FC's basis in the DC stock received is $160 ($40 + $120) and F's basis in the DC stock received in the exchange is $140.

Example 3. *Transfer of importation and non-importation property.* (i) *Facts.* As in paragraph (i) of *Example 2,* FC owns A1 (basis $40, value $150) and A2 (basis $120, value $30), and F owns A3 (basis $140, value $20). In addition, A2 is a U.S. real property interest as defined in section

897(c)(1). On Date 1, FC transfers A1 and A2, and F transfers A3, to DC in a single transaction described in section 351.
(ii) *Importation property.* A1 and A3 are importation properties for the reasons set forth in paragraph (i)(B) of *Example 1* and paragraph (ii) of *Example 2* of this paragraph (f), respectively. However, A2 is not importation property because, if FC had sold A2 immediately before the transaction, FC would take into account any gain or loss recognized on the sale in determining its federal income tax liability.

(iii) *Loss importation transaction.* FC's and F's transfer is a section 362 transaction. Furthermore, but for section 362(e)(1) and this section and section 362(e)(2), DC's aggregate basis in the importation properties, A1 and A3, would be $180 ($40 + $140) and the properties' aggregate value would be $170 ($150 + $20) immediately after the transaction. Therefore, the importation properties' aggregate basis would exceed their aggregate value immediately after the transaction, and the transfer is a loss importation transaction.

(iv) *Application of section 362(e)(1) and this section to importation property received in loss importation transaction.* Because the importation properties, A1 and A3, were transferred in a loss importation transaction, paragraph (b)(1) of this section applies and DC's basis in A1 and in A3 will each be equal to the property's value ($150 and $20, respectively) immediately after the transfer.

(v) *Basis of property received in transaction.* Following the application of section 362(e)(1) and this section, the provisions of section 362(e)(2) must be taken into account because the transfer is a section 362(a) transaction. The application of section 362(e)(2) is determined separately for each transferor. See § 1.362-4(b).

(A) *FC's transfer.* Taking into account the application of section 362(e)(1) and this section but without taking into account the provisions of section 362(e)(2), DC would have an aggregate basis of $270 in the transferred properties ($150 in A1, as determined under paragraph (iv) of this *Example 3,* plus $120 in A2, determined under section 362(a)), and the properties would have an aggregate value of $180 ($150 + $30) immediately after the transfer. Therefore, FC has a net built-in loss and FC's transfer of A1 and A2 is a loss duplication transaction. Accordingly, under the general rule of section 362(e)(2), FC's $90 net built-in loss ($270 aggregate basis to DC over $180 aggregate value) would be allocated proportionately to reduce DC's basis in the loss property transferred by FC. As a result, FC's entire net built-in loss would be allocated to A2, the only loss property transferred by FC, and DC's basis in A2 would be $30 ($120 basis under section 362(a) reduced by $90 net built-in loss). However, if FC and DC were to elect under section 362(e)(2)(C) to apply the $90 basis reduction to FC's basis in the DC stock received in the transaction, DC's basis in A2 would remain its section 362(a) basis of $120. DC's basis in A1 is $150 as determined under paragraph (iv) of this *Example 3* (irrespective of whether the section 362(e)(2)(C) election is

made). If FC and DC do not make a section 362(e)(2)(C) election, FC's basis in the DC stock received in the exchange will be $160; if FC and DC do make the election, FC's basis in the DC stock will be $70 ($160−$90 net built-in loss). See § 1.362-4.

(B) *F's transfer of A3.* Taking into account the application of section 362(e)(1) and this section, DC's basis in A3, the property transferred by F, would not exceed its value immediately after the transfer. Therefore, F does not have a built-in loss, F's transfer is not a loss duplication transaction, and section 362(e)(2) does not apply to F's transfer. DC's basis in A3, as determined under paragraph (iv) of this *Example 3,* is $20. Under section 358(a), F receives the DC stock with a basis of $140.

Example 4. *Multiple transferors of non-importation properties.* (i) *Facts.* DC1 owns A1 (basis $40, value $150). In addition, as in *Example 3* of this paragraph (f), FC owns A2 (basis $120, value $30), a U.S. real property interest as defined in section 897(c)(1), and F owns A3 (basis $140, value $20). On Date 1, DC1 transfers A1, FC transfers A2, and F transfers A3, to DC in a single transaction described in section 351.
(ii) *Importation property.* A2 is not importation property and A3 is importation property for the reasons set forth in paragraph (ii) of *Example 3* and paragraph (i)(B) of *Example 1* of this paragraph (f), respectively. A1 is not importation property because, if DC1 had sold A2 immediately before the transaction, DC1 would take into account any gain or loss recognized on the sale in determining its federal income tax liability.

(iii) *Loss importation transaction.* The transfer of A1, A2, and A3 is a section 362 transaction. Furthermore, but for section 362(e)(1) and this section and section 362(e)(2), DC's basis in importation property, A3, would be $140 and the value of the property would be $20 immediately after the transaction. Therefore, the importation property's basis would exceed value and the transfer is a loss importation transaction.

(iv) *Application of section 362(e)(1) and this section to importation property received in loss importation transaction.* Because the importation property, A3, was transferred in a loss importation transaction, section 362(e)(1) and paragraph (b)(1) of this section apply and DC's basis in A3 will be equal to A3's $20 value immediately after the transfer.

(v) *Basis of property received in transaction.* Following the application of section 362(e)(1) and this section, the provisions of section 362(e)(2) must be taken into account because the transfer is a section 362(a) transaction. The application of section 362(e)(2) is determined separately for each transferor. See § 1.362-4.

(A) *DC1's transfer.* Taking into account the application of section 362(e)(1) and this section, DC's basis in A1 ($40 under section 362(a)) would not exceed its value immediately after the transfer. Therefore, DC1 does not have a net built-in loss, DC1's transfer is not a loss duplication transaction, and section 362(e)(2) does not apply to DC1's transfer. DC's basis in A1, determined under section 362(a), is $40. Under section 358(a), DC1 receives the DC stock with a basis of $40.

(B) *FC's transfer.* Taking into account the application of section 362(e)(1) and this section, but without taking into account the provisions of section 362(e)(2), DC would have a section 362(a) basis of $120 in A2, which would exceed A2's $30 value immediately after the transfer. Therefore, FC has a net built-in loss and FC's transfer of A2 is a loss duplication transaction. Accordingly, under the general rule of section 362(e)(2), FC's $90 net built-in loss (DC's $120 basis in A2 over A2's $30 value) would be applied to reduce DC's basis in A2, the only loss property transferred by FC. As a result, DC's basis in A2 would be $30 ($120 basis under section 362(a), reduced by the $90 net built-in loss). However, if FC and DC were to elect under section 362(e)(2)(C) to apply the $90 basis reduction to FC's basis in the DC stock received in the transaction, DC's basis in A2 would be its $120 basis determined under section 362(a). If FC and DC do not make a section 362(e)(2)(C) election, FC's basis in the DC stock received in the exchange will be $120; if FC and DC do make the election, FC's basis in the DC stock will be $30 ($120−$90). See § 1.362-4.

(C) *F's transfer.* F's transfer of A3 is a transaction described in section 362(a). However, taking into account the application of section 362(e)(1) and this section, DC's basis in A3 ($20) would not exceed its value immediately after the transfer. Therefore, F does not have a built-in loss, F's transfer is not a loss duplication transaction, and section 362(e)(2) does not apply to F's transfer. DC's basis in A3, as determined under paragraph (iv) of this *Example 4,* is $20. Under section 358(a), F receives the DC stock with a basis of $140.

Example 5. *Partnership transactions.* (i) *Transfer by foreign partnership, foreign and domestic partners.* (A) *Facts.* A and F are equal partners in FP. FP owns A1 (basis $100, value $70). Under the terms of the FP partnership agreement, FP's items of income, gain, deduction, and loss are allocated equally between A and F. Section 704(c) does not apply with respect to the partnership property. FP transfers A1 to DC in a transfer to which section 351 applies. No election is made under section 362(e)(2)(C).
(B) *Importation property.* If FP had sold A1 immediately before the transaction, any gain or loss recognized on the sale would be allocated to and includible by A and F equally under the partnership agreement. Thus, under paragraph (d)(2) of this section, A1 is treated as tentatively divided into two equal portions, one treated as owned by A and one treated as owned by F. If FP had sold A1 immediately before the transaction, any gain or loss recognized on the portion treated as owned by A would have been taken into account in determining a federal income tax liability (A's); thus A's tentatively divided portion of A1 is not importation property. However, no gain or loss recognized on the tentatively divided portion treated as owned by F would have been taken into account in determining a federal income tax liability. Further, if DC had sold A1 immediately after

the transaction, any gain or loss recognized on the sale would have been taken into account in determining a federal income tax liability (DC's); thus, F's tentatively divided portion of A1 is importation property.

(C) *Loss importation transaction.* FP's transfer of A1 is a section 362 transaction. Furthermore, but for section 362(e)(1) and this section and section 362(e)(2), DC's basis in the importation property, F's portion of A1, would be $50 under section 362(a) and the property's value would be $35 immediately after the transaction. Therefore, the importation property's basis would exceed its value and the transfer is a loss importation transaction.

(D) *Application of section 362(e)(1) and this section to importation property received in loss importation transaction.* Because the importation property, F's tentatively divided portion of A1, was transferred in a loss importation transaction, section 362(e)(1) and paragraph (b)(1) of this section apply and DC's basis in F's portion of A1 will be equal to its $35 value.

(E) *Basis of property received in transaction.* Following the application of section 362(e)(1) and this section, the provisions of section 362(e)(2) must be taken into account because the transfer is a section 362(a) transaction. Taking into account the application of section 362(e)(1) and this section but without taking into account the provisions of section 362(e)(2), DC's aggregate basis in A1 would be $85 (the sum of the $35 basis in F's tentatively divided portion of A1, as determined under paragraph (i)(D) of this *Example 5,* and the $50 basis in A's tentatively divided portion of A1, determined under section 362(a), see paragraphs (d)(2) and (e)(3) of this section) and A1's value immediately after the transfer would be $70. Therefore, FP has a net built-in loss and FP's transfer of A1 is a loss duplication transaction. Accordingly, under the general rule of section 362(e)(2), FP's $15 net built-in loss ($85 basis over $70 value) would be allocated to reduce DC's basis in the loss asset, A1, the only loss property transferred by FP. As a result, DC's basis in A1 would be $70 ($85 basis under section 362(a) and this section, reduced by the $15 net built-in loss). Under section 358, FP's basis in the DC stock received in the exchange will be $100. See § 1.362-4.

(ii) *Transfer with election to apply section 362(e)(2)(C).* The facts are the same as in paragraph (i)(A) of this *Example 5,* except that FP and DC elect to apply section 362(e)(2)(C) to reduce FP's basis in the DC stock received in the exchange. The analysis and results are the same as in paragraphs (i)(B), (C), (D), and (E) of this *Example 5,* except that the $15 reduction to DC's basis in A1 is not made and, as a result, DC's basis in A1 remains $85, and FP's basis in the DC stock received in the exchange is reduced from $100 to $85. The $15 reduction to FP's basis in DC stock reduces A's basis in its FP interest under section 705(a)(2)(B). See § 1.362-4(e)(1).

(iii) *Transfer by domestic partnership.* The facts are the same as in paragraph (i)(A) of this *Example 5* except that FP is a domestic partnership. The analysis and results are the same as in paragraphs (i)(B), (C), (D), and (E) of this *Example 5.*

(iv) *Transfer of interest in partnership with liability.* (A) *Facts.* F and two other individuals are equal partners in FP. F's basis in its partnership interest is $247. F's share of FP's § 1.752-1 liabilities (as defined in § 1.752-1(a)(4)) is $150. F transfers his partnership interest to DC in a transaction to which section 351 applies. If DC were to sell the FP interest immediately after the transfer, DC would receive $100 in cash or other property. In addition, taking into account the rules under § 1.752-4, DC's share of FP's § 1.752-1 liabilities (as defined in § 1.752-1(a)(4)) is $145 immediately after the transfer.

(B) *Importation property.* If F had sold his partnership interest immediately before the transaction, no gain or loss recognized on the sale would have been taken into account in determining a federal income tax liability. Further, if DC had sold the partnership interest immediately after the transaction, any gain or loss recognized on the sale would have been taken into account in determining a federal income tax liability. Therefore, F's partnership interest is importation property.

(C) *Loss importation transaction.* F's transfer is a section 362 transaction. However, but for section 362(e)(1) and this section and section 362(e)(2), DC's basis in the importation property, the partnership interest, determined under section 362(a) and taking into account the rules under section 752, would be $242 (F's $247 basis reduced by F's $150 share of FP liabilities and increased by DC's $145 share of FP liabilities) and, under paragraph (c)(4)(ii) of this section, the value of the FP interest would be $245 (the sum of $100, the cash DC would receive if DC immediately sold the partnership interest, and $145, DC's share of the § 1.752-1 liabilities (as defined in § 1.752-1(a)(4)) under section 752 immediately after the transfer to DC). Therefore, the importation property's basis ($242) would not exceed its value ($245), and the transfer is not a loss importation transaction.

(D) *Basis in property received in transaction.* Following the application of section 362(e)(1) and this section, the provisions of section 362(e)(2) must be taken into account because the transfer is a section 362(a) transaction. As described in paragraph (iv)(C) of this *Example 5,* taking into account the application of section 362(e)(1) and this section, DC's basis in the partnership interest would not exceed its value. Therefore, under § 1.362-4, F does not have a net built-in loss, the transfer is not a loss duplication transaction, and section 362(e)(2) does not apply to the transfer. DC's basis in F's partnership interest is $242, determined under sections 362(a) and 752. Under section 358, taking into account the rules under section 752, F's basis in the DC stock received in the exchange is $97 ($247 reduced by F's $150 share of FP liabilities). If FP had elected under section 754, or if section 743(b) required a downward basis adjustment to the partnership property, FP would apply the rules of § 1.743-1 to determine the amount of the basis adjustment to the partnership property.

Example 6. Transactions involving tax-exempt entities. (i) *Exempt transferor.* (A) *Facts.* InsCo is a benevolent life insurance association of a purely local character exempt from federal income tax

under section 501(a) because it is described in section 501(c)(12). InsCo owns shares of stock of DC1 (basis $100, value $70) for investment purposes, which are not debt-financed property (as defined in section 514). On December 31, Year 1, InsCo transfers the DC1 stock to DC in exchange for DC stock in a transaction to which section 351 applies. No election is made under section 362(e)(2)(C).

(B) *Importation property.* If InsCo had sold the DC1 stock immediately before the transaction, any gain or loss realized would be excluded from UBTI under section 512(b)(5), and thus no gain or loss recognized on the sale would have been taken into account in determining federal income tax liability. Further, if DC had sold the DC1 stock immediately after the transaction, any gain or loss recognized on the sale would have been taken into account in determining federal income tax liability. Therefore, the DC1 stock is importation property.

(C) *Loss importation transaction.* InsCo's transfer is a section 362 transaction. Furthermore, but for section 362(e)(1) and this section and section 362(e)(2), DC's basis in importation property, the DC1 stock, would be $100, and the stock's value would be $70 immediately after the transaction. Therefore, the importation property's basis would exceed its value and the transfer is a loss importation transaction.

(D) *Application of section 362(e)(1) and this section to importation property received in loss importation transaction.* Because the importation property, the DC1 stock, was transferred in a loss importation transaction, paragraph (b)(1) of this section applies and DC's basis in the stock will be equal to its $70 value.

(E) *Basis of property received in transaction.* Following the application of section 362(e)(1) and this section, the provisions of section 362(e)(2) must be taken into account because the transfer is a section 362(a) transaction. Taking into account the application of section 362(e)(1) and this section, DC's basis in the DC1 stock does not exceed its value immediately after the transaction. Therefore, InsCo does not have a net built-in loss, InsCo's transfer is not a loss duplication transaction, and section 362(e)(2) has no application to the transaction. DC's basis in the DC1 stock, as determined under paragraph (i)(D) of this *Example 6,* is $70. Under section 358, InsCo's basis in the DC stock received in the exchange will be $100.

(ii) *Transferor loses tax-exempt status.* (A) *Facts.* The facts are the same as in paragraph (i)(A) of this *Example 6* except that InsCo fails to be described in section 501(c)(12) in Year 1.

(B) *Importation property.* If InsCo had sold the DC1 stock immediately before the transaction, any gain or loss recognized on the sale would have been taken into account in determining a federal income tax liability. Therefore, the DC1 stock is not importation property and this section does not apply to the transaction.

(C) *Basis of property received in transaction.* Following the application of section 362(e)(1) and this section, the provisions of section 362(e)(2) must be taken into account because the transfer is a section 362(a) transaction. Taking into account the application of section 362(e)(1) and this section but without taking into account the provisions of section 362(e)(2), DC would have a section 362(a) basis of $100 in the stock, which would exceed its value of $70 immediately after the transfer. Therefore, InsCo has a net built-in loss and InsCo's transfer of the DC1 stock is a loss duplication transaction. Accordingly, under the general rule of section 362(e)(2), InsCo's $30 net built-in loss ($100 basis over $70 value) would be allocated to reduce DC's basis in the loss asset, the DC1 stock, the only loss property transferred by InsCo. As a result, DC's basis in the DC1 stock would be $70 ($100 basis under section 362(a), reduced by the $30 net built-in loss). Under section 358, InsCo's basis in the DC stock received in the exchange will be $100.

(iii) *Transfer of property that is subject to unrelated business tax.* (A) *Facts.* The facts are the same as in paragraph (i)(A) of this *Example 6* except that, on December 31, Year 1, instead of the DC1 stock, InsCo transfers A1 (basis $200, value $150) to DC. A1 is real property that InsCo owned from January 1 to December 31 of Year 1. During the entirety of this period, A1's basis was $200, and in the twelve months prior to December 31, Year 1, the highest amount of outstanding principal indebtedness on A1 was $40. For purposes of the UBTI rules under section 512, A1 is debt-financed property within the meaning of section 514(b).

(B) *Importation property.* If InsCo had sold A1 immediately before the transaction, 20 percent of any gain or loss recognized on that sale (that is, $40 of acquisition indebtedness on A1 divided by A1's $200 basis in Year 1) would, under sections 512 and 514, be includible in UBTI at the end of Year 1, and 80 percent would not. Thus, under paragraph (d)(4) of this section, A1 is treated as tentatively divided into two portions, one reflecting the gain or loss that would be taken into account in determining a federal income tax liability in InsCo's hands immediately before the transfer (the 20 percent portion) and one that would not (the 80 percent portion). Further, if DC sold A1 immediately after the transfer, any gain or loss on both portions would be taken into account in determining a federal income tax liability. Accordingly, the 20 percent portion is not importation property, but the 80 percent portion is.

(C) *Loss importation transaction.* InsCo's transfer of A1 is a section 362 transaction. Furthermore, but for section 362(e)(1) and this section and section 362(e)(2), DC's basis in the importation property, the 80 percent portion of A1, would be $160 (80 percent of InsCo's $200 basis) under section 362(a) and the property's value would be $120 (80% of A1's $120 value) immediately after the transaction. Therefore, the importation property's basis would exceed its value and the transfer is a loss importation transaction.

(D) *Application of section 362(e)(1) and this section to importation property received in loss importation transaction.* Because the importation property, the 80 percent portion of A1, was transferred in a loss importation transaction, section 362(e)(1) and paragraph (b)(1) of this section apply and DC's basis in that portion of A1 will be equal to its $120 value.

(E) *Basis of property received in transaction.* Following the application of section 362(e)(1) and this section, the provisions of section 362(e)(2) must be taken into account because the transfer is a section 362(a) transaction. Taking into account the application of section 362(e)(1) and this section but without taking into account the provisions of section 362(e)(2), DC's aggregate basis in A1 would be $160 (the sum of the $120 basis in the 80 percent importation portion of A1, as determined under paragraph (iii)(D) of this *Example 6,* and the $40 basis in the 20 percent portion of A1 that is not importation property, determined under section 362(a). See paragraph (e)(3) of this section). Further, A1's value immediately after the transfer would be $150. Therefore, InsCo has a net built-in loss in A1, and InsCo's transfer of A1 is a loss duplication transaction. Accordingly, under the general rule of section 362(e)(2), InsCo's $10 net built-in loss ($160 basis over $150 value) would be allocated to reduce DC's basis in the loss asset, A1, the only loss property transferred by InsCo. As a result, DC's basis in A1 would be $150 ($160 basis under section 362(a) and this section, reduced by the $10 net built-in loss). Under section 358, InsCo's basis in the DC stock received in the exchange will be $200. See § 1.362-4.

(iv) *Transfer with election to apply section 362(e)(2)(C).* The facts are the same as in paragraph (iii)(A) of this *Example 6,* except that InsCo and DC elect to apply section 362(e)(2)(C) to reduce InsCo's basis in the DC stock received in the exchange. The analysis and results are the same as in paragraphs (iii)(B), (C), (D), and (E) of this *Example 6,* except that the $10 reduction to DC's basis in A1 is not made and, as a result, DC's basis in A1 remains $160; however, InsCo's basis in the DC stock received in the exchange is reduced from $200 to $190.

Example 7. *Transactions involving CFCs.* (i) *Transfer by CFC.* (A) *Facts.* FC is a CFC with 100 shares of stock outstanding. A owns 60 of the shares and F owns the remaining 40 shares. FC owns two assets, A1 (basis $70, value $100), which is used in the conduct of a U.S. trade or business, and A2 (basis $100, value $75), which is not used in the conduct of a U.S. trade or business. FC transfers both assets to DC in a transaction to which section 351 applies.
(B) *Importation property.* If FC had sold A1 immediately before the transaction, any gain or loss recognized on the sale would have been taken into account in determining a federal income tax liability (FC's). See section 882(a). Therefore, A1 is not importation property. If FC had sold A2 immediately before the transaction, FC would not take the gain or loss recognized into account in determining its federal income tax liability, but the gain or loss could be taken into account in determining a section 951 inclusion to FC's U.S. shareholders. However, under paragraph (d)(3) of this section, gain or loss is not deemed taken into account in determining a federal income tax

liability solely because it could affect an inclusion under section 951(a). Further, if DC had sold A2 immediately after the transaction, any gain or loss recognized on the sale would have been taken into account in determining a federal income tax liability. Therefore, A2 is importation property.

(C) *Loss importation transaction.* FC's transfer is a section 362 transaction. Furthermore, but for section 362(e)(1) and this section and section 362(e)(2), DC's basis in the importation property, A2, would be $100 and the property's value would be $75 immediately after the transaction. Therefore, the importation property's basis would exceed its value and the transfer is a loss importation transaction.

(D) *Application of section 362(e)(1) and this section to importation property received in loss importation transaction.* Because the importation property, A2, was transferred in a loss importation transaction, paragraph (b)(1) of this section applies and DC's basis in A2 will be equal to A2's $75 value immediately after the transfer.

(E) *Basis of property received in transaction.* Following the application of section 362(e)(1) and this section, the provisions of section 362(e)(2) must be taken into account because the transfer is a section 362(a) transaction. Taking into account the application of section 362(e)(1) and this section but without taking into account the provisions of section 362(e)(2), DC would have an aggregate basis of $145 in the transferred properties ($70 in A1, determined under section 362(a), plus $75 in A2, determined under this section) and the properties would have an aggregate value of $175 ($100 + $75) immediately after the transfer. Therefore, FC does not have a net built-in loss, FC's transfer is not a loss duplication transaction, and section 362(e)(2) does not apply to the transaction. DC's basis in A1 will be $70, determined under section 362(a), and DC's basis in A2 will be $75, as determined under paragraph (i)(D) of this *Example 7.* Under the general rule in section 358(a), FC receives the DC stock with a basis of $170 ($70 attributable to A1 plus $100 attributable to A2).

(ii) *Transfer of CFC stock.* (A) *Facts.* The facts are the same as in paragraph (i)(A) of this *Example 7,* except that A transfers its 60 shares of FC stock (basis $80, value $105) and F transfers its 40 shares of FC stock (basis $100, value $70) to DC in an exchange that qualifies under section 351.

(B) *Importation property.* If A had sold its FC shares immediately before the transaction, any gain or loss recognized on the sale would have been taken into account in determining a federal income tax liability (A's). Therefore, A's FC shares are not importation property. However, if F had sold its FC shares immediately before the transaction, no gain or loss recognized on the sale would have been taken into account in determining a federal income tax liability. Further, if DC had sold F's FC shares immediately after the transaction, any gain or loss recognized on the sale would have been taken into account in determining a federal income tax liability. Therefore, F's FC shares are importation property.

(C) *Loss importation transaction.* The transfer of the FC shares is a section 362 transaction. Furthermore, but for section 362(e)(1) and this section and section 362(e)(2), DC's aggregate basis in the importation property, F's shares of FC stock, would be $100 under section 362(a) and the shares' aggregate value would be $70. Therefore, the importation property's aggregate basis would exceed its aggregate value, and the transfer is a loss importation transaction.

(D) *Application of section 362(e)(1) and this section to importation property received in loss importation transaction.* Because the importation property, F's shares of FC stock, was transferred in a loss importation transaction, paragraph (b)(1) of this section applies and DC's aggregate basis in the shares will be equal to their $70 aggregate value immediately after the transfer.

(E) *Basis of property received in transaction.* Following the application of section 362(e)(1) and this section, the provisions of section 362(e)(2) must be taken into account because the transfer is a section 362(a) transaction. The application of section 362(e)(2) is determined separately for each transferor. See § 1.362-4(b).

(*1*) *A's transfer.* Taking into account the application of section 362(e)(1) and this section, DC's aggregate basis in the shares ($80 under section 362(a)) would not exceed the shares' value ($105) immediately after the transaction. Therefore A does not have a built-in loss, A's transfer is not a loss duplication transaction, and section 362(e)(2) does not apply to A's transfer. DC's aggregate basis in A's shares, determined under section 362(a), is $80. Under section 358(a), A receives the DC stock with a basis of $80.

(*2*) *F's transfer.* Taking into account the application of section 362(e)(1) and this section, DC's aggregate basis in the shares would not exceed their value immediately after the transaction. Therefore, F does not have a built-in loss, F's transfer is not a loss duplication transaction, and section 362(e)(2) does not apply to F's transfer. DC's aggregate basis in F's shares, as determined under paragraph (ii)(D) of this *Example 7,* is $70. Under section 358(a), F receives the DC stock with a basis of $100.

Example 8. *Property subject to withholding tax.* (i) *Facts.* FC owns a share of DC1 stock (basis $100, value $70) as an investment. FC receives dividends on the share that are subject to federal withholding tax of 30 percent of the amount received under section 881(a); under section 1442(a), DC1 must withhold tax on the dividends paid. FC transfers the DC1 share to DC in a transaction to which section 351 applies.
(ii) *Importation property.* Although any dividends received with respect to the DC1 stock were subject to withholding tax, if FC had sold the share of stock of DC1, no gain or loss recognized on the sale would have been taken into account in determining a federal income tax liability. See section 865(a)(2). Further, if DC had sold the share of DC1 stock immediately after the transaction, any gain or loss recognized on the sale would be taken into account in determining federal income tax liability. Therefore, the share of DC1 stock is importation property.

(iii) *Loss importation transaction.* FC's transfer is a section 362 transaction. Furthermore, but for section 362(e)(1) and this section and section 362(e)(2), DC's basis in the importation property, the share of DC1 stock, would be $100 and the share's value would be $70 immediately after the transaction. Therefore, the share's basis would exceed its value and the transfer is a loss importation transaction.

(iv) *Application of section 362(e)(1) and this section to importation property received in loss importation transaction.* Because the importation property, the DC1 share, was transferred in a loss importation transaction, paragraph (b)(1) of this section applies and DC's basis in the share will be equal to the share's $70 value.

(v) *Basis of property received in transaction.* Following the application of section 362(e)(1) and this section, the provisions of section 362(e)(2) must be taken into account because the transfer is a section 362(a) transaction. Taking into account the application of section 362(e)(1) and this section, DC's basis in the DC1 share would not exceed the share's value immediately after the transaction. Therefore, FC does not have a net built-in loss, FC's transfer is not a loss duplication transaction, and section 362(e)(2) does not apply to the transaction. DC's basis in the DC1 share, as determined under paragraph (iv) of this *Example 8,* is $70. Under section 358, FC's basis in the DC stock received in the exchange will be $100.

Example 9. *Property transferred in triangular reorganization.* (i) *Foreign subsidiary.* (A) *Facts.* P owns the sole outstanding share of stock of FC (basis $1), FC1 owns the sole outstanding share of FC2 (basis $100), and FC2 owns one asset, A1 (basis $100, value $20). In a forward triangular merger described in § 1.358-6(b)(2)(i), FC2 merges with and into FC, and FC1 receives shares of P stock in exchange for its FC2 stock. The forward triangular merger is a transaction described in section 368(a)(2)(D) and, therefore, in section 362(b).
(B) *Determining P's basis in its FC share.* Pursuant to § 1.358-6, for purposes of determining the adjustment to P's basis in its FC shares, P is treated as though it first received A1 in a transaction in which its basis in A1 would be determined under section 362(b) and then it transferred A1 to FC in a transaction in which P's basis in its FC stock would be determined under section 358.

(*1*) *P's deemed acquisition and transfer of A1.* If FC2 had sold A1 for its value immediately before the deemed transaction, no gain or loss recognized on the sale would have been taken into account in determining a federal income tax liability. If P had sold A1 immediately after the deemed transaction, any gain or loss recognized on the sale would have been taken into account in determining a federal income tax liability (P's). Therefore, with respect to P's deemed acquisition, A1 is importation property. Furthermore, immediately after the deemed transaction, P's basis in A1, but for section 362(e)(1) and this section and section 362(e)(2), would be $100 and A1's value is $20. Therefore, the importation property's basis would exceed its value and the transfer is a loss importation transaction. Accordingly, P's deemed basis in A1 will be equal to A1's $20 value.

(*2*) *P's FC stock basis.* As a result of P's deemed transfer of A1 to FC (and applying the principles of § 1.367(b)-13), P's basis in its FC stock is increased by its $20 deemed basis in A1. Accordingly, following the transaction, P's basis in its share of FC stock will be $21 (the sum of its original $1 basis and the $20 adjustment for the deemed transfer of A1).

(C) *FC's basis in A1.* FC's basis in A1 is determined under the rules of this section without regard to the determination of P's adjustment to its basis in FC stock. If FC2 had sold A1 for its value immediately before the transaction, no gain or loss recognized on the sale would have been taken into account in determining a federal income tax liability. However, if FC had sold A1 immediately after the transaction, no gain or loss recognized on the sale would have been taken into account in determining a federal income tax liability, so A1 is not importation property. Accordingly, this section will not apply to the transaction. Although there is a net built-in loss in A1, the transaction is not described in section 362(a), and so section 362(e)(2) and § 1.362-4 will not apply to the transaction. Thus, under section 362(b), FC's basis in A1 will be $100.

(D) *FC1's basis in P stock.* Under section 358, FC1's basis in the P stock it receives in the exchange will be $100.

(ii) *Property transferred to U.S. subsidiary in triangular reorganization.* (A) *Facts.* The facts are the same as in paragraph (i)(A) of this *Example 9,* except that P also owns the sole outstanding share of DC (basis $1) and, instead of merging into FC, FC2 merged into DC.

(B) *Determining P's basis in its DC share.* As determined under paragraph (i)(B)(*2*) of this *Example 9,* P's basis in its DC share is $21, the sum of its original $1 basis plus the $20 adjustment for the deemed transfer of A1.

(C) *DC's basis in A1.* If FC2 had sold A1 for its value immediately before the transaction, no gain or loss recognized on the sale would have been taken into account in determining a federal income tax liability. However, if DC had sold A1 immediately after the transaction, any gain or loss recognized on the sale would have been taken into account in determining a federal income tax liability, so A1 is importation property with respect to DC. Furthermore, immediately after the transaction, DC's basis in A1, but for section 362(e)(1) and this section and section 362(e)(2), would be $100 and A1's value is $20. Therefore, the importation property's basis would exceed its value and the transfer is a loss importation transaction. Accordingly, DC's basis in A1 will be $20, A1's value immediately after the transaction.

(D) *FC1's basis in P stock.* Under section 358, FC1's basis in the P stock it receives in the exchange is $100.

(g) ***Applicability date.*** This section applies with respect to any transaction occurring on or after *March 28, 2016,* and also with respect to any transaction occurring before such date as a result of an entity classification election under § 301.7701-3 of this chapter filed on or after *March 28, 2016,* unless such

transaction is pursuant to a binding agreement that was in effect prior to *March 28, 2016* and at all times thereafter. In addition, taxpayers may apply this section to any transaction occurring after October 22, 2004.

[T.D. 9759, 81 FR 17075, Mar. 28, 2016]

§ 1.362-4 Basis of loss duplication property.

(a) ***Purpose and scope*** —

(1) ***In general.*** The purpose of section 362(e)(2) and this section is to prevent the duplication of net loss in transfers to which section 351 applies, capital contributions, and paid-in surplus (each, a section 362(a) transaction). See paragraph (g) of this section for definitions of terms used in this section.

(2) ***Intercompany transactions.*** For rules relating to the application of section 362(e)(2) to transfers between members of a consolidated group on or after October 22, 2004, see § 1.1502-80(h).

(b) ***Basis determinations under section 362(e)(2) and this section.*** Notwithstanding section 362(a), if a corporation (Acquiring) receives loss duplication property (as defined in paragraph (g)(1) of this section) from a person (Transferor) in a loss duplication transaction (as defined in paragraph (g)(2) of this section), Acquiring's basis in such property is equal to the basis of the property determined without regard to section 362(e)(2) and this section (as described in paragraph (g)(1)(ii) of this section), reduced by the property's allocable portion of Transferor's net built-in loss (as defined in paragraph (g)(3) of this section). If more than one Transferor transfers property to a corporation in a section 362(a) transaction, whether and the extent to which section 362(e)(2) and this section apply is determined separately for each Transferor.

(c) ***Exceptions and special rules*** —

(1) ***Transactions in which net built-in loss is eliminated without recognition.*** Section 362(e)(2) does not apply to a transaction to the extent that—

(i) Without recognizing gain or loss, Transferor distributes the Acquiring stock received in the transaction; and

(ii) Upon completion of the transaction, no person holds Acquiring stock or any other asset with a basis determined, in whole or in part, by reference to Transferor's basis in the distributed Acquiring stock.

(2) ***Certain transactions outside of the United States.*** Section 362(e)(2) does not apply to a transaction if—

(i) Neither Transferor nor Acquiring is a U.S. person (as defined in section 7701(a)(30)), a person otherwise required to file a U.S. return for the year of the transaction, a controlled foreign corporation (CFC, as defined in paragraph (g)(7) of this section), or a controlled foreign partnership (CFP, as defined in paragraph (g)(9) of this section) on the date of the transaction;

(ii) The transfer occurs more than two years prior to the date of any event described in paragraph (d)(3)(ii)(E), (F), or (G) of this section; and

(iii) The original transaction and the event or events described in paragraph (d)(3)(ii)(E), (F), or (G) of this section were not entered into with a view to reducing or avoiding the Federal income tax liability of any person by avoiding the application of section 362(e)(2) and this section to the original transaction.

(3) ***Other effects of basis determination under this section*** —

(i) ***Determination by reference to transferor's basis.*** A determination of basis under this section is a determination by reference to the transferor's basis, including for purposes of sections 755, 1223(2), and 7701(a)(43).

(ii) ***Treatment as tax-exempt income or noncapital, nondeductible expense.*** A determination of basis under paragraph (b) of this section does not give rise to an item treated as a noncapital, nondeductible expense under § 1.1502-32(b)(2)(iii). However, a determination of basis under paragraph (d) of this section does give rise to an item treated as a noncapital, nondeductible expense under § 1.1502-32(b)(2)(iii).

(d) ***Election to reduce Transferor's stock basis instead of Acquiring's asset basis*** —

(1) ***In general.*** In lieu of making the basis reductions otherwise required under paragraph (b) of this section, Transferor and Acquiring may elect to reduce Transferor's basis in Acquiring stock that is received in the transaction without the recognition of gain or loss (the section 362(e)(2)(C) election). The section 362(e)(2)(C) election may be made protectively and will have no effect to the extent that property transferred in the transaction is determined not to be subject to section 362(e)(2) and this section. However, the election is irrevocable once it is made. A section 362(e)(2)(C) election is made and effective if—

(i) Prior to the filing of a Section 362(e)(2)(C) Statement (described in paragraph (d)(3)(i) of this section), Transferor and Acquiring enter into a written, binding agreement to elect to apply section 362(e)(2)(C); and

(ii) The Section 362(e)(2)(C) Statement is filed in accordance with the provisions of paragraph (d)(3) of this section.

(2) ***Effect of section 362(e)(2)(C) election.*** If a section 362(e)(2)(C) election is made and in effect—

(i) An amount equal to the portion of Transferor's net built-in loss (as defined in paragraph (g)(3) of this section) that would otherwise be applied to reduce asset basis under paragraph (b) of this section is allocated among the Acquiring shares received or deemed received in the exchange (in proportion to the value of such shares) and applied to reduce Transferor's basis (determined without regard to section 362(e)(2) and this section) in each such share; and

(ii) Acquiring's basis in loss duplication property received from Transferor in the transaction is not determined under section 362(e)(2) and this section.

(3) ***Section 362(e)(2)(C) Statement*** —

(i) ***Form and contents of statement.*** The Section 362(e)(2)(C) Statement is to be titled “Section 362(e)(2)(C) Statement.” The Section 362(e)(2)(C) Statement must—

(A) Identify (by name and tax identification number, if any) Transferor and Acquiring;

(B) State that Transferor and Acquiring have entered into a written, binding agreement to elect to apply section 362(e)(2)(C) as required in paragraph (d)(1)(i) of this section; and

(C) State the date of the transaction (or, if the transaction includes transfers on more than one date, then the dates of all transfers) to which the election applies.

(ii) ***Filing the Section 362(e)(2)(C) Statement.*** In general, the Section 362(e)(2)(C) Statement is filed by the person or entity described in the applicable paragraph of this paragraph (d)(3)(ii). Thus, if Transferor is a partnership, S corporation, trust (including a subpart E trust), or other pass-through entity, or Acquiring is an S corporation, the entity (and not the partners, shareholders, or other persons having an interest in the entity or its property) is the person that must file the Section 362(e)(2)(C) Statement, without regard to whether such entity is foreign or domestic. However, in the case of a CFC or CFP, the controlling U.S. shareholders of the CFC or the reporting U.S. partners of the CFP, respectively, file the Section 362(e)(2)(C) Statement.

(A) ***Transferor is a person required to file a U.S. return.*** If Transferor is a person required to file a U.S. return for the year of the transfer, Transferor must include the Section 362(e)(2)(C) Statement on or with its timely filed (including extensions) original U.S. return for the taxable year in which the transfer occurred.

(B) ***Transferor is a CFC or CFP and not required to file a U.S. return.*** If paragraph (d)(3)(ii)(A) of this section does not apply and Transferor is either a CFC or a CFP on the date of the transfer, all of Transferor's controlling U.S. shareholders (in the case of a CFC) or all of Transferor's reporting U.S. partners (in the case of a CFP) must include the Section 362(e)(2)(C) Statement on or with their timely filed (including extensions) original U.S. returns for their taxable years in which the transfer occurred.

(C) ***Transferor is not a person required to file a U.S. return, a CFC, or a CFP, but Acquiring is required to file U.S. return.*** If paragraphs (d)(3)(ii)(A) and (B) of this section do not apply and Acquiring is a person required to file a U.S. return for the year of the transfer, Acquiring must include the Section 362(e)(2)(C) Statement on or with its timely filed (including extensions) original U.S. return for the taxable year in which the transfer occurred.

(D) ***Transferor is not a person required to file a U.S. return, a CFC, or a CFP, Acquiring is not required to file a U.S. return, but Acquiring is a CFC.*** If paragraphs (d)(3)(ii)(A) through (C) of this section do not apply and Acquiring is a CFC on the date of the transfer, all of Acquiring's controlling U.S. shareholders must include the Section 362(e)(2)(C) Statement on or with their timely filed (including extensions) original U.S. returns for their taxable years in which the transfer occurred.

(E) ***Neither Transferor nor Acquiring is a person required to file a U.S. return, a CFC, or a CFP, but Transferor later becomes a person required to file a U.S. return, a CFC, or a CFP.*** If paragraphs (d)(3)(ii)(A) through (D) of this section do not apply and Transferor becomes a person required to file a U.S. return, a CFC, or a CFP, Transferor (if required to file a U.S. return), all of Transferor's controlling U.S. shareholders (if Transferor becomes a CFC not otherwise required to file a U.S. return), or all of Transferor's reporting U.S. partners (if Transferor becomes a CFP not otherwise required to file a U.S. return) must include the Section 362(e)(2)(C) Statement on or with their timely filed (including extensions) original U.S. returns for their taxable years in which an event described in this paragraph (d)(3)(ii)(E) first occurs. For purposes of this paragraph (d)(3)(ii)(E), the term Transferor includes any person holding property with a basis determined directly or indirectly by reference to Transferor's basis in the Acquiring stock received in the transaction.

(F) ***Transferor is not and does not become a person required to file a U.S. return, a CFC, or a CFP, Acquiring is not, but later becomes either a person required to file a U.S. return, a CFC, or a CFP.*** If paragraphs (d)(3)(ii)(A) through (E) of this section do not apply and Acquiring becomes a person required to file a U.S. return, a CFC, or a CFP, Acquiring (if required to file a U.S. return), all of Acquiring's controlling U.S. shareholders (if Acquiring becomes a CFC not otherwise required to file a U.S. return), or all of Acquiring's reporting U.S. partners (if Acquiring becomes a CFP not otherwise required to file a U.S. return) must include the Section 362(e)(2)(C) Statement on or with their timely filed (including extensions) original U.S. returns for their taxable years in which an event described in this paragraph (d)(3)(ii)(F) first occurs. For purposes of this paragraph (d)(3)(ii)(F), the term Acquiring includes any person holding property with a basis determined directly or indirectly by reference to Acquiring's basis in loss duplication property received in the transaction.

(G) ***Transferor and Acquiring are not and do not become a person required to file a U.S. return, a CFC, or a CFP, but the basis of the loss duplication property or Acquiring stock later becomes relevant for Federal tax purposes.*** If paragraphs (d)(3)(ii)(A) through (F) of this section do not apply and, in a transferred basis transaction, a person required to file a U.S. return, a CFC, or a CFP acquires either loss duplication property or Acquiring stock that was received in the loss duplication transaction, or any property the basis of which is determined in whole or in part by reference to any such property or stock, all such persons (or, in the case of a CFC or CFP not required to file a U.S. return, all the controlling U.S. shareholders or all the reporting U.S. partners, as applicable) must include the Section 362(e)(2)(C) Statement on or with their timely filed (including extensions) original U.S. returns for their first taxable year(s) in which there occurs an event or events described in this paragraph (d)(3)(ii)(G).

(e) ***Transfers by partnerships and S corporations*** —

(1) ***Transfers by partnerships.*** If a partnership transfers property in a loss duplication transaction with respect to which a section 362(e)(2)(C) election is made, the resulting reduction to the partnership's basis in the Acquiring stock received in exchange for the loss duplication property is treated as an expenditure of the partnership described in section 705(a)(2)(B).

(2) ***Transfers by S corporations.*** If an S corporation transfers property in a loss duplication transaction with respect to which a section 362(e)(2)(C) election is made, the resulting reduction to the S corporation's basis in the Acquiring stock received in exchange for the loss duplication property is treated as an expense of the S corporation described in section 1367(a)(2)(D).

(f) ***Transfers to S corporations.*** If a person transfers property to an S corporation in a loss duplication transaction, any resulting reduction under section 362(e)(2) and this section to the S corporation's basis in the property received is not treated as an expense of the S corporation described in section 1367(a)(2)(D).

(g) ***Definitions.*** For purposes of section 362(e)(2) and this section—

(1) ***Loss duplication property*** is any property—

(i) That is transferred by Transferor to Acquiring in a loss duplication transaction (as defined in paragraph (g)(2) of this section); and

(ii) That Acquiring would take with a basis in excess of value immediately after the transaction; for this purpose, the basis Acquiring would take in the property is determined immediately after the transaction and without regard to section 362(e)(2) and this section, but otherwise taking into account all applicable provisions of law, including, without limitation, section 362(e)(1).

(2) A *loss duplication transaction* is a section 362(a) transaction in which Acquiring's aggregate basis in the property received from Transferor would, but for section 362(e)(2) and this section, exceed the aggregate value of such property immediately after the transaction. For this purpose—

(i) A transaction is a section 362(a) transaction if it is described in section 362(a) without regard to whether it is also described in any other provision of the Internal Revenue Code (Code), including, without limitation, section 362(b); and

(ii) Acquiring's aggregate basis in the property received from Transferor is determined immediately after the transaction and without regard to section 362(e)(2) and this section, but otherwise taking into account all applicable provisions of law, including, without limitation, section 362(e)(1).

(3) ***Transferor's net built-in loss*** is the excess of—

(i) Acquiring's aggregate basis (determined under paragraph (g)(2)(ii) of this section) in all property received from Transferor in a loss duplication transaction, over

(ii) The aggregate value of such property immediately after the transaction.

(4) A property's *built-in loss* is the excess of Acquiring's basis in the property (determined as described in paragraph (g)(1)(ii) of this section) over the property's value (determined immediately after the transaction).

(5) A property's *allocable portion of Transferor's net built-in loss* is the portion of Transferor's net built-in loss that bears the same ratio to Transferor's net built-in loss that the property's built-in loss bears to the aggregate built-in losses reflected in the bases of loss duplication property transferred by Transferor in the transaction.

(6) A *U.S. return* is a return of income under section 6012 or an information return under Subtitle F, Chapter 61, Subchapter A, Part III of the Code (sections 6031 and following) or the regulations thereunder, that the taxpayer is unconditionally required to file. Thus, the term does not include elective forms or statements that are required to be filed only to obtain a particular tax treatment, including forms filed to make an election or to reduce or avoid withholding by a person not otherwise required to file a U.S. return (as described in this paragraph (g)(6)) (for example, a notice of nonrecognition under § 1.1445-2(d)).

(7) A *controlled foreign corporation* (CFC) is any corporation described in section 957 or section 953(c).

(8) A *controlling U.S. shareholder* is any person that is treated as a controlling U.S. shareholder under § 1.964-1(c)(5) because such person either owns a direct interest in the CFC or is treated as owning an interest in the CFC by reason of section 318(a)(2) (attribution from partnerships, estates, trusts, and corporations).

(9) A *controlled foreign partnership* (CFP) is any partnership treated as a controlled foreign partnership for purposes of section 6038.

(10) A *reporting U.S. partner* is any partner of a CFP that is required to file an information return with respect to the CFP pursuant to section 6038 or the regulations thereunder, without regard to § 1.6038-3(c) or (j). In addition, in applying the constructive ownership rules of § 1.6038-3(b)(4), the term "nonresident alien" is replaced by the term "individual."

(11) The term *stock* means both Acquiring stock and Acquiring securities received by Transferor in the transaction if gain or loss on the receipt of the stock or securities is not recognized in whole or in part.

(12) ***Value*** —

(i) ***General rule.*** The term *value* means fair market value.

(ii) ***Special rule for transfers of partnership interests.*** Notwithstanding the general rule in paragraph (g)(12)(i) of this section, when referring to a partnership interest, for purposes of section 362(e)(2) and this section, the term *value* means the sum of the cash that Acquiring would receive for the interest, assuming an exchange between a willing buyer and a willing seller (neither being under any compulsion to buy or sell and both having reasonable knowledge of relevant facts), increased by any § 1.752-1 liabilities (as defined in § 1.752-1(a)(4)) of the partnership allocated to Acquiring with regard to such transferred interest under section 752 immediately after the transfer to Acquiring. See § 1.743-1 regarding the application of section 743(b) following a section 362(e) basis reduction.

(h) ***Examples.*** The examples in this paragraph (h) illustrate the application of section 362(e)(2) and the provisions of this section. Unless the facts otherwise indicate, the examples use the following nomenclature and assumptions: X, Y, P, S, S1, and S2 are domestic corporations; A and B are U.S. individuals; FC1 and FC2 are foreign corporations and are not engaged in a U.S. trade or business, have no U.S. real property interests, and have no other relationships, activities, or interests that would cause them, their shareholders, or their property to be subject to tax imposed under any provision of subtitle A of the Internal Revenue Code (federal income tax); there is no applicable income tax treaty; PRS is a domestic partnership; no election is made under section 362(e)(2)(C); and the transferred property is not importation property (as defined in § 1.362-3(c)(2)) and the transfers are not loss importation transactions (as defined in § 1.362-3(c)(3)), so that the basis of no property is determined under section 362(e)(1). All persons and transactions are unrelated unless the facts indicate otherwise, all taxpayers are on a calendar tax year, and all other relevant facts are set forth in the examples. See § 1.362-3(f) for additional examples illustrating the application of section 362(e)(2) and this section, including to transactions that are subject to section 362(e)(2), and section 362(e)(1).

> *Example 1. Transfer described in section 351.* (i) *Basic application of section.* (A) *Facts.* A owns Asset 1 (basis $90, value $60) and Asset 2 (basis $110, value $120). In a transaction to which section 351 applies, A transfers Asset 1 and Asset 2 to X in exchange for a single outstanding share of X stock representing all the outstanding X stock immediately after the transaction.
> (B) *Analysis*—(*1*) *Loss duplication transaction.* A's transfer of Asset 1 and Asset 2 is a section 362(a) transaction. But for section 362(e)(2) and this section, X's aggregate basis in those assets would be $200 ($90 + $110), which would exceed the aggregate value of the assets $180 ($60 + $120) immediately after the transaction. Accordingly, the transfer is a loss duplication transaction and A has a net built-in loss of $20 ($200−$180).

(*2*) *Identifying loss duplication property.* But for section 362(e)(2) and this section, X's basis in Asset 1 would be $90, which would exceed Asset 1's $60 value immediately after the transaction. Accordingly, Asset 1 is loss duplication property. But for section 362(e)(2) and this section, X's basis in Asset 2 would be $110, which would not exceed Asset 2's $120 value immediately after the transaction. Accordingly, Asset 2 is not loss duplication property.

(C) *Basis in loss duplication property.* X's basis in Asset 1 is $70, computed as its $90 basis under section 362(a) reduced by A's $20 net built-in loss.

(D) *Basis in other property.* Under section 362(a), X has a transferred basis of $110 in Asset 2. Under section 358(a), A has an exchanged basis of $200 in the X stock it receives in the transaction.

(ii) *Section 362(e)(2)(C) election.* The facts are the same as in paragraph (i)(A) of this *Example 1,* except that A and X make an election under section 362(e)(2)(C). Under paragraph (d)(2)(i) of this section, A reduces its basis in the X stock, as determined without regard to section 362(e)(2) and this section, by the amount of A's net built-in loss that would have been applied to reduce X's basis in Asset 1 had the section 362(e)(2)(C) election not been made. In addition, no reduction is made to X's basis in Asset 1, as determined without regard to section 362(e)(2) and this section. As a result, A's basis in the X stock is $180 ($200−$20), X's basis in Asset 1 is $90, and X's basis in Asset 2 is $110.

Example 2. Transfer described in both section 351 and section 368(a)(1)(B). (i) *Basic application of section*—(A) *Facts.* P owns the sole outstanding share of S1 stock and the ten outstanding shares of S2 stock. In a transaction to which section 351 applies and that is described in section 368(a)(1)(B), P transfers its ten S2 shares to S1 in exchange for an additional ten shares of S1 voting stock. At the time of the transfer, P has a basis of $10 each in five of its S2 shares (Shares 1-5) and a basis of $5 each in its other five S2 shares (Shares 6-10), and the value of each share is $7.
(B) *Analysis*—(*1*) *Loss duplication transaction.* P's transfer of the S2 shares is a section 362(a) transaction notwithstanding that it is also a transaction described in section 368(a)(1)(B) and therefore section 362(b). But for section 362(e)(2) and this section, S1's aggregate basis in the S2 shares would be $75 ($10 × 5, or $50, for Shares 1-5 + $5 × 5, or $25, for Shares 6-10). Thus, S1's $75 aggregate basis in the shares would exceed the aggregate value of the shares, $70 ($7 × 10 shares), immediately after the transaction. Accordingly, the transfer is a loss duplication transaction and P has a net built-in loss of $5 ($75−$70).

(*2*) *Identifying loss duplication property.* But for section 362(e)(2) and this section, S1's basis in each of Shares 1-5 would be $10, which would exceed each share's $7 value immediately after the transaction. Accordingly, Shares 1-5 are each loss duplication property. But for section 362(e)(2)

and this section, S1's basis in each of Shares 6-10 would be $5, which would not exceed each share's $7 value immediately after the transaction. Accordingly, Shares 6-10 are not loss duplication property.

(C) *Basis in loss duplication property.* S1's basis in each of Shares 1-5 is $9, computed as its $10 basis (determined without regard to section 362(e)(2) and this section) reduced by $1, the share's allocable portion (1/5) of P's net built-in loss ($5).

(D) *Basis in other property.* Under section 362(a), S1 has a transferred basis of $5 in each of Shares 6-10. Under section 358(a), P has an exchanged basis in the ten S1 shares it receives in the exchange ($10 in each of the five S1 shares received in exchange for Shares 1-5 and $5 in each of the five S1 shares received in exchange for Shares 5-10).

(ii) *Section 362(e)(2)(C) election.* The facts are the same as in paragraph (i)(A) of this *Example 2,* except that an election under section 362(e)(2)(C) is made to reduce P's basis in the shares of S1 stock received in the exchange. Under paragraph (d)(2)(i) of this section, P reduces its basis in the S1 stock by $5, the amount of P's net built-in loss that S1's basis in the S2 shares would have been reduced under section 362(e)(2) and this section had the section 362(e)(2)(C) election not been made, and no reduction is made to S1's basis in the S2 stock (as determined without regard to section 362(e)(2) and this section). Because an election is being made under section 362(e)(2)(C), P's basis in the new S1 shares is not determined under the general rule of § 1.358-2(a)(2)(i) (under which P's basis in each new S1 share would be equal to the basis of the S2 share transferred in exchange for the S1 share). Section 1.358-2(a)(2)(viii)(B). Accordingly, P's basis in each new S1 share will be $7, the share's allocable portion of P's $75 aggregate basis in the S2 shares transferred in the transaction (or, $7.50 per share), reduced under paragraph (d)(2)(i) of this section by the $5 that would have been applied to reduce S1's basis in the S2 shares had the section 362(e)(2)(C) election not been made (or $.50 per share). Under paragraph (d)(2)(ii) of this section and section 362(a), S1 receives five shares of the S2 stock with a basis of $10 each and five shares of the S2 stock with a basis of $5 each.

Example 3. Transfer described in both section 351 and section 368(a)(1)(A), multiple transferors, elimination of duplicated loss. (i) *Facts.* A owns Asset 1 (basis $120, value $130) and all the outstanding shares of X stock. B owns all the outstanding shares of Y stock (basis $150). Y owns Asset 2 (basis $250, value $210). Pursuant to a single plan, A transfers Asset 1 to X in exchange for additional X shares and, in a transaction qualifying as a reorganization described in section 368(a)(1)(A), Y merges with and into X. In the merger, B receives X stock with a basis equal to B's basis in its Y stock immediately before the merger. A's transfer of Asset 1 to X in exchange for X stock and Y's transfer of Asset 2 to X in the merger are both transactions to which section 351 applies. Notwithstanding that the transfers by A and Y are pursuant to a single plan forming one transaction, section 362(e)(2) and this section apply to each transferor separately.

(ii) *Application of section to A's transfer of Asset 1.* A's transfer of Asset 1 is a section 362(a) transaction. But for section 362(e)(2) and this section, X's basis in Asset 1 would be $120, which would not exceed Asset 1's $130 value immediately after the transaction. Accordingly, A's transfer of Asset 1 is not a loss duplication transaction notwithstanding that, taking both A's transfer and Y's transfer into account, X has an aggregate net loss in Asset 1 and Asset 2. Because Asset 1 is not received in a loss duplication transaction, it is not loss duplication property and section 362(e)(2) and this section do not apply to A's transfer of Asset 1.

(iii) *Application of section to Y's transfer of Asset 2*—(A) *Analysis*—(*1*) *Loss duplication transaction.* Y's transfer of Asset 2 to X is a section 362(a) transaction, notwithstanding that it is also a transaction described in section 368(a)(1)(A) and therefore section 362(b). But for section 362(e)(2) and this section, X's basis in Asset 2 would be $250, which would exceed Asset 2's $210 value immediately after the transaction. Accordingly, Y's transfer is a loss duplication transaction and Y has a net built-in loss of $40.

(*2*) *Identifying loss duplication property.* But for section 362(e)(2) and this section, X's basis in Asset 2 would be $250, which would exceed Asset 2's $210 value immediately after the transaction. Accordingly, Asset 2 is loss duplication property.

(B) *Basis in loss duplication property.* Although Asset 2 is loss duplication property, section 362(e)(2) does not apply to Y's transfer of Asset 2 to X because Y distributes all of the X stock received in the exchange without recognizing gain or loss, and, upon completion of the transaction, no person will hold the X stock or any other asset with a basis determined in whole or in part by reference to Y's basis in such stock. Accordingly, under paragraph (c)(1) of this section, X's basis in Asset 2 is not determined under section 362(e)(2) and this section. Thus, under section 362(a), X's basis in Asset 2 is $250.

(iv) *Basis in other property.* Under section 358, A's basis in the X stock received in exchange for Asset 1 is $120 and B's basis in the X stock received in the merger is $150. Under section 362(a), X's basis in Asset 1 is $120.

Example 4. Transfer described in both section 351 and section 368(a)(1)(D), followed by a distribution qualifying under section 355. (i) *Basic transaction*—(A) *Facts.* A and B each own one of the two outstanding shares of X common stock. X's assets include Asset 1 (basis $120, value $70), Asset 2 (basis $160, value $110), and Asset 3 (basis $220, value $240). In a transaction to which section 351 applies and that is described in section 368(a)(1)(D), X transfers Asset 1, Asset 2, and Asset 3 to Y in exchange for all the Y stock; then, in a distribution that qualifies under section 355, X distributes all the Y stock received in the exchange to A in exchange for all of A's X stock. Under section 361(c)(1), X does not recognize gain or loss as a result of the distribution of all the Y stock.

(B) *Analysis*—(*1*) *Loss duplication transaction.* X's transfer of Asset 1, Asset 2, and Asset 3 is a section 362(a) transaction. But for section 362(e)(2) and this section, Y's aggregate basis in those assets would be $500 ($120 + $160 + $220). The aggregate value of the assets immediately after the transaction is $420 ($70 + $110 + $240). Thus, Y's aggregate basis in the assets would exceed the aggregate value of the assets immediately after the transaction. Accordingly, the transfer is a loss duplication transaction and X has a net built-in loss of $80 ($500 − $420).

(*2*) *Identifying loss duplication property.* But for section 362(e)(2) and this section, Y's basis in Asset 1 would be $120, which would exceed Asset 1's $70 value immediately after the transaction. Accordingly, Asset 1 is loss duplication property. But for section 362(e)(2) and this section, Y's basis in Asset 2 would be $160, which would exceed Asset 2's $110 value immediately after the transaction. Accordingly, Asset 2 is also loss duplication property. But for section 362(e)(2) and this section, Y's basis in Asset 3 would be $220 and would therefore not exceed Asset 3's $240 value immediately after the transaction. Accordingly, Asset 3 is not loss duplication property.

(C) *Basis in loss duplication property.* Although Asset 1 and Asset 2 are each loss duplication property, X will distribute the Y stock received in exchange for Asset 1 and Asset 2 without recognition of gain or loss, and, upon completion of the transaction, no person will hold the Y stock received by X or any other asset with a basis determined in whole or in part by reference to X's basis in the Y stock received in the exchange. (A's basis in the Y stock will be determined by reference to his basis in his X stock.) Accordingly, under paragraph (c)(1) of this section, Y's bases in Asset 1 and Asset 2 are determined under section 362(a) and not under section 362(e)(2) and this section. Thus, Y's basis in Asset 1 is $120 and Y's basis in Asset 2 is $160.

(D) *Basis in other property.* Under section 358, A's basis in the Y stock received in exchange for his X stock is determined by reference to his basis in his X stock surrendered. Under section 362(a), Y's basis in Asset 3 is $220.

(ii) *Section 355(e)*—(A) *Facts.* The facts are the same as in paragraph (i)(A) of this *Example 4,* except that, after the section 355 distribution, Y is acquired pursuant to a plan (within the meaning of § 1.355-7), resulting in the application of section 355(e) to the transactions.

(B) *Analysis.* Because section 361(c)(2), and not section 361(c)(1), will apply to X's distribution of Y stock, X will not qualify for nonrecognition treatment on the distribution of the Y stock. As a result, paragraph (c)(1) of this section does not apply to the transaction, and Y's bases in Asset 1 and Asset 2, the loss duplication property, are determined under section 362(e)(2) and this section. Asset 1 has a built-in loss of $50 ($120 − $70), and Asset 2 has a built-in loss of $50 ($160 − $110). Thus, Asset 1's allocable portion of X's net built-in loss is $40 ($50/$100 × $80), and Asset 2's allocable portion of X's net built-in loss is $40 ($50/$100 × $80). Accordingly, Y receives Asset 1 with a basis of $80 ($120 − $40) and Asset 2 with a basis of $120 ($160 − $40).

(iii) *Retained stock and securities*—(A) *Facts.* The facts are the same as in paragraph (i)(A) of this *Example 4,* except that X transfers Asset 1, Asset 2, and Asset 3 to Y in exchange for Y stock and Y securities, each constituting half of the consideration. In addition, for a valid business purpose, X retains Y stock and Y securities each worth 1 percent of the total consideration.

(B) *Analysis.* Paragraph (c)(1) of this section applies only to the extent that stock received in a transaction is distributed without recognition of gain or loss. Thus, section 362(e)(2) and this section apply to the extent that property was exchanged for the retained Y stock and Y securities (2 percent of the total). Accordingly, Y reduces its basis in Asset 1 and in Asset 2, the loss duplication property, by $1.60 (two percent of X's $80 net built-in loss). Asset 1 has a built-in loss of $50 ($120 − $70), and Asset 2 has a built-in loss of $50 ($160 − $110). Thus, Asset 1's allocable portion of X's net built-in loss is $.80 ($50/$100 × $1.60), and Asset 2's allocable portion of X's net built-in loss is $.80 ($50/$100 × $1.60). As a result, Y receives Asset 1 with a basis of $119.20 ($120 − $.80) and Asset 2 with a basis of $159.20 ($160 − $.80).

(iv) *Retained stock and securities with a section 362(e)(2)(C) election*—(A) *Facts.* The facts are the same as in paragraph (iii)(A) of this *Example 4,* except that an election under section 362(e)(2)(C) is made to reduce X's bases in its retained Y stock and retained Y securities.

(B) *Analysis.* Under paragraph (d)(2)(i) of this section, X reduces its basis in the retained Y stock and the retained Y securities (determined without regard to section 362(e)(2) and this section) by $1.60, the portion of X's $80 net built-in loss that would have been applied to reduce Y's basis in the transferred assets had the election to apply section 362(e)(2)(C) not been made. (Because the value of the Y stock and the value of the Y securities are equal, X's $500 basis in the transferred property would be allocated equally between the Y stock and the Y securities, $250 to each, under § 1.358-2(b)(2), and the retained Y stock and Y securities have a basis of $2.50 each (one percent of $250).) For the reasons set forth in paragraph (iii)(B) of this *Example 4,* Y would have been required to reduce its basis in the transferred assets by $1.60. Accordingly, X must reduce its aggregate basis in the retained Y stock and Y securities by $1.60. Under paragraph (d)(2)(i) of this section, the $1.60 basis reduction is allocated and applied to reduce X's bases in the retained Y stock and Y securities in proportion to the value of each. Because X retained Y stock and Y securities with equal values, X holds each of the retained Y stock and securities with an adjusted basis of $1.70 ($2.50 − $.80). Under paragraph (d)(2)(ii) of this section, Y receives Asset 1 with a basis of $120, Asset 2 with a basis of $160, and Asset 3 with a basis of $220.

Example 5. Transfer of liabilities. (i) *Liabilities described in section 358(d)(1)*—(A) *Basic application of section, no section 362(e)(2)(C) election*—(*1*) *Facts.* A owns Asset 1 (basis $800, value $700). A also has a $200 liability that has been taken into account for tax purposes and is thus described in section 358(d)(1), and not in sections 357(c)(3), 358(d)(2), and 358(h)(1). A transfers Asset 1 to X in exchange for a single outstanding share of X stock representing all the outstanding X stock immediately after the transaction and X's assumption of the liability. The

transfer is a transaction to which section 351 applies.
(*2*) *Analysis*—(*i*) *Loss duplication transaction.* A's transfer of Asset 1 is a section 362(a) transaction. But for section 362(e)(2) and this section, X's basis in Asset 1 would be $800, which would exceed Asset 1's $700 value immediately after the transaction. Accordingly, the transfer is a loss duplication transaction and A has a net built-in loss of $100 ($800 − $700).

(*ii*) *Identifying loss duplication property.* But for section 362(e)(2) and this section, X's basis in Asset 1 would be $800, which would exceed the $700 value of Asset 1 immediately after the transaction. Accordingly, Asset 1 is loss duplication property.

(*3*) *Basis in loss duplication property.* X's basis in Asset 1 is $700, computed as its $800 basis determined under section 362(a) reduced by A's $100 net built-in loss.

(*4*) *Basis in other property.* Under sections 358(a) and (d)(1), A's basis in the X stock is $600 ($800 basis in property transferred—$200 liability assumed).

(B) *Section 362(e)(2)(C) election.* The facts are the same as in paragraph (i)(A)(*1*) of this *Example 5,* except that A and X make an election under section 362(e)(2)(C). In this case, A's $100 net built-in loss that would have been applied to reduce X's basis in Asset 1 is applied to reduce A's basis in the X stock received. As a result, A's basis in the X stock is $500 ($600, as determined in paragraph (i)(A)(*4*) of this *Example 5,* reduced by $100) and X's basis in Asset 1 is $800.

(ii) *Contingent liabilities described in section 358(h)(1), section 358(h)(2)(A) exception applies*—(A) *Facts.* The facts are the same as in paragraph (i)(A)(*1*) of this *Example 5,* except that A's liability (valued at $200) has not been taken into account for tax purposes and is described in sections 358(d)(2) and 358(h)(1). However, Asset 1 is a trade or business and the liability is associated with the trade or business; as a result, the liability is described in section 358(h)(2)(A) and is excepted from the general rule of section 358(h)(1).

(B) *Analysis.* For the reasons set forth in paragraph (i)(A)(*2*) of this *Example 5,* A's transfer of Asset 1 is a loss duplication transaction, A has a net built-in loss of $100, and Asset 1 is loss duplication property.

(C) *Basis in loss duplication property.* For the reasons set forth in paragraph (i)(A)(*3*) of this *Example 5,* X's basis in Asset 1 is $700.

(D) *Basis in other property.* A's basis in the X stock is $800 under sections 358(a), 358(d)(2), and 358(h)(2)(A).

(E) *Section 362(e)(2)(C) election.* The facts are the same as in paragraph (ii)(A) of this *Example 5,* except that A and X make an election under section 362(e)(2)(C). In this case, A's $100 net built-in loss that would have applied to reduce X's basis in Asset 1 is applied to reduce A's basis in the X stock received. As a result, A's basis in the X stock is $700 ($800, as determined in paragraph (ii)(D) of this *Example 5,* reduced by $100). X's basis in Asset 1 is $800.

Example 6. Section 351 transfer with boot. (i) *Basic transaction*-(A) *Facts.* A owns Asset 1 (basis $80, value $100) and Asset 2 (basis $30, value $25). In a transaction to which section 351 applies, A transfers Asset 1 and Asset 2 to X in exchange for 10 shares of X stock and $25.
(B) *Analysis*—(*1*) *Loss duplication transaction.* A's transfer of Asset 1 and Asset 2 is a section 362(a) transaction. But for section 362(e)(2) and this section, X's aggregate basis in those assets would be $130, computed as follows. Under section 362(a), a corporation's basis in property acquired in a transaction to which section 351 applies is the same as the property's basis in the hands of the transferor, increased by any gain recognized to the transferor on such transfer. Under section 351(b), gain (but not loss) is recognized to the extent a transferor in a section 351 exchange receives other property or money in addition to the stock permitted to be received without the recognition of gain. To determine the amount of gain recognized under section 351(b), the consideration is allocated proportionately (by value) among the transferred properties. A's gain on the transfer is therefore computed as follows: Asset 1 reflects 80 percent of the value transferred ($100/$125) and Asset 2 reflects 20 percent of the value transferred ($25/$125). Thus, 80 percent of the stock (eight shares) and the cash ($20) are treated as being received in exchange for Asset 1 and 20 percent of the stock (two shares) and the cash ($5) are treated as being received in exchange for Asset 2. Thus, under section 351(b), A recognizes $20 of gain for the cash received in exchange for Asset 1, but A recognizes no loss for the amount received for Asset 2. As a result, under section 362(a), X would have a basis of $100 in Asset 1 and $30 in Asset 2. Thus, X's aggregate basis in the assets would be $130, which exceeds the $125 aggregate value of the assets ($100 + $25)). The transfer is a loss duplication transaction and A has a net built-in loss of $5 ($130−$125).

(*2*) *Identifying loss duplication property.* But for section 362(e)(2) and this section, X's basis in Asset 1 would be $100 (A's $80 basis increased by A's $20 gain recognized), which would not exceed Asset 1's $100 value immediately after the transaction. Accordingly, Asset 1 is not loss duplication property. But for section 362(e)(2) and this section, X's basis in Asset 2 would be $30, which would exceed Asset 2's $25 value immediately after the transaction. Accordingly, Asset 2 is loss duplication property.

(C) *Basis in loss duplication property.* X's basis in Asset 2 is $25, computed as its $30 basis under section 362(a) reduced by A's $5 net built-in loss.

(D) *Basis in other property.* Under section 362(a), X's basis in Asset 1 is $100 (A's $80 basis increased by the $20 gain recognized). Under section 358, A's basis in the X stock is $105 (the sum of its $80 basis in Asset 1, its $30 basis in Asset 2, and its $20 gain recognized, reduced by the $25 cash received in the exchange).

(ii) *Section 362(e)(2)(C) election.* The facts are the same as in paragraph (i)(A) of this *Example 6,* except that A and X elect to reduce A's stock basis under section 362(e)(2)(C). Under paragraph (d)(2)(i) of this section, A reduces its $105 basis in the X stock by $5, the amount of A's net built-in loss of that would have been applied to reduce X's basis in Asset 2 had the section 362(e)(2)(C) election not been made. As a result, A's basis in the X stock is $100, and X's basis in Asset 2 is $30.

Example 7. Section 304 sale of built-in loss stock. (i) *Basic transaction*—(A) *Facts.* A owns all the stock of X (basis $90, value $60) and all the stock of Y. A sells all his X stock to Y for $60. Under section 304, A is treated as though he transferred the X stock to Y in exchange for Y stock in a transaction to which section 351 applies. Then, Y is treated as redeeming the Y stock it was treated as having issued to A in the deemed section 351 transaction.
(B) *Analysis*—(*1*) *Loss duplication transaction.* A's deemed transfer of X stock to Y is a section 362(a) transaction. But for section 362(e)(2) and this section, Y's aggregate basis in the X stock would be $90, which would exceed the X stock's value of $60 immediately after the transaction. Accordingly, the transfer is a loss duplication transaction and A has a net built-in loss of $30.

(*2*) *Identifying loss duplication property.* But for section 362(e)(2) and this section, Y's basis in the X stock would be $90, which would exceed the X stock's $60 value immediately after the transaction. Accordingly, the X stock is loss duplication property.

(C) *Basis in loss duplication property.* Y's basis in the X stock is $60, its $90 basis determined without regard to section 362(e)(2) and this section, reduced by A's $30 net built-in loss.

(D) *Basis in other property.* Under section 358(a), A has an exchanged basis of $90 in the Y stock he is deemed to receive in the exchange; the effect of the deemed redemption of that stock is then determined under section 302.

(ii) *Section 362(e)(2)(C) election.* The facts are the same as in paragraph (i)(A) of this *Example 7,* except that the parties elect to reduce A's stock basis under section 362(e)(2)(C). For the reasons set forth in paragraphs (i)(B) and (C) of this *Example 7,* Y's basis in the X stock would be reduced by $30. Accordingly, A's basis in the deemed-issued Y stock is $60, his $90 basis otherwise determined under section 358(a) reduced by the $30 that would have been applied to reduce Y's basis in the X stock under section 362(e)(2) and this section; the effect of the deemed redemption of that stock is then determined under section 302. Y's basis in the X stock is $90.

Example 8. Transactions involving partnerships. (i) *Transfer by a partnership*—(A) *Basic application of section*—(*1*) *Facts.* PRS owns Asset 1 (basis $100, value $70). PRS contributes Asset 1 to X in a transaction to which section 351 applies.
(*2*) *Analysis*—(*i*) *Loss duplication transaction.* PRS's transfer of Asset 1 is a section 362(a) transaction. But for section 362(e)(2) and this section, X's basis in Asset 1 would be $100, which would exceed Asset 1's $70 value immediately after the transaction. Accordingly, the transfer is a loss duplication transaction and PRS has a net built-in loss of $30 ($100−$70).

(*ii*) *Identifying loss duplication property.* But for section 362(e)(2) and this section, X's basis in Asset 1 would be $100, which would exceed Asset 1's $70 value immediately after the transaction. Accordingly, Asset 1 is loss duplication property.

(*3*) *Basis in loss duplication property.* X's basis in Asset 1 is $70, computed as its $100 basis under section 362(a) reduced by PRS's $30 net built-in loss.

(*4*) *Basis in other property.* Under section 358(a), PRS has an exchanged basis of $100 in the X stock it receives in the exchange.

(B) *Section 362(e)(2)(C) election.* The facts are the same as in paragraph (i)(A)(*1*) of this *Example 8,* except that PRS and X elect to reduce PRS's stock basis under section 362(e)(2)(C). In this case, PRS's $30 net built-in loss (as determined in paragraph (i)(A)(*2*)(*i*) of this *Example 8*) that would have been applied to reduce X's basis in Asset 1 is applied to reduce PRS's basis in the X stock received. As a result, PRS's basis in the X stock is $70 ($100−$30) and X's basis in Asset 1 is $100. The $30 reduction to PRS's basis in the X stock is treated as an expenditure of PRS under section 705(a)(2)(B) and paragraph (e)(1) of this section. As a result, the partners of PRS must reduce their bases in their PRS interests.

(ii) *Transfer of interest in partnership with liability*—(A) *Basic application of section*—(*1*) *Facts.* A and two other individuals are equal partners in PRS. A's basis in its partnership interest is $247. A's share of PRS's § 1.752-1 liabilities (as defined in § 1.752-1(a)(4)) is $145. A transfers his partnership interest to X in a transaction to which section 351 applies. PRS has no election in effect under section 754. If X were to sell the PRS interest immediately after the transfer, X would receive $100 in cash or other property. In addition, assume that, taking into account the rules under § 1.752-4, X's share of PRS's § 1.752-1 liabilities (as defined in § 1.752-1(a)(4)) is $150 immediately after the transfer.

(*2*) *Analysis*—(*i*) *Loss duplication transaction.* A's transfer of its PRS interest is a section 362(a) transaction. But for section 362(e)(2) and this section, X's basis in the PRS interest, would be $252 (A's basis of $247, reduced by A's $145 share of PRS liabilities, increased by X's $150 share of PRS liabilities) and, under paragraph (g)(12)(ii) of this section, the value of the PRS interest would be $250 (the sum of $100, the cash X would receive if X immediately sold the interest, and $150, X's

share of the § 1.752-1 liabilities (as defined in § 1.752-1(a)(4)) under section 752 immediately after the transfer to X). Therefore, the transfer is a loss duplication transaction and A has a net built-in loss of $2 ($252−$250).

(*ii*) *Identifying loss duplication property.* But for section 362(e)(2) and this section, X's basis in the PRS interest would be $252, which would exceed the PRS interest's $250 value immediately after the transaction. Accordingly, the PRS interest is loss duplication property.

(*3*) *Basis in loss duplication property.* X's basis in the PRS interest is $250, computed as its $252 basis under section 362(a), taking into account the rules under section 752, reduced by A's $2 net built-in loss.

(*4*) *Basis in other property.* Under section 358, taking into account the rules under section 752, A has a basis of $102 ($247 reduced by A's $145 share of PRS liabilities) in the X stock he receives in the transaction.

(B) *Section 362(e)(2)(C) election.* The facts are the same as in paragraph (i)(A) of this *Example 8,* except that A and X make an election under section 362(e)(2)(C). Under paragraph (d)(2)(i) of this section, A reduces his basis in the X stock, as determined without regard to section 362(e)(2) and this section, by the amount of A's net built-in loss that would have been applied to reduce X's basis in the PRS interest had the section 362(e)(2)(C) election not been made. In addition, no reduction is made to X's basis in the PRS interest, as determined without regard to section 362(e)(2) and this section. As a result, A's basis in the X stock is $100 ($102−$2) and X's basis in the PRS interest is $252.

(C) *Transfer of partnership interest with liability, not loss duplication transaction.* The facts are the same as in paragraph (ii)(A)(1) of this *Example 8,* except that A's share of PRS's § 1.752-1 liabilities (as defined in § 1.752-1(a)(4)) is $155. But for section 362(e)(2) and this section, X's basis in the PRS interest would be $242 (A's basis of $247, reduced by A's $155 share of PRS liabilities, increased by X's $150 share of PRS liabilities), which would not exceed the PRS interest's $250 value immediately after the transaction. Accordingly, A's transfer of the PRS interest is not a loss duplication transaction and section 362(e)(2) and this section have no application to the transaction. Under section 362(a), X's basis in the PRS interest is $242 and, under section 358, taking into account the rules under section 752, A has a basis of $92 ($247 reduced by A's $155 share of PRS liabilities) in the X stock he receives in the transaction.

Example 9. Transactions involving S Corporations. (i) *Transfer by S Corporation*—(A) *No section 362(e)(2)(C) election*—(*1*) *Facts.* S, an S corporation as defined in section 1361(a)(1), owns Asset 1 (basis $100, value $70). S transfers Asset 1 to X in exchange for a single outstanding share of X stock representing all the outstanding X stock immediately after the transaction. S does not elect to treat X as a qualified subchapter S subsidiary. The transaction is one to which section 351

applies.
(*2*) *Analysis*—(*i*) *Loss duplication transaction.* S's transfer of Asset 1 is a section 362(a) transaction. But for section 362(e)(2) and this section, X's basis in Asset 1 would be $100, which would exceed Asset 1's $70 value immediately after the transaction. Accordingly, the transfer is a loss duplication transaction and S has a net built-in loss of $30 ($100−$70).

(*ii*) *Identifying loss duplication property.* But for section 362(e)(2) and this section, X's basis in Asset 1 would be $100, which would exceed Asset 1's $70 value immediately after the transaction. Accordingly, Asset 1 is loss duplication property.

(*iii*) *Basis in loss duplication property.* X's basis in Asset 1 is $70, computed as its $100 basis under section 362(a) reduced by S's $30 net built-in loss.

(*iv*) *Basis in other property.* Under section 358(a), S has an exchanged basis of $100 in the X stock it receives in the exchange.

(B) *Section 362(e)(2)(C) election.* The facts are the same as in paragraph (i)(A)(*1*) of this *Example 9,* except that S and X elect to reduce S's stock basis under section 362(e)(2). In this case, S's $30 built-in loss (as determined in paragraph (i)(A)(*2*)(*i*) of this *Example 9*) that would have been applied to reduce X's basis in Asset 1 is applied to reduce S's basis in the X stock received. As a result, S's basis in the X stock is $70 ($100 − $30) and X's basis in Asset 1 is $100. The $30 reduction to S's basis in the X stock is treated as an expense of S under section 1367(a)(2)(D) and paragraph (e)(2) of this section. As a result, the shareholders of S must reduce their bases in their S stock.

(ii) *Transfer to S Corporation*—(A) *Basic application of section.* (*1*) *Facts.* A owns Asset 1 (basis $90, value $60) and Asset 2 (basis $110, value $120). In a transaction to which section 351 applies, A transfers Asset 1 and Asset 2 to S, an S corporation as defined in section 1361(a)(1), in exchange for a single share of S stock representing all the outstanding S stock immediately after the transaction.

(*2*) *Analysis*—(*i*) *Loss duplication transaction.* A's transfer of Asset 1 and Asset 2 is a section 362(a) transaction. But for section 362(e)(2) and this section, S's aggregate basis in those assets would be $200 ($90 + $110), which would exceed the aggregate value of the assets $180 ($60 + $120) immediately after the transaction. Accordingly, the transfer is a loss duplication transaction and A has a net built-in loss of $20 ($200 − $180).

(*ii*) *Identifying loss duplication property.* But for section 362(e)(2) and this section, S's basis in Asset 1 would be $90, which would exceed Asset 1's $60 value immediately after the transaction. As a result, Asset 1 is loss duplication property. But for section 362(e)(2) and this section, S's basis in Asset 2 would be $110, which would not exceed Asset 2's $120 value immediately after the transaction. As a result, Asset 2 is not loss duplication property.

(*3*) *Basis in loss duplication property.* S's basis in Asset 1 is $70, computed as its $90 basis under section 362(a) reduced by S's $20 net built-in loss. The $20 reduction to S's basis in Asset 1 does not require a reduction to A's basis in its S stock under section 1367(a)(2)(D). See paragraph (f) of this section.

(*4*) *Basis in other property.* Under section 362(a), S has a transferred basis of $110 in Asset 2. Under section 358(a), A has a basis of $200 in the S stock it receives in the exchange.

(B) *Section 362(e)(2)(C) election—*(*1*) *Application of section to transaction.* The facts are the same as in paragraph (ii)(A)(*1*) of this *Example 9,* except that A and S elect to reduce A's stock basis under section 362(e)(2)(C). In this case, A's $20 built-in loss (as determined in paragraph (ii)(A)(*2*) of this *Example 9*) that would have been applied to reduce S's basis in Asset 1 is applied to reduce A's basis in the S stock received. As a result, A's basis in the S stock is $180 ($200 − $20), S's basis in Asset 1 is $90, and S's basis in Asset 2 is $110.

(*2*) *Tax consequences of subsequent disposition of transferred assets.* The facts are the same as in paragraph (ii)(B)(*1*) of this *Example 9* except that, in addition, the year after the transaction, S sells Asset 1 (basis $90, value $60) and Asset 2 (basis $110, value $120) for $180, recognizing the $20 net built-in loss. The loss is allocated to A and reduces A's basis in the S stock from $180 to $160 under section 1367(a)(2)(B). If A then sells its S stock for its $180 value, A will recognize a gain of $20.

Example 10. Triangular reorganizations. (i) *Facts.* P owns all the stock of S1 and X owns all the stock of S2. In a merger described in section 368(a)(2)(D), S2 merges with and into S1, and X receives stock of P in exchange for its S2 stock. S2 has a net built-in loss in its assets acquired by S1 in the transaction.
(ii) *Analysis.* The reorganization is not a section 362(a) transaction, notwithstanding that, under § 1.358-6(c), P is treated as acquiring and then transferring S2's assets to S1 for purposes of determining P's adjustment to its basis in its S1 stock. Accordingly, S1's basis in the property acquired in the transaction is not determined under section 362(e)(2) and this section; it is determined under section 362(b).

Example 11. Transfers of importation property with non-importation property. (*i*) *Single transferor, loss importation transaction.* (A) *Facts.* FC1 transfers Asset 1 (basis $80, value $50), Asset 2 (basis $120, value $110), and Asset 3 (basis $32, value $40) to DC in a transaction to which section 351 applies. Asset 1 is not importation property within the meaning of § 1.362-3(c)(2). Asset 2 and Asset 3 are importation property within the meaning of § 1.362-3(c)(2).

(B) *Application of section 362(e)(1).* Immediately after the transfer, and without regard to section 362(e)(1) or section 362(e)(2) and this section, DC's aggregate basis in importation property (Asset 2 and Asset 3) would be $152. The aggregate value of the importation property immediately after the transfer is $150. Accordingly, the transaction is a loss importation transaction within the meaning of § 1.362-3(c)(3) and, under section 362(e)(1), DC's bases in Asset 2 and Asset 3 would equal the value of each, $110 and $40, respectively.

(C) *Application of section 362(e)(2) and this section.* (*1*) *Analysis.* (*i*) *Loss duplication transaction.* FC1's transfer of Asset 1, Asset 2, and Asset 3 is a transaction described in section 362(a). But for section 362(e)(2) and this section, DC's aggregate basis in those assets would be $230 ($80 under section 362(a) + $110 + $40 under section 362(e)(1)), which would exceed the aggregate value of the assets $200 ($50 + $110 + 40) immediately after the transaction. Accordingly, the transfer is a loss duplication transaction and FC1 has a net built-in loss of $30 ($230 − $200).

(*ii*) *Identifying loss duplication property.* But for section 362(e)(2) and this section, DC's basis in Asset 1 would be $80, which would exceed Asset 1's $50 value immediately after the transaction. Accordingly, Asset 1 is loss duplication property. But for section 362(e)(2) and this section, DC's basis in Asset 2 would be $110, which would not exceed Asset 2's $110 value immediately after the transaction. Accordingly, Asset 2 is not loss duplication property. But for section 362(e)(2) and this section, DC's basis in Asset 3 would be $40, which would not exceed Asset 3's $40 value immediately after the transaction. Accordingly, Asset 3 is not loss duplication property.

(D) *Basis in loss duplication property.* DC's basis in Asset 1 is $50, computed as its $80 basis under section 362(a) reduced by FC1's $30 net built-in loss.

(E) *Basis in other property.* Under section 362(e)(1), DC's basis in Asset 2 is $110 and DC's basis in Asset 3 is $40. Under section 358(a), FC1 has an exchanged basis of $232 in the DC stock it receives in the transaction.

(ii) *Multiple transferors, no importation of loss.* (A) *Facts.* The facts are the same as paragraph (i)(A) of this *Example 11,* except that, in addition, FC2 transfers Asset 4 (basis $100, value $150) to DC as part of the same transaction. Asset 4 is importation property within the meaning of § 1.362-3(c)(2).

(B) *Application of section 362(e)(1).* Immediately after the transfer, and without regard to section 362(e)(1) or section 362(e)(2) and this section, DC's aggregate basis in importation property (Asset 2, Asset 3, and Asset 4) would be $252 ($120 + $32 + $100). The aggregate value of the importation property immediately after the transfer is $300 ($110 + $40 + $150). Accordingly, the transaction is not a loss importation transaction within the meaning of § 1.362-3(c)(3) and DC's bases in the importation property is not determined under section 362(e)(1).

(C) *Application of section 362(e)(2) and this section.* Notwithstanding that the transfers by FC1 and FC2 are pursuant to a single plan forming one transaction, section 362(e)(2) and this section apply to each transferor separately.

(*1*) *Application of section to FC1.* (*i*) *Loss duplication transaction.* FC1's transfer of Asset 1, Asset 2, and Asset 3 is a transaction described in section 362(a). But for section 362(e)(2) and this section, DC's aggregate basis in those assets would be $232 ($80 + $120 + $32), which would exceed the aggregate value of the assets $200 ($50 + $110 + $40) immediately after the transaction. Accordingly, the transfer is a loss duplication transaction and FC1 has a net built-in loss of $32 ($232 − $200).

(*ii*) *Identifying loss duplication property.* But for section 362(e)(2) and this section, DC's basis in Asset 1 would be $80, which would exceed Asset 1's $50 value immediately after the transaction. Accordingly, Asset 1 is loss duplication property. But for section 362(e)(2) and this section, DC's basis in Asset 2 would be $120, which would exceed Asset 2's $110 value immediately after the transaction. Accordingly, Asset 2 is also loss duplication property. But for section 362(e)(2) and this section, DC's basis in Asset 3 would be $32, which would not exceed Asset 3's $40 value immediately after the transaction. Accordingly, Asset 3 is not loss duplication property.

(*iii*) *Basis in loss duplication property.* DC's basis in Asset 1 is $56, computed as its $80 basis under section 362(a) reduced by $24, its allocable portion of FC1's $32 net built-in loss ($30/40 × $32). DC's basis in Asset 2 is $112, computed as its $120 basis under section 362(a) reduced by $8, its allocable portion of FC1's $40 net built-in loss ($10/$40 × $32).

(*iv*) *Basis in other property.* Under section 358(a), FC1 has an exchanged basis of $232 in the DC stock it receives in the transaction.

(*2*) *Application of section to FC2.* FC2's transfer of Asset 3 is not a loss duplication transaction because Asset 3's value exceeds its basis immediately after the transaction. Accordingly, under section 362(a), DC's basis in Asset 3 is $100.

Example 12. Section 362(e)(2)(C) elections with respect to transfers between persons that are not required to file a U.S. return and that are not CFCs or CFPs—(i) *Basic application of section.* On June 30, Year 1, FC1 transfers Asset 1 to FC2 in a transaction to which section 351 applies (the original transfer) and that is therefore a section 362(a) transaction. But for section 362(e)(2) and this section, FC2's basis in Asset 1 (determined immediately after the transfer, taking into account all applicable law, including section 362(e)(1)) exceeds the value of Asset 1 immediately after the transaction. Accordingly, the transaction is a loss duplication transaction and Asset 1 is loss duplication property. FC1 and FC2 executed a written, binding agreement to apply section 362(e)(2)(C) at some point before any Section 362(e)(2)(C) Statement is filed. However, the transfer was not entered into with a view to reducing or avoiding the Federal income tax liability of any person by avoiding the application of section 362(e)(2) and this section; further, no event described in paragraph (d)(3)(ii)(E), (F), or (G) of this section occurs prior to June 30, Year 3. As a result,

under paragraph (c)(2) of this section, section 362(e)(2) and this section do not apply to the transfer. Accordingly, FC2's basis in Asset 1 is determined under section 362(a), no section 362(e)(2)(C) election can be made, and any protective filing of a Section 362(e)(2)(C) Statement will have no effect.
(ii) *Loss duplication property later acquired by a person required to file U.S. return.* The facts are the same as in paragraph (i) of this *Example 12,* except that, in addition, on January 1, Year 2, FC2 transfers Asset 1 to DC in an exchange to which section 351 applies. FC2's transfer is an event described in paragraph (d)(3)(ii)(G) of this section. As a result, paragraph (c)(2) does not except the original transfer from the application of section 362(e)(2) and this section. Under paragraph (d)(3)(ii)(G) of this section, DC must include the Section 362(e)(2)(C) Statement for the original transfer on or with its Year 2 U.S. return in order for that election to be effective. The result would be the same if, instead of FC2 transferring Asset 1 to DC, FC1 transferred its FC2 stock to DC in an exchange to which section 351 applies. (Further, if an asset transferred by FC1 or FC2 to DC is a loss asset immediately after its transfer to DC, DC's basis in that asset may be subject to section 362(e)(1).)

(iii) *Party to exchange later becomes a person required to file U.S. return.* The facts are the same as in paragraph (i) of this *Example 12,* except that, in addition, on January 1, Year 2, FC2 becomes engaged in a U.S. business. FC2's becoming engaged in a U.S. business is an event described in paragraph (d)(3)(ii)(F) of this section because it will cause FC2 to become a person required to file a U.S. return. As a result, paragraph (c)(2) of this section does not except the transfer from the application of section 362(e)(2) and this section. Under paragraph (d)(3)(ii)(F) of this section, FC2 must include the Section 362(e)(2)(C) Statement for the original transfer on or with its Year 2 U.S. return in order for the section 362(e)(2)(C) election for the original transfer to be effective.

(iv) *Statement not filed with respect to designated event.* The facts are the same as in paragraph (iii) of this *Example 12,* except that, in addition, FC1 became engaged in a U.S. trade or business on October 31, Year 1 and as a result became a person required to file a U.S. return, an event described in paragraph (d)(3)(ii)(E) of this section. As a result, paragraph (c)(2) of this section does not except the transfer from the application of section 362(e)(2) and this section. Further, in order for the election to be effective, FC1 must file the Section 362(e)(2)(C) Statement on or with its Year 1 U.S. return. See paragraph (d)(3)(ii)(E) of this section. A statement filed by FC2 on or with its Year 2 U.S. return has no effect. Thus, if FC1 does not file the statement, the election does not become effective and basis is determined under the general rule of section 362(e)(2).

(v) *Nonrecognition transfer of loss duplication property outside United States, transferee later becomes engaged in U.S. trade or business.* The facts are the same as in paragraph (i) of this *Example 12,* except that, in addition, on December 31, Year 1, FC2 transfers Asset 1 to FC3 in a transferred basis transaction. In Year 2, FC3 becomes engaged in a U.S. trade or business and as a result becomes a person required to file a U.S. return; Asset 1 is not used in or connected with the U.S. trade or business or otherwise subject to Federal income tax. FC3's becoming engaged in a U.S. trade or business is an event described in paragraph (d)(3)(ii)(F) of this section because FC3, a person who holds loss duplication property with a basis determined by FC2's basis in the property, will be required to file a U.S. return as a result of its

becoming engaged in a U.S. business. As a result, paragraph (c)(2) of this section does not except the transfer from the application of section 362(e)(2) and this section. Under paragraph (d)(3)(ii)(F) of this section, FC3 must include the Section 362(e)(2)(C) Statement for the original transfer on or with its Year 2 U.S. return in order for the section 362(e)(2)(C) election for the original transfer to be effective.

(i) [Reserved]

(j) ***Effective/applicability date.*** This section applies to transactions occurring after September 3, 2013, unless effected pursuant to a binding agreement that was in effect prior to September 3, 2013, and at all times thereafter. In addition, taxpayers may apply these regulations to transactions occurring after October 22, 2004. The introductory text and *Example 11* of paragraph (h) of this section apply with respect to transactions occurring on or after March 28, 2016, and also with respect to transactions occurring before such date as a result of an entity classification election under § 301.7701-3 of this chapter filed on or after March 28, 2016, unless such transaction is pursuant to a binding agreement that was in effect prior to March 28, 2016 and at all times thereafter. In addition, taxpayers may apply such provisions to any transaction occurring after October 22, 2004.

[T.D. 9424, 73 FR 53948, Sept. 17, 2008, as amended by T.D. 9633, 78 FR 54160, Sept. 3, 2013; T.D. 9759, 81 FR 17082, Mar. 28, 2016]

§ 1.367(a)-0 Table of contents.

This section lists the paragraphs contained in §§ 1.367(a)-1 through 1.367(a)-8.

§ 1.367(a)-1 Transfers to foreign corporations subject to section 367(a): In general.

(a) Scope.

(b) General rules.

(1) Foreign corporation not considered a corporation for purposes of certain transfers.

(2) Cases in which foreign corporate status is not disregarded.

(3) Determination of value.

(4) In general.

(5) Treatment of certain property as subject to section 367(d).

(c) [Reserved]

(d) Definitions.

(1) United States person.

(2) Foreign corporation.

(3) Transfer.

(4) Property.

(5) Intangible property.

(6) Operating intangibles.

(e) Close of taxable year in certain section 368(a)(1)(F) reorganizations.

(f) Exchanges under sections 354(a) and 361(a) in certain section 368(a)(1)(F) reorganizations.

(1) Rule.

(2) Rule applies regardless of whether a continuance under applicable law.

(g) Effective/applicability dates.

§ 1.367(a)-2 Exceptions for transfers of property for use in the active conduct of a trade or business.

(a) Scope and general rule.

(1) Scope.

(2) General rule.

(b) Eligible property.

(c) Exception for certain property.

(1) Inventory.

(2) Installment obligations, etc.

(3) Nonfunctional currency, etc.

(4) Certain leased tangible property.

(d) Active conduct of a trade or business outside the United States.

(1) In general.

(2) Trade or business.

(3) Active conduct.

(4) Outside of the United States.

(5) Use in the trade or business.

(6) Active leasing and licensing.

(e) Special rules for certain property to be leased.

(1) Leasing business of the foreign corporation.

(2) De minimis leasing by the foreign corporation.

(3) Aircraft and vessels leased in foreign commerce.

(f) Special rules for oil and gas working interests.

(1) In general.

(2) Active use of working interest.

(3) Start-up operations.

(4) Other applicable rules.

(g) Property retransferred by the foreign corporation.

(1) General rule.

(2) Exception.

(h) Compulsory transfers of property.

(i) [Reserved]

(j) Failure to comply with reporting requirements of section 6038B.

(1) Failure to comply.

(2) Relief for certain failures to comply that are not willful.

(k) Effective/applicability dates.

(1) In general.

(2) Foreign currency exception.

§ 1.367(a)-3 Treatment of transfers of stock or securities to foreign corporations.

(a) In general.

(1) Overview.

(2) Exceptions for certain exchanges of stock or securities.

(3) Cross-references.

(b) Transfers of stock or securities of foreign corporations.

(1) General rule.

(2) Certain transfers subject to sections 367(a) and (b).

(c) Transfers of stock or securities of domestic corporations.

(1) General rule.

(2) Ownership presumption.

(3) Active trade or business test.

(4) Special rules.

(5) Definitions.

(6) Reporting requirements of U.S. target company.

(7) Ownership statements.

(8) Certain transfers in connection with performance of services.

(9) Private letter ruling option.

(10) Examples.

(11) Effective date.

(d) Indirect stock transfers in certain nonrecognition transfers.

(1) In general.

(2) Special rules for indirect transfers.

(3) Examples.

(e) [Reserved]

(f) Failure to file statements.

(1) Failure to file.

(2) Relief for certain failures to file that are not willful.

(g) Effective/applicability dates.

(1) Rules of applicability.

(2) Election.

(h) Former 10-year gain recognition agreements.

(i) [Reserved]

(j) Transition rules regarding certain transfers of domestic or foreign stock or securities after December 16, 1987, and prior to July 20, 1998.

(1) Scope.

(2) Transfers of domestic or foreign stock or securities: Additional substantive rules.

(k) [Reserved]

§ 1.367(a)-4 Special rule applicable to U.S. depreciated property.

(a) Depreciated property used in the United States.

(1) In general.

(2) U.S. depreciated property.

(3) Property used within and without the United States.

(b) Effective/applicability dates.

§ 1.367(a)-5 [Reserved].

§ 1.367(a)-6 Transfer of foreign branch with previously deducted losses.

(a) through (b)(1) [Reserved]

(2) No active conduct exception.

(c)(1) [Reserved]

(2) Gain limitation.

(3) [Reserved]

(4) Transfers of certain intangible property.

(d) through (i) [Reserved].

(j) Effective/applicability dates.

§ 1.367(a)-7 Outbound transfers of property described in section 361(a) or (b).

(a) Scope and purpose.

(b) General rule.

(1) Nonrecognition exchanges enumerated in section 367(a)(1).

(2) Nonrecognition exchanges not enumerated in section 367(a)(1).

(c) Elective exception.

(1) Control.

(2) Gain recognition.

(3) Basis adjustments required for control group members.

(4) Agreement to amend or file a U.S. income tax return.

(5) Election and reporting requirements.

(d) Section 361 exchange followed by successive distributions to which section 355 applies.

(e) Other rules.

(1) Section 367(a) property with respect to which gain is recognized.

(2) Relief for certain failures to comply that are not willful.

(3) Anti-abuse rule.

(4) Certain income inclusions under § 1.367(b)-4.

(5) Certain gain under § 1.367(a)-6.

(f) Definitions.

(g) Examples.

(h) Applicable cross-references.

(i) [Reserved]

(j) Effective/applicability dates.

(1) In general.

(2) Section 367(d) property.

§ 1.367(a)-8 Gain recognition agreement requirements.

(a) Scope.

(b) Definitions and special rules.

(1) Definitions.

(2) Special rules.

(c) Gain recognition agreement.

(1) Terms of agreement.

(2) Content of gain recognition agreement.

(3) Description of transferred stock or securities and other information.

(4) Basis adjustments for gain recognized.

(5) Terms and conditions of a new gain recognition agreement.

(6) Cross-reference.

(d) Filing requirements.

(1) General rule.

(2) Special requirements.

(3) Common parent as agent for U.S. transferor.

(e) Signatory.

(1) General rule.

(2) Signature requirement.

(f) Extension of period of limitations on assessments of tax.

(1) General rule.

(2) New gain recognition agreement.

(g) Annual certification.

(h) Use of security.

(i) [Reserved]

(j) Triggering events.

(1) Disposition of transferred stock or securities.

(2) Disposition of substantially all of the assets of the transferred corporation.

(3) Disposition of certain partnership interests.

(4) Disposition of stock of the transferee foreign corporation.

(5) Deconsolidation.

(6) Consolidation.

(7) Death of an individual; trust or estate ceases to exist.

(8) Failure to comply.

(9) Gain recognition agreement filed in connection with indirect stock transfers and certain triangular asset reorganizations.

(10) Gain recognition agreement filed pursuant to paragraph (k)(14) of this section.

(k) Triggering event exceptions.

(1) Transfers of stock of the transferee foreign corporation to a corporation or partnership.

(2) Complete liquidation of U.S. transferor under sections 332 and 337.

(3) Transfers of transferred stock or securities to a corporation or partnership.

(4) Transfers of substantially all of the assets of the transferred corporation.

(5) Recapitalizations and section 1036 exchanges.

(6) Certain asset reorganizations.

(7) Certain triangular reorganizations.

(8) Complete liquidation of transferred corporation.

(9) Death of U.S. transferor.

(10) Deconsolidation.

(11) Consolidation.

(12) Intercompany transactions.

(13) Deemed asset sales pursuant to section 338(g) elections.

(14) Other dispositions or events.

(l) [Reserved]

(m) Receipt of boot in nonrecognition transactions.

(1) Dispositions of transferred stock or securities.

(2) Dispositions of assets of transferred corporation.

(n) Special rules for distributions with respect to stock.

(1) Certain dividend equivalent redemptions treated as dispositions.

(2) Gain recognized under section 301(c)(3).

(o) Dispositions or other events that terminate or reduce the amount of gain subject to the gain recognition agreement.

(1) Taxable disposition of stock of the transferee foreign corporation.

(2) Gain recognized in connection with certain nonrecognition transactions.

(3) Gain recognized under section 301(c)(3).

(4) Dispositions of substantially all of the assets of a domestic transferred corporation.

(5) Certain distributions or transfers of transferred stock or securities to U.S. persons.

(6) Dispositions or other event following certain intercompany transactions.

(7) Expropriations under foreign law.

(p) Relief for certain failures to file or failures to comply that are not willful.

(1) In general.

(2) Procedures for establishing that a failure to file or failure to comply was not willful.

(3) Examples.

(q) Examples.

(1) Presumed facts and references.

(2) Examples.

(r) Effective/applicability date.

(1) General rule.

(2) Applicability to transfers occurring before March 13, 2009.

(3) Applicability to requests for relief submitted before November 19, 2014.

[T.D. 9803, 81 FR 91021, Dec. 16, 2016]

§ 1.367(a)-1 Transfers to foreign corporations subject to section 367(a): In general.

(a) ***Scope.*** Section 367(a)(1) provides the general rule concerning certain transfers of property by a United States person (referred to at times in this section as the "U.S. person" or "U.S. transferor") to a foreign corporation. Paragraph (b) of this section provides general rules explaining the effect of section 367(a)(1). Paragraph (c) of this section describes transfers of property that are described in section 367(a)(1). Paragraph (d) of this section provides definitions that apply for purposes of sections 367(a) and (d) and the regulations thereunder. Paragraphs (e) and (f) of this section provide rules that apply to certain reorganizations described in section 368(a)(1)(F). Paragraph (g) of this section provides dates of applicability. For rules concerning the reporting requirements under section 6038B for certain transfers of property to a foreign corporation, see § 1.6038B-1.

(b) ***General rules*** —

(1) ***Foreign corporation not considered a corporation for purposes of certain transfers.*** If a U.S. person transfers property to a foreign corporation in connection with an exchange described in section 351, 354, 356, or 361, then, pursuant to section 367(a)(1), the foreign corporation will not be considered to be a corporation for purposes of determining the extent to which gain is recognized on the

transfer. Section 367(a)(1) denies nonrecognition treatment only to transfers of items of property on which gain is realized. Thus, the amount of gain recognized because of section 367(a)(1) is unaffected by the transfer of items of property on which loss is realized (but not recognized).

(2) ***Cases in which foreign corporate status is not disregarded.*** For circumstances in which section 367(a)(1) does not apply to a U.S. transferor's transfer of property to a foreign corporation, and thus the foreign corporation is considered to be a corporation, see §§ 1.367(a)-2, 1.367(a)-3, and 1.367(a)-7.

(3) ***Determination of value.*** In cases in which a U.S. transferor's transfer of property to a foreign corporation constitutes a controlled transaction as defined in § 1.482-1(i)(8), the value of the property transferred is determined in accordance with section 482 and the regulations thereunder.

(4) ***Character, source, and adjustments*** —

(i) ***In general.*** If a U.S. person is required to recognize gain under section 367 upon a transfer of property to a foreign corporation, then—

(A) The character and source of such gain are determined as if the property had been disposed of in a taxable exchange with the transferee foreign corporation (unless otherwise provided by regulation); and

(B) Appropriate adjustments to earnings and profits, basis, and other affected items will be made according to otherwise applicable rules, taking into account the gain recognized under section 367(a)(1). For purposes of applying section 362, the foreign corporation's basis in the property received is increased by the amount of gain recognized by the U.S. transferor under section 367(a) and the regulations issued pursuant to that section. To the extent the regulations provide that the U.S. transferor recognizes gain with respect to a particular item of property, the foreign corporation increases its basis in that item of property by the amount of such gain recognized. For example, §§ 1.367(a)-2, 1.367(a)-3, and 1.367(a)-4 provide that gain is recognized with respect to particular items of property. To the extent the regulations do not provide that gain recognized by the U.S. transferor is with respect to a particular item of property, such gain is treated as recognized with respect to items of property subject to section 367(a) in proportion to the U.S. transferor's gain realized in such property, after taking into account gain recognized with respect to particular items of property transferred under any other provision of section 367(a). For example, § 1.367(a)-6 provides that branch losses must be recaptured by the recognition of gain realized on the transfer but does not associate the gain with particular items of property. See also § 1.367(a)-1(c)(3) for rules concerning transfers by partnerships or of partnership interests.

(C) The transfer will not be recharacterized for U.S. Federal tax purposes solely because the U.S. person recognizes gain in connection with the transfer under section 367(a)(1). For example, if a U.S. person transfers appreciated stock or securities to a foreign corporation in an exchange described in section 351, the transfer is not recharacterized as other than an exchange described in section 351 solely because the U.S. person recognizes gain in the transfer under section 367(a)(1).

(ii) ***Example.*** The rules of this paragraph (b)(4) are illustrated by the following example.

Example. Domestic corporation DC transfers inventory with a fair market value of $1 million and adjusted basis of $800,000 to foreign corporation FC in exchange for stock of FC that is described in section 351(a). Title passes within the United States. Pursuant to section 367(a), DC is required to recognize gain of $200,000 upon the transfer. Under the rule of this paragraph (b)(4), the gain is treated as ordinary income (sections 1201 and 1221) from sources within the United States (section 861) arising from a taxable exchange with FC. Appropriate adjustments to earnings and profits, basis, etc., will be made as if the transfer were subject to section 351. Thus, for example, DC's basis in the FC stock received, and FC's basis in the transferred inventory, will each be increased by the $200,000 gain recognized by DC, pursuant to sections 358(a)(1) and 362(a), respectively.

(5) ***Treatment of certain property as subject to section 367(d).*** A U.S. transferor may apply section 367(d) and § 1.367(d)-1, rather than section 367(a) and the regulations thereunder, to a transfer of property to a foreign corporation that otherwise would be subject to section 367(a), provided that the property is not eligible property, as defined in § 1.367(a)-2(b) but determined without regard to § 1.367(a)-2(c). A U.S. transferor and any other U.S. transferor that is related (within the meaning of section 267(b) or 707(b)(1)) to the U.S. transferor must consistently apply this paragraph (b)(5) to all property described in this paragraph (b)(5) that is transferred to one or more foreign corporations pursuant to a plan. A U.S. transferor applies the provisions of this paragraph (b)(5) in the form and manner set forth in § 1.6038B-1(d)(1)(iv) and (v).

(c)

(1) through(c)(3)(i) [Reserved]. For further guidance, see § 1.367(a)-1T(c)(1) through (c)

(3)

(i) .

(ii) ***Transfer of partnership interest treated as transfer of proportionate share of assets*** —(A) *In general.* If a U.S. person transfers an interest as a partner in a partnership (whether foreign or domestic) in an exchange described in section 367(a)(1), then that person is treated as having transferred a proportionate share of the property of the partnership in an exchange described in section 367(a)(1). Accordingly, the applicability of the exception to section 367(a)(1) provided in § 1.367(a)-2 is determined with reference to the property of the partnership rather than the partnership interest itself. A U.S. person's proportionate share of partnership property is determined under the rules and principles of sections 701 through 761 and the regulations thereunder.

(c) (3)(i)(A) *Example* through (7) [Reserved]. For further guidance, see § 1.367(a)-1T(c)(3)(i)(A) *Example* through (7).

(d) ***Definitions.*** The following definitions apply for purposes of sections 367(a) and (d) and the regulations thereunder.

(1) ***United States person.*** The term "United States person" includes those persons described in section 7701(a)(30). The term includes a citizen or resident of the United States, a domestic partnership, a domestic corporation, and any estate or trust other than a foreign estate or trust. (For definitions of these terms, see section 7701 and the regulations thereunder.) For purposes of this section, an individual with respect to whom an election has been made under section 6013(g) or (h) is

considered to be a resident of the United States while such election is in effect. A nonresident alien or a foreign corporation will not be considered a United States person because of its actual or deemed conduct of a trade or business within the United States during a taxable year.

(2) ***Foreign corporation.*** The term "foreign corporation" has the meaning set forth in section 7701(a)(3) and (5) and § 301.7701-5.

(3) ***Transfer.*** For purposes of section 367 and regulations thereunder, the term "transfer" means any transaction that constitutes a transfer for purposes of section 332, 351, 354, 355, 356, or 361, as applicable. A person's entering into a cost sharing arrangement under § 1.482-7 or acquiring rights to intangible property under such an arrangement shall not be considered a transfer of property described in section 367(a)(1). See § 1.6038B-1T(b)(4) for the date on which the transfer is considered to be made.

(4) ***Property.*** For purposes of section 367 and the regulations thereunder, the term "property" means any item that constitutes property for purposes of section 351, 354, 355, 356, or 361, as applicable.

(5) ***Intangible property.*** The term "intangible property" means either property described in section 367(d)(4) or property to which a U.S. person applies section 367(d) pursuant to paragraph (b)(5) of this section, but does not include property described in section 1221(a)(3) or a working interest in oil and gas property.

(6) ***Operating intangibles.*** An operating intangible is any property described in section 367(d)(4) of a type not ordinarily licensed or otherwise transferred in transactions between unrelated parties for consideration contingent upon the licensee's or transferee's use of the property. Examples of operating intangibles may include long-term purchase or supply contracts, surveys, studies, and customer lists.

(e) ***Close of taxable year in certain section 368(a)(1)(F) reorganizations.*** If a domestic corporation is the transferor corporation in a reorganization described in section 368(a)(1)(F) after March 30, 1987, in which the acquiring corporation is a foreign corporation, then the taxable year of the transferor corporation shall end with the close of the date of the transfer and the taxable year of the acquiring corporation shall end with the close of the date on which the transferor's taxable year would have ended but for the occurrence of the transfer. With regard to the consequences of the closing of the taxable year, see section 381 and the regulations thereunder.

(f) ***Exchanges under sections 354(a) and 361(a) in certain section 368(a)(1)(F) reorganizations*** —

(1) ***Rule.*** In every reorganization under section 368(a)(1)(F), where the transferor corporation is a domestic corporation, and the acquiring corporation is a foreign corporation, there is considered to exist—

(i) A transfer of assets by the transferor corporation to the acquiring corporation under section 361(a) in exchange for stock (or stock and securities) of the acquiring corporation and the assumption by the acquiring corporation of the transferor corporation's liabilities;

(ii) A distribution of the stock (or stock and securities) of the acquiring corporation by the transferor corporation to the shareholders (or shareholders and security holders) of the transferor corporation; and

(iii) An exchange by the transferor corporation's shareholders (or shareholders and security holders) of their stock (or stock and securities) of the transferor corporation for stock (or stock and securities) of the acquiring corporation under section 354(a).

(2) ***Rule applies regardless of whether a continuance under applicable law.*** For purposes of paragraph (f)(1) of this section, it shall be immaterial that the applicable foreign or domestic law treats the acquiring corporation as a continuance of the transferor corporation.

(g) ***Effective/applicability dates.***

(1) through (3) [Reserved]. For further guidance, *see* § 1.367(a)-1T(g)(1) through (3).

(4) The rules in paragraphs (b)(4)(i)(B) and (b)(4)(i)(C) of this section apply to transfers occurring on or after April 18, 2013. For guidance with respect to paragraph (b)(4)(i)(B) of this section before April 18, 2013, see 26 CFR part 1 revised as of April 1, 2012. The rules in paragraph (e) of this section apply to transactions occurring on or after March 31, 1987. The rules in paragraph (f) of this section apply to transactions occurring on or after January 1, 1985.

(5) Paragraphs (a), (b)(1) through (b)(4)(i)(B), (b)(4)(ii) through (b)(5), (c)(3)(ii)(A), (d) introductory text through (d)(2), (d)(4) through (d)(6) of this section apply to transfers occurring on or after September 14, 2015, and to transfers occurring before September 14, 2015, resulting from entity classification elections made under § 301.7701-3 that are filed on or after September 14, 2015. For transfers occurring before this section is applicable, see §§ 1.367(a)-1 and 1.367(a)-1T as contained in 26 CFR part 1 revised as of April 1, 2016.

[T.D. 9803, 81 FR 91022, Dec. 16, 2016, as amended at 82 FR 52848, Nov. 15, 2017; T.D. 9994, 89 FR 82165, Oct. 10, 2024]

§ 1.367(a)-1T Transfers to foreign corporations subject to section 367(a): In general (temporary).

(a) [Reserved]

(b) ***General rules*** —

(b)

(1) through (3) [Reserved]

(4) ***Character, source, and adjustments*** —

(i) ***In general.*** If a U.S. person is required to recognize gain under section 367 upon a transfer of property to a foreign corporation, then—

(A) [Reserved]

(B) [Reserved] For further guidance see § 1.367(a)-1(b)(4)(i)(B).

(C) [Reserved] For further guidance see § 1.367(a)-1(b)(4)(i)(C).

(b) (4)(ii) through (5) [Reserved]

(c) ***Transfers described in section 367(a)(1)*** —

(1) ***In general.*** A transfer described in section 367(a)(1) is any transfer of property by a U.S. person to a foreign corporation pursuant to an exchange described in section 332, 351, 354, 355, 356, or 361. Section 367(a)(1) applies to such a transfer whether it is made directly, indirectly, or constructively. Indirect or constructive transfers that are described in section 367(a)(1) include the transfers described in subparagraphs (2) through (7) of this paragraph (c).

(2) ***Indirect transfers in certain reorganizations.*** [Reserved]. For further guidance, see § 1.367(a)-3(d).

(3) *Indirect transfers involving partnerships and interests therein* —

(i) *Transfer by partnership treated as transfer by partners* —

(A) ***In general.*** If a partnership (whether foreign or domestic) transfers property to a foreign corporation in an exchange described in section 367(a)(1), then a U.S. person that is a partner in the partnership shall be treated as having transferred a proportionate share of the property in an exchange described in section 367(a)(1). A U.S. person's proportionate share of partnership property shall be determined under the rules and principles of sections 701 through 761 and the regulations thereunder. The rule of this paragraph (c)(3)(i)(A) is illustrated by the following example.

Example. P is a partnership having five equal general partners, two of whom are United States persons. P transfers property to F, a foreign corporation, in connection with an exchange described in section 351. The exchange includes an indirect transfer of property by the partners to F. The transfers of property attributable to those partners who are United States persons, that is, 40 percent of each asset transferred to F, are transfers described in section 367(a)(1). The gain (if any) recognized on the transfer of 40 percent of each asset to F is attributable to the two partners who are United States persons.

(B) ***Special adjustments to basis.*** If a U.S. person is treated under the rule of this paragraph (c)(3)(i) as having transferred a proportionate share of the property of a partnership in an exchange described in section 367(a), and is therefore required to recognize gain upon the transfer, then—

(*1*) The U.S. person's basis in the partnership shall be increased by the amount of gain recognized by him;

(*2*) Solely for purposes of determining the basis of the partnership in the stock of the transferee foreign corporation, the U.S. person shall be treated as having newly acquired an interest in the partnership (for an amount equal to the gain recognized), permitting the partnership to make an optional adjustment to basis pursuant to sections 743 and 754; and

(*3*) The transferee foreign corporation's basis in the property acquired from the partnership shall be increased by the amount of gain recognized by U.S. persons under this paragraph (c)(3)(i).

(ii) *Transfer of partnership interest treated as transfer of proportionate share of assets* —

(A) [Reserved]

(B) ***Special adjustments to basis.*** If a U.S. person is treated under the rule of paragraph (c)(3)(ii)(A) of this section as having transferred a proportionate share of the property of a partnership in an exchange described in section 367(a), and is therefore required to recognize gain upon the transfer, then—

(*1*) The U.S. person's basis in the stock of the transferee foreign corporation shall be increased by the amount of gain so recognized by that person;

(*2*) The transferee foreign corporation's basis in the transferred partnership interest shall be increased by the amount of gain recognized by the U.S. person; and

(3) Solely for purposes of determining the partnership's basis in the property held by it, the U.S. person shall be treated as having newly acquired an interest in the partnership (for an amount equal to the gain recognized), permitting the partnership to make an optional adjustment to basis pursuant to sections 743 and 754.

(C) ***Limited partnership interest.*** The transfer by a U.S. person of an interest in a partnership shall not be subject to the rules of paragraph (c)(3)(ii)(A) and (B) if—

(1) The interest transferred is a limited partnership interest; and

(2) Such interest is regularly traded on an established securities market.

Instead, the transfer of such an interest shall be treated in the same manner as a transfer of stock or securities. Thus, the consequences of such a transfer shall be determined under the rules of § 1.367(a)-3. For purposes of this section, a limited partnership interest is an interest as a limited partner in a partnership that is organized under the laws of any State of the United States or the District of Columbia. Whether such an interest is regularly traded on an established securities market shall be determined under the provisions of paragraph (c)(3)(ii)(D) of this section.

(D) ***Regularly traded on an established securities market*** —

(1) ***Established securities market.*** For purposes of this paragraph (c)(3)(ii), an established securities market is—

(*i*) A national securities exchange which is registered under section 6 of the Securities Exchange Act of 1934 (15 U.S.C. 78f);

(*ii*) A foreign national securities exchange which is officially recognized, sanctioned, or supervised by governmental authority; and

(*iii*) An over-the-counter market. An over-the-counter market is any market reflected by the existence of an inter-dealer quotation system. An inter-dealer quotation system is any system of general circulation to brokers and dealers which regularly disseminates quotations of stock and securities by identified brokers or dealers, other than by quotation sheets which are prepared and distributed by a broker or dealer in the regular course of business and which contain only quotations of such broker or dealer.

(2) ***Regularly traded.*** A class of interests that is traded on an established securities market is considered to be regularly traded if it is regularly quoted by brokers or dealers making a market in such interests. A class of interests shall be presumed to be regularly traded if the entity has a total of 500 or more interest-holders.

(4) ***Transfers by trusts and estates*** —

(i) ***In general.*** For purposes of section 367(a), a transfer of property by an estate or trust shall be treated as a transfer by the entity itself and not as an indirect transfer by its beneficiaries. Thus, a transfer of property by a foreign trust or estate (as defined in section 7701(a)(31)) is not described in section 367(a)(1), regardless of whether the beneficiaries of the trust or estate are U.S. persons. Similarly, a transfer of property by a domestic trust or estate may be described in section 367(a)(1), regardless of whether the beneficiaries of the trust or estate are foreign persons.

(ii) ***Grantor trusts.*** A transfer of a portion or all of the assets of a foreign or domestic trust to a foreign corporation in an exchange described in section 367(a)(1) is considered a transfer by any U.S. person who is treated as the owner of any such portion or all of the assets of the trust under sections 671 through 679.

(5) ***Termination of election under section 1504(d).*** Section 367(A) applies to the constructive reorganization and transfer of property from a domestic corporation to a foreign corporation that occurs upon the termination of an election under section 1504(d), which permits the treatment of certain contiguous country corporations as domestic corporations. The rule of this paragraph (c)(5) is illustrated by the following example.

Example. Domestic corporation Y previously made a valid election under section 1504(d) to have its wholly owned Canadian subsidiary, C, treated as a domestic corporation. On July, 1, 1986, C fails to continue to qualify for the election under section 1504 (d). A constructive reorganization described in section 368(a)(1)(D) occurs. The resulting constructive transfer of assets by "domestic" corporation C to Canadian corporation C upon the termination of the election is a transfer of property described in section 367(a)(1).

(6) ***Changes in classification of an entity.*** If a foreign entity is classified as an entity other than an association taxable as a corporation for United States tax purposes, and subsequently a change is made in the governing documents, articles, or agreements of the entity so that the entity is thereafter classified as an association taxable as a corporation, the change in classification is considered a transfer of property to a foreign corporation in connection with an exchange described in section 351. For purposes of section 367(a)(1), the transfer of property is considered as made by the persons determined under the rules set forth in paragraph (c)(3) of this section with respect to partnerships, and paragraph (c)(4)(i) or (ii), with respect to trusts and estates, and the rules of such paragraphs apply determining whether a transfer described in section 367(a)(1) has been made.

(7) ***Contributions to capital.*** For rules with respect to the treatment of a contribution to the capital of a foreign corporation as a transfer described in section 367(a)(1), see section 367(c)(2) and the regulations thereunder.

(d) introductory text through (d)

(2) [Reserved]

(3) [Reserved] For further guidance, see § 1.367(a)-1(d)(3).

(4) through (6) [Reserved]

(e) [Reserved]. For further guidance, *see* § 1.367(a)-1(e).

(f) [Reserved]. For further guidance, *see* § 1.367(a)-1(f).

(g) ***Effective date of certain section*** —

(1) ***In general.*** Except as specifically provided to the contrary elsewhere in these sections, §§ 1.367(a)-1T through 1.367(a)-6T apply to transfers occurring after December 31, 1984.

(2) ***Private rulings.*** The taxpayer may rely on a private ruling under section 367(a) received by him before June 16, 1986.

(3) ***Certain indirect transfers.*** Sections 1.367(a)-1T(c)(2)(i) and (iii) and 1.367(a)-1T(c)(3) apply to transfers made after June 16, 1986. For transfers made before that date, see 26 CFR 1.367(a)-1(b) (revised as of April 1, 1986).

(4) [Reserved] For further guidance see § 1.367(a)-1(g)(4).

[T.D. 8087, 51 FR 17938, May 16, 1986, as amended by T.D. 8280, 55 FR 1408, Jan. 16, 1990; T.D. 8770, 63 FR 33555, June 19, 1998; T.D. 9441, 74 FR 348, Jan. 5, 2009; T.D. 9568, 76 FR 80087, Dec. 22, 2011; T.D. 9614, 78 FR 17031, Mar. 19, 2013; T.D. 9739, 80 FR 56912, Sept. 21, 2015; T.D. 9803, 81 FR 91024, Dec. 16, 2016]

§ 1.367(a)-2 Exceptions for transfers of property for use in the active conduct of a trade or business.

(a) ***Scope and general rule*** —

(1) ***Scope.*** Paragraph (a)(2) of this section provides the general exception to section 367(a)(1) for certain property transferred for use in the active conduct of a trade or business. Paragraph (b) of this section describes property that is eligible for the exception provided in paragraph (a)(2) of this section. Paragraph (c) of this section describes property that is not eligible for the exception provided in paragraph (a)(2) of this section. Paragraph (d) of this section provides general rules, and paragraphs (e) through (h) of this section provide special rules, for determining whether property is used in the active conduct of a trade or business outside of the United States. Paragraph (i) of this section is reserved. Paragraph (j) of this section provides relief for certain failures to comply with the reporting requirements under paragraph (a)(2)(iii) of this section that are not willful. Paragraph (k) of this section provides dates of applicability. The rules of this section do not apply to a transfer of stock or securities in an exchange subject to § 1.367(a)-3.

(2) ***General rule.*** Except as otherwise provided in §§ 1.367(a)-4, 1.367(a)-6, and 1.367(a)-7, section 367(a)(1) does not apply to property transferred by a United States person (U.S. transferor) to a foreign corporation if—

(i) The property constitutes eligible property;

(ii) The property is transferred for use by the foreign corporation in the active conduct of a trade or business outside of the United States, as determined under paragraph (d), (e), (f), (g), or (h) of this section, as applicable; and

(iii) The U.S. transferor complies with the reporting requirements of section 6038B and the regulations thereunder.

(b) ***Eligible property.*** Except as provided in paragraph (c) of this section, eligible property means—

(1) Tangible property;

(2) A working interest in oil and gas property; and

(3) A financial asset. For purposes of this section, a financial asset is—

(i) A cash equivalent;

(ii) A security within the meaning of section 475(c)(2), without regard to the last sentence of section 475(c)(2) (referencing section 1256) and without regard to section 475(c)(4), but excluding an interest in a partnership;

(iii) A commodities position described in section 475(e)(2)(B), 475(e)(2)(C), or 475(e)(2)(D); and

(iv) A notional principal contract described in § 1.446-3(c)(1).

(c) ***Exception for certain property.*** Notwithstanding paragraph (b) of this section, property described in paragraph (c)(1), (2), (3), or (4) of this section does not constitute eligible property.

(1) ***Inventory.*** Stock in trade of the taxpayer or other property of a kind which would properly be included in the inventory of the taxpayer if on hand at the close of the taxable year, or property held by the taxpayer primarily for sale to customers in the ordinary course of its trade or business (including raw materials and supplies, partially completed goods, and finished products).

(2) ***Installment obligations, etc.*** Installment obligations, accounts receivable, or similar property, but only to the extent that the principal amount of any such obligation has not previously been included by the taxpayer in its taxable income.

(3) ***Nonfunctional currency, etc.*** —

(i) ***In general.*** Property that gives rise to a section 988 transaction of the taxpayer described in section 988(c)(1)(A) through (C), without regard to section 988(c)(1)(D) and (E), or that would give rise to such a section 988 transaction if it were acquired, accrued, entered into, or disposed of directly by the taxpayer.

(ii) ***Limitation of gain required to be recognized.*** If section 367(a)(1) applies to a transfer of property described in paragraph (c)(3)(i) of this section, then the gain required to be recognized is limited to the gain realized as part of the same transaction upon the transfer of property described in paragraph (c)(3)(i) of this section, less any loss realized as part of the same transaction upon the transfer of property described in paragraph (c)(3)(i) of this section. This limitation applies in lieu of the rule in § 1.367(a)-1(b)(1). No loss is recognized with respect to property described in this paragraph (c)(3).

(4) ***Certain leased tangible property.*** Tangible property with respect to which the transferor is a lessor at the time of the transfer, unless either the foreign corporation is the lessee at the time of the transfer or the foreign corporation will lease the property to third persons.

(d) ***Active conduct of a trade or business outside the United States*** —

(1) ***In general.*** Except as provided in paragraphs (e), (f), (g), and (h) of this section, to determine whether property is transferred for use by the foreign corporation in the active conduct of a trade or business outside of the United States, four factual determinations must be made:

(i) What is the trade or business of the foreign corporation (see paragraph (d)(2) of this section);

(ii) Do the activities of the foreign corporation constitute the active conduct of that trade or business (see paragraph (d)(3) of this section);

(iii) Is the trade or business conducted outside of the United States (see paragraph (d)(4) of this section); and

(iv) Is the transferred property used or held for use in the trade or business (see paragraph (d)(5) of this section)?

(2) ***Trade or business.*** Whether the activities of the foreign corporation constitute a trade or business is determined based on all the facts and circumstances. In general, a trade or business is a specific unified group of activities that constitute (or could constitute) an independent economic enterprise

carried on for profit. For example, the activities of a foreign selling subsidiary could constitute a trade or business if they could be independently carried on for profit, even though the subsidiary acts exclusively on behalf of, and has operations fully integrated with, its parent corporation. To constitute a trade or business, a group of activities must ordinarily include every operation which forms a part of, or a step in, a process by which an enterprise may earn income or profit. In this regard, one or more of such activities may be carried on by independent contractors under the direct control of the foreign corporation. (However, see paragraph (d)(3) of this section.) The group of activities must ordinarily include the collection of income and the payment of expenses. If the activities of the foreign corporation do not constitute a trade or business, then the exception provided by this section does not apply, regardless of the level of activities carried on by the corporation. The following activities are not considered to constitute by themselves a trade or business for purposes of this section:

(i) Any activity giving rise to expenses that would be deductible only under section 212 if the activities were carried on by an individual; or

(ii) The holding for one's own account of investments in stock, securities, land, or other property, including casual sales thereof.

(3) ***Active conduct.*** Whether a trade or business is actively conducted by the foreign corporation is determined based on all the facts and circumstances. In general, a corporation actively conducts a trade or business only if the officers and employees of the corporation carry out substantial managerial and operational activities. A corporation may be engaged in the active conduct of a trade or business even though incidental activities of the trade or business are carried out on behalf of the corporation by independent contractors. In determining whether the officers and employees of the corporation carry out substantial managerial and operational activities, however, the activities of independent contractors are disregarded. On the other hand, the officers and employees of the corporation are considered to include the officers and employees of related entities who are made available to and supervised on a day-to-day basis by, and whose salaries are paid by (or reimbursed to the lending related entity by), the foreign corporation. See paragraph (d)(6) of this section for the standard that applies to determine whether a trade or business that produces rents or royalties is actively conducted. The rule of this paragraph (d)(3) is illustrated by the following example.

Example. X, a domestic corporation, and Y, a foreign corporation not related to X, transfer property to Z, a newly formed foreign corporation organized for the purpose of combining the research activities of X and Y. Z contracts all of its operational and research activities to Y for an arm's-length fee. Z's activities do not constitute the active conduct of a trade or business.

(4) ***Outside of the United States.*** Whether the foreign corporation conducts a trade or business outside of the United States is determined based on all the facts and circumstances. Generally, the primary managerial and operational activities of the trade or business must be conducted outside the United States and immediately after the transfer the transferred assets must be located outside the United States. Thus, the exception provided by this section would not apply to the transfer of the assets of a domestic business to a foreign corporation if the domestic business continued to operate in the United States after the transfer. In such a case, the primary operational activities of the business would continue to be conducted in the United States. Moreover, the transferred assets would be located in the United States. However, it is not necessary that every item of property transferred be used outside of the United States. As long as the primary managerial and operational activities of the trade or business are conducted outside of the United States and substantially all of the

transferred assets are located outside the United States, incidental items of transferred property located in the United States may be considered to have been transferred for use in the active conduct of a trade or business outside of the United States.

(5) ***Use in the trade or business.*** Whether property is used or held for use by the foreign corporation in a trade or business is determined based on all the facts and circumstances. In general, property is used or held for use in the foreign corporation's trade or business if it is—

(i) Held for the principal purpose of promoting the present conduct of the trade or business;

(ii) Acquired and held in the ordinary course of the trade or business; or

(iii) Otherwise held in a direct relationship to the trade or business. Property is considered held in a direct relationship to a trade or business if it is held to meet the present needs of that trade or business and not its anticipated future needs. Thus, property will not be considered to be held in a direct relationship to a trade or business if it is held for the purpose of providing for future diversification into a new trade or business, future expansion of trade or business activities, future plant replacement, or future business contingencies.

(6) ***Active leasing and licensing.*** For purposes of paragraph (d)(3) of this section, whether a trade or business that produces rents or royalties is actively conducted is determined under the principles of section 954(c)(2)(A) and the regulations thereunder, but without regard to whether the rents or royalties are received from an unrelated party. See §§ 1.954-2(c) and (d).

(e) ***Special rules for certain property to be leased*** —

(1) ***Leasing business of the foreign corporation.*** Except as otherwise provided in this paragraph (e), tangible property that will be leased to another person by the foreign corporation will be considered to be transferred for use by the foreign corporation in an active trade or business outside the United States only if—

(i) The foreign corporation's leasing of the property constitutes the active conduct of a leasing business, as determined under paragraph (d)(6) of this section;

(ii) The lessee of the property is not expected to, and does not, use the property in the United States; and

(iii) The foreign corporation has a need for substantial investment in assets of the type transferred.

(2) ***De minimis leasing by the foreign corporation.*** Tangible property that will be leased to another person by the foreign corporation but that does not satisfy the conditions of paragraph (e)(1) of this section will, nevertheless, be considered to be transferred for use in the active conduct of a trade or business if either—

(i) The property transferred will be used by the foreign corporation in the active conduct of a trade or business but will be leased during occasional brief periods when the property would otherwise be idle, such as an airplane leased during periods of excess capacity; or

(ii) The property transferred is real property located outside the United States and—

(A) The property will be used primarily in the active conduct of a trade or business of the foreign corporation; and

(B) Not more than ten percent of the square footage of the property will be leased to others.

(3) ***Aircraft and vessels leased in foreign commerce.*** For purposes of satisfying paragraph (e)(1) of this section, an aircraft or vessel, including component parts such as an engine leased separately from the aircraft or vessel, that will be leased to another person by the foreign corporation will be considered to be transferred for use in the active conduct of a trade or business if—

(i) The employees of the foreign corporation perform substantial managerial and operational activities of leasing aircraft or vessels outside the United States; and

(ii) The leased property is predominantly used outside the United States, as determined under § 1.954-2(c)(2)(v).

(f) ***Special rules for oil and gas working interests*** —

(1) ***In general.*** A working interest in oil and gas property will be considered to be transferred for use in the active conduct of a trade or business if—

(i) The transfer satisfies the conditions of paragraph (f)(2) or (f)(3) of this section;

(ii) At the time of the transfer, the foreign corporation has no intention to farm out or otherwise transfer any part of the transferred working interest; and

(iii) During the first three years after the transfer there are no farmouts or other transfers of any part of the transferred working interest as a result of which the foreign corporation retains less than a 50-percent share of the transferred working interest.

(2) ***Active use of working interest.*** A working interest in oil and gas property that satisfies the conditions in paragraphs (f)(1)(ii) and (iii) of this section will be considered to be transferred for use in the active conduct of a trade or business if—

(i) The U.S. transferor is regularly and substantially engaged in exploration for and extraction of minerals, either directly or through working interests in joint ventures, other than by reason of the property that is transferred;

(ii) The terms of the working interest transferred were actively negotiated among the joint venturers;

(iii) The working interest transferred constitutes at least a five percent working interest;

(iv) Before and at the time of the transfer, through its own employees or officers, the U.S. transferor was regularly and actively engaged in—

(A) Operating the working interest, or

(B) Analyzing technical data relating to the activities of the venture;

(v) Before and at the time of the transfer, through its own employees or officers, the U.S. transferor was regularly and actively involved in decision making with respect to the operations of the venture, including decisions relating to exploration, development, production, and marketing; and

(vi) After the transfer, the foreign corporation will for the foreseeable future satisfy the requirements of subparagraphs (iv) and (v) of this paragraph (f)(2).

(3) ***Start-up operations.*** A working interest in oil and gas property that satisfies the conditions in paragraphs (f)(1)(ii) and (iii) of this section but that does not satisfy all the requirements of paragraph (f)(2) of this section will, nevertheless, be considered to be transferred for use in the active conduct of a trade or business if—

(i) The working interest was acquired by the U.S. transferor immediately before the transfer and for the specific purpose of transferring it to the foreign corporation;

(ii) The requirements of paragraphs (f)(2)(ii) and (iii) of this section are satisfied; and

(iii) The foreign corporation will for the foreseeable future satisfy the requirements of paragraph (f)(2)(iv) and (v) of this section.

(4) ***Other applicable rules.*** A working interest in oil and gas property that is not described in paragraph (f)(1) of this section may nonetheless qualify for the exception to section 367(a)(1) contained in this section depending upon the facts and circumstances.

(g) ***Property retransferred by the foreign corporation*** —

(1) ***General rule.*** Property will not be considered to be transferred for use in the active conduct of a trade or business outside of the United States if—

(i) At the time of the transfer, it is reasonable to believe that, in the reasonably foreseeable future, the foreign corporation will sell or otherwise dispose of any material portion of the property other than in the ordinary course of business; or

(ii) Except as provided in paragraph (g)(2) of this section, the foreign corporation receives the property in an exchange described in section 367(a)(1), and, as part of the same transaction, transfers the property to another person. For purposes of the preceding sentence, a subsequent transfer within six months of the initial transfer will be considered to be part of the same transaction, and a subsequent transfer more than six months after the initial transfer may be considered to be part of the same transaction under step-transaction principles.

(2) ***Exception.*** Notwithstanding paragraph (g)(1) of this section, the active conduct exception provided by this section shall apply to the initial transfer if—

(i) The initial transfer is followed by one or more subsequent transfers described in section 351 or 721; and

(ii) Each subsequent transferee is either a partnership in which the preceding transferor is a general partner or a corporation in which the preceding transferor owns common stock; and

(iii) The ultimate transferee uses the property in the active conduct of a trade or business outside the United States.

(h) ***Compulsory transfers of property.*** Property is presumed to be transferred for use in the active conduct of a trade or business outside of the United States, if—

(1) The property was previously in use in the country in which the foreign corporation is organized; and

(2) The transfer is either:

(i) Legally required by the foreign government as a necessary condition of doing business; or

(ii) Compelled by a genuine threat of immediate expropriation by the foreign government.

(i) [Reserved]

(j) *Failure to comply with reporting requirements of section 6038B* —

(1) ***Failure to comply.*** For purposes of the exception to the application of section 367(a)(1) provided in paragraph (a)(2) of this section, a failure to comply with the reporting requirements of section 6038B and the regulations thereunder (failure to comply) has the meaning set forth in § 1.6038B-1(f)(2).

(2) *Relief for certain failures to comply that are not willful* —

(i) ***In general.*** A failure to comply described in paragraph (j)(1) of this section will be deemed not to have occurred for purposes of satisfying the requirements of this section if the taxpayer demonstrates that the failure was not willful using the procedure set forth in this paragraph (j)(2). For this purpose, willful is to be interpreted consistent with the meaning of that term in the context of other civil penalties, which would include a failure due to gross negligence, reckless disregard, or willful neglect. Whether a failure to comply was a willful failure will be determined by the Director of Field Operations, Cross Border Activities Practice Area, Large Business & International (or any successor to the roles and responsibilities of such position, as appropriate) (Director) based on all the facts and circumstances. The taxpayer must submit a request for relief and an explanation as provided in paragraph (j)(2)(ii)(A) of this section. Although a taxpayer whose failure to comply is determined not to be willful will not be subject to gain recognition under this section, the taxpayer will be subject to a penalty under section 6038B if the taxpayer fails to demonstrate that the failure was due to reasonable cause and not willful neglect. See § 1.6038B-1(b)(1) and (f). The determination of whether the failure to comply was willful under this section has no effect on any request for relief made under § 1.6038B-1(f).

(ii) *Procedures for establishing that a failure to comply was not willful* —

(A) ***Time and manner of submission.*** A taxpayer's statement that the failure to comply was not willful will be considered only if, promptly after the taxpayer becomes aware of the failure, an amended return is filed for the taxable year to which the failure relates that includes the information that should have been included with the original return for such taxable year or that otherwise complies with the rules of this section, and that includes a written statement explaining the reasons for the failure to comply. The amended return must be filed with the Internal Revenue Service at the location where the taxpayer filed its original return. The taxpayer may submit a request for relief from the penalty under section 6038B as part of the same submission. See § 1.6038B-1(f).

(B) ***Notice requirement.*** In addition to the requirements of paragraph (j)(2)(ii)(A) of this section, the taxpayer must comply with the notice requirements of this paragraph (j)(2)(ii)(B). If any taxable year of the taxpayer is under examination when the amended return is filed, a copy of the amended return and any information required to be included with such return must be delivered to the Internal Revenue Service personnel conducting the examination. If no taxable year of the taxpayer is under examination when the amended return is filed, a copy of the amended return and any information required to be included with such return must be delivered to the Director.

(3) For illustrations of the application of the willfulness standard of this paragraph (j), see the examples in § 1.367(a)-8(p)(3).

(4) Paragraph (j) applies to requests for relief submitted on or after November 19, 2014.

(k) *Effective/applicability dates* —

(1) ***In general.*** Except as provided in paragraphs (j)(4) and (k)(2) of this section, the rules of this section apply to transfers occurring on or after September 14, 2015, and to transfers occurring before September 14, 2015, resulting from entity classification elections made under § 301.7701-3 that are filed on or after September 14, 2015. For transfers occurring before this section is applicable, see §§ 1.367(a)-2, -2T, -4, -4T, -5, and -5T as contained in 26 CFR part 1 revised as of April 1, 2016.

(2) ***Foreign currency exception.*** Notwithstanding paragraph (c)(3)(i) of this section, § 1.367(a)-5T(d)(2) as contained in 26 CFR part 1 revised as of April 1, 2016, applies to transfers of property denominated in a foreign currency occurring before December 16, 2016, other than transfers occurring before that date resulting from entity classification elections made under § 301.7701-3 that are filed on or after that date.

[T.D. 9803, 81 FR 91024, Dec. 16, 2016]

§ 1.367(a)-3 Treatment of transfers of stock or securities to foreign corporations.

(a) *In general* —

(1) ***Overview.*** This section provides rules concerning the transfer of stock or securities by a U.S. person to a foreign corporation in an exchange described in section 367(a)(1). In general, a transfer of stock or securities (including an indirect stock transfer described in paragraph (d) of this section) by a U.S. person to a foreign corporation that is described in section 351, 354 (including a section 354 exchange pursuant to a reorganization described in section 368(a)(1)(B)), 356, or section 361(a) or (b) is subject to section 367(a)(1). Therefore, gain is recognized on such a transfer unless one of the exceptions set forth in paragraph (a)(2) of this section (regarding general exceptions for certain exchanges of stock or securities), paragraph (b) of this section (regarding transfers of foreign stock or securities), paragraph (c) of this section (regarding transfers of domestic stock or securities), or paragraph (e) of this section (regarding transfers of stock or securities in a section 361 exchange) applies to the transfer. For rules applicable when, pursuant to section 304(a)(1), a U.S. person is treated as transferring stock of a domestic or foreign corporation to a foreign corporation in exchange for stock of such foreign corporation in a transaction to which section 351(a) applies, see § 1.367(a)-9T.

(2) ***Exceptions for certain exchanges of stock or securities.*** Unless otherwise provided, the following exchanges are not subject to section 367(a)(1) and therefore gain is not recognized under section 367(a)(1).

(i) ***Section 368(a)(1)(E) reorganizations.*** In an exchange under section 354 or 356, a U.S. person exchanges stock or securities of a foreign corporation in a reorganization described in section 368(a)(1)(E).

(ii) ***Certain section 368(a)(1) asset reorganizations.*** In an exchange under section 354 or 356, a U.S. person exchanges stock or securities of a domestic or foreign corporation pursuant to an asset reorganization that is not treated as an indirect stock transfer under paragraph (d) of this section. See paragraph (d)(3) *Example 16* of this section. For purposes of this section, an *asset reorganization* is defined as a reorganization described in section 368(a)(1) involving a transfer of property under section 361.

(iii) ***Certain reorganizations described in sections 368(a)(1)(A) and (a)(2)(E).*** If, in an exchange described in section 361, a domestic merging corporation transfers stock of a controlling corporation to a foreign surviving corporation in a reorganization described in section 368(a)(1)(A) and (a)(2)(E), the stock of the controlling corporation transferred in such section 361 exchange is not subject to section 367(a)(1) if the stock of the controlling corporation is provided to the merging corporation by the controlling corporation pursuant to the plan of reorganization. However, a section 361 exchange of other property, including stock of the controlling corporation not provided by the controlling corporation pursuant to the plan of reorganization, by the domestic merging corporation to the foreign surviving corporation pursuant to such a reorganization is described in section 367(a)(1) and therefore subject to section 367(a)(1) unless an exception to section 367(a)(1) applies.

(iv) ***Certain triangular reorganizations described in § 1.367(b)-10.*** If, in an exchange under section 354 or 356, one or more U.S. persons exchange stock or securities of T (as defined in § 1.367(b)-10(a)(3)(i)) in connection with a transaction described in § 1.367(b)-10 (applying to certain acquisitions of parent stock or securities for property in triangular reorganizations), section 367(a)(1) does not apply to such U.S. persons with respect to the exchange of the stock or securities of T if the condition in paragraph (a)(2)(iv)(A) or (B) of this section is satisfied. *See* § 1.367(b)-10(a)(2)(iii) (providing a similar rule that excludes certain transactions from the application of § 1.367(b)-10).

(A) The amount of gain in the T stock or securities that would otherwise be recognized under section 367(a)(1) (without regard to any exceptions thereto) pursuant to the indirect stock transfer rules of paragraph (d) of this section is less than the sum of the amount of the deemed distribution under § 1.367(b)-10 that would be treated and subject to U.S. tax as a dividend under section 301(c)(1) (or would give rise to an inclusion under section 951(a)(1)(A) or 951A(a) that would be subject to U.S. tax) and the amount of such deemed distribution that would be treated and subject to U.S. tax as gain from the sale or exchange of property under section 301(c)(3) (or would give rise to an inclusion under section 951(a)(1)(A) or 951A(a) that would be subject to U.S. tax) if § 1.367(b)-10 would otherwise apply to the triangular reorganization.

(B) T is a foreign corporation, but only to the extent that the stock or securities of T are exchanged for stock or securities of P that were acquired by S in exchange for property in the P acquisition (as the terms P, S, property, and P acquisition are defined in § 1.367(b)-10(a)). Such exchange of T stock or securities is subject to the rules under § 1.367(b)-4(g). Section 367(a) applies to the exchange of T stock or securities to the extent that such stock or securities are exchanged for P stock or securities that were not acquired by S in exchange for property in the P acquisition.

(3) ***Cross-references.*** For rules regarding other indirect or constructive transfers of stock or securities subject to section 367(a)(1) (unless an exception applies) see § 1.367(a)-1(c). For additional rules regarding a transfer of stock or securities in an exchange described in section 361(a) or (b), see § 1.367(a)-7. For special basis and holding period rules involving foreign corporations that are parties to certain triangular reorganizations under section 368(a)(1), see § 1.367(b)-13. For additional rules relating to certain nonrecognition exchanges involving a foreign corporation, see section 367(b) and the regulations under that section. For rules regarding reporting requirements with respect to transfers described under section 367(a), see section 6038B and the regulations thereunder. For rules related to expatriated entities, see section 7874 and the regulations thereunder.

(b) *Transfers of stock or securities of foreign corporations* —

(1) ***General rule.*** Except as provided in paragraph (e) of this section, a transfer of stock or securities of a foreign corporation by a U.S. person to a foreign corporation that would otherwise be subject to section 367(a)(1) under paragraph (a) of this section will not be subject to section 367(a)(1) if either—

(i) ***Less than 5-percent shareholder.*** The U.S. person owns less than five percent (applying the attribution rules of section 318, as modified by section 958(b)) of both the total voting power and the total value of the stock of the transferee foreign corporation immediately after the transfer; or

(ii) ***5-percent shareholder.*** The U.S. person enters into a five-year gain recognition agreement with respect to the transferred stock or securities as provided in § 1.367(a)-8.

(2) *Certain transfers subject to sections 367(a) and (b)* —

(i) ***In general.*** A transfer of stock or securities described in section 367(a) or the regulations thereunder as well as in section 367(b) or the regulations thereunder shall be subject concurrently to sections 367(a) and (b) and the respective regulations thereunder, except as provided in paragraph (b)(2)(i)(A) through (C) of this section. See paragraph (d)(3) *Examples 11* and *14* of this section.

(A) Section 367(b) and the regulations thereunder shall not apply if a foreign corporation is not treated as a corporation under section 367(a)(1). See the example in paragraph (b)(2)(ii) of this section and paragraph (d)(3) *Example 14* of this section.

(B) If a foreign corporation transfers assets to a domestic corporation in a transaction to which § 1.367(b)-3(a) and (b) and the indirect stock transfer rules of paragraph (d) of this section apply, and all the earnings and profits amount attributable to the stock of an exchanging shareholder under § 1.367(b)-3(b) is greater than the amount of gain in such stock subject to section 367(a) pursuant to the indirect stock transfer rules of paragraph (d) of this section, then the rules of section 367(b), and not the rules of section 367(a), shall apply to the exchange. See paragraph (d)(3) *Example 15* of this section.

(C) [Reserved] For further guidance, see § 1.367(a)-3T(b)(2)(i)(C).

(ii) ***Example.*** The following example illustrates the provisions of this paragraph (b)(2):

> *Example.* (i) *Facts.* DC, a domestic corporation, owns all of the stock of FC1, a controlled foreign corporation within the meaning of section 957(a). DC's basis in the stock of FC1 is $50, and the value of such stock is $100. The section 1248 amount with respect to such stock is $30. FC2, also a foreign corporation, is owned entirely by foreign individuals who are not related to DC or FC1. In a reorganization described in section 368(a)(1)(B), FC2 acquires all of the stock of FC1 from DC in exchange for 20 percent of the voting stock of FC2. FC2 is not a controlled foreign corporation after the reorganization.

(ii) *Result without gain recognition agreement.* Under the provisions of this paragraph (b), if DC fails to enter into a gain recognition agreement, DC is required to recognize in the year of the transfer the $50 of gain that it realized upon the transfer, $30 of which will be treated as a dividend under section 1248.

(iii) *Result with gain recognition agreement.* If DC enters into a gain recognition agreement under § 1.367(a)-8 with respect to the transfer of FC1 stock, the exchange will also be subject to the provisions of section 367(b) and the regulations thereunder to the extent that it is not subject to tax under section 367(a)(1). In such case, DC will be required to recognize the section 1248 amount of $30 on the exchange of FC1 for FC2 stock. See § 1.367(b)-4(b). The deemed dividend of $30 recognized by DC will increase its basis in the FC1 stock exchanged in the transaction and, therefore, the basis of the FC2 stock received in the transaction. The remaining gain of $20 realized by DC (otherwise recognizable under section 367(a)) in the exchange of FC1 stock will not be recognized if DC enters into a gain recognition agreement with respect to the transfer. (The result would be unchanged if, for example, the exchange of FC1 stock for FC2 stock qualified as a section 351 exchange, or as an exchange described in both sections 351 and 368(a)(1)(B).)

(c) ***Transfers of stock or securities of domestic corporations*** —

(1) ***General rule.*** Except as provided in paragraph (e) of this section, a transfer of stock or securities of a domestic corporation by a U.S. person to a foreign corporation that would otherwise be subject to section 367(a)(1) under paragraph (a) of this section will not be subject to section 367(a)(1) if the domestic corporation the stock or securities of which are transferred (referred to as the U.S. target company) complies with the reporting requirements in paragraph (c)(6) of this section and if each of the following four conditions is met:

(i) Fifty percent or less of both the total voting power and the total value of the stock of the transferee foreign corporation is received in the transaction, in the aggregate, by U.S. transferors (*i.e.,* the amount of stock received does not exceed the 50-percent ownership threshold).

(ii) Fifty percent or less of each of the total voting power and the total value of the stock of the transferee foreign corporation is owned, in the aggregate, immediately after the transfer by U.S. persons that are either officers or directors of the U.S. target company or that are five-percent target shareholders (as defined in paragraph (c)(5)(iii) of this section) (*i.e.,* there is no control group). For purposes of this paragraph (c)(1)(ii), any stock of the transferee foreign corporation owned by U.S. persons immediately after the transfer will be taken into account, whether or not it was received in the exchange for stock or securities of the U.S. target company.

(iii) Either—

(A) The U.S. person is not a five-percent transferee shareholder (as defined in paragraph (c)(5)(ii) of this section); or

(B) The U.S. person is a five-percent transferee shareholder and enters into a five-year agreement to recognize gain with respect to the U.S. target company stock or securities it exchanged in the form provided in § 1.367(a)-8; and

(iv) The active trade or business test (as defined in paragraph (c)(3) of this section) is satisfied.

(2) ***Ownership presumption.*** For purposes of paragraph (c)(1) of this section, persons who transfer stock or securities of the U.S. target company in exchange for stock of the transferee foreign corporation are presumed to be U.S. persons. This presumption may be rebutted in accordance with paragraph (c)(7) of this section.

(3) ***Active trade or business test*** —

(i) ***In general.*** The tests of this paragraph (c)(3), collectively referred to as the active trade or business test, are satisfied if:

(A) The transferee foreign corporation or any qualified subsidiary (as defined in paragraph (c)(5)(vii) of this section) or any qualified partnership (as defined in paragraph (c)(5)(viii) of this section) is engaged in an active trade or business outside the United States, within the meaning of § 1.367(a)-2(d)(2), (3), and (4) for the entire 36-month period immediately before the transfer;

(B) At the time of the transfer, neither the transferors nor the transferee foreign corporation (and, if applicable, the qualified subsidiary or qualified partnership engaged in the active trade or business) have an intention to substantially dispose of or discontinue such trade or business; and

(C) The substantiality test (as defined in paragraph (c)(3)(iii) of this section) is satisfied.

(ii) ***Special rules.*** For purposes of paragraphs (c)(3)(i)(A) and (B) of this section, the following special rules apply:

(A) The transferee foreign corporation, a qualified subsidiary, or a qualified partnership will be considered to be engaged in an active trade or business for the entire 36-month period preceding the exchange if it acquires at the time of, or any time prior to, the exchange a trade or business that has been active throughout the entire 36-month period preceding the exchange. This special rule shall not apply, however, if the acquired active trade or business assets were owned by the U.S. target company or any affiliate (within the meaning of section 1504(a) but excluding the exceptions contained in section 1504(b) and substituting “50 percent” for “80 percent” where it appears therein) at any time during the 36-month period prior to the acquisition. Nor will this special rule apply if the principal purpose of such acquisition is to satisfy the active trade or business test.

(B) An active trade or business does not include the making or managing of investments for the account of the transferee foreign corporation or any affiliate (within the meaning of section 1504(a) but excluding the exceptions contained in section 1504(b) and substituting “50 percent” for “80 percent” where it appears therein). (This paragraph (c)(3)(ii)(B) shall not create any inference as to the scope of § 1.367(a)-2(d)(2) and (3) for other purposes.)

(iii) ***Substantiality test*** —

(A) ***General rule.*** A transferee foreign corporation will be deemed to satisfy the substantiality test if, at the time of the transfer, the fair market value of the transferee foreign corporation is at least equal to the fair market value of the U.S. target company.

(B) ***Special rules for transferee foreign corporation value.***

(*1*) For purposes of paragraph (c)(3)(iii)(A) of this section, the value of the transferee foreign corporation shall include assets acquired outside the ordinary course of business by the transferee foreign corporation within the 36-month period preceding the exchange only if either—

(*i*) Both—

(*A*) At the time of the exchange, such assets or, as applicable, the proceeds thereof, do not produce, and are not held for the production of, passive income as defined in section 1297(b); and

(*B*) Such assets are not acquired for the principal purpose of satisfying the substantiality test; or

(*ii*) Such assets consist of the stock of a qualified subsidiary or an interest in a qualified partnership. See paragraph (c)(3)(iii)(B)(*2*) of this section.

(*2*) For purposes of paragraph (c)(3)(iii)(A) of this section, the value of the transferee foreign corporation shall not include the value of the stock of any qualified subsidiary or the value of any interest in a qualified partnership, held directly or indirectly, to the extent that such value is attributable to assets acquired by such qualified subsidiary or partnership outside the ordinary course of business and within the 36-month period preceding the exchange unless those assets satisfy the requirements in paragraph (c)(3)(iii)(B)(*1*) of this section.

(*3*) For purposes of paragraph (c)(3)(iii)(A) of this section, the value of the transferee foreign corporation shall not include the value of assets received within the 36-month period prior to the acquisition, notwithstanding the special rule in paragraph (c)(3)(iii)(B)(*1*) of this section, if such assets were owned by the U.S. target company or an affiliate (within the meaning of section 1504(a) but without the exceptions under section 1504(b) and substituting “50 percent” for “80 percent” where it appears therein) at any time during the 36-month period prior to the transaction.

(C) ***Special rule for U.S. target company value.*** For purposes of § 1.367(a)-3(c)(3)(iii)(A), the fair market value of the U.S. target company includes the aggregate amount of non-ordinary course distributions (NOCDs) made by the U.S. target company. To calculate the aggregate value of NOCDs, the principles of § 1.7874-10, including the rule regarding predecessors in § 1.7874-10(e) and the rule regarding a deemed distribution of stock in certain cases in § 1.7874-10(g), apply. However, this paragraph (c)(3)(iii)(C) does not apply if the principles of the de minimis exception in § 1.7874-10(d) are satisfied.

(4) ***Special rules*** —

(i) ***Treatment of partnerships.*** For purposes of this paragraph (c), if a partnership (whether domestic or foreign) owns stock or securities in the U.S. target company or the transferee foreign corporation, or transfers stock or securities in an exchange described in section 367(a),

each partner in the partnership, and not the partnership itself, is treated as owning and as having transferred, or as owning, a proportionate share of the stock or securities. See § 1.367(a)-1(c)(3).

(ii) ***Treatment of options.*** For purposes of this paragraph (c), one or more options (or an interest similar to an option) will be treated as exercised and thus will be counted as stock for purposes of determining whether the 50-percent threshold is exceeded or whether a control group exists if a principal purpose of the issuance or the acquisition of the option (or other interest) was the avoidance of the general rule contained in section 367(a)(1).

(iii) ***U.S. target has a vestigial ownership interest in transferee foreign corporation.*** In cases where, immediately after the transfer, the U.S. target company owns, directly or indirectly (applying the attribution rules of sections 267(c)(1) and (5)), stock of the transferee foreign corporation, that stock will not in any way be taken into account (and, thus, will not be treated as outstanding) in determining whether the 50-percent threshold under paragraph (c)(1)(i) of this section is exceeded or whether a control group under paragraph (c)(1)(ii) of this section exists.

(iv) ***Attribution rule.*** Except as otherwise provided in this section, the rules of section 318, as modified by the rules of section 958(b) shall apply for purposes of determining the ownership or receipt of stock, securities or other property under this paragraph (c).

(5) ***Definitions*** —

(i) ***Ownership statement.*** An ownership statement is a statement, signed under penalties of perjury, stating—

(A) The identity and taxpayer identification number, if any, of the person making the statement;

(B) That the person making the statement is not a U.S. person (as defined in paragraph (c)(5)(iv) of this section);

(C) That the person making the statement either—

(*1*) Owns less than 1 percent of the total voting power and total value of a U.S. target company the stock of which is described in Rule 13d-1(d) of Regulation 13D (17 CFR 240.13d-1(d)) (or any rule or regulation to generally the same effect) promulgated by the Securities and Exchange Commission under the Securities and Exchange Act of 1934 (15 U.S.C. 78m), and such person did not acquire the stock with a principal purpose to enable the U.S. transferors to satisfy the requirement contained in paragraph (c)(1)(i) of this section; or

(2) Is not related to any U.S. person to whom the stock or securities owned by the person making the statement are attributable under the rules of section 958(b), and did not acquire the stock with a principal purpose to enable the U.S. transferors to satisfy the requirement contained in paragraph (c)(1)(i) of this section;

(D) The citizenship, permanent residence, home address, and U.S. address, if any, of the person making the statement; and

(E) The ownership such person has (by voting power and by value) in the U.S. target company prior to the exchange and the amount of stock of the transferee foreign corporation (by voting power and value) received by such person in the exchange.

(ii) ***Five-percent transferee shareholder.*** A five-percent transferee shareholder is a person that owns at least five percent of either the total voting power or the total value of the stock of the transferee foreign corporation immediately after the transfer described in section 367(a)(1). For special rules involving cases in which stock is held by a partnership, see paragraph (c)(4)(i) of this section.

(iii) ***Five-percent target shareholder and certain other 5-percent shareholders.*** A five-percent target shareholder is a person that owns at least five percent of either the total voting power or the total value of the stock of the U.S. target company immediately prior to the transfer described in section 367(a)(1). If the stock of the U.S. target company (or any company through which stock of the U.S. target company is owned indirectly or constructively) is described in Rule 13d-1(d) of Regulation 13D (17 CFR 240.13d-1(d)) (or any rule or regulation to generally the same effect), promulgated by the Securities and Exchange Commission under the Securities Exchange Act of 1934 (15 U.S.C. 78m), then, in the absence of actual knowledge to the contrary, the existence or absence of filings of Schedule 13-D or 13-G (or any similar schedules) may be relied upon for purposes of identifying five-percent target shareholders (or a five-percent shareholder of a corporation which itself is a five-percent shareholder of the U.S. target company). For special rules involving cases in which U.S. target company stock is held by a partnership, see paragraph (c)(4)(i) of this section.

(iv) ***U.S. Person.*** For purposes of this section, a U.S. person is defined by reference to § 1.367(a)-1(d)(1). For application of the rules of this section to stock or securities owned or transferred by a partnership that is a U.S. person, however, see paragraph (c)(4)(i) of this section.

(v) ***U.S. Transferor.*** A U.S. transferor is a U.S. person (as defined in paragraph (c)(5)(iv) of this section) that transfers stock or securities of one or more U.S. target companies in exchange for stock of the transferee foreign corporation in an exchange described in section 367.

(vi) ***Transferee foreign corporation.*** Except as provided in paragraph (d)(2)(i)(B) of this section, a transferee foreign corporation is the foreign corporation whose stock is received in the exchange by U.S. persons.

(vii) ***Qualified Subsidiary.*** A qualified subsidiary is a foreign corporation whose stock is at least 80-percent owned (by total voting power and total value), directly or indirectly, by the transferee foreign corporation. However, a corporation will not be treated as a qualified subsidiary if it was affiliated with the U.S. target company (within the meaning of section 1504(a) but without the exceptions under section 1504(b) and substituting “50 percent” for “80 percent” where it appears therein) at any time during the 36-month period prior to the transfer. Nor will a corporation be treated as a qualified subsidiary if it was acquired by the transferee foreign corporation at any time during the 36-month period prior to the transfer for the principal purpose of satisfying the active trade or business test, including the substantiality test.

(viii) ***Qualified partnership.***

(A) Except as provided in paragraph (c)(5)(viii)(B) or (C) of this section, a qualified partnership is a partnership in which the transferee foreign corporation—

(*1*) Has active and substantial management functions as a partner with regard to the partnership business; or —

(2) Has an interest representing a 25 percent or greater interest in the partnership's capital and profits.

(B) A partnership is not a qualified partnership if the U.S. target company or any affiliate of the U.S. target company (within the meaning of section 1504(a) but without the exceptions under section 1504(b) and substituting “50 percent” for “80 percent” where it appears therein) held a 5 percent or greater interest in the partnership's capital and profits at any time during the 36-month period prior to the transfer.

(C) A partnership is not a qualified partnership if the transferee foreign corporation's interest was acquired by that corporation at any time during the 36-month period prior to the transfer for the principal purpose of satisfying the active trade or business test, including the substantiality test.

(6) ***Reporting requirements of U.S. target company.***

(i) In order for a U.S. person that transfers stock or securities of a domestic corporation to qualify for the exception provided by this paragraph (c) to the general rule under section 367(a)(1), in cases where 10 percent or more of the total voting power or the total value of the stock of the U.S. target company is transferred by U.S. persons in the transaction, the U.S. target company must comply with the reporting requirements contained in this paragraph (c)(6). The U.S. target company must attach to its timely filed U.S. income tax return for the taxable year in which the transfer occurs a statement titled “Section 367(a)—Reporting of Cross-Border Transfer Under Reg. § 1.367(a)-3(c)(6),” signed under penalties of perjury by an officer of the corporation to the best of the officer's knowledge and belief, disclosing the following information—

(A) A description of the transaction in which a U.S. person or persons transferred stock or securities in the U.S. target company to the transferee foreign corporation in a transfer otherwise subject to section 367(a)(1);

(B) The amount (specified as to the percentage of the total voting power and the total value) of stock of the transferee foreign corporation received in the transaction, in the aggregate, by persons who transferred stock or securities of the U.S. target company. For additional information that may be required to rebut the ownership presumption of paragraph (c)(2) of this section in cases where more than 50 percent of either the total voting power or the total value of the stock of the transferee foreign corporation is received in the transaction, in the aggregate, by persons who transferred stock or securities of the U.S. target company, see paragraph (c)(7) of this section;

(C) The amount (if any) of transferee foreign corporation stock owned directly or indirectly (applying the attribution rules of sections 267(c)(1) and (5)) immediately after the exchange by the U.S. target company;

(D) A statement that there is no control group within the meaning of paragraph (c)(1)(ii) of this section;

(E) A list of U.S. persons who are officers, directors or five-percent target shareholders and the percentage of the total voting power and the total value of the stock of the transferee foreign corporation owned by such persons both immediately before and immediately after the transaction; and

(F) A statement that includes the following—

(*1*) A statement that the active trade or business test described in paragraph (c)(3) of this section is satisfied by the transferee foreign corporation and a description of such business;

(*2*) A statement that on the day of the transaction, there was no intent on the part of the transferee foreign corporation (or its qualified subsidiary, if relevant) or the transferors of the transferee foreign corporation (or qualified subsidiary, if relevant) to substantially discontinue its active trade or business; and

(*3*) A statement that the substantiality test described in paragraph (c)(3)(iii) of this section is satisfied, and documentation that such test is satisfied, including the value of the transferee foreign corporation and the value of the U.S. target company on the day of the transfer, and either one of the following—

(*i*) A statement demonstrating that the value of the transferee foreign corporation 36 months prior to the acquisition, plus the value of any assets described in paragraph (c)(3)(iii)(B) of this section (including stock) acquired by the transferee foreign corporation within the 36-month period, less the amount of any liabilities acquired during that period, equals or exceeds the value of the U.S. target company on the acquisition date; or

(*ii*) A statement demonstrating that the value of the transferee foreign corporation on the date of the acquisition, reduced by the value of any assets not described in paragraph (c)(3)(iii)(B) of this section (including stock) acquired by the transferee foreign corporation within the 36-month period, equals or exceeds the value of the U.S. target company on the date of the acquisition.

(ii) Except as provided in paragraph (f) of this section, for purposes of this paragraph (c)(6), a U.S. income tax return will be considered timely filed if it is filed on or before the last date prescribed for filing (taking into account any extensions of time therefor) for the taxable year in which the transfer occurs.

(7) ***Ownership statements.*** To rebut the ownership presumption of paragraph (c)(2) of this section, the U.S. target company must obtain ownership statements (described in paragraph (c)(5)(i) of this section) from a sufficient number of persons that transfer U.S. target company stock or securities in the transaction that are not U.S. persons to demonstrate that the 50-percent threshold of paragraph (c)(1)(i) of this section is not exceeded. In addition, the U.S. target company must attach to its timely filed U.S. income tax return (as described in paragraph (c)(6)(ii) of this section) for the taxable year in which the transfer occurs a statement, titled "Section 367(a)—Compilation of Ownership Statements Under Reg. § 1.367(a)-3(c)," signed under penalties of perjury by an officer of the corporation, disclosing the following information:

(i) The amount (specified as to the percentage of the total voting power and the total value) of stock of the transferee foreign corporation received, in the aggregate, by U.S. transferors;

(ii) The amount (specified as to the percentage of total voting power and total value) of stock of the transferee foreign corporation received, in the aggregate, by foreign persons that filed ownership statements;

(iii) A summary of the information tabulated from the ownership statements, including—

(A) The names of the persons that filed ownership statements stating that they are not U.S. persons;

(B) The countries of residence and citizenship of such persons; and

(C) Each of such person's ownership (by voting power and by value) in the U.S. target company prior to the exchange and the amount of stock of the transferee foreign corporation (by voting power and value) received by such persons in the exchange.

(8) ***Certain transfers in connection with performance of services.*** Section 367(a)(1) shall not apply to a domestic corporation's transfer of its own stock or securities in connection with the performance of services, if the transfer is considered to be to a foreign corporation solely by reason of § 1.83-6(d)(1). The transfer may still, however, be reportable under section 6038B. See § 1.6038B-1(b)(2)(i)(A)(*4*) and (b)(2)(i)(B)(*4*).

(9) ***Private letter ruling option.*** The Internal Revenue Service may, in limited circumstances, issue a private letter ruling to permit the taxpayer to qualify for an exception to the general rule under section 367(a)(1) if—

(i) A taxpayer is unable to satisfy all of the requirements of paragraph (c)(3) of this section relating to the active trade or business test of paragraph (c)(1)(iv) of this section, but such taxpayer meets all of the other requirements contained in paragraphs (c)(1)(i) through (c)(1)(iii) of this section, and such taxpayer is substantially in compliance with the rules set forth in paragraph (c)(3) of this section; or

(ii) A taxpayer is unable to satisfy any requirement of paragraph (c)(1) of this section due to the application of paragraph (c)(4)(iv) of this section. Notwithstanding the preceding sentence, in no event will the Internal Revenue Service rule on the issue of whether the principal purpose of an acquisition was to satisfy the active trade or business test, including the substantiality test.

(10) ***Examples.*** This paragraph (c) may be illustrated by the following examples:

> *Example 1. Ownership presumption.* (i) FC, a foreign corporation, issues 51 percent of its stock to the shareholders of S, a domestic corporation, in exchange for their S stock, in a transaction described in section 367(a)(1).
> (ii) Under paragraph (c)(2) of this section, all shareholders of S who receive stock of FC in the exchange are presumed to be U.S. persons. Unless this ownership presumption is rebutted, the condition set forth in paragraph (c)(1)(i) of this section will not be satisfied, and the exception in paragraph (c)(1) of this section will not be available. As a result, all U.S. persons that transferred S stock will recognize gain on the exchange. To rebut the ownership presumption, S must comply with the reporting requirements contained in paragraph (c)(6) of this section, obtaining ownership statements (described in paragraph (c)(5)(i) of this section) from a sufficient number of non-U.S. persons who received FC stock in the exchange to demonstrate that the amount of FC stock received by U.S. persons in the exchange does not exceed 50 percent.

> *Example 2. Filing of Gain Recognition Agreement.* (i) The facts are the same as in *Example 1*, except that FC issues only 40 percent of its stock to the shareholders of S in the exchange.

FC satisfies the active trade or business test of paragraph (c)(1)(iv) of this section. A, a U.S. person, owns 10 percent of S's stock immediately before the transfer. All other shareholders of S own less than five percent of its stock. None of S's officers or directors owns any stock in FC immediately after the transfer. A will own 15 percent of the stock of FC immediately after the transfer, 4 percent received in the exchange, and the balance being stock in FC that A owned prior to and independent of the transaction. No S shareholder besides A owns five percent or more of FC immediately after the transfer. The reporting requirements under paragraph (c)(6) of this section are satisfied.
(ii) The condition set forth in paragraph (c)(1)(i) of this section is satisfied because, even after application of the presumption in paragraph (c)(2) of this section, U.S. transferors could not receive more than 50 percent of FC's stock in the transaction. There is no control group because five-percent target shareholders and officers and directors of S do not, in the aggregate, own more than 50 percent of the stock of FC immediately after the transfer (A, the sole five-percent target shareholder, owns 15 percent of the stock of FC immediately after the transfer, and no officers or directors of S own any stock of FC immediately after the transfer). Therefore, the condition set forth in paragraph (c)(1)(ii) of this section is satisfied. The facts assume that the condition set forth in paragraph (c)(1)(iv) of this section is satisfied. Thus, U.S. persons that are not five-percent transferee shareholders will not recognize gain on the exchange of S shares for FC shares. A, a five-percent transferee shareholder, will not be required to include in income any gain realized on the exchange in the year of the transfer if he files a 5-year gain recognition agreement (GRA) and complies with section 6038B.

Example 3. Control Group. (i) The facts are the same as in *Example 2,* except that B, another U.S. person, is a 5-percent target shareholder, owning 25 percent of S's stock immediately before the transfer. B owns 40 percent of the stock of FC immediately after the transfer, 10 percent received in the exchange, and the balance being stock in FC that B owned prior to and independent of the transaction.
(ii) A control group exists because A and B, each a five-percent target shareholder within the meaning of paragraph (c)(5)(iii) of this section, together own more than 50 percent of FC immediately after the transfer (counting both stock received in the exchange and stock owned prior to and independent of the exchange). As a result, the condition set forth in paragraph (c)(1)(ii) of this section is not satisfied, and all U.S. persons (not merely A and B) who transferred S stock will recognize gain on the exchange.

Example 4. Partnerships. (i) The facts are the same as in *Example 3,* except that B is a partnership (domestic or foreign) that has five equal partners, only two of whom, X and Y, are U.S. persons. Under paragraph (c)(4)(i) of this section, X and Y are treated as the owners and transferors of 5 percent each of the S stock owned and transferred by B and as owners of 8 percent each of the FC stock owned by B immediately after the transfer. U.S. persons that are five-percent target shareholders thus own a total of 31 percent of the stock of FC immediately

after the transfer (A's 15 percent, plus X's 8 percent, plus Y's 8 percent).
(ii) Because no control group exists, the condition in paragraph (c)(1)(ii) of this section is satisfied. The conditions in paragraphs (c)(1)(i) and (iv) of this section also are satisfied. Thus, U.S. persons that are not five-percent transferee shareholders will not recognize gain on the exchange of S shares for FC shares. A, X, and Y, each a five-percent transferee shareholder, will not be required to include in income in the year of the transfer any gain realized on the exchange if they file 5-year GRAs and comply with section 6038B.

(11) ***Applicability date of this paragraph (c)*** —

(i) ***In general.*** Except as otherwise provided, this paragraph (c) applies to transfers occurring after January 29, 1997. However, taxpayers may elect to apply this section in its entirety to all transfers occurring after April 17, 1994, provided that the statute of limitations of the affected tax year or years is open.

(ii) ***Applicability date of certain provisions of this paragraph (c).*** The first and second sentence of paragraph (c)(3)(iii)(C) of this section apply to transfers completed on or after September 22, 2014. The third sentence of paragraph (c)(3)(iii)(C) of this section applies to transfers completed on or after November 19, 2015. Taxpayers may, however, elect to apply the third sentence of paragraph (c)(3)(iii)(C) of this section to transfers completed on or after September 22, 2014, and before November 19, 2015.

(d) ***Indirect stock transfers in certain nonrecognition transfers*** —

(1) ***In general.*** For purposes of this section, a U.S. person who exchanges, under section 354 (or section 356) stock or securities in a domestic or foreign corporation for stock or securities in a foreign corporation (or in a domestic corporation in control of a foreign acquiring corporation in a triangular section 368(a)(1)(B) reorganization) in connection with a transaction described in paragraphs (d)(1)(i) through (v) of this section (or who is deemed to make such an exchange under paragraph (d)(1)(vi) of this section) shall, except as provided in paragraph (d)(2)(vii) of this section, be treated as having made an indirect transfer of such stock or securities to a foreign corporation that is subject to the rules of this section, including, for example, the requirement, where applicable, that the U.S. transferor enter into a gain recognition agreement to preserve nonrecognition treatment under section 367(a). If the U.S. person exchanges stock or securities of a foreign corporation, see also section 367(b) and the regulations thereunder. For examples of the concurrent application of the indirect stock transfer rules under section 367(a) and the rules of section 367(b), see paragraph (d)(3) *Examples 14* and *15* of this section. For purposes of this paragraph (d), if a corporation acquiring assets in an asset reorganization transfers all or a portion of such assets to a corporation controlled (within the meaning of section 368(c)) by the acquiring corporation as part of the same transaction, the subsequent transfer of assets to the controlled corporation will be referred to as a controlled asset transfer. See section 368(a)(2)(C).

(i) ***Mergers described in sections 368(a)(1)(A) and (a)(2)(D) and reorganizations described in sections 368(a)(1)(G) and (a)(2)(D).*** A U.S. person exchanges stock or securities of a corporation (the acquired corporation) for stock or securities of a foreign corporation that controls the acquiring corporation in a reorganization described in either sections 368(a)(1)(A) and (a)(2)(D), or in sections 368(a)(1)(G) and (a)(2)(D). See paragraph (d)(3) *Example 1* of this section for an example of a reorganization described in sections 368(a)(1)(A) and (a)(2)(D)

involving domestic acquired and acquiring corporations, and see paragraph (d)(3) *Example 10* of this section for an example involving a domestic acquired corporation and a foreign acquiring corporation.

(ii) ***Mergers described in sections 368(a)(1)(A) and (a)(2)(E).*** A U.S. person exchanges stock or securities of a corporation (the acquiring corporation) for stock or securities in a foreign corporation that controls the acquired corporation in a reorganization described in sections 368(a)(1)(A) and (a)(2)(E). See paragraph (d)(3) *Example 2* of this section for an example of a reorganization described in sections 368(a)(1)(A) and (a)(2)(E) involving domestic acquired and acquiring corporations, and see paragraph (d)(3) *Example 11* of this section for an example involving a domestic acquired corporation and a foreign acquiring corporation.

(iii) ***Triangular reorganizations described in section 368(a)(1)(B)*** —

(A) A U.S. person exchanges stock or securities of the acquired corporation for voting stock or securities of a foreign corporation that is in control (as defined in section 368(c)) of the acquiring corporation in a reorganization described in section 368(a)(1)(B). See paragraph (d)(3) *Example 5* of this section.

(B) A U.S. person exchanges stock or securities of the acquired corporation for voting stock or securities of a domestic corporation that is in control (as defined in section 368(c)) of a foreign acquiring corporation in a reorganization described in section 368(a)(1)(B). See paragraph (d)(3) *Example 5A* of this section.

(iv) ***Triangular reorganizations described in section 368(a)(1)(C).*** A U.S. person exchanges stock or securities of a corporation (the acquired corporation) for voting stock or securities of a foreign corporation that controls the acquiring corporation in a reorganization described in section 368(a)(1)(C). See, e.g., paragraph (d)(3) *Example 6* of this section (for an example of a triangular section 368(a)(1)(C) reorganization involving domestic acquired and acquiring corporations), and paragraph (d)(3) *Example 8* of this section (for an example involving a domestic acquired corporation and a foreign acquiring corporation). If the acquired corporation is a foreign corporation, see paragraph (d)(3) *Example 14* of this section, and section 367(b) and the regulations thereunder.

(v) ***Transfers of assets to subsidiaries in certain section 368(a)(1) reorganizations.*** A U.S. person exchanges stock or securities of a corporation (the acquired corporation) for stock or securities of a foreign acquiring corporation in an asset reorganization (other than a triangular section 368(a)(1)(C) reorganization described in paragraph (d)(1)(iv) of this section, a reorganization described in sections 368(a)(1)(A) and (a)(2)(D) or sections 368(a)(1)(G) and (a)(2)(D) described in paragraph (d)(1)(i) of this section, a reorganization described in sections 368(a)(1)(A) and (a)(2)(E) described in paragraph (d)(1)(ii) of this section, or a same-country section 368(a)(1)(F) reorganization) that is followed by a controlled asset transfer. For purposes of this section, a same-country section 368(a)(1)(F) reorganization is a reorganization described in section 368(a)(1)(F) in which both the acquired corporation and the acquiring corporation are foreign corporations and are created or organized under the laws of the same foreign country. In the case of a transaction described in this paragraph (d)(1)(v) in which some but not all of the assets of the acquired corporation are transferred in a controlled asset transfer, the transaction shall be considered to be an indirect transfer of stock or securities subject to this paragraph (d) only to the extent of the assets so transferred. The remaining assets shall be treated as having been transferred by the acquired corporation in an asset transfer rather than an indirect stock transfer, and, if the acquired corporation is a

domestic corporation, such asset transfer shall be subject to the other provisions of section 367, including sections 367(a)(1), (3), and (5), and (d). See paragraph (d)(3) *Examples 6A* and *6B* of this section.

(vi) ***Successive transfers of property to which section 351 applies.*** A U.S. person transfers property (other than stock or securities) to a foreign corporation in an exchange described in section 351, and all or a portion of such assets transferred to the foreign corporation by such person are, in connection with the same transaction, transferred to a second corporation that is controlled by the foreign corporation in one or more exchanges described in section 351. For purposes of this paragraph (d)(1) and § 1.367(a)-8, the initial transfer by the U.S. person shall be deemed to be a transfer of stock described in section 354. (Any assets transferred to the foreign corporation that are not transferred by the foreign corporation to a second corporation shall be treated as a transfer of assets subject to the general rules of section 367, including sections 367(a)(1), (3), (5) and (d), and not as an indirect stock transfer under the rules of this paragraph (d).) See, e.g., paragraph (d)(3) *Example 13* and *Example 13A* of this section.

(2) ***Special rules for indirect transfers.*** If a U.S. person is considered to make an indirect transfer of stock or securities described in paragraph (d)(1) of this section, the rules of this section and § 1.367(a)-8 shall apply to the transfer. For purposes of applying the rules of this section and § 1.367(a)-8:

(i) ***Transferee foreign corporation*** —

(A) ***General rule.*** Except as provided in paragraph (d)(2)(i)(B) of this section, the transferee foreign corporation shall be the foreign corporation that issues stock or securities to the U.S. person in the exchange.

(B) ***Special rule for triangular reorganizations described in paragraph (d)(1)(iii)(B) of this section.*** In the case of a triangular reorganization described in paragraph (d)(1)(iii)(B) of this section, the transferee foreign corporation shall be the foreign acquiring corporation. See paragraph (d)(3) *Example 5A* of this section.

(ii) ***Transferred corporation.*** The transferred corporation shall be the acquiring corporation, except as provided in this paragraph (d)(2)(ii). In the case of a triangular section 368(a)(1)(B) reorganization described in paragraph (d)(1)(iii) of this section, the transferred corporation shall be the acquired corporation. In the case of an indirect stock transfer described in paragraph (d)(1)(i), (ii), or (iv) of this section followed by a controlled asset transfer, or an indirect stock transfer described in paragraph (d)(1)(v) of this section, the transferred corporation shall be the controlled corporation to which the assets are transferred. In the case of successive section 351 transfers described in paragraph (d)(1)(vi) of this section, the transferred corporation shall be the corporation to which the assets are transferred in the final section 351 transfer. The transferred property shall be the stock or securities of the transferred corporation, as appropriate under the circumstances.

(iii) ***Amount of gain.*** For purposes of determining the amount of gain that a U.S. person is required to include in income as a result of a triggering event, see § 1.367(a)-8(c)(1)(i).

(iv) ***Gain recognition agreements involving multiple parties.*** The U.S. person's agreement to recognize gain, as provided in § 1.367(a)-8, shall include appropriate provisions consistent with the principles of § 1.367(a)-8. See *Examples 5* and *5A* of this section and § 1.367(a)-8(j)(9).

(v) ***Determination of whether substantially all of the transferred corporation's assets are disposed of.*** For purposes of applying § 1.367(a)-8(j)(2)(i) to determine whether substantially all of the assets of the transferred corporation have been disposed of, the following assets shall be taken into account (but only if such assets are not fully taxable under section 367 in the taxable year that includes the indirect transfer)—

(A) In the case of a reorganization described in paragraph (d)(1)(i) of this section (a reorganization described in sections 368(a)(1)(A) and (a)(2)(D) or sections 368(a)(1)(G) and (a)(2)(D)) or a reorganization described in section (d)(1)(iv) of this section (a triangular section 368(a)(1)(C) reorganization), the assets of the acquired corporation;

(B) In the case of a sections 368(a)(1)(A) and (a)(2)(E) reorganization described in paragraph (d)(1)(ii) of this section, the assets of the acquiring corporation immediately prior to the transaction;

(C) In the case of an asset reorganization followed by a controlled asset transfer, as described in paragraph (d)(1)(v) of this section, the assets of the acquired corporation that are transferred to the corporation controlled by the acquiring corporation;

(D) In the case of a triangular reorganization described in section 368(a)(1)(C) followed by a controlled asset transfer, a reorganization described in sections 368(a)(1)(A) and (a)(2)(D) followed by a controlled asset transfer, or a reorganization described in sections 368(a)(1)(G) and (a)(2)(D) followed by a controlled asset transfer, the assets of the acquired corporation including those transferred to the corporation controlled by the acquiring corporation;

(E) In the case of a reorganization described in sections 368(a)(1)(A) and (a)(2)(E) followed by a controlled asset transfer, the assets of the acquiring corporation including those transferred to the corporation controlled by the acquiring corporation; and

(F) In the case of successive section 351 exchanges described in paragraph (d)(1)(vi) of this section, the assets that are both transferred initially to the foreign corporation, and transferred by the foreign corporation to a second corporation.

(vi) ***Coordination between asset transfer rules and indirect stock transfer rules*** —

(A) ***General rule.*** Except as otherwise provided in this paragraph (d)(2)(vi), if, pursuant to any of the transactions described in paragraph (d)(1) of this section, a U.S. person transfers (or is deemed to transfer) assets to a foreign corporation in an exchange described in section 351 or section 361, the rules of section 367, including sections 367(a)(1), (a)(3), and (a)(5), as well as section 367(d), and the regulations thereunder shall apply prior to the application of the rules of this section.

(B) ***Exceptions*** —

(*1*) If a transaction is described in paragraph (d)(2)(vi)(A) of this section, section 367(a) and (d) will not apply to the extent a domestic corporation (domestic acquired corporation) transfers assets to a foreign corporation (foreign acquiring corporation) in an asset reorganization, and those assets (re-transferred assets) are transferred to a domestic corporation (domestic controlled corporation) in a controlled asset transfer, provided that each of the following conditions is satisfied:

(*i*) The domestic controlled corporation's adjusted basis in the re-transferred assets is not greater than the domestic acquired corporation's adjusted basis in those assets. For this purpose, any increase in basis in the re-transferred assets that results because the domestic acquired corporation recognized gain or income with respect to the re-transferred assets in the transaction is not taken into account.

(*ii*) The domestic acquired corporation includes a statement described in paragraph (d)(2)(vi)(C) of this section with its timely filed U.S. income tax return for the taxable year of the transfer; and

(*iii*) The requirements of paragraphs (c)(1)(i), (ii), and (iv) and (c)(6) of this section are satisfied with respect to the indirect transfer of stock in the domestic acquired corporation.

(*2*) Sections 367(a) and (d) shall not apply to transfers described in paragraph (d)(1)(vi) of this section if a U.S. person transfers assets to a foreign corporation in a section 351 exchange, to the extent that such assets are transferred by such foreign corporation to a domestic corporation in another section 351 exchange, but only if the domestic transferee's adjusted basis in the assets is not greater than the adjusted basis that the U.S. person had in such assets. Any increase in adjusted basis in the assets that results because the U.S. person recognized gain or income with respect to such assets in the initial section 351 exchange is not taken into account for purposes of determining whether the domestic transferee's adjusted basis in the assets is not greater than the U.S. person's adjusted basis in such assets. This paragraph (d)(2)(vi)(B)(*2*) will not, however, apply to an exchange described in section 351 that is also an exchange described in section 361(a) or (b). An exchange described in section 351 that is also an exchange described in section 361(a) or (b) is only eligible for the exception in paragraph (d)(2)(vi)(B)(*1*) of this section.

(C) ***Required statement.*** The statement required by paragraph (d)(2)(vi)(B)(*1*)(*ii*) of this section shall be entitled “Required Statement under § 1.367(a)-3(d) for Assets Transferred to a Domestic Corporation” and shall be signed under penalties of perjury by an authorized officer of the domestic acquired corporation and by an authorized officer of the foreign acquiring corporation. The required statement shall contain a certification that, if the foreign acquiring corporation disposes of any stock of the domestic controlled corporation in a transaction described in paragraph (d)(2)(vi)(D) of this section, the domestic acquired corporation shall recognize gain as described in paragraph (d)(2)(vi)(E) of this section. The domestic acquired corporation (or the foreign acquiring corporation on behalf of the domestic acquired corporation) shall file a U.S. income tax return (or an amended U.S. tax return, as the case may be) for the year of the transfer reporting such gain.

(D) ***Gain recognition transaction.***

(*1*) A transaction described in this paragraph (d)(2)(vi)(D) is one where a principal purpose of the transfer by the domestic acquired corporation is the avoidance of U.S. tax that would have been imposed on the domestic acquired corporation on the

disposition of the re-transferred assets. A transfer may have a principal purpose of tax avoidance even though the tax avoidance purpose is outweighed by other purposes when taken together.

(2) For purposes of paragraph (d)(2)(vi)(D)(*1*) of this section, a transaction is deemed to have a principal purpose of tax avoidance if the foreign acquiring corporation disposes of any stock of the domestic controlled corporation (whether in a recognition or non-recognition transaction) within 2 years of the transfer described in paragraph (d)(2)(vi)(A) of this section. The rule in this paragraph (d)(2)(vi)(D)(*2*) shall not apply if the domestic acquired corporation (or the foreign acquiring corporation on behalf of the domestic acquired corporation) demonstrates to the satisfaction of the Commissioner that the avoidance of U.S. tax was not a principal purpose of the transaction. For this purpose, a disposition by the foreign acquiring corporation of stock of the domestic controlled corporation more than 5 years after completion of the transfer described in paragraph (d)(2)(vi)(A) of this section is deemed to not have a principal purpose of tax avoidance.

(E) ***Amount of gain recognized and other matters.***

(*1*) In the case of a transaction described in paragraph (d)(2)(vi)(D) of this section, solely for purposes of this paragraph (d)(2)(vi)(E), the domestic acquired corporation shall be treated as if, immediately prior to the transfer described in paragraph (d)(2)(vi)(A) of this section, it transferred the re-transferred assets, including any intangible assets, directly to a domestic corporation in exchange for stock of such domestic corporation in a transaction that is treated as a section 351 exchange, and immediately sold such stock to an unrelated party for its fair market value in a sale in which it shall recognize gain, if any (but not loss). Any gain recognized by the domestic acquired corporation pursuant to this paragraph (d)(2)(vi)(E) will increase the basis that the foreign acquiring corporation has in the stock of the domestic controlled corporation immediately before the transaction described in paragraph (d)(2)(vi)(D) of this section, but will not increase the basis of the re-transferred assets held by the domestic controlled corporation. Section 1.367(d)-1T(g)(6) shall not apply with respect to any intangible property included in the re-transferred assets described in this paragraph.

(*2*) If additional tax is required to be paid as a result of a transaction described in paragraph (d)(2)(vi)(D) of this section, then interest must be paid on that amount at rates determined under section 6621 with respect to the period between the date prescribed for filing the domestic acquired corporation's income tax return for the year of the transfer and the date on which the additional tax for that year is paid.

(F) ***Examples.*** For illustrations of the rules in paragraph (d)(2)(vi) of this section, see paragraph (d)(3) *Examples 6B, 6C, 9,* and *13A* of this section.

(vii) ***Change in status of a domestic acquired corporation to a foreign corporation.***

(A) A U.S. person that exchanges stock or securities of a domestic corporation for stock or securities of a foreign corporation under section 354 (or section 356) will be treated for purposes of this section as having made an indirect stock transfer of the stock or securities of a foreign corporation (and not of a domestic corporation) to a foreign corporation under paragraph (b) of this section (but not paragraph (c) of this section), if

the acquired domestic corporation is a subsidiary member (within the meaning of § 1.1502-1(c)) of a consolidated group (within the meaning of § 1.1502-1(h)) immediately before the transaction, and if the transaction is either of the following:

(*1*) Described in paragraph (d)(1)(i) or (iv) of this section, but only if the acquiring corporation is foreign. See paragraph (d)(3) *Examples 8, 9, 10* and *12* of this section.

(*2*) Described in paragraph (d)(1)(v) of this section, but only to the extent the controlled asset transfer is to a foreign corporation. See paragraph (d)(3) *Example 6A* of this section.

(B) The rules of paragraph (d)(2)(vii)(A) of this section will not apply to the extent assets transferred to the foreign acquiring corporation in a transaction described in paragraph (d)(2)(vii)(A)(*1*) of this section, or assets transferred to a foreign corporation in a controlled asset transfer in a transaction described in paragraph (d)(2)(vii)(A)(*2*) of this section, are retransferred to a domestic controlled corporation in one or more successive transfers as part of the same transaction. See paragraph (d)(3) *Example 9* of this section.

(3) ***Examples.*** The rules of this paragraph (d) and § 1.367(a)-8 are illustrated by the following examples. For purposes of these examples, assume section 7874 does not apply.

> *Example 1. Section 368(a)(1)(A)/(a)(2)(D) reorganization.* (i) *Facts.* F, a foreign corporation, owns all the stock of Newco, a domestic corporation. A, a domestic corporation, owns all of the stock of W, also a domestic corporation. A and W file a consolidated Federal income tax return. A does not own any stock in F (applying the attribution rules of section 318, as modified by section 958(b)). In a reorganization described in sections 368(a)(1)(A) and (a)(2)(D), Newco acquires all of the assets of W, and A receives 40% of the stock of F in an exchange described in section 354.
> (ii) *Result.* Pursuant to paragraph (d)(1)(i) of this section, the reorganization is subject to the indirect stock transfer rules. F is treated as the transferee foreign corporation, and Newco is treated as the transferred corporation. Provided that the requirements of paragraph (c)(1) of this section are satisfied, including the requirement that A enter into a five-year gain recognition agreement as described in § 1.367(a)-8, A's exchange of W stock for F stock under section 354 will not be subject to section 367(a)(1). If F disposes (within the meaning of § 1.367(a)-8(j)(1)) of all (or a portion) of Newco's stock within the five-year term of the agreement (and A has not made a valid election under § 1.367(a)-8(c)(2)(vi)), A is required to file an amended return for the year of the transfer and include in income, with interest, the gain realized but not recognized on the initial section 354 exchange. If A has made a valid election under § 1.367(a)-8(c)(2)(vi) to include the amount subject to the gain recognition agreement in the year of the triggering event, A would instead include the gain on its tax return for the taxable year that includes the triggering event, together with interest.

> *Example 1A. Transferor is a subsidiary in consolidated group.* (i) *Facts.* The facts are the same as in *Example 1,* except that A is owned by P, a domestic corporation, and for the taxable year in which the transaction occurred, P, A and W filed a consolidated Federal income

tax return.
(ii) *Result.* Even though A is the U.S. transferor, P is required under § 1.367(a)-8(d)(3) and (e)(1)(i) to enter into the gain recognition agreement and comply with the requirements under § 1.367(a)-8. If A leaves the P group, the gain recognition agreement would be triggered pursuant to § 1.367(a)-8(j)(5), unless the exception provided under § 1.367(a)-8(k)(10) applies.

Example 2. Section 368(a)(1)(A)/(a)(2)(E) reorganization. (i) *Facts.*The facts are the same as in *Example 1,* except that Newco merges into W and Newco receives stock of W which it distributes to F in a reorganization described in sections 368(a)(1)(A) and (a)(2)(E). Pursuant to the reorganization, A receives 40 percent of the stock of F in an exchange described in section 354.
(ii) *Result.* The consequences of the transfer are similar to those described in *Example 1*. Pursuant to paragraph (d)(1)(ii) of this section, A is considered to have transferred its W stock to F pursuant to the indirect stock transfer rules. F is treated as the transferee foreign corporation, and W is treated as the transferred corporation. Provided that the requirements of paragraph (c)(1) of this section are satisfied, including the requirement that A enter into a five-year gain recognition agreement as described in § 1.367(a)-8, A's exchange of W stock for F stock under section 354 will not be subject to section 367(a)(1).

Example 3. Taxable transaction pursuant to indirect stock transfer rules. (i) *Facts.*The facts are the same as in *Example 1*, except that A receives 55 percent of either the total voting power or the total value of the stock of F in the transaction.
(ii) *Result.* A is required to include in income in the year of the exchange the amount of gain realized on such exchange. See paragraph (c)(1)(i) of this section. If A fails to include the income on its timely-filed return, A will also be liable for the penalty under section 6038B (together with interest and other applicable penalties) unless A's failure to include the income is due to reasonable cause and not willful neglect. See § 1.6038B-1(f).

Example 4. Disposition by U.S. transferred corporation of substantially all of its assets. (i) *Facts.* The facts are the same as in *Example 1,* except that, during the third year of the gain recognition agreement, Newco disposes of substantially all (as described in§ 1.367(a)-8(j)(2)(i)) of the assets described in paragraph (d)(2)(v)(A) of this section for cash and recognizes currently all of the gain realized on the disposition.
(ii) *Result.* Under § 1.367(a)-8(j)(2), the gain recognition agreement is generally triggered when the transferred corporation disposes of substantially all of its assets. However, under the special rule contained in § 1.367(a)-8(o)(4), because A owned an amount of stock in W described in section 1504(a)(2) immediately before the transaction, because A and W filed a consolidated Federal income tax return prior to the transaction, and Newco, the transferred corporation, is a domestic corporation, the gain recognition agreement is terminated and has no further effect.

Example 5. Triangular section 368(a)(1)(B) reorganization. (i) *Facts.* F, a foreign corporation, owns all the stock of S, a domestic corporation. U, a domestic corporation, owns all of the stock of Y, also a domestic corporation. U does not own any of the stock of F (applying the attribution rules of section 318, as modified by section 958(b)). In a triangular reorganization described in section 368(a)(1)(B) and paragraph (d)(1)(iii)(A) of this section, S acquires all the stock of Y, and U receives 10% of the voting stock of F.
(ii) *Result.* U's exchange of Y stock for F stock will not be subject to section 367(a)(1), provided that all of the requirements of paragraph (c)(1) are satisfied, including the requirement that U enter into a five-year gain recognition agreement. For purposes of this section, F is treated as the transferee foreign corporation and Y is treated as the transferred corporation. See paragraphs (d)(2)(i) and (ii) of this section. Under § 1.367(a)-8(j)(9), the gain recognition agreement would be triggered if F sold all or a portion of the stock of S.

Example 5A. Triangular section 368(a)(1)(B) reorganization. (i) *Facts.* The facts are the same as in *Example 5*, except that F is a domestic corporation and S is a foreign corporation.
(ii) *Result.* U's exchange of Y stock for stock of F, a domestic corporation in control of S, the foreign acquiring corporation, is treated as an indirect transfer of Y stock to a foreign corporation under paragraph (d)(1)(iii)(B) of this section. U's exchange of Y stock for F stock will not be subject to section 367(a)(1) provided that all of the requirements of paragraph (c)(1) of this section are satisfied, including the requirement that U enter into a five-year gain recognition agreement. In satisfying the 50 percent or less ownership requirements of paragraphs (c)(1)(i) and (ii) of this section, U's indirect ownership of S stock (through its direct ownership of F) will determine whether the requirement of paragraph (c)(1)(i) of this section is satisfied and will be taken into account in determining whether the requirement of paragraph (c)(1)(ii) of this section is satisfied. See paragraph (c)(4)(iv) of this section. For purposes of this section, S is treated as the transferee foreign corporation (see paragraph (d)(2)(i)(B) of this section). If Y sold substantially all of its assets (within the meaning of section 368(a)(1)(C)), the gain recognition agreement would be terminated because U owned an amount of stock in Y described in section 1504(a)(2) immediately before the transaction and Y is a domestic corporation. See § 1.367(a)-8(o)(4).

Example 6. Triangular section 368(a)(1)(C) reorganization. (i) *Facts.* F, a foreign corporation, owns all of the stock of R, a domestic corporation that operates an historical business. V, a domestic corporation, owns all of the stock of Z, also a domestic corporation. V does not own any of the stock of F (applying the attribution rules of section 318 as modified by section 958(b)). In a triangular reorganization described in section 368(a)(1)(C) (and paragraph (d)(1)(iv) of this section), R acquires all of the assets of Z, and V receives 30% of the voting stock of F.

(ii) *Result.* The consequences of the transfer are similar to those described in *Example 1*; V is required to enter into a 5-year gain recognition agreement under § 1.367(a)-8 to secure nonrecognition treatment under section 367(a). Under paragraphs (d)(2)(i) and (ii) of this section, F is treated as the transferee foreign corporation and R is treated as the transferred corporation. In determining whether, in a later transaction, R has disposed of substantially all of its assets under § 1.367(a)-8(j)(2)(i), see paragraph (d)(2)(v)(A) of this section.

Example 6A. Section 368(a)(1)(C) reorganization followed by section 368(a)(2)(C) exchange. (i) *Facts.* The facts are the same as in *Example 6*, except that the transaction is structured as a section 368(a)(1)(C) reorganization with Z transferring its assets to F, followed by a controlled asset transfer, and R is a foreign corporation. The following additional facts are present. Z has 3 businesses: Business A with a basis of $10 and a value of $50, Business B with a basis of $10 and a value of $40, and Business C with a basis of $10 and a value of $30. V and Z file a consolidated Federal income tax return and V has a basis of $30 in the Z stock, which has a value of $120. Assume that Businesses A and B consist solely of assets that will satisfy the section 367(a)(3) active trade or business exception; none of Business C's assets will satisfy the exception. Z transfers all 3 businesses to F in exchange for 30 percent of the F stock, which Z distributes to V pursuant to a section 368(a)(1)(C) reorganization. F then contributes Businesses B and C to R in a controlled asset transfer.
(ii) *Result.* The transfer of the Business A assets by Z to F does not constitute an indirect stock transfer under paragraph (d) of this section, and, subject to the conditions and requirements of section 367(a)(5) and § 1.367(a)-7(c), the Business A assets qualify for the section 367(a)(3) active trade or business exception and are not subject to section 367(a)(1). The transfer of the Business B and C assets by Z to F must first be tested under sections 367(a)(1), (a)(3), and (a)(5). Z recognizes $20 of gain on the outbound transfer of the Business C assets, as those assets do not qualify for an exception to section 367(a)(1). Subject to the conditions and requirements of section 367(a)(5) and § 1.367(a)-7(c), the Business B assets qualify for the active trade or business exception under section 367(a)(3). Pursuant to paragraphs (d)(1) and (d)(2)(vii)(A)(2) of this section, V is deemed to transfer the stock of a foreign corporation to F in a section 354 exchange subject to the rules of paragraphs (b) and (d) of this section. V must enter into the gain recognition agreement in the amount of $30 to preserve Z's nonrecognition treatment with respect to its transfer of Business B assets. Under paragraphs (d)(2)(i) and (d)(2)(ii) of this section, F is the transferee foreign corporation and R is the transferred corporation.

Example 6B. Section 368(a)(1)(C) reorganization followed by a controlled asset transfer to a domestic controlled corporation—(i) *Facts.* The facts are the same as in paragraph (d)(3), *Example 6A,* of this section, except that R is a domestic corporation.

(ii) *Result.* As in paragraph (d)(3), *Example 6A,* of this section, the outbound transfer of the Business A assets to F is not affected by the rules of § 1.367-3(d) and is subject to the general rules under section 367. Subject to the conditions and requirements of section 367(a)(5) and § 1.367(a)-7(c), the Business A assets qualify for the section 367(a)(3) active trade or business exception and are not subject to section 367(a)(1). The Business B and C assets are part of an indirect stock transfer under § 1.367-3(d), but must first be tested under section 367(a) and (d). The Business B assets qualify for the active trade or business exception under section 367(a)(3); the Business C assets do not. However, pursuant to paragraph (d)(2)(vi)(B)(*1*) of this section, the Business B and C assets are not subject to section 367(a) or (d), provided that the basis of the Business B and C assets in the hands of R is not greater than the basis of the assets in the hands of Z, the requirements of paragraphs (c)(1)(i), (ii), and (iv) and (c)(6) of this section are satisfied, and Z attaches a statement described in paragraphs (d)(2)(vi)(C) of this section to its U.S. income tax return for the taxable year of the transfer. V also is deemed to make an indirect transfer of Z stock under the rules of paragraph (d) of this section to the extent the assets are transferred to R. To preserve non-recognition treatment, and assuming the other requirements of paragraph (c) of this section are satisfied, V must enter into a gain recognition agreement in the amount of $50, which equals the aggregate gain in the Business B and C assets, because the transfer of those assets by Z was not taxable under section 367(a)(1) and constitute an indirect stock transfer.

Example 6C. Section 368(a)(1)(C) reorganization followed by a controlled asset transfer to a domestic controlled corporation—(i) *Facts.* The facts are the same as in paragraph (d)(3), *Example 6B,* of this section, except that Z is owned by U.S. individuals, none of whom qualify as five-percent target shareholders with respect to Z within the meaning of paragraph (c)(5)(iii) of this section. The following additional facts are present. No U.S. persons that are either officers or directors of Z own any stock of F immediately after the transfer. F is engaged in an active trade or business outside the United States that satisfies the test set forth in paragraph (c)(3) of this section.
(ii) *Result.* The Business A assets transferred to F are not re-transferred to R and therefore Z's transfer of these assets is not subject to the rules of paragraph (d) of this section. However, gain must be recognized on the transfer of those assets under section 367(a)(1) because the section 367(a)(3) active trade or business exception is inapplicable pursuant to section 367(a)(5) and § 1.367(a)-7(b). The Business B and C assets are part of an indirect stock transfer under paragraph (d) of this section, but must first be tested with respect to Z under section 367(a) and (d), as provided in paragraph (d)(2)(vi) of this section. The transfer of the Business B assets (which otherwise would satisfy the section 367(a)(3) active trade or business exception) generally is subject to section 367(a)(1) pursuant to section 367(a)(5) and § 1.367(a)-7(b). The transfer of the Business C assets generally is subject to section 367(a)(1) because these assets do not qualify for the active trade or business exception under section 367(a)(3). However, pursuant to paragraph (d)(2)(vi)(B) of this section, the transfer of the Business B and C assets is not subject to sections 367(a)(1) and (d), provided the basis of the Business B and C assets in the hands of R is no greater than the basis in the hands of Z and certain other requirements are satisfied. Z may avoid immediate gain recognition under section 367(a) and (d) on the transfers of the Business B and Business C assets to F if, pursuant to paragraph (d)(2)(vi)(B) of this section, the indirect transfer of Z stock satisfies the requirements of paragraphs (c)(1)(i), (ii), and (iv) and (c)(6) of this section, and Z attaches a statement

described in paragraph (d)(2)(vi)(C) of this section to its U.S. income tax return for the taxable year of the transfer. In general, the statement must contain a certification that, if F disposes of the stock of R (in a recognition or nonrecognition transaction) and a principal purpose of the transfer is the avoidance of U.S. tax that would have been imposed on Z on the disposition of the Business B and C assets transferred to R, then Z (or F on behalf of Z) will file a return (or amended return as the case may be) recognizing gain ($50), as if, immediately prior to the reorganization, Z transferred the Business B and C assets to a domestic corporation in exchange for stock in a transaction treated as a section 351 exchange and immediately sold such stock to an unrelated party for its fair market value. A transaction is deemed to have a principal purpose of U.S. tax avoidance if F disposes of R stock within two years of the transfer, unless Z (or F on behalf of Z) can rebut the presumption to the satisfaction of the Commissioner. See paragraph (d)(2)(vi)(D)(2) of this section. With respect to the indirect transfer of Z stock, assume the requirements of paragraphs (c)(1)(i), (ii), and (iv) of this section are satisfied. Thus, assuming Z attaches the statement described in paragraph (d)(2)(vi)(C) of this section to its U.S. income tax return and satisfies the reporting requirements of paragraph (c)(6) of this section, the transfer of Business B and C assets is not subject to immediate gain recognition under section 367(a) or (d).

Example 7. Triangular section 368(a)(1)(C) reorganization followed by 351 exchange. (i) *Facts.* The facts are the same as in *Example 6,* except that, during the fourth year of the gain recognition agreement, R transfers substantially all of the assets received from Z to K, a wholly-owned domestic subsidiary of R, in an exchange described in section 351.
(ii) *Result.* The disposition by R, the transferred corporation, of substantially all of its assets would terminate the gain recognition agreement if the assets were disposed of in a taxable transaction because V owned an amount of stock in Z described in section 1504(a)(2) immediately before the transaction, and R is a domestic corporation. See § 1.367(a)-8(o)(4). Because the assets were transferred in an exchange to which section 351 applies, such transfer does not trigger the gain recognition agreement if V complies with the requirements contained in § 1.367(a)-8(k)(4). See also paragraph (d)(2)(iv) of this section. To determine whether substantially all of the assets are disposed of, any assets of Z that were transferred by Z to R and then contributed by R to K are taken into account.

Example 7A. Triangular section 368(a)(1)(C) reorganization followed by section 351 exchange with foreign transferee. (i) *Facts.* The facts are the same as in *Example 7* except that K is a foreign corporation.
(ii) *Result.* This transfer of assets by R to K must be analyzed to determine its effect upon the gain recognition agreement, and such transfer is also an outbound transfer of assets that is taxable under section 367(a)(1) unless the active trade or business exception under section 367(a)(3) applies. If the transfer is fully taxable under section 367(a)(1), the transfer is treated as if the transferred company, R, sold substantially all of its assets. Thus, the gain recognition agreement would terminate because V owned an amount of stock in Z described in section 1504(a)(2) immediately before the transaction, and R is a domestic corporation. See § 1.367(a)-8(o)(4). If each asset transferred qualifies for nonrecognition treatment under section 367(a)(3) and the regulations thereunder (which require, under § 1.367(a)-2(a)(2)(iii), the transferor to comply with the reporting requirements under section 6038B), the result is the same as in *Example 7.* If a portion of the assets transferred qualify for nonrecognition

treatment under section 367(a)(3) and a portion are taxable under section 367(a)(1) (but such portion does not result in the disposition of substantially all of the assets), the gain recognition agreement will not be triggered if such information is reported as required under § 1.367(a)-8(g) and V satisfies the requirements contained in § 1.367(a)-8(k)(4).

Example 8. Concurrent application of asset transfer and indirect stock transfer rules in consolidated return setting. (i) *Facts.* Assume the same facts as in *Example 6,* except that R is a foreign corporation and V and Z file a consolidated return for Federal income tax purposes. The properties of Z consist of Business A assets, with an adjusted basis of $50 and fair market value of $90, and Business B assets, with an adjusted basis of $50 and a fair market value of $110. Assume that the Business A assets do not qualify for the active trade or business exception under section 367(a)(3), but that the Business B assets do qualify for the exception. V's basis in the Z stock is $100, and the value of such stock is $200.
(ii) *Result.* Under paragraph (d)(2)(vi), the assets of Businesses A and B that are transferred to R must be tested under sections 367(a)(3) and (a)(5) prior to consideration of the indirect stock transfer rules of this paragraph (d). Thus, Z must recognize $40 of income under section 367(a)(1) on the outbound transfer of Business A assets. Subject to the conditions and requirements of section 367(a)(5) and § 1.367(a)-7(c), the Business B assets qualify for the active trade or business exception under section 367(a)(3). Under § 1.1502-32, because V and Z file a consolidated return, V's basis in its Z stock increases from $100 to $140 as a result of Z's $40 gain. Pursuant to paragraphs (d)(1) and (d)(2)(vii)(A)(*1*) of this section, V is deemed to transfer the stock of a foreign corporation to F in a section 354 exchange subject to the rules of paragraphs (b) and (d) of this section, and therefore must enter into a gain recognition agreement in the amount of $60 (the gain realized but not recognized by V in the stock of Z after the $40 basis adjustment). If F sells a portion of its stock in R during the term of the agreement, V will be required to recognize a portion of the $60 gain subject to the agreement. To determine whether R disposes of substantially all of its assets (under § 1.367(a)-8(j)(2)(i)), only the Business B assets will be considered (because the transfer of the Business A assets was taxable to Z under section 367). See paragraph (d)(2)(v)(A) of this section.

Example 8A. Concurrent application without consolidated returns. (i) *Facts.* The facts are the same as in *Example 8,* except that V and Z do not file consolidated income tax returns.
(ii) *Result.* Z would still recognize $40 of gain on the transfer of its Business A assets, and the Business B assets would still qualify for the active trade or business exception under section 367(a)(3). However, V's basis in its stock of Z would not be increased by the amount of Z's gain. V's indirect transfer of stock will be taxable unless V enters into a gain recognition agreement (as described in § 1.367(a)-8) for the $100 of gain realized but not recognized with respect to the stock of Z.

Example 8B. Concurrent application with individual U.S. shareholder. (i) *Facts.* The facts are the same as in *Example 8,* except that V is an individual U.S. citizen.
(ii) *Result.* Under section 367(a)(5) and § 1.367(a)-7(b), the active trade or business exception under section 367(a)(3) does not apply to Z's transfer of assets to R. Thus, Z's transfer of assets to R would be fully taxable under section 367(a)(1). Z would recognize $100 of income. V's basis in its stock of Z is not

increased by this amount. V is taxable with respect to its indirect transfer of its Z stock unless V enters into a gain recognition agreement in the amount of the $100, the gain realized but not recognized with respect to its Z stock.

Example 8C. Concurrent application with nonresident alien shareholder. (i) *Facts.* The facts are the same as in *Example 8,* except that V is a nonresident alien.
(ii) *Result.* Under section 367(a)(5) and § 1.367(a)-7(b), the active trade or business exception under section 367(a)(3) does not apply to Z's transfer of assets to R. Thus, Z has $100 of gain with respect to the Business A and B assets. Because V is a nonresident alien, however, V is not subject to section 367(a) with respect to its indirect transfer of Z stock.

Example 9. Indirect stock transfer by reason of a controlled asset transfer—(i) *Facts.* The facts are the same as in paragraph (d)(3), *Example 8,* of this section, except that R transfers the Business A assets to M, a wholly owned domestic subsidiary of R, in a controlled asset transfer. In addition, V's basis in its Z stock is $90.
(ii) *Result.* Pursuant to paragraph (d)(2)(vi)(B) of this section, sections 367(a) and (d) do not apply to Z's transfer of the Business A assets to R if M's basis in the Business A assets is not greater than the basis of the assets in the hands of Z, the requirements of paragraphs (c)(1)(i), (ii), and (iv) and (c)(6) of this section are satisfied, and Z includes a statement described in paragraph (d)(2)(vi)(C) of this section with its U.S. income tax return for the taxable year of the transfer. Subject to the conditions and requirements of section 367(a)(5) and § 1.367(a)-7(c), Z's transfer of the Business B assets to R (which are not re-transferred to M) qualifies for the active trade or business exception under section 367(a)(3). Pursuant to paragraphs (d)(1) and (d)(2)(vii)(A)(*1*) of this section, V is generally deemed to transfer the stock of a foreign corporation to F in a section 354 exchange subject to the rules of paragraphs (b) and (d) of this section, including the requirement that V enter into a gain recognition agreement and comply with the requirements of § 1.367(a)-8. However, pursuant to paragraph (d)(2)(vii)(B) of this section, paragraph (d)(2)(vii)(A) of this section does not apply to the extent of the transfer of business A assets by R to M, a domestic corporation. As a result, to the extent of the business A assets transferred by R to M, V is deemed to transfer the stock of Z (a domestic corporation) to F in a section 354 exchange subject to the rules of paragraphs (c) and (d) of this section. Thus, with respect to V's indirect transfer of stock of a domestic corporation to F, such transfer is not subject to gain recognition under section 367(a)(1) if the requirements of paragraph (c) of this section are satisfied, including the requirement that V enter into a gain recognition agreement (separate from the gain recognition agreement described above with respect to the deemed transfer of stock of a foreign corporation to F) and comply with the requirements of § 1.367(a)-8. Under paragraphs (d)(2)(i) and (ii) of this section, the transferee foreign corporation is F and the transferred corporation is R (with respect to the transfer of stock of a foreign corporation) and M (with respect to the transfer of stock of a domestic corporation). Pursuant to paragraph (d)(2)(iv) of this section, a disposition by F of the stock of R would trigger both gain recognition agreements. In addition, a disposition by R of the stock of M would trigger the gain recognition agreement filed with respect to the transfer of the stock of a domestic corporation. To determine whether there is a triggering event under § 1.367(a)-8(j)(2)(i) for the gain recognition agreement filed with respect to the transfer of stock of the

domestic corporation, the Business A assets in M must be considered. To determine whether there is such a triggering event for the gain recognition agreement filed with respect to the transfer of stock of the foreign corporation, the Business B assets in R must be considered.

Example 10. Concurrent application of asset transfer and indirect stock transfer rules in section 368(a)(1)(A)/(a)(2)(D) reorganization. (i) *Facts.* The facts are the same as in Example 8, except that R acquires all of the assets of Z in a reorganization described in sections 368(a)(1)(A) and (a)(2)(D). Pursuant to the reorganization, V receives 30 percent of the stock of F in a section 354 exchange.
(ii) *Result.* The consequences of the transaction are similar to those in *Example 8.* The assets of Businesses A and B that are transferred to R must be tested under section 367(a) and (d) prior to the consideration of the indirect stock transfer rules of this paragraph (d). Subject to the conditions and requirements of section 367(a)(5) and § 1.367(a)-7(c), the Business B assets qualify for the active trade or business exception under section 367(a)(3). Because the Business A assets do not qualify for the exception, Z must recognize $40 of gain under section 367(a) on the transfer of Business A assets to R. Further, because V and Z file a consolidated return, V's basis in the stock of Z is increased from $100 to $140 as a result of Z's $40 gain. Pursuant to paragraphs (d)(1) and (d)(2)(vii)(A)(*1*) of this section, V is deemed to transfer the stock of a foreign corporation to F in a section 354 exchange subject to the rules of paragraphs (b) and (d) of this section. V's indirect transfer of foreign stock will be taxable under section 367(a) unless V enters into a gain recognition agreement in the amount of $60 ($200 value of Z stock less $140 adjusted basis).

Example 11. Concurrent application of section 367(a) and (b) in section 368(a)(1)(A)/(a)(2)(E) reorganization. (i) *Facts.* F, a foreign corporation, owns all the stock of D, a domestic corporation. V, a domestic corporation, owns all the stock of Z, a foreign corporation. V has a basis of $100 in the stock of Z which has a fair market value of $200. D is an operating corporation with assets valued at $100 with a basis of $60. In a reorganization described in sections 368(a)(1)(A) and (a)(2)(E), D merges into Z, and V exchanges its Z stock for 55 percent of the outstanding F stock.
(ii) *Result.* Under paragraph (d)(1)(ii) of this section, V is treated as indirectly transferring Z stock to F. V must recognize gain on its indirect transfer of Z stock to F under section 367(a) (and section 1248 will be applicable) if V does not enter into a gain recognition agreement with respect to the indirect stock transfer in accordance with § 1.367(a)-8. Under paragraph (b)(2) of this section, if V enters into a gain recognition agreement with respect to the indirect stock transfer, the exchange will be subject to the provisions of section 367(b) and the regulations pursuant to such section as well as section 367(a). Under § 1.367(b)-4(b), however, no income inclusion is required because, immediately after the exchange, F and Z are controlled foreign corporations with respect to which V is a section 1248 shareholder. Under paragraphs (d)(2)(i) and (d)(2)(ii) of this section, the transferee foreign corporation is F, and the transferred corporation is Z (the acquiring corporation). If F disposes (within the meaning of § 1.367(a)-8(j)(1)) of all (or a portion) of Z stock within the term of the gain recognition agreement, V must either file an amended return for the year of the indirect stock transfer and include in income, with interest, the gain realized but not recognized on the initial exchange or if a valid election under § 1.367(a)-8(c)(2)(vi) was made, currently recognize the gain and pay the related interest. Under paragraph (d)(2)(v)(B) of this section, to determine

whether, for purposes of the gain recognition agreement, Z (the transferred corporation) disposes of substantially all of its assets, only the assets held by Z immediately before the transaction are taken into account. Because D is wholly owned by F, a foreign corporation, the control requirement of section 367(a)(5) and § 1.367(a)-7(c)(1) cannot be satisfied. Therefore, section 367(a)(5) and § 1.367(a)-7(b) preclude the application of the active trade or business exception under section 367(a)(3) to any property transferred by D to Z. Thus, under section 367(a)(1), D must recognize the gross amount of gain in each asset transferred to Z, or $40.

Example 12. Concurrent application of direct and indirect stock transfer rules. (i) *Facts.* F, a foreign corporation, owns all of the stock of O, also a foreign corporation. D, a domestic corporation, owns all of the stock of E, also a domestic corporation, which owns all of the stock of N, also a domestic corporation. Prior to the transactions described in this *Example 12,* D, E and N filed a consolidated income tax return. D has a basis of $100 in the stock of E, which has a fair market value of $160. The N stock has a fair market value of $100, and E has a basis of $60 in such stock. In addition to the stock of N, E owns the assets of Business X. The assets of Business X have a fair market value of $60, and E has a basis of $50 in such assets. Assume that the Business X assets qualify for nonrecognition treatment under section 367(a)(3). D does not own any stock in F (applying the attribution rules of section 318 as modified by section 958(b)). In a triangular reorganization described in section 368(a)(1)(C) and paragraph (d)(1)(iv) of this section, O acquires all of the assets of E, and D exchanges its stock in E for 40% of the voting stock of F.
(ii) *Result.* E's transfer of its assets, including the N stock, must be tested under the general rules of section 367(a) before consideration of D's indirect transfer of the stock of E. Subject to the conditions and requirements of section 367(a)(5) and § 1.367(a)-7(c), the active trade or business exception under section 367(a)(3) applies to E's transfer of Business X assets. E's transfer of its N stock could qualify for nonrecognition treatment if D satisfies the requirements in § 1.367(a)-3(e)(3). O is the transferee foreign corporation; N is the transferred corporation. Pursuant to paragraphs (d)(1) and (d)(2)(vii)(A)(*1*) of this section, D is deemed to transfer the stock of a foreign corporation to F in a section 354 exchange subject to the rules of paragraphs (b) and (d) of this section, and therefore may enter into a gain recognition agreement for such indirect stock transfer as provided in paragraph (b) of this section and § 1.367(a)-8. As to this transfer, F is the transferee foreign corporation; O is the transferred corporation.

Example 13. Successive section 351 exchanges. (i) *Facts.* D, a domestic corporation, owns all the stock of X, a controlled foreign corporation that operates an historical business, which owns all the stock of Y, a controlled foreign corporation that also operates an historical business. The properties of D consist of Business A assets, with an adjusted basis of $50 and a fair market value of $90, and Business B assets, with an adjusted basis of $50 and a fair market value of $110. Assume that the Business B assets qualify for the exception under section 367(a)(3) and § 1.367(a)-2(g)(2), but that the Business A assets do not qualify for the exception. In an exchange described in section 351, D transfers the assets of Businesses A and B to X, and, in connection with the same transaction, X transfers the assets of Business B to Y in another exchange described in section 351.

(ii) *Result.* Under paragraph (d)(1)(vi) of this section, this transaction is treated as an indirect stock transfer for purposes of section 367(a), but the transaction is not recharacterized for purposes of section 367(b). Moreover, under paragraph (d)(2)(vi) of this section, the assets of Businesses A and B that are transferred to X must be tested under section 367(a)(3). The Business A assets, which were not transferred to Y, are subject to the general rules of section 367(a), and not the indirect stock transfer rules described in this paragraph (d). D must recognize $40 of income on the outbound transfer of Business A assets. The transfer of the Business B assets is subject to both the asset transfer rules (under section 367(a)(3)) and the indirect stock transfer rules of this paragraph (d) and § 1.367(a)-8. Thus, D's transfer of the Business B assets will not be subject to section 367(a)(1) if D enters into a five-year gain recognition agreement with respect to the stock of Y. Under paragraphs (d)(2)(i) and (ii) of this section, X will be treated as the transferee foreign corporation and Y will be treated as the transferred corporation for purposes of applying the terms of the agreement. If X sells all or a portion of the stock of Y during the term of the agreement, D will be required to recognize a proportionate amount of the $60 gain that was realized by D on the initial transfer of the Business B assets.

Example 13A. Successive section 351 exchanges with ultimate domestic transferee. (i) *Facts.* The facts are the same as in *Example 13,* except that Y is a domestic corporation.
(ii) *Result.* As in *Example 13,* D must recognize $40 of income on the outbound transfer of the Business A assets. Although the Business B assets qualify for the exception under section 367(a)(3) (and end up in U.S. corporate solution, in Y), the $60 of gain realized on the Business B assets is nevertheless taxable under paragraphs (c)(1) and (d)(1)(vi) of this section because the transaction is considered to be a transfer by D of stock of a domestic corporation, Y, in which D receives more than 50 percent of the stock of the transferee foreign corporation, X. A gain recognition agreement is not permitted.

Example 14. Concurrent application of indirect stock transfer rules and section 367(b). (i) *Facts.* F, a foreign corporation, owns all of the stock of Newco, which is also a foreign corporation. P, a domestic corporation, owns all of the stock of S, a foreign corporation that is a controlled foreign corporation within the meaning of section 957(a). P's basis in the stock of S is $50 and the value of S is $100. The section 1248 amount with respect to S stock is $30. In a reorganization described in section 368(a)(1)(C) (and paragraph (d)(1)(iv) of this section), Newco acquires all of the properties of S, and P exchanges its stock in S for 49 percent of the stock of F.
(ii) *Result.* P's exchange of S stock for F stock under section 354 will be taxable under section 367(a) (and section 1248 will be applicable) if P fails to enter into a 5-year gain recognition agreement in accordance with § 1.367(a)-8. Under paragraph (b)(2) of this section, if P enters into a gain recognition agreement, the exchange will be subject to the provisions of section 367(b) and the regulations thereunder as well as section 367(a). Under § 1.367(b)-4(b), P must recognize the section 1248 amount of $30 because P exchanged stock of a controlled foreign corporation, S, for stock of a foreign corporation that is not a controlled foreign corporation, F. The indirect stock transfer rules do not apply with respect to section 367(b). The deemed dividend of $30 recognized by P will increase P's basis in the F stock received in the transaction, and F's basis in the Newco stock. Thus, the amount of the gain recognition agreement is $20

($50 gain realized on the transfer less the $30 inclusion under section 367(b)). Under paragraphs (d)(2)(i) and (ii) of this section, F is treated as the transferee foreign corporation and Newco is the transferred corporation.

Example 14A. Triangular section 368(a)(1)(C) reorganization involving foreign acquired corporation. (i) *Facts.* Assume the same facts as in Example 14, except that P receives 51 percent of the stock of F.
(ii) *Result.* Assuming § 1.367(b)-4(b) does not apply, there is no income inclusion under section 367(b), and the amount of the gain recognition agreement is $50.

Example 15. Concurrent application of indirect stock transfer rules and section 367(b). (i) *Facts.* F, a foreign corporation, owns all of the stock of Newco, a domestic corporation. P, a domestic corporation, owns all of the stock of FC, a foreign corporation. P's basis in the stock of FC is $50 and the value of FC stock is $100. The all earnings and profits amount with respect to the FC stock held by P is $60. See § 1.367(b)-2(d). In a reorganization described in sections 368(a)(1)(A) and (a)(2)(D) (and paragraph (d)(1)(i) of this section), Newco acquires all of the properties of FC, and P exchanges its stock in FC for 20 percent of the stock in F.
(ii) *Result.* P's section 354 exchange is considered an indirect stock transfer under paragraph (d)(1)(i) of this section. Further, because the assets of FC were acquired by Newco, a domestic corporation, in an asset reorganization, the transaction is within § 1.367(b)-3(a) and (b). Because the transaction is subject to § 1.367(b)-3 and the indirect stock rules of paragraph (d) of this section, and because the all earnings and profits amount with respect to the FC stock exchanged by P ($60) is greater than the gain in such stock subject to section 367(a) ($50), the section 367(b) rules (and not the section 367(a) rules) apply to the exchange. See § 1.367(a)-3(b)(2)(i)(B). Under the rules of section 367(b), P must include in income the all earnings and profits amount of $60 with respect to its FC stock. See § 1.367(b)-3. Alternatively, if P's all earnings and profits amount with respect to its FC stock were $30 (which is less than the gain in such stock subject to section 367(a) ($50)), section 367(b) and the regulations thereunder would not apply if there is gain recognition under section 367(a). Thus, if P failed to enter into a 5-year gain recognition agreement in accordance with § 1.367(a)-8, then P would recognize $50 of gain under section 367(a) and there would be no income inclusion under section 367(b). If, instead, P enters into a 5-year gain recognition agreement under § 1.367(a)-8, thereby avoiding immediate gain recognition on the entire $50 of section 367(a) gain, P is required to include in income the all earnings and profits amount of $30. In such a case, P will adjust its basis in the FC stock pursuant to § 1.367(b)-2(e)(3)(ii) and enter into a gain recognition agreement in the amount of $20.

Example 16. Direct asset reorganization not subject to stock transfer rules. (i) *Facts.* D is a domestic corporation that owns all the stock of F1 and F2, both foreign corporations. In a reorganization described in section 368(a)(1)(D), F2 acquires all of the assets of F1, and D receives 30 percent of the stock of F2 in an exchange described in section 354.
(ii) *Result.* The section 368(a)(1)(D) reorganization is not an indirect stock transfer described in paragraph (d) of this section. Moreover, the section 354 exchange by D of F1 stock for F2 stock is not an exchange described under section 367(a). See paragraph (a)(2)(ii) of this section.

(e) *Transfers of stock or securities by a domestic corporation to a foreign corporation in a section 361 exchange* —

(1) *Overview* —

(i) ***Scope and definitions.*** This paragraph (e) applies to a domestic corporation (U.S. transferor) that transfers stock or securities of a domestic or foreign corporation (transferred stock or securities) to a foreign corporation (foreign acquiring corporation) in a section 361 exchange. Except as otherwise provided in this paragraph (e), paragraphs (b) and (c) of this section do not apply to the U.S. transferor's transfer of the transferred stock or securities in the section 361 exchange. For purposes of this paragraph (e), the definitions of control group, control group member, and non-control group member in § 1.367(a)-7(f)(1), ownership interest percentage in § 1.367(a)-7(f)(7), section 361 exchange in § 1.367(a)-7(f)(8), and U.S. transferor shareholder in § 1.367(a)-7(f)(13), apply.

(ii) ***Ordering rules.*** Except as otherwise provided, this paragraph (e) applies to the transfer of the transferred stock or securities in the section 361 exchange prior to the application of any other provision of section 367 to such transfer. Furthermore, any gain recognized (including gain treated as a deemed dividend pursuant to section 1248(a)) by the U.S. transferor under this paragraph (e) shall be taken into account for purposes of applying any other provision of section 367 (including §§ 1.367(a)-6, 1.367(a)-7, and 1.367(b)-4) to the transfer of the transferred stock or securities.

(2) ***General rule.*** Except as provided in paragraph (e)(3) of this section, the transfer by the U.S. transferor of the transferred stock or securities to the foreign acquiring corporation in the section 361 exchange shall be subject to section 367(a)(1), and therefore the U.S. transferor shall recognize any gain (but not loss) realized with respect to the transferred stock or securities. Realized gain is recognized pursuant to the prior sentence notwithstanding that the transfer is described in any other nonrecognition provision enumerated in section 367(a)(1) (such as section 351 or 354).

(3) ***Exception.*** The general rule of paragraph (e)(2) of this section shall not apply if the conditions of paragraphs (e)(3)(i), (ii), and (iii) of this section are satisfied.

(i) The conditions set forth in § 1.367(a)-7(c) are satisfied with respect to the section 361 exchange.

(ii) If the transferred stock or securities are of a domestic corporation, the U.S. target company (as defined in paragraph (c)(1) of this section) complies with the reporting requirements of paragraph (c)(6) of this section, and the conditions of paragraphs (c)(1)(i), (ii), and (iv) of this section are satisfied with respect to the transferred stock or securities.

(iii) If the U.S. transferor owns (applying the attribution rules of section 318, as modified by section 958(b)) five percent or more of the total voting power or the total value of the stock of the transferee foreign corporation immediately after the transfer of the transferred stock or securities in the section 361 exchange, then the conditions set forth in paragraphs (e)(3)(iii)(A), (B), and (C) of this section are satisfied.

(A) Except as otherwise provided in this paragraph (e)(3)(iii)(A), each U.S. transferor shareholder that is a qualified U.S. person (as defined in paragraph (e)(6)(vii) of this section) owning (applying the attribution rules of section 318, as modified by section 958(b)) five percent or more of the total voting power or the total value of the stock of the transferee foreign corporation immediately after the reorganization enters into a gain

recognition agreement that satisfies the conditions of paragraph (e)(6) of this section and § 1.367(a)-8. A U.S. transferor shareholder is not required to enter into a gain recognition agreement pursuant to this paragraph if the amount of gain that would be subject to the gain recognition agreement (as determined under paragraph (e)(6)(i) of this section) is zero.

(B) With respect to non-control group members that are not described in paragraph (e)(3)(iii)(A) of this section, the U.S. transferor recognizes gain equal to the product of the aggregate ownership interest percentage of such non-control group members multiplied by the gain realized by the U.S. transferor on the transfer of the transferred stock or securities.

(C) With respect to each control group member that is not described in paragraph (e)(3)(iii)(A) of this section, the U.S. transferor recognizes gain equal to the product of the ownership interest percentage of such control group member multiplied by the gain realized by the U.S. transferor on the transfer of the transferred stock or securities.

(4) ***Application of certain rules at U.S. transferor-level.*** For purposes of paragraphs (c)(5)(iii) and (e)(3)(ii) and (iii) of this section, ownership of the stock of the transferee foreign corporation is determined by reference to stock owned by the U.S. transferor immediately after the transfer of the transferred stock or securities to the foreign acquiring corporation in the section 361 exchange, but prior to and without taking into account the U.S. transferor's distribution under section 361(c)(1) of the stock received.

(5) ***Transferee foreign corporation*** —

(i) ***General rule.*** Except as provided in paragraph (e)(5)(ii) of this section, the transferee foreign corporation for purposes of applying paragraph (e) of this section and § 1.367(a)-8 shall be the foreign corporation that issues stock or securities to the U.S. transferor in the section 361 exchange.

(ii) ***Special rule for triangular asset reorganizations involving the receipt of stock or securities of a domestic corporation.*** In the case of a triangular asset reorganization described in § 1.358-(6)(b)(2)(i), (ii), or (iii) or (b)(2)(v) (triangular asset reorganization) in which the U.S. transferor receives stock or securities of a domestic corporation that is in control (within the meaning of section 368(c)) of the foreign acquiring corporation, the transferee foreign corporation shall be the foreign acquiring corporation.

(6) ***Special requirements for gain recognition agreements.*** A gain recognition agreement filed by a U.S. transferor shareholder pursuant to paragraph (e)(3)(iii)(A) of this section is, in addition to the terms and conditions of § 1.367(a)-8, subject to the conditions of this paragraph (e)(6).

(i) The amount of gain subject to the gain recognition agreement shall equal the product of the ownership interest percentage of the U.S. transferor shareholder multiplied by the gain realized by the U.S. transferor on the transfer of the transferred stock or securities, reduced (but not below zero) by the sum of the amounts described in paragraphs (e)(6)(i)(A),(B), (C), and (D) of this section.

(A) Gain recognized by the U.S. transferor with respect to the transferred stock or securities under section 367(a)(1) (including any portion treated as a deemed dividend under section 1248(a)) that is attributable to such U.S. transferor shareholder pursuant to § 1.367(a)-7(c)(2) or (e)(5).

(B) A deemed dividend included in the income of the U.S. transferor with respect to the transferred stock under § 1.367(b)-4(b)(1)(i) that is attributable to such U.S. transferor shareholder pursuant to § 1.367(a)-7(e)(4).

(C) If the U.S. transferor shareholder is subject to an election under § 1.1248(f)-2(c)(1), a deemed dividend included in the income of the U.S. transferor pursuant to § 1.1248(f)-2(c)(3) that is attributable to the U.S. transferor shareholder.

(D) If the U.S. transferor shareholder is not subject to an election under § 1.1248(f)-2(c)(1), the hypothetical section 1248 amount (as defined in § 1.1248(f)-1(c)(4)) with respect to the stock of each foreign corporation transferred in the section 361 exchange attributable to the U.S. transferor shareholder.

(ii) The gain recognition agreement shall include the election described in § 1.367(a)-8(c)(2)(vi).

(iii) The gain recognition agreement shall designate the U.S. transferor shareholder as the U.S. transferor for purposes of § 1.367(a)-8.

(iv) If the transfer of the transferred stock or securities in the section 361 exchange is pursuant to a triangular asset reorganization, the gain recognition agreement shall include appropriate provisions that are consistent with the principles of § 1.367(a)-8 for gain recognition agreements involving multiple parties. See § 1.367(a)-8(j)(9).

(v) The gain recognition agreement shall not be eligible for termination upon a taxable disposition pursuant to § 1.367(a)-8(o)(1) unless the value of the stock or securities received by the U.S. transferor shareholder in exchange for the stock or securities of the U.S. transferor under section 354 or 356 is at least equal to the amount of gain subject to the gain recognition agreement filed by such U.S. transferor shareholder.

(vi) Except as otherwise provided in this paragraph (e)(6)(vi), if gain is subsequently recognized by the U.S. transferor shareholder under the terms of the gain recognition agreement pursuant to § 1.367(a)-8(c)(1)(i), the increase in stock basis provided under § 1.367(a)-8(c)(4)(i) with respect to the stock received by the U.S. transferor shareholder shall not exceed the amount of the stock basis adjustment made pursuant to § 1.367(a)-7(c)(3) with respect to the stock received by the U.S. transferor shareholder. This paragraph (e)(6)(vi) shall not apply if the U.S. transferor shareholder and the U.S. transferor are members of the same consolidated group at the time of the reorganization.

(vii) For purposes of this section, a qualified U.S. person means a U.S. person, as defined in § 1.367(a)-1T(d)(1), but for this purpose does not include domestic partnerships, regulated investment companies (as defined in section 851(a)), real estate investment trusts (as defined in section 856(a)), and S corporations (as defined in section 1361(a)).

(7) ***Gain subject to section 1248(a).*** If the U.S. transferor recognizes gain under paragraphs (e)(3)(iii)(B) or (C) of this section with respect to transferred stock that is stock in a foreign corporation to which section 1248(a) applies, then the portion of such gain treated as a deemed dividend under section 1248(a) is the product of the amount of the gain multiplied by the section 1248(a) ratio. The section 1248(a) ratio is the ratio of the amount that would be treated as a deemed dividend under section 1248(a) if all the gain in the transferred stock were recognized to the amount of gain realized in all the transferred stock.

(8) ***Examples.*** The following examples illustrate the provisions of paragraph (e) of this section. Except as otherwise indicated: US1, US2, and UST are domestic corporations that are not members of a consolidated group; X is a United States citizen; US1, US2, and X are unrelated parties; CFC1, CFC2, and FA are foreign corporations; each corporation described herein has a single class of stock issued and outstanding and a tax year ending on December 31; the section 1248 amount (within the meaning of § 1.367(b)-2(c)) with respect to the stock of CFC1 and CFC2 is zero; Asset A is section 367(a) property that, but for the application of section 367(a)(5), would qualify for the active foreign trade or business exception under § 1.367(a)-2T; the requirements of § 1.367(a)-7(c)(2) through (5) are satisfied with respect to a section 361 exchange; the provisions of § 1.367(a)-6T (regarding branch loss recapture) are not applicable; and none of the foreign corporations in the examples is a surrogate foreign corporation (within the meaning of section 7874) as a result of the transactions described in the examples because one or more of the conditions of section 7874(a)(2)(B) is not satisfied.

Example 1. U.S. transferor owns less than 5% of stock of transferee foreign corporation—(i) *Facts.* US1, US2, and X own 80%, 5%, and 15%, respectively, of the stock of UST with a fair market value of $160x, $10x, and $30x, respectively. UST has two assets, Asset A and 100% of the stock of CFC1. UST has no liabilities. Asset A has a $150x basis and $100x fair market value (as defined in § 1.367(a)-7(f)(3)), and the CFC1 stock has a $0x basis and $100x fair market value. UST transfers Asset A and the CFC1 stock to FA solely in exchange for $200x of FA voting stock in a reorganization described in section 368(a)(1)(C). UST's transfer of Asset A and the CFC1 stock to FA qualifies as a section 361 exchange. UST distributes the FA stock received in the section 361 exchange to US1, US2, and X pursuant to the plan of reorganization, and liquidates. US1 receives $160x of FA stock, US2 receives $10x of FA stock, and X receives $30x of FA stock in exchange for the UST stock. Immediately after the transfer of Asset A and the CFC1 stock to FA in the section 361 exchange, but prior to and without taking into account UST's distribution of the FA stock pursuant to section 361(c)(1), UST does not own (applying the attribution rules of section 318, as modified by section 958(b)) five percent or more of the total voting power or the total value of the stock of FA.
(ii) *Result*—(A) UST's transfer of the CFC1 stock to FA in the section 361 exchange is subject to the provisions of this paragraph (e), and this paragraph (e) applies to the transfer of the CFC1 stock prior to the application of any other provision of section 367 to such transfer. See paragraphs (e)(1)(i) and (ii) of this section. Pursuant to the general rule of paragraph (e)(2) of this section, UST must recognize the gain realized of $100x on the transfer of the CFC1 stock (computed as the excess of the $100x fair market value over the $0x basis) unless the requirements for the exception provided in paragraph (e)(3) of this section are satisfied. In this case, the requirements of paragraph (e)(3) of this section are satisfied. First, the requirement of paragraph (e)(3)(i) of this section is satisfied because the control requirement of § 1.367(a)-7(c)(1) is satisfied, and a stated assumption is that the requirements of § 1.367(a)-7(c)(2) through (5) will be satisfied. The control requirement is satisfied because US1 and US2, each a control group member, own in the aggregate 85% of the stock of UST immediately before the reorganization. Second, the requirement of paragraph (e)(3)(ii) of this

section is not applicable because that paragraph applies to the transfer of stock of a domestic corporation and CFC1 is a foreign corporation. Third, paragraph (e)(3)(iii) of this section is not applicable because immediately after the section 361 exchange, but prior to and without taking into account UST's distribution of the FA stock pursuant to section 361(c)(1), UST does not own (applying the attribution rules of section 318, as modified by section 958(b)) 5% or more of the total voting power or the total value of the stock of FA. See paragraph (e)(4) of this section. Accordingly, UST does not recognize the $100x of gain realized in the CFC1 stock pursuant to this section.

(B) In order to meet the requirements of § 1.367(a)-7(c)(2)(i), UST must recognize gain equal to the portion of the inside gain (as defined in § 1.367(a)-7(f)(5)) attributable to non-control group members (X), or $7.50x. The $7.50x of gain is computed as the product of the inside gain ($50x) multiplied by X's ownership interest percentage in UST (15%). Pursuant to § 1.367(a)-7(f)(5), the $50x of inside gain is the amount by which the aggregate fair market value ($200x) of the section 367(a) property (as defined in § 1.367(a)-7(f)(10), or Asset A and the CFC1 stock) exceeds the sum of the inside basis ($150x) of such property and the product of the section 367(a) percentage (as defined in § 1.367(a)-7(f)(9), or 100%) multiplied by UST's deductible liabilities (as defined in § 1.367(a)-7(f)(2), or $0x). Pursuant to § 1.367(a)-7(f)(4), the inside basis equals the aggregate basis of the section 367(a) property transferred in the section 361 exchange ($150x), increased by any gain or deemed dividends recognized by UST with respect to the section 367(a) property under section 367 ($0x), but not including the $7.50x of gain recognized by UST under § 1.367(a)-7(c)(2)(i). Pursuant to § 1.367(a)-7(e)(1), the $7.50x of gain recognized by UST is treated as recognized with respect to the CFC1 stock and Asset A in proportion to the amount of gain realized in each. However, because there is no gain realized by UST with respect to Asset A, all $7.50x of the gain is allocated to the CFC1 stock. Furthermore, FA's basis in the CFC1 stock, as determined under section 362 is increased by the $7.50x of gain recognized by UST. See § 1.367(a)-1(b)(4)(i)(B).

(C) The requirement to recognize gain under § 1.367(a)-7(c)(2)(ii) is not applicable because the portion of the inside gain attributable to US1 and US2 (control group members) can be preserved in the stock received by each such shareholder. As described in paragraph (ii)(B) of this *Example 1*, the inside gain is $50x. US1's attributable inside gain of $40x (equal to the product of $50x inside gain multiplied by US1's 80% ownership interest percentage, reduced by $0x, the sum of the amounts described in § 1.367(a)-7(c)(2)(ii)(A)(*1*) through (*3*)) does not exceed $160x (equal to the product of the section 367(a) percentage of 100% multiplied by $160x fair market value of FA stock received by US1). Similarly, US2's attributable inside gain of $2.50x (equal to the product of $50x inside gain multiplied by US2's 5% ownership interest percentage, reduced by $0x, the sum of the amounts described in § 1.367(a)-7(c)(2)(ii)(A)(*1*) through (*3*)) does not exceed $10x (equal to the product of the section 367(a) percentage of 100% multiplied by $10x fair market value of FA stock received by US2).

(D) Each control group member (US1 and US2) must separately compute any required adjustment to stock basis under § 1.367(a)-7(c)(3).

Example 2. U.S. transferor owns 5% or more of the stock of the transferee foreign corporation—(i) *Facts.* The facts are the same as in paragraph (e), *Example 1,* of this section except that immediately after the section 361 exchange, but prior to and without taking into account UST's distribution of the FA stock pursuant to section 361(c)(1), UST owns (applying the attribution rules of section 318, as modified by section 958(b)) 5% or more of the total voting power or value of the stock of FA. Furthermore, immediately after the reorganization, US1 and X (but not US2) each own (applying the attribution rules of section 318, as modified by section 958(b)) five percent or more of the total voting power or value of the stock of FA. (ii) *Result*—(A) As is the case with paragraph (e), *Example 1,* of this section, UST's transfer of the CFC1 stock to FA in the section 361 exchange is subject to the provisions of this paragraph (e), and this paragraph (e) applies to the transfer of the CFC1 stock prior to the application of any other provision of section 367 to such transfer. See paragraphs (e)(1)(i) and (ii) of this section. In addition, UST must recognize the gain realized of $100x on the transfer of the CFC1 stock (computed as the excess of the $100x fair market value over the $0x basis) unless the requirements for the exception provided in paragraph (e)(3) of this section are satisfied. For the same reasons provided in *Example 1,* the requirement in paragraph (e)(3)(i) of this section is satisfied and the requirement of paragraph (e)(3)(ii) of this section is not applicable.

(B) Unlike paragraph (e), *Example 1,* of this section, however, UST owns 5% or more of the voting power or value of the stock of FA immediately after the transfer of the CFC1 stock in the section 361 exchange, but prior to and without taking into account UST's distribution of the FA stock under section 361(c)(1). As a result, paragraph (e)(3)(iii) of this section is applicable to the section 361 exchange of the CFC1 stock. Accordingly, in order to meet the requirements of paragraph (e)(3)(iii)(A) of this section US1 and X must enter into gain recognition agreements that satisfy the requirements of paragraph (e)(6) of this section and § 1.367(a)-8. See paragraph (ii)(G) of this *Example 2* for the computation of the amount of gain subject to each gain recognition agreement.

(C) In order to meet the requirements of paragraph (e)(3)(iii)(C) of this section, UST must recognize $5x of gain attributable to US2 (computed as the product of the $100x of gain realized with respect to the transfer of the CFC1 stock multiplied by the 5% ownership interest percentage of US2). The $5x of gain recognized is not included in the computation of inside basis (see § 1.367(a)-7(f)(4)(i)), but reduces (but not below zero) the amount of gain recognized by UST pursuant to § 1.367(a)-7(c)(2)(ii) that is attributable to US2. Furthermore, FA's basis in the CFC1 stock as determined under section 362 is increased for the $5x of gain recognized. See § 1.367(a)-1(b)(4)(i)(B). Assuming US1 and X enter into the gain recognition agreements described in paragraph (ii)(B) of this *Example 2,* and UST recognizes the $5x of

gain described in this example, the requirements of paragraph (e)(3) of this section are satisfied and, accordingly, UST does not recognize the remaining $95x of gain realized in the CFC1 stock pursuant to this section.

(D) As described in paragraph (ii)(B) of *Example 1* of this paragraph (e), UST must recognize $7.50x of gain pursuant to § 1.367(a)-7(c)(2)(i), the amount of the $50x of inside gain attributable to X. Pursuant to § 1.367(a)-7(e)(1), the $7.50x of gain recognized by UST is treated as recognized with respect to the CFC1 stock and Asset A in proportion to the amount of gain realized in each. However, because there is no gain realized by UST with respect to Asset A, all $7.50x of the gain is allocated to the CFC1 stock. Furthermore, FA's basis in the CFC1 stock as determined under section 362 is increased for the $7.50x of gain recognized. See § 1.367(a)-1(b)(4)(i)(B).

(E) As described in paragraph (ii)(C) of *Example 1* of this paragraph (e), the requirement to recognize gain pursuant to § 1.367(a)-7(c)(2)(ii) is not applicable because the attributable inside gain of US1 and US2 can be preserved in the stock received by each shareholder. However, if UST were required to recognize gain pursuant to § 1.367(a)-7(c)(2)(ii) for inside gain attributable to US2 (for example, if US2 received solely cash rather than FA stock in the reorganization), the amount of such gain would be reduced (but not below zero) by the amount of gain recognized by UST pursuant to paragraph (e)(3)(iii)(C) of this section that is attributable to US2 (computed as $5x in paragraph (ii)(C) of this *Example 2*). See § 1.367(a)-7(c)(2)(ii)(A)(*1*).

(F) Each control group member (US1 and US2) must separately compute any required adjustment to stock basis under § 1.367(a)-7(c)(3).

(G) The amount of gain subject to the gain recognition agreement filed by each of US1 and X is determined pursuant to paragraph (e)(6)(i) of this section. With respect to US1, the amount of gain subject to the gain recognition agreement is $80x. The $80x is computed as the product of US1's ownership interest percentage (80%) multiplied by the gain realized by UST in the CFC1 stock as determined prior to taking into account the application of any other provision of section 367 ($100x), reduced by the sum of the amounts described in paragraphs (e)(6)(i)(A) through (D) of this section attributable to US1 ($0x). With respect to X, the amount of gain subject to the gain recognition agreement is $7.50x. The $7.50x is computed as the product of X's ownership interest percentage (15%) multiplied by the gain realized by UST in the CFC1 stock as determined prior to taking into account the application of any other provision of section 367 ($100x), reduced by the sum of the amounts described in paragraphs (e)(6)(i)(A) through (D) of this section attributable to X ($7.50x, as computed in paragraph (ii)(D) of this *Example 2*).

(H) In order the meet the requirements of paragraph (e)(6)(ii) of this section, each gain recognition agreement must include the election described in § 1.367(a)-8(c)(2)(vi). Furthermore, pursuant to paragraph (e)(6)(iii) of this section, US1 and X must be designated as the U.S. transferor on their respective gain recognition agreements for purposes of § 1.367(a)-8.

Example 3. U.S. transferor owns 5% or more of the stock of the transferee foreign corporation; interaction with section 1248(f)—(i) *Facts.* US1, US2, and X own 50%, 30%, and 20%, respectively, of the stock of UST. The UST stock owned by US1 has a $180x basis and $200x fair market value; the UST stock owned by US2 has a $100x basis and $120x fair market value; and the UST stock owned by X has a $80x fair market value. UST owns Asset A, and all the stock of CFC1 and CFC2. UST has no liabilities. Asset A has a $10x basis and $200x fair market value. The CFC1 stock is a single block of stock (as defined in § 1.1248(f)-1(c)(2)) with a $20x basis, $40x fair market value, and $30x of earnings and profits attributable to it for purposes of section 1248 (with the result that the section 1248 amount (as defined in § 1.1248(f)-1(c)(9)) is $20x). The CFC2 stock is also a single block of stock with a $30x basis, $160x fair market value, and $150x of earnings and profits attributable to it for purposes of section 1248 (with the result that the section 1248 amount is $130x). On December 31, Year 3, in a reorganization described in section 368(a)(1)(D), UST transfers the CFC1 stock, CFC2 stock, and Asset A to FA in exchange for 60 shares of FA stock with a $400x fair market value. UST's transfer of the CFC1 stock, CFC2 stock, and Asset A to FA in exchange for the 60 shares of FA stock qualifies as a section 361 exchange. UST distributes the FA stock received in the section 361 exchange to US1, US2, and X pursuant to section 361(c)(1). US1, US2, and X exchange their UST stock for 30, 18, and 12 shares, respectively, of FA stock pursuant to section 354. Immediately after the reorganization, FA has 100 shares of stock outstanding, and US1 and US2 are each a section 1248 shareholder with respect to FA.
(ii) *Result*—(A) UST's transfer of the CFC1 stock and CFC2 stock to FA in the section 361 exchange is subject to the provisions of this paragraph (e), and this paragraph (e) applies to the transfer of the CFC1 stock and CFC2 stock prior to the application of any other provision of section 367 to such transfer. See paragraphs (e)(1)(i) and (ii) of this section. Pursuant to the general rule of paragraph (e)(2) of this section, UST must recognize the gain realized of $20x on the transfer of the CFC1 stock (the excess of $40x fair market value over $20x basis) and the gain realized of $130x on the transfer of the CFC2 stock (the excess of $160x fair market value over $30x basis), subject to the application of section 1248(a), unless the requirements for the exception provided in paragraph (e)(3) of this section are satisfied. In this case, the requirement of paragraph (e)(3)(i) of this section is satisfied because the control requirement of § 1.367(a)-7(c)(1) is satisfied, and a stated assumption is that the requirements of § 1.367(a)-7(c)(2) through (5) will be satisfied. The control requirement is satisfied because US1 and US2, each a control group member, own in the aggregate 80% of the UST stock immediately before the reorganization. The requirement of paragraph (e)(3)(ii)

of this section is not applicable because paragraph (e)(3)(ii) applies to the transfer of stock of a domestic corporation, and CFC1 and CFC2 are foreign corporations. UST owns 5% or more of the total voting power or value of the stock of FA (60%, or 60 of the 100 shares of FA stock outstanding) immediately after the transfer of the CFC1 stock and CFC2 stock in the section 361 exchange, but prior to and without taking into account UST's distribution of the FA stock under section 361(c)(1). As a result, paragraph (e)(3)(iii) of this section is applicable to the section 361 exchange of the CFC1 stock and CFC2 stock. US1, US2, and X each own (applying the attribution rules of section 318, as modified by section 958(b)) 5% or more of the total voting power or value of the FA stock immediately after the reorganization, or 30%, 18%, and 12%, respectively. Accordingly, in order to meet the requirements of paragraph (e)(3)(iii)(A) of this section, US1 and US2 must enter into gain recognition agreements with respect to the CFC1 stock and CFC2 stock that satisfy the requirements of paragraph (e)(6) of this section and § 1.367(a)-8. X is not required to enter into a gain recognition agreement because the amount of gain that would be subject to the gain recognition agreement is zero. See paragraph (ii)(J) of this *Example 3* for the computation of the amount of gain subject to each gain recognition agreement. Assuming US1 and US2 enter into the gain recognitions agreements described above, the requirements of paragraph (e)(3) of this section are satisfied and accordingly, UST does not recognize the gain realized of $20x in the stock of CFC1 or the gain realized of $130x in the stock of CFC2 pursuant to this section.

(B) UST's transfer of the CFC1 stock and CFC2 stock to FA pursuant to the section 361 exchange is subject to § 1.367(b)-4(b)(1)(i), which applies prior to the application of § 1.367(a)-7(c). See paragraph (e)(1) of this section. UST (the exchanging shareholder) is a U.S. person and a section 1248 shareholder with respect to CFC1 and CFC2 (each a foreign acquired corporation). However, UST is not required to include in income as a deemed dividend the section 1248 amount with respect to the CFC1 stock ($20x) or CFC2 stock ($130x) under § 1.367(b)-4(b)(1)(i) because, immediately after UST's section 361 exchange of the CFC1 stock and CFC2 stock for FA stock (and before the distribution of the FA stock to US1, US2, and X under section 361(c)(1), FA, CFC1, and CFC2 are controlled foreign corporations as to which UST is a section 1248 shareholder. See § 1.367(b)-4(b)(1)(ii)(A). However, if UST were required to include in income as a deemed dividend the section 1248 amount with respect to the CFC1 stock or CFC2 stock (for example, if FA were not a controlled foreign corporation), such deemed dividend would be taken into account prior to the application of § 1.367(a)-7(c). Furthermore, because US1, US2, and X are all persons described in paragraph (e)(3)(iii)(A) of this section, any such deemed dividend would increase inside basis. See § 1.367(a)-7(f)(4).

(C) In order to meet the requirements of § 1.367(a)-7(c)(2)(i), UST must recognize gain equal to the portion of the inside gain attributable to non-control group members (X), or $68x. The $68x of gain is computed as the product of the inside gain ($340x) multiplied by X's ownership interest percentage in UST (20%), reduced (but not below zero) by $0x, the sum of

the amounts described in § 1.367(a)-7(c)(2)(i)(A) through (C). Pursuant to § 1.367(a)-7(f)(5), the $340x of inside gain is the amount by which the aggregate fair market value ($400x) of the section 367(a) property (Asset A, CFC1 stock, and CFC2 stock) exceeds the sum of the inside basis ($60x) and $0x (the product of the section 367(a) percentage (100%) multiplied by UST's deductible liabilities ($0x)). Pursuant to § 1.367(a)-7(f)(4), the inside basis equals the aggregate basis of the section 367(a) property transferred in the section 361 exchange ($60x), increased by any gain or deemed dividends recognized by UST with respect to the section 367(a) property under section 367 ($0x), but not including the $68x of gain recognized by UST under § 1.367(a)-7(c)(2)(i). Under § 1.367(a)-7(e)(1), the $68x gain recognized is treated as being with respect to the CFC1 stock, CFC2 stock, and Asset A in proportion to the amount of gain realized by UST on the transfer of the property. The amount treated as recognized with respect to the CFC1 stock is $4x ($68x gain multiplied by $20x/$340x). The amount treated as recognized with respect to the CFC2 stock is $26x ($68x gain multiplied by $130x/$340x). The amount treated as recognized with respect to Asset A is $38x ($68x gain multiplied by $190x/$340x). Under section 1248(a), UST must include in gross income as a dividend the $4x gain recognized with respect to the CFC1 stock and the $26x gain recognized with respect to CFC2 stock. Furthermore, FA's basis in the CFC1 stock, CFC2 stock, and Asset A, as determined under section 362, is increased by the amount of gain recognized by UST with respect to such property. See § 1.367(a)-1(b)(4)(i)(B). Thus, FA's basis in the CFC1 stock is $24x ($20x increased by $4x of gain), the CFC2 stock is $56x ($30x increased by $26x of gain), and Asset A is $48x ($10x increased by $38x of gain).

(D) The requirement to recognize gain under § 1.367(a)-7(c)(2)(ii) is not applicable because the portion of the inside gain attributable to US1 and US2 (control group members) can be preserved in the stock received by each such shareholder. As described in paragraph (ii)(C) of this Example 3, the inside gain is $340x. US1's attributable inside gain of $170x (equal to the product of $340x inside gain multiplied by US1's 50% ownership interest percentage, reduced by $0x, the sum of the amounts described in § 1.367(a)-7(c)(2)(ii)(A)(*1*) through (*3*)) does not exceed $200x (equal to the product of the section 367(a) percentage of 100% multiplied by $200x fair market value of FA stock received by US1). Similarly, US2's attributable inside gain of $102x (equal to the product of $340x inside gain multiplied by US2's 30% ownership interest percentage, reduced by $0x, the sum of the amounts described in § 1.367(a)-7(c)(2)(ii)(A)(*1*) through (*3*)) does not exceed $120x (equal to the product of the section 367(a) percentage of 100% multiplied by $120x fair market value of FA stock received by US2).

(E) Each control group member (US1 and US2) separately computes any required adjustment to stock basis under § 1.367(a)-7(c)(3). US1's section 358 basis in the FA stock received of $180x (equal to US1's basis in the UST stock exchanged) is reduced to preserve the attributable inside gain with respect to US1, less any gain recognized with respect to US1 under § 1.367(a)-7(c)(2)(ii). Because UST does not recognize gain on the section 361

exchange with respect to US1 under § 1.367(a)-7(c)(2)(ii) (as determined in paragraph (ii)(D) of this *Example 3*), the attributable inside gain of $170x with respect to US1 is not reduced under § 1.367(a)-7(c)(3)(i)(A). US1's outside gain (as defined in § 1.367(a)-7(f)(6)) in the FA stock is $20x, the product of the section 367(a) percentage (100%) multiplied by the $20x gain (equal to the difference between $200x fair market value and $180x section 358 basis in the FA stock). Thus, US1's $180x section 358 basis in the FA stock must be reduced by $150x (the excess of $170x attributable inside gain, reduced by $0x, over $20x outside gain) to $30x. Similarly, US2's section 358 basis in the FA stock received of $100x (equal to US2's basis in the UST stock exchanged) is reduced to preserve the attributable inside gain with respect to US2, less any gain recognized with respect to US2 under § 1.367(a)-7(c)(2)(ii). Because UST does not recognize gain on the section 361 exchange with respect to US2 under § 1.367(a)-7(c)(2)(ii) (as determined in paragraph (ii)(D) of this *Example 3*), the attributable inside gain of $102x with respect to US2 is not reduced under § 1.367(a)-7(c)(3)(i)(A). US2's outside gain in the FA stock is $20x, the product of the section 367(a) percentage (100%) multiplied by the $20x gain (equal to the difference between $120x fair market value and $100x section 358 basis in FA stock). Thus, US2's $100x section 358 basis in the FA stock must be reduced by $82x (the excess of $102x attributable inside gain, reduced by $0x, over $20x outside gain) to $18x.

(F) UST's distribution of the FA stock to US1, US2, and X under section 361(c)(1) (new stock distribution) is subject to § 1.1248(f)-1(b)(3). Except as provided in § 1.1248(f)-2(c), under § 1.1248(f)-1(b)(3) UST must include in gross income as a dividend the total section 1248(f) amount (as defined in § 1.1248(f)-1(c)(14)). The total section 1248(f) amount is $120x, the sum of the section 1248(f) amount (as defined in § 1.1248(f)-1(c)(10)) with respect to the CFC1 stock ($16x) and CFC2 stock ($104x). The $16x section 1248(f) amount with respect to the CFC1 stock is the amount that UST would have included in income as a dividend under § 1.367(b)-4(b)(1)(i) with respect to the CFC1 stock if the requirements of § 1.367(b)-4(b)(1)(ii)(A) had not been satisfied ($20x), reduced by the amount of gain recognized by UST under § 1.367(a)-7(c)(2) allocable to the CFC1 stock and treated as a dividend under section 1248(a) ($4x, as described in paragraph (ii)(C) of this *Example 3*). Similarly, the section 1248(f) amount with respect to the CFC2 stock is $104x ($130x reduced by $26x).

(G) If, however, UST along with US1 and US2 (each a section 1248 shareholder of FA immediately after the distribution) elect to apply the provisions of § 1.1248(f)-2(c) (as provided in § 1.1248(f)-2(c)(1)), the amount that UST is required to include in income as a dividend under § 1.1248(f)-1(b)(3) ($120x total section 1248(f) amount as computed in paragraph (ii)(F) of this *Example 3*) is reduced by the sum of the portions of the section 1248(f) amount with respect to the CFC1 stock and CFC2 stock that is attributable (under the rules of § 1.1248(f)-2(d)) to the FA stock distributed to US1 and US2. Assume that the election is made to apply § 1.1248(f)-2(c).

(*1*) Under § 1.1248(f)-2(d)(1), the portion of the section 1248(f) amount with respect to the CFC1 stock that is attributed to the 30 shares of FA stock distributed to US1 is equal to the hypothetical section 1248 amount (as defined in § 1.1248(f)-1(c)(4)) with respect to the CFC1 stock that is attributable to US1's ownership interest percentage in UST. US1's hypothetical section 1248 amount with respect to the CFC1 stock is the amount that UST would have included in income as a deemed dividend under § 1.367(b)-4(b)(1)(i) with respect to the CFC1 stock if the requirements of § 1.367(b)-4(b)(1)(ii)(A) had not been satisfied ($20x) and that would be attributable to US1's ownership interest percentage in UST (50%), reduced by the amount of gain recognized by UST under § 1.367(a)-7(c)(2) attributable to US1 and allocable to the CFC1 stock, but only to the extent such gain is treated as a dividend under section 1248(a) ($0x, as described in paragraphs (ii)(C) and (D) of this *Example 3*). Thus, US1's hypothetical section 1248 amount with respect to the CFC1 stock is $10x ($20x multiplied by 50%, reduced by $0x). The $10x hypothetical section 1248 amount is attributed pro rata (based on relative values) among the 30 shares of FA stock distributed to US1, and the attributable share amount (as defined in § 1.1248(f)-2(d)(1)) is $.33x ($10x/30 shares). Similarly, US1's hypothetical section 1248 amount with respect to the CFC2 stock is $65x ($130x multiplied by 50%, reduced by $0x), and the attributable share amount is $2.17x ($65x/30 shares). Similarly, US2's hypothetical section 1248 amount with respect to the CFC1 stock is $6x ($20x multiplied by 30%, reduced by $0x), and the attributable share amount is also $.33x ($6x/18 shares). Finally, US2's hypothetical section 1248 amount with respect to the CFC2 stock is $39x ($130x multiplied by 30%, reduced by $0x), and the attributable share amount is also $2.17x ($39x/18 shares). Thus, the sum of the portion of the section 1248(f) amount with respect to the CFC1 stock and CFC2 stock attributable to shares of stock of FA distributed to US1 and US2 is $120x ($10x plus $65x plus $6x plus $39x).

(*2*) If the shares of FA stock are divided into portions, § 1.1248(f)-2(d)(2) applies to attribute the attributable share amount to portions of shares of FA stock distributed to US1 and US2. Under § 1.1248(f)-2(c)(2) each share of FA stock received by US1 (30 shares) and US2 (18 shares) is divided into three portions, one attributable to the single block of stock of CFC1, one attributable to the single block of stock of CFC2, and one attributable to Asset A. Thus, the attributable share amount of $.33x with respect to the CFC1 stock is attributed to the portion of each of the 30 shares and 18 shares of FA stock received by US1 and US2, respectively, that relates to the CFC1 stock. Similarly, the attributable share amount of $2.17x with respect to the CFC2 stock is attributed to the portion of each of the 30 shares and 18 shares of FA stock received by US1 and US2, respectively, that relates to the CFC2 stock.

(*3*) The total section 1248(f) amount ($120x) that UST is otherwise required to include in gross income as a dividend under § 1.1248(f)-1(b)(3) is reduced by $120x, the sum of the portions of the section 1248(f) amount with respect to the CFC1 stock and CFC2 stock that

are attributable to the shares of FA stock distributed to US1 and US2. Thus, the amount DC is required to include in gross income as a dividend under § 1.1248(f)-1(b)(3) is $0x ($120x reduced by $120x).

(H) As stated in paragraph (ii)(G)(*2*) of this *Example 3,* under § 1.1248(f)-2(c)(2) each share of FA stock received by US1 (30 shares) and US2 (18 shares) is divided into three portions, one attributable to the CFC1 stock, one attributable to the CFC2 stock, and one attributable to Asset A. Under § 1.1248(f)-2(c)(4)(i), the basis of each portion is the product of US1's and US2's section 358 basis in the share of FA stock multiplied by the ratio of the section 362 basis of the property (CFC1 stock, CFC2 stock, or Asset A, as applicable) received by FA in the section 361 exchange to which the portion relates, to the aggregate section 362 basis of all property received by FA in the section 361 exchange. Under § 1.1248(f)-2(c)(4)(ii), the fair market value of each portion is the product of the fair market value of the share of FA stock multiplied by the ratio of the fair market value of the property (CFC1 stock, CFC2 stock, or Asset A, as applicable) to which the portion relates, to the aggregate fair market value of all property received by FA in the section 361 exchange. The section 362 basis of the CFC1 stock, CFC2 stock, and Asset A is $24x, $56x, and $48x, respectively, for an aggregate section 362 basis of $128x. See paragraph (ii)(C) of this *Example 3.* The fair market value of the CFC1 stock, CFC2 stock, and Asset A is $40x, $160x, and $200x, for an aggregate fair market value of $400x. Furthermore, US1's 30 shares of FA stock have an aggregate fair market value of $200x and section 358 basis of $30x (resulting in aggregate gain of $170x), and US2's 18 shares of FA stock have an aggregate fair market value of $120x and section 358 basis of $18x (resulting in aggregate gain of $102x). See paragraph (ii)(E) of this *Example 3.*

(*1*) With respect to US1's 30 shares of FA stock, the portions attributable to the CFC1 stock have an aggregate basis of $5.63x ($30x multiplied by $24x/$128x) and fair market value of $20x ($200x multiplied by $40x/$400x), resulting in aggregate gain in such portions of $14.38x (or $.48x gain in each such portion of the 30 shares). The portions attributable to the CFC2 stock have an aggregate basis of $13.13x ($30x multiplied by $56x/$128x) and fair market value of $80x ($200x multiplied by $160x/$400x), resulting in aggregate gain in such portions of $66.88x (or $2.23x in each such portion of the 30 shares). The portions attributable to Asset A have an aggregate basis of $11.25x ($30x multiplied by $48x/$128x) and fair market value of $100x ($200x multiplied by $200x/$400x), resulting in aggregate gain in such portions of $88.75x (or $2.96x in each such portion of the 30 shares). Thus, the aggregate gain in all the portions of the 30 shares is $170x ($14.38x plus $66.88x plus $88.75x).

(*2*) With respect to US2's 18 shares of FA stock, the portions attributable to the CFC1 stock have an aggregate basis of $3.38x ($18x multiplied by $24x/$128x) and fair market value of $12x ($120x multiplied by $40x/$400x), resulting in aggregate gain in such portions of $8.63x (or $.48x in each such portion of the 18 shares). The portions attributable to the CFC2 stock

have an aggregate basis of $7.88x ($18x multiplied by $56x/$128x) and fair market value of $48x ($120x multiplied by $160x/$400x), resulting in aggregate gain of $40.13x (or $2.23x in each such portion of the 18 shares). The portions attributable to Asset A have an aggregate basis of $6.75x ($18x multiplied by $48x/$128x) and fair market value of $60x ($120x multiplied by $200x/$400x), resulting in aggregate gain of $53.25x (or $2.96x in each such portion of the 18 shares). Thus, the aggregate gain in all the portions of the 18 shares is $102x ($8.63x plus $40.13x plus $53.25x).

(*3*) Under § 1.1248-8(b)(2)(iv), the earnings and profits of CFC1 attributable to the portions of US1's 30 shares of FA stock that relate to the CFC1 stock is $15x (the product of US1's 50% ownership interest percentage in UST multiplied by $30x of earnings and profits attributable to the CFC1 stock before the section 361 exchange, reduced by $0x of dividend included in UST's income with respect to the CFC1 stock under section 1248(a) attributable to US1). The earnings and profits of CFC2 attributable to the portions of US1's 30 shares of FA stock that relate to the CFC2 stock is $75x (the product of US1's 50% ownership interest percentage in UST multiplied by $150x of earnings and profits attributable to the CFC2 stock before the section 361 exchange, reduced by $0x of dividend included in UST's income with respect to the CFC2 stock under section 1248(a) attributable to US1). Similarly, the earnings and profits of CFC1 attributable to the portions of US2's 18 shares of FA stock that relate to the CFC1 stock is $9x (the product of US2's 30% ownership interest percentage in UST multiplied by $30x of earnings and profits attributable to the CFC1 stock before the section 361 exchange, reduced by $0x of dividend included in UST's income with respect to the CFC1 stock under section 1248(a) attributable to US2). Finally, the earnings and profits of CFC2 attributable to the portions of US2's 18 shares of FA stock that relate to the CFC2 stock is $45x (the product of US2's 30% ownership interest percentage in UST multiplied by $150x of earnings and profits attributable to the CFC2 stock before the section 361 exchange, reduced by $0x of dividend included in UST's income with respect to the CFC2 stock under section 1248(a) attributable to US2).

(I) Under § 1.1248(f)-2(c)(3), neither US1 nor US2 is required to reduce the aggregate section 358 basis in the portions of their respective shares of FA stock, and UST is not required to include in gross income any additional deemed dividend.

(*1*) US1 is not required to reduce the aggregate section 358 basis of the portions of its 30 shares of FA stock that relate to the CFC1 stock because the $10x section 1248(f) amount with respect to the CFC1 stock attributable to the portions of the shares of FA stock received by US1 (as computed in paragraph (ii)(G) of this *Example 3*) does not exceed US1's postdistribution amount (as defined in § 1.1248(f)-1(c)(6), or $14.38x) in those portions. The $14.38x postdistribution amount equals the amount that US1 would be required to include in income as a dividend under section 1248(a) with respect to such portion if it sold the 30 shares of FA stock immediately after the distribution in a transaction in which all realized gain

is recognized, without taking into account basis adjustments or income inclusions under § 1.1248(f)-2(c)(3) ($20x fair market value, $5.63x basis, and $15x earnings and profits attributable to the portions for purposes of section 1248). Similarly, US1 is not required to reduce the aggregate section 358 basis of the portions of its 30 shares of FA stock that relate to the CFC2 stock because the $65x section 1248(f) amount with respect to the CFC2 stock attributable to the portions of the shares of FA stock received by US1 (as computed in paragraph (ii)(G) of this *Example 3*) does not exceed US1's postdistribution amount ($66.88x) in those portions. The $66.88x postdistribution amount equals the amount that US1 would be required to include in income as a dividend under section 1248(a) with respect to such portion if it sold the 30 shares of FA stock immediately after the distribution in a transaction in which all realized gain is recognized, without taking into account basis adjustments or income inclusions under § 1.1248(f)-2(c)(3) ($80x fair market value, $13.13x basis, and $75x earnings and profits attributable to the portions for purposes of section 1248).

(*2*) US2 is not required to reduce the aggregate section 358 basis of the portions of its 18 shares of FA stock that relate to the CFC1 stock because the $6x section 1248(f) amount with respect to the CFC1 stock attributable to the portions of the shares of FA stock received by US2 (as computed in paragraph (ii)(G) of this *Example 3*) does not exceed US2's postdistribution amount ($8.63x) in those portions. The $8.63x postdistribution amount equals the amount that US2 would be required to include in income as a dividend under section 1248(a) with respect to such portion if it sold the 18 shares of FA stock immediately after the distribution in a transaction in which all realized gain is recognized, without taking into account basis adjustments or income inclusions under § 1.1248(f)-2(c)(3) ($12x fair market value, $3.38x basis, and $9x earnings and profits attributable to the portions for purposes of section 1248). Similarly, US2 is not required to reduce the aggregate section 358 basis of the portions of its 18 shares of FA stock that relate to the CFC2 stock because the $39x section 1248(f) amount with respect to the CFC2 stock attributable to the portions of the shares of FA stock received by US2 (as computed in paragraph (ii)(G) of this *Example 3*) does not exceed US1's postdistribution amount ($40.13x) in those portions. The $40.13x postdistribution amount equals the amount that US2 would be required to include in income as a dividend under section 1248(a) with respect to such portion if it sold the 18 shares of FA stock immediately after the distribution in a transaction in which all realized gain is recognized, without taking into account basis adjustments or income inclusions under § 1.1248(f)-2(c)(3) ($48x fair market value, $7.88x basis, and $45x earnings and profits attributable to the portions for purposes of section 1248).

(J) The amount of gain subject to the gain recognition agreement filed by each of US1 and US2 is determined pursuant to paragraph (e)(6)(i) of this section. The amount of gain subject to the gain recognition agreement filed by US1 with respect to the stock of CFC1 and CFC2 is $10x and $65x, respectively. The $10x and $65x are computed as the product of US1's ownership interest percentage (50%) multiplied by the gain realized by UST in the CFC1 stock

($20x) and CFC2 stock ($130x), respectively, as determined prior to taking into account the application of any other provision of section 367, reduced by the sum of the amounts described in paragraphs (e)(6)(i)(A) through (D) of this section with respect to the CFC1 stock and CFC2 stock attributable to US1 ($0x with respect to the CFC1 stock, and $0x with respect to the CFC2 stock). The amount of gain subject to the gain recognition agreement filed by US2 with respect to the stock of CFC1 and CFC2 is $6x and $39x, respectively. The $6x and $39x are computed as the product of US2's ownership interest percentage (30%) multiplied by the gain realized by UST in the CFC1 stock ($20x) and CFC2 stock ($130x), respectively, as determined prior to taking into account the application of any other provision of section 367, reduced by the sum of the amounts described in paragraphs (e)(6)(i)(A) through (D) of this section with respect to the CFC1 stock and CFC2 stock attributable to US2 ($0x with respect to the CFC1 stock, and $0x with respect to the CFC2 stock). X is not required to enter into a gain recognition agreement because the amount of gain that would be subject to the gain recognition agreement is $0x with respect to the CFC1 stock, and $0x with respect to the CFC2 stock, computed as X's ownership percentage (20%) multiplied by the gain realized in the stock of CFC1 ($20x multiplied by 20%, or $4x) and CFC2 ($130x multiplied by 20%, or $26x), reduced by the amount of gain recognized by UST with respect to the stock of CFC1 and CFC2 that is attributable to X pursuant to § 1.367(a)-7(c)(2) ($4x and $26x, respectively, as determined in paragraph (ii)(C) of this *Example 3*). Pursuant to paragraph (e)(6)(ii) of this section, each gain recognition agreement must include the election described in § 1.367(a)-8(c)(2)(vi). Furthermore, pursuant to paragraph (e)(6)(iii) of this section, US1 and US2 must be designated as the U.S. transferor on their respective gain recognition agreements for purposes of § 1.367(a)-8.

(9) ***Illustration of rules.*** For rules relating to certain distributions of stock of a foreign corporation by a domestic corporation, see section 1248(f) and §§ 1.1248(f)-1 through 1.1248(f)-3.

(f) ***Failure to file statements*** —

(1) ***Failure to file.*** For purposes of the exceptions to the application of section 367(a)(1) provided in paragraphs (c) and (d)(2)(vi)(B) of this section, there is a failure to file a statement described in paragraph (c)(6), (c)(7), or (d)(2)(vi)(C) of this section (failure to file) if the statement is not filed with a timely filed U.S. income tax return or is not completed in all material respects.

(2) ***Relief for certain failures to file that are not willful*** —

(i) ***In general.*** A failure to file described in paragraph (f)(1) of this section will be deemed not to have occurred for purposes of satisfying the requirements of the applicable regulation if the taxpayer demonstrates that the failure was not willful using the procedure set forth in this paragraph (f)(2). For this purpose, willful is to be interpreted consistent with the meaning of that term in the context of other civil penalties, which would include a failure due to gross negligence, reckless disregard, or willful neglect. Whether a failure to file was a willful failure will be determined by the Director of Field Operations International, Large Business & International (or any successor to the roles and responsibilities of such position, as appropriate) (Director) based on all the facts and circumstances. The taxpayer must submit a request for relief and an explanation as provided in paragraph (f)(2)(ii)(A) of this section.

Although a taxpayer whose failure to file is determined not to be willful will not be subject to gain recognition under this section, the taxpayer will be subject to a penalty under section 6038B if the taxpayer fails to satisfy the reporting requirements, if any, under that section and does not demonstrate that the failure was due to reasonable cause and not willful neglect. See § 1.6038B-1(b) and (f). The determination of whether the failure to file was willful under this section has no effect on any request for relief made under § 1.6038B-1(f).

(ii) ***Procedures for establishing that a failure to file was not willful*** —

(A) ***Time and manner of submission.*** A taxpayer's statement that the failure to file was not willful will be considered only if, promptly after the taxpayer becomes aware of the failure, an amended return is filed for the taxable year to which the failure relates that includes the information that should have been included with the original return for such taxable year or that otherwise complies with the rules of this section, and that includes a written statement explaining the reasons for the failure to file. The amended return must be filed with the Internal Revenue Service at the location where the taxpayer filed its original return. The taxpayer may submit a request for relief from the penalty under section 6038B as part of the same submission. See § 1.6038B-1(f).

(B) ***Notice requirement.*** In addition to the requirements of paragraph (f)(2)(ii)(A) of this section, the taxpayer must comply with the notice requirements of this paragraph (f)(2)(ii)(B). If any taxable year of the taxpayer is under examination when the amended return is filed, a copy of the amended return and any information required to be included with such return must be delivered to the Internal Revenue Service personnel conducting the examination. If no taxable year of the taxpayer is under examination when the amended return is filed, a copy of the amended return and any information required to be included with such return must be delivered to the Director.

(3) For illustrations of the application of the willfulness standard of this paragraph (f), see the examples in § 1.367(a)-8(p)(3).

(g) ***Effective/applicability dates*** —

(1) ***Rules of applicability.***

(i) Except as otherwise provided in this paragraph (g), the rules in paragraphs (a), (b), and (d) of this section apply to transfers occurring on or after July 20, 1998.

(ii) The following rules apply to transactions occurring on or after January 23, 2006—

(A) The rules in paragraphs (a) and (d) of this section, as they apply to section 368(a)(1)(A) reorganizations (including reorganizations described in section 368(a)(2)(D) or (E)) involving a foreign acquiring or foreign acquired corporation;

(B) The rules in paragraph (b)(2)(i)(B) of this section;

(C) The rules in paragraph (d) of this section, as they apply to section 368(a)(1)(G) reorganizations (including reorganizations described in section 368(a)(2)(D));

(D) The rules of paragraph (d)(1) and (d)(2)(iv), as they relate to exchanges by a U.S. person of securities of an acquired corporation for voting stock or securities of a foreign corporation in control of the acquiring corporation in a triangular section 368(a)(1)(B) reorganization;

(E) The rules in paragraph (d)(1) and (d)(2)(iv) of this section, as they relate to exchanges by a U.S. person of stock or securities of an acquired corporation for voting stock or securities of a domestic corporation in control of the foreign acquiring corporation in a triangular section 368(a)(1)(B) reorganization; and

(F) The rules in paragraph (d)(2)(vii) of this section.

(iii) The rules of paragraph (a) of this section that apply to transfers of securities in a section 354 or 356 exchange (pursuant to a section 368(a)(1)(E) reorganization or an asset reorganization that is not treated as an indirect stock transfer) that is not subject to section 367(a) apply only to transfers occurring after January 5, 2005 (although taxpayers may apply such provision to transfers of securities occurring on or after July 20, 1998, and on or before January 5, 2005, if done consistently to all transactions).

(iv) The rules in paragraph (d)(1)(v) of this section apply to:

(A) A reorganization described in section 368(a)(1)(C) followed by a controlled asset transfer if such reorganization occurs on or after July 20, 1998;

(B) A reorganization described in section 368(a)(1)(D) followed by a controlled asset transfer if such reorganization occurs after December 9, 2002 (for additional guidance concerning such reorganizations that occur on or after July 20, 1998 and on or before December 9, 2002, see Rev. Rul. 2002-85 (2002-2 C.B. 986) and § 601.601(d)(2) of this chapter); and

(C) A reorganization described in section 368(a)(1)(A), (F), or (G) followed by a controlled asset transfer if such reorganization occurs on or after January 23, 2006.

(v) The rules of paragraph (d)(2)(vi) of this section apply only to transactions occurring on or after January 23, 2006. See § 1.367(a)-3(d)(2)(vi), as contained in 26 CFR part 1 revised as of April 1, 2005, for transactions occurring on or after July 20, 1998 and before January 23, 2006.

(A) Except as provided in paragraphs (g)(1)(v)(B) of this section and § 1.367(a)-3T(g)(1)(ix), the rules of paragraph (d)(2)(vi) of this section apply only to transactions occurring on or after January 23, 2006. See § 1.367(a)-3(d)(2)(vi), as contained in 26 CFR part 1 revised as of April 1, 2005, for transactions occurring on or after July 20, 1998, and before January 23, 2006.

(B)

(*1*) For purposes of paragraph (d)(2)(vi)(B)(*1*) of this section as contained in 26 CFR part 1 revised as of April 1, 2007, except as provided in paragraph (g)(1)(v)(B)(*3*) of this section, the following conditions must be satisfied for transactions occurring on or after December 28, 2007, and before March 18, 2013: The conditions and requirements of section 367(a)(5) and paragraph (g)(1)(v)(B)(*2*) of this section must be satisfied with respect to the domestic acquired corporation's transfer of assets to the foreign acquiring corporation and those conditions and requirements apply before the application of the exception under paragraph (d)(2)(vi)(B)(*1*) of this section as contained in 26 CFR part 1 revised as of April 1, 2007.

(*2*) The domestic acquired corporation is controlled (within the meaning of section 368(c)) by five or fewer (but at least one) domestic corporations (controlling domestic corporations) immediately before the reorganization, appropriate basis adjustments under section 367(a)(5) are made to the stock received by the

controlling domestic corporations in the reorganization, and any other conditions as provided in regulations under section 367(a)(5) are satisfied. For purposes of determining whether the domestic acquired corporation is controlled by five or fewer domestic corporations, all members of the same affiliated group within the meaning of section 1504 are treated as one corporation. Any adjustments to stock basis required under section 367(a)(5) must be made to the stock received by the controlling domestic corporation in the reorganization so the appropriate amount of built-in gain in the property transferred by the domestic acquired corporation to the foreign acquiring corporation in the section 361 exchange is reflected in the stock received. The basis adjustment requirement cannot be satisfied by adjusting the basis in stock of the foreign acquiring corporation held by the controlling domestic corporation before the reorganization. To the extent the appropriate amount of built-in gain in the property transferred by the domestic acquired corporation to the foreign acquiring corporation in the section 361 exchange cannot be preserved in the stock received by the controlling domestic corporation in the reorganization, the domestic acquired corporation's transfer of property to the foreign acquiring corporation is subject to section 367(a) and (d).

(*3*) For transactions occurring on or after August 19, 2008, and before March 18, 2013, the following condition also applies: To the extent any of the retransferred assets constitute property to which section 367(d) applies, the exception under paragraph (d)(2)(iv)(B)(*1*) of this section, as contained in 26 CFR part 1 revised as of April 1, 2007, applies only if the property to which section 367(d) applies is treated as property subject to section 367(a) for purposes of satisfying the conditions and requirements of section 367(a)(5).

(vi) With respect to certain transfers of domestic stock or securities, the rules in paragraph (c) of this section are generally applicable for transfers occurring after January 29, 1997. See § 1.367(a)-3(c)(11). For transition rules regarding certain transfers of domestic stock or securities after December 16, 1987, and before January 30, 1997, and transfers of foreign stock or securities after December 16, 1987, and before July 20, 1998, see paragraph (j) of this section.

(vii)

(A) Except as provided in this paragraph (g)(1)(vii), the rules of paragraph (e) of this section apply to transfers of stock or securities occurring on or after April 17, 2013. For matters covered in this section for periods before April 17, 2013, but on or after March 13, 2009, see § 1.367(a)-3(e) as contained in 26 CFR part 1 revised as of April 1, 2012. For matters covered in this section for periods before March 13, 2009, but on or after March 7, 2007, see § 1.367(a)-3T(e) as contained in 26 CFR part 1 revised as of April 1, 2007. For matters covered in this section for periods before March 7, 2007, but on or after July 20, 1998, see § 1.367(a)-8(f)(2)(i) as contained in 26 CFR part 1 revised as of April 1, 2006.

(B) Taxpayers may apply the rules of § 1.367(a)-3(e) to transfers occurring before March 13, 2009, and during a taxable year for which the period of limitations on assessments under section 6501(a) has not closed, if done consistently to all such transfers occurring during each taxable year. A taxpayer applies the rules of § 1.367(a)-3(e) to transfers occurring before March 13, 2009, and during a taxable year for which the period of limitations on assessments under section 6501(a) has not closed, by including the gain recognition

agreement, annual certification, or other information filing, that is required as a result of the rules of § 1.367(a)-3(e) applying to such a transfer, with an amended tax return for the taxable year in which the transfer occurs that is filed on or before August 10, 2009. A taxpayer that wishes to apply the rules of § 1.367(a)-3(e) to transfers occurring before March 13, 2009, and during a taxable year for which the period of limitations on assessments under section 6501(a) has not closed but that fails to meet the filing requirement described in the preceding sentence must request relief for reasonable cause for such failure as provided in § 1.367(a)-8.

(viii) Except as provided in this paragraph (g)(1)(viii), paragraph (a)(2)(iv) of this section applies to exchanges occurring on or after May 17, 2011. For exchanges that occur prior to May 17, 2011, *see* § 1.367(a)-3T(b)(2)(i)(C) as contained in 26 CFR part 1 revised as of April 1, 2011. Paragraph (a)(2)(iv)(A) of this section, to the extent it relates to amounts that would be subject to U.S. tax or give rise to an inclusion under section 951(a)(1)(A) that would be subject to U.S. tax, applies to triangular reorganizations that are completed on or after April 25, 2014, unless T was not related to P or S (within the meaning of section 267(b)) immediately before the triangular reorganization; the triangular reorganization was entered into either pursuant to a written agreement that was (subject to customary conditions) binding before April 25, 2014, and at all times afterwards, or pursuant to a tender offer announced before April 25, 2014, that is subject to section 14(d) of the Securities and Exchange Act of 1934 (15 U.S.C. 78n(d)(1)) and Regulation 14(D) (17 CFR 240.14d-1 through 240.14d-101) or that is subject to comparable foreign laws; and to the extent the P acquisition that occurs pursuant to the plan of reorganization is not completed before April 25, 2014, the P acquisition was included as part of the plan before April 25, 2014. Paragraph (a)(2)(iv)(B) of this section applies to transactions completed on or after December 2, 2016. Paragraph (a)(2)(iv)(A) of this section, to the extent it relates to amounts that would give rise to an inclusion under section 951A(a) that would be subject to U.S. tax, applies to triangular reorganizations that are completed on or after October 5, 2023.

(ix) Paragraphs (d)(2)(vi)(B)(*1*)(*i*) and (*iii*), (d)(2)(vi)(B)(*2*), and (d)(3), *Examples 6B, 6C,* and *9* of this section apply to transfers that occur on or after March 18, 2013. See paragraphs (d)(2)(vi)(B)(*1*)(*i*) and (*iii*), (d)(2)(vi)(B)(*2*), and (d)(3), *Examples 6B, 6C,* and *9* of this section, as contained in 26 CFR part 1 revised as of April 1, 2012, for transfers that occur on or after January 23, 2006, and before March 18, 2013. Paragraph (d)(2)(vi)(B)(*1*)(*ii*) of this section applies to statements that are required to be filed on or after November 19, 2014. See paragraph (d)(2)(vi)(B)(*1*)(*ii*) of this section, as contained in 26 CFR part 1 revised as of April 1, 2014, for statements required to be filed on or after March 18, 2013, and before November 19, 2014.

(x) Paragraphs (c)(6)(ii) and (f) of this section apply to statements that are required to be filed on or after November 19, 2014, as well as to requests for relief submitted on or after November 19, 2014.

(2) ***Election.*** Notwithstanding paragraphs (g)(1) and (j) of this section, taxpayers may, by timely filing an original or amended return, elect to apply paragraphs (b) and (d) of this section to all transfers of foreign stock or securities occurring after December 16, 1987, and before July 20, 1998, except to the extent that a gain recognition agreement has been triggered prior to July 20, 1998. If an election is made under this paragraph (g)(2), the provisions of § 1.367(a)-3T(g) (see 26 CFR part 1, revised April 1, 1998) shall apply, and, for this purpose, the term *substantial portion* under § 1.367(a)-3T(g)(3)(iii) (see 26 CFR part 1, revised April 1, 1998) shall be interpreted to mean

substantially all as defined in section 368(a)(1)(C). In addition, if such an election is made, the taxpayer must apply the rules under section 367(b) and the regulations thereunder to any transfers occurring within that period as if the election to apply § 1.367(a)-3(b) and (d) to transfers occurring within that period had not been made, except that in the case of an exchange described in section 351 the taxpayer must apply section 367(b) and the regulations thereunder as if the exchange was described in § 7.367(b)-7 of this chapter (as in effect before February 23, 2000; see 26 CFR part 1, revised as of April 1, 1999). For example, if a U.S. person, pursuant to a section 351 exchange, transfers stock of a controlled foreign corporation in which it is a United States shareholder but does not receive back stock of a controlled foreign corporation in which it is a United States shareholder, the U.S. person must include in income under § 7.367(b)-7 of this chapter (as in effect before February 23, 2000; see 26 CFR part 1, revised as of April 1, 1999) the section 1248 amount attributable to the stock exchanged (to the extent that the fair market value of the stock exchanged exceeds its adjusted basis). Such inclusion is required even though § 7.367(b)-7 of this chapter (as in effect before February 23, 2000; see 26 CFR part 1, revised as of April 1, 1999), by its terms, did not apply to section 351 exchanges.

(h) ***Former 10-year gain recognition agreements.*** If a taxpayer elects to apply the rules of this section to all prior transfers occurring after December 16, 1987, any 10-year gain recognition agreement that remains in effect (has not been triggered in full) on July 20, 1998 will be considered by the Internal Revenue Service to be a 5-year gain recognition agreement with a duration of five full taxable years following the close of the taxable year of the initial transfer.

(i) [Reserved]

(j) ***Transition rules regarding certain transfers of domestic or foreign stock or securities after December 16, 1987, and prior to July 20, 1998*** —

(1) ***Scope.*** Transfers of domestic stock or securities described under section 367(a) that occurred after December 16, 1987, and prior to April 17, 1994, and transfers of foreign stock or securities described under section 367(a) that occur after December 16, 1987, and prior to July 20, 1998 are subject to the rules contained in section 367(a) and the regulations thereunder, as modified by the rules contained in paragraph (j)(2) of this section. For transfers of domestic stock or securities described under section 367(a) that occurred after April 17, 1994 and before January 30, 1997, see Temporary Income Regulations under section 367(a) in effect at the time of the transfer (§ 1.367(a)-3T(a) and (c), 26 CFR part 1, revised April 1, 1996) and paragraph (c)(11) of this section. For transfers of domestic stock or securities described under section 367(a) that occur after January 29, 1997, see § 1.367(a)-3(c).

(2) ***Transfers of domestic or foreign stock or securities: Additional substantive rules*** —

(i) ***Rule for less than 5-percent shareholders.*** Unless paragraph (j)(2)(iii) of this section applies (in the case of domestic stock or securities) or paragraph (j)(2)(iv) of this section applies (in the case of foreign stock or securities), a U.S. transferor that transfers stock or securities of a domestic or foreign corporation in an exchange described in section 367(a) and owns less than 5 percent of both the total voting power and the total value of the stock of the transferee foreign corporation immediately after the transfer (taking into account the attribution rules of section 958) is not subject to section 367(a)(1) and is not required to enter into a gain recognition agreement.

(ii) ***Rule for 5-percent shareholders.*** Unless paragraph (j)(2)(iii) or (iv) of this section applies, a U.S. transferor that transfers domestic or foreign stock or securities in an exchange described in section 367(a) and owns at least 5 percent of either the total voting power or the total value of the stock of the transferee foreign corporation immediately after the transfer (taking into account the attribution rules under section 958) may qualify for nonrecognition treatment by filing a gain recognition agreement in accordance with § 1.367(a)-3T(g) in effect prior to July 20, 1998 (see 26 CFR part 1, revised April 1, 1998) for a duration of 5 or 10 years. The duration is 5 years if the U.S. transferor (5-percent shareholder) determines that all U.S. transferors, in the aggregate, own less than 50 percent of both the total voting power and the total value of the transferee foreign corporation immediately after the transfer. The duration is 10 years in all other cases. See, however, § 1.367(a)-3(h). If a 5-percent shareholder fails to properly enter into a gain recognition agreement, the exchange is taxable to such shareholder under section 367(a)(1).

(iii) ***Gain recognition agreement option not available to controlling U.S. transferor if U.S. stock or securities are transferred.*** Notwithstanding the provisions of paragraph (j)(2)(ii) of this section, in no event will any exception to section 367(a)(1) apply to the transfer of stock or securities of a domestic corporation where the U.S. transferor owns (applying the attribution rules of section 958) more than 50 percent of either the total voting power or the total value of the stock of the transferee foreign corporation immediately after the transfer (i.e., the use of a gain recognition agreement to qualify for nonrecognition treatment is unavailable in this case).

(iv) ***Loss of United States shareholder status in the case of a transfer of foreign stock.*** Notwithstanding the provisions of paragraphs (j)(2)(i) and (ii) of this section, in no event will any exception to section 367(a)(1) apply to the transfer of stock of a foreign corporation in which the U.S. transferor is a United States shareholder (as defined in § 7.367(b)-2(b) of this chapter (as in effect before February 23, 2000; see 26 CFR part 1, revised as of April 1, 1999) or section 953(c)) unless the U.S. transferor receives back stock in a controlled foreign corporation (as defined in section 953(c), section 957(a) or section 957(b)) as to which the U.S. transferor is a United States shareholder immediately after the transfer.

(k) [Reserved] For further guidance, see § 1.367-3T(k).

[T.D. 8702, 61 FR 68637, Dec. 30, 1996]

Editorial Note: For FEDERAL REGISTER citations affecting § 1.367(a)-3, see the List of CFR Sections Affected, which appears in the Finding Aids section of the printed volume and at *www.govinfo.gov*.

§ 1.367(a)-4 Special rule applicable to U.S. depreciated property.

(a) ***Depreciated property used in the United States*** —

(1) ***In general.*** A U.S. person that transfers U.S. depreciated property (as defined in paragraph (a)(2) of this section) to a foreign corporation in an exchange described in section 367(a)(1), must include in its gross income for the taxable year in which the transfer occurs ordinary income equal to the gain realized that would have been includible in the transferor's gross income as ordinary income under section 617(d)(1), 1245(a), 1250(a), 1252(a), 1254(a), or 1255(a), whichever is applicable, if at the time of the transfer the U.S. person had sold the property at its fair market value. Recapture of depreciation under this paragraph (a) is required regardless of whether the exception to section

367(a)(1) provided by § 1.367(a)-2(a)(2) applies to the transfer of the U.S. depreciated property. However, the transfer of the U.S. depreciated property may qualify for the exception with respect to realized gain that is not included in ordinary income pursuant to this paragraph (a).

(2) ***U.S. depreciated property.*** U.S. depreciated property subject to the rules of this paragraph (a) is any property that—

(i) Is either mining property (as defined in section 617(f)(2)), section 1245 property (as defined in section 1245(a)(3)), section 1250 property (as defined in section 1250(c)), farm land (as defined in section 1252(a)(2)), section 1254 property (as defined in section 1254(a)(3)), or section 126 property (as defined in section 1255(a)(2)); and

(ii) Has been used in the United States or has been described in section 168(g)(4) before its transfer.

(3) ***Property used within and without the United States.***

(i) If U.S. depreciated property has been used partly within and partly without the United States, then the amount required to be included in ordinary income pursuant to this paragraph (a) is reduced to an amount determined in accordance with the following formula:

$$\text{Full recapture amount} \times \frac{\text{U.S use}}{\text{Total use}}$$

(ii) For purposes of the fraction in paragraph (a)(3)(i) of this section, the "full recapture amount" is the amount that would otherwise be included in the transferor's income under paragraph (a)(1) of this section. "U.S. use" is the number of months that the property either was used within the United States or has been described in section 168(g)(4), and was subject to depreciation by the transferor or a related person. "Total use" is the total number of months that the property was used (or available for use), and subject to depreciation, by the transferor or a related person. For purposes of this paragraph (a)(3), property is not considered to have been in use outside of the United States during any period in which such property was, for purposes of section 168, treated as property not used predominantly outside the United States pursuant to section 168(g)(4). For purposes of this paragraph (a)(3), the term "related person" has the meaning set forth in § 1.367(d)-1(h).

(b) ***Effective/applicability dates.*** The rules of this section apply to transfers occurring on or after September 14, 2015, and to transfers occurring before September 14, 2015, resulting from entity classification elections made under § 301.7701-3 that are filed on or after September 14, 2015. For transfers occurring before this section is applicable, see §§ 1.367(a)-4 and 1.367(a)-4T as contained in 26 CFR part 1 revised as of April 1, 2016.

[T.D. 9803, 81 FR 91027, Dec. 16, 2016]

§ 1.367(a)-5 [Reserved]

§ 1.367(a)-6 Transfer of foreign branch with previously deducted losses.

(a) through (b)

(1) [Reserved]. For further guidance, see § 1.367(a)-6T(a) through (b)(1).

(b) (2) *No active conduct exception.* The rules of this paragraph (b) apply regardless of whether any of the assets of the foreign branch satisfy the active trade or business exception of § 1.367(a)-2(a)(2).

(c)

(1) [Reserved]. For further guidance, see § 1.367(a)-6T(c)(1).

(2) ***Gain limitation.*** The gain required to be recognized under paragraph (b)(1) of this section will not exceed the aggregate amount of gain realized on the transfer of all branch assets (without regard to the transfer of any assets on which loss is realized but not recognized).

(3) [Reserved]

(4) ***Transfers of certain intangible property.*** Gain realized on the transfer of intangible property (computed with reference to the fair market value of the intangible property as of the date of the transfer) that is an asset of a foreign branch is taken into account in computing the limitation on loss recapture under paragraph (c)(2) of this section. For rules relating to the crediting of gain recognized under this section against income deemed to arise by operation of section 367(d), see § 1.367(d)-1(g)(3).

(d) through (i) [Reserved]. For further guidance, see § 1.367(a)-6T(d) through (i).

(j) ***Effective/applicability dates.*** The rules of this section apply to transfers occurring on or after September 14, 2015, and to transfers occurring before September 14, 2015, resulting from entity classification elections made under § 301.7701-3 that are filed on or after September 14, 2015. For transfers occurring before this section is applicable, see § 1.367(a)-6T as contained in 26 CFR part 1 revised as of April 1, 2016.

[T.D. 9803, 81 FR 91028, Dec. 16, 2016]

§ 1.367(a)-6T Transfer of foreign branch with previously deducted losses (temporary).

(a) ***In general.*** This section provides special rules relating to the transfer of the assets of a foreign branch with previously deducted losses. Paragraph (b) of this section provides generally that such losses must be recaptured by the recognition of the gain realized on the transfer. Paragraph (c) of this section sets forth rules concerning the character of, and limitations on, the gain required to be recognized. Paragraph (d) of this section defines the term *previously deducted losses.* Paragraph (e) of this section describes certain reductions that are made to the previously deducted losses before they are taken into income under this section. Finally, paragraph (g) of this section defines the term *foreign branch.*

(b) ***Recognition of gain required*** —

(1) ***In general.*** If a U.S. person transfers any assets of a foreign branch to a foreign corporation in an exchange described in section 367(a)(1), then the transferor shall recognize gain equal to—

(i) The sum of the previously deducted branch ordinary losses as defined and reduced in paragraphs (d) and (e) of this section; and

(ii) The sum of the previously deducted branch capital losses as defined and reduced in paragraphs (d) and (e) of this section.

(2) [Reserved]

(c) ***Special rules concerning gain recognized*** —

(1) ***Character and source of gain.*** The gain described in paragraph (b)(1)(i) of this section shall be treated as ordinary income of the transferor, and the gain described in paragraph (b)(1)(ii) of this section shall be treated as long-term capital gain of the transferor. Gain that is recognized pursuant to the rules of this section shall be treated as income from sources outside the United States. Such recognized gain shall be treated as foreign oil and gas extraction income (as defined in section 907) in the same proportion that previously deducted foreign oil and gas extraction losses bore to the total amount of previously deducted losses.

(2) [Reserved]

(3) ***Foreign goodwill and going concern value.*** For purposes of this section, the assets of a foreign branch shall include foreign goodwill and going concern value related to the business of the foreign branch, as defined in § 1.367(a)-1T(d)(5)(iii). Thus, gain realized upon the transfer of the foreign goodwill or going concern value of a foreign branch to a foreign corporation will be taken into account in computing the limitation on loss recapture under paragraph (c)(2) of this section.

(4) [Reserved]

(d) ***Previously deducted losses*** —

(1) ***In general.*** This paragraph (d) provides rules for determining, for purposes of paragraph (b)(1) of this section, the previously deducted losses of a foreign branch any of whose assets are transferred to a foreign corporation in an exchange described in section 367(a)(1). Initially, the two previously deducted losses of a foreign branch for a taxable year are the total ordinary loss ("previously deducted branch ordinary loss") and the total capital loss ("previously deducted branch capital loss") that were realized by the foreign branch in that taxable year (a "branch loss year") prior to the transfer and that were or will be reflected on a U.S. income tax return of the transferor. The previously deducted branch ordinary loss for each branch loss year is reduced by expired net ordinary losses under paragraph (d)(2) of this section, while the previously deducted capital loss for each loss year is reduced by expired net capital losses under paragraph (d)(3) of this section. For each branch loss year, the remaining previously deducted branch ordinary loss and the remaining previously deducted branch capital loss are then reduced, proceeding from the first branch loss year to the last branch loss year, to reflect expired foreign tax credits under paragraph (d)(4) of this section. The reductions are made in the order of the taxable years in which the foreign tax credits arose. Finally, similar reductions are made to reflect expired investment credits under paragraph (d)(5) of this section.

(2) ***Reduction by expired net ordinary loss*** —

(i) ***In general.*** The previously deducted branch ordinary loss for each branch loss year shall be reduced under this paragraph (d)(2) by the amount of any expired net ordinary loss with respect to that branch loss year. Expired net ordinary losses arising in years other than the branch loss year shall reduce the previously deducted branch ordinary loss for the branch loss year only to the extent that the previously deducted branch ordinary loss exceeds the net operating loss, if any, incurred by the transferor in the branch loss year. The previously deducted branch ordinary losses shall be reduced proceeding from the first branch loss year to the last branch loss year. For each branch loss year, expired net operating losses shall be applied to reduce the previously deducted branch ordinary loss for that year in the order in which the expired net ordinary losses arose.

(ii) ***Existence of expired net ordinary loss.*** An expired net ordinary loss exists with respect to a branch loss year to the extent that—

(A) The transferor incurred a net operating loss (within the meaning of section 172(c));

(B) That net operating loss arose in the branch loss year or was available for carryover or carryback to the branch loss year under section 172(b)(1);

(C) That net operating loss has neither given rise to a net operating loss deduction (within the meaning of section 172(a)) for any taxable year prior to the year of the transfer, nor given rise to a reduction of any previously deducted branch ordinary loss (pursuant to paragraph (d)(2) of this section) of any foreign branch of the transferor upon a previous transfer to a foreign corporation; and

(D) The period during which the transferor may claim a net operating loss deduction with respect to that net operating loss has expired.

(3) ***Reduction by expired net capital loss*** —

(i) ***In general.*** The previously deducted branch capital loss for each branch loss year shall be reduced under this paragraph (d)(3) by the amount of any expired net capital loss with respect to that branch loss year. Expired net capital losses arising in years other than the branch loss year shall reduce the previously deducted branch capital loss for the branch loss year only to the extent that the previously deducted branch capital loss exceeds the net capital loss, if any, incurred by the transferor in the branch loss year. The previously deducted branch capital losses shall be reduced proceeding from the first branch loss year to the last branch loss year. For each branch loss year, expired net capital losses shall be applied to reduce the previously deducted branch capital loss for that year in the order in which the expired net capital losses arose.

(ii) ***Existence of expired net capital loss.*** An expired net capital loss exists with respect to a branch loss year to the extent that—

(A) The transferor incurred a net capital loss (within the meaning of section 1222(10));

(B) That net capital loss arose in the branch loss year or was available for carryover or carryback to the branch loss year under section 1212;

(C) That net capital loss has neither been allowed for any taxable year prior to the year of the transfer, nor given rise to a reduction of any previously deducted branch capital loss (pursuant to paragraph (c)(3) of this section) of any foreign branch of the transferor upon any previous transfer to a foreign corporation; and

(D) The period during which the transferor may claim a capital loss deduction with respect to that net capital loss has expired.

(4) ***Reduction for expired foreign tax credit*** —

(i) ***In general.*** The previously deducted branch ordinary loss and the previously deducted branch capital loss for each branch loss year remaining after the reductions described in paragraph (d)(2) and (3) of this section shall be further reduced under this paragraph (d)(4) proportionately by the amount of any expired foreign tax credit loss equivalent with respect to that branch loss year. The previously deducted branch losses shall be reduced proceeding from the first branch loss year to the last branch loss year. For each branch loss year, expired foreign tax credit loss equivalents shall be applied to reduce the previously deducted branch loss for that year in the order in which the expired foreign tax credits arose.

(ii) ***Existence of foreign tax credit loss equivalent.*** A foreign tax credit loss equivalent exists with respect to a branch loss year if—

(A) The transferor paid, accrued, or is deemed under section 902 or 960 to have paid creditable foreign taxes in a taxable year;

(B) The creditable foreign taxes were paid, accrued, or deemed paid in the branch loss year or were available for carryover or carryback to the branch loss year under section 904(c);

(C) No foreign tax credit with respect to the foreign taxes paid, accrued, or deemed paid has been taken because of the operation of section 904(a) or similar limitations provided by the Code or an applicable treaty, and such taxes have not given rise to a reduction (pursuant to this paragraph (d)(5)) of any previously deducted branch loss of the foreign branch for a prior taxable year or of any previously deducted branch losses of any foreign branch of the transferor upon a prior transfer to a foreign corporation; and

(D) The period during which the transferor may claim a foreign tax credit for the foreign taxes paid, accrued, or deemed paid has expired.

(iii) ***Amount of foreign tax credit loss equivalent.*** The amount of the foreign tax credit loss equivalent for the branch loss year with respect to the creditable foreign taxes described in paragraph (d)(4)(ii) of this section is the amount of those creditable foreign taxes divided by the highest rate of tax to which the transferor was subject in the loss year.

(5) ***Reduction for expired investment credits*** —

(i) ***In general.*** The previously deducted branch ordinary loss and the previously deducted branch capital loss for each branch loss year shall be further reduced under this paragraph (d)(5) proportionately by the amount of any expired investment credit loss equivalent with respect to that branch year. The previously deducted branch losses shall be reduced proceeding from the first branch loss year to the last branch loss year. For each branch loss year, expired investment credit loss equivalents shall be applied to reduce the previously deducted branch loss for that year in the order in which the expired investment credits were earned.

(ii) ***Existence of investment credit loss equivalent.*** An investment credit loss equivalent exists with respect to a branch loss year if—

(A) The transferor earned an investment credit (within the meaning of section 46(a)) in a taxable year;

(B) The investment credit was earned in the branch loss year or was available for carryover or carryback to the branch loss year under section 39;

(C) The investment credit earned by the transferor in the credit year has been denied by section 38(a) or by similar provisions of the Code and has not given rise to a reduction (pursuant to this paragraph (d)(5)) of any previously deducted branch loss of the foreign branch for a preceding taxable year or of the previously deducted losses of any foreign branch of the transferor upon any previous transfer to a foreign corporation; and

(D) The period during which the transferor may claim the investment credit has expired.

(iii) ***Amount of investment tax credit loss equivalent.*** The amount of the investment credit loss equivalent for the branch loss year with respect to the investment credit described in paragraph (d)(5)(ii) of this section is 85 percent of the amount of that investment credit divided by the highest rate of tax to which the transferor was subject in the loss year.

(e) ***Amounts that reduce previously deducted losses subject to recapture*** —

(1) ***In general.*** This paragraph (e) describes five amounts that reduce the sum of the previously deducted branch ordinary losses and the sum of the previously deducted branch capital losses before they are taken into income under paragraph (b) of this section. Amounts representing ordinary income shall be applied to reduce first the sum of the previously deducted branch ordinary losses to the extent thereof, and then the sum of the previously deducted branch capital losses to the extent thereof. Similarly, amounts representing capital gains shall be applied to reduce first the sum of the previously deducted branch capital losses and then the sum of the previously deducted branch ordinary losses.

(2) ***Taxable income.*** The previously deducted losses shall be reduced by any taxable income of the foreign branch recognized through the close of the taxable year of the transfer, whether before or after any taxable year in which losses were incurred.

(3) ***Amounts currently recaptured under section 904(f)(3).*** The previously deducted losses shall be reduced by the amount recognized under section 904(f)(3) on account of the transfer.

(4) [Reserved]

(5) ***Amounts previously recaptured under section 904(f)(3)*** —

(i) ***In general.*** The previously deducted branch losses shall be reduced by the portion of any amount recognized under section 904(f)(3) upon a previous transfer of property that was attributable to the losses of the foreign branch, provided that the amount did not reduce any gain otherwise required to be recognized under section 367(a)(3)(C) and this section (or Revenue Ruling 78-201, 1978-1 C.B. 91).

(ii) ***Portion attributable to the losses of the foreign branch*** —

(A) ***Branch property.*** The full amount recognized under section 904(f)(3) upon a previous transfer of property of the branch shall be treated as attributable to the losses of the foreign branch.

(B) ***Non-branch property.*** The portion of the amount previously recognized under section 904(f)(3) upon a transfer of non-branch property that was attributable to the losses of the foreign branch shall be the sum, over the taxable years in which the transferor sustained an overall foreign loss some portion of which was recaptured on the disposition, of the recaptured portions of those overall foreign losses after multiplication by the following fraction:

$$\frac{\text{Losses of the foreign branch for the year}}{\text{All foreign losses for the year}}$$

For purposes of this fraction, the term *losses of the foreign branch for the year* means the losses of the foreign branch that were taken into account under section 904(f)(2) in determining the amount of the transferor's overall foreign loss for the year, and the term *all foreign losses for the year* means all of the losses of the transferor that were taken into account under section 904(f)(2).

(6) ***Amounts previously recognized under the rules of this section.*** The previously deducted losses shall be reduced by the amounts previously recognized under the rules of this section upon a previous transfer of assets of the foreign branch.

(f) ***Example.*** The rules of paragraphs (b) through (e) of this section are illustrated by the following example.

Example. (i) *Facts.* X, a U.S. corporation, is a calendar year taxpayer. On January 1, 1981, X established a branch in foreign country A to manufacture and sell X's products in country A. On July 1, 1986, X organized corporation Y, a country A subsidiary, and transferred to Y all of the assets of its country A branch, including goodwill and going concern value. During the period from January 1, 1981, through July 1, 1986, X's country A branch earned income and incurred losses in the following amounts:

COUNTRY A BRANCH

Year	Ordinary income (loss)	Capital gain (loss)
1981	(200)	0
1982	(300)	(100)
1983	(400)	0
1984	(200)	0
1985	(100)	0
1986	50	0

At the time of the transfer of X's country A branch assets to Y, those assets had a fair market value of $2,500 and an adjusted basis of $1,000. For each of the assets, fair market value exceeded adjusted basis. X had no net capital loss or unused investment credit during any taxable year relevant to the transfer. In 1984, X incurred a net operating loss of $400, $200 of which was carried back to prior years. An additional $50 of the 1984 net operating loss was carried over to 1985. The remaining $150 of the 1984 net operating loss was not used in any year prior to the transfer. In 1979, X paid creditable foreign taxes of $330 that could not be claimed as a credit in that year or any earlier year because of section 904. Of those foreign taxes, $100 were carried over and claimed as a credit in 1983, but the remaining $230 were not used in any year prior to the transfer. X was not required to recognize any gain under section 904(f)(3) on account of the 1986 transfer or any prior transfer. X was not required to recognize gain upon the transfer under section

367(a) (other than by reason of the provisions of this section).
(ii) *Previously deducted losses.* The previously deducted losses of X's country A branch are $575 of ordinary losses and $25 of capital losses, computed as follows: Initially, the branch has previously deducted ordinary losses of $1,000 ($200 + $300 + $400 + $100), and previously deducted capital losses of $100. (See paragraph (d)(1) of this section.)

(iii) *Expired losses and credits.* Under the facts of this example, there are no reductions for expired net ordinary losses or expired net capital losses under paragraph (d)(2) or (3) of this section. However, the previously deducted losses are reduced proceeding from the first branch loss year to the last branch loss year to reflect the expired foreign tax credit from 1979. The amount of the foreign tax credit loss equivalent with respect to 1981 is $500 ($230/.46). It reduces the previously deducted losses for 1981 proportionately. Thus, the previously deducted ordinary loss for 1981 is reduced from $200 to $0. (See paragraph (d)(4) of this section.) The amount of the foreign tax credit loss equivalent with respect to 1982 is $300 ($500−$200, *i.e.*, $138/.46). (See paragraph (d)(4)(ii)(C) of this section.) It reduces the previously deducted losses for 1982 proportionately. Thus, the previously deducted ordinary loss for 1982 is reduced from $300 to $75, and the previously deducted capital loss for 1982 is reduced from $100 to $25.

(iv) *Further reductions.* The previously deducted ordinary losses of $575 and the previously deducted capital losses of $25 are reduced by the taxable income earned by the branch prior to the date of the transfer ($250). (See paragraph (e)(2) of this section.) Since that income was ordinary income, it is applied first to reduce the previously deducted ordinary losses of $575 to $325. (See paragraph (e)(1) of this section.)

(v) *Recapture.* Since the gain realized by X upon its transfer of the branch assets to Y exceeds the sum of the previously deducted branch losses as defined and reduced above $325 + $25), the limitation in paragraph (c)(2) of this section does not apply. Thus, X is required to recognize $325 of ordinary income and $25 of long-term capital gain upon the transfer. (See paragraph (b) and (c)(1) of this section.)

(g) ***Definition of foreign branch*** —

(1) ***In general.*** For purposes of this section, the term *foreign branch* means an integral business operation carried on by a U.S. person outside the United States. Whether the activities of a U.S. person outside the United States constitute a foreign branch operation must be determined under all the facts and circumstances. Evidence of the existence of a foreign branch includes, but is not limited to, the existence of a separate set of books and records, and the existence of an office or other fixed place of business used by employees or officers of the U.S. person in carrying out business activities outside the United States. Activities outside the United States shall be deemed to constitute a foreign branch for purposes of this section if the activities constitute a permanent establishment under the terms of a treaty between the United States and the country in which the activities are carried out. Any U.S. person may be treated as having a foreign branch for purposes of this section, whether that person is a corporation, partnership, trust, estate, or individual.

(2) ***More than one branch.*** If a U.S. person carries on more than one branch operation outside the United States, then the rules of this section must be separately applied with respect to each foreign branch that is transferred to a foreign corporation. Thus, the previously deducted losses of one branch may not be offset, for purposes of determining the gain required to be recognized under the rules of this section, by the income of another branch that is also transferred to a foreign corporation. Similarly, the losses of one branch shall not be recaptured upon a transfer of the assets of a separate branch. Whether the foreign activities of a U.S. person are carried out through more than one branch must be determined under all of the facts and circumstances. In general, a separate branch exists if a particular group of activities is sufficiently integrated to constitute a single business that could be operated as an independent enterprise. For purposes of determining the combination of activities that constitute a branch operation as defined in this paragraph (g), the nominal relationship among those activities shall not be controlling. Factors suggesting that nominally separate business operations constitute a single foreign branch include a substantial identity of products, customers, operational facilities, operational processes, accounting and record-keeping functions, management, employees, distribution channels, or sales and purchasing forces. For examples of the application of the principles of this paragraph (g)(2), see Revenue Ruling 81-82, 1981-1 C.B. 127.

(3) ***Consolidated group.*** For purposes of this section, the activities of each of two domestic corporations outside the United States will be considered to constitute a single foreign branch if—

(i) The two corporations are members of the same consolidated group of corporations; and

(ii) The activities of the two corporations in the aggregate would constitute a single foreign branch if conducted by a single corporation.

Notwithstanding the preceding rule of this paragraph (g)(3), gains of a foreign branch of a domestic corporation arising in a year in which that corporation did not file a consolidated return with a second domestic corporation shall not be applied to reduce the previously deducted losses of a foreign branch of the second corporation (but may be applied to reduce such losses of the foreign branch of the first corporation) upon the transfer of the two branches to a foreign corporation, even though the two domestic corporations file a consolidated return for the year in which the transfer occurs and the two branches are considered at that time to constitute a single foreign branch. For an example of the application of the principles of this paragraph (g)(3), see Revenue Ruling 81-89, 1981-1 C.B. 129.

(4) ***Property not transferred.*** A U.S. transferor's failure to transfer any property of a foreign branch shall be irrelevant to the determination of the previously deducted losses of the branch subject to recapture under the rules of this section. Thus, if the activities with respect to untransferred property constituted a part of the branch operation under the rules of this paragraph (g), then the losses generated by those activities shall be subject to recapture, notwithstanding the failure to transfer the property. For an example of the application of the principles of this paragraph (g)(4), see Revenue Ruling 80-247, 1980-2 C.B. 127, relating to property abandoned by the U.S. transferor.

(h) ***Anti-abuse rule.*** If—

(1) A U.S. person transfers property of a foreign branch to a domestic corporation for a principal purpose of avoiding the effect of this section; and

(2) The domestic corporation thereafter transfers the property of the foreign branch to a foreign corporation,

Then, solely for purposes of this section, that U.S. person shall be treated as having transferred the property of the branch directly to the foreign corporation. A U.S. person shall be presumed to have transferred property of a foreign branch for a principal purpose of avoiding the effect of this section if the property is transferred to the domestic corporation less than two years prior to the domestic corporation's transfer of the property to a foreign corporation. This presumption may be rebutted by clear evidence that the subsequent transfer of the property was not contemplated at the time of the initial transfer to the domestic corporation and that avoidance of the effect of this section was not a principal purpose for the transaction. A transfer may have more than one principal purpose.

(i) ***Basis adjustments.*** Basis adjustments reflecting gain recognized pursuant to this section shall be made as described in § 1.367(a)-1T(b)(4)(ii).

(j) [Reserved]

[T.D. 8087, 51 FR 17950, May 16, 1986, as amended by T.D. 9615, 78 FR 17063, Mar. 19, 2013; T.D. 9760, 81 FR 15169, Mar. 22, 2016; T.D. 9803, 81 FR 91028, Dec. 16, 2016]

§ 1.367(a)-7 Outbound transfers of property described in section 361(a) or (b).

(a) ***Scope and purpose.*** This section provides rules under section 367(a)(5) that apply to the transfer of certain property (including stock or securities) by a domestic corporation (U.S. transferor) to a foreign corporation (foreign acquiring corporation) in a section 361 exchange. This section applies only to the transfer of section 367(a) property. See section 367(d) for rules applicable to transfers of section 367(d) property. Paragraph (b) of this section provides the general rule requiring the recognition of gain on the transfer of section 367(a) property, while paragraph (c) of this section provides an elective exception to the general rule that is available if certain requirements are satisfied. Paragraph (d) of this section provides rules for applying the elective exception to a section 361 exchange followed by successive distributions to which section 355 applies. Paragraph (e) of this section provides rules for recognizing gain on section 367(a) property, not willful relief provisions, an anti-abuse rule, and special rules that take into account income inclusions under § 1.367(b)-4 and gain recognition under § 1.367(a)-6. Paragraph (f) of this section provides definitions, and paragraph (g) of this section provides examples. Paragraph (h) of this section provides applicable cross-references, paragraph (i) of this section is reserved, and paragraph (j) of this section provides effective/applicability dates.

(b) ***General rule*** —

(1) ***Nonrecognition exchanges enumerated in section 367(a)(1).*** Except to the extent provided in paragraphs (b)(2) and (c) of this section, the exceptions to section 367(a)(1) provided in section 367(a) and the regulations under that section do not apply to a transfer of section 367(a) property by a U.S. transferor to a foreign acquiring corporation in a section 361 exchange, and the U.S. transferor shall recognize any gain (but not loss) realized with respect to the section 367(a) property under section 367(a)(1). Realized gain is recognized pursuant to the prior sentence notwithstanding the application of any other nonrecognition provision enumerated in section 367(a)(1) to the transfer (such as section 351 or 354).

(2) ***Nonrecognition exchanges not enumerated in section 367(a)(1).*** To the extent a transfer of items of property described in paragraph (b)(1) of this section also qualifies for nonrecognition under a provision that is not enumerated in section 367(a)(1) (such as section 1036), the U.S. transferor

recognizes gain or loss realized on the transfer of such items of property, but the amount of loss recognized on the property shall not exceed the amount of gain recognized on the property. See section 337(d).

(c) ***Elective exception.*** Except to the extent provided in paragraph (d) of this section, paragraph (b) of this section does not apply to the transfer of section 367(a) property by a U.S. transferor to a foreign acquiring corporation in a section 361 exchange if the conditions of paragraphs (c)(1), (c)(2), (c)(3), and (c)(4) of this section are satisfied, and an election to apply the exception provided by this paragraph (c) is made in the manner provided by paragraph (c)(5) of this section. If this paragraph (c) applies to the section 361 exchange, see, for example, § 1.367(a)-2, § 1.367(a)-3, § 1.367(a)-4, or § 1.367(a)-6, as applicable, for additional requirements that must be satisfied in order for the U.S. transferor to not recognize gain under section 367(a)(1) on the transfer of section 367(a) property in the section 361 exchange. Nothing in this section provides for the nonrecognition of gain not otherwise permitted under another provision of the Internal Revenue Code (Code) or the regulations.

(1) ***Control.*** Immediately before the reorganization, the U.S. transferor is controlled (within the meaning of section 368(c)) by five or fewer, but at least one, control group members. For illustrations of this rule, see paragraph (g) of this section, *Example 4* and *Example 5*.

(2) ***Gain recognition*** —

(i) ***Non-control group members.*** The U.S. transferor recognizes gain equal to the product of the inside gain multiplied by the aggregate ownership interest percentage of all non-control group members, reduced (but not below zero) by the sum of the amounts described in paragraphs (c)(2)(i)(A), (c)(2)(i)(B), and (c)(2)(i)(C) of this section.

(A) Gain recognized with respect to stock or securities under § 1.367(a)-3(e)(3)(iii)(B) (including any portion treated as a deemed dividend under section 1248(a));

(B) Gain recognized with respect to stock or securities under § 1.367(a)-6 (including any portion treated as a deemed dividend under section 1248(a)) attributable to non-control group members (as determined pursuant to § 1.367(a)-7(e)(5)); and

(C) A deemed dividend included in income under § 1.367(b)-4 attributable to non-control group members (as determined pursuant to § 1.367(a)-7(e)(4)).

(ii) ***Control group members.*** With respect to each control group member, the U.S. transferor recognizes gain equal to the amount, if any, by which the amount described in paragraph (c)(2)(ii)(A) of this section exceeds the amount described in paragraph (c)(2)(ii)(B) of this section.

(A) The product of the inside gain multiplied by such control group member's ownership interest percentage, reduced (but not below zero) by the sum of the amounts described in paragraphs (c)(2)(ii)(A)(*1*), (c)(2)(ii)(A)(*2*), and (c)(2)(ii)(A)(*3*) of this section (attributable inside gain).

(*1*) Gain recognized with respect to stock or securities under § 1.367(a)-3(e)(3)(iii)(C) (including any portion treated as a deemed dividend under section 1248(a)) attributable to the control group member;

(*2*) Gain recognized with respect to stock or securities under § 1.367(a)-6 (including any portion treated as a deemed dividend under section 1248(a)) attributable to the control group member (as determined pursuant to § 1.367(a)-7(e)(5)); and

(3) A deemed dividend included in income under § 1.367(b)-4 attributable to the control group member (as determined pursuant to § 1.367(a)-7(e)(4)).

(B) The product of the section 367(a) percentage multiplied by the fair market value of the stock received by the U.S. transferor in the section 361 exchange and distributed to the control group member under section 354, 355, or 356.

(iii) ***Illustration of rules.*** For an illustration of gain recognition under paragraph (c)(2)(i) of this section, see paragraph (g) of this section, *Example 1*. For an illustration of gain recognition under paragraph (c)(2)(ii) of this section, see paragraph (g) of this section, *Example 2*.

(3) ***Basis adjustments required for control group members*** —

(i) ***General rule.*** Except as provided in paragraph (c)(3)(iv) of this section, if there is any attributable inside gain (determined under paragraph (c)(2)(ii)(A) of this section) with respect to a control group member, then such control group member's aggregate basis in the stock received in exchange for (or with respect to, as applicable) stock or securities of the U.S. transferor under section 354, 355, or 356, as determined under section 358 and the regulations under that section (section 358 basis), is reduced by the amount in paragraph (c)(3)(i)(A), (c)(3)(i)(B), or (c)(3)(i)(C) of this section, as applicable.

(A) If the control group member has outside gain, the amount, if any, by which the attributable inside gain, reduced by any gain recognized by the U.S. transferor with respect to the control group member under paragraph (c)(2)(ii) of this section, exceeds the control group member's outside gain.

(B) If the control group member has outside loss, the amount, if any, by which the attributable inside gain, reduced by any gain recognized by the U.S. transferor with respect to the control group member under paragraph (c)(2)(ii) of this section, exceeds the control group member's outside loss (for this purpose, treating the outside loss as a negative amount).

(C) If the control group member has no outside gain or outside loss, the amount of the attributable inside gain, reduced by any gain recognized by the U.S. transferor with respect to the control group member under paragraph (c)(2)(ii) of this section.

(ii) ***Stock received in the section 361 exchange.*** This paragraph (c)(3) applies only to stock received by the U.S. transferor in the section 361 exchange and distributed to the control group member in exchange for (or with respect to, as applicable) stock or securities of the U.S. transferor.

(iii) ***Pro rata adjustments.*** The section 358 basis of each share of stock received by the control group member must be reduced pro rata based on the relative section 358 basis of all shares of stock received by the control group member.

(iv) ***Successive distributions to which section 355 applies.*** Paragraph (c)(3) of this section does not apply to a control group member that distributes the stock of a foreign acquiring corporation received from the U.S. transferor in a distribution satisfying the requirements of section 355 (section 355 distribution) that is in connection with a transaction described in paragraph (d) of this section (relating to successive section 355 distributions). If paragraph (c)(3) of this section does not apply to a control group member pursuant to this paragraph (c)(3)(iv), then paragraph (c)(3) of this section shall apply to the final distributee (as defined in paragraph (d) of this section) that receives the stock of the foreign acquiring corporation in the final section 355 distribution described in paragraph (d) of this section.

(v) ***Illustration of rules.*** For illustrations of the adjustment to stock basis under paragraph (c)(3)(i) of this section, see paragraph (g) of this section, *Example 1* and *Example 2,* § 1.367(a)-3(e)(8), *Example 3,* and § 1.1248(f)-2(e), *Example 3.* For an illustration of the adjustment to stock basis under paragraph (c)(3)(iii) of this section, see paragraph (g) of this section, *Example 3.*

(4) ***Agreement to amend or file a U.S. income tax return*** —

(i) ***General rule.*** Except as provided in paragraph (c)(4)(ii) of this section, the U.S. transferor complies with the requirements of § 1.6038B-1(c)(6)(iii), relating to the requirement to report gain that was not recognized by the U.S. transferor upon certain subsequent dispositions by the foreign acquiring corporation of section 367(a) property received from the U.S. transferor in the section 361 exchange.

(ii) ***Exception.*** To the extent section 367(a) property transferred in the section 361 exchange is subject to § 1.367(a)-3(e) (relating to transfers of stock or securities by a domestic corporation to a foreign corporation in a section 361 exchange), § 1.6038B-1(c)(6)(iii) does not apply with respect to the transfer of that property.

(5) ***Election and reporting requirements*** —

(i) ***General rule.*** The U.S. transferor and each control group member elect to apply the provisions of paragraph (c) of this section in the manner provided under paragraph (c)(5)(ii) or (c)(5)(iii) of this section, as applicable, and by entering into a written agreement described in paragraph (c)(5)(iv) of this section. If a control group member distributes the stock of the foreign acquiring corporation received from the U.S. transferor in a section 355 distribution that is in connection with a transaction described in paragraph (d) of this section, the final distributee that receives that stock in the final section 355 distribution elects to apply the provisions of this paragraph (c) and enters into the written agreement instead of the control group member. For this purpose, the term *control group member* will be replaced by the term *final distributee,* as appropriate.

(ii) ***Control group member*** —

(A) ***Time and manner of making election.*** Each control group member elects to apply the provisions of paragraph (c) of this section by including a statement (in the form and with the content specified in paragraph (c)(5)(ii)(B) of this section) on or with a timely filed return for the taxable year in which the reorganization occurs. If the control group member is a member of a consolidated group but is not the common parent of the consolidated group, the common parent makes the election on behalf of the control group member.

(B) ***Form and content of election statement.*** The statement must be entitled, "ELECTION TO APPLY EXCEPTION UNDER § 1.367(a)-7(c)," and set forth:

(*1*) The name and taxpayer identification number (if any) of the control group member, the U.S. transferor, the foreign acquiring corporation and, in the case of a triangular reorganization (within the meaning of § 1.358-6(b)(2)), the corporation that controls the foreign acquiring corporation; the control group member's ownership interest percentage in the U.S. transferor; and the percentage of voting stock and non-voting stock of the U.S. transferor owned by the control group member for purposes of satisfying the control requirement of paragraph (c)(1) of this section;

(2) If the control group member is a member of a consolidated group but is not the common parent, the name and taxpayer identification number of the common parent;

(3) The amount of the adjustment (if any) to stock basis required under paragraph (c)(3) of this section, the resulting adjusted basis in the stock, and the fair market value of the stock, or if no stock was received, indicate no stock was received; and

(4) The date on which the written agreement described in paragraph (c)(5)(iv) of this section was entered into.

(iii) ***Statement by U.S. transferor.*** The U.S. transferor elects to apply the provisions of paragraph (c) of this section in the form and manner set forth in § 1.6038B-1(c)(6)(ii).

(iv) ***Written agreement.*** The U.S. transferor and each control group member must enter into a written agreement satisfying the conditions of this paragraph on or before the due date (including extensions) for the U.S. transferor's tax return for the taxable year in which the reorganization occurs. Each party to the agreement must retain the original or a copy of the agreement in the manner specified by § 1.6001-1(e). Each party to the agreement must provide a copy of the agreement to the Internal Revenue Service within 30 days of the receipt of a request for the copy of the agreement. The written agreement must—

(A) State the document constitutes an agreement entered into pursuant to paragraph (c)(5) of this section;

(B) Identify the U.S. transferor, the foreign acquiring corporation, the corporation that controls the foreign acquiring corporation (in the case of a triangular reorganization within the meaning of § 1.358-6(b)(2)), and each control group member, and provide the taxpayer identification number (if any) for each corporation;

(C) State the amount of gain (if any) recognized by the U.S. transferor under paragraph (c)(2) of this section; and

(D) With respect to each control group member, state the amount of the adjustment (if any) to stock basis required under paragraph (c)(3) of this section, the resulting adjusted basis in the stock, and the fair market value of the stock. Alternatively, if a control group member did not receive any stock, indicate that no stock was received.

(d) ***Section 361 exchange followed by successive distributions to which section 355 applies.*** If the U.S. transferor distributes stock of the foreign acquiring corporation received in the section 361 exchange to a control group member in a section 355 distribution and, as part of a plan or series of related transactions, that stock is further distributed in one or more successive section 355 distributions, paragraph (c) of this section can apply to the section 361 exchange only to the extent each subsequent section 355 distribution is to a member of the affiliated group (within the meaning of section 1504) that includes the U.S. transferor immediately before the reorganization. In that case, each affiliated group member that receives stock of the foreign acquiring corporation in the final section 355 distribution (final distributee) is subject to the requirements of paragraphs (c)(3) and (c)(5) of this section. If this paragraph (d) applies, then for purposes of applying paragraphs (c)(3), (c)(5) or (e)(2) of this section the term *control group member* is replaced by the term *final distributee,* as appropriate.

(e) ***Other rules*** —

(1) ***Section 367(a) property with respect to which gain is recognized.*** Except as otherwise provided in this paragraph (e)(1), gain recognized by the U.S. transferor pursuant to paragraph (c)(2) of this section will be treated as recognized with respect to the section 367(a) property transferred in the section 361 exchange in proportion to the amount of gain realized by the U.S. transferor on the transfer of each item of section 367(a) property. This paragraph (e)(1) will be applied after taking into account any gain or deemed dividends (including any deemed dividends under section 1248(a)) recognized by the U.S. transferor on the transfer of the section 367(a) property in the section 361 exchange pursuant to all other provisions of sections 367(a) and (b) and the regulations under that section. See, for example, §§ 1.367(a)-2, 1.367(a)-3(e), 1.367(a)-4, 1.367(a)-6, and 1.367(b)-4. If the U.S. transferor recognizes gain (including gain treated as a deemed dividend under section 1248(a)) pursuant to § 1.367(a)-3(e)(3)(iii)(B) or (e)(3)(iii)(C) with respect to stock or securities transferred in the section 361 exchange, the realized gain in such stock or securities shall not be taken into account for purposes of applying this paragraph (e)(1) to gain recognized under paragraph (c)(2) of this section attributable to U.S. transferor shareholders described in § 1.367(a)-3(e)(3)(iii)(B) or (e)(3)(iii)(C). Accordingly, gain recognized under paragraph (c)(2) attributable to such U.S. transferor shareholders shall not be treated as recognized with respect to such stock or securities under this paragraph. Furthermore, to the extent gain recognized by the U.S. transferor under paragraph (c)(2) is treated as recognized with respect to stock in a foreign corporation transferred in the section 361 exchange to which section 1248(a) applies, the portion of such gain treated as a deemed dividend under section 1248(a) is the product of the amount of the gain multiplied by the ratio of the amount that would be treated as a deemed dividend under section 1248(a) if all gain in the transferred stock were recognized under § 1.367(a)-7(b) and the amount of gain realized in the transferred stock. See § 1.367(a)-1(b)(4) for additional rules on the character, source, and adjustments relating to gain recognized under section 367(a)(1), and § 1.367(b)-2(e) for rules on the timing, treatment, and effect of amounts included in income as deemed dividends pursuant to regulations under section 367(b).

(2) ***Relief for certain failures to comply that are not willful*** —

(i) ***In general.*** A control group member or U.S. transferor's failure to comply with any requirement of this section will be deemed not to have occurred for purposes of satisfying the requirements of this section if the control group member or U.S. transferor (or the foreign acquiring corporation on behalf of the U.S. transferor), as applicable, demonstrates that the failure was not willful using the procedure set forth in paragraph (e)(2)(ii) of this section. For this purpose, willful is to be interpreted consistent with the meaning of that term in the context of other civil penalties, which would include a failure due to gross negligence, reckless disregard, or willful neglect. Whether the failure to comply was a willful failure will be determined by the Director of Field Operations, Cross Border Activities Practice Area of Large Business & International (or any successor to the roles and responsibilities of such person) (Director) based on all the facts and circumstances. The control group member or U.S. transferor (or the foreign acquiring corporation on behalf of the U.S. transferor), as applicable, must submit a request for relief and an explanation as provided in paragraph (e)(2)(ii) of this section. Although a U.S transferor whose failure to comply is determined not to be willful will not be subject to gain recognition under this section, the U.S. transferor will be subject to a penalty under section 6038B if the U.S. transferor fails to demonstrate that the failure was due to reasonable cause and not willful neglect. See § 1.6038B-1(b) and (f). The determination of whether the failure to comply was willful under this section has no effect on any request for relief made under § 1.6038B-1(f).

(ii) ***Procedures for establishing that a failure to comply was not willful*** —

(A) ***Time and manner of submission.*** A control group member or U.S. transferor's statement that the failure to comply was not willful will be considered only if, promptly after the control group member or U.S. transferor, as applicable, becomes aware of the failure, an amended return is filed for the taxable year to which the failure relates that includes the information that should have been included with the original return for such taxable year or that otherwise complies with the rules of this section, and that includes a written statement explaining the reasons for the failure to comply. The amended return must be filed with the Internal Revenue Service at the location where the taxpayer filed its original return. The U.S. transferor may submit a request for relief from the penalty under section 6038B as part of the same submission. See § 1.6038B-1(f).

(B) ***Notice requirement.*** In addition to the requirements of paragraph (e)(2)(ii)(A) of this section, a control group member or U.S. transferor, as applicable, must comply with the notice requirements of this paragraph (e)(2)(ii)(B). If any taxable year of the control group member or U.S. transferor, as applicable, is under examination when the amended return is filed, a copy of the amended return and any information required to be included with such return must be delivered to the Internal Revenue Service personnel conducting the examination. If no taxable year of the control group member or U.S transferor, as applicable, is under examination when the amended return is filed, a copy of the amended return and any information required to be included with such return must be delivered to the Director.

(iii) For illustrations of the application of the willfulness standard of this paragraph (e)(2), see the examples in § 1.367(a)-8(p)(3).

(3) ***Anti-abuse rule.*** Any property of the U.S. transferor acquired with a principal purpose of affecting any determination under this section (including, for example, the section 367(a) percentage, inside gain, or inside basis) shall not be taken in account for purposes of any determination under this section. Nothing in this paragraph (e)(3) constitutes a limitation on or modification to judicial doctrines, including step-transaction or substance-over-form.

(4) ***Certain income inclusions under § 1.367(b)-4*** —

(i) ***Income inclusion attributable to U.S. transferor shareholder described in § 1.367(a)-3(e)(3)(iii)(A).*** If pursuant to § 1.367(a)-3(e)(3)(iii)(B) or (e)(3)(iii)(C) the U.S. transferor is required to recognize gain on the transfer of foreign stock (all or a portion of which is treated as a deemed dividend under section 1248(a)), and if pursuant to § 1.367(b)-4(b)(1)(i) the U.S. transferor is also required to include in income as a deemed dividend the section 1248 amount (within the meaning of § 1.367(b)-2(c)) in the foreign stock, then the section 1248 amount included in income under § 1.367(b)-4(b)(1)(i) is attributable to each U.S. transferor shareholder described in § 1.367(a)-3(e)(3)(iii)(A) pursuant to this paragraph (e)(4)(i). The portion of the section 1248 amount attributable to each U.S. transferor shareholder described in § 1.367(a)-3(e)(3)(iii)(A) is the portion of the section 1248 amount that bears the same ratio as such U.S. transferor shareholder's ownership interest percentage bears to the aggregate ownership interest percentage of all U.S. transferor shareholders described in § 1.367(a)-3(e)(3)(iii)(A).

(ii) ***Ordering rules for determining section 1248 amount.*** The section 1248 amount (within the meaning of § 1.367(b)-2(c)) included in income as a deemed dividend under § 1.367(b)-4(b)(1)(i) is determined after taking into account any gain recognized under §§ 1.367(a)-3(e)(3)(iii)(B) or (e)(3)(iii)(C) or 1.367(a)-6 that is treated as a deemed dividend under

section 1248(a). See § 1.367(a)-3(e)(7) and paragraph (e)(5)(ii) of this section for rules to determine the amount of gain recognized under §§ 1.367(a)-3(e)(3)(iii)(B) or (e)(3)(iii)(C) or 1.367(a)-6, respectively, that is treated as a deemed dividend under section 1248(a).

(5) ***Certain gain under § 1.367(a)-6*** —

(i) ***Gain attributable to U.S. transferor shareholder described in § 1.367(a)-3(e)(3)(iii)(A).*** If pursuant to § 1.367(a)-3(e)(3)(iii)(B) or (e)(3)(iii)(C), the U.S. transferor is required to recognize gain on the transfer of stock or securities, and if pursuant to § 1.367(a)-6 the U.S. transferor is also required to recognize gain, then gain recognized under § 1.367(a)-6 (including any portion treated as a deemed dividend under section 1248(a)) to the extent treated as recognized with respect to the stock or securities, is attributable to each U.S. transferor shareholder described in § 1.367(a)-3(e)(3)(iii)(A) pursuant to this paragraph (e)(5)(i). The portion of the gain (including any portion treated as a deemed dividend under section 1248(a)) that is attributable to each U.S. transferor shareholder described in § 1.367(a)-3(e)(3)(iii)(A) is the portion of the gain that bears the same ratio as such U.S. transferor shareholder's ownership interest percentage bears to the aggregate ownership interest percentage of all U.S. transferor shareholders described in § 1.367(a)-3(e)(3)(iii)(A).

(ii) ***Gain subject to section 1248(a).*** If the U.S. transferor recognizes gain under § 1.367(a)-6 with respect to transferred stock that is stock in a foreign corporation to which section 1248(a) applies, the portion of such gain treated as a deemed dividend under section 1248(a) is determined after taking into account any gain recognized under § 1.367(a)-3(e)(3)(iii)(B) or (e)(3)(iii)(C) and the amount of such gain treated as a deemed dividend under section 1248(a) pursuant to § 1.367(a)-3(e)(7).

(f) ***Definitions.*** The following definitions apply for purposes of this section:

(1) ***Control group, control group member, and non-control group member*** —

(i) ***General rule.*** Except as provided in paragraph (f)(1)(ii) of this section, the *control group* is the group of five or fewer, but at least one, domestic corporations that controls (within the meaning of section 368(c)) the U.S. transferor immediately before the reorganization. If the U.S. transferor is owned directly by more than five domestic corporations immediately before the reorganization, but some combination of five or fewer domestic corporations controls the U.S. transferor, the U.S. transferor must designate the five or fewer domestic corporations that comprise the control group on Form 926, “Return by a U.S. Transferor of Property to a Foreign Corporation.” For purposes of identifying the control group, members of an affiliated group (within the meaning of section 1504) are treated as a single corporation. Except as provided in paragraph (f)(1)(ii) of this section, a *control group member* is a domestic corporation that is part of the control group. A *non-control group member* is a shareholder of the U.S. transferor immediately before the reorganization that is not a control group member.

(ii) ***Exception for certain entities.*** Regulated investment companies (as defined in section 851(a)), real estate investment trusts (as defined in section 856(a)), and S corporations (as defined in section 1361(a)) cannot be control group members.

(2) ***Deductible liability*** is any liability of the U.S. transferor that is assumed in the section 361 exchange if payment of the liability would give rise to a deduction.

(3) ***Fair market value*** is the fair market value determined without regard to mortgages, liens, pledges, or other liabilities. For this purpose, the fair market value of any property subject to a nonrecourse indebtedness shall be treated as being not less than the amount of any nonrecourse indebtedness to which such property is subject.

(4) ***Inside basis*** is the aggregate basis of the section 367(a) property transferred by the U.S. transferor in the section 361 exchange and, except as otherwise provided in this paragraph (f)(4), increased by any gain recognized or any deemed dividend included in income by the U.S. transferor under section 367 on the transfer of the section 367(a) property in the section 361 exchange, but not including any gain recognized under paragraph (c)(2) of this section. If the U.S. transferor transfers stock or securities and recognizes gain under § 1.367(a)-3(e)(3)(iii)(B) or (e)(3)(iii)(C) with respect to such stock or securities, then inside basis is not increased for gain recognized or deemed dividends included in income that are described in paragraph (f)(4)(i), (f)(4)(ii), or (f)(4)(iii) of this section.

(i) Gain recognized under § 1.367(a)-3(e)(3)(iii)(B) or (e)(3)(iii)(C) (including any portion treated as a deemed dividend under section 1248(a));

(ii) Gain recognized under § 1.367(a)-6 (including any portion treated as a deemed dividend under section 1248(a)) attributable to U.S. transferor shareholders described in § 1.367(a)-3(e)(3)(iii)(A) (as determined pursuant to § 1.367(a)-7(e)(5));

(iii) A deemed dividend included in income under § 1.367(b)-4(b) attributable to U.S. transferor shareholders described in § 1.367(a)-3(e)(3)(iii)(A) (as determined pursuant to § 1.367(a)-7(e)(4)).

(5) ***Inside gain*** is the amount (but not below zero) by which the aggregate fair market value of the section 367(a) property transferred in the section 361 exchange exceeds the sum of:

(i) The inside basis; and

(ii) The product of the section 367(a) percentage multiplied by the aggregate deductible liabilities of the U.S. transferor.

(6) ***Outside gain or loss*** is the product of the section 367(a) percentage multiplied by the difference between—

(i) The aggregate fair market value of the stock received by a control group member in exchange for (or with respect to, as applicable) stock or securities of the U.S. transferor under section 354, 355, or 356, and

(ii) The control group member's aggregate section 358 basis (as defined in paragraph (c)(3) of this section) in such stock received, determined without regard to any adjustment to that basis under paragraph (c)(3) of this section.

(7) ***Ownership interest percentage*** is the ratio of the fair market value of the stock in the U.S. transferor owned by a shareholder to the fair market value of all of the outstanding stock of the U.S. transferor. Except as provided in this paragraph (f)(7), the ownership interest percentage of a shareholder is determined immediately before the reorganization. For purposes of determining the ownership interest percentage with respect to each shareholder, however, the numerator and denominator of the fraction are first reduced as described in this paragraph (f)(7). The numerator is reduced (but not below zero) by any distributions by the U.S. transferor of money or other property (within the meaning of section 356) to such shareholder pursuant to the plan of reorganization, but only to the extent such money or other property is not provided by the foreign acquiring corporation in exchange

for property of the U.S. transferor acquired in the section 361 exchange. Furthermore, the denominator of the fraction is reduced (but not below zero) by all such distributions by the U.S. transferor to all shareholders. For illustrations of this definition, see paragraph (g) of this section, *Example 4* and *Example 5*.

(8) ***Section 361 exchange*** is an exchange described in section 361(a) or (b).

(9) ***Section 367(a) percentage*** is the ratio of the aggregate fair market value of the section 367(a) property transferred by the U.S. transferor in the section 361 exchange to the aggregate fair market value of all property transferred by the U.S. transferor in the section 361 exchange.

(10) ***Section 367(a) property.*** Except as provided in paragraph (e)(3) of this section, *section 367(a) property* is any property, as defined in § 1.367(a)-1(d)(4), other than section 367(d) property.

(11) ***Section 367(d) property*** is intangible property as defined in § 1.367(a)-1(d)(5).

(12) ***Timely filed return*** is a U.S. income tax return filed on or before the due date set forth in section 6072(b), including any extensions of time to file the return granted under section 6081.

(13) ***U.S. transferor shareholder*** is a person that is either a control group member or a non-control group member.

(g) ***Examples.*** The rules of this section are illustrated by the examples set forth in this paragraph (g). See also § 1.367(a)-3(e)(8), *Example 2* and *Example 3*. The analysis of the following examples is limited to a discussion of issues under this section. Unless otherwise indicated, for purposes of the following examples: DP1, DP2, and DC are domestic corporations that do not join in the filing of a consolidated return and none of which is a regulated investment company, a real estate investment trust, or an S corporation; FP and FA are foreign corporations created or organized under the laws of Country B and are unrelated to DP1, DP2, and DC; each corporation has a single class of stock outstanding; each share of stock of DC owned by a shareholder of DC has an identical stock basis; Business A consists solely of section 367(a) property whose fair market value exceeds its basis and that, but for the application of this section, would qualify for the active foreign trade or business exception under § 1.367(a)-2; the fair market value of any FA stock received in a reorganization is equal to the fair market value of property exchanged therefor; FA is not a surrogate foreign corporation for purposes of section 7874 because one or more of the conditions of section 7874(a)(2)(B) is not satisfied; DC has no liabilities; DP1 and DP2 satisfy the requirements of paragraph (c)(5) of this section, and DC satisfies the requirements of § 1.6038B-1(c)(6)(ii).

> *Example 1. Tainted assets and non-control group ownership.* (i) *Facts.* DP1, DP2, and FP own 50%, 30%, and 20%, respectively, of the outstanding stock of DC. DP1 and DP2 are members of the same affiliated group within the meaning of section 1504. DP1's DC stock has a $120x basis and $100x fair market value. DP2's DC stock has a $50x basis and $60x fair market value. DC owns inventory with a $40x basis and a $100x fair market value. DC also owns Business A (excluding the inventory) with a $10x basis and $100x fair market value. In a reorganization described in section 368(a)(1)(F), DC transfers the inventory and Business A to FA, a newly formed corporation, in exchange for all of the outstanding stock of FA. DC's transfer of the inventory and Business A to FA qualifies as a section 361 exchange. DP1, DP2, and FP exchange the DC stock for a proportionate amount of FA stock pursuant to section 354.

(ii) *Result.* (A) Under section 367(a)(3)(B)(i), DC must recognize $60x gain ($100x fair market value less $40x basis) on the transfer of the inventory to FA. The basis of the inventory in the hands of FA is increased by the gain recognized of $60x (that is, increased from $40x to $100x). See § 1.367(a)-1(b)(4)(i)(B). Under section 367(a)(5) and paragraph (b) of this section, DC's transfer of Business A to FA is subject to the general rule of section 367(a)(1). As a result, DC must also generally recognize $90x gain ($100x fair market value less $10x basis) on the transfer of Business A to FA notwithstanding the application of section 361 (or any other nonrecognition provision enumerated in section 367(a)(1)). However, if the conditions and requirements of paragraph (c) of this section are met, DC's transfer of Business A to FA would qualify for the active foreign trade or business exception provided by section 367(a)(3) and § 1.367(a)-2.

(B) The requirement of paragraph (c)(1) of this section is satisfied because DC is controlled (within the meaning of section 368(c)) by five or fewer domestic corporations immediately before the reorganization (in this case, by a single domestic corporation because DP1 and DP2 together own 80% of the stock of DC). DP1 and DP2 are treated as a single domestic corporation for this purpose under paragraph (f)(1)(i) of this section because DP1 and DP2 are members of the same affiliated group.

(C) Paragraph (c)(2)(i) of this section would be satisfied only if DC recognizes $18x gain on the transfer of Business A, which is the amount of inside gain attributable to FP, a non-control group member. The $18x gain equals the product of the inside gain ($90x) multiplied by FP's ownership interest percentage (20%) in DC, reduced by $0x (the sum of the amounts described in paragraphs (c)(2)(i)(A) through (c)(2)(i)(C) of this section). Under paragraph (f)(5) of this section, the $90x inside gain is the amount by which the aggregate fair market value ($200x) of the section 367(a) property (inventory and Business A) exceeds $110x, the sum of the inside basis of $110x and the product of the section 367(a) percentage (100%) multiplied by the deductible liabilities of DC ($0x). Under paragraph (f)(4) of this section, the inside basis equals the $50x aggregate basis of the section 367(a) property transferred in the section 361 exchange, increased by the $60x gain recognized by DC on the transfer of the inventory to FA, but not by the $18x gain recognized by DC under paragraph (c)(2)(i) of this section attributable to FP. The section 367(a) percentage is 100% because the only assets transferred are the inventory and Business A, which are section 367(a) property. Under paragraph (e)(1) of this section, the $18x gain recognized under paragraph (c)(2)(i) of this section is treated as recognized with respect to Business A. FA's basis in Business A as determined under section 362 is increased for the $18x gain recognized. See § 1.367(a)-1(b)(4)(i)(B).

(D) Paragraph (c)(2)(ii) of this section is not applicable with respect to either DP1 or DP2 because the attributable inside gain with respect to each such shareholder can be preserved in the FA stock received. As stated in paragraph (ii)(C) of this *Example 1*, the amount of the inside gain is $90x. The attributable inside gain with respect to DP1 of $45x (equal to the product of $90x inside gain multiplied by DP1's 50% ownership interest percentage, reduced by $0x (the sum of the amounts

described in paragraphs (c)(2)(ii)(A)(*1*) through (c)(2)(ii)(A)(*3*) of this section)) does not exceed $100x (equal to the product of the section 367(a) percentage of 100% multiplied by $100x fair market value of FA stock received by DP1). Similarly, the attributable inside gain with respect to DP2 of $27x (equal to the product of $90x inside gain multiplied by DP2's 30% ownership interest percentage, reduced by $0x (the sum of the amounts described in paragraphs (c)(2)(ii)(A)(*1*) through (c)(2)(ii)(A)(*3*) of this section)) does not exceed $60x (equal to the product of the section 367(a) percentage of 100% multiplied by $60x fair market value of FA stock received by DP2).

(E) Each control group member (DP1 and DP2) separately computes any required adjustment to stock basis under paragraph (c)(3) of this section. DP1's section 358 basis in the FA stock received of $120x (the amount of DP1's basis in the DC stock exchanged) is reduced to preserve the attributable inside gain with respect to DP1, less any gain recognized with respect to DP1 under paragraph (c)(2)(ii) of this section. Because DC does not recognize gain on the section 361 exchange with respect to DP1 under paragraph (c)(2)(ii) of this section (as determined in paragraph (ii)(D) of this *Example 1*), the attributable inside gain of $45x with respect to DP1 is not reduced under paragraph (c)(3)(i)(B) of this section. DP1's outside loss in the FA stock is $20x, the product of the section 367(a) percentage of 100% multiplied by $20x loss (equal to the difference between $100x fair market value and $120x section 358 basis in FA stock). Thus, DP1's $120x section 358 basis in the FA stock must be reduced by $65x (excess of $45x, reduced by $0x, over $20x outside loss) to $55x.

(F) DP2's aggregate section 358 basis in the FA stock received of $50x (the amount of DP2's basis in the DC stock exchanged) is reduced to preserve the attributable inside gain with respect to DP2, less any gain recognized with respect to DP2 under paragraph (c)(2)(ii) of this section. Because DC does not recognize gain on the section 361 exchange with respect to DP2 (as determined in paragraph (ii)(D) of this *Example 1*), the attributable inside gain of $27x with respect to DP2 is not reduced under paragraph (c)(3)(i)(A) of this section. DP2's outside gain in the FA stock is $10x, the product of the section 367(a) percentage of 100% multiplied by $10x gain (equal to the difference between $60x fair market value and $50x section 358 basis in FA stock). Thus, DP2's $50x section 358 basis in the FA stock must be reduced by $17x (excess of $27x, reduced by $0x, over the $10x outside gain) to $33x.

(G) Paragraph (c)(4) of this section would be satisfied only if DC complies with the requirements of § 1.6038B-1(c)(6)(iii), including filing with its timely filed return for the year of the reorganization a statement agreeing to file an amended return reporting the gain realized but not recognized on the section 361 exchange in certain cases if a significant amount of the section 367(a) property received in the section 361 exchange is disposed of, directly or indirectly, in one or more related transactions within the prescribed 60-month period.

Example 2. Triangular reorganization involving an exchange of section 367(a) property for foreign stock and cash. (i) *Facts.* (A) DP1 wholly owns DC. DP1 and DC file a consolidated return. DP1's

DC stock has a $170x basis and $200x fair market value. DC owns Business A, which has a $10x basis and $200x fair market value. FP wholly owns FA.
(B) In a triangular reorganization described in section 368(a)(1)(A) by reason of section 368(a)(2)(D), DC transfers Business A to FA in exchange for $180x of FP stock and $20x cash. DC's transfer of Business A to FA qualifies as a section 361 exchange. DP1 exchanges its DC stock for $180x of FP stock and $20x cash pursuant to section 356. The triangular reorganization constitutes an indirect stock transfer under § 1.367(a)-3(d)(1)(i), and DP1 properly files a gain recognition agreement under § 1.367(a)-8 with respect to the transfer. See also § 1.367(a)-3(d)(2)(vii).

(ii) *Result.* (A) Under section 367(a)(5) and paragraph (b) of this section, DC's transfer of Business A to FA is subject to the general rule of section 367(a)(1). As a result, DC must generally recognize $190x gain ($200x fair market value less $10x basis) on the transfer of Business A to FA notwithstanding the application of section 361 (or any other nonrecognition exchange enumerated in section 367(a)(1)). However, if the requirements of paragraph (c) of this section are satisfied, DC's transfer of Business A to FA would qualify for the active foreign trade or business exception provided in section 367(a)(3) and § 1.367(a)-2.

(B) The requirement of paragraph (c)(1) of this section is satisfied because DC is controlled (within the meaning of section 368(c)) by five or fewer domestic corporations immediately before the reorganization (in this case, by a single domestic corporation, DP1).

(C) DC is not required to recognize gain under paragraph (c)(2)(i) of this section because, immediately before the reorganization, DC is wholly owned by DP1, a control group member. In addition, DP1's ownership interest percentage is 100%. Paragraph (c)(2)(ii) of this section would be satisfied only if DC recognizes $10x gain, computed as the amount by which the attributable inside gain with respect to DP1 of $190x (the product of $190x inside gain multiplied by DP1's ownership interest percentage of 100%, reduced by $0x (the sum of the amounts in paragraphs (c)(2)(ii)(A)(*1*) through (c)(2)(ii)(A)(*3*) of this section)) exceeds $180x (the product of the section 367(a) percentage of 100% multiplied by $180x fair market value of FP stock received by DP1). Under paragraph (f)(5) of this section, the $190x inside gain is the amount by which the $200x aggregate fair market value of Business A exceeds $10x (the sum of the inside basis of $10x and the product of the section 367(a) percentage (100%) multiplied by the deductible liabilities of DC ($0x)). Under paragraph (f)(4) of this section, the inside basis equals the $10x aggregate basis of the section 367(a) property transferred in the section 361 exchange (not increased by the $10x gain recognized by DC under paragraph (c)(2)(ii) of this section). The section 367(a) percentage is 100% because the only asset transferred is Business A, which is section 367(a) property. Under § 1.1502-32(b)(2), DP1 increases the basis of its DC stock by the $10x gain recognized, that is, from $170x to $180x. Under paragraph (e)(1) of this section, the $10x gain recognized under paragraph

(c)(2)(ii) of this section is treated as recognized with respect to Business A. FA's basis in Business A as determined under section 362 is increased for the $10x gain recognized. See § 1.367(a)-1(b)(4)(i)(B).

(D) Paragraph (c)(3) of this section would be satisfied only if DP1's section 358 basis in the FP stock is reduced by the amount by which the attributable inside gain with respect to DP1, reduced by any gain recognized by DC with respect to DP1 under paragraph (c)(2)(ii) of this section, exceeds DP1's outside gain in the FP stock. DP1's section 358 basis in the FP stock is $180x, computed as $180x basis in DC stock, as determined in paragraph (ii)(C) of this *Example 2,* decreased by $20x cash received and increased by $20x gain recognized under section 356 (such amount equal to the lesser of the $20x cash received and the $20x gain in the DC stock, computed as $200x fair market value less $180x basis). Because DC recognizes $10x gain on the section 361 exchange with respect to DP1 under paragraph (c)(2)(ii) of this section as determined in paragraph (ii)(C) of this *Example 2,* the $190x attributable inside gain with respect to DP1 is reduced by $10x to $180x under paragraph (c)(3)(i)(C) of this section. DP1's outside gain in the FP stock is $0x, the product of the section 367(a) percentage of 100% multiplied by $0x gain (the difference between $180x fair market value and $180x section 358 basis in FP stock). Thus, DP1's section 358 basis in the FP stock ($180x) must be reduced by $180x ($190x attributable inside gain reduced by $10x) to $0x.

(E) Paragraph (c)(4)(i) of this section would be satisfied only if DC complies with the requirements of § 1.6038B-1(c)(6)(iii), including filing with its tax return for the year of the reorganization a statement agreeing to file an amended return reporting the gain on the section 361 exchange in certain cases if a significant amount of the section 367(a) property received in the section 361 exchange is disposed of, directly or indirectly, in one or more related transactions within the prescribed 60-month period.

Example 3. Adjustment to basis of multiple blocks of stock; transfer of section 367(d) property. (i) *Facts.* (A) DP1 wholly owns DC. One half of DP1's shares of stock in DC, each with an identical basis, has an aggregate basis of $60x and fair market value of $100x (Block 1). The other one half of DP's shares of stock in DC, each with an identical basis, has an aggregate basis of $120x and fair market value of $100x (Block 2). DC owns Business A ($15x basis and $150x fair market value) (excluding the patent) and a patent ($0x basis and $50x fair market value). The patent is section 367(d) property.
(B) In a reorganization described in section 368(a)(1)(F), DC transfers Business A and the patent to FA, a newly formed corporation, in exchange for 2 shares of FA stock. DC's transfer of Business A and the patent to FA qualifies as a section 361 exchange. DP1 exchanges Block 1 and Block 2 for the two shares of FA stock pursuant to section 354. Pursuant to § 1.358-2(a)(2)(i), one share of the FA stock corresponds to Block 1 (Share 1) and the other share of FA stock corresponds to Block 2 (Share 2). The basis of Share 1 and Share 2 correspond to the basis of Block 1 and Block 2, respectively.

(ii) *Result.* (A) Under section 367(a)(5) and paragraph (b) of this section, DC's transfer of Business A to FA is subject to the general rule of section 367(a)(1). As a result, DC must generally recognize $135x of gain on the transfer of Business A to FA notwithstanding the application of section 361 (or any other nonrecognition exchange described in section 367(a)(1)). However, if the requirements of paragraph (c) of this section are met, DC's transfer of Business A to FA would qualify for the active foreign trade or business exception provided in section 367(a)(3). For rules applicable to DC's transfer of the patent to FA, see section 367(d).

(B) The requirement of paragraph (c)(1) of this section is satisfied because DC is controlled (within the meaning of section 368(c)) by five or fewer domestic corporations immediately before the reorganization (in this case, by a single domestic corporation, DP1).

(C) Paragraph (c)(2)(i) of this section is not applicable because, immediately before the reorganization, DC is wholly owned by DP1, a control group member. In addition, DP1's ownership interest percentage is 100%. Paragraph (c)(2)(ii) of this section is not applicable because the attributable inside gain with respect to DP1 can be preserved in the FA stock received. The attributable inside gain with respect to DP1 of $135x (equal to the product of $135x inside gain multiplied by DP1's 100% ownership interest percentage, reduced by $0x (the sum of the amounts in paragraphs (c)(2)(ii)(A)(*1*) through (c)(2)(ii)(A)(*3*) of this section)) does not exceed $150x (equal to the product of the section 367(a) percentage of 75% multiplied by $200x fair market value of FA stock received by DP1). Under paragraph (f)(5) of this section, the $135x inside gain is the amount by which the aggregate fair market value of Business A ($150x) exceeds $15x, the sum of the inside basis of Business A ($15x) and the product of the section 367(a) percentage (75%) multiplied by the deductible liabilities of DC ($0x). Under paragraph (f)(4) of this section, the inside basis equals the $15x aggregate basis of the section 367(a) property transferred in the exchange. The section 367(a) percentage of 75% is equal to the ratio of the fair market value of the section 367(a) property ($150x for Business A) to the fair market value of all the property transferred ($200x, the sum of $150x for Business A and $50x for the patent).

(D) Under paragraph (c)(3) of this section, DP1's aggregate section 358 basis of $180x in the stock of FA (computed as the sum of $60x basis in Share 1 and $120x basis in Share 2) is reduced by the amount by which the attributable inside gain with respect to DP1, reduced by any gain recognized by DC with respect to DP1 under paragraph (c)(2)(ii) of this section, exceeds DP1's outside gain in the FP stock received. Because DC recognizes no gain on the section 361 exchange with respect to DP1 under paragraph (c)(2)(ii) of this section as determined in paragraph (ii)(C) of this *Example 3,* the $135x attributable inside gain with respect to DP1 is not reduced under paragraph (c)(3)(i)(A) of this section. DP1's outside gain in Share 1 and Share 2 in the aggregate is $15x, the product of the section 367(a) percentage of 75% multiplied by $20x (the difference between $200x aggregate fair market value and $180x aggregate section 358 basis in

the FA stock received by DP1). Thus, DP1's section 358 basis in the FA stock ($180x) must be reduced by $120x (the excess of $135x attributable inside gain, reduced by $0x, over $15x outside gain) to $60x.

(E) Under paragraph (c)(3)(iii) of this section, the $120x reduction to basis is allocated between Share 1 and Share 2 based on the relative section 358 basis of each share. Therefore, the basis in Share 1 is reduced by $40x ($120x multiplied by $60x/$180x). As adjusted, DP1's basis in Share 1 is $20x ($60x less $40x). The basis in Share 2 is reduced by $80x ($120x multiplied by $120x/$180x). As adjusted, DP1's basis in Share 2 is $40x ($120x less $80x).

(F) Paragraph (c)(4)(i) of this section would be satisfied only if DC complies with the requirements of § 1.6038B-1(c)(6)(iii), including filing with its tax return for the year of the reorganization, a statement agreeing to file an amended return reporting the gain realized but not recognized on the section 361 exchange in certain cases if a significant amount of the section 367(a) property received in the section 361 exchange is disposed of, directly or indirectly, in one or more related transactions within the prescribed 60-month period.

Example 4. Control requirement and ownership interest percentage; non-qualified property provided by foreign acquiring corporation. (i) *Facts.* DP1 and FP own 80% and 20%, respectively, of the outstanding stock of DC. DC owns Business A with a basis of $0x and $100x fair market value. DP1's DC stock has a fair market value of $80x, and FP's DC stock has a fair market value of $20x. In a reorganization described in section 368(a)(1)(D), DC transfers Business A to FA in exchange for $80x of FA stock and $20x cash. DC's transfer of Business A to FA qualifies as a section 361 exchange. DP1 exchanges its $80x of DC stock for $60x of FA stock and $20x cash, and FP exchanges its $20x of DC stock for $20x of FA stock.
(ii) *Result.* (A) The requirement of paragraph (c)(1) of this section is satisfied because DC is controlled (within the meaning of section 368(c)) by five or fewer domestic corporations immediately before the reorganization (in this case, by a single domestic corporation, DP1). The fact that the $20x cash is distributed solely to DP1 does not change the analysis of the control requirement. The control requirement is determined immediately before the reorganization and is not affected by distributions of property.

(B) Pursuant to paragraph (f)(7) of this section, the ownership interest percentages of DP1 and FP immediately before the reorganization are 80% ($80x/($80x + $20x)) and 20% ($20x/($80x + $20x)), respectively. The fact that the $20x of cash is distributed solely to DP1 does not change this result. The distribution of the $20x of cash is not taken into account for purposes of the ownership interest percentage computation because the $20x of cash distributed by DC is provided by FA to DC in the section 361 exchange.

Example 5. Control requirement and ownership interest percentage; non-qualified property provided by U.S. transferor. (i) *Facts.* The facts are the same as in *Example 4,* except as follows.

Business A has a fair market value of $80x (and not $100x) and DC also owns inventory with a basis of $0x and fair market value of $20x. DC transfers Business A, but not the inventory, to FA in exchange for $80x of FA stock. DP1 exchanges its $80x of DC stock for $60x of FA stock and the $20x of inventory, and FP exchanges its $20x of DC stock for $20x of FA stock.
(ii) *Result.* (A) The requirement of paragraph (c)(1) of this section is satisfied because DC is controlled (within the meaning of section 368(c)) by five or fewer domestic corporations immediately before the reorganization (in this case, by a single domestic corporation, DP1). The fact that the $20x of inventory is not transferred to FA, but is instead distributed solely to DP1, does not change the analysis of the control requirement. The control requirement is determined immediately before the reorganization, and is not affected by distributions of property.

(B) Pursuant to the general rule of paragraph (f)(7) of this section, the ownership interest percentages of DP1 and FP immediately before the reorganization would be 80% ($80x/($80x + $20x)) and 20% ($20x/($80x + $20x)), respectively. In this case, however, the distribution of the $20x inventory to DP1 is taken into account for purposes of computing the ownership interest percentage of DP1 and FP because the inventory is not provided by FA to DC in the section 361 exchange. With respect to DP1, the numerator of the ownership interest percentage computation is $60x, computed as the fair market value of DC stock owned by DP1 immediately before the reorganization but reduced by the fair market value of the inventory distributed to DP1 ($80x less $20x). With respect to FP, the numerator of the ownership interest percentage computation is $20x, the fair market value of the DC stock owned by FP immediately before the reorganization. With respect to both DP1 and FP, the denominator of the ownership interest percentage computation is $80x, computed as the fair market value of all DC stock immediately before the reorganization, but reduced by the fair market value of the inventory distributed to DP1 ($100x, less $20x). Accordingly, the ownership interest percentage of DP1 is 75% ($60x/$80x), and the ownership interest percentage of FP is 25% ($20x/$80x).

(h) ***Applicable cross-references.*** For rules relating to the character, source, and adjustments resulting from gain recognized by a U.S. transferor under section 367(a), see § 1.367(a)-1(b)(4). For rules relating to transfers of stock or securities in a section 361 exchange, see § 1.367(a)-3(e). For rules relating to the acquisition of the stock or assets of a foreign corporation by another foreign corporation, see § 1.367(b)-4. For rules relating to transfers of section 367(d) property by a U.S. transferor to a foreign corporation, see section 367(d). For rules relating to distributions of stock of a foreign corporation by a domestic corporation under section 355 or 361, see §§ 1.367(b)-5, 1.367(e)-1, and 1.1248(f)-1 through 1.1248(f)-3. For additional rules relating to certain reporting requirements of a U.S. transferor, see § 1.6038B-1. For rules regarding expatriated entities, see section 7874 and the regulations under that section.

(i) [Reserved]

(j)

(1) ***Effective/applicability dates.*** Except for paragraph (e)(2) of this section, and as provided in paragraph (j)(2) of this section, this section applies to transfers occurring on or after April 18, 2013. Paragraph (e)(2) applies to requests for relief submitted on or after November 19, 2014. Paragraph (e)(2) of this

section also applies to requests for relief submitted before November 19, 2014 if the statute of limitations on the assessment of tax has not expired for any year to which the request relates and the control group member or U.S. transferor, as applicable, resubmits the request under paragraph (e)(2) of this section and notes, on the request, that the request is being submitted pursuant to the third sentence of this paragraph (j). See paragraph (e)(2) of this section, as contained in 26 CFR part 1 revised as of April 1, 2014, for requests for relief submitted after April 17, 2013, and before November 19, 2014, that are not resubmitted under paragraph (e)(2) of this section.

(2) ***Section 367(d) property.*** The definition provided in paragraph (f)(11) of this section applies to transfers occurring on or after September 14, 2015, and to transfers occurring before September 14, 2015, resulting from entity classification elections made under § 301.7701-3 that are filed on or after September 14, 2015. For transfers occurring before this section is applicable, see § 1.367(a)-7 as contained in 26 CFR part 1 revised as of April 1, 2016.

[T.D. 9614, 78 FR 17032, Mar. 19, 2013, as amended by T.D. 9704, 79 FR 68767, Nov. 19, 2014; T.D. 9760, 81 FR 15169, Mar. 22, 2016; T.D. 9803, 81 FR 91028, Dec. 16, 2016; T.D. 9614, 85 FR 51347, Aug. 20, 2020]

§ 1.367(a)-8 Gain recognition agreement requirements.

(a) ***Scope.*** This section provides the terms and conditions for a gain recognition agreement entered into by a United States person pursuant to § 1.367(a)-3(b) through (e) in connection with a transfer of stock or securities to a foreign corporation pursuant to an exchange that would otherwise be subject to section 367(a)(1). Paragraph (b) of this section provides definitions and special rules. Paragraphs (c) through (h) of this section identify the form, content, and other conditions of a gain recognition agreement. Paragraph (i) of this section is reserved. Paragraph (j) of this section identifies certain events that may require gain to be recognized under a gain recognition agreement. Paragraph (k) of this section provides exceptions for certain events that would otherwise require gain to be recognized under a gain recognition agreement. Paragraph (l) of this section is reserved. Paragraph (m) of this section provides rules that require gain to be recognized under a gain recognition agreement in connection with certain events to which an exception under paragraph (k) of this section otherwise applies. Paragraph (n) of this section provides special rules in the case of a distribution of property with respect to stock to which section 301 applies. Paragraph (o) of this section provides rules for certain transactions that terminate or reduce the amount of gain subject to a gain recognition agreement. Paragraph (p) of this section provides relief for certain failures to file an initial gain recognition agreement (as defined in paragraph (b)(1)(vi) of this section) or to comply with the requirements of this section with respect to a gain recognition agreement (as described in paragraph (c) of this section). Paragraph (q) of this section provides examples that illustrate the rules of the section. Paragraph (r) of this section provides effective dates for the provisions of this section.

(b) ***Definitions and special rules.*** The following definitions and special rules apply for purposes of this section.

(1) ***Definitions*** —

(i) ***Asset reorganization*** —

(A) ***General rule.*** Except as provided in paragraph (b)(1)(i)(B) of this section, *an asset reorganization* is a reorganization described in section 368(a)(1) that involves an exchange of property described in section 361(a) or (b) (a section 361 exchange).

(B) ***Exceptions.*** An asset reorganization does not include the following:

(1) A reorganization described in section 368(a)(1)(D) or (G) if the requirements of section 354(b)(1)(A) and (B) are not met.

(2) For purposes of paragraphs (j)(2)(ii)(B), (k)(6)(ii), and (k)(6)(iii) of this section, a triangular asset reorganization. For rules applicable to a triangular asset reorganization, see paragraph (k)(7) of this section.

(ii) ***A consolidated group*** has the meaning set forth in § 1.1502-1(h).

(iii) ***Disposition.*** Except as provided in this paragraph (b)(1)(iii), a *disposition* includes any transfer that would constitute a disposition for any purpose of the Internal Revenue Code. A disposition includes an indirect disposition of the stock of the transferred corporation as described in § 1.367(a)-3(d). Except as provided in paragraph (n)(1) of this section, a disposition does not include the receipt of a distribution of property with respect to stock to which section 301 applies (including by reason of section 302(d)). See paragraphs (n)(2) and (o)(3) of this section for rules that apply if gain is recognized under section 301(c)(3). A complete or partial disposition by installment sale (under section 453) shall be treated as a disposition in the year of the installment sale.

(iv) A *gain recognition agreement document* means any agreement, statement, schedule, or form required to be filed under this section, including an initial gain recognition agreement (as defined in paragraph (b)(1)(vi) of this section), a new gain recognition agreement described in paragraph (c)(5) of this section, a Form 8838 extending the period of limitations on assessment of tax described in paragraph (f) of this section, and an annual certification described in paragraph (g) of this section.

(v) A *gain recognition event* is an event described in paragraphs (j) through (o) of this section that requires gain to be recognized under a gain recognition agreement.

(vi) An *initial gain recognition agreement* means the gain recognition agreement entered into under paragraph (c) of this section with respect to the initial transfer.

(vii) The *initial transfer* means a transfer of stock or securities (transferred stock or securities) to a foreign corporation pursuant to an exchange that would otherwise be subject to section 367(a)(1) but with respect to which a gain recognition agreement is entered into by a United States person pursuant to § 1.367(a)-3(b) through (e).

(viii) An *intercompany item* has the meaning set forth in § 1.1502-13(b)(2).

(ix) An *intercompany transaction* has the meaning set forth in § 1.1502-13(b)(1).

(x) A *nonrecognition transaction* has the meaning set forth in section 7701(a)(45). In addition, a nonrecognition transaction includes an exchange described in section 351(b) or 356 even if all gain realized in the exchange is recognized.

(xi) The terms *P, S,* and *T* have the meanings set forth in § 1.358-6(b)(1)(i), (ii), and (iii), respectively.

(xii) The determination of whether *substantially all* of the assets of the transferred corporation have been disposed of is based on all the facts and circumstances.

(xiii) A *timely filed return* means a Federal income tax return filed on or before the last date prescribed for filing (taking into account any extensions of time therefor) such return.

(xiv) ***Transferee foreign corporation.*** Except as provided in this paragraph (b)(1)(xiv), the *transferee foreign corporation* is the foreign corporation to which the transferred stock or securities are transferred in an initial transfer. In the case of an indirect stock transfer, the transferee foreign corporation has the meaning set forth in § 1.367(a)-3(d)(2)(i). The transferee foreign corporation also includes a corporation designated as the transferee foreign corporation in the case of a new gain recognition agreement entered into under this section.

(xv) ***Transferred corporation.*** Except as provided in this paragraph (b)(1)(xv), the *transferred corporation* is the corporation the stock or securities of which are transferred in the initial transfer. In the case of an indirect stock transfer, the transferred corporation has the meaning set forth in § 1.367(a)-3(d)(2)(ii). The transferred corporation also includes a corporation designated as the transferred corporation in the case of a new gain recognition agreement entered into under this section.

(xvi) A *triangular asset reorganization* is a reorganization described in § 1.358-6(b)(2)(i), (ii), (iii), or (v).

(xvii) The *U.S. transferor* is the United States person (as defined in § 1.367(a)-1(d)(1)) that transfers the transferred stock or securities to the transferee foreign corporation in the initial transfer. For purposes of determining the U.S. transferor in the case of a transfer by a partnership, see § 1.367(a)-1(c)(3)(i). The *U.S. transferor* also includes the United States person designated as the U.S. transferor in the case of a new gain recognition agreement entered into under this section including, for example, under paragraph (k)(14) of this section.

(2) ***Special rules*** —

(i) ***Stock deemed received or transferred.*** References to stock received include stock deemed received (for example, pursuant to section 367(c)(2)). References to a transfer of stock or securities include a deemed transfer of stock or securities.

(ii) ***Stock of the transferee foreign corporation.*** References to stock of the transferee foreign corporation include any stock of the transferee foreign corporation the basis of which is determined, in whole or in part, by reference to the basis of the stock of the transferee foreign corporation received by the U.S. transferor in the initial transfer.

(iii) ***Transferred stock or securities.*** References to transferred stock or securities include any stock or securities of the transferred corporation the basis of which is determined, in whole or in part, by reference to the basis of the stock or securities transferred in the initial transfer.

(c) ***Gain recognition agreement*** —

(1) ***Terms of agreement*** —

(i) ***General rule.*** Except as provided in this paragraph (c)(1)(i), if a gain recognition event occurs during the period beginning on the date of the initial transfer and ending as of the close of the fifth full taxable year (not less than 60 months) following the close of the taxable year in which the initial transfer occurs (GRA term), the U.S. transferor must include in income the gain realized but not recognized on the initial transfer by reason of entering into the gain recognition agreement. In the case of a gain recognition event that occurs as a result of a partial disposition of stock, securities, or a partnership interest, as applicable, the U.S. transferor is required to recognize a proportionate amount of the gain subject to the gain recognition agreement, determined based on the fair market value of the stock, securities, or partnership

interest, as applicable, disposed of (measured at the time of the partial disposition) as compared to the fair market value of all the stock, securities, or partnership interest, as applicable (measured at the time of the partial disposition). If the U.S. transferor must recognize gain under this paragraph as a result of an event described in paragraph (m) or (n) of this section, see those paragraphs to determine the amount of the gain that must be recognized. The amount of gain subject to the gain recognition agreement shall be reduced by the amount of gain recognized under this paragraph. If the amount of gain subject to the gain recognition agreement is reduced to zero, the gain recognition agreement shall terminate without further effect.

(ii) ***Ordering rule for gain recognized under multiple gain recognition agreements.*** If a gain recognition event occurs that requires gain to be recognized under multiple gain recognition agreements, gain shall first be recognized under the gain recognition agreement that relates to the earliest initial transfer, then under the gain recognition agreement that relates to the immediately following initial transfer and so forth until the appropriate amount of gain has been recognized under each gain recognition agreement. The amount of gain recognized under a gain recognition agreement shall be determined after taking into account, as appropriate, any increase to basis (including the basis of the transferred stock or securities) under paragraph (c)(4) of this section resulting from gain recognized under another gain recognition agreement. For an illustration of this ordering rule, see paragraph (q)(2)(vi) of this section.

(iii) ***Taxable year in which gain is reported*** —

(A) ***Year of initial transfer.*** Except as provided in paragraph (c)(1)(iii)(B) of this section, the U.S. transferor must report any gain recognized under paragraph (c)(1)(i) of this section on an amended Federal income tax return for the taxable year of the initial transfer. The amended return must be filed on or before the 90th day following the date on which the gain recognition event occurs.

(B) ***Year of gain recognition event.*** If an election under paragraph (c)(2)(vi) of this section is made with the gain recognition agreement or if paragraph (c)(5)(ii) of this section applies to the gain recognition agreement, the U.S. transferor must report any gain recognized under paragraph (c)(1)(i) of this section on its Federal income tax return for the taxable year during which the gain recognition event occurs. If an election under paragraph (c)(2)(vi) of this section is made with the gain recognition agreement or if paragraph (c)(5)(ii) of this section applies to the gain recognition agreement but the U.S. transferor does not report the gain recognized on its Federal income tax return for the taxable year during which the gain recognition event occurs, the Commissioner may require the U.S. transferor to report the gain on an amended Federal income tax return for the taxable year during which the initial transfer occurred.

(iv) ***Offsets.*** No special limitations apply with respect to offsetting gain recognized under paragraph (c)(1)(i) of this section with net operating losses, capital losses, credits against tax, or similar items.

(v) ***Payment and reporting of interest.*** Interest must be paid on any additional tax due with respect to gain recognized by the U.S. transferor under paragraph (c)(1)(i) of this section. Any interest due shall be determined based on the rates under section 6621 for the period between the date that was prescribed for filing the Federal income tax return of the U.S. transferor for the year of the initial transfer and the date on which the additional tax due is paid. If paragraph (c)(1)(iii)(B) of this section applies, any interest due must be included with the payment of tax due with the

Federal income tax return of the U.S. transferor for the taxable year during which the gain recognition event occurs (or should reduce the amount of any refund due to the U.S. transferor for such taxable year). A schedule entitled "Calculation of Section 367 Tax and Interest" that separately identifies and calculates any additional tax and interest due must be included with the Federal income tax return on which any interest due is reported.

(2) ***Content of gain recognition agreement.*** The gain recognition agreement must be entitled "GAIN RECOGNITION AGREEMENT UNDER § 1.367(a)-8" and include the information described in paragraphs (c)(2)(i) through (viii) of this paragraph with the corresponding paragraph numbers. The information required under this paragraph (c)(2) and paragraph (c)(3) of this section must be included in the gain recognition agreement as filed.

(i) A statement that the document constitutes an agreement by the U.S. transferor to recognize gain in accordance with the requirements of this section.

(ii) A description of the transferred stock or securities and other information as required in paragraph (c)(3) of this section.

(iii) A statement that the U.S. transferor agrees to comply with all the conditions and requirements of this section, including to recognize gain under the gain recognition agreement in accordance with paragraph (c)(1)(i) of this section, to extend the period of limitations on assessment of tax as provided in paragraph (f) of this section, to file the certification described in paragraph (g) of this section, and, as provided in paragraph (j)(8) of this section, to treat a failure to comply (as described in paragraph (j)(8) of this section) as extending the period of limitations on assessment of tax for the taxable year in which gain is required to be reported.

(iv) A statement that arrangements have been made to ensure that the U.S. transferor is informed of any events that affect the gain recognition agreement, including triggering events or other gain recognition events.

(v) In the case of a new gain recognition agreement filed under this section—

(A) A description of the event (such as a triggering event) and the applicable exception, if any, that gave rise to the new gain recognition agreement (such as a triggering event exception), including the date of the event and the name, address, and taxpayer identification number (if any) of each person that is a party to the event;

(B) As applicable, a description of the class, amount, and characteristics of the stock, securities or partnership interest received in the transaction; and

(C) As applicable, a calculation of the amount of gain that remains subject to the new gain recognition agreement as a result of the application of paragraph (m), (n), or (o) of this section.

(vi) A statement whether the U.S. transferor elects to include in income any gain recognized under paragraph (c)(1)(i) of this section in the taxable year during which a gain recognition event occurs. See paragraph (c)(5)(ii) of this section for a rule that requires, in certain cases, for the gain recognized pursuant to a new gain recognition agreement to be included in income during the taxable year in which the gain recognition event occurs.

(vii) A statement whether a gain recognition event has occurred during the taxable year of the initial transfer.

(viii) A statement describing any disposition of assets of the transferred corporation during such taxable year other than in the ordinary course of business.

(3) ***Description of transferred stock or securities and other information.*** The gain recognition agreement shall include the following:

(i) A description of the transferred stock or securities including—

(A) The type or class, amount, and characteristics of the transferred stock or securities;

(B) A calculation of the amount of the built-in gain in the transferred stock or securities that are subject to the gain recognition agreement, reflecting the basis and fair market value on the date of the initial transfer;

(C) The amount of any gain recognized by the U.S. transferor on the initial transfer; and

(D) The percentage (by voting power and value) that the transferred stock (if any) represents of the total stock outstanding of the transferred corporation on the date of the initial transfer.

(ii) The name, address, place of incorporation, and taxpayer identification number (if any) of the transferred corporation.

(iii) The date on which the U.S. transferor acquired the transferred stock or securities.

(iv) The name, address and place of incorporation of the transferee foreign corporation, and a description of the stock or securities received by the U.S. transferor in the initial transfer, including the percentage of stock (by vote and value) of the transferee foreign corporation received in such exchange.

(v) If the initial transfer is described in § 1.367(a)-3(e), a statement that the conditions of section 367(a)(5) and any regulations under that section have been satisfied, and a description of any adjustments to the basis of the stock received in the transaction or other adjustments made pursuant to section 367(a)(5) and any regulations under that section.

(vi) If the transferred corporation is domestic, a statement describing the application of section 7874 to the transaction, and indicating that the requirements of § 1.367(a)-3(c)(1) are satisfied.

(vii) If the transferred corporation is foreign, a statement indicating whether the U.S. transferor was a section 1248 shareholder (as defined in § 1.367(b)-2(b)) of the transferred corporation immediately before the initial transfer, and whether the U.S. transferor is a section 1248 shareholder with respect to the transferee foreign corporation immediately after the initial transfer, and whether any reporting requirements or other rules contained in regulations under section 367(b) are applicable, and, if so, whether they have been satisfied.

(viii) If the initial transfer involves a transfer by a partnership (see § 1.367(a)-1(c)(3)(i)) or a transfer of a partnership interest (see section 367(a)(4) and § 1.367(a)-1(c)(3)(ii)) a complete description of the transfer, including a description of the partners in the partnership.

(ix) If the transaction involved the transfer of property other than the transferred stock or securities and the transaction was subject to the indirect stock transfer rules of § 1.367(a)-3(d), a statement indicating whether—

(A) The reporting requirements under section 6038B have been satisfied with respect to the transfer of such other property;

(B) Whether gain was recognized under section 367(a)(1);

(C) Whether section 367(d) applied to the transfer of such property; and

(D) Whether the other property transferred qualified for the active foreign trade or business exception under section 367(a)(3).

(4) ***Basis adjustments for gain recognized.*** The following basis adjustments shall be made if gain is recognized under paragraph (c)(1)(i) of this section.

(i) ***Stock or securities of transferee foreign corporation.*** The basis of the stock or securities, as applicable, of the transferee foreign corporation received by the U.S. transferor in the initial transfer shall be increased as of the date of the initial transfer by the amount of gain recognized.

(ii) ***Transferred stock or securities.*** The basis of the transferred stock or securities shall be increased as of the date of the initial transfer by the amount of the gain recognized.

(iii) ***Other appropriate adjustments.*** The basis of other stock, securities, or a partnership interest shall be increased, as appropriate, in accordance with the principles of this paragraph (c)(4). Under no circumstances shall the basis of stock, securities, or of a partnership interest held by a U.S. person that does not recognize gain under paragraph (c)(1)(i) of this section be increased under this paragraph (c)(4). In addition, under no circumstances shall the basis of any property be increased by the amount of any additional tax due or interest paid with respect to such tax, nor shall the basis of the assets of the transferred corporation be increased as a result of gain recognized by the U.S. transferor under paragraph (c)(1)(i) of this section.

(iv) ***Cross-reference.*** See paragraphs (q)(2)(i), (ii), (iii), and (v) of this section for illustrations of the rules of this paragraph (c)(4). See also § 1.367(a)-1(b)(4) for rules that determine the increase to basis of property resulting from the application of section 367(a).

(5) ***Terms and conditions of a new gain recognition agreement*** —

(i) ***General rule.*** A new gain recognition agreement entered into pursuant to this section shall replace the existing gain recognition agreement, which shall terminate without further effect. The term of the new gain recognition agreement shall be the remaining term of the existing gain recognition agreement. The amount of gain subject to the new gain recognition agreement shall equal the amount of gain subject to the existing gain recognition agreement, reduced by any gain recognized under paragraph (c)(1)(i) of this section with respect to the existing gain recognition agreement by reason of the gain recognition event that gives rise to the new gain recognition agreement. The new gain recognition agreement shall, as applicable, be subject to the conditions and requirements of this section to the same extent as the existing gain recognition agreement. For example, a triggering event with respect to the new gain recognition agreement will generally include a disposition of the transferred stock or securities or of substantially all the assets of the transferred corporation. If, however, the transferred stock is canceled or redeemed pursuant to the disposition or other event that gives rise to the new gain recognition agreement (for example, pursuant to a liquidation where the transferee foreign corporation is the corporate distributee (within the meaning of section 334(b)(2)), or an asset reorganization where the transferee foreign corporation is the acquiring corporation) the transferred stock is not subject to the new gain recognition agreement.

(ii) ***Special rule for inclusion of gain.*** If the U.S. transferor with respect to the new gain recognition agreement is not the U.S. transferor with respect to the existing gain recognition agreement, or a member of the consolidated group of which the U.S. transferor with respect to the existing gain recognition agreement was a member on the date of the initial transfer, then any gain recognized under paragraph (c)(1)(i) of this section with respect to the new gain recognition agreement must be included in income in the taxable year during which the gain recognition event occurs.

(6) ***Cross-reference.*** For gain recognition agreements entered into pursuant to certain outbound asset reorganizations, see § 1.367(a)-3(e)(6).

(d) ***Filing requirements*** —

(1) ***General rule.*** An initial gain recognition agreement must be timely filed in order for the U.S. transferor to avoid recognizing gain under section 367(a)(1) with respect to the transferred stock or securities by reason of the applicable exceptions provided under § 1.367(a)-3. Except as provided in paragraph (p) of this section, an initial gain recognition agreement is timely filed only if—

(i) The initial gain recognition agreement and any other gain recognition agreement document required to be filed with the initial gain recognition agreement are included with a timely filed return of the U.S. transferor for the taxable year during which the initial transfer occurs; and

(ii) Each gain recognition agreement document identified in paragraph (d)(1)(i) of this section is completed in all material respects.

(2) ***Special requirements*** —

(i) ***New gain recognition agreement.*** A new gain recognition agreement entered into under this section must be included with the timely-filed return of the U.S. transferor (as identified in the new gain recognition agreement) for the taxable year during which the disposition or event that requires the new gain recognition agreement occurs. If the new gain recognition agreement is entered into by the U.S. transferor that entered into the existing gain recognition agreement, the new gain recognition agreement is in lieu of the annual certification otherwise required for such taxable year under paragraph (g) of this section with respect to the existing gain recognition agreement.

(ii) ***Multiple events within a taxable year.*** Except as otherwise provided in this paragraph (d)(2)(ii), if the initial transfer and one or more dispositions or other events (even if a triggering event exception applies) that affect the gain recognition agreement entered into by the U.S. transferor with respect to the initial transfer occur within the same taxable year of such U.S. transferor, or if multiple dispositions or other events occur in a taxable year of the U.S. transferor that does not include the initial transfer, only one gain recognition agreement is required to be entered into and included with the timely-filed return of the U.S. transferor for such taxable year. The gain recognition agreement must describe the initial transfer and/or each disposition or other event that affects the gain recognition agreement (even if a triggering event exception applies). This paragraph does not apply, however, if any such disposition or other event requires a new gain recognition agreement to be entered into by a United States person other than the U.S. transferor with respect to the initial transfer or that entered into the existing gain recognition agreement, as applicable.

(3) ***Common parent as agent for U.S. transferor.*** If the U.S. transferor is a member but not the common parent of a consolidated group, the common parent of the consolidated group is the agent for the U.S. transferor under § 1.1502-77(a)(1). Thus, the common parent must file the gain recognition agreement on behalf of the U.S. transferor. References in this section to the timely-filed return of the U.S. transferor include the timely-filed return of the consolidated group of which the U.S. transferor is a member, as applicable.

(e) ***Signatory*** —

(1) ***General rule.*** The gain recognition agreement must be signed under penalties of perjury by an agent of the U.S. transferor that is authorized to sign under a general or specific power of attorney, or by the appropriate party based on the category of the U.S. transferor described in this paragraph (e)(1).

(i) If the U.S. transferor is a corporation but not a member of a consolidated group, a responsible officer of the U.S. transferor. If the U.S. transferor is a member of a consolidated group, a responsible officer of the common parent of the consolidated group.

(ii) If the U.S. transferor is an individual, the individual.

(iii) If the U.S. transferor is a trust or estate, a trustee, executor, or equivalent fiduciary of the U.S. transferor.

(iv) In a bankruptcy case under title 11, United States Code, a debtor in possession or trustee.

(2) ***Signature requirement.*** The inclusion of an unsigned copy of the gain recognition agreement with the timely-filed return of the U.S. transferor shall satisfy the signature requirement of paragraph (e)(1) of this section if the U.S. transferor retains the original signed gain recognition agreement in the manner specified by § 1.6001-1(e).

(f) ***Extension of period of limitations on assessments of tax*** —

(1) ***General rule.*** In connection with the filing of a gain recognition agreement, the U.S. transferor must extend the period of limitations on assessments of tax with respect to the gain realized but not recognized on the initial transfer through the close of the eighth full taxable year following the taxable year during which the initial transfer occurs. The U.S. transferor extends the period of limitations by filing Form 8838 “Consent to Extend the Time to Assess Tax Under Section 367—Gain Recognition Agreement.” The Form 8838 must be signed by a person authorized to sign the gain recognition agreement under paragraph (e)(1) of this section.

(2) ***New gain recognition agreement.*** If a new gain recognition agreement is entered into under this section, the U.S. transferor must extend the period of limitations on assessments of tax on the initial transfer through the close of the eighth full taxable year following the taxable year during which the initial transfer occurs, consistent with paragraph (f)(1) of this section, unless the U.S. transferor with respect to the new gain recognition agreement is the U.S. transferor with respect to the existing gain recognition agreement, or a member of the consolidated group of which the U.S. transferor with respect to the existing gain recognition agreement was a member on the date of the initial transfer.

(g) ***Annual certification.*** Except as provided in paragraph (d)(2)(i) of this section, the U.S. transferor must include with its timely-filed return for each of the five full taxable years following the taxable year of the initial transfer a certification (annual certification) that includes the information described in paragraphs (g)(1) through (3) of this section, as appropriate. The annual certification must be signed by a person authorized under paragraph (e)(1) of this section to sign the gain recognition agreement for the initial

transfer. The inclusion of an unsigned copy of the annual certification with the relevant timely-filed return of the U.S. transferor shall satisfy the signature requirement of paragraph (e)(1) of this section provided the U.S. transferor retains the original signed certification in the manner specified by § 1.6001-1(e).

(1) A statement of whether a gain recognition event has or has not occurred during such taxable year. If a gain recognition event has occurred during such taxable year, the annual certification must state:

(i) The amount of gain subject to the gain recognition agreement at the time of the gain recognition event;

(ii) The amount of gain recognized under the gain recognition agreement by reason of the gain recognition event; and

(iii) A calculation of the reduction to the amount of gain subject to the gain recognition agreement by reason of the gain recognition event (for example, in the case of a gain recognition event described in paragraph (n)(2) of this section).

(2) A complete description of any event occurring during such taxable year that has terminated or reduced the amount of gain subject to the gain recognition agreement (for example, an event described in paragraph (o) of this section), including a calculation of any reduction to the amount of gain subject to the gain recognition agreement.

(3) A statement describing any disposition of assets of the transferred corporation during the taxable year not in the ordinary course of business.

(h) ***Use of security.*** The U.S. transferor may be required to furnish a bond or other security that satisfies the requirements of § 301.7101-1 if the Area Director, Field Examination, Small Business/Self Employed or the Director of Field Operations, Large and Mid-Size Business (Director) determines that such security is necessary to ensure the payment of any tax on the gain realized, but not recognized, upon the initial transfer. Such bond or security generally will be required only if the transferred stock or securities are a principal asset of the U.S. transferor and the Director has reason to believe that a disposition of the stock or securities may be contemplated.

(i) [Reserved]

(j) ***Triggering events.*** Except as provided in this section, if an event described in paragraphs (j)(1) through (10) of this section (triggering event) occurs during the GRA term, the U.S. transferor must recognize gain under the gain recognition agreement in accordance with paragraph (c)(1)(i) of this section. This paragraph (j) generally requires the U.S. transferor to recognize gain (and pay applicable interest with respect to any additional tax due as provided in paragraph (c)(1)(v) of this section) under the gain recognition agreement to the extent the transferred stock or securities are disposed of, directly or indirectly. This paragraph (j) also requires the U.S. transferor to recognize gain under the gain recognition agreement in certain cases where it is not appropriate for the gain recognition agreement to continue. See paragraph (k) of this section for exceptions available for certain events that would otherwise constitute triggering events under this paragraph (j). See paragraph (o) of this section for certain events that terminate or reduce the amount of gain subject to a gain recognition agreement.

(1) ***Disposition of transferred stock or securities.*** A complete or partial disposition of the transferred stock or securities. See paragraph (q)(2)(ii) of this section for an illustration of the rule of this paragraph (j)(1).

(2) ***Disposition of substantially all of the assets of the transferred corporation*** —

(i) ***General rule.*** Except as provided in paragraph (j)(2)(ii) of this section, a disposition in one or more related transactions of substantially all of the assets of the transferred corporation (including stock or securities in a subsidiary corporation or a partnership interest). If the transferred corporation is domestic, see paragraph (o)(4) of this section.

(ii) ***Exceptions.*** For purposes of paragraph (j)(2)(i) of this section, the following dispositions shall be disregarded—

(A) Dispositions of property described in section 1221(a)(1) occurring in the ordinary course of business;

(B) An exchange of stock or securities described in section 354 that is pursuant to an asset reorganization; and

(C) An exchange of stock by a corporate distributee (as defined in section 334(b)(2)) pursuant to a complete liquidation to which section 332 applies.

(3) ***Disposition of certain partnership interests.*** If the initial transfer occurs by reason of the transfer of a partnership interest, a complete or partial disposition of such partnership interest. See section 367(a)(4) and § 1.367(a)-1(c)(3)(ii).

(4) ***Disposition of stock of the transferee foreign corporation.*** A complete or partial disposition of the stock of the transferee foreign corporation received by the U.S. transferor in the initial transfer. For purposes of this section, an individual U.S. transferor that loses U.S. citizenship or ceases to be a lawful permanent resident of the United States (within the meaning of section 7701(b)(6)) shall be treated as disposing of all the stock of the transferee foreign corporation received in the initial transfer as of the date before the loss of such status.

(5) ***Deconsolidation.*** A U.S. transferor that is a member of a consolidated group ceases to be a member of the consolidated group, other than by reason of an acquisition of the assets of the U.S. transferor in a transaction to which section 381(a) applies, or by reason of the U.S. transferor joining another consolidated group as part of the same transaction.

(6) ***Consolidation.*** A U.S. transferor becomes a member of a consolidated group, including a U.S. transferor that is a member of a consolidated group and that becomes a member of another consolidated group.

(7) ***Death of an individual; trust or estate ceases to exist.*** A U.S. transferor that is an individual dies, or a U.S. transferor that is a trust or estate ceases to exist.

(8) ***Failure to comply.*** A U.S. transferor fails to comply in any material respect with any requirement of this section, or the terms of the gain recognition agreement as described in paragraph (c)(1) of this section. A failure to comply under this paragraph (j)(8) will extend the period of limitations on assessment of tax for the taxable year in which gain is required to be reported until the close of the third full taxable year ending after the date on which the U.S. transferor furnishes to the Director of Field Operations, Cross Border Activities Practice Area of Large Business & International (or any successor to the roles and responsibilities of such person) (Director) the information that should have been provided under this section. Except as provided in paragraph (p) of this section, for purposes of this paragraph (j)(8), a failure to comply includes—

(i) If there is a gain recognition event in a taxable year, a failure to report gain or pay any additional tax or interest due under the terms of the gain recognition agreement; and

(ii) A failure to file a gain recognition agreement document, other than an initial gain recognition agreement or a document required to be filed with the initial gain recognition agreement. For this purpose, there is a failure to file a gain recognition agreement document if—

(A) The gain recognition agreement document is not timely filed as required under this section, or

(B) The gain recognition agreement document is not completed in all material respects.

(9) ***Gain recognition agreement filed in connection with indirect stock transfers and certain triangular asset reorganizations.*** With respect to a gain recognition agreement entered into in connection with an indirect stock transfer (as defined in § 1.367(a)-3(d)), or a triangular asset reorganization described in § 1.367(a)-3(e)(6)(iv), an indirect disposition of the transferred stock or securities. For example, in the case of an indirect stock transfer described in § 1.367(a)-3(d)(1)(iii)(A), a complete or partial disposition of the stock of the acquiring corporation.

(10) ***Gain recognition agreement filed pursuant to paragraph (k)(14) of this section.*** In the case of a gain recognition agreement entered into pursuant to paragraph (k)(14) of this section, in addition to any disposition or other event described in paragraphs (j)(1) through (9) of this section,—

(i) Any disposition or other event identified as a triggering event in a new gain recognition agreement as required under paragraph (k)(14)(iii) of this section; and

(ii) Any disposition or other event that is inconsistent with the principles of paragraph (k) of this section including, for example, an indirect disposition of the transferred stock or securities.

(k) ***Triggering event exceptions.*** Notwithstanding paragraph (j) of this section, a disposition or other event described in paragraphs (k)(1) through (14) of this section shall not constitute a triggering event. This paragraph (k) generally provides exceptions for certain dispositions that constitute nonrecognition transactions but only if, immediately after the disposition, a U.S. transferor retains, as applicable, a direct or indirect interest in the transferred stock or securities, or in the assets of the transferred corporation, and a new gain recognition agreement is entered into with respect to the initial transfer in accordance with this paragraph (k). Notwithstanding the application of this paragraph (k), if a gain recognition event described under paragraphs (m) and (n) of this section occurs during the GRA term the U.S. transferor may be required to recognize gain under the gain recognition agreement in accordance with paragraph (c)(1)(i) of this section. See paragraph (o) of this section which provides that, notwithstanding paragraph (j) of this section, certain dispositions or other events shall instead terminate or reduce the amount of gain subject to a gain recognition agreement.

(1) ***Transfers of stock of the transferee foreign corporation to a corporation or partnership.*** A disposition of stock of the transferee foreign corporation received in the initial transfer pursuant to an exchange to which section 351, 354 (but only in a reorganization described in section 368(a)(1)(B) that is not a triangular reorganization), 361 (but only in a divisive reorganization to which section 355 applies), or 721 applies, shall not constitute a triggering event if a new gain recognition agreement is entered into in accordance with paragraphs (k)(1)(i) through (iv) of this section, as applicable. In the case of an exchange to which section 354 applies that is pursuant to a triangular reorganization described in section 368(a)(1)(B), see paragraph (k)(14) of this section and paragraph (q)(2)(iv) of this section.

(i) In the case of an exchange to which section 351 or 354 applies in which stock of a foreign acquiring corporation is received, the U.S. transferor includes with the new gain recognition agreement a statement that a complete or partial disposition of the stock of the foreign acquiring corporation received in the exchange shall constitute a triggering event. The

principles of paragraph (o)(1)(i) or (ii), as appropriate, shall be applied to determine whether a subsequent complete or partial disposition of the stock of the foreign acquiring corporation received in the exchange shall instead terminate or reduce the amount of the new gain recognition agreement.

(ii) In the case of an exchange to which section 351 or 354 applies in which stock of a domestic acquiring corporation is received, the domestic acquiring corporation enters into the new gain recognition agreement, which must designate the domestic acquiring corporation as the U.S. transferor for purposes of this section. For an illustration of the rule provided by this paragraph (k)(1)(ii), see paragraph (q)(2)(iii) of this section.

(iii) In the case of a section 361 exchange that is pursuant to a divisive reorganization to which section 355 applies and in which stock of a domestic corporation (domestic controlled corporation) is received, the domestic controlled corporation enters into the new gain recognition agreement, which must designate the domestic controlled corporation as the U.S. transferor for purposes of this section. For an illustration of the rule provided by this paragraph (k)(1)(iii), see paragraph (q)(2)(xi) of this section.

(iv) In the case of an exchange to which section 721 applies, the U.S. transferor includes with the new gain recognition agreement a statement that a complete or partial disposition of the partnership interest received in the exchange shall constitute a triggering event for purposes of the new gain recognition agreement.

(2) ***Complete liquidation of U.S. transferor under sections 332 and 337.*** A distribution by the U.S. transferor of the stock of the transferee foreign corporation received in the initial transfer to which section 337 applies, that is pursuant to a complete liquidation under section 332, shall not constitute a triggering event if the corporate distributee (as defined in section 334(b)(2)) is a domestic corporation (domestic corporate distributee) and the domestic corporate distributee enters into a new gain recognition agreement. The new gain recognition agreement must designate the domestic corporate distributee as the U.S. transferor for purposes of this section.

(3) ***Transfers of transferred stock or securities to a corporation or partnership.*** A disposition of the transferred stock or securities pursuant to an exchange to which section 351, 354 (but only in a reorganization described in section 368(a)(1)(B)), or 721 applies, shall not constitute a triggering event if the U.S. transferor enters in to a new gain recognition agreement that provides that the dispositions described in paragraphs (k)(3)(i) and (ii) of this section shall constitute triggering events for purposes of the new gain recognition agreement.

(i) A complete or partial disposition of the stock, securities, or partnership interest (as applicable) received in exchange for the transferred stock or securities.

(ii) Any other event that is inconsistent with the principles of this paragraph (k), including the indirect disposition of the transferred stock or securities.

(4) ***Transfers of substantially all of the assets of the transferred corporation.*** A disposition of substantially all of the assets of the transferred corporation pursuant to an exchange to which section 351, 354 (but only in a reorganization described in section 368(a)(1)(B)), or 721 applies, shall not constitute a triggering event if the U.S. transferor enters into a new gain recognition agreement that provides that a complete or partial disposition of the stock, securities, or partnership interest (as applicable) received in exchange for the assets shall constitute a triggering event for purposes of the new gain recognition agreement.

(5) ***Recapitalizations and section 1036 exchanges.*** A complete or partial disposition of the transferred stock or securities, or of the stock of the transferee foreign corporation received in the initial transfer, pursuant to a reorganization described under section 368(a)(1)(E), or pursuant to a transaction to which section 1036 applies, shall not constitute a triggering event if the U.S. transferor enters into a new gain recognition agreement.

(6) ***Certain asset reorganizations*** —

(i) ***Stock of transferee foreign corporation.*** If stock of the transferee foreign corporation received in the initial transfer is transferred to a domestic acquiring corporation in a section 361 exchange that is pursuant to an asset reorganization, the exchanges made pursuant to the asset reorganization shall not constitute triggering events if the domestic acquiring corporation enters into a new gain recognition agreement that designates the domestic acquiring corporation as the U.S. transferor for purposes of this section. For an illustration of the rule provided by this paragraph (k)(6), see paragraph (q)(2)(v) of this section. If the acquiring corporation is foreign, see paragraph (k)(14) of this section and paragraph (q)(2)(vi) of this section.

(ii) ***Transferred stock or securities.*** If the transferred stock or securities are transferred to a foreign acquiring corporation in a section 361 exchange that is pursuant to an asset reorganization, the exchanges made pursuant to the asset reorganization shall not constitute triggering events if the U.S. transferor enters into a new gain recognition agreement that designates the foreign acquiring corporation as the transferee foreign corporation for purposes of this section. For an illustration of the rule provided by this paragraph, see paragraph (q)(2)(vii) of this section. If the transfer is to a domestic acquiring corporation, or is pursuant to a triangular asset reorganization, see paragraph (k)(14) or (o)(5) of this section.

(iii) ***Assets of transferred corporation.*** If substantially all of the assets of the transferred corporation are transferred to a foreign or domestic acquiring corporation in a section 361 exchange that is pursuant to an asset reorganization, the exchanges made pursuant to the asset reorganization shall not constitute triggering events if the U.S. transferor enters into a new gain recognition agreement that, unless the acquiring corporation is the transferee foreign corporation, designates the acquiring corporation as the transferred corporation for purposes of this section. Only the assets of the transferred corporation received by the acquiring corporation shall be treated as assets of the transferred corporation for purposes of this section (for example, only such assets will be taken into account for purposes of paragraph (j)(2) of this section). For an illustration of the rule provided by this paragraph, see paragraph (q)(2)(viii) of this section. If the transferred corporation is domestic, see section 367(a)(1) and (a)(5), and paragraph (o)(4) of this section. If the transfer is pursuant to a triangular asset reorganization, see paragraph (k)(14) of this section.

(7) ***Certain triangular reorganizations*** —

(i) ***Transferee foreign corporation.*** If substantially all of the assets of the transferee foreign corporation are transferred to a foreign acquiring corporation in a section 361 exchange that is pursuant to a triangular asset reorganization, the exchanges made pursuant to the reorganization shall not constitute triggering events if a new gain recognition agreement is entered into in accordance with paragraphs (k)(7)(i)(A) through (C) of this section. If the acquiring corporation is domestic, see paragraph (k)(14) of this section. For rules that apply to gain recognition agreements entered into as a result of an indirect stock transfer, see § 1.367(a)-3(d)(2)(iv) and paragraph (j)(9) of this section.

(A) If P is foreign, the new gain recognition agreement designates P as the transferee foreign corporation and includes a statement that the U.S. transferor agrees to treat a complete or partial disposition of the S stock held by P as a triggering event.

(B) Except as provided in paragraph (k)(7)(i)(C) of this section, if P is domestic, P enters into the new gain recognition agreement that designates P as the U.S. transferor and S as the transferee foreign corporation.

(C) If the triangular asset reorganization is described in section 368(a)(1)(A) by reason of section 368(a)(2)(E) and the transferee foreign corporation is the merged corporation, the U.S. transferor enters into the new gain recognition agreement and designates the surviving corporation as the transferee foreign corporation.

(ii) ***Transferred corporation.*** If substantially all of the assets of the transferred corporation are transferred in a section 361 exchange pursuant to a triangular asset reorganization, the exchanges made pursuant to the reorganization shall not constitute triggering events if the U.S. transferor enters into a new gain recognition agreement in accordance with paragraph (k)(7)(ii)(A) of this section and, as applicable, paragraph (k)(7)(ii)(B) or (C) of this section.

(A) The new gain recognition agreement includes a statement that the U.S. transferor agrees to treat a complete or partial disposition of the P stock received in the reorganization as a triggering event.

(B) If the triangular asset reorganization is described in section 368(a)(1)(C), or section 368(a)(1)(A) or (G) by reason of section 368(a)(2)(D), the new gain recognition agreement includes a statement that the U.S. transferor agrees to treat a complete or partial disposition of the S stock held by P as a triggering event.

(C) If the triangular asset reorganization is described in section 368(a)(1)(A) by reason of section 368(a)(2)(E) and the transferred corporation is the merged corporation, the new gain recognition agreement includes a statement that the U.S. transferor agrees to treat a complete or partial disposition of the stock of the surviving corporation as a triggering event.

(8) ***Complete liquidation of transferred corporation.*** A distribution of substantially all of the assets of the transferred corporation to which section 337 applies, and the related exchange of the transferred stock to which section 332 applies, shall not constitute triggering events, if the U.S. transferor enters into a new gain recognition agreement. If the transferred corporation is domestic, see § 1.367(e)-2 and paragraph (o)(4) of this section. See paragraph (q)(2)(ix) of this section for an illustration of the rules provided in this paragraph (k)(8).

(9) ***Death of U.S. transferor.*** The death of a U.S. transferor shall not constitute a triggering event if the person winding up the affairs of the U.S. transferor—

(i) Retains sufficient assets of the U.S. transferor to satisfy any possible Federal tax liability of the U.S. transferor under the gain recognition agreement for the duration of the extended period of limitations on assessments of tax on the gain realized but not recognized in the initial transfer;

(ii) Provides security as required under paragraph (h) of this section for any possible Federal tax liability of the U.S. transferor under the gain recognition agreement; or

(iii) Obtains a ruling from the Internal Revenue Service providing for one or more successors to the U.S. transferor under the gain recognition agreement.

(10) ***Deconsolidation.*** A deconsolidation of the U.S. transferor shall not constitute a triggering event if the U.S. transferor enters into a new gain recognition agreement.

(11) ***Consolidation.*** A consolidation of the U.S. transferor shall not constitute a triggering event if the U.S. transferor enters into a new gain recognition agreement. See paragraph (d)(3) of this section.

(12) ***Intercompany transactions*** —

(i) ***General rule.*** If, pursuant to an intercompany transaction, the U.S. transferor disposes of stock of the transferee foreign corporation received in the initial transfer, this paragraph (k)(12) applies to such disposition to the extent the intercompany transaction creates an intercompany item that is not taken into account in the taxable year during which the intercompany transaction occurs. To the extent this paragraph (k)(12) applies, the disposition shall not constitute a triggering event, and the U.S. transferor shall remain subject to the gain recognition agreement if the conditions of paragraphs (k)(12)(i)(A) and (B) of this section are satisfied. To the extent the intercompany transaction does not create an intercompany item see, for example, paragraph (k)(1) and paragraph (q)(2)(xx) of this section. See paragraph (o)(6) of this section for the effect on a gain recognition agreement when an intercompany item from an intercompany transaction to which this paragraph (k)(12)(i) applies is taken into account.

(A) At the time of the disposition, the basis of the stock of the transferee foreign corporation received in the initial transfer that is disposed of in the intercompany transaction is not greater than the sum of the amounts described in paragraphs (k)(12)(i)(A)(*1*) through (*3*) of this section. If only a portion of the stock of the transferee foreign corporation received in the initial transfer is disposed of, then the basis of such stock shall be compared with a proportionate amount (measured by value as determined at the time of the disposition) of the amounts described in paragraph (k)(12)(i)(A)(*1*) through (*3*) of this section. To satisfy the basis condition of this paragraph (k)(12)(i)(A), the U.S. transferor may reduce the basis of the stock of the transferee foreign corporation received in the initial transfer that is disposed of in the intercompany transaction in accordance with the principles of paragraph (o)(1)(iii) of this section.

(*1*) The aggregate basis of the transferred stock or securities at the time of the initial transfer;

(*2*) The amount of any increase to the basis of the transferred stock or securities by reason of gain recognized by the U.S. transferor on the initial transfer; and

(*3*) The amount of any increase to the basis of the stock disposed of by reason of an income inclusion by the U.S. transferor with respect to such stock (for example, pursuant to section 961(a)).

(B) The annual certification filed with respect to the existing gain recognition agreement for the taxable year during which the intercompany transaction occurs includes a complete description of the intercompany transaction and a schedule illustrating how the basis condition of paragraph (k)(12)(i)(A) of this section is satisfied.

(ii) ***Certain dispositions following intercompany transaction.*** A subsequent disposition of stock of the transferee foreign corporation that is transferred in an intercompany transaction to which the exception provided by paragraph (k)(12)(i) of this section applies shall not constitute a triggering event if—

(A) The stock is transferred to a member of the consolidated group that includes the U.S. transferor immediately after the disposition, and

(B) The annual certification filed with respect to the existing gain recognition agreement for the taxable year during which the subsequent disposition occurs includes a complete description of the disposition.

(13) ***Deemed asset sales pursuant to section 338(g) elections.*** A deemed sale of the assets of the transferred corporation or the transferee foreign corporation as a result of an election under section 338(g) shall not constitute a triggering event. This paragraph does not apply to the sale of the stock of the target corporation (within the meaning of section 338(d)(2)) with respect to which such election is made.

(14) ***Other dispositions or events.*** A disposition or other event that would constitute a triggering event, without regard to this paragraph (k)(14), shall not constitute a triggering event if the conditions of paragraph (k)(14)(i) through (iii) of this section, as applicable, are satisfied. See paragraphs (q)(2)(iv), (vi), (x), (xii), (xvii), (xxi), and (xxiii) of this section for illustrations of the rules provided by this paragraph (k)(14).

(i) The disposition qualifies as a nonrecognition transaction.

(ii) Immediately after the disposition or other event, a U.S. transferor retains a direct or indirect interest in the transferred stock or securities or, as applicable, in substantially all of the assets of the transferred corporation (for example, in a case where the transferred corporation has been liquidated pursuant to section 332). If, as a result of the disposition or other event, a foreign corporation acquires the transferred stock or securities or, as applicable, substantially all the assets of the transferred corporation, the condition of this paragraph (k)(14)(ii) is satisfied only if the U.S. transferor owns at least five percent (applying the attribution rules of section 318, as modified by section 958(b) but without applying section 318(a)(3)(A), (B), and (C) so as to consider the U.S. transferor as owning stock which is owned by a person who is not a United States person) of the total voting power and the total value of the outstanding stock of such foreign corporation.

(iii) A new gain recognition agreement is entered into by the U.S. transferor described in paragraph (k)(14)(ii) of this section that includes—

(A) An explanation of why this paragraph (k)(14) applies to the disposition or other event; and

(B) A description of each subsequent disposition or other event that would constitute a triggering event, other than those described in paragraph (j) of this section, with respect to the new gain recognition agreement based on the principles of paragraphs (j) and (k) of this section including, for example, an indirect disposition of the transferred stock or securities.

(l) [Reserved]

(m) ***Receipt of boot in nonrecognition transactions*** —

(1) ***Dispositions of transferred stock or securities.*** Notwithstanding paragraph (k) of this section, if gain is required to be recognized (not including any gain that would be treated as a dividend under section 356(a)(2)) in connection with a disposition of the transferred stock or securities to which an exception under paragraph (k) of this section otherwise applies (triggering event exception), the U.S. transferor shall recognize gain under paragraph (c)(1)(i) of this section equal to the amount of gain

required to be recognized in connection with the disposition, but not in excess of the amount of gain subject to the gain recognition agreement. For purposes of this paragraph (m)(1), the amount of gain required to be recognized in connection with the disposition shall be determined before taking into account any increase to the basis of the transferred stock or securities under paragraph (c)(4)(ii) of this section. See paragraph (q)(2)(xiii) of this section, for an illustration of the rule provided by this paragraph (m)(1).

(2) ***Dispositions of assets of transferred corporation.*** If gain is required to be recognized (not including any gain that would be treated as a dividend under section 356(a)(2)) in connection with a disposition of substantially all of the assets of the transferred corporation to which a triggering event exception otherwise applies, the U.S. transferor shall recognize gain under paragraph (c)(1)(i) of this section equal to the amount of gain required to be recognized in connection with the disposition, but not in excess of the amount of gain subject to the gain recognition agreement.

(n) ***Special rules for distributions with respect to stock*** —

(1) ***Certain dividend equivalent redemptions treated as dispositions.*** A redemption of the transferred stock or of stock of the transferee foreign corporation received in the initial transfer that is treated by reason of section 302(d) as a distribution of property to which section 301 applies shall constitute a disposition for purposes of this section unless the U.S. transferor enters into a new gain recognition agreement that includes appropriate provisions to account for the redemption. For an illustration of the rule of this paragraph (n)(1), see paragraph (q)(2)(xiv) of this section.

(2) ***Gain recognized under section 301(c)(3).*** If gain is required to be recognized under section 301(c)(3) with respect to the transferred stock, the U.S. transferor shall recognize gain under the gain recognition agreement in accordance with paragraph (c)(1)(i) of this section in an amount equal to the gain required to be recognized under section 301(c)(3), but not in excess of the amount of gain subject to the gain recognition agreement. For this purpose, the amount of gain required to be recognized under section 301(c)(3) shall be determined before taking into account any increase in the basis of the transferred stock under paragraph (c)(4)(ii) of this section.

(o) ***Dispositions or other events that terminate or reduce the amount of gain subject to the gain recognition agreement.*** Notwithstanding paragraph (j) of this section, the following dispositions or other events shall not constitute triggering events but instead shall terminate or reduce the amount of gain subject to the gain recognition agreement.

(1) ***Taxable disposition of stock of the transferee foreign corporation*** —

(i) ***Complete disposition.*** Except as otherwise provided in this paragraph (o)(1)(i), if the U.S. transferor disposes of all the stock of the transferee foreign corporation received in the initial transfer in a transaction in which all gain realized is recognized and included in taxable income during the taxable year of the disposition, the gain recognition agreement shall terminate without further effect if, at the time of the disposition, the aggregate basis of such stock is not greater than the sum of the amounts described in paragraphs (o)(1)(i)(A) through (C) of this section. This paragraph shall not apply to a disposition of stock of the transferee foreign corporation pursuant to an intercompany transaction to which paragraph (k)(12) of this section applies. This paragraph shall also not apply to an individual U.S. transferor that loses U.S. citizenship or ceases to be a lawful permanent resident of the United States (within the meaning of section 7701(b)(6)).

(A) The aggregate basis of the transferred stock or securities at the time of the initial transfer;

(B) The amount of any increase to the basis of the transferred stock or securities by reason of gain recognized by the U.S. transferor on the initial transfer; and

(C) The amount of any increase to the basis of the stock disposed of by reason of an income inclusion by the U.S. transferor with respect to such stock (for example, pursuant to section 961(a)).

(ii) ***Partial dispositions.*** A partial disposition by the U.S. transferor of the stock of the transferee foreign corporation received in the initial transfer in a transaction otherwise described in paragraph (o)(1)(i) of this section shall reduce the amount of gain subject to the gain recognition agreement based on the relative fair market value of the stock disposed of (measured at the time of the disposition) compared to the fair market value of all of the stock of the transferee foreign corporation received in the initial transfer (measured at the time of the disposition). For determining whether the basis condition of paragraph (o)(1)(i) of this section is satisfied in the case of a partial disposition, the aggregate basis of the stock disposed of is compared to a proportionate amount (based on fair market value, as measured at the time of the partial disposition) of the amounts described in paragraphs (o)(1)(i)(A) through (C) of this section. For an illustration of the rules of this paragraph (o)(1)(ii), see paragraph (q)(2)(xv) of this section.

(iii) ***Reduction of stock basis.*** For purposes of satisfying the basis condition of paragraph (o)(1)(i) or (ii) of this section, the U.S. transferor may reduce the aggregate basis of the stock of the transferee foreign corporation received in the initial transfer, effective immediately before the disposition. For an illustration of the rules of this paragraph (o)(1)(iii), see paragraph (q)(2), *Example 16,* of this section. The U.S. transferor reduces the basis of the stock of the transferee foreign corporation by including a statement with the timely-filed return of the U.S. transferor for the taxable year in which the disposition occurs, entitled "Election to Reduce Stock Basis Under § 1.367(a)-8(o)(1)(iii)" and that includes—

(A) A description, including the date, of the disposition;

(B) A description of the stock of the transferee foreign corporation disposed of and the basis adjustments made under this paragraph (o)(1)(iii); and

(C) The fair market value of all the stock of the transferee foreign corporation held by the U.S. transferor at the time of the disposition.

(2) ***Gain recognized in connection with certain nonrecognition transactions.*** If the U.S. transferor recognizes gain in connection with a complete or partial disposition of stock of the transferee foreign corporation received in the initial transfer that is described in paragraph (k) of this section, and the basis condition of paragraph (o)(1)(i) or (ii) of this section, as applicable, is satisfied with the respect to such disposition, the amount of gain subject to the new gain recognition agreement filed under paragraph (k) of this section as a result of such disposition shall equal the amount of gain subject to the existing gain recognition agreement reduced by the amount of gain recognized by the U.S. transferor on the disposition. If the U.S. transferor recognizes gain in connection with a complete or partial disposition of the stock of the transferee foreign corporation received in the initial transfer that is described in paragraph (k) of this section, and the condition of paragraph (o)(1)(i) or (ii) of this section, as applicable, is satisfied with the respect to the disposition, but a new gain recognition agreement is not filed with respect to such disposition so that a triggering event

exception does not apply to the disposition, the amount of gain required to be recognized by the U.S. transferor under the existing gain recognition agreement shall be reduced by the amount of the gain recognized on the disposition.

(3) ***Gain recognized under section 301(c)(3).*** If the U.S. transferor recognizes gain under section 301(c)(3) with respect to the stock of the transferee foreign corporation received in the initial transfer, the amount of gain subject to the gain recognition agreement shall be reduced by the amount of such recognized gain.

(4) ***Dispositions of substantially all of the assets of a domestic transferred corporation.*** Except as otherwise provided in this paragraph (o)(4), the gain recognition agreement shall terminate without further effect if substantially all of the assets of the transferred corporation are disposed of in a transaction in which all gain realized is recognized and included in taxable income during the taxable year of the disposition, but only if, at the time of the initial transfer, the U.S. transferor owned stock in the transferred corporation satisfying the requirements of section 1504(a)(2) and the U.S. transferor and the transferred corporation were members of the same consolidated group. If the initial transfer was part of an indirect stock transfer, the gain recognition agreement shall terminate without further effect if substantially all of the assets of the transferred corporation (taking into account § 1.367(a)-3(d)(2)(v)) are disposed of in a transaction in which all gain realized is recognized and included in taxable income during the taxable year of the disposition, but only if at the time of the initial transfer the U.S. transferor owned stock in the transferred corporation satisfying the requirements of section 1504(a)(2) (for example, in the case of a reorganization described in section 368(a)(1)(A) by reason of section 368(a)(2)(E)) and the U.S. transferor and the transferred corporation were members of the same consolidated group.

(5) ***Certain distributions or transfers of transferred stock or securities to U.S. persons.*** To the extent a distribution or transfer of the transferred stock or securities satisfies the conditions of paragraphs (o)(5)(i) through (iii) of this section, the gain recognition agreement shall terminate without further effect, or the amount of gain subject to the gain recognition agreement shall be reduced, as appropriate.

(i) ***Distributions or transfers described in section 337, 355, or 361.*** The transferred stock or securities are distributed or transferred pursuant to a transaction described in paragraph (o)(5)(i)(A) through (D) of this section, as appropriate.

(A) A distribution described in section 337 that is pursuant to a complete liquidation described in section 332. See paragraph (q)(2)(xviii) of this section, for an illustration of the rule provided by this paragraph (o)(5)(i)(A).

(B) A distribution to which section 355 applies. See paragraph (q)(2)(xix) of this section, for an illustration of the rule provided by this paragraph (o)(5)(i)(B).

(C) A section 361 exchange that is pursuant to an asset reorganization. See paragraph (q)(2)(xxii) of this section, for an illustration of the rule provided by this paragraph (o)(5)(i)(C).

(D) A distribution to which section 361(c) applies that is pursuant to an asset reorganization. See paragraph (q)(2)(xxii) of this section, for an illustration of the rule provided by this paragraph (o)(5)(i)(D).

(ii) ***Qualified recipient.*** The recipient of the transferred stock or securities in the relevant transaction described in paragraph (o)(5)(i) of this section (qualified recipient) is—

(A) The U.S. transferor;

(B) A member of the consolidated group that includes the U.S. transferor immediately after the transaction; or

(C) An individual that is a United States person.

(iii) ***Basis requirement*** —

(A) ***General rule.*** Immediately after the relevant transaction described in paragraph (o)(5)(i) of this section, the aggregate basis of the transferred stock or securities received by the qualified recipient is not greater than the aggregate basis of such stock or securities at the time of the initial transfer (as adjusted for gain recognized by the U.S. transferor on the initial transfer attributable to such stock or securities). For this purpose, the basis of the transferred stock in the hands of the qualified recipient shall be determined without regard to any basis attributable to income inclusions with respect to the stock (for example, under section 961(a)). In the case of a distribution to which section 355 applies, any adjustments to basis under § 1.367(b)-5(c) shall be made before determining whether the basis condition of this paragraph is satisfied.

(B) ***Election to reduce basis in transferred stock or securities.*** If the basis condition of paragraph (o)(5)(iii)(A) of this section is not satisfied, each qualified recipient may reduce the basis of the transferred stock or securities received in the transaction to the extent necessary to satisfy the basis condition. A qualified recipient reduces the basis of the transferred stock or securities by including a statement with its timely-filed return for the taxable year during which the distribution or transfer occurs entitled "Election to Reduce Stock Basis Under § 1.367(a)-8(o)(5)(iii)(B)" and that includes—

(*1*) A complete description and the date of the distribution or transfer;

(*2*) The fair market value of the transferred stock or securities received by the qualified recipient in the transaction; and

(*3*) The basis of the transferred stock or securities received by the qualified recipient immediately before and after the basis reduction.

(6) ***Dispositions or other event following certain intercompany transactions.*** If, subsequent to an intercompany transaction to which paragraph (k)(12) of this section applies, a disposition or other event occurs that requires the U.S. transferor to take into account the intercompany item related to the intercompany transaction (under the provisions of § 1.1502-13), the gain recognition agreement shall terminate without further effect or the amount of gain subject to the gain recognition agreement shall be reduced based on the principles of paragraph (o)(1)(i) or (ii) of this section, as appropriate. For an illustration of the rules of this paragraph (o)(6), see paragraph (q)(2)(xx) of this section.

(7) ***Expropriations under foreign law.*** The amount of gain subject to the gain recognition agreement shall be reduced to the extent the stock or securities of the transferee foreign corporation received in the initial transfer, the transferred stock or securities, or substantially all the assets of the transferred corporation, are expropriated, seized, or subjected to a similar taking of such property by the government of a foreign country, any political subdivision thereof, or any agency or instrumentality of the foregoing. Principles similar to those of paragraph (o)(1)(i) or (o)(1)(ii) of this paragraph, as relevant, shall be applied to determine the amount of the reduction.

(p) ***Relief for certain failures to file or failures to comply that are not willful*** —

(1) ***In general.*** This paragraph (p) provides relief if there is a failure to file an initial gain recognition agreement as required under paragraph (d)(1) of this section (failure to file), or a failure to comply that is a triggering event under paragraph (j)(8) of this section (failure to comply). A failure to file or failure to comply will be deemed not to have occurred for purposes of paragraph (d)(1) of this section or paragraph (j)(8) of this section if the U.S. transferor demonstrates that the failure was not willful using the procedure set forth in this paragraph (p). For this purpose, willful is to be interpreted consistent with the meaning of that term in the context of other civil penalties, which would include a failure due to gross negligence, reckless disregard, or willful neglect. Whether a failure to file or failure to comply was willful will be determined by the Director (as described in paragraph (j)(8) of this section) based on all the facts and circumstances. The U.S. transferor must submit a request for relief and an explanation as provided in paragraph (p)(2)(i) of this section. Although a U.S. transferor whose failure to file or failure to comply is determined not to be willful will not be subject to gain recognition under paragraph (b), (c), or (e) of § 1.367(a)-3 or paragraph (c)(1) of this section, as applicable, the U.S. transferor will be subject to a penalty under section 6038B if the U.S. transferor fails to satisfy the reporting requirements under that section and does not demonstrate that the failure was due to reasonable cause and not willful neglect. See § 1.6038B-1(b)(2) and (f). The determination of whether the failure to file or failure to comply was willful under this section has no effect on any request for relief made under § 1.6038B-1(f).

(2) ***Procedures for establishing that a failure to file or failure to comply was not willful*** —

(i) ***Time and manner of submission.*** A U.S. transferor's statement that a failure to file or failure to comply was not willful will be considered only if, promptly after the U.S. transferor becomes aware of the failure, an amended return is filed for the taxable year to which the failure relates that includes the information that should have been included with the original return for such taxable year or that otherwise complies with the rules of this section, and that includes a written statement explaining the reasons for the failure to file or failure to comply. The U.S. transferor must file, with the amended return, a Form 8838 extending the period of limitations on assessment of tax with respect to the gain realized but not recognized on the initial transfer to the later of: The close of the eighth full taxable year following the taxable year during which the initial transfer occurred (date one); or the close of the third full taxable year ending after the date on which the required information is provided to the Director (date two). However, the U.S. transferor is not required to file a Form 8838 with the amended return if both date one is later than date two and a Form 8838 was previously filed extending the period of limitations on assessment of tax with respect to the gain realized but not recognized on the initial transfer to date one. If a Form 8838 is not required to be filed with the amended return pursuant to the previous sentence, a copy of the previously filed Form 8838 must be filed with the amended return. The amended return and either a Form 8838 or a copy of the previously filed Form 8838, as the case may be, must be filed with the Internal Revenue Service at the location where the U.S. transferor filed its original return. The U.S. transferor may submit a request for relief from the penalty under section 6038B as part of the same submission. See § 1.6038B-1(f).

(ii) ***Notice requirement.*** In addition to the requirements of paragraph (p)(2)(i) of this section, the U.S. transferor must comply with the notice requirements of this paragraph (p)(2)(ii). If any taxable year of the U.S. transferor is under examination when the amended return is filed, a copy of the amended return and any information required to be included with such return must be delivered to the Internal Revenue Service personnel conducting the examination. If no

taxable year of the U.S. transferor is under examination when the amended return is filed, a copy of the amended return and any information required to be included with such return must be delivered to the Director.

(3) ***Examples.*** The following examples illustrate the application of this paragraph (p). All of the examples are based solely on the following facts and any additional facts stated in the particular example. DC, a domestic corporation, wholly owns FS and FA, each a foreign corporation. In Year 1, pursuant to a transaction qualifying both as an exchange under section 351 and a reorganization under section 368(a)(1)(B), DC transferred all the FS stock to FA solely in exchange for voting stock of FA (FS Transfer). The fair market value of the FS stock exceeded DC's tax basis in the stock at the time of the FS transfer. Absent the application of section 367 to the transaction, DC's exchange of the FS stock for the stock of FA qualified as a tax-free exchange under sections 351(a) and section 354. Immediately after the transaction, both FA and FS were controlled foreign corporations (as defined in section 957). Furthermore, DC was a section 1248 shareholder (as defined in § 1.367(b)-2(b)) with respect to FA and FS, and a 5-percent shareholder with respect to FA for purposes of § 1.367(a)-3(b)(ii). Thus, DC was required to recognize gain under section 367(a)(1) by reason of the FS Transfer unless DC timely filed an initial gain recognition agreement (GRA) as required by paragraph (d)(1) of this section and complies in all material respects with the requirements of this section throughout the term of the GRA. The application of section 6038B is not addressed in these examples. DC may be subject to a penalty under section 6038B even if DC demonstrates under this section that a failure to file or failure to comply was not willful. See § 1.6038B-1(b) and (f) for the application of section 6038B.

(i) ***Example 1. Taxpayer failed to file a GRA due to accidental oversight*** —

(A) ***Facts.*** DC filed its tax return for the year of the FS Transfer, reporting no gain with respect to the exchange of the FS stock. DC, through its tax department, was aware of the requirement to file a GRA in order for DC to avoid recognizing gain with respect to the FS Transfer under section 367(a)(1), and had the experience and competency to properly prepare the GRA. DC had filed many GRAs over the years and had never failed to timely file a GRA. However, although DC prepared the GRA with respect to the FS Transfer, it was not filed with DC's tax return for the year of the FS Transfer due to an accidental oversight. During the preparation of the following year's tax return, DC discovered that the GRA was not filed. DC filed an amended return to file the GRA and complied with the procedures set forth under paragraph (p)(2) of this section promptly after it became aware of the failure.

(B) ***Result.*** Because DC failed to file a GRA with its timely filed tax return for the year of the FS Transfer, there is a failure to timely file the GRA as required by paragraph (d)(1) of this section. However, based on the facts of in paragraph (p)(3)(i)(A) of this section (the facts of this *Example 1*), including that the failure to timely file the GRA was an isolated and accidental oversight, the failure to timely file is not a willful failure to file. Accordingly, the timely filed requirement of paragraph (d)(1) of this section is considered to be satisfied, and DC is not required to recognize the gain realized on the FS Transfer under section 367(a)(1).

(ii) ***Example 2. Taxpayer's course of conduct is taken into account in determination*** —

(A) ***Facts.*** DC filed its tax return for the year of the FS Transfer, reporting no gain with respect to the exchange of the FS stock, but failed to file a GRA. DC, through its tax department, was aware of the requirement to file a GRA in order for DC to avoid recognizing gain with respect to the FS Transfer under section 367(a)(1). DC had not consistently and in a timely

manner filed GRAs in the past, and also had an established history of failing to timely file other tax and information returns for which it was subject to penalties. In a year subsequent to Year 1, DC transferred stock of another foreign subsidiary with respect to which DC had a built-in gain (FS2) to FA in a transaction that qualified as both a reorganization under section 368(a)(1)(B) and an exchange described under section 351 (FS2 Transfer). DC was required to recognize gain on the FS2 Transfer under section 367(a)(1) unless DC timely filed a GRA as required by paragraph (d)(1) of this section and complied with the requirements of this section during the term of the GRA. DC reported no gain on the FS2 Transfer on its tax return, but failed to file a GRA. At the time of the FS2 Transfer, DC was already aware of its failure to file the GRA required for the prior FS Transfer, but had not implemented any safeguards to ensure that it would timely file GRAs for future transactions. DC filed an amended return to file the GRA for the FS2 Transfer and complied with the procedures set forth under paragraph (p)(2) of this section promptly after it became aware of the failure. DC asserts that its failure to timely file a GRA with respect to the FS2 Transfer was due to an isolated oversight similar to the one that occurred with respect to the FS Transfer. At issue is DC's failure to timely file a GRA for the FS2 Transfer.

(B) ***Result.*** Because DC failed to file a GRA with its timely filed tax return for the year of the FS2 Transfer, there is a failure to timely file the GRA as required by paragraph (d)(1) of this section. DC's course of conduct is taken into account in determining whether its failure to timely file a GRA for the FS2 Transfer was willful. Based on the facts of in paragraph (p)(3)(ii)(A) of this section (the facts of this *Example 2*), including DC's history of failing to file required tax and information returns in general and GRAs in particular, and its failure to implement safeguards to ensure that it would timely file GRAs, the failure to timely file a GRA with respect to the FS2 Transfer rises to the level of a willful failure to timely file. Accordingly, DC is ineligible for relief under paragraph (p) of this section, the GRA is not considered timely filed for purposes of paragraph (d)(1) of this section, and DC must recognize the full amount of the gain realized on the FS2 Transfer.

(iii) ***Example 3. GRA not completed in all material respects*** —

(A) ***Facts.*** DC timely filed its tax return for the year of the FS Transfer, reporting no gain with respect to the exchange of the FS stock. DC was aware of the requirement to file a GRA to avoid recognizing gain under section 367(a)(1), including the requirement to provide the basis and fair market value of the transferred stock. However, DC filed a purported GRA that did not contain the fair market value of the FS stock. Instead, the GRA was filed with the statement that the fair market value information was “available upon request.” Other than the omission of the fair market value of the FS stock, the GRA contained all other information required by this section.

(B) ***Result.*** Because DC omitted the fair market value of the FS stock from the GRA, the GRA was not completed in all material respects. Accordingly, there is a failure to timely file the GRA. Furthermore, because DC knowingly omitted such information, DC's omission is a willful failure to timely file a GRA. Accordingly, DC is ineligible for relief under paragraph (p) of this section, the GRA is not considered timely filed for purposes of paragraph (d)(1) of this section, and DC must recognize the full amount of the gain realized on the FS Transfer. The same result would arise if DC had included the fair market value of the FS stock, but knowingly omitted its tax basis from the GRA.

(iv) *Example 4. Taxpayer knew of GRA filing requirement, but intentionally chose not to file* —

(A) ***Facts.*** When DC filed its tax return for the tax year of the FS Transfer, it was aware of the requirement to file a GRA to avoid recognizing gain under section 367(a)(1). However, because DC anticipated selling Business A in the following tax year, which was expected to produce a capital loss that could be carried back to fully offset the gain recognized on the FS Transfer, DC intentionally chose not to file a GRA. DC recognized the gain from the FS Transfer under section 367(a)(1) and reported the gain on its timely filed tax return. At the end of the following year, a large class action lawsuit was filed against Business A and, consequently, DC was unable to sell the business. As a result, DC did not realize the expected capital loss, and it was not able to offset the gain from the FS Transfer. DC now seeks to file a GRA for the FS Transfer.

(B) ***Result.*** Because DC failed to file a GRA with its timely filed tax return for the year of the FS Transfer, there is a failure to timely file the GRA as required by paragraph (d)(1) of this section. Furthermore, because DC intentionally chose not to file a GRA for the FS Transfer, its actions constitute a willful failure to timely file a GRA. Accordingly, DC is ineligible for relief under paragraph (p) of this section, the GRA is not considered timely filed for purposes of paragraph (d)(1) of this section, and DC must recognize the full amount of the gain realized on the FS Transfer in Year 1.

(q) *Examples* —

(1) ***Presumed facts and references.*** For purposes of the examples in paragraph (q)(2) of this section, and except where otherwise indicated, the following is presumed.

(i) UST, USP, and DC are domestic corporations that each use a calendar taxable year.

(ii) USP wholly owns UST and is the common parent of the consolidated group of which UST is a member.

(iii) TFC, TFD, F1, and FA are foreign corporations.

(iv) UST wholly owns TFD.

(v) In a section 351 exchange, UST transfers all of the stock of TFD (TFD stock) to TFC in exchange solely for stock of TFC (the initial transfer).

(vi) Pursuant to § 1.367(a)-3(b)(1)(ii) and this section, UST enters into a gain recognition agreement in connection with the initial transfer and makes the election described under paragraph (c)(2)(vi) of this section with respect to the gain recognition agreement.

(vii) As applicable, the section 1248 amount (within the meaning of § 1.367(b)-2(c)) or all earnings and profits amount (within the meaning of § 1.367(b)-2(d)) attributable to the stock of a foreign corporation is zero.

(viii) All transactions are respected under general principles of tax law, including the step transaction doctrine.

(ix) References to a U.S. transferor entering into a gain recognition agreement mean, where applicable, that the common parent of the consolidated group of which the U.S. transferor is a member has filed the gain recognition agreement on behalf of the U.S. transferor in accordance with paragraph (d)(3) of this section.

(x) Taxable years during the GRA term are referred to, for example, as year 1 and year 2.

(2) ***Examples.*** The following examples illustrate the application of the rules of this section.

(i) ***Example 1. Basis adjustments from gain recognized under the gain recognition agreement*** —

(A) ***Facts.*** TFC wholly owns F1. In year 3, pursuant to a section 351 exchange, TFC transfers all of the TFD stock to F1 in exchange solely for voting stock of F1. UST enters into a new gain recognition agreement with respect to the initial transfer under paragraph (k)(3) of this section, and therefore the transfer by TFC of the TFD stock to F1 is not a triggering event. Under paragraph (c)(5)(i) of this section, the existing gain recognition agreement terminates without further effect. In year 4, in an exchange to which section 721 applies, UST contributes the TFC stock received in the initial transfer to PRS, a domestic partnership, in exchange for a partnership interest. UST enters into a new gain recognition agreement with respect to the initial transfer under paragraph (k)(1) of this section, and therefore the transfer by UST of the TFC stock to PRS is not a triggering event. Under paragraph (c)(5)(i) of this section, the new gain recognition agreement filed by UST in year 3 terminates without further effect. In year 5, TFD disposes of substantially all of its assets in a transaction that constitutes a triggering event under paragraph (j)(2)(i) of this section. Under paragraph (c)(1)(i) of this section, UST recognizes the gain realized but not recognized on the initial transfer by reason of entering into the gain recognition agreement.

(B) ***Result.*** Under paragraph (c)(4) of this section, the basis of the PRS interest held by UST, the TFC stock held by PRS that was received from UST in year 4, the F1 stock held by TFC that was received in exchange for the TFD stock in year 3, and the TFD stock held by F1 that was received from TFC in year 3 is increased by the amount of gain recognized by UST (but not by the additional tax or interest paid as result of such gain) with respect to the initial transfer under the gain recognition agreement. However, the basis of the assets of TFD (including the assets disposed of in year 5) is not increased as a result of the gain recognized by UST.

(ii) ***Example 2. Impact of gain recognition event on computation of income*** —

(A) ***Facts.*** At the time of the initial transfer, the TFD stock has a $50x basis, a $100x fair market value, and a $30x section 1248 amount. The amount of gain subject to the gain recognition agreement is $50x. UST did not make an election under paragraph (c)(2)(vi) of this section with respect to the gain recognition agreement. In year 3, TFC disposes of the TFD stock received in the initial transfer in exchange for $120x cash.

(B) ***Result*** —

(*1*) ***Gain recognition without an election.*** The disposition by TFC of the TFD stock in year 3 is a triggering event under paragraph (j)(1) of this section. As a result, under paragraph (c)(1)(i) of this section, UST must recognize and include in income $50x gain under the gain recognition agreement. Under paragraph (c)(1)(iii)(A) of this section, UST must report the $50x gain on an amended return filed for the taxable year of the initial transfer. Under paragraph (c)(1)(v) of this section, UST must pay applicable interest on any additional tax due with respect to the $50x gain recognized. Under section 1248(a), $30x of the gain recognized by UST under the gain recognition agreement is recharacterized as a dividend. Under paragraph (c)(4) of this section, as of the date of the initial transfer, the basis of the TFC stock

received by UST in the initial transfer and the TFD stock received by TFC in the initial transfer, respectively, is increased by $50x. After taking into account the increase to the basis of the TFD stock, TFC recognizes $20x gain on the disposition of the TFD stock in year 3.

(*2*) ***Gain recognition with an election.*** If UST made an election under paragraph (c)(2)(vi) of this section with the gain recognition agreement filed for the initial transfer, the result would be the same as in paragraph (q)(2)(ii)(B)(*1*) of this section (paragraph (*1*) in the results in this *Example 2*), except that UST must include in income the $50x gain recognized under the gain recognition agreement on its tax return filed for year 3. Any additional tax due with respect to the $50x gain and applicable interest on the additional tax due must be included with such return. The amount, if any, of the $50x gain recognized by UST under the gain recognition agreement that is characterized as a dividend under section 1248(a) is determined in year 3.

(iii) ***Example 3. Transfer of stock of the transferee foreign corporation to a domestic corporation in a section 351 exchange*** —

(A) ***Facts.*** UST wholly owns DC. In year 3, pursuant to a section 351 exchange, UST transfers all of the TFC stock received in the initial transfer to DC in an exchange solely for voting stock of DC.

(B) ***Result.*** The year 3 transfer of the TFC stock by UST to DC constitutes a triggering event under paragraph (j)(4) of this section. However, the transfer shall not constitute a triggering event pursuant to paragraph (k)(1)(ii) of this section if DC enters into a new gain recognition agreement with respect to the initial transfer that designates DC as the U.S. transferor for purposes of this section. Pursuant to paragraphs (c)(4)(i) and (ii) of this section, if DC is required to recognize gain under the new gain recognition agreement, the basis of the stock of TFC and TFD would be increased by the amount of gain recognized. However, pursuant to paragraph (c)(4)(iii) of this section, no adjustment would be made to the basis of the DC voting stock received by UST in year 3 as a result of such gain recognition. Alternatively, if the conditions for the application of paragraph (k)(14) of this section are satisfied UST could instead enter into the new gain recognition agreement with respect to the initial transfer.

(iv) ***Example 4. Transfer of stock of the transferee foreign corporation in a triangular section 368(a)(1)(B) reorganization*** —

(A) ***Facts.*** DC wholly owns FA. In year 3, pursuant to a triangular reorganization described in section 368(a)(1)(B), UST transfers all of the TFC stock received in the initial transfer to FA in exchange solely for 20% of the outstanding voting stock of DC. At the time of the reorganization, the TFC stock has a basis in excess of fair market value.

(B) ***Result.***

(*1*) The transfer by UST of the TFC stock to FA is an indirect stock transfer under § 1.367(a)-3(d)(1)(iii)(B). Accordingly, to preserve nonrecognition treatment, UST must enter into a separate gain recognition agreement under this section with respect to such transfer.

(2) With respect to the gain recognition agreement filed for the initial transfer of the TFD stock, the transfer by UST of the TFC stock to FA is a triggering event under paragraph (j)(4) of this section. However, the transfer shall not constitute a triggering event if the conditions of the exception provided by paragraph (k)(14) of this section are satisfied.

(*i*) The condition of paragraph (k)(14)(i) of this section is satisfied because the transfer qualifies as a nonrecognition transaction (assuming UST enters into a gain recognition agreement as described in paragraph (q)(2)(iv)(B)(*1*) of this section (paragraph (*1*) in the results in this *Example 4*).

(*ii*) The condition of paragraph (k)(14)(ii) of this section is satisfied because immediately after the transfer DC, a domestic corporation that is eligible to be a U.S. transferor, owns at least 5% (determined as provided in paragraph (k)(14)(ii) of this section) of the total voting power and total fair market value of the outstanding stock of FA. As a result, DC is treated as retaining an indirect interest in the TFD stock immediately following the transfer.

(*iii*) The condition of paragraph (k)(14)(iii) of this section is satisfied if DC enters into a new gain recognition agreement with respect to the initial transfer of the TFD stock that, based on the principles of paragraph (j) of this section, describes the subsequent dispositions or other events that would constitute triggering events for purposes of the new gain recognition agreement (other than the dispositions and other events described in paragraph (j) of this section). For example, a complete or partial disposition of the stock of FA would constitute a triggering event for purposes of the new gain recognition agreement.

(v) ***Example 5. Transfer of stock of the transferee foreign corporation to a domestic corporation pursuant to an asset reorganization*** —

(A) ***Facts.*** At the time of the initial transfer the TFD stock has a $50x basis and a $100x fair market value. Therefore, the amount of gain subject to the gain recognition agreement is $50x. In year 3, pursuant to an asset reorganization described in section 368(a)(1)(A), UST transfers its assets to DC in exchange solely for 20% of the outstanding stock of DC. UST distributes the stock of DC to USP pursuant to the plan of reorganization.

(B) ***Result.*** The transfer by UST of the TFC stock to DC constitutes a triggering event under paragraph (j)(4) of this section. However, pursuant to paragraph (k)(6)(i) of this section, if DC enters into a new gain recognition agreement with respect to the initial transfer that designates DC as the U.S. transferor, the transfer shall not constitute a triggering event.

(vi) ***Example 6. Transfer of stock of the transferee foreign corporation to a foreign corporation pursuant to an asset reorganization*** —

(A) ***Facts.*** The facts are the same as in Example 5, except the acquiring corporation in the asset reorganization is FA, and, at the time of the asset reorganization, the TFC stock transferred by UST to FA has a $50x basis and a $150x fair market value. All of the conditions under section 367(a)(5) and the regulations under that section are satisfied, and no adjustment is required to the basis of the FA stock received by USP in the transaction.

(B) ***Result.***

(*1*) The transfer by UST of the TFC stock to FA is described in section 361(a) and is therefore subject to section 367(a)(5). In general, UST cannot file a gain recognition agreement with respect to such transfer, and the transfer therefore is subject to the general rule of section 367(a)(1). However, if the conditions of § 1.367(a)-3(e)(1)(i) through (iv) are satisfied, USP can enter into a gain recognition agreement with respect to the transfer to avoid the recognition of gain by UST on the transfer under section 367(a)(1). If the exception provided by paragraph (k)(14) of this section applies so that the transfer by UST of the TFC stock to FA is not a triggering event with respect to the gain recognition agreement filed for the initial transfer (discussed in paragraph (q)(2)(vi)(B)(*2*) of this section (paragraph (*2*) in the results in this *Example 6*), the amount of gain subject to the gain recognition agreement (if entered into) with respect to the transfer by UST of the TFC stock to FA in the asset reorganization is $100x.

(*2*) Under paragraph (j)(4) of this section, the transfer of the TFC stock by UST to FA is a triggering event with respect to the gain recognition agreement for the initial transfer. The exception provided by paragraph (k)(6)(i) of this section does not apply to such transfer because FA, the acquiring corporation in the asset reorganization, is foreign. However, the transfer shall not constitute a triggering event if the conditions of the exception provided by paragraph (k)(14) of this section are satisfied.

(*i*) The condition of paragraph (k)(14)(i) of this section is satisfied because the transfer of the TFC stock to FA qualifies as a nonrecognition transaction (assuming USP enters into a gain recognition agreement with respect to such transfer).

(*ii*) The condition of paragraph (k)(14)(ii) of this section is satisfied because immediately after the transfer USP, a domestic corporation that is eligible to be a U.S. transferor, owns at least 5% (determined as provided in paragraph (k)(14)(ii) of this section) of the total voting power and total fair market value of the outstanding stock of FA. As a result, USP is treated as retaining an indirect interest in the TFD stock immediately following the transfer.

(*iii*) The condition of paragraph (k)(14)(iii) of this section is satisfied if USP enters into a new gain recognition agreement with respect to the initial transfer of the TFD stock that, based on the principles of paragraph (j) of this section, describes the subsequent dispositions or other events that would constitute triggering events for purposes of the new gain recognition agreement, other than those already provided in paragraph (j) of this section. For example, a disposition of the stock of FA would constitute such a triggering event for purposes of the new gain recognition agreement.

(C) ***Alternate facts.*** Assume the same facts as in paragraph (q)(2)(vi)(A) of this section (the facts in this *Example 6*), including that paragraph (k)(14) of this section applies to the year 3 reorganization so that USP enters into a new gain recognition agreement with respect to the initial transfer of the TFD stock that occurred in year 1 (GRA 1), and that under § 1.367(a)-3(e) USP enters into a separate gain recognition agreement with respect to the initial transfer of the TFC stock by UST to FA pursuant to the year 3 asset reorganization (GRA 2). Assume further that in year 4 TFC disposes of 10% of the TFD stock pursuant to

a transaction that constitutes a triggering event with respect to GRA 1. The disposition of the TFD stock is not a triggering event with respect to GRA 2 because the TFD stock disposed of does not constitute substantially all the assets of TFC. Under paragraphs (j)(1) and (c)(1)(i) of this section, USP must recognize $5x gain (10% of $50x) under GRA 1. Under paragraph (c)(4)(i) and (ii) of this section, as of the date of the initial transfer (with respect to which GRA 1 was filed), the basis of the TFC stock and TFD stock, respectively, is increased by $5x. Under paragraph (c)(1)(i) of this section, the amount of gain subject to GRA 1 is reduced from $50x to $45x. Similarly, because the transferred stock for purposes of GRA 2 is the TFC stock, the amount of gain subject to GRA 2 is reduced from $100x to $95x to reflect the increase to the basis of the TFC stock.

(vii) ***Example 7. Transfer of transferred stock to a foreign corporation pursuant to an asset reorganization*** —

(A) ***Facts.*** UST wholly owns FA. In year 4, pursuant to a reorganization described in section 368(a)(1)(D), TFC transfers all of the TFD stock to FA in exchange solely for stock of FA. TFC distributes the FA stock to UST pursuant to the plan of reorganization.

(B) ***Analysis.*** In general, the year 4 transfer by TFC of the TFD stock to FA and the exchange by UST of the TFC stock for FA stock constitute triggering events under paragraphs (j)(1) and (4) of this section, respectively. However, under paragraph (k)(6)(ii) of this section, the transfers shall not constitute triggering events if UST enters into a new gain recognition agreement with respect to the initial transfer that designates FA as the transferee foreign corporation.

(viii) ***Example 8. Transfer of substantially all the assets of the transferred corporation pursuant to an asset reorganization*** —

(A) ***Facts.*** In year 4, pursuant to an asset reorganization described in section 368(a)(1)(C), TFD transfers all of its assets to FA in exchange solely for voting stock of FA. TFD distributes the FA voting stock to TFC pursuant to the plan of reorganization.

(B) ***Analysis.*** The year 4 transfer by TFD of all its assets to FA and the exchange by TFC of its TFD stock for FA voting stock pursuant to the reorganization constitute triggering events under paragraphs (j)(2) and (j)(1) of this section, respectively. However, under paragraph (k)(6)(iii) of this section, the transfers shall not constitute triggering events if UST enters into a new gain recognition agreement with respect to the initial transfer that designates FA as the transferred corporation. In addition, under paragraph (k)(6)(iii) of this section only the assets of TFD acquired by FA in the asset reorganization shall be treated as assets of the transferred corporation for purposes of the new gain recognition agreement.

(ix) ***Example 9. Complete liquidation of transferred corporation into transferee foreign corporation*** —

(A) ***Facts.*** UST does not make an election under paragraph (c)(2)(vi) of this section in connection with the gain recognition agreement entered into with respect to the initial transfer. In year 3, TFD distributes all of its assets to TFC pursuant to a complete liquidation to which sections 332 and 337 apply. Under paragraph (k)(8) of this section, UST enters into a new gain recognition agreement with respect to the initial transfer such that the liquidation is not a triggering event. Under paragraph (c)(5)(i) of this section, the new gain recognition agreement is subject to the conditions and requirements of this section to the same extent as the existing gain recognition agreement, except that the

transferred stock is no longer subject to the gain recognition agreement because the transferred stock is cancelled by reason of the liquidation. In year 5 TFC disposes of substantially all of the assets received from TFD in the year 3 liquidation.

(B) ***Result.*** The year 5 disposition by TFC of substantially all of the assets received from TFD in the year 3 liquidation is a triggering event under paragraph (j)(2) of this section, and therefore UST must recognize the gain subject to the gain recognition agreement. UST must report the gain recognized on an amended return for the taxable year during which the initial transfer occurred. UST must also pay applicable interest on any additional tax due with respect to the gain recognized. Under paragraph (c)(4)(i) of this section, the basis of the TFC stock received by UST in the initial transfer is increased as of the date of the initial transfer by the amount of gain recognized under the gain recognition agreement. The basis of the assets of TFD, however, is not increased.

(x) ***Example 10. Transfer of transferred stock to foreign corporation in section 351 exchange, followed by a section 332 liquidation of the foreign corporation*** —

(A) ***Facts.*** In year 3, pursuant to a section 351 exchange, TFC transfers the TFD stock to F1, a newly formed corporation, in exchange solely for voting stock of F1. The transfer by TFC of the TFD stock to F1 is not a triggering event because UST complies with the conditions of paragraph (k)(3) of this section. In year 5, F1 distributes all of its assets to TFC in a complete liquidation to which sections 332 and 337 apply.

(B) ***Result.*** The distribution of the TFD stock by F1, and the exchange of F1 stock by TFC pursuant to the year 5 liquidation of F1 constitute triggering events under paragraphs (j)(1) and (k)(3)(i) of this section, respectively. However, if paragraph (k)(14) of this section applies, neither the distribution of the TFD stock by F1, nor the exchange by TFC of the F1 stock, shall constitute a triggering event.

(*1*) The condition of paragraph (k)(14)(i) of this section is satisfied because the distribution of the TFD stock, and the exchange of F1 stock, both qualify as nonrecognition transactions.

(*2*) The condition of paragraph (k)(14)(ii) of this section is satisfied because immediately after the distribution UST, a domestic corporation that is eligible to be a U.S. transferor, owns at least 5% (determined as provided in paragraph (k)(14)(ii) of this section) of the stock of TFC. As a result, UST is treated as retaining an indirect interest in the TFD stock following the complete liquidation of F1.

(*3*) The condition of paragraph (k)(14)(iii) of this section is satisfied if UST enters into a new gain recognition agreement. Because after the complete liquidation of F1, UST wholly owns TFC, which wholly owns TFD, as was the case immediately after the initial transfer, UST is not required to describe, with the new gain recognition agreement, other dispositions or events that would constitute triggering events based on the principles of paragraph (j) of this section, other than the dispositions or events described in paragraph (j) of this section.

(xi) ***Example 11. Disposition of stock of transferee foreign corporation pursuant to a divisive reorganization*** —

(A) ***Facts.*** In year 3, pursuant to a divisive reorganization described in section 368(a)(1)(D), UST transfers all of the TFC stock to DC, a newly-formed corporation, in exchange solely for stock of DC. UST then distributes all of the DC stock to USP in a transaction to which section 355 applies.

(B) ***Result.*** The transfer of the TFC stock by UST to DC constitutes a triggering event under paragraph (j)(4) of this section. However, under paragraph (k)(1)(iii) of this section, the transfer of the TFC stock shall not constitute a triggering event if DC enters into a new gain recognition agreement that designates DC as the U.S. transferor for purposes of this section.

(C) ***Alternate facts.*** The facts are the same as in paragraph (q)(2)(xi)(A) of this section (the facts in this *Example 11*), except that UST transfers only 90% of the TFC stock to DC. Paragraph (k)(1)(iii) of this section applies only with respect to the TFC stock transferred to DC. Thus, the conditions of paragraph (k)(1)(iii) of this section are satisfied if DC enters into a new gain recognition agreement with respect to the TFC stock received from UST. The amount of gain subject to the new gain recognition agreement entered into by DC equals 90% of the amount of gain subject to the gain recognition agreement entered into by UST with respect to the initial transfer. The amount of gain subject to the gain recognition agreement entered into by UST with respect to the initial transfer is reduced by the amount of gain subject to the new gain recognition agreement entered into by DC. The gain recognition agreement entered into by UST with respect to the initial transfer continues to apply to the remaining TFC stock held by UST.

(xii) ***Example 12. Disposition of transferred stock pursuant to a divisive reorganization*** —

(A) ***Facts.*** In year 3, pursuant to a divisive reorganization described in section 368(a)(1)(D), TFC transfers all of the TFD stock to F1, a newly formed corporation, in exchange solely for all of the outstanding stock of F1. TFC then distributes all of the F1 stock to UST in a transaction to which section 355 applies.

(B) ***Result.*** The transfer by TFC of the TFD stock to F1 constitutes a triggering event under paragraph (j)(1) of this section. However, if paragraph (k)(14) of this section applies, neither the transfer of the TFD stock by TFC to F1, nor the distribution of the F1 stock by TFC to UST, shall constitute triggering events.

(*1*) The condition of paragraph (k)(14)(i) of this section is satisfied because the dispositions of the TFD stock and F1 stock qualify as nonrecognition transactions.

(*2*) The condition of paragraph (k)(14)(ii) of this section is satisfied because immediately after the transfer UST, an eligible U.S. transferor, owns at least 5% (determined as provided in paragraph (k)(14)(ii) of this section) of the total voting power and the total fair market value of the outstanding stock of F1. As a result, UST is treated as retaining an indirect interest in the TFD stock following the dispositions.

(*3*) The condition of paragraph (k)(14)(iii) of this section is satisfied if UST enters into a new gain recognition agreement with respect to the initial transfer that describes the subsequent dispositions or other events that would constitute triggering events based on the principles of paragraph (j) of this section, other than those described in paragraph (j) of this section. For example, a complete or partial disposition of the F1 stock would constitute a triggering event for purposes of the new gain recognition agreement (subject to the exceptions provided by paragraph (k) of this section).

(xiii) *Example 13. Receipt of boot by the transferee foreign corporation in a subsequent section 351 exchange* —

(A) ***Facts.*** At the time of the initial transfer, the TFD stock has a $50x basis and $100x fair market value. The amount of gain subject to the gain recognition agreement is $50x. In year 3, TFC and X, an unrelated foreign corporation, form F1. TFC transfers the TFD stock to F1 in exchange for $35x cash and $65x stock of F1. At the time of the transfer, the TFD stock has a $50x basis and $100x fair market value. The F1 stock received by TFC represents 25% of the outstanding stock of F1. Without regard to the gain recognized under the gain recognition agreement and any adjustments to basis under paragraph (c)(4)(ii) of this section, under section 351(b) TFC would recognize $35x gain in connection with the transfer of the TFD stock to F1. UST complies with the conditions of paragraph (k)(3) of this section, and therefore the disposition by TFC of the TFD stock does not constitute a triggering event.

(B) ***Result.*** Under paragraph (m)(1) of this section, UST must recognize $35x gain under the gain recognition agreement as a result of the year 3 disposition by TFC of the TFD stock. Thus, the amount of gain subject to the new gain recognition agreement entered into by UST pursuant to paragraph (k)(3) of this section is $15x. Under paragraph (c)(4)(ii) of this section, as of the date of the initial transfer, the basis of the TFD stock held by TFC is increased by $35x, the amount of the gain recognized by UST under the gain recognition agreement. Under paragraph (c)(4)(i) of this section, the basis of the TFC stock received by UST in the initial transfer is also increased by $35x. After taking into account the increase to the basis of the TFD stock under paragraph (c)(4)(ii) of this section, TFC recognizes $15x gain under section 351(b) in connection with the year 3 transfer of the TFD stock to F1. Under section 362(a), the basis of the TFD stock in the hands of F1 is $100x.

(xiv) *Example 14. Complete disposition of transferred stock pursuant to a section 304(a)(1) transaction* —

(A) ***Facts.*** UST wholly owns FA. In year 3, in a transaction to which section 304(a)(1) applies, TFC transfers all of the TFD stock to FA in exchange for cash. Under section 304(a)(1), TFC and FA are treated as if TFC transferred the TFD stock to FA in a section 351 exchange in exchange solely for FA stock, and then FA redeemed the FA stock deemed issued in exchange for the cash. Under section 302(d), the redemption of the FA stock deemed issued by FA to TFC under section 304(a)(1) is treated as a distribution to which section 301 applies.

(B) ***Result.***

(*1*) In general, the deemed contribution by TFC of the TFD stock to FA in the section 351 exchange is a triggering event under paragraph (j)(1) of this section. However, under paragraph (k)(3) of this section the deemed contribution shall not be a triggering event if UST enters into a new gain recognition agreement with respect to the initial transfer in which it agrees to treat as a triggering event a complete or partial disposition of the FA stock deemed received by TFC.

(*2*) Under paragraph (n)(1) of this section, the redemption of the FA stock deemed received by TFC in exchange for the TFD stock shall not constitute a disposition if UST enters into a new gain recognition agreement with respect to the initial transfer

that includes appropriate provisions to take into account such redemption. Therefore, under the new gain recognition agreement UST must agree to treat as a triggering event a complete or partial disposition of the stock of FA. Pursuant to paragraph (d)(2)(ii) of this section, UST is permitted to enter into a single new gain recognition agreement in year 3, but the gain recognition agreement must provide a complete description of the section 304(a)(1) transaction including the deemed section 351 exchange and redemption of the FA stock.

(xv) ***Example 15. Reduction in amount of gain subject to gain recognition agreement, followed by triggering event*** —

(A) ***Facts.*** In year 3, UST disposes of 60% of the TFC stock received in the initial transfer in a transaction in which the conditions of paragraph (o)(1)(ii) of this section are satisfied. Thus, the amount of gain subject to the gain recognition agreement is reduced by 60%. In year 5, TFC disposes of 50% of the TFD stock in a transaction that constitutes a triggering event.

(B) ***Result.*** As a result of the year 5 disposition by TFC of 50% of the TFD stock, under paragraphs (j)(1) and (c)(1)(i) of this section, UST must recognize and include in income 50% of the gain subject to the gain recognition agreement (because of the year 3 disposition of TFC stock, the amount of gain subject to the gain recognition agreement equals 40% of the gain realized, but not recognized, on the initial transfer). UST must pay applicable interest on any additional tax due with respect to the gain recognized. The amount of gain subject to the gain recognition agreement is reduced by the amount of gain recognized by UST (the remaining gain equals 20% of the gain realized, but not recognized, by UST on the initial transfer).

(xvi) ***Example 16. Taxable sale of stock of transferee foreign corporation and election to reduce stock basis*** —

(A) ***Facts.*** UST wholly owns F1 and TFD. The F1 stock has a $100x basis and $90x fair market value, and the TFD stock has a $0x basis and $100x fair market value. UST also owns real property with a $10x basis and $10x fair market value. In year 1, pursuant to a section 351 exchange, UST transfers the real property, the TFD stock, and the F1 stock to TFC in exchange solely for 20 shares of TFC stock. UST enters into a gain recognition agreement with respect to the transfer of the TFD stock. The amount of the gain recognition agreement is $100x. UST takes the position that the basis of each share of TFC stock received in the exchange is $5.5x (a proportionate amount of the $110x aggregate basis of the transferred property). In year 3, UST disposes of all its TFC stock in a transaction in which all gain realized is recognized and included in taxable income.

(B) ***Result.*** The year 3 disposition of the TFC stock is a triggering event under paragraph (j)(4) of this section. The disposition does not terminate the gain recognition agreement pursuant to paragraph (o)(1)(i) of this section because the basis of each share of TFC stock received in exchange for the TFD stock in the initial transfer is $5.5x, which exceeds the $0x basis of the TFD stock at time of the initial transfer. However, under paragraph (o)(1)(iii) of this section, to satisfy the basis condition of paragraph (o)(1)(i) of this section, UST can reduce the basis of the 10 shares of the TFC stock received in exchange for the TFD stock to $0x. If UST reduces the basis of the 10 shares of TFC stock to $0x,

under paragraph (o)(1)(i) of this section the disposition of the TFC stock shall not constitute a triggering event but instead shall terminate the gain recognition agreement without further effect.

(xvii) *Example 17. Successive section 351 exchanges, section 301 distributions, and transactions involving partnerships* —

(A) ***Facts.*** UST owns a 40 percent capital and profits interest in a foreign partnership (PRS). PRS wholly owns TFD and other assets with basis equal to fair market value. The TFD stock has a $50x basis and $200x fair market value. TFC wholly owns F1. On day 1 of year 1, in a section 351 exchange, UST transfers its PRS interest to TFC in exchange solely for stock of TFC (initial transfer). On that same day, in a section 351 exchange, TFC transfers the PRS interest received from UST to F1 in exchange solely for stock of F1. In year 3, PRS receives a $150x distribution from TFD to which section 301 applies. Under section 301(c), $25x of the distribution constitutes a dividend, $50x is applied against and reduces the basis of the TFD stock held by PRS, and the remaining $75x is treated as gain from the sale or exchange of property. With respect to the TFD stock deemed transferred by UST in the initial transfer, under section 301(c), $10x (40% of $25x) of the distribution constitutes a dividend, $20x (40% of $50x) is applied against and reduces the basis of TFD stock, and $30x (40% of $75x) is treated as gain from the sale or exchange of property. In year 5, pursuant to a distribution to which section 731 applies, PRS distributes all of the TFD stock to F1.

(B) ***Result.***

(*1*) ***Successive section 351 transfers.*** Under section 367(a)(4) and § 1.367(a)-1T(c)(3)(ii), the transfer of the PRS interest by UST to TFC is treated, for purposes of section 367(a), as a transfer by UST to TFC of its proportionate share of the TFD stock held by PRS (the initial transfer). The initial transfer by UST of the TFD stock to TFC is subject to the general rule of section 367(a)(1), unless UST enters into a gain recognition agreement with respect to such transfer pursuant to § 1.367(a)-3(b)(1)(ii) and this section. Under paragraph (c)(3)(viii) of this section, the gain recognition agreement must include a complete description of the transfer, including a description of the partners of PRS. Even if UST enters into a gain recognition agreement with respect to the initial transfer, under paragraph (j)(3) of this section, the subsequent transfer by TFC of the PRS interest to F1 is a triggering event unless UST enters into a new gain recognition agreement with respect to the initial transfer under paragraph (k)(14) that provides that, in addition to the triggering events provided in paragraph (j) of this section, a complete or partial disposition of the F1 stock received by TFC in exchange for the PRS interest shall constitute a triggering event for purposes of the gain recognition agreement. The new gain recognition agreement must also provide that any other disposition that is inconsistent with the principles of paragraph (k), including an indirect disposition of the TFD stock or of substantially all of the assets of TFD, shall constitute a triggering event for purposes of the new gain recognition agreement. Under paragraph (d)(2)(ii) of this section, UST is permitted to enter into a single gain recognition agreement with respect to the initial transfer and the subsequent transfer by TFC of the PRS interest, but the agreement must include a complete description of the initial transfer and the subsequent transfer of the PRS interest.

(2) ***Section 301 distribution from TFD to PRS.*** Under paragraph (b)(1)(iii) of this section, the section 301 distribution received by PRS from TFD is not a disposition (and therefore does not affect the gain recognition agreement) to the extent it is described in section 301(c)(1) or (2). However, under paragraph (n)(2) of this section, to the extent the distribution is described in section 301(c)(3), UST must recognize gain ($30x) under the gain recognition agreement. For this purpose, the amount of the distribution that is described in section 301(c)(3) is determined before taking into account the increase to the basis of the TFD stock under paragraph (c)(4)(ii) of this section.

(3) ***Distribution of TFD stock by PRS to F1.*** The year 5 distribution of the TFD stock by PRS to F1 is a triggering event under paragraph (j)(1) of this section, unless paragraph (k)(14) of this section applies.

(*i*) The condition of paragraph (k)(14)(i) of this section is satisfied because the distribution qualifies as a nonrecognition transaction.

(*ii*) The condition of paragraph (k)(14)(ii) of this section is satisfied because immediately after the distribution UST, a domestic corporation that is eligible to be a U.S. transferor, owns at least 5% (determined as provided in paragraph (k)(14)(ii) of this section) of the total voting power and total value of the outstanding stock of F1. As a result, UST is treated as retaining an indirect interest in the TFD stock following the distribution.

(*iii*) The condition of paragraph (k)(14)(iii) of this section is satisfied if UST enters into a new gain recognition agreement with respect to the initial transfer. The new gain recognition agreement need not describe additional dispositions or other events that would constitute triggering events because, pursuant to paragraph (c)(5) of this section, the dispositions or other events described in paragraph (j) of this section or in the existing gain recognition agreement apply to the new gain recognition agreement.

(xviii) ***Example 18. Complete liquidation of transferee foreign corporation*** —

(A) ***Facts.*** TFD has 10 shares of stock outstanding immediately before the initial transfer. On the date of the initial transfer, the TFD stock has a $0x basis and $90x fair market value. In year 2, in exchange for 1 share of TFD stock TFC transfers real estate to TFD with a $10x basis and $10x fair market value. In year 4, TFC distributes the 11 shares of TFD stock to UST in a complete liquidation to which sections 332 and 337 apply.

(B) ***Result.*** In determining whether the gain recognition agreement entered into by UST with respect to the initial transfer is terminated under paragraph (o)(5) of this section, or triggered under paragraphs (j)(1) and (j)(4) of this section, only the 10 shares of TFD stock transferred by UST in the initial transfer are considered. Thus, the 1 share of TFD stock received by TFC in exchange for the real estate in year 2 is not taken into account.

(xix) ***Example 19. Spin-off of transferred corporation*** —

(A) ***Facts.*** Before the initial transfer, the TFD stock has an $80x basis and a $100x fair market value, and the TFC stock has a $100x basis and a $100x fair market value. In year 4, TFC distributes all of the TFD stock to UST in a transaction to which section 355 applies. At the time of the distribution, the TFD stock has a $200x fair market value, and the TFC stock

(without regard to the value of the TFD stock held by TFC) has a $100x fair market value. At such time, the TFC stock has a $180x basis. As determined under section 358, immediately after the distribution, the TFC stock has a $60x basis, and the TFD stock has a $120x basis.

(B) ***Result.*** The distribution of the TFD stock by TFC in year 4 is a triggering event under paragraph (j)(1) of this section. The distribution does not terminate the gain recognition agreement under paragraph (o)(5) of this section because after the distribution, the basis of the TFD stock in the hands of UST ($120x) is greater than the basis of the TFD stock at the time of the initial transfer ($80x). However, if UST reduces the basis of the TFD stock to $80x (as provided under paragraph (o)(5)(iii) of this section) the gain recognition agreement will terminate without further effect. If UST does not elect to reduce the basis of the TFD stock, see paragraph (k)(14) of this section.

(xx) ***Example 20. Intercompany transaction followed by disposition to nonmember*** —

(A) ***Facts.*** At the time of the initial transfer, the TFD stock has a $50x basis and $100x fair market value. The amount of the gain recognition agreement is $50x. In year 3, UST distributes all of the TFC stock to USP in a transaction to which section 301 applies. At the time of the distribution, the TFC stock has a $50x basis and $90x fair market value. Under section 311(b), UST must recognize $40x gain (the intercompany item) on the distribution, but because the distribution is an intercompany transaction, under the provisions of § 1.1502-13, the $40x gain is not taken into account in year 3. In year 4, USP sells all of the TFC stock to X, an unrelated corporation. Under the provisions of § 1.1502-13, in year 4 UST takes into account the $40x intercompany item as a result of the sale of the TFC stock to X.

(B) ***Result.*** (*1*) The year 3 distribution of the TFC stock by UST to USP does not terminate the gain recognition agreement under paragraph (o)(1) of this section because UST does not include the $40x gain in taxable income during year 3. Under paragraph (j)(4) of this section, the year 3 distribution of the TFC stock by UST to USP is generally a triggering event; however, because the distribution is an intercompany transaction that creates an intercompany item, the distribution shall not constitute a triggering event if the conditions of paragraph (k)(12)(i) of this section are satisfied.

(1) The condition of paragraph (k)(12)(i)(A) of this section is satisfied because the aggregate basis of the TFC stock distributed ($50x) is not greater than the sum of the aggregate basis of the TFD stock at the time of the initial transfer ($50x).

(2) The condition of paragraph (k)(12)(i)(B) of this section is satisfied if the next annual certification for the existing gain recognition agreement includes a complete description of the intercompany transaction and an explanation of how the basis condition of paragraph (k)(12)(i)(A) of this section is satisfied.

(*2*) Under paragraph (o)(6) of this section and the principles of paragraph (o)(1)(i) of this section, because the year 4 sale of the TFC stock to X requires UST to take into account the $40x gain (the intercompany item) from the year 3 distribution, the year 4 sale terminates the gain recognition agreement. If, alternatively, in year 4 USP had sold only 30% of the TFC stock, then under paragraph (o)(6) of this section and the principles of paragraph (o)(1)(ii) of this section the amount of gain subject to the gain recognition agreement would be reduced by 30%.

(C) ***Alternate facts. Intercompany transaction followed by sale of transferee foreign corporation to member.*** Assume the same facts as in paragraph (q)(2)(xx)(A) of this section (the facts in this *Example 20*), except that, instead of USP selling the TFC stock to X, in year 4 USP sells the TFC stock to USS in exchange for $90x cash. UST and USS are members of the USP consolidated group immediately after the sale. The results of the year 3 distribution of the TFC stock by UST to USP are the same as in paragraph (q)(2)(xx)(B) of this section (the results in this *Example 20*). In addition, under paragraph (k)(12)(ii) of this section, the year 4 sale by USP of the TFC stock to USS is not a triggering event, provided UST includes a complete description of the sale with the annual certification filed for the gain recognition agreement in year 4.

(D) ***Alternate facts. Intercompany transaction followed by complete liquidation of transferee foreign corporation.*** Assume the same facts as in paragraph (q)(2)(xx)(A) of this section (the facts in this *Example 20*), except that, instead of USP selling the TFC stock to X, in year 4 TFC distributes all of its assets to USP in a complete liquidation to which sections 332 and 337 apply. The result is the same as in paragraph (q)(2)(xx)(B) of this section (the facts in this *Example 20*) because, under the provisions of § 1.1502-13, in year 4 UST takes into account the $40x gain (the intercompany item) from the year 3 distribution.

(E) ***Alternate facts. Intercompany transaction followed by triggering event.*** Assume the same facts as in paragraph (q)(2)(xx)(A) of this section (the facts in this *Example 20*), except that instead of USP selling the TFC stock to X, in year 4 TFC disposes of all of the TFD stock in a transaction that constitutes a triggering event under paragraph (j)(1) of this section. Under paragraph (c)(1)(i) of this section UST must recognize $50x gain under the gain recognition agreement. Under paragraphs (c)(4)(i) and (ii) of this section, as of the date of the initial transfer the basis of the TFC stock and TFD stock, respectively, is increased by $50x.

(F) ***Alternate facts. Intercompany transaction followed by section 351 transfer to member.*** The facts are the same as in paragraph (q)(2)(xx)(A) of this section (the facts in this *Example 20*), except that, in year 3, in a section 351 exchange UST transfers all of the TFC stock to USS in exchange for $10x cash and $80x of stock of USS. USS is a member of the USP consolidated group immediately after the exchange. The transfer of the TFC stock by UST to USS is an intercompany transaction. Under section 351(b), UST must generally recognize $10x gain (intercompany item) in connection with the transfer; however, under the provisions of § 1.1502-13, UST does not take the $10x gain into account in year 3. Under paragraph (k)(12) of this section, as result of the intercompany transaction creating an intercompany item ($10x gain), the existing gain recognition agreement ($50x gain) must be divided between UST and USS. UST shall remain subject to a gain recognition agreement of $10x (equal to the amount of the intercompany item). The amount of the gain recognition agreement entered into by USS under paragraph (k)(1) of this section is $40x (equal to the amount of the existing gain recognition agreement, reduced by the amount of the of the gain recognition agreement to which UST remains subject).

(xxi) ***Example 21. Transfer of transferred stock to United States person other than U.S. transferor*** —

(A) ***Facts.*** An individual (A) that is a United States citizen wholly owns TFD, TFC, and DC. A transfers the TFD stock to TFC in a section 351 exchange and enters into a gain recognition agreement with respect to such transfer. In year 5, pursuant to an asset reorganization, TFC transfers all of its assets to DC in exchange solely for DC stock. TFC distributes the DC stock to A pursuant to the plan of reorganization.

(B) ***Result.*** The transfer by TFC of the TFD stock to DC and the exchange by A of the TFC stock for DC stock pursuant to the asset reorganization are triggering events under paragraphs (j)(1) and (j)(4) of this section, respectively. The gain recognition agreement does not terminate under paragraph (o)(5) of this section because DC is neither the U.S. transferor, nor an individual that is a United States person, nor a member of the same consolidated group of which the U.S. transferor is a member. However, if paragraph (k)(14) of this section applies the exchanges shall not constitute triggering events.

(*1*) The condition of paragraph (k)(14)(i) of this section is satisfied because the transfer of the TFD stock to DC qualifies as a nonrecognition transaction.

(*2*) The condition of paragraph (k)(14)(ii) of this section is satisfied because immediately after the transfer DC, a domestic corporation that is eligible to be a U.S. transferor, retains a direct interest in the TFD stock following the transfer.

(*3*) The condition of paragraph (k)(14)(iii) of this section is satisfied if DC enters into a new gain recognition agreement with respect to the initial transfer. Under paragraph (k)(14)(iii)(B) of this section, DC is not required to describe any subsequent dispositions or other events that (based on the principles of paragraph (j) of this section) would constitute triggering events for purposes of the new gain recognition agreement, other than the dispositions or other events described in paragraph (j) of this section, because DC holds a direct interest in TFD after the asset reorganization.

(xxii) ***Example 22. Transfer of transferred stock to consolidated group member*** —

(A) ***Facts.*** UST wholly owns DC, a member of the USP consolidated group that includes UST. In year 5, pursuant to an asset reorganization described in section 368(a)(1)(A) TFC merges with and into DC. Immediately after the asset reorganization, DC wholly owns TFD, and the basis of the TFD stock is not greater than the aggregate basis of such stock at the time of the initial transfer.

(B) ***Result.*** The gain recognition agreement filed by UST with respect to the initial transfer terminates without further effect if the conditions of paragraph (o)(5) of this section are satisfied.

(*1*) The condition of paragraph (o)(5)(i) of this section is satisfied because the transfer of the TFD stock is a section 361 exchange.

(*2*) The condition of paragraph (o)(5)(ii) of this section is satisfied because DC is a member of the consolidated group that includes UST immediately after the section 361 exchange.

(*3*) The condition of paragraph (o)(5)(iii) of this section is satisfied because the aggregate basis of the TFD stock immediately after the section 361 exchange is not greater than the aggregate basis of the TFD stock at the time of the initial transfer (as adjusted for any gain recognized by UST on such transfer). If the basis condition

of paragraph (o)(5)(iii) were not satisfied, under paragraph (o)(5)(iii) of this section, DC could reduce the basis of the TFD stock received in the reorganization. Alternatively, a new gain recognition agreement could be entered into if paragraph (k)(14) of this section applied to the disposition of the TFD stock pursuant to the section 361 exchange.

(C) ***Alternate facts.*** The facts are the same as in paragraph (q)(2)(xxii)(A) of this section (the facts in this *Example 22*), except that instead of TFC merging into DC, TFC merges into TFD in a reorganization described in section 368(a)(1)(A). The gain recognition agreement terminates without further effect if the conditions of paragraph (o)(5) of this section are satisfied.

(*1*) The condition of paragraph (o)(5)(i) of this section is satisfied because the TFD stock issued by TFD to TFC in the reorganization, which is treated as transferred stock under paragraph (b)(2)(iii) of this section, is distributed by TFC to UST pursuant to section 361(c).

(*2*) The condition of paragraph (o)(5)(ii) of this section is satisfied because UST is the U.S. transferor.

(*3*) The condition of paragraph (o)(5)(iii) of this section is satisfied if the aggregate basis of the TFD stock received by UST from TFC is not greater than the aggregate basis of the TFD stock at the time of the initial transfer (as adjusted for any gain recognized by UST on such transfer). If the basis condition of paragraph (o)(5)(iii) were not satisfied, under paragraph (o)(5)(iii) of this section, UST could reduce the basis of the TFD stock received in the reorganization.

(xxiii) ***Example 23. Split-off of transferred stock*** —

(A) ***Facts.*** X, a domestic corporation that is unrelated to USP and UST, wholly owns TFC. Pursuant to a reorganization described in section 368(a)(1)(B), UST transfers all of the TFD stock to TFC in exchange for 50% of the outstanding voting stock of TFC. UST enters into a gain recognition agreement with respect to such transfer. In year 4, in a split-off transaction to which section 355 applies, TFC distributes all of the TFD stock to X in exchange for all the TFC stock held by X.

(B) ***Result.*** Under paragraph (j)(1) of this section, the year 4 distribution of the TFD stock to X constitutes a triggering event. However, the distribution shall not constitute a triggering event if paragraph (k)(14) of this section applies. The gain recognition agreement does not terminate under paragraph (o)(5) of this section because X is not a recipient described in paragraph (o)(5)(ii) of this section.

(*1*) The condition of paragraph (k)(14)(i) of this section is satisfied because the distribution of the TFD stock qualifies as a nonrecognition transaction.

(*2*) The condition of paragraph (k)(14)(ii) of this section is satisfied because immediately after the distribution X, a domestic corporation that is eligible to be a U.S. transferor, retains a direct interest in the TFD stock.

(*3*) The condition of paragraph (k)(14)(iii) of this section is satisfied if X enters into a new gain recognition agreement with respect to the initial transfer. Under paragraph (k)(14)(iii)(B) of this section, X is not required to describe, with the new gain

recognition agreement, any subsequent dispositions or other events that (based on the principles of paragraph (j) of this section) would constitute triggering events, other than the dispositions described in paragraph (j) of this section, because X directly owns TFD after the distribution.

(*4*) If X were a United States citizen, the gain recognition agreement would terminate if the condition of paragraph (o)(5)(iii) of this section were satisfied. Alternatively, the gain recognition agreement would continue for its remaining term if the conditions for the application of paragraph (k)(14) of this section were satisfied.

(C) ***Alternate facts. Distribution to unrelated foreign corporation.*** The facts are the same as in paragraph (q)(2)(xxiii)(A) of this section (the facts in this *Example 23*), except that X is a foreign corporation wholly owned by DC. DC is unrelated to UST. The results are the same as in paragraph (q)(2)(xxiii)(B) of this section (the results in this *Example 23*), except as follows.

(*1*) The condition of paragraph (k)(14)(ii) of this section is satisfied because immediately after the distribution DC, a domestic corporation that is eligible to be a U.S. transferor, owns at least 5% (determined as provided in paragraph (k)(14)(ii) of this section) of the total voting power and total value of the outstanding stock of X. As a result, DC is treated as retaining an indirect interest in the TFD stock immediately following the distribution.

(*2*) The condition of paragraph (k)(14)(iii) of this section is satisfied if DC enters into a new gain recognition agreement with respect to the initial transfer. Under paragraph (k)(14)(iii)(B) of this section, DC must, in addition to the dispositions described in paragraph (j) of this section, include as a triggering event a complete or partial disposition of the stock of X.

(D) ***Alternate facts. Distribution to nonresident alien individual.*** The facts are the same as in paragraph (q)(2)(xxiii)(A) of this section (the facts in this *Example 23*), except that X is a nonresident alien individual. Paragraph (k)(14) of this section does not apply to the distribution because the conditions of paragraph (k)(14)(ii) and (iii) of this section cannot be satisfied. Therefore, the distribution is a triggering event, and UST will recognize gain under the gain recognition agreement as required under paragraphs (c)(1)(i) and (v) of this section. The result would be the same if X were a foreign corporation and, immediately after the distribution, no United States person owned at least 5% (determined as provided in paragraph (k)(14)(ii) of this section) of the total voting power and value of the outstanding stock of X.

(xxiv) ***Example 24. Applicability of this section to gain recognition agreements filed before March 13, 2009 —***

(A) ***Facts.*** The facts are the same as in paragraph (q)(2)(vi)(A) of this section (the facts in *Example 6*), except that the initial transfer occurred on March 7, 2007, and the asset reorganization occurred on July 1, 2008.

(B) ***Result.*** Under paragraph (r)(1)(ii) of this section, the rules of § 1.367(a)-8T (see 26 CFR part 1, revised April 1, 2007) apply to the transfers pursuant to the asset reorganization because the initial transfer occurred on March 7, 2007. As a result of the disposition of the TFC stock pursuant to the asset reorganization, under § 1.367(a)-8T(d), USP is required to recognize the gain subject to the gain recognition agreement and pay applicable interest

on any additional tax due with respect to such gain. Because the acquiring corporation in the asset reorganization is foreign, an exception under § 1.367(a)-8T(e) is not available for the exchange of TFC stock by USP. However, pursuant to paragraph (r)(2)(i) of this section, because the exception provided by paragraph (k)(14) of this section is not included in § 1.367(a)-8T, USP may apply paragraph (k)(14) of this section to such exchange (provided the conditions of paragraph (k)(14) of this section are satisfied), if the statute of limitations on assessments of tax for the 2007 tax year has not closed. If USP applies paragraph (k)(14) of this section to its exchange of the TFC stock pursuant to the asset reorganization, under paragraph (r)(2)(ii) of this section USP must include the new gain recognition agreement required under paragraph (k)(14)(iii) of this section with an amended Federal income tax return for its 2008 tax year that is filed August 10, 2009.

(xxv) ***Example 25. Applicability of this section to gain recognition agreements filed before March 13, 2009*** —

(A) ***Facts.*** The initial transfer occurs in 2004. In 2005, pursuant to a section 351 exchange, TFC transfers the TFD stock to F1 in exchange solely for F1 voting stock. UST does not file a new gain recognition agreement under § 1.367(a)-8(g)(2) with respect to the exchange.

(B) ***Result.*** Under paragraph (r)(1)(ii) of this section, the rules of § 1.367(a)-8 (see 26 CFR part 1, revised April 1, 2006) apply to the year 2005 disposition of the TFD stock because UST filed the gain recognition agreement after July 20, 1998, but before March 7, 2007. Under § 1.367(a)-8(e) (see 26 CFR part 1, revised April 1, 2006), as a result of the disposition of the TFD stock by TFC, UST must recognize the amount of gain subject to the gain recognition agreement. Paragraph (r)(2)(i) of this section does not apply because the rule provided by paragraph (k)(3) of this section was included in § 1.367(a)-8(g)(2) (see 26 CFR part 1, revised April 1, 2006). However, UST may request relief for reasonable cause under § 1.367(a)-8(c)(2) (see 26 CFR part 1, revised April 1, 2006) to file a new gain recognition agreement with respect to the disposition of the TFD stock by TFC in 2005.

(r) ***Applicability dates*** —

(1) ***General rule*** —

(i) ***Transfers occurring on or after March 13, 2009; relief for certain failures that are not willful.*** The rules of this section apply to gain recognition agreements filed with respect to transfers of stock or securities occurring on or after March 13, 2009. However, the rules of this section do not apply to gain recognition agreements filed with respect to any such transfer occurring on or after March 13, 2009, if such transfer was entered into pursuant to a written agreement that was (subject to customary conditions) binding before February 11, 2009, and at all times thereafter. Solely for purposes of this paragraph (r), a transfer described in the preceding sentence shall be deemed to be a transfer occurring before March 13, 2009 to which the rules of § 1.367(a)-8 (see 26 CFR part 1, revised April 1, 2006) apply. See paragraph (r)(2)(iii) of this section for the ability to apply the rules of this section with respect to gain recognition agreements filed for taxable years ending before March 13, 2009. The eleventh sentence of paragraph (a) and paragraphs (b)(1)(iv), (b)(1)(vi), (b)(1)(xiii), (d)(1), (j)(8), and (p) of this section will apply to gain recognition agreement documents that are required to be filed on or after November 19, 2014, as well as to requests for relief submitted on or after November 19, 2014. Paragraph (k)(14)(ii) of this section applies to transfers occurring on or after October 1, 2019, and to transfers occurring before October 1, 2019, that result from an entity classification election made under § 301.7701-3 of this chapter that is filed on or after October 1, 2019. For

transfers occurring before October 1, 2019, other than transfers occurring before October 1, 2019, that result from an entity classification election made under § 301.7701-3 of this chapter that is filed on or after October 1, 2019, a taxpayer may apply paragraph (k)(14)(ii) of this section to transfers occurring during the last taxable year of a transferee foreign corporation beginning before January 1, 2018, and each subsequent taxable year of the foreign corporation, provided that the taxpayer and United States persons that are related (within the meaning of section 267 or 707) to the taxpayer consistently apply such paragraph with respect to all foreign corporations. For transfers occurring before October 1, 2019, other than transfers occurring before October 1, 2019, that result from an entity classification election made under § 301.7701-3 of this chapter that is filed on or after October 1, 2019, where the taxpayer does not apply paragraph (k)(14)(ii) of this section as described in the preceding sentence, see paragraph (k)(14)(ii) of this section as in effect and contained in 26 CFR part 1, as revised April 1, 2020.

(ii) ***Transfers occurring before*** March 13, 2009. For matters covered in this section for periods before March 13, 2009 but on or after March 7, 2007, the corresponding rules of § 1.367(a)-8T (see 26 CFR part 1, revised April 1, 2007) apply. For matters covered in this section for periods before March 7, 2007 but on or after July 20, 1998, the corresponding rules of § 1.367(a)-8 (see 26 CFR part 1, revised April 1, 2006) apply. For matters covered in this section for periods before July 20, 1998, the corresponding rules of § 1.367(a)-3T(g) (see 26 CFR part 1, revised April 1, 1998) and Notice 87-85 (1987-2 CB 395) apply. In addition, if a U.S. transferor entered into a gain recognition agreement for transfers before July 20, 1998, then the rules of § 1.367(a)-3T(g) (see 26 CFR part 1, revised April 1, 1998) continue to apply in lieu of this section in the event of any direct or indirect nonrecognition transfer of the same property. See also, § 1.367(a)-3(h).

(2) ***Applicability to transfers occurring before March 13, 2009*** March 13, 2009—

(i) ***General rule.*** Taxpayers may apply the rules of this regulation § 1.367(a)-8 that were not included in § 1.367(a)-8T (see 26 CFR part 1, revised April 1, 2007), to gain recognition agreements filed with respect to transfers of stock or securities for all open taxable years, if done consistently to all transfers. A U.S. transferor subject to section 877 and § 1.367(a)-8T(d)(6) shall not apply the rules of this regulation to reach a contrary result. A taxpayer that failed to file a gain recognition agreement for a transfer, or to comply materially with any requirement of this section with respect to an existing gain recognition agreement, must obtain relief for reasonable cause for such failure under § 1.367(a)-8T(e)(10) before applying the rules of this regulation § 1.367(a)-8 that were not included in § 1.367(a)-8T as permitted by this paragraph (r)(2). See paragraphs (q)(2)(xxiv) and (xxv) of this section for illustrations of the rule provided by this paragraph (r)(2)(i).

(ii) ***Taxable years ending before*** March 13, 2009. Notwithstanding the requirements of § 1.367(a)-8(d), any gain recognition agreement or other filing required by reason of electing to apply the rules of this regulation § 1.367(a)-8 that were not included in § 1.367(a)-8T, as permitted by this paragraph (r)(2), for a taxable year ending before March 13, 2009 shall be considered filed in accordance with the requirements of § 1.367(a)-8(d), provided the gain recognition agreement or other filing is attached to an original or amended return for such taxable year. An amended return required to be filed by reason of electing to apply the rules of this regulation § 1.367(a)-8 that were not included in § 1.367(a)-8T, as permitted by this paragraph (r)(2), must be filed on or before August 10, 2009. A taxpayer that wishes to apply

the rules of this regulation § 1.367(a)-8 that were not included in § 1.367(a)-8T, as permitted by this paragraph (r)(2), but that fails to meet the filing requirement described in the preceding sentence must request relief for reasonable cause under paragraph (p) of this section.

(iii) ***Taxable years ending after effective date.*** A taxpayer that entered into a gain recognition agreement to which § 1.367(a)-8T (see 26 CFR part 1, revised April 1, 2007) applies may apply the rules of this section in a tax year ending on or after March 13, 2009 by attaching the agreement, certification, or other information related to such gain recognition agreement that the rules of this section require in accordance with the rules of this section and with the time and manner rules provided in § 1.367(a)-8(d).

(3) ***Applicability to requests for relief submitted before*** November 19, 2014. The eleventh sentence of paragraph (a) and paragraphs (b)(1)(iv), (b)(1)(vi), (b)(1)(xiii), (d)(1), (j)(8), and (p) of this section will apply to requests for relief submitted before November 19, 2014 if—

(i) The statute of limitations on the assessment of tax has not expired for any year to which the request relates; and

(ii) The U.S. transferor resubmits the request under paragraph (p) of this section, notes on the request that the request is being submitted pursuant to this paragraph (r)(3), and acknowledges on the request that the last sentence of § 1.6038B-1(g)(6) provides a special rule regarding the application of § 1.6038B-1 to any transfer that is the subject of the request.

[T.D. 9446, 74 FR 6960, Feb. 11, 2009; 74 FR 10175, Mar. 10, 2009, as amended at T.D. 9446, 74 FR 13341, Mar. 27, 2009; T.D. 9614, 78 FR 17039, Mar. 19, 2013; T.D. 9704, 79 FR 68768, Nov. 19, 2014; 80 FR 167, Jan. 5, 2015; T.D. 9760, 81 FR 15169, Mar. 22, 2016; T.D. 9803, 81 FR 91029, Dec. 16, 2016; T.D. 9908, 85 FR 59431, Sept. 22, 2020]

Editorial Note: By T.D. 9908, 85 FR 59431, Sept. 22, 2020, § 1.367(a)-8 was amended; however, a portion of amendment could not be incorporated due to inaccurate amendatory instruction.

§ 1.367(a)-9T Treatment of deemed section 351 exchanges pursuant to section 304(a)(1) (temporary).

(a) ***Scope and general rule.*** This section applies to the extent that, pursuant to section 304(a)(1), a United States person is treated as transferring stock of a domestic or foreign corporation to a foreign corporation (foreign acquiring corporation) in exchange for stock of the foreign acquiring corporation in a transaction to which section 351(a) applies (deemed section 351 exchange). Except to the extent provided in paragraph (b) of this section, a transfer of stock by a United States person to a foreign acquiring corporation in a deemed section 351 exchange is not subject to section 367(a)(1).

(b) ***Special rule.*** Notwithstanding paragraph (a) of this section, if the distribution received by the United States person in redemption of the stock of the foreign acquiring corporation deemed issued in the deemed section 351 exchange is applied against and reduces (in whole or in part), pursuant to section 301(c)(2), the basis of stock of the foreign acquiring corporation held by the United States person other than the stock deemed issued in the deemed section 351 exchange, the United States person shall recognize gain pursuant to this paragraph (b). The exceptions described in § 1.367(a)-3(b)(1) and (c)(1) shall not apply to a transfer of stock described in paragraph (a) of this section. The amount of gain recognized by a United States person pursuant to this paragraph (b) shall equal the amount, if any, by which—

(1) The gain realized by the United States person with respect to the transferred stock in connection with the deemed section 351 exchange exceeds;

(2) The amount of the distribution received by the United States person in redemption of the stock of the foreign acquiring corporation deemed issued in the deemed section 351 exchange that is treated as a dividend under section 301(c)(1) and included in gross income by the United States person.

(c) ***Ordering rule.*** For purposes of paragraph (b)(1) of this section, the amount of gain realized by the United States person in connection with the deemed section 351 exchange shall be determined without regard to the amount of gain recognized by the United States person under paragraph (b) of this section.

(d) ***Allocation of recognized gain.*** Gain recognized by a United States person pursuant to paragraph (b) of this section shall be treated as recognized with respect to the stock transferred in the deemed section 351 exchange in proportion to the amount of gain realized by the United States person with respect to such stock. See § 1.367(a)-1T(b)(4) for additional rules on the character, source, and adjustments relating to gain recognized under section 367(a).

(e) ***Example.*** The following example illustrates the rules of this section:

Example. (i) *Facts.* (A) USP, a domestic corporation, wholly owns FC1 and FC2, each a foreign corporation. USP, FC1 and FC2 use a calendar taxable year. The FC1 stock has a $40x basis and $100x fair market value. The FC2 stock has a $100x basis and $100x fair market value. As of December 31, year 1, FC1 has zero earnings and profits, and FC2 has $20x earnings and profits. On December 31, year 1, in a transaction described in section 304(a)(1), USP sells the FC1 stock to FC2 for $100x cash.
(B) Because USP wholly owns FC1 before the transactions and is treated, under section 318, as indirectly owning 100% of the FC1 stock after the transfer, under section 304(a)(1), USP and FC2 are treated in the same manner as if USP contributed the FC1 stock to FC2 in a deemed section 351 exchange in exchange solely for $100x of FC2 stock, and then FC2 redeemed for $100x cash its stock deemed issued to USP. Because USP wholly owns FC1 before the sale and is treated as owning 100% of FC1 after the sale, section 302(a) does not apply to the redemption. Instead, under section 302(d), the redemption is treated as a distribution to which section 301 applies. Pursuant to section 304(b)(2), $20x of the distribution is treated as a dividend from FC2. With respect to the remaining $80x, USP takes the position that $40x is applied against and reduces the basis of the FC2 stock issued in the deemed section 351 exchange, and $40x is applied against and reduces the basis of the FC2 stock held by USP prior to (and after) the transaction.

(ii) *Analysis.* Under paragraph (b) of this section, USP must recognize gain of $40x on its transfer of the FC1 stock to FC2 in the deemed section 351 exchange (the amount by which the $60x gain realized by USP on the deemed section 351 exchange with respect to the F1 stock exceeds the $20x dividend inclusion). Pursuant to paragraph (b) of this section, the exception under § 1.367(a)-3(b) is not available to the transfer of the FC1 stock by USP to FC2 in the deemed section 351 exchange. Thus, USP cannot avoid gain recognition under paragraph (b) of this section by entering into a gain recognition agreement with respect to its transfer of the FC1 stock to FC2 in the deemed section 351 exchange. Under paragraph (d) of this section, the $40x gain recognized

is allocated among the shares of FC1 stock transferred to FC2 in the deemed section 351 exchange in proportion to the gain realized by USP on the transfer of such shares. Under paragraph (c) of this section, the application of paragraph (b) of this section is determined prior to taking into account the $40x increase to the basis of the FC1 stock transferred by USP. Under section 362, the basis of the FC1 stock in the hands of FC2 is increased by $40x, the amount of gain recognized by the USP on the transfer of the FC1 stock under paragraph (b) of this section. Under section 358, the basis of the FC2 stock received by USP in the deemed section 351 exchange is similarly increased by $40x. See § 1.367(a)-1T(b)(4). The $40x increase to the basis of the FC2 stock is taken into account before determining the consequences of the redemption of such stock under section 304(a)(1).

(f) ***Effective/applicability date.*** This section applies to transfers occurring on or after February 10, 2009. See § 1.367(a)-3(a), as contained in 26 CFR part 1 revised as of April 1, 2008, for transfers occurring on or after February 21, 2006, and before February 10, 2009.

(g) ***Expiration date.*** This section expires on or before February 10, 2012.

[T.D. 9444, 74 FR 6826, Feb. 11, 2009; 74 FR 10175, Mar. 10, 2009]

§ 1.367(b)-0 Table of contents.

This section lists the paragraphs contained in §§ 1.367(b)-1 through 1.367(b)-13.

§ 1.367(b)-1 Other transfers.

(a) Scope.

(b) General rules.

(1) Rules.

(2) Example.

(c) Notice required.

(1) In general.

(2) Persons subject to section 367(b) notice.

(3) Time and manner for filing notice.

(i) United States persons described in § 1.367(b)-1(c)(2).

(ii) Foreign corporations described in § 1.367(b)-1(c)(2).

(4) Information required.

(5) Abbreviated notice provision for shareholders that make the election described in § 1.367(b)-3(c)(3).

(6) Supplemental published guidance.

§ 1.367(b)-2 Definitions and special rules.

(a) Controlled foreign corporation.

(b) Section 1248 shareholder.

(c) Section 1248 amount.

(1) Rule.

(2) Examples.

(d) All earnings and profits amount.

(1) General rule.

(2) Rules for determining earnings and profits.

(i) Domestic rules generally applicable.

(ii) Certain adjustments to earnings and profits.

(iii) Effect of section 332 liquidating distribution.

(3) Amount attributable to a block of stock.

(i) Application of section 1248 principles.

(A) In general.

(*1*) Rule.

(*2*) Example.

(B) Foreign shareholders.

(ii) Exclusion of lower-tier earnings.

(e) Treatment of deemed dividends.

(1) In general.

(2) Consequences of dividend characterization.

(3) Ordering rules.

(4) Examples.

(f) Deemed asset transfer and closing of taxable year in certain section 368(a)(1)(F) reorganizations.

(1) Scope.

(2) Deemed asset transfer.

(3) Other applicable rules.

(4) Closing of taxable year.

(g) Stapled stock under section 269B.

(h) Section 953(d) domestication elections.

(1) Effect of election.

(2) Post-election exchanges.

(i) Section 1504(d) elections.

(j) Sections 985 through 989.

(1) Change in functional currency of a qualified business unit.

(i) Rule.

(ii) Example.

(2) Previously taxed earnings and profits.

(i) Exchanging shareholder that is a United States person.

(ii) Exchanging shareholder that is a foreign corporation.

(3) Other rules.

(k) Partnerships, trusts and estates.

(l) Additional definitions.

(1) Foreign income taxes.

(2) Post-1986 undistributed earnings.

(3) Post-1986 foreign income taxes.

(4) Pre-1987 accumulated profits.

(5) Pre-1987 foreign income taxes.

(6) Pre-1987 section 960 earnings and profits.

(7) Pre-1987 section 960 foreign income taxes.

(8) Earnings and profits.

(9) Pooling corporation.

(10) Nonpooling corporation.

(11) Separate category.

(12) Passive category.

(13) General category

§ 1.367(b)-3 Repatriation of foreign corporate assets in certain nonrecognition transactions.

(a) Scope.

(b) Exchange of stock owned directly by a United States shareholder or by certain foreign corporate shareholders.

(1) Scope.

(2) United States shareholder.

(3) Income inclusion.

(i) Inclusion of all earnings and profits amount.

(ii) Examples.

(iii) Recognition of exchange gain or loss with respect to capital. [Reserved]

(4) [Reserved]

(c) Exchange of stock owned by a United States person that is not a United States shareholder.

(1) Scope.

(2) Requirement to recognize gain.

(3) Election to include all earnings and profits amount.

(4) De minimis exception.

(5) Examples.

(d) Carryover of certain foreign taxes.

(1) Rule.

(2) Example.

(e) Net operating loss and capital loss carryovers.

(f) Carryover of earnings and profits.

(1) General rule.

(2) Previously taxed earnings and profits. [Reserved

§ 1.367(b)-4 Acquisition of foreign corporate stock or assets by a foreign corporation in certain nonrecognition transactions.

(a) Scope.

(b) Income inclusion.

(1) Exchange that results in loss of status as section 1248 shareholder.

(i) General rule.

(ii) Special rules.

(iii) Examples.

(2) Receipt by exchanging shareholder of preferred or other stock in certain instances.

(i) Rule.

(ii) Examples.

(3) Certain recapitalizations.

(c) Exclusion of deemed dividend from foreign personal holding company income.

(1) Rule.

(2) Example.

(d) Rules for subsequent exchanges.

(1) Rule.

(2) Example.

§ 1.367(b)-5 Distributions of stock described in section 355.

(a) In general.

(1) Scope.

(2) Treatment of distributees as exchanging shareholders.

(b) Distribution by a domestic corporation.

(1) General rule.

(2) Section 367(e) transactions.

(3) Determining whether distributees are individuals.

(4) Applicable cross-references.

(c) Pro rata distribution by a controlled foreign corporation.

(1) Scope.

(2) Adjustment to basis in stock and income inclusion.

(3) Interaction with § 1.367(b)-2(e)(3)(ii).

(4) Basis redistribution.

(d) Non-pro rata distribution by a controlled foreign corporation.

(1) Scope.

(2) Treatment of certain shareholders as distributees.

(3) Inclusion of excess section 1248 amount by exchanging shareholder.

(4) Interaction with § 1.367(b)-2(e)(3)(ii).

(i) Limited application.

(ii) Interaction with predistribution amount.

(e) Definitions.

(1) Predistribution amount.

(2) Postdistribution amount.

(f) Exclusion of deemed dividend from foreign personal holding company income.

(g) Examples.

§ 1.367(b)-6 Effective/applicability dates and coordination rules.

(a) Effective/applicability dates.

(1) In general.

(2) Exception.

(b) Certain recapitalizations described in § 1.367(b)-4(b)(3).

(c) Use of reasonable method to comply with prior published guidance.

(1) Prior exchanges.

(2) Future exchanges.

(d) Effect of removal of attribution rules.

§ 1.367(b)-7 Carryover of earnings and profits and foreign income taxes in certain foreign-to-foreign nonrecognition transactions.

(a) Scope.

(b) General rules.

(1) Non-previously taxed earnings and profits and related taxes.

(2) Previously taxed earnings and profits. [Reserved]

(c) Ordering rule for post-transaction distributions.

(1) If foreign surviving corporation is a pooling corporation.

(2) If foreign surviving corporation is a nonpooling corporation.

(d) Post-1986 pool.

(1) In general.

(i) Qualifying earnings and taxes.

(ii) Carryover rule.

(2) Hovering deficit.

(i) In general.

(ii) Offset rule.

(iii) Related taxes.

(3) Examples.

(e) Pre-pooling annual layers.

(1) If foreign surviving corporation is a pooling corporation.

(i) Qualifying earnings and taxes.

(ii) Carryover rule.

(iii) Deficits.

(A) In general.

(B) Aggregate positive pre-1987 accumulated profits.

(C) Aggregate deficit in pre-1987 accumulated profits.

(D) Deficit and positive separate categories within annual layers

(iv) Pre-1987 section 960 earnings and profits and foreign income taxes.

(v) Examples.

(2) If foreign surviving corporation is a nonpooling corporation.

(i) Qualifying earnings and taxes.

(ii) Carryover rule.

(iii) Deficits.

(A) In general.

(B) Aggregate positive pre-1987 accumulated profits.

(C) Aggregate deficit in pre-1987 accumulated profits.

(D) Deficit and positive separate categories within annual layers.

(iv) Pre-1987 section 960 earnings and profits and foreign income taxes.

(v) Examples.

(f) Special rules.

(1) Treatment of deficit.

(i) General rule.

(ii) Exceptions.

(iii) Examples.

(2) Reconciling taxable years.

(3) Post-transaction change of status.

(4) Ordering rule for multiple hovering deficits.

(i) Rule.

(ii) Example.

(5) Pro rata rule for earnings and deficits during transaction year.

(g) Effective date.

§ 1.367(b)-8 Allocation of earnings and profits and foreign income taxes in certain foreign corporate separations. [Reserved]

§ 1.367(b)-9 Special rule for F reorganizations and similar transactions.

(a) Scope.

(b) Hovering deficit rules inapplicable.

(c) Foreign divisive transactions. [Reserved]

(d) Examples.

(e) Effective date.

§ 1.367(b)-10 Acquisition of parent stock or securities for property in triangular reorganizations.

(a) In general.

(1) Scope.

(2) Exceptions.

(3) Definitions.

(b) General rules.

(1) Deemed distribution.

(2) Deemed contribution.

(3) Timing of deemed distribution and deemed contribution.

(4) Application of other provisions.

(5) Example.

(c) Collateral adjustments.

(1) Deemed distribution.

(2) Deemed contribution.

(d) Anti-abuse rule.

(e) Effective/applicability date.

§ 1.367(b)-12 Subsequent treatment of amounts attributed or included in income.

(a) In general.

(b) Applicable rules.

(c) Effective date.

§ 1.367(b)-13 Special rules for determining basis and holding period.

(a) Scope and definitions.

(1) Scope.

(2) Definitions.

(b) Determination of basis for exchanges of foreign stock or securities under section 354 or 356.

(c) Determination of basis and holding period for triangular reorganizations.

(1) Application.

(2) Basis and holding period rules.

(i) Portions attributable to S stock.

(ii) Portions attributable to T stock.

(d) Special rules applicable to divided shares of stock.

(1) In general.

(2) Pre-exchange earnings and profits.

(3) Post-exchange earnings and profits.

(e) Examples.

(f) Effective date.

[T.D. 8862, 65 FR 3596, Jan. 24, 2000; 65 FR 66501, Nov. 6, 2000, as amended by T.D. 8937, 66 FR 2257, Jan. 11, 2001; T.D. 9273, 71 FR 44984, Aug. 8, 2006; T.D. 9526, 76 FR 28893, May 19, 2011; T.D. 9614, 78 FR 17039, Mar. 19, 2013]

Editorial Note: By T.D. 9526, 76 FR 28893, May 19, 2011, § 1.367(b)-0 was amended by redesignating the entries for § 1.367(b)-2(d)(3)(iii)(A) and (B) as entries for (d)(3)(ii)(A) and (B); however, the amendment could not be

incorporated due to inaccurate amendatory instruction.

§ 1.367(b)-1 Other transfers.

(a) ***Scope.*** The regulations promulgated under section 367(b) (the section 367(b) regulations) set forth rules regarding the proper inclusions and adjustments that must be made as a result of an exchange described in section 367(b) (a section 367(b) exchange). A section 367(b) exchange is any exchange described in section 332, 351, 354, 355, 356 or 361, with respect to which the status of a foreign corporation as a corporation is relevant for determining the extent to which income shall be recognized or for determining the effect of the transaction on earnings and profits, basis of stock or securities, basis of assets, or other relevant tax attributes. For rules coordinating the concurrent application of sections 367(a) and (b), see § 1.367(a)-3(b)(2).

(b) ***General rules*** —

(1) ***Rules.*** The following general rules apply under the section 367(b) regulations—

(i) A foreign corporation in a section 367(b) exchange is considered to be a corporation and, as a result, all of the related provisions (*e.g.,* section 381) shall apply, except to the extent provided in the section 367(b) regulations; and

(ii) Nothing in the section 367(b) regulations shall permit—

(A) The nonrecognition of income that would otherwise be required to be recognized under another provision of the Internal Revenue Code or the regulations thereunder; or

(B) The recognition of a loss or deduction that would otherwise not be recognized under another provision of the Internal Revenue Code or the regulations thereunder.

(2) ***Example.*** The following example illustrates the rules of this paragraph (b):

> *Example.* (i) *Facts.* DC, a domestic corporation, owns 90 percent of P, a partnership. The remaining 10 percent of P is owned by a person unrelated to DC. P owns all of the outstanding stock of FC, a controlled foreign corporation. FC liquidates into P.
> (ii) *Result.* FC's liquidation is not a transaction described in section 332. Nothing in the section 367(b) regulations, including § 1.367(b)-2(k), permits FC's liquidation to qualify as a liquidation described in section 332.

(c) ***Notice Required*** —

(1) ***In general.*** A notice under this paragraph (c) (section 367(b) notice) must be filed with regard to any person described in paragraph (c)(2) of this section. A section 367(b) notice must be filed in the time and manner described in paragraph (c)(3) of this section and must include the information described in paragraph (c)(4) of this section.

(2) ***Persons subject to section 367(b) notice.*** The following persons are described in this paragraph (c)(2)—

(i) A shareholder described in § 1.367(b)-3(b)(1) that realizes income in a transaction described in § 1.367(b)-3(a);

(ii) A shareholder that makes the election described in § 1.367(b)-3(c)(3);

(iii) A shareholder described in § 1.367(b)-4(b)(1)(i)(A)(*1*) or (*2*) that realizes income in a transaction described in § 1.367(b)-4(a);

(iv) A shareholder that realizes income in a transaction described in § 1.367(b)-5(c) or 1.367(b)-5(d) and that is either—

(A) A section 1248 shareholder of the distributing or controlled corporation; or

(B) A foreign corporation with one or more shareholders that are described in paragraph (c)(2)(iv)(A) of this section;

(v) A foreign surviving corporation described in § 1.367(b)-7(a); and

(vi) A domestic or foreign corporation (S) that acquires stock or securities of another corporation (P) in a transaction described in § 1.367(b)-10(a)(1), without regard to the exceptions in § 1.367(b)-10(a)(2).

(3) *Time and manner for filing notice* —

(i) ***United States persons described in § 1.367(b)-1(c)(2).*** A United States person described in paragraph (c)(2) of this section must file a section 367(b) notice attached to a timely filed Federal tax return (including extensions) for the person's taxable year in which income is realized in the section 367(b) exchange. In the case of a shareholder that makes the election described in § 1.367(b)-3(c)(3), notification of such election must be sent to the foreign acquired corporation (or its successor in interest) on or before the date the section 367(b) notice is filed, so that appropriate corresponding adjustments can be made in accordance with the rules of § 1.367(b)-2(e).

(ii) ***Foreign corporations described in § 1.367(b)-1(c)(2).*** Each United States person listed in this paragraph (c)(3)(ii) must file a section 367(b) notice with regard to a foreign corporation described in paragraph (c)(2) of this section. Such notice must be attached to a timely filed Federal tax return (including extensions) for the United States person's taxable year in which income is realized in the section 367(b) exchange and, if the United States person is required to file a Form 5471 (Information Return of U.S. Persons With Respect to Certain Foreign Corporations), the section 367(b) notice must be attached to the Form 5471. The following persons are listed in this paragraph (c)(3)(ii)—

(A) United States shareholders (as defined in § 1.367(b)-3(b)(2)) of foreign corporations described in paragraph (c)(2)(i), (v), or (vi) of this section; and

(B) Section 1248 shareholders of foreign corporations described in paragraph (c)(2)(iii) or (iv) of this section.

(4) ***Information required.*** Except as provided in paragraph (c)(5) of this section, a section 367(b) notice shall include the following information—

(i) A statement that the exchange is a section 367(b) exchange;

(ii) A complete description of the exchange;

(iii) A description of any stock, securities or other consideration transferred or received in the exchange;

(iv) A statement that describes any amount (or amounts) required, under the section 367(b) regulations, to be taken into account as income or loss or as an adjustment (including an adjustment under § 1.367(b)-7 or 1.367(b)-9) to basis, earnings and profits, or other tax attributes as a result of the exchange;

(v) Any information that is or would be required to be furnished with a Federal income tax return pursuant to regulations or other guidance under section 332, 351, 354, 355, 356, 361, 368, or 381 (whether or not a Federal income tax return is required to be filed), if such information has not otherwise been provided by the person filing the section 367(b) notice;

(vi) Any information required to be furnished with respect to the exchange under sections 6038, 6038A, 6038B, 6038C or 6046, or the regulations under those sections, if such information has not otherwise been provided by the person filing the section 367(b) notice;

(vii) If applicable, a statement that the shareholder is making the election described in § 1.367(b)-3(c)(3). This statement must include—

(A) A copy of the information the shareholder received from the foreign acquired corporation (or its successor in interest) establishing and substantiating the shareholder's all earnings and profits amount with respect to the shareholder's stock in the foreign acquired corporation; and

(B) A representation that the shareholder has notified the foreign acquired corporation (or its successor in interest) that the shareholder is making the election described in § 1.367(b)-3(c)(3);

(viii) In the case of a corporation (S) described in paragraph (c)(2)(vi) of this section, the rules of this paragraph (c)(4) apply by treating the acquisition of the stock or securities of P in exchange for property as the section 367(b) exchange referred to in paragraph (a) of this section. The section 367(b) notice must also include a complete description of the acquisition of the stock or securities of P in exchange for property, including a description of the property provided in exchange for the stock or securities and any related transactions involving the acquisition of the stock or securities. The section 367(b) notice must describe any adjustments made pursuant to § 1.367(b)-10 or, if no adjustments are made, explain why no such adjustments were made; and

(ix) In the case of an exchange to which § 1.367(b)-3(g) applies, a statement describing how any excess asset basis (as defined in § 1.367(b)-3(g)(2)(i)) arose, the amount of excess asset basis, and a description of the computation of the amount of excess asset basis.

(5) ***Abbreviated notice provision for shareholders that make the election described in § 1.367(b)-3(c)(3).*** In the case of a foreign acquired corporation that has never had earnings and profits that would result in any shareholder having an all earnings and profits amount, a shareholder making the election described in § 1.367(b)-3(c)(3) may satisfy the information requirements of paragraph (c)(4) of this section by filing a section 367(b) notice that includes—

(i) A statement from the foreign acquired corporation (or its successor in interest) that the foreign acquired corporation has never had any earnings and profits that would result in any shareholder having an all earnings and profits amount; and

(ii) The information described in paragraphs (c)(4) (i) through (iii) of this section.

(6) ***Supplemental published guidance.*** The section 367(b) notice requirements may be updated or amended by revenue procedure or other published guidance.

[T.D. 8862, 65 FR 3597, Jan. 24, 2000; 65 FR 66501, Nov. 6, 2000, as amended by T.D. 9243, 71 FR 4288, Jan. 26, 2006; T.D. 9273, 71 FR 44894, Aug. 8, 2006; T.D. 10004, 89 FR 58278, July 18, 2024]

§ 1.367(b)-2 Definitions and special rules.

(a) ***Controlled foreign corporation.*** The term *controlled foreign corporation* means a controlled foreign corporation as defined in section 957 (taking into account section 953(c)).

(b) ***Section 1248 shareholder.*** The term *section 1248 shareholder* means any United States person that satisfies the ownership requirements of section 1248 (a)(2) or (c)(2) with respect to a foreign corporation.

(c) ***Section 1248 amount*** —

(1) ***Rule.*** The term *section 1248 amount* with respect to stock in a foreign corporation means the net positive earnings and profits (if any) that would have been attributable to such stock and includible in income as a dividend under section 1248 and the regulations thereunder if the stock were sold by the shareholder. But *see* § 1.1411-10(c)(3)(ii), which for certain exchanges modifies the section 1248 amount for purposes of section 1411. In the case of a transaction in which the shareholder is a foreign corporation (foreign shareholder), the following additional rules shall apply—

(i) The foreign shareholder shall be deemed to be a United States person for purposes of this paragraph (c), except that the foreign shareholder shall not be considered a United States person for purposes of determining whether the stock owned by the foreign shareholder is stock of a controlled foreign corporation; and

(ii) The foreign shareholder's holding period in the stock of the foreign corporation shall be determined by reference to the period that the foreign shareholder's section 1248 shareholders held (directly or indirectly) an interest in the foreign corporation. This paragraph (c)(1)(ii) applies in addition to the section 1248 regulations' incorporation of section 1223 holding periods. See § 1.1248-8.

(2) ***Examples.*** The following examples illustrate the rules of this paragraph (c):

> *Example 1.* (i) *Facts.* DC, a domestic corporation, owns all of the outstanding stock of FC1, a controlled foreign corporation (CFC). FC1 owns all of the outstanding stock of FC2, a CFC. DC has always owned all of the stock of FC1, and FC1 has always owned all of the stock of FC2. (ii) *Result.* Under this paragraph (c), DC's section 1248 amount with respect to its FC1 stock is computed by reference to all of FC1's and FC2's earnings and profits. See section 1248(c)(2). Because FC1's section 1248 shareholder (DC) always indirectly held all of the stock of FC2, FC1's section 1248 amount with respect to its FC2 stock is computed by reference to all of FC2's earnings and profits.

> *Example 2.* (i) *Facts.* DC, a domestic corporation, owns 40 percent of the outstanding stock of FC1, a foreign corporation. The other 60 percent of FC1 stock is owned (directly and indirectly) by foreign persons that are unrelated to DC. FC1 owns all of the outstanding stock of FC2, a foreign corporation. On January 1, 2001, DC purchases the remaining 60 percent of

FC1 stock.
(ii) *Result.* Under this paragraph (c), DC's section 1248 amount with respect to its FC1 stock is computed by reference to FC1's and FC2's earnings and profits that accumulated on or after January 1, 2001, the date FC1 and FC2 became controlled foreign corporations (CFCs). See section 1248(a). Because FC1 is not considered a United States person for purposes of determining whether FC2 is a CFC, FC1's section 1248 amount with respect to its FC2 stock is computed by reference to FC2's earnings and profits that accumulated on or after January 1, 2001, the date FC2 became an actual CFC.

Example 3. (i) *Facts.* FC1, a foreign corporation, owns all of the outstanding stock of FC2, a foreign corporation. DC is a domestic corporation that is unrelated to FC1, FC2, and their direct and indirect owners. On January 1, 2001, DC purchases all of the outstanding stock of FC1.
(ii) *Result.* Under this paragraph (c), DC's section 1248 amount with respect to its FC1 stock is computed by reference to FC1's and FC2's earnings and profits that accumulated on or after January 1, 2001, the first day DC held the stock of FC1. See section 1248(a). FC1's section 1248 amount with respect to its FC2 stock is computed by reference to FC2's earnings and profits that accumulated on or after January 1, 2001, the first day FC1's section 1248 shareholder (DC) indirectly held the stock of FC2.

(d) ***All earnings and profits amount*** —

(1) ***General rule.*** The term *all earnings and profits amount* with respect to stock in a foreign corporation means the net positive earnings and profits (if any) determined as provided under paragraph (d)(2) of this section and attributable to such stock as provided under paragraph (d)(3) of this section. The all earnings and profits amount shall be determined without regard to the amount of gain that would be realized on a sale or exchange of the stock of the foreign corporation.

(2) ***Rules for determining earnings and profits*** —

(i) ***Domestic rules generally applicable.*** For purposes of this paragraph (d), except as provided in sections 312(k)(4) and (n)(8), 964 and 986, the earnings and profits of a foreign corporation for any taxable year shall be determined according to principles substantially similar to those applicable to domestic corporations.

(ii) ***Certain adjustments to earnings and profits.*** Notwithstanding paragraph (d)(2)(i) of this section, for purposes of this paragraph (d), the earnings and profits of a foreign corporation for any taxable year shall not include the amounts specified in section 1248(d). In the case of amounts specified in section 1248(d)(4), the preceding sentence requires that the earnings and profits for any taxable year be decreased by the net positive amount (if any) of earnings and profits attributable to activities described in section 1248(d)(4), and increased by the net reduction (if any) in earnings and profits attributable to activities described in section 1248(d)(4). But *see* § 1.1411-10(c)(3)(ii), which for certain exchanges modifies the all earnings and profits amount for purposes of section 1411.

(iii) ***Effect of section 332 liquidating distribution.*** The all earnings and profits amount with respect to stock of a corporation that distributes all of its property in a liquidation described in section 332 shall be determined without regard to the adjustments prescribed by section 312(a) and (b) resulting from the distribution of such property in liquidation, except that gain or loss realized by the corporation on the distribution shall be taken into account to the extent provided in section 312(f)(1). See § 1.367(b)-3(b)(3)(ii) *Example 3.*

(3) ***Amount attributable to a block of stock*** —

(i) ***Application of section 1248 principles*** —

(A) ***In general*** —

(*1*) ***Rule.*** The all earnings and profits amount with respect to stock of a foreign corporation is determined according to the attribution principles of section 1248 and the regulations thereunder. The attribution principles of section 1248 shall apply without regard to the requirements of section 1248 that are not relevant to the determination of a shareholder's pro rata portion of earnings and profits. Thus, for example, the all earnings and profits amount is determined without regard to whether the foreign corporation was a controlled foreign corporation at any time during the five years preceding the section 367(b) exchange in question, without regard to whether the shareholder owned a 10 percent or greater interest in the stock, and without regard to whether the earnings and profits of the foreign corporation were accumulated in post-1962 taxable years or while the corporation was a controlled foreign corporation.

(*2*) ***Example.*** The following example illustrates the rules of this paragraph (d)(3)(i)(A):

> *Example.* (i) *Facts.* On January 1, 2001, DC, a domestic corporation, purchases 9 percent of the outstanding stock of FC, a foreign corporation. On January 1, 2002, DC purchases an additional 1 percent of FC stock. On January 1, 2003, DC exchanges its stock in FC in a section 367(b) exchange in which DC is required to include the all earnings and profits amount in income. FC was not a controlled foreign corporation during the entire period DC held its FC stock.
> (ii) *Result.* The all earnings and profits amount with respect to DC's stock in FC is computed by reference to 9 percent of FC's earnings and profits from January 1, 2001, through December 31, 2001, and by reference to 10 percent of FC's earnings and profits from January 1, 2002, through January 1, 2003.

(B) ***Foreign shareholders.*** In the case of a transaction in which the exchanging shareholder is a foreign corporation (foreign shareholder), the following additional rules shall apply—

(*1*) The attribution principles of section 1248 shall apply without regard to whether the person directly owning the stock is a United States person; and

(*2*) The foreign shareholder's holding period in the stock of the foreign acquired corporation shall be determined by reference to the period that the foreign shareholder's United States shareholders (as defined in § 1.367(b)-3(b)(2)) held

(directly or indirectly) an interest in the foreign acquired corporation. This paragraph (d)(3)(i)(B)(2) applies in addition to the section 1248 regulations' incorporation of section 1223 holding periods. See § 1.1248-8.

(ii) ***Exclusion of lower-tier earnings.*** In applying the attribution principles of section 1248 and the regulations thereunder to determine the all earnings and profits amount with respect to stock of a foreign corporation, the earnings and profits of corporations owned by the foreign corporation shall not be taken into account notwithstanding section 1248(c)(2). But *see* § 1.367(b)-3(g)(1), which adjusts the all earnings and profits amount through a deemed distribution of certain earnings and profits of foreign subsidiaries owned by the foreign acquired corporation.

(e) ***Treatment of deemed dividends*** —

(1) ***In general.*** In certain circumstances these regulations provide that an exchanging shareholder shall include an amount in income as a deemed dividend. This paragraph provides rules for the treatment of the deemed dividend.

(2) ***Consequences of dividend characterization.*** A deemed dividend described in paragraph (e)(1) of this section shall be treated as a dividend for purposes of the Internal Revenue Code. The deemed dividend shall be considered as paid out of the earnings and profits with respect to which the amount of the deemed dividend was determined. Thus, for example, a deemed dividend that is determined by reference to the all earnings and profits amount or the section 1248 amount will never be considered as paid out of (and therefore will never reduce) earnings and profits specified in section 1248(d), because such earnings and profits are excluded in computing the all earnings and profits amount (under paragraph (d)(2)(ii) of this section) and the section 1248 amount (under section 1248(d) and paragraph (c)(1) of this section). If the deemed dividend is determined by reference to the earnings and profits of a foreign corporation that is owned indirectly (*i.e.,* through one or more tiers of intermediate owners) by the person that is required to include the deemed dividend in income, the deemed dividend shall be considered as having been paid by such corporation to such person through the intermediate owners, rather than directly to such person.

(3) ***Ordering rules.*** In the case of an exchange of stock in which the exchanging shareholder is treated as receiving a deemed dividend from a foreign corporation, the following ordering rules concerning the timing, treatment, and effect of such a deemed dividend shall apply. See also paragraph (j)(2) of this section.

(i) For purposes of the section 367(b) regulations, the gain realized by an exchanging shareholder shall be determined before increasing (as provided in paragraph (e)(3)(ii) of this section) the basis in the stock of the foreign corporation by the amount of the deemed dividend.

(ii) Except as provided in paragraph (e)(3)(i) of this section, the deemed dividend shall be considered to be received immediately before the exchanging shareholder's receipt of consideration for its stock in the foreign corporation, and the shareholder's basis in the stock exchanged shall be increased by the amount of the deemed dividend. Such basis increase shall be taken into account before determining the gain otherwise recognized on the exchange (for example, under section 356), the basis that the exchanging shareholder takes in the property that it receives in the exchange (under section 358(a)(1)), and the basis that the transferee otherwise takes in the transferred stock (under section 362).

(iii) Except as provided in paragraph (e)(3)(i) of this section, the earnings and profits of the appropriate foreign corporation shall be reduced by the deemed dividend amount before determining the consequences of the recognition of gain in excess of the deemed dividend amount (for example, under section 356(a)(2) or sections 356(a)(1) and 1248).

(4) ***Examples.*** The following examples illustrate the rules of this paragraph (e):

Example 1. DC, a domestic corporation, exchanges stock in FC, a foreign corporation, in a section 367(b) exchange in which DC includes the all earnings and profits amount in income as a deemed dividend. Under paragraph (e)(2) of this section, a deemed dividend is treated as a dividend for purposes of the Internal Revenue Code.

Example 2. DC, a domestic corporation, exchanges stock in FC1, a foreign corporation that is a controlled foreign corporation, in a transaction in which DC is required to include the section 1248 amount in income as a deemed dividend. A portion of the section 1248 amount is determined by reference to the earnings and profits of FC1 (the upper-tier portion of the section 1248 amount), and the remainder of the section 1248 amount is determined by reference to the earnings and profits of FC2, which is a wholly owned foreign corporation of FC1 (the lower-tier portion of the section 1248 amount). Under paragraph (e)(2) of this section, DC computes its deemed paid foreign tax credit as if the lower-tier portion of the section 1248 amount were distributed as a dividend by FC2 to FC1, and as if such portion and the upper-tier portion of the section 1248 amount were then distributed as a dividend by FC1 to DC.

Example 3. DC, a domestic corporation, exchanges stock in FC, a foreign corporation that is a controlled foreign corporation, in a transaction in which DC realizes gain of $100 (prior to the application of the section 367(b) regulations). In connection with the transaction, DC is required to include $40 in income as a deemed dividend under the section 367(b) regulations. In addition to receiving property permitted to be received under section 354 without the recognition of gain, DC also receives cash in the amount of $70. Under paragraph (e)(3) of this section, the $40 deemed dividend increases DC's basis in its FC stock before determining the gain to be recognized under section 356. Thus, in applying section 356, DC is considered to realize $60 of gain on the exchange, all of which is recognized under section 356(a)(1).

(f) ***Deemed asset transfer and closing of taxable year in certain section 368(a)(1)(F) reorganizations*** —

(1) ***Scope.*** This paragraph applies to a reorganization described in section 368(a)(1)(F) in which the transferor corporation is a foreign corporation.

(2) ***Deemed asset transfer.*** In a reorganization described in paragraph (f)(1) of this section, there is considered to exist—

(i) A transfer of assets by the foreign transferor corporation to the acquiring corporation in exchange for stock (or stock and securities) of the acquiring corporation and the assumption by the acquiring corporation of the foreign transferor corporation's liabilities;

(ii) A distribution of such stock (or stock and securities) by the foreign transferor corporation to its shareholders (or shareholders and security holders); and

(iii) An exchange by the foreign transferor corporation's shareholders (or shareholders and security holders) of their stock (or stock and securities) for stock (or stock and securities) of the acquiring corporation.

(3) ***Other applicable rules.*** For purposes of this paragraph (f), it is immaterial that the applicable foreign or domestic law treats the acquiring corporation as a continuation of the foreign transferor corporation.

(4) ***Closing of taxable year.*** In a reorganization described in paragraph (f)(1) of this section, the taxable year of the foreign transferor corporation shall end with the close of the date of the transfer and, except as otherwise required under the Internal Revenue Code (*e.g.* section 1502 and the regulations thereunder), the taxable year of the acquiring corporation shall end with the close of the date on which the transferor's taxable year would have ended but for the occurrence of the reorganization if—

(i) The acquiring corporation is a domestic corporation; or

(ii) The foreign transferor corporation has effectively connected earnings and profits (as defined in section 884(d)) or accumulated effectively connected earnings and profits (as defined in section 884(b)(2)(B)(ii)).

(g) ***Stapled stock under section 269B.*** For rules addressing the deemed conversion of a foreign corporation to a domestic corporation under section 269B, see § 1.269B-1(c).

(h) ***Section 953(d) domestication elections*** —

(1) ***Effect of election.*** A foreign corporation that elects under section 953(d) to be treated as a domestic corporation shall be treated for purposes of section 367(b) as transferring, as of the first day of the first taxable year for which the election is effective, all of its assets to a domestic corporation in a reorganization described in section 368(a)(1)(F). Notwithstanding paragraph (d) of this section, for purposes of determining the consequences of the reorganization under § 1.367(b)-3, the all earnings and profits amount shall not be considered to include earnings and profits accumulated in taxable years beginning before January 1, 1988.

(2) ***Post-election exchanges.*** For purposes of applying section 367(b) to post-election exchanges with respect to a corporation that has made a valid election under section 953(d) to be treated as a domestic corporation, such corporation shall be treated as a domestic corporation as to earnings and profits that were taken into account at the time of the section 953(d) election or which accrue after such election, and shall be treated as a foreign corporation as to earnings and profits accumulated in taxable years beginning before January 1, 1988. Thus, for example, if the section 953(d) corporation subsequently transfers its assets to a domestic corporation (other than another section 953(d) corporation) in a transaction described in section 381(a), the rules of § 1.367(b)-3 shall apply to such transaction to the extent of the section 953(d) corporation's earnings and profits accumulated in taxable years beginning before January 1, 1988.

(i) ***Section 1504(d) elections.*** An election under section 1504(d), which permits certain foreign corporations to be treated as domestic corporations, is treated as a transfer of property to a domestic corporation and will generally constitute a reorganization described in section 368(a)(1)(F). However, if an election under section 1504(d) is made with respect to a foreign corporation from the first day of the foreign corporation's existence, then the foreign corporation shall be treated as a domestic corporation, and the section 367(b) regulations will not apply.

(j) ***Sections 985 through 989*** —

(1) ***Change in functional currency of a qualified business unit*** —

(i) ***Rule.*** If, as a result of a section 367(b) exchange described in section 381(a), a qualified business unit (as defined in section 989(a)) (QBU) has a different functional currency determined under the rules of section 985(b) than it used prior to the transaction, then the QBU shall be deemed to have automatically changed its functional currency immediately prior to the transaction. A QBU that is deemed to change its functional currency pursuant to this paragraph (j) must make the adjustments described in § 1.985-5.

(ii) ***Example.*** The following example illustrates the rule of this paragraph (j)(1):

> *Example.* (i) *Facts.* DC, a domestic corporation, owns 100 percent of FC1, a foreign corporation. FC1 owns and operates a qualified business unit (QBU) (B1) in France, whose functional currency is the euro. FC2, an unrelated foreign corporation, owns and operates a QBU (B2) in France, whose functional currency is the dollar. FC2 acquires FC1's assets (including B1) in a reorganization described in section 368(a)(1)(C). As a part of the reorganization, B1 and B2 combine their operations into one QBU. Applying the rules of section 985(b), the functional currency of the combined operations of B1 and B2 is the euro.
> (ii) *Result.* FC2's acquisition of FC1's assets is a section 367(b) exchange that is described in section 381(a). Because the functional currency of the combined operations of B1 and B2 after the exchange is the euro, B2 is deemed to have automatically changed its functional currency to the euro immediately prior to the section 367(b) exchange. B2 must make the adjustments described in § 1.985-5.

(2) ***Previously taxed earnings and profits*** —

(i) ***Exchanging shareholder that is a United States person.*** If an exchanging shareholder that is a United States person exchanges stock pursuant to a transaction described in § 1.367(b)-3 or § 1.367(b)-4(b)(1)(i), (b)(2)(i), (b)(3), (e), or (g), then immediately prior to the exchange, and solely for the purpose of computing exchange gain or loss under section 986(c), the exchanging shareholder shall be treated as receiving a distribution of previously taxed earnings and profits from the appropriate foreign corporation that is attributable (under the principles of section 1248) to the exchanged stock. If an exchanging shareholder that is a United States person is a distributee in an exchange described in § 1.367(b)-5(c) or (d), then immediately prior to the exchange, and solely for the purpose of computing exchange gain or loss under section 986(c), the exchanging shareholder shall be treated as receiving a distribution of previously taxed earnings and profits from the appropriate foreign corporation to the extent such shareholder has a diminished interest in such previously taxed earnings and profits after the exchange. The exchange gain or loss recognized under this paragraph (j)(2)(i) will increase or decrease the exchanging shareholder's adjusted basis in the stock of the foreign corporation, including for purposes of computing gain or loss realized with respect to the stock on the transaction. The exchanging shareholder's dollar basis with respect to each account of previously taxed income shall be increased or decreased by the exchange gain or loss recognized.

(ii) ***Exchanging shareholder that is a foreign corporation.*** If an exchanging shareholder that is a foreign corporation exchanges stock pursuant to a transaction described in § 1.367(b)-3 or § 1.367(b)-4(b)(1)(i), (b)(2)(i), (b)(3), (e), or (g), then, immediately prior to the exchange, the exchanging shareholder shall be treated as receiving a distribution of previously taxed earnings

and profits from the appropriate foreign corporation that is attributable (under the principles of section 1248) to the exchanged stock. If an exchanging shareholder that is a foreign corporation is a distributee in an exchange described in § 1.367(b)-5(c) or (d), then the exchanging shareholder shall be treated as receiving (immediately prior to the exchange) a distribution of previously taxed earnings and profits from the appropriate foreign corporation. Such distribution shall be measured by the extent to which the exchanging shareholder's direct or indirect United States shareholders (as defined in section 951(b)) have a diminished interest in such previously taxed earnings and profits after the exchange.

(3) ***Other rules.*** See sections 985 through 989 for other currency rules that may apply in connection with a section 367(b) exchange.

(k) ***Partnerships, trusts and estates.*** In applying the section 367(b) regulations, stock of a corporation that is owned by a foreign partnership, trust or estate shall be considered as owned proportionately by its partners, owners, or beneficiaries under the principles of § 1.367(e)-1(b)(2). Stock owned by an entity that is disregarded as an entity separate from its owner under § 301.7701-3 is owned directly by the owner of such entity. In applying § 1.367(b)-5(b), the principles of § 1.367(e)-1(b)(2) shall also apply to a domestic partnership, trust or estate.

(l) ***Additional definitions*** —

(1) ***Foreign income taxes.*** The term *foreign income taxes* has the meaning set forth in § 1.902-1(a)(7).

(2) ***Post-1986 undistributed earnings.*** The term *post-1986 undistributed earnings* has the meaning set forth in § 1.902-1(a)(9).

(3) ***Post-1986 foreign income taxes.*** The term *post-1986 foreign income taxes* has the meaning set forth in § 1.902-1(a)(8).

(4) ***Pre-1987 accumulated profits.*** The term *pre-1987 accumulated profits* means the earnings and profits described in § 1.902-1(a)(10)(i), computed in accordance with the rules of § 1.902-1(a)(10)(ii).

(5) ***Pre-1987 foreign income taxes.*** The term *pre-1987 foreign income taxes* has the meaning set forth in § 1.902-1(a)(10)(iii).

(6) ***Pre-1987 section 960 earnings and profits.*** The term *pre-1987 section 960 earnings and profits* means the earnings and profits of a foreign corporation accumulated in taxable years beginning before January 1, 1987, computed under § 1.964-1(a) through (e), and translated into the functional currency (as determined under section 985) of the foreign corporation at the spot rate on the first day of the foreign corporation's first taxable year beginning after December 31, 1986. For further guidance, see Notice 88-70 (1988-2 C.B. 369, 370) (see also § 601.601(d)(2) of this chapter). The term pre-1987 section 960 earnings and profits does not include earnings and profits that represent previously taxed earnings and profits described in section 959.

(7) ***Pre-1987 section 960 foreign income taxes.*** The term *pre-1987 section 960 foreign income taxes* means the foreign income taxes related to pre-1987 section 960 earnings and profits, determined in accordance with the principles of § 1.902-1(a)(10)(iii), except that the U.S. dollar amounts of pre-1987 section 960 foreign income taxes are determined by reference to the exchange rates in effect when the taxes were paid or accrued.

(8) ***Earnings and profits.*** For purposes of §§ 1.367(b)-7 and 1.367(b)-9, the term *earnings and profits* means post-1986 undistributed earnings, pre-1987 accumulated profits, and pre-1987 section 960 earnings and profits.

(9) ***Pooling corporation.*** The term *pooling corporation* means a foreign corporation with respect to which the requirements of section 902(c)(3)(B) have been met in the current taxable year or any prior taxable year.

(10) ***Nonpooling corporation.*** The term *nonpooling corporation* means a foreign corporation that is not a pooling corporation.

(11) ***Separate category.*** The term *separate category* has the meaning set forth in section 904(d)(1), and shall also include any other category of income to which section 904(a), (b), and (c) are applied separately under any other provision of the Internal Revenue Code (e.g., sections 56(g)(4)(C)(iii)(IV), 245(a)(10), 865(h), 901(j), and 904(h)(10) (or section 904(g)(10) for taxable years beginning on or before December 31, 2006).

(12) ***Passive category.*** The term *passive category* means the separate category that includes income described in section 904(d)(1)(A).

(13) ***General category.*** The term *general category* means the separate category that includes income described in section 904(d)(1)(B) (or section 904(d)(1)(I) for taxable years beginning on or before December 31, 2006).

[T.D. 8862, 65 FR 3598, Jan. 24, 2000; 65 FR 66501, Nov. 6, 2000, as amended by T.D. 9216, 70 FR 43760, July 29, 2005; T.D. 9273, 71 FR 44894, Aug. 8, 2006; T.D. 9345, 72 FR 41444, July 30, 2007; T.D. 9400, 73 FR 30303, May 27, 2008; T.D. 9959, 87 FR 325, Jan. 4, 2022; T.D. 10004, 89 FR 58279, July 18, 2024]

§ 1.367(b)-3 Repatriation of foreign corporate assets in certain nonrecognition transactions.

(a) ***Scope.*** This section applies to an acquisition by a domestic corporation (the domestic acquiring corporation) of the assets of a foreign corporation (the foreign acquired corporation) in a liquidation described in section 332 or an asset acquisition described in section 368(a)(1).

(b) ***Exchange of stock owned directly by a United States shareholder or by certain foreign corporate shareholders—***

(1) ***Scope.*** This paragraph (b) applies in the case of an exchanging shareholder that is either—

(i) A United States shareholder of the foreign acquired corporation; or

(ii) A foreign corporation with respect to which there are one or more United States shareholders.

(2) ***United States shareholder.*** For purposes of this section (and for purposes of the other section 367(b) regulation provisions that specifically refer to this paragraph (b)(2)), the term *United States shareholder* means any shareholder described in section 951(b) (without regard to whether the foreign corporation is a controlled foreign corporation), and also any shareholder described in section 953(c)(1)(A) (but only if the foreign corporation is a controlled foreign corporation as defined in section 953(c)(1)(B) subject to the rules of section 953(c)).

(3) ***Income inclusion*** —

(i) ***Inclusion of all earnings and profits amount.*** An exchanging shareholder shall include in income as a deemed dividend the all earnings and profits amount with respect to its stock in the foreign acquired corporation. For the consequences of the deemed dividend, see § 1.367(b)-2(e). Notwithstanding § 1.367(b)-2(e), however, a deemed dividend from the foreign acquired corporation to an exchanging foreign corporate shareholder shall not qualify for the

exception from foreign personal holding company income provided by section 954(c)(3)(A)(i), although it may qualify for the look-through treatment provided by section 904(d)(3) if the requirements of that section are met with respect to the deemed dividend.

(ii) ***Examples.*** The following examples illustrate the rules of paragraph (b)(3)(i) of this section:

Example 1. (i) *Facts.* DC, a domestic corporation, owns all of the outstanding stock of FC, a foreign corporation. The stock of FC has a value of $100, and DC has a basis of $30 in such stock. The all earnings and profits amount attributable to the FC stock owned by DC is $20, of which $15 is described in section 1248(a) and the remaining $5 is not (for example, because it accumulated prior to 1963). FC has a basis of $50 in its assets. In a liquidation described in section 332, FC distributes all of its property to DC, and the FC stock held by DC is canceled.
(ii) *Result.* Under paragraph (b)(3)(i) of this section, DC must include $20 in income as a deemed dividend from FC. Under section 337(a) FC does not recognize gain or loss in the assets that it distributes to DC, and under section 334(b), DC takes a basis of $50 in such assets.

Example 2. (i) *Facts.* DC, a domestic corporation, owns all of the outstanding stock of FC, a foreign corporation. The stock of FC has a value of $100, and DC has a basis of $30 in such stock. The all earnings and profits amount attributable to the FC stock owned by DC is $75. FC has a basis of $50 in its assets. In a liquidation described in section 332, FC distributes all of its property to DC, and the FC stock held by DC is canceled.
(ii) *Result.* Under paragraph (b)(3)(i) of this section, DC must include $75 in income as a deemed dividend from FC. Under section 337(a) FC does not recognize gain or loss in the assets that it distributes to DC, and under section 334(b), DC takes a basis of $50 in such assets.

Example 3. (i) *Facts.* DC, a domestic corporation, owns 80 percent of the outstanding stock of FC, a foreign corporation. DC has owned its 80 percent interest in FC since FC was incorporated. The remaining 20 percent of the outstanding stock of FC is owned by a person unrelated to DC (the minority shareholder). The stock of FC owned by DC has a value of $80, and DC has a basis of $24 in such stock. The stock of FC owned by the minority shareholder has a value of $20, and the minority shareholder has a basis of $18 in such stock. FC's only asset is land having a value of $100, and FC has a basis of $50 in the land. Gain on the land would not generate earnings and profits qualifying under section 1248(d) for an exclusion from earnings and profits for purposes of section 1248. FC has earnings and profits of $20 (determined under the rules of § 1.367(b)-2(d)(2) (i) and (ii)), $16 of which is attributable to the stock owned by DC under the rules of § 1.367(b)-2(d)(3). FC subdivides the land and distributes to the minority shareholder land

with a value of $20 and a basis of $10. As part of the same transaction, in a liquidation described in section 332, FC distributes the remainder of its land to DC, and the FC stock held by DC and the minority shareholder is canceled.
(ii) *Result.* Under section 336, FC must recognize the $10 of gain it realizes in the land it distributes to the minority shareholder, and under section 331 the minority shareholder recognizes its gain of $2 in the stock of FC. Such gain is included in income by the minority shareholder as a dividend to the extent provided in section 1248 if the minority shareholder is a United States person that is described in section 1248(a)(2). Under § 1.367(b)-2(d)(2)(iii), the $10 of gain recognized by FC increases its earnings and profits for purposes of computing the all earnings and profits amount and, as a result, $8 of such increase (80 percent of $10) is considered to be attributable to the FC stock owned by DC under § 1.367(b)-2(d)(3)(i)(A)(*1*). DC's all earnings and profits amount with respect to its stock in FC is $24 (the $16 of initial all earnings and profits amount with respect to the FC stock held by DC, plus the $8 addition to such amount that results from FC's recognition of gain on the distribution to the minority shareholder). Under paragraph (b)(3)(i) of this section, DC must include the $24 all earnings and profits amount in income as a deemed dividend from FC.

Example 4. (i) *Facts.* DC1, a domestic corporation, owns all of the outstanding stock of DC2, a domestic corporation. DC1 also owns all of the outstanding stock of FC, a foreign corporation. The stock of FC has a value of $100, and DC1 has a basis of $30 in such stock. The assets of FC have a value of $100. The all earnings and profits amount with respect to the FC stock owned by DC1 is $20. In a reorganization described in section 368(a)(1)(D), DC2 acquires all of the assets of FC solely in exchange for DC2 stock. FC distributes the DC2 stock to DC1, and the FC stock held by DC1 is canceled.
(ii) *Result.* DC1 must include $20 in income as a deemed dividend from FC under paragraph (b)(3)(i) of this section. Under section 361, FC does not recognize gain or loss in the assets that it transfers to DC2 or in the DC2 stock that it distributes to DC1, and under section 362(b) DC2 takes a basis in the assets that it acquires from FC equal to the basis that FC had therein. Under § 1.367(b)-2(e)(3)(ii) and section 358(a)(1), DC1 takes a basis of $50 (its $30 basis in the stock of FC, plus the $20 that was treated as a deemed dividend to DC1) in the stock of DC2 that it receives in exchange for the stock of FC. Under § 1.367(b)-2(e)(3)(iii) and section 312(a), the earnings and profits of FC are reduced by the $20 deemed dividend.

Example 5. (i) *Facts.* DC1, a domestic corporation, owns all of the outstanding stock of FC1, a foreign corporation. FC1 owns all of the outstanding stock of FC2, a foreign corporation. The all earnings and profits amount with respect to the FC2 stock owned by FC1 is $20. In a reorganization described in section 368(a)(1)(A), DC2, a domestic corporation unrelated to FC1 or FC2, acquires all of the assets and liabilities of FC2

pursuant to a State W merger. FC2 receives DC2 stock and distributes such stock to FC1. The FC2 stock held by FC1 is canceled, and FC2 ceases its separate legal existence.
(ii) *Result.* FC1 must include $20 in income as a deemed dividend from FC2 under paragraph (b)(3)(i) of this section. The deemed dividend is treated as a dividend for purposes of the Internal Revenue Code as provided in § 1.367(b)-2(e)(2); however, under paragraph (b)(3)(i) of this section the deemed dividend cannot qualify for the exception from foreign personal holding company income provided by section 954(c)(3)(A)(i), even if the provisions of that section would otherwise have been met in the case of an actual dividend.

Example 6. (i) *Facts.* DC1, a domestic corporation, owns 99 percent of USP, a domestic partnership. The remaining 1 percent of USP is owned by a person unrelated to DC1. DC1 and USP each directly own 9 percent of the outstanding stock of FC, a foreign corporation that is not a controlled foreign corporation subject to the rule of section 953(c). In a reorganization described in section 368(a)(1)(C), DC2, a domestic corporation, acquires all of the assets and liabilities of FC in exchange for DC2 stock. FC distributes to its shareholders DC2 stock, and the FC stock held by its shareholders is canceled.
(ii) *Result.* (A) DC1 and USP are United States persons that are exchanging shareholders in a transaction described in paragraph (a) of this section. As a result, DC1 and USP are subject to the rules of paragraph (b) of this section if they qualify as United States shareholders as defined in paragraph (b)(2) of this section. Alternatively, if they do not qualify as United States shareholders as defined in paragraph (b)(2) of this section, DC1 and USP are subject to the rules of paragraph (c) of this section. Paragraph (b)(2) of this section defines the term United States shareholder to include any shareholder described in section 951(b) (without regard to whether the foreign corporation is a controlled foreign corporation). A shareholder described in section 951(b) is a United States person that is considered to own, applying the rules of section 958(a) and 958(b), 10 percent or more of the total combined voting power of all classes of stock entitled to vote of a foreign corporation. Under section 958(b), the rules of section 318(a), as modified by section 958(b) and the regulations thereunder, apply so that, in general, stock owned directly or indirectly by a partnership is considered as owned proportionately by its partners, and stock owned directly or indirectly by a partner is considered as owned by the partnership. Thus, under section 958(b), DC1 is treated as owning its proportionate share of FC stock held by USP, and USP is treated as owning all of the FC stock held by DC1.

(B) Accordingly, for purposes of determining whether DC1 is a United States shareholder under paragraph (b)(2) of this section, DC1 is considered as owning 99 percent of the 9 percent of FC stock held by USP. Because DC1 also owns 9 percent of FC stock directly,

DC1 is considered as owning more than 10 percent of FC stock. DC1 is thus a United States shareholder of FC under paragraph (b)(2) of this section and, as a result, is subject to the rules of paragraph (b) of this section. However, for purposes of determining DC1's all earnings and profits amount, DC1 is not treated as owning the FC stock held by USP. Under § 1.367(b)-2(d)(3), DC1's all earnings and profits amount is determined by reference to the 9 percent of FC stock that it directly owns.

(C) For purposes of determining whether USP is a United States shareholder under paragraph (b)(2) of this section, USP is considered as owning the 9 percent of FC stock held by DC1. Because USP also owns 9 percent of FC stock directly, USP is considered as owning more than 10 percent of FC stock. USP is thus a United States shareholder of FC under paragraph (b)(2) of this section and, as a result, is subject to the rules of paragraph (b) of this section. However, for purposes of determining USP's all earnings and profits amount, USP is not treated as owning the FC shares held by DC1. Under § 1.367(b)-2(d)(3), USP's all earnings and profits amount is determined by reference to the 9 percent of FC stock that it directly owns.

(iii) *Recognition of exchange gain or loss with respect to capital.* [Reserved]

(4) ***Reserved.*** For further guidance concerning section 367(b) exchanges occurring before February 23, 2001, see § 1.367(b)-3T(b)(4).

(c) ***Exchange of stock owned by a United States person that is not a United States shareholder*** —

(1) ***Scope.*** This paragraph (c) applies in the case of an exchanging shareholder that is a United States person not described in paragraph (b)(1)(i) of this section (*i.e.,* a United States person that is not a United States shareholder of the foreign acquired corporation).

(2) ***Requirement to recognize gain.*** An exchanging shareholder described in paragraph (c)(1) of this section shall recognize realized gain (but not loss) with respect to the stock of the foreign acquired corporation.

(3) ***Election to include all earnings and profits amount.*** In lieu of the treatment prescribed by paragraph (c)(2) of this section, an exchanging shareholder described in paragraph (c)(1) of this section may instead elect to include in income as a deemed dividend the all earnings and profits amount with respect to its stock in the foreign acquired corporation. For the consequences of a deemed dividend, see § 1.367(b)-2(e). Such election may be made only if—

(i) The foreign acquired corporation (or its successor in interest) has provided the exchanging shareholder information to substantiate the exchanging shareholder's all earnings and profits amount with respect to its stock in the foreign acquired corporation; and

(ii) The exchanging shareholder complies with the section 367(b) notice requirement described in § 1.367(b)-1(c), including the specific rules contained therein concerning the time and manner for electing to apply the rules of this paragraph (c)(3).

(4) ***De minimis exception.*** This paragraph (c) shall not apply in the case of an exchanging shareholder whose stock in the foreign acquired corporation has a fair market value of less than $50,000 on the date of the section 367(b) exchange.

(5) ***Examples.*** The following examples illustrate the rules of this paragraph (c):

> *Example 1.* (i) *Facts.* DC1, a domestic corporation, owns 5 percent of the outstanding stock of FC, a foreign corporation that is not a controlled foreign corporation subject to the rule of section 953(c). Persons unrelated to DC1 own the remaining 95 percent of the outstanding stock of FC. DC1 has owned its 5 percent interest in FC since FC was incorporated. DC1's stock in FC has a basis of $40,000 and a value of $100,000. The all earnings and profits amount with respect to DC1's stock in FC is $50,000. In a reorganization described in section 368(a)(1)(C), DC2, a domestic corporation, acquires all of the assets and liabilities of FC in exchange for DC2 stock. FC distributes DC2 stock to its shareholders, and the FC stock held by its shareholders is canceled.
> (ii) *Alternate result 1.* If DC1 does not make the election described in paragraph (c)(3) of this section, then the general rule of paragraph (c)(2) of this section applies and DC1 must recognize its $60,000 gain in the FC stock. Under section 358(a)(1), DC1 has a $100,000 basis (its $40,000 basis in the FC stock, plus the $60,000 recognized gain) in the DC2 stock that it receives in exchange for its FC stock. Because DC1 is not a shareholder described in section 1248(a)(2), section 1248 does not apply to recharacterize any of DC1's gain as a dividend.
>
> (iii) *Alternate result 2.* If DC1 makes a valid election under paragraph (c)(3) of this section, then DC1 must include in income as a deemed dividend the $50,000 all earnings and profits amount with respect to its FC stock. Under § 1.367(b)-2(e)(3) and section 358(a)(1), DC1 has a $90,000 basis (its $40,000 basis in the FC stock, plus the $50,000 that was treated as a deemed dividend to DC1) in the DC2 stock that it receives in exchange for its FC stock.

> *Example 2.* (i) *Facts.* The facts are the same as in *Example 1,* except that DC1's stock in FC has a fair market value of $48,000 on the date DC1 receives the DC2 stock.
> (ii) *Result.* Because DC1's stock in FC has a fair market value of less than $50,000 on the date of the section 367(b) exchange, the de minimis exception of paragraph (c)(4) of this section applies. As a result, DC1 is not subject to the gain or income inclusion requirements of this paragraph (c).

(d) ***Carryover of certain foreign taxes*** —

(1) ***Rule.*** Excess foreign taxes under section 904(c) allowable to the foreign acquired corporation under section 906 shall carry over to the domestic acquiring corporation and become allowable under section 901, subject to the limitations prescribed by the Internal Revenue Code (for example, sections 383, 904 and 907). The domestic acquiring corporation shall not succeed to any other foreign taxes paid or incurred by the foreign acquired corporation.

(2) ***Example.*** The following example illustrates the rules of this paragraph (d):

> *Example.* (i) *Facts.* DC, a domestic corporation owns 100 percent of the outstanding stock of FC, a foreign corporation. FC has net positive earnings and profits, none of which are attributable to DC's FC stock under § 1.367(b)-2(d)(3). FC has paid foreign taxes that are not eligible for credit under section 906. In a liquidation described in section 332, FC distributes all of its property to DC, and the FC stock held by DC is canceled.
> (ii) *Result.* The liquidation of FC into DC is a section 367(b) exchange. Thus, DC is subject to the section 367(b) regulations, and must file a section 367(b) notice pursuant to § 1.367(b)-1(c). Pursuant to the provisions of paragraph (d)(1) of this section, the foreign taxes paid by FC do not carryover to DC because FC's foreign taxes are not eligible for credit under section 906.

(e) ***Net operating loss and capital loss carryovers.*** A net operating loss or capital loss carryover of the foreign acquired corporation is described in section 381(c)(1) and (c)(3) and thus is eligible to carry over from the foreign acquired corporation to the domestic acquiring corporation only to the extent the underlying deductions or losses were allowable under chapter 1 of subtitle A of the Internal Revenue Code. Thus, only a net operating loss or capital loss carryover that is effectively connected with the conduct of a trade or business within the United States (or that is attributable to a permanent establishment, in the context of an applicable United States income tax treaty) is eligible to be carried over under section 381. For further guidance, see Rev. Rul. 72-421 (1972-2 C.B. 166) (see also § 601.601(d)(2) of this chapter).

(f) ***Carryover of earnings and profits —***

(1) General rule. Except to the extent otherwise specifically provided (see, e.g., Notice 89-79 (1989-2 C.B. 392) (see also § 601.601(d)(2) of this chapter)), earnings and profits of the foreign acquired corporation that are not included in income as a deemed dividend under the section 367(b) regulations (or deficit in earnings and profits) are eligible to carry over from the foreign acquired corporation to the domestic acquiring corporation under section 381(c)(2) only to the extent such earnings and profits (or deficit in earnings and profits) are effectively connected with the conduct of a trade or business within the United States (or are attributable to a permanent establishment in the United States, in the context of an applicable United States income tax treaty). All other earnings and profits (or deficit in earnings and profits) of the foreign acquired corporation shall not carry over to the domestic acquiring corporation and, as a result, shall be eliminated.

(2) ***Previously taxed earnings and profits.*** [Reserved]

(g) ***All earnings and profits amount adjusted for excess asset basis —***

(1) ***General rule.*** If there is excess asset basis with respect to a foreign acquired corporation and the condition described in paragraph (g)(1)(i) or (ii) of this section is satisfied, then, except as provided in paragraph (g)(5) of this section, an exchanging shareholder to which paragraph (b)(3)(i) of this section applies must compute the all earnings and profits amount with respect to its stock in the foreign acquired corporation as if, immediately before the inbound nonrecognition transaction, the foreign acquired corporation had received a distribution of property from a foreign subsidiary under section 301 in an amount equal to the specified earnings. In addition, the deemed distribution described in the preceding sentence is treated as occurring for all purposes of the Internal Revenue Code. For purposes of this paragraph (g)(1), the amount of the distribution from a foreign subsidiary

is equal to the amount of earnings and profits of that foreign subsidiary that is designated as specified earnings under paragraph (g)(3) of this section. In the case of a foreign subsidiary the stock of which is not held directly by the foreign acquired corporation, the distribution is treated as being made through any intermediate owners, or directly from any constructively owned foreign subsidiaries, where applicable. For purposes of this paragraph (g)(1), references to the foreign acquired corporation, S, and a foreign subsidiary include any predecessor corporation.

(i) S previously acquired in exchange for property stock or securities of the foreign acquired corporation in connection with a triangular reorganization described in § 1.358-6(b)(2), and the foreign acquired corporation and S did not make adjustments that have the effect of a distribution of property from S to the foreign acquired corporation under § 1.367(b)-10(b)(1).

(ii) The excess asset basis is attributable, directly or indirectly, to property previously provided by a foreign subsidiary of the foreign acquired corporation in connection with a transaction not described in paragraph (g)(1)(i) of this section and undertaken with a principal purpose to create such excess asset basis.

(2) ***Definitions.*** The following definitions apply for purposes of this paragraph (g).

(i) ***Excess asset basis.*** The term *excess asset basis* means, with respect to a foreign acquired corporation, the amount by which the inside asset basis of that corporation exceeds the sum of the following amounts:

(A) The earnings and profits of the foreign acquired corporation attributable to its outstanding stock. For purposes of this paragraph (g)(2)(i)(A), such earnings and profits are determined under the principles of § 1.367(b)-2(d) but without regard to whether the exchanging shareholder is described in paragraph (b)(1) of this section or whether the exchanging shareholder is a U.S. person or a foreign person. Such earnings and profits include amounts described in section 1248(d)(3) or (4).

(B) The aggregate basis in the outstanding stock of the foreign acquired corporation determined immediately before the nonrecognition transaction described in paragraph (a) of this section (the inbound nonrecognition transaction) and therefore without regard to any basis increase described in § 1.367(b)-2(e)(3)(ii) resulting from such inbound nonrecognition transaction.

(C) The aggregate amount of liabilities of the foreign acquired corporation that are assumed (determined under the principles of section 357(d)) by the domestic acquiring corporation in the inbound nonrecognition transaction.

(ii) ***Foreign subsidiary.*** The term *foreign subsidiary* means, with respect to a foreign acquired corporation, a foreign corporation with respect to which the foreign acquired corporation satisfies the ownership requirements of section 1248(c)(2)(B) but for this purpose treating the foreign acquired corporation as the United States person referred to in section 1248(c)(2)(B).

(iii) ***Inbound nonrecognition transaction.*** The term *inbound nonrecognition transaction* has the meaning set forth in paragraph (g)(2)(i)(B) of this section.

(iv) ***Inside asset basis.*** The term *inside asset basis* means, with respect to a foreign acquired corporation, the aggregate of the adjusted basis of all the assets of that corporation in the hands of the domestic acquiring corporation determined immediately after the inbound nonrecognition transaction.

(v) ***Lower-tier earnings.*** The term *lower-tier earnings* means, with respect to a foreign acquired corporation, the sum of the earnings and profits (including deficits) of each foreign subsidiary.

(vi) ***Property.*** The term *property* has the same meaning as in § 1.367(b)-10(a)(3)(ii).

(vii) ***S.*** The term *S* has the same meaning as in § 1.367(b)-10(a)(3)(i).

(viii) ***Specified earnings.*** The term *specified earnings* means, with respect to a foreign acquired corporation, the lesser of the following amounts:

(A) Lower-tier earnings; and

(B) The excess asset basis of the foreign acquired corporation.

(3) ***Designation of specified earnings.*** If lower-tier earnings exceed specified earnings, then the portion of lower-tier earnings that is designated as specified earnings is determined by reference to the earnings and profits of each foreign subsidiary on a pro rata basis in proportion to each foreign subsidiary's share of lower-tier earnings.

(4) ***Anti-abuse rule.*** Appropriate adjustments are made pursuant to this section if a transaction is engaged in with a view to avoid the purposes of this paragraph (g). For example, if a transaction is engaged in with a view to reduce excess asset basis, including by increasing the basis in the stock of the foreign acquired corporation without a corresponding increase in the basis of the assets of the foreign acquired corporation, that increase in the basis in the stock of the foreign acquired corporation will be disregarded for purposes of computing excess asset basis.

(5) ***Prohibition against affirmative use.*** This paragraph (g) does not apply to an inbound nonrecognition transaction if a transaction described in paragraph (g)(1) of this section was entered into with a principal purpose of subjecting the inbound nonrecognition transaction to this paragraph (g). For example, this paragraph (g) will not apply to an inbound nonrecognition transaction if a taxpayer engaged in a transaction described in paragraph (g)(1) of this section with a principal purpose of accessing tax attributes of lower-tier foreign subsidiaries by reason of a deemed distribution of lower-tier earnings of the foreign acquired corporation.

(6) ***Examples.*** The application of this paragraph (g) is illustrated by the examples in this paragraph (g)(6). In each example, all corporations have a calendar year-end and use the United States dollar as their functional currency.

(i) ***Example 1: Excess asset basis from triangular reorganization*** —

(A) ***Facts.*** USP, a domestic corporation, owns all of the stock of USS, also a domestic corporation, and 80 percent of the stock of FP, a foreign corporation. USS owns the remaining 20 percent of the stock of FP. FP owns all of the stock of FS1, which in turn owns all of the stock of FS2. Both FS1 and FS2 are foreign corporations. In a reorganization described in section 368(a)(1)(F) (F reorganization), US Newco, a newly formed domestic corporation, acquires all of the assets of FP solely in exchange for stock of US Newco, which FP distributes to USP and USS in liquidation. Immediately before the F reorganization, the stock of FP owned by USP has a fair market value of $80x and an adjusted basis of $4x. The stock of FP owned by USS has a fair market value of $20x and an adjusted basis of $1x. The all earnings and profits amounts with respect to USP's stock of FP and USS's stock of FP, determined before any adjustments required by paragraph (g)(1) of this section, are $32x and $8x, respectively. FP holds assets with an adjusted basis of $95x, has no liabilities, and has $40x of earnings and profits attributable to its

outstanding stock. FS1 and FS2 have $30x and $70x of earnings and profits, respectively, all of which are described in section 959(c)(3). Dividends paid by FS2 to FS1, and by FS1 to FP, would qualify for the exception to foreign personal holding company income under section 954(c)(6). Before the applicability date described in paragraph (g)(7)(i) of this section, and separate from the F reorganization, FS1 provided property to FP in exchange for stock of FP in connection with a triangular reorganization described in § 1.358-6(b)(2), and neither FP nor FS1 made adjustments that had the effect of a distribution of property from FS1 to FP under § 1.367(b)-10(b)(1).

(B) *Analysis* —

(*1*) ***All earnings and profits amount.*** The F reorganization is an asset acquisition described in section 368(a)(1) and is thus subject to section 367(b) and this section. Under paragraph (b)(3) of this section, USP and USS each must include in income as a deemed dividend the all earnings and profits amount with respect to their stock of FP. Because there is excess asset basis with respect to FP (as determined in paragraph (g)(6)(i)(B)(*2*) of this section), USP and USS must compute the all earnings and profits amounts attributable to their stock of FP as if FP had received a distribution of specified earnings, immediately before the F reorganization. *See* paragraph (g)(1) of this section. Because the stock of FS2 is indirectly owned by FP, to the extent the specified earnings are determined by reference to the earnings and profits of FS2, FS2 is treated as making a distribution to FS1 under section 301, and FS1 is then treated as making a distribution to FP under section 301 in an amount equal to the sum of the amount of specified earnings determined by reference to the earnings and profits of FS1 (determined without regard to the deemed distribution from FS2) and the amount of the deemed distribution received from FS2. *See id.*

(*2*) ***Excess asset basis.*** The amount of excess asset basis is $50x, calculated as the amount by which FP's inside asset basis ($95x) exceeds the sum of FP's earnings and profits ($40x), the aggregate basis in the outstanding stock of FP ($5x), and the amount of liabilities of FP assumed by US Newco in the F reorganization ($0). *See* paragraph (g)(2)(i) of this section.

(*3*) ***Deemed distribution of specified earnings.*** The amount of specified earnings equals $50x, the lesser of the following amounts: the sum of the earnings and profits of FS1 and FS2 ($100x); and the amount of excess asset basis with respect to FP ($50x). *See* paragraph (g)(2)(viii) of this section. FP is accordingly treated as receiving a distribution of $50x from FS1. *See* paragraph (g)(1) of this section. Under paragraph (g)(3) of this section, $15x ($50x × ($30x/$100x)) of FS1's earnings and profits and $35x ($50x × ($70x/$100x)) of FS2's earnings and profits are designated as specified earnings. FS2 is treated as distributing $35x to FS1. *See* paragraph (g)(1) of this section. Under sections 301(c)(1) and 954(c)(6), the $35x deemed distribution from FS2 to FS1 is treated as a dividend that does not give rise to foreign personal holding company income. FS1 must accordingly increase its earnings and profits described in section 959(c)(3) by $35x to $65x, and FS2 must decrease its earnings and profits described in section 959(c)(3) by the same amount. FS1 is then treated as making a distribution of $50x to FP. *See* paragraph (g)(1) of this section. Under sections 301(c)(1) and 954(c)(6), the $50x deemed distribution is also treated as a dividend that does not give rise to foreign personal holding company income. FP must

accordingly increase its earnings and profits described in section 959(c)(3) by $50x to $90x, and FS1 must decrease its earnings and profits described in section 959(c)(3) by the same amount.

(4) ***Adjusted all earnings and profits amount attributable to USP's FP stock.*** USP must compute the all earnings and profits amount attributable to its stock of FP after taking into account the $50x increase to FP's earnings and profits that resulted from the deemed distribution of specified earnings. *See* paragraph (g)(1) of this section. Because USP owns 80% of the stock of FP, $40x (calculated as 80% of $50x) of the specified earnings are attributable to USP's stock of FP and are included in the all earnings and profits amount attributable to USP's stock of FP. The all earnings and profits amount that USP must include in income as a deemed dividend is therefore $72x ($32x + $40x).

(5) ***Adjusted all earnings and profits amount attributable to USS's FP stock.*** USS must compute the all earnings and profits amount attributable to its stock of FP after taking into account the $50x increase to FP's earnings and profits that resulted from the deemed distribution of specified earnings. *See* paragraph (g)(1) of this section. Because USS owns 20% of the stock of FP, $10x (calculated as 20% of $50x) of the specified earnings are attributable to USS's stock of FP and are included in the all earnings and profits amount attributable to USS's stock of FP. The all earnings and profits amount that USS must include in income as a deemed divided is therefore $18x ($8x + $10x).

(ii) ***Example 2: Principal purpose of creating excess asset basis*** —

(A) ***Facts.*** USP, a domestic corporation, owns all of the stock of FP, which in turn owns all of the stock of FS. Both FP and FS are foreign corporations. The all earnings and profits amount with respect to USP's stock of FP, determined before any adjustments required by paragraph (g)(1) of this section, is $50x. FP has no other earnings and profits other than the $50x that reflect USP's all earnings and profits amount. FS has $200x of earnings and profits, all of which are earnings and profits described in section 959(c)(2) (PTEP) because those earnings and profits gave rise to an earlier income inclusion under section 951 with respect to USP. Increases in stock basis were made under section 961 by reason of USP's section 951 inclusion. FP has excess asset basis of $100x as a result of a previous transaction that was undertaken with a principal purpose of creating excess asset basis in which FS provided $100x of property to FP. At the time of that transaction, FP did not also have a principal purpose of subjecting an inbound nonrecognition transaction to this paragraph (g) and thus paragraph (g)(5) of this section is not applicable. Subsequently, in a liquidation described in section 332, FP distributes all of its assets to USP and the stock of FP is cancelled (the FP liquidation).

(B) ***Analysis*** —

(1) ***All earnings and profits amount.*** The FP liquidation is subject to section 367(b) and this section. Under paragraph (b)(3) of this section, USP must include in income as a deemed dividend the all earnings and profits amount with respect to its stock of FP. Because there is excess asset basis with respect to FP, USP must compute the all earnings and profits amount attributable to its stock of FP as if FP had received a distribution of specified earnings immediately before the FP liquidation. *See* paragraph (g)(1) of this section.

(2) ***Deemed distribution of specified earnings.*** The amount of specified earnings equals $100x, the lesser of the following amounts: the earnings and profits of FS ($200); and the amount of excess asset basis with respect to FP ($100x). *See* paragraph (g)(2)(viii) of this section. FS is accordingly treated as making a distribution of $100x to FP. *See* paragraph (g)(1) of this section. Under sections 301(c)(1) and 959(b), the $100x deemed distribution from FS to FP is treated as a distribution of PTEP that is not included in the gross income of FP for purposes of section 951. The distribution reduces FS's earnings and profits and PTEP with respect to USP by $100x and increases FP's earnings and profits and PTEP with respect to USP by $100x. Furthermore, appropriate adjustments are made under section 961 for the distribution of PTEP.

(3) ***Adjusted all earnings and profits amount attributable to USP's stock of FP.*** USP must compute the all earnings and profits amount attributable to its stock of FP after taking into account the $100x increase to FP's earnings and profits that resulted from the deemed distribution of specified earnings. *See* paragraph (g)(1) of this section. Because the deemed distribution consisted entirely of PTEP with respect to USP, the deemed distribution does not affect USP's all earnings and profits amount of $50x. *See* § 1.367(b)-2(d)(2)(ii). USP must therefore include $50x in income as a deemed dividend under this section. USP must also recognize any foreign currency gain or loss under section 986(c) with respect to the $100x of PTEP of FP. *See* § 1.367(b)-2(j)(2).

(7) ***Applicability date —***

(i) ***In general.*** This paragraph (g) (other than paragraphs (g)(2)(viii), (g)(3) and (5) of this section) applies to transactions completed on or after December 2, 2016, and to any transactions treated as completed before December 2, 2016, as a result of an entity classification election made under § 301.7701-3 of this chapter that is filed on or after December 2, 2016. Paragraphs (g)(2)(viii), (g)(3) and (5) of this section apply to transactions completed on or after October 5, 2023.

(ii) ***Transactions completed (or elections made) on or after December 2, 2016, and before October 5, 2023.*** Except as provided in paragraph (g)(7)(iii) of this section, the following definitions (in lieu of the corresponding definitions or in addition to the definitions in paragraph (g)(2) of this section) and rules apply with respect to transactions completed on or after December 2, 2016, and to any transactions treated as completed before December 2, 2016, as a result of an entity classification election made under § 301.7701-3 of this chapter that is filed on or after December 2, 2016, but before October 5, 2023:

(A) The term *specified earnings* means, with respect to the stock of a foreign acquired corporation that is exchanged by an exchanging shareholder, the lesser of the following amounts (but not below zero):

(1) The sum of the earnings and profits (including a deficit) with respect to each foreign subsidiary of the foreign acquired corporation that are attributable under section 1248(c)(2) to the stock of the foreign acquired corporation exchanged (lower-tier earnings). For purposes of the preceding sentence, the modifications described in § 1.367(b)-2(d)(2) and (d)(3)(i) apply. Thus, for example, the amount of the earnings and profits of a foreign subsidiary that are attributable to stock of the foreign

acquired corporation is determined without regard to whether the foreign subsidiary was a controlled foreign corporation at any time during the five years preceding the inbound nonrecognition transaction.

(2) The product of the excess asset basis of the foreign acquired corporation, multiplied by the exchanging shareholder's specified percentage.

(3) The amount of gain that would be realized by the exchanging shareholder if, immediately before the inbound nonrecognition transaction, the exchanging shareholder had sold the stock of the foreign acquired corporation for fair market value, reduced by the exchanging shareholder's all earnings and profits amount (for this purpose, determined without regard to the modifications described in this paragraph (g)) (specified stock gain).

(B) The term *specified percentage* means, with respect to an exchanging shareholder, a fraction (expressed as a percentage), the numerator of which is the sum of the aggregate of the specified stock gain with respect to all exchanging shareholders to which paragraph (b)(3) of this section applies and the aggregate of the gain realized (regardless of whether such gain is recognized) with respect to the stock exchanged by all other exchanging shareholders.

(C) If there is excess asset basis with respect to a foreign acquired corporation, as determined under paragraph (g)(2)(i) of this section, a taxpayer may reduce the excess asset basis to the extent that the excess asset basis is not attributable, directly or indirectly, to property provided by a foreign subsidiary of the foreign acquired corporation. For example, if there was a transfer of property to the foreign acquired corporation described in section 362(e)(2), and the election described in section 362(e)(2)(C) was made to limit the basis in the stock received in the foreign acquired corporation to its fair market value, then, for purposes of determining excess asset basis, the basis in the stock of the foreign acquiring corporation may be determined without regard to the application of section 362(e)(2).

(iii) ***Early application.*** A taxpayer and its related parties (within the meaning of sections 267(b) and 707(b)(1)) may choose to apply paragraphs (g)(1) through (6) of this section to all open taxable years beginning before July 17, 2024, provided that the taxpayer and its related parties consistently apply paragraphs (g)(1) through (6) of this section and § 1.367(b)-1(c)(4)(ix) for such years.

[T.D. 8862, 65 FR 3601, Jan. 24, 2000; 65 FR 66501, Nov. 6, 2000, as amended by T.D. 9243, 71 FR 4288, Jan. 26, 2006; T.D. 9273, 71 FR 44895, Aug. 8, 2006; T.D. 9959, 87 FR 325, Jan. 4, 2022; T.D. 10004, 89 FR 58279, July 18, 2024]

§ 1.367(b)-3T Repatriation of foreign corporate assets in certain nonrecognition transactions (temporary).

(a)-(b) (3) [Reserved]. For further guidance, see § 1.367(b)-3(a) through (b)(3).

(4) ***Election of taxable exchange treatment*** —

(i) ***Rules*** —

(A) ***In general.*** In lieu of the treatment prescribed by § 1.367(b)-3(b)(3)(i), an exchanging shareholder described in § 1.367(b)-3(b)(1) may instead elect to recognize the gain (but not loss) that it realizes in the exchange (taxable exchange election). To make a taxable exchange election, the following requirements must be satisfied—

(*1*) The exchanging shareholder (and its direct or indirect owners that would be affected by the election, in the case of an exchanging shareholder that is a foreign corporation) reports the exchange in a manner consistent therewith (see, e.g., sections 954(c)(1)(B)(i), 1001 and 1248);

(*2*) The notification requirements of paragraph (b)(4)(i)(C) of this section are satisfied; and

(*3*) The adjustments described in paragraph (b)(4)(i)(B) of this section are made when the following circumstances are present—

(*i*) The transaction is described in section 332 or is an asset acquisition described in section 368(a)(1), with regard to which one U.S. person owns (directly or indirectly) 100 percent of the foreign acquired corporation; and

(*ii*) The all earnings and profits amount described in § 1.367(b)-3(b)(3)(i) with respect to the exchange exceeds the gain recognized by the exchanging shareholder.

(B) ***Attribute reduction*** —

(*1*) ***Reduction of NOL carryovers.*** The amount by which the all earnings and profits amount exceeds the gain recognized by the exchanging shareholder (the excess earnings and profits amount) shall be applied to reduce the net operating loss carryovers (if any) of the foreign acquired corporation to which the domestic acquiring corporation would otherwise succeed under section 381(a) and (c)(1). See also Rev. Rul. 72-421 (1972-2 C.B. 166) (see § 601.601(d)(2) of this chapter).

(*2*) ***Reduction of capital loss carryovers.*** After the application of paragraph (b)(4)(i)(B)(*1*) of this section, any remaining excess earnings and profits amount shall be applied to reduce the capital loss carryovers (if any) of the foreign acquired corporation to which the domestic acquiring corporation would otherwise succeed under section 381(a) and (c)(3).

(*3*) ***Reduction of basis.*** After the application of paragraph (b)(4)(i)(B)(*2*) of this section, any remaining excess earnings and profits amount shall be applied to reduce (but not below zero) the basis of the assets (other than dollar-denominated money) of the foreign acquired corporation that are acquired by the domestic acquiring corporation. Such remaining excess earnings and profits amount shall be applied to reduce the basis of such assets in the following order: first, tangible depreciable or depletable assets, according to their class lives (beginning with those assets with the shortest class life); second, other non-inventory tangible assets; third, intangible assets that are amortizable; and finally, the remaining assets of the foreign acquired corporation that are acquired by the domestic acquiring corporation. Within each of these categories, if the total basis of all assets in the category is greater than the excess earnings and profits amount to be applied against such basis, the taxpayer may choose to which specific assets in the category the basis reduction first applies.

(C) ***Notification.*** The exchanging shareholder shall elect to apply the rules of this paragraph (b)(4)(i) by attaching a statement of its election to its section 367(b) notice. See § 1.367(b)-1(c) For the rules concerning filing a section 367(b) notice.

(D) ***Example.*** The following example illustrates the rules of this paragraph (b)(4)(i):

> *Example.* (i) *Facts.* DC, a domestic corporation, owns all of the outstanding stock of FC, a foreign corporation. The stock of FC has a value of $100, and DC has a basis of $80 in such stock. The assets of FC are one parcel of land with a value of $60 and a basis of $30, and tangible depreciable assets with a value of $40 and a basis of $80. FC has no net operating loss carryovers or capital loss carryovers. The all earnings and profits amount with respect to the FC stock owned by DC is $30, of which $19 is described in section 1248(a) and the remaining $11 is not (for example, because it was earned prior to 1963). In a liquidation described in section 332, FC distributes all of its property to DC, and the FC stock held by DC is canceled. Rather than including in income as a deemed dividend the all earnings and profits amount of $30 as provided in § 1.367(b)-3(b)(3)(i), DC instead elects taxable exchange treatment under paragraph (b)(4)(i)(A) of this section.
> (ii) *Result.* DC recognizes the $20 of gain it realizes on its stock in FC. Of this $20 amount, $19 is included in income by DC as a dividend pursuant to section 1248(a). (For the source of the remaining $1 of gain recognized by DC, see section 865. For the treatment of the $1 for purposes of the foreign tax credit limitation, see generally section 904(d)(2)(A)(i).) Because the transaction is described in section 332 and because the all earnings and profits amount with respect to the FC stock held by DC ($30) exceeds by $10 the income recognized by DC ($20), the attribute reduction rules of paragraph (b)(4)(i)(B) of this section apply. Accordingly, the $10 excess earnings and profits amount is applied to reduce the basis of the tangible depreciable assets of FC, beginning with those assets with the shortest class lives. Under section 337(a) FC does not recognize gain or loss in the assets that it distributes to DC, and under section 334(b) (which is applied taking into account the basis reduction prescribed by paragraph (b)(4)(i)(A)(*3*) of this section) DC takes a basis of $30 in the land and $70 in the tangible depreciable assets that it receives from FC.

(ii) ***Effective date.*** This paragraph (b)(4) applies for section 367(b) exchanges that occur between February 23, 2000, and February 23, 2001.

(c)-(d) [Reserved]. For further guidance, see § 1.367(b)-3(c) through (d).

[T.D. 8863, 65 FR 3588, Jan. 24, 2000, as amended by T.D. 9243, 71 FR 4288, Jan. 26, 2006]

§ 1.367(b)-4 Acquisition of foreign corporate stock or assets by a foreign corporation in certain nonrecognition transactions.

(a) ***Scope.*** This section applies to certain acquisitions by a foreign corporation of the stock or assets of a foreign corporation in an exchange described in section 351 or in a reorganization described in section 368(a)(1). Paragraph (b) of this section provides a rule regarding when an exchanging shareholder is required to include in income as a deemed dividend the section 1248 amount attributable to the stock that it exchanges. Paragraph (c) of this section provides a rule excluding deemed dividends from foreign personal holding company income. Paragraph (d) of this section provides rules for subsequent sales or exchanges. Paragraphs (e) and (f) of this section provide rules regarding certain exchanges following inversion transactions. Paragraph (g) of this section provides rules regarding exchanges that occur pursuant to a transaction described in § 1.367(b)-10(a)(1), without regard to the exceptions in § 1.367(b)-10(a)(2). Paragraph (h) of this section provides definitions and special rules, including special rules regarding triangular reorganizations and recapitalizations. Paragraph (i) of this section provides the applicability dates for certain paragraphs of this section. See also § 1.367(a)-3(b)(2) for transactions subject to the concurrent application of sections 367(a) and (b) and § 1.367(b)-2 for additional definitions that apply.

(b) ***Income inclusion.*** If a foreign corporation (the transferee foreign corporation) acquires the stock of a foreign corporation in an exchange described in section 351 or the stock or assets of a foreign corporation in a reorganization described in section 368(a)(1) (in either case, the foreign acquired corporation), then an exchanging shareholder must, if its exchange is described in paragraph (b)(1)(i), (b)(2)(i), or (b)(3) of this section, include in income as a deemed dividend the section 1248 amount attributable to the stock that it exchanges.

(1) ***Exchange that results in loss of status as section 1248 shareholder*** —

(i) ***General rule.*** Except as provided in paragraph (b)(1)(ii) of this section, an exchange is described in this paragraph (b)(1)(i) if—

(A) Immediately before the exchange, the exchanging shareholder is—

(*1*) A United States person that is a section 1248 shareholder with respect to the foreign acquired corporation; or

(*2*) A foreign corporation, and a United States person is a section 1248 shareholder with respect to such foreign corporation and with respect to the foreign acquired corporation;

(B) Either of the following conditions is satisfied—

(*1*) Immediately after the exchange, the stock received in the exchange is not stock in a corporation that is a controlled foreign corporation as to which the United States person described in paragraph (b)(1)(i)(A) of this section is a section 1248 shareholder; or

(*2*) Immediately after the exchange, the transferee foreign corporation or the foreign acquired corporation (in the case of the acquisition of the stock of a foreign acquired corporation) is not a controlled foreign corporation as to which the United States person described in paragraph (b)(1)(i)(A) of this section is a section 1248 shareholder; and

(C) The exchange is not a specified exchange to which paragraph (e)(1) of this section applies.

(ii) *Special rules* —

(A) ***Receipt of foreign stock in an exchange to which § 1.367(a)-7(c) applies.*** If an exchanging shareholder is a domestic corporation that transfers stock of a foreign acquired corporation in an exchange under section 361(a) or (b) (section 361 exchange) to which the exception to section 367(a)(5) in § 1.367(a)-7(c) applies, and the exchanging shareholder receives stock in either the transferee foreign corporation or foreign controlling corporation (in the case of a triangular reorganization), such exchange will not be described in paragraph (b)(1)(i) of this section only if immediately after the exchanging shareholder's receipt of the foreign stock in the section 361 exchange, but prior to, and without taking into account, the exchanging shareholder's distribution of the foreign stock under section 361(c)(1), the foreign acquired corporation, transferee foreign corporation, and foreign controlling corporation (in the case of a triangular reorganization) are controlled foreign corporations as to which the exchanging shareholder is a section 1248 shareholder. See paragraph (b)(1)(iii) of this section, *Example 4,* for an illustration of this rule. If an exchange is not described in paragraph (b)(1)(i) of this section as a result of the application of this paragraph, see §§ 1.1248(f)-1(b)(3) and 1.1248(f)-2(c), as applicable. For adjustments to the basis of stock of the foreign surviving corporation in certain triangular reorganizations, see paragraph (b)(1)(ii)(B)(*2*)(*i*) of this section.

(B) *Special rules for certain triangular reorganizations* —

(*1*) ***Receipt of domestic stock.*** In the case of a triangular reorganization in which the stock received in the exchange is stock of a domestic controlling corporation, such exchange is not described in paragraph (b)(1)(i) of this section if immediately after the exchange the following foreign corporations are controlled foreign corporations as to which the domestic controlling corporation is a section 1248 shareholder—

(*i*) The foreign acquired corporation and foreign surviving corporation, in the case of a section 354 exchange of the stock of the foreign acquired corporation pursuant to a triangular B reorganization.

(*ii*) The foreign surviving corporation, in the case of a section 354 or section 356 exchange of the stock of the foreign acquired corporation pursuant to a forward triangular merger, triangular C reorganization, reverse triangular merger, or triangular G reorganization. See paragraph (b)(1)(iii) of this section, *Example 3B* for an illustration of this rule.

(*iii*) The foreign acquired corporation and foreign surviving corporation, in the case of a section 361 exchange of the stock of the foreign acquired corporation by an exchanging shareholder that is a foreign corporation described in paragraph (b)(1)(i)(A)(*2*) of this section and that is a foreign acquired corporation the assets of which are acquired in a triangular reorganization described in paragraph (b)(1)(ii)(B)(*1*)(*ii*) of this section.

(*iv*) The foreign acquired corporation and foreign surviving corporation, in the case of a section 361 exchange of the stock of the foreign acquired corporation by an exchanging shareholder that is a domestic corporation described in

paragraph (b)(1)(i)(A)(*1*) of this section and that is acquired in a triangular reorganization to which the exception to section 367(a)(5) in § 1.367(a)-7(c) applies. See paragraph (b)(1)(iii) of this section, *Example 5* for an illustration of this rule.

(*2*) ***Adjustments to basis of stock of foreign surviving corporation*** —

(*i*) ***Section 361 exchanges to which § 1.367(a)-7(c) applies.*** If stock of the foreign acquired corporation is acquired by the foreign surviving corporation in a section 361 exchange by reason of triangular reorganization (other than a triangular B reorganization) to which the exception to section 367(a)(5) provided in § 1.367(a)-7(c) applies, and if paragraph (b)(1)(i) of this section does not apply to the section 361 exchange by reason of (b)(1)(ii)(A) of this section (if the stock received is stock of a foreign controlling corporation) or by reason of (b)(1)(ii)(B)(*1*)(*iv*) of this section (if the stock received is stock of a domestic controlling corporation), then the controlling corporation (foreign or domestic) must apply the principles of § 1.367(b)-13 to adjust the basis of the stock of the foreign surviving corporation so that the section 1248 amount in the stock of the foreign acquired corporation (determined when the foreign surviving corporation acquires such stock) is reflected in the stock of the foreign surviving corporation immediately after the exchange. See paragraph (b)(1)(iii) of this section, *Example 5,* for an illustration of this rule.

(*ii*) ***Other exchanges.*** See § 1.367(b)-13 for rules regarding the adjustment to the basis of the stock of the foreign surviving corporation in exchanges pursuant to triangular reorganizations that are not subject to paragraph (b)(1)(ii)(B)(*2*)(*i*) of this section.

(iii) ***Examples.*** The following examples illustrate the rules of this paragraph (b)(1):

> *Example 1.* (i) *Facts.* FC1 is a foreign corporation that is owned, directly and indirectly (applying the ownership rules of section 958), solely by foreign persons. DC is a domestic corporation that is unrelated to FC1. DC owns all of the outstanding stock of FC2, a foreign corporation. Thus, under § 1.367(b)-2(a) and (b), DC is a section 1248 shareholder with respect to FC2, and FC2 is a controlled foreign corporation. Under § 1.367(b)-2(c)(1), the section 1248 amount attributable to the stock of FC2 held by DC is $20. In a reorganization described in section 368(a)(1)(C), FC1 acquires all of the assets and assumes all of the liabilities of FC2 in exchange for FC1 voting stock. The FC1 voting stock received does not represent more than 50 percent of the voting power or value of FC1's stock. FC2 distributes the FC1 stock to DC, and the FC2 stock held by DC is canceled.
> (ii) *Result.* FC1 is not a controlled foreign corporation immediately after the exchange. As a result, the exchange is described in paragraph (b)(1)(i) of this section. Under paragraph (b) of this section, DC must include in income, as a deemed dividend from FC2, the section 1248 amount ($20) attributable to the FC2 stock that DC exchanged.

Example 2. (i) *Facts.* The facts are the same as in *Example 1,* except that the voting stock of FC1, which is received by FC2 in exchange for its assets and distributed by FC2 to DC, represents more than 50 percent of the voting power of FC1's stock under the rules of section 957(a).
(ii) *Result.* Paragraph (b)(1)(i) of this section does not apply to require inclusion in income of the section 1248 amount, because FC1 is a controlled foreign corporation as to which DC is a section 1248 shareholder immediately after the exchange.

Example 3. (i) *Facts.* The facts are the same as in *Example 1,* except that FC2 receives and distributes voting stock of FP, a foreign corporation that is in control (within the meaning of section 368(c)) of FC1, instead of receiving and distributing voting stock of FC1.
(ii) *Result.* For purposes of section 367(a), the transfer is an indirect stock transfer subject to section 367(a). See § 1.367(a)-3(d)(1)(iv). Accordingly, DC's exchange of FC2 stock for FP stock under section 354 will be taxable under section 367(a) (and section 1248 will be applicable) if DC fails to enter into a gain recognition agreement in accordance with § 1.367(a)-8. Under § 1.367(a)-3(b)(2), if DC enters into a gain recognition agreement, the exchange will be subject to the provisions of section 367(b) and the regulations thereunder, as well as section 367(a). If FP and FC1 are controlled foreign corporations as to which DC is a (direct or indirect) section 1248 shareholder immediately after the reorganization, then the section 367(b) result is the same as in *Example 2*—that is, paragraph (b)(1)(i) of this section does not apply to require inclusion in income of the section 1248 amount. Under these circumstances, the amount of the gain recognition agreement would equal the amount of the gain realized on the indirect stock transfer. If FP or FC1 is not a controlled foreign corporation as to which DC is a (direct or indirect) section 1248 shareholder immediately after the exchange, then the section 367(b) result is the same as in *Example 1*—that is, DC must include in income, as a deemed dividend from FC2, the section 1248 amount ($20) attributable to the FC2 stock that DC exchanged. Under these circumstances, the amount of the gain recognition agreement would equal the amount of the gain realized on the indirect stock transfer, less the $20 section 1248 amount inclusion.

Example 3A. (i) *Facts.* The facts are the same as in *Example 3,* except that FC1 merges into FC2 in a reorganization described in sections 368(a)(1)(A) and (a)(2)(E). Pursuant to the reorganization, DC exchanges its FC2 stock for stock of FP.
(ii) *Result.* The result is similar to the result in *Example 3.* The transfer is an indirect stock transfer subject to section 367(a). See § 1.367(a)-3(d)(1)(ii). Accordingly, DC's exchange of FC2 stock for FP stock will be taxable under section 367(a) (and section 1248 will be applicable) if DC fails to enter into a gain recognition agreement. If DC enters into a gain recognition agreement, the exchange will be subject to the provisions of section 367(b) and the regulations thereunder, as well as section 367(a). If FP and FC2 are controlled

foreign corporations as to which DC is a section 1248 shareholder immediately after the reorganization, then paragraph (b)(1)(i) of this section does not apply to require DC to include in income the section 1248 amount attributable to the FC2 stock that was exchanged and the amount of the gain recognition agreement is the amount of gain realized on the indirect stock transfer. If FP or FC2 is not a controlled foreign corporation as to which DC is a section 1248 shareholder immediately after the exchange, then DC must include in income as a deemed dividend from FC2 the section 1248 amount ($20) attributable to the FC2 stock that DC exchanged. Under these circumstances, the gain recognition agreement would be the amount of gain realized on the indirect transfer, less the $20 section 1248 amount inclusion.

Example 3B. (i) *Facts.* The facts are the same as *Example 3,* except that USP, a domestic corporation, owns the controlling interest (within the meaning of section 368(c)) in FC1 stock. In addition, FC2 merges into FC1 in a reorganization described in sections 368(a)(1)(A) and (a)(2)(D). Pursuant to the reorganization, DC exchanges its FC2 stock for USP stock.
(ii) *Result.* Because DC receives stock of a domestic corporation, USP, in the section 354 exchange, the transfer is not an indirect stock transfer subject to section 367(a). Accordingly, the exchange will be subject only to the provisions of section 367(b) and the regulations thereunder. Under paragraph (b)(1)(ii) of this section, because the stock received is stock of a domestic corporation (USP) and, immediately after the exchange, USP is a section 1248 shareholder of FC1 (the surviving corporation) and FC1 is a controlled foreign corporation, the exchange is not described in paragraph (b)(1)(i) of this section and DC is not required to include in income the section 1248 amount attributable to the FC2 stock that was exchanged. See § 1.367(b)-13(c) for the basis and holding period rules applicable to this transaction, which cause USP's adjusted basis and holding period in the stock of FC1 after the transaction to reflect the basis and holding period that DC had in its FC2 stock.

Example 4. (i) *Facts.* DC1, a domestic corporation, owns all of the outstanding stock of DC2, a domestic corporation. DC2 owns various assets, including all of the outstanding stock of FC2, a foreign corporation. The stock of FC2 has a value of $100, and DC2 has a basis of $30 in the stock. The section 1248 earnings and profits attributable to the FC2 stock held by DC2 is $20. DC2 does not own any stock other than the FC2 stock. FC1 is a foreign corporation that is unrelated to DC1, DC2, and FC2. In a reorganization described in section 368(a)(1)(C), FC1 acquires all of the assets of DC2 in exchange for the assumption of DC2's liabilities and voting stock of FC1 that represents 20% of the outstanding voting stock of FC1. DC2 distributes the FC1 stock to DC1 under section 361(c)(1), and the DC2 stock held by DC1 is canceled. The exception to section 367(a)(5) provided in § 1.367(a)-7(c) applies to the section 361 exchange. DC1 properly

files a gain recognition agreement that satisfies the conditions of §§ 1.367(a)-3(e)(6) and 1.367(a)-8 to qualify for nonrecognition treatment under section 367(a) with respect to DC2's transfer of the FC2 stock to FC1. See § 1.367(a)-3(e). FC1 is not a surrogate foreign corporation (within the meaning of section 7874) because DC1 does not hold at least 60% of the stock of FC1 by reason of holding stock of DC2.
(ii) *Result.* DC2, the exchanging shareholder, is a U.S. person and a section 1248 shareholder with respect to FC2, the foreign acquired corporation. Whether DC2 is required to include in income the section 1248 amount attributable to the FC2 stock under paragraph (b)(1)(i) of this section depends on whether, immediately after DC2's section 361 exchange of the FC2 stock for FC1 stock (and before the distribution of the FC1 stock to DC1 under section 361(c)(1)), FC1 and FC2 are controlled foreign corporations as to which DC2 is a section 1248 shareholder. See paragraph (b)(1)(ii)(A) of this section. If, immediately after the section 361 exchange (and before the distribution of the FC1 stock to DC1 under section 361(c)(1)), FC1 and FC2 are both controlled foreign corporations as to which DC2 is a section 1248 shareholder, then DC2 is not required to include in income the section 1248 amount attributable to the FC2 stock under paragraph (b)(1)(i) of this section because neither condition in paragraph (b)(1)(i)(B) of this section is satisfied. Alternatively, if immediately after the section 361 exchange (and before the distribution of the FC1 stock to DC1 under section 361(c)(1)) either FC1 or FC2 is not a controlled foreign corporation as to which DC2 is a section 1248 shareholder, then, pursuant to paragraph (b)(1)(i) of this section, DC2 must include in income the section 1248 amount attributable to the FC2 stock. For the treatment of DC2's transfer of assets other than the FC2 stock to FC1, see section 367(a)(1) and (a)(3) and the regulations under that section. Furthermore, because DC2's transfer of any other assets to FC1 is pursuant to a section 361 exchange, see section 367(a)(5) and § 1.367(a)-7. If any of the assets transferred are intangible assets for purposes of section 367(d), see section 367(d). With respect to DC2's distribution of the FC1 stock to DC1 under section 361(c)(1), see section 1248(f)(1), and §§ 1.1248(f)-1 and 1.1248(f)-2.

Example 5. (i) *Facts.* DC1, a domestic corporation, wholly owns DC2, a domestic corporation. The DC2 stock has a $100x fair market value, and DC1 has a basis of $30x in the stock. DC2's only asset is all of the outstanding stock of FC2, a foreign corporation. The FC2 stock has a $100x fair market value, and DC2 has a basis of $30x in the stock. There are $20x of earnings and profits attributable to the FC2 stock for purposes of section 1248. USP, a domestic corporation unrelated to DC1, DC2, and FC2, wholly owns FC1, a foreign corporation. In a triangular reorganization described in section 368(a)(1)(C), DC2 transfers all the FC2 stock to FC1 in exchange solely for voting stock of USP, and distributes the USP stock to DC1 under section 361(c)(1). DC1 exchanges its DC2 stock for the USP stock under section 354. DC2's transfer of the FC2 stock to FC1 is described in section 361(a) and therefore, under section 367(a)(5) and §

1.367(a)-7, is generally subject to section 367(a)(1). However, the exception to section 367(a)(5) provided in § 1.367(a)-7(c) applies to the section 361 exchange. In addition, DC1 is not required to adjust the basis of its USP stock (determined under section 358) under section 367(a)(5) and § 1.367(a)-7(c)(3). DC1 properly files a gain recognition agreement that satisfies the conditions of §§ 1.367(a)-3(e)(6) and 1.367(a)-8 to qualify for nonrecognition treatment under section 367(a) with respect to DC2's transfer of the FC2 stock to FC1. See § 1.367(a)-3(e).

(ii) *Result.* Immediately after the exchange, FC1 and FC2 are controlled foreign corporations as to which USP is a section 1248 shareholder because USP directly and indirectly owns all the FC1 stock and FC2 stock, respectively. Because DC2 receives stock of a domestic corporation (USP) in exchange for the FC2 stock and, immediately after the exchange, FC1 and FC2 are controlled foreign corporations as to which USP is a section 1248 shareholder, DC2's exchange of the FC2 stock for the USP stock is not described in paragraph (b)(1)(i) of this section. See paragraph (b)(1)(ii)(B)(*1*)(*iv*) of this section. Therefore, DC2 is not required to include in income the section 1248 amount in the FC2 stock. Under paragraph (b)(1)(ii)(B)(*2*)(*i*) of this section, USP must apply the principles of § 1.367(b)-13 to adjust the basis of its FC1 stock to preserve the section 1248 amount ($20x) in the FC2 stock. Under the principles of § 1.367(b)-13, each share of FC1 stock held by USP after the exchange must be divided into portions, one portion attributable to the FC1 stock owned before the exchange and one portion attributable to the FC2 stock received in the exchange. The $30x basis in the FC2 stock and the $20x earnings and profits attributable to the FC2 stock before the exchange are attributable to the divided portions of the FC1 stock to which the FC2 stock relates.

(2) ***Receipt by exchanging shareholder of preferred or other stock in certain instances*** —

(i) ***Rule.*** An exchange is described in this paragraph (b)(2)(i) if—

(A) Immediately before the exchange, the foreign acquired corporation and the transferee foreign corporation are not members of the same affiliated group (within the meaning of section 1504(a), but without regard to the exceptions set forth in section 1504(b), and substituting the words “more than 50” in place of the words “at least 80” in sections 1504(a)(2)(A) and (B));

(B) Immediately after the exchange, a domestic corporation directly or indirectly owns 10 percent or more of the voting power or value of the transferee foreign corporation; and

(C) The exchanging shareholder receives preferred stock (other than preferred stock that is fully participating with respect to dividends, redemptions and corporate growth) in consideration for common stock or preferred stock that is fully participating with respect to dividends, redemptions and corporate growth, or, in the discretion of the Commissioner or the Commissioner's delegate (and without regard to whether the stock exchanged is

common stock or preferred stock), receives stock that entitles it to participate (through dividends, redemption payments or otherwise) disproportionately in the earnings generated by particular assets of the foreign acquired corporation or transferee foreign corporation.

(ii) ***Examples.*** The following examples illustrate the rules of this paragraph (b)(2):

Example 1. (i) *Facts.* FC1 is a foreign corporation. DC is a domestic corporation that is unrelated to FC1. DC owns all of the outstanding stock of FC2, a foreign corporation, and FC2 has no outstanding preferred stock. The value of FC2 is $100 and DC has a basis of $50 in the stock of FC2. Under § 1.367(b)-2(c)(1), the section 1248 amount attributable to the stock of FC2 held by DC is $20. In a reorganization described in section 368(a)(1)(B), FC1 acquires all of the stock of FC2 and, in exchange, DC receives FC1 voting preferred stock that constitutes 10 percent of the voting stock of FC1 for purposes of section 902(a). Immediately after the exchange, FC1 and FC2 are controlled foreign corporations and DC is a section 1248 shareholder of FC1 and FC2, so paragraph (b)(1)(i) of this section does not require inclusion in income of the section 1248 amount.
(ii) *Result.* Pursuant to § 1.367(a)-3(b)(2), the transfer is subject to both section 367(a) and section 367(b). Under § 1.367(a)-3(b)(1), DC will not be subject to tax under section 367(a)(1) if it enters into a gain recognition agreement in accordance with § 1.367(a)-8. Even though paragraph (b)(1)(i) of this section does not apply to require inclusion in income by DC of the section 1248 amount, DC must nevertheless include the $20 section 1248 amount in income as a deemed dividend from FC2 under paragraph (b)(2)(i) of this section. Thus, if DC enters into a gain recognition agreement, the amount is $30 (the $50 gain realized less the $20 recognized under section 367(b)). If DC fails to enter into a gain recognition agreement, it must include in income under section 367(a)(1) the $50 of gain realized ($20 of which is treated as a dividend under section 1248). Section 367(b) does not apply in such case.

Example 2. (i) *Facts.* The facts are the same as in *Example 1,* except that DC owns all of the outstanding stock of FC1 immediately before the transaction.
(ii) *Result.* Both section 367(a) and section 367(b) apply to the transfer. Paragraph (b)(2)(i) of this section does not apply to require inclusion of the section 1248 amount. Under paragraph (b)(2)(i)(A) of this section, the transaction is outside the scope of paragraph (b)(2)(i) of this section because FC1 and FC2 are, immediately before the transaction, members of the same affiliated group (within the meaning of such paragraph). Thus, if DC enters into a gain recognition agreement in accordance with § 1.367(a)-8, the amount of such agreement is $50. As in *Example 1,* if DC fails to enter into a gain recognition agreement, it must include in income $50, $20 of which will be treated as a dividend under section 1248.

Example 3. (i) *Facts.* FC1 is a foreign corporation. DC is a domestic corporation that is

unrelated to FC1. DC owns all of the outstanding stock of FC2, a foreign corporation. The section 1248 amount attributable to the stock of FC2 held by DC is $20. In a reorganization described in section 368(a)(1)(B), FC1 acquires all of the stock of FC2 in exchange for FC1 voting stock that constitutes 10 percent of the voting stock of FC1 for purposes of section 902(a). The FC1 voting stock received by DC in the exchange carries voting rights in FC1, but by agreement of the parties the shares entitle the holder to dividends, amounts to be paid on redemption, and amounts to be paid on liquidation, that are to be determined by reference to the earnings or value of FC2 as of the date of such event, and that are affected by the earnings or value of FC1 only if FC1 becomes insolvent or has insufficient capital surplus to pay dividends.
(ii) *Result.* Under § 1.367(a)-3(b)(1), DC will not be subject to tax under section 367(a)(1) if it enters into a gain recognition agreement with respect to the transfer of FC2 stock to FC1. Under § 1.367(a)-3(b)(2), the exchange will be subject to the provisions of section 367(b) and the regulations thereunder to the extent that it is not subject to tax under section 367(a)(1). Furthermore, even if DC would not otherwise be required to recognize income under this section, the Commissioner or the Commissioner's delegate may nevertheless require that DC include the $20 section 1248 amount in income as a deemed dividend from FC2 under paragraph (b)(2)(i) of this section.

(3) ***Certain recapitalizations.*** An exchange pursuant to a recapitalization under section 368(a)(1)(E) shall be deemed to be an exchange described in this paragraph (b)(3) if the following conditions are satisfied—

(i) During the 24-month period immediately preceding or following the date of the recapitalization, the corporation that undergoes the recapitalization (or a predecessor of, or successor to, such corporation) also engages in a transaction that would be described in paragraph (b)(2)(i) of this section but for paragraph (b)(2)(i)(C) of this section, either as the foreign acquired corporation or the transferee foreign corporation; and

(ii) The exchange in the recapitalization is described in paragraph (b)(2)(i)(C) of this section.

(c) ***Exclusion of deemed dividend from foreign personal holding company income*** —

(1) ***Rule.*** In the event the section 1248 amount is included in income as a deemed dividend by a foreign corporation under paragraph (b) of this section, such deemed dividend shall not be included as foreign personal holding company income under section 954(c).

(2) ***Example.*** The following example illustrates the rule of this paragraph (c):

Example. (i) *Facts.* FC1 is a foreign corporation that is owned, directly and indirectly (applying the ownership rules of section 958), solely by foreign persons. DC is a domestic corporation that is unrelated to FC1. DC owns all of the outstanding stock of FC2, a foreign corporation. FC2 owns all of the outstanding stock of FC3, a foreign corporation. Under § 1.367(b)-2(c)(1), the section 1248 amount attributable to the stock of FC3 held by FC2 is $20. In a reorganization described in section 368(a)(1)(B), FC1 acquires from FC2 all of the stock

of FC3 in exchange for FC1 voting stock. The FC1 voting stock received by FC2 does not represent more than 50 percent of the voting power or value of FC1's stock.
(ii) *Result.* FC1 is not a controlled foreign corporation immediately after the exchange. Under paragraph (b)(1) of this section, FC2 must include in income, as a deemed dividend from FC3, the section 1248 amount ($20) attributable to the FC3 stock that FC2 exchanged. The deemed dividend is treated as a dividend for purposes of the Internal Revenue Code as provided in § 1.367(b)-2(e)(2); however, under this paragraph (c) the deemed dividend is not foreign personal holding company income to FC2.

(d) ***Rules for subsequent sales or exchanges*** —

(1) ***Rule.*** If an exchanging shareholder (as defined in § 1.1248-8(b)(1)(iv)) is not required to include in income as a deemed dividend the section 1248 amount under paragraph (b) or paragraph (e)(1) of this section (non-inclusion exchange), then, for purposes of applying section 367(b) or 1248 to subsequent sales or exchanges, and subject to the limitation of § 1.367(b)-2(d)(3)(ii) (in the case of a transaction described in § 1.367(b)-3), the determination of the earnings and profits attributable to the stock an exchanging shareholder receives in the non-inclusion exchange is determined pursuant to the rules of section 1248 and the regulations under that section.

(2) ***Example.*** The following example illustrates the rules of this section. For purposes of the example, assume that—

(i) There is no immediate gain recognition pursuant to section 367(a)(1) and the regulations under that section (either through operation of the rules or because the appropriate parties have entered into a gain recognition agreement under §§ 1.367(a)-3(b) and 1.367(a)-8);

(ii) References to earnings and profits are to earnings and profits that would be includible in income as a dividend under section 1248 and the regulations under that section if stock to which the earnings and profits are attributable were sold or exchanged by its shareholder;

(iii) Each corporation has only a single class of stock outstanding and uses the calendar year as its taxable year; and

(iv) Each transaction is unrelated to all other transactions.

Example. Acquisition of the stock of a foreign corporation that controls a transferee foreign corporation in a reorganization described in section 368(a)(1)(C). (i) *Facts.* DC1, a domestic corporation, has owned all the stock of CFC1, a controlled foreign corporation, since its formation on January 1, year 1. CFC1 has owned all the stock of CFC2, a controlled foreign corporation, since its formation on January 1, year 1. FC, a foreign corporation that is not a controlled foreign corporation, has owned all of the stock of FC2, a foreign corporation, since its formation on January 1, year 2. On December 31, year 3, pursuant to a restructuring transaction that was a triangular reorganization described in section 368(a)(1)(C), CFC1 transfers all of its assets, including the CFC2 stock, to FC2 in exchange for 80% of the voting stock of FC. CFC1 transfers the voting stock of FC to DC1 and the CFC1 stock is cancelled. Pursuant to

section 1223(1), DC1 is considered to have held the stock of FC since January 1, year 1. Under section 1223(2), FC2 is considered to have held the stock of CFC2 since January 1, year 1. On December 31, year 3, CFC1 has $100 of earnings and profits. From January 1, year 4, until December 31, year 5, FC (a controlled foreign corporation after the restructuring transaction) accumulates an additional $50 of earnings and profits. FC2, a controlled foreign corporation after the restructuring transaction, accumulates $100 of earnings and profits from January 1, year 4, until December 31, year 5. On December 31, year 5, FC is liquidated into DC1 in a transaction described in section 332.
(ii) *Result.* Generally, this paragraph (d) requires that DC1 include in income the earnings and profits attributable to its stock in FC as determined under § 1.1248-8. However, since the liquidation of FC into DC1 is a transaction described in § 1.367(b)-3, the earnings and profits attributable to the stock of FC are limited by § 1.367(b)-2(d) (3)(ii) to that portion of the earnings and profits accumulated by FC itself before or after the restructuring transaction, and do not include the earnings and profits of FC's subsidiaries accumulated before or after the restructuring transaction. Thus, DC1 will include $40 of earnings and profits in income (80% of the $50 of earnings and profits accumulated by FC after the restructuring transaction).

(e) ***Income inclusion and gain recognition in certain exchanges following an inversion transaction*** —

(1) ***General rule.*** If a foreign corporation (the transferee foreign corporation) acquires stock of a foreign corporation in an exchange described in section 351 or stock or assets of a foreign corporation in a reorganization described in section 368(a)(1) (in either case, the foreign acquired corporation), then an exchanging shareholder must, if its exchange is a specified exchange and the exception in paragraph (e)(3) of this section does not apply—

(i) Include in income as a deemed dividend the section 1248 amount attributable to the stock that it exchanges; and

(ii) After taking into account the increase in basis provided in § 1.367(b)-2(e)(3)(ii) resulting from the deemed dividend (if any), recognize all realized gain with respect to the stock that would not otherwise be recognized.

(2) ***Specified exchanges.*** An exchange is a specified exchange if—

(i) Immediately before the exchange, the foreign acquired corporation is an expatriated foreign subsidiary and the exchanging shareholder is either an expatriated entity described in paragraph (b)(1)(i)(A)(*1*) of this section or an expatriated foreign subsidiary described in paragraph (b)(1)(i)(A)(*2*) of this section;

(ii) The stock received in the exchange is stock of a foreign corporation; and

(iii) The exchange occurs during the applicable period.

(3) ***De minimis exception.*** The exception in this paragraph (e)(3) applies if—

(i) Immediately after the exchange, the foreign acquired corporation (in the case of an acquisition of stock of the foreign acquired corporation) or the transferee foreign corporation (in the case of an acquisition of assets of the foreign acquired corporation) is a controlled foreign corporation;

(ii) The post-exchange ownership percentage with respect to the foreign acquired corporation (in the case of an acquisition of stock of the foreign acquired corporation) or the transferee foreign corporation (in the case of an acquisition of assets of the foreign acquired corporation) is at least 90 percent of the pre-exchange ownership percentage with respect to the foreign acquired corporation; and

(iii) The post-exchange ownership percentage with respect to each lower-tier expatriated foreign subsidiary of the foreign acquired corporation is at least 90 percent of the pre-exchange ownership percentage with respect to the lower-tier expatriated foreign subsidiary.

(4) ***Certain exceptions from foreign personal holding company not available.*** An income inclusion of a foreign corporation under paragraph (e)(1) of this section does not qualify for the exceptions from foreign personal holding company income provided by sections 954(c)(3)(A)(i) and 954(c)(6) (to the extent in effect).

(5) ***Examples.*** The following examples illustrate the application of this paragraph (e). For purposes of all of the examples, unless otherwise indicated: FP, a foreign corporation, owns all of the stock of USP, a domestic corporation, and all 40 shares of stock of FS, a controlled foreign corporation for its taxable year beginning January 1, 2017, but not for prior taxable years, except as a result of a transaction described in the facts of an example. USP owns all 50 shares of stock of FT1, a controlled foreign corporation, which, in turn, owns all 50 shares of FT2, a controlled foreign corporation. FP acquired all of the stock of USP in an inversion transaction that was completed on July 1, 2016. Therefore, with respect to that inversion transaction, USP is an expatriated entity; FT1 and FT2 are expatriated foreign subsidiaries; and FP and FS are each a non-EFS foreign related person. All entities have a calendar year tax year for U.S. tax purposes. All shares of stock have a fair market value of $1x, and each corporation has a single class of stock outstanding.

Example 1. Specified exchange to which general rule applies—(i) *Facts.* During the applicable period, and pursuant to a reorganization described in section 368(a)(1)(B), FT1 transfers all 50 shares of FT2 stock to FS in exchange solely for 50 newly issued voting shares of FS. Immediately before the exchange, USP is a section 1248 shareholder with respect to FT1 and FT2. At the time of the exchange, the FT2 stock owned by FT1 has a fair market value of $50x and an adjusted basis of $5x, such that the FT2 stock has a built-in gain of $45x. In addition, the earnings and profits of FT2 attributable to FT1's stock in FT2 for purposes of section 1248 is $30x, taking into account the rules of § 1.367(b)-2(c)(1)(i) and (ii), and therefore the section 1248 amount with respect to the FT2 stock is $30x (the lesser of the $45x of built-in gain and the $30x of earnings and profits attributable to the stock).
(ii) *Analysis.* FT1's exchange is a specified exchange because the requirements set forth in paragraphs (e)(2)(i) through (iii) of this section are satisfied. The requirement set forth in paragraph (e)(2)(i) of this section is satisfied because, immediately before the exchange, FT2 (the foreign acquired corporation) is an expatriated foreign subsidiary and FT1 (the exchanging shareholder) is an expatriated foreign subsidiary that is described in paragraph

(b)(1)(i)(A)(2) of this section. The requirement set forth in paragraph (e)(2)(ii) of this section is also satisfied because the stock received in the exchange (FS stock) is stock of a foreign corporation. The requirement set forth in paragraph (e)(2)(iii) of this section is satisfied because the exchange occurs during the applicable period. Accordingly, under paragraph (e)(1)(i) of this section, FT1 must include in income as a deemed dividend $30x, the section 1248 amount with respect to its FT2 stock. In addition, under paragraph (e)(1)(ii) of this section, FT1 must, after taking into account the increase in basis provided in § 1.367(b)-2(e)(3)(ii) resulting from the deemed dividend (which increases FT1's basis in its FT2 stock from $5x to $35x), recognize $15x ($50x amount realized less $35x basis), the realized gain with respect to the FT2 stock that would not otherwise be recognized.

Example 2. De minimis shift to non-EFS foreign related persons—(i) *Facts.* The facts are the same as in the introductory sentences of this paragraph (e)(5), except as follows. FT1 does not own any shares of FT2, and all 40 shares of FS are owned by DX, a domestic corporation wholly owned by individual A, and thus FS is not a non-EFS foreign related person. During the applicable period and pursuant to a reorganization described in section 368(a)(1)(D), FT1 transfers all of its assets to FS in exchange for 50 newly issued FS shares, FT1 distributes the 50 FS shares to USP in liquidation under section 361(c)(1), and USP exchanges its 50 shares of FT1 stock for the 50 FS shares under section 354. Further, immediately after the exchange, FS is a controlled foreign corporation.
(ii) *Analysis.* Although USP's exchange is a specified exchange, paragraph (e)(1) of this section does not apply to the exchange because, as described in paragraphs (ii)(A) through (C) of this *Example 2,* the requirements of paragraph (e)(3) of this section are satisfied.

(A) Because the assets, rather than the stock, of FT1 (the foreign acquired corporation) are acquired, the requirement set forth in paragraph (e)(3)(i) of this section is satisfied if FS (the transferee foreign corporation) is a controlled foreign corporation immediately after the exchange. As stated in the facts, FS is a controlled foreign corporation immediately after the exchange.

(B) The requirement set forth in paragraph (e)(3)(ii) of this section is satisfied if the post-exchange ownership percentage with respect to FS is at least 90% of the pre-exchange ownership percentage with respect to FT1. Because USP, a domestic corporation that is an expatriated entity, directly owns 50 shares of FT1 stock immediately before the exchange, none of those shares are treated as indirectly owned by FP (a non-EFS foreign related person) for purposes of calculating the pre-exchange ownership percentage with respect to FT1. See paragraph (h)(1) of this section. Thus, for purposes of calculating the pre-exchange ownership percentage with respect to FT1, FP is treated as directly or indirectly owning 0%, or 0 of 50 shares, of the stock of FT1. Accordingly, the pre-exchange ownership percentage with respect to FT1 is 100 (calculated as 100% less 0%, the percentage of FT1 stock that non-EFS foreign related persons are treated as directly or indirectly owning immediately before the

exchange). Consequently, for the requirement set forth in paragraph (e)(3)(ii) of this section to be satisfied, the post-exchange ownership percentage with respect to FS must be at least 90. Because USP, a domestic corporation that is an expatriated entity, directly owns 50 shares of FS stock immediately after the exchange, none of those shares are treated as indirectly owned by FP (a non-EFS foreign related person) for purposes of calculating the post-exchange ownership percentage with respect to FS. See paragraph (h)(1) of this section. Thus, for purposes of calculating the post-exchange ownership percentage with respect to FS, FP is treated as directly or indirectly owning 0%, or 0 of 90 shares, of the stock of FS. As a result, the post-exchange ownership percentage with respect to FS is 100 (calculated as 100% less 0%, the percentage of FS stock that non-EFS foreign related persons are treated as directly or indirectly owning immediately after the exchange). Therefore, because the post-exchange ownership percentage with respect to FS (100) is at least 90, the requirement set forth in paragraph (e)(3)(ii) of this section is satisfied.

(C) Because there is not a lower-tier expatriated foreign subsidiary of FT1, the requirement set forth in paragraph (e)(3)(iii) of this section does not apply.

(f) ***Gain recognition upon certain transfers of property described in section 351 following an inversion transaction*** —

(1) ***General rule.*** If, during the applicable period, an expatriated foreign subsidiary transfers specified property to a foreign corporation (the transferee foreign corporation) in an exchange described in section 351, then the expatriated foreign subsidiary must recognize all realized gain with respect to the specified property transferred that would not otherwise be recognized, unless the exception in paragraph (f)(2) of this section applies.

(2) ***De minimis exception.*** The exception in this paragraph (f)(2) applies if—

(i) Immediately after the transfer, the transferee foreign corporation is a controlled foreign corporation; and

(ii) The post-exchange ownership percentage with respect to the transferee foreign corporation is at least 90 percent of the pre-exchange ownership percentage with respect to the expatriated foreign subsidiary.

(3) ***Examples.*** The following examples illustrate the application of this paragraph (f). For purposes of all of the examples, unless otherwise indicated: FP, a foreign corporation, owns all of the stock of USP, a domestic corporation, and all 10 shares of stock of FS, a controlled foreign corporation for its taxable year beginning January 1, 2017, but not for prior taxable years, except as a result of a transaction described in the facts of an example. USP owns all 50 shares of stock of FT, a controlled foreign corporation. FT owns Asset A, which is specified property with a fair market value of $50x and an adjusted basis of $10x. FP acquired all of the stock of USP in an inversion transaction that was completed on or after September 22, 2014. Accordingly, with respect to that inversion transaction, USP is an expatriated entity, FT is an expatriated foreign subsidiary, and FP and FS are each a non-EFS foreign related person. All entities have a calendar year tax year for U.S. tax purposes. All shares of stock have a fair market value of $1x, and each corporation has a single class of stock outstanding.

Example 1. Transfer to which general rule applies—(i) Facts. In addition to the stock of USP and FS, FP owns Asset B, which has a fair market value of $40x. During the applicable period, and pursuant to an exchange described in section 351, FT transfers Asset A to FS in exchange for 50 newly issued shares of FS stock, and FP transfers Asset B to FS in exchange for 40 newly issued shares of FS stock. (ii) *Analysis.* Paragraph (f)(1) of this section applies to the transfer by FT (an expatriated foreign subsidiary) of Asset A, which is specified property, to FS (the transferee foreign corporation). Thus, FT must recognize gain of $40x under paragraph (f)(1) of this section, which is the realized gain with respect to Asset A that would not otherwise be recognized ($50x amount realized less $10x basis). For rules regarding whether the FS stock held by FT is treated as United States property for purposes of section 956, see § 1.956-2(a)(4)(i).

Example 2. De minimis shift to non-EFS foreign related persons—(i) Facts. Individual, a United States person, owns Asset B, which has a fair market value of $40x. During the applicable period, and pursuant to an exchange described in section 351, FT transfers Asset A to FS in exchange for 50 newly issued shares of FS stock, and Individual transfers Asset B to FS in exchange for 40 newly issued shares of FS stock. (ii) *Analysis.* Paragraph (f)(1) of this section does not apply to the transfer by FT (an expatriated foreign subsidiary) of Asset A, which is specified property, to FS (the transferee foreign corporation)) because the requirements set forth in paragraph (f)(2) of this section are satisfied. The requirement set forth in paragraph (f)(2)(i) of this section is satisfied because FS is a controlled foreign corporation immediately after the transfer. The requirement set forth in paragraph (f)(2)(ii) of this section is satisfied if the post-exchange ownership percentage with respect to FS is at least 90 percent of the pre-exchange ownership percentage with respect to FT. Because USP, a domestic corporation that is an expatriated entity, directly owns 50 shares of FT stock immediately before the transfer, none of those shares are treated as indirectly owned by FP (a non-EFS foreign related person) for purposes of calculating the pre-exchange ownership percentage with respect to FT. See paragraph (h)(1) of this section. Thus, for purposes of calculating the pre-exchange ownership percentage with respect to FT, FP is treated as directly or indirectly owning 0 percent, or 0 of 50 shares, of the stock of FT. Accordingly, the pre-exchange ownership percentage with respect to FT is 100 (calculated as 100 percent less 0 percent, the percentage of FT stock that non-EFS foreign related persons are treated as directly or indirectly owning immediately before the transfer). Consequently, for the requirement set forth in paragraph (f)(2)(ii) of this section to be satisfied, the post-exchange ownership percentage with respect to FS must be at least 90. Although FP directly owns 10 FS shares, none of the 50 FS shares that FP owns through USP (a domestic corporation that is an expatriated entity) are treated as indirectly owned by FP for purposes of calculating the post-exchange ownership percentage with respect to FS because USP directly owns them. See paragraph (h)(1) of this section. Thus, for purposes of calculating the post-exchange

ownership percentage with respect to FS, FP is treated as directly or indirectly owning 10 percent, or 10 of 100 shares, of the stock of FS. As a result, the post-exchange ownership percentage with respect to FS is 90 (calculated as 100 percent less 10 percent, the percentage of FS stock that non-EFS foreign related persons are treated as directly or indirectly owning immediately after the transfer). Therefore, because the post-exchange ownership percentage with respect to FS (90) is at least 90, the requirement set forth in paragraph (f)(2)(ii) of this section is satisfied.

(g) ***Income inclusion and gain recognition in exchanges occurring in connection with certain triangular reorganizations*** —

(1) ***Rule.*** If, in an exchange under section 354 or 356 that occurs in connection with a transaction described in § 1.367(b)-10, an exchanging shareholder exchanges stock or securities of a foreign acquired corporation, then, to the extent that the exchanging shareholder receives stock or securities of P acquired by S in exchange for property in the P acquisition, the shareholder must—

(i) Include in income as a deemed dividend the section 1248 amount attributable to the stock that the shareholder exchanges; and

(ii) After taking into account the increase in basis in the stock provided in § 1.367(b)-2(e)(3)(ii) resulting from the deemed dividend (if any), recognize all realized gain with respect to the stock or securities that would not otherwise be recognized.

(2) ***Special rules and definitions.*** For the purposes of this paragraph (g), an *exchanging shareholder* means a United States person or foreign person that exchanges stock of a foreign acquired corporation in a prescribed exchange, regardless of whether such United States person is a section 1248 shareholder or such foreign person is a foreign corporation in which a United States person is a section 1248 shareholder. As used in this paragraph (g), the terms P, S, property, and P acquisition have the meanings provided in § 1.367(b)-10(a), and the term *foreign person* means a person that is not a United States person.

(3) ***Example.*** The following example illustrates the rules of this paragraph (g):

(i) ***Facts.*** USP, a domestic corporation, owns all of the stock of FP and USS. FP is a foreign corporation that owns all of the stock of FS, a foreign corporation. USS is a domestic corporation that owns all of the stock of FT, a foreign corporation. USS owns 100 shares of stock of FT, which constitutes a single block of stock with a fair market value of $100x, an adjusted basis of $20x, and a section 1248 amount of $50x. FS has earnings and profits of $60x. A dividend from FS to FP would qualify for the exception to foreign personal holding company income under section 954(c)(6). FP issues 100 shares of voting stock with a fair market value of $100x to FS, $40x of which (the 40-percent FP block) is issued in exchange for $40x of newly issued common stock of FS and $60x of which (the 60-percent FP block) is issued in exchange for $60x of cash. FS acquires all of the stock of FT held by USS solely in exchange for the $100x of voting stock of FP (that is, FS exchanges both the 40-percent FP block and the 60-percent FP block) in a triangular reorganization described in section 368(a)(1)(B) (triangular B reorganization).

(ii) ***Analysis*** —

(A) ***Application of § 1.367(b)-10.*** The triangular B reorganization is described in § 1.367(b)-10, and the $60x of cash constitutes property under § 1.367(b)-10(a)(3)(ii). Pursuant to § 1.367(b)-10(b)(1), adjustments must be made that have the effect of a distribution of property in the amount of $60x from FS to FP under section 301. The $60x deemed distribution is treated as separate from, and occurring immediately before, FS's acquisition of the 60-percent FP block used in the triangular B reorganization. The $60x deemed distribution from FS to FP results in $60x of dividend income to FP under section 301(c)(1) that is not foreign personal holding company income under section 954(c)(6).

(B) ***Application of paragraph (g) of this section.*** Pursuant to § 1.367(a)-3(a)(2)(iv)(B), this paragraph (g) applies to $60x of the stock of FT (the 60-percent FT block) exchanged for the 60-percent FP block. Thus, under paragraph (g)(1)(i) of this section, USS must include in income a $30x deemed dividend (representing 60 percent of USS's $50x section 1248 amount) with respect to the 60-percent FT block exchanged for the 60-percent FP block. In addition, under paragraph (g)(1)(ii) of this section, USS must recognize its realized gain that would not otherwise be recognized with respect to the 60-percent FT block. USS's fair market value and adjusted basis in the 60-percent FT block are $60x (60 percent of the $100x fair market value of the stock of FT) and $12x (60 percent of the $20x adjusted basis of the stock of FT), respectively. USS's initial built-in gain with respect to the 60-percent FT block is accordingly $48x ($60x fair market value less $12x adjusted basis). The $30x deemed dividend increases USS's basis in the 60-percent FT block to $42 ($12x + $30x), leaving $18x ($60x−$42x) of built-in gain. USS must therefore recognize the remaining $18x of gain with respect to the 60-percent FT block.

(C) ***Application of paragraph (b) of this section and regulations under section 367(a).*** USS has $32x of built-in gain in the remaining $40x of stock of FT (the 40-percent FT block) that USS exchanged for the 40-percent FP block, calculated as USS's initial $80 of built-in gain in all of its stock of FT less the $48x of initial built-in gain attributable to the 60-percent FT block. USS's section 1248 amount in the 40-percent FT block is $20x, calculated as 40 percent of USS's $50x section 1248 amount. USS does not recognize a deemed dividend of the $20x section 1248 amount under paragraph (b) of this section because FT remains a controlled foreign corporation with respect to which USS is a section 1248 shareholder immediately after the triangular B reorganization. Unless USS properly files a gain recognition agreement pursuant to §§ 1.367(a)-3(b) and 1.367(a)-8, USS recognizes the $32x of built-in gain under section 367(a)(1) with respect to the 40-percent FT block.

(h) ***Definitions and special rules.*** In addition to the definitions and special rules in §§ 1.367(b)-2 and 1.7874-12, the following definitions and special rules apply for purposes of this section.

(1) ***Indirect ownership.*** To determine indirect ownership of the stock of a corporation for purposes of calculating a pre-exchange ownership percentage or post-exchange ownership percentage with respect to that corporation, the principles of section 958(a) apply without regard to whether an intermediate entity is foreign or domestic. For this purpose, stock of the corporation that is directly or indirectly (applying the principles of section 958(a) without regard to whether an intermediate entity is foreign or domestic) owned by a domestic corporation that is an expatriated entity is not treated as indirectly owned by a non-EFS foreign related person.

(2) A *lower-tier expatriated foreign subsidiary* means an expatriated foreign subsidiary whose stock is directly or indirectly owned (under the principles of section 958(a)) by an expatriated foreign subsidiary.

(3) ***Pre-exchange ownership percentage*** means, with respect to a corporation, 100 percent less the percentage of stock (by value) in the corporation that, immediately before an exchange, is owned, in the aggregate, directly or indirectly by non-EFS foreign related persons.

(4) ***Post-exchange ownership percentage*** means, with respect to a corporation, 100 percent less the percentage of stock (by value) in the corporation that, immediately after the exchange, is owned, in the aggregate, directly or indirectly by non-EFS foreign related persons.

(5) ***Specified property*** means any property other than stock of a lower-tier expatriated foreign subsidiary.

(6) ***Recapitalizations.*** A foreign corporation that undergoes a reorganization described in section 368(a)(1)(E) is treated as both the foreign acquired corporation and the transferee foreign corporation.

(7) ***Triangular reorganizations*** —

(i) ***Definition.*** A triangular reorganization means a reorganization described in § 1.358-6(b)(2)(i) (forward triangular merger), (ii) (triangular C reorganization), (iii) (reverse triangular merger), (iv) (triangular B reorganization), and (v) (triangular G reorganization).

(ii) ***Special rules*** —

(A) ***Triangular reorganizations other than a reverse triangular merger.*** In the case of a triangular reorganization other than a reverse triangular merger, the surviving corporation is the transferee foreign corporation that acquires the assets or stock of the foreign acquired corporation, and the reference to controlling corporation (foreign or domestic) is to the corporation that controls the surviving corporation.

(B) ***Reverse triangular merger.*** In the case of a reverse triangular merger, the surviving corporation is the entity that survives the merger, and the controlling corporation (foreign or domestic) is the corporation that before the merger controls the merged corporation. In the case of a reverse triangular merger, this section applies only if stock of the foreign surviving corporation is exchanged for stock of a foreign corporation in control of the merging corporation; in such a case, the foreign surviving corporation is treated as a foreign acquired corporation.

(i) ***Applicability date of certain paragraphs in this section.*** Except as otherwise provided in this paragraph (i), paragraphs (a), (b) introductory text, (b)(1)(i)(C), (d)(1), (e), (f), and (h) of this section apply to exchanges completed on or after September 22, 2014, but only if the inversion transaction was completed on or after September 22, 2014. Paragraph (e)(1)(ii) of this section applies to exchanges completed on or after November 19, 2015, but only if the inversion transaction was completed on or after September 22, 2014. The portion of paragraph (e)(2)(i) of this section that requires the exchanging shareholder to be an expatriated entity or an expatriated foreign subsidiary apply to exchanges completed on or after April 4, 2016, but only if the inversion transaction was completed on or after September 22, 2014. For inversion transactions completed on or after September 22, 2014, however, taxpayers may elect to apply the portion of paragraph (e)(2)(i) of this section that requires the exchanging shareholder to be an expatriated entity or an expatriated foreign subsidiary to exchanges completed on or after September 22, 2014, and before April 4, 2016. Paragraphs (f) and (h)(5) of this section apply to transfers completed on or after April 4, 2016, but only if the inversion transaction was completed or after September 22, 2014. See § 1.367(b)-4, as contained in 26 CFR part 1 revised as of April 1, 2016, for exchanges completed before September 22, 2014. Paragraph (g) of this section applies to transactions completed on or after December 2, 2016. Paragraph (b)(2)(i)(B) of this section applies to exchanges completed in taxable years of exchanging

shareholders ending on or after November 2, 2020, and to taxable years of exchanging shareholders ending before November 2, 2020, resulting from an entity classification election made under § 301.7701-3 of this chapter that was effective on or before November 2, 2020, but was filed on or after November 2, 2020.

[T.D. 8862, 65 FR 3603, Jan. 24, 2000; 65 FR 66501, Nov. 6, 2000]

Editorial Note: For FEDERAL REGISTER citations affecting § 1.367(b)-4, see the List of CFR Sections Affected, which appears in the Finding Aids section of the printed volume and at *www.govinfo.gov*.

§ 1.367(b)-5 Distributions of stock described in section 355.

(a) ***In general*** —

(1) ***Scope.*** This section provides rules relating to a distribution described in section 355 (or so much of section 356 as relates to section 355) and to which section 367(b) applies. For purposes of this section, the terms *distributing corporation, controlled corporation,* and *distributee* have the same meaning as used in section 355 and the regulations thereunder.

(2) ***Treatment of distributees as exchanging shareholders.*** For purposes of the section 367(b) regulations, all distributees in a transaction described in paragraph (b), (c), or (d) of this section shall be treated as exchanging shareholders that realize income in a section 367(b) exchange.

(b) ***Distribution by a domestic corporation*** —

(1) ***General rule.*** In a distribution described in section 355, if the distributing corporation is a domestic corporation and the controlled corporation is a foreign corporation, the following general rules shall apply—

(i) If the distributee is a corporation, then the controlled corporation shall be considered to be a corporation; and

(ii) If the distributee is an individual, then, solely for purposes of determining the gain recognized by the distributing corporation, the controlled corporation shall not be considered to be a corporation, and the distributing corporation shall recognize any gain (but not loss) realized on the distribution.

(2) ***Section 367(e) transactions.*** The rules of paragraph (b)(1) of this section shall not apply to a foreign distributee to the extent gain is recognized under section 367(e)(1) and the regulations thereunder.

(3) ***Determining whether distributees are individuals.*** All distributees in a distribution described in paragraph (b)(1) of this section are presumed to be individuals. However, the shareholder identification principles of § 1.367(e)-1(d) (including the reporting procedures in § 1.367(e)-1(d)(2) and (3)) shall apply for purposes of rebutting this presumption.

(4) ***Applicable cross-references.*** For rules with respect to a distributee that is a partnership, trust or estate, see § 1.367(b)-2(k). For additional rules relating to a distribution of stock of a foreign corporation by a domestic corporation, see section 1248(f) and the regulations thereunder. For additional rules relating to a distribution described in section 355 by a domestic corporation to a foreign distributee, see section 367(e)(1) and the regulations thereunder.

(c) ***Pro rata distribution by a controlled foreign corporation*** —

(1) ***Scope.*** This paragraph (c) applies to a distribution described in section 355 in which the distributing corporation is a controlled foreign corporation and in which the stock of the controlled corporation is distributed pro rata to each of the distributing corporation's shareholders.

(2) ***Adjustment to basis in stock and income inclusion.*** If the distributee's postdistribution amount (as defined in paragraph (e)(2) of this section) with respect to the distributing or controlled corporation is less than the distributee's predistribution amount (as defined in paragraph (e)(1) of this section) with respect to such corporation, then the distributee's basis in such stock immediately after the distribution (determined under the normal principles of section 358) shall be reduced by the amount of the difference. However, the distributee's basis in such stock shall not be reduced below zero, and to the extent the foregoing reduction would have reduced basis below zero, the distributee shall instead include such amount in income as a deemed dividend from such corporation.

(3) ***Interaction with § 1.367(b)-2(e)(3)(ii).*** The basis increase provided in § 1.367(b)-2(e)(3)(ii) shall not apply to a deemed dividend that is included in income pursuant to paragraph (c)(2) of this section.

(4) ***Basis redistribution.*** If a distributee reduces the basis in the stock of the distributing or controlled corporation (or has an inclusion with respect to such stock) under paragraph (c)(2) of this section, the distributee shall increase its basis in the stock of the other corporation by the amount of the basis decrease (or deemed dividend inclusion) required by paragraph (c)(2) of this section. However, the distributee's basis in such stock shall not be increased above the fair market value of such stock and shall not be increased to the extent the increase diminishes the distributee's postdistribution amount with respect to such corporation.

(d) ***Non-pro rata distribution by a controlled foreign corporation*** —

(1) ***Scope.*** This paragraph (d) applies to a distribution described in section 355 in which the distributing corporation is a controlled foreign corporation and in which the stock of the controlled corporation is not distributed pro rata to each of the distributing corporation's shareholders.

(2) ***Treatment of certain shareholders as distributees.*** For purposes of the section 367(b) regulations, all persons owning stock of the distributing corporation immediately after a transaction described in paragraph (d)(1) of this section shall be treated as distributees of such stock. For other applicable rules, see paragraph (a)(2) of this section.

(3) ***Inclusion of excess section 1248 amount by exchanging shareholder.*** If the distributee's postdistribution amount (as defined in paragraph (e)(2) of this section) with respect to the distributing or controlled corporation is less than the distributee's predistribution amount (as defined in paragraph (e)(1) of this section) with respect to such corporation, then the distributee shall include in income as a deemed dividend the amount of the difference. For purposes of this paragraph (d)(3), if a distributee owns no stock in the distributing or controlled corporation immediately after the distribution, the distributee's postdistribution amount with respect to such corporation shall be zero.

(4) ***Interaction with § 1.367(b)—2(e)(3)(ii)*** —

(i) ***Limited application.*** The basis increase provided in § 1.367(b)—2(e)(3)(ii) shall apply to a deemed dividend that is included in income pursuant to paragraph (d)(3) of this section only to the extent that such basis increase does not increase the distributee's basis above the fair market value of such stock and does not diminish the distributee's postdistribution amount with respect to such corporation.

(ii) ***Interaction with predistribution amount.*** For purposes of this paragraph (d), the distributee's predistribution amount (as defined in paragraph (e)(1) of this section) shall be determined without regard to any basis increase permitted under paragraph (d)(4)(i) of this section.

(e) ***Definitions*** —

(1) ***Predistribution amount.*** For purposes of this section, the predistribution amount with respect to a distributing or controlled corporation is the distributee's section 1248 amount (as defined in § 1.367(b)—2(c)(1)) computed immediately before the distribution (and after any section 368(a)(1)(D) transfer connected with the section 355 distribution), but only to the extent that such amount is attributable to the distributing corporation and any corporations controlled by it immediately before the distribution (the distributing group) or the controlled corporation and any corporations controlled by it immediately before the distribution (the controlled group), as the case may be, under the principles of §§ 1.1248-1(d)(3), 1.1248-2 and 1.1248-3. However, the predistribution amount with regard to the distributing group shall be computed without taking into account the distributee's predistribution amount with respect to the controlled group.

(2) ***Postdistribution amount.*** For purposes of this section, the postdistribution amount with respect to a distributing or controlled corporation is the distributee's section 1248 amount (as defined in § 1.367(b)-2(c)(1)) with respect to such stock, computed immediately after the distribution (but without regard to paragraph (c) or (d) of this section (whichever is applicable)). The postdistribution amount under this paragraph (e)(2) shall be computed before taking into account the effect (if any) of any inclusion under section 356(a) or (b).

(f) ***Exclusion of deemed dividend from foreign personal holding company income.*** In the event an amount is included in income as a deemed dividend by a foreign corporation under paragraph (c) or (d) of this section (including amounts received as an intermediate owner under the rule of § 1.367(b)-2(e)(2)), such deemed dividend shall not be included as foreign personal holding company income under section 954(c).

(g) ***Examples.*** The following examples illustrate the rules of this section:

Example 1. (i) *Facts.* USS, a domestic corporation, owns 40 percent of the outstanding stock of FD, a controlled foreign corporation (CFC). USS has owned the stock since FD was incorporated, and FD has always been a CFC. USS has a basis of $80 in its FD stock, which has a fair market value of $200. FD owns 100 percent of the outstanding stock of FC, a foreign corporation. FD has owned the stock since FC was incorporated. Neither FD nor FC own stock in any other corporation. FD has earnings and profits of $0 and a fair market value of $250 (not considering its ownership of FC). FC has earnings and profits of $300, none of which is described in section 1248(d), and a fair market value of $250. In a pro rata distribution described in section 355, FD distributes to USS stock in FC worth $100; thereafter, USS's FD stock is worth $100 as well.
(ii) *Result*—(A) FD's distribution is a transaction described in paragraph (c)(1) of this section. Under paragraph (c)(2) of this section, USS must compare its predistribution amounts with respect to FD and FC to its respective postdistribution amounts. Under paragraph (e)(1) of this section, USS's predistribution amount with respect to FD or FC is its section 1248 amount computed immediately before the distribution, but only to the extent such amount is attributable to FD or FC. Under § 1.367(b)-2(c)(1), USS's section 1248 amount computed immediately before the distribution is $120, all of which is attributable to FC. Thus,

USS's predistribution amount with respect to FD is $0, and its predistribution amount with respect to FC is $120. These amounts are computed as follows: If USS had sold its FD stock immediately before the transaction, it would have recognized $120 of gain ($200 fair market value $80 basis). All of the gain would have been treated as a dividend under section 1248, and all of the section 1248 amount would have been attributable to FC (based on USS's pro rata share of FC's earnings and profits (40 percent × $300)).

(B) Under paragraph (e)(2) of this section, USS's postdistribution amount with respect to FD or FC is its section 1248 amount with respect to such corporation, computed immediately after the distribution (but without regard to paragraph (c) of this section). Under § 1.367(b)-2(c)(1), USS's section 1248 amounts computed immediately after the distribution with respect to FD and FC are $0 and $60, respectively. These amounts, which are USS's postdistribution amounts, are computed as follows: Under the normal principles of section 358, USS allocates its $80 predistribution basis in FD between FD and FC according to the stock blocks' relative values, yielding a $40 basis in each block. If USS sold its FD stock immediately after the distribution, none of the resulting gain would be treated as a dividend under section 1248. If USS sold its FC stock immediately after the distribution, it would have a $60 gain ($100 fair market value—$40 basis), all of which would be treated as a dividend under section 1248.

(C) The basis adjustment and income inclusion rules of paragraph (c)(2) of this section apply to the extent of any difference between USS's postdistribution and predistribution amounts. In the case of FD, there is no difference between the two amounts and, as a result, no adjustment or income inclusion is required. In the case of FC, USS's postdistribution amount is $60 less than its predistribution amount. Accordingly, under paragraph (c)(2) of this section, USS is required to reduce its basis in its FC stock from $40 to $0 and include $20 in income as a deemed dividend. Under § 1.367(b)-2(e)(2), the $20 deemed dividend is considered as having been paid by FC to FD, and by FD to USS, immediately prior to the distribution. Under paragraph (f) of this section, the deemed dividend is not included by FD as foreign personal holding company income under section 954(c). Under paragraph (c)(3) of this section, the basis increase provided in § 1.367(b)-2(e)(3)(ii) does not apply with regard to the $20 deemed dividend. Under the rules of paragraph (c)(4) of this section, USS increases its basis in FD by the amount by which it decreased its basis in FC, as well as by the amount of its deemed dividend inclusion ($40 + $40 + $20 = $100).

Example 2. (i) *Facts.* USS1 and USS2, domestic corporations, each own 50 percent of the outstanding stock of FD, a controlled foreign corporation (CFC). USS1 and USS2 have owned their FD stock since it was incorporated, and FD has always been a CFC. USS1 and USS2 each have a basis of $500 in their FD stock, and the fair market value of each block of FD stock is $750. FD owns 100 percent of the outstanding stock of FC, a foreign corporation. FD owned the stock since FC was incorporated. Neither FD nor FC own stock in any other corporation. FD has earnings and profits of $0 and a fair market value of $750 (not considering its ownership of FC). FC has earnings and profits of $500, none of which is described in section 1248(d), and a fair market value of $750. In a non-pro rata distribution described in section 355, FD distributes all of the stock of FC to USS2 in exchange for USS2's FD stock.

(ii) *Result*—(A) FD's distribution is a transaction described in paragraph (d)(1) of this section. Under paragraph (d)(2) of this section, USS1 is considered a distributee of FD stock. Under paragraph (d)(3) of this section, USS1 and USS2 must compare their predistribution amounts with respect to FD and FC stock to their respective postdistribution amounts. Under paragraph (e)(1) of this section, USS1's predistribution amount with respect to FD or FC is USS1's section 1248 amount computed immediately before the distribution, but only to the extent such amount is attributable to FD or FC. USS2's predistribution amount is determined in the same manner. Under § 1.367(b)-2(c)(1), USS1 and USS2 each have a section 1248 amount computed immediately before the distribution of $250, all of which is attributable to FC. Thus, USS1 and USS2 each have a predistribution amount with respect to FD of $0, and each have a predistribution amount with respect to FC of $250. These amounts are computed as follows: If either USS1 or USS2 had sold its FD stock immediately before the transaction, it would have recognized $250 of gain ($750 fair market value—$500 basis). All of the gain would have been treated as a dividend under section 1248, and all of the section 1248 amount would have been attributable to FC (based on USS1's and USS2's pro rata shares of FC's earnings and profits (50 percent × $500)).

(B) Under paragraph (d)(3) of this section, a distributee that owns no stock in the distributing or controlled corporation immediately after the distribution has a postdistribution amount with regard to that stock of zero. Accordingly, USS2 has a postdistribution amount of $0 with respect to FD and USS1 has a postdistribution amount of $0 with respect to FC. Under paragraph (e)(2) of this section, USS1's postdistribution amount with respect to FD is its section 1248 amount with respect to such corporation, computed immediately after the distribution (but without regard to paragraph (d) of this section). USS2's postdistribution amount with respect to FC is determined in the same manner. Under § 1.367(b)-2(c)(1), USS1's section 1248 amount computed immediately after the distribution with respect to FD is $0 and USS2's section 1248 amount computed immediately after the distribution with respect to FC is $250. These amounts, which are USS1's and USS2's postdistribution amounts, are computed as follows: After the non-pro rata distribution, USS1 owns all the stock of FD and USS2 owns all the stock of FC. If USS1 sold its FD stock immediately after the distribution, none of the resulting $250 gain ($750 fair market value $500 basis) would be treated as a dividend under section 1248. If USS2 sold its FC stock immediately after the distribution, it would have a $250 gain ($750 fair market value—$500 basis), all of which would be treated as a dividend under section 1248.

(C) The income inclusion rule of paragraph (d)(3) of this section applies to the extent of any difference between USS1's and USS2's postdistribution and predistribution amounts. In the case of USS2, there is no difference between the two amounts with respect to either FD or FC and, as a result, no income inclusion is required. In the case of USS1, there is no difference between the two amounts with respect to its FD stock. However, USS1's postdistribution amount with respect to FC is $250 less than its predistribution amount. Accordingly, under paragraph (d)(3) of this section, USS1 is required to include $250 in income as a deemed dividend. Under § 1.367(b)-2(e)(2), the $250 deemed dividend is considered as having been paid by FC to FD, and by FD to USS1, immediately prior to the distribution. This deemed dividend increases USS1's basis in FD ($500 + $250 = $750). Under paragraph (f) of this section, the deemed dividend is not included by FD as foreign personal holding company income under section 954(c).

[T.D. 8862, 65 FR 3606, Jan. 24, 2000; 65 FR 66502, Nov. 6, 2000]

§ 1.367(b)-6 Effective/applicability dates and coordination rules.

(a) ***Effective/applicability dates*** —

(1) ***In general.***

(i) Except as otherwise provided in this paragraph (a)(1) and paragraph (a)(2) of this section, §§ 1.367(b)-1 through 1.367(b)-5, and this section, apply to section 367(b) exchanges that occur on or after February 23, 2000.

(ii) The rules of §§ 1.367(b)-3 and 1.367(b)-4, as they apply to reorganizations described in section 368(a)(1)(A) (including reorganizations described in section 368(a)(2)(D) or (a)(2)(E)) involving a foreign acquiring or foreign acquired corporation, apply only to transfers occurring on or after January 23, 2006.

(iii) Section 1.367(b)-1(c)(2)(v), (c)(3)(ii)(A), (c)(4)(iv), (c)(4)(v), § 1.367(b)-2(j)(1)(i) and (l), and § 1.367(b)-3(e) and (f), apply to section 367(b) exchanges that occur on or after November 6, 2006. For guidance with respect to § 1.367(b)-1(c)(3)(ii)(A), (c)(4)(iv), and (c)(4)(v) and § 1.367(b)-2(j)(1)(i) for exchanges that occur before November 6, 2006, see 26 CFR part 1 revised as of April 1, 2006.

(iv) Section 1.367(b)-4(b)(1)(i)(B)(*2*), § 1.367(b)-4(b)(1)(ii), § 1.367(b)-4(b)(1)(iii), *Example 4* and *Example 5* apply to section 367(b) exchanges that occur on or after April 18, 2013. For guidance with respect to § 1.367(b)-4(b)(1)(i)(B)(*2*), § 1.367(b)-4(b)(1)(ii) and § 1.367(b)-4(b)(1)(iii), *Example 4,* for exchanges that occur before April 18, 2013, see 26 CFR part 1 revised as of April 1, 2012.

(v) Section 1.367(b)-2(j)(2) applies to transactions completed on or after October 5, 2023, and to any transactions treated as completed before October 5, 2023, as a result of an entity classification election made under § 301.7701-3 of this chapter that is filed on or after October 5, 2023.

(vi) Section 1.367(b)-1(c)(2)(vi), (c)(4)(viii), and (c)(4)(ix) apply to taxable years ending on or after October 5, 2023. However, a taxpayer and its related parties (within the meaning of sections 267(b) and 707(b)(1)) may choose to apply the rules referred to in the preceding sentence to all open taxable years ending before October 5, 2023, provided that the taxpayer and its related parties consistently apply such rules and § 1.367(b)-3(g) for such years.

(2) ***Exception.*** A taxpayer may, however, elect to have §§ 1.367(b)-1 through 1.367(b)-5, and this section, apply to section 367(b) exchanges that occur (or occurred) before February 23, 2000, if the due date for the taxpayer's timely filed Federal tax return (including extensions) for the taxable year in which the section 367(b) exchange occurs (or occurred) is after February 23, 2000. The election under this paragraph (a)(2) will be valid only if—

(i) The electing taxpayer makes the election on a timely filed section 367(b) notice;

(ii) In the case of an exchanging shareholder that is a foreign corporation, the election is made on the section 367(b) notice that is filed by each of its shareholders listed in § 1.367(b)-1(c)(3)(ii); and

(iii) The electing taxpayer provides notice of the election to all corporations (or their successors in interest) whose earnings and profits are affected by the election on or before the date the section 367(b) notice is filed.

(b) ***Certain recapitalizations described in § 1.367(b)-4(b)(3).*** In the case of a recapitalization described in § 1.367(b)-4(b)(3) that occurred prior to July 20, 1998, the exchanging shareholder shall include the section 1248 amount on its tax return for the taxable year that includes the exchange described in § 1.367(b)-4(b)(3)(i) (and not in the taxable year of the recapitalization), except that no inclusion is required if both the recapitalization and the exchange described in § 1.367(b)-4(b)(3)(i) occurred prior to July 20, 1998.

(c) ***Use of reasonable method to comply with prior published guidance*** —

(1) ***Prior exchanges.*** The taxpayer may use a reasonable method to comply with the following prior published guidance to the extent such guidance relates to section 367(b): Notice 88-71 (1988-2 C.B. 374); Notice 89-30 (1989-1 C.B. 670); and Notice 89-79 (1989-2 C.B. 392) (see § 601.601(d)(2) of this chapter). This rule applies to section 367(b) exchanges that occur (or occurred) before February 23, 2000, or, if a taxpayer makes the election described in paragraph (a)(2) of this section, for section 367(b) exchanges that occur (or occurred) before the date described in paragraph (a)(2) of this section. This rule also applies to section 367(b) exchanges and distributions described in paragraph (d) of this section.

(2) ***Future exchanges.*** Section 367(b) exchanges that occur on or after February 23, 2000, (or, if a taxpayer makes the election described in paragraph (a)(2) of this section, for section 367(b) exchanges that occur on or after the date described in paragraph (a)(2) of this section) are governed by the section 367(b) regulations and, as a result, paragraph (c)(1) of this section shall not apply.

(d) ***Effect of removal of attribution rules.*** To the extent that the rules under §§ 7.367(b)-9 and 7.367(b)-10(h) of this chapter, as in effect prior to February 23, 2000 (see 26 CFR part 1, revised as of April 1, 1999), attributed earnings and profits to the stock of a foreign corporation in connection with an exchange described in section 351, 354, 355, or 356 before February 23, 2000, the foreign corporation shall continue to be subject to the rules of § 7.367(b)-12 of this chapter in the event of any subsequent exchanges and distributions with respect to such stock, notwithstanding the fact that such subsequent exchange or distribution occurs on or after the effective date described in paragraph (a) of this section.

[T.D. 8862, 65 FR 3608, Jan. 24, 2000, as amended by T.D. 9243, 71 FR 4289, Jan. 26, 2006; T.D. 9250, 71 FR 8805, Feb. 21, 2006; T.D. 9243, 71 FR 28266, May 16, 2006; T.D. 9273, 71 FR 44895, Aug. 8, 2006; 73 FR 14386, Mar. 18, 2008; T.D. 9614, 78 FR 17041, Mar. 19, 2013; T.D. 9834, 83 FR 32536, July 12, 2018; T.D. 10004, 89 FR 58283, July 18, 2024]

§ 1.367(b)-7 Carryover of earnings and profits and foreign income taxes in certain foreign-to-foreign nonrecognition transactions.

(a) ***Scope.*** This section applies to an acquisition by a foreign corporation (foreign acquiring corporation) of the assets of another foreign corporation (foreign target corporation) in a transaction described in section 381 (foreign section 381 transaction). This section describes the manner and extent to which earnings and profits and foreign income taxes of the foreign acquiring corporation and the foreign target corporation carry over to the surviving foreign corporation (foreign surviving corporation) and the ordering of distributions by the foreign surviving corporation. See § 1.367(b)-9 for special rules governing

reorganizations described in section 368(a)(1)(F) and foreign section 381 transactions involving foreign corporations that hold no property and have no tax attributes immediately before the transaction, other than a nominal amount of assets (and related tax attributes).

(b) ***General rules*** —

(1) ***Non-previously taxed earnings and profits and related taxes.*** Earnings and profits and related foreign income taxes of the foreign acquiring corporation and the foreign target corporation (pre-transaction earnings and pre-transaction taxes, respectively) shall carry over to the foreign surviving corporation in the manner described in paragraphs (d), (e), and (f) of this section. Dividend distributions by the foreign surviving corporation (post-transaction distributions) shall be out of earnings and profits and shall reduce related foreign income taxes in the manner described in paragraph (c) of this section. See paragraph (g) of this section for rules applicable to taxable years of foreign corporations beginning on or after January 1, 2018, and taxable years of United States shareholders in which or with which such taxable years of foreign corporations end ("post-2017 taxable years").

(2) ***Previously taxed earnings and profits.*** [Reserved]

(c) ***Ordering rule for post-transaction distributions.*** Dividend distributions out of a foreign surviving corporation's earnings and profits shall be ordered in accordance with the rules of paragraph (c)(1) or (2) of this section, depending on whether the foreign surviving corporation is a pooling corporation or a nonpooling corporation.

(1) ***If foreign surviving corporation is a pooling corporation.*** In the case of a foreign surviving corporation that is a pooling corporation, post-transaction distributions shall be first out of the post-1986 pool (as described in paragraph (d) of this section) and second out of the pre-pooling annual layers (as described in paragraph (e)(1) of this section) under an annual last-in, first-out (LIFO) method.

(2) ***If foreign surviving corporation is a nonpooling corporation.*** In the case of a foreign surviving corporation that is a nonpooling corporation, post-transaction distributions shall be out of the pre-pooling annual layers (as described in paragraph (e)(2) of this section) under the LIFO method.

(d) ***Post-1986 pool.*** If the foreign surviving corporation is a pooling corporation, then the post-1986 pool shall be determined under the rules of this paragraph (d).

(1) ***In general*** —

(i) ***Qualifying earnings and taxes.*** The post-1986 pool shall consist of the post-1986 undistributed earnings and related post-1986 foreign income taxes of the foreign acquiring corporation and the foreign target corporation.

(ii) ***Carryover rule.*** Subject to paragraph (d)(2) of this section, the amounts described in paragraph (d)(1)(i) of this section attributable to the foreign acquiring corporation and the foreign target corporation shall carry over to the foreign surviving corporation and shall be combined on a separate category-by-separate category basis.

(2) ***Hovering deficit*** —

(i) ***In general.*** If immediately prior to the foreign section 381 transaction either the foreign acquiring corporation or the foreign target corporation has a deficit in one or more separate categories of post-1986 undistributed earnings or an aggregate deficit in pre-1987 accumulated profits, such deficit will be a hovering deficit of the foreign surviving corporation. The rules of this paragraph (d)(2) apply to hovering deficits in separate categories of post-1986

undistributed earnings. See paragraphs (e)(1)(iii) and (e)(2)(iii) of this section for rules that apply to hovering deficits in pre-1987 accumulated profits. If the foreign acquiring corporation and the foreign target corporation each have a post-1986 hovering deficit in the same separate category of post-1986 undistributed earnings, such deficits and their related post-1986 foreign income taxes shall be combined for purposes of applying this paragraph (d)(2). See also paragraphs (f)(1) and (4) of this section (describing other rules applicable to a deficit described in this paragraph (d)(2)).

(ii) ***Offset rule.*** A hovering deficit in a separate category of post-1986 undistributed earnings shall offset only earnings and profits accumulated by the foreign surviving corporation after the foreign section 381 transaction (post-transaction earnings) in the same separate category of post-1986 undistributed earnings. For purposes of this rule, however, post-transaction earnings do not include post-1986 undistributed earnings in the same category that are earned after the foreign section 381 transaction, but are distributed or deemed distributed in the same year they are earned (that is, that do not become accumulated). The offset shall occur as of the first day of the foreign surviving corporation's first taxable year following the year in which the post-transaction earnings accumulated.

(iii) ***Related taxes.*** Post-1986 foreign income taxes that are related to a hovering deficit in a separate category of post-1986 undistributed earnings shall only be added to the foreign surviving corporation's post-1986 foreign income taxes in that separate category on a pro rata basis as the hovering deficit is absorbed. Pro rata means in the same proportion as the portion of the hovering deficit that offsets post-transaction earnings in the separate category under paragraph (d)(2)(ii) of this section bears to the total amount of the hovering deficit.

(3) ***Examples.*** The following examples illustrate the rules of this paragraph (d). The examples assume the following facts: Foreign corporations A and B are controlled foreign corporations (CFCs) that were incorporated after December 31, 1986, have always been pooling corporations, and have always had calendar taxable years. None of the shareholders of foreign corporations A and B are required to include any amount in income under § 1.367(b)-4 as a result of the foreign section 381 transaction. Foreign corporations A and B (and all of their respective qualified business units as defined in section 989) maintain a “u” functional currency. Finally, unless otherwise stated, any post-1986 undistributed earnings in the passive category resulted from a look-through dividend that was paid by a lower-tier CFC out of earnings accumulated when the CFC was a noncontrolled section 902 corporation and that qualified for the subpart F same-country exception under section 954(c)(3)(A). The examples are as follows:

Example 1. (i) *Facts.* (A) On December 31, 2006, foreign corporations A and B have the following post-1986 undistributed earnings and post-1986 foreign income taxes:

Separate category	E&P	Foreign taxes
FOREIGN CORPORATION A		
General	300u	$60
Passive	100u	40
	400u	$100

Separate category	E&P	Foreign taxes
FOREIGN CORPORATION B		
General	300u	$70

(B) On January 1, 2007, foreign corporation B acquires the assets of foreign corporation A in a reorganization described in section 368(a)(1)(C). Immediately following the foreign section 381 transaction, foreign surviving corporation is a CFC.
(ii) *Result.* Under the rules described in paragraph (d)(1) of this section, foreign surviving corporation has the following post-1986 undistributed earnings and post-1986 foreign income taxes:

Separate category	E&P	Foreign taxes
General	600u	$130
Passive	100u	40
	700u	$170

(iii) *Post-transaction distribution.* (A) During 2007, foreign surviving corporation does not accumulate any earnings and profits or pay or accrue any foreign income taxes. On December 31, 2007, foreign surviving corporation distributes 350u to its shareholders. Under the rules described in § 1.902-1(d)(1) and paragraph (c)(1) of this section, the distribution is out of, and reduces, post-1986 undistributed earnings and post-1986 foreign income taxes in the separate categories on a pro rata basis, as follows:

Separate category	E&P	Foreign taxes
General	300u	$65
Passive	50u	20
	350u	$85

(B) The foreign income taxes deemed paid by qualifying shareholders of foreign surviving corporation upon the distribution are subject to generally applicable rules and limitations, such as those of sections 78, 902, and 904(d).

(C) Immediately after the distribution, foreign surviving corporation has the following post-1986 undistributed earnings and post-1986 foreign income taxes:

Separate category	E&P	Foreign taxes
General	300u	$65
Passive	50u	20
	350u	$85

Example 2. (i) *Facts.* (A) On December 31, 2006, foreign corporations A and B have the following post-1986 undistributed earnings and post-1986 foreign income taxes:

Separate category	E&P	Foreign taxes
FOREIGN CORPORATION A		
General	200u	$30
Passive	(100u)	10
	100u	$40
FOREIGN CORPORATION B		
General	300u	$60
Passive	100u	30
	400u	$90

(B) On January 1, 2007, foreign corporation B acquires the assets of foreign corporation A in a reorganization described in section 368(a)(1)(C). Immediately following the foreign section 381 transaction, foreign surviving corporation is a CFC.
(ii) *Result.* Under the rules described in paragraphs (d)(1) and (2) of this section, foreign surviving corporation has the following post-1986 undistributed earnings and post-1986 foreign income taxes:

Separate category	Earnings & profits		Foreign taxes	
	Positive E&P	Hovering deficit	Foreign taxes available	Foreign taxes associated with hovering deficit
General	500u		$ 90	
Passive	100u	(100u)	30	$10

Separate category	Earnings & profits		Foreign taxes	
	Positive E&P	Hovering deficit	Foreign taxes available	Foreign taxes associated with hovering deficit
	600u	(100u)	$120	$10

(iii) *Post-transaction distribution.* (A) During 2007, foreign surviving corporation does not accumulate any earnings and profits or pay or accrue any foreign income taxes. On December 31, 2007, foreign surviving corporation distributes 300u to its shareholders. Under the rules described in § 1.902-1(d)(1) and paragraph (c)(1) of this section, the distribution is out of, and reduces, post-1986 undistributed earnings and post-1986 foreign income taxes on a pro rata basis as follows:

Separate category	E&P	Foreign taxes
General	250u	$45
Passive	50u	15
	300u	$60

(B) The foreign income taxes deemed paid by qualifying shareholders of foreign surviving corporation upon the distribution are subject to generally applicable rules and limitations, such as those of sections 78, 902, and 904(d).
(C) Immediately after the distribution, foreign surviving corporation has the following post-1986 undistributed earnings and post-1986 foreign income taxes:

Separate category	Earnings & profits		Foreign taxes	
	Positive E&P	Hovering deficit	Foreign taxes available	Foreign taxes associated with hovering deficit
General	250u		$45	
Passive	50u	(100u)	15	$10
	300u	(100u)	$60	$10

(iv) *Post-transaction earnings*—(A) In its taxable year ending on December 31, 2008, foreign

surviving corporation accumulates earnings and profits and pays related foreign income taxes as follows:

Separate category	E&P	Foreign taxes
General	100u	$20
Passive	50u	$10
	150u	$40

(B) None of foreign surviving corporation's earnings and profits for its 2008 taxable year qualifies as subpart F income as defined in section 952(a). Under the rules described in paragraphs (d)(2)(ii) and (iii) of this section, the hovering deficit in the passive category will offset the post-transaction earnings in that category and a proportionate amount of the foreign taxes related to the hovering deficit will be added to the post-1986 foreign income taxes pool. Because the post-transaction earnings in the passive category are half of the amount of the hovering deficit, half of the related taxes are added to the post-1986 foreign income taxes pool. Accordingly, foreign surviving corporation has the following post-1986 undistributed earnings and post-1986 foreign income taxes on January 1, 2009:

Separate category	Earnings & profits		Foreign taxes	
	Positive E&P	Hovering deficit	Foreign taxes available	Foreign taxes associated with hovering deficit
General	350u		$65	
Passive	50u	(50u)	30	$5
	400u	(50u)	$95	$5

Example 3. (i) *Facts.* The facts are the same as *Example 2*, except that the 50u of earnings in the passive category accrued by foreign surviving corporation during 2008 is subpart F income, all of which is included in income under section 951(a) by United States shareholders (as defined in section 951(b)). This example assumes that none of the United States shareholders are able to reduce their subpart F income inclusion with a qualified deficit under section 952(c)(1)(B).

(ii) *Result.* (A) Under the rule described in paragraph (f)(1) of this section, the (100u) hovering deficit in the passive category does not reduce foreign surviving corporation's current passive earnings and profits for purposes of determining subpart F income or associated deemed paid credits. Thus, foreign surviving corporation's United States shareholders include their pro

rata shares of 50u in taxable income for the year and are eligible for a deemed paid foreign tax credit under section 960, computed by reference to their pro rata shares of $12.50 (50u subpart F inclusion / (50u + 50u post-1986 undistributed earnings in the passive category = 100u) = 50%, × $25 post-1986 foreign income taxes in the passive category = $12.50). The United States shareholders will also include their pro rata shares of the deemed-paid taxes of $12.50 in taxable income for the year as a deemed dividend pursuant to section 78.

(B) Immediately after the subpart F inclusion and section 960 deemed paid taxes (and taking into account the taxable year 2008 earnings and profits and related taxes in the general category), foreign surviving corporation has the following post-1986 undistributed earnings and post-1986 foreign income taxes:

Separate category	Earnings & profits		Foreign taxes available	Foreign taxes	
	Positive E&P	Hovering deficit			Foreign taxes associated with hovering deficit
General	350u		$65.00		
Passive	50u	(100u)	12.50		$10
	400u	(100u)	77.50		10

(C) The 50u included as subpart F income constitutes previously taxed earnings and profits under section 959.

Example 4. (i) *Facts.* (A) On December 31, 2006, foreign corporations A and B have the following post-1986 undistributed earnings and post-1986 foreign income taxes:

Separate category	E&P	Foreign taxes
FOREIGN CORPORATION A		
General	50u	$10
FOREIGN CORPORATION B		
General	(100u)	$20

(B) On January 1, 2007, foreign corporation B acquires the assets of foreign corporation A in a reorganization described in section 368(a)(1)(C). Immediately following the foreign section 381 transaction, foreign surviving corporation is a CFC.

(ii) *Result.* (A) Under the rules described in paragraphs (d)(1) and (2) of this section, foreign surviving corporation has the following post-1986 undistributed earnings and post-1986 foreign income taxes:

Separate category	Earnings & profits		Foreign taxes available	Foreign taxes	
	Positive E&P	Hovering deficit		Foreign taxes associated with hovering deficit	
General	50u	(100u)	$10	$20	

(iii) *Post-transaction earnings and distribution.* (A) In its taxable year ending on December 31, 2007, foreign surviving corporation earns 100u in the general category and pays related foreign income taxes of $24. On December 31, 2007, foreign surviving corporation distributes 75u to its shareholders.
(B) *Result.* For purposes of determining the dividend amount under section 316 and the foreign income taxes deemed paid with respect to that dividend under section 902, under paragraph (d)(2)(ii) of this section the hovering deficit does not offset the post-transaction current year earnings. Accordingly, the full 75u will be a dividend under section 316. The deemed paid taxes on that dividend are $17 (75u distribution / (100u current earnings + 50u accumulated earnings) = 50%, × ($10 accumulated foreign taxes + $24 current year foreign taxes) = $17). The 25u of undistributed earnings and profits in 2007 will be offset by (25u) of the hovering deficit for purposes of determining the opening balance of the post-1986 undistributed earnings pool in 2008. Because the amount of earnings offset by the hovering deficit is 25% of the amount of the hovering deficit, under paragraph (d)(2)(iii) of this section $5 (25% of $20) of the related taxes are added to the post-1986 foreign income taxes pool at the beginning of the next taxable year. Accordingly, foreign surviving corporation has the following post-1986 undistributed earnings and post-1986 foreign income taxes on January 1, 2008:

Separate category	Earnings & profits		Foreign taxes	
	Positive E&P	Hovering deficit	Foreign taxes available	Foreign taxes associated with hovering deficit
General	50u	(75u)	$22	$15

(e) *Pre-pooling annual layers —*

(1) ***If foreign surviving corporation is a pooling corporation.*** If the foreign surviving corporation is a pooling corporation, the pre-pooling annual layers shall be determined under the rules of this paragraph (e)(1).

(i) ***Qualifying earnings and taxes.*** The pre-pooling annual layers shall consist of the pre-1987 accumulated profits and the pre-1987 foreign income taxes of the foreign acquiring corporation and the foreign target corporation.

(ii) ***Carryover rule.*** Subject to paragraph (e)(1)(iii) of this section, the amounts described in paragraph (e)(1)(i) of this section shall carry over to the foreign surviving corporation but shall not be combined. If the foreign acquiring corporation and the foreign target corporation have pre-1987 accumulated profits in the same year and a distribution is made therefrom, the rules of § 1.902-1(b)(2)(ii) and (b)(3) shall apply separately to reduce pre-1987 accumulated profits and pre-1987 foreign income taxes of the foreign acquiring corporation and the foreign target corporation on a pro rata basis. For further guidance, see Rev. Rul. 68-351 (1968-2 C.B. 307); Rev. Rul. 70-373 (1970-2 C.B. 152) (see also § 601.601(d)(2) of this chapter); see also paragraph (f)(2) of this section (governing the reconciliation of taxable years).

(iii) ***Deficit*** —

(A) ***In general.*** The rules of this paragraph (e)(1)(iii) apply when, immediately prior to the foreign section 381 transaction, the foreign acquiring corporation or the foreign target corporation (or both) has a deficit in earnings and profits for one or more of the years that comprise its pre-1987 accumulated profits (see also paragraphs (f)(1) and (4) of this section, describing other rules applicable to a deficit described in this paragraph (e)(1)(iii)).

(B) ***Aggregate positive pre-1987 accumulated profits.*** If the foreign acquiring corporation or the foreign target corporation (or both) has an aggregate positive (or zero) amount of pre-1987 accumulated profits, but a deficit in earnings and profits for one or more years, then the rules otherwise applicable to such deficits shall apply separately to the pre-1987 accumulated profits and related pre-1987 foreign income taxes of such corporation. A deficit in pre-1987 accumulated profits for one or more years is applied to reduce pre-1987 accumulated profits on a LIFO basis. Any remaining deficit shall be applied to reduce pre-1987 accumulated profits in succeeding years. See Rev. Rul. 74-550 (1974-2 C.B. 209) (see also § 601.601(d)(2) of this chapter); *Champion Int'l Corp.* v. *Commissioner*, 81 T.C. 424 (1983), acq. in result, 1987-2 C.B. 1; Rev. Rul. 87-72 (1987-2 C.B. 170) (see also § 601.601(d)(2) of this chapter). As a result, no amount in excess of the aggregate positive amount of pre-1987 accumulated profits shall be distributed from the pre-transaction earnings of the foreign acquiring corporation or the foreign target corporation.

(C) ***Aggregate deficit in pre-1987 accumulated profits.*** If the foreign acquiring corporation or the foreign target corporation (or both) has an aggregate deficit in pre-1987 accumulated profits, a hovering deficit as defined under paragraph (d)(2)(i) of this section, then the rules under § 1.902-2(b) shall apply to such hovering deficit (and related pre-1987 foreign income taxes) immediately prior to the transaction, except that the aggregate hovering deficit that is carried forward into the foreign surviving corporation's post-1986 pool shall offset only post-transaction earnings accumulated by the foreign surviving corporation in the same separate category of post-1986 undistributed earnings to which the relevant

portion of the hovering deficit is attributable. Post-transaction earnings do not include earnings and profits that are earned after the foreign section 381 transaction but distributed or deemed distributed in the same year they are earned.

(D) ***Deficit and positive separate categories within annual layers.*** For purposes of applying the rules of paragraphs (e)(1)(iii)(B) and (C) of this section, if within a single pre-pooling annual layer, the foreign acquiring corporation or the foreign target corporation (or both) has a deficit in pre-1987 accumulated profits in a separate category and positive pre-1987 accumulated profits in another separate category, the deficit shall first be used to offset the positive pre-1987 accumulated profits in the other separate category in the same pre-pooling annual layer. Any remaining deficit shall be carried forward or back to other years according to the rules of paragraph (e)(1)(iii)(B) or (C) of this section as applicable.

(iv) ***Pre-1987 section 960 earnings and profits and foreign income taxes.*** The pre-1987 section 960 earnings and profits and pre-1987 section 960 foreign income taxes of the foreign acquiring corporation and the foreign target corporation shall carry over to the foreign surviving corporation but shall not be combined. The rules otherwise applicable to such amounts shall apply separately to the pre-1987 section 960 earnings and profits and pre-1987 section 960 foreign income taxes of the foreign acquiring corporation and the foreign target corporation on a pro rata basis. For further guidance, see Notice 88-70 (1988-2 C.B. 369) (see also § 601.601(d)(2) of this chapter).

(v) ***Examples.*** The following examples illustrate the rules of this paragraph (e)(1). The examples assume the following facts: Foreign corporation A was incorporated in 2003 and was a nonpooling corporation through December 31, 2004. Foreign corporation A became a CFC on January 1, 2005 and, as a result, began to maintain a pool of post-1986 undistributed earnings on that date. Foreign corporation B was incorporated in 2003 and has always been owned by foreign shareholders (and thus never has met the requirements of section 902(c)(3)(B)). Both foreign corporation A and foreign corporation B have always had calendar taxable years. Foreign corporations A and B (and all of their respective qualified business units as defined in section 989) maintain a "u" functional currency. Finally, unless otherwise stated, all earnings and profits of foreign corporations A and B are in the general category. The examples are as follows:

Example 1. (i) *Facts.* (A) On December 31, 2006, foreign corporations A and B have the following earnings and profits and foreign income taxes:

	E&P	Foreign taxes
Foreign Corporation A:		
Post-1986 pool	1,000u	$350
2004	400u	160u
2003	100u	5u
	1,500u	
Foreign Corporation B:		

	E&P	Foreign taxes
2006	100u	20u
2005	150u	30u
2004	0u	50u
2003	50u	5u
	300u	105u

(B) On January 1, 2007, foreign corporation B acquires the assets of foreign corporation A in a reorganization described in section 368(a)(1)(C). Immediately following the foreign section 381 transaction, foreign surviving corporation is a CFC.
(ii) *Result.* Under the rules described in paragraphs (e)(1)(i) and (ii) of this section, foreign surviving corporation has the following earnings and profits and foreign income taxes:

	E&P	Foreign taxes
Post-1986 Pool	1,000u	$350
2006	100u	20u
2005	150u	30u
Two Side-by-Side Layers of 2004 E&P:		
2004 layer #1 (from Corp A)	400u	160u
2004 layer #2 (from Corp B)	0u	50u
Two Side-by-Side Layers of 2003 E&P:		
2003 layer #1 (from Corp A)	100u	5u
2003 layer #2 (from Corp B)	50u	5u
	1,800u	

(iii) *Post-transaction distribution.* (A) During 2007, foreign surviving corporation does not accumulate any earnings and profits or pay or accrue any foreign income taxes. On December 31, 2007, foreign surviving corporation distributes 1,725u to its shareholders. Under the rules of paragraph (c)(1) of this section, the distribution is first out of the post-1986 pool, and then out of the pre-pooling annual layers under the LIFO method, as

follows:

	E&P	Foreign taxes
Post-1986 pool	1,000u	$350
2006	100u	20u
2005	150u	30u
Two Side-by-Side Layers of 2004 E&P:		
2004 layer #1	400u	160u
2004 layer #2	0u	0u
Two Side-by-Side Layers of 2003 E&P:		
2003 layer #1	* 50u	2.5u
2003 layer #2	** 25u	2.5u
	1,725u	

** 100u in layer/150u aggregate 2003 earnings = 66.67% × 75u distribution.*

*** 50u in layer/150u aggregate 2003 earnings = 33.33% × 75u distribution.*

(B) The foreign income taxes deemed paid by qualifying shareholders of foreign surviving corporation upon the distribution are subject to generally applicable rules and limitations, such as those of sections 78, 902, and 904(d).

(C) Immediately after the distribution, foreign surviving corporation has the following earnings and profits and foreign income taxes:

	E&P	Foreign taxes
2004 layer #2	0u	50u
Two Side-by-Side Layers of 2003 E&P:		
2003 layer #1	50u	2.5u
2003 layer #2	25u	2.5u
	75u	55u

(iv) *Post-transaction earnings.* For the taxable year ending on December 31, 2008, foreign surviving corporation has 500u of current earnings and profits in the general category, none of which qualify as subpart F income under section 952(a), and pays $70 in foreign income taxes. As of the close of the 2008 taxable year, foreign surviving

corporation has the following earnings and profits and foreign income taxes:

	E&P	Foreign taxes
Post-1986 pool	500u	$70
2004	0u	50u
Two Side-by-Side Layers of 2003 E&P:		
2003 layer #1	50u	2.5u
2003 layer #2	25u	2.5u
	575u	

Example 2. (i) *Facts.* (A) On December 31, 2006, foreign corporations A and B have the following earnings and profits and foreign income taxes:

	E&P	Foreign taxes
Foreign Corporation A:		
Post-1986 pool	1,000u	$350
2004	100u	20u
2003	(50u)	5u
	1,050u	
Foreign Corporation B:		
2006	100u	20u
2005	(50u)	5u
2004	0u	50u
2003	100u	10u
	150u	85u

(B) On January 1, 2007, foreign corporation B acquires the assets of foreign corporation A in a reorganization described in section 368(a)(1)(C). Immediately following the foreign section 381 transaction, foreign surviving corporation is a CFC.

(ii) *Result.* Because foreign corporations A and B have aggregate positive amounts of pre-1987 accumulated profits with a deficit in one or more years, the rules of paragraph (e)(1)(iii)(B) of this section apply. Accordingly, after the foreign section 381 transaction, foreign surviving corporation has the following earnings and profits and foreign income taxes:

	Earnings & profits		Foreign taxes	
	Positive E&P	Deficit E&P	Foreign taxes available	Foreign taxes associated with deficit E&P
Post-1986 pool	1,000u		$350	
2006	100u		20u	
2005		(50u)		5u
Two Side-by-Side Layers of 2004 E&P:				
2004 layer #1 (from Corp A)	100u		20u	
2004 layer #2 (from Corp B)	0u		50u	
Two Side-by-Side Layers of 2003 E&P:				
2003 layer #1 (from Corp A)		(50u)		5u
2003 layer #2 (from Corp B)	100u		10u	
	1,300u	(100u)		10u

(iii) *Post-transaction distribution.* (A) During 2007, foreign surviving corporation does not accumulate any earnings and profits or pay or accrue any foreign income taxes. On December 31, 2007, foreign surviving corporation distributes 1,175u to its shareholders. Under the rules described in paragraphs (c)(1) and (e)(1)(iii)(B) of this section, the distribution is first out of the post-1986 pool, and then out of the pre-pooling annual layers, as follows:

Distribution	E&P	Foreign taxes
Post-1986 pool	1,000u	$350
2006	100u	20u

Distribution	E&P	Foreign taxes
2005	0u	0u
Two Side-by-Side Layers of 2004 E&P:		
2004 layer #1	50u	20u
2004 layer #2	0u	0u
Two Side-by-Side Layers of 2003 E&P:		
2003 layer #1	0u	0u
2003 layer #2	25u	5u
	1,175u	

(B) Under paragraph (e)(1)(iii)(B) of this section, the rules otherwise applicable when a foreign corporation has an aggregate positive (or zero) amount of pre-1987 accumulated profits, but a deficit in one or more years, apply separately to the pre-1987 accumulated profits and related foreign income taxes of foreign corporation A and foreign corporation B. As a result, distributions out of the pre-pooling annual layers of foreign corporation A and foreign corporation B cannot exceed the aggregate positive amount of pre-1987 accumulated profits of each corporation. Accordingly, only 50u can be distributed from foreign corporation A's pre-pooling annual layers and is out of its 2004 layer #1 (after rolling forward the (50u) deficit in 2003 layer #1 to reduce earnings in 2004 layer #1 to 50u (100u −50u)). Under the principles of § 1.902-1(b)(3), the full 20u of taxes related to 2004 layer #1 is reduced or deemed paid ($20 × (50/50)). 100u is distributed from foreign corporation B's 2006 annual layer. Foreign corporation B's (50u) deficit in 2005 is then rolled back to offset its 2003 annual layer to reduce earnings in that layer to 50u, 25u of which is distributed. Thus, after the distribution, 25u remains in 2003 layer # 2 along with 5u of foreign income taxes (10u × (25u/50u)).
(C) The foreign income taxes deemed paid by qualifying shareholders of foreign surviving corporation upon the distribution are subject to generally applicable rules and limitations, such as those of sections 78, 902, and 904(d).

(D) Immediately after the distribution, foreign surviving corporation has the following earnings and profits and foreign income taxes:

	E&P	Foreign taxes
2005	0u	5u
2004 layer #2	0u	50u
Two Side-by-Side Layers of 2003 E&P:		

	E&P	Foreign taxes
2003 layer #1	0u	5u
2003 layer #2	25u	5u
	25u	65u

(E) Under paragraph (e)(1)(iii)(B) of this section, the 5u, 50u, and 5u of pre-1987 foreign income taxes related to foreign surviving corporation's 2005 layer, 2004 layer #2, and 2003 layer #1, respectively, remain in those layers. These foreign income taxes generally will not be reduced or deemed paid unless a foreign tax refund restores a positive balance to the associated earnings pursuant to section 905(c), and thus will be trapped. See § 1.902-2(b)(2).

Example 3. (i) Facts. (A) On December 31, 2006, foreign corporations A and B have the following earnings and profits and foreign income taxes:

	E&P	Foreign taxes
Foreign Corporation A:		
Post-1986 pool	1,000u	$350
2004	150u	20u
2003	100u	5u
	1,250u	
Foreign Corporation B:		
2006	100u	20u
2005	(250u)	5u
2004	0u	50u
2003	100u	10u
	(50u)	85u

(B) On January 1, 2007, foreign corporation B acquires the assets of foreign corporation A in a reorganization described in section 368(a)(1)(C). Immediately following the foreign section 381 transaction, foreign surviving corporation is a CFC.
(ii) *Result.* (A) Because foreign corporation B has an aggregate hovering deficit in pre-1987 accumulated profits, the rules of paragraph (e)(1)(iii)(C) of this section apply. Accordingly, § 1.902-2(b) applies immediately prior to the foreign section 381 transaction, except that the hovering deficit is carried forward into the foreign surviving corporation's post-1986 undistributed earnings pool and will offset only post-transaction

earnings accumulated by foreign surviving corporation in the general category. Accordingly, after the foreign section 381 transaction, foreign surviving corporation has the following earnings and profits and foreign income taxes:

	Earnings & profits		Foreign taxes	
	Positive E&P	Hovering deficit	Foreign taxes available	Foreign taxes associated with hovering deficit
Post-1986 pool	1,000u	(50u)	$350	$0
2006	0u		20u	
2005	0u		5u	
Two Side-by-Side Layers of 2004 E&P:				
2004 layer #1 (from Corp A)	150u		20u	
2004 layer #2 (from Corp B)	0u		50u	
Two Side-by-Side Layers of 2003 E&P:				
2003 layer #1 (from Corp A)	100u		5u	
2003 layer #2 (from Corp B)	0u		10u	
	1,250u	(50u)		$0

(B) Under paragraph (e)(1)(iii)(C) of this section, the 20u, 5u, 50u, and 10u of pre-1987 foreign income taxes associated with foreign corporation B's pre-1987 accumulated profits for 2006, 2005, 2004 layer #2, and 2003 layer #2, respectively, remain in those layers. These foreign income taxes generally will not be reduced or deemed paid unless a foreign tax refund restores a positive balance to the associated earnings pursuant to section 905(c), and thus will be trapped. See § 1.902-2(b)(2).

(2) ***If foreign surviving corporation is a nonpooling corporation.*** If the foreign surviving corporation is a nonpooling corporation, then the pre-pooling annual layers shall be determined under the rules of this paragraph (e)(2).

(i) ***Qualifying earnings and taxes.*** The pre-pooling annual layers shall consist of the pre-1987 accumulated profits and the pre-1987 foreign income taxes of the foreign acquiring corporation and the foreign target corporation. If the foreign acquiring corporation or the foreign target corporation (or both) has post-1986 undistributed earnings or a deficit in post-1986 undistributed earnings, then those earnings or deficits and any related post-1986 foreign

income taxes shall be recharacterized as pre-1987 accumulated profits or deficits and pre-1987 foreign income taxes of the foreign acquiring corporation or the foreign target corporation accumulated immediately prior to the foreign section 381 transaction.

(ii) ***Carryover rule.*** Subject to paragraph (e)(2)(iii) of this section, the amounts described in paragraph (e)(2)(i) of this section shall carry over to the foreign surviving corporation but shall not be combined. If the foreign acquiring corporation and the foreign target corporation have pre-1987 accumulated profits in the same year and a distribution is made therefrom, the principles of § 1.902-1(b)(2)(ii) and (3) shall apply separately to reduce pre-1987 accumulated profits and pre-1987 foreign income taxes of the foreign acquiring corporation and the foreign target corporation on a pro rata basis. For further guidance, see Rev. Rul. 68-351 (1968-2 C.B. 307); Rev. Rul. 70-373 (1970-2 C.B. 152) (see also § 601.601(d)(2) of this chapter); see also paragraph (f)(2) of this section (governing the reconciliation of taxable years).

(iii) ***Deficits*** —

(A) ***In general.*** The rules of this paragraph (e)(2)(iii) apply when, immediately prior to the foreign section 381 transaction (and after application of the last sentence of paragraph (e)(2)(i) of this section), the foreign acquiring corporation or the foreign target corporation (or both) has a deficit in one or more years that comprise its pre-1987 accumulated profits. See also paragraphs (f)(1) and (4) of this section (describing other rules applicable to a deficit described in this paragraph (e)(2)(iii)).

(B) ***Aggregate positive pre-1987 accumulated profits.*** If the foreign acquiring corporation or the foreign target corporation (or both) has an aggregate positive (or zero) amount of pre-1987 accumulated profits, but a deficit in pre-1987 accumulated profits in one or more years, then the rules otherwise applicable to such deficits shall apply separately to the pre-1987 accumulated profits and related foreign income taxes of such corporation. A deficit in pre-1987 accumulated profits for one or more years is applied to reduce pre-1987 accumulated profits on a LIFO basis. Any remaining deficit shall be applied to reduce pre-1987 accumulated profits in succeeding years. See Rev. Rul. 74-550 (1974-2 C.B. 209) (see also § 601.601(d)(2) of this chapter); *Champion Int'l Corp.* v. *Commissioner,* 81 T.C. 424 (1983), acq. in result, 1987-2 C.B. 1; Rev. Rul. 87-72 (1987-2 C.B. 170) (see also § 601.601(d)(2) of this chapter). As a result, no amount in excess of the aggregate positive amount of pre-1987 accumulated profits shall be distributed from the pre-transaction earnings of the foreign acquiring corporation or the foreign target corporation.

(C) ***Aggregate deficit in pre-1987 accumulated profits.*** If the foreign acquiring corporation or the foreign target corporation (or both) has an aggregate deficit in pre-1987 accumulated profits, a hovering deficit as defined under paragraph (d)(2)(i) of this section, then the rules otherwise applicable to such hovering deficits shall apply separately to the pre-transaction earnings and profits and related taxes of the relevant corporation. See, e.g., sections 316(a) and 381(c)(2)(B). Thus, any hovering deficit shall offset only post-transaction earnings accumulated by the foreign surviving corporation in the same separate category of earnings and profits to which the relevant portion of the hovering deficit is attributable. Post-transaction earnings do not include earnings and profits that are earned after the foreign section 381 transaction but distributed or deemed distributed in the same year they are earned. Following the principles of § 1.902-2(b), if there is an aggregate deficit in pre-1987 accumulated profits, any related pre-1987 foreign income

taxes generally will not be reduced or deemed paid unless a foreign tax refund restores a positive balance to the associated earnings pursuant to section 905(c), and creates a pre-transaction aggregate positive balance for pre-1987 accumulated profits.

(D) ***Deficit and positive separate categories within annual layers.*** For purposes of applying the rules of paragraphs (e)(2)(iii)(B) and (C) of this section, if within a single pre-pooling annual layer, the foreign acquiring corporation or the foreign target corporation (or both) has a deficit in pre-1987 accumulated profits in a separate category and positive pre-1987 accumulated profits in another separate category, the deficit shall first be used to offset the positive pre-1987 accumulated profits in the other separate category in the same pre-pooling annual layer. Any remaining deficit shall be carried forward or back to other years according to the rules of paragraph (e)(2)(iii)(B) or (C) as applicable.

(iv) ***Pre-1987 section 960 earnings and profits and foreign income taxes.*** The pre-1987 section 960 earnings and profits and pre-1987 section 960 foreign income taxes of the foreign acquiring corporation and the foreign target corporation shall carry over to the foreign surviving corporation but shall not be combined. The rules otherwise applicable to such amounts shall apply separately to the pre-1987 section 960 earnings and profits and pre-1987 section 960 foreign income taxes of the foreign acquiring corporation and the foreign target corporation on a pro rata basis. For further guidance, see Notice 88-70 (1988-2 C.B. 369) (see also § 601.601(d)(2) of this chapter).

(v) ***Examples.*** The following examples illustrate the rules of this paragraph (e)(2). The examples assume the following facts: Both foreign corporation A and foreign corporation B have always had calendar taxable years. Foreign corporations A and B (and all of their respective qualified business units as defined in section 989) maintain a “u” functional currency, and 1u = US$1 at all times. Finally, unless otherwise stated, all earnings and profits of foreign corporations A and B are in the general category. The examples are as follows:

Example 1. (i) *Facts.* (A) Foreign corporations A and B both were incorporated in 2003. Nine percent of the voting stock of foreign corporation A is owned by domestic corporate shareholder C. Nine percent of the voting stock of foreign corporation B is owned by domestic corporate shareholder D. Shareholders C and D are unrelated. The remaining 91% of the voting stock of each foreign corporation is owned by unrelated foreign shareholders. Thus, neither corporation meets the requirements of section 902(c)(3)(B). On December 31, 2006, foreign corporations A and B have the following earnings and profits and foreign income taxes:

	E&P	Foreign taxes
Foreign Corporation A:		
2006	500u	350u
2005	400u	300u
2004	400u	160u

	E&P	Foreign taxes
2003	100u	5u
	1,400u	815u
Foreign Corporation B:		
2006	100u	20u
2005	300u	60u
2004	0u	50u
2003	50u	5u
	450u	135u

(B) On January 1, 2007, foreign corporation B acquires the assets of foreign corporation A in a reorganization described in section 368(a)(1)(C). Immediately following the foreign section 381 transaction, foreign surviving corporation is a nonpooling corporation that does not meet the requirements of section 902(c)(3)(B).
(ii) *Result.* Under the rules described in paragraphs (e)(2)(i) and (ii) of this section, foreign surviving corporation has the following earnings and profits and foreign income taxes:

	E&P	Foreign taxes
Two Side-by-Side Layers of 2006 E&P:		
2006 layer #1 (from Corp A)	500u	350u
2006 layer #2 (from Corp B)	100u	20u
Two Side-by-Side Layers of 2005 E&P:		
2005 layer #1 (from Corp A)	400u	300u
2005 layer #2 (from Corp B)	300u	60u
Two Side-by-Side Layers of 2004 E&P:		
2004 layer #1 (from Corp A)	400u	160u
2004 layer #2 (from Corp B)	0u	50u
Two Side-by-Side Layers of 2003 E&P:		
2003 layer #1 (from Corp A)	100u	5u
2003 layer #2 (from Corp B)	50u	5u
	1,850u	950u

(iii) *Post-transaction distribution.* (A) During 2007, foreign surviving corporation does not accumulate any earnings and profits or pay or accrue any foreign income taxes. On December 31, 2007, foreign surviving corporation distributes 600u to its shareholders.

Under the rules of paragraph (c)(3) of this section, the distribution is out of pre-pooling annual layers under the LIFO method as follows:

	E&P	Foreign taxes
Two Side-by-Side Layers of 2006 E&P:		
2006 layer #1 (from Corp A)	500u	350u
2006 layer #2 (from Corp B)	100u	20u
	600u	370u

(B) Foreign surviving corporation's foreign income tax accounts are reduced to reflect the distribution of earnings and profits notwithstanding that no shareholders are eligible to claim deemed paid foreign income taxes under section 902. See § 1.902-1(a)(10)(iii).
(C) Immediately after the distribution, foreign surviving corporation has the following earnings and profits and foreign income taxes:

	E&P	Foreign taxes
Two Side-by-Side Layers of 2005 E&P:		
2005 layer #1 (from Corp A)	400u	300u
2005 layer #2 (from Corp B)	300u	60u
Two Side-by-Side Layers of 2004 E&P:		
2004 layer #1 (from Corp A)	400u	160u
2004 layer #2 (from Corp B)	0u	50u
Two Side-by-Side Layers of 2003 E&P:		
2003 layer #1 (from Corp A)	100u	5u
2003 layer #2 (from Corp B)	50u	5u
	1,250u	580u

Example 2. (i) *Facts.* (A) The facts are the same as in *Example 1* (i)(A), except that foreign corporation A met the requirements of section 902(c)(3)(B) on January 1, 2005, when U.S. corporate shareholder C acquired an additional 1% of voting stock for a total ownership interest of 10%; foreign corporation A thereby became a pooling corporation. On December 31, 2006, foreign corporations A and B have the following earnings and

profits and foreign income taxes:

	E&P	Foreign taxes
Foreign Corporation A:		
Post-1986 pool	900u	$650
2004	400u	160u
2003	100u	5u
	1,400u	
Foreign Corporation B:		
2006	100u	20u
2005	300u	60u
2004	0u	50u
2003	50u	5u
	450u	135u

(B) On January 1, 2007, foreign corporation B acquires the assets of foreign corporation A in a reorganization described in section 368(a)(1)(C). Immediately following the foreign section 381 transaction, foreign surviving corporation is a nonpooling corporation that does not meet the requirements of section 902(c)(3)(B).
(ii) *Result.* Under the rules described in paragraphs (e)(2)(i) and (ii) of this section, foreign surviving corporation has the following earnings and profits and foreign income taxes:

	E&P	Foreign taxes
Two Side-by-Side Layers of 2006 E&P:		
2006 layer #1 (from Corp A's pool)	900u	$650
2006 layer #2 (from Corp B's layer)	100u	20u
2005 (from Corp B):	300u	60u
Two Side-by-Side Layers of 2004 E&P:		
2004 layer #1 (from Corp A)	400u	160u
2004 layer #2 (from Corp B)	0u	50u
Two Side-by-Side Layers of 2003 E&P:		
2003 layer #1 (from Corp A)	100u	5u
2003 layer #2 (from Corp B)	50u	5u

	E&P	Foreign taxes
	1,850u	

(iii) *Subsequent ownership change.* On July 1, 2010, USS (a domestic corporation) acquires 100% of the stock of foreign surviving corporation. Under the rules of paragraph (f)(3) of this section, foreign surviving corporation begins to pool its earnings and profits under section 902(c)(3) as of January 1, 2010. Foreign surviving corporation's earnings and profits and foreign income taxes accrued before January 1, 2010 retain their character as pre-1987 accumulated profits and pre-1987 foreign income taxes.

Example 3. (i) *Facts.* (A) The facts are the same as in *Example 2*(i)(A), except that on December 31, 2006, foreign corporations A and B have the following earnings and profits and foreign income taxes:

	E&P	Foreign Taxes
Foreign Corporation A:		
Post-1986 pool	1,000u	$500
2004	(200u)	10u
2003	400u	5u
	1,200u	
Foreign Corporation B		
2006	300u	20u
2005	(100u)	60u
2004	0u	50u
2003	50u	5u
	250u	135u

(B) On January 1, 2007, foreign corporation B acquires the assets of foreign corporation A in a reorganization described in section 368(a)(1)(C). Immediately following the foreign section 381 transaction, foreign surviving corporation is a nonpooling corporation that does not meet the requirements of section 902(c)(3)(B).

(ii) *Result.* Because foreign corporations A and B have aggregate positive amounts of pre-1987 accumulated profits with a deficit in one or more years, the rules of paragraph (e)(2)(iii)(B) of this section apply. Accordingly, after the foreign section 381 transaction, foreign surviving corporation has the following earnings and profits and foreign income taxes:

	Earnings & profits		Foreign taxes	
	Positive E&P	Deficit E&P	Foreign taxes available	Foreign taxes associated with deficit E&P
Two Side-by-Side Layers of 2006 E&P:				
2006 layer #1 (from Corp A's pool)	1,000u		$500	
2006 layer #2 (from Corp B's layer)	300u		20u	
2005 (from Corp B)		(100u)		60u
Two Side-by-Side Layers of 2004 E&P:				
2004 layer #1 (from Corp A)		(200u)		10u
2004 layer #2 (from Corp B)	0u		50u	
Two Side-by-Side Layers of 2003 E&P:				
2003 layer #1 (from Corp A)	400u		5u	
2003 layer #2 (from Corp B)	50u		5u	
	1,750u	(300u)		70u

(iii) *Post-transaction distribution.* (A) During 2007, foreign surviving corporation does not accumulate any earnings and profits or pay or accrue any foreign income taxes. On December 31, 2007, foreign surviving corporation distributes 1,300u to its shareholders. Under the rules described in paragraphs (c)(3) and (e)(2)(iii)(B) of this section, the

distribution is out of the pre-pooling annual layers, as follows:

	E&P	Foreign taxes
Two Side-by-Side Layers of 2006 E&P:		
2006 layer #1	1,000u	$500
2006 layer #2	250u	20u
2003 E&P:		
2003 layer #1	50u	1.25u (25% of 5u taxes)
	1,300u	

(B) Under paragraph (e)(2)(iii)(B) of this section, the rules otherwise applicable when a foreign corporation has an aggregate positive (or zero) amount of pre-1987 accumulated profits, but a deficit in one or more years, apply separately to the pre-1987 accumulated profits and related pre-1987 foreign income taxes of foreign corporation A and foreign corporation B. As a result, distributions out of the pre-pooling annual layers of foreign corporation A and foreign corporation B cannot exceed the aggregate positive amount of pre-1987 accumulated profits of each corporation. Accordingly, only 1,200u and 250u can be distributed out of foreign corporation A's and foreign corporation B's pre-pooling annual layers, respectively. Thus, 1,000u of the distribution is out of foreign corporation A's 2006 layer #1 and 250u is out of foreign corporation B's 2006 layer #2 (after rolling forward (50u) of the deficit in 2005 layer to reduce earnings in 2006 layer #1 to 250u (300u−50u)). Under the principles of § 1.902-1(b)(3), all of the taxes in each of those respective layers are reduced. The remaining 50u is distributed from foreign corporation A's 2003 layer #1 (after rolling back the (200u) deficit in 2004 layer #1 to reduce earnings in 2003 layer #1 to 200u (400u−200u)). Thus, after the distribution, 150u remains in the 2003 layer #1 along with 3.75u of foreign income taxes (5u × (150u/200u)).
(C) Foreign surviving corporation's foreign income tax accounts are reduced to reflect the distribution of earnings and profits notwithstanding that no shareholders are eligible to claim a credit for deemed paid foreign income taxes under section 902. See § 1.902-1(a)(10)(iii).

(D) Immediately after the distribution, foreign surviving corporation has the following earnings and profits and foreign income taxes:

	E&P	Foreign taxes
2005	0u	60u
Two Side-by-Side Layers of 2004 E&P:		
2004 layer #1	0u	10u
2004 layer #2	0u	50u
Two Side-by-Side Layers of 2003 E&P:		
2003 layer #1	150u	3.75u
2003 layer #2	0u	5u
	150u	128.75u

(E) Under paragraph (e)(2)(iii)(B) of this section, the 60u, 10u, 50u, and 5u of foreign income taxes related to foreign surviving corporation's 2005 layer, 2004 layer #1, 2004 layer #2, and 2003 layer #2, respectively, remain in those layers. These foreign income taxes generally will not be reduced or deemed paid unless a foreign tax refund restores a positive balance to the associated earnings pursuant to section 905(c), and thus will be trapped. See § 1.902-2(b)(2).

Example 4. (i) *Facts.* (A) The facts are the same as in *Example 2* (i)(A), except that on December 31, 2006, foreign corporations A and B have the following earnings and profits and foreign income taxes:

	E&P	Foreign Taxes
Foreign Corporation A:		
Post-1986 pool	(1,000u)	$20
2004	(200u)	10u
2003	400u	5u
	(800u)	
Foreign Corporation B:		
2006	100u	20u
2005	300u	60u
2004	0u	50u
2003	50u	5u

	E&P	Foreign Taxes
	450u	135u

(B) On January 1, 2007, foreign corporation A acquires the assets of foreign corporation B in a reorganization described in section 368(a)(1)(C). Immediately following the foreign section 381 transaction, foreign surviving corporation is a nonpooling corporation.

(ii) *Result.* (A) Under paragraph (e)(2)(i) of this section, foreign corporation A's post-1986 pool is recharacterized as a 2006 layer of pre-1987 accumulated profits. Because after the foreign section 381 transaction foreign corporation A has an aggregate deficit in pre-1987 accumulated profits, the rules of paragraph (e)(2)(iii)(C) of this section apply and the rules otherwise applicable apply separately to the pre-1987 accumulated profits that carry over to foreign surviving corporation from foreign corporation A. The (800u) aggregate deficit in foreign corporation A's pre-1987 accumulated profits is a hovering deficit that will offset only post-transaction earnings accumulated by foreign surviving corporation in the general category. Accordingly, after the foreign section 381 transaction, foreign surviving corporation has the following earnings and profits and foreign income taxes:

	Earnings & profits		Foreign taxes	
	Positive E&P	Deficit E&P	Foreign taxes available	Foreign taxes associated deficit E&P
Hovering deficit from Corp A's annual layers		(800u)		0
Two Side-by-Side Layers of 2006 E&P:				
2006 layer #1 (from Corp A's pool)		0u		$20
2006 layer #2 (from Corp B's layer)	100u		20u	
2005 (from Corp B)	300u		60u	
Two Side-by-Side Layers of 2004 E&P:				
2004 layer #1 (from Corp A)		0u		10u
2004 layer #2 (from Corp B)	0u		50u	
Two Side-by-Side Layers of 2003 E&P:				

	Earnings & profits		Foreign taxes	
	Positive E&P	Deficit E&P	Foreign taxes available	Foreign taxes associated deficit E&P
2003 layer #1 (from Corp A)	0u		5u	
2003 layer #2 (from Corp B)	50u		5u	
	450u	(800u)	140u	

(B) Under paragraph (e)(2)(iii)(C) of this section, the $20, 10u, and 5u of pre-1987 foreign income taxes associated with foreign corporation A's pre-1987 accumulated profits for 2006 layer #1, 2004 layer #1, and 2003 layer #1, respectively, remain in those layers. These foreign income taxes generally will not be reduced or deemed paid unless a foreign tax refund restores a positive balance to the associated earnings pursuant to section 905(c), and thus will be trapped. See § 1.902-2(b)(2).

(iii) *Post-transaction distribution.* (A) During 2007, foreign surviving corporation does not accumulate any earnings and profits or pay or accrue any foreign income taxes. On December 31, 2007, foreign surviving corporation distributes 200u to its shareholders. Under the rules described in paragraph (e)(2)(iii)(C) of this section, no distribution can be made out of the pre-1987 accumulated profits of foreign corporation A (and the (800u) aggregate hovering deficit will offset only post-transaction earnings accumulated by foreign surviving corporation). Thus, the distribution is out of pre-pooling annual layers as follows:

	E&P	Foreign taxes paid
2006 layer #2	100u	20u
2005	100u	20u
	200u	40u

(B) Foreign surviving corporation's foreign income tax accounts are reduced to reflect the distribution of earnings and profits notwithstanding that no shareholders are eligible to claim deemed paid foreign income taxes under section 902. See § 1.902-1(a)(10)(iii).

(C) Immediately after the distribution, foreign surviving corporation has the following earnings and profits and foreign income taxes:

	Earnings & profits		Foreign taxes	
	Positive E&P	Deficit E&P	Foreign taxes available	Foreign taxes associated with deficit E&P
Hovering deficit from Corp A's annual layers		(800u)		0
Two Side-by-Side Layers of 2006 E&P:				
2006 layer #1 (from Corp A's pool)		0u		$20
2006 layer #2 (from Corp B's layer)	0u		0u	
2005 (from Corp B)	200u		40u	
Two Side-by-Side Layers of 2004 E&P:				
2004 layer #1 (from Corp A)		0u		10u
2004 layer #2 (from Corp B)	0u		50u	
Two Side-by-Side Layers of 2003 E&P:				
2003 layer #1 (from Corp A)	0u		5u	
2003 layer #2 (from Corp B)	50u		5u	
	250u	(800u)	140u	

(f) *Special rules* —

(1) *Treatment of deficit* —

(i) ***General rule.*** Any deficit described in paragraph (d)(2), (e)(1)(iii), or (e)(2)(iii) of this section shall not be taken into account in determining current or accumulated earnings and profits of a foreign surviving corporation other than to offset post-transaction accumulated earnings, as defined in paragraph (d)(2)(ii) of this section, including for purposes of calculating—

(A) The earnings and profits limitation of section 952(c)(1)(A); and

(B) The amount of the foreign surviving corporation's subpart F income as defined in section 952(a).

(ii) ***Exceptions.*** The rule in paragraph (i) shall not apply for purposes of calculating an earnings and profits limitation under section 952(c)(1)(B) or (C).

(iii) ***Examples.*** The following examples illustrate the principles of this paragraph (f)(1). The examples assume the following facts: foreign corporation A, incorporated in 2002, is and always has been a wholly owned subsidiary of USP, a domestic corporation. Foreign corporation B, incorporated in 2004, is and always has been a wholly owned subsidiary of foreign corporation A. Both foreign corporation A and foreign corporation B are organized under the laws of foreign country X and have always had a calendar taxable year. Foreign corporations A and B (and all of their respective qualified business units as defined in section 989) maintain a "u" functional currency. Unless otherwise stated, any earnings and profits or deficit in earnings and profits of foreign corporation A and B in the general category are attributable to subpart F income derived from foreign base company sales income. Foreign corporation C is a wholly owned subsidiary of USP2 and was organized in 2004 under the laws of foreign country Y. Foreign corporation C (and all of its qualified business units as defined in section 989) maintains a "u" functional currency. Earnings and profits of foreign corporation C in the general category are not attributable to subpart F income. The examples are as follows:

Example 1. (i) *Facts.* (A) On December 31, 2007, foreign corporations A and B have the following post-1986 undistributed earnings and post-1986 foreign income taxes:

	E&P	Foreign taxes
Foreign Corporation A Separate Category:		
General	(100u)	$25
Foreign Corporation B Separate Category:		
General	0u	$10

(B) On January 1, 2008, foreign corporation B elects under § 301.7701-3(c) of this chapter to be disregarded as an entity separate from foreign corporation A. Accordingly, foreign corporation B is deemed to have distributed all its property to foreign corporation A in a liquidation described in section 332.

(ii) *Result.* Under the rules described in paragraphs (d)(1) and (2) of this section, foreign surviving corporation A has the following post-1986 undistributed earnings and post-1986 foreign income taxes:

Separate category	Earnings & profits:		Foreign taxes:	
	Positive E&P	Hovering deficit	Foreign taxes available	Foreign taxes associated with hovering deficit
General	0u	(100u)	$10	$25

(iii) *Post-transaction earnings and subpart F limitations.* (A) In its taxable year ending on December 31, 2008, foreign surviving corporation A earns 300u of subpart F general category income with respect to which it pays $50 in foreign income taxes. The hovering deficit of (100u) meets the requirements under section 952(c)(1)(B) and therefore is taken into account as a qualified deficit that may be used by USP to offset a portion of its income inclusion related to foreign surviving corporation A's subpart F income of 300u in the 2008 taxable year. Accordingly, USP includes 200u in taxable income for the year and is eligible for a deemed paid foreign tax credit under section 960 of $40 (200u subpart F inclusion/300 post-1986 undistributed earnings in the general category = 66.67%, × $60 foreign income taxes in the general category = $40). USP will also include the deemed paid foreign taxes of $40 in taxable income for the year as a deemed dividend pursuant to section 78. The 100u offset under section 952(c)(1)(B) does not result in a reduction of the hovering deficit for purposes of section 316 or section 902. (B) Foreign surviving corporation A's 100u of subpart F income not included in income by USP will accumulate and be added to its post-1986 undistributed earnings as of the beginning of 2009. This 100u of post-transaction earnings will be offset by the (100u) hovering deficit. Because the amount of earnings offset by the hovering deficit is 100% of the total amount of the hovering deficit, all $25 of the related taxes are added to the

post-1986 foreign income taxes pool as well. Accordingly, foreign surviving corporation A has the following post-1986 undistributed earnings and post-1986 foreign income taxes on January 1, 2009:

Separate category	Earnings & profits		Foreign taxes	
	Positive E&P	Hovering deficit	Foreign taxes available	Foreign taxes associated with hovering deficit
General	0u	(0u)	$45	$0

(C) The 200u included as subpart F income constitutes previously taxed earnings under section 959.

Example 2. (i) *Facts.* (A) On July 1, 2007, foreign corporation B elects under § 301.7701-3(c) of this chapter to be disregarded as an entity separate from foreign corporation A. Accordingly, foreign corporation B is deemed to have distributed all of its property to foreign corporation A in a liquidation described in section 332.
(B) Neither foreign corporation A nor B has any post-1986 undistributed earnings or post-1986 foreign income taxes as of the beginning of the 2007 taxable year. For its short taxable year ending on June 30, 2007, foreign corporation B has the following post-1986 undistributed earnings and post-1986 foreign income taxes:

FOREIGN CORPORATION B

Separate category	E&P	Foreign taxes
General	(200u)	$30

(C) For the 2007 taxable year, foreign surviving corporation A earns a total of 200u of subpart F foreign based company sales income in the general category with respect to which it pays $40 in foreign income taxes.
(ii) *Result.* (A) Under paragraph (d)(2) of this section, foreign corporation B's (200u) deficit carries over to foreign surviving corporation A as a hovering deficit. Nevertheless, because it is a deficit of a qualified chain member for a taxable year ending within the 2007 taxable year of foreign surviving corporation A, the (200u) deficit meets the requirements under section 952(c)(1)(C) and therefore may still be taken into account

for purposes of limiting foreign surviving corporation A's subpart F income. Accordingly, foreign surviving corporation A's 200u of subpart F income for the 2007 taxable year is fully offset by the (200u) deficit of foreign corporation B, and USP will have no subpart F income inclusion for the 2007 taxable year. The offset under section 952(c)(1)(C) does not result in a reduction of the hovering deficit for purposes of section 316 or section 902. The hovering deficit may not also be taken into account under section 952(c)(1)(B).

(B) Because USP has no subpart F income inclusion, foreign surviving corporation A's subpart F earnings of 200u will accumulate and be added to its post-1986 undistributed earnings as of the beginning of 2008. Under the rules of paragraph (f)(5) of this section, a pro rata amount, in this case 50% or 100u, will be deemed to have been accumulated prior to the foreign section 381 transaction and the other 50%, or 100u, will be deemed to have been accumulated after the foreign section 381 transaction. The 100u of post-transaction earnings will be offset by (100u) of the hovering deficit for purposes of determining the opening balance of the post-1986 undistributed earnings pool in 2008. Because the amount of earnings offset by the hovering deficit is 50% of the total amount of the hovering deficit, $15 (50% of $30) of the related taxes are added to the post-1986 foreign income taxes pool as well. The 100u of pre-transaction earnings remain in the post-1986 undistributed earnings pool. Accordingly, foreign surviving corporation A has the following post-1986 undistributed earnings and post-1986 foreign income taxes on January 1, 2008:

Separate category	Earnings & profits		Foreign taxes	
	Positive E&P	Hovering deficit	Foreign taxes available	Foreign taxes associated with hovering deficit
General	100u	(100u)	$55	$15

Example 3. (i) *Facts.* (A) On January 1, 2007, foreign corporation B and foreign corporation C have the following post-1986 undistributed earnings and post-1986 foreign income taxes:

	E&P	Foreign taxes
Foreign Corporation B Separate Category:		

	E&P	Foreign taxes
General	(100u)	$0
Foreign Corporation C Separate Category:		
General	0u	$10

(B) On July 1, 2007, foreign corporation B acquires the assets of foreign corporation C in a reorganization described in section 368(a)(1)(C). Immediately following the foreign section 381 transaction, foreign surviving corporation B is a CFC.
(C) During the 2007 taxable year foreign surviving corporation B has a current deficit of (400u) and $60 of related foreign income taxes. During its short taxable year ending on June 30, 2007, foreign corporation C has no additional earnings and pays or accrues no foreign income taxes.

(ii) *Result.* (A) Under the rules of paragraph (f)(5) of this section, a pro rata amount, in this case 50% or (200u), of foreign surviving corporation B's (400u) current year deficit for the 2007 taxable year will be deemed to have been accumulated prior to the foreign section 381 transaction and be treated as a hovering deficit. The other 50%, or (200u) of the deficit will be deemed to have been accumulated after the foreign section 381 transaction. The related foreign income taxes of $60 will also be allocated on a similar 50/50 basis.

(B) Under the rules described in paragraphs (d)(1) and (2) of this section, foreign surviving corporation B has the following post-1986 undistributed earnings and post-1986 foreign income taxes as of January 1, 2008:

Separate category	Earnings & profits		Foreign taxes	
	E&P	Hovering deficit	Foreign taxes available	Foreign taxes associated with hovering deficit
General	(200u)	(300u)	$40	$30

(iii) *Subpart F income limitations.* Even though (200u) of the current year deficit is treated as a hovering deficit, the full (400u) current year deficit in 2007 of foreign surviving corporation B meets the requirements under section 952(c)(1)(C) and therefore is available as a limitation on subpart F income, to the extent foreign corporation A, which wholly owns foreign surviving corporation B, earns any subpart F

income in the 2007 taxable year. Any such offset under section 952(c)(1)(C) will have no effect on the earnings and profits and foreign income tax accounts above of foreign surviving corporation B for purposes of sections 316 and 902. Moreover, to the extent the hovering deficit reduces subpart F income under section 952(c)(1)(C), it may not also be taken into account under section 952(c)(1)(B).

(2) ***Reconciling taxable years.*** If a foreign acquiring corporation and a foreign target corporation had taxable years ending on different dates, then the pro rata distribution rules of paragraphs (e)(1)(ii) and (e)(2)(ii) of this section shall apply with respect to the taxable years that end within the same calendar year.

(3) ***Post-transaction change of status.*** If a foreign surviving corporation that is subject to the rules of paragraph (c)(2) of this section subsequently becomes a pooling corporation (by reason, for example, of a reorganization, liquidation, or change of ownership), then post-1986 undistributed earnings and post-1986 foreign income taxes that were recharacterized as pre-1987 accumulated profits and pre-1987 foreign income taxes, respectively, under paragraph (e)(2)(i) of this section retain their characterization as a pre-pooling annual layer.

(4) ***Ordering rule for multiple hovering deficits*** —

(i) ***Rule.*** A foreign surviving corporation shall apply the deficit rules of paragraphs (d)(2), (e)(1)(iii), and (e)(2)(iii) of this section in that order if more than one of such rules applies to the foreign surviving corporation.

(ii) ***Example.*** The following example illustrates the principles of this paragraph (f)(4). The example assumes the following facts: Foreign corporation A has been a pooling corporation since its incorporation on January 1, 1998. Foreign corporation B has been a nonpooling corporation since its incorporation on January 1, 2000. Foreign corporations A and B have always had calendar taxable years. Foreign corporations A and B (and all of their respective qualified business units as defined in section 989) maintain a “u” functional currency. All earnings and profits of foreign corporation B are in the general category. Finally, unless otherwise stated, any earnings and profits in the passive category resulted from a look-through dividend that was paid by a lower-tier CFC out of earnings accumulated when the CFC was a noncontrolled section 902 corporation and that qualified for the subpart F same-country exception under section 954(c)(3)(A). The example is as follows:

Example. (i) *Facts.* (A) On December 31, 2006, foreign corporations A and B have the following earnings and profits and foreign income taxes:

	E&P	Foreign taxes
Foreign Corporation A Post-1986 Pool Separate Category:		
Passive	400u	$160
General	(300u)	25
	100u	185

	E&P	Foreign taxes
Foreign Corporation B:		
2006	(300u)	50u
2005	100u	25u
	(200u)	75u

(B) On January 1, 2007, foreign corporation B acquires the assets of foreign corporation A in a reorganization described in section 368(a)(1)(C). Immediately following the foreign section 381 transaction, foreign surviving corporation is a CFC.

(ii) *Result.* Under the rules described in paragraphs (d)(1), (d)(2), (e)(1)(i), (e)(1)(ii), and (e)(1)(iii) of this section, foreign surviving corporation has the following earnings and profits and foreign income taxes:

	Earnings & profits		Foreign taxes	
	Positive E&P	Hovering deficit	Foreign taxes available	Foreign taxes associated with hovering deficit
Post-1986 pool separate category:				
Passive	400u		$160	
General		(300u)		$25
Carryforward pre-pooling deficit from Corp B		(200u)		0
2006 (from Corp B)	0u		50u	
2005 (from Corp B)	0u		25u	
	400u	(500u)		$25

(iii) *Post-transaction earnings.* (A) In the taxable year ending on December 31, 2007, foreign surviving corporation accumulates earnings and profits and pays related foreign income taxes as follows:

	E&P	Foreign taxes
Post-1986 pool separate category:		

	E&P	Foreign taxes
Passive	150u	$40
General	400u	60
	550u	100

(B) None of the earnings and profits qualify as subpart F income as defined in section 952(a). Under paragraph (f)(4)(i) of this section, the rules of paragraph (d)(2) of this section apply before the rules of paragraph (e)(1)(iii) of this section. Accordingly, post-transaction earnings in a separate category are first offset by a hovering deficit in the same separate category in the post-1986 pool. Thus, foreign surviving corporation's (300u) deficit in the general category offsets 300u of post-transaction earnings in the general category. After application of paragraph (d)(2) of this section, the (200u) deficit in the general category carried forward from foreign corporation B's pre-pooling aggregate deficit offsets the remaining 100u of post-transaction earnings in the general category. Accordingly, foreign surviving corporation has the following earnings and profits and foreign income taxes at the end of 2007:

	Earnings & profits		Foreign taxes	
	Positive E&P	Hovering deficit	Foreign taxes available	Foreign taxes associated with hovering deficit
Post-1986 pool separate category:				
Passive	550u		$200	
General			$85	
Carryforward pre-pooling deficit from Corp B		(100u)		$0
2006 (from Corp B)	0u		50u	
2005 (from Corp B)	0u		25u	
	550u	(100u)		$0

(C) Under paragraph (d)(2)(iii) of this section, all of the $25 of post-1986 foreign income taxes related to the (300u) hovering deficit in the general category is added to the foreign surviving corporation's post-1986 foreign income taxes of $60 in that category (because post-transaction earnings in the general category have exceeded the deficit in that category). Under paragraph (e)(1)(iii)(C) of this section, the 50u and 25u of foreign

> income taxes associated with foreign corporation B's pre-1987 accumulated profits for 2006 and 2005 remain in those layers. These foreign income taxes generally will not be reduced or deemed paid unless a foreign tax refund restores a positive balance to the associated earnings pursuant to section 905(c), and thus will be trapped. See § 1.902-2(b)(2).

(5) ***Pro rata rule for earnings and deficits during transaction year.***

(i) For purposes of offsetting post-transaction earnings of a foreign surviving corporation under the rules described in paragraphs (d)(2), (e)(1)(iii), and (e)(2)(iii) of this section, the earnings and profits, and any related foreign income taxes, in each separate category for the taxable year of the foreign surviving corporation in which the transaction occurs shall be deemed to have been accumulated after such transaction in an amount which bears the same ratio to the undistributed earnings and profits of the foreign surviving corporation for such taxable year (computed without regard to any earnings and profits carried over) as the number of days in the taxable year after the date of transaction bears to the total number of days in the taxable year. See, e.g., § 1.381(c)(2)-1(a)(7) *Example 2* (illustrating application of this rule with respect to domestic corporations).

(ii) For purposes of determining the amount of pre-transaction deficits described in paragraphs (d)(2), (e)(1)(iii), and (e)(2)(iii) of this section, of a foreign surviving corporation that has a deficit in earnings and profits in any separate category for its taxable year in which the transaction occurs, unless the actual accumulated earnings and profits, or deficit, as of such date can be shown, such pre-transaction deficit, and any related foreign income taxes, shall be deemed to have accumulated in a manner similar to that described in paragraph (f)(5)(i) of this section. See, e.g., § 1.381(c)(2)-1(a)(7) *Example 4* (illustrating application of this rule with respect to domestic corporations).

(g) ***Post-2017 taxable years.*** As a result of the repeal of section 902 effective for taxable years of foreign corporations beginning on or after January 1, 2018, all foreign target corporations, foreign acquiring corporations, and foreign surviving corporations are treated as nonpooling corporations in post-2017 taxable years. Any amounts remaining in post-1986 undistributed earnings and post-1986 foreign income taxes of any such corporation in any separate category as of the end of the foreign corporation's last taxable year beginning before January 1, 2018, are treated as earnings and taxes in a single pre-pooling annual layer in the foreign corporation's post-2017 taxable years for purposes of this section. Foreign income taxes that are related to non-previously taxed earnings of a foreign acquiring corporation and a foreign target corporation that were accumulated in taxable years before the current taxable year of the foreign corporation, or in a foreign target's taxable year that ends on the date of the section 381 transaction, are not treated as current year taxes (as defined in § 1.960-1(b)(4)) of a foreign surviving corporation in any post-2017 taxable year. In addition, foreign income taxes that are related to a hovering deficit are not treated as current year taxes of the foreign surviving corporation in any post-2017 taxable year, regardless of whether the hovering deficit is absorbed.

(h) ***Applicability dates.*** Except as otherwise provided in this paragraph (h), this section applies to foreign section 381 transactions that occur on or after November 6, 2006. Paragraph (g) of this section applies to taxable years of foreign corporations ending on or after November 2, 2020, and to taxable years of United States shareholders in which or with which such taxable years of foreign corporations end.

[T.D. 9273, 71 FR 44985, Aug. 8, 2006; 71 FR 57889, Oct. 2, 2006; 71 FR 70876, Dec. 7, 2006, as amended by T.D. 9959, 87 FR 325, Jan. 4, 2022]

§ 1.367(b)-8 Allocation of earnings and profits and foreign income taxes in certain foreign corporate separations. [Reserved]

§ 1.367(b)-9 Special rule for F reorganizations and similar transactions.

(a) ***Scope.*** This section applies to a foreign section 381 transaction (as defined in § 1.367(b)-7(a)) either—

(1) That is described in section 368(a)(1)(F); or

(2) That involves—

(i) At least one foreign corporation that holds no property and has no tax attributes immediately before the transaction, other than a nominal amount of assets (and related tax attributes) to facilitate its organization or preserve its existence as a corporation; and

(ii) No more than one foreign corporation that holds more than a nominal amount of property or has more than a nominal amount of tax attributes immediately before the transaction.

(b) ***Hovering deficit rules inapplicable.*** If a transaction is described in paragraph (a) of this section, a foreign surviving corporation shall succeed to earnings and profits, deficits in earnings and profits, and foreign income taxes without regard to the hovering deficit rules of § 1.367(b)-7(d)(2), (e)(1)(iii), and (e)(2)(iii).

(c) ***Foreign divisive transactions.*** [Reserved]

(d) ***Examples.*** The following examples illustrate the principles of this section:

Example 1. (i) *Facts.* (A) Foreign corporation A is and always has been a wholly owned subsidiary of USP, a domestic corporation. Foreign corporation A was incorporated in 1995, and has always had a calendar taxable year. Foreign corporation A (and all of its respective qualified business units as defined in section 989) maintains a “u” functional currency. On December 31, 2006, foreign corporation A has the following post-1986 undistributed earnings and post-1986 foreign income taxes:

Separate Category	E&P	Foreign taxes
Passive	(1,000u)	$5
General	200u	200
	(800u)	205

(B) On January 1, 2007, foreign corporation A moves its place of incorporation from Country 1 to Country 2 in a reorganization described in section 368(a)(1)(F).

(ii) *Result.* Under § 1.367(b)-7(d), as modified by paragraph (b) of this section, the pre-transaction deficit of foreign corporation A will not hover. Accordingly, foreign surviving corporation has the following post-1986 undistributed earnings and post-1986 foreign income taxes immediately after the foreign section 381 transaction:

Separate category	E&P	Foreign taxes
Passive	(1,000u)	$5
General	200u	200
	(800u)	205

Example 2. (i) *Facts.* (A) Foreign corporations B, C and D are and always have been wholly owned subsidiaries of USP, a domestic corporation. Foreign corporation B was incorporated in 2000 and foreign corporations C and D were incorporated in 2001. Foreign corporation B does not own any significant property and has no earnings and profits or foreign income taxes accounts. Both foreign corporations C and D have always had a calendar taxable year. Foreign corporations C and D (and all of their respective qualified business units as defined in section 989) maintain a "u" functional currency. On December 31, 2006, foreign corporations C and D have the following post-1986 undistributed earnings and post-1986 foreign income taxes:

	E&P	Foreign taxes
Foreign corporation C Separate Category:		
Passive	(900u)	$50
General	(200u)	100
	(1100u)	150
Foreign corporation D Separate Category:		
Passive	1200u	400
General	400u	100
	1600u	500

(B) On January 1, 2007, USP foreign corporations C and D merge into foreign corporation B in a reorganization described in section 368(a)(1)(A).

(ii) *Result.* Although the merger is a foreign section 381 transaction involving a foreign corporation with no property or tax attributes, paragraph (b) of this section does not apply because more than one foreign corporation with significant tax attributes is involved in the foreign section 381 transaction. Accordingly, under § 1.367(b)-7(d), foreign surviving corporation B has the following post-1986 undistributed earnings and post-1986 foreign income taxes immediately after the foreign section 381 transaction:

Separate Category	Earnings & profits		Foreign taxes	
	Positive E&P	Hovering deficit	Foreign taxes available	Foreign taxes associated with hovering deficit
General	1200u	(900u)	$400	$50
Passive	400u	(200u)	100	100
	1600u	(1100u)	500	150

(e) ***Effective date.*** This section shall apply to section 367(b) transactions that occur on or after November 6, 2006.

[T.D. 9273, 71 FR 44913, Aug. 8, 2006]

§ 1.367(b)-10 Acquisition of parent stock or securities for property in triangular reorganizations.

(a) ***In general*** —

(1) ***Scope.*** Except as provided in paragraphs (a)(2)(i) through (iii) of this section, this section applies to a triangular reorganization if P or S (or both) is a foreign corporation and, in connection with the reorganization, S acquires in exchange for property all or a portion of the P stock or P securities (P acquisition) that are used to acquire the stock, securities or property of T in the triangular reorganization. This section applies to a triangular reorganization regardless of whether P controls (within the meaning of section 368(c)) S at the time of the P acquisition. *See* § 1.367(b)-3(g) for the treatment of certain inbound nonrecognition transactions following transactions described in this section. *See* § 1.367(b)-4(g) for rules applicable to certain exchanging shareholders that exchange stock of T in connection with a transaction described in this section.

(2) ***Exceptions.*** This section shall not apply if—

(i) P and S are foreign corporations and neither P nor S is a controlled foreign corporation (within the meaning of § 1.367(b)-2(a)) immediately before or immediately after the triangular reorganization;

(ii) S is a domestic corporation, P is not a controlled foreign corporation (within the meaning of § 1.367(b)-2(a)), P's stock in S is not a United States real property interest (within the meaning of section 897(c)), and the deemed distribution that would result from the application of this section would not be treated as a dividend under section 301(c)(1) that would be subject to U.S. tax under either section 881 (for example, by reason of an applicable treaty or by reason of an absence of earnings and profits) or section 882; or

(iii) In an exchange under section 354 or 356, one or more U.S. persons exchange stock or securities of T and the amount of gain in the T stock or securities that would otherwise be recognized under section 367(a)(1) is equal to or greater than the sum of the amount of the deemed distribution under this section that would be treated and subject to U.S. tax as a dividend under section 301(c)(1) (or would give rise to an inclusion under section 951(a)(1)(A) or 951A(a) that would be subject to U.S. tax) and the amount of such deemed distribution that would be treated and subject to U.S. tax as gain from the sale or exchange of property under section 301(c)(3) (or would give rise to an inclusion under section 951(a)(1)(A) or 951A(a) that would be subject to U.S. tax) if this section would otherwise apply to the triangular reorganization. The exception provided in this paragraph (a)(2)(iii) does not apply if T is a foreign corporation. *See* § 1.367(a)-3(a)(2)(iv) (providing a similar rule that excludes certain transactions from the application of section 367(a)(1)).

(3) ***Definitions.*** For purposes of this section, the following definitions apply:

(i) The terms *P, S,* and *T* have the meanings set forth in § 1.358-6(b)(1)(i), (ii), and (iii), respectively.

(ii) The term *property* has the meaning set forth in section 317(a), except that the term property also includes—

(A) A liability assumed by S to acquire the P stock or securities;

(B) S stock (or any rights to acquire S stock) to the extent such S stock (or rights to acquire S stock) is used by S to acquire P stock or securities from a person other than P; and

(C) Stock of S that is nonqualified preferred stock (as defined in section 351(g)(2)).

(iii) The term *security* means an instrument that constitutes a security for purposes of section 354 or 356.

(iv) The term *triangular reorganization* has the meaning set forth in § 1.358-6(b)(2).

(b) ***General rules*** —

(1) ***Deemed distribution.*** If this section applies, adjustments shall be made that have the effect of a distribution of property (with no built-in gain or loss) from S to P under section 301 (deemed distribution). The amount of the deemed distribution shall equal the sum of the amount of money transferred by S, the amount of any liabilities that are assumed by S and constitute property, and the fair market value of other property transferred by S in the P acquisition in exchange for the P stock or P securities described in paragraph (i) or (ii), respectively, of this paragraph (b)(1)—

(i) P stock received by T shareholders or securityholders in an exchange to which section 354 or 356 applies.

(ii) P securities received by T shareholders or securityholders to the extent such securities are "other property" (within the meaning of section 356(d)).

(2) ***Timing of deemed distribution.*** If P controls (within the meaning of section 368(c)) S at the time of the P acquisition, the adjustments described in paragraph (b)(1) of this section are made as if the deemed distribution is a separate transaction occurring immediately before the P acquisition. If P does not control (within the meaning of section 368(c)) S at the time of the P acquisition, the adjustments described in paragraph (b)(1) of this section are made as if the deemed distribution is a separate transaction occurring immediately after P acquires control of S, but before the reorganization.

(3) ***Application of other provisions.*** Nothing in this section shall prevent the application of other provisions of the Internal Revenue Code from applying to the P acquisition. For example, section 304 may apply to the P acquisition. Furthermore, section 1001 or 267 may apply to S's transfer of property to acquire P stock or securities from P or a person other than P. In addition, generally applicable provisions that apply to triangular reorganizations, such as § 1.358-6 and § 1.1032-2, shall apply to the triangular reorganization in a manner consistent with S acquiring the P stock or securities in exchange for property from P or a person other than P, as the case may be. Thus, P's adjustment to the basis in its S stock under § 1.358-6 is determined as if P provided the P stock or securities pursuant to the plan of reorganization, notwithstanding that S acquired the P stock or securities in exchange for property in the P acquisition. *See also* § 1.367(b)-13.

(4) ***Example.*** The rules of this paragraph (b) are illustrated by the following example:

(i) ***Facts.*** P, a publicly traded domestic corporation, owns all of the outstanding stock of FS, a foreign corporation, and all of the outstanding stock of US1, a domestic corporation that is a member of the P consolidated group. US1 owns all of the outstanding stock of FT, a foreign corporation, the fair market value of which is $100x. US1's basis in the FT stock is $100x, such that there is a no built-in gain or loss in the FT stock. FS has earnings and profits in excess of $100x. FS purchases $100x of P stock from the public on the open market in exchange for $100x of cash. Pursuant to foreign law, FT merges with and into FS in a triangular reorganization that qualifies under section 368(a)(1)(A) by reason of section 368(a)(2)(D). In an exchange to which section 354 applies, US1 exchanges all the outstanding stock of FT for the $100x of P stock purchased by FS on the open market.

(ii) ***Analysis.*** The triangular reorganization is described in paragraph (a)(1) of this section. P is a domestic corporation and FS is a foreign corporation. In connection with FS purchasing the $100x of P stock in exchange for property (cash), FS uses the P stock to acquire the FT property in a triangular reorganization, and US1 receives the P stock in an exchange to which section 354 applies. Furthermore, none of the exceptions of paragraphs (a)(2)(i) through (iii) of this section apply. Therefore, pursuant to paragraph (b)(1) of this section, adjustments are made that have the effect of a deemed distribution of property (with no built-in gain or loss) in the amount of $100x from FS to P under section 301. Pursuant to paragraph (b)(2) of this section, the adjustments described in paragraph (b)(1) of this section are made as if the deemed distribution is a separate transaction occurring immediately before FS's purchase of the P stock on the open market. Generally applicable provisions apply to FS's purchase of the P stock on the open market (see, for example, section 304) and in determining certain tax consequences to P and FS as a result of the triangular reorganization (see, for example, § 1.358-6(d) and § 1.1032-2(c)). US1's transfer of its FT stock in exchange for P stock is subject to § 1.367(b)-4(g). If, contrary to the facts in this paragraph (b)(4), US1 had built-in gain with respect to its FT stock, then such gain would be recognized in accordance with § 1.367(b)-4(g).

(c) ***Collateral adjustments.*** This paragraph (c) provides additional rules that apply by reason of the deemed distribution described in paragraph (b)(1) of this section. A deemed distribution described in paragraph (b)(1) of this section is treated as occurring for all purposes of the Internal Revenue Code. Thus, for example, the ordering rules of section 301(c) apply to characterize the deemed distribution to P as a dividend from the earnings and profits of S, return of stock basis, or gain from the sale or exchange of property, as the case may be. Furthermore, section 959 may apply to the deemed distribution if S is a foreign corporation, and section 881, 882, 897, 1442, or 1445 may apply to the deemed distribution if S is a domestic corporation. Appropriate corresponding adjustments must be made to S's earnings and profits consistent with the principles of section 312.

(d) *Anti-abuse rule* —

(1) ***Rule.*** Appropriate adjustments must be made pursuant to this section if, in connection with a triangular reorganization, a transaction is engaged in with a view to avoid the purpose of this section. For example, if S is created, organized, or funded to avoid the application of this section with respect to the earnings and profits of another corporation, the earnings and profits of S (or any successor corporation) may be deemed to include the earnings and profits of such other corporation (or any successor corporation) for purposes of determining the consequences of the adjustments provided in this section, and appropriate corresponding adjustments may be made to account for the application of this section to the earnings and profits of such other corporation (or any successor corporation). Adjustments may be made under this paragraph (d) whether S is funded before or after a triangular reorganization, and such funding may include capital contributions, loans, and distributions. The following examples illustrate the application of this paragraph (d), the application of which is not limited to the particular situations described in the examples.

(2) *Example 1: Deemed increase to S's earnings and profits* —

(i) ***Facts.*** FP is a foreign corporation that owns all of the stock of USS, a domestic corporation. USS has no assets, liabilities, or earnings and profits. FP issues $10x of voting stock to USS in exchange for $10x of newly issued stock of USS, and FP also issues $90x of voting stock to USS in exchange for a note newly issued by USS with a fair market value of $90x (USS note). FP would be subject to U.S. tax under section 881 on a distribution from USS if, contrary to the facts, USS had earnings and profits for purposes of applying section 301(c) to the distribution. USS acquires all the stock of UST, a domestic corporation that is unrelated to FP and USS, from a foreign person in exchange for the $100x of voting stock of FP in a triangular reorganization described in section 368(a)(1)(B) (triangular B reorganization). UST has $100x of earnings and profits. USS's purchase of the $90x of stock of FP in exchange for the USS note in connection with the triangular B reorganization is engaged in with a view to avoid the purpose of this section.

(ii) ***Analysis.*** Because USS's purchase of the $90x of stock of FP in exchange for the USS note is engaged in with a view to avoid the purpose of this section, the anti-abuse rule applies and appropriate adjustments are made. In particular, for purposes of determining the consequences of the deemed distribution provided for in paragraph (b)(1) of this section, the earnings and profits of USS are deemed to include the earnings and profits of UST. USS is therefore treated as having made a deemed distribution equal to $90x, which reflects the portion of the stock of FP that USS acquired in exchange for property (the USS note). Because USS is deemed to have $100x of earnings and profits, the entire $90x deemed distribution is treated as a dividend under section 301(c)(1). The deemed distribution is treated as separate from, and occurring immediately before, USS's acquisition of the stock of FP used in the triangular B reorganization. No adjustments are made by FP to the basis in its stock of USS except as provided in § 1.358-6. Under paragraph (b)(3) of this section, FP's adjustment to the basis in its stock of USS under § 1.358-6 is determined as if FP provided all $100x of the stock of FP pursuant to the plan of reorganization.

(3) *Example 2: Downstream property transfer* —

(i) ***Facts.*** USP is a domestic corporation that owns all of the stock of FS1, a foreign corporation, FS1 holds a note receivable issued by USP with a fair market value of $100x (USP note), and FS1 has more than $100x of earnings and profits. USP has no income inclusion under section 951(a)(1)(B) with respect to the USP note after the application of § 1.956-1(a)(2). FS1 forms

USS Newco, a domestic corporation, to which it transfers the USP note in exchange for voting stock of USS Newco. USS Newco then forms FS2 Newco, a foreign corporation, and FS1 transfers all of its remaining assets (except for its stock in USS Newco) to FS2 Newco in exchange for additional voting stock of USS Newco in a transaction intended to qualify as a triangular reorganization described in section 368(a)(1)(C) (triangular C reorganization). FS1 liquidates into USP pursuant to the triangular C reorganization, and USP receives the stock of USS Newco held by FS1. FS1's transfer of the USP note to USS Newco in connection with the intended triangular C reorganization is engaged in with a view to avoid the purpose of this section.

(ii) ***Analysis.*** Because FS1's transfer of the USP note to USS Newco is in connection with a triangular reorganization and is engaged in with a view to avoid the purpose of this section, the anti-abuse rule applies and appropriate adjustments are made. FS1's formation of USS Newco and transfer of the USP note to USS Newco, together with the distribution of the shares of USS Newco pursuant to the liquidation of FS1, is treated under the anti-abuse rule as a distribution of $100x, consistent with its substance. Accordingly, adjustments are made consistent with there having been such a distribution. Because FS1 has more than $100x of earnings and profits, the adjustments made are consistent with USS Newco having received a $100x dividend from FS1 separate from, and immediately before, the triangular C reorganization. USS Newco must therefore include $100x in gross income as if it had received that amount as a dividend and increase its earnings and profits by the same amount. FS1 must decrease its earnings and profits by $100x. For purposes of determining USS Newco's basis in its stock of FS2 Newco, § 1.367(b)-13 applies by treating USS Newco as P (within the meaning of § 1.367(b)-13(a)(2)(ii)). Under paragraph (b)(3) of this section, USS Newco's adjustment to the basis in its FS2 Newco stock under § 1.367(b)-13 is determined as if USS Newco provided the stock of USS Newco stock pursuant to the plan of reorganization.

(4) ***Example 3: Taxable debt exchange*** —

(i) ***Facts.*** USP is a domestic corporation that owns all of the stock of FP, a foreign corporation, and USS, a domestic corporation. Furthermore, FP owns all of the stock of FS, a foreign corporation, and USS owns all of the stock of UST, a domestic corporation. FP has no earnings and profits, and FS has more than $100x of earnings and profits. USP will not satisfy the requirements of sections 245A and 246(c) with respect to dividends received from FP. FS transfers a note issued by FS with a fair market value of $100x (FS note) to FP in exchange for $100x of voting stock of FP, and FS then uses the stock of FP to acquire all of the stock of UST held by USS in a triangular reorganization described in section 368(a)(1)(B) (triangular B reorganization). Because a dividend from FS to FP would not constitute foreign personal holding company income under section 954(c)(6), the taxpayer asserts that the exception in paragraph (a)(2)(iii) of this section applies and therefore does not make any adjustments pursuant to this section. FP then transfers the FS note to USP in exchange for a note issued by USP with a fair market value of $100x (USP note). The USP note constitutes United States property within the meaning of section 956(c), and USP would otherwise have an inclusion under section 951(a)(1)(B) and § 1.956-1(a)(2) if FP had earnings and profits. FS's transfer of the FS note to FP, and FP's subsequent transfer of the FS note to USP in connection with the triangular B reorganization, are engaged in with a view to avoid the purpose of this section.

(ii) ***Analysis.*** Because the transfers of the FS note are in connection with a triangular reorganization and are engaged in with a view to avoid the purpose of this section, the anti-abuse rule applies and appropriate adjustments are made. FS is therefore treated as having made a distribution to

FP of $100x, reflecting the value of the stock of FP that FS acquired in exchange for property (the FS note). The deemed distribution is treated as separate from, and occurring immediately before, FS's acquisition of the stock of FP stock used in the triangular B reorganization. Because FS has more than $100x of earnings and profits, the entire deemed distribution is treated as a dividend under section 301(c)(1). The deemed dividend causes FP to increase its earnings and profits by $100x but does not constitute foreign personal holding company income to FP under section 954(c)(6). FP thus has $100x of earnings and profits available to support inclusions under section 951(a)(1)(B) in connection with FP's subsequent acquisition of the USP note. No adjustments are made by FP to the basis in its stock of FS except as provided in § 1.358-6. Under paragraph (b)(3) of this section, FP's adjustment to the basis in its stock of FS under § 1.358-6 is determined as if FP provided the stock of FP pursuant to the plan of reorganization.

(e) ***Applicability dates*** —

(1) ***General rule.*** This section applies to triangular reorganizations occurring on or after May 17, 2011. For triangular reorganizations that occur before May 17, 2011, *see* § 1.367(b)-14T as contained in 26 CFR part 1 revised as of April 1, 2011.

(2) ***Triangular reorganizations completed on or after April 25, 2014.*** The following paragraphs apply to triangular reorganizations that are completed on or after April 25, 2014, unless T was not related to P or S (within the meaning of section 267(b)) immediately before the triangular reorganization; the triangular reorganization was entered into either pursuant to a written agreement that was (subject to customary conditions) binding before April 25, 2014, and at all times afterwards, or pursuant to a tender offer announced before April 25, 2014, that is subject to section 14(d) of the Securities and Exchange Act of 1934 (15 U.S.C. 78n(d)(1)) and Regulation 14(D) (17 CFR 240.14d-1 through 240.14d-101) or that is subject to comparable foreign laws; and to the extent the P acquisition that occurs pursuant to the plan of reorganization is not completed before April 25, 2014, the P acquisition was included as part of the plan before April 25, 2014:

(i) Paragraph (a)(2)(ii) of this section, to the extent it does not apply where P is a controlled foreign corporation, and to the extent it relates to dividends that would be subject to U.S. tax;

(ii) Paragraph (a)(2)(iii) of this section, to the extent it relates to amounts that would be subject to U.S. tax or give rise to an inclusion under section 951(a)(1)(A) that would be subject to U.S. tax;

(iii) Paragraph (b)(3) of this section, to the extent it relates to P's provision of its stock or securities pursuant to the plan of reorganization; and

(iv) Paragraphs (b) and (c) of this section, to the extent they do not reference the rule described in former paragraph (b)(2) of this section (relating to the deemed contribution), as contained in 26 CFR part 1 revised as of April 1, 2021.

(3) ***Transactions completed on or after December 2, 2016.*** The following paragraphs apply to transactions completed on or after December 2, 2016:

(i) Paragraph (a)(2)(iii) of this section, to the extent it does not apply where T is a foreign corporation; and

(ii) Paragraph (a)(3)(ii)(C) of this section.

(4) ***Deemed distributions that occurred in taxable years ending before November 2, 2020.*** Former paragraph (c)(1) of this section, as contained in 26 CFR part 1 revised as of April 1, 2021, to the extent it references section 902, applies to deemed distributions that occur in taxable years ending before November 2, 2020.

(5) ***Triangular reorganizations completed on or after October 5, 2023.*** Paragraph (a)(2)(iii) of this section, to the extent it relates to amounts that would give rise to an inclusion under section 951A(a) that would be subject to U.S. tax, applies to triangular reorganizations that are completed on or after October 5, 2023.

[T.D. 9526, 76 FR 28893, May 19, 2011, as amended by T.D. 9959, 87 FR 325, Jan. 4, 2022; T.D. 10004, 89 FR 58283, July 18, 2024]

§ 1.367(b)-12 Subsequent treatment of amounts attributed or included in income.

(a) ***In general.*** This section applies to distributions with respect to, or a disposition of, stock—

(1) To which, in connection with an exchange occurring before February 23, 2000, an amount has been attributed pursuant to § 7.367(b)-9 or 7.367(b)-10 of this chapter (as in effect prior to February 23, 2000, see 26 CFR part 1 revised as of April 1, 1999); or

(2) In respect of which, before February 23, 2000, an amount has been included in income or added to earnings and profits pursuant to § 7.367(b)-7 or § 7.367(b)-10 of this chapter (as in effect prior to February 23, 2000, see 26 CFR part 1 revised as of April 1, 1999).

(b) ***Applicable rules.*** See § 7.367(b)-12(b) through (e) of this chapter (as in effect prior to January 11, 2001, see 26 CFR part 1 revised as of April 1, 2000) for purposes of applying paragraph (a) of this section.

(c) ***Effective date.*** This section applies to distributions or dispositions that occur on or after January 11, 2001.

[T.D. 8937, 66 FR 2257, Jan. 11, 2001]

§ 1.367(b)-13 Special rules for determining basis and holding period.

(a) *Scope and definitions* —

(1) ***Scope.*** This section provides special basis and holding period rules to determine the basis and holding period of stock of certain foreign surviving corporations held by a controlling corporation whose stock is issued in an exchange under section 354 or 356 in a triangular reorganization. This section applies to transactions that are subject to section 367(b) as well as section 367(a), including transactions concurrently subject to sections 367(a) and (b).

(2) ***Definitions.*** For purposes of this section, the following definitions apply:

(i) A block of stock has the meaning provided in § 1.1248-2(b).

(ii) The terms *P, S,* and *T* have the meanings set forth in § 1.358-6(b)(1)(i), (ii), and (iii), respectively.

(iii) A triangular reorganization is a reorganization described in § 1.358-6(b)(2)(i), (ii), or (iii), or (v) (a forward triangular merger, triangular C reorganization, reverse triangular merger, or triangular G reorganization, respectively).

(b) ***Determination of basis for exchanges of foreign stock or securities under section 354 or 356.*** For rules determining the basis of stock or securities in a foreign corporation received in a section 354 or 356 exchange, see § 1.358-2.

(c) ***Determination of basis and holding period for triangular reorganizations*** —

(1) ***Application.*** In the case of a triangular reorganization described in paragraph (a)(2)(ii) of this section, this paragraph (c) applies, if—

(i)

(A) Immediately before the transaction, either P is a section 1248 shareholder with respect to S, or P is a foreign corporation and a United States person is a section 1248 shareholder with respect to both P and S; and

(B) In the case of a reverse triangular merger, P's exchange of S stock is not described in § 1.367(b)-3(a) and (b) or in § 1.367(b)-4(b)(1)(i), (2)(i), or (3); or

(ii)

(A) Immediately before the transaction, a shareholder of T is a section 1248 shareholder with respect to T, or a shareholder of T is a foreign corporation and a United States person is a section 1248 shareholder with respect to both such foreign corporation and T; and

(B) With respect to at least one of the exchanging shareholders described in paragraph (c)(1)(ii)(A) of this section, the exchange of T stock is not described in § 1.367(b)-3(a) and (b) or in § 1.367(b)-4(b)(1)(i), (2)(i), or (3).

(2) ***Basis and holding period rules.*** In the case of a triangular reorganization described in paragraph (c)(1) of this section, each share of stock of the surviving corporation (S or T) held by P must be divided into portions attributable to the S stock and the T stock immediately before the exchange. See paragraph (e) of this section *Examples 1* through *4* for illustrations of this rule.

(i) ***Portions attributable to S stock*** —

(A) In the case of a forward triangular merger, a triangular C reorganization, or a triangular G reorganization, the basis and holding period of the portion of each share of surviving corporation stock attributable to the S stock is the basis and holding period of such share of stock immediately before the exchange.

(B) In the case of a reverse triangular merger, the basis and holding period of the portion of each share of surviving corporation stock attributable to the S stock is the basis and the holding period immediately before the exchange of a proportionate amount of the S stock to which the portion relates. If P is a shareholder described in paragraph (c)(1)(i)(A) of this section with respect to S, and P exchanges two or more blocks of S stock pursuant to the transaction, then each share of the surviving corporation (T) attributable to the S stock must be further divided into separate portions to account for the separate blocks of stock in S.

(C) If the value of S stock immediately before the triangular reorganization is less than one percent of the value of the surviving corporation stock immediately after the triangular reorganization, then P may determine its basis in the surviving corporation stock by applying the rules of paragraph (c)(2)(ii) of this section to determine the basis and holding period of the surviving corporation stock attributable to the T stock, and then increasing the basis of each share of surviving corporation stock by the proportionate amount of P's aggregate basis in the S stock immediately before the exchange (without dividing the stock of the surviving corporation into separate portions attributable to the S stock).

(ii) *Portions attributable to T stock* —

(A) If any exchanging shareholder of T stock is described in paragraph (c)(1)(ii) of this section, the basis and holding period of the portion of each share of stock in the surviving corporation attributable to the T stock is the basis and holding period immediately before the exchange of a proportionate amount of the T stock to which such portion relates. If any exchanging shareholder of T stock is described in paragraph (c)(1)(ii) of this section, and such shareholder exchanges two or more blocks of T stock pursuant to the transaction, then each share of surviving corporation stock attributable to the T stock must be further divided into separate portions to account for the separate blocks of T stock.

(B) If no exchanging shareholder of T stock is described in paragraph (c)(1)(ii) of this section, the rules of § 1.358-6 apply to determine the basis of the portion of each share of the surviving corporation attributable to T immediately before the exchange.

(d) *Special rules applicable to divided shares of stock* —

(1) *In general* —

(i) Shares of stock in different blocks are aggregated into one divided portion for basis purposes, if such shares immediately before the exchange are owned by one or more shareholders that are—

(A) Not section 1248 shareholders with respect to the corporation; or

(B) Foreign corporate shareholders, provided that no United States persons are section 1248 shareholders with respect to both such foreign corporate shareholders and the corporation.

(ii) For purposes of determining the amount of gain realized on the sale or exchange of stock that has a divided portion pursuant to paragraph (c) of this section, any amount realized on such sale or exchange will be allocated to each divided portion of the stock based on the relative fair market value of the stock to which the portion is attributable at the time the portions were created. See paragraph (e) *Example 5* of this section.

(iii) Shares of stock will no longer be required to be divided if section 1248 or section 964(e) would not apply to a disposition or exchange of such stock.

(2) ***Pre-exchange earnings and profits.*** All earnings and profits (or deficits) accumulated by a foreign corporation before the reorganization and attributable to a share (or block) of stock for purposes of section 1248 are attributable to the divided portion of stock with the basis and holding period of that share (or block). See § 1.367(b)-4(d).

(3) ***Post-exchange earnings and profits.*** Any earnings and profits (or deficits) accumulated by the surviving corporation subsequent to the reorganization are attributed to each divided share of stock pursuant to section 1248 and the regulations thereunder. The amount of earnings and profits (or deficits) attributable to a divided share of stock is further attributed to the divided portions of such share of stock based on the relative fair market value of each divided portion of stock. See paragraph (e) *Example 5* of this section.

(e) ***Examples.*** The rules of this section are illustrated by the following examples:

Example 1. Blocks of stock exchanged in a triangular reorganization. (i) *Facts.* (A) US1, a domestic corporation, owns all the stock of F1, a foreign corporation. F1 owns all the stock of FT, a foreign corporation, with 100 shares of stock outstanding. Each share of FT stock is valued at $10x. Because F1 acquired the stock of FT at two different dates, F1 owns two blocks of FT stock for purposes of section 1248. The first block consists of 60 shares. The shares in the first block have a basis of $300x ($5x per share), a holding period of 10 years, and $240x ($4x per share) of earnings and profits attributable to the shares for purposes of section 1248. The second block consists of 40 shares. The shares in the second block have a basis of $600x ($15x per share), a holding period of 2 years, and $80x ($2x per share) of earnings and profits attributable to the shares for purposes of section 1248.
(B) US2, a domestic corporation, owns all of the stock of FP, a foreign corporation, which owns all of the stock of FS, a foreign corporation. FP owns two blocks of FS stock. Each block consists of 10 shares with a value of $200x ($20x per share). The shares in the first block have a basis of $50x ($5x per share), a holding period of 10 years, and $50x ($5x per share) of earnings and profits attributable to such shares for purposes of section 1248. The shares in the second block had a basis of $100x ($10x per share), a holding period of 5 years, and $20x ($2x per share) of earnings and profits attributable to such shares for purposes of section 1248.

(C) FT merges into FS, with FS surviving, and F1 receives 50 shares of FP stock with a value of $1,000x in exchange for its FT stock. The merger of FT into FS qualifies as forward triangular merger, and immediately after the exchange US1 is a section 1248 shareholder with respect to F1, the exchanging shareholder, FP and FS, all of which are controlled foreign corporations.

(ii) *Basis and holding period determination.* (*1*) US1 is a section 1248 shareholder of F1, the exchanging shareholder, and FT (both of which are controlled foreign corporations) immediately before the transaction. Moreover, F1 is not required to include amounts in income under § 1.367(b)-3(b) or 1.367(b)-4(b) as described in paragraph (c)(1)(ii)(B) of this section. Accordingly, the basis and holding period of the FS stock held by FP immediately after the triangular reorganization is determined pursuant to paragraph (c) of this section.

(*2*) Pursuant to paragraph (c) of this section, each share of FS stock is divided into portions attributable to the basis and holding period of the FS stock held by FP immediately before the exchange (the FS portion) and the FT stock held by F1 immediately before the exchange (the FT portion). The basis and holding period of the FS portion is the basis and holding period of the FS stock held by FP immediately before the exchange. Thus, each share of FS stock in the first block has a portion with a basis of $5x, a value of $20x, a holding period of 10 years, and $5x of earnings and profits attributable to such portion for purposes of section 1248. Each share of FS stock in the second block has a portion with a basis of $10x, a value of $20x, a holding period of 5 years, and $2x of earnings and profits attributable to such portion for purposes of section 1248.

(*3*) Because the exchanging shareholder of FT stock (F1) has a section 1248 shareholder (US1), the holding period and basis of the FT portion is the holding period and the proportionate amount of the basis of the FT stock immediately before the exchange to which such portion relates. Further, because F1 exchanged two blocks of FT stock, the FT portion must be divided into two separate portions attributable to the two blocks of FT stock. Thus, each share of FS stock will have a second portion with a basis of $15x ($300x basis / 20 shares), a value of $30x ($600x value / 20 shares), a holding period of 10 years, and $12x of earnings and profits ($240x / 20 shares) attributable to such portion for purposes of section 1248. Each share of FS stock will have a third portion with a basis of $30x ($600x basis / 20 shares), a value of $20x ($400x value / 20 shares), a holding period of 2 years, and $4x of earnings and profits ($80x / 20 shares) attributable to such portion for purposes of section 1248.

(iii) *Subsequent disposition—first block.* Assume, immediately after the transaction, FP disposes of a share of FS stock from the first block. When FP disposes of any share of its FS stock, it is treated as disposing of each divided portion of such share. With respect to the first portion (attributable to the FS stock), FP recognizes a gain of $15x ($20x value − $5x basis), $5x of which is treated as a dividend under section 1248. With respect to the second portion (attributable to the first block of FT stock), FP recognizes a gain of $15x ($30x value − $15x basis), $12x of which is treated as a dividend under section 1248. With respect to the third portion (attributable to the second block of FT stock), FP recognizes a capital loss of $10x ($20x value − $30x basis).

(iv) *Subsequent disposition—second block.* Assume further, immediately after the transaction, FP also disposes of a share of stock from the second block of FS stock. With respect to the first portion (attributable to the FS stock), FP recognizes a gain of $10x ($20x value − $10x basis), $2x of which is treated as a dividend under section 1248. With respect to the second portion (attributable to the first block of FT stock), FP recognizes a gain of $15x ($30x value − $15x basis), $12x of which is treated as a dividend under section 1248. With respect to the third portion (attributable to the second block of FT stock), FP recognizes a capital loss of $10x ($20x value − $30x basis).

Example 2. (i) *Facts.* The facts are the same as in *Example 1,* except that FS merges into FT with FT surviving in a reverse triangular merger. Pursuant to the merger, F1 receives FP stock with a value of $1,000x in exchange for its FT stock, and FP receives 10 shares of FT stock with a value of $1,000x in exchange for its FS stock. Immediately after the exchange, US1 is a section 1248 shareholder with respect to F1, the exchanging shareholder, FP, and FT, all of which are controlled foreign corporations.
(ii) *Basis and holding period determination*—(A) The basis and holding period of the stock of the surviving corporation held by FP are the same as in *Example 1,* except that each share of the surviving corporation (FT, instead of FS) will be divided into four portions instead of three portions. Because FP exchanges two blocks of FS stock, the FS portion must be divided into two separate

portions attributable to the two blocks of FS stock. Because F1 exchanges two blocks of FT stock, the FT portion must be divided into two separate portions attributable to the two blocks of FT stock.

(B) Thus, each share of the surviving corporation (FT) will have a first portion (attributable to the first block of FS stock) with a basis of $5x ($50x / 10 shares), a value of $20x ($200x / 10 shares), a holding period of 10 years, and $5x of earnings and profits ($50x / 10 shares) attributable to such portion for purposes of section 1248. Each share of FT stock will have a second portion (attributable to the second block of FS stock) with a basis of $10x ($100x / 10 shares), a value of $20x ($200x / 10 shares), a holding period of 5 years, and $2x of earnings and profits ($20x / 10 shares) attributable to such portion for purposes of section 1248. Moreover, each share of FT stock will have a third portion (attributable to the first block of FT stock) with a basis of $30x ($300x basis / 10 shares), a value of $60x ($600x value / 10 shares), a holding period of 10 years, and $24x of earnings and profits ($240x / 10 shares) attributable to such portion for purposes of section 1248. Lastly, each share of FT stock will have a fourth portion (attributable to the second block of FT stock) with a basis of $60x ($600x basis / 10 shares), a value of $40x ($400x value / 10 shares), a holding period of 2 years, and $8x of earnings and profits ($80x / 10 shares) attributable to such portion for purposes of section 1248.

Example 3. (i) *Facts.* USP, a domestic corporation, owns all the stock of FS, a foreign corporation with 10 shares of stock outstanding. Each share of FS stock has a value of $10x, a basis of $5x, a holding period of 10 years, and $7x of earnings and profits attributable to such share for purposes of section 1248. FP, a foreign corporation, owns the stock of FT, another foreign corporation. FP and FT do not have any section 1248 shareholders. FT has assets with a value of $100x, a basis of $50x, and no liabilities. The FT stock held by FP has a value of $100x and a basis of $75x. FT merges into FS with FS surviving in a forward triangular merger. Pursuant to the reorganization, FP receives USP stock with a value of $100x in exchange for its FT stock.
(ii) *Basis and holding period determination*—(A) Because USP is a section 1248 shareholder of FS immediately before the transaction, the basis and holding period of the FS stock held by USP immediately after the triangular reorganization is determined pursuant to paragraph (c) of this section.

(B) Pursuant to paragraph (c) of this section, each share of FS stock is divided into portions attributable to the basis and holding period of the FS stock held by USP immediately before the exchange (the FS portion) and the FT portion immediately before the exchange. Because FT does not have a section 1248 shareholder immediately before the transaction, the rules of § 1.358-6 apply to determine the basis of the FT portion of each share of FS stock. Those rules determine the basis of FS stock held by USP by reference to the basis of FT's net assets. The basis and holding period of the FS portion is the basis and holding period of the FS stock held by USP immediately before the exchange. Thus, each share of FS stock has a portion with a basis of $5x, a value of $10x, a holding period of 10 years, and $7x of earnings and profits attributable to such

portion for section 1248 purposes. The basis of the FT portion is the basis of the FT assets to which such portion relates. Thus, each share of FS stock has a second portion with a basis of $5x ($50x basis in FT's assets / 10 shares) and a value of $10x ($100x value of FT's assets / 10 shares). All of FS's earnings and profits prior to the transaction ($70x) is attributed solely to the FS portion in each share of FS stock. As a result of each share of stock being divided into portions, the basis of the FS stock is not averaged with the basis of the FT assets to increase the section 1248 amount with respect to the stock of the surviving corporation (FS).

Example 4. (i) *Facts.* US, a domestic corporation, owns all of the stock of FT, a foreign corporation. The FT stock held by US constitutes a single block of stock with a value of $1,000x, a basis of $600x, and holding period of 5 years. USP, a domestic corporation, forms FS, a foreign corporation, pursuant to the plan of reorganization and capitalizes it with $10x of cash. FS merges into FT with FT surviving in a reverse triangular merger and a reorganization described in section 368(a)(1)(B). Pursuant to the reorganization, US receives USP stock with a value of $1,000x in exchange for its FT stock, and USP receives 10 shares of FT stock with a value of $1,010x in exchange for its FS stock.
(ii) *Basis and holding period determination.* (A) US and USP are section 1248 shareholders of FT and FS, respectively, immediately before the transaction. Neither US nor USP is required to include amounts in income under § 1.367(b)-3(b) or 1.367(b)-4(b) as described in paragraph (c)(1)(i)(B) or (c)(1)(ii)(B) of this section. The basis and holding period of the FT stock held by USP is determined pursuant to paragraph (c) of this section.

(B) Pursuant to paragraph (c) of this section, because the exchanging shareholder of FT stock (US) is a section 1248 shareholder of FT, each share of the surviving corporation (FT) has a proportionate amount of the basis and holding period of the FT stock immediately before the exchange to which such share relates. Thus, the portion of each share of FT stock attributable to the FT stock has a basis of $60x ($600x basis / 10 shares), a value of $100x ($1,000x value / 10 shares), and a holding period of 5 years. Because the value of FS stock immediately before the triangular reorganization ($10x) is less than one percent of the value of the surviving corporation (FT) immediately after the triangular reorganization ($1,010x), USP may determine its basis in the stock of the surviving corporation (FT) attributable to its FS stock basis held prior to the reorganization by increasing the basis of each share of FT stock by the proportionate amount of USP's aggregate basis in the FS stock immediately before the exchange (without dividing each share of FT stock into separate portions to account for FS and FT). If USP so elects, USP's basis in each share of FT stock is increased by $1x ($10x basis in FS stock / 10 shares). As a result, each share of FT stock has a basis of $61x, a value of $101x, and a holding period of 5 years.

Example 5. (i) *Facts.* US, a domestic corporation, owns all of the stock of F1, a foreign corporation, which owns all the stock of FT, a foreign corporation. The FT stock held by F1 constitutes one block of stock with a basis of $170x, a value of $200x, a holding period of 5 years, and $10x of earnings and profits attributable to such stock for purposes of section 1248. FP, a

foreign corporation, owns all the stock of FS, a foreign corporation. FS has 10 shares of stock outstanding. No United States person is a section 1248 shareholder with respect to FP or FS. The FS stock held by FP has a value of $100x and a basis of $50x ($5x per share). FT merges into FS with FS surviving in a forward triangular merger. Pursuant to the merger, F1 receives FP stock with a value of $200x for its FT stock in an exchange that qualifies for non-recognition under section 354. US is a section 1248 shareholder with respect to F1, the exchanging shareholder, FP, and FS (all of which are controlled foreign corporations) immediately after the exchange.
(ii) *Basis and holding period determination.* (A) Because US is a section 1248 shareholder of F1, the exchanging shareholder, and FT immediately before the transaction, and US is a section 1248 shareholder of F1, FP, and FS immediately after the transactions, F1 is not required to include amounts in income under §§ 1.367(b)-3(b) and 1.367(b)-4(b) as described in paragraph (c)(1)(ii)(B) of this section. Thus, the basis and holding period of the FS stock held by FP immediately after the triangular reorganization is determined pursuant to paragraph (c) of this section.

(B) Pursuant to paragraph (c) of this section, each share of FS stock is divided into portions attributable to the basis and holding period of the FS stock held by FP immediately before the exchange (the FS portion) and the FT stock held by F1 immediately before the exchange (the FT portion). The basis and holding period of the FS portion is the basis and holding period of the FS stock held by FP immediately before the exchange. Thus, each share of FS stock has a portion with a basis of $5x and a value of $10x. Because the exchanging shareholder of FT stock (F1) has a section 1248 shareholder of both F1 and FT, the basis and holding period of the FT portion is the proportionate amount of the basis and the holding period of the FT stock immediately before the exchange to which such portion relates. Thus, each share of FS stock will have a second portion with a basis of $17x ($170x basis / 10 shares), a value of $20x ($200x value / 10 shares), a holding period of 5 years, and $1x of earnings and profits ($10x earnings and profits / 10 shares) attributable to such portion for purposes of section 1248.

(iii) *Subsequent disposition.* (A) Several years after the merger, FP disposes of all of its FS stock in a transaction governed by section 964(e). At the time of the disposition, FS stock has decreased in value to $210x (a post-merger reduction in value of $90x), and FS has incurred a post-merger deficit in earnings and profits of $30x.

(B) Pursuant to paragraph (d)(1)(ii) of this section, for purposes of determining the amount of gain realized on the sale or exchange of stock that has a divided portion, any amount realized on such sale or exchange is allocated to each divided portion of the stock based on the relative fair market value of the stock to which the portion is attributable at the time the portions were created. Immediately before the merger, the value of the FS stock in relation to the value of both the FS stock and the FT stock was one-third ($100x / ($100x plus $200x)). Likewise, immediately before the merger, the value of the FT stock in relation to the value of both the FT stock and the FS stock was two-thirds ($200x / $100x plus $200x). Accordingly, one-third of the $210x amount realized is

allocated to the FS portion of each share and two-thirds to the FT portion of each share. Thus, the amount realized allocated to the FS portion of each share is $7x (one-third of $210x divided by 10 shares). The amount realized allocated to the FT portion of each share is $14x (two-thirds of $210x divided by 10 shares).

(C) Pursuant to paragraph (d)(3) of this section, any earnings and profits (or deficits) accumulated by the surviving corporation subsequent to the reorganization are attributed to the divided portions of shares of stock based on the relative fair market value of each divided portion of stock. Accordingly, one-third of the post-merger earnings and profits deficit of $30x is allocated to the FS portion of each share and two-thirds to the FT portion of each share. Thus, the deficit in earnings and profits allocated to the FS portion of each share is $1x (one-third of $30x divided by 10 shares). The deficit in earnings and profits allocated to the FT portion of each share is $2x (two-thirds of $30x divided by 10 shares).

(D) When FP disposes of its FS stock, FP is treated as disposing of each divided portion of a share of stock. With respect to the FS portion of each share of stock, FP recognizes a gain of $2x ($7x value − $5x basis), which is not recharacterized as a dividend because a deficit in earnings and profits of $1x is attributable to such portion for purposes of section 1248. With respect to the FT portion of each share of stock, FP recognizes a loss of $3x ($14x value − $17x basis).

(f) ***Effective date.*** This section applies to exchanges occurring on or after January 23, 2006.

[T.D. 9243, 71 FR 4289, Jan. 26, 2006, as amended by T.D. 9400, 73 FR 30303, May 27, 2008; T.D. 9446, 74 FR 6958, Feb. 11, 2009]

§ 1.367(d)-1 Transfers of intangible property to foreign corporations.

(a) [Reserved]. For further guidance, see § 1.367(d)-1T(a).

(b) ***Property subject to section 367(d).*** Section 367(d) and the rules of this section apply to the transfer of intangible property, as defined in § 1.367(a)-1(d)(5), by a U.S. person to a foreign corporation in an exchange described in section 351 or 361. See section 367(a) and the regulations thereunder for the rules that apply to the transfer of any property other than intangible property.

(c) ***Deemed payments upon transfer of intangible property to foreign corporation*** —

(1) ***In general.*** For further guidance, *see* § 1.367(d)-1T(c)(1).

(2) ***Required adjustments.*** For further guidance, *see* § 1.367(d)-1T(c)(2) introductory text and (c)(2)(i).

(i) [Reserved]

(ii) The deemed payment is treated as an allowable deduction (whether or not that amount is paid) of the transferee foreign corporation properly allocated and apportioned to the appropriate classes of gross income in accordance with §§ 1.882-4(b)(1), 1.951A-2(c)(3), 1.954-1(c), and 1.960-1(c) and(d), as applicable.

(3) ***Useful life*** —

(i) ***In general.*** For purposes of determining the period of inclusions for deemed payments under § 1.367(d)-1T(c)(1), the useful life of intangible property is the entire period during which exploitation of the intangible property is reasonably anticipated to affect the determination of taxable income, as of the time of transfer. Exploitation of intangible property includes any direct or indirect use or transfer of the intangible property, including use without further development, use in the further development of the intangible property itself (and any exploitation of the further developed intangible property), and use in the development of other intangible property (and any exploitation of the other developed intangible property).

(ii) ***Procedure to limit inclusions to 20 years.*** In cases where the useful life of the transferred property is indefinite or is reasonably anticipated to exceed twenty years, taxpayers may, in lieu of including amounts during the entire useful life of the intangible property, choose in the year of transfer to increase annual inclusions during the 20-year period beginning with the first year in which the U.S. transferor takes into account income pursuant to section 367(d), to reflect amounts that, but for this paragraph (c)(3)(ii), would have been required to be included following the end of the 20-year period. See § 1.6038B-1(d)(1)(iv) for guidance on reporting this choice of method. If the taxpayer applies this method during the 20-year period, no adjustments will be made for taxable years beginning after the conclusion of the 20-year period. However, for purposes of determining whether amounts included during the 20-year period are commensurate with the income attributable to the transferred intangible property, the Commissioner may take into account information with respect to taxable years after that period, such as the income attributable to the transferred property during those later years. The application of this paragraph (c)(3)(ii) must be reflected in a statement (titled "Application of 20-Year Inclusion Period to Section 367(d) Transfers") attached to a timely filed original federal income tax return (including extensions) for the year of the transfer. An increase to the deemed payment rate made pursuant to this paragraph (c)(3)(ii) will be irrevocable, and a failure to timely file the statement under this paragraph (c)(3)(ii) may not be remedied.

(iii) ***Example.*** Property subject to section 367(d) is transferred from USP, a domestic corporation, to FA, a foreign corporation wholly owned by USP. The useful life of the transferred property, inclusive of derivative works, at the time of transfer is indefinite but is reasonably anticipated to exceed 20 years. In the first five years following the transfer, sales related to the property are expected to be $100x, $130x, $160x, $180x and $187.2x, respectively. Thereafter, for the remainder of the property's useful life, sales are expected to grow by four percent annually. In the first five years following the transfer, operating profits attributable to the property are expected to be $5x, $8x, $11x, $12.5x, and $13x, respectively. Thereafter, for the remainder of the property's useful life, operating profits are expected to grow by four percent annually. It is determined that the appropriate discount rate for sales and operating profits is 10 percent. The present value of operating profits through the property's indefinite useful life is $185x. The present value of sales through the property's indefinite useful life is $2698x. Accordingly, the sales based royalty rate during the property's useful life is 6.8 percent ($185x/$2698x). The taxpayer may choose to take income inclusions into account over a 20-year period. The present value of sales through the 20-year period is $1787x. Accordingly, the sales based royalty rate under the 20-year option is increased to 10.3 percent ($185x/$1787x).

(4) ***Blocked income.*** For further guidance, *see* § 1.367(d)-1T(c)(4).

(d) ***Subsequent transfer of stock of transferee corporation to unrelated person.*** For further guidance, *see* § 1.367(d)-1T(d).

(e) ***Subsequent transfer of stock of transferee foreign corporation to related person*** —

(1) ***Transfer to related U.S. person treated as disposition of intangible property.*** For further guidance, *see* § 1.367(d)-1T(e)(1).

(2) ***Required adjustments.*** For further guidance, *see* § 1.367(d)-1T(e)(2) introductory text and (e)(2)(i).

(i) [Reserved]

(ii) The deemed payment is treated as an allowable deduction (whether or not that amount is paid) of the transferee foreign corporation properly allocated and apportioned to the appropriate classes of gross income in accordance with §§ 1.882-4(b)(1), 1.951A-2(c)(3), 1.954-1(c), and 1.960-1(c) and(d), as applicable.

(iii) For further guidance, *see* § 1.367(d)-1T(e)(2)(iii) through (e)(4).

(iv) [Reserved]

(3)-(4) [Reserved]

(f) ***Subsequent disposition of transferred intangible property by transferee foreign corporation*** —

(1) ***In general.*** For further guidance, *see* § 1.367(d)-1T(f)(1).

(2) ***Required adjustments.*** If a U.S. transferor is required to recognize gain under paragraph (f)(4)(i)(A) of this section or § 1.367(d)-1T(f)(1), then, in addition to the adjustments described in paragraph (c)(2)(ii) of this section and § 1.367(d)-1T(c)(2) with respect to the deemed payment described in § 1.367(d)-1T(f)(1)(ii)—

(i) For purposes of chapter 1 of the Code, the transferee foreign corporation reduces (but not below zero) the portion of its earnings and profits and gross income arising by reason of the subsequent disposition of the intangible property by the amount of gain recognized by the U.S. transferor under paragraph (f)(4)(i)(A) of this section or § 1.367(d)-1T(f)(1); and

(ii) The U.S. transferor may establish an account receivable from the transferee foreign corporation equal to the amount of gain recognized under paragraph (f)(4)(i)(A) of this section or § 1.367(d)-1T(f)(1) in accordance with § 1.367(d)-1T(g)(1).

(3) ***Subsequent transfer of intangible property to related person.*** Except as provided in paragraph (f)(4)(i)(B) of this section, a U.S. person's requirement to recognize income under § 1.367(d)-1T(c) or (e) is not affected by the transferee foreign corporation's subsequent disposition of the transferred intangible property to a related person. For purposes of any required adjustments, and of any accounts receivable created under § 1.367(d)-1T(g)(1), the related person that receives the intangible property is treated as the transferee foreign corporation.

(4) ***Subsequent transfer of intangible property to qualified domestic person*** —

(i) ***In general.*** Except as provided in paragraph (f)(4)(v) of this section, if a U.S. person transfers intangible property subject to section 367(d) and the rules of this section and § 1.367(d)-1T to a foreign corporation in an exchange described in section 351 or 361 and, within the useful life of the intangible property, that transferee foreign corporation subsequently disposes of the intangible property to a qualified domestic person, then—

(A) The U.S. transferor of the intangible property (or any person treated as such pursuant to § 1.367(d)-1T(e)(1)) is required to recognize gain, as applicable, equal to the amount described in paragraph (f)(4)(ii) of this section; and

(B) If the U.S. transferor provides the information described in § 1.6038B-1(d)(2)(iv), then—

(*1*) The U.S. transferor is required to recognize a deemed payment as provided in § 1.367(d)-1T(f)(1)(ii); and

(*2*) The intangible property is no longer subject to section 367(d), this section, or § 1.367(d)-1T after applying paragraphs (f)(4)(i)(A) and (f)(4)(i)(B)(*1*) of this section.

(ii) ***Gain recognition for U.S. transferor.*** The amount of gain a U.S. transferor must recognize under paragraph (f)(4)(i)(A) of this section is determined as follows—

(A) If the intangible property is transferred basis property (as defined in section 7701(a)(43)) by reason of the subsequent disposition (determined without regard to section 367(d), this section, and § 1.367(d)-1T), the amount of gain, if any, the transferee foreign corporation would recognize if its adjusted basis in the intangible property were equal to the U.S. transferor's former adjusted basis in the property; or

(B) If the intangible property is not transferred basis property by reason of the subsequent disposition (determined without regard to section 367(d), this section, and § 1.367(d)-1T), the excess, if any, of the fair market value of the intangible property on the date of the subsequent disposition over the U.S. transferor's former adjusted basis in that property.

(iii) ***Qualified domestic person.*** For purposes of this paragraph (f)(4), a *qualified domestic person* means—

(A) The U.S. transferor that initially transferred intangible property subject to section 367(d);

(B) A U.S. person treated as a U.S. transferor under § 1.367(d)-1T(e)(1), provided such person is an individual or a corporation other than a corporation exempt from tax under section 501(a), a regulated investment company (as defined in section 851(a)), a real estate investment trust (as defined in section 856(a)), a DISC (as defined in section 992(a)(1)), or an S corporation (as defined in section 1361(a));

(C) A U.S. person that is an individual related, within the meaning of paragraph (h)(2)(ii) of this section and § 1.367(d)-1T(h), to the person described in paragraph (f)(4)(iii)(A) or (B) of this section; or

(D) A U.S. person that is a corporation related, within the meaning of paragraph (h)(2)(ii) of this section and § 1.367(d)-1T(h), to the person described in paragraph (f)(4)(iii)(A) or (B) of this section, other than a corporation exempt from tax under section 501(a), a regulated investment company (as defined in section 851(a)), a real estate investment trust (as defined in section 856(a)), a DISC (as defined in section 992(a)(1)), or an S corporation (as defined in section 1361(a)).

(iv) ***Qualified domestic person's basis in the intangible property.*** The qualified domestic person's adjusted basis in the intangible property is—

(A) In the case of a subsequent disposition of intangible property described in paragraph (f)(4)(ii)(A) of this section, and subject to any applicable limitations that may apply under the Code, the lesser of the U.S. transferor's former adjusted basis in the intangible

property or the transferee foreign corporation's adjusted basis in the intangible property (as determined immediately before the subsequent disposition), in each case increased by the greater of the amount of gain (if any) described in paragraph (f)(4)(ii)(A) of this section and recognized by the U.S. transferor or the amount of gain (if any) recognized by the transferee foreign corporation as to the intangible property by reason of the subsequent disposition; or

(B) In the case of a subsequent disposition of intangible property described in paragraph (f)(4)(ii)(B) of this section, the fair market value of the intangible property (as determined on the date of the subsequent disposition).

(v) ***Special rule for related transactions.*** If the transferee foreign corporation subsequently disposes of the transferred intangible property to a person that would, absent this paragraph (f)(4)(v), be a qualified domestic person (initial transferee) and, as part of a series of related transactions, the intangible property is subsequently disposed of to any other person, including by reason of multiple dispositions, then the initial transferee is treated as a qualified domestic person only if the ultimate recipient of the intangible property is a qualified domestic person. *see* paragraphs (f)(6)(ii)(D) and (E) of this section (*Examples 4* and *5*) for illustrations of the application of this paragraph (f)(4)(v).

(5) ***Relief for certain failures to comply.*** This paragraph (f)(5) provides relief if paragraph (f)(4)(i)(B)(*2*) of this section would apply but for the U.S. transferor's failure to provide the information required by paragraph (f)(4)(i)(B) of this section (a “failure to comply”). When a failure to comply occurs, the subsequent disposition of the transferred intangible property is generally subject to paragraphs (f)(3) and (f)(4)(i)(A) of this section. Nevertheless, a failure to comply is deemed not to have occurred (regardless of whether the U.S. transferor continued to include amounts in gross income under § 1.367(d)-1T(c) or (e) after the subsequent disposition), and the requirements of paragraph (f)(4)(i)(B) of this section are treated as satisfied as of the date of the subsequent disposition if—

(i) Promptly after the U.S. transferor becomes aware of the failure, the U.S. transferor provides such information and provides a reasonable explanation for its failure to comply to the Director of Field Operations, Cross Border Activities Practice Area of Large Business & International (or any successor to the roles and responsibilities of such position, as appropriate), by eFax at (855) 582-4842 (or as otherwise directed on *irs.gov*), or, if any taxable year of the U.S. transferor is under examination when the discovery is made, to the Internal Revenue Service personnel conducting the examination;

(ii) The U.S. transferor timely files an amended return for the taxable year in which the subsequent disposition occurred (and, if applicable, for each taxable year starting with the taxable year immediately after the taxable year in which the subsequent disposition occurred and ending with the taxable year in which the U.S. transferor seeks relief under this paragraph (f)(5)) that includes the information required by paragraph (f)(4)(i)(B) of this section; and

(iii) If any taxable year of the U.S. transferor is under examination when an amended return is filed, the U.S. transferor provides a copy of the amended return (or, if applicable, amended returns) to the Internal Revenue Service personnel conducting the examination.

(6) ***Examples*** —

(i) ***Assumed facts.*** For purposes of the examples in paragraph (f)(6)(ii) of this section, and except where otherwise indicated, the following facts are assumed.

(A) USP and USS are domestic corporations that each use a calendar taxable year.

(B) TFC is a foreign corporation whose functional currency is the U.S. dollar.

(C) In year 1, USP transfers intangible property, as defined in section 367(d)(4), with a $0 adjusted basis, to TFC in a section 351 exchange (the transferred IP), and such transfer is subject to section 367(d).

(D) Each annual inclusion (including any amount described in § 1.367(d)-1T(f)(1)(ii)) is taken into account under section 367(d)(2)(A)(ii)(I) and § 1.367(d)-1T(c)(1).

(E) Any subsequent transfer or disposition of stock of TFC or the transferred IP occurs within the useful life of the transferred IP.

(F) All transactions are respected under general principles of tax law.

(ii) ***Examples.*** The following examples illustrate the application of paragraph (f)(4) of this section and other paragraphs of this section that relate to paragraph (f)(4).

(A) ***Example 1: Complete liquidation of transferee foreign corporation into a qualified domestic person*** —

(*1*) ***Facts.*** In year 2, USP transfers all the stock of TFC to USS, a related person within the meaning of § 1.367(d)-1T(h) and paragraph (h)(2)(ii) of this section, in a section 351 exchange to which § 1.367(d)-1T(e)(1) applies (the year 2 transfer). In year 3, TFC distributes all its property (including the transferred IP) to USS pursuant to a complete liquidation to which sections 332 and 337 apply (the year 3 liquidation). The all earnings and profits amount determined under § 1.367(b)-2(d) with respect to the stock of TFC held by USS is $0. The information described in § 1.6038B-1(d)(2) is provided by USS for the taxable year in which the year 3 liquidation occurs.

(*2*) ***Analysis*** —

(*i*) ***The year 2 transfer.*** Because the year 2 transfer involves a transfer of all the stock of TFC by USP (the initial U.S. transferor) to a related U.S. person (USS), under § 1.367(d)-1T(e)(1)(i) USS (a successor U.S. transferor) is treated as receiving the right to receive a proportionate share of the contingent annual payments that USP would have otherwise taken into account under § 1.367(d)-1T(c). As determined under § 1.367(d)-1T(e)(4), USS's proportionate share of such payments is 100 percent. Accordingly, USS will annually include in its gross income the full amount of each of the annual payments that USP would otherwise have taken into account under § 1.367(d)-1T(c) over the useful life of the transferred IP, and USP will not recognize any gain upon the year 2 transfer. *see* § 1.367(d)-1T(e)(1)(ii) and (iii).

(*ii*) ***The year 3 liquidation.*** The year 3 liquidation results in a subsequent disposition of the transferred IP to USS. USS, a U.S. person treated as the U.S. transferor pursuant to § 1.367(d)-1T(e)(1), is a qualified domestic person within the meaning of paragraph (f)(4)(iii) of this section. Pursuant to paragraph (f)(4)(i)(A) of this section, USS must recognize the amount of gain described in paragraph (f)(4)(ii) of this section. Because the year 3 liquidation is a complete liquidation to which sections 332 and 337 apply, the intangible property is transferred basis property (as defined in section 7701(a)(43) and determined

without regard to section 367(d), this section, and § 1.367(d)-1T), and therefore paragraph (f)(4)(ii)(A) of this section applies to determine the amount of any gain USS must recognize. Because TFC does not recognize gain with respect to the transferred IP (regardless of the adjusted basis in the intangible property) by reason of the year 3 liquidation, the amount of gain described in paragraph (f)(4)(ii)(A) of this section is $0. Accordingly, USS does not recognize gain pursuant to paragraph (f)(4)(i)(A) of this section by reason of the year 3 liquidation. Additionally, because USS provides the information described in § 1.6038B-1(d)(2), paragraph (f)(4)(i)(B) of this section applies to the year 3 liquidation. USS therefore recognizes a deemed payment representing the part of USS's taxable year during which TFC held the transferred IP pursuant to paragraph (f)(4)(i)(B)(*1*) of this section, and the required adjustments described in paragraph (c)(2)(ii) of this section and § 1.367(d)-1T(c)(2)(i) apply as to the deemed payment. Also, because USS does not recognize gain pursuant to paragraph (f)(4)(i)(A) of this section, the required adjustments described in paragraph (f)(2) of this section do not apply. Pursuant to paragraph (f)(4)(i)(B)(*2*) of this section, after taking the deemed payment into account, the transferred IP is no longer subject to section 367(d), this section, and § 1.367(d)-1T. Finally, pursuant to paragraph (f)(4)(iv)(A) of this section, USS's adjusted basis in the transferred IP is $0, which is equal to USP's former adjusted basis in the transferred IP ($0), increased by the greater of the amount of gain recognized by USS under paragraph (f)(4)(i)(A) of this section ($0) or the amount of gain recognized by TFC upon the year 3 liquidation ($0).

(B) ***Example 2: Taxable distribution of the transferred intangible property to a qualified domestic person —***

(*1*) ***Facts.*** The facts are the same as in paragraph (f)(6)(ii)(A) of this section (*Example 1*), except that, instead of in year 3 TFC distributing all its property to USS pursuant to a complete liquidation, in year 3 TFC distributes the transferred IP to USS in a distribution described in section 311(b) when the fair market value of the transferred IP is $100x (the year 3 distribution). TFC's adjusted basis in the transferred IP immediately before the distribution is $0.

(*2*) ***Analysis.*** The consequence of the year 2 transfer is the same as described in paragraph (f)(6)(ii)(A)(*2*)(*i*) of this section (*Example 1*). Like the consequences described in paragraph (f)(6)(ii)(A)(*2*) of this section (*Example 1*), the year 3 distribution is a subsequent disposition of the transferred IP to USS, a qualified domestic person. Pursuant to paragraph (f)(4)(i)(A) of this section, USS must recognize the amount of gain described in paragraph (f)(4)(ii) of this section. Because the year 3 distribution is described in section 311(b) the intangible property is not transferred basis property (as defined in section 7701(a)(43) and determined without regard to section 367(d), this section, and § 1.367(d)-1T), and therefore USS must recognize $100x gain under paragraph (f)(4)(ii)(B) of this section. The $100x gain amount equals the excess of the fair market value of the transferred IP on the date of the year 3 distribution ($100x) over USP's former adjusted basis in the property ($0). TFC, because of USS's gain recognition under paragraph (f)(4)(i)(A) of this section, reduces (but not below zero) the portion of its earnings and profits and gross income arising by reason of the year 3 distribution by the amount of such gain

under paragraph (f)(2)(i) of this section. Specifically, because the year 3 distribution requires USS to recognize $100x of gain, TFC reduces the portion of its earnings and profits and gross income that arise by reason of the year 3 distribution, which is $100x (the excess of the fair market value of the transferred IP ($100x) over TFC's adjusted basis in the transferred IP ($0)), by $100x (the amount of gain USS recognizes pursuant to paragraph (f)(4)(i)(A) of this section). As a result, after taking into account the reduction, TFC has no earnings and profits or gross income that arise by reason of the year 3 distribution. Furthermore, USS may establish an account receivable from TFC equal to $100x under paragraph (f)(2)(ii) of this section. Additionally, and as described in paragraph (f)(6)(ii)(A)(*2*) of this section (*Example 1*), pursuant to paragraph (f)(4)(i)(B)(*1*) of this section, USS recognizes a deemed payment for the portion of USS's taxable year during which TFC held the transferred IP, and the required adjustments described in paragraph (c)(2)(ii) of this section and § 1.367(d)-1T(c)(2) apply to this deemed payment. After taking these consequences into account, pursuant to paragraph (f)(4)(i)(B)(*2*) of this section, the transferred IP is no longer subject to section 367(d), this section, and § 1.367(d)-1T. Finally, pursuant to paragraph (f)(4)(iv)(B) of this section, USS's adjusted basis in the transferred IP is $100x, which is the fair market value of the transferred IP on the date of the year 3 distribution.

(C) ***Example 3: Qualified domestic person's basis in intangible property when intangible property is repatriated in an exchange described in section 351*** (*b*) — (*1*) *Facts.* The facts are the same as in paragraph (f)(6)(ii)(A) of this section (*Example 1*), except that the transfer of stock of TFC to USS in year 2 does not occur and instead of the year 3 liquidation, in year 3 TFC transfers the intangible property to USS (a qualified domestic person as defined in paragraph (f)(4)(iii) of this section) in an exchange described in section 351(b) pursuant to which TFC recognizes $50x of gain and USP recognizes $50x of gain under paragraph (f)(4)(i)(A) of this section (the year 3 exchange), which amount will reduce TFC's earnings and profits and gross income by $50x under paragraph (f)(2)(i) of this section.

(*2*) ***Analysis.*** Pursuant to paragraph (f)(4)(iv)(A) of this section, USS's adjusted basis in the intangible property is $50x, which is the amount equal to the lesser of USP's former adjusted basis in the property ($0) or TFC's adjusted basis in the property ($0), increased by the greater of the amount of gain recognized by USP under paragraph (f)(4)(i)(A) of this section ($50x) or the amount of gain recognized by TFC upon the year 3 exchange ($50x).

(D) ***Example 4: Repatriation as part of a series of related transactions culminating in transfer to a foreign corporation*** —

(*1*) ***Facts.*** The facts are the same as in paragraph (f)(6)(ii)(A)(*1*) of this section (*Example 1*), except that the year 3 liquidation occurs as part of a series of related transactions pursuant to which USS transfers the transferred IP that it receives from TFC to a related foreign corporation (FC1) in exchange for stock in FC1.

(*2*) ***Analysis.*** Because the year 3 liquidation occurs as part of a series of related transactions pursuant to which the transferred IP is ultimately contributed to a FC1, a foreign corporation, and because a foreign corporation is not a qualified domestic person pursuant to paragraph (f)(4)(iii) of this section, then, under paragraph (f)(4)(v)

of this section, the year 3 liquidation is not treated as a subsequent disposition described in paragraph (f)(4)(i) of this section, but is instead treated as a subsequent disposition described in paragraph (f)(3) of this section.

(E) ***Example 5: Repatriation as part of a series of related transactions culminating in transfer to a qualified domestic person*** —

(*1*) ***Facts.*** The facts are the same as in paragraph (f)(6)(ii)(B)(*1*) of this section (*Example 2*), except that the year 3 distribution occurs as part of a series of related transactions pursuant to which USS disposes of the transferred IP that it receives from TFC to USP.

(*2*) ***Analysis.*** Because the year 3 distribution occurs as part of a series of related transactions pursuant to which the transferred IP is distributed to USP, and because USP is a qualified domestic person pursuant to paragraph (f)(4)(iii) of this section, paragraph (f)(4)(v) of this section does not prevent paragraph (f)(4)(i) of this section from applying to the year 3 distribution. Accordingly, the consequences under section 367(d) of the year 3 distribution are the same as those described in paragraph (f)(6)(ii)(B)(*2*) of this section (*Example 2*), and the consequences of the subsequent disposition of the transferred IP by USS to USP are determined after applying paragraph (f)(4) of this section to the transfer of the transferred IP by TFC to USS.

(g) ***Special rules*** —

(1) ***Establishment of accounts receivable.*** For further guidance, *see* § 1.367(d)-1T(g)(1).

(2) ***Election to treat transfer as sale.*** For further guidance, *see* § 1.367(d)-1T(g)(2) introductory text.

(i) The intangible property transferred constitutes an operating intangible, as defined in § 1.367(a)-1(d)(6).

(ii) For further guidance, *see* § 1.367-1T(g)(2)(ii) through (g)(2)(iii)(D).

(iii)

(A)-(D) [Reserved]

(E) The transferred intangible property will be used in the active conduct of a trade or business outside of the United States within the meaning of § 1.367(a)-2 and will not be used in connection with the manufacture or sale of products in or for use or consumption in the United States.

(F) For further guidance, *see* § 1.367(d)-1T(g)(2)(iii)(F).

(3) ***Intangible property transferred from branch with previously deducted losses.***

(i) If income is required to be recognized under section 904(f)(3) and the regulations thereunder or under § 1.367(a)-6 upon the transfer of intangible property of a foreign branch that had previously deducted losses, then the income recognized under those sections with respect to that property is credited against amounts that would otherwise be required to be recognized with respect to that same property under paragraphs (c) through (f) of this section in either the current or future taxable years. The amount recognized under section 904(f)(3) or § 1.367(a)-6 with respect to the transferred intangible property is determined in accordance with the following formula:

$$\text{Loss recapture income} \times \frac{\text{gain from intangible property}}{\text{gain from all branch assets}}$$

(ii) For purposes of the formula in paragraph (g)(3)(i) of this section, the "loss recapture income" is the total amount required to be recognized by the U.S. transferor pursuant to section 904(f)(3) or § 1.367(a)-6. The "gain from intangible property" is the total amount of gain realized by the U.S. transferor pursuant to section 904(f)(3) and § 1.367(a)-6 upon the transfer of items of property that are subject to section 367(d). "Gain from intangible property" does not include gain realized with respect to intangible property by reason of an election under paragraph (g)(2) of this section. The "gain from all branch assets" is the total amount of gain realized by the transferor upon the transfer of items of property of the branch for which gain is realized.

(4) ***Coordination with section 482.*** For further guidance, *see* § 1.367(d)-1T(g)(4)

(5) ***Determination of fair market value.*** For further guidance, *see* § 1.367(d)-1T(g)(5).

(6) ***Anti-abuse rule.*** For further guidance, *see* § 1.367(d)-1T(g)(6).

(h) ***Related person.*** For further guidance, *see* § 1.367(d)-1T(h) introductory text through (h)(1).

(1) [Reserved]

(2) For further guidance, *see* § 1.367(d)-1T(h)(2) introductory text and (h)(2)(i).

(i) [Reserved]

(ii) Section 1563 applies (for purposes of section 267(f)) without regard to section 1563(b)(2).

(i) ***Effective date.*** For further guidance, *see* § 1.367(d)-1T(i).

(j) ***Applicability dates*** —

(1) ***In general.*** This section applies to transfers occurring on or after September 14, 2015, and to transfers occurring before September 14, 2015, resulting from entity classification elections made under § 301.7701-3 of this chapter that are filed on or after September 14, 2015. For transfers occurring before this section is applicable, *see* § 1.367(d)-1T as contained in 26 CFR part 1 revised as of April 1, 2016.

(2) ***Certain subsequent dispositions of intangible property.*** Paragraphs (c)(2)(ii), (e)(2)(ii), (f)(2) through (5), and (h)(2)(ii) of this section apply to subsequent dispositions of intangible property occurring on or after October 10, 2024. For subsequent dispositions of intangible property occurring before October 10, 2024, *see* § 1.367(d)-1T as contained in 26 CFR part 1 revised as of April 1, 2022.

[T.D. 9803, 81 FR 91029, Dec. 16, 2016, as amended by T.D. 9994, 89 FR 82165, Oct. 10, 2024]

§ 1.367(d)-1T Transfers of intangible property to foreign corporations (temporary).

(a) ***Purpose and scope.*** This section provides rules under section 367(d) concerning transfers of intangible property by U.S. persons to foreign corporations pursuant to section 351 or 361. Paragraph (b) of this section specifies the transfers that are subject to section 367(d) and the rules of this section, while paragraph (c) provides rules concerning the consequences of such a transfer. In general, the U.S. transferor will be treated as receiving annual payments contingent on productivity or use of the transferred property, over the useful life of the property (regardless of whether such payments are in fact made by the transferee). Paragraphs (d), (e), and (f) of this section provide rules for cases in which there

is a later direct or indirect disposition of the intangible property transferred. In general, deemed annual license payments will continue if a transfer is made to a related person, while gain must be recognized immediately if the transfer is to an unrelated person. Paragraph (g) of this section provides several special rules, including a rule allowing appropriate adjustments where deemed payments under section 367(d) are not in fact received by the U.S. transferor of the intangible property, and a rule providing for a limited election to treat certain transfers of intangible property as sales at fair market value (in lieu of applying the general useful life-contingent payment rule). In addition, paragraph (g) of this section provides rules coordinating the application of section 367(d) with other relevant Code sections. Paragraph (h) of this section defines the term *related person* for purposes of this section. Finally, paragraph (i) of this section provides the effective date of this section. For rules concerning transfers of intangible property pursuant to section 332, see § 1.367(a)-5T(e). For purposes of determining whether a U.S. person has made a transfer of intangible property that is subject to the rules of section 367(d), the rules of § 1.367(a)-1T(c) shall apply.

(b) [Reserved]

(c) ***Deemed payments upon transfer of intangible property to foreign corporation*** —

(1) ***In general.*** If a U.S. person transfers intangible property that is subject to section 367(d) and the rules of this section to a foreign corporation in an exchange described in section 351 or 361, then such person shall be treated as having transferred that property in exchange for annual payments contingent on the productivity or use of the property. Such person shall, over the useful life of the property, annually include in gross income an amount that represents an appropriate arms-length charge for the use of the property. The appropriate charge shall be determined in accordance with the provisions of section 482 and regulations thereunder. See § 1.482-2(d). The amount of the deemed payment thus calculated shall be reduced by any royalty or other periodic payment made or accrued by the transferee to an unrelated person during that taxable year for the right to use the intangible property. Amounts so included in the transferor's income shall be treated as ordinary income from sources within the United States. For purposes of computing estimated tax payments, deemed payments under this paragraph (c) shall be treated as received by the transferor on the last day of its taxable year.

(2) ***Required adjustments.*** The following adjustments shall be made with respect to a U.S. person's recognition of a deemed payment for the use of intangible property under this paragraph (c):

(i) For purposes of chapter 1 of the Code, the earnings and profits of the transferee foreign corporation shall be reduced by the amount of such deemed payment; and

(ii) For further guidance, *see* § 1.367(d)-1(c)(2)(ii).

(3) [Reserved]

(4) ***Blocked income.*** No deemed payment included in a taxpayer's income under paragraph (c)(1) of this section shall be treated as deferrable income for purposes of applying rules relating to blocked foreign income. See Revenue Ruling 74-351, 1974-2 C.B. 144.

(d) ***Subsequent transfer of stock of transferee foreign corporation to unrelated person*** —

(1) ***Treatment as sale of intangible property.*** If a U.S. person transfers intangible property that is subject to section 367(d) and the rules of this section to a foreign corporation in an exchange described in section 351 or 361, and within the useful life of the intangible property that U.S. transferor subsequently disposes of the stock of the transferee foreign corporation to a person that is not a

related person (within the meaning of paragraph (h) of this section), then the U.S. transferor shall be treated as having simultaneously sold the intangible property to the person acquiring the stock of the transferee foreign corporation. The U.S. transferor shall be required to recognize gain (but not loss) from sources within the United States in an amount equal to the difference between the fair market value of the transferred intangible property on the date of the subsequent disposition and the U.S. transferor's former adjusted basis in that property (determined as of the original transfer). If the U.S. transferor's disposition of the stock of the transferee foreign corporation is subject to U.S. tax other than by reason of this paragraph (d), then the amount of gain otherwise required to be recognized with respect to the stock of the transferee foreign corporation shall be reduced by the amount of gain recognized with respect to the intangible property pursuant to this paragraph (d).

(2) ***Required adjustments.*** If a U.S. person disposes of the stock of a transferee foreign corporation, and under paragraph (d)(1) of this section is treated as having simultaneously sold intangible property, then, for purposes of computing basis and earnings and profits, the person acquiring the stock of the transferee foreign corporation shall be deemed to have purchased that property at fair market value and to have immediately thereafter contributed it to the transferee foreign corporation in a transaction not covered by section 367(d). Therefore, for purposes of chapter 1 of the Code—

(i) The transferee foreign corporation's basis in the intangible property will be equal to its fair market value (as calculated for purposes of determining the gain required to be recognized by the U.S. transferor);

(ii) The acquiring person's basis in the stock of the transferee foreign corporation shall be determined as if no portion of the consideration given by the acquiring person for the stock is attributable to the intangible property; and

(iii) The earnings and profits of the transferee foreign corporation will not be affected by the transfer of its stock or the deemed transfer to it of the intangible property.

(e) ***Subsequent transfer of stock of transferee foreign corporation to related person*** —

(1) ***Transfer to related U.S. person treated as disposition of intangible property.*** If a U.S. person transfers intangible property that is subject to section 367(d) and the rules of this section to a foreign corporation in an exchange described in section 351 or 361 and, within the useful life of the transferred intangible property, that U.S. transferor subsequently transfers the stock of the transferee foreign corporation to U.S. persons that are related to the transferor within the meaning of paragraph (h) of this section, then the following rules shall apply:

(i) Each such related U.S. person shall be treated as having received (with the stock of the transferee foreign corporation) a right to receive a proportionate share of the contingent annual payments that would otherwise be deemed to be received by the U.S. transferor under paragraph (c) of this section.

(ii) Each such related U.S. person shall, over the useful life of the property, annually include in gross income a proportionate share of the amount that would have been included in the income of the U.S. transferor pursuant to paragraph (c) of this section. Such amounts shall be treated as ordinary income from sources within the United States.

(iii) The amount of income required to be recognized by the U.S. transferor pursuant to the rule of paragraph (d)(1) of this section shall be reduced to the amount determined in accordance with the following formula:

(d)(1) amount × (100% − (e) percentage)

For purposes of the above formula, the (*d*)(*1*) *amount* is the income that would otherwise be required to be recognized by the transferor corporation pursuant to paragraph (d)(1) of this section, and the (*e*) *percentage* is the percentage of the transferor corporation's total deemed rights to receive contingent annual payments under paragraph (c) of this section that is deemed to be transferred to related U.S. persons under the rules of this paragraph (e).

(iv) The rules of paragraphs (d) and (e) of this section shall be reapplied in the case of any later transfer of the stock of the transferee foreign corporation by a related U.S. person that received such stock in a transfer that was subject to the rules of this paragraph (e). For purposes of reapplying the rules of paragraphs (d) and (e), each such related U.S. person shall be treated as a U.S. transferor of intangible property to the transferee foreign corporation (to the extent of the interest attributed to such person pursuant to subdivision (i) of this paragraph (e)(1)).

(2) ***Required adjustments.*** If a U.S. person transfers stock of a transferee foreign corporation to a U.S. related person in a transaction that is subject to the rules of paragraph (e)(1) of this section, the following adjustments shall be made:

(i) For purposes of chapter 1 of the Code, the earnings and profits of the transferee foreign corporation shall be reduced by the amount of any payment deemed to be received by a related U.S. person under paragraph (e)(1)(ii) of this section;

(ii) For further guidance, *see* § 1.367(d)-1(e)(2)(ii);

(iii) For purposes of reapplying the rules of paragraph (d) and (e) of this section, if the related U.S. person is deemed to have received a right to contingent annual payments for the use of intangible property, then the U.S. related person shall be deemed to have held a proportionate share of the property with a basis equal to a proportionate share of the U.S. transferor's adjusted basis plus the gain, if any, recognized by the U.S. transferor on the earlier transfer of the stock to the U.S. related person, and then to have transferred that proportionate share of the property to the foreign corporation in a transfer subject to section 367(d); and

(iv) If the U.S. transferor is itself required to recognize gain upon the transfer by reason of the operation of paragraphs (d)(1) and (e)(1)(iii) of this section (because stock of the transferee foreign corporation is also transferred to unrelated persons), then those unrelated persons shall be deemed to have purchased a proportionate share of the transferred intangible property at fair market value and immediately contributed that property to the transferee foreign corporation, consistent with the general rule of paragraph (d)(2) of this section concerning transfers of stock to unrelated persons. Therefore, for purposes of chapter 1 of the Code—

(A) Each unrelated person's basis in the stock of the transferee foreign corporation shall be increased to the extent of the gain recognized by the U.S. transferor upon the deemed purchase of intangible property by that person; and

(B) The transferee foreign corporation will receive an increase in its basis in the transferred intangible property equal to the fair market value of that portion of the intangible property deemed to be contributed to the transferee foreign corporation by unrelated persons (as calculated for purposes of determining the gain required to be recognized by the U.S. transferor).

(3) ***Transfer to related foreign person not treated as disposition of intangible property.*** If a U.S. person transfers intangible property that is subject to section 367(d) and the rules of this section to a foreign corporation in an exchange described in section 351 or 361, and within the useful life of the transferred intangible property, that U.S. transferor subsequently transfers any of the stock of the transferee foreign corporation to one or more foreign persons that are related to the transferor within the meaning of paragraph (h) of this section, then the U.S. transferor shall continue to include in its income the deemed payments described in paragraph (c) of this section in the same manner as if the subsequent transfer of stock had not occurred. The rule of this paragraph (e)(3) shall not apply with respect to the subsequent transfer by the U.S. person of any of the remaining stock to any related U.S. person or unrelated person.

(4) ***Proportionate share.*** For purposes of this paragraph (e), any "proportionate share" shall be determined by reference to the fair market value (at the time of the original transfer) of the stock of the transferee foreign corporation that was transferred by the U.S. transferor and the fair market value of all of the stock of the transferee foreign corporation originally received by the U.S. transferor.

(f) ***Subsequent disposition of transferred intangible property by transferee foreign corporation*** —

(1) ***In general.*** If a U.S. person transfers intangible property that is subject to section 367(d) and the rules of this section to a foreign corporation in an exchange described in section 351 or 361, and within the useful life of the intangible property that transferee foreign corporation subsequently disposes of the intangible property to an unrelated person, then—

(i) The U.S. transferor of the intangible property (or any person treated as such pursuant to paragraph (e)(1) of this section) shall be required to recognize gain from U.S. sources (but not loss) in an amount equal to the difference between the fair market value of the transferred intangible property on the date of the subsequent disposition and the U.S. transferor's former adjusted basis in that property (determined as of the original transfer); and

(ii) The U.S. transferor shall be required to recognize a deemed payment under paragraph (c) of this section for that part of its taxable year that the intangible property was held by the transferee foreign corporation and thereafter shall not be required to recognize any further deemed payments under paragraph (c) or (e)(1) of this section with respect to the transferred intangible property disposed of by the transferee foreign corporation.

(2) ***Required adjustments.*** For further guidance, *see* § 1.367(d)-1(f)(2) through (6).

(3)-(6) [Reserved]

(g) ***Special rules*** —

(1) ***Establishment of accounts receivable*** —

(i) ***In general.*** If a U.S. person is required to recognize income under the provisions of paragraph (c), (e), or (f) of this section, and the amount deemed to be received is not actually paid by the transferee foreign corporation, then the U.S. person may establish an account receivable from the transferee foreign corporation equal to the amount deemed paid that was not actually paid. A separate account receivable must be established for each taxable year in which payments deemed to be received are not actually made. Payments received from the transferee foreign corporation must be designated as payments upon a particular account and must be deducted from that account. Accounts receivable under this paragraph (g)(1) may be established and

paid without further U.S. income tax consequences to the U.S. transferor or the transferee foreign corporation. No interest shall be paid or accrued on an account receivable created under this paragraph (g)(1), nor shall any bad debt deduction be allowed under section 166 with respect to any failure to receive payment on an account.

(ii) ***Unpaid receivable treated as contribution to capital.*** If any portion of an account receivable established under this paragraph (g)(1) remains unpaid as of the last day of the third taxable year following the taxable year to which the account relates, then—

(A) Such portion shall be deemed to have been paid on that date; and

(B) The U.S. person shall be deemed to have contributed an equivalent amount to the capital of the foreign corporation, and the U.S. person's basis in the stock of the foreign corporation shall, therefore, be increased by that amount.

(2) ***Election to treat transfer as sale.*** A U.S. person that transfers intangible property to a foreign corporation in a transaction subject to section 367(d) may elect to recognize income in accordance with the rules of this paragraph (g)(2), if—

(i) [Reserved]

(ii) The transfer of the intangible property is either legally required by the government of the country in which the transferee corporation is organized as a condition of doing business in that country, or compelled by a genuine threat of immediate expropriation by the foreign government; or

(iii)

(A) The U.S. person transferred the intangible property to the foreign corporation within three months of the organization of that corporation and as part of the original plan of capitalization of that corporation;

(B) Immediately after the transfer, the U.S. person owns at least 40 percent but not more than 60 percent of the total voting power and total value of the stock of the transferee foreign corporation;

(C) Immediately after the transfer, at least 40 percent of the total voting power and total value of the stock of the transferee foreign corporation is owned by foreign persons unrelated to the U.S. person;

(D) Intangible property constitutes at least 50 percent of the fair market value of the property transferred to the foreign corporation by the U.S. transferor; and

(E) [Reserved]

(F) A person that makes the election under this paragraph (g)(2) shall not be subject to the provisions of paragraphs (c) through (f) of this section. Such person shall instead recognize in the year of the transfer ordinary income from sources within the United States in an amount equal to the difference between the fair market value of the intangible property transferred and its adjusted basis. A U.S. person shall make an election under this paragraph (g)(2) by notifying the Internal Revenue Service of the election in accordance with the requirements of section 6038B and regulations thereunder, and subsequently including the appropriate amounts in gross income in a timely filed tax return for the year of the transfer.

(3) [Reserved]

(4) *Coordination with section 482* —

(i) ***In general.*** Section 367(d) and the rules of this section shall not apply in the case of an actual sale or license of intangible property by a U.S. person to a foreign corporation. If an adjustment under section 482 is required with respect to an actual sale or license of intangible property, then section 367(d) and the rules of this section shall not apply with respect to the required adjustment. If a U.S. person transfers intangible property to a related foreign corporation without consideration, or in exchange for stock or securities of the transferee in a transaction described in sections 351 or 361, no sale or license subject to adjustment under section 482 will be deemed to have occurred. Instead, the U.S. person shall be treated as having made a transfer of the intangible property that is subject to section 367(d).

(ii) ***Sham licenses and sales.*** For purposes of paragraph (g)(4)(i) of this section, a purported sale or license of intangible property may be disregarded, and treated as a transfer subject to section 367(d) and the rules of this section, if—

(A) The purported sale or license is made to a foreign corporation in which the transferor holds (or is acquiring) an interest; and

(B) The terms of the purported sale or license differ so greatly from the economic substance of the transaction or the terms that would obtain between unrelated persons that the purported sale or license is a sham.

The terms of a purported sale or license, for purposes of applying the rule of this paragraph (g)(4)(ii), shall be determined by reference not only to the nominal terms of the agreement but also to the actual practice of the parties under that agreement. A sale or license of intangible property shall not be disregarded under this paragraph (g)(4)(ii) solely because other property of an integrated business is simultaneously transferred to the foreign corporation by the U.S. transferor in a transaction described in section 367(a)(1) or any statutory or regulatory exception to section 367(a)(1).

(5) ***Determination of fair market value.*** For purposes of determining the gain required to be recognized immediately under paragraph (d), (f), or (g)(2) of this section, the fair market value of transferred property shall be the single payment arm's-length price that would be paid for the property by an unrelated purchaser determined in accordance with the principles of section 482 and regulations thereunder. The allocation of a portion of the purchase price to intangible property agreed to by the parties to the transaction shall not necessarily be controlling for this purpose.

(6) ***Anti-abuse rule.*** If a U.S. person—

(i) Transfers intangible property to a domestic corporation with a principal purpose of avoiding the effect of section 367(d) and the rules of this section; and

(ii) Thereafter transfers the stock of that domestic corporation to a related foreign corporation,

then solely for purposes of section 367(d) that U.S. person shall be treated as having transferred the intangible property directly to the foreign corporation. A U.S. person shall be presumed to have transferred intangible property for a principal purpose of avoiding the effect of section 367(d) if the property is transferred to the domestic corporation less than two years prior to the transfer of the stock of that domestic corporation to a foreign corporation. The presumption created by the previous sentence may be rebutted by clear evidence that the subsequent transfer of the stock of

the domestic transferee corporation was not contemplated at the time the intangible property was transferred to that corporation and that avoidance of section 367(d) and the rules of this section was not a principal purpose of the transaction. A transfer may have more than one principal purpose.

(h) ***Related person.*** For purposes of this section, persons are considered to be related if—

(1) They are partners or partnerships described in section 707(b)(1) of the Code; or

(2) They are related within the meaning of section 267 (b), (c), and (f) of the Code, except that—

(i) "10 percent or more" shall be substituted for "more than 50 percent" each place it appears; and

(ii) For further guidance, *see* § 1.367(d)-1(h)(2)(ii).

(i) ***Effective date.*** Except as specifically provided to the contrary elsewhere in this section, this section applies to transfers occurring after December 31, 1984.

[T.D. 8087, 51 FR 17953, May 16, 1986, as amended by T.D. 8770, 63 FR 33568, June 19, 1998; T.D. 9803, 81 FR 91030, Dec. 16, 2016; T.D. 9994, 89 FR 82169, Oct. 10, 2024]

§ 1.367(e)-0 Outline of §§ 1.367(e)-1 and 1.367(e)-2.

This section lists captioned paragraphs contained in §§ 1.367(e)-1 and 1.367(e)-2 as follows:

§ 1.367(e)-1 Distributions described in section 367(e)(1).

(a) Purpose and scope.

(b) Gain recognition.

(1) General rule.

(2) Stock owned through partnerships, disregarded entities, trusts, and estates.

(3) Gain computation.

(4) Treatment of distributee.

(c) Nonrecognition of gain.

(d) Determining whether distributees are qualified U.S. persons.

(1) General rule—presumption of foreign status.

(2) Non-publicly traded distributing corporations.

(3) Publicly traded distributing corporations.

(i) Five percent shareholders.

(ii) Other distributees.

(4) Qualified exchange or other market.

(e) Reporting under section 6038B.

(f) Effective date.

§ 1.367(e)-2 Distributions described in section 367(e)(2).

(a) Purpose and scope.

(1) In general.

(2) Nonapplicability of section 367(a).

(b) Distribution by a domestic corporation.

(1) General rule.

(i) Recognition of gain and loss.

(ii) Operating rules.

(A) General rule.

(B) Overall loss limitation.

(*1*) Overall loss limitation rule.

(*2*) Example.

(C) Special rules for built-in gains and losses attributable to property received in liquidations and reorganizations.

(iii) Distribution of partnership interest.

(A) General rule.

(B) Gain or loss calculation. [Reserved]

(C) Basis adjustments.

(D) Publicly traded partnerships.

(2) Exceptions.

(i) Distribution of property used in a U.S. trade or business.

(A) Conditions for nonrecognition.

(B) Qualifying property.

(C) Required statement.

(*1*) Declaration and certification.

(*2*) Property description.

(*3*) Distributee identification.

(*4*) Treaty benefits waiver.

(*5*) Statute of limitations extension.

(D) Failure to file statement.

(E) Operating rules.

(*1*) Gain or loss recognition by the foreign distributee corporation.

(*i*) Taxable dispositions.

(*ii*) Other triggering events.

(*2*) Gain recognition by the domestic liquidating corporation.

(*i*) General rule.

(*ii*) Amended return.

(*iii*) Interest.

(*iv*) Joint and several liability.

(*3*) Schedule for property no longer used in a U.S. trade or business.

(*4*) Nontriggering events.

(*i*) Conversions, certain exchanges, and abandonment.

(*ii*) Amendment to Master Property Description

(*5*) Nontriggering transfers to qualified transferees.

(ii) Distribution of certain U.S. real property interests.

(iii) Distribution of stock of domestic subsidiary corporations.

(A) Conditions for nonrecognition.

(B) Exceptions when the liquidating corporation is a U.S. real property holding corporation.

(C) Anti-abuse rule.

(D) Required statement.

(3) Other consequences.

(i) Distributee basis in property.

(ii) Reporting under section 6038B.

(iii) Other rules.

(c) Distribution by a foreign corporation.

(1) General rule—gain and loss not recognized.

(2) Exceptions.

(i) Property used in a U.S. trade or business.

(A) General rule.

(B) Ten-year active U.S. business exception.

(C) Required statement.

(D) Operating rules.

(ii) Property formerly used in a U.S. trade or business.

(3) Other consequences.

(i) Distributee basis in property.

(ii) Other rules.

(d) Anti-abuse rule.

(e) Effective date.

[T.D. 8834, 64 FR 43075, Aug. 9, 1999]

§ 1.367(e)-1 Distributions described in section 367(e)(1).

(a) ***Purpose and scope.*** This section provides rules for recognition (and nonrecognition) of gain by a domestic corporation (distributing corporation) on a distribution of stock or securities of a corporation (controlled corporation) to foreign persons that is described in section 355. Paragraph (b) of this section contains the general rule that gain is recognized on the distribution to the extent stock or securities of controlled are distributed to foreign persons. Paragraph (c) of this section provides an exception to the gain recognition rule for distributions of stock or securities of a domestic corporation. Paragraph (d) of this section contains rules for determining whether distributees of stock or securities in a section 355 distribution are qualified U.S. persons. Paragraph (e) of this section provides cross-references. Finally, paragraph (f) of this section specifies the effective date of this section.

(b) ***Gain recognition*** —

(1) ***General rule.*** If a domestic corporation makes a distribution of stock or securities of a corporation that qualifies for nonrecognition under section 355 to a person who is not a qualified U.S. person, then, except as provided in paragraph (c) of this section, the distributing corporation shall recognize gain (but not loss) on the distribution under section 367(e)(1). A distributing corporation shall not recognize gain under this section with respect to a section 355 distribution to a qualified U.S. person. For purposes of this section, a qualified U.S. person is—

(A) A citizen or resident of the United States; or

(B) A domestic corporation.

(2) ***Stock owned through partnerships, disregarded entities, trusts, and estates.*** For purposes of this section, distributing corporation stock or securities owned by or for a partnership (whether foreign or domestic) are owned proportionately by its partners. A partner's proportionate share of the stock or securities of the distributing corporation shall be equal to the partner's distributive share of the gain that would have been recognized had the partnership sold the stock or securities (at a taxable gain) immediately before the distribution. The partner's distributive share of gain shall be determined under the rules and principles of sections 701 through 761 and the regulations thereunder. For purposes of this section, stock or securities owned by or for an entity that is disregarded as an entity separate from its owner (disregarded entity) under § 301.7701-3 of this chapter are owned directly by the owner of such disregarded entity. For purposes of this section, stock or securities owned by or for a trust or estate (whether foreign or domestic) are owned proportionately by the persons who would be treated as owning such stock or securities under section 318(a)(2)(A) and (B). In applying section 318(a)(2)(B)(i), if a trust includes interests that are not actuarially ascertainable, all such interests shall be considered to be owned by foreign persons. In a case where an interest holder in a partnership, a disregarded entity, trust, or estate that (directly or indirectly) owns stock of the distributing corporation is itself a partnership, disregarded entity, trust, or estate, the rules of this paragraph (b)(2) apply to such interest holder.

(3) ***Gain computation.*** Gain recognized under paragraph (b)(1) of this section shall be equal to the excess of the fair market value of the stock or securities distributed to persons who are not qualified U.S. persons (determined as of the time of the distribution) over the distributing corporation's adjusted basis in the stock or securities distributed to such distributees. For purposes of the preceding sentence, the distributing corporation's adjusted basis in each unit of each class of stock or securities distributed to a distributee shall be equal to the distributing corporation's total adjusted basis in all of the units of the respective class of stock or securities owned immediately before the distribution, divided by the total number of units of the class of stock or securities owned immediately before the distribution.

(4) ***Treatment of distributee.*** If the distribution otherwise qualifies for nonrecognition under section 355, each distributee shall be considered to have received stock or securities in a distribution qualifying for nonrecognition under section 355, even though the distributing corporation may recognize gain on the distribution under this section. Thus, the distributee shall not be considered to have received a distribution described in section 301 or a distribution in an exchange described in section 302(b) upon the receipt of the stock or securities of the controlled corporation, and the domestic distributing corporation shall have no withholding responsibilities under section 1441. Except where section 897(e)(1) and the regulations thereunder cause gain to be recognized by the distributee, the basis of the distributed domestic or foreign corporation stock in the hands of the foreign distributee shall be the basis of the distributed stock determined under section 358 without any increase for any gain recognized by the domestic corporation on the distribution.

(c) ***Nonrecognition of gain.*** A domestic distributing corporation shall not recognize gain under paragraph (b)(1) of this section on the distribution of stock or securities of a domestic corporation.

(d) ***Determining whether distributees are qualified U.S. persons*** —

(1) ***General rule—presumption of foreign status.*** Except as provided in paragraphs (d)(2) and (3) of this section, all distributions of stock or securities in a distribution described in section 355 in which the distributing corporation is domestic and the controlled corporation is foreign are presumed to be to persons who are not qualified U.S. persons, as defined in paragraph (b)(1) of this section.

(2) ***Non-publicly traded distributing corporations.*** If the class of stock or securities of the distributing corporation (in respect to which stock or securities of the controlled corporation are distributed) is not regularly traded on a qualified exchange or other market (as defined in paragraph (d)(4) of this section), then the distributing corporation may only rebut the presumption contained in paragraph (d)(1) of this section by identifying the qualified U.S. persons to which controlled corporation stock or securities were distributed and by certifying the amount of stock or securities that were distributed to the qualified U.S. persons.

(3) ***Publicly traded distributing corporations.*** If the class of stock or securities of the distributing corporation (in respect to which stock or securities of the controlled corporation are distributed) is regularly traded on a qualified exchange or other market (as defined in paragraph (d)(4) of this section), then the distributing corporation may only rebut the presumption contained in paragraph (d)(1) of this section as described in this paragraph (d)(3).

(i) ***Five percent shareholders.*** A publicly traded distributing corporation may only rebut the presumption contained in paragraph (d)(1) of this section with respect to distributees that are five percent shareholders of the class of stock or securities of the distributing corporation (in respect to which stock or securities of the controlled corporation are distributed) by identifying the qualified U.S. persons to which controlled corporation stock or securities were distributed

and by certifying the amount of stock or securities that were distributed to the qualified U.S. persons. A five percent shareholder is a distributee who is required under U.S. securities laws to file with the Securities and Exchange Commission (SEC) a Schedule 13D or 13G under 17 CFR 240.13d-1 or 17 CFR 240.13d-2, and provide a copy of same to the distributing corporation under 17 CFR 240.13d-7.

(ii) ***Other distributees.*** A distributing corporation that has made a distribution described in paragraph (d)(3) of this section may rebut the presumption contained in paragraph (d)(1) of this section with respect to distributees that are not five percent shareholders (as defined in this paragraph (d)(3)) by relying on and providing a reasonable analysis of shareholder records and other relevant information that demonstrates a number of distributees that are qualified U.S. persons. Taxpayers may rely on such analysis, unless it is subsequently determined that there are actually fewer distributees who are qualified U.S. persons than were demonstrated in the analysis.

(4) ***Qualified exchange or other market.*** For purposes of paragraph (d) of this section, the term qualified exchange or other market means, for any taxable year—

(i) A national securities exchange which is registered with the SEC or the national market system established pursuant to section 11A of the Securities Exchange Act of 1934 (15 U.S.C. 78f); or

(ii) A foreign securities exchange that is regulated or supervised by a governmental authority of the country in which the market is located and which has the following characteristics—

(A) The exchange has trading volume, listing, financial disclosure, and other requirements designed to prevent fraudulent and manipulative acts and practices, to remove impediments to and perfect the mechanism of a free and open market, and to protect investors; and the laws of the country in which the exchange is located and the rules of the exchange ensure that such requirements are actually enforced; and

(B) The rules of the exchange ensure active trading of listed stocks.

(e) ***Cross-references.*** For additional rules relating to the distribution of the stock of a foreign corporation by a domestic corporation, see §§ 1.367(a)-3(e), 1.367(a)-7, 1.367(b)-5, and 1.1248(f)-1 through 1.1248(f)-3. See the regulations under section 6038B for reporting requirements for distributions under this section.

(f) ***Effective/applicability date.*** This section shall be applicable to distributions occurring in taxable years ending after August 8, 1999.

[T.D. 8834, 64 FR 43076, Aug. 9, 1999; 65 FR 14467, Mar. 3, 2000, as amended by T.D. 9614, 78 FR 17041, Mar. 19, 2013; T.D. 9760, 81 FR 15169, Mar. 22, 2016]

§ 1.367(e)-2 Distributions described in section 367(e)(2).

(a) ***Purpose and scope*** —

(1) ***In general.*** This section provides rules requiring gain and loss recognition by a corporation on its distribution of property to a foreign corporation in a complete liquidation described in section 332. Paragraph (b)(1) of this section contains the general rule that gain and loss are recognized when a domestic corporation makes a distribution of property in complete liquidation under section 332 to a foreign corporation that meets the stock ownership requirements of section 332(b) with respect to stock in the domestic corporation. Paragraph (b)(2) of this section provides the only exceptions to

the gain and loss recognition rule of paragraph (b)(1) of this section. Paragraph (b)(3) of this section refers to other consequences of distributions described in paragraphs (b)(1) and (2) of this section. Paragraph (c)(1) of this section contains the general rule that gain and loss are not recognized when a foreign corporation makes a distribution of property in complete liquidation under section 332 to a foreign corporation that meets the stock ownership requirements of section 332(b) with respect to stock in the foreign liquidating corporation. Paragraph (c)(2) of this section provides the only exceptions to the nonrecognition rule of paragraph (c)(1) of this section. Paragraph (c)(3) of this section refers to other consequences of distributions described in paragraphs (c)(1) and (2) of this section. Paragraph (d) of this section contains an anti-abuse rule. Paragraph (e) of this section provides rules regarding failures to file statements or other documents required under this section or failures to comply with the requirements of this section. Paragraph (f) of this section provides relief for certain failures to file or comply. Finally, paragraph (g) of this section specifies the effective/applicability dates for the rules of this section. The rules of this section are issued pursuant to the authority conferred by section 367(e)(2).

(2) ***Nonapplicability of section 367(a).*** Section 367(a) shall not apply to a complete liquidation described in section 332 by a domestic liquidating corporation into a foreign corporation that meets the stock ownership requirements of section 332(b).

(b) ***Distribution by a domestic corporation*** —

(1) ***General rule*** —

(i) ***Recognition of gain and loss.*** If a domestic corporation (domestic liquidating corporation) makes a distribution of property in complete liquidation under section 332 to a foreign corporation (foreign distributee corporation) that meets the stock ownership requirements of section 332(b) with respect to stock in the domestic liquidating corporation, then—

(A) Section 337(a) and (b)(1) will not apply; and

(B) The domestic liquidating corporation will recognize gain or loss on the distribution of property to the foreign distributee corporation, except as provided in paragraph (b)(2) of this section.

(ii) ***Operating rules*** —

(A) ***General rule.*** Except as provided in paragraphs (b)(1)(ii) (B) and (C) of this section, the rules contained in section 336 will apply to the gain and loss recognized pursuant to this section.

(B) ***Overall loss limitation*** —

(*1*) ***Overall loss limitation rule.*** Loss in excess of gain from the distribution shall not be recognized. If realized losses exceed recognized losses, the losses shall be recognized on a pro rata basis with respect to the realized loss attributable to each distributed loss asset in the category of assets (i.e., capital or ordinary) to which the realized but unrecognized loss relates. For additional limitations on the recognition of losses, see, e.g., section 1211.

(*2*) ***Example.*** The following example illustrates the overall loss limitation rule, the pro rata loss allocation method, and the general capital loss limitation rule in section 1211(a):

Example. F, a foreign corporation, owns all stock of US1, a domestic corporation. US1 owns the following capital assets: Asset A, which has a fair market value of $100 and an adjusted basis of $40; Asset B, which has a fair market value of $60 and an adjusted basis of $80; and, Asset C, which has a fair market value of $40 and an adjusted basis of $100. US1 also owns the following business assets that will generate ordinary income (or loss) upon disposition: Asset D, which has a fair market value of $100 and an adjusted basis of $40; Asset E, which has a fair market value of $60 and an adjusted basis of $100; and, Asset F, which has a fair market value of $40 and an adjusted basis of $80. US1 liquidates into F and distributes all assets to F in liquidation. None of the assets qualify for nonrecognition under paragraph (b)(2) of this section. US1's total realized capital loss is $80, but it may only recognize $60 of that loss. See section 1211(a). US1's total realized ordinary loss is $80, but it may only recognize $60 of that loss. See paragraph (b)(1)(ii)(B)(*1*) of this section. US1 will allocate $15 (60 × .25) of the recognized capital loss to Asset B and will allocate the remaining $45 (60 × .75) of recognized capital loss to Asset C. See paragraph (b)(1)(ii)(B)(*1*) of this section. US1 will allocate $30 (60 × .50) of the recognized ordinary loss to Asset E and will allocate the remaining $30 (60 × .50) to Asset F. See paragraph (b)(1)(ii)(B)(*1*) of this section.

(C) ***Special rules for built-in gains and losses attributable to property received in liquidations and reorganizations.*** Built-in losses attributable to property received in a transaction described in sections 332 or 361 (during the two-year period ending on the date of the distribution in liquidation covered by this section) shall not offset gain from property not received in the same transaction. Built-in gains attributable to property received in a transaction described in sections 332 or 361 (during the two-year period ending on the date of the distribution in liquidation covered by this section) shall not be offset by a loss from property not received in the same transaction. Built-in gain or loss is that amount of gain or loss on property that existed at the time the domestic liquidating corporation acquired such property. See sections 336(d) and 382 for additional limitations on the recognition of losses.

(iii) ***Distribution of partnership interest*** —

(A) ***General rule.*** If a domestic corporation distributes a partnership interest (whether foreign or domestic) in a distribution described in paragraph (b)(1)(i) of this section, then for purposes of applying this section the domestic liquidating corporation shall be treated as having distributed a proportionate share of partnership property. Accordingly, the applicability of the recognition rules of paragraphs (b)(1) (i) and (ii) of this section, and of any exception to recognition provided in this section shall be determined with reference to the partnership property, rather than to the partnership interest itself. Where the partnership property includes an interest in a lower-tier partnership, the applicability of any exception with respect to the interest in the lower-tier partnership shall be determined with reference to the lower-tier partnership property. In the case of multiple tiers of partnerships, the applicability of an exception shall be determined with reference to the property of each partnership, applying the rule contained in the preceding sentence. A domestic liquidating corporation's proportionate share of partnership property shall be determined under the rules and principles of sections 701 through 761 and the regulations thereunder.

(B) ***Gain or loss calculation.*** [Reserved]

(C) ***Basis adjustments.*** The foreign distributee corporation's basis in the distributed partnership interest shall be equal to the domestic liquidating corporation's basis in such partnership interest immediately prior to the distribution, increased by the amount of gain and reduced by the amount of loss recognized by the domestic liquidating corporation on the distribution of the partnership interest. Solely for purposes of sections 743 and 754, the foreign distributee corporation shall be treated as having purchased the partnership interest for an amount equal to the foreign corporation's adjusted basis therein.

(D) ***Publicly traded partnerships.*** The distribution by a domestic liquidating corporation of an interest in a publicly traded partnership that is treated as a corporation for U.S. income tax purposes under section 7704(a) shall not be subject to the rules of paragraphs (b)(1)(iii)(A) and (B) of this section. Instead, the distribution of such an interest shall be treated in the same manner as a distribution of stock. Thus, a transfer of an interest in a publicly traded partnership that is treated as a U.S. corporation for U.S. income tax purposes shall be treated in the same manner as stock in a domestic corporation, and a transfer of an interest in a publicly traded partnership that is treated as a foreign corporation for U.S. income tax purposes shall be treated in the same manner as stock in a foreign corporation.

(2) ***Exceptions —***

(i) ***Distribution of property used in a U.S. trade or business —***

(A) ***Conditions for nonrecognition.*** A domestic liquidating corporation shall not recognize gain or loss under paragraph (b)(1) of this section on its distribution of property (including inventory) used by the domestic liquidating corporation in the conduct of a trade or business within United States, if—

(*1*) The foreign distributee corporation, immediately thereafter and for the ten-year period beginning on the date of the distribution of such property, uses the property in the conduct of a trade or business within the United States;

(*2*) The domestic liquidating corporation attaches the statement described in paragraph (b)(2)(i)(C) of this section to its timely filed U.S. income tax returns for the taxable years that include the distributions in liquidation; and

(*3*) The foreign distributee corporation attaches a copy of the property description contained in paragraph (b)(2)(i)(C)(*2*) of this section to its timely filed U.S. income tax returns for the tax year that includes the date of distribution.

(B) ***Qualifying property.*** Property is used by the foreign distributee corporation in the conduct of a trade or business in the United States within the meaning of this paragraph (b)(2)(i) only if all income from the use of the property and all income or gain from the sale or exchange of the property would be subject to taxation under section 882(a) as effectively connected income. Also, stock held by a dealer as inventory or for sale in the ordinary course of its trade or business shall be treated as inventory and not as stock in the hands of both the domestic liquidating corporation and the distributee foreign corporation. Notwithstanding the foregoing, the exception provided in this paragraph (b)(2)(i) shall not apply to intangibles described in section 367(d)(4).

(C) ***Required statement.*** The statement required by paragraph (b)(2)(i)(A) of this section shall be entitled "Required Statement under § 1.367(e)-2(b)(2)(i)" and shall be prepared by the domestic liquidating corporation and signed under penalties of perjury by an authorized officer of the domestic liquidating corporation and by an authorized officer of the foreign distributee corporation. The statement shall contain the following items:

(*1*) A declaration that the distribution to the foreign distributee corporation is one to which the rules of this paragraph (b)(2)(i) apply and a certification that the domestic liquidating corporation and the foreign distributee corporation agree to comply with all the conditions and requirements of this section, including, as provided in paragraph (e)(4)(ii)(B) of this section, to treat a failure to comply (as described in paragraph (e)(4)(i) of this section) as extending the period of limitations on assessment of tax for the taxable year in which gain is required to be reported.

(*2*) ***Property description.*** A description of all property distributed by the domestic liquidating corporation (irrespective of whether the property qualifies for nonrecognition). Such description shall be entitled "Master Property Description" and shall identify the property that continues to be used by the foreign distributee corporation in the conduct of a trade or business within the United States, including the location, adjusted basis, estimated fair market value, a summary of the method (including appraisals if any) used for determining such value, and the date of distribution of such items of property. The description shall also identify the property excepted from gain recognition under paragraphs (b)(2)(ii) and (iii) of this section.

(*3*) ***Distributee identification.*** An identification of the foreign distributee corporation, including its name and address, taxpayer identification number, residence, and place of incorporation.

(*4*) ***Treaty benefits waiver.*** With respect to property entitled to nonrecognition pursuant to this paragraph (b)(2)(i), a declaration by the foreign distributee corporation that it irrevocably waives any right under any treaty (whether or not currently in force at the time of the liquidation) to sell or exchange any item of such property without U.S. income taxation or at a reduced rate of taxation, or to derive income from the use of any item of such property without U.S. income taxation or at a reduced rate of taxation.

(*5*) ***Statute of limitations extension.*** An agreement by the domestic liquidating corporation and the foreign distributee corporation to extend the statute of limitations on assessments and collections (under section 6501) with respect to the domestic liquidating corporation on the distribution of each item of property until three years after the date on which all such items of property have ceased to be used in a trade or business within the United States, but in no event shall the extension be for a period longer than 13 years from the filing of the original U.S. income tax return for the taxable year of the last distribution of any such item of property. The agreement to extend the statute of limitation shall be executed on a Form 8838, "Consent to Extend the Time to Assess Tax Under Section 367—Gain Recognition Agreement."

(D) ***Failure to file statement.*** If a domestic liquidating corporation that would otherwise qualify for nonrecognition on the distribution of property under this paragraph (b)(2)(i) fails to file the statement described in paragraph (b)(2)(i)(C) of this section or files a statement that

does not comply with the requirements of paragraph (b)(2)(i)(C) of this section, the Commissioner may treat the domestic liquidating corporation as if it had claimed nonrecognition under this paragraph (b)(2)(i) and met all the requirements of paragraph (b)(2)(i)(C) of this section, if such treatment is necessary to prevent the domestic liquidating corporation or the foreign distributee corporation from otherwise deriving a tax benefit by such failure.

(E) ***Operating rules.*** By the domestic liquidating corporation's claiming nonrecognition under this paragraph (b)(2)(i) and filing a statement described in paragraph (b)(2)(i)(C) of this section, the domestic liquidating corporation and the foreign distributee corporation agree to be subject to the rules of this paragraph (b)(2)(i)(E).

(*1*) ***Gain or loss recognition by the foreign distributee corporation*** —

(*i*) ***Taxable dispositions.*** If, within the ten-year period from the date of a distribution of qualifying property, the foreign distributee corporation disposes of any qualifying property in a transaction subject to tax under section 882(a), then the foreign distributee corporation shall recognize such gain (or loss) and properly report it on a timely filed U.S. income tax return. If the foreign distributee corporation recognizes gain (or loss) under this paragraph (b)(2)(i)(E)(*1*)(*i*) and properly reports such gain (or loss) on its U.S. income tax return, then the domestic liquidating corporation shall not recognize gain attributable to such property under paragraph (b)(2)(i)(E)(*2*) of this section.

(*ii*) ***Other triggering events.*** If, within the ten-year period from the date of distribution, any qualifying property ceases to be used by the foreign distributee corporation in the conduct of a trade or business in the United States (other than by reason of a taxable disposition described in paragraph (b)(2)(i)(E)(*1*)(*i*) of this section, a nontriggering event described in paragraph (b)(2)(i)(E)(*4*) of this section, or a nontriggering transfer described in paragraph (b)(2)(i)(E)(*5*) of this section), then the foreign distributee corporation shall recognize gain (but not loss) attributable to such property and properly report it on a timely filed U.S. income tax return. If the foreign distributee corporation properly reports gain under this paragraph (or if such qualified property is not gain property on the date that it ceases to be used in the foreign distributee corporation's U.S. trade or business), then the domestic liquidating corporation shall not recognize gain attributable to such property under paragraph (b)(2)(i)(E)(*2*) of this section. The gain recognized under this paragraph (b)(2)(i)(E)(*1*)(*ii*) shall be an amount equal to the fair market value of the property on the date it ceases to be used in the foreign distributee corporation's U.S. trade or business less the foreign distributee corporation's adjusted basis in such property.

(*2*) ***Gain recognition by the domestic liquidating corporation*** —

(*i*) ***General rule.*** If, within the ten-year period from the date of distribution, any qualifying property described in paragraph (b)(2)(i)(B) of this section ceases to be used by the foreign distributee corporation (or a qualifying transferee described in paragraph (b)(2)(i)(E)(*5*) of this section) in the conduct of a trade or business in the United States for any reason (including but not limited to the sale or exchange of such property or the removal of the property from conduct of the trade or business), then, except to the extent gain (or loss) is recognized

under paragraph (b)(1)(i)(E)(*1*) of this section, the domestic liquidating corporation shall recognize the gain (but not loss) realized but not recognized upon the initial distribution of such item of property. The domestic liquidating corporation shall recognize gain pursuant to this paragraph (b)(2)(i)(E)(*2*)(*i*) on the amended U.S. income tax return described in paragraph (b)(2)(i)(E)(*2*)(*ii*) of this section.

(*ii*) ***Amended return.*** If gain recognition is required pursuant to paragraph (b)(2)(i)(E)(*2*)(*i*) of this section, the foreign distributee corporation shall file an amended U.S. income tax return on behalf of the domestic liquidating corporation for the year of the distribution of such item of property. On the amended return, the domestic liquidating corporation may use any losses (or credits) existing in the year of the distribution to offset the gain recognized pursuant to paragraph (b)(2)(i)(E)(*2*)(*i*) of this section (or the tax thereon), provided that the losses (or credits) were otherwise available in the year distribution and were not used in another year. The amended return shall be filed no later than the due date (including extensions) for the return of the foreign distributee corporation for the taxable year in which the property ceases to be used by the foreign distributee corporation in the conduct of a trade or business in the United States.

(*iii*) ***Interest.*** If the domestic liquidating corporation owes additional tax pursuant to paragraph (b)(2)(i)(E)(*2*)(*i*) of this section for the year of liquidation, then interest must be paid on that amount at the rates determined under section 6621. The interest due will be calculated from the due date of the domestic liquidating corporation's U.S. income tax return for the year of the distribution to the date on which the additional tax for that year is paid.

(*iv*) ***Joint and several liability.*** The foreign distributee corporation shall be jointly and severally liable for any tax owed by the domestic liquidating corporation as a result of the application of this section, and shall succeed to the domestic liquidating corporation's agreement to extend the statute of limitations on assessments and collections under section 6501.

(*3*) ***Schedule for property no longer used in a U.S. trade or business.*** If qualifying property (other than inventory) ceases to be used by the foreign distributee corporation in the conduct of a U.S. trade or business in the ten-year period beginning on the date of distribution of such property from the domestic liquidating corporation to the foreign distributee corporation, then the foreign distributee corporation shall list on a separate schedule (attached to its timely filed U.S. income tax return for the year of cessation) all such qualifying property. For purposes of this paragraph (b)(2)(i)(E)(*3*), property ceases to be used in a U.S. trade or business whenever such property is sold, exchanged, or otherwise removed from the U.S. trade or business, irrespective of whether the domestic liquidating corporation filed an amended return under paragraph (b)(2)(i)(E)(*2*) of this section, and irrespective of whether the property ceases to be used in the foreign distributee corporation's U.S. trade or business by virtue of a nontriggering event described in paragraph (b)(2)(i)(E)(*4*) of this section or a nontriggering transfer described in paragraph (b)(2)(i)(E)(*5*) of this section.

(*4*) ***Nontriggering events —***

(*i*) ***Conversions, certain exchanges, and abandonment.*** Gain (or loss) under this paragraph (b)(2)(i)(E) shall not be triggered if qualifying property described in paragraph (b)(2)(i)(B) of this section is involuntarily converted into, or exchanged for, similar qualifying property used in the conduct of a trade or business in the United States, to the extent such conversion or exchange qualifies for nonrecognition under section 1033 or 1031. Also, the abandonment or disposal of worthless or obsolete property shall not trigger gain (or loss) under this paragraph (b)(2)(i)(E).

(*ii*) ***Amendment to Master Property Description.*** If the foreign distributee corporation acquires replacement property by virtue of a conversion or exchange of the qualifying property under this paragraph (b)(2)(i)(E)(*4*), then the foreign distributee corporation shall attach to its timely filed U.S. income tax return for the year of the acquisition such replacement property a schedule entitled "Amendment to Master Property Description Required by § 1.367(e)-2(b)(2)(i)" that lists the replacement property and the property being replaced.

(*5*) ***Nontriggering transfers to qualified transferees.*** Gain (or loss) under this paragraph (b)(2)(i)(E) will not be triggered if qualifying property described in paragraph (b)(2)(i)(B) of this section is transferred to another person (qualified transferee) in a transaction qualifying for nonrecognition under the Internal Revenue Code (other than transactions described in paragraphs (b)(2)(i)(E)(4)(*i*) and (c)(1) of this section), if—

(*i*) The qualified transferee (and all other subsequent qualified transferees), immediately thereafter and for the ten-year period beginning on the date of the initial distribution of such qualifying property from the domestic liquidating corporation to the foreign distributee corporation, uses the property in the conduct of a trade or business in the United States;

(*ii*) The foreign distributee corporation (or its successor in interest) prepares and attaches to its timely filed U.S. income tax return for the year of transfer a statement entitled "Required Statement under § 1.367(e)-2(b)(2)(i)(E)(*5*) for Property Transferred to a Qualified Transferee" that is signed under penalties of perjury by an authorized officer of the foreign distributee corporation and by a person similarly authorized by the qualified transferee;

(*iii*) The statement described in paragraph (b)(2)(i)(E)(*5*)(*ii*) of this section shall contain a description of all qualifying property transferred by the foreign distributee corporation (or qualified transferee) to the qualified transferee (or subsequent qualified transferee);

(*iv*) The statement described in paragraph (b)(2)(i)(E)(*5*)(*ii*) of this section shall also contain an identification of the qualified transferee (or subsequent qualified transferee), including its name and address, taxpayer identification number, residence, and place of incorporation (if applicable);

(*v*) The statement described in paragraph (b)(2)(i)(E)(*5*)(*ii*) of this section shall also contain a declaration by the qualifying transferee (or subsequent qualifying transferee) that it irrevocably waives any right under any treaty (whether or not currently in force at the time of the liquidation) to sell or exchange any item of

such property without U.S. income taxation or at a reduced rate of taxation, or to derive income from the use of any item of such qualifying property without U.S. income taxation or at a reduced rate of taxation; and

(*vi*) A declaration that the transfer to the qualifying transferee (or subsequent qualifying transferee) is one to which the rules of this paragraph (b)(2)(i)(E)(*5*) apply and a certification that the foreign distributee corporation (or its successor in interest) and the qualifying transferee (or subsequent qualifying transferee) agree to all of the terms and conditions set forth in paragraph (b)(2)(i)(E)(*1*) of this section, replacing "foreign distributee corporation" with "qualifying transferee" and replacing references to "section 882(a)" with "section 871(b)" (as the case may be).

(ii) ***Distribution of certain U.S. real property interests.*** A domestic liquidating corporation shall not recognize gain (or loss) under paragraph (b)(1) of this section on the distribution of a U.S. real property interest (other than stock in a former U.S. real property holding corporation that is treated as a U.S. real property interest for five years under section 897(c)(1)(A)(ii)). If property distributed by the domestic liquidating corporation is a U.S. real property interest that qualifies for nonrecognition under this paragraph (b)(2)(ii) in addition to nonrecognition provided by paragraph (b)(2)(i) of this section, then the domestic liquidating corporation shall secure nonrecognition pursuant to this paragraph (b)(2)(ii) and not pursuant to the provisions of paragraph (b)(2)(i) of this section.

(iii) ***Distribution of stock of domestic subsidiary corporations*** —

(A) ***Conditions for nonrecognition.*** A domestic liquidating corporation shall not recognize gain or loss under paragraph (b)(1) of this section on a distribution of stock of an 80 percent domestic subsidiary corporation, if the domestic liquidating corporation attaches a statement described in paragraph (b)(2)(iii)(D) of this section to its timely filed U.S. income tax return for the year of the distribution of such stock. For purposes of this paragraph (b)(2)(iii), a corporation is an 80 percent domestic subsidiary corporation, if—

(*1*) The subsidiary corporation is a domestic corporation (but not a foreign corporation that has made an election under section 897(i) to be treated as a U.S. corporation for purposes of section 897);

(*2*) The domestic liquidating corporation owns (directly and without regard to paragraph (b)(1)(iii) of this section) at least 80 percent of the total voting power of the stock of such corporation; and

(*3*) The domestic liquidating corporation owns (directly and without regard to paragraph (b)(1)(iii) of this section) at least 80 percent of the total value of all stock of such corporation.

(B) ***Exceptions when the liquidating corporation is a U.S. real property holding corporation.*** If the domestic liquidating corporation is a U.S. real property holding corporation (as defined in section 897(c)(2)) at the time of liquidation (or is a former U.S. real property holding corporation the stock of which is treated as a U.S. real property interest for five years under section 897(c)(1)(A)(ii)), then the exception in paragraph (b)(2)(iii)(A) of this section shall apply only to the distribution of stock of an 80 percent domestic subsidiary corporation that is a U.S. real property holding corporation (as defined in section 897(c)(2)) at the time of the liquidation and immediately thereafter.

(C) ***Anti-abuse rule.***

(*1*) The exception in paragraph (b)(2)(iii)(A) of this section shall not apply, if a principal purpose of the distribution of the 80 percent domestic subsidiary corporation's stock is the avoidance of U.S. tax that would have been imposed on the domestic liquidating corporation's disposition of such stock when taken together to an unrelated party. A distribution may have a principal purpose of tax avoidance even though the tax avoidance purpose is outweighed by other purposes when taken together.

(*2*) For purposes of paragraph (b)(2)(iii)(C)(*1*) of this section, a distribution of stock of the 80 percent domestic subsidiary corporation will be deemed to have been made pursuant to a plan, one of the principal purposes of which was the avoidance of U.S. tax, if the foreign distributee corporation disposes of (whether in a recognition or nonrecognition transaction) any such stock within two years of such distribution. The rule in this paragraph (b)(2)(iii)(C)(*2*) will not apply if the foreign distributee corporation can demonstrate to the satisfaction of the Commissioner that the avoidance of U.S. tax was not a principal purpose of the liquidation.

(D) ***Required statement.*** The statement required by paragraph (b)(2)(iii)(A) of this section shall be entitled "Required Statement under § 1.367(e)-2(b)(2)(iii) for Stock of 80 Percent Domestic Subsidiary Corporations" and shall be prepared by the domestic liquidating corporation and shall be signed under penalties of perjury by an authorized officer of the domestic liquidating corporation and by an authorized officer of the foreign distributee corporation. The required statement shall contain a certification that states that if the foreign distributee corporation disposes of any stock subject to paragraph (b)(2)(iii)(A) of this section in a transaction described in paragraph (b)(2)(iii)(C) of this section, then the domestic liquidating corporation shall recognize all realized gain attributable to the distributed stock at the time of distribution, and the domestic liquidating corporation (or the foreign distributee corporation on behalf of the domestic liquidating corporation) shall file a U.S. income tax return (or amended U.S. income tax return, as the case may be) for the year of distribution reporting the gain attributable to such stock. The required statement shall also state that the domestic liquidating corporation agrees, as provided in paragraph (e)(4)(ii)(B) of this section, to treat a failure to comply (as described in paragraph (e)(4)(i) of this section) as extending the period of limitations on assessment of tax for the taxable year in which gain is required to be reported.

(3) ***Other consequences —***

(i) ***Distributee basis in property.*** The foreign distributee corporation's basis in property subject to this paragraph (b) shall be the same as the domestic liquidating corporation's basis in such property immediately before the liquidation, increased by any gain, or reduced by any loss recognized by the domestic liquidating corporation on such property pursuant to paragraph (b)(1) of this section.

(ii) ***Reporting under section 6038B.*** Section 6038B and the regulations thereunder apply to a domestic liquidating corporation's transfer of property to a foreign distributee corporation under section 367(e)(2).

(iii) ***Other rules.*** For other rules that may apply, see sections 381, 897, 1248, and § 1.482-1(f)(2)(i)(C).

(c) *Distribution by a foreign corporation* —

(1) ***General rule—gain and loss not recognized.*** If a foreign corporation (foreign liquidating) makes a distribution of property in complete liquidation under section 332 to a foreign corporation (foreign distributee) that meets the stock ownership requirements of section 332(b) with respect to stock in the foreign liquidating corporation, then, except as provided in paragraph (c)(2) of this section, section 337 (a) and (b)(1) shall apply and the foreign liquidating corporation shall not recognize gain (or loss) on the distribution under section 367(e)(2). If a foreign liquidating corporation distributes a partnership interest (whether foreign or domestic), then such corporation shall be treated as having distributed a proportionate share of partnership property in accordance with the principles of paragraph (b)(1)(iii) of this section.

(2) *Exceptions* —

(i) *Property used in a U.S. trade or business* —

(A) ***General rule.*** A foreign liquidating corporation (including a corporation that has made an effective election under section 897(i)) that makes a distribution described in paragraph (c)(1) of this section shall recognize gain (or loss in accordance with principles contained in paragraph (b)(1)(ii) of this section) on the distribution of qualified property, as described in paragraph (b)(2)(i)(B) of this section (other than U.S. real property interests), that is used by the foreign liquidating corporation in the conduct of a trade or business within the United States at the time of distribution.

(B) ***Ten-year active U.S. business exception.*** A foreign liquidating corporation shall not recognize gain under paragraph (c)(2)(i)(A) of this section, if—

(*1*) The foreign distributee corporation, immediately thereafter and for the ten-year period beginning on the date of the distribution of such property, uses the property in the conduct of a trade or business in the United States;

(*2*) The foreign distributee corporation is not entitled to benefits under a comprehensive income tax treaty (this requirement shall apply only if the foreign liquidating corporation (or predecessor corporation) was not entitled to benefits under a comprehensive income tax treaty); and

(*3*) The foreign liquidating corporation and foreign distributee corporation attach the statement described in paragraph (c)(2)(i)(C) of this section to their timely filed U.S. income tax returns for their taxable years that include the distribution.

(C) ***Required statement.*** The statement required by paragraph (c)(2)(i)(B)(3) of this section shall be entitled "Required Statement under § 1.367(e)-2(c)(2)(i)," shall be prepared by foreign liquidating corporation, shall be signed under penalties of perjury by an authorized officer of the foreign liquidating corporation and by an authorized officer of the foreign distributee corporation, and shall be identical to the statement described in paragraph (b)(2)(i)(C) of this section, except that "§ 1.367(e)-2(c)(2)(i)(B)" shall be substituted for references to "§ 1.367(e)-2(b)(2)(i)" and "foreign liquidating corporation" shall be substituted for "domestic liquidating corporation" each time it appears. References in the rules of paragraph (b)(2)(i)(C) of this section to various rules in paragraph (b) of this section shall be applied as if such references were to this paragraph (c). However, the statement described in this paragraph (c)(2)(i)(C) shall be modified as follows:

(*1*) The foreign distributee corporation shall not be required to waive its income tax treaty benefits as required by § 1.367(e)-2(b)(2)(i)(C)(*4*), unless—

(*i*) The foreign liquidating corporation was required to waive its treaty benefits under paragraph (b)(2)(i)(C)(4) of this section in connection with the distribution of such property in a prior liquidation distribution subject to the provisions of this section; or

(*ii*) The foreign distributee corporation is entitled benefits under a treaty to which the foreign liquidating corporation was not entitled.

(*2*) If the foreign distributee is required to waive treaty benefits because of paragraph (c)(2)(i)(C)(*1*)(*ii*) of this section, then the foreign distributee shall only be required to waive benefits that were not available to the foreign liquidating corporation (or a predecessor corporation) prior to liquidation.

(*3*) The property description described in paragraph (b)(2)(i)(C)(*2*) of this section shall include only the qualified U.S. trade or business property described in paragraph (c)(2)(i) of this section.

(D) ***Operating rules.*** By the foreign liquidating corporation's claiming nonrecognition under paragraph (c)(2)(i)(B) of this section and filing a statement described in paragraph (c)(2)(i)(C) of this section, the foreign liquidating corporation and the foreign distributee corporation agree to be subject to the rules of paragraph (c)(2)(i) of this section, as well as the rules of paragraphs (b)(2)(i)(D) and (E) of this section. In applying the rules of paragraphs (b)(2)(i)(D) and (E) of this section, "foreign liquidating corporation" shall be used instead of "domestic liquidating corporation" each time it appears. References in the rules of paragraphs (b)(2)(i)(D) and (E) of this section to various rules in paragraph (b) of this section shall be applied as if such references were to this paragraph (c).

(ii) ***Property formerly used in a United States trade or business.*** A foreign liquidating corporation that makes a distribution described in paragraph (c)(1) of this section shall recognize gain (but not loss) on the distribution of property (other than U.S. real property interests) that had ceased to be used by the foreign liquidating corporation in the conduct of a U.S. trade or business within the ten-year period ending on the date of distribution and that would have been subject to section 864(c)(7) had it been disposed. Section 864(c)(7) shall govern the treatment of any gain recognized on the distribution of assets described in this paragraph as income effectively connected with the conduct of a trade or business within the United States.

(3) ***Other consequences*** —

(i) ***Distributee basis in property.*** The foreign distributee corporation's basis in property subject to this paragraph (c) shall be the same as the foreign liquidating corporation's basis in such property immediately before the liquidation, increased by any gain, or reduced by any loss recognized by the foreign liquidating corporation on such property, pursuant to paragraph (c)(2) of this section.

(ii) ***Other rules.*** For other rules that may apply, see sections 367(b) and 381.

(d) ***Anti-abuse rule.*** The Commissioner may require a domestic liquidating corporation to recognize gain on a distribution in liquidation described in paragraph (b) of this section (or treat the liquidating corporation as if it had recognized loss on a distribution in liquidation), if a principal purpose of the liquidation is the

avoidance of U.S. tax (including, but not limited to, the distribution of a liquidating corporation's earnings and profits with a principal purpose of avoiding U.S. tax). A liquidation may have a principal purpose of tax avoidance even though the tax avoidance purpose is outweighed by other purposes when taken together.

(e) ***Failures to file or failures to comply*** —

(1) ***Scope.*** This paragraph (e) provides rules regarding a failure to file an initial liquidation document with respect to one or more liquidating distributions by a domestic liquidating corporation that, absent such failure, would qualify for nonrecognition treatment under paragraph (b)(2)(i) or (iii) of this section, or with respect to one or more liquidating distributions by a foreign liquidating corporation that, absent such failure, would qualify for nonrecognition treatment under paragraph (c)(2)(i)(B) of this section (failure to file). This paragraph (e) also provides rules regarding failures to comply in all material respects with the terms of this section with respect to one or more liquidating distributions for which nonrecognition treatment was initially claimed under paragraph (b)(2)(i), (b)(2)(iii), or (c)(2)(i)(B) of this section, as applicable (failure to comply).

(2) ***Definitions.*** The following definitions apply for purposes of this section.

(i) An *initial liquidation document* means any statement, schedule, or form required to be filed under this section in order for the domestic liquidating corporation or foreign liquidating corporation, as applicable, to initially qualify to claim nonrecognition treatment with respect to one or more liquidating distributions described in this section, including—

(A) The statement and attachments described in paragraph (b)(2)(i)(C) of this section;

(B) The statement described in paragraph (b)(2)(iii)(D) of this section; and

(C) The statement and attachments described in paragraph (c)(2)(i)(C) of this section.

(ii) A *subsequent liquidation document* means any statement, schedule, or form (other than an initial liquidation document) required to be filed under this section in order for the domestic liquidating corporation or foreign liquidating corporation, as applicable, to continue to qualify for nonrecognition treatment with respect to one or more liquidating distributions described in this section, including—

(A) The schedule described in paragraph (b)(2)(i)(E)(*3*) of this section;

(B) The schedule described in paragraph (b)(2)(i)(E)(*4*)(*ii*) of this section; and

(C) The statement and attachments described in paragraph (b)(2)(i)(E)(*5*) of this section.

(iii) A *timely filed U.S. income tax return* means a Federal income tax return filed on or before the last date prescribed for filing (taking into account any extensions of time therefor) such return.

(3) ***Failure to file*** —

(i) ***General rule.*** For purposes of this section and except as provided in paragraph (b)(2)(i)(D) or (f) of this section, there is a failure to file an initial liquidation document if—

(A) An initial liquidation document is not filed with the timely filed U.S. income tax return specified under this section, or

(B) An initial liquidation document is not completed in all material respects.

(ii) ***Consequences of a failure to file.*** If there is a failure to file an initial liquidation document, then nonrecognition treatment under paragraph (b)(2)(i), (b)(2)(iii), or (c)(2)(i)(B) of this section (as appropriate) will not apply.

(4) ***Failure to comply*** —

(i) ***General rule.*** For purposes of this section and except as provided in paragraph (b)(2)(i)(D) or (f) of this section, a failure to comply includes—

(A) A failure to report gain, or pay any additional tax or interest due, in accordance with the requirements under this section; and

(B) A failure to file a subsequent liquidation document, as determined by applying paragraph (e)(3)(i) of this section, but replacing the term "initial liquidation document" with the term "subsequent liquidation document."

(ii) ***Consequences of a failure to comply.*** If there is a failure to comply in any material respect with the terms of paragraph (b)(2)(i), (b)(2)(iii), or (c)(2)(i) of this section, as applicable, then—

(A) Any gain (but not loss) that was not previously recognized by the domestic liquidating corporation or foreign liquidating corporation, as applicable, under paragraph (b)(2)(i), (b)(2)(iii), or (c)(2)(i)(B) of this section must be recognized; and

(B) The period of limitations on assessment of tax for the taxable year in which gain is required to be reported will be extended until the close of the third full taxable year ending after the date on which the domestic liquidating corporation, foreign distributee corporation, or foreign liquidating corporation, as applicable, furnishes to the Director of Field Operations, Cross Border Activities Practice Area of Large Business & International (or any successor to the roles and responsibilities of such position, as appropriate) (Director) the information that should have been provided under this section.

(f) ***Relief for certain failures to file or failures to comply that are not willful*** —

(1) ***In general.*** This paragraph (f) provides relief if there is a failure to file an initial liquidation document as described in paragraph (e)(3)(i) of this section (failure to file), or a failure to comply in any material respect with the terms of this section as described in paragraph (e)(4)(i) of this section (failure to comply). A failure to file or a failure to comply will be deemed not to have occurred for purposes of paragraph (e)(3)(ii) or (e)(4)(ii) of this section if the taxpayer demonstrates that the failure was not willful using the procedure set forth in this paragraph (f). For this purpose, willful is to be interpreted consistent with the meaning of that term in the context of other civil penalties, which would include a failure due to gross negligence, reckless disregard, or willful neglect. Whether a failure to file or failure to comply was willful will be determined by the Director (as described in paragraph (e)(4)(ii)(B) of this section) based on all the facts and circumstances. The taxpayer must submit a request for relief and an explanation as provided in paragraph (f)(2)(i) of this section. Although a taxpayer whose failure to file or failure to comply is determined not to be willful will not be subject to gain or loss recognition under this section, the taxpayer will be subject to a penalty under section 6038B if the taxpayer fails to satisfy the reporting requirements, if any, under that section and does not demonstrate that the failure was due to reasonable cause and not willful neglect. See § 1.6038B-1(e)(4) and (f). The determination of whether the failure to file or failure to comply was willful under this section has no effect on any request for relief made under § 1.6038B-1(f).

(2) *Procedures for establishing that a failure to file or failure to comply was not willful* —

(i) ***Time and manner of submission.*** A taxpayer's statement that a failure to file or failure to comply was not willful will be considered only if, promptly after the taxpayer becomes aware of the failure, an amended return is filed for the taxable year to which the failure relates that includes the information that should have been included with the original return for such taxable year or that otherwise complies with the rules of this section, and that includes a written statement explaining the reasons for the failure. In the case of a liquidating distribution described in paragraph (b)(2)(iii) of this section, the taxpayer must file, with the amended return, a Form 8838 extending the period of limitations on assessment of tax with respect to the gain realized but not recognized with respect to the liquidating distribution to the close of the third full taxable year ending after the date on which the required information is provided to the Director. In the case of a liquidating distribution described in paragraph (b)(2)(i) or (c)(2)(i)(B) of this section, the taxpayer must file, with the amended return, a Form 8838 extending the period of limitations on the assessment of tax with respect to the gain realized but not recognized with respect to the liquidating distribution to the later of: the date provided in paragraph (b)(2)(i)(C)(*5*), taking into account paragraph (c)(2)(i)(C) and (D), as applicable (date one); or, the close of the third full taxable year ending after the date on which the required information is provided to the Director (date two). However, the taxpayer is not required to file a Form 8838 with the amended return if both date one is later than date two and a Form 8838 was previously filed extending the period of limitations on assessment of tax with respect to the gain realized but not recognized with respect to the liquidating distribution to date one. If a Form 8838 is not required to be filed pursuant to the previous sentence, a copy of the previously filed Form 8838 must be filed with the amended return. The amended return and either a Form 8838 or a copy of the previously filed Form 8838, as the case may be, must be filed with the Internal Revenue Service at the location where the taxpayer filed its original return. The taxpayer may submit a request for relief from the penalty under section 6038B as part of the same submission. See § 1.6038B-1(f).

(ii) ***Notice requirement.*** In addition to the requirements of paragraph (f)(2)(i) of this section, the taxpayer must comply with the notice requirements of this paragraph (f)(2)(ii). If any taxable year of the taxpayer is under examination when the amended return is filed, a copy of the amended return and any information required to be included with such return must be delivered to the Internal Revenue Service personnel conducting the examination. If no taxable year of the taxpayer is under examination when the amended return is filed, a copy of the amended return and any information required to be included with such return must be delivered to the Director.

(3) For illustrations of the application of the willfulness standard of this paragraph (f), see the examples in § 1.367(a)-8(p)(3).

(g) ***Effective/applicability dates.*** Except as otherwise provided, this section applies to distributions occurring on or after September 7, 1999 or, if the taxpayer so elects, to distributions in taxable years ending after August 8, 1999. The ninth, tenth, and eleventh sentences of paragraph (a) of this section, and paragraphs (b)(1)(i), (b)(2)(i)(A)(*2*), (b)(2)(i)(A)(*3*), (b)(2)(i)(E)(*3*), (b)(2)(i)(E)(*4*)(*ii*), (b)(2)(i)(E)(*5*)(*ii*), (b)(2)(iii)(A), (c)(2)(i)(B)(*3*), (e), and (f) of this section will apply to liquidation documents that are required to be filed on or after November 19, 2014, as well as to requests for relief submitted on or after November 19, 2014.

[T.D. 8834, 64 FR 43077, Aug. 9, 1999; 65 FR 11467, Mar. 3, 2000, as amended by T.D. 9066, 68 FR 39452, July 2, 2003; T.D. 9704, 79 FR 68771, Nov. 19, 2014; 80 FR 167, Jan. 5, 2015; T.D. 9803, 81 FR 91030, Dec. 16, 2016; T.D. 9994, 89 FR 82169, Oct. 10, 2024]

SPECIAL RULE; DEFINITIONS

§ 1.368-1 Purpose and scope of exception of reorganization exchanges.

(a) ***Reorganizations.*** As used in the regulations under parts I, II, and III (section 301 and following), subchapter C, chapter 1 of the Code, the terms *reorganization* and *party to a reorganization* mean only a reorganization or a party to a reorganization as defined in subsections (a) and (b) of section 368. In determining whether a transaction qualifies as a reorganization under section 368(a), the transaction must be evaluated under relevant provisions of law, including the step transaction doctrine. But see §§ 1.368-2 (f) and (k) and 1.338-3(d). The preceding two sentences apply to transactions occurring after January 28, 1998, except that they do not apply to any transaction occurring pursuant to a written agreement which is binding on January 28, 1998, and at all times thereafter. With respect to insolvency reorganizations, see part IV, subchapter C, chapter 1 of the Code.

(b) ***Purpose.*** Under the general rule, upon the exchange of property, gain or loss must be accounted for if the new property differs in a material particular, either in kind or in extent, from the old property. The purpose of the reorganization provisions of the Code is to except from the general rule certain specifically described exchanges incident to such readjustments of corporate structures made in one of the particular ways specified in the Code, as are required by business exigencies and which effect only a readjustment of continuing interest in property under modified corporate forms. Requisite to a reorganization under the Internal Revenue Code are a continuity of the business enterprise through the issuing corporation under the modified corporate form as described in paragraph (d) of this section, and (except as provided in section 368(a)(1)(D)) a continuity of interest as described in paragraph (e) of this section. (For rules regarding the continuity of interest requirement under section 355, see § 1.355-2(c).) For purposes of this section, the term *issuing corporation* means the acquiring corporation (as that term is used in section 368(a)), except that, in determining whether a reorganization qualifies as a triangular reorganization (as defined in § 1.358-6(b)(2)), the issuing corporation means the corporation in control of the acquiring corporation. The preceding three sentences apply to transactions occurring after January 28, 1998, except that they do not apply to any transaction occurring pursuant to a written agreement which is binding on January 28, 1998, and at all times thereafter. The continuity of business enterprise requirement is described in paragraph (d) of this section. Notwithstanding the requirements of this paragraph (b), for transactions occurring on or after February 25, 2005, a continuity of the business enterprise and a continuity of interest are not required for the transaction to qualify as a reorganization under section 368(a)(1)(E) or (F). The Code recognizes as a reorganization the amalgamation (occurring in a specified way) of two corporate enterprises under a single corporate structure if there exists among the holders of the stock and securities of either of the old corporations the requisite continuity of interest in the new corporation, but there is not a reorganization if the holders of the stock and securities of the old corporation are merely the holders of short-term notes in the new corporation. In order to exclude transactions not intended to be included, the specifications of the reorganization provisions of the law are precise. Both the terms of the specifications and their underlying assumptions and purposes must be satisfied in order to entitle the taxpayer to the benefit of the exception from the general rule. Accordingly, under the Code, a short-term purchase money note is not a security of a party to a reorganization, an ordinary dividend is to be treated as an ordinary dividend, and a sale is nevertheless to be treated as a sale even though the mechanics of a reorganization have been set up.

(c) ***Scope.*** The nonrecognition of gain or loss is prescribed for two specifically described types of exchanges, viz: The exchange that is provided for in section 354(a)(1) in which stock or securities in a corporation, a party to a reorganization, are, in pursuance of a plan of reorganization, exchanged for the stock or securities in a corporation, a party to the same reorganization; and the exchange that is provided for in

section 361(a) in which a corporation, a party to a reorganization, exchanges property, in pursuance of a plan of reorganization, for stock or securities in another corporation, a party to the same reorganization. Section 368(a)(1) limits the definition of the term *reorganization* to six kinds of transactions and excludes all others. From its context, the term *a party to a reorganization* can only mean a party to a transaction specifically defined as a reorganization by section 368(a). Certain rules respecting boot received in either of the two types of exchanges provided for in section 354(a)(1) and section 361(a) are prescribed in sections 356, 357, and 361(b). A special rule respecting a transfer of property with a liability in excess of its basis is prescribed in section 357(c). Under section 367 a limitation is placed on all these provisions by providing that except under specified conditions foreign corporations shall not be deemed within their scope. The provisions of the Code referred to in this paragraph are inapplicable unless there is a plan of reorganization. A plan of reorganization must contemplate the bona fide execution of one of the transactions specifically described as a reorganization in section 368(a) and for the bona fide consummation of each of the requisite acts under which nonrecognition of gain is claimed. Such transaction and such acts must be an ordinary and necessary incident of the conduct of the enterprise and must provide for a continuation of the enterprise. A scheme, which involves an abrupt departure from normal reorganization procedure in connection with a transaction on which the imposition of tax is imminent, such as a mere device that puts on the form of a corporate reorganization as a disguise for concealing its real character, and the object and accomplishment of which is the consummation of a preconceived plan having no business or corporate purpose, is not a plan of reorganization.

(d) ***Continuity of business enterprise*** —

(1) ***General rule.*** Continuity of business enterprise (COBE) requires that the issuing corporation (P), as defined in paragraph (b) of this section, either continue the target corporation's (T's) historic business or use a significant portion of T's historic business assets in a business. The preceding sentence applies to transactions occurring after January 28, 1998, except that it does not apply to any transaction occurring pursuant to a written agreement which is binding on January 28, 1998, and at all times thereafter. The application of this general rule to certain transactions, such as mergers of holding companies, will depend on all facts and circumstances. The policy underlying this general rule, which is to ensure that reorganizations are limited to readjustments of continuing interests in property under modified corporate form, provides the guidance necessary to make these facts and circumstances determinations.

(2) ***Business continuity.***

(i) The continuity of business enterprise requirement is satisfied if *P* continues *T*'s historic business. The fact *P* is in the same line of business as *T* tends to establish the requisite continuity, but is not alone sufficient.

(ii) If *T* has more than one line of business, continuity of business enterprise requires only that *P* continue a significant line of business.

(iii) In general, a corporation's historic business is the business it has conducted most recently. However, a corporation's historic business is not one the corporation enters into as part of a plan of reorganization.

(iv) All facts and circumstances are considered in determining the time when the plan comes into existence and in determining whether a line of business is “significant”.

(3) ***Asset continuity.***

(i) The continuity of business enterprise requirement is satisfied if *P* uses a significant portion of *T*'s historic business assets in a business.

(ii) A corporation's historic business assets are the assets used in its historic business. Business assets may include stock and securities and intangible operating assets such as good will, patents, and trademarks, whether or not they have a tax basis.

(iii) In general, the determination of the portion of a corporation's assets considered "significant" is based on the relative importance of the assets to operation of the business. However, all other facts and circumstances, such as the net fair market value of those assets, will be considered.

(4) ***Acquired assets or stock held by members of the qualified group or partnerships.*** The following rules apply in determining whether the COBE requirement of paragraph (d)(1) of this section is satisfied:

(i) ***Businesses and assets of members of a qualified group.*** The issuing corporation is treated as holding all of the businesses and assets of all of the members of the qualified group, as defined in paragraph (d)(4)(ii) of this section.

(ii) ***Qualified group.*** A qualified group is one or more chains of corporations connected through stock ownership with the issuing corporation, but only if the issuing corporation owns directly stock meeting the requirements of section 368(c) in at least one other corporation, and stock meeting the requirements of section 368(c) in each of the corporations (except the issuing corporation) is owned directly (or indirectly as provided in paragraph (d)(4)(iii)(D) of this section) by one or more of the other corporations.

(iii) ***Partnerships*** —

(A) ***Partnership assets.*** Each partner of a partnership will be treated as owning the T business assets used in a business of the partnership in accordance with that partner's interest in the partnership.

(B) ***Partnership businesses.*** The issuing corporation will be treated as conducting a business of a partnership if—

(*1*) Members of the qualified group, in the aggregate, own an interest in the partnership representing a significant interest in that partnership business; or

(*2*) One or more members of the qualified group have active and substantial management functions as a partner with respect to that partnership business.

(C) ***Conduct of the historic T business in a partnership.*** If a significant historic T business is conducted in a partnership, the fact that P is treated as conducting such T business under paragraph (d)(4)(iii)(B) of this section tends to establish the requisite continuity, but is not alone sufficient.

(D) ***Stock attributed from certain partnerships.*** Solely for purposes of paragraph (d)(4)(ii) of this section, if members of the qualified group own interests in a partnership meeting requirements equivalent to section 368(c) (a section 368(c) controlled partnership), any stock owned by the section 368(c) controlled partnership shall be treated as owned by members of the qualified group. Solely for purposes of determining whether a lower-tier partnership is a section 368(c) controlled partnership, any interest in a lower-tier partnership that is owned by a section 368(c) controlled partnership shall be treated as owned by members of the qualified group.

(iv) ***Effective/applicability dates.*** Paragraphs (d)(4)(i) and (d)(4)(iii) (other than paragraph (d)(4)(iii)(D)) of this section apply to transactions occurring after January 28, 1998, except that they do not apply to any transaction occurring pursuant to a written agreement which is binding on January 28, 1998, and at all times thereafter. Paragraphs (d)(4)(ii) and (d)(4)(iii)(D) of this section apply to transactions occurring on or after October 25, 2007, except that they do not apply to any transaction occurring pursuant to a written agreement which is binding before October 25, 2007, and at all times after that.

(5) ***Examples.*** The following examples illustrate this paragraph (d). All the corporations have only one class of stock outstanding. The preceding sentence and paragraph (d)(5) *Example 6* and *Example 8* through *Example 13* apply to transactions occurring after January 28, 1998, except that they do not apply to any transaction occurring pursuant to a written agreement which is binding on January 28, 1998, and at all times thereafter. Paragraph (d)(5) *Example 7*, *Example 14*, and *Example 15* apply to transactions occurring on or after October 25, 2007, except that they do not apply to any transaction occurring pursuant to a written agreement which is binding before October 25, 2007, and at all times after that. The examples read as follows:

Example 1. T conducts three lines of business: manufacture of synthetic resins, manufacture of chemicals for the textile industry, and distribution of chemicals. The three lines of business are approximately equal in value. On July 1, 1981, *T* sells the synthetic resin and chemicals distribution businesses to a third party for cash and marketable securities. On December 31, 1981, *T* transfers all of its assets to *P* solely for *P* voting stock. *P* continues the chemical manufacturing business without interruption. The continuity of business enterprise requirement is met. Continuity of business enterprise requires only that *P* continue one of *T*'s three significant lines of business.

Example 2. P manufactures computers and *T* manufactures components for computers. *T* sells all of its output to *P*. On January 1, 1981, *P* decides to buy imported components only. On March 1, 1981, *T* merges into *P*. *P* continues buying imported components but retains *T*'s equipment as a backup source of supply. The use of the equipment as a backup source of supply constitutes use of a significant portion of *T*'s historic business assets, thus establishing continuity of business enterprise. *P* is not required to continue *T*'s business.

Example 3. T is a manufacturer of boys' and men's trousers. On January 1, 1978, as part of a plan of reorganization, *T* sold all of its assets to a third party for cash and purchased a highly diversified portfolio of stocks and bonds. As part of the plan *T* operates an investment business until July 1, 1981. On that date, the plan of reorganization culminates in a transfer by *T* of all its assets to *P*, a regulated investment company, solely in exchange for *P* voting stock. The continuity of business enterprise requirement is not met. *T*'s investment activity is not its historic business, and the stocks and bonds are not *T*'s historic business assets.

Example 4. T manufactures children's toys and *P* distributes steel and allied products. On January 1, 1981, *T* sells all of its assets to a third party for $100,000 cash and $900,000 in notes. On March 1, 1981, *T* merges into *P*. Continuity of business enterprise is lacking. The use of the sales proceeds in *P*'s business is not sufficient.

Example 5. T manufactures farm machinery and *P* operates a lumber mill. *T* merges into *P*. *P* disposes of *T*'s assets immediately after the merger as part of the plan of reorganization. *P* does not continue *T*'s farm machinery manufacturing business. Continuity of business enterprise is lacking.

Example 6. Use of a significant portion of T's historic business assets by the qualified group. (i) *Facts. T* operates an auto parts distributorship. *P* owns 80 percent of the stock of a holding company (HC). HC owns 80 percent of the stock of ten subsidiaries, S-1 through S-10. S-1 through S-10 each separately operate a full service gas station. Pursuant to a plan of reorganization, *T* merges into *P* and the *T* shareholders receive solely *P* stock. As part of the plan of reorganization, *P* transfers *T*'s assets to HC, which in turn transfers some of the *T* assets to each of the ten subsidiaries. No one subsidiary receives a significant portion of *T*'s historic business assets. Each of the subsidiaries will use the *T* assets in the operation of its full service gas station. No *P* subsidiary will be an auto parts distributor.
(ii) *Continuity of business enterprise.* Under paragraph (d)(4)(i) of this section, *P* is treated as conducting the ten gas station businesses of S-1 through S-10 and as holding the historic *T* assets used in those businesses. *P* is treated as holding all the assets and conducting the businesses of all of the members of the qualified group, which includes S-1 through S-10 (paragraphs (d)(4)(i) and (ii) of this section). No member of the qualified group continues *T*'s historic distributorship business. However, subsidiaries S-1 through S-10 continue to use the historic *T* assets in a business. Even though no one corporation of the qualified group is using a significant portion of *T*'s historic business assets in a business, the COBE requirement of paragraph (d)(1) of this section is satisfied because, in the aggregate, the qualified group is using a significant portion of *T*'s historic business assets in a business.

Example 7. Transfers of acquired stock to members of the qualified group—continuity of business enterprise satisfied. (i) *Facts.* The facts are the same as *Example 6*, except that, instead of P acquiring the assets of T, HC acquires all of the outstanding stock of T in exchange solely for stock of P. In addition, as part of the plan of reorganization, HC transfers 10 percent of the stock of T to each of subsidiaries S-1 through S-10. T will continue to operate an auto parts distributorship. Without regard to whether the transaction satisfies the COBE requirement, the transaction qualifies as a triangular B reorganization (as defined in § 1.358-6(b)(2)(iv)).
(ii) *Continuity of business enterprise.* Under paragraph (d)(4)(i) of this section, P is treated as holding the assets and conducting the business of T because T is a member of the qualified group (as defined in paragraph (d)(4)(ii) of this section). The COBE requirement of paragraph (d)(1) of this section is satisfied.

Example 8. Continuation of the historic T business in a partnership satisfies continuity of business enterprise. (i) *Facts. T* manufactures ski boots. *P* owns all of the stock of S-1. S-1 owns all of the stock of S-2, and S-2 owns all of the stock of S-3. *T* merges into *P* and the *T* shareholders receive consideration consisting of *P* stock and cash. The *T* ski boot business is to be continued and expanded. In anticipation of this expansion, *P*

transfers all of the *T* assets to S-1, S-1 transfers all of the *T* assets to S-2, and S-2 transfers all of the *T* assets to S-3. S-3 and *X* (an unrelated party) form a new partnership (PRS). As part of the plan of reorganization, S-3 transfers all the *T* assets to PRS, and S-3, in its capacity as a partner, performs active and substantial management functions for the PRS ski boot business, including making significant business decisions and regularly participating in the overall supervision, direction, and control of the employees of the ski boot business. S-3 receives a 20 percent interest in PRS. *X* transfers cash in exchange for an 80 percent interest in PRS.
(ii) *Continuity of business enterprise.* Under paragraph (d)(4)(iii)(B)(*2*) of this section, *P* is treated as conducting *T*'s historic business because S-3 performs active and substantial management functions for the ski boot business in S-3's capacity as a partner. *P* is treated as holding all the assets and conducting the businesses of all of the members of the qualified group, which includes S-3 (paragraphs (d)(4)(i) and (ii) of this section). The COBE requirement of paragraph (d)(1) of this section is satisfied.

Example 9. Continuation of the historic T business in a partnership does not satisfy continuity of business enterprise. (i) *Facts.* The facts are the same as *Example 8,* except that S-3 transfers the historic T business to PRS in exchange for a 1 percent interest in PRS.
(ii) *Continuity of business enterprise.* Under paragraph (d)(4)(iii)(B)(*2*) of this section, *P* is treated as conducting *T*'s historic business because S-3 performs active and substantial management functions for the ski boot business in S-3's capacity as a partner. The fact that a significant historic *T* business is conducted in PRS, and *P* is treated as conducting such *T* business under (d)(4)(iii)(B) tends to establish the requisite continuity, but is not alone sufficient (paragraph (d)(4)(iii)(C) of this section). The COBE requirement of paragraph (d)(1) of this section is not satisfied.

Example 10. Continuation of the T historic business in a partnership satisfies continuity of business enterprise. (i) *Facts.* The facts are the same as *Example 8,* except that S-3 transfers the historic T business to PRS in exchange for a $33^{1}/_{3}$ percent interest in PRS, and no member of P's qualified group performs active and substantial management functions for the ski boot business operated in PRS.
(ii) *Continuity of business enterprise.* Under paragraph (d)(4)(iii)(B)(*1*) of this section, *P* is treated as conducting *T*'s historic business because S-3 owns an interest in the partnership representing a significant interest in that partnership business. *P* is treated as holding all the assets and conducting the businesses of all of the members of the qualified group, which includes S-3 (paragraphs (d)(4)(i) and (ii) of this section). The COBE requirement of paragraph (d)(1) of this section is satisfied.

Example 11. Use of T's historic business assets in a partnership business. (i) *Facts. T* is

a fabric distributor. *P* owns all of the stock of S-1. *T* merges into *P* and the *T* shareholders receive solely *P* stock. S-1 and *X* (an unrelated party) own interests in a partnership (PRS). As part of the plan of reorganization, *P* transfers all of the *T* assets to S-1, and S-1 transfers all the *T* assets to PRS, increasing S-1's percentage interest in PRS from 5 to $33^{1}/_{3}$ percent. After the transfer, *X* owns the remaining $66^{2}/_{3}$ percent interest in PRS. Almost all of the *T* assets consist of *T*'s large inventory of fabric, which PRS uses to manufacture sportswear. All of the *T* assets are used in the sportswear business. No member of *P*'s qualified group performs active and substantial management functions for the sportswear business operated in PRS.

(ii) *Continuity of business enterprise.* Under paragraph (d)(4)(iii)(A) of this section, S-1 is treated as owning $33^{1}/_{3}$ percent of the *T* assets used in the PRS sportswear manufacturing business. Under paragraph (d)(4)(iii)(B)(*1*) of this section, *P* is treated as conducting the sportswear manufacturing business because S-1 owns an interest in the partnership representing a significant interest in that partnership business. *P* is treated as holding all the assets and conducting the businesses of all of the members of the qualified group, which includes S-1 (paragraphs (d)(4)(i) and (ii) of this section). The COBE requirement of paragraph (d)(1) of this section is satisfied.

Example 12. Aggregation of partnership interests among members of the qualified group: use of T's historic business assets in a partnership business. (i) *Facts.* The facts are the same as *Example 11*, except that S-1 transfers all the T assets to PRS, and P and X each transfer cash to PRS in exchange for partnership interests. After the transfers, *P* owns 11 percent, S-1 owns $22^{1}/_{3}$ percent, and *X* owns $66^{2}/_{3}$ percent of PRS.

(ii) *Continuity of business enterprise.* Under paragraph (d)(4)(iii)(B)(*1*) of this section, *P* is treated as conducting the sportswear manufacturing business because members of the qualified group, in the aggregate, own an interest in the partnership representing a significant interest in that business. *P* is treated as owning 11 percent of the assets directly, and S-1 is treated as owning $22^{1}/_{3}$ percent of the assets, used in the PRS sportswear business (paragraph (d)(4)(iii)(A) of this section). *P* is treated as holding all the assets of all of the members of the qualified group, which includes S-1, and thus in the aggregate, *P* is treated as owning $33^{1}/_{3}$ of the *T* assets (paragraphs (d)(4)(i) and (ii) of this section). The COBE requirement of paragraph (d)(1) of this section is satisfied because *P* is treated as using a significant portion of *T*'s historic business assets in its sportswear manufacturing business.

Example 13. Tiered partnerships: use of T's historic business assets in a partnership business. (i) *Facts. T* owns and manages a commercial office building in state *Z*. Pursuant to a plan of reorganization, *T* merges into *P*, solely in exchange for *P* stock, which is distributed to the *T* shareholders. *P* transfers all of the *T* assets to a partnership,

PRS-1, which owns and operates television stations nationwide. After the transfer, *P* owns a 50 percent interest in PRS-1. *P* does not have active and substantial management functions as a partner with respect to the PRS-1 business. *X,* not a member of *P*'s qualified group, owns the remaining 50 percent interest in PRS-1. PRS-1, in an effort to expand its state *Z* television operation, enters into a joint venture with *U,* an unrelated party. As part of the plan of reorganization, PRS-1 transfers all the *T* assets and its state *Z* television station to PRS-2, in exchange for a 75 percent partnership interest. *U* contributes cash to PRS-2 in exchange for a 25 percent partnership interest and oversees the management of the state *Z* television operation. PRS-1 does not actively and substantially manage PRS-2's business. PRS-2's state *Z* operations are moved into the acquired *T* office building. All of the assets that *P* acquired from *T* are used in PRS-2's business.

(ii) *Continuity of business enterprise.* Under paragraph (d)(4)(iii)(A) of this section, PRS-1 is treated as owning 75 percent of the *T* assets used in PRS-2's business. *P,* in turn, is treated as owning 50 percent of PRS-1's interest the *T* assets. Thus, *P* is treated as owning $37^{1}/_{2}$ percent (50 percent × 75 percent) of the *T* assets used in the PRS-2 business. Under paragraph (d)(4)(iii)(B)(*1*) of this section, *P* is treated as conducting PRS-2's business, the operation of the state *Z* television station, and under paragraph (d)(4)(iii)(A) of this section, *P* is treated as using $37^{1}/_{2}$ percent of the historic *T* business assets in that business. The COBE requirement of paragraph (d)(1) of this section is satisfied because *P* is treated as using a significant portion of *T*'s historic business assets in its television business.

Example 14. Transfer of acquired stock to a partnership—continuity of business enterprise satisfied. (i) *Facts.* Pursuant to a plan of reorganization, the T shareholders transfer all of their T stock to a subsidiary of P, S-1, solely in exchange for P stock. In addition, as part of the plan of reorganization, S-1 transfers the T stock to its subsidiary, S-2, and S-2 transfers the T stock to its subsidiary, S-3. S-2 and S-3 form a new partnership, PRS. Immediately thereafter, S-3 transfers all of the T stock to PRS in exchange for an 80 percent interest in PRS, and S-2 transfers cash to PRS in exchange for a 20 percent interest in PRS.

(ii) *Continuity of business enterprise.* Members of the qualified group, in the aggregate, own all of the interests in PRS. Because these interests in PRS meet requirements equivalent to section 368(c), under paragraph (d)(4)(iii)(D) of this section, the T stock owned by PRS is treated as owned by members of the qualified group. P is treated as holding all of the businesses and assets of T because T is a member of the qualified group (as defined in paragraph (d)(4)(ii) of this section). The COBE requirement of paragraph (d)(1) of this section is satisfied because P is treated as continuing T's business.

> *Example 15. Transfer of acquired stock to a partnership—continuity of business enterprise not satisfied.*
> (i) *Facts.* The facts are the same as in *Example 14,* except that S-3 and U, an unrelated corporation, form a new partnership, PRS, and, immediately thereafter, S-3 transfers all of the T stock to PRS in exchange for a 50 percent interest in PRS, and U transfers cash to PRS in exchange for a 50 percent interest in PRS.
> (ii) *Continuity of business enterprise.* Members of the qualified group, in the aggregate, own 50 percent of the interests in PRS. Because these interests in PRS do not meet requirements equivalent to section 368(c), the T stock owned by PRS is not treated as owned by members of the qualified group under paragraph (d)(4)(iii)(D) of this section. P is not treated as holding all of the businesses and assets of T because T has ceased to be a member of the qualified group (as defined in paragraph (d)(4)(ii) of this section). The COBE requirement of paragraph (d)(1) of this section is not satisfied because P is not treated as continuing T's business or using T's historic business assets in a business.

(e) ***Continuity of interest*** —

(1) ***General rule.***

(i) The purpose of the continuity of interest requirement is to prevent transactions that resemble sales from qualifying for nonrecognition of gain or loss available to corporate reorganizations. Continuity of interest requires that in substance a substantial part of the value of the proprietary interests in the target corporation be preserved in the reorganization. A proprietary interest in the target corporation is preserved if, in a potential reorganization, it is exchanged for a proprietary interest in the issuing corporation (as defined in paragraph (b) of this section), it is exchanged by the acquiring corporation for a direct interest in the target corporation enterprise, or it otherwise continues as a proprietary interest in the target corporation. However, a proprietary interest in the target corporation is not preserved if, in connection with the potential reorganization, it is acquired by the issuing corporation for consideration other than stock of the issuing corporation, or stock of the issuing corporation furnished in exchange for a proprietary interest in the target corporation in the potential reorganization is redeemed. All facts and circumstances must be considered in determining whether, in substance, a proprietary interest in the target corporation is preserved. See paragraph (e)(6) of this section for rules related to when a creditor's claim against a target corporation is a proprietary interest in the corporation. For purposes of the continuity of interest requirement, a mere disposition of stock of the target corporation prior to a potential reorganization to persons not related (as defined in paragraph (e)(4) of this section determined without regard to paragraph (e)(4)(i)(A) of this section) to the target corporation or to persons not related (as defined in paragraph (e)(4) of this section) to the issuing corporation is disregarded and a mere disposition of stock of the issuing corporation received in a potential reorganization to persons not related (as defined in paragraph (e)(4) of this section) to the issuing corporation is disregarded.

(ii) For purposes of paragraph (e)(1)(i) of this section, a proprietary interest in the target corporation (other than one held by the acquiring corporation) is not preserved to the extent that consideration received prior to a potential reorganization, either in a redemption of the target corporation stock or in a distribution with respect to the target corporation stock, is treated as other property or money received in the exchange for purposes of section 356, or would be so treated if the target shareholder also had received stock of the issuing corporation in exchange for stock owned by the shareholder in the target corporation. A proprietary interest in the target corporation is not preserved to the extent that creditors (or former creditors) of the

target corporation that own a proprietary interest in the corporation under paragraph (e)(6) of this section (or would be so treated if they had received the consideration in the potential reorganization) receive payment for the claim prior to the potential reorganization and such payment would be treated as other property or money received in the exchange for purposes of section 356 had it been a distribution with respect to stock.

(2) ***Measuring continuity of interest*** —

(i) ***In general.*** In determining whether a proprietary interest in the target corporation is preserved, the consideration to be exchanged for the proprietary interests in the target corporation pursuant to a contract to effect the potential reorganization shall be valued on the last business day before the first date such contract is a binding contract (the pre-signing date), if such contract provides for fixed consideration. If a portion of the consideration provided for in such a contract consists of other property identified by value, then this specified value of such other property is used for purposes of determining the extent to which a proprietary interest in the target corporation is preserved. If the contract does not provide for fixed consideration, this paragraph (e)(2)(i) is not applicable.

(ii) ***Binding contract*** —

(A) ***In general.*** A binding contract is an instrument enforceable under applicable law against the parties to the instrument. The presence of a condition outside the control of the parties (including, for example, regulatory agency approval) shall not prevent an instrument from being a binding contract. Further, the fact that insubstantial terms remain to be negotiated by the parties to the contract, or that customary conditions remain to be satisfied, shall not prevent an instrument from being a binding contract.

(B) ***Modifications*** —

(*1*) ***In general.*** If a term of a binding contract that relates to the amount or type of the consideration the target shareholders will receive in a potential reorganization is modified before the closing date of the potential reorganization, and the contract as modified is a binding contract, the date of the modification shall be treated as the first date there is a binding contract.

(*2*) ***Modification of a transaction that preserves continuity of interest.*** Notwithstanding paragraph (e)(2)(ii)(B)(*1*) of this section, a modification of a term that relates to the amount or type of consideration the target shareholders will receive in a transaction that would have resulted in the preservation of a substantial part of the value of the target corporation shareholders' proprietary interests in the target corporation if there had been no modification will not be treated as a modification if—

(*i*) The modification has the sole effect of providing for the issuance of additional shares of issuing corporation stock to the target corporation shareholders;

(*ii*) The modification has the sole effect of decreasing the amount of money or other property to be delivered to the target corporation shareholders; or

(*iii*) The modification has the effect of decreasing the amount of money or other property to be delivered to the target corporation shareholders and providing for the issuance of additional shares of issuing corporation stock to the target corporation shareholders.

(3) ***Modification of a transaction that does not preserve continuity of interest.*** Notwithstanding paragraph (e)(2)(ii)(B)(*1*) of this section, a modification of a term that relates to the amount or type of consideration the target shareholders will receive in a transaction that would not have resulted in the preservation of a substantial part of the value of the target corporation shareholders' proprietary interests in the target corporation if there had been no modification will not be treated as a modification if—

(*i*) The modification has the sole effect of providing for the issuance of fewer shares of issuing corporation stock to the target corporation shareholders;

(*ii*) The modification has the sole effect of increasing the amount of money or other property to be delivered to the target corporation shareholders; or

(*iii*) The modification has the effect of increasing the amount of money or other property to be delivered to the target corporation shareholders and providing for the issuance of fewer shares of issuing corporation stock to the target corporation shareholders.

(C) ***Tender offers.*** For purposes of this paragraph (e)(2), a tender offer that is subject to section 14(d) of the Securities and Exchange Act of 1934 [15 U.S.C. 78n(d)(1)] and Regulation 14D (17 CFR 240.14d-1 through 240.14d-101) and is not pursuant to a binding contract, is treated as a binding contract made on the date of its announcement, notwithstanding that it may be modified by the offeror or that it is not enforceable against the offerees. If a modification (not pursuant to a binding contract) of such a tender offer is subject to the provisions of Regulation 14d-6(c) (17 CFR 240.14d-6(c)) and relates to the amount or type of the consideration received in the tender offer, then the date of the modification shall be treated as the first date there is a binding contract.

(iii) ***Fixed consideration*** —

(A) ***In general.*** A contract provides for fixed consideration if it provides the number of shares of each class of stock of the issuing corporation, the amount of money, and the other property (identified either by value or by specific description), if any, to be exchanged for all the proprietary interests in the target corporation, or to be exchanged for each proprietary interest in the target corporation. A shareholder's election to receive a number of shares of stock of the issuing corporation, money, or other property (or some combination of stock of the issuing corporation, money, or other property) in exchange for all of the shareholder's proprietary interests in the target corporation, or each of the shareholder's proprietary interests in the target corporation, will not prevent a contract from satisfying the definition of fixed consideration provided for in this paragraph (e)(2)(iii)(A).

(B) ***Shareholder elections.*** A contract that provides a target corporation shareholder with an election to receive a number of shares of stock of the issuing corporation, money, or other property (or some combination of stock of the issuing corporation, money, or other property) in exchange for all of the shareholder's proprietary interests in the target corporation, or each of the shareholder's proprietary interests in the target corporation, provides for fixed consideration if the determination of the number of shares of issuing corporation stock to be provided to the target corporation shareholder is determined using the value of the issuing corporation stock on the last business day before the first date

there is a binding contract. This is the case even though the shareholder election may preclude a determination, prior to the closing date, of the number of shares of each class of the issuing corporation, the amount of money, and the other property (or the combination of shares, money and other property) to be exchanged for each proprietary interest in the target corporation.

(C) ***Contingent adjustments to the consideration*** —

(*1*) ***In general.*** Except as provided in paragraph (e)(2)(iii)(C)(*2*) of this section, a contract that provides for contingent adjustments to the consideration will be treated as providing for fixed consideration if it would satisfy the requirements of paragraph (e)(2)(iii)(A) of this section without the contingent adjustment provision.

(2) ***Exceptions.*** A contract will not be treated as providing for fixed consideration if the contract provides for contingent adjustments to the consideration that prevent (to any extent) the target corporation shareholders from being subject to the economic benefits and burdens of ownership of the issuing corporation stock after the last business day before the first date the contract is a binding contract. For example, a contract will not be treated as providing for fixed consideration if the contract provides for contingent adjustments to the consideration in the event that the value of the stock of the issuing corporation, the value of the assets of the issuing corporation, or the value of any surrogate for either the value of the stock of the issuing corporation or the assets of the issuing corporation increases or decreases after the last business day before the first date there is a binding contract. Similarly, a contract will not be treated as providing for fixed consideration if the contract provides for contingent adjustments to the number of shares of the issuing corporation stock to be provided to the target corporation shareholders computed using any value of the issuing corporation shares after the last business day before the first date there is a binding contract.

(D) ***Escrows.*** Placing part of the consideration to be exchanged for proprietary interests in the target corporation in escrow to secure target's performance of customary pre-closing covenants or customary target representations and warranties will not prevent a contract from being treated as providing for fixed consideration.

(E) ***Anti-dilution clauses.*** The presence of a customary anti-dilution clause will not prevent a contract from being treated as providing for fixed consideration. However, the absence of such a clause will prevent a contract from being treated as providing for fixed consideration if the issuing corporation alters its capital structure between the first date there is an otherwise binding contract to effect the transaction and the effective date of the transaction in a manner that materially alters the economic arrangement of the parties to the binding contract. If the number of shares of the issuing corporation to be issued to the target corporation shareholders is altered pursuant to a customary anti-dilution clause, the value of the shares determined under paragraph (e)(2)(i) of this section must be adjusted accordingly.

(F) ***Dissenters' rights.*** The possibility that some shareholders may exercise dissenters' rights and receive consideration other than that provided for in the binding contract will not prevent the contract from being treated as providing for fixed consideration.

(G) ***Fractional shares.*** The fact that money may be paid in lieu of issuing fractional shares will not prevent a contract from being treated as providing for fixed consideration.

(iv) ***New issuances.*** For purposes of applying paragraph (e)(2)(i) of this section, any class of stock, securities, or indebtedness that the issuing corporation issues to the target corporation shareholders pursuant to the potential reorganization and that does not exist before the first date there is a binding contract to effect the potential reorganization is deemed to have been issued on the last business day before the first date there is a binding contract to effect the potential reorganization.

(v) ***Examples.*** For purposes of the examples in this paragraph (e)(2)(v), P is the issuing corporation, T is the target corporation, S is a wholly owned subsidiary of P, all corporations have only one class of stock outstanding, A is an individual, no transactions other than those described occur, and the transactions are not otherwise subject to recharacterization. The following examples illustrate the application of this paragraph (e)(2):

Example 1. Application of signing date rule. On January 3 of year 1, P and T sign a binding contract pursuant to which T will be merged with and into P on June 1 of year 1. Pursuant to the contract, the T shareholders will receive 40 P shares and $60 of cash in exchange for all of the outstanding stock of T. Twenty of the P shares, however, will be placed in escrow to secure customary target representations and warranties. The P stock is listed on an established market. On January 2 of year 1, the value of the P stock is $1 per share. On June 1 of year 1, T merges with and into P pursuant to the terms of the contract. On that date, the value of the P stock is $.25 per share. None of the stock placed in escrow is returned to P. Because the contract provides for the number of shares of P and the amount of money to be exchanged for all of the proprietary interests in T, under this paragraph (e)(2), there is a binding contract providing for fixed consideration as of January 3 of year 1. Therefore, whether the transaction satisfies the continuity of interest requirement is determined by reference to the value of the P stock on the pre-signing date. Because, for continuity of interest purposes, the T stock is exchanged for $40 of P stock and $60 of cash, the transaction preserves a substantial part of the value of the proprietary interest in T. Therefore, the transaction satisfies the continuity of interest requirement.

Example 2. Treatment of forfeited escrowed stock. (i) Escrowed stock. The facts are the same as in *Example 1* except that T's breach of a representation results in the escrowed consideration being returned to P. Because the contract provides for the number of shares of P and the amount of money to be exchanged for all of the proprietary interests in T, under this paragraph (e)(2), there is a binding contract providing for fixed consideration as of January 3 of year 1. Therefore, whether the transaction satisfies the continuity of interest requirement is determined by reference to the value of the P stock on the pre-signing date. Pursuant to paragraph (e)(1)(i) of this section, for continuity of interest purposes, the T stock is exchanged for $20 of P stock and $60 of cash, and the transaction does not preserve a substantial part of the value of the proprietary interest in T. Therefore, the transaction does not satisfy the continuity of interest requirement.

(ii) *Escrowed stock and cash.* The facts are the same as in paragraph (i) of this *Example 2* except that the consideration placed in escrow consists solely of eight of the P shares and $12 of the cash. Because the contract provides for the number of shares of P and the amount of money to be exchanged for all of the proprietary interests in T, under this paragraph (e)(2), there is a binding contract providing for fixed consideration as of January 3 of year 1. Therefore, whether the transaction satisfies the continuity of interest requirement is determined by reference to the value of the P stock on the pre-signing date. Pursuant to paragraph (e)(1)(i) of this section, for continuity of interest purposes, the T stock is exchanged for $32 of P stock and $48 of cash, and the transaction preserves a substantial part of the value of the proprietary interest in T. Therefore, the transaction satisfies the continuity of interest requirement.

Example 3. Redemption of stock received pursuant to binding contract. The facts are the same as in *Example 1* except that A owns 50 percent of the outstanding stock of T immediately prior to the merger and receives 10 P shares and $30 in the merger and an additional 10 P shares upon the release of the stock placed in escrow. In connection with the merger, A and S agree that, immediately after the merger, S will purchase any P shares that A acquires in the merger for $1 per share. Shortly after the merger, S purchases A's P shares for $20. Because the contract provides for the number of shares of P and the amount of money to be exchanged for all of the proprietary interests in T, under this paragraph (e)(2), there is a binding contract providing for fixed consideration as of January 3 of year 1. Therefore, whether the transaction satisfies the continuity of interest requirement is determined by reference to the value of the P stock on the pre-signing date. In addition, S is a person related to P under paragraph (e)(4)(i)(A) of this section. Accordingly, A is treated as exchanging his T shares for $50 of cash. Because, for continuity of interest purposes, the T stock is exchanged for $20 of P stock and $80 of cash, the transaction does not preserve a substantial part of the value of the proprietary interest in T. Therefore, the transaction does not satisfy the continuity of interest requirement.

Example 4. Modification of binding contract—continuity not preserved. The facts are the same as in *Example 1* except that on April 1 of year 1, the parties modify their contract. Pursuant to the modified contract, which is a binding contract, the T shareholders will receive 50 P shares (an additional 10 shares) and $75 of cash (an additional $15 of cash) in exchange for all of the outstanding T stock. On March 31 of year 1, the value of the P stock is $.50 per share. Under this paragraph (e)(2), although there was a binding contract providing for fixed consideration as of January 3 of year 1, terms of that contract relating to the consideration to be provided to the target shareholders were modified on April 1 of year 1. The execution of the transaction without modification would have resulted in the preservation of a substantial part of the value of the target corporation shareholders' proprietary interests in the target corporation if there had been no modification. However, because the modified contract provides for additional P stock and cash to be exchanged for all the proprietary interests in T, the exception in paragraph (e)(2)(ii)(B)(*2*) of this section does not apply to preserve the original signing date. Therefore, whether the transaction satisfies the continuity of interest requirement is determined by reference to the value of the P stock on March 31 of year 1. Because, for continuity of interest

purposes, the T stock is exchanged for $25 of P stock and $75 of cash, the transaction does not preserve a substantial part of the value of the proprietary interest in T. Therefore, the transaction does not satisfy the continuity of interest requirement.

Example 5. Modification of binding contract disregarded—continuity preserved. The facts are the same as in *Example 4* except that, pursuant to the modified contract, which is a binding contract, the T shareholders will receive 60 P shares (an additional 20 shares as compared to the original contract) and $60 of cash in exchange for all of the outstanding T stock. In addition, on March 31 of year 1, the value of the P stock is $.40 per share. Under this paragraph (e)(2), although there was a binding contract providing for fixed consideration as of January 3 of year 1, terms of that contract relating to the consideration to be provided to the target shareholders were modified on April 1 of year 1. Nonetheless, the modification has the sole effect of providing for the issuance of additional P shares to the T shareholders. In addition, the execution of the terms of the contract without regard to the modification would have resulted in the preservation of a substantial part of the value of the T shareholders' proprietary interest in T because, for continuity of interest purposes, the T stock would have been exchanged for $40 of P stock and $60 of cash. Pursuant to paragraph (e)(2)(ii)(B)(*2*) of this section, the modification is not treated as a modification for purposes of paragraph (e)(2)(ii)(B)(*1*) of this section. Accordingly, whether the transaction satisfies the continuity of interest requirement is determined by reference to the value of the P stock on the pre-signing date. Because, for continuity of interest purposes, the T stock is exchanged for $60 of P stock and $60 of cash, the transaction preserves a substantial part of the value of the proprietary interest in T. Therefore the transaction satisfies the continuity of interest requirement.

Example 6. New issuance. The facts are the same as in *Example 1,* except that, instead of cash, the T shareholders will receive a new class of P securities that will be publicly traded. In the aggregate, the securities will have a stated principal amount of $60 and bear interest at the average LIBOR (London Interbank Offered Rates) during the 10 days prior to the potential reorganization. If the T shareholders had been issued the P securities on January 2 of year 1, the P securities would have had a value of $60 (determined by reference to the value of comparable publicly traded securities). Whether the transaction satisfies the continuity of interest requirement is determined by reference to the value of the P stock and the P securities to be issued to the T shareholders on January 2 of year 1. Under paragraph (e)(2)(iv) of this section, for purposes of valuing the new P securities, they will be treated as having been issued on the pre-signing date. Because, for continuity of interest purposes, the T stock is exchanged for $40 of P stock and $60 of other property, the transaction preserves a substantial part of the value of the proprietary interest in T. Therefore, the transaction satisfies the continuity of interest requirement.

Example 7. Fixed consideration—continuity not preserved. On January 3 of year 1, P and T sign a binding contract pursuant to which T will be merged with and into P on June 1 of year 1. Pursuant to the contract, 60 shares of the T stock will be exchanged for $80 of cash and 40 shares of the T stock will be exchanged for 20 shares of P stock. On January 2 of year 1, the value of the P stock is $1 per share. On June 1 of year 1, T merges with and into P pursuant to the terms of the contract. This contract provides for fixed consideration and therefore whether the transaction satisfies the continuity of interest requirement is determined by reference to the value of the P stock on the pre-signing date. However, applying the signing date rule, the P stock represents only 20 percent of the value of the

total consideration to be received by the T shareholders. Accordingly, based on the economic realities of the exchange, the transaction does not preserve a substantial part of the value of the proprietary interest in T. Therefore, the transaction does not satisfy the continuity of interest requirement.

> *Example 8. Anti-dilution clause.* (i) *Absence of anti-dilution clause.* On January 3 of year 1, P and T sign a binding contract pursuant to which T will be merged with and into P on June 1 of year 1. Pursuant to the contract, the T shareholders will receive 40 P shares and $60 of cash in exchange for all of the outstanding stock of T. The contract does not contain a customary anti-dilution provision. The P stock is listed on an established market. On January 2 of year 1, the value of the P stock is $1 per share. On April 10 of year 1, P issues its stock to effect a stock split; each shareholder of P receives an additional share of P for each P share that it holds. On April 11 of year 1, the value of the P stock is $.50 per share. Because P altered its capital structure between January 3 and June 1 of year 1 in a manner that materially alters the economic arrangement of the parties, under paragraph (e)(2)(iii)(E) of this section, the contract is not treated as a binding contract that provides for fixed consideration. Accordingly, whether the transaction satisfies the continuity of interest requirement cannot be determined by reference to the value of the P stock on January 2 of year 1.
> (ii) *Adjustment for anti-dilution clause.* The facts are the same as in paragraph (i) of this *Example 8* except that the contract contains a customary anti-dilution provision, and the T shareholders receive 80 P shares and $60 of cash in exchange for all of the outstanding stock of T. Under paragraph (e)(2)(iii)(E) of this section, the contract is treated as a binding contract that provides for fixed consideration as of January 3 of year 1. Therefore, whether the transaction satisfies the continuity of interest requirement is generally determined by reference to the value of the P stock on January 2 of year 1. However, under paragraph (e)(2)(iii)(E) of this section, the value of the P stock on the pre-signing date must be adjusted to take the stock split into account. For continuity of interest purposes, the T stock is exchanged for $40 of P stock (($1/2) × 80) and $60 of cash. Therefore, the transaction satisfies the continuity of interest requirement.

Example 9. Shareholder election. On January 3 of year 1, P and T sign a binding contract pursuant to which T will be merged with and into P on June 1 of year 1. On January 2 of year 1, the value of the P stock and the T stock is $1 per share. Pursuant to the contract, at the shareholders' election, each share of T's 100 shares will be exchanged for cash of $1, or alternatively, P stock. The contract provides that the determination of the number of shares of P stock to be exchanged for a share of T stock is made using the value of the P stock on the last business day before the first date there is a binding contract (that is, $1 per share). The contract further provides that, in the aggregate, 40 shares of P stock and $60 will be delivered, and contains a proration mechanism in the event that either item of

consideration is oversubscribed. On the closing date, the value of the P stock is $.20 per share, and all target shareholders elect to receive cash. Pursuant to the proration provision, each target share is exchanged for $.60 of cash and $.08 of P stock. Pursuant to paragraph (e)(2)(iii)(A) of this section, the contract provides for fixed consideration because it provides for the number of shares of P stock and the amount of money to be exchanged for all the proprietary interests in the target corporation. Furthermore, pursuant to paragraph (e)(2)(iii)(B) of this section, the contract provides for fixed consideration because the number of shares of issuing corporation stock to be provided to the target corporation shareholders is determined using the pre-signing date value of P stock. Accordingly, whether the transaction satisfies the continuity of interest requirement is determined by reference to the value of the P stock on January 2 of year 1. Because, for continuity purposes, the T stock is exchanged for $40 of P stock and $60 of cash, the transaction preserves a substantial part of the value of the proprietary interest in T. Therefore, the transaction satisfies the continuity of interest requirement.

Example 10. Contingent adjustment based on the value of the issuing corporation stock—continuity not preserved. On January 3 of year 1, P and T sign a binding contract pursuant to which T will be merged with and into P on June 1 of year 1. On January 2 of year 1, the value of the P stock is $1 per share. Pursuant to the contract, if the value of the P stock does not decrease after January 2 of year 1, the T shareholders will receive 40 P shares and $60 of cash in exchange for all of the outstanding stock of T. Furthermore, the contract provides that the T shareholders will receive $.16 of additional P shares and $.24 for every $.01 decrease in the value of one share of P stock after January 2 of year 1. On June 1 of year 1, T merges with and into P pursuant to the terms of the contract. On that date, the value of the P stock is $.40 per share. Pursuant to the terms of the contract, the consideration is adjusted so that the T shareholders receive 24 more P shares ((60 × $.16)/$.40) and $14.40 more cash (60 × $.24) than they would absent an adjustment. Accordingly, at closing the T shareholders receive 64 P shares and $74.40 of cash. Because the contract provides that additional P shares and cash will be delivered to the T shareholders if the value of the stock of P decreases after January 2 of year 1, under paragraph (e)(2)(iii)(C)(2) of this section, the contract is not treated as providing for fixed consideration, and therefore whether the transaction satisfies the continuity of interest requirement cannot be determined by reference to the value of the P stock on January 2 of year 1. For continuity of interest purposes, the T stock is exchanged for $25.60 of P stock (64 × $.40) and $74.40 of cash and the transaction does not preserve a substantial part of the value of the proprietary interest in T. Therefore, the transaction does not satisfy the continuity of interest requirement.

Example 11. Contingent adjustment to boot based on the value of the target corporation stock—continuity not preserved. On January 3 of year 1, P and T sign a binding contract pursuant to which T will be merged with and into P on June 1 of year 1. On January 2 of year 1, T has 100 shares outstanding, and each T share is worth $1. On January 2 of year 1, each P share is worth $1. Pursuant to the contract, if the value of the T stock does not increase after January 3 of year 1, the T shareholders will receive 40 P shares and $60 of cash in exchange for all of the outstanding stock of T. Furthermore, the contract provides that the T shareholders will receive $1 of additional cash for every $.01 increase in the value of one share of T stock after January 3 of year 1. On June 1 of year 1, the value of the T stock is $1.40 per share

and the value of the P stock is $.75 per share. Pursuant to the terms of the contract, the consideration is adjusted so that the T shareholders receive $40 more cash (40 × $1) than they would absent an adjustment. Accordingly, at closing the T shareholders receive 40 P shares and $100 of cash. Because the contract provides the number of shares of P stock and the amount of money to be exchanged for all the proprietary interests in T, and the contingent adjustment to the cash consideration is not based on changes in the value of the P stock, P assets, or any surrogate thereof, after January 2 of year 1, there is a binding contract providing for fixed consideration as of January 3 of year 1. Therefore, whether the transaction satisfies the continuity of interest requirement is determined by reference to the value of the P stock on January 2 of year 1. For continuity of interest purposes, the T stock is exchanged for $40 of P stock (40 × $1) and $100 of cash. Therefore, the transaction does not satisfy the continuity of interest requirement.

Example 12. Contingent adjustment to stock based on the value of the target corporation stock—continuity preserved. On January 3 of year 1, P and T sign a binding contract pursuant to which T will be merged with and into P on June 1 of year 1. On that date T has 100 shares outstanding, and each T share is worth $1. On January 2 of year 1, each P share is worth $1. Pursuant to the contract, if the value of the T stock does not decrease after January 3 of year 1, the T shareholders will receive 40 P shares and $60 of cash in exchange for all of the outstanding stock of T. Furthermore, the contract provides that the T shareholders will receive $.40 less P stock and $.60 less cash for every $.01 decrease in the value of one share of T stock after January 3 of year 1. The contract also provides that the number of P shares by which the consideration will be reduced as a result of this adjustment will be determined based on the value of the P stock on January 2 of year 1. On June 1 of year 1, T merges with and into P pursuant to the terms of the contract. On that date, the value of the T stock is $.70 per share and the value of the P stock is $.75 per share. Pursuant to the terms of the contract, the consideration is adjusted so that the T shareholders receive 12 fewer P shares ((30 × $.40)/$1) and $18 less cash (30 × $.60) than they would absent an adjustment. Accordingly, at closing the T shareholders receive 28 P shares and $42 of cash. Because the contract provides for the number of shares of P stock and the amount of money to be exchanged for all of the proprietary interests in T, the contract does not provide for contingent adjustments to the consideration based on a change in value of the P stock, P assets, or any surrogate thereof, after January 2 of year 1, and the adjustment to the number of P shares the T shareholders receive is determined based on the value of the P shares on January 2 of year 1, there is a binding contract providing for fixed consideration as of January 3 of year 1. Therefore, whether the transaction satisfies the continuity of interest requirement is determined by reference to the value of the P stock on January 2 of year 1. For continuity of interest purposes, the T stock is exchanged for $28 of P stock (28 × $1) and $42 of cash. Accordingly, the transaction satisfies the continuity of interest requirement.

(3) ***Related persons acquisitions.*** A proprietary interest in the target corporation is not preserved if, in connection with a potential reorganization, a person related (as defined in paragraph (e)(4) of this section) to the issuing corporation acquires, for consideration other than stock of the issuing corporation, either a proprietary interest in the target corporation or stock of the issuing corporation that was furnished in exchange for a proprietary interest in the target corporation. The preceding

sentence does not apply to the extent those persons who were the direct or indirect owners of the target corporation prior to the potential reorganization maintain a direct or indirect proprietary interest in the issuing corporation.

(4) ***Definition of related person*** —

(i) ***In general.*** For purposes of this paragraph (e), two corporations are related persons if either—

(A) The corporations are members of the same affiliated group as defined in section 1504 (determined without regard to section 1504(b)); or

(B) A purchase of the stock of one corporation by another corporation would be treated as a distribution in redemption of the stock of the first corporation under section 304(a)(2) (determined without regard to § 1.1502-80(b)).

(ii) ***Special rules.*** The following rules apply solely for purposes of this paragraph (e)(4):

(A) A corporation will be treated as related to another corporation if such relationship exists immediately before or immediately after the acquisition of the stock involved.

(B) A corporation, other than the target corporation or a person related (as defined in paragraph (e)(4) of this section determined without regard to paragraph (e)(4)(i)(A) of this section) to the target corporation, will be treated as related to the issuing corporation if the relationship is created in connection with the potential reorganization.

(5) ***Acquisitions by partnerships.*** For purposes of this paragraph (e), each partner of a partnership will be treated as owning or acquiring any stock owned or acquired, as the case may be, by the partnership in accordance with that partner's interest in the partnership. If a partner is treated as acquiring any stock by reason of the application of this paragraph (e)(5), the partner is also treated as having furnished its share of any consideration furnished by the partnership to acquire the stock in accordance with that partner's interest in the partnership.

(6) ***Creditors' claims as proprietary interests*** —

(i) ***In general.*** A creditor's claim against a target corporation may be a proprietary interest in the target corporation if the target corporation is in a title 11 or similar case (as defined in section 368(a)(3)) or the amount of the target corporation's liabilities exceeds the fair market value of its assets immediately prior to the potential reorganization. In such cases, if any creditor receives a proprietary interest in the issuing corporation in exchange for its claim, every claim of that class of creditors and every claim of all equal and junior classes of creditors (in addition to the claims of shareholders) is a proprietary interest in the target corporation immediately prior to the potential reorganization to the extent provided in paragraph (e)(6)(ii) of this section.

(ii) ***Value of proprietary interest*** —

(A) ***Claims of most senior class of creditors receiving stock.*** A claim of the most senior class of creditors receiving a proprietary interest in the issuing corporation and a claim of any equal class of creditors will be treated as a proprietary interest in accordance with the rules of this paragraph (e)(6)(ii). For a claim of the most senior class of creditors receiving a proprietary interest in the issuing corporation, and a claim of any equal class of creditors, the value of the proprietary interest in the target corporation represented by the claim is determined by multiplying the fair market value of the claim by a fraction, the numerator of which is the fair market value of the proprietary interests in the issuing

corporation that are received in the aggregate in exchange for the claims of those classes of creditors, and the denominator of which is the sum of the amount of money and the fair market value of all other consideration (including the proprietary interests in the issuing corporation) received in the aggregate in exchange for such claims. If only one class (or one set of equal classes) of creditors receives stock, such class (or set of equal classes) is treated as the most senior class of creditors receiving stock. When only one class (or one set of equal classes) of creditors receives issuing corporation stock in exchange for a creditor's proprietary interest in the target corporation, such stock will be counted for measuring continuity of interest provided that the stock issued by the issuing corporation is not de minimis in relation to the total consideration received by the insolvent target corporation, its shareholders, and its creditors.

(B) ***Claims of junior classes of creditor receiving stock.*** The value of a proprietary interest in the target corporation held by a creditor whose claim is junior to the claims of other classes of target claims which are receiving proprietary interests in the issuing corporation is the fair market value of the junior creditor's claim.

(iii) ***Bifurcated claims.*** If a creditor's claim is bifurcated into a secured claim and an unsecured claim pursuant to an order in a title 11 or similar case (as defined in section 368(a)(3)) or pursuant to an agreement between the creditor and the debtor, the bifurcation of the claim and the allocation of consideration to each of the resulting claims will be respected in applying the rules of this paragraph (e)(6).

(iv) ***Effect of treating creditors as proprietors.*** The treatment of a creditor's claim as a proprietary interest in the target corporation shall not preclude treating shares of the target corporation as proprietary interests in the target corporation.

(7) ***Successors and predecessors.*** For purposes of this paragraph (e), any reference to the issuing corporation or the target corporation includes a reference to any successor or predecessor of such corporation, except that the target corporation is not treated as a predecessor of the issuing corporation and the issuing corporation is not treated as a successor of the target corporation.

(8) ***Examples.*** For purposes of the examples in this paragraph (e)(7), P is the issuing corporation, T is the target corporation, S is a wholly owned subsidiary of P, all corporations have only one class of stock outstanding, A and B are individuals, PRS is a partnership, all reorganization requirements other than the continuity of interest requirement are satisfied, and the transaction is not otherwise subject to recharacterization. The following examples illustrate the application of this paragraph (e):

> *Example 1. Sale of stock to third party.* (i) *Sale of issuing corporation stock after merger.* A owns all of the stock of T. T merges into P. In the merger, A receives P stock having a fair market value of $50x and cash of $50x. Immediately after the merger, and pursuant to a preexisting binding contract, A sells all of the P stock received by A in the merger to B. Assume that there are no facts and circumstances indicating that the cash used by B to purchase A's P stock was in substance exchanged by P for T stock. Under paragraphs (e)(1) and (3) of this section, the sale to B is disregarded because B is not a person related to P within the meaning of paragraph (e)(4) of this section. Thus, the transaction satisfies the continuity of interest requirement because 50 percent of A's T stock was exchanged for P stock, preserving a substantial part of the value of the proprietary interest in T.

(ii) *Sale of target corporation stock before merger.* The facts are the same as paragraph (i) of this *Example 1,* except that B buys A's T stock prior to the merger of T into P and then exchanges the T stock for P stock having a fair market value of $50x and cash of $50x. The sale by A is disregarded. The continuity of interest requirement is satisfied because B's T stock was exchanged for P stock, preserving a substantial part of the value of the proprietary interest in T.

Example 2. Relationship created in connection with potential reorganization. Corporation X owns 60 percent of the stock of P and 30 percent of the stock of T. A owns the remaining 70 percent of the stock of T. X buys A's T stock for cash in a transaction which is not a qualified stock purchase within the meaning of section 338. T then merges into P. In the merger, X exchanges all of its T stock for additional stock of P. As a result of the issuance of the additional stock to X in the merger, X's ownership interest in P increases from 60 to 80 percent of the stock of P. X is not a person related to P under paragraph (e)(4)(i)(B) of this section, because a purchase of stock of P by X would not be treated as a distribution in redemption of the stock of P under section 304(a)(2). However, X is a person related to P under paragraphs (e)(4)(i)(A) and (ii)(B) of this section, because X becomes affiliated with P in the merger. The continuity of interest requirement is not satisfied, because X acquired a proprietary interest in T for consideration other than P stock, and a substantial part of the value of the proprietary interest in T is not preserved. See paragraph (e)(3) of this section.

Example 3. Participation by issuing corporation in post-merger sale. A owns 80 percent of the T stock and none of the P stock, which is widely held. T merges into P. In the merger, A receives P stock. In addition, A obtains rights pursuant to an arrangement with P to have P register the P stock under the Securities Act of 1933, as amended. P registers A's stock, and A sells the stock shortly after the merger. No person who purchased the P stock from A is a person related to P within the meaning of paragraph (e)(4) of this section. Under paragraphs (e)(1) and (3) of this section, the sale of the P stock by A is disregarded because no person who purchased the P stock from A is a person related to P within the meaning of paragraph (e)(4) of this section. The transaction satisfies the continuity of interest requirement because A's T stock was exchanged for P stock, preserving a substantial part of the value of the proprietary interest in T.

Example 4. Redemptions and purchases by issuing corporation or related persons. (i) *Redemption by issuing corporation.* A owns 100 percent of the stock of T and none of the stock of P. T merges into S. In the merger, A receives P stock. In connection with the merger, P redeems all of the P stock received by A in the merger for cash. The continuity of interest requirement is not satisfied, because, in connection with the merger, P redeemed the stock exchanged for a proprietary interest in T, and a substantial part of the value of the proprietary interest in T is not preserved. See paragraph (e)(1) of this section.

(ii) *Purchase of target corporation stock by issuing corporation.* The facts are the same as paragraph (i) of this *Example 4,* except that, instead of P redeeming its stock, prior to and in connection with the merger of T into S, P purchases 90 percent of the T stock from A for cash. The continuity of interest requirement is not satisfied, because in connection with the merger, P acquired a proprietary interest in T for consideration other than P

stock, and a substantial part of the value of the proprietary interest in T is not preserved. See paragraph (e)(1) of this section. However, see § 1.338-3(d) (which may change the result in this case by providing that, by virtue of section 338, continuity of interest is satisfied for certain parties after a qualified stock purchase).

(iii) *Purchase of issuing corporation stock by person related to issuing corporation.* The facts are the same as paragraph (i) of this *Example 4,* except that, instead of P redeeming its stock, S buys all of the P stock received by A in the merger for cash. S is a person related to P under paragraphs (e)(4)(i)(A) and (B) of this section. The continuity of interest requirement is not satisfied, because S acquired P stock issued in the merger, and a substantial part of the value of the proprietary interest in T is not preserved. See paragraph (e)(3) of this section.

Example 5. Redemption in substance by issuing corporation. A owns 100 percent of the stock of T and none of the stock of P. T merges into P. In the merger, A receives P stock. In connection with the merger, B buys all of the P stock received by A in the merger for cash. Shortly thereafter, in connection with the merger, P redeems the stock held by B for cash. Based on all the facts and circumstances, P in substance has exchanged solely cash for T stock in the merger. The continuity of interest requirement is not satisfied, because in substance P redeemed the stock exchanged for a proprietary interest in T, and a substantial part of the value of the proprietary interest in T is not preserved. See paragraph (e)(1) of this section.

Example 6. Purchase of issuing corporation stock through partnership. A owns 100 percent of the stock of T and none of the stock of P. S is an 85 percent partner in PRS. The other 15 percent of PRS is owned by unrelated persons. T merges into P. In the merger, A receives P stock. In connection with the merger, PRS purchases all of the P stock received by A in the merger for cash. Under paragraph (e)(5) of this section, S, as an 85 percent partner of PRS, is treated as having acquired 85 percent of the P stock exchanged for A's T stock in the merger, and as having furnished 85 percent of the cash paid by PRS to acquire the P stock. S is a person related to P under paragraphs (e)(4)(i)(A) and (B) of this section. The continuity of interest requirement is not satisfied, because S is treated as acquiring 85 percent of the P stock issued in the merger, and a substantial part of the value of the proprietary interest in T is not preserved. See paragraph (e)(3) of this section.

Example 7. Exchange by acquiring corporation for direct interest. A owns 30 percent of the stock of T. P owns 70 percent of the stock of T, which was not acquired by P in connection with the acquisition of T's assets. T merges into P. A receives cash in the merger. The continuity of interest requirement is satisfied, because P's 70 percent proprietary interest in T is exchanged by P for a direct interest in the assets of the target corporation enterprise.

Example 8. Maintenance of direct or indirect interest in issuing corporation. X, a corporation, owns all of the stock of each of corporations P and Z. Z owns all of the stock of T. T merges into P. Z receives P stock in the merger. Immediately thereafter and in connection with the merger, Z distributes the P stock received in the merger to X. X is a person related to P under paragraph (e)(4)(i)(A) of this section. The continuity of interest requirement is satisfied, because X was an

indirect owner of T prior to the merger who maintains a direct or indirect proprietary interest in P, preserving a substantial part of the value of the proprietary interest in T. See paragraph (e)(3) of this section.

Example 9. Preacquisition redemption by target corporation. T has two shareholders, A and B. P expresses an interest in acquiring the stock of T. A does not wish to own P stock. T redeems A's shares in T in exchange for cash. No funds have been or will be provided by P for this purpose. P subsequently acquires all the outstanding stock of T from B solely in exchange for voting stock of P. The cash received by A in the prereorganization redemption is not treated as other property or money under section 356, and would not be so treated even if A had received some stock of P in exchange for his T stock. The prereorganization redemption by T does not affect continuity of interest, because B's proprietary interest in T is unaffected, and the value of the proprietary interest in T is preserved.

Example 10. Creditors treated as owning a proprietary interest. (i) *More than one class of creditor receives issuing corporation stock.* T has assets with a fair market value of $150x and liabilities of $200x. T has two classes of creditors: two senior creditors with claims of $25x each; and one junior creditor with a claim of $150x. T transfers all of its assets to P in exchange for $95x in cash and shares of P stock with a fair market value of $55x. Each T senior creditor receives $20x in cash and P stock with a fair market value of $5x in exchange for his claim. The T junior creditor receives $55x in cash and P stock with a fair market value of $45x in exchange for his claim. The T shareholders receive no consideration in exchange for their T stock. Under paragraph (e)(6) of this section, because the amount of T's liabilities exceeds the fair market value of its assets immediately prior to the potential reorganization, the claims of the creditors of T may be proprietary interests in T. Because the senior creditors receive proprietary interests in P in the transaction in exchange for their claims, their claims and the claim of the junior creditor and the T stock are treated as proprietary interests in T immediately prior to the transaction. Under paragraph (e)(6)(ii)(A) of this section, the value of the proprietary interest of each of the senior creditors' claims is $5x (the fair market value of the senior creditor's claim, $25x, multiplied by a fraction, the numerator of which is $10x, the fair market value of the proprietary interests in the issuing corporation, P, received in the aggregate in exchange for the claims of all the creditors in the senior class, and the denominator of which is $50x, the sum of the amount of money and the fair market value of all other consideration (including the proprietary interests in P) received in the aggregate in exchange for such claims). Accordingly, $5x of the stock that each of the senior creditors receives is counted in measuring continuity of interest. Under paragraph (e)(6)(ii)(B) of this section, the value of the junior creditor's proprietary interest in T immediately prior to the transaction is $100x, the value of his claim. Thus, the value of the creditors' proprietary interests in total is $110x and the creditors received $55x worth of P stock in total in exchange for their proprietary interests. Therefore, P acquired 50 percent of the value of the proprietary interests in T in exchange for P stock. Because a

substantial part of the value of the proprietary interests in T is preserved, the continuity of interest requirement is satisfied.

(ii) *One class of creditor receives issuing corporation stock and cash in disproportionate amounts.* T has assets with a fair market value of $80x and liabilities of $200x. T has one class of creditor with two creditors, A and B, each having a claim of $100x. T transfers all of its assets to P for $60x in cash and shares of P stock with a fair market value of $20x. A receives $40x in cash in exchange for its claim. B receives $20x in cash and P stock with a fair market value of $20x in exchange for its claim. The T shareholders receive no consideration in exchange for their T stock. The P stock is not de minimis in relation to the total consideration received. Under paragraph (e)(6) of this section, because the amount of T's liabilities exceeds the fair market value of its assets immediately prior to the potential reorganization, the claims of the creditors of T may be proprietary interests in T. Because the creditors of T received proprietary interests in P in the transaction in exchange for their claims, their claims and the T stock are treated as proprietary interests in T immediately prior to the transaction. Under paragraph (e)(6)(ii)(A) of this section, the value of the proprietary interest of each of the senior creditors is $10x (the fair market value of a senior creditor's claim, $40x, multiplied by a fraction, the numerator of which is $20x, the fair market value of the proprietary interests in the issuing corporation, P, received in the aggregate in exchange for the claims of all the creditors in the class, and the denominator of which is $80x, the sum of the amount of money and the fair market value of all other consideration (including the proprietary interests in P) received in the aggregate in exchange for such claims). Accordingly, $10x of the cash that was received by A and $10x of the P stock that was received by B are counted in measuring continuity of interest. Thus, the value of the creditors' proprietary interests in total is $20x and the creditors received $10x worth of P stock in total in exchange for their proprietary interests. Therefore, P acquired 50 percent of the value of the proprietary interests in T in exchange for P stock. Because a substantial part of the value of the proprietary interests in T is preserved, the continuity of interest requirement is satisfied.

(9) ***Effective/applicability dates*** —

(i) ***In general.*** Paragraphs (e)(1) and (e)(3) through (e)(7) of this section apply to transactions occurring after January 28, 1998, except that they do not apply to any transaction occurring pursuant to a written agreement which is binding on January 28, 1998, and at all times thereafter. Paragraph (e)(1)(ii) of this section, however, applies to transactions occurring after August 30, 2000, unless the transaction occurs pursuant to a written agreement that is (subject to customary conditions) binding on that date and at all times thereafter. Taxpayers who entered into a binding agreement on or after January 28, 1998, and before August 30, 2000, may request a private letter ruling permitting them to apply the final regulations to their transaction. A private letter ruling will not be issued unless the taxpayer establishes to the satisfaction of the IRS that there is not a significant risk of different parties to the transaction taking inconsistent positions, for Federal tax purposes, with respect to the applicability of the

final regulations to the transaction. The sixth sentence of paragraph (e)(1)(i) of this section, the last sentence of paragraph (e)(1)(ii) of this section, paragraph (e)(3) of this section, paragraph (e)(6) of this section, and *Example 10* of paragraph (e)(8) of this section apply to transactions occurring after December 12, 2008.

(ii) ***COI measurement date.*** Paragraph (e)(2) of this section applies to transactions occurring pursuant to binding contracts entered into after December 19, 2011. For transactions entered into after March 19, 2010, and occurring pursuant to binding contracts entered into on or before December 19, 2011, the parties to the transaction may elect to apply the provisions of § 1.368-1T as contained in 26 CFR, Part 1, §§ 1.301-1.400, revised as of April 1, 2009. However, the target corporation, the issuing corporation, the controlling corporation of the acquiring corporation if stock thereof is provided as consideration in the transaction, and any direct or indirect transferee of transferred basis property from any of the foregoing, may not elect to apply the provisions of § 1.368-1T as contained in 26 CFR, Part 1, §§ 1.301-1.400, revised as of April 1, 2009, unless all such taxpayers elect to apply such provisions. This election requirement will be satisfied if none of the specified parties adopts inconsistent treatment. For transactions entered into on or before March 19, 2010, see § 1.368-1T as contained in 26 CFR, Part 1, §§ 1.301-1.400, revised as of April 1, 2009.

[T.D. 6500, 25 FR 11607, Nov. 26, 1960]

Editorial Note: For FEDERAL REGISTER citations affecting § 1.368-1, see the List of CFR Sections Affected, which appears in the Finding Aids section of the printed volume and at *www.govinfo.gov.*

§ 1.368-2 Definition of terms.

(a) The application of the term *reorganization* is to be strictly limited to the specific transactions set forth in section 368(a). The term does not embrace the mere purchase by one corporation of the properties of another corporation. The preceding sentence applies to transactions occurring after January 28, 1998, except that it does not apply to any transaction occurring pursuant to a written agreement which is binding on January 28, 1998, and at all times thereafter. If the properties are transferred for cash and deferred payment obligations of the transferee evidenced by short-term notes, the transaction is a sale and not an exchange in which gain or loss is not recognized.

(b)

(1)

(i) ***Definitions.*** For purposes of this paragraph (b)(1), the following terms shall have the following meanings:

(A) ***Disregarded entity.*** A disregarded entity is a business entity (as defined in § 301.7701-2(a) of this chapter) that is disregarded as an entity separate from its owner for Federal income tax purposes. Examples of disregarded entities include a domestic single member limited liability company that does not elect to be classified as a corporation for Federal income tax purposes, a corporation (as defined in § 301.7701-2(b) of this chapter) that is a qualified REIT subsidiary (within the meaning of section 856(i)(2)), and a corporation that is a qualified subchapter S subsidiary (within the meaning of section 1361(b)(3)(B)).

(B) ***Combining entity.*** A combining entity is a business entity that is a corporation (as defined in § 301.7701-2(b) of this chapter) that is not a disregarded entity.

(C) ***Combining unit.*** A combining unit is composed solely of a combining entity and all disregarded entities, if any, the assets of which are treated as owned by such combining entity for Federal income tax purposes.

(ii) ***Statutory merger or consolidation generally.*** For purposes of section 368(a)(1)(A), a statutory merger or consolidation is a transaction effected pursuant to the statute or statutes necessary to effect the merger or consolidation, in which transaction, as a result of the operation of such statute or statutes, the following events occur simultaneously at the effective time of the transaction—

(A) All of the assets (other than those distributed in the transaction) and liabilities (except to the extent such liabilities are satisfied or discharged in the transaction or are nonrecourse liabilities to which assets distributed in the transaction are subject) of each member of one or more combining units (each a transferor unit) become the assets and liabilities of one or more members of one other combining unit (the transferee unit); and

(B) The combining entity of each transferor unit ceases its separate legal existence for all purposes; provided, however, that this requirement will be satisfied even if, under applicable law, after the effective time of the transaction, the combining entity of the transferor unit (or its officers, directors, or agents) may act or be acted against, or a member of the transferee unit (or its officers, directors, or agents) may act or be acted against in the name of the combining entity of the transferor unit, provided that such actions relate to assets or obligations of the combining entity of the transferor unit that arose, or relate to activities engaged in by such entity, prior to the effective time of the transaction, and such actions are not inconsistent with the requirements of paragraph (b)(1)(ii)(A) of this section.

(iii) ***Examples.*** The following examples illustrate the rules of paragraph (b)(1) of this section. In each of the examples, except as otherwise provided, each of R, V, Y, and Z is a C corporation. X is a domestic limited liability company. Except as otherwise provided, X is wholly owned by Y and is disregarded as an entity separate from Y for Federal income tax purposes. The examples are as follows:

> *Example 1. Divisive transaction pursuant to a merger statute.* (i) *Facts.* Under State W law, Z transfers some of its assets and liabilities to Y, retains the remainder of its assets and liabilities, and remains in existence for Federal income tax purposes following the transaction. The transaction qualifies as a merger under State W corporate law.
> (ii) *Analysis.* The transaction does not satisfy the requirements of paragraph (b)(1)(ii)(A) of this section because all of the assets and liabilities of Z, the combining entity of the transferor unit, do not become the assets and liabilities of Y, the combining entity and sole member of the transferee unit. In addition, the transaction does not satisfy the requirements of paragraph (b)(1)(ii)(B) of this section because the separate legal existence of Z does not cease for all purposes. Accordingly, the transaction does not qualify as a statutory merger or consolidation under section 368(a)(1)(A).

Example 2. Merger of a target corporation into a disregarded entity in exchange for stock of the owner. (i) *Facts.* Under State W law, Z merges into X. Pursuant to such law, the following events occur simultaneously at the effective time of the transaction: all of the assets and liabilities of Z become the assets and liabilities of X and Z's separate legal existence ceases for all purposes. In the merger, the Z shareholders exchange their stock of Z for stock of Y.
(ii) *Analysis.* The transaction satisfies the requirements of paragraph (b)(1)(ii) of this section because the transaction is effected pursuant to State W law and the following events occur simultaneously at the effective time of the transaction: all of the assets and liabilities of Z, the combining entity and sole member of the transferor unit, become the assets and liabilities of one or more members of the transferee unit that is comprised of Y, the combining entity of the transferee unit, and X, a disregarded entity the assets of which Y is treated as owning for Federal income tax purposes, and Z ceases its separate legal existence for all purposes. Accordingly, the transaction qualifies as a statutory merger or consolidation for purposes of section 368(a)(1)(A).

Example 3. Merger of a target S corporation that owns a QSub into a disregarded entity. (i) *Facts.* The facts are the same as in *Example 2,* except that Z is an S corporation and owns all of the stock of U, a QSub.
(ii) *Analysis.* The deemed formation by Z of U pursuant to § 1.1361-5(b)(1) (as a consequence of the termination of U's QSub election) is disregarded for Federal income tax purposes. The transaction is treated as a transfer of the assets of U to X, followed by X's transfer of these assets to U in exchange for stock of U. See § 1.1361-5(b)(3) *Example 9.* The transaction will, therefore, satisfy the requirements of paragraph (b)(1)(ii) of this section because the transaction is effected pursuant to State W law and the following events occur simultaneously at the effective time of the transaction: all of the assets and liabilities of Z and U, the sole members of the transferor unit, become the assets and liabilities of one or more members of the transferee unit that is comprised of Y, the combining entity of the transferee unit, and X, a disregarded entity the assets of which Y is treated as owning for Federal income tax purposes, and Z ceases its separate legal existence for all purposes. Moreover, the deemed transfer of the assets of U in exchange for U stock does not cause the transaction to fail to qualify as a statutory merger or consolidation. See § 368(a)(2)(C). Accordingly, the transaction qualifies as a statutory merger or consolidation for purposes of section 368(a)(1)(A).

Example 4. Triangular merger of a target corporation into a disregarded entity. (i) *Facts.* The facts are the same as in *Example 2,* except that V owns 100 percent of the outstanding stock of Y and, in the merger of Z into X, the Z shareholders exchange their stock of Z for stock of V. In the transaction, Z transfers substantially all of its properties to X.

(ii) *Analysis.* The transaction is not prevented from qualifying as a statutory merger or consolidation under section 368(a)(1)(A), provided the requirements of section 368(a)(2)(D) are satisfied. Because the assets of X are treated for Federal income tax purposes as the assets of Y, Y will be treated as acquiring substantially all of the properties of Z in the merger for purposes of determining whether the merger satisfies the requirements of section 368(a)(2)(D). As a result, the Z shareholders that receive stock of V will be treated as receiving stock of a corporation that is in control of Y, the combining entity of the transferee unit that is the acquiring corporation for purposes of section 368(a)(2)(D). Accordingly, the merger will satisfy the requirements of section 368(a)(2)(D).

Example 5. Merger of a target corporation into a disregarded entity owned by a partnership. (i) *Facts.* The facts are the same as in *Example 2,* except that Y is organized as a partnership under the laws of State W and is classified as a partnership for Federal income tax purposes.
(ii) *Analysis.* The transaction does not satisfy the requirements of paragraph (b)(1)(ii)(A) of this section. All of the assets and liabilities of Z, the combining entity and sole member of the transferor unit, do not become the assets and liabilities of one or more members of a transferee unit because neither X nor Y qualifies as a combining entity. Accordingly, the transaction cannot qualify as a statutory merger or consolidation for purposes of section 368(a)(1)(A).

Example 6. Merger of a disregarded entity into a corporation. (i) *Facts.* Under State W law, X merges into Z. Pursuant to such law, the following events occur simultaneously at the effective time of the transaction: all of the assets and liabilities of X (but not the assets and liabilities of Y other than those of X) become the assets and liabilities of Z and X's separate legal existence ceases for all purposes.
(ii) *Analysis.* The transaction does not satisfy the requirements of paragraph (b)(1)(ii)(A) of this section because all of the assets and liabilities of a transferor unit do not become the assets and liabilities of one or more members of the transferee unit. The transaction also does not satisfy the requirements of paragraph (b)(1)(ii)(B) of this section because X does not qualify as a combining entity. Accordingly, the transaction cannot qualify as a statutory merger or consolidation for purposes of section 368(a)(1)(A).

Example 7. Merger of a corporation into a disregarded entity in exchange for interests in the disregarded entity. (i) *Facts.* Under State W law, Z merges into X. Pursuant to such law, the following events occur simultaneously at the effective time of the transaction: all of the assets and liabilities of Z become the assets and liabilities of X and Z's separate legal existence ceases for all purposes. In the merger of Z into X, the Z shareholders exchange their stock of Z for interests in X so that, immediately after the

merger, X is not disregarded as an entity separate from Y for Federal income tax purposes. Following the merger, pursuant to § 301.7701-3(b)(1)(i) of this chapter, X is classified as a partnership for Federal income tax purposes.
(ii) *Analysis.* The transaction does not satisfy the requirements of paragraph (b)(1)(ii)(A) of this section because immediately after the merger X is not disregarded as an entity separate from Y and, consequently, all of the assets and liabilities of Z, the combining entity of the transferor unit, do not become the assets and liabilities of one or more members of a transferee unit. Accordingly, the transaction cannot qualify as a statutory merger or consolidation for purposes of section 368(a)(1)(A).

Example 8. Merger transaction preceded by distribution. (i) *Facts.* Z operates two unrelated businesses, Business P and Business Q, each of which represents 50 percent of the value of the assets of Z. Y desires to acquire and continue operating Business P, but does not want to acquire Business Q. Pursuant to a single plan, Z sells Business Q for cash to parties unrelated to Z and Y in a taxable transaction, and then distributes the proceeds of the sale pro rata to its shareholders. Then, pursuant to State W law, Z merges into Y. Pursuant to such law, the following events occur simultaneously at the effective time of the transaction: all of the assets and liabilities of Z related to Business P become the assets and liabilities of Y and Z's separate legal existence ceases for all purposes. In the merger, the Z shareholders exchange their Z stock for Y stock.
(ii) *Analysis.* The transaction satisfies the requirements of paragraph (b)(1)(ii) of this section because the transaction is effected pursuant to State W law and the following events occur simultaneously at the effective time of the transaction: all of the assets and liabilities of Z, the combining entity and sole member of the transferor unit, become the assets and liabilities of Y, the combining entity and sole member of the transferee unit, and Z ceases its separate legal existence for all purposes. Accordingly, the transaction qualifies as a statutory merger or consolidation for purposes of section 368(a)(1)(A).

Example 9. State law conversion of target corporation into a limited liability company. (i) *Facts.* Y acquires the stock of V from the V shareholders in exchange for consideration that consists of 50 percent voting stock of Y and 50 percent cash. Immediately after the stock acquisition, V files the necessary documents to convert from a corporation to a limited liability company under State W law. Y's acquisition of the stock of V and the conversion of V to a limited liability company are steps in a single integrated acquisition by Y of the assets of V.
(ii) *Analysis.* The acquisition by Y of the assets of V does not satisfy the requirements of paragraph (b)(1)(ii)(B) of this section because V, the combining entity of the transferor unit, does not cease its separate legal existence. Although V is an entity disregarded

from its owner for Federal income tax purposes, it continues to exist as a juridical entity after the conversion. Accordingly, Y's acquisition of the assets of V does not qualify as a statutory merger or consolidation for purposes of section 368(a)(1)(A).

Example 10. Dissolution of target corporation. (i) *Facts.* Y acquires the stock of Z from the Z shareholders in exchange for consideration that consists of 50 percent voting stock of Y and 50 percent cash. Immediately after the stock acquisition, Z files a certificate of dissolution pursuant to State W law and commences winding up its activities. Under State W dissolution law, ownership and title to Z's assets does not automatically vest in Y upon dissolution. Instead, Z transfers assets to its creditors in satisfaction of its liabilities and transfers its remaining assets to Y in the liquidation stage of the dissolution. Y's acquisition of the stock of Z and the dissolution of Z are steps in a single integrated acquisition by Y of the assets of Z.
(ii) *Analysis.* The acquisition by Y of the assets of Z does not satisfy the requirements of paragraph (b)(1)(ii) of this section because Y does not acquire all of the assets of Z as a result of Z filing the certificate of dissolution or simultaneously with Z ceasing its separate legal existence. Instead, Y acquires the assets of Z by reason of Z's transfer of its assets to Y. Accordingly, Y's acquisition of the assets of Z does not qualify as a statutory merger or consolidation for purposes of section 368(a)(1)(A).

Example 11. Merger of corporate partner into a partnership. (i) *Facts.* Y owns an interest in X, an entity classified as a partnership for Federal income tax purposes, that represents a 60 percent capital and profits interest in X. Z owns an interest in X that represents a 40 percent capital and profits interest. Under State W law, Z merges into X. Pursuant to such law, the following events occur simultaneously at the effective time of the transaction: all of the assets and liabilities of Z become the assets and liabilities of X and Z ceases its separate legal existence for all purposes. In the merger, the Z shareholders exchange their stock of Z for stock of Y. As a result of the merger, X becomes an entity that is disregarded as an entity separate from Y for Federal income tax purposes.
(ii) *Analysis.* The transaction satisfies the requirements of paragraph (b)(1)(ii) of this section because the transaction is effected pursuant to State W law and the following events occur simultaneously at the effective time of the transaction: all of the assets and liabilities of Z, the combining entity and sole member of the transferor unit, become the assets and liabilities of one or more members of the transferee unit that is comprised of Y, the combining entity of the transferee unit, and X, a disregarded entity the assets of which Y is treated as owning for Federal income tax purposes immediately after the transaction, and Z ceases its separate legal existence for all purposes. Accordingly, the transaction qualifies as a statutory merger or consolidation for purposes of section 368(a)(1)(A).

Example 12. State law consolidation. (i) *Facts.* Under State W law, Z and V consolidate. Pursuant to such law, the following events occur simultaneously at the effective time of the transaction: all of the assets and liabilities of Z and V become the assets and liabilities of Y, an entity that is created in the transaction, and the existence of Z and V continues in Y. In the consolidation, the Z shareholders and the V shareholders exchange their stock of Z and V, respectively, for stock of Y.

(ii) *Analysis.* With respect to each of Z and V, the transaction satisfies the requirements of paragraph (b)(1)(ii) of this section because the transaction is effected pursuant to State W law and the following events occur simultaneously at the effective time of the transaction: all of the assets and liabilities of Z and V, respectively, each of which is the combining entity of a transferor unit, become the assets and liabilities of Y, the combining entity and sole member of the transferee unit, and Z and V each ceases its separate legal existence for all purposes. Accordingly, the transaction qualifies as the statutory merger or consolidation of each of Z and V into Y for purposes of section 368(a)(1)(A).

Example 13. Transaction effected pursuant to foreign statutes. (i) *Facts.* Z and Y are entities organized under the laws of Country Q and classified as corporations for Federal income tax purposes. Z and Y combine. Pursuant to statutes of Country Q the following events occur simultaneously: all of the assets and liabilities of Z become the assets and liabilities of Y and Z's separate legal existence ceases for all purposes.
(ii) *Analysis.* The transaction satisfies the requirements of paragraph (b)(1)(ii) of this section because the transaction is effected pursuant to statutes of Country Q and the following events occur simultaneously at the effective time of the transaction: all of the assets and liabilities of Z, the combining entity of the transferor unit, become the assets and liabilities of Y, the combining entity and sole member of the transferee unit, and Z ceases its separate legal existence for all purposes. Accordingly, the transaction qualifies as a statutory merger or consolidation for purposes of section 368(a)(1)(A).

Example 14. Foreign law amalgamation using parent stock. (i) *Facts.* Z and V are entities organized under the laws of Country Q and classified as corporations for Federal income tax purposes. Z and V amalgamate. Pursuant to statutes of Country Q, the following events occur simultaneously: all the assets and liabilities of Z and V become the assets and liabilities of R, an entity that is created in the transaction and that is wholly owned by Y immediately after the transaction, and Z's and V's separate legal existences cease for all purposes. In the transaction, the Z and V shareholders exchange their Z and V stock, respectively, for stock of Y.
(ii) *Analysis.* With respect to each of Z and V, the transaction satisfies the requirements of paragraph (b)(1)(ii) of this section because the transaction is effected pursuant to Country Q law and the following events occur simultaneously at the effective time of the transaction: all of the assets and liabilities of Z and V, respectively, each of which is the combining entity of a transferor unit, become the assets and liabilities of R, the combining entity and sole member of the transferee unit, with regard to each of the above transfers, and Z and V each ceases its separate legal existence for all purposes. Because Y is in control of R immediately after the transaction, the Z shareholders and the V shareholders will be treated as receiving stock of a corporation that is in control of R, the combining entity of the transferee unit that is the acquiring corporation for purposes of section 368(a)(2)(D). Accordingly, the transaction qualifies as the statutory merger or consolidation of each of Z and V into R, a corporation controlled by Y, and is a reorganization under section 368(a)(1)(A) by reason of section 368(a)(2)(D).

(v) ***Effective date*** —

(A) ***In general.*** This paragraph (b)(1) applies to transactions occurring on or after January 23, 2006. For rules regarding statutory mergers or consolidation occurring before January 23, 2006, see § 1.368-2T as contained in 26 CFR part 1, revised April 1, 2005, and § 1.368-2(b)(1) as in effect before January 24, 2003 (see 26 CFR part 1, revised April 1, 2002).

(B) ***Transitional rule.*** A taxpayer may elect to apply the provisions of § 1.368-2T(b) as contained in 26 CFR part 1, revised April 1, 2005 (the temporary regulations), instead of the provisions of this paragraph (b), to a transaction that occurs on or after January 23, 2006, pursuant to a written agreement which is (subject to customary conditions) binding on January 22, 2006, and at all times thereafter, or pursuant to a tender offer announced prior to January 23, 2006. However, the combining entity of the transferor unit, the combining entity of the transferee unit, any controlling corporation of the combining entity of the transferee unit if stock thereof is provided as consideration in the transaction, and any direct or indirect transferee of transferred basis property from any of the foregoing, may not elect to apply the provisions of the temporary regulations unless all such taxpayers elect to apply the provisions of the temporary regulations.

(2) In order for the transaction to qualify under section 368(a)(1)(A) by reason of the application of section 368(a)(2)(D), one corporation (the acquiring corporation) must acquire substantially all of the properties of another corporation (the acquired corporation) partly or entirely in exchange for stock of a corporation which is in control of the acquiring corporation (the controlling corporation), provided that

(i) the transaction would have qualified under section 368(a)(1)(A) if the merger had been into the controlling corporation, and

(ii) no stock of the acquiring corporation is used in the transaction. The foregoing test of whether the transaction would have qualified under section 368(a)(1)(A) if the merger had been into the controlling corporation means that the general requirements of a reorganization under section 368(a)(1)(A) (such as a business purpose, continuity of business enterprise, and continuity of interest) must be met in addition to the special requirements of section 368(a)(2)(D). Under this test, it is not relevant whether the merger into the controlling corporation could have been effected pursuant to State or Federal corporation law. The term *substantially all* has the same meaning as it has in section 368(a)(1)(C). Although no stock of the acquiring corporation can be used in the transaction, there is no prohibition (other than the continuity of interest requirement) against using other property, such as cash or securities, of either the acquiring corporation or the parent or both. In addition, the controlling corporation may assume liabilities of the acquired corporation without disqualifying the transaction under section 368(a)(2(D), and for purposes of section 357(a) the controlling corporation is considered a party to the exchange. For example, if the controlling corporation agrees to substitute its stock for stock of the acquired corporation under an outstanding employee stock option agreement, this assumption of liability will not prevent the transaction from qualifying as a reorganization under section 368(a)(2)(D) and the assumption of liability is not treated as money or other property for purposes of section 361(b). Section 368(a)(2)(D) applies whether or not the controlling corporation (or the acquiring corporation) is formed immediately before the merger, in anticipation of the merger, or after preliminary steps have been taken to merge directly into the controlling corporation. Section 368(a)(2)(D) applies only to statutory mergers occurring after October 22, 1968.

(3) For regulations under section 368(a)(2)(E), see paragraph (j) of this section.

(c) In order to qualify as a "reorganization" under section 368(a)(1)(B), the acquisition by the acquiring corporation of stock of another corporation must be in exchange solely for all or a part of the voting stock of the acquiring corporation (or, in the case of transactions occurring after December 31, 1963, solely for all or a part of the voting stock of a corporation which is in control of the acquiring corporation), and the acquiring corporation must be in control of the other corporation immediately after the transaction. If, for example, Corporation X in one transaction exchanges nonvoting preferred stock or bonds in addition to all or a part of its voting stock in the acquisition of stock of Corporation Y, the transaction is not a reorganization under section 368(a)(1)(B). Nor is a transaction a reorganization described in section 368(a)(1)(B) if stock is acquired in exchange for voting stock both of the acquiring corporation and of a corporation which is in control of the acquiring corporation. The acquisition of stock of another corporation by the acquiring corporation solely for its voting stock (or solely for voting stock of a corporation which is in control of the acquiring corporation) is permitted tax-free even though the acquiring corporation already owns some of the stock of the other corporation. Such an acquisition is permitted tax-free in a single transaction or in a series of transactions taking place over a relatively short period of time such as 12 months. For example, Corporation A purchased 30 percent of the common stock of Corporation W (the only class of stock outstanding) for cash in 1939. On March 1, 1955, Corporation A offers to exchange its own voting stock for all the stock of Corporation W tendered within 6 months from the date of the offer. Within the 6-months' period Corporation A acquires an additional 60 percent of stock of Corporation W solely for its own voting stock, so that it owns 90 percent of the stock of Corporation W. No gain or loss is recognized with respect to the exchanges of stock of Corporation A for stock of Corporation W. For this purpose, it is immaterial whether such exchanges occurred before Corporation A acquired control (80 percent) of Corporation W or after such control was acquired. If Corporation A had acquired 80 percent of the stock of Corporation W for cash in 1939, it could likewise acquire some or all of the remainder of such stock solely in exchange for its own voting stock without recognition of gain or loss.

(d) In order to qualify as a reorganization under section 368(a)(1)(C), the transaction must be one described in subparagraph (1) or (2) of this paragraph:

(1) One corporation must acquire substantially all the properties of another corporation solely in exchange for all or a part of its own voting stock, or solely in exchange for all or a part of the voting stock of a corporation which is in control of the acquiring corporation. For example, Corporation P owns all the stock of Corporation A. All the properties of Corporation W are transferred to Corporation A either solely in exchange for voting stock of Corporation P or solely in exchange for less than 80 percent of the voting stock of Corporation A. Either of such transactions constitutes a reorganization under section 368(a)(1)(C). However, if the properties of Corporation W are acquired in exchange for voting stock of both Corporation P and Corporation A, the transaction will not constitute a reorganization under section 368(a)(1)(C). In determining whether the exchange meets the requirement of "solely for voting stock", the assumption by the acquiring corporation of liabilities of the transferor corporation, or the fact that property acquired from the transferor corporation is subject to a liability, shall be disregarded. Though such an assumption does not prevent an exchange from being solely for voting stock for the purposes of the definition of a reorganization contained in section 368(a)(1)(C), it may in some cases, however, so alter the character of the transaction as to place the transaction outside the purposes and assumptions of the reorganization provisions. Section 368(a)(1)(C) does not prevent consideration of the effect of an assumption of

liabilities on the general character of the transaction but merely provides that the requirement that the exchange be solely for voting stock is satisfied if the only additional consideration is an assumption of liabilities.

(2) One corporation:

(i) Must acquire substantially all of the properties of another corporation in such manner that the acquisition would qualify under (1) above, but for the fact that the acquiring corporation exchanges money, or other property in addition to such voting stock, and

(ii) Must acquire solely for voting stock (either of the acquiring corporation or of a corporation which is in control of the acquiring corporation) properties of the other corporation having a fair market value which is at least 80 percent of the fair market value of all the properties of the other corporation.

(3) For the purposes of subparagraph (2)(ii) only, a liability assumed or to which the properties are subject is considered money paid for the properties. For example, Corporation A has properties with a fair market value of $100,000 and liabilities of $10,000. In exchange for these properties, Corporation Y transfers its own voting stock, assumes the $10,000 liabilities, and pays $8,000 in cash. The transaction is a reorganization even though a part of the properties of Corporation A is acquired for cash. On the other hand, if the properties of Corporation A worth $100,000, were subject to $50,000 in liabilities, an acquisition of all the properties, subject to the liabilities, for any consideration other than solely voting stock would not qualify as a reorganization under this section since the liabilities alone are in excess of 20 percent of the fair market value of the properties. If the transaction would qualify under either subparagraph (1) or (2) of this paragraph and also under section 368(a)(1)(D), such transaction shall not be treated as a reorganization under section 368 (a)(1)(C).

(4)

(i) For purposes of paragraphs (d)(1) and (2)(ii) of this section, prior ownership of stock of the target corporation by an acquiring corporation will not by itself prevent the solely for voting stock requirement of such paragraphs from being satisfied. In a transaction in which the acquiring corporation has prior ownership of stock of the target corporation, the requirement of paragraph (d)(2)(ii) of this section is satisfied only if the sum of the money or other property that is distributed in pursuance of the plan of reorganization to the shareholders of the target corporation other than the acquiring corporation and to the creditors of the target corporation pursuant to section 361(b)(3), and all of the liabilities of the target corporation assumed by the acquiring corporation (including liabilities to which the properties of the target corporation are subject), does not exceed 20 percent of the value of all of the properties of the target corporation. If, in connection with a potential acquisition by an acquiring corporation of substantially all of a target corporation's properties, the acquiring corporation acquires the target corporation's stock for consideration other than the acquiring corporation's own voting stock (or voting stock of a corporation in control of the acquiring corporation if such stock is used in the acquisition of the target corporation's properties), whether from a shareholder of the target corporation or the target corporation itself, such consideration is treated, for purposes of paragraphs (d)(1) and (2) of this section, as money or other property exchanged by the acquiring corporation for the target corporation's properties. Accordingly, the transaction will not qualify under section 368(a)(1)(C) unless, treating such consideration as money or other property, the requirements of section 368(a)(2)(B) and paragraph (d)(2)(ii) of this section are met. The determination of whether there has been an acquisition in connection with a

potential reorganization under section 368(a)(1)(C) of a target corporation's stock for consideration other than an acquiring corporation's own voting stock (or voting stock of a corporation in control of the acquiring corporation if such stock is used in the acquisition of the target corporation's properties) will be made on the basis of all of the facts and circumstances.

(ii) The following examples illustrate the principles of this paragraph (d)(4):

Example 1. Corporation P (P) holds 60 percent of the Corporation T (T) stock that P purchased several years ago in an unrelated transaction. T has 100 shares of stock outstanding. The other 40 percent of the T stock is owned by Corporation X (X), an unrelated corporation. T has properties with a fair market value of $110 and liabilities of $10. T transfers all of its properties to P. In exchange, P assumes the $10 of liabilities, and transfers to T $30 of P voting stock and $10 of cash. T distributes the P voting stock and $10 of cash to X and liquidates. The transaction satisfies the solely for voting stock requirement of paragraph (d)(2)(ii) of this section because the sum of $10 of cash paid to X and the assumption by P of $10 of liabilities does not exceed 20% of the value of the properties of T.

Example 2. The facts are the same as in *Example 1* except that P purchased the 60 shares of T for $60 in cash in connection with the acquisition of T's assets. The transaction does not satisfy the solely for voting stock requirement of paragraph (d)(2)(ii) of this section because P is treated as having acquired all of the T assets for consideration consisting of $70 of cash, $10 of liability assumption and $30 of P voting stock, and the sum of $70 of cash and the assumption by P of $10 of liabilities exceeds 20% of the value of the properties of T.

(iii) This paragraph (d)(4) applies to transactions occurring after December 31, 1999, unless the transaction occurs pursuant to a written agreement that is (subject to customary conditions) binding on that date and at all times thereafter.

(e) A “recapitalization”, and therefore a reorganization, takes place if, for example:

(1) A corporation with $200,000 par value of bonds outstanding, instead of paying them off in cash, discharges them by issuing preferred shares to the bondholders;

(2) There is surrendered to a corporation for cancellation 25 percent of its preferred stock in exchange for no par value common stock;

(3) A corporation issues preferred stock, previously authorized but unissued, for outstanding common stock;

(4) An exchange is made of a corporation's outstanding preferred stock, having certain priorities with reference to the amount and time of payment of dividends and the distribution of the corporate assets upon liquidation, for a new issue of such corporation's common stock having no such rights;

(5) An exchange is made of an amount of a corporation's outstanding preferred stock with dividends in arrears for other stock of the corporation. However, if pursuant to such an exchange there is an increase in the proportionate interest of the preferred shareholders in the assets or earnings and profits of the corporation, then under § 1.305-7(c)(2), an amount equal to the lesser of

(i) the amount by which the fair market value or liquidation preference, whichever is greater, of the stock received in the exchange (determined immediately following the recapitalization) exceeds the issue price of the preferred stock surrendered, or

(ii) the amount of the dividends in arrears, shall be treated under section 305(c) as a deemed distribution to which sections 305(b)(4) and 301 apply.

(f) The term *a party to a reorganization* includes a corporation resulting from a reorganization, and both corporations, in a transaction qualifying as a reorganization where one corporation acquires stock or properties of another corporation. If a transaction otherwise qualifies as a reorganization, a corporation remains a party to the reorganization even though stock or assets acquired in the reorganization are transferred in a transaction described in paragraph (k) of this section. If a transaction otherwise qualifies as a reorganization, a corporation shall not cease to be a party to the reorganization solely by reason of the fact that part or all of the assets acquired in the reorganization are transferred to a partnership in which the transferor is a partner if the continuity of business enterprise requirement is satisfied. See § 1.368-1(d). The preceding three sentences apply to transactions occurring after January 28, 1998, except that they do not apply to any transaction occurring pursuant to a written agreement which is binding on January 28, 1998, and at all times thereafter. A corporation controlling an acquiring corporation is a party to the reorganization when the stock of such controlling corporation is used in the acquisition of properties. Both corporations are parties to the reorganization if, under statutory authority, Corporation A is merged into Corporation B. All three of the corporations are parties to the reorganization if, pursuant to statutory authority, Corporation C and Corporation D are consolidated into Corporation E. Both corporations are parties to the reorganization if Corporation F transfers substantially all its assets to Corporation G in exchange for all or a part of the voting stock of Corporation G. All three corporations are parties to the reorganization if Corporation H transfers substantially all its assets to Corporation K in exchange for all or a part of the voting stock of Corporation L, which is in control of Corporation K. Both corporations are parties to the reorganization if Corporation M transfers all or part of its assets to Corporation N in exchange for all or a part of the stock and securities of Corporation N, but only if

(1) immediately after such transfer, Corporation M, or one or more of its shareholders (including persons who were shareholders immediately before such transfer), or any combination thereof, is in control of Corporation N, and

(2) in pursuance of the plan, the stock and securities of Corporation N are transferred or distributed by Corporation M in a transaction in which gain or loss is not recognized under section 354 or 355, or is recognized only to the extent provided in section 356. Both Corporation O and Corporation P, but not Corporation S, are parties to the reorganization if Corporation O acquires stock of Corporation P from Corporation S in exchange solely for a part of the voting stock of Corporation O, if (1) the stock of Corporation P does not constitute substantially all of the assets of Corporation S, (2) Corporation S is not in control of Corporation O immediately after the acquisition, and (3) Corporation O is in control of Corporation P immediately after the acquisition. If a transaction otherwise qualifies as a reorganization under section 368(a)(1)(B) or as a reverse triangular merger (as defined in § 1.358-6(b)(2)(iii)), the target corporation (in the case of a transaction that otherwise qualifies as a reorganization under section 368(a)(1)(B)) or the surviving corporation (in the case of a transaction that otherwise qualifies as a reverse triangular merger) remains a party to the reorganization even though its stock or assets are transferred in a transaction described in paragraph (k) of this section. If a transaction otherwise qualifies as a forward triangular merger (as defined in § 1.358-6(b)(2)(i)), a triangular B reorganization (as defined in § 1.358-6(b)(2)(iv)), a triangular C reorganization (as defined in § 1.358-6(b)(2)(ii)), or a reorganization under section 368(a)(1)(G) by reason of section 368(a)(2)(D), the acquiring corporation remains a party to the reorganization even though its stock is transferred in a transaction described in paragraph (k) of this section. The two preceding sentences

apply to transactions occurring on or after October 25, 2007, except that they do not apply to any transaction occurring pursuant to a written agreement which is binding before October 25, 2007, and at all times after that.

(g) The term *plan of reorganization* has reference to a consummated transaction specifically defined as a reorganization under section 368(a). The term is not to be construed as broadening the definition of *reorganization* as set forth in section 368(a), but is to be taken as limiting the nonrecognition of gain or loss to such exchanges or distributions as are directly a part of the transaction specifically described as a reorganization in section 368(a). Moreover, the transaction, or series of transactions, embraced in a plan of reorganization must not only come within the specific language of section 368(a), but the readjustments involved in the exchanges or distributions effected in the consummation thereof must be undertaken for reasons germane to the continuance of the business of a corporation a party to the reorganization. Section 368(a) contemplates genuine corporate reorganizations which are designed to effect a readjustment of continuing interests under modified corporate forms.

(h) As used in section 368, as well as in other provisions of the Internal Revenue Code, if the context so requires, the conjunction "or" denotes both the conjunctive and the disjunctive, and the singular includes the plural. For example, the provisions of the statute are complied with if "stock and securities" are received in exchange as well as if "stock or securities" are received.

(i) [Reserved]

(j)

(1) This paragraph (j) prescribes rules relating to the application of section 368 (a)(2)(E).

(2) Section 368(a)(2)(E) does not apply to a consolidation.

(3) A transaction otherwise qualifying under section 368(a)(1)(A) is not disqualified by reason of the fact that stock of a corporation (the controlling corporation) which before the merger was in control of the merged corporation is used in the transaction, if the conditions of section 368(a)(2)(E) are satisfied. Those conditions are as follows:

(i) In the transaction, shareholders of the surviving corporation must surrender stock in exchange for voting stock of the controlling corporation. Further, the stock so surrendered must constitute control of the surviving corporation. Control is defined in section 368(c). The amount of stock constituting control is measured immediately before the transaction. For purposes of this subdivision (i), stock in the surviving corporation which is surrendered in the transaction (by any shareholder except the controlling corporation) in exchange for consideration furnished by the surviving corporation (and not by the controlling corporation of the merged corporation) is considered not to be outstanding immediately before the transaction. For effect on "substantially all" test of consideration furnished by the surviving corporation, see paragraph (j)(3)(iii) of this section.

(ii) Except as provided in paragraph (k) of this section, the controlling corporation must control the surviving corporation immediately after the transaction.

(iii) After the transaction, the surviving corporation must hold substantially all of its own properties and substantially all of the properties of the merged corporation (other than stock of the controlling corporation distributed in the transaction). The surviving corporation may transfer such properties as provided in paragraph (k) of this section. After the transaction, except as provided in paragraph (k)(2) of this section, the surviving corporation must hold substantially all

of its own properties and substantially all of the properties of the merged corporation (other than stock of the controlling corporation distributed in the transaction). The term *substantially all* has the same meaning as in section 368(a)(1)(C). The "substantially all" test applies separately to the merged corporation and to the surviving corporation. In applying the "substantially all" test to the surviving corporation, consideration furnished in the transaction by the surviving corporation in exchange for its stock is property of the surviving corporation which it does not hold after the transaction. In applying the "substantially all" test to the merged corporation, assets transferred from the controlling corporation to the merged corporation in pursuance of the plan of reorganization are not taken into account. Thus, for example, money transferred from the controlling corporation to the merged corporation to be used for the following purposes is not taken into account for purposes of the "substantially all" test:

(A) To pay additional consideration to shareholders of the surviving corporation;

(B) To pay dissenting shareholders of the surviving corporation;

(C) To pay creditors of the surviving corporation;

(D) To pay reorganization expenses; or

(E) To enable the merged corporation to satisfy state minimum capitalization requirements (where the money is returned to the controlling corporation as part of the transaction).

(iv) Paragraph (j)(3)(ii) and the first two sentences of paragraph (j)(3)(iii) of this section apply to transactions occurring on or after October 25, 2007, except that they do not apply to any transaction occurring pursuant to a written agreement which is binding before October 25, 2007, and at all times thereafter. The remainder of paragraph (j)(3)(iii) of this section applies to transactions occurring after January 28, 1998, except that it does not apply to any transaction occurring pursuant to a written agreement which is binding on January 28, 1998, and at all times after that.

(4) The controlling corporation may assume liabilities of the surviving corporation without disqualifying the transaction under section 368(a)(2)(E). An assumption of liabilities of the surviving corporation by the controlling corporation is a contribution to capital by the controlling corporation to the surviving corporation. If, in pursuance of the plan of reorganization, securities of the surviving corporation are exchanged for securities of the controlling corporation, or for other securities of the surviving corporation, see sections 354 and 356.

(5) In applying section 368(a)(2)(E), it makes no difference if the merged corporation is an existing corporation, or is formed immediately before the merger, in anticipation of the merger, or after preliminary steps have been taken to otherwise acquire control of the surviving corporation.

(6) The following examples illustrate the application of this paragraph (j). In each of the examples, Corporation P owns all of the stock of Corporation S and, except as otherwise stated, Corporation T has outstanding 1,000 shares of common stock and no shares of any other class. In each of the examples, it is also assumed that the transaction qualifies under section 368(a)(1)(A) if the conditions of section 368(a)(2)(E) are satisfied.

Example 1. P owns no T stock. On January 1, 1981, S merges into T. In the merger, T's shareholders surrender 950 shares of common stock in exchange for P voting stock. The holders of the other 50 shares (who dissent from the merger) are paid in cash with funds supplied by P. After the transaction, T holds all of its own assets and all of S's assets. Based on these facts, the

transaction qualifies under section 368(a)(1)(A) by reason of the application of section 368(a)(2)(E). In the transaction, former shareholders of T surrender, in exchange for P voting stock, an amount of T stock (950/1,000 shares or 95 percent) which constitutes control of T.

Example 2. The facts are the same as in *Example (1)* except that holders of 100 shares in corporation T, who dissented from the merger, are paid in cash with funds supplied by T (and not by P or S) and in the merger, T's remaining shareholders surrender 720 shares of common stock in exchange for P voting stock and 180 shares of common stock for cash supplied by P. The requirements of section 368(a)(2)(E)(ii) are satisfied since, in the transaction, former shareholders of T surrender, in exchange for P voting stock, an amount of T stock (720/900 shares or 80 percent) which constitutes control of T. The T stock surrendered in exchange for consideration furnished by T is not considered outstanding for purposes of determining whether the amount of T stock surrendered by T shareholders for P stock constitutes control of T.

Example 3. T has outstanding 1,000 shares of common stock, 100 shares of nonvoting preferred stock, and no shares of any other class. On January 1, 1981, S merges into T. Prior to the merger, as part of the transaction, T distributes its own cash in redemption of the 100 shares of preferred stock. In the transaction, T's remaining shareholders surrender their 1,000 shares of common stock in exchange for P voting stock. The requirements of section 368(a)(2)(E)(ii) are satisfied since, in the transaction, former shareholders of T surrender, in exchange for P voting stock, an amount of T stock (1,000/1,000 shares or 100 percent) which constitutes control of T. The preferred stock surrendered in exchange for consideration furnished by T is not considered outstanding for purposes of determining whether the amount of T stock surrendered by T shareholders for P stock constitutes control of T. However, the consideration furnished by T for its stock is property of T which T does not hold after the transaction for purposes of the substantially all test in paragraph (j)(3)(iii) of this section.

Example 4. On January 1, 1971, P purchased 201 shares of T's stock. On January 1, 1981, S merges into T. In the merger, T's shareholders (other than P) surrender 799 shares of T stock in exchange for P voting stock. Based on these facts, in the transaction, former shareholders of T do not surrender, in exchange for P voting stock, an amount of T stock which constitutes control of T (799/1,000 shares being less than 80 percent). Therefore, the transaction does not qualify under section 368(a)(1)(A). However, if S is a transitory corporation, formed solely for purposes of effectuating the transaction, the transaction may qualify as a reorganization described in section 368(a)(1)(B) provided all of the applicable requirements are satisfied.

Example 5. On January 1, 1971, P purchased 200 shares of T's stock. On January 1, 1981, S merges into T. Prior to the merger, as part of the transaction, T distributes its own cash in redemption of 1 share of T stock from a T shareholder other than P. In the merger, T's remaining shareholders (other than P) surrender 799 shares of T stock in exchange for P voting stock. Based on these facts, in the transaction, former shareholders of T do not surrender, in exchange for P voting stock, an amount of T stock which constitutes control of T (799/999 shares being less than 80 percent). Therefore, the transaction does not qualify under section 368(a)(1)(A). However, if S is a transitory corporation, formed for purposes of effectuating the transaction, the transaction may qualify as a reorganization described in section 368(a)(1)(B) provided all of the applicable requirements are satisfied.

Example 6. The stock of S has a value of $25,000. The stock of T has a value of $75,000. On January 1, 1984, S merges into T. In the merger, T's shareholders surrender all of their T stock in exchange for P voting stock. After the transaction, T holds all of its own assets and all of S's assets. Based on these facts, the transaction qualifies under section 368(a)(1)(A) by reason of the application of section 368(a)(2)(E). In the transaction, former shareholders of T surrender, in exchange for P voting stock, an amount of T stock (1,000/1,000 shares or 100 percent) which constitutes control of T. The stock of T received by P in exchange for P's prior interest in S is not taken into account for purposes of section 368(a)(2)(E)(ii) since the amount of T stock constituting control of T is measured before the transaction.

Example 7. The stock of T has a value of $75,000. On January 1, 1984, S merges into T. In the merger, T's shareholders surrender all of their T stock in exchange for P voting stock. As part of the transaction, P contributes $25,000 to T in exchange for new shares of T stock. None of the cash received by T is distributed or otherwise paid out to former T shareholders. After the transaction, T holds all of its own assets and all of S's assets. Based on these facts, the transaction qualifies under section 368(a)(1)(A) by reason of the application of section 368(a)(2)(E). In the transaction, former shareholders of T surrender, in exchange for P voting stock, an amount of T stock (1,000/1,000 shares or 100 percent) which constitutes control of T. The T stock received by P in exchange for its contribution to T is not taken into account for purposes of section 368(a)(2)(E)(ii) since the amount of T stock constituting control of T is measured before the transaction.

Example 8. The facts are the same as in *Example (7)* except that, as part of the transaction, corporation R, instead of P, contributes $25,000 to T in exchange for T stock. Based on these facts, the transaction does not qualify under section 368(a)(1)(A) by reason of section 368(a)(2)(E) since P does not control T immediately after the transaction.

Example 9. T stock has a value of $75,000. P owns 500 shares (1/2) of that stock with a value of $37,500. The stock of S has a value of $125,000. On January 1, 1984, S merges into T. In the merger, T's shareholders (other than P) surrender their T stock in exchange for P voting stock. Based on these facts, in the transaction, former shareholders of T do not surrender, in exchange for P voting stock, an amount of T stock which constitutes control of T (500/1,000 shares being less than 80 percent). Therefore, the transaction does not qualify under section 368(a)(1)(A). The stock of T received by P in exchange for P's prior interest in S does not contribute to satisfaction of the requirement of section 368(a)(2)(E)(ii).

(k) ***Certain transfers of assets or stock in reorganizations*** —

(1) ***General rule.*** A transaction otherwise qualifying as a reorganization under section 368(a) shall not be disqualified or recharacterized as a result of one or more subsequent transfers (or successive transfers) of assets or stock, provided that the requirements of § 1.368-1(d) are satisfied and the transfer(s) are described in either paragraph (k)(1)(i) or (k)(1)(ii) of this section. However, this paragraph (k) shall not apply to a transfer to the former shareholders of the acquired corporation (other than a former shareholder that is also the acquiring corporation) or the surviving corporation, as the case may be, to the extent it constitutes the receipt of consideration for a proprietary interest in the acquired corporation or the surviving corporation, as the case may be. Similarly, this paragraph (k) shall not apply to a transfer by the former shareholders of the acquired corporation (other than a former shareholder that is also the acquiring corporation) or the surviving corporation, as the case may be, of consideration initially received in the potential reorganization to the issuing corporation or a person related to the issuing corporation (see definition of "related person" in § 1.368-1(e)).

(i) ***Distributions.*** One or more distributions to shareholders (including distribution(s) that involve the assumption of liabilities) are described in this paragraph (k)(1)(i) if—

(A) The property distributed consists of—

(*1*) Assets of the acquired corporation, the acquiring corporation, or the surviving corporation, as the case may be, or an interest in an entity received in exchange for such assets in a transfer described in paragraph (k)(1)(ii) of this section;

(*2*) Stock of the acquired corporation provided that such distribution(s) of stock do not cause the acquired corporation to cease to be a member of the qualified group (as defined in § 1.368-1(d)(4)(ii)); or

(*3*) A combination thereof; and

(B) The aggregate of such distributions does not consist of—

(*1*) An amount of assets of the acquired corporation, the acquiring corporation (disregarding assets held prior to the potential reorganization), or the surviving corporation (disregarding assets of the merged corporation), as the case may be, that would result in a liquidation of such corporation for Federal income tax purposes; or

(*2*) All of the stock of the acquired corporation that was acquired in the transaction.

(ii) ***Transfers Other Than Distributions.*** One or more other transfers are described in this paragraph (k)(1)(ii) if—

(A) The transfer(s) do not consist of one or more distributions to shareholders;

(B) The property transferred consists of—

(*1*) Part or all of the assets of the acquired corporation, the acquiring corporation, or the surviving corporation, as the case may be;

(*2*) Part or all of the stock of the acquired corporation, the acquiring corporation, or the surviving corporation, as the case may be, provided that such transfer(s) of stock do not cause such corporation to cease to be a member of the qualified group (as defined in § 1.368-1(d)(4)(ii)); or

(3) A combination thereof; and

(C) The acquired corporation, the acquiring corporation, or the surviving corporation, as the case may be, does not terminate its corporate existence for Federal income tax purposes in connection with the transfer(s).

(2) ***Examples.*** The following examples illustrate the application of this paragraph (k). Except as otherwise noted, P is the issuing corporation, and T is an unrelated target corporation. All corporations have only one class of stock outstanding. T operates a bakery that supplies delectable pastries and cookies to local retail stores. The acquiring corporate group produces a variety of baked goods for nationwide distribution. Except as otherwise noted, P owns all of the stock of S-1 and 80 percent of the stock of S-4, S-1 owns 80 percent of the stock of S-2 and 50 percent of the stock of S-5, S-2 owns 80 percent of the stock of S-3, and S-4 owns the remaining 50 percent of the stock of S-5. The examples are as follows:

Example 1. Transfers of acquired assets to members of the qualified group after a reorganization under section 368(a)(1)(C). (i) *Facts.* Pursuant to a plan of reorganization, T transfers all of its assets to S-1 solely in exchange for P stock, which T distributes to its shareholders, and S-1's assumption of T's liabilities. In addition, pursuant to the plan, S-1 transfers all of the T assets to S-2, and S-2 transfers all of the T assets to S-3.
(ii) *Analysis.* Under this paragraph (k), the transaction, which otherwise qualifies as a reorganization under section 368(a)(1)(C), is not disqualified by the successive transfers of all of the T assets to S-2 and from S-2 to S-3 because the transfers are not one or more distributions to shareholders, the transfers consist of part or all of the assets of the acquiring corporation, the acquiring corporation does not terminate its corporate existence for Federal income tax purposes in connection with the transfers, and the transaction satisfies the requirements of § 1.368-1(d).

Example 2. Distribution of acquired assets to a member of the qualified group after a reorganization under section 368(a)(1)(C). (i) *Facts.* Pursuant to a plan of reorganization, T transfers all of its assets to S-1 solely in exchange for P stock, which T distributes to its shareholders, and S-1's assumption of T's liabilities. In addition, pursuant to the plan, S-1 distributes half of the T assets to P, and P assumes half of the T liabilities.
(ii) *Analysis.* Under this paragraph (k), the transaction, which otherwise qualifies as a reorganization under section 368(a)(1)(C), is not disqualified by the distribution of half of the T assets from S-1 to P, or P's assumption of half of the T liabilities from S-1, because the distribution consists of assets of the acquiring corporation, the distribution does not consist of an amount of S-1's assets that would result in a liquidation of S-1 for Federal income tax purposes (disregarding S-1's assets held prior to the acquisition of T), and the transaction satisfies the requirements of § 1.368-1(d).

Example 3. Indirect distribution of acquired assets to a member of the qualified group after a reorganization under section 368(a)(1)(C). (i) *Facts.* The facts are the same as *Example 2*, except that, instead of S-1 distributing half of the T assets to P and having P assume half of the T liabilities, S-1 contributes half of the T assets to newly formed S-6, S-6 assumes half of the T liabilities, and S-1 distributes all of the S-6 stock to P.
(ii) *Analysis.* Under this paragraph (k), the transaction, which otherwise qualifies as a reorganization under section 368(a)(1)(C), is not disqualified by the transfer of half of the T assets to S-6 and the distribution of the S-6 stock to P because the transfer of half of the T assets to S-6 is described in paragraph (k)(1)(ii) of this section, the distribution of the S-6 stock to P is an indirect distribution of assets of the acquiring corporation, the distribution does not consist of an amount of S-1's assets that would result in a liquidation of S-1 for Federal income tax purposes (disregarding S-1's assets held prior to the acquisition of T), and the transaction satisfies the requirements of § 1.368-1(d).

Example 4. Distribution of acquired stock to a controlled partnership after a reorganization under section 368(a)(1)(B). (i) *Facts.* P owns 80 percent of the stock of S-1, and an 80-percent interest in PRS, a partnership. S-4 owns the remaining 20-percent interest in PRS. PRS owns the remaining 20 percent of the stock of S-1. Pursuant to a plan of reorganization, the T shareholders transfer all of their T stock to S-1 solely in exchange for P stock. In addition, pursuant to the plan, S-1 distributes 90 percent of the T stock to PRS in redemption of 5 percent of the stock of S-1 owned by PRS.
(ii) *Analysis.* Under this paragraph (k), the transaction, which otherwise qualifies as a reorganization under section 368(a)(1)(B), is not disqualified by the distribution of 90 percent of the T stock from S-1 to PRS because the distribution consists of less than all of the stock of the acquired corporation that was acquired in the transaction, the distribution does not cause T to cease to be a member of the qualified group (as defined in § 1.368-1(d)(4)(ii)), and the transaction satisfies the requirements of § 1.368-1(d).

Example 5. Transfer of acquired stock to a non-controlled partnership. (i) *Facts.* Pursuant to a plan, the T shareholders transfer all of their T stock to S-1 solely in exchange for P stock. In addition, as part of the plan, T distributes half of its assets to S-1, S-1 assumes half of the T liabilities, and S-1 transfers the T stock to S-2. S-2 and U, an unrelated corporation, form a new partnership, PRS. Immediately thereafter, S-2 transfers all of the T stock to PRS in exchange for a 50 percent interest in PRS, and U transfers cash to PRS in exchange for a 50 percent interest in PRS.
(ii) *Analysis.* Under this paragraph (k), the transaction, which otherwise qualifies as a reorganization under section 368(a)(1)(B), is not disqualified by the distribution of half of the T assets from T to S-1, or S-1's assumption of half of the T liabilities from T, because the distribution consists of assets of the acquired corporation, the distribution does not consist of an amount of T's assets that would result in a liquidation of T for Federal income tax purposes, and the transaction satisfies the requirements of § 1.368-1(d). Further, this paragraph (k) describes the transfer of the acquired stock from S-1 to S-2, but does not describe the transfer of the acquired stock from S-2 to PRS because such transfer causes T to cease to be a member of the qualified group (as defined in § 1.368-1(d)(4)(ii)). Therefore, the characterization of this transaction must be determined under the relevant provisions of law, including the step transaction doctrine. See § 1.368-1(a). The transaction fails to meet the control requirement of a reorganization described in section 368(a)(1)(B) because immediately after the acquisition of the T stock, the acquiring corporation does not have control of T.

Example 6. Transfers of acquired assets to members of the qualified group after a reorganization under section 368(a)(1)(D). (i) *Facts.* P owns all of the stock of T. Pursuant to a plan of reorganization, T transfers all of its assets to S-1 solely in exchange for S-1 stock, which T distributes to P, and S-1's assumption of T's liabilities. In addition, pursuant to the

plan, S-1 transfers all of the T assets to S-2, and S-2 transfers all of the T assets to S-3.
(ii) *Analysis.* Under this paragraph (k), the transaction, which otherwise qualifies as a reorganization under section 368(a)(1)(D), is not disqualified by the successive transfers of all the T assets from S-1 to S-2 and from S-2 to S-3 because the transfers are not one or more distributions to shareholders, the transfers consist of part or all of the assets of the acquiring corporation, the acquiring corporation does not terminate its corporate existence for Federal income tax purposes in connection with the transfers, and the transaction satisfies the requirements of § 1.368-1(d).

Example 7. Transfer of stock of the acquiring corporation to a member of the qualified group after a reorganization under section 368(a)(1)(A) by reason of section 368(a)(2)(D). (i) *Facts.* Pursuant to a plan of reorganization, S-1 acquires all of the T assets in the merger of T into S-1. In the merger, the T shareholders receive solely P stock. Also, pursuant to the plan, P transfers all of the S-1 stock to S-4.
(ii) *Analysis.* Under this paragraph (k), the transaction, which otherwise qualifies as a reorganization under section 368(a)(1)(A) by reason of section 368(a)(2)(D), is not disqualified by the transfer of all of the S-1 stock to S-4 because the transfer is not a distribution to shareholders, the transfer consists of part or all of the stock of the acquiring corporation, the transfer does not cause S-1 to cease to be a member of the qualified group (as defined in § 1.368-1(d)(4)(ii)), the acquiring corporation does not terminate its corporate existence for Federal income tax purposes in connection with the transfer, and the transaction satisfies the requirements of § 1.368-1(d).

Example 8. Transfer of acquired assets to a partnership after a reorganization under section 368(a)(1)(A) by reason of section 368(a)(2)(D). (i) *Facts.* Pursuant to a plan of reorganization, S-1 acquires all of the T assets in the merger of T into S-1. In the merger, the T shareholders receive solely P stock. In addition, pursuant to the plan, S-1 transfers all of the T assets to PRS, a partnership in which S-1 owns a $33^{1}/_{3}$-percent interest. PRS continues T's historic business. S-1 does not perform active and substantial management functions as a partner with respect to PRS' business.
(ii) *Analysis.* Under this paragraph (k), the transaction, which otherwise qualifies as a reorganization under section 368(a)(1)(A) by reason of section 368(a)(2)(D), is not disqualified by the transfer of T assets from S-1 to PRS because the transfer is not a distribution to shareholders, the transfer consists of part or all of the assets of the acquiring corporation, the acquiring corporation does not terminate its corporate existence for Federal income tax purposes in connection with the transfers, and the transaction satisfies the requirements of § 1.368-1(d).

Example 9. Sale of acquired assets to a member of the qualified group after a reorganization under section 368(a)(1)(C). (i) *Facts.* Pursuant to a plan of reorganization, T transfers all of

its assets to S-1 in exchange for P stock, which T distributes to its shareholders, and S-1's assumption of T's liabilities. In addition, pursuant to the plan, S-1 sells all of the T assets to S-5 for cash equal to the fair market value of those assets.
(ii) *Analysis.* Under this paragraph (k), the transaction, which otherwise qualifies as a reorganization under section 368(a)(1)(C), is not disqualified by the sale of all of the T assets from S-1 to S-5 because the transfer is not a distribution to shareholders, the transfer consists of part or all of the assets of the acquiring corporation, the acquiring corporation does not terminate its corporate existence for Federal income tax purposes in connection with the transfer, and the transaction satisfies the requirements of § 1.368-1(d).

(3) ***Effective/applicability dates.*** This paragraph (k) applies to transactions occurring on or after *May 9, 2008*, except that it does not apply to any transaction occurring pursuant to a written agreement which is binding before *May 9, 2008*, and at all times after that.

(l) ***Certain transactions treated as reorganizations described in section 368(a)(1)(D)*** —

(1) ***General rule.*** In order to qualify as a reorganization under section 368(a)(1)(D), a corporation (transferor corporation) must transfer all or part of its assets to another corporation (transferee corporation) and immediately after the transfer the transferor corporation, or one or more of its shareholders (including persons who were shareholders immediately before the transfer), or any combination thereof, must be in control of the transferee corporation; but only if, in pursuance of the plan, stock or securities of the transferee are distributed in a transaction which qualifies under section 354, 355, or 356.

(2) ***Distribution requirement*** —

(i) ***In general.*** For purposes of paragraph (l)(1) of this section, a transaction otherwise described in section 368(a)(1)(D) will be treated as satisfying the requirements of sections 368(a)(1)(D) and 354(b)(1)(B) notwithstanding that there is no actual issuance of stock and/or securities of the transferee corporation if the same person or persons own, directly or indirectly, all of the stock of the transferor and transferee corporations in identical proportions. In cases where no consideration is received or the value of the consideration received in the transaction is less than the fair market value of the transferor corporation's assets, the transferee corporation will be treated as issuing stock with a value equal to the excess of the fair market value of the transferor corporation's assets over the value of the consideration actually received in the transaction. In cases where the value of the consideration received in the transaction is equal to the fair market value of the transferor corporation's assets, the transferee corporation will be deemed to issue a nominal share of stock to the transferor corporation in addition to the actual consideration exchanged for the transferor corporation's assets. The nominal share of stock in the transferee corporation will then be deemed distributed by the transferor corporation to the shareholders of the transferor corporation, as part of the exchange for the stock of such shareholders. Where appropriate, the nominal share will be further transferred through chains of ownership to the extent necessary to reflect the actual ownership of the transferor and transferee corporations. Similar treatment to that of the preceding two sentences shall apply where the transferee corporation is treated as issuing stock with a value equal to the excess of the fair market value of the transferor corporation's assets over the value of the consideration actually received in the transaction.

(ii) ***Attribution.*** For purposes of paragraph (l)(2)(i) of this section, ownership of stock will be determined by applying the principles of section 318(a)(2) without regard to the 50 percent limitation in section 318(a)(2)(C). In addition, an individual and all members of his family described in section 318(a)(1) shall be treated as one individual.

(iii) ***De minimis variations in ownership and certain stock not taken into account.*** For purposes of paragraph (l)(2)(i) of this section, the same person or persons will be treated as owning, directly or indirectly, all of the stock of the transferor and transferee corporations in identical proportions notwithstanding the fact that there is a de minimis variation in shareholder identity or proportionality of ownership. Additionally, for purposes of paragraph (l)(2)(i) of this section, stock described in section 1504(a)(4) is not taken into account.

(iv) ***Exception.*** Paragraph (l)(2) of this section does not apply to a transaction otherwise described in § 1.358-6(b)(2).

(3) ***Examples.*** The following examples illustrate the principles of paragraph (l) of this section. For purposes of these examples, each of A, B, C, and D is an individual, T is the acquired corporation, S is the acquiring corporation, P is the parent corporation, and each of S1, S2, S3, and S4 is a direct or indirect subsidiary of P. Further, all of the requirements of section 368(a)(1)(D) other than the requirement that stock or securities be distributed in a transaction to which section 354 or 356 applies are satisfied. The examples are as follows:

Example 1. A owns all the stock of T and S. The T stock has a fair market value of $100x. T sells all of its assets to S in exchange for $100x of cash and immediately liquidates. Because there is complete shareholder identity and proportionality of ownership in T and S, under paragraph (l)(2)(i) of this section, the requirements of sections 368(a)(1)(D) and 354(b)(1)(B) are treated as satisfied notwithstanding the fact that no S stock is issued. Pursuant to paragraph (l)(2)(i) of this section, S will be deemed to issue a nominal share of S stock to T in addition to the $100x of cash actually exchanged for the T assets, and T will be deemed to distribute all such consideration to A. The transaction qualifies as a reorganization described in section 368(a)(1)(D).

Example 2. The facts are the same as in *Example 1* except that C, A's son, owns all of the stock of S. Under paragraph (l)(2)(ii) of this section, A and C are treated as one individual. Accordingly, there is complete shareholder identity and proportionality of ownership in T and S. Therefore, under paragraph (l)(2)(i) of this section, the requirements of sections 368(a)(1)(D) and 354(b)(1)(B) are treated as satisfied notwithstanding the fact that no S stock is issued. Pursuant to paragraph (l)(2)(i) of this section, S will be deemed to issue a nominal share of S stock to T in addition to the $100x of cash actually exchanged for the T assets, and T will be deemed to distribute all such consideration to A. A will be deemed to transfer the nominal share of S stock to C. The transaction qualifies as a reorganization described in section 368(a)(1)(D).

Example 3. P owns all of the stock of S1 and S2. S1 owns all of the stock of S3, which owns all of the stock of T. S2 owns all of the stock of S4, which owns all of the stock of S. The T stock has a fair market value of $70x. T sells all of its assets to S in exchange for $70x of cash and immediately liquidates. Under paragraph (l)(2)(ii) of this section, there is indirect, complete shareholder identity and proportionality of ownership in T and S. Accordingly, the requirements of sections 368(a)(1)(D) and 354(b)(1)(B) are treated as satisfied notwithstanding the fact that no S stock is issued. Pursuant to paragraph (l)(2)(i) of this section, S will be deemed to issue a nominal share of S stock to T in addition to the $70x of cash actually exchanged for the T

assets, and T will be deemed to distribute all such consideration to S3. S3 will be deemed to distribute the nominal share of S stock to S1, which, in turn, will be deemed to distribute the nominal share of S stock to P. P will be deemed to transfer the nominal share of S stock to S2, which, in turn, will be deemed to transfer such share of S stock to S4. The transaction qualifies as a reorganization described in section 368(a)(1)(D).

Example 4. A, B, and C own 34%, 33%, and 33%, respectively, of the stock of T. The T stock has a fair market value of $100x. A, B, and C each own 33% of the stock of S. D owns the remaining 1% of the stock of S. T sells all of its assets to S in exchange for $100x of cash and immediately liquidates. For purposes of determining whether the distribution requirement of sections 368(a)(1)(D) and 354(b)(1)(B) is met, under paragraph (l)(2)(iii) of this section, D's ownership of a de minimis amount of stock of S is disregarded and the transaction is treated as if there is complete shareholder identity and proportionality of ownership in T and S. Because there is complete shareholder identity and proportionality of ownership in T and S, under paragraph (l)(2)(i) of this section, the requirements of sections 368(a)(1)(D) and 354(b)(1)(B) are treated as satisfied notwithstanding the fact that no S stock is issued. Pursuant to paragraph (l)(2)(i) of this section, S will be deemed to issue a nominal share of S stock to T in addition to the $100x of cash actually exchanged for the T assets, T will be deemed to distribute all such consideration to A, B, and C, and the nominal S stock will be deemed transferred among the S shareholders to the extent necessary to reflect their actual ownership of S. The transaction qualifies as a reorganization described in section 368(a)(1)(D).

Example 5. The facts are the same as in *Example 4* except that A, B, and C own 34%, 33%, and 33%, respectively, of the common stock of T and S. D owns preferred stock in S described in section 1504(a)(4). For purposes of determining whether the distribution requirement of sections 368(a)(1)(D) and 354(b)(1)(B) is met, under paragraph (l)(2)(iii) of this section, D's ownership of S stock described in section 1504(a)(4) is ignored and the transaction is treated as if there is complete shareholder identity and proportionality of ownership in T and S. Because there is complete shareholder identity and proportionality of ownership in T and S, under paragraph (l)(2)(i) of this section, the requirements of sections 368(a)(1)(D) and 354(b)(1)(B) are treated as satisfied notwithstanding the fact that no S stock is issued. Pursuant to paragraph (l)(2)(i) of this section, S will be deemed to issue a nominal share of S stock to T in addition to the $100x of cash actually exchanged for the T assets, and T will be deemed to distribute all such consideration to A, B, and C. The transaction qualifies as a reorganization described in section 368(a)(1)(D).

Example 6. A and B each own 50% of the stock of T. The T stock has a fair market value of $100x. B and C own 90% and 10%, respectively, of the stock of S. T sells all of its assets to S in exchange for $100x of cash and immediately liquidates. Because complete shareholder identity and proportionality of ownership in T and S does not exist, paragraph (l)(2)(i) of this section does not apply. The requirements of sections 368(a)(1)(D) and 354(b)(1)(B) are not satisfied, and the transaction does not qualify as a reorganization described in section 368(a)(1)(D).

(4) ***Effective/applicability date*** —

(i) ***In general.*** This section applies to transactions occurring on or after *December 18, 2009.* For rules regarding transactions occurring before *December 18, 2009,* see section 1.368-2T(l) as contained in 26 CFR part 1.

(ii) ***Transitional rule.*** A taxpayer may apply the provisions of these regulations to transactions occurring before *December 18, 2009.* However, the transferor corporation, the transferee corporation, any direct or indirect transferee of transferred basis property from either of the foregoing, and any shareholder of the transferor or transferee corporation may not apply the provisions of these regulations unless all such taxpayers apply the provisions of the regulations.

(m) ***Qualification as a reorganization under section 368(a)(1)(F)*** —

(1) ***Mere change.*** To qualify as a reorganization under section 368(a)(1)(F), a transaction must result in a mere change in identity, form, or place of organization of one corporation, however effected (a mere change). A mere change can consist of a transaction that involves an actual or deemed transfer of property from one corporation (a transferor corporation) to one other corporation (a resulting corporation). Such a transaction is a mere change and qualifies as a reorganization under section 368(a)(1)(F) only if all the requirements set forth in paragraphs (m)(1)(i) through (vi) of this section are satisfied. For purposes of this paragraph (m), a transaction or a series of related transactions that can be tested against the requirements set forth in paragraphs (m)(1)(i) through (vi) of this section (a potential F reorganization) begins when the transferor corporation begins transferring (or is deemed to begin transferring) its assets, directly or indirectly, to the resulting corporation, and it ends when the transferor corporation has distributed (or is deemed to have distributed) to its shareholders the consideration it receives (or is deemed to receive) from the resulting corporation and has completely liquidated for federal income tax purposes. For purposes of this paragraph (m), deemed transfers include, for example, those provided in § 301.7701-3(g)(1)(iv) of this chapter (when an entity disregarded as separate from its owner elects under paragraph § 301.7701-3(c)(1)(i) of this chapter to be classified as an association, the owner of the entity is deemed to transfer all of the assets and liabilities of the entity to the association in exchange for stock of the association). Deemed transfers also include those resulting from the application of step transaction principles. For example, step transaction principles may disregard a transitory holding of property by an individual after a liquidation of the transferor corporation and before a subsequent transfer of the transferor corporation's property to the resulting corporation. Step transaction principles may also treat a contribution of all the stock of the transferor corporation to the resulting corporation, followed by a liquidation (or deemed liquidation) of the transferor corporation, as a deemed transfer of the transferor corporation's property to the resulting corporation, followed by a distribution of stock of the resulting corporation in complete liquidation of the transferor corporation.

(i) ***Resulting corporation stock distributed in exchange for transferor corporation stock.*** Immediately after the potential F reorganization, all the stock of the resulting corporation, including any stock of the resulting corporation issued before the potential F reorganization, must have been distributed (or deemed distributed) in exchange for stock of the transferor corporation in the potential F reorganization. However, for purposes of this paragraph (m)(1)(i) and paragraph (m)(1)(ii) of this section, a de minimis amount of stock issued by the resulting corporation other than in respect of stock of the transferor corporation to facilitate the organization of the resulting corporation or maintain its legal existence is disregarded.

(ii) ***Identity of stock ownership.*** The same person or persons must own all of the stock of the transferor corporation, determined immediately before the potential F reorganization, and of the resulting corporation, determined immediately after the potential F reorganization, in identical proportions. However, this requirement is not violated if one or more holders of stock in the transferor corporation exchange stock in the transferor corporation for stock of equivalent value in the resulting corporation, but having different terms from those of the stock in the

transferor corporation, or receive a distribution of money or other property from either the transferor corporation or the resulting corporation, whether or not in exchange for stock in the transferor corporation or the resulting corporation.

(iii) ***Prior assets or attributes of resulting corporation.*** The resulting corporation may not hold any property or have any tax attributes (including those specified in section 381(c)) immediately before the potential F reorganization. However, this requirement is not violated if the resulting corporation holds or has held a de minimis amount of assets to facilitate its organization or maintain its legal existence, and has tax attributes related to holding those assets, or holds the proceeds of borrowings undertaken in connection with the potential F reorganization.

(iv) ***Liquidation of transferor corporation.*** The transferor corporation must completely liquidate, for federal income tax purposes, in the potential F reorganization. However, the transferor corporation is not required to dissolve under applicable law and may retain a de minimis amount of assets for the sole purpose of preserving its legal existence.

(v) ***Resulting corporation is the only acquiring corporation.*** Immediately after the potential F reorganization, no corporation other than the resulting corporation may hold property that was held by the transferor corporation immediately before the potential F reorganization, if such other corporation would, as a result, succeed to and take into account the items of the transferor corporation described in section 381(c).

(vi) ***Transferor corporation is the only acquired corporation.*** Immediately after the potential F reorganization, the resulting corporation may not hold property acquired from a corporation other than the transferor corporation if the resulting corporation would, as a result, succeed to and take into account the items of such other corporation described in section 381(c).

(2) ***Non-application of continuity of interest and continuity of business enterprise requirements.*** A continuity of the business enterprise and a continuity of interest are not required for a potential F reorganization to qualify as a reorganization under section 368(a)(1)(F). *See* § 1.368-1(b).

(3) ***Related transactions*** —

(i) ***Series of transactions.*** A potential F reorganization consisting of a series of related transactions that together result in a mere change of one corporation may qualify as a reorganization under section 368(a)(1)(F), whether or not certain steps in the series, viewed in isolation, could be subject to other Code provisions, such as sections 304(a), 331, 332, or 351. However, *see* paragraph (k) of this section for transactions that qualify as reorganizations under section 368(a) and will not be recharacterized as a mere change as a result of one or more subsequent transfers of assets or stock.

(ii) ***Mere change within a larger transaction.*** A potential F reorganization that qualifies as a reorganization under section 368(a)(1)(F) may occur before, within, or after other transactions that effect more than a mere change, even if the resulting corporation has only transitory existence. Related events that precede or follow the potential F reorganization generally will not cause that potential F reorganization to fail to qualify as a reorganization under section 368(a)(1)(F). Qualification of a potential F reorganization as a reorganization under section 368(a)(1)(F) will not alter the character of other transactions for federal income tax purposes, and step transaction principles may be applied to other transactions without regard to whether certain steps qualify as a reorganization or part of a reorganization under section 368(a)(1)(F).

(iii) ***Distributions treated as separate transactions.*** As provided in paragraph (m)(1)(ii) of this section, a potential F reorganization may qualify as a mere change even though a holder of stock in the transferor corporation receives a distribution of money or other property from either the transferor corporation or the resulting corporation. If a shareholder receives money or other property (including in exchange for its shares) from the transferor corporation or the resulting corporation in a potential F reorganization that qualifies as a reorganization under section 368(a)(1)(F), then the receipt of money or other property (including any exchanged for shares) is treated as an unrelated, separate transaction from the reorganization, whether or not connected in a formal sense. See § 1.301-1(j).

(iv) ***Transactions also qualifying under other provisions of section 368(a)(1).*** In certain cases, a potential F reorganization would (but for this paragraph (m)(3)(iv)) qualify both as a reorganization under section 368(a)(1)(F) and as a reorganization or part of a reorganization under another provision of section 368(a)(1). The following rules determine which of these overlapping qualifications applies.

(A) If the potential F reorganization or a step thereof qualifies as a reorganization or part of a reorganization under another provision of section 368(a)(1), and if a corporation in control (within the meaning of section 368(c)) of the resulting corporation is a party to such other reorganization (within the meaning of section 368(b)), the potential F reorganization will not qualify as a reorganization under section 368(a)(1)(F).

(B) Except as provided in paragraph (m)(3)(iv)(A) of this section, if, but for this paragraph (m)(3)(iv)(B), the potential F reorganization would qualify as a reorganization under both section 368(a)(1)(F) and one or more of sections 368(a)(1)(A), 368(a)(1)(C), or 368(a)(1)(D), then for all federal income tax purposes the potential F reorganization will qualify as a reorganization only under section 368(a)(1)(F).

(4) ***Examples.*** The following examples illustrate the application of this paragraph (m). Unless the facts otherwise indicate, A, B, and C are domestic individuals; P, S, T, X, Y, and Z (and similar designations) are domestic corporations; each transaction is entered into for a valid business purpose; all persons and transactions are unrelated; and all other relevant facts are set forth in the examples.

Example 1. Cash contribution and redemption—no mere change. C owns all of the stock of X, a State A corporation. The net value of X's assets and liabilities is $1,000,000. Y, a State B corporation, seeks to acquire the assets of X for cash. To effect the acquisition, Y and X enter into an agreement under which Y will contribute $1,000,000 to Z, a newly formed corporation of which Y is the sole shareholder, in exchange for Z stock and X will merge into Z. In the merger, C surrenders all of the X stock and receives the $1,000,000 Y contributed to Z. C receives no Z stock in the transaction. After the merger, Y holds all of the Z stock, and Z holds all of the assets and liabilities previously held by X. Z stock is not distributed to the shareholders of X in exchange for their stock in X as required by paragraph (m)(1)(i) of this section, and the transaction results in a change in the ownership of X that does not result from an exchange or distribution described in paragraph (m)(1)(ii) of this section. Therefore, the merger of X into Z is not a mere change of X and does not qualify as a reorganization under section 368(a)(1)(F).

Example 2. Cash redemption—mere change. A owns 75%, and B owns 25%, of the stock of X, a State A corporation. The management of X determines that it would be in the best interest of X to reorganize under the laws of State B. Accordingly, X forms Y, a State B corporation, and X and Y enter into an agreement under which X will merge into Y. A does not wish to own stock in Y. In the merger, A surrenders A's X stock and receives cash, and B surrenders all of B's X stock and

receives all the stock of Y. The change in ownership caused by A's surrender of X stock results from a distribution and exchange described in paragraph (m)(1)(ii) of this section. Therefore, the merger of X into Y is a mere change of X and qualifies as a reorganization under section 368(a)(1)(F). Under paragraph (m)(3)(iii) of this section, A's surrender of X stock for cash is treated as a transaction, separate from the reorganization, to which section 302(a) applies.

Example 3. Pre-transaction de minimis stock issuance—mere change—other provisions of section 368(a)(1). P owns all of the stock of S, a Country A corporation. The management of P determines that it would be in the best interest of S to change its place of incorporation to Country B. Under Country B law, a corporation must have at least two shareholders to enjoy limited liability. P is advised by its Country B advisors that the new corporation should issue 1% of its stock to a shareholder that is not P's nominee to assure satisfaction of the two-shareholder requirement. As part of an integrated plan, C, an officer of S, organizes Y, a Country B corporation with 1,000 shares of common stock authorized, and contributes cash to Y in exchange for ten of the common shares. S then merges into Y under the laws of Country A and Country B. Pursuant to the plan of merger, P surrenders its shares of S stock and receives 990 shares of Y common stock. The ten shares of Y stock issued to C not in respect of the S stock are de minimis and are used to facilitate the organization of Y within the meaning of paragraph (m)(1)(i) of this section. Therefore, the issuance of this stock to a new shareholder does not prevent the merger of S into Y from qualifying as a mere change of S. Accordingly, the merger is a reorganization under section 368(a)(1)(F). Without regard to the merger's qualification under section 368(a)(1)(F), the merger would also qualify as a reorganization under both section 368(a)(1)(A) and section 368(a)(1)(D). Under paragraph (m)(3)(iv)(B) of this section, if a potential F reorganization qualifies as a reorganization under section 368(a)(1)(F), and would also qualify under one or more of sections 368(a)(1)(A) or 368(a)(1)(D), the potential F reorganization qualifies only as a reorganization under 368(a)(1)(F), and neither section 368(a)(1)(A) nor section 368(a)(1)(D) will apply.

Example 4. Pre-transaction assets, attributes—no mere change. A owns all of the stock of P, and P owns all of the stock of S, which is engaged in a manufacturing business. P has owned the stock of S for many years. P owns no assets other than the stock of S. A decides to eliminate the holding company structure by merging P into S. Because it operates a manufacturing business, the potential resulting corporation, S, holds property and has tax attributes immediately before the potential F reorganization. Therefore, under paragraph (m)(1)(iii) of this section, the merger of P into S is not a mere change of P and does not qualify as a reorganization under section 368(a)(1)(F). The same result would occur under paragraph (m)(1)(iii) of this section if, instead of P merging into S, S merged into P, because P, the potential resulting corporation, holds property (the stock of S) and has tax attributes immediately before the potential F reorganization.

Example 5. Series of related transactions—mere change. P owns all of the stock of S1, a State A corporation. The management of P determines that it would be in the best interest of S1 to change its place of incorporation to State B. Accordingly, under an integrated plan, P forms S2, a new State B corporation; P contributes the S1 stock to S2; and S1 merges into S2 under the laws of State A and State B. Under paragraph (m)(3)(i) of this section, a series of transactions that together result in a mere change of one corporation may qualify as a reorganization under section 368(a)(1)(F). The contribution of S1 stock to S2 and the merger of S1 into S2 together constitute a mere change of S1. Therefore, the potential F reorganization qualifies as a

reorganization under section 368(a)(1)(F). Without regard to its qualification under section 368(a)(1)(F), the potential F reorganization would also qualify as a reorganization under both section 368(a)(1)(A) and section 368(a)(1)(D). Under paragraph (m)(3)(iv)(B) of this section, if a potential F reorganization qualifies as a reorganization under section 368(a)(1)(F) and would also qualify under one or more of sections 368(a)(1)(A) or 368(a)(1)(D), it qualifies only as a reorganization under 368(a)(1)(F), and neither section 368(a)(1)(A) nor section 368(a)(1)(D) will apply. The result would be the same with respect to qualification under section 368(a)(1)(F) if, instead of merging into S2, S1 completely liquidates or is deemed to liquidate by reason of a conversion in an entity disregarded as separate from its owner under § 301.7701-3 of this chapter.

Example 6. Post-transaction stock sale—mere change. P owns all of the stock of S1, a State A corporation. The management of P determines that it would be in the best interest of S1 to change its place of incorporation to State B. Accordingly, P forms S2, a new State B corporation. S1 then merges into S2 under the laws of State A and State B. Immediately thereafter, and as part of the same plan, P sells all of its stock in S2 to an unrelated party. Without regard to P's sale of S2 stock, the merger of S1 into S2 is a potential F reorganization that qualifies as a mere change of S1 within the meaning of paragraph (m)(1) of this section. Under paragraph (m)(3)(ii) of this section, related events that occur before or after a potential F reorganization that qualifies as a mere change generally do not cause that potential F reorganization to fail to qualify as a reorganization under section 368(a)(1)(F). Therefore, P's sale of the S2 stock is disregarded in determining whether the merger of S1 into S2 is a mere change of S1. Accordingly, the merger of S1 into S2 qualifies as a reorganization under section 368(a)(1)(F). The result would be the same if, instead of the S2 stock being sold by P, S2 merges into a previously unrelated corporation and terminates its separate existence.

Example 7. Post-transaction redemption—mere change. A owns all of the stock of T. P owns all of the stock of S. Each of T and S is a State A corporation engaged in a manufacturing business. The following transactions occur pursuant to a single plan. Each of T, P, and S is a State A corporation engaged in a manufacturing business. Second, P changes its state of incorporation to State B by merging into newly incorporated New P under the laws of State A and State B. Third, New P redeems all the New P stock issued to A in respect of A's P stock (initially issued to A in respect of A's T stock) for cash. Without regard to the other steps, the merger of P into New P is a potential F reorganization that qualifies as a reorganization under section 368(a)(1)(F). Under paragraph (m)(3)(ii) of this section, related events that occur before or after a potential F reorganization that qualifies as a mere change generally do not prevent that potential F reorganization from qualifying as a reorganization under section 368(a)(1)(F). Therefore, the merger of P into New P qualifies as a reorganization under section 368(a)(1)(F). Under paragraph (m)(3)(ii) of this section, the qualification of the merger of P into New P as a reorganization under section 368(a)(1)(F) does not alter the tax treatment of the merger of T into S. Because the P shares received by A in respect of the T shares (exchanged for New P shares in the mere change of P into New P) are redeemed for cash pursuant to the plan, the merger of T into S does not satisfy the continuity of interest requirement of § 1.368-1(e) and therefore does not qualify as a reorganization under section 368(a).

Example 8. Series of related transactions—mere change. P owns all of the stock of S, a State A corporation. The management of P determines that it would be in the best interest of S to change its form from a State A corporation to a State A limited partnership but to continue to be treated as a corporation for federal tax purposes. Accordingly, P contributes 1% of the S

stock to newly formed LLC, a limited liability company, in exchange for all of the membership interests in LLC. P is the sole member of LLC. Under § 301.7701-3 of this chapter, LLC is disregarded as an entity separate from its owner, P. Then, under a State A statute, S converts to a State A limited partnership. In the conversion, P's interest as a 99% shareholder of S is converted into a 99% limited partner interest, and LLC's interest as a 1% shareholder of S is converted into a 1% general partner interest. S also elects, under § 301.7701-3(c) of this chapter, to be classified as a corporation for federal income tax purposes, effective on the same day as the conversion. Under paragraph (m)(3)(i) of this section, the conversion of S from a State A corporation to a State A limited partnership, together with the election to treat S as a corporation for federal tax purposes, results in a mere change of S and qualifies as a reorganization under section 368(a)(1)(F).

Example 9. Other acquiring corporation—no mere change. P owns 80%, and A owns 20%, of the stock of S. A and the management of P determine that it would be in the best interest of S to completely liquidate while A continues to operate part of the business of S in corporate form. Accordingly, S distributes 80% of its assets to P and 20% of its assets to A; S dissolves; and A contributes the assets it receives from S to newly incorporated New S in exchange for all of the stock of New S. S's distribution of 80% of its property to P as part of the complete liquidation of S meets the requirements of section 332. Thus, section 381(a)(1) applies to P's acquisition of 80% of the property held by S immediately before the transaction. Under paragraph (m)(1)(v) of this section, the potential F reorganization in which 20% of the property held by S immediately before the transaction is transferred to New S cannot be a mere change of S, because section 381(a) applies to P's acquisition of property held by S immediately before the potential F reorganization. Accordingly, sections 331 and 336 apply to A's acquisition of property from S and S's distribution of property to A, and section 351 applies to A's contribution of that property to New S.

Example 10. Other acquiring corporation—no mere change. P owns all of the stock of S1. The management of P determines that it would be in the best interest of S1 to merge S1 into P. Accordingly, pursuant to a state merger statute, S1 merges into P. Immediately afterward and as part of the same plan, P contributes 50% of the former assets of S1 to newly incorporated S2 in exchange for all of the stock of S2. The transaction does not qualify as a complete liquidation of S1 under section 332 (because of the reincorporation of some of S1's assets) but does qualify as a reorganization under section 368(a)(1)(A) by reason of section 368(a)(2)(C) and paragraph (k) of this section. Under paragraph (m)(1)(v) of this section, the potential F reorganization in which some of the former assets of S1 are transferred (in form) first to P, and then to S2, is not a mere change of S1, because section 381(a) applies to P's acquisition of property held by S1 immediately before the potential F reorganization. Furthermore, under paragraph (m)(3)(iv)(A) of this section, P, the corporation in control of S2 within the meaning of section 368(c), is a party to the reorganization within the meaning of section 368(b). Thus, the indirect transfer of property from S1 to S2 does not qualify under section 368(a)(1)(F).

Example 11. Other acquiring corporation—mere change. P owns all of the stock of S1. S1's only asset is all of the equity interest in LLC2, a domestic limited liability company. Under § 301.7701-3 of this chapter, LLC2 is disregarded as an entity separate from its owner, S1. Pursuant to an integrated plan to undergo a reorganization under 368(a)(1)(F), S1 and LLC2 undergo the following two state law conversions. First, under state law LLC2 converts into S2, a corporation. Second, under state law S1 converts into LLC1, a domestic limited liability company. Under § 301.7701-3 of this chapter, LLC1 is disregarded as an entity separate from its owner, P. As a

result of the two conversions, S1 is deemed to transfer its assets to S2 in exchange for all of the stock in S2 and then distribute the S2 stock to P in complete liquidation of S1. The two conversions, viewed as a potential F reorganization, constitute a mere change of S1, and that potential F reorganization qualifies as a reorganization under section 368(a)(1)(F). The result would be the same if, instead of converting into S2 pursuant to state law, LLC2 elected under § 301.7701-3(c) to change its classification for federal tax purposes and be treated as an association taxable as a corporation, provided the effective date of the election (and its resulting deemed transactions) occurs before the conversion of S1.

Example 12. Other acquiring corporation—no mere change. The facts are the same facts as in *Example 11,* except that S1 converts into LLC1 prior to the conversion of LLC2 into S2. As a result of these conversions, S1 is deemed to distribute all of its assets to P in exchange for all of P's S1 stock, and P is deemed to transfer all of those assets to S2 in exchange for all of the stock in S2. The transaction does not qualify as a complete liquidation of S1 under section 332 (because of the reincorporation of S1's assets), but does qualify as a reorganization under section 368(a)(1)(C) by reason of section 368(a)(2)(C) and paragraph (k) of this section. Under paragraph (m)(1)(v) of this section, the potential F reorganization in which the former assets of S1 are deemed transferred, first by S1 to P, and then by P to S2, is not a mere change of S1 because section 381(a) applies to P's acquisition of property held by S1 immediately before the potential F reorganization. Furthermore, the corporation in control of S2, within the meaning of section 368(c), is a party to the reorganization within the meaning of section 368(b). Thus, the indirect transfer of property from S1 to S2 does not qualify under section 368(a)(1)(F).

Example 13. Series of related transactions—no mere change. X owns all of the stock of T. P acquires all of the stock of T in exchange for consideration consisting of $50 cash and P voting stock with $50 value. No election is made under section 338. Immediately thereafter and as part of the same plan, P forms S as a wholly-owned subsidiary, and T is merged into S. Viewed in isolation as a potential F reorganization, the merger of T into S appears to constitute a mere change of T. However, the acquisition of the T stock by P and the merger of T into S, viewed together, qualify as a reorganization under section 368(a)(1)(A) by reason of section 368(a)(2)(D). The step transaction doctrine is applied treat the transaction as a statutory merger of T into S in exchange for $50 cash and $50 of P's voting stock (and S's assumption of T's liabilities), P's momentary ownership of T stock is disregarded. Under paragraph (m)(3)(iv)(A) of this section, P, the corporation in control of S, is a party to the reorganization within the meaning of section 368(b). Thus, the transfer of property from T to S does not qualify under section 368(a)(1)(F).

Example 14. Multiple transferor corporations—no mere change. P owns all the stock of S1 and S2. The management of P determines it would be in the best interest of S1 and S2 to operate as a single corporation. P forms S3 and, under applicable corporate law, S1 and S2 simultaneously merge into S3. Immediately after the merger, P owns all the stock of S3. Each of the mergers can be tested as a potential F reorganization. However, immediately after the simultaneous mergers, the resulting corporation, S3, holds property acquired from a corporation other than the transferor corporation, and section 381(a) would apply to the acquisition of such property. Therefore, under paragraph (m)(1)(vi) of this section, neither potential F reorganization is a mere change, and neither merger into S3 qualifies as a reorganization under section 386(a)(1)(F). The result would be different if the mergers were not simultaneous. If S1 completed its merger into S3 before S2 began its merger into S3, the merger of S1 into S3

would qualify as a reorganization under section 368(a)(1)(F), but the merger of S2 into S3 would not so qualify (although it would qualify as a reorganization under sections 368(a)(1)(A) and 368(a)(1)(D)).

(5) ***Effective/Applicability Date.*** This paragraph (m) applies to transactions occurring on or after September 21, 2015.

[T.D. 6500, 25 FR 11607, Nov. 26, 1960]

Editorial Note: For FEDERAL REGISTER citations affecting § 1.368-2, see the List of CFR Sections Affected, which appears in the Finding Aids section of the printed volume and at *www.govinfo.gov*.

§ 1.368-3 Records to be kept and information to be filed with returns.

(a) ***Parties to the reorganization.*** The plan of reorganization must be adopted by each of the corporations that are parties thereto. Each such corporation must include a statement entitled, "STATEMENT PURSUANT TO § 1.368-3(a) BY [INSERT NAME AND EMPLOYER IDENTIFICATION NUMBER (IF ANY) OF TAXPAYER], A CORPORATION A PARTY TO A REORGANIZATION," on or with its return for the taxable year of the exchange. If any such corporation is a controlled foreign corporation (within the meaning of section 957), each United States shareholder (within the meaning of section 951(b)) with respect thereto must include this statement on or with its return. However, it is not necessary for any taxpayer to include more than one such statement on or with the same return for the same reorganization. The statement must include—

(1) The names and employer identification numbers (if any) of all such parties;

(2) The date of the reorganization;

(3) The value and basis of the assets, stock or securities of the target corporation transferred in the transaction, determined immediately before the transfer and aggregated as follows—

(i) Importation property transferred in a loss importation transaction, as defined in § 1.362-3(c)(2) and (3), respectively;

(ii) Loss duplication property as defined in § 1.362-4(g)(1);

(iii) Property with respect to which any gain or loss was recognized on the transfer (without regard to whether such property is also identified in paragraph (a)(3)(i) or (ii) of this section);

(iv) Property not described in paragraph (a)(3)(i), (ii), or (iii) of this section; and

(4) The date and control number of any private letter ruling(s) issued by the Internal Revenue Service in connection with this reorganization.

(b) ***Significant holders.*** Every significant holder, other than a corporation a party to the reorganization, must include a statement entitled, "STATEMENT PURSUANT TO § 1.368-3(b) BY [INSERT NAME AND TAXPAYER IDENTIFICATION NUMBER (IF ANY) OF TAXPAYER], A SIGNIFICANT HOLDER," on or with such holder's return for the taxable year of the exchange. If a significant holder is a controlled foreign corporation (within the meaning of section 957), each United States shareholder (within the meaning of section 951(b)) with respect thereto must include this statement on or with its return. The statement must include—

(1) The names and employer identification numbers (if any) of all of the parties to the reorganization;

(2) The date of the reorganization; and

(3) The value and basis of all the stock or securities of the target corporation held by the significant holder that is transferred in the transaction and such holder's basis in that stock or securities, determined immediately before the transfer and aggregated as follows—

(i) Stock and securities with respect to which an election is made under section 362(e)(2)(C); and

(ii) Stock and securities not described in paragraph (b)(3)(i) of this section.

(c) ***Definitions.*** For purposes of this section:

(1) ***Significant holder*** means—

(i) A holder of stock of the target corporation that receives stock or securities in an exchange described in section 354 (or so much of section 356 as relates to section 354) if, immediately before the exchange, such holder—

(A) Owned at least five percent (by vote or value) of the total outstanding stock of the target corporation if the stock owned by such holder is publicly traded; or

(B) Owned at least one percent (by vote or value) of the total outstanding stock of the target corporation if the stock owned by such holder is not publicly traded; or

(ii) A holder of securities of the target corporation that receives stock or securities in an exchange described in section 354 (or so much of section 356 as relates to section 354) if, immediately before the exchange, such holder owned securities in such target corporation with a basis of $1,000,000 or more.

(2) ***Publicly traded stock*** means stock that is listed on—

(i) A national securities exchange registered under section 6 of the Securities Exchange Act of 1934 (15 U.S.C. 78f); or

(ii) An interdealer quotation system sponsored by a national securities association registered under section 15A of the Securities Exchange Act of 1934 (15 U.S.C. 78o-3).

(d) ***Substantiation information.*** Under § 1.6001-1(e), taxpayers are required to retain their permanent records and make such records available to any authorized Internal Revenue Service officers and employees. In connection with the reorganization described in this section, these records should specifically include information regarding the amount, basis, and fair market value of all transferred property, and relevant facts regarding any liabilities assumed or extinguished as part of such reorganization.

(e) ***Effective/applicability date.*** This section applies to any taxable year beginning on or after May 30, 2006. However, taxpayers may apply this section to any original Federal income tax return (including any amended return filed on or before the due date (including extensions) of such original return) timely filed on or after May 30, 2006. For taxable years beginning before May 30, 2006, see § 1.368-3 as contained in 26 CFR part 1 in effect on April 1, 2006. Paragraphs (a)(3) and (b)(3) of this section apply with respect to reorganizations occurring on or after March 28, 2016, and also with respect to reorganizations occurring before such date as a result of an entity classification election under § 301.7701-3 of this chapter filed on or after March 28, 2016, unless such reorganization is pursuant to a binding agreement that was in effect prior to March 28, 2016 and at all times thereafter.

[T.D. 9329, 72 FR 32800, June 14, 2007, as amended by T.D. 9759, 81 FR 17083, Mar. 28, 2016]

Insolvency Reorganizations

CARRYOVERS

§ 1.381(a)-1 General rule relating to carryovers in certain corporate acquisitions.

(a) ***Allowance of carryovers.*** Section 381 provides that a corporation which acquires the assets of another corporation in certain liquidations and reorganizations shall succeed to, and take into account, as of the close of the date of distribution or transfer, the items described in section 381(c) of the distributor or transferor corporation. These items shall be taken into account by the acquiring corporation subject to the conditions and limitations specified in sections 381, 382(b), and 383 and the regulations thereunder.

(b) ***Determination of transactions and items to which section 381 applies*** —

(1) ***Qualified transactions.*** Except to the extent provided in section 381(c)(20), relating to the carryover of unused pension trust deductions in certain liquidations, the items described in section 381(c) are required by section 381 to be carried over to the acquiring corporation (as defined in subparagraph (2) of this paragraph) only in the following liquidations and reorganizations:

(i) The complete liquidation of a subsidiary corporation upon which no gain or loss is recognized in accordance with the provisions of section 332;

(ii) A statutory merger or consolidation qualifying under section 368(a)(1)(A) to which section 361 applies;

(iii) A reorganization qualifying under section 368(a)(1)(C);

(iv) A reorganization qualifying under section 368(a)(1)(D) if the requirements of section 354(b)(1)(A) and (B) are satisfied; and

(v) A mere change in identity, form, or place of organization qualifying under section 368(a)(1)(F).

(2) ***Acquiring corporation defined.***

(i) Only a single corporation may be an acquiring corporation for purposes of section 381 and the regulations thereunder. The corporation which acquires the assets of its subsidiary corporation in a complete liquidation to which section 381(a)(1) applies is the acquiring corporation for purposes of section 381. In a transaction to which section 381(a)(2) applies, the acquiring corporation is the corporation that, pursuant to the plan of reorganization, directly acquires the assets transferred by the transferor corporation, even if that corporation ultimately retains none of the assets so transferred.

(ii) The application of this subparagraph may be illustrated by the following examples:

Example 1. Y Corporation, a wholly-owned subsidiary of X Corporation, directly acquired all the assets of Z Corporation solely in exchange for voting stock of X Corporation in a transaction qualifying under section 368(a)(1)(C). Y Corporation is the acquiring corporation for purposes of section 381.

Example 2. X Corporation acquired all the assets of Z Corporation solely in exchange for voting stock of X Corporation in a transaction qualifying under section 368(a)(1)(C). Thereafter, pursuant to the plan of reorganization X Corporation transferred all the assets so acquired to Y Corporation, its wholly-owned subsidiary (see section 368(a)(2)(C)). X Corporation is the acquiring corporation for purposes of section 381.

Example 3. X Corporation acquired all the assets of Z Corporation solely in exchange for the voting stock of X Corporation in a transaction qualifying under section 368(a)(1)(C). Thereafter, pursuant to the plan of reorganization X Corporation transferred one-half of the assets so acquired to Y Corporation, its wholly-owned subsidiary, and retained the other half of such assets. X Corporation is the acquiring corporation for purposes of section 381.

Example 4. X Corporation acquired all the assets of Z Corporation solely in exchange for voting stock of X Corporation in a transaction qualifying under section 368(a)(1)(C). Thereafter, pursuant to the plan of reorganization X Corporation transferred one-half of the assets so acquired to Y Corporation, its wholly-owned subsidiary, and the other half of such assets to M Corporation, another wholly-owned subsidiary of X Corporation. X Corporation is the acquiring corporation for purposes of section 381.

(3) ***Transactions and items not covered by section 381.*** Section 381 does not apply to partial liquidations, divisive reorganizations, or other transactions not described in subparagraph (1) of this paragraph. Moreover, section 381 does not apply to the carryover of an item or tax attribute not specified in subsection (c) thereof. In a case where section 381 does not apply to a transaction, item, or tax attribute by reason of either of the preceding sentences, no inference is to be drawn from the provisions of section 381 as to whether any item or tax attribute shall be taken into account by the successor corporation.

(c) ***Foreign corporations.*** For additional rules involving foreign corporations, see §§ 1.367(b)-7 through 1.367(b)-9.

(d) ***Internal Revenue Code of 1939.*** Any reference in the regulations under section 381 to any provision of the Internal Revenue Code of 1954 shall, where appropriate, be deemed also to refer to the corresponding provision of the Internal Revenue Code of 1939.

(e) ***Effective/applicability date.*** The rules of paragraph (b)(1)(i) of this section apply to corporate reorganizations and tax-free liquidations described in section 381(a) that occur on or after August 31, 2011. The last sentence of paragraph (b)(2)(i) of this section and *Example 2* of paragraph (b)(2)(ii) of this section apply to transactions occurring on or after November 10, 2014.

[T.D. 6500, 25 FR 11607, Nov. 26, 1960, as amended by T.D. 7343, 40 FR 1698, Jan. 9, 1975; T.D. 9273, 71 FR 44914, Aug. 8, 2006; T.D. 9534, 76 FR 45675, Aug. 1, 2011; T.D. 9700; 79 FR 66617, Nov. 10, 2014]

§ 1.381(b)-1 Operating rules applicable to carryovers in certain corporate acquisitions.

(a) ***Closing of taxable year —***

(1) ***In general.*** Except in the case of certain reorganizations qualifying under section 368(a)(1)(F), the taxable year of the distributor or transferor corporation shall end with the close of the date of distribution or transfer. With regard to the closing of the taxable year of the transferor corporation in certain reorganizations under section 368(a)(1)(F) involving a foreign corporation after December 31, 1986, see §§ 1.367(a)-1(e) and 1.367(b)-2(f).

(2) ***Reorganizations under section 368(a)(1)(F).*** In the case of a reorganization qualifying under section 368(a)(1)(F) (whether or not such reorganization also qualifies under any other provision of section 368(a)(1)), the acquiring corporation shall be treated (for purposes of section 381) just as the transferor corporation would have been treated if there had been no reorganization. Thus, the taxable year of the transferor corporation shall not end on the date of transfer merely because of the transfer; a net operating loss of the acquiring corporation for any taxable year ending after the date of transfer shall be carried back in accordance with section 172(b) in computing the taxable income of the transferor corporation for a taxable year ending before the date of transfer; and the tax attributes of the transferor corporation enumerated in section 381(c) shall be taken into account by the acquiring corporation as if there had been no reorganization.

(b) ***Date of distribution or transfer.***

(1) The date of distribution or transfer shall be that day on which are distributed or transferred all those properties of the distributor or transferor corporation which are to be distributed or transferred pursuant to a liquidation or reorganization described in paragraph (b)(1) of § 1.381(a)-1. If the distribution or transfer of all such properties is not made on one day, then, except as provided in subparagraph (2) of this paragraph, the date of distribution or transfer shall be that day on which the distribution or transfer of all such properties is completed.

(2) If the distributor or transferor and acquiring corporations file the statements described in subparagraph (3) of this paragraph, the date of distribution or transfer shall be that day as of which

(i) substantially all of the properties to be distributed or transferred have been distributed or transferred, and

(ii) the distributor or transferor corporation has ceased all operations (other than liquidating activities). Such day also shall be the date of distribution or transfer if the completion of the distribution or transfer is unreasonably postponed beyond the date as of which substantially all the properties to be distributed or transferred have been distributed or transferred and the distributor or transferor corporation has ceased all operations other than liquidating activities. A corporation shall be considered to have distributed or transferred substantially all of its properties to be distributed or transferred even though it retains money or other property in a reasonable amount to pay outstanding debts or preserve the corporation's legal existence. A corporation shall be considered to have ceased all operations, other than liquidating activities, when it ceases to be a going concern and its activities are merely for the purpose of winding up its affairs, paying its debts, and distributing any remaining balance of its money or other properties to its shareholders.

(3) ***Election*** —

(i) ***Content of statements.*** The statements referred to in paragraph (b)(2) of this section must be entitled, “ELECTION OF DATE OF DISTRIBUTION OR TRANSFER PURSUANT TO § 1.381(b)-1(b)(2),” and must include: [INSERT NAME AND EMPLOYER IDENTIFICATION NUMBER (IF ANY) OF DISTRIBUTOR OR TRANSFEROR CORPORATION] AND [INSERT NAME AND EMPLOYER IDENTIFICATION NUMBER (IF ANY) OF ACQUIRING CORPORATION] ELECT TO DETERMINE THE DATE OF DISTRIBUTION OR TRANSFER UNDER § 1.381(b)-1(b)(2). SUCH DATE IS [INSERT DATE (mm/dd/yyyy)].

(ii) ***Filing of statements.*** One statement must be included on or with the timely filed Federal income tax return of the distributor or transferor corporation for its taxable year ending with the date of distribution or transfer. An identical statement must be included on or with the timely filed

Federal income tax return of the acquiring corporation for its first taxable year ending after that date. If the distributor or transferor corporation, or the acquiring corporation, is a controlled foreign corporation (within the meaning of section 957), each United States shareholder (within the meaning of section 951(b)) with respect thereto must include this statement on or with its return.

(4) If—

(i) The last day of the acquiring corporation's taxable year is a Saturday, Sunday, or legal holiday, and

(ii) The day specified in subparagraph (1) or (2) of this paragraph as the date of distribution or transfer is the last business day before such Saturday, Sunday, or holiday,

then the last day of the acquiring corporation's taxable year shall be the date of distribution or transfer for purposes of section 381(b) and this section. For purposes of this subparagraph, the term *business day* means a day which is not a Saturday, Sunday, or legal holiday, and also means a Saturday, Sunday, or legal holiday if the date of distribution or transfer determined under subparagraph (1) or (2) of this paragraph is such Saturday, Sunday, or holiday.

(c) ***Return of distributor or transferor corporation.*** The distributor or transferor corporation shall file an income tax return for the taxable year ending with the date of distribution or transfer described in paragraph (b) of this section. If the distributor or transferor corporation remains in existence after such date of distribution or transfer, it shall file an income tax return for the taxable year beginning on the day following the date of distribution or transfer and ending with the date on which the distributor or transferor corporation's taxable year would have ended if there had been no distribution or transfer.

(d) ***Carryback of net operating losses.*** For provisions relating to the carryback of net operating losses of the acquiring corporation, see paragraph (b) of § 1.381(c)(1)-1.

(e) ***Effective/applicability date.*** Paragraph (b)(3) of this section applies to any taxable year beginning on or after May 30, 2006. However, taxpayers may apply paragraph (b)(3) of this section to any original Federal income tax return (including any amended return filed on or before the due date (including extensions) of such original return) timely filed on or after May 30, 2006. For taxable years beginning before May 30, 2006, see § 1.381(b)-1 as contained in 26 CFR part 1 in effect on April 1, 2006.

[T.D. 6500, 25 FR 11607, Nov. 26, 1960, as amended at T.D. 8280, 55 FR 1417, Jan. 16, 1990; T.D. 8862, 65 FR 3609, Jan. 24, 2000; T.D. 9264, 71 FR 30598, May 30, 2006; T.D. 9329, 72 FR 32801, June 14, 2007; T.D. 9739, 80 FR 56915, Sept. 21, 2015]

§ 1.381(c)(1)-1 Net operating loss carryovers in certain corporate acquisitions.

(a) ***Carryover requirement.***

(1) Section 381(c)(1) requires the acquiring corporation to succeed to, and take into account, the net operating loss carryovers of the distributor or transferor corporation. To determine the amount of these carryovers as of the close of the date of distribution or transfer, and to integrate them with any carryovers and carrybacks of the acquiring corporation for purposes of determining the taxable income of the acquiring corporation for taxable years ending after the date of distribution or transfer, it is necessary to apply the provisions of section 172 in accordance with the conditions and limitations of section 381(c)(1) and this section. See also section 382(b) and the regulations thereunder.

(2) The net operating loss carryovers and carrybacks of the acquiring corporation determined as of the close of the date of distribution or transfer shall be computed without reference to any net operating loss of a distributor or transferor corporation. The net operating loss carryovers of a distributor or transferor corporation as of the close of the date of distribution or transfer shall be determined without reference to any net operating loss of the acquiring corporation.

(3) For purposes of the tax imposed under section 56, the acquiring corporation succeeding to and taking into account any net operating loss carryovers of the distributor or transferor corporation shall also succeed to and take into account along with such net operating loss carryforward any deferred tax liability under section 56(b) and the regulations thereunder attributable to such net operating loss carryover.

(b) ***Carryback of net operating losses.*** A net operating loss of the acquiring corporation for any taxable year ending after the date of distribution or transfer shall not be carried back in computing the taxable income of a distributor or transferor corporation. However, a net operating loss of the acquiring corporation for any such taxable year shall be carried back in accordance with section 172(b) in computing the taxable income of the acquiring corporation for a taxable year ending on or before the date of distribution or transfer. If a distributor or transferor corporation remains in existence after the date of distribution or transfer, a net operating loss sustained by it for any taxable year beginning after such date shall be carried back in accordance with section 172(b) in computing the taxable income of such corporation for a taxable year ending on or before that date, but may not be carried back or over in computing the taxable income of the acquiring corporation. This paragraph may be illustrated by the following examples:

Example 1. On December 31, 1954, X Corporation merged into Y Corporation in a statutory merger to which section 361 applies, and the charter of Y Corporation continued after the merger. Y Corporation sustained a net operating loss for the calendar year 1955. Y Corporation's net operating loss for 1955 may not be carried back in computing the taxable income of X Corporation but shall be carried back in computing the taxable income of Y Corporation.

Example 2. On December 31, 1954, X Corporation and Y Corporation transferred all their assets to Z Corporation in a statutory consolidation to which section 361 applies. Z Corporation sustained a net operating loss for the calendar year 1955. Z Corporation's net operating loss for 1955 may not be carried back in computing the taxable income of X Corporation or Y Corporation.

Example 3. On December 31, 1954, X Corporation ceased all operations (other than liquidating activities) and transferred substantially all its properties to Y Corporation in a reorganization qualifying under section 368(a)(1)(C). Such properties comprised all of X Corporation's properties which were to be transferred pursuant to the reorganization. In the process of liquidating its assets and winding up its affairs, X Corporation sustained a net operating loss for its taxable year beginning on January 1, 1955. This net operating loss of X Corporation shall be carried back in computing the taxable income of that corporation but may not be carried back or over in computing the taxable income of Y Corporation.

(c) ***First taxable year to which carryovers apply.***

(1) The net operating loss carryovers available to the distributor or transferor corporation as of the close of the date of distribution or transfer shall first be carried to the first taxable year of the acquiring corporation ending after that date. This rule applies irrespective of whether the date of distribution or transfer is on the last day, or any other day, of the acquiring corporation's taxable year. Thus, such net operating loss carryovers shall first be used by the acquiring corporation with respect to the

computation of its net operating loss deduction under section 172(a), and its taxable income determined under the provisions of section 172(b)(2), for such first taxable year. However, see paragraph (f) of this section.

(2) The net operating loss carryovers available to the distributor or transferor corporation as of the close of the date of distribution or transfer shall be carried to the acquiring corporation without diminution by reason of the fact that the acquiring corporation does not acquire 100 percent of the assets of the distributor or transferor corporation. Thus, if a parent corporation owning 80 percent of all classes of stock of its subsidiary corporation were to acquire its share of the assets of the subsidiary corporation upon a complete liquidation described in paragraph (b)(1)(i) of § 1.381(a)-1, then, subject to the conditions and limitations of this section, 100 percent of the net operating loss carryovers available to the subsidiary corporation as of the close of the date of distribution would be carried over to the parent corporation.

(d) ***Limitation on net operating loss deduction for first taxable year ending after date of distribution or transfer.***

(1) That part of the acquiring corporation's net operating loss deduction, determined in accordance with sections 172(a) and 381(c)(1), for its first taxable year ending after the date of distribution or transfer which is attributable to the net operating loss carryovers of the distributor or transferor corporation, is limited by section 381(c)(1)(B) and this paragraph to an amount equal to the acquiring corporation's postacquisition part year taxable income. Such postacquisition part year taxable income is the amount which bears the same ratio to the acquiring corporation's taxable income for the first taxable year ending after the date of distribution or transfer (determined under section 63 without regard to any net operating loss deduction but taking into account other items to which the acquiring corporation succeeds under section 381) as the number of days in such first taxable year which follow the date of distribution or transfer bears to the total number of days in such taxable year. Thus, if the date of distribution or transfer is the last day of the acquiring corporation's taxable year, the net operating loss carryovers of the distributor or transferor are allowed in full in computing under section 172(a) the net operating loss deduction of the acquiring corporation for its first taxable year ending after that date. In such instance, the number of days in the first taxable year which follow the date of distribution or transfer is the total number of days in such taxable year.

(2) The limitation provided by section 381(c)(1)(B) applies solely for the purpose of computing the net operating loss deduction of the acquiring corporation under section 172(a) for the acquiring corporation's first taxable year ending after the date of distribution or transfer. The limitation does not apply for purposes of determining the portion of any net operating loss (whether of the distributor, transferor, or acquiring corporation) which may be carried to any taxable year of the acquiring corporation following its first taxable year ending after the date of distribution or transfer since such determination is made pursuant to section 172(b) and section 381(c)(1)(C). See paragraphs (e) and (f) of this section.

(3) The limitation provided by section 381(c)(1)(B) shall be applied to the aggregate of the allowable net operating loss carryovers of the distributor or transferor corporation without reference to the taxable years in which the net operating losses were sustained by such corporation. If the acquiring corporation has acquired the assets of two or more distributor or transferor corporations on the same date of distribution or transfer, then the limitation provided by section 381(c)(1)(B) shall be applied to the aggregate of the net operating loss carryovers from all of such distributor or transferor corporations.

(4) If the acquiring corporation succeeds to the net operating loss carryovers of two or more distributor or transferor corporations on two or more different dates of distribution or transfer within one taxable year of the acquiring corporation, the limitation to be applied under section 381(c)(1)(B) to the aggregate of such carryovers shall be governed by the rules prescribed in paragraph (b) of § 1.381(c)(1)-2.

(5) ***Illustrations.*** The application of this paragraph may be illustrated by the following examples:

Example 1. (i) X Corporation and Y Corporation were organized on January 1, 1956, and make their returns on the calendar year basis. On December 16, 1957, X Corporation transferred all its assets to Y Corporation in a statutory merger to which section 361 applies. The net operating losses and taxable income (computed without the net operating loss deduction) of the two corporations are as follows, the assumption being made that none of the modifications specified in section 172(b)(2)(A) apply to any taxable year:

Taxable year	X Corporation (transferor)	Y Corporation (acquirer)
1956	($35,000)	($5,000)
Ending 12-16-57	(30,000)	xxx
1957	xxx	36,500

(ii) The aggregate of the net operating loss carryovers of X Corporation carried under section 381(c)(1)(A) to Y Corporation's taxable year ending December 31, 1957, is $65,000; but pursuant to section 381(c)(1)(B), only $1,500 of such aggregate amount ($36,500 × 15/365) may be used in computing the net operating loss deduction of Y Corporation for such taxable year under section 172(a). This limitation applies even though Y Corporation's own net operating loss carryover to such year is only $5,000, with the result that Y Corporation has taxable income under section 63 of $30,000 for its taxable year ending December 31, 1957, that is, $36,500 less the sum of $5,000 and $1,500.
(iii) For rules determining the portion of any given loss of X Corporation or Y Corporation which may be carried to a taxable year of Y Corporation following its taxable year ending December 31, 1957, see sections 172(b)(2) and 381(c)(1)(C) and paragraph (f) of this section.

Example 2. (i) X Corporation was organized on January 1, 1954, and Y Corporation was organized on January 1, 1956. Each corporation makes its return on the basis of the calendar year. On December 31, 1956, X Corporation transferred all its assets to Y Corporation in a statutory merger to which section 361 applies. The net operating losses and the taxable income (computed without any net operating loss deduction) of the two corporations are as follows, the assumption being made that none of the modifications specified in section

172(b)(2)(A) apply to any taxable year:

Taxable year	X Corporation (transferor)	Y Corporation (acquirer)
1954	($5,000)	xxx
1955	(15,000)	xxx
1956	(10,000)	$20,000
1957	xxx	40,000

(ii) The aggregate of the net operating loss carryovers of X Corporation carried under section 381(c)(1)(A) to Y Corporation's taxable year 1957 is $30,000, and the full amount of such carryovers is allowed in such taxable year to Y Corporation as a deduction under section 172(a), since such amount does not exceed the limitation ($40,000 × 365/365) for such taxable year under section 381(c)(1)(B).

Example 3. (i) X Corporation, Y Corporation, and Z Corporation were organized on January 1, 1954, and each corporation makes its return on the basis of the calendar year. On September 30, 1956, X Corporation and Y Corporation transferred all their assets to Z Corporation in a statutory merger to which section 361 applies. The net operating losses and the taxable income (computed without any net operating loss deduction) of the three corporations are as follows, the assumption being made that none of the modifications specified in section 172(b)(2)(A) apply to any taxable year:

Taxable year	X Corporation (transferor)	Y Corporation (transferor)	Z Corporation (acquirer)
1954	($5,000)	($3,000)	($40,000)
1955	(4,000)	(2,000)	10,000
Ending 9-30-56	(1,000)	(9,000)	xxx
1956	xxx	xxx	73,200

(ii) The aggregate of the net operating loss carryovers of X Corporation and Y Corporation carried under section 381(c)(1)(A) to Z Corporation's taxable year 1956 is $24,000; but, pursuant to section 381(c)(1)(B), only $18,400 of such aggregate amount ($73,200 × 92/366) may be used in computing the net operating loss deduction of Z Corporation for such taxable year under section 172(a). For this purpose, Z Corporation may not use the total of the aggregate carryovers ($10,000) from X Corporation plus the aggregate carryovers ($14,000)

from Y Corporation, even though each such aggregate of carryovers is separately less than the limitation ($18,400) applicable under section 381(c)(1)(B) and this section.
(iii) For rules determining the portion of any given loss of X Corporation, Y Corporation, or Z Corporation which may be carried to a taxable year of Z Corporation following its taxable year ending December 31, 1956, see sections 172(b)(2) and 381(c)(1)(C) and paragraph (f) of this section.

(e) *Computation of carryovers and carrybacks; general rule* —

(1) ***Sequence for applying losses and computation of taxable income.*** The portion of any net operating loss which is carried back or carried over to any taxable year is the excess, if any, of the amount of the loss over the sum of the taxable income for each of the prior taxable years to which the loss may be carried under sections 172(b)(1) and 381. In determining the taxable income for each such prior taxable year for this purpose, the various net operating loss carryovers and carrybacks to such prior taxable year are considered to be applied in reduction of the taxable income in the order of the taxable years in which the net operating losses are sustained, beginning with the loss for the earliest taxable year. The application of this rule to the taxable income of the acquiring corporation for any taxable year ending after the date of distribution or transfer involves the use of carryovers of the distributor or transfer corporation, and of carryovers and carrybacks of the acquiring corporation. In such instance, the sequence for the use of loss years remains the same, and the requirement is to begin with the net operating loss of the earliest taxable year, whether or not it is a loss of the distributor, transferor, or acquiring corporation. The taxable income of the acquiring corporation for any taxable year ending after the date of distribution or transfer shall be determined in the manner prescribed by section 172(b)(2), except that, if the date of distribution or transfer is on a day other than the last day of a taxable year of the acquiring corporation, the taxable income of such corporation for the taxable year which includes such date shall be computed in the special manner prescribed by section 381(c)(1)(C) and paragraph (f) of this section.

(2) ***Loss year of transferor or distributor considered prior taxable year.*** Section 381(c)(1)(C) provides that, for the purpose of determining the net operating loss carryovers under section 172(b)(2), a net operating loss for a loss year of a distributor or transferor corporation which ends on or before the last day of a loss year of the acquiring corporation shall be considered to be a net operating loss for a year prior to such loss year of the acquiring corporation. In a case where the acquiring corporation has acquired the assets of two or more distributor or transferor corporations on the same date of distribution or transfer, the loss years of the distributor or transferor corporations shall be taken into account in the order in which such loss years terminate; if any one of the loss years of a distributor or transferor corporation ends on the same day as the loss year of another distributor or transferor corporation, either loss year may be taken into account before the other.

(3) ***Years to which losses may be carried.*** The taxable years to which a net operating loss shall be carried back or carried over are prescribed by section 172(b)(1). Since the taxable year of the distributor or transferor corporation ends with the close of the date of distribution or transfer, such taxable year and the first taxable year of the acquiring corporation which ends after that date shall be considered two separate taxable years to which a net operating loss of the distributor or transferor corporation for any taxable year ending before that date may be carried over. This rule applies even though the taxable year of the distributor or transferor corporation which ends on the date of distribution or transfer is a period of less than twelve months. However, for the purpose of determining under section 172(b)(1) the taxable years to which a net operating loss of the acquiring corporation is

carried over or carried back, the first taxable year of the acquiring corporation which ends after the date of distribution or transfer shall be treated as only one taxable year even though such taxable year is considered under section 381(c)(1)(C) and paragraph (f)(2) of this section as two taxable years. The application of this subparagraph may be illustrated by the following example:

Example. X Corporation was organized on January 1, 1954, and thereafter it sustained net operating losses in its calendar years 1954, 1955, and 1956. On June 30, 1957, X Corporation transferred all its assets to Y Corporation, which was organized on January 1, 1955, in a statutory merger to which section 361 applies. In its taxable year ending June 30, 1957, X Corporation sustained a net operating loss. Y Corporation sustained net operating losses in its calendar years 1955, 1956, and 1958, but had taxable income for the year 1957. The years to which these losses of X Corporation and Y Corporation shall be carried, and the sequence in which carried, are as follows:

Loss year	
X 1954	X 1955, X 1956, X 6/30/57, Y 1957, Y 1958.
X 1955	X 1954, X 1956, X 6/30/57, Y 1957, Y 1958, Y 1959.
Y 1955	Y 1956, Y 1957, Y 1958, Y 1959, Y 1960.
X 1956	X 1954, X 1955, X 6/30/57, Y 1957, Y 1958, Y 1959, Y 1960.
Y 1956	Y 1955, Y 1957, Y 1958, Y 1959, Y 1960, Y 1961.
X 6-30-57	X 1955, X 1956, Y 1957, Y 1958, Y 1959, Y 1960, Y 1961.
Y 1958	Y 1955, Y 1956, Y 1957, Y 1959, Y 1960, Y 1961, Y 1962, Y 1963.

(4) ***Computation of carryovers in a case where the date of distribution or transfer occurs on last day of acquiring corporation's taxable year.*** The computation of the net operating loss carryovers from the distributor or transferor corporation and from the acquiring corporation in a case where the date of distribution or transfer occurs on the last day of a taxable year of the acquiring corporation may be illustrated by the following example:

Example. X Corporation and Y Corporation were organized on January 1, 1955, and each corporation makes its return on the basis of the calendar year. On December 31, 1956, X Corporation transferred all its assets to Y Corporation in a statutory merger to which section 361 applies. The net operating losses and the taxable income (computed without any net operating loss deduction) of the two corporations are as follows, the assumption being made

that none of the modifications specified in section 172(b)(2)(A) apply to any taxable year:

Taxable year	X Corporation (transferor)	Y Corporation (acquirer)
1955	($2,000)	($11,000)
1956	(3,000)	10,000
1957	xxx	(15,000)

The sequence in which the losses of X Corporation and Y Corporation are applied, and the computation of the carryovers to Y Corporation's calendar year 1958, may be illustrated as follows:

(i) *X Corporation's 1955 loss.* The carryover to 1958 is $2,000, computed as follows:

Net operating loss		$2,000
Less:		
X's 1956 taxable income	0	
Y's 1957 taxable income	0	
		0
Carryover		2,000

(ii) *Y Corporation's 1955 loss.* The carryover to 1958 is $1,000, computed as follows:

Net operating loss		$11,000
Less:		
Y's 1956 taxable income	$10,000	
Y's 1957 taxable income	0	
		10,000

Carryover		1,000

(iii) *X Corporation's 1956 loss.* The carryover to 1958 is $3,000, computed as follows:

Net operating loss		$3,000
Less:		
X's 1955 taxable income	0	
Y's 1957 taxable income	0	
		0
Carryover		3,000

(iv) *Y Corporation's 1957 loss.* The carryover to 1958 is $15,000, computed as follows:

Net operating loss			$15,000
Less:			
Y's 1955 taxable income		0	
Y's 1956 taxable income before net operating loss deduction	$10,000		
Minus Y's 1956 net operating loss deduction (i.e., Y's 1955 carryover)	11,000	0	
		0	
Carryover			15,000

(v) *Summary of carryovers to 1958.* The aggregate of the net operating loss carryovers to 1958 is $21,000, computed as follows:

X's 1955 loss	$2,000
Y's 1955 loss	1,000
X's 1956 loss	3,000
Y's 1957 loss	15,000

Total	21,000

(f) ***Computation of carryovers and carrybacks when date of distribution or transfer is not on last day of acquiring corporation's taxable year*** —

(1) ***General rule.*** Pursuant to the provisions of section 381(c)(1)(C), the taxable income of the acquiring corporation for its taxable year which is a prior taxable year for purposes of section 172(b)(2) and paragraph (e) of this section shall be determined in the manner prescribed in this paragraph, if the date of distribution or transfer occurs within, but not on the last day of, such taxable year.

(2) ***Taxable year considered as two taxable years.*** Such taxable year of the acquiring corporation shall be considered as though it were two taxable years, but only for the limited purpose of applying section 172(b)(2). The first of such two taxable years shall be referred to in this section as the preacquisition part year; the second, as the postacquisition part year. For purposes of section 172(b)(2), a net operating loss of the acquiring corporation shall be carried to the preacquisition part year and then to the postacquisition part year, whereas a net operating loss of a distributor or transferor corporation shall be carried to the postacquisition part year and then to the acquiring corporation's subsequent taxable years. In determining under section 172(b)(2) and this paragraph the portion of any net operating loss of a distributor or transferor corporation which is carried to any taxable year of the acquiring corporation ending after the postacquisition part year, the taxable income (as determined under this paragraph) of the postacquisition part year shall be taken into account but the taxable income of the preacquisition part year (as so determined) shall not be taken into account. Though considered as two separate taxable years for purposes of section 172(b)(2), the preacquisition part year and the postacquisition part year are treated as one taxable year in determining the years to which a net operating loss is carried under section 172(b)(1). See paragraph (e)(3) of this section.

(3) ***Preacquisition part year.*** The preacquisition part year shall begin with the beginning of such taxable year of the acquiring corporation and shall end with the close of the date of distribution or transfer.

(4) ***Postacquisition part year.*** The postacquisition part year shall begin with the day following the date of distribution or transfer and shall end with the close of such taxable year of the acquiring corporation.

(5) ***Division of taxable income.*** The taxable income for such taxable year (computed with the modifications specified in section 172(b)(2)(A) but without any net operating loss deduction) of the acquiring corporation shall be divided between the preacquisition part year and the postacquisition part year in proportion to the number of days in each. Thus, if in a statutory merger to which section 361 applies Y Corporation acquires the assets of X Corporation on June 30, 1960, and Y Corporation has taxable income (computed in the manner so prescribed) of $36,600 for its calendar year 1960, then the preacquisition part year taxable income would be $18,200 ($36,600 × 182/366) and the postacquisition part year taxable income would be $18,400 ($36,600 × 184/366).

(6) ***Net operating loss deduction.*** After obtaining the taxable income of the preacquisition part year and of the postacquisition part year in the manner described in subparagraph (5) of this paragraph, it is necessary to compute the net operating loss deduction for each such part year. This deduction shall be determined in the manner prescribed by section 172(b)(2)(B) but subject to the provisions of this subparagraph. The net operating loss deduction for the preacquisition part year shall, for purposes

of section 172(b)(2) only, be determined in the same manner as that prescribed by section 172(b)(2)(B) but shall be computed without taking into account any net operating loss of the distributor or transferor corporation. Therefore, only net operating loss carryovers and carrybacks of the acquiring corporation to the preacquisition part year shall be taken into account in computing the net operating loss deduction for such part year. The net operating loss deduction for the post-acquisition part year shall, for purposes of section 172(b)(2) only, be determined in the same manner as that prescribed by section 172(b)(2)(B) and shall be computed by taking into account all the net operating loss carryovers available to the distributor or transferor corporation as of the close of the date of distribution or transfer, as well as the net operating loss carryovers and carrybacks of the acquiring corporation to the postacquisition part year. The sequence in which the net operating losses of the two corporations shall be applied for purposes of this subparagraph shall be determined in the manner prescribed in paragraph (e) of this section.

(7) ***Limitation on taxable income.*** In no case shall the taxable income of the preacquisition part year or the postacquisition part year, as computed under this paragraph, be considered to be less than zero.

(8) ***Cross reference.*** If the acquiring corporation succeeds to the net operating loss carryovers of two or more distributors or transferor corporations on two or more dates of distribution or transfer during the same taxable year of the acquiring corporation, the determination of the taxable income of the acquiring corporation for such year pursuant to section 381(c)(1)(C) shall be governed by the rules prescribed in paragraph (c) of § 1.381(c)(1)-2.

(9) ***Illustration.*** The application of this paragraph may be illustrated by the following example:

Example. (i) *Facts.* X Corporation was organized on January 1, 1955, and Y Corporation was organized on January 1, 1954. Each corporation makes its return on the basis of the calendar year. On June 30, 1956, X Corporation transferred all its assets to Y Corporation in a statutory merger to which section 361 applies. The net operating losses and the taxable income (computed without any net operating loss deduction) of the two corporations are as follows, the assumption being made that none of the modifications specified in section 172(b)(2)(A) apply to any taxable year:

Taxable year	X Corporation (transferor)	Y Corporation (acquirer)
1954	xxx	($5,000)
1955	($65,000)	(20,000)
Ending June 30, 1956	1,000	xxx

Taxable year	X Corporation (transferor)	Y Corporation (acquirer)
1956	xxx	36,600

(ii) *Y Corporation's 1954 loss.* The carryover to 1957 is $0, computed as follows:

Net operating loss		$5,000
Less:		
Y's 1955 taxable income		0
Carryover to Y's preacquisition part year		5,000
Less:		
Y's preacquisition part year taxable income computed under subparagraph (5) of this paragraph ($36,600 × 182/366)	$18,200	
Minus Y's net operating loss deduction for preacquisition part year	xxx	18,200
Carryover to Y's postacquisition part year and also to Y 1957		0

(iii) *X Corporation's 1955 loss.* The carryover to 1957 is $45,600, computed as follows:

Net operating loss		$65,000
Less:		
X's 6/30/56 year taxable income		1,000
Carryover to Y's postacquisition part year		64,000
Less:		
Y's postacquisition part year taxable income computed under subparagraph (5) of this paragraph ($36,600 × 184/366)	$18,400	
Minus Y's net operating loss deduction for postacquisition part year (i.e., Y's 1954 carryover of $0 to such part year)		$18,400
Carryover to Y 1957		45,600

(iv) *Y Corporation's 1955 loss.* The carryover to 1957 is $6,800, computed as follows:

Net operating loss	$20,000
Less:	

Y's 1954 taxable income		0
Carryover to Y's preacquisition part year		20,000
Less:		
Y's preacquisition part year taxable income computed under subparagraph (5) of this paragraph	$18,200	
Minus Y's net operating loss deduction for preacquisition part year (i.e., Y's 1954 carryover to such part year)	5,000	
		13,200
Carryover to Y's postacquisition part year		6,800
Less:		
Y's postacquisition part year taxable income computed under subparagraph (5) of this paragraph	$18,400	
Minus Y's net operating loss deduction for postacquisition part year (i.e., Y's 1954 carryover of $0, and X's 1955 carryover of $64,000, to such part year)	64,000	
		0
Carryover to Y 1957		6,800

(v) *Summary of carryovers to 1957.* The aggregate of the net operating loss carryovers to 1957 is $52,400, determined as follows:

Y's 1954 loss	0
X's 1955 loss	$45,600
Y's 1955 loss	6,800
Total	52,400

(g) ***Successive acquiring corporations.*** An acquiring corporation which, in a distribution or transfer to which section 381(a) applies, acquires the assets of a distributor or transferor corporation which previously acquired the assets of another corporation in a transaction to which section 381(a) applies, shall succeed to and take into account, subject to the conditions and limitations of sections 172 and 381, the net operating loss carryovers available to the first acquiring corporation under sections 172 and 381.

(h) ***Illustration.*** The application of this section may be further illustrated by the following example:

Example. (1) *Facts.* X Corporation was organized on January 1, 1954, and Y Corporation was organized on January 1, 1955. Each corporation makes its return on the basis of the calendar year. On August 31, 1957, X Corporation transferred all its assets to Y Corporation in a statutory merger to which section 361 applies. The net operating losses and the taxable income of the two corporations for the taxable years involved are set forth in the tabulation below. The taxable income so shown is computed without the

modifications required by section 172(b)(2)(A) and without the benefit of any net operating loss deduction. In its calendar year 1957, Y Corporation had a deduction of $365 which is disallowed by section 172(b)(2)(A).

Taxable year	X Corporation (transferor)	Y Corporation (acquirer)
1954	($7,000)	xxx
1955	(10,000)	($10,000)
1956	(25,000)	(15,000)
Ending 8-31-57	1,000	xxx
1957	xxx	54,750
1958	xxx	(5,000)
1959	xxx	50,000

(2) *Computation of carryovers and carrybacks.* The sequence in which the losses of X Corporation and Y Corporation are applied and the computation of the carryovers to Y Corporation's calendar year 1959 may be illustrated as follows:

(i) *X Corporation's 1954 loss.* The carryover to 1958, which is the last year to which this loss may be carried, is $0, computed as follows:

Net operating loss		$7,000
Less:		
X's 1955 taxable income	0	
X's 1956 taxable income	0	
		0
Carryover to X's 8/31/57-year		7,000
Less:		
X's 8/31/57-year taxable income		1,000
Carryover to Y's postacquisition part year		6,000
Less:		
Y's postacquisition part year taxable income computed under paragraph (f)(5) of this section (($54,750 + $365) × 122/365)	$18,422	
Minus Y's net operating loss deduction for postacquisition part year	xxx	
		18,422

Carryover to Y 1958		0

(ii) *X Corporation's 1955 loss.* The carryover to 1959 is $0, computed as follows:

Net operating loss		$10,000
Less:		
X's 1954 taxable income	0	
X's 1956 taxable income	0	
		0
Carryover to X's 8/31/57-year		10,000
Less:		
X's 8/31/57-year taxable income before net operating loss deduction	$1,000	
Minus X's net operating loss deduction for 8/31/57-year (i.e., X's 1954 carryover)	7,000	
		0
Carryover to Y's postacquisition part year		10,000
Less:		
Y's postacquisition part year taxable income computed under paragraph (f)(5) of this section	$18,422	
Minus Y's net operating loss deduction for postacquisition part year (i.e., X's 1954 carryover to such part year)	6,000	
		12,422
Carryover to Y 1958 and Y 1959		0

(iii) *Y Corporation's 1955 loss.* The carryover to 1959 is $0, computed as follows:

Net operating loss		$10,000
Less:		
Y's 1956 taxable income		0
Carryover to Y's preacquisition part year		10,000
Less:		
Y's preacquisition part year taxable income computed under paragraph (f)(5) of this section (($54,750 + $365) × 243/365)	$36,693	
Minus Y's net operating loss deduction for preacquisition part year	xxx	
		36,693

Carryover to Y's postacquisition part year, to Y 1958, and to Y 1959			0

(iv) *X Corporation's 1956 loss.* The carryover to 1959 is $22,578, computed as follows:

Net operating loss			$25,000
Less:			
X's 1954 taxable income		0	
X's 1955 taxable income		0	
X's 8/31/57-year taxable income before net operating loss deduction	$1,000		
Minus X's net operating loss deduction for 8/31/57-year (i.e., X's 1954 carryover of $7,000 and X's 1955 carryover of $10,000)	$17,000	0	0
Carryover to Y's postacquisition part year			$25,000
Less:			
Y's postacquisition part year taxable income computed under paragraph (f)(5) of this section		$18,422	
Minus Y's net operating loss deduction for postacquisition part year (i.e., X's 1954 carryover of $6,000, X's 1955 carryover of $10,000 and Y's 1955 carryover of $0, to such part year)		16,000	
			2,422
Carryover to Y 1958			22,578
Less:			
Y's 1958 taxable income			0
Carryover to Y 1959			22,578

(v) *Y Corporation's 1956 loss.* The carryover to 1959 is $0, computed as follows:

Net operating loss		$15,000
Less:		
Y's 1955 taxable income		0
Carryover to Y's preacquisition part year		15,000
Less:		
Y's preacquisition part year taxable income computed under paragraph (f)(5) of this section	$36,693	
Minus Y's net operating loss deduction for preacquisition part year (i.e., Y's 1955 carryover to such part year)	10,000	

		26,693
Carryover to Y's postacquisition part year, to Y 1958, and to Y 1959		0

(vi) *Y Corporation's 1958 loss.* The carryover to 1959 is $0, computed as follows:

Net operating loss		$5,000
Less:		
Y's 1955 taxable income [1]	0	
Y's 1956 taxable income	0	
		0
Carryback to Y's preacquisition part year		$5,000
Less:		
Y's preacquisition part year taxable income computed under paragraph (f)(5) of this section	$36,693	
Minus Y's net operating loss deduction for preacquisition part year (i.e., Y's 1955 carryover of $10,000, and Y's 1956 carryover of $15,000, to such part year)	25,000	
		11,693
Carryback to Y's postacquisition part year and carryover to Y 1959		0

[1] *Three-year carryback in case of loss years ending after December 31, 1957.*

(vii) *Summary of carryovers to 1959.* The aggregate of the net operating loss carryovers to 1959 is $22,578, computed as follows:

X's 1955 loss	0
Y's 1955 loss	0
X's 1956 loss	$22,578
Y's 1956 loss	0
Y's 1958 loss	0
Total	22,578

(3) *Net operating loss deduction for 1957.* (i) The net operating loss deduction available to Y Corporation under section 172(a) for the calendar year 1957, determined in accordance with paragraph (d) of this

section, is $48,300, computed as follows:

Aggregate of the net operating loss carryovers available to the transferor corporation as of the close of August 31, 1957, but limited by paragraph (d) of this section to $18,300 (Y's 1957 taxable income of $54,750, computed without any net operating loss deduction, multiplied by 122/365)		
Carryover of X's 1954 loss	$6,000	
Carryover of X's 1955 loss	10,000	
Carryover of X's 1956 loss	25,000	
	$41,000	
Aggregate of carryovers, limited as above		$18,300
Carryover of Y's 1955 loss		10,000
Carryover of Y's 1956 loss		15,000
Carryback of Y's 1958 loss		5,000
Net operating loss deduction		48,800

(ii) The taxable income under section 63 for 1957 is $6,450, computed as follows:

Taxable income determined without any net operating loss deduction	$54,750
Less:	
Net operating loss deduction for 1957, as determined under subdivision (i) of this subparagraph	$48,300
Taxable income under section 63	6,450

(4) *Net operating loss deduction for 1959.* The taxable income under section 63 for 1959 is $27,422, computed as follows:

Taxable income determined without any net operating loss deduction	$50,000
Less:	
Net operating loss deduction for 1959 (i.e., the aggregate carryovers determined under subparagraph (2)(vii) of this paragraph)	22,578
Taxable income under section 63	27,422

(5) *Years to which losses may be carried.* The taxable years to which the losses of X Corporation and Y

Corporation may be carried, and the sequence in which carried, are as follows:

Loss year	Carried to
X 1954	X 1955, X 1956, X 8/31/57, Y 1957, Y 1958.
X 1955	X 1954, X 1956, X 8/31/57, Y 1957, Y 1958, Y 1959.
Y 1955	Y 1956, Y 1957, Y 1958, Y 1959, Y 1960.
X 1956	X 1954, X 1955, X 8/31/57, Y 1957, Y 1958, Y 1959, Y 1960.
Y 1956	Y 1955, Y 1957, Y 1958, Y 1959, Y 1960, Y 1961.
Y 1958	Y 1955, Y 1956, Y 1957, Y 1959, Y 1960, Y 1961, Y 1962, Y 1963.

[T.D. 6500, 25 FR 11607, Nov. 26, 1960, as amended by T.D. 7564, 43 FR 40493, Sept. 12, 1978]

§ 1.381(c)(1)-2 Net operating loss carryovers; two or more dates of distribution or transfer in the taxable year.

(a) ***In general.*** If the acquiring corporation succeeds to the net operating loss carryovers of two or more distributor or transferor corporations on two or more dates of distribution or transfer within one taxable year of the acquiring corporation, the limitation to be applied under section 381(c)(1)(B) to the aggregate of the net operating loss carryovers to that taxable year from all of the distributor or transferor corporations shall be determined by applying the rules prescribed in paragraph (b) of this section, and the taxable income of the acquiring corporation for that taxable year under sections 381(c)(1)(C) and 172(b)(2) shall be determined by applying the rules prescribed in paragraph (c) of this section. For purposes of this section, the term *postacquisition income* means postacquisition part year taxable income determined under paragraph (d)(1) of § 1.381(c)(1)-1 by treating the first date of distribution or transfer as though it were the only date of distribution or transfer during the taxable year of the acquiring corporation.

(b) ***Determination of limitation under section 381(c)(1)(B)*** —

(1) ***In general.*** If the acquiring corporation succeeds to the net operating loss carryovers of two or more distributor or transferor corporations on two or more dates of distribution or transfer during the same taxable year of the acquiring corporation, and if the amount of the net operating loss carryovers acquired on the first date of distribution or transfer equals or exceeds the postacquisition income, then the limitation under section 381(c)(1)(B) shall be an amount equal to such postacquisition income. If the amount of the net operating loss carryovers acquired on the first date of distribution or transfer is less than such postacquisition income, then the limitation under section 381(c)(1)(B) shall be determined as provided in subparagraphs (2) through (5) of this paragraph.

(2) ***Allocation of postacquisition income among partial postacquisition years.*** That part of the taxable year of the acquiring corporation beginning on the day following the first date of distribution or transfer and ending with the close of the taxable year of the acquiring corporation shall be divided into the same number of partial postacquisition years as the number of dates of distribution or transfer on which the acquiring corporation succeeds to net operating loss carryovers during its taxable year. The first partial postacquisition year shall begin with the day following the first date of distribution or transfer and shall end with the close of the second date of distribution or transfer. The

second and succeeding partial postacquisition years shall begin with the day following the close of the preceding such partial year and shall end with the close of the succeeding date of distribution or transfer, or, if there is no such succeeding date, then with the close of the taxable year of the acquiring corporation. The postacquisition income of the acquiring corporation shall be allocated among the partial postacquisition years in proportion to the number of days in each such partial year.

(3) ***Two dates of distribution or transfer.*** If the acquiring corporation succeeds to the net operating loss carryovers of two distributor or transferor corporations on two dates of distribution or transfer during the same taxable year of the acquiring corporation, and if the amount of the net operating loss carryovers acquired on the first date equals or exceeds the income for the first partial postacquisition year, the limitation provided by section 381(c)(1)(B) shall be the amount of the postacquisition income. If the income for the first partial postacquisition year exceeds the net operating loss carryovers acquired on the first date of distribution or transfer, the limitation provided by section 381(c)(1)(B) shall be the amount of the postacquisition income reduced by the amount of such excess. The application of this subparagraph may be illustrated by the following example:

Example. (i) X Corporation has taxable income (computed without any net operating loss deduction) of $36,500 for its calendar year 1955. During 1955, X Corporation acquires the assets of Y and Z Corporations in statutory mergers to each of which section 361 applies, the dates of transfer being January 1 and December 1, respectively. The net operating loss carryovers of each transferor corporation and the income for each partial postacquisition year are:

Corp.	Carryovers	Income for partial years	Reduction
Y	$1,000	$33,400 ($36,500 × 334/365)	$32,400
Z	50,000	3,000 ($36,500 × 30/365)	0
	51,000	36,400	32,400

(ii) The limitation provided by section 381(c)(1)(B) equals the postacquisition income of $36,400 reduced by $32,400, the excess of the income for the first partial year ($33,400) over the net operating loss carryovers acquired on the first date of transfer ($1,000). Accordingly, the limitation is $4,000 ($36,400 minus $32,400). Therefore, although X Corporation acquired carryovers aggregating $51,000 during 1955, it can utilize only $4,000 of such carryovers in computing its net operating loss deduction for 1955.

(4) ***Three dates of distribution or transfer.*** If the acquiring corporation succeeds to the net operating loss carryovers of three distributor or transferor corporations on three dates of distribution or transfer during the same taxable year of the acquiring corporation, and if the amount of the net operating loss carryovers acquired on the first date equals or exceeds the income for the first and second partial postacquisition years, the limitation provided by section 381(c)(1)(B) shall be the amount of the postacquisition income. If the amount of the carryovers acquired on the first date equals or

exceeds the income for the first partial postacquisition year but does not equal or exceed the income for the first and second partial postacquisition years, the limitation shall be the amount of the postacquisition income reduced by the excess of the income for the first and second partial postacquisition years over the amount of carryovers acquired on the first and second dates of distribution or transfer. If the income for the first partial postacquisition year exceeds the carryovers acquired on the first date, the limitation shall be the postacquisition income reduced by the sum of the amount of such excess plus the amount, if any, by which the income for the second partial postacquisition year exceeds the carryovers acquired on the second date. This subparagraph may be illustrated by the following examples:

Example 1. (i) X Corporation has taxable income (computed without any net operating loss deduction) of $36,500 for its calendar year 1955. During 1955, X Corporation acquires the assets of M, N, and Z Corporations in statutory mergers to each of which section 361 applies, the dates of transfer being January 1, January 31, and December 1, respectively. The net operating loss carryovers of each transferor corporation and the income for each partial postacquisition year are:

Corp.	Carryovers	Income for partial years	Reduction
M	$4,000	$3,000 ($36,500 × 30/365)	$23,400
N	6,000	30,400 ($36,500 × 304/365)	
Z	50,000	3,000 ($36,500 × 30/365)	0
	60,000	36,400	23,400

(ii) Since the carryovers of $4,000 acquired on the first date of transfer exceed the income for the first partial year ($3,000), the limitation provided by section 381(c)(1)(B) is the amount of the postacquisition income ($36,400) reduced by the excess of the income for the first and second partial years ($33,400) over the carryovers acquired on the first and second dates of transfer ($10,000). Therefore, the limitation is $13,000 ($36,400 less $23,400).

Example 2. (i) Assume the same facts as in *Example (1)* except that the amount of the net operating loss carryovers acquired from M Corporation is $1,000. The net operating loss carryovers of each transferor corporation and the income for each partial postacquisition year are:

Corp.	Carryovers	Income for partial years	Reduction
M	$1,000	$3,000 ($36,500 × 30/365)	$2,000
N	6,000	30,400 ($36,500 × 304/365)	24,400

Corp.	Carryovers	Income for partial years	Reduction
Z	50,000	3,000 ($36,500 × 30/365)	0
	57,000	36,400	26,400

(ii) Since the income for the first partial year ($3,000) exceeds the $1,000 of carryovers acquired on the first date by $2,000, the limitation provided by section 381(c)(1)(B) is the postacquisition income of $36,400 reduced by such excess and also reduced by the excess of the income for the second partial year ($30,400) over the carryovers acquired on the second date of transfer ($6,000). Therefore, the limitation is $10,000 ($36,400 less the sum of $2,000 and $24,400).

Example 3. (i) Assume the same facts as in *Example (2)* except that the carryovers acquired from N Corporation are $75,000. The net operating loss carryovers of each transferor corporation and the income for each partial postacquisition year are:

Corp.	Carryovers	Income for partial years	Reduction
M	$1,000	$3,000 ($36,500 × 30/365)	$2,000
N	75,000	30,400 ($36,500 × 304/365)	0
Z	50,000	3,000 ($36,500 × 30/365)	0
	126,000	36,400	2,000

(ii) Since the income for the first partial year ($3,000) exceeds the $1,000 of carryovers acquired on the first date by $2,000, the limitation provided by section 381(c)(1)(B) is the postacquisition income of $36,400 reduced by $2,000, or $34,400. No further reduction is made since the income for the second partial year ($30,400) does not exceed the carryovers of $75,000 acquired on the second date of transfer.

(5) ***Four or more dates of distribution or transfer.*** If the acquiring corporation succeeds to the net operating loss carryovers of four or more distributor or transferor corporations on four or more dates of distribution or transfer during the same taxable year of the acquiring corporation, the limitation provided by section 381(c)(1)(B) shall be determined consistently with the methods prescribed in subparagraphs (3) and (4) of this paragraph. The application of this subparagraph may be illustrated by the following example:

Example. (i) X Corporation has taxable income (computed without any net operating loss deduction) of $36,500 for its calendar year 1955. During 1955, X Corporation acquired the

assets of M, N, O, Y, and Z Corporations in statutory mergers to each of which section 361 applied, the dates of transfer being, respectively, January 1, January 31, March 3, April 2, and December 1. The net operating loss carryovers of each transferor corporation and the income for each partial postacquisition year are:

Corp.	Carryovers	Income for partial years	Reduction
M	$1,000	$3,000 ($36,500 × 30/365)	$2,000
N	4,000	3,100 ($36,500 × 31/365)	
O	1,000	3,000 ($36,500 × 30/365)	1,100
Y	10,000	24,300 ($36,500 × 243/365)	14,300
Z	20,000	3,000 ($36,500 × 30/365)	0
	36,000	36,400	17,400

(ii) The limitation provided by section 381(c)(1)(B) equals the postacquisition income of $36,400 reduced by the sum of (a) the $2,000 excess of the income for the first partial year ($3,000) over the carryovers acquired from M Corporation ($1,000), (b) the $1,100 excess of the income for the second and third partial years ($6,100) over the carryovers acquired from N and O Corporations ($5,000), and (c) the $14,300 excess of the income for the fourth partial year ($24,300) over the carryovers acquired from Y Corporation ($10,000). Accordingly, the limitation is $19,000 ($36,400 minus $17,400). Therefore, although X Corporation acquired carryovers aggregating $36,000 during 1955, it can utilize only $19,000 of such carryovers in computing its net operating loss deduction for 1955.

(c) ***Determination of taxable income of acquiring corporation under section 381(c)(1)(C)*** —

(1) ***In general.*** If the acquiring corporation succeeds to the net operating loss carryovers of two or more distributor or transferor corporations on two or more dates of distribution or transfer within one taxable year of the acquiring corporation, then pursuant to section 381(c)(1)(C) the taxable income of the acquiring corporation for its taxable year which is a prior taxable year for purposes of section 172(b)(2) and paragraph (e) of § 1.381(c)(1)-1 shall be determined as provided in this paragraph.

(2) ***Division of taxable income.*** The taxable income of the acquiring corporation (computed with the modifications specified in section 172(b)(2)(A) but without any net operating loss deduction) shall be allocated proportionately on a daily basis among a preacquisition part year (determined under paragraph (f)(3) of § 1.381(c)(1)-1 by treating the first date of distribution or transfer as though it were the only date of distribution or transfer during the taxable year of the acquiring corporation) and two or more partial postacquisition years (determined as provided in paragraph (b)(2) of this section). The preacquisition part year and each partial postacquisition year shall be considered a separate taxable year, but only for the limited purpose of applying sections 172(b)(2) and 381(c)(1)(C).

(3) ***Net operating loss deduction.*** The net operating loss deduction of the preacquisition part year and the partial postacquisition years shall be determined consistently with the manner described in paragraph (f)(6) of § 1.381(c)(1)-1 but by taking into account, in the case of any partial postacquisition year, only the net operating loss carryovers and carrybacks of the acquiring corporation and those net operating loss carryovers from a distributor or transferor corporation which become available to the acquiring corporation as of the close of those dates of distribution or transfer which occur before the beginning of that specific partial postacquisition year. The sequence in which the net operating losses of the distributor or transferor and acquiring corporations shall be applied for this purpose shall be determined in the manner described in paragraph (e) of § 1.381(c)(1)-1. Subject to the preceding sentence, the net operating loss carryovers to any specific partial postacquisition year, whether from a distributor, transferor, or acquiring corporation, shall be taken into account in the order of the taxable years in which the net operating losses arose, beginning with the loss for the earliest taxable year.

(4) ***Illustration.*** The application of this paragraph may be illustrated by the following example:

Example. (i) *Facts.* X Corporation, which was organized on January 1, 1957, sustained a net operating loss of $20,000 for its calendar year 1957 and had taxable income (computed without any net operating loss deduction) of $36,500 for its calendar year 1958. During 1958, X Corporation acquired the assets of Y and Z Corporations in statutory mergers to each of which section 361 applied, the dates of transfer being June 30 and September 30, respectively. None of the modifications specified in section 172(b)(2)(A) apply to any of the corporations for any taxable year. The taxable income (computed without any net operating loss deduction) and net operating losses of Y and Z Corporations (which were organized on January 1, 1957, and January 1, 1954, respectively) are set forth below:

Taxable year	Acquiring corporation X	Transferor corporation Y	Transferor corporation Z
1954	xxx	xxx	($30,000)
1955	xxx	xxx	1,000
1956	xxx	xxx	1,000
1957	($20,000)	($25,000)	1,000
Ending 6-30-58	xxx	1,000	xxx
Ending 9-30-58	xxx	xxx	1,000
1958	36,500	xxx	xxx

The sequence in which the losses of the acquiring corporation and the transferor corporations are applied and the computation of the carryovers to X Corporation's calendar year 1959 are illustrated in the following subdivisions of this example.

(ii) *Computation of taxable income.* X Corporation's taxable income, determined in the manner described in subparagraph (2) of this paragraph, for the preacquisition part year and for the partial postacquisition

years is as follows:

Year	Taxable income	Computation
Preacquisition part year	$18,100	$36,500 × 181/365
Partial No. 1	9,200	36,500 × 92/365
Partial No. 2	9,200	36,500 × 92/365

(iii) *Z Corporation's 1954 loss.* The carryover to 1959 is $0, computed as follows:

Net operating loss	$30,000
Less:	
Z's 1955, 1956, 1957, and 9/30/58-3 year income	4,000
Net operating loss carryover to Partial No. 2 year	26,000
Less:	
Partial No. 2 year taxable income	9,200
	16,800

The balance of $16,800 is not carried over to 1959 since X Corporation's taxable year 1958 is the last of the five years to which Z's 1954 loss may be carried under section 172(b)(1).

(iv) *Y Corporation's 1957 loss.* The carryover to 1959 is $14,800, computed as follows:

Net operating loss		$25,000
Less:		
Y's 6/30/58-year income		1,000
Net operating loss carryover to Partial No. 1 year		24,000
Less:		
Partial No. 1 year taxable income		9,200
Carryover to Partial No. 2 year		14,800
Less:		
X's Partial No. 2 year taxable income	$9,200	
Minus X's net operating loss deduction for Partial No. 2 year (i.e., Z's 1954 carryover of $26,000 to such partial year)	26,000	
		0

Carryover to 1959	14,800

(v) *X Corporation's 1957 loss.* The carryover to 1959 is $1,900, computed as follows:

Net operating loss		$20,000
Less:		
X's preacquisition part year taxable income		18,100
Carryover to Partial No. 1 year		1,900
Less:		
Partial No. 1 year taxable income	$9,200	
Minus X's net operating loss deduction for Partial No. 1 year (i.e., Y's 1957 carryover of $24,000 to such partial year)	24,000	
		0
Carryover to Partial No. 2 year		1,900
Less:		
Partial No. 2 year taxable income	$9,200	
Minus X's net operating loss deduction for Partial No. 2 year (i.e., Z's 1954 carryover of $26,000, and Y's 1957 carryover of $14,800, to such partial year	40,800	
		0
Carryover to 1959		$1,900

(vi) *Summary of carryovers to 1959.* The aggregate of the net operating loss carryovers to 1959 is $16,700, computed as follows:

Z's 1954 loss	xxx
Y's 1957 loss	$14,800
X's 1957 loss	91,900
Total	16,700

§ 1.381(c)(2)-1 Earnings and profits.

(a) ***In general.***

(1) Section 381(c)(2) requires the acquiring corporation in a transaction to which section 381(a) applies to succeed to, and take into account, the earnings and profits, or deficit in earnings and profits, of the distributor or transferor corporation as of the close of the date of distribution or transfer. In

determining the amount of such earnings and profits, or deficit, to be carried over, and the manner in which they are to be used by the acquiring corporation after such date, the provisions of section 381(c)(2) and this section shall apply. For purposes of section 381(c)(2) and this section, if the distributor or transferor corporation accumulates earnings and profits, or incurs a deficit in earnings and profits, after the date of distribution or transfer and before the completion of the reorganization or liquidation, such earnings and profits, or deficit, shall be deemed to have been accumulated or incurred as of the close of the date of distribution or transfer.

(2) If the distributor or transferor corporation has accumulated earnings and profits as of the close of the date of distribution or transfer, such earnings and profits shall (except as hereinafter provided in this section) be deemed to be received by, and to become a part of the accumulated earnings and profits of, the acquiring corporation as of such time. Similarly, if the distributor or transferor corporation has a deficit in accumulated earnings and profits as of the close of the date of distribution or transfer, such deficit shall (except as hereinafter provided in this section) be deemed to be incurred by the acquiring corporation as of such time. In no event, however, shall the accumulated earnings and profits, or deficit, of the distribution or transferor corporation be taken into account in determining earnings and profits of the acquiring corporation for the taxable year during which occurs the date of distribution or transfer.

(3) Any part of the accumulated earnings and profits, or deficit in accumulated earnings and profits, of the distributor or transferor corporation which consists of earnings and profits, or deficits, accumulated before March 1, 1913, shall be deemed to become earnings and profits, or deficits, of the acquiring corporation accumulated before March 1, 1913, and any part of the accumulated earnings and profits of the distributor or transferor corporation which consists of increase in value of property accrued before March 1, 1913, shall be deemed to become earnings and profits of the acquiring corporation consisting of increase in value of property accrued before March 1, 1913.

(4) If the acquiring corporation and each distributor or transferor corporation has accumulated earnings and profits as of the close of the date of distribution or transfer, or if each of such corporations has a deficit in accumulated earnings and profits as of such time, then the accumulated earnings and profits (or deficit) of each such corporation shall be consolidated as of the close of the date of distribution or transfer in the accumulated earnings and profits account of the acquiring corporation. See subparagraph (6) of this paragraph for determination of the accumulated earnings and profits (or deficit) of the acquiring corporation as of the close of the date of distribution or transfer.

(5) If

(i) one or more corporations a party to a distribution or transfer has accumulated earnings and profits as of the close of the date of distribution or transfer, and

(ii) one or more of such corporations has a deficit in accumulated earnings and profits as of such time, the total of any such deficits shall be used only to offset earnings and profits accumulated, or deemed to have been accumulated under subparagraph (6) of this paragraph, by the acquiring corporation after the date of distribution or transfer. In such instance, the acquiring corporation will be considered as maintaining two separate earnings and profits accounts after the date of distribution or transfer. The first such account shall contain the total of the accumulated earnings and profits as of the close of the date of distribution or transfer of each corporation which has accumulated earnings and profits as of such time, and the second such account shall contain the total of the deficits in accumulated earnings and profits of each corporation which has a deficit as of such time. The total deficit in the second account may not be used to reduce the accumulated earnings and profits in the first account (although such

earnings and profits may be offset by deficits incurred, or deemed to have been incurred, after the date of distribution or transfer) but shall be used only to offset earnings and profits accumulated, or deemed to have been accumulated under subparagraph (6) of this paragraph, by the acquiring corporation after the date of distribution or transfer.

(6) In any case in which it is necessary to compute the accumulated earnings and profits, or the deficit in accumulated earnings and profits, of the acquiring corporation as of the close of the date of distribution or transfer and such date is a day other than the last day of a taxable year of the acquiring corporation—

(i) If the acquiring corporation has earnings and profits for its taxable year during which occurs the date of distribution or transfer, such earnings and profits (*a*) shall be deemed to have accumulated as of the close of such date in an amount which bears the same ratio to the undistributed earnings and profits of such corporation for such year as the number of days in the taxable year preceding the date following the date of distribution or transfer bears to the total number of days in the taxable year, and (*b*) shall be deemed to have accumulated after the date of distribution or transfer in an amount which bears the same ratio to the undistributed earnings and profits of such corporation for such year as the number of days in the taxable year following such date bears to the total number of days in such taxable year. For purposes of the preceding sentence, the undistributed earnings and profits of the acquiring corporation for such taxable year shall be the earnings and profits for such taxable year reduced by any distributions made therefrom during such taxable year.

(ii) If the acquiring corporation has an operating deficit for its taxable year during which occurs the date of distribution or transfer, then, unless the actual accumulated earnings and profits, or deficit, as of such date can be shown, such operating deficit shall be deemed to have accumulated in a manner similar to that described in subdivision (i) of this subparagraph.

(7) This paragraph may be illustrated by the following examples, in which it is assumed that none of the accumulated earnings and profits, or deficits, consist of earnings and profits or deficits accumulated, or increase in value of property accrued, before March 1, 1913.

Example 1. (i) M and N Corporations make their returns on the basis of the calendar year. On June 30, 1959, M Corporation transfers all its assets to N Corporation in a statutory merger to which section 361 applies. The books of the two corporations reveal the following information:

Description	M Corporation (transferor)	N Corporation (acquirer)
Accumulated earnings and profits at close of calendar year 1958	$100,000	$150,000
Earnings and profits of taxable year ending June 30, 1959	15,000	
Earnings and profits of calendar year 1959		36,500

Description	M Corporation (transferor)	N Corporation (acquirer)
Distributions during calendar year 1959	0	0

(ii) As of the close of June 30, 1959, N acquires from M accumulated earnings and profits of $115,000. Since M and N each has accumulated earnings and profits as of the close of the date of transfer, M's accumulated earnings and profits are added to N's accumulated earnings and profits as of such time. However, no part of M's accumulated earnings and profits is taken into account in determining N's earnings and profits for the calendar year 1959. Therefore, N's earnings and profits for the calendar year 1959 are $36,500.

Example 2. (i) X and Y Corporations make their returns on the basis of the calendar year. On June 30, 1959, X Corporation transfers all its assets to Y Corporation in a statutory merger to which section 361 applies. The books of the two corporations reveal the following information:

Description	X Corporation (transferor)	Y Corporation (acquirer)
Accumulated earnings and profits at close of calendar year 1958	$20,000	$100,000
Deficit in earnings and profits for taxable year ending June 30, 1959	80,000	
Earnings and profits of calendar year 1959		36,500
Distributions during calendar year 1959	0	0

(ii) As of the close of June 30, 1959, Y acquires from X a deficit in accumulated earnings and profits in the amount of $60,000. This deficit may be used only to reduce those earnings and profits of Y which are accumulated, or deemed to have accumulated, after June 30, 1959. Accordingly, as of December 31, 1959, the accumulated earnings and profits of Y amount to $118,100; at such time Y also has a separate deficit in accumulated earnings and profits in the amount of $41,600. These amounts are determined as follows:

Accumulated earnings and profits of Y as of the close of 1958	$100,000

Add:	
Portion of undistributed earnings and profits of Y for 1959 deemed to have accumulated as of close of June 30, 1959 ($36,500 × 181/365)	18,100
Accumulated earnings and profits of Y as of close of June 30, 1959, and also as of Dec. 31, 1959	118,100
Portion of undistributed earnings and profits of Y for 1959 deemed to have accumulated after June 30, 1959 ($36,500 × 184/365)	18,400
Less:	
Deficit in accumulated earnings and profits acquired by Y from X Corporation as of close of June 30, 1959	60,000
Separate deficit in accumulated earnings and profits of Y as of Dec. 31, 1959	41,600

Example 3. Assume the same facts as in *Example (2),* except that on September 15, 1959, Y Corporation makes a cash distribution of $96,500. The entire distribution is a dividend: $36,500 from earnings and profits for the taxable year 1959 and $60,000 from earnings and profits accumulated as of December 31, 1958. Accordingly, as of December 31, 1959, Y has accumulated earnings and profits of $40,000, and also has a separate deficit in accumulated earnings and profits of $60,000. These amounts are determined as follows:

Earnings and profits of Y for calendar year 1959	$36,500
Accumulated earnings and profits of Y as of close of 1958	100,000
Total	136,500
Less:	
Distributions during 1959	96,500
Accumulated earnings and profits of Y as of Dec. 31, 1959	40,000
Deficit in accumulated earnings and profits acquired from X as of close of June 30, 1959	$60,000
Less:	
Portion of Y's undistributed earnings and profits for 1959 deemed to have accumulated after June 30, 1959	0
Separate deficit in accumulated earnings and profits of Y as of Dec. 31, 1959	60,000

Example 4. (i) M and N Corporations make their returns on the basis of the calendar year. On June 30, 1959, M Corporation transfers all its assets to N Corporation in a statutory merger to which section 361 applies. The books of the two corporations reveal the following

information:

Description	M Corporation (transferor)	N Corporation (acquirer)
Accumulated earnings and profits at close of calendar year 1958	$100,000	$50,000
Earnings and profits for taxable year ending June 30, 1959	10,000	
Deficit in earnings and profits for calendar year 1959		146,000
Distributions during calendar year 1959	0	0

(ii) Assuming that N has not shown its actual accumulated earnings and profits, or deficit, as of the close of June 30, 1959, N has a deficit in accumulated earnings and profits at such time which amounts to $22,400, determined as follows:

Accumulated earnings and profits of N as of close of 1958	$50,000
Less:	
Portion of deficit in earnings and profits of N for 1959 deemed to have accumulated as of close of June 30, 1959 ($146,000 × 181/365)	72,400
Deficit in accumulated earnings and profits of N as of close of June 30, 1959, and also as of Dec. 31, 1959	22,400

As of the close of June 30, 1959, N acquires from M accumulated earnings and profits in the amount of $110,000, no part of which may be offset by N's own deficit of $22,400; however, such earnings and profits may be offset by deficits incurred, or deemed incurred, by N after June 30, 1959. Thus, as of December 31, 1959, N has the above-mentioned deficit of $22,400; at such time N also has accumulated earnings and profits in the amount of $36,400, determined as follows:

Accumulated earnings and profits acquired from M as of close of June 30, 1959	$110,000
Less:	
Portion of deficit in earnings and profits of N for 1959 deemed to have accumulated after June 30, 1959 ($146,000 × 184/365)	73,600

Accumulated earnings and profits of N as of Dec. 31, 1959	36,400

Example 5. Assume the same facts as in *Example (4),* except that on September 9, 1959, N Corporation makes a cash distribution of $100,000. The amount of $82,000 is a dividend from accumulated earnings and profits, computed as follows:

Accumulated earnings and profits acquired from M as of close of June 30, 1959	$110,000
Less:	
Deficit in earnings and profits of N for 1959 deemed to have accumulated from June 30 through Sept. 8, 1959 ($146,000 × 70/365)	28,000
Accumulated earnings and profits as of close of Sept. 8, 1959	82,000

As of December 31, 1959, N Corporation has a deficit in accumulated earnings and profits of $68,000, computed as follows:

Deficit in accumulated earnings and profits of N as of close of June 30, 1959	$22,400
Add:	
Portion of N's deficit in earnings and profits for 1959 deemed to have accumulated after Sept. 8, 1959 ($146,000 × 114/365)	45,600
Deficit in accumulated earnings and profits of N as of Dec. 31, 1959	68,000

Example 6. (i) X, Y, and Z Corporations make their returns on the basis of the calendar year. On June 30, 1959, X Corporation and Y Corporation transfer all their assets to Z Corporation in a statutory merger to which section 361 applies. The books of the three corporations reveal the following information:

Description	X Corporation (transferor)	Y Corporation (transferor)	Z Corporation (acquirer)
Accumulated earnings and profits (or deficit) at close of calendar year 1958	$35,000	($25,000)	($20,000)

Description	X Corporation (transferor)	Y Corporation (transferor)	Z Corporation (acquirer)
Earnings and profits (or deficit) for taxable year ended June 30, 1959	5,000	(5,000)	
Earnings and profits for calendar year 1959			36,500
Distributions during 1959	0	0	0

(ii) As of the close of June 30, 1959, Z acquires from Y a deficit in accumulated earnings and profits of $30,000. As of such time, Z's own deficit in accumulated earnings and profits amounts to $1,900, determined as follows:

Deficit in accumulated earnings and profits of Z as of close of 1958	$20,000
Less:	
Portion of undistributed earnings and profits of Z for 1959 deemed to have accumulated as of close of June 30, 1959 ($36,500 × 181/365)	18,100
Deficit in accumulated earnings and profits as of close of June 30, 1959	1,900

The total deficit of $31,900 may be used only to offset earnings and profits of Z accumulated, or deemed to have accumulated, after June 30, 1959; such deficit may not be used to reduce the accumulated earnings and profits of $40,000 acquired from X as of the close of June 30, 1959. Thus, as of December 31, 1959, the accumulated earnings and profits of Z amount to $40,000; at such time Z Corporation also has a separate deficit in accumulated earnings and profits in the amount of $13,500, determined as follows:

Deficit in accumulated earnings and profits as of close of June 30, 1959	$31,900
Less:	
Portion of undistributed earnings and profits of Z for 1959 deemed to have accumulated after June 30, 1959 ($36,500 × 184/365)	18,400
Separate deficit in accumulated earnings and profits as of Dec. 31, 1959	13,500

Example 7. X and Y Corporations make their returns on the basis of the calendar year. On December 31, 1954, X transfers all its assets to Y in a statutory merger to which section 361

applies. The books of the two corporations reveal the following information:

Description	X Corporation (transferor)	Y Corporation (acquirer)
Accumulated earnings and profits (or deficit) at close of calendar year 1954	($50,000)	$210,000
Earnings and profits (or deficit) for calendar year:		
1955		5,000
1956		(20,000)
1957		70,000
1958		60,000
1959		55,000
Cash distributions on:		
Sept. 1, 1957		80,000
Sept. 1, 1958		40,000
Sept. 1, 1959		30,000

The balances in the accumulated earnings and profits account and the separate deficit account of Y Corporation at the close of the taxable year involved are as follows:

Year	Deficit acquired from X Corporation	Accumulated earnings and profits of Y Corporation
1954	$50,000	$210,000
1955	45,000	210,000
1956	45,000	190,000
1957	45,000	180,000
1958	25,000	180,000
1959	None	180,000

(b) *Successive acquisitions.*

(1) If, as of the date of distribution or transfer, either the acquiring corporation, or the distributor or transferor corporation, or both, is considered under paragraph (a) of this section to be maintaining separate earnings and profits accounts as the result of a prior transaction or transactions to which section 381(a) applied, the accumulated earnings and profits, or deficit in accumulated earnings and profits, of each such corporation shall be combined with the appropriate earnings and profits account of the other such corporation. For example, if, as of the date of transfer, the acquiring corporation and the transferor corporation are each maintaining separate accounts, one containing accumulated earnings and profits and the other containing a deficit in accumulated earnings and

profits, the amounts in the two accumulated earnings and profits accounts shall be combined into one account, and the amounts in the two deficit accounts shall be combined into a second account, and the amount in one combined account may not be used to offset the amount in the other combined account.

(2) This paragraph may be illustrated by the following examples, in which it is assumed that none of the accumulated earnings and profits, or deficits, consist of earnings and profits or deficits accumulated, or increase in value of property accrued, before March 1, 1913.

Example 1. (i) X, Y, and Z Corporations make their returns on the basis of the calendar year. On June 30, 1958, X Corporation transfers all its assets to Z Corporation in a statutory merger to which section 361 applies, and on August 31, 1958, Y Corporation transfers all its assets to Z Corporation in another statutory merger to which section 361 applies. The books of the three corporations reveal the following information:

Description	X Corporation (transferor)	Y Corporation (transferor)	Z Corporation (acquirer)
Accumulated earnings and profits (deficit) at close of calendar year 1957	($40,000	$10,000	$60,000
Deficit in earnings and profits for taxable year ending June 30, 1958	(5,000)		
Earnings and profits for taxable year ending Aug. 31, 1958		2,000	
Earnings and profits of calendar year 1958			36,500
Distributions during calendar year 1958	0	0	0

(ii) As of the close of June 30, 1958, Z acquires from X a deficit in accumulated earnings and profits in the amount of $45,000, which deficit may be used only to reduce those earnings and profits of Z which are accumulated, or deemed to have been accumulated, after June 30, 1958. As of the close of August 31, 1958, Z acquires from Y earnings and profits of $12,000, no portion of which may be reduced by the deficit acquired by Z from X. Accordingly, as of December 31, 1958, Z has accumulated earnings and profits of $90,100, and also has a separate deficit in accumulated earnings and profits of $26,600. These amounts are determined as follows:

Accumulated earnings and profits of Z as of Dec. 31, 1957	$60,000

Add:	
Portion of undistributed earnings and profits of Z for 1958 deemed to have accumulated as of close of June 30, 1958 ($36,500 × 181/365)	18,100
Accumulated earnings and profits of Z as of June 30, 1958	78,100
Add:	
Accumulated earnings and profits acquired by Z from Y as of close of Aug. 31, 1958	12,000
Accumulated earnings and profits of Z as of close of Aug. 31, 1958, and also as of Dec. 31, 1958	90,100
Deficit in accumulated earnings and profits acquired by Z from X as of close of June 30, 1958	45,000
Less:	
Portion of undistributed earnings and profits of Z for 1958 deemed to have accumulated from June 30 through Aug. 31, 1958 ($36,500 × 62/365)	6,200
Separate deficit in accumulated earnings and profits of Z as of Aug. 31, 1958	38,800
Less:	
Portion of undistributed earnings and profits of Z for 1958 deemed to have accumulated after Aug. 31, 1958 ($36,500 × 122/365)	12,200
Separate deficit in accumulated earnings and profits of Z as of Dec. 31, 1958	26,600

Example 2. (i) Assume the same facts as in *Example (1),* plus the additional fact that on June 30, 1959, Z Corporation transfers all its assets to M Corporation (which makes its return on the basis of the calendar year) in a statutory merger to which section 361 applies, and that as of such time M Corporation is considered to be maintaining separate earnings and profits accounts as the result of a previous transaction to which section 381(a) applied. The books of the two corporations reveal the following information:

Description	Z Corporation (transferor)	M Corporation (acquirer)
Accumulated earnings and profits as of Dec. 31, 1958	$90,100	$50,000
Separate deficit in accumulated earnings and profits as of Dec. 31, 1958	26,600	30,000
Earnings and profits for taxable year ending June 30, 1959	5,000	
Earnings and profits of calendar year 1959		36,500

Description	Z Corporation (transferor)	M Corporation (acquirer)
Distributions during 1959	0	0

(ii) As of June 30, 1959, M acquires from Z accumulated earnings and profits of $90,100, which amount is combined with M's own accumulated earnings and profits of $50,000; M also acquires from Z a deficit in accumulated earnings and profits of $21,600 ($26,600 minus $5,000), which amount is combined with M's own deficit of $11,900. The total deficit of $33,500 may be used only to reduce earnings and profits of M which are accumulated, or deemed to have accumulated, after June 30, 1959. Accordingly, as of December 31, 1959, M has accumulated earnings and profits of $140,100, and also has a separate deficit in accumulated earnings and profits in the amount of $15,100. These amounts are determined as follows:

Deficit of M as of Dec. 31, 1958	$30,000
Less:	
Portion of M's undistributed earnings and profits for 1959 deemed to have accumulated as of close of June 30, 1959 ($36,500 × 181/365)	18,100
Deficit of M as of June 30, 1959	11,900
Plus:	
Deficit of Z as of June 30, 1959	21,600
Combined deficit of M as of close of June 30, 1959	33,500
Less:	
Portion of M's undistributed earnings and profits for 1959 deemed to have accumulated after June 30, 1959 ($36,500 × 184/365)	18,400
Separate deficit of M as of Dec. 31, 1959	15,100
Accumulated earnings and profits of M as of Dec. 31, 1958, and also as of June 30, 1959	50,000
Accumulated earnings and profits of Z as of Dec. 31, 1958, and also as of June 30, 1959	90,100
Combined accumulated earnings and profits of M as of close of June 30, 1959, and also as of Dec. 31, 1959	140,100

(c) ***Distribution of earnings and profits pursuant to reorganization or liquidation.***

(1) If, in a reorganization to which section 381(a)(2) applies, the transferor corporation pursuant to the plan of reorganization distributes to its stockholders property consisting not only of property permitted by section 354 to be received without recognition of gain, but also of other property or

money, then the accumulated earnings and profits of the transferor corporation as of the close of the date of transfer shall be computed by taking into account the amount of earnings and profits properly applicable to the distribution, regardless of whether such distribution occurs before or after the close of the date of transfer.

(2) If, in a distribution to which section 381(a)(1) (relating to certain liquidations of subsidiaries) applies, the acquiring corporation receives less than 100 percent of the assets distributed by the distributor corporation, then the accumulated earnings and profits of the distributor corporation as of the close of the date of distribution shall be computed by taking into account the amount of earnings and profits properly applicable to the distributions to minority stockholders, regardless of whether such distributions occur before or after the close of the date of distribution.

[T.D. 6586, 26 FR 12550, Dec. 28, 1961, as amended by T.D. 6692, 28 FR 12817, Dec. 3, 1963; T.D. 9700, 79 FR 66617, Nov. 10, 2014]

§ 1.381(c)(3)-1 Capital loss carryovers.

(a) ***Carryover requirement.***

(1) Section 381(c)(3) requires the acquiring corporation in a transaction to which section 381(a) applies to succeed to, and take into account, the capital loss carryovers of the distributor or transferor corporation. To determine the amount of these carryovers as of the close of the date of distribution or transfer, and to integrate them with the capital loss carryovers of the acquiring corporation for purposes of determining the taxable income of the acquiring corporation for taxable years ending after the date of distribution or transfer, it is necessary to apply the provisions of section 1212 in accordance with the conditions and limitations of section 381(c)(3) and this section.

(2) The capital loss carryovers of the acquiring corporation as of the close of the date of distribution or transfer shall be determined without reference to any capital gains or capital losses of the distributor or transferor corporation. The capital loss carryovers of a distributor or transferor corporation as of the close of the date of distribution or transfer shall be determined without reference to any capital gains or capital losses of the acquiring corporation.

(3) This section contains rules applicable to capital loss carryovers determined without reference to the amendment of section 1212(a) made by section 7 of the Act of September 2, 1964 (Public Law 88-571, 78 Stat. 860) in respect of foreign expropriation capital losses. If the distributor, transferor, or acquiring corporation sustains a net capital loss in a taxable year ending after December 31, 1958, any portion of which is attributable to a foreign expropriation capital loss, such portion shall be carried over to each of the ten succeeding taxable years consistently with the rules prescribed in this section and paragraph (a)(2) of § 1.1212-1.

(b) ***First taxable year to which carryovers apply.***

(1) The capital loss carryovers available to the distributor or transferor corporation as of the close of the date of distribution or transfer shall first be carried to the first taxable year of the acquiring corporation ending after that date. This rule applies irrespective of whether the date of distribution or transfer is on the last day, or any other day, of the acquiring corporation's taxable year.

(2) The capital loss carryovers available to the distributor or transferor corporation as of the close of the date of distribution or transfer shall be carried to the acquiring corporation without diminution by reason of the fact that the acquiring corporation does not acquire 100 percent of the assets of the distributor or transferor corporation.

(c) ***Limitation on capital loss carryovers for first taxable year ending after date of distribution or transfer.***

(1) Any capital loss carryover of a distributor or transferor corporation which is available to the acquiring corporation as of the close of the date of distribution or transfer shall be a short-term capital loss of the acquiring corporation in each of the taxable years to which the net capital loss giving rise to such carryover may be carried to the extent provided in section 1212 and this section. However, in the first taxable year of the acquiring corporation ending after the date of distribution or transfer, the total capital loss carryovers of the distributor or transferor corporation which may be treated in that year as short-term capital losses of the acquiring corporation is limited by section 381(c)(3)(B) to an amount which bears the same ratio to the acquiring corporation's capital gain net income (net capital gain for taxable years beginning before January 1, 1977) for such first taxable year (determined without regard to any capital loss carryovers) as the number of days in such first taxable year which follow the date of distribution or transfer bears to the total number of days in such taxable year. Thus, if the date of distribution or transfer is the last day of the acquiring corporation's taxable year, there is no limitation under section 381(c)(3)(B) on the amount of such carryovers which may be treated as short-term capital losses of the acquiring corporation for its first taxable year ending after that date.

(2) The limitation provided by section 381(c)(3)(B) shall be applied to the aggregate of the capital loss carryovers of the distributor or transferor corporation without reference to the taxable years in which the net capital losses giving rise to the carryovers were sustained. If the acquiring corporation has acquired the assets of two or more distributor or transferor corporations on the same date of distribution or transfer, then the limitation provided by section 381(c)(3)(B) shall be applied to the aggregate of the capital loss carryovers from all of such distributor or transferor corporations.

(3) If the acquiring corporation succeeds to the capital loss carryovers of two or more distributor or transferor corporations on two or more dates of distribution or transfer during the same taxable year of the acquiring corporation, the limitation to be applied under section 381(c)(3)(B) to the aggregate of such carryovers shall be determined consistently with the rules prescribed in paragraph (b) of § 1.381(c)(1)-2.

(4) The application of this paragraph may be illustrated by the following example:

> *Example.* (i) X and Y Corporations are organized on January 1, 1954, and make their returns on the basis of the calendar year. On July 4, 1957, X Corporation transfers all its assets to Y Corporation in a statutory merger to which section 361 applies. The net capital losses and the net capital gains (capital gain net income for taxable years beginning after Dec. 31, 1976), (computed without regard to any capital loss carryovers) of the two corporations are as

follows:

Taxable year	X Corporation (transferor)	Y Corporation (acquirer)
1954	($5,000)	0
1955	(10,000)	$5,000
1956	(25,000)	(7,000)
Ending 7-4-57	(8,000)	
1957		36,500

(ii) The capital loss carryovers of X Corporation which are available to Y Corporation as of the close of July 4, 1957, amount to $48,000 in the aggregate; but only $18,000 ($36,500 × 180/365) of such amount may be treated as short-term capital losses of Y Corporation for 1957.

(d) *Computation of carryovers; general rule* —

(1) ***Sequence for applying losses and determination of capital gain net income.*** Section 1212 provides that a net capital loss sustained in any taxable year (hereinafter referred to as the "loss year") shall be carried over to each of the five succeeding taxable years and treated in each of such succeeding years as a short-term capital loss to the extent not allowed as a deduction against any capital gain net income (net capital gain for taxable years beginning before January 1, 1977) of any taxable years intervening between the loss year and the taxable year to which such loss is carried. For this purpose, the capital gain net income (net capital gain for taxable years beginning before January 1, 1977) of any intervening taxable year is determined without regard to the net capital loss for the loss year or for any taxable year thereafter, and the various capital loss carryovers from taxable years preceding the loss year to any such intervening taxable year are considered to be applied in reduction of the capital gain net income (net capital gain for taxable years beginning before January 1, 1977) for such year in the order of the taxable years in which the losses were sustained, beginning with the loss for the earliest preceding taxable year. The application of these rules to the capital gain net income (net capital gain for taxable years beginning before January 1, 1977) of the acquiring corporation for any taxable year ending after the date of distribution or transfer involves the use of carryovers of the distributor or transferor corporation and of the acquiring corporation. In determining the order in which the capital loss carryovers of the distributor or transferor and acquiring corporations from taxable years ending on or before the date of distribution or transfer are considered to be applied in reduction of the capital gain net income (net capital gain for taxable years beginning before January 1, 1977) of the acquiring corporation for any intervening taxable year ending after such date, the following rules shall apply:

(i) Each taxable year of the distributor or transferor and acquiring corporations which, with respect to the first taxable year of the acquiring corporation ending after the date of distribution or transfer, constitutes a first preceding taxable year, shall be treated as if each such year ended on the same day, whether or not such taxable years actually end on the same day. In like manner, each taxable year of the distributor or transferor and acquiring corporations which, with respect to such first taxable year of the acquiring corporation ending after the date of

distribution or transfer, constitutes a second preceding taxable year, shall be treated as if each such year ended on the same day (whether or not such taxable years actually end on the same day), and a similar rule shall be applied with respect to those taxable years of the distributor or transferor and acquiring corporations which constitute third, fourth, and fifth preceding taxable years;

(ii) If in the same preceding taxable year both the distributor or transferor and acquiring corporations incurred a net capital loss which is a carryover to an intervening taxable year of the acquiring corporation ending after the date of distribution or transfer, then in applying such losses in reduction of the capital gain net income (net capital gain for taxable years beginning before January 1, 1977) for such an intervening year, either such loss may be taken into account before the other; and

(iii) The rules of subdivisions (i) and (ii) of this subparagraph shall apply regardless of the number of distributor or transferor corporations the assets of which are acquired by the acquiring corporation on the same date of distribution or transfer.

(2) ***Cross reference.*** If the date of distribution or transfer is a day other than the last day of a taxable year of the acquiring corporation, then in determining the capital gain net income (net capital gain for taxable years beginning before January 1, 1977) of the acquiring corporation for its first taxable year ending after the date of distribution or transfer, section 1212 and this paragraph shall be applied in the special manner set forth in paragraph (e) of this section.

(3) ***Years to which losses may be carried.*** The taxable years to which a net capital loss shall be carried are prescribed by section 1212. Since the taxable year of a distributor or transferor corporation ends with the close of the date of distribution or transfer, such taxable year and the first taxable year of the acquiring corporation which ends after that date are considered two separate taxable years to which a net capital loss of the distributor or transferor corporation for any taxable year ending before that date shall be carried. This rule applies even though the taxable year of the distributor or transferor corporation which ends on the date of distribution or transfer is a period of less than twelve months. However, the distribution or transfer has no effect in determining under section 1212 the taxable years to which a net capital loss of the acquiring corporation is carried. For this purpose, the first taxable year of the acquiring corporation which ends after the date of distribution or transfer constitutes only one taxable year even though such taxable year is considered under paragraph (e) of this section as two taxable years for certain purposes. The application of this subparagraph may be illustrated by the following example:

> *Example.* R and S Corporations are organized on January 1, 1954, and both corporations make their returns on the basis of the calendar year. R Corporation has net capital losses for its years 1954, 1955, and 1957, and S Corporation has net capital losses for its years 1954 and 1956. On June 30, 1958, R Corporation transfers all its assets to S Corporation in a statutory merger to which section 361 applies. The taxable years to which these losses of R

and S Corporations may be carried are as follows:

Loss year	Carried to
R1954	R1955, R1956, R1957, R6/30/58, S1958.
S1954	S1955, S1956, S1957, S1958, S1959.
R1955	R1956, R1957, R6/30/58, S1958, S1959.
S1956	S1957, S1958, S1959, S1960, S1961.
R1957	R6/30/58, S1958, S1959, S1960, S1961.

(4) ***Computation of carryovers in case where date of distribution or transfer occurs on last day of acquiring corporation's taxable year.*** The computation of the capital loss carryovers from the distributor or transferor corporation and from the acquiring corporation in a case where the date of distribution or transfer occurs on the last day of a taxable year of the acquiring corporation may be illustrated by the following example:

Example. X and Y Corporations are organized on January 1, 1955, and make their returns on the basis of the calendar year. On December 31, 1956, X Corporation transfers all its assets to Y Corporation in a statutory merger to which section 361 applies. The net capital losses and the net capital gains (capital gain net income for taxable years beginning after December 31, 1976), (computed without regard to any capital loss carryovers) of the two corporations are as follows:

Taxable year	X Corporation (transferor)	Y Corporation (acquirer)
1955	($20,000)	($2,000)
1956	(10,000)	(8,000)
1957		25,000
1958		10,000

The sequence in which the net capital losses of X and Y Corporations are applied, and the computation of the capital loss carryovers to Y Corporation's taxable year 1959, may be illustrated as follows. (For purposes of this example, the carryover from a preceding taxable year of the transferor corporation will be applied before the carryover from the same preceding taxable year of the acquiring corporation):

(i) *X Corporation's 1955 loss.* The carryover to 1959 is $0, computed as follows:

Net capital loss	$20,000
Less: Y's 1957 net capital gain (computed without regard to any capital loss carryovers)	25,000
Carryover to Y 1958 and Y 1959	0

(ii) *Y Corporation's 1955 loss.* The carryover to 1959 is $0, computed as follows:

Net capital loss		$2,000
Less:		
Y's 1957 net capital gain (computed without regard to any capital loss carryovers)	$25,000	
Minus capital loss carryovers to Y 1957 (i.e., carryover of $20,000 from X 1955)	20,000	
		5,000
Carryover to Y 1958 and Y 1959		0

(iii) *X Corporation's 1956 loss.* The carryover to 1959 is $0, computed as follows:

Net capital loss		$10,000
Less:		
Y's 1957 net capital gain (computed without regard to any capital loss carryovers)	$25,000	
Minus capital loss carryovers to Y 1957 (i.e., carryovers of $20,000 from X 1955 and $2,000 from Y 1955)	22,000	
		3,000
Carryover to Y 1958		7,000
Less:		
Y's 1958 net capital gain (computed without regard to any capital loss carryovers)	$10,000	
Minus capital loss carryovers to Y 1958	0	
		10,000

Carryover to Y 1959		0

(iv) *Y Corporation's 1956 loss.* The carryover to 1959 is $5,000, computed as follows:

Net capital loss		$8,000
Less:		
Y's 1957 net capital gain (computed without regard to any capital loss carryovers)	$25,000	
Minus capital loss carryovers to Y 1957 (i.e., carryovers of $20,000 from X 1955, $2,000 from Y 1955, and $10,000 from X 1956)	32,000	
		0
Carryover to Y 1958		8,000
Less:		
Y's 1958 net capital gain (computed without regard to any capital loss carryovers)	$10,000	
Minus capital loss carryovers to Y 1958 (i.e., carryover of $7,000 from X 1956)	7,000	
		3,000
Carryover to Y 1959		5,000

(e) ***Computation of carryovers when date of distribution or transfer is not on last day of acquiring corporation's taxable year*** —

(1) ***General rule.*** If, in determining under paragraph (d) of this section the portion of a net capital loss for any taxable year which is carried over to a succeeding taxable year, an intervening taxable year is a taxable year of the acquiring corporation which includes, but does not end on, the date of distribution or transfer, the capital gain net income (net capital gain for taxable years beginning before January 1, 1977) of such intervening year shall be determined by applying section 1212 in the special manner provided by this paragraph.

(2) ***Taxable year considered as two taxable years.*** Such intervening taxable year of the acquiring corporation shall be considered as though it were two taxable years, but only for the limited purpose of computing capital loss carryovers to subsequent taxable years. The first of such two taxable years shall be referred to in this paragraph as the preacquisition part year; the second, as the postacquisition part year. Though considered as two separate taxable years for purposes of this paragraph, the preacquisition part year and the postacquisition part year are treated as one taxable year in determining the years to which a net capital loss is carried under section 1212. See paragraph (d)(3) of this section.

(3) ***Preacquisition part year.*** The preacquisition part year shall begin with the beginning of such taxable year of the acquiring corporation and shall end with the close of the date of distribution or transfer.

(4) ***Postacquisition part year.*** The postacquisition part year shall begin with the day following the date of distribution or transfer and shall end with the close of such taxable year of the acquiring corporation.

(5) ***Division of capital gain net income.*** The capital gain net income (net capital gain for taxable years beginning before January 1, 1977) for such intervening taxable year (computed without regard to any capital loss carryovers) of the acquiring corporation shall be divided between the preacquisition part year and the postacquisition part year in proportion to the number of days in each. Thus, if in a statutory merger to which section 361 applies Y Corporation acquires the assets of X Corporation on June 30, 1956, and Y Corporation has net capital gain (computed in the manner so prescribed) of $36,600 for its calendar year 1956, then the preacquisition part year capital gain net income (net capital gain for taxable years beginning before January 1, 1977) would be $18,200 ($36,600 × 182/366) and the postacquisition part year capital gain net income (net capital gain for taxable years beginning before January 1, 1977) would be $18,400 ($36,600 × 184/366).

(6) ***Application of capital loss carryovers.*** After obtaining the capital gain net income (net capital gain for taxable years beginning before January 1, 1977) of the preacquisition part year and postacquisition part year in the manner described in subparagraph (5) of this paragraph, it is necessary to determine the capital loss carryovers which are taken into account with respect to each such part year. The carryovers to be taken into account and the sequence in which such carryovers are applied, shall be determined in accordance with paragraph (d)(1) of this section but subject to the provisions of this subparagraph. With respect to the preacquisition part year, no capital loss carryovers of the distributor or transferor corporation shall be taken into account; that is, only capital loss carryovers of the acquiring corporation shall be taken into account. With respect to the postacquisition part year, capital loss carryovers of both the distributor or transferor corporation and the acquiring corporation shall be taken into account.

(7) ***Cross reference.*** If an intervening taxable year is a taxable year of the acquiring corporation during which the acquiring corporation succeeds to the capital loss carryovers of two or more distributor or transferor corporations on two or more dates of distribution or transfer, the capital gain net income (net capital gain for taxable years beginning before January 1, 1977) of the acquiring corporation for such intervening taxable year shall be determined consistently with the rules prescribed in paragraph (c) of § 1.381(c)(1)-2, except that the sequence in which the capital loss carryovers of the distributor or transferor and acquiring corporations shall be applied shall be determined under paragraph (d)(1) of this section.

(8) ***Illustration.*** The application of this paragraph may be illustrated as follows:

> *Example.* X Corporation is organized on April 1, 1959, and makes its return on the basis of the fiscal year ending March 31. Y Corporation is organized on January 1, 1959, and makes its return on the basis of the calendar year. On June 30, 1961, X Corporation transfers all its assets to Y Corporation in a statutory merger to which section 361 applies. The net capital losses and the net capital gains (capital gain net income for taxable years beginning after December 31, 1976) (computed without regard to any capital loss carryovers) of the two

corporations are as follows:

Taxable year	X Corporation (transferor)	Y Corporation (acquirer)
1959		($24,000)
Ending 3-31-60	($19,000)	
1960		(6,000)
Ending 3-31-61	(5,000)	
Ending 6-30-61	0	
1961		36,500
1962		12,000

The following table shows those taxable years of the transferor and acquiring corporations which, with respect to Y Corporation's calendar year 1961, are first, second, and third preceding taxable years:

Taxable year	X Corporation (transferor)	Y Corporation (acquirer)
First preceding year	Ending June 30, 1961	1960
Second preceding year	Ending March 31, 1961	1959
Third preceding year	Ending March 31, 1960	

The sequence in which the net capital losses of X and Y Corporations are applied, and the computation of the capital loss carryovers to Y Corporation's calendar year 1963, may be illustrated as follows. (For purposes of this example, the carryover from a preceding taxable year of the acquiring corporation will be applied before the carryover from the same preceding taxable year of the transferor corporation):

(i) *X Corporation's 3/31/60 loss.* The carryover to 1963 is $0, computed as follows:

Net capital loss	$19,000
Less: Y's postacquisition part year net capital gain computed under subparagraph (5) of this paragraph ($36,500 × 184/365)	18,400
Carryover to Y 1962	600
Less: Y's 1962 net capital gain (computed without regard to any capital loss carryovers)	12,000

Carryover to Y 1963		0

(ii) *Y Corporation's 1959 loss.* The carryover to 1963 is $0, computed as follows:

Net capital loss		$24,000
Less: Y's preacquisition part year net capital gain computed under subparagraph (5) of this paragraph ($36,500 × 181/365)		18,100
Carryover to Y's postacquisition part year		5,900
Less:		
Y's postacquisition part year net capital gain computed under subparagraph (5) of this paragraph	$18,400	
Minus capital loss carryovers to postacquisition part year (i.e., carryover of $19,000 from X 3/31/60)	19,000	0
Carryover to Y 1962		5,900
Less:		
Y's 1962 net capital gain (computed without regard to any capital loss carryovers)	$12,000	
Minus capital loss carryovers to Y 1962 (i.e., carryover of $600 from X 3/31/60)	600	11,400
Carryover to Y 1963		0

(iii) *X Corporation's 3/31/61 loss.* The carryover to 1963 is $0, computed as follows:

Net capital loss		$5,000
Less:		
Y's postacquisition part year net capital gain computed under subparagraph (5) of this paragraph	$18,400	
Minus capital loss carryovers to postacquisition part year (i.e., carryovers of $19,000 from X 3/31/60 and $5,900 from Y 1959)	24,900	
		0
Carryover to Y 1962		5,000
Less:		
Y's 1962 net capital gain (computed without regard to any capital loss carryovers)	$12,000	
Minus capital loss carryovers to Y 1962 (i.e., carryovers of $600 from X 3/31/60 and $5,900 from Y 1959)	6,500	

		5,500
Carryover to Y 1963		0

(iv) *Y Corporation's 1960 loss.* The carryover to 1963 is $5,500, computed as follows:

Net capital loss		$6,000
Less:		
Y's preacquisition part year net capital gain computed under subparagraph (5) of this paragraph	$18,100	
Minus capital loss carryovers to preacquisition part year (i.e., carryover of $24,000 from Y 1959)	24,000	
		0
Carryover to Y's postacquisition part year		6,000
Less:		
Y's postacquisition part year net capital gain computed under subparagraph (5) of this paragraph	$18,400	
Minus capital loss carryovers to postacquisition part year (i.e., carryovers of $19,000 from X 3/31/60, $5,900 from Y 1959, and $5,000 from X 3/31/61)	29,900	0
		0
Carryover to Y 1962		6,000
Less:		
Y's 1962 net capital gain (computed without regard to any capital loss carryovers)	$12,000	
Minus capital loss carryovers to Y 1962 (i.e., carryovers of $600 from X 3/31/60, $5,900 from Y 1959, and $5,000 from X 3/31/61)	11,5000	
		$500
Carryover to Y 1963		5,500

(f) ***Successive acquiring corporations.*** An acquiring corporation which, in a transaction to which section 381(a) applies, acquires the assets of a distributor or transferor corporation which previously acquired the assets of another corporation in a transaction to which section 381(a) applies, shall succeed to and take into account, subject to the conditions and limitations of sections 1212 and 381, the capital loss carryovers available to the first acquiring corporation under sections 1212 and 381.

[T.D. 6552, 26 FR 1985, Mar. 8, 1961, as amended by T.D. 6867, 30 FR 15094, Dec. 12, 1965; T.D. 7728, 45 FR 72650, Nov. 3, 1980]

§ 1.381(c)(4)-1 Method of accounting.

(a) *Introduction* —

(1) ***Purpose.*** This section provides guidance regarding the method of accounting or combination of methods (other than inventory and depreciation methods) an acquiring corporation must use following a distribution or transfer to which sections 381(a) and 381(c)(4) apply and how to implement any associated change in method of accounting. See § 1.381(c)(5)-1 for guidance regarding the inventory method an acquiring corporation must use following a distribution or transfer to which sections 381(a) and 381(c)(5) apply. See § 1.381(c)(6)-1 for guidance regarding the depreciation method an acquiring corporation must use following a distribution or transfer to which sections 381(a) and 381(c)(6) apply.

(2) ***Carryover method requirement for separate and distinct trades or businesses.*** In a transaction to which section 381(a) applies, if an acquiring corporation continues to operate a trade or business of the parties to the section 381(a) transaction as a separate and distinct trade or business after the date of distribution or transfer, the acquiring corporation must use a carryover method as defined in paragraph (b)(5) of this section for each continuing trade or business, unless either the carryover method is impermissible and must be changed under paragraph (a)(4) of this section or the acquiring corporation changes the carryover method in accordance with paragraph (a)(5) of this section. The carryover method requirement applies to the overall method of accounting (for example, an accrual method of accounting) and any special method of accounting (for example, the percentage of completion method of accounting described in section 460) as defined in paragraph (b)(2) of this section used by each trade or business after the date of distribution or transfer. The acquiring corporation need not secure the Commissioner's consent to continue a carryover method.

(3) ***Principal method requirement for trades or businesses not operated as separate and distinct trades or businesses.*** In a transaction to which section 381(a) applies, if an acquiring corporation does not operate the trades or businesses of the parties to the section 381(a) transaction as separate and distinct trades or businesses after the date of distribution or transfer, the acquiring corporation must use a principal method determined under paragraph (c) of this section, unless either the principal method is impermissible and must be changed under paragraph (a)(4) of this section or the acquiring corporation changes the principal method in accordance with paragraph (a)(5) of this section. The principal method requirement applies to the overall method of accounting (for example, the cash receipts and disbursements method of accounting) and any special method of accounting (for example, the installment method under section 453) as defined in paragraph (b)(2) of this section used by each integrated trade or business after the date of distribution or transfer. The acquiring corporation must change to a principal method in accordance with paragraph (d)(1) of this section for each integrated trade or business and need not secure the Commissioner's consent to use a principal method.

(4) ***Carryover method or principal method not a permissible method.*** If a carryover method or principal method is not a permissible method of accounting, the acquiring corporation must secure the Commissioner's consent to change to a permissible method of accounting as provided in paragraph (d)(2) of this section. If the acquiring corporation must use a single method of accounting for a particular item after the date of distribution or transfer regardless of the number of separate and distinct trades or businesses operated on that date, the acquiring corporation must use the principal method for that item as determined under paragraph (c) of this section, unless either the principal method is impermissible and must be changed under this paragraph (a)(4) or the acquiring corporation changes the principal method in accordance with paragraph (a)(5) of this section.

(5) ***Voluntary change.*** Any party to a section 381(a) transaction may request permission under section 446(e) to change a method of accounting for the taxable year in which the transaction occurs or is expected to occur. For trades or businesses that will not operate as separate and distinct trades or businesses after the date of distribution or transfer, a change in method of accounting for the taxable year that includes that date will be granted only if the requested method is the method that the acquiring corporation must use after the date of distribution or transfer. The time and manner of obtaining the Commissioner's consent to change to a different method of accounting is described in paragraph (d)(2) of this section.

(6) ***Examples.*** The following examples illustrate the rules of this paragraph (a). Unless otherwise noted, the carryover method is a permissible method of accounting.

> *Example (1). Carryover method for separate and distinct trades or businesses after the date of distribution or transfer.* (i) *Facts.* X Corporation operates an employment agency that uses the overall cash receipts and disbursements method of accounting. T Corporation operates an educational institution that uses an overall accrual method of accounting. X Corporation acquires the assets of T Corporation in a transaction to which section 381(a) applies. After the date of distribution or transfer, X Corporation operates the employment agency as a trade or business that is separate and distinct from the educational institution. (ii) *Conclusion.* Because after the date of distribution or transfer X Corporation operates the employment agency as a separate and distinct trade or business, under paragraph (a)(2) of this section X Corporation must use the carryover method for each continuing trade or business, unless either the carryover method is impermissible and must be changed under paragraph (a)(4) of this section or X Corporation changes the carryover method in accordance with paragraph (a)(5) of this section. As defined in paragraph (b)(5) of this section, the carryover method for the employment agency is the cash receipts and disbursements method of accounting and the carryover method for the educational institution is the accrual method of accounting used by T Corporation immediately prior to the date of distribution or transfer. There is no change in method of accounting, and X Corporation need not secure the Commissioner's consent to use either carryover method.

> *Example (2). Carryover method for a special method of accounting.* (i) *Facts.* X Corporation provides personal grooming consulting and T Corporation provides weight management consulting. Both X Corporation and T Corporation use the same overall accrual method of accounting. X Corporation has elected to use the recurring item exception under § 1.461-5. T Corporation does not use the recurring item exception. X Corporation acquires the assets of T Corporation in a transaction to which section 381(a) applies. After the date of distribution or transfer, X Corporation operates the personal grooming consulting business as a trade or business that is separate and distinct from the weight management consulting business. (ii) *Conclusion.* Because after the date of distribution or transfer, X Corporation operates the personal grooming consulting business as a separate and distinct trade or business, under paragraph (a)(2) of this section X Corporation must use a carryover method for each

continuing trade or business, unless either the carryover method is impermissible and must be changed under paragraph (a)(4) of this section or X Corporation changes the carryover method in accordance with paragraph (a)(5) of this section. As defined in paragraph (b)(5) of this section, the carryover method for the overall method of accounting for each trade or business is the accrual method used immediately prior to the date of distribution or transfer. The carryover method for the special method of accounting for the personal grooming consulting business is the recurring item exception under § 1.461-5 while the carryover method for the weight management consulting business is not to use the recurring item exception under § 1.461-5. There is no change in method of accounting, and X Corporation need not secure the Commissioner's consent to use the carryover methods of accounting.

Example (3). Carryover method for a special method of accounting not permissible. (i) *Facts.* X Corporation is an engineering firm that uses the overall cash receipts and disbursements method of accounting and has elected under section 171 to amortize bond premium with respect to its taxable bonds acquired at a premium. T Corporation is a manufacturer that uses an overall accrual method of accounting and has not made a section 171 election to amortize bond premium with respect to its taxable bonds acquired at a premium. X Corporation acquires the assets of T Corporation in a transaction to which section 381(a) applies. After the date of distribution or transfer, X Corporation operates the engineering firm as a trade or business that is separate and distinct from the manufacturing business.
(ii) *Conclusion.* Because after the date of distribution or transfer X Corporation operates the engineering firm as a separate and distinct trade or business, under paragraph (a)(2) of this section X Corporation must use a carryover method for each continuing trade or business, unless either the carryover method is impermissible and must be changed under paragraph (a)(4) of this section or X Corporation changes the carryover method in accordance with paragraph (a)(5) of this section. As defined in paragraph (b)(5) of this section, the carryover method for the overall method of accounting for the engineering firm is the cash receipts and disbursements method used by X Corporation immediately prior to the date of distribution or transfer, and the carryover method for the overall method of accounting for the manufacturing business is the accrual method used by T Corporation immediately prior to the date of distribution or transfer. There is no change in method of accounting, and X Corporation need not secure the Commissioner's consent to use either carryover method. Notwithstanding that after the date of distribution or transfer X Corporation has two separate and distinct trades or businesses, X Corporation is permitted only one method of accounting for amortizable bond premium under section 171. Because after the date of distribution or transfer X Corporation must use a single method of accounting for bond premium for all trades or businesses, X Corporation must use the principal method for that item as determined under paragraph (c) of this section, unless either the principal method is impermissible and must be changed under paragraph (a)(4) of this section or X Corporation changes that method in accordance with paragraph (a)(5) of this section. X Corporation must

> change to the principal method in accordance with paragraph (d)(1) of this section. If amortizing bond premium is not the principal method, X Corporation may make an election to amortize bond premium to the extent permitted by section 171. See paragraph (e)(2) of this section for rules on making elections.

(b) ***Definitions.*** For purposes of this section—

(1) ***Method of accounting.*** A method of accounting has the same meaning as provided in section 446 and any applicable Income Tax Regulations.

(2) ***Special method of accounting.*** A special method of accounting is a method expressly permitted or required by the Internal Revenue Code, Income Tax Regulations, or administrative guidance published in the Internal Revenue Bulletin that deviates from the normal application of the cash receipts and disbursements method or an accrual method of accounting. The installment method under section 453, the mark-to-market method under section 475, the amortization of bond premium under section 171, the percentage of completion method under section 460, the recurring item exception of § 1.461-5, and the income deferral method under section 455 are examples of special methods of accounting. See § 1.446-1(c)(1)(iii).

(3) ***Adoption of a method of accounting.*** Adoption of a method of accounting has the same meaning as provided in § 1.446-1(e)(1).

(4) ***Change in method of accounting.*** A change in method of accounting has the same meaning as provided in § 1.446-1(e)(2).

(5) ***Carryover method.*** A carryover method for the overall method of accounting is the overall method of accounting that each party to a section 381(a) transaction uses for each separate and distinct trade or business immediately prior to the date of distribution or transfer. The carryover method for a special method of accounting for an item is the special method of accounting for that item that each party to a section 381(a) transaction uses for each separate and distinct trade or business immediately prior to the date of distribution or transfer.

(6) ***Principal method.*** A principal method is an overall or special method of accounting that is determined under paragraph (c) of this section.

(7) ***Permissible method of accounting.*** A permissible method of accounting is a method of accounting that is proper or permitted under the Internal Revenue Code or any applicable Income Tax Regulations.

(8) ***Acquiring corporation.*** An acquiring corporation has the same meaning as provided in § 1.381(a)-1(b)(2).

(9) ***Distributor corporation.*** A distributor corporation means the corporation, foreign or domestic, that distributes its assets to another corporation described in section 332(b) in a distribution to which section 332 (relating to liquidations of subsidiaries) applies.

(10) ***Transferor corporation.*** A transferor corporation means the corporation, foreign or domestic, that transfers its assets to another corporation in a transfer to which section 361 (relating to nonrecognition of gain or loss to corporations) applies, but only if—

(i) The transfer is in connection with a reorganization described in section 368(a)(1)(A), (a)(1)(C), or (a)(1)(F), or

(ii) The transfer is in connection with a reorganization described in section 368(a)(1)(D) or (a)(1)(G), provided the requirements of section 354(b) are met.

(11) ***Parties to the section 381(a) transaction.*** Parties to the section 381(a) transaction means the acquiring corporation and the distributor or transferor corporation that participate in a transaction to which section 381(a) applies.

(12) ***Date of distribution or transfer.*** The date of distribution or transfer has the same meaning as provided in section 381(b)(2) and § 1.381(b)-1(b).

(13) ***Separate and distinct trades or businesses.*** Separate and distinct trades or businesses has the same meaning as provided in § 1.446-1(d).

(14) ***Gross receipts.*** Gross receipts means all the receipts, including amounts that are excludible from gross income, that must be taken into account under the method of accounting used in a representative period (determined without regard to this section) for federal income tax purposes. For example, gross receipts includes income from investments, amounts received for services, rents, total sales (net of returns and allowances), and both taxable and tax-exempt interest. See paragraph (e)(5) of this section for rules on determining the representative period.

(15) ***Audit protection.*** Audit protection means, for purposes of paragraph (d)(1) of this section, that the IRS will not require an acquiring corporation that is required to change a method of accounting under paragraph (a)(3) of this section to change that method for a taxable year ending prior to the taxable year that includes the date of distribution or transfer.

(16) ***Section 481(a) adjustment.*** The section 481(a) adjustment means an adjustment that must be taken into account as required under section 481(a) to prevent amounts from being duplicated or omitted when the taxable income of an acquiring corporation is computed under a method of accounting different from the method used to compute taxable income for the preceding taxable year.

(17) ***Cut-off basis.*** A cut-off basis means a manner in which a change in method of accounting is made without a section 481(a) adjustment and under which only the items arising after the beginning of the year of change (or, in the case of a change made under paragraph (d)(1) of this section, after the date of distribution or transfer) are accounted for under the new method of accounting.

(18) ***Adjustment period.*** The adjustment period means the number of taxable years for taking into account the section 481(a) adjustment required as a result of a change in method of accounting.

(19) ***Component trade or business.*** A component trade or business is a trade or business of a party to the section 381(a) transaction that will be combined and integrated with a trade or business of the other party to the section 381 transaction. See paragraph (e)(4)(ii) of this section for the determination of whether a trade or business is operated as a separate and distinct trade or business after the date of distribution or transfer.

(c) ***Principal method*** —

(1) ***In general.*** For each integrated trade or business, the principal method is generally the method of accounting used by the component trade or business of the acquiring corporation immediately prior to the date of distribution or transfer. If, however, the component trade or business of the distributor or transferor corporation is larger than the component trade or business of the acquiring corporation on the date of distribution or transfer, the principal method is the method used by the component trade or business of the distributor or transferor corporation immediately prior to that date. If the larger component trade or business does not have a special method of accounting for a particular

item immediately prior to the date of distribution or transfer, the principal method for that item is the method of accounting used by the component trade or business that does have a special method of accounting for that item. See paragraph (e)(9) of this section for special rules concerning methods of accounting that are elected on a project-by-project, job-by-job, or other similar basis. For each integrated trade or business, the component trade or business of the distributor or transferor corporation is larger than the component trade or business of the acquiring corporation on the date of distribution or transfer if—

(i) The aggregate of the adjusted bases of the assets held by each component trade or business of the distributor or transferor corporation (determined under section 1011 and any applicable Income Tax Regulations) exceeds the aggregate of the adjusted bases of the assets of each component trade or business of the acquiring corporation immediately prior to the date of distribution or transfer, and

(ii) The aggregate of the gross receipts for a representative period of each component trade or business of the distributor or transferor corporation exceeds the aggregate of the gross receipts for the same period of each component trade or business of the acquiring corporation. See paragraph (e)(5) of this section for rules on determining the representative period.

(2) ***Multiple component trades or businesses with different principal methods.*** If a party to the section 381(a) transaction has multiple component trades or businesses and more than one principal overall method of accounting or more than one principal special method of accounting for an item, then the acquiring corporation may choose which of the principal methods of accounting used by such component trades or businesses will be the principal methods of the integrated trade or business. The acquiring corporation must choose a principal method that is a permissible method of accounting. In general, a change to a principal method in a transaction to which section 381(a) and paragraph (a)(3) of this section applies is made under paragraph (d)(1) of this section.

(3) ***Examples.*** The following examples illustrate the rules of this paragraph (c). Unless otherwise noted, the principal method is a permissible method of accounting.

> *Example (1). Principal method is the method used by the acquiring corporation.* (i) *Facts.* X Corporation and T Corporation each operate an employment agency. X Corporation uses the overall cash receipts and disbursements method of accounting, and T Corporation uses an overall accrual method of accounting. X Corporation acquires the assets of T Corporation in a transaction to which section 381(a) applies. The adjusted bases of the assets in X Corporation's employment agency immediately prior to the date of distribution or transfer exceed the adjusted bases of the assets in T Corporation's employment agency, and the gross receipts in X Corporation's employment agency for the representative period exceed the gross receipts of T Corporation's employment agency for the period. After the date of distribution or transfer, X Corporation's employment agency will not be operated as a trade or business that is separate and distinct from T Corporation's employment agency.
> (ii) *Conclusion.* Because after the date of distribution or transfer X Corporation will not operate its employment agency as a separate and distinct trade or business, X Corporation must use a principal method under paragraph (a)(3) of this section, unless either the principal method is impermissible and must be changed under paragraph (a)(4) of this section or X

Corporation changes the principal method in accordance with paragraph (a)(5) of this section. Because on the date of distribution or transfer T Corporation's employment agency is not larger than X Corporation's employment agency, the principal method for the overall method of accounting is the cash receipts and disbursements method used by X Corporation's employment agency. X Corporation need not secure the Commissioner's consent to use this method of accounting. However, in accordance with paragraph (d)(1) of this section, X Corporation must change the method of accounting for the employment agency acquired from T Corporation to the cash receipts and disbursements method.

Example (2). Principal method is the method used by the acquiring corporation. (i) *Facts.* The facts are the same as in *Example* (1), except that the gross receipts of T Corporation's employment agency for the representative period exceed the gross receipts of X Corporation's employment agency for the period.
(ii) *Conclusion.* The result is the same as in *Example* (1). Although the gross receipts of T Corporation's employment agency exceed the gross receipts of X Corporation's employment agency, T Corporation's employment agency is not larger than X Corporation's employment agency because the adjusted bases of the assets of T Corporation's employment agency do not exceed the adjusted bases of the assets of X Corporation's employment agency. Thus, the principal method for the overall method of accounting is the cash receipts and disbursements method of accounting used by X Corporation's employment agency immediately prior to the date of distribution or transfer. X Corporation need not secure the Commissioner's consent to use this method of accounting. However, in accordance with paragraph (d)(1) of this section, X Corporation must change the method of accounting for the employment agency business acquired from T Corporation to the cash receipts and disbursements method.

Example (3). Principal method is the method used by the distributor or transferor corporation. (i) *Facts.* The facts are the same as in *Example* (2), except that the adjusted bases of the assets held by T Corporation's employment agency immediately prior to the date of distribution or transfer exceed the adjusted bases of the assets held by X Corporation's employment agency.
(ii) *Conclusion.* The principal method for the overall method of accounting is the accrual method of accounting used by T Corporation's employment agency immediately prior to the date of distribution or transfer because on the date of distribution or transfer T Corporation's employment agency is larger than X Corporation's employment agency. The adjusted bases of the assets of T Corporation's employment agency exceed the adjusted bases of the assets of X Corporation's employment agency, and the gross receipts of T Corporation's employment agency exceed the gross receipts of X Corporation's employment agency. X Corporation need not secure the Commissioner's consent to use this method of accounting. However, in accordance with paragraph (d)(1) of this section, X Corporation must change the method of

accounting for the employment agency business it operated prior to the date of distribution or transfer to the accrual method of accounting used by T Corporation's employment agency immediately prior to the date of distribution or transfer.

Example (4). Impermissible principal method. (i) *Facts.* The facts are the same as in *Example* (1), except that X Corporation is prohibited under section 448 from using the cash receipts and disbursements method of accounting after the date of distribution or transfer.
(ii) *Conclusion.* Because section 448 prohibits X Corporation from using the cash receipts and disbursements method of accounting, X Corporation is not permitted to use the principal method for the overall method of accounting as determined in *Example* (1). Because after the date of distribution or transfer that method is not a permissible method, under paragraph (a)(4) of this section X Corporation must secure the Commissioner's consent to change to a permissible method in accordance with the procedures set forth in paragraph (d)(2) of this section.

Example (5). Voluntary change not allowable. (i) *Facts.* The facts are the same as in *Example* (4), except that T Corporation wants to discontinue using the overall accrual method of accounting for its employment agency and change to the cash receipts and disbursements method for the taxable year in which the section 381(a) transaction occurs or is expected to occur.
(ii) *Conclusion.* Under paragraph (a)(5) of this section, the Commissioner will grant a request to change a method of accounting for the taxable year that includes the date of distribution or transfer only if the requested method is the method that the acquiring corporation must use after the date of distribution or transfer. The Commissioner will not consent to a request by T Corporation to change to the cash receipts and disbursements method for the taxable year in which the section 381(a) transaction occurs or is expected to occur because X Corporation cannot use the cash receipts and disbursements method after the date of distribution or transfer.

Example (6). Principal methods are the acquiring corporation's methods. (i) *Facts.* X Corporation and T Corporation each publishes magazines. X Corporation acquires the assets of T Corporation in a transaction to which section 381(a) applies. Both X Corporation and T Corporation use an overall accrual method of accounting. X Corporation has elected to defer income from its subscription sales under section 455. T Corporation has not elected to defer income from its subscription sales under section 455 and instead has recognized the income from these sales in accordance with section 451. The adjusted bases of the assets in X Corporation's publication business immediately prior to the date of distribution or transfer exceed the adjusted bases of the assets in T Corporation's publication business, and the gross receipts in X Corporation's publication business for the representative period exceed the gross receipts in T Corporation's publication business for the representative period. After

the date of distribution or transfer, X Corporation will not operate its publication business as a trade or business that is separate and distinct from T Corporation's publication business.
(ii) *Conclusion.* Because after the date of distribution or transfer X Corporation will not operate its publication business as a separate and distinct trade or business, X Corporation must use the principal method under paragraph (a)(3) of this section, unless either the principal method is impermissible and must be changed under paragraph (a)(4) of this section or X Corporation changes the principal method in accordance with paragraph (a)(5) of this section. The adjusted bases of the assets in T Corporation's publication business do not exceed the adjusted bases of the assets in X Corporation's publication business, and the gross receipts in T Corporation's publication business do not exceed the gross receipts in X Corporation's publication business. Because on the date of distribution or transfer T Corporation's publication business is not larger than X Corporation's publication business, the principal method for the overall method of accounting is the accrual method used by X Corporation's publication business immediately prior to the date of distribution or transfer. The principal method for subscription sales is the section 455 deferral method used by X Corporation immediately prior to the date of distribution or transfer. X Corporation need not secure the Commissioner's consent to use the principal method for either the overall method of accounting or the special method of accounting. However, in accordance with paragraph (d)(1) of this section, X Corporation must change both the overall method of accounting and the special method of accounting for the publication business acquired from T Corporation to the accrual method and the section 455 deferral method used by X Corporation immediately prior to the date of distribution or transfer.

Example (7). Principal methods are the acquiring corporation's methods. (i) *Facts.* The facts are the same as in *Example* (6), except that the adjusted bases of the assets in T Corporation's publication business immediately prior to the date of distribution or transfer exceed the adjusted bases of the assets in X Corporation's business.
(ii) *Conclusion.* The result is the same as in *Example* (6). Because on the date of distribution or transfer T Corporation's publication business is not larger than X Corporation's publication business, the principal method for the overall method of accounting is the accrual method used by X Corporation's publication business immediately prior to the date of distribution or transfer. The principal method for subscription sales is the section 455 deferral method used by X Corporation immediately prior to the date of distribution or transfer. X Corporation need not secure the Commissioner's consent to use the principal method for either the overall method of accounting or the special method of accounting. However, in accordance with paragraph (d)(1) of this section, X Corporation must change both the overall method of accounting and the special method of accounting for the publication business acquired from T Corporation to the accrual method and the section 455 deferral method used by X Corporation immediately prior to the date of distribution or transfer.

Example (8). Principal method determination when larger component trade or business does

not have a special method of accounting. (i) *Facts.* X Corporation and T Corporation both install ice skating rinks. Both X Corporation and T Corporation use an overall accrual method of accounting for their respective businesses. X Corporation completes its installation contracts within the contracting year and uses an accrual method of accounting to recognize the revenue from its installation contracts. T Corporation's installation contracts are subject to section 460, and T Corporation recognizes the revenue from such contracts under the percentage-of-completion method. X Corporation acquires the assets of T Corporation in a transaction to which section 381(a) applies. The adjusted bases of the assets in X Corporation's installation business immediately prior to the date of distribution or transfer exceed the adjusted bases of the assets in T Corporation's installation business, and the gross receipts in X Corporation's installation business for the representative period exceed the gross receipts in T Corporation's installation business for the representative period. After the date of distribution or transfer, X Corporation will not operate its installation business as a trade or business that is separate and distinct from T Corporation's installation business. (ii) *Conclusion.* Because after the date of distribution or transfer X Corporation will not operate its installation business as a separate and distinct trade or business, X Corporation must use a principal method under paragraph (a)(3) of this section, unless either the principal method is impermissible and must be changed under paragraph (a)(4) of this section or X Corporation changes the principal method in accordance with paragraph (a)(5) of this section. The adjusted bases of the assets in T Corporation's installation business do not exceed the adjusted bases of the assets in X Corporation's installation business, and the gross receipts in T Corporation's installation business do not exceed the gross receipts in X Corporation's installation business. Because on the date of distribution or transfer T Corporation's installation business is not larger than X Corporation's installation business, the principal method for the overall method of accounting is the accrual method used by X Corporation's installation business immediately prior to the date of distribution or transfer. X Corporation need not secure the Commissioner's consent to use the principal method for the overall method of accounting. However, in accordance with paragraph (d)(1) of this section, X Corporation must change the overall method of accounting for the installation business acquired from T Corporation to the accrual method used by X Corporation. Under paragraph (c) of this section, the principal method for T Corporation's long-term contracts is the percentage-of-completion method used by T Corporation immediately prior to the date of distribution or transfer because X Corporation's installation business does not have a method of accounting for long-term contracts. There is no change in method of accounting, and X Corporation need not secure the Commissioner's consent to use T Corporation's percentage-of-completion method.

Example (9). Principal method determination with a combined trade or business and a separate and distinct trade or business. (i) *Facts.* X Corporation operates a tennis academy as a trade or business that is separate and distinct from its trade or business of operating a

golf academy. X Corporation uses the overall cash receipts and disbursements method of accounting for the tennis academy and an overall accrual method of accounting for the golf academy. T Corporation operates a tennis academy and uses an accrual method of accounting for the overall method. X Corporation acquires the assets of T Corporation in a transaction to which section 381(a) applies. After the date of distribution or transfer, X Corporation will not operate its tennis academy as a trade or business that is separate and distinct from T Corporation's tennis academy. X Corporation will continue to operate its golf academy as a trade or business that is separate and distinct from the operation of the tennis academy. The adjusted bases of the assets in T Corporation's tennis academy exceed the adjusted bases of the assets in X Corporation's tennis academy immediately prior to the date of distribution or transfer. The gross receipts of T Corporation's tennis academy for the representative period exceed the gross receipts of X Corporation's tennis academy for that period.

(ii) *Conclusion.* Because after the date of distribution or transfer X Corporation will not operate its tennis academy as a separate and distinct trade or business, X Corporation must use a principal method under paragraph (a)(3) of this section, unless either the principal method is impermissible and must be changed under paragraph (a)(4) of this section or X Corporation changes the principal method in accordance with paragraph (a)(5) of this section. Because on the date of distribution or transfer the tennis academy operated by T Corporation is larger than the tennis academy operated by X Corporation, the principal method for the overall method of accounting for the combined tennis academy business is the accrual method used by T Corporation's tennis academy immediately prior to the date of distribution or transfer. X Corporation need not secure the Commissioner's consent to use the principal method for the overall method of accounting. However, in accordance with paragraph (d)(1) of this section, X Corporation must change the method of accounting for its tennis academy to the accrual method. Because X Corporation will operate the golf academy as a separate trade or business, under paragraph (a)(2) of this section X Corporation must continue to use the accrual method that it used immediately prior to the date of distribution or transfer as the carryover method for the golf academy. There is no change in method of accounting, and X Corporation need not secure the Commissioner's consent to use the carryover method.

Example (10). Principal method determination with multiple component trades or businesses. (i) *Facts.* The facts are the same as in *Example* (9), except that after the date of distribution or transfer X Corporation will not operate its golf academy as a trade or business that is separate and distinct from the tennis academy. In addition, X Corporation's component trades or businesses are larger than T Corporation's component trade or business: (1) the adjusted bases of the assets of X Corporation's tennis academy and golf academy businesses, in the aggregate, exceed the adjusted bases of the assets held by T Corporation's tennis academy; and (2) the gross receipts for the representative period of X Corporation's tennis academy and golf academy businesses, in the aggregate, exceed the gross receipts in T

Corporation's tennis academy.

(ii) *Conclusion.* Because on the date of distribution or transfer T Corporation's tennis academy is not larger than X Corporation's combined tennis academy and golf academy, the principal method for the overall method of accounting is the method of accounting used by the component trades or businesses of X Corporation that will be combined with T Corporation's component trade or business on that date. Because on the date of distribution or transfer X Corporation operates two component trades or businesses with different overall methods of accounting that will be integrated after the date of distribution or transfer, X Corporation may choose under paragraph (c)(2) of this section which overall method (and any special method of accounting) used by its component trades or businesses will be the principal method. X Corporation may choose to use either the accrual method used by the golf academy or the cash receipts and disbursements method used by its tennis academy as the principal method after the date of distribution or transfer, if either method is a permissible method. In accordance with paragraph (d)(1) of this section, X Corporation must change T Corporation's overall method of accounting to the principal method. Under paragraph (a)(3) of this section, X Corporation also must change either its golf academy business or its tennis academy business, depending on which principal method X Corporation selects, to the principal method.

(d) ***Procedures for changing a method of accounting*** —

(1) ***Change made to principal method under paragraph (a)(3) of this section*** —

(i) ***Section 481(a) adjustment*** —

(A) ***In general.*** An acquiring corporation that changes its method of accounting or the distributor or transferor corporation's method of accounting under paragraph (a)(3) of this section does not need to secure the Commissioner's consent to use the principal method. To the extent the use of a principal method constitutes a change in method of accounting, the change in method is treated as a change initiated by the acquiring corporation for purposes of section 481(a)(2). Any change to a principal method, whether the change relates to a trade or business of the acquiring corporation or a trade or business of the distributor or transferor corporation, must be reflected on the acquiring corporation's federal income tax return for the taxable year that includes the date of distribution or transfer. The amount of the section 481(a) adjustment and the adjustment period, if any, necessary to implement a change to the principal method are determined under § 1.446-1(e) and the applicable administrative procedures that govern voluntary changes in methods of accounting under section 446(e). If the Internal Revenue Code, the Income Tax Regulations, or administrative procedures require that a method of accounting be implemented on a cut-off basis, the acquiring corporation must implement the change on a cut-off basis as of the date of distribution or transfer on its federal income tax return for the taxable year that includes the date of distribution or transfer. If the Internal Revenue Code, the Income Tax Regulations, or administrative procedures require a section 481(a) adjustment, the acquiring corporation must determine the section 481(a) adjustment and include the appropriate amount of the section 481(a) adjustment on its federal income tax return for the taxable year that includes the date of distribution or transfer and subsequent taxable year(s), as necessary. This adjustment is determined by the acquiring corporation as of the beginning of the day that is immediately after the date of distribution or transfer.

(B) ***Example.*** The following example illustrates the rules of this paragraph (d)(1)(i):

Example. X Corporation uses the overall cash receipts and disbursements method of accounting, and T Corporation uses an overall accrual method of accounting. X Corporation acquires the assets of T Corporation in a transaction to which section 381(a) applies. X Corporation determines that under the rules of paragraph (c)(1) of this section X Corporation must change the method of accounting for the business acquired from T Corporation to the cash receipts and disbursements method. X Corporation will determine the section 481(a) adjustment pertaining to the change to the cash receipts and disbursements method by consolidating the adjustments (whether the amounts thereof represent increases or decreases in items of income or deductions) arising with respect to balances in the various accounts, such as accounts receivable, as of the beginning of the day that immediately follows the day on which X Corporation acquires the assets of T Corporation. X Corporation will reflect this adjustment, or an appropriate part thereof, on its federal income tax return for the taxable year that includes the date of distribution or transfer.

(ii) ***Audit protection.*** Notwithstanding any other provision in any other Income Tax Regulation or administrative procedure, no audit protection is provided for any change in method of accounting under paragraph (d)(1) of this section.

(iii) ***Other terms and conditions.*** Except as otherwise provided in this section, other terms and conditions provided in § 1.446-1(e) and the applicable administrative procedures for voluntary changes in method of accounting under section 446(e) apply to a change in method of accounting under this section. Thus, for example, if the administrative procedures for a particular change in method of accounting have a term and condition that provides for the acceleration of the section 481(a) adjustment period, this term and condition applies to a change made under this paragraph (d)(1). However, any scope limitation in the applicable administrative procedures will not apply for purposes of making a change under this paragraph (d)(1). For example, if the administrative procedures provide as a limitation that an identical change in method of accounting is barred for a period of years, this limitation will not bar a change to the principal method made under this section.

(2) ***Change made to a method of accounting under paragraph (a)(4) or (a)(5) of this section*** —

(i) ***In general.*** A party to a section 381(a) transaction that changes a method of accounting under either paragraph (a)(4) or paragraph (a)(5) of this section must follow the provisions of § 1.446-(1)(e) and the applicable administrative procedures, including scope limitations, for voluntary changes in method of accounting under section 446(e), except as provided in paragraphs (d)(2)(ii) and (d)(2)(iii) of this section. An application on Form 3115, “Application for Change in Accounting Method,” filed with the IRS to change a method of accounting under this paragraph (d)(2) should be labeled “Filed under section 381(c)(4)” at the top.

(ii) ***Final year limitation.*** Any scope limitation relating to the final year of a trade or business will not apply to a taxpayer that changes its method of accounting in the final year of a trade or business that is terminated as the result of a section 381(a) transaction.

(iii) ***Time to file.*** Under the authority of § 1.446-1(e)(3)(ii), for a change in method of accounting requiring advance consent, the application for a change in method of accounting (for example, Form 3115) must be filed with the IRS on or before the later of—

(A) The due date for filing a Form 3115 as specified in § 1.446-1(e), for example, the last day of the taxable year in which the distribution or transfer occurred, or

(B) The earlier of—

(1) The day that is 180 days after the date of distribution or transfer, or

(2) The day on which the acquiring corporation files its federal income tax return for the taxable year in which the distribution or transfer occurred.

(e) *Rules and procedures* —

(1) ***No method of accounting.*** If a party to a section 381(a) transaction is not using a method of accounting, does not have a method of accounting for a particular item, or came into existence as a result of the transaction, the party will not be treated as having a method of accounting different from that used by another party to the section 381(a) transaction.

(2) ***Elections and adoptions allowed.*** If an election does not require the Commissioner's consent, an acquiring corporation or a distributor or transferor corporation is not precluded from making any election that is otherwise permissible for the taxable year that includes the date of distribution or transfer. For purposes of this section, a corporation shall be deemed as having made any election as of the first day of the taxable year that includes the date of distribution or transfer. Similarly, where adoption is permissible, an acquiring corporation or a distributor or transferor corporation may adopt any permissible method of accounting for the taxable year that includes the date of distribution or transfer.

(3) *Elections continue after section 381(a) transaction* —

(i) ***General rule.*** An acquiring corporation is not required to renew any election not otherwise requiring renewal and previously made by it or by a distributor or transferor corporation for a carryover method or a principal method if the acquiring corporation uses the method after the section 381(a) transaction. If the acquiring corporation uses a method after the date of distribution or transfer, an election made by the acquiring corporation or by a distributor or transferor corporation for that method that was in effect on the date of distribution or transfer continues after the section 381(a) transaction as though the distribution or transfer had not occurred.

(ii) ***Example.*** The following example illustrates the rules of this paragraph (e)(3):

Example. The acquiring corporation, X Corporation, previously elected to amortize bond premium under section 171. X Corporation acquires the assets of T Corporation in a transaction to which section 381(a) applies. X Corporation determines under the rules of paragraph (c)(1) of this section that X Corporation's method of amortizing bond premium is the principal method. After the date of distribution or transfer, X Corporation is not required to renew its bond premium amortization election and is bound by it. Additionally, X Corporation would not be required to renew its election to amortize bond premium if the method were the carryover method under paragraph (a)(2) of this section.

(4) *Appropriate times for certain determinations* —

(i) ***Determining the method of accounting.*** The method of accounting used by a party to a section 381(a) transaction on the date of distribution or transfer is the method of accounting used by that party as of the end of the day that is immediately prior to the date of distribution or transfer.

(ii) ***Determining whether there are separate and distinct trades or businesses after the date of distribution or transfer.*** Whether an acquiring corporation will operate the trades or businesses of the parties to a section 381(a) transaction as separate and distinct trades or businesses after the date of distribution or transfer will be determined as of the date of distribution or transfer based upon the facts and circumstances. Intent to combine books and records of the trades or businesses may be demonstrated by contemporaneous records and documents or by other objective evidence that reflects the acquiring corporation's ultimate plan of operation, even though the actual combination of the books and records may extend beyond the end of the taxable year that includes the date of distribution or transfer.

(5) ***Representative period for aggregating gross receipts.*** The representative period for measuring gross receipts is generally the 12 consecutive months preceding the date of distribution or transfer. If a component trade or business was not in existence for the 12 consecutive months preceding the date of distribution or transfer, then all component trades or businesses of each integrated trade or business will compare their gross receipts for the period that such trade or business was in existence. For example, if the acquiring corporation's component trade or business was formed in August and the date of distribution or transfer occurred in December of the same year, the gross receipts for those five months will be compared with the gross receipts of the other component trades or businesses for the same period.

(6) ***Establishing a method of accounting.*** A method of accounting used by the distributor or transferor corporation immediately prior to the date of distribution or transfer that continues to be used by the acquiring corporation after the date of distribution or transfer is an established method of accounting for purposes of section 446(e), whether or not such method is proper or is permitted under the Internal Revenue Code or any applicable Income Tax Regulations.

(7) ***Other applicable provisions.*** This section does not preempt any other provision of the Internal Revenue Code or the Income Tax Regulations that is applicable to the acquiring corporation's circumstances. For example, income, deductions, credits, allowances, and exclusions may be allocated among the parties to a section 381(a) transaction and other taxpayers under sections 269 and 482, if appropriate. Similarly, transfers of contracts accounted for using a long-term contract method of accounting are governed by the rules provided in § 1.460-4(k). Further, if other paragraphs of section 381(c) apply for purposes of determining the methods of accounting to be used following the date of distribution or transfer, section 381(c)(4) and this § 1.381(c)(4)-1 will not apply to the tax treatment of the items. For example, this section does not apply to inventories that an acquiring corporation obtains in a transaction to which section 381(a) applies. Instead, the rules of section 381(c)(5) govern the inventory method to be used by the acquiring corporation after the distribution or transfer. Similarly, if the acquiring corporation assumes an obligation of the distributor or transferor corporation that gives rise to a liability after the date of distribution or transfer and to which § 1.381(c)(16)-1 applies, the deductibility of the item is determined under this section only after the rules of section 381(c)(16) are applied.

(8) ***Character of items of income and deduction.*** After the date of distribution or transfer, items of income and deduction have the same character in the hands of the acquiring corporation as they would have had in the hands of the distributor or transferor corporation if no distribution or transfer had occurred.

(9) ***Method of accounting selected by project or job.*** If other sections of the Internal Revenue Code, Income Tax Regulations, or other administrative guidance permit an acquiring corporation to elect a method of accounting on a project-by-project, job-by-job, or other similar basis, then for purposes of this section the method elected with respect to each project or job is the established method only for that project or job. For example, the election under section 460 to classify a contract to perform both manufacturing and construction activities as a long-term construction contract if at least 95 percent of the estimated total allocable contract costs are reasonably allocated to the construction activities is made on a contract-by-contract basis. Accordingly, the method of accounting previously elected for a project or job generally continues after the date of distribution or transfer. However, if the trades or businesses of the parties to a section 381(a) transaction are not operated as separate and distinct trades or businesses after the date of distribution or transfer, and two or more of the parties to the section 381(a) transaction previously worked on the same project or job and used different methods of accounting for the project or job immediately before the distribution or transfer, then the acquiring corporation must determine the principal method for that project or job under paragraph (c) of this section and make changes, if necessary, to the principal method in accordance with paragraph (d)(1) of this section.

(10) ***Impermissible method of accounting.*** This section does not limit the Commissioner's ability under section 446(b) to determine whether a taxpayer's method of accounting is an impermissible method or otherwise fails to clearly reflect income. For example, an acquiring corporation may not use the method of accounting determined under paragraph (a)(2) of this section if the method fails to clearly reflect the acquiring corporation's income within the meaning of section 446(b).

(f) ***Effective/applicability date.*** This section applies to corporate reorganizations and tax-free liquidations described in section 381(a) that occur on or after August 31, 2011.

[T.D. 9534, 76 FR 45675, Aug. 1, 2011, as amended by T.D. 9870, 84 FR 33692, July 15, 2019]

§ 1.381(c)(5)-1 Inventory method.

(a) ***Introduction*** —

(1) ***Purpose.*** This section provides guidance regarding the inventory method an acquiring corporation must use following a distribution or transfer to which sections 381(a) and 381(c)(5) apply and how to implement any associated change in method of accounting. See § 1.381(c)(4)-1 for guidance regarding the method of accounting or combination of methods (other than inventory and depreciation methods) an acquiring corporation must use following a distribution or transfer to which sections 381(a) and 381(c)(4) apply. See § 1.381(c)(6)-1 for guidance regarding the depreciation method an acquiring corporation must use following a distribution or transfer to which sections 381(a) and 381(c)(6) apply.

(2) ***Carryover method requirement for separate and distinct trades or businesses.*** In a transaction to which section 381(a) applies, if an acquiring corporation continues to operate a trade or business of the parties to the section 381(a) transaction as a separate and distinct trade or business after the date of distribution or transfer, the acquiring corporation must use a carryover method as defined in

paragraph (b)(4) of this section for each continuing trade or business, unless either the carryover method is impermissible and must be changed under paragraph (a)(4) of this section or the acquiring corporation changes the carryover method in accordance with paragraph (a)(5) of this section. The acquiring corporation need not secure the Commissioner's consent to continue a carryover method.

(3) ***Principal method requirement for trades or businesses not operated as separate and distinct trades or businesses.*** In a transaction to which section 381(a) applies, if an acquiring corporation does not operate the trades or businesses of the parties to the section 381(a) transaction as separate and distinct trades or businesses after the date of distribution or transfer, the acquiring corporation must use a principal method determined under paragraph (c) of this section, unless either the principal method is impermissible and must be changed under paragraph (a)(4) of this section or the acquiring corporation changes the principal method in accordance with paragraph (a)(5) of this section. The acquiring corporation must change to a principal method in accordance with paragraph (d)(1) of this section for each integrated trade or business and need not secure the Commissioner's consent to use a principal method.

(4) ***Carryover method or principal method not a permissible method.*** If a carryover method or principal method is not a permissible inventory method, the acquiring corporation must secure the Commissioner's consent to change to a permissible inventory method as provided in paragraph (d)(2) of this section. If the acquiring corporation must use a single inventory method for a particular type of goods after the date of distribution or transfer regardless of the number of separate and distinct trades or businesses operated on that date, the acquiring corporation must use the principal method for that type of goods as determined under paragraph (c) of this section, unless either the principal method is impermissible and must be changed under this paragraph (a)(4) or the acquiring corporation changes the principal method in accordance with paragraph (a)(5) of this section.

(5) ***Voluntary change.*** Any party to a section 381(a) transaction may request permission under section 446(e) to change an inventory method for the taxable year in which the transaction occurs or is expected to occur. For trades or businesses that will not operate as separate and distinct trades or businesses after the date of distribution or transfer, a change in method of accounting for the taxable year that includes that date will be granted only if the requested inventory method is the method that the acquiring corporation must use after the date of distribution or transfer. The time and manner of obtaining the Commissioner's consent to change to a different inventory method is described in paragraph (d)(2) of this section.

(6) ***Examples.*** The following examples illustrate the rules of this paragraph (a). Unless otherwise noted, the carryover method is a permissible inventory method.

(i) ***Example (1).*** Carryover method for separate and distinct trades or businesses after the date of distribution or transfer.

(A) ***Facts.*** X Corporation manufactures radios and television sets. X Corporation uses the first-in, first-out (FIFO) method of inventory identification, the cost method of valuing its inventories, and capitalizes inventory costs in accordance with section 263A. T Corporation manufactures washing machines and dryers. T Corporation uses the last-in, first-out (LIFO) method of inventory identification, the cost method of valuing its inventories, and capitalizes inventory costs under section 263A using methods other than those used by X Corporation. X Corporation acquires the inventory of T Corporation in a

transaction to which section 381(a) applies. After the date of distribution or transfer, X Corporation operates its radio and television manufacturing business as a trade or business that is separate and distinct from its washing machines and dryers manufacturing business.

(B) ***Conclusion.*** Because after the date of distribution or transfer X Corporation operates its manufacturing businesses as separate and distinct trades or businesses, under paragraph (a)(2) of this section X Corporation must use the carryover methods for each continuing trade or business, unless either the carryover methods are impermissible and must be changed under paragraph (a)(4) of this section or X Corporation changes the carryover methods in accordance with paragraph (a)(5) of this section. As defined in paragraph (b)(4) of this section, the carryover methods for the radios and television sets manufacturing business are the FIFO method, the cost basis of valuation, and X Corporation's methods of accounting for section 263A costs immediately prior to the date of distribution or transfer. The carryover methods for the washing machines and dryers manufacturing business are the LIFO method, the cost basis of valuation, and T Corporation's methods of accounting for section 263A costs immediately prior to the date of distribution or transfer. There is no change in method of accounting, and X Corporation need not secure the Commissioner's consent to use any carryover method.

(ii) ***Example (2).*** Carryover method not permissible.

(A) ***Facts.*** X Corporation manufactures food and beverages and uses the FIFO method of inventory identification, the cost method of valuing its inventories, and capitalizes costs in accordance with section 263A. T Corporation sells sporting equipment. T Corporation uses the FIFO method of inventory identification and the cost method of valuing its inventories. T Corporation does not capitalize costs under section 263A because it meets the small business taxpayer exception under section 263A. X Corporation acquires the inventory of T Corporation in a transaction to which section 381(a) applies. After the date of distribution or transfer, X Corporation operates the food and beverages business as a trade or business that is separate and distinct from the sporting equipment business, and X Corporation does not qualify for the small business taxpayer exception under section 263A for its sporting equipment business.

(B) ***Conclusion.*** Because after the date of distribution or transfer X Corporation operates the food and beverages business as a separate and distinct trade or business, under paragraph (a)(2) of this section X Corporation must use the carryover methods for each continuing trade or business, unless either the carryover methods are impermissible and must be changed under paragraph (a)(4) of this section or X Corporation changes the carryover methods in accordance with paragraph (a)(5) of this section. As defined in paragraph (b)(4) of this section, the carryover methods for the food and beverages business are the FIFO method, the cost basis of valuation, and X Corporation's methods of capitalizing costs under section 263A immediately prior to the date of distribution or transfer. The carryover methods for the sporting equipment business are the FIFO method and the cost basis of valuation. There is no change in method of accounting, and X Corporation need not secure the Commissioner's consent to use any carryover method. However, because X Corporation does not qualify for the small business taxpayer exception under section 263A for its sporting equipment business, X Corporation's method of not capitalizing additional section 263A costs is an impermissible carryover

method under paragraph (a)(4) of this section. X Corporation must secure the Commissioner's consent to change to a permissible method of capitalizing costs under section 263A for the sporting equipment business as provided in paragraph (d)(2) of this section.

(b) ***Definitions.*** For purposes of this section—

(1) ***Inventory method.*** An inventory method is a method of accounting used to account for merchandise on hand (including finished goods, work in process, and raw materials) at the beginning of a year for purposes of computing taxable income for that year. The term includes not only the method for identifying inventory, for example, the FIFO inventory method or the LIFO inventory method, but also all other methods necessary to account for merchandise.

(2) ***Adoption of a method of accounting.*** Adoption of a method of accounting has the same meaning as provided in § 1.446-1(e)(1).

(3) ***Change in method of accounting.*** A change in method of accounting has the same meaning as provided in § 1.446-1(e)(2).

(4) ***Carryover method.*** A carryover method is an inventory method that each party to a section 381(a) transaction uses for each separate and distinct trade or business immediately prior to the date of distribution or transfer.

(5) ***Principal method.*** A principal method is an inventory method that is determined under paragraph (c) of this section.

(6) ***Permissible method of accounting.*** A permissible method of accounting is a method of accounting that is proper or permitted under the Internal Revenue Code or any applicable Income Tax Regulations.

(7) ***Acquiring corporation.*** An acquiring corporation has the same meaning as provided in § 1.381(a)-1(b)(2).

(8) ***Distributor corporation.*** A distributor corporation means the corporation, foreign or domestic, that distributes its assets to another corporation described in section 332(b) in a distribution to which section 332 (relating to liquidations of subsidiaries) applies.

(9) ***Transferor corporation.*** A transferor corporation means the corporation, foreign or domestic, that transfers its assets to another corporation in a transfer to which section 361 (relating to nonrecognition of gain or loss to corporations) applies, but only if—

(i) The transfer is in connection with a reorganization described in section 368(a)(1)(A), (a)(1)(C), or (a)(1)(F), or

(ii) The transfer is in connection with a reorganization described in section 368(a)(1)(D) or (a)(1)(G), provided the requirements of section 354(b) are met.

(10) ***Parties to the section 381(a) transaction.*** Parties to the section 381(a) transaction means the acquiring corporation and the distributor or transferor corporation that participate in a transaction to which section 381(a) applies.

(11) ***Date of distribution or transfer.*** The date of distribution or transfer has the same meaning as provided in section 381(b)(2) and § 1.381(b)-1(b).

(12) ***Separate and distinct trades or businesses.*** Separate and distinct trades or businesses has the same meaning as provided in § 1.446-1(d).

(13) ***Audit protection.*** Audit protection means, for purposes of paragraph (d)(1) of this section, that the IRS will not require an acquiring corporation that is required to change a method of accounting under paragraph (a)(3) of this section to change that method for a taxable year ending prior to the taxable year that includes the date of distribution or transfer.

(14) ***Section 481(a) adjustment.*** The section 481(a) adjustment means an adjustment that must be taken into account as required under section 481(a) to prevent amounts from being duplicated or omitted when the taxable income of an acquiring corporation is computed under a method of accounting different from the method used to compute taxable income for the preceding taxable year.

(15) ***Cut-off basis.*** A cut-off basis means a manner in which a change in method of accounting is made without a section 481(a) adjustment and under which only the items arising after the beginning of the year of change (or, in the case of a change made under paragraph (d)(1) of this section, after the date of distribution or transfer) are accounted for under the new method of accounting. When it implements the change on a cut-off basis, a taxpayer using the LIFO inventory method to identify its inventory goods that makes a change in method of accounting within the LIFO inventory method from one LIFO method or sub-method to another LIFO method or sub-method uses the new LIFO inventory method to determine its current-year cost and base-year cost of ending inventories for the year of change, but does not recompute the cost of beginning inventories for the year of change using the new LIFO inventory method.

(16) ***Adjustment period.*** The adjustment period means the number of taxable years for taking into account the section 481(a) adjustment required as a result of a change in method of accounting.

(17) ***Component trade or business.*** A component trade or business is a trade or business of a party to the section 381(a) transaction that will be combined and integrated with a trade or business of the other party to the section 381 transaction. See paragraph (e)(7)(ii) of this section for the determination of whether a trade or business is operated as a separate and distinct trade or business after the date of distribution or transfer.

(c) ***Principal method*** —

(1) ***In general.*** For each integrated trade or business, the principal method for a particular type of goods is generally the inventory method used by the component trade or business of the acquiring corporation immediately prior to the date of distribution or transfer for that type of goods. If, however, on the date of distribution or transfer the component trade or business of the distributor or transferor corporation holds more inventory of a type of goods than the component trade or business of the acquiring corporation, the principal method for such goods is the inventory method used by the component trade or business of the distributor or transferor corporation immediately prior to that date. For each integrated trade or business, the component trade or business of the distributor or transferor corporation holds more inventory if, for a particular type of goods, the aggregate of the fair market value of the goods held by each component trade or business of the distributor or transferor corporation exceeds the aggregate of the fair market value of the goods held by each component trade or business of the acquiring corporation immediately prior to the date of distribution or transfer. Alternatively, as a simplifying convention, the acquiring corporation may elect to apply the preceding sentence to the aggregate fair market value of the entire inventories, held by each component trade or business of the acquiring corporation and each component trade or business of the distributor or transferor corporation, that will be integrated after the date of

distribution or transfer. If the component trade or business with the larger aggregate fair market value of the entire inventories does not have an inventory method for a particular type of goods immediately prior to the date of distribution or transfer, the principal method for that type of goods is the inventory method used by the component trade or business that does have an inventory method for that type of goods.

(2) ***Multiple component trades or businesses with different principal methods.*** If a party to the section 381(a) transaction has multiple component trades or businesses and more than one principal inventory method for a particular type of goods, then the acquiring corporation may choose which of the inventory methods used by such component trades or businesses will be the principal method of the integrated trade or business. The acquiring corporation must choose a principal method that is a permissible method of accounting. In general, a change to a principal method in a transaction to which section 381(a) and paragraph (a)(3) of this section apply is made under paragraph (d)(1) of this section.

(3) ***Examples.*** The following examples illustrate the rules of this paragraph (c). Unless otherwise noted, the principal method is a permissible inventory method.

Example (1). Principal methods are the methods used by the acquiring corporation. (i) *Facts.* X Corporation and T Corporation each manufacture tennis equipment. X Corporation's manufacturing business uses the FIFO method of inventory identification, the cost method of valuing inventories, and allocates indirect costs to the property produced using the burden rate method provided in § 1.263A-1(f)(3)(i). T Corporation's manufacturing business uses the LIFO method of inventory identification, the cost method of valuing its inventories, and allocates indirect costs to the property it produces using the standard cost method provided in § 1.263A-1(f)(3)(ii). X Corporation acquires the inventory of T Corporation in a transaction to which section 381(a) applies. The fair market value of each particular type of goods held by X Corporation's manufacturing business immediately prior to the date of distribution or transfer exceeds the fair market value of each particular type of goods held by T Corporation's manufacturing business on that date. After the date of distribution or transfer, X Corporation will not operate its manufacturing business as a trade or business that is separate and distinct from T Corporation's manufacturing business.
(ii) *Conclusion.* Because after the date of distribution or transfer X Corporation will not operate its manufacturing business as a separate and distinct trade or business, X Corporation must use the principal methods under paragraph (a)(3) of this section, unless either the principal methods are impermissible and must be changed under paragraph (a)(4) of this section or X Corporation changes the principal methods in accordance with paragraph (a)(5) of this section. The fair market value of each particular type of goods held by T Corporation's manufacturing business immediately prior to the date of distribution or transfer does not exceed the fair market value of each particular type of goods held by X Corporation's manufacturing business on that date. Because on the date of distribution or transfer T Corporation's manufacturing business does not hold more inventory than X Corporation's manufacturing business, the principal methods are the FIFO method of inventory identification, the cost method of valuation, and X Corporation's method of allocating indirect

costs under section 263A using the burden rate method. X Corporation need not secure the Commissioner's consent to use these methods. However, in accordance with paragraph (d)(1) of this section, X Corporation must change the inventory methods for the manufacturing business acquired from T Corporation to the principal methods.

Example (2). Principal methods are the methods used by the acquiring corporation. (i) *Facts.* The facts are the same as in *Example* (1), except that the fair market value of each particular type of goods held by X Corporation's manufacturing business immediately prior to the date of distribution or transfer is identical to the fair market value of each particular type of goods held by T Corporation's manufacturing business on that date.
(ii) *Conclusion.* The result is the same as in *Example* (1). The principal methods are the FIFO method of inventory identification, the cost method of valuation, and X Corporation's method of allocating indirect costs under section 263A using the burden rate method. X Corporation need not secure the Commissioner's consent to use the principal methods. However, in accordance with paragraph (d)(1) of this section, X Corporation must change the inventory methods for the manufacturing business acquired from T Corporation to the principal methods.

Example (3). Principal methods are the methods used by the distributor or transferor corporation. (i) *Facts.* The facts are the same as in *Example* (1), except that the fair market value of each particular type of goods held by T Corporation's manufacturing business immediately prior to the date of distribution or transfer exceeds the fair market value of each particular type of goods held by X Corporation's manufacturing business on that date.
(ii) *Conclusion.* Because after the date of distribution or transfer X Corporation will not operate its manufacturing business as a separate and distinct trade or business, X Corporation must use the principal methods under paragraph (a)(3) of this section, unless either the principal methods are impermissible and must be changed under paragraph (a)(4) of this section or X Corporation changes the principal methods in accordance with paragraph (a)(5) of this section. The fair market value of each particular type of goods held by T Corporation's manufacturing business immediately prior to the date of distribution or transfer exceeds the fair market value of each particular type of goods held by X Corporation's manufacturing business on that date. Because on the date of distribution or transfer T Corporation's manufacturing business holds more inventory than X Corporation's manufacturing business, the principal methods are the LIFO method of inventory identification, the cost method of valuation, and T Corporation's method of allocating indirect costs under section 263A using the standard cost method. X Corporation need not secure the Commissioner's consent to use the principal methods. However, in accordance with paragraph (d)(1) of this section, X Corporation must change the inventory methods for the manufacturing business operated by X Corporation prior to the date of distribution or transfer to the principal methods.

Example (4). Voluntary change allowable. (i) *Facts.* The facts are the same as in *Example* (1), except that T Corporation wants to discontinue using the LIFO method for its manufacturing business and change to the FIFO method for the taxable year in which the section 381(a) transaction occurs or is expected to occur.
(ii) *Conclusion.* Under paragraph (a)(5) of this section, the Commissioner will grant a request to change a method of accounting for the taxable year that includes the date of distribution or transfer only if the requested method is the method that the acquiring corporation must use after the date of distribution or transfer. The Commissioner will consent to a request by T Corporation to change to the FIFO method for the taxable year in which the section 381(a) transaction occurs or is expected to occur because X Corporation will use this method after the date of distribution or transfer.

Example (5). Principal method determination when larger component trade or business does not have a method of accounting for a particular type of goods. (i) *Facts.* The facts are the same as in *Example* (1), except that T Corporation's manufacturing business has a particular type of goods that is not held by X Corporation's manufacturing business.
(ii) *Conclusion.* The result is similar to *Example* (1). In general, the principal methods are the FIFO method of inventory identification, the cost method of valuation, and X Corporation's method of allocating indirect costs to the property produced using the burden rate method. X Corporation need not secure the Commissioner's consent to use the principal methods. However, in accordance with paragraph (d)(1) of this section, X Corporation must change the inventory methods for the manufacturing business acquired from T Corporation to the principal methods. Under paragraph (c) of this section, the principal methods for the particular type of goods held only by T Corporation's manufacturing business are the LIFO method of inventory identification, the cost method of valuation, and T Corporation's method of allocating indirect costs to the property it produces using the standard cost method. X Corporation must determine whether the principal methods for the type of goods previously held by T Corporation are permissible given that such methods are different than the principal methods that must be used by X for all other goods. If X Corporation's use of the standard cost method would be impermissible after the date of distribution or transfer, X Corporation must change to a permissible method under section 263A for those goods in accordance with paragraph (a)(4) of this section.

Example (6). Inventory convention elected. (i) *Facts.* X Corporation manufactures planes and T Corporation manufactures planes and communications satellites. X Corporation's manufacturing business uses the FIFO method of inventory identification and values its inventories at cost or market, whichever is lower, while T Corporation's manufacturing business uses the LIFO method of inventory identification and values its inventories at cost. X Corporation's manufacturing business and T Corporation's manufacturing business use the same methods to capitalize costs under section 263A. X Corporation acquires the inventory

of T Corporation in a transaction to which section 381(a) applies. In lieu of determining the fair market value of each particular type of goods held on the date of distribution or transfer, X Corporation elects to value the entire inventories of its manufacturing business and the entire inventories of T Corporation's manufacturing business in accordance with paragraph (c)(1) of this section. The fair market value of the inventory held by T Corporation's manufacturing business immediately prior to the date of distribution or transfer does not exceed the fair market value of the inventory held by X Corporation's manufacturing business on that date. After the date of distribution or transfer, X Corporation will not operate its manufacturing business as a trade or business that is separate and distinct from T Corporation's manufacturing business.

(ii) *Conclusion.* Because after the date of distribution or transfer X Corporation will not operate its manufacturing business as a separate and distinct trade or business, X Corporation must use the principal methods under paragraph (a)(3) of this section, unless either the principal methods are impermissible and must be changed under paragraph (a)(4) of this section or X Corporation changes the principal methods in accordance with paragraph (a)(5) of this section. The fair market value of the entire inventory held by T Corporation's manufacturing business immediately prior to the date of distribution or transfer does not exceed the fair market value of the entire inventory of X Corporation's manufacturing business on that date. Because on the date of distribution or transfer T Corporation's manufacturing business does not hold more inventory than X Corporation's manufacturing business, the principal methods are the FIFO method, the cost or market, whichever is lower, method of valuation, and X Corporation's method of capitalizing costs under section 263A on the date of distribution or transfer. X Corporation need not secure the Commissioner's consent to use the principal methods. However, in accordance with paragraph (d)(1) of this section, X Corporation must change the inventory methods for the manufacturing business acquired from T Corporation to the principal methods.

Example (7). Principal method determination with a combined trade or business and a separate and distinct trade or business. (i) *Facts.* X Corporation manufactures tennis equipment in a trade or business that is separate and distinct from its trade or business of manufacturing golf equipment. X Corporation uses the FIFO method of inventory identification for its tennis equipment and the LIFO method of inventory identification for its golf equipment. X Corporation values the goods in both inventories at cost and allocates indirect costs to the property produced using the burden rate method provided in § 1.263A-1(f)(3)(i). T Corporation manufactures tennis equipment. T Corporation's manufacturing business uses the FIFO method of inventory identification, values inventories at cost, and allocates indirect costs to the property it produces using the standard cost method provided in § 1.263A-1(f)(3)(ii). X Corporation acquires the inventory of T Corporation in a transaction to which section 381(a) applies. Immediately prior to the date of distribution or transfer, the fair market value of T Corporation's inventories in the tennis equipment

manufacturing business exceeds the fair market value of the inventories held by X Corporation's tennis equipment manufacturing business. After the date of distribution or transfer, X Corporation will not operate its tennis equipment manufacturing business as a trade or business that is separate and distinct from T Corporation's tennis equipment manufacturing business, but X Corporation will operate its golf equipment manufacturing business as a trade or business that is separate and distinct from the tennis equipment manufacturing business.

(ii) *Conclusion.* Because after the date of distribution or transfer X Corporation will not operate its tennis equipment manufacturing business as a separate and distinct trade or business, X Corporation must use the principal methods under paragraph (a)(3) of this section, unless either the principal methods are impermissible and must be changed under paragraph (a)(4) of this section or X Corporation changes the principal methods in accordance with paragraph (a)(5) of this section. Under paragraph (c)(1) of this section, X Corporation elects to compare the fair market values of the entire inventories of the component trades or businesses on the date of distribution or transfer to determine whether T Corporation holds more inventory than X Corporation. The fair market value of the inventory held by T Corporation's tennis equipment manufacturing business exceeds the fair market value of the tennis equipment held by X Corporation's tennis equipment manufacturing business. Because on the date of distribution or transfer T Corporation's tennis equipment manufacturing business holds more inventory than X Corporation's tennis equipment manufacturing business, the principal methods for the combined tennis equipment business are the FIFO method of inventory identification, the cost basis of valuation, and T Corporation's methods of allocating indirect costs under section 263A using the standard cost method provided in § 1.263A-1(f)(3)(ii). X Corporation need not secure the Commissioner's consent to use the principal methods. However, in accordance with paragraph (d)(1) of this section, X Corporation must change the methods of accounting for its tennis equipment manufacturing business to the principal methods. Under paragraph (a)(2) of this section, because X Corporation will operate the golf equipment manufacturing business as a separate trade or business, for the inventories held by the golf equipment manufacturing business X Corporation must continue to use the LIFO method of inventory identification, use the cost basis of valuation, and allocate indirect costs under section 263A using the burden rate method provided in § 1.263A-1(f)(3)(i). There are no changes in method of accounting for the golf manufacturing business, and X Corporation need not secure the Commissioner's consent to use these carryover methods.

Example (8). Principal method determination with multiple component trades or businesses. (i) *Facts.* The facts are the same as in *Example* (7), except that after the date of distribution or transfer X Corporation will not operate the golf equipment manufacturing business as a trade or business that is separate and distinct from the tennis equipment manufacturing business. In addition, the fair market value of the inventories of X

Corporation's tennis equipment manufacturing business and golf equipment manufacturing business, in the aggregate, exceed the fair market value of the inventories of T Corporation's tennis equipment manufacturing business.
(ii) *Conclusion.* Because on the date of distribution or transfer T Corporation's tennis equipment manufacturing business does not hold more inventory than X Corporation's tennis equipment manufacturing business and golf equipment manufacturing business, in the aggregate, the principal method for identifying inventory is the method used by X Corporation's component trade or business on the date of distribution or transfer. However, because on the date of distribution or transfer X Corporation operates two separate and distinct trades or businesses with different inventory identification methods that will be combined after the date of distribution or transfer, X Corporation may choose under paragraph (c)(2) of this section which method used by its component trades or businesses will be the principal method. After the date of distribution or transfer, X Corporation may use either the FIFO method of inventory identification used by the tennis equipment manufacturing business or the LIFO method of inventory identification used by the golf equipment manufacturing business as the principal method of identification, if either method is a permissible method. For the integrated trade or business, X Corporation will use the cost method of valuation and allocate indirect costs under section 263A using the burden rate method provided in § 1.263A-1(f)(3)(i). In accordance with paragraph (d)(1) of this section, X Corporation must change the inventory methods of T Corporation's manufacturing business to the principal methods. Under paragraph (a)(3) of this section, X Corporation also must change either its golf equipment manufacturing business or its tennis equipment manufacturing business, depending on which principal method X Corporation selects, to the principal method.

(d) ***Procedures for changing a method of accounting —***

(1) ***Change made to principal method under paragraph (a)(3) of this section —***

(i) ***Section 481(a) adjustment —***

(A) ***In general.*** An acquiring corporation that changes its method of accounting or the distributor or transferor corporation's method of accounting under paragraph (a)(3) of this section does not need to secure the Commissioner's consent to use a principal method. To the extent the use of a principal method constitutes a change in method of accounting, the change in method is treated as a change initiated by the acquiring corporation for purposes of section 481(a)(2). Any change to a principal method, whether the change relates to a trade or business of the acquiring corporation or a trade or business of the distributor or transferor corporation, must be reflected on the acquiring corporation's federal income tax return for the taxable year that includes the date of distribution or transfer. The amount of the section 481(a) adjustment and the adjustment period, if any, necessary to implement a change to the principal method are determined under § 1.446-1(e) and the applicable administrative procedures that govern voluntary changes in methods of accounting under section 446(e). If the Internal Revenue Code, the Income Tax Regulations, or administrative procedures require that a method of accounting be

implemented on a cut-off basis, the acquiring corporation must implement the change, on a cut-off basis as of the date of distribution or transfer, on its federal income tax return for the taxable year that includes the date of distribution or transfer. If the Internal Revenue Code, the Income Tax Regulations, or administrative procedures require a section 481(a) adjustment, the acquiring corporation must determine the section 481(a) adjustment and include the appropriate amount of the section 481(a) adjustment on its federal income tax return for the taxable year that includes the date of distribution or transfer and subsequent taxable year(s), as necessary. This adjustment is determined by the acquiring corporation as of the beginning of the day that is immediately after the date of distribution or transfer.

(B) ***Example.*** The following example illustrates the rules of this paragraph (d)(1)(i):

Example. X Corporation uses the FIFO method of inventory identification, and T Corporation uses the LIFO method of inventory identification. X Corporation acquires the inventory of T Corporation in a transaction to which section 381(a) applies. X Corporation determines that under the rules of paragraph (c)(1) of this section, X Corporation must change the inventory method for the business acquired from T Corporation to the FIFO method. X Corporation will determine the section 481(a) adjustment pertaining to the change to the FIFO method (whether the amounts thereof represent increases or decreases in income) as of the beginning of the day that immediately follows the day on which X Corporation acquires the inventory of T Corporation. X Corporation will reflect this adjustment, or an appropriate part thereof, on its federal income tax return for the taxable year that includes the date of distribution or transfer.

(ii) ***Audit protection.*** Notwithstanding any other provision in any other Income Tax Regulation or administrative procedure, no audit protection is provided for any change in method of accounting under paragraph (d)(1) of this section.

(iii) ***Other terms and conditions.*** Except as otherwise provided in this section, other terms and conditions provided in § 1.446-1(e) and the applicable administrative procedures for voluntary changes in method of accounting under section 446(e) apply to a change in method of accounting under this section. Thus, for example, if the administrative procedures for a particular change in method of accounting have a term and condition that provides for the acceleration of the section 481(a) adjustment period, this term and condition applies to a change made under this paragraph (d)(1). However, any scope limitation in the applicable administrative procedures will not apply for purposes of making a change under this paragraph (d)(1). For example, if the administrative procedures provide as a limitation that an identical change in method of accounting is barred for a period of years, this limitation will not bar a change to the principal method made under this section.

(2) ***Change made to a method of accounting under paragraph (a)(4) or (a)(5) of this section*** —

(i) ***In general.*** A party to a section 381(a) transaction that changes a method of accounting under either paragraph (a)(4) or paragraph (a)(5) of this section must follow the provisions of § 1.446-(1)(e) and the applicable administrative procedures, including scope limitations, for voluntary changes in method of accounting under section 446(e), except as provided in paragraphs (d)(2)(ii) and (d)(2)(iii) of this section. An application on Form 3115, "Application for Change in Accounting Method," filed with the IRS to change a method of accounting under this paragraph (d)(2) should be labeled "Filed under section 381(c)(5)" at the top.

(ii) ***Final year limitation.*** Any scope limitation relating to the final year of a trade or business will not apply to a taxpayer that changes its method of accounting in the final year of a trade or business that is terminated as the result of a section 381(a) transaction.

(iii) ***Time to file.*** Under the authority of § 1.446-1(e)(3)(ii), for a change in method of accounting requiring advance consent, the application for a change in method of accounting (for example, Form 3115), must be filed with the IRS on or before the later of—

(A) The due date for filing a Form 3115 as specified in § 1.446-1(e), for example, the last day of the taxable year in which the distribution or transfer occurred, or

(B) The earlier of—

(*1*) The day that is 180 days after the date of distribution or transfer, or

(*2*) The day on which the acquiring corporation files its federal income tax return for the taxable year in which the distribution or transfer occurred.

(e) ***Rules and procedures*** —

(1) ***Inventory method selected for a particular type of goods.*** If other sections of the Internal Revenue Code or Income Tax Regulations allow a taxpayer to elect an inventory method for a particular type of goods, the method elected with respect to those goods is the established inventory method only for those goods. For example, an election to use the LIFO inventory method to identify specified goods in inventory, such as certain products in finished goods, is the inventory method only for those products.

(2) ***No method of accounting.*** If a party to a section 381(a) transaction is not using an inventory method, does not have an inventory method for a particular type of goods, or came into existence as a result of the transaction, the party will not be treated as having an inventory method different from that used by another party to the section 381(a) transaction.

(3) ***Elections and adoptions allowed.*** If an election does not require the Commissioner's consent, an acquiring corporation or a distributor or transferor corporation is not precluded from making any election that is otherwise permissible for the taxable year that includes the date of distribution or transfer. For example, an acquiring corporation may elect to identify its inventory using the LIFO inventory method in the year of the distribution or transfer. For purposes of this section, a corporation shall be deemed as having made any election as of the first day of the taxable year that includes the date of distribution or transfer. Similarly, where adoption is permissible, an acquiring corporation or a distributor or transferor corporation may adopt any permissible method of accounting for the taxable year that includes the date of distribution or transfer.

(4) ***Elections continue after section 381(a) transaction*** —

(i) ***General rule.*** An acquiring corporation is not required to renew any election not requiring renewal and previously made by it or by a distributor or transferor corporation for a carryover method or a principal method if the acquiring corporation uses the method after the section 381(a) transaction. If the acquiring corporation uses a method after the date of distribution or transfer, an election made by the acquiring corporation or by a distributor or transferor corporation for that method that was in effect on the date of distribution or transfer continues after the section 381(a) transaction as though the distribution or transfer had not occurred.

(ii) ***Example.*** The following example illustrates the rules of paragraph (e)(4):

Example. Since its incorporation in 1982, X Corporation elected to use the LIFO inventory method under section 472 to identify its inventory of tennis balls. Since its incorporation in 2002, T Corporation elected to use the FIFO inventory method to identify its inventory of tennis balls. X Corporation acquires the assets of T Corporation in a transaction to which section 381(a) applies. Immediately prior to the date of distribution or transfer, the fair market value of X Corporation's inventory in its tennis balls exceeds the fair market value of the tennis balls inventory held by T Corporation. After the date of distribution or transfer, X Corporation will not operate its business as a trade or business that is separate and distinct from T Corporation's business. Because on the date of distribution or transfer T Corporation does not hold more inventory than X Corporation, the principal method for identifying inventory is the method used by X Corporation on the date of distribution or transfer. After the date of distribution or transfer, X Corporation need not renew its election to identify inventory using the LIFO inventory method, and X Corporation is bound by the election.

(5) ***Adopting the LIFO inventory method.*** A party to a section 381(a) transaction will be deemed to be using the LIFO inventory method for a particular type of goods on the date of distribution or transfer if that party elects under section 472 to adopt that inventory method with respect to those goods for its taxable year within which the date of distribution or transfer occurs. See section 472 for the requirements to adopt the LIFO inventory method.

(6) ***Inventory layers treatment*** —

(i) ***Adjustments required after a section 381(a) transaction.*** An acquiring corporation that determines the principal method of taking an inventory after a section 381(a) transaction under paragraphs (a)(3) and (c) of this section after the date of distribution or transfer may need to integrate inventories and make appropriate adjustments as provided in paragraphs (e)(6)(ii) and (e)(6)(iii) of this section.

(ii) ***LIFO inventory method used after the section 381(a) transaction*** —

(A) ***LIFO inventory method used by the acquiring corporation and the distributor or transferor corporation*** —

(1) ***Principal method is the dollar-value LIFO method.*** If, under paragraphs (a)(3) and (c) of this section, the acquiring corporation changes its inventory method or the inventory method of the distributor or transferor corporation from the specific goods LIFO method of pricing inventories to the dollar-value LIFO method of pricing inventories (dollar-value LIFO method) for a particular type of goods, the inventory accounted for under the specific goods method shall be placed on the dollar-value method as provided in § 1.472-8(f), and then the inventory shall be integrated with the inventory previously accounted for under the dollar-value LIFO method. If pools of each corporation are permitted or required to be combined, the pools must be combined as provided in § 1.472-8(g)(2). For purposes of combining pools, all base year inventories or layers of increment that occur in taxable years including the same December 31 shall be combined. A base year inventory or layer of increment occurring in any short taxable year of a distributor or transferor corporation shall be merged with and considered a layer of increment of its immediately preceding taxable year.

(2) ***Principal method is the specific goods LIFO method.*** If, under paragraphs (a)(3) and (c) of this section, the acquiring corporation changes its inventory method or the inventory method of the distributor or transferor corporation from the dollar-value LIFO method of pricing inventories to the specific goods LIFO method of pricing inventories, the acquiring corporation shall treat the inventory being changed to the specific goods LIFO method as having the same acquisition dates and costs as such inventory had under the dollar-value LIFO method.

(B) ***Change from the FIFO inventory method to either the specific goods LIFO method or the dollar-value LIFO method.*** If, under paragraphs (a)(3) and (c) of this section, the acquiring corporation changes its inventory method or the inventory method of the distributor or transferor corporation from the FIFO inventory method to either the specific goods LIFO method or the dollar-value method of pricing LIFO inventories, the inventory accounted for under the FIFO inventory method shall be treated by the acquiring corporation as having been acquired at their average unit cost in a single transaction on the date of the distribution or transfer. Thus, if an inventory of a particular type of goods is combined in an existing dollar-value pool, the goods shall be treated as if they were purchased by the acquiring corporation at the average unit cost on the date of the distribution or transfer with respect to such pool. Alternatively, if the goods are not combined in an existing pool, the goods will be treated as if they were purchased by the acquiring corporation at the average unit cost on the date of the distribution or transfer with respect to a new pool, with the base-year being the year of the section 381(a) transaction. Adjustments resulting from a restoration to cost of any write-down to market value of the inventories shall be taken into account by the acquiring corporation ratably in each of the three taxable years beginning with the taxable year that includes the date of the distribution or transfer. See section 472(d).

(iii) ***FIFO inventory method used after the section 381(a) transaction*** —

(A) ***FIFO inventory method used by the acquiring corporation and the distributor or transferor corporation.*** If, under paragraphs (a)(3) and (c) of this section, the FIFO inventory method is the principal method and the component trades or businesses of both the acquiring corporation and the distributor or transferor corporation use the FIFO method immediately prior to the distribution or transfer, the acquiring corporation must treat the inventory that must change to the principal method as having the same acquisition dates and costs as such inventory had immediately prior to the date of distribution or transfer. However, if the principal method of valuing inventories is the cost or market, whichever is lower, method, the acquiring corporation must treat the inventories that must change to the principal method as having been acquired at cost or market, whichever is lower.

(B) ***Change from either the specific goods LIFO method or the dollar-value LIFO method to the FIFO inventory method.*** If, under paragraphs (a)(3) and (c) of this section, the acquiring corporation changes its inventory method or the inventory method of the distributor or transferor corporation from either the specific goods LIFO method or the dollar-value LIFO method to the FIFO inventory method, the acquiring corporation must treat the inventory accounted for under the LIFO method as having the same acquisition dates and costs that the inventory would have had if the FIFO inventory method had been used on the date of distribution or transfer. However, if the principal method of valuing inventories is the cost

or market, whichever is lower, method, the acquiring corporation must treat the inventories accounted for under the LIFO method as having been acquired at cost or market, whichever is lower.

(7) *Appropriate times for certain determinations* —

(i) ***Determining the inventory method.*** The inventory method used by a party to a section 381(a) transaction on the date of distribution or transfer is the method used by that party as of the end of the day that is immediately prior to the date of distribution or transfer.

(ii) ***Determining whether there are separate and distinct trades or businesses after the date of distribution or transfer.*** Whether an acquiring corporation will operate the trades or businesses of the parties to a section 381(a) transaction as separate and distinct trades or businesses after the date of distribution or transfer will be determined as of the date of distribution or transfer based upon the facts and circumstances. Intent to combine books and records of the trades or businesses may be demonstrated by contemporaneous records and documents or by other objective evidence that reflects the acquiring corporation's ultimate plan of operation, even though the actual combination of the books and records may extend beyond the end of the taxable year that includes the date of distribution or transfer.

(8) ***Establishing an inventory method.*** An inventory method used by the distributor or transferor corporation immediately prior to the date of distribution or transfer that continues to be used by the acquiring corporation after the date of distribution or transfer is an established method of accounting for purposes of section 446(e), whether or not such method is proper or is permitted under the Internal Revenue Code or any applicable Income Tax Regulations.

(9) ***Other applicable provisions.*** This section does not preempt any other provision of the Internal Revenue Code or the Income Tax Regulations that is applicable to the acquiring corporation's circumstances. Section 381(c)(5) and this § 1.381(c)(5)-1 determine only the inventory method to be used after a section 381(a) transaction. If other paragraphs of section 381(c) apply for purposes of determining the methods of accounting to be used following the date of distribution or transfer, section 381(c)(5) and this § 1.381(c)(5)-1 will not apply to the tax treatment of the items. Specifically, section 381(c)(5) and this § 1.381(c)(5)-1 do not apply to assets other than inventory that an acquiring corporation obtains in a transaction to which section 381(a) applies.

(10) ***Use of the cash receipts and disbursements method of accounting.*** If immediately prior to the date of distribution or transfer, an acquiring corporation or a distributor or transferor corporation uses the cash receipts and disbursements method of accounting within the meaning of section 446(c)(1) and § 1.446-1(c)(1)(i), or is not required to use an inventory method for its goods, section 381(c)(5) and § 1.381(c)(5)-1 do not apply. Instead, section 381(c)(4) and § 1.381(c)(4)-1 must be applied to determine the methods of accounting that continue after the transaction.

(11) ***Character of items of income and deduction.*** After the date of distribution or transfer, items of income and deduction have the same character in the hands of the acquiring corporation as they would have had in the hands of the distributor or transferor corporation if no distribution or transfer had occurred.

(12) ***Impermissible inventory method.*** This section does not limit the Commissioner's ability under section 446(b) to determine whether a taxpayer's inventory method is an impermissible method or otherwise fails to clearly reflect income. For example, an acquiring corporation may not use the method of accounting determined under paragraph (a)(2) of this section if the method fails to clearly reflect the acquiring corporation's income within the meaning of section 446(b).

(f) ***Effective/applicability date.*** This section applies to corporate reorganizations and tax-free liquidations described in section 381(a) that occur on or after August 31, 2011. The designations of paragraphs (a)(6)(ii)(A) and (B) of this section and removal of the term "small reseller" and replacement with the term "small business taxpayer" apply to taxable years beginning on or after January 5, 2021.

[T.D. 9534, 76 FR 45682, Aug. 1, 2011; 76 FR 53820, Aug. 30, 2011; T.D. 9942, 86 FR 268, Jan. 5, 2021]

§ 1.381(c)(6)-1 Depreciation method.

(a) ***Carryover requirement —***

(1) ***Distributions in taxable years ending before July 25, 1969.***

(i) Section 381(c)(6) provides that if, in a transaction in a taxable year which ends before July 25, 1969, to which section 381(a) applies, an acquiring corporation acquires depreciable property from a distributor or transferor corporation which computes its allowance for the depreciation of the property under section 167(b)(2), (3), or (4), the acquiring corporation shall compute its depreciation allowance by the same method used by the distributor or transferor corporation with respect to such property. Thus, if the distributor or transferor corporation used the sum of the years-digits method under section 167(b)(3) with respect to an asset distributed or transferred to an acquiring corporation, the acquiring corporation will be required to use the sum of the years-digits method with respect to such asset acquired. The computation of the depreciation allowance with respect to the property acquired shall be made under the provisions of section 167 and the regulations thereunder.

(ii) The rules provided in section 381(c)(6) and subdivision (i) of this subparagraph will apply only with respect to that part or all of the basis of the property in the hands of the acquiring corporation immediately after the date of distribution or transfer as does not exceed the basis of the property in the hands of the distributor or transferor corporation on the date of the distribution or transfer. For this purpose, the basis of the property in the hands of the distributor or transferor corporation shall be the adjusted basis provided in section 1011 for the purpose of determining gain on the sale or other disposition of such property. For provisions defining the date of distribution or transfer see § 1.381(b)-1(b).

(2) ***Distributions in taxable years ending after July 24, 1969.***

(i) Section 381(c)(6) provides that if, in a transaction in a taxable year ending after July 24, 1969, to which section 381(a) applies, an acquiring corporation acquires depreciable property from a distributor or transferor corporation which computes its allowances for the depreciation of the property under subsection (b), (j), or (k) of section 167, the acquiring corporation shall compute its depreciation allowance by the same method used by the distributor or transferor corporation with respect to such property. Thus, if the distributor or transferor corporation used the straight line method under section 167(b)(1) with respect to an asset distributed or transferred to an acquiring corporation, the acquiring corporation will be required to use the straight line method with respect to such asset. Similarly, if the distributor or transferor corporation elected to compute depreciation under section 167(k) with respect to property attributable to rehabilitation expenditures, and such property is transferred to an acquiring corporation, the acquiring corporation will be required to compute depreciation under section 167(k) with

respect to the property acquired. The computation of the depreciation allowance with respect to the property acquired shall be made under the provisions of section 167 and the regulations thereunder.

(ii) The rules provided in section 381(c)(6) and subdivision (i) of this subparagraph shall apply only with respect to that part or all of the basis of the property in the hands of the acquiring corporation immediately after the date of distribution or transfer as does not exceed the basis of the property in the hands of the distributor or transferor corporation on the date of the distribution or transfer. For this purpose, the basis of the property in the hands of the distributor or transferor corporation shall be the adjusted basis provided in section 1011 for the purpose of determining gain on the sale or other disposition of such property. For provisions defining the date of distribution or transfer see § 1.38(b)-1(b).

(b) ***Portion in excess of distributor or transferor corporation's basis*** —

(1) ***General rule.*** With respect to that part of the basis of the depreciable property (other than certain section 1250 property described in subparagraph (2) of this paragraph) which in the hands of the acquiring corporation exceeds the adjusted basis to the distributor or transferor corporation, the acquiring corporation may use any reasonable method of computing depreciation, other than the methods provided in section 167(b)(2), (3), or (4). See paragraph (b) of § 1.167(b)-0 for methods which are acceptable under section 167(a) with respect to such property. See also sections 334(b)(1) and 362(b) for the determination of basis of property in the hands of the acquiring corporation in connection with a transaction to which section 381(a) applies.

(2) ***Section 1250 property.*** With respect to that part of the basis of section 1250 property acquired after July 24, 1969, which in the hands of the acquiring corporation exceeds the adjusted basis to the distributor or transferor corporation, the acquiring corporation shall be subject to the limitations contained in section 167(j)(4) (relating to used section 1250 property) or 167(j)(5) (relating to used residential rental property). Thus, for example, if section 1250 property which is not residential rental property is acquired in a section 381(a) transaction after July 24, 1969, the straight line method of depreciation (or other method allowable under section 167(j)(4)(B)) is the only acceptable method with respect to that portion of the basis of the property which, in the hands of the acquiring corporation, exceeds the adjusted basis to the transferor or distributor corporation.

(c) ***Records required.*** Records shall be maintained in sufficient detail to identify any depreciable property to which this section applies, and to establish the basis thereof.

(d) ***Agreement under section 167(d).*** To the extent not inconsistent with paragraph (b) of this section, an acquiring corporation shall be treated as the distributor or transferor corporation in the case of an agreement between the distributor or transferor corporation and the district director under section 167(d) and § 1.167(d)-1 with respect to property to which section 381(c)(6) and this section apply. Thus, in the case where the basis of an asset in the hands of an acquiring corporation exceeds the basis of such asset in the hands of the distributor or the transferor corporation, such an agreement will not have the effect of permitting the acquiring corporation to compute its depreciation allowance with respect to such excess basis under the methods provided in section 167(b)(2), (3), or (4). However, the provisions of the agreement will continue to apply with respect to the useful life of the asset.

(e) ***Change of method of depreciation.*** Although the acquiring corporation is required to use the method of computing depreciation used by the distributor or transferor with respect to depreciable property to which this section applies, such acquiring corporation may use another method with respect to such property if consent of the Commissioner is obtained in accordance with paragraph (e) of § 1.446-1. Further, subject

to the provisions of paragraph (b) of § 1.167(e)-1 the acquiring corporation may change from the declining balance method described in section 167(b)(2) to the straight line method without consent of the Commissioner.

(f) ***Successive transactions to which*** section 381(a) applies. The provisions of this section shall apply in the case of successive transactions to which section 381(a) applies. Thus, for example, if X Corporation, a transferor corporation, used the sum of the years-digits method under section 167(b)(3) with respect to an asset transferred to Y Corporation, an acquiring corporation, in a transaction to which section 381(a) applies, and subsequently Y Corporation, using the same method, transfers such asset to Z Corporation in a transaction to which section 381(a) also applies, then Z Corporation shall be required to use the sum of the years-digits method with respect to such asset.

(g) ***Illustration.*** The application of this section may be illustrated by the following example:

Example. M and N Corporations compute their taxable incomes on the basis of the calendar year. On December 31, 1959, M Corporation transfers all of its assets to N Corporation in a transaction to which section 381(a) applies. Included among these assets is an item of depreciable property which on that date has an adjusted basis (for determining gain) of $800,000 after M Corporation takes into account for 1959 its allowance for depreciation under section 167(b)(2). The basis attributable to the asset under section 362(b) is determined to be $900,000 in the hands of N Corporation. Under the provisions of section 381(c)(6) and paragraph (a) of this section, N Corporation is required to compute its allowance for the depreciation of the asset under section 167(b)(2) for 1960 and subsequent years but only in respect of $800,000 of its basis. N Corporation may use any reasonable method other than the methods provided in section 167(b)(2), (3), or (4) in computing its depreciation allowance of the remaining $100,000.

[T.D. 6559, 26 FR 2983, Apr. 7, 1961, as amended by T.D. 7166, 37 FR 5246, Mar. 11, 1972; 37 FR 6400, Mar. 29, 1972]

§ 1.381(c)(8)-1 Installment method.

(a) ***Carryover requirement.***

(1) Section 381(c)(8) provides that if, in a transaction to which section 381(a) applies, an acquiring corporation acquires installment obligations, the income from which the distributor or transferor corporation has elected under section 453 and the regulations thereunder to report on the installment method, then the acquiring corporation shall be treated as the distributor or transferor corporation would have been treated under section 453 had it not transferred the installment obligations. Thus, if the distributor or transferor corporation had properly elected to return income from the sale or other disposition of property giving rise to the obligations on the installment method, then the acquiring corporation shall be required to return the income from all such installment obligations in the same manner and to the same extent as the distributor or transferor corporation, unless consent of the Commissioner to use another method is obtained in accordance with paragraph (e) of § 1.446-1. Amounts received by the acquiring corporation on or after the date of distribution or transfer with respect to an installment sale made by the distributor or transferor corporation will not be taken into account in applying the limitation under section 453(b)(2) with respect to the amount of payments received in the year of sale or other disposition.

(2) Section 381(c)(8) and this section have no application to sales or other dispositions of property made by the acquiring corporation on or after the date of distribution or transfer. For provisions defining the date of distribution or transfer, see § 1.381(b)-1(b). See section 381(c)(4) and the regulations thereunder for rules relating to the proper method or combination of methods of accounting to be used by the acquiring corporation.

(b) ***Basis of obligations.*** The basis in the hands of an acquiring corporation of installment obligations described in section 381(c)(8) and paragraph (a) of this section shall be the same as in the hands of the distributor or transferor corporation.

(c) ***Repossession of property sold in prior years.*** If the acquiring corporation repossesses property, previously sold by the distributor or transferor corporation, by reason of default by the purchaser in payment of the acquired installment obligations, then the acquiring corporation shall be treated as though it were the vendor corporation for purposes of determining, under section 453 and the regulations thereunder, the gain, loss, income, or deduction with respect to the property repossessed.

[T.D. 6559, 26 FR 2983, Apr. 7, 1961]

§ 1.381(c)(9)-1 Amortization of bond discount or premium.

(a) ***Carryover requirement.*** If, in a transaction to which section 381(a) applies, the acquiring corporation assumes liability for the payment of bonds of a distributor or transferor corporation which were issued at a discount or premium, then under the provisions of section 381(c)(9) the acquiring corporation is to be treated as the distributor or transferor corporation after the date of distribution or transfer for purposes of determining the amount of amortization allowable, or includible, with respect to such discount or premium in computing taxable income. Thus, if subsequent to February 28, 1913, a distributor or transferor corporation issues bonds at a premium and the liability for them is assumed by the acquiring corporation in a transaction to which section 381(a) applies, then the net amount of the premium is income which should be prorated or amortized over the life of the bonds, including the period during which the acquiring corporation is liable upon the obligations assumed. On the other hand, if a distributor or transferor corporation issues bonds at a discount and the liability for them is assumed by the acquiring corporation in a transaction to which section 381(a) applies, then the net amount of the discount is deductible in computing taxable income but should be prorated or amortized over the life of the bonds, including the period during which the acquiring corporation is liable upon the obligations assumed.

(b) ***Expense incurred upon issuance of bonds.*** If, in a transaction to which section 381(a) applies, the acquiring corporation assumes liability for bonds of a distributor or transferor corporation which were issued at a discount or premium, the acquiring corporation shall be treated as the distributor or transferor corporation after the date of distribution or transfer with respect to the expense incurred upon the issuance of such bonds.

(c) ***Purchase of bonds.*** If, in a transaction to which section 381(a) applies, the acquiring corporation assumes liability for bonds of a distributor or transferor corporation which were issued at a discount or premium and if the acquiring corporation subsequently purchases such bonds, then the acquiring corporation shall be treated as the distributor or transferor corporation for the purpose of determining the amount of any income or deduction resulting from the purchase. See paragraph (c) of § 1.61-12. For rules relating to the exchange or substitution of bonds issued by the acquiring corporation for bonds of a distributor or transferor corporation, see paragraph (d) of this section.

(d) ***Exchange of new for old bonds.*** Notwithstanding any other provision of this section, if—

(1) In a transaction to which section 381(a) applies, bonds of the acquiring corporation are exchanged or substituted for bonds of a distributor or transferor corporation which were issued at a discount or premium, or

(2) Bonds of the acquiring corporation are exchanged or substituted for bonds of a distributor or transferor corporation which were issued at a discount or premium and in respect of which the acquiring corporation has assumed the liability in a transaction to which section 381(a) applies,

then, with respect to any unamortized discount, premium, or expense of issuance attributable to such bonds of the distributor or transferor corporation, the acquiring corporation shall be treated as the distributor or transferor corporation.

(e) ***Bonds of a distributor or transferor corporation.*** For purposes of applying section 381(c)(9), the term *bonds of a distributor or transferor corporation* includes not only bonds issued by the distributor or transferor corporation but also bonds for which the distributor or transferor corporation has assumed liability. Thus, if the distributor or transferor corporation has assumed liability for bonds in a transaction in which any unamortized discount or premium attributable to such bonds carried over to such corporation, then the acquiring corporation assuming liability for the bonds shall be treated as the distributor or transferor corporation after the date of distribution or transfer for purposes of determining the amount of amortization allowable, or includible, with respect to such discount or premium. On the other hand, if the distributor or transferor corporation has assumed liability for bonds in a transaction in which any unamortized discount or premium attributable to such bonds did not carry over to such corporation, then there can be no carryover to the acquiring corporation under this section.

[T.D. 6532, 26 FR 405, Jan. 19, 1961]

§ 1.381(c)(10)-1 Deferred exploration and development expenditures.

(a) ***Carryover requirement.***

(1) If for any taxable year a distributor or transferor corporation has elected under section 615 or section 616 (or corresponding provisions of prior law) to defer and deduct on a ratable basis any exploration or development expenditures made in connection with any ore, mineral, mine, or other natural deposit transferred to the acquiring corporation in a transaction described in section 381(a), then under the provisions of section 381(c)(10) the acquiring corporation shall be entitled to deduct such expenditures on a ratable basis in the same manner, and to the same extent, as they would have been deductible by the distributor or transferor corporation in the absence of the distribution or transfer. For this purpose, the acquiring corporation shall be treated as though it were the distributor or transferor corporation. The principles set forth in paragraph (e) of § 1.615-3 and paragraph (f) of § 1.616-2 are applicable in computing the amount of the deduction allowable to the acquiring corporation in respect of expenditures deferred by a distributor or transferor corporation.

Example. X and Y Corporations are both organized on January 1, 1955, and both corporations compute their taxable income on the basis of the calendar year. During 1955, X Corporation purchases a mineral property which it begins to develop in 1956. During 1956, X Corporation incurs development expenditures of $500,000 in respect of such property which it elects to defer under section 616(b). On December 31, 1956, Y Corporation acquires all of the assets of X Corporation in a reorganization to which section 381(a) applies, no gain being recognized to X Corporation on the transfer. In 1957, Y Corporation sells 150,000 units of produced ore benefited by the development expenditures incurred and deferred by X Corporation, and the

number of units remaining as of the end of 1957, plus the number of units sold during that year, is estimated to be 1,000,000. In addition to its deduction for depletion, Y Corporation is, in 1957, entitled to a deduction under sections 616(b) and 381(c)(10) of $75,000 of the development expenditures previously deferred by X Corporation, that is, $500,000 × 150,000/1,000,000.

(2) If a distributor or transferor corporation has elected under section 615 or section 616 (or corresponding provisions of prior law) to defer exploration or development expenditures in respect of a mine or other natural deposit which it subsequently disposes of except for a retained economic interest therein, such as the right to royalty income or in-ore payments, and such retained economic interest is transferred to the acquiring corporation in a transaction to which section 381(a) applies, then the acquiring corporation shall be entitled to deduct such deferred expenditures attributable to the economic interest retained on a ratable basis to the same extent they would have been deductible by the distributor or transferor corporation in the absence of the distribution or transfer. See paragraph (c) of § 1.615-3 and paragraph (c) of § 1.616-2.

(3) For purposes of this section, the terms *exploration expenditures* and *development expenditures* shall have the same meaning as that ascribed to them in the regulations under sections 615 and 616 of the Internal Revenue Code of 1954, or under sections 23(cc) and 23(ff) of the Internal Revenue Code of 1939, whichever applies. See, for example, paragraph (a) of § 1.615-1 and paragraph (a) of § 1.616-1.

(b) ***Effect and identification of election previously made.***

(1) The election made by a distributor or transferor corporation under the provisions of section 615 or section 616 (or corresponding provisions of prior law) to defer exploration or development expenditures in respect of any taxable year may not be revoked by the acquiring corporation for any reason whatsoever.

(2) When filing its return for the first taxable year for which it deducts exploration or development expenditures which were deferred under section 615 or section 616 (or corresponding provisions of prior law) by a distributor or transferor corporation, the acquiring corporation shall attach thereto a statement properly identifying the taxable year for which the election to defer was made by the distributor or transferor corporation, the name of the corporation which made the election, and the district director with whom the election was filed.

(3) It is unnecessary for an acquiring corporation to renew an election to defer exploration or development expenditures which was made by a distributor or transferor corporation.

(c) ***Successive transactions to which section 381(a) applies.*** If, by virtue of section 381(c)(10), the acquiring corporation is entitled to deduct exploration or development expenditures deferred by a distributor or transferor corporation, then such acquiring corporation shall be deemed to have made the election to defer such expenditures for purposes of applying section 381(c)(10) to any subsequent transaction in which such acquiring corporation is a distributor or transferor corporation.

(d) ***Carryover of limitation requirements.***

(1) If a distributor or transferor corporation transfers any mineral property to the acquiring corporation in a transaction described in section 381(a) and the acquiring corporation pays or incurs exploration expenditures in a taxable year ending after the date of the distribution or transfer, then in applying the 4-year or $400,000 limitations described in section 615(c) and paragraphs (a) and (b) of § 1.615-4, whichever is applicable, the acquiring corporation shall be deemed to have been allowed any deduction which, for any taxable year ending on or before the date of distribution or transfer, was

allowed to the distributor or transferor corporation under section 615(a), or under section 23(ff)(1) of the Internal Revenue Code of 1939, or to have made any election which, for any such preceding year, was made by the distributor or transferor corporation under section 615(b), or under section 23(ff)(2) of the Internal Revenue Code of 1939. Thus, in such instance, the acquiring corporation shall take into account the years in which the distributor or transferor corporation exercised the election to deduct or defer exploration expenditures and any amounts so deducted or deferred. For this purpose, it is immaterial whether the deduction has been allowed to, or the election has been made by, the distributor or transferor corporation with respect to the specific mineral property transferred by that corporation to the acquiring corporation.

(2) Generally, for purposes of applying the 4-year limitation described in paragraph (a) of § 1.615-4, if there are two or more distributor or transferor corporations that transfer any mineral property to the acquiring corporation, each taxable year of any such corporation ending on or before the date of distribution or transfer in which exploration expenditures were deducted or deferred shall be treated as a separate taxable year regardless of the fact that the taxable years of two or more such corporations normally end on the same date. However, if the date of distribution or transfer is the same with respect to more than one distributor or transferor corporation, then the taxable years of such corporations ending on the same date of distribution or transfer shall be considered as one taxable year for purposes of applying the 4-year limitation even though more than one such corporation deducted or deferred exploration expenditures for such taxable years.

(3) For purposes of applying the $400,000 limitation described in paragraph (b) of § 1.615-4, if there are two or more distributor or transferor corporations that transfer any mineral property to the acquiring corporation, any exploration expenditures which were deducted or treated as deferred expenses by such corporations for taxable years ending after December 31, 1950, shall be taken into account by the acquiring corporation.

(4) If a distributor or transferor corporation that transfers any mineral property to the acquiring corporation was required to take into account any taxable years or amounts of its transferor, as provided by paragraph (e) of § 1.615-4, for purposes of either the 4-year limitation described in paragraph (a) of § 1.615-4 or the $400,000 limitation described in paragraph (b) of § 1.615-4, then the acquiring corporation shall also take these taxable years and amounts into account in applying the same limitations.

(5) The provisions of this paragraph may be illustrated by the following examples:

Example 1. M and N Corporations were organized on January 1, 1956, and each corporation computes its taxable income on the basis of the calendar year. For each of its taxable years 1956 and 1957, M Corporation expended $60,000 for exploration expenditures and exercised the option to deduct such amounts under section 615(a). N Corporation made no exploration expenditures during its taxable years 1956 and 1957. On December 31, 1957, M Corporation transferred all of its assets to N Corporation in a transaction to which section 381(a) applies, no gain being recognized to the transferor corporation on the transfer. N Corporation made exploration expenditures of $100,000, $120,000, $110,000, and $100,000 for the years 1958, 1959, 1960, and 1961, respectively, which expenditures it desired to deduct under section 615(a) to the extent allowable. On the basis of these facts, N Corporation may deduct up to $100,000 for each of the years 1958 and 1959. No deduction or deferral is allowable for 1960 since the benefits of section 615(c) were previously availed of for 4 taxable years. However, N Corporation may deduct $80,000 for 1961 (the 4-year limitation not applying to such year) but, if such deduction is made, N Corporation will not be allowed any further deductions or deferrals since the $400,000 limitation of paragraph (b) of § 1.615-4 will have been reached.

Example 2. R and S Corporations were organized on January 1, 1955, and each corporation computes its income on the basis of the calendar year. For the 1955 taxable year neither corporation made any exploration expenditures under section 615(a). On June 30, 1956, R Corporation transferred all its assets to S Corporation in a transaction to which section 381(a) applies, no gain being recognized to the transferor corporation on the transfer. During its short taxable year ending June 30, 1956, R Corporation made exploration expenditures of $60,000 which it elected to deduct under section 615. For its taxable year ending December 31, 1956, S Corporation may deduct or defer exploration expenditures up to $100,000 since this is a separate election for purposes of utilizing section 615 and is not affected by the $60,000 previously deducted by R Corporation. Assuming S Corporation exercises an election under section 615 for its taxable year ending December 31, 1956, S Corporation may elect to apply the benefits of section 615 to exploration expenditures for two more taxable years. However, for taxable years beginning after July 6, 1960 (the 4-year limitation not applying), S Corporation is entitled under section 615 to deduct or defer exploration expenditures made in such years to the extent that the combined deductions and deferrals by R and S Corporations in prior years did not exceed $400,000.

Example 3. O and P Corporations were organized on January 1, 1955, and each corporation computes its taxable income on the basis of the calendar year. For their taxable years 1955, 1956, and 1957, each corporation deducted exploration expenditures made in such years under section 615(a). On June 30, 1958, O Corporation transferred all its assets to P Corporation in a transaction to which section 381(a) applies, no gain being recognized to the transferor corporation on the transfer. If, during its short taxable year ending June 30, 1958, O Corporation made additional exploration expenditures, it may deduct or defer such expenditures (up to $100,000) under section 615 since O Corporation has utilized section 615 in only three previous taxable years. For its taxable years ending after June 30, 1958, and beginning before July 7, 1960, P Corporation may not deduct or defer exploration expenditures under section 615, since the benefits of that section were utilized by O and P Corporations for 4 taxable years. However, for taxable years beginning after July 6, 1960 (the 4-year limitation not applying), P is entitled under section 615 to deduct or defer exploration expenditures made in such years to the extent that the combined deductions and deferrals by O and P Corporations in prior years do not exceed $400,000. See paragraph (b) of § 1.615-4.

Example 4. X, Y, and Z Corporations were organized on January 1, 1955, and each corporation computes its taxable income on the basis of the calendar year. For their taxable years ending December 31, 1955, X and Y Corporations each deferred $100,000 for exploration expenditures made in such taxable years under section 615(b). Z Corporation made no exploration expenditures during its taxable year ending December 31, 1955. On March 31, 1956, X and Y Corporations transferred all their assets to Z Corporation in a transaction to which section 381(a) applies, no gain being recognized to the transferor corporations on the transfer. X and Y Corporations each made exploration expenditures of $75,000 during their short taxable years ending March 31, 1956, which they deducted under section 615(a). For purposes of taxable years beginning before July 7, 1960, Z Corporation must take into account the taxable years in which X and Y Corporations deducted or deferred exploration expenditures. In so doing, each taxable year in which exploration expenditures were deducted or deferred must be taken into account except that the taxable years of X and Y Corporations ending on March 31, 1956, shall be considered as one taxable year. Therefore, Z Corporation may deduct or defer exploration expenditures in accordance with section 615 for any one taxable year ending after March 31, 1956, and beginning before July 7, 1960. However, for taxable years beginning after July 6, 1960 (the 4-year limitation not applying), Z Corporation must take into account for purposes of the $400,000 limitation all of the $350,000 of exploration expenditures deducted or deferred by X, Y, and Z Corporations during taxable years ending after December 31, 1950. Therefore, Z

Corporation, assuming it has not deducted or deferred any exploration expenditures, is entitled under section 615 to deduct or defer in taxable years beginning after July 6, 1960, up to $50,000 for exploration expenditures made in such years.

Example 5. For purposes of this example, assume that each taxpayer computes taxable income on the basis of the calendar year. Taxpayer A, an individual who has deducted exploration expenditures of $75,000 under section 23(ff) of the Internal Revenue Code of 1939 for each of his taxable years 1952 and 1953, transferred a mineral property to K Corporation on January 1, 1954, in a transaction in which the basis of the mineral property in the hands of K Corporation is determined under section 362(a). For its taxable year 1954 and pursuant to section 615(a)., K Corporation deducted exploration expenditures of $100,000 which it made in such year. K Corporation had made no exploration expenditures in any preceding taxable year. On December 31, 1954, K Corporation transferred all its assets to L Corporation in a reorganization to which section 381(a) applies, no gain being recognized to the transferor corporation on the transfer. Assuming that L Corporation has not deducted or deferred exploration expenditures in any preceding taxable year, L Corporation may deduct or defer exploration expenditures (up to $100,000) in accordance with section 615 for any one taxable year ending after December 31, 1954, and beginning before July 7, 1960, in view of the 4-year limitation. However, if L Corporation does not deduct or defer exploration expenditures in that period, then for taxable years beginning after July 6, 1960 (the 4-year limitation not applying), L Corporation is entitled to deduct or defer up to $150,000 (but not to exceed $100,000 per year) for exploration expenditures made in such years. See paragraph (b) of § 1.615-4.

[T.D. 6552, 26 FR 1988, Mar. 8, 1961, as amended by T.D. 6685, 28 FR 11406, Oct. 24, 1963]

§ 1.381(c)(11)-1 Contributions to pension plan, employees' annuity plans, and stock bonus and profit-sharing plans.

(a) ***Carryover requirement.*** Section 381(c)(11) provides that, for purposes of determining amounts deductible under section 404 for any taxable year, the acquiring corporation shall be considered after the date of distribution or transfer to be the distributor or transferor corporation in respect of any pension, annuity, stock bonus, or profit-sharing plan.

(b) ***Nature of carryover.***

(1) Primarily, section 381(c)(11) and this section apply to the amount of any unused deductions or excess contributions carryovers which, in the absence of the transaction causing section 381 to apply, would have been available to the distributor or transferor corporation under section 404. Thus, for example, this section applies to unused deductions under a profit-sharing or stock bonus trust which, in accordance with the second sentence of section 404(a)(3)(A), would have been available in succeeding taxable years to the transferor corporation if the transfer of assets to the acquiring corporation had not occurred.

(2) Section 381(c)(11) also permits or requires the acquiring corporation to be treated as though it were the distributor or transferor corporation for the purpose of satisfying any conditions which would have been required of the distributor or transferor corporation in the absence of the distribution or transfer, so that it may be determined whether the distributor or transferor corporation, or the acquiring corporation, is entitled to take a deduction under section 404 in respect of a trust or plan established by the distributor or transferor corporation. Thus, for example, in a case when the taxable year of the transferor corporation ends on the date of transfer pursuant to section 381(b)(1), that corporation is entitled, pursuant to the provisions of section 404(a)(6) and paragraph (c) of § 1.404(a)-1, to a deduction in such taxable year for a payment to a qualified trust of that corporation

made by the acquiring corporation after the close of such taxable year but within the time specified in section 404(a)(6). In further illustration, if the transferor corporation were to establish a qualified plan, and if the plan were maintained as a qualified plan by the acquiring corporation, then any contributions paid under the plan by the acquiring corporation (other than those which are deductible by the transferor corporation by reason of section 404(a)(6)) would be deductible under section 404 by the acquiring corporation even though the plan were exclusively for the benefit of former employees of the transferor corporation. Also, for example, if the transferor corporation were to adopt an annuity plan during its taxable year ending on the date of transfer, the acquiring corporation would be entitled, subject to the provisions of section 401(b), to amend the plan so as to make it retroactively satisfy the requirements of section 401(a)(3), (4), (5), and (6) for the period beginning with the date on which the plan was put into effect.

(c) ***Taxable year of deduction.*** The first taxable year of the acquiring corporation in which any amount shall be allowed as a deduction to that corporation by reason of section 381(c)(11) and this section shall be its first taxable year ending after the date of distribution or transfer.

(d) ***Requirements for deductions.***

(1) In order for any amount paid by the acquiring corporation (other than amounts deductible under section 404(a)(5)) to be deductible by the acquiring corporation by reason of this section in respect of a trust or nontrusteed annuity plan which is established by a distributor or transferor corporation and maintained by the acquiring corporation, the contributions must be paid (or deemed to have been paid under section 404(a)(6)) by the acquiring corporation in a taxable year of that corporation which ends with or within a year of the trust for which it is exempt under section 501(a), or, in the case of a nontrusteed annuity plan, for which it meets the requirements of section 404(a)(2). See, however, section 404(a)(4) and § 1.404(a)-11 for rules relating to deductions for contributions to foreign-situs trusts. The trust or plan which is established by the distributor or transferor corporation and maintained by the acquiring corporation may separately satisfy the requirements of section 401(a) or section 404(a)(2) or may, together with other trusts or plans of the acquiring corporation, constitute a single plan which qualifies under section 401(a) or meets the requirements of section 404(a)(2).

(2) Excess contributions paid under a qualified trust or plan established by the transferor or distributor corporation may be carried over and, subject to the applicable limitations, deducted by the acquiring corporation in a taxable year ending after the date of distribution or transfer regardless of whether the trust is exempt, or the plan meets the requirements of section 404(a)(2), during such taxable year. There are, however, special rules for computing the limitations on the amount of excess contributions which are deductible in a taxable year ending after the trust or plan has terminated (see paragraph (a) of § 1.404(a)-13). For this purpose, the pension, annuity, stock bonus, or profit-sharing plan of the distributor or transferor corporation under which the excess contributions were made shall be considered continued (and not terminated) by the acquiring corporation if, after the date of distribution or transfer, the acquiring corporation continues the plan as a separate and distinct plan of its own which continues to qualify under section 401(a), or to meet the requirements of section 404(a)(2), or consolidates or replaces that plan with a comparable plan. See subparagraph (4) of this paragraph for rules relating to what constitutes a “comparable” plan.

(3) In order for any amount paid by the acquiring corporation to be deductible by the acquiring corporation as an unused deduction carried over from a qualified profit-sharing or stock bonus trust established by a distributor or transferor corporation, the acquiring corporation must continue such trust established by the distributor or transferor corporation as a separate and distinct trust of its

own which continues to qualify under section 401(a), or must consolidate or replace that trust with a comparable trust. In addition, the amount paid by the acquiring corporation will be deductible as an unused deduction carried over from the transferor or distributor corporation only if it is paid into the profit-sharing or stock bonus trust established by the transferor or distributor corporation, or the comparable trust, in a taxable year of the acquiring corporation which ends with or within a year of such trust (or such comparable trust) for which it meets the requirements of section 401(a) and is exempt under section 501(a). See subparagraph (4) of this paragraph for rules relating to what constitutes a "comparable" trust.

(4) For purposes of subparagraphs (2) and (3) of this paragraph, a plan under which deductions are determined pursuant to paragraph (1) or (2) of section 404(a) shall be considered comparable to another plan under which deductions are determined pursuant to either of those paragraphs, and a plan under which deductions are determined pursuant to paragraph (3) of section 404(a) shall be considered comparable to another plan under which deductions are determined pursuant to such paragraph (3). Thus, a profit-sharing plan (which qualifies under section 401(a)) established by the transferor or distributor corporation shall, for purposes of subparagraphs (2) and (3) of this paragraph, be considered terminated if, after the date of distribution or transfer, the acquiring corporation transfers the funds accumulated under the profit-sharing plan into a pension plan covering the same employees. In such a case, excess contributions paid under the profit-sharing plan by the distributor or transferor corporation may be carried over and deducted by the acquiring corporation in a taxable year ending after the date of distribution or transfer subject to the limitations in section 404(a)(3)(A). On the other hand, unused deductions attributable to the profit sharing plan may not be carried over and used by the acquiring corporation as a basis for deducting amounts contributed by it to the pension plan.

(e) ***Effect of consolidation or replacement of plan on prior contributions.*** If a pension, annuity, stock bonus, or profit-sharing plan which was established by a distributor or transferor corporation is terminated after the date of distribution or transfer because of consolidation or replacement with a comparable plan of the acquiring corporation, then the contributions paid to or under its plan by the distributor or transferor corporation on or before the date of distribution or transfer shall not be disallowed under section 404 merely because of the termination of the plan which was established by that corporation, provided that the termination does not cause the plan to fail to qualify under section 401(a).

(f) ***Amounts deductible under section 404.*** Section 381(c)(11) and this section apply only to amounts which are otherwise deductible under section 404 and the regulations thereunder. See §§ 1.404(a)-1 through 1.404(d)-1. Thus, to be deductible by reason of this section, contributions paid by the acquiring corporation must be expenses which otherwise satisfy the conditions of section 162 (relating to trade or business expenses). No deduction shall be allowed by reason of section 381(c)(11) and this section for a contribution which is allowable under section 162 but is not allowable under section 404. Thus, the acquiring corporation shall not be allowed a deduction by reason of this section in respect of a plan established by a distributor or transferor corporation if the contribution would not otherwise be deductible under section 404 by reason of section 404(c) and § 1.404(c)-1. On the other hand, any unused deductions or excess contributions of a distributor or transferor corporation which are carried over from 1939 Code years shall be deductible by the acquiring corporation if the requirements of this section, section 404(d), and § 1.404(d)-1 are satisfied.

(g) ***Cost of past service credits.*** In computing the cost of past service credits under a plan with respect to employees of the distributor or transferor corporation, the acquiring corporation may include the cost of credits for periods during which the employees were in the service of the distributor or transferor corporation.

(h) ***Separate carryovers required.*** The excess contributions which are available to a distributor or transferor corporation under the provisions of section 404(a)(1)(D) and section 404(a)(3)(A) at the close of the date of distribution or transfer and are carried over to the acquiring corporation under this section shall be kept separate and distinct from each other and from any excess contributions which are available to the distributor or transferor corporation at that time under the provisions of section 404(a)(7) and are carried over to the acquiring corporation under this section. If there are excess contributions carried over to the acquiring corporation from more than one transferor or distributor corporation, the excess contributions of each transferor or distributor corporation shall be kept separate and distinct from those of the other transferor or distributor corporations and, with respect to each such transferor or distributor corporation, shall be kept separate and distinct as provided in the preceding sentence. See, however, paragraph (i) of this section for rules for applying the provisions of section 404(a)(3)(A) when the acquiring corporation maintains two or more profit-sharing or stock bonus trusts, one or more of which was established by a distributor or transferor corporation. The requirements in this paragraph shall apply with respect to any excess contributions which are carried over to the acquiring corporation from a distributor or transferor corporation under the provisions of section 404(d) and this section.

(i) ***Limitations applicable to profit-sharing or stock bonus trusts.*** When contributions are paid by the acquiring corporation after the date of distribution or transfer to two or more profit-sharing or stock bonus trusts, and one or more of such trusts was established by a distributor or transferor corporation, such trusts shall be considered as a single trust in applying the provisions of section 404(a)(3)(A) under this section. Accordingly, in determining its secondary limitation, and its excess contributions carryover, under section 404(a)(3)(A) in any taxable year ending after the date of distribution or transfer, the acquiring corporation shall take into accounts its primary limitations, and the deductions allowed or allowable to it, for all prior years under the limitations provided in those sections, and also the primary limitations of, and deductions allowed or allowable to, the distributor or transferor corporation or corporations for all prior years under the limitations provided in those sections.

(j) ***Successive carryovers.*** The provisions of section 381(c)(11) and this section shall apply to an acquiring corporation which, in a distribution or transfer to which section 381(a) applies acquires the assets of a distributor or transferor corporation which has previously acquired the assets of another corporation in a transaction to which section 381(a) applies, even though, in computing an unused deductions or excess contributions carryover to the second acquiring corporation, it is necessary to take into account contributions paid by, and limitations applicable to, the first distributor or transferor corporation.

(k) ***Information to be furnished by acquiring corporation.*** The acquiring corporation shall furnish such information with respect to a plan established by a distributor or transferor corporation as will, consistently with the principles of section 404, establish that the provisions of such section and this section apply. For purposes of this section, the district director may require any other information that he considers necessary to determine deductions allowable under section 404 and this section or qualification under section 401. Any unused deductions or excess contributions carried over from a distributor or transferor corporation pursuant to this section shall be properly identified with the corporation which would have been permitted to use those deductions or contributions in the absence of the transaction causing section 381 to apply.

(l) ***Illustration.*** The application of this section may be illustrated by the following example:

Example. In 1955, X Corporation, which makes its return on the basis of the calendar year, paid $400,000 to completely fund past service credits under a qualified pension plan and deducted 10 percent ($40,000) of that cost in each of the taxable years 1955, 1956, and 1957. The pension plan established by X Corporation had an anniversary date of January 1. On December 31, 1957, on which date the undeducted

part of the cost amounted to $280,000, X Corporation transferred all its assets to Y Corporation in a statutory merger to which section 361 applies. Y Corporation, which also makes its return on the basis of the calendar year, had a qualified pension plan and trust which also had an anniversary date of January 1. Since Y Corporation had many more employees than X Corporation on the date of transfer, it covered the former employees of X Corporation under its own plan. Y Corporation is entitled to deductions under section 404(a)(1)(D) and this section in 1958 and succeeding taxable years, in order of time, with respect to the undeducted balance of $280,000, to the extent of the difference between the amount paid and deductible by that corporation in each such taxable year and the maximum amount deductible by that corporation for such taxable year in accordance with the applicable limitations of section 404(a)(1). In computing the maximum amount deductible by Y Corporation for 1958 and 1959 under section 404(a)(1)(C), that corporation may include $40,000 for each year, the amount that X Corporation could have included for each of those years in computing the maximum amount that would have been deductible by X Corporation under section 404(a)(1)(C) if the merger had not occurred. Thus, assuming that Y Corporation's appropriate limitation so computed under section 404(a)(1)(C) is $1,000,000 (including the $40,000 carried over from X Corporation under this section) for each of those taxable years, and that Y Corporation contributed $925,000 to its trust in 1958 and $975,000 in 1959, then Y Corporation is entitled under section 404(a)(1)(D) and this section to deduct in 1958 $75,000, and in 1959 $25,000, of the amount ($280,000) carried over from X Corporation. The undeducted balance of such amount ($180,000) available to Y Corporation on December 31, 1959, would be deductible by that corporation in succeeding taxable years in accordance with section 404(a)(1)(D) and this section.

[T.D. 6556, 26 FR 2405, Mar. 22, 1961, as amended by T.D. 7168, 37 FR 5024, Mar. 9, 1972; T.D. 9849, 84 FR 9233, Mar. 14, 2019]

§ 1.381(c)(12)-1 Recovery of bad debts, prior taxes, or delinquency amounts.

(a) ***Carryover requirement.***

(1) If, as a result of a distribution or transfer to which section 381(a) applies, the acquiring corporation is entitled to the recovery of a bad debt, prior tax, or delinquency amount on account of which a deduction or credit was allowed to a distributor or transferor corporation for a prior taxable year, and such debt, tax, or amount is recovered by the acquiring corporation after the date of distribution or transfer, then under the provisions of section 381(c)(12) the acquiring corporation is required to include in its gross income for the taxable year of recovery the same amount of income attributable to the recovery as the distributor or transferor corporation would have been required to include under section 111 and the regulations thereunder had the distribution or transfer not occurred.

(2) The rule prescribed by paragraph (a)(1) of this section and by section 381(c)(12) with respect to bad debts, prior taxes, and delinquency amounts applies equally with respect to the recovery by the acquiring corporation of all other losses, expenditures, and accruals made on the basis of deductions from the gross income of a distributor or transferor corporation for prior taxable years, including war losses referred to in section 127 of the Internal Revenue Code of 1939, but not including deductions with respect to depreciation, depletion, amortization, or amortizable bond premiums. An item which is not a “section 111 item” for purposes of the regulations under section 111 is not subject to the provisions of section 381(c)(12). The provisions of section 111(c) shall be applied with respect to a recovery by the acquiring corporation in the same manner as they would have been applied by the distributor or transferor corporation.

(b) ***Amount of recovery exclusion allowable for year of recovery.*** For the year of any recovery by the acquiring corporation, the amount of the recovery exclusion for the original taxable year shall be determined in accordance with paragraph (b) of § 1.111-1. For the purpose of this paragraph and section 381(c)(12), the recovery exclusion for any year with respect to section 111 items of the acquiring corporation shall be kept separate from the recovery exclusion for any year with respect to section 111 items of each distributor or transferor corporation. The recovery by the acquiring corporation of any section 111 item of such corporation after the date of the distribution or transfer shall be considered separately from recoveries by the acquiring corporation of any such item which was deducted or credited by a distributor or transferor corporation. Any recovery by the acquiring corporation of a section 111 item shall be excluded from the gross income of the acquiring corporation to the extent of the recovery exclusion

(1) determined for the original year for which that item was deducted or credited by the specific corporation which claimed the deduction or credit and

(2) reduced by the excludable recoveries (whether made by the acquiring corporation, or by the distributor or transferor corporation) in intervening years with respect to the recovery exclusion of such corporation for such original year. There shall be taken into account the effect of net operating loss carryovers and carrybacks or capital loss carryovers.

(c) ***Illustration of carryover of recovery exclusion*** —

(1) ***Facts.***

(i) The application of section 381(c)(12) may be illustrated by the following example. M and N Corporations are both organized on January 1, 1957, and both corporations compute their taxable income on the basis of the calendar year. On December 31, 1959, M Corporation transfers all its assets to N Corporation in a reorganization to which section 381(a) applies.

(ii) The section 111 items of the two corporations for the following taxable years are as follows, identification of such items being made by an appropriate letter:

Taxable year of deduction or credit	M Corporation (transferor)	N Corporation (acquirer)
1957	$500(g)	$200(h)
1958	300(i)	400(j)
1959	600(k)	100(m)

(iii) The recovery exclusions in respect of such taxable years, computed in accordance with § 1.111-1(b)(2), are assumed to be as follows:

Taxable year	M Corporation (transferor)	N Corporation (acquirer)
1957	$400	$150
1958	200	300

Taxable year	M Corporation (transferor)	N Corporation (acquirer)
1959	500	75

(iv) The recoveries of the above-mentioned section 111 items by the two corporations are as follows:

Taxable year of recovery	M Corporation (transferor)	N Corporation (acquirer)
1958	$25 (g)	$50 (h)
1959	50 (g)	20 (h)
	30 (i)	15 (j)
1960		350 (g)
		225 (i)
		550 (k)
		100 (h)
		350 (j)
		85 (m)

(2) *M Corporation's 1958 recovery.*

Total recovery of section 111 items for 1957	$25
Less: Recovery exclusion for 1957	400
Amount included in gross income of M Corporation for 1958	0

(3) *M Corporation's 1959 recoveries.*

(i) Total recovery of section 111 items for 1957		$50
Less: Recovery exclusion for 1957	$400	
Minus excludable recovery	25	
		375
Amount included in gross income of M Corporation for 1959		0
(ii) Total recovery of section 111 items for 1958		30
Less: Recovery exclusion for 1958		200

Amount included in gross income of M Corporation for 1959	0

(4) *N Corporation's 1958 recovery.*

Total recovery of section 111 items for 1957	$50
Less: Recovery exclusion for 1957	150
Amount included in gross income of N Corporation for 1958	0

(5) *N Corporation's 1959 recoveries.*

(i) Total recovery of section 111 items for 1957		$20
Less: Recovery exclusion for 1957	$150	
Minus excludable recovery in 1958	50	
		100
Amount included in gross income of N Corporation for 1959		0
(ii) Total recovery of section 111 items for 1958		15
Less: Recovery exclusion for 1958		300
Amount included in gross income of N Corporation for 1959		0

(6) *N Corporation's 1960 recoveries.*

(i) Total recovery of section 111 items of M Corporation for 1957			$350
Less: Recovery exclusion of M Corporation for 1957			$400
Minus:			
Excludable recovery in 1959	$50		
Excludable recovery in 1958	25		
		75	
			325
Amount included in gross income of N Corporation for 1960			25
(ii) Total recovery of section 111 items of M Corporation for 1958			225
Less: Recovery exclusion of M Corporation for 1958		$200	
Minus excludable recovery in 1959		30	

			170
Amount included in gross income of N Corporation for 1960			55
(iii) Total recovery of section 111 items of M Corporation for 1959			550
Less: Recovery exclusion of M Corporation for 1959			500
Amount included in gross income of N Corporation for 1960			50
(iv) Total recovery of section 111 items of N Corporation for 1957			100
Less: Recovery exclusion of N Corporation for 1957		$150	
Minus:			
Excludable recovery in 1959	$20		
Excludable recovery in 1958	50		
		70	
			80
Amount included in gross income of N Corporation for 1960			20
(v) Total recovery of section 111 items of N Corporation for 1958			$350
Less: Recovery exclusion of N Corporation for 1958		$300	
Minus excludable recovery in 1959		15	
			285
Amount included in gross income of N Corporation for 1960			65
(vi) Total recovery of section 111 items of N Corporation for 1959			85
Less: Recovery exclusion of N Corporation for 1959			75
Amount included in gross income of N Corporation for 1960			10

(7) *Summary of recoveries included in gross income of N Corporation for 1960.*

(i) Recovery of M Corporation items for:		
1957	$25	
1958	55	
1959	50	
		$130
(ii) Recovery of N corporation items for:		
1957	20	
1958	65	
1959	10	
		95
Total amount included in gross income		225

[T.D. 6559, 26 FR 2984, Apr. 7, 1961]

§ 1.381(c)(13)-1 Involuntary conversions.

(a) *Carryover requirement* —

(1) ***General rule.*** Section 381(c)(13) requires that after the date of distribution or transfer the acquiring corporation, in a transaction to which section 381(a) applies, shall be treated as the distributor or transferor corporation for purposes of applying section 1033, relating to involuntary conversions. This rule shall apply even though the property similar or related in service or use to the property converted, or the stock of a corporation owning such similar property, is purchased by the acquiring corporation after the date of distribution or transfer and is not received from the distributor or transferor corporation in the transaction to which section 381(a) applies. Accordingly, if any factor essential to the application of section 1033 occurs on or before the date of distribution or transfer and any other such factor also occurs after that date, then, in accordance with section 381(c)(13) and this section, the provisions of section 1033 shall apply to the acquiring corporation in the same manner that they would have applied to the distributor or transferor corporation in the absence of the distribution or transfer. For purposes of this section, the terms *involuntary conversion* and *disposition of the converted property* shall have the meaning ascribed to them by the regulations under section 1033.

(2) ***Application to other transactions.*** The provisions of this section shall apply to any transaction which, under provisions of the Internal Revenue Code of 1954, is treated as though it were an involuntary conversion within the meaning of section 1033. See, for example, section 1071, relating to gain from a sale or exchange to effectuate the policies of the Federal Communications Commission; and sections 1332(b)(3) and 1333(3), relating to war loss recoveries.

(b) ***Conversion into similar property.*** Section 1033(a)(1) provides that no gain shall be recognized if property is involuntarily converted only into property which is similar or related in service or use to the property so converted. If there is a disposition of property of a distributor or transferor corporation and, subsequent to the date of distribution or transfer, property similar or related in service or use to the property disposed of is received by the acquiring corporation as compensation for the property so disposed of, then no gain shall be recognized to the acquiring corporation, provided that no gain would have been recognized under section 1033(a)(1) if the similar property had been received directly by the distributor or transferor corporation.

Example. Property of S Corporation with an adjusted basis of $100 is condemned by the local government. Shortly after the property is so condemned, S Corporation liquidates and distributes its assets to P Corporation in a distribution to which section 381(a) applies. Subsequent to the date of distribution, P Corporation receives from the government (in settlement of the condemnation proceedings) property with a market value of $500 which is similar or related in service or use to the property so condemned. No gain is recognized to either corporation upon P Corporation's receipt of the similar property, and the property so received has a basis of $100 in the hands of P Corporation on the date of its acquisition.

(c) ***Conversion into money or dissimilar property when disposition occurs after December 31, 1950*** —

(1) ***General rule.*** Section 1033(a)(3) and § 1.1033(a)-2 provide rules for involuntary conversions of property into money or dissimilar property where the disposition of the converted property occurs after December 31, 1950. In such a case, the gain on the conversion, if any, shall be recognized, at the election of the taxpayer, only to the extent that the amount realized on the conversion exceeds

the cost of other property purchased by the taxpayer which is similar or related in service or use to the property so converted, or exceeds the cost of stock purchased by the taxpayer in the acquisition of control of a corporation owning such other property, provided

(i) the taxpayer purchases such other property or stock for the purpose of replacing the property so converted and

(ii) the purchase occurs during the period of time specified in section 1033(a)(3)(B). The provisions of this paragraph shall apply to involuntary conversions where the disposition of the property occurs after December 31, 1950, and where the election to have section 1033(a)(3) apply to the treatment of the gain upon the conversion is contingent upon activities of both the distributor or transferor corporation and the acquiring corporation. For purposes of section 381(c)(13), the period of time specified in section 1033(a)(3)(B) shall be determined by taking into account taxable years of, and extensions of time granted to, both the distributor or transferor corporation and the acquiring corporation.

(2) ***Replacement period.*** The period during which the purchase of similar property or stock must be made in order to prevent the recognition of gain on the involuntary conversion terminates 2 years (or, in the case of a disposition occurring before Dec. 31, 1969, 1 year) after the close of the first taxable year in which any part of the gain upon the conversion is realized, or at the close of such later date as may be designated pursuant to an application of the taxpayer. See paragraph (c)(3) of § 1.1033(a)-2. Therefore, if, in a case to which this subparagraph applies, the first taxable year in which gain is realized is the taxable year of the distributor or transferor corporation ending with the close of the date of distribution or transfer, the acquiring corporation will have a maximum of only 2 years (or, in the case of a disposition occurring before Dec. 31, 1969, 1 year) after that date in which to purchase the similar property or stock, unless an extension of time has been granted upon application by the distributor, transferor, or acquiring corporation within the time prescribed. See paragraph (a) of § 1.381(b)-1 as to the termination of the taxable year of the distributor or transferor corporation. See paragraph (c)(3) of § 1.1033(a)-2 as to applications to extend the period within which to replace the converted property. In addition to the information otherwise required under paragraph (c)(3) of § 1.1033(a)-2, the application shall contain sufficient detail in connection with the distribution or transfer to establish that section 381(c)(13) applies to the involuntary conversion involved.

(3) ***Examples.*** The application of this paragraph may be illustrated by the following examples:

Example 1. A and B Corporations compute their taxable income on the basis of the calendar year, and both corporations use the cash method of accounting. During 1970 property of A Corporation is destroyed by fire, and in January 1971, A Corporation receives $15,000 from an insurance company as compensation for its loss of property. The adjusted basis of the property on the date of destruction is $10,000; as a consequence, A Corporation realizes a gain of $5,000 on the involuntary conversion. On June 30, 1971, B Corporation acquires all of the assets of A Corporation in a reorganization to which section 381(a) applies. In accordance with paragraph (c)(2) of § 1.1033(a)-2, A Corporation reports in its return for the short taxable year ending June 30, 1971, all the details in connection with the involuntary conversion but does not include the realized gain in gross income, thereby electing to have the gain recognized only to the extent provided in section 1033(a)(3). On June 15, 1973, B Corporation purchases for $20,000 property which is similar or related in service or use to the property previously destroyed. In its return for 1973, B Corporation reports all of the details in connection with its replacement of the property, as required by paragraph (c)(2) of § 1.1033(a)-2. As a result of this replacement by B

Corporation, none of the gain realized by A Corporation is recognized. The replacement property which is purchased by B Corporation has a basis to that corporation of $15,000 on the date of its purchase, that is, the cost of such property ($20,000) decreased by the amount of gain not recognized to A Corporation on the involuntary conversion ($5,000).

Example 2. Assume the same facts as in *Example (1),* except that B Corporation does not purchase similar property on or before June 30, 1973, and does not apply on or before that date (in accordance with paragraph (c)(3) of § 1.1033(a)-2) for an extension of time in which to make a replacement. In such event, the gain realized by A Corporation is recognized to that corporation for its taxable year ending June 30, 1971. A Corporation's tax liability for such taxable year must be recomputed in accordance with paragraph (c)(2) of § 1.1033(a)-2 in order to reflect this additional income.

Example 3. Assume the same facts as in *Example (1),* except that the property of A Corporation is destroyed in 1968, A Corporation receives the $15,000 from an insurance company in January 1969, B Corporation acquires all of the assets of A Corporation on June 30, 1969, and A Corporation's return is filed for the short taxable year ending June 30, 1969. B Corporation would have to purchase property which is similar or related in service or use to the property previously destroyed by June 30, 1970, in order to take advantage of the provisions of section 1033.

Example 4. M and N Corporations compute their taxable income on the basis of the calendar year, and both corporations use the cash method of accounting. During 1970, property of M Corporation is destroyed by fire. The adjusted basis of the property on the date of destruction is $10,000. The property is insured against loss by fire, but the insurance claim is not satisfied on or before June 30, 1971, the date on which N Corporation acquires all of the assets (including the insurance claim) of M Corporation in a reorganization to which section 381(a) applies. On September 1, 1972, N Corporation receives $15,000 from the insurance company as compensation for the fire loss suffered by M Corporation. Upon receipt of the insurance proceeds, N Corporation realizes a gain of $5,000 upon the involuntary conversion; however, in its return for 1972, N Corporation elects under the provisions of paragraph (c)(2) of § 1.1033(a)-2 to have the gain recognized only to the extent provided by section 1033(a)(3). On December 30, 1974, N Corporation purchases for $20,000 property which is similar or related in service or use to the property previously destroyed in the hands of M Corporation. As a result of this replacement by N Corporation, none of the gain realized by N Corporation in 1972 is recognized. The replacement property which is purchased by N Corporation has a basis to that corporation of $15,000 on the date of its purchase, that is, the cost of such property ($20,000) decreased by the amount of gain not recognized to N Corporation on the involuntary conversion ($5,000).

Example 5. R and S Corporations compute their taxable income on the basis of the calendar year, and both corporations use the cash method of accounting. During 1970 property of R Corporation is destroyed by fire. The adjusted basis of the property on the date of destruction is $10,000. In anticipation of taking the benefit of section 1033(a)(3), R Corporation purchases for $20,000 on June 1, 1971, property which is similar or related in service or use to the destroyed property. In its return for 1971, R Corporation reports all of the details in connection with the replacement of the property, as required by paragraph (c)(2) of § 1.1033(a)-2. The property destroyed in 1970 is insured against loss by fire, but the insurance claim is not satisfied on or before March 1, 1972, the date on which S Corporation acquires all of the assets (including the insurance claim) of R Corporation in a reorganization to which section 381(a) applies. On October 1, 1972, S

Corporation receives $12,000 from the insurance company as compensation for the fire loss suffered by R Corporation. Upon receipt of the insurance proceeds, S Corporation realizes a gain of $2,000 upon the involuntary conversion; however, in its return for 1972, S Corporation elects under the provisions of paragraph (c)(2) of § 1.1033(a)-2 to have the gain recognized only to the extent provided by section 1033(a)(3). As a result of the replacement by R Corporation, none of the gain realized by S Corporation in 1972 is recognized. Assuming there are no adjustments for depreciation, the replacement property has a basis on October 1, 1972, of $18,000, that is, the cost of such property ($20,000) decreased by the amount of gain not recognized to S Corporation on the involuntary conversion ($2,000)

(d) ***Conversion into money when disposition occurs before January 1, 1951.*** Section 1033(a)(2) provides that, if property is disposed of in an involuntary conversion before January 1, 1951, and money is received as compensation for the conversion, no gain shall be recognized if such money is forthwith expended in the acquisition of other property similar or related in service or use to the property so converted, or in the acquisition of control of a corporation owning such other property, or in the establishment of a replacement fund. That section also provides that, if any part of the money is not so expended, the gain, if any, shall be recognized to the extent of the money which is not so expended. For example, if, pursuant to section 381(c)(13) and section 1033(a)(2), property of a distributor or transferor corporation is disposed of before January 1, 1951, in an involuntary conversion, and the proceeds from the conversion are received by the acquiring corporation so that the gain on the conversion is realized by that corporation, the acquiring corporation may avoid recognition of the gain if it complies with the provisions of section 1033(a)(2) for nonrecognition of gain. Thus, the acquiring corporation must forthwith expend the proceeds in the acquisition of similar property or stock, or in the establishment of a replacement fund, in order to avoid recognition of the gain, if the disposition occurred before January 1, 1951. See the provisions of §§ 1.1033(a)-3 and 1.1033(a)-4 relating to involuntary conversions and replacement funds when disposition of the converted property occurred before January 1, 1951.

(e) ***Successive acquiring corporations.*** An acquiring corporation which, in a transaction to which section 381(a) applies, acquires the assets of a corporation which previously acquired the assets of another corporation in a transaction to which section 381(a) applies, shall be treated as such other corporation for purposes of applying sections 381(c)(13) and 1033 (relating to involuntary conversions). Thus, for example, if any factor essential to the application of section 1033 occurs on or before the date of distribution or transfer in one transaction to which section 381(a) applies, and any other such factor occurs after the date of distribution or transfer in a subsequent transaction to which section 381(a) applies, then the acquiring corporation in such subsequent transaction shall be treated as the first distributor or transferor corporation subject to the rules and limitations of this section for purposes of sections 381(c)(13) and 1033.

[T.D. 6552, 26 FR 1989, Mar. 8, 1961, as amended by T.D. 7075, 35 FR 17995, Nov. 24, 1970]

§ 1.381(c)(14)-1 Dividend carryover to personal holding company.

(a) ***Carryover requirement.*** Section 381(c)(14) provides that an acquiring corporation shall succeed to and take into account the dividend carryover (described in section 564) of a distributor or transferor corporation in computing its dividends paid deduction under section 561 for taxable years ending after the date of distribution or transfer for which the acquiring corporation is a personal holding company under section 542. To determine the amount of such dividend carryover and to integrate it with the

dividend carryover of the acquiring corporation in computing the dividends paid deduction for taxable years ending after the date of distribution or transfer, it is necessary to apply the provisions of section 564 and § 1.564-1 in accordance with this section.

(b) ***Manner of computing dividend carryover*** —

(1) ***Preceding taxable years.*** If the acquiring corporation is a personal holding company under section 542 for its first taxable year ending after the date of distribution or transfer, the taxable year of the distributor or transferor corporation ending with such date is a first preceding taxable year for purposes of section 564, and the taxable year of the distributor or transferor corporation immediately preceding such first preceding year is a second preceding taxable year for purposes of section 564. If the acquiring corporation is a personal holding company for its second taxable year ending after the date of distribution or transfer, the taxable year of the distributor or transferor corporation ending with such date is a second preceding taxable year for purposes of section 564.

(2) ***Determination of dividends paid deduction and taxable income.*** The dividends paid deduction of any distributor or transferor corporation (determined under section 561 but without regard to any dividend carryover) and the taxable income of any such corporation (adjusted as provided in section 545(b)) for any taxable year ending on or before the date of distribution or transfer shall be determined without reference to any dividends paid deduction, or taxable income, of the acquiring corporation or any other distributor or transferor corporation; in like manner, the dividends paid deduction and the taxable income of the acquiring corporation for any such taxable year shall be determined without reference to any dividends paid deduction, or taxable income, of a distributor or transferor corporation.

(3) ***Computation of dividend carryover.***

(i) For the purpose of determining the dividend carryover to the first taxable year of the acquiring corporation ending after the date of distribution or transfer, the amount of the dividend carryover from the distributor or transferor corporation shall be determined under section 564 without reference to the dividends paid deduction or taxable income of the acquiring corporation or any other corporation. If two or more transactions to which section 381(a) applies have the same date of distribution or transfer, or if a particular taxable year of the acquiring corporation is the first taxable year ending after the dates of distribution or transfer of two or more such transactions occurring on different dates, the amount of the dividend carryover from each distributor or transferor corporation shall be determined separately as provided in the preceding sentence. Except as provided in subdivision (iii) of this subparagraph, the aggregate of the dividend carryovers from each distributor or transferor corporation and the dividend carryover of the acquiring corporation (computed without regard to this section) shall constitute the dividend carryover under section 561(a)(3) of the acquiring corporation for its first taxable year ending after the date (or dates) of distribution or transfer.

(ii) For the purpose of determining the dividend carryover to the second taxable year of the acquiring corporation ending after the date (or dates) of distribution or transfer, the excess, if any, of the dividends paid deduction (determined under section 561 without regard to any dividend carryover) over the taxable income (adjusted as provided in section 545(b)) for the taxable year of each distributor or transferor corporation and the acquiring corporation referred to as a second preceding taxable year shall be determined separately without reference to the dividends paid deduction or taxable income of any other of such corporations. The excesses thus determined shall be aggregated, and such aggregate shall be—

(*a*) Increased by the excess of the dividends paid deduction (determined without regard to any dividend carryover) over the taxable income (adjusted as provided in section 545(b)), or

(*b*) Reduced by the excess of the taxable income (adjusted as provided in section 545(b)) over the dividends paid deduction (determined without regard to any dividend carryover),

for the first preceding taxable year of the acquiring corporation. Except as provided in subdivision (iii) of this subparagraph, the amount thus determined shall constitute the dividend carryover under section 561(a)(3) of the acquiring corporation for its second taxable year ending after the date (or dates) of distribution or transfer.

(iii) ***If a particular taxable year of the acquiring corporation is its first taxable year ending after the date (or dates) of distribution or transfer of one or more transactions to which section 381(a) applies, and if the same taxable year of the acquiring corporation is also its second taxable year ending after the date (or dates) of distribution or transfer of one or more other transactions to which section 381(a) applies, then, for the purpose of determining the dividend carryover to such taxable year of the acquiring corporation, the rules contained in both subdivisions (i) and (ii) of this subparagraph shall be applied. Insofar as such taxable year constitutes the first taxable year ending after the date (or dates) of distribution or transfer of any transaction, the amount of the dividend carryover from any distributor or transferor corporation involved in such transaction shall be determined separately as provided in subdivision (i) of this subparagraph. Insofar as such taxable year constitutes the second taxable year ending after the date (or dates) of distribution or transfer of any transaction, the amount of the dividend carryover from any distributor or transferor corporation involved in the transaction and the acquiring corporation shall be determined as provided in subdivision (ii) of this subparagraph. The aggregate of the dividend carryovers thus determined shall constitute the dividend carryover under section 561(a)(3) of the acquiring corporation for such taxable year. See Example*** *(4)* in paragraph (c) of this section.

(c) ***Illustrations.*** The rules set forth in paragraphs (a) and (b) of this section may be illustrated by the following examples:

> *Example 1.* (i) *Facts.* N Corporation acquired on June 30, 1960, all the assets of M Corporation in a reorganization to which section 381(a) applies. Both corporations compute taxable income on the basis of the calendar year. N Corporation is a personal holding company for its taxable years ending December 31, 1960, and December 31, 1961.
> (ii) *Dividend carryover to N Corporation's taxable year ending December 31, 1960.* With respect to N Corporation's taxable year ending December 31, 1960, the taxable years referred to as first preceding taxable years and second preceding taxable years are—
>
> (*a*) M Corporation's taxable years ending June 30, 1960, and December 31, 1959, respectively; and
>
> (*b*) N Corporation's taxable years ending December 31, 1959, and December 31, 1958, respectively.

The dividend carryover to N Corporation's taxable year ending December 31, 1960, is $22,000 computed as follows, assuming the dividends paid deduction before dividend carryovers, and the taxable income after section 545(b) adjustments, to be as stated in the computation:

M Corporation N Corporation			
Second preceding taxable year:			
Dividends paid deduction	$25,000		$12,000
Taxable income	15,000		13,000
Excess dividends paid deduction		$10,000	
First preceding taxable year:			
Dividends paid deduction	23,000		20,000
Taxable income	21,000		10,000
Excess dividends paid deduction	2,000		$10,000
Separate dividend carryovers	12,000		10,000

The aggregate dividend carryover of $22,000 is the sum of $12,000 (the separate dividend carryover from M Corporation) and $10,000 (the separate dividend carryover from N Corporation's own preceding taxable years).

(iii) *Dividend carryover to N Corporation's taxable year ending December 31, 1961.* With respect to N Corporation's taxable year ending December 31, 1961, the first preceding taxable year is N Corporation's taxable year ending December 31, 1960; and the taxable years referred to as second preceding taxable years are M Corporation's taxable year ending June 30, 1960, and N Corporation's taxable year ending December 31, 1959. The dividend carryover to N Corporation's taxable year ending December 31, 1961, is $17,000 computed as follows, assuming the dividends paid deduction before dividend carryovers, and the taxable income after section 545(b) adjustments, to be as stated in the computation:

Second preceding taxable year	M Corporation	N Corporation
Dividends paid deduction	$23,000	$20,000
Taxable income	21,000	10,000
Separate excess of dividends paid deduction over taxable	2,000	10,000

Second preceding taxable year	M Corporation	N Corporation
income		

The aggregate excess of dividends paid deduction over taxable income for the second preceding taxable year is $12,000, the sum of $2,000 (separate excess from N Corporation) and $10,000 (separate excess from N Corporation). Such aggregate excess is increased by the excess dividends paid deduction, or is reduced by the excess of taxable income, for the first preceding taxable year as follows:

Aggregate excess of dividends paid deduction for second preceding taxable year		$12,000
Dividends paid deduction of N Corporation for first preceding taxable year	$50,000	
Taxable income of N Corporation for first preceding taxable year	45,000	
		$5,000
Dividend carryover to N Corporation's taxable year ending December 31, 1961		17,000

Example 2. (i) *Facts.* X Corporation is organized on May 1, 1956, and computes its taxable income on the basis of the fiscal year ending April 30. Y Corporation and Z Corporation are both organized on January 1, 1955, and both compute their taxable income on the basis of the calendar year. On July 31, 1957, X Corporation and Y Corporation transfer all their assets to Z Corporation in a statutory merger to which section 381(a) applies. For its taxable years ending December 31, 1957, and December 31, 1958, Z Corporation is a personal holding company.
(ii) *Dividend carryover to Z Corporation's taxable year ending December 31, 1957.* With respect to Z Corporation's taxable year ending December 31, 1957, the taxable years referred to as first preceding taxable years and second preceding taxable years are—

(*a*) X Corporation's taxable years ending July 31, 1957, and April 30, 1957, respectively;

(*b*) Y Corporation's taxable years ending July 31, 1957, and December 31, 1956, respectively; and

(*c*) Z Corporation's taxable years ending December 31, 1956, and December 31, 1955, respectively.

The dividend carryover to Z Corporation's taxable year ending December 31, 1957, is $40,000 computed as follows, assuming the dividends paid deduction before dividend carryovers, and the taxable income after section 545(b) adjustments, to be as stated in the computation:

	X Corporation		*Y Corporation*		*Z Corporation*	
Second preceding taxable year:						
Dividends paid deduction	$56,000		$19,000		$6,000	
Taxable income	24,000		17,000		5,000	
Excess		$32,000		$2,000		$1,000
First preceding taxable year:						
Dividends paid deduction	9,000		4,000		10,000	
Taxable income	7,000		8,000		5,000	
Excess		2,000		(4,000)		5,000
Separate dividend carryovers		34,000		0		6,000

The aggregate dividend carryover of $40,000 is the sum of $34,000 (the separate dividend carryover from X Corporation) and $6,000 (the separate dividend carryover from Z Corporation's own preceding taxable years).

(iii) *Dividend carryover to Z Corporation's taxable year ending December 31, 1958.* With respect to Z Corporation's taxable year ending December 31, 1958, the first preceding taxable year is Z Corporation's taxable year ending December 31, 1957; and the taxable years referred to as second preceding taxable years are X Corporation's taxable year ending July 31, 1957, Y Corporation's taxable year ending July 31, 1957, and Z Corporation's taxable year ending December 31, 1956. The dividend carryover to Z Corporation's taxable year ending December 31, 1958, is $1,000 computed as follows, assuming the dividends paid deduction before dividend carryovers, and the taxable income after section 545(b) adjustments, to be as stated in the computation:

	X Corporation	***Y Corporation***	***Z Corporation***
Second preceding taxable year:			
Dividends paid deduction	$9,000	$4,000	$10,000
Taxable income	7,000	8,000	5,000
Separate excess of dividends paid deduction over	2,000	0	5,000

	X Corporation	*Y Corporation*	*Z Corporation*
taxable income			

The aggregate excess of dividends paid deduction over taxable income for the second preceding taxable year is $7,000, the sum of $2,000 (separate excess from X Corporation) and $5,000 (separate excess from Z Corporation). Such aggregate excess is increased by the excess dividends paid deduction, or is reduced by the excess of taxable income, for the first preceding taxable year as follows:

Aggregate excess of dividends paid deduction for second preceding taxable year		$7,000
Dividends paid deduction of Z Corporation for first preceding taxable year	$102,000	
Taxable income of Z Corporation for first preceding taxable year	108,000	(6,000)
Dividend carryover to Z Corporation's taxable year ending December 31, 1958		1,000

Example 3. **Assume the facts stated in *Example (2),* except that Y Corporation transferred all its assets to Z Corporation on May 31, 1957. Assume also that the facts for Y Corporation's taxable year ending May 31, 1957, are otherwise the same as those stated for its taxable year in *Example* (2) ending July 31, 1957. In such case, the dividend carryovers to Z Corporation's taxable years ending on December 31, 1957, and December 31, 1958, are the same as in *Example (2)*** notwithstanding the fact that the transfers from X Corporation and Y Corporation occurred on the different dates.

Example 4. (i) *Facts.* T Corporation acquired on June 30, 1960, all the assets of U Corporation in a statutory merger to which section 381(a) applies, and in a like transaction acquired on June 30, 1961, all the assets of V Corporation. Such corporations all compute taxable income on the basis of the calendar year. T Corporation is a personal holding company for its taxable years 1960 and 1961.
(ii) *Dividend carryover to T Corporation's taxable year 1960.* With respect to T Corporation's taxable year ending December 31, 1960, the taxable years referred to as first preceding taxable years and second preceding taxable years are—

(*a*) U Corporation's taxable years ending June 30, 1960, and December 31, 1959, respectively; and

(*b*) T Corporation's taxable years ending December 31, 1959, and December 31, 1958, respectively.

The dividend carryover to T Corporation's taxable year ending December 31, 1960, is $7,000 computed as follows, assuming the dividends paid deduction before dividend carryovers, and the taxable income after section 545(b) adjustments, to be as stated in the computation:

	U Corporation		*T Corporation*	
Second preceding taxable year:				
Dividends paid deduction	$16,000		$10,000	
Taxable income	12,000		13,000	
Excess		$4,000		0
First preceding taxable year:				
Dividends paid deduction	7,000		17,000	
Taxable income	5,000		16,000	
Excess		2,000		$1,000
Separate dividend carryovers		6,000		1,000

The aggregate dividend carryover of $7,000 is the sum of $6,000 (the separate dividend carryover from U Corporation) and $1,000 (the separate dividend carryover from T Corporation's own first preceding taxable year).

(iii) *Dividend carryover to T Corporation's taxable year 1961.* Inasmuch as T Corporation's taxable year 1961 is the second taxable year ending after the date of distribution or transfer from U Corporation, paragraph (b)(3)(ii) of this section governs the determination of the dividend carryover from taxable years of T Corporation and U Corporation. On the other hand, inasmuch as T Corporation's taxable year 1961 is the first taxable year ending after the date of distribution or transfer from V Corporation, paragraph (b)(3)(i) governs the determination of the dividend carryover from taxable years of V Corporation.

(*a*) *Application of paragraph (b)(3)(ii) of this section.* With respect to T Corporation's taxable year 1961, the first preceding taxable year is T Corporation's taxable year ending December 31, 1960; and the taxable years referred to as second preceding taxable year are T Corporation's taxable year ending December 31, 1959, and U Corporation's taxable year ending June 30, 1960. The

dividend carryover from taxable years of T Corporation and U Corporation is $1,500 computed as follows, assuming the dividends paid deduction before dividend carryovers, and the taxable income after section 545(b) adjustments, to be as stated in the computation:

Second preceding taxable year	U Corporation	T Corporation
Dividends paid deduction	$7,000	$17,000
Taxable income	5,000	16,000
Separate excess of dividends paid deduction over taxable income	2,000	1,000

The aggregate excess of dividends paid deduction over taxable income for the second preceding taxable year is $3,000, the sum of $2,000 (separate excess from U Corporation) and $1,000 (separate excess from T Corporation). Such aggregate is increased by the excess dividends paid deduction, or is reduced by the excess of taxable income, for the first preceding taxable year as follows:

		T Corporation
Aggregate excess of dividends paid deduction for second preceding taxable year		$3,000
First preceding taxable year:		
Dividends paid deduction of T Corporation	$21,000	
Taxable income of T Corporation	22,500	
Excess taxable income		(1,500)
Separate dividend carryover (without regard to V Corporation)		1,500

(*b*) *Application of paragraph (b)(3)(i) of this section.* With respect to T Corporation's taxable year 1961, V Corporation's taxable year ending June 30, 1961, is a first preceding taxable year, and its taxable year ending December 31, 1960, is a second preceding taxable year. The separate dividend carryover from V Corporation is $8,000 computed as follows, assuming the dividends paid deduction before dividend carryovers, and the taxable income after section 545(b) adjustments, to

be as stated in the computation:

Second preceding taxable year	V Corporation	
Dividends paid deduction	$11,000	
Taxable income	6,000	
Excess		$5,000
First preceding taxable year:		
Dividends paid deduction	$9,000	
Taxable income	6,000	
Excess	3,000	
Separate dividend carryover from V Corporation		8,000

(c) *Dividend carryover.* The dividend carryover to T Corporation's taxable year 1961 is $9,500, the sum of $8,000 (the separate dividend carryover from V Corporation) and $1,500 (the aggregate dividend carryover from T Corporation and U Corporation).

(d) ***Successive carryovers.*** The provisions of this section shall apply for the purpose of determining a dividend carryover to an acquiring corporation which, in a distribution or transfer to which section 381(a) applies, acquires the assets of a distributor or transferor corporation which has previously acquired the assets of another corporation in a transaction to which section 381(a) applies; even though, in computing the dividend carryover to such second acquiring corporation, it is necessary to take into account the deduction for dividends paid, and the adjusted taxable income, of the first distributor or transferor corporation.

(e) ***Acquiring corporation not receiving all the assets.*** The dividend carryover acquired from a distributor or transferor corporation by an acquiring corporation in a transaction to which section 381(a) applies is not reduced by reason of the fact that the acquiring corporation does not acquire 100 percent of the assets of the distributor or transferor corporation.

(f) ***Dividends paid after the close of taxable year.*** A transaction to which section 381(a) applies does not prevent the application of section 563(b) to a dividend paid by a distributor or transferor corporation after the close of its taxable year ending with the date of distribution or transfer but on or before the 15th day of the third month following the close of such taxable year. However, dividends paid by the acquiring corporation may not be taken into account under section 563(b) for the purpose of determining the dividends paid deduction of the distributor or transferor corporation for its taxable year ending with the date of distribution or transfer.

[T.D. 6532, 26 FR 406, Jan. 19, 1961]

§ 1.381(c)(15)-1 Indebtedness of certain personal holding companies.

(a) ***Qualified indebtedness*** —

(1) ***Carryover requirement.*** If, in a transaction to which section 381(a) applies, the acquiring corporation assumes liability for any indebtedness which was qualified indebtedness (as defined in section 545(c) and § 1.545-3) in the hands of the distributor or transferor corporation immediately before the assumption of such indebtedness, then, under section 381(c)(15), in computing its undistributed personal holding company income for any taxable year beginning after December 31, 1963, and ending after the date of distribution or transfer, the acquiring corporation shall be considered the distributor or transferor corporation for purposes of computing the deduction under section 545(c) and § 1.545-3. Such deduction shall be allowed to the acquiring corporation in accordance with section 545(c) and § 1.545-3.

(2) ***Successive transactions to which section 381(a) applies.*** If in a transaction to which section 381(a) applies, an acquiring corporation assumes liability for qualified indebtedness, such acquiring corporation shall be deemed to have incurred such qualified indebtedness for the purpose of applying section 381(c)(15) to any subsequent transaction in which such acquiring corporation is the distributor or transferor corporation.

(b) ***Pre-1934 indebtedness*** —

(1) ***Carryover requirement.*** If, in a transaction to which section 381(a) applies, the acquiring corporation assumes liability for any indebtedness incurred, or assumed, before January 1, 1934, by a distributor or transferor corporation, then under section 381(c)(15) the acquiring corporation shall be allowed, in computing its undistributed personal holding company income for any taxable year ending after the date of distribution or transfer, a deduction under section 545(b)(7) for amounts used or irrevocably set aside to pay or to retire such indebtedness. Such deduction shall be allowed to the acquiring corporation in accordance with section 545(b)(7) and paragraph (g) of § 1.545-2 as though the indebtedness had been incurred, or assumed, by the acquiring corporation before January 1, 1934.

(2) ***Successive transactions to which section 381(a) applies.*** If, in a transaction to which section 381(a) applies, an acquiring corporation assumes liability for indebtedness described in subparagraph (1) of this paragraph, such acquiring corporation shall be deemed to have incurred the indebtedness before January 1, 1934, for the purpose of applying section 381(c)(15) to any subsequent transaction in which such acquiring corporation is the distributor or transferor corporation.

(c) ***Special rule.*** For purposes of this section, if, in a transaction otherwise described in this section, an acquiring corporation acquires real estate—

(1) of which the distributor or transferor corporation is the legal or equitable owner immediately before the acquisition, and

(2) which is subject to indebtedness that, with respect to the distributor or transferor corporation, is indebtedness described in this section immediately before the acquisition, then the acquiring corporation will be treated as having assumed such indebtedness, provided it shows to the satisfaction of the Commissioner that under all the facts and circumstances it bears the burden of discharging such indebtedness.

[T.D. 6949, 33 FR 5524, Apr. 9, 1968; 33 FR 6091, Apr. 20, 1968]

§ 1.381(c)(16)-1 Obligations of distributor or transferor corporation.

(a) ***Deduction allowed to acquiring corporation.***

(1) If, in a transaction to which section 381(a) applies, the acquiring corporation assumes an obligation of a distributor or transferor corporation which gives rise to a liability after the date of distribution or transfer and if the distributor or transferor corporation would be entitled to deduct such liability in computing taxable income were it paid or accrued after that date by such corporation, then, under the provisions of section 381(c)(16) and this section, the acquiring corporation shall be entitled to deduct such liability as if it were the distributor or transferor corporation. However, in the case of a transaction to which section 381(a)(2) applies, section 381(c)(16) shall not apply to an obligation which is reflected in the amount of consideration, that is, the stock, securities, or other property, transferred by the acquiring corporation to a transferor corporation or its shareholders in exchange for the property of that transferor corporation. An obligation which is so reflected in the amount of consideration will be treated as an item or tax attribute not specified in section 381(c)(16). Such an obligation is subject to section 381(c)(4). See subparagraph (2) of this paragraph. Any deduction allowed under section 381(c)(16) to the acquiring corporation shall be taken by that corporation in the taxable year ending after the date of distribution or transfer in which the liability is paid or accrued by that corporation, as the case may be.

(2) In order to determine whether, in the case of obligations of a distributor or transferor corporation assumed by an acquiring corporation, section 381(c)(16) and this section, or section 381(c)(4) and the regulations thereunder, apply, the following rules shall govern:

(i) If the obligation gave rise to a liability before the date of distribution or transfer, see section 381(c)(4) and the regulations thereunder.

(ii) If the obligation gives rise to a liability after the date of distribution or transfer, and the obligation was not reflected in the amount of consideration transferred by the acquiring corporation to the distributor or transferor corporation or its shareholders in exchange for the property of the distributor or transferor corporation, then section 381(c)(16) and this section shall apply.

(iii) In the case of a transaction to which section 381(a)(1) applies, if the obligation gives rise to a liability after the date of a distribution, and the obligation was reflected in the amount of consideration transferred by the acquiring corporation to the distributor corporation or its shareholders in exchange for the property of the distributor corporation, then section 381(c)(16) and this section shall apply.

(iv) In the case of a transaction to which section 381(a)(2) applies, if the obligation gives rise to a liability after the date of a transfer, and the obligation was reflected in the amount of consideration transferred by the acquiring corporation to the transferor corporation or its shareholders in exchange for the property of the transferor corporation, then see section 381(c)(4) and the regulations thereunder.

(3) The rules of this section apply to obligations assumed by agreement of the parties as well as by operation of law.

(4) For purposes of this section, an obligation of a distributor or transferor corporation gives rise to a liability when the liability would be accruable by a taxpayer using the accrual method of accounting notwithstanding the fact that the distributor or transferor corporation is not using the accrual method of accounting. See paragraph (a)(2) of § 1.461-1.

(5) In the case of a transaction to which section 381(a)(2) applies, the determination as to whether or not an obligation was reflected in the amount of consideration transferred by the acquiring corporation to the transferor corporation or its shareholders in exchange for the property of the

transferor corporation shall be made on the basis of all the facts of each particular transfer. Where, on the date of distribution or transfer, the parties were aware of the existence of a specific obligation and reduced the amount of consideration to be transferred by the acquiring corporation by a specific amount because of the existence of such obligation, then such obligation shall be considered to have been reflected in the amount of consideration transferred. In the absence of such facts, it shall be presumed that the obligation was not reflected in the amount of consideration transferred.

(b) ***Distribution or transfer occurring under the Internal Revenue Code of 1939.*** Subject to the provisions of section 381(c)(16) and this section, a corporation which would have been an acquiring corporation (under the provisions of paragraph (b) of § 1.381(a)-1) in a transaction to which section 381(a) applies if the date of distribution or transfer had occurred on or after the effective date of the provisions of subchapter C, chapter 1 of the Internal Revenue Code of 1954, applicable to a liquidation or reorganization, as the case may be, shall be entitled to take a deduction for amounts paid or accrued in any taxable year beginning after December 31, 1953, in respect of any obligation which it has assumed from a corporation which would have been a distributor or transferor corporation in such transaction. However, this paragraph shall have no application to a situation described in paragraph (a)(2)(iv) of this section.

(c) ***Examples.*** The application of the foregoing rules may be illustrated by the following examples:

Example 1. X Corporation and Y Corporation compute their taxable income on the basis of the calendar year, and both corporations use an accrual method of accounting. On December 31, 1954, Y Corporation acquires the assets of X Corporation in a transfer to which section 381(a)(2) applies. By reason of State law, Y Corporation assumes responsibility for all of the obligations for which X Corporation is then, or may become, liable. The parties have no knowledge of any specific obligations of X Corporation which are not yet fixed and ascertainable, but it is agreed to reduce the amount of consideration that Y Corporation is to transfer in exchange for the assets of X Corporation by $5,000 to reflect any unforeseen contingent liabilities of X Corporation for which Y Corporation might subsequently become liable. After the date of the transfer, a claim for damages on account of the alleged negligence of an alleged agent of X Corporation is filed. After commencement of legal action by the claimant and in order to eliminate the possibility of injury to its business, Y Corporation settles the claim in 1955 by paying the claimant the amount of $3,000. Assuming that such sum would have been deductible under section 162 if paid by X Corporation, Y Corporation is entitled to deduct such sum in accordance with the provisions of section 381(c)(16) and this section in computing its taxable income for 1955, since the claim gave rise to a liability after the date of transfer, the parties were not aware of a specific obligation, and the specific obligation was not reflected in the consideration transferred by Y Corporation in exchange for the assets of X Corporation.

Example 2. Assume the same facts as in *Example (1),* except that the claim for damages was filed prior to the transfer of X Corporation's assets to Y Corporation, but the parties considered the chances for recovery by the claimant so remote that no specific amount other than the $5,000 reduction in consideration for all contingent liabilities as a whole is reflected in the consideration transferred by Y Corporation in exchange for the assets of X Corporation. Assuming that such sum would have been deductible under section 162 if paid by X Corporation, the $3,000 paid by Y Corporation in 1955 is deductible in accordance with the provisions of section 381(c)(16) and this section in 1955.

Example 3. Assume the same facts as in *Example (1),* except that the parties consider the chances of recovery by the claimant of sufficient probability that Y Corporation reduces the amount of consideration it transfers in exchange for the assets of X Corporation by $1,000 in addition to the $5,000 reduction for all other contingent liabilities. The $3,000 paid by Y Corporation in 1955 is not

deductible under section 381(c)(16) and this section, since the specific obligation was reflected in the consideration transferred by Y Corporation in exchange for the assets of X Corporation. The deductibility of the payment is accordingly governed by the provisions of section 381(c)(4) and the regulations thereunder. Similarly, if in this case Y Corporation had transferred $10,000 less in consideration for the assets of X Corporation because of this particular claim, Y Corporation would not be entitled to any deduction for the $3,000 paid in 1955 under section 381(c)(16) and this section, and the deductibility of the payment would be governed by the provisions of section 381(c)(4) and the regulations thereunder. If the date of transfer of X Corporation's assets had occurred prior to the effective date of subchapter C, chapter 1 of the Internal Revenue Code of 1954, applicable to a reorganization, no deduction would be allowed to Y Corporation under that section.

[T.D. 6750, 29 FR 11267, Aug. 5, 1964]

§ 1.381(c)(17)-1 Deficiency dividend of personal holding company.

(a) ***Carryover requirement.*** If a determination (as defined in section 547(c)) establishes that a distributor or transferor corporation in a transaction to which section 381(a) applies is liable for personal holding company tax imposed by section 541 (or by a corresponding provision of prior income tax law) for any taxable year ending on or before the date of distribution or transfer, then in computing such tax the deduction described in section 547 shall be allowed pursuant to section 381(c)(17) to such corporation for the amount of deficiency dividends paid by the acquiring corporation with respect to the distributor or transferor corporation. Except as otherwise provided in this section, the provisions of section 547 and the regulations thereunder apply with respect to a deficiency dividend deduction allowable pursuant to section 381(c)(17).

(b) ***Deficiency dividends paid by the acquiring corporation with respect to the distributor or transferor corporation.*** A deficiency dividend paid by the acquiring corporation with respect to the distributor or transferor corporation is a distribution that would satisfy the definition of a deficiency dividend under section 547(d)(1) if paid by the distributor or transferor corporation to its own shareholders except that it shall be paid by the acquiring corporation to its own shareholders and shall be paid after the date of distribution or transfer and on, or within 90 days after, the date of the determination but before the acquiring corporation files claim under paragraph (c) of this section.

(c) ***Claim for deduction.*** A claim for a deduction under this section shall be made by the acquiring corporation on Form 976, and shall be filed within 120 days after the date of the determination. The form shall contain, or be accompanied by, the information required under paragraph (b)(2) of § 1.547-2 in sufficient detail to properly identify the facts with the distributor or transferor corporation and the acquiring corporation. The statement required with respect to the shareholders on the date of payment of the deficiency dividend shall relate to the shareholders of the acquiring corporation, and the required certified copy of the resolution authorizing the payment of the dividend shall be that of the board of directors, or other authority, of the acquiring corporation. Necessary changes may be made in Form 976 in order to carry out the provisions of this paragraph. The claim shall be filed with the district director for the internal revenue district in which the return of the distributor or transferor corporation to which such claim relates was filed.

(d) ***Effect on dividends paid deduction.*** A deficiency dividend paid by the acquiring corporation, which is allowable as a deduction to a distributor or transferor corporation pursuant to section 381(c)(17), shall not become a part of the dividends paid deduction of the acquiring corporation under section 561 for any taxable year.

(e) ***Successive transactions to which section 381(a) applies.*** The provisions of this section shall apply in the case of successive transactions to which section 381(a) applies. Thus, if X Corporation transfers its assets to Y Corporation in a transaction to which section 381(a) applies and if Y Corporation transfers its assets to Z Corporation in a subsequent transaction to which section 381(a) applies, then, subject to the provisions of this section, X Corporation may take a deficiency dividend deduction for the amount of deficiency dividends paid by Z Corporation with respect to X Corporation.

(f) ***Example.*** The provisions of this section may be illustrated by the following example:

> ***Example.*** **M Corporation, a personal holding company, computes its taxable income on the basis of the calendar year. On December 31, 1956, N Corporation acquires the assets of M Corporation in a transaction to which section 381(a) applies. On July 31, 1958, a determination (as defined in section 547(c)) establishes that M Corporation is liable for the taxable year 1955 for personal holding company tax in the amount of $35,500 based on undistributed personal holding company income of $42,000 for such taxable year. N Corporation complies with the provisions of this section and on September 30, 1958, distributes $42,000 to its shareholders as deficiency dividends with respect to M Corporation's taxable year 1955. The distribution of $42,000 by N Corporation is a taxable dividend under section 316(b)(2) regardless of whether N Corporation is a personal holding company for the taxable year 1958 or whether it had any current or accumulated earnings and profits.** See ***Example (3)*** in paragraph (e) of § 1.316-1. Because N Corporation has paid deficiency dividends of $42,000 in accordance with this section, M Corporation is entitled to a deficiency dividend deduction of $42,000 for the taxable year 1955 and is thus relieved of its liability for personal holding company tax of $35,500 for such taxable year. To prevent a duplication of deductions, the amount distributed by N Corporation in 1958 does not become a part of N Corporation's dividends paid deduction under section 561 for any taxable year.

[T.D. 6532, 26 FR 409, Jan. 19, 1961, as amended by T.D. 7604, 44 FR 18661, Mar. 29, 1979; T.D. 7767, 45 FR 11264, Feb. 6, 1981]

§ 1.381(c)(18)-1 Depletion on extraction of ores or minerals from the waste or residue of prior mining.

(a) ***Carryover requirement.*** Section 381(c)(18) provides that the acquiring corporation in a transaction described in section 381(a) shall be considered as though it were the distributor or transferor corporation after the date of distribution or transfer for the purpose of determining the applicability of section 613(c)(3) (relating to extraction of ores or minerals from the ground). Thus, an acquiring corporation which has acquired the waste or residue of prior mining from a distributor or transferor corporation in a transaction described in section 381(a) shall be entitled, after the date of distribution or transfer, to an allowance for depletion under section 611 in respect of ores or minerals extracted from such waste or residue if the distributor or transferor corporation would have been entitled to such an allowance for depletion in the absence of the distribution or transfer. See paragraph (f) of § 1.613-4 to determine whether a distributor or transferor corporation is entitled to an allowance for depletion with respect to the waste or residue of prior mining.

(b) ***Application of section 614 to waste or residue of prior mining.*** If, in a transaction described in section 381(a), the acquiring corporation acquires waste or residue of prior mining from a distributor or transferor corporation, then the acquiring corporation shall be considered as though it were the distributor or transferor corporation for the purpose of applying section 614 and the regulations thereunder to the waste or residue so acquired. Thus, if the distributor or transferor corporation was required under paragraph (c) of § 1.614-1 to treat the waste or residue as part of the mineral deposit from which it was extracted and if the acquiring corporation acquires both the waste or residue and the mineral deposit from which it was extracted in a transaction described in section 381(a), then such waste or residue shall

be treated as a part of such mineral deposit in the hands of the acquiring corporation. On the other hand, if the waste or residue was required to be treated as a separate mineral deposit in the hands of the distributor or transferor corporation, such waste or residue shall be treated as a separate mineral deposit in the hands of the acquiring corporation.

[T.D. 6552, 26 FR 1991, Mar. 8, 1961, as amended by T.D. 7170, 37 FR 5373, Mar. 15, 1972]

§ 1.381(c)(19)-1 Charitable contribution carryovers in certain acquisitions.

(a) ***Carryover requirement.*** Section 381(c)(19) provides that, in computing taxable income for its taxable years which begin after the date of distribution or transfer to which section 381(a) applies, the acquiring corporation shall take into account any charitable contributions made by a distributor or transferor corporation during the taxable year ending on the date of distribution or transfer, and in certain immediately preceding taxable years, which are in excess of the maximum amount deductible for those taxable years under section 170(b)(2) in the following manner:

(1) If the taxable year of the distributor or transferor corporation ending on the date of distribution or transfer begins before January 1, 1962, the acquiring corporation shall, in computing taxable income for its first 2 taxable years which begin after the date of such distribution or transfer, take into account the excess contributions made by the distributor or transferor corporation in the taxable year ending on the date of distribution or transfer and in the immediately preceding taxable year;

(2) If the taxable year of the distributor or transferor corporation ending on the date of distribution or transfer begins after December 31, 1961, the acquiring corporation shall, in computing taxable income for certain taxable years which begin after the date of distribution or transfer, take into account the excess contributions made by the distributor or transferor corporation in the taxable year ending on such date of distribution or transfer and in any of the four taxable years immediately preceding such taxable year but excluding any taxable year beginning before January 1, 1962 (see paragraph (c)(3) of this section). Notwithstanding the preceding sentence, if the taxable year of the distributor or transferor corporation ending on the date of distribution or transfer begins after December 31, 1961, and before January 1, 1963, the acquiring corporation shall, in computing taxable income for its first taxable year which begins after the date of distribution or transfer, also take into account the excess contributions made by the distributor or transferor corporation in the taxable year immediately preceding the taxable year of the distributor or transferor corporation ending on the date of distribution or transfer (see paragraph (c)(2) of this section).

To determine the amount of excess contributions made by a distributor or transferor corporation and to integrate them with contributions made by the acquiring corporation for the purpose of determining the charitable contributions deductible by the acquiring corporation for its taxable years beginning immediately after the date of distribution or transfer, it is necessary to apply the provisions of section 170(b)(2) and § 1.170-3 (or, if applicable, section 170(b)(2) and (d)(2) and § 1.170A-11) in accordance with the conditions and limitations of section 381(c)(19) and this section. For taxable years beginning before January 1, 1970, see section 170 for provisions of section 170(b)(2) as referred to in this section. For taxable years beginning after December 31, 1969, see section 170A for provisions of section 170(b)(2) or (d)(2) as referred to in this section. For special rules for applying section 170(d)(2) with respect to contributions paid, or treated as paid, in taxable years beginning before January 1, 1970, see paragraph (d) of § 1.170A-11.

(b) ***Manner of computing excess charitable contribution carryovers.***

(1) The amount of any charitable contribution made by a distributor or transferor corporation in any taxable year ending on or before the date of distribution or transfer, or made by the acquiring corporation in any taxable year before its taxable year beginning after the date of distribution or transfer, in excess of the amount allowable as a deduction to such corporation for such taxable year under section 170(b)(2) shall be determined by taking into account the taxable income of, and the contributions made by, that corporation only.

(2) An acquiring corporation which, in a distribution or transfer to which section 381(a) applies, acquires the assets of a distributor or transferor corporation which previously acquired the assets of another corporation in a transaction to which section 381(a) applies, shall succeed to and take into account, subject to the conditions and limitations of sections 170 and 381, the charitable contribution carryovers available to the first acquiring corporation under sections 170 and 381, including those derived by such first acquiring corporation from its distributor or transferor corporation.

(3) The excess charitable contributions made by a distributor or transferor corporation in its taxable year ending on the date of distribution or transfer and in certain immediately preceding taxable years (see paragraph (c) of this section) which are not deductible by the distributor or transferor corporation because of the 5-percent limitation of section 170(b)(2) shall be available to the acquiring corporation without diminution by reason of the fact that the acquiring corporation does not acquire 100 percent of the assets of the distributor or transferor corporation. Thus, if a parent corporation owning 80 percent of all classes of stock of its subsidiary corporation were to acquire its share of the assets of the subsidiary corporation upon a complete liquidation described in paragraph (b)(1)(i) of § 1.381(a)-1, then, subject to the conditions and limitations of this section, 100 percent of the excess contributions made by the subsidiary corporation would be available to the acquiring corporation.

(c) *Taxable years to which carryovers apply and amount deductible* —

(1) *Taxable years beginning before January 1, 1962.* If the taxable year of the distributor or transferor corporation ending on the date of distribution or transfer begins before January 1, 1962:

(i) The excess charitable contributions made by a distributor or transferor corporation in its taxable year immediately preceding that ending on the date of distribution or transfer, to the extent not deductible by it because of the limitations of section 170(b)(2) in its taxable year ending on that date, shall be deductible by the acquiring corporation to the extent prescribed by section 170(b)(2) in its first taxable year beginning after the date of distribution or transfer. Any portion of such excess which is not deductible under this section by the acquiring corporation in such first taxable year shall not be deducted by that corporation in any other taxable year.

(ii) The excess charitable contributions made by a distributor or transferor corporation in its taxable year ending on the date of distribution or transfer shall first be deductible by the acquiring corporation to the extent prescribed by section 170(b)(2) and this section in its first taxable year beginning after that date and then, to the extent prescribed by section 170(b)(2) and this section, in its second taxable year beginning after that date. Any portion of such excess which is not deductible under this section by the acquiring corporation in such first and second taxable years shall not be deducted by that corporation in any other taxable year.

(2) *Taxable years beginning in 1962.* If the taxable year of the distributor or transferor corporation ending on the date of distribution or transfer begins after December 31, 1961, and before January 1, 1963:

(i) The excess charitable contributions made by a distributor or transferor corporation in its taxable year immediately preceding that ending on the date of distribution or transfer, to the extent not deductible by it because of the limitations of section 170(b)(2) in its taxable year ending on that date, shall be deductible by the acquiring corporation to the extent prescribed by section 170(b)(2) in its first taxable year beginning after the date of distribution or transfer. Any portion of such excess which is not deductible under this section by the acquiring corporation in such first year shall not be deducted by that corporation in any other taxable year.

(ii) The excess charitable contributions made by a distributor or transferor corporation in its taxable year ending on the date of distribution or transfer and beginning after December 31, 1961, and before January 1, 1963, shall first be deductible by the acquiring corporation to the extent prescribed by section 170(b)(2) and this section in its first taxable year beginning after that date and then, to the extent prescribed by section 170(b)(2) and this section, in its second, third, fourth, and fifth taxable year, in order of time, beginning after that date. Any portion of such excess which is not deductible under this section by the acquiring corporation in such 5 taxable years shall not be deducted by that corporation in any other taxable year.

(3) *Taxable years beginning after December 31, 1962.*

(i) If the taxable year of the distributor or transferor corporation ending on the date of distribution or transfer begins after December 31, 1962, the excess charitable contributions made by a distributor or transferor corporation in its taxable year ending on the date of distribution or transfer and in each of its four immediately preceding taxable years (excluding any taxable year beginning before January 1, 1962), to the extent not deductible by it because of the limitations of section 170(b)(2) in its taxable year ending on the date of distribution or transfer or its prior taxable years, shall be deductible by the acquiring corporation to the extent prescribed by section 170(b)(2) (or, if applicable, section 170(d)(2)) and subdivision (ii) of this subparagraph, in its taxable years which begin after the date of distribution or transfer. However, any portion of the excess charitable contributions made by a distributor or transferor corporation in a particular taxable year, to which this subparagraph is applicable, which is not deductible under this section within the 5 taxable years immediately following the taxable year in which the contribution was paid by the distributor or transferor corporation shall not be deductible by the acquiring corporation in any other taxable year.

(ii) For purposes of determining the 5 taxable years in which the excess contributions may be deducted, all taxable years of the distributor or transferor corporation subsequent to the taxable year in which the excess contribution was made, including the taxable year ending on the date of distribution or transfer shall be treated as taxable years of the acquiring corporation.

(iii) The provisions of this subparagraph may be illustrated by the following example:

Example. X Corporation and Y Corporation both compute taxable income on the calendar year basis. X Corporation has excess charitable contributions for 1962 and 1964. On December 31, 1966, X Corporation distributes all its assets to Y Corporation in a complete liquidation to which section 381(a) applies. The excess 1962 charitable contributions of X Corporation (to the extent not deductible by X because of the limitations of section 170(b)(2) in its taxable years 1963 through 1966) may be deducted by Y Corporation only in 1967. Y Corporation's taxable year 1967 is the fifth taxable year succeeding the taxable year 1962 (the year in which the excess contributions were made), and the portion of such excess contributions which is not deductible in the 5 taxable years immediately succeeding 1962 (1963 through 1967) is not deductible by Y Corporation in any other taxable year. Any excess charitable contributions for 1964 to which Y

Corporation may be entitled must be deducted by Y Corporation (if deductible at all) in 1967, 1968, and 1969 since such years are the third, fourth, and fifth taxable years succeeding the taxable year 1964 (the year in which the excess contributions were paid).

(4) ***General rules.*** No excess charitable contributions made by a distributor or transferor corporation shall be deductible by the acquiring corporation in its taxable year which includes the date of distribution or transfer. In addition, an excess charitable contribution made by a distributor or transferor corporation in a taxable year prior to the taxable year of the transfer is only deductible by the distributor or transferor corporation, subject to the limitations of section 170(b)(2) (or, if applicable, section 170(d)(2)), in its subsequent taxable years which begin on or before the date of distribution or transfer, and by the acquiring corporation in its taxable year or years beginning after the date of distribution or transfer.

(d) ***Rules governing amounts deductible by acquiring corporations.***

(1) In applying the provisions of section 170(b)(2) (or, if applicable, section 170(d)(2)) for the purpose of determining the amount of excess charitable contributions which are deductible by the acquiring corporation in its taxable years beginning after the date of distribution or transfer, all taxable years of the distributor or transferor and acquiring corporations which, with respect to a particular taxable year beginning after the date of distribution or transfer, constitute the same numbered preceding taxable year shall together be considered as a 1 taxable year even though the taxable years involved may not end on the same date. Thus, for example, all taxable years of the distributor or transferor and acquiring corporations which, with respect to the first taxable year of the acquiring corporation beginning after the date of distribution or transfer, constitutes the second preceding taxable year shall together be considered as 1 taxable year even though the taxable years involved may not end on the same date. Any excess charitable contributions carried over from preceding taxable years which are considered as 1 taxable year shall be taken into account by the acquiring corporation as one amount, without regard to the extent to which the contributions were made by a distributor or transferor corporation or the acquiring corporation.

(2) For purposes of this paragraph, each taxable year of the distributor or transferor corporation beginning on or before the date of distribution or transfer shall be treated as a preceding taxable year with reference to the acquiring corporation's taxable years beginning after such date. For example, the taxable year of a distributor or transferor corporation which ends on the date of distribution or transfer shall be considered a first preceding taxable year with reference to the acquiring corporation's first taxable year beginning after that date, a second preceding taxable year with reference to the acquiring corporation's second taxable year beginning after that date, and so forth with respect to succeeding taxable years of the acquiring corporation. Also, for example, the taxable year of a distributor or transferor corporation which immediately precedes its taxable year ending on the date of distribution or transfer shall be considered a second preceding taxable year with reference to the acquiring corporation's first taxable year beginning after that date.

(e) ***Illustration.*** The application of this section may be illustrated by the following example:

> *Example.* (i) X Corporation is organized on April 1, 1956, and computes its taxable income on the basis of the fiscal year ending March 31. Y Corporation is organized on July 1, 1955, and computes its taxable income on the basis of the fiscal year ending June 30. Z Corporation is organized on January 1, 1956, and computes its taxable income on the basis of the calendar year. On June 30, 1957, X Corporation distributes all its assets to Y Corporation in a complete liquidation to which section 381(a) applies. On November 30,

1957, Y Corporation transfers all its assets to Z Corporation in a statutory merger to which section 381(a) applies.

(ii) The 5-percent limitation (computed in the manner prescribed by section 170(b)(2)), the charitable contributions actually paid, and the excess contributions with respect to each such corporation during the taxable years involved are as follows:

Name of corporation	*X*	*X*	
Taxable year ending	*3-31-57*	*6-30-57*	
5-percent limitation	$20,000	$9,000	
Current contributions	32,000	15,000	
(Excess contributions)	(12,000)	(6,000)	
Name of corporation	*Y*	*Y*	*Y*
Taxable year ending	*6-30-56*	*6-30-57*	*11-30-57*
5-percent limitation	$15,000	$10,000	$18,000
Current contributions	29,000	0	17,000
(Excess contributions)	(14,000)		
Balance of 5-percent limitation		10,000	1,000
Name of corporation	*Z*	*Z*	*Z*
Taxable year ending	*12-31-56*	*12-31-57*	*12-31-58*
5-percent limitation	$10,000	$30,000	$58,000
Current contributions	40,000	28,000	92,000
(Excess contributions)	(30,000)		
Balance of 5-percent limitation		2,000	56,000

(iii) X Corporation was in existence for two taxable years, in each of which it made charitable contributions in excess of the maximum amount deductible for those years under section 170(b)(2). The excess contributions made in the year ending March 31, 1957, of $12,000, are deductible by X Corporation in its short taxable year ending June 30, 1957, and then by Y Corporation in its short taxable year ending November 30, 1957, in each instance in the manner and to the extent prescribed by section 170(b)(2) and this section. The excess contributions made by X Corporation in the year ending June 30, 1957, of $6,000, are deductible by Y Corporation in its short taxable year ending November 30, 1957, and then by Z Corporation in its taxable year 1958, in each instance in the manner and to the extent prescribed by section 170(b)(2) and this section.

(iv) Y Corporation was in existence for three taxable years. In the year ended June 30, 1956, its contributions in excess of the amount deductible for that year under section 170(b)(2) amounted to $14,000. Such excess is deductible by Y Corporation in its taxable year ending June 30, 1957, and, together with X Corporation's excess contributions of $18,000, in its short taxable year ending November 30, 1957, in each instance in the manner and to the extent prescribed by section 170(b)(2) and this section. Accordingly, since Y Corporation made no contributions in its taxable year ending June 30, 1957, its

deduction for that year on account of excess contributions carried over is $10,000, an amount equal to the 5-percent limitation of section 170(b)(2). The deduction is attributable to excess contributions made by Y Corporation in the taxable year ended June 30, 1956; thus, the excess of those contributions over $10,000, namely, $4,000, is deductible by Y Corporation in its short taxable year ending November 30, 1957, in the manner and to the extent prescribed by section 170(b)(2) and this section. With respect to the short taxable year ending November 30, 1957, the excess contributions of the second preceding year are X Corporation's excess contributions of $12,000 made in the year ending March 31, 1957, and Y Corporation's excess contributions of $4,000 made in the year ending June 30, 1956, which were not deductible by Y Corporation in the taxable year ending June 30, 1957, because of the 5-percent limitation prescribed by section 170(b)(2), an aggregate of $16,000. Inasmuch as Y Corporation's limitation for the short taxable year ended November 30, 1957, exceeds the contributions made in that year by $1,000, the excess contributions of the second preceding taxable year are deductible in the taxable year ending November 30, 1957, to the extent of $1,000 and the remainder ($15,000) is not deductible by any corporation in any taxable year. The excess contributions of the first preceding taxable year, namely, X Corporation's excess contributions made in the short taxable year ending June 30, 1957, are deductible by Z Corporation in its taxable year 1958, in the manner and to the extent prescribed in section 170(b)(2) and this section.

(v) Z Corporation has been in existence for 3 taxable years. The contributions made in 1956 in excess of the amount deductible for that year under section 170(b)(2) amounted to $30,000. Such excess is deductible by Z Corporation in its taxable year 1957 and, together with X Corporation's excess contributions of $6,000 (derived through Y Corporation) made in the taxable year ending June 30, 1957, in the taxable year 1958, in each instance in the manner and to the extent prescribed by section 170(b)(2) and this section. Thus, $2,000 of the $30,000 excess contributions made in the year 1956 are deducted in 1957 and the remainder ($28,000), together with X Corporation's excess contributions of $6,000 made in the short taxable year ending June 30, 1957, are deducted in 1958 since the aggregate of such amounts plus the contributions actually made in that year does not exceed the 5-percent limitation prescribed by section 170(b)(2).

[T.D. 6552, 26 FR 1992, Mar. 8, 1961, as amended by T.D. 6900, 31 FR 14642, Nov. 17, 1966; T.D. 7207, 37 FR 20795, Oct. 5, 1972]

§ 1.381(c)(20)-1 Carryforward of disallowed business interest.

(a) ***Carryover requirement.*** Section 381(c)(20) provides that the acquiring corporation in a transaction described in section 381(a) will succeed to and take into account the carryover of disallowed business interest described in section 163(j)(2) to taxable years ending after the date of distribution or transfer.

(b) ***Carryover of disallowed business interest described in section 163(j)(2).*** For purposes of section 381(c)(20) and this section, the term *carryover of disallowed business interest described in section 163(j)(2)* means the disallowed business interest expense carryforward (as defined in § 1.163(j)-1(b)(11)), including any disallowed disqualified interest (as defined in § 1.163(j)-1(b)(12)), and including the distributor or transferor corporation's disallowed business interest expense from the taxable year that ends on the date

of distribution or transfer. For the application of section 382 to disallowed business interest expense described in section 163(j)(2), see the regulations in this part under section 382 of the Code, including but not limited to § 1.382-2.

(c) ***Limitation on use of disallowed business interest expense carryforwards in the acquiring corporation's first taxable year ending after the date of distribution or transfer*** —

(1) ***In general.*** In determining the extent to which the acquiring corporation may use disallowed business interest expense carryforwards in its first taxable year ending after the date of distribution or transfer, the principles of §§ 1.381(c)(1)-1 and 1.381(c)(1)-2 apply with appropriate adjustments, including but not limited to the adjustments described in paragraphs (c)(2) and (3) of this section.

(2) ***One date of distribution or transfer within the acquiring corporation's taxable year.*** If the acquiring corporation succeeds to the disallowed business interest expense carryforwards of one or more distributor or transferor corporations on a single date of distribution or transfer within one taxable year of the acquiring corporation, then, for the acquiring corporation's first taxable year ending after the date of distribution or transfer, that part of the acquiring corporation's business interest expense deduction (if any) that is attributable to the disallowed business interest expense carryforwards of the distributor or transferor corporation is limited under this paragraph (c) to an amount equal to the post-acquisition portion of the acquiring corporation's section 163(j) limitation, as defined in paragraph (c)(4) of this section.

(3) ***Two or more dates of distribution or transfer in the taxable year.*** If the acquiring corporation succeeds to the disallowed business interest expense carryforwards of two or more distributor or transferor corporations on two or more dates of distribution or transfer within one taxable year of the acquiring corporation, the limitation to be applied under this paragraph (c) is determined by applying the principles of § 1.381(c)(1)-2(b) to the post-acquisition portion of the acquiring corporation's section 163(j) limitation, as defined in paragraph (c)(4) of this section.

(4) ***Definition.*** For purposes of this paragraph (c), the term *post-acquisition portion of the acquiring corporation's section 163(j) limitation* means the amount that bears the same ratio to the acquiring corporation's section 163(j) limitation (within the meaning of § 1.163(j)-1(b)(31)) (or, if the acquiring corporation is a member of a consolidated group, the consolidated group's section 163(j) limitation) for the first taxable year ending after the date of distribution or transfer (taking into account items to which the acquiring corporation succeeds under section 381, other than disallowed business interest expense carryforwards) as the number of days in that year after the date of distribution or transfer bears to the total number of days in that year.

(5) ***Examples.*** For purposes of this paragraph (c)(5), unless otherwise stated, X, Y, and Z are taxable domestic C corporations that were incorporated on January 1, 2021 and that file their tax returns on a calendar-year basis; none of X, Y, or Z is a member of a consolidated group; the small business exemption in § 1.163(j)-2(d) does not apply; interest expense is deductible except to the extent of the potential application of section 163(j); and the facts set forth the only corporate activity. The principles of this paragraph (c) are illustrated by the following examples.

(i) ***Example 1: Transfer before last day of acquiring corporation's taxable year*** —

(A) ***Facts.*** On October 31, 2022, X transferred all of its assets to Y in a statutory merger to which section 361 applies. For the 2021 taxable year, X had $400x of disallowed business interest expense, and Y had $0 of disallowed business interest expense. For the taxable year ending October 31, 2022, X had an additional $350x of disallowed business interest expense (X did not deduct any of its 2021 carryforwards in its 2022 taxable year). For the

taxable year ending December 31, 2022, Y had business interest expense of $100x, business interest income of $200x, and ATI of $1,000x. Y's section 163(j) limitation for the 2022 taxable year was $500x ($200x + (30 percent × $1,000x) = $500x).

(B) ***Analysis.*** Pursuant to § 1.163(j)-5(b)(2), Y deducts its $100x of current-year business interest expense (as defined in § 1.163(j)-1(b)(9)) before any disallowed business interest expense carryforwards (including X's carryforwards) from a prior taxable year are deducted. The aggregate disallowed business interest expense of X carried forward under section 381(c)(20) to Y's taxable year ending December 31, 2022, is $750x. However, pursuant to paragraph (c)(2) of this section, for Y's first taxable year ending after the date of distribution or transfer, the maximum amount of X's disallowed business interest expense carryforwards that Y can deduct is equal to the post-acquisition portion of Y's section 163(j) limitation. Pursuant to paragraph (c)(4) of this section, the post-acquisition portion of Y's section 163(j) limitation means Y's section 163(j) limitation times the ratio of the number of days in the taxable year after the date of distribution or transfer to the total number of days in that year. Therefore, only $84x of the aggregate amount ($500x × (61/365) = $84x) may be deducted by Y in that year, and the remaining $666x ($750x−$84x = $666x) is carried forward to the succeeding taxable year.

(C) ***Transfer on last day of acquiring corporation's taxable year.*** The facts are the same as in *Example 1* in paragraph (c)(5)(i)(A) of this section, except that X's transfer of its assets to Y occurred on December 31, 2022. For the taxable year ending December 31, 2022, X had an additional $350x of disallowed business interest expense (X did not deduct any of its 2021 carryforwards in its 2022 taxable year). For the taxable year ending December 31, 2023, Y had business interest expense of $100x, business interest income of $200x, and ATI of $1,000x. Y's section 163(j) limitation for the 2023 taxable year was $500x ($200x + (30 percent × $1,000x) = $500x). The aggregate disallowed business interest expense of X carried under section 381(c)(20) to Y's taxable year ending December 31, 2023, is $750x. Paragraph (c)(2) of this section does not limit the amount of X's disallowed business interest expense carryforwards that may be deducted by Y in the 2023 taxable year. Since the amount of Y's section 163(j) limit for the 2023 taxable year was $500x, Y may deduct the full amount ($100x) of its own business interest expense for the 2023 taxable year, along with $400x of X's disallowed business interest expense carryforwards.

(ii) ***Example 2: Multiple transferors on same date*** —

(A) ***Facts.*** On October 31, 2022, X and Y transferred all of their assets to Z in statutory mergers to which section 361 applies. For the 2021 taxable year, X had $300x of disallowed business interest expense, Y had $200x, and Z had $0. For the taxable year ending October 31, 2022, each of X and Y had an additional $125x of disallowed business interest expense (neither X nor Y deducted any of its 2021 carryforwards in 2022). For the taxable year ending December 31, 2022, Z had business interest expense of $100x, business interest income of $200x, and ATI of $1,000x. Z's section 163(j) limitation for the 2022 taxable year was $500x ($200x + (30 percent × $1,000x) = $500x).

(B) ***Analysis.*** The aggregate disallowed business interest expense of X and Y carried under section 381(c)(20) to Z's taxable year ending December 31, 2022, is $750x. However, pursuant to paragraph (c)(2) of this section, only $84x of the aggregate amount ($500x ×

(61/365) = $84x) may be deducted by Z in that year. Moreover, under paragraph (b)(2) of this section, this amount only may be deducted by Z in that year after Z has deducted its $100x of current-year business interest expense (as defined in § 1.163(j)-1(b)(9)).

(d) ***Applicability date.*** This section applies to taxable years beginning on or after November 13, 2020. However, taxpayers and their related parties, within the meaning of sections 267(b) and 707(b)(1), may choose to apply the rules of this section to ta axable year beginning after December 31, 2017, so long as the taxpayers and their related parties consistently apply the rules of the section 163(j) regulations (as defined in § 1.163(j)-1(b)(37)), and, if applicable, §§ 1.263A-9, 1.263A-15, 1.382-1, 1.382-2, 1.382-5, 1.382-6, 1.382-7, 1.383-0, 1.383-1, 1.469-9, 1.469-11, 1.704-1, 1.882-5, 1.1362-3, 1.1368-1, 1.1377-1, 1.1502-13, 1.1502-21, 1.1502-36, 1.1502-79, 1.1502-91 through 1.1502-99 (to the extent they effectuate the rules of §§ 1.382-2, 1.382-5, 1.382-6, and 1.383-1), and 1.1504-4, to that taxable year.

[T.D. 9905, 85 FR 56832, Sept. 14, 2020]

§ 1.381(c)(21)-1 Pre-1954 adjustments resulting from change in method of accounting.

(a) ***Carryover requirement.*** Section 381(c)(21) provides that, in a transaction to which section 381(a) applies, an acquiring corporation shall take into account the net amount of any adjustments described in section 481(b)(4) (relating to adjustments arising from changes in accounting methods initiated by the taxpayer attributable to pre-1954 Code years) of the distributor or transferor corporation to the extent that such net amount of such adjustments has not been taken into account in any taxable year, including a short taxable year, by the distributor or transferor corporation. The acquiring corporation shall take into account in each taxable year beginning with the taxable year ending after the date of distribution or transfer the net amount of such adjustments in the same manner and at the same time as such net amount would have been taken into account by the distributor or transferor corporation. Thus, the amount of any such adjustment which the acquiring corporation shall take into account in each taxable year shall be the same amount that would have been taken into account in each taxable year by the distributor or transferor corporation.

(b) This section may be illustrated by the following example:

> *Example.* On January 1, 1960, X Corporation, a calendar year taxpayer, voluntarily changed its method of accounting giving rise to a $50,000 adjustment under section 481(a), of which $20,000 is attributable to pre-1954 Code years. Under section 481(b)(4) the $20,000 adjustment is to be spread over 1960 and the following 9 years at the rate of $2,000 each year. On November 1, 1963, all the assets of X Corporation are acquired by Y Corporation in a transaction to which section 381(a) applies. Y Corporation reports its income on a fiscal year ending June 30. X and Y Corporations must take into account the $20,000 adjustment at the rate of $2,000 in each taxable

year in the following time and manner:

X CORPORATION

Calendar years 1960-62 ($2,000 × 3)	$6,000	
Short taxable year ending Nov. 1, 1963 ($2,000 × 1)	2,000	$8,000
Y Corporation		
Fiscal years ending:		
June 30, 1964 ($2,000 × 1)	2,000	
June 30, 1965-69 ($2,000 × 5)	10,000	12,000
		20,000

(c) ***Successive transactions to which section 381(a) applies.*** The provisions of this section shall apply in the case of successive transactions to which section 381(a) applies. Thus, if R Corporation, which was taking into account adjustments described in section 481(b)(4), distributes or transfers its assets to S Corporation in a transaction to which section 381(a) applies, and S Corporation was required to take into account any remaining portion of such adjustments under section 381(c)(21) and this section, and if subsequently S Corporation distributes or transfers its assets to T Corporation in a transaction to which section 381(a) applies, then T Corporation, under section 381(c)(21) and this section, shall take into account any remaining portion of such adjustments not previously taken into account by R and S Corporations.

(d) ***Acquiring corporation not receiving all the assets.*** The adjustments described in this section acquired from a distributor or transferor corporation by an acquiring corporation in a transaction to which section 381(a) applies is not reduced by reason of the fact that the acquiring corporation does not acquire 100 percent of the assets of the distributor or transferor corporation.

[T.D. 6553, 26 FR 2171, Mar. 15, 1961]

§ 1.381(c)(22)-1 Successor life insurance company.

(a) ***Carryover requirement.*** If in a taxable year beginning after December 31, 1957, a distributor or transferor corporation which is an insurance company is acquired by a corporation which is an insurance company in a transaction to which section 381(a) applies, section 381(c)(22) provides that the acquiring corporation shall take into account the appropriate items which the distributor or transferor corporation was required to take into account for purposes of part I, subchapter L, chapter 1 of the Internal Revenue Code. Furthermore, except as otherwise provided by this section, the acquiring corporation shall take into account the items described in paragraphs (2) through (21), other than paragraphs (14), (15), and (17), of section 381(c) and the regulations thereunder. For example, the acquiring corporation shall take into account the reserves described in section 810(c) distributed or transferred to it as of the close of the date of distribution or transfer by the distributor or transferor corporation in accordance with the provisions of section 381(c)(4) and the regulations thereunder. For provisions defining the date of distribution or transfer, see paragraph (b) of § 1.381(b)-1.

(b) ***Items required to be taken into account by acquiring corporation.*** If a transaction meets the requirements of paragraph (a) of this section, the acquiring corporation shall, except as otherwise provided, take into account as of the close of the date of distribution or transfer the following items of the distributor or transferor corporation:

(1) The operations loss carryovers (as determined under section 812), subject to conditions and limitations consistent with the conditions and limitations prescribed in section 381(c)(1) and the regulations thereunder. For example, a loss from operations for a loss year of a distributor or transferor corporation which ends on or before the last day of a loss year of the acquiring corporation shall be considered to be a loss from operations for a year prior to such loss year of the acquiring corporation. All references in section 381(c)(1) and the regulations thereunder to section 172 shall be construed as referring to the appropriate corresponding provisions of section 812. Thus, a reference to section 172(b) shall be construed as referring to section 812 (b) and (d). In determining the span of years for which a loss from operations may be carried, the number of taxable years for which the distributor or transferor corporation was authorized to do business as an insurance company shall be taken into account. For purposes of this determination, the taxable year of the distributor or transferor corporation which ends on the date of distribution or transfer shall be taken into account even though such taxable year is a period of less than 12 months.

(2)

(i) The investment yield and the beginning of the year asset balance for the distributor or transferor corporation's taxable year ending with the close of the date of distribution or transfer. Such items shall be integrated with the investment yield and beginning of the year asset balance of the acquiring corporation for its first taxable year ending after such date of distribution or transfer for purposes of determining the current earnings rate of the acquiring corporation for such taxable year. Furthermore, for purposes of determining the average earnings rate of the acquiring corporation, the investment yield and mean of the assets of the distributor or transferor corporation for its 4 taxable years immediately preceding its taxable year which closes with the date of distribution or transfer shall be integrated with the investment yield and mean of the assets of the acquiring corporation for such corresponding taxable years.

(ii) The provisions of this subparagraph may be illustrated by the following examples:

> *Example 1.* X qualified as a life insurance company in 1949. Y qualified as a life insurance company in 1951. On June 30, 1961, at which time both X and Y were life insurance companies (as defined in section 801(a)), X transferred all its assets to Y in a statutory merger to which section 361 applies. For its taxable year ending on June 30, 1961, X had investment yield of $15 and assets at the beginning of such taxable year of $450. For purposes of determining its current earnings rate for its taxable year ending on December 31, 1961, Y had investment yield of $45 (including the $15 of investment yield of X), assets at the beginning of such taxable year of $1,250 (including the $450 of X's assets at the beginning of its taxable year 1961), and assets at the end of such taxable year of $1,750 (after the application of section 806(a)). Under the provisions of subdivision (i) of this subparagraph, the current earnings rate of Y for the taxable year 1961 would be 3 percent, determined by dividing the investment yield of Y, $45, by the

mean of the assets of Y, $1,500 ($1,250 + $1,750 ÷ 2). In order to determine its average earnings rate and adjusted reserves rate for the taxable year 1961, Y would make up the following schedule:

Investment yield				Mean of assets			Current earnings rate of Y
Taxable year	Column 1—X	Column 2—Y	Column 3 (Col. 1 + Col. 2) integrated investment yield	Column 4—X	Column 5—Y	Column 6 (Col. 4 + Col. 5) integrated means of assets	Column 7 (Col. 3 ÷ Col. 6)
1960	$16	$26	$42	$400	$800	$1,200	3.5
1959	16	24	40	500	750	1,250	3.2
1958	17	22	39	650	650	1,300	3.0
1957	19	21	40	700	500	1,200	3.3

> For the taxable year 1961, Y would have an average earnings rate of 3.2 percent, computed by taking into account the current earnings rates for the taxable year 1961 and each of the 4 taxable years immediately preceding such taxable year. The adjusted reserves rate for such taxable year would be 3 percent since the current earnings rate of 3 percent for 1961 is lower than the average earnings rate of 3.2 percent.

Example 2. The facts are the same as in *Example (1),* except that the taxable year in issue is 1962, and the current earnings rate of Y for such taxable year was 3.8 percent. For the taxable year 1962, Y would have an average earnings rate of 3.3 percent, computed by taking into account only the current earnings rates for the taxable year 1962 and each of the 4 taxable years immediately preceding such taxable year. The adjusted reserves rate for such taxable year would be 3.3 percent since the average earnings rate of 3.3 percent is lower than the 1962 current earnings rate of 3.8 percent.

(3) To the extent there are any amounts accrued for discounts in the nature of interest which have not been included as interest paid under section 805(e)(3), the acquiring corporation shall be treated as the distributor or transferor corporation for purposes of including such amounts as interest paid.

(4) Any adjustment required by section 806(b) with respect to an item described in section 810(c) shall be made by the acquiring corporation in its first taxable year which begins after the date of distribution or transfer.

(5) The amount of the deduction provided by section 809(d)(6), as limited by section 809(f), for all taxable years of the distributor or transferor corporation which end on and before the date of distribution or transfer (irrespective of whether or not the distributor or transferor corporation claimed this deduction for such taxable years) for the purpose of determining the limitation under section 809(d)(6).

(6) [Reserved]

(7)

(i) The dollar balances in the shareholders surplus account, policyholders surplus account, and other accounts provided, however, that the acquiring corporation is a stock life insurance company. The dollar balance in the policyholders surplus account shall reflect the amount (if any) treated as a subtraction from such account by reason of the application of the limitation provided under section 815(d)(4) immediately prior to the close of the date of distribution or transfer. To the extent that any amount must be added to the shareholders surplus account as a result of the application of the limitation provided under section 815(d)(4), the acquiring corporation shall be treated as the distributor or transferor corporation as of its first taxable year which begins after the date of distribution or transfer. However, any amounts attributable to money or other property not permitted to be received without the recognition of gain (*i.e.*, boot) distributed to a person other than the acquiring corporation under section 381(a) shall be treated as a distribution under section 815.

(ii) Notwithstanding paragraph (b)(7)(i) of this section, if the distributor or transferor corporation distributes or transfers less than 50 percent of its insurance business to the acquiring corporation, then the acquiring corporation shall succeed to a ratable portion of the dollar balances in the distributor's or transferor's shareholders surplus account, policyholders surplus

account, and other accounts. The percentage of the accounts to which the acquiring corporation succeeds is determined by the ratio of the distributor's or transferor's insurance reserves for the contracts transferred to the acquiring corporation, as maintained under section 816(b), to the distributor's or transferor's reserves for all of its contracts maintained under section 816(b) immediately before the earlier of the distribution or transfer or the adoption of the plan of liquidation or reorganization. For transactions in which the distributor liquidates pursuant to an election under section 338(h)(10), see § 1.338-11(f) for the treatment of its remaining policyholders surplus account. For all other transactions subject to this paragraph, the distributor or transferor must take into account as income its remaining policyholders surplus account to the extent the fair market value of its assets (net of liabilities) distributed or transferred to the acquiring corporation or to the transferor's shareholders pursuant to the plan of liquidation or reorganization exceeds the distributor's or transferor's remaining shareholders surplus account.

(iii) If, pursuant to a plan in existence at the time of the liquidation or reorganization, the acquiring corporation transfers any insurance or annuity contract it received in the liquidation or reorganization to another person, then, for purposes of paragraph (b)(7)(ii) of this section, that contract shall be deemed to have been transferred by the transferor to that other person after the adoption of the plan of liquidation or reorganization. If the transferor is an old target within the meaning of § 1.338(h)(10)-1(d)(2), any transfer by the acquiring corporation to the purchasing corporation (as defined in § 1.338-2(c)(11)) or to any person related to the purchasing corporation within the meaning of section 197(f)(9)(C) within two years of the transfer described in section 381(a) will be presumed to have been pursuant to a plan in existence at the time of the liquidation or reorganization.

(iv) If the acquiring corporation is a mutual life insurance company, the dollar balances in the shareholders surplus account, policyholders surplus account, and other accounts shall not be taken into account by such acquiring corporation and the distributor or transferor corporation shall be subject to the provisions of section 815(d)(2)(A) as of the close of the date of distribution or transfer.

(v) The provisions of this paragraph (b)(7) are illustrated by the following examples:

Example 1. P buys the stock of insurance company target, T, from S for $16, and P and S make a section 338(h)(10) election for T. T transfers no insurance contracts to S, or any related party, in connection with the transaction. Further, assume that T had $10 in its policyholders surplus account and no balance in its shareholders surplus account or other accounts. Immediately before the deemed asset sale, old T is required to include as ordinary income the $10 in the policyholders surplus account.

Example 2. Assume the same facts as in *Example 1*, except that T holds a block of life insurance contracts P does not wish to acquire, and, immediately before the sale of T stock, S causes T to distribute the unwanted block of insurance contracts to S. Further, assume that S is an insurance company, that the distribution of contracts is one of series of distributions in complete cancellation or redemption of all of its stock (the others occurring under § 1.338(h)(10)-1(d)(4)(i)) that qualifies as a complete liquidation under section 332, and that old T's tax reserves with respect to the distributed contracts represent one-tenth of old T's tax reserves with respect to all of its life insurance contracts. Because T transfers less than 50

percent of its life insurance business to S in a transaction to which section 381(a) applies, S succeeds to a ratable portion of old T's policyholders surplus account ($1), and old T includes as ordinary income the remaining $9 of that account.

Example 3. Assume the same facts as in *Example 2*, except that 14 months after the deemed asset sale, S and X, a person related to new T under section 197(f)(9)(C), engage in an indemnity reinsurance transaction involving the contracts transferred to S from old T. Because X is related to the purchasing corporation (P) under section 197(f)(9)(C), and X receives contracts from the acquiring corporation (S) that S acquired from old T within two years of the transfer from old T to S, the contracts are presumed to have been transferred pursuant to a plan in existence at the time of old T's liquidation. If S cannot establish otherwise, old T is treated as having distributed the remainder of its policyholders surplus account. In that case, in the taxable year of the indemnity reinsurance transaction, S takes into account as ordinary income the portion of the old T's accounts ($1) that old T or S has not previously taken into account as income.

(8) To the extent that any amount must be added to the shareholders surplus account as a result of an election made under section 815(d)(1) by the distributor or transferor corporation, the acquiring corporation shall be treated as the distributor or transferor corporation as of its first taxable year which begins after the date of distribution or transfer.

(9) The amount of the life insurance reserves at the end of 1958, but only for the purpose of applying the limitation provided under section 815(d)(4)(B).

(10) To the extent there are amounts subject to the provisions of section 817(d), the acquiring corporation shall be treated as the distributor or transferor corporation.

(11) To the extent there are any installments of tax imposed by section 818(e)(3)(A) remaining to be paid, the acquiring corporation shall be treated as the distributor or transferor corporation for the purpose of paying such installments.

(12) The capital loss carryovers, subject to conditions and limitations consistent with the conditions and limitations prescribed in section 381(c)(3) and the regulations thereunder, except that any net capital loss of the distributor or transferor corporation for a taxable year beginning before January 1, 1959, shall not be taken into account. See section 817(c).

(13)

(i) The transferor's unamortized policy acquisition expenses or positive or negative capitalization requirements on its specified insurance contracts.

(ii) Notwithstanding paragraph (b)(13)(i) of this section, if the distributor or transferor corporation transfers less than 50 percent of its insurance business to the acquiring corporation, then the acquiring corporation shall succeed to a ratable portion of the transferor's unamortized policy acquisition expenses or positive or negative capitalization requirements on its specified insurance contracts. The percentage of such acquisition expenses or positive or negative capitalization requirements to which the acquiring corporation succeeds is determined by the ratio of the distributor's or transferor's insurance reserves for the contracts transferred to the acquiring corporation, as maintained under section 816(b), to the distributor's or transferor's reserves for all of its contracts maintained under section 816(b) immediately before the earlier of the distribution or transfer or the adoption of the plan of liquidation or reorganization. For amounts of the distributor's or transferor's unamortized policy acquisition expenses or positive or negative capitalization requirements on its specified insurance contracts to which the

acquirer does not succeed to under this paragraph, and, for transactions in which the transferor liquidates pursuant to an election under section 338(h)(10), see § 1.338-11(f) for the treatment of its capitalized amounts under section 848.

(iii) If, pursuant to a plan in existence at the time of the liquidation or reorganization, the acquiring corporation transfers any insurance or annuity contract it received in the liquidation or reorganization to another person, then, for purposes of paragraph (b)(13)(ii) of this section, that contract shall be deemed to have been transferred by the transferor to that other person after the adoption of the plan of liquidation or reorganization. If the transferor is an old target within the meaning of § 1.338(h)(10)-1(d)(2), any transfer by the acquiring corporation to the purchasing corporation (as defined in § 1.338-2(c)(11)) or to any person related to the purchasing corporation within the meaning of section 197(f)(9)(C) within two years of the transfer described in section 381(a) will be presumed to have been pursuant to a plan in existence at the time of the liquidation or reorganization.

(14) The special loss discount account, provided, however, that the acquiring corporation will succeed to the special loss discount account only to the extent that it is attributable to the portion of the transferor's insurance business acquired by the acquiring corporation in the section 381 transaction.

(c) *Effective dates* —

(1) ***In general.*** This section applies to the acquisition of assets of an insurance company by another insurance company in a transaction to which section 381 applies for taxable years beginning after December 31, 1957.

(2) ***Special rules for section 381 transactions.*** Paragraphs (a), (b)(7), (b)(13), and (b)(14) of this section apply to the acquisition of assets of an insurance company by another insurance company in a transaction to which section 381 applies on or after April 10, 2006.

(3) ***Joint retroactive election.*** The distributor or transferor and the acquiring corporation may jointly make an irrevocable election to apply paragraphs (a), (b)(7), (b)(13), and (b)(14) of this section to a transaction to which section 381 applies occurring before April 10, 2006 provided that the taxable year that includes the acquisition and all subsequent affected taxable years of both the distributor or transferor and the acquiring corporation are years for which an assessment of deficiency or a refund for overpayment is not prevented by any law or rule of law.

(4) ***Time and manner of making the joint election.*** The distributor or transferor and the acquiring corporation may make an election described in paragraph (c)(2) of this section by each attaching a statement to its original or amended income tax return for the taxable year that includes the acquisition of assets in a transaction to which section 381 applies. The statement must be entitled "Election to retroactively apply the rules of section 1.381(c)(22)-1 to a transaction completed before April 10, 2006" and must include the following information—

(i) The name and EIN of the distributor or transferor and the acquiring corporation; and

(ii) The following declaration (or a substantially similar declaration): The distributor or transferor and the acquiring corporation have each amended its income tax returns for the taxable year that includes the acquisition of assets in a transaction to which section 381 applies and for all affected subsequent years to reflect the rules in paragraphs (a), (b)(7), (b)(13), and (b)(14) of section 1.381(c)(22)-1.

[T.D. 6625, 27 FR 12541, Dec. 19, 1962, as amended by T.D. 9257, 71 FR 18004, Apr. 10, 2006; T.D. 9377, 73 FR 3873, Jan. 23, 2007; T.D. 9911, 85 FR 64392, Oct. 13, 2020]

§ 1.381(c)(23)-1 Investment credit carryovers in certain corporate acquisitions.

(a) ***Carryover requirement.***

(1) Section 381(c)(23) requires the acquiring corporation in a transaction to which section 381 applies to succeed to and take into account under such regulations as may be prescribed by the Secretary or his delegate, the investment credit carryovers of the distributor or transferor corporation. To determine the amount of these carryovers as of the close of the date of distribution or transfer, and to integrate them with any carryovers and carrybacks of the acquiring corporation for purposes of determining the amount of credit allowed by section 38 to the acquiring corporation for taxable years ending after the date of distribution or transfer, it is necessary to apply the provisions of sections 46, 47, and 48 in accordance with the conditions and limitations of this section.

(2) The investment credit carryovers and carrybacks of the acquiring corporation determined as of the close of the date of distribution or transfer shall be computed without reference to any unused credit of a distributor or transferor corporation. The investment credit carryovers of a distributor or transferor corporation as of the close of the date of distribution or transfer shall be determined without reference to any unused credit of the acquiring corporation.

(b) ***Carryback of unused credits.*** An unused credit of the acquiring corporation for any taxable year ending after the date of distribution or transfer shall not be carried back in computing the credit allowed by section 38 to a distributor or transferor corporation. However, an unused credit of the acquiring corporation for any such taxable year shall be carried back in accordance with section 46(b)(1) in computing the credit allowed to the acquiring corporation for a taxable year ending on or before the date of distribution or transfer. If a distributor or transferor corporation remains in existence after the date of distribution or transfer, an unused credit sustained by it for any taxable year beginning after such date shall be carried back in accordance with section 46(b)(1) in computing the credit allowed by section 38 to such corporation for a taxable year ending on or before that date, but may not be carried back or over in computing the credit allowed by section 38 to the acquiring corporation.

(c) ***Computation of carryovers and carrybacks.***

(1) Subject to the modifications set forth in this paragraph, the provisions of § 1.46-2 shall apply in computing carryovers and carrybacks of unused credits to taxable years of the acquiring corporation.

(2)

(i) The investment credit carryovers available to the distributor or transferor corporation as of the close of the date of distribution or transfer shall first be carried to the first taxable year of the acquiring corporation ending after that date. This rule applies whether the date of distribution or transfer is on the last day, or any other day, of the acquiring corporation's taxable year.

(ii) The investment credit carryovers available to the distributor or transferor corporation as of the close of the date of distribution or transfer shall be carried to the acquiring corporation without diminution by reason of the fact that the acquiring corporation does not acquire 100 percent of the assets of the distributor or transferor corporation.

(3) An unused credit of a distributor or transferor corporation for a taxable year which ends on or before the last day of a taxable year of the acquiring corporation shall be considered to be an unused credit for a year prior to such taxable year of the acquiring corporation. If the acquiring corporation has acquired the assets of two or more distributor or transferor corporations on the same date of distribution or transfer, the unused credit years of the distributor or transferor corporations shall be taken into account in the order in which such years terminate. If any one of the unused credit years of a distributor or transferor corporation ends on the same day as the unused credit year of another distributor or transferor corporation, either unused credit year may be taken into account before the other.

(4) The extent to which an investment credit carryover of a distributor or transferor corporation or of an acquiring corporation from an unused credit year ending before January 1, 1971, may be taken into account by the acquiring corporation for a taxable year beginning after December 31, 1970, shall be determined without regard to the credit earned by the acquiring corporation for such year. Thus, in such a case, the amount of unused credit from such unused credit years which may be taken into account in a taxable year of the acquiring corporation beginning after December 31, 1970, shall be determined solely with reference to the limitation based on amount of tax for such taxable year (without reduction for the credit earned for such year).

(d) ***Computation of carryovers when date of distribution or transfer occurs on last day of acquiring corporation's taxable year.*** The computation of the investment credit carryovers from the distributor or transferor corporation and from the acquiring corporation in a case where the date of distribution or transfer occurs on the last day of a taxable year of the acquiring corporation may be illustrated by the following example:

Example. X Corporation and Y Corporation were organized on January 1, 1971, and each corporation files its return on the calendar year basis. On December 31, 1972, X transfers all its assets to Y in a statutory merger to which section 361 applies. X's credit earned and its limitation based on amount of tax for its taxable years 1971 and 1972 are as follows:

X Corporation's taxable year	Credit earned	Limitation based on amount of tax
1971	$10,000	$5,000
1972	5,000	3,000

Y's credit earned and its limitation based on amount of tax for its taxable years 1971 through 1973 are as follows:

Y Corporation's	Credit earned	Limitation based on amount of tax
1971	$6,000	$5,000
1972	5,000	3,000

Y Corporation's	Credit earned	Limitation based on amount of tax
1973	3,000	10,000

The sequence for the allowance of unused credits of X Corporation and Y Corporation, and the computation of the carryovers to Y Corporation's calendar year 1974, may be illustrated as follows:

(1) *X Corporation's 1971 unused credit.* The carryover to Y 1974 is $0, computed as follows:

Unused credit	$5,000
Excess of X's 1972 limitation based on tax over credit earned	0
Carryover to Y's year 1973	5,000
Excess of Y's 1973 limitation based on tax over credit earned	7,000
Carryover to Y's year 1974	0

(2) *Y Corporation's 1971 unused credit.* The carryover to Y 1974 is $0, computed as follows:

Unused credit	$1,000
Excess of Y's 1972 limitation based on tax over credit earned	0
Carryover to Y's year 1973	1,000
Excess of Y's 1973 limitation based on tax over credit earned	7,000
Less: X's $5,000 carryover from 1971	5,000
	2,000
Carryover to Y's year 1974	0

(3) *X Corporation's 1972 unused credit.* The carryover to Y 1974 is $1,000, computed as follows:

Unused credit	$2,000
Excess of Y's 1973 limitation based on tax over credit earned	7,000
Less: X's $5,000 carryover from 1971 and Y's $1,000 carryover from 1971	6,000
	1,000

Carryover to Y's year 1974	1,000

(4) *Y Corporation's 1972 unused credit.* The carryover to Y 1974 is $2,000, computed as follows:

Unused credit	$2,000
Excess of Y's 1973 limitation based on tax over credit earned	7,000
Less: X's $5,000 carryover from 1971 Y's $1,000 carryover from 1971 and X's $1,000 carryover from 1972	7,000
	0
Carryover to Y's year 1974	2,000

(5) The aggregate of the investment credit carryovers to Y's year 1974 is $3,000, computed as follows:

X's 1972 unused credit	$1,000
Y's 1972 unused credit	2,000
Total	3,000

(e) ***Computation of carryovers when date of distribution or transfer is not on last day of acquiring corporation's taxable year.***

(1) If the date of distribution or transfer occurs on any day other than the last day of a taxable year of the acquiring corporation, the amount which may be added to the amount allowable as a credit by section 38 for the first taxable year of the acquiring corporation ending after the date of distribution or transfer (hereinafter called the "year of acquisition") shall be determined in the following manner. The year of acquisition shall be considered as though it were 2 taxable years. The first of such 2 taxable years shall be referred to in this paragraph as the preacquisition part year and shall begin with the beginning of the year of acquisition and end with the close of the date of distribution or transfer. The second of such 2 taxable years shall be referred to in this paragraph as the postacquisition part year and shall begin with the day following the date of distribution or transfer and shall end with the close of the year of acquisition.

(2) The excess limitation for the year of acquisition (i.e., the excess of the limitation based on the amount of tax for such year over the amount of credit earned for such year) shall be divided between the preacquisition part year and the postacquisition part year in proportion to the number of days in each. Thus, if in a statutory merger to which section 361 applies Y Corporation, a calendar year taxpayer, acquires the assets of X Corporation on June 30, 1975, and Y Corporation has an excess

limitation of $36,500 for its calendar year 1975, then the excess limitation for the preacquisition part year would be $18,100 ($36,500 × 181/365) and the excess limitation for the postacquisition part year would be $18,400 ($36,500 × 184/365).

(3) An unused credit of the acquiring corporation shall be carried to and applied against the excess limitation for the preacquisition part year and then carried to and applied against the excess limitation for the postacquisition part year, whereas an unused credit of the distributor or transferor corporation shall not be carried to the preacquisition part year but shall only be carried to and applied against the excess limitation for the postacquisition part year. For special rule relating to carryovers from taxable years ending before January 1, 1971, to taxable years beginning after December 31, 1970, see subparagraph (6) of this paragraph.

(4) Though considered as two separate taxable years for purposes of this paragraph, the preacquisition part year and the postacquisition part year are treated as one taxable year in determining the years to which an unused credit is carried under section 46(b)(1).

(5) The preceding subparagraphs may be illustrated by the following example:

Example. X Corporation and Y Corporation were organized on January 1, 1971, and each corporation files its return on the calendar year basis. On May 1, 1972, X transfers all its assets to Y in a statutory merger to which section 361 applies. X's credit earned and its limitation based on amount of tax for its taxable years 1971 and ending May 1, 1972, are as follows:

X Corporation's taxable year	Credit earned	Limitation based on amount of tax
1971	$11,000	$5,000
Ending 5-1-72	3,000	6,000

Y's credit earned and its limitation based on amount of tax for its taxable years 1971 and 1972 are as follows:

Y Corporation's taxable year	Credit earned	Limitation based on amount of tax
1971	$7,000	$3,000
1972	3,000	9,000

The sequence for the allowance of unused credits of X Corporation and Y Corporation, and the computation of carryovers to Y Corporation's calendar year 1973, may be illustrated as follows:

(i) *X Corporation's 1971 unused credit.* The carryover to Y 1973 is $0, computed as follows:

Unused credit	$6,000
Excess of X's 5-1-72 limitation based on tax over credit earned	3,000
Carryover to Y's postacquisition part year 1972	3,000
Excess limitation for Y's postacquisition part year ($6,000 × 244/366)	4,000
Carryover to Y's year 1973	0

(ii) *Y Corporation's 1971 unused credit.* The carryover to Y 1973 is $1,000, computed as follows:

Unused credit	$4,000
Excess limitation for Y's preacquisition part year ($6,000 × 122/ 366)	2,000
Carryover to Y's postacquisition part year	2,000
Excess limitation for Y's postacquisition part year ($6,000 × 244/366)	4,000
Less: X's $3,000 carryover from 1971	3,000
	1,000
Carryover to Y's year 1973	1,000

(iii) The aggregate of the investment credit carryovers to Y's year 1973 is $1,000, computed as follows:

X's 1971 unused credit	0
Y's 1971 unused credit	$1,000
Total	1,000

(6) If the year of acquisition is a taxable year beginning after December 31, 1970, and if there is an unused credit of the distributor or transferor corporation or of the acquiring corporation arising in an unused credit year ending before January 1, 1971, which may be carried to such year of acquisition (see paragraph (c)(4) of this section), then in applying subparagraphs (1), (2), and (3) of this paragraph, in lieu of dividing the excess limitation for the year of acquisition between the preacquisition and postacquisition part years, only the limitation based on the amount of tax for such year (i.e., without reduction for the credit earned) shall be divided between the preacquisition and postacquisition part years. If there is also an unused credit arising in an unused credit year

ending after December 31, 1970, which may be carried to the year of acquisition, then for the purpose of determining the amount of such unused credit which may be taken into account for such year of acquisition, the credit earned for the year of acquisition shall first be applied against the limitation based on amount of tax for the preacquisition part year (reduced by any investment credit carryovers to such part year from unused credit years ending before January 1, 1971) and the excess, if any, shall then be applied against the limitation based on amount of tax for the postacquisition part year (also reduced by any investment credit carryovers to such part year from unused credit years ending before January 1, 1971).

(7) Subparagraph (6) of this paragraph may be illustrated by the following example:

Example. X Corporation and Y Corporation were organized on January 1, 1970, and each corporation files its return on the calendar year basis. On May 1, 1972, X transfers all its assets to Y in a statutory merger to which section 361 applies. X's credit earned and its limitation based on amount of tax for its taxable years 1970, 1971, and ending May 1, 1972, are as follows:

X Corporation's taxable year	Credit earned	Limitation based on amount of tax
1970	$300	
1971	100	
Ending 5-1-72	200	

Y's credit earned and its limitation based on amount of tax for its taxable years 1970 through 1972 are as follows:

Y Corporation's taxable year	Credit earned	Limitation based on amount of tax
1970	$100	
1971	200	
1972	300	$900

The sequence for the allowance of unused credits of X Corporation and Y Corporation, and the computation of carryovers to Y Corporation's calendar year 1973, may be illustrated as follows:

(i) *X Corporation's 1970 unused credit.* The carryover to Y 1973 is $0, computed as follows:

Unused credit	$300
X Corporation's 1971 limitation based on tax	0
X Corporation's 5-1-72 limitation based on tax	0
Carryover to Y's postacquisition part year 1972	300
Limitation based on tax for Y's postacquisition part year 1972 ($900 × 244/366)	600
Carryover to Y's year 1973	0

(ii) *Y Corporation's 1970 unused credit.* The carryover to Y 1973 is $0, computed as follows:

Unused credit	$100
Y Corporation's 1971 limitation based on tax	0
Carryover to Y's preacquisition part year 1972	100
Limitation based on tax for Y's preacquisition part year 1972 ($900 × 122/366)	300
Carryover to Y's postacquisition part year 1972	0

(iii) *Y Corporation's credit earned for 1972.* The carryover to Y 1973 is $0, computed as follows:

Credit earned	$300
Limitation based on tax for preacquisition part year 1972 ($900 × 122/366)	300
Less: Y's $100 carryover from 1970	100
	$200
Carryover to Y's postacquisition part year 1972	100
Limitation based on tax for postacquisition part year 1972 ($900 × 244/366)	600
Less: X's $300 carryover from 1970	$300
	300

Carryover to Y's year 1973	0

(iv) *X Corporation's 1971 unused credit.* The carryover to Y 1973 is $0, computed as follows:

Unused credit	$100
Excess of X's 1972 limitation based on tax over credit earned	0
Carryover to Y's postacquisition part year 1972	100
Limitation based on tax for postacquisition part year 1972 ($900 × 244/366)	600
Less:	
X's $300 carryover from 1970	300
Y's 1972 credit earned for postacquisition part year	100
	400
	200
Carryover to Y's year 1973	0

(v) *Y Corporation's 1971 unused credit.* The carryover to Y 1973 is $100, computed as follows:

Unused credit	$200
Limitation based on tax for preacquisition part year 1972 ($900 × 122/366)	300
Less:	
Y's $100 carryover from 1970	100
Y's 1972 credit earned for preacquisition part year 1972	200
	300
	0
Carryover to Y's postacquisition part year	200
Limitation based on tax for postacquisition part year 1972 ($900 × 244/366)	600
Less:	
X's $300 carryover from 1970	300
Y's 1972 credit earned for postacquisition part year 1972	100
X's $100 carryover from 1971	100
	500
	100

Carryover to Y's year 1973	100

(vi) *X Corporation's 5-1-72 unused credit.* The carryover to Y 1973 is $200, computed as follows:

Unused credit	$200
Limitation based on tax for postacquisition part year 1972 ($900 × 244/366)	600
Less:	
X's $300 carryover from 1970	300
Y's 1972 credit earned for postacquisition part year 1972	100
X's $100 carryover from 1971, and Y's $100 carryover from 1971	200
	600
	0
Carryover to Y's year 1973	200

(vii) The aggregate of the investment credit carryovers to Y 1973 is $300, computed as follows:

Y's 1971 unused credit	$100
X's 1972 unused credit	200
Total	300

(8) If the year of acquisition is a taxable year to which the limitation provided in § 1.46-2(b)(2) (relating to 20- percent limitation on carryovers and carrybacks to certain taxable years) applies, then for purposes of applying such limitation the preacquisition part year and the postacquisition part year shall each be considered a fractional part of a year, but, if the date of distribution or transfer is not on the last day of a month, the entire month in which the date of distribution or transfer occurs shall be considered as included in the preacquisition part year and no portion thereof shall be considered as included in the postacquisition part year.

(9) If the acquiring corporation succeeds to the investment credit carryovers of two or more distributor or transferor corporations on two or more dates of distribution or transfer during the same taxable year of the acquiring corporation, the manner in which the unused credits of the distributor or transferor corporations shall be applied shall be determined consistently with the rules prescribed in paragraph (c) of § 1.381(c)(1)-2.

(f) ***Successive acquiring corporations.*** An acquiring corporation which, in a distribution or transfer to which section 381(a) applies, acquires the assets of a distributor or transferor corporation which previously acquired the assets of another corporation in a transaction to which section 381(a) applies, shall succeed to and take into account, subject to the conditions and limitations of § 1.46-2 and this section, the investment credit carryovers available to the first acquiring corporation under § 1.46-2 and this section.

(g) ***Recomputation of credit allowed by section 38 on certain property of acquiring corporation.*** If section 38 property acquired by an acquiring corporation in a transaction to which section 381(a) applies is disposed of, or otherwise ceases to be section 38 property (or becomes public utility property) with respect to the acquiring corporation, before the close of the estimated useful life which was taken into account in computing the distributor or transferor corporation's qualified investment, see paragraph (e) of § 1.47-3.

(h) ***Electing small business corporation.*** An unused credit of a distributor or transferor corporation arising in an unused credit year for which such corporation is not an electing small business corporation (as defined in section 1371(b)) may not be carried over in a transaction to which section 381 applies to a taxable year of the acquiring corporation for which such corporation is an electing small business corporation and may not be added to the amount allowable as a credit under section 38 to the shareholders of the acquiring corporation for such taxable year. However, in such a case, a taxable year for which the acquiring corporation is an electing small business corporation shall be counted as a taxable year for purposes of determining the taxable years to which such unused credit may be carried.

(i) [Reserved]

(j) ***Carryover of operating capacity for qualified intercity bus.*** For rules for determining an acquiring corporation's qualified investment for the energy credit for a qualified intercity bus, see § 1.48-9(q)(11).

(Sec. 38(b) (76 Stat. 963, 26 U.S.C. 38(b)), 48(l)(16) (94 Stat. 264, 26 U.S.C. 48(l)(16)), and 7805 (68A Stat. 917, 26 U.S.C. 7805))

[T.D. 7289, 38 FR 30554, Nov. 6, 1973, as amended by T.D. 7982, 49 FR 39544, Oct. 9, 1984; 49 FR 41246, Oct. 22, 1984]

§ 1.381(c)(24)-1 Work incentive program credit carryovers in certain corporate acquisitions.

The computation of carryovers and carrybacks of unused WIN credits in a transaction to which section 381 applies shall be made under the principles of § 1.381(c)(23)-1 (relating to the computation of carryovers and carrybacks of unused investment credits), except that the provisions of paragraph (c)(4) and paragraph (e)(6), (7), and (8) of such section shall not apply.

(Secs. 381(c)(23), 76 Stat. 971 (26 U.S.C. 381(c)(23), 381(c)(24)) 85 Stat. 557 (26 U.S.C. 381(c)(24)), 7805, 68A Stat. 917 (26 U.S.C. 7805))

[T.D. 7289, 38 FR 30557, Nov. 6, 1973]

§ 1.381(c)(25)-1 Deficiency dividend of a qualified investment entity.

(a) ***Carryover requirement.*** If a distributor or transferor corporation in a transaction to which section 381(a) applies—

(1) Was a qualified investment entity (within the meaning of section 860(b)) for any taxable year ending on or before the date of distribution or transfer, and

(2) A determination (as defined in section 860(e)) establishes that the transferor or distributor corporation is liable for the tax imposed by section 11(a), 56(a), 852(b), 857(b)(1), 857(b)(3)(A), or 1201(a) for such taxable year, then in determining the liability for such tax the deduction described in section 860 shall be allowed pursuant to section 381(c)(25) to such corporation for the amount of deficiency dividends paid by the acquiring corporation with respect to the distributor or transferor corporation. Except as otherwise provided in this section, the provisions of section 860 and the regulations thereunder apply with respect to a deficiency dividend deduction allowable pursuant to section 381(c)(25).

(b) ***Deficiency dividends paid by the acquiring corporation with respect to the distributor or transferor corporation.*** A deficiency dividend paid by the acquiring corporation with respect to the distributor or transferor corporation must be a distribution that would satisfy the definition of a deficiency dividend under section 860(f) if paid by the distributor or transferor corporation to its own shareholders. The distribution, however, shall be paid by the acquiring corporation to its own shareholders. The distribution also shall be paid after the date of distribution or transfer and on, or within 90 days after, the date of the determination but before the acquiring corporation files a claim under paragraph (c) of this section.

(c) ***Claim for deduction.*** A claim for deduction under this section shall be made by the acquiring corporation on Form 976 and shall be filed within 120 days after the date of the determination. The form shall contain, or be accompanied by, the information required under § 1.860-2(b)(2) in sufficient detail to properly identify the facts with respect to the distributor or transferor corporation and the acquiring corporation. The required certified copy of the resolution authorizing the payment of the dividend shall be that of the trustees, board of directors, or other authority, of the acquiring corporation. Necessary changes may be made in Form 976 in order to carry out the provisions of this paragraph. The claim shall be filed with the district director, or director of the internal revenue service center, with whom the return of the distributor or transferor corporation to which the claim relates was filed.

(d) ***Effect on dividends paid deduction.*** A deficiency dividend paid by the acquiring corporation that is allowable as a deduction to a distributor or transferor corporation pursuant to section 381(c)(25) shall not become a part of the dividends paid deduction of the acquiring corporation under section 561 for any taxable year.

(e) ***Successive transactions to which section 381(a) applies.*** The provisions of this section shall apply in the case of successive transactions to which section 381(a) applies. Thus, if X corporation transfers its assets to Y corporation in a transaction to which section 381(a) applies and if Y corporation transfers its assets to Z corporation in a subsequent transaction to which section 381(a) applies, then, subject to the provisions of this section, X corporation may take a deficiency dividend deduction for the amount of deficiency dividends paid by Z corporation with respect to X corporation.

(Sec. 860(l) (92 Stat. 2849, 26 U.S.C. 860(l)); sec. 860(g) (92 Stat. 2850, 26 U.S.C. 860(g)); and sec. 7805 (68A Stat. 917, 26 U.S.C. 7805))

[T.D. 7767, 46 FR 11264, Feb. 6, 1981, as amended by T.D. 7936, 49 FR 2106, Jan. 18, 1984]

§ 1.381(c)(26)-1 Credit for employment of certain new employees.

(a) ***Carryovers and carrybacks.*** For taxable years beginning before January 1, 1984, the computation of carryovers and carrybacks of unused targeted jobs credit (new jobs credit in the case of wages paid before 1979) under section 44B (as in effect prior to enactment of the Tax Reform Act of 1984) in a

transaction to which section 381(a) applies shall be made under the principles of § 1.381(c)(23)-1 (relating to the computation of carryovers and carrybacks of unused investment credit), except that the provisions of paragraph (c)(4) and paragraph (e)(6), (7) and (8) of such section shall not apply.

(b) ***Other items.*** See § 1.51-1(h) for a rule that applies to certain transfers of a trade or business in which a member of a targeted group is employed.

[T.D. 8062, 50 FR 46003, Nov. 6, 1985]

§ 1.381(d)-1 Operations loss carryovers of life insurance companies.

For the application of part V, subchapter C, chapter 1 of the Code to operations loss carryovers of life insurance companies, see section 812(f) and § 1.812-7 and section 381(c)(22) and § 1.381(c)(22)-1.

[T.D. 6625, 27 FR 12543, Dec. 19, 1962]

§ 1.382-1 Table of contents.

This section lists the captions that appear in the regulations for §§ 1.382-2 through 1.382-12.

§ 1.382-2 General rules for ownership change.

(a) Certain definitions for purposes of sections 382 and 383 and the regulations thereunder.

(1) Loss corporation.

(i) In general.

(ii) Distributor of transferor loss corporation in a transaction under section 381.

(iii) Separate accounting required for losses and credits of an acquiring corporation and a distributor or transferor loss corporation.

(iv) End of separate accounting for losses and credits of distributor or transferor corporation.

(v) Application to other successor corporations.

(vi) Any section 382 disallowed business interest carryforward.

(2) Pre-change loss.

(3) Stock.

(i) In general.

(ii) Convertible stock.

(4) Testing date.

(i) In general.

(ii) Exceptions.

(5) Successor corporation.

(6) Predecessor corporation.

(7) Section 382 disallowed business interest carryforward.

(8) Testing period.

(b) Effective dates.

(1) In general. [Reserved]

(2) Rules provided in paragraph (a)(3)(ii) of this section.

(i) In general.

(ii) Certain convertible preferred stock.

(3) Rules provided in paragraphs (a)(1)(i)(A), (a)(1)(ii), (iv), and (v), (a)(2)(iv) through (vi), (a)(3)(i), and (a)(4) through (8) of this section.

§ 1.382-3 Definitions and rules relating to a 5-percent shareholder.

(a) Definitions.

(1) Entity.

(i) In general.

(ii) Examples.

(iii) Effective date.

(A) In general

(B) Special rule.

(C) Example.

(2) [Reserved]

(b)-(i) [Reserved]

(j) Modification of the segregation rules of § 1.382-2T(j)(2)(iii) in the case of certain issuances of stock.

(1) Introduction.

(2) Small issuance exception.

(i) In general.

(ii) Small issuance defined.

(iii) Small issuance limitation.

(A) In general.

(B) Class of stock defined.

(C) Adjustments for stock splits and similar transactions.

(D) Exception.

(iv) Short taxable years.

(3) Other issuances of stock for cash.

(i) In general.

(ii) Solely for cash.

(A) In general.

(B) Related issuances.

(iii) Coordination with paragraph (j)(2) of this section.

(4) Limitation on exempted stock.

(5) Proportionate acquisition of exempted stock.

(i) In general.

(ii) Actual knowledge of greater overlapping ownership.

(6) Exception for equity structure shifts.

(7) Transitory ownership by underwriter disregarded.

(8) Certain related issuances.

(9) Application to options.

(10) Issuance of stock pursuant to the exercise of certain options.

(11) Application to first tier and higher tier entities.

(12) Certain non-stock ownership interests.

(13) Examples.

(14) Effective date.

(i) In general.

(ii) Effective date for paragraph (j)(10) of this section.

(iii) Election to apply this paragraph (j) retroactively.

(A) Election.

(B) Amended returns.

(C) Revised information statements.

(k) Special rules for certain regulated investment companies.

(1) In general.

(2) Effective date.

(i) General rule.

(ii) Election to apply prospectively.

§ 1.382-4 Constructive ownership of stock.

(a) In general. [Reserved]

(b) Attribution from corporations, partnerships, estates and trusts.

(1) [Reserved]

(2) Limitation.

(c) Attribution to corporations, partnerships, estates and trusts. [Reserved]

(d) Treatment of options as exercised.

(1) General rule.

(2) Options treated as exercised.

(i) Issuance or transfer.

(ii) Subsequent testing dates.

(3) The ownership test.

(4) The control test.

(i) In general.

(ii) Operating rules.

(A) Person and related persons.

(B) Indirect ownership interest.

(5) The income test.

(6) Application of the ownership, control, and income tests.

(i) In general.

(ii) Application of ownership test.

(iii) Application of control test.

(iv) Application of income test.

(7) Safe harbors.

(i) Contracts to acquire stock.

(ii) Escrow, pledge, or other security agreements.

(iii) Compensatory options.

(iv) Options exercisable only upon death, disability, mental incompetency or retirement.

(v) Rights of first refusal.

(vi) Options designated in the Internal Revenue Bulletin.

(8) Additional rules.

(i) Contracts to acquire stock.

(ii) Indirect transfer of an option.

(iii) Options related to interests in non-corporate entities.

(iv) Puts.

(9) Definition of option.

(i) In general.

(ii) Convertible stock.

(iii) Series of options.

(iv) General principles of tax law.

(10) Subsequent treatment of options treated as exercised on a change date.

(i) In general.

(ii) Alternative look-back rule for options exercised within 3 years after change date.

(11) Transfers not subject to deemed exercise.

(12) Certain rules regarding non-stock interests as stock.

(e) Stock transferred under certain agreements. [Reserved]

(f) Family attribution. [Reserved]

(g) Definitions.

(h) Effective date.

(1) In general. [Reserved]

(2) Option attribution rules.

(i) General rule.

(ii) Special rule for control test.

(iii) Convertible stock issued prior to July 20, 1988.

(A) In general.

(B) Exceptions.

(*1*) Nonvoting convertible preferred stock.

(*2*) Other convertible stock.

(iv) Convertible stock issued on or after July 20, 1988, and before November 5, 1992.

(v) Certain options in existence immediately before and after an ownership change.

(vi) Election to apply § 1.382-2T(h)(4).

(A) In general.

(B) Additional consequences of election.

(C) Time and manner of making the election.

(D) Amended returns.

(3) Special rule for options subject to attribution under § 1.382-2T(h)(4).

§ 1.382-5 Section 382 limitation.

(a) Scope.

(b) Computation of value.

(c) Short taxable year.

(d) Successive ownership changes and absorption of a section 382 limitation.

(1) In general.

(2) Recognized built-in gains and losses.

(3) Effective date.

(e) Controlled groups.

(f) Effective date.

§ 1.382-6 Allocation of income and loss to periods before and after the change date for purposes of section 382.

(a) General rule.

(1) In general.

(2) Allocation of business interest expense.

(i) Scope.

(ii) Deductibility of business interest expense.

(b) Closing-of-the-books election.

(1) In general.

(2) Making the closing-of-the-books election.

(i) Time and manner.

(ii) Election irrevocable.

(3) Special rules relating to consolidated and controlled groups.

(i) Consolidated groups.

(ii) Controlled groups.

(4) Allocation of business interest expense.

(i) Scope.

(ii) Deductibility of business interest expense.

(iii) Example.

(c) Operating rules for determining net operating loss, taxable income, net capital loss, modified capital gain net income, and special allocations.

(1) In general.

(2) Adjustment to net operating loss.

(i) Determination of remaining capital gain.

(ii) Reduction of net operating loss by remaining capital gain.

(d) Coordination with rules relating to the allocation of income under § 1.1502-76(b).

(e) Allocation of certain credits.

(f) Examples.

(g) Definitions and nomenclature.

(1) Change year.

(2) Pre-change period.

(3) Post-change period.

(4) Modified capital gain net income.

(h) Applicability date.

(1) In general.

(2) Paragraphs (a) and (b)(1) and (4) of this section.

§ 1.382-7 Built-in gains and losses.

(a) Treatment of prepaid income.

(b) Effective/applicability dates.

(c) [Reserved]

(d) Special rules.

(1)-(4) [Reserved]

(5) Section 382 disallowed business interest carryforwards.

(e)-(f) [Reserved]

(g) Applicability dates.

(1)-(3) [Reserved]

(4) Paragraph (d)(5) of this section.

§ 1.382-8 Controlled groups.

(a) Introduction.

(b) Controlled group loss and controlled group with respect to a controlled group loss.

(1) In general.

(2) Presumption regarding net unrealized built-in loss.

(c) Computation of value.

(1) Reduction in value by the amount restored.

(2) Restoration of value.

(3) Reduction in value by the amount restored.

(4) Appropriate adjustments.

(5) Certain reductions in the value of members of a controlled group.

(d) No double reduction.

(e) Definitions and nomenclature.

(1) Definitions in Section 382 and the regulations thereunder.

(2) Controlled group.

(3) Component member.

(4) Foreign component member.

(i) In general.

(ii) Exception.

(5) Predecessor and successor corporation.

(f) Coordination between consolidated groups and controlled groups.

(g) Examples.

(h) Time and manner of filing election to restore.

(1) Statements required.

(i) Filing by loss corporation.

(ii) Filing by electing member.

(iii) Agreement.

(2) Special rule for foreign component members.

(i) Deemed election to restore full value.

(ii) Election not to restore full value.

(iii) Agreement.

(3) Revocation of election.

(i) [Reserved]

(j) Effective date.

(1) In general.

(2) Transition rule.

(i) In general.

(ii) Special transition rules for controlled groups that had ownership changes before January 29, 1991.

(3) Amended returns.

(4) Effective/applicability date.

§ 1.382-9 Special rules under section 382 for corporations under the jurisdiction of a court in a title 11 or similar case.

(a) Introduction.

(b) Application of section 382(1)(5).

(c) [Reserved]

(d) Rules for determining whether stock of the loss corporation is owned as a result of being a qualified creditor.

(1) Qualified creditor.

(2) General rules for determining whether indebtedness is qualified indebtedness.

(i) Definition.

(ii) Determination of beneficial ownership.

(iii) Duty of inquiry.

(iv) Ordinary course indebtedness.

(3) Treatment of certain indebtedness as continuously owned by the same owner.

(i) In general.

(ii) Operating rules.

(iii) Indebtedness owned by beneficial owner who becomes a 5-percent shareholder or 5-percent entity.

(iv) Example.

(4) Special rule if indebtedness is a large portion of creditor's assets.

(i) In general.

(ii) Applicable period.

(iii) Determination of ownership change.

(iv) Reliance on statement.

(5) Tacking of ownership periods.

(i) Transferee treated as owning indebtedness for period owned by transferor.

(ii) Qualified transfer.

(iii) Exception.

(iv) Debt-for-debt exchanges.

(6) Effective date.

(i) In general.

(ii) Elections and amended returns.

(A) Election to apply this paragraph (d) retroactively.

(B) Election to revoke section 382(l)(5)(H) election.

(C) Amended returns.

(e) Option attribution for purposes of determining stock ownership under section 382(1)(5)(A)(ii).

(1) In general.

(2) Special rules.

(i) Lapse or forfeiture of options deemed exercised.

(ii) Actual exercise of options not deemed exercised.

(iii) Amended returns.

(3) Examples.

(4) Effective dates.

(i) In general.

(ii) Special rule for interest or dividends.

(f)-(h) [Reserved]

(i) Election not to apply section 382(l)(5).

(j) Value of the loss corporation in an ownership change to which section 382(l)(6) applies.

(k) Rules for determining the value of the stock of the loss corporation.

(1) Certain ownership interests treated as stock.

(2) Coordination with section 382(e)(2).

(3) Coordination with section 382(e)(3).

(4) Coordination with section 382(l)(1).

(5) Coordination with section 382(l)(4).

(6) Special rule for stock not subject to the risk of corporate business operations.

(i) In general.

(ii) Coordination of special rule and other rules affecting value.

(7) Limitation on value of stock.

(l) Rules for determining the value of the loss corporation's pre-change assets.

(1) In general.

(2) Coordination with section 382(e)(2).

(3) Coordination with section 382(e)(3).

(4) Coordination with section 382(l)(1).

(5) Coordination with section 382(l)(4).

(m) Continuity of business requirement.

(1) Under section 382(1)(5).

(2) Under section 382(l)(6).

(n) Ownership change in a title 11 or similar case succeeded by another ownership change within two years.

(1) Section 382(l)(5) applies to the first ownership change.

(2) Section 382(l)(6) applies to the first ownership change.

(o) Options not subject to attribution.

(p) Effective date for rules relating to section 382(l)(6).

(1) In general.

(2) Ownership change to which section 382(l)(6) applies occurring before March 17, 1994.

§ 1.382-10 Special rules for determining time and manner of acquisition of an interest in a loss corporation.

§ 1.382-11 Reporting requirements.

(a) Information statement required.

(b) Effective/applicability date.

§ 1.382-12 Determination of adjusted Federal long-term rate.

(a) In general.

(b) Adjusted Federal long-term rate.

(c) Adjustment factor.

(d) Effective/applicability date.

[T.D. 8149, 52 FR 29674, Aug. 11, 1987. Redesignated by T.D. 8440, 57 FR 45711, Oct. 5, 1992]

Editorial Note: For FEDERAL REGISTER citations affecting § 1.382-1, see the List of CFR Sections Affected, which appears in the Finding Aids section of the printed volume and at *www.govinfo.gov.*

§ 1.382-1T Table of contents (temporary).

This section lists the captions that appear in the regulations for § 1.382-2T.

1.382-2T Definition of ownership change under section 382, as amended by the Tax Reform Act of 1986 (temporary).

(a) Ownership change.

(1) In general.

(2) Events requiring a determination of whether an ownership change has occurred.

(i) Testing dates prior to November 5, 1992.

(ii) [Reserved]

(iii) Records to be maintained by loss corporation.

(b) Nomenclature and assumptions.

(c) Computing the amount of increases in percentage ownership.

(1) In general.

(2) Example.

(3) Related and unrelated increases in percentage stock ownership.

(4) Example.

(d) Testing period.

(1) In general.

(2) Effect of a prior ownership change.

(3) Commencement of the testing period.

(i) In general.

(ii) Exception for corporations with net unrealized built-in loss.

(4) Disregarding testing dates.

(5) Example.

(e) Owner shift and equity structure shift.

(1) Owner shift.

(i) Defined.

(ii) Transactions between persons who are not 5-percent shareholders disregarded.

(iii) Examples.

(2) Equity structure shift.

(i) Tax-free reorganizations.

(ii) Transactions designated under section 382(g)(3)(B) treated as equity structure shifts.

(iii) Overlap of owner shift and equity structure shift.

(iv) Examples.

(f) Definitions.

(1) Loss corporation.

(2) Old loss corporation.

(3) New loss corporation.

(4) Successor corporation.

(5) Predecessor corporation.

(6) Shift.

(7) Entity.

(8) Direct ownership interest.

(9) First tier entity.

(10) 5-percent owner.

(11) Public shareholder.

(12) Public owner.

(13) Public group.

(14) Higher tier entity.

(15) Indirect ownership interest.

(16) Highest tier entity.

(17) Next lower tier entity.

(18) Stock.

(i) In general.

(ii) Treating stock as not stock.

(iii) Treating interests not constituting stock as stock.

(iv) Stock of the loss corporation.

(19) Change date.

(20) Year.

(21) Old section 382.

(22) Pre-change loss.

(23) Unrelated.

(24) Percentage ownership interest.

(g) 5-percent shareholder.

(1) In general.

(2) Determination of whether a person is a 5-percent shareholder.

(3) Determination of the percentage stock ownership interest of a 5-percent shareholder.

(4) Examples.

(5) Stock ownership presumptions in connection with certain acquisitions and dispositions of loss corporation stock.

(i) In general.

(ii) Example.

(h) Constructive ownership of stock.

(1) In general.

(2) Attribution from corporations, partnerships, estates and trusts.

(i) In general.

(ii) Limitation on attribution from entities with respect to certain interests.

(iii) Limitation on attribution from certain entities.

(iv) Examples.

(3) Attribution to corporations, partnerships, estates and trusts.

(4) Option attribution.

(i) In general.

(ii) Examples.

(iii) Contingencies.

(iv) Series of options.

(v) Interests that are similar to options.

(vi) Actual exercise of options.

(A) In general.

(B) Actual exercise within 120 days of deemed exercise.

(vii) Effect of deemed exercise of options on the outstanding stock of the loss corporation.

(A) Right of obligation to issue stock.

(B) Right or obligation to acquire outstanding stock by the loss corporation.

(C) Effect on value of old loss corporation.

(viii) Options that lapse or are forfeited.

(ix) Option rule inapplicable if pre-change losses are de minimis.

(x) Options not subject to attribution

(A) Long-held options with respect to actively traded stock.

(B) Right to receive or obligation to issue a fixed dollar amount of value of stock upon maturity of certain debt.

(C) Right or obligation to redeem stock of the loss corporation.

(D) Options exercisable only upon death, disability or mental incompetency.

(E) Right to receive or obligation to issue stock as interest or dividends.

(F) Options outstanding following an ownership change.

(*1*) In general.

(*2*) Example.

(G) Right to acquire loss corporation stock pursuant to a default under loan agreement.

(H) Agreement to acquire or sell stock owned by certain shareholders upon retirement.

(I) [Reserved]

(J) Title 11 of similar case.

(K)-(Y) [Reserved]

(xi) Certain transfers of options disregarded.

(xii) Exercise of an option that has not been treated as stock.

(xiii) Effective date.

(5) Stock transferred under certain agreements.

(6) Family attribution.

(i) [Reserved]

(j) Aggregation and segregation rules.

(1) Aggregation of public shareholders and public owners into public groups.

(i) Public group.

(ii) Treatment of public group that is a 5-percent shareholder.

(iii) Presumption of no cross-ownership.

(iv) Identification of the public groups treated as 5-percent shareholders.

(A) Analysis of highest tier entities.

(B) Analysis of other higher tier entities and first tier entities.

(C) Aggregation of the public shareholders.

(v) Appropriate adjustments.

(vi) Examples.

(2) Segregation rules applicable to transactions involving the loss corporation.

(i) In general.

(ii) Direct public group.

(iii) Transactions to which segregation rules apply.

(A) In general.

(B) Certain equity structure shifts and transactions to which section 1032 applies.

(*1*) In general.

(*2*) Examples.

(C) Redemption-type transactions.

(*1*) In general.

(*2*) Examples.

(D) Acquisition of loss corporation stock as the result of the ownership of a right to acquire stock.

(*1*) In general.

(*2*) Example.

(E) Transactions identified in the Internal Revenue Bulletin.

(F) Issuance of rights to acquire loss corporation stock.

(*1*) In general.

(*2*) Example.

(iv) Combination of de minimis public groups.

(A) In general.

(B) Example.

(v) Multiple transactions.

(A) In general.

(B) Example.

(vi) Acquisitions made by either a 5-percent shareholder or the loss corporation following application of the segregation rules.

(3) Segregation rules applicable to transactions involving first tier entities or higher tier entities.

(i) Dispositions.

(ii) Example.

(iii) Other transactions affecting direct public groups of a first tier entity or higher tier entity.

(iv) Examples.

(v) Acquisitions made by a 5-percent shareholder, a higher tier entity, or a first tier entity following application of the segregation rules.

(k) Operating rules.

(1) Presumptions regarding stock ownership.

(i) Stock subject to regulation by the Securities and Exchange Commission.

(ii) Statements under penalties of perjury.

(2) Actual knowledge regarding stock ownership.

(3) Duty to inquire as to actual stock ownership in the loss corporation.

(4) Ownership interests structured to avoid the section 382 limitation.

(5) Example.

(6) First tier entity or higher tier entity that is a foreign corporation or entity. [Reserved]

(l) Changes in percentage ownership which are attributable to fluctuations in value. [Reserved]

(m) Effective date.

(1) In general.

(2) Plan of reorganization.

(3) Earliest commencement of the testing period.

(4) Transitional rules.

(i) Rules provided in paragraph (j) of this section for testing dates before September 4, 1987.

(ii) Example.

(iii) Rules provided in paragraph (j) of this section for testing dates on or after September 4, 1987.

(iv) Rules provided in paragraphs (f)(18)(ii) and (iii) of this section.

(v) Rules provided in paragraph (a)(2)(ii) of this section.

(vi) Rules provided in paragraph (h)(4) of this section.

(vii) Rules provided in paragraph (a)(2)(i) of this section.

(5) Bankruptcy proceedings.

(i) In general.

(ii) Example.

(6) Transactions of domestic building and loan associations.

(7) Transactions not subject to section 382.

(i) Application of old section 382.

(ii) Effect on testing period.

(iii) Termination of old section 382. [Reserved]

(8) Options issued or transferred before January 1, 1987.

(i) Options issued before May 6, 1986.

(ii) Options issued on or after May 6, 1986 and before September 18, 1986.

(iii) Options issued on or after September 18, 1986 and before January 1, 1987.

(9) Examples.

[T.D. 9487, 75 FR 33991, June 16, 2010]

§ 1.382-2 General rules for ownership change.

(a) ***Certain definitions for purposes of sections 382 and 383 and the regulations thereunder.*** The following definitions apply for purposes of sections 382 and 383 and the regulations thereunder.

(1) ***Loss corporation*** —

(i) ***In general.*** The term *loss corporation* means a corporation which—

(A) Is entitled to use a net operating loss carryforward, a capital loss carryover, a carryover of excess foreign taxes under section 904(c), a carryforward of a general business credit under section 39, a carryover of a minimum tax credit under section 53, or a section 382 disallowed business interest carryforward described in paragraph (a)(7) of this section;

(B) For the taxable year that includes a testing date, as defined in paragraph (a)(4) of this section or § 1.382-2T(a)(2)(i), whichever is applicable (determined for purposes of this paragraph (a)(1) without regard to whether the corporation is a loss corporation), has a net operating loss, a net capital loss, excess foreign taxes under section 904(c), unused general business credits under section 38, or an unused minimum tax credit under section 53; or

(C) Has a net unrealized built-in loss (determined for purposes of this paragraph (a)(1) by treating the date on which such determination is made as the change date). See section 382(h)(3) for the definition of net unrealized built-in loss.

See section 383 and § 1.383-1 for rules relating to a loss corporation that has an ownership change and has capital losses, excess foreign taxes, general business credits or minimum tax credits. Any predecessor or successor to a loss corporation described in this paragraph (a)(1) is also a loss corporation.

(ii) ***Distributor or transferor loss corporation in a transaction under section 381.*** Notwithstanding that a loss corporation ceases to exist under state law, if its disallowed business interest expense carryforwards, net operating loss carryforwards, excess foreign taxes, or other items described in section 381(c) are succeeded to and taken into account by an acquiring corporation in a transaction described in section 381(a), such loss corporation will be treated as continuing in existence until—

(A) Any pre-change losses (excluding pre-change credits described in § 1.383-1(c)(3)), determined as if the date of such transaction were the change date, are fully utilized or expire under section 163(j), 172, or 1212;

(B) Any net unrealized built-in losses, determined as if the date of such transaction were the change date, may no longer be treated as pre-change losses; and

(C) Any pre-change credits (described in § 1.383-1(c)(3)), determined as if the date of such transaction were the change date, are fully utilized or expire under sections 39, 53, or 904(c).

Following a transaction described in the preceding sentence, the stock of the acquiring corporation shall be treated as the stock of the loss corporation for purposes of determining whether an ownership change occurs with respect to the pre-change losses and net unrealized built-in losses that may be treated as pre-change losses of the distributor or transferor corporation.

(iii) ***Separate accounting required for losses and credits of an acquiring corporation and a distributor or transferor loss corporation.*** **Except as provided in paragraph (a)(1)(iv) of this section, pre-change losses (determined as if the testing date were the change date and treating the amount of any net unrealized built-in loss as a pre-change loss), that are succeeded to and taken into account by an acquiring corporation in a transaction to which section 381(a) applies must be accounted for separately from losses and credits of the acquiring corporation for purposes of applying this section. See *Example (2)*** of § 1.382-2T(e)(2)(iv) of this section.

(iv) ***End of separate accounting for losses and credits of distributor or transferor loss corporation.*** The separate tracking of owner shifts of the stock of an acquiring corporation required by paragraph (a)(1)(iii) of this section with respect to the net operating loss carryovers and other attributes described in paragraph (a)(1)(ii) of this section ends when a fold-in event occurs. A fold-in event is either an ownership change of the distributor or transferor corporation in connection with, or after, the transaction to which section 381(a) applies, or a period of 5 consecutive years following the section 381(a) transaction during which the distributor or transferor corporation has not had an ownership change. Starting on the day after the earlier of the change date (but not earlier than the day of the section 381(a) transaction) or the last day of the 5 consecutive year period, the losses and other attributes of the distributor or transferor corporation are treated as losses and attributes of the acquiring corporation for purposes of

determining whether an ownership change occurs with respect to such losses. Also, for purposes of determining the beginning of the acquiring corporation's testing period, such losses are considered to arise either in a taxable year that begins not earlier than the later of the day following the change date or the day of the section 381(a) transaction, or in a taxable year that begins 3 years before the end of the 5 consecutive year period. Pre-change losses of a distributor or transferor corporation that are subject to a limitation under section 382 continue to be subject to the limitation notwithstanding the occurrence of a fold-in event. Any ownership change that occurs in connection with, or subsequent to, the section 381 transaction may result in an additional, lesser limitation with respect to such pre-change losses.

(v) ***Application to other successor corporations.*** This paragraph (a)(1) also applies, as the context may require, to successor corporations other than successors in section 381(a) transactions. For example, if a corporation receives assets from the loss corporation that have basis in excess of value, the recipient corporation's basis for the assets is determined, directly or indirectly, in whole or in part, by reference to the loss corporation's basis, and the amount by which basis exceeds value is material, the recipient corporation is a successor corporation subject to this paragraph (a)(1).

(2) ***Pre-change loss.*** The term *pre-change loss* means—

(i) Any net operating loss carryforward of the old loss corporation to the taxable year ending on the change date or in which the change date occurs;

(ii) Any net operating loss of the old loss corporation for the taxable year in which the ownership change occurs to the extent such loss is allocable to the period in such year on or before the change date;

(iii) Any recognized built-in loss for any recognition period taxable year (within the meaning of 382(h));

(iv) Any pre-change capital losses described in § 1.383-1T(c)(2)(i) and (ii);

(v) Any pre-change credits described in 1.383-1T(c)(3); and

(vi) Any section 382 disallowed business interest carryforward.

(3) ***Stock*** —

(i) ***In general.*** Except as provided in this paragraph (a)(3)(i) and § 1.382-2T(f)(18)(ii) and (iii), the term *stock* means stock other than stock described in section 1504(a)(4). Notwithstanding the preceding sentence, stock that is not described in section 1504(a)(4) solely because it is entitled to vote as a result of dividend arrearages shall be treated as so described and thus shall not be considered stock. Stock described in section 1504(a)(4), however, is not excluded for purposes of determining the value of the loss corporation under section 382(e). The determination of the percentage of stock of any corporation owned by any person shall be made on the basis of the relative fair market value of the stock owned by such person to the total fair market value of the outstanding stock of the corporation. Solely for purposes of determining the percentage of stock owned by a person, each share of all the outstanding shares of stock that have the same material terms is treated as having the same value. Thus, for example, a control premium or blockage discount is disregarded in determining the percentage of stock owned by any person.

(ii) ***Convertible stock.*** The term *stock* includes any convertible stock. For rules regarding the treatment of certain convertible stock as an option, see § 1.382-4(d)(9)(ii).

(4) ***Testing date*** —

(i) ***In general.*** Except as provided in paragraph (a)(4)(ii) of this section, a loss corporation is required to determine whether an ownership change has occurred immediately after any owner shift, or issuance or transfer (including an issuance or transfer described in § 1.382-4(d)(8)(i) or (ii)) of an option with respect to stock of the loss corporation that is treated as exercised under § 1.382-4(d)(2). Each date on which a loss corporation is required to make a determination of whether an ownership change has occurred is referred to as a testing date. All computations of increases in percentage ownership are to be made as of the close of the testing date and any transactions described in this paragraph (a)(4) that occur on that date are treated as occurring simultaneously at the close of the testing date. See § 1.382-2T(e)(1) for the definition of owner shift. The term *option,* as used in this paragraph (a)(4), includes interests that are treated as options under § 1.382-4(d)(9).

(ii) ***Exceptions.*** A loss corporation is not required to determine whether an ownership change has occurred immediately after—

(A) Any transfer of stock, or an option with respect to stock, of the loss corporation in any of the circumstances described in section 382(l)(3)(B) (death, gift, divorce, etc.); or

(B) The transfer of an option described in § 1.382-4(d)(11)(i) or (ii) (relating to transfers between persons who are not 5-percent shareholders or between members of certain public groups).

(5) ***Successor corporation.*** A successor corporation is a distributee or transferee corporation that succeeds to and takes into account items described in section 381(c) from a corporation as the result of an acquisition of assets described in section 381(a). A successor corporation also includes, as the context may require, a corporation which receives an asset or assets from another corporation if the corporation's basis for the asset(s) is determined, directly or indirectly, in whole or in part, by reference to the other corporation's basis and the amount by which basis differs from value is, in the aggregate, material.

(6) ***Predecessor corporation.*** A predecessor corporation is a distributor or transferor corporation that distributes or transfers its assets to an acquiring corporation in a transaction described in section 381(a). A predecessor corporation also includes, as the context may require, a corporation which transfers an asset or assets to another corporation if the transferee's basis for the asset(s) is determined, directly or indirectly, in whole or in part, by reference to the corporation's basis and the amount by which basis differs from value is, in the aggregate, material.

(7) ***Section 382 disallowed business interest carryforward.*** The term *section 382 disallowed business interest carryforward* includes the following items:

(i) The loss corporation's disallowed business interest expense carryforwards (as defined in § 1.163(j)-1(b)(11)), including disallowed disqualified interest (as defined in § 1.163(j)-1(b)(12)), as of the date of the ownership change.

(ii) The loss corporation's current-year business interest expense (as defined in § 1.163(j)-1(b)(9)) in the change year (as defined in § 1.382-6(g)(1)) that is allocable to the pre-change period (as defined in § 1.382-6(g)(2)) under § 1.382-6(a) or (b) and that becomes disallowed business interest expense (as defined in § 1.163(j)-1(b)(10)).

(8) ***Testing period.*** Notwithstanding the temporal limitations provided in § 1.382-2T(d)(3)(i), the testing period for a loss corporation can begin as early as the first day of the first taxable year from which there is a section 382 disallowed business interest carryforward to the first taxable year ending after the testing date.

(b) ***Effective dates*** —

(1) ***In general.*** [Reserved]

(2) ***Rules provided in paragraph (a)(3)(ii) of this section*** —

(i) ***In general.*** Except as provided in paragraph (b)(2)(ii) of this section, the rules provided in paragraph (a)(3)(ii) of this section apply with respect to any convertible stock.

(ii) ***Certain convertible preferred stock.*** Convertible stock that, when issued, would be described in section 1504(a)(4) by disregarding subparagraph (D) thereof and by ignoring the potential participation in corporate growth that the conversion feature may offer is treated as stock described in that section (and thus is not treated as stock for the purpose of determining whether an ownership change occurs, but is taken into account for the purpose of determining the value of the loss corporation immediately before an ownership change; see sections 382(e)(1) and 382(k)(6)(A)) if—

(A) The stock was issued on or after July 20, 1988, and prior to November 5, 1992; or

(B) The stock was issued prior to July 20, 1988, and the loss corporation makes the election described in Notice 88-67, 1988-1 C.B. 555, (see § 601.601(d)(2)(ii)(*b*) of this chapter for availability of Cumulative Bulletins (C.B.)) on or before the earlier of the date prescribed in the Notice or December 7, 1992.

(3) ***Rules provided in paragraphs (a)(1)(i)(A), (a)(1)(ii), (iv), and (v), (a)(2)(iv) through (vi), (a)(3)(i), and (a)(4) through (8) of this section.*** The rules provided in paragraphs (a)(1)(i)(A), (a)(1)(ii), (iv), and (v), (a)(2)(iv) through (vi), (a)(3)(i), and (a)(4) through (8) of this section apply to testing dates occurring on or after November 13, 2020. For loss corporations that have testing dates occurring before November 13, 2020, see § 1.382-2 as contained in 26 CFR part 1, revised April 1, 2019. However, taxpayers and their related parties, within the meaning of sections 267(b) and 707(b)(1), may choose to apply the rules of this section to testing dates occurring during a taxable year beginning after December 31, 2017, and before November 13, 2020, so long as the taxpayers and their related parties consistently apply the rules of this section, the section 163(j) regulations (as defined in § 1.163(j)-1(b)(37)), §§ 1.382-1, 1.382-5, 1.382-6, 1.382-7, 1.383-0, and 1.383-1, and, if applicable, §§ 1.263A-9, 1.263A-15, 1.381(c)(20)-1, 1.469-9, 1.469-11, 1.704-1, 1.882-5, 1.1362-3, 1.1368-1, 1.1377-1, 1.1502-13, 1.1502-21, 1.1502-36, 1.1502-79, 1.1502-91 through 1.1502-99 (to the extent they effectuate the rules of §§ 1.382-2, 1.382-5, 1.382-6, and 1.383-1), and 1.1504-4, to that taxable year.

[T.D. 8352, 56 FR 29434, June 27, 1991, as amended by T.D. 8405, 57 FR 10740, Mar. 30, 1992; 57 FR 24188, June 8, 1992; T.D. 8531, 59 FR 12836, Mar. 18, 1994; T.D. 8679, 61 FR 33315, June 27, 1996; T.D. 8825, 64 FR 36177, 36178, July 2, 1999; T.D. 9905, 85 FR 56834, Sept. 14, 2020]

§ 1.382-2T Definition of ownership change under section 382, as amended by the Tax Reform Act of 1986 (temporary).

(a) *Ownership change* —

(1) ***In general.*** A corporation is a new loss corporation and thus subject to limitation under section 382 only if an ownership change has occurred with respect to such corporation. An ownership change occurs with respect to a corporation if it is a loss corporation on a testing date and, immediately after the close of the testing date, the percentage of stock of the corporation owned by one or more 5-percent shareholders has increased by more than 50 percentage points over the lowest percentage of stock of such corporation owned by such shareholders at any time during the testing period. See paragraph (a)(2)(i) of this section for the definition of testing date. See paragraph (d) of this section for the definition of testing period. See § 1.382-2(a)(1) and paragraph (f)(3) of this section for the respective definition of loss corporation and new loss corporation. See paragraph (g) of this section for the definition of 5-percent shareholder. See section 383 and § 1.383-1 for rules relating to loss corporations that have an ownership change and have capital loss carryovers, excess foreign taxes carried over under section 904(c), carryovers of general business credits under section 39, or unused minimum tax credits under section 53.

(2) *Events requiring a determination of whether an ownership change has occurred* —

(i) ***Testing dates prior to November 5, 1992.*** Except as otherwise provided in this paragraph (a)(2)(i), a loss corporation is required to determine whether an ownership change has occurred immediately after any owner shift, any equity structure shift, or any transaction in which an option with respect to stock of the loss corporation is—

(A) Transferred to (or by) a 5-percent shareholder (or a person who would be 5-percent shareholder if the option were treated as exercised), or

(B) Issued by the loss corporation, a first tier entity, or a higher tier entity that owns five percent or more of the loss corporation (determined without regard to the application of paragraph (h)(2)(i)(A) of this section). Notwithstanding the preceding sentence, any transfer of stock of the loss corporation (or an option with respect to such stock) in any of the circumstances described in section 382(l)(3)(B), or any equity structure shift that is not also an owner shift, is not an event that requires the loss corporation to make a determination of whether an ownership change has occurred. For purposes of this section, each date on which a loss corporation is required to make a determination of whether an ownership change has occurred is referred to as a testing date, all computations of increases in percentage ownership are to be made as of the close of the testing date, and any transactions described in this paragraph (a)(2)(i) that occur on that date are treated as occurring simultaneously at the close of the testing date. See paragraphs (e)(1) and (2) of this section for the respective definitions of owner shift and equity structure shift. See paragraphs (f)(9) and (14) of this section for the respective definitions of first tier entity and higher tier entity. See paragraph (m)(4)(vii) of this section for special rules regarding the effective date of the provisions of this paragraph (a)(2)(i).

(ii) [Reserved]. For further guidance, see § 1.382-11(a).

(iii) ***Records to be maintained by loss corporation.*** A loss corporation shall keep such records as are necessary to determine:

(A) The identity of its 5-percent shareholders,

(B) the percentage of its stock owned by each such 5-percent shareholder, and

(C) whether the section 382 limitation is applicable. Such records shall be retained so long as they may be material in the administration of any internal revenue law.

(b) ***Nomenclature and assumptions.*** For purposes of the example in this section—

(1) L is a loss corporation, and, if there is more than one loss corporation, they are designated as L_1, L_2, L_3, etc.

(2) P is a corporation that is not a loss corporation, and, if there is more than one such corporation, they are designated as P_1, P_2, P_3, etc.

(3) HC is a corporation whose assets consist solely of the stock of other corporations.

(4) E is an entity other than a corporation (e.g., a partnership), and, if there is more than one such entity, they are designated as E_1, E_2, E_3, etc.

(5) Unless otherwise stated—

(i) A, B, C, D, AA, BB, CC, and DD are unrelated individuals who own interests in corporations or other entities only to the extent expressly stated,

(ii) All corporations have one class of stock outstanding and each share of stock has the same fair market value as each other share,

(iii) The capital structure of the loss corporation and its business do not change over time, and

(iv) The rules of paragraphs (k)(2) and (4) of this section are not applicable.

(6) Public L represents a group of unrelated individuals and entities that own direct (and not indirect) stock ownership interests in loss corporation L, each of whom owns less than five percent of the stock of the loss corporation, and, if there is more than one loss corporation, such groups are designated as Public L_1, Public L_2, Public L_3, etc.

(7) Public P represents a group of unrelated individuals and entities that own direct (and not indirect) stock ownership interests in corporation P, each of whom owns less than five percent of the stock of the corporation, and, if there is more than one corporation, such groups are designated as Public P_1, P_2, P_3, etc.

(8) Public E represents a group of unrelated individuals and entities that own direct (and not indirect) ownership interests in entity E, each of whom owns less than five percent of the entity, and, if there is more than one entity, such groups are designated as Public E_1, Public E_2, Public E_3, etc.

(c) ***Computing the amount of increases in percentage ownership*** —

(1) ***In general.*** In order to determine whether an ownership change has occurred on a testing date, the loss corporation must identify each 5-percent shareholder whose percentage of stock ownership in the loss corporation immediately after the close of the testing date has increased, compared to such shareholder's lowest percentage of stock ownership in such corporation at any time during the testing period. The amount of the increase in the percentage of stock ownership in the loss corporation of each 5-percent shareholder must be computed separately by comparing the percentage ownership of each such 5-percent shareholder immediately after the close of the testing date to such shareholder's lowest percentage ownership at any time during the testing period. Each such increase in the percentage ownership of a 5-percent shareholder is then added together with

any other such increases of other 5-percent shareholders to determine whether an ownership change has occurred. Because only those 5-percent shareholders whose percentages of stock ownership have increased are taken into account, a 5-percent shareholder is disregarded if his percentage of stock ownership, immediately after the close of the testing date, has decreased (or has remained the same), compared to his lowest percentage ownership interest on any previous date during the testing period.

(2) ***Example.***

> *Example.* (i) A and B each own 40 percent of the outstanding L stock. The remaining 20 percent of the L stock is owned by 100 unrelated individuals, none of whom own as much as five percent of L stock ("Public L"). C negotiates with A and B to purchase all their stock in L.
> (ii) The acquisitions from both A and B are completed on September 13, 1990. C's acquisition of 80 percent of L stock results in an ownership change because C's percentage ownership has increased by 80 percentage points as of the testing date, compared to his lowest percentage ownership in L at any time during the testing period (0 percent).

(3) ***Related and unrelated increases in percentage stock ownership.*** The determination whether an ownership change has occurred is made without regard to whether the changes in stock ownership of the loss corporation (by one or more 5-percent shareholders) result from related or unrelated events.

(4) ***Example.***

> *Example.* (i) L has outstanding 200 shares of common stock. A, B and C respectively own 100, 50 and 50 shares of the L stock. On January 2, 1988, A sells 60 shares of L stock to B. Thus, B's percentage ownership interest in L increases by 30 percentage points, from 50 shares to 110 shares. On January 1, 1989, A purchases C's entire interest in L. Thus, A's percentage ownership interest in L increases by 25 percentage points, compared to his lowest percentage ownership interest in L, from 40 shares immediately following the January 2, 1988 sale to B to 90 shares. Even though A's ownership interest in L as of January 1, 1989 has decreased, compared to his 50 percent ownership interest at the beginning of the testing period, A is a 5-percent shareholder who must be taken into account for purposes of the computation required under paragraph (c)(1) of this section because his interest in L on that testing date (45 percent) has increased, compared to his lowest percentage ownership interest in L at any time during the testing period (20 percent following the sale to B).
> (ii) Accordingly, although A and B jointly have increased their aggregate total ownership interest in L between January 2, 1988 and January 1, 1989 by only 25 percentage points (*i.e.,* the total ownership interest in L held by A and B at all times is not less than a 75 percent interest), the total of their separate increases in the percentage stock ownership of L, compared to their respective lowest percentage ownership interests at any time during the testing period, is 55 percentage points. Thus, an ownership change occurs as a result of A's acquisition of L stock on January 1, 1989.

(d) *Testing period* —

(1) ***In general.*** Except as otherwise provided in paragraphs (d) and (m) of this section, the testing period for any testing date is the three-year period ending on the testing date. See paragraph (a)(2)(i) of this section for the definition of testing date.

(2) ***Effect of a prior ownership change.*** Following an ownership change, the testing period for determining whether a subsequent ownership change has occurred shall begin no earlier than the first day following the change date of the most recent ownership change. See paragraph (f)(19) of this section for the definition of change date.

(3) *Commencement of the testing period* —

(i) ***In general.*** Except as otherwise provided in paragraph (d)(3)(ii) of this section, the testing period for any loss corporation shall not begin before the earlier of the first day of either—

(A) The first taxable year from which there is a loss or excess credit carryforward to the first taxable year ending after the testing date, or

(B) The taxable year in which the testing date occurs.

(ii) ***Exception for corporations with net unrealized built-in loss.*** Paragraph (d)(3)(i) of this section shall not apply if the corporation has a net unrealized built-in loss (determined after application of section 382(h)(3)(B)) on the testing date, unless the loss corporation establishes the taxable year in which the net unrealized built-in loss first accrued.

In that event, the testing period shall not begin before the earlier of—

(A) The first day of the taxable year in which the net unrealized built-in loss first accrued, or

(B) The day described in paragraph (d)(3)(i) of this section. See section 382(h) for the definition of net unrealized built-in loss.

(4) ***Disregarding testing dates.*** Any testing date that occurs before the beginning of the testing period shall be disregarded for purposes of this section.

(5) ***Example.***

> *Example.* (i) A owns all 100 outstanding shares of L stock. A sells 40 shares to B on January 1, 1988. C purchases 20 shares of L stock from A on July 1, 1991. In determining if an ownership change occurs on the July 1, 1991 testing date, B's acquisition of L stock is disregarded because it occurred before the testing period that ends on such testing date. Thus, B's ownership interest in L does not increase during the testing period, and no ownership change results from C's acquisition.
> (ii) The facts are the same as in (i), except that throughout the period during which B negotiated his stock purchase transaction with A, B knew that C intended to attempt to acquire a significant stock interest in L. Also, B and C have been partners in a number of significant business ventures. The result is the same as in (i).

(e) *Owner shift and equity structure shift* —

(1) *Owner shift* —

(i) ***Defined.*** For purposes of this section, an owner shift is any change in the ownership of the stock of a loss corporation that affects the percentage of such stock owned by any 5-percent shareholder. See paragraph (g) of this section for the definition of a 5-percent shareholder. An owner shift includes, but is not limited to, the following transactions:

(A) A purchase of disposition of loss corporation stock by a 5-percent shareholder,

(B) A section 351 exchange that affects the percentage of stock owned by a 5-percent shareholder,

(C) A redemption or a recapitalization that affects the percentage of stock owned by a 5-percent shareholder,

(D) An issuance of loss corporation stock that affects the percentage of stock owned by a 5-percent shareholder, and

(E) An equity structure shift that affects the percentage of stock owned by a 5-percent shareholder.

(ii) ***Transactions between persons who are not 5-percent shareholders disregarded.*** Transfers of loss corporation stock between persons who are not 5-percent shareholders of such corporation (and between members of separate public groups resulting from the application of the segregation rules of paragraphs (j)(2) and (3)(iii) of this section) are not owner shifts and thus are not taken into account. See paragraph (h)(4)(xi) of this section for a similar rule applicable to transfers of options.

(iii) ***Examples.***

Example 1. A has owned all 1000 shares of outstanding L stock for more than three years. On June 15, 1988, A sells 300 of his L shares to B. This transaction is an owner shift. No other 5-percent shareholder has increased his percentage ownership of L stock during the testing period. Thus, the owner shift resulting from B's acquisition does not result in an ownership change, because B has increased his stock ownership in L by only 30 percentage points.

Example 2. The facts are the same as in *Example (1).* In addition, on June 15, 1989, L issues 100 shares to each of C, D and AA. The stock issuance is an owner shift. The transaction, however, does not result in an ownership change, because B, C, D and AA (the 5-percent shareholders whose stock ownership has increased as of the testing date, compared to any other time during the testing period) have increased their percentage of stock ownership in L by a total of only 46.2 percentage points during the testing period (by 23.1 percentage points [300 shares/1300 shares] for B, and 7.7 percentage points [100 shares/1300 shares] for each of C, D and AA).

Example 3. All 1000 shares of L stock are owned by a group of 100 unrelated individuals, none of whom own as much as five percent of L stock (“Public L”). Several of the members of Public L sell their L stock, amounting to a 30 percent ownership interest in L, to B on June 15, 1988. The sale of stock to B is an owner shift. Between June 16, 1988 and June 15, 1989, each of the remaining individuals in Public L sells his stock to another person who is not a 5-percent shareholder. Under paragraph (e)(1)(ii) of this section, trading activity among the members of Public L is disregarded and does not result in an owner shift. On June 15, 1989, L issues 100 shares to each of C, D and AA. The only sale transactions by

members of Public L that are taken into account in determining whether an ownership change occurs on June 15, 1989 are the sales to B on June 15, 1988. Because B, C, D and AA together have increased their percentage ownership of L stock as a result of B's purchase and the stock issuance by an amount not in excess of 50 percentage points during the testing period ending on June 15, 1988, an ownership change does not occur on that date.

Example 4. The facts are the same as in *Example (2).* In addition, on December 15, 1989, L redeems 200 of the L shares from A. The redemption is an owner shift that results in an ownership change, because B, C, D and AA are 5-percent shareholders whose percentage ownership of L increase by a total of 54.6 percentage points during the testing period (by 27.3 percentage points [300 shares/1100 shares] for B and 9.1 percentage points [100 shares/1100 shares] for each of C, D and AA).

Example 5. L is owned entirely by 10,000 unrelated shareholders, none of whom owns as much as five percent of the stock of L ("Public L"). Accordingly, Public L is L's only 5-percent shareholder. See paragraph (j)(1) of this section. There are one million shares of common stock outstanding. On December 1, 1988, L issues two million new shares of its common stock to members of the public, none of whom owned any L stock prior to the issuance. Following the public offering, no shareholder of L owns, directly or indirectly, five percent or more of L stock. Under paragraph (j)(2) of this section, however, all of the newly issued stock is treated as acquired by a 5-percent shareholder ("Public NL") that is unrelated to Public L. Therefore, the public offering constitutes an owner shift that results in an ownership change because Public NL's percentage of stock ownership in L increased by $66^{2}/_{3}$ percentage points (two million shares acquired in the public offering/three million shares outstanding following the offering) over its lowest percentage ownership during the testing period (0 percent prior to the offering).

Example 6. The facts are the same as in *Example (5),* except that L issues only 500,000 new shares of L stock on December 1, 1988, and Public NL's percentage ownership interest in L increases by only $33^{1}/_{3}$ percentage points (500,000 shares acquired in the public offering/1.5 million shares outstanding following the offering). During the two years following December 2, 1988, 14 percent of the stock outstanding on that date is sold over a public stock exchange. On December 3, 1990, A purchases five percent of L stock (75,000 shares) over a public stock exchange. The purchase of five percent of L stock by A is an owner shift and is presumed to have been made proportionately from Public L and Public NL under paragraph (j)(1)(vi) of this section. Under paragraph (e)(1)(ii) of this section, transfers of L stock in transactions not involving A (*i.e.,* in transactions among or between members of separate public groups resulting from the application of paragraphs (j)(2) and (3) of this section) are not taken into account, and do not constitute owner shifts. (Transfers between members of Public NL and Public L, which are treated as separate 5-percent shareholders solely by virtue of paragraph (j)(2) of this section, are disregarded even if L has actual knowledge of any such transfers.) A and Public NL, the only 5-percent shareholders whose interests in L have increased during the testing period, have increased their respective stock ownership by only $36^{2}/_{3}$ percentage points—five percent points for A [75,000 shares/1.5 million shares outstanding] and $31^{2}/_{3}$ percentage points for Public NL [((500,000 shares issued in the public offering)−(5 percent × 500,000 shares presumed to have been acquired by A)) /1.5 million shares outstanding]. Accordingly, there is no ownership change with respect to L notwithstanding that, taking

into account the public trading, a change of more than 50 percentage points in the ultimate beneficial ownership of L stock occurred during the three-year period ending on the December 3, 1990 testing date.

Example 7. The facts are the same as in *Example 6,* except that five percent of the L stock has always been owned by P which, in turn, has always been owned by Public P. On December 6, 1990, P sells all of its L stock over a public stock exchange. Although the trading of P stock among persons that are not 5-percent share-holders (without regard to the segregation rules of paragraph (j) of this section) are disregarded under paragraph (e)(1)(ii) of this section, the disposition of the L stock by P is not disregarded because the L stock is transferred in a transaction that is subject to paragraph (j)(3)(i) of this section.

(2) ***Equity structure shift*** —

(i) ***Tax-free reorganizations.*** An equity structure shift is any reorganization within the meaning of section 368 with respect to which the loss corporation is a party to the reorganization, except that such term does not include a reorganization described in—

(A) Section 368(a)(1)(D) or (G) unless the requirements of section 354(b)(1) are met, or

(B) Section 368(a)(1)(F).

(ii) ***Transactions designated under section 382(g)(3)(B) treated as equity structure shifts.*** [Reserved]

(iii) ***Overlap of owner shift and equity structure shift.*** Any equity structure shift that affects the percentage of loss corporation stock owned by a 5-percent shareholder also constitutes an owner shift. See paragraph (e)(i)(E) of this section

(iv) ***Examples.***

Example 1. A owns all of the stock of L and B owns all of the stock of P. On October 13, 1988, L merges into P in a reorganization described in section 368a(1)(A). As a result of the merger, A and B own 25 and 75 percent, respectively, of the stock of P. The merger is an equity structure shift (and, because it affects the percentage of L stock owned by 5-percent shareholders, it also constitutes an owner shift). On the October 13, 1988 testing date, B is a 5-percent shareholder whose stock ownership in the loss corporation following the merger has increased by 75 percentage points over his lowest percentage of stock ownership in L at any time during the testing period (0 percent prior to the merger). Accordingly, an ownership change occurs as a result of the merger. P is thus a new loss corporation and L's pre-change losses are subject to limitation under section 382.

Example 2. (*i*) A owns 100 percent of L_1 stock and B owns 100 percent of L_2 stock. On January 1, 1988, L_1 merges into L_2 in a reorganization described in section 368(a)(1)(A). Immediately after the merger, A and B own 40 percent and 60 percent, respectively, of the L_2 stock. There is an equity structure shift (as well as an owner shift) with respect to both L_1 and L_2 on January 1, 1988.
(*ii*) Because the percentage of L_2 stock owned by B immediately after the merger (60 percent) increases by more than 50 percentage points over the lowest percentage of the stock of L_1 owned by B during the testing period (0 percent prior to the merger), there is an ownership change with respect to L_1. L_2 is a new loss

corporation and thus, under § 1.382-2(a)(1)(iii) of this section, the pre-change losses of L_1 must be accounted for separately by L_2 from the losses of L_2 (immediately before the ownership change) and are subject to limitation under section 382. See § 1.382-2(a)(1)(iv) of this section for rules that end separate accounting for L_1's pre-change losses on any testing date occurring on or after January 29, 1991.

(*iii*) L_2 is a new loss corporation because it is a successor corporation to L_1. There is no ownership change with respect to L_2, however, because A's stock ownership in L_2 increased by only 40 percentage points (to 40 percent) over the amount owned by A prior to the merger (0 percent). Therefore, the pre-change losses of L_2 are not limited under section 382 as a result of the merger.

Example 3. The result in *Example (2)* would be the same if L_1 had survived the merger (*i.e.,* L_2 merged into L_1) with A and B owning 40 and 60 percent, respectively, of L_1 stock. L_1's pre-change losses would be accounted for separately and limited under section 382 and the pre-change losses of L_2 would be accounted for separately under § 1.382-2(a)(1)(iii) of this section, but would not be limited under section 382. See § 1.382-2(a)(1)(ii) for the treatment of L_2 following the transaction.

Example 4. The facts are the same as *Example (2),* except, instead of acquiring L_1 in a merger, L_2 acquires all of the L_1 stock from A on January 1, 1988, solely in exchange for stock representing a 40 percent interest in L_2, in a reorganization described in section 368(a)(1)(B). The acquisition of stock by L_2 is an equity structure shift (as well as an owner shift) with respect to L_1 that results in an ownership change with respect to L_1 because the percentage of L_1 stock owned by B immediately after the reorganization (60 percent, by virtue of B's ownership of L_2, through the operation of the constructive ownership rules of paragraph (h) of this section) increases by more than 50 percentage points over the lowest percentage of L_1 stock owned by B at any time during the testing period (0 percent prior to the reorganization). The acquisition also results in an equity structure shift and an owner shift with respect to L_2, but L_2 incurs no ownership change, because A's stock ownership in L_2 increased by only 40 percentage points over the percentage of L_2 stock owned by A prior to the reorganization (0 percent).

(f) ***Definitions.*** For purposes of this section—

(1) ***Loss corporation.*** See section 382 and § 1.382-2(a)(1) for the definition of a loss corporation.

(2) ***Old loss corporation.*** The term *old loss corporation* means any corporation with respect to which there is an ownership change and that was a loss corporation immediately before the ownership change.

(3) ***New loss corporation.*** The term *new loss corporation* means a corporation with respect to which there is an ownership change if, immediately after such change, it is a loss corporation. A successor corporation to the corporation described in the preceding sentence also is a new loss corporation.

(4) ***Successor corporation.*** See § 1.382-2(a)(5) for the definition of *successor corporation.*

(5) ***Predecessor corporation.*** See § 1.382-2(a)(6) for the definitions of *predecessor corporation.*

(6) ***Shift.*** As the context may require, a shift means an equity structure shift, an owner shift or both.

(7) ***Entity.*** See § 1.382-3(a)(1) for the definition of an entity.

(8) ***Direct ownership interest.*** A *direct ownership interest* means the interest a person owns in an entity, including a loss corporation, without regard to the constructive ownership rules of paragraph (h) of this section.

(9) ***First tier entity.*** A first tier entity is an entity that, at any time during the testing period, owns a five percent or more direct ownership interest in the loss corporation.

(10) ***5-percent owner.*** A 5-percent owner is any individual that, at any time during the testing period, owns a five percent or more direct ownership interest in a first tier entity or a higher tier entity. See paragraph (g) of this section for rules to determine whether, as a result of the constructive ownership rules of paragraph (h) of this section, a 5-percent owner is a 5-percent shareholder.

(11) ***Public shareholder.*** A public shareholder is any individual, entity, or other person with a direct ownership interest in a loss corporation of less than five percent at all times during the testing period.

(12) ***Public owner.*** A public owner is any individual, entity, or other person that, at all times during the testing period, owns less than a five percent direct ownership interest in a first tier entity or any higher tier entity.

(13) ***Public group.*** A public group is a group of individuals, entities, or other persons each of whom owns, directly or constructively, less than five percent of the loss corporation. See paragraphs (g) and (j) of this section for the rules applicable to identify public groups and to determine whether a public group is a 5-percent shareholder.

(14) ***Higher tier entity.*** A higher tier entity is any entity that, at any time during the testing period, owns a five percent or more direct ownership interest in a first tier entity or in any higher tier entity.

(15) ***Indirect ownership interest.*** An indirect ownership is an interest a person owns in an entity determined solely as a result of the application of the constructive ownership rules of paragraph (h) of this section and without regard to any direct ownership interest (or other beneficial ownership interest) in the entity.

(16) ***Highest tier entity.*** A highest tier entity is a first tier entity or a higher tier entity that is not owned, in whole or in part, at any time during the testing period by a higher tier entity.

(17) ***Next lower tier entity.*** The next lower tier entity with respect to a first tier entity is the loss corporation. The next lower tier entity with respect to a higher tier entity is any first tier entity or other higher tier entity in which the higher tier entity owns, at any time during the testing period, a five percent or more direct ownership interest.

(18) ***Stock*** —

(i) ***In general.*** For further guidance, see § 1.382-2(a)(3)(i).

(ii) ***Treating stock as not stock.*** Any ownership interest that otherwise would be treated as stock under paragraph (f)(18)(i) of this section shall not be treated as stock if—

(A) As of the time of its issuance or transfer to (or by) a 5-percent shareholder, the likely participation of such interest in future corporate growth is disproportionately small when compared to the value of such stock as a proportion of the total value of the outstanding stock of the corporation,

(B) Treating the interest as not constituting stock would result in an ownership change, and

(C) The amount of the pre-change loss (determined as if the testing date were the change and treating the amount of any net unrealized built-in loss as a pre-change loss) is more than twice the amount determined by multiplying

(*1*) the value of the loss corporation (as determined under section 382(e)) on the testing date, by

(*2*) the long-term tax exempt rate (as defined in section 382(f)) for the calendar month in which the testing date occurs.

Stock that is not treated as stock under this paragraph (f)(18)(ii), however, is taken into account for purposes of determining the value of the loss corporation under section 382(e).

(iii) ***Treating interests not constituting stock as stock.*** Any ownership interest that would not be treated as stock under paragraph (f)(18)(i) of this section (other than an option that is subject to paragraph (h)(4) of this section) shall be treated as constituting stock if—

(A) As of the time of its issuance or transfer to (or by) a 5-percent shareholder (or a person who would be a 5-percent shareholder if the interest not constituting stock were treated as stock), such interest offers a potential significant participation in the growth of the corporation,

(B) Treating the interest as constituting stock would result in an ownership change, and

(C) The amount of the pre-change losses (determined as if the testing date were the change date and treating the amount of any net unrealized built-in loss as a pre-change loss) is more than twice the amount determined by multiplying

(*1*) The value of the loss corporation (as determined under section 382(e)) on the testing date, by

(*2*) The long-term tax exempt rate (as defined in section 382(f)) for the calendar month in which the testing date occurs.

An ownership interest is that treated as stock under this paragraph (f)(18)(iii) is taken into account for purposes of determining the value of the loss corporation under section 382(e). See § 1.382-4(d)(12) for rules that apply with respect to options and this paragraph (f)(18)(iii).

(iv) ***Stock of the loss corporation.*** The *stock of the loss corporation* means stock of such corporation within the meaning of this paragraph (f)(18) and, as the context may require, includes any indirect ownership interest in the loss corporation.

(19) ***Change date.*** The *change date* means the date on which a shift (or any other transaction described in paragraph (a)(2)(i) of this section) that is the last component of an ownership change occurs.

(20) ***Year.*** A *year,* or any multiple thereof, means a 365-day period (or a 366-day period in the case of a leap year), or any multiple thereof, unless the year is specifically identified as a taxable year.

(21) ***Old section 382.*** "Old section 382" means section 382, as in effect prior to the effective date of section 382 in the Tax Reform Act of 1986 (the "Act"), but taking into account section 621(f)(2) of the Act.

(22) ***Pre-change loss.*** See section 382 and § 1.382-2(a)(2) for the definition of pre-change loss.

(23) ***Unrelated.*** Any two persons are unrelated if the constructive ownership rules of paragraph (h) of this section do not apply to treat either person as owning stock that is owned, directly or constructively, by the other person.

(24) ***Percentage ownership interest.*** A person's percentage ownership interest in—

(i) A corporation shall be determined under the rules of this section that are applicable to the determination of a shareholder's percentage stock ownership interest in a loss corporation (see paragraphs (f)(18)(i) through (iii) of this section),

(ii) A partnership shall be equal to the relative fair market value of such person's partnership interest to the total fair market value of all outstanding partnership interests, determined without regard to any limited and preferred partnership interest that is described in paragraph (h)(2)(ii)(C) of this section,

(iii) A trust shall be determined in accordance with the principles of section 318(a)(2)(B) for determining the constructive ownership of stock,

(iv) An estate shall be determined in accordance with the principles of section 318(a)(2)(A) for determining the constructive ownership of stock, and

(v) All other entities shall be determined by reference to the person's relative economic interest in the entity, taking into account all of the relevant facts and circumstances.

(g) ***5-percent shareholder*** —

(1) ***In general.*** Subject to the rules of paragraphs (k)(2) and (4) of this section, the term *5-percent shareholder* means—

(i) An individual that owns, at any time during the testing period,

(A) A direct ownership interest in the stock of the loss corporation of five percent or more or

(B) An indirect ownership interest in the stock of the loss corporation of five percent or more by virtue of an ownership interest in any one first tier entity or higher tier entity,

(ii) A public group, of either a first tier entity or a higher tier entity, identified as a 5-percent shareholder under paragraph (j)(1)(iv)(A) or (B) of this section,

(iii) A public group of the loss corporation identified as a 5-percent shareholder under paragraph (j)(1)(iv)(C) of this section, and

(iv) A public group, of the loss corporation, a first tier entity or a higher tier entity, identified as a 5-percent shareholder under paragraph (j)(2) or (3) of this section. An individual owning five percent or more of the stock of the loss corporation at any time during the testing period is a 5-percent shareholder notwithstanding that the individual may own less than five percent of the

stock of the loss corporation on the testing date. See paragraph (g)(5)(i)(B) of this section for rules permitting a loss corporation to make an adjustment in cases described in the preceding sentence.

(2) ***Determination of whether a person is a 5-percent shareholder.*** Except as provided in paragraphs (k)(2) and (4) of this section, a person shall be treated as constructively owning stock of the loss corporation pursuant to paragraph (h)(2) of this section only if the loss corporation stock is attributed to such person in the person's capacity as a higher tier entity or a 5-percent owner of the first tier entity or higher tier entity from which such stock is attributed. See paragraph (k)(3) of this section for rules explaining the extent of the obligation of the loss corporation to determine the identity of its 5-percent shareholders. Nothing in this paragraph (g)(2), however, shall limit the attribution of loss corporation stock under section 318(a)(2) and paragraph (h) of this section to a public owner.

(3) ***Determination of the percentage stock ownership interest of a 5-percent shareholder.*** Subject to the rules of paragraphs (k)(2) and (4) of this section, in determining a 5-percent shareholder's percentage ownership interest in the loss corporation, the shareholder's direct ownership interest, if any, and each indirect ownership interest that he may have in the loss corporation in his capacity as a 5-percent owner of any one first tier entity or higher tier entity, if any, are required to be added together and taken into account with respect to such shareholder only to the extent that each such direct or indirect ownership interest constitutes five percent or more of the stock of the loss corporation.

(4) ***Examples.***

> *Example 1.* (i) Twenty percent of L stock is owned by A, 10 percent is owned by P_1, 20 percent is owned by E, a joint venture, and the remaining 50 percent of L stock is owned by Public L. P_1 is owned 15 percent by B and 85 percent by Public P_1. E is owned 30 percent by P_2 and 70 percent by P_3, which, in turn, are owned by Public P_2 and Public P_3, respectively.
> (ii) The ownership structure of L is illustrated by the following chart:

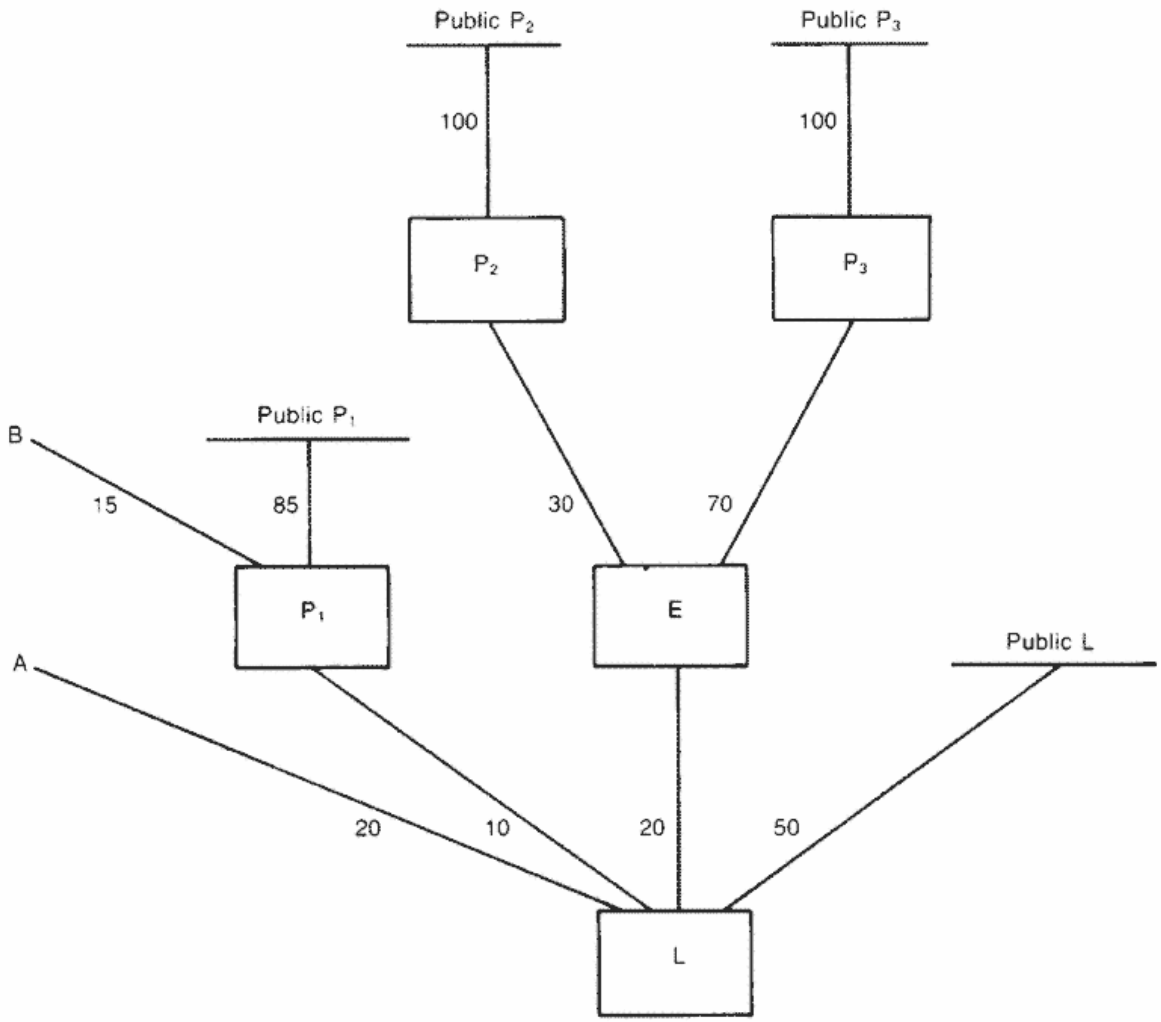

(iii) P_1 and E, each of which has a direct ownership interest in L of five percent or more, are first tier entities. The shareholders with direct ownership interests in L who individually own less than five percent of L are public shareholders (Public L). B, who has a direct ownership interest of five percent or more in P_1, is a 5-percent owner of P. P_2 and P_3, and P_3, each of which has a direct ownership interest in a first tier entity (E) of five percent or more, are higher tier entities with respect to L and, because neither entity is owned at any time during the testing period by a higher tier entity, they also are highest tier entities. The shareholders of P_2 and P_3 (Public P_2 and Public P_3, respectively) are public owners of such entities, because none of those shareholders own five percent or more of either entity at any time during the testing period.

(iv) A, who has a 20 percent direct ownership interest in L, is a 5-percent shareholder of L. Because, by application of the constructive ownership rules of paragraph (h) of this section, B owns only 1.5 percent of L stock in his capacity as a 5-percent owner of P_1 (15 percent ownership of P_1 × 10 percent ownership of L), B is not a 5-percent shareholder of L, even though he is a 5-percent owner of P_1. Under the rules of paragraph (j) of this section,

therefore, B is treated as a member of Public P_1. See *Example (3)* of paragraph (j)(1)(vi) of this section for a determination of which public owners and public shareholders constitute public groups that are treated as 5-percent shareholders of L.

Example 2. (i) The facts are the same as in *Example (1),* except that P_3 is owned 60 percent by C, 30 percent by P_4, and 10 percent by Public P_3. The stock of P_4 is owned by a group of persons (Public P_4), none of whom own five percent or more of the stock of P_4.
(ii) The ownership structure of L is illustrated by the following chart:

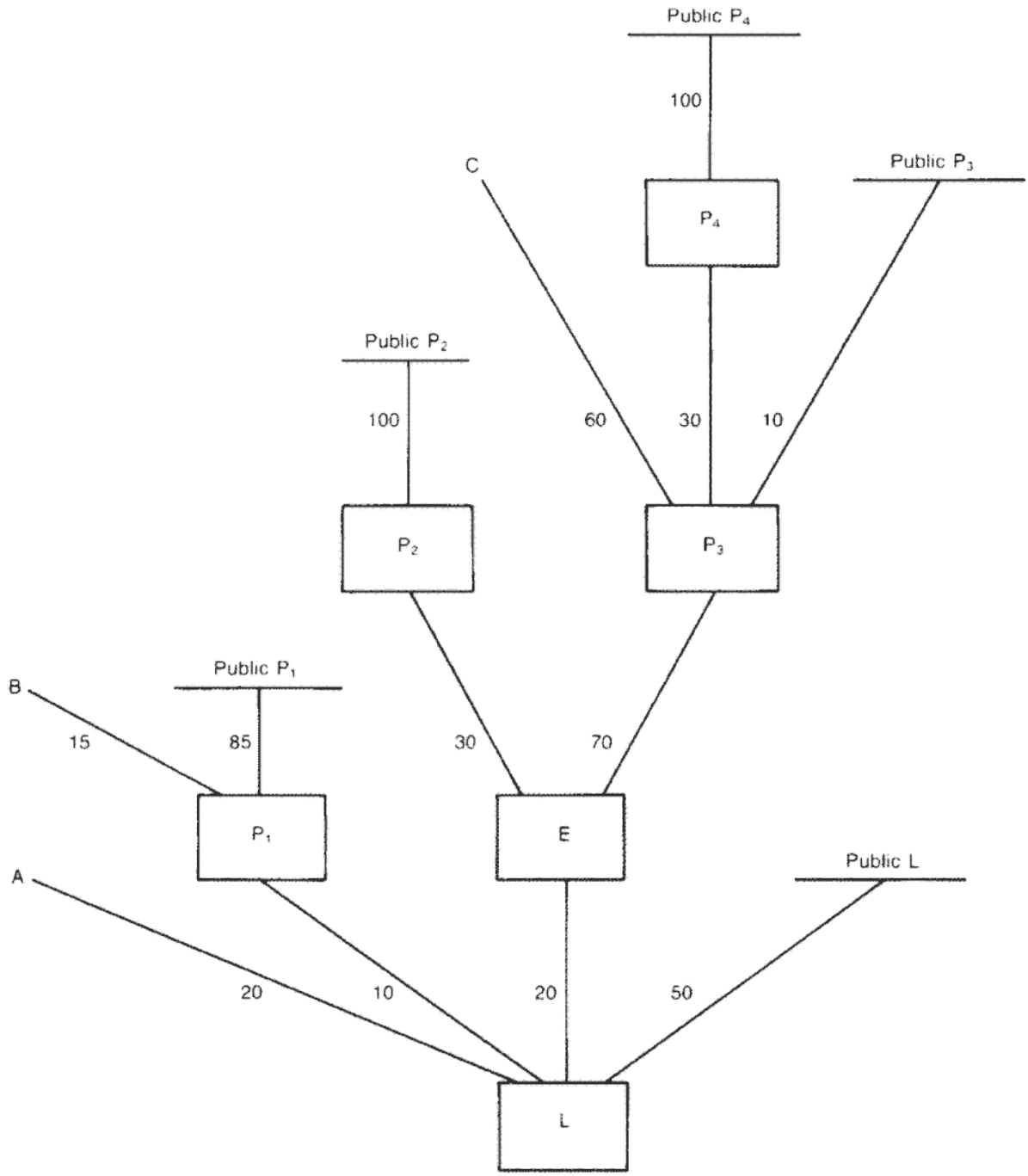

(iii) The defined terms are the same as in *Example (1),* except that P_3 is a higher tier entity,

not a highest tier entity, because five percent or more of P_3 is, in turn, owned by another entity (P_4). P_4, which owns five percent or more of a higher tier entity (P_3), also is a higher tier entity and, because it is not owned at any time during any testing period by any entity that is also a higher tier entity, P_4 is a highest tier entity. All of the shareholders of P_4, none of which own a direct ownership interest of five percent or more in P_4, are public owners of P_4.
(iv) C is a 5-percent owner of P_3 and, under the constructive ownership rules of paragraph (h) of this section, C indirectly owns 8.4 percent of L ([60 percent ownership of P_3] × [70 percent ownership of E] × [20 percent ownership of L]), in his capacity as a 5-percent owner of P_3. B is a 5-percent owner of P_1 and, under the constructive ownership rules of paragraph (h) of his section, B owns 1.5 percent of L ([15 percent ownership of P_1] × [10 percent ownership of L]) in his capacity as a 5-percent owner of P_1. Therefore, C is a 5-percent shareholder of L, but B is not a 5-percent shareholder of L, even though he is a 5-percent owner of P_1. See *Example (4)* of paragraph (j)(1)(vi) of this section for a determination of which public owners and public shareholders constitute public groups that are treated as separate 5-percent shareholders of L.

Example 3. (i) L is owned 30 percent by A and 70 percent by P. A owns six percent of P stock and the balance (94 percent) is owned equally by 500 unrelated shareholders ("Public P").
(ii) A is a 5-percent shareholder because he directly owns 30 percent of L. Even though A is a 5-percent owner of P, A's 4.2 percent indirect ownership interest in L (six percent ownership interest in P × P's 70 percent ownership of L) is generally not taken into account in determining A's ownership interest, because such indirect ownership interest is less than five percent. Instead, A's 4.2 percent indirect interest is treated under paragraph (j)(1)(iv) of this section as owned by Public P. If, however, L has actual knowledge of A's less-than-five-percent indirect ownership interest in L and is thus subject to paragraph (k)(2) of this section, or paragraph (k)(4) of this section otherwise applies, L must take A's total 34.2 percent ownership interest into account in determining A's percentage ownership in L.

Example 4. The facts are the same as in *Example (3),* except that A owns ten percent of P's stock. Because A's indirect ownership interest in L in his capacity as a 5-percent owner of P is five percent or more, both A's 30 percent direct ownership interest in L and his seven percent indirect ownership interest in L (10 percent ownership interest in P × P's 70 percent ownership of L) are taken into account in determining his ownership interest in L, without regard to L's actual knowledge or whether paragraph (k)(4) of this section applies.

Example 5. See § 1.382-3(a)(1)(ii) for additional examples with respect to the definition of an entity.

(5) ***Stock ownership presumptions in connection with certain acquisitions, and dispositions of loss corporation stock*** —

(i) ***In general.*** For purposes of this section—

(A) If an individual owns less than five percent of the stock of a loss corporation during the testing period (excluding the testing date) and acquires an amount of such stock so that the individual becomes a 5-percent shareholder on the testing date, the loss corporation may treat any interest in the loss corporation owned by such individual prior to that acquisition as owned by a public group during the period of such individual's ownership of that interest and as not owned by the 5-percent shareholder during the same period, and

(B) If a 5-percent shareholder's percentage ownership interest in the loss corporation is reduced to less than five percent, the loss corporation may presume that the remaining stock owned by such 5-percent shareholder immediately after such reduction is the stock owned by such shareholder for each subsequent testing date having a testing period that includes the date on which the reduction occurred as long as such shareholder continues to own less than five percent of the stock of the loss corporation. In that event, such ownership interest shall be treated as owned by a separate public group for purposes of the rules of paragraph (j)(2)(vi) of this section.

(ii) ***Example.***

Example. L has 100,000 shares of stock outstanding. All of the L stock is owned equally by 40 unrelated, individual shareholders, including A (who owns 2.5 percent of L stock). Because no person owns as much as five percent of L stock, Public L is the only 5-percent shareholder of L. See paragraph (j)(1) of this section. A purchases 5,000 shares of L stock over a public stock exchange on June 8, 1989. The purchase is an owner shift. When added to his ownership interest before that date (the testing date), A owns 7,500 shares of L stock (7.5 percent). Under paragraph (g)(5)(i)(A) of this section, L may treat A and Public L as having owned 0 percent and 100 percent, respectively, at all times prior to June 8, 1989 (rather than having owned 2.5 percent by A and 97.5 percent by Public L, even if L has actual knowledge of A's less than five percent ownership interest). The increase in A's stock ownership of L as of June 8, 1989 thus would be 7.5 percentage points, rather than 5.0 percentage points, for purposes of determining whether an ownership change occurs on that testing date and any subsequent testing date.

(h) ***Constructive ownership of stock*** —

(1) ***In general.*** Subject to certain modifications set forth in this section and section 382(l)(3), the constructive ownership rules of section 318(a) generally apply for purposes of determining ownership of loss corporation stock.

(2) ***Attribution from corporations, partnerships, estates and trusts*** —(i) *In general.* Stock owned (directly or indirectly) by an entity shall be attributed to its owners—

(A) Except as otherwise provided in this section, by treating the stock attributed pursuant to section 318(a)(2) as no longer being owned by the entity from which it is attributed, and

(B) If attribution is from a corporation, without regard to the 50 percent stock ownership limitation contained in section 318(a)(2)(C).

(ii) *Limitation on attribution from entities with respect to certain interests.* Section 318(a)(2) shall not apply to treat the stock of the loss corporation that is owned directly by a first tier entity (or indirectly by any higher tier entity) as being indirectly owned by any person that has an ownership interest in the first tier entity (or any higher tier entity) to the extent that such interest is (or is attributable to)—

(A) Stock of any such entity that is described in section 1504(a)(4),

(B) Any ownership interest in any such entity that does not constitute stock under paragraph (f)(18)(ii) of this section, or

(C) If the entity is not a corporation, any ownership interest in any such entity that has characteristics similar to the interests described in paragraph (h)(2)(ii)(A) or (B) of this section.

The ownership interests described in this paragraph (h)(2)(ii) shall not be taken into account in determining a person's percentage ownership interest in an entity under paragraph (f)(24) of this section.

(iii) *Limitation on attribution from certain entities.* For purposes of this section, except as provided in paragraphs (k)(2) and (4) of this section, each of the following shall be treated as an individual who is unrelated to any other owner (direct or indirect) of the loss corporation—

(A) Any entity other than a higher tier entity that owns five percent or more of the loss corporation stock (determined without regard to paragraph (h)(2)(i)(A) of this section) on a testing date, a first tier entity or the loss corporation,

(B) A qualified trust described in section 401(a),

(C) Any State, any possession of the United States, the District of Columbia, the United States (or any agency or instrumentality thereof), any foreign government, or any political subdivision of any of the foregoing, and

(D) Any other person designated by the Internal Revenue Service in the Internal Revenue Bulletin.

Stock of a loss corporation that is owned by any such person shall thus not be attributed to any other person for purposes of this section. See paragraph (g)(2) of this section limiting attribution from a first tier entity or a higher tier entity to any person that is not a 5-percent owner or a higher tier entity.

(iv) *Examples.*

> ***Example 1.*** All the stock of L is owned by A. B and C respectively own 70 and 30 percent of the outstanding P stock. P acquires 60 percent of the outstanding L stock from A on July 1, 1988 (a testing date). After the acquisition, P is a first tier entity and a higher tier entity of L. B and C are each 5-percent owners of P and also are 5-percent shareholders of L having a 42 percent and 18 percent stock ownership interest in L, respectively, through the operation of the constructive ownership rules of paragraph (h) of this section. Because B and C together have increased their ownership in L by more than 50 percentage points during the testing period ending on the testing date (60 percent on the testing date and 0 percent prior thereto), an ownership change occurs with respect to L on July 1, 1988.

> ***Example 2.*** **The facts are the same as in *Example (1),* except that B and C are not shareholders in a corporation, but instead are partners in a general partnership, E. B and C respectively own 70 percent and 30 percent of E. E acquires 60 percent of the L stock on July 1, 1988. The results are the same as in *Example (1).***

Example 3. The facts are the same as in Example (1), except that the acquisition is accomplished in a transaction that qualifies under section 351(a). In that transaction, HC is formed through (i) a contribution of money by P in exchange for 60 shares of HC common stock and (ii) a contribution

of all the outstanding shares of L stock plus cash by A in exchange for 40 shares of HC common stock and 30 shares of HC preferred stock that is described in section 1504(a)(4). The respective values of each share of HC stock, common and preferred, are equal. The stock of L is attributed to A through his interest in HC common stock, but not through his interest in HC preferred stock (see paragraph (h)(2)(ii)(A) of this section). Thus, A is treated as owning indirectly only 40 percent of L. B and C are 5-percent shareholders of L having indirect ownership interests in L of 42 percent and 18 percent, respectively, through their ownership of HC common stock. The results are therefore the same as in Example (1).

(3) ***Attribution to corporations, partnerships, estates and trusts.*** Except as otherwise provided by regulation under section 382 or by the Internal Revenue Service in the Internal Revenue Bulletin, the rules of section 318(a)(3) shall not apply in determining the ownership of stock under this section.

(4) ***Option attribution*** —(i) *In general.* Solely for the purpose of determining whether there is an ownership change on any testing date, stock of the loss corporation that is subject to an option shall be treated as acquired on any such date, pursuant to an exercise of the option by its owner on that date, if such deemed exercise would result in an ownership change. The preceding sentence shall be applied separately with respect to—

(A) Each class of options (*i.e.,* options with terms that are identical, issued by the same issuer, and issued on the same date) owned by each 5-percent shareholder (or person who would be a 5-percent shareholder if the option were treated as exercised), and

(B) Each 5-percent shareholder, each owner of an option who would be a 5-percent shareholder if the option were treated as exercised, and each combination of such persons.

(ii) *Examples.*

Example 1. (*i*) A owns all of the 100 shares of outstanding L stock. A grants options for the purchase of his L stock, exercisable for 10 years from the date of issuance, in the following transactions: An option to B for four shares (issued January 1, 1988), an option to C for six shares (issued June 1, 1989), and an option to D for 15 shares (issued July 30, 1989). On July 30, 1990, A sells 41 shares of his L stock to BB.
(*ii*) Pursuant to paragraph (a)(2)(i) of this section, the date on which each option is acquired is a testing date. The issuance of options to acquire L stock to each of B, C, and D is not treated as an acquisition of the underlying stock on any such testing date since such treatment with respect to any one of the option owners (or any combination thereof) would not have resulted in an ownership change on any of those testing dates.

(*iii*) The date on which BB acquires 41 shares also is a testing date. BB's acquisition of 41 percent of the L stock, taken together with the shift in ownership that would result if the options held by B, C and D were exercised, would result in an ownership change, because the stock owned or treated as owned by Public L (a group including only B, the sole shareholder who owns less than five percent of L stock), C, D and BB would have increased by 66 percentage points (four, six, 15, and 41 percentage points, respectively) during the testing period. Subject to paragraph (h)(4)(ix) of this section, the options are treated as exercised and an ownership change occurs on July 30, 1990, pursuant to

paragraph (h)(4)(i) of this section. Accordingly, no new testing period can begin before July 31, 1990. Under paragraph (h)(4)(x)(F) of this section, the option attribution rules of paragraph (h)(4)(i) of this section shall not be applicable with respect to any of the options owned by B, C, and D immediately before the ownership change until such time, if any, that such options are transferred to (or by) 5-percent shareholder (or a person who would be a 5-percent shareholder if such option were exercised). In addition, the subsequent exercise of any of those options by A, B, or C (the persons owning such options immediately before the ownership change) is disregarded. See paragraph (h)(4)(vi) of this section. Also see paragraph (h)(4)(viii) of this section for the treatment of options that lapse or are forfeited.

(*iv*) The facts are the same as in (*i*), except that the sale of A's 41 shares of L stock to BB occurs on July 30, 1995. Because the options are treated as exercised and the related stock is treated as acquired on the July 30, 1995 testing date, the results are the same as described in (*iii*).

Example 2. (*i*) A owns all of the outstanding 100 shares of the stock of L. On July 22, 1988, the value of A's stock in L is $500 and the following agreements are entered into: (i) A sells 40 shares of his L stock to B for $200, (ii) in exchange for $10, A grants B an option to acquire the balance of his L stock for $305 at any time before July 22, 1992, and (iii) L grants A an option to acquire 100 shares of L stock at a price of $600 exercisable until such time as B's option is no longer outstanding.
(*ii*) If the stock subject to the options owned by both A and B were treated as acquired on the July 22, 1988 testing date, B would have increased his ownership interest in L by only 50 percentage points to 50 percent ([40 shares purchased + 60 shares acquired pursuant to the option]/200 outstanding shares of L stock, including 100 shares deemed outstanding pursuant to the option issued to A by L) as compared with 0 percent prior to July 22, 1988. In determining whether the options with respect to the stock of L would, if exercised, result in an ownership change, paragraph (h)(4)(i)(B) of this section requires that such options be treated as exercised separately with respect to each 5-percent shareholder, each person who would be a 5-percent shareholder if the option were treated as exercised or each combination of such persons. Therefore, by treating the option owned by A as not having been exercised and the option owned by B as having been exercised, B's interest in L increases by 100 percentage points during the testing period. An ownership change with respect to L therefore results from the transactions occurring on July 22, 1988.

(iii) *Contingencies.* Except as provided in paragraph (h)(4)(x)(D) of this section, the extent to which an option is contingent or otherwise not currently exercisable shall be disregarded for purposes of this section.

(iv) *Series of options.* For purposes of this section, an option to acquire an option with respect to the stock of the loss corporation, and each one of a series of such options, shall be considered as an option to acquire such stock.

(v) *Interests that are similar to options.* For purposes of this section,

(A) An interest that is similar to an option includes, but is not limited to, a warrant, a convertible debt instrument, an instrument other than debt that is convertible into stock, a put, a stock interest subject to risk of forfeiture, and a contract to acquire or sell stock, and

(B) Any such interest shall be treated as an option.

(vi) *Actual exercise of options*—(A) *In general.* The actual exercise of any option in existence immediately before and after an ownership change, whether or not the option was treated as exercised in connection with the ownership change under paragraph (h)(4)(i) of this section, shall be disregarded for purposes of this section, but only if the option is exercised by the 5-percent shareholder (or person who would have been a 5-percent shareholder if the options owned by such person had been exercised immediately before the ownership change) who owned the option immediately before and after such ownership change.

(B) ***Actual exercise within 120 days of deemed exercise.*** If the actual exercise of an option occurs on or before the end of the period which is 120 days after the date on which the option is treated as exercised under paragraph (h)(4)(i) of this section, the loss corporation may elect to treat paragraphs (h)(4)(i) and (vi)(A) of this section as not applying to such option and take into account only the acquisition of loss corporation stock resulting from the actual exercise of the option. An election under this paragraph (h)(4)(vi)(B) shall have no effect on the determination of whether an ownership change occurs, but shall apply only for the purpose of determining the date on which the change date occurs. An election under this paragraph (h)(4)(vi)(B) shall be made in the statement described in § 1.382-11(a).

(vii) *Effect of deemed exercise of options on the outstanding stock of the loss corporation*—(A) *Right or obligation to issue stock.* Solely for purposes of determining whether an ownership change has occurred under paragraph (h)(4)(i) of this section, the deemed exercise of an option with respect to unissued stock (or treasury stock) of a corporation shall result in a corresponding increase in the amount of its total outstanding stock.

(B) ***Right or obligation to acquire outstanding stock by the loss corporation.*** Solely for purposes of determining whether an ownership change has occurred under paragraph (h)(4)(i) of this section, the deemed exercise of a right to transfer outstanding stock to the issuing corporation (or a right of the issuing corporation to acquire its stock) shall result in a corresponding decrease in the amount of its total outstanding stock.

(C) ***Effect on value of old loss corporation.*** The deemed exercise of an option with respect to unissued stock (or treasury stock) under paragraph (h)(4)(i) of this section shall have no effect on the determination of the value of the old loss corporation and the computation of the section 382 limitation. See section 382(l)(1)(B) disregarding capital contributions made during the two-year period preceding the change date for purposes of computing the section 382 limitation.

(viii) *Options that lapse or are forfeited.* If an option that is treated as exercised under paragraph (h)(4)(i) of this section lapses unexercised or the owner of such option irrevocably forfeits his right to acquire stock pursuant to the option, the option shall be treated for purposes of this section as if it never had been issued. In that case, the loss corporation may file an amended return for prior years (subject to any applicable statute of limitations) if the section 382 limitation was thus inapplicable. If paragraph (h)(4)(i) of this section applied to an option (or options) with respect to a taxable year for which an income tax return has not been filed by the date that the option (or options) lapses or is irrevocably forfeited, the loss corporation may treat paragraph (h)(4)(i) of this section as inapplicable to such option (or options).

(ix) *Option rule inapplicable if pre-change losses are de minimis.* Paragraph (h)(4)(i) of this section shall not apply to treat the stock of the loss corporation as acquired by the owner of an option if, on a testing date, the amount of pre-change losses (determined as if the testing date were a change date and treating the amount of any net unrealized built-in loss as a pre-change loss) is less than twice the amount determined by multiplying.

(A) The value of the loss corporation (as determined under section 382(e)) on the testing date, by

(B) The long-term tax exempt rate (as defined in section 382(f)) for the calendar month in which the testing date occurs.

(x) *Options not subject to attribution.* Paragraph (h)(4)(i) of this section shall not apply to—

(A) ***Long-held options with respect to actively traded stock.*** Any option with respect to stock of the loss corporation which stock is actively traded on an established securities market (within the meaning of section 1273(b)) for which market quotations are readily available, if such option has been continuously owned by the same 5-percent shareholder (or a person who would be a 5-percent shareholder if such option were exercised) for at least three years, but only until the earlier of such time as—

(*1*) The option is transferred by or to a 5-percent shareholder (or a person who would be a 5-percent shareholder if such option were exercised), or

(*2*) The fair market value of the stock that is subject to the option exceeds the exercise price for such stock on the testing date. For purposes of this paragraph (h)(4)(x)(A), options with respect to the stock of a loss corporation that are assumed (or substituted) in a reorganization and converted into options with respect to the stock of another party to the reorganization shall not be treated as transferred, provided that there are no changes in the terms of the options, other than that the stock that may be acquired pursuant to the option is that of another party to the reorganization and that the amount of stock subject to the option is adjusted only to reflect the exchange ratio for the exchange of stock of the loss corporation in the reorganization.

(B) ***Right to receive or obligation to issue a fixed dollar amount of value of stock upon maturity of certain debt.*** Any right to receive or obligation to issue stock pursuant to the terms of a debt instrument that, in economic terms, is equivalent to nonconvertible debt because the right to receive stock of the issuer of a fixed dollar amount is based upon the fair market value for such stock determined at or about the date the stock is transferred pursuant to such right or obligation (*i.e.,* the amount of the stock transferred pursuant to the option is equal to a fixed dollar amount, divided by the value of each share of such stock at or about the date of the

stock transfer). This paragraph (h)(4)(x)(B) shall not apply if the method for determining the fair market value of the stock of the issuer is intended to or, in fact, provides the owner of the debt instrument with a participation in any appreciation of any stock of the issuer.

(C) ***Right or obligation to redeem stock of the loss corporation.*** Any right or obligation of the loss corporation to redeem any of its stock at the time such stock is issued, but only to the extent such stock is issued to persons who are not 5-percent shareholders immediately before the issuance.

(D) ***Options exercisable only upon death, disability or mental incompetency.*** Any option entered into between owners of the same entity (or an owner and the entity in which the owner has a direct ownership interest) with respect to such owner's ownership interest in the entity that is exercisable only upon the death, complete disability or mental incompetency of such owner.

(E) ***Right to receive or obligation to issue stock as interest or dividends.*** Any right to receive or obligation to issue stock of a corporation in payment of interest or dividends by the issuing corporation. (For an example illustrating this exception, see paragraph (j)(2)(iv)(B) of this section.)

(F) ***Options outstanding following an ownership change*** —(*1*) *In general.* Any option in existence immediately before and after an ownership change, whether or not the option was treated as exercised in connection with the ownership change under paragraph (h)(4)(i) of this section, but only so long as the option continues to be owned by the 5-percent shareholder (or person who was treated as a 5-percent shareholder) who owned the option immediately before and after such ownership change.

(*2*) *Example* (*i*) A, B, C and D own all of the outstanding stock of L. A owns 70 shares of L stock and each of B, C and D own 10 shares of L stock. On July 12, 1988, L issues warrants to each of its shareholders entitling them to acquire an additional 8.5 shares of L stock for each share of stock owned.

(*ii*) If B, C and D, but not A, each exercise their respective rights to acquire an additional 85 shares of L stock (10 shares × 8.5 shares that may be acquired for each share owned) on July 12, 1988, their combined ownership interest in L on that date would exceed 80 percent (255 shares deemed to be acquired + 30 shares actually owned)/355 shares outstanding (actual and deemed)). B, C and D thus would increase their ownership interest in L by 50.3 percentage points during the testing period, causing an ownership change, because, under paragraph (h)(4)(i)(B) of this section, the options are treated as exercised if the exercise would cause an ownership change.

(*iii*) Following the ownership change, paragraph (h)(4)(i) of this section applies to prevent A's right to acquire 595 shares of L stock (70 shares × 8.5 shares that may be acquired for each share owned) or the rights held by B, C, or D, to be treated as exercised on any subsequent testing date, except to the extent that those rights are transferred. To the extent any of those options are transferred following the ownership change, paragraph (h)(4)(i) of this section will apply to any such options on the date of the transfer and on any subsequent testing date.

(G) ***Right to acquire loss corporation stock pursuant to a default under a loan agreement.*** Any right to acquire stock of a corporation by a bank (as that term is defined in section 581), an insurance company (as that term is defined in § 1.801-3(a)), or a trust qualified under section 401(a) solely as the result of a default under a loan agreement entered into in the ordinary course of the trade or business of such bank, life insurance company or qualified trust.

(H) ***Agreement to acquire or sell stock owned by certain shareholders upon retirement.*** Any option entered into between noncorporate owners of the same entity (or a noncorporate owner and the entity in which the owner has a direct ownership interest) with respect to such owner's ownership interest in the entity, but only if each of such owners actively participate in the management of the entity's trade or business, the option is issued at a time that the loss corporation is not a loss corporation and the option is exercisable solely upon the retirement of such owner. An option with terms described in both this paragraph (h)(4)(x)(H) and in paragraph (h)(4)(x)(D) of this section shall also not be subject to paragraph (h)(4)(i) of this section.

(I) [Reserved]

(J) ***Title 11 or similar case.*** See § 1.382-9(o) which excepts certain options created by or under a plan of reorganization in a title 11 or similar case from the operation of paragraph (h)(4)(i) of this section.

(K)-(Y) [Reserved]

(xi) *Certain transfers of options disregarded.* Transfers of options between persons who are not 5-percent shareholders (and between members of separate public groups resulting from the application of the segregation rules of paragraphs (j)(2) and (3)(iii) of this section) are not taken into account. Transfers of options in any of the circumstances described in section 382(l)(3)(B) are also disregarded and the transferee shall be treated as having owned the option for the period that it was owned by the transferor.

(xii) *Exercise of an option that has not been treated as stock.* The acquisition of stock pursuant to the actual exercise of an option (other than an option described in paragraph (h)(4)(vi)(A) of this section) shall not be disregarded.

(xiii) *Effective date.* See paragraph (m)(4)(vi) of this section for special rules regarding the effective date of the provisions of this paragraph (h)(4).

(5) ***Stock transferred under certain agreements.*** Notwithstanding paragraph (h)(4) of this section, no shift results solely because under section 1058(a)—

(i) A shareholder transfers stock of a corporation pursuant to an agreement that meets the requirements of section 1058(b), or

(ii) A person having rights under such an agreement exchanges those rights for stock identical to the stock transferred pursuant to the agreement.

(6) ***Family attribution.*** For purposes of this section—

(i) Paragraphs (1) and (5)(B) of section 318(a) shall not apply,

(ii) An individual and all members of his family described in section 318(a)(1) shall be treated as one individual,

(iii) Subject to paragraph (k)(2) of this section, paragraph (h)(6)(ii) of this section shall not apply to members of a family who, without regard to that paragraph (h)(6)(ii), would not be 5-percent shareholders, and

(iv) If under paragraph (h)(6)(ii) of this section, an individual may be treated as a member of more than one family, and each family that is treated as one individual is a 5-percent shareholder (or would be treated as a 5-percent shareholder if such individual were treated as a member of such family), then such individual shall be treated only as a member of the family that results in the smallest increase in the total percentage stock ownership of the 5-percent shareholders on the testing date and shall not be treated as the member of any other family.

(i) [Reserved]

(j) ***Aggregation and segregation rules.*** For purposes of this section, except as provided in paragraphs (k)(2) and (4) of this section—

(1) ***Aggregation of public shareholders and public owners into public groups*** —

(i) ***Public group.*** Under this paragraph (j), a loss corporation or other entity can be treated as owned, in whole or in part, by one or more public groups. A public group can include public shareholders, public owners, and 5-percent owners who are not 5-percent shareholders of the loss corporation.

(ii) ***Treatment of a public group that is a 5-percent shareholder.*** Each public group that is treated as a 5-percent shareholder under paragraph (g)(1)(ii), (iii) or (iv) of this section shall be treated as one individual. See paragraph (j)(2)(iv) for a rule combining certain de minimis public groups.

(iii) ***Presumption of no cross-ownership.*** The public owners, 5-percent owners who are not 5-percent shareholders and public shareholders in any public group, subject to paragraphs (j)(2)(iii), (k)(2) and (k)(4) of this section, are presumed not to be members of any other public group. It also is presumed that each such person is unrelated to all other shareholders (direct and indirect) of the loss corporation. See paragraph (h)(6)(iii) of this section. The members of a public group that exists by virtue of its direct ownership interest in an entity are presumed not to be members (and not to be related to a member) of any other public group that exists at any time by virtue of its direct ownership interest in any other entity. To the extent that the presumptions adopted in this paragraph (j)(1)(iii) are not applicable because the loss corporation has actual knowledge of facts to the contrary and is thus subject to paragraph (k)(2) of this section, public shareholders, public owners and 5-percent owners who are not 5-percent shareholders may be aggregated into additional public groups.

(iv) ***Identification of the public groups treated as 5-percent shareholders*** —

(A) ***Analysis of highest tier entities.*** The loss corporation must identify first tier entities and higher tier entities in order to identify any highest tier entities that must be identified under paragraph (k)(3) of this section. The loss corporation must then identify any 5-percent owners of each such highest tier entity who indirectly own, at any time during the testing period, five percent or more of the loss corporation through the ownership interest in such highest tier entity. Under paragraph (g)(1)(i)(B) of this section, any such 5-percent owner is a 5-percent shareholder. See paragraph (k)(3) of this section for rules explaining the extent of the obligation of the loss corporation to determine the identity of its shareholders. Each person who has an ownership interest in any highest tier entity and who is not treated as a 5-percent shareholder (*i.e.,* persons who are public owners or 5-percent owners who are not 5-percent shareholders) is a member of the public group of that highest tier entity. A public group, so identified, that indirectly owns five percent or more of the loss corporation on the testing date is treated under paragraph (g)(1)(ii) of this section as a 5-percent

shareholder. If the public group so identified owns less than five percent of the loss corporation on the testing date, such public group is treated as part of the public group of the next lower tier entity.

(B) ***Analysis of other higher tier entities and first tier entities.*** The analysis and aggregation of public groups described in paragraph (j)(1)(iv)(A) of this section is repeated for any next lower tier entity and successively for any next lower tier entity of any entity described in this paragraph (j)(1)(iv)(B) until applied to each first tier entity.

(C) ***Aggregation of the public shareholders.*** The public shareholders are aggregated and, under paragraph (g)(1)(iii) of this section, are treated as a public group that is a 5-percent shareholder without regard to whether such group, at any time during the testing period, owns five percent or more of the loss corporation. For this purpose, if the public group of any first tier entity indirectly owns less than five percent of the loss corporation on the testing date, and is thus not treated as a 5-percent shareholder, but is treated as part of the public group of the loss corporation under paragraph (j)(1)(iv)(A) or (B) of this section, the ownership interest of that group is included in the public group of the loss corporation referred to in the preceding sentence.

(v) ***Appropriate adjustments.*** A loss corporation may apply the principles of paragraph (g)(5) of this section with respect to—

(A) Any public group that is treated as a 5-percent shareholder on the testing date if such public group, at any time during the testing period, was treated as part of the public group of the next lower tier entity, or

(B) Any public group that is treated as part of the public group of a next lower tier entity if such public group, at any time during the testing period, was part of the public group of a higher tier entity that was treated as a 5-percent shareholder and had a direct or indirect ownership interest in such lower tier entity.

(vi) ***Examples.***

> *Example 1.* (i) All of the stock of L is owned by 1,000 shareholders, none of whom own as much as five percent of L stock ("Public L"). All of the stock of P is owned by 150,000 shareholders, none of whom own as much as five percent of P stock ("Public P"). Between July 12, 1988 and August 13, 1988, P purchases all of the L stock through a series of transactions on the public stock exchange. P's percentage of direct stock ownership in L increases from 4.9 percent to five percent on July 15, 1988, and from 50 percent to 51 percent on July 30, 1988.
> (ii) Before July 15, 1988, P is a public shareholder of L. On and after July 15, 1988, P is a first tier entity (and a highest tier entity) of L. Accordingly, under the rules of paragraph (j)(1) of this section, Public P, on and after July 15, 1988, is treated as a public group that is a 5-percent shareholder. Each acquisition by P on and after such date affects the percentage of L stock that is owned by Public P and thus constitutes an owner shift.

(iii) Immediately after the transaction on July 30, 1988, P owns 51 percent of L stock. Under paragraph (j)(1)(iv)(A) of this section, Public P thus owns 51 percent of L. Under paragraph (j)(1)(iv)(C) of this section, Public L, the public group that includes the public shareholders of L, is treated as a 5-percent shareholder that owns 49 percent of L. Under paragraph (j)(1)(iii) of this section, Public L and Public P are presumed not to have any common members and it is also presumed that no member of either public group is related to any other member of either of the two public groups.

(iv) Assuming that the presumption provided in paragraph (j)(1)(iii) of this section (*i.e.,* that no person owns stock in both P and L) is not rebutted to any extent, Public P is treated as a 5-percent shareholder whose stock ownership in L, as of the July 30, 1988 testing date, has increased by 51 percentage points over its lowest percentage of stock ownership in L at any time during the testing period (0 percent prior to July 12, 1988). Accordingly, an ownership change with respect to L occurs as a result of P's acquisition on July 30, 1988. L is thus a new loss corporation and its pre-change losses are subject to limitation under section 382.

Example 2. (i) All of the stock of P is owned by 1,000 unrelated shareholders, none of whom owns as much as five percent of P stock. L_1 is a wholly owned subsidiary of P. On January 2, 1988, P distributes all of the L_1 stock pro rata to its shareholders.
(ii) Prior to the stock distribution, the public owners of P are members of a public group ("Public P") that is treated as a 5-percent shareholder owning 100 percent of the stock of L_1.

See paragraph (j)(1)(iv)(A) of this section. Following the stock distribution to the P shareholders, L_1 is owned by 1,000 public shareholders that are members of a public group ("Public L_1") that is treated as a 5-percent shareholder owning 100 percent of the stock of L_1. See paragraph (j)(1)(iv)(C) of this section.

(iii) Public P and Public L_1 are treated as unrelated, individual 5-percent shareholders under paragraph (j)(1)(iii) of this section. Although the members of one public group are presumed not to be members of any other public group under paragraph (j)(1)(iii) of this section, L_1 has actual knowledge that all of its public shareholders immediately following the distribution (Public L_1) received L_1 stock pro rata in respect to the outstanding P stock and thus were also members of Public P. Applying paragraph (k)(2) of this section, the loss corporation may take into account the identity of ownership interests between Public L_1 and Public P to establish that Public L_1 did not increase its percentage ownership in L_1. Accordingly, the transaction would not constitute an owner shift.

Example 3. (i) The facts are the same as in *Example 1* of paragraph (g)(4) of this

section. Thus, 20 percent of L stock is owned by A, 10 percent is owned by P_1, 20 percent is owned by E, a joint venture, and the remaining 50 percent of L stock is owned by Public L. P_1 is owned 15 percent by B and 85 percent by Public P_1. E is owned 30 percent by P_2 and 70 percent by P_3, which are owned by Public P_2 and Public P_3, respectively. See *Example (1)(ii)* of paragraph (g)(4) of this section for a chart illustrating this ownership structure.
(ii) The public owners of P_2 and P_3 (Public P_2 and Public P_3, respectively), are public groups that are treated as 5-percent shareholders of L, because each such public group indirectly owns five percent or more of L stock (six percent by Public P_2 [(30 percent ownership of E) × (20 percent ownership of L)] and 14 percent by Public P_3 [(70 percent ownership of E) × (20 percent ownership of L)]). The public owners of P_1 ("Public P_1"), who indirectly own 8.5 percent of L stock [(85 percent ownership of P_1) × (10 percent ownership of L)] and B, who indirectly owns 1.5 percent of L and is thus included in Public P_1 under paragraph (j)(1)(iv)(A) of this section, are members of a public group that is treated as a 5-percent shareholder of L that owns ten percent of L stock. Finally, the public group of L ("Public L") is a 5-percent shareholder that owns 50 percent of L. Accordingly, A, Public L, Public P_1 (including B), Public P_2, and Public P_3 are the only 5-percent shareholders of L.

Example 4. (i) The facts are the same as *Example 3* above, except that P_3 is owned 60 percent by C, 30 percent by P_4, and 10 percent by P_3. The stock of P_4 is publicly traded and is owned by Public P_4. The facts are thus the same as in *Example (2)* in paragraph (g)(4) of this section. See *Example (2)(ii)* of paragraph (g)(4) of this section for a chart illustrating this ownership structure.
(ii) The public owners of P_4 (a highest tier entity) are members of a public group that indirectly owns 4.2 percent of L ([30 percent ownership of P_3] × [70 percent ownership of E] × [20 percent ownership of L]). For purposes of identifying public groups that are 5-.percent shareholders, L is not required to identify P_4 as a highest tier entity under paragraph (k)(3) of this section because P_4 does not own five percent or more of L stock. Moreover, under paragraph (h)(2)(iii) of this section, P_4 generally is treated as an individual from which there is no attribution of loss corporation stock. The public group of P_3 (including P_4) indirectly owns 5.6 percent of L ([40 percent of P_3] × [70 percent ownership of E] × [20 percent of L]), and is thus a 5-percent shareholder of L. The public groups of P_2 and P_1 (both Public P_1 and B), respectively, also own five percent or more of L stock and are thus 5-percent shareholders of L. In addition, the public group of L is a 5-percent shareholder regardless of whether it owns five percent of L stock. Accordingly, A, Public L, Public P_3 (including P_4), Public P_2, and Public P_1 (including B), are the only 5-percent shareholders of L.

Example 5(i) On September 4, 1987, L is owned 14 percent by each of A and B, 30 percent by each of P_1 and P_2, four percent by each of C and P_3, and two percent by each

of D and AA. P_1 is owned 30 percent by each of A, B, and P_4 and 10 percent by D. P_2 is owned 70 percent by A, 10 percent by each of B and D, six percent by DD and four percent by C. AA owns 100 percent of the stock of P_3. P_4 is owned 60 percent by C and 20 percent by each of BB and CC.

(ii) The ownership structure of L is illustrated by the following chart:

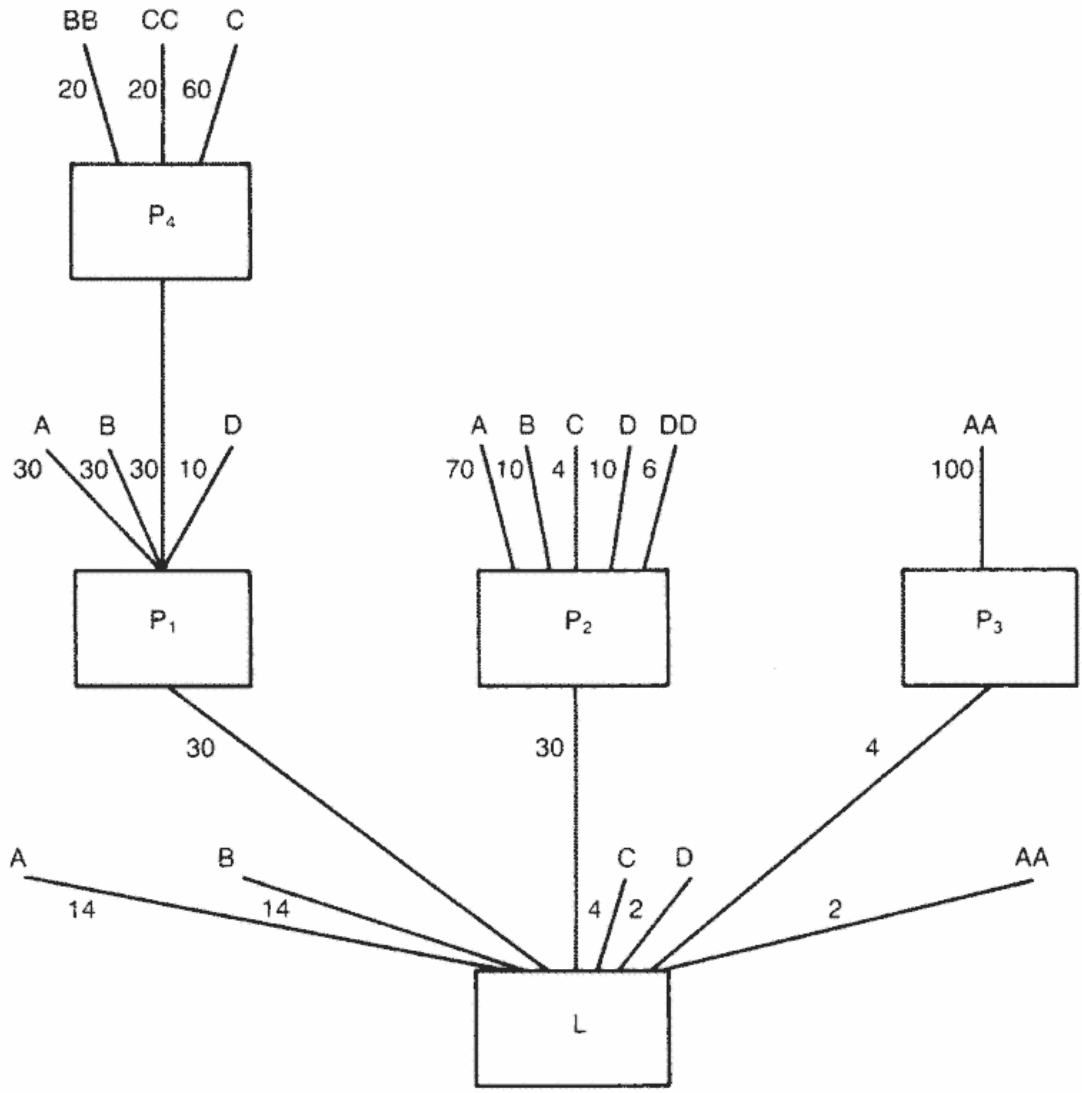

(iii) In order to identify L's 5-percent shareholders and their respective ownership interests in L on September 4, 1987, the rules of paragraph (j)(1) of this section apply to identify the public groups that are treated as separate 5-percent shareholders. Analysis begins with any highest tier entity, such as P_4. Each of P_4's shareholders is a 5-percent owner of P_4. C_4 owns 5.4 percent of L in his capacity as a 5-percent owner of P_4 and therefore is a 5-percent shareholder. Notwithstanding that C actually owns, directly and by attribution, 10.6 percent of L (four percent directly, 5.4 percent indirectly through P_4, and 1.2 percent through P_2), C's ownership interest in L as a 5-percent shareholder is presumed to include only the 5.4 percent indirect ownership through P_4. (Under

paragraphs (g) and (k)(2) of this section, however, L must account for C's direct and indirect ownership interests in determining whether an ownership change occurs on any testing date if it has actual knowledge of such ownership on or before the date that its income tax return is filed for the taxable year that includes the testing date). Although BB and CC are each 5-percent owners of P_4, they are not 5-percent shareholders and therefore are members of the public group of P_4. Because the public group of P_4 indirectly owns only 3.6 percent of L, it is treated under paragraph (j)(1)(iv)(A) of this section as part of the public group of the next lower tier entity, P_1.
(iv) With respect to P_1, a first tier entity, each of its shareholders are 5-percent owners. Because A and B each indirectly own nine percent of L as 5-percent owners of P_1 and A indirectly owns 21 percent of L as a 5-percent owner of P_2, they are each 5-percent shareholders without regard to their direct ownership interests in L. A's ownership interest in L as a 5-percent shareholder is 44 percent (14 percent directly, nine percent in his capacity as a 5-percent owner of P_1, and 21 percent in his capacity as a 5-percent owner of P_2). B's ownership interest in L as a 5-percent shareholder is 23 percent (14 percent directly and nine percent in his capacity as a 5-percent and nine percent in his capacity as a 5-percent owner of P_1). B's ownership interest as a 5-percent shareholder does not include the three percent interest he owns indirectly through P_2. (Under paragraphs (g) and (k)(2) of this section, however, L must account for B's direct and indirect ownership interests, including his three percent interest through P_2, in determining whether an ownership change occurs on any testing date if L has actual knowledge of such ownership on or before the date that its income tax return is filed for the taxable year that includes the testing date.) D is a 5-percent owner of P_1. Although D owns eight percent of L (two percent directly, three percent indirectly through P_1, and three percent indirectly through P_2), he is not a 5-percent shareholder because he does not own five percent or more of L stock either directly or in his capacity as a 5-percent owner of either P_1 or P_2. (Under paragraphs (g) and (k)(2) of this section, however, L must account for D's direct and indirect ownership interests in determining whether an ownership change occurs on any testing date to the extent L has actual knowledge of such ownership amounting to five percent or more of L stock before the date that its income tax return is filed for the taxable year that includes the testing date.) The public group of P_1 (comprised of the public group of P_4 and D's direct ownership interest in P_1) has a 6.6 percent interest in L and is therefore treated as a separate 5-percent shareholder.

(v) With respect to highest tier entity P_2, D is a 5-percent owner who is not a 5-percent shareholder for the reason described in the preceding subdivision. DD is a 5-percent owner of P_2, who is not a 5-percent shareholder, because DD indirectly owns only 1.8 percent of L. Assuming that L does not have actual knowledge of B's and C's direct ownership interest in P_2, those interests are accounted for in computing the ownership interest are accounted for in computing the ownership interest of the public group of P_2.

Therefore, each of P_2's shareholders, except A who is a 5-percent shareholder in his capacity as a 5-percent owner of P_2, are treated as members of the public group of P_2 that owns nine percent of L and is thus treated as a separate 5-percent shareholder.

(vi) Because the direct ownership interest of P_3 is less than five percent, it is a public shareholder. Therefore, assuming that L does not have actual knowledge of C's, D's, or AA's direct and/or indirect ownership interests in L, the public group of L is a separate 5-percent shareholder owning 12 percent of L (comprised of the direct ownership interests of C, D, AA and P_3).

(2) ***Segregation rules applicable to transactions involving the loss corporation*** —

(i) ***In general.*** For purposes of this section, if—

(A) A transaction is described in paragraph (j)(2)(iii) of this section, and

(B) The loss corporation has one or more direct public groups immediately before and after the transaction,

the stock owned by such direct public group or groups is subject to the segregation rules described in paragraph (j)(2)(iii) of this section for purposes of determining whether an ownership change has occurred on the date of the transaction (and on any subsequent testing date with a testing period that includes the date of such transaction). See paragraph (j)(3) of this section for the application of the rules of this paragraph (j)(2) to transactions involving first tier entities or higher tier entities.

(ii) ***Direct public group.*** For purposes of this section, a direct public group is any public group of the loss corporation described in paragraph (j)(1)(iv)(C) of this section or any public group of the loss corporation resulting from the application of paragraph (j)(2)(iii) or (j)(3)(i) of this section.

(iii) ***Transactions to which segregation rules apply*** —

(A) ***In general.*** The segregation rules of this paragraph (j)(2)(iii) apply to any transaction described in paragraph (j)(2)(iii)(B), (C), (D), (E), or (F) of this section in the manner specified. The presumptions adopted by this paragraph (j)(2)(iii) shall not apply only if, and to the extent that, the loss corporation either has actual knowledge of facts to the contrary regarding its stock ownership and is thus subject to paragraph (k)(2) of this section, or is subject to paragraph (k)(4) of this section. Any direct public group that is required to be identified as a result of a transaction described in paragraph (j)(2)(iii) of this section shall be treated as a 5-percent shareholder under paragraph (g)(1)(iv) of this section without regard to whether such group, at any time during the testing period, owns five percent or more of the loss corporation stock. To the extent that the presumptions are rebutted, the public shareholders, public owners and 5-percent owners who are not 5-percent shareholders may be aggregated into additional public groups. For an exception applicable to certain regulated investment companies, see § 1.382-3(k)(1).

(B) ***Certain equity structure shifts and transactions to which section 1032 applies*** —(*1*) *In general.* In the case of—

(*i*) A transaction that is an equity structure shift that also is described in section 381(a)(2) and in which the loss corporation is a party to the reorganization, or

(*ii*) A transfer of the stock of the loss corporation (including treasury stock) by the loss corporation in any other transaction to which section 1032 applies,

each direct public group that exists immediately after such transaction shall be segregated so that each direct public group that existed immediately before the transaction is treated separately from the direct public group that acquires stock of the loss corporation in the transaction. The direct public group that acquires stock of the loss corporation in the transaction is presumed not to include any members of any direct public group that existed immediately before the transaction. For purposes of this paragraph (j)(2)(iii)(B), a person is treated as acquiring stock of the loss corporation in a reorganization as the result of the person's ownership interest in another corporation that succeeds to the loss corporation's pre-change losses (determined as if the testing date were the change date and treating the amount of any net unrealized built-in loss as a pre-change loss) in a transaction to which section 381(a)(2) applies. In determining whether a transaction is described in section 1032 for purposes of this paragraph (j)(2)(iii)(B), the transfer by the loss corporation of any interest not constituting stock that is treated as stock under paragraph (f)(18)(iii) of this section shall be treated as the transfer of stock. See § 1.382-3(j) for exceptions to the segregation rules of this paragraph (j)(2)(iii)(B)(*1*).

(*2*) *Examples.*

> *Example 1.* (i) P_1 owns 60 percent of the stock of L. The remaining L stock (40 percent) is owned by Public L. A owns 40 percent of the P_1 stock. The remaining P_1 stock (60 percent) is owned by Public P_1. P_2 is a publicly traded corporation owned by shareholders who each own less than five percent of P_2 stock (Public P_2).
> (ii) On May 22, 1988, L merges into P_2 in a transaction described in section 368(a)(1)(A), with the shareholders of L receiving an amount of P_2 stock equal to 70 percent of the value of P_2 immediately after the reorganization.
>
> (iii) Immediately before the merger, L's 5-percent shareholders were Public L (40 percent), Public P_1 (36 percent), and A (24 percent). Although the shareholders of P_2 (immediately before the merger) do not acquire any stock in the merger, they are treated as acquiring a direct ownership interest in the loss corporation in the reorganization because P_2 succeeds to the pre-change losses of L in a transaction to which section 381(a)(2) applies. As a result of the merger, which constitutes a transaction described in (j)(2)(iii)(B)(*1*) of this section, L's direct public group, Public L, must be segregated from the direct public group that would otherwise exist after the transaction (Public L and Public P_2). Public L, the direct public group that exists before the merger, has a continuing 28 percent interest in the loss corporation [70 percent of P_2 shares received in the merger × 40 percent shares of L owned prior to the merger] that must be segregated from the interests acquired by Public P_2.

(iv) In addition, Public P_1, which owns five percent or more of the stock of P_2 through P_1's ownership interest in P_2, also is segregated from any other public group (*i.e.,* both Public L and Public P_2) under paragraph (j)(1) of this section. Therefore, under paragraphs (j)(1) and (2) of this section, Public P_2 (excluding the members of Public L and Public P_1 immediately before the merger) is treated as a separate public group and 5-percent shareholder.

(v) The only 5-percent shareholder whose interest in the loss corporation, P_2, has increased during the testing period is Public P_2. Its interest has increased by 30 percentage points. Accordingly, no ownership change results from the merger. For purposes of measuring the shift in ownership of P_2 on any subsequent testing date with a testing period that includes May 22, 1988 (the date on which L merged into P_2), Public P_2 will continue to be treated as a direct public group, separate from Public L (the members of which own P_2 stock as a result of the merger) and Public P_1.

Example 2. (i) P and L are each owned by 21 equal shareholders. Each of 14 of the shareholders of P and L are owners of both corporations ("common owners"). L has actual knowledge of this cross ownership. therefore, as a group, these persons own $66^2/_3$ percent of each of P and L. P stock has a value of $600 and L stock has a value of $400.
(ii) P merges into L under section 368(a)(1)(A) on June 10, 1988. Ordinarily, the direct public group of L that exists immediately before the transaction would be segregated from the direct public group that acquires stock in the merger (the public group of P immediately before the merger). In view of the common ownership of P and L, however, a third group may be created under paragraph (j)(2)(iii)(A) of this section so that L's owners following the merger would be: The common owners ($66^2/_3$ percent), Public L, less the common owners, $13^1/_3$ percent), and Public P, less the common owners (20 percent). Accordingly, the only 5-percent shareholder increasing its ownership interest by 20 percentage points and no ownership change occurs as a result of the merger.

Example 3. (i) L is entirely owned by Public L. L commences and completes a public offering of common stock on January 22, 1988, with the result that its outstanding stock increases from 100,000 shares to 300,000 shares. No person owns as much as five percent of L stock following the public offering.
(ii) The public offering of L stock is a transaction to which section 1032 applies. Immediately before the public offering, L's only 5-percent shareholder was Public L, a direct public group. Therefore, Public L (as in existence immediately before the transaction) must be segregated from the direct public group that would otherwise exist immediately after the transaction. Under paragraph (j)(2)(iii)(B)(*1*) of this section, the acquisition of 200,000 shares of L stock in the public offering must be treated as acquired by a direct public group ("New Public L") that is separate from Public L. Each such public group is treated as an individual that is a separate 5-percent shareholder. See paragraphs (g)(1)(iv) and (j)(1)(ii) of this section.

(iii) As a result of the public offering, L has two 5-percent shareholders, Public L and New Public L, which own $33^{1}/_{3}$ percent and $66^{2}/_{3}$ percent of the stock of L, respectively. Because the members of New Public L are presumed not to be members of Public L (and not to be related to any such members), the ownership interest of New Public L immediately prior to the offering of stock was 0 percent.

(iv) New Public L is a 5-percent shareholder that has increased its ownership interest in L by more than 50 percentage points during the testing period (by $66^{2}/_{3}$ percentage points). Thus, there is an ownership change with respect to L. For purposes of subsequent transactions, Public L and New Public L will not be segregated into two public groups because a new testing period commences on the day following the change date, January 23, 1988 (*i.e.,* any subsequent testing date will not have a testing period that includes the date of the public offering).

Example 4. The facts are the same as in *Example 3,* but L establishes that 60,000 shares of the newly issued L stock were acquired by its shareholders of record on the date of the stock issuance (*i.e.,* members of Public L, referred to as Acquiring Public L) by persons owning 27 percent of the L stock immediately before the stock issuance. Accordingly, L has actual knowledge that New Public L acquired no more than 140,000 shares of L stock in the public offering. Under paragraphs (j)(2)(iii) and (k)(2) of this section, New Public L may be treated as having increased its ownership interest in L by $46^{2}/_{3}$ percentage points (140,000 shares acquired in the offering/ 300,000 shares outstanding). L also has actual knowledge that the members of Public L owning 27 percent of L stock immediately before the stock issuance (27,000 shares/100,000 shares outstanding) own 29 percent of L stock immediately after such issuance ([27,000 shares + 60,000 shares acquired in the offering]/300,000 shares outstanding). Assuming that L chooses to take its actual knowledge into account for purposes of determining whether an ownership change occurred on January 22, 1988, Public L is segregated into two direct public groups immediately before the stock issuance so that the two percentage point increase in the ownership interest in L by Acquiring Public L is taken into account. The total increased ownership interest in L by New Public L and Acquiring Public L on the testing date over their lowest ownership interest during the testing period is $48^{2}/_{3}$ percent. Thus, no ownership change occurs with respect to L.

Example 5. (i) L is owned entirely by 10,000 unrelated individuals, none of whom own as much as five percent of L stock ("Public L"). P is owned entirely by 1,500 unrelated individuals, none of whom own as much as five percent of P stock ("Public P"). On December 22, 1988, L acquires all of the P stock from Public P in exchange for L stock representing 25 percent of the value of L, in a transaction described in section 368(a)(1)(B).
(ii) Under paragraph (j)(2)(iii)(B)(*1*) of this section, Public L, the direct public group that owns L stock immediately before and after the transaction to which section 1032 applies, is treated separately from Public P, the direct public group that acquires L stock in the transaction. Because Public P's percentage

ownership interest in L increases to only 25 percent (as compared with 0 percent before the acquisition), no ownership change occurs. For purposes of determining whether an ownership change occurs on any testing date with a testing period that includes December 22, 1988, Public L and Public P will continue to be treated as separate 5-percent shareholders.

(iii) See *Example (4)* in paragraph (j)(3)(iv) of this section for the application of paragraph (j)(2)(iii)(B) of this section to a reorganization under section 368(a)(1)(B) in which the loss corporation is acquired.

(C) ***Redemption-type transactions*** —(*1*) *In general.* In the case of a transaction in which the loss corporation acquires its stock in exchange for property, each direct public group that exists immediately before the transaction shall be segregated at that time (and thereafter) so that the stock that is acquired in the transaction is treated as owned by a separate public group from each public group that owns the stock that is not acquired. For purposes of the preceding sentence, the term property shall include stock described in section 1504(a)(4) and stock described in paragraph (f)(18)(ii) of this section. Each direct public group that owned the stock that is acquired in the transaction is presumed not to own any such stock immediately after the transaction.

(*2*) *Examples.*

Example 1. L is entirely owned by Public L. There are 500,000 shares of L stock outstanding. On July 12, 1988, L acquires 150,000 shares of its stock for cash. Because L's acquisition is a redemption, Public L is segregated into two different public groups immediately before the transaction (and thereafter) so that the redeemed interests (“Public RL”) are treated as part of a public group that is separate from the ownership interests that are not redeemed (“Public CL”). Therefore, as a result of the redemption, Public CL's interest in L increases by 30 percentage points (from 70 percent (350,000/500,000) to 100 percent) on the July 12, 1988 testing date. Because the resulting increase is not more than 50 percentage points, no ownership change occurs. For purposes of determining whether an ownership change occurs on any subsequent testing date having a testing period that includes such redemption, Public CL is treated as a 5-percent shareholder whose percentage ownership interests in L increased by 30 percentage points as a result of the redemption.

Example 2. L is entirely owned by Public L. There are 250,000 shares of L common stock outstanding. On April 22, 1988, L acquires 100,000 shares of its outstanding common stock in exchange for 100,000 shares of preferred stock described in section 1504(a)(4). (The transaction thus constitutes a recapitalization within the meaning of section 368(a)(1)(E).) As a result of the recapitalization, which is a transaction described in paragraph (j)(2)(iii)(C) of this section, Public L is segregated into two different public groups immediately before the transaction (and thereafter) so that the stock acquired by L is treated as owned by a public group (“Public RL”) that is separate from the public group that owns the stock that is not so acquired (“Public CL”). Therefore, as a result of the transaction, Public CL's interest in L increases by 40 percentage points (from 60 percent to 100 percent). Because the

resulting increase is not more than 50 percentage points, no ownership change occurs. For purposes of determining whether an ownership change occurs on any subsequent testing date with a testing period that includes the date of the recapitalization, Public CL is treated as a separate 5-percent shareholder whose percentage ownership interest increased by 40 percentage points as a result of the redemption type transaction.

(D) ***Acquisition of loss corporation stock as the result of the ownership of a right to acquire stock—(1***) *In general.* In the case of a deemed acquisition of stock of the loss corporation as the result of the ownership of a right issued by the loss corporation to acquire such stock (see paragraph (h)(4) of this section), each direct public group that exists immediately after such acquisition shall be segregated so that each direct public group that existed immediately before the transaction is treated separately from the direct public group that is deemed to acquire stock of the loss corporation as a result of the ownership of the right to acquire such stock. The direct public group that is treated as acquiring stock of the loss corporation in the transaction is presumed not to include any members of any direct public group that existed immediately before the transaction. In applying the rules of paragraph (h)(4) of this section, the segregation rules of this paragraph (j)(2)(iii)(D) shall apply before making the determination required under that paragraph (h)(4) of this section. See § 1.382-3(j)(9) for rules relating to this paragraph (j)(2)(iii)(D).

(*2*) *Example.*

Example. (i) L has 700,000 shares of common stock outstanding. Public L owns all of the outstanding L common stock. On May 20, 1988, L issues a class of debentures to the public that, in the aggregate, may be converted into 300,000 shares of L common stock. On September 7, 1988, P_1 acquires 210,000 shares of L common stock over a public stock exchange. None of the L debentures have been converted as of that date.
(ii) By virtue of L's issuance of convertible debentures, May 20, 1988 is a testing date. See paragraph (a)(2)(i) of this section. Immediately before the issuance of the convertible debentures, L's only 5-percent shareholder was Public L, a direct public group. Therefore, under paragraph (j)(2)(iii)(D) of this section, Public L must be segregated from the direct public group that would otherwise exist immediately after the transaction for the purpose of applying paragraph (h)(4) of this section, so that any acquisition of L stock through the conversion of L's debentures is treated as made by a public group other than Public L (“New Public L”). Assuming the largest increase in the total percentage stock ownership of New Public L on the testing date (see paragraph (h)(4) of this section), New Public L would have increased its ownership interest in L by 30 percentage points. Therefore, the stock of L would not be treated as acquired pursuant to a deemed conversion of the L debentures on May 20, 1988, under paragraph (h)(4) of this section, because the conversion would not cause an ownership change.

(iii) P_1's acquisition of L common stock results in second testing date. For the purpose of applying paragraph (h)(4) of this section, Public L must again be segregated from the direct public group that would otherwise result from conversion of the debentures, so that a deemed acquisition of L stock through the conversion of L's debentures on September 7, 1988 is treated as made by a public group other than Public L ("New Public L"). As on the previous testing date, New Public L would have increased its ownership interest in L by 30 percentage points if it were treated as having acquired L common stock pursuant to the conversion of the L debentures. The increase in New Public L's ownership, taken together with P_1's 21 percentage point ownership increase in L during the testing period [210,000 shares deemed converted/(700,000 (actual) + 300,000 (deemed) shares outstanding)], results in an ownership change.

(E) ***Transactions identified in the Internal Revenue Bulletin.*** Any transaction that is designated by the International Revenue Service in the Internal Revenue Bulletin shall be subject to the rules, as provided in such bulletin, similar to the rules described in this paragraph (j)(2)(iii).

(F) ***Issuance of rights to acquire loss corporation stock*** —(*1*) *In general.* In the case of any transaction that is described in paragraph (j)(2)(iii)(B), (D) or (E) of this section in which the loss corporation issues rights to acquire its stock to the members of more than one public group, those rights shall be presumed to be exercised pro rata by each such public group as those rights are actually exercised. See § 1.382-3(j)(10) for an exception to the application of the rule of this paragraph (j)(2)(iii)(F)(*1*) to stock issued on the exercise of a transferable option.

(*2*) *Example.*

Example. (i) L, which has six million shares outstanding, is owned entirely by Public L and P is owned entirely by Public P. On November 30, 1988, P merges into L in a transaction qualifying under section 368(a)(1)(A) with Public P receiving four million shares of L stock as a result of the reorganization. Under paragraph (j)(2)(iii)(B) of this section, Public L and Public P continue to be treated as separate public groups following the merger. Pursuant to the plan of reorganization, L also issues an amount of warrants in L stock pro rata to Public L and Public P that, if exercised, would result in the issuance of an additional two million shares of L stock. On November 30, 1989, when only one-half of the outstanding warrants have been exercised, A acquires all of the unexercised warrants.
(ii) Without regard to the warrants distributed in reorganization, Public P's ownership interest in L increases by 40 percentage points on November 30, 1988, relative to its lowest ownership interest in L at any time during the testing period (0 percent prior to the merger). For purposes of determining whether an ownership change occurs on November 30, 1988, the segregation rules of paragraphs (j)(2)(iii)(B) and (D) of this section does not require that a third direct public group

be separately identified and treated as acquiring the warrants, because L has actual knowledge that Public L and Public P acquired the distributed warrants in proportion to their respective ownership interests in L stock. Because the largest increase in the ownership of L on the testing date results from treating only Public P as exercising the distributing warrants, in which event, its ownership interest would increase by 44.4 percentage points ([four million shares acquired in the merger + 800,000 shares deemed acquired]/10.8 million (actual and deemed) shares outstanding), the issuance of the warrants by L does not cause an ownership change on November 30, 1988.

(iii) Under paragraph (j)(2)(iii)(F)(*1*) of this section, each actual exercise of warrants to acquire one million shares of L stock between November 30, 1988 and November 30, 1989 is treated as made pro rata by Public L and Public P (600,000 shares to Public L and 400,000 shares to Public P). Accordingly, as a result of the actual exercises of warrants during that period the ownership interests of the only 5-percent shareholders, Public L and Public P, are proportionately increased.

(iv) A's acquisition of the all of the outstanding warrants on November 30, 1989 requires the determination whether there has been an ownership change with respect to L, because A would be 5-percent shareholder under paragraph (g)(1)(i) of this section owning $8^{1}/_{3}$ percent of the L stock if the acquired warrants were exercised (one million shares deemed acquired/12 million (actual and deemed) shares outstanding). See paragraph (a)(2)(i) of this section. Under paragraph (h)(4)(i) of this section, A is not treated as having exercised those warrants, because an ownership change would not results. (Public P's $36^{2}/_{3}$ percentage point increase [(four million shares acquired in the merger + 400,000 shares deemed acquired)/12 million (actual and deemed) shares outstanding] and A's $8^{1}/_{3}$ percentage point increase is not greater than 50 percentage points).

(iv) ***Combination of de minimis public groups*** —

(A) ***In general.*** Notwithstanding paragraph (j)(2)(iii)(A) of this section, any public group first identified during a taxable year, as a result of any transaction described in paragraph (j)(2)(iii)(B), (D), (E), or (F) of this section, that owns less than five percent of loss corporation stock may be combined, at the option of the loss corporation, with any other such groups also first identified as a result of any such transaction that occurs during such taxable year.

(B) ***Example.***

Example. (i) L is widely held with no person owning as much as five percent of the L stock at any time ("Public L"). L's taxable year ends on December 31. On January

1, 1989, L issues a class of debt maturing on December 31, 2019 ("Class A Debentures") with respect to which it will semi-annually issue L stock in discharge of its interest obligation. In addition, L issues an amount of L stock to the public in two separate transactions during 1989. As a percentage of the L stock outstanding at the close of L's taxable year on December 31, 1989, L issued .45 percent of its stock on each of two dates in payment of interest with respect to the Class A Debentures, 4.5 percent of its stock in the first stock offering and six percent of its stock in the second stock offering. During 1990, L did not issue stock other than in payment of interest with respect to the Class A Debentures. As a percentage of L stock outstanding on December 31, 1990, L issued .41 percent of its stock on each of two dates during 1990 with respect to its outstanding debt.
(ii) Under paragraph (h)(4)(x)(E) of this section, L's obligation to issue stock in satisfaction of the interest with respect to the Class A Debentures until December 31, 2019, is not subject to paragraph (h)(4)(i) of this section and thus is taken into account only as such stock is issued.

(iii) The application of the segregation rules of paragraphs (j)(2)(iii)(B) and (iv) of this section require the identification of at least two additional, separate direct public groups during 1989. First, the persons who acquire six percent of L stock in a public offering to which section 1032 applies must be treated as a separate 5-percent shareholder ("Public 1L"). See paragraph (j)(2)(iii)(B) of this section. Even though this group was first identified in 1989, it may not be combined with other public groups also first identified in 1989 because it owns five percent or more of L stock. Second, although each of the three other issuances of L stock during the year ordinarily result in the identification of an additional, separate direct public group, each such direct public group may be combined with the two other such groups into a single public group ("Public 2L"). As of the end of 1989, Public 2L would own a total of 5.4 percent of the stock of L.

(iv) The application of the segregation rules of paragraphs (j)(2)(iii)(B) and (iv) of this section require the identification of at least one additional, direct public group during 1990. Because each additional, direct public group first identified in 1990 acquires less than five percent of L stock, they may be combined into a single public group ("Public 3L") owning .82 percent of the stock of L. Public 3L is treated as a five percent shareholder even though it owns less than five percent of the stock of L. See paragraph (j)(2)(iv)(A) of this section.

(v) *Multiple transactions* —

(A) ***In general.*** If a transaction (or any part thereof) is described by more than one subdivision of paragraph (j)(2)(iii) of this section, each such subdivision shall apply to the transaction (or each part of the transaction) in the manner that results in the largest increase in the percentage stock ownership by the 5-percent shareholders.

(B) ***Example.***

Example. (i) All of the common stock of L is owned by 1,000 unrelated persons, none of whom owns as much as five percent of the L stock ("Public CL"). L has outstanding a class of preferred stock described in section 1504(a)(4) that is owned in equal amounts by 500 unrelated persons ("Public PL").
(ii) On September 4, 1988, L rearranges its capital structure by redeeming 70 percent of the common stock owned by 700 of the shareholders in exchange for cash. In addition, all of the preferred stock is exchanged for a new class of common stock (nonvoting) representing 40 percent of the value of L.

(iii) With respect to the part of the transaction that is treated as a redemption under paragraph (j)(2)(iii)(C) of this section (the exchange of common stock for cash), Public CL is segregated into two different public groups immediately before the transaction (and thereafter) so that the owners of the redeemed stock ("Public RCL") are treated as part of a public group that is separate from the public group comprised of the owners of the stock that is not redeemed ("Public CCL"). As a result of the redemption, Public CCL's percentage ownership interest in L thus increases by 30 percentage points from 30 percent to 60 percent (taking into account all transactions occurring on the testing date, because the change in ownership is measured under paragraph (a)(1)(i) of this section by reference to each 5-percent shareholder's ownership interest immediately after the testing date). In addition, the exchange of preferred stock for nonvoting common stock is a transaction to which section 1032 applies. Under paragraph (j)(2)(v) of this section, the part of the transaction to which section 1032 applies is also subject to the segregation rules in the manner specified in paragraph (j)(2)(iii)(B) of this section. Accordingly, Public PL, the direct public group that acquires L nonvoting common stock in exchange for L preferred stock, must be treated as a separate public group from the other direct public groups, Public CCL and Public RCL. As a separate public group, Public PL's percentage stock ownership in L increases by 40 points (as compared to 0 percent prior to the transaction).

(iv) In summary, Public CCL increases its percentage ownership in L by 30 percentage points and Public PL increases its percentage ownership by 40 percentage points. Consequently, an ownership change occurs with respect to L on September 4, 1988.

(vi) ***Acquisitions made by either a 5-percent shareholder or the loss corporation following application of the segregation rules.*** Unless a different proportion is established by either the loss corporation or the Internal Revenue Service, the acquisition of loss corporation stock by either a 5-percent shareholder or the loss corporation on any date on which more than one public group of the loss corporation exists by virtue of the application of the rules of this paragraph (j)(2) shall be treated as being made proportionately from each public group existing immediately before such acquisition. See paragraph (g)(5)(i)(B) of this section for the application of this paragraph to the ownership interest of a 5-percent shareholder that owns less than five percent of the stock of the loss corporation on the testing date.

(3) ***Segregation rules applicable to transactions involving first tier entities or higher tier entities*** —

(i) ***Dispositions.*** If a loss corporation is owned, in whole or in part, by a public group (or groups), the rules of paragraphs (j)(2)(iii)(B) and (iv) of this section shall apply to any transaction in which a first tier entity or an individual that owns a direct ownership interest in the loss corporation of five percent or more transfers a direct ownership interest in the loss corporation to public shareholders. Therefore, each direct public group that exists immediately after such a disposition shall be segregated so that the ownership interests of each public group that existed immediately before the transaction are treated separately from the public group that acquires stock of the loss corporation as a result of the disposition by the individual or first tier entity. The principles of this paragraph (j)(3)(i) shall also apply to transactions in which an ownership interest in a higher tier entity that owns five percent or more of the loss corporation (determined without regard to the application of paragraph (h)(2)(i)(A) of this section) or a first tier entity is transferred to a public owner or 5-percent owner who is not a 5-percent shareholder.

(ii) ***Example.***

> *Example.* (A) L is owned equally by Public L, P and E. Public L consists of 150 equal, unrelated shareholders. P is owned by Public P, a group consisting of 1,500 equal, unrelated shareholders. E is a partnership and none of its partners are 5-percent owners. On October 22, 1988, E sells its entire interest in L over a public stock exchange. No individual or entity acquires as much as five percent of L's stock as the result of E's disposition of the L stock.
> (B) The disposition of the L stock by E is a transaction that causes the segregation of L's direct public group that exists immediately before the transaction (Public L) from the direct public group that acquires L stock in the transaction (Public EL). As a result, L has three 5-percent shareholders, Public L, Public P (through the application of paragraph (j)(1) of this section) and Public EL, each of which owns $33^{1}/_{3}$ percent of L stock. Therefore, Public EL is a 5-percent shareholder that has increased its ownership interest in L by $33^{1}/_{3}$ percentage points during the testing period. For purposes of subsequent transactions, Public L and Public EL will continue to be treated as separate direct public groups until any subsequent testing date that does not have a testing period that includes E's disposition of L stock.

(iii) ***Other transactions affecting direct public groups of a first tier entity or higher tier entity.*** The rules of paragraphs (j)(2)(i), (iii), (iv) and (v) of this section shall apply to transactions described in such paragraphs that involve either a higher tier entity that owns five percent or more of the loss corporation (determined without regard to the application of paragraph (h)(2)(i)(A) of this section) or a first tier entity. In applying those rules for purposes of this paragraph (j)(3)(iii), each direct public group of a first tier entity or a higher tier entity is any public group of any such entity identified in paragraph (j)(1)(iv)(A) or (B) of this section or resulting from the application of this paragraph (j)(3)(iii). The principles of paragraph (j)(2)(iii)(C) of this section also shall apply to any transaction that has the effect of a redemption-type transaction (e.g., an acquisition by the loss corporation of stock in a first tier entity).

(iv) ***Examples.***

Example 1. The facts are the same as in *Example 1* of paragraph (j)(2)(iii)(B)(*2*) of this section, except that Public L and P_1 own 40 percent and 60 percent, respectively, of the stock of HC which, in turn, owns 100 percent of L and HC merges into P_2. Under paragraph (j)(3)(iii) of this section, the rules of paragraph (j)(2)(iii)(B) of this section apply to segregate HC's direct public group (Public L) immediately before the merger from the direct public group (Public P_2) that acquires loss corporation stock in the merger. The consequences of the merger of HC into P_2 are thus the same as in *Example*

(1) of paragraph (j)(2)(iii)(B)(*2*) of this section.

> *Example 2.* (i) Twenty-five individual shareholders each own four percent of L ("Public L"). Public L is therefore the only 5-percent shareholder of L. Each of the shareholders of L contribute their L stock to a newly formed corporation, HC. In exchange for their contribution of L stock, HC issues 100 percent of each of its two classes of common stock (voting and nonvoting).
> (ii) The formation of HC, a first tier entity of L, is a transaction to which section 1032 applies. Under paragraph (j)(3)(iii) of this section, the rules of paragraphs (j)(1)(iii) and (j)(2)(iii)(B) of this section are applied to this transaction with the result that the shareholders of HC, immediately after the issuance of HC stock, are presumed not to include any persons that previously had a direct or indirect ownership interest in L. The presumption underlying those rules, however, is rebutted by establishing that all of the HC stock outstanding immediately after the transaction was issued solely in exchange for L stock. Thus, Public HC (immediately after the transaction) and Public L (immediately before the transaction) would be treated owned by the same direct public group.

> *Example 3.* (i) All of the stock of L is owned by unrelated shareholders, none of whom owns as much as five percent of L stock. P also is owned by unrelated shareholders, none of whom owns as much as five percent of P stock. On November 22, 1988, P incorporates P_1 with a contribution of P stock. Immediately thereafter, P_1 acquires all of the properties of L in exchange for its

P stock in a forward triangular merger qualifying under sections 368 (a)(1)(A) and (a)(2)(D). The P stock transferred by P_1 equals 45 percent of the total outstanding P stock.
(ii) Immediately before the merger of L into P_1, P's only 5-percent shareholder was Public P, a direct public group of P. The rules of paragraph (j)(2)(iii)(B) of this section thus apply to the transaction under paragraph (j)(3)(i) of this section since P, a first tier entity, is a party to the reorganization described in such paragraph. Although Public P does not acquire any stock in the merger, it is treated as acquiring stock in the loss corporation, P_1, because such corporation succeeds to the pre-change losses of L in a transaction to which 381(a) applies. As a result of the merger, Public P, the direct public group of P that exists immediately before the merger, must be segregated from the direct public groups acquiring P stock in the reorganization. Public P is, therefore, treated as acquiring 55 percent of the outstanding stock of the loss corporation, P_1, in the transaction. The transaction, therefore, results in an ownership change for P_1.

Example 4. (i) L is owned 20 percent by A and 80 percent by 1,000 unrelated individuals and entities, none of whom owns as much as five percent of L stock ("Public L"). P is owned 10 percent by B, 40 percent by E, and 50 percent by 5,000 unrelated individuals, none of whom owns as much as five percent of P stock ("Public P"). E is owned 30 percent by C and 70 percent by 30 unrelated individuals, none of whom owns as much as five percent of E ("Public E").
(ii) On October 31, 1987, P acquires all of the L stock from A and Public L in exchange for P stock representing 20 percent of the value of P (determined immediately after the acquisition) in a transaction described in section 368(a)(1)(B). After the acquisition, P is owned eight percent by B, 32 percent by E, four percent by A, and 56 percent by 6,000 unrelated individuals, none of whom owns as much as five percent of P. Because L is wholly owned by P immediately after the acquisition, L, under paragraph (j)(1) of this section, is treated as owned as follows: Eight percent by B, 9.6 percent by C (through C's ownership interest in E, a highest tier entity, and E's ownership interest in P, a first tier entity), 22.4 percent by Public E (through its ownership interest in E and E's ownership interest in P), four percent by A, and 56 percent by the shareholders who each own less than five percent of L through their ownership interest in P.

(iii) Under paragraph (j)(3)(iii) of this section, the rules of paragraph (j)(2)(iii)(B) of this section apply to the reorganization since the transaction involved a first tier entity of L. Thus, the direct public group of P that exists immediately after

the transaction must be segregated into two public groups—the direct public group of P that existed immediately before the acquisition (Public P) is treated separately from the direct public group consisting of the persons who acquire P stock in the transaction (Public L). Accordingly, immediately after the reorganization, Public P and Public L own 40 percent and 16 percent of L, respectively. See paragraph (h) of this section. (Under paragraph (g)(5)(ii)(B) of this section, L may treat the four percent of L stock owned by A immediately after the reorganization as the amount of L stock owned by A for each subsequent testing date having a testing period that includes the reorganization.)

(iv) In summary, after applying the rules of paragraphs (j)(1) and (3) of this section, L is treated as owned as follows:

5-percent shareholder	Percentage ownership interest
A	4.0
B	8.0
C	9.6
Public E	22.4
Public P	40.0
Public L	16.0

(*v*) The reorganization results in an ownership change, because B, C, Public E and Public P, all of whom are 5-percent shareholders, together have increased their percentage ownership in L by 80 percentage points as compared to their lowest percentage ownership in L at any time during the testing period (0 percent prior to the acquisition).

(v) ***Acquisitions made by a 5-percent shareholder, a higher tier entity, or a first tier entity following application of the segregation rules.*** The rules of paragraph (j)(2)(vi) of this section shall apply to the acquisition of an ownership interest in a first tier entity (or higher tier entity) if more than one direct public group of any such entity are segregated under the rules of this paragraph (j)(3). Accordingly, an acquisition by such an entity or a 5-percent shareholder of any ownership interest in such an entity shall be treated as made proportionately from the direct public groups resulting from the application of this paragraph (j)(3).

(k) ***Operating rules*** —

(1) ***Presumptions regarding stock ownership.*** Subject to paragraphs (k)(2) and (4) of this section, for purposes of applying paragraphs (f), (g), (h), and (j)(1) of this section—

(i) ***Stock subject to regulation by the Securities and Exchange Commission.*** With respect to loss corporation stock that is described in Rule 13d-1(d) of Regulation 13D-G (or any rule or regulation to generally the same effect), promulgated by the Securities and Exchange Commission under the Securities and Exchange Act of 1934 ("registered stock"), a loss corporation may rely on the existence and absence of filings of Schedules 13D and 13G (or any similar schedules) as of any date to identify all of the corporation's shareholders who have a direct ownership interest of five percent or more (both individuals and first tier entities) on such date. A loss corporation may similarly rely on the existence and absence of such filings as of any date with respect to registered stock of any first tier entity or any higher tier entity to identify the 5-percent owners of any such entities on such date who indirectly own five percent or more of the loss corporation stock, and are thus 5-percent shareholders, and to identify any higher tier entities of such entities.

(ii) ***Statements under penalties of perjury.*** A loss corporation may rely on a statement, signed under penalties of perjury, by an officer, director, partner, trustee, executor or similar responsible person, on behalf of a first tier entity or a higher tier entity to establish the extent, if any, to which the ownership interests of any 5-percent owners or higher tier entities with respect to such entities have changed during a testing period. A loss corporation may not rely on such a statement

(A) that it knows to be false or

(B) that is made by either a first tier entity or higher tier entity that owns 50 percent or more of the stock of the loss corporation. For purposes of the preceding sentence, any first tier entities and higher tier entities that are known by the loss corporation to be members of the same controlled group (within the meaning of section 267(f)) shall be treated as one corporation.

(2) ***Actual knowledge regarding stock ownership.*** For purposes of this section (other than paragraphs (g)(5) and (j)(1)(v) of this section), to the extent that the loss corporation has actual knowledge of stock ownership on any testing date (or acquires such knowledge before the date that the income tax return is filed for the taxable year in which the testing date occurs) by—

(i) An individual who would be a 5-percent shareholder, but for the application of paragraphs (h)(2)(iii), (h)(6)(iii) or (g)(2) of this section, or

(ii) A 5-percent shareholder that would be taken into account, but for paragraphs (h)(2)(iii), (h)(6)(iii) or (g)(3) of this section,

the loss corporation must take such stock ownership into account for purposes of determining whether an ownership change has occurred on that testing date. If a loss corporation acquires such knowledge after such income tax return is filed, the loss corporation may take such ownership into account for purposes of determining whether an ownership change occurred on that testing date and, if appropriate, file an amended income tax return (subject to any applicable statute of limitations). To the extent the loss corporation has actual knowledge on or after any testing date regarding the ownership interest in the loss corporation by members of one public group (described in paragraphs (g)(1)(ii), (iii) or (iv) of this section) and the ownership interest of those members in the loss corporation as members in another such public group, the loss corporation may take such ownership into account for purposes of determining whether an ownership change occurred on that testing date.

(3) ***Duty to inquire as to actual stock ownership in the loss corporation.*** For purposes of this section, the loss corporation is required to determine the stock ownership on each testing date (and, except as otherwise provided in this section, the changes in the stock ownership during the testing period) of—

(i) Any individual shareholder who has a direct ownership interest of five percent or more in the loss corporation,

(ii) Any first tier entity,

(iii) Any higher tier entity that has an indirect ownership interest of five percent or more in the loss corporation (determined without regard to paragraph (h)(2)(i)(A) of this section), and

(iv) Any 5-percent owner who indirectly owns five percent or more of the stock of the loss corporation in his capacity as a 5-percent owner in any one first tier entity or higher tier entity.

The loss corporation does not have any obligation to inquire or to determine facts relating to the stock ownership of any shareholders other than those described in the preceding sentence. In addition, the loss corporation does not have any obligation to inquire or to determine if the actual facts relating to the stock ownership of any shareholder are consistent with the ownership interests of the loss corporation as determined by applying the presumptions and other rules of paragraphs (g), (h), (j) or (k)(1) of this section.

(4) ***Ownership interest structured to avoid the section 382 limitation.*** For purposes of this section, if the ownership interests in a loss corporation are structured by a person with a direct or indirect ownership interest in the loss corporation to avoid treating a person as a 5-percent shareholder (or to permit the loss corporation to rely on the presumption provided in paragraph (g)(5)(i)(B) of this section) for a principal purpose of circumventing the section 382 limitation, then—

(i) Paragraph (h)(2)(iii) of this section shall not apply with respect to the ownership interests so structured and the constructive ownership rules of paragraph (h)(2)(i) of this section shall thus apply to attribute stock from any entity without regard to the amount of stock it owns in the loss corporation or any other corporation,

(ii) Paragraphs (g)(2) and (3) of this section shall be modified with respect to the ownership interests so structured so that the ownership interest of a person includes all of an individual's direct and indirect ownership in the loss corporation, without regard to whether each such interest represents five percent or more of the stock of the loss corporation, and

(iii) Paragraph (g)(5)(i)(B) of this section shall not apply with respect to the ownership interests so structured so that the ownership interest of a person takes into account his actual ownership interest in the loss corporation.

This paragraph (k)(4) shall apply, however, only if application would result in an ownership change.

(5) ***Example.***

Example. L is owned by 25 individuals who each own four percent of the outstanding L stock. A purchases 40 percent of L stock from such shareholders on August 13, 1988. Thereafter, B plans to acquire 15 percent of the L stock. B is advised concerning the potential application of section 382 to L. On February 1, 1989, B acquires a 15 percent interest in L pursuant to a program in which each of four corporations, P_1 through P_4, each of which is wholly-owned by B, acquire a 3.75 percent interest in L. A principal purpose of acquiring the L stock through four corporations is to avoid treating B as owning any ownership interest in L amounting to as much

as five percent, and thus to circumvent the section 382 limitation by avoiding an ownership change. Under paragraph (k)(4) of this section, the limitation on the constructive ownership rules of paragraph (h)(2)(iii) of this section are disregarded and B is treated as a 5-percent shareholder owning 15 percent of the stock of L by virtue of his ownership interests in P_1 through P_4, notwithstanding paragraph (g)(2) of this section. Accordingly, an ownership change occurs with respect to L.

(6) ***First tier entity or higher tier entity that is a foreign corporation or entity.*** [Reserved]

(l) ***Changes in percentage ownership which are attributable to fluctuations in value.*** [Reserved]

(m) ***Effective date*** —

(1) ***In general.*** Except as provided in this paragraph (m), section 382 shall apply to any ownership change that occurs immediately after an owner shift or an equity structure shift that occurs after December 31, 1986, or any other event occurring after such date that requires the determination of whether an ownership change has occurred under paragraph (a)(2)(i) of this section. In the case of an equity structure shift (including an equity structure shift that also constitutes an owner shift), any equity structure shift completed pursuant to a plan of reorganization adopted before January 1, 1987, shall be treated as occurring on the date such plan was adopted. Therefore, section 382 shall apply to any ownership change occurring immediately after—

(i) An owner shift (excluding an owner shift that also constitutes an equity structure shift) that occurs on or after January 1, 1987,

(ii) An equity structure shift that occurs after December 31, 1986, if it is completed pursuant to a plan of reorganization adopted on or after January 1, 1987, or

(iii) Any transfer or issuance of an option, or other interest that is similar to an option, that occurs on or after January l, 1987 and that is taken into account under paragraph (a)(2)(i) of this section.

With respect to equity structure shifts completed pursuant to plans adopted before January 1, 1987, section 382 shall be inapplicable only if the equity structure shift that is treated as occurring on the date the plan of reorganization for such shift was adopted (or other event occurring after the adoption of such plan) results in an ownership change before January 1, 1987. In that event, a new testing period for the loss corporation shall begin on the day after such ownership change.

(2) ***Plan of reorganization.*** For purposes of paragraph (m)(1) of this section, a plan of reorganization shall be treated as adopted on the earlier of—

(i) The first date that the boards of directors of all the parties to the reorganization have adopted the plan or have recommended adoption to their shareholders, or

(ii) The date the shareholders approve such reorganization.

If there is an ownership change with respect to a subsidiary as the result of a reorganization of the parent, the treatment of the subsidiary under this paragraph (m)(2) shall be governed by the classification of the parent-level transaction. For purposes of the preceding sentence, a corporation shall be treated as a subsidiary of another corporation only if the other corporation owns stock in that corporation meeting the requirements of section 1504(a)(2).

(3) ***Earliest commencement of the testing period.*** For purposes of determining if an ownership change has occurred at any time after May 5, 1986, the testing period shall begin no earlier than May 6, 1986. Under paragraph (d)(4) of this section, therefore, shifts in the ownership of stock of the loss corporation prior to May 6, 1986 are disregarded.

(4) ***Transitional rules*** —

(i) ***Rules provided in paragraph (j) of this section for testing dates before September 4, 1987.*** For purposes of determining whether an ownership change occurs for any testing date before September 4, 1987.

(A) The rules of paragraph (j)(1) of this section shall apply only to stock of the loss corporation acquired after May 5, 1986, by any first tier entity or higher tier entity and shall not apply to any stock acquired by such an entity on or before that date,

(B) The rules of paragraph (j)(2) of this section shall apply only to equity structure shifts in which more than one corporation is a party to the reorganization and shall not apply to any other transactions, and

(C) The rules of paragraph (j)(3) of this section shall apply only to—

(*1*) Dispositions of stock acquired by an individual, a first tier entity or higher tier entity after May 5, 1986 (and shall not apply to dispositions of stock acquired on or before such date), and

(*2*) Equity structure shifts in which more than one corporation is a party to the reorganization (and shall not apply to any other transactions).

For any testing date before September 4, 1987, however, the loss corporation is permitted to apply all of the rules of paragraph (j) of this section. A loss corporation that applies the rules of paragraph (j) of this section under the preceding sentence must apply all of the rules of such paragraph in determining whether any ownership change occurs on any testing dates after May 5, 1986.

(ii) ***Example.***

> *Example.* (i) L is owned entirely by 10,000 unrelated individuals, none of whom owns as much as five percent of the stock of L (“Public L”). P is owned entirely by 1,000 unrelated individuals, none of whom owns as much as five percent of the stock of P (“Public P”).
> (ii) Between March 1, 1987 and June 1, 1987, P acquires 45 percent of L stock in a series of transactions. On June 15, 1987, L redeems 20 percent of the L stock from Public L.
>
> (iii) Under paragraph (m)(4)(i)(A) of this section, the rules of paragraph (j)(1) of this section apply to the acquisitions made by P, because they occurred after May 5, 1986. Accordingly, following those acquisitions, the stock of L is owned 45 percent by Public P and 55 percent by Public L. Because the increase in the percentage ownership by Public P as a result of P's stock purchases is not more than 50 percent, no ownership change occurs as the result of P's purchases.

(iv) On or after September 4, 1987, the rules of paragraph (j)(2)(iii)(C) of this section apply to treat any L stock that is redeemed as owned by a public group that is separate from the public group owning the stock that is not redeemed. (Under paragraph (j)(2)(iii)(C) of this section, the continuing shareholders of Public L, who owned 35 percent of the stock of L before the redemption ([55 percent—20 percent]/100 percent) increase their ownership interest in L by 8.8 percentage points as a result of such redemption (43.8 percent—35 percent)). Those rules, however, do not apply to the June 15, 1987 redemption because it occurs before the date that paragraph (j)(2)(iii) of this section generally is effective. (Until September 4, 1987, paragraph (j)(2)(iii) of this section generally is effective only for equity structure shifts in which more than one corporation is a party to the reorganization.) Solely because of the application of paragraph (j)(1) of this section to P's acquisitions of L stock, Public P's ownership interest in L as a result of the redemption has increased from 45 percentage points to 56.2 percentage points which, compared to its lowest percentage ownership interest at any time during the testing period (0 percent prior to March 1, 1987), is a more than 50 percentage point increase thus causing an ownership change with respect to L on June 15, 1987.

(iii) ***Rules provided in paragraph (j) of this section for testing dates on or after September 4, 1987.*** For purposes of determining whether an ownership change occurs for any testing date on or after September 4, 1987, the rules of paragraphs (j)(2) and (3) of this section shall not apply to identify any public group resulting from—

(A) Any transaction described in such paragraphs (j)(2) and (3), unless that transaction is also described in paragraph (m)(4)(i)(B) or (C) of this section, or

(B) Any disposition of stock acquired on or before May 5, 1986, but only if such disposition or other transaction occurs before September 4, 1987. Thus, for example, the rules of paragraph (j)(2)(iii)(D) of this section shall apply only to rights to acquire stock of the loss corporation issued on or after such date.

(iv) ***Rules provided in paragraphs (f)(18)(ii) and (iii) of this section.*** For purposes of determining whether an ownership change occurs for any testing date, the rules of paragraphs (f)(18)(ii) and (iii) of this section apply only to stock (or any other ownership interest) that is—

(A) Issued on or after September 4, 1987, or

(B) Transferred to (or by) a person who is a 5-percent shareholder (or would be a 5-percent shareholder if paragraph (f)(18)(iii) of this section were applicable) on or after September 4, 1987.

(v) ***Rules provided in paragraph (a)(2)(ii) of this section.*** The information statement required under paragraph (a)(2)(ii) of this section is not required to be filed with respect to any taxable year for which the due date (including extensions) of the income tax return of the loss corporation is on or before October 5, 1987.

(vi) ***Rules provided in paragraph (h)(4) of this section.*** The rules provided in paragraph (h)(4) of this section do not apply on any testing date on or after November 5, 1992. The rule provided in paragraph (h)(4)(viii) of this section applies to the lapse or forfeiture of any option treated as exercised under paragraph (h)(4)(i) of this section. If an option is treated as exercised under paragraph (h)(4)(i) of this section, and the option is actually exercised on a day that is within 120 days after the date on which the option is treated as exercised, the rule provided in paragraph (h)(4)(vi)(B) of this section applies (even if the actual exercise of the option occurs on a date on which the rules of paragraph (h)(4) of this section would not otherwise apply). Thus, in such a case, the loss corporation may elect to treat paragraphs (h)(4)(i) and (vi)(A) of this section as not applying to the option and take into account only the acquisition of loss corporation stock resulting from the actual exercise of the option.

(vii) ***Rules provided in paragraph (a)(2)(i) of this section.*** The rules provided in paragraph (a)(2)(i) of this section apply to determine whether dates prior to November 5, 1992, are testing dates. For rules regarding the determination of whether dates on or after November 5, 1992, are testing dates, see § 1.382-2(a)(4).

(5) ***Bankruptcy proceedings*** —

(i) ***In general.*** In the case of a reorganization described in section 368(a)(1)(G) or an exchange of debt for stock in a title 11 or similar case (within the meaning of section 368(a)(3)), section 382 shall not apply to any ownership change resulting from such a reorganization or proceeding if a petition in such case was filed with the court before August 14, 1986. Accordingly, any shift in ownership in the loss corporation arising out of such reorganization or proceeding shall not be taken into account for purposes of determining whether an ownership change occurs on any testing date that occurs after December 31, 1986.

(ii) ***Example.***

> *Example.* (i) L filed a petition in bankruptcy on September 29, 1985. As a result of a title 11 bankruptcy reorganization of L that is confirmed by a court on February 2, 1988, there is a shift in the ownership of L so that JK increased her interest in L by 24 percentage points relative to her lowest ownership interest in L during the testing period. JK is the only 5-percent shareholder of L following the reorganization whose interest in L increased as a result of the transaction. On December 25, 1988, GK purchases 42 percent of the outstanding stock of L from shareholders other than JK.
> (ii) There is no ownership change on December 25, 1988 because the 24 percentage point increase in JK's ownership interest in L is not taken into account under paragraph (m)(6)(i) of this section.
>
> (iii) The facts are the same as in (i), except that the acquisitions by JK and GK occurred on August 5, 1986 and September 26, 1986, respectively. Because paragraph (m)(6)(i) of this section is only applicable with respect to the determination of whether an ownership change has occurred on any testing date that occurs after December 31, 1986, there is an ownership change as a result of GK's acquisition on September 26, 1986. Accordingly, section 382 is inapplicable to such ownership change under paragraph (m)(1) of this

> section because it occurred prior to January 1, 1987. Under paragraph (d)(2) of this section, the testing period for determining whether an ownership change occurs on any subsequent testing date shall commence no earlier than September 27, 1986.

(6) ***Transactions of domestic building and loan associations.*** The rules of paragraph (j)(2)(iii)(B) of this section (and the application of those rules by virtue of paragraph (j)(3) of this section) shall not apply to a public offering of stock by a domestic building and loan association described in section 591 (or any corporation that owns stock in the association meeting the requirements of section 1504(a)(2)) prior to January 1, 1989. In the case of any transaction described in the preceding sentence, any transitory ownership of stock by any entity that is an underwriter shall be disregarded so that the rules of paragraph (j)(1) of this section shall not apply to treat such stock as owned by the owners of the underwriter and thus the rules of paragraph (j)(3)(i) of this section shall not apply to the disposition of such stock by the underwriter. For purposes of this paragraph (m)(7)—

(i) Ownership shall be considered transitory only with respect to an underwriter acquiring stock in a firm commitment underwriting to the extent the stock is disposed of pursuant to the offer (but in no event later than sixty (60) days after the initial offering) and,

(ii) To the extent a transaction may be described both by paragraph (j)(2)(iii)(B) of this section and any other provision of paragraph (j)(2)(iii) or (3) of this section, paragraph (j)(2)(v)(A) of this section shall not apply and the transaction shall be treated as described solely by paragraph (j)(2)(iii)(B) of this section.

(7) ***Transactions not subject to section 382*** —

(i) ***Application of old section 382.*** Old section 382 shall not apply to a loss corporation on or after the date on which an ownership change occurs, but only if such ownership change results in the application of the section 382 limitation (as defined in section 382(b)) with respect to the loss corporation.

(ii) ***Effect on testing period.*** The application of old section 382 to a transaction is disregarded for purposes of paragraph (d)(2) of this section unless the transaction that results in such application is the last component of an ownership change after May 5, 1986 that is not subject to section 382 under the effective date rules of this paragraph (m) (*e.g.,* an ownership change occurring as the result of an individual's purchase of more than 50 percent of L stock on any date on or before December 31, 1986).

(iii) ***Termination of old section 382.*** [Reserved]

(8) ***Options issued or transferred before January 1, 1987*** —

(i) ***Options issued before May 6, 1986.*** An option issued before May 6, 1986, is subject to the rules of paragraph (h)(4) of this section only if it is transferred by (or to) a 5-percent shareholder (or a person who would be a 5-percent shareholder if the option were treated as exercised) on or after such date. In all other cases, such an option shall not be subject to paragraph (h)(4)(i) of this section, but shall be subject to paragraph (h)(4)(xii) of this section. Thus, for example, a warrant to acquire stock of the loss corporation issued before May 6, 1986 shall not be subject to paragraph (h)(4) of this section unless the warrant is transferred by (or to) a 5-percent shareholder. The exercise of such a warrant, however, would be taken into account as required by this paragraph (m)(8)(i) and paragraph (h)(4)(xii) of this section.

(ii) ***Options issued on or after May 6, 1986 and before September 18, 1986.*** An option issued or transferred on or after May 6, 1986, and before September 18, 1986, is subject to the rules of paragraph (h)(4) of this section.

(iii) ***Options issued on or after September 18, 1986 and before January 1, 1987.*** An option issued or transferred on or after September 18, 1986, and before January 1, 1987, is subject to the rules of paragraph (h)(4) of this section, except that the option shall be treated for purposes of this section as if it never had been issued in the event that either—

(A) The option lapses unexercised or is irrevocably forfeited by the holder thereof, or

(B) On the date the option was issued, there was no significant likelihood that such option would be exercised within the five-year period from the date of such issuance and a purpose for the issuance of the option was to cause an ownership change prior to January 1, 1987.

(9) ***Examples.*** The rules of this paragraph (m) may be illustrated by the following examples.

Example 1. (i) A owns all 100 outstanding shares of L stock. A sells 11 shares to B on January 1, 1986. The January 1, 1986 testing date is disregarded under paragraph (m)(3) of this section. A sells another 40 shares to B on January 1, 1988. B's second stock purchase is an owner shift that does not result in an ownership change. B's percentage ownership interest on the testing date (51 percent) is only 40 percentage points greater than the lowest percentage of L stock owned by B at any time during the testing period (11 percent on and after May 6, 1986).
(ii) The facts are the same as in (i). In addition A sells 20 shares of his L stock to C on July 1, 1990. C's stock purchase is an owner shift. Because B and C together have increased their respective ownership interests in L by 40 and 20 percentage points relative to their lowest percentage stock ownership interests in L at any time during the testing period, C's purchase causes an ownership change. The testing period for any subsequent ownership change begins on the first day following C's acquisition, July 2, 1990.

Example 2. (i) C has owned 100 percent of L since March 22, 1980. On October 13, 1986, P merges into L. As a result of the merger, 40 percent of L stock is acquired by A, the sole shareholder of P. The merger of P into L is both an equity structure shift and an owner shift. The transaction, however, is not an ownership change with respect to L, because A's percentage ownership interest has increased by only 40 percentage points. On August 22, 1987, B purchases 15 percent of the L stock from C. B's purchase constitutes an owner shift resulting in an ownership change that is subject to section 382 because the aggregate increases in percentage ownership by B and C (respectively 40 percent and 15 percent) is more than 50 percentage points.
(ii) The facts are the same as in (i), except that the plan of reorganization is adopted on October 13, 1986, and the merger is completed on July 22, 1987. The result is the same as in (i).

(iii) The facts are the same as in (ii), except that the reorganization is completed on August 22, 1987, and B's purchase of the L stock occurs one month earlier, on July 22, 1987. Assume that after the reorganization on August 22, 1987, A and B own 40 percent and 15 percent, respectively, of L stock.

Although the merger occurred pursuant to a plan of reorganization adopted before 1987, L is subject to section 382 following the equity structure shift, because the merger would not have caused an ownership change if it had been completed in 1986 after the commencement of the L's testing period.

(iv) The facts are the same as in (ii), except that B's purchase occurs on June 7, 1986. Assume that immediately after the reorganization on August 22, 1987, A and B own 40 percent and 15 percent, respectively, of L stock. Since the reorganization pursuant to a plan adopted before 1987, taken together with the other shifts in the ownership of L's stock between May 5, 1986, and December 31, 1986, would have caused an ownership change, section 382 does not apply as a result of the merger. Since an ownership change occurs as a result of the merger, L's testing period for purposes of any subsequent ownership change begins on October 14, 1986.

(v) The facts are the same as in (iv), except that B makes an additional purchase from C of one percent of L's stock on February 14, 1987. The result is the same as in (iv). B's additional purchase, however, is taken into account for the purpose of determining whether there is a second ownership change with respect to L.

[T.D. 8149, 52 FR 29675, Aug. 11, 1987]

Editorial Note: For FEDERAL REGISTER citations affecting § 1.382-2T, see the List of CFR Sections Affected, which appears in the Finding Aids section of the printed volume and at *www.govinfo.gov*.

§ 1.382-3 Definitions and rules relating to a 5-percent shareholder.

(a) ***Definitions*** —

(1) ***Entity*** —

(i) ***In general.*** An entity is any corporation, estate, trust, association, company, partnership or similar organization. An entity includes a group of persons who have a formal or informal understanding among themselves to make a coordinated acquisition of stock. A principal element in determining if such an understanding exists is whether the investment decision of each member of a group is based upon the investment decision of one or more other members. However, the participation by creditors in formulating a plan for an insolvency workout or a reorganization in a title 11 or similar case (whether as members of a creditors' committee or otherwise) and the receipt of stock by creditors in satisfaction of indebtedness pursuant to the workout or reorganization do not cause the creditors to be considered an entity.

(ii) ***Examples.*** The following examples illustrate the provisions of paragraph (a)(1)(i) of this section.

Example 1. (i) L corporation has 1,000 shares of common stock outstanding. For the three-year period ending on October 1, 1992, L's stock was owned by unrelated individuals, none of whom owned five percent or more of L. A group of 20 individuals who previously owned no stock (the “Group”) agree among themselves to acquire more than 5 percent of L's stock. The Group is not a corporation, trust, association, partnership or company. On October 1, 1992, pursuant to their understanding, the

members of the Group purchase 600 shares of L common stock from the old shareholders of L (a total of 60 percent of L stock), with each member purchasing 30 shares.
(ii) Before the members of the Group acquired L's stock on October 1, 1992, no individual or entity owned, directly or indirectly, five percent or more of the stock of L. As a result, all shareholders were aggregated into a public group and L was considered to be owned by a single 5-percent shareholder ("Public L") in accordance with § 1.382-2T (g)(1) and (j)(1).

(iii) Under paragraph (a)(1)(i) of this section, the members of the Group have a formal or informal understanding among themselves to make a coordinated acquisition of stock and, therefore, the Group is an entity. Thus, the acquisition of more than five percent of the stock of L on October 1, 1992, by members of the Group is not disregarded under § 1.382-2T(e)(1)(ii). Because no member of the Group owns, directly or indirectly, five percent or more of the stock of L, §§ 1.382-2T (g)(1) and (j)(1) require that the members of the Group be aggregated into a separate public group, which will be presumed to consist of persons unrelated to the members of Public L. Because there is a shift of more than fifty percentage points in the ownership of L stock during the three-year testing period ending on October 1, 1992, an ownership change occurs on October 1, 1992, as a result of the Group's purchase of the 600 shares.

Example 2. (i) Prior to October 1, 1992, L's 1,000 shares of outstanding stock were owned by unrelated individuals, none of whom owned five percent or more of the stock of L. L's management is concerned that L may become subject to a takeover bid. In separate meetings, L's management meets with potential investors who own no stock and are friendly to management to convince them to acquire L's stock based on an understanding that L will assemble a group that in the aggregate will acquire more than 50 percent of L's stock. On October 1, 1992, 15 of these investors each purchase 4 percent of L's stock.
(ii) Under paragraph (a)(1)(i) of this section, the 15 investors (the "Group") are treated as an entity because the members of the Group purchase L stock pursuant to a formal or informal understanding among themselves to make a coordinated acquisition of stock. Sections 1.382-2T (g)(1) and (j)(1) require that on October 1, 1992, the Group be aggregated into a separate public group, which has increased its ownership of L stock by 60 percentage points over its lowest level of ownership in the three-year period ending on October 1, 1992. Accordingly, an ownership change occurs on that date.

Example 3. (i) Prior to October 1, 1992, L's 1,000 shares of outstanding stock were owned by unrelated individuals, none of whom owned five percent or more of the stock of L. On October 1, 1992, an investment advisor advises its clients that it believes L's stock is undervalued and recommends that they acquire L stock. Acting on the

investment advisor's recommendation, 20 unrelated individuals purchase 6 percent of L's stock in aggregate, with each individual purchasing less than 5 percent. Each client's decision was not based upon the investment decisions made by one or more other clients.
(ii) Because there is no formal or informal understanding among the clients to make a coordinated acquisition of L stock, their purchase of stock is not made by an entity under paragraph (a)(1)(i) of this section. As a result, they remain part of the public group which owns L stock, and no owner shift results upon their purchase of L stock under § 1.382-2T(e)(1)(ii).

(iii) The result in this example would be the same under paragraph (a)(3)(i) of this section if the only additional fact was that the investment advisor is also the underwriter (without regard to whether it is a firm commitment or best efforts underwriting) for a primary or secondary offering of L stock.

(iv) Assume that the facts are the same except that, instead of an investment advisor recommending that clients purchase L stock, the trustee of several trusts qualified under section 401(a) sponsored by unrelated corporations causes each trust to purchase the L stock. In this case, the result is the same, so long as the investment decision made on behalf of each trust was not based on the investment decision made on behalf of one or more of the other trusts.

(iii) ***Effective date.***

(A) ***In general.*** The second, third and fourth sentences of paragraph (a)(1)(i) of this section and *Examples 1, 2* and *3* of paragraph (a)(1)(ii) of this section apply to testing dates (determined by applying such sentence and examples) on or after November 20, 1990, but with respect to any group of persons that pursuant to a formal or informal understanding among themselves makes a coordinated acquisition of stock before November 20, 1990, only if the group increases or decreases its ownership of stock of the loss corporation relative to its percentage ownership interest at the close of November 19, 1990, by five percentage points or more on or after November 20, 1990.

(B) ***Special rule.*** If pursuant to a formal or informal understanding among themselves a group consisting only of regulated investment companies under section 851, qualified trusts under section 401, common trust funds under section 584, or trusts or estates that are clients of a trust department of a bank under section 581, make a coordinated acquisition of stock before November 20, 1990, the second, third and fourth sentences of paragraph (a)(1)(i) of this section and *Examples 1, 2,* and *3* of paragraph (a)(1)(ii) of this section apply for testing dates (determined by applying such sentences and examples) on or after November 20, 1990, only if the group increases its ownership of stock of the loss corporation relative to its percentage ownership interest at the close of November 19, 1990, by five percentage points or more on or after November 20, 1990.

(C) ***Example.*** The following example illustrates the provisions of paragraph (a)(1)(iii) of this section.

Example. Prior to November 1, 1990, L, a loss, corporation, is owned entirely by 1,000 unrelated individuals, none of whom owns as much as 5 percent of the stock of L ("Public L"). On November 1, 1990, 15 individuals (the "Group") each acquired 3 percent, or 45 percent, in total, of L stock pursuant to an understanding among themselves to make a coordinated acquisition of stock. The Group is not a corporation, trust, association, partnership or company. On March 1, 1992, six members of the Group each purchased an additional one percent of L stock, or 6 percent, in total, pursuant to the understanding. Accordingly, the Group increased its ownership in L stock by 51 percentage points during the three-year testing period ending on March 1, 1992. As a result, an ownership change of L occurs on March 1, 1992.

(2) [Reserved]

(b)-(i) [Reserved]

(j) ***Modification of the segregation rules of § 1.382-2T(j)(2)(iii) and (3)*** —

(1) ***Introduction.*** This paragraph (j) exempts, in whole or in part, certain transfers of stock from the segregation rules of § 1.382-2T(j)(2)(iii) and (3). Terms and nomenclature used in this paragraph (j), and not otherwise defined herein, have the same meanings as in section 382 and the regulations issued under section 382.

(2) ***Small issuance exception*** —

(i) ***In general.*** Section 1.382-2T(j)(2)(iii)(B) does not apply to a small issuance (as defined in paragraph (j)(2)(ii) of this section), except to the extent that the total amount of stock issued in that issuance and all other small issuances previously made in the same taxable year (determined in each case on issuance) exceeds the small issuance limitation. This paragraph (j)(2) does not apply to an issuance of stock that, by itself, exceeds the small issuance limitation.

(ii) ***Small issuance defined.*** "Small issuance" means an issuance (other than an issuance described in paragraph (j)(6) of this section) by the loss corporation of an amount of stock not exceeding the small issuance limitation. For purposes of this paragraph (j)(2)(ii), all stock issued in the issuance is taken into account, including stock owned immediately after the issuance by a 5-percent shareholder that is not a direct public group.

(iii) ***Small issuance limitation*** —

(A) ***In general.*** For each taxable year, the loss corporation may, at its option, apply this paragraph (j)(2)—

(*1*) On a corporation-wide basis, in which case the small issuance limitation is 10 percent of the total value of the loss corporation's stock outstanding at the beginning of the taxable year (excluding the value of stock described in section 1504(a)(4)); or

(*2*) On a class-by-class basis, in which case the small issuance limitation is 10 percent of the number of shares of the class outstanding at the beginning of the taxable year.

(B) ***Class of stock defined.*** For purposes of this paragraph (j)(2)(iii), a class of stock includes all stock with the same material terms.

(C) ***Adjustments for stock splits and similar transactions.*** Appropriate adjustments to the number of shares of a class outstanding at the beginning of a taxable year must be made to take into account any stock split, reverse stock split, stock dividend to which section 305(a) applies, recapitalization, or similar transaction occurring during the taxable year.

(D) ***Exception.*** The loss corporation may not apply this paragraph (j)(2)(iii) on a class-by-class basis if, during the taxable year, more than one class of stock is issued in a single issuance (or in two or more issuances that are treated as a single issuance under paragraph (j)(8)(ii) of this section).

(iv) ***Short taxable years.*** In the case of a taxable year that is less than 365 days, the small issuance limitation is reduced by multiplying it by a fraction, the numerator of which is the number of days in the taxable year, and the denominator of which is 365.

(3) ***Other issuances of stock for cash*** —

(i) ***In general.*** If the loss corporation issues stock solely for cash, § 1.382-2T(j)(2)(iii)(B) does not apply to such stock in an amount equal (as a percentage of the total stock issued) to one-half of the aggregate percentage ownership interest of direct public groups immediately before the issuance.

(ii) ***Solely for cash*** —

(A) ***In general.*** A share of stock is not issued solely for cash if—

(*1*) The acquiror, as a condition of acquiring that share for cash, is required to purchase other stock for consideration other than cash; or

(*2*) The share is acquired upon the exercise of an option that was not issued solely for cash or was not distributed with respect to stock.

(B) ***Related issuances.*** Paragraph (j)(8)(i) of this section (relating to the treatment of one or more issuances as a single issuance) does not apply in determining whether stock is issued solely for cash.

(iii) ***Coordination with paragraph (j)(2) of this section.*** This paragraph (j)(3) does not apply to a small issuance exempted in whole from § 1.382-2T(j)(2)(iii)(B) under paragraph (j)(2) of this section. In the case of a small issuance exempted in part from § 1.382-2T(j)(2)(iii)(B) under paragraph (j)(2) of this section, this paragraph (j)(3) applies only to the portion of the issuance not so exempted, and that portion is treated as a separate issuance for purposes of this paragraph (j)(3).

(4) ***Limitation on exempted stock.*** The total amount of stock that is exempted from the application of § 1.382-2T(j)(2)(iii)(B) under paragraphs (j)(2) and (j)(3) of this section cannot exceed the total amount of stock issued in the issuance less the amount of that stock owned by a 5-percent shareholder (other than a direct public group) immediately after the issuance. Except to the extent that the loss corporation has actual knowledge to the contrary, any increase in the amount of the loss corporation's stock owned by a 5-percent shareholder on the day of the issuance is considered to be attributable to an acquisition of stock in the issuance.

(5) ***Proportionate acquisition of exempted stock*** —

(i) ***In general.*** Each direct public group that exists immediately before an issuance to which paragraph (j)(2) or (j)(3) of this section applies is treated as acquiring its proportionate share of the amount of stock exempted from the application of § 1.382-2T(j)(2)(iii)(B) under paragraph (j)(2) or (j)(3) of this section.

(ii) ***Actual knowledge of greater overlapping ownership.*** Under the last sentence of § 1.382-2T(k)(2), the loss corporation may treat direct public groups existing immediately before an issuance to which paragraph (j)(2) or (j)(3) of this section applies as acquiring in the aggregate more stock than the amount determined under paragraph (j)(5)(i) of this section, but only if the loss corporation actually knows that the aggregate amount acquired by those groups in the issuance exceeds the amount so determined.

(6) ***Exception for equity structure shifts.*** This paragraph (j) does not apply to any issuance of stock in an equity structure shift, except that paragraph (j)(2) of this section applies (if its requirements are met) to the issuance of stock in a recapitalization under section 368(a)(1)(E).

(7) ***Transitory ownership by underwriter disregarded.*** For purposes of § 1.382-2T(g)(1) and (j), and this paragraph (j), the transitory ownership of stock by an underwriter of the issuance is disregarded.

(8) ***Certain related issuances.*** For purposes of this paragraph (j), two or more issuances (including issuances of stock by first tier or higher tier entities) are treated as a single issuance if—

(i) The issuances occur at approximately the same time pursuant to the same plan or arrangement; or

(ii) A principal purpose of issuing the stock in separate issuances rather than in a single issuance is to minimize or avoid an owner shift under the rules of this paragraph (j).

(9) ***Application to options.*** The principles of this paragraph (j) apply for purposes of applying § 1.382-2T(j)(2)(iii)(D) (relating to the deemed acquisition of stock as a result of the ownership of an option).

(10) ***Issuance of stock pursuant to the exercise of certain options.*** If stock is issued on the exercise of a transferable option issued by the loss corporation, § 1.382-2T(j)(2)(iii)(F) does not apply and, in applying the last sentence of § 1.382-2T(k)(2), the loss corporation must take into account any transfers of the option (including transfers described in § 1.382-2T(h)(4)(xi)). Therefore, even if transferable options are distributed pro rata to members of existing public groups, the actual knowledge exception of § 1.382-2T(k)(2) applies only to the extent that the loss corporation actually knows that the persons acquiring stock on exercise of the options are members of a pre-existing public group. Moreover, if transferable options are issued to more than one public group, § 1.382-2T(j)(2)(iii)(F) does not apply to treat the options as exercised pro rata by each such public group as the options are actually exercised.

(11) ***Application to first tier and higher tier entities*** —

(i) ***In general.*** The principles of paragraphs (j)(1) through (10) and paragraph (j)(12) apply to issuances of stock by a first tier entity or a higher tier entity that owns 5 percent or more of the loss corporation's stock (determined without regard to § 1.382-2T(h)(2)(1)(A)).

(ii) ***Small issuance limitation.*** In applying paragraph (j)(2) of this section to any issuance of stock by a first tier or higher tier entity, the small issuance limitations of paragraph (j)(2)(iii)(A) and (B) of this section are computed by reference to the stock value and the stock classes of the issuing corporation.

(12) ***Certain non-stock ownership interests.*** As the context may require, a non-stock ownership interest in an entity other than a corporation is treated as stock for purposes of this paragraph (j).

(13) ***Secondary transfer exception.*** The segregation rules of § 1.382-2T(j)(3)(i) will not apply to the transfer of a direct ownership interest in the loss corporation by a first tier entity or an individual that owns five percent or more of the loss corporation to public shareholders. Instead, each public group existing at the time of the transfer will be treated under § 1.382-2T(j)(3)(i) as acquiring its proportionate share of the stock exempted from the application of § 1.382-2T(j)(3)(i). The segregation rules also will not apply if an ownership interest in an entity that owns five percent or more of the loss corporation (determined without regard to the application of § 1.382-2T(h)(2)(i)(A)) is transferred to a public owner or a 5-percent owner who is not a 5-percent shareholder of the loss corporation. Instead, provided that the transferor is either a 5-percent owner that is a 5-percent shareholder of the loss corporation or a higher tier entity owning five percent or more of the loss corporation (determined without regard to the application of section 1.382-2T(h)(2)(i)(A)), each public group of the entity existing at the time of the transfer is treated under § 1.382-2T(j)(3)(i) as acquiring its proportionate share of the transferred ownership interest. With regard to a transferor that is neither a 5-percent shareholder of the loss corporation nor a higher tier entity owning five percent or more of the loss corporation (determined without regard to the application of § 1.382-2T(h)(2)(i)(A)), see generally § 1.382-2T(e)(1)(ii) (disregarding these transactions if the transferee is not a 5-percent shareholder).

(14) ***Small redemption exception*** —

(i) ***In general.*** Section 1.382-2T(j)(2)(iii)(C) does not apply to a small redemption (as defined in paragraph (j)(14)(ii) of this section), except to the extent that the total amount of stock redeemed in that redemption and all other small redemptions previously made in the same taxable year (determined in each case on redemption) exceeds the small redemption limitation. This paragraph (j)(14) does not apply to a redemption of stock that, by itself, exceeds the small redemption limitation.

(ii) ***Small redemption defined. Small redemption*** means a redemption of public shareholders by the loss corporation of an amount of stock not exceeding the small redemption limitation.

(iii) ***Small redemption limitation*** —

(A) ***In general.*** For each taxable year, the loss corporation may, at its option, apply this paragraph (j)(14)—

(*1*) On a corporation-wide basis, in which case the small redemption limitation is 10 percent of the total value of the loss corporation's stock outstanding at the beginning of the taxable year (excluding the value of stock described in section 1504(a)(4)); or

(*2*) On a class-by-class basis, in which case the small redemption limitation is 10 percent of the number of shares of the class redeemed that are outstanding at the beginning of the taxable year.

(B) ***Class of stock defined.*** For purposes of this paragraph (j)(14)(iii), a class of stock includes all stock with the same material terms.

(C) ***Adjustments for stock splits and similar transactions.*** Appropriate adjustments to the number of shares of a class outstanding at the beginning of a taxable year must be made to take into account any stock split, reverse stock split, stock dividend to which section 305(a) applies, recapitalization, or similar transaction occurring during the taxable year.

(D) ***Exception.*** The loss corporation may not apply this paragraph (j)(14)(iii) on a class-by-class basis if, during the taxable year, more than one class of stock is redeemed in a single redemption (or in two or more redemptions that are treated as a single redemption under paragraph (j)(14)(v) of this section).

(E) ***Short taxable years.*** In the case of a taxable year that is less than 365 days, the small redemption limitation is reduced by multiplying it by a fraction, the numerator of which is the number of days in the taxable year, and the denominator of which is 365.

(iv) ***Proportionate redemption of exempted stock*** —

(A) ***In general.*** Each direct public group that exists immediately before a redemption to which this paragraph (j)(14) applies is treated as having been redeemed of its proportionate share of the amount of stock exempted from the application of § 1.382-2T(j)(2)(iii)(C) under this paragraph (j)(14).

(B) ***Actual knowledge of greater redemption.*** Under the last sentence of § 1.382-2T(k)(2), the loss corporation may treat direct public groups existing immediately before a redemption to which this paragraph (j)(14) applies as having been redeemed of more stock than the amount determined under paragraph (j)(14)(iv)(A) of this section, but only if the loss corporation actually knows that the amount redeemed from those groups in the redemption exceeds the amount so determined.

(v) ***Certain related redemptions.*** For purposes of this paragraph (j)(14), two or more redemptions (including redemptions of stock by first tier or higher tier entities) are treated as a single redemption if—

(A) The redemptions occur at approximately the same time pursuant to the same plan or arrangement; or

(B) A principal purpose of redeeming the stock in separate redemptions rather than in a single redemption is to minimize or avoid an owner shift under the rules of this paragraph (j)(14).

(vi) ***Certain non-stock ownership interests.*** As the context may require, a non-stock ownership interest in an entity other than a corporation is treated as stock for purposes of this paragraph (j)(14).

(vii) ***Application to first tier and higher tier entities*** —

(A) ***In general.*** The principles of this paragraph (j)(14) apply to redemptions of stock by a first tier entity or a higher tier entity that owns 5 percent of the loss corporation stock (determined without regard to § 1.382-2T(h)(2)(i)(A)).

(B) ***Small redemption limitation.*** In applying this paragraph (j)(14) to any redemption of stock by a first tier or a higher tier entity, the small redemption limitations of paragraph (j)(14)(iii)(A) of this section are computed by reference to the stock value and the stock classes of the redeeming corporation.

(15) ***Exception for first tier and higher tier entities*** —

(i) ***In general.*** The segregation rules of § 1.382-2T(j)(3)(iii) will not apply to a transaction involving stock in a first tier or a higher tier entity if, after taking into account the results of such transaction and all other transactions occurring on that date, the first tier or higher tier entity owns 10 percent or less (by value) of all the outstanding stock (without regard to § 1.382-2(a)(3)) of the loss corporation.

(ii) ***Anti-avoidance rule.*** The rules of paragraph (j)(15)(i) of this section do not apply to a transaction involving an ownership interest in a first tier or higher tier entity if the loss corporation, directly or through one or more persons, has participated in planning or structuring the transaction with a view to avoiding the application of the segregation rules. For this purpose, a transaction includes any event that would result in segregation under § 1.382-2T(j)(3)(iii), absent the application of this paragraph (j)(15), and any event (for example, the formation of a holding company) occurring as part of the same plan that includes the event that would result in segregation (without the application of this paragraph (j)(15)). Other anti-avoidance rules continue to be applicable. See, for example, §§ 1.382-2T(k)(4) and 1.382-3(a)(1).

(iii) ***Special rules.*** If application of paragraph (j)(15)(i) of this section results in the combination of public groups, then—

(A) The amount of increase in the percentage of stock ownership of the continuing public group will be the sum of its increase and a proportionate amount of any increase by any public group that is combined with the continuing public group (the former public group); and

(B) The continuing public group's lowest percentage ownership will be the sum of its lowest percentage ownership and a proportionate amount of the former public group's lowest percentage ownership.

(iv) ***Ownership of the loss corporation.*** In making the determination under paragraph (j)(15)(i) of this section—

(A) The rules of § 1.382-2T(h)(2) will not apply;

(B) The entity will be treated as owning the loss corporation stock that it actually owns, and any other loss corporation stock if that other stock would be attributed to the entity under section 318(a) (without regard to paragraph (4) thereof) unless an option is treated as exercised under § 1.382-4(d)); and

(C) The operating rules of paragraph (j)(15)(v) of this section will apply.

(v) ***Operating rules.*** Subject to the principles of § 1.382-2T(k)(4), a loss corporation may establish the ownership limitation of paragraph (j)(15)(i) of this section through either—

(A) Actual knowledge; or

(B) Absent actual knowledge to the contrary, the presumptions regarding stock ownership in § 1.382-2T(k)(1).

(16) ***Examples.*** The provisions of this paragraph (j) are illustrated by the following examples:

> *Example 1.* (i) L corporation is a calendar year taxpayer. On January 1, 1994, L has 1,000 shares of a single class of common stock outstanding, all of which are owned by a single direct public group (Public L). On February 1, 1994, L issues to employees as compensation

60 new common shares of the same class. On May 1, 1994, L issues 50 new common shares of the same class solely for cash. Following each issuance, L's stock is owned entirely by public shareholders. No other changes in the ownership of L's stock occur prior to May 1, 1994. L chooses to determine its small issuance limitation for 1994 on a class-by-class basis under paragraph (j)(2)(iii)(A)(2) of this section.
(ii) The February issuance is a small issuance because the number of shares issued (60) does not exceed 100, the small issuance limitation (10 percent of the number of common shares outstanding on January 1, 1994). Under paragraph (j)(2) of this section, the segregation rules of § 1.382-2T(j)(2)(iii)(B) do not apply to the February issuance. Under paragraph (j)(5) of this section, Public L is treated as acquiring all 60 shares issued.

(iii) The May issuance is a small issuance because the number of shares issued (50) does not exceed 100, the small issuance limitation (10 percent of the number of common shares outstanding on January 1, 1994). However, under paragraph (j)(2) of this section, only 40 of the 50 shares issued are exempted from the segregation rules of § 1.382-2T(j)(2)(iii)(B) because the total number of shares of common stock issued in the February and May issuances exceeds 100, the small issuance limitation, by 10. Because the May issuance is solely for cash, paragraph (j)(3) of this section exempts 5 of the 10 remaining shares from the segregation rules of § 1.382-2T(j)(2)(iii)(B) (10 shares multiplied by 50 percent, one-half of Public L's 100 percent ownership interest immediately before the May issuance—1,060 shares/1,060 shares). Accordingly, under paragraph (j)(5) of this section, Public L is treated as acquiring 45 shares in the May issuance. Section 1.382-2T(j)(2)(iii)(B) applies to the remaining 5 shares issued, which are treated as acquired by a direct public group separate from Public L. Each such public group is treated as an individual who is a separate 5-percent shareholder. See § 1.382-2T (g)(1)(iv) and (j)(1)(ii).

(iv) Assume that L actually knows that at least 10 shares of the May issuance are acquired by members of Public L. The result is the same. See paragraph (j)(5)(ii) of this section.

(v) Assume instead that L actually knows that all 50 shares of the May issuance are acquired by members of Public L. Under paragraph (j)(5)(ii) of this section, L may treat Public L as acquiring 50 shares in the May issuance.

Example 2. (i) L corporation is a calendar year taxpayer. On January 1, 1995, L has 1,000 shares of Class A common stock outstanding, the aggregate value of which is $1,000. Five hundred shares are owned by one direct public group (Public 1), and 500 shares are owned by another direct public group (Public 2). On August 1, 1995, L issues 200 shares of Class B common stock for $200 cash. A, an individual, acquires 120 Class B shares in the transaction. The remaining 80 Class B shares are acquired by public shareholders. No other changes in ownership of L's stock occur prior to August 1, 1995.

(ii) The August issuance is not a small issuance. The total value of the Class B stock issued ($200) exceeds $100, the small issuance limitation as calculated under paragraph (j)(2)(iii)(A)(*1*) of this section (10 percent of the value of L's stock on January 1, 1995). The total number of Class B shares issued (200) exceeds 0, the small issuance limitation as calculated under paragraph (j)(2)(iii)(A)(*2*) of this section (10 percent of the number of Class B shares outstanding on January 1, 1995). Accordingly, paragraph (j)(2) of this section does not apply to the August issuance.

(iii) Paragraph (j)(3) of this section, as limited by paragraph (j)(4) of this section, exempts 80 Class B shares from the segregation rule of § 1.382-2T(j)(2)(iii)(B). Paragraph (j)(3) of this section, without regard to paragraph (j)(4) of this section, would exempt 100 Class B shares: the product of the 200 Class B shares issued and 50 percent (one-half of the combined 100 percent pre-issuance ownership interest of Public 1 and Public 2). Paragraph (j)(4), however, limits the total number of Class B shares that may be excluded to 80 Class B shares: the difference between the 200 shares issued and the 120 shares acquired by A. Under paragraph (j)(5) of this section, Public 1 and Public 2 are treated as acquiring the 80 exempted Class B shares. Because Public 1 and Public 2 each owned 500 Class A shares prior to the issuance, Public 1 and Public 2 are considered to acquire 40 Class B shares each.

Example 3. (i) L has 1,000 shares of a single class of common stock outstanding, all of which are owned by a direct public group (Public L). At the same time pursuant to the same plan, L issues 500 shares of its stock to its creditors in exchange for its outstanding debt and 500 shares of its stock to the public for cash. Assume that the separate issuances of stock for debt and stock for cash do not have a principal purpose of minimizing or avoiding an owner shift. L has no individual 5-percent shareholders immediately after the issuances.
(ii) The 500 shares of stock issued by L to its former creditors were not issued solely for cash. Therefore, paragraph (j)(3) of this section does not apply to those 500 shares, which are treated as owned by a public group separate from Public L. See § 1.382-2T(j)(2)(iii)(B)(*1*)(*ii*).

(iii) Paragraph (j)(3) of this section applies to the 500 shares of stock issued by L to the public because that stock was issued solely for cash. Because the two issuances occur at the same time pursuant to the same plan, they are generally treated as a single issuance for purposes of this paragraph (j). See paragraph (j)(8)(i) of this section. The treatment of the two issuances as a single issuance does not apply, however, for the purpose of determining whether the stock issued to the public was issued solely for cash. See paragraph (j)(3)(ii)(B) of this section.

(iv) Paragraph (j)(3) of this section applies to exempt 250 of the 500 shares issued solely for cash from the segregation rules of § 1.382-2T(j)(2)(iii)(B) (the product of the 500 shares issued for cash and 50 percent (one-half of the 100 percent pre-issuance ownership interest of Public L)). The creditors that receive stock in exchange for their debt would not be treated

as acquiring any of the 250 exempted shares even if their exchange of debt for stock occurs prior to the cash issuance. Paragraph (j)(5)(i) of this section allocates exempted shares among the direct public groups that exist immediately before an issuance. Because the issuance for cash and the issuance for debt are generally treated as a single issuance, the public group comprised of the former creditors of L was not a public group that existed immediately before the issuance.

(v) Three public groups owning L stock exist immediately after the two issuances. Public L owns 1,250 shares—the 1,000 shares it owned prior to the issuances plus the 250 shares it is treated as acquiring in the cash issuance. A separate group comprised of the former creditors of L owns the 500 shares issued for debt. A third public group owns the 250 shares that are not treated as acquired by Public L in the cash issuance.

Example 4. (i) L has 1,000 shares of a single class of common stock outstanding, all of which are owned by a direct public group (Public L). L issues 1,000 shares pursuant to an offer under which 500 shares must be acquired in exchange for debt and the remainder may be acquired for cash. Under the terms of the offer, only persons that acquire stock for debt are eligible to acquire stock for cash. L has no 5-percent shareholders other than direct public groups immediately after the issuance.
(ii) As a condition of acquiring shares for cash, the creditors are required to purchase stock for debt. Therefore, paragraph (j)(3) of this section does not apply to any part of the issuance because it is not an issuance of stock solely for cash. The segregation rules of § 1.382-2T(j)(2)(iii)(B) apply to treat all 1,000 shares as acquired by a new public group separate from Public L.

Example 5. Secondary transfer exception to segregation rules—no new public group. (i) *Facts.* L is owned 60 percent by one public group (Public L_1) and 40 percent by another public group (Public L_2). On July 1, 2014, individual A acquires 10 percent of L's stock over a public stock exchange. On December 31, 2014, A sells all of his L stock over a public stock exchange. No individual or entity acquires as much as five percent of L's stock as a result of A's disposition of his L stock. On January 3, 2015, individual B acquires 10 percent of L's stock over a public stock exchange. On June 30, 2015, B sells all of her L stock over a public stock exchange. No individual or entity acquires as much as five percent of L's stock as a result of B's disposition of her L stock.
(ii) *Analysis.* The dispositions of the L stock by A and B are not transactions that cause the segregation of L's direct public groups that exist immediately before the transaction (Public L_1 and Public L_2). When A and B sell their shares to public shareholders over the public stock exchange, the shares are treated as being reacquired by Public L_1 and Public L_2. As a result, Public L_1's ownership interest is treated as increasing from 54 percent to 60 percent during the testing period, and Public L_2's ownership interest is treated as increasing from 36 percent to 40 percent during the testing period.

Example 6. Secondary transfer exception—first tier entity. (i) *Facts.* L has a single class of common stock outstanding that is owned 60 percent by a direct public group (Public L) and 40 percent by P. P is owned 20 percent by individual A and 80 percent by a direct public group (Public P). On October 6, 2014, A sells 50 percent of his interest in P to B, an individual who is, and remains, a member of Public P.
(ii) *Analysis.* P is an entity that owns five percent or more of L. A is a 5-percent owner of P that is a 5-percent shareholder of L. Because A's sale of the P stock is to a member of Public P, the disposition of the P stock by A is not a transaction that causes the segregation of P's direct public group that exists immediately before the transaction (Public P). See paragraph (j)(13) of this section. When A sells his shares to B, the shares are treated as being acquired by Public P. As a result, Public P's ownership interest in L is treated as increasing from 32 percent to 36 percent during the testing period.

Example 7. Small redemption exception. (i) *Facts.* L is a calendar year taxpayer. On January 1, 2014, L has 1,060 shares of a single class of common stock outstanding, all of which are owned by a single direct public group (Public L). On July 1, 2014, L acquires 60 shares of its stock for cash. On December 31, 2014, in an unrelated redemption, L acquires 90 more shares of its stock for cash. Following each redemption, L's stock is owned entirely by public shareholders. No other changes in the ownership of L's stock occur prior to December 31, 2014.
(ii) *Analysis—(A) July redemption.* The July redemption is a small redemption because the number of shares redeemed (60) does not exceed 106, the small redemption limitation (10 percent of the number of common shares outstanding on January 1, 2014). Under paragraph (j)(14) of this section, the segregation rules of § 1.382-2T(j)(2)(iii)(C) do not apply to the July redemption. Under paragraph (j)(14)(iv) of this section, Public L is treated as having all 60 shares redeemed.

(B) *December redemption.* The December redemption is a small redemption because the number of shares redeemed (90) does not exceed 106, the small redemption limitation (10 percent of the number of common shares outstanding on January 1, 2014). However, under paragraph (j)(14)(i) of this section, only 46 of the 90 shares redeemed are exempted from the segregation rules of § 1.382-2T(j)(2)(iii)(C) because the total number of shares of common stock redeemed in the July and December redemptions exceeds 106, the small redemption limitation, by 44. Accordingly, under paragraph (j)(14)(iv) of this section, Public L is treated as having 46 shares redeemed in the December redemption. Section 1.382-2T(j)(2)(iii)(C) applies to the remaining 44 shares redeemed. Accordingly, Public L is segregated into two different public groups immediately before the transaction (and thereafter) so that the redeemed interests (Public RL) are treated as part of a public group that is separate from the ownership interests that are not redeemed (Public CL). Therefore, as a result of the December redemption, Public CL's interest in L increases by 4.4 percentage points (from 95.6 percent (956/1,000) to 100 percent (910/910)) on the December 31, 2014 testing date. For purposes of determining whether an ownership change occurs on any subsequent testing date

having a testing period that includes the December redemption, Public CL is treated as a 5-percent shareholder whose percentage ownership interests in L increased by 4.4 percentage points as a result of such redemption.

Example 8. *Segregation rules inapplicable—proportionate amount.* (i) *Facts.* P_1 is a corporation that owns 8 percent of the stock of L. The remaining L stock (92 percent) is owned by Public L. P_1 is entirely owned by Public P_1. P_2 is a corporation owned 90 percent by individual A and 10 percent by a public group (Public P_2). On May 22, 2014, P_1 merges into P_2 with the shareholders of P_1 receiving an amount of P_2 stock equal to 25 percent of the value of P_2 immediately after the reorganization. L was owned 92 percent by Public L and 8 percent by P_1 throughout the testing period ending on the date of the merger.
(ii) *Analysis.* Assuming L can establish that P_2 owns 10 percent or less (by value) of L on May 22, 2014 pursuant to the operating rules of paragraph (j)(15)(v) of this section, the segregation rules of § 1.382-2T(j)(3)(iii) will not apply to segregate P_1's direct public group (Public P_1) immediately before the merger from P_2's direct public group (Public P_2). Thus, following the merger, P_2 is owned 67.5 percent (90 percent × 75 percent) by A and 32.5 percent (25 percent + (10 percent × 75 percent)) by Public P_2. Pursuant to paragraph (j)(15)(iii)(B) of this section, Public P_2's lowest percentage of ownership is the sum of its lowest percentage of ownership (zero) and a proportionate amount of former Public P_1's lowest ownership percentage of L of 2.6 percent (32.5 percent × 8 percent). P_2 will be treated as having one public group whose ownership interest in L was 2.6 percent before the merger and remains 2.6 percent after the merger. Because Public P_2 owns less than 5 percent of L, Public P_2 is treated as part of Public L. See § 1.382-2T(j)(1)(iv). Thus, pursuant to paragraph (j)(15)(iii)(B) of this section, Public L's lowest ownership percentage of L during the testing period is 94.6 percent.

Example 9. *Segregation rules inapplicable—prior increase in ownership by former public group during testing period.* (i) *Facts.* The facts are the same as *Example 8,* except that P_1 acquired its 8 percent interest in L during the testing period that includes the merger.
(ii) *Analysis.* Pursuant to the rules of paragraph (j)(15)(iii)(A) of this section, the amount of increase in the percentage of stock ownership by Public P_2 is the sum of its increase (zero) and a proportionate amount of the increase by former Public P_1 of 2.6 percent (32.5 percent × 8 percent). Pursuant to paragraph (j)(15)(iii)(B) of this section, Public P_2's lowest percentage of ownership is zero, because both former Public P_1 and Public P_2 owned no L stock at the beginning of the testing period. Accordingly, Public P_2, the continuing public group, is treated as having increased its ownership interest by 2.6 percent. Because Public P_2 is treated as part of Public L, Public L is treated as increasing its ownership interest by 2.6 percent.

Example 10. *Ownership limitation based upon fair market value.* (i) *Facts.* L has one class of common stock and one class of preferred stock outstanding. The preferred stock is stock within the meaning of § 1.382-2(a)(3). Before December 23, 2014, a direct public group

(Public L) owns all of the common stock of L. On December 23, 2014, P purchases all of the preferred stock of L and a portion of the common stock of L. On the date of purchase, the value of the L common stock held by P was greater than 5 percent of the value of L, and the total value of L common and L preferred stock held by P was less than 10 percent of the value of all stock of L. P has one class of common stock outstanding, all of which is owned by a direct public group (Public P). On October 7, 2015, P redeems 30 percent of its single outstanding class of common stock. On the redemption date of the P stock, due to a decline in the relative value of the common stock of L, the preferred stock of L owned by P represents 40 percent of the value of all the outstanding stock of L. No ownership change of L occurs between December 23, 2014, and October 7, 2015.
(ii) *Analysis.* The rules of paragraph (j)(15) of this section do not apply to the redemption because P owns more than 10 percent of L (by value) on that date.

Example 11. Ownership limitation—fair market value includes preferred stock. The facts are the same as in *Example 10,* except that the preferred stock is not stock within the meaning of § 1.382-2(a)(3). Although the preferred stock is not stock for the purpose of determining owner shifts, the value of that stock is taken into account in computing the 10-percent limitation of paragraph (j)(15)(i) of this section. Therefore, the results are the same as in *Example 10.*

Example 12. Ownership limitation—application of attribution rules. (i) *Facts.* Individual A owns all the outstanding stock of X. A also owns preferred stock in Y that is not stock within the meaning § 1.382-2(a)(3), which represents 50 percent of the value of Y. All the Y common stock is owned by public owners. Each of X and Y own 6 percent of the single class of L stock outstanding. On October 6, 2014, Y redeems 15 percent of its common stock.
(ii) *Analysis.* In determining satisfaction of the ownership limitation of paragraph (j)(15)(i) of this section, the attribution rules of section 318(a) apply. Pursuant to section 318(a)(2), A is treated as owning the L stock owned by X. Pursuant to section 318(a)(3), Y is treated as owning the L stock that A indirectly owns. Because Y's ownership of L exceeds the 10 percent ownership limitation of paragraph (j)(15)(i) of this section, the rules of paragraph (j)(15) of this section do not apply.

Example 13. Anti-avoidance rule. (i) *Facts.* P_1 is a corporation that owns 10 percent of the stock of L. P_1 is owned entirely by a direct public group (Public P). L has had owner shifts of 45 percentage points in its current testing period. P_1 is planning to merge into P_2, a corporation which has a public group. Advisers to L, upon learning of the proposed merger, asked the management of P_1 for details of the proposed merger, including the stock ownership of P_2 after P_1 merges into P_2. After finding out that information, L or L's advisers did not request any changes in the planned transaction.

(ii) *Analysis.* The anti-avoidance rule of paragraph (j)(15)(ii) of this section does not apply because L did not participate in planning or structuring the transaction. Pursuant to paragraph (j)(15)(i) of this section, § 1.382-2T(j)(3)(iii) does not apply to cause the segregation of P_1's public group from P_2's public group.

(17) ***Effective/applicability date.*** This paragraph (j) generally applies to issuances or deemed issuances of stock in taxable years beginning on or after November 4, 1992. However, paragraphs (j)(11)(ii) and (j)(13) through (15) of this section and *Examples 5* through *13* of paragraph (j)(16) of this section apply to testing dates occurring on or after October 22, 2013, other than with respect to the sale of a Program Instrument by the Treasury Department. For purposes of this paragraph (j)(17), a Program Instrument is an instrument issued pursuant to a Program, as defined in Internal Revenue Service Notice 2010-2 (2010-2 IRB 251 (December 16, 2009)) (see § 601.601(a)(2)(ii)(*b*) of this chapter), or a Covered Instrument, as defined in that Notice. Taxpayers may apply paragraphs (j)(11)(ii) and (j)(13) through (15) of this section and *Examples 5* through *13* of paragraph (j)(16) of this section in their entirety (other than with respect to a sale of a Program Instrument by the Treasury Department) to all testing dates that are included in a testing period beginning before and ending on or after October 22, 2013. However, the provisions described in the preceding sentence may not be applied to any date on or before the date of any ownership change that occurred before October 22, 2013, under the regulations in effect before October 22, 2013, and they may not be applied as described in the preceding sentence if such application would result in an ownership change occurring on a date before October 22, 2013, that did not occur under the regulations in effect before October 22, 2013. See § 1.382-3(j)(14)(ii) and (iii), as contained in 26 CFR part 1 revised as of April 1, 1994 for the application of paragraph (j)(10) of this section to stock issued on the exercise of certain options exercised on or after November 4, 1992, and for an election to apply paragraphs (j)(1) through (12) of this section retroactively to certain issuances and deemed issuances of stock occurring in taxable years prior to November 4, 1992.

(k) ***Special rules for certain regulated investment companies*** —

(1) ***In general.*** The segregation rules of § 1.382-2T(j)(2) do not apply to the issuance (as described in § 1.382-2T(j)(2)(iii)(B)(1)(*ii*)) or the redemption (as described in § 1.382-2T(j)(2)(iii)(C)) of any redeemable security, as defined in 15 U.S.C. 80a-2(a)(32), by a regulated investment company in the ordinary course of business.

(2) ***Effective date*** —

(i) ***General rule.*** Paragraph (k)(1) of this section applies to testing dates after December 31, 1986. A corporation may file an amended return for taxable years ending before August 21, 1992 (subject to any applicable statute of limitations) to take into account paragraph (k)(1) of this section only if corresponding adjustments are made in amended returns for all affected taxable years ending after December 31, 1986 (subject to any applicable statute of limitations).

(ii) ***Election to apply prospectively.*** A corporation may elect to apply paragraph (k)(1) of this section only to testing dates on or after October 29, 1991. The election must be made on the first return which is filed after October 20, 1992 by stating on such return, "This is an Election To Apply § 1.382-3(k)(1) Only to Testing Dates on or After October 29, 1991."

[T.D. 8428, 57 FR 38282, Aug. 24, 1992. Redesignated by T.D. 8440, 57 FR 45712, Oct. 5, 1992; 57 FR 52827, Nov. 5, 1992; T.D. 8490, 59 FR 51573, Oct. 4, 1993; T.D. 9638, 78 FR 62423, Oct. 22, 2013; T.D. 9685, 79 FR 44282, July 31, 2014; T.D. 9721, 80 FR 31997, June 5, 2015]

§ 1.382-4 Constructive ownership of stock.

(a) ***In general.*** [Reserved]

(b) ***Attribution from corporations, partnerships, estates and trusts.***

(1) [Reserved].

(2) ***Limitation.*** Section 1.382-2T(h)(2)(i)(A) applies solely for purposes of determining whether a loss corporation has an ownership change.

(c) ***Attribution to corporations, partnerships, estates and trusts.*** [Reserved]

(d) ***Treatment of options as exercised*** —

(1) ***General rule.*** Except as provided in paragraph (d)(2) of this section, an option is not treated as exercised under section 382(l)(3)(A).

(2) ***Options treated as exercised*** —

(i) ***Issuance or transfer.*** For purposes of determining whether an ownership change occurs, an option is treated as exercised on the date of its issuance or transfer if, on that date, the option satisfies—

(A) The ownership test of paragraph (d)(3) of this section,

(B) The control test of paragraph (d)(4) of this section, or

(C) The income test of paragraph (d)(5) of this section.

(ii) ***Subsequent testing dates.*** Except as provided in paragraph (d)(10) of this section, an option that is treated as exercised on the date of its issuance or transfer is treated as exercised on any subsequent testing date (as defined in § 1.382-2(a)(4)) for purposes of determining whether an ownership change occurs.

(3) ***The ownership test.*** An option satisfies the ownership test if a principal purpose of the issuance, transfer, or structuring of the option (alone or in combination with other arrangements) is to avoid or ameliorate the impact of an ownership change of the loss corporation by providing the holder of the option, prior to its exercise or transfer, with a substantial portion of the attributes of ownership of the underlying stock.

(4) ***The control test*** —

(i) ***In general.*** An option satisfies the control test if—

(A) A principal purpose of the issuance, transfer, or structuring of the option (alone or in combination with other arrangements) is to avoid or ameliorate the impact of an ownership change of the loss corporation, and

(B) The holder of the option and any persons related to the option holder have, in the aggregate, a direct and indirect ownership interest in the loss corporation of more than 50 percent (determined as if the increase in such persons' percentage ownership interest that would result from the exercise of the option in question and any other options to acquire stock held by such persons, and any other intended increases in such persons' percentage ownership interest, actually occurred on the date the option is issued or transferred).

(ii) ***Operating rules*** —

(A) ***Person and related persons.*** For purposes of this paragraph (d)(4)—

(*1*) The term *person* includes an individual or entity, but not a public group, as defined in § 1.382-2T(f)(13), and

(*2*) Persons are related if they bear a relationship specified in section 267(b) or 707(b) or if they have a formal or informal understanding among themselves to make a coordinated acquisition of stock, within the meaning of § 1.382-3(a)(1)(i).

(B) ***Indirect ownership interest.*** The indirect ownership interest that the holder of the option and any persons related to the holder have in the loss corporation is determined by applying the constructive ownership rules of § 1.382-2T(h), other than § 1.382-2T(h)(2)(i)(A) (which treats stock attributed pursuant to section 318(a)(2) as no longer being owned by the entity from which it is attributed) and § 1.382-2T(h)(4) (which treats options as exercised in certain circumstances). If, however, the application of such constructive ownership rules without regard to § 1.382-2T(h)(2)(i)(A) would result in the same stock of the loss corporation being owned by two or more such persons, appropriate adjustments must be made so that such stock is not counted more than once in computing the aggregate ownership interests of such persons.

(5) ***The income test.*** An option satisfies the income test if a principal purpose of the issuance, transfer, or structuring of the option (alone or in combination with other arrangements) is to avoid or ameliorate the impact of an ownership change of the loss corporation by facilitating the creation of income (including accelerating income or deferring deductions) or value (including unrealized built-in gains) prior to the exercise or transfer of the option.

(6) ***Application of the ownership, control, and income tests*** —

(i) ***In general.*** Whether an option satisfies the ownership, control, or income test depends on all the relevant facts and circumstances. Among the factors that are relevant in applying all three tests are any business purposes for the issuance, transfer, or structure of the option, the likelihood of exercise of the option (taking into account, for example, any contingencies to its exercise), transactions related to the issuance or transfer of the option, and the consequences of treating the option as exercised.

An option is not treated as exercised under any of the three tests, however, if a principal purpose of its issuance, transfer, or structuring is to avoid an ownership change by having it treated as exercised. Paragraphs (d)(6)(ii), (iii) and (iv) of this section describe additional examples of factors that are relevant in applying each test. The weight given to any factor depends on all the facts and circumstances. The presence or absence of any factor described in this paragraph (d)(6) does not create a presumption.

(ii) ***Application of ownership test.*** Among the additional factors that are taken into account in applying the ownership test are the relationship, at the time of issuance or transfer of the option, between the exercise price of the option and the value of the underlying stock, whether the option provides its holder or a related person with the right to participate in the management of the loss corporation or with other rights that ordinarily would be afforded to owners of the underlying stock, and the existence of reciprocal options (e.g., a call option held by the prospective purchaser and a corresponding put option held by the prospective seller). The ability of the holder of an option with a fixed exercise price to share in future appreciation of the underlying stock is also a relevant factor, but is not sufficient, by itself, for the option to

satisfy the ownership test. Conversely, the fact that the holder of such an option does not bear the risk of loss due to declines in value of the underlying stock does not preclude the option from satisfying the ownership test.

(iii) ***Application of control test.*** Among the additional factors that are taken into account in applying the control test are the economic interests in the loss corporation of the option holder or related persons and the influence of those persons over the management of the loss corporation (in either case, through the option or a related arrangement, or through rights in stock).

(iv) ***Application of income test.*** Among the additional factors that are taken into account in applying the income test are whether, in connection with the issuance or transfer of the option, the loss corporation engages in income acceleration transactions or the holder of the option or a related person purchases stock (including section 1504(a)(4) stock) from, or makes a capital contribution or loan to, the loss corporation that can reasonably be expected to avoid or ameliorate the impact of an ownership change. Examples of income acceleration transactions are those outside the ordinary course of the loss corporation's business that accelerate income or gain into the period prior to the exercise of the option (or defer deductions to the period after the exercise of the option). A stock purchase, capital contribution, or loan is more probative toward an option satisfying the income test the larger the amount received by the loss corporation in the transaction or related transactions. A stock purchase, capital contribution, or loan is generally not taken into account in applying the income test if it is made to enable the loss corporation to continue basic operations of its business (*e.g.,* to meet the monthly payroll or fund other operating expenses of the loss corporation).

(7) ***Safe harbors.*** Except as provided in paragraph (d)(7)(i) of this section, an option described in this paragraph (d)(7) is not treated as exercised pursuant to the ownership, control, or income test. The failure of an option to be described in this paragraph (d)(7) does not affect the determination of whether the option satisfies the ownership, income, or control test. The following options are described in this paragraph (d)(7):

(i) ***Contracts to acquire stock.*** A stock purchase agreement or a similar arrangement, the terms of which are commercially reasonable, in which the parties' obligations to complete the transaction are subject only to reasonable closing conditions, and which is closed on a change date within one year after it is entered into. An option is not exempt from the income test of paragraph (d)(5) of this section solely by reason of its description in this paragraph (d)(7)(i).

(ii) ***Escrow, pledge, or other security agreements.*** An option that is part of a security arrangement in a typical lending transaction (including a purchase money loan), if the arrangement is subject to customary commercial conditions. For this purpose, a security arrangement includes, for example, an agreement for holding stock in escrow or under a pledge or other security agreement, or an option to acquire stock contingent upon a default under a loan.

(iii) ***Compensatory options.*** An option to acquire stock in a corporation with customary terms and conditions provided to an employee, director, or independent contractor in connection with the performance of services for the corporation or a related person (and that is not excessive by reference to the services performed) and which—

(A) Is nontransferable within the meaning of § 1.83-3(d); and

(B) Does not have a readily ascertainable fair market value as defined in § 1.83-7(b) on the date the option is issued.

(iv) ***Options exercisable only upon death, disability, mental incompetency, or retirement.*** An option entered into between stockholders of a corporation (or a stockholder and the corporation) with respect to stock of either stockholder, that is exercisable only upon the death, disability, mental incompetency of the stockholder, or, in the case of stock acquired in connection with the performance of services for the corporation or a related person (and that is not excessive by reference to the services performed), the stockholder's retirement.

(v) ***Rights of first refusal.*** A bona fide right of first refusal with customary terms, entered into between stockholders of a corporation (or between the corporation and a stockholder), and regarding the corporation's stock.

(vi) ***Options designated in the Internal Revenue Bulletin.*** An option designated by the Internal Revenue Service in the Internal Revenue Bulletin as being exempt from one or more of the ownership, control, or income tests. See § 601.601(d)(2)(ii) of this chapter (relating to the Internal Revenue Bulletin).

(8) ***Additional rules*** —

(i) ***Contracts to acquire stock.*** For purposes of this paragraph (d), a contract is considered to be issued or transferred on the date it is entered into or assigned, respectively.

(ii) ***Indirect transfer of an option.*** If an entity is formed or availed of for a principal purpose of facilitating an indirect transfer of an option by issuing or transferring interests in the entity, an issuance or transfer of an interest in the entity will be treated as a transfer of the option for purposes of applying the ownership, control, and income tests of paragraphs (d)(3) through (5) of this section.

(iii) ***Options related to interests in non-corporate entities.*** The rules of this paragraph (d) apply, with appropriate adjustments, to options to acquire or transfer interests in non-corporate entities.

(iv) ***Puts.*** In applying the rules of this section to puts, appropriate adjustments must be made to take into account that the put provides its holder with a right to transfer, instead of acquire, stock.

(9) ***Definition of option*** —

(i) ***In general.*** Any contingent purchase, warrant, convertible debt, put, stock subject to a risk of forfeiture, contract to acquire stock, or similar interest is treated as an option for purposes of this paragraph (d), regardless of whether it is contingent or otherwise not currently exercisable.

(ii) ***Convertible stock.*** Convertible stock is treated as an option for purposes of this paragraph (d) (in addition to being treated as stock under § 1.382-2(a)(3)(ii)) only if the terms of the conversion feature permit or require consideration other than the stock being converted.

(iii) ***Series of options.*** For purposes of this paragraph (d), an option to acquire an option with respect to the stock of the loss corporation, and each one of a series of such options, is treated as an option to acquire such stock.

(iv) ***General principles of tax law.*** This paragraph (d) does not affect the determination under general principles of tax law (such as substance over form) of whether an instrument is an option or stock.

(10) ***Subsequent treatment of options treated as exercised on a change date*** —

(i) ***In general.*** The following rules apply to options that are treated as exercised under paragraph (d)(2) of this section on a change date:

(A) The option is not treated as exercised under paragraph (d)(2) of this section on any testing date after the change date and prior to a transfer of the option that would itself (*i.e.,* without regard to the purposes for the issuance or any prior transfers of the option) cause the option to satisfy the ownership test of paragraph (d)(3) of this section, the control test of paragraph (d)(4) of this section, or the income test of paragraph (d)(5) of this section; and

(B) The exercise of the option, if by the person who owned the option immediately after the ownership change (or by a transferee of the option who acquired the option, directly or indirectly, from that person in one or more transfers described in paragraph (d)(11) of this section), does not contribute to another ownership change on any testing date on or after the date of exercise.

(ii) ***Alternative look-back rule for options exercised within 3 years after change date.*** If a loss corporation, on its return, as originally filed, for a taxable year that includes a change date, properly treats an option as exercised under paragraph (d)(2) of this section on the change date, and the option is actually exercised within three years after the change date, the loss corporation may treat the rules of paragraph (d)(10)(i) of this section as inapplicable to the option and instead treat the option as having been exercised on the change date for the purpose of determining whether an ownership change occurs on any and all testing dates after the change date (filing such amended returns as may be necessary for taxable years ending after the change date and before the date of exercise of the option). A transfer after the change date of an option to which this paragraph (d)(10)(ii) applies is treated as a transfer of the stock subject to the option. The exercise of an option to which this paragraph (d)(10)(ii) applies is not taken into account for the purpose of determining whether an ownership change occurs on or after the date of exercise.

(11) ***Transfers not subject to deemed exercise.*** Paragraph (d)(2) of this section does not apply to the transfer of an option (including a transfer described in paragraph (d)(8)(i) or (ii) of this section), if—

(i) Neither the transferor nor the transferee is a 5-percent shareholder and neither person would be a 5-percent shareholder if all options held by that person to acquire stock were treated as exercised;

(ii) The transfer is between members of separate public groups resulting from the application of the segregation rules of § 1.382-2T(j)(2) and (3)(iii); or

(iii) The transfer occurs in any of the circumstances described in section 382(l)(3)(B) (relating to stock acquired by reason of death, gift, divorce, separation, etc.).

(12) ***Certain rules regarding non-stock interests as stock.*** Section 1.382-2T(f)(18)(iii) does not apply to treat an option (whether or not treated as exercised under this paragraph (d)) as stock.

(e) ***Stock transferred under certain agreements.*** [Reserved]

(f) ***Family attribution.*** [Reserved]

(g) ***Definitions.*** The terms and nomenclature used in this section, and not otherwise defined herein, have the same meaning as in section 382 and the regulations thereunder.

(h) *Effective date* —

(1) *In general.* [Reserved]

(2) *Option attribution rules* —

(i) *General rule.* The rules of paragraph (d) of this section apply, instead of the rules of § 1.382-2T(h)(4), on any testing date on or after November 5, 1992. See paragraph (h)(2)(vi) of this section for an election relating to the effective date.

(ii) *Special rule for control test.* An option issued on or before March 17, 1994, or an option issued within 60 days after that date pursuant to a plan existing before that date, is not treated as exercised under the control test provided in paragraph (d)(4) of this section on any testing date prior to a transfer of the option after March 17, 1994 that would itself cause the option to satisfy the control test.

(iii) *Convertible stock issued prior to July 20, 1988* —

(A) *In general.* Except as provided in paragraph (h)(2)(iii)(B) of this section, convertible stock issued prior to July 20, 1988, is not treated as an option subject to the rules of § 1.382-2T(h)(4) or paragraph (d)(2) of this section.

(B) *Exceptions* —

(1) *Nonvoting convertible preferred stock.* Convertible stock issued prior to July 20, 1988, is treated as an option subject to the rules of § 1.382-2T(h)(4) or paragraph (d)(2) of this section if—

(*i*) The stock, when issued, would be described in section 1504(a)(4) by disregarding subparagraph (D) thereof and by ignoring the potential participation in corporate growth that the conversion feature may offer; and

(*ii*) The loss corporation makes the election described in Notice 88-67, 1988-1 C.B. 555 (see § 601.601(d)(2)(ii)(*b*) of this chapter for availability of Cumulative Bulletins (C.B.)), on or before the earlier of the date prescribed in Notice 88-67 or December 7, 1992.

(2) *Other convertible stock.* Convertible stock issued prior to July 20, 1988, is treated as an option subject to the rules of § 1.382-2T(h)(4) or paragraph (d)(2) of this section if—

(*i*) The terms of the conversion feature permit or require the tender of consideration other than the stock being converted; and

(*ii*) The loss corporation makes the election described in Notice 88-67 on or before the date prescribed in the Notice.

(iv) *Convertible stock issued on or after July 20, 1988, and before November 5, 1992.* Convertible stock issued on or after July 20, 1988, and before November 5, 1992, is treated as an option subject to the rules of § 1.382-2T(h)(4) or paragraph (d) of this section only if—

(A) The stock, when issued, would be described in section 1504(a)(4) by disregarding subparagraph (D) thereof and by ignoring the potential participation in corporate growth that the conversion feature may offer; or

(B) The terms of the conversion feature permit or require the tender of consideration other than the stock being converted.

(v) ***Certain options in existence immediately before and after an ownership change.*** If an option existed immediately before and after an ownership change occurring on a testing date to which § 1.382-2T(h)(4) applies—

(A) The option is not treated as exercised under paragraph (d)(2) of this section on any testing date after the change date and prior to a transfer of the option that would itself cause the option to satisfy the ownership test of paragraph (d)(3) of this section, the control test of paragraph (d)(4) of this section, or the income test of paragraph (d)(5) of this section; and

(B) Except as provided in § 1.382-2T(m)(4)(vi) (which relates to the effective date of the rules provided in § 1.382-2T(h)(4) and includes a special rule related to options that are actually exercised within 120 days after they are treated as exercised under that section), the actual exercise of the option, if by the person who owned the option immediately after the ownership change (or by a transferee of the option who acquired the option, directly or indirectly, from that person in one or more transfers described in paragraph (d)(11) of this section), will not contribute to an ownership change on any testing date on or after the date of exercise.

(vi) ***Election to apply § 1.382-2T(h)(4)*** —

(A) ***In general.*** If a loss corporation makes an election under this paragraph (h)(2)(vi), §§ 1.382-2T(a)(2)(i) and (h)(4) (relating to testing dates and option attribution) apply (instead of the definition of testing date in § 1.382-2(a)(4) and paragraph (d) of this section) for the purpose of determining whether an ownership change occurs—

(*1*) On any testing date on or before May 17, 1994, or

(*2*) In the case of a loss corporation that is under the jurisdiction of a court in a title 11 or similar case filed on or before May 17, 1994, subject to § 1.382-9(o)(1), on any testing date at or before the time the plan of reorganization becomes effective.

(B) ***Additional consequences of election.*** If a loss corporation makes an election under this paragraph (h)(2)(vi)—

(*1*) In determining whether any convertible preferred stock issued by the loss corporation during the period that the election is in effect is treated as stock or as an option, the convertible preferred stock is treated as if it were issued on November 4, 1992, and

(*2*) The special effective date for the control test provided in paragraph (h)(2)(ii) of this section does not apply to any option with respect to stock of the loss corporation.

(C) ***Time and manner of making the election.*** The election described in paragraph (h)(2)(vi)(A) of this section is made by attaching a statement to the loss corporation's income tax return for the first taxable year ending after November 4, 1992, in which a testing date (within the meaning of § 1.382-2T(a)(2)(i)) occurs, or if such return is filed on or before May 17, 1994, with its first return filed after May 17, 1994. However, a loss corporation that is under the jurisdiction of a court in a title 11 or similar case filed on or before May 17, 1994, may make the election described in paragraph (h)(2)(vi)(A) by attaching a statement to its tax return for its first taxable year ending after that date. The statement must say

"THIS IS AN ELECTION UNDER § 1.382-4(h)(2)(vi) TO APPLY § 1.382-2T(h)(4) ON OR AFTER NOVEMBER 5, 1992." Any amended returns required by paragraph (h)(2)(vi)(D) of this section must accompany the return with which the election is made. An election under paragraph (h)(2)(vi)(A) of this section is irrevocable.

(D) ***Amended returns.*** If an election under this paragraph (h)(2)(vi) affects the amount of taxable income or loss for a prior taxable year, the loss corporation (or the common parent of any consolidated group of which the loss corporation was a member for the year) must file an amended return for the year that reflects the effect of the election.

(3) ***Special rule for options subject to attribution under § 1.382-2T(h)(4).*** Section § 1.382-2T(h)(4)(i) does not apply to any option designated by the Internal Revenue Service in the Internal Revenue Bulletin as being excepted from the operation of § 1.382-2T(h)(4)(i).

[T.D. 8531, 59 FR 12837, Mar. 18, 1994, as amended by T.D. 8825, 64 FR 36178, July 2, 1999]

§ 1.382-5 Section 382 limitation.

(a) ***Scope.*** Following an ownership change, the section 382 limitation for any post-change year is an amount equal to the value of the loss corporation multiplied by the long-term tax-exempt rate that applies with respect to the ownership change, and adjusted as required by section 382 and the regulations thereunder. See, for example, section 382(b)(2) (relating to the carryforward of unused section 382 limitation), section 382(b)(3)(B) (relating to the section 382 limitation for the post-change year that includes the change date), section 382(m)(2) (relating to short taxable years), and section 382(h) (relating to recognized built-in gains and section 338 gains).

(b) ***Computation of value.*** [Reserved]

(c) ***Short taxable year.*** The section 382 limitation for any post-change year that is less than 365 days is the amount that bears the same ratio to the section 382 limitation determined under section 382(b)(1) as the number of days in the post-change year bears to 365. The section 382 limitation, as so determined, is adjusted as required by section 382 and the regulations thereunder. This paragraph (c) does not apply to a 52-53 week taxable year that is less than 365 days unless a return is required under section 443 (relating to short periods) for such year.

(d) ***Successive ownership changes and absorption of a section 382 limitation*** —

(1) ***In general.*** If a loss corporation has two (or more) ownership changes, any losses or section 382 disallowed business interest carryforwards ((within the meaning of § 1.382-2(a)(7)) attributable to the period preceding the earlier ownership change are treated as pre-change losses with respect to both ownership changes. Thus, the later ownership change may result in a lesser (but never in a greater) section 382 limitation with respect to such pre-change losses. In any case, the amount of taxable income for any post-change year that can be offset by pre-change losses may not exceed the section 382 limitation for such ownership change, reduced by the amount of taxable income offset by pre-change losses subject to any earlier ownership change(s).

(2) ***Recognized built-in gains and losses.*** [Reserved]

(3) ***Effective date.*** This paragraph (d) applies to taxable years of a loss corporation beginning on or after January 1, 1997.

(e) ***Controlled groups.*** See § 1.382-8 for rules for determining the value of a loss corporation that is a member of a controlled group.

(f) ***Effective date.*** Except as otherwise provided, this section applies to a loss corporation that has an ownership change to which section 382(a), as amended by the Tax Reform Act of 1986, applies. Paragraph (d)(1) of this section applies with respect to an ownership change occurring on or after November 13, 2020. For loss corporations that have undergone an ownership change before or after November 13, 2020, see § 1.382-5 as contained in 26 CFR part 1, revised April 1, 2019. However, taxpayers and their related parties, within the meaning of sections 267(b) and 707(b)(1), may choose to apply the rules of this section to testing dates occurring during a taxable year beginning after December 31, 2017, so long as the taxpayers and their related parties consistently apply the rules of this section, the section 163(j) regulations (as defined in § 1.163(j)-1(b)(37)), §§ 1.382-1, 1.382-2, 1.382-6, 1.382-7, 1.383-0, and 1.383-1, and, if applicable, §§ 1.263A-9, 1.263A-15, 1.381(c)(20)-1, 1.469-9, 1.469-11, 1.704-1, 1.882-5, 1.1362-3, 1.1368-1, 1.1377-1, 1.1502-13, 1.1502-21, 1.1502-36, 1.1502-79, 1.1502-91 through 1.1502-99 (to the extent they effectuate the rules of §§ 1.382-2, 1.382-5, 1.382-6, and 1.383-1), and 1.1504-4, to that taxable year.

[T.D. 8679, 61 FR 33316, June 27, 1996, as amended by T.D. 8825, 64 FR 36178, July 2, 1999; T.D. 9905, 85 FR 56835, Sept. 14, 2020]

§ 1.382-6 Allocation of income and loss to periods before and after the change date for purposes of section 382.

(a) ***General rule*** —

(1) ***In general.*** Except as provided in paragraphs (b) and (d) of this section, a loss corporation must allocate its net operating loss or taxable income (see section 382(k)(4)), and its net capital loss (see section 1222(10)) or modified capital gain net income (as defined in paragraph (g)(4) of this section), for the change year between the pre-change period and the post-change period by ratably allocating an equal portion to each day in the year.

(2) ***Allocation of business interest expense*** —

(i) ***Scope.*** Except as provided in paragraph (b)(4) of this section, this paragraph (a)(2) applies if a loss corporation has business interest expense (as defined in § 1.163(j)-1(b)(3)) in the change year. The rules of this paragraph (a)(2) apply to determine the amount of current-year business interest expense (as defined in § 1.163(j)-1(b)(9)) that is deducted in the change year. These rules also apply to determine the amount of any current-year business interest expense that is characterized as disallowed business interest expense (as defined in § 1.163(j)-1(b)(10)) allocable to the pre-change period and the post-change period, and to allocate disallowed business interest expense carryforwards (as defined in § 1.163(j)-1(b)(11)) to the change year for deduction in the pre-change period and the post-change period.

(ii) ***Deductibility of business interest expense.*** The rules of this paragraph (a)(2)(ii) apply in the following order.

(A) First, the loss corporation calculates its section 163(j) limitation (as defined in § 1.163(j)-1(b)(36)) for the change year.

(B) Second, the loss corporation calculates its deductible current-year BIE and deducts this amount in determining its taxable income or net operating loss for the change year. For purposes of this paragraph (a)(2)(ii), the term *deductible current-year BIE* means the loss corporation's current-year business interest expense (including its floor plan financing interest expense, as defined in § 1.163(j)-1(b)(19)), to the extent of its section 163(j) limitation.

(C) Third, if the loss corporation has disallowed business interest expense paid or accrued (without regard to section 163(j)) in the change year that is carried forward to post-change years, it allocates an equal portion of that disallowed business interest expense to each day in the change year. Any amount of disallowed business interest expense that is allocated to the pre-change period pursuant to this paragraph (a)(2)(ii)(C) is carried forward subject to section 382(d)(3). Any amount of disallowed business interest expense that is allocated to the post-change period pursuant to this paragraph (a)(2)(ii)(C) is carried forward and is not subject to section 382(d)(3).

(D) Fourth, if the loss corporation has excess section 163(j) limitation, then the loss corporation calculates its deductible disallowed business interest expense carryforward and allocates an equal portion to each day in the change year. For purposes of this paragraph (a)(2)(ii), the term *excess section 163(j) limitation* means the excess, if any, of the loss corporation's section 163(j) limitation over its deductible current-year BIE, and the term *deductible disallowed business interest expense carryforward* means the loss corporation's disallowed business interest expense carryforward to the extent of its excess section 163(j) limitation.

(E) Fifth, the loss corporation deducts its deductible disallowed business interest expense carryforward that was allocated to the pre-change period under paragraph (a)(2)(ii)(D) of this section. Subject to the application of sections 382(b)(3)(B) and 382(d)(3), the loss corporation deducts its deductible disallowed business interest expense carryforward that was allocated to the post-change period under paragraph (a)(2)(ii)(D) of this section. Any amount of disallowed business interest expense carryforward that is not deducted pursuant to this paragraph (a)(2)(ii)(E) is carried forward subject to section 382(d)(3).

(b) ***Closing-of-the-books election*** —

(1) ***In general.*** Subject to paragraphs (b)(3)(ii), (b)(4), and (d) of this section, a loss corporation may elect to allocate its net operating loss or taxable income and its net capital loss or modified capital gain net income for the change year between the pre-change period and the post-change period as if the loss corporation's books were closed on the change date. An election under this paragraph (b)(1) does not terminate the loss corporation's taxable year as of the change date (e.g., the change year is a single tax year for purposes of section 172).

(2) ***Making the closing-of-the-books election*** —

(i) ***Time and manner.*** A loss corporation makes the closing-of-the-books election by including the following statement on the information statement required by § 1.382-11(a) for the change year: "THE CLOSING-OF-THE-BOOKS ELECTION UNDER § 1.382-6(b) IS HEREBY MADE WITH RESPECT TO THE OWNERSHIP CHANGE OCCURRING ON [INSERT DATE]." The election must be made on or before the due date (including extensions) of the loss corporation's income tax return for the change year.

(ii) ***Election irrevocable.*** An election under this paragraph (b) is irrevocable.

(3) *Special rules relating to consolidated and controlled groups* —

(i) ***Consolidated groups.*** If an election under this paragraph (b) is made with respect to an ownership change occurring in a consolidated return year, all allocations under this section with respect to that ownership change must be consistent with the election.

(ii) ***Controlled groups.*** If paragraph (b)(3)(i) of this section does not apply, and if, as part of the same plan or arrangement, two or more members of a controlled group (as defined in section 1563(a), determined by substituting "50 percent" for "80 percent" each place that it appears, and without regard to section 1563(a)(4)), have ownership changes and continue to be members of the controlled group (or become members of the same other controlled group), a closing-of-the-books election applies only if the election is made by all members having the ownership changes.

(4) *Allocation of business interest expense* —

(i) ***Scope.*** This paragraph (b)(4) applies if a loss corporation makes a closing-of-the-books election pursuant to paragraph (b) of this section and has business interest expense in the change year. The rules of this paragraph (b)(4) apply to determine the amount of deductible current-year business interest expense that is allocable to the pre-change period and the post-change period for purposes of the allocations referred to in paragraph (b)(1) of this section. These rules also apply to determine the amount of any current-year business interest expense that is characterized as disallowed business interest expense allocable to the pre-change period and the post-change period, and to allocate disallowed business interest expense carryforwards to the change year between the pre-change period and the post-change period for deduction.

(ii) ***Deductibility of business interest expense.*** The rules of this paragraph (b)(4)(ii) apply in the order provided.

(A) The loss corporation calculates its ATI limit, which is the product of its ATI (as defined in § 1.163(j)-1(b)(1)) for the change year and 30 percent. For purposes of this paragraph (b)(4)(ii), the terms *pre-change ATI limit* and *post-change ATI limit* mean the amount of ATI limit allocated to the pre-change period or the post-change period, respectively, computed by allocating an equal portion of the ATI limit to each day in the change year.

(B) Pursuant to paragraph (b)(1) of this section, the loss corporation allocates its current-year business interest expense (including its floor plan financing interest expense) and its business interest income (as defined in § 1.163(j)-1(b)(4)) to the pre-change and post-change periods as if the loss corporation's books were closed on the change date. For purposes of this paragraph (b)(4)(ii), the terms *pre-change BIE* and *post-change BIE* mean the amount of the loss corporation's current-year business interest expense that is allocated to the pre-change period or the post-change period, respectively, under this paragraph (b)(4)(ii)(B).

(C) The loss corporation deducts its pre-change BIE to the extent of its pre-change section 163(j) limit, and the loss corporation deducts its post-change BIE to the extent of its post-change section 163(j) limit. For purposes of this paragraph (b)(4)(ii), the term *pre-change section 163(j) limit* means the sum of the pre-change ATI and the amount of business interest income and floor plan financing interest expense allocated to the pre-change period; the term *post-change section 163(j) limit* means the sum of the post-change ATI limit and the amount of business interest income and floor plan financing interest expense allocated to the post-change period.

(D) If any pre-change BIE or post-change BIE has not been deducted under paragraph (b)(4)(ii)(C) of this section, the loss corporation deducts either any pre-change BIE that has not been deducted to the extent of its surplus post-change section 163(j) limit or any post-change BIE that has not been deducted to the extent of its surplus pre-change section 163(j) limit. For purposes of this paragraph (b)(4)(ii), the term *surplus pre-change section 163(j) limit* means the amount by which the pre-change section 163(j) limit exceeds the amount of pre-change BIE deducted pursuant to paragraph (b)(4)(ii)(C) of this section; the term *surplus post-change section 163(j) limit* means the amount by which the post-change section 163(j) limit exceeds the amount of post-change BIE deducted pursuant to paragraph (b)(4)(ii)(C) of this section.

(E) If the loss corporation has any excess pre-change section 163(j) limit or excess post-change section 163(j) limit, the loss corporation allocates its disallowed business interest expense carryforward, if any, ratably between the pre-change and post-change periods based upon the relative amounts of excess pre-change section 163(j) limit and excess post-change section 163(j) limit. For purposes of this paragraph (b)(4)(ii), the term *excess pre-change section 163(j) limit* means the amount by which the surplus pre-change section 163(j) limit exceeds the amount of post-change BIE deducted pursuant to paragraph (b)(4)(ii)(D) of this section; the term *excess post-change section 163(j) limit* means the amount by which the surplus post-change section 163(j) limit exceeds the amount of pre-change BIE deducted pursuant to paragraph (b)(4)(ii)(D) of this section.

(F) The loss corporation deducts its disallowed business interest expense carryforward that was allocated to the pre-change period under paragraph (b)(4)(ii)(E) of this section to the extent of its excess pre-change section 163(j) limit. Subject to the application of sections 382(b)(3)(B) and 382(d)(3), the loss corporation deducts its disallowed business interest expense carryforward that was allocated to the post-change period under paragraph (b)(4)(ii)(E) of this section to the extent of its excess post-change section 163(j) limit. Any amount of disallowed business interest expense carryforward that is not deducted pursuant to this paragraph (b)(4)(ii)(F) is subject to section 382(d)(3) irrespective of the period to which it was allocated pursuant to paragraph (b)(4)(ii)(E) of this section.

(iii) *Example 1* —

(A) ***Facts.*** X is a calendar-year domestic C corporation that is not a member of a consolidated group. As of January 1, 2021, X has no disallowed business interest expense carryforwards. On October 19, 2021, X experiences an ownership change under section 382(g). For calendar year 2021, X's ATI is $500. For the period beginning on January 1, 2021 and ending on October 19, 2021, X pays or accrues $250 of current-year business interest expense that is deductible but for the potential application of section 163(j), including $50 of floor plan financing interest expense, and X has $60 of business interest income. For the period beginning on October 20, 2021 and ending on December 31, 2021, X pays or accrues $100 of current-year business interest expense that is deductible but for the potential application of section 163(j), including $40 of floor plan financing interest expense, and X has $70 of business interest income. X makes a closing-of-the-books election pursuant to paragraph (b) of this section.

(B) *Analysis* —

(1) ***Calculation and allocation of ATI limit.*** For purposes of allocating its net operating loss or taxable income for the change year between the pre-change period and the post-change period under § 1.382-6, X applies paragraph (b)(4) of this section to allocate items related to section 163(j). X's ATI for calendar year 2021 is $500x. Therefore, pursuant to paragraph (b)(4)(ii)(A) of this section, X's ATI limit is $150 ($500 × 30 percent). Additionally, pursuant to paragraph (b)(4)(ii)(A) of this section, X's pre-change ATI limit is $120 ($150 × (292 days/365 days)), and X's post-change ATI limit is $30 ($150 × (73 days/365 days)).

(2) ***Determination of pre-change BIE and post-change BIE.*** Pursuant to paragraph (b)(4)(ii)(B) of this section, X's pre-change BIE and post-change BIE are $250 and $100, respectively.

(3) ***Determination of pre-change section 163(j) limit and post-change section 163(j) limit.*** Pursuant to paragraph (b)(4)(ii)(C) of this section, X's pre-change section 163(j) limit is $230 ($120 (X's pre-change ATI limit) + $60 (X's business interest income allocated to the pre-change period) + $50 (X's floor plan financing interest expense allocated to the pre-change period)). Additionally, pursuant to paragraph (b)(4)(ii)(C) of this section, X's post-change section 163(j) limit is $140 ($30 (X's post-change ATI limit) + $70 (X's business interest income allocated to the post-change period) + $40 (X's floor plan financing interest expense allocated to the post-change period)).

(4) ***Initial deduction of BIE.*** Pursuant to paragraph (b)(4)(ii)(C) of this section, X deducts $230 (its pre-change section 163(j) limit) of its $250 pre-change BIE and all $100 (less than its $140 post-change section 163(j) limit) of its post-change BIE.

(5) ***Deduction of BIE due to surplus post-change section 163(j) limit.*** After applying paragraph (b)(4)(ii)(C) of this section, X has $20 of pre-change BIE that has not been deducted ($250−$230) and a surplus post-change section 163(j) limit of $40 ($140−$100). As a result, pursuant to paragraph (b)(4)(ii)(D) of this section, X deducts its remaining $20 of pre-change BIE. (If, after applying paragraph (b)(4)(ii)(C) of this section, X instead had $20 of post-change BIE that had not yet been deducted and a $40 surplus pre-change section 163(j) limit, then X would deduct its remaining $20 of post-change BIE pursuant to paragraph (b)(4)(ii)(D) of this section.)

(iv) ***Example 2*** *—Potential deduction of disallowed business interest expense carryforwards.* The facts are the same as in paragraph (b)(4)(iii)(A) of this section, except that, as of January 1, 2021, X has $90 of disallowed business interest expense carryforwards and $150 (rather than $250) of pre-change BIE. X's pre-change section 163(j) limit and post-change section 163(j) limit are the same as in paragraph (b)(4)(iii)(B)(*3*) of this section. Pursuant to paragraph (b)(4)(ii)(C) of this section, X deducts all $150 of its pre-change BIE and all $100 of its post-change BIE. X has no remaining pre-change BIE or post-change BIE to deduct under paragraph (b)(4)(ii)(D) of this section. Paragraph (b)(4)(ii)(E) of this section applies because X has $80 of excess pre-change section 163(j) limit ($230−$150) and $40 of excess post-change section 163(j) limit ($140−$100). Under paragraph (b)(4)(ii)(E) of this section, X allocates $60 of its disallowed business interest expense carryforwards to the pre-change period ($90 × ($80/($80 + $40))) and $30 of its disallowed business interest expense carryforwards to the post-change period ($90 × ($40/($80 + $40))). As provided in paragraph (b)(4)(ii)(F) of this section, X deducts all

$60 of its disallowed business interest expense carryforwards that are allocated to the pre-change period; subject to the application of section 382, X deducts all $30 of its disallowed business interest expense carryforwards that are allocated to the post-change period.

(c) ***Operating rules for determining net operating loss, taxable income, net capital loss, modified capital gain net income, and special allocations.*** For purposes of this section, for the change year—

(1) ***In general*** —

(i) Net operating loss or taxable income is determined without regard to gains or losses on the sale or exchange of capital assets; and

(ii) Net operating loss or taxable income and net capital loss or modified capital gain net income are determined without regard to the section 382 limitation and do not include the following items, which are allocated entirely to the post-change period—

(A) Any income, gain, loss, or deduction to which section 382(h)(5)(A) applies; and

(B) Any income or gain recognized on the disposition of assets transferred to the loss corporation during the post-change period for a principal purpose of ameliorating the section 382 limitation.

(2) ***Adjustment to net operating loss*** —

(i) ***Determination of remaining capital gain.*** The amount of modified capital gain net income (defined in paragraph (g)(4) of this section) allocated to each period is offset by capital losses to which section 382(h)(5)(A) applies and capital loss carryovers, subject to the section 382 limitation (in the case of modified capital gain net income allocated to the post-change period).

(ii) ***Reduction of net operating loss by remaining capital gain.*** The amount of net operating loss allocated to each period is reduced (but not below zero) without regard to the section 382 limitation, first by the modified capital gain net income remaining in the same period, and then by the modified capital gain net income remaining in the other period.

(d) ***Coordination with rules relating to the allocation of income under § 1.1502-76(b).*** If § 1.1502-76 applies (relating to the taxable year of members of a consolidated group), an allocation of items under paragraph (a) or (b) of this section is determined after applying § 1.1502-76. Thus, if a short taxable year under § 1.1502-76 is a change year for which an allocation under this section is to be made, the allocation under this section applies only to the items allocated to that short taxable year under § 1.1502-76.

(e) ***Allocation of certain credits.*** The principles of this section apply for purposes of allocating, under section 383, excess foreign taxes under section 904(c), current year business credits under section 38, and the minimum tax credit under section 53. The loss corporation must use the same method of allocation (ratable allocation or closing-of-the-books) for purposes of sections 382 and 383.

(f) ***Examples.*** The rules of this section are illustrated by the following examples:

> *Example 1.* (i) Assume that the loss corporation, L, a calendar year taxpayer with a May 26, 1995, change date, determines a section 382 limitation under section 382(b)(1) of $100,000. Thus, for the change year, its section 382 limitation is $100,000 × (219/365) = $60,000. L makes the closing-of-the- books election under paragraph (b) of this section.

(ii) Assume that L has a $150,000 capital loss carryover (from its 1994 taxable year) and a $300,000 net operating loss carryover (from its 1994 taxable year) to the change year. L recognizes, in the pre-change period, $200,000 of ordinary loss, and, in the post-change period, $150,000 of capital gain and $100,000 of ordinary income. Assume that section 382(h) does not apply to the capital gain or the ordinary income.

(iii) L has a $100,000 net operating loss for the change year ($200,000 pre-change loss less $100,000 post-change income), as determined under paragraph (c)(1)(i) of this section. Because L has no current year capital losses, L's $150,000 capital gain recognized in the post-change period is its modified capital gain net income for the change year (as defined at paragraph (g)(4) of this section). L allocates $100,000 of net operating loss to the pre-change period and $150,000 of modified capital gain net income to the post-change period.

(iv) Under paragraph (c)(2)(i) of this section, L uses its capital loss carryover to offset its modified capital gain net income allocated to the post-change period, subject to its section 382 limitation. L's section 382 limitation is $60,000, so L uses $60,000 of its capital loss carryover to offset $60,000 of its $150,000 modified capital gain net income. L has absorbed its entire section 382 limitation for the change year and has $90,000 of modified capital gain net income remaining in the post-change period.

(v) Under paragraph (c)(2)(ii) of this section, L offsets its $100,000 net operating loss allocated to the pre-change period by the $90,000 of modified capital gain net income remaining in the post-change period, without regard to the section 382 limitation, thereby reducing its pre-change net operating loss to $10,000.

(vi) From its 1994 taxable year, L will carry over $90,000 of capital loss and $300,000 of net operating loss to its 1996 taxable year. From its 1995 taxable year, L will carry over $10,000 of net operating loss subject to the section 382 limitation to its 1996 taxable year.

Example 2. (i) Assume the facts of *Example 1,* except that L does not make the closing-of-the-books election under paragraph (b) of this section.
(ii) L ratably allocates its $100,000 net operating loss and its $150,000 of modified capital gain net income for the change year. $40,000 of net operating loss ($100,000 × (146/365)) and $60,000 of modified capital gain net income ($150,000 × (146/365)) are allocated to the pre-change period. $60,000 of net operating loss ($100,000 × (219/365)) and $90,000 of modified capital gain net income ($150,000 × (219/365)) are allocated to the post-change period.

(iii) Under paragraph (c)(2)(i) of this section, L uses its capital loss carryovers to offset modified capital gain net income. The capital loss carryovers offset the $60,000 modified capital gain net income allocated to the pre-change period without limitation. Subject to the section 382 limitation, the remaining $90,000 of capital loss carryovers offset the modified capital gain net income

allocated to the post-change period. Accordingly, L uses $60,000 of its capital loss carryovers to offset $60,000 of its $90,000 modified capital gain net income allocated to the post-change period. L has absorbed its entire section 382 limitation for the change year.

(iv) Under paragraph (c)(2)(ii) of this section, L's $60,000 net operating loss allocated to the post-change period is offset by its remaining $30,000 of post-change modified capital gain net income, reducing its post-change net operating loss to $30,000.

(v) From its 1994 taxable year, L will carry over $30,000 of capital loss and $300,000 of net operating loss to its 1996 taxable year. From its 1995 taxable year, L will carry over $70,000 of net operating loss ($40,000 pre-change + $30,000 post-change) to its 1996 taxable year. The $40,000 pre-change portion of that carryover is subject to the section 382 limitation.

(g) ***Definitions and nomenclature.*** The terms and nomenclature used in this section and not otherwise defined herein have the same meanings as in sections 382 and 383 and the regulations thereunder. For purposes of this section:

(1) ***Change year.*** A loss corporation's taxable year that includes the change date is its *change year.*

(2) ***Pre-change period.*** The *pre-change period* is the portion of the change year ending on the close of the change date.

(3) ***Post-change period.*** The *post-change period* is the portion of the change year beginning with the day after the change date.

(4) ***Modified capital gain net income.*** A loss corporation's *modified capital gain net income* is the excess of the gains from sales or exchanges of capital assets over the losses from such sales or exchanges for the change year, determined by excluding any short-term capital losses under section 1212.

(h) ***Applicability date*** —

(1) ***In general.*** This section applies to ownership changes occurring on or after June 22, 1994.

(2) ***Ownership changes.*** Paragraphs (a) and (b)(1) and (4) of this section apply with respect to an ownership change occurring during a taxable year beginning on or after November 13, 2020. For ownership changes occurring during a taxable year beginning before November 13, 2020, see § 1.382-6 as contained in 26 CFR part 1, revised April 1, 2019. However, taxpayers and their related parties, within the meaning of sections 267(b) and 707(b)(1), may choose to apply the rules of this section to testing dates occurring during a taxable year beginning after December 31, 2017, so long as the taxpayers and their related parties consistently apply the rules of this section, the section 163(j) regulations (as defined in § 1.163(j)-1(b)(37)), §§ 1.382-1, 1.382-2, 1.382-5, 1.383-0, and 1.383-1, and, if applicable, §§ 1.263A-9, 1.263A-15, 1.381(c)(20)-1, 1.469-9, 1.469-11, 1.704-1, 1.882-5, 1.1362-3, 1.1368-1, 1.1377-1, 1.1502-13, 1.1502-21, 1.1502-36, 1.1502-79, 1.1502-91 through 1.1502-99 (to the extent they effectuate the rules of §§ 1.382-2, 1.382-5, 1.382-6, 1.382-7, and 1.383-1), and 1.1504-4, to taxable years beginning after December 31, 2017.

[T.D. 8546, 59 FR 32080, June 22, 1994, as amended by T.D. 9264, 71 FR 30607, May 30, 2006; T.D. 9329, 72 FR 32808, June 14, 2007; T.D. 9905, 85 FR 56835, Sept. 14, 2020]

§ 1.382-7 Built-in gains and losses.

(a) ***Treatment of prepaid income.*** For purposes of section 382(h), prepaid income is not recognized built-in gain. The term *prepaid income* means any amount received prior to the change date that is attributable to performance occurring on or after the change date. Examples to which this paragraph (a) will apply include, but are not limited to, income received prior to the change date that is deferred under section 455 or Rev. Proc. 2004-34 (2004-1 CB 991 (June 1, 2004)) (or any successor revenue procedure) (see § 601.601(d)(2)(ii)(b)).

(b) ***Effective/applicability dates.*** This section applies to loss corporations that have undergone an ownership change on or after June 11, 2010. For loss corporations that have undergone an ownership change before June 11, 2010, see § 1.382-7T as contained in 26 CFR part 1, revised April 1, 2009.

(c) [Reserved]

(d) ***Special rules.*** This paragraph (d) contains special rules regarding the identification of recognized built-in losses.

(1)-(4) [Reserved]

(5) ***Section 382 disallowed business interest carryforwards.*** Section 382 disallowed business interest carryforwards are not treated as recognized built-in losses.

(e)-(f) [Reserved]

(g) ***Applicability dates.***

(1)-(3) [Reserved]

(4) ***Paragraph (d)(5) of this section.*** Paragraph (d)(5) of this section applies with respect to an ownership change occurring on or after November 13, 2020. For loss corporations that have undergone an ownership change before or after November 13, 2020, see § 1.382-7 as contained in 26 CFR part 1, revised April 1, 2019. However, taxpayers and their related parties, within the meaning of sections 267(b) and 707(b)(1), may choose to apply the rules of paragraph (d)(5) of this section to testing dates occurring during a taxable year beginning after December 31, 2017.

[T.D. 9487, 75 FR 33992, June 16, 2010, as amended by T.D. 9870, 84 FR 33692, July 15, 2019; T.D. 9905, 85 FR 56837, Sept. 14, 2020]

§ 1.382-8 Controlled groups.

(a) ***Introduction.*** This section provides rules to adjust the value of a loss corporation that is a member of a controlled group of corporations on a change date so that the same value is not included more than once in computing the limitations under section 382 for the loss corporations that are members of the controlled group. In general, the adjustment is made under paragraph (c) of this section by reducing the value of the loss corporation by the value of the stock of each component member of the controlled group that the loss corporation owns immediately after the ownership change. The loss corporation's value may, however, be increased under paragraph (c) of this section by any amount of value that the other member elects to restore to the loss corporation.

(b)

(1) ***Controlled group loss and controlled group with respect to a controlled group loss*** —(1) *In general.* A controlled group loss is a pre-change loss (or a net unrealized built-in loss) of a loss corporation that is attributable to a taxable year of the corporation with respect to which the corporation is a component member of a controlled group (as defined by paragraphs (e)(2) and (3) of this section). The controlled group with respect to each controlled group loss is composed of the loss corporation and each other corporation that is a component member of a controlled group that includes the loss corporation both—

(1)

(i) With respect to the taxable year to which the controlled group loss is attributable; and

(1) (ii) On the date the loss corporation has an ownership change.

(2) ***Presumption regarding net unrealized built-in loss.*** For purposes of determining whether a net unrealized built-in loss of a loss corporation is attributable to a taxable year (the determination year) with respect to which the corporation is a component member of a controlled group, the built-in loss in a prior change date asset is deemed to be attributable to a period ending before the determination year. A prior change date asset is any asset held by the loss corporation at all times during the period beginning on the change date of its most recent ownership change after 1986 (the first change date), and ending on the first day of the determination year. The built-in loss in a prior change date asset is the amount by which the adjusted basis of the asset on the first change date exceeds the fair market value of the asset on that date. The principles of this paragraph (b)(2) also apply to items described in section 382(h)(6)(B).

(c) ***Computation of value.*** For purposes of computing the limitation under section 382 with respect to each controlled group loss, the value of the stock of each component member of the controlled group with respect to that loss is determined immediately before the ownership change, and is adjusted by applying the following rules:

(1) ***Reduction in value.*** The value of the stock of each component member is reduced by the value (immediately before the ownership change and without regard to any restoration of value or other adjustment under this section) of the stock of any other component member directly owned by the component member immediately after the ownership change.

(2) ***Restoration of value.*** After the value of the stock of each component member is reduced pursuant to paragraph (c)(1) of this section, the value of the stock of each component member is increased by the amount of value, if any, restored to the component member by another component member (the electing member) pursuant to this paragraph (c)(2). The electing member may elect (or may be deemed to elect under paragraph (h)(2)(i) of this section in the case of a foreign component member) to restore value to another component member in an amount that does not exceed the lesser of—

(i) The sum of—

(A) The value, determined immediately before the ownership change, of the electing member's stock (after adjustment under paragraph (c)(1) of this section and before any restoration of value under this paragraph (c)(2)); plus

(B) Any amount of value restored to the electing member by another component member under this paragraph (c)(2); or

(ii) The value, determined immediately before any ownership change, of the electing member's stock (without regard to any adjustment under this section) that is directly owned by the other component member immediately after the ownership change.

(3) ***Reduction in value by the amount restored.*** The value of the stock of the electing member is reduced by any amount of value that the electing member elects to restore under paragraph (c)(2) of this section to another component member.

(4) ***Appropriate adjustments.*** Appropriate additional adjustments consistent with paragraphs (c)(1), (2), and (3) of this section must be made to prevent any duplication of value. Thus, for example, adjustments must be made to reflect—

(i) Any indirect ownership interest in another component member;

(ii) Any cross ownership of stock by component members of the controlled group with respect to the controlled group loss; and

(iii) Any value used to determine a limitation under section 382 with respect to controlled group losses from the same period.

(5) ***Certain reductions in the value of members of a controlled group.*** A loss corporation that has an ownership change is required to make adjustments consistent with this paragraph (c) with respect to its stock if the stock of another corporation in which it had a direct or indirect ownership interest was disposed of before the ownership change, and;

(i) Both corporations were component members of a controlled group—

(A) With respect to a taxable year to which a controlled group loss of the loss corporation is attributable; and

(B) At any time during the 2 year period before the ownership change; and

(ii) Both corporations are component members of a controlled group at any time during the 2 year period following the ownership change.

(d) ***No double reduction.*** To the extent consistent with the purposes of this section, section 382 and this section shall not be applied to duplicate a reduction in the value of a loss corporation. Thus, for example, if the value of a loss corporation is reduced under section 382(l)(1) to reflect a capital contribution of stock of a component member, it is not again reduced by such amount under paragraph (c)(1) of this section. If this paragraph (d) applies to prevent a reduction in value from being duplicated, the application of the other rules of this section, such as those relating to the restoration of value, is correspondingly limited in a manner consistent with the principles of this section.

(e) ***Definitions and nomenclature*** —

(1) ***Definitions in section 382 and the regulations thereunder.*** Except as otherwise provided, the definitions and nomenclature contained in section 382 and the regulations thereunder apply to this section.

(2) ***Controlled group.*** Controlled group has the same meaning as in section 1563(a), determined by substituting “50 percent” for “80 percent” each place that it appears, and without regard to section 1563(a)(4).

(3) ***Component member.*** Component member has the same meaning as in section 1563(b), determined by substituting "December 31 (or the change date, if earlier)" for "December 31" each place it appears, and without regard to section 1563 (b)(2), (b)(3)(C), and (b)(4).

(4) ***Foreign component member*** —

(i) ***In general.*** Except as provided in paragraph (e)(4)(ii) of this section, foreign component member means a component member that is a foreign corporation.

(ii) ***Exception.*** A foreign component member shall not include a foreign corporation that has items treated as connected with the conduct of a trade or business in the United States that it takes into account in determining its value pursuant to section 382(e)(3).

(5) ***Predecessor and successor corporation.*** As the context may require, a reference to a corporation, or component member includes a reference to a predecessor or successor corporation.

(f) ***Coordination between consolidated groups and controlled groups.*** Some or all of the component members of a controlled group may also be members of a consolidated group, and a controlled group loss may be subject to a consolidated section 382 limitation or subgroup section 382 limitation determined under § 1.1502-93. Except as otherwise provided in this paragraph (f) and §§ 1.1502-91 through 1.1502-99, § 1.1502-93 applies instead of this section when both sections, by their terms, are otherwise applicable. This section is applicable and may require an adjustment to value if a member of a consolidated group, a loss group, or loss subgroup (as those terms are defined in §§ 1.1502-1(h) and 1.1502-91) is also a component member of a controlled group with respect to a controlled group loss. Solely for purposes of applying this section, a consolidated group, loss group, or loss subgroup is treated as a single corporation. Thus to determine the limitation with respect to any portion of the pre-change consolidated attributes or pre-change subgroup attributes of the loss group or loss subgroup that is a controlled group loss, the consolidated section 382 limitation or subgroup section 382 limitation is computed by treating the loss group or the loss subgroup as a single corporation, and adjusting value in accordance with paragraph (c) of this section. See paragraph (g) *Example 4* of this section.

(g) ***Examples.*** For purposes of the examples in this section, unless otherwise stated, the nomenclature and assumptions of the examples in § 1.382-2T(b) apply, all corporations file separate income tax returns on a calendar year basis, the only 5-percent shareholder of a corporation is a public group, and the facts set forth the only owner shifts with respect to the corporations during the testing period.

> *Example 1. Controlled group with respect to a controlled group loss.* (a) Public L owns all of the L stock, L and Public L1 own 30 percent and 70 percent, respectively, of the L1 stock, and L1 owns all of the corporation T stock. L1 has a net operating loss arising in Year 1 that is carried over to Year 4. L has a net operating loss arising in Year 2 that is carried over to Year 4. On August 1, Year 3, L acquires 30 percent of the stock of L1, thereby increasing its percentage ownership interest in L1 to 60 percent. On December 1, Year 3, L1 purchases all of the stock of corporation S from Public S. On November 1, Year 4, P acquires all of the L stock. The acquisition by P of all of the L stock on November 1, Year 4, causes ownership changes of both L and L1 under the rules of § 1.382-2T. The following is a graphic illustration of these facts.

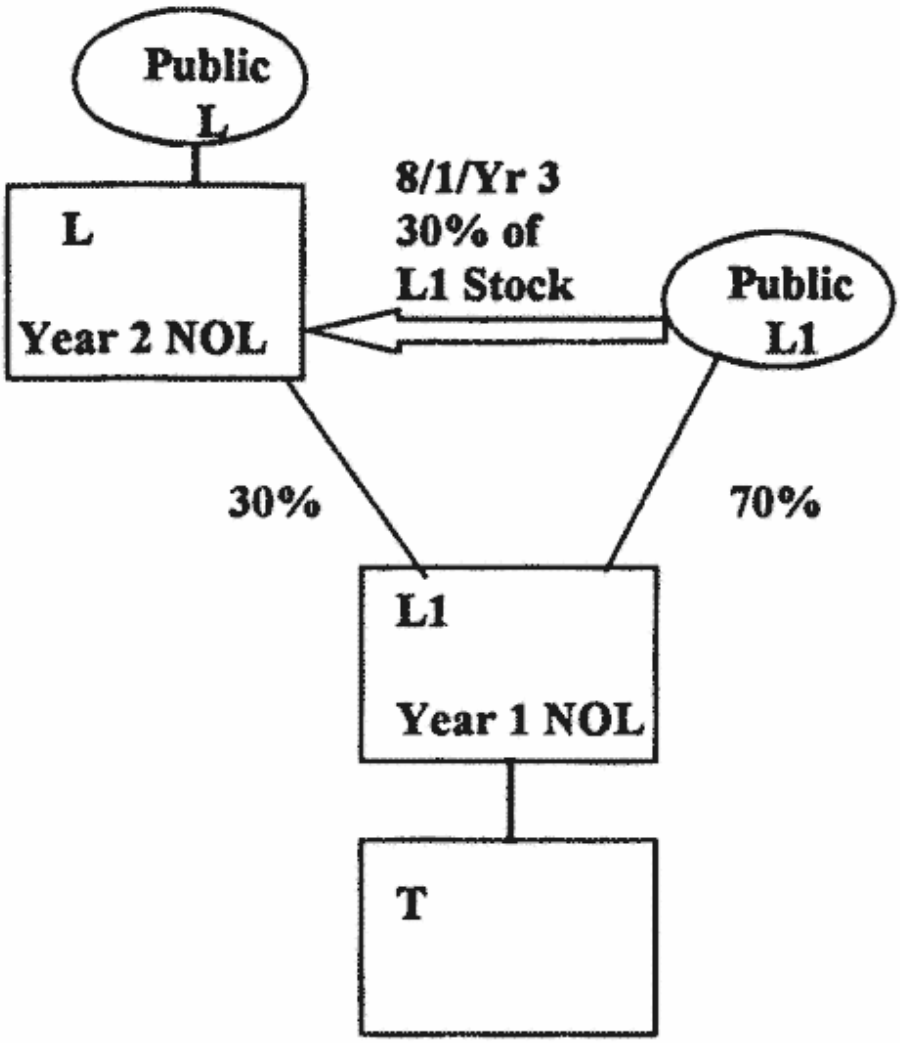
Public
L
L
Year 2 NOL
8/1/Yr 3
30% of
L1 Stock
Public
L1
30%
70%
L1
Year 1 NOL
T

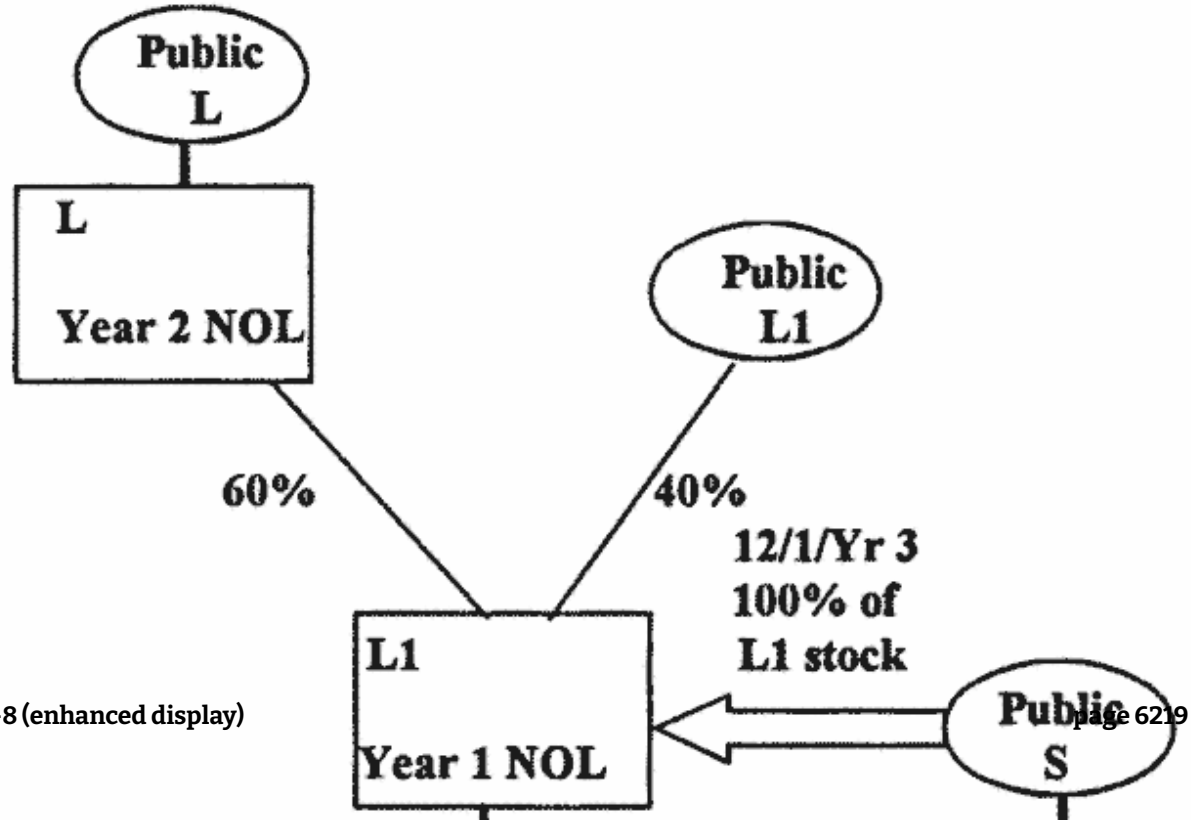
Public
L
L
Year 2 NOL
Public
L1
60%
40%
12/1/Yr 3
100% of
L1 stock
L1
Year 1 NOL
Public
S

(b)(1) Under paragraph (b) of this section, the Year 1 net operating loss carryover of L1 is a controlled group loss because L1 is a component member of a controlled group with respect to Year 1, the year to which the loss is attributable. L1 and T compose a controlled group with respect to the net operating loss carryover because L1 and T are component members of a controlled group both—
(A) With respect to the taxable year to which L1's net operating loss carryover is attributable (i.e., Year 1); and

(B) On November 1, Year 4, L1's change date. Although L and S are component members of L1's controlled group on L1's change date, they are not component members of the controlled group with respect to the Year 1 net operating loss carryover because they were not component members with respect to the year to which the net operating loss carryover is attributable.

(2) The value of L1's stock must therefore be adjusted in accordance with paragraph (c) of this section to take into account an adjustment with respect to the T stock (but not the S stock) in computing L1's limitation under section 382 with respect to its net operating loss carryover.

(c) Although L is a member of a controlled group composed of L, L1, S, and T on November 1, Year 4, L's change date, it is not a component member of a controlled group with respect to Year 2, the taxable year to which its net operating loss carryover is attributable. Therefore, L's Year 2 net operating loss carryover is not a controlled group loss under paragraph (b) of this section and the value of L's stock is not adjusted in accordance with paragraph (c) of this section to compute L's limitation under section 382 with respect to the Year 2 net operating loss carryover.

Example 2. Adjustments to value of the controlled group members. (a) Since Year 1, A has owned all of the stock of L, L and B have owned 80 percent and 20 percent, respectively, of the stock of corporation P, and P and C have owned 75 percent and 25 percent, respectively, of the stock of L1. L and L1 each has a net operating loss for the Year 6 taxable year that is carried over to its respective Year 7 taxable year. On December 1, Year 7, A sells all of the L stock to D. The sale results in ownership changes of both L and L1. Immediately before the ownership changes, the total value of the L1 stock is $40, the total value of the P stock (including the value of its L1 stock) is $100, and the total value of the L stock (including the value of the P stock) is $200. The following is a graphic illustration of these facts.

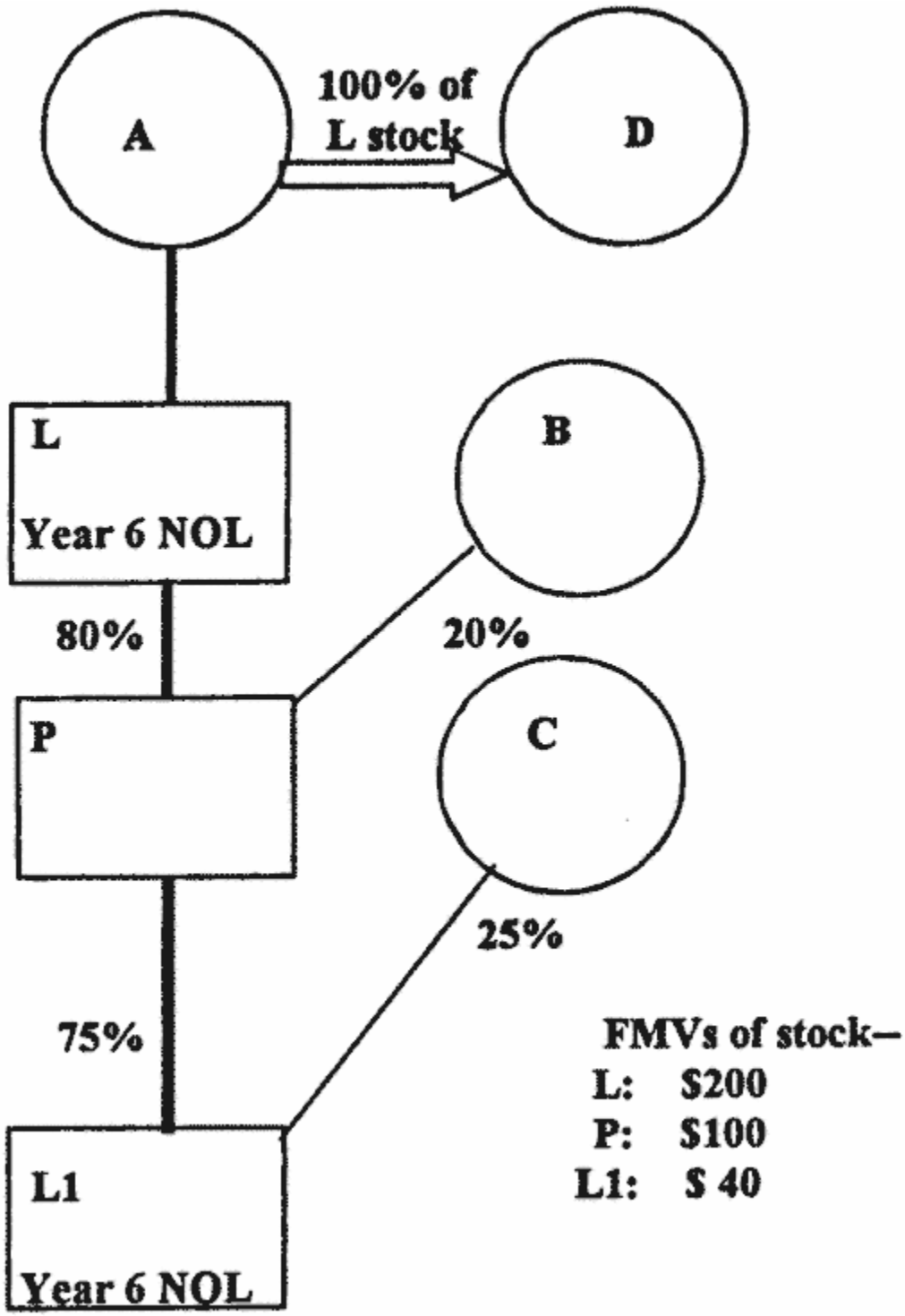

(b) Under paragraph (b) of this section, the Year 6 net operating loss carryovers of each of L and L1 are controlled group losses because each of L and L1 is a component member of a controlled group with respect to Year 6, the year to which the losses are attributable. L, P, and L1 compose controlled groups with respect to both Year 6 net operating loss carryovers because L, P, and L1 are component members of a controlled group both—

(1) With respect to the taxable years to which the net operating loss carryovers are attributable (i.e., Year 6); and

(2) On December 1, Year 7, the change date.

(c) The value of the stock of L1 for purposes of determining its limitation under section 382 with respect to its net operating loss carryover from Year 6 is $40. L1 does not elect to restore any value to P paragraph (c)(2) of this section.

(d) The value of the stock of P ($100) is reduced under paragraph (c)(1) of this section by the value of the stock of L1 that it directly owns, $30 (75% × $40). Following the adjustment, the value of the stock of P is $70. P elects to restore this entire $70 of value to L.

(e) The value of the stock of L, $200, is reduced under paragraph (c)(1) of this section by the value of the stock of P it directly owns, i.e., $80 (80% × $100), and increased paragraph (c)(2) of this section by the amount P elects to restore to L, i.e., $70. Thus, the value of the L stock for purposes of determining L's limitation under section 382 with respect to its net operating loss carryover from Year 6 is $190 ($200−$80 + $70).

Example 3. Limitation on restoration of value. (a) The facts are the same as in *Example 2,* except that L1 elects to restore $20 to P. For purposes of determining L1's limitation under section 382 with respect to the Year 6 net operating loss carryover, the value of the stock of L1 is $20 ($40−$20) because the value of its stock is reduced under paragraph (c)(3) of this section by the $20 of value it elects to restore to P.
(b) The value of the stock of P ($100) is reduced under paragraph (c)(1) of this section by the value of the L1 stock it directly owns ($30), and is increased paragraph (c)(2) of this section by the value that L1 elects to restore to P ($20). Thus, the value of the P stock is $90 ($100−$30 + $20).

(c)(1) P elects to restore to L the maximum value permitted under this section. The value of the stock of L, $200, is reduced under paragraph (c)(1) of this section by the value of the P stock it directly owns ($80), and is increased by the value that P elects to restore to L. P may elect to restore to L the lesser of—

(A) The sum of the value of its stock immediately after adjustment under paragraph (c)(1) of this section (i.e., $70) plus the value restored to it by L1 (i.e., $20) (a total of $90); or

(B) The value of the P stock (without regard to the adjustment required by paragraph (c)(1) and (2) of this section) that is directly owned by L immediately before the ownership change (i.e., $80).

(2) Thus, $80 is the maximum amount that P may elect to restore to L. Following the restoration of value by P, the value of the L stock for purposes of determining L's limitation under section 382 is $200 ($200 −$80 + $80).

Example 4. Coordination with consolidated return regulations. (a) P and its wholly owned

subsidiary L file a consolidated return. L owns 79 percent of the outstanding stock of L1. P acquired the stock of L in Year 1 and L acquired the stock of L1 in Year 2. The P consolidated group has a consolidated net operating loss arising in the Year 6 consolidated return year that is carried over to Year 8. L1 has a net operating loss arising in its Year 6 taxable year that is also carried over to Year 8. On January 1, Year 8, the P consolidated group has an ownership change under § 1.1502-92(b)(1)(i) and L1 has an ownership change under § 1.382-2T.
(b)(1) Under paragraph (b) of this section, the Year 6 net operating loss carryover of the P group is a controlled group loss because P, L, and L1 are component members of a controlled group with respect to Year 6, the year to which the loss is attributable. P, L, and L1 compose a controlled group with respect to the Year 6 net operating loss carryover of the P loss group because they are component members of a controlled group both—

(A) With respect to the taxable years to which the net operating loss carryover is attributable (i.e., Year 6); and

(B) On January 1, Year 8, the P group's change date.

(2) Because P and L compose a loss group (within the meaning of § 1.1502-91(c)) with respect to its Year 6 net operating loss carryover, the P loss group must compute a consolidated section 382 limitation with respect to its Year 6 net operating loss carryover as a result of the ownership change.

(c) In computing the consolidated section 382 limitation under § 1.1502-93 with respect to the Year 6 net operating loss carryover, the value of the P stock immediately before the ownership change is reduced under paragraphs (c)(1) and (f) of this section by the value immediately before the ownership change of the L1 stock directly owned by L immediately after the ownership change. L1 may, however, elect to restore such value to the P consolidated group to the extent permitted under paragraph (c)(2) of this section§ 1.382-8T.

Example 5. Appropriate adjustments for indirect ownership interest. (a) Individual A owns all of the stock of L, L owns an 80 percent interest in the capital and profits of partnership PS, and PS owns 75 percent of the stock of L1. Both L and L1 have net operating losses for the Year 1 taxable year that are carried over to their respective Year 2 taxable years. On December 19, Year 2, A sells all of the L stock to an unrelated individual. The sale results in an ownership change of L and L1.
(b) Under paragraph (b) of this section, the Year 1 net operating loss carryovers of each of L and L1 are controlled group losses because each of L and L1 is a component member of a controlled group with respect to Year 1, the year to which the losses are attributable. L and L1 compose controlled groups with respect to each corporation's net operating loss carryovers because L and L1 are component members of a controlled group both—

(1) With respect to the taxable years to which the net operating loss carryovers are attributable (i.e., Year 1); and

(2) On December 19, Year 2, the change date.

(c) L has an indirect ownership interest in L1 which, under paragraph (c)(4) of this section, must be taken into account in applying this section. As a result, the value of the L stock for purposes of determining its limitation under section 382 with respect to the Year 1 net operating loss carryover must be reduced by the value of L's indirect ownership interest in the L1 stock (60 percent) that it owns through PS immediately before the ownership change, and is increased by the amount (if any) that L1 elects to restore to L under paragraph (c)(2) of this section. The value of L1 is reduced under paragraph (c)(3) of this section to the extent that L1 elects to restore value to L.

(h) *Time and manner of filing election to restore* —

(1) *Statements required* —

(i) ***Filing by loss corporation.*** The election to restore value described in paragraph (c)(2) of this section must be in the form set forth in this paragraph (h)(1)(i). It must be filed by the loss corporation by including a statement on or with its income tax return for the taxable year in which the ownership change occurs (or with an amended return for that year filed on or before the due date (including extensions) of the income tax return of any component member with respect to the taxable year in which the ownership change occurs). The common parent of a consolidated group must make the election on behalf of the group. The election is made in the form of a statement entitled, “STATEMENT PURSUANT TO § 1.382-8(h)(1) TO ELECT TO RESTORE ALL OR PART OF THE VALUE OF [INSERT NAME AND EMPLOYER IDENTIFICATION NUMBER (IF ANY) OF THE ELECTING MEMBER] TO [INSERT NAME AND EMPLOYER IDENTIFICATION NUMBER (IF ANY) OF THE CORPORATION TO WHICH VALUE IS RESTORED].” The statement must include the amount of the value being restored and must also indicate that an agreement signed and dated by both parties, as described in paragraph (h)(1)(iii) of this section, has been entered into. Each such party must retain either the original or a copy of this agreement as part of its records. See § 1.6001-1(e).

(ii) ***Filing by electing member.*** An electing member must include a statement identical to the one described in paragraph (h)(1)(i) of this section on or with its income tax return (or with an amended return for that year filed on or before the due date (including extensions) of the income tax return of any component member with respect to the taxable year in which the ownership change occurs) (if any) for the taxable year which includes the change date in connection with which the election described in paragraph (c)(2) of this section is made. If the electing member is a controlled foreign corporation (within the meaning of section 957), each United States shareholder (within the meaning of section 951(b)) with respect thereto must include this statement on or with its return. It is not necessary for the electing member (or the United States shareholder, as the case may be) to include this statement on or with its return if the loss corporation includes an identical statement on or with the same return for the same election.

(iii) ***Agreement.*** Both the electing member and the corporation to which value is restored must sign and date an agreement. The agreement must—

(A) Identify the change date for the loss corporation in connection with which the election is made;

(B) State the value of the electing member's stock (without regard to any adjustment under paragraph (c) of this section) immediately before the ownership change;

(C) State the amount of any reduction required under paragraph (c)(1) of this section with respect to stock of the electing member that is owned directly or indirectly by the corporation to which value is restored;

(D) State the amount of value that the electing member elects to restore to the corporation; and

(E) State whether the value of either component member's stock was adjusted pursuant to paragraph (c)(4) of this section.

(2) *Special rule for foreign component members* —

(i) ***Deemed election to restore full value.*** Unless the election described in paragraph (h)(2)(ii) of this section is made for a foreign component member, each foreign component member of the controlled group is deemed to have elected to restore to each other component member the maximum value allowable under paragraph (c)(2) of this section, taking into account the limitations of this section.

(ii) ***Election not to restore full value.***

(A) A loss corporation may elect to reduce the amount of value restored from a foreign component member (the electing foreign component member) to another component member under paragraph (h)(2)(i) of this section in the form set forth in this paragraph (h)(2)(ii). It must be filed by the loss corporation by including a statement on or with its income tax return for the taxable year in which the ownership change occurs (or with an amended return for that year filed on or before the due date (including extensions) of the income tax return of any component member with respect to the taxable year in which the ownership change occurs). The common parent of a consolidated group must make the election on behalf of the group. The election is made in the form of a statement entitled, "STATEMENT PURSUANT TO § 1.382-8(h)(2)(ii) TO ELECT NOT TO RESTORE FULL VALUE OF [INSERT NAME AND EMPLOYER IDENTIFICATION NUMBER (IF ANY) OF ELECTING FOREIGN COMPONENT MEMBER] TO [INSERT NAME AND EMPLOYER IDENTIFICATION NUMBER (IF ANY) OF THE CORPORATION TO WHICH SUCH VALUE IS NOT TO BE RESTORED]." The statement must include the amount of the value not being restored and must also indicate that an agreement signed and dated by both parties, as described in paragraph (h)(2)(iii) of this section, has been entered into. Each such party must retain either the original or a copy of the agreement as part of its records. See § 1.6001-1(e).

(B) An electing foreign component member must include a statement identical to the one described in paragraph (h)(2)(ii)(A) of this section on or with its income tax return (or with an amended return for that year filed on or before the due date (including extensions) of the income tax return of any component member with respect to the taxable year in which the ownership change occurs) (if any) for the taxable year which includes the change date in connection with which the election described in paragraph (h)(2)(ii)(A) of this section is made. If the electing foreign component member is a controlled foreign corporation (within the meaning of section 957), each United States shareholder (within the meaning

of section 951(b)) with respect thereto must include this statement on or with its return. It is not necessary for the electing foreign component member (or United States shareholder, as the case may be) to include this statement on or with its return if the loss corporation includes an identical statement on or with the same return for the same election.

(iii) ***Agreement.*** Both the electing foreign component member and the corporation to which full value is not restored must sign and date an agreement. The agreement must—

(A) Identify the change date for the loss corporation in connection with which the election is made;

(B) State the value of the electing foreign component member's stock (without regard to any adjustment under paragraph (c) of this section) immediately before the ownership change;

(C) State the amount of any reduction required under paragraph (c)(1) of this section with respect to stock of the electing foreign component member that is owned directly or indirectly by the corporation to which value is not restored;

(D) State the amount of value that the electing foreign component member elects not to restore to the corporation; and

(E) State whether the value of either component member's stock was adjusted pursuant to paragraph (c)(4) of this section.

(3) ***Revocation of election.*** An election (other than the deemed election described in paragraph (h)(2)(i) of this section) made under this section is revocable only with the consent of the Commissioner.

(i) [Reserved]

(j) ***Effective date*** —

(1) ***In general.*** This section applies to a loss corporation that has an ownership change with respect to a controlled group loss on or after January 1, 1997.

(2) ***Transition rule*** —

(i) ***In general.*** The members of a controlled group on January 1, 1997, that have had an ownership change with respect to a controlled group loss before January 1, 1997, must determine the limitations under section 382 for any post-change year with respect to controlled group losses by using a reasonable method to preclude the value of stock of a component member that was owned directly or indirectly by another member immediately after an ownership change from being taken into account more than once in determining the limitations under section 382 with respect to controlled group losses. If such a reasonable method was not used for a post-change year, subject to the exception in paragraph (j)(3) of this section, the members of the controlled group described in the preceding sentence must reduce their limitations under section 382 for post-change years for which the income tax return is filed after January 1, 1997, to recapture, as quickly as possible, any limitation that members took into account in excess of the amount that would be allowable under this section.

(ii) ***Special transition rule for controlled groups that had ownership changes before January 29, 1991.*** For purposes of this section, in the case of an ownership change occurring before January 29, 1991, the controlled group with respect to a controlled group loss does not include a corporation that is not a component member of the controlled group on January 29, 1991.

Thus, in the case of an ownership change occurring before January 29, 1991, paragraph (c) of this section does not require that a loss corporation that is a component member of a controlled group to disregard the value of stock of another corporation directly owned immediately after the ownership change in determining the value of its own stock unless the other corporation is a component member of the controlled group on January 29, 1991.

(3) ***Amended returns.*** A taxpayer that has had an ownership change before January 1, 1997, may file an amended return for any taxable year to modify the amount of a limitation under section 382 with respect to a controlled group loss only if—

(i) The modification complies with the rules contained in this section for computing a limitation under section 382;

(ii) Any other component member of the controlled group with respect to the controlled group loss who elects to restore value and whose taxable income is affected by the election to restore value also files amended returns that comply with such rules; and

(iii) Corresponding adjustments are made in amended returns for all taxable years ending after December 31, 1986.

(4) ***Effective/applicability date.*** Paragraphs (c)(2), (e)(4) and (h) of this section apply to any taxable year beginning on or after May 30, 2006. However, taxpayers may apply paragraphs (c)(2), (e)(4) and (h) of this section to any original Federal income tax return (including any amended return filed on or before the due date (including extensions) of such original return) timely filed on or after May 30, 2006. For taxable years beginning before May 30, 2006, see § 1.382-8 as contained in 26 CFR part 1 in effect on April 1, 2006.

[T.D. 8679, 61 FR 33316, June 27, 1996, as amended by T.D. 8825, 64 FR 36178, July 2, 1999; T.D. 9264, 71 FR 30599, 30607, May 30, 2006; T.D. 9329, 72 FR 32801, June 14, 2007; T.D. 10018, 89 FR 106851, Dec. 30, 2024]

§ 1.382-9 Special rules under section 382 for corporations under the jurisdiction of a court in a title 11 or similar case.

(a) ***Introduction.*** Either section 382(l)(5) or section 382(l)(6) may apply to an ownership change which occurs in a title 11 or similar case (as defined in section 368(a)(3)(A)) if the transaction resulting in the ownership change is ordered by the court or is pursuant to a plan approved by the court. Terms and nomenclature used in this section, and not otherwise defined herein (including the nomenclature and assumptions in § 1.382-2T(b) relating to the examples) have the same respective meanings as in section 382 and the regulations thereunder.

(b) ***Application of section 382(l)(5).*** section 382(a) does not apply to any ownership change if—

(1) The old loss corporation is (immediately before the ownership change) under the jurisdiction of the court in a title 11 or similar case; and

(2) The pre-change shareholders and qualified creditors of the old loss corporation (determined immediately before the ownership change) own (after the ownership change and as a result of being pre-change shareholders or qualified creditors immediately before the ownership change) stock of the new loss corporation (or stock of a controlling corporation if also in bankruptcy) that meets the requirements of section 1504(a)(2) (determined by substituting “50 percent” for “80 percent” each place it appears).

(c) [Reserved]

(d) ***Rules for determining whether stock of the loss corporation is owned as a result of being a qualified creditor*** —

(1) ***Qualified creditor.*** A qualified creditor is the beneficial owner, immediately before the ownership change, of qualified indebtedness of the loss corporation. A qualified creditor owns stock of the new loss corporation (or a controlling corporation) as a result of being a qualified creditor only to the extent that the qualified creditor receives stock in full or partial satisfaction of qualified indebtedness (including interest accrued on such indebtedness) in a transaction that is ordered by the court or is pursuant to a plan approved by the court in a title 11 or similar case. For purposes of this paragraph (d)(1), ownership of stock after the ownership change is determined without applying the attribution rules generally applicable under section 382(l)(3)(A) or § 1.382-2T(h).

(2) ***General rules for determining whether indebtedness is qualified indebtedness*** —

(i) ***Definition.*** Indebtedness of the loss corporation is qualified indebtedness if it—

(A) Has been owned by the same beneficial owner since the date that is 18 months before the date of the filing of the title 11 or similar case; or

(B) Arose in the ordinary course of the trade or business of the loss corporation and has been owned at all times by the same beneficial owner.

(ii) ***Determination of beneficial ownership.*** For purposes of paragraph (d)(2)(i) of this section, beneficial ownership of indebtedness is determined without applying attribution rules.

(iii) ***Duty of inquiry.*** The loss corporation must determine that indebtedness that the loss corporation treats as qualified indebtedness, other than indebtedness to which paragraph (d)(3)(i) of this section applies, has been owned for the requisite period by the beneficial owner who owns the indebtedness immediately before the ownership change. The loss corporation may rely on a statement, signed under penalties of perjury, by a beneficial owner regarding the amount of indebtedness the beneficial owner owns and the length of time that the beneficial owner has owned the indebtedness.

(iv) ***Ordinary course indebtedness.*** For purposes of this paragraph (d)(2), indebtedness arises in the ordinary course of the loss corporation's trade or business only if the indebtedness is incurred by the loss corporation in connection with the normal, usual, or customary conduct of business, determined without regard to whether the indebtedness funds ordinary or capital expenditures of the loss corporation. For example, indebtedness (other than indebtedness acquired for a principal purpose of being exchanged for stock) arises in the ordinary course of the loss corporation's trade or business if it is trade debt; a tax liability; a liability arising from a past or present employment relationship, a past or present business relationship with a supplier, customer, or competitor of the loss corporation, a tort, a breach of warranty, or a breach of statutory duty; or indebtedness incurred to pay an expense deductible under section 162 or included in the cost of goods sold. A claim that arises upon the rejection of a burdensome contract or lease pursuant to the title 11 or similar case is treated as arising in the ordinary course of the loss corporation's trade or business if the contract or lease so arose.

(3) ***Treatment of certain indebtedness as continuously owned by the same owner*** —

(i) ***In general.*** For purposes of paragraph (d)(2) of this section, a loss corporation may treat indebtedness as always having been owned by the beneficial owner of the indebtedness immediately before the ownership change if the beneficial owner is not, immediately after the ownership change, either a 5-percent shareholder or an entity through which a 5-percent shareholder owns an indirect ownership interest in the loss corporation (a *5-percent entity*). This paragraph (d)(3)(i) does not apply to indebtedness beneficially owned by a person whose participation in formulating a plan of reorganization makes evident to the loss corporation (whether or not the loss corporation had previous knowledge) that the person has not owned the indebtedness for the requisite period.

(ii) ***Operating rules.*** For purposes of paragraph (d)(3)(i) of this section:

(A) If a loss corporation has actual knowledge of a coordinated acquisition of its indebtedness by a group of persons, through a formal or informal understanding among themselves, for a principal purpose of exchanging the indebtedness for stock, the indebtedness (and any stock received in exchange therefor) is treated as owned by an entity. A principal element in determining if an understanding exists among members of a group is whether the investment decision of each member is based upon the investment decision of one or more other members.

(B) If the loss corporation has actual knowledge regarding stock ownership described in § 1.382-2T(k)(2), the loss corporation must take that ownership into account in determining which beneficial owners of indebtedness are, immediately after the ownership change, 5-percent shareholders or 5-percent entities. The loss corporation is not required to take into account an ownership interest described in § 1.382-2T(k)(4) unless the loss corporation has actual knowledge of the ownership interest.

(C) The term *5-percent shareholder* includes any person who is a 5-percent shareholder of the loss corporation within the meaning of § 1.382-2T(g), without regard to the option attribution rules of section 382(l)(3)(A) or § 1.382-4(d) (or, if applicable, § 1.382-2T(h)(4)).

(D) Paragraph (d)(3)(i) of this section does not apply to indebtedness if the loss corporation has actual knowledge immediately after the ownership change that the exercise of an option to acquire or dispose of stock of the loss corporation would cause the beneficial owner of the indebtedness immediately before the ownership change to be, after the ownership change, either a 5-percent shareholder or a 5-percent entity. An interest that is treated as an option under § 1.382-4(d)(9) (or § 1.382-2T(h)(4)(v) if applicable) is treated as an option for purposes of this paragraph (d)(3)(ii)(D).

(iii) ***Indebtedness owned by beneficial owner who becomes a 5-percent shareholder or 5-percent entity.*** If the beneficial owner of indebtedness immediately before the ownership change is a 5-percent shareholder or 5-percent entity immediately after the ownership change, the general rules of paragraph (d)(2) of this section apply to determine whether the indebtedness has been owned for the requisite period by the beneficial owner.

(iv) ***Example.*** The following example illustrates paragraph (d)(3) of this section.

> *Example.* (A)(1) L is a loss corporation in a title 11 case. The plan of reorganization of L approved by the bankruptcy court provides for the satisfaction of claims by the issuance of new L common stock to its creditors as follows:

A—2 percent

B—7.5 percent

C—2.5 percent

P1—3 percent

P2—10 percent

P3—4.9 percent

P4—4.9 percent

P5—4.9 percent

(2) P2 is owned by Public P2. B owns 10 percent of the stock of P1 and L has no actual knowledge of this ownership. L has actual knowledge that D owns P3, P4 and P5. In addition, L has actual knowledge, immediately after the ownership change, that C owns an option to acquire newly-issued stock of L that, if exercised, would increase C's percentage ownership of L stock from 2.5 percent to 8 percent. An ownership change of L occurs on the date the plan becomes effective.
(B) Under paragraph (d)(3)(i) of this section, L may treat the indebtedness owned by A and P1 immediately before the ownership change as always having been owned by A and P1. Neither A nor P1 is a 5-percent shareholder immediately after the ownership change. Further, because P1 owns less than 5 percent of the L stock (and L has no actual knowledge of B's ownership interest in P1), P1 is treated as an individual, and the L stock owned by P1 is not attributed to any other person, including B. See § 1.382-2T(h)(2)(iii). Therefore, P1 is not a 5-percent entity.

(C) Paragraph (d)(3)(i) of this section does not apply to the indebtedness owned by B, C, P2, P3, P4, or P5. B is a 5-percent shareholder immediately after the ownership change. L has actual knowledge immediately after the ownership change that the exercise of C's option would cause C to be a 5-percent shareholder immediately after the ownership change. (L does not take into account the effect of the exercise of the option, however, in determining the percentage stock ownership of any person other than C because the deemed exercise would not cause any other person to be a 5-percent shareholder or a 5-percent entity after the ownership change.) P2 is a 5-percent entity, because Public P2, a 5-percent shareholder, owns an indirect ownership interest in L through P2. P3, P4, and P5 are 5-percent entities because D, a 5-percent shareholder, owns an indirect ownership interest in L through P3, P4, and P5. Because L has actual knowledge that D would be a

> 5-percent shareholder but for the application of § 1.382-2T(h)(2)(iii), that section does not apply to P3, P4, or P5. See § 1.382-2T(k)(2). Thus, under § 1.382-2T(h)(2)(i), the L stock owned by P3, P4, and P5 is attributed to D, and D is a 5-percent shareholder. Because paragraph (d)(3)(i) of this section does not apply to the indebtedness owned by B, C, P2, P3, P4, and P5, L may treat as qualified indebtedness only indebtedness that it determines had been owned by such persons for the requisite period. See paragraph (d)(2)(iii) of this section.

(4) ***Special rule if indebtedness is a large portion of creditor's assets*** —

(i) ***In general.*** Indebtedness is not qualified indebtedness if—

(A) The beneficial owner of the indebtedness is a corporation or other entity that had an ownership change on any day during the applicable period;

(B) The indebtedness represents more than 25 percent of the fair market value of the total gross assets (excluding cash or cash equivalents) of the beneficial owner on its change date; and

(C) The beneficial owner is a 5-percent entity immediately after the ownership change of the loss corporation (determined by applying the rules of paragraph (d)(3) of this section).

(ii) ***Applicable period.*** For purposes of paragraph (d)(4)(i) of this section, the term *applicable period* means the period beginning on the day 18 months before the filing of the title 11 or similar case (or the day on which the beneficial owner acquired the indebtedness, if later) and ending with the change date of the loss corporation.

(iii) ***Determination of ownership change.*** For purposes of paragraph (d)(4)(i) of this section, the determination whether a beneficial owner of indebtedness has an ownership change is made under the principles of section 382 and the regulations thereunder, without regard to whether the beneficial owner is a loss corporation and by beginning the testing period no earlier than the latest of the day three years before the change date, the day 18 months before the filing of the title 11 or similar case, or the day on which the beneficial owner acquired the indebtedness.

(iv) ***Reliance on statement.*** Paragraph (d)(4)(i) of this section does not apply to indebtedness if the loss corporation obtains a statement, signed under penalties of perjury, by the beneficial owner of the indebtedness that states that paragraph (d)(4)(i) of this section does not apply to the indebtedness.

(5) ***Tacking of ownership periods*** —

(i) ***Transferee treated as owning indebtedness for period owned by transferor.*** To determine whether indebtedness transferred in a qualified transfer is qualified indebtedness, the transferee is treated as having owned the indebtedness for the period that it was owned by the transferor.

(ii) ***Qualified transfer.*** For purposes of paragraph (d)(5)(i) of this section, a transfer of indebtedness is a qualified transfer if—

(A) The transfer is between parties who bear a relationship to each other described in section 267(b) or 707(b) (substituting at least 80 percent for more than 50 percent each place it appears in section 267(b) (and section 267(f)(1)) or 707(b));

(B) The transfer is a transfer of a loan within 90 days after its origination, pursuant to a customary syndication transaction;

(C) The transfer is a transfer of newly incurred indebtedness by an underwriter that owned the indebtedness for a transitory period pursuant to an underwriting;

(D) The transferee's basis in the indebtedness is determined under section 1014, 1015, or 1022 or with reference to the transferor's basis in the indebtedness;

(E) The transfer is in satisfaction of a right to receive a pecuniary bequest;

(F) The transfer is pursuant to any divorce or separation instrument (within the meaning of section 71(b)(2));

(G) The transfer is pursuant to a subrogation in which the transferee acquires a claim against the loss corporation by reason of a payment to the claimant pursuant to an insurance policy or a guarantee, letter of credit or similar security arrangement; or

(H) The transfer is a transfer of an account receivable in a customary commercial factoring transaction made within 30 days after the account arose to a transferee that regularly engages in such transactions.

(iii) ***Exception.*** A transfer of indebtedness is not a qualified transfer for purposes of paragraph (d)(5)(i) of this section if the transferee acquired the indebtedness for a principal purpose of benefiting from the losses of the loss corporation by—

(A) Exchanging the indebtedness for stock of the loss corporation pursuant to the title 11 or similar case; or

(B) Selling the indebtedness at a profit that reflects the expectation that, by reason of section 382(l)(5), section 382(a) will not apply to any ownership change resulting from the title 11 or similar case.

(iv) ***Debt-for-debt exchanges.*** If the loss corporation satisfies its indebtedness with new indebtedness, either through an exchange of new indebtedness for old indebtedness or a change in the terms of indebtedness that results in an exchange under section 1001—

(A) The owner of the new indebtedness is treated as having owned that indebtedness for the period that it owned the old indebtedness; and

(B) The new indebtedness is treated as having arisen in the ordinary course of the trade or business of the loss corporation if the old indebtedness so arose.

(6) ***Effective date*** —

(i) ***In general.*** This paragraph (d) applies to ownership changes occurring on or after March 17, 1994. The provisions of paragraph (d)(5)(ii)(D) of this section relating to section 1022 are effective on and after January 19, 2017.

(ii) ***Elections and amended returns*** —

(A) ***Election to apply this paragraph (d) retroactively.*** A loss corporation may elect to apply this paragraph (d) to an ownership change occurring prior to March 17, 1994. This election must be made by the later of the due date (including any extensions of time) of the loss corporation's tax return for the taxable year which includes the change date or the date

that the loss corporation files its first tax return after May 16, 1994. The election is made by attaching the following statement to the return: "This is an Election to Apply § 1.382-9(d) Retroactively with Respect to the Ownership Change on [Insert Date of Ownership Change] That Occurred in Connection with the title 11 or Similar Case filed on [Insert Date of Filing]." This statement must be accompanied by the amended returns described in paragraph (d)(6)(ii)(C) of this section. An election under this paragraph (d)(6) is irrevocable.

(B) ***Election to revoke section 382(l)(5)(H) election.*** A loss corporation may elect to revoke a prior election made under section 382(l)(5)(H) with respect to an ownership change occurring before March 17, 1994 by including the following statement with its election to apply § 1.382-9(d) retroactively: "This is an Election to Revoke a Prior Election Made Under Section 382(l)(5)(H) With Respect to the Ownership Change on [Insert Date of Ownership Change] That Occurred in Connection With the title 11 or Similar Case Filed on [Insert Date of Filing]."

(C) ***Amended returns.*** If the retroactive application of this paragraph (d) affects the amount of taxable income or loss for a prior taxable year, then, except as precluded by the applicable statute of limitations, the loss corporation (or the common parent of any consolidated group of which the loss corporation was a member for the year) must file an amended return for the year that reflects the effects of the retroactive application of the rules of this paragraph (d). If the statute of limitations precludes the filing of an amended return for one or more such prior taxable years, the loss corporation (or the common parent) must make appropriate adjustments under the principles of section 382(l)(2)(A) in subsequent taxable years to reflect the difference between the losses and credits actually used in such prior taxable years and the amount that would have been used in those years applying the rules of this paragraph (d).

(e) ***Option attribution for purposes of determining stock ownership under section 382(l)(5)(A)(ii)*** —

(1) ***In general.*** Solely for purposes of determining whether the stock ownership requirements of section 382(l)(5)(A)(ii) are satisfied at the time of an ownership change, stock of the loss corporation (or of a controlling corporation if also in bankruptcy) that is subject to an option is treated as acquired at that time, pursuant to an exercise of the option by its owner, if such deemed exercise would cause the pre-change shareholders and qualified creditors of the loss corporation to own (after such ownership change and as a result of being pre-change shareholders or qualified creditors immediately before such change) less than an amount of such stock sufficient to satisfy the ownership requirements of section 382(l)(5)(A)(ii). An option that is owned as a result of being a pre-change shareholder or qualified creditor and that, if exercised, would result in the ownership of stock by a pre-change shareholder or qualified creditor is not treated as exercised under this paragraph (e). For purposes of this paragraph (e)(1), rules similar to those option attribution rules under § 1.382-2T(h)(4)(iii), (iv), (v), (vii), and (x)(A), (B) (except with respect to a debt instrument that was issued after the filing of the petition in the title 11 or similar case), (D), (E) (except with respect to a right to receive or obligation to issue stock as interest or dividends on a debt instrument or stock that was issued after the filing of the petition in the title 11 or similar case), (G), (H), and (Z), apply.

(2) ***Special rules*** —

(i) ***Lapse or forfeiture of options deemed exercised.*** A loss corporation may apply rules similar to the rules of § 1.382-2T(h)(4)(viii) with respect to an option except to the extent any person owning the option at any time on or after the change date acquires additional stock or an option to acquire additional stock during the period of time on or after the ownership change and on or before the lapse or forfeiture of the option.

(ii) ***Actual exercise of options not deemed exercised.*** In determining whether the ownership change pursuant to the plan of reorganization qualifies under section 382(l)(5), a loss corporation may take into account stock acquired pursuant to the actual exercise of an option issued pursuant to the plan of reorganization if that option was not deemed exercised under paragraph (e)(1) of this section. However, this paragraph (e)(2)(ii) applies only if the option is actually exercised within the 3 years of the ownership change by the 5-percent shareholder who, as a result of being a pre-change shareholder or qualified creditor, acquired the option under the plan.

(iii) ***Amended returns.*** A loss corporation may file an amended return for a prior taxable year (subject to any applicable statute of limitations) if it determines that section 382(l)(5) applies to an ownership change as a result of the operation of paragraph (e)(2)(i) or (ii) of this section, but only if the loss corporation makes corresponding adjustments on amended returns for all affected taxable years (subject to any applicable statute of limitations).

(3) ***Examples.*** In each of the examples in this paragraph (e)(3), assume that there is an ownership change of loss corporation L on the date the plan of reorganization is effective.

Example 1. L is a loss corporation in a title 11 case. The plan of reorganization of L approved by the bankruptcy court provides for the cancellation of all existing L stock, the issuance of 100 shares of new L common stock to qualified creditors, and the issuance of an option to a new investor to acquire, at any time during the next 3 years, 90 shares of new L common stock from L at its fair market value on the date the plan becomes effective. Under paragraph (e)(1) of this section, on the date the plan becomes effective, the option held by the new investor is deemed exercised if the exercise would cause the qualified creditors of L to own less than 50 percent of the total voting power or value of the L stock after the ownership change. Because the qualified creditors would receive at least 50 percent of the voting power and value of the new L common stock even if the option were deemed exercised, the stock ownership requirements of section 382(l)(5)(A)(ii) are satisfied.

Example 2. The facts are the same as in *Example 1,* except that L issues an option to the new investor to acquire 110 shares of new L common stock. This option is deemed exercised under paragraph (e)(1) of this section on the date the plan becomes effective, because, as a result of the deemed exercise, the qualified creditors would own only 100 of 210 shares of the new L common stock (approximately 48 percent) after the ownership change. Accordingly, the stock ownership requirements of section 382(l)(5)(A)(ii) are not satisfied and section 382(a) applies to the ownership change.

Example 3. (a) L is a loss corporation in a title 11 case. The plan of reorganization of L approved by the bankruptcy court provides for the cancellation of all existing L stock, the issuance of new L common stock and 5-year options to acquire L common stock as follows:
(i) To qualified creditors—100 shares of stock and options to acquire 50 shares;

(ii) To a new investor—options to acquire 110 shares.

(b) Under paragraph (e)(1) of this section, the option held by the new investor is deemed exercised on the date the plan becomes effective because the exercise would cause the qualified creditors of L to own less than 50 percent of the total voting power and value of the L stock after the ownership change (100 of 210 shares or approximately 48 percent). Accordingly, the stock ownership requirements of section 382(l)(5)(A)(ii) are not satisfied initially and section 382(a) applies to the ownership change.

(c) Assume, however, that the qualified creditors actually exercise enough options that were acquired pursuant to the plan of reorganization to purchase 30 additional shares during the 3 year period after the plan becomes effective. Under paragraph (e)(2)(ii) of this section, L may take into account the 30 shares purchased by the qualified creditors by the exercise of the options in determining whether the stock ownership requirements of section 382(l)(5)(A)(ii) were satisfied on the date the plan of reorganization became effective. If L takes such purchases into account, the qualified creditors of L are deemed to own as of the date of the ownership change more than 50 percent of the total voting power or value of the L stock after the ownership change (130 of 240 shares or approximately 54 percent), with the result that the stock ownership requirements of section 382(l)(5)(A)(ii) are satisfied and section 382(l)(5) applies to the ownership change as of the effective date of the plan.

(d) Assume instead that the qualified creditors acquire 30 additional shares by exercise of options more than 3 years after the plan becomes effective. Such exercise is not taken into account under paragraph (e)(2)(ii) of this section for purposes of determining whether the stock ownership requirements of section 382(l)(5)(A)(ii) are satisfied as of the effective date of the plan. Thus, the qualified creditors are deemed to own less than 50 percent of the total voting power and value of the L stock after the ownership change (100 of 210 shares) and section 382(l)(5) does not apply to the ownership change.

(e) Assume instead that, during the 3 year period after the plan becomes effective, the new investor exercises part of his option and purchases 105 shares of stock. The exercise causes a lapse of the rights to acquire the remaining 5 shares of stock. Also during that time, the qualified creditors exercise part of their options and acquire 6 additional shares of stock. Under paragraph (e)(2)(i) of this section, L may treat the lapse of that part of the new investor's option to acquire 5 shares of stock as if that part of the option had never been issued for purposes of determining whether the stock ownership requirements of section 382(l)(5)(A)(ii) are satisfied as of the effective date of the plan. Also, under paragraph (e)(2)(ii) of this section, L may take into account the 6 shares purchased by the qualified creditors by the exercise of the options in determining whether the stock ownership requirements of section 382(l)(5)(A)(ii) are satisfied as of

> the effective date of the plan. If L takes all of this information into account, the qualified creditors are deemed to own more than 50 percent of the total voting power or value of the L stock after the ownership change (106 of 211 shares or approximately 50.2 percent) and section 382(l)(5) applies to the ownership change as of the effective date of the plan.

(4) ***Effective dates*** —

(i) ***In general.*** This paragraph (e) applies to ownership changes occurring on or after September 5, 1990.

(ii) ***Special rule for interest or dividends.*** Rules similar to the rules of § 1.382-2T(h)(4)(x)(E) (relating to option attribution for purposes of determining whether an ownership change occurs) apply to a right to receive or obligation to issue stock as interest or dividends on a debt instrument or stock that was issued after the filing of the petition in the title 11 or similar case for ownership changes occurring before April 8, 1992.

(f)-(h) [Reserved]

(i) ***Election not to apply section 382(l)(5).*** Under section 382(l)(5)(H), a loss corporation may elect not to have the provisions of section 382(l)(5) apply to an ownership change in a title 11 or similar case. This election is irrevocable and must be made by the due date (including any extensions of time) of the loss corporation's tax return for the taxable year which includes the change date. The election is to be made by attaching the following statement to the tax return of the loss corporation for that taxable year: "This is an Election Under § 1.382-9(i) not to Apply the Provisions of Section 382(l)(5) to the Ownership Change Occurring Pursuant to a Plan of Reorganization Confirmed by the Court on [Insert Confirmation Date]."

(j) ***Value of the loss corporation in an ownership change to which section 382(l)(6) applies.*** Section 382(l)(6) applies to any ownership change occurring pursuant to a plan of reorganization in a title 11 or similar case to which section 382(l)(5) does not apply. In such case, the value of the loss corporation under section 382(e) is equal to the lesser of—

(1) The value of the stock of the loss corporation immediately after the ownership change (determined under the rules of paragraph (k) of this section); or

(2) The value of the loss corporation's pre-change assets (determined under the rules of paragraph (l) of this section).

(k) ***Rules for determining the value of the stock of the loss corporation*** —

(1) ***Certain ownership interests treated as stock.*** For purposes of paragraph (j)(1) of this section—

(i) Stock includes stock described in section 1504(a)(4) and any stock that is not treated as stock under § 1.382-2T(f)(18)(ii) for purposes of determining whether a loss corporation has an ownership change; and

(ii) Stock does not include an ownership interest that is treated as stock under § 1.382-2T(f)(18)(iii) for purposes of determining whether a loss corporation has an ownership change.

(2) ***Coordination with section 382(e)(2).*** In the case of a redemption or other corporate contraction occurring after and in connection with the ownership change, the value of the stock of the loss corporation under paragraph (j)(1) of this section is reduced under section 382(e)(2).

(3) ***Coordination with section 382(e)(3).*** If the loss corporation is a foreign corporation, in determining the value of the stock under paragraph (j)(1) of this section, only items treated as connected with the conduct of a trade or business in the United States are taken into account.

(4) ***Coordination with section 382(l)(1).*** Section 382(l)(1) does not apply in determining the value of the stock of the loss corporation under paragraph (j)(1) of this section.

(5) ***Coordination with section 382(l)(4).*** If, immediately after the ownership change, the loss corporation has substantial nonbusiness assets (as determined under section 382(l)(4)(B) taking into account only those assets the loss corporation held immediately before the ownership change), the value of the stock of the loss corporation under paragraph (j)(1) of this section is reduced by the excess of the value of such nonbusiness assets over those assets' share of the loss corporation's indebtedness (determined under section 382(l)(4)(D) taking into account the loss corporation's assets and liabilities immediately after the ownership change).

(6) ***Special rule for stock not subject to the risk of corporate business operations*** —

(i) ***In general.*** The value of the stock of the loss corporation under paragraph (j)(1) of this section is reduced by the value of stock that is issued as part of a plan one of the principal purposes of which is to increase the section 382 limitation without subjecting the investment to the entrepreneurial risks of corporate business operations.

(ii) ***Coordination of special rule and other rules affecting value.*** If the value of the loss corporation is modified under another rule affecting value, appropriate adjustments are to be made so that such modification is not duplicated under this paragraph (k)(6).

(7) ***Limitation on value of stock.*** For purposes of paragraph (j)(1) of this section, the value of stock of the loss corporation issued in connection with the ownership change cannot exceed the cash and the value of any property (including indebtedness of the loss corporation) received by the loss corporation in consideration for the issuance of that stock.

(l) ***Rules for determining the value of the loss corporation's pre-change assets*** —

(1) ***In general.*** Except as otherwise provided in this paragraph (l), the value of the loss corporation's pre-change assets is the value of its assets (determined without regard to liabilities) immediately before the ownership change.

(2) ***Coordination with section 382(e)(2).*** Section 382(e)(2) does not apply in determining the value of the pre-change assets of the loss corporation under paragraph (j)(2) of this section.

(3) ***Coordination with section 382(e)(3).*** If the loss corporation is a foreign corporation, in determining the value of the pre-change assets under paragraph (j)(2) of this section, only assets treated as connected with the conduct of a trade or business in the United States are taken into account.

(4) ***Coordination with section 382(l)(1).*** For purposes of paragraph (j)(2) of this section, the value of the pre-change assets of the loss corporation is determined without regard to the amount of any capital contribution to which section 382(l)(1) applies. For purposes of applying this paragraph (l)(4), the receipt of cash or property by the loss corporation in exchange for the issuance of indebtedness is considered a capital contribution if it is part of a plan one of the principal purposes of which is to increase the value of the loss corporation under paragraph (j) of this section.

(5) ***Coordination with section 382(l)(4).*** If, immediately after the ownership change, the loss corporation has substantial nonbusiness assets (as determined under section 382(l)(4)(B) taking into account only those assets the loss corporation held immediately before the ownership change), the value of the loss corporation's pre-change assets is reduced by the value of the nonbusiness assets.

(m) ***Continuity of business requirement*** —

(1) ***Under section 382(l)(5).*** If section 382(l)(5) applies to an ownership change of a loss corporation, section 382(c) and the regulations thereunder do not apply with respect to the ownership change.

(2) ***Under section 382(l)(6).*** If section 382(l)(6) applies to an ownership change of a loss corporation, section 382(c) and the regulations thereunder apply to the ownership change.

(n) ***Ownership change in a title 11 or similar case succeeded by another ownership change within two years*** —

(1) ***Section 382(l)(5) applies to the first ownership change.*** If section 382(l)(5) applies to an ownership change and, within the two-year period immediately following such ownership change, a second ownership change occurs, section 382(l)(5) cannot apply to the second ownership change and the section 382(a) limitation with respect to the second ownership change is zero.

(2) ***Section 382(l)(6) applies to the first ownership change.*** If the value of a loss corporation in an ownership change was determined under section 382(l)(6) and a second ownership change occurs within the two-year period immediately following the first ownership change, the value of the loss corporation under section 382(e) with respect to the second ownership change is not reduced under section 382(l)(1) for any increase in value of the loss corporation previously taken into account under section 382(l)(6) with respect to the first ownership change.

(o) ***Treatment of certain options for ownership change purposes*** —

(1) Neither § 1.382-2T(h)(4)(i) nor § 1.382-4(d) (relating to the treatment of options as exercised) applies to the following options to acquire stock of a loss corporation reorganized pursuant to a plan of reorganization that is confirmed in a title 11 or similar case (within the meaning of section 368(a)(3)(A)) but only until the time the plan becomes effective—

(i) Any option created by the solicitation or receipt of acceptances to the plan;

(ii) The option created by the confirmation of the plan; and

(iii) Any option created under the plan.

(2) This paragraph (o) generally applies to any testing date occurring on or after September 5, 1990. However, this paragraph (o) does not apply on any testing date occurring on or after April 8, 1992, if, in connection with the plan of reorganization, the loss corporation issues stock (including stock described in section 1504(a)(4)) or otherwise receives a capital contribution before the effective date of the plan for a principal purpose of using before the effective date losses and credits that would be subject to limitation under section 382(a) or would be eliminated under section 382(l)(5)(B) or (C) if this paragraph (o) did not apply on the testing date. A loss corporation may elect to apply this paragraph (o) to any testing date occurring before September 5, 1990, by filing a statement substantially similar to the following with its income tax return: “THIS IS AN ELECTION TO APPLY § 1.382-3(o) (OR § 1.382-9(o) AFTER REDESIGNATION) FOR TESTING DATES PRIOR TO SEPTEMBER 5, 1990, TO OPTIONS CREATED BY OR UNDER A PLAN OF REORGANIZATION CONFIRMED IN A TITLE 11 OR SIMILAR CASE.” A loss corporation may elect to not apply this paragraph (o) to testing dates occurring on or after September 5, 1990, to April 8, 1992, by filing a

statement substantially similar to the following with its income tax return: "THIS IS AN ELECTION TO NOT APPLY § 1.382-3(o) (OR § 1.382-9(o) AFTER REDESIGNATION) FOR TESTING DATES OCCURRING ON OR AFTER SEPTEMBER 5, 1990, TO APRIL 8, 1992, TO OPTIONS CREATED BY OR UNDER A PLAN OF REORGANIZATION CONFIRMED IN A TITLE 11 OR SIMILAR CASE."

(p) *Effective date for rules relating to section 382(l)(6)* —

(1) ***In general.*** Paragraphs (i), (j), (k), (l), (m)(2), and (n)(2) of this section apply to any ownership change occurring on or after March 17, 1994.

(2) ***Ownership change to which section 382(l)(6) applies occurring before March 17, 1994.*** In the case of an ownership change occurring before March 17, 1994, the loss corporation may elect to apply the rules of paragraphs (j), (k), (l), (m)(2), and (n)(2) of § 1.382-9 in their entirety. The election must be made by the later of the due date (including any extensions of time) of the loss corporation's tax return for the taxable year which includes the change date or the date that the loss corporation files its first tax return after May 16, 1994. The election is made by attaching the following statement to the return: "This is an Election to Apply §§ 1.382-9 (j), (k), (l), (m)(2), and (n)(2) of the Income Tax Regulations to the Ownership Change Occurring Pursuant to a Plan of Reorganization Confirmed by the Court on [Insert Confirmation Date]." In connection with making this election, on the same return the loss corporation may also elect not to apply section 382(l)(5) to the ownership change under paragraph (i) of this section (if the loss corporation has not already done so pursuant to § 301.9100-7T(a) of this chapter). If, under the applicable statute of limitations, the loss corporation may file amended returns for the year of the ownership change and all subsequent years (an open year), an electing loss corporation must file an amended return for each prior affected year to reflect the elections. If, under the applicable statute of limitations, the loss corporation may not file an amended return for the year of the ownership change or any subsequent year (a closed year), an electing loss corporation must file an amended return for each affected open year to reflect the elections and the section 382 limitation resulting from the ownership change must be appropriately adjusted for the earliest open year (or years) to reflect the difference between the amount of pre-change losses actually used in closed years and the amount of pre-change losses that would have been used in such years applying the rules of paragraphs (j), (k), (l), (m)(2), (n)(2) of this section to the ownership change.

[T.D. 8388, 57 FR 346, Jan. 6, 1992; T.D. 8407, 57 FR 12210, Apr. 9, 1992. Redesignated by T.D. 8440, 57 FR 45712, 45713, Oct. 5, 1992; 57 FR 52827, Nov. 5, 1992; T.D. 8531, 59 FR 12840, Mar. 18, 1994; T.D. 8530, 59 FR 12843, Mar. 18, 1994; T.D. 8529, 59 FR 12846, Mar. 18, 1994; T.D. 9811, 82 FR 6237, Jan. 19, 2017]

§ 1.382-10 Special rules for determining time and manner of acquisition of an interest in a loss corporation.

(a) *Distributions from qualified trusts* —

(1) ***In general.*** For purposes of § 1.382-2T, if a qualified trust described in section 401(a) (qualified trust) distributes an ownership interest in an entity (as defined in § 1.382-3(a)(1)), then for testing dates on or after the date of the distribution, the distributed ownership interest is treated as having been acquired by the distributee on the date and in the manner acquired by the trust and not as having been acquired or disposed of by the trust. The distribution does not cause the day of the distribution to be a testing date.

(2) *Accounting for dispositions* —

(i) ***General rule.*** For purposes of this paragraph (a), in order to determine which ownership interest in an entity is distributed from a qualified trust, a loss corporation must either specifically identify the ownership interests that are the subject of all dispositions by the qualified trust of ownership interests in an entity, or apply the first-in, first-out (FIFO) method to all such dispositions.

(ii) ***Special rules.*** For purposes of this paragraph (a)(2):

(A) The FIFO method must be applied on a class-by-class basis; and

(B) The term *dispositions* includes distributions, sales, and other transfers.

(3) ***Examples.*** The following examples illustrate the principles of this paragraph (a). For purposes of these examples, unless otherwise stated, the nomenclature and assumptions of the examples in § 1.382-2T(b) apply, all corporations file separate income tax returns on a calendar year basis, the only 5-percent shareholder of a loss corporation is a public group, and the facts set forth the only acquisitions of stock by any participants in a qualified plan and the only owner shifts with respect to the loss corporation during the testing period. The examples are as follows:

Example 1. (i) *Facts.* In 1994, E, a qualified trust established under Plan F, acquires 10 percent of L stock. A is a participant in Plan F. On January 1, 2002, A acquires 4 percent of L stock, and B, who is not a participant or a beneficiary of a participant in Plan F, acquires 5 percent of L stock. On January 1, 2004, E distributes 2 percent of L stock to A. On July 1, 2004, A acquires 1 percent of L stock.
(ii) *Analysis.* January 1, 2002, is a testing date because B's acquisition of 5 percent of L stock causes an increase in the percentage ownership of B, a 5-percent shareholder. As of the close of that testing date, A is treated as owning only 4 percent of L stock. Therefore, A is treated as a member of the public group of L. In addition, E is treated as owning 10 percent of L stock that it acquired in 1994.

(iii) As a result of the application of paragraph (a)(1) of this section to E's distribution of 2 percent of L stock to A on January 1, 2004, for testing dates on and after January 1, 2004, A is treated as having acquired that 2 percent interest in L in 1994, and E is treated as having acquired only 8 percent of L stock in 1994. Because there are no owner shifts on January 1, 2004, that date is not a testing date.

(iv) July 1, 2004, is a testing date because on that date A, a 5-percent shareholder, acquires 1 percent of L stock. As of the close of that testing date, A's percentage of ownership of L stock is 7 percent, and A's lowest percentage of ownership of L stock at any time within the testing period is 2 percent (deemed acquired in 1994), representing an increase of 5 percentage points. In addition, as of the close of July 1, 2004, B's percentage of ownership of L stock is 5 percent, and B's lowest percentage of ownership of L stock at any time within the testing period is 0 percent, representing an increase of 5 percentage points. Thus, on July 1, 2004, L must take into account an increase of 10 (5 + 5) percentage points in determining whether it has an ownership change.

Example 2. (i) *Facts.* E is a qualified trust established under Plan F. L, a publicly traded corporation, has 100x shares of stock outstanding. As of January 1, 2006, C owns 5x shares of L stock and is not a participant or beneficiary of a participant in Plan F. At all times prior to January 1, 2006, E owns no L stock. On January 1, 2006, E acquires 10x shares of L stock from members of the public group of L. On December 1, 2007, E distributes 5x shares of L stock to some of the participants in Plan F. No one participant acquires all 5x shares as a result of the distribution. On February 1, 2008, C purchases 1x shares of L stock from the public group of L.
(ii) *Analysis.* Because E's acquisition of 10x shares of L stock on January 1, 2006, is an owner shift, that date is a testing date. As of the close of that date, E's percentage of stock ownership in L has increased by 10 percentage points.

(iii) As a result of the application of paragraph (a)(1) of this section to E's distribution of 5x shares of L stock to some Plan F participants on December 1, 2007, for testing dates on and after December 1, 2007, those distributees are treated as having acquired those shares of stock on January 1, 2006, from members of the public group of L, and E is not treated as having acquired those shares on that date. E's distribution of the 5x shares is not an owner shift. Therefore, December 1, 2007, is not a testing date.

(iv) February 1, 2008, is a testing date because on that date an owner shift results from C's purchase of 1x shares of L stock. As of the close of that testing date, the distributees of 5x shares of L stock are treated as members of the public group of L having acquired 5x shares of L stock from other members of the public group of L on January 1, 2006. Because those acquisitions are not by 5-percent shareholders, L does not take them into account. In addition, as of the close of February 1, 2008, E's percentage of stock ownership in L is 5 percent, and E's lowest percentage of stock ownership in L at any time within the testing period is 0 percent, representing an increase of 5 percentage points. In addition, as of the close of February 1, 2008, C's percentage of stock ownership in L is 6 percent, and C's lowest percentage of stock ownership in L at any time within the testing period is 5 percent, representing an increase of 1 percentage point. Therefore, on February 1, 2008, L must take into account an increase of 6 (5 + 1) percentage points in determining whether it has an ownership change.

(4) ***Effective dates.*** This section applies to all distributions after June 23, 2006. For distributions on or before June 23, 2006, see § 1.382-10T as contained in 26 CFR part 1, revised April 1, 2006.

(b) [Reserved]

[T.D. 9269, 71 FR 36677, June 28, 2006]

§ 1.382-11 Reporting requirements.

(a) ***Information statement required.*** A loss corporation must include a statement entitled, "STATEMENT PURSUANT TO § 1.382-11(a) BY [INSERT NAME AND EMPLOYER IDENTIFICATION NUMBER OF TAXPAYER], A LOSS CORPORATION," on or with its income tax return for each taxable year that it is a loss corporation in which an owner shift, equity structure shift or other transaction described in § 1.382-2T(a)(2)(i) occurs. The statement must include the date(s) of any owner shifts, equity structure shifts, or other transactions described in § 1.382-2T(a)(2)(i), the date(s) on which any ownership change(s) occurred, and the amount of any attributes described in § 1.382-2(a)(1)(i) that caused the corporation to be a loss corporation. A loss corporation may also be required to include certain elections on this statement, including—

(1) An election made under § 1.382-2T(h)(4)(vi)(B) to disregard the deemed exercise of an option if the actual exercise of that option occurred within 120 days of the ownership change; and

(2) An election made under § 1.382-6(b)(2) to close the books of the loss corporation for purposes of allocating income and loss to periods before and after the change date for purposes of section 382.

(b) ***Effective/applicability date.*** This section applies to any taxable year beginning on or after May 30, 2006. However, taxpayers may apply this section to any original Federal income tax return (including any amended return filed on or before the due date (including extensions) of such original return) timely filed on or after May 30, 2006. For taxable years beginning before May 30, 2006, see § 1.382-2T as contained in 26 CFR part 1 in effect on April 1, 2006.

[T.D. 9329, 72 FR 32803, June 14, 2007]

§ 1.382-12 Determination of adjusted Federal long-term rate.

(a) ***In general.*** The long-term tax-exempt rate for an ownership change is the highest of the adjusted Federal long-term rates in effect for any month in the 3-calendar-month period ending with the calendar month in which the change date occurs. For purposes of the previous sentence, the adjusted Federal long-term rate is the Federal long-term rate determined under section 1274(d) (without regard to paragraphs (2) and (3) thereof), adjusted for differences between rates on long-term taxable and tax-exempt obligations. The Secretary calculates the adjusted Federal long-term rate as provided in paragraph (b) of this section. The Internal Revenue Service publishes the long-term tax-exempt rate and the adjusted Federal long-term rate for each month in the Internal Revenue Bulletin (see § 601.601(d)(2)(ii) of this chapter).

(b) ***Adjusted Federal long-term rate.*** The adjusted Federal long-term rate for a calendar month is the product of the Federal long-term rate determined under section 1274(d) for that month, based on annual compounding, multiplied by the adjustment factor described in paragraph (c) of this section.

(c) ***Adjustment factor.*** The adjustment factor is a percentage equal to—

(1) The excess of 100 percent, over

(2) The product of—

(i) 59 percent, and

(ii) The sum of the maximum rate in effect under section 1 applicable to individuals and the maximum rate in effect under section 1411 applicable to individuals for the month to which the adjusted applicable Federal rate applies.

(d) ***Effective/applicability date.*** The rules of this section apply to the determination of the long-term tax-exempt rate and the adjusted Federal long-term rate beginning with the rates determined during August 2016 that apply during September 2016.

[T.D. 9763, 81 FR 24483, Apr. 26, 2016]

§ 1.383-0 Effective date.

(a) The regulations in this part under section 383 of the Code (other than the regulations described in paragraph (b) of this section) reflect the amendments made to sections 382 and 383 by the Tax Reform Act of 1986 and the amendments made to section 382 by Public Law 115-97 (2017). See § 1.383-1(j) for effective date rules.

(b) Sections 1.383-1A, 1.383-2A, and 1.383-3A do not reflect the amendments made to sections 382 and 383 by the Tax Reform Act of 1986.

[T.D. 8352, 56 FR 29434, June 27, 1991, as amended by T.D. 9905, 85 FR 56837, Sept. 14, 2020]

§ 1.383-1 Special limitations on certain capital losses and excess credits.

(a) ***Outline of topics.*** In order to facilitate the use of this section, this paragraph lists the paragraphs, subparagraphs and subdivisions contained in this section.

(a) Outline of topics.

(b) In general.

(c) Definitions.

(1) Coordination with definitions and nomenclature used in section 382.

(2) Pre-change capital loss.

(3) Pre-change credit.

(4) Pre-change loss.

(5) Regular tax liability.

(6) Section 383 credit limitation.

(i) Definition.

(ii) Example.

(d) Limitation on use of pre-change losses and pre-change credits.

(1) In general.

(i) In general.

(ii) Ordering rule for losses or credits from same taxable year.

(2) Ordering rules for utilization of pre-change losses and pre-change credits and for absorption of the section 382 limitation and the section 383 credit limitation.

(3) Coordination with other limitations.

(i) In general.

(ii) Examples.

(e) Carryforward of unused section 382 limitation.

(1) Computation of carryforward amount.

(2) Section 383 credit reduction amount.

(3) [Reserved]

(4) Special rules for determining the section 383 credit reduction amount.

(i) Ordering rules.

(ii) Special rule for credits under section 38(a).

(f) Examples.

(g) Coordination with section 382 and the regulations thereunder.

(h) Alternative minimum tax.

(i) [Reserved]

(j) Applicability date.

(1) In general.

(2) Interaction with section 163(j).

(b) ***In general.*** Under section 383, if an ownership change occurs with respect to a loss corporation, the section 382 limitation and the section 383 credit limitation (as defined in paragraph (c)(6) of this section) for a post-change year shall apply to limit the amount of taxable income and regular tax liability, respectively, that can be offset by pre-change capital losses and pre-change credits of the new loss corporation. The section 383 credit limitation for a post-change year bears a direct relationship to the amount, if any, of the section 382 limitation that remains after taking into account the reduction in the

loss corporation's taxable income during a post-change year as a result of its pre-change losses (as defined in paragraph (c)(4) of this section). In general, the section 383 credit limitation is an amount equal to the tax liability of the new loss corporation for the post-change year which is attributable to so much of the corporation's taxable income that would be reduced by allowing as a deduction its section 382 limitation remaining after accounting for the use of pre-change losses. As pre-change losses and pre-change credits of a corporation are used, they absorb the section 382 limitation and the section 383 credit limitation, respectively, in the manner prescribed by paragraph (d) of this section. See also section 382 and the regulations thereunder.

(c) ***Definitions*** —

(1) ***Coordination with definitions and nomenclature used in section 382.*** Terms and nomenclature used in this section, and not otherwise defined herein, shall have the same respective meanings as in section 382 and the regulations thereunder, taking into account that the limitations of section 383 and this section apply to pre-change capital losses and pre-change credits.

(2) ***Pre-change capital loss.*** The term *pre-change capital loss* means—

(i) Any capital loss carryover under section 1212 of the old loss corporation to the taxable year ending on the change date or in which the change date occurs,

(ii) Any net capital loss of the old loss corporation for the taxable year in which the ownership change occurs, to the extent such loss is allocable to the period in such year ending on or before the change date, and

(iii) If the old loss corporation has a net unrealized built-in loss, any recognized built-in loss for any recognition period taxable year (within the meaning of section 382(h)) that is a capital loss.

(3) ***Pre-change credit.*** The term *pre-change credit* means—

(i) Any excess foreign taxes under section 904(c) of the old loss corporation—

(A) carried forward to the taxable year ending on the change date or in which the change date occurs, or

(B) carried forward from the taxable year that includes the change date, to the extent such credit is allocable to the period in such year ending on or before the change date,

(ii) Any credit under section 38 of the old loss corporation—

(A) carried forward to the taxable year ending on the change date or in which the change date occurs, or

(B) carried forward from a taxable year that includes the change date to the extent such credit is allocable to the period in such year ending on or before the change date, and

(iii) The available minimum tax credit of the old loss corporation under section 53 to the extent attributable to periods ending on or before the change date.

(4) ***Pre-change loss.*** Solely for purposes of this section, the term *prechange loss* means any pre-change loss described in § 1.382-2(a)(2) other than pre-change credits described in paragraph (c)(3) of this section.

(5) ***Regular tax liability.*** For purposes of this section, the term *regular tax liability* has the same meaning as provided in section 26(b).

(6) *Section 383 credit limitation* —

(i) ***Definition.*** The *section 383 credit limitation* for a post-change year of a new loss corporation is an amount equal to the excess of—

(A) The new loss corporation's regular tax liability for the post-change year, over

(B) The new loss corporation's regular tax liability for the post-change year computed, for this purpose, by allowing as an additional deduction an amount equal to the section 382 limitation remaining after the application of paragraphs (d)(2)(i) through (v) of this section.

(ii) ***Example.*** L, a new loss corporation, is a calendar-year taxpayer. L has an ownership change on December 31, 2021. For 2022, L has taxable income (prior to the use of any pre-change losses) of $100,000. In addition, L has a section 382 limitation of $25,000, a pre-change net operating loss carryover of $12,000, a pre-change general business credit carryforward under section 39 of $50,000, and no items described in § 1.383-1(d)(2)(i) through (iv). L's section 383 credit limitation for 2022 is the excess of its regular tax liability computed after allowing a $12,000 net operating loss deduction (taxable income of $88,000; regular tax liability of $18,480), over its regular tax liability computed after allowing an additional deduction in the amount of L's section 382 limitation remaining after the application of paragraphs (d)(2)(i) through (v) of this section, or $13,000 (taxable income of $75,000; regular tax liability of $15,750). L's section 383 credit limitation is therefore $2,730 ($18,480 minus $15,750).

(d) *Limitation on use of pre-change losses and pre-change credits* —

(1) *In general* —

(i) ***General rule.*** The amount of taxable income of a new loss corporation for any post-change year that may be offset by pre-change losses shall not exceed the amount of the section 382 limitation for the post-change year. The amount of the regular tax liability of a new loss corporation for any post-change year that may be offset by pre-change credits shall not exceed the amount of the section 383 credit limitation for the post-change year.

(ii) ***Ordering rule for losses or credits from same taxable year.*** A loss corporation's taxable income is offset first by losses subject to a section 382 limitation, to the extent the section 382 limitation for that taxable year has not yet been absorbed, before being offset by losses of the same type from the same taxable year that are not subject to a section 382 limitation. For example, assume that Corporation X has an ownership change in Year 1 and carries over disallowed business interest expense as defined in § 1.163(j)-1(b)(10), some of which constitutes a section 382 disallowed business interest carryforward, from Year 1 to Year 2. To the extent of its section 163(j) limitation, as defined in § 1.163(j)-1(b)(36), and its remaining section 382 limitation, Corporation X offsets its Year 2 income with the section 382 disallowed business interest carryforward before using any of the disallowed business interest expense that is not a section 382 disallowed business interest carryforward. Similar principles apply to the use of tax credits.

(2) ***Ordering rules for utilization of pre-change losses and pre-change credits and for absorption of the section 382 limitation and the section 383 credit limitation.*** Pre-change losses described in any subdivision of this paragraph (d)(2) can offset taxable income in a post-change year only to the extent that the section 382 limitation for that year has not been absorbed by pre-change losses described in any lower-numbered subdivisions. Pre-change credits described in any subdivision of

this paragraph (d)(2) can offset regular tax liability in a post-change year only to the extent that the section 383 credit limitation for that year has not been absorbed by pre-change credits described in any lower numbered subdivisions. The section 382 limitation is absorbed by one dollar for each dollar of pre-change loss that is used to offset taxable income. The section 383 credit limitation is absorbed by one dollar for each dollar of pre-change credit that is used to offset regular tax liability. For each post-change year, the section 382 limitation and the section 383 credit limitation of a new loss corporation are absorbed by such corporation's pre-change losses and pre-change credits in the following order:

(i) Pre-change capital losses described in paragraph (c)(2)(iii) of this section that are recognized and are subject to the section 382 limitation in such post-change year;

(ii) Pre-change capital losses described in paragraphs (c)(2)(i) and (ii) of this section;

(iii) Pre-change losses that are described in § 1.382-2(a)(2)(iii), other than losses that are pre-change capital losses, that are recognized and are subject to the section 382 limitation in such post-change year;

(iv)

(A) With respect to an ownership change date occurring prior to November 13, 2020, but during the taxable year which includes November 13, 2020, the pre-change loss described in section 382(d)(3);

(B) With respect to an ownership change date occurring on or after November 13, 2020, section 382 disallowed business interest carryforwards (within the meaning of § 1.382-2(a)(7));

(v) Pre-change losses not described in paragraphs (d)(2)(i) through (iv) of this section;

(vi) Pre-change credits described in paragraph (c)(3)(i) of this section (excess foreign taxes),

(vii) Pre-change credits described in paragraph (c)(3)(ii) of this section (business credits); and

(viii) Pre-change credits described in paragraph (c)(3)(iii) of this section (minimum tax credit).

(3) *Coordination with other limitations* —

(i) ***In general.*** Paragraphs (d)(1) and (2) of this section shall be applied after the application of all other limitations contained in subtitle A which are applicable to the use of a pre-change loss or pre-change credit in a post-change year. Thus, only otherwise currently allowable pre-change losses and pre-change credits will result in the absorption of the section 382 limitation and the section 383 credit limitation. The application of section 59A is not a limitation contained in subtitle A for purposes of this paragraph (d)(3)(i). Therefore, the treatment of pre-change losses and pre-change credits in the computation of the base erosion minimum tax amount will not affect whether such losses or credits result in absorption of the section 382 limitation and the section 383 credit limitation.

(ii) ***Example.*** L, a calendar-year taxpayer, has an ownership change on December 31, 2021. For 2022, L has taxable income of $300,000 and a regular tax liability of $63,000. L has no pre-change losses, but it has a business credit carryforward from 2020 of $25,000. L has a section 382 limitation for 2022 of $50,000. L's section 383 credit limitation is $10,500, an amount equal to the excess of L's regular tax liability ($63,000) over its regular tax liability calculated by allowing an additional deduction of $50,000 ($52,500). Pursuant to the limitation contained in

section 38(c), however, L is entitled to use only $9,500 (($63,000−$25,000) × 25 percent) of its business credit carryforward in 2022. The unabsorbed portion of L's section 382 limitation, $1,000 (computed pursuant to paragraph (e) of this section), is carried forward under section 382(b)(2). The unused portion of L's business credit carryforward, $14,500, is carried forward to the extent provided in section 39.

(e) ***Carryforward of unused section 382 limitation*** —

(1) ***Computation of carryforward amount.*** The section 382 limitation that can be carried forward under section 382(b)(2) is the excess, if any, of

(i) the section 382 limitation for the post-change year remaining after the application of paragraphs (d)(2)(i) through (v) of this section, over

(ii) the section 383 credit reduction amount for that post-change year.

(2) ***Section 383 credit reduction amount.*** The section 383 credit reduction amount for a post-change year is equal to the amount of taxable income attributable to the portion of the new loss corporation's regular tax liability for the year that is offset by pre-change credits. Each dollar of regular tax liability that is offset by a dollar of pre-change credit is divided by the effective marginal rate at which that dollar of tax was imposed to determine the amount of taxable income that resulted in that particular dollar of regular tax liability. The sum of these "grossed-up" amounts for the taxable year is the section 383 credit reduction amount. In determining the effective marginal rate at which a dollar of tax was imposed, special rules regarding rates of tax (*e.g.,* section 15 or taxable income brackets (*e.g.,* section 1561), or both, shall be taken into account.

(3) [Reserved]

(4) ***Special rules for determining the section 383 credit reduction amount*** —

(i) ***Ordering rules.*** For purposes of this paragraph (e), credits, including pre-change credits, are considered to offset regular tax liability in the order that such credits are applied under the ordering rules of part IV of subchapter A of chapter 1 and section 904. For example, for purposes of this paragraph (e), excess foreign taxes carried over under section 904(c) (whether or not a pre-change credit) are considered (under section 38(c)) to offset regular tax liability before the general business credit carryovers to the taxable year are considered (under section 39) to offset regular tax liability before general business credits arising in the taxable year.

(ii) ***Special rule for credits under section 38(a).*** For purposes of applying this paragraph (e), credits under section 38(a) that, under section 38(c)(2) as applicable, taking into account amendments made by section 11813 of the Revenue Reconciliation Act of 1990, effectively offset both regular tax liability and the tax imposed by section 55 (relating to minimum tax), are considered to offset regular tax liability.

(f) ***Examples.*** The following examples illustrate the operation of paragraphs (b) through (e) of this section. For purposes of these examples, the term *modified tax liability* means the amount determined under paragraph (c)(6)(i)(B) of this section.

(1) ***Example 1.***

(i) L, a calendar year taxpayer, has an ownership change on December 31, 1987. Before the application of carryovers, L, a new loss corporation, has $60,000 of capital gain, $100,000 of ordinary taxable income and a section 382 limitation of $100,000 for its first post-change year

beginning after the change date. L's only carryovers are an $80,000 capital loss carryover and a $100,000 net operating loss carryover. Both carryovers are from taxable years ending before the change date and thus are pre-change losses.

(ii) L first uses $60,000 of its pre-change capital loss carryover to offset its capital gain. This reduces its section 382 limitation to $40,000 (i.e., $100,000−$60,000). L's pre-change net operating loss carryover can therefore be used only to the extent of $40,000. L's remaining $20,000 pre-change capital loss carryover and remaining $60,000 pre-change net operating loss carryover are carried to later years to the extent permitted under this section and sections 172, 382(l)(2) and 1212.

(2) *Example 2* —

(i) ***Facts.*** L, a calendar-year taxpayer, has an ownership change on December 31, 2021. For 2022, L has $750,000 of ordinary taxable income (before the application of carryovers) and a section 382 limitation of $1,500,000. L's only carryovers are from pre-2021 taxable years and consist of a $500,000 net operating loss (NOL) carryover, and a $200,000 foreign tax credit carryover (all of which may be used under the section 904 limitation). The NOL carryover is a pre-change loss, and the foreign tax credit carryover is a pre-change credit. L has no other pre-change losses or credits that can be used in 2022.

(ii) ***Analysis.*** The following computation illustrates the application of this section for 2022:

TABLE 1 TO PARAGRAPH (f)(2)(ii)

1. Taxable income before carryovers	$750,000
2. Pre-change NOL carryover	500,000
3. Section 382 limitation	1,500,000
4. Amount of pre-change NOL carryover that can be used (least of line 1, 2, or 3)	500,000
5. Taxable income (line 1 minus line 4)	250,000
6. Section 382 limitation remaining (line 3 minus line 4)	1,000,000
7. Pre-change credit carryover	200,000
8. Regular tax liability (line 5 × section 11 rates)	52,500
9. Modified tax liability (line 5 minus line 6 (but not less than zero) × section 11 rates)	0
10. Section 383 credit limitation (line 8 minus line 9)	52,500
11. Amount of pre-change credits that can be used in 2022 (lesser of line 7 or line 10)	52,500
12. Amount of pre-change credits to be carried over to 2023 under section 904(c) (line 7 minus line 11)	147,500
13. Section 383 credit reduction amount: $52,500/0.21	250,000
14. Section 382 limitation to be carried to 2023 under section 382(b)(2) (line 6 minus line 13)	750,000

(3) *Example 3* —

(i) ***Facts.*** L, a calendar-year taxpayer, has an ownership change on December 31, 2021. L has $80,000 of ordinary taxable income (before the application of carryovers) and a section 382 limitation of $25,000 for 2022, a post-change year. L's only carryover is from a pre-2021 taxable year and is a general business credit carryforward under section 39 in the amount of $10,000 (no portion of which is attributable to the investment tax credit under section 46). The general business credit carryforward is a pre-change credit. L has no other credits which can be used in 2022.

(ii) ***Analysis.*** The following computation illustrates the application of this section:

TABLE 2 TO PARAGRAPH (f)(3)(ii)

1. Taxable income before carryovers	$80,000
2. Section 382 limitation	25,000
3. Pre-change credit carryover	10,000
4. Regular tax liability (line 1 × section 11 rates)	16,800
5. Modified tax liability ((line 1 minus line 2) × section 11 rates)	11,550
6. Section 383 credit limitation (line 4 minus line 5)	5,250
7. Amount of pre-change credits that can be used (lesser of line 3 or line 6)	5,250
8. Amount of pre-change credits to be carried over to 2023 under sections 39 and 382(l)(2) (line 3 minus line 7)	4,750
9. Regular tax payable (line 4 minus line 7)	11,550
10. Section 383 credit reduction amount: $5,250/0.21	25,000
11. Section 382 limitation to be carried to 2023 under section 382(b)(2) (line 2 minus line 10)	0

(g) ***Coordination with section 382 and the regulations thereunder.*** The rules and principles of section 382 (including, for example, section 382(b)(3) and section 382(l)(2)) and the regulations thereunder shall also apply with respect to section 383 and this section. To the extent section 382(h)(6) applies to credits, the principles of this section apply to such credits. In applying the rules and principles of section 382 and the regulations thereunder, appropriate adjustments shall be made to take into account that section 383 and this section apply to pre-change capital losses and pre-change credits. For example, in applying § 1.382-2T (f)(18)(ii)(C), (f)(18)(iii)(C) and (h)(4)(ix), any pre-change credits, as defined in paragraph (c)(3) of this section, must be converted to a deduction equivalent by dividing the amount of such credits by the maximum effective rate of tax provided for under section 11.

(h) ***Alternative minimum tax.*** See § 1.383-2T for the application of the limitations contained in sections 382 and 383 in computing the alternative minimum tax under section 55.

(i) [Reserved]

(j) ***Applicability date—***

(1) ***In general.*** Subject to any exception from the application of section 382 or the section 382 limitation with respect to a loss corporation, section 383 and this section apply to any loss corporation with respect to which an ownership change occurs after December 31, 1986. See § 1.382-2T(m) for effective date rules relating to ownership changes. If section 383 was not taken into account or was applied other than in accordance with this section in a prior taxable year with respect to which section 383 applies, the taxpayer should, within the period of limitation, file an amended return and pay any additional tax due plus interest.

(2) ***Interaction with section 163(j).*** Paragraphs (c)(6)(i)(B) and (c)(6)(ii), (d)(1), (d)(2)(iii) through (viii), (d)(3)(ii), (e)(1) through (3), (f), and (g) of this section apply with respect to ownership changes occurring during a taxable year beginning on or after November 13, 2020. For loss corporations that have undergone an ownership change during a taxable year beginning before November 13, 2020, see § 1.383-1 as contained in 26 CFR part 1, revised April 1, 2019. However, taxpayers and their related parties, within the meaning of sections 267(b) and 707(b)(1), may choose to apply the rules of this section to an ownership change occurring during a taxable year beginning after December 31, 2017, so long as the taxpayers and their related parties consistently apply either the rules of this section (except paragraph (d)(2)(iv)(B) of this section), the section 163(j) regulations (as defined in § 1.163(j)-1(b)(37)), §§ 1.382-1, 1.382-2, 1.382-5, 1.382-6, 1.382-7, and 1.383-0, and, if applicable, §§ 1.263A-9, 1.263A-15, 1.381(c)(20)-1, 1.469-9, 1.469-11, 1.704-1, 1.882-5, 1.1362-3, 1.1368-1, 1.1377-1, 1.1502-13, 1.1502-21, 1.1502-36, 1.1502-79, 1.1502-91 through 1.1502-99 (to the extent they effectuate the rules of §§ 1.382-2, § 1.382-5, 1.382-6, and 1.383-1), and 1.1504-4; or the rules of this section (except paragraph (d)(2)(iv)(A) of this section), the section 163(j) regulations (as defined in § 1.163(j)-1(b)(37)) and §§ 1.382-1, 1.382-2, 1.382-5, 1.382-6, and 1.383-0, and, if applicable, §§ 1.263A-9, 1.263A-15, 1.381(c)(20)-1, 1.469-9, 1.469-11, 1.704-1, 1.882-5, 1.1362-3, 1.1368-1, 1.1377-1, 1.1502-13, 1.1502-21, 1.1502-36, 1.1502-79, 1.1502-91 through 1.1502-99 (to the extent they effectuate the rules of §§ 1.382-2, 1.382-5, 1.382-6, 1.382-7, and 1.383-1), and 1.1504-4, to those ownership changes.

[T.D. 8264, 54 FR 38668, Sept. 20, 1989; T.D. 8264, 54 FR 46187, Nov. 1, 1989; T.D. 8264, 54 FR 50043, Dec. 4, 1989. Redesignated and amended by T.D. 8352, 56 FR 29434, June 27, 1991; T.D. 9885, 84 FR 67038, Dec. 6, 2019; T.D. 9905, 85 FR 56837, Sept. 14, 2020]

§ 1.383-2 Limitations on certain capital losses and excess credits in computing alternative minimum tax. [Reserved]

§ 1.385-1 General provisions.

(a) ***Overview of section 385 regulations.*** This section and §§ 1.385-3 through 1.385-4 (collectively, the section 385 regulations) provide rules under section 385 to determine the treatment of an interest in a corporation as stock or indebtedness (or as in part stock and in part indebtedness) in particular factual situations. Paragraph (b) of this section provides the general rule for determining the treatment of an interest based on provisions of the Internal Revenue Code and on common law, including the factors prescribed under common law. Paragraphs (c), (d), and (e) of this section provide definitions and rules of general application for purposes of the section 385 regulations. Section 1.385-3 sets forth additional factors that, when present, control the determination of whether an interest in a corporation that is held by a member of the corporation's expanded group is treated (in whole or in part) as stock or indebtedness.

(b) ***General rule.*** Except as otherwise provided in the Internal Revenue Code and the regulations thereunder, including the section 385 regulations, whether an interest in a corporation is treated for purposes of the Internal Revenue Code as stock or indebtedness (or as in part stock and in part indebtedness) is determined based on common law, including the factors prescribed under such common law.

(c) ***Definitions.*** The definitions in this paragraph (c) apply for purposes of the section 385 regulations. For additional definitions that apply for purposes of their respective sections, see §§ 1.385-3(g) and 1.385-4(e).

(1) ***Controlled partnership.*** The term controlled partnership means, with respect to an expanded group, a partnership with respect to which at least 80 percent of the interests in partnership capital or profits are owned, directly or indirectly, by one or more members of the expanded group. For purposes of identifying a controlled partnership, indirect ownership of a partnership interest is determined by applying the principles of paragraph (c)(4)(iii) of this section. Such determination is separate from the determination of the status of a corporation as a member of an expanded group. An unincorporated organization described in § 1.761-2 that elects to be excluded from all of subchapter K of chapter 1 of the Internal Revenue Code is not a controlled partnership.

(2) ***Covered member.*** The term covered member means a member of an expanded group that is—

(i) A domestic corporation; and

(ii) [Reserved]

(3) ***Disregarded entity.*** The term disregarded entity means a business entity (as defined in § 301.7701-2(a) of this chapter) that is disregarded as an entity separate from its owner for federal income tax purposes under §§ 301.7701-1 through 301.7701-3 of this chapter.

(4) ***Expanded group*** —

(i) ***In general.*** The term expanded group means one or more chains of corporations (other than S corporations) connected through stock ownership with a common parent corporation that is not an S corporation or a regulated investment company or a real estate investment trust subject to tax under subchapter M of chapter 1 of the Internal Revenue Code (a RIC or a REIT, respectively) (such common parent corporation, an expanded group parent), but only if—

(A) The expanded group parent owns directly or indirectly stock meeting the requirements of section 1504(a)(2) (modified by substituting “or” for “and” in section 1504(a)(2)(A)) in at least one of the other corporations; and

(B) Stock meeting the requirements of section 1504(a)(2) (modified by substituting “or” for “and” in section 1504(a)(2)(A)) in each of the other corporations (except the expanded group parent) is owned directly or indirectly by one or more of the other corporations.

(ii) ***Definition of stock.*** For purposes of paragraph (c)(4)(i) of this section, the term stock has the same meaning as “stock” in section 1504 (without regard to § 1.1504-4) and all shares of stock within a single class are considered to have the same value. Thus, control premiums and minority and blockage discounts within a single class are not taken into account.

(iii) ***Indirect stock ownership.*** For purposes of paragraph (c)(4)(i) of this section, indirect stock ownership is determined by applying the constructive ownership rules of section 318(a) with the following modifications:

(A) Section 318(a)(1) and (a)(3) do not apply except as set forth in paragraph (c)(4)(v) of this section;

(B) Section 318(a)(2)(C) applies by substituting “5 percent” for “50 percent;” and

(C) Section 318(a)(4) only applies to options (as defined in § 1.1504-4(d)) that are reasonably certain to be exercised as described in § 1.1504-4(g).

(iv) ***Member of an expanded group or expanded group member.*** The expanded group parent and each of the other corporations described in paragraphs (c)(4)(i)(A) and (c)(4)(i)(B) of this section is a member of an expanded group (also referred to as an expanded group member). For purposes of the section 385 regulations, a corporation is a member of an expanded group if it is described in this paragraph (c)(4)(iv) immediately before the relevant time for determining membership (for example, immediately before the issuance of a debt instrument (as defined in § 1.385-3(g)(4)) or immediately before a distribution or acquisition that may be subject to § 1.385-3(b)(2) or (3)).

(v) ***Brother-sister groups with non-corporate owners.*** [Reserved]

(vi) ***Special rule for indirect ownership through options for certain members of consolidated groups.*** In the case of an option of which a member of a consolidated group, other than the common parent, is the issuing corporation (as defined in § 1.1504-4(c)(1)), section 318(a)(4) only applies (for purposes of applying paragraph (c)(4)(iii)(C) of this section) to the option if the option is treated as stock or as exercised under § 1.1504-4(b) for purposes of determining whether a corporation is a member of an affiliated group.

(vii) ***Examples.*** The following examples illustrate the rules of this paragraph (c)(4). Except as otherwise stated, for purposes of the examples in this paragraph (c)(4)(vii), all persons described are corporations that have a single class of stock outstanding and file separate federal tax returns and are not an S corporation, a RIC, or a REIT. In addition, the stock of each publicly traded corporation is widely held such that no person directly or indirectly owns stock in the publicly traded corporation meeting the requirements of section 1504(a)(2) (as modified by this paragraph (c)(4)).

(A) ***Example 1. Two different expanded group parents*** —

(1) ***Facts.*** P has two classes of common stock outstanding: Class A and Class B. X, a publicly traded corporation, directly owns all shares of P's Class A common stock, which is high-vote common stock representing 85% of the vote and 15% of the value of the stock of P. Y, a publicly traded corporation, directly owns all shares of P's Class B common stock, which is low-vote common stock representing 15% of the vote and 85% of the value of the stock of P. P directly owns 100% of the stock of S1.

(2) ***Analysis.*** X owns directly 85% of the vote of the stock of P, which is stock meeting the requirements of section 1504(a)(2) (as modified by paragraph (c)(4)(i)(A) of this section). Therefore, X is an expanded group parent described in paragraph (c)(4)(i) of this section with respect to P. Y owns 85% of the value of the stock of P, which is stock meeting the requirements of section 1504(a)(2) (as modified by paragraph (c)(4)(i)(A) of this section). Therefore, Y is also an expanded group parent described in paragraph (c)(4)(i) of this section with respect to P. P owns directly 100% of the voting power and value of the stock of S1, which is stock meeting the requirements of section 1504(a)(2) (as modified by paragraph (c)(4)(i)(B) of this section).

Therefore, X, P, and S1 constitute an expanded group as defined in paragraph (c)(4)(i) of this section. Additionally, Y, P, and S1 constitute an expanded group as defined in paragraph (c)(4) of this section. X and Y are not members of the same expanded group under paragraph (c)(4) of this section because X does not directly or indirectly own any of the stock of Y and Y does not directly or indirectly own any of the stock of X, such that X and Y do not comprise a chain of corporations described in paragraph (c)(4)(i) of this section.

(B) ***Example 2. Inclusion of a REIT within an expanded group*** —

(*1*) ***Facts.*** All of the stock of P is publicly traded. In addition to other assets representing 85% of the value of its total assets, P directly owns all of the stock of S1. S1 owns 99% of the stock of S2. The remaining 1% of the stock of S2 is owned by 100 unrelated individuals. In addition to other assets representing 85% of the value of its total assets, S2 owns all of the stock of S3, which has elected to be treated as a taxable REIT subsidiary of S2 under section 856(l)(1). Both P and S2 are REITs.

(*2*) ***Analysis.*** P directly owns 100% of the stock of S1. However, under paragraph (c)(4)(i) of this section, P cannot be the expanded group parent because P is a REIT. Because no other corporation owns stock in P meeting the requirements described in paragraph (c)(4)(i) of this section, P is not an expanded group member. S1 directly owns 99% of the stock of S2, which is stock meeting the requirements of section 1504(a)(2) (as modified by paragraph (c)(4)(i)(A) of this section). Although S2 is a corporation that is a REIT, a REIT may be a member of an expanded group described under paragraph (c)(4)(i) of this section provided the corporation is not the expanded group parent. In this case, S1 is the expanded group parent. S2 directly owns 100% of the stock of S3, which is stock meeting the requirements of section 1504(a)(2) (as modified by paragraph (c)(4)(i)(B) of this section). Therefore, S1, S2, and S3 constitute an expanded group as defined in paragraph (c)(4) of this section.

(C) ***Example 3. Attribution of hook stock*** —

(*1*) ***Facts.*** P, a publicly traded corporation, directly owns 50% of the stock of S1. S1 directly owns 100% of the stock of S2. S2 directly owns the remaining 50% of the stock of S1.

(*2*) ***Analysis.***

(*i*) P directly owns 50% of the stock of S1. Under paragraph (c)(4)(iii) of this section (which applies section 318(a)(2) with modifications), P constructively owns 50% of the stock of S2 because P directly owns 50% of the stock of S1, which directly owns 100% of S2. Under section 318(a)(5)(A), stock constructively owned by P by reason of the application of section 318(a)(2) is, for purposes of section 318(a)(2), considered as actually owned by P.

(*ii*) S2 directly owns 50% of the stock of S1. Thus, under paragraph (c)(4)(iii) of this section, P is treated as constructively owning an additional 25% of the stock of S1. For purposes of determining the expanded group, P's ownership must be recalculated treating the additional 25% of S1 stock as actually owned. Under the second application of section 318(a)(2)(C) as modified by paragraph (c)(4)(iii) of this section, P constructively owns an additional 12.5% of the stock of S1 as follows: 25% (P's new attributed ownership of S1) × 100% (S1's

ownership of S2) × 50% (S2's ownership of S1) = 12.5%. After two iterations, P's ownership in S1 is 87.5% (50% direct ownership + 25% first order constructive ownership + 12.5% second order constructive ownership) and thus S1 is a member of the expanded group that includes P and S2. Subsequent iterative calculations of P's ownership, treating constructive ownership as actual ownership, would demonstrate that P owns, directly and indirectly, 100% of the stock of S1. P, S1, and S2 therefore constitute an expanded group as defined in paragraph (c)(4) of this section and P is the expanded group parent.

(D) ***Example 4. Attribution of hook stock when an intermediary has multiple owners*** —

(*1*) ***Facts.*** The facts are the same as in paragraph (c)(4)(vii)(C)(*1*) of this section (*Example 3*), except that P directly owns only 25% of the stock of S1. X, a corporation unrelated to P, also directly owns 25% of the stock of S1.

(*2*) ***Analysis.***

(*i*) P and X each directly owns 25% of the stock of S1. Under paragraph (c)(4)(iii) of this section, P and X each constructively owns 25% of the stock of S2 because P and X each directly owns 25% of the stock of S1, which directly owns 100% of the stock of S2. Under section 318(a)(5)(A), stock constructively owned by P or X by reason of the application of section 318(a)(2) is, for purposes of section 318(a)(2), considered as actually owned by P or X, respectively.

(*ii*) S2 directly owns 50% of the stock of S1. Thus, under paragraph (c)(4)(iii) of this section, P and X each is treated as constructively owning an additional 12.5% of the stock of S1. Under a second application of section 318(a)(2)(C) as modified by paragraph (c)(4)(iii) of this section, P and X each constructively owns an additional 6.25% of the stock of S1 as follows: 12.5% (each of P's and X's new attributed ownership of S1) × 100% (S1's ownership of S2) × 50% (S2's ownership of S1) = 6.25%. After two iterations, each of P's and X's ownership in S1 is 43.75% (25% direct ownership + 12.5% first order constructive ownership + 6.25% second order constructive ownership). Subsequent iterative calculations of each of P's and X's ownership, treating constructive ownership as actual ownership, would demonstrate that P and X each owns, directly and indirectly, 50% of the stock of S1.

(*iii*) S1 and S2 constitute an expanded group as defined under paragraph (c)(4)(i) of this section because S1 directly owns 100% of the stock of S2. S1 is the expanded group parent of the expanded group and neither P nor X are a member of the expanded group that includes S1 and S2.

(5) ***Regarded owner.*** The term *regarded owner* means a person (which cannot be a disregarded entity) that is the single owner (within the meaning of § 301.7701-2(c)(2)(i) of this chapter) of a disregarded entity.

(d) ***Treatment of deemed exchanges*** —

(1) ***Debt instrument deemed to be exchanged for stock*** —

(i) ***In general.*** If a debt instrument (as defined in § 1.385-3(g)(4)) is deemed to be exchanged under the section 385 regulations, in whole or in part, for stock, the holder is treated for all Federal tax purposes as having realized an amount equal to the holder's adjusted basis in that portion of the debt instrument as of the date of the deemed exchange (and as having basis in the stock deemed to be received equal to that amount), and, except as provided in paragraph (d)(1)(iv)(B) of this section, the issuer is treated for all Federal tax purposes as having retired that portion of the debt instrument for an amount equal to its adjusted issue price as of the date of the deemed exchange. In addition, neither party accounts for any accrued but unpaid qualified stated interest on the debt instrument or any foreign exchange gain or loss with respect to that accrued but unpaid qualified stated interest (if any) as of the deemed exchange. This paragraph (d)(1)(i) does not affect any rules in Title 26 of the United States Code that otherwise apply to the debt instrument prior to the date of the deemed exchange (for example, this paragraph (d)(1)(i) does not affect the issuer's deduction of accrued but unpaid qualified stated interest otherwise deductible prior to the date of the deemed exchange). Moreover, the stock issued in the deemed exchange is not treated as a payment of accrued but unpaid original issue discount or qualified stated interest on the debt instrument for Federal tax purposes.

(ii) ***Section 988.*** Notwithstanding the first sentence of paragraph (d)(1)(i) of this section, the rules of § 1.988-2(b)(13) apply to require the holder and the issuer of a debt instrument that is deemed to be exchanged under the section 385 regulations, in whole or in part, for stock to recognize any exchange gain or loss, other than any exchange gain or loss with respect to accrued but unpaid qualified stated interest that is not taken into account under paragraph (d)(1)(i) of this section at the time of the deemed exchange. For purposes of this paragraph (d)(1)(ii), in applying § 1.988-2(b)(13) the exchange gain or loss under section 988 is treated as the total gain or loss on the exchange.

(iii) ***Section 108(e)(8).*** For purposes of section 108(e)(8), if the issuer of a debt instrument is treated as having retired all or a portion of the debt instrument in exchange for stock under paragraph (d)(1)(i) of this section, the stock is treated as having a fair market value equal to the adjusted issue price of that portion of the debt instrument as of the date of the deemed exchange.

(iv) ***Issuer of stock deemed exchanged for debt.*** For purposes of applying paragraph (d)(1)(i) of this section—

(A) A debt instrument that is issued by a disregarded entity is deemed to be exchanged for stock of the regarded owner under § 1.385-3(d)(4);

(B) A debt instrument that is issued by a partnership that becomes a deemed transferred receivable, in whole or in part, is deemed to be exchanged by the holder for deemed partner stock under § 1.385-3(f)(4) and the partnership is therefore not treated for any federal tax purpose as having retired any portion of the debt instrument; and

(C) A debt instrument that is issued in any situation not described in paragraph (d)(1)(iv)(A) or (B) of this section is deemed to be exchanged for stock of the issuer of the debt instrument.

(2) ***Stock deemed to be exchanged for newly-issued debt instrument.***

(i) [Reserved]

(ii) ***Debt instruments recharacterized under § 1.385-3.*** If a debt instrument treated as stock under § 1.385-3(b) is deemed to be exchanged under § 1.385-3(d)(2), in whole or in part, for a newly-issued debt instrument, the issue price of the newly-issued debt instrument is determined under either section 1273(b)(4) or 1274, as applicable.

(e) ***Indebtedness in part.*** [Reserved]

(f) ***Applicability date.*** This section applies to taxable years ending on or after January 19, 2017.

[T.D. 9790, 81 FR 72950, Oct. 21, 2016, as amended by T.D. 9790, 82 FR 8166, Jan. 24, 2017; T.D. 9880, 84 FR 59301, Nov. 4, 2019; T.D. 9897, 85 FR 28870, May 14, 2020]

§ 1.385-3 Certain distributions of debt instruments and similar transactions.

(a) ***Scope.*** This section sets forth factors that control the determination of whether an interest is treated as stock or indebtedness. Specifically, this section addresses the issuance of a covered debt instrument to a related person as part of a transaction or series of transactions that does not result in new investment in the operations of the issuer. Paragraph (b) of this section sets forth rules for determining when these factors are present, such that a covered debt instrument is treated as stock under this section. Paragraph (c) of this section provides exceptions to the application of paragraph (b) of this section. Paragraph (d) of this section provides operating rules. Paragraph (e) of this section reserves on the affirmative use of this section. Paragraph (f) of this section provides rules for the aggregate treatment of controlled partnerships. Paragraph (g) of this section provides definitions. Paragraph (h) of this section provides examples illustrating the application of the rules of this section. Paragraph (j) of this section provides dates of applicability. For rules regarding the application of this section to members of a consolidated group, see generally § 1.385-4.

(b) ***Covered debt instrument treated as stock*** —

(1) ***Effect of characterization as stock.*** Except as otherwise provided in paragraph (d)(7) of this section, to the extent a covered debt instrument is treated as stock under paragraphs (b)(2), (3), or (4) of this section, it is treated as stock for all federal tax purposes.

(2) ***General rule.*** Except as otherwise provided in paragraphs (c) and (e) of this section, a covered debt instrument is treated as stock to the extent the covered debt instrument is issued by a covered member to a member of the covered member's expanded group in one or more of the following transactions:

(i) In a distribution;

(ii) In exchange for expanded group stock, other than in an exempt exchange; or

(iii) In exchange for property in an asset reorganization, but only to the extent that, pursuant to the plan of reorganization, a shareholder in the transferor corporation that is a member of the issuer's expanded group immediately before the reorganization receives the covered debt instrument with respect to its stock in the transferor corporation.

(3) ***Funding rule*** —

(i) ***In general.*** Except as otherwise provided in paragraphs (c) and (e) of this section, a covered debt instrument that is not a qualified short-term debt instrument (as defined in paragraph (b)(3)(vii) of this section) is treated as stock to the extent that it is both issued by a covered member to a member of the covered member's expanded group in exchange for property and,

pursuant to paragraph (b)(3)(iii) or (b)(3)(iv) of this section, treated as funding a distribution or acquisition described in one or more of paragraphs (b)(3)(i)(A) through (C) of this section. A covered member that makes a distribution or acquisition described in paragraphs (b)(3)(i)(A) through (C) is referred to as a "funded member," regardless of when it issues a covered debt instrument in exchange for property.

(A) A distribution of property by the funded member to a member of the funded member's expanded group, other than in an exempt distribution;

(B) An acquisition of expanded group stock, other than an exempt exchange, by the funded member from a member of the funded member's expanded group in exchange for property other than expanded group stock; or

(C) An acquisition of property by the funded member in an asset reorganization but only to the extent that, pursuant to the plan of reorganization, a shareholder in the transferor corporation that is a member of the funded member's expanded group immediately before the reorganization receives other property or money within the meaning of section 356 with respect to its stock in the transferor corporation.

(ii) ***Transactions described in more than one paragraph.*** For purposes of this section, to the extent that a distribution or acquisition by a funded member is described in more than one of paragraphs (b)(3)(i)(A) through (C) of this section, the funded member is treated as making only a single distribution or acquisition described in paragraph (b)(3)(i) of this section. In the case of an asset reorganization, to the extent an acquisition by the transferee corporation is described in paragraph (b)(3)(i)(C) of this section, a distribution or acquisition by the transferor corporation is not also described in paragraph (b)(3)(i)(A) through (C) of this section. For purposes of this paragraph (b)(3)(ii), whether a distribution or acquisition is described in paragraphs (b)(3)(i)(A) through (C) of this section is determined without regard to paragraph (c) of this section.

(iii) ***Per se funding rule*** —

(A) ***In general.*** A covered debt instrument is treated as funding a distribution or acquisition described in paragraphs (b)(3)(i)(A) through (C) of this section if the covered debt instrument is issued by a funded member during the period beginning 36 months before the date of the distribution or acquisition, and ending 36 months after the date of the distribution or acquisition (*per se period*).

(B) ***Multiple interests.*** If, pursuant to paragraph (b)(3)(iii)(A) of this section, two or more covered debt instruments may be treated as stock by reason of this paragraph (b)(3), the covered debt instruments are tested under paragraph (b)(3)(iii)(A) of this section based on the order in which they are issued, with the earliest issued covered debt instrument tested first. See paragraph (h)(3) of this section, *Example 6,* for an illustration of this rule.

(C) ***Multiple distributions or acquisitions.*** If, pursuant to paragraph (b)(3)(iii)(A) of this section, a covered debt instrument may be treated as funding more than one distribution or acquisition described in paragraphs (b)(3)(i)(A) through (C) of this section, the covered debt instrument is treated as funding one or more distributions or acquisitions based on the order in which the distributions or acquisitions occur, with the earliest distribution or acquisition treated as the first distribution or acquisition that is funded. See paragraph (h)(3) of this section, *Example 9,* for an illustration of this rule.

(D) ***Transactions that straddle different expanded groups*** —

(*1*) ***In general.*** For purposes of paragraph (b)(3)(iii)(A) of this section, a covered debt instrument is not treated as issued by a funded member during the per se period with respect to a distribution or acquisition described in paragraphs (b)(3)(i)(A) through (C) of this section if all of the conditions described in paragraphs (b)(3)(iii)(D)(*1*)(*i*) through (*iii*) of this section are satisfied.

(*i*) The distribution or acquisition occurs prior to the issuance of the covered debt instrument by the funded member or, if the funded member is treated as making the distribution or acquisition of a predecessor or a successor, the predecessor or successor is not a member of the expanded group of which the funded member is a member on the date on which the distribution or the acquisition occurs.

(*ii*) The distribution or acquisition is made by the funded member when the funded member is a member of an expanded group that does not have an expanded group parent that is the funded member's expanded group parent when the covered debt instrument is issued. For purposes of the preceding sentence, a reference to an expanded group parent includes a reference to a predecessor or successor of the expanded group parent.

(*iii*) On the date of the issuance of the covered debt instrument, the recipient member (as defined in paragraph (b)(3)(iii)(D)(*2*) of this section) is neither a member nor a controlled partnership of an expanded group of which the funded member is a member.

(*2*) ***Recipient member.*** For purposes of this paragraph (b)(3)(iii)(D), the term *recipient member* means, with respect to a distribution or acquisition by a funded member described in paragraphs (b)(3)(i)(A) through (C) of this section, the expanded group member that receives a distribution of property, property in exchange for expanded group stock, or other property or money within the meaning of section 356 with respect to its stock in the transferor corporation. For purposes of this paragraph (b)(3)(iii)(D), a reference to the recipient member includes a predecessor or successor of the recipient member or one or more other entities that, in the aggregate, acquire substantially all of the property of the recipient member.

(E) ***Modifications of a covered debt instrument*** —

(*1*) ***In general.*** For purposes of paragraph (b)(3)(iii)(A) of this section, if a covered debt instrument is treated as exchanged for a modified covered debt instrument pursuant to § 1.1001-3(b), the modified covered debt instrument is treated as issued on the original issue date of the covered debt instrument.

(*2*) ***Effect of certain modifications.*** Notwithstanding paragraph (b)(3)(iii)(E)(1) of this section, if a covered debt instrument is treated as exchanged for a modified covered debt instrument pursuant to § 1.1001-3(b) and the modification, or one of the modifications, that results in the deemed exchange includes the substitution of an obligor on the covered debt instrument, the addition or deletion of a co-obligor on the covered debt instrument, or the material deferral of scheduled payments due under

the covered debt instrument, then the modified covered debt instrument is treated as issued on the date of the deemed exchange for purposes of paragraph (b)(3)(iii)(A) of this section.

(*3*) ***Additional principal amount.*** For purposes of paragraph (b)(3)(iii)(A) of this section, if the principal amount of a covered debt instrument is increased, the portion of the covered debt instrument attributable to such increase is treated as issued on the date of such increase.

(iv) ***Principal purpose rule.*** For purposes of this paragraph (b)(3), a covered debt instrument that is not issued by a funded member during the per se period with respect to a distribution or acquisition described in paragraphs (b)(3)(i)(A) through (C) of this section is treated as funding the distribution or acquisition to the extent that it is issued by a funded member with a principal purpose of funding a distribution or acquisition described in paragraphs (b)(3)(i)(A) through (C) of this section. Whether a covered debt instrument is issued with a principal purpose of funding a distribution or acquisition described in paragraphs (b)(3)(i)(A) through (C) of this section is determined based on all the facts and circumstances. A covered debt instrument may be treated as issued with a principal purpose of funding a distribution or acquisition described in paragraphs (b)(3)(i)(A) through (C) of this section regardless of whether it is issued before or after the distribution or acquisition.

(v) ***Predecessors and successors*** —

(A) ***In general.*** Subject to the limitations in paragraph (b)(3)(v)(B) of this section, for purposes of this paragraph (b)(3), references to a funded member include references to any predecessor or successor of such member. See paragraph (h)(3) of this section, *Examples 9* and *10,* for illustrations of this rule.

(B) ***Limitations to the application of the per se funding rule.*** For purposes of paragraph (b)(3)(iii)(A) of this section, a covered debt instrument issued by a funded member that satisfies the condition described in paragraph (b)(3)(iii)(A) with respect to a distribution or acquisition described in paragraphs (b)(3)(i)(A) through (C) of this section made by a predecessor or successor of the funded member is not treated as issued during the per se period with respect to the distribution or acquisition unless the conditions described in paragraphs (b)(3)(v)(B)(*1*) and (*2*) of this section are satisfied:

(*1*) The covered debt instrument is issued by the funded member during the period beginning 36 months before the date of the transaction in which the predecessor or successor becomes a predecessor or successor and ending 36 months after the date of the transaction.

(*2*) The distribution or acquisition is made by the predecessor or successor during the period beginning 36 months before the date of the transaction in which the predecessor or successor becomes a predecessor or successor of the funded member and ending 36 months after the date of the transaction.

(vi) ***Treatment of funded transactions.*** When a covered debt instrument is treated as stock pursuant to paragraph (b)(3) of this section, the distribution or acquisition described in paragraphs (b)(3)(i)(A) through (C) of this section that is treated as funded by such covered debt instrument is not recharacterized as a result of the treatment of the covered debt instrument as stock.

(vii) ***Qualified short-term debt instrument.*** The term qualified short-term debt instrument means a covered debt instrument that is described in paragraphs (b)(3)(vii)(A) though (D) of this section.

(A) ***Short-term funding arrangement.*** A covered debt instrument is described in this paragraph (b)(3)(vii)(A) if the requirements of the specified current assets test described in paragraph (b)(3)(vii)(A)(*1*) of this section or the 270-day test described in paragraph (b)(3)(vii)(A)(*2*) of this section (the alternative tests) are satisfied, provided that an issuer may only claim the benefit of one of the alternative tests with respect to covered debt instruments issued by the issuer in the same taxable year.

(*1*) ***Specified current assets test*** —

(*i*) ***In general.*** The requirements of this paragraph (b)(3)(vii)(A)(*1*) are satisfied with respect to a covered debt instrument if the requirement of paragraph (b)(3)(vii)(A)(*1*)(*ii*) of this section is satisfied, but only to the extent the requirement of paragraph (b)(3)(vii)(A)(*1*)(*iii*) of this section is satisfied.

(*ii*) ***Maximum interest rate.*** The rate of interest charged with respect to the covered debt instrument does not exceed an arm's length interest rate, as determined under section 482 and §§ 1.482-1 through 1.482-9, that would be charged with respect to a comparable debt instrument of the issuer with a term that does not exceed the longer of 90 days and the issuer's normal operating cycle.

(*iii*) ***Maximum outstanding balance.*** The amount owed by the issuer under covered debt instruments issued to members of the issuer's expanded group that satisfy the requirements of paragraph (b)(3)(vii)(A)(*1*)(*ii*), (b)(3)(vii)(A)(*2*) (if the covered debt instrument was issued in a prior taxable year), or (b)(3)(vii)(B) or (C) of this section immediately after the covered debt instrument is issued does not exceed the maximum of the amounts of specified current assets reasonably expected to be reflected, under applicable accounting principles, on the issuer's balance sheet as a result of transactions in the ordinary course of business during the subsequent 90-day period or the issuer's normal operating cycle, whichever is longer. For purposes of the preceding sentence, in the case of an issuer that is a qualified cash pool header, the amount owed by the issuer shall not take into account deposits described in paragraph (b)(3)(vii)(D) of this section. Additionally, the amount owed by any issuer shall be reduced by the amount of the issuer's deposits with a qualified cash pool header, but only to the extent of amounts borrowed from the same qualified cash pool header that satisfy the requirements of paragraph (b)(3)(vii)(A)(*2*) (if the covered debt instrument was issued in a prior taxable year) or (b)(3)(vii)(A)(*1*)(*ii*) of this section.

(*iv*) ***Specified current assets.*** For purposes of paragraph (b)(3)(vii)(A)(*1*)(*iii*) of this section, the term *specified current assets* means assets that are reasonably expected to be realized in cash or sold (including by being incorporated into inventory that is sold) during the normal operating cycle of the issuer, other than cash, cash equivalents, and assets that are reflected on the books and records of a qualified cash pool header.

(*v*) ***Normal operating cycle.*** For purposes of paragraph (b)(3)(vii)(A)(*1*) of this section, the term *normal operating cycle* means the issuer's normal operating cycle as determined under applicable accounting principles, except that if the issuer has no single clearly defined normal operating cycle, then the normal operating cycle is determined based on a reasonable analysis of the length of the operating cycles of the multiple businesses and their sizes relative to the overall size of the issuer.

(*vi*) ***Applicable accounting principles.*** For purposes of paragraph (b)(3)(vii)(A)(*1*) of this section, the term *applicable accounting principles* means the financial accounting principles generally accepted in the United States, or an international financial accounting standard, that is applicable to the issuer in preparing its financial statements, computed on a consistent basis.

(*2*) ***270-day test*** —

(*i*) ***In general.*** A covered debt instrument is described in this paragraph (b)(3)(vii)(A)(*2*) if the requirements of paragraphs (b)(3)(vii)(A)(*2*)(*ii*) through (*iv*) of this section are satisfied.

(*ii*) ***Maximum term and interest rate.*** The covered debt instrument must have a term of 270 days or less or be an advance under a revolving credit agreement or similar arrangement and must bear a rate of interest that does not exceed an arm's length interest rate, as determined under section 482 and §§ 1.482-1 through 1.482-9, that would be charged with respect to a comparable debt instrument of the issuer with a term that does not exceed 270 days.

(*iii*) ***Lender-specific indebtedness limit.*** The issuer is a net borrower from the lender for no more than 270 days during the taxable year of the issuer, and in the case of a covered debt instrument outstanding during consecutive tax years, the issuer is a net borrower from the lender for no more than 270 consecutive days, in both cases taking into account only covered debt instruments that satisfy the requirement of paragraph (b)(3)(vii)(A)(*2*)(*ii*) of this section other than covered debt instruments described in paragraph (b)(3)(vii)(B) or (C) of this section.

(*iv*) ***Overall indebtedness limit.*** The issuer is a net borrower under all covered debt instruments issued to members of the issuer's expanded group that satisfy the requirements of paragraphs (b)(3)(vii)(A)(*2*)(*ii*) and (*iii*) of this section, other than covered debt instruments described in paragraph (b)(3)(vii)(B) or (C) of this section, for no more than 270 days during the taxable year of the issuer, determined without regard to the identity of the lender under such covered debt instruments.

(*v*) ***Inadvertent error.*** An issuer's failure to satisfy the 270-day test will be disregarded if the failure is reasonable in light of all the facts and circumstances and the failure is promptly cured upon discovery. A failure to satisfy the 270-day test will be considered reasonable if the taxpayer maintains due diligence procedures to prevent such failures, as evidenced by having written policies and operational procedures in place to monitor compliance with

the 270-day test and management-level employees of the expanded group having undertaken reasonable efforts to establish, follow, and enforce such policies and procedures.

(B) ***Ordinary course loans.*** A covered debt instrument is described in this paragraph (b)(3)(vii)(B) if the covered debt instrument is issued as consideration for the acquisition of property other than money in the ordinary course of the issuer's trade or business, provided that the obligation is reasonably expected to be repaid within 120 days of issuance.

(C) ***Interest-free loans.*** A covered debt instrument is described in this paragraph (b)(3)(vii)(C) if the instrument does not provide for stated interest or no interest is charged on the instrument, the instrument does not have original issue discount (as defined in section 1273 and §§ 1.1273-1 and 1.1273-2), interest is not imputed under section 483 or section 7872 and §§ 1.483-1 through 1.483-4 or §§ 1.7872-1 through 1.7872-16, respectively, and interest is not required to be charged under section 482 and §§ 1.482-1 through 1.482-9.

(D) ***Deposits with a qualified cash pool header*** —

(*1*) ***In general.*** A covered debt instrument is described in this paragraph (b)(3)(vii)(D) if it is a demand deposit received by a qualified cash pool header described in paragraph (b)(3)(vii)(D)(*2*) of this section pursuant to a cash-management arrangement described in paragraph (b)(3)(vii)(D)(*3*) of this section. This paragraph (b)(3)(vii)(D) does not apply if a purpose for making the demand deposit is to facilitate the avoidance of the purposes of this section with respect to a qualified business unit (as defined in section 989(a) and § 1.989(a)-1) (QBU) that is not a qualified cash pool header.

(*2*) ***Qualified cash pool header.*** The term *qualified cash pool header* means an expanded group member, controlled partnership, or QBU described in § 1.989(a)-1(b)(2)(ii), that has as its principal purpose managing a cash-management arrangement for participating expanded group members, provided that the excess (if any) of funds on deposit with such expanded group member, controlled partnership, or QBU (header) over the outstanding balance of loans made by the header is maintained on the books and records of the header in the form of cash or cash equivalents, or invested through deposits with, or the acquisition of obligations or portfolio securities of, persons that do not have a relationship to the header (or, in the case of a header that is a QBU described in § 1.989(a)-1(b)(2)(ii), its owner) described in section 267(b) or section 707(b).

(*3*) ***Cash-management arrangement.*** The term cash-management arrangement means an arrangement the principal purpose of which is to manage cash for participating expanded group members. For purposes of the preceding sentence, managing cash means borrowing excess funds from participating expanded group members and lending funds to participating expanded group members, and may also include foreign exchange management, clearing payments, investing excess cash with an unrelated person, depositing excess cash with another qualified cash pool header, and settling intercompany accounts, for example through netting centers and pay-on-behalf-of programs.

(viii) ***Distributions or acquisitions occurring before April 5, 2016.*** A distribution or acquisition that occurs before April 5, 2016, is not taken into account for purposes of applying this paragraph (b)(3).

(4) ***Anti-abuse rule.*** If a member of an expanded group enters into a transaction with a principal purpose of avoiding the purposes of this section or § 1.385-3, an interest issued or held by that member or another member of the member's expanded group may, depending on the relevant facts and circumstances, be treated as stock. Paragraphs (b)(4)(i) and (ii) of this section include a non-exhaustive list of transactions that could result in an interest being treated as stock under this paragraph (b)(4).

(i) ***Interests.*** An interest is treated as stock if it is issued with a principal purpose of avoiding the purposes of this section or § 1.385-3. Interests subject to this paragraph (b)(4)(i) may include:

(A) An interest that is not a covered debt instrument for purposes of this section (for example, a contract to which section 483 applies that is not otherwise a covered debt instrument or a non-periodic swap payment that is not otherwise a covered debt instrument).

(B) A covered debt instrument issued to a person that is not a member of the issuer's expanded group, if the covered debt instrument is later acquired by a member of the issuer's expanded group or such person later becomes a member of the issuer's expanded group.

(C) A covered debt instrument issued to an entity that is not taxable as a corporation for federal tax purposes.

(D) A covered debt instrument issued in connection with a reorganization or similar transaction.

(E) A covered debt instrument issued as part of a plan or a series of transactions to expand the applicability of the transition rules described in § 1.385-3(j)(2) or § 1.385-3(k)(2).

(ii) ***Other transactions.*** A covered debt instrument is treated as stock if the funded member or any member of the expanded group engages in a transaction (including a distribution or acquisition) with a principal purpose of avoiding the purposes of this section or § 1.385-3. Transactions subject to this paragraph (b)(4)(ii) may include:

(A) A member of the issuer's expanded group is substituted as a new obligor or added as a co-obligor on an existing covered debt instrument.

(B) A covered debt instrument is transferred in connection with a reorganization or similar transaction.

(C) A covered debt instrument funds a distribution or acquisition where the distribution or acquisition is made by a member other than the funded member and the funded member acquires the assets of the other member in a transaction that does not make the other member a predecessor to the funded member.

(D) Members of a consolidated group engage in transactions as part of a plan or a series of transactions through the use of the consolidated group rules set forth in § 1.385-4, including through the use of the departing member rules.

(5) ***Coordination between general rule and funding rule.*** For purposes of this section, a distribution or acquisition described in paragraph (b)(2) of this section is not also described in paragraph (b)(3)(i) of this section. In the case of an asset reorganization, an acquisition described in paragraph (b)(2)(iii) of this section by the transferee corporation is not also a distribution or acquisition described in paragraph (b)(3)(i) of this section by the transferor corporation. For purposes of this paragraph (b)(5), whether a distribution or acquisition is described in paragraphs (b)(2)(i) through (iii) of this section is determined without regard to paragraph (c) of this section.

(6) ***Non-duplication.*** Except as otherwise provided in paragraph (d)(2) of this section, to the extent a distribution or acquisition described in paragraphs (b)(3)(i)(A) through (C) of this section is treated as funded by a covered debt instrument under paragraph (b)(3) of this section, the distribution or acquisition is not treated as funded by another covered debt instrument and the covered debt instrument is not treated as funding another distribution or acquisition for purposes of paragraph (b)(3).

(c) ***Exceptions*** —

(1) ***In general.*** This paragraph (c) provides exceptions for purposes of applying paragraphs (b)(2) and (b)(3) of this section to a covered member. These exceptions are applied in the following order: First, paragraph (c)(2) of this section; second, paragraph (c)(3) of this section; and, third, paragraph (c)(4) of this section. The exceptions under § 1.385-3(c)(2) and (c)(3) apply to distributions and acquisitions that are otherwise described in paragraph (b)(2) or (b)(3)(i) of this section after applying paragraphs (b)(3)(ii) and (b)(5) of this section. Except as otherwise provided, the exceptions are applied by taking into account the aggregate treatment of controlled partnerships described in § 1.385-3(f).

(2) ***Exclusions for transactions otherwise described in paragraph (b)(2) or (b)(3)(i) of this section*** —

(i) ***Exclusion for certain acquisitions of subsidiary stock*** —

(A) ***In general.*** An acquisition of expanded group stock (including by issuance) is not treated as described in paragraph (b)(2)(ii) or (b)(3)(i)(B) of this section if, immediately after the acquisition, the covered member that acquires the expanded group stock (acquirer) controls the member of the expanded group from which the expanded group stock is acquired (seller), and the acquirer does not relinquish control of the seller pursuant to a plan that existed on the date of the acquisition, other than in a transaction in which the seller ceases to be a member of the expanded group of which the acquirer is a member. For purposes of the preceding sentence, an acquirer and seller do not cease to be members of the same expanded group by reason of a complete liquidation described in section 331.

(B) ***Control.*** For purposes of this paragraph (c)(2)(i) and paragraph (c)(3)(ii)(E) of this section, control of a corporation means the direct or indirect ownership of more than 50 percent of the total combined voting power of all classes of stock of the corporation entitled to vote and more than 50 percent of the total value of the stock of the corporation. For purposes of the preceding sentence, indirect ownership is determined by applying the principles of section 958(a) without regard to whether an intermediate entity is foreign or domestic.

(C) ***Rebuttable presumption.*** For purposes of paragraph (c)(2)(i)(A) of this section, the acquirer is presumed to have a plan to relinquish control of the seller on the date of the acquisition if the acquirer relinquishes control of the seller within the 36-month period following the date of the acquisition. The presumption created by the previous sentence may be

rebutted by facts and circumstances clearly establishing that the loss of control was not contemplated on the date of the acquisition and that the avoidance of the purposes of this section or § 1.385-3 was not a principal purpose for the subsequent loss of control.

(ii) ***Exclusion for compensatory stock acquisitions.*** An acquisition of expanded group stock is not treated as described in paragraph (b)(2)(ii) or (b)(3)(i)(B) of this section if the expanded group stock is delivered to individuals that are employees, directors, or independent contractors in consideration for services rendered by such individuals to a member of the expanded group or a controlled partnership in which a member of the expanded group is an expanded group partner.

(iii) ***Exclusion for distributions or acquisitions resulting from transfer pricing adjustments.*** A distribution or acquisition deemed to occur under § 1.482-1(g) (including adjustments made pursuant to Revenue Procedure 99-32, 1999-2 C.B. 296) is not treated as described in paragraph (b)(3)(i)(A) or (B) of this section.

(iv) ***Exclusion for acquisitions of expanded group stock by a dealer in securities.*** An acquisition of expanded group stock by a dealer in securities (within the meaning of section 475(c)(1)), or by an expanded group partner treated as acquiring expanded group stock pursuant to § 1.385-3(f)(2) if the relevant controlled partnership is a dealer in securities, is not treated as described in paragraph (b)(2)(ii) or (b)(3)(i)(B) of this section to the extent the expanded group stock is acquired in the ordinary course of the dealer's business of dealing in securities. The preceding sentence applies solely to the extent that—

(A) The dealer accounts for the stock as securities held primarily for sale to customers in the ordinary course of business;

(B) The dealer disposes of the stock within a period of time that is consistent with the holding of the stock for sale to customers in the ordinary course of business, taking into account the terms of the stock and the conditions and practices prevailing in the markets for similar stock during the period in which it is held; and

(C) The dealer does not sell or otherwise transfer the stock to a person in the same expanded group, other than in a sale to a dealer that in turn satisfies the requirements of paragraph (c)(2)(iv) of this section.

(v) ***Exclusion for certain acquisitions of expanded group stock resulting from application of this section.*** The following deemed acquisitions are not treated as acquisitions of expanded group stock described in paragraph (b)(3)(i)(B) of this section, provided that they are not part of a plan or arrangement to prevent the application of paragraph (b)(3)(i) to a covered debt instrument:

(A) An acquisition of a covered debt instrument that is treated as stock by means of paragraph (b)(3) of this section.

(B) An acquisition of stock of a regarded owner that is deemed to be issued under § 1.385-3(d)(4).

(C) An acquisition of deemed partner stock pursuant to a deemed transfer or a specified event described in § 1.385-3(f)(4) or (5).

(3) ***Reductions for transactions described in paragraph (b)(2) or (b)(3)(i) of this section*** —

(i) ***Reduction for expanded group earnings*** —

(A) ***In general.*** The aggregate amount of any distributions or acquisitions by a covered member described in paragraph (b)(2) or (b)(3)(i) of this section in a taxable year during the covered member's expanded group period is reduced by the covered member's expanded group earnings account (as defined in paragraph (c)(3)(i)(B) of this section) for the expanded group period as of the close of the taxable year. The reduction described in this paragraph (c)(3)(i)(A) applies to one or more distributions or acquisitions based on the order in which the distributions or acquisitions occur, regardless of whether any distribution or acquisition would be treated as funded by a covered debt instrument without regard to this paragraph (c)(3).

(B) ***Expanded group earnings account.*** The term *expanded group earnings account* means, with respect to a covered member and an expanded group period (as defined in paragraph (c)(3)(i)(E) of this section) of the covered member, the excess, if any, of the covered member's expanded group earnings (as defined in paragraph (c)(3)(i)(C) of this section) for the expanded group period over the covered member's expanded group reductions (as defined in paragraph (c)(3)(i)(D) of this section) for the expanded group period.

(C) ***Expanded group earnings*** —

(*1*) ***In general.*** The term expanded group earnings means, with respect to a covered member and an expanded group period of the covered member, the earnings and profits accumulated by the covered member during the expanded group period, computed as of the close of the taxable year of the covered member, without diminution by reason of any distributions or acquisitions by the covered member described in paragraphs (b)(2) and (b)(3)(i) of this section. Notwithstanding the preceding sentence, the expanded group earnings of a covered member do not include earnings and profits accumulated by the covered member in any taxable year ending before April 5, 2016.

(*2*) ***Special rule for change in expanded group within a taxable year.*** For purposes of calculating a covered member's expanded group earnings for a taxable year that is not wholly included in an expanded group period, the covered member's expanded group earnings are ratably allocated among the portion of the taxable year included in the expanded group period and the portion of the taxable year not included in the expanded group period. For purposes of the preceding sentence, the expanded group period is determined by excluding the day on which the covered member becomes a member of an expanded group with the same expanded group parent and including the day on which the covered member ceases to be a member of an expanded group with the same expanded group parent.

(*3*) ***Look-through rule for dividends*** —

(*i*) ***In general.*** For purposes of paragraph (c)(3)(i)(C)(*1*) of this section, a dividend from a member of the same expanded group (*distributing member*) is not taken into account for purposes of calculating a covered member's expanded group earnings, except to the extent the dividend is attributable to earnings and profits accumulated by the distributing member in a taxable year ending after April 4, 2016, during its expanded group period (*qualified earnings and profits*). For purposes of the preceding sentence, a dividend received from a member

(*intermediate distributing member*) is not taken into account for purposes of calculating the qualified earnings and profits of a distributing member (or another intermediate distributing member), except to the extent the dividend is attributable to qualified earnings and profits of the intermediate distributing member. A dividend from a distributing member or an intermediate distributing member is considered to be attributable to qualified earnings and profits to the extent thereof. If the distributing member or the intermediate distributing member is not a covered member, the expanded group period of the member is determined under the principles of paragraph (c)(3)(i)(E) of this section. If a controlled partnership receives a dividend from a distributing member and a portion of the dividend is allocated (including through one or more partnerships) to a covered member, then, for purposes of this paragraph (c)(3)(i)(C)(*3*), the covered member is treated as receiving the dividend from the distributing member.

(*ii*) ***Dividend.*** For purposes of paragraph (c)(3)(i)(C)(*3*)(*i*) of this section, the term dividend has the meaning specified in section 316, including the portion of gain recognized under section 1248 that is treated as a dividend and deemed dividends under section 367(b) and the regulations thereunder. In addition, the term dividend includes inclusions with respect to stock (for example, inclusions under sections 951(a) and 1293).

(*4*) ***Effect of interest deductions.*** For purposes of calculating the expanded group earnings of a covered member for a taxable year, expanded group earnings are calculated without regard to the application of this section during the taxable year to a covered debt instrument issued by the covered member that was not treated as stock under paragraph (b) of this section as of the close of the preceding taxable year, or, if the covered member is an expanded group partner in a controlled partnership that is the issuer of a debt instrument, without regard to the application of § 1.385-3(f)(4)(i) during the taxable year with respect to the covered member's share of the debt instrument. To the extent that the application of this paragraph (c)(3)(i)(C)(*4*) reduces the expanded group earnings of the covered member for the taxable year, the expanded group earnings of the covered member are increased as of the beginning of the succeeding taxable year during the expanded group period.

(D) ***Expanded group reductions.*** The term expanded group reductions means, with respect to a covered member and an expanded group period of the covered member, the amounts by which acquisitions or distributions described in paragraph (b)(2) or (b)(3)(i) of this section were reduced by reason of paragraph (c)(3)(i)(A) of this section during the portion of the expanded group period preceding the taxable year.

(E) ***Expanded group period*** —

(*1*) ***In general.*** For purposes of this paragraph (c)(3)(i) and paragraph (c)(3)(ii) of this section, the term expanded group period means, with respect to a covered member, the period during which a covered member is a member of an expanded group with the same expanded group parent.

(2) ***Mere change.*** For purposes of paragraph (c)(3)(i)(E)(*1*) of this section, an expanded group parent that is a resulting corporation (within the meaning of § 1.368-2(m)(1)) in a reorganization described in section 368(a)(1)(F) is treated as the same expanded group parent as an expanded group parent that is a transferor corporation (within the meaning of § 1.368-2(m)(1)) in the same reorganization, provided that either—

(*i*) The transferor corporation is not a covered member; or

(*ii*) Both the transferor corporation and the resulting corporation are covered members.

(F) ***Special rules for certain corporate transactions*** —

(*1*) ***Reduction for expanded group earnings in an asset reorganization.*** For purposes of applying paragraph (c)(3)(i) of this section, a distribution or acquisition described in paragraph (b)(2) or (b)(3)(i) of this section that occurs pursuant to a reorganization described in section 381(a)(2) is reduced solely by the expanded group earnings account of the acquiring member after taking into account the adjustment to its expanded group earnings account provided in paragraph (c)(3)(i)(F)(*2*)(*ii*) of this section.

(*2*) ***Effect of certain corporate transactions on the calculation of expanded group earnings account*** —

(*i*) ***In general.*** Section 381 and § 1.312-10 are not taken into account for purposes of calculating a covered member's expanded group earnings account for an expanded group period. The expanded group earnings account that a covered member succeeds to under paragraphs (c)(3)(i)(F)(*2*)(*ii*) through (*iv*) of this section is attributed to the covered member's expanded group period as of the close of the date of the distribution or transfer.

(*ii*) ***Section 381 transactions.*** If a covered member (*acquiring member*) acquires the assets of another covered member (*acquired member*) in a transaction described in section 381(a), and, immediately before the transaction, both corporations are members of the same expanded group, then the acquiring member succeeds to the expanded group earnings account of the acquired member, if any, determined after application of paragraph (c)(3)(i) of this section with respect to the final taxable year of the acquired member.

(*iii*) ***Section 1.312-10(a) transactions.*** If a covered member (*transferor member*) transfers property to another covered member (*transferee member*) in a transaction described in § 1.312-10(a), the expanded group earnings account of the transferor member is allocated between the transferor member and the transferee member in the same proportion as the earnings and profits of the transferor member are allocated between the transferor member and the transferee member under § 1.312-10(a).

(*iv*) ***Section 1.312-10(b) transactions.*** If a covered member (*distributing member*) distributes the stock of another covered member (*controlled member*) in a transaction described in § 1.312-10(b), the expanded group earnings account of the distributing member is decreased by the amount that the expanded group

earnings account of the distributing member would have been decreased under paragraph (c)(3)(i)(F)(*2*)(*iii*) of this section if the distributing member had transferred the stock of the controlled member to a newly formed corporation in a transaction described in § 1.312-10(a). If the amount of the decrease described in the preceding sentence exceeds the expanded group earnings account of the controlled member immediately before the transaction described in § 1.312-10(b), then the expanded group earnings account of the controlled member after the transaction is equal to the amount of the decrease.

(G) ***Overlapping expanded groups.*** A covered member that is a member of two expanded groups at the same time has a single expanded group earnings account with respect to a single expanded group period. In this case, the expanded group period is determined by reference to the shorter of the two periods during which the covered member is a member of an expanded group with the same expanded group parent.

(ii) ***Reduction for qualified contributions*** —

(A) ***In general.*** The amount of a distribution or acquisition by a covered member described in paragraph (b)(2) or (b)(3)(i) of this section is reduced by the aggregate fair market value of the stock issued by the covered member in one or more qualified contributions (as defined in paragraph (c)(3)(ii)(B) of this section) during the qualified period (as defined in paragraph (c)(3)(ii)(C) of this section), but only to the extent the qualified contribution or qualified contributions have not reduced another distribution or acquisition. The reduction described in this paragraph (c)(3)(ii)(A) applies to one or more distributions or acquisitions based on the order in which the distributions or acquisitions occur, regardless of whether any distribution or acquisition would be treated as funded by a covered debt instrument without regard to this paragraph (c)(3).

(B) ***Qualified contribution.*** The term *qualified contribution* means, with respect to a covered member, except as provided in paragraph (c)(3)(ii)(E) of this section, a contribution of property, other than excluded property (defined in paragraph (c)(3)(ii)(D) of this section), to the covered member by a member of the covered member's expanded group (or by a controlled partnership of the expanded group) in exchange for stock.

(C) ***Qualified period.*** The term *qualified period* means, with respect to a covered member, a qualified contribution, and a distribution or acquisition described in paragraph (b)(2) or (b)(3)(i) of this section, the period beginning on the later of the beginning of the periods described in paragraphs (c)(3)(ii)(C)(*1*) and (*2*) of this section, and ending on the earlier of the ending of the periods described in paragraphs (c)(3)(ii)(C)(*1*) and (*2*) of this section or the date described in paragraph (c)(3)(ii)(C)(*3*) of this section.

(*1*) The period beginning 36 months before the date of the distribution or acquisition, and ending 36 months after the date of the distribution or acquisition.

(*2*) The covered member's expanded group period (as defined in paragraph (c)(3)(i)(E) of this section) that includes the distribution or acquisition.

(*3*) The last day of the first taxable year that a covered debt instrument issued by the covered member would, absent the application of this paragraph (c)(3)(ii) with respect to the distribution or acquisition, be treated, in whole or in part, as stock under paragraph (b) of this section or, in the case of a covered debt instrument

issued by a controlled partnership in which the covered member is an expanded group partner, the covered debt instrument would be treated, in whole or in part, as a specified portion.

(D) ***Excluded property.*** The term *excluded property* means—

(*1*) Expanded group stock;

(*2*) Property acquired by the covered member in an asset reorganization from a member of the expanded group of which the covered member is a member;

(*3*) A covered debt instrument of any member of the same expanded group, including a covered debt instrument issued by the covered member;

(*4*) Property acquired by the covered member in exchange for a covered debt instrument issued by the covered member that is recharacterized under paragraph (b)(3) of this section;

(*5*) A debt instrument issued by a controlled partnership of the expanded group of which the covered member is a member, including the portion of such a debt instrument that is a deemed transferred receivable or a retained receivable; and

(*6*) Any other property acquired by the covered member with a principal purpose to avoid the purposes of this section or § 1.385-3, including a transaction involving an indirect transfer of property described in paragraphs (c)(3)(ii)(D)(*1*) through (*5*) of this section.

(E) ***Excluded contributions*** —

(*1*) ***Upstream contributions from certain subsidiaries.*** For purposes of paragraph (c)(3)(ii)(B) of this section, a contribution of property from a corporation (*controlled member*) that the covered member controls, within the meaning of paragraph (c)(2)(i)(B) of this section, is not a qualified contribution.

(*2*) ***Contributions to a predecessor or successor.*** For purposes of paragraph (c)(3)(ii)(B) of this section, a contribution of property to a covered member from a corporation of which the covered member is a predecessor or successor, or from a corporation controlled by that corporation within the meaning of paragraph (c)(2)(i)(B) of this section, is not a qualified contribution.

(*3*) ***Contributions that do not increase fair market value.*** A contribution of property to a covered member that is not described in paragraph (c)(3)(ii)(E)(*1*) or (*2*) of this section is not a qualified contribution to the extent that the contribution does not increase the aggregate fair market value of the outstanding stock of the covered member immediately after the transaction and taking into account all related transactions, other than distributions and acquisitions described in paragraphs (b)(2) and (b)(3)(i) of this section.

(*4*) ***Contributions that become excluded contributions after the date of the contribution.*** If a contribution of property described in paragraph (c)(3)(ii)(E)(*1*) or (*2*) of this section occurs before the covered member acquires control of the controlled member described in paragraph (c)(3)(ii)(E)(*1*) or before the transaction in which the corporation described in paragraph (c)(3)(ii)(E)(*2*) becomes a predecessor or

successor to the covered member, the contribution of property ceases to be a qualified contribution on the date that the covered member acquires control of the controlled member or on the date of the transaction in which the corporation becomes a predecessor or successor to the covered member (*transaction date*). If the contribution of property occurs within 36 months before the transaction date, the covered member is treated as making a distribution described in paragraph (b)(3)(i)(A) of this section on the transaction date equal to the amount by which any distribution or acquisition described in paragraph (b)(2) or (b)(3)(i) of this section was reduced under paragraph (c)(3)(ii)(A) of this section because the contribution of property was treated as a qualified contribution.

(F) ***Special rules for certain corporate transactions*** —

(*1*) ***Reduction for qualified contributions in an asset reorganization.*** For purposes of applying paragraph (c)(3)(ii)(A) of this section, a distribution or acquisition described in paragraph (b)(2) or (b)(3)(i) of this section that occurs pursuant to a reorganization described in section 381(a)(2) is reduced solely by the qualified contributions of the acquiring member after taking into account the adjustment to its qualified contributions provided in paragraph (c)(3)(ii)(F)(*2*) of this section.

(*2*) ***Effect of certain corporate transactions on the calculation of qualified contributions*** —

(*i*) ***In general.*** This paragraph (c)(3)(ii)(F)(*2*) provides rules for allocating or reducing the qualified contributions of a covered member as a result of certain corporation transactions. For purposes of paragraph (c)(3)(ii)(C)(*1*) of this section, a qualified contribution that a covered member succeeds to under paragraphs (c)(3)(ii)(F)(*2*)(*ii*) and (*iii*) of this section is treated as made to the covered member on the date on which the qualified contribution was made to the covered member that received the qualified contribution. For purposes of paragraph (c)(3)(ii)(C)(*2*) of this section, a qualified contribution that a covered member succeeds to under paragraphs (c)(3)(ii)(F)(*2*)(*ii*) and (*iii*) of this section is attributed to the covered member's expanded group period as of the close of the date of the distribution or transfer. For purposes of paragraph (c)(3)(ii)(C)(*3*) of this section, a qualified contribution a covered member succeeds to under paragraphs (c)(3)(ii)(F)(*2*)(*ii*) and (*iii*) of this section is treated as made to the covered member as of the close of the date of the distribution or transfer.

(*ii*) ***Section 381 transactions.*** If a covered member (acquiring member) acquires the assets of another covered member (acquired member) in a transaction described in section 381(a), and, immediately before the transaction, both corporations are members of the same expanded group, the acquiring member succeeds to the qualified contributions of the acquired member, if any, adjusted for the application of paragraph (c)(3)(ii)(E)(*4*) of this section.

(*iii*) ***Section 1.312-10(a) transactions.*** If a covered member (transferor member) transfers property to another covered member (transferee member) in a transaction described in § 1.312-10(a), each qualified contribution of the transferor member is allocated between the transferor member and the transferee member in the same proportion as the earnings and profits of the transferor member are allocated between the transferor member and the transferee member under § 1.312-10(a).

(*iv*) ***Section 1.312-10(b) transactions.*** If a covered member (distributing member) distributes the stock of another covered member (controlled member) in a transaction described in § 1.312-10(b), each qualified contribution of the distributing member is decreased by the amount that each qualified contribution of the distributing member would have been decreased under paragraph (c)(3)(ii)(F)(*2*)(*iii*) of this section if the distributing member had transferred the stock of the controlled member to a newly formed corporation in a transaction described in § 1.312-10(a). No amount of the qualified contributions of the distributing member is allocated to the controlled member.

(iii) ***Predecessors and successors.*** For purposes of this paragraph (c)(3), references to a covered member do not include references to any corporation of which the covered member is a predecessor or successor. Accordingly, a distribution or acquisition by a covered member described in paragraphs (b)(3)(i)(A) through (C) is reduced solely by the expanded group earnings account of the covered member (taking into account the application of paragraph (c)(3)(i)(F)(*2*) of this section) and the qualified contributions of the covered member (taking into account the application of paragraph (c)(3)(ii)(F)(*2*) of this section), notwithstanding that the distribution or acquisition is treated as made by a funded member of which the covered member is a predecessor or successor.

(iv) ***Ordering rule.*** The exceptions described in this paragraph (c)(3) are applied in the following order: First, paragraph (c)(3)(i) of this section; and, second, paragraph (c)(3)(ii) of this section.

(4) ***Threshold exception.*** A covered debt instrument is not treated as stock under this section if, immediately after the covered debt instrument would be treated as stock under this section but for the application of this paragraph (c)(4), the aggregate adjusted issue price of covered debt instruments held by members of the issuer's expanded group that would be treated as stock under this section but for the application of this paragraph (c)(4) does not exceed $50 million. To the extent a debt instrument issued by a controlled partnership would be treated as a specified portion (as defined in paragraph (g)(23) of this section) but for the application of this paragraph (c)(4), the debt instrument is treated as a covered debt instrument described in the preceding sentence for purposes of this paragraph (c)(4). To the extent that, immediately after a covered debt instrument would be treated as stock under this section but for the application of this paragraph (c)(4), the aggregate adjusted issue price of covered debt instruments held by members of the issuer's expanded group that would be treated as stock under this section but for the application of this paragraph (c)(4) exceeds $50 million, only the amount of the covered debt instrument in excess of $50 million is treated as stock under this section. For purposes of this rule, any covered debt instrument that is not denominated in U.S. dollars is translated into U.S. dollars at the spot rate (as defined in § 1.988-1(d)) on the date that the covered debt instrument is issued.

(d) ***Operating rules*** —

(1) ***Timing.*** This paragraph (d)(1) provides rules for determining when a covered debt instrument is treated as stock under paragraph (b) of this section. For special rules regarding the treatment of a deemed exchange of a covered debt instrument that occurs pursuant to paragraphs (d)(1)(ii), (d)(1)(iii), or (d)(1)(iv) of this section, see § 1.385-1(d).

(i) ***General timing rule.*** Except as otherwise provided in this paragraph (d)(1), when paragraph (b) of this section applies to treat a covered debt instrument as stock, the covered debt instrument is treated as stock when the covered debt instrument is issued. When paragraph (b)(3) of this section applies to treat a covered debt instrument as stock when the covered debt instrument is issued, see also paragraph (b)(3)(vi) of this section.

(ii) ***Exception when a covered debt instrument is treated as funding a distribution or acquisition that occurs after the issuance of the covered debt instrument.*** When paragraph (b)(3)(iii) of this section applies to treat a covered debt instrument as funding a distribution or acquisition described in paragraph (b)(3)(i)(A) through (C) of this section that occurs after the covered debt instrument is issued, the covered debt instrument is deemed to be exchanged for stock on the date that the distribution or acquisition occurs. See paragraph (h)(3) of this section, *Examples 4* and *9,* for an illustration of this rule.

(iii) ***Exception for certain predecessor and successor transactions.*** To the extent that a covered debt instrument would not be treated as stock but for the fact that a funded member is treated as the predecessor or successor of another expanded group member under paragraph (b)(3)(v) of this section, the covered debt instrument is deemed to be exchanged for stock on the later of the date that the funded member completes the transaction causing it to become a predecessor or successor of the other expanded group member or the date that the covered debt instrument would be treated as stock under paragraph (d)(1)(i) or (ii) of this section.

(iv) ***Exception when a covered debt instrument is re-tested under paragraph (d)(2) of this section.*** When paragraph (b)(3)(iii) of this section applies to treat a covered debt instrument as funding a distribution or acquisition described in paragraphs (b)(3)(i)(A) through (C) of this section as a result of a re-testing described in paragraph (d)(2)(ii) of this section that occurs in a taxable year subsequent to the taxable year in which the covered debt instrument is issued, the covered debt instrument is deemed to be exchanged for stock on the later of the date of the re-testing or the date that the covered debt instrument would be treated as stock under paragraph (d)(1)(i) or (ii) of this section. See paragraph (h)(3) of this section, *Example 7,* for an illustration of this rule.

(2) ***Covered debt instrument treated as stock that leaves the expanded group*** —

(i) ***Events that cause a covered debt instrument to cease to be treated as stock.*** Subject to paragraph (b)(4) of this section, this paragraph (d)(2)(i) applies with respect to a covered debt instrument that is treated as stock under this section when the holder and issuer of a covered debt instrument cease to be members of the same expanded group, either because the covered debt instrument is transferred to a person that is not a member of the expanded group that includes the issuer or because the holder or the issuer ceases to be a member of the same expanded group, or in the case of a holder that is a controlled partnership, when the holder ceases to be a controlled partnership with respect to the expanded group of which the issuer is a member, either because the partnership ceases to be a controlled partnership or because the issuer ceases to be a member of the same expanded group with respect to which the holder is a controlled partnership. In such a case, the covered debt instrument ceases to be treated as stock under this section. For this purpose, immediately before the transaction that causes the holder and issuer of the covered debt instrument to cease to be members of the same expanded group, or, if the holder is a controlled partnership, that causes the holder to cease to be a controlled partnership with respect to the expanded group of which the issuer is a

member, the issuer is deemed to issue a new covered debt instrument to the holder in exchange for the covered debt instrument that was treated as stock in a transaction that is disregarded for purposes of paragraphs (b)(2) and (b)(3) of this section.

(ii) ***Re-testing of covered debt instruments and certain distributions and acquisitions*** —

(A) ***General rule.*** For purposes of paragraph (b)(3)(iii) of this section, when paragraph (d)(2)(i) of this section or § 1.385-4(c)(2) causes a covered debt instrument that previously was treated as stock pursuant to paragraph (b)(3) of this section to cease to be treated as stock, all other covered debt instruments of the issuer that are not treated as stock on the date that the transaction occurs that causes paragraph (d)(2)(i) of this section to apply are re-tested to determine whether those other covered debt instruments are treated as funding the distribution or acquisition that previously was treated as funded by the covered debt instrument that ceases to be treated as stock pursuant to paragraph (d)(2)(i) of this section. In addition, a covered debt instrument that is issued after an application of paragraph (d)(2)(i) of this section and within the per se period may also be treated as funding that distribution or acquisition. See paragraph (h)(3) of this section, *Example 7,* for an illustration of this rule.

(B) ***Re-testing upon a specified event with respect to a debt instrument issued by a controlled partnership.*** If, with respect to a covered member that is an expanded group partner and a debt instrument issued by the controlled partnership, there is reduction in the covered member's specified portion under § 1.385-3(f)(5)(i) by reason of a specified event, the covered member must re-test its debt instruments as described in paragraph (d)(2)(ii)(A) of this section.

(3) ***Inapplicability of section 385(c)(1).*** Section 385(c)(1) does not apply with respect to a covered debt instrument to the extent that it is treated as stock under this section.

(4) ***Treatment of disregarded entities.*** This paragraph (d)(4) applies to the extent that a covered debt instrument issued by a disregarded entity, the regarded owner of which is a covered member, would, absent the application of this paragraph (d)(4), be treated as stock under this section. In this case, rather than the covered debt instrument being treated as stock to such extent (applicable portion), the covered member that is the regarded owner of the disregarded entity is deemed to issue its stock in the manner described in this paragraph (d)(4). If the applicable portion otherwise would have been treated as stock under paragraph (b)(2) of this section, then the covered member is deemed to issue its stock to the expanded group member to which the covered debt instrument was, in form, issued (or transferred) in the transaction described in paragraph (b)(2) of this section. If the applicable portion otherwise would have been treated as stock under paragraph (b)(3)(i) of this section, then the covered member is deemed to issue its stock to the holder of the covered debt instrument in exchange for a portion of the covered debt instrument equal to the applicable portion. In each case, the covered member that is the regarded owner of the disregarded entity is treated as the holder of the applicable portion of the debt instrument issued by the disregarded entity, and the actual holder is treated as the holder of the remaining portion of the covered debt instrument and the stock deemed to be issued by the regarded owner. Under Federal tax principles, the applicable portion of the debt instrument issued by the disregarded entity generally is disregarded. This paragraph (d)(4) must be applied in a manner that is consistent with the principles of paragraph (f)(4) of this section. Thus, for example, stock deemed issued is deemed to have the same terms as the covered debt instrument issued by the disregarded entity, other than the identity of the issuer, and payments on the stock are determined by reference to payments made on the covered debt

instrument issued by the disregarded entity. See § 1.385-4(b)(3) for additional rules that apply if the regarded owner of the disregarded entity is a member of a consolidated group. If the regarded owner of a disregarded entity is a controlled partnership, then paragraph (f) of this section applies as though the controlled partnership were the issuer in form of the debt instrument.

(5) ***Payments with respect to partially recharacterized covered debt instruments*** —

(i) ***General rule.*** Except as otherwise provided in paragraph (d)(5)(ii) of this section, a payment with respect to an instrument that is partially recharacterized as stock is treated as made pro rata to the portion treated as stock and to the portion treated as indebtedness.

(ii) ***Special rule for payments not required pursuant to the terms of the instrument.*** A payment with respect to an instrument that is partially recharacterized as stock and that is a payment that is not required to be made pursuant to the terms of the instrument (for example, a prepayment of principal) may be designated by the issuer and the holder as with respect to the portion treated as stock or to the portion treated as indebtedness, in whole or in part. In the absence of such designation, see paragraph (d)(5)(i) of this section.

(6) ***Treatment of a general rule transaction to which an exception applies.*** To the extent a covered member would, absent the application of paragraph (c)(2) or (c)(3) of this section, be treated as making a distribution or acquisition described in paragraph (b)(2) of this section, then, solely for purposes of applying paragraph (b)(3) of this section, the covered member is treated as issuing the covered debt instrument issued in the distribution or acquisition to a member of the covered member's expanded group in exchange for property.

(7) ***Treatment for purposes of section 1504(a)*** —

(i) ***Debt instruments treated as stock.*** A covered debt instrument that is treated as stock under paragraph (b)(2), (3), or (4) of this section and that is not described in section 1504(a)(4) is not treated as stock for purposes of determining whether the issuer is a member of an affiliated group (within the meaning of section 1504(a)).

(ii) ***Deemed partner stock and stock deemed issued by a regarded owner.*** If deemed partner stock or stock that is deemed issued by a regarded owner under § 1.385-3(d)(4) is not described in section 1504(a)(4), then that stock is not treated as stock for purposes of determining whether the issuer of the stock is a member of an affiliated group (within the meaning of section 1504(a)).

(e) ***No affirmative use.*** [Reserved]

(f) ***Treatment of controlled partnerships*** —

(1) ***In general.*** For purposes of this section and § 1.385-4, a controlled partnership is treated as an aggregate of its partners in the manner described in this paragraph (f). Paragraph (f)(2) of this section sets forth rules concerning the aggregate treatment when a controlled partnership acquires property from a member of the expanded group. Paragraph (f)(3) of this section sets forth rules concerning the aggregate treatment when a controlled partnership issues a debt instrument. Paragraph (f)(4) of this section deems a debt instrument issued by a controlled partnership to be held by an expanded group partner rather than the holder-in-form in certain cases. Paragraph (f)(5) of this section sets forth the rules concerning events that cause the deemed results described in paragraph (f)(4) of this section to cease. Paragraph (f)(6) of this section exempts certain issuances

of a controlled partnership's debt to a partner and a partner's debt to a controlled partnership from the application of this section. For definitions applicable for this section, see paragraph (g) of this section. For examples illustrating the application of this section, see paragraph (h) of this section.

(2) *Acquisitions of property by a controlled partnership* —

(i) *Acquisitions of property when a member of the expanded group is a partner on the date of the acquisition* —

(A) ***Aggregate treatment.*** Except as otherwise provided in paragraphs (f)(2)(i)(C) and (f)(6) of this section, if a controlled partnership, with respect to an expanded group, acquires property from a member of the expanded group (transferor member), then, for purposes of this section, a member of the expanded group that is an expanded group partner on the date of the acquisition is treated as acquiring its share (as determined under paragraph (f)(2)(i)(B) of this section) of the property. The expanded group partner is treated as acquiring its share of the property from the transferor member in the manner (for example, in a distribution, in an exchange for property, or in an issuance), and on the date on which, the property is actually acquired by the controlled partnership from the transferor member. Accordingly, this section applies to a member's acquisition of property described in this paragraph (f)(2)(i)(A) in the same manner as if the member actually acquired the property from the transferor member, unless explicitly provided otherwise.

(B) ***Expanded group partner's share of property.*** For purposes of paragraph (f)(2)(i)(A) of this section, a partner's share of property acquired by a controlled partnership is determined in accordance with the partner's liquidation value percentage (as defined in paragraph (g)(17) of this section) with respect to the controlled partnership. The liquidation value percentage is determined on the date on which the controlled partnership acquires the property.

(C) ***Exception if transferor member is an expanded group partner.*** If a transferor member is an expanded group partner in the controlled partnership, paragraph (f)(2)(i)(A) of this section does not apply to such partner.

(ii) *Acquisitions of expanded group stock when a member of the expanded group becomes a partner after the acquisition* —

(A) ***Aggregate treatment.*** Except as otherwise provided in paragraph (f)(2)(ii)(C) of this section, if a controlled partnership, with respect to an expanded group, owns expanded group stock, and a member of the expanded group becomes an expanded group partner in the controlled partnership, then, for purposes of this section, the member is treated as acquiring its share (as determined under paragraph (f)(2)(ii)(B) of this section) of the expanded group stock owned by the controlled partnership. The member is treated as acquiring its share of the expanded group stock on the date on which the member becomes an expanded group partner. Furthermore, the member is treated as if it acquires its share of the expanded group stock from a member of the expanded group in exchange for property other than expanded group stock, regardless of the manner in which the partnership acquired the stock and in which the member acquires its partnership interest. Accordingly, this section applies to a member's acquisition of expanded group stock described in this paragraph (f)(2)(ii)(A) in the same manner as if the member actually acquired the stock from a member of the expanded group in exchange for property other than expanded group stock, unless explicitly provided otherwise.

(B) ***Expanded group partner's share of expanded group stock.*** For purposes of paragraph (f)(2)(ii)(A) of this section, a partner's share of expanded group stock owned by a controlled partnership is determined in accordance with the partner's liquidation value percentage with respect to the controlled partnership. The liquidation value percentage is determined on the date on which a member of the expanded group becomes an expanded group partner in the controlled partnership.

(C) ***Exception if an expanded group partner acquires its interest in a controlled partnership in exchange for expanded group stock.*** Paragraph (f)(2)(ii)(A) of this section does not apply to a member of an expanded group that acquires its interest in a controlled partnership either from another partner in exchange solely for expanded group stock or upon a partnership contribution to the controlled partnership comprised solely of expanded group stock.

(3) ***Issuances of debt instruments by a controlled partnership to a member of an expanded group*** —

(i) ***Aggregate treatment.*** If a controlled partnership, with respect to an expanded group, issues a debt instrument to a member of the expanded group, then, for purposes of this section, a covered member that is an expanded group partner is treated as the issuer with respect to its share (as determined under paragraph (f)(3)(ii) of this section) of the debt instrument issued by the controlled partnership. This section applies to the portion of the debt instrument treated as issued by the covered member as described in this paragraph (f)(3)(i) in the same manner as if the covered member actually issued the debt instrument to the holder-in-form, unless otherwise provided. See paragraph (f)(4) of this section, which deems a debt instrument issued by a controlled partnership to be held by an expanded group partner rather than the holder-in-form in certain cases.

(ii) ***Expanded group partner's share of a debt instrument issued by a controlled partnership*** —

(A) ***General rule.*** An expanded group partner's share of a debt instrument issued by a controlled partnership is determined on each date on which the partner makes a distribution or acquisition described in paragraph (b)(2) or (b)(3)(i) of this section (testing date). An expanded group partner's share of a debt instrument issued by a controlled partnership to a member of the expanded group is determined in accordance with the partner's issuance percentage (as defined in paragraph (g)(16) of this section) on the testing date. A partner's share determined under this paragraph (f)(3)(ii)(A) is adjusted as described in paragraph (f)(3)(ii)(B) of this section.

(B) ***Additional rules if there is a specified portion with respect to a debt instrument*** —

(*1*) An expanded group partner's share (as determined under paragraph (f)(3)(ii)(A) of this section) of a debt instrument issued by a controlled partnership is reduced, but not below zero, by the sum of all of the specified portions (as defined in paragraph (g)(23) of this section), if any, with respect to the debt instrument that correspond to one or more deemed transferred receivables (as defined in paragraph (g)(8) of this section) that are deemed to be held by the partner.

(*2*) If the aggregate of all of the expanded group partners' shares (as determined under paragraph (f)(3)(ii)(A) of this section and reduced under paragraph (f)(3)(ii)(B)(*1*) of this section) of the debt instrument exceeds the adjusted issue price of the debt, reduced by the sum of all of the specified portions with respect to the debt instrument that correspond to one or more deemed transferred receivables that are

deemed to be held by one or more expanded group partners (excess amount), then each expanded group partner's share (as determined under paragraph (f)(3)(ii)(A) of this section and reduced under paragraph (f)(3)(ii)(B)(*1*) of this section) of the debt instrument is reduced. The amount of an expanded group partner's reduction is the excess amount multiplied by a fraction, the numerator of which is the partner's share, and the denominator of which is the aggregate of all of the expanded group partners' shares.

(iii) ***Qualified short-term debt instrument.*** The determination of whether a debt instrument is a qualified short-term debt instrument for purposes of paragraph (b)(3)(vii) of this section is made at the partnership-level without regard to paragraph (f)(3)(i) of this section.

(4) ***Recharacterization when there is a specified portion with respect to a debt instrument issued by a controlled partnership*** —

(i) ***General rule.*** A specified portion, with respect to a debt instrument issued by a controlled partnership and an expanded group partner, is not treated as stock under paragraph (b)(2) or (b)(3)(i) of this section. Except as otherwise provided in paragraphs (f)(4)(ii) and (iii) of this section, the holder-in-form (as defined in paragraph (g)(15) of this section) of the debt instrument is deemed to transfer a portion of the debt instrument (a deemed transferred receivable, as defined in paragraph (g)(8) of this section) with a principal amount equal to the adjusted issue price of the specified portion to the expanded group partner in exchange for stock in the expanded group partner (deemed partner stock, as defined in paragraph (g)(6) of this section) with a fair market value equal to the principal amount of the deemed transferred receivable. Except as otherwise provided in paragraph (f)(4)(vi) of this section (concerning the treatment of a deemed transferred receivable for purposes of section 752) and paragraph (f)(5) of this section (concerning specified events subsequent to the deemed transfer), the deemed transfer described in this paragraph (f)(4)(i) is deemed to occur for all Federal tax purposes.

(ii) ***Expanded group partner is the holder-in-form of a debt instrument.*** If the specified portion described in paragraph (f)(4)(i) of this section is with respect to an expanded group partner that is the holder-in-form of the debt instrument, then paragraph (f)(4)(i) of this section will not apply with respect to that specified portion except that only the first sentence of paragraph (f)(4)(i) of this section is applicable.

(iii) ***Expanded group partner is a consolidated group member.*** This paragraph (f)(4)(iii) applies when one or more expanded group partners is a member of a consolidated group that files (or is required to file) a consolidated U.S. Federal income tax return. In this case, notwithstanding § 1.385-4(b)(1) (which generally treats members of a consolidated group as one corporation for purposes of this section), the holder-in-form of the debt instrument issued by the controlled partnership is deemed to transfer the deemed transferred receivable or receivables to the expanded group partner or partners that are members of a consolidated group that make, or are treated as making under paragraph (f)(2) of this section, the regarded distributions or acquisitions (within the meaning of § 1.385-4(e)(5)) described in paragraph (b)(2) or (b)(3)(i) of this section in exchange for deemed partner stock in such partner or partners. To the extent those regarded distributions or acquisitions are made by a member of the consolidated group that is not an expanded group partner (excess amount), the holder-in-form is deemed to transfer a portion of the deemed transferred receivable or receivables to each member of the consolidated group that is an expanded group partner in exchange for deemed partner stock in the expanded group partner. The portion is the excess amount multiplied by a fraction, the

numerator of which is the portion of the consolidated group's share (as determined under paragraph (f)(3)(ii) of this section) of the debt instrument issued by the controlled partnership that would have been the expanded group partner's share if the partner was not a member of a consolidated group, and the denominator of which is the consolidated group's share of the debt instrument issued by the controlled partnership.

(iv) ***Rules regarding deemed transferred receivables and deemed partner stock*** —

(A) ***Terms of deemed partner stock.*** Deemed partner stock has the same terms as the deemed transferred receivable with respect to the deemed transfer, other than the identity of the issuer.

(B) ***Treatment of payments with respect to a debt instrument for which there is one or more deemed transferred receivables.*** When a payment is made with respect to a debt instrument issued by a controlled partnership for which there is one or more deemed transferred receivables, then, if the amount of the retained receivable (as defined in paragraph (g)(22) of this section) held by the holder-in-form is zero and a single deemed holder is deemed to hold all of the deemed transferred receivables, the entire payment is allocated to the deemed transferred receivables held by the single deemed holder. If the amount of the retained receivable held by the holder-in-form is greater than zero or there are multiple deemed holders of deemed transferred receivables, or both, the payment is apportioned among the retained receivable, if any, and each deemed transferred receivable in proportion to the principal amount of all the receivables. The portion of a payment allocated or apportioned to a retained receivable or a deemed transferred receivable reduces the principal amount of, or accrued interest with respect to, as applicable depending on the payment, the retained receivable or deemed transferred receivable. When a payment allocated or apportioned to a deemed transferred receivable reduces the principal amount of the receivable, the expanded group partner that is the deemed holder with respect to the deemed transferred receivable is deemed to redeem the same amount of deemed partner stock, and the specified portion with respect to the debt instrument is reduced by the same amount. When a payment allocated or apportioned to a deemed transferred receivable reduces accrued interest with respect to the receivable, the expanded group partner that is the deemed holder with respect to the deemed transferred receivable is deemed to make a matching distribution in the same amount with respect to the deemed partner stock. The controlled partnership is treated as the paying agent with respect to the deemed partner stock.

(v) ***Holder-in-form transfers debt instrument in a transaction that is not a specified event.*** If the holder-in-form transfers the debt instrument (which is disregarded for Federal tax purposes) to a member of the expanded group or a controlled partnership (and therefore the transfer is not a specified event described in paragraph (f)(5)(iii)(F) of this section), then, for Federal tax purposes, the holder-in-form is deemed to transfer the retained receivable and the deemed partner stock to the transferee.

(vi) ***Allocation of deemed transferred receivable under section 752.*** A partnership liability that is a debt instrument with respect to which there is one or more deemed transferred receivables is allocated for purposes of section 752 without regard to any deemed transfer.

(5) ***Specified events affecting ownership following a deemed transfer*** —

(i) ***General rule.*** If a specified event (within the meaning of paragraph (f)(5)(iii) of this section) occurs with respect to a deemed transfer, then, immediately before the specified event, the expanded group partner that is both the issuer of the deemed partner stock and the deemed holder of the deemed transferred receivable is deemed to distribute the deemed transferred receivable (or portion thereof, as determined under paragraph (f)(5)(iv) of this section) to the holder-in-form in redemption of the deemed partner stock (or portion thereof, as determined under paragraph (f)(5)(iv) of this section) deemed to be held by the holder-in-form. The deemed distribution is deemed to occur for all Federal tax purposes, except that the distribution is disregarded for purposes of paragraph (b) of this section. Except when the deemed transferred receivable (or portion thereof, as determined under paragraph (f)(5)(iv) of this section) is deemed to be retransferred under paragraph (f)(5)(ii) of this section, the principal amount of the retained receivable held by the holder-in-form is increased by the principal amount of the deemed transferred receivable, the deemed transferred receivable ceases to exist for Federal tax purposes, and the specified portion (or portion thereof) that corresponds to the deemed transferred receivable (or portion thereof) ceases to be treated as a specified portion for purposes of this section.

(ii) ***New deemed transfer when a specified event involves a transferee that is a covered member that is an expanded group partner.*** If the specified event is described in paragraph (f)(5)(iii)(E) of this section, the holder-in-form of the debt instrument is deemed to retransfer the deemed transferred receivable (or portion thereof, as determined under paragraph (f)(5)(iv) of this section) that the holder-in-form is deemed to have received pursuant to paragraph (f)(5)(i) of this section, to the transferee expanded group partner in exchange for deemed partner stock issued by the transferee expanded group partner with a fair market value equal to the principal amount of the deemed transferred receivable (or portion thereof) that is retransferred. For purposes of this section, this deemed transfer is treated in the same manner as a deemed transfer described in paragraph (f)(4)(i) of this section.

(iii) ***Specified events.*** A specified event, with respect to a deemed transfer, occurs when, immediately after the transaction and taking into account all related transactions:

(A) The controlled partnership that is the issuer of the debt instrument either ceases to be a controlled partnership or ceases to have an expanded group partner that is a covered member.

(B) The holder-in-form is a member of the expanded group immediately before the transaction, and the holder-in-form and the deemed holder cease to be members of the same expanded group for the reasons described in paragraph (d)(2) of this section.

(C) The holder-in-form is a controlled partnership immediately before the transaction, and the holder-in-form ceases to be a controlled partnership.

(D) The expanded group partner that is both the issuer of deemed partner stock and the deemed holder transfers (directly or indirectly through one or more partnerships) all or a portion of its interest in the controlled partnership to a person that neither is a covered member nor a controlled partnership with an expanded group partner that is a covered member. If there is a transfer of only a portion of the interest, see paragraph (f)(5)(iv) of this section.

(E) The expanded group partner that is both the issuer of deemed partner stock and the deemed holder transfers (directly or indirectly through one or more partnerships) all or a portion of its interest in the controlled partnership to a covered member or a controlled partnership with an expanded group partner that is a covered member. If there is a transfer of only a portion of the interest, see paragraph (f)(5)(iv) of this section.

(F) The holder-in-form transfers the debt instrument (which is disregarded for Federal tax purposes) to a person that is neither a member of the expanded group nor a controlled partnership. See paragraph (f)(4)(v) of this section if the holder-in-form transfers the debt instrument to a member of the expanded group or a controlled partnership.

(iv) ***Specified event involving a transfer of only a portion of an interest in a controlled partnership.*** If, with respect to a specified event described in paragraph (f)(5)(iii)(D) or (E) of this section, an expanded group partner transfers only a portion of its interest in a controlled partnership, then, only a portion of the deemed transferred receivable that is deemed to be held by the expanded group partner is deemed to be distributed in redemption of an equal portion of the deemed partner stock. The portion of the deemed transferred receivable referred to in the preceding sentence is equal to the product of the entire principal amount of the deemed transferred receivable deemed to be held by the expanded group partner multiplied by a fraction, the numerator of which is the portion of the expanded group partner's capital account attributable to the interest that is transferred, and the denominator of which is the expanded group partner's capital account with respect to its entire interest, determined immediately before the specified event.

(6) ***Issuance of a partnership's debt instrument to a partner and a partner's debt instrument to a partnership.*** If a controlled partnership, with respect to an expanded group, issues a debt instrument to an expanded group partner, or if a covered member that is an expanded group partner issues a covered debt instrument to a controlled partnership, and in each case, no partner deducts or receives an allocation of expense with respect to the debt instrument, then this section does not apply to the debt instrument.

(g) ***Definitions.*** The definitions in this paragraph (g) apply for purposes of this section and §§ 1.385-3 and 1.385-4.

(1) ***Asset reorganization.*** The term asset reorganization means a reorganization described in section 368(a)(1)(A), (C), (D), (F), or (G).

(2) ***Consolidated group.*** The term consolidated group has the meaning specified in § 1.1502-1(h).

(3) ***Covered debt instrument*** —

(i) ***In general.*** The term covered debt instrument means a debt instrument issued after April 4, 2016, that is not a qualified dealer debt instrument (as defined in paragraph (g)(3)(ii) of this section) or an excluded statutory or regulatory debt instrument (as defined in paragraph (g)(3)(iii) of this section), and that is issued by a covered member that is not an excepted regulated financial company (as defined in paragraph (g)(3)(iv) of this section) or a regulated insurance company (as defined in paragraph (g)(3)(v) of this section).

(ii) ***Qualified dealer debt instrument.*** For purposes of this paragraph (g)(3), the term qualified dealer debt instrument means a debt instrument that is issued to or acquired by an expanded group member that is a dealer in securities (within the meaning of section 475(c)(1)) in the ordinary course of the dealer's business of dealing in securities. The preceding sentence applies solely to the extent that—

(A) The dealer accounts for the debt instruments as securities held primarily for sale to customers in the ordinary course of business;

(B) The dealer disposes of the debt instruments (or the debt instruments mature) within a period of time that is consistent with the holding of the debt instruments for sale to customers in the ordinary course of business, taking into account the terms of the debt instruments and the conditions and practices prevailing in the markets for similar debt instruments during the period in which it is held; and

(C) The dealer does not sell or otherwise transfer the debt instrument to a member of the dealer's expanded group unless that sale or transfer is to a dealer that satisfies the requirements of this paragraph (g)(3)(ii).

(iii) ***Excluded statutory or regulatory debt instrument.*** For purposes of this paragraph (g)(3), the term excluded statutory or regulatory debt instrument means a debt instrument that is described in any of the following paragraphs:

(A) Production payments treated as a loan under section 636(a) or (b).

(B) A “regular interest” in a real estate mortgage investment conduit described in section 860G(a)(1).

(C) A debt instrument that is deemed to arise under § 1.482-1(g)(3) (including adjustments made pursuant to Revenue Procedure 99-32, 1999-2 C.B. 296).

(D) A stripped bond or coupon described in section 1286, unless such instrument was issued with a principal purpose of avoiding the purposes of this section or § 1.385-3.

(E) A lease treated as a loan under section 467.

(iv) ***Excepted regulated financial company.*** For purposes of this paragraph (g)(3), the term excepted regulated financial company means a covered member that is a regulated financial company (as defined in paragraph (g)(3)(iv)(A) of this section) or a member of a regulated financial group (as defined in paragraph (g)(3)(iv)(B) of this section).

(A) ***Regulated financial company.*** For purposes of paragraph (g)(3)(iv), the term regulated financial company means—

(*1*) A bank holding company, as defined in 12 U.S.C. 1841;

(*2*) A covered savings and loan holding company, as defined in 12 CFR 217.2;

(*3*) A national bank;

(*4*) A bank that is a member of the Federal Reserve System and is incorporated by special law of any State, or organized under the general laws of any State, or of the United States, including a Morris Plan bank, or other incorporated banking institution engaged in a similar business;

(*5*) An insured depository institution, as defined in 12 U.S.C. 1813(c)(2);

(*6*) A nonbank financial company subject to a determination under 12 U.S.C. 5323(a)(1) or (b)(1);

(*7*) A U.S. intermediate holding company formed by a foreign banking organization in compliance with 12 CFR 252.153;

(*8*) An Edge Act corporation organized under section 25A of the Federal Reserve Act (12 U.S.C. 611-631);

(*9*) Corporations having an agreement or undertaking with the Board of Governors of the Federal Reserve System under section 25 of the Federal Reserve Act (12 U.S.C. 601-604a);

(*10*) A supervised securities holding company, as defined in 12 U.S.C. 1850a(a)(5);

(*11*) A broker or dealer that is registered with the Securities and Exchange Commission under 15 U.S.C. 78o(b);

(*12*) A futures commission merchant, as defined in 7 U.S.C. 1a(28);

(*13*) A swap dealer, as defined in 7 U.S.C. 1a(49);

(*14*) A security-based swap dealer, as defined in 15 U.S.C. 78c(a)(71);

(*15*) A Federal Home Loan Bank, as defined in 12 U.S.C. 1422(1)(A);

(*16*) A Farm Credit System Institution chartered and subject to the provisions of the Farm Credit Act of 1971 (12 U.S.C. 2001 *et seq.*); or

(*17*) A small business investment company, as defined in 15 U.S.C. 662(3).

(B) ***Regulated financial group*** —

(*1*) ***General rule.*** For purposes of paragraph (g)(3)(iv) of this section, except as otherwise provided in paragraph (g)(3)(iv)(B)(*2*) of this section, the term regulated financial group means any expanded group of which a covered member that is a regulated financial company within the meaning of paragraphs (g)(3)(iv)(A)(*1*) through (*10*) of this section would be the expanded group parent if no person owned, directly or indirectly (as defined in § 1.385-1(c)(4)(iii)), the regulated financial company. A domestic eligible entity (within the meaning of § 301.7701-5(a) of this chapter) treated as a partnership or disregarded as an entity separate from its owner is, for purposes of this paragraph (g)(3)(iv)(B), also treated as a covered member.

(*2*) ***Exception for certain non-financial entities.*** A corporation is not a member of a regulated financial group if it is held by a regulated financial company pursuant to 12 U.S.C. 1843(k)(1)(B), 12 U.S.C. 1843(k)(4)(H), or 12 U.S.C. 1843(o).

(v) ***Regulated insurance company.*** For purposes of this paragraph (g)(3), the term regulated insurance company means a covered member that is—

(A) Subject to tax under subchapter L of chapter 1 of the Internal Revenue Code;

(B) Domiciled or organized under the laws of one of the 50 states or the District of Columbia (for purposes of paragraph (g)(3)(v) of this section, each being a “state”);

(C) Licensed, authorized, or regulated by one or more states to sell insurance, reinsurance, or annuity contracts to persons other than related persons (within the meaning of section 954(d)(3)) in such states, but in no case will a corporation satisfy the requirements of this paragraph (g)(3)(v)(C) if a principal purpose for obtaining such license, authorization, or regulation was to qualify the issuer as a regulated insurance company; and

(D) Engaged in regular issuances of (or subject to ongoing liability with respect to) insurance, reinsurance, or annuity contracts with persons that are not related persons (within the meaning of section 954(d)(3)).

(4) ***Debt instrument.*** The term debt instrument means an interest that would, but for the application of this section, be treated as a debt instrument as defined in section 1275(a) and § 1.1275-1(d).

(5) ***Deemed holder.*** The term *deemed holder* means, with respect to a deemed transfer, the expanded group partner that is deemed to hold a deemed transferred receivable by reason of the deemed transfer.

(6) ***Deemed partner stock.*** The term *deemed partner stock* means, with respect to a deemed transfer, the stock deemed issued by an expanded group partner as described in paragraphs (f)(4)(i) and (iii) and (f)(5)(ii) of this section. The amount of deemed partner stock is reduced as described in paragraphs (f)(4)(iv)(B) and (f)(5)(i) of this section.

(7) ***Deemed transfer.*** The term *deemed transfer* means, with respect to a specified portion, the transfer described in paragraph (f)(4)(i) or (iii) or (f)(5)(ii) of this section.

(8) ***Deemed transferred receivable.*** The term *deemed transferred receivable* means, with respect to a deemed transfer, the portion of the debt instrument described in paragraph (f)(4)(i) or (iii) or (f)(5)(ii) of this section. The deemed transferred receivable is reduced as described in paragraphs (f)(4)(iv)(B) and (f)(5)(i) of this section.

(9) ***Distribution.*** The term distribution means any distribution made by a corporation with respect to its stock.

(10) ***Exempt distribution.*** The term exempt distribution means either—

(i) A distribution of stock that is permitted to be received without the recognition of gain or income under section 354(a)(1) or 355(a)(1), or, if section 356 applies, that is not treated as other property or money described in section 356; or

(ii) A distribution of property in a complete liquidation under section 336(a) or 337(a).

(11) ***Exempt exchange.*** The term exempt exchange means an acquisition of expanded group stock in which either—

(i) In a case in which the transferor and transferee of the expanded group stock are parties to an asset reorganization, either—

(A) Section 361(a) or (b) applies to the transferor of the expanded group stock and the stock is not transferred by issuance; or

(B) Section 1032 or § 1.1032-2 applies to the transferor of the expanded group stock and the stock is distributed by the transferee pursuant to the plan of reorganization;

(ii) The transferor of the expanded group stock is a shareholder that receives property in a complete liquidation to which section 331 or 332 applies; or

(iii) The transferor of the expanded group stock is an acquiring entity that is deemed to issue the stock in exchange for cash from an issuing corporation in a transaction described in § 1.1032-3(b).

(12) ***Expanded group partner.*** The term expanded group partner means, with respect to a controlled partnership of an expanded group, a member of the expanded group that is a partner (directly or indirectly through one or more partnerships).

(13) ***Expanded group stock.*** The term expanded group stock means, with respect to a member of an expanded group, stock of a member of the same expanded group.

(14) ***Funded member.*** The term funded member has the meaning provided in paragraph (b)(3)(i) of this section.

(15) ***Holder-in-form.*** The term *holder-in-form* means, with respect to a debt instrument issued by a controlled partnership, the person that, absent the application of paragraph (f)(4) of this section, would be the holder of the debt instrument for Federal tax purposes. Therefore, the term holder-in-form does not include a deemed holder (as defined in paragraph (g)(5) of this section).

(16) ***Issuance percentage.*** The term *issuance percentage* means, with respect to a controlled partnership and an expanded group partner, the ratio (expressed as a percentage) of the partner's reasonably anticipated distributive share of all the partnership's interest expense over a reasonable period, divided by all of the partnership's reasonably anticipated interest expense over that same period, taking into account any and all relevant facts and circumstances. The relevant facts and circumstances include, without limitation, the term of the debt instrument; whether the partnership anticipates issuing other debt instruments; and the partnership's anticipated section 704(b) income and expense, and the partners' respective anticipated allocation percentages, taking into account anticipated changes to those allocation percentages over time resulting, for example, from anticipated contributions, distributions, recapitalizations, or provisions in the controlled partnership agreement.

(17) ***Liquidation value percentage.*** The term *liquidation value percentage* means, with respect to a controlled partnership and an expanded group partner, the ratio (expressed as a percentage) of the liquidation value of the expanded group partner's interest in the partnership divided by the aggregate liquidation value of all the partners' interests in the partnership. The liquidation value of an expanded group partner's interest in a controlled partnership is the amount of cash the partner would receive with respect to the interest if the partnership (and any partnership through which the partner indirectly owns an interest in the controlled partnership) sold all of its property for an amount of cash equal to the fair market value of the property (taking into account section 7701(g)), satisfied all of its liabilities (other than those described in § 1.752-7), paid an unrelated third party to assume all of its § 1.752-7 liabilities in a fully taxable transaction, and then the partnership (and any partnership through which the partner indirectly owns an interest in the controlled partnership) liquidated.

(18) ***Member of a consolidated group.*** The term member of a consolidated group means a corporation described in § 1.1502-1(b).

(19) ***Per se period.*** The term per se period has the meaning provided in paragraph (b)(3)(iii)(A) of this section.

(20) ***Predecessor*** —

(i) ***In general.*** Except as otherwise provided in paragraph (g)(20)(ii) of this section, the term predecessor means, with respect to a corporation—

(A) The distributor or transferor corporation in a transaction described in section 381(a) in which the corporation is the acquiring corporation; or

(B) The distributing corporation in a distribution or exchange to which section 355 (or so much of section 356 that relates to section 355) applies in which the corporation is a controlled corporation.

(ii) ***Predecessor ceasing to be a member of the same expanded group as corporation.*** The term predecessor does not include the distributing corporation described in paragraph (g)(20)(i)(B) of this section from the date that the distributing corporation ceases to be a member of the expanded group of which the controlled corporation is a member.

(iii) ***Multiple predecessors.*** A corporation may have more than one predecessor, including by reason of a predecessor of the corporation having a predecessor or successor. Accordingly, references to a corporation also include references to a predecessor or successor of a predecessor of the corporation.

(21) ***Property.*** The term property has the meaning specified in section 317(a).

(22) ***Retained receivable.*** The term *retained receivable* means, with respect to a debt instrument issued by a controlled partnership, the portion of the debt instrument that is not transferred by the holder-in-form pursuant to one or more deemed transfers. The retained receivable is adjusted for decreases described in paragraph (f)(4)(iv)(B) of this section and increases described in paragraph (f)(5)(i) of this section.

(23) ***Specified portion.*** The term *specified portion* means, with respect to a debt instrument issued by a controlled partnership and a covered member that is an expanded group partner, the portion of the debt instrument that is treated under paragraph (f)(3)(i) of this section as issued on a testing date (within the meaning of paragraph (f)(3)(ii) of this section) by the covered member and that, absent the application of paragraph (f)(4)(i) of this section, would be treated as stock under paragraph (b)(2) or (b)(3)(i) of this section on the testing date. A specified portion is reduced as described in paragraphs (f)(4)(iv)(B) and (f)(5)(i) of this section.

(24) ***Successor*** —

(i) ***In general.*** Except as otherwise provided in paragraph (g)(24)(iii) of this section, the term successor means, with respect to a corporation—

(A) The acquiring corporation in a transaction described in section 381(a) in which the corporation is the distributor or transferor corporation;

(B) A controlled corporation in a distribution or exchange to which section 355 (or so much of section 356 that relates to section 355) applies in which the corporation is the distributing corporation; or

(C) Subject to the rules in paragraph (g)(24)(ii) of this section, a seller in an acquisition described in paragraph (c)(2)(i)(A) of this section in which the corporation is the acquirer.

(ii) ***Special rules for certain acquisitions of subsidiary stock.*** The following rules apply with respect to a successor described in paragraph (g)(24)(i)(C) of this section:

(A) The seller is a successor to the acquirer only to the extent of the value (adjusted as described in paragraph (g)(24)(ii)(C) of this section) of the expanded group stock acquired from the seller in exchange for property (other than expanded group stock) in the acquisition described in paragraph (c)(2)(i)(A) of this section.

(B) A distribution or acquisition by either the seller or a successor seller to or from either the acquirer, the seller, or a successor seller is not treated as described in paragraph (b)(3) of this section for purposes of applying paragraph (b)(3) of this section to a covered debt instrument of the acquirer. For purposes of the preceding sentence, the term successor seller means a member of the expanded group that receives property (other than expanded group stock) in a distribution or acquisition from the seller or another successor seller and is controlled by the acquirer as determined under the principles of paragraph (c)(2)(i) of this section. A successor seller is treated as a successor to the acquirer to the extent of the value of the property received in a distribution or acquisition described in the preceding sentence and, for purposes of applying this paragraph (g)(24)(ii)(B).

(C) To the extent that a covered debt instrument of the acquirer is treated as funding a distribution or acquisition by the seller or successor seller described in paragraphs (b)(3)(i)(A) through (C) of this section, or would be treated but for the exceptions described in paragraphs (c)(3)(i) and (ii) of this section, the value of the expanded group stock described in paragraph (g)(24)(ii)(A) of this section is reduced by an amount equal to the distribution or acquisition for purposes of any further application of paragraph (g)(24)(ii)(A) of this section with respect to the acquirer and seller.

(iii) ***Successor ceasing to be a member of the same expanded group as corporation.*** The term successor does not include a controlled corporation described in paragraph (g)(24)(i)(B) of this section with respect to a distributing corporation or a seller described in paragraph (g)(24)(i)(C) of this section with respect to an acquirer from the date that the controlled corporation or the seller ceases to be a member of the expanded group of which the controlled corporation or acquirer, respectively, is a member.

(iv) ***Multiple successors.*** A corporation may have more than one successor, including by reason of a successor of the corporation having a predecessor or successor. Accordingly, references to a corporation also include references to a predecessor or successor of a successor of the corporation.

(25) ***Taxable year.*** The term taxable year refers to the taxable year of the issuer of the covered debt instrument.

(h) ***Examples*** —

(1) ***Assumed facts.*** Except as otherwise stated, the following facts are assumed for purposes of the examples in paragraph (h)(3) of this section:

(i) FP is a foreign corporation that owns 100% of the stock of USS1, a covered member, 100% of the stock of USS2, a covered member, and 100% of the stock of FS, a foreign corporation;

(ii) USS1 owns 100% of the stock of DS, a covered member, and CFC, which is a controlled foreign corporation within the meaning of section 957;

(iii) At the beginning of Year 1, FP is the common parent of an expanded group comprised solely of FP, USS1, USS2, FS, DS, and CFC (the FP expanded group);

(iv) The FP expanded group has more than $50 million of covered debt instruments described in paragraph (c)(4) of this section at all times;

(v) No issuer of a covered debt instrument has a positive expanded group earnings account within the meaning of paragraph (c)(3)(i)(B) of this section or has received qualified contributions within the meaning of paragraph (c)(3)(ii) of this section;

(vi) All notes are covered debt instruments (as defined in paragraph (g)(3) of this section) and are not qualified short-term debt instruments (as defined in paragraph (b)(3)(vii) of this section);

(vii) Each entity has as its taxable year the calendar year;

(viii) PRS is a partnership for federal income tax purposes;

(ix) No corporation is a member of a consolidated group;

(x) No domestic corporation is a United States real property holding corporation within the meaning of section 897(c)(2);

(xi) Each note is issued with adequate stated interest (as defined in section 1274(c)(2)); and

(xii) Each transaction occurs after January 19, 2017.

(2) ***No inference.*** Except as otherwise provided in this section, it is assumed for purposes of the examples in paragraph (h)(3) of this section that the form of each transaction is respected for federal tax purposes. No inference is intended, however, as to whether any particular note would be respected as indebtedness or as to whether the form of any particular transaction described in an example in paragraph (h)(3) of this section would be respected for federal tax purposes.

(3) ***Examples.*** The following examples illustrate the rules of this section.

(i) ***Example 1. Distribution of a covered debt instrument*** —

(A) ***Facts.*** On Date A in Year 1, FS lends $100x to USS1 in exchange for USS1 Note A. On Date B in Year 2, USS1 issues USS1 Note B, which is has a value of $100x, to FP in a distribution.

(B) ***Analysis.*** USS1 Note B is a covered debt instrument that is issued by USS1 to FP, a member of the expanded group of which USS1 is a member, in a distribution. Accordingly, USS1 Note B is treated as stock under paragraph (b)(2)(i) of this section. Under paragraph (d)(1)(i) of this section, USS1 Note B is treated as stock when it is issued by USS1 to FP on Date B in Year 2. Accordingly, USS1 is treated as distributing USS1 stock to its shareholder FP in a distribution that is subject to section 305. Under paragraph (b)(5) of this section, because the distribution of USS1 Note B is described in paragraph (b)(2)(i) of this section, the distribution of USS1 Note B is not treated as a distribution of property described in paragraph (b)(3)(i)(A) of this section. Accordingly, USS1 Note A is not treated as funding the distribution of USS1 Note B for purposes of paragraph (b)(3)(i)(A) of this section.

(ii) ***Example 2. Covered debt instrument issued for expanded group stock that is exchanged for stock in a corporation that is not a member of the same expanded group*** —

(A) ***Facts.*** UST is a publicly traded domestic corporation. On Date A in Year 1, USS1 issues USS1 Note to FP in exchange for FP stock. Subsequently, on Date B of Year 1, USS1 transfers the FP stock to UST's shareholders, which are not members of the FP expanded group, in exchange for all of the stock of UST.

(B) ***Analysis.***

(*1*) Because USS1 and FP are both members of the FP expanded group, USS1 Note is treated as stock when it is issued by USS1 to FP in exchange for FP stock on Date A in Year 1 under paragraphs (b)(2)(ii) and (d)(1)(i) of this section. This result applies even though, pursuant to the same plan, USS1 transfers the FP stock to persons that are not members of the FP expanded group. The exchange of USS1 Note for FP stock is not an exempt exchange within the meaning of paragraph (g)(11) of this section.

(*2*) Because USS1 Note is treated as stock for federal tax purposes when it is issued by USS1, pursuant to section § 1.367(b)-10(a)(3)(ii) (defining property for purposes of § 1.367(b)-10) there is no potential application of § 1.367(b)-10(a) to USS1's acquisition of the FP stock.

(iii) ***Example 3. Issuance of a note in exchange for expanded group stock*** —

(A) ***Facts.*** On Date A in Year 1, USS1 issues USS1 Note to FP in exchange for 40% of the FS stock owned by FP.

(B) ***Analysis.***

(*1*) Because USS1 and FP are both members of the FP expanded group, USS1 Note is treated as stock when it is issued by USS1 to FP in exchange for FS stock on Date A in Year 1 under paragraphs (b)(2)(ii) and (d)(1)(i) of this section. The exchange of USS1 Note for FS stock is not an exempt exchange within the meaning of paragraph (g)(11) of this section.

(*2*) Because USS1 Note is treated as stock for federal tax purposes when it is issued by USS1, USS1 Note is not treated as property for purposes of section 304(a) because it is not property within the meaning specified in section 317(a). Therefore, USS1's acquisition of FS stock from FP in exchange for USS1 Note is not an acquisition described in section 304(a)(1).

(iv) ***Example 4. Funding occurs in same taxable year as distribution*** —

(A) ***Facts.*** On Date A in Year 1, FP lends $200x to DS in exchange for DS Note A. On Date B in Year 1, DS distributes $400x of cash to USS1 in a distribution.

(B) ***Analysis.*** Under paragraph (b)(3)(iii)(A) of this section, DS Note A is treated as funding the distribution by DS to USS1 because DS Note A is issued to a member of the FP expanded group during the per se period with respect to DS's distribution to USS1. Accordingly, under paragraphs (b)(3)(i)(A) and (d)(1)(ii) of this section, DS Note A is treated as stock on Date B in Year 1.

(v) ***Example 5. Additional funding*** —

(A) ***Facts.*** The facts are the same as in paragraph (h)(3)(iv)(A) of this section (*Example 4*), except that, in addition, on Date C in Year 2, FP lends an additional $300x to DS in exchange for DS Note B.

(B) ***Analysis.*** The analysis is the same as in paragraph (h)(3)(iv)(B) of this section (*Example 4*) with respect to DS Note A. DS Note B is also issued to a member of the FP expanded group during the per se period with respect to DS's distribution to USS1. Under paragraphs

(b)(3)(iii)(A) and (b)(6) of this section, DS Note B is treated as funding only the remaining portion of DS's distribution to USS1, which is $200x. Accordingly, $200x of DS Note B is treated as stock under paragraph (b)(3)(i)(A) of this section. Under paragraph (d)(1)(i) of this section, $200x of DS Note B is treated as stock when it is issued by DS to FP on Date C in Year 2. The remaining $100x of DS Note B continues to be treated as indebtedness.

(vi) *Example 6. Funding involving multiple interests* —

(A) ***Facts.*** On Date A in Year 1, FP lends $300x to USS1 in exchange for USS1 Note A. On Date B in Year 2, USS1 distributes $300x of cash to FP. On Date C in Year 3, FP lends another $300x to USS1 in exchange for USS1 Note B.

(B) ***Analysis.***

(*1*) Under paragraph (b)(3)(iii)(B) of this section, USS1 Note A is tested under paragraph (b)(3) of this section before USS1 Note B is tested. USS1 Note A is issued during the per se period with respect to USS1's $300x distribution to FP and, therefore, is treated as funding the distribution under paragraph (b)(3)(iii)(A) of this section. Beginning on Date B in Year 2, USS1 Note A is treated as stock under paragraphs (b)(3)(i)(A) and (d)(1)(ii) of this section.

(*2*) Under paragraph (b)(3)(iii)(B) of this section, USS1 Note B is tested under paragraph (b)(3) of this section after USS1 Note A is tested. Because USS1 Note A is treated as funding the entire $300x distribution by USS1 to FP, USS1 Note B will continue to be treated as indebtedness. See paragraph (b)(6) of this section.

(vii) *Example 7. Re-testing* —

(A) ***Facts.*** The facts are the same as in paragraph (h)(3)(vi)(A) of this section (*Example 6*), except that on Date D in Year 4, FP sells USS1 Note A to Bank.

(B) ***Analysis.***

(*1*) Under paragraph (d)(2)(i) of this section, USS1 Note A ceases to be treated as stock when FP sells USS1 Note A to Bank on Date D in Year 4. Immediately before FP sells USS1 Note A to Bank, USS1 is deemed to issue a debt instrument to FP in exchange for USS1 Note A in a transaction that is disregarded for purposes of paragraphs (b)(2) and (b)(3) of this section.

(*2*) Under paragraph (d)(2)(ii) of this section, after USS1 Note A is deemed exchanged for a new debt instrument, USS1's other covered debt instruments that are not treated as stock as of Date D in Year 4 (USS1 Note B) are re-tested for purposes of paragraph (b)(3)(iii) of this section to determine whether the instruments are treated as funding the $300x distribution by USS1 to FP on Date B in Year 2. USS1 Note B was issued by USS1 to FP during the per se period. Accordingly, USS1 Note B is re-tested under paragraph (b)(3)(iii) of this section. Under paragraph (b)(3)(iii) of this section, USS1 Note B is treated as funding the distribution on Date C in Year 3 and, accordingly, is treated as stock under paragraph (b)(3)(i)(A) of this section. USS1 Note B is deemed to be exchanged for stock on Date D in Year 4, the re-testing date, under paragraph (d)(1)(iv) of this section. See § 1.385-1(d) for rules regarding the treatment of this deemed exchange.

(viii) ***Example 8. Distribution of expanded group stock and covered debt instrument in a reorganization that qualifies under section 355*** —

(A) ***Facts.*** On Date A in Year 1, FP lends $200x to USS2 in exchange for USS2 Note. In a transaction that is treated as independent from the transaction on Date A in Year 1, on Date B in Year 2, USS2 transfers a portion of its assets to DS2, a newly formed domestic corporation, in exchange for all of the stock of DS2 and DS2 Note. Immediately afterwards, USS2 distributes all of the DS2 stock and the DS2 Note to FP with respect to FP's USS2 stock in a transaction that qualifies under section 355. USS2's transfer of a portion of its assets to DS2 qualifies as a reorganization described in section 368(a)(1)(D). The DS2 stock has a value of $150x and DS2 Note has a value of $50x. The DS2 stock is not non-qualified preferred stock as defined in section 351(g)(2). Absent the application of this section, DS2 Note would be treated by FP as other property within the meaning of section 356.

(B) ***Analysis.***

(*1*) The contribution and distribution transaction is a reorganization described in section 368(a)(1)(D) involving a transfer of property by USS2 to DS2 in exchange for DS2 stock and DS2 Note. The transfer of property by USS2 to DS2 is a contribution of excluded property described in paragraph (c)(3)(ii)(D)(*2*) of this section and an excluded contribution described in paragraph (c)(3)(ii)(E)(*2*) of this section. Accordingly, USS2's contribution of property to DS2 is not a qualified contribution described in paragraph (c)(3)(ii)(B) of this section.

(*2*) DS2 Note is a covered debt instrument that is issued by DS2 to USS2, both members of the FP expanded group, in exchange for property of USS2 in an asset reorganization (as defined in paragraph (g)(1) of this section), and received by FP, another FP expanded group member immediately before the reorganization, as other property with respect to FP's USS2 stock. Accordingly, the transaction is described in paragraph (b)(2)(iii) of this section, and DS2 Note is treated as stock when it is issued by DS2 to USS2 on Date B in Year 2 pursuant to paragraphs (b)(2)(iii) and (d)(1)(i) of this section.

(*3*) Because the issuance of DS2 Note by DS2 in exchange for the property of USS2 in an asset reorganization is described in paragraph (b)(2)(iii) of this section, the distribution and acquisition of DS2 Note by USS2 is not treated as a distribution or acquisition described in paragraph (b)(3)(i) of this section. Accordingly, USS2 Note is not treated as funding the distribution of DS2 Note for purposes of paragraph (b)(3)(i) of this section.

(*4*) USS2's acquisition of DS2 stock is not an acquisition described in paragraph (b)(3)(i)(B) of this section because it is an exempt exchange (as defined in paragraph (g)(11) of this section). USS2's acquisition of DS2 stock is an exempt exchange because USS2 and DS2 are both parties to a reorganization that is an asset reorganization, section 1032 applies to DS2, the transferor of the expanded group stock, and the DS2 stock is distributed by USS2, the transferee of the expanded group stock, pursuant to the plan of reorganization.

(5) USS2's distribution of $150x of the DS2 stock is a distribution of stock that is permitted to be received by FP without recognition of gain under section 355(a)(1). Accordingly, USS2's distribution of the DS2 stock (other than the DS2 Note) to FP is an exempt distribution, and is not described in paragraph (b)(3)(i)(A) of this section.

(6) Because USS2 has not made a distribution or acquisition that is described in paragraph (b)(3)(i)(A), (B), or (C) of this section, USS2 Note is not treated as stock.

(ix) ***Example 9. Funding a distribution by a successor to funded member*** —

(A) ***Facts.*** The facts are the same as in *Example 8* of this paragraph (h)(3), except that on Date C in Year 3, DS2 distributes $200x of cash to FP and, subsequently, on Date D in Year 3, USS2 distributes $100x of cash to FP.

(B) ***Analysis.***

(1) USS2 is a predecessor of DS2 under paragraph (g)(20)(i)(B) of this section and DS2 is a successor to USS2 under paragraph (g)(24)(i)(B) of this section because USS2 is the distributing corporation and DS2 is the controlled corporation in a distribution to which section 355 applies. Accordingly, under paragraph (b)(3)(v) of this section, a distribution by DS2 is treated as a distribution by USS2. Under paragraphs (b)(3)(iii)(A) and (b)(3)(v)(B) of this section, USS2 Note is treated as funding the distribution by DS2 to FP because USS2 Note was issued during the per se period with respect to DS2's $200x cash distribution, and because both the issuance of USS2 Note and the distribution by DS2 occur during the per se period with respect to the section 355 distribution. Accordingly, under paragraphs (b)(3)(i)(A) and (d)(1)(ii) of this section, USS2 Note is treated as stock beginning on Date C in Year 3. See § 1.385-1(d) for rules regarding the treatment of this deemed exchange.

(2) Because the entire amount of USS2 Note is treated as funding DS2's $200x distribution to FP, under paragraph (b)(3)(iii)(C) of this section, USS2 Note is not treated as funding the subsequent distribution by USS2 on Date D in Year 3.

(x) ***Example 10. Asset reorganization; section 354 qualified property*** —

(A) ***Facts.*** On Date A in Year 1, FS lends $100x to USS2 in exchange for USS2 Note. On Date B in Year 2, in a transaction that qualifies as a reorganization described in section 368(a)(1)(D), USS2 transfers all of its assets to USS1 in exchange for stock of USS1 and the assumption by USS1 of all of the liabilities of USS2, and USS2 distributes to FP, with respect to FP's USS2 stock, all of the USS1 stock that USS2 receives. FP does not recognize gain under section 354(a)(1).

(B) ***Analysis.***

(1) USS1 is a successor to USS2 under paragraph (g)(24)(i)(A) of this section. For purposes of paragraph (b)(3) of this section, USS2 and, under paragraph (b)(3)(v)(A) of this section, its successor, USS1, are funded members with respect to USS2 Note. Although USS2, a funded member, distributes property (USS1 stock) to its shareholder, FP, pursuant to the reorganization, the distribution of USS1 stock is not described in paragraph (b)(3)(i)(A) of this section because the stock is distributed in an exempt distribution (as defined in paragraph (g)(10) of this section). In addition,

neither USS1's acquisition of the assets of USS2 nor USS2's acquisition of USS1 stock is described in paragraph (b)(3)(i)(C) of this section because FP does not receive other property within the meaning of section 356 with respect to its stock in USS2.

(2) USS2's acquisition of USS1 stock is not an acquisition described in paragraph (b)(3)(i)(B) of this section because it is an exempt exchange (as defined in paragraph (g)(11) of this section). USS2's acquisition of USS1 stock is an exempt exchange because USS1 and USS2 are both parties to an asset reorganization, section 1032 applies to USS1, the transferor of the USS1 stock, and the USS1 stock is distributed by USS2, the transferee, pursuant to the plan of reorganization. Furthermore, USS2's acquisition of its own stock from FS is not an acquisition described in paragraph (b)(3)(i)(B) of this section because USS2 acquires its stock in exchange for USS1 stock.

(3) Because neither USS1 nor USS2 has made a distribution or acquisition described in paragraph (b)(3)(i)(A), (B), or (C) of this section, USS2 Note is not treated as stock under paragraph (b)(3)(iii)(A) of this section.

(xi) ***Example 11. Distribution of a covered debt instrument and issuance of a covered debt instrument with a principal purpose of avoiding the purposes of this section*** —

(A) ***Facts.*** On Date A in Year 1, USS1 issues USS1 Note A, which has a value of $100x, to FP in a distribution. On Date B in Year 1, with a principal purpose of avoiding the purposes of this section, FP sells USS1 Note A to Bank for $100x of cash and lends $100x to USS1 in exchange for USS1 Note B.

(B) ***Analysis.*** USS1 Note A is a covered debt instrument that is issued by USS1 to FP, a member of USS1's expanded group, in a distribution. Accordingly, under paragraphs (b)(2)(i) and (d)(1)(i) of this section, USS1 Note A is treated as stock when it is issued by USS1 to FP on Date A in Year 1. Accordingly, USS1 is treated as distributing USS1 stock to FP. Because the distribution of USS1 Note A is described in paragraph (b)(2)(i) of this section, the distribution of USS1 Note A is not described in paragraph (b)(3)(i)(A) of this section under paragraph (b)(5) of this section. Under paragraph (d)(2)(i) of this section, USS1 Note A ceases to be treated as stock when FP sells USS1 Note A to Bank on Date B in Year 1. Immediately before FP sells USS1 Note A to Bank, USS1 is deemed to issue a debt instrument to FP in exchange for USS1 Note A in a transaction that is disregarded for purposes of paragraphs (b)(2) and (b)(3)(i) of this section. USS1 Note B is not treated as stock under paragraph (b)(3)(i)(A) of this section because the funded member, USS1, has not made a distribution of property. However, because the transactions occurring on Date B of Year 1 were undertaken with a principal purpose of avoiding the purposes of this section, USS1 Note B is treated as stock on Date B of Year 1 under paragraph (b)(4) of this section.

(xii) ***Example 12: Distribution of a covered debt instrument to a controlled partnership*** —

(A) ***Facts.*** CFC and FS are equal partners in PRS. PRS owns 100% of the stock in X Corp, a domestic corporation. On Date A in Year 1, X Corp issues X Note to PRS in a distribution.

(B) ***Analysis.***

(1) Under § 1.385-1(c)(4), in determining whether X Corp is a member of the FP expanded group that includes CFC and FS, CFC and FS are each treated as owning 50% of the X Corp stock held by PRS. Accordingly, 100% of X Corp's stock is treated as owned by CFC and FS, and X Corp is a member of the FP expanded group.

(2) Together CFC and FS own 100% of the interests in PRS capital and profits, such that PRS is a controlled partnership under § 1.385-1(c)(1). CFC and FS are both expanded group partners on the date on which PRS acquired X Note. Therefore, pursuant to paragraph (f)(2)(i)(A) of this section, each of CFC and FS is treated as acquiring its share of X Note in the same manner (in this case, by a distribution of X Note), and on the date on which, PRS acquired X Note. Likewise, X Corp is treated as issuing to each of CFC and FS its share of X Note. Under paragraph (f)(2)(i)(B) of this section, each of CFC's and FS's share of X Note, respectively, is determined in accordance with its liquidation value percentage determined on Date A in Year 1, the date X Corp distributed X Note to PRS. On Date A in Year 1, pursuant to paragraph (g)(17) of this section, each of CFC's and FS's liquidation value percentages is 50%. Accordingly, on Date A in Year 1, under paragraph (f)(2)(i)(A) of this section, for purposes of this section, CFC and FS are each treated as acquiring 50% of X Note in a distribution.

(3) Under paragraphs (b)(2)(i) and (d)(1)(i) of this section, X Note is treated as stock on the date of issuance, which is Date A in Year 1. Under paragraph (f)(2)(i)(A) of this section, each of CFC and FS are treated as acquiring 50% of X Note in a distribution for purposes of this section. Therefore, X Corp is treated as distributing its stock to PRS in a distribution described in section 305.

(xiii) ***Example 13: Loan to a controlled partnership; proportionate distributions by expanded group partners*** —

(A) ***Facts.*** DS, USS2, and USP are partners in PRS. USP is a domestic corporation that is not a member of the FP expanded group. Each of DS and USS2 own 45% of the interests in PRS profits and capital, and USP owns 10% of the interests in PRS profits and capital. The PRS partnership agreement provides that all items of PRS income, gain, loss, deduction, and credit are allocated in accordance with the percentages in the preceding sentence. On Date A in Year 1, FP lends $200x to PRS in exchange for PRS Note with stated principal amount of $200x, which is payable at maturity. PRS Note also provides for annual payments of interest that are qualified stated interest. PRS uses all $200x in its business and does not distribute any money or other property to a partner. Subsequently, on Date B in Year 1, DS distributes $90x to USS1, USS2 distributes $90x to FP, and USP distributes $20x to its shareholder. Each of DS's and USS2's issuance percentage is 45% on Date B in Year 1, the date of the distributions and therefore a testing date under paragraph (f)(3)(ii)(A) of this section.

(B) ***Analysis.***

(1) DS and USS2 together own 90% of the interests in PRS profits and capital and therefore PRS is a controlled partnership under § 1.385-1(c)(1). Under § 1.385-1(c)(2), each of DS and USS2 is a covered member.

(2) Under paragraph (f)(3)(i) of this section, each of DS and USS2 is treated as issuing its share of PRS Note, and under paragraph (f)(3)(ii)(A) of this section, DS's and USS2's share is each $90x (45% of $200x). USP is not an expanded group partner and therefore has no issuance percentage and is not treated as issuing any portion of PRS Note.

(3) The $90x distributions made by DS to USS1 and by USS2 to FP are described in paragraph (b)(3)(i)(A) of this section. Under paragraph (b)(3)(iii)(A) of this section, the portions of PRS Note treated as issued by each of DS and USS2 are treated as funding the distribution made by DS and USS2 because the distributions occurred within the per se period with respect to PRS Note. Under paragraph (b)(3)(i) of this section, the portions of PRS Note treated as issued by each of DS and USS2 would, absent the application of paragraph (f)(4)(i) of this section, be treated as stock of DS and USS2 on Date B in Year 1, the date of the distributions. See paragraph (d)(1)(ii) of this section. Under paragraph (g)(23) of this section, each of the $90x portions is a specified portion.

(4) Under paragraph (f)(4)(i) of this section, the specified portions are not treated as stock under paragraph (b)(3)(i) of this section. Instead, FP is deemed to transfer a portion of PRS Note with a principal amount equal to $90x (the adjusted issue price of the specified portion with respect to DS) to DS in exchange for deemed partner stock in DS with a fair market value of $90x. Similarly, FP is deemed to transfer a portion of PRS Note with a principal amount equal to $90x (the adjusted issue price of the specified portion with respect to USS2) to USS2 in exchange for deemed partner stock in USS2 with a fair market value of $90x. The principal amount of the retained receivable held by FP is $20x ($200x−$90x−$90x).

(xiv) ***Example 14: Loan to a controlled partnership; disproportionate distributions by expanded group partners*** —

(A) ***Facts.*** The facts are the same as in paragraph (h)(3)(xiii)(A) of this section (*Example 13*), except that on Date B in Year 1, DS distributes $45x to USS1 and USS2 distributes $135x to FP.

(B) ***Analysis.***

(1) The analysis is the same as in paragraph (h)(3)(xiii)(B)(*1*) of this section (*Example 13*).

(2) The analysis is the same as in paragraph (h)(3)(xiii)(B)(*2*) of this section (*Example 13*).

(3) The $45x and $135x distributions made by DS to USS1 and by USS2 to FP, respectively, are described in paragraph (b)(3)(i)(A) of this section. Under paragraph (b)(3)(iii)(A) of this section, the portion of PRS Note treated as issued by DS is treated as funding the distribution made by DS because the distribution occurred within the per se period with respect to PRS Note, but under paragraph (b)(3)(i) of this section, only to the extent of DS's $45x distribution. USS2 is treated as issuing $90x of PRS Note, all of which is treated as funding $90x of USS2's $135x distribution under paragraph (b)(3)(iii)(A) of this section. Under paragraph (b)(3)(i) of this section, absent the application of paragraph (f)(4)(i) of this section, $45x of PRS Note would be treated as stock of DS and $90x of PRS Note would be treated as

stock of USS2 on Date B in Year 1, the date of the distributions. See paragraph (d)(1)(ii) of this section. Under paragraph (g)(23) of this section, $45x of PRS Note is a specified portion with respect to DS and $90x of PRS Note is a specified portion with respect to USS2.

(*4*) Under paragraph (f)(4)(i) of this section, the specified portions are not treated as stock under paragraph (b)(3)(i) of this section. Instead, FP is deemed to transfer a portion of PRS Note with a principal amount equal to $45x (the adjusted issue price of the specified portion with respect to DS) to DS in exchange for stock of DS with a fair market value of $90x. Similarly, FP is deemed to transfer a portion of PRS Note with a principal amount equal to $90x (the adjusted issue price of the specified portion with respect to USS2) to USS2 in exchange for stock of USS2 with a fair market value of $90x. The principal amount of the retained receivable held by FP is $65x ($200x−$45x−$90x).

(xv) ***Example 15: Loan to partnership; distribution in later year*** —

(A) ***Facts.*** The facts are the same as in paragraph (h)(3)(xiii)(A) of this section (*Example 13*), except that USS2 does not distribute $90x to FP until Date C in Year 2, which is less than 36 months after Date A in Year 1. On Date C in Year 2, DS's, USS2's, and USP's issuance percentages under paragraph (g)(16) of this section are unchanged at 45%, 45%, and 10%, respectively.

(B) ***Analysis.***

(*1*) The analysis is the same as in paragraph (h)(3)(xiii)(B)(*1*) of this section (*Example 13*).

(*2*) The analysis is the same as in paragraph (h)(3)(xiii)(B)(*2*) of this section (*Example 13*).

(*3*) With respect to the distribution made by DS, the analysis is the same as in paragraph (h)(3)(xiii)(B)(*3*) of this section (*Example 13*).

(*4*) With respect to the deemed transfer to DS, the analysis is the same as in paragraph (h)(3)(xiii)(B)(*4*) of this section (*Example 13*). Accordingly, the amount of the retained receivable held by FP as of Date B in Year 1 is $110x ($200x−$90x).

(*5*) Under paragraph (f)(3)(ii)(A) of this section, USS2's share of PRS Note is determined on Date C in Year 2. On Date C in Year 2, DS's, USS2's, and USP's respective shares of PRS Note under paragraph (f)(3)(ii)(A) of this section are $90x, $90x, and $20x. However, because DS is treated as the issuer with respect to a $90x specified portion of PRS Note, DS's share of PRS Note is reduced by $90x to $0 under paragraph (f)(3)(ii)(B)(*1*) of this section. No reduction to either of USS2's or USP's share of PRS Note is required under paragraph (f)(3)(ii)(B)(*2*) of this section because the aggregate of DS's, USS2's, and USP's shares of PRS Note as reduced is $110x (DS has a $0 share, USS2 has a $90x share, and USP has a $20x share), which does not exceed $110x (the $200x adjusted issue price of PRS Note reduced by the $90x specified portion with respect to DS). Under paragraph (f)(3)(i) of this section, USS2 is treated as issuing its share of PRS Note.

(6) The $90x distribution made by USS2 to FP is described in paragraph (b)(3)(i)(A) of this section. Under paragraph (b)(3)(iii)(A) of this section, the portion of PRS Note treated as issued by USS2 is treated as funding the distribution made by USS2, because the distribution occurred within the per se period with respect to PRS Note. Accordingly, the portion of PRS Note treated as issued by USS2 would, absent the application of paragraph (f)(4)(i) of this section, be treated as stock of USS2 under paragraph (b)(3)(i) of this section on Date C in Year 2. See paragraph (d)(1)(ii) of this section. Under paragraph (g)(23) of this section, the $90x portion is a specified portion.

(7) Under paragraph (f)(4)(i) of this section, the specified portion of PRS Note treated as issued by USS2 is not treated as stock under paragraph (b)(3)(i) of this section. Instead, on Date C in Year 2, FP is deemed to transfer a portion of PRS Note with a principal amount equal to $90x (the adjusted issue price of the specified portion with respect to USS2) to USS2 in exchange for stock in USS2 with a fair market value of $90x. The principal amount of the retained receivable held by FP is reduced from $110x to $20x.

(xvi) ***Example 16: Loan to a controlled partnership; partnership ceases to be a controlled partnership*** —

(A) ***Facts.*** The facts are the same as in paragraph (h)(3)(xiii)(A) of this section (*Example 13*), except that on Date C in Year 4, USS2 sells its entire interest in PRS to an unrelated person.

(B) ***Analysis.***

(1) On date C in Year 4, PRS ceases to be a controlled partnership with respect to the FP expanded group under § 1.385-1(c)(1). This is the case because DS, the only remaining partner that is a member of the FP expanded group, only owns 45% of the total interest in PRS profits and capital. Because PRS ceases to be a controlled partnership, a specified event (within the meaning of paragraph (f)(5)(iii)(A) of this section) occurs with respect to the deemed transfers with respect to each of DS and USS2.

(2) Under paragraph (f)(5)(i) of this section, on Date C in Year 4, immediately before PRS ceases to be a controlled partnership, each of DS and USS2 is deemed to distribute its deemed transferred receivable to FP in redemption of FP's deemed partner stock in DS and USS2. The specified portion that corresponds to each of the deemed transferred receivables ceases to be treated as a specified portion. Furthermore, the deemed transferred receivables cease to exist, and the retained receivable held by FP increases from $20x to $200x.

(xvii) ***Example 17: Transfer of an interest in a partnership to a covered member*** —

(A) ***Facts.*** The facts are the same as in paragraph (h)(3)(xiii)(A) of this section (*Example 13*), except that on Date C in Year 4, USS2 sells its entire interest in PRS to USS1.

(B) ***Analysis.***

(1) After USS2 sells its interest in PRS to USS1, DS and USS1 together own 90% of the interests in PRS profits and capital and therefore PRS continues to be a controlled partnership under § 1.385-1(c)(1). A specified event (within the meaning of paragraph (f)(5)(iii)(E) of this section) occurs as result of the sale only with respect to the deemed transfer with respect to USS2.

(2) Under paragraph (f)(5)(i) of this section, on Date C in Year 4, immediately before USS2 sells its entire interest in PRS to USS1, USS2 is deemed to distribute its deemed transferred receivable to FP in redemption of FP's deemed partner stock in USS2. Because the specified event is described in paragraph (f)(5)(iii)(E) of this section, under paragraph (f)(5)(ii) of this section, FP is deemed to retransfer the deemed transferred receivable deemed received from USS2 to USS1 in exchange for deemed partner stock in USS1 with a fair market value equal to the principal amount of the deemed transferred receivable that is retransferred to USS1.

(xviii) ***Example 18: Loan to partnership and all partners are members of a consolidated group*** —

(A) ***Facts.*** USS1 and DS are equal partners in PRS. USS1 and DS are members of a consolidated group, as defined in § 1.1502-1(h). The PRS partnership agreement provides that all items of PRS income, gain, loss, deduction, and credit are allocated equally between USS1 and DS. On Date A in Year 1, FP lends $200x to PRS in exchange for PRS Note. PRS uses all $200x in its business and does not distribute any money or other property to any partner. On Date B in Year 1, DS distributes $200x to USS1, and USS1 distributes $200x to FP. If neither of USS1 or DS were a member of the consolidated group, each would have an issuance percentage under paragraph (g)(16) of this section, determined as of Date A in Year 1, of 50%.

(B) ***Analysis.***

(1) Pursuant to § 1.385-4(b)(6), PRS is treated as a partnership for purposes of this section. Under § 1.385-4(b)(1), DS and USS1 are treated as one corporation for purposes of this section, and thus a single covered member under § 1.385-1(c)(2). For purposes of this section, the single covered member owns 100% of the PRS profits and capital and therefore PRS is a controlled partnership under § 1.385-1(c)(1). Under paragraph (f)(3)(i) of this section, the single covered member is treated as issuing all $200x of PRS Note to FP, a member of the same expanded group as the single covered member. DS's distribution to USS1 is a disregarded distribution because it is a distribution between members of a consolidated group that is disregarded under the one-corporation rule described in § 1.385-4(b)(1). However, under paragraph (b)(3)(iii)(A) of this section, PRS Note, treated as issued by the single covered member, is treated as funding the distribution by USS1 to FP, which is described in paragraph (b)(3)(i)(A) of this section and which is a regarded distribution. Accordingly, PRS Note, absent the application of paragraph (f)(4)(i) of this section, would be treated as stock under paragraph (b) of this section on Date B in Year 1. Thus, pursuant to paragraph (g)(23) of this section, the entire PRS Note is a specified portion.

(2) Under paragraphs (f)(4)(i) and (iii) of this section, the specified portion is not treated as stock and, instead, FP is deemed to transfer PRS Note with a principal amount equal to $200x to USS1 in exchange for stock of USS1 with a fair market value of

$200x. Under paragraph (f)(4)(iii) of this section, FP is deemed to transfer PRS Note to USS1 because only USS1 made a regarded distribution described in paragraph (b)(3)(i) of this section.

(xix) ***Example 19: Loan to a disregarded entity*** —

(A) ***Facts.*** DS owns DRE, a disregarded entity within the meaning of § 1.385-1(c)(3). On Date A in Year 1, FP lends $200x to DRE in exchange for DRE Note. Subsequently, on Date B in Year 1, DS distributes $100x of cash to USS1.

(B) ***Analysis.*** Under paragraph (b)(3)(iii)(A) of this section, $100x of DRE Note would be treated as funding the distribution by DS to USS1 because DRE Note is issued to a member of the FP expanded group during the per se period with respect to DS's distribution to USS1. Accordingly, under paragraphs (b)(3)(i)(A) and (d)(1)(ii) of this section, $100x of DRE Note would be treated as stock on Date B in Year 1. However, under paragraph (d)(4) of this section, DS, as the regarded owner, within the meaning of § 1.385-1(c)(5), of DRE is deemed to issue its stock to FP in exchange for a portion of DRE Note equal to the $100x applicable portion (as defined in paragraph (d)(4) of this section). Thus, DS is treated as the holder of $100x of DRE Note, which is disregarded, and FP is treated as the holder of the remaining $100x of DRE Note. The $100x of stock deemed issued by DS to FP has the same terms as DRE Note, other than the issuer, and payments on the stock are determined by reference to payments on DRE Note.

(i) [Reserved]

(j) ***Applicability date and transition rules*** —

(1) ***In general.*** Except as provided in paragraph (j)(2) or (3) or (k) of this section, this section applies to taxable years ending on or after January 19, 2017.

(2) ***Transition rules*** —

(i) ***Transition rule for covered debt instruments that would be treated as stock in taxable years ending before January 19, 2017.*** If paragraphs (b) and (d)(1) of this section, taking into account §§ 1.385-1, 1.385-3, and 1.385-4, would have treated a covered debt instrument as stock in a taxable year ending before January 19, 2017 but for the application of paragraph (j)(1) of this section, to the extent that the covered debt instrument is held by a member of the expanded group of which the issuer is a member immediately after January 19, 2017, then the covered debt instrument is deemed to be exchanged for stock immediately after January 19, 2017.

(ii) ***Transition rule for certain covered debt instruments treated as stock in taxable years ending on or after*** January 19, 2017. If paragraphs (b) and (d)(1) of this section, taking into account §§ 1.385-1, 1.385-3, and 1.385-4, would treat a covered debt instrument as stock on or before January 19, 2017 but in a taxable year ending on or after January 19, 2017, that covered debt instrument is not treated as stock during the 90-day period after October 21, 2016. Instead, to the extent that the covered debt instrument is held by a member of the expanded group of which the issuer is a member immediately after January 19, 2017, the covered debt instrument is deemed to be exchanged for stock immediately after January 19, 2017.

(iii) ***Transition funding rule.*** When a covered debt instrument would be recharacterized as stock after April 4, 2016, and on or before January 19, 2017 (the *transition period*), but that covered debt instrument is not recharacterized as stock on such date due to the application of

paragraph (j)(1), (j)(2)(i), or (j)(2)(ii) of this section, any payments made with respect to such covered debt instrument (other than stated interest), including pursuant to a refinancing, after the date that the covered debt instrument would have been recharacterized as stock and through the remaining portion of the transition period are treated as distributions for purposes of applying paragraph (b)(3) of this section for taxable years ending on or after January 19, 2017. In addition, to the extent that the holder and the issuer of the covered debt instrument cease to be members of the same expanded group during the transition period, the distribution or acquisition that would have caused the covered debt instrument to be treated as stock is available to be treated as funded by other covered debt instruments of the issuer for purposes of paragraph (b)(3) of this section (to the extent provided in paragraph (b)(3)(iii) of this section). The prior sentence is applied in a manner that is consistent with the rules set forth in paragraph (d)(2) of this section.

(iv) ***Coordination between the general rule and funding rule.*** When a covered debt instrument would be recharacterized as stock pursuant to paragraph (b)(2) of this section after April 4, 2016, and on or before January 19, 2017, but that covered debt instrument is not recharacterized as stock on such date due to the application of paragraph (j)(1), (j)(2)(i), or (j)(2)(ii) of this section, the issuance of such covered debt instrument is not treated as a distribution or acquisition described in § 1.385-3(b)(3)(i), but only to the extent that the covered debt instrument is held by a member of the expanded group of which the issuer is a member immediately after January 19, 2017.

(v) ***Option to apply proposed regulations.*** In lieu of applying §§ 1.385-1, 1.385-3, and 1.385-4, taxpayers may apply the provisions matching §§ 1.385-1, 1.385-3, and 1.385-4 from the Internal Revenue Bulletin (IRB) 2016-17 (*https://www.irs.gov/pub/irs-irbs/irb16-17.pdf*) to all debt instruments issued by a particular issuer (and members of its expanded group that are covered members) after April 4, 2016, and before October 13, 2016, solely for purposes of determining whether a debt instrument is treated as stock, provided that those sections are consistently applied.

(3) ***Paragraph (f)(4)(iii) of this section.*** Paragraph (f)(4)(iii) of this section applies to taxable years for which the U.S. Federal income tax return is due, without extensions, after May 14, 2020. For taxable years ending on or after January 19, 2017, and for which the U.S. Federal income tax return is due, without extensions, on or before May 14, 2020, see § 1.385-3T(f)(4)(iii), as contained in 26 CFR in part 1 in effect on April 1, 2019. In the case of a taxable year that ends after October 13, 2019, and on or before May 14, 2020, a taxpayer may choose to apply paragraph (f)(4)(iii) of this section to the portion of the taxable year that occurs after the expiration of § 1.385-3T on October 13, 2019, provided that all members of the taxpayer's expanded group apply such paragraph.

(k) ***Additional transition rules.*** See transition rules in § 1.385-3T(k)(2) as contained in 26 CFR in part 1 in effect on April 1, 2019.

[T.D. 9790, 81 FR 72960, Oct. 21, 2016, as amended by T.D. 9790, 82 FR 8167, Jan. 24, 2017; T.D. 9880, 84 FR 59302, Nov. 4, 2019; T.D 9897, 85 FR 28870, May 14, 2020]

§ 1.385-4 Treatment of consolidated groups.

(a) ***Scope.*** This section provides rules for applying § 1.385-3 to members of consolidated groups. Paragraph (b) of this section sets forth rules concerning the extent to which, solely for purposes of applying § 1.385-3, members of a consolidated group that file (or that are required to file) a consolidated U.S. Federal

income tax return are treated as one corporation. Paragraph (c) of this section sets forth rules concerning the treatment of a debt instrument that ceases to be, or becomes, a consolidated group debt instrument. Paragraph (d) of this section provides rules for applying the funding rule of § 1.385-3(b)(3) to members that depart a consolidated group. For definitions applicable to this section, see paragraph (e) of this section and §§ 1.385-1(c) and 1.385-3(g). For examples illustrating the application of this section, see paragraph (f) of this section.

(b) *Treatment of consolidated groups* —

(1) ***Members treated as one corporation.*** For purposes of this section and § 1.385-3, and except as otherwise provided in this section and § 1.385-3, all members of a consolidated group (as defined in § 1.1502-1(h)) that file (or that are required to file) a consolidated U.S. Federal income tax return are treated as one corporation. Thus, for example, when a member of a consolidated group issues a covered debt instrument that is not a consolidated group debt instrument, the consolidated group generally is treated as the issuer of the covered debt instrument for purposes of this section and § 1.385-3. Also, for example, when one member of a consolidated group issues a covered debt instrument that is not a consolidated group debt instrument and therefore is treated as issued by the consolidated group, and another member of the consolidated group makes a distribution or acquisition described in § 1.385-3(b)(3)(i)(A) through (C) with an expanded group member that is not a member of the consolidated group, § 1.385-3(b)(3)(i) may treat the covered debt instrument as funding the distribution or acquisition made by the consolidated group. In addition, except as otherwise provided in this section, acquisitions and distributions described in § 1.385-3(b)(2) and (b)(3)(i) in which all parties to the transaction are members of the same consolidated group both before and after the transaction are disregarded for purposes of this section and § 1.385-3.

(2) ***One-corporation rule inapplicable to expanded group member determination.*** The one-corporation rule described in paragraph (b)(1) of this section does not apply in determining the members of an expanded group. Notwithstanding the previous sentence, an expanded group does not exist for purposes of this section and § 1.385-3 if it consists only of members of a single consolidated group.

(3) *Application of § 1.385-3 to debt instruments issued by members of a consolidated group* —

(i) ***Debt instrument treated as stock of the issuing member of a consolidated group.*** If a covered debt instrument treated as issued by a consolidated group under the one-corporation rule described in paragraph (b)(1) of this section is treated as stock under § 1.385-3, the covered debt instrument is treated as stock in the member of the consolidated group that would be the issuer of such debt instrument without regard to this section. But see § 1.385-3(d)(7) (providing that a covered debt instrument that is treated as stock under § 1.385-3(b)(2), (3), or (4) and that is not described in section 1504(a)(4) is not treated as stock for purposes of determining whether the issuer is a member of an affiliated group (within the meaning of section 1504(a)).

(ii) ***Application of the covered debt instrument exclusions.*** For purposes of determining whether a debt instrument issued by a member of a consolidated group is a covered debt instrument, each test described in § 1.385-3(g)(3) is applied on a separate member basis without regard to the one-corporation rule described in paragraph (b)(1) of this section.

(iii) ***Qualified short-term debt instrument.*** The determination of whether a member of a consolidated group has issued a qualified short-term debt instrument for purposes of § 1.385-3(b)(3)(vii) is made on a separate member basis without regard to the one-corporation rule described in paragraph (b)(1) of this section.

(4) *Application of the reductions of § 1.385-3(c)(3) to members of a consolidated group* —

(i) ***Application of the reduction for expanded group earnings*** —

(A) ***In general.*** A consolidated group maintains one expanded group earnings account with respect to an expanded group period, and only the earnings and profits, determined in accordance with § 1.1502-33 (without regard to the application of § 1.1502-33(b)(2), (e), and (f)), of the common parent (within the meaning of section 1504) of the consolidated group are considered in calculating the expanded group earnings for the expanded group period of the consolidated group. Accordingly, a regarded distribution or acquisition made by a member of a consolidated group is reduced to the extent of the expanded group earnings account of the consolidated group.

(B) ***Effect of certain corporate transactions on the calculation of expanded group earnings*** —

(*1*) ***Consolidation.*** A consolidated group succeeds to the expanded group earnings account of a joining member under the principles of § 1.385-3(c)(3)(i)(F)(*2*)(*ii*).

(*2*) ***Deconsolidation*** —

(*i*) ***In general.*** Except as otherwise provided in paragraph (b)(4)(i)(B)(*2*)(*ii*) of this section, no amount of the expanded group earnings account of a consolidated group for an expanded group period, if any, is allocated to a departing member. Accordingly, immediately after leaving the consolidated group, the departing member has no expanded group earnings account with respect to its expanded group period.

(*ii*) ***Allocation of expanded group earnings to a departing member in a distribution described in section 355.*** If a departing member leaves the consolidated group by reason of an exchange or distribution to which section 355 (or so much of section 356 that relates to section 355) applies, the expanded group earnings account of the consolidated group is allocated between the consolidated group and the departing member in proportion to the earnings and profits of the consolidated group and the earnings and profits of the departing member immediately after the transaction.

(ii) ***Application of the reduction for qualified contributions*** —

(A) ***In general.*** For purposes of applying § 1.385-3(c)(3)(ii)(A) to a consolidated group—

(*1*) A qualified contribution to any member of a consolidated group that remains a member of the consolidated group immediately after the qualified contribution from a person other than a member of the same consolidated group is treated as made to the one corporation described in paragraph (b)(1) of this section;

(*2*) A qualified contribution that causes a member of a consolidated group to become a departing member of that consolidated group is treated as made to the departing member and not to the consolidated group of which the departing member was a member immediately prior to the qualified contribution; and

(*3*) No contribution of property by a member of a consolidated group to any other member of the consolidated group is a qualified contribution.

(B) ***Effect of certain corporate transactions on the calculation of qualified contributions*** —

(1) ***Consolidation.*** A consolidated group succeeds to the qualified contributions of a joining member under the principles of § 1.385-3(c)(3)(ii)(F)(2)(*ii*).

(2) ***Deconsolidation*** —

(*i*) ***In general.*** Except as otherwise provided in paragraph (b)(4)(ii)(B)(2)(*ii*) of this section, no amount of the qualified contributions of a consolidated group for an expanded group period, if any, is allocated to a departing member. Accordingly, immediately after leaving the consolidated group, the departing member has no qualified contributions with respect to its expanded group period.

(*ii*) ***Allocation of qualified contributions to a departing member in a distribution described in section 355.*** If a departing member leaves the consolidated group by reason of an exchange or distribution to which section 355 (or so much of section 356 that relates to section 355) applies, each qualified contribution of the consolidated group is allocated between the consolidated group and the departing member in proportion to the earnings and profits of the consolidated group and the earnings and profits of the departing member immediately after the transaction.

(5) ***Order of operations.*** For purposes of this section and § 1.385-3, the consequences of a transaction involving one or more members of a consolidated group are determined as provided in paragraphs (b)(5)(i) and (ii) of this section.

(i) First, determine the characterization of the transaction under Federal tax law without regard to the one-corporation rule described in paragraph (b)(1) of this section.

(ii) Second, apply this section and § 1.385-3 to the transaction as characterized to determine whether to treat a debt instrument as stock, treating the consolidated group as one corporation under paragraph (b)(1) of this section, unless otherwise provided.

(6) ***Partnership owned by a consolidated group.*** For purposes of this section and § 1.385-3, and notwithstanding the one-corporation rule described in paragraph (b)(1) of this section, a partnership that is wholly owned by members of a consolidated group is treated as a partnership. Thus, for example, if members of a consolidated group own all of the interests in a controlled partnership that issues a debt instrument to a member of the consolidated group, such debt instrument would be treated as a consolidated group debt instrument because, under § 1.385-3(f)(3)(i), for purposes of this section and § 1.385-3, a consolidated group member that is an expanded group partner is treated as the issuer with respect to its share of the debt instrument issued by the partnership.

(7) ***Predecessor and successor*** —

(i) ***In general.*** Pursuant to paragraph (b)(5) of this section, the determination as to whether a member of an expanded group is a predecessor or successor of another member of the consolidated group is made without regard to paragraph (b)(1) of this section. For purposes of § 1.385-3(b)(3), if a consolidated group member is a predecessor or successor of a member of the same expanded group that is not a member of the same consolidated group, the consolidated group is treated as a predecessor or successor of the expanded group member (or the consolidated group of which that expanded group member is a member). Thus, for example, a departing member that departs a consolidated group in a distribution or exchange to which section 355 applies is a successor to the consolidated group and the consolidated group is a predecessor of the departing member.

(ii) ***Joining members.*** For purposes of § 1.385-3(b)(3), the term *predecessor* also means, with respect to a consolidated group, a joining member and the term successor also means, with respect to a joining member, a consolidated group.

(c) ***Consolidated group debt instruments —***

(1) ***Debt instrument ceases to be a consolidated group debt instrument but continues to be issued and held by expanded group members —***

(i) ***Consolidated group member leaves the consolidated group.*** For purposes of this section and § 1.385-3, when a debt instrument ceases to be a consolidated group debt instrument as a result of a transaction in which the member of the consolidated group that issued the instrument (the issuer) or the member of the consolidated group holding the instrument (the holder) ceases to be a member of the same consolidated group but both the issuer and the holder continue to be members of the same expanded group, the issuer is treated as issuing a new debt instrument to the holder in exchange for property immediately after the debt instrument ceases to be a consolidated group debt instrument. To the extent the newly-issued debt instrument is a covered debt instrument that is treated as stock under § 1.385-3(b)(3), the covered debt instrument is then immediately deemed to be exchanged for stock of the issuer. For rules regarding the treatment of the deemed exchange, see § 1.385-1(d). For examples illustrating the rule in this paragraph (c)(1)(i), see paragraphs (f)(3)(iv) and (v) of this section (*Examples 4* and *5*).

(ii) ***Consolidated group debt instrument that is transferred outside of the consolidated group.*** For purposes of this section and § 1.385-3, when a member of a consolidated group that holds a consolidated group debt instrument transfers the debt instrument to an expanded group member that is not a member of the same consolidated group (transferee expanded group member), the debt instrument is treated as issued by the consolidated group to the transferee expanded group member immediately after the debt instrument ceases to be a consolidated group debt instrument. Thus, for example, for purposes of this section and § 1.385-3, the sale of a consolidated group debt instrument to a transferee expanded group member is treated as an issuance of the debt instrument by the consolidated group to the transferee expanded group member in exchange for property. To the extent the newly-issued debt instrument is a covered debt instrument that is treated as stock upon being transferred, the covered debt instrument is deemed to be exchanged for stock of the member of the consolidated group treated as the issuer of the debt instrument (determined under paragraph (b)(3)(i) of this section) immediately after the covered debt instrument is transferred outside of the consolidated group. For rules regarding the treatment of the deemed exchange, see § 1.385-1(d). For examples illustrating the rule in this paragraph (c)(1)(ii), see paragraphs (f)(3)(ii) and (iii) of this section (*Examples 2* and *3*).

(iii) ***Overlap transactions.*** If a debt instrument ceases to be a consolidated group debt instrument in a transaction to which both paragraphs (c)(1)(i) and (ii) of this section apply, then only the rules of paragraph (c)(1)(ii) of this section apply with respect to such debt instrument.

(iv) ***Subgroup exception.*** A debt instrument is not treated as ceasing to be a consolidated group debt instrument for purposes of paragraphs (c)(1)(i) and (ii) of this section if both the issuer and the holder of the debt instrument are members of the same consolidated group immediately after the transaction described in paragraph (c)(1)(i) or (ii) of this section.

(2) ***Covered debt instrument treated as stock becomes a consolidated group debt instrument.*** When a covered debt instrument that is treated as stock under § 1.385-3 becomes a consolidated group debt instrument, then immediately after the covered debt instrument becomes a consolidated group debt instrument, the issuer is deemed to issue a new covered debt instrument to the holder in exchange for the covered debt instrument that was treated as stock. In addition, in a manner consistent with § 1.385-3(d)(2)(ii)(A), when the covered debt instrument that previously was treated as stock becomes a consolidated group debt instrument, other covered debt instruments issued by the issuer of that instrument (including a consolidated group that includes the issuer) that are not treated as stock when the instrument becomes a consolidated group debt instrument are re-tested to determine whether those other covered debt instruments are treated as funding the regarded distribution or acquisition that previously was treated as funded by the instrument (unless such distribution or acquisition is disregarded under paragraph (b)(1) of this section). Further, also in a manner consistent with § 1.385-3(d)(2)(ii)(A), a covered debt instrument that is issued by the issuer (including a consolidated group that includes the issuer) after the application of this paragraph (c)(2) and within the per se period may also be treated as funding that regarded distribution or acquisition.

(3) ***No interaction with the intercompany obligation rules of § 1.1502-13(g).*** The rules of this section do not affect the application of the rules of § 1.1502-13(g). Thus, any deemed satisfaction and reissuance of a debt instrument under § 1.1502-13(g) and any deemed issuance and deemed exchange of a debt instrument under this paragraph (c) that arise as part of the same transaction or series of transactions are not integrated. Rather, each deemed satisfaction and reissuance under the rules of § 1.1502-13(g), and each deemed issuance and exchange under the rules of this section, are respected as separate steps and treated as separate transactions.

(d) ***Application of the funding rule of § 1.385-3(b)(3) to members departing a consolidated group.*** This paragraph (d) provides rules for applying the funding rule of § 1.385-3(b)(3) when a departing member ceases to be a member of a consolidated group, but only if the departing member and the consolidated group are members of the same expanded group immediately after the deconsolidation.

(1) ***Continued application of the one-corporation rule.*** A disregarded distribution or acquisition by any member of the consolidated group continues to be disregarded when the departing member ceases to be a member of the consolidated group.

(2) ***Continued recharacterization of a departing member's covered debt instrument as stock.*** A covered debt instrument of a departing member that is treated as stock of the departing member under § 1.385-3(b) continues to be treated as stock when the departing member ceases to be a member of the consolidated group.

(3) ***Effect of issuances of covered debt instruments that are not consolidated group debt instruments on the departing member and the consolidated group.*** If a departing member has issued a covered debt instrument (determined without regard to the one-corporation rule described in paragraph (b)(1) of this section) that is not a consolidated group debt instrument and that is not treated as stock immediately before the departing member ceases to be a consolidated group member, then the departing member (and not the consolidated group) is treated as issuing the covered debt instrument on the date and in the manner the covered debt instrument was issued. If the departing member is not treated as the issuer of a covered debt instrument pursuant to the preceding sentence, then the consolidated group continues to be treated as issuing the covered debt instrument on the date and in the manner the covered debt instrument was issued.

(4) ***Treatment of prior regarded distributions or acquisitions.*** This paragraph (d)(4) applies when a departing member ceases to be a consolidated group member in a transaction other than a distribution to which section 355 (or so much of section 356 as relates to section 355) applies, and the consolidated group has made a regarded distribution or acquisition. In this case, to the extent the distribution or acquisition has not caused a covered debt instrument of the consolidated group to be treated as stock under § 1.385-3(b) on or before the date the departing member leaves the consolidated group, then—

(i) If the departing member made the regarded distribution or acquisition (determined without regard to the one-corporation rule described in paragraph (b)(1) of this section), the departing member (and not the consolidated group) is treated as having made the regarded distribution or acquisition.

(ii) If the departing member did not make the regarded distribution or acquisition (determined without regard to the one-corporation rule described in paragraph (b)(1) of this section), then the consolidated group (and not the departing member) continues to be treated as having made the regarded distribution or acquisition.

(e) ***Definitions.*** The definitions in this paragraph (e) apply for purposes of this section.

(1) ***Consolidated group debt instrument.*** The term *consolidated group debt instrument* means a covered debt instrument issued by a member of a consolidated group and held by a member of the same consolidated group.

(2) ***Departing member.*** The term *departing member* means a member of an expanded group that ceases to be a member of a consolidated group but continues to be a member of the same expanded group. In the case of multiple members leaving a consolidated group as a result of a single transaction that continue to be members of the same expanded group, if such members are treated as one corporation under paragraph (b)(1) of this section immediately after the transaction, that one corporation is a departing member with respect to the consolidated group.

(3) ***Disregarded distribution or acquisition.*** The term *disregarded distribution or acquisition* means a distribution or acquisition described in § 1.385-3(b)(2) or (b)(3)(i) between members of a consolidated group that is disregarded under the one-corporation rule described in paragraph (b)(1) of this section.

(4) ***Joining member.*** The term *joining member* means a member of an expanded group that becomes a member of a consolidated group and continues to be a member of the same expanded group. In the case of multiple members joining a consolidated group as a result of a single transaction that continue to be members of the same expanded group, if such members were treated as one corporation under paragraph (b)(1) of this section immediately before the transaction, that one corporation is a joining member with respect to the consolidated group.

(5) ***Regarded distribution or acquisition.*** The term *regarded distribution or acquisition* means a distribution or acquisition described in § 1.385-3(b)(2) or (b)(3)(i) that is not disregarded under the one-corporation rule described in paragraph (b)(1) of this section.

(f) ***Examples*** —

(1) ***Assumed facts.*** Except as otherwise stated, the following facts are assumed for purposes of the examples in paragraph (f)(3) of this section:

(i) FP is a foreign corporation that owns 100% of the stock of USS1, a covered member, and 100% of the stock of FS, a foreign corporation;

(ii) USS1 owns 100% of the stock of DS1 and DS3, both covered members;

(iii) DS1 owns 100% of the stock of DS2, a covered member;

(iv) FS owns 100% of the stock of UST, a covered member;

(v) At the beginning of Year 1, FP is the common parent of an expanded group comprised solely of FP, USS1, FS, DS1, DS2, DS3, and UST (the FP expanded group);

(vi) USS1, DS1, DS2, and DS3 are members of a consolidated group of which USS1 is the common parent (the USS1 consolidated group);

(vii) The FP expanded group has outstanding more than $50 million of debt instruments described in § 1.385-3(c)(4) at all times;

(viii) No issuer of a covered debt instrument has a positive expanded group earnings account, within the meaning of § 1.385-3(c)(3)(i)(B), or has received a qualified contribution, within the meaning of § 1.385-3(c)(3)(ii)(B);

(ix) All notes are covered debt instruments, within the meaning of § 1.385-3(g)(3), and are not qualified short-term debt instruments, within the meaning of § 1.385-3(b)(3)(vii);

(x) All notes between members of a consolidated group are intercompany obligations within the meaning of § 1.1502-13(g)(2)(ii);

(xi) Each entity has as its taxable year the calendar year;

(xii) No domestic corporation is a United States real property holding corporation within the meaning of section 897(c)(2);

(xiii) Each note is issued with adequate stated interest (as defined in section 1274(c)(2)); and

(xiv) Each transaction occurs after January 19, 2017.

(2) ***No inference.*** Except as otherwise provided in this section, it is assumed for purposes of the examples in paragraph (f)(3) of this section that the form of each transaction is respected for Federal tax purposes. No inference is intended, however, as to whether any particular note would be respected as indebtedness or as to whether the form of any particular transaction described in an example in paragraph (f)(3) of this section would be respected for Federal tax purposes.

(3) ***Examples.*** The following examples illustrate the rules of this section.

(i) ***Example 1: Order of operations*** —

(A) ***Facts.*** On Date A in Year 1, UST issues UST Note to USS1 in exchange for DS3 stock representing less than 20% of the value and voting power of DS3.

(B) ***Analysis.*** UST is acquiring the stock of DS3, the non-common parent member of a consolidated group. Pursuant to paragraph (b)(5)(i) of this section, the transaction is first analyzed without regard to the one-corporation rule described in paragraph (b)(1) of this section, and therefore UST is treated as issuing a covered debt instrument in exchange for expanded group stock. The exchange of UST Note for DS3 stock is not an exempt exchange within the meaning of § 1.385-3(g)(11) because UST and USS1 are not parties

to an asset reorganization. Pursuant to paragraph (b)(5)(ii) of this section, § 1.385-3 (including § 1.385-3(b)(2)(ii)) is then applied to the transaction, thereby treating UST Note as stock for Federal tax purposes when it is issued by UST to USS1. The UST Note is not treated as property for purposes of section 304(a) because it is not property within the meaning specified in section 317(a). Therefore, UST's acquisition of DS3 stock from USS1 in exchange for UST Note is not an acquisition described in section 304(a)(1).

(ii) *Example 2: Distribution of consolidated group debt instrument* —

(A) ***Facts.*** On Date A in Year 1, DS1 issues DS1 Note to USS1 in a distribution. On Date B in Year 2, USS1 distributes DS1 Note to FP.

(B) ***Analysis.*** Under paragraph (b)(1) of this section, the USS1 consolidated group is treated as one corporation for purposes of § 1.385-3. Accordingly, when DS1 issues DS1 Note to USS1 in a distribution on Date A in Year 1, DS1 is not treated as issuing a debt instrument to another member of DS1's expanded group in a distribution for purposes of § 1.385-3(b)(2), and DS1 Note is not treated as stock under § 1.385-3. When USS1 distributes DS1 Note to FP, DS1 Note is deemed satisfied and reissued under § 1.1502-13(g)(3)(ii), immediately before DS1 Note ceases to be an intercompany obligation. Under paragraph (c)(1)(ii) of this section, when USS1 distributes DS1 Note to FP, the USS1 consolidated group is treated as issuing DS1 Note to FP in a distribution on Date B in Year 2. Accordingly, DS1 Note is treated as stock under § 1.385-3(b)(2)(i). Under paragraph (c)(1)(ii) of this section, DS1 Note is deemed to be exchanged for stock of the issuing member, DS1, immediately after DS1 Note is transferred outside of the USS1 consolidated group. Under paragraph (c)(3) of this section, the deemed satisfaction and reissuance under § 1.1502-13(g)(3)(ii) and the deemed issuance and exchange under paragraph (c)(1)(ii) of this section, are respected as separate steps and treated as separate transactions.

(iii) *Example 3: Sale of consolidated group debt instrument* —

(A) ***Facts.*** On Date A in Year 1, DS1 lends $200x of cash to USS1 in exchange for USS1 Note. On Date B in Year 2, USS1 distributes $200x of cash to FP. Subsequently, on Date C in Year 2, DS1 sells USS1 Note to FS for $200x.

(B) ***Analysis.*** Under paragraph (b)(1) of this section, the USS1 consolidated group is treated as one corporation for purposes of § 1.385-3. Accordingly, when USS1 issues USS1 Note to DS1 for property on Date A in Year 1, the USS1 consolidated group is not treated as a funded member, and when USS1 distributes $200x to FP on Date B in Year 2, that distribution is a transaction described in § 1.385-3(b)(3)(i)(A), but does not cause USS1 Note to be recharacterized under § 1.385-3(b)(3). When DS1 sells USS1 Note to FS, USS1 Note is deemed satisfied and reissued under § 1.1502-13(g)(3)(ii), immediately before USS1 Note ceases to be an intercompany obligation. Under paragraph (c)(1)(ii) of this section, when the USS1 Note is transferred to FS for $200x on Date C in Year 2, the USS1 consolidated group is treated as issuing USS1 Note to FS in exchange for $200x on that date. Because USS1 Note is issued by the USS1 consolidated group to FS within the per se period as defined in § 1.385-3(g)(19) with respect to the distribution by the USS1 consolidated group to FP, USS1 Note is treated as funding the distribution under § 1.385-3(b)(3)(iii)(A) and, accordingly, is treated as stock under § 1.385-3(b)(3). Under § 1.385-3(d)(1)(i) and paragraph (c)(1)(ii) of this section, USS1 Note is deemed to be exchanged for stock of the issuing member, USS1, immediately after USS1 Note is

transferred outside of the USS1 consolidated group. Under paragraph (c)(3) of this section, the deemed satisfaction and reissuance under § 1.1502-13(g)(3)(ii) and the deemed issuance and exchange under paragraph (c)(1)(ii) of this section are respected as separate steps and treated as separate transactions.

(iv) ***Example 4: Treatment of consolidated group debt instrument and departing member's regarded distribution or acquisition when the issuer of the instrument leaves the consolidated group*** —

(A) ***Facts.*** The facts are the same as provided in paragraph (f)(1) of this section, except that USS1 and FS own 90% and 10% of the stock of DS1, respectively. On Date A in Year 1, DS1 distributes $80x of cash and newly-issued DS1 Note, which has a value of $10x, to USS1. Also on Date A in Year 1, DS1 distributes $10x of cash to FS. On Date B in Year 2, FS purchases all of USS1's stock in DS1 (90% of the stock of DS1), resulting in DS1 ceasing to be a member of the USS1 consolidated group.

(B) ***Analysis.*** Under paragraph (b)(1) of this section, the USS1 consolidated group is treated as one corporation for purposes of § 1.385-3. Accordingly, DS1's distribution of $80x of cash to USS1 on Date A in Year 1 is a disregarded distribution or acquisition, and under paragraph (d)(1) of this section, continues to be a disregarded distribution or acquisition when DS1 ceases to be a member of the USS1 consolidated group. In addition, when DS1 issues DS1 Note to USS1 in a distribution on Date A in Year 1, DS1 is not treated as issuing a debt instrument to a member of DS1's expanded group in a distribution for purposes of § 1.385-3(b)(2)(i), and DS1 Note is not treated as stock under § 1.385-3(b)(2)(i). DS1's issuance of DS1 Note to USS1 is also a disregarded distribution or acquisition, and under paragraph (d)(1) of this section, continues to be a disregarded distribution or acquisition when DS1 ceases to be a member of the USS1 consolidated group. The distribution of $10x cash by DS1 to FS on Date A in Year 1 is a regarded distribution or acquisition. When FS purchases 90% of the stock of DS1's from USS1 on Date B in Year 2 and DS1 ceases to be a member of the USS1 consolidated group, DS1 Note is deemed satisfied and reissued under § 1.1502-13(g)(3)(ii), immediately before DS1 Note ceases to be an intercompany obligation. Under paragraph (c)(1)(i) of this section, for purposes of § 1.385-3, DS1 is treated as issuing a new debt instrument to USS1 in exchange for property immediately after DS1 Note ceases to be a consolidated group debt instrument. Under paragraph (d)(4)(i) of this section, the departing member, DS1 (and not the USS1 consolidated group) is treated as having distributed $10x to FS on Date A in Year 1 (a regarded distribution or acquisition) for purposes of applying § 1.385-3(b)(3) after DS1 ceases to be a member of the USS1 consolidated group. Because DS1 Note is reissued by DS1 to USS1 within the per se period (as defined in § 1.385-3(g)(19)) with respect to DS1's regarded distribution to FS, DS1 Note is treated as funding the distribution under § 1.385-3(b)(3)(iii)(A) and, accordingly, is treated as stock under § 1.385-3(b)(3). Under § 1.385-3(d)(1)(i) and paragraph (c)(1)(i) of this section, DS1 Note is immediately deemed to be exchanged for stock of DS1 on Date B in Year 2. Under paragraph (c)(3) of this section, the deemed satisfaction and reissuance under § 1.1502-13(g)(3)(ii) and the deemed issuance and exchange under paragraph (c)(1)(i) of this section are respected as separate steps and treated as separate transactions. Under § 1.385-3(d)(7)(i), after DS1 Note is treated as stock held by USS1, DS1 Note is not treated as stock for purposes of determining whether DS1 is a member of the USS1 consolidated group.

(v) ***Example 5: Treatment of consolidated group debt instrument and consolidated group's regarded distribution or acquisition*** —

(A) ***Facts.*** On Date A in Year 1, DS1 issues DS1 Note to USS1. On Date B in Year 2, USS1 distributes $100x of cash to FP. On Date C in Year 3, USS1 sells all of its interest in DS1 to FS, resulting in DS1 ceasing to be a member of the USS1 consolidated group.

(B) ***Analysis.*** Under paragraph (b)(1) of this section, the USS1 consolidated group is treated as one corporation for purposes of § 1.385-3. Accordingly, when DS1 issues DS1 Note to USS1 in a distribution on Date A in Year 1, DS1 is not treated as issuing a debt instrument to a member of DS1's expanded group in a distribution for purposes of § 1.385-3(b)(2)(i), and DS1 Note is not treated as stock under § 1.385-3(b)(2)(i). DS1's issuance of DS1 Note to USS1 is also a disregarded distribution or acquisition, and under paragraph (d)(1) of this section, continues to be a disregarded distribution or acquisition when DS1 ceases to be a member of the USS1 consolidated group. The distribution of $100x cash by DS1 to USS1 on Date B in Year 2 is a regarded distribution or acquisition. When FS purchases all of the stock of DS1 from USS1 on Date C in Year 3 and DS1 ceases to be a member of the USS1 consolidated group, DS1 Note is deemed satisfied and reissued under § 1.1502-13(g)(3)(ii), immediately before DS1 Note ceases to be an intercompany obligation. Under paragraph (c)(1)(i) of this section, for purposes of § 1.385-3, DS1 is treated as issuing a new debt instrument to USS1 in exchange for property immediately after DS1 Note ceases to be a consolidated group debt instrument. Under paragraph (d)(4)(ii) of this section, the USS1 consolidated group (and not DS1) is treated as having distributed $100x to FP on Date B in Year 2 (a regarded distribution or acquisition) for purposes of applying § 1.385-3(b)(3) after DS1 ceases to be a member of the USS1 consolidated group. Because DS1 has not engaged in a regarded distribution or acquisition that would have been treated as funded by the reissued DS1 Note, the reissued DS1 Note is not treated as stock.

(vi) ***Example 6: Treatment of departing member's issuance of a covered debt instrument*** —

(A) ***Facts.*** On Date A in Year 1, FS lends $100x of cash to DS1 in exchange for DS1 Note. On Date B in Year 2, USS1 distributes $30x of cash to FP. On Date C in Year 2, USS1 sells all of its DS1 stock to FP, resulting in DS1 ceasing to be a member of the USS1 consolidated group.

(B) ***Analysis.*** Under paragraph (b)(1) of this section, the USS1 consolidated group is treated as one corporation for purposes of § 1.385-3. Accordingly, on Date A in Year 1, the USS1 consolidated group is treated as issuing DS1 Note to FS, and on Date B in Year 2, the USS1 consolidated group is treated as distributing $30x of cash to FP. Because DS1 Note is issued by the USS1 consolidated group to FS within the per se period as defined in § 1.385-3(g)(19) with respect to the distribution by the USS1consoldiated group of $30x cash to FP, $30x of DS1 Note is treated as funding the distribution under § 1.385-3(b)(3)(iii)(A), and, accordingly, is treated as stock on Date B in Year 2 under § 1.385-3(b)(3) and § 1.385-3(d)(1)(ii). Under paragraph (d)(3) of this section, DS1 (and not the USS1 consolidated group) is treated as the issuer of the remaining portion of DS1 Note for purposes of applying § 1.385-3(b)(3) after DS1 ceases to be a member of the USS1 consolidated group.

(g) ***Applicability date.*** This section applies to taxable years for which the U.S. Federal income tax return is due, without extensions, after May 14, 2020. For taxable years ending on or after January 19, 2017, and for which the U.S. Federal income tax return is due, without extensions, on or before May 14, 2020, see § 1.385-4T, as contained in 26 CFR in part 1 in effect on April 1, 2019. In the case of a taxable year that

ends after October 13, 2019, and on or before May 14, 2020, a taxpayer may choose to apply this section to the portion of the taxable year that occurs after the expiration of § 1.385-4T on October 13, 2019, provided that all members of the taxpayer's expanded group apply this section in its entirety.

[T.D 9897, 85 FR 28878, May 14, 2020]

§§ 1.386-1.400 [Reserved]

DEFERRED COMPENSATION, ETC.

PENSION, PROFIT-SHARING, STOCK BONUS PLANS, ETC.

§ 1.401-0 Scope and definitions.

(a) ***In general.*** Sections 1.401 through 1.401-14 (inclusive) reflect the provisions of section 401 prior to amendment by the Employee Retirement Income Security Act of 1974. The sections following § 1.401-14 and preceding § 1.402(a)-1 (hereafter referred to in this section as the "Post-ERISA Regulations") reflect the provisions of section 401 after amendment by such Act.

(b) ***Definitions.*** For purposes of the Post-ERISA regulations—

(1) ***Qualified plan.*** The term "qualified plan" means a plan which satisfies the requirements of section 401(a).

(2) ***Qualified trust.*** The term "qualified trust" means a trust which satisfies the requirements of section 401(a).

(Sec. 411 Internal Revenue Code of 1954 (88 Stat. 901; 26 U.S.C. 411))

[T.D. 7501, 42 FR 42320, Aug. 23, 1977]

§ 1.401-1 Qualified pension, profit-sharing, and stock bonus plans.

(a) ***Introduction.***

(1) Sections 401 through 405 relate to pension, profit- sharing, stock bonus, and annuity plans, compensation paid under a deferred-payment plan, and bond purchase plans. Section 401(a) prescribes the requirements which must be met for qualification of a trust forming part of a pension, profit-sharing, or stock bonus plan.

(2) A qualified pension, profit-sharing, or stock bonus plan is a definite written program and arrangement which is communicated to the employees and which is established and maintained by an employer—

(i) In the case of a pension plan, to provide for the livelihood of the employees or their beneficiaries after the retirement of such employees through the payment of benefits determined without regard to profits (see paragraph (b)(1)(i) of this section);

(ii) In the case of a profit-sharing plan, to enable employees or their beneficiaries to participate in the profits of the employer's trade or business, or in the profits of an affiliated employer who is entitled to deduct his contributions to the plan under section 404(a)(3)(B), pursuant to a definite formula for allocating the contributions and for distributing the funds accumulated under the plan (see paragraph (b)(1)(ii) of this section); and

(iii) In the case of a stock bonus plan, to provide employees or their beneficiaries benefits similar to those of profit-sharing plans, except that such benefits are distributable in stock of the employer, and that the contributions by the employer are not necessarily dependent upon profits. If the employer's contributions are dependent upon profits, the plan may enable employees or their beneficiaries to participate not only in the profits of the employer, but also in the profits of an affiliated employer who is entitled to deduct his contributions to the plan under section 404(a)(3)(B) (see paragraph (b)(1)(iii) of this section).

(3) In order for a trust forming part of a pension, profit-sharing, or stock bonus plan to constitute a qualified trust under section 401(a), the following tests must be met:

(i) It must be created or organized in the United States, as defined in section 7701(a)(9), and it must be maintained at all times as a domestic trust in the United States;

(ii) It must be part of a pension, profit-sharing, or stock bonus plan established by an employer for the exclusive benefit of his employees or their beneficiaries (see paragraph (b)(2) through (5) of this section);

(iii) It must be formed or availed of for the purpose of distributing to the employees or their beneficiaries the corpus and income of the fund accumulated by the trust in accordance with the plan, and, in the case of a plan which covers (as defined in paragraph (a)(2) of § 1.401-10) any self-employed individual, the time and method of such distribution must satisfy the requirements of section 401(a)(9) with respect to each employee covered by the plan;

(iv) It must be impossible under the trust instrument at any time before the satisfaction of all liabilities with respect to employees and their beneficiaries under the trust, for any part of the corpus or income to be used for, or diverted to, purposes other than for the exclusive benefit of the employees or their beneficiaries (see § 1.401-2);

(v) It must be part of a plan which benefits prescribed percentages of the employees, or which benefits such employees as qualify under a classification set up by the employer and found by the Commissioner not to be discriminatory in favor of certain specified classes of employees (see § 1.401-3);

(vi) It must be part of a plan under which contributions or benefits do not discriminate in favor of certain specified classes of employees (see §§ 1.401(a)(4)-0 through 1.401(a)(4)-13);

(vii) It must be part of a plan which provides the nonforfeitable rights described in section 401(a)(7) (see § 1.401-6);

(viii) If the trust forms part of a pension plan, the plan must provide that forfeitures must not be applied to increase the benefits any employee would receive under such plan (see § 1.401-7);

(ix) It must, if the plan benefits any self-employed individual who is an owner-employee, satisfy the additional requirements for qualification contained in section 401(a)(10) and (d).

(4) For taxable years beginning after December 31, 1962, self-employed individuals may be included in qualified plans. See generally § 1.401-10.

(b) *General rules.*

(1)

(i) A pension plan within the meaning of section 401(a) is a plan established and maintained by an employer primarily to provide systematically for the payment of definitely determinable benefits to his employees over a period of years, usually for life, after retirement. Retirement benefits generally are measured by, and based on, such factors as years of service and compensation received by the employees. The determination of the amount of retirement benefits and the contributions to provide such benefits are not dependent upon profits. Benefits are not definitely determinable if funds arising from forfeitures on termination of service, or other reason, may be used to provide increased benefits for the remaining participants (see § 1.401-7, relating to the treatment of forfeitures under a qualified pension plan). A plan designed to provide benefits for employees or their beneficiaries to be paid upon retirement or over a period of years after retirement will, for the purposes of section 401(a), be considered a pension plan if the employer contributions under the plan can be determined actuarially on the basis of definitely determinable benefits, or, as in the case of money purchase pension plans, such contributions are fixed without being geared to profits. A pension plan may provide for the payment of a pension due to disability and may also provide for the payment of incidental death benefits through insurance or otherwise. However, a plan is not a pension plan if it provides for the payment of benefits not customarily included in a pension plan such as layoff benefits or benefits for sickness, accident, hospitalization, or medical expenses (except medical benefits described in section 401(h) as defined in paragraph (a) of § 1.401-14).

(ii) A profit-sharing plan is a plan established and maintained by an employer to provide for the participation in his profits by his employees or their beneficiaries. The plan must provide a definite predetermined formula for allocating the contributions made to the plan among the participants and for distributing the funds accumulated under the plan after a fixed number of years, the attainment of a stated age, or upon the prior occurrence of some event such as layoff, illness, disability, retirement, death, or severance of employment. A formula for allocating the contributions among the participants is definite if, for example, it provides for an allocation in proportion to the basic compensation of each participant. A plan (whether or not it contains a definite predetermined formula for determining the profits to be shared with the employees) does not qualify under section 401(a) if the contributions to the plan are made at such times or in such amounts that the plan in operation discriminates in favor of officers, shareholders, persons whose principal duties consist in supervising the work of other employees, or highly compensated employees. For the rules with respect to discrimination, see §§ 1.401-3 and 1.401(a)(4)-0 through 1.401(a)(4)-13. A profit-sharing plan within the meaning of section 401 is primarily a plan of deferred compensation, but the amounts allocated to the account of a participant may be used to provide for him or his family incidental life or accident or health insurance. See §§ 1.72-15, 1.72-16, and 1.402(a)-1(e) for rules regarding the tax treatment of incidental life or accident or health insurance.

(iii) A stock bonus plan is a plan established and maintained by an employer to provide benefits similar to those of a profit-sharing plan, except that the contributions by the employer are not necessarily dependent upon profits and the benefits are distributable in stock of the employer company. For the purpose of allocating and distributing the stock of the employer which is to be shared among his employees or their beneficiaries, such a plan is subject to the same requirements as a profit-sharing plan.

(iv) As to inclusion of full-time life insurance salesmen within the class of persons considered to be employees, see section 7701(a)(20).

(2) The term “plan” implies a permanent as distinguished from a temporary program. Thus, although the employer may reserve the right to change or terminate the plan, and to discontinue contributions thereunder, the abandonment of the plan for any reason other than business necessity within a few years after it has taken effect will be evidence that the plan from its inception was not a bona fide program for the exclusive benefit of employees in general. Especially will this be true if, for example, a pension plan is abandoned soon after pensions have been fully funded for persons in favor of whom discrimination is prohibited under section 401(a). The permanency of the plan will be indicated by all of the surrounding facts and circumstances, including the likelihood of the employer's ability to continue contributions as provided under the plan. In the case of a profit-sharing plan, other than a profit-sharing plan which covers employees and owner-employees (see section 401(d)(2)(B)), it is not necessary that the employer contribute every year or that he contribute the same amount or contribute in accordance with the same ratio every year. However, merely making a single or occasional contribution out of profits for employees does not establish a plan of profit-sharing. To be a profit-sharing plan, there must be recurring and substantial contributions out of profits for the employees. In the event a plan is abandoned, the employer should promptly notify the district director, stating the circumstances which led to the discontinuance of the plan.

(3) If the plan is so designed as to amount to a subterfuge for the distribution of profits to shareholders, it will not qualify as a plan for the exclusive benefit of employees even though other employees who are not shareholders are also included under the plan. The plan must benefit the employees in general, although it need not provide benefits for all of the employees. Among the employees to be benefited may be persons who are officers and shareholders. However, a plan is not for the exclusive benefit of employees in general if, by any device whatever, it discriminates either in eligibility requirements, contributions, or benefits in favor of employees who are officers, shareholders, persons whose principal duties consist in supervising the work of other employees, or the highly compensated employees. See section 401(a) (3), (4), and (5). Similarly, a stock bonus or profit-sharing plan is not a plan for the exclusive benefit of employees in general if the funds therein may be used to relieve the employer from contributing to a pension plan operating concurrently and covering the same employees. All of the surrounding and attendant circumstances and the details of the plan will be indicative of whether it is a bona fide stock bonus, pension, or profit-sharing plan for the exclusive benefit of employees in general. The law is concerned not only with the form of a plan but also with its effects in operation. For example, section 401(a)(5) specifies certain provisions which of themselves are not discriminatory. However, this does not mean that a plan containing these provisions may not be discriminatory in actual operation.

(4) A plan is for the exclusive benefit of employees or their beneficiaries even though it may cover former employees as well as present employees and employees who are temporarily on leave, as, for example, in the Armed Forces of the United States. A plan covering only former employees may qualify under section 401(a) if it complies with the provisions of section 401(a)(3)(B), with respect to coverage, and section 401(a)(4), with respect to contributions and benefits, as applied to all of the former employees. The term “beneficiaries” of an employee within the meaning of section 401 includes the estate of the employee, dependents of the employee, persons who are the natural objects of the employee's bounty, and any persons designated by the employee to share in the benefits of the plan after the death of the employee.

(5)

(i) No specific limitations are provided in section 401(a) with respect to investments which may be made by the trustees of a trust qualifying under section 401(a). Generally, the contributions may be used by the trustees to purchase any investments permitted by the trust agreement to

the extent allowed by local law. However, such a trust will be subject to tax under section 511 with respect to any "unrelated business taxable income" (as defined in section 512) realized by it from its investments.

(ii) Where the trust funds are invested in stock or securities of, or loaned to, the employer or other person described in section 503(b), full disclosure must be made of the reasons for such arrangement and the conditions under which such investments are made in order that a determination may be made whether the trust serves any purpose other than constituting part of a plan for the exclusive benefit of employees. The trustee shall report any of such investments on the return which under section 6033 it is required to file and shall with respect to any such investment furnish the information required by such return. See § 1.6033-1.

(c) ***Portions of years.*** A qualified status must be maintained throughout the entire taxable year of the trust in order for the trust to obtain any exemption for such year. But see section 401(a)(6) and § 1.401-3.

(d) ***Plan of several employers.*** A trust forming part of a plan of several employers for their employees will be qualified if all the requirements are otherwise satisfied.

(e) ***Determination of exemptions and returns.***

(1) An employees' trust may request a determination letter as to its qualification under section 401 and exemption under section 501. For the procedure for obtaining such a determination letter see paragraph (l) of § 601.201 of this chapter (Statement of Procedural Rules).

(2) A trust which qualifies under section 401(a) and which is exempt under section 501(a) must file a return in accordance with section 6033 and the regulations thereunder. See §§ 1.6033-1 and 1.6033-2(a)(3). In case such a trust realizes any unrelated business taxable income, as defined in section 512, such trust is also required to file a return with respect to such income. See paragraph (e) of § 1.6012-2 and paragraph (a)(5) of § 1.6012-3 for requirements with respect to such returns. For information required to be furnished periodically by an employer with respect to the qualification of a plan, see §§ 1.404(a)-2, and 1.6033-2(a)(2)(ii)(l).

[T.D. 6500, 25 FR 11670, Nov. 26, 1960, as amended by T.D. 6675, 28 FR 10118, Sept. 17, 1963; T.D. 6722, 29 FR 5071, Apr. 14, 1964; T.D. 7168, 37 FR 5024, Mar. 9, 1972; T.D. 7428, 41 FR 34619, Aug. 16, 1976; T.D. 9665, 79 FR 26842, May 12, 2014; T.D. 9849, 84 FR 9233, Mar. 14, 2019; T.D. 9898, 85 FR 31967, May 28, 2020]

§ 1.401-2 Impossibility of diversion under the trust instrument.

(a) ***In general.***

(1) Under section 401(a)(2) a trust is not qualified unless under the trust instrument it is impossible (in the taxable year and at any time thereafter before the satisfaction of all liabilities to employees or their beneficiaries covered by the trust) for any part of the trust corpus or income to be used for, or diverted to, purposes other than for the exclusive benefit of such employees or their beneficiaries. This section does not apply to funds of the trust which are allocated to provide medical benefits described in section 401(h) as defined in paragraph (a) of § 1.401-14. For the rules prohibiting diversion of such funds and the requirement of reversion to the employer after satisfaction of all liabilities under the medical benefits account, see paragraph (c) (4) and (5) of § 1.401-14. For rules permitting reversion to the employer of amounts held in a section 415 suspense acount, see § 1.401(a)-2(b).

(2) As used in section 401(a)(2), the phrase "if under the trust instrument it is impossible" means that the trust instrument must definitely and affirmatively make it impossible for the nonexempt diversion or use to occur, whether by operation or natural termination of the trust, by power of revocation or amendment, by the happening of a contingency, by collateral arrangement, or by any other means. Although it is not essential that the employer relinquish all power to modify or terminate the rights of certain employees covered by the trust, it must be impossible for the trust funds to be used or diverted for purposes other than for the exclusive benefit of his employees or their beneficiaries.

(3) As used in section 401(a)(2), the phrase "purposes other than for the exclusive benefit of his employees or their beneficiaries" includes all objects or aims not solely designed for the proper satisfaction of all liabilities to employees or their beneficiaries covered by the trust.

(b) ***Meaning of "liabilities".***

(1) The intent and purpose in section 401(a)(2) of the phrase "prior to the satisfaction of all liabilities with respect to employees and their beneficiaries under the trust" is to permit the employer to reserve the right to recover at the termination of the trust, and only at such termination, any balance remaining in the trust which is due to erroneous actuarial computations during the previous life of the trust. A balance due to an "erroneous actuarial computation" is the surplus arising because actual requirements differ from the expected requirements even though the latter were based upon previous actuarial valuations of liabilities or determinations of costs of providing pension benefits under the plan and were made by a person competent to make such determinations in accordance with reasonable assumptions as to mortality, interest, etc., and correct procedures relating to the method of funding. For example, a trust has accumulated assets of $1,000,000 at the time of liquidation, determined by acceptable actuarial procedures using reasonable assumptions as to interest, mortality, etc., as being necessary to provide the benefits in accordance with the provisions of the plan. Upon such liquidation it is found that $950,000 will satisfy all of the liabilities under the plan. The surplus of $50,000 arises, therefore, because of the difference between the amounts actuarially determined and the amounts actually required to satisfy the liabilities. This $50,000, therefore, is the amount which may be returned to the employer as the result of an erroneous actuarial computation. If, however, the surplus of $50,000 had been accumulated as a result of a change in the benefit provisions or in the eligibility requirements of the plan, the $50,000 could not revert to the employer because such surplus would not be the result of an erroneous actuarial computation.

(2) The term "liabilities" as used in section 401(a)(2) includes both fixed and contingent obligations to employees. For example, if 1,000 employees are covered by a trust forming part of a pension plan, 300 of whom have satisfied all the requirements for a monthly pension, while the remaining 700 employees have not yet completed the required period of service, contingent obligations to such 700 employees have nevertheless arisen which constitute "liabilities" within the meaning of that term. It must be impossible for the employer (or other non employee) to recover any amounts other than such amounts as remain in the trust because of "erroneous actuarial computations" after the satisfaction of all fixed and contingent obligations. Furthermore, the trust instrument must contain a definite affirmative provision to this effect, irrespective of whether the obligations to employees have their source in the trust instrument itself, in the plan of which the trust forms a part, or in some collateral instrument or arrangement forming a part of such plan, and regardless of whether such obligations are, technically speaking, liabilities of the employer, of the trust, or of some other person forming a part of the plan or connected with it.

[T.D. 6500, 25 FR 11672, Nov. 26, 1960, as amended by T.D. 6722, 29 FR 5072, Apr. 14, 1964; T.D. 7748, 46 FR 1695, Jan. 7, 1981]

§ 1.401-3 Requirements as to coverage.

(a)

(1) In order to insure that stock bonus, pension, and profit-sharing plans are utilized for the welfare of employees in general, and to prevent the trust device from being used for the principal benefit of shareholders, officers, persons whose principal duties consist in supervising the work of other employees, or highly paid employees, or as a means of tax avoidance, a trust will not be qualified unless it is part of a plan which satisfies the coverage requirements of section 401(a)(3). However, if the plan covers any individual who is an owner-employee, as defined in section 401(c)(3), the requirements of section 401(a)(3) and this section are not applicable to such plan, but the plan must satisfy the requirements of section 401(d).

(2) The percentage requirements in section 401(a)(3)(A) refer to a percentage of all the active employees, including employees temporarily on leave, such as those in the Armed Forces of the United States, if such employees are eligible under the plan.

(3) The application of section 401(a)(3)(A) may be illustrated by the following example:

Example. A corporation adopts a plan at a time when it has 1,000 employees. The plan provides that all full-time employees who have been employed for a period of two years and have reached the age of 30 shall be eligible to participate. The plan also requires participating employees to contribute 3 percent of their monthly pay. At the time the plan is made effective 100 of the 1,000 employees had not been employed for a period of two years. Fifty of the employees were seasonal employees whose customary employment did not exceed five months in any calendar year. Twenty-five of the employees were part-time employees whose customary employment did not exceed 20 hours in any one week. One hundred and fifty of the full-time employees who had been employed for two years or more had not yet reached age 30. The requirements of section 401(a)(3)(A) will be met if 540 employees are covered by the plan, as shown by the following computation:

(i) Total employees with respect to whom the percentage requirements are applicable (1,000 minus 175 (100 plus 50 plus 25))	825
(ii) Employees not eligible to participate because of age requirements	150
(iii) Total employees eligible to participate	675
(iv) Percentage of employees in item (i) eligible to participate	81
	+ %
(v) Minimum number of participating employees to qualify the plan (80 percent of 675)	540

If only 70 percent, or 578, of the 825 employees satisfied the age and service requirements, then 462 (80 percent of 578) participating employees would satisfy the percentage requirements.

(b) If a plan fails to qualify under the percentage requirements of section 401(a)(3)(A), it may still qualify under section 401(a)(3)(B) provided always that (as required by section 401(a) (3) and (4)) the plan's eligibility conditions, benefits, and contributions do not discriminate in favor of employees who are officers, shareholders, persons whose principal duties consist in supervising the work of other employees, or the highly compensated employees.

(c) Since, for the purpose of section 401, a profit-sharing plan is a plan which provides for distributing the funds accumulated under the plan after a fixed number of years, the attainment of a stated age, or upon the prior occurrence of some event such as illness, disability, retirement, death, layoff, or severance of employment, employees who receive the amounts allocated to their accounts before the expiration of such a period of time or the occurrence of such a contingency shall not be considered covered by a profit-sharing plan in determining whether the plan meets the coverage requirements of section 401(a)(3) (A) and (B). Thus, in case a plan permits employees to receive immediately the amounts allocated to their accounts, or to have such amounts paid to a profit- sharing plan for them, the employees who receive the shares immediately shall not, for the purpose of section 401, be considered covered by a profit-sharing plan.

(d) Section 401(a)(5) sets out certain classifications that will not in themselves be considered discriminatory. However, those so designated are not intended to be exclusive. Thus, plans may qualify under section 401(a)(3)(B) even though coverage thereunder is limited to employees who have either reached a designated age or have been employed for a designated number of years, or who are employed in certain designated departments or are in other classifications, provided the effect of covering only such employees does not discriminate in favor of officers, shareholders, employees whose principal duties consist in supervising the work of other employees, or highly compensated employees. For example, if there are 1,000 employees, and the plan is written for only salaried employees, and consequently only 500 employees are covered, that fact alone will not justify the conclusion that the plan does not meet the coverage requirements of section 401(a)(3)(B). Conversely, if a contributory plan is offered to all of the employees but the contributions required of the employee participants are so burdensome as to make the plan acceptable only to the highly paid employees, the classification will be considered discriminatory in favor of such highly paid employees.

(e)

(1) Section 401(a)(5) contains a provision to the effect that a classification shall not be considered discriminatory within the meaning of section 401(a)(3)(B) merely because all employees whose entire annual remuneration constitutes “wages” under section 3121(a)(1) (for purposes of the Federal Insurance Contributions Act, chapter 21 of the Code) are excluded from the plan. A reference to section 3121(a)(1) for years after 1954 shall be deemed a reference to section 1426(a)(1) of the Internal Revenue Code of 1939 for years before 1955. This provision, in conjunction with section 401(a)(3)(B), is intended to permit the qualification of plans which supplement the old-age, survivors, and disability insurance benefits under the Social Security Act (42 U.S.C. ch. 7). Thus, a classification which excludes all employees whose entire remuneration constitutes “wages” under section 3121(a)(1), will not be considered discriminatory merely because of such exclusion. Similarly, a plan which includes all employees will not be considered discriminatory solely because the contributions or benefits based on that part of their remuneration which is excluded from wages under section 3121(a)(1) differ from the contributions or benefits based on that part of their remuneration which is not so excluded. However, in making his determination with respect to discrimination in classification under section 401(a)(3)(B), the Commissioner will consider whether the total benefits resulting to each employee under the plan and under the Social Security Act, or under the Social Security Act only, establish an integrated and correlated retirement system satisfying the tests of

section 401(a). If, therefore, a classification of employees under a plan results in relatively or proportionately greater benefits for employees earning above any specified salary amount or rate than for those below any such salary amount or rate, it may be found to be discriminatory within the meaning of section 401(a)(3)(B). If, however, the relative or proportionate differences in benefits which result from such classification are approximately offset by the old-age, survivors, and disability insurance benefits which are provided by the Social Security Act and which are not attributable to employee contributions under the Federal Insurance Contributions Act, the plan will be considered to be properly integrated with the Social Security Act and will, therefore, not be considered discriminatory.

(2)

(i) For purposes of determining whether a plan is properly integrated with the Social Security Act, the amount of old-age, survivors, and disability insurance benefits which may be considered as attributable to employer contributions under the Federal Insurance Contributions Act is computed on the basis of the following:

(A) The rate at which the maximum monthly old-age insurance benefit is provided under the Social Security Act is considered to be the average of

(1) the rate at which the maximum benefit currently payable under the Act (i.e., in 1971) is provided to an employee retiring at age 65, and

(2) the rate at which the maximum benefit ultimately payable under the Act (i.e., in 2010) is provided to an employee retiring at age 65. The resulting figure is 43 percent of the average monthly wage on which such benefit is computed.

(B) The total old-age, survivors, and disability insurance benefits with respect to an employee is considered to be 162 percent of the employee's old-age insurance benefits. The resulting figure is 70 percent of the average monthly wage on which it is computed.

(C) In view of the fact that social security benefits are funded through equal contributions by the employer and employee, 50 percent of such benefits is considered attributable to employer contributions. The resulting figure is 35 percent of the average monthly wage on which the benefit is computed.

Under these assumptions, the maximum old-age, survivors, and disability insurance benefits which may be attributed to employer contributions under the Federal Insurance Contributions Act is an amount equal to 35 percent of the earnings on which they are computed. These computations take into account all amendments to the Society Security Act through the Social Security Amendments of 1971 (85 Stat. 6). It is recognized, however, that subsequent amendments to this Act may increase the percentages described in (A) or (B) of this subdivision (i), or both. If this occurs, the method used in this subparagraph for determining the integration formula may result in a figure under (C) of this subdivision (i) which is greater than 35 percent and a plan could be amended to adopt such greater figure in its benefit formula. In order to minimize future plan amendments of this nature, an employer may anticipate future changes in the Social Security Act by immediately utilizing such a higher figure, but not in excess of $37^{1}/_{2}$ percent, in developing its benefit formula.

(ii) Under the rules provided in this subparagraph, a classification of employees under a noncontributory pension or annuity plan which limits coverage to employees whose compensation exceeds the applicable integration level under the plan will not be considered discriminatory within the meaning of section 401(a)(3)(B), where:

(A) The integration level applicable to an employee is his covered compensation, or is

(*1*) in the case of an active employee, a stated dollar amount uniformly applicable to all active employees which is not greater than the covered compensation of any active employee, and

(*2*) in the case of a retired employee an amount which is not greater than his covered compensation. (For rules relating to determination of an employee's covered compensation, see subdivision (iv) of this subparagraph.)

(B) The rate at which normal annual retirement benefits are provided for any employee with respect to his average annual compensation in excess of the plan's integration level applicable to him does not exceed $37^{1}/_{2}$ percent.

(C) Average annual compensation is defined to mean the average annual compensation over the highest 5 consecutive years.

(D) There are no benefits payable in case of death before retirement.

(E) The normal form of retirement benefits is a straight life annuity, and if there are optional forms, the benefit payments under each optional form are actuarially equivalent to benefit payments under the normal form.

(F) In the case of any employee who reaches normal retirement age before completion of 15 years of service with the employer, the rate at which normal annual retirement benefits are provided for him with respect to his average annual compensation in excess of the plan's integration level applicable to him does not exceed $2^{1}/_{2}$ percent for each year of service.

(G) Normal retirement age is not lower than age 65.

(H) Benefits payable in case of retirement or any other severance of employment before normal retirement age cannot exceed the actuarial equivalent of the maximum normal retirement benefits, which might be provided in accordance with (A) through (G) of this subdivision (ii), multiplied by a fraction, the numerator of which is the actual number of years of service of the employee at retirement or severance, and the denominator of which is the total number of years of service he would have had if he had remained in service until normal retirement age. A special disabled life mortality table shall not be used in determining the actuarial equivalent in the case of severance due to disability.

(iii)

(A) If a plan was properly integrated with old-age and survivors insurance benefits on July 5, 1968 (hereinafter referred to as an “existing plan”), then, notwithstanding the fact that such plan does not satisfy the requirements of subdivision (ii) of this subparagraph, it will continue to be considered properly integrated with such benefits until January 1, 1972. Such plan will be considered properly integrated after December 31, 1971, so long as the benefits provided under the plan for each employee equal the sum of—

(1) The benefits to which he would be entitled under a plan which, on July 5, 1968, would have been considered properly integrated with old-age and survivors insurance benefits, and under which benefits are provided at the same (or a lesser) rate with respect to the same portion of compensation with respect to which benefits are provided under the existing plan, multiplied by the percentage of his total service with the employer performed before a specified date not later than January 1, 1972; and

(2) The benefits to which he would be entitled under a plan satisfying the requirements of subdivision (ii) of this subparagraph, multiplied by the percentage of his total service with the employer performed on and after such specified date.

(B) A plan which, on July 5, 1968, was properly integrated with old-age and survivors insurance benefits will not be considered not to be properly integrated with such benefits thereafter merely because such plan provides a minimum benefit for each employee (other than an employee who owns, directly or indirectly, stock possessing more than 10 percent of the total combined voting power or value of all classes of stock of the employer corporation) equal to the benefit to which he would be entitled under the plan as in effect on July 5, 1968, if he continued to earn annually until retirement the same amount of compensation as he earned in 1967.

(C) If a plan was properly integrated with old-age and survivors insurance benefits on May 17, 1971, notwithstanding the fact that such plan does not satisfy the requirements of subdivision (ii) of this subparagraph, it will continue to be considered properly integrated with such benefits until January 1, 1972.

(iv) For purposes of this subparagraph, an employee's covered compensation is the amount of compensation with respect to which old-age insurance benefits would be provided for him under the Social Security Act (as in effect at any uniformly applicable date occurring before the employee's separation from the service) if for each year until he attains age 65 his annual compensation is at least equal to the maximum amount of earnings subject to tax in each such year under the Federal Insurance Contributions Act. A plan may provide that an employee's covered compensation is the amount determined under the preceding sentence rounded to the nearest whole multiple of a stated dollar amount which does not exceed $600.

(v) In the case of an integrated plan providing benefits different from those described in subdivision (ii) or (iii) (whichever is applicable) of this subparagraph, or providing benefits related to years of service, or providing benefits purchasable by stated employer contributions, or under the terms of which the employees contribute, or providing a combination of any of the foregoing variations, the plan will be considered to be properly integrated only if, as determined by the Commissioner, the benefits provided thereunder by employer contributions cannot exceed in value the benefits described in subdivision (ii) or (iii) (whichever is applicable) of this subparagraph. Similar principles will govern in determining whether a plan is properly integrated if participation therein is limited to employees earning in excess of amounts other than those specified in subdivision (iv) of this subparagraph, or if it bases benefits or contributions on compensation in excess of such amounts, or if it provides for an offset of benefits otherwise payable under the plan on account of old-age, survivors, and disability insurance benefits. Similar principles will govern in determining whether a profit-sharing or stock bonus plan is properly integrated with the Social Security Act.

(3) A plan supplementing the Social Security Act and excluding all employees whose entire annual remuneration constitutes "wages" under section 3121(a)(1) will not, however, be deemed discriminatory merely because, for administrative convenience, it provides a reasonable minimum benefit not to exceed $20 a month.

(4) Similar considerations, to the extent applicable in any case, will govern classifications under a plan supplementing the benefits provided by other Federal or State laws. See section 401(a)(5).

(5) If a plan provides contributions or benefits for a self-employed individual, the rules relating to the integration of such a plan with the contributions or benefits under the Social Security Act are set forth in paragraph (c) of § 1.401-11 and paragraph (h) of § 1.401-12 of the Treasury Regulations in effect on April 1, 2017.

(6) This paragraph (e) does not apply to plan years beginning on or after January 1, 1989.

(f) An employer may designate several trusts or a trust or trusts and an annuity plan or plans as constituting one plan which is intended to qualify under section 401(a)(3), in which case all of such trusts and plans taken as a whole may meet the requirements of such section. The fact that such combination of trusts and plans fails to qualify as one plan does not prevent such of the trusts and plans as qualify from meeting the requirements of section 401(a).

(g) It is provided in section 401(a)(6) that a plan will satisfy the requirements of section 401(a)(3), if on at least one day in each quarter of the taxable year of the plan it satisfies such requirements. This makes it possible for a new plan requiring contributions from employees to qualify if by the end of the quarter-year in which the plan is adopted it secures sufficient contributing participants to meet the requirements of section 401(a)(3). It also affords a period of time in which new participants may be secured to replace former participants, so as to meet the requirements of either subparagraph (A) or (B) of section 401(a)(3).

[T.D. 6500, 25 FR 11672, Nov. 26, 1960, as amended by T.D. 6675, 28 FR 10119, Sept. 17, 1963; T.D. 6982, 33 FR 16499, Nov. 13, 1968; T.D. 7134, 36 FR 13592, July 22, 1971; 36 FR 13990, July 29, 1971; T.D. 8359, 56 FR 47614, Sept. 19, 1991; T.D. 9849, 84 FR 9234, Mar. 14, 2019]

§§ 1.401-4-1.401-5 [Reserved]

§ 1.401-6 Termination of a qualified plan.

(a) ***General rules.***

(1) In order for a pension, profit-sharing, or stock bonus trust to satisfy the requirements of section 401, the plan of which such trust forms a part must expressly provide that, upon the termination of the plan or upon the complete discontinuance of contributions under the plan, the rights of each employee to benefits accrued to the date of such termination or discontinuance, to the extent then funded, or the rights of each employee to the amounts credited to his account at such time, are nonforfeitable. As to what constitutes nonforfeitable rights of an employee, see paragraph (a)(2) of § 1.402(b)-1.

(2)

(i) A qualified plan must also provide for the allocation of any previously unallocated funds to the employees covered by the plan upon the termination of the plan or the complete discontinuance of contributions under the plan. Such provision may be incorporated in the plan at its inception or by an amendment made prior to the termination of the plan or the discontinuance of contributions thereunder.

(ii) Any provision for the allocation of unallocated funds is acceptable if it specifies the method to be used and does not conflict with the provisions of section 401(a)(4) and the regulations thereunder. The allocation of unallocated funds may be in cash or in the form of other benefits provided under the plan. However, the allocation of the funds contributed by the employer among the employees need not necessarily benefit all the employees covered by the plan. For example, an allocation may be satisfactory if priority is given to benefits for employees over the age of 50 at the time of the termination of the plan, or those who then have at least 10 years of service, if there is no possibility of discrimination in favor of employees who are officers, shareholders, employees whose principal duties consist in supervising the work of other employees, or highly compensated employees.

(iii) Subdivisions (i) and (ii) of this subparagraph do not require the allocation of amounts to the account of any employee if such amounts are not required to be used to satisfy the liabilities with respect to employees and their beneficiaries under the plan (see section 401(a)(2)).

(b) ***Termination defined.***

(1) Whether a plan is terminated is generally a question to be determined with regard to all the facts and circumstances in a particular case. For example, a plan is terminated when, in connection with the winding up of the employer's trade or business, the employer begins to discharge his employees. However, a plan is not terminated, for example, merely because an employer consolidates or replaces that plan with a comparable plan. Similarly, a plan is not terminated merely because the employer sells or otherwise disposes of his trade or business if the acquiring employer continues the plan as a separate and distinct plan of its own, or consolidates or replaces that plan with a comparable plan. See paragraph (d)(4) of § 1.381(c)(11)-1 for the definition of comparable plan. In addition, the Commissioner may determine that other plans are comparable for purposes of this section.

(2) For purposes of this section, the term *termination* includes both a partial termination and a complete termination of a plan. Whether or not a partial termination of a qualified plan occurs when a group of employees who have been covered by the plan are subsequently excluded from such coverage either by reason of an amendment to the plan, or by reason of being discharged by the employer, will be determined on the basis of all the facts and circumstances. Similarly, whether or not a partial termination occurs when benefits or employer contributions are reduced, or the eligibility or vesting requirements under the plan are made less liberal, will be determined on the basis of all the facts and circumstances. However, if a partial termination of a qualified plan occurs, the provisions of section 401(a)(7) and this section apply only to the part of the plan that is terminated.

(c) ***Complete discontinuance defined.***

(1) For purposes of this section, a complete discontinuance of contributions under the plan is contrasted with a suspension of contributions under the plan, which is merely a temporary cessation of contributions by the employer. A complete discontinuance of contributions may occur although some amounts are contributed by the employer under the plan if such amounts are not substantial enough to reflect the intent on the part of the employer to continue to maintain the plan. The

determination of whether a complete discontinuance of contributions under the plan has occurred will be made with regard to all the facts and circumstances in the particular case, and without regard to the amount of any contributions made under the plan by employees.

(2) In the case of a pension plan, a suspension of contributions will not constitute a discontinuance if—

(i) The benefits to be paid or made available under the plan are not affected at any time by the suspension, and

(ii) The unfunded past service cost at any time (which includes the unfunded prior normal cost and unfunded interest on any unfunded cost) does not exceed the unfunded past service cost as of the date of establishment of the plan, plus any additional past service or supplemental costs added by amendment.

(3) In any case in which a suspension of a profit-sharing plan is considered a discontinuance, the discontinuance becomes effective not later than the last day of the taxable year of the employer following the last taxable year of such employer for which a substantial contribution was made under the profit-sharing plan.

(d) ***Contributions or benefits which remain forfeitable.*** The provisions of this section do not apply to amounts which are reallocated to prevent the discrimination prohibited by section 401(a)(4).

(e) ***Effective date.*** This section shall apply to taxable years of a qualified plan commencing after September 30, 1963. In the case of the termination or complete discontinuance (as defined in this section) of any qualified plan during any such taxable year, the rights accorded to each employee covered under the plan must conform to the requirements of this section. However, a plan which is qualified on September 30, 1963, will not be disqualified merely because it does not expressly include the provisions prescribed by this section.

[T.D. 6675, 28 FR 10120, Sept. 17, 1963, as amended by T.D. 9849, Mar. 14, 2019]

§ 1.401-7 Forfeitures under a qualified pension plan.

(a) ***General rules.*** In the case of a trust forming a part of a qualified pension plan, the plan must expressly provide that forfeitures arising from severance of employment, death, or for any other reason, must not be applied to increase the benefits any employee would otherwise receive under the plan at any time prior to the termination of the plan or the complete discontinuance of employer contributions thereunder. The amounts so forfeited must be used as soon as possible to reduce the employer's contributions under the plan. However, a qualified pension plan may anticipate the effect of forfeitures in determining the costs under the plan. Furthermore, a qualified plan will not be disqualified merely because a determination of the amount of forfeitures under the plan is made only once during each taxable year of the employer.

(b) ***Examples.*** The rules of paragraph (a) of this section may be illustrated by the following examples:

Example 1. The B Company Pension Trust forms a part of a pension plan which is funded by individual level annual premium annuity contracts. The plan requires ten years of service prior to obtaining a vested right to benefits under the plan. One of the company's employees resigns his position after two years of service. The insurance company paid to the trustees the cash surrender value of the contract—$750. The B Company must reduce its next contribution to the pension trust by this amount.

Example 2. The C Corporation's trusteed pension plan has been in existence for 20 years. It is funded by individual contracts issued by an insurance company, and the premiums thereunder are paid annually. Under such plan, the annual premium accrued for the year 1966 is due and is paid on January 2, 1966, and on July 1 of the same year the plan is terminated due to the liquidation of the employer. Some forfeitures were incurred and collected by the trustee with respect to those participants whose employment terminated between January 2 and July 1. The plan provides that the amount of such forfeitures is to be applied to provide additional annuity benefits for the remaining employees covered by the plan. The pension plan of the C Corporation satisfies the provisions of section 401(a)(8). Although forfeitures are used to increase benefits in this case, this use of forfeitures is permissible since no further contributions will be made under the plan.

(c) ***Effective date.*** This section applies to taxable years of a qualified plan commencing after September 30, 1963. However, a plan which is qualified on September 30, 1963, will not be disqualified merely because it does not expressly include the provisions prescribed by this section.

[T.D. 6675, 28 FR 10121, Sept. 17, 1963]

§ 1.401-8 [Reserved]

§ 1.401-9 Face-amount certificates—nontransferable annuity contracts.

(a) ***Face-amount certificates treated as annuity contracts.*** Section 401(g) provides that a face-amount certificate (as defined in section 2(a)(15) of the Investment Company Act of 1940 (15 U.S.C. sec. 80a-2)) which is not transferable within the meaning of paragraph (b)(3) of this section shall be treated as an annuity contract for purposes of sections 401 through 404 for any taxable year of a plan subject to such sections beginning after December 31, 1962. Accordingly, there may be established for any such taxable year a qualified plan under which such face-amount certificates are purchased for the participating employees without the creation of a trust or custodial account. However, for such a plan to qualify, the plan must satisfy all the requirements applicable to a qualified annuity plan (see section 403(a) and the regulations thereunder).

(b) ***Nontransferability of face-amount certificates and annuity contracts.***

(1)

(i) Section 401(g) provides that, in order for any face-amount certificate, or any other contract issued after December 31, 1962, to be subject to any provision under sections 401 through 404 which is applicable to annuity contracts, as compared to other forms of investment, such certificate or contract must be nontransferable at any time when it is held by any person other than the trustee of a trust described in section 401(a) and exempt under section 501(a). Thus, for example, in order for a group or individual retirement income contract to be treated as an annuity contract, if such contract is not held by the trustee of an exempt employees' trust, it must satisfy the requirements of this section. Furthermore, a face-amount certificate or an annuity contract will be subject to the tax treatment under section 403(b) only if it satisfies the requirements of section 401(g) and this section. Any certificate or contract in order to satisfy the provisions of this section must expressly contain the provisions that are necessary to make such certificate or contract not transferable within the meaning of this paragraph.

(ii) In the case of any group contract purchased by an employer under a plan to which sections 401 through 404 apply, the restriction on transferability required by section 401(g) and this section applies to the interest of the employee participants under such group contract but not to the interest of the employer under such contract.

(2) If a trust described in section 401(a) which is exempt from tax under section 501(a) distributes any annuity, endowment, retirement income, or life insurance contract, then the rules relating to the taxability of the distributee of any such contract are set forth in paragraph (a)(2) of § 1.402(a)-1.

(3) A face-amount certificate or an annuity contract is transferable if the owner can transfer any portion of his interest in the certificate or contract to any person other than the issuer thereof. Accordingly, such a certificate or contract is transferable if the owner can sell, assign, discount, or pledge as collateral for a loan or as security for the performance of an obligation or for any other purpose his interest in the certificate or contract to any person other than the issuer thereof. On the other hand, for purposes of section 401(g), a face-amount certificate or annuity contract is not considered to be transferable merely because such certificate or contract, or the plan of which it is a part, contains a provision permitting the employee to designate a beneficiary to receive the proceeds of the certificate or contract in the event of his death, or contains a provision permitting the employee to elect to receive a joint and survivor annuity, or contains other similar provisions.

(4) A material modification in the terms of an annuity contract constitutes the issuance of a new contract regardless of the manner in which it is made.

(c) ***Examples.*** The rules of this section may be illustrated by the following examples:

Example 1. The P Employees' Annuity Plan is a nontrusteed plan which is funded by individual annuity contracts issued by the Y Insurance Company. Each annuity contract issued by such company after December 31, 1962, provides, on its face, that it is "NOT TRANSFERABLE". The terms of each such contract further provide that, "This contract may not be sold, assigned, discounted, or pledged as collateral for a loan or as security for the performance of an obligation or for any other purpose, to any person other than this company." The annuity contracts of the P Employees' Annuity Plan satisfy the requirements of section 401(g) and this section.

Example 2. The R Company Pension Trust forms a part of a pension plan which is funded by individual level premium annuity contracts. Such contracts are purchased by the trustee of the R Company Pension Trust from the Y Insurance Company. The trustee of the R Company Pension Trust is the legal owner of each such contract at all times prior to the distribution of such contract to a qualifying annuitant. The trustee purchases such a contract on January 3, 1963, in the name of an employee who qualifies on that date for coverage under the plan. At the time such contract is purchased, and while the contract is held by the trustee of the R Company Pension Trust, the contract does not contain any restrictions with respect to its transferability. The annuity contract purchased by the trustee of the R Company Pension Trust satisfies the requirements of section 401(g) and this section while it is held by the trustee.

Example 3. A is the trustee of the X Corporation's Employees' Pension Trust. The trust forms a part of a pension plan which is funded by individual level premium annuity contracts. The trustee is the legal owner of such contracts, but the employees covered under the plan obtain beneficial interests in such contracts after ten years of service with the X Corporation. On January 15, 1980, A distributes to D an annuity contract issued to A in D's name on June 25, 1959, and distributes to E an annuity

contract issued to A in E's name on September 30, 1963. The contract issued to D need not be nontransferable, but the contract issued to E must be nontransferable in order to satisfy the requirements of section 401(g) and this section.

Example 4. The corpus of the Y Corporation's Employees' Pension Plan consists of individual insurance contracts in the names of the covered employees and an auxiliary fund which is used to convert such policies to annuity contracts at the time a beneficiary of such trust retires. F retires on June 15, 1963, and the trustee converts the individual insurance contract on F's life to a life annuity which is distributed to him. The life annuity issued on F's life must be nontransferable in order to satisfy the requirements of section 401(g) and this section.

[T.D. 6675, 28 FR 10122, Sept. 17, 1963]

§ 1.401-10 Definitions relating to plans covering self-employed individuals.

(a) ***In general.***

(1) Certain self-employed individuals may be covered by a qualified pension, annuity, or profit- sharing plan for taxable years beginning after December 31, 1962. This section contains definitions relating to plans covering self-employed individuals.

(2) A self-employed individual is covered under a qualified plan during the period beginning with the date a contribution is first made by, or for, him under the qualified plan and ending when there are no longer funds under the plan which can be used to provide him or his beneficiaries with benefits.

(b) ***Treatment of a self-employed individual as an employee.***

(1) For purposes of section 401, a self-employed individual who receives earned income from an employer during a taxable year of such employer beginning after December 31, 1962, shall be considered an employee of such employer for such taxable year. Moreover, such an individual will be considered an employee for a taxable year if he would otherwise be treated as an employee but for the fact that the employer did not have net profits for that taxable year. Accordingly, the employer may cover such an individual under a qualified plan during years of the plan beginning with or within a taxable year of the employer beginning after December 31, 1962.

(2) If a self-employed individual is engaged in more than one trade or business, each such trade or business shall be considered a separate employer for purposes of applying the provisions of sections 401 through 404 to such individual. Thus, if a qualified plan is established for one trade or business but not the others, the individual will be considered an employee only if he received earned income with respect to such trade or business and only the amount of such earned income derived from that trade or business shall be taken into account for purposes of the qualified plan.

(3)

(i) The term *employee,* for purposes of section 401, does not include a self-employed individual when the term "common-law" employee is used or when the context otherwise requires that the term "employee" does not include a self-employed individual. The term "common- law" employee also includes an individual who is treated as an employee for purposes of section 401 by reason of the provisions of section 7701(a)(20), relating to the treatment of certain full-time life insurance salesmen as employees. Furthermore, an individual who is a common-law employee is not a self-employed individual with respect to income attributable to such employment, even though such income constitutes net earnings from self-employment as

defined in section 1402(a). Thus, for example, a minister who is a common-law employee is not a self-employed individual with respect to income attributable to such employment, even though such income constitutes net earnings from self-employment as defined in section 1402(a).

(ii) An individual may be treated as an employee within the meaning of section 401(c)(1) of one employer even though such individual is also a common-law employee of another employer. For example, an attorney who is a common-law employee of a corporation and who, in the evenings maintains an office in which he practices law as a self-employed individual is an employee within the meaning of section 401(c)(1) with respect to the law practice. This example would not be altered by the fact that the corporation maintained a qualified plan under which the attorney is benefited as a common-law employee.

(4) For the purpose of determining whether an employee within the meaning of section 401(c)(1) satisfies the requirements for eligibility under a qualified plan established by an employer, such an employer may take into account past services rendered by such an employee both as a self-employed individual and as a common-law employee if past services rendered by other employees, including common-law employees, are similarly taken into account. However, an employer cannot take into account only past services rendered by employees within the meaning of section 401(c)(1) if past services rendered to such employer by individuals who are, or were, common-law employees are not taken into account. Past service as described in this subparagraph may be taken into account for the purpose of determining whether an individual who is, or was, an employee within the meaning of section 401(c)(1) satisfies the requirements for eligibility even if such service was rendered prior to January 1, 1963. On the other hand, past service cannot be taken into account for purposes of determining the contributions which may be made on such an individual's behalf under a qualified plan.

(c) ***Definition of earned income*** —

(1) ***General rule.*** For purposes of section 401 and the regulations thereunder, “earned income” means, in general, net earnings from self-employment (as defined in section 1402(a)) to the extent such net earnings constitute compensation for personal services actually rendered within the meaning of section 911(b).

(2) ***Net earnings from self-employment.***

(i) The computation of the net earnings from self-employment shall be made in accordance with the provisions of section 1402(a) and the regulations thereunder, with the modifications and exceptions described in subdivisions (ii) through (iv) of this subparagraph. Thus, an individual may have net earnings from self-employment, as defined in section 1402(a), even though such individual does not have self-employment income, as defined in section 1402(b), and, therefore, is not subject to the tax on self-employment income imposed by section 1401.

(ii) Items which are not included in gross income for purposes of chapter 1 of the Code and the deductions properly attributable to such items must be excluded from the computation of net earnings from self-employment even though the provisions of section 1402(a) specifically require the inclusion of such items. For example, if an individual is a resident of Puerto Rico, so much of his net earnings from self-employment as are excluded from gross income under section 933 must not be taken into account in computing his net earnings from self-employment which are earned income for purposes of section 401.

(iii) In computing net earnings from self-employment for the purpose of determining earned income, a self-employed individual may disregard only deductions for contributions made on his own behalf under a qualified plan. However, such computation must take into account the deduction allowed by section 404 or 405 for contributions under a qualified plan on behalf of the common-law employees of the trade or business.

(iv) For purposes of determining whether an individual has net earnings from self-employment and, thus, whether he is an employee within the meaning of section 401(c)(1), the exceptions in section 1402(c) (4) and (5) shall not apply. Thus, certain ministers, certain members of religious orders, doctors of medicine, and Christian Science practitioners are treated for purposes of section 401 as being engaged in a trade or business from which net earnings from self-employment are derived. In addition, the exceptions in section 1402(c)(2) shall not apply in the case of any individual who is treated as an employee under section 3121(d)(3) (A), (C), or (D). Therefore, such individuals are treated, for purposes of section 401, as being engaged in a trade or business from which net earnings from self-employment may be derived.

(3) ***Compensation for personal services actually rendered.***

(i) For purposes of section 401, the term “earned income” includes only that portion of an individual's net earnings from self-employment which constitutes earned income as defined in section 911(b) and the regulations thereunder. Thus, such term includes only professional fees and other amounts received as compensation for personal services actually rendered by the individual. There is excluded from “earned income” the amount of any item of income, and any deduction properly attributable to such item, if such amount is not received as compensation for personal services actually rendered. Therefore, an individual who renders no personal services has no “earned income” even though such an individual may have net earnings from self-employment from a trade or business.

(ii) If a self-employed individual is engaged in a trade or business in which capital is a material income-producing factor, then, under section 911(b), his earned income is only that portion of the net profits from the trade or business which constitutes a reasonable allowance as compensation for personal services actually rendered. However, such individual's earned income cannot exceed 30 percent of the net profits of such trade or business. The net profits of the trade or business is not necessarily the same as the net earnings from self-employment derived from such trade or business.

(4) ***Minimum earned income when both personal services and capital are material income-producing factors.***

(i) If a self-employed individual renders personal services on a full-time, or substantially full-time, basis to only one trade or business, and if with respect to such trade or business capital is a material income-producing factor, then the amount of such individual's earned income from the trade or business is considered to be not less than so much of his share in the net profits of such trade or business as does not exceed $2,500.

(ii) If a self-employed individual renders substantial personal services to more than one trade or business, and if with respect to all such trades or businesses such self-employed individual actually renders personal services on a full-time, or substantially full-time, basis, then the earned income of the self-employed individual from trades or businesses for which he renders substantial personal services and in which both personal services and capital are material income-producing factors is considered to be not less than—

(A) So much of such individual's share of the net profits from all trades or businesses in which he renders substantial personal services as does not exceed $2,500, reduced by.

(B) Such individual's share of the net profits of any trade or business in which only personal services is a material income-producing factor.

However, in no event shall the share of the net profits of any trade or business in which capital is a material income-producing factor be reduced below the amount which would, without regard to the provisions of this subdivision, be treated as the earned income derived from such trade or business under section 911(b). In making the computation required by this subdivision, any trade or business with respect to which the individual renders substantial personal services shall be taken into account irrespective of whether a qualified plan has been established by such trade or business.

(iii) If the provisions of subdivision (ii) of this subparagraph apply in determining the earned income of a self-employed individual, and such individual is engaged in two or more trades or businesses in which capital and personal services are material income-producing factors, then the total amount treated as the earned income shall be allocated to each such trade or business for which he performs substantial personal services in the same proportion as his share of net profits from each such trade or business bears to his share of the total net profits from all such trades or businesses. Thus, in such case, the amount of earned income attributable to any such trade or business is computed by multiplying the total earned income as determined under subdivision (ii) of this subparagraph by the individual's net profits from such trade or business and dividing that product by the individual's total net profits from all such trades or businesses.

(iv) For purposes of this subparagraph, the determination of whether an individual renders personal services on a full-time, or substantially full-time, basis is to be made with regard to the aggregate of the trades and businesses with respect to which the employee renders substantial personal services as a common-law employee or as a self-employed individual. However, for all other purposes in applying the rules of this subparagraph, a trade or business with respect to which an individual is a common-law employee shall be disregarded.

(d) ***Definition of owner-employee.*** For purposes of section 401 and the regulations thereunder, the term “owner-employee” means a proprietor of a proprietorship, or, in the case of a partnership, a partner who owns either more than 10 percent of the capital interest, or more than 10 percent of the profits interest, of the partnership. Thus, an individual who owns only 2 percent of the profits interest but 11 percent of the capital interest of a partnership is an owner-employee. A partner's interest in the profits and the capital of the partnership shall be determined by the partnership agreement. In the absence of any provision regarding the sharing of profits, the interest in profits of the partners will be determined in the same manner as their distributive shares of partnership taxable income. However, a guaranteed payment (as described in section 707(c)) is not considered a distributive share of partnership income for such purpose. See section 704(b), relating to the determination of the distributive share by the income or loss ratio, and the regulations thereunder. In the absence of a provision in the partnership agreement, a partner's capital interest in a partnership shall be determined on the basis of his interest in the assets of the partnership which would be distributable to such partner upon his withdrawal from the partnership, or upon liquidation of the partnership, whichever is the greater.

(e) ***Definition of employer.***

(1) For purposes of section 401, a sole proprietor is considered to be his own employer, and the partnership is considered to be the employer of each of the partners. Thus, an individual partner is not an employer who may establish a qualified plan with respect to his services to the partnership.

(2) Regardless of the provision of local law, a partnership is deemed, for purposes of section 401, to be continuing until such time as it is terminated within the meaning of section 708, relating to the continuation of a partnership.

[T.D. 6675, 28 FR 10123, Sept. 17, 1963, as amended by T.D. 9849, 84 FR 9234, Mar. 14, 2019]

§ 1.401-11-1.401.13 [Reserved]

§ 1.401-14 Inclusion of medical benefits for retired employees in qualified pension or annuity plans.

(a) ***Introduction.*** Under section 401(h) a qualified pension or annuity plan may make provision for the payment of sickness, accident, hospitalization, and medical expenses for retired employees, their spouses, and their dependents. The term "medical benefits described in section 401(h)" is used in this section to describe such payments.

(b) ***In general*** —

(1) ***Coverage.*** Under section 401(h), a qualified pension or annuity plan may provide for the payment of medical benefits described in section 401(h) only for retired employees, their spouses, or their dependents. To be "retired" for purposes of eligibility to receive medical benefits described in section 401(h), an employee must be eligible to receive retirement benefits provided under the pension plan, or else be retired by an employer providing such medical benefits by reason of permanent disability. For purposes of the preceding sentence, an employee is not considered to be eligible to receive retirement benefits provided under the plan if he is still employed by the employer and a separation from employment is a condition to receiving the retirement benefits.

(2) ***Discrimination.*** A plan which provides medical benefits described in section 401(h) must not discriminate in favor of officers, shareholders, supervisory employees, or highly compensated employees with respect to coverage and with respect to the contributions or benefits under the plan. The determination of whether such a plan so discriminates is made with reference to the retirement portion of the plan as well as the portion providing the medical benefits described in section 401(h). Thus, for example, a plan will not be qualified under section 401 if it discriminates in favor of employees who are officers or shareholders with respect to either portion of the plan.

(3) ***Funding medical benefits.*** Contributions to provide the medical benefits described in section 401(h) may be made either on a contributory or noncontributory basis, without regard to whether the contributions to fund the retirement benefits are made on a similar basis. Thus, for example, the contributions to fund the medical benefits described in section 401(h) may be provided for entirely out of employer contributions even though the retirement benefits under the plan are determined on the basis of both employer and employee contributions.

(4) ***Definitions.*** For purposes of section 401(h) and this section:

(i) The term *dependent* shall have the same meaning as that assigned to it by section 152, and

(ii) The term *medical expense* means expenses for medical care as defined in section 213(e)(1).

(c) ***Requirements.*** The requirements which must be met for a qualified pension or annuity plan to provide medical benefits described in section 401(h) are set forth in subparagraphs (1) through (5) of this paragraph.

(1) ***Benefits.***

(i) The plan must specify the medical benefits described in section 401(h) which will be available and must contain provisions for determining the amount which will be paid. Such benefits, when added to any life insurance protection provided for under the plan, must be subordinate to the retirement benefits provided by such plan. For purposes of this section, life insurance protection includes any benefit paid under the plan on behalf of an employee-participant as a result of the employee-participant's death to the extent such payment exceeds the amount of the reserve to provide the retirement benefits for the employee-participant existing at his death. The medical benefits described in section 401(h) are considered subordinate to the retirement benefits if at all times the aggregate of contributions (made after the date on which the plan first includes such medical benefits) to provide such medical benefits and any life insurance protection does not exceed 25 percent of the aggregate contributions (made after such date) other than contributions to fund past service credits.

(ii) The meaning of the term *subordinate* may be illustrated by the following example:

Example. The X Corporation amends its qualified pension plan to provide medical benefits described in section 401(h) effective for the taxable year 1964. The total contributions under the plan (excluding those for past service credits) for the taxable year 1964 are $125,000, allocated as follows: $100,000 for retirement benefits, $10,000 for life insurance protection, and $15,000 for medical benefits described in section 401(h). The medical benefits described in section 401(h) are considered subordinate to the retirement benefits since the portion of the contributions allocated to the medical benefits described in section 401(h) ($15,000) and to life insurance protection after such medical benefits were included in the plan ($10,000), or $25,000, does not exceed 25 percent of $125,000. For the taxable year 1965, the X Corporation contributes $140,000 (exclusive of contributions for past service credits) allocated as follows: $100,000 for retirement benefits, $10,000 for life insurance protection, and $30,000 for medical benefits described in section 401(h). The medical benefits described in section 401(h) are considered subordinate to the retirement benefits since the aggregate contributions allocated to the medical benefits described in section 401(h) ($45,000) and to life insurance protection after such medical benefits were included in the plan ($20,000) or $65,000 does not exceed 25 percent of $265,000, the aggregate of the contributions made in 1964 and 1965.

(2) ***Separate accounts.*** Where medical benefits described in section 401(h) are provided for under a qualified pension or annuity plan, a separate account must be maintained with respect to contributions to fund such benefits. The separation required by this section is for recordkeeping purposes only. Consequently, the funds in the medical benefits account need not be separately invested. They may be invested with funds set aside for retirement purposes without identification of which investment properties are allocable to each account. However, where the investment properties are not allocated to each account, the earnings on such properties must be allocated to each account in a reasonable manner.

(3) ***Reasonable and ascertainable.*** Section 401(h) further requires that amounts contributed to fund medical benefits therein described must be reasonable and ascertainable. For the rules relating to the deduction of such contributions, see paragraph (f) of § 1.404(a)-3. The employer must, at the time he makes a contribution, designate that portion of such contribution allocable to the funding of medical benefits.

(4) ***Impossibility of diversion prior to satisfaction of all liabilities.*** Section 401(h) further requires that it must be impossible, at any time prior to the satisfaction of all liabilities under the plan to provide for the payment of medical benefits described in section 401(h), for any part of the corpus or income of the medical benefits account to be (within the taxable year or thereafter) used for, or diverted to, any purpose other than the providing of such benefits. Consequently, a plan which, for example, under its terms, permits funds in the medical benefits account to be used for any retirement benefit provided under the plan does not satisfy the requirements of section 401(h) and will not qualify under section 401(a). However, the payment of any necessary or appropriate expenses attributable to the administration of the medical benefits account does not affect the qualification of the plan.

(5) ***Reversion upon satisfaction of all liabilities.*** The plan must provide that any amounts which are contributed to fund medical benefits described in section 401(h) and which remain in the medical benefits account upon the satisfaction of all liabilities arising out of the operation of the medical benefits portion of the plan are to be returned to the employer.

(6) ***Forfeitures.*** The plan must expressly provide that in the event an individual's interest in the medical benefits account is forfeited prior to termination of the plan an amount equal to the amount of the forfeiture must be applied as soon as possible to reduce employer contributions to fund the medical benefits described in section 401(h).

(d) ***Effective date.*** This section applies to taxable years of a qualified pension or annuity plan beginning after October 23, 1962.

[T.D. 6722, 29 FR 5072, Apr. 14, 1964]

§ 1.401(a)-1 Post-ERISA qualified plans and qualified trusts; in general.

(a) ***Introduction*** —

(1) ***In general.*** This section and the following regulation sections under section 401 reflect the provisions of section 401 after amendment by the Employee Retirement Income Security Act of 1974 (Pub. L. 93-406) ("ERISA").

(2) [Reserved]

(b) ***Requirements for pension plans*** —

(1) ***Definitely determinable benefits.***

(i) In order for a pension plan to be a qualified plan under section 401(a), the plan must be established and maintained by an employer primarily to provide systematically for the payment of definitely determinable benefits to its employees over a period of years, usually for life, after retirement or attainment of normal retirement age (subject to paragraph (b)(2) of this section). A plan does not fail to satisfy this paragraph (b)(1)(i) merely because the plan provides, in

accordance with section 401(a)(36), that a distribution may be made from the plan to an employee who has attained age 62 and who is not separated from employment at the time of such distribution.

(ii) Section 1.401-1(b)(1)(i), a pre-ERISA regulation, provides rules applicable to this requirement, and that regulation is applicable except as otherwise provided.

(iii) The use of the type of plan provision described in § 1.415(a)-1(d)(1) which automatically freezes or reduces the rate of benefit accrual or the annual addition to insure that the limitations of section 415 will not be exceeded, will not be considered to violate the requirements of this subparagraph provided that the operation of such provision precludes discretion by the employer.

(2) ***Normal retirement age*** —

(i) ***General rule.*** The normal retirement age under a plan must be an age that is not earlier than the earliest age that is reasonably representative of the typical retirement age for the industry in which the covered workforce is employed.

(ii) ***Age 62 safe harbor.*** A normal retirement age under a plan that is age 62 or later is deemed to be not earlier than the earliest age that is reasonably representative of the typical retirement age for the industry in which the covered workforce is employed.

(iii) ***Age 55 to age 62.*** In the case of a normal retirement age that is not earlier than age 55 and is earlier than age 62, whether the age is not earlier than the earliest age that is reasonably representative of the typical retirement age for the industry in which the covered workforce is employed is based on all of the relevant facts and circumstances.

(iv) ***Under age 55.*** A normal retirement age that is lower than age 55 is presumed to be earlier than the earliest age that is reasonably representative of the typical retirement age for the industry in which the covered workforce is employed, unless the Commissioner determines that under the facts and circumstances the normal retirement age is not earlier than the earliest age that is reasonably representative of the typical retirement age for the industry in which the covered workforce is employed.

(v) ***Age 50 safe harbor for qualified public safety employees.*** A normal retirement age under a plan that is age 50 or later is deemed to be not earlier than the earliest age that is reasonably representative of the typical retirement age for the industry in which the covered workforce is employed if substantially all of the participants in the plan are qualified public safety employees (within the meaning of section 72(t)(10)(B)).

(3) ***Benefit distribution prior to retirement.*** For purposes of paragraph (b)(1)(i) of this section, retirement does not include a mere reduction in the number of hours that an employee works. Accordingly, benefits may not be distributed prior to normal retirement age solely due to a reduction in the number of hours that an employee works.

(4) ***Effective date.*** Except as otherwise provided in this paragraph (b)(4), paragraphs (b)(2) and (3) of this section are effective May 22, 2007. In the case of a governmental plan (as defined in section 414(d)), paragraphs (b)(2) and (3) of this section are effective for plan years beginning on or after January 1, 2009. In the case of a plan maintained pursuant to one or more collective bargaining agreements that have been ratified and are in effect on May 22, 2007, paragraphs (b)(2) and (3) of this section do not apply before the first plan year that begins after the last of such agreements terminate

determined without regard to any extension thereof (or, if earlier, May 24, 2010. See § 1.411(d)-4, A-12, for a special transition rule in the case of a plan amendment that increases a plan's normal retirement age pursuant to paragraph (b)(2) of this section.

[T.D. 7748, 46 FR 1695, Jan. 7, 1981, as amended by T.D. 9319, 72 FR 16894, Apr. 5, 2007; T.D. 9325, 72 FR 28606, May 22, 2007]

§ 1.401(a)-2 Impossibility of diversion under qualified plan or trust.

(a) ***General rule.*** Section 401(a)(2) requires that in order for a trust to be qualified, it must be impossible under the trust instrument (in the taxable year and at any time thereafter before the satisfaction of all liabilities to employees or their beneficiaries covered by the trust) for any part of the trust corpus or income to be used for, or diverted to, purposes other than for the exclusive benefit of those employees or their beneficiaries. Section 1.401-2, a pre-ERISA regulation, provides rules under section 401(a)(2) and that regulation is applicable except as otherwise provided.

(b) ***Section 415 suspense account.*** Notwithstanding paragraph (a) of this section, a plan, or trust forming part of a plan, may provide for the reversion to the employer, upon termination of the plan, of amounts contributed to the plan that exceed the limitations imposed under section 415(c), to the extent set forth in rules prescribed by the Commissioner in revenue rulings, notices, or other guidance published in the Internal Revenue Bulletin (see § 601.601(d)(2) of this chapter).

[T.D. 7748, 46 FR 1696, Jan. 7, 1981, as amended by T.D. 9319, 72 FR 16894, Apr. 5, 2007]

§ 1.401(a)-4 Optional forms of benefit (before 1994).

Q-1: How does section 401(a)(4) apply to optional forms of benefits?

A-1:

(a) ***In general*** —

(1) ***Scope.*** The nondiscrimination requirements of section 401(a)(4) apply to the amount of contributions or benefits, optional forms of benefit, and other benefits, rights and features (e.g., actuarial assumptions, methods of benefit calculation, loans, social security supplements, and disability benefits) under a plan. This section addresses the application of section 401(a)(4) only to optional forms of benefit under a plan. Generally, the determination of whether an optional form is nondiscriminatory under section 401(a)(4) is made by reference to the availability of such optional form, and not by reference to the utilization or actual receipt of such optional form. See Q&A-2 of this section. Even though an optional form of benefit under a plan may be nondiscriminatory under section 401(a)(4) and this § 1.401(a)-4 because the availability of such optional form does not impermissibly favor employees in the highly compensated group, such plan may fail to satisfy section 401(a)(4) with respect to the amount of contributions or benefits or with respect to other benefits, rights and features if, for example, the method of calculation or the amount or value of benefits payable under such optional form impermissibly favors the highly compensated group. See § 1.411(d)-4, Q&A-1 for the definition of “optional form of benefit.”

(2) ***Nondiscrimination requirements.*** Each optional form of benefit provided under a plan is subject to the nondiscrimination requirement of section 401(a)(4) and thus the availability of each optional form of benefit must not discriminate in favor of the employees described in section 401(a)(4) in whose favor discrimination is prohibited (the “highly compensated group”). See

paragraph (b) of this Q&A-1 for a description of the employees included in such group. This is true without regard to whether a particular optional form of benefit is the actuarial equivalent of any other optional form of benefit under the plan. Thus, for example, a plan may not condition, or otherwise limit, the availability of a single sum distribution of an employee's benefit in a manner that impermissibly favors the highly compensated group.

(b) ***Highly compensated group.*** For plan years commencing prior to the applicable effective date for the amendment made to section 401(a)(4) by section 1114 of the Tax Reform Act of 1986 (TRA '86), the highly compensated group consists of those employees who are officers, shareholders, or highly compensated. For plan years beginning on or after the applicable effective date of the amendments to section 401(a)(4) made by TRA '86, the highly compensated group consists of those employees who are highly compensated within the meaning of section 414(q). The amendment to section 401(a)(4) made by section 1114 of TRA '86 is generally effective for plan years commencing after December 31, 1988. See section 1114(a) of TRA '86.

Q-2: How is it determined whether an optional form of benefit satisfies the nondiscrimination requirements of section 401(a)(4)?

A-2:

(a) ***Nondiscrimination requirement*** —

(1) ***In general.*** An optional form of benefit under a plan is nondiscriminatory under section 401(a)(4) only if the requirements of paragraphs (a)(2) and (a)(3) of this Q&A-2 are satisfied with respect to such optional form. The determination of whether an optional form of benefit satisfies these requirements is made by reference to the availability of the optional form, and not by reference to the utilization or actual receipt of such optional form. Thus, an optional form of benefit that satisfies the requirements of paragraphs (a)(2) and (a)(3) of this Q&A-2 is nondiscriminatory under section 401(a)(2) even though the highly compensated group disproportionately utilizes such optional form. However, the composition of the group of employees who actually receive benefits in an optional form may be relevant in determining whether such optional form satisfies the requirement of paragraph (a)(3) of this Q&A-2 with respect to effective availability.

(2) ***Current availability*** —

(i) ***Plan years prior to TRA '86 effective date.*** Except as provided in paragraph (a)(2)(iii) of this Q&A-2, for plan years prior to the effective date of the amendments made to section 401(b) by section 1112(a) of TRA '86, the requirement of this paragraph (a)(2) is satisfied only if the group of employees to whom the optional form is currently available satisfies either the seventy percent test of section 410(b)(1)(A) or the nondiscriminatory classification test of section 410(b)(1)(B).

(ii) ***Plan years commencing on or after TRA '86 effective date.*** Except as provided in paragraph (a)(2)(iii) of this Q&A-2, for plan years commencing on or after the effective date on which the amendments made to section 410(b) by section 1112(a) of TRA '86 first apply to a plan, the requirement of this paragraph (a)(2) is satisfied only if the group of employees to whom the optional form is currently available satisfies either the percentage test set forth in section 410(b)(1)(A), the ratio test set forth in section 410(b)(1)(B), or the nondiscriminatory classification test set forth in section 410(b)(2)(A)(i). The employer need not satisfy the average benefit percentage test in section 410(b)(2)(A)(ii) in order for the optional form to be currently available to a nondiscriminatory group of employees.

(iii) ***Special rule for certain governmental or church plans.*** Plans described in section 410(c) will be treated as satisfying the current availability test of this paragraph (a)(2) if the group of employees with respect to whom the optional form is currently available satisfies the requirements of section 401(a)(3) as in effect on September 1, 1974.

(iv) ***Effective data for TRA '86 amendments to section 410(b).*** The amendments to section 410(b) made by section 1112(a) of TRA '86 are generally effective for plan years commencing after December 31, 1988. See section 1112(e)(1) of TRA '86.

(v) ***Elimination of optional forms*** —

(A) ***In general.*** Notwithstanding paragraphs (a)(2)(i) and (a)(2)(ii) of this Q&A-2, in the case of an optional form of benefit that has been eliminated under a plan with respect to specified employees for benefits accrued after the later of the eliminating amendment's adoption date or effective date, the determination of whether such optional form satisfies this paragraph (a)(2) with respect to such employees is to be made immediately prior to the elimination. Accordingly, if, as of the later of the adoption date or effective date of an amendment eliminating an optional form with respect to future benefit accruals, the current availability of such optional form immediately prior to such amendment satisfies this paragraph (a)(2), then the optional form will be treated as satisfying this paragraph (a)(2) for all subsequent years.

(B) ***Example.*** A profit-sharing plan that provides for a single sum distribution available to all employees on termination of employment is amended January 1, 1990, to eliminate such single sum optional form of benefit with respect to benefits accrued after January 1, 1991. As of January 1, 1991, the single sum optional form of benefit is available to a group of employees that satisfies the percentage test of section 410(b)(1)(A). As of January 1, 1995, all nonhighly compensated employees who were entitled to the single sum optional form of benefit have terminated from employment with the employer and taken a distribution of their benefits. The only remaining employees who have a right to take a portion of their benefits in the form of a single sum distribution on termination of employment are highly compensated employees. Because the availability of the single sum optional form of benefit satisfied the current availability test as of January 1, 1991, the availability of such optional form of benefit is deemed to continue to satisfy the current availability test of this paragraph (a)(2).

(3) ***Effective availability*** —

(i) ***In general.*** The requirement of this paragraph (a)(3) is satisfied only if, based on the facts and circumstances, the group of employees to whom the optional form is effectively available does not substantially favor the highly compensated group. This is the case even if the optional form is, or has been, currently available to a group of employees that satisfies the applicable requirements in paragraph (a)(2) (i) or (ii) of this Q&A-2.

(ii) ***Examples.*** The provisions of paragraph (a)(3)(i) of this Q&A-2 can be illustrated by the following examples:

Example 1. Employer X maintains a defined benefit plan that covers both of the 2 highly compensated employees of the employer and 8 of the twelve nonhighly compensated employees of the employer. Plan X provides for a normal retirement

benefit payable as an annuity and based on a normal retirement age of 65, and an early retirement benefit payable upon termination in the form of an annuity to employees who terminate from service with the employer on or after age 55 with 30 or more years of service. Each of the 2 employees of employer X who are in the highly compensated group currently meet the age and service requirement, or will have 30 years of service by the time they reach age 55. All but 2 of the 8 nonhighly compensated employees of employer X who are covered by the plan were hired on or after age 35 and thus, cannot qualify for the early retirement benefit provision. Even though the group of employees to whom the early retirement benefit is currently available does not impermissibly favor the highly compensated group by reason of disregarding age and service, these facts and circumstances indicate that the effective availability of the early retirement benefit in plan X substantially favors the highly compensated group.

Example 2. Assume the same facts as in *Example 1* except that the early retirement benefit is added by a plan amendment first adopted, announced and effective December 1, 1991, and is available only to employees who terminate from employment with the employer prior to December 15, 1991. Further assume that all employees were hired prior to attaining age 25, and that the group of employees who have, or will have attained age 55 with 30 years of service, by December 15, 1991, satisfies the ratio test of section 410(b)(1)(B). Finally, assume that the only employees who terminate from employment with the employer during the two week period in which the early retirement benefit is available are employees in the highly compensated group. These facts and circumstances indicate that the effective availability of the early retirement benefit substantially favors the highly compensated group. This is the case even though the limitation of the early retirement benefit to a specified period satisfies section 411(d)(6).

Example 3. Employer Y amends plan Y on June 30, 1990, to provide for a single sum distribution for employees who terminate from employment with the employer after June 30, 1990, and prior to January 1, 1991. The availability of this single sum distribution is conditioned on the employee having a particular disability at the time of termination of employment. The only employee of the employer who meets this disability requirement at the time of the amendment and thereafter through December 31, 1990, is a highly compensated employee. Generally, a disability condition with respect to the availability of a single sum distribution may be disregarded in determining whether the current availability of such optional form of benefit is discriminatory. However, these facts and circumstances indicate that the effective availability of the optional form of benefit substantially favors the highly compensated group.

Example 4. Employer Z maintains a money purchase pension plan that covers all employees of the employer. The plan provides for distribution in the form of a joint and survivor annuity, a life annuity, or equal installments over 10 years. During the 1992 calendar year the employer winds up his business. In December of 1992, only two employees remain in the employment of the employer, both of whom are highly compensated. Employer Z then amends the plan to provide for a single sum distribution to employees who terminate from employment on or after the date of the amendment. Both highly compensated employees terminate from employment on

December 31, 1992, taking a single sum distribution of their benefits. These facts and circumstances indicate that the effective availability of the single sum optional form of benefit substantially favors the highly compensated group.

(b) *Application of tests* —

(1) *Current availability* —

(i) ***In general.*** Except as otherwise provided in this paragraph (b), in determining whether an optional form of benefit that is subject to specified eligibility conditions is currently available to an employee for purposes of paragraph (a) of this Q&A-2, the determination of current availability generally is to be based on the current facts and circumstances with respect to the employee (e.g., the employee's current compensation or the employee's current net worth). Thus, for example, the fact that an employee may, in the future, satisfy an eligibility condition generally does not cause an optional form of benefit to be treated as currently available to such employee.

(ii) *Exceptions for age, service, employment termination and certain other conditions* —

(A) ***Age and service conditions.*** For purposes of applying paragraph (a)(2) of this Q&A-2, except as provided in paragraph (b)(1)(ii)(B) of this Q&A-2, an age condition, a service condition, or both are to be disregarded. For example, an employer that maintains a plan that provides for an early retirement benefit payable as an annuity for employees in division A, subject to a requirement that the employee has attained his or her 55th birthday and has at least twenty years of service with the employer, is to disregard the age and service conditions in determining the group of employees to whom the early retirement annuity benefit is currently available. Thus, the early retirement annuity benefit is treated as currently available to all employees of division A, without regard to their ages or years of service and without regard to whether they could potentially meet the age and service conditions prior to attaining the plan's normal retirement age.

(B) ***Exception for certain age and service conditions.*** Age and service conditions that must be satisfied within a specified period of time may not be disregarded pursuant to paragraph (b)(1)(ii)(A) of this Q&A-2. However, in determining the current availability of an optional form of benefit subject to such an age condition, service condition, or both, an employer may project the age and service of employees to the last date on which the optional form of benefit subject to the age condition or service condition (or both) is available under the plan. An employer's ability to protect age and service to the last date on which the optional form of benefit is available under the plan is not cut off by a plan termination occurring prior to that date. Thus, for example, assume that an employer maintaining a plan that permits employees terminating from employment on or after age 55 between June 1, 1991 to May 31, 1992, to elect a single sum distribution, decides to terminate the plan on December 31, 1991. In determining the group of employees to whom the single sum optional form of benefit is currently available, this employer may project employees' ages through May 31, 1992.

(C) ***Certain other conditions disregarded.*** Conditions on the availability of optional forms of benefit requiring termination of employment, death, satisfaction of a specified health condition (or failure to meet such condition), disability, hardship, marital

status, default on a plan loan secured by a participant's account balance, or execution of a covenant not to compete may be disregarded in determining the group of employees to whom an optional form of benefit is currently available.

(2) ***Employees taken into account.*** For purposes of applying paragraph (a) of this Q&A-2, the tests are to be applied on the basis of the employer's nonexcludable employees (whether or not they are participants in the plan) in the same manner as such tests would be applied in determining whether the plan providing the optional form of benefit satisfies the tests under section 410(b).

(3) ***Definition of "plan".*** For purposes of applying paragraph (a) of this Q&A-2, the term "plan" has the meaning that such term has for purposes of determining whether the amount of contributions or benefits and whether other benefits, rights, and features are nondiscriminatory under section 401(a)(4).

(4) ***Restructuring optional forms of benefit*** —

(i) ***In general.*** For purposes of applying paragraph (a) of this Q&A-2, the availability of two or more optional forms of benefit under a plan may be tested by restructuring such benefits into two or more restructured optional forms of benefit and testing the availability of such restructured optional forms of benefit. If two or more optional forms of benefit under a plan contain both common and distinct components, such optional forms of benefit may be restructured as a single optional form of benefit comprising the common component, and one or more optional forms of benefit comprising each distinct component. Components of optional forms of benefit may be treated as common only if they are identical with respect to all characteristics taken into account under Q&A-1(b) of § 1.411(d)-4. The availability of each restructured optional form of benefit must satisfy the applicable nondiscrimination requirements of paragraph (a) of this Q&A-2.

(ii) ***Example.*** A profit-sharing plan covering all the employees of an employer provides a single sum distribution option upon termination from employment for all employees earning less than $50,000 and a single sum distribution option upon termination from employment after the attainment of age 55 for all employees earning $50,000 or more. These distribution options are identical in all other respects. For purposes of applying section 401(a)(4), such optional forms of benefit may be restructured into two different optional forms of benefit:

(A) a single sum distribution option upon termination from employment after the attainment of age 55 for all employees (i.e., the common component), and

(B) a single sum distribution option upon termination from employment before the attainment of age 55 for all employees earning less than $50,000. The availability of each of these restructured optional forms of benefit must satisfy section 401(a)(4).

(c) ***Commissioner may provide additional tests.*** The Commissioner may provide such additional factors, tests, and safe harbors as are necessary or appropriate for purposes of determining whether the availability of an optional form of benefit is discriminatory under section 401(a)(4). In addition, the Commissioner may provide that additional eligibility conditions not related directly or indirectly to compensation or wealth may be disregarded under paragraph (b)(1)(ii)(C) of this Q&A-2 in determining the current availability of an optional form of benefit. The Commissioner may provide such additional guidance only through the publication of revenue rulings, notices or other documents of general applicability.

Q-3: May a plan condition the availability of an optional form of benefit on employer discretion?

A-3: No. Even if the availability of an optional form of benefit that is conditioned on employer discretion satisfies the nondiscrimination requirements of section 401(a)(4), the plan providing the optional form of benefit will fail to satisfy certain other requirements of section 401(a), including, in applicable circumstances, the definitely determinable requirement of section 401(a) and the requirements of section 401(a)(25) and section 411(d)(6). See § 1.411(d)-4.

Q-4: Will a plan provision violate section 401(a)(4) merely because it requires that an employee who terminates from service with the employer receive a single sum distribution in the event that the present value of the employee's benefit is not more than $3,500, as permitted by sections 411(a)(11) and 417(e)?

A-4: No. A plan will not be treated as discriminatory under section 401(a)(4) merely because the plan mandates a single sum distribution when the present value of an employee's benefit is not more than $3,500, as permitted by sections 411(a)(11) and 417(e). This is an exception to the general principles of this section. (No similar provision exists excepting such single sum distributions from the limits on employer discretion under section 411(d)(6). See § 1.411(d)-4 Q&A-4.)

Q-5: If the availability of an optional form of benefit discriminates, or may reasonably be expected to discriminate, in favor of the highly compensated group, what acceptable alternatives exist for amending the plan without violating section 411(d)(6)?

A-5:

(a) ***Transitional rules*** —

(1) ***In general.*** The following rules apply for purposes of making necessary amendments to existing plans (as defined in Q&A-6 of this section) under which the availability of an optional form of benefit violates the nondiscrimination requirements of section 401(a)(4) or may reasonably be expected to violate such requirements. These transitional rules are provided under the authority of section 411(d)(6), which allows the elimination of certain optional forms of benefit if permitted by regulations, and section 7805(b).

(2) ***Nondiscrimination*** —

(i) ***In general.*** The determination of whether the availability of an optional form of benefit violates section 401(a)(4) is to be made in accordance with Q&A-2 of this section. In addition, the availability of a particular optional form of benefit may reasonably be expected to violate the nondiscrimination requirements of section 401(a)(4) if, under the applicable facts and circumstances, there is a significant possibility that the current availability of such optional form of benefit will impermissibly favor the highly compensated group. This determination must be made on the basis of the seventy percent test of section 410(b)(1)(A) or the nondiscriminatory classification test of section 410(b)(1)(B) as such tests existed prior to the effective date of the amendments made to section 410(b) by section 1112(a) of TRA '86. Thus, a condition may not reasonably be expected to discriminate for purposes of these rules merely because it results in a significant possibility that discrimination will result because of the amendments made to section 410(b) by section 1112(a) of TRA '86. In addition, the availability of an optional form of benefit may not reasonably be expected to discriminate merely because of an age or service condition that may be disregarded in determining the current availability of such optional form of benefit under paragraph (b)(1)(ii)(A) of Q&A-2 of this section. Similarly,

the availability of an optional form of benefit may not reasonably be expected to discriminate merely because of an age or service condition that, after permitted projection, does not cause such optional form to fail to satisfy the requirement of this paragraph (a)(2).

(ii) ***Examples.*** The provisions of paragraph (a)(2)(i) of this Q&A-5 can be illustrated by the following examples:

Example 1. A plan provides that a single sum distribution option is available only to

(A) employees earning $50,000 or more in the final year of employment,

(B) employees who furnish evidence that they have a net worth above a certain specified amount, and

(C) employees who present a letter from an accountant or attorney declaring that it is in the employee's best interest to receive a single sum distribution. Whether the availability of such optional form of benefit discriminates depends on whether it meets the requirements of Q&A-2 of this § 1.401(a)-4. However, each of the specified conditions limiting the availability of the optional form of benefit may reasonably be expected to discriminate in favor of the highly compensated group in operation because of the likelihood of a significant positive correlation between the ability to meet any of the specified conditions and membership in the highly compensated group.

Example 2. A plan limits the availability of a single sum distribution option to employees employed in one particular division of the employer's company. All the employees of the company are participants in the plan. During the 1988 plan year, the division employs individuals who represent a nondiscriminatory classification of that company's employees (under section 410(b)(1)(B) prior to the effective date of the amendments made to section 410(b) by section 1112(a) of TRA '86) and is unlikely to cease employing such a nondiscriminatory classification in the future. The availability of a single sum distribution under this plan does not result in discrimination during the 1988 plan year and may not reasonably be expected to do so.

(b) ***Transitional alternatives.*** If the availability of an optional form of benefit under an existing plan is discriminatory under section 401(a)(4), the plan must be amended either to eliminate the optional form of benefit or to make the availability of the optional form of benefit nondiscriminatory. For example, the availability of an optional form of benefit may be made nondiscriminatory by making such benefit available to sufficient additional employees who are not in the highly compensated group or by imposing nondiscriminatory objective criteria on its availability such that the group of employees to whom the benefit is available is nondiscriminatory. See Q&A-6 of § 1.411(d)-4 for requirements with respect to such objective criteria. If, under an existing plan, the availability of an optional form of benefit may reasonably be expected to discriminate, the plan may be amended in the same manner permitted where the availability of an optional form of benefit is discriminatory. See paragraph (d) of this Q&A-5 for rules limiting the period during which the availability of optional forms of benefit may be eliminated or reduced under this paragraph.

(c) ***Compliance and amendment date provisions*** —

(1) ***Operational compliance requirement.*** On or before the applicable effective date for the plan (see Q&A-6 of this section), the plan sponsor must select one of the alternatives permitted under paragraph (b) of this Q&A-5 with respect to each affected optional form of benefit and the plan

must be operated in accordance with this selection. This is an operational requirement and does not require a plan amendment prior to the period set forth in paragraph (c)(2) of this Q&A-5. There is no special reporting requirement under the Code or this section with respect to this selection.

(2) ***Deferred amendment date.*** If paragraph (c)(1) of this Q&A-5 is satisfied, a plan amendment conforming the plan to the particular alternative selected under paragraph (b) of this Q&A-5 must be adopted within the time period permitted for amending plans in order to meet the requirements of section 410(b) as amended by TRA '86. Such conforming amendment must be consistent with the sponsor's selection as reflected by plan practice during the period from the effective date to the date the amendment is adopted. Thus, for example, if an existing calendar year noncollectively bargained defined benefit plan has a single sum distribution form subject to a discriminatory condition, that was available as of January 30, 1986 (subject to such condition), and such employer makes one or more single sum distributions available on or after the first day of the first plan year commencing on or after January 1, 1989, and before the plan amendment, then such employer may not adopt a plan amendment eliminating the single sum distribution form. Instead, such employer must adopt an amendment making the distribution form available to a nondiscriminatory group of employees while retaining the availability of such distribution form with respect to the group of employees to whom the benefit is already available. Similarly, any objective criteria that are adopted as part of such amendment must be consistent with the plan practice for the applicable period prior to the amendment. A conforming amendment under this paragraph (c)(2) must be made with respect to each optional form of benefit for which such amendment is required and must be retroactive to the applicable effective date.

(d) ***Limitation on transitional alternatives.*** The transitional alternatives permitting the elimination or reduction of optional forms of benefit will not violate section 411(d)(6) during the period prior to the applicable effective date for the plan (see Q&A-6 of this section). After the applicable effective date, any amendment (other than one described in paragraph (c)(2) of this Q&A-5) that eliminates or reduces an optional form of benefit or imposes new objective criteria restricting the availability of such optional form of benefit will fail to qualify for the exception to section 411(d)(6) provided in this Q&A-5. This is the case without regard to whether the availability of the optional form of benefit is discriminatory or may reasonably be expected to be discriminatory.

Q-6: For what period are the rules of this section effective?

A-6:

(a) ***General effective date —***

(1) ***In general.*** Except as otherwise provided in this section, the provisions of this section are effective January 30, 1986, and do not apply to plan years beginning on or after January 1, 1994. For rules applicable to plan years beginning on or after January 1, 1994, see §§ 1.401(a)(4)-1 through 1.401(a)(4)-13.

(2) ***Plans of tax-exempt organizations.*** In the case of plans maintained by organizations exempt from income taxation under section 501(a), including plans subject to section 403(b)(12)(A)(i) (nonelective plans), except as otherwise provided in this section, the provisions of this section are effective January 30, 1986, and do not apply to plan years beginning on or after January 1, 1996. For rules applicable to plan years beginning on or after January 1, 1996, see §§ 1.401(a)(4)-1 through 1.401(a)(4)-13.

(b) *New plans* —

(1) ***In general.*** Unless otherwise provided in paragraph (b)(2) of this Q&A-6, plans that are either adopted or made effective on or after January 30, 1986, are “new plans”. With respect to such new plans, this section is effective January 30, 1986. This effective date is applicable to such plans whether or not they are collectively bargained.

(2) ***Exception with respect to certain new plans.*** Plans that are new plans as defined in paragraph (b)(1) of this Q&A-6, under which the availability of an optional form of benefit is discriminatory or may reasonably be expected to be discriminatory, and that receive a favorable determination letter that covered such plan provisions with respect to an application submitted prior to July 11, 1988, will be treated as existing plans with respect to such optional form of benefit for purposes of the transitional rules of this section. Thus, such plans are eligible for the compliance and amendment alternatives set forth in the transitional rule in Q&A-5 of this section.

(c) *Existing plans* —

(1) ***In general.*** Plans that are both adopted and in effect prior to January 30, 1986, are “existing plans”. In addition, new plans described in paragraph (b)(2) of this Q&A-6 are treated as existing plans with respect to certain forms of benefit. Subject to the limitations in paragraph (d) of this Q&A-6, the effective dates set forth in paragraphs (c)(2) and (c)(3) of this Q&A-6 apply to these existing plans for purposes of this section.

(2) ***Existing noncollectively bargained plans.*** With respect to existing noncollectively bargained plans, this section is effective for the first day of the first plan year commencing on or after January 1, 1989.

(3) ***Existing collectively bargained plans.*** With respect to existing collectively bargained plans, this section is effective for the later of the first day of the first plan year commencing on or after January 1, 1989, or the first day of the first plan year that the requirements of section 410(b) as amended by TRA '86 apply to such plan.

(d) *Delayed effective dates not applicable to new optional forms of benefit or conditions* —

(1) ***In general.*** The delayed effective dates in paragraph (c) (2) and (3) of this Q&A-6 for existing plans are applicable with respect to an optional form of benefit only if both the optional form of benefit and any applicable condition either causing the availability of such optional form of benefit to be discriminatory or making it reasonable to expect that the availability of such optional form will be discriminatory were both adopted and in effect prior to January 30, 1986. If the preceding sentence is not satisfied with respect to an optional form of benefit, this section is effective with respect to such optional form of benefit as if the plan were a new plan.

(2) ***Exception for certain amendments covered by a favorable determination letter.*** If a condition causing the availability of an optional form of benefit to be discriminatory, or to be reasonably expected to discriminate, was adopted or made effective on or after January 30, 1986, and a favorable determination letter that covered such plan provision is or was received with respect to an application submitted before July 11, 1988, the effective date of this section with respect to such provision is the applicable effective date determined under the rules with respect to existing plans, as though such provision had been adopted and in effect prior to January 30, 1986.

(e) ***Transitional rule effective date.*** The transitional rule provided in Q&A-5 of this section is effective January 30, 1986.

[53 FR 26054, July 11, 1988, as amended by T.D. 8360, 56 FR 47536, Sept. 19, 1991; T.D. 8485, 58 FR 46778, Sept. 3, 1993; T.D. 8212, 61 FR 14247, Apr. 1, 1996]

§ 1.401(a)-11 Qualified joint and survivor annuities.

(a) ***General rule*** —

(1) ***Required provisions.*** A trust, to which section 411 (relating to minimum vesting standards) applies without regard to section 411(e)(2), which is a part of a plan providing for the payment of benefits in any form of a life annuity (as defined in paragraph (b)(1) of this section), shall not constitute a qualified trust under section 401(a)(11) and this section unless such plan provides that:

(i) Unless the election provided in paragraph (c)(1) of this section has been made, life annuity benefits will be paid in a form having the effect of a qualified joint and survivor annuity (as defined in paragraph (b)(2) of this section) with respect to any participant who—

(A) Begins to receive payments under such plan on or after the date the normal retirement age is attained, or

(B) Dies (on or after the date the normal retirement age is attained) while in active service of the employer maintaining the plan, or

(C) In the case of a plan which provides for the payment of benefits before the normal retirement age, begins to receive payments under such plan on or after the date the qualified early retirement age (as defined in paragraph (b)(4) of this section) is attained, or

(D) Separates from service on or after the date the normal retirement age (or the qualified early retirement age) is attained and after satisfaction of eligibility requirements for the payment of benefits under the plan (except for any plan requirement that there be filed a claim for benefits) and thereafter dies before beginning to receive life annuity benefits;

(ii) Any participant may elect, as provided in paragraph (c)(1) of this section, not to receive life annuity benefits in the form of a qualified joint and survivor annuity; and

(iii) If the plan provides for the payment of benefits before the normal retirement age, any participant may elect, as provided in paragraph (c)(2) of this section, that life annuity benefits be payable as an early survivor annuity (as defined in paragraph (b)(3) of this section) upon his death in the event that he—

(A) Attains the qualified early retirement age (as defined in paragraph (b)(4) of this section), and

(B) Dies on or before the day normal retirement age is attained while employed by an employer maintaining the plan.

(2) ***Certain cash-outs.*** A plan will not fail to satisfy the requirements of section 401(a)(11) and this section merely because it provides that if the present value of the entire nonforfeitable benefit derived from employer contributions of a participant at the time of his separation from service does not exceed $1,750 (or such smaller amount as the plan may specify), such benefit will be paid to him in a lump sum.

(3) ***Illustrations.*** The provisions of subparagraph (1) of this paragraph may be illustrated by the following examples:

Example 1. The X Corporation Defined Contribution Plan was established in 1960. As in effect on January 1, 1974, the plan provided that, upon the participant's retirement, the participant may elect to receive the balance of his account in the form of (1) a single-sum cash payment, (2) a single-sum distribution consisting of X Corporation stock, (3) five equal annual cash payments, (4) a life annuity, or (5) a combination of options (1) through (4). The plan also provided that, if a participant did not elect another form of distribution, the balance of his account would be distributed to him in the form of a single-sum cash payment upon his retirement. Assume that section 401(a)(11) and this section became applicable to the plan as of its plan year beginning January 1, 1976, with respect to persons who were active participants in the plan as of such date (see paragraph (f) of this section). If X Corporation Defined Contribution Plan continues to allow the life annuity payment option after December 31, 1975, it must be amended to provide that if a participant elects a life annuity option the life annuity benefit will be paid in a form having the effect of a qualified joint and survivor annuity, except to the extent that the participant elects another form of benefit payment. However, the plan can continue to provide that, if no election is made, the balance will be paid as a single-sum cash payment. If the trust is not so amended, it will fail to qualify under section 401(a).

Example 2. The Corporation Retirement Plan provides that plan benefits are payable only in the form of a life annuity and also provides that a participant may retire before the normal retirement age of 65 and receive a benefit if he has completed 30 years of service. Under this plan, an employee who begins employment at the age of 18 will be eligible to receive retirement benefits at the age of 48 if he then has 30 years of service. This plan must allow a participant to elect in the time and manner prescribed in paragraph (c)(2) of this section an early survivor annuity (defined in paragraph (b)(3) of this section) to be payable on the death of the participant if death occurs while the participant is in active service for the employer maintaining the plan and on or after the date the participant reaches the qualified early retirement age of 55 (the later of the date the participant reaches the earliest retirement age (age 48) or 10 years before normal retirement age (age 55)) but before the day after the day the participant reaches normal retirement age (age 65).

Example 3. Assume the same facts as in Example 2. A, B, and C began employment with Y Corporation when they each attained age 18. A retires and begins to receive benefit payments at age 48 after completing 30 years of service. The plan is not required to pay a qualified joint and survivor annuity to A and his spouse at any time. B does not elect an early survivor annuity at age 55, but retires at age 57 after completing 39 years of service. Unless B makes an election under subparagraph (1)(ii) of this paragraph, the plan is required to pay a qualified joint and survivor annuity to B and his spouse. C makes no elections described in subparagraph (1) of this paragraph, and dies while in active service at age 66 after completing 48 years of service. The plan is required to pay a qualified survivor annuity to C's spouse.

(b) ***Definitions.*** As used in this section—

(1) ***Life annuity.***

(i) The term “life annuity” means an annuity that provides retirement payments and requires the survival of the participant or his spouse as one of the conditions for any payment or possible payment under the annuity. For example, annuities that make payments for 10 years or until death, whichever occurs first or whichever occurs last, are life annuities.

(ii) However, the term "life annuity" does not include an annuity, or that portion of an annuity, that provides those benefits which, under section 411(a)(9), would not be taken into account in the determination of the normal retirement benefit or early retirement benefit. For example, "social security supplements" described in the fourth sentence of section 411(a)(9) are not considered to be life annuities for the purposes of this section, whether or not an early retirement benefit is provided under the plan.

(2) ***Qualified joint and survivor annuity.*** The term "qualified joint and survivor annuity" means an annuity for the life of the participant with a survivor annuity for the life of his spouse which is neither

(i) less than one-half of, nor

(ii) greater than, the amount of the annuity payable during the joint lives of the participant and his spouse. For purposes of the preceding sentence, amounts described in § 1.401(a)-11(b)(1)(ii) may be disregarded. A qualified joint and survivor annuity must be at least the actuarial equivalent of the normal form of life annuity or, if greater, of any optional form of life annuity offered under the plan. Equivalence may be determined, on the basis of consistently applied reasonable actuarial factors, for each participant or for all participants or reasonable groupings of participants, if such determination does not result in discrimination in favor of employees who are officers, shareholders, or highly compensated. An annuity is not a qualified joint and survivor annuity if payments to the spouse of a deceased participant are terminated, or reduced, because of such spouse's remarriage.

(3) ***Early survivor annuity.*** The term "early survivor annuity" means an annuity for the life of the participant's spouse the payments under which must not be less than the payments which would have been made to the spouse under the joint and survivor annuity if the participant had made the election described in paragraph (c)(2) of this section immediately prior to his retirement and if his retirement had occurred on the day before his death and within the period during which an election can be made under such paragraph (c)(2). For example, if a participant would be entitled to a single life annuity of $100 per month or a reduced amount under a qualified joint and survivor annuity of $80 per month, his spouse is entitled to a payment of at least $40 per month. However, the payments may be reduced to reflect the number of months of coverage under the survivor annuity pursuant to paragraph (e) of this section.

(4) ***Qualified early retirement age.*** The term "qualified early retirement age" means the latest of—

(i) The earliest date, under the plan, on which the participant could elect (without regard to any requirement that approval of early retirement be obtained) to receive retirement benefits (other than disability benefits).

(ii) The first day of the 120th month beginning before the participant reaches normal retirement age, or

(iii) The date on which the participant begins participation.

(5) ***Normal retirement age.*** The term "normal retirement age" has the meaning set forth in section 411(a)(8).

(6) ***Annuity starting date.*** The term "annuity starting date" means the first day of the first period with respect to which an amount is received as a life annuity, whether by reason of retirement or by reason of disability.

(7) ***Day.*** The term "day" means a calendar day.

(c) *Elections* —

(1) *Election not to take joint and survivor annuity form* —

(i) *In general.*

(A) A plan shall not be treated as satisfying the requirements of this section unless it provides that each participant may elect, during the election period described in subdivision (ii) of this subparagraph, not to receive a qualified joint and survivor annuity. However, if a plan provides that a qualified joint and survivor annuity is the only form of benefit payable under the plan with respect to a married participant, no election need be provided.

(B) The election shall be in writing and clearly indicate that the participant is electing to receive all or, if permitted by the plan, part of his benefits under the plan in a form other than that of a qualified joint and survivor annuity. A plan will not fail to meet the requirements of this section merely because the plan requires the participant to obtain the written approval of his spouse in order for the participant to make this election or if the plan provides that such approval is not required.

(ii) *Election period.*

(A) For purposes of the election described in paragraph (c)(1)(i) of this section, the plan shall provide an election period which shall include a period of at least 90 days following the furnishing of all of the applicable information required by subparagraph (3)(i) of this paragraph and ending prior to commencement of benefits. In no event may the election period end earlier than the 90th day before the commencement of benefits. Thus, for example, the commencement of benefits may be delayed until the end of such election period because the amount of payments to be made to a participant cannot be ascertained before the end of such period; see § 1.401(a)-14(d).

If a participant makes a request for additional information as provided in subparagraph (3)(iii) of this paragraph on or before the last day of the election period, the election period shall be extended to the extent necessary to include at least the 90 calendar days immediately following the day the requested additional information is personally delivered or mailed to the participant. Notwithstanding the immediately preceding sentence, a plan may provide in cases in which the participant has been furnished by mail or personal delivery all of the applicable information required by subparagraph (3)(i) of this paragraph, that a request for such additional information must be made on or before a date which is not less than 60 days from the date of such mailing or delivery; and if the plan does so provide, the election period shall be extended to the extent necessary to include at least the 60 calendar days following the day the requested additional information is personally delivered or mailed to the participant.

(B) In the case of a participant in a plan to which this subparagraph applies who separated from service after section 401(a)(11) and this section became applicable to such plan with respect to such participant, and to whom an election required by this subparagraph has not been previously made available (and will not become available in normal course), the plan must provide an election to receive the balance of his benefits (properly adjusted, if applicable, for payments received, prior to the exercise of such election, in the form of a qualified joint and survivor annuity) in a form other than that of a qualified joint and survivor annuity. The provisions of paragraph (c)(1)(ii)(A) shall apply except that in no event shall the election period end before the 90th day after the date on which notice of the availability of such election and the applicable information required by subparagraph

(3)(i) of this paragraph is given directly to the participant. If such notice and information is given by mail, it shall be treated as given on the date of mailing. If such participant has died, such election shall be made available to such participant's personal representative.

(2) ***Election of early survivor annuity*** —

(i) ***In general.***

(A) A plan described in subparagraph (a)(1)(iii) of this section shall not be treated as satisfying the requirements of this section unless it provides that each participant may elect, during the period described in subdivision (ii) of this subparagraph, an early survivor annuity as described in paragraph (a)(1)(iii) of this section. Breaks in service after the participant has attained the qualified early retirement age neither invalidate a previous election or revocation nor prevent an election from being made or revoked during the election period.

(B) The election shall be in writing and clearly indicate that the participant is electing the early survivor annuity form.

(C) A plan is not required to provide an election under this subparagraph if—

(*1*) The plan provides that an early survivor annuity is the only form of benefit payable under the plan with respect to a married participant who dies while employed by an employer maintaining the plan,

(*2*) In the case of a defined contribution plan, the plan provides a survivor benefit at least equal in value to the vested portion of the participant's account balance, if the participant dies while in active service with an employer maintaining the plan, or

(*3*) In the case of a defined benefit plan, the plan provides a survivor benefit at least equal in value to the present value of the vested portion of the participant's normal form of the accrued benefit payable at normal retirement age (determined immediately prior to death), if the participant dies while in active service with an employer maintaining the plan. Any present values must be determined in accordance with either the actuarial assumptions or factors specified in the plan, or a variable standard independent of employer discretion for converting optional benefits specified in the plan.

(ii) ***Election period.***

(A) For purposes of the election described in paragraph (c)(2)(i) of this section the plan shall provide an election period which, except as provided in the following sentence, shall begin not later than the later of either the 90th day before a participant attains the qualified early retirement age or the date on which his participation begins, and shall end on the date the participant terminates his employment. If such a plan contains a provision that any election made under this subparagraph does not become effective or ceases to be effective if the participant dies within a certain period beginning on the date of such election, the election period prescribed in this subdivision (ii) shall begin not later than the later of

(*1*) a date which is 90 days plus such certain period before the participant attains the qualified early retirement age or

(2) the date on which his participation begins. For example, if a plan provides that an election made under this subparagraph does not become effective if the participant dies less than 2 years after the date of such election, the period for making an election under this subparagraph must begin not later than the later of (*1*) 2 years and 90 days before the participant attains the qualified early retirement age, or (*2*) the date on which his participation begins. However, the election period for an individual who was an active participant on the date this section became effective with regard to the plan need not begin earlier than such effective date.

(B) In the case of a participant in a plan to which this subparagraph applies who dies after section 401(a)(11) and this section became applicable to such plan with respect to such participant and to whom an election required by this subparagraph has not been previously made available, the plan must give the participant's surviving spouse or, if dead, such spouse's personal representative the option of electing an early survivor annuity. The plan may reduce the surviving spouse's annuity to take into account any benefits already received. The period for making such election shall not end before the 90th day after the date on which written notice of the availability of such election and applicable information required by subparagraph (3)(i) of this paragraph is given directly to such surviving spouse or personal representative. If such notice and information is given by mail, if shall be treated as given on the date of mailing.

(3) ***Information to be provided by plan.*** For rules regarding the information required to be provided with respect to the election to waive a QJSA or a QPSA, see § 1.417(a)(3)-1.

(4) ***Election is revocable.*** A plan to which this section applies must provide that any election made under this paragraph may be revoked in writing during the specified election period, and that after such election has been revoked, another election under this paragraph may be made during the specified election period.

(5) ***Election by surviving spouse.*** A plan will not fail to meet the requirements of section 401(a)(11) and this section merely because it provides that the spouse of a deceased participant may elect to have benefits paid in a form other than a survivor annuity. If the plan provides that such a spouse may make such an election, the plan administrator must furnish to this spouse, within a reasonable amount of time after a written request has been made by this spouse, a written explanation in non-technical language of the survivor annuity and any other form of payment which may be selected. This explanation must state the financial effect (in terms of dollars) of each form of payment. A plan need not respond to more than one such request.

(d) ***Permissible additional plan provisions*** —

(1) ***In general.*** A plan will not fail to meet the requirements of section 401(a)(11) and this section merely because it contains one or more of the provisions described in paragraphs (d)(2) through (5) of this section.

(2) ***Claim for benefits.*** A plan may provide that as a condition precedent to the payment of benefits, a participant must express in writing to the plan administrator the form in which he prefers benefits to be paid and provide all the information reasonably necessary for the payment of such benefits. However, if a participant files a claim for benefits with the plan administrator and provides the plan administrator with all the information necessary for the payment of benefits but does not indicate a preference as to the form for the payment of benefits, benefits must be paid in the form of a qualified joint and survivor annuity if the participant has attained the qualified early retirement age

unless such participant has made an effective election not to receive benefits in such form. For rules relating to provisions in a plan to the effect that a claim for benefits must be filed before the payment of benefits will commence, see § 1.401(a)-14.

(3) ***Marriage requirements.*** A plan may provide that a joint and survivor annuity will be paid only if—

(i) The participant and his spouse have been married to each other throughout a period (not exceeding one year) ending on the annuity starting date.

(ii) The spouse of the participant is not entitled to receive a survivor annuity (whether or not the election described in paragraph (c)(2) of this section has been made) unless the participant and his spouse have been married to each other throughout a period (not exceeding one year) ending on the date of such participant's death.

(iii) The same spouse must satisfy the requirements of subdivisions (i) and (ii) of this subparagraph.

(iv) The participant must notify the plan administrator (as defined by section 414(g)) of his marital status within any reasonable time period specified in the plan.

(4) ***Effect of participant's death on an election or revocation of an election under paragraph (c).*** A plan may provide that any election described in paragraph (c) of this section or any revocation of any such election does not become effective or ceases to be effective if the participant dies within a period, not in excess of 2 years, beginning on the date of such election or revocation. However, a plan containing a provision described in the preceding sentence shall not satisfy the requirements of this section unless it also provides that any such election or any revocation of any such election will be given effect in any case in which—

(i) The participant dies from accidental causes,

(ii) A failure to give effect to the election or revocation would deprive the participant's survivor of a survivor annuity, and

(iii) Such election or revocation is made before such accident occurred.

(5) ***Benefit option approval by third party.***

(i) A plan may provide that an optional form of benefit elected by a participant is subject to the approval of an administrative committee or similar third party. However, the administrative committee cannot deny a participant any of the benefits required by section 401(a)(11). For example, if a plan offers a life annuity option, the committee may deny the participant a qualified joint and survivor annuity only by denying the participant access to all life annuity options without knowledge of whether the participant wishes to receive a qualified joint and survivor annuity. Alternatively, if the committee knows which form of life annuity the participant has chosen before the committee makes its decision, the committee cannot withhold its consent for payment of a qualified joint and survivor annuity event though it denies all other life annuity options. This subparagraph (5) only applies before the effective date of the amendment made to section 411(d)(6) by section 301 of the Retirement Equity Act of 1984. See section 411(d)(6) and the regulations thereunder for rules limiting employer discretion.

(ii) The provisions of this subparagraph may be illustrated by the following example:

Example. In 1980 plan M provides that the automatic form of benefit is a single sum distribution. The plan also permits, subject to approval by the administrative committee, the election of several optional forms of life annuity. On the election form that is reviewed by the administrative committee the participant indicates whether any life annuity option is preferred, without indicating the particular life annuity chosen. Thus, the committee approves or disapproves the election without knowledge of whether a qualified joint and survivor annuity will be elected. The administrative committee approval provision in Plan M does not cause the plan to fail to satisfy this section. On the other hand, if the form indicates which form of life annuity is preferred, committee disapproval of any election of the qualified joint and survivor annuity would cause the plan to fail to satisfy this section.

(e) ***Costs of providing qualified joint and survivor annuity form or early survivor annuity form.*** A plan may take into account in any equitable manner consistent with generally accepted actuarial principles applied on a consistent basis any increased costs resulting from providing qualified joint and survivor annuity and early survivor annuity benefits. A plan may give a participant the option of paying premiums only if it provides another option under which an out-of-pocket expense by the participant is not required.

(f) ***Application and effective date.*** Section 401(a)(11) and this section shall apply to a plan only with respect to plan years beginning after December 31, 1975, and shall apply only if—

(1) The participant's annuity starting date did not fall within a plan year beginning before January 1, 1976, and

(2) The participant was an active participant in the plan on or after the first day of the first plan year beginning after December 31, 1975.

For purposes of this paragraph, the term "active participant" means a participant for whom benefits are being accrued under the plan on his behalf (in the case of a defined benefit plan), the employer is obligated to contribute to or under the plan on his behalf (in the case of a defined contribution plan other than a profit-sharing plan), or the employer either is obligated to contribute to or under the plan on his behalf or would have been obligated to contribute to or under the plan on his behalf if any contribution were made to or under the plan (in the case of a profit-sharing plan).

If benefits under a plan are provided by the distribution to the participants of individual annuity contracts, the annuity starting date will be considered for purposes of this paragraph to fall within a plan year beginning before January 1, 1976, with respect to any such individual contract that was distributed to the participant during a plan year beginning before January 1, 1976, if no premiums are paid with respect to such contract during a plan year beginning after December 31, 1975. In the case of individual annuity contracts that are distributed to participants before January 1, 1978, and which contain an option to provide a qualified joint and survivor annuity, the requirements of this section will be considered to have been satisfied if, not later than January 1, 1978, holders of individual annuity contracts who are participants described in the first sentence of this paragraph are given an opportunity to have such contracts amended, so as to provide for a qualified joint and survivor annuity in the absence of a contrary election, within a period of not less than one year from the date such opportunity was offered. In no event, however, shall the preceding sentence apply with respect to benefits attributable to premiums paid after December 31, 1977.

(g) ***Effect of REA 1984*** —

(1) ***In general.*** The Retirement Equity Act of 1984 (REA 1984) significantly changed the qualified joint and survivor annuity rules generally effective for plan years beginning after December 31, 1984. The new survivor annuity rules are primarily in sections 401(a)(11) and 417 as revised by REA 1984 and §§ 1.401(a)-20 and 417(e)-1.

(2) *Regulations after REA 1984.*

(i) REA and the regulations thereunder to the extent inconsistent with pre-REA 1984 section 401(a)(11) and this section are controlling for years to which REA 1984 applies. See e.g., paragraphs (a)(1) and (2) of this section, relating to required provisions and certain cash-outs, respectively and (e), relating to costs of providing annuities, for rules that are inconsistent with REA 1984 and, therefore, are not applicable to REA 1984 years.

(ii) To the extent that the pre-REA 1984 law either is the same as or consistent with REA 1984 and the new regulations hereunder, the rules in this section shall continue to apply for years to which REA 1984 applies. (See, e.g., paragraph (c) (relating to how information is furnished participants and spouses) and paragraph (b) (defining a life annuity) for some of the rules that apply to REA 1984 years.) The rules in this section shall not apply for such years to the extent that they are inconsistent with REA 1984 and the regulations thereunder.

(iii) The Commissioner may provide additional guidance as to the continuing effect of the various rules in this section for years to which REA 1984 applies.

(Secs. 401(a)(11), 7805 Internal Revenue Code of 1954, (88 Stat. 935, 68A Stat. 917; (26 U.S.C. 401(a)(11), 7805)))

[T.D. 7458, 42 FR 1466, Jan. 7, 1977; 42 FR 6367, Feb. 2, 1977, as amended by T.D. 7510, 42 FR 53956, Oct. 4, 1977; T.D. 8219, 53 FR 31841, Aug. 22, 1988; 53 FR 48534, Dec. 1, 1988; T.D. 9099, 68 FR 70144, Dec. 17, 2003]

§ 1.401(a)-12 Mergers and consolidations of plans and transfers of plan assets.

A trust will not be qualified under section 401 unless the plan of which the trust is a part provides that in the case of any merger or consolidation with, or transfer of assets or liabilities to, another plan after September 2, 1974, each participant in the plan would receive a minimum benefit if the plan terminated immediately after the merger, consolidation, or transfer. This benefit must be equal to or greater than the benefit the participant would have been entitled to receive immediately before the merger, consolidation, or transfer if the plan in which he was a participant had then terminated. This section applies to a multiemployer plan only to the extent determined by the Pension Benefit Guaranty Corporation. For additional rules concerning mergers or consolidations of plans and transfers of plan assets, see section 414(l) and § 1.414(l)-1.

[T.D. 7638, 44 FR 48195, Aug. 17, 1979]

§ 1.401(a)-13 Assignment or alienation of benefits.

(a) *Scope of the regulations.* This section applies only to plans to which section 411 applies without regard to section 411(e)(2). Thus, for example, it does not apply to a governmental plan, within the meaning of section 414(d); a church plan, within the meaning of section 414(e), for which there has not been made the election under section 410(a) to have the participation, vesting, funding, etc. requirements apply; or a plan which at no time after September 2, 1974, provided for employer contributions.

(b) *No assignment or alienation* —

(1) *General rule.* Under section 401(a)(13), a trust will not be qualified unless the plan of which the trust is a part provides that benefits provided under the plan may not be anticipated, assigned (either at law or in equity), alienated or subject to attachment, garnishment, levy, execution or other legal or equitable process.

(2) ***Federal tax levies and judgments.*** A plan provision satisfying the requirements of subparagraph (1) of this paragraph shall not preclude the following:

(i) The enforcement of a Federal tax levy made pursuant to section 6331.

(ii) The collection by the United States on a judgment resulting from an unpaid tax assessment.

(c) ***Definition of assignment and alienation*** —

(1) ***In general.*** For purposes of this section, the terms “assignment” and “alienation” include—

(i) Any arrangement providing for the payment to the employer of plan benefits which otherwise would be due the participant under the plan, and

(ii) Any direct or indirect arrangement (whether revocable or irrevocable) whereby a party acquires from a participant or beneficiary a right or interest enforceable against the plan in, or to, all or any part of a plan benefit payment which is, or may become, payable to the participant or beneficiary.

(2) ***Specific arrangements not considered an assignment or alienation.*** The terms “assignment” and “alienation” do not include, and paragraph (e) of this section does not apply to, the following arrangements:

(i) Any arrangement for the recovery of amounts described in section 4045(b) of the Employee Retirement Income Security Act of 1974, 88 Stat. 1027 (relating to the recapture of certain payments),

(ii) Any arrangement for the withholding of Federal, State or local tax from plan benefit payments,

(iii) Any arrangement for the recovery by the plan of overpayments of benefits previously made to a participant,

(iv) Any arrangement for the transfer of benefit rights from the plan to another plan, or

(v) Any arrangement for the direct deposit of benefit payments to an account in a bank, savings and loan association or credit union, provided such arrangement is not part of an arrangement constituting an assignment or alienation. Thus, for example, such an arrangement could provide for the direct deposit of a participant's benefit payments to a bank account held by the participant and the participant's spouse as joint tenants.

(d) ***Exceptions to general rule prohibiting assignments or alienations*** —

(1) ***Certain voluntary and revocable assignments or alienations.*** Not withstanding paragraph (b)(1) of this section, a plan may provide that once a participant or beneficiary begins receiving benefits under the plan, the participant or beneficiary may assign or alienate the right to future benefit payments provided that the provision is limited to assignments or alienations which—

(i) Are voluntary and revocable;

(ii) Do not in the aggregate exceed 10 percent of any benefit payment; and

(iii) Are neither for the purpose, nor have the effect, of defraying plan administration costs.

For purposes of this subparagraph, an attachment, garnishment, levy, execution, or other legal or equitable process is not considered a voluntary assignment or alienation.

(2) ***Benefits assigned or alienated as security for loans.***

(i) Notwithstanding paragraph (b)(1) of this section, a plan may provide for loans from the plan to a participant or a beneficiary to be secured (by whatever means) by the participant's accrued nonforfeitable benefit provided that the following conditions are met.

(ii) The plan provision providing for the loans must be limited to loans from the plan. A plan may not provide for the use of benefits accrued or to be accrued under the plan as security for a loan from a party other than the plan, regardless of whether these benefits are nonforfeitable within the meaning of section 411 and the regulations thereunder.

(iii) The loan, if made to a participant or beneficiary who is a disqualified person (within the meaning of section 4975(e)(2)), must be exempt from the tax imposed by section 4975 (relating to the tax imposed on prohibited transactions) by reason of section 4975(d)(1). If the loan is made to a participant or beneficiary who is not a disqualified person, the loan must be one which would the exempt from the tax imposed by section 4975 by reason of section 4975(d)(1) if the loan were made to a disqualified person.

(e) ***Special rule for certain arrangements*** —

(1) ***In general.*** For purposes of this section and notwithstanding paragraph (c)(1) of this section, an arrangement whereby a participant or beneficiary directs the plan to pay all, or any portion, of a plan benefit payment to a third party (which includes the participant's employer) will not constitute an "assignment or alienation" if—

(i) It is revocable at any time by the participant or beneficiary; and

(ii) The third party files a written acknowledgement with the plan administrator pursuant to subparagraph (2) of this paragraph.

(2) ***Acknowledgement requirement for third party arrangements.*** In accordance with paragraph (e)(1)(ii) of this section, the third party is required to file a written acknowledgement with the plan administrator. This acknowledgement must state that the third party has no enforceable right in, or to, any plan benefit payment or portion thereof (except to the extent of payments actually received pursuant to the terms of the arrangement). A blanket written acknowledgement for all participants and beneficiaries who are covered under the arrangement with the third party is sufficient. The written acknowledgement must be filed with the plan administrator no later than the later of—

(i) August 18, 1978; or

(ii) 90 days after the arrangement is entered into.

(f) ***Effective date.*** Section 401(a)(13) is applicable as of January 1, 1976, and the plan provision required by this section must be effective as of that date. However, regardless of when the provision is adopted, it will not affect—

(1) Attachments, garnishments, levies, or other legal or equitable process permitted under the plan that are made before January 1, 1976;

(2) Assignments permitted under the plan that are irrevocable on December 31, 1975, including assignments made before January 1, 1976, as security for loans to a participant or beneficiary from a party other than the plan; and

(3) Renewals or extensions of loans described in subparagraph (2) of this paragraph, if—

(i) The principal amount of the obligation outstanding on December 31, 1975 (or, if less, the principal amount outstanding on the date of renewal or extension), is not increased;

(ii) The loan, as renewed or extended, does not bear a rate of interest in excess of the rate prevailing for similar loans at the time of the renewal or extensions; and

(iii) With respect to loans that are renewed or extended to bear a variable interest rate, the formula for determining the applicable rate is consistent with the formula for formulae prevailing for similar loans at the time of the renewal or extension. For purposes of subparagraphs (2) and (3) of this paragraph, a loan from a party other than the plan made after December 31, 1975, will be treated as a new loan. This is so even if the lender's security interest for the loan arises from an assignment of the participant's accrued nonforfeitable benefit made before that date.

(g) *Special rules for qualified domestic relations orders* —

(1) ***Definition.*** The term "qualified domestic relations order" (QDRO) has the meaning set forth in section 414(p). For purposes of the Internal Revenue Code, a QDRO also includes any domestic relations order described in section 303(d) of the Retirement Equity Act of 1984.

(2) ***Plan amendments.*** A plan will not fail to satisfy the qualification requirements of section 401(a) or 403(a) merely because it does not include provisions with regard to a QDRO.

(3) ***Waiver of distribution requirements.*** A plan shall not be treated as failing to satisfy the requirements of sections 401 (a) and (k) and 409(d) solely because of a payment to an alternate payee pursuant to a QDRO. This is the case even if the plan provides for payments pursuant to a QDRO to an alternate payee prior to the time it may make payments to a participant. Thus, for example, a pension plan may pay an alternate payee even though the participant may not receive a distribution because he continues to be employed by the employer.

(4) *Coordination with section 417* —

(i) ***Former spouse.***

(A) ***In general.*** Under section 414(p)(5), a QDRO may provide that a former spouse shall be treated as the current spouse of a participant for all or some purposes under sections 401(a)(11) and 417.

(B) ***Consent.***

(*1*) To the extent a former spouse is treated as the current spouse of the participant by reason of a QDRO, any current spouse shall not be treated as the current spouse. For example, assume H is divorced from W, but a QDRO provides that H shall be treated as W's current spouse with respect to all of W's benefits under a plan. H will be treated as the surviving spouse under the QPSA and QJSA unless W obtains H's consent to waive the QPSA or QJSA or both. The fact that W married S after W's divorce from H is disregarded. If, however, the QDRO had provided that H shall be treated as W's current spouse only with respect to benefits that accrued prior to the divorce, then H's consent would be needed by W to waive the QPSA or QJSA with respect to benefits accrued before the divorce. S's consent would be required with respect to the remainder of the benefits.

(2) In the preceding examples, if the QDRO ordered that a portion of W's benefit (either through separate accounts or a percentage of the benefit) must be distributed to H rather than ordering that H be treated as W's spouse, the survivor annuity requirements of sections 401(a)(11) and 417 would not apply to the part of W's benefit awarded H. Instead, the terms of the QDRO would determine how H's portion of W's accrued benefit is paid. W is required to obtain S's consent if W elects to waive either the QJSA or QPSA with respect to the remaining portion of W's benefit.

(C) ***Amount of the QPSA or QJSA.***

(1) Where, because of a QDRO, more than one individual is to be treated as the surviving spouse, a plan may provide that the total amount to be paid in the form of a QPSA or survivor portion of a QJSA may not exceed the amount that would be paid if there were only one surviving spouse. The QPSA or survivor portion of the QJSA, as the case may be, payable to each surviving spouse must be paid as an annuity based on the life of each such spouse.

(2) Where the QDRO splits the participant's accrued benefit between the participant and a former spouse (either through separate accounts or percentage of the benefit), the surviving spouse of the participant is entitled to a QPSA or QJSA based on the participant's accrued benefit as of the date of death or the annuity starting date, less the separate account or percentage that is payable to the former spouse. The calculation is made as if the separate account or percentage had been distributed to the participant prior to the relevant date.

(ii) ***Current spouse.*** Under section 414(p)(5), even if the applicable election periods (*i.e.,* the first day of the year in which the participant attains age 35 and 90 days before the annuity starting date) have not begun, a QDRO may provide that a current spouse shall not be treated as the current spouse of the participant for all or some purposes under sections 401(a)(11) and 417. A QDRO may provide that the current spouse waives all future rights to a QPSA or QJSA.

(iii) ***Effects on benefits.***

(A) A plan is not required to provide additional vesting or benefits because of a QDRO.

(B) If an alternate payee is treated pursuant to a QDRO as having an interest in the plan benefit, including a separate account or percentage of the participant's account, then the QDRO cannot provide the alternate payee with a greater right to designate a beneficiary for the alternate payee's benefit amount than the participant's right. The QJSA or QPSA provisions of section 417 do not apply to the spouse of an alternate payee.

(C) If the former spouse who is treated as a current spouse dies prior to the participant's annuity starting date, then any actual current spouse of the participant is treated as the current spouse, except as otherwise provided in a QDRO.

(iv) ***Section 415 requirements.*** Even though a participant's benefits are awarded to an alternate payee pursuant to a QDRO, the benefits are benefits of the participant for purposes of applying the limitations of section 415 to the participant's benefits.

[T.D. 7534, 43 FR 6943, Feb. 17, 1978, as amended by T.D. 8219, 53 FR 31850, Aug. 22, 1988; 53 FR 48534, Dec. 1, 1988]

§ 1.401(a)-14 Commencement of benefits under qualified trusts.

(a) ***In general.*** Under section 401(a)(14), a trust to which section 411 applies (without regard to section 411(e)(2) is not qualified under section 401 unless the plan of which such trust is a part provides that the payment of benefits under the plan to the participant will begin not later than the 60th day after the close of the plan year in which the latest of the following events occurs—

(1) The attainment by the participant of age 65, or, if earlier, the normal retirement age specified under the plan,

(2) The 10th anniversary of the date on which the participant commenced participation in the plan,

(3) The termination of the participant's service with the employer, or

(4) The date specified in an election made pursuant to paragraph (b) of this section.

Notwithstanding the preceding sentence, a plan may require that a participant file a claim for benefits before payment of benefits will commence.

(b) ***Election of later date*** —

(1) ***General rule.*** A plan may permit a participant to elect that the payment to him of any benefit under a plan will commence at a date later than the dates specified under paragraphs (a)(1), (2), and (3) of this section.

(2) ***Manner of election.*** A plan permitting an election under this paragraph shall require that such election must be made by submitting to the plan administrator a written statement, signed by the participant, which describes the benefit and the date on which the payment of such benefit shall commence.

(3) ***Restriction.*** An election may not be made pursuant to a plan provision permitted by this paragraph if the exercise of such election will cause benefits payable under the plan with respect to the participant in the event of his death to be more than “incidental” within the meaning of paragraph (b)(1)(i) of § 1.401-1.

(c) ***Special early retirement rule*** —

(1) ***Separation prior to early retirement age.*** A trust forming part of a plan which provides for the payment of an early retirement benefit is not qualified under section 401 unless, upon satisfaction of the age requirement for such early retirement benefit, a participant who—

(i) Satisfied the service requirements for such early retirement benefit, but

(ii) Separated from service (with any nonforfeitable right to an accrued benefit) before satisfying such age requirement,

is entitled to receive not less than the reduced normal retirement benefit described in paragraph (c)(2) of this section. A plan may establish reasonable conditions for payments of early retirement benefits (including for example, a requirement that a claim for benefits be made) if the conditions are equally applicable to participants who separate from service when eligible for an early retirement benefit and participants who separate from service earlier.

(2) ***Reduced normal retirement benefit.*** For purposes of this section, the reduced normal retirement benefit is the benefit to which the participant would have been entitled under the plan at normal retirement age, reduced in accordance with reasonable actuarial assumptions.

(3) ***Separation prior to effective date of this section.*** The provisions of this paragraph shall not apply in the case of a plan participant who separates from service before attainment of early retirement age and prior to the effective date of this section set forth in paragraph (e) of this section.

(4) ***Illustration.*** The provisions of this paragraph may be illustrated by the following example:

Example. The X Corporation Defined Benefit Plan provides that a normal retirement benefit will be payable to a participant upon attainment of age 65. The plan also provides that an actuarially reduced retirement benefit will be payable, upon application, to any participant who has completed 10 years of service with the X Corporation and attained age 60. When he is 55 years of age and has completed 10 years of service with X Corporation, A, a participant in the plan, leaves the service of X Corporation and does not return. The plan will not be qualified under section 401 unless, upon attainment of age 60 and application for benefits, A is entitled to receive a reduced normal retirement benefit described in subparagraph (2) of this paragraph.

(d) ***Retroactive payment rule.*** If the amount of the payment required to commence on the date determined under this section cannot be ascertained by such date, or if it is not possible to make such payment on such date because the plan administrator has been unable to locate the participant after making reasonable efforts to do so, a payment retroactive to such date may be made no later than 60 days after the earliest date on which the amount of such payment can be ascertained under the plan or the date on which the participant is located (whichever is applicable).

(e) ***Effective date.*** This section shall apply to a plan for those plan years to which section 411 of the Code applies without regard to section 411(e)(2).

(Secs. 401(a)(14), 7805, Internal Revenue Code of 1954 (88 Stat. 937, 68A Stat. 917; 26 U.S.C. 401(a)(14), 7805))

[T.D. 7436, 41 FR 42651, Sept. 28, 1976; 41 FR 44690, Oct. 12, 1976]

§ 1.401(a)-15 Requirement that plan benefits are not decreased on account of certain Social Security increases.

(a) ***In general.*** Under section 401(a)(15), a trust which is part of a plan to which section 411 applies (without regard to section 411(e)(2)) is not qualified under section 401 unless, under the plan of which such trust is a part:

(1) ***Benefit being received by participant or beneficiary.*** A benefit (including a death or disability benefit) being received under the plan by a participant or beneficiary (other than a participant to whom subparagraph (2)(ii) of this paragraph applies, or a beneficiary of such a participant) is not decreased by reason of any post-separation social security benefit increase effective after the later of—

(i) September 2, 1974, or

(ii) The date of first receipt of any retirement benefit, death benefit, or disability benefit under the plan by the participant or by a beneficiary of the participant (whichever receipt occurs first).

(2) ***Benefit to which participant separated from service has nonforfeitable right.*** In the case of a benefit to which a participant has a nonforfeitable right under such plan—

(i) If such participant is separated from service and does not subsequently return to service and resume participation in the plan, such benefit is not decreased by reason of any post-separation social security benefit increase effective after the later of September 2, 1974, or separation from service, or

(ii) If such participant is separated from service and subsequently returns to service and resumes participation in the plan, such benefit is not decreased by reason of any post-separation social security benefit increase effective after September 2, 1974, which occurs during separation from service and which would decrease such benefit to a level below the level of benefits to which he would have been entitled had he not returned to service after his separation.

(b) ***Post-separation social security benefit increase.*** For purposes of this section, the term "post-separation social security benefit increase" means, with respect to a participant or a beneficiary of the participant, an increase in a benefit level or wage base under title II of the Social Security Act (whether such increase is a result of an amendment of such title II or is a result of the application of the provisions of such title II) occurring after the earlier of such participant's separation from service or commencement of benefits under the plan.

(c) ***Illustrations.*** The provisions of paragraphs (a) and (b) of this section may be illustrated by the following examples:

Example 1. A plan to which section 401(a)(15) applies provides an annual benefit at the normal retirement age, 65, in the form of a stated benefit formula amount less a specified percentage of the primary insurance amount payable under title II of the Social Security Act. The plan provides no early retirement benefits. In the case of a participant who separates from service before age 65 with a nonforfeitable right to a benefit under the plan, the plan defines the primary insurance amount as the amount which the participant is entitled to receive under title II of the Social Security Act at age 65, multiplied by the ratio of the number of years of service with the employer to the number of years of service the participant would have had if he had worked for the employer until age 65. The plan does not satisfy the requirements of section 401(a)(15), because social security increases that occur after a participant's separation from service will reduce the benefit the participant will receive under the plan.

Example 2. A plan to which section 401(a)(15) applies provides an annual benefit at the normal retirement age, 65, in the form of a stated benefit formula amount less a specified percentage of the primary insurance amount payable under title II of the Social Security Act. The plan provides no early retirement benefits. In the case of a participant who separates from service before age 65 with a nonforfeitable right to a benefit under the plan, the plan defines the primary insurance amount as the amount which the participant is entitled to receive under title II of the Social Security Act at age 65 based upon the assumption that he will continue to receive until reaching age 65 compensation which would be treated as wages for purposes of the Social Security Act at the same rate as he received such compensation at the time he separated from service, but determined without regard to any post-separation social security benefit increase, multiplied by the ratio of the number of years of service with the employer to the number of years of service the participant would have had if he had worked for the employer until age 65. The plan satisfies the requirements of section 401(a)(15), because social security increases that occur after a participant's separation from service will not reduce the benefit the participant will receive under the plan.

(d) ***Other Federal or State laws.*** To the extent applicable, the rules discussed in this section will govern classifications under a plan supplementing the benefits provided by other Federal or State laws, such as the Railroad Retirement Act of 1937. See section 206(b) of the Employee Retirement Income Security Act of 1974 (Public Law 93-406, 88 Stat. 864).

(e) ***Effect on prior law.*** Nothing in this section shall be construed as amending or modifying the rules applicable to post-separation social security increases prior to September 2, 1974. See paragraph (e) of § 1.401-3.

(f) ***Effective date.*** Section 401(a)(15) and this section shall apply to a plan only with respect to plan years to which section 411 (relating to minimum vesting standards) is applicable to the plan without regard to section 411(e)(2).

[T.D. 7434, 41 FR 42650, Sept. 28, 1976]

§ 1.401(a)-16 Limitations on benefits and contributions under qualified plans.

A trust will not be a qualified trust and a plan will not be a qualified plan if the plan provides for benefits or contributions which exceed the limitations of section 415. Section 415 and the regulations thereunder provide rules concerning these limitations on benefits and contributions.

[T.D. 7748, 46 FR 1696, Jan. 7, 1981]

§ 1.401(a)-19 Nonforfeitability in case of certain withdrawals.

(a) ***Application of section.*** Section 401(a)(19) and this section apply to a plan to which section 411(a) applies. (See section 411(e) and § 1.411(a)-2 for applicability of section 411).

(b) ***Prohibited forfeitures*** —

(1) ***General rule.*** A plan to which this section applies is not a qualified plan (and a trust forming a part of such plan is not a qualified trust) if, under such plan, any part of a participant's accrued benefit derived from employer contributions is forfeitable solely because a benefit derived from the participant's contributions under the plan is voluntarily withdrawn by him after he has become a 50 percent vested participant.

(2) ***50 percent vested participant.*** For purposes of subparagraph (1) of this paragraph, a participant is a 50 percent vested participant when he has a nonforfeitable right (within the meaning of section 411 and the regulations thereunder) to at least 50 percent of his accrued benefit derived from employer contributions. Whether or not a participant is 50 percent vested shall be determined by the ratio of the participant's total nonforfeitable employer-derived accrued benefit under the plan to his total employer-derived accrued benefit under the plan.

(3) ***Certain forfeitures.*** Paragraph (b)(1) of this section does not apply in the case of a forfeiture permitted by section 411(a)(3)(D)(iii) and § 1.411(a)-7(d)(3) (relating to forfeitures of certain benefits accrued before September 2, 1974).

(c) ***Supersession.*** Section 11.401(a)-(19) of the Temporary Income Tax Regulations under the Employee Retirement Income Security Act of 1974 is superseded by this section.

(Sec. 411 Internal Revenue Code of 1954 (88 Stat. 901; 26 U.S.C. 411))

[T.D. 7501, 42 FR 42320, Aug. 23, 1977]

§ 1.401(a)-20 Requirements of qualified joint and survivor annuity and qualified preretirement survivor annuity.

Q-1: What are the survivor annuity requirements added to the Code by the Retirement Equity Act of 1984 (REA 1984)?

A-1: REA 1984 replaced section 401(a)(11) with a new section 401(a)(11) and added section 417. Plans to which new section 401(a)(11) applies must comply with the requirements of sections 401(a)(11) and 417 in order to remain qualified under sections 401(a) or 403(a). In general, these plans must provide both a qualified joint and survivor annuity (QJSA) and a qualified preretirement survivor annuity (QPSA) to remain qualified. These survivor annuity requirements are applicable to any benefit payable under a plan, including a benefit payable to a participant under a contract purchased by the plan and paid by a third party.

Q-2: Must annuity contracts purchased and distributed to a participant or spouse by a plan subject to the survivor annuity requirements of sections 401(a)(11) and 417 satisfy the requirements of those sections?

A-2: Yes. Rights and benefits under section 401(a)(11) or 417 may not be eliminated or reduced because the plan uses annuity contracts to provide benefits merely because

(a) such a contract is held by a participant or spouse instead of a plan trustee, or

(b) such contracts are distributed upon plan termination. Thus, the requirements of sections 401(a)(11) and 417 apply to payments under the annuity contracts, not to the distributions of the contracts.

Q-3: What plans are subject to the survivor annuity requirements of section 401(a)(11)?

A-3:

(a) Section 401(a)(11) applies to any defined benefit plan and to any defined contribution plan that is subject to the minimum funding standards of section 412. This section also applies to any participant under any other defined contribution plan unless all of the following conditions are satisfied—

(1) The plan provides that the participant's nonforfeitable accrued benefit is payable in full, upon the participant's death, to the participant's surviving spouse (unless the participant elects, with spousal consent that satisfies the requirements of section 417(a)(2), that such benefit be provided instead to a designated beneficiary);

(2) The participant does not elect the payment of benefits in the form of a life annuity; and

(3) With respect to the participant, the plan is not a transferee or an offset plan. (See Q&A 5 of this section.)

(b) A defined contribution plan not subject to the minimum funding standards of section 412 will not be treated as satisfying the requirement of paragraph (a)(1) unless both of the following conditions are satisfied—

(1) The benefit is available to the surviving spouse within a reasonable time after the participant's death. For this purpose, availability within the 90-day period following the date of death is deemed to be reasonable and the reasonableness of longer periods shall be determined based on the particular facts and circumstances. A time period longer than 90 days, however, is

deemed unreasonable if it is less favorable to the surviving spouse than any time period under the plan that is applicable to other distributions. Thus, for example, the availability of a benefit to the surviving spouse would be unreasonable if the distribution was required to be made by the close of the plan year including the participant's death while distributions to employees who separate from service were required to be made within 90 days of separation.

(2) The benefit payable to the surviving spouse is adjusted for gains or losses occurring after the participant's death in accordance with plan rules governing the adjustment of account balances for other plan distributions. Thus, for example, the plan may not provide for distributions of an account balance to a surviving spouse determined as of the last day of the quarter in which the participant's death occurred with no adjustments of an account balance for gains or losses after death if the plan provides for such adjustments for a participant who separates from service within a quarter.

(c) For purposes of determining the extent to which section 401(a)(11) applies to benefits under an employee stock ownership plan (as defined in section 4975(e)(7)), the portion of a participant's accrued benefit that is subject to section 409(h) is to be treated as though such benefit were provided under a defined contribution plan not subject to section 412.

(d) The requirements set forth in section 401(a)(11) apply to other employee benefit plans that are covered by applicable provisions under title I of the Employee Retirement Income Security Act of 1974. For purposes of applying the regulations under sections 401(a)(11) and 417, plans subject to ERISA section 205 are treated as if they were described in section 401(a). For example, to the extent that section 205 covers section 403(b) contracts and custodial accounts they are treated as section 401(a) plans. Individual retirement plans (IRAs), including IRAs to which contributions are made under simplified employee pensions described in section 408(k) and IRAs that are treated as plans subject to title I, are not subject to these requirements.

Q-4: What rules apply to a participant who elects a life annuity option under a defined contribution plan not subject to section 412?

A-4: If a participant elects at any time (irrespective of the applicable election period defined in section 417(a)(6)) a life annuity option under a defined contribution plan not subject to section 412, the survivor annuity requirements of sections 401(a)(11) and 417 will always thereafter apply to all of the participant's benefits under such plan unless there is a separate accounting of the account balance subject to the election. A plan may allow a participant to elect an annuity option prior to the applicable election period described in section 417(a)(6). If a participant elects an annuity option, the plan must satisfy the applicable written explanation, consent, election, and withdrawal rules of section 417, including waiver of the QJSA within 90 days of the annuity starting date. If a participant selecting such an option dies, the surviving spouse must be able to receive the QPSA benefit described in section 417(c)(2) which is a life annuity, the actuarial equivalent of which is not less than 50 percent of the nonforfeitable account balance (adjusted for loans as described in Q&A 24(d) of this section). The remaining account balance may be paid to a designated nonspouse beneficiary.

Q-5: How do sections 401(a)(11) and 417 apply to transferee plans which are defined contribution plans not subject to section 412?

A-5:

(a) ***Transferee plans.*** Although the survivor annuity requirements of sections 401(a)(11) and 417 generally do not apply to defined contribution plans not subject to section 412, such plans are subject to the survivor annuity requirements to the extent that they are transferee plans with respect to any participant. A defined contribution plan is a transferee plan with respect to any participant if the plan is a direct or indirect transferee of such participant's benefits held on or after January 1, 1985, by:

(1) A defined benefit plan,

(2) A defined contribution plan subject to section 412 or

(3) A defined contribution plan that is subject to the survivor annuity requirements of sections 401(a)(11) and 417 with respect to that participant.

If through a merger, spinoff, or other transaction having the effect of a transfer, benefits subject to the survivor annuity requirements of sections 401(a)(11) and 417 are held under a plan that is not otherwise subject to such requirements, such benefits will be subject to the survivor annuity requirements even though they are held under such plan. Even if a plan satisfies the survivor annuity requirements, other rules apply to these transactions. See, e.g., section 411(d)(6) and the regulations thereunder. A transfer made before January 1, 1985, and any rollover contribution made at any time, are not transactions that subject the transferee plan to the survivor annuity requirements with respect to a participant. If a plan is a transferee plan with respect to a participant, the survivor annuity requirements do not apply with respect to other plan participants solely because of the transfer. Any plan that would not otherwise be subject to the survivor annuity requirements of sections 401(a)(11) and 417 whose benefits are used to offset benefits in a plan subject to such requirements is subject to the survivor annuity requirements with respect to those participants whose benefits are offset. Thus, if a stock bonus or profit-sharing plan offsets benefits under a defined benefit plan, such a plan is subject to the survivor annuity requirements.

(b) ***Benefits covered.*** The survivor annuity requirements apply to all accrued benefits held for a participant with respect to whom the plan is a transferee plan unless there is an acceptable separate accounting between the transferred benefits and all other benefits under the plan. A separate accounting is not acceptable unless gains, losses, withdrawals, contributions, forfeitures, and other credits or charges are allocated on a reasonable and consistent basis between the accrued benefits subject to the survivor annuity requirements and other benefits. If there is an acceptable separate accounting between transferred benefits and any other benefits under the plan, only the transferred benefits are subject to the survivor annuity requirements.

Q-6: Is a frozen or terminated plan required to satisfy the survivor annuity requirements of sections 401(a)(11) and 417?

A-6: In general, benefits provided under a plan that is subject to the survivor annuity requirements of sections 401(a)(11) and 417 must be provided in accordance with those requirements even if the plan is frozen or terminated. However, any plan that has a termination date prior to September 17, 1985, and that distributed all remaining assets as soon as administratively feasible after the termination date, is not subject to the survivor annuity requirements. The date of termination is determined under section 411(d)(3) and § 1.411(d)-2(c).

Q-7: If the Pension Benefit Guaranty Corporation (PBGC) is administering a plan, are benefits payable in the form of a QPSA or QJSA-

A-7: Yes, the PBGC will pay benefits in such forms.

Q-8: How do the survivor annuity requirements of sections 401(a)(11) and 417 apply to participants?

A-8:

(a) If a participant dies before the annuity starting date with vested benefits attributable to employer or employee contributions (or both), benefits must be paid to the surviving spouse in the form of a QPSA. If a participant survives until the annuity starting date with vested benefits attributable to employer or employee contributions (or both), benefits must be provided to the participant in the form of a QJSA.

(b) A participant may waive the QPSA or the QJSA (or both) if the applicable notice, election, and spousal consent requirements of section 417 are satisfied.

(c) Benefits are not required to be paid in the form of a QPSA or QJSA if at the time of death or distribution the participant was vested only in employee contributions and such death occurred, or distribution commenced, before October 22, 1986.

(d) ***Certain mandatory distributions.*** A distribution may occur without satisfying the spousal consent requirements of section 417 (a) and

(e) if the present value of the nonforfeitable benefit does not exceed the cash-out limit in effect under§ 1.411(a)-11(c)(3)(ii). See § 1.417(e)-1.

Q-9: May separate portions of a participant's accrued benefit be subject to QPSA and QJSA requirements at any particular point in time?

A-9:

(a) ***Dual QPSA and QJSA rights.*** One portion of a participant's benefit may be subject to the QPSA and another portion to the QJSA requirements at the same time. For example, in order for a money purchase pension plan to distribute any portion of a married participant's benefit to the participant, the plan must distribute such portion in the form of a QJSA (unless the plan satisfies the applicable consent requirements of section 417 (a) and (e) with respect to such portion of the participant's benefit). This rule applies even if the distribution is merely an in-service distribution attributable to voluntary employee contributions and regardless of whether the participant has attained the normal retirement age under the plan. The QJSA requirements apply to such a distribution because the annuity starting date has occurred with respect to this portion of the participant's benefit. In the event of a participant's death following the commencement of a distribution in the form of a QJSA, the remaining payments must be made to the surviving spouse under the QJSA. In addition, the plan must satisfy the QPSA requirements with respect to any portion of the participant's benefits for which the annuity starting date had not yet occurred.

(b) ***Example.*** Assume that participant A has a $100,000 account balance in a money purchase pension plan. A makes an in-service withdrawal of $20,000 attributable to voluntary employee contributions. The QJSA requirements apply to A's withdrawal of the $20,000. Accordingly, unless the QJSA form is properly waived such amount must be distributed in the form of a QJSA. A's remaining account balance ($80,000) remains subject to the QPSA requirements because the annuity starting date has not occurred with respect to the $80,000. (If A survives until the annuity starting date, the $80,000 would be subject to the QJSA requirements.) If A died on the day following the annuity starting date for the withdrawal, A's spouse would be entitled to a QPSA with a value equal to at least $40,000 with respect to the $80,000 account balance, in addition to any survivor benefit without respect to the $20,000. If the $20,000 payment to A had been the first payment of an annuity purchased with the

entire $100,000 account balance rather than an in-service distribution, then the QJSA requirements would apply to the entire account balance at the time of the annuity starting date. In such event, the plan would have no obligation to provide A's spouse with a QPSA benefit upon A's death. Of course, A's spouse would receive the QJSA benefit (if the QJSA had not been waived) based on the full $100,000.

Q-10: What is the relevance of the annuity starting date with respect to the survivor benefit requirements?

A-10:

(a) ***Relevance.*** The annuity starting date is relevant to whether benefits are payable as either a QJSA or QPSA, or other selected optional form of benefit. If a participant is alive on the annuity starting date, the benefits must be payable as a QJSA. If the participant is not alive on the annuity starting date, the surviving spouse must receive a QPSA. The annuity starting date is also used to determine when a spouse may consent to and a participant may waive a QJSA. A waiver is only effective if it is made 90 days before the annuity starting date. Thus, a deferred annuity cannot be selected and a QJSA waived until 90 days before payments commence under the deferred annuity. In some cases, the annuity starting date will have occurred with respect to a portion of the participant's accrued benefit and will not have occurred with respect to the remaining portion. (See Q&A-9.)

(b) ***Annuity starting date*** —

(1) ***General rule.*** For purposes of sections 401(a)(11), 411(a)(11) and 417, the annuity starting date is the first day of the first period for which an amount is paid as an annuity or any other form.

(2) ***Annuity payments.*** The annuity starting date is the first date for which an amount is paid, not the actual date of payment. Thus, if participant A is to receive annuity payments as of the first day of the first month after retirement but does not receive any payments until three months later, the annuity starting date is the first day of the first month. For example, if an annuity is to commence on January 1, January 1 is the annuity starting date even though the payment for January is not actually made until a later date. In the case of a deferred annuity, the annuity starting date is the date for which the annuity payments are to commence, not the date that the deferred annuity is elected or the date the deferred annuity contract is distributed.

(3) ***Administrative delay.*** A payment shall not be considered to occur after the annuity starting date merely because actual payment is reasonably delayed for calculation of the benefit amount if all payments are actually made.

(4) ***Forfeitures on death.*** Prior to the annuity starting date, section 411(a)(3)(A) allows a plan to provide for a forfeiture of a participant's benefit, except in the case of a QPSA or a spousal benefit described in section 401(a)(11)(B)(iii)(I). Once the annuity starting date has occurred, even if actual payment has not yet been made, a plan must pay the benefit in the distribution form elected.

(5) ***Surviving spouses, alternate payees, etc.*** The definition of “annuity starting date” for surviving spouses, other beneficiaries and alternate payees under section 414(p) is the same as it is for participants.

(c) ***Disability auxiliary benefit*** —(1) *General rule.* The annuity starting date for a disability benefit is the first day of the first period for which the benefit becomes payable unless the disability benefit is an auxiliary benefit. The payment of any auxiliary disability benefits is disregarded in determining the

annuity starting date. A disability benefit is an auxiliary benefit if upon attainment of early or normal retirement age, a participant receives a benefit that satisfies the accrual and vesting rules of section 411 without taking into account the disability benefit payments up to that date.

> *Example.* (i) Assume that participant A at age 45 is entitled to a vested accrued benefit of $100 per month commencing at age 65 in the form of a joint and survivor annuity under Plan X. If prior to age 65 A receives a disability benefit under Plan X and the payment of such benefit does not reduce the amount of A's retirement benefit of $100 per month commencing at age 65, any disability benefit payments made to A between ages 45 and 65 are auxiliary benefits. Thus, A's annuity starting date does not occur until A attains age 65. A's surviving spouse B would be entitled to receive a QPSA if A died before age 65. B would be entitled to receive the survivor portion of a QJSA (unless waived) if A died after age 65. The QPSA payable to B upon A's death prior to age 65 would be computed by reference to the QJSA that would have been payable to A and B had A survived to age 65.
> (ii) If in the above example A's benefit payable at age 65 is reduced to $99 per month because a disability benefit is provided to A prior to age 65, the disability benefit would not be an auxiliary benefit. The benefit of $99 per month payable to A at age 65 would not, without taking into account the disability benefit payments to A prior to age 65, satisfy the minimum vesting and accrual rules of section 411. Accordingly, the first day of the first period for which the disability payments are to be made to A would constitute A's annuity starting date, and any benefit paid to A would be required to be paid in the form of a QJSA (unless waived by A with the consent of B).

(d) ***Other rules*** —

(1) ***Suspension of benefits.*** If benefit payments are suspended after the annuity starting date pursuant to a suspension of benefits described in section 411(a)(3)(B) after an employee separates from service, the recommencement of benefit payments after the suspension is not treated as a new annuity starting date unless the plan provides otherwise. In such case, the plan administrator is not required to provide new notices nor to obtain new waivers for the recommenced distributions if the form of distribution is the same as the form that was appropriately selected prior to the suspension. If benefits are suspended for an employee who continues in service without a separation and who never receives payments, the commencement of payments after the period of suspension is treated as the annuity starting date unless the plan provides otherwise.

(2) ***Additional accruals.*** In the case of an annuity starting date that occurs on or after normal retirement age, such date applies to any additional accruals after the annuity starting date, unless the plan provides otherwise. For example, if a participant who continues to accrue benefits elects to have benefits paid in an optional form at normal retirement age, the additional accruals must be paid in the optional form selected unless the plan provides otherwise. In the case of an annuity starting date that occurs prior to normal retirement age, such date does not apply to any additional accruals after such date.

Q-11: Do the survivor annuity requirements apply to benefits derived from both employer and employee contributions?

A-11: Yes. The survivor annuity benefit requirements apply to benefits derived from both employer and employee contributions. Benefits are not required to be paid in the form of a QPSA or a QJSA if the participant was vested only in employee contributions at the time of death or distribution and such death or distribution occurred before October 22, 1986. All benefits provided under a plan, including benefits attributable to rollover contributions, are subject to the survivor annuity requirements.

Q-12: To what benefits do the survivor annuity requirements of sections 401(a)(11) and 417 apply?

A-12:

(a) ***Defined benefit plans.*** Under a defined benefit plan, sections 401(a)(11) and 417 apply only to benefits in which a participant was vested immediately prior to death. They do not apply to benefits to which a participant's beneficiary becomes entitled by reason of death or to the proceeds of a life insurance contract to the extent such proceeds exceed the present value of the participant's nonforfeitable benefits that existed immediately prior to death.

(b) ***Defined contribution plans.*** Sections 401(a)(11) and 417 apply to all nonforfeitable benefits which are payable under a defined contribution plan, whether nonforfeitable before or upon death, including the proceeds of insurance contracts.

Q-13: Does the rule of section 411(a)(3)(A) which permits forfeitures on account of death apply to a QPSA or the spousal benefit described in section 401(a)(11)(B)(iii)?

A-13: No. Section 411(a)(3)(A) permits forfeiture on account of death prior to the time all the events fixing payment occur. However, this provision does not operate to deprive a surviving spouse of a QPSA or the spousal benefit described in section 401(a)(11)(B)(iii). Therefore, sections 401(a)(11) and 417 apply to benefits that were nonforfeitable immediately prior to death (determined without regard to section 411(a)(3)(A)). Thus, in the case of the death of a married participant in a defined contribution plan not subject to section 412 which provides that, upon a participant's death, the entire nonforfeitable accrued benefit is payable to the participant's spouse, the nonforfeitable benefit is determined without regard to the provisions of section 411(a)(3)(A).

Q-14: Do sections 411(a)(11), 401(a)(11) and 417 apply to accumulated deductible employee contributions, as defined in section 72(o)(5)(B) (Accumulated DECs)?

A-14:

(a) ***Employee consent, section 411.*** The requirements of section 411(a)(11) apply to Accumulated DECs. Thus, Accumulated DECs may not be distributed without participant consent unless the applicable exemptions apply.

(b) ***Survior requirements.*** Accumulated DECs are treated as though held under a separate defined contribution plan that is not subject to section 412. Thus, section 401(a)(11) applies to Accumulated DECs only as provided in section 401(a)(11)(B)(iii). All Accumulated DECs are treated in this manner, including Accumulated DECs that are the only benefit held under a plan and Accumulated DECs that are part of a defined benefit or a defined contribution plan.

(c) ***Effective date.*** Sections 401(a)(11) and 411(a)(11) shall not apply to distributions of accumulated DECs until the first plan year beginning after December 31, 1988.

Q-15: How do the survivor annuity requirements of sections 401(a)(11) and 417 apply to a defined benefit plan that includes an accrued benefit based upon a contribution to a separate account or mandatory employee contributions?

A-15:

(a) ***414(k) plans.*** In the case of a section 414(k) plan that includes both a defined benefit plan and a separate account, the rules of sections 401(a)(11) and 417 apply separately to the defined benefit portion and the separate account portion of the plan. The separate account portion is subject to the survivor annuity requirements of sections 401(a)(11) and 417 and the special QPSA rules in section 417(c)(2).

(b) ***Employee contributions*** —

(1) ***Voluntary.*** In the case of voluntary employee contributions to a defined benefit plan, the plan must maintain a separate account with respect to the voluntary employee contributions. This separate account is subject to the survivor annuity requirements of sections 401(a)(11) and 417 and the special QPSA rules in section 417(c)(2).

(2) ***Mandatory.*** In the case of a defined benefit plan providing for mandatory employee contributions, the entire accrued benefit is subject to the survivor annuity requirements of sections 401(a)(11) and 417 as a defined benefit plan.

(c) ***Accumulated DECs.*** See Q&A 14 of this section for the rule applicable to accumulated deductible employee contributions.

Q-16: Can a plan provide a benefit form more valuable than the QJSA and if a plan offers more than one annuity option satisfying the requirements of a QJSA, is spousal consent required when the participant chooses among the various forms?

A-16: In the case of an unmarried participant, the QJSA may be less valuable than other optional forms of benefit payable under the plan. In the case of a married participant, the QJSA must be at least as valuable as any other optional form of benefit payable under the plan at the same time. Thus, if a plan has two joint and survivor annuities that would satisfy the requirements for a QJSA, but one has a greater actuarial value than the other, the more valuable joint and survivor annuity is the QJSA. If there are two or more actuarially equivalent joint and survivor annuities that satisfy the requirements for a QJSA, the plan must designate which one is the QJSA and, therefore, the automatic form of benefit payment. A plan, however, may allow a participant to elect out of such a QJSA, without spousal consent, in favor of another actuarially equivalent joint and survivor annuity that satisfies the QJSA conditions. Such an election is not subject to the requirement that it be made within the 90-day period before the annuity starting date. For example, if a plan designates a joint and 100% survivor annuity as the QJSA and also offers an actuarially equivalent joint and 50% survivor annuity that would satisfy the requirements of a QJSA, the participant may elect the joint and 50% survivor annuity without spousal consent. The participant, however, does need spousal consent to elect a joint and survivor annuity that was not actuarially equivalent to the automatic QJSA. A plan does not fail to satisfy the requirements of this Q&A-16 merely because the amount payable under an optional form of benefit that is subject to the minimum present value requirement of section 417(e)(3) is calculated using the applicable interest rate (and, for periods when required, the applicable mortality table) under section 417(e)(3).

Q-17: When must distributions to a participant under a QJSA commence?

A-17:

(a) ***QJSA benefits upon earliest retirement.*** A plan must permit a participant to receive a distribution in the form of a QJSA when the participant attains the earliest retirement age under the plan. Written consent of the participant is required. However, the consent of the participant's spouse is not

required. Any payment not in the form of a QJSA is subject to spousal consent. For example, if the participant separates from service under a plan that allows for distributions on separation from service or if a plan allows for in-service distributions, the participant may receive a QJSA without spousal consent in such events. Payments in any other form, including a single sum, would require waiver of the QJSA by the participant's spouse.

(b) ***Earliest retirement age.***

(1) This paragraph (b) defines the term “earliest retirement age” for purposes of sections 401(a)(11), 411(a)(11) and 417.

(2) In the case of a plan that provides for voluntary distributions that commence upon the participant's separation from service, earliest retirement age is the earliest age at which a participant could separate from service and receive a distribution. Death of a participant is treated as a separation from service.

(3) In the case of a plan that provides for in-service distributions, earliest retirement age is the earliest age at which such distributions may be made.

(4) In the case of a plan not described in subparagraph (2) or (3) of this paragraph, the rule below applies. Earliest retirement age is the early retirement age determined under the plan, or if no early retirement age, the normal retirement age determined under the plan. If the participant dies or separates from service before such age, then only the participant's actual years of service at the time of the participant's separation from service or death are taken into account. Thus, in the case of a plan under which benefits are not payable until the attainment of age 65, or upon attainment of age 55 and completion of 10 years of service, the earliest retirement age of a participant who died or separated from service with 8 years of service is when the participant would have attained age 65 (if the participant had survived). On the other hand, if a participant died or separated from service after 10 years of service, the earliest retirement age is when the participant would have attained age 55 (if the participant had survived).

Q-18: What is a qualified preretirement survivor annuity (QPSA) in a defined benefit plan?

A-18: A QPSA is an immediate annuity for the life of the surviving spouse of a participant. Each payment under a QPSA under a defined benefit plan is not to be less than the payment that would have been made to the survivor under the QJSA payable under the plan if

(a) in the case of a participant who dies after attaining the earliest retirement age under the plan, the participant had retired with a QJSA on the day before the participant's death, and

(b) in the case of a participant who dies on or before the participant's earliest retirement age under the plan, the participant had separated from service at the earlier of the actual time of separation or death, survived until the earliest retirement age, retired at that time with a QJSA, and died on the day thereafter. If the participant elects before the annuity starting date a form of joint and survivor annuity that satisfies the requirements for a QJSA and dies before the annuity starting date, the elected form is treated as the QJSA and the QPSA must be based on such form.

Q-19: What rules apply in determining the amount and forfeitability of a QPSA?

A-19: The QPSA is calculated as of the earliest retirement age if the participant dies before such time, or at death if the participant dies after the earliest retirement age. The plan must make reasonable actuarial adjustments to reflect a payment earlier or later than the earliest retirement age. A defined benefit plan may provide that the QPSA is forfeited if the spouse does not survive until the date prescribed under the

plan for commencement of the QPSA (*i.e.*, the earliest retirement age). Similarly, if the spouse survives past the participant's earliest retirement age (or other earlier QPSA distribution date under the plan) and elects after the death of the participant to defer the commencement of the QPSA to a later date, a defined benefit plan may provide for a forfeiture of the QPSA benefit if the spouse does not survive until the deferred commencement date. The account balance in a defined contribution plan may not be forfeited even though the spouse does not survive until the time the account balance is used to purchase the QPSA. See Q&A-17 of this section for the meaning of earliest retirement age.

Q-20: What preretirement survivor annuity benefits must a defined contibution plan subject to the survivor annuity requirements of sections 401(a)(11) and 417 provide?

A-20: A defined contribution plan that is subject to the survivor annuity requirements of sections 401(a)(11) and 417 must provide a preretirement survivor annuity with a value which is not less than 50 percent of the nonforfeitable account balance of the participant as of the date of the participant's death. If a contributory defined contribution plan has a forfeiture provision permitted by section 411(a)(3)(A), not more than a proportional percent of the account balance attributable to contributions that may not be forfeited at death (for example, employee and section 401(k) contributions) may be used to satisfy the QPSA benefit. Thus, for example, if the QPSA benefit is to be provided from 50 percent of the account balance, not more than 50 percent of the nonforfeitable contributions may be used for the QPSA.

Q-21: May a defined benefit plan charge the participant for the cost of the QPSA benefit?

A-21: Prior to the later of the time the plan allows the participant to waive the QPSA or provides notice of the ability to waive the QPSA, a defined benefit plan may not charge the participant for the cost of the QPSA by reducing the participant's plan benefits or by any other method. The preceding sentence does not apply to any charges prior to the first plan year beginning after December 31, 1988. Once the participant is given the opportunity to waive the QPSA or the notice of the QPSA is later, the plan may charge the participant for the cost of the QPSA. A charge for the QPSA that reasonably reflects the cost of providing the QPSA will not fail to satisfy section 411 even if it reduces the accrued benefit.

Q-22: When must distributions to a surviving spouse under a QPSA commence?

A-22:

(a) In the case of a defined benefit plan, the plan must permit the surviving spouse to direct the commencement of payments under QPSA no later than the month in which the participant would have attained the earliest retirement age. However, a plan may permit the commencement of payments at an earlier date.

(b) In the case of a defined contribution plan, the plan must permit the surviving spouse to direct the commencement of payments under the QPSA within a reasonable time after the participant's death.

Q-23: Must a defined benefit plan obtain the consent of a participant and the participant's spouse to commence payments in the form of a QJSA in order to avoid violating section 415 or 411(b)?

A-23: No. A defined benefit plan may commence distributions in the form of a QJSA without the consent of the participant and spouse, even if consent would otherwise be required (see § 1.417(e)-1(b)), to the extent necessary to avoid a violation of section 415 or 411(b). For example, assume a plan has a normal retirement age of 55. A is a married participant, age 55, and has accrued a $75,000 joint and 100 percent survivor annuity that satisfies section 415. If an actuarial increase would be required under section 411

because of deferred commencement and the increase would cause the benefit to exceed the applicable limit under section 415, the plan may commence payment of a QJSA at age 55 without the participant's election or consent and without the spouse's concent.

Q-24: What are the rules under sections 401(a)(11) and 417 applicable to plan loans?

A-24:

(a) ***Consent rules.***

(1) A plan does not satisfy the survivor annuity requirements of sections 401(a)(11) and 417 unless the plan provides that, at the time the participant's accrued benefit is used as security for a loan, spousal consent to such use is obtained. Consent is required even if the accrued benefit is not the primary security for the loan. No spousal consent is necessary if, at the time the loan is secured, no consent would be required for a distribution under section 417(a)(2)(B). Spousal consent is not required if the plan or the participant is not subject to section 401(a)(11) at the time the accrued benefit is used as security, or if the total accrued benefit subject to the security is not in excess of the cash-out limit in effect under § 1.411(a)-11(c)(3)(ii). The spousal consent must be obtained no earlier than the beginning of the 90-day period that ends on the date on which the loan is to be so secured. The consent is subject to the requirements of section 417(a)(2). Therefore, the consent must be in writing, must acknowledge the effect of the loan and must be witnessed by a plan representative or a notary public.

(2) Participant consent is deemed obtained at the time the participant agrees to use his accrued benefit as security for a loan for purposes of satisfying the requirements for participant consent under sections 401(a)(11), 411(a)(11) and 417.

(b) ***Change in status.*** If spousal consent is obtained or is not required under paragraph (a) of this Q&A 24 at the time the benefits are used as security, spousal consent is not required at the time of any setoff of the loan against the accrued benefit resulting from a default, even if the participant is married to a different spouse at the time of the setoff. Similarly, in the case of a participant who secured a loan while unmarried, no consent is required at the time of a setoff of the loan against the accrued benefit even if the participant is married at the time of the setoff.

(c) ***Renegotiation.*** For purposes of obtaining any required spousal consent, any renegotiation, extension, renewal, or other revision of a loan shall be treated as a new loan made on the date of the renegotiation, extension, renewal, or other revision.

(d) ***Effect on benefits.*** For purposes of determining the amount of a QPSA or QJSA, the accrued benefit of a participant shall be reduced by any security interest held by the plan by reason of a loan outstanding to the participant at the time of death or payment, if the security interest is treated as payment in satisfaction of the loan under the plan. A plan may offset any loan outstanding at the participant's death which is secured by the participant's account balance against the spousal benefit required to be paid under section 401(a)(11)(B)(iii).

(e) ***Effective date.*** Loans made prior to August 19, 1985, are deemed to satisfy the consent requirements of paragraph (a) of this Q&A 24.

Q-25: How do the survivor annuity requirements of sections 401(a)(11) and 417 apply with respect to participants who are not married or to surviving spouses and participants who have a change in marital status?

A-25:

(a) ***Unmarried participant rule.*** Plans subject to the survivor annuity requirements of sections 401(a)(11) and 417 must satisfy those requirements applicable to QJSAs with respect to participants who are not married. A QJSA for a participant who is not married is an annuity for the life of the participant. Thus, an unmarried participant must be provided the written explanation described in section 417(a)(3)(A) and a single life annuity unless another form of benefit is elected by the participant. An unmarried participant is deemed to have waived the QPSA requirements. This deemed waiver is null and void if the participant later marries.

(b) ***Marital status change*** —

(1) ***Remarriage.*** If a participant is married on the date of death, payments to a surviving spouse under a QPSA or QJSA must continue even if the surviving spouse remarries.

(2) ***One-year rule.***

(i) A plan is not required to treat a participant as married unless the participant and the participant's spouse have been married throughout the one-year period ending on the earlier of

(A) the participant's annuity starting date or

(B) the date of the participant's death. Nevertheless, for purposes of the preceding sentence, a participant and the participant's spouse must be treated as married throughout the one-year period ending on the participant's annuity starting date even though they are married to each other for less than one year before the annuity starting date if they remain married to each other for at least one year. See section 417(d)(2). If a plan adopts the one-year rule provided in section 417(d), the plan must treat the participant and spouse who are married on the annuity starting date as married and must provide benefits which are to commence on the annuity starting date in the form of a QJSA unless the participant (with spousal consent) elects another form of benefit. The plan is not required to provide the participant with a new or retroactive election or the spouse with a new consent when the one-year period is satisfied. If the participant and the spouse do not remain married for at least one year, the plan may treat the participant as having not been married on the annuity starting date. In such event, the plan may provide that the spouse loses any survivor benefit right; further, no retroactive correction of the amount paid the participant is required.

(ii) ***Example.*** Plan X provides that participants who are married on the annuity starting date for less than one year are treated as unmarried participants. Plan X provides benefits in the form of a QJSA or an optional single sum distribution. Participant A was married 6 months prior to the annuity starting date. Plan X must treat A as married and must commence payments to A in the form of a QJSA unless another form of benefit is elected by A with spousal consent. If a QJSA is paid and A is divorced from his spouse S, within the first year of the marriage, S will no longer have any survivor rights under the annuity (unless a QDRO provides otherwise). If A continues to be married to S, and A dies within the one-year period, Plan X may treat A as unmarried and forfeit the OJSA benefit payable to S.

(3) ***Divorce.*** If a participant divorces his spouse prior to the annuity starting date, any elections made while the participant was married to his former spouse remain valid, unless otherwise provided in a QDRO, or unless the participant changes them or is remarried. If a participant dies

after the annuity starting date, the spouse to whom the participant was married on the annuity starting date is entitled to the QJSA protection under the plan. The spouse is entitled to this protection (unless waived and consented to by such spouse) even if the participant and spouse are not married on the date of the participant's death, except as provided in a QDRO.

Q-26: In the case of a defined contribution plan not subject to section 412, does the requirement that a participant's nonforfeitable accrued benefit be payable in full to a surviving spouse apply to a spouse who has been married to the participant for less than one year?

A-26: A plan may provide that a spouse who has not been married to a participant throughout the one-year period ending on the earlier of

(a) the participant's annuity starting date or

(b) the date of the participant's death is not treated as a surviving spouse and is not required to receive the participant's account balance. The special exception described in section 417(d)(2) and Q&A 25 of this section does not apply.

Q-27: Are there circumstances when spousal consent to a participant's election to waive the QJSA or the QPSA is not required?

A-27: Yes. If it is established to the satisfaction of a plan representative that there is no spouse or that the spouse cannot be located, spousal consent to waive the QJSA or the QPSA is not required. If the spouse is legally incompetnent to give consent, the spouse's legal guardian, even if the guardian is the participant, may give consent. Also, if the participant is legally separated or the participant has been abandoned (within the meaning of local law) and the participant has a court order to such effect, spousal consent is not required unless a QDRO provides otherwise. Similar rules apply to a plan subject to the requirements of section 401(a)(11)(B)(iii)(I).

Q-28: Does consent contained in an antenuptial agreement or similar contract entered into prior to marriage satisfy the consent requirements of sections 401(a)(11) and 417?

A-28: No. An agreement entered into prior to marriage does not satisfy the applicable consent requirements, even if the agreement is executed within the applicable election period.

Q-29: If a participant's spouse consents under section 417(a)(2)(A) to the participant's waiver of a survivor annuity form of benefit, is a subsequent spouse of the same participant bound by the consent?

A-29: No. A consent under section 417(a)(2)(A) by one spouse is binding only with respect to the consenting spouse. See Q&A-24 of this section for an exception in the case of plan benefits securing plan loans.

Q-30: Does the spousal consent requirement of section 417(a)(2)(A) require that a spouse's consent be revocable?

A-30: No. A plan may preclude a spouse from revoking consent once it has been given. Alternatively, a plan may also permit a spouse to revoke a consent after it has been given, and thereby to render ineffective the participant's prior election not to receive a QPSA or QJSA. A participant must always be allowed to change his election during the applicable election period. Spousal consent is required in such cases to the extent provided in Q&A 31, except that spousal consent is never required for a QJSA or QPSA.

Q-31: What rules govern a participant's waiver of a QPSA or QJSA under section 417(a)(2)?

A-31:

(a) ***Specific beneficiary.*** Both the participant's waivers of a QPSA and QJSA and the spouse's consents thereto must state the specific nonspouse beneficiary (including any class of beneficiaries or any contingent beneficiaries) who will receive the benefit. Thus, for example, if spouse B consents to participant A's election to waive a QPSA, and to have any benefits payable upon A's death before the annuity starting date paid to A's children, A may not subsequently change beneficiaries without the consent of B (except if the change is back to a QPSA). If the designated beneficiary is a trust, A's spouse need only consent to the designation of the trust and need not consent to the designation of trust beneficiaries or any changes of trust beneficiaries.

(b) ***Optional form of benefit*** —

(1) ***QJSA.*** Both the participant's waiver of a QJSA (and any required spouse's consent thereto) must specify the particular optional form of benefit. The participant who has waived a QJSA with the spouse's consent in favor of another form of benefit may not subsequently change the optional form of benefit without obtaining the spouse's consent (except back to a QJSA). Of course, the participant may change the form of benefit if the plan so provides after the spouse's death or a divorce (other than as provided in a QDRO). A participant's waiver of a QJSA (and any required spouse's consent thereto) made prior to the first plan year beginning after December 31, 1986, is not required to specify the optional form of benefit.

(2) ***QPSA.*** A participant's waiver of a QPSA and the spouse's consent thereto are not required to specify the optional form of any preretirement benefit. Thus, a participant who waives the QPSA with spousal consent may subsequently change the form of the preretirement benefit, but not the nonspouse beneficiary, without obtaining the spouse's consent.

(3) ***Change in form.*** After the participant's death, a beneficiary may change the optional form of survivor benefit as permitted by the plan.

(c) ***General consent.*** In lieu of satisfying paragraphs (a) and (b) of this Q&A 31, a plan may permit a spouse to execute a general consent that satisfies the requirements of this paragraph (c). A general consent permits the participant to waive a QPSA or QJSA, and change the designated beneficary or the optional form of benefit payment without any requirement of further consent by such spouse. No general consent is valid unless the general consent acknowledges that the spouse has the right to limit consent to a specific beneficiary and a specific optional form of benefit, where applicable, and that the spouse voluntarily elects to relinquish both of such rights. Notwithstanding the previous sentence, a spouse may execute a general consent that is limited to certain beneficiaries or forms of benefit payment. In such case, paragraphs (a) and (b) of this Q&A 31 shall apply to the extent that the limited general consent is not applicable and this paragraph (c) shall apply to the extent that the limited general consent is applicable. A general consent, including a limited general consent, is not effective unless it is made during the applicable election period. A general consent executed prior to October 22, 1986 does not have to satisfy the specificity requirements of this Q&A 31.

Q-32: What rules govern a participant's waiver of the spousal benefit under section 401(a)(11)(B)?

A-32:

(a) ***Application.*** In the case of a defined contribution plan that is not subject to the survivor annuity requirements of sections 401(a)(11) and 417, a participant may waive the spousal benefit of section 401(a)(11)(B)(iii) if the conditions of paragraph (b) are satisfied. In general, a spousal benefit is the nonforfeitable account balance on the participant's date of death.

(b) ***Conditions.*** In general, the same conditions, other than the age 35 requirement, that apply to the participant's waiver of a QPSA and the spouse's consent thereto apply to the participant's waiver of the spousal benefit and the spouse's consent thereto. See Q&A-31. Thus, the participant's waiver of the spousal benefit must state the specific nonspouse beneficiary who will receive such benefit. The waiver is not required to specify the optional form of benefit. The participant may change the optional form of benefit, but not the nonspouse beneficiary, without obtaining the spouse's consent.

Q-33: When and in what manner, may a participant waive a spousal benefit or a QPSA?

A-33:

(a) ***Plans not subject to section 401(a)(11).*** A participant in a plan that is not subject to the survivor annuity requirements of section 401(a)(11) (because of subparagraph (B)(iii) thereof) may waive the spousal benefit at any time, provided that no such waiver shall be effective unless the spouse has consented to the waiver. The spouse may consent to a waiver of the spousal benefit at any time, even prior to the participant's attaining age 35. No spousal consent is required for a payment to the participant or the use of the accrued benefit as security for a plan loan to the participant.

(b) ***Plans subject to section 401(a)(11).*** A participant in a plan subject to the survivor annuity requirements of section 401(a)(11) generally may waive the QPSA benefit (with spousal consent) only on or after the first day of the plan year in which the participant attains age 35. However, a plan may provide for an earlier waiver (with spousal consent), provided that a written explanation of the QPSA is given to the participant and such waiver becomes invalid upon the beginning of the plan year in which the participant's 35th birthday occurs. If there is no new waiver after such date, the participant's spouse must receive the QPSA benefit upon the participant's death.

Q-34: Must the written explanations required by section 417(a)(3) be provided to nonvested participants?

A-34: Such written explantions must be provided to nonvested participants who are employed by an employer maintaining the plan. Thus, they are not required to be provided to those nonvested participants who are no longer employed by such an employer.

Q-35: When must a plan provide the written explanation, required by section 417(a)(3)(B), of the QPSA to a participant?

A-35:

(a) ***General rule.*** A plan must provide the written explanation of the QPSA to a participant within the applicable period. Except as provided in paragraph (b), the applicable period means, with respect to a participant, whichever of the following periods ends last:

(1) The period beginning with the first day of the plan year in which the participant attains age 32 and ending with the close of the plan year preceding the plan year in which the participant attains age 35.

(2) A reasonable period ending after the individual becomes a participant.

(3) A reasonable period ending after the QPSA is no longer fully subsidized.

(4) A reasonable period ending after section 401(a)(11) first applies to the participant. Section 401(a)(11) would first apply when a benefit is transferred from a plan not subject to the survivor annuity requirements of section 401(a)(11) to a plan subject to such section or at the time of an election of an annuity under a defined contribution plan described in section 401(a)(11)(B)(iii).

(b) ***Pre-35 separations.*** In the case of a participant who separates from service before attaining age 35, the applicable period means the period beginning one year before the separation from service and ending one year after such separation. If such a participant returns to service, the plan must also comply with pragraph (a).

(c) ***Reasonable period.*** For purposes of applying paragraph (a), a reasonable period ending after the enumerated events described in paragraphs (a) (2), (3) and (4) is the end of the one-year period beginning with the date the applicable event occurs. The applicable period for such events begins one year prior to the occurrence of the enumerated events.

(d) ***Transition rule.*** In the case of an individual who was a participant in the plan on August 23, 1984, and, as of that date had attained age 34, the plan will satisfy the requriement of section 417(a)(3)(B) if it provided the explanation not later than December 31, 1985.

Q-36: How do plans satisfy the requirements of providing participants explanations of QPSAs and QJSAs?

A-36. For rules regarding the explanation of QPSAs and QJSAs required under section 417(a)(3), see § 1.417(a)(3)-1. However, the rules of § 1.401(a)-20, Q&A-36, as it appeared in 26 CFR part 1 revised April 1, 2003, apply to the explanation of a QJSA under section 417(a)(3) for an annuity starting date prior to February 1, 2006.

Q-37: What are the consequences of fully subsidizing the cost of either a QJSA or a QPSA in accordance with section 417(a)(5)?

A-37: If a plan fully subsidizes a QJSA or QPSA in accordance with section 417(a)(5) and does not allow a participant to waive such QJSA or QPSA or to select a nonspouse beneficiary, the plan is not required to provide the written explanation required by section 417(a)(3). However, if the plan offers an election to waive the benefit or designate a beneficiary, it must satisfy the election, consent, and notice requirements of section 417(a) (1), (2), and (3), with respect to such subsidized QJSA or QPSA, in accordance with section 417(a)(5).

Q-38: What is a fully subsidized benefit?

A-38:

(a) ***QJSA*** —

(1) ***General rule.*** A fully subsidized QJSA is one under which no increase in cost to, or decrease in actual amounts received by, the participant may result from the participant's failure to elect another form of benefit.

(2) ***Examples.***

Example 1. . If a plan provides a joint and survivor annuity and a single sum option, the plan does not fully subsidize the joint and survivor annuity, regardless of the actuarial value of the joint and survivor annuity because, in the event of the participant's early death, the participant would have received less under the annuity than he would have received under the single sum option.

Example 2. . If a plan provides for a life annuity of $100 per month and a joint and 100% survivor benefit of $99 per month, the plan does not fully subsidize the joint and survivor benefit.

(b) ***QPSA.*** A QPSA is fully subsidized if the amount of the participant's benefit is not reduced because of the QPSA coverage and if no charge to the participant under the plan is made for the coverage. Thus, a QPSA is fully subsidized in a defined contribution plan.

Q-39: When do the survivor annuity requirements of sections 401(a)(11) and 417 apply to plans?

A-39: Sections 401(a)(11) and 417 generally apply to plan years beginning after December 31, 1984. Sections 302 and 303 of REA 1984 provide specific effective dates and transitional rules under which the QJSA or QPSA (or pre-REA 1984 section 401(a)(11)) requirements may be applicable to particular plans or with respect to benefits provided to (as amended by REA 1984) particular participants. In general, the section 401(a)(11) (as amended by REA 1984) survivor annuity requirements do not apply with respect to a participant who does not have at least one hour of service or one hour of paid leave under the plan after August 22, 1984.

Q-40: Are there special effective dates for plans maintained pursuant to collective bargaining agreements?

A-40: Yes. Section 302(b) of REA 1984 as amended by section 1898(g) of the Tax Reform Act of 1986 provides a special deferred effective date for such plans. Whether a plan is described in section 302(b) of REA 1984 is determined under the principles applied under section 1017(c) of the Employee Retirement Income Security Act of 1974. See H.R. Rep. No. 1280, 93d Cong., 2d Sess. 266 (1974). In addition, a plan will not be treated as maintained under a collective bargaining agreement unless the employee representatives satisfy section 7701(a)(46) of the Internal Revenue Code after March 31, 1984. See § 301.7701-17T for other requirements for a plan to be considered to be collectively bargained. Nothing in section 302(b) of REA 1984 denies a participant or spouse the rights set forth in sections 303(c)(2), 303(c)(3), 303(e)(1), and 303(e)(2) of REA 1984.

Q-41: What is one hour of service or paid leave under the plan for purposes of the transition rules in section 303 of REA 1984?

A-41: One hour of service or paid leave under the plan is one hour of service or paid leave recognized or required to be recognized under the plan for any purpose, e.g., participation, vesting percentage, or benefit accrual purposes. For plans that do not compute hours of service, one hour of service or paid leave means any service or paid leave recognized or required to be recognized under the plan for any purpose.

Q-42: Must a plan be amended to provide for the QPSA required by section 303(c)(2) of REA 1984, or for the survivor annuities required by section 303(e) of REA 1984?

A-42: A plan will not fail to satisfy the qualification requirements of section 401(a) or 403(a) merely because it is not amended to provide the QPSA required by section 303(c)(2) or the survivor annuities required by section 303(e). The plan must, however, satisfy those requirements in operation.

Q-43: Is a participant's election, or a spouse's consent to an election, with respect to a QPSA, made before August 23, 1984, valid?

A-43: No.

Q-44: Is spousal consent required for certain survivor annuity elections made by the participant after December 31, 1984, and before the first plan year to which new sections 401(a)(11) and 417 apply?

A-44: Yes. Section 303(c)(3) of REA 1984 provides that any election not to take a QJSA made after December 31, 1984, and before the date sections 401(a)(11) and 417 apply to the plan by a participant who has 1 hour of service or leave under the plan after August 23, 1984, is not effective unless the spousal consent requirements of section 417 are met with respect to such election. Unless the participant's annuity

starting date occurred before January 1, 1985, the spousal consent required by section 417 (a)(2) and (e) must be obtained even though the participant elected the benefit prior to January 1, 1985. The plan is not required to be amended to comply with section 303(c)(3) of REA 1984, but the plan must satisfy this requirement in operation.

Q-45: Are there special rules for certain participants who separated from service prior to August 23, 1984?

A-45: Yes. Section 303(e) of REA 1984 provides special rules for certain participants who separated from service before August 23, 1984. Section 303(e)(1), which applies only to plans subject to section 401(a)(11) of the Code (as in effect on August 22, 1984), provides that participants whose annuity starting date did not occur before August 24, 1984, and who had one hour of service on or after September 2, 1974, but not in a plan year beginning after December 31, 1975, may elect to receive the benefits required to be provided under section 401(a)(11) of the Code (as in effect on August 22, 1984). Section 303(e)(2) provides that certain participants who had one hour of service in a plan year beginning on or after January 1, 1976, but not after August 22, 1984, may elect QPSA coverage under new sections 401(a)(11) and 417 in plans subject to these provisions. Section 303(e)(4)(A) requires plans or plan administrators to notify those participants of the provisions of section 303(e).

Q-46: When must a plan provide the notice required by section 303(e)(4)(A) of REA 1984?

A-46: The notice required by section 303(e)(4)(A) must be provided no later than the earlier of:

(a) The date the first summary annual report provided after September 17, 1985, is distributed to participants; or

(b) September 30, 1985.

A plan will not fail to satisfy the preceding sentence if the plan provides a fully subsidized QPSA with respect to any participant described in section 303(e) who dies on or after July 19, 1985, and before the notice is received. If the plan ceases to fully subsidize the QPSA, the cessation must not be effective until the notice is given. For this purpose, an annuity payable to a nonspouse beneficiary elected by the participant, in lieu of a spouse, shall satisfy the QPSA requirement, so long as the survivor benefit is fully subsidized. The notice required by this paragraph must be in writing and sent to the participant's last known address.

Q-47: Is there another time when plans must provide notice of the right, described in section 303(e)(1) of REA '84, to elect a pre-REA 1984 qualified joint and survivor annuity?

A-47: Yes. Notice of this right must also be provided to a participant at the time the participant applies for benefit payments.

[53 FR 31842, Aug. 22, 1988; 53 FR 48534, Dec. 1, 1988, as amended by T.D. 8794, 63 FR 70338, Dec. 21, 1998; T.D. 8891, 65 FR 44682, July 19, 2000; T.D. 9099, 68 FR 70144, Dec. 17, 2003; T.D. 9256, 71 FR 14802, Mar. 24, 2006]

§ 1.401(a)-21 Rules relating to the use of an electronic medium to provide applicable notices and to make participant elections.

(a) *Introduction* —

(1) *In general* —

(i) ***Permission to use an electronic medium.*** This section provides rules relating to the use of an electronic medium to provide applicable notices and to make participant elections as defined in paragraph (e)(1) and (6) of this section with respect to retirement plans, employee benefit arrangements, and individual retirement plans described in paragraph (a)(2) of this section. The rules in this section reflect the provisions of the Electronic Signatures in Global and National Commerce Act, Public Law 106-229 (114 Stat. 464 (2000) (E-SIGN)).

(ii) ***Notices and elections required to be in writing or in written form*** —

(A) ***In general.*** The rules of this section must be satisfied in order to use an electronic medium to provide an applicable notice or to make a participant election if the notice or election is required to be in writing or in written form under the Internal Revenue Code, Department of Treasury regulations, or other guidance issued by the Commissioner.

(B) ***Rules relating to applicable notices.*** An applicable notice that is provided using an electronic medium is treated as being provided in writing or in written form if and only if the requirements of paragraph (a)(5) of this section are satisfied and either the consumer consent requirements of paragraph (b) of this section or the requirements for exemption from the consumer consent requirements under paragraph (c) of this section are satisfied. For example, in order to provide a section 402(f) notice electronically, a qualified plan must satisfy either the consumer consent requirements of paragraph (b) of this section or the requirements for exemption under paragraph (c) of this section. If a plan fails to satisfy either of these requirements, the plan must provide the section 402(f) notice using a written paper document in order to satisfy the requirements of section 402(f).

(C) ***Rules relating to participant elections.*** A participant election that is made using an electronic medium is treated as being provided in writing or in written form if and only if the requirements of paragraphs (a)(5) and (d) of this section are satisfied.

(iii) ***Safe harbor method for applicable notices and participant elections that are not required to be in writing or written form.*** For an applicable notice or a participant election that is not required to be in writing or in written form, the rules of this section provide a safe harbor method for using an electronic medium to provide the applicable notice or to make the participant election.

(2) ***Application of rules*** —

(i) ***Notices, elections, or consents under retirement plans.*** The rules of this section apply to any applicable notice or any participant election relating to the following retirement plans: A qualified retirement plan under section 401(a) or 403(a); a section 403(b) plan; a simplified employee pension (SEP) under section 408(k); a simple retirement plan under section 408(p); or an eligible governmental plan under section 457(b).

(ii) ***Notices, elections, or consents under other employee benefit arrangements.*** The rules of this section also apply to any applicable notice or any participant election relating to the following employee benefit arrangements: An accident and health plan or arrangement under sections 104(a)(3) and 105; a cafeteria plan under section 125; an educational assistance program under section 127; a qualified transportation fringe program under section 132; an Archer MSA under section 220; or a health savings account under section 223.

(iii) ***Notices, elections, or consents under individual retirement plans.*** The rules of this section also apply to any applicable notice or any participant election relating to individual retirement plans, including a Roth IRA under section 408A; or a deemed IRA under a qualified employer plan described in section 408(q).

(3) ***Limitation on application of rules*** —

(i) ***In general.*** The rules of this section do not apply to any notice, election, consent, disclosure, or obligation required under the provisions of title I or IV of the Employee Retirement Income Security Act of 1974, as amended (ERISA), over which the Department of Labor or the Pension Benefit Guaranty Corporation has interpretative and enforcement authority. For example, the rules in 29 CFR 2520.104b-1 of the Department of Labor Regulations apply with respect to an employee benefit plan providing disclosure documents, such as a summary plan description or a summary annual report. The rules in this section also do not apply to Internal Revenue Code section 411(a)(3)(B) (relating to suspension of benefits), Internal Revenue Code section 4980B(f)(6) (relating to an individual's COBRA rights), or any other Internal Revenue Code provision over which Department of Labor or the Pension Benefit Guaranty Corporation has similar interpretative authority.

(ii) ***Recordkeeping and other requirements.*** The rules in this section only apply with respect to applicable notices and participant elections relating to an individual's rights under a retirement plan, an employee benefit arrangement, or an individual retirement plan. Thus, the rules in this section do not alter the otherwise applicable requirements under the Internal Revenue Code, such as the requirements relating to tax reporting, tax records, or substantiation of expenses. See section 6001 for rules relating to the maintenance of records, statements, and special returns. See also section 101(e) of E-SIGN, which provides that if an electronic record of an applicable notice or a participant election is not maintained in a form that is capable of being retained and accurately reproduced for later reference, then the legal effect, validity, or enforceability of such electronic record may be denied.

(4) ***General requirements related to applicable notices and participant elections.*** The rules of this section supplement the general requirements related to each applicable notice and participant election. Thus, in addition to satisfying the rules for timing and content, the rules in this section must be satisfied.

(5) ***Requirements related to the design of an electronic system used to deliver applicable notices and to make participant elections*** —

(i) ***The electronic system must take into account the content of a notice.*** With respect to the content of an applicable notice, the electronic system must be reasonably designed to provide the information in the notice to a recipient in a manner that is no less understandable to the recipient than a written paper document.

(ii) ***Identification of the significance of information in the notice.*** The electronic system must be designed to alert the recipient, at the time an applicable notice is provided, to the significance of the information in the notice (including identification of the subject matter of the notice), and provide any instructions needed to access the notice, in a manner that is readily understandable.

(b) ***Consumer consent requirements*** —

(1) ***Requirements.*** With respect to an applicable notice, the consumer consent requirements of this paragraph (b) are satisfied if—

(i) The requirements in paragraphs (b)(2) through (4) of this section are satisfied; and

(ii) In accordance with section 101(c)(6) of E-SIGN, the applicable notice is not provided through the use of oral communication or a recording of an oral communication.

(2) ***Consent*** —

(i) ***In general.*** The recipient must affirmatively consent to the delivery of the applicable notice using an electronic medium. This consent must be either—

(A) Made electronically in a manner that reasonably demonstrates that the recipient can access the applicable notice in the electronic medium in the form that will be used to provide the notice; or

(B) Made using a written paper document (or using another form not described in paragraph (b)(2)(i)(A) of this section), but only if the recipient confirms the consent electronically in a manner that reasonably demonstrates that the recipient can access the applicable notice in the electronic medium in the form that will be used to provide the notice.

(ii) ***Withdrawal of consumer consent.*** The consent to receive electronic delivery requirement of this paragraph (b)(2) is not satisfied if the recipient withdraws his or her consent before the applicable notice is delivered.

(3) ***Required disclosure statement.*** The recipient, prior to consenting under paragraph (b)(2)(i) of this section, must be provided with a clear and conspicuous statement containing the disclosures described in paragraphs (b)(3)(i) through (v) of this section:

(i) ***Right to receive paper document*** —

(A) ***In general.*** The statement informs the recipient of any right to have the applicable notice be provided using a written paper document or other nonelectronic form.

(B) ***Post-consent request for paper copy.*** The statement informs the recipient how, after having provided consent to receive the applicable notice electronically, the recipient may, upon request, obtain a paper copy of the applicable notice and whether any fee will be charged for such copy.

(ii) ***Right to withdraw consumer consent.*** The statement informs the recipient of the right to withdraw consent to receive electronic delivery of an applicable notice on a prospective basis at any time and explains the procedures for withdrawing that consent and any conditions, consequences, or fees in the event of the withdrawal.

(iii) ***Scope of the consumer consent.*** The statement informs the recipient whether the consent to receive electronic delivery of an applicable notice applies only to the particular transaction that gave rise to the applicable notice or to other identified transactions that may be provided or made available during the course of the parties' relationship. For example, the statement may provide that a recipient's consent to receive electronic delivery will apply to all future applicable notices of the recipient relating to the employee benefit arrangement until the recipient is no longer a participant in the employee benefit arrangement (or withdraws the consent).

(iv) ***Description of the contact procedures.*** The statement describes the procedures to update information needed to contact the recipient electronically.

(v) ***Hardware or software requirements.*** The statement describes the hardware and software requirements needed to access and retain the applicable notice.

(4) ***Post-consent change in hardware or software requirements.*** If, after a recipient provides consent to receive electronic delivery, there is a change in the hardware or software requirements needed to access or retain the applicable notice and such change creates a material risk that the recipient will not be able to access or retain the applicable notice in electronic format—

(i) The recipient must receive a statement of—

(A) The revised hardware or software requirements for access to and retention of the applicable notice; and

(B) The right to withdraw consent to receive electronic delivery without the imposition of any fees for the withdrawal and without the imposition of any condition or consequence that was not previously disclosed in paragraph (b)(3) of this section; and

(ii) The recipient must reaffirm consent to receive electronic delivery in accordance with the requirements of paragraph (b)(2) of this section.

(c) ***Exemption from consumer consent requirements*** —

(1) ***In general.*** This paragraph (c) is satisfied if the conditions in paragraphs (c)(2) and (3) of this section are satisfied. This paragraph (c) constitutes an exemption from the consumer consent requirements of section 101(c) of E-SIGN pursuant to the authority granted in section 104(d)(1) of E-SIGN.

(2) ***Effective ability to access.*** For purposes of this paragraph (c), the electronic medium used to provide an applicable notice must be a medium that the recipient has the effective ability to access.

(3) ***Free paper copy of applicable notice.*** At the time the applicable notice is provided, the recipient must be advised that he or she may request and receive the applicable notice in writing on paper at no charge, and, upon request, that applicable notice must be provided to the recipient at no charge.

(d) ***Special rules for participant elections*** —

(1) ***In general.*** This paragraph (d) is satisfied if the conditions described in the following paragraphs (d)(2) through (6) are satisfied:

(2) ***Effective ability to access.*** The electronic medium under an electronic system used to make a participant election must be a medium that the person who is eligible to make the election is effectively able to access. If the appropriate individual is not effectively able to access the electronic medium for making the participant election, the participant election will not be treated as made available to that individual. Thus, for example, the participant election will not be treated as made available to that individual for purposes of the rules under section 401(a)(4).

(3) ***Authentication.*** The electronic system used in making participant elections is reasonably designed to preclude any person other than the appropriate individual from making the election. Whether this condition is satisfied is based on facts and circumstances, including whether the participant election has the potential for a conflict of interest between the individuals involved in the election. See *Examples 3*, *4*, and *5* of paragraph (f) of this section for illustrations of electronic systems that satisfy the authentication requirement of this paragraph (d)(3).

(4) ***Opportunity to review.*** The electronic system used in making participant elections provides the person making the participant election with a reasonable opportunity to review, confirm, modify, or rescind the terms of the election before the election becomes effective.

(5) ***Confirmation of action.*** The person making the participant election receives, within a reasonable time, a confirmation of the effect of the election under the terms of the plan or arrangement through either a written paper document or an electronic medium under a system that satisfies the requirements of either paragraph (b) or (c) of this section (as if the confirmation were an applicable notice).

(6) ***Participant elections, including spousal consents, that are required to be witnessed by a plan representative or a notary public*** —

(i) ***In general.*** In the case of a participant election which is required to be witnessed by a plan representative or a notary public (such as a spousal consent under section 417), the signature of the individual making the participant election is witnessed in the physical presence of a plan representative or a notary public.

(ii) ***Electronic notarization permitted.*** If the requirements of paragraph (d)(6)(i) of this section are satisfied, an electronic notarization acknowledging a signature (in accordance with section 101(g) of E-SIGN and State law applicable to notary publics) will not be denied legal effect if the signature of the individual is witnessed in the physical presence of a notary public.

(iii) ***Delegation to Commissioner.*** In guidance published in the Internal Revenue Bulletin, the Commissioner may provide that the use of procedures under an electronic system is deemed to satisfy the physical presence requirement under paragraph (d)(6)(i) of this section, but only if those procedures with respect to the electronic system provide the same safeguards for participant elections as are provided through the physical presence requirement. See § 601.601(d)(2)(ii)(*b*) of this chapter.

(e) ***Definitions.*** The definitions in this paragraph (e) apply for purposes of this section.

(1) ***Applicable notice.*** The term *applicable notice* includes any notice, report, statement, or other document required to be provided to a recipient under a retirement plan, employee benefit arrangement, or individual retirement plan as described in paragraph (a)(2) of this section.

(2) ***Electronic.*** The term *electronic* means technology having electrical, digital, magnetic, wireless, optical, electromagnetic, voice-recording systems, or similar capabilities.

(3) ***Electronic medium.*** The term *electronic medium* means an electronic method of communication (*e.g.*, Web site, electronic mail, telephonic system, magnetic disk, and CD-ROM).

(4) ***Electronic record.*** The term *electronic record* means an applicable notice or a participant election that is created, generated, sent, communicated, received, or stored by electronic media.

(5) ***Electronic system.*** The term *electronic system* means a system designed for creating, generating, sending, receiving, storing, retrieving, displaying, or processing information that makes use of any electronic medium.

(6) ***Participant election.*** The term *participant election* includes any consent, election, request, agreement, or similar communication made by or from a participant, beneficiary, alternate payee, or an individual entitled to benefits under a retirement plan, employee benefit arrangement, or individual retirement plan as described in paragraph (a)(2) of this section.

(7) ***Recipient.*** The term *recipient* means a plan participant, beneficiary, employee, alternate payee, or any other person to whom an applicable notice is to be provided.

(f) ***Examples.*** The following examples illustrate the rules of this section. *Examples 1*, *2*, *3*, and *6* assume that the requirements of paragraph (a)(4) and (5) of this section are satisfied.

Example 1. (i) *Facts involving using the consumer consent requirements to deliver a section 402(f) notice via e-mail.* Plan A, a qualified plan, permits participants to request benefit distributions from the plan on Plan A's Internet Web site. Under Plan A's system for such transactions, a participant must enter his or her account number, personal identification number (PIN), and his or her e-mail address to which the notice is to be sent. The participant's PIN and account number must match the information in Plan A's records in order for the transaction to proceed. Participant H requests a distribution from Plan A on Plan A's Web site, and, at the time of the request for distribution, a disclosure statement appears on the computer screen that explains that Participant H can consent to receive the section 402(f) notice electronically. The disclosure statement provides information relating to the consent, including how to receive a paper copy of the notice, how to withdraw consent, the hardware and software requirements, and the procedures for accessing the section 402(f) notice, which is in a file format from a specific spreadsheet program. After reviewing the disclosure statement, which satisfies the requirements of paragraph (b)(3) of this section, Participant H consents to receive the section 402(f) notice via e-mail by selecting the consent button at the end of the disclosure statement. As a part of the consent procedure, an e-mail is sent to Participant H's e-mail address in order to demonstrate that Participant H can access the spreadsheet program. In the e-mail, Participant H is prompted to answer a question from the spreadsheet program, which is in an attachment to the e-mail. Once Participant H correctly answers the question, the section 402(f) notice is then delivered to Participant H via e-mail.
(ii) *Conclusion.* In this *Example 1*, Plan A's delivery of the section 402(f) notice to Participant H satisfies the requirements of paragraph (b) of this section.

Example 2. (i) *Facts*—(A) *Facts involving using the alternative method to deliver a section 411(a)(11) notice via e-mail.* Plan B, a qualified plan, permits participants to request benefit distributions from the plan on Plan B's Internet Web site. Under Plan B's system for such transactions, a participant must enter his or her account number and personal identification number (PIN), and his or her e-mail address to which the notice is to be sent. The participant's PIN and account number must match the information in Plan B's records in order for the transaction to proceed. After Participant K, a single employee, requests a distribution from Plan B on Plan B's Internet Web site, the plan administrator provides Participant K with a section 411(a)(11) notice in an attachment to an e-mail. Plan B sends the e-mail with a request for a computer generated notification that the message was received and opened. The e-mail instructs Participant K to read the attachment for important information regarding the request for a distribution. In addition, the e-mail also states that Participant K may request the section 411(a)(11) notice on a written paper

document and that, if Participant K requests the notice on a written paper document, it will be provided at no charge. Plan B receives notification indicating that the e-mail was received and opened by Participant K.
(B) *Facts involving making a participant's consent to a distribution.* In order to consent to a distribution, Plan B requires a participant to enter the participant's account number and PIN in order to preclude any person other than the participant from making the election. After the authentication process, Participant K completes a distribution request form on the Web site. After completing the request form, the Web site provides a summary of the information entered on the form and gives Participant K an opportunity to review or modify the distribution request form before the transaction is completed. Within a reasonable period of time after Participant K consents to the distribution, the plan administrator, by e-mail, sends confirmation of the terms (including the form) of the distribution to Participant K and advises Participant K that, upon request, the confirmation may be provided to Participant K on a written paper document at no charge. Plan B retains an electronic copy of the consent to the distribution in a form that is capable of being retained and accurately reproduced for later reference by Participant K.

(ii) *Conclusion.* In this *Example 2*, Plan B's delivery of the section 411(a)(11) notice and the electronic system used to make Participant K's consent to a distribution satisfy the requirements of paragraphs (a), (c), and (d) of this section.

Example 3. (i) *Facts involving the transmission of a spousal consent via electronic notarization.* Plan C, a qualified money purchase pension plan, permits a married participant to request a plan loan through the Plan C's Internet Web site with the notarized consent of the spouse. Under Plan C's system for requesting a plan loan, a participant must enter his or her account number, personal identification number (PIN), and his or her e-mail address. The information entered by the participant must match the information in Plan C's records in order for the transaction to proceed. Participant M, a married participant, is effectively able to access the Web site available to apply for a plan loan. In order to apply for a loan, Plan C requires a participant to enter the participant's account number and PIN in order to preclude any person other than the participant from making the election. Participant M completes the loan application on Plan C's Web site. Within a reasonable period of time after submitting the plan loan application, the plan administrator, by e-mail, sends Participant M the loan application, including all attachments setting forth the terms of the loan agreement and all other required information. In the e-mail, Plan C also notifies Participant M that, upon request, the loan application may be provided to Participant M on a written paper document at no charge. Plan C then instructs Participant M that, in order for the loan application to proceed, Participant M must submit to the plan administrator a notarized spousal consent form. Participant M and M's spouse go to a notary public and the notary witnesses Participant M's spouse signing the spousal consent for the loan agreement on an electronic signature capture pad with adequate security. After witnessing M's spouse signing the spousal consent, the notary public sends an e-mail with an electronic acknowledgement that is attached to

or logically associated with the signature of M's spouse to the plan administrator. The electronic acknowledgement is in accordance with section 101(g) of E-SIGN and the relevant State law applicable to notary publics. After the plan receives the e-mail, Plan C sends an e-mail to Participant M, giving M a reasonable period to review and confirm the completed loan application and to determine whether the loan application should be modified or rescinded. In addition, the e-mail to Participant M also provides that M may request the completed loan application on a written paper document and that, if M requests the written paper document, it will be provided at no charge. Plan C retains an electronic copy of the loan agreement, including the spousal consent, in a form that is capable of being retained and accurately reproduced for later reference by all parties.

(ii) *Conclusion.* In this *Example 3*, the transmission of the plan loan agreement satisfies the requirements of paragraphs (a), (c), and (d) of this section. By requiring that the spouse sign the spousal consent on an electronic signature capture pad in the physical presence of a notary public, the electronic system satisfies the requirement that the system be reasonably designed to preclude any person other than the appropriate individual from making the election. Thus, the electronic notarization of spousal consent satisfies the requirements of paragraphs (a) and (d) of this section.

Example 4. (i) *Facts*—(A) *Facts involving using the alternative method of compliance to deliver a section 411(a)(11) notice via an automated telephone system.* A qualified profit-sharing plan (Plan D) permits participants to request distributions through an automated telephone system. Under Plan D's system for such transactions, a participant must enter his or her account number and personal identification number (PIN); this information must match the information in Plan D's records in order for the transaction to proceed. Plan D provides only the following distribution options: single-sum payment; and annual installments over 5, 10, or 20 years. Participant N, a single participant, requests a distribution from Plan D by following the applicable instructions on the automated telephone system. After Participant N has requested the distribution, the automated telephone system recites the section 411(a)(11) notice over the phone. The automated telephone system also advises Participant N that, upon request, the notice may be provided on a written paper document and that, if Participant N so requests, the notice will be provided on a written paper document at no charge.

(B) *Facts involving making a participant's consent to a distribution via an automated telephone system.* In order to consent to a distribution, Plan D requires a participant to enter the participant's account number and PIN in order to preclude any person other than the participant from making the election. Participant N requests a distribution by entering information on the automated telephone system. After completing the request, the automated telephone system provides a oral summary of the information entered and gives Participant N an opportunity to review or modify the distribution request before the transaction is completed. Plan D's automated telephone system confirms the distribution request to Participant N and advises Participant N that, upon request, a

confirmation may be provided on a written paper document at no charge. Plan D retains an electronic copy of the consent to the distribution in a form that is capable of being retained and accurately reproduced for later reference by Participant N.

(ii) *Conclusion.* In this *Example 4*, because Plan D has relatively few and simple distribution options, the provision of the section 411(a)(11) notice through the automated telephone system is no less understandable to the participant than a written paper notice for purposes of paragraph (a)(5)(i) of this section. In addition, the automated telephone procedures of Plan D satisfy the applicable requirements of paragraphs (a), (c), and (d) of this section.

Example 5. (i) *Facts.* Same facts as *Example 4* of this paragraph (f), except that, pursuant to Plan D's system for processing such transactions, a participant who so requests is transferred to a customer service representative whose conversation with the participant is recorded. The customer service representative provides the section 411(a)(11) notice from a prepared text and processes the participant's distribution in accordance with the predetermined instructions from the plan administrator.
(ii) *Conclusion.* As in *Example 4* of this paragraph (f), because Plan D has relatively few and simple distribution options, the provision of the section 411(a)(11) notice through the automated telephone system is no less understandable to the participant than a written paper notice for purposes of paragraph (a)(4) of this section. Further, in this *Example 5*, the customer service telephone procedures of Plan D satisfy the requirements of paragraphs (a), (c), and (d) of this section.

Example 6. (i) *Facts.* Plan E, a qualified plan, permits participants to request distributions by e-mail on the employer's e-mail system. Under this system, a participant must enter his or her account number, personal identification number (PIN), and e-mail address. This information must match that in Plan E's records in order for the transaction to proceed. If a participant requests a distribution by e-mail, the plan administrator provides the participant with a section 411(a)(11) notice by e-mail. The plan administrator also advises the participant by e-mail that he or she may request the section 411(a)(11) notice on a written paper document and that, if the participant requests the notice on a written paper document, it will be provided at no charge. Participant Q requests a distribution and receives the section 411(a)(11) notice from the plan administrator by reply e-mail. However, before Participant Q elects a distribution, Q terminates employment. Following termination of employment, Participant Q no longer has access to the employer's e-mail system.
(ii) *Conclusion.* In this *Example 6*, Plan E does not satisfy the participant election requirements under paragraph (d) of this section because Participant Q is not effectively able to access the electronic medium used to make the participant election. Plan E must provide Participant Q with

> the opportunity to make the participant election through a written paper document or another system that Participant Q is effectively able to access, such as the automated telephone systems described in *Example 4* and *Example 5* of this paragraph (f).

(g) ***Effective date.*** The rules provided in this section apply to applicable notices provided, and to participant elections made, on or after January 1, 2007. However, a retirement plan, an employee benefit arrangement, or an individual retirement plan that provides an applicable notice or makes a participant election that complies with the requirements set forth in these regulations on or after October 1, 2000, and before January 1, 2007, will not be treated as failing to provide an applicable notice or to make a participant election merely because the notice or election was not in writing or written form.

[T.D. 9294, 71 FR 61883, Oct. 20, 2006]

§ 1.401(a)-30 Limit on elective deferrals.

(a) ***General Rule.*** A trust that is part of a plan under which elective deferrals may be made during a calendar year is not qualified under section 401(a) unless the plan provides that the elective deferrals on behalf of an individual under the plan and all other plans, contracts, or arrangements of the employer maintaining the plan may not exceed the applicable limit for the individual's taxable year beginning in the calendar year. A plan may incorporate the applicable limit by reference. In the case of a plan maintained by more than one employer to which section 413 (b) or (c) applies, section 401(a)(30) and this section are applied as if each employer maintained a separate plan. See § 1.402(g)-1(e) for rules permitting the distribution of excess deferrals to prevent disqualification of a plan or trust for failure to comply in operation with section 401(a)(30).

(b) ***Definitions.*** For purposes of this section:

(1) ***Applicable limit.*** The term “applicable limit” has the meaning provided in § 1.402(g)-1(d).

(2) ***Elective deferrals.*** The term “elective deferrals” has the meaning provided in § 1.402(g)-1(b).

(c) ***Effective date*** —

(1) ***In general.*** Except as otherwise provided in this paragraph (c), this section is effective for plan years beginning after December 31, 1987.

(2) ***Transition rule.*** For plan years beginning in l988, a plan may rely on a reasonable interpretation of the law as in effect on December 31, 1987.

(3) ***Deferrals under collective bargaining agreements.*** In the case of a plan maintained pursuant to one or more collective bargaining agreements between employee representatives and one or more employers ratified before March 1, 1986, this section does not apply to contributions made pursuant to a collective bargaining agreement for plan years beginning before the earlier of:

(i) The later of January 1, 1988, or the date on which the last collective bargaining agreement terminates (determined without regard to any extension thereof after February 28, 1986), or

(ii) January 1, 1989.

[T.D. 8357, 56 FR 40516, Aug. 15, 1991]

§ 1.401(a)-50 Puerto Rican trusts; election to be treated as a domestic trust.

(a) ***In general.*** Section 401(a) requires, among other things, that a trust forming part of a pension, profit-sharing, or stock bonus plan must be created or organized in the United States to be a qualified trust. Section 1022(i)(2) of the Employee Retirement Income Security Act of 1974 (ERISA) (88 Stat. 942) provides that trusts under certain pension, etc., plans created or organized in Puerto Rico whose administrators have made the election referred to in section 1022(i)(2) are to be treated as trusts created or organized in the United States for purposes of section 401(a). Thus, if a plan otherwise satisfies the qualification requirements of section 401(a), any trust forming part of the plan for which an election is made will be treated as a qualified trust under that section.

(b) ***Manner and effect of election.*** A plan administrator may make an election under ERISA section 1022(i)(2) by filing a statement making the election, along with a copy of the plan, with the Director's Representative of the Internal Revenue Service in Puerto Rico. The statement making the election must indicate that it is being made under ERISA section 1022(i)(2). The statement may also be filed in conjunction with a written request for a determination letter. If the election is made with a written request for a determination letter, the election may be conditioned upon issuance of a favorable determination letter and will be irrevocable upon issuance of such letter. Otherwise, once made, an election is irrevocable. It is generally effective for plan years beginning after the date it has been made. However, an election made before March 3, 1983 may, at the option of the plan administrator at the time he or she makes the election, be considered to have been made on any date between September 2, 1974, and the actual date of the election. The election will then be effective for plan years beginning on or after the date chosen by the plan administrator.

(c) ***Annuities, custodial accounts, etc.*** See section 401 (f) for rules relating to the treatment of certain annuities, custodial accounts or other contracts, as trusts for purposes of section 401(a).

(d) ***Source of plan distributions to participants and beneficiaries residing outside the United States.*** Except as provided under section 871(f) (relating to amounts received as an annuity by nonresident aliens), the amount of a distribution from an electing plan that is to be treated as income from sources within the United States is determined as described below. The portion of the distribution considered to be a return of employer contributions is to be treated as income from sources within the United States in an amount equal to the portion of the distribution considered to be a return of employer contributions multiplied by the following fraction:

$$\frac{\text{Days of performance of labor or services within the United States for the employer.}}{\text{Total days of performance of labor or services for the employer.}}$$

The days of performance of labor or services within the United States shall not include the time period for which the employee's compensation is deemed not to be income from sources within the United States under subtitle A of the Code. Thus, for example, if an employee's compensation was not deemed to be income from sources within the United States under section 861(a)(3), then the time the emloyee was present in the United States while such compensation was earned would not be included in determining the days of performance of labor or services within the United States in the numerator of the above fraction. In addition, days of performance of labor or services for the employer in both the numerator and denominator of the above fraction are limited to days of plan participation by the employee and any service used for determining an employee's accrued benefit under the plan. The remaining portion of the distribution, that is, any amount other than the portion of the distribution considered to be a return of employer contributions, is not to be treated as income from sources within the United States. For example, if a distribution consists of amounts representing employer contributions, employee contributions, and earnings on

employer and employee contributions, no part of the portion of the distribution attributable to employee contributions, or earnings on employer and employee contributions, will be treated as income from sources within the United States.

[T.D. 7859, 47 FR 54297, Dec. 2, 1982]

§ 1.401(a)(2)-1 Refund of mistaken employer contributions and withdrawal liability payments to multiemployer plans.

(a) ***Introduction*** —

(1) ***In general.*** Section 401(a)(2) provides that a contribution or payment of withdrawal liability made to a multiemployer plan due to a mistake of fact or mistake of law can be returned to the employer under certain conditions. This section specifies the conditions under which an employer's contribution or payment may be returned.

(2) ***Effective dates.*** This section applies to refunds made after July 22, 2002.

(b) ***Conditions for return of contribution*** —

(1) ***In general.*** In the case of a contribution or a withdrawal liability payment to a multiemployer plan which was made because of a mistake of fact or a mistake of law, the plan will not violate section 401(a)(2) merely because the contribution or payment is returned within six months after the date on which the plan administrator determines that the contribution or payment was the result of a mistake of fact or law. The contribution or payment is considered as returned within the required period if the employer establishes a right to a refund of the amount mistakenly contributed or paid by filing a claim with the plan administrator within six months after the date on which the plan administrator determines that a mistake did occur. For purposes of this section, plan administrator is defined in section 414(g) and the regulations thereunder.

(2) ***Applicable conditions*** —

(i) ***In general.*** The employer making the contribution or withdrawal liability payment to a multiemployer plan must demonstrate that an excessive contribution or overpayment has been made due to a mistake of fact or law. A mistake of fact or law relating to plan qualification under section 401 or to trust exemption under section 501 is not considered to be a mistake of fact or law which entitles an employer to a refund under this section. For purposes of this section, a multiemployer plan is defined in section 414(f) and the regulations thereunder.

(ii) ***Amount to be returned*** —

(A) ***General rule.*** The amount to be returned to the employer is the excess of the amount contributed or paid over the amount that would have been contributed or paid had no mistake been made. This amount is the excess contribution or overpayment. Except as provided in paragraph (b)(2)(ii)(B) of this section, interest or earnings attributable to an excess contribution shall not be returned to the employer, and any losses attributable to an excess contribution must reduce the amount returned to the employer. For purposes of the previous sentence, the application of plan-wide investment experience to the excess contribution would be an acceptable method of calculating losses. A refund of a mistaken contribution must in no event reduce a participant's account balance in a defined contribution plan to an amount less than that amount which would properly have been in that participant's account had no mistake occurred. Thus, to the extent that the refund of

an excess contribution would reduce a participant's account balance in a defined contribution plan to an amount less than the amount which would properly be in the participant's account had no mistake occurred, the return of the excess contribution would be prohibited by this section.

(B) ***Overpayment of withdrawal liability.*** In the case of an overpayment of withdrawal liability established by the plan sponsor under section 4219(c)(2) of ERISA, the plan will not fail to satisfy section 401(a)(2) if, in accordance with Pension Benefit Guaranty Corporation regulations regarding the overpayments of withdrawal liability (29 CFR 4219.31(d)), the overpayment, with interest, is returned to the employer.

(c) ***Amount refunded includible in employer's income.*** In general, the amount of the excess contribution or overpayment must be included in gross income by the employer if the excess contribution or overpayment resulted in a tax benefit in a prior year. Any interest credited or paid on the refund of mistaken withdrawal liability payments must also be included in gross income by the employer.

(d) ***Application of section 412.*** An amount returned under paragraph (b)(2)(ii) of this section is charged to the funding standard account under section 412 in the year in which the amount is returned.

[T.D. 9005, 67 FR 47693, July 22, 2002]

§ 1.401(a)(4)-0 Table of contents.

This section contains a listing of the major headings of §§ 1.401(a)(4)-1 through 1.401(a)(4)-13.

§ 1.401(a)(4)-1 Nondiscrimination requirements of section 401(a)(4)

(a) In general.

(b) Requirements a plan must satisfy.

(1) In general.

(2) Nondiscriminatory amount of contributions or benefits.

(3) Nondiscriminatory availability of benefits, rights, and features.

(4) Nondiscriminatory effect of plan amendments and terminations.

(c) Application of requirements.

(1) In general.

(2) Interpretation.

(3) Plan-year basis of testing.

(4) Application of section 410(b) rules.

(5) Collectively-bargained plans.

(6) Former employees.

(7) Employee-provided contributions and benefits.

(8) Allocation of earnings.

(9) Rollovers, transfers, and buybacks.

(10) Vesting.

(11) Crediting service.

(12) Governmental plans.

(13) Employee stock ownership plans.

(14) Section 401(h) benefits.

(15) Definitions.

(16) Effective dates and fresh-start rules.

(d) Additional guidance.

§ 1.401(a)(4)-2 Nondiscrimination in amount of employer contributions under a defined contribution plan

(a) Introduction.

(1) Overview.

(2) Alternative methods of satisfying nondiscriminatory amount requirement.

(b) Safe harbors.

(1) In general.

(2) Safe harbor for plans with uniform allocation formula.

(3) Safe harbor for plans with uniform points allocation formula.

(4) Use of safe harbors not precluded by certain plan provisions.

(c) General test for nondiscrimination in amount of contributions.

(1) General rule.

(2) Determination of allocation rates.

(3) Satisfaction of section 410(b) by a rate group.

(4) Examples.

§ 1.401(a)(4)-3 Nondiscrimination in amount of employer-provided benefits under a defined benefit plan

(a) Introduction.

(1) Overview.

(2) Alternative methods of satisfying nondiscriminatory amount requirement.

(b) Safe harbors.

(1) In general.

(2) Uniformity requirements.

(3) Safe harbor for unit credit plans.

(4) Safe harbor for plans using fractional accrual rule.

(5) Safe harbor for insurance contract plans.

(6) Use of safe harbors not precluded by certain plan provisions.

(c) General test for nondiscrimination in amount of benefits.

(1) General rule.

(2) Satisfaction of section 410(b) by a rate group.

(3) Certain violations disregarded.

(4) Examples.

(d) Determination of accrual rates.

(1) Definitions.

(2) Rules of application.

(3) Optional rules.

(4) Examples.

(e) Compensation rules.

(1) In general.

(2) Average annual compensation.

(3) Examples.

(f) Special rules.

(1) In general.

(2) Certain qualified disability benefits.

(3) Accruals after normal retirement age.

(4) Early retirement window benefits.

(5) Unpredictable contingent event benefits.

(6) Determination of benefits on other than plan-year basis.

(7) Adjustments for certain plan distributions.

(8) Adjustment for certain QPSA charges.

(9) Disregard of certain offsets.

(10) Special rule for multiemployer plans.

§ 1.401(a)(4)-4 Nondiscriminatory availability of benefits, rights, and features

(a) Introduction.

(b) Current availability.

(1) General rule.

(2) Determination of current availability.

(3) Benefits, rights, and features that are eliminated prospectively.

(c) Effective availability.

(1) General rule.

(2) Examples.

(d) Special rules.

(1) Mergers and acquisitions.

(2) Frozen participants.

(3) Early retirement window benefits.

(4) Permissive aggregation of certain benefits, rights, or features.

(5) Certain spousal benefits.

(6) Special ESOP rules.

(7) Special testing rule for unpredictable contingent event benefits.

(e) Definitions.

(1) Optional form of benefit.

(2) Ancillary benefit.

(3) Other right or feature.

§ 1.401(a)(4)-5 Plan amendments and plan terminations

(a) Introduction.

(1) Overview.

(2) Facts-and-circumstances determination.

(3) Safe harbor for certain grants of benefits for past periods.

(4) Examples.

(b) Pre-termination restrictions.

(1) Required provisions in defined benefit plans.

(2) Restriction of benefits upon plan termination.

(3) Restrictions on distributions.

(4) Operational restrictions on certain money purchase pension plans.

§ 1.401(a)(4)-6 Contributory defined benefit plans

(a) Introduction.

(b) Determination of employer-provided benefit.

(1) General rule.

(2) Composition-of-work-force method.

(3) Minimum-benefit method.

(4) Grandfather rules for plans in existence on May 14, 1990.

(5) Government-plan method.

(6) Cessation of employee contributions.

(c) Rules applicable in determining whether employee-provided benefits are nondiscriminatory in amount.

(1) In general.

(2) Same rate of contributions.

(3) Total-benefits method.

(4) Grandfather rule for plans in existence on May 14, 1990.

§ 1.401(a)(4)-7 Imputation of permitted disparity

(a) Introduction.

(b) Adjusting allocation rates.

(1) In general.

(2) Employees whose plan year compensation does not exceed taxable wage base.

(3) Employees whose plan year compensation exceeds taxable wage base.

(4) Definitions.

(5) Example.

(c) Adjusting accrual rates.

(1) In general.

(2) Employees whose average annual compensation does not exceed covered compensation.

(3) Employees whose average annual compensation exceeds covered compensation.

(4) Definitions.

(5) Employees with negative unadjusted accrual rates.

(6) Example.

(d) Rules of general application.

(1) Eligible plans.

(2) Exceptions from consistency requirements.

(3) Overall permitted disparity.

§ 1.401(a)(4)-8 Cross-testing

(a) Introduction.

(b) Nondiscrimination in amount of benefits provided under a defined contribution plan.

(1) General rule and gateway.

(2) Determination of equivalent accrual rates.

(3) Safe-harbor testing method for target benefit plans.

(c) Nondiscrimination in amount of contributions under a defined benefit plan.

(1) General rule.

(2) Determination of equivalent allocation rates.

(3) Safe harbor testing method for cash balance plans.

(d) Safe-harbor testing method for defined benefit plans that are part of a floor-offset arrangement.

(1) General rule.

(2) Application of safe-harbor testing method to qualified offset arrangements.

§ 1.401(a)(4)-9 Plan aggregation and restructuring

(a) Introduction.

(b) Application of nondiscrimination requirements to DB/DC plans.

(1) General rule.

(2) Special rules for demonstrating nondiscrimination in amount of contributions or benefits.

(3) Optional rules for demonstrating nondiscrimination in availability of certain benefits, rights, and features.

(c) Plan restructuring.

(1) General rule.

(2) Identification of component plans.

(3) Satisfaction of section 401(a)(4) by a component plan.

(4) Satisfaction of section 410(b) by a component plan.

(5) Effect of restructuring under other sections.

(6) Examples.

§ 1.401(a)(4)-10 Testing of former employees

(a) Introduction.

(b) Nondiscrimination in amount of contributions or benefits.

(1) General rule.

(2) Permitted disparity.

(3) Examples.

(c) Nondiscrimination in availability of benefits, rights, or features.

§ 1.401(a)(4)-11 Additional rules

(a) Introduction.

(b) Rollovers, transfers, and buybacks.

(1) Rollovers and elective transfers.

(2) Other transfers. [Reserved]

(3) Employee buybacks.

(c) Vesting.

(1) General rule.

(2) Deemed equivalence of statutory vesting schedules.

(3) Safe harbor for vesting schedules.

(4) Examples.

(d) Service-crediting rules.

(1) Overview.

(2) Manner of crediting service.

(3) Service-crediting period.

(e) Family aggregation rules. [Reserved]

(f) Governmental plans. [Reserved]

(g) Corrective amendments.

(1) In general.

(2) Scope of corrective amendments.

(3) Conditions for corrective amendments.

(4) Corrective amendments must have substance.

(5) Effect under other statutory requirements.

(6) Examples.

§ 1.401(a)(4)-12 Definitions

§ 1.401(a)(4)-13 Effective dates and fresh-start rules

(a) General effective dates.

(1) In general.

(2) Plans of tax-exempt organizations.

(3) Compliance during transition period.

(b) Effective date for governmental plans.

(c) Fresh-start rules for defined benefit plans.

(1) Introduction.

(2) General rule.

(3) Definition of frozen.

(4) Fresh-start formulas.

(5) Rules of application.

(6) Examples.

(d) Compensation adjustments to frozen accrued benefits.

(1) Introduction.

(2) In general.

(3) Plan requirements.

(4) Meaningful coverage as of fresh-start date.

(5) Meaningful ongoing coverage.

(6) Meaningful current benefit accruals.

(7) Minimum benefit adjustment.

(8) Adjusted accrued benefit.

(9) Examples.

(e) Determination of initial theoretical reserve for target benefit plans.

(1) General rule.

(2) Example.

(f) Special fresh-start rules for cash balance plans.

(1) In general.

(2) Alternative formula.

(3) Limitations on formulas.

[T.D. 8485, 58 FR 46778, Sept. 3, 1993, as amended by T.D. 8954, 66 FR 34540, June 29, 2001]

§ 1.401(a)(4)-1 Nondiscrimination requirements of section 401(a)(4).

(a) ***In general.*** Section 401(a)(4) provides that a plan is a qualified plan only if the contributions or the benefits provided under the plan do not discriminate in favor of HCEs. Whether a plan satisfies this requirement depends on the form of the plan and on its effect in operation. In making this determination, intent is irrelevant. This section sets forth the exclusive rules for determining whether a plan satisfies section 401(a)(4). A plan that complies in form and operation with the rules in this section therefore satisfies section 401(a)(4).

(b) ***Requirements a plan must satisfy*** —

(1) ***In general.*** In order to satisfy section 401(a)(4), a plan must satisfy each of the requirements of this paragraph (b).

(2) ***Nondiscriminatory amount of contributions or benefits*** —

(i) ***General rule.*** Either the contributions or the benefits provided under the plan must be nondiscriminatory in amount. It need not be shown that both the contributions and the benefits provided are nondiscriminatory in amount, but only that either the contributions alone or the benefits alone are nondiscriminatory in amount.

(ii) ***Defined contribution plans*** —

(A) ***General rule.*** A defined contribution plan satisfies this paragraph (b)(2) if the contributions allocated under the plan (including forfeitures) are nondiscriminatory in amount under § 1.401(a)(4)-2. Alternatively, a defined contribution plan (other than an ESOP) satisfies this paragraph (b)(2) if the equivalent benefits provided under the plan are nondiscriminatory in amount under § 1.401(a)(4)-8(b). Section 1.401(a)(4)-8(b) includes a safe-harbor testing method for contributions provided under a target benefit plan.

(B) ***Section 401(k) plans and section 401(m) plans.*** A section 401(k) plan is deemed to satisfy this paragraph (b)(2) because § 1.410(b)-9 defines a section 401(k) plan as a plan consisting of elective contributions under a qualified cash or deferred arrangement (i.e., one that satisfies section 401(k)(3), the nondiscriminatory amount requirement applicable to qualified cash or deferred arrangements). A section 401(m) plan satisfies this paragraph (b)(2) only if the plan satisfies §§ 1.401(m)-1(b) and 1.401(m)-2. Contributions under a nonqualified cash or deferred arrangement, elective contributions described in § 1.401(k)-1(b)(4)(iv) that fail to satisfy the allocation and compensation requirements of § 1.401(k)-2(a)(4)(i), matching contributions that fail to satisfy § 1.401(m)-2(a)(4)(iii), and

qualified nonelective contributions treated as elective or matching contributions for certain purposes under §§ 1.401(k)-2(a)(6) and 1.401(m)-2(a)(6), respectively, are not subject to the special rule in this paragraph (b)(2)(ii)(B), because they are not treated as part of a section 401(k) plan or section 401(m) plan as those terms are defined in § 1.410(b)-9. The contributions described in the preceding sentence must satisfy paragraph (b)(2)(ii)(A) of this section.

(iii) ***Defined benefit plans.*** A defined benefit plan satisfies this paragraph (b)(2) if the benefits provided under the plan are nondiscriminatory in amount under § 1.401(a)(4)-3. Alternatively, a defined benefit plan satisfies this paragraph (b)(2) if the equivalent allocations provided under the plan are nondiscriminatory in amount under § 1.401(a)(4)-8(c). Section 1.401(a)(4)-8(c) includes a safe-harbor testing method for benefits provided under a cash balance plan. In addition, § 1.401(a)(4)-8(d) provides a safe-harbor testing method for benefits provided under a defined benefit plan that is part of a floor-offset arrangement.

(3) ***Nondiscriminatory availability of benefits, rights, and features.*** All benefits, rights, and features provided under the plan must be made available in the plan in a nondiscriminatory manner. Rules for determining whether this requirement is satisfied are set forth in § 1.401(a)(4)-4.

(4) ***Nondiscriminatory effect of plan amendments and terminations.*** The timing of plan amendments must not have the effect of discriminating significantly in favor of HCEs. Rules for determining whether this requirement is satisfied are set forth in § 1.401(a)(4)-5(a). Section 1.401(a)(4)-5(b) provides additional requirements regarding plan terminations.

(c) ***Application of requirements*** —

(1) ***In general.*** The requirements of paragraph (b) of this section must be applied in accordance with the rules set forth in this paragraph (c).

(2) ***Interpretation.*** The provisions of §§ 1.401(a)(4)-1 through 1.401(a)(4)-13 must be interpreted in a reasonable manner consistent with the purpose of preventing discrimination in favor of HCEs.

(3) ***Plan-year basis of testing.*** The requirements of paragraph (b) of this section are generally applied on the basis of the plan year and on the basis of the terms of the plan in effect during the plan year. Thus, unless otherwise provided, the compensation, contributions, benefit accruals, and other items used to apply these requirements must be determined with respect to the plan year being tested. However, § 1.401(a)(4)-11(g) provides rules allowing for corrective amendments made after the close of the plan year to be taken into account in satisfying certain requirements under paragraph (b) of this section.

(4) ***Application of section 410(b) rules*** —

(i) ***Relationship between sections 401(a)(4) and 410(b).*** To be a qualified plan, a plan must satisfy both sections 410(b) and 401(a)(4). Section 410(b) requires that a plan benefit a nondiscriminatory group of employees, and section 401(a)(4) requires that the contributions or benefits provided to employees benefiting under the plan not discriminate in favor of HCEs. Consistent with this requirement, the definition of a plan subject to testing under section 401(a)(4) is the same as the definition of a plan subject to testing under section 410(b), i.e., the plan determined after applying the mandatory disaggregation rules of § 1.410(b)-7(c) and the permissive aggregation rules of § 1.410(b)-7(d). In addition, whichever testing option is used for the plan year under § 1.410(b)-8(a) (e.g., quarterly testing) must also be used for purposes of determining whether the plan satisfies section 401(a)(4) for the plan year.

(ii) ***Special rules for certain aggregated plans.*** Special rules are set forth in § 1.401(a)(4)-9(b) for applying the nondiscriminatory amount and availability requirements of paragraphs (b)(2) and (b)(3) of this section to a plan that includes one or more defined benefit plans and one or more defined contribution plans that have been permissively aggregated under § 1.410(b)-7(d).

(iii) ***Restructuring.*** In certain circumstances, a plan may be restructured on the basis of employee groups and treated as comprising two or more plans, each of which is treated as a separate plan that must independently satisfy sections 401(a)(4) and 410(b). Rules relating to restructuring plans for purposes of applying the requirements of paragraph (b) of this section are set forth in § 1.401(a)(4)-9(c).

(iv) ***References to section 410(b).*** Except as otherwise specifically provided, references to satisfying section 410(b) in §§ 1.401(a)(4)-1 through 1.401(a)(4)-13 mean satisfying § 1.410(b)-2 (taking into account any special rules available in satisfying that section, other than the permissive aggregation rules of § 1.410(b)-7(d)). In the case of a plan described in section 410(c)(1) that has not made the election described in section 410(d) and is not subject to section 403(b)(12)(A)(i), references in §§ 1.401(a)(4)-1 through 1.401(a)(4)-13 to satisfying section 410(b) mean satisfying section 410(c)(2).

(5) ***Collectively-bargained plans.*** The requirements of paragraph (b) of this section are treated as satisfied by a collectively-bargained plan that automatically satisfies section 410(b) under § 1.410(b)-2(b)(7).

(6) ***Former employees.*** In applying the nondiscriminatory amount and availability requirements of paragraphs (b)(2) and (b)(3) of this section, former employees are tested separately from active employees, unless otherwise provided. Rules for applying paragraphs (b)(2) and (b)(3) of this section to former employees are set forth in § 1.401(a)(4)-10.

(7) ***Employee-provided contributions and benefits.*** In applying the nondiscriminatory amount requirement of paragraph (b)(2) of this section, employee-provided contributions and benefits are tested separately from employer-provided contributions and benefits, unless otherwise provided. Rules for determining the amount of employer-provided benefits under a defined benefit plan that include employee contributions not allocated to separate accounts are set forth in § 1.401(a)(4)-6(b), and rules for applying paragraph (b)(2) of this section to employee contributions under such a plan are set forth in § 1.401(a)(4)-6(c). See paragraph (b)(2)(ii)(B) of this section for rules applicable to employee contributions allocated to separate accounts.

(8) ***Allocation of earnings.*** Notwithstanding any other provision in §§ 1.401(a)(4)-1 through 1.401(a)(4)-13, a defined contribution plan does not satisfy paragraph (b)(2) of this section if the manner in which income, expenses, gains, or losses are allocated to accounts under the plan discriminates in favor of HCEs or former HCEs.

(9) ***Rollovers, transfers, and buybacks.*** In applying the requirements of paragraph (b) of this section, rollover (including direct rollover) contributions described in section 402(c), 402(e)(6), 403(a)(4), 403(a)(5), or 408(d)(3), elective transfers described in § 1.411(d)-4, Q&A-3(b), transfers of assets and liabilities described in section 414(l), and employee buybacks are treated in accordance with the rules set forth in § 1.401(a)(4)-11(b).

(10) ***Vesting.*** A plan does not satisfy the nondiscriminatory amount requirement of paragraph (b)(2) of this section unless it satisfies § 1.401(a)(4)-11(c) with respect to the manner in which employees vest in their accrued benefits.

(11) ***Crediting service.*** A plan does not satisfy paragraphs (b)(2) and (b)(3) of this section unless it satisfies § 1.401(a)(4)-11(d) with respect to the manner in which employees' service is credited under the plan. Service other than actual service with the employer may not be taken into account in determining whether the plan satisfies paragraphs (b)(2) and (b)(3) of this section except as provided in § 1.401(a)(4)-11(d).

(12) ***Governmental plans.*** The rules of this section apply to a governmental plan within the meaning of section 414(d), except as provided in §§ 1.401(a)(4)-11(f) and 1.401(a)(4)-13(b).

(13) ***Employee stock ownership plans.*** [Reserved]

(14) ***Section 401(h) benefits.*** In applying the requirements of paragraph (b) of this section, the portion of a plan providing benefits described in section 401(h) is tested separately from the portion of the same plan providing retirement benefits, and thus is not required to satisfy this section. Rules applicable to section 401(h) benefits are set forth in § 1.401-14(b)(2).

(15) ***Definitions.*** In applying the requirements of this section, the definitions in § 1.401(a)(4)-12 govern.

(16) ***Effective dates and fresh-start rules.*** In applying the requirements of this section, the effective dates set forth in § 1.401(a)(4)-13 govern. Section 1.401(a)(4)-13 also provides certain transition and fresh-start rules that apply for purposes of this section.

(d) ***Additional guidance.*** The Commissioner may, in revenue rulings, notices, and other guidance, published in the Internal Revenue Bulletin, provide any additional guidance that may be necessary or appropriate in applying the nondiscrimination requirements of section 401(a)(4), including additional safe harbors and alternative methods and procedures for satisfying those requirements. See § 601.601(d)(2)(ii)(*b*) of this chapter.

[T.D. 8485, 58 FR 46780, Sept. 3, 1993, as amended by T.D. 9169, 69 FR 78153, Dec. 29, 2004]

§ 1.401(a)(4)-2 Nondiscrimination in amount of employer contributions under a defined contribution plan.

(a) ***Introduction*** —

(1) ***Overview.*** This section provides rules for determining whether the employer contributions allocated under a defined contribution plan are nondiscriminatory in amount as required by § 1.401(a)(4)-1(b)(2)(ii)(A). Certain defined contribution plans that provide uniform allocations are permitted to satisfy this requirement by meeting one of the safe harbors in paragraph (b) of this section. Plans that do not provide uniform allocations may satisfy this requirement by satisfying the general test in paragraph (c) of this section. See § 1.401(a)(4)-1(b)(2)(ii)(B) for the exclusive tests applicable to section 401(k) plans and section 401(m) plans.

(2) ***Alternative methods of satisfying nondiscriminatory amount requirement.*** A defined contribution plan is permitted to satisfy paragraph (b)(2) or (c) of this section on a restructured basis pursuant to § 1.401(a)(4)-9(c). Alternatively, a defined contribution plan (other than an ESOP) is permitted to satisfy the nondiscriminatory amount requirement of § 1.401(a)(4)-1(b)(2)(ii)(A) on the basis of equivalent benefits pursuant to § 1.401(a)(4)-8(b).

(b) ***Safe harbors*** —

(1) ***In general.*** The employer contributions allocated under a defined contribution plan are nondiscriminatory in amount for a plan year if the plan satisfies either of the safe harbors in paragraph (b)(2) or (b)(3) of this section. Paragraph (b)(4) of this section provides exceptions for certain plan provisions that do not cause a plan to fail to satisfy this paragraph (b).

(2) ***Safe harbor for plans with uniform allocation formula*** —

(i) ***General rule.*** A defined contribution plan satisfies the safe harbor in this paragraph (b)(2) for a plan year if the plan allocates all amounts taken into account under paragraph (c)(2)(ii) of this section for the plan year under an allocation formula that allocates to each employee the same percentage of plan year compensation, the same dollar amount, or the same dollar amount for each uniform unit of service (not to exceed one week) performed by the employee during the plan year.

(ii) ***Permitted disparity.*** If a plan satisfies section 401(l) in form, differences in employees' allocations under the plan attributable to uniform disparities permitted under § 1.401(l)-2 (including differences in disparities that are deemed uniform under § 1.401(l)-2(c)(2)) do not cause the plan to fail to satisfy this paragraph (b)(2).

(3) ***Safe harbor for plans with uniform points allocation formula*** —

(i) ***General rule.*** A defined contribution plan (other than an ESOP) satisfies the safe harbor in this paragraph (b)(3) for a plan year if it satisfies both of the following requirements:

(A) The plan must allocate amounts under a uniform points allocation formula. A uniform points allocation formula defines each employee's allocation for the plan year as the product of the total of all amounts taken into account under paragraph (c)(2)(ii) of this section and a fraction, the numerator of which is the employee's points for the plan year and the denominator of which is the sum of the points of all employees in the plan for the plan year. For this purpose, an employee's points for a plan year equal the sum of the employee's points for age, service, and units of plan year compensation for the plan year. Under a uniform points allocation formula, each employee must receive the same number of points for each year of age, the same number of points for each year of service, and the same number of points for each unit of plan year compensation. (See § 1.401(a)(4)-11(d)(3) regarding service that may be taken into account as years of service.) A uniform points allocation formula need not grant points for both age and service, but it must grant points for at least one of them. If the allocation formula grants points for years of service, the plan is permitted to limit the number of years of service taken into account to a single maximum number of years of service. A uniform points allocation formula need not grant points for units of plan year compensation, but if it does, the unit used must be a single dollar amount for all employees that does not exceed $200.

(B) For the plan year, the average of the allocation rates for the HCEs in the plan must not exceed the average of the allocation rates for the NHCEs in the plan. For this purpose, allocation rates are determined in accordance with paragraph (c)(2) of this section, without imputing permitted disparity and without grouping allocation rates under paragraphs (c)(2) (iv) and (v) of this section, respectively.

(ii) ***Example.*** The following example illustrates the safe harbor in this paragraph (b)(3):

> *Example.* (a) Plan A has a single allocation formula that applies to all employees, under

which each employee's allocation for the plan year equals the product of the total of all amounts taken into account for all employees for the plan year under paragraph (c)(2)(ii) of this section and a fraction, the numerator of which is the employee's points for the plan year and the denominator of which is the sum of the points of all employees for the plan year. Plan A grants each employee 10 points for each year of service (including pre-participation service and imputed service credited under Plan A that satisfies § 1.401(a)(4)-11(d)(3)) and one point for each $100 of plan year compensation. For the 1994 plan year, the total allocations are $71,200, and the total points for all employees are 7,120. Each employee's allocation for the 1994 plan year is set forth in the table below.

Employee	Years of service	Plan year compensation	Points	Amount of allocation	Allocation rate (percent)
H1	20	$150,000	1,700	$17,000	11.3
H2	10	150,000	1,600	16,000	10.7
H3	30	100,000	1,300	13,000	13.0
H4	3	100,000	1,030	10,300	10.3
N1	10	40,000	500	5,000	12.5
N2	5	35,000	400	4,000	11.4
N3	3	30,000	330	3,300	11.0
N4	1	25,000	260	2,600	10.4
Total			7,120	71,200	

(b) Under these facts, for the 1994 plan year, Plan A allocates amounts under a uniform points allocation formula within the meaning of paragraph (b)(3)(i)(A) of this section.
(c) For the 1994 plan year, the average allocation rate for the HCEs (H1 through H4) is 11.3 percent, and the average allocation rate for NHCEs (N1 through N4) is 11.3 percent. Because the average of the allocation rates for the HCEs does not exceed the average of the allocation rates for the NHCEs, Plan A satisfies paragraph (b)(3)(i)(B) of this section and, thus, the safe harbor in this paragraph (b)(3) for the 1994 plan year.

(4) *Use of safe harbors not precluded by certain plan provisions* —

(i) ***In general.*** A plan does not fail to satisfy this paragraph (b) merely because the plan contains one or more of the provisions described in this paragraph (b)(4). Unless otherwise provided, any such provision must apply uniformly to all employees.

(ii) ***Entry dates.*** The plan provides one or more entry dates during the plan year as permitted by section 410(a)(4).

(iii) ***Certain conditions on allocations.*** The plan provides that an employee's allocation for the plan year is conditioned on either the employee's employment on the last day of the plan year or the employee's completion of a minimum number of hours of service during the plan year (not to exceed 1,000), or both. Such a provision may include an exception from this condition for all employees whose employment terminates during the plan year or only for those employees whose employment terminates during the plan year on account of one or more of the following circumstances: retirement, disability, death, or military service.

(iv) ***Certain limits on allocations.*** The plan limits allocations otherwise provided under the allocation formula to a maximum dollar amount or a maximum percentage of plan year compensation, limits the dollar amount of plan year compensation taken into account in determining the amount of allocations, or applies the restrictions of section 409(n) or the limits of section 415.

(v) ***Lower allocations for HCEs.*** The allocations provided to one or more HCEs under the plan are less than the allocations that would otherwise be provided to those employees if the plan satisfied this paragraph (b) (without regard to this paragraph (b)(4)(v)).

(vi) ***Multiple formulas*** —

(A) ***General rule.*** The plan provides that an employee's allocation under the plan is the greater of the allocations determined under two or more formulas, or is the sum of the allocations determined under two or more formulas. This paragraph (b)(4)(vi) does not apply to a plan unless each of the formulas under the plan satisfies the requirements of paragraph (b)(4)(vi) (B) through (D) of this section.

(B) ***Sole formulas.*** The formulas must be the only formulas under the plan.

(C) ***Separate testing.*** Each of the formulas must separately satisfy this paragraph (b). A formula that is available solely to some or all NHCEs is deemed to satisfy this paragraph (b)(4)(vi)(C).

(D) ***Availability*** —

(*1*) ***General rule.*** All of the formulas must be available on the same terms to all employees.

(*2*) ***Formulas for NHCEs.*** A formula does not fail to be available on the same terms to all employees merely because the formula is not available to any HCEs, but is available to some or all NHCEs on the same terms as all of the other formulas in the plan.

(*3*) ***Top-heavy formulas.*** In the case of a plan that provides the greater of the allocations under two or more formulas, one of which is a top-heavy formula, the top-heavy formula does not fail to be available on the same terms to all employees merely because it is available solely to all non-key employees on the same terms as all the other formulas under the plan. Furthermore, the top-heavy formula does not fail to be available on the same terms as the other formulas under the plan merely because it is conditioned on the plan's being top-heavy within the meaning of section 416(g). Finally, the top-heavy formula does not fail to be available on the same terms as the other formulas under the plan merely because it is available to all employees described in § 1.416-1, Q&A M-10 (i.e., all non-key employees who have not separated from service as of the last day of the plan year). The preceding sentence does not apply, however, unless the plan would satisfy section 410(b) if all

employees who are benefiting under the plan solely as a result of receiving allocations under the top-heavy formula were treated as not currently benefiting under the plan. For purposes of this paragraph (b)(4)(vi)(D)(*3*), a top-heavy formula is a formula that provides the minimum benefit described in section 416(c)(2) (taking into account, if applicable, the modification in section 416(h)(2)(A)(ii)(II)).

(E) ***Provisions may be applied more than once.*** The provisions of this paragraph (b)(4)(vi) may be applied more than once. For example, a plan satisfies this paragraph (b) if an employee's allocation under the plan is the greater of the allocations under two or more formulas, and one or more of those formulas is the sum of the allocations under two or more other formulas, provided that each of the formulas under the plan satisfies the requirements of paragraph (b)(4)(vi) (B) through (D) of this section.

(F) ***Examples.*** The following examples illustrate the rules in this paragraph (b)(4)(vi):

> ***Example 1.*** Under Plan A, each employee's allocation equals the sum of the allocations determined under two formulas. The first formula provides an allocation of five percent of plan year compensation. The second formula provides an allocation of $100. Plan A satisfies this paragraph (b)(4)(vi).

> ***Example 2.*** Under Plan B, each employee's allocation equals the greater of the allocations determined under two formulas. The first formula provides an allocation of seven percent of plan year compensation and is available to all employees who complete at least 1,000 hours of service during the plan year and who have not separated from service as of the last day of the plan year. The second formula is a top-heavy formula that provides an allocation of three percent of plan year compensation and that is available to all employees described in § 1.416-1, Q&A M-10. Plan B does not satisfy the general rule in paragraph (b)(4)(vi)(D)(*1*) of this section because the two formulas are not available on the same terms to all employees (i.e., an employee is required to complete 1,000 hours of service during the plan year to receive an allocation under the first formula, but not under the second formula). Nonetheless, because the second formula is a top-heavy formula, the special availability rules for top-heavy formulas in paragraph (b)(4)(vi)(D)(*3*) of this section apply. Thus, the second formula does not fail to be available on the same terms as the first formula merely because the second formula is available to all employees described in § 1.416-1, Q&A M-10, as long as the plan would satisfy section 410(b) if all employees who are benefiting under the plan solely as a result of receiving allocations under the top-heavy formula were treated as not currently benefiting under the plan. This is true even if the plan conditions the availability of the second formula on the plan's being top-heavy for the plan year.

> ***Example 3.*** The facts are the same as in *Example 2,* except that the first formula is available to all employees who have not separated from service as of the last day of the plan year, regardless of whether they complete at least 1,000 hours of service during the plan year. Plan B still does not satisfy the general rule in paragraph (b)(4)(vi)(D)(*1*) of this section because the two formulas are not available on the same terms to all employees (i.e., the second formula is only available to all non-key employees). Nonetheless, because the second formula is a top-heavy formula, the special availability

> rules for top-heavy formulas in paragraph (b)(4)(vi)(D)(*3*) of this section apply. Thus, the second formula does not fail to be available on the same terms as the first formula merely because the second formula is available solely to all non-key employees.

(c) ***General test for nondiscrimination in amount of contributions*** —

(1) ***General rule.*** The employer contributions allocated under a defined contribution plan are nondiscriminatory in amount for a plan year if each rate group under the plan satisfies section 410(b). For purposes of this paragraph (c), a rate group exists under a plan for each HCE and consists of the HCE and all other employees in the plan (both HCEs and NHCEs) who have an allocation rate greater than or equal to the HCE's allocation rate. Thus, an employee is in the rate group for each HCE who has an allocation rate less than or equal to the employee's allocation rate.

(2) ***Determination of allocation rates*** —

(i) ***General rule.*** The allocation rate for an employee for a plan year equals the sum of the allocations to the employee's account for the plan year, expressed either as a percentage of plan year compensation or as a dollar amount.

(ii) ***Allocations taken into account.*** The amounts taken into account in determining allocation rates for a plan year include all employer contributions and forfeitures that are allocated or treated as allocated to the account of an employee under the plan for the plan year, other than amounts described in paragraph (c)(2)(iii) of this section. For this purpose, employer contributions include annual additions described in § 1.415(c)-1(b)(4) (regarding amounts arising from certain transactions between the plan and the employer). In the case of a defined contribution plan subject to section 412, an employer contribution is taken into account in the plan year for which it is required to be contributed and allocated to employees' accounts under the plan, even if all or part of the required contribution is not actually made.

(iii) ***Allocations not taken into account.*** Allocations of income, expenses, gains, and losses attributable to the balance in an employee's account are not taken into account in determining allocation rates.

(iv) ***Imputation of permitted disparity.*** The disparity permitted under section 401(l) may be imputed in accordance with the rules of § 1.401(a)(4)-7.

(v) ***Grouping of allocation rates*** —

(A) ***General rule.*** An employer may treat all employees who have allocation rates within a specified range above and below a midpoint rate chosen by the employer as having an allocation rate equal to the midpoint rate within that range. Allocation rates within a given range may not be grouped under this paragraph (c)(2)(v) if the allocation rates of HCEs within the range generally are significantly higher than the allocation rates of NHCEs in the range. The specified ranges within which all employees are treated as having the same allocation rate may not overlap and may be no larger than provided in paragraph (c)(2)(v)(B) of this section. Allocation rates of employees that are not within any of these specified ranges are determined without regard to this paragraph (c)(2)(v).

(B) ***Size of specified ranges.*** The lowest and highest allocation rates in the range must be within five percent (not five percentage points) of the midpoint rate. If allocation rates are determined as a percentage of plan year compensation, the lowest and highest allocation rates need not be within five percent of the midpoint rate, if they are no more than one quarter of a percentage point above or below the midpoint rate.

(vi) ***Consistency requirement.*** Allocation rates must be determined in a consistent manner for all employees for the plan year.

(3) ***Satisfaction of section 410(b) by a rate group*** —

(i) ***General rule.*** For purposes of determining whether a rate group satisfies section 410(b), the rate group is treated as if it were a separate plan that benefits only the employees included in the rate group for the plan year. Thus, for example, under § 1.401(a)(4)-1(c)(4)(iv), the ratio percentage of the rate group is determined taking into account all nonexcludable employees regardless of whether they benefit under the plan. Paragraph (c)(3) (ii) and (iii) of this section provide additional special rules for determining whether a rate group satisfies section 410(b).

(ii) ***Application of nondiscriminatory classification test.*** A rate group satisfies the nondiscriminatory classification test of § 1.410(b)-4 (including the reasonable classification requirement of § 1.410(b)-4(b)) if and only if the ratio percentage of the rate group is greater than or equal to the lesser of—

(A) The midpoint between the safe and the unsafe harbor percentages applicable to the plan; and

(B) The ratio percentage of the plan.

(iii) ***Application of average benefit percentage test.*** A rate group satisfies the average benefit percentage test of § 1.410(b)-5 if the plan of which it is a part satisfies § 1.410(b)-5 (without regard to § 1.410(b)-5(f)). In the case of a plan that relies on § 1.410(b)-5(f) to satisfy the average benefit percentage test, each rate group under the plan satisfies the average benefit percentage test (if applicable) only if the rate group separately satisfies § 1.410(b)-5(f).

(4) ***Examples.*** The following examples illustrate the general test in this paragraph (c):

Example 1. Employer X maintains two defined contribution plans, Plan A and Plan B, that are aggregated and treated as a single plan for purposes of sections 410(b) and 401(a)(4) pursuant to § 1.410(b)-7(d). For the 1994 plan year, Employee M has plan year compensation of $10,000 and receives an allocation of $200 under Plan A and an allocation of $800 under Plan B. Employee M's allocation rate under the aggregated plan for the 1994 plan year is 10 percent (i.e., $1,000 divided by $10,000).

Example 2. The employees in Plan C have the following allocation rates (expressed as a percentage of plan year compensation): 2.75 percent, 2.80 percent, 2.85 percent, 3.25 percent, 6.65 percent, 7.33 percent, 7.34 percent, and 7.35 percent. Because the first four rates are within a range of no more than one quarter of a percentage point above and below 3.0 percent (a midpoint rate chosen by the employer), under paragraph (c)(2)(v) of this section the employer may treat the employees who have those rates as having an allocation rate of 3.0 percent (provided that the allocation rates of HCEs within the range generally are not significantly higher than the allocation rates of NHCEs within the range). Because the last four rates are within a range of no more than five percent above and below 7.0 percent (a midpoint rate chosen by the employer),

the employer may treat the employees who have those rates as having an allocation rate of 7.0 percent (provided that the allocation rates of HCEs within the range generally are not significantly higher than the allocation rates of NHCEs within the range).

Example 3. (a) Employer Y has only six nonexcludable employees, all of whom benefit under Plan D. The HCEs are H1 and H2, and the NHCEs are N1 through N4. For the 1994 plan year, H1 and N1 through N4 have an allocation rate of 5.0 percent of plan year compensation. For the same plan year, H2 has an allocation rate of 7.5 percent of plan year compensation.
(b) There are two rate groups under Plan D. Rate group 1 consists of H1 and all those employees who have an allocation rate greater than or equal to H1's allocation rate (5.0 percent). Thus, rate group 1 consists of H1, H2, and N1 through N4. Rate group 2 consists only of H2 because no other employee has an allocation rate greater than or equal to H2's allocation rate (7.5 percent).

(c) The ratio percentage for rate group 2 is zero percent—i.e., zero percent (the percentage of all nonhighly compensated nonexcludable employees who are in the rate group) divided by 50 percent (the percentage of all highly compensated nonexcludable employees who are in the rate group). Therefore rate group 2 does not satisfy the ratio percentage test under § 1.410(b)-2(b)(2). Rate group 2 also does not satisfy the nondiscriminatory classification test of § 1.410(b)-4 (as modified by paragraph (c)(3) of this section). Rate group 2 therefore does not satisfy section 410(b) and, as a result, Plan D does not satisfy the general test in paragraph (c)(1) of this section. This is true regardless of whether rate group 1 satisfies § 1.410(b)-2(b)(2).

Example 4. (a) The facts are the same as in *Example 3,* except that N4 has an allocation rate of 8.0 percent.
(b) There are two rate groups in Plan D. Rate group 1 consists of H1 and all those employees who have an allocation rate greater than or equal to H1's allocation rate (5.0 percent). Thus, rate group 1 consists of H1, H2 and N1 through N4. Rate group 2 consists of H2, and all those employees who have an allocation rate greater than or equal to H2's allocation rate (7.5 percent). Thus, rate group 2 consists of H2 and N4.

(c) Rate group 1 satisfies the ratio percentage test under § 1.410(b)-2(b)(2) because the ratio percentage of the rate group is 100 percent—i.e., 100 percent (the percentage of all nonhighly compensated nonexcludable employees who are in the rate group) divided by 100 percent (the percentage of all highly compensated nonexcludable employees who are in the rate group).

(d) Rate group 2 does not satisfy the ratio percentage test of § 1.410(b)-2(b)(2) because the ratio percentage of the rate group is 50 percent—i.e., 25 percent (the percentage of all nonhighly compensated nonexcludable employees who are in the rate group) divided by 50 percent (the percentage of all highly compensated nonexcludable employees who are in the rate group).

(e) However, rate group 2 does satisfy the nondiscriminatory classification test of § 1.410(b)-4 because the ratio percentage of the rate group (50 percent) is greater than the safe harbor percentage applicable to the plan under § 1.410(b)-4(c)(4) (45.5 percent).

(f) Under paragraph (c)(3)(iii) of this section, rate group 2 satisfies the average benefit percentage test, if Plan D satisfies the average benefit percentage test. (The requirement that Plan D satisfy the average benefit percentage test applies even though Plan D satisfies the ratio percentage test and would ordinarily not need to run the average benefit percentage test.) If Plan D satisfies the average benefit percentage test, then rate group 2 satisfies section 410(b) and thus, Plan D satisfies the general test in paragraph (c)(1) of this section, because each rate group under the plan satisfies section 410(b).

Example 5. (a) Plan E satisfies section 410(b) by satisfying the nondiscriminatory classification test of § 1.410(b)-4 and the average benefit percentage test of § 1.410(b)-5 (without regard to § 1.410(b)-5(f)). See § 1.410(b)-2(b)(3). Plan E uses the facts-and-circumstances requirements of § 1.410(b)-4(c)(3) to satisfy the nondiscriminatory classification test of § 1.410(b)-4. The safe and unsafe harbor percentages applicable to the plan under § 1.410(b)-4(c)(4) are 29 and 20 percent, respectively. Plan E has a ratio percentage of 22 percent.
(b) Rate group 1 under Plan E has a ratio percentage of 23 percent. Under paragraph (c)(3)(ii) of this section, the rate group satisfies the nondiscriminatory classification requirement of § 1.410(b)-4, because the ratio percentage of the rate group (23 percent) is greater than the lesser of—

(1) The ratio percentage for the plan as a whole (22 percent); and

(2) The midpoint between the safe and unsafe harbor percentages (24.5 percent).

(c) Under paragraph (c)(3)(iii) of this section, the rate group satisfies section 410(b) because the plan satisfies the average benefit percentage test of § 1.410(b)-5.

[T.D. 8485, 58 FR 46781, Sept. 3, 1993, as amended by T.D. 9319, 72 FR 16894, Apr. 5, 2007]

§ 1.401(a)(4)-3 Nondiscrimination in amount of employer-provided benefits under a defined benefit plan.

(a) ***Introduction*** —

(1) ***Overview.*** This section provides rules for determining whether the employer-provided benefits under a defined benefit plan are nondiscriminatory in amount as required by § 1.401(a)(4)-1(b)(2)(iii). Certain defined benefit plans that provide uniform benefits are permitted to satisfy this requirement by meeting one of the safe harbors in paragraph (b) of this section. Plans that do not provide uniform benefits may satisfy this requirement by satisfying the general test in paragraph (c) of this section. Paragraph (d) of this section provides rules for determining the individual benefit accrual rates needed for the general test. Paragraph (e) of this section provides rules for determining compensation for purposes of applying the requirements of this section. Paragraph (f) of this section provides additional rules that apply generally for purposes of both the safe harbors in paragraph (b) of this section and the general test in paragraph (c) of this section. See § 1.401(a)(4)-6 for rules for determining the amount of employer-provided benefits under a contributory DB plan, and for determining whether the employee-provided benefits under such a plan are nondiscriminatory in amount.

(2) ***Alternative methods of satisfying nondiscriminatory amount requirement.*** A defined benefit plan is permitted to satisfy paragraph (b) or (c) of this section on a restructured basis pursuant to § 1.401(a)(4)-9(c). Alternatively, a defined benefit plan is permitted to satisfy the nondiscriminatory amount requirement of § 1.401(a)(4)-1(b)(2)(iii) on the basis of equivalent allocations pursuant to § 1.401(a)(4)-8(c). In addition, a defined benefit plan that is part of a floor-offset arrangement is permitted to satisfy this section pursuant to § 1.401(a)(4)-8(d).

(b) ***Safe harbors*** —

(1) ***In general.*** The employer-provided benefits under a defined benefit plan are nondiscriminatory in amount for a plan year if the plan satisfies each of the uniformity requirements of paragraph (b)(2) of this section and any one of the safe harbors in paragraphs (b)(3) (unit credit plans), (b)(4) (fractional accrual plans), and (b)(5) (insurance contract plans) of this section. Paragraph (b)(6) of this section provides exceptions for certain plan provisions that do not cause a plan to fail to satisfy this paragraph (b). Paragraph (f) of this section provides additional rules that apply in determining whether a plan satisfies this paragraph (b).

(2) ***Uniformity requirements*** —

(i) ***Uniform normal retirement benefit.*** The same benefit formula must apply to all employees. The benefit formula must provide all employees with an annual benefit payable in the same form commencing at the same uniform normal retirement age. The annual benefit must be the same percentage of average annual compensation or the same dollar amount for all employees who will have the same number of years of service at normal retirement age. (See § 1.401(a)(4)-11(d)(3) regarding service that may be taken into account as years of service.) The annual benefit must equal the employee's accrued benefit at normal retirement age (within the meaning of section 411(a)(7)(A)(i)) and must be the normal retirement benefit under the plan (within the meaning of section 411(a)(9)).

(ii) ***Uniform post-normal retirement benefit.*** With respect to an employee with a given number of years of service at any age after normal retirement age, the annual benefit commencing at that employee's age must be the same percentage of average annual compensation or the same dollar amount that would be payable commencing at normal retirement age to an employee who had that same number of years of service at normal retirement age.

(iii) ***Uniform subsidies.*** Each subsidized optional form of benefit available under the plan must be currently available (within the meaning of § 1.401(a)(4)-4(b)(2)) to substantially all employees. Whether an optional form of benefit is considered subsidized for this purpose may be determined using any reasonable actuarial assumptions.

(iv) ***No employee contributions.*** The plan must not be a contributory DB plan.

(v) ***Period of accrual.*** Each employee's benefit must be accrued over the same years of service that are taken into account in applying the benefit formula under the plan to that employee. For this purpose, any year in which the employee benefits under the plan (within the meaning of § 1.410(b)-3(a)) is included as a year of service in which a benefit accrues. Thus, for example, a plan does not satisfy the safe harbor in paragraph (b)(4) of this section unless the plan uses the same years of service to determine both the normal retirement benefit under the plan's benefit formula and the fraction by which an employee's fractional rule benefit is multiplied to derive the employee's accrued benefit as of any plan year.

(vi) ***Examples.*** The following examples illustrate the rules in this paragraph (b)(2):

Example 1. Plan A provides a normal retirement benefit equal to two percent of average annual compensation times each year of service commencing at age 65 for all employees. Plan A provides that employees of Division S receive their benefit in the form of a straight life annuity and that employees of Division T receive their benefit in the form of a life annuity with an automatic cost-of-living increase. Plan A does not provide a uniform normal retirement benefit within the meaning of paragraph (b)(2)(i) of this section because the annual benefit is not payable in the same form to all employees.

Example 2. Plan B provides a normal retirement benefit equal to 1.5 percent of average annual compensation times each year of service at normal retirement age for all employees. The normal retirement age under the plan is the earlier of age 65 or the age at which the employee completes 10 years of service, but in no event earlier than age 62. Plan B does not provide a uniform normal retirement benefit within the meaning of paragraph (b)(2)(i) of this section because the same uniform normal retirement age does not apply to all employees.

Example 3. Plan C is an accumulation plan under which the benefit for each year of service equals one percent of plan year compensation payable in the same form to all employees commencing at the same uniform normal retirement age. Under paragraph (e)(2) of this section, an accumulation plan may substitute plan year compensation for average annual compensation. Plan C provides a uniform normal retirement benefit within the meaning of paragraph (b)(2)(i) of this section, because all employees with the same number of years of service at normal retirement age will receive an annual benefit that is treated as the same percentage of average annual compensation.

Example 4. The facts are the same as in *Example 3,* except that the benefit for each year of service equals one percent of plan year compensation increased by reference to the increase in the cost of living from the year of service to normal retirement age. Plan C does not provide a uniform normal retirement benefit, because the annual benefit defined by the benefit formula can vary for employees with the same number of years of service at normal retirement age, depending on the age at which those years of service were credited to the employee under the plan.

Example 5. Plan D provides a normal retirement benefit of 50 percent of average annual compensation at normal retirement age (age 65) for employees with 30 years of service at normal retirement age. Plan D provides that, in the case of an employee with less than 30 years of service at normal retirement age, the normal retirement benefit is reduced on a pro rata basis for each year of service less than 30. However, if an employee with less than 30 years of service at normal retirement age continues to work past normal retirement age, Plan D provides that the additional years of service worked past normal retirement age are taken into account for purposes of the 30 years of service requirement. Thus, an employee who has 26 years of service at age 65 but who does not retire until age 69 with 30 years of service will receive a benefit of 50 percent of average annual compensation. Plan D provides uniform post-normal retirement benefits within the meaning of paragraph (b)(2)(ii) of this section.

> *Example 6.* (a) Plan E is amended on February 14, 1994, to provide an early retirement window benefit that consists of an unreduced early retirement benefit to employees who terminate employment after attainment of age 55 with 10 years of

service and between June 1, 1994, and November 30, 1994. The early retirement window benefit is a single subsidized optional form of benefit. Paragraph (b)(2)(iii) of this section requires that the subsidized optional form of benefit be currently available (within the meaning of § 1.401(a)(4)-4(b)(2)) to substantially all employees. Section 1.401(a)(4)-4(b)(2)(ii)(A)(2) provides that age and service requirements are not disregarded in determining the current availability of an optional form of benefit if those requirements must be satisfied within a specified period of time. Thus, the early retirement window benefit is not currently available to an employee unless the employee will satisfy the eligibility requirements for the early retirement window benefit by the close of the early retirement window benefit period. Plan E will fail to satisfy paragraph (b)(2)(iii) of this section unless substantially all of the employees satisfy the eligibility requirements for the early retirement window benefit by November 30, 1994. However, see § 1.401(a)(4)-9(c)(6), *Example 2,* for an example of how a plan with an early retirement window benefit may be restructured into two component plans, each of which satisfies the safe harbors of this paragraph (b).
(b) A similar analysis would apply if, instead of an unreduced early retirement benefit, the early retirement window benefit consisted of a special schedule of early retirement factors, defined by starting with the plan's usual schedule and then treating each employee eligible for the early retirement window benefit as being five years older than the employee actually is, but not older than the employee's normal retirement age.

Example 7. Plan F generally provides a normal retirement benefit of 1.5 percent of an employee's average annual compensation multiplied by the employee's years of service with the employer. For employees transferred outside of the group of employees covered by the plan, the plan's benefit formula takes into account only years of service prior to the transfer, but determines average annual compensation taking into account section 414(s) compensation both before and after the transfer. Plan F does not satisfy the requirements of paragraph (b)(2)(v) of this section with respect to transferred employees, because their benefits are accrued over years of service (i.e., after transfer) that are not taken into account in applying the plan's benefit formula to them. However, see *Example 2* of paragraph (b)(6)(x)(B) of this section for an example of how a plan that continues to take transferred employees' section 414(s) compensation into account after their transfer may still satisfy this paragraph (b).

(3) ***Safe harbor for unit credit plans*** —

(i) ***General rule.*** A plan satisfies the safe harbor in this paragraph (b)(3) for a plan year if it satisfies both of the following requirements:

(A) The plan must satisfy the $133^{1}/_{3}$ percent accrual rule of section 411(b)(1)(B).

(B) Each employee's accrued benefit under the plan as of any plan year must be determined by applying the plan's benefit formula to the employee's years of service and (if applicable) average annual compensation, both determined as of that plan year.

(ii) ***Example.*** The following example illustrates the rules in this paragraph (b)(3):

Example. Plan A provides that the accrued benefit of each employee as of any plan year equals the employee's average annual compensation times a percentage that depends on the employee's years of service determined as of that plan year. The percentage is 2 percent for each of the first 10 years of service, plus 1.5 percent for each of the next 10 years of service, plus 2 percent for all additional years of service. Plan A satisfies this paragraph (b)(3).

(4) ***Safe harbor for plans using fractional accrual rule*** —

(i) ***General rule.*** A plan satisfies the safe harbor in this paragraph (b)(4) for a plan year if it satisfies each of the following requirements:

(A) The plan must satisfy the fractional accrual rule of section 411(b)(1)(C).

(B) Each employee's accrued benefit under the plan as of any plan year before the employee reaches normal retirement age must be determined by multiplying the employee's fractional rule benefit (within the meaning of § 1.411(b)-1(b)(3)(ii)(A)) by a fraction, the numerator of which is the employee's years of service determined as of the plan year, and the denominator of which is the employee's projected years of service as of normal retirement age.

(C) The plan must satisfy one of the following requirements:

(*1*) Under the plan, it must be impossible for any employee to accrue in a plan year a portion of the normal retirement benefit described in paragraph (b)(2)(i) of this section that is more than one-third larger than the portion of the same benefit accrued in that or any other plan year by any other employee, when each portion of the benefit is expressed as a percentage of each employee's average annual compensation or as a dollar amount. In making this determination, actual and potential employees in the plan with any amount of service at normal retirement must be taken into account (other than employees with more than 33 years of service at normal retirement age). In addition, in the case of a plan that satisfies section 401(l) in form, an employee is treated as accruing benefits at a rate equal to the excess benefit percentage in the case of a defined benefit excess plan or at a rate equal to the gross benefit percentage in the case of an offset plan.

(*2*) The normal retirement benefit under the plan must be a flat benefit that requires a minimum of 25 years of service at normal retirement age for an employee to receive the unreduced flat benefit, determined without regard to section 415. For this purpose, a flat benefit is a benefit that is the same percentage of average annual compensation or the same dollar amount for all employees who have a minimum number of years of service at normal retirement age (e.g., 50 percent of average annual compensation), with a pro rata reduction in the flat benefit for employees who have less than the minimum number of years of service at normal retirement age. An

employee is permitted to accrue the maximum benefit permitted under section 415 over a period of less than 25 years, provided that the flat benefit under the plan, determined without regard to section 415, can accrue over no less than 25 years.

(*3*) The plan must satisfy the requirements of paragraph (b)(4)(i)(C)(*2*) of this section (other than the requirement that the minimum number of years of service for receiving the unreduced flat benefit is at least 25 years), and, for the plan year, the average of the normal accrual rates for all nonhighly compensated nonexcludable employees must be at least 70 percent of the average of the normal accrual rates for all highly compensated nonexcludable employees. The averages in the preceding sentence are determined taking into account all nonexcludable employees (regardless of whether they benefit under the plan). In addition, contributions and benefits under other plans of the employer are disregarded. For purposes of this paragraph (b)(4)(i)(C)(*3*), normal accrual rates are determined under paragraph (d) of this section.

(ii) ***Examples.*** The following examples illustrate the rules in this paragraph (b)(4). In each example, it is assumed that the plan has never permitted employee contributions.

Example 1. Plan A provides a normal retirement benefit equal to 1.6 percent of average annual compensation times each year of service up to 25. Plan A further provides that an employee's accrued benefit as of any plan year equals the employee's fractional rule benefit multiplied by a fraction, the numerator of which is the employee's years of service as of the plan year, and the denominator of which is the employee's projected years of service as of normal retirement age. The greatest benefit that an employee could accrue in any plan year is 1.6 percent of average annual compensation (this is the case for an employee with 25 or fewer years of projected service at normal retirement age). Among potential employees with 33 or fewer years of projected service at normal retirement age, the lowest benefit that an employee could accrue in any plan year is 1.212 percent of average annual compensation (this is the case for an employee with 33 years of projected service at normal retirement age). Plan A satisfies paragraph (b)(4)(i)(C)(*1*) of this section because 1.6 percent is not more than one third larger than 1.212 percent.

Example 2. Plan B provides a normal retirement benefit equal to 1.0 percent of average annual compensation up to the integration level, and 1.6 percent of average annual compensation above the integration level, times each year of service up to 35. Plan B further provides that an employee's accrued benefit as of any plan year equals the employee's fractional rule benefit multiplied by a fraction, the numerator of which is the employee's years of service as of the plan year and the denominator of which is the employee's projected years of service as of normal retirement age. For purposes of satisfying the one third larger rule in paragraph (b)(4)(i)(C)(*1*) of this section, because Plan B satisfies section 401(l) in form, all employees with less than 35 projected years of service are assumed to accrue benefits at the rate of 1.6 percent of average annual compensation (the excess benefit percentage under the plan). Plan B satisfies paragraph (b)(4)(i)(C) of this section because all employees with 33 or fewer years of projected service at normal retirement age accrue in each plan year a benefit of 1.6 percent of average annual compensation.

Example 3. Plan C provides a normal retirement benefit equal to four percent of average annual compensation times each year of service up to 10 and one percent of average annual compensation times each year of service in excess of 10 and not in excess of 30. Plan C

further provides that an employee's accrued benefit as of any plan year equals the employee's fractional rule benefit multiplied by a fraction, the numerator of which is the employee's years of service as of the plan year, and the denominator of which is the employee's projected years of service as of normal retirement age. The greatest benefit that an employee could accrue in any plan year is four percent of average annual compensation (this is the case for an employee with 10 or fewer years of projected service at normal retirement age). Among employees with 33 or fewer years of projected service at normal retirement age, the lowest benefit that an employee could accrue in a plan year is 1.82 percent of average annual compensation (this is the case of an employee with 33 years of projected service at normal retirement age). Plan C fails to satisfy this paragraph (b)(4) because four percent is more than one third larger than 1.82 percent. See also § 1.401(a)(4)-9(c)(6), *Example 3.*

Example 4. Plan D provides a normal retirement benefit of 100 percent of average annual compensation, reduced by four percentage points for each year of service below 25 the employee has at normal retirement age. Plan D further provides that an employee's accrued benefit as of any plan year is equal to the employee's fractional rule benefit multiplied by a fraction, the numerator of which is the employee's years of service as of the plan year, and the denominator of which is the employee's projected years of service at normal retirement age. In the case of an employee who has five years of service as of the current plan year, and who is projected to have 10 years of service at normal retirement age, the employee's fractional rule benefit would be 40 percent of average annual compensation, and the employee's accrued benefit as of the current plan year would be 20 percent of average annual compensation (the fractional rule benefit multiplied by a fraction of five years over 10 years). Plan D satisfies this paragraph (b)(4).

Example 5. The facts are the same as in *Example 4,* except that the normal retirement benefit is 125 percent of average annual compensation, reduced by five percentage points for each year of service below 25 that the employee has at normal retirement age. Plan D satisfies this paragraph (b)(4), even though an employee may accrue the maximum benefit allowed under section 415 (i.e., 100 percent of the participant's average compensation for the high three years of service) in less than 25 years.

Example 6. The facts are the same as in *Example 1,* except that the plan determines each employee's accrued benefit by multiplying the employee's projected normal retirement benefit (rather than the fractional rule benefit) by the fraction described in *Example 1.* In determining an employee's projected normal retirement benefit, the plan defines each employee's average annual compensation as the average annual compensation the employee would have at normal retirement age if the employee's annual section 414(s) compensation in future plan years equaled the employee's plan year compensation for the prior plan year. Under these facts, Plan A does not satisfy paragraph (b)(4)(i)(B) of this section because the employee's accrued benefit is determined on the basis of a projected normal retirement benefit that is not the same as the employee's fractional rule benefit determined in accordance with § 1.411(b)-1(b)(3)(ii)(A).

Example 7. Plan E provides a normal retirement benefit of 50 percent of average annual compensation, with a pro rata reduction for employees with less than 30 years of service at normal retirement age. Plan E further provides that an employee's accrued benefit as of any plan year is equal to the employee's fractional rule benefit multiplied by a fraction, the numerator of which is the employee's years of service as of the plan year, and the

denominator of which is the employee's projected years of service at normal retirement age. For purposes of determining this fraction, the plan limits the years of service taken into account for an employee to the number of years the employee has participated in the plan. However, all years of service (including years of service before the employee commenced participation in the plan) are taken into account in determining an employee's normal retirement benefit under the plan's benefit formula. Plan E fails to satisfy this paragraph (b)(4) because the years of service over which benefits accrue differ from the years of service used in applying the benefit formula under the plan. See paragraph (b)(2)(v) of this section.

Example 8. (a) Plan F provides a normal retirement benefit equal to 2.0 percent of average annual compensation, plus 0.65 percent of average annual compensation above covered compensation, for each year of service up to 25. Plan F further provides that an employee's accrued benefit as of any plan year equals the sum of—
(1) The employee's fractional rule benefit (determined as if the normal retirement benefit under the plan equaled 2.0 percent of average annual compensation for each year of service up to 25) multiplied by a fraction, the numerator of which is the employee's years of service as of the plan year and the denominator of which is the employee's projected years of service as of normal retirement age; plus

(2) 0.65 percent of the employee's average annual compensation above covered compensation multiplied by the employee's years of service (up to 25) as of the current plan year.

(b) Although Plan F satisfies the fractional accrual rule of section 411(b)(1)(C), the plan fails to satisfy this paragraph (b)(4) because the plan does not determine employees' accrued benefits in accordance with paragraph (b)(4)(i)(B) of this section.

(5) ***Safe harbor for insurance contract plans.*** A plan satisfies the safe harbor in this paragraph (b)(5) if it satisfies each of the following requirements:

(i) The plan must satisfy the accrual rule of section 411(b)(1)(F).

(ii) The plan must be an insurance contract plan within the meaning of section 412(i).

(iii) The benefit formula under the plan must be one that would satisfy the requirements of paragraph (b)(4) of this section if the stated normal retirement benefit under the formula accrued ratably over each employee's period of plan participation through normal retirement age in accordance with paragraph (b)(4)(i)(B) of this section. Thus, the benefit formula may not recognize years of service before an employee commenced participation in the plan because, otherwise, the definition of years of service for determining the normal retirement benefit would differ from the definition of years of service for determining the accrued benefit under paragraph (b)(4)(i)(B) of this section. See paragraph (b)(4)(ii), *Example 7,* of this section. Notwithstanding the foregoing, an insurance contract plan adopted and in effect on September

19, 1991, may continue to recognize years of service prior to an employee's participation in the plan for an employee who is a participant in the plan on that date to the extent provided by the benefit formula in the plan on such date.

(iv) The scheduled premium payments under an individual or group insurance contract used to fund an employee's normal retirement benefit must be level annual payments to normal retirement age. Thus, payments may not be scheduled to cease before normal retirement age.

(v) The premium payments for an employee who continues benefiting after normal retirement age must be equal to the amount necessary to fund additional benefits that accrue under the plan's benefit formula for the plan year.

(vi) Experience gains, dividends, forfeitures, and similar items must be used solely to reduce future premiums.

(vii) All benefits must be funded through contracts of the same series. Among other requirements, contracts of the same series must have cash values based on the same terms (including interest and mortality assumptions) and the same conversion rights. A plan does not fail to satisfy this requirement, however, if any change in the contract series or insurer applies on the same terms to all employees. But see § 1.401(a)(4)-5(a)(4), *Example 12* (change in insurer considered a plan amendment subject to § 1.401(a)(4)-5(a)).

(viii) If permitted disparity is taken into account, the normal retirement benefit stated under the plan's benefit formula must satisfy § 1.401(l)-3. For this purpose, the 0.75-percent factor in the maximum excess or offset allowance in § 1.401(l)-3(b)(2)(i) or (b)(3)(i), respectively, adjusted in accordance with § 1.401(l)-3(d)(9) and (e), is reduced by multiplying the factor by 0.80.

(6) ***Use of safe harbors not precluded by certain plan provisions*** —

(i) ***In general.*** A plan does not fail to satisfy this paragraph (b) merely because the plan contains one or more of the provisions described in this paragraph (b)(6). Unless otherwise provided, any such provision must apply uniformly to all employees.

(ii) ***Section 401(l) permitted disparity.*** The plan takes permitted disparity into account in a manner that satisfies section 401(l) in form. Thus, differences in employees' benefits under the plan attributable to uniform disparities permitted under § 1.401(l)-3 (including differences in disparities that are deemed uniform under § 1.401(l)-3(c)(2)) do not cause a plan to fail to satisfy this paragraph (b).

(iii) ***Different entry dates.*** The plan provides one or more entry dates during the plan year as permitted by section 410(a)(4).

(iv) ***Certain conditions on accruals.*** The plan provides that an employee's accrual for the plan year is less than a full accrual (including a zero accrual) because of a plan provision permitted by the year-of-participation rules of section 411(b)(4).

(v) ***Certain limits on accruals.*** The plan limits benefits otherwise provided under the benefit formula or accrual method to a maximum dollar amount or to a maximum percentage of average annual compensation (e.g., by limiting service taken into account in the benefit formula) or in accordance with section 401(a)(5)(D), applies the limits of section 415, or limits the dollar amount of compensation taken into account in determining benefits.

(vi) ***Dollar accrual per uniform unit of service.*** The plan determines accruals based on the same dollar amount for each uniform unit of service (not to exceed one week) performed by each employee with the same number of years of service under the plan during the plan year. The preceding sentence applies solely for purposes of the unit credit safe harbor in paragraph (b)(3) of this section.

(vii) ***Prior benefits accrued under a different formula.*** The plan determines benefits for years of service after a fresh-start date for all employees under a benefit formula and accrual method that differ from the benefit formula and accrual method previously used to determine benefit accruals for employees in a fresh-start group for years of service before the fresh-start date. This paragraph (b)(6)(vii) applies solely to plans that satisfy § 1.401(a)(4)-13(c) with respect to the fresh start.

(viii) ***Employee contributions.*** The plan is a contributory DB plan that would satisfy the requirements of paragraph (b) of this section if the plan's benefit formula provided benefits at employees' employer-provided benefit rates determined under § 1.401(a)(4)-6(b). This paragraph (b)(6)(viii) does not apply to a plan tested under paragraph (b)(4) or (b)(5) of this section unless the plan satisfies one of the methods in § 1.401(a)(4)-6 (b)(4) through (b)(6). A minimum benefit added to the plan solely to satisfy § 1.401(a)(4)-6(b)(3) is not taken into account in determining whether this paragraph (b)(6)(viii) is satisfied.

(ix) ***Certain subsidized optional forms.*** The plan provides a subsidized optional form of benefit that is available to fewer than substantially all employees because the optional form of benefit has been eliminated prospectively as provided in § 1.401(a)(4)-4(b)(3).

(x) ***Lower benefits for HCEs*** —

(A) ***General rule.*** The benefits (including any subsidized optional form of benefit) provided to one or more HCEs under the plan are inherently less valuable to those HCEs (determined by applying the principles of § 1.401(a)(4)-4(d)(4)) than the benefits that would otherwise be provided to those HCEs if the plan satisfied this paragraph (b) (determined without regard to this paragraph (b)(6)(x)). These inherently less valuable benefits are deemed to satisfy this paragraph (b).

(B) ***Examples.*** The following examples illustrate the rules in this paragraph (b)(6)(x):

Example 1. Plan A would satisfy this paragraph (b) (determined without regard to this paragraph (b)(6)(x)), except for the fact that it fails to satisfy the requirement of paragraph (b)(2)(iii) of this section (i.e., a subsidized optional form must be available to substantially all employees on similar terms). Each subsidized optional form in the plan is available to all the NHCEs on similar terms, but one of the subsidized optional forms of benefit is not available to any of the HCEs. Plan A satisfies this paragraph (b), because Plan A is a safe harbor plan with respect to the NHCEs and provides inherently less valuable benefits to the HCEs.

> *Example 2.* (a) Plan B would satisfy this paragraph (b) (determined without regard to this paragraph (b)(6)(x)), except for the fact that some employees are not being credited with years of service under the plan, but are continuing to accrue benefits as a result of compensation increases. These are employees who have been transferred from the employer that sponsors Plan B

to another member of the controlled group whose employees are not covered by Plan B. For these employees, Plan B fails to satisfy the requirement of paragraph (b)(2)(v) of this section (i.e., each employee's benefit must accrue over the same years of service used in applying the benefit formula).
(b) Plan B is restructured into two component plans under the provisions of § 1.401(a)(4)-9(c). One component plan (Component Plan B1) consists of all NHCEs who are not being credited with years of service under the plan's benefit formula but are continuing to accrue benefits as a result of compensation increases, and the other component plan (Component Plan B2) consists of the balance of the employees.

(c) Component Plan B1 satisfies this section and section 410(b), because it benefits only NHCEs.

(d) Component Plan B2 is treated as satisfying this paragraph (b), because Plan B would satisfy this paragraph (b) (determined without regard to this paragraph (b)(6)(x)) with respect to the employees in Component Plan B2 but for the fact that it provides inherently less valuable benefits to some HCEs in that component plan (i.e., the employees who are credited only with compensation increases rather than both years of service and compensation increases).

(e) Under § 1.401(a)(4)-9(c), if Component Plan B2 satisfies section 410(b), then Plan B satisfies this section.

(xi) ***Multiple formulas*** —

(A) ***General rule.*** The plan provides that an employee's benefit under the plan is the greater of the benefits determined under two or more formulas, or is the sum of the benefits determined under two or more formulas. This paragraph (b)(6)(xi) does not apply to a plan unless each of the formulas under the plan satisfies the requirements of paragraph (b)(6)(xi) (B) through (D) of this section.

(B) ***Sole formulas.*** The formulas must be the only formulas under the plan.

(C) ***Separate testing.*** Each of the formulas must separately satisfy the uniformity requirements of paragraph (b)(2) of this section and also separately satisfy one of the safe harbors in paragraphs (b)(3) through (b)(5) of this section. A formula that is available solely to some or all NHCEs is deemed to satisfy this paragraph (b)(6)(xi)(C).

(D) ***Availability*** —(*1*) *General rule.* All of the formulas must be available on the same terms to all employees.

(*2*) *Formulas for NHCEs.* A formula does not fail to be available on the same terms to all employees merely because the formula is not available to any HCEs, but is available to some or all NHCEs on the same terms as all of the other formulas in the plan.

(*3*) *Top-heavy formulas.* Rules parallel to those in § 1.401(a)(4)-2(b)(4)(vi)(D)(*3*) apply in the case of a plan that provides the greater of the benefits under two or more formulas, one of which is a top-heavy formula. For purposes of this paragraph (b)(6)(xi)(D)(*3*), a top-heavy formula is a formula that provides a benefit equal to the minimum benefit described in section 416(c)(1) (taking into account, if applicable, the modification in section 416(h)(2)(A)(ii)(I)).

(E) ***Provisions may be applied more than once.*** The provisions of this paragraph (b)(6)(xi) may be applied more than once. See § 1.401(a)(4)-2(b)(4)(vi)(E) for an example of the application of these provisions more than once.

(F) ***Examples.*** The following examples illustrate the rules in this paragraph (b)(6)(xi):

Example 1. Under Plan A, each employee's benefit equals the sum of the benefits determined under two formulas. The first formula provides one percent of average annual compensation per year of service. The second formula provides $10 per year of service. Plan A is eligible to apply the rules in this paragraph (b)(6)(xi).

Example 2. Under Plan B, each employee's benefit equals the greater of the benefits determined under two formulas. The first formula provides $15 per year of service and is available to all employees who complete at least 500 hours of service during the plan year. The second formula provides 1.5 percent of average annual compensation per year of service and is available to all employees who complete at least 1,000 hours of service during the plan year. Plan B does not satisfy this paragraph (b)(6)(xi) because the two formulas are not available on the same terms to all employees.

Example 3. Under Plan C, each employee's benefit equals the greater of the benefits determined under two formulas. The first formula provides $15 per year of service and is available to all employees who complete at least 1,000 hours of service during the plan year. The second formula provides the minimum benefit described in section 416(c)(1) and is available to all non-key employees who complete at least 1,000 hours of service during the plan year. Plan C does not satisfy the general rule in paragraph (b)(6)(xi)(D)(*1*) of this section because the two formulas are not available on the same terms to all employees (i.e., the second formula is only available to all non-key employees). Nonetheless, because the second formula is a top-heavy formula, the special availability rules for top-heavy formulas in paragraph (b)(6)(xi)(D)(*3*) of this section apply. Thus, the second formula does not fail to be available on the same terms as the first formula merely because the second formula is available solely to all non-key employees on the same terms. This is true even if the plan conditions the availability of the second formula on the plan's being top-heavy for the plan year.

Example 4. Under Plan D, each employee's benefit equals the greater of the benefits determined under two formulas. The first formula is available to all employees and provides a benefit equal to 1.5 percent of average annual compensation per year of service. The second formula is only available to NHCEs and provides a benefit equal to two percent of average annual compensation per year of service, minus two percent of the primary insurance amount per year of service. The amount of the offset is not limited to the maximum permitted offset under § 1.401(l)-3(b). Under paragraph (b)(6)(xi)(D)(*2*) of this section, both formulas are treated as available to all

employees on the same terms. Furthermore, even though the second formula does not satisfy any of the safe harbors in this paragraph (b), the formula is deemed to satisfy the separate testing requirement under paragraph (b)(6)(xi)(C) of this section, because the formula is available solely to some or all NHCEs.

Example 5. Plan E is a unit credit plan that provides a benefit of one percent of average annual compensation per year of service to all employees. In 1994, the plan is amended to provide a benefit of two percent of average annual compensation per year of service after 1993, while continuing to provide a benefit of one percent of average annual compensation per year of service for all years of service before 1994. Thus, the plan's amended benefit formula provides a benefit equal to the sum of the benefits determined under two benefit formulas: one percent of average annual compensation per year of service, plus one percent of average annual compensation per year of service after 1993. Plan E satisfies this paragraph (b)(6)(xi).

Example 6. The facts are the same as in *Example 5,* except that the plan amendment in 1994 decreases the benefit to 0.75 percent of average annual compensation per year of service after 1993, while retaining the one-percent formula for all years of service before 1994. Thus, the plan's amended benefit formula provides a benefit equal to the sum of the benefits determined under two benefit formulas: 0.75 percent of average annual compensation per year of service, plus 0.25 percent of average annual compensation per year of service before 1994. Under these facts, the second formula does not separately satisfy any of the safe harbors in this paragraph (b) because the years of service over which each employee's benefit accrues under the second formula (i.e., all years of service) are not the same years of service that are taken into account in applying the benefit formula under the plan to that employee (i.e., years of service before 1994). See paragraph (b)(2)(v) of this section. But see paragraph (b)(6)(vii) of this section and § 1.401(a)(4)-13, which provide rules under which Plan E, as amended, may be able to satisfy this paragraph (b).

Example 7. Plan F provides a benefit to all employees of one percent of average annual compensation per year of service. Employee M was hired as the president of the employer in December 1994 and was not a HCE under section 414(q) during the 1994 calendar plan year. In 1994, Plan F is amended to provide a benefit that is the greater of the benefit determined under the pre-existing formula in the plan and a new formula that is available solely to some NHCEs (including Employee M). The new formula does not satisfy the uniformity requirements of paragraph (b)(2) of this section, because it provides a different benefit for some NHCEs than for other NHCEs. As a result of this change, Employee M receives a higher accrual in 1994 than the NHCEs who are not eligible for the new formula. In 1995, when Employee M first becomes a HCE, the second formula no longer applies to Employee M. It would be inconsistent with the purpose of preventing discrimination in favor of HCEs for Plan F to use the special rule for a formula that is available solely to some or all NHCEs to satisfy the separate testing requirement of paragraph (b)(6)(xi)(C) of this section for the 1994 calendar plan year. See § 1.401(a)(4)-1(c)(2).

(c) ***General test for nondiscrimination in amount of benefits —***

(1) ***General rule.*** The employer-provided benefits under a defined benefit plan are nondiscriminatory in amount for a plan year if each rate group under the plan satisfies section 410(b). For purposes of this paragraph (c)(1), a rate group exists under a plan for each HCE and consists of the HCE and all other employees (both HCEs and NHCEs) who have a normal accrual rate greater than or equal to the HCE's normal accrual rate, and who also have a most valuable accrual rate greater than or equal to the HCE's most valuable accrual rate. Thus, an employee is in the rate group for each HCE who has a normal accrual rate less than or equal to the employee's normal accrual rate, and who also has a most valuable accrual rate less than or equal to the employee's most valuable accrual rate.

(2) ***Satisfaction of section 410(b) by a rate group.*** For purposes of determining whether a rate group satisfies section 410(b), the same rules apply as in § 1.401(a)(4)-2(c)(3). See paragraph (c)(4) of this section and § 1.401(a)(4)-2(c)(4), *Example 3* through *Example 5,* for examples of this rule.

(3) ***Certain violations disregarded.*** A plan is deemed to satisfy paragraph (c)(1) of this section if the plan would satisfy that paragraph by treating as not benefiting no more than five percent of the HCEs in the plan, and the Commissioner determines that, on the basis of all of the relevant facts and circumstances, the plan does not discriminate with respect to the amount of employer-provided benefits. For this purpose, five percent of the number of HCEs may be determined by rounding to the nearest whole number (e.g., 1.4 rounds to 1 and 1.5 rounds to 2). Among the relevant factors that the Commissioner may consider in making this determination are—

(i) The extent to which the plan has failed the test in paragraph (c)(1) of this section;

(ii) The extent to which the failure is for reasons other than the design of the plan;

(iii) Whether the HCEs causing the failure are five-percent owners or are among the highest paid nonexcludable employees;

(iv) Whether the failure is attributable to an event that is not expected to recur (e.g., a plant closing); and

(v) The extent to which the failure is attributable to benefits accrued under a prior benefit structure or to benefits accrued when a participant was not a HCE.

(4) ***Examples.*** The following examples illustrate the rules in this paragraph (c):

Example 1. (a) Employer X has 1100 nonexcludable employees, N1 through N1000, who are NHCEs, and H1 through H100, who are HCEs. Employer X maintains Plan A, a defined benefit plan that benefits all of these nonexcludable employees. The normal and most valuable accrual rates (determined as a percentage of average annual compensation) for the employees in Plan A for the 1994 plan year are listed in the following table.

Employee	Normal accrual rate	Most valuable accrual rate
N1 through N100	1.0	1.4
N101 through N500	1.5	3.0
N501 through N750	2.0	2.65
N751 through N1000	2.3	2.8

Employee	Normal accrual rate	Most valuable accrual rate
H1 through H50	1.5	2.0
H51 through H100	2.0	2.65

(b) There are 100 rate groups in Plan A because there are 100 HCEs in Plan A.
(c) Rate group 1 consists of H1 and all those employees who have a normal accrual rate greater than or equal to H1's normal accrual rate (1.5 percent) and who also have a most valuable accrual rate greater than or equal to H1's most valuable accrual rate (2.0 percent). Thus, rate group 1 consists of H1 through H100 and N101 through N1000.

(d) Rate group 1 satisfies the ratio percentage test of § 1.410(b)-2(b)(2) because the ratio percentage of the rate group is 90 percent, i.e., 90 percent (the percentage of all nonhighly compensated nonexcludable employees who are in the rate group) divided by 100 percent (the percentage of all highly compensated nonexcludable employees who are in the rate group).

(e) Because H1 through H50 have the same normal accrual rates and the same most valuable accrual rates, the rate group with respect to each of them is identical. Thus, because rate group 1 satisfies section 410(b), rate groups 2 through 50 also satisfy section 410(b).

(f) Rate group 51 consists of H51 and all those employees who have a normal accrual rate greater than or equal to H51's normal accrual rate (2.0 percent) and who also have a most valuable accrual rate greater than or equal to H51's most valuable accrual rate (2.65 percent). Thus, rate group 51 consists of H51 through H100 and N501 through N1000. (Even though N101 through N500 have a most valuable accrual rate (3.0 percent) greater than H51's most valuable accrual rate (2.65 percent), they are not included in this rate group because their normal accrual rate (1.5 percent) is less than H51's normal accrual rate (2.0 percent).)

(g) Rate group 51 satisfies the ratio percentage test of § 1.410(b)-2(b)(2) because the ratio percentage of the rate group is 100 percent, i.e., 50 percent (the percentage of all nonhighly compensated nonexcludable employees who are in the rate group) divided by 50 percent (the percentage of all highly compensated nonexcludable employees who are in the rate group).

(h) Because H51 through H100 have the same normal accrual rates and the same most valuable accrual rates, the rate group with respect to each of them is identical. Thus, because rate group 51 satisfies section 410(b), rate groups 52 through 100 also satisfy section 410(b).

(i) The employer-provided benefits under Plan A are nondiscriminatory in amount because each rate group under the plan satisfies section 410(b).

Example 2. The facts are the same as in *Example 1,* except that H96 has a most valuable accrual rate of 3.5. Each of the rate groups is the same as in *Example 1,* except that rate group 96 consists solely of H96 because no other employee has a most valuable accrual rate greater than 3.5. Because the plan would satisfy the test in paragraph (c)(1) of this section by treating H96 (who constitutes less than five percent of the HCEs in the plan) as not benefiting, the Commissioner may determine under paragraph (c)(3) of this section that, on the basis of all of the relevant facts and circumstances, the plan does not discriminate with respect to the amount of benefits.

(d) ***Determination of accrual rates*** —

(1) ***Definitions*** —

(i) ***Normal accrual rate.*** The normal accrual rate for an employee for a plan year is the increase in the employee's accrued benefit (within the meaning of section 411(a)(7)(A)(i)) during the measurement period, divided by the employee's testing service during the measurement period, and expressed either as a dollar amount or as a percentage of the employee's average annual compensation.

(ii) ***Most valuable accrual rate.*** The most valuable accrual rate for an employee for a plan year is the increase in the employee's most valuable optional form of payment of the accrued benefit during the measurement period, divided by the employee's testing service during the measurement period, and expressed either as a dollar amount or as a percentage of the employee's average annual compensation. The employee's most valuable optional form of payment of the accrued benefit is determined by calculating for the employee the normalized QJSA associated with the accrued benefit that is potentially payable in the current or any future plan year at any age under the plan and selecting the largest (per year of testing service). If the plan provides a QSUPP, the most valuable accrual rate also takes into account the QSUPP payable in conjunction with the QJSA at each age under the plan. Thus, the most valuable accrual rate reflects the value of all benefits accrued or treated as accrued under section 411(d)(6) that are payable in any form and at any time under the plan, including early retirement benefits, retirement-type subsidies, early retirement window benefits, and QSUPPs. In addition, the most valuable accrual rate must take into account any such benefits that are available during a plan year, even if the benefits cease to be available before the end of the current or any future plan year.

(iii) ***Measurement period.*** The measurement period can be—

(A) The current plan year;

(B) The current plan year and all prior years; or

(C) The current plan year and all prior and future years.

(iv) ***Testing service*** —

(A) ***General rule.*** Testing service means an employee's years of service as defined in the plan for purposes of applying the benefit formula under the plan, subject to the requirements of paragraph (d)(1)(iv)(B) of this section. Alternatively, testing service means service determined for all employees in a reasonable manner that satisfies the requirements of paragraph (d)(1)(iv)(B) of this section. For example, the number of plan years that an employee has benefited under the plan within the meaning of § 1.410(b)-3(a) is an

acceptable definition of testing service because it determines service in a reasonable manner and satisfies paragraph (d)(1)(iv)(B) of this section. See also § 1.401(a)(4)-11(d)(3) (additional limits on service that may be taken into account as testing service).

(B) ***Requirements for testing service*** —(*1*) *Employees not credited with years of service under the benefit formula.* An employee must be credited with testing service for any year in which the employee benefits under the plan (within the meaning of § 1.410(b)-3(a)), unless that year is part of a period of service that may not be taken into account under § 1.401(a)(4)-11(d)(3). This rule applies even if the employee does not receive service credit under the benefit formula for that year (e.g., because of a service cap in the benefit formula or because of a transfer out of the group of employees covered by the plan).

(2) ***Current year testing service.*** In the case of a measurement period that is the current plan year, testing service for the plan year equals one

(1) .

(2) ***Rules of application*** —

(i) ***Consistency requirement.*** Both normal and most valuable accrual rates must be determined in a consistent manner for all employees for the plan year. Thus, for example, the same measurement periods must be used, and the rules of this paragraph (d)(2) and any available options described in paragraph (d)(3) of this section must be applied consistently. If plan benefits are not expressed as straight life annuities beginning at employees' testing ages, they must be normalized.

(ii) ***Determining plan benefits, service and compensation*** —

(A) ***In general.*** Potential plan benefits, testing service, and average annual compensation must be determined in a reasonable manner, reflecting actual or projected service and compensation only through the end of the measurement period. The determination of potential plan benefits is not reasonable if it incorporates an assumption that, in future years, an employee's compensation will increase or the employee will terminate employment before the employee's testing age (other than the assumptions under paragraph (d)(1)(ii) of this section that the employee's service will end in connection with the payment of each potential QJSA in future years).

(B) Section 415 limits. For purposes of determining accrual rates under this paragraph (d), plan benefits are generally determined without regard to whether those benefits are permitted to be paid under section 415. However, plan provisions implementing any of the limits of section 415 may be taken into account in applying this paragraph (d) if the plan does not provide for benefit increases resulting from section 415(d)(1) adjustments for former employees who were employees in a plan year in which such plan provisions were taken into account in applying this paragraph (d). If the limits of section 415 are taken into account under this paragraph (d)(2)(ii)(B) as of the end of the measurement period, they must also be taken into account as of the beginning of the measurement period. If the limits of section 415 are not taken into account in testing the plan for the current plan year, but were taken into account in testing the plan for the preceding plan year, any resulting increase in the accrued benefits taken into account in testing the plan is treated as an increase in accrued benefits during the current plan year.

(iii) *Requirements for measurement period that includes future years* —

(A) ***Discriminatory pattern of accruals.*** A measurement period that includes future years (as described in paragraph (d)(1)(iii)(C) of this section) may not be used if the pattern of accruals under the plan discriminates in favor of HCEs (i.e., if projected benefits for HCEs are relatively frontloaded when compared to the degree of front loading or backloading for NHCEs). This determination is made based on all of the relevant facts and circumstances.

(B) ***Future-period limitation.*** Future years beginning after an employee's attainment of the employee's testing age (or after the employee's assumed termination in the case of most valuable accrual rates) may not be included in the measurement period.

(3) *Optional rules* —

(i) ***Imputation of permitted disparity.*** The disparity permitted under section 401(l) may be imputed in accordance with the rules of § 1.401(a)(4)-7.

(ii) *Grouping of accrual rates* —

(A) ***General rule.*** An employer may treat all employees who have accrual rates within a specified range above and below a midpoint rate chosen by the employer as having an accrual rate equal to the midpoint rate within that range. Accrual rates within a given range may not be grouped under this paragraph (d)(3)(ii) if the accrual rates of HCEs within the range generally are significantly higher than the accrual rates of NHCEs in the range. The specified ranges within which all employees are treated as having the same accrual rate may not overlap and may be no larger than provided in paragraph (d)(3)(ii)(B) of this section. Accrual rates of employees that are not within any of these specified ranges are determined without regard to this paragraph (d)(3)(ii).

(B) ***Size of specified ranges.*** In the case of normal accrual rates, the lowest and highest accrual rates in the range must be within five percent (not five percentage points) of the midpoint rate. In the case of most valuable accrual rates, the lowest and highest accrual rates in the range must be within 15 percent (not 15 percentage points) of the midpoint rate. If accrual rates are determined as a percentage of average annual compensation, the lowest and highest accrual rates need not be within five percent (or 15 percent) of the midpoint rate, if they are no more than one twentieth of a percentage point above or below the midpoint rate.

(iii) *Fresh-start alternative* —

(A) ***General rule.*** Notwithstanding the definition of measurement period provided in paragraph (d)(1)(iii) of this section, a measurement period for a fresh-start group is permitted to be limited to the period beginning after the fresh-start date with respect to that group if the plan makes a fresh start that satisfies § 1.401(a)(4)-13(c) (without regard to § 1.401(a)(4)-13(c)(2)(i) and (ii)). If the measurement period is so limited or the measurement period is the plan year (whether or not so limited), any compensation adjustments during the measurement period to the frozen accrued benefit as of the fresh-start date that are permitted under the rules of § 1.401(a)(4)-13(d) may be disregarded in determining the increase in accrued benefits during the measurement period, but only if—

(1) The plan makes a fresh start as of the fresh-start date that satisfies § 1.401(a)(4)-13(c) (without regard to § 1.401(a)(4)-13(c)(2)(ii)) in conjunction with a bona fide amendment to the benefit formula or accrual method under the plan; and

(2) The amendment provides for adjustments to employees' frozen accrued benefits as of the fresh-start date in accordance with the rules of § 1.401(a)(4)-13(d).

(B) ***Application of consistency requirements.*** Limiting the application of the fresh-start alternative in this paragraph (d)(3)(iii) to a fresh-start group that consists of fewer than all employees does not violate the consistency requirement of paragraph (d)(2)(i) of this section.

(iv) ***Floor on most valuable accrual rate.*** In lieu of determining an employee's most valuable accrual rate in accordance with the definition in paragraph (d)(1)(ii) of this section, an employer may determine an employee's most valuable accrual rate for the current plan year as the employee's highest most valuable accrual rate determined for any prior plan year. This option may be used only if the employee's normal accrual rate has not changed significantly from the normal accrual rate for the relevant prior plan year and, there have been no plan amendments in the interim period since that prior plan year that affect the determination of most valuable accrual rates.

(4) ***Examples.*** The following examples illustrate the rules in this paragraph (d):

Example 1. The employees in Plan A have the following normal accrual rates (expressed as percentage of average annual compensation): 0.8 percent, 0.83 percent, 0.9 percent, 1.9 percent, 2.0 percent, and 2.1 percent. Because the first three rates are within a range of no more than one twentieth of a percentage point above or below 0.85 percent (a midpoint rate chosen by the employer), the employer may treat the employees who have those rates as having an accrual rate of 0.85 percent (provided that the accrual rates of HCEs within the range are not significantly higher than the accrual rates for NHCEs within the range). Because the last three rates are within a range of no more than five percent above or below 2.0 percent (a midpoint rate chosen by the employer), the employer may treat the employees who have those rates as having an accrual rate of 2.0 percent (provided that the accrual rates of HCEs within the range are not significantly higher than the accrual rates for NHCEs within the range).

Example 2. Employer X maintains a plan under which headquarters employees accrue a benefit of 1.25 percent of average compensation for the first 10 years of service and 0.75 percent of average compensation for subsequent years of service, while all other employees accrue a benefit of one percent of compensation for all years of service. Assume that the group of headquarters employees does not satisfy section 410(b). Under these facts, the pattern of accruals under the plan discriminates in favor of HCEs, and, therefore, under paragraph (d)(2)(iii)(A) of this section, the measurement period for determining accrual rates under the plan may not include future service.

(e) ***Compensation rules*** —

(1) ***In general.*** This paragraph (e) provides rules for determining average annual compensation. Safe harbor plans that satisfy paragraph (b) of this section must determine benefits either as a dollar amount unrelated to employees' compensation or as a percentage of each employee's average annual compensation. In contrast, plans that must satisfy the general test of paragraph (c) of this

section are not required under this section to determine benefits under any particular definition of compensation or in any particular manner, but the accrual rates used in testing these plans must be expressed either as a dollar amount or determined as a percentage of each employee's average annual compensation.

(2) ***Average annual compensation*** —

(i) ***General rule.*** An employee's average annual compensation is the average of the employee's annual section 414(s) compensation determined over the averaging period in the employee's compensation history during which the average of the employee's annual section 414(s) compensation is the highest. For this purpose, an averaging period must consist of three or more consecutive 12-month periods, but need not be longer than the employee's period of employment. An employee's compensation history may begin at any time, but must be continuous, be no shorter than the averaging period, and end in the current plan year.

(ii) ***Certain permitted modifications to average annual compensation*** —

(A) ***Use of plan year compensation.*** If the measurement period for determination of accrual rates is the current plan year, or the plan is an accumulation plan that satisfies paragraph (b) of this section, then plan year compensation may be substituted for average annual compensation.

(B) ***Drop-out years.*** Any of the following types of 12-month periods in an employee's compensation history may be disregarded in determining the employee's average annual compensation (including for purposes of the requirement to average section 414(s) compensation over consecutive 12-month periods), but only if the plan disregards the employee's compensation for those periods in determining benefits—

(*1*) The 12-month period in which the employee terminates employment;

(*2*) All 12-month periods in which the employee performs no services; or

(*3*) All 12-month periods in which the employee performs services for less than a specified number of hours or specified period of time in the 12-month period. The specified number of hours or specified period of time may be selected by the employer, but may not exceed three quarters of the time that an employee in the same job category working on a full-time basis would perform services during that 12-month period.

(C) ***Drop-out months within 12-month periods.*** If a plan determines an employee's average annual compensation using 12-month periods that do not end on a fixed date (e.g., average annual compensation as of a date is defined as the average of the employee's section 414(s) compensation for the 60 consecutive months within the compensation history in which the average is highest), then, for purposes of determining a 12-month period, any of the following type of months may be disregarded (including for purposes of the requirement to average section 414(s) compensation over consecutive 12-month periods), but only if the plan disregards the employee's compensation for those months in determining benefits—

(*1*) The month in which the employee terminates employment;

(*2*) All months in which the employee performs no services; or

(*3*) All months in which the employee performs services for less than a specified number of hours or specified period of time in the month. The specified number of hours or specified period of time may be selected by the employer, but may not exceed three quarters of the time that an employee in the same job category working on a full-time basis would perform services during that month.

(D) ***Employees working less than full-time.*** In the case of an employee who normally works less than full-time, the rules in paragraphs (e)(2)(ii)(B)(*3*) and (e)(2)(ii)(C)(*3*) of this section may be applied in relation to that employee's normal work schedule (instead of a full- time employee's work schedule) by prorating the specified number of hours or specified period of time, based on the employee's normal work schedule as a fraction of a full-time schedule.

(E) ***Exception from consecutive-periods requirement for certain plans.*** The requirement that the periods taken into account under paragraph (e)(2)(i) of this section be consecutive does not apply in the case of a plan that is not a section 401(l) plan, provided that it does not take permitted disparity into account under § 1.401(a)(4)-7. This paragraph (e)(2)(ii)(E) applies only if the plan does not take into account whether 12-month periods of compensation are consecutive in determining average compensation for purposes of calculating benefits.

(iii) ***Consistency requirements.*** Average annual compensation must be determined in a consistent manner for all employees.

(3) ***Examples.*** The following examples illustrate the rules in this paragraph (e):

Example 1. Plan A is a defined benefit plan. Plan A determines benefits on the basis of the average of each employee's annual compensation for the five consecutive plan years (or the employee's period of employment, if shorter) during the employee's compensation history in which the average of the employee's annual compensation is the highest. The compensation history used for this purpose is the last 10 plan years, plus the current plan year. In determining compensation for each plan year in the compensation history, Plan A defines compensation using a single definition that satisfies section 414(s) as a safe harbor definition under § 1.414(s)-1(c). Plan A determines benefits on the basis of average annual compensation.

Example 2. Plan B is a defined benefit plan. Plan B determines benefits on the basis of the average of each employee's compensation for the five consecutive 12-month periods (or the employee's period of employment, if shorter) during the employee's compensation history in which the average of the employee's annual compensation is the highest. The compensation history used for this purpose is the 10 consecutive 12-month periods ending on the employee's termination date. In determining the average, Plan B disregards all months in which the employee performs services for less than 100 hours (60 percent of a full-time work schedule of 173 hours). In the case of an employee whose normal work schedule is less than a full-time schedule, Plan B disregards all months in which that employee performs services for less than 60 percent of the employee's normal work schedule. Plan B defines compensation for each 12-month period using a single definition that satisfies § 1.414(s)-1. Plan B determines benefits on the basis of average annual compensation.

Example 3. (a) The facts are the same as in *Example 1*, except that, for plan years prior to 1996, the compensation for a plan year was determined under a rate of pay definition

of compensation that satisfies section 414(s), while, for plan years after 1995, the compensation for a plan year is determined using a definition that satisfies section 414(s) as a safe harbor definition under § 1.414(s)-1(c).
(b) The underlying definition of compensation for each plan year in the employee's compensation history is section 414(s) compensation, because for each plan year the definition satisfies the requirements for section 414(s) compensation under § 1.401(a)(4)-12. Therefore, Plan A determines benefits on the basis of average annual compensation, even though the underlying definition used to measure the amount of compensation for each plan year in an employee's compensation history is not the same for all plan years.

Example 4. The facts are the same as in *Example 1,* except that Plan A determines benefits on the basis of the average of the employee's annual section 414(s) compensation for the five consecutive 12-month periods ending on June 30 during the employee's compensation history in which the average is highest. An employee's compensation history begins when the employee commences participation in the plan and ends in the current plan year. In the case of an employee with less than five consecutive years of plan participation as of June 30, the compensation history is extended prior to the employee's commencement of participation to include the five consecutive 12-month periods ending on June 30 of the current plan year (or the employee's total period of employment, if shorter). Plan A determines benefits on the basis of average annual compensation.

Example 5. The facts are the same as in *Example 4,* except that Plan A determines benefits on the basis of the average of each employee's compensation for the employee's entire compensation history. Plan A determines benefits on the basis of average annual compensation.

(f) ***Special rules*** —

(1) ***In general.*** The special rules in this paragraph (f) apply for purposes of applying the provisions of this section to a defined benefit plan. Any special rule provided in this paragraph (f) that is optional must, if used, apply uniformly to all employees.

(2) ***Certain qualified disability benefits.*** In general, qualified disability benefits (within the meaning of section 411(a)(9)) are not taken into account under this section. However, a qualified disability benefit that results from the crediting of compensation or service for a period of disability in the same manner as actual compensation or service is credited under a plan's benefit formula is permitted to be taken into account under this section as an accrued benefit upon the employee's return to service with the employer following the period of disability, provided that the qualified disability benefit is then treated in the same manner as an accrued benefit for all purposes under the plan.

(3) ***Accruals after normal retirement age*** —

(i) ***General rule.*** An employee's accruals for any plan year after the plan year in which the employee attains normal retirement age are taken into account for purposes of this section. However, any plan provision that provides for increases in an employee's accrued benefit solely because the employee has delayed commencing benefits beyond the normal retirement age applicable to the employee under the plan may be disregarded, but only if—

(A) The same uniform normal retirement age applies to all employees; and

(B) The percentage factor used to increase the employee's accrued benefit is no greater than the largest percentage factor that could be applied to increase actuarially the employee's accrued benefit using any standard mortality table and any standard interest rate.

(ii) ***Examples.*** The following examples illustrate the rules of this paragraph (f)(3). In each example, it is assumed that the plan satisfies the requirements of paragraph (f)(3)(i)(A) and (B) of this section.

Example 1. Plan A provides a benefit of two percent of average annual compensation per year of service for all employees. In addition, Plan A provides an actuarial increase in an employee's accrued benefit of six percent for each year that an employee defers commencement of benefits beyond normal retirement age. For employees who continue in service beyond normal retirement age, the employee's two-percent accrual for the current plan year is offset by the six-percent actuarial increase, as permitted under section 411(b)(1)(H)(iii)(II). For purposes of this section, the actuarial increase (and hence the offset) may be disregarded, and thus all employees may be treated as if they were accruing at the rate of two percent of average annual compensation per year.

Example 2. The facts are the same as in *Example 1,* except that the employee's two- percent accrual for the current plan year is not offset by the six-percent actuarial increase. The employer may disregard the actuarial increase and thus may treat all employees as if they were accruing at the rate of two percent of average annual compensation per year.

(4) ***Early retirement window benefits*** —

(i) ***General rule.*** In applying the requirements of this section, all early retirement benefits, retirement-type subsidies, QSUPPs, and other optional forms of benefit under a plan, and changes in the plan's benefit formula, are taken into account regardless of whether they are permanent features of the plan or are offered only to employees whose employment terminates within a limited period of time. Additional rules and examples relevant to the testing of early retirement window benefits are found in *Example 6* of paragraph (b)(2)(vi) of this section; paragraph (b)(2)(ii)(A)(2), *Example 2* of paragraph (c)(2), paragraph (d)(3), and *Example 3* of paragraph (e)(1)(iii) of § 1.401(a)(4)-4; paragraph (c)(4)(i) and *Example 2* of paragraph (c)(6) of § 1.401(a)(4)-9; and the definition of benefit formula in § 1.401(a)(4)-12.

(ii) Special rules—

(A) ***Year in which early retirement window benefit taken into account.*** Notwithstanding paragraph (f)(4)(i) of this section, an early retirement window benefit is disregarded for purposes of determining whether a plan satisfies this section with respect to an employee for all plan years other than the first plan year in which the benefit is currently available (within the meaning of § 1.401(a)(4)-4(b)(2)) to the employee. For purposes of this paragraph (f)(4)(ii)(A), in determining which plan years the benefit is currently available, an early retirement window benefit that consists of a temporary change in the plan's benefit formula is treated as an optional form of benefit.

(B) ***Treatment of early retirement window benefit that consists of temporary change in benefit formula.*** An early retirement window benefit is disregarded for purposes of determining an employee's normal accrual rate, even if the early retirement window benefit consists of a temporary change in a plan's benefit formula. However, if an early retirement window

benefit consists of a temporary change in a plan's benefit formula, the plan does not satisfy paragraph (b) of this section during the period for which the change is effective unless the plan satisfies paragraph (b) of this section both reflecting the temporary change in the benefit formula and disregarding that change.

(C) ***Effect of early retirement window benefit on most valuable accrual rate.*** In determining an employee's most valuable optional form of payment of the accrued benefit (which is used in determining the employee's most valuable accrual rate under paragraphs (d)(1)(ii) and (f)(4)(i) of this section), an early retirement window benefit that is currently available to the employee (within the meaning of paragraph (f)(4)(ii)(A) of this section) and that is not disregarded for a plan year under paragraph (f)(4)(ii)(A) of this section is taken into account in that plan year with respect to the employee's accrued benefit as of the earliest of the employee's date of termination, the close of the early retirement window, or the last day of that plan year.

(D) ***Effect of early retirement window benefit on average benefit percentage test.*** Notwithstanding paragraph (c)(2) of this section, a rate group under a plan that provides an early retirement window benefit is deemed to satisfy the average benefit percentage test of § 1.410(b)-5 if—

(*1*) All rate groups under the plan would satisfy the ratio percentage test of § 1.410(b)-2(b)(2) if the early retirement window benefit were disregarded; and

(*2*) The group of employees to whom the early retirement window benefit is currently available (within the meaning of paragraph (f)(4)(ii)(A) of this section) satisfies section 410(b) without regard to the average benefit percentage test of § 1.410(b)-5.

(iii) ***Early retirement window benefit defined.*** For purposes of this paragraph (f)(4), an early retirement window benefit is an early retirement benefit, retirement-type subsidy, QSUPP, or other optional form of benefit under a plan that is available, or a change in the plan's benefit formula that is applicable, only to employees who terminate employment within a limited period specified by the plan (not to exceed one year) under circumstances specified by the plan. A benefit does not fail to be described in the preceding sentence merely because the plan contains provisions under which certain employees may receive the benefit even though, for bona fide business reasons, they terminate employment within a reasonable period after the end of the limited period. An amendment to an early retirement window benefit that merely extends the periods in the preceding sentences is not treated as a separate early retirement window benefit, provided that the periods, as extended, satisfy the preceding sentences. However, any other amendment to an early retirement window benefit creates a separate early retirement window benefit.

(iv) ***Examples.*** The following examples illustrate the rules of this paragraph (f)(4):

> *Example 1.* (a) Plan A provides a benefit of one percent of average annual compensation per year of service and satisfies the requirements of paragraph (b)(2) of this section. Thus, the plan provides the same benefit to all employees with the same years of service under the Plan. Plan A is amended to treat all employees with ten or more years of service who terminate employment after attainment of age 55 and between March 1, 1999, and January 31, 2000, as if they had an additional five years of

service under the benefit formula. However, in order to ensure the orderly implementation of the early retirement window, the plan amendment provides that designated employees in the human resources department who would otherwise be eligible for the early retirement window benefit are eligible to be treated as having the additional five years of service only if they terminate between January 1, 2000, and April 30, 2000.
(b) The additional benefits provided under this amendment are tested as benefits provided to employees rather than former employees. The effect of this amendment is temporarily to change the benefit formula for employees who are eligible for the early retirement window benefit because the amendment changes (albeit temporarily) the amount of the benefit payable to those employees at normal retirement age. See the definition of benefit formula in § 1.401(a)(4)-12. Assume that the additional years of service credited to employees eligible for the window benefit do not represent past service (within the meaning of § 1.401(a)(4)-11(d)(3)(i)(B)) or pre-participation or imputed service (within the meaning of § 1.401(a)(4)-11(d)(3)(ii)(A) or (B), respectively) and thus may not be taken into account as years of service. See § 1.401(a)(4)-11(d)(3)(i)(A) (regarding years of service that may not be taken into account under § 1.401(a)(4)-1(b)(2)). Thus, the window-eligible employees are entitled to a larger benefit (as a percentage of average annual compensation) than other employees with the same number of years of service, and the plan does not satisfy the uniform normal retirement benefit requirement of paragraph (b)(2)(i) of this section.

(c) Plan A is restructured under the provisions of § 1.401(a)(4)-9(c) into two component plans: Component Plan A1, consisting of all employees who are not eligible for the early retirement window benefit and all of their accruals and benefits, rights, and features under the plan, and Component Plan A2, consisting of all employees who are eligible for the early retirement window benefit (including the designated employees in the human resource department) and all of their accruals and benefits, rights, and features under the plan.

(d) Component Plan A1 still satisfies paragraph (b) of this section, because there has been no change for the employees in that component plan. Similarly, Component Plan A2 satisfies paragraph (b) of this section disregarding the change in the benefit formula.

(e) Because the early retirement window benefit consists of a temporary change in the benefit formula, paragraph (f)(4)(ii)(B) of this section requires that the plan satisfy the requirements of paragraph (b) of this section reflecting the change in order to remain a safe harbor plan. After reflecting the change, Component Plan A2 still provides the same benefit (albeit higher than under the regular benefit formula) to all employees with the

same years of service that may be taken into account in testing the plan, and thus the benefit formula (as temporarily amended) satisfies the requirements of paragraphs (b)(2) (i) and (ii) of this section.

(f) Since Component Plan A2 also satisfies all of the other requirements of paragraph (b)(2) of this section and the safe harbor of paragraph (b)(3) of this section reflecting the change in the benefit formula, Component Plan A2 satisfies this paragraph (b) both reflecting and disregarding the change in the benefit formula. Thus, Component Plan A2 satisfies paragraph (b) of this section.

Example 2. The facts are the same as in *Example 1,* except that Plan A's benefit formula used the maximum amount of permitted disparity under section 401(l) prior to the amendment. The analysis is the same as in paragraphs (a) through the first sentence of paragraph (e) of *Example 1*. In order to satisfy the requirements of paragraph (b)(2) of this section, a plan that uses permitted disparity must satisfy the requirements of section 401(l) after reflecting the change in the benefit formula. Because, as stated in *Example 1,* the additional five years of service may not be taken into account for purposes of satisfying paragraph (b) of this section, the disparity that results from crediting that service exceeds the maximum permitted disparity under section 401(l). Thus, Component Plan A2 does not satisfy the requirements of paragraph (b) of this section.

Example 3. The facts are the same as in *Example 1,* except that Plan A is tested under the general test in paragraph (c) of this section. The early retirement window benefit is disregarded for purposes of determining the normal accrual rates, but is taken into account in 1999 for purposes of determining the most valuable accrual rates, of employees who were eligible for the early retirement window benefit (regardless of whether they elected to receive it). As stated in *Example 1,* the additional five years of service do not represent past service, pre-participation service, or imputed service, and thus under § 1.401(a)(4)-11(d)(3)(i)(A) may not be taken into account as testing service.

(5) ***Unpredictable contingent event benefits*** —

(i) ***General rule.*** In general, an unpredictable contingent event benefit (within the meaning of section 412(l)(7)(B)(ii)) is not taken into account under this section until the occurrence of the contingent event. Thus, the special rule in § 1.401(a)(4)-4(d)(7) (treating the contingent event as having occurred) does not apply for purposes of this section. In the case of an unpredictable contingent event that is expected to result in the termination from employment of certain employees within a period of time consistent with the rules for defining an early retirement window benefit in paragraph (f)(4)(iii) of this section, the unpredictable contingent event benefit available to those employees is permitted to be treated as an early retirement window benefit, thus permitting the rules of paragraph (f)(4) of this section to be applied to it.

(ii) ***Example.*** The following example illustrates the rules of this paragraph (f)(5):

Example. (a) Employer X operates various manufacturing plants and maintains Plan A, a defined benefit plan that covers all of its nonexcludable employees. Plan A provides an early retirement benefit under which employees who retire after age 55 but before

normal retirement age and who have at least 10 years of service receive a benefit equal to their normal retirement benefit reduced by four percent per year for each year prior to normal retirement age. Plan A also provides a plant-closing benefit under which employees who satisfy the conditions for receiving the early retirement benefit and who work at a plant where operations have ceased and whose employment has been terminated will receive an unreduced normal retirement benefit. The plant-closing benefit is an unpredictable contingent event benefit.
(b) During the 1997 plan year, Employer X had no plant closings. Therefore, the plant-closing benefit is not taken into account for the 1997 plan year in determining accrual rates or in applying the safe harbors in paragraph (b) of this section.

(c) During the 1998 plan year, Employer X begins to close one plant. Employees M through Z, who are employees at the plant that is closing, are expected to terminate employment with Employer X during the plan year and will satisfy the conditions for the plant-closing benefit. Therefore, in testing Plan A under this section for the 1998 plan year, the availability of the plant-closing benefit to Employees M through Z must be taken into account in determining their accrual rates or in determining whether the plan satisfies one of the safe harbors under paragraph (b) of this section.

(d) Because the employees eligible for the unpredictable contingent event benefit are expected to terminate employment with Employer X during a period consistent with the rules for defining an early retirement window benefit, in testing Plan A under this section for the 1998 plan year, the special rules in paragraph (f)(4)(ii) of this section may be applied. Thus, for example, normal accrual rates may be determined without reference to the unpredictable contingent event benefit.

(e) Despite the closing of the plant, Employee Q remains an employee into the 1999 plan year. Under paragraph (f)(4)(ii)(A) of this section, the availability of the plant-closing benefit to Employee Q may be disregarded in the 1999 plan year.

(6) ***Determination of benefits on other than plan-year basis.*** For purposes of this section, accruals are generally determined based on the plan year. Nevertheless, an employer may determine accruals on the basis of any period ending within the plan year as long as the period is at least 12 months in duration. For example, accruals for all employees may be determined based on accrual computation periods ending within the plan year.

(7) ***Adjustments for certain plan distributions.*** For purposes of this section, an employee's accrued benefit includes the actuarial equivalent of prior distributions of accrued benefits from the plan to the employee if the years of service taken into account in determining the accrued benefits that were distributed continue to be taken into account under the plan for purposes of determining the employee's current accrued benefit. For purposes of this paragraph (f)(7), actuarial equivalence must be determined in a uniform manner for all employees using reasonable actuarial assumptions. A standard interest rate and a standard mortality table are among the assumptions considered

reasonable for this purpose. Thus, for example, if an employee has commenced receipt of benefits in accordance with the minimum distribution requirements of section 401(a)(9), and the plan reduces the employee's accrued benefit to take into account the amount of the distributions, the employee's accrued benefit for purposes of this section is restored to the value it would have had if the distributions had not occurred.

(8) ***Adjustment for certain QPSA charges.*** For purposes of this section, an employee's accrued benefit includes the cost of a qualified preretirement survivor annuity (QPSA) that reduces the employee's accrued benefit otherwise determined under the plan, as permitted under § 1.401(a)-20, Q&A-21. Thus, an employee's accrued benefit for purposes of this section is determined as if the cost of the QPSA had not been charged against the accrued benefit. This paragraph (f)(8) applies only if the QPSA charges apply uniformly to all employees.

(9) ***Disregard of certain offsets*** —

(i) ***General rule.*** For purposes of this section, an employee's accrued benefit under a plan includes that portion of the benefit that is offset under an offset provision described in § 1.401(a)(4)-11(d)(3)(i)(D). The rule in the preceding sentence applies only to the extent that the benefit by which the benefit under the plan being tested is offset is attributable to periods for which the plan being tested credits pre-participation service (within the meaning of § 1.401(a)(4)-11(d)(3)(ii)(A)) that satisfies § 1.401(a)(4)-11(d)(3)(iii) or past service (within the meaning of § 1.401(a)(4)-11(d)(3)(i)(B)), and only if—

(A) The benefit under the plan being tested is offset by either—

(*1*) Benefits under a qualified defined benefit plan or defined contribution plan (whether or not terminated); or

(*2*) Benefits under a foreign plan that are reasonably expected to be paid; and,

(B) If any portion of the benefit that is offset is nonforfeitable (within the meaning of section 411), that portion is offset by a benefit (or portion of a benefit) that is also nonforfeitable (or vested, in the case of a foreign plan).

(ii) ***Examples.*** The following examples illustrate the rules in this paragraph (f)(9):

> *Example 1.* (a) Employer X maintains two qualified defined benefit plans, Plan A and Plan B. Plan B provides that, whenever an employee transfers to Plan B from Plan A, the service that was credited under Plan A is credited in determining benefits under Plan B. The Plan A service credited under Plan B is pre-participation service that satisfies § 1.401(a)(4)-11(d)(3)(iii). Plan B offsets the benefits determined under Plan B by the employee's vested benefits under Plan A. Plan A does not credit additional benefit service or accrual service after employees transfer to Plan B.
> (b) The Plan B provision providing for an offset of benefits under Plan A satisfies § 1.401(a)(4)-11(d)(3)(i)(D). This is because the provision applies to similarly-situated employees and the benefits under Plan A that are offset against the Plan B benefits are attributable to pre-participation service taken into account under Plan B.

(c) This paragraph (f)(9) applies in determining the benefits that are taken into account under this section for employees in Plan B who are transferred from Plan A. This is because the offset provision is described in § 1.401(a)(4)-11(d)(3)(i)(D), the benefits under the other plan by which the benefits under the plan being tested are offset are attributable solely to pre-participation service that satisfies § 1.401(a)(4)-11(d)(3)(iii), and the benefits are offset solely by vested benefits under another qualified plan. Thus, for example, the accrual rates of employees in Plan B are determined as if there were no offset, i.e., by adding back the benefits that are offset to the net benefits under Plan B.

(d) The result would be the same even if Plan A continued to recognize compensation paid after the transfer in the determination of benefits under Plan A. However, if Plan A continued to credit benefit or accrual service after the transfer, then, to the extent that Plan B's offset of benefits under Plan A increased as a result, the additional benefits offset under Plan B would not be added back in determining the benefits under Plan B that are taken into account under this section.

Example 2. The facts are the same as in *Example 1,* except that Plan A is not a plan described in paragraph (f)(9)(i)(A) of this section. None of the benefits under Plan B that are offset by benefits under Plan A may be added back in determining the benefits under Plan B that are taken into account under this section. Thus, benefits under Plan B are tested on a net basis.

(10) ***Special rule for multiemployer plans.*** For purposes of this section, if a multiemployer plan increases benefits for service prior to a specific date subject to a plan provision requiring employees to complete a specified amount of service (not to exceed five years) after that date, then benefits are permitted to be determined disregarding the service condition, provided that the condition is applicable to all employees in the multiemployer plan (including collectively bargained employees).

[T.D. 8485, 58 FR 46785, Sept. 3, 1993]

§ 1.401(a)(4)-4 Nondiscriminatory availability of benefits, rights, and features.

(a) ***Introduction.*** This section provides rules for determining whether the benefits, rights, and features provided under a plan (i.e., all optional forms of benefit, ancillary benefits, and other rights and features available to any employee under the plan) are made available in a nondiscriminatory manner. Benefits, rights, and features provided under a plan are made available to employees in a nondiscriminatory manner only if each benefit, right, or feature satisfies the current availability requirement of paragraph (b) of this section and the effective availability requirement of paragraph (c) of this section. Paragraph (d) of this section provides special rules for applying these requirements. Paragraph (e) of this section defines optional form of benefit, ancillary benefit, and other right or feature.

(b) ***Current availability*** —

(1) ***General rule.*** The current availability requirement of this paragraph (b) is satisfied if the group of employees to whom a benefit, right, or feature is currently available during the plan year satisfies section 410(b) (without regard to the average benefit percentage test of § 1.410(b)-5). In determining whether the group of employees satisfies section 410(b), an employee is treated as benefiting only if the benefit, right, or feature is currently available to the employee.

(2) ***Determination of current availability*** —

(i) ***General rule.*** Whether a benefit, right, or feature that is subject to specified eligibility conditions is currently available to an employee generally is determined based on the current facts and circumstances with respect to the employee (e.g., current compensation, accrued benefit, position, or net worth).

(ii) ***Certain conditions disregarded*** —

(A) ***Certain age and service conditions—***

(1) ***General rule.*** Notwithstanding paragraph (b)(2)(i) of this section, any specified age or service condition with respect to an optional form of benefit or a social security supplement is disregarded in determining whether the optional form of benefit or the social security supplement is currently available to an employee. Thus, for example, an optional form of benefit that is available to all employees who terminate employment on or after age 55 with at least 10 years of service is treated as currently available to an employee, without regard to the employee's current age or years of service, and without regard to whether the employee could potentially meet the age and service conditions prior to attaining the plan's normal retirement age.

(2) ***Time-limited age or service conditions not disregarded.*** Notwithstanding paragraph (b)(2)(ii)(A)(*1*) of this section, an age or service condition is not disregarded in determining the current availability of an optional form of benefit or social security supplement if the condition must be satisfied within a limited period of time. However, in determining the current availability of an optional form of benefit or a social security supplement subject to such an age or service condition, the age and service of employees may be projected to the last date by which the age condition or service condition must be satisfied in order to be eligible for the optional form of benefit or social security supplement under the plan. Thus, for example, an optional form of benefit that is available only to employees who terminate employment between July 1, 1995, and December 31, 1995, after attainment of age 55 with at least 10 years of service is treated as currently available to an employee only if the employee could satisfy those age and service conditions by December 31, 1995.

(B) ***Certain other conditions.*** Specified conditions on the availability of a benefit, right, or feature requiring a specified percentage of the employee's accrued benefit to be nonforfeitable, termination of employment, death, satisfaction of a specified health condition (or failure to meet such condition), disability, hardship, family status, default on a plan loan secured by a participant's account balance, execution of a covenant not to compete, application for benefits or similar ministerial or mechanical acts, election of a benefit form, execution of a waiver of rights under the Age Discrimination in Employment Act or other federal or state law, or absence from service, are disregarded in determining the employees to whom the benefit, right, or feature is currently available. In addition, if a multiemployer plan includes a reasonable condition that limits eligibility for an ancillary

benefit, or other right or feature, to those employees who have recent service under the plan (e.g., a condition on a death benefit that requires an employee to have a minimum number of hours credited during the last two years) and the condition applies to all employees in the multiemployer plan (including the collectively bargained employees) to whom the ancillary benefit, or other right or feature, is otherwise currently available, then the condition is disregarded in determining the employees to whom the ancillary benefit, or other right or feature, is currently available.

(C) ***Certain conditions relating to mandatory cash-outs.*** In the case of a plan that provides for mandatory cash-outs of all terminated employees who have a vested accrued benefit with an actuarial present value less than or equal to a specified dollar amount (not to exceed the cash-out limit in effect under § 1.411(a)-11(c)(3)(ii)) as permitted by sections 411(a)(11) and 417(e), the implicit condition on any benefit, right, or feature (other than the mandatory cash-out) that requires the employee to have a vested accrued benefit with an actuarial present value in excess of the specified dollar amount is disregarded in determining the employees to whom the benefit, right, or feature is currently available.

(D) ***Other dollar limits.*** A condition that the amount of an employee's vested accrued benefit or the actuarial present value of that benefit be less than or equal to a specified dollar amount is disregarded in determining the employees to whom the benefit, right, or feature is currently available.

(E) ***Certain conditions on plan loans.*** In the case of an employee's right to a loan from the plan, the condition that an employee must have an account balance sufficient to be eligible to receive a minimum loan amount specified in the plan (not to exceed $1,000) is disregarded in determining the employees to whom the right is currently available.

(3) ***Benefits, rights, and features that are eliminated prospectively*** —

(i) ***Special testing rule.*** Notwithstanding paragraph (b)(1) of this section, a benefit, right, or feature that is eliminated with respect to benefits accrued after the later of the eliminating amendment's adoption or effective date (the elimination date), but is retained with respect to benefits accrued as of the elimination date, and that satisfies this paragraph (b) as of the elimination date, is treated as satisfying this paragraph (b) for all subsequent periods. This rule does not apply if the terms of the benefit, right, or feature (including the employees to whom it is available) are changed after the elimination date.

(ii) ***Elimination of a benefit, right, or feature*** —

(A) ***General rule.*** For purposes of this paragraph (b)(3), a benefit, right, or feature provided to an employee is eliminated with respect to benefits accrued after the elimination date if the amount or value of the benefit, right, or feature depends solely on the amount of the employee's accrued benefit (within the meaning of section 411(a)(7)) as of the elimination date, including subsequent income, expenses, gains, and losses with respect to that benefit in the case of a defined contribution plan.

(B) ***Special rule for benefits, rights, and features that are not section 411(d)(6)-protected benefits.*** Notwithstanding paragraph (b)(3)(ii)(A) of this section, in the case of a benefit, right, or feature under a defined contribution plan that is not a section 411(d)(6)-protected benefit (within the meaning of § 1.411(d)-4, Q&A-1), e.g., the availability of plan loans, for

purposes of this paragraph (b)(3)(ii) each employee's accrued benefit as of the elimination date may be treated, on a uniform basis, as consisting exclusively of the dollar amount of the employee's account balance as of the elimination date.

(C) ***Special rule for benefits, rights, and features that depend on adjusted accrued benefits.*** For purposes of this paragraph (b)(3), a benefit, right, or feature provided to an employee under a plan that has made a fresh start does not fail to be eliminated as of an elimination date that is the fresh-start date merely because it depends solely on the amount of the employee's adjusted accrued benefit (within the meaning of § 1.401(a)(4)-13(d)(8)).

(c) ***Effective availability*** —

(1) ***General rule.*** Based on all of the relevant facts and circumstances, the group of employees to whom a benefit, right, or feature is effectively available must not substantially favor HCEs.

(2) ***Examples.*** The following examples illustrate the rules of this paragraph (c):

Example 1. Employer X maintains Plan A, a defined benefit plan that covers both of its highly compensated nonexcludable employees and nine of its 12 nonhighly compensated nonexcludable employees. Plan A provides for a normal retirement benefit payable as an annuity and based on a normal retirement age of 65, and an early retirement benefit payable upon termination in the form of an annuity to employees who terminate from service with the employer on or after age 55 with 30 or more years of service. Both HCEs of Employer X currently meet the age and service requirement, or will have 30 years of service by the time they reach age 55. All but two of the nine NHCEs of Employer X who are covered by Plan A were hired on or after age 35 and, thus, cannot qualify for the early retirement benefit. Even though the group of employees to whom the early retirement benefit is currently available satisfies the ratio percentage test of § 1.410(b)-2(b)(2) when age and service are disregarded pursuant to paragraph (b)(2)(ii)(A) of this section, absent other facts, the group of employees to whom the early retirement benefit is effectively available substantially favors HCEs.

Example 2. Employer Y maintains Plan B, a defined benefit plan that provides for a normal retirement benefit payable as an annuity and based on a normal retirement age of 65. By a plan amendment first adopted and effective December 1, 1998, Employer Y amends Plan B to provide an early retirement benefit that is available only to employees who terminate employment by December 15, 1998, and who are at least age 55 with 30 or more years of service. Assume that all employees were hired prior to attaining age 25 and that the group of employees who have, or will have, attained age 55 with 30 years of service by December 15, 1998, satisfies the ratio percentage test of § 1.410(b)-2(b)(2). Assume, further, that the employer takes no steps to inform all eligible employees of the early retirement option on a timely basis and that the only employees who terminate from employment with the employer during the two-week period in which the early retirement benefit is available are HCEs. Under these facts, the group of employees to whom this early retirement window benefit is effectively available substantially favors HCEs.

Example 3. Employer Z amends Plan C on June 30, 1999, to provide for a single sum optional form of benefit for employees who terminate from employment with Employer Z after June 30, 1999, and before January 1, 2000. The availability of this single sum optional form of benefit is conditioned on the employee's having a particular disability at the time of termination of employment. The only employee of the employer who meets this disability requirement at the time of the amendment and thereafter through December 31, 1999, is a HCE. Under paragraph

(b)(2)(ii)(B) of this section, the disability condition is disregarded in determining the current availability of the single sum optional form of benefit. Nevertheless, under these facts, the group of employees to whom the single sum optional form of benefit is effectively available substantially favors HCEs.

(d) *Special rules* —

(1) *Mergers and acquisitions* —

(i) ***Special testing rule.*** A benefit, right, or feature available under a plan solely to an acquired group of employees is treated as satisfying paragraphs (b) and (c) of this section during the period that each of the following requirements is satisfied:

(A) The benefit, right, or feature must satisfy paragraphs (b) and (c) of this section (determined without regard to the special rule in section 410(b)(6)(C)) on the date that is selected by the employer as the latest date by which an employee must be hired or transferred into the acquired trade or business for an employee to be included in the acquired group of employees. This determination is made with reference to the plan of the current employer and its nonexcludable employees.

(B) The benefit, right, or feature must be available under the plan of the current employer after the transaction on the same terms as it was available under the plan of the prior employer before the transaction. This requirement is not violated merely because of a change made to the benefit, right, or feature that is permitted by section 411(d)(6), provided that—

(*1*) The change is a replacement of the benefit, right, or feature with another benefit, right, or feature that is available to the same employees as the original benefit, right, or feature, and the original benefit, right, or feature is of inherently equal or greater value (within the meaning of paragraph (d)(4)(i)(A) of this section) than the benefit, right, or feature that replaces it; or

(*2*) The change is made before January 12, 1993.

(ii) ***Scope of special testing rule.*** This paragraph (d)(1) applies only to benefits, rights, and features with respect to benefits accruing under the plan of the current employer, and not to benefits, rights, and features with respect to benefits accrued under the plan of the prior employer (unless, pursuant to the transaction, the plan of the prior employer becomes the plan of the current employer, or the assets and liabilities with respect to the acquired group of employees under the plan of the prior employer are transferred to the plan of the current employer in a plan merger, consolidation, or other transfer described in section 414(l)).

(iii) ***Example.*** The following example illustrates the rules of this paragraph (d)(1):

Example. Employer X maintains Plan A, a defined benefit plan with a single sum optional form of benefit for all employees. Employer Y acquires Employer X and merges Plan A into Plan B, a defined benefit plan maintained by Employer Y that does not otherwise provide a single sum optional form of benefit. Employer Y continues to provide the single sum optional form of benefit under Plan B on the same terms as it was offered under Plan A to all employees who were acquired in the transaction with Employer X (and to no other employees). The optional form of benefit satisfies paragraphs (b) and (c) of this section immediately following the transaction (determined without taking into account section 410(b)(6)(C)) when tested with reference to Plan B and Employer Y's nonexcludable

employees. Under these facts, Plan B is treated as satisfying this section with respect to the single sum optional form of benefit for the plan year of the transaction and all subsequent plan years.

(2) ***Frozen participants.*** A plan must satisfy the nondiscriminatory availability requirement of this section not only with respect to benefits, rights, and features provided to employees who are currently benefiting under the plan, but also separately with respect to benefits, rights, and features provided to nonexcludable employees with accrued benefits who are not currently benefiting under the plan (frozen participants). Thus, each benefit, right, and feature available to any frozen participant under the plan is separately subject to the requirements of this section. A plan satisfies paragraphs (b) and (c) of this section with respect to a benefit, right, or feature available to any frozen participant under the plan only if one or more of the following requirements is satisfied:

(i) The benefit, right, or feature must be one that would satisfy paragraphs (b) and (c) of this section if it were not available to any employee currently benefiting under the plan.

(ii) The benefit, right, or feature must be one that would satisfy paragraphs (b) and (c) of this section if all frozen participants were treated as employees currently benefiting under the plan.

(iii) No change in the availability of the benefit, right, or feature may have been made that is first effective in the current plan year with respect to a frozen participant.

(iv) Any change in the availability of the benefit, right, or feature that is first effective in the current plan year with respect to a frozen participant must be made in a nondiscriminatory manner. Thus, any expansion in the availability of the benefit, right, or feature to any highly compensated frozen participant must be applied on a consistent basis to all nonhighly compensated frozen participants. Similarly, any contraction in the availability of the benefit, right, or feature that affects any nonhighly compensated frozen participant must be applied on a consistent basis to all highly compensated frozen participants.

(3) ***Early retirement window benefits.*** If a benefit, right, or feature meets the definition of an early retirement window benefit in § 1.401(a)(4)-3(f)(4)(iii) (or would meet that definition if the definition applied to all benefits, rights, and features), the benefit, right, or feature is disregarded for purposes of applying this section with respect to an employee for all plan years other than the first plan year in which the benefit is currently available to the employee.

(4) ***Permissive aggregation of certain benefits, rights, or features*** —

(i) ***General rule.*** An optional form of benefit, ancillary benefit, or other right or feature may be aggregated with another optional form of benefit, ancillary benefit, or other right or feature, respectively, and the two may be treated as a single optional form of benefit, ancillary benefit, or other right or feature, if both of the following requirements are satisfied:

(A) One of the two optional forms of benefit, ancillary benefit, or other rights or features must in all cases be of inherently equal or greater value than the other. For this purpose, one benefit, right, or feature is of inherently equal or greater value than another benefit, right, or feature only if, at any time and under any conditions, it is impossible for any employee to receive a smaller amount or a less valuable right under the first benefit, right, or feature than under the second benefit, right, or feature.

(B) The optional form of benefit, ancillary benefit, or other right or feature of inherently equal or greater value must separately satisfy paragraphs (b) and (c) of this section (without regard to this paragraph (d)(4)).

(ii) ***Aggregation may be applied more than once.*** The aggregation rule in this paragraph (d)(4) may be applied more than once. Thus, for example, an optional form of benefit may be aggregated with another optional form of benefit that itself constitutes two separate optional forms of benefit that are aggregated and treated as a single optional form of benefit under this paragraph (d)(4).

(iii) ***Examples.*** The following examples illustrate the rules in this paragraph (d)(4):

Example 1. Plan A is a defined benefit plan that provides a single sum optional form of benefit to all employees. The single sum optional form of benefit is available on the same terms to all employees, except that, for employees in Division S, a five-percent discount factor is applied and, for employees of Division T, a seven-percent discount factor is applied. Under paragraph (e)(1) of this section, the single sum optional form of benefit constitutes two separate optional forms of benefit. Assume that the single sum optional form of benefit available to employees of Division S separately satisfies paragraphs (b) and (c) of this section without taking into account this paragraph (d)(4). Because a lower discount factor is applied in determining the single sum optional form of benefit available to employees of Division S than is applied in determining the single sum optional form of benefit available to employees of Division T, the first single sum optional form of benefit is of inherently greater value than the second single sum optional form of benefit. Under these facts, these two single sum optional forms of benefit may be aggregated and treated as a single optional form of benefit for purposes of this section.

Example 2. The facts are the same as in *Example 1,* except that, in order to receive the single sum optional form of benefit, employees of Division S (but not employees of Division T) must have completed at least 20 years of service. The single sum optional form of benefit available to employees of Division S is not of inherently equal or greater value than the single sum optional form of benefit available to employees of Division T, because an employee of Division S who terminates employment with less than 20 years of service would receive a smaller single sum amount (i.e., zero) than a similarly-situated employee of Division T who terminates employment with less than 20 years of service. Under these facts, the two single sum optional forms of benefit may not be aggregated and treated as a single optional form of benefit for purposes of this section.

(5) ***Certain spousal benefits.*** In the case of a plan that includes two or more plans that have been permissively aggregated under § 1.410(b)-7(d), the aggregated plan satisfies this section with respect to the availability of any nonsubsidized qualified joint and survivor annuities, qualified preretirement survivor annuities, or spousal death benefits described in section 401(a)(11), if each plan that is part of the aggregated plan satisfies section 401(a)(11). Whether a benefit is considered subsidized for this purpose may be determined using any reasonable actuarial assumptions. For purposes of this paragraph (d)(5), a qualified joint and survivor annuity, qualified preretirement survivor annuity, or spousal death benefit is deemed to be nonsubsidized if it is provided under a defined contribution plan.

(6) ***Special ESOP rules.*** An ESOP does not fail to satisfy paragraphs (b) and (c) of this section merely because it makes an investment diversification right or feature or a distribution option available solely to all qualified participants (within the meaning of section 401(a)(28)(B)(iii)), or merely because the restrictions of section 409(n) apply to certain individuals.

(7) ***Special testing rule for unpredictable contingent event benefits.*** A benefit, right, or feature that is contingent on the occurrence of an unpredictable contingent event (within the meaning of section 412(l)(7)(B)(ii)) is tested under this section as if the event had occurred. Thus, the current availability of a benefit that becomes an optional form of benefit upon the occurrence of an unpredictable contingent event is tested by deeming the event to have occurred and by disregarding age and service conditions on the eligibility for that benefit to the extent permitted for optional forms of benefit under paragraph (b)(2) of this section.

(e) ***Definitions —***

(1) ***Optional form of benefit —***

(i) ***General rule.*** The term optional form of benefit means a distribution alternative (including the normal form of benefit) that is available under a plan with respect to benefits described in section 411(d)(6)(A) or a distribution alternative that is an early retirement benefit or retirement-type subsidy described in section 411(d)(6)(B)(i), including a QSUPP. Except as provided in paragraph (e)(1)(ii) of this section, different optional forms of benefit exist if a distribution alternative is not payable on substantially the same terms as another distribution alternative. The relevant terms include all terms affecting the value of the optional form, such as the method of benefit calculation and the actuarial assumptions used to determine the amount distributed. Thus, for example, different optional forms of benefit may result from differences in terms relating to the payment schedule, timing, commencement, medium of distribution (e.g., in cash or in kind), election rights, differences in eligibility requirements, or the portion of the benefit to which the distribution alternative applies.

(ii) ***Exceptions —***

(A) ***Differences in benefit formula or accrual method.*** A distribution alternative available under a defined benefit plan does not fail to be a single optional form of benefit merely because the benefit formulas, accrual methods, or other factors (including service-computation methods and definitions of compensation) underlying, or the manner in which employees vest in, the accrued benefit that is paid in the form of the distribution alternative are different for different employees to whom the distribution alternative is available. Notwithstanding the foregoing, differences in the normal retirement ages of employees or in the form in which the accrued benefit of employees is payable at normal retirement age under a plan are taken into account in determining whether a distribution alternative constitutes one or more optional forms of benefit.

(B) ***Differences in allocation formula.*** A distribution alternative available under a defined contribution plan does not fail to be a single optional form of benefit merely because the allocation formula or other factors (including service-computation methods, definitions of compensation, and the manner in which amounts described in § 1.401(a)(4)-2(c)(2)(iii) are allocated) underlying, or the manner in which employees vest in, the accrued benefit that is paid in the form of the distribution alternative are different for different employees to whom the distribution alternative is available.

(C) ***Distributions subject to section 417(e).*** A distribution alternative available under a defined benefit plan does not fail to be a single optional form of benefit merely because, in determining the amount of a distribution, the plan applies a lower interest rate to determine the distribution for employees with a vested accrued benefit having an actuarial present value not in excess of $25,000, as required by section 417(e)(3) and § 1.417(e)-1.

(D) ***Differences attributable to uniform normal retirement age.*** A distribution alternative available under a defined benefit plan does not fail to be a single optional form of benefit, to the extent that the differences are attributable to differences in normal retirement dates among employees, provided that the differences do not prevent the employees from having the same uniform normal retirement age under the definition of uniform normal retirement age in § 1.401(a)(4)-12.

(iii) ***Examples.*** The following examples illustrate the rules in this paragraph (e)(1):

Example 1. Plan A is a defined benefit plan that benefits all employees of Divisions S and T. The plan offers a qualified joint and 50-percent survivor annuity at normal retirement age, calculated by multiplying an employee's single life annuity payment by a factor. For an employee of Division S whose benefit commences at age 65, the plan provides a factor of 0.90, but for a similarly-situated employee of Division T the plan provides a factor of 0.85. The qualified joint and survivor annuity is not available to employees of Divisions S and T on substantially the same terms, and thus it constitutes two separate optional forms of benefit.

Example 2. Plan B is a defined benefit plan that benefits all employees of Divisions U and V. The plan offers a single sum distribution alternative available on the same terms and determined using the same actuarial assumptions, to all employees. However, different benefit formulas apply to employees of each division. Under the exception provided in paragraph (e)(1)(ii)(A) of this section, the single sum optional form of benefit available to employees of Division U is not a separate optional form of benefit from the single sum optional form of benefit available to employees of Division V.

Example 3. Defined benefit Plan C provides an early retirement benefit based on a schedule of early retirement factors that is a single optional form of benefit. Plan C is amended to provide an early retirement window benefit that consists of a temporary change in the plan's benefit formula (e.g., the addition of five years of service to an employee's actual service under the benefit formula) applicable in determining the benefits for certain employees who terminate employment within a limited period of time. Under the exception provided in paragraph (e)(1)(ii)(A) of this section, the early retirement optional form of benefit available to window-eligible employees is not a separate optional form of benefit from the early retirement optional form of benefit available to the other employees.

(2) ***Ancillary benefit.*** The term ancillary benefit means social security supplements (other than QSUPPs), disability benefits not in excess of a qualified disability benefit described in section 411(a)(9), ancillary life insurance and health insurance benefits, death benefits under a defined contribution plan, preretirement death benefits under a defined benefit plan, shut-down benefits not protected under section 411(d)(6), and other similar benefits. Different ancillary benefits exist if an ancillary benefit is not available on substantially the same terms as another ancillary benefit. Principles similar to those in paragraph (e)(1)(ii) of this section apply in making this determination.

(3) ***Other right or feature —***

(i) ***General rule.*** The term other right or feature generally means any right or feature applicable to employees under the plan. Different rights or features exist if a right or feature is not available on substantially the same terms as another right or feature.

(ii) ***Exceptions to definition of other right or feature.*** Notwithstanding paragraph (e)(3)(i) of this section, a right or feature is not considered an other right or feature if it—

(A) Is an optional form of benefit or an ancillary benefit under the plan;

(B) Is one of the terms that are taken into account in determining whether separate optional forms of benefit or ancillary benefits exist, or that would be taken into account but for paragraph (e)(1)(ii) of this section (e.g., benefit formulas or the manner in which benefits vest); or

(C) Cannot reasonably be expected to be of meaningful value to an employee (e.g., administrative details).

(iii) ***Examples.*** Other rights and features include, but are not limited to—

(A) Plan loan provisions (other than those relating to a distribution of an employee's accrued benefit upon default under a loan);

(B) The right to direct investments;

(C) The right to a particular form of investment, including, for example, a particular class or type of employer securities (taking into account, in determining whether different forms of investment exist, any differences in conversion, dividend, voting, liquidation preference, or other rights conferred under the security);

(D) The right to make each rate of elective contributions described in § 1.401(k)-6 (determining the rate based on the plan's definition of the compensation out of which the elective contributions are made (regardless of whether that definition satisfies section 414(s)), but also treating different rates as existing if they are based on definitions of compensation or other requirements or formulas that are not substantially the same);

(E) The right to make after-tax employee contributions to a defined benefit plan that are not allocated to separate accounts;

(F) The right to make each rate of after-tax employee contributions described in § 1.401(m)-1(a)(3) (determining the rate based on the plan's definition of the compensation out of which the after-tax employee contributions are made (regardless of whether that definition satisfies section 414(s)), but also treating different rates as existing if they are based on definitions of compensation or other requirements or formulas that are not substantially the same);

(G) The right to each rate of allocation of matching contributions described in § 1.401(m)-1(a)(2) (determining the rate using the amount of matching, elective, and after-tax employee contributions determined after any corrections under §§ 1.401(k)-2(b)(1)(i), 1.401(m)-2(b)(1)(i), but also treating different rates as existing if they are based on definitions of compensation or other requirements or formulas that are not substantially the same);

(H) The right to purchase additional retirement or ancillary benefits under the plan; and

(I) The right to make rollover contributions and transfers to and from the plan.

[T.D. 8485, 58 FR 46796, Sept. 3, 1993, as amended by T.D. 8794, 63 FR 70338, Dec. 21, 1998; T.D. 8891, 65 FR 44682, July 19, 2000; T.D. 9169, 69 FR 78153, Dec. 29, 2004]

§ 1.401(a)(4)-5 Plan amendments and plan terminations.

(a) ***Introduction*** —

(1) ***Overview.*** This paragraph (a) provides rules for determining whether the timing of a plan amendment or series of amendments has the effect of discriminating significantly in favor of HCEs or former HCEs. For purposes of this section, a plan amendment includes, for example, the establishment or termination of the plan, and any change in the benefits, rights, or features, benefit formulas, or allocation formulas under the plan. Paragraph (b) of this section sets forth additional requirements that must be satisfied in the case of a plan termination.

(2) ***Facts-and-circumstances determination.*** Whether the timing of a plan amendment or series of plan amendments has the effect of discriminating significantly in favor of HCEs or former HCEs is determined at the time the plan amendment first becomes effective for purposes of section 401(a), based on all of the relevant facts and circumstances. These include, for example, the relative numbers of current and former HCEs and NHCEs affected by the plan amendment, the relative length of service of current and former HCEs and NHCEs, the length of time the plan or plan provision being amended has been in effect, and the turnover of employees prior to the plan amendment. In addition, the relevant facts and circumstances include the relative accrued benefits of current and former HCEs and NHCEs before and after the plan amendment and any additional benefits provided to current and former HCEs and NHCEs under other plans (including plans of other employers, if relevant). In the case of a plan amendment that provides additional benefits based on an employee's service prior to the amendment, the relevant facts and circumstances also include the benefits that employees and former employees who do not benefit under the amendment would have received had the plan, as amended, been in effect throughout the period on which the additional benefits are based.

(3) ***Safe harbor for certain grants of benefits for past periods.*** The timing of a plan amendment that credits (or increases benefits attributable to) years of service for a period in the past is deemed not to have the effect of discriminating significantly in favor of HCEs or former HCEs if the period for which the service credit (or benefit increase) is granted does not exceed the five years immediately preceding the year in which the amendment first becomes effective, the service credit (or benefit increase) is granted on a reasonably uniform basis to all employees, benefits attributable to the period are determined by applying the current plan formula, and the service credited is service (including pre-participation or imputed service) with the employer or a previous employer that may be taken into account under § 1.401(a)(4)-11(d)(3) (without regard to § 1.401(a)(4)-11(d)(3)(i)(B)). However, this safe harbor is not available if the plan amendment granting the service credit (or increasing benefits) is part of a pattern of amendments that has the effect of discriminating significantly in favor of HCEs or former HCEs.

(4) ***Examples.*** The following examples illustrate the rules in this paragraph (a):

Example 1. Plan A is a defined benefit plan that covered both HCEs and NHCEs for most of its existence. The employer decides to wind up its business. In the process of ceasing operations, but at a time when the plan covers only HCEs, Plan A is amended to increase benefits and thereafter is terminated. The timing of this plan amendment has the effect of discriminating significantly in favor of HCEs.

Example 2. Plan B is a defined benefit plan that provides a social security supplement that is not a QSUPP. After substantially all of the HCEs of the employer have benefited from the supplement, but before a substantial number of NHCEs have become eligible for the supplement, Plan B is amended to reduce significantly the amount of the supplement. The timing of this plan amendment has the effect of discriminating significantly in favor of HCEs.

Example 3. Plan C is a defined benefit plan that contains an ancillary life insurance benefit available to all employees. The plan is amended to eliminate this benefit at a time when life insurance payments have been made only to beneficiaries of HCEs. Because all employees received the benefit of life insurance coverage before Plan C was amended, the timing of this plan amendment does not have the effect of discriminating significantly in favor of HCEs or former HCEs.

Example 4. Plan D provides for a benefit of one percent of average annual compensation per year of service. Ten years after Plan D is adopted, it is amended to provide a benefit of two percent of average annual compensation per year of service, including years of service prior to the amendment. The amendment is effective only for employees currently employed at the time of the amendment. The ratio of HCEs to former HCEs is significantly higher than the ratio of NHCEs to former NHCEs. In the absence of any additional factors, the timing of this plan amendment has the effect of discriminating significantly in favor of HCEs.

Example 5. The facts are the same as in *Example 4,* except that, in addition, the years of prior service are equivalent between HCEs and NHCEs who are current employees, and the group of current employees with prior service would satisfy the nondiscriminatory classification test of § 1.410(b)-4 in the current and all prior plan years for which past service credit is granted. The timing of this plan amendment does not have the effect of discriminating significantly in favor of HCEs or former HCEs.

Example 6. Employer V maintains Plan E, an accumulation plan. In 1994, Employer V amends Plan E to provide that the compensation used to determine an employee's benefit for all preceding plan years shall not be less than the employee's average annual compensation as of the close of the 1994 plan year. The years of service and percentage increases in compensation for HCEs are reasonably comparable to those of NHCEs. In addition, the ratio of HCEs to former HCEs is reasonably comparable to the ratio of NHCEs to former NHCEs. The timing of this plan amendment does not have the effect of discriminating significantly in favor of HCEs or former HCEs.

Example 7. Employer W currently has six nonexcludable employees, two of whom, H1 and H2, are HCEs, and the remaining four of whom, N1 through N4, are NHCEs. The ratio of HCEs to former HCEs is significantly higher than the ratio of NHCEs to former NHCEs. Employer W establishes Plan F, a defined benefit plan providing a benefit of one percent of average annual compensation per year of service, including years of service prior to the establishment of the plan. H1 and H2 each have 15 years of prior service, N1 has nine years of past service, N2 has five years, N3 has three years, and N4 has one year. The timing of this plan establishment has the effect of discriminating significantly in favor of HCEs.

Example 8. Assume the same facts as in *Example 7,* except that N1 through N4 were hired in the current year, and Employer W never employed any NHCEs prior to the current year. Thus, no NHCEs would have received additional benefits had Plan F been in existence during the preceding 15 years. The timing of this plan establishment does not have the effect of discriminating significantly in favor of HCEs or former HCEs.

Example 9. The facts are the same as in *Example 7,* except that Plan F limits the grant of past service credit to five years, and the grant of past service otherwise satisfies the safe harbor in paragraph (a)(3) of this section. The timing of this plan establishment is deemed not to have the effect of discriminating significantly in favor of HCEs or former HCEs.

Example 10. The facts are the same as in *Example 9,* except that, five years after the establishment of Plan F, Employer W amends the plan to provide a benefit equal to two percent of average annual compensation per year of service, taking into account all years of service since the establishment of the plan. The ratio of HCEs to former HCEs who terminated employment during the five-year period since the establishment of the plan is significantly higher than the ratio of NHCEs to former NHCEs who terminated employment during the five-year period since the establishment of the plan. Although the amendment described in this example might separately satisfy the safe harbor in paragraph (a)(3) of this section, the safe harbor is not available with respect to the amendment because, under these facts, the amendment is part of a pattern of amendments that has the effect of discriminating significantly in favor of HCEs.

Example 11. Employer Y maintains Plan G, a defined benefit plan, covering all its employees. In 1995, Employer Y acquires Division S from Employer Z. Some of the employees of Division S had been covered under a defined benefit plan maintained by Employer Z. Soon after the acquisition, Employer Y amends Plan G to cover all employees of Division S and to credit those who were in Division S's defined benefit plan with years of service for years of employment with Employer Z. Because the timing of the plan amendment was determined by the timing of the transaction, the timing of this plan amendment does not have the effect of discriminating significantly in favor of HCEs or former HCEs. See also § 1.401(a)(4)-11(d)(3) for other rules regarding the crediting of pre-participation service.

Example 12. Plan H is an insurance contract plan within the meaning of section 412(i). For all plan years before 1999, Plan H purchases insurance contracts from Insurance Company J. In 1999, Plan H shifts future purchases of insurance contracts to Insurance Company K. The shift in insurance companies is a plan amendment subject to this paragraph (a).

(b) ***Pre-termination restrictions*** —

(1) ***Required provisions in defined benefit plans.*** A defined benefit plan has the effect of discriminating significantly in favor of HCEs or former HCEs unless it incorporates provisions restricting benefits and distributions as described in paragraph (b)(2) and (3) of this section at the time the plan is established or, if later, as of the first plan year to which §§ 1.401(a)(4)-1 through 1.401(a)(4)-13 apply to the plan under § 1.401(a)(4)-13(a) or (b). This paragraph (b) does not apply if the Commissioner determines that such provisions are not necessary to prevent the prohibited discrimination that may occur in the event of an early termination of the plan. The restrictions in this paragraph (b) apply to a plan within the meaning of § 1.410(b)-7(b) (i.e., a section 414(l) plan). Any plan containing a provision described in this paragraph (b) satisfies section 411(d)(2) and does not fail to satisfy section 411(a) or (d)(3) merely because of the provision.

(2) ***Restriction of benefits upon plan termination.*** A plan must provide that, in the event of plan termination, the benefit of any HCE (and any former HCE) is limited to a benefit that is nondiscriminatory under section 401(a)(4).

(3) ***Restrictions on distributions*** —

(i) ***General rule.*** A plan must provide that, in any year, the payment of benefits to or on behalf of a restricted employee shall not exceed an amount equal to the payments that would be made to or on behalf of the restricted employee in that year under—

(A) A straight life annuity that is the actuarial equivalent of the accrued benefit and other benefits to which the restricted employee is entitled under the plan (other than a social security supplement); and

(B) A social security supplement, if any, that the restricted employee is entitled to receive.

(ii) ***Restricted employee defined.*** For purposes of this paragraph (b), the term restricted employee generally means any HCE or former HCE. However, an HCE or former HCE need not be treated as a restricted employee in the current year if the HCE or former HCE is not one of the 25 (or a larger number chosen by the employer) nonexcludable employees and former employees of the employer with the largest amount of compensation in the current or any prior year. Plan provisions defining or altering this group can be amended at any time without violating section 411(d)(6).

(iii) ***Benefit defined.*** For purposes of this paragraph (b), the term benefit includes, among other benefits, loans in excess of the amounts set forth in section 72(p)(2)(A), any periodic income, any withdrawal values payable to a living employee or former employee, and any death benefits not provided for by insurance on the employee's or former employee's life.

(iv) ***Nonapplicability in certain cases.*** The restrictions in this paragraph (b)(3) do not apply, however, if any one of the following requirements is satisfied:

(A) After taking into account payment to or on behalf of the restricted employee of all benefits payable to or on behalf of that restricted employee under the plan, the value of plan assets must equal or exceed 110 percent of the value of current liabilities, as defined in section 412(l)(7).

(B) The value of the benefits payable to or on behalf of the restricted employee must be less than one percent of the value of current liabilities before distribution.

(C) The value of the benefits payable to or on behalf of the restricted employee must not exceed the amount described in section 411(a)(11)(A) (restrictions on certain mandatory distributions).

(v) ***Determination of current liabilities.*** For purposes of this paragraph (b), any reasonable and consistent method may be used for determining the value of current liabilities and the value of plan assets.

(4) ***Operational restrictions on certain money purchase pension plans.*** A money purchase pension plan that has an accumulated funding deficiency, within the meaning of section 412(a), or an unamortized funding waiver, within the meaning of section 412(d), must comply in operation with the restrictions

on benefits and distributions as described in paragraphs (b)(2) and (b)(3) of this section. Such a plan does not fail to satisfy section 411(d)(6) merely because of restrictions imposed by the requirements of this paragraph (b)(4).

[T.D. 8485, 58 FR 46800, Sept. 3, 1993]

§ 1.401(a)(4)-6 Contributory defined benefit plans.

(a) ***Introduction.*** This section provides rules necessary for determining whether a contributory DB plan satisfies the nondiscriminatory amount requirement of § 1.401(a)(4)-1(b)(2). Paragraph (b) of this section provides rules for determining the amount of benefits derived from employer contributions (employer-provided benefits) under a contributory DB plan for purposes of determining whether the plan satisfies § 1.401(a)(4)-1(b)(2) with respect to such amounts. Paragraph (c) of this section provides the exclusive rules for determining whether a contributory DB plan satisfies § 1.401(a)(4)-1(b)(2) with respect to the amount of benefits derived from employee contributions not allocated to separate accounts (employee-provided benefits). See § 1.401(a)(4)-1(b)(2)(ii)(B) for the exclusive tests applicable to employee contributions allocated to separate accounts under a section 401(m) plan.

(b) ***Determination of employer-provided benefit*** —

(1) ***General rule.*** An employee's employer-provided benefit under a contributory DB plan for purposes of section 401(a)(4) equals the difference between the employee's total benefit and the employee's employee-provided benefit under the plan. The rules of section 411(c) generally must be used to determine the employee's employer-provided benefit for this purpose. However, paragraphs (b)(2) through (b)(6) of this section provide alternative methods for determining the employee's employer-provided benefit.

(2) ***Composition-of-workforce method*** —

(i) ***General rule.*** A contributory DB plan that satisfies paragraph (b)(2)(ii) (A) and (B) of this section may determine employees' employer-provided benefit rates under the rules of paragraph (b)(2)(iii) of this section.

(ii) ***Eligibility requirements*** —

(A) ***Uniform rate of employee contributions.*** A contributory DB plan satisfies this paragraph (b)(2)(ii)(A) if all employees make employee contributions at the same rate, expressed as a percentage of plan year compensation (the employee contribution rate). A plan does not fail to satisfy this paragraph (b)(2)(ii)(A) merely because it eliminates employee contributions for all employees with plan year compensation below a specified contribution breakpoint that is either a stated dollar amount or a stated percentage of covered compensation (within the meaning of § 1.401(l)-1(c)(7)); or merely because all employees make employee contributions at the same rate (expressed as a percentage of plan year compensation) with respect to plan year compensation up to the contribution breakpoint (base employee contribution rate) and at a higher rate (expressed as a percentage of plan year compensation) that is the same for all employees with respect to plan year compensation above the contribution breakpoint (excess employee contribution rate). A plan described in paragraph (c)(4)(i) of this section that satisfies paragraph (c)(4)(iii) of this section is deemed to satisfy this paragraph.

(B) ***Demographic requirements*** —

(1) ***In general.*** A contributory DB plan satisfies this paragraph (b)(2)(ii)(B) if it satisfies either of the demographic tests in paragraph (b)(2)(ii)(B) (2) or (3) of this section.

(2) ***Minimum percentage test.*** This test is satisfied only if more than 40 percent of the NHCEs in the plan have attained ages at least equal to the plan's target age, and more than 20 percent of the NHCEs in the plan have attained ages at least equal to the average attained age of the HCEs in the plan. For this purpose, a plan's target age is the lower of age 50 or the average attained age of the HCEs in the plan minus X years, where X equals 20 minus the product of five times the employee contribution rate under the plan. In no case, however, may X years be fewer than zero (0) years. Thus, for example, if the average attained age of the HCEs in the plan is 53 and the employee contribution rate is two percent of plan year compensation, the plan's target age is 43 years (i.e., 53−(20−(5 × 2))).

(3) ***Ratio test.*** This test is satisfied only if the percentage of all nonhighly compensated nonexcludable employees, who are in the plan and who have attained ages at least equal to the average attained age of the HCEs in the plan, is at least 70 percent of the percentage of all highly compensated nonexcludable employees, who are in the plan and who have attained ages at least equal to the average attained age of the HCEs in the plan. Attained ages must be determined as of the beginning of the plan year. In lieu of determining the actual distribution of the attained ages of the HCEs, an employer may assume that 50 percent of all HCEs have attained ages at least equal to the average attained age of the HCEs.

(iii) ***Determination of employer-provided benefit*** —

(A) ***Safe harbor plans other than section 401(l) plans.*** For purposes of applying the exception to the safe harbor in § 1.401(a)(4)-3(b)(6)(viii) with respect to employer-provided benefits under a plan other than a section 401(l) plan, the employee's entire accrued benefit is treated as employer-provided.

(B) ***Section 401(l) plans*** —

(1) ***General rule.*** For purposes of applying the exception to the safe harbor in § 1.401(a)(4)-3(b)(6)(viii) with respect to employer-provided benefits under a section 401(l) plan, an employee's base benefit percentage and excess benefit percentage are reduced, or an employee's gross benefit percentage is reduced, by subtracting the product of the employee contribution rate and the factor determined under paragraph (b)(2)(iv) of this section from the respective percentages for the plan year. For this purpose, the employee contribution rate is the highest rate of employee contributions applicable to any potential level of plan year compensation for that plan year under the plan.

(2) ***Excess plans with varying contribution rates.*** In the case of a defined benefit excess plan described in the second sentence of paragraph (b)(2)(ii)(A) of this section, solely for purposes of reducing an employee's base benefit percentage as required under paragraph (b)(2)(iii)(B)(1) of this section, it may be assumed that the employee's employee contribution rate equals the weighted average of the base employee contribution rate and the excess employee contribution rate. In determining this weighted average, the weight of the base employee contribution rate is equal to a fraction, the numerator of which is the lesser of the integration level and

the contribution breakpoint and the denominator of which is the integration level. The weight of the excess employee contribution rate is equal to the difference between one and the weight of the base employee contribution rate.

(3) ***Offset plans with varying contribution rates.*** In the case of an offset plan described in the second sentence of paragraph (b)(2)(ii)(A) of this section, an equivalent adjustment to the alternative method in paragraph (b)(2)(iii)(B)(2) of this section may be made to the offset percentage.

(C) ***Employer-provided benefits under the general test.*** For purposes of applying the general test of § 1.401(a)(4)-3(c) with respect to employer-provided benefits, an employee's normal and most valuable accrual rates otherwise determined under § 1.401(a)(4)-3(d) (without applying any of the options under § 1.401(a)(4)-3(d)(3) other than the fresh-start alternative of § 1.401(a)(4)-3(d)(3)(iii)) are each reduced by subtracting the product of the employee's contributions (expressed as a percentage of plan year compensation) and the factor determined under paragraph (b)(2)(iv) of this section from the respective accrual rates. A plan may then apply the optional rules in § 1.401(a)(4)-3(d)(3) (i) and (ii) to this resulting accrual rate.

(D) ***Additional limitation.*** A plan may not use the composition-of-workforce method provided in this paragraph (b)(2) to determine an employee's base benefit percentage, excess benefit percentage, gross benefit percentage, offset percentage, or accrual rates unless employee contributions have been made at the same rate (or rates) throughout the period after the fresh-start date or throughout the measurement period used to determine accrual rates.

(iv) ***Determination of plan factor.*** The factor for a plan is determined under the following table based on the average entry age of the employees in the plan and on whether the plan determines benefits based on average compensation. For this purpose, average entry age equals the average attained age of all employees in the plan, minus the average years of participation of all employees in the plan. A plan is treated as determining benefits based on average compensation if it determines benefits based on compensation averaged over a specified period not exceeding five consecutive years (or the employee's entire period of employment with the employer, if shorter).

TABLE OF FACTORS

Average entry age	Factors	
	Average compensation benefit formula	Other formulas
Less than 30	0.5	0.75
30 to 40	0.4	0.6
Over 40	0.2	0.3

(v) ***Examples.*** The following examples illustrate the rules of this paragraph (b)(2):

Example 1. Plan A is a contributory DB plan that is a defined benefit excess plan providing a benefit equal to 2.0 percent of employees' average annual compensation at or below covered compensation, plus 2.5 percent of average annual compensation above covered compensation, times years of service up to 35. Under the plan, average annual compensation is determined using a five-consecutive-year period for purposes of § 1.401(a)(4)-3(e)(2). The plan requires employee contributions at a rate of four percent of plan year compensation for all employees. Assume that the plan satisfies the demographic requirements of paragraph (b)(2)(ii)(B) of this section. Under these facts, the plan satisfies the eligibility requirements of paragraph (b)(2)(ii) of this section. Assume, further, that the average attained age for all employees in the plan is 55, and that the average years of participation of all employees in the plan is 10. The average entry age for the plan is therefore 45, and, accordingly, the appropriate factor under the table is 0.2. Thus, in applying the safe harbor requirements of § 1.401(a)(4)-3(b) to this plan for the plan year (including the requirements of § 1.401(l)-3), the employee's base benefit percentage and excess benefit percentage are each reduced by 0.8 percent (4 percent × 0.2) and equal 1.2 percent and 1.7 percent, respectively.

Example 2. The facts are the same as in *Example 1,* except that the employee contribution rate is two percent of plan year compensation up to the covered compensation level, and four percent for plan year compensation at or above that contribution breakpoint. The employer elects to apply the alternative method in paragraph (b)(2)(iii)(B)(*2*) of this section to determine the reduction in the base benefit percentage. Because the contribution breakpoint is equal to the integration level, the weight of the employee contribution rate below the contribution breakpoint is 100 percent, and the weight of the employee contribution rate above the contribution breakpoint is zero. Thus, the weighted average of employee contribution rates is two percent. Under the alternative method in paragraph (b)(2)(iii)(B)(*2*) of this section, the reduction in the employee's base benefit percentage is 0.4. In applying the safe harbor requirements of § 1.401(a)(4)-3(b) to this plan (including the requirements of § 1.401(l)-3), the employee's base benefit percentage is 1.6 percent, and the employee's excess benefit percentage is 1.7.

Example 3. The facts are the same as in *Example 1,* except that the employee contribution rate is two percent of plan year compensation up to 50 percent of the covered compensation level, and four percent for plan year compensation at or above that contribution breakpoint. Because the contribution breakpoint is equal to 50 percent of the integration level, the weight of the employee contribution rate below the contribution breakpoint is 50 percent, and the weight of the employee contribution rate above the contribution breakpoint is 50 percent. Thus, the weighted average of employee contribution rates is three percent. Under the alternative method in paragraph (b)(2)(iii)(B)(*2*) of this section, the reduction in the employee's base benefit percentage is 0.6. In applying the safe harbor requirements of § 1.401(a)(4)-3(b) to this plan (including the requirements of § 1.401(l)-3), the employee's base benefit percentage is 1.4 percent, and the employee's excess benefit percentage is 1.7.

Example 4. The facts are the same as in *Example 1,* except that the plan is tested using the general test in § 1.401(a)(4)-3(c). Assume Employee M benefits under Plan A and has a normal accrual rate for the plan year (calculated with respect to Employee M's total accrued benefit) of 2.2 percent of average annual compensation. In applying the general

test in § 1.401(a)(4)-3(c) with respect to employer-provided benefits, this rate is reduced by 0.8 to yield a normal accrual rate of 1.4 percent. This rate may then be adjusted using either of the optional rules in § 1.401(a)(4)-3(d)(3)(i) or (ii).

(3) ***Minimum-benefit method*** —

(i) ***Application of uniform factors.*** A contributory DB plan that satisfies the uniform rate requirement of paragraph (b)(2)(ii)(A) of this section and the minimum benefit requirement of paragraph (b)(3)(ii) of this section may apply the adjustments provided in paragraph (b)(2)(iii) of this section as if the average entry age of employees in the plan were within the range of 30 to 40, without regard to the actual demographics of the employees in the plan.

(ii) ***Minimum benefit requirement.*** This requirement is satisfied if the plan provides that, in plan years beginning on or after the effective date of these regulations, as set forth in § 1.401(a)(4)-13(a) and (b), each employee will accrue a benefit that equals or exceeds the sum of—

(A) The accrued benefit derived from employee contributions made for plan years beginning on or after the effective date of these regulations, determined in accordance with section 411(c); and

(B) Fifty percent of the total benefit accrued in plan years beginning on or after the effective date of these regulations, as determined under the plan benefit formula without regard to that portion of the formula designed to satisfy the minimum benefit requirement of this paragraph (b)(3)(ii).

(iii) ***Example.*** The following example illustrates the minimum-benefit method of this paragraph (b)(3):

Example. Plan A is contributory DB plan. For the plan year beginning in 1994, Employee M participates in Plan A and accrues a benefit under the terms of the plan (without regard to the minimum benefit requirement of paragraph (b)(3)(ii) of this section) of $3,000. The portion of Employee M's benefit accrual for the plan year beginning in 1994 derived from employee contributions is $2,000, determined by applying the rules of section 411(c) to such contributions. The requirement of paragraph (b)(3)(ii) of this section is not satisfied for the plan year beginning in 1994 unless the plan provides that Employee M's benefit accrual for the plan year beginning in 1994 is equal to $3,500 ($2,000 + (50 percent × $3,000)).

(4) ***Grandfather rule for plans in existence on May 14, 1990.*** A contributory DB plan that satisfies paragraph (c)(4) of this section may determine an employee's employer-provided benefit by subtracting from the employee's total benefit the employee-provided benefits determined using any reasonable method set forth in the plan, provided that it is the same method used in determining whether the plan satisfies paragraph (c)(4)(ii)(D) of this section.

(5) ***Government-plan method.*** A contributory DB plan that is established and maintained for its employees by the government of any state or political subdivision or by any agency or instrumentality thereof may treat an employee's total benefit as entirely employer-provided.

(6) ***Cessation of employee contributions.*** If a contributory DB plan provides that no employee contributions may be made to the plan after the last day of the first plan year beginning on or after the effective date of these regulations, as set forth in § 1.401(a)(4)-13 (a) and (b), the plan may treat an employee's total benefit as entirely employer-provided.

(c) ***Rules applicable in determining whether employee-provided benefits are nondiscriminatory in amount*** —

(1) ***In general.*** A contributory DB plan satisfies § 1.401(a)(4)-1(b)(2) with respect to the amount of employee-provided benefits for a plan year only if the plan satisfies the requirements of paragraph (c)(2), (c)(3), or (c)(4) of this section for the plan year. This requirement applies regardless of the method used to determine the amount of employer-provided benefits under paragraph (b) of this section.

(2) ***Same rate of contributions.*** This requirement is satisfied for a plan year if the employee contribution rate (within the meaning of paragraph (b)(2)(ii)(A) of this section) is the same for all employees for the plan year.

(3) ***Total-benefits method.*** This requirement is satisfied for a plan year if—

(i) The total benefits (i.e., the sum of employer-provided and employee-provided benefits) under the plan would satisfy § 1.401(a)(4)-3 if all benefits were treated as employer-provided benefits; and

(ii) The plan's contribution requirements satisfy paragraph (b)(2)(ii)(A) of this section.

(4) ***Grandfather rules for plans in existence on May 14, 1990*** —

(i) ***In general.*** This requirement is satisfied for a plan year if the plan contained provisions as of May 14, 1990, that meet the requirements of paragraph (c)(4)(ii) or (c)(4)(iii) of this section.

(ii) ***Graded contribution rates.*** The plan's provisions meet the requirements of this paragraph (c)(4)(ii) if all the following requirements are met:

(A) The provisions require employee contributions at a greater rate (expressed as a percentage of compensation) at higher levels of compensation than at lower levels of compensation.

(B) The required rate of employee contributions is not increased after May 14, 1990, although the level of compensation at which employee contributions are required may be increased or decreased.

(C) All employees are permitted to make employee contributions under the plan at a uniform rate with respect to all compensation, beginning no later than the last day of the first plan year to which these regulations apply, as set forth in § 1.401(a)(4)-13 (a) and (b).

(D) The benefits provided on account of employee contributions at lower levels of compensation are comparable to those provided on account of employee contributions at higher levels of compensation.

(iii) ***Prior year compensation.*** The plan's provisions meet the requirements of this paragraph (c)(4)(iii) if they are part of a plan maintained by more than one employer that requires employee contributions and the rate of required employee contributions, expressed as a percentage of compensation for the last calendar year ending before the beginning of the plan year, is the same for all employees.

[T.D. 8485, 58 FR 46802, Sept. 3, 1993]

§ 1.401(a)(4)-7 Imputation of permitted disparity.

(a) ***Introduction.*** In determining whether a plan satisfies section 401(a)(4) with respect to the amount of contributions or benefits, section 401(a)(5)(C) allows the disparities permitted under section 401(l) to be taken into account. For purposes of satisfying the safe harbors of §§ 1.401(a)(4)-2(b)(2) and 1.401(a)(4)-3(b), permitted disparity may be taken into account only by satisfying section 401(l) in form in accordance with § 1.401(l)-2 or 1.401(l)-3, respectively. For purposes of the general tests of §§ 1.401(a)(4)-2(c) and 1.401(a)(4)-3(c), permitted disparity may be taken into account only in accordance with the rules of this section. In general, this section allows permitted disparity to be arithmetically imputed with respect to employer-provided contributions or benefits by determining an adjusted allocation or accrual rate that appropriately accounts for the permitted disparity with respect to each employee. Paragraph (b) of this section provides rules for imputing permitted disparity with respect to employer-provided contributions by adjusting each employee's unadjusted allocation rate. Paragraph (c) of this section provides rules for imputing permitted disparity with respect to employer-provided benefits by adjusting each employee's unadjusted accrual rate. Paragraph (d) of this section provides rules of general application.

(b) ***Adjusting allocation rates*** —

(1) ***In general.*** The rules in this paragraph (b) produce an adjusted allocation rate for each employee by determining the excess contribution percentage under the hypothetical formula that would yield the allocation actually received by the employee, if the plan took into account the full disparity permitted under section 401(l)(2) and used the taxable wage base as the integration level. This adjusted allocation rate is used to determine whether the amount of contributions under the plan satisfies the general test of § 1.401(a)(4)-2(c) and to apply the average benefit percentage test on the basis of contributions under § 1.410(b)-5(d). Paragraphs (b)(2) and (b)(3) of this section apply to employees whose plan year compensation does not exceed and does exceed, respectively, the taxable wage base, and paragraph (b)(4) of this section provides definitions.

(2) ***Employees whose plan year compensation does not exceed taxable wage base.*** If an employee's plan year compensation does not exceed the taxable wage base, the employee's adjusted allocation rate is the lesser of the A rate and the B rate determined under the formulas below, where the permitted disparity rate and the unadjusted allocation rate are determined under paragraph (b)(4) (ii) and (iv) of this section, respectively.

A Rate = 2 × unadjusted allocation rate

B Rate = unadjusted allocation rate + permitted disparity rate

(3) ***Employees whose plan year compensation exceeds taxable wage base.*** If an employee's plan year compensation exceeds the taxable wage base, the employee's adjusted allocation rate is the lesser of the C rate and the D rate determined under the formulas below, where allocations and the permitted disparity rate are determined under paragraph (b)(4) (i) and (ii) of this section, respectively.

$$\text{C Rate} = \frac{\text{allocations}}{\text{plan year compensation} - \frac{1}{2}\ \text{taxable wage base}}$$

$$\text{D Rate} = \frac{\text{allocations} + (\text{permitted disparity rate} \times \text{taxable wage base})}{\text{plan year compensation}}$$

(4) ***Definitions.*** In applying this paragraph (b), the following definitions govern—

(i) ***Allocations.*** Allocations means the amount determined by multiplying the employee's plan year compensation by the employee's unadjusted allocation rate.

(ii) ***Permitted disparity rate*** —

(A) ***General rule.*** Permitted disparity rate means the rate in effect as of the beginning of the plan year under section 401(l)(2)(A)(ii) (e.g., 5.7 percent for plan years beginning in 1990).

(B) ***Cumulative permitted disparity limit.*** Notwithstanding paragraph (b)(4)(ii)(A) of this section, the permitted disparity rate is zero for an employee who has benefited under a defined benefit plan taken into account under § 1.401(l)-5(a)(3) for a plan year that begins on or after one year from the first day of the first plan year to which these regulations apply, as set forth in § 1.401(a)(4)-13 (a) and (b), if imputing permitted disparity would result in a cumulative disparity fraction for the employee, as defined in § 1.401(l)-5(c)(2), that exceeds 35. See § 1.401(l)-5(c)(1) for special rules for determining whether an employee has benefited under a defined benefit plan for this purpose.

(iii) ***Taxable wage base.*** Taxable wage base means the taxable wage base, as defined in § 1.401(l)-1(c)(32), in effect as of the beginning of the plan year.

(iv) ***Unadjusted allocation rate.*** Unadjusted allocation rate means the employee's allocation rate determined under § 1.401(a)(4)-2(c)(2)(i) for the plan year (expressed as a percentage of plan year compensation), without imputing permitted disparity under this section.

(5) ***Example.*** The following example illustrates the rules in this paragraph (b):

> *Example.* (a) Employees M and N participate in a defined contribution plan maintained by Employer X. Employee M has plan year compensation of $30,000 in the 1990 plan year and has an unadjusted allocation rate of five percent. Employee N has plan year compensation of $100,000 in the 1990 plan year and has an unadjusted allocation rate of eight percent. The taxable wage base in 1990 is $51,300.
> (b) Because Employee M's plan year compensation does not exceed the taxable wage base, Employee M's A rate is 10 percent (2 × 5 percent), and Employee M's B rate is 10.7 percent (5 percent + 5.7 percent). Thus, Employee M's adjusted allocation rate is 10 percent, the lesser of the A rate and the B rate.

(c) Employee N's allocations are $8,000 (8 percent × $100,000). Because Employee N's plan year compensation exceeds the taxable wage base, Employee N's C rate is 10.76 percent ($8,000 divided by ($100,000−(1/2 × $51,300))), and Employee N's D rate is 10.92 percent (($8,000 + (5.7 percent × $51,300)) divided by $100,000). Thus, Employee N's adjusted allocation rate is 10.76 percent, the lesser of the C rate and the D rate.

(c) *Adjusting accrual rates* —

(1) ***In general.*** The rules in this paragraph (c) produce an adjusted accrual rate for each employee by determining the excess benefit percentage under the hypothetical plan formula that would yield the employer-provided accrual actually received by the employee, if the plan took into account the full permitted disparity under section 401(l)(3)(A) in each of the first 35 years of an employee's testing service under the plan and used the employee's covered compensation as the integration level. This adjusted accrual rate is used to determine whether the amount of employer-provided benefits under the plan satisfies the alternative safe harbor for flat benefit plans under § 1.401(a)(4)-3(b)(4)(i)(C)(*3*) or the general test of § 1.401(a)(4)-3(c), and to apply the average benefit percentage test on the basis of benefits under § 1.410(b)-5. Paragraphs (c)(2) and (c)(3) of this section apply to employees whose average annual compensation does not exceed and does exceed, respectively, covered compensation, and paragraph (c)(4) of this section provides definitions. Paragraph (c)(5) of this section provides a special rule for employees with negative unadjusted accrual rates.

(2) ***Employees whose average annual compensation does not exceed covered compensation.*** If an employee's average annual compensation does not exceed the employee's covered compensation, the employee's adjusted accrual rate is the lesser of the A rate and the B rate determined under the formulas below, where the permitted disparity factor and the unadjusted accrual rate are determined under paragraph (c)(4)(iii) and (v) of this section, respectively.

$$\text{A Rate} = 2 \times \text{unadjusted accrual rate}$$

$$\text{B Rate} = \text{unadjusted accrual rate} + \text{permitted disparity factor}$$

(3) ***Employees whose average annual compensation exceeds covered compensation.*** If an employee's average annual compensation exceeds the employee's covered compensation, the employee's adjusted accrual rate is the lesser of the C rate and D rate determined under the formulas below, where the employer-provided accrual and the permitted disparity factor are determined under paragraph (c)(4)(ii) and (iii) of this section, respectively.

$$\text{C Rate} = \frac{\text{employer-provided accrual}}{\text{average annual compensation} - \frac{1}{2}\ \text{covered compensation}}$$

$$\text{D Rate} = \frac{\text{employer-provided accrual} + (\text{permitted disparity factor} \times \text{covered compensation})}{\text{average annual compensation}}$$

(4) ***Definitions.*** For purposes of this paragraph (c), the following definitions apply.

(i) ***Covered compensation.*** Covered compensation means covered compensation as defined in § 1.401(l)-1(c)(7). Notwithstanding § 1.401(l)-1(c)(7)(iii), an employee's covered compensation must be automatically adjusted each plan year for purposes of applying this paragraph (c).

(ii) ***Employer-provided accrual.*** Employer-provided accrual means the amount determined by multiplying the employee's average annual compensation by the employee's unadjusted accrual rate.

(iii) ***Permitted disparity factor*** —

(A) ***General rule.*** Permitted disparity factor for an employee means the sum of the employee's annual permitted disparity factors determined under paragraph (c)(4)(iii)(B) of this section for each of the years in the measurement period used for determining the employee's accrual rate in § 1.401(a)(4)-3(d)(1), divided by the employee's testing service during that measurement period.

(B) ***Annual permitted disparity factor*** —

(*1*) ***Definition.*** An employee's annual permitted disparity factor is generally 0.75 percent adjusted, pursuant to § 1.401(l)-3(e), using as the age at which benefits commence the lesser of age 65 or the employee's testing age. No adjustments are made in the annual permitted disparity factor unless an employee's testing age is different from the employee's social security retirement age. An annual permitted disparity factor that is less than the annual permitted disparity factor described in the first sentence of this paragraph (c)(4)(iii)(B)(*1*) may be used if it is a uniform percentage of that factor (e.g., 50 percent of the annual permitted disparity factor) or a fixed percentage (e.g., 0.65 percent) for all employees.

(*2*) ***Annual permitted disparity factor after 35 years.*** For purposes of determining the sum described in paragraph (c)(4)(iii)(A) of this section, the annual permitted disparity factor for each of the employee's first 35 years of testing service is the amount described in paragraph (c)(4)(iii)(B)(*1*) of this section, and the annual permitted disparity factor in any subsequent year equals zero. This rule applies regardless of whether the end of the measurement period extends beyond an employee's first 35 years of testing service. Thus, for example, if the measurement period is the current plan year and the employee completed 35 years of testing service prior to the beginning of the current plan year, under this paragraph (c)(4)(iii)(B)(*2*) the annual permitted disparity factor in the current plan year (and hence the sum of the annual permitted disparity factors for each year in the measurement period) is zero.

(*3*) ***Cumulative permitted disparity limit.*** The 35 years used in paragraph (c)(4)(iii)(B)(*2*) of this section must be reduced by the employee's cumulative disparity fraction, as defined in § 1.401(l)-5(c)(2), but determined solely with respect to the employee's total years of service under all plans taken into account under § 1.401(l)-5(a)(3) during the measurement period, other than the plan being tested.

(iv) ***Social security retirement age.*** Social security retirement age means social security retirement age as defined in section 415(b)(8).

(v) ***Unadjusted accrual rate.*** Unadjusted accrual rate means the normal or most valuable accrual rate, whichever is being determined for the employee under § 1.401(a)(4)-3(d), expressed as a percentage of average annual compensation, without imputing permitted disparity under this section.

(5) ***Employees with negative unadjusted accrual rates.*** Notwithstanding the formulas in paragraph (c)(2) and (c)(3) of this section, if an employee's unadjusted accrual rate is less than zero, the employee's adjusted accrual rate is deemed to be the employee's unadjusted accrual rate.

(6) ***Example.*** The following example illustrates the rules in this paragraph (c):

> *Example.* (a) Employees M and N participate in a defined benefit plan that uses a normal retirement age of 65. The plan is being tested for the plan year under § 1.401(a)(4)-3(c), using unadjusted accrual rates determined using a plan year measurement period under § 1.401(a)(4)-3(d)(1)(iii)(A). Employee M has an unadjusted normal accrual rate of 1.48 percent, average annual compensation of $21,000, and an employer-provided accrual of $311 (1.48 percent × $21,000). Employee N has an unadjusted normal accrual rate of 1.7 percent, average annual compensation of $106,000, and an employer-provided accrual of $1,802 (1.7 percent × $106,000). The covered compensation of both Employees M and N is $25,000, and social security retirement age for both employees is 65. Neither employee has testing service of more than 35 years and neither has ever participated in another plan.
> (b) Because Employee M's average annual compensation does not exceed covered compensation, Employee M's A rate is 2.96 percent (2.0 × 1.48 percent), and Employee M's B rate is 2.23 percent (1.48 percent + 0.75 percent). Thus, Employee M's adjusted accrual rate is 2.23 percent, the lesser of the A rate and the B rate.
>
> (c) Because Employee N's average annual compensation exceeds covered compensation, Employee N's C rate is 1.93 percent ($1,802/($106,000−(0.5 × $25,000))), and Employee N's D rate is 1.88 percent (($1,802 + (0.75 percent × $25,000))/$106,000). Thus, Employee N's adjusted accrual rate is 1.88 percent, the lesser of the C rate and the D rate.

(d) ***Rules of general application*** —

(1) ***Eligible plans.*** The rules in this section may be used only for those plans to which the permitted disparity rules of section 401(l) are available. See § 1.401(l)-1(a)(3).

(2) ***Exceptions from consistency requirements.*** A plan does not fail to satisfy the consistency requirements of § 1.401(a)(4)-2(c)(2)(vi) or § 1.401(a)(4)-3(d)(2)(i) merely because the plan does not impute disparity for some employees to the extent required to comply with paragraph (d)(3) of this section, or because the plan does not impute disparity for any employees (including self-employed individuals within the meaning of section 401(c)(1)) who are not covered by any of the taxes under section 3111(a), section 3221, or section 1401.

(3) ***Overall permitted disparity.*** The annual overall permitted disparity limits of § 1.401(l)-5(b) apply to the employer-provided contributions and benefits for an employee under all plans taken into account under § 1.401(l)-5(a)(3). Thus, if an employee who benefits under the plan for the current plan year also benefits under a section 401(l) plan for the plan year ending with or within the current plan year, permitted disparity may not be imputed for that employee for the plan year. See § 1.401(l)-5(b)(9), *Example 4.* Similarly, if an employee who benefits under the plan for the current plan year also benefits under another plan of the employer for the plan year ending with or within the current plan year, disparity may be imputed for that employee under only one of the plans.

[T.D. 8485, 58 FR 46804, Sept. 3, 1993]

§ 1.401(a)(4)-8 Cross-testing.

(a) ***Introduction.*** This section provides rules for testing defined benefit plans on the basis of equivalent employer-provided contributions and defined contribution plans on the basis of equivalent employer-provided benefits under § 1.401(a)(4)-1(b)(2). Paragraphs (b)(1) and (c)(1) of this section provide general tests for nondiscrimination based on individual equivalent accrual or allocation rates determined under paragraphs (b)(2) and (c)(2) of this section, respectively. Paragraphs (b)(3), (c)(3), and (d) of this section provide additional safe-harbor testing methods for target benefit plans, cash balance plans, and defined benefit plans that are part of floor-offset arrangements, respectively, that generally may be satisfied on a design basis.

(b) ***Nondiscrimination in amount of benefits provided under a defined contribution plan*** —

(1) ***General rule and gateway*** —

(i) ***General rule.*** Equivalent benefits under a defined contribution plan (other than an ESOP) are nondiscriminatory in amount for a plan year if—

(A) The plan would satisfy § 1.401(a)(4)-2(c)(1) for the plan year if an equivalent accrual rate, as determined under paragraph (b)(2) of this section, were substituted for each employee's allocation rate in the determination of rate groups; and

(B) For plan years beginning on or after January 1, 2002, the plan satisfies one of the following conditions—

(*1*) The plan has broadly available allocation rates (within the meaning of paragraph (b)(1)(iii) of this section) for the plan year;

(*2*) The plan has age-based allocation rates that are based on either a gradual age or service schedule (within the meaning of paragraph (b)(1)(iv) of this section) or a uniform target benefit allocation (within the meaning of paragraph (b)(1)(v) of this section) for the plan year; or

(*3*) The plan satisfies the minimum allocation gateway of paragraph (b)(1)(vi) of this section for the plan year.

(ii) ***Allocations after testing age.*** A plan does not fail to satisfy paragraph (b)(1)(i)(A) of this section merely because allocations are made at the same rate for employees who are older than their testing age (determined without regard to the current-age rule in paragraph (4) of the definition of *testing age* in § 1.401(a)(4)-12) as they are made for employees who are at that age.

(iii) ***Broadly available allocation rates*** —

(A) ***In general.*** A plan has broadly available allocation rates for the plan year if each allocation rate under the plan is currently available during the plan year (within the meaning of § 1.401(a)(4)-4(b)(2)), to a group of employees that satisfies section 410(b) (without regard to the average benefit percentage test of § 1.410(b)-5). For this purpose, if two allocation rates could be permissively aggregated under § 1.401(a)(4)-4(d)(4), assuming the allocation rates were treated as benefits, rights or features, they may be aggregated and

treated as a single allocation rate. In addition, the disregard of age and service conditions described in § 1.401(a)(4)-4(b)(2)(ii)(A) does not apply for purposes of this paragraph (b)(1)(iii)(A).

(B) ***Certain transition allocations.*** In determining whether a plan has broadly available allocation rates for the plan year within the meaning of paragraph (b)(1)(iii)(A) of this section, an employee's allocation may be disregarded to the extent that the allocation is a transition allocation for the plan year. In order for an allocation to be a transition allocation, the allocation must comply with the requirements of paragraph (b)(1)(iii)(C) of this section and must be either—

(*1*) A defined benefit replacement allocation within the meaning of paragraph (b)(1)(iii)(D) of this section; or

(*2*) A pre-existing replacement allocation or pre-existing merger and acquisition allocation, within the meaning of paragraph (b)(1)(iii)(E) of this section.

(C) ***Plan provisions relating to transition allocations*** —

(*1*) ***In general.*** Plan provisions providing for transition allocations for the plan year must specify both the group of employees who are eligible for the transition allocations and the amount of the transition allocations.

(*2*) ***Limited plan amendments.*** Allocations are not transition allocations within the meaning of paragraph (b)(1)(iii)(B) of this section for the plan year if the plan provisions relating to the allocations are amended after the date those plan provisions are both adopted and effective. The preceding sentence in this paragraph (b)(1)(iii)(C)(*2*) does not apply to a plan amendment that reduces transition allocations to HCEs, makes de minimis changes in the calculation of the transition allocations (such as a change in the definition of compensation to include section 132(f) elective reductions), or adds or removes a provision permitted under paragraph (b)(1)(iii)(C)(*3*) of this section.

(*3*) ***Certain permitted plan provisions.*** An allocation does not fail to be a transition allocation within the meaning of paragraph (b)(1)(iii)(B) of this section merely because the plan provides that each employee who is eligible for a transition allocation receives the greater of such allocation and the allocation for which the employee would otherwise be eligible under the plan. In a plan that contains such a provision, for purposes of determining whether the plan has broadly available allocation rates within the meaning of paragraph (b)(1)(iii)(A) of this section, the allocation for which an employee would otherwise be eligible is considered currently available to the employee, even if the employee's transition allocation is greater.

(D) ***Defined benefit replacement allocation.*** An allocation is a defined benefit replacement allocation for the plan year if it is provided in accordance with guidance prescribed by the Commissioner published in the Internal Revenue Bulletin (see § 601.601(d)(2)(ii)(*b*) of this chapter) and satisfies the following conditions—

(*1*) The allocations are provided to a group of employees who formerly benefitted under an established nondiscriminatory defined benefit plan of the employer or of a prior employer that provided age-based equivalent allocation rates;

(2) The allocations for each employee in the group were reasonably calculated, in a consistent manner, to replace the retirement benefits that the employee would have been provided under the defined benefit plan if the employee had continued to benefit under the defined benefit plan;

(3) Except as provided in paragraph (b)(1)(iii)(C) of this section, no employee who receives the allocation receives any other allocations under the plan for the plan year; and

(4) The composition of the group of employees who receive the allocations is nondiscriminatory.

(E) *Pre-existing transition allocations* —

(1) ***Pre-existing replacement allocations.*** An allocation is a pre-existing replacement allocation for the plan year if the allocation satisfies the following conditions—

(i) The allocations are provided pursuant to a plan provision adopted before June 29, 2001;

(ii) The allocations are provided to employees who formerly benefitted under a defined benefit plan of the employer; and

(iii) The allocations for each employee in the group are reasonably calculated, in a consistent manner, to replace some or all of the retirement benefits that the employee would have received under the defined benefit plan and any other plan or arrangement of the employer if the employee had continued to benefit under such defined benefit plan and such other plan or arrangement.

(2) ***Pre-existing merger and acquisition allocations.*** An allocation is a pre-existing merger and acquisition allocation for the plan year if the allocation satisfies the following conditions—

(i) The allocations are provided solely to employees of a trade or business that has been acquired by the employer in a stock or asset acquisition, merger, or other similar transaction occurring prior to August 28, 2001, involving a change in the employer of the employees of the trade or business;

(ii) The allocations are provided only to employees who were employed by the acquired trade or business before a specified date that is no later than two years after the transaction (or January 1, 2002, if earlier);

(iii) The allocations are provided pursuant a plan provision adopted no later than the specified date; and

(iv) The allocations for each employee in the group are reasonably calculated, in a consistent manner, to replace some or all of the retirement benefits that the employee would have received under any plan of the employer if the new employer had continued to provide the retirement benefits that the prior employer was providing for employees of the trade or business.

(F) ***Successor employers.*** An employer that accepts a transfer of assets (within the meaning of section 414(l)) from the plan of a prior employer may continue to treat any transition allocations provided under that plan as transition allocations under paragraph (b)(1)(iii)(B)

of this section, provided that the successor employer continues to satisfy the applicable requirements set forth in paragraphs (b)(1)(iii)(C) through (E) of this section for the plan year.

(iv) ***Gradual age or service schedule*** —

(A) ***In general.*** A plan has a gradual age or service schedule for the plan year if the allocation formula for all employees under the plan provides for a single schedule of allocation rates under which—

(*1*) The schedule defines a series of bands based solely on age, years of service, or the number of points representing the sum of age and years of service (age and service points), under which the same allocation rate applies to all employees whose age, years of service, or age and service points are within each band; and

(*2*) The allocation rates under the schedule increase smoothly at regular intervals, within the meaning of paragraphs (b)(1)(iv)(B) and (C) of this section.

(B) ***Smoothly increasing schedule of allocation rates.*** A schedule of allocation rates increases smoothly if the allocation rate for each band within the schedule is greater than the allocation rate for the immediately preceding band (i.e., the band with the next lower number of years of age, years of service, or age and service points) but by no more than 5 percentage points. However, a schedule of allocation rates will not be treated as increasing smoothly if the ratio of the allocation rate for any band to the rate for the immediately preceding band is more than 2.0 or if it exceeds the ratio of allocation rates between the two immediately preceding bands.

(C) ***Regular intervals.*** A schedule of allocation rates has regular intervals of age, years of service or age and service points, if each band, other than the band associated with the highest age, years of service, or age and service points, is the same length. For this purpose, if the schedule is based on age, the first band is deemed to be of the same length as the other bands if it ends at or before age 25. If the first age band ends after age 25, then, in determining whether the length of the first band is the same as the length of other bands, the starting age for the first age band is permitted to be treated as age 25 or any age earlier than 25. For a schedule of allocation rates based on age and service points, the rules of the preceding two sentences are applied by substituting 25 age and service points for age 25. For a schedule of allocation rates based on service, the starting service for the first service band is permitted to be treated as one year of service or any lesser amount of service.

(D) ***Minimum allocation rates permitted.*** A schedule of allocation rates under a plan does not fail to increase smoothly at regular intervals, within the meaning of paragraphs (b)(1)(iv)(B) and (C) of this section, merely because a minimum uniform allocation rate is provided for all employees or the minimum benefit described in section 416(c)(2) is provided for all non-key employees (either because the plan is top heavy or without regard to whether the plan is top heavy) if the schedule satisfies one of the following conditions—

(*1*) The allocation rates under the plan that are greater than the minimum allocation rate can be included in a hypothetical schedule of allocation rates that increases smoothly at regular intervals, within the meaning of paragraphs (b)(1)(iv)(B) and (C) of this section, where the hypothetical schedule has a lowest allocation rate no lower than 1% of plan year compensation; or

(2) For a plan using a schedule of allocation rates based on age, for each age band in the schedule that provides an allocation rate greater than the minimum allocation rate, there could be an employee in that age band with an equivalent accrual rate that is less than or equal to the equivalent accrual rate that would apply to an employee whose age is the highest age for which the allocation rate equals the minimum allocation rate.

(v) ***Uniform target benefit allocations.*** A plan has allocation rates that are based on a uniform target benefit allocation for the plan year if the plan fails to satisfy the requirements for the safe harbor testing method in paragraph (b)(3) of this section merely because the determination of the allocations under the plan differs from the allocations determined under that safe harbor testing method for any of the following reasons—

(A) The interest rate used for determining the actuarial present value of the stated plan benefit and the theoretical reserve is lower than a standard interest rate;

(B) The stated benefit is calculated assuming compensation increases at a specified rate; or

(C) The plan computes the current year contribution using the actual account balance instead of the theoretical reserve.

(vi) ***Minimum allocation gateway*** —

(A) ***General rule.*** A plan satisfies the minimum allocation gateway of this paragraph (b)(1)(vi) if each NHCE has an allocation rate that is at least one third of the allocation rate of the HCE with the highest allocation rate.

(B) ***Deemed satisfaction.*** A plan is deemed to satisfy the minimum allocation gateway of this paragraph (b)(1)(vi) if each NHCE receives an allocation of at least 5% of the NHCE's compensation within the meaning of section 415(c)(3), measured over a period of time permitted under the definition of plan year compensation.

(vii) ***Determination of allocation rate.*** For purposes of paragraph (b)(1)(i)(B) of this section, allocations and allocation rates are determined under § 1.401(a)(4)-2(c)(2), but without taking into account the imputation of permitted disparity under § 1.401(a)(4)-7. However, in determining whether the plan has broadly available allocation rates as provided in paragraph (b)(1)(iii) of this section, differences in allocation rates attributable solely to the use of permitted disparity described in § 1.401(l)-2 are disregarded.

(viii) ***Examples.*** The following examples illustrate the rules in this paragraph (b)(1):

> *Example 1.* (i) Plan M, a defined contribution plan without a minimum service requirement, provides an allocation formula under which allocations are provided to all

employees according to the following schedule:

Completed years of service	Allocation rate (in percent)	Ratio of allocation rate for band to allocation rate for immediately preceding band
0-5	3.0	([1])
6-10	4.5	1.50
11-15	6.5	1.44
16-20	8.5	1.31
21-25	10.0	1.18
26 or more	11.5	1.15

[1] *Not applicable.*

(ii) Plan M provides that allocation rates for all employees are determined using a single schedule based solely on service, as described in paragraph (b)(1)(iv)(A)(*1*) of this section. Therefore, if the allocation rates under the schedule increase smoothly at regular intervals as described in paragraph (b)(1)(iv)(A)(*2*) of this section, then the plan has a gradual age or service schedule described in paragraph (b)(1)(iv) of this section.
(iii) The schedule of allocation rates under Plan M does not increase by more than 5 percentage points between adjacent bands and the ratio of the allocation rate for any band to the allocation rate for the immediately preceding band is never more than 2.0 and does not increase. Therefore, the allocation rates increase smoothly as described in paragraph (b)(1)(iv)(B) of this section. In addition, the bands (other than the highest band) are all 5 years long, so the increases occur at regular intervals as described in paragraph (b)(1)(iv)(C) of this section. Thus, the allocation rates under the plan's schedule increase smoothly at regular intervals as described in paragraph (b)(1)(iv)(A)(*2*) of this section. Accordingly, the plan has a gradual age or service schedule described in paragraph (b)(1)(iv) of this section.

(iv) Under paragraph (b)(1)(i) of this section, Plan M satisfies the nondiscrimination in amount requirement of § 1.401(a)(4)-1(b)(2) on the basis of benefits if it satisfies paragraph (b)(1)(i)(A) of this section, regardless of whether it satisfies the minimum allocation gateway of paragraph (b)(1)(vi) of this section.

Example 2. (i) The facts are the same as in *Example 1*, except that the 4.5% allocation rate applies for all employees with 10 years of service or less.

(ii) Plan M provides that allocation rates for all employees are determined using a single schedule based solely on service, as described in paragraph (b)(1)(iv)(A)(*1*) of this section. Therefore, if the allocation rates under the schedule increase smoothly at regular intervals as described in paragraph (b)(1)(iv)(A)(*2*) of this section, then the plan has a gradual age or service schedule described in paragraph (b)(1)(iv) of this section.

(iii) The bands (other than the highest band) in the schedule are not all the same length, since the first band is 10 years long while other bands are 5 years long. Thus, the schedule does not have regular intervals as described in paragraph (b)(1)(iv)(C) of this section. However, under paragraph (b)(1)(iv)(D) of this section, the schedule of allocation rates does not fail to increase smoothly at regular intervals merely because the minimum allocation rate of 4.5% results in a first band that is longer than the other bands, if either of the conditions of paragraph (b)(1)(iv)(D)(*1*) or (*2*) of this section is satisfied.

(iv) In this case, the schedule of allocation rates satisfies the condition in paragraph (b)(1)(iv)(D)(*1*) of this section because the allocation rates under the plan that are greater than the 4.5% minimum allocation rate can be included in the following hypothetical schedule of allocation rates that increases smoothly at regular intervals and has a lowest allocation rate of at least 1% of plan year compensation:

Completed years of service	Allocation rate (in percent)	Ratio of allocation rate for band to allocation rate for immediately preceding band
0-5	2.5	([1])
6-10	4.5	1.80
11-15	6.5	1.44
16-20	8.5	1.31
21-25	10.0	1.18
26 or more	11.5	1.15

[1] *Not applicable.*

(v) Accordingly, the plan has a gradual age or service schedule described in paragraph (b)(1)(iv) of this section. Under paragraph (b)(1)(i) of this section, Plan M satisfies the nondiscrimination in amount requirement of § 1.401(a)(4)-1(b)(2) on the basis of benefits if it satisfies paragraph (b)(1)(i)(A) of this section, regardless of whether it satisfies the minimum allocation gateway of paragraph (b)(1)(vi) of this section.

Example 3. (i) Plan N, a defined contribution plan, provides an allocation formula under which allocations are provided to all employees according to the following schedule:

Age	Allocation rate (in percent)	Ratio of allocation rate for band to allocation rate for immediately preceding band
Under 25	3.0	([1])
25-34	6.0	2.00
35-44	9.0	1.50
45-54	12.0	1.33
55-64	16.0	1.33
65 or older	21.0	1.31

[1] *Not applicable.*

(ii) Plan N provides that allocation rates for all employees are determined using a single schedule based solely on age, as described in paragraph (b)(1)(iv)(A)(*1*) of this section. Therefore, if the allocation rates under the schedule increase smoothly at regular intervals as described in paragraph (b)(1)(iv)(A)(*2*) of this section, then the plan has a gradual age or service schedule described in paragraph (b)(1)(iv) of this section.
(iii) The schedule of allocation rates under Plan N does not increase by more than 5 percentage points between adjacent bands and the ratio of the allocation rate for any band to the allocation rate for the immediately preceding band is never more than 2.0 and does not increase. Therefore, the allocation rates increase smoothly as described in paragraph (b)(1)(iv)(B) of this section. In addition, the bands (other than the highest band and the first band, which is deemed to be the same length as the other bands because it ends prior to age 25) are all 5 years long, so the increases occur at regular intervals as described in paragraph (b)(1)(iv)(C) of this section. Thus, the allocation rates under the plan's schedule increase smoothly at regular intervals as described in paragraph (b)(1)(iv)(A)(*2*) of this section. Accordingly, the plan has a gradual age or service schedule described in paragraph (b)(1)(iv) of this section.

(iv) Under paragraph (b)(1)(i) of this section, Plan N satisfies the nondiscrimination in amount requirement of § 1.401(a)(4)-1(b)(2) on the basis of benefits if it satisfies paragraph (b)(1)(i)(A) of this section, regardless of whether it satisfies the minimum allocation gateway of paragraph (b)(1)(vi) of this section.

Example 4. (i) Plan O, a defined contribution plan, provides an allocation formula under which allocations are provided to all employees according to the following schedule:

Age	Allocation rate (in percent)	Ratio of allocation rate for band to allocation rate for immediately preceding band
Under 40	3	([1])
40-44	6	2.00
45-49	9	1.50
50-54	12	1.33
55-59	16	1.33
60-64	20	1.25
65 or older	25	1.25

[1] *Not applicable.*

(ii) Plan O provides that allocation rates for all employees are determined using a single schedule based solely on age, as described in paragraph (b)(1)(iv)(A)(*1*) of this section. Therefore, if the allocation rates under the schedule increase smoothly at regular intervals as described in paragraph (b)(1)(iv)(A)(*2*) of this section, then the plan has a gradual age or service schedule described in paragraph (b)(1)(iv) of this section.
(iii) The bands (other than the highest band) in the schedule are not all the same length, since the first band is treated as 15 years long while other bands are 5 years long. Thus, the schedule does not have regular intervals as described in paragraph (b)(1)(iv)(C) of this section. However, under paragraph (b)(1)(iv)(D) of this section, the schedule of allocation rates does not fail to increase smoothly at regular intervals merely because the minimum allocation rate of 3% results in a first band that is longer than the other bands, if either of the conditions of paragraph (b)(1)(iv)(D)(*1*) or (*2*) of this section is satisfied.

(iv) In this case, in order to define a hypothetical schedule that could include the allocation rates in the actual schedule of allocation rates, each of the bands below age 40 would have to be 5 years long (or be treated as 5 years long). Accordingly, the hypothetical schedule would have to provide for a band for employees under age 30, a band for employees in the range 30-34 and a band for employees age 35-39.

(v) The ratio of the allocation rate for the age 40-44 band to the next lower band is 2.0. Accordingly, in order for the applicable allocations rates under this hypothetical schedule to increase smoothly, the ratio of the allocation rate for each band in the hypothetical schedule below age 40 to the allocation rate for the immediately preceding band would have to be 2.0. Thus, the allocation rate for the hypothetical band applicable for employees under age 30 would be .75%, the allocation rate for the hypothetical band for employees in the range 30-34 would be 1.5% and the allocation rate for employees in the range 35-39 would be 3%.

(vi) Because the lowest allocation rate under any possible hypothetical schedule is less than 1% of plan year compensation, Plan O will be treated as satisfying the requirements of paragraphs (b)(1)(iv)(B) and (C) of this section only if the schedule of allocation rates satisfies the steepness condition described in paragraph (b)(1)(iv)(D)(2) of this section. In this case, the steepness condition is not satisfied because the equivalent accrual rate for an employee age 39 is 2.81%, but there is no hypothetical employee in the band for ages 40-44 with an equal or lower equivalent accrual rate (since the lowest equivalent accrual rate for hypothetical employees within this band is 3.74% at age 44).

(vii) Since the schedule of allocation rates under the plan does not increase smoothly at regular intervals, Plan O's schedule of allocation rates is not a gradual age or service schedule. Further, Plan O does not provide uniform target benefit allocations. Therefore, under paragraph (b)(1)(i) of this section, Plan O cannot satisfy the nondiscrimination in amount requirement of § 1.401(a)(4)-1(b)(2) for the plan year on the basis of benefits unless either Plan O provides for broadly available allocation rates for the plan year as described in paragraph (b)(1)(iii) of this section (i.e., the allocation rate at each age is provided to a group of employees that satisfies section 410(b) without regard to the average benefit percentage test), or Plan O satisfies the minimum allocation gateway of paragraph (b)(1)(vi) of this section for the plan year.

Example 5. (i) Plan P is a profit-sharing plan maintained by Employer A that covers all of Employer A's employees, consisting of two HCEs, X and Y, and 7 NHCEs. Employee X's compensation is $170,000 and Employee Y's compensation is $150,000. The allocation for Employees X and Y is $30,000 each, resulting in an allocation rate of 17.65% for Employee X and 20% for Employee Y. Under Plan P, each NHCE receives an allocation of 5% of compensation within the meaning of section 415(c)(3), measured over a period of time permitted under the definition of plan year compensation.
(ii) Because the allocation rate for X is not currently available to any NHCE, Plan P does not have broadly available allocation rates within the meaning of paragraph (b)(1)(iii) of this section. Furthermore, Plan P does not provide for age based-allocation rates within the meaning of paragraph (b)(1)(iv) or (v) of this section. Thus, under paragraph (b)(1)(i)

of this section, Plan P can satisfy the nondiscrimination in amount requirement of § 1.401(a)(4)-1(b)(2) for the plan year on the basis of benefits only if Plan P satisfies the minimum allocation gateway of paragraph (b)(1)(vi) of this section for the plan year.

(iii) The highest allocation rate for any HCE under Plan P is 20%. Accordingly, Plan P would satisfy the minimum allocation gateway of paragraph (b)(1)(vi) of this section if all NHCEs have an allocation rate of at least 6.67%, or if all NHCEs receive an allocation of at least 5% of compensation within the meaning of section 415(c)(3) (measured over a period of time permitted under the definition of plan year compensation).

(iv) Under Plan P, each NHCE receives an allocation of 5% of compensation within the meaning of section 415(c)(3) (measured over a period of time permitted under the definition of plan year compensation). Accordingly, Plan P satisfies the minimum allocation gateway of paragraph (b)(1)(vi) of this section.

(v) Under paragraph (b)(1)(i) of this section, Plan P satisfies the nondiscrimination in amount requirement of § 1.401(a)(4)-1(b)(2) on the basis of benefits if it satisfies paragraph (b)(1)(i)(A) of this section.

(2) ***Determination of equivalent accrual rates*** —

(i) ***Basic definition.*** An employee's equivalent accrual rate for a plan year is the annual benefit that is the result of normalizing the increase in the employee's account balance during the measurement period, divided by the number of years in which the employee benefited under the plan during the measurement period, and expressed either as a dollar amount or as a percentage of the employee's average annual compensation. A measurement period that includes future years may not be used for this purpose.

(ii) ***Rules of application*** —

(A) ***Determination of account balance.*** The increase in the account balance during the measurement period taken into account under paragraph (b)(2)(i) of this section does not include income, expenses, gains, or losses allocated during the measurement period that are attributable to the account balance as of the beginning of the measurement period, but does include any additional amounts that would have been included in the increase in the account balance but for the fact that they were previously distributed (including a reasonable adjustment for interest). In the case of a measurement period that is the current plan year, an employer may also elect to disregard the income, expenses, gains, and losses allocated during the current plan year that are attributable to the increase in account balance since the beginning of the year, and thus, determine the increase in account balance during the plan year taking into account only the allocations described in § 1.401(a)(4)-2(c)(2)(ii). In addition, an employer may disregard distributions made to a NHCE as well as distributions made to any employee in plan years beginning before a selected date no later than January 1, 1986.

(B) ***Normalization.*** The account balances determined under paragraph (b)(2)(ii)(A) of this section are normalized by treating them as single-sum benefits that are immediately and unconditionally payable to the employee. A standard interest rate, and a straight life annuity factor that is based on the same or a different standard interest rate and on a standard mortality table, must be used in normalizing these benefits. In addition, no mortality may be assumed prior to the employee's testing age.

(iii) ***Options.*** Any of the optional rules in § 1.401(a)(4)-3(d)(3) (e.g., imputation of permitted disparity) may be applied in determining an employee's equivalent accrual rate by substituting the employee's equivalent accrual rate (determined without regard to the option) for the employee's normal accrual rate (i.e., not most valuable accrual rate) in that section where appropriate. For this purpose, however, the last sentence of the fresh-start alternative in § 1.401(a)(4)-3(d)(3)(iii)(A) (dealing with compensation adjustments to the frozen accrued benefit) is not applicable. No other options are available in determining an employee's equivalent accrual rate except those (e.g., selection of alternative measurement periods) specifically provided in this paragraph (b)(2). Thus, for example, none of the optional special rules in § 1.401(a)(4)-3(f) (e.g., determination of benefits on other than a plan year basis under § 1.401(a)(4)-3(f)(6)) is available.

(iv) ***Consistency rule.*** Equivalent accrual rates must be determined in a consistent manner for all employees for the plan year. Thus, for example, the same measurement periods and standard interest rates must be used, and any available options must be applied consistently if at all.

(3) ***Safe-harbor testing method for target benefit plans*** —

(i) ***General rule.*** A target benefit plan is a money purchase pension plan under which contributions to an employee's account are determined by reference to the amounts necessary to fund the employee's stated benefit under the plan. Whether a target benefit plan satisfies section 401(a)(4) with respect to an equivalent amount of benefits is generally determined under paragraphs (b)(1) and (b)(2) of this section. A target benefit plan is deemed to satisfy section 401(a)(4) with respect to an equivalent amount of benefits, however, if each of the following requirements is satisfied:

(A) ***Stated benefit formula.*** Each employee's stated benefit must be determined as the straight life annuity commencing at the employee's normal retirement age under a formula that would satisfy the requirements of § 1.401(a)(4)-3(b)(4)(i)(C) (*1*) or (*2*), and that would satisfy each of the uniformity requirements in § 1.401(a)(4)-3(b)(2) (taking into account the relevant exceptions provided in § 1.401(a)(4)-3(b)(6)), if the plan were a defined benefit plan with the same benefit formula. In determining whether these requirements are satisfied, the rules of § 1.401(a)(4)-3(f) do not apply, and, in addition, except as provided in paragraph (b)(3)(vii) of this section, an employee's stated benefit at normal retirement age under the stated benefit formula is deemed to accrue ratably over the period ending with the plan year in which the employee is projected to reach normal retirement age and beginning with the latest of: the first plan year in which the employee benefited under the plan, the first plan year taken into account in the stated benefit formula, and any plan year immediately following a plan year in which the plan did not satisfy this paragraph (b)(3). Thus, except as provided in paragraph (b)(3)(vii) of this section, under § 1.401(a)(4)-3(b)(2)(v) an employee's stated benefit may not take into account service in

years prior to the first plan year that the employee benefited under the plan, and an employee's stated benefit may not take into account service in plan years prior to the current plan year unless the plan satisfied this paragraph (b)(3) in all of those prior plan years.

(B) ***Employer and employee contributions.*** Employer contributions with respect to each employee must be based exclusively on the employee's stated benefit using the method provided in paragraph (b)(3)(iv) of this section, and forfeitures and any other amounts under the plan taken into account under § 1.401(a)(4)-2(c)(2)(ii) (other than employer contributions) are used exclusively to reduce employer contributions. Employee contributions (if any) may not be used to fund the stated benefit.

(C) ***Permitted disparity.*** If permitted disparity is taken into account, the stated benefit formula must satisfy § 1.401(l)-3. For this purpose, the 0.75-percent factor in the maximum excess or offset allowance in § 1.401(l)-3(b)(2)(i) or (b)(3)(i), respectively, as adjusted in accordance with § 1.401(l)-3(d)(9) (and, if the employee's normal retirement age is not the employee's social security retirement age, § 1.401(l)-3(e)), is further reduced by multiplying the factor by 0.80.

(ii) ***Changes in stated benefit formula.*** A plan does not fail to satisfy paragraph (b)(3)(i) of this section merely because the plan determines each employee's stated benefit in the current plan year under a stated benefit formula that differs from the stated benefit formula used to determine the employee's stated benefit in prior plan years.

(iii) ***Stated benefits after normal retirement age.*** A target benefit plan may limit increases in the stated benefit after normal retirement age consistent with the requirements applicable to defined benefit plans under section 411(b)(1)(H) (without regard to section 411(b)(1)(H)(iii)), provided that the limitation applies on the same terms to all employees. Thus, post-normal retirement benefits required under § 1.401(a)(4)-3(b)(2)(ii) must be provided under the stated benefit formula, subject to any uniformly applicable service cap under the formula.

(iv) ***Method for determining required employer contributions*** —

(A) ***General rule.*** An employer's required contribution to the account of an employee for a plan year is determined based on the employee's stated benefit and the amount of the employee's theoretical reserve as of the date the employer's required contribution is determined for the plan year (the determination date). Paragraph (b)(3)(iv)(B) of this section provides rules for determining an employee's theoretical reserve. Paragraph (b)(3)(iv) (C) and (D) of this section provides rules for determining an employer's required contributions.

(B) ***Theoretical reserve*** —

(*1*) ***Initial theoretical reserve.*** An employee's theoretical reserve as of the determination date for the first plan year in which the employee benefits under the plan, the first plan year taken into account under the stated benefit formula (if that is the current plan year), or the first plan year immediately following any plan year in which the plan did not satisfy this paragraph (b)(3), is zero.

(*2*) ***Theoretical reserve in subsequent plan years.*** An employee's theoretical reserve as of the determination date for a plan year (other than a plan year described in paragraph (b)(3)(iv)(B)(*1*) of this section) is the employee's theoretical reserve as of the

determination date for the prior plan year, plus the employer's required contribution for the prior plan year (as limited by section 415, but without regard to the additional contributions described in paragraph (b)(3)(v) of this section) both increased by interest from the determination date for the prior plan year through the determination date for the current plan year, but not beyond the determination date for the plan year that includes the employee's normal retirement date. (Thus, an employee's theoretical reserve as of the determination date for a plan year does not include the amount of the employer's required contribution for the plan year.) The interest rate for determining employer contributions that was in effect on the determination date in the prior plan year must be applied to determine the required interest adjustment for this period. For plan years beginning after the effective date applicable to the plan under § 1.401(a)(4)-13(a) or (b), a standard interest rate must be used, and may not be changed except on the determination date for a plan year.

(C) ***Required contributions for employees under normal retirement age.*** The required employer contributions with respect to an employee whose attained age is less than the employee's normal retirement age must be determined for each plan year as follows:

(*1*) Determine the employee's fractional rule benefit (within the meaning of § 1.411(b)-1(b)(3)(ii)(A)) under the plan's stated benefit formula as if the plan were a defined benefit plan with the same benefit formula.

(*2*) Determine the actuarial present value of the fractional rule benefit determined in paragraph (b)(3)(iv)(C)(*1*) of this section as of the determination date for the current plan year, using a standard interest rate and a standard mortality table that are set forth in the plan and that are the same for all employees, and assuming no mortality before the employee's normal retirement age.

(*3*) Determine the excess, if any, of the amount determined in paragraph (b)(3)(iv)(C)(*2*) of this section over the employee's theoretical reserve for the current plan year determined under paragraph (b)(3)(iv)(B) of this section.

(*4*) Determine the required employer contribution for the current plan year by amortizing on a level annual basis, using the same interest rate used for paragraph (b)(3)(iv)(C)(*2*) of this section, the result in paragraph (b)(3)(iv)(C)(*3*) of this section over the period beginning with the determination date for the current plan year and ending with the determination date for the plan year in which the employee is projected to reach normal retirement age.

(D) ***Required contributions for employees over normal retirement age.*** The required employer contributions with respect to an employee whose attained age equals or exceeds the employee's normal retirement age is the excess, if any, of the actuarial present value, as of the determination date for the current plan year, of the employee's stated benefit for the current plan year (determined using an immediate straight life annuity factor based on a standard interest rate and a standard mortality table, for an employee whose attained age equals the employee's normal retirement age) over the employee's theoretical reserve as of the determination date.

(v) ***Effect of section 415 and 416 requirements.*** A target benefit plan does not fail to satisfy this paragraph (b)(3) merely because required contributions under the plan are limited by section 415 in a plan year. Similarly, a target benefit plan does not fail to satisfy this paragraph (b)(3) merely because additional contributions are made consistent with the requirements of section 416(c)(2) (regardless of whether the plan is top-heavy).

(vi) ***Certain conditions on allocations.*** A target benefit plan does not fail to satisfy this paragraph (b)(3) merely because required contributions under the plan are subject to the conditions on allocations permitted under § 1.401(a)(4)-2(b)(4)(iii).

(vii) ***Special rules for target benefit plans qualified under prior law*** —

(A) *Service taken into account prior to satisfaction of this paragraph.* For purposes of determining whether the stated benefit formula satisfies paragraph (b)(3)(i)(A) of this section (e.g., whether the period over which an employee's stated benefit is deemed to accrue is the same as the period taken into account under the stated benefit formula as required by paragraph (b)(3)(i)(A) of this section), a target benefit plan that was adopted and in effect on September 19, 1991, is deemed to have satisfied this paragraph (b)(3), and an employee is treated as benefiting under the plan, in any year prior to the effective date applicable to the plan under § 1.401(a)(4)-13 (a) or (b) that was taken into account in the stated benefit formula under the plan on September 19, 1991, if the plan satisfied the applicable nondiscrimination requirements for target benefit plans for that prior year.

(B) ***Initial theoretical reserve.*** Notwithstanding paragraph (b)(3)(iv)(B)(1) of this section, a target benefit plan under which the stated benefit formula takes into account service for an employee for plan years prior to the first plan year in which the plan satisfied this paragraph (b)(3), as permitted under paragraph (b)(3)(vii)(A) of this section, must determine an initial theoretical reserve for the employee as of the determination date for the last plan year beginning before such plan year under the rules of § 1.401(a)(4)-13(e).

(C) ***Satisfaction of prior law.*** In determining whether a plan satisfied the applicable nondiscrimination requirements for target benefit plans for any period prior to the effective date applicable to the plan under § 1.401(a)(4)-13 (a) or (b), no amendments after September 19, 1991, other than amendments necessary to satisfy section 401(l), are taken into account.

(viii) ***Examples.*** The following examples illustrate the rules in this paragraph (b)(3):

> *Example 1.* (a) Employer X maintains a target benefit plan with a calendar plan year that bases contributions on a stated benefit equal to 40 percent of each employee's average annual compensation, reduced pro rata for years of participation less than 25, payable annually as a straight life annuity commencing at normal retirement age. The UP-84 mortality table and an interest rate of 7.5 percent are used to calculate the contributions necessary to fund the stated benefit. Required contributions are determined on the last day of each plan year. The normal retirement age under the plan is 65. Employee M is 39 years old in 1994, has participated in the plan for six years, and has average annual compensation equal to $60,000 for the 1994 plan year. Assume that Employee M's theoretical reserve as of the last day of the 1993 plan year is $13,909, determined under

§ 1.401(a)(4)-13(e), and that required employer contributions for 1993 were determined using an interest rate of six percent.
(b) Under these facts, Employer X's 1994 required contribution to fund Employee M's stated benefit is $1,318, calculated as follows:

(1) Employee M's fractional rule benefit is $24,000 (40 percent of Employee M's average annual compensation of $60,000).

(2) The actuarial present value of Employee M's fractional rule benefit as of the last day of the 1994 plan year is $30,960 (Employee M's fractional rule benefit of $24,000 multiplied by 1.290, the actuarial present value factor for an annual straight life annuity commencing at age 65 applicable to a 39-year-old employee, determined using the stated interest rate of 7.5 percent and the UP-84 mortality table, and assuming no mortality before normal retirement age).

(3) The actuarial present value of Employee M's fractional rule benefit ($30,960) is reduced by Employee M's theoretical reserve as of the last day of the 1994 plan year. The theoretical reserve on that day is $14,744—the $13,909 theoretical reserve as of the last day of the 1993 plan year, increased by interest for one year at the rate of six percent. Because the required contribution for the 1993 plan year is taken into account under § 1.401(a)(4)-13(e)(2) in determining the theoretical reserve as of the last day of the 1993 plan year, it is not added to the theoretical reserve again in this paragraph (b)(3) of this *Example 1*. The resulting difference is $16,216 ($30,960−$14,744).

(4) The $16,216 excess of the actuarial present value of Employee M's fractional rule benefit over Employee M's theoretical reserve is multiplied by 0.0813, the amortization factor applicable to a 39-year-old employee determined using the stated interest rate of 7.5 percent. The product of $1,318 is the amount of the required employer contribution for Employee M for the 1994 plan year.

Example 2. (a) The facts are the same as in *Example 1,* except that as of January 1, 1995, the plan's stated benefit formula is amended to provide for a stated benefit equal to 45 percent of average annual compensation, reduced pro rata for years of participation less than 25, payable annually as a straight life annuity commencing at normal retirement age. For the 1995 plan year, Employee M's average annual compensation continues to be $60,000. The mortality table used for the calculation of the employer's required contributions remains the same as in the prior plan year, but the plan's stated interest rate is changed to 8.0 percent effective as of December 31, 1995.
(b) Under these facts, Employer X's required contribution for Employee M is $1,290, calculated as follows:

(1) Employee M's fractional rule benefit is $27,000 (45 percent of $60,000).

(2) The actuarial present value of Employee M's fractional rule benefit as of the last day of the 1995 plan year is $32,319 ($27,000 multiplied by 1.197, the actuarial present value factor for an annuity commencing at age 65 applicable to a 40-year-old employee, determined using the stated interest rate of 8.0 percent and the UP-84 mortality table, and assuming no mortality before normal retirement age).

(3) The actuarial present value of Employee M's fractional rule benefit ($32,319) is reduced by Employee M's theoretical reserve as of the last day of the 1995 plan year. The theoretical reserve as of that day is $17,267—the $14,744 theoretical reserve as of the last day of the 1994 plan year plus the $1,318 required contribution for the 1994 plan year, both increased by interest for one year at the rate of 7.5 percent. The resulting difference is $15,052 ($32,319−$17,267).

(4) The result in paragraph (b)(3) of this *Example 2* is multiplied by 0.0857, the amortization factor applicable to a 40-year-old employee determined using the stated interest rate of 8.0 percent. The product, $1,290, is the amount of the required employer contribution for Employee M for the 1995 plan year.

(c) ***Nondiscrimination in amount of contributions under a defined benefit plan*** —

(1) ***General rule.*** Equivalent allocations under a defined benefit plan are nondiscriminatory in amount for a plan year if the plan would satisfy § 1.401(a)(4)-3(c)(1) (taking into account § 1.401(a)(4)-3(c)(3)) for the plan year if an equivalent normal and most valuable allocation rate, as determined under paragraph (c)(2) of this section, were substituted for each employee's normal and most valuable accrual rate, respectively, in the determination of rate groups.

(2) ***Determination of equivalent allocation rates*** —

(i) ***Basic definitions.*** An employee's equivalent normal and most valuable allocation rates for a plan year are, respectively, the actuarial present value of the increase over the plan year in the benefit that would be taken into account in determining the employee's normal and most valuable accrual rates for the plan year, expressed either as a dollar amount or as a percentage of the employee's plan year compensation. In the case of a contributory DB plan, the rules in § 1.401(a)(4)-6(b)(1), (b)(5), or (b)(6) must be used to determine the amount of each employee's employer-provided benefit that would be taken into account for this purpose.

(ii) ***Rules for determining actuarial present value.*** The actuarial present value of the increase in an employee's benefit must be determined using a standard interest rate and a standard mortality table, and no mortality may be assumed prior to the employee's testing age.

(iii) ***Options.*** The optional rules in § 1.401(a)(4)-2(c)(2)(iv) (imputation of permitted disparity) and (v) (grouping of rates) may be applied to determine an employee's equivalent normal and most valuable allocation rates by substituting those rates (determined without regard to the option) for the employee's allocation rate in that section where appropriate. In addition, the limitations under section 415 may be taken into account under § 1.401(a)(4)-3(d)(2)(ii)(B), and qualified

disability benefits may be taken into account as accrued benefits under § 1.401(a)(4)-3(f)(2), in determining the increase in an employee's accrued benefit during a plan year for purposes of paragraph (c)(2)(i) of this section, if those rules would otherwise be available. No other options are available in determining an employee's equivalent normal and most valuable allocations rate except those (e.g., selection of alternative standard interest rates) specifically provided in this paragraph (c)(2). Thus, while all of the mandatory rules in § 1.401(a)(4)-3(d) and (f) for determining the amount of benefits used to determine an employee's normal and most valuable accrual rates (e.g., the treatment of early retirement window benefits in § 1.401(a)(4)-3(f)(4)) are applicable in determining an employee's equivalent normal and most valuable allocation rates, none of the optional rules under § 1.401(a)(4)-3 is available (except the options relating to the section 415 limits and qualified disability benefits noted above).

(iv) ***Consistency rule.*** Equivalent allocation rates must be determined in a consistent manner for all employees for the plan year. Thus, for example, the same standard interest rates must be used, and any available options must be applied consistently if at all.

(3) ***Safe harbor testing method for cash balance plans*** —

(i) ***General rule.*** A cash balance plan is a defined benefit plan that defines benefits for each employee by reference to the employee's hypothetical account. An employee's hypothetical account is determined by reference to hypothetical allocations and interest adjustments that are analogous to actual allocations of contributions and earnings to an employee's account under a defined contribution plan. Because a cash balance plan is a defined benefit plan, whether it satisfies section 401(a)(4) with respect to the equivalent amount of contributions is generally determined under paragraphs (c)(1) and (c)(2) of this section. However, a cash balance plan that satisfies each of the requirements in paragraphs (c)(3)(ii) through (xi) of this section is deemed to satisfy section 401(a)(4) with respect to an equivalent amount of contributions.

(ii) ***Plan requirements in general.*** The plan must be an accumulation plan. The benefit formula under the plan must provide for hypothetical allocations for each employee in the plan that satisfy paragraph (c)(3)(iii) of this section, and interest adjustments to these hypothetical allocations that satisfy paragraph (c)(3)(iv) of this section. The benefit formula under the plan must provide that these hypothetical allocations and interest adjustments are accumulated as a hypothetical account for each employee, determined in accordance with paragraph (c)(3)(v) of this section. The plan must provide that an employee's accrued benefit under the plan as of any date is an annuity that is the actuarial equivalent of the employee's projected hypothetical account as of normal retirement age, determined in accordance with paragraph (c)(3)(vi) of this section. In addition, the plan must satisfy paragraphs (c)(3)(vii) through (xi) of this section (to the extent applicable) regarding optional forms of benefit, past service credits, post-normal retirement age benefits, certain uniformity requirements, and changes in the plan's benefit formula, respectively.

(iii) ***Hypothetical allocations*** —

(A) ***In general.*** The hypothetical allocations provided under the plan's benefit formula must satisfy either paragraph (c)(3)(iii)(B) or (C) of this section. Paragraph (c)(3)(iii)(B) of this section provides a design-based safe harbor that does not require the annual comparison of hypothetical allocations under the plan. Paragraph (c)(3)(iii)(C) of this section requires the annual comparison of hypothetical allocations.

(B) ***Uniform hypothetical allocation formula.*** To satisfy this paragraph (c)(3)(iii)(B), the plan's benefit formula must provide for hypothetical allocations for all employees in the plan for all plan years of amounts that would satisfy § 1.401(a)(4)-2(b)(3) for each such plan year if the hypothetical allocations were the only allocations under a defined contribution plan for the employees for those plan years. Thus, the plan's benefit formula must provide for hypothetical allocations for all employees in the plan for all plan years that are the same percentage of plan year compensation or the same dollar amount. In determining whether the hypothetical allocations satisfy § 1.401(a)(4)-2(b)(3), the only provisions of § 1.401(a)(4)-2(b)(5) that apply are § 1.401(a)(4)-2(b)(5)(ii) (section 401(l) permitted disparity, (iii) (entry dates), (vi) (certain limits on allocations), and (vii) (dollar allocation per uniform unit of service). Thus, for example, the plan's benefit formula may take permitted disparity into account in a manner allowed under § 1.401(l)-2 for defined contribution plans.

(C) ***Modified general test.*** To satisfy this paragraph (c)(3)(iii)(C), the plan's benefit formula must provide for hypothetical allocations for all employees in the plan for the plan year that would satisfy the general test in § 1.401(a)(4)-2(c) for the plan year, if the hypothetical allocations were the only allocations for the employees taken into account under § 1.401(a)(4)-2(c)(2)(ii) under a defined contribution plan for the plan year. In determining whether the hypothetical allocations satisfy § 1.401(a)(4)-2(c), the provisions of § 1.401(a)(4)-2(c)(2)(iii) through (v) apply. Thus, for example, permitted disparity may be imputed under § 1.401(a)(4)-2(c)(2)(iv) in accordance with the rules of § 1.401(a)(4)-7(b) applicable to defined contribution plans.

(iv) ***Interest adjustments to hypothetical allocations*** —

(A) ***General rule.*** The plan benefit formula must provide that the dollar amount of the hypothetical allocation for each employee for a plan year is automatically adjusted using an interest rate that satisfies paragraph (c)(3)(iv)(B) of this section, compounded no less frequently than annually, for the period that begins with a date in the plan year and that ends at normal retirement age. This requirement is not satisfied if any portion of the interest adjustments to a hypothetical allocation are contingent on the employee's satisfaction of any requirement. Thus, for example, the interest adjustments to a hypothetical allocation must be provided through normal retirement age, even though the employee terminates employment or commences benefits before that age.

(B) ***Requirements with respect to interest rates.*** The interest rate must be a single interest rate specified in the plan that is the same for all employees in the plan for all plan years. The interest rate must be either a standard interest rate or a variable interest rate. If the interest rate is a variable interest rate, it must satisfy paragraph (c)(3)(iv)(C) of this section.

(C) ***Variable interest rates*** —

(*1*) ***General rule.*** The plan must specify the variable interest rate, the method for determining the current value of the variable interest rate, and the period (not to exceed 1 year) for which the current value of the variable interest rate applies. Permissible variable interest rates are listed in paragraph (c)(3)(iv)(C)(*2*) of this section. Permissible methods for determining the current value of the variable interest rate are provided in paragraph (c)(3)(iv)(C)(*3*) of this section.

(2) ***Permissible variable interest rates.*** The variable interest rate specified in the plan must be one of the following—

(*i*) The rate on 3-month Treasury Bills,

(*ii*) The rate on 6-month Treasury Bills,

(*iii*) The rate on 1-year Treasury Bills,

(*iv*) The yield on 1-year Treasury Constant Maturities,

(*v*) The yield on 2-year Treasury Constant Maturities,

(*vi*) The yield on 5-year Treasury Constant Maturities,

(*vii*) The yield on 10-year Treasury Constant Maturities,

(*viii*) The yield on 30-year Treasury Constant Maturities, or

(*ix*) The single interest rate such that, as of a single age specified in the plan, the actuarial present value of a deferred straight life annuity of an amount commencing at the normal retirement age under the plan, calculated using that interest rate and a standard mortality table but assuming no mortality before normal retirement age, is equal to the actuarial present value, as of the single age specified in the plan, of the same annuity calculated using the section 417(e) rates applicable to distributions in excess of $25,000 (determined under § 1.417(e)-1(d)), and the same mortality assumptions.

(3) ***Current value of variable interest rate.*** The current value of the variable interest rate that applies for a period must be either the value of the variable interest rate determined as of a specified date in the period or the immediately preceding period, or the average of the values of the variable interest rate as of two or more specified dates during the current period or the immediately preceding period. The value as of a date of the rate on a Treasury Bill is the average auction rate for the week or month in which the date falls, as reported in the Federal Reserve Bulletin. The value as of a date of the yield on a Treasury Constant Maturity is the average yield for the week, month, or year in which the date falls, as reported in the Federal Reserve Bulletin. (The Federal Reserve Bulletin is published by the Board of Governors of the Federal Reserve System and is available from Publication Services, Mail Stop 138, Board of Governors of the Federal Reserve System, Washington DC 20551.) The plan may limit the current value of the variable interest rate to a maximum (not less than the highest standard interest rate), or a minimum (not more than the lowest standard interest rate), or both.

(v) ***Hypothetical account*** —

(A) ***Current value of hypothetical account.*** As of any date, the current value of an employee's hypothetical account must equal the sum of all hypothetical allocations and the respective interest adjustments to each such hypothetical allocation provided through that date for the employee under the plan's benefit formula (without regard to any interest adjustments provided under the plan's benefit formula for periods after that date).

(B) ***Value of hypothetical account as of normal retirement age.*** Under paragraph (c)(3)(vi) of this section, the value of an employee's hypothetical account must be determined as of normal retirement age in order to determine the employee's accrued benefit as of any date at or before normal retirement age. As of any date at or before normal retirement age, the value of an employee's hypothetical account as of normal retirement age must equal the sum of each hypothetical allocation provided through that date for the employee under the plan's benefit formula, plus the interest adjustments provided through normal retirement age on each of those hypothetical allocations for the employee under the plan's benefit formula (without regard to any hypothetical allocations that might be provided after that date under the plan's benefit formula). If the interest rate specified in the plan is a variable interest rate, the plan must specify that the determination in the preceding sentence is made by assuming that the current value of the variable interest rate for all future periods is either the current value of the variable interest rate for the current period or the average of the current values of the variable interest rate for the current period and one or more periods immediately preceding the current period (not to exceed 5 years in the aggregate).

(vi) ***Determination of accrued benefit*** —

(A) ***Definition of accrued benefit.*** The plan must provide that at any date at or before normal retirement age the accrued benefit (within the meaning of section 411(a)(7)(A)(i)) of each employee in the plan is an annuity commencing at normal retirement age that is the actuarial equivalent of the employee's hypothetical account as of normal retirement age (as determined under paragraph (c)(3)(v)(B) of this section). The separate benefit that each employee accrues for a plan year is an annuity that is the actuarial equivalent of the employee's hypothetical allocation for that plan year, including the automatic adjustments for interest through normal retirement age required under paragraph (c)(3)(iv) of this section.

(B) ***Normal form of benefit.*** The annuity specified in paragraph (c)(3)(vi)(A) of this section must provide an annual benefit payable in the same form at the same uniform normal retirement age for all employees in the plan. The annual benefit must be the normal retirement benefit under the plan (within the meaning of section 411(a)(9)) under the plan.

(C) ***Determination of actuarial equivalence.*** For purposes of this paragraph (c)(3)(vi) and paragraph (c)(3)(ix) of this section, actuarial equivalence must be determined using a standard mortality table and either a standard interest rate or the interest rate specified in the plan for making interest adjustments to hypothetical allocations. If the interest rate used is the interest rate specified in the plan, and that rate is a variable interest rate, the assumed value of the variable interest rate for all future periods must be the same value that would be assumed for purposes of paragraph (c)(3)(v)(B) of this section. The same actuarial assumptions must be used for all employees in the plan.

(D) ***Effect of section 415 and 416 requirements.*** A plan does not fail to satisfy this paragraph (c)(3)(vi) merely because the accrued benefits under the plan are limited by section 415, or merely because the accrued benefits under the plan are the greater of the accrued benefits otherwise determined under the plan and the minimum benefit described in section 416(c)(1) (regardless of whether the plan is top-heavy).

(vii) ***Optional forms of benefit*** —

(A) ***In general.*** The plan must satisfy the uniform subsidies requirement of § 1.401(a)(4)-3(b)(2)(iv) with respect to all subsidized optional forms of benefit.

(B) ***Limitation on subsidies.*** Unless hypothetical allocations are determined under a uniform hypothetical allocation formula that satisfies paragraph (c)(3)(iii)(B) of this section, the actuarial present value of any QJSA provided under the plan must not be greater than the single sum distribution to the employee that would satisfy paragraph (c)(3)(vii)(C) of this section assuming that it was distributed to the employee on the date of commencement of the QJSA.

(C) ***Distributions subject to section 417(e).*** Except as otherwise required under section 415(b), if the plan provides for a distribution alternative that is subject to the interest rate restrictions under section 417(e), the actuarial present value of the benefit paid to an employee under the distribution alternative must equal the nonforfeitable percentage (determined under the plan's vesting schedule) of the greater of the following two amounts—

(*1*) The current value of the employee's hypothetical account as of the date the distribution commences, calculated in accordance with paragraph (c)(3)(v)(A) of this section.

(*2*) The actuarial present value (calculated in accordance with § 1.417(e)-1(d)) of the employee's accrued benefit.

(D) ***Determination of actuarial present value.*** For purposes of this paragraph (c)(3)(vii), actuarial present value must be determined using a reasonable interest rate and mortality table. A standard interest rate and a standard mortality table are considered reasonable for this purpose.

(viii) ***Past service credit.*** The benefit formula under the plan may not provide for hypothetical allocations in the curent plan year that are attributable to years of service before the current plan year, unless each of the following requirements is satisfied—

(A) The years of past service credit are granted on a uniform basis to all current employees in the plan.

(B) Hypothetical allocations for the current plan year are determined under a uniform hypothetical allocation formula that satisfies paragraph (c)(3)(iii)(B) of this section.

(C) The hypothetical allocations attributable to the years of past service would have satisfied the uniform hypothetical allocation formula requirement of paragraph (c)(3)(iii)(B) of this section, and the interest adjustments to those hypothetical allocations would have satisfied paragraph (c)(3)(iv)(A) of this section, if the plan provision granting past service had been in effect for the entire period for which years of past service are granted to any employee. In order to satisfy this requirement, the hypothetical allocation attributable to a year of past service must be adjusted for interest in accordance with paragraph (c)(3)(iv) of this section for the period (including the retroactive period) beginning with the year of past service to which the hypothetical allocation is attributable and ending at normal retirement age. If the interest rate specified in the plan is a variable interest rate, the interest adjustments for the period prior to the current plan year either must be based on

the current value of the variable interest rate for the period in which the grant of past service first becomes effective or must be reconstructed based on the then current value of the variable interest rate that would have applied during each prior period.

(ix) ***Employees beyond normal retirement age.*** In the case of an employee who commences receipt of benefits after normal retirement age, the plan must provide that interest adjustments continue to be made to an employee's hypothetical account until the employee's benefit commencement date. In the case of an employee described in the previous sentence, the employee's accrued benefit is defined as an annuity that is the actuarial equivalent of the employee's hypothetical account determined in accordance with paragraph (c)(3)(v)(A) of this section as of the date of benefit commencement.

(x) ***Additional uniformity requirements.*** In addition to any uniformity requirements provided elsewhere in this paragraph (c)(3), the plan must satisfy the uniformity requirements in § 1.401(a)(4)-3(b)(2)(v) (uniform vesting and service requirements) and (vi) (no employee contributions). A plan does not fail to satisfy the uniformity requirements of this paragraph (c)(3)(x) or any other uniformity requirement provided in this paragraph (c)(3) merely because the plan contains one or more of the provisions described in § 1.401(a)(4)-3(b)(8)(iv) (prior vesting schedules), (v) (certain conditions on accruals), or (xi) (multiple definitions of service).

(xi) ***Changes in benefit formula, allocation formula, or interest rates.*** A plan does not fail to satisfy this paragraph (c)(3) merely because the plan is amended to change the benefit formula, hypothetical allocation formula, or the interest rate used to adjust hypothetical allocations for plan years after a fresh-start date, provided that the accrued benefits for plan years beginning after the fresh-start date are determined in accordance with § 1.401(a)(4)-13(c), as modified by § 1.401(a)(4)-13(f).

(d) ***Safe-harbor testing method for defined benefit plans that are part of a floor-offset arrangement*** —

(1) ***General rule.*** A defined benefit plan that is part of a floor-offset arrangement is deemed to satisfy the nondiscriminatory amount requirement of § 1.401(a)(4)-1(b)(2) if all of the following requirements are satisfied:

(i) Under the floor-offset arrangement, the accrued benefit (as defined in section 411(a)(7)(A)(i)) that would otherwise be provided to an employee under the defined benefit plan must be reduced solely by the actuarial equivalent of all or part of the employee's account balance attributable to employer contributions under a defined contribution plan maintained by the same employer (plus the actuarial equivalent of all or part of any prior distributions from that portion of the account balance). If any portion of the benefit that is being offset is nonforfeitable, that portion may be offset only by a benefit (or portion of a benefit) that is also nonforfeitable. In determining the actuarial equivalent of amounts provided under the defined contribution plan, an interest rate no higher than the highest standard interest rate must be used, and no mortality may be assumed in determining the actuarial equivalent of any prior distributions from the defined contribution plan or for periods prior to the benefit commencement date under the defined benefit plan.

(ii) The defined benefit plan may not be a contributory DB plan (unless it satisfies § 1.401(a)(4)-6(b)(6)), and benefits under the defined benefit plan may not be reduced by any portion of the employee's account balance under the defined contribution plan (or prior distributions from that account) that are attributable to employee contributions.

(iii) The defined benefit plan and the defined contribution plan must benefit the same employees.

(iv) The offset under the defined benefit plan must be applied to all employees on the same terms.

(v) All employees must have available to them under the defined contribution plan the same investment options and the same options with respect to the timing of preretirement distributions.

(vi) The defined benefit plan must satisfy the uniformity requirements of § 1.401(a)(4)-3(b)(2) and the unit credit safe harbor in § 1.401(a)(4)-3(b)(3) without taking into account the offset described in paragraph (d)(1)(i) of this section (i.e., on a gross-benefit basis), and the defined contribution plan must satisfy any of the tests in § 1.401(a)(4)-2(b) or (c). Alternatively, the defined benefit plan must satisfy any of the tests in § 1.401(a)(4)-3(b) or (c) without taking into account the offset described in paragraph (d)(1)(i) of this section, and the defined contribution plan must satisfy the uniform allocation safe harbor in § 1.401(a)(4)-2(b)(2).

(vii) The defined contribution plan may not be a section 401(k) plan or a section 401(m) plan.

(2) ***Application of safe-harbor testing method to qualified offset arrangements.*** A defined benefit plan that is part of a qualified offset arrangement as defined in section 1116(f)(5) of the Tax Reform Act of 1986, Public Law No. 99-514, is deemed to satisfy the requirements of paragraph (d)(1)(vi) and (vii) of this section, if the only defined contribution plans included in the qualified offset arrangement are section 401(k) plans, section 401(m) plans, or both, and the defined benefit plan would satisfy the requirements of paragraph (d)(1)(vi) of this section assuming the elective contributions for each employee under the defined contribution plan were the same (either as a dollar amount or as a percentage of compensation) for all plan years since the establishment of the plan.

[T.D. 8360, 56 FR 47580, Sept. 19, 1991; 57 FR 4720, Feb. 7, 1992; 57 FR 10952, 10953, Mar. 31, 1992, as amended by T.D. 8485, 58 FR 46807, Sept. 3, 1993; T.D. 8954, 66 FR 34540, June 29, 2001]

§ 1.401(a)(4)-9 Plan aggregation and restructuring.

(a) ***Introduction.*** Two or more plans that are permissively aggregated and treated as a single plan under §§ 1.410(b)-7(d) must also be treated as a single plan for purposes of section 401(a)(4). See § 1.401(a)(4)-12 (definition of plan). An aggregated plan is generally tested under the same rules applicable to single plans. Paragraph (b) of this section, however, provides special rules for determining whether a plan that consists of one or more defined contribution plans and one or more defined benefit plans (a DB/DC plan) satisfies section 401(a)(4) with respect to the amount of employer-provided benefits and the availability of benefits, rights, and features. Paragraph (c) of this section provides rules allowing a plan to be treated as consisting of separate component plans and allowing the component plans to be tested separately under section 401(a)(4).

(b) ***Application of nondiscrimination requirements to DB/DC plans*** —

(1) ***General rule.*** Except as provided in paragraph (b)(2) of this section, whether a DB/DC plan satisfies section 401(a)(4) is determined using the same rules applicable to a single plan. In addition, paragraph (b)(3) of this section provides an optional rule for demonstrating nondiscrimination in availability of benefits, rights, and features provided under a DB/DC plan.

(2) ***Special rules for demonstrating nondiscrimination in amount of contributions or benefits*** —

(i) ***Application of general tests.*** A DB/DC plan satisfies section 401(a)(4) with respect to the amount of contributions or benefits for a plan year if it would satisfy § 1.401(a)(4)-3(c)(1) (without regard to the special rule in § 1.401(a)(4)-3(c)(3)) for the plan year if an employee's

aggregate normal and most valuable allocation rates, as determined under paragraph (b)(2)(ii)(A) of this section, or an employee's aggregate normal and most valuable accrual rates, as determined under paragraph (b)(2)(ii)(B) of this section, were substituted for each employee's normal and most valuable accrual rates, respectively, in the determination of rate groups.

(ii) ***Determination of aggregate rates*** —

(A) ***Aggregate allocation rates.*** An employee's aggregate normal and most valuable allocation rates are determined by treating all defined contribution plans that are part of the DB/DC plan as a single plan, and all defined benefit plans that are part of the DB/DC plan as a separate single plan; and determining an allocation rate and equivalent normal and most valuable allocation rates for the employee under each plan under §§ 1.401(a)(4)-2(c)(2) and 1.401(a)(4)-8(c)(2), respectively. The employee's aggregate normal allocation rate is the sum of the employee's allocation rate and equivalent normal allocation rate determined in this manner, and the employee's aggregate most valuable allocation rate is the sum of the employee's allocation rate and equivalent most valuable allocation rate determined in this manner.

(B) ***Aggregate accrual rates.*** An employee's aggregate normal and most valuable accrual rates are determined by treating all defined contribution plans that are part of the DB/DC plan as a single plan, and all defined benefit plans that are part of the DB/DC plan as a separate single plan; and determining an equivalent accrual rate and normal and most valuable accrual rates for the employee under each plan under §§ 1.401(a)(4)-8(b)(2) and 1.401(a)(4)-3(d), respectively. The employee's aggregate normal accrual rate is the sum of the employee's equivalent accrual rate and the normal accrual rate determined in this manner, and the employee's aggregate most valuable accrual rate is the sum of the employee's equivalent accrual rate and most valuable accrual rate determined in this manner.

(iii) ***Options applied on an aggregate basis.*** The optional rules in § 1.401(a)(4)-2(c)(2)(iv) (imputation of permitted disparity) and (v) (grouping of rates) may not be used to determine an employee's allocation or equivalent allocation rate, but may be applied to determine an employee's aggregate normal and most valuable allocation rates by substituting those rates (determined without regard to the option) for the employee's allocation rate in that section where appropriate. The optional rules in § 1.401(a)(4)-3(d)(3) (e.g., imputation of permitted disparity) may not be used to determine an employee's accrual or equivalent accrual rate, but may be applied to determine an employee's aggregate normal and most valuable accrual rate by substituting those rates (determined without regard to the option) for the employee's normal and most valuable accrual rates, respectively, in that section where appropriate.

(iv) ***Consistency rule*** —

(A) ***General rule.*** Aggregate normal and most valuable allocation rates and aggregate normal and most valuable accrual rates must be determined in a consistent manner for all employees for the plan year. Thus, for example, the same measurement periods and interest rates must be used, and any available options must be applied consistently, if at all, for the entire DB/DC plan. Consequently, options that are not permitted to be used under § 1.401(a)(4)-8 in cross-testing a defined contribution plan or a defined benefit plan (such as measurement periods that include future periods, non-standard interest rates, the option to disregard compensation adjustments described in § 1.401(a)(4)-13(d), or the

option to disregard plan provisions providing for actuarial increases after normal retirement age under § 1.401(a)(4)-3(f)(3)) may not be used in testing a DB/DC plan on either a benefits or contributions basis, because their use would inevitably result in inconsistent determinations under the defined contribution and defined benefit portions of the plan.

(B) ***Exception for section 415 alternative.*** A DB/DC plan does not fail to satisfy the consistency rule in paragraph (b)(2)(iv)(A) of this section merely because the limitations under section 415 are not taken into account, or may not be taken into account, under § 1.401(a)(4)-3(d)(2)(ii)(B) in determining employees' accrual or equivalent allocation rates under the defined benefit portion of the plan, even though those limitations are applied in determining employees' allocation and equivalent accrual rates under the defined contribution portion of the plan.

(v) ***Eligibility for testing on a benefits basis*** —

(A) ***General rule.*** For plan years beginning on or after January 1, 2002, unless, for the plan year, a DB/DC plan is primarily defined benefit in character (within the meaning of paragraph (b)(2)(v)(B) of this section) or consists of broadly available separate plans (within the meaning of paragraph (b)(2)(v)(C) of this section), the DB/DC plan must satisfy the minimum aggregate allocation gateway of paragraph (b)(2)(v)(D) of this section for the plan year in order to be permitted to demonstrate satisfaction of the nondiscrimination in amount requirement of § 1.401(a)(4)-1(b)(2) on the basis of benefits.

(B) ***Primarily defined benefit in character.*** A DB/DC plan is primarily defined benefit in character if, for more than 50% of the NHCEs benefitting under the plan, the normal accrual rate for the NHCE attributable to benefits provided under defined benefit plans that are part of the DB/DC plan exceeds the equivalent accrual rate for the NHCE attributable to contributions under defined contribution plans that are part of the DB/DC plan.

(C) ***Broadly available separate plans.*** A DB/DC plan consists of broadly available separate plans if the defined contribution plan and the defined benefit plan that are part of the DB/DC plan each would satisfy the requirements of section 410(b) and the nondiscrimination in amount requirement of § 1.401(a)(4)-1(b)(2) if each plan were tested separately and assuming that the average benefit percentage test of § 1.410(b)-5 were satisfied. For this purpose, all defined contribution plans that are part of the DB/DC plan are treated as a single defined contribution plan and all defined benefit plans that are part of the DB/DC plan are treated as a single defined benefit plan. In addition, if permitted disparity is used for an employee for purposes of satisfying the separate testing requirement of this paragraph (b)(2)(v)(C) for plans of one type, it may not be used in satisfying the separate testing requirement for plans of the other type for the employee.

(D) ***Minimum aggregate allocation gateway*** —

(*1*) ***General rule.*** A DB/DC plan satisfies the minimum aggregate allocation gateway if each NHCE has an aggregate normal allocation rate that is at least one third of the aggregate normal allocation rate of the HCE with the highest such rate (HCE rate), or, if less, 5% of the NHCE's compensation, provided that the HCE rate does not exceed 25% of compensation. If the HCE rate exceeds 25% of compensation, then the aggregate normal allocation rate for each NHCE must be at least 5% increased by

one percentage point for each 5-percentage-point increment (or portion thereof) by which the HCE rate exceeds 25% (e.g., the NHCE minimum is 6% for an HCE rate that exceeds 25% but not 30%, and 7% for an HCE rate that exceeds 30% but not 35%).

(2) ***Deemed satisfaction.*** A plan is deemed to satisfy the minimum aggregate allocation gateway of this paragraph (b)(2)(v)(D) if the aggregate normal allocation rate for each NHCE is at least $7^1/_2$% of the NHCE's compensation within the meaning of section 415(c)(3), measured over a period of time permitted under the definition of plan year compensation.

(3) ***Averaging of equivalent allocation rates for NHCEs.*** For purposes of this paragraph (b)(2)(v)(D), a plan is permitted to treat each NHCE who benefits under the defined benefit plan as having an equivalent normal allocation rate equal to the average of the equivalent normal allocation rates under the defined benefit plan for all NHCEs benefitting under that plan.

(E) ***Determination of rates.*** For purposes of this paragraph (b)(2)(v), the normal accrual rate and the equivalent normal allocation rate attributable to defined benefit plans, the equivalent accrual rate attributable to defined contribution plans, and the aggregate normal allocation rate are determined under paragraph (b)(2)(ii) of this section, but without taking into account the imputation of permitted disparity under § 1.401(a)(4)-7, except as otherwise permitted under paragraph (b)(2)(v)(C) of this section.

(F) ***Examples.*** The following examples illustrate the application of this paragraph (b)(2)(v):

> *Example 1.* (i) Employer A maintains Plan M, a defined benefit plan, and Plan N, a defined contribution plan. All HCEs of Employer A are covered by Plan M (at a 1% accrual rate), but are not covered by Plan N. All NHCEs of Employer A are covered by Plan N (at a 3% allocation rate), but are not covered by Plan M. Because Plan M does not satisfy section 410(b) standing alone, Plans M and N are aggregated for purposes of satisfying sections 410(b) and 401(a)(4).
> (ii) Because none of the NHCEs participate in the defined benefit plan, the aggregated DB/DC plan is not primarily defined benefit in character within the meaning of paragraph (b)(2)(v)(B) of this section nor does it consist of broadly available separate plans within the meaning of paragraph (b)(2)(v)(C) of this section. Accordingly, the aggregated Plan M and Plan N must satisfy the minimum aggregate allocation gateway of paragraph (b)(2)(v)(D) of this section in order be permitted to demonstrate satisfaction of the nondiscrimination in amount requirement of § 1.401(a)(4)-1(b)(2) on the basis of benefits.

> *Example 2.* (i) Employer B maintains Plan O, a defined benefit plan, and Plan P, a defined contribution plan. All of the six employees of Employer B are covered under both Plan O and Plan P. Under Plan O, all employees have a uniform normal accrual rate of 1% of compensation. Under Plan P, Employees A and B, who are HCEs, receive an allocation rate of 15%, and participants C, D, E and F, who are NHCEs, receive an allocation rate of 3%. Employer B aggregates Plans O and P for purposes

of satisfying sections 410(b) and 401(a)(4). The equivalent normal allocation and normal accrual rates under Plans O and P are as follows:

Employee	Equivalent normal allocation rates for the 1% accrual under plan O (defined benefit plan) (in percent)	Equivalent normal accrual rates for the 15%/3% allocation under plan P (defined contribution plan) (in percent)
HCE A (age 55)	3.93	3.82
HCE B (age 50)	2.61	5.74
C (age 60)	5.91	.51
D (age 45)	1.74	1.73
E (age 35)	.77	3.90
F (age 25)	.34	8.82

(ii) Although all of the NHCEs benefit under Plan O (the defined benefit plan), the aggregated DB/DC plan is not primarily defined benefit in character because the normal accrual rate attributable to defined benefit plans (which is 1% for each of the NHCEs) is greater than the equivalent accrual rate under defined contribution plans only for Employee C. In addition, because the 15% allocation rate is available only to HCEs, the defined contribution plan cannot satisfy the requirements of § 1.401(a)(4)-2 and does not have broadly available allocation rates within the meaning of § 1.401(a)(4)-8(b)(1)(iii). Further, the defined contribution plan does not satisfy the minimum allocation gateway of § 1.401(a)(4)-8(b)(1)(vi) (3% is less than $^{1}/_{3}$ of the 15% HCE rate). Therefore, the defined contribution plan within the DB/DC plan cannot separately satisfy § 1.401(a)(4)-1(b)(2) and does not constitute a broadly available separate plan within the meaning of paragraph (b)(2)(v)(C) of this section. Accordingly, the aggregated plans are permitted to demonstrate satisfaction of the nondiscrimination in amounts requirement of § 1.401(a)(4)-1(b)(2) on the basis of benefits only if the aggregated plans satisfy the minimum aggregate allocation gateway of paragraph (b)(2)(v)(D) of this section.

(iii) Employee A has an aggregate normal allocation rate of 18.93% under the aggregated plans (3.93% from Plan O plus 15% from Plan P), which is the highest aggregate normal allocation rate for any HCE under the plans. Employee F has an aggregate normal allocation rate of 3.34% under the aggregated plans (.34% from Plan O plus 3% from Plan P) which is less than the 5% aggregate normal allocation rate that Employee F would be required to have to satisfy the minimum aggregate allocation gateway of paragraph (b)(2)(v)(D) of this section.

(iv) However, for purposes of satisfying the minimum aggregate allocation gateway of paragraph (b)(2)(v)(D) of this section, Employer B is permitted to treat each NHCE who benefits under Plan O (the defined benefit plan) as having an equivalent allocation rate equal to the average of the equivalent allocation rates under Plan O for all NHCEs benefitting under that plan. The average of the equivalent allocation rates for all of the NHCEs under Plan O is 2.19% (the sum of 5.91%, 1.74%, .77%, and .34%, divided by 4). Accordingly, Employer B is permitted to treat all of the NHCEs as having an equivalent allocation rate attributable to Plan O equal to 2.19%. Thus, all of the NHCEs can be treated as having an aggregate normal allocation rate of 5.19% for this purpose (3% from the defined contribution plan and 2.19% from the defined benefit plan) and the aggregated DB/DC plan satisfies the minimum aggregate allocation gateway of paragraph (b)(2)(v)(D) of this section.

(3) ***Optional rules for demonstrating nondiscrimination in availability of certain benefits, rights, and features*** —

(i) ***Current availability.*** A DB/DC plan is deemed to satisfy § 1.401(a)(4)-4(b)(1) with respect to the current availability of a benefit, right, or feature other than a single sum benefit, loan, ancillary benefit, or benefit commencement date (including the availability of in-service withdrawals), that is provided under only one type of plan (defined benefit or defined contribution) included in the DB/DC plan, if the benefit, right, or feature is currently available to all NHCEs in all plans of the same type as the plan under which it is provided.

(ii) ***Effective availability.*** The fact that it may be difficult or impossible to provide a benefit, right, or feature described in paragraph (b)(3)(i) of this section under a plan of a different type than the plan or plans under which it is provided is one of the factors taken into account in determining whether the plan satisfies the effective availability requirement of § 1.401(a)(4)-4(c)(1).

(c) ***Plan restructuring*** —

(1) ***General rule.*** A plan may be treated, in accordance with this paragraph (c), as consisting of two or more component plans for purposes of determining whether the plan satisfies section 401(a)(4). If each of the component plans of a plan satisfies all of the requirements of sections 401(a)(4) and 410(b) as if it were a separate plan, then the plan is treated as satisfying section 401(a)(4).

(2) ***Identification of component plans.*** A plan may be restructured into component plans, each consisting of all the allocations, accruals, and other benefits, rights, and features provided to a selected group of employees. The employer may select the group of employees used for this purpose in any manner, and the composition of the groups may be changed from plan year to plan year. Every employee must be included in one and only one component plan under the same plan for a plan year.

(3) ***Satisfaction of section 401(a)(4) by a component plan*** —

(i) ***General rule.*** The rules applicable in determining whether a component plan satisfies section 401(a)(4) are the same as those applicable to a plan. Thus, for this purpose, any reference to a plan in section 401(a)(4) and the regulations thereunder (other than this paragraph (c)) is interpreted as a reference to a component plan. As is true for a plan, whether a component plan satisfies the uniformity and other requirements applicable to safe harbor plans under §§ 1.401(a)(4)-2(b) and 1.401(a)(4)-3(b) is determined on a design basis. Thus, for example, plan provisions are not disregarded merely because they do not currently apply to employees in the component plan if they will apply to those employees as a result of the mere passage of time.

(ii) ***Restructuring not available for certain testing purposes.*** The safe harbor in § 1.401(a)(4)-2(b)(3) for plans with uniform points allocation formulas is not available in testing (and thus cannot be satisfied by) contributions under a component plan. Similarly, component plans cannot be used for purposes of determining whether a plan provides broadly available allocation rates (as defined in § 1.401(a)(4)-8(b)(1)(iii)), determining whether a plan has a gradual age or service schedule (as defined in § 1.401(a)(4)-8(b)(1)(iv)), determining whether a plan has allocation rates that are based on a uniform target benefit allocation (as defined in § 1.401(a)(4)-8(b)(1)(v)), or determining whether a plan is primarily defined benefit in character or consists of broadly available separate plans (as defined in paragraphs (b)(2)(v)(B) and (C) of this section). In addition, the minimum allocation gateway of § 1.401(a)(4)-8(b)(1)(vi) and the minimum aggregate allocation gateway of paragraph (b)(2)(v)(D) of this section cannot be satisfied on the basis of component plans. See §§ 1.401(k)-1(b)(3)(iii) and 1.401(m)-1(b)(3)(ii) for rules regarding the inapplicability of restructuring to section 401(k) plans and section 401(m) plans.

(4) ***Satisfaction of section 410(b) by a component plan*** —

(i) ***General rule.*** The rules applicable in determining whether a component plan satisfies section 410(b) are generally the same as those applicable to a plan. However, a component plan is deemed to satisfy the average benefit percentage test of § 1.410(b)-5 if the plan of which it is a part satisfies § 1.410(b)-5 (without regard to § 1.410(b)-5(f)). In the case of a component plan that is part of a plan that relies on § 1.410(b)-5(f) to satisfy the average benefit percentage test, the component plan is deemed to satisfy the average benefit percentage test only if the component plan separately satisfies § 1.410(b)-5(f). In addition, all component plans of a plan are deemed to satisfy the average benefit percentage test if the plan makes an early retirement window benefit (within the meaning of § 1.401(a)(4)-3(f)(4)(iii)) currently available (within the meaning of § 1.401(a)(4)-3(f)(4)(ii)(A)) to a group of employees that satisfies section 410(b) (without regard to the average benefit percentage test), and if it would not be necessary for the plan or any rate group or component plan of the plan to satisfy that test in order for the plan to satisfy sections 401(a)(4) and 410(b) in the absence of the early retirement window benefit.

(ii) ***Relationship to satisfaction of section 410(b) by the plan.*** Satisfaction of section 410(b) by a component plan is relevant solely for purposes of determining whether the plan of which it is a part satisfies section 401(a)(4), and not for purposes of determining whether the plan satisfies

section 410(b) itself. The plan must still independently satisfy section 410(b) in order to be a qualified plan. Similarly, satisfaction of section 410(b) by a plan is relevant solely for purposes of determining whether the plan, and not the component plan, satisfies section 410(b). Thus, for example, a component plan that does not satisfy the ratio percentage test of § 1.410(b)-2(b)(2) must still satisfy the average benefit test of § 1.410(b)-2(b)(3), even though the plan of which it is a part satisfies the ratio percentage test.

(5) ***Effect of restructuring under other sections.*** The restructuring rules provided in this paragraph (c) apply solely for purposes of sections 401(a)(4) and 401(l), and those portions of sections 410(b), 414(s), and any other provisions that are specifically applicable in determining whether the requirements of section 401(a)(4) are satisfied. Thus, for example, a component plan is not treated as a separate plan under section 401(a)(26).

(6) ***Examples.*** The following examples illustrate the rules in this paragraph (c):

Example 1. Employer X maintains a defined benefit plan. The plan provides a normal retirement benefit equal to 1.0 percent of average annual compensation times years of service to employees at Plant S, and 1.5 percent of average annual compensation times years of service to employees at Plant T. Under paragraph (c)(2) of this section, the plan may be treated as consisting of two component defined benefit plans, one providing retirement benefits equal to 1.0 percent of average annual compensation times years of service to the employees at Plant S, and another providing benefits equal to 1.5 percent of average annual compensation times years of service to employees at Plant T. If each component plan satisfies sections 401(a)(4) and 410(b) as if it were a separate plan under the rules of this paragraph (c), then the entire plan satisfies section 401(a)(4).

Example 2. (a) Employer Y maintains Plan A, a defined benefit plan, for its Employees M, N, O, P, Q, and R. Plan A provides benefits under a uniform formula that satisfies the requirements of § 1.401(a)(4)-3 (b)(2) and (b)(3) before it is amended on February 14, 1994. The amendment provides an early retirement window benefit that is a subsidized optional form of benefit under § 1.401(a)(4)-3(b)(2)(iii) and that is available on the same terms to all employees who satisfy the eligibility requirements for the window. The early retirement window benefit is available only to employees who retire between June 1, 1994, and November 30, 1994.
(b) Assume that Employees M, N, and O will be eligible to receive the window benefit by the end of the window period and Employees P, Q, and R will not. Because substantially all employees will not satisfy the eligibility requirements for the early retirement window benefit by the close of the early retirement window benefit period, Plan A fails to satisfy the uniform subsidies requirement of § 1.401(a)(4)-3(b)(2)(iii). See § 1.401(a)(4)-3(b)(2)(vi), *Example 6*.

(c) Under paragraph (c)(2) of this section, Employees M, N, O, P, Q, and R may be grouped into two component plans, one consisting of Employees M, N, and O, and all their accruals and other benefits, rights, and features under the plan (including the early retirement window benefit), and another consisting of Employees P, Q, and R, and all their accruals and other benefits, rights, and features under the plan. Each of the component plans identified in this manner satisfies the uniform subsidies requirement of § 1.401(a)(4)-3(b)(2)(iii), and thus satisfies § 1.401(a)(4)-3(b). The entire plan satisfies section 401(a)(4) under the rules of this paragraph (c), if each of these component plans also satisfies section 410(b) as if it

were a separate plan (including, if applicable, the reasonable classification requirement of § 1.410(b)-4(b), and taking into account the special rule of paragraph (c)(4)(i) of this section that forgives the average benefit percentage test in certain situations in which the average benefit percentage test would be required solely as a result of the early retirement window benefit).

Example 3. (a) Employer Z maintains Plan B, a defined benefit plan with a benefit formula that provides two percent of average annual compensation for each year of service up to 20 to each employee. Assume that Plan B would satisfy the fractional accrual rule safe harbor in § 1.401(a)(4)-3(b)(4), except that some employees accrue a portion of their normal retirement benefit in the current plan year that is more than one-third larger than the portion of the same benefit accrued by other employees for the current plan year, and the plan therefore fails to satisfy the one-third-larger requirement of § 1.401(a)(4)-3(b)(4)(i)(C)(*1*). (b) Employer Z restructures Plan B into two plans, one covering employees with 30 years or less of service at normal retirement age, and the other covering all other employees. Each component plan would separately satisfy the one-third-larger requirement of § 1.401(a)(4)-3(b)(4)(i)(C)(*1*) if the only employees taken into account were those employees included in the component plan in the current plan year. Under paragraph (c)(3)(i) of this section and § 1.401(a)(4)-3(b)(4)(i)(C)(*1*), however, the component plans do not satisfy the one-third-larger requirement because the safe harbor determination is made taking into account the effect of the plan benefit formula on any potential employee in the component plan (other than employees with more than 33 years of service at normal retirement age), and not just those employees included in the component plan in the current plan year.

[T.D. 8485, 58 FR 46810, Sept. 3, 1993, as amended by T.D. 8954, 66 FR 34544, June 29, 2001]

§ 1.401(a)(4)-10 Testing of former employees.

(a) ***Introduction.*** This section provides rules for determining whether a plan satisfies the nondiscriminatory amount and nondiscriminatory availability requirements of § 1.401(a)(4)-1(b)(2) and (3), respectively, with respect to former employees. Generally, this section is relevant only in the case of benefits provided through an amendment to the plan effective in the current plan year. See the definitions of employee and former employee in § 1.401(a)(4)-12.

(b) ***Nondiscrimination in amount of contributions or benefits*** —

(1) ***General rule.*** A plan satisfies § 1.401(a)(4)-1(b)(2) with respect to the amount of contributions or benefits provided to former employees if, under all of the relevant facts and circumstances, the amount of contributions or benefits provided to former employees does not discriminate significantly in favor of former HCEs. For this purpose, contributions or benefits provided to former employees includes all contributions or benefits provided to former employees or, at the employer's option, only those contributions or benefits arising out of the amendment providing the contributions or benefits. A plan under which no former employee currently benefits (within the meaning of § 1.410(b)-3(b)) is deemed to satisfy this paragraph (b).

(2) ***Permitted disparity.*** Section 401(l) and § 1.401(a)(4)-7 generally apply to benefits provided to former employees in the same manner as those provisions apply to employees. Thus, for example, for purposes of determining a former employee's cumulative permitted disparity limit, the sum of the former employee's total annual disparity fractions (within the meaning of § 1.401(l)-5) as an

employee continues to be taken into account. However, the permitted disparity rate applicable to a former employee is determined under § 1.401(l)-3(e) as of the age the former employee commenced receipt of benefits, not as of the date the employee receives the accrual for the current plan year.

(3) ***Examples.*** The following examples illustrate the rules in this paragraph (b):

Example 1. Employer X maintains a section 401(l) plan, Plan A, that uses maximum permitted disparity. Plan A is amended to increase the benefits of all former employees in pay status. The percentage increase for each former employee is reasonably comparable to the adjustment in social security benefits under section 215(i)(2)(A) of the Social Security Act since the former employee commenced receipt of benefits. Plan A does not fail to satisfy this paragraph (b) merely because of the amendment.

Example 2. The facts are the same as in *Example 1,* except that the amendment provides an across-the-board 20 percent increase in benefits for all former employees in pay status. The cost of living has increased at an average rate of three percent in the two years preceding the amendment, and some HCEs have retired and become former HCEs during that period. Because this amendment increases the disparity in the plan formula beyond the maximum permitted disparity adjusted for any reasonable approximation of the increase in the cost of living since the HCEs retired, Plan A discriminates significantly in favor of former HCEs, and thus does not satisfy this paragraph (b).

Example 3. The facts are the same as in *Example 1,* except that Plan A is only amended to increase the benefits of former employees in pay status who terminated employment with Employer X after attaining early retirement age. The determination of whether the amendment causes Plan A to fail to satisfy this paragraph (b) must take into account the relative numbers of former HCEs and former NHCEs who have terminated employment with Employer X after attaining early retirement age.

(c) ***Nondiscrimination in availability of benefits, rights, or features.*** A plan satisfies section 401(a)(4) with respect to the availability of benefits, rights, and features provided to former employees if any change in the availability of any benefit, right, or feature to any former employee is applied in a manner that, under all of the relevant facts and circumstances, does not discriminate significantly in favor of former HCEs. For purposes of demonstrating that a plan satisfies section 401(a)(4) with respect to the availability of loans provided to former employees, an employer may treat former employees who are parties in interest within the meaning of section 3(14) of the Employee Retirement Income Security Act of 1974 as employees.

[T.D. 8485, 58 FR 46812, Sept. 3, 1993]

§ 1.401(a)(4)-11 Additional rules.

(a) ***Introduction.*** This section provides additional rules for determining whether a plan satisfies section 401(a)(4). Paragraph (b) of this section provides rules for the treatment of the portion of an employee's accrued benefit or account balance that is attributable to rollovers, transfers between plans, and employee buybacks. Paragraph (c) of this section provides rules regarding vesting. Paragraph (d) of this section provides rules regarding service crediting. Paragraph (e) of this section, regarding family aggregation, and paragraph (f) of this section, regarding governmental plans, are reserved. Paragraph (g) of this section provides rules regarding the extent to which corrective amendments may be made for purposes of section 401(a).

(b) ***Rollovers, transfers, and buybacks*** —

(1) ***Rollovers and elective transfers.*** The portion of an employee's accrued benefit or account balance under a plan that is attributable to rollover (including direct rollover) contributions to the plan that are described in section 402(c), 402(e)(6), 403(a)(4), 403(a)(5), or 408(d)(3), or elective transfers to the plan that are described in § 1.411(d)-4, Q&A-3(b), is not taken into account in determining whether the plan satisfies the nondiscriminatory amount requirement of § 1.401(a)(4)-1(b)(2).

(2) ***Other transfers.*** [Reserved]

(3) ***Employee buybacks*** —

(i) ***Rehired employee buyback of previous service.*** An employee's repayment to a plan of a prior distribution from the plan (including reasonable interest from the time of the distribution) that results in the restoration of the employee's accrued benefit under the plan (or the service associated with that accrued benefit) that would otherwise be disregarded in determining the employee's accrued benefit in accordance with section 411 on account of the distribution is not treated as an employee contribution for purposes of §§ 1.401(a)(4)-1 through 1.401(a)(4)-13.

(ii) ***Make-up of missed employee contributions.*** If a contributory DB plan gives all employees who did not make employee contributions for a prior period the right to make the missed contributions at a later date (including reasonable interest from the time of the missed contributions) and, once the contributions have been made, determines benefits under the plan by treating the employee contributions (excluding the interest) as if they were actually made during that prior period, then those contributions must satisfy § 1.401(a)(4)-6(c) as if they were employee contributions actually made during that prior period. Thus, for example, § 1.401(a)(4)-6(c)(2) is not satisfied for the current plan year if the employee contribution rate (within the meaning of § 1.401(a)(4)-6(b)(2)(ii)(A) but determined without regard to the interest) for the employees making up missed contributions is different than the employee contribution rate applicable to other employees during the prior period. The rule in this paragraph (b)(3)(ii) may be extended to employees who did not make employee contributions for a period of service that is or would otherwise have been credited under the plan and that preceded their participation in the plan.

(c) ***Vesting*** —

(1) ***General rule.*** A plan satisfies this paragraph (c) if the manner in which employees vest in their accrued benefits under the plan does not discriminate in favor of HCEs. Whether the manner in which employees vest in their accrued benefits under a plan discriminates in favor of HCEs is determined under this paragraph (c) based on all of the relevant facts and circumstances, taking into account any relevant provisions of sections 401(a)(5)(E), 411(a)(10), 411(d)(1), 411(d)(2), 411(d)(3), 411(e), and 420(c)(2), and taking into account any plan provisions that affect the nonforfeitability of employees' accrued benefits (e.g., plan provisions regarding suspension of benefits permitted under section 411(a)(3)(B)), other than the method of crediting years of service for purposes of applying the vesting schedule provided in the plan.

(2) ***Deemed equivalence of statutory vesting schedules.*** For purposes of this paragraph (c), the manner in which employees vest in their accrued benefits under the vesting schedules in section 411(a)(2) (A) and (B) are treated as equivalent to one another, and the manner in which employees vest in their accrued benefits under the vesting schedules in section 416(b)(1) (A) and (B) are treated as equivalent to one another.

(3) ***Safe harbor for vesting schedules.*** The manner in which employees vest in their accrued benefits under a plan is deemed not to discriminate in favor of HCEs if each combination of plan provisions that affect the nonforfeitability of any employee's accrued benefit would satisfy the nondiscriminatory availability requirements of § 1.401(a)(4)-4 if that combination were an other right or feature.

(4) ***Examples.*** The following examples illustrate the rules in this paragraph (c):

Example 1. Plan A provides the six-year graded vesting schedule described in section 416(b)(1)(B). In 1996, Plan A is amended to provide the five-year vesting schedule described in section 411(a)(2)(A). To comply with section 411(a)(10)(B), the plan amendment also provides that all employees with at least three years of service may elect to retain the prior vesting schedule. The manner in which employees vest in their accrued benefits under Plan A does not discriminate in favor of HCEs merely because the prior vesting schedule continues to apply to the accrued benefits of electing employees, even if, at the time of the election or in future years, the prior vesting schedule applies only to a group of employees that does not satisfy section 410(b).

Example 2. The facts are the same as in *Example 1,* except that, for administrative convenience in complying with section 411(a)(10)(B), the plan amendment automatically provides all employees employed on the date of the amendment with the higher of the nonforfeitable percentages determined under either schedule. The manner in which employees vest in their accrued benefits under Plan A does not discriminate in favor of HCEs merely because, for administrative convenience in complying with section 411(a)(10), the amendment exceeds the requirements of section 411(a)(10). The result would be the same if the plan amendment automatically provided the higher of the nonforfeitable percentages only to those employees with at least three years of service.

Example 3. (a) Employer Y maintains Plan B covering all of its employees. On January 1, 1996, Employer Y sells Division M to Employer Z, and all of the employees in Division M become employees of Employer Z. Employer Y obtains a determination letter that the resulting cessation of participation by these employees in Plan B constitutes a partial termination. Therefore, in order to satisfy section 411(d)(3), Plan B fully vests the accrued benefit of each of the employees of Division M whose participation in Plan B ceased as a result of the sale on January 1, 1996.
(b) The manner in which employees vest in their accrued benefits under Plan B does not discriminate in favor of HCEs merely because, in order to satisfy section 411(d)(3), the accrued benefits of all employees affected by the partial termination become fully vested. This is true even if the affected group of employees does not satisfy section 410(b).

Example 4. (a) The facts are the same as in *Example 3,* except that Employer Y does not obtain a determination letter that the sale of Division M to Employer Z will cause a partial termination. Instead, based on its reasonable belief that the sale will cause a partial termination, and in order to ensure that Plan B will satisfy section 411(d)(3), Employer Y amends Plan B to vest fully the accrued benefit on January 1, 1996 of each

of the employees it reasonably believes to be an affected employee.
(b) The manner in which employees vest in their accrued benefits under Plan B does not discriminate in favor of HCEs merely because, based on Employer Y's reasonable belief that the sale will cause a partial termination, Plan B is amended to vest fully the accrued benefits of each of the employees it reasonably believes to be an affected employee.

(d) *Service-crediting rules* —

(1) *Overview* —

(i) ***In general.*** A defined benefit plan or a defined contribution plan does not satisfy this paragraph (d) with respect to the manner in which service is credited under the plan unless the plan satisfies paragraph (d)(2) of this section. Paragraph (d)(3) of this section provides rules for determining whether service other than actual service with the employer may be taken into account in determining whether a defined benefit plan or a defined contribution plan satisfies § 1.401(a)(4)-1 (b)(2) or (b)(3). (However, for purposes of cross-testing a defined contribution plan, only years in which the employee benefited under the plan may be taken into account in determining equivalent accrual rates. See § 1.401(a)(4)-8(b)(2)(i).) The rules of this paragraph (d) apply separately to service credited under a plan for each different purpose under the plan, including, but not limited to: application of the benefit formula (benefit service), application of the accrual method (accrual service), application of the vesting schedule (vesting service), entitlement to benefits, rights, and features (entitlement service), application of the requirements for eligibility to participate in the plan (eligibility service).

(ii) ***Special rule for pre-effective date service.*** A plan is deemed to satisfy this paragraph (d) with respect to service credited for periods prior to the effective date applicable to the plan under § 1.401(a)(4)-13 (a) or (b) under a plan provision adopted and in effect as of February 11, 1993 (and any such service may be taken into account for purposes of satisfying § 1.401(a)(4)-1 (b)(2) or (b)(3)), if the plan satisfied the applicable nondiscrimination requirements with respect to the service that were in effect for all relevant periods prior to the applicable effective date.

(2) *Manner of crediting service* —

(i) ***General rule.*** A plan satisfies this paragraph (d)(2) if, on the basis of all of the relevant facts and circumstances, the manner in which employees' service is credited for all purposes under the plan does not discriminate in favor of HCEs.

(ii) ***Equivalent service-crediting methods.*** For purposes of this paragraph (d)(2), a service-crediting method used for a specified purpose that is based on hours of service, as provided in 29 CFR 2530.200b-2, and a service-crediting method used for the same purpose that is based on one of the equivalencies set forth in 29 CFR 2530.200b-3, are treated as equivalent if the service-crediting methods are otherwise the same.

(iii) ***Safe harbor for service-crediting.*** The manner in which service is credited under a plan for a specified purpose is deemed to satisfy this paragraph (d)(2) if each combination of service-crediting provisions applied for that purpose would satisfy the nondiscriminatory availability requirements of § 1.401(a)(4)-4 if that combination were an other right or feature.

(iv) ***Examples.*** The following examples illustrate the rules in this paragraph (d)(2):

Example 1. (a) Plan A covers both salaried employees and hourly employees. All of the HCEs in Plan A are salaried employees. For administrative convenience, salaried employees in Plan A (none of whom are part-time) have their years of service calculated in accordance with the elapsed time provisions in § 1.410(a)-7. Hourly employees in Plan A (most of whom are scheduled to work 2,000 hours in a year) have their hours of service calculated in accordance with 29 CFR 2530.200b-2 and are credited with a year of service for each plan year in which they complete 1,000 hours of service.
(b) Plan A does not fail to satisfy this paragraph (d)(2) merely because different service-crediting provisions are applied to salaried and hourly employees for administrative convenience. The service-crediting provisions for hourly employees in Plan A are reasonably comparable to the service-crediting provisions for salaried employees. This is because the amount of service credited to hourly employees who complete fewer than 1,000 hours of service before termination of employment (i.e., quit, retirement, discharge, or death) during the plan year (and are treated less favorably than the salaried employees with the same period of employment during the plan year) is balanced by the amount of service credited to hourly employees who complete more than 1,000 hours of service before termination of employment during the plan year (who are treated more favorably than the salaried employees with the same period of employment during the plan year).

Example 2. (a) The facts are the same as in *Example 1,* except Plan A requires hourly employees to complete 2,000 hours of service in order to be credited with a full year of service, with a pro rata reduction for hourly employees who complete fewer than 2,000 hours of service.
(b) Plan A does not fail to satisfy this paragraph (d)(2) merely because different service-crediting provisions are applied to salaried and hourly employees for administrative convenience. The service-crediting provisions for hourly employees in Plan A are reasonably comparable to the service-crediting provisions for salaried employees. This is because the amount of service credited to hourly employees whose employment terminates (i.e., quit, retire, are discharged, or die) during the plan year is reasonably comparable to the amount of service credited to salaried employees whose employment is terminated during the plan year with the same period of employment during the plan year.

(3) ***Service-crediting period*** —

(i) ***Limitation on service taken into account*** —

(A) ***General rule.*** Except as otherwise provided in this paragraph (d)(3), service for periods in which an employee does not perform services as an employee of the employer or in which the employee did not participate in the plan may not be taken into account in determining whether the plan satisfies § 1.401(a)(4)-1 (b)(2) and (b)(3). In addition, in determining whether a plan satisfies § 1.401(a)(4)-1 (b)(2) and (b)(3), no more than one year of service

may be taken into account with respect to any 12-consecutive-month period (with adjustments for shorter periods, if appropriate) unless the additional service is required to be credited under section 410 or 411, whichever is applicable.

(B) ***Past service.*** Notwithstanding paragraph (d)(3)(i)(A) of this section, service for periods in which an employee performed services as an employee of the employer and did not participate in a plan, but in which the employee would have participated in the plan but for the fact that the plan (or the plan amendment extending coverage to the employee) was not in existence during that period, may be taken into account in determining whether the plan satisfies § 1.401(a)(4)-1 (b)(2) and (b)(3). This is because service for such periods generally would have been credited for the employee but for the timing of the plan establishment or amendment, and the timing of the plan establishment or amendment must satisfy § 1.401(a)(4)-5(a).

(C) ***Pre-participation and imputed service.*** Notwithstanding paragraph (d)(3)(i)(A) of this section, to the extent that a plan treats pre-participation service and imputed service as actual service with the employer, such service may be taken into account in determining whether the plan satisfies § 1.401(a)(4)-1 (b)(2) and (b)(3) if the service satisfies each of the requirements in paragraph (d)(3)(iii) of this section taking into account, in the case of imputed service, the additional rules in paragraph (d)(3)(iv) of this section.

(D) ***Additional limitations on service-crediting in the case of certain offsets.*** Notwithstanding paragraphs (d)(3)(i) (B) and (C) of this section, if a plan credits benefit service or accrual service under paragraph (d)(3)(i) (B) or (C) of this section for a period before an employee becomes a participant in the plan, but offsets the benefits determined under the plan by benefits under another plan (whether or not qualified or terminated) that are attributable to the same period for which that service is credited, then that service may not be taken into account for purposes of determining whether the first plan satisfies § 1.401(a)(4)-1 (b)(2) or (b)(3) unless the offset provision applies on the same basis to all similarly-situated employees (within the meaning of paragraph (d)(3)(iii)(A) of this section).

(ii) ***Definitions*** —

(A) ***Pre-participation service.*** For purposes of this section, pre-participation service includes all years of service credited under a plan for years of service with the employer or a prior employer for periods before the employee commenced or recommenced participation in the plan (other than past service described in paragraph (d)(3)(i)(B) of this section).

(B) ***Imputed service.*** For purposes of this section, imputed service includes any service credited for periods after an employee has commenced participation in a plan while the employee is not performing services as an employee for the employer (including a period in which the employee performs services for another employer, e.g., a joint venture), or while the employee has a reduced work schedule and would not otherwise be credited with service at the level being credited under the general terms of the plan.

(iii) ***Requirements for pre-participation and imputed service*** —

(A) ***Provision applied to all similarly-situated employees*** —

(*1*) ***General rule.*** A plan provision crediting pre-participation service or imputed service to any HCE must apply on the same terms to all similarly-situated NHCEs. Whether two employees are similarly situated for this purpose must be determined based on

reasonable business criteria, generally taking into account only the circumstances resulting in the employees being covered under the plan or being granted imputed service and on the situation of the employees (e.g., the plan in which the employees benefit or the employer by which they are employed) during the period for which the pre-participation service or imputed service is credited. For example, employees who enter a plan as a result of a particular merger and who participated in the same plan of a prior employer are generally similarly situated. As another example, employees who are transferred to different joint ventures or different spun-off divisions are generally not similarly situated.

(2) ***Examples.*** The following examples illustrate the rules in this paragraph (d)(3)(iii)(A):

Example 1. Employer X maintains defined benefit Plans A and B and defined contribution Plan C. Plan A covers all employees who work at the headquarters of Employer X. Plan B covers some employees in Division M of Employer X, and Plan C covers the other employees of Division M. Plans B and C have not been aggregated for purposes of satisfying section 401(a)(4) or 410(b) for the period for which service is being credited. Plan A provides that, whenever an employee covered by Plan B transfers from Division M to the headquarters, the employee's service credited under Plan B is credited under Plan A, and the employee's benefit under Plan A is offset by the employee's benefit under Plan B. However, Plan A provides for no similar recognition of service or offset for employees covered by Plan C who transfer from Division M to the headquarters. Plan A does not fail to satisfy this paragraph (d)(3)(iii)(A) merely because it credits service for employees transferring from Plan B but not from Plan C, because it is reasonable to treat employees participating in different plans that have not been aggregated as not being similarly situated.

Example 2. The facts are the same as in *Example 1,* except that Employer X acquires two trades or businesses from different employers. Employees of the acquired trades or businesses become employees of Division M and become covered by Plan B. In addition, Plan B is amended to credit service with one of the trades or businesses but not the other. Plan B does not fail to satisfy this paragraph (d)(3)(iii)(A) merely because it credits service for one acquired trade or business but not another, because it is reasonable to treat employees of one acquired trade or business as not similarly situated to employees of another acquired trade or business.

(B) ***Legitimate business reason*** —

(1) ***General rule.*** There must be a legitimate business reason, based on all of the relevant facts and circumstances, for a plan to credit imputed service or for a plan to credit pre-participation service for a period of service with another employer.

(2) ***Relevant facts and circumstances when crediting service with another employer.*** The following are examples of relevant facts and circumstances for determining whether a legitimate business reason exists for a plan to credit pre-participation or imputed service for a period of service with another employer as service with the employer: whether one employer has a significant ownership, control, or similar interest in, or relationship with, the other employer (though not enough to cause the two employers to be treated as a single employer under section 414); whether the two employers

share interrelated business operations; whether the employers maintain the same multiple-employer plan; whether the employers share similar attributes, such as operation in the same industry or the same geographic area; and whether the employees are an acquired group of employees or the employees became employed by the other employer in a transaction between the two employers that was a stock or asset acquisition, merger, or other similar transaction involving a change in the employer of the employees of a trade or business. Other factors may also be relevant for this purpose, such as the plan's treatment of service with other employers with which the employer has a similar relationship and the type of service being credited (e.g., vesting service as compared to benefit service or accrual service). A legitimate business reason is deemed to exist for a plan to credit military service as service with the employer.

(3) ***Examples.*** The following examples illustrate the rules in this paragraph (d)(3)(iii)(B):

Example 1. Twenty unrelated employers jointly sponsor a multiple-employer plan that covers all employees of the employers. From time to time, employees transfer employment among the employers. There is a legitimate business reason for a disaggregated portion of the plan that benefits the employees of one of the employers to treat service with any of the other employers as service with the employer.

Example 2. Employer X owns 20 percent of the outstanding stock of Employer Y. From time to time, employees transfer from Employer X to Employer Y at the request of Employer X. Employer X maintains defined benefit Plan A. Plan A provides that years of service include an employee's years of service with Employer Y. There is a legitimate business reason for Plan A to credit service with Employer Y because Employer X, through its 20-percent ownership interest, benefits from the service that the transferred employees provide to Employer Y.

Example 3. Employer Z manufactures widgets and belongs to the National Widget Manufacturers' Association. From time to time, Employer Z hires employees from other widget manufacturers. Employer Z maintains a defined benefit plan, Plan B, which credits pre-participation service for periods of service with all other members of the Association located in the western half of the United States as service with Employer Z. There is a legitimate business reason for Plan B to treat service with other members of the Association as service with Employer Z.

(C) ***No significant discrimination*** —

(1) ***General rule.*** Based on all of the relevant facts and circumstances, a plan provision crediting pre-participation or imputed service must not by design or in operation discriminate significantly in favor of HCEs.

(2) ***Relevant facts and circumstances.*** The following are examples of relevant facts and circumstances for determining whether a plan provision crediting pre-participation service or imputed service discriminates significantly in favor of HCEs: whether the service credit does not duplicate benefits but merely makes an employee whole (i.e., prevents the employee from being disadvantaged with respect to benefits by a change in job or employer or provides the employee with benefits comparable to

those of other employees); the degree of business ties between the current employer and the prior employer, such as the degree of ownership interest or other affiliation; the degree of excess coverage under section 410(b) of NHCEs for the plan crediting the service, taking into account employees who are credited with pre-participation service; whether the other employer maintains a qualified plan for its employees; the existence of reciprocal service credit under other plans of the employer or the prior employer; the circumstances underlying the employee's transfer into the group of employees covered by the plan; the type of service being credited; and the relative number of employees other than five-percent owners or the most highly-paid HCEs of the employer (determined without regard to the one officer rule of section 414(q)(5)(B)) who are being credited with pre-participation service or imputed service. The relative number referred to in the last factor is determined taking into account all employees who have been over time, or are reasonably expected to be in the future, credited with such service.

(3) ***Examples.*** The following examples illustrate the rules in this paragraph (d)(3)(iii)(C). It is assumed that facts not described in an example do not, in the aggregate, suggest that the relevant plan provision either does or does not discriminate significantly in favor of HCEs.

> *Example 1.* (a) Employer U maintains defined benefit Plans A and B. Plan A covers all employees who work at the headquarters of Employer U. Plan B covers all employees of Division M of Employer U. Plan A provides that, whenever an employee transfers from Division M to the headquarters, the employee's service credited under Plan B is credited under Plan A, and the employee's benefit under Plan A is offset by the employee's benefit under Plan B. Employees, including a meaningful number of NHCEs, are periodically transferred from Division M to the headquarters of Employer U for bona fide business reasons.
> (b) The Plan A provision crediting service under Plan B does not discriminate significantly in favor of HCEs. The provision is designed only to prevent employees from being disadvantaged by being transferred from Division M to the headquarters, and a meaningful number of NHCEs can be expected to benefit from it.

> *Example 2.* (a) The facts are the same as in *Example 1,* except that the only employees transferred from Division M to the headquarters of Employer U are HCEs (but not the most highly-paid HCEs of Employer U).
> (b) Employer U determines that Plan A would have satisfied sections 401(a)(4) and 410(b) for the period for which the transferred employees are being credited with pre-participation service had the employees participated in Plan A during that period. This determination is based on test results under sections 401(a)(4) and 410(b) for the current year, taking into account significant demographic changes over this period.

(c) The Plan A provision crediting service under Plan B does not significantly discriminate in favor of HCEs in the current year. This conclusion is based on the fact that the circumstances underlying the transfers indicate that they were made for bona fide business reasons, that Plan A would have satisfied sections 401(a)(4) and 410(b) had the transferred employees participated in Plan A during the period for which the pre-participation service is credited, and that the transferred employees are not the most highly-paid HCEs of Employer U.

Example 3. (a) The facts are the same as in *Example 1,* except that the only employee who is transferred from Division M to the headquarters of Employer U is Employee P, who is among the most highly-paid HCEs of Employer U. Plan A provides an unreduced early retirement benefit at age 55 for employees with 20 years of service, but Plan B's early retirement benefits are not subsidized. Employee P is transferred to the headquarters with 20 years of service credited under Plan B and shortly before attainment of age 55. Employee P is expected to retire upon reaching age 55.
(b) The Plan A provision crediting service under Plan B discriminates significantly in favor of HCEs in the year of the transfer. This is because the circumstances underlying this transfer (i.e., its occurrence shortly before Employee P's expected retirement and the fact that the transfer significantly increased Employee P's early retirement benefits) indicate that Employee P was transferred to the headquarters primarily to obtain the higher pension benefits provided under Plan A.

(c) Because of this conclusion, the pre-participation service credited to Employee P cannot be taken into account in determining whether Plan A satisfies § 1.401(a)(4)-1 (b)(2) and (b)(3). Thus, if Plan A credits the service, it cannot be a safe harbor plan because the benefit formula will take into account service that may not be taken into account under this paragraph (d)(3). In addition, Employee P's accrual rates under the general test in § 1.401(a)(4)-3(c) are likely to be higher than those of other employees because, while the pre-participation service may be used to determine Employee P's benefits under Plan A, the service must be disregarded in determining Employee P's testing service. Also, if Employee P's pre-participation service is used in determining Employee P's entitlement to a benefit, right, or feature under Plan A, the fact that the service must be disregarded in determining Employee P's entitlement service for purposes of § 1.401(a)(4)-4 may cause the benefit, right, or feature to be treated as a separate benefit, right, or feature that is currently available only to Employee P.

Example 4. (a) Employer V manufactures widgets and belongs to the National Widget Manufacturers' Association. Each member of the Association maintains a defined benefit plan that credits pre-participation service for periods of service with other members and offsets benefits under the plan by benefits under the plans of the other members. Employer V maintains defined benefit Plan C. Employer V periodically hires employees from other widget manufacturers who are not among its most highly-paid HCEs. In 1997, however, the only employee hired by Employer V from another member of the Association is Employee Q, who is among Employer V's most highly-paid HCEs. Employee Q receives pre-participation service credit in accordance with the terms of Plan C. Some of the plans maintained by other members of the Association credited pre-participation service to NHCEs for the same period for which the pre-participation service is credited to Employee Q.
(b) The provision of Plan C crediting pre-participation service with other members of the Association does not discriminate significantly in 1997, despite the fact that the only employee who received pre-participation service credit under the provision in that year was among the most highly-paid HCEs of Employer V. This conclusion is based on the relative number of employees other than Employer V's most highly-paid HCEs who have been credited in the past, or are reasonably expected to be credited in the future, with pre-participation service for periods of service with other members of the Association, and the fact that other employees who are NHCEs are being credited with pre-participation service under a reciprocal agreement.

Example 5. Employer W owns 79 percent of the outstanding stock of Employer X. From time to time, employees transfer from Employer W to Employer X at the request of Employer W. The only employees who have ever been transferred are HCEs. Employer W maintains a defined benefit plan, Plan D, which credits employees transferred to Employer X with imputed benefit and accrual service while employed by Employer X. Employer X maintains no qualified plan. Plan D would fail either section 401(a)(4) or section 410(b) in the current plan year if the individuals employed by Employer X were treated as employed by Employer W. In addition, Plan D would fail either section 401(a)(4) or section 410(b) in the current plan year if the portion of Plan D covering the transferred employees were treated as maintained by Employer X. The Plan D provision crediting imputed benefit and accrual service to employees transferred to Employer X significantly discriminates in favor of HCEs in the current plan year.

Example 6. The facts are the same as in Example 5, except that Plan D credits the individuals who transfer to Employer X only with imputed vesting and entitlement service. The Plan D provision crediting imputed vesting and entitlement service to individuals transferred to Employer X does not

significantly discriminate in favor of HCEs in the current plan year, because there is less potential for discrimination when the only types of service being imputed are vesting and entitlement service.

(iv) ***Additional rules for imputed service*** —

(A) ***Legitimate business reasons for crediting imputed service*** —

(*1*) ***General rule.*** A legitimate business reason does not exist for a plan to impute service after an individual has permanently ceased to perform services as an employee (within the meaning of § 1.410(b)-9) for the employer maintaining the plan, i.e., is not expected to resume performing services as an employee for the employer. The preceding sentence does not apply in the case of an individual who is not performing services for the employer because of disability or is performing services for another employer under an arrangement (such as a transfer of the employee to another employer) that provides some ongoing business benefit to the original employer. The first sentence in this paragraph (d)(3)(iv)(A)(*1*) also does not apply in the case of vesting and entitlement service if the employee is performing services for another employer that is being treated under the plan as actual service with the original employer.

(*2*) ***Certain presumptions applicable.*** Whether an individual has permanently ceased to perform services as an employee for an employer is determined taking into account all of the relevant facts and circumstances. There is a rebuttable presumption for a period of up to two years that an individual who has ceased to perform services as an employee for an employer is nonetheless expected to resume performing services as an employee for the employer, if the employer continues to treat the individual as an employee for significant purposes unrelated to the plan. After two years, there is a rebuttable presumption that an individual who has ceased to perform services as an employee for the employer is not expected to resume performing services as an employee for the employer. The fact that an individual is absent to perform jury duty or military service automatically rebuts the latter presumption. Other evidence, such as the employer's layoff policy, the terms of an employment contract, or specific leave to pursue a degree requiring more than two years of study, may also rebut this presumption.

(*3*) ***Imputed service for part-time employees.*** Rules similar to the rules in paragraph (d)(3)(iv)(A) (*1*) and (*2*) of this section apply in the case of an employee whose work hours are temporarily reduced and who therefore would normally be credited with service at a reduced rate, but who continues to be credited with service at the same rate as before the reduction (e.g., an employee who continues to be credited with service as if the employee were a full-time employee during a temporary change from a full-time to a part-time work schedule).

(B) ***Additional factors for determining whether a provision crediting imputed service discriminates significantly.*** In addition to the factors described in paragraph (d)(3)(iii)(C)(*2*) of this section, relevant facts and circumstances for determining whether a plan provision crediting imputed service during a leave of absence or a period of reduced services discriminates significantly include any employer policies or practices that restrict the ability of employees to take leaves of absence or work temporarily on a part-time basis, respectively.

(v) ***Satisfaction of other service-crediting rules.*** A plan does not fail to satisfy this paragraph (d)(3) merely because it credits service to the extent necessary to satisfy the service-crediting rules in section 410(a), 411(a), 413, or 414(a), § 1.410(a)-7 (elapsed-time method of service-crediting) or 29 CFR 2530.200b-2 (regarding hours of service to be credited), whichever is applicable, or 29 CFR § 2530.204-2(d) (regarding double proration of service and compensation).

(e) ***Family aggregation rules.*** [Reserved]

(f) ***Governmental plans.*** [Reserved]

(g) ***Corrective amendments*** —

(1) ***In general.*** A corrective amendment that satisfies the rules of this paragraph (g) is taken into account for purposes of satisfying certain section 401(a) requirements for a plan year, by treating the corrective amendment as if it were adopted and effective as of the first day of the plan year. These rules apply in addition to the rules of section 401(b). Paragraph (g)(2) of this section describes the scope of the corrective amendments that are permitted to be made. Paragraph (g)(3) of this section specifies the conditions under which a corrective amendment may be made. Paragraph (g)(4) of this section provides a rule prohibiting a corrective amendment from being taken into account to the extent that it does not have substance. Paragraph (g)(5) of this section discusses the effect of the corrective amendments permitted under this paragraph (g) under provisions other than section 401(a).

(2) ***Scope of corrective amendments.*** For purposes of satisfying the minimum coverage requirements of section 410(b), the nondiscriminatory amount requirement of § 1.401(a)(4)-1(b)(2), or the nondiscriminatory plan amendment requirement of § 1.401(a)(4)-1(b)(4), a corrective amendment may retroactively increase accruals or allocations for employees who benefited under the plan during the plan year being corrected, or may grant accruals or allocations to individuals who did not benefit under the plan during the plan year being corrected. In addition, for purposes of satisfying the nondiscriminatory current availability requirement of § 1.401(a)(4)-4(b) for benefits, rights, or features, a corrective amendment may make a benefit, right, or feature available to employees to whom it was previously not available. A corrective amendment may not, however, correct for a failure to incorporate the pre-termination restrictions of § 1.401(a)(4)-5(b).

(3) ***Conditions for corrective amendments*** —

(i) ***In general.*** A corrective amendment is not taken into account prior to its adoption under this paragraph (g) unless it satisfies each of the requirements of paragraph (g)(3) (ii) through (vii) of this section, whichever are applicable. Thus, for example, if any of the applicable requirements are not satisfied, any additional accruals arising from an amendment adopted after the end of a plan year are not given retroactive effect and, thus, are tested in the plan year in which the amendment is adopted.

(ii) ***Benefits not reduced.*** Except as permitted under paragraph (g)(3)(vi)(C)(*2*) of this section, the corrective amendment may not result in a reduction of an employee's benefits (including any benefit, right, or feature), determined based on the terms of the plan in effect immediately before the amendment.

(iii) ***Amendment effective for all purposes.*** For purposes of determining an employee's rights and benefits under the plan, the corrective amendment must generally be effective as if the amendment had been made on the first day of the plan year being corrected. Thus, if the corrective amendment is made after the close of the plan year being corrected, an employee's

allocations or accruals, along with the associated benefits, rights, and features, must be increased to the level at which they would have been had the amendment been in effect for the entire preceding plan year. Accordingly, such increases are taken into account for testing purposes as if the increases had actually occurred in the prior plan year. However, to the extent that an amendment makes a benefit, right, or feature available to a group of employees, the amendment does not fail to satisfy this paragraph (g)(3)(iii) merely because it is not effective prior to the date of adoption and, therefore, the benefit, right, or feature is not made currently available to those employees before that date.

(iv) ***Time when amendment must be adopted and put into effect*** —

(A) ***General rule.*** Any corrective amendment intended to apply to the preceding plan year must be adopted and implemented on or before the 15th day of the 10th month after the close of the plan year in order to be taken into account for the preceding plan year.

(B) ***Determination letter requested by employer or plan administrator.*** If, on or before the end of the period set forth in paragraph (g)(3)(iv)(A) of this section, the employer or plan administrator files a request pursuant to § 601.201(o) of this chapter (Statement of Procedural Rules) for a determination letter on the amendment, the initial or continuing qualification of the plan, or the trust that is part of the plan, the period set forth in paragraph (g)(3)(iv)(A) of this section is extended in the same manner as provided for an extension of the remedial amendment period under § 1.401(b)-1(d)(3).

(v) ***Corrective amendment for coverage or amounts testing*** —

(A) ***Retroactive benefits must be provided to nondiscriminatory group.*** Except as provided in paragraph (g)(3)(v)(B) of this section, if the corrective amendment is adopted after the close of the plan year, the additional allocations or accruals for the preceding year resulting from the corrective amendment must separately satisfy section 401(a)(4) for the preceding plan year and must benefit a group of employees that separately satisfies section 410(b) (determined by applying the same rules as are applied in determining whether a component plan separately satisfies section 410(b) under § 1.401(a)(4)-9(c)(4)). Thus, for example, in applying the rules of this paragraph (g)(3)(v), an employer may not aggregate the additional accruals or allocations for the preceding plan year resulting from the corrective amendment with the other accruals or allocations already provided under the terms of the plan as in effect during the preceding plan year without regard to the corrective amendment.

(B) ***Corrective amendment to conform to safe harbor.*** The requirements of paragraph (g)(3)(v)(A) of this section need not be met if the corrective amendment is for purposes of conforming the plan to one of the safe harbors in § 1.401(a)(4)-2(b) or § 1.401(a)(4)-3(b) (including for purposes of applying the requirements of those safe harbors under the optional testing methods in § 1.401(a)(4)-8 (b)(3) or (c)(3)), or ensuring that the plan continues to meet one of those safe harbors.

(vi) ***Conditions for corrective amendment of the availability of benefits, rights, and features.*** A corrective amendment may not be taken into account under this paragraph (g) for purposes of satisfying § 1.401(a)(4)-4(b) for a given plan year unless—

(A) The corrective amendment is not part of a pattern of amendments being used to correct repeated failures with respect to a particular benefit, right, or feature;

(B) The relevant provisions of the plan immediately after the corrective amendment with respect to the benefit, right, or feature (including a corrective amendment eliminating the benefit, right, or feature) remain in effect until the end of the first plan year beginning after the date of the amendment; and

(C) The corrective amendment either—

(*1*) Expands the group of employees to whom the benefit, right, or feature is currently available so that for each plan year in which the corrective amendment is taken into account in determining whether the plan satisfies § 1.401(a)(4)-4(b), the group of employees to whom the benefit, right, or feature is currently available, after taking into account the amendment, satisfies the nondiscriminatory classification requirement of § 1.410(b)-4 (and thus the current availability requirement of § 1.401(a)(4)-4(b)) with a ratio percentage greater than or equal to the lesser of—

(*i*) The safe harbor percentage applicable to the plan; and

(*ii*) The ratio percentage of the plan; or

(*2*) Eliminates the benefit, right, or feature (to the extent permitted under section 411(d)(6)) on or before the last day of the plan year for which the corrective amendment is taken into account.

(vii) ***Special rules for section 401(k) plans and section 401(m) plans*** —

(A) ***Minimum coverage requirements.*** In the case of a section 401(k) plan, a corrective amendment may only be taken into account for purposes of satisfying § 1.410(b)-3(a)(2)(i) under this paragraph (g) for a given plan year to the extent that the corrective amendment grants qualified nonelective contributions within the meaning of § 1.401(k)-6 (QNECs) to nonhighly compensated nonexcludable employees who were not eligible employees within the meaning of § 1.401(k)-6 for the given plan year, and the amount of the QNECs granted to each nonhighly compensated nonexcludable employee equals the product of the nonhighly compensated nonexcludable employee's plan year compensation and the actual deferral percentage (within the meaning of section 401(k)(3)(B)) for the given plan year for the group of NHCEs who are eligible employees. Similarly, in the case of a section 401(m) plan, a corrective amendment may only be taken into account for purposes of satisfying § 1.410(b)-3(a)(2)(i) under this paragraph (g) for a given plan year to the extent that the corrective amendment grants qualified nonelective contributions (QNECs) to nonhighly compensated nonexcludable employees who were not eligible employees within the meaning of § 1.401(m)-5 for the given plan year, and the amount of the QNECs granted to each nonhighly compensated nonexcludable employee equals the product of the nonhighly compensated nonexcludable employee's plan year compensation and the actual contribution percentage (within the meaning of section 401(m)(3)) for the given plan year for the group of NHCEs who are eligible employees.

(B) ***Correction of rate of match.*** In the case of a section 401(m) plan, allocations for a given plan year granted under a corrective amendment to NHCEs who made contributions for the plan year eligible for a matching contribution may be treated as matching contributions. These allocations treated as matching contributions may be taken into account for purposes of satisfying the current availability requirement of § 1.401(a)(4)-4(b) with respect to the right to a rate of match, but may not be taken into account for satisfying other amounts testing.

(4) ***Corrective amendments must have substance.*** A corrective amendment is not taken into account in determining whether a plan satisfies section 401(a)(4) or 410(b) to the extent the amendment affects nonvested employees whose employment with the employer terminated on or before the close of the preceding year, and who therefore would not have received any economic benefit from the amendment if it had been made in the prior year. Similarly, in determining whether the requirements of paragraph (g)(3)(vi)(C)(*1*) of this section are satisfied, a corrective amendment making a benefit, right, or feature available to employees is not taken into account to the extent the benefit, right, or feature is not currently available to any of those employees immediately after the amendment. However, a plan will not fail to satisfy the requirements of paragraph (g)(3)(vi)(C)(*1*) of this section by operation of the provisions in this paragraph (g)(4) if the benefit, right, or feature is made available to all employees in the plan as of the date of the amendment.

(5) ***Effect under other statutory requirements.*** A corrective amendment under this paragraph (g) is treated as if it were adopted and effective as of the first day of the plan year only for the specific purposes described in this paragraph (g). Thus, for example, the corrective amendment is taken into account not only for purposes of sections 401(a)(4) and 410(b), but also for purposes of determining whether the plan satisfies sections 401(l). By contrast, the amendment is not given retroactive effect for purposes of section 404 (deductions for employer contributions) or section 412 (minimum funding standards), unless otherwise provided for in rules applicable to those sections.

(6) ***Examples.*** The following examples illustrate the rules in this paragraph (g):

Example 1. Employer U maintains a calendar year defined benefit plan that in 1994 is tested using the safe harbor for flat benefit plans in § 1.401(a)(4)-3(b)(4). In 1996, Employer U is concerned that the plan will not satisfy the demographic requirement in § 1.401(a)(4)-3(b)(4)(i)(C)(*3*) for the 1995 plan year because the average of the normal accrual rates for all NHCEs is less than 70 percent of the average of the normal accrual rates for all HCEs. Provided the corrective amendment would otherwise satisfy this paragraph (g), Employer U may make a corrective amendment to the plan to increase the number of NHCEs so that the amended plan satisfies the safe harbor for the 1995 plan year. The corrective amendment need not satisfy paragraph (g)(3)(v)(A) of this section because Employer U is retroactively amending the plan to conform to a safe harbor in § 1.401(a)(4)-3(b). See paragraph (g)(3)(v)(B) of this section.

Example 2. (a) Employer V maintains a calendar year defined contribution plan covering all the employees in Division M and Division N. Under the plan, only employees in Division M have the right to direct the investments in their account. For plan years prior to 1996, the plan met the current availability requirement of § 1.401(a)(4)-4(b) because the employees in Division M were a group of employees that satisfied the nondiscriminatory classification test of § 1.410(b)-4. Because of attrition in the employee population in Division M in 1996, the group of employees to whom the right to direct investments is available during that plan year no longer meets the nondiscriminatory classification test of § 1.410(b)-4. Thus, the right to direct investments under the plan does not meet the current availability requirement of § 1.401(a)(4)-4(b) during the 1996 plan year.

(b) Employer V may amend the plan in 1997 (but on or before October 15) to make the right to direct investments available from the date of the corrective amendment to a larger group of employees and the corrective amendment may be taken into account for purposes of satisfying the current availability requirement of § 1.401(a)(4)-4(b) for 1996 if the amendment satisfies this paragraph (g). Thus, for example, the group of employees to whom the right to direct investments is currently available, after taking into account the corrective amendment, must satisfy the nondiscriminatory classification test of § 1.410(b)-4 for 1996 using a safe harbor percentage (or if lower, the ratio percentage of the plan for 1996). In addition, the corrective amendment making the right to direct investments available to a larger group of employees must remain in effect through the end of the 1998 plan year.

(c) In order for Employer V to take the corrective amendment into account for purposes of satisfying the current availability requirement of § 1.401(a)(4)-4(b) for the portion of the 1997 plan year before the amendment, the group of employees to whom the right to direct investments is currently available, taking into account the amendment, must satisfy the nondiscriminatory classification test of § 1.410(b)-4 for 1997 using a safe harbor percentage (or if lower, the ratio percentage of the plan for 1997).

(d) Alternatively, if Employer V adopts the corrective amendment before the end of the 1996 plan year, the corrective amendment need only remain in force through the end of the 1997 plan year, or the corrective amendment may eliminate the right to direct investments (provided that the elimination remains in effect through the end of the 1997 plan year).

Example 3. The facts are the same as in *Example 2.* In 1997, Employer V makes a corrective amendment to extend the plan to employees of Division O as well as Divisions M and N. Assume that the corrective amendment satisfies paragraph (g)(3)(v)(A) of this section, and thus, may be taken into account for purposes of satisfying the nondiscriminatory amounts requirement of § 1.401(a)(4)-1(b)(2) or the minimum coverage requirements of section 410(b). However, the employees in Division O will not be taken into account in determining whether the right to direct investments meets the current availability requirements of § 1.401(a)(4)-4(b) unless the corrective amendment meets the requirements of paragraph (g)(3)(vi) of this section. Thus, for example, the group of employees to whom the right to direct investments is made available as a result of the expansion of coverage, after taking into account the corrective amendment, must satisfy the nondiscriminatory clarification test of § 1.410(b)-4 for 1996 using a safe harbor percentage (or if lower, the ratio percentage of the plan for 1996). In addition, the amendment making the right to direct investments available to a larger group of employees must remain in effect though the end of the 1998 plan year.

Example 4. Employer W maintains a defined benefit plan that covers all employees and that offsets an employee's benefit by the employee's projected primary insurance amount. The plan is not eligible to use the safe harbors under § 1.401(a)(4)-3(b) because the plan does not satisfy section 401(l). Under the plan, the accrual rates for all HCEs (determined under the general test

of § 1.401(a)(4)-3(c)) for 1998 are less than 1.5 percent of average annual compensation, and the accrual rates for all NHCEs (determined under the general test of § 1.401(a)(4)-3(c)) for 1998 are two percent of average annual compensation. If Employer W adopts a corrective amendment adopted in 1999 that retroactively increases HCEs' benefits under the plan so that their accrual rates equal those of the NHCEs, the corrective amendment may not be taken into account in testing the 1998 plan year (i.e., the accruals that result from the corrective amendment are treated as 1999 accruals), because the accruals for the 1998 plan year resulting from the corrective amendment would not separately satisfy sections 410(b) and 401(a)(4). This is the case even if, after taking the amendment into account, the plan would satisfy sections 410(b) and 401(a)(4) for the 1998 plan year.

Example 5. Employer X maintains two plans—Plan A and Plan B. Plan A satisfies the ratio percentage test of § 1.410(b)-2(b)(2), but Plan B does not. Thus, in order to satisfy section 410(b), Plan B must satisfy the average benefits test of § 1.410(b)-2(b)(3). The average benefit percentage of Plan B is 60 percent. Employer X may take into account a corrective amendment that increases the accruals under either Plan A or Plan B so that the average benefit percentage meets the 70 percent requirement of the average benefits test, if the amendment satisfies paragraph (g)(3)(v) of this section.

Example 6. Employer Y maintains Plan C, which does not satisfy section 401(a)(4) in a plan year. Under the terms of paragraph (g)(2) of this section, Employer Y amends Plan C to increase the benefits of certain employees retroactively. In designing the amendment, Employer Y identifies those employees who have terminated without vested benefits during the period after the end of the prior plan year and before the adoption date of the amendment, and the amendment provides increases in benefits primarily to those employees. It would be inconsistent with the purpose of preventing discrimination in favor of HCEs for Plan C to treat the amendment as retroactively effective under this paragraph (g). See § 1.401(a)(4)-1(c)(2).

Example 7. Employer Z maintains both a section 401(k) plan and a section 401(m) plan that provides matching contributions at a rate of 50 percent with respect to elective contributions under the section 401(k) plan. In plan year 1995, the section 401(k) plan fails to satisfy the actual deferral percentage test of section 401(k)(3). In order to satisfy section 401(k)(3), Employer Z makes corrective distributions to HCEs H1 through H10 of their excess contributions as provided under § 1.401(k)-2(b). The matching contributions that H1 through H10 had received on account of their excess contributions are not forfeited, however. Thus, the effective rate of matching contributions provided to H1 through H10 is increased as a result of the corrective distributions. See § 1.401(a)(4)-4(e)(3)(iii)(G). Since no NHCE in the section 401(m) plan is provided with an equivalent rate of matching contributions, the rate of matching contributions provided to H1 through H10 does not satisfy the nondiscriminatory availability requirement of § 1.401(a)(4)-4 in plan year 1995. Employer Z makes a corrective amendment by October 15, 1996, that grants allocations to NHCEs who made contributions for the 1995 plan year eligible for a matching contribution. Employer Z may treat the allocations granted under the corrective amendment to those NHCEs as matching contributions for the 1995 plan year and, as a result, take them into account in determining whether the availability of the rate of matching contributions provided to H1 through H10 satisfies the current availability requirement of § 1.401(a)(4)-4(b) for the 1995 plan year.

[T.D. 8485, 58 FR 46813, Sept. 3, 1993, as amended by T.D. 9169, 69 FR 78153, Dec. 29, 2004]

§ 1.401(a)(4)-12 Definitions.

Unless otherwise provided, the definitions in this section govern in applying the provisions of §§ 1.401(a)(4)-1 through 1.401(a)(4)-13.

Accumulation plan. Accumulation plan means a defined benefit plan under which the benefit of every employee for each plan year is separately determined, using plan year compensation (if benefits are determined as a percentage of compensation rather as than a dollar amount) separately calculated for the plan year, and each employee's total accrued benefit as of the end of a plan year is the sum of the separately determined benefit for that plan year and the total accrued benefit as of the end of the preceding plan year.

Acquired group of employees. Acquired group of employees means employees of a prior employer who become employed by the employer in a transaction between the employer and the prior employer that is a stock or asset acquisition, merger, or other similar transaction involving a change in the employer of the employees of a trade or business, plus employees hired by or transferred into the acquired trade or business on or before a date selected by the employer that is within the transition period defined in section 410(b)(6)(C)(ii). In addition, in the case of a transaction prior to the effective date of these regulations, the date by which employees must be hired by or transferred into the acquired trade or business in order to be included in the acquired group of employees may be any date prior to February 11, 1993, without regard to whether it is later than the end of the transition period defined in section 410(b)(6)(C)(ii).

Actuarial equivalent. An amount or benefit is the actuarial equivalent of, or is actuarially equivalent to, another amount or benefit at a given time if the actuarial present value of the two amounts or benefits (calculated using the same actuarial assumptions) at that time is the same.

Actuarial present value. Actuarial present value means the value as of a specified date of an amount or series of amounts due thereafter, where each amount is—

(1) Multiplied by the probability that the condition or conditions on which payment of the amount is contingent will be satisfied; and

(2) Discounted according to an assumed rate of interest to reflect the time value of money.

Ancillary benefit. Ancillary benefit is defined in § 1.401(a)(4)-4(e)(2).

Average annual compensation. Average annual compensation is defined in § 1.401(a)(4)-3(e)(2).

Base benefit percentage. Base benefit percentage is defined in § 1.401(l)-1(c)(3).

Benefit formula. Benefit formula means the formula a defined benefit plan applies to determine the accrued benefit (within the meaning of section 411(a)(7)(A)(i)) in the form of an annual benefit commencing at normal retirement age of an employee who continues in service until normal retirement age. Thus, for example, the benefit formula does not include the accrual method the plan applies (in conjunction with the benefit formula) to determine the accrued benefit of an employee who terminates employment before normal retirement age. For purposes of this definition, a change in plan provisions that applies only to certain employees who terminate within a limited period of time (e.g., an early retirement window benefit) is treated as a change in the plan's benefit formula for the employees to whom the change is potentially applicable during the period that the change is potentially applicable to them. The preceding sentence applies only to the extent that the change in plan provisions would result in a change in the benefit formula if it were permanent and applied without regard to when the employees' employment was terminated.

Benefit, right, or feature. Benefit, right, or feature means an optional form of benefit, an ancillary benefit, or an other right or feature within the meaning of § 1.401(a)(4)-4(e).

Contributory DB plan. Contributory DB plan means a defined benefit plan that includes employee contributions not allocated to separate accounts.

Defined benefit excess plan. Defined benefit excess plan is defined in § 1.401(l)-1(c)(16)(i).

Defined benefit plan. Defined benefit plan is defined in § 1.410(b)-9.

Defined contribution plan. Defined contribution plan is defined in § 1.410(b)-9.

Determination date. Determination date is defined in § 1.401(a)(4)-8(b)(3)(iv)(A).

Employee. With respect to a plan for a given plan year, employee means an employee (within the meaning of § 1.410(b)-9) who benefits as an employee under the plan for the plan year (within the meaning of § 1.410(b)-3).

Employer. Employer is defined in § 1.410(b)-9.

ESOP. ESOP is defined in § 1.410(b)-9.

Excess benefit percentage. Excess benefit percentage is defined in § 1.401(l)-1(c)(14).

Former employee. With respect to a plan for a given plan year, former employee means a former employee (within the meaning of § 1.410(b)-9).

Former HCE. Former HCE means a highly compensated former employee as defined in § 1.410(b)-9.

Former NHCE. Former NHCE means a former employee who is not a former HCE.

Fresh-start date. Fresh-start date is defined in § 1.401(a)(4)-13(c)(5)(iii).

Fresh-start group. Fresh-start group is defined in § 1.401(a)(4)-13(c)(5)(ii).

Gross benefit percentage. Gross benefit percentage is defined in § 1.401(l)-1(c)(18).

HCE. HCE means a highly compensated employee as defined in § 1.410(b)-9 who benefits under the plan for the plan year (within the meaning of § 1.410(b)-3).

Integration level. Integration level is defined in § 1.401(l)-1(c)(20).

Measurement period. Measurement period is defined in § 1.401(a)(4)-3(d)(1)(iii).

Multiemployer plan. Multiemployer plan is defined in § 1.410(b)-9.

NHCE. NHCE means an employee who is not an HCE.

Nonexcludable employee. Nonexcludable employee means an employee within the meaning of § 1.410(b)-9, other than an excludable employee with respect to the plan as determined under § 1.410(b)-6. A nonexcludable employee may be either a highly or nonhighly compensated nonexcludable employee, depending on the nonexcludable employee's status under section 414(q).

Normalize. With respect to a benefit payable to an employee in a particular form, normalize means to convert the benefit to an actuarially equivalent straight life annuity commencing at the employee's testing age. The actuarial assumptions used in normalizing a benefit must be reasonable and must be applied on a gender-neutral basis. A standard interest rate and a standard mortality table are among the assumptions considered reasonable for this purpose.

Offset plan. Offset plan is defined in § 1.401(l)-1(c)(24).

Optional form of benefit. Optional form of benefit is defined in § 1.401(a)(4)-4(e)(1).

Other right or feature. Other right or feature is defined in § 1.401(a)(4)-4(e)(3).

Plan. Plan means a plan within the meaning of § 1.410(b)-7 (a) and (b), after application of the mandatory disaggregation rules of § 1.410(b)-7(c) and the permissive aggregation rules of § 1.410(b)-7(d).

Plan year. Plan year is defined in § 1.410(b)-9.

Plan year compensation —

(1) ***In general.*** Plan year compensation means section 414(s) compensation for the plan year determined by measuring section 414(s) compensation during one of the periods described in paragraphs (2) through (4) of this definition. Whichever period is selected must be applied uniformly to determine the plan year compensation of every employee.

(2) ***Plan year.*** This period consists of the plan year.

(3) ***Twelve-month period ending in the plan year.*** This period consists of a specified 12-month period ending with or within the plan year, such as the calendar year or the period for determining benefit accruals described in § 1.401(a)(4)-3(f)(6).

(4) ***Period of plan participation during the plan year.*** This period consists of the portion of the plan year during which the employee is a participant in the plan. This period may be used to determine plan year compensation for the plan year in which participation begins, the plan year in which participation ends, or both. This period may be used to determine plan year compensation when substituted for average annual compensation in § 1.401(a)(4)-3(e)(2)(ii)(A) only if the plan year is also the period for determining benefit accruals under the plan rather than another period as permitted under § 1.401(a)(4)-3(f)(6). Further, selection of this period must be made on a reasonably consistent basis from plan year to plan year in a manner that does not discriminate in favor of HCEs.

(5) ***Special rule for new employees.*** Notwithstanding the uniformity requirement of paragraph (1) of this definition, if employees' plan year compensation for a plan year is determined based on a 12-month period ending within the plan year under paragraph (3) of this definition, then the plan year compensation of any employees whose date of hire was less than 12 months before the end of that 12-month period must be determined uniformly based either on the plan year or on the employees' periods of participation during the plan year, as provided in paragraphs (2) and (4), respectively, of this definition.

QJSA. QJSA means a qualified joint and survivor annuity as defined in section 417(b).

QSUPP —

(1) ***In general.*** QSUPP or qualified social security supplement means a social security supplement that meets each of the requirements in paragraphs (2) through (6) of this definition.

(2) ***Accrual*** —

(i) ***General rule.*** The amount of the social security supplement payable at any age for which the employee is eligible for the social security supplement must be equal to the lesser of—

(A) The employee's old-age insurance benefit, unreduced on account of age, under title II of the Social Security Act; and

(B) The accrued social security supplement, determined under one of the methods in paragraph (2) (ii) through (iv) of this definition.

(ii) ***Section 401(l) plans.*** In the case of a section 401(l) plan that is a defined benefit excess plan, each employee's accrued social security supplement equals the employee's average annual compensation up to the integration level, multiplied by the disparity provided by the plan for the employee's years of service used in determining the employee's accrued benefit under the plan. In the case of a section 401(l) plan that is an offset plan, each employee's accrued social security supplement equals the dollar amount of the offset accrued for the employee under the plan.

(iii) ***PIA offset plan.*** In the case of a PIA offset plan, each employee's accrued social security supplement equals the dollar amount of the offset accrued for the employee under the plan. For this purpose, a PIA offset plan is a plan that reduces an employee's benefit by an offset based on a stated percentage of the employee's primary insurance amount under the Social Security Act.

(iv) ***Other plans.*** In the case of any other plan, each employee's social security supplement accrues ratably over the period beginning with the later of the employee's commencement of participation in the plan or the effective date of the social security supplement and ending with the earliest age at which the social security supplement is payable to the employee. The effective date of the social security supplement is the later of the effective date of the amendment adding the social security supplement or the effective date of the amendment modifying an existing social security supplement to comply with the requirements of this definition. If, by the end of the first plan year to which these regulations apply, as set forth in § 1.401(a)(4)-13 (a) and (b), an amendment is made to a social security supplement in existence on September 19, 1991, the employer may treat the accrued portion of the social security supplement, as determined under the plan without regard to amendments made after September 19, 1991, as included in the employee's accrued social security supplement, provided that the remainder of the social security supplement is accrued under the otherwise-applicable method.

(3) ***Vesting.*** The plan must provide that an employee's right to the accrued social security supplement becomes nonforfeitable within the meaning of section 411 as if it were an early retirement benefit.

(4) ***Eligibility.*** The plan must impose the same eligibility conditions on receipt of the social security supplement as on receipt of the early retirement benefit in conjunction with which the social security supplement is payable. Furthermore, if the service required for an employee to become eligible for the social security supplement exceeds 15 years, then the ratio percentage of the group of employees who actually satisfy the eligibility conditions on receipt of the QSUPP in the current plan year must equal or exceed the unsafe harbor percentage applicable to the plan under § 1.410(b)-4(c)(4)(ii).

(5) ***QJSA.*** At each age, the most valuable QSUPP commencing at that age must be payable in conjunction with the QJSA commencing at that age. In addition, the plan must provide that, in the case of a social security supplement payable in conjunction with a QJSA, the social security supplement will be paid after the employee's death on the same terms as the QJSA, but in no event for a period longer than the period for which the social security supplement would have been paid to the employee had the employee not died. For example, if the QJSA is in the form of a joint annuity with a 50-percent survivor's benefit, the social security supplement must provide a 50-percent survivor's benefit. When section 417(c) requires the determination of a QJSA for purposes of

determining a qualified pre-retirement survivor's annuity as defined in section 417(c) (QPSA), the social security supplement payable in conjunction with that QJSA must be paid in conjunction with the QPSA.

(6) ***Protection.*** The plan must specifically provide that the social security supplement is treated as an early retirement benefit that is protected under section 411(d)(6) (other than for purposes of sections 401(a)(11) and 417). Thus, the accrued social security supplement must continue to be payable notwithstanding subsequent amendment of the plan (including the plan's termination), and an employee may meet the eligibility requirements for the social security supplement after plan termination.

Qualified plan. Qualified plan means a plan that satisfies section 401(a). For this purpose, a qualified plan includes an annuity plan described in section 403(a).

Rate group. Rate group is defined in § 1.401(a)(4)-2(c)(1) or is defined in § 1.401(a)(4)-3(c)(1).

Ratio percentage. Ratio percentage is defined in § 1.410(b)-9.

Section 401(a)(17) employee. Section 401(a)(17) employee is defined in § 1.401(a)(17)-1(e)(2)(ii).

Section 401(k) plan. Section 401(k) plan is defined in § 1.410(b)-9.

Section 401(l) plan. Section 401(l) plan is defined in § 1.410(b)-9.

Section 401(m) plan. Section 401(m) plan is defined in § 1.410(b)-9.

Section 414(s) compensation —

(1) ***General rule.*** When used with reference to compensation for a plan year, 12-month period, or other specified period, section 414(s) compensation means compensation measured using an underlying definition that satisfies section 414(s) for the applicable plan year. Whether an underlying definition of compensation satisfies section 414(s) is determined on a year-by-year basis, based on the provisions of section 414(s) in effect for the applicable plan year and, if relevant, the employer's HCEs and NHCEs for that plan year. See § 1.414(s)-1(i) for transition rules for plan years beginning before the effective date applicable to the plan under § 1.401(a)(4)-13 (a) or (b). For a plan year or 12-month period beginning before January 1, 1988, any underlying definition of compensation may be used to measure the amount of employees' compensation for purposes of this definition, provided that the definition was nondiscriminatory based on the facts and circumstances in existence for that plan year or for the plan year in which that 12-month period ends.

(2) ***Determination period for section 414(s) nondiscrimination requirement*** —

(i) ***General rule.*** If an underlying definition of compensation must satisfy the nondiscrimination requirement in § 1.414(s)-1(d)(3) in order to satisfy section 414(s) for a plan year, any one of the following determination periods may be used to satisfy the nondiscrimination requirement—

(A) The plan year;

(B) The calendar year ending in the plan year; or

(C) The 12-month period ending in the plan year that is used to determine the underlying definition of compensation.

(ii) ***Exception for partial plan year compensation.*** Notwithstanding the general rule in paragraph (2)(i) of this definition, if the period for measuring the underlying compensation is the portion of the plan year during which each employee is a participant in the plan (as provided in paragraph (4) of the definition of plan year compensation in this section), that period must be used as the determination period.

(3) ***Plans using permitted disparity.*** In the case of a section 401(l) plan or a plan that imputes permitted disparity in accordance with § 1.401(a)(4)-7, an underlying definition of compensation is not section 414(s) compensation if the definition results in significant under- inclusion of compensation for employees.

(4) ***Double proration of service and compensation.*** If a defined benefit plan prorates benefit accruals as permitted under section 411(b)(4)(B) by crediting less than full years of participation, then compensation for a plan year, 12-month period, or other specified period that is used to determine the amount of an employee's benefits under the plan will not fail to be section 414(s) compensation, merely because the amount of compensation for that period is adjusted to reflect the equivalent of full-time compensation to the extent necessary to satisfy the requirements of 29 CFR 2530.204-2(d) (regarding double proration of service and compensation). This adjustment is disregarded in determining whether the underlying definition of compensation used satisfies the requirements of section 414(s). Thus, for example, if the underlying definition of compensation is an alternative definition that must satisfy the nondiscrimination requirement of § 1.414(s)-1(d)(3), in determining whether that requirement is satisfied with regard to the underlying definition, the compensation included for any employee is determined without any adjustment to reflect the equivalent of full-time compensation required by 29 CFR 2530.204-2(d).

Social security supplement. Social security supplement is defined in § 1.411(a)-7(c)(4)(ii).

Standard interest rate. Standard interest rate means an interest rate that is neither less than 7.5 percent nor greater than 8.5 percent, compounded annually. The Commissioner may, in revenue rulings, notices, and other guidance of general applicability, change the definition of standard interest rate.

Standard mortality table. Standard mortality table means one of the following tables: the UP-1984 Mortality Table (Unisex); the 1983 Group Annuity Mortality Table (1983 GAM) (Female); the 1983 Group Annuity Mortality Table (1983 GAM) (Male); the 1983 Individual Annuity Mortality Table (1983 IAM) (Female); the 1983 Individual Annuity Mortality Table (1983 IAM) (Male); the 1971 Group Annuity Mortality Table (1971 GAM) (Female); the 1971 Group Annuity Mortality Table (1971 GAM) (Male); the 1971 Individual Annuity Mortality Table (1971 IAM) (Female); or the 1971 Individual Annuity Mortality Table (1971 IAM) (Male). These standard mortality tables are available from the Society of Actuaries, 475 N. Martingale Road, Suite 800, Schaumberg, Illinois 60173. The Commissioner may, in revenue rulings, notices, and other guidance of general applicability, change the definition of standard mortality table. See § 601.601(d)(2)(ii)(*b*) of this Chapter. The applicable mortality table under section 417(e)(3)(A)(ii)(I) is also a standard mortality table.

Straight life annuity. Straight life annuity means an annuity payable in equal installments for the life of the employee that terminates upon the employee's death.

Testing age. With respect to an employee, testing age means the age determined for the employee under the following rules:

(1) If the plan provides the same uniform normal retirement age for all employees, the employee's testing age is the employee's normal retirement age under the plan.

(2) If a plan provides different uniform normal retirement ages for different employees or different groups of employees, the employee's testing age is the employee's latest normal retirement age under any uniform normal retirement age under the plan, regardless of whether that particular uniform normal retirement age actually applies to the employee under the plan.

(3) If the plan does not provide a uniform normal retirement age, the employee's testing age is 65.

(4) If an employee is beyond the testing age otherwise determined for the employee under paragraphs (1) through (3) of this definition, the employee's testing age is the employee's current age. The rule in the preceding sentence does not apply in the case of a defined benefit plan that fails to satisfy the requirements of § 1.401(a)(4)-3(f)(3)(i) (permitting certain increases in benefits that commence after normal retirement age to be disregarded).

Testing service. Testing service is defined in § 1.401(a)(4)-3(d)(1)(iv).

Uniform normal retirement age —

(1) ***General rule.*** Uniform normal retirement age means a single normal retirement age under the plan that does not exceed the maximum age in paragraph (2) of this definition and that is the same for all of the employees in a given group. A group of employees does not fail to have a uniform normal retirement age merely because the plan contains provisions described in paragraphs (3) and (4) of this definition.

(2) ***Maximum age.*** The maximum age is generally 65. However, if all employees have the same social security retirement age (within the meaning of section 415(b)(8)), the maximum age is the employees' social security retirement age. Thus, for example, a component plan has a uniform normal retirement age of 67 if it defines normal retirement age as social security retirement age and all employees in the component plan have a social security retirement age of 67.

(3) ***Stated anniversary date*** —

(i) ***General rule.*** A group of employees does not fail to have a uniform normal retirement age merely because the plan provides that the normal retirement age of all employees in the group is the later of a stated age (not exceeding the maximum age in paragraph (2) of this definition) or a stated anniversary no later than the fifth anniversary of the time each employee commenced participation in the plan. For employees who commenced participation in the plan before the first plan year beginning on or after January 1, 1988, the stated anniversary date may be later than the anniversary described in the preceding sentence if it is no later than the earlier of the tenth anniversary of the date the employee commenced participation in the plan (or such earlier anniversary selected by the employer, if less than 10) or the fifth anniversary of the first day of the first plan year beginning on or after January 1, 1988.

(ii) ***Use of service other than anniversary of commencement of participation.*** In lieu of using a stated anniversary date as permitted under paragraph (3)(i) of this definition, a plan may use a stated number of years of service measured on another basis, provided that the determination is made on a basis that satisfies section 411(a)(8) and that the stated number of years of service does not exceed the number of anniversaries permitted under paragraph (3)(i) of this definition. For example, a uniform normal retirement age could be based on the earlier of the fifth anniversary of the commencement of participation and the completion of five years of vesting service.

(4) ***Conversion of normal retirement age to normal retirement date.*** A group of employees does not fail to have a uniform normal retirement age merely because a defined benefit plan provides for the commencement of normal retirement benefits on different retirement dates for different employees if each employee's normal retirement date is determined on a reasonable basis with reference to an otherwise uniform normal retirement age and the difference between the normal retirement date and the uniform normal retirement age cannot exceed six months for any employee. Thus, for example, benefits under a plan do not fail to commence at a uniform normal retirement age of age 62 for purposes of § 1.401(a)(4)-3(b)(2)(i), merely because the plan's normal retirement date is defined as the last day of the plan year nearest attainment of age 62.

Year of service. Year of service means a year of service as defined in the plan for a specific purpose, including the method of crediting service for that purpose under the plan.

[T.D. 8485, 58 FR 46820, Sept. 3, 1993, as amended by T.D. 8954, 66 FR 34545, June 29, 2001]

§ 1.401(a)(4)-13 Effective dates and fresh-start rules.

(a) ***General effective dates*** —

(1) ***In general.*** Except as otherwise provided in this section, §§ 1.401(a)(4)-1 through 1.401(a)(4)-13 apply to plan years beginning on or after January 1, 1994.

(2) ***Plans of tax-exempt organizations.*** In the case of plans maintained by organizations exempt from income taxation under section 501(a), including plans subject to section 403(b)(12)(A)(i) (nonelective plans), §§ 1.401(a)(4)-1 through 1.401(a)(4)-13 apply to plan years beginning on or after January 1, 1996.

(3) ***Compliance during transition period.*** For plan years beginning before the effective date of these regulations, as set forth in paragraph (a)(1) and (2) of this section, and on or after the first day of the first plan year to which the amendments made to section 410(b) by section 1112(a) of the Tax Reform Act of 1986 (TRA '86) apply, a plan must be operated in accordance with a reasonable, good faith interpretation of section 401(a)(4), taking into account pre-existing guidance and the amendments made by TRA '86 to related provisions of the Code (including, for example, sections 401(l), 401(a)(17), and 410(b)). Whether a plan is operated in accordance with a reasonable, good faith interpretation of section 401(a)(4) will generally be determined on the basis of all the relevant facts and circumstances, including the extent to which an employer has resolved unclear issues in its favor. A plan will be deemed to be operated in accordance with a reasonable, good faith interpretation of section 401(a)(4) if it is operated in accordance with the terms of §§ 1.401(a)(4)-1 through 1.401(a)(4)-13.

(b) ***Effective date for governmental plans.*** In the case of governmental plans described in section 414(d), including plans subject to section 403(b)(12)(A)(i) (nonelective plans), §§ 1.401(a)(4)-1 through 1.401(a)(4)-13 apply to plan years beginning on or after the later of January 1, 1996, or 90 days after the opening of the first legislative session beginning on or after January 1, 1996, of the governing body with authority to amend the plan, if that body does not meet continuously. Such plans are deemed to satisfy section 401(a)(4) for plan years before that effective date. For purposes of this paragraph (b), the governing body with authority to amend the plan is the legislature, board, commission, council, or other governing body with authority to amend the plan.

(c) ***Fresh-start rules for defined benefit plans*** —

(1) ***Introduction.*** This paragraph (c) provides rules that must be satisfied in order to use the fresh-start testing options for defined benefit plans in § 1.401(a)(4)-3(b)(6)(vii) and (d)(3)(iii), relating to the safe harbors and the general test, respectively. Those fresh-start options are designed to allow a plan to be tested without regard to benefits accrued before a selected fresh-start date. To the extent provided in paragraph (d) of this section, those options also may be used to disregard certain increases in benefits attributable to compensation increases after a fresh-start date. Although this paragraph (c) generally requires a plan to be amended to freeze employees' accrued benefits as of a fresh-start date and to provide any additional accrued benefits after the fresh-start date solely in accordance with certain specified formulas, certain of these requirements do not apply to a plan that is tested under the general test of § 1.401(a)(4)-3(c). See § 1.401(a)(4)-3(b)(6)(vii) and (d)(3)(iii).

(2) ***General rule.*** A defined benefit plan satisfies this paragraph (c) if—

(i) Accrued benefits of employees in the fresh-start group are frozen as of the fresh-start date in accordance with paragraph (c)(3) of this section;

(ii) Accrued benefits after the fresh-start date for employees in the fresh-start group are determined under one of the fresh-start formulas in paragraph (c)(4) of this section; and

(iii) Paragraph (c)(5) of this section is satisfied.

(3) ***Definition of frozen*** —

(i) ***General rule.*** An employee's accrued benefit under a plan is frozen as of the fresh-start date if it is determined as if the employee terminated employment with the employer as of the fresh-start date (or the date the employee actually terminated employment with the employer, if earlier), and without regard to any amendment to the plan adopted after that date, other than amendments recognized as effective as of or before that date under section 401(b) or § 1.401(a)(4)-11(g). The assumption that an employee has terminated employment applies solely for purposes of this paragraph (c)(3). Thus, for example, the fresh start has no effect on the service taken into account for purposes of determining vesting and eligibility for benefits, rights, and features under the plan.

(ii) ***Permitted compensation adjustments.*** An employee's accrued benefit under a plan that satisfies paragraph (d) of this section does not fail to be frozen as of the fresh-start date merely because the plan makes the adjustments described in paragraph (d)(7) and (8) of this section with regard to the fresh-start date. In addition, if the frozen accrued benefit of an employee under the plan includes top-heavy minimum benefits, an employee's accrued benefit under a plan does not fail to be frozen as of the fresh-start date merely because the plan increases the frozen accrued benefit of each employee in the fresh-start group solely to the extent necessary to comply with the average compensation requirement of section 416(c)(1)(D)(i).

(iii) ***Permitted changes in optional forms.*** An employee's accrued benefit under a plan does not fail to be frozen as of the fresh-start date merely because the plan provides a new optional form of benefit with respect to the frozen accrued benefit, if—

(A) The optional form is provided with respect to each employee's entire accrued benefit (i.e., accrued both before and after the fresh-start date);

(B) The plan provided meaningful coverage as of the fresh-start date, as described in paragraph (d)(4) of this section; and

(C) The plan provides meaningful current benefit accruals as described in paragraph (d)(6) of this section.

(iv) ***Floor-offset plans.*** In the case of a plan that was a floor-offset plan described in § 1.401(a)(4)-8(d) prior to the fresh-start date, an employee's accrued benefit as of the fresh-start date does not fail to be frozen merely because the actuarial equivalent of the account balance in the defined contribution plan that is offset against the defined benefit plan varies as a result of investment return that is different from the assumed interest rate used to determine the actuarial equivalent of the account balance.

(4) ***Fresh-start formulas*** —

(i) ***Formula without wear-away.*** An employee's accrued benefit under the plan is equal to the sum of—

(A) The employee's frozen accrued benefit; and

(B) The employee's accrued benefit determined under the formula applicable to benefit accruals in the current plan year (current formula) as applied to the employee's years of service after the fresh-start date.

(ii) ***Formula with wear-away.*** An employee's accrued benefit under the plan is equal to the greater of—

(A) The employee's frozen accrued benefit; or

(B) The employee's accrued benefit determined under the current formula as applied to the employee's total years of service (before and after the fresh-start date) taken into account under the current formula.

(iii) ***Formula with extended wear-away.*** An employee's accrued benefit under the plan is equal to the greater of—

(A) The amount determined under paragraph (c)(4)(i) of this section; or

(B) The amount determined under paragraph (c)(4)(ii)(B) of this section.

(5) ***Rules of application*** —

(i) ***Consistency requirement.*** This paragraph (c)(5) is not satisfied unless the fresh-start rules in this paragraph (c) (and paragraph (d) of this section, if applicable) are applied consistently to all employees in the fresh-start group. Thus, for example, the same fresh-start date and fresh-start formula (within the meaning of paragraph (c)(4) of this section) must apply to all employees in the fresh-start group. Similarly, if a plan makes a fresh start for all employees with accrued benefits on the fresh-start date and, for a later plan year, is aggregated for purposes of section 401(a)(4) with another plan that did not make the same fresh start, the aggregated plan must make a new fresh start in order to use the fresh-start rules for that later plan year or any subsequent plan year.

(ii) ***Definition of fresh-start group.*** Generally, the fresh-start group with respect to a fresh start consists of all employees who have accrued benefits as of the fresh-start date and have at least one hour of service with the employer after that date. However, a fresh-start group with respect to a fresh start may consist exclusively of all employees who have accrued benefits as of the fresh-start date, have at least one hour of service with the employer after that date, and are—

(A) Section 401(a)(17) employees;

(B) Members of an acquired group of employees (provided the fresh-start date is the date determined under paragraph (c)(5)(iii)(B) of this section); or

(C) Employees with a frozen accrued benefit that is attributable to assets and liabilities transferred to the plan as of a fresh-start date in connection with the transfer (provided the fresh-start date is the date determined under paragraph (c)(5)(iii)(C) of this section) and for whom the current formula is different from the formula used to determine the frozen accrued benefit.

(iii) ***Definition of fresh-start date.*** Generally, the fresh-start date is the last day of a plan year. However, a plan may use a fresh-start date other than the last day of the plan year if—

(A) The plan satisfied the safe harbor rules of § 1.401(a)(4)-3(b) for the period from the beginning of the plan year through the fresh-start date;

(B) The fresh-start group is an acquired group of employees, and the fresh-start date is the latest date of hire or transfer into an acquired trade or business selected by the employer for any employees to be included in the acquired group of employees; or

(C) The fresh-start group is the group of employees with a frozen accrued benefit that is attributable to assets and liabilities transferred to the plan and the fresh-start date is the date as of which the employees begin accruing benefits under the plan.

(6) ***Examples.*** The following examples illustrate the rules in this paragraph (c):

> *Example 1.* (a) Employer X maintains a defined benefit plan with a calendar plan year. The plan formula provides an employee with a normal retirement benefit at age 65 of one percent of average annual compensation up to covered compensation multiplied by the employee's years of service for Employer X, plus 1.5 percent of average annual compensation in excess of covered compensation, multiplied by the employee's years of service for Employer X up to 40.
> (b) For plan years beginning after 1994, Employer X amends the plan formula to provide a normal retirement benefit of 0.75 percent of average annual compensation up to covered compensation multiplied by the employee's total years of service for Employer X up to 35, plus 1.4 percent of average annual compensation in excess of covered compensation multiplied by the employee's years of service for Employer X up to 35. For plan years after 1994, each employee's accrued benefit is determined under the fresh-start formula in paragraph (c)(4)(iii) of this section (formula with extended wear-away), using December 31, 1994, as the fresh-start date.

(c) As of December 31, 1994, Employee M has 10 years of service for Employer X, has average annual compensation of $38,000, and has covered compensation of $30,000. Employee M's accrued benefit as of December 31, 1994, is therefore $4,200 ((1 percent × $30,000 × 10 years) + (1.5 percent × $8,000 × 10 years)). As of December 31, 1995, Employee M has 11 years of service for Employer X, has average annual compensation of $40,000 (determined by taking into account compensation before and after the fresh-start date), and has covered compensation of $32,000. Employee M's accrued benefit as of December 31, 1995, is $4,552, the greater of—

(1) $4,552, the sum of Employee M's accrued benefit frozen as of December 31, 1994, ($4,200) and the amended formula applied to Employee M's years of service after 1994 ((0.75 percent × $32,000 × 1 year) + (1.4 percent × $8,000 × 1 year), or $352); or

(2) $3,872, the amended formula applied to Employee M's total years of service ((0.75 percent × $32,000 × 11 years) + (1.4 percent × $8,000 × 11 years)).

Example 2. (a) Employer Y maintains a defined benefit plan, Plan A, that has a calendar plan year. For the 1995 plan year, Plan A satisfies the requirements for a safe harbor plan in § 1.401(a)(4)-3(b). Employer Y selects a date in 1995 for all the employees, freezes the employees' accrued benefits as of that date under the rules of paragraph (c)(3) of this section, and, in accordance with the rules of this paragraph (c), amends Plan A to determine benefits for all employees after that date using the formula with wear-away described in paragraph (c)(4)(ii) of this section. The new benefit formula would satisfy the requirements for a safe harbor plan in § 1.401(a)(4)-3(b) if all accrued benefits were determined under it. (b) Because Plan A satisfied the requirements for a safe harbor plan for the period from the beginning of the plan year through the selected date, paragraph (c)(5)(iii)(A) of this section permits the selected date to be a fresh-start date, even if it is not the last day of the plan year. Thus, Plan A satisfies the requirements in this paragraph (c) for a fresh start as of the fresh-start date.

(c) Under § 1.401(a)(4)-3(b)(6)(vii), a plan does not fail to satisfy the requirements of § 1.401(a)(4)-3(b), merely because of benefits accrued under a different formula prior to a fresh-start date. Thus, Plan A still satisfies the safe harbor requirements of § 1.401(a)(4)-3(b) after the amendment to the benefit formula. Because Plan A satisfied the requirements for a safe harbor plan for the period from the beginning of the plan year, taking the amendment into account, Employer Y may select any date within the plan year (which may be the same date as the first fresh-start date) and apply the fresh-start rules in this paragraph (c) a second time as of that date.

(d) ***Compensation adjustments to frozen accrued benefits*** —

(1) ***Introduction.*** In addition to the fresh-start rules in paragraph (c) of this section, this paragraph (d) sets forth requirements that must be satisfied in order for a plan to disregard increases in benefits accrued as of a fresh-start date that are attributable to increases in employees' compensation after the fresh-start date.

(2) ***In general.*** In the case of a defined benefit plan that is tested under the safe harbors in § 1.401(a)(4)-3(b) or § 1.401(a)(4)-8(c)(3), an employee's adjusted accrued benefit (determined under the rules in paragraph (d)(8) of this section) may be substituted for the employee's frozen accrued benefit in applying the formulas in paragraph (c)(4) of this section (or paragraph (f)(2) of this section, if applicable) if paragraphs (d)(3) through (d)(7) of this section are satisfied. Thus, for example, in determining whether such a plan satisfies § 1.401(a)(4)-3(b), any compensation adjustments to the employee's frozen accrued benefit described in paragraph (d)(8) of this section are disregarded. Similarly, in the case of a defined benefit plan tested under the general test in § 1.401(a)(4)-3(c), the compensation adjustments described in paragraph (d)(8) of this section may be disregarded under the rules of § 1.401(a)(4)-3(d)(3)(iii) if paragraphs (d)(3) through (d)(7) of this section are satisfied. Of course, any increases in accrued benefits exceeding these adjustments must be taken into account under the general test, and a plan providing such excess increases generally will fail to satisfy the safe harbor requirements of § 1.401(a)(4)-3(b). Where paragraphs (d)(3) through (d)(7) of this section are satisfied with respect to a plan as of the fresh-start date, but one or more of those paragraphs fail to be satisfied for a later plan year, further compensation adjustments described in paragraph (d)(8) of this section may not be disregarded in testing the plan under § 1.401(a)(4)-3.

(3) ***Plan requirements*** —

(i) ***Pre-fresh-start date.*** As of the fresh-start date, the plan must have contained a benefit formula under which benefits of each employee in the fresh-start group that are accrued as of the fresh-start date and are attributable to service before the fresh-start date would be affected by the employee's compensation after the fresh-start date. A plan satisfies this requirement, for example, if it based benefits on an employee's highest average pay over a fixed period of years or on an employee's average pay over the employee's entire career with the employer. A plan does not satisfy this paragraph (d)(3)(i) if the Commissioner determines, based on all of the relevant facts and circumstances, that the plan provision described in the first sentence of this paragraph (d)(3) was added primarily in order to provide additional benefits to HCEs that are disregarded under the special testing rules described in this paragraph (d).

(ii) ***Post-fresh-start date.*** The plan by its terms must provide that the accrued benefits of each employee in the fresh-start group after the fresh-start date be at least equal to the employee's adjusted accrued benefit (i.e., the frozen accrued benefit as of the fresh-start date, adjusted as provided under paragraph (d)(7) of this section, plus the compensation adjustments described in paragraph (d)(8) of this section).

(4) ***Meaningful coverage as of fresh-start date.*** The plan must have provided meaningful coverage as of the fresh-start date. A plan provided meaningful coverage as of the fresh-start date if the group of employees with accrued benefits under the plan as of the fresh-start date satisfied the minimum coverage requirements of section 410(b) as in effect on that date (determined without regard to section 410(b)(6)(C)). In order to satisfy the requirement in the preceding sentence, an employer may amend the plan to grant past service credit under the formula in effect as of the fresh-start date to NHCEs, if the amount of past service granted them is reasonably comparable, on average, to the

amount of past service HCEs have under the plan. Any benefit increase that results from the grant of past service credit to a NHCE under this paragraph (d)(4) is included in the employee's frozen accrued benefit.

(5) *Meaningful ongoing coverage* —

(i) ***General rule.*** The fresh-start group must have satisfied the minimum coverage requirements of section 410(b) for all plan years from the first plan year beginning after the fresh-start date through the current plan year. Thus, if a fresh-start group fails to satisfy the minimum coverage requirements of section 410(b) for any plan year, this paragraph (d)(5) is not satisfied for that plan year or any subsequent plan year; however, such a failure is not taken into account in determining whether this paragraph (d)(5) is satisfied for any previous plan year.

(ii) ***Alternative rules.*** Notwithstanding paragraph (d)(5)(i) of this section, a fresh-start group is deemed to satisfy this paragraph (d)(5) for all plan years following the fresh-start date if any one of the following requirements is satisfied:

(A) ***Section 410(b) coverage for first five years.*** The fresh-start group must have satisfied the minimum coverage requirements of section 410(b) for the first five plan years beginning after the fresh-start date.

(B) ***Ratio percentage coverage as of fresh-start date.*** The fresh-start group must have satisfied the ratio percentage test of § 1.410(b)-2(b)(2) as of the fresh-start date.

(C) ***Fresh start for acquired group of employees.*** The fresh-start group must consist of an acquired group of employees that satisfied the minimum coverage requirements of section 410(b) (determined without regard to section 410(b)(6)(C)) as of the fresh-start date.

(D) ***Fresh start before applicable effective date.*** The fresh-start date with respect to the fresh-start group must have been on or before the effective date applicable to the plan under paragraph (a) or (b) of this section.

(6) ***Meaningful current benefit accruals.*** The benefit formula and accrual method under the plan that applies to the fresh-start group in the aggregate must provide benefit accruals in the current plan year (other than increases in benefits accrued as of the fresh-start date) at a rate that is meaningful in comparison to the rate at which benefits accrued for the fresh-start group in plan years beginning before the fresh-start date. Whether this requirement is satisfied with respect to a fresh-start group that does not include all employees in the plan with an hour of service after the fresh-start date may be determined taking into account the rate at which benefits are provided to other employees in the plan.

(7) *Minimum benefit adjustment* —

(i) ***In general.*** In the case of a section 401(l) plan or a plan that imputes disparity under § 1.401(a)(4)-7, the plan must make the minimum benefit adjustment described in paragraph (d)(7)(ii) or (iii) of this section.

(ii) ***Excess or offset plans.*** In the case of a plan that is a defined benefit excess plan as of the fresh-start date, each employee's frozen accrued benefit is adjusted so that the base benefit percentage is not less than 50 percent of the excess benefit percentage. In the case of a plan that is a PIA offset plan (as defined in paragraph (2)(iii) of the definition of QSUPP in §

1.401(a)(4)-12) as of the fresh-start date, each employee's offset as applied to determine the frozen accrued benefit is adjusted so that it does not exceed 50 percent of the benefit determined without applying the offset.

(iii) ***Other plans.*** In the case of a plan that is not described in paragraph (d)(7)(ii) of this section, each employee's frozen accrued benefit is adjusted in a manner that is economically equivalent to the adjustment required under that paragraph, taking into account the plan's benefit formula, accrual rate, and relevant employee factors, such as period of service.

(8) ***Adjusted accrued benefit*** —

(i) ***General rule.*** The term adjusted accrued benefit means an employee's frozen accrued benefit that is adjusted as provided in paragraph (d)(7) of this section and then multiplied by a fraction (not less than one), the numerator of which is the employee's compensation for the current plan year and the denominator of which is the employee's compensation as of the fresh-start date determined under the same definition. For purposes of this adjustment, the compensation definition must be either the same compensation definition and formula used to determine the frozen accrued benefit or average annual compensation (determined without regard to § 1.401(a)(4)-3(e)(2)(ii)(A) (use of plan year compensation)).

(ii) ***Alternative formula for pre-effective-date fresh starts.*** In the case of a fresh-start date before the effective date that applies to the plan under paragraph (a) or (b) of this section, the adjusted accrued benefit may be determined by multiplying the frozen accrued benefit by a fraction (not less than one) determined under this paragraph (d)(8)(ii). The numerator of the fraction is the employee's average annual compensation for the current plan year. The denominator of the fraction is the employee's reconstructed average annual compensation as of the fresh-start date. An employee's reconstructed average annual compensation is determined by—

(A) Selecting a single plan year beginning after the fresh-start date but beginning not later than the last day of the first plan year to which these regulations apply under paragraph (a) or (b) of this section;

(B) Determining the employee's average annual compensation for the selected plan year under the same method used to determine the employee's average annual compensation for the current plan year under this paragraph (d)(8)(ii); and

(C) Multiplying the employee's average annual compensation for the selected plan year by a fraction, the numerator of which is the employee's compensation as of the fresh-start date determined under the same compensation definition and formula used to determine the employee's frozen accrued benefit and the denominator of which is the employee's compensation for the selected plan year determined under the compensation definition and formula used to determine the employee's frozen accrued benefit.

(iii) ***Effect of section 401(a)(17).*** In determining the numerators and the denominators of the fractions described in this paragraph (d)(8), the annual compensation limit under section 401(a)(17) generally applies. See, however, § 1.401(a)(17)-1(e)(4) for special rules applicable to section 401(a)(17) employees.

(iv) ***Option to make less than the full permitted adjustment.*** A plan may limit the increase in an employee's frozen accrued benefit for the current and all future years to a percentage (not more than 100 percent) of the increase otherwise provided under this paragraph (d)(8). Furthermore, the plan may, at any time, terminate all future adjustments permitted under this paragraph (d).

(v) ***Alternative determination of adjusted accrued benefit.*** In lieu of applying the fractions in paragraph (d)(8)(i) or (ii) of this section, a plan may determine an employee's adjusted accrued benefit by substituting the employee's compensation for the current plan year (determined under the same compensation formula and underlying definition of compensation used to determine the employee's frozen accrued benefit) in the benefit formula used to determine the frozen accrued benefit. For this purpose, insignificant changes in the underlying definition of compensation to reflect current compensation practices will not be treated as a change in the definition of compensation. A plan may apply the alternative in this paragraph (d)(8)(v), only if it is reasonable to expect as of the fresh-start date that, over time, the use of this method instead of the general rule of paragraph (d)(8)(i) will not discriminate significantly in favor of HCEs.

(9) ***Examples.*** The following examples illustrate the rules of this paragraph (d).

Example 1. (a) Employer X maintains a defined benefit plan that is an excess plan with a calendar plan year. For plan years before 1989, the plan is integrated with benefits provided under the Social Security Act, providing each employee with a normal retirement benefit equal to one percent of the employee's average annual compensation in excess of the employee's covered compensation, multiplied by the employee's years of service for Employer X. The benefit formula thus provides no benefit with respect to average annual compensation up to covered compensation.
(b) As of December 31, 1988, Employee M has 10 years of service for Employer X and has covered compensation of $25,000 and average annual compensation of $20,000. Employee M's average annual compensation has never exceeded $20,000. Therefore, as of December 31, 1988, Employee M's accrued benefit under the plan is zero.

(c) Effective with the 1989 plan year, the plan is amended to provide each employee with a normal retirement benefit of 0.6 percent of average annual compensation up to covered compensation plus 1.2 percent of average annual compensation in excess of covered compensation, multiplied by the employee's years of service up to 35. The plan also provides that, for plan years after 1988, each employee's accrued benefit is determined under the formula in paragraph (c)(4)(i) of this section (formula without wear-away) and, in applying the fresh-start formula, each employee's frozen accrued benefit under paragraph (c)(4)(i) of this section will be adjusted under this paragraph (d), using the same compensation definition and formula used to determine the frozen accrued benefit under paragraph (d)(8)(i) of this section.

(d) The plan uses the permitted disparity of section 401(l) and thus must also make the minimum benefit adjustment under paragraph (d)(7) of this section. Because the excess benefit percentage under the plan for years before 1989 was one percent, the plan must provide a base benefit percentage for those years of at least 0.5 percent. After the minimum benefit adjustment, Employee M's accrued benefit as of December 31, 1988, is $1,000 (0.5 percent × $20,000 × 10 years).

(e) As of December 31, 1992, Employee M has 14 years of service and has covered compensation of $30,000 and average annual compensation of $35,000. Employee M's adjusted accrued benefit as of December 31, 1992, is $1,750 ($1,000 × $35,000/$20,000), and Employee M's accrued benefit as of December 31, 1992, is $2,710 (the sum of $1,750 plus $960 ((0.6 percent × $30,000 × 4 years) plus (1.2 percent × $5,000 × 4 years))).

Example 2. (a) The facts are the same as in *Example 1,* except that in determining adjusted accrued benefits, the plan specifies the alternative method of paragraph (d)(8)(v) of this section. This method may be used because it is reasonable to expect as of the fresh-start date that, over time, the use of this method instead of the general rule of paragraph (d)(8)(i) will not discriminate significantly in favor of HCEs.
(b) As of December 31, 1992, Employee M's adjusted accrued benefit is $2,000 (10 years of service prior to the fresh-start date × (0.5 percent of $30,000 + 1.0 percent of the excess of $35,000 over $30,000)).

(c) Alternatively, Employer X may choose to use the method of paragraph (d)(8)(v) of this section but freezes the covered compensation level at the dollar level in place as of the fresh-start date. In such case, Employee M's adjusted accrued benefit as of December 31, 1992, would have been $2,250 (10 years of service prior to the fresh-start date × (0.5 percent of $25,000 + 1.0 percent of the excess of $35,000 over $25,000)). This method may be used because it is reasonable to expect as of the fresh-start date that, over time, the use of this method instead of the general rule of paragraph (d)(8)(i) will not discriminate significantly in favor of HCEs.

Example 3. (a) The facts are the same as in *Example 1,* except that for plan years before 1989, the plan provided a minimum benefit to certain employees equal to $120 per year of service. Employee M is entitled to the minimum benefit, and thus, Employee M's frozen accrued benefit as of December 31, 1988 was $1,200 (the greater of 10 years of service × $120 and $1,000, Employee M's benefit under the underlying formula, after the minimum benefit adjustment of paragraph (d)(7) of this section).
(b) Employer X's plan specifies instead the alternative method of adjusting accrued benefits described in paragraph (d)(8)(v) of this section. (The fact that a minimum benefit applying to certain employees is not adjusted under the alternative method of paragraph (d)(8)(v) of this section, but would be adjusted under the general rule of paragraph (d)(8)(i) of this section does not change the conclusion in *Example 2,* that the plan may apply the alternative method).

(e) ***Determination of initial theoretical reserve for target benefit plans*** —

(1) ***General rule.*** In the case of a target benefit plan the stated benefit formula under which takes into account service for years in which the plan did not satisfy § 1.401(a)(4)-8(b)(3), as permitted under § 1.401(a)(4)-8(b)(3)(vii), the theoretical reserve as of the determination date for the last plan year beginning before the first day of the first plan year in which the plan satisfies § 1.401(a)(4)-8(b)(3) of an employee who was a participant in the plan on that determination date, is determined as follows:

(i) Determine the actuarial present value, as of that determination date, of the stated benefit that the employee is projected to have at the employee's normal retirement age, using the actuarial assumptions, the provisions of the plan, and the employee's compensation as of that determination date. For an employee whose attained age equals or exceeds the employee's normal retirement age, determine the actuarial present value of the employee's stated benefit at the employee's current age, but using an immediate straight life annuity factor for an employee whose attained age equals the employee's normal retirement age.

(ii) Calculate the actuarial present value of future required employer contributions (without regard to limitations under section 415 or additional contributions described in § 1.401(a)(4)-8(b)(3)(v)) as of that determination date (i.e., the actuarial present value of the level contributions due for each plan year through the end of the plan year in which the employee attains normal retirement age). This calculation is made assuming that the required contribution in each future year will be equal to the required contribution for the plan year that includes that determination date, and applying the interest rate that was used in determining that required contribution.

(iii) Determine the excess, if any, of the amount determined in paragraph (e)(1)(i) of this section over the amount determined in paragraph (e)(1)(ii) of this section. This excess is the employee's theoretical reserve on that determination date.

(2) ***Example.*** The following example illustrates the determination of an employee's theoretical reserve.

> *Example.* (a) A target benefit plan was adopted and in effect before September 19, 1991, and satisfied the requirements of Rev. Rul. 76-464, 1976-2 C.B. 115, with respect to all years credited under the stated benefit formula through 1993. The plan provides a stated benefit equal to 40 percent of compensation, payable annually as a straight life annuity beginning at normal retirement age. Normal retirement age under the plan is 65. The stated interest rate under the plan is six percent. The determination date for required contributions under the plan is the last day of the plan year. Employee M is 38 years old on the determination date for the 1993 plan year, has participated in the plan for five years, and has compensation equal to $60,000 in 1993. The amount of employer contribution to Employee M's account for 1993 was $2,468.
> (b) Under these facts, Employee M's theoretical reserve is equal to $13,909, calculated as follows:
>
> (1) The actuarial present value of Employee M's stated benefit is calculated using the actuarial assumptions, provisions of the plan and Employee M's compensation as of the determination date for the 1993 plan year. This amount is equal to $46,512, Employee M's

stated benefit of $24,000 ($60,000 multiplied by 40 percent), multiplied by 1.938, the actuarial present value factor applicable to a participant who is 38 years old using a stated interest rate of six percent.

(2) The actuarial present value of future employer contributions is calculated assuming that the required contribution in each future year will be equal to the required contribution for the 1993 plan year and assuming the same interest rate as was used in determining that contribution. This amount is equal to $32,603, which is equal to the amount of the level annual employer contribution ($2,468) multiplied by a factor of 13.2105 (the temporary annuity factor for a period of 27 years, assuming the six percent interest rate that was used to determine the required employer contribution).

(3) Employee M's theoretical reserve is $13,909, the excess of the amount determined in paragraph (b)(1) of this *Example* over the amount determined in paragraph (b)(2) of this *Example*.

(f) ***Special fresh-start rules for cash balance plans*** —

(1) ***In general.*** In order to satisfy the optional testing method of § 1.401(a)(4)-8(c)(3) after a fresh-start date, a cash balance plan must apply the rules of paragraph (c) of this section as modified under this paragraph (f). Paragraph (f)(2) of this section provides an alternative formula that may be used in addition to the formulas in paragraphs (c)(2) through (c)(4) of this section. Paragraph (f)(3) of this section sets forth certain limitations on use of the formulas in paragraph (c) or (f)(2) of this section.

(2) ***Alternative formula*** —

(i) ***In general.*** An employee's accrued benefit under the plan is equal to the greater of—

(A) The employee's frozen accrued benefit, or

(B) The employee's accrued benefit determined under the plan's benefit formula applicable to benefit accruals in the current plan year as applied to years of service after the fresh-start date, modified in accordance with paragraph (f)(2)(ii) of this section.

(ii) ***Addition of opening hypothetical account.*** As of the first day after the fresh-start date, the plan must credit each employee's hypothetical account with an amount equal to the employee's opening hypothetical account (determined under paragraph (f)(2)(iii) of this section), adjusted for interest for the period that begins on the first day after the fresh-start date and that ends at normal retirement age. The interest adjustment in the preceding sentence must be made using the same interest rate applied to the hypothetical allocation for the first plan year beginning after the fresh-start date.

(iii) ***Determination of opening hypothetical account*** —

(A) ***General rule.*** An employee's opening hypothetical account equals the actuarial present value of the employee's frozen accrued benefit as of the fresh-start date. For this purpose, if the plan provides for a single sum distribution as of the fresh-start date, the actuarial present value of the employee's frozen accrued benefit as of the fresh-start date equals the amount of a single sum distribution payable under the plan on that date, assuming

that the employee terminated employment on the fresh-start date, the employee's accrued benefit was 100-percent vested, and the employee satisfied all eligibility requirements under the plan for the single sum distribution. If the plan does not offer a single sum distribution as of the fresh-start date, the actuarial present value of the employee's frozen accrued benefit as of the fresh-start date must be determined using a standard mortality table and the applicable section 417(e) rates, as defined in § 1.417(e)-1(d).

(B) ***Alternative opening hypothetical account.*** Alternatively, the employee's opening hypothetical account is the greater of the opening hypothetical account determined under paragraph (f)(2)(ii)(A) of this section and the employee's hypothetical account as of the fresh-start date determined in accordance with § 1.401(a)(4)-8(c)(3)(v)(A) calculated under the plan's benefit formula applicable to benefit accruals in the current plan year as applied to the employee's total years of service through the fresh-start date in a manner that satisfies the past service credit rules of § 1.401(a)(4)-8(c)(3)(viii).

(3) ***Limitations on formulas*** —

(i) ***Past service restriction.*** If the plan does not satisfy the uniform hypothetical allocation formula requirement of § 1.401(a)(4)-8(c)(3)(iii)(B) as of the fresh-start date, under § 1.401(a)(4)-8(c)(3)(viii) the plan may not provide for past service credits, and thus may not use the formula in paragraph (c)(3) of this section (formula with wear-away), the formula in paragraph (c)(4) of this section (formula with extended wear-away), or the alternative determination of the opening hypothetical account in paragraph (f)(2)(iii)(B) of this section.

(ii) ***Change in interest rate.*** If the interest rate used to adjust employees' hypothetical allocations under § 1.401(a)(4)-8(c)(3)(iv) for the plan year is different from the interest rate used for this purpose in the immediately preceding plan year, the plan must use the formula in paragraph (c)(2) of this section (formula without wear-away).

(iii) ***Meaningful benefit requirement.*** A plan is permitted to use the formula provided in paragraph (f)(2) of this section only if the plan satisfies paragraphs (d)(3) through (d)(5) of this section (regarding coverage as of fresh-start date, current benefit accruals, and minimum benefit adjustment, respectively).

[T.D. 8360, 56 FR 47598, Sept. 19, 1991; 57 FR 4721, Feb. 7, 1992; 57 FR 10953, Mar. 31, 1992, as amended by T.D. 8485, 58 FR 46823, Sept. 3, 1993]

§ 1.401(a)(5)-1 Special rules relating to nondiscrimination requirements.

(a) ***In general.*** Section 401(a)(5) sets out certain provisions that will not of themselves be discriminatory within the meaning of section 410(b)(2)(A)(i) or section 401(a)(4). The exceptions specified in section 401(a)(5) are not an exclusive enumeration, but are merely a recital of provisions frequently encountered that will not of themselves constitute prohibited discrimination in contributions or benefits. See section 401(a)(4) and the regulations thereunder for the basic nondiscrimination rules. See § 1.410(b)-4 for the rule of section 410(b)(2)(A)(i) (relating to the nondiscriminatory classification test that is part of the minimum coverage requirements) referred to in section 401(a)(5)(A). See paragraphs (b) through (f) of this section for special rules used in applying the section 401(a)(4) nondiscrimination requirements under the remaining provisions of section 401(a)(5).

(b) ***Salaried or clerical employees.*** A plan does not fail to satisfy the nondiscrimination requirements of section 401(a)(4) merely because contributions or benefits provided under the plan are limited to salaried or clerical employees.

(c) ***Uniform relationship to compensation.*** A plan does not fail to satisfy the nondiscrimination requirements of section 401(a)(4) merely because the contributions or benefits of, or on behalf of, the employees under the plan bear a uniform relationship to the compensation (within the meaning of section 414(s)) of those employees.

(d) ***Certain disparity permitted.*** Under section 401(a)(5)(C), a plan does not discriminate in favor of highly compensated employees (as defined in section 414(q)), within the meaning of section 401(a)(4), in the amount of employer-provided contributions or benefits solely because—

(1) In the case of a defined contribution plan, employer contributions allocated to the accounts of employees favor highly compensated employees in a manner permitted by section 401(l) (relating to permitted disparity in plan contributions and benefits), and

(2) In the case of a defined benefit plan, employer-provided benefits favor highly compensated employees in a manner permitted by section 401(l) (relating to permitted disparity in plan contributions and benefits).

See §§ 1.401(l)-1 through 1.401(l)-6 for rules under which a plan may satisfy section 401(l) for purposes of the safe harbors of §§ 1.401(a)(4)-2(b)(3) and 1.401(a)(4)-3(b).

(e) ***Defined benefit plans integrated with social security*** —

(1) ***In general.*** Under section 401(a)(5)(D), a defined benefit plan does not discriminate in favor of highly compensated employees (as defined in section 414(q)) with respect to the amount of employer-provided contributions or benefits solely because the plan provides that, with respect to each employee, the employer-provided accrued retirement benefit under the plan is limited to the excess (if any) of—

(i) The employee's final pay from the employer, over

(ii) The employer-provided retirement benefit created under the Social Security Act and attributable to service by the employee for the employer.

(2) ***Final pay.*** For purposes of paragraph (e)(1)(i) of this section, an employee's final pay from the employer as of a plan year is the employee's compensation (as defined in section 414(q)(7)) for the year (ending with or within the 5-plan-year period ending with the plan year in which the employee terminates from employment with the employer) in which the employee receives the highest compensation from the employer. Notwithstanding the preceding sentence, final pay for each employee under the plan may be determined with reference to the 5-plan-year period ending with the plan year before the plan year in which the employee terminates from employment with the employer. In determining an employee's final pay, the plan may specify any 12-month period (ending with or within the applicable 5-plan-year period) as a year provided the specified 12-month period is uniformly and consistently applied with respect to all employees. In determining an employee's final pay, compensation for any year in excess of the applicable limit under section 401(a)(17) for the year may not be taken into account.

(3) ***Rules for determining amount of employer-provided social security retirement benefit.*** For purposes of paragraph (e)(1)(ii) of this section, the following rules apply.

(i) The employer-provided retirement benefit on which any reduction or offset in the employee's accrued retirement benefit is based is limited solely to the employer-provided primary insurance amount payable under section 215 of the Social Security Act attributable to service by the employee for the employer.

(ii) The employer-provided primary insurance amount attributable to service by the employee for the employer is determined by multiplying the employer-provided portion of the employee's projected primary insurance amount by a fraction (not exceeding 1), the numerator of which is the employee's number of complete years of covered service for the employer under the Social Security Act, and the denominator of which is 35.

(4) ***Projected primary insurance amount.***

(i) As of a plan year, an employee's projected primary insurance amount is the primary insurance amount, determined as of the close of the plan year (the "determination date"), payable to the employee upon attainment of the employee's social security retirement age (as determined under section 415(b)(8)), assuming the employee's annual compensation from the employer that is treated as wages for purposes of the Social Security Act remains the same from the plan year until the employee's attainment of social security retirement age. With respect to service by the employee for the employer before the determination date, the actual compensation paid to the employee by the employer during all periods of service of the employee for the employer covered by the Social Security Act must be used in determining an employee's projected primary insurance amount. With respect to years before the employee's commencement of service for the employer, in determining the employee's projected primary insurance amount, it may be assumed that the employee received compensation in an amount computed by using a six-percent salary scale projected backwards from the determination date to the employee's 21st birthday. However, if the employee provides the employer with satisfactory evidence of the employee's actual past compensation for the prior years treated as wages under the Social Security Act at the time the compensation was earned and the actual past compensation results in a smaller projected primary insurance amount, the plan must use the actual past compensation. The plan administrator must give clear written notice to each employee of the employee's right to supply actual compensation history and of the financial consequences of failing to supply the history. The notice must be given each time the summary plan description is provided to the employee and must also be given upon the employee's separation from service. The notice must also state that the employee can obtain the actual compensation history from the Social Security Administration. In determining the employee's projected primary insurance amount, the employer may not take into account any compensation from any other employer while the employee is employed by the employer.

(ii) As of a plan year, the employer-provided portion of the employee's projected primary insurance amount under the Social Security Act is 50 percent of the employee's projected primary insurance amount (as determined under paragraph (e)(4)(i) of this section).

(5) ***Employer-provided accrued retirement benefit.*** For purposes of this section, the employee's employer-provided accrued retirement benefit as of a plan year is the employee's accrued retirement benefit under the plan (determined on an actual basis and not on a projected basis) attributable to employer contributions under the plan. With respect to plans that provide for employee contributions, see section 411(c) for rules relating to the allocation of accrued benefits between employer contributions and employee contributions.

(6) ***Additional rules.***

(i) As of a plan year, paragraph (e)(1) of this section does not apply to the extent that its application would result in a decrease in an employee's accrued benefit. See sections 411(b)(1)(G) and 411(d)(6).

(ii) Section 401(a)(5)(D) and this paragraph (e) do not apply to a plan maintained by an employer, determined for purposes of the Federal Insurance Contributions Act or the Railroad Retirement Tax Act, as applicable, that does not pay any wages within the meaning of section 3121(a) or compensation within the meaning of section 3231(e). For this purpose, a plan maintained for a self-employed individual within the meaning of section 401(c)(1), who is also subject to the tax under section 1401, is deemed to be a plan maintained by an employer that pays wages within the meaning of section 3121(a).

(iii) If a plan provides for the payment of an employee's accrued retirement benefit (whether or not subsidized) commencing before an employee's social security retirement age, the projected employer-provided primary insurance amount attributable to service by the employee for the employer (as determined under paragraphs (e)(3) and (e)(4) of this section) that may be applied as an offset to limit the employee's accrued retirement benefit must be reduced in accordance with § 1.401(l)-3(e)(1). The reduction is made by multiplying the employee's projected employer-provided primary insurance amount by a fraction, the numerator of which is the appropriate factor under § 1.401(l)-3(e)(1), and the denominator of which is 0.75 percent.

(iv) The Commissioner may, in revenue rulings, notices or other documents of general applicability, prescribe additional rules that may be necessary or appropriate to carry out the purposes of this section, including rules relating to the determination of an employee's projected primary insurance amount attributable to the employee's service for former employers and rules applying section 401(a)(5)(D) with respect to an employer that pays wages within the meaning of section 3121(a) or compensation within the meaning of section 3231(e) for some years and not for other years.

(7) ***Examples.*** The following examples illustrate this paragraph (e).

> *Example 1.* Employer Z maintains a noncontributory defined benefit plan that uses the calendar year as its plan year. The plan provides a normal retirement benefit, commencing at age 65, equal to $500 a year, multiplied by the employee's years of service for Z, limited to the excess of the amount of the employee's final pay from Z (as determined in accordance with paragraph (e)(2) of this section) over the employee's employer-provided primary insurance amount attributable to the employee's service for Z. If an employee's social security retirement age is greater than 65, the plan provides for reduction of the employee's employer-provided primary insurance amount in accordance with paragraph (e)(6)(iii) of this section. The plan provides no limitation on the number of years of service taken into account in determining benefits under the plan. Employee A retires on July 6, 1995, at A's social security retirement age of 65 with 35 years of service for Z. The plan uses the plan year as the 12-month period for determining an employee's year of final highest pay from the employer.

A's compensation for A's final 5 plan years is as follows:

1995 plan year	$10,500
1994 plan year	$20,000
1993 plan year	$18,000
1992 plan year	$17,000
1991 plan year	$16,500

A's annual primary insurance amount under social security, determined as of A's social security retirement age, is $9,000, of which $4,500 is the employer-provided portion attributable to A's service for Z ($9,000 × 50 percent × 35/35). Under the plan's benefit formula (disregarding the final pay limitation), A would be entitled to receive a normal retirement benefit of $17,500 ($500 × 35 years). However, under the plan, A's otherwise determined normal retirement benefit of $17,500 is limited to the excess of the amount of A's final pay from Z over A's employer-provided primary insurance amount under social security attributable to A's service for Z. Accordingly, A's normal retirement benefit is determined to be $15,500 ($20,000 (A's final pay from Z) less $4,500 (A's employer-provided primary insurance amount attributable to A's service for Z)) rather than $17,500. The final pay limitation in Z's plan satisfies section 401(a)(5)(D) and this paragraph (e). Accordingly, the plan maintained by Z does not discriminate in favor of highly compensated employees within the meaning of section 401(a)(4) merely because of the final pay limitation contained in the plan.

Example 2. Assume the same facts as in *Example 1,* except that A has 32 years of service for Z when A retires at A's social security retirement age. Under the plan's benefit formula (disregarding the final pay limitation), A would be entitled to receive an annual normal retirement benefit of $16,000 ($500 × 32 years). However, the plan provides that A's normal retirement benefit of $16,000 will be limited to $15,500 ($20,000 (the amount of A's final pay from Z) less $4,500 ($^{1}/_{2}$ of A's primary insurance amount under the Social Security Act)). The final pay limitation does not satisfy this paragraph (e). The portion of A's employer-provided primary insurance amount under the Social Security Act attributable to A's service for Z is 32/35 × $4,500, or $4,114. Therefore, to satisfy this paragraph (e), the final pay provision in Z's plan may not limit A's otherwise determined normal retirement benefit of $16,000 to less than $15,886 ($20,000 (the amount of X's final pay) minus $4,114 (the portion of A's employer-provided primary insurance amount attributable to A's service for Z)).

Example 3. (a) Employer X maintains a noncontributory defined benefit plan that uses the calendar year as its plan year. The formula for determining benefits under the plan provides a normal retirement benefit at age 65 equal to 90 percent of an employee's final average compensation, with the benefit reduced by $^{1}/_{30}$th for each year of the employee's service less than 30 and limited to the employee's final pay (as determined in

accordance with paragraph (e)(2) of this section) less the employee's employer-provided primary insurance amount under social security attributable to the employee's service for X. The plan determines an employee's employer-provided projected primary insurance amount under social security attributable to the employee's service for X in accordance with paragraph (e)(3) of this section and applies the reductions applicable under paragraph (e)(6)(iii) of this section if benefits commence before social security retirement age. The plan determines an employee's accrued benefit under the fractional accrual method of section 411(b)(1)(C).
(b) Employee A commences participation in the plan on January 1, 1990, when A is 35 years of age. A's social security retirement age is 67. As of the close of the 2014 plan year, A's final average compensation from X is $15,000; A's final pay from X is $15,400, and A's projected employer-provided annual primary insurance amount under social security attributable to A's service for X is $4,000 (after the reduction applicable under paragraph (e)(6)(iii) of this section). Under the plan formula, A's accrued benefit as of the close of the 2014 plan year is $11,250 (90 percent × $15,000 × 25/30). As of the close of the 2014 plan year, the plan's final pay limitation does not affect A's benefit because A's benefit under the plan as of the close of the plan year and before application of the final pay limitation ($11,250) does not exceed A's final pay of $15,400 from X, determined as of the close of the plan year, less A's employer-provided projected primary insurance amount under social security attributable to A's service for X ($4,000).

(c) Assume that, as of the close of the 2015 plan year, A's final average compensation from X is $14,500 and A's final pay from X is $15,400. Assume also that as of the close of the 2015 plan year, A's employer-provided primary insurance amount attributable to A's service for X is $4,200 (after the reduction applicable under paragraph (e)(6)(iii) of this section). Accordingly, A's benefit as of the close of the 2015 plan year and before application of the final pay limitation is $11,310 (90 percent × $14,500 × 26/30). Under the plan's final pay limitation, A's benefit of $11,310 would be limited to $11,200, the amount of A's final pay from X ($15,400), less A's employer-provided projected primary insurance amount under social security attributable to A's service for X ($4,200). However, the plan's final pay limitation may not be applied to limit A's accrued benefit for the 2015 plan year to an amount below $11,250, which was A's accrued benefit under the

plan at the close of the prior plan year. The foregoing is further illustrated in the following table for the plan years presented above and for additional years of service performed by A for X.

TABLE
[IN DOLLAR AMOUNTS]

1	2	3	4	5	6	7
Years of service	Final average compensation	Benefit under plan formula (Column 2 × 0.9 × years of service/ 30)	Final pay	Employer-provided projected primary insurance amount under social security attributable to service for employer	Benefit if final pay reduction is applied in full (Column 4 – Column 5)	Benefit to which A is entitled (smaller of Column 6 or Column 3, but not less than Column 7 for prior year)
25	$15,000	$11,250	$15,400	$4,000	$11,400	$11,250
26	14,500	11,310	15,400	4,200	11,200	11,250
27	15,500	12,555	15,800	4,400	11,400	11,400
28	15,500	13,020	16,000	4,500	11,500	11,500
29	15,000	13,050	16,000	4,800	11,200	11,500
30	14,500	13,050	16,000	5,000	11,000	11,500

(f) ***Certain benefits not taken into account.*** In determining whether a plan satisfies section 401(a)(4) and this section, other benefits created under state or federal law (e.g., worker's compensation benefits or black lung benefits) may not be taken into account.

(g) ***More than one plan treated as single plan.*** [Reserved]

(h) ***Effective date*** —

(1) ***In general.*** Except as provided in paragraph (h)(2) of this section, this section is effective for plan years beginning on or after January 1, 1994.

(2) ***Plans of tax-exempt organizations.*** In the case of plans maintained by organizations exempt from income taxation under section 501(a), including plans subject to section 403(b)(12)(A)(i) (nonelective plans), this section is effective for plan years beginning on or after January 1, 1996.

(3) ***Compliance during transition period.*** For plan years beginning before the effective date of these regulations, as set forth in paragraphs (h)(1) and (h)(2) of this section, and on or after the first day of the first plan year to which the amendments made to section 401(a)(5) by section 1111(b) of the Tax Reform Act of 1986 (TRA '86) apply, a plan must be operated in accordance with a reasonable, good faith interpretation of section 401(a)(5), taking into account pre-existing guidance and the amendments made by TRA '86 to related provisions of the Code. Whether a plan is operated in accordance with a reasonable, good faith interpretation of section 401(a)(5) will generally be determined based on all of the relevant facts and circumstances, including the extent to which an employer has resolved unclear issues in its favor. A plan will be deemed to be operated in accordance with a reasonable, good faith interpretation of section 401(a)(5) if it is operated in accordance with the terms of this section.

[T.D. 8359, 56 FR 47614, Sept. 19, 1991; 57 FR 10817, 10818, 10951, Mar. 31, 1992, as amended by T.D. 8486, 58 FR 46830, Sept. 3, 1993]

§ 1.401(a)(9)-0 Required minimum distributions; table of contents.

This table of contents lists the regulations relating to required minimum distributions under section 401(a)(9) of the Internal Revenue Code as follows:

§ 1.401(a)(9)-1 Minimum distribution requirement in general.

(a) Plans subject to minimum distribution requirement.

(1) In general.

(2) Participant in multiple plans.

(3) Governmental plans.

(b) Statutory effective date.

(1) In general.

(2) Effective date for section 401(a)(9)(H).

(3) Examples.

(c) Required and optional plan provisions.

(1) Required provisions.

(2) Optional provisions.

(d) Regulatory applicability date.

§ 1.401(a)(9)-2 Distributions commencing during an employee's lifetime.

(a) Distributions commencing during an employee's lifetime.

(1) In general.

(2) Amount required to be distributed for a calendar year.

(3) Distributions commencing before required beginning date.

(4) Distributions after death.

(b) Determination of required beginning date.

(1) General rule.

(2) Definition of applicable age.

(3) Required beginning date for 5-percent owner.

(4) Uniform required beginning date.

(5) Plans maintained by more than one employer.

§ 1.401(a)(9)-3 Death before required beginning date.

(a) Distribution requirements.

(1) In general.

(2) Special rule for designated Roth accounts.

(b) Distribution requirements in the case of a defined benefit plan.

(1) In general.

(2) 5-year rule.

(3) Annuity payments.

(4) Determination of which rule applies.

(c) Distributions in the case of a defined contribution plan.

(1) In general.

(2) 5-year rule.

(3) 10-year rule.

(4) Life expectancy payments.

(5) Determination of which rule applies.

(d) Permitted delay for surviving spouse beneficiaries.

(e) Distributions that commence after surviving spouse's death.

(1) In general.

(2) Remarriage of surviving spouse.

(3) When distributions are treated as having begun to surviving spouse.

§ 1.401(a)(9)-4 Determination of the designated beneficiary.

(a) Beneficiary designated under the plan.

(1) In general.

(2) Entitlement to employee's interest in the plan.

(3) Specificity of beneficiary designation.

(4) Affirmative and default elections of designated beneficiary.

(b) Designated beneficiary must be an individual.

(c) Rules for determining beneficiaries.

(1) Time period for determining the beneficiary.

(2) Circumstances under which a beneficiary is disregarded as a beneficiary of the employee.

(3) Examples.

(d) Application of beneficiary designation rules to surviving spouse.

(e) Eligible designated beneficiaries.

(1) In general.

(2) Multiple designated beneficiaries.

(3) Determination of age of majority.

(4) Disabled individual.

(5) Chronically ill individual.

(6) Individual not more than 10 years younger than the employee.

(7) Documentation requirements for disabled or chronically ill individuals.

(8) Applicability of definition of eligible designated beneficiary to beneficiary of surviving spouse.

(9) Examples.

(f) Special rules for trusts.

(1) Look-through of trust to determine designated beneficiaries.

(2) Trust requirements.

(3) Trust beneficiaries treated as beneficiaries of the employee.

(4) Multiple trust arrangements.

(5) Identifiability of trust beneficiaries.

(6) Examples.

(g) Applicable multi-beneficiary trust.

(1) Certain see-through trusts with disabled or chronically ill beneficiaries.

(2) Termination of interest in trust.

(3) Special definition of designated beneficiary.

(h) Documentation requirements for trusts.

(1) General rule.

(2) Required minimum distributions while employee is still alive.

(3) Required minimum distributions after death.

(4) Relief for discrepancy between trust instrument and employee certifications or earlier trust instruments.

§ 1.401(a)(9)-5 Required minimum distributions from defined contribution plans.

(a) General rules.

(1) In general.

(2) Distribution calendar year.

(3) Time for distributions.

(4) Minimum distribution incidental benefit requirement.

(5) Annuity contracts.

(6) Impact of additional distributions in prior years.

(b) Determination of account balance.

(1) General rule.

(2) Adjustment for subsequent allocations and distributions.

(3) Adjustment for designated Roth accounts.

(4) Exclusion for QLAC.

(5) Treatment of rollovers.

(c) Determination of applicable denominator during employee's lifetime.

(1) General rule.

(2) Spouse is sole beneficiary.

(d) Applicable denominator after employee's death.

(1) Death on or after the employee's required beginning date.

(2) Death before an employee's required beginning date.

(3) Remaining life expectancy.

(e) Distribution of employee's entire interest required.

(1) In general.

(2) 10-year limit for designated beneficiary who is not an eligible designated beneficiary.

(3) 10-year limit following death of eligible designated beneficiary.

(4) 10-year limit after minor child of the employee reaches age of majority.

(f) Rules for multiple designated beneficiaries.

(1) Determination of applicable denominator.

(2) Determination of when entire interest is required to be distributed.

(g) Special rules.

(1) Treatment of nonvested amounts.

(2) Distributions taken into account.

(3) Surviving spouse election under section 401(a)(9)(B)(iv).

§ 1.401(a)(9)-6 Required minimum distributions for defined benefit plans and annuity contracts.

(a) General rules.

(1) In general.

(2) Definition of life annuity.

(3) Annuity commencement.

(4) Single-sum distributions.

(5) Death benefits.

(6) Separate treatment of separate identifiable components.

(7) Additional guidance.

(b) Application of incidental benefit requirement.

(1) Life annuity for employee.

(2) Joint and survivor annuity.

(3) Period certain and annuity features.

(4) Deemed satisfaction of incidental benefit rule.

(c) Period certain annuity.

(1) Distributions commencing during the employee's life.

(2) Distributions commencing after the employee's death.

(d) Use of annuity contract.

(1) In general.

(2) Applicability of section 401(a)(9)(H).

(e) Treatment of additional accruals.

(1) General rule.

(2) Administrative delay.

(f) Treatment of nonvested benefits.

(g) Requirement for actuarial increase.

(1) General rule.

(2) Nonapplication to 5-percent owners.

(3) Nonapplication to governmental plans.

(4) Nonapplication to church plans and church employees.

(h) Amount of actuarial increase.

(1) In general.

(2) Actuarial equivalence basis.

(3) Coordination with section 411 actuarial increase.

(i) [Reserved]

(j) Distributions restricted pursuant to section 436.

(1) General rule.

(2) Payments restricted under section 436(d)(3).

(3) Payments restricted under section 436(d)(1) or (2).

(k) Treatment of early commencement.

(1) General rule.

(2) Joint and survivor annuity, non-spouse beneficiary.

(3) Limitation on period certain.

(l) Early commencement for surviving spouse.

(m) Determination of entire interest under annuity contract.

(1) General rule.

(2) Entire interest.

(3) Exclusions.

(4) Examples.

(n) Change in annuity payment period.

(1) In general.

(2) Reannuitization.

(3) Conditions.

(4) Examples.

(o) Increase in annuity payments.

(1) General rules.

(2) Eligible cost of living index.

(3) Additional permitted increases for annuity contracts purchased from insurance companies.

(4) Additional permitted increases for annuity payments from a qualified trust.

(5) Actuarial gain defined.

(6) Examples.

(p) Payments to children.

(1) In general.

(2) Age of majority.

(q) Qualifying longevity annuity contract.

(1) Definition of qualifying longevity annuity contract.

(2) Limitation on premiums.

(3) Payments after death of the employee.

(4) Rules of application.

§ 1.401(a)(9)-7 Rollovers and transfers.

(a) Treatment of rollover from distributing plan.

(b) Treatment of rollover by receiving plan.

(c) Treatment of transfer under transferor plan.

(1) Generally not treated as distribution.

(2) Account balance decreased after transfer.

(d) Treatment of transfer under transferee plan.

(e) Treatment of spinoff or merger.

§ 1.401(a)(9)-8 Special rules.

(a) Use of separate accounts.

(1) Separate application of section 401(a)(9) for each beneficiary.

(2) Separate accounting requirements.

(b) Application of consent requirements.

(c) Definition of spouse.

(d) Treatment of QDROs.

(1) Continued treatment of spouse.

(2) Separate accounts.

(3) Other situations.

(e) Application of section 401(a)(9) pending determination of whether a domestic relations order is a QDRO is being made.

(f) Application of section 401(a)(9) when insurer is in State delinquency proceedings.

(g) In-service distributions required to satisfy section 401(a)(9).

(h) TEFRA section 242(b) elections.

(1) In general.

(2) Application of section 242(b) election after transfer.

(3) Application of section 242(b) election after rollover.

(4) Revocation of section 242(b) election.

§ 1.401(a)(9)-9 Life expectancy and Uniform Lifetime tables.

(a) In general.

(b) Single Life Table.

(c) Uniform Lifetime Table.

(d) Joint and Last Survivor Table.

(e) Mortality rates.

(f) Applicability dates.

(1) In general.

(2) Application to life expectancies that may not be recalculated.

[T.D. 8987, 67 FR 18994, Apr. 17, 2002, as amended by T.D. 9130, 69 FR 33293, June 15, 2004; T.D. 10001, 89 FR 58907, July 19, 2024]

§ 1.401(a)(9)-1 Minimum distribution requirement in general.

(a) ***Plans subject to minimum distribution requirement*** —

(1) ***In general.*** Under section 401(a)(9), all stock bonus, pension, and profit-sharing plans qualified under section 401(a) and annuity contracts described in section 403(a) are subject to required minimum distribution rules. See this section and §§ 1.401(a)(9)-2 through 1.401(a)(9)-9 for the distribution rules applicable to these plans. Under section 403(b)(10), annuity contracts and custodial accounts

described in section 403(b) are subject to required minimum distribution rules. See § 1.403(b)-6(e) for the distribution rules applicable to these annuity contracts and custodial accounts. Under section 408(a)(6) and 408(b)(3), individual retirement accounts and individual retirements annuities (collectively, IRAs) are subject to required minimum distribution rules. See § 1.408-8 for the minimum distribution rules applicable to IRAs and § 1.408A-6 for the minimum distribution rules applicable to Roth IRAs under section 408A. Under section 457(d)(2), eligible deferred compensation plans described in section 457(b) for employees of tax-exempt organizations or employees of State and local governments are subject to required minimum distribution rules. See § 1.457-6(d) for the minimum distribution rules applicable to those eligible deferred compensation plans.

(2) ***Participant in multiple plans.*** If an employee is a participant in more than one plan, the plans in which the employee participates are not permitted to be aggregated for purposes of testing whether the distribution requirements of section 401(a)(9) are met. Thus, the distribution of the benefit of the employee under each plan must separately meet the requirements of section 401(a)(9). For this purpose, a plan described in section 414(k) is treated as two separate plans, a defined contribution plan to the extent benefits are based on an individual account and a defined benefit plan with respect to the remaining benefits.

(3) ***Governmental plans.*** A governmental plan (within the meaning of section 414(d)), or an eligible governmental plan described in § 1.457-2(f), is treated as having complied with section 401(a)(9) if the plan complies with a reasonable, good faith interpretation of section 401(a)(9). Thus, the terms of a governmental plan that reflect a reasonable, good faith interpretation of section 401(a)(9) do not have to provide that distributions will be made in accordance with this section and §§ 1.401(a)(9)-2 through 1.401(a)(9)-9. Similarly, a governmental plan may apply the rules of section 401(a)(9)(F) using the rules of § 1.401(a)(9)-6, Q&A-15 (as it appeared in the April 1, 2023, edition of 26 CFR part 1).

(b) ***Statutory effective date*** —

(1) ***In general.*** The distribution rules of section 401(a)(9) generally apply to all account balances and benefits in existence on or after January 1, 1985.

(2) ***Effective date for section 401(a)(9)(H)*** —

(i) ***General effective date.*** Except as otherwise provided in this paragraph (b)(2), section 401(a)(9)(H) applies with respect to employees who die on or after January 1, 2020. However, in the case of a governmental plan (as defined in section 414(d)), section 401(a)(9)(H) applies with respect to employees who die on or after January 1, 2022.

(ii) ***Delayed effective date for collectively bargained plans*** —

(A) ***General rule.*** In the case of a plan maintained pursuant to one or more collective bargaining agreements between employee representatives and one or more employers ratified before December 20, 2019 (the date of enactment of the Further Consolidated Appropriations Act, 2020, Public Law 116-94, 133 Stat. 2534 (2019)), section 401(a)(9)(H) generally applies with respect to employees who die on or after January 1, 2022.

(B) ***Earlier effective date if agreements terminate.*** Notwithstanding paragraph (b)(2)(ii)(A) of this section, section 401(a)(9)(H) applies to a plan maintained pursuant to one or more collective bargaining agreements with respect to employees who die in 2020 or 2021 if—

(1) The year in which the employee dies begins after the date on which the last of the collective bargaining agreements described in paragraph (b)(2)(ii)(A) of this section terminates (determined without regard to any extension thereof to which the parties agreed on or after December 20, 2019), and

(2) Section 401(a)(9)(H) would apply with respect to the employee under the rules of paragraph (b)(2)(i) of this section.

(C) ***Rules of application.*** For purposes of this paragraph (b)(2)(ii)—

(1) A plan is treated as maintained pursuant to one or more collective bargaining agreements only if the plan constitutes a collectively bargained plan under the rules of § 1.436-1(a)(5)(ii)(B), and

(2) Any plan amendment made pursuant to a collective bargaining agreement that amends the plan solely to conform to the requirements of section 401(a)(9)(H) is not treated as a termination of the collective bargaining agreement.

(iii) ***Applicability upon death of designated beneficiary*** —

(A) ***In general.*** Except as otherwise provided in this paragraph (b)(2)(iii), if an employee who died before the effective date described in paragraph (b)(2)(i) or (ii) of this section (whichever applies to the plan) has only one designated beneficiary and that beneficiary dies on or after that effective date, then, upon the death of the designated beneficiary, section 401(a)(9)(H) applies with respect to any beneficiary of the employee's designated beneficiary. Section 401(b)(5) of Division O of the Further Consolidated Appropriations Act, 2020 (known as the SECURE Act) provides that, if an employee dies before the effective date, then a designated beneficiary of an employee is treated as an eligible designated beneficiary. Accordingly, once the rules of section 401(a)(9)(H) apply with respect to the employee's designated beneficiary, the rules of section 401(a)(9)(H)(iii) (requiring full distribution of the employee's interest within 10 years after the death of an eligible designated beneficiary) apply upon the designated beneficiary's death.

(B) ***Employee with multiple designated beneficiaries.*** If an employee described in paragraph (b)(2)(iii)(A) of this section has more than one designated beneficiary, then whether section 401(a)(9)(H) applies is determined based on the date of death of the oldest of the employee's designated beneficiaries. Thus, section 401(a)(9)(H) will apply upon the death of the oldest of the employee's designated beneficiaries if that designated beneficiary is still alive on or after the effective date of section 401(a)(9)(H) for the plan as determined under the rules of paragraph (b)(2)(i) or (ii) of this section. However, see § 1.401(a)(9)-8(a) for rules related to the separate application of section 401(a)(9) with respect to multiple beneficiaries if certain requirements are met.

(C) ***Surviving spouse of the employee dies before employee's required beginning date.*** If an employee described in paragraph (b)(2)(iii)(A) of this section dies before the employee's required beginning date and the employee's surviving spouse is waiting to begin distributions until the year for which the employee would have been required to begin distributions pursuant to section 401(a)(9)(B)(iv)(II), then, in applying the rules of this paragraph (b)(2)(iii), the surviving spouse is treated as the employee. Thus, for example, if an employee with a required beginning date of April 1, 2025, names the employee's surviving spouse as the sole beneficiary of the employee's interest in the plan, both the employee and the employee's surviving spouse die before the effective date of section

401(a)(9)(H) for the plan, and that spouse's designated beneficiary dies on or after that effective date, then section 401(a)(9)(H) applies with respect to the surviving spouse's designated beneficiary upon the death of that designated beneficiary (so that full distribution of the employee's interest must be made no later than the end of the calendar year that includes the tenth anniversary of the date of that designated beneficiary's death).

(iv) ***Qualified annuity exception*** —

(A) ***In general.*** Section 401(a)(9)(H) does not apply to a commercial annuity (as defined in section 3405(e)(6))—

(*1*) That is a binding annuity contract in effect as of December 20, 2019;

(*2*) Under which payments satisfy the requirements of §§ 1.401(a)(9)-1 through 1.401(a)(9)-9 (as those sections appeared in the April 1, 2019, edition of 26 CFR part 1); and

(*3*) That satisfies the irrevocability requirements of paragraph (b)(2)(iv)(B) of this section.

(B) ***Irrevocability requirements applicable to annuity contract.*** A contract satisfies the requirements of this paragraph (b)(2)(iv)(B) if the employee (or, if the employee has died, the designated beneficiary) has made an irrevocable election before December 20, 2019, as to the method and amount of annuity payments to the employee and any designated beneficiary.

(3) ***Examples.*** The following examples illustrate the applicability date rules of this paragraph (b).

(i) ***Example 1.*** Employer M maintains a defined contribution plan, Plan X. Employee A died in 2017, at the age of 68, and designated A's 40-year-old child, B, who was not disabled or chronically ill at the time of A's death, as the sole beneficiary of A's interest in Plan X. Pursuant to a plan provision in Plan X, B elected to take distributions over B's life expectancy under section 401(a)(9)(B)(iii). B dies in 2024, after the effective date of section 401(a)(9)(H). Because section 401(b)(5) of the SECURE Act treats B as an eligible designated beneficiary, the rules of section 401(a)(9)(H)(iii) apply to B's beneficiaries. Therefore, A's remaining interest in Plan X must be distributed by the end of 2034 (the calendar year that includes the tenth anniversary of B's death).

(ii) ***Example 2.*** The facts are the same as in paragraph (b)(3)(i) of this section (*Example 1*), except that B died in 2019. Because A's designated beneficiary died before the effective date of section 401 of the SECURE Act, the rules of section 401(a)(9)(H) do not apply to B's beneficiaries.

(iii) ***Example 3.*** The facts are the same as in paragraph (b)(3)(i) of this section (*Example 1*) except that, pursuant to a provision in Plan X, B elected the 5-year rule under section 401(a)(9)(B)(ii). Accordingly, A's entire interest is required to be distributed by the end of 2022. Because A died before January 1, 2020, section 401(a)(9)(H) does not apply with respect to B. Therefore, section 401(a)(9)(H)(i)(I) does not extend the 5-year period under B's election to a 10-year period. Although B's election required A's entire interest to be distributed by the end of 2022, the enactment of section 401(a)(9)(I)(iii)(II) (permitting disregard of 2020 when the 5-year period applies) permits distribution of A's entire interest in the plan to be delayed until the end of 2023.

(iv) ***Example 4.*** The facts are the same as in paragraph (b)(3)(i) of this section (*Example 1*), except that A designates a see-through trust that satisfies the requirements of § 1.401(a)(9)-4(f)(2) as the sole beneficiary of A's interest in Plan X. All of the trust beneficiaries are alive as of January 1, 2020. The oldest of the trust beneficiaries, C, died in 2022. Because section 401(b)(5) of the SECURE Act treats C as an eligible designated beneficiary, the rules of section 401(a)(9)(H)(iii) apply to the other trust beneficiaries. Thus, unless the rules of § 1.401(a)(9)-5(f)(2)(ii)(B) or (iii) apply, A's remaining interest in Plan X must be distributed by the end of 2032 (the calendar year that includes the tenth anniversary of C's death).

(v) ***Example 5.*** The facts are the same as in paragraph (b)(3)(iv) of this section (*Example 4*), except that C died in 2019. Because the oldest designated beneficiary died before January 1, 2020, the rules of section 401(a)(9)(H) do not apply to any of the other trust beneficiaries.

(vi) ***Example 6.*** The facts are the same as in paragraph (b)(3)(i) of this section (*Example 1*), except that B elected to purchase an annuity that pays over B's lifetime with a 15-year certain period starting in the calendar year following the calendar year of A's death. Because B died after the effective date of section 401(a)(9)(H), the rules of section 401(a)(9)(H)(iii) apply, and accordingly, the annuity may not provide distributions any later than the end of 2034.

(c) ***Required and optional plan provisions*** —

(1) ***Required provisions.*** In order to satisfy section 401(a)(9), a plan must include the provisions described in this paragraph (c)(1) reflecting section 401(a)(9). First, a plan generally must set forth the statutory rules of section 401(a)(9), including the incidental death benefit requirement in section 401(a)(9)(G). Second, a plan must provide that distributions will be made in accordance with this section and §§ 1.401(a)(9)-2 through 1.401(a)(9)-9. A plan document also must provide that the provisions reflecting section 401(a)(9) override any distribution options in the plan that are inconsistent with section 401(a)(9). A plan also must include any other provisions reflecting section 401(a)(9) that are prescribed by the Commissioner in revenue rulings, notices, and other guidance published in the Internal Revenue Bulletin. See § 601.601(d) of this chapter.

(2) ***Optional provisions.*** A plan may also include optional provisions governing plan distributions that do not conflict with section 401(a)(9). For example, a defined benefit plan may include a provision described in § 1.401(a)(9)-3(b)(4)(ii) (requiring that the 5-year rule apply to an employee who has a designated beneficiary). Similarly, a defined contribution plan may provide for an election by an eligible designated beneficiary as described in § 1.401(a)(9)-3(c)(5)(iii).

(d) ***Regulatory applicability date.*** This section and §§ 1.401(a)(9)-2 through 1.401(a)(9)-9 apply for purposes of determining required minimum distributions for calendar years beginning on or after January 1, 2025. For earlier calendar years, the rules of §§ 1.401(a)(9)-1 through 1.401(a)(9)-9 (as those sections appeared in the April 1, 2023, edition of 26 CFR part 1) apply.

[T.D. 8987, 67 FR 18994, Apr. 17, 2002, as amended by T.D. 9130, 69 FR 33293, June 15, 2004; T.D. 9340, 72 FR 41159, July 26, 2007; T.D. 9459, 74 FR 45994, Sept. 8, 2009; T.D. 10001, 89 FR 58907, July 19, 2024]

§ 1.401(a)(9)-2 Distributions commencing during an employee's lifetime.

(a) ***Distributions commencing during an employee's lifetime*** —

(1) ***In general.*** In order to satisfy section 401(a)(9)(A), the entire interest of each employee must be distributed to the employee not later than the required beginning date, or must be distributed, beginning not later than the required beginning date, over the life of the employee or the joint lives of the employee and a designated beneficiary or over a period not extending beyond the life expectancy of the employee or the joint life and last survivor expectancy of the employee and the designated beneficiary. Under section 401(a)(9)(G), lifetime distributions must satisfy the incidental death benefit requirements of § 1.401-1(b)(1).

(2) ***Amount required to be distributed for a calendar year.*** The amount required to be distributed for each calendar year in order to satisfy section 401(a)(9)(A) and (G) generally depends on whether the amount to be distributed is from an individual account under a defined contribution plan, is an annuity payment from a defined benefit plan, or is a payment under an annuity contract. For the method of determining the required minimum distribution in accordance with section 401(a)(9)(A) and (G) from an individual account under a defined contribution plan, see § 1.401(a)(9)-5. For the method of determining the required minimum distribution in accordance with section 401(a)(9)(A) and (G) in the case of annuity payments from a defined benefit plan or under an annuity contract (including an annuity contract purchased under a defined contribution plan), see § 1.401(a)(9)-6.

(3) ***Distributions commencing before required beginning date*** —

(i) ***In general.*** Lifetime distributions made before the employee's required beginning date for calendar years before the employee's first distribution calendar year, as defined in § 1.401(a)(9)-5(a)(2)(ii), need not be made in accordance with section 401(a)(9). However, if distributions commence before the employee's required beginning date under a particular distribution option (such as in the form of an annuity) and, under the terms of that distribution option, distributions to be made for the employee's first distribution calendar year (or any subsequent calendar year) will fail to satisfy section 401(a)(9), then the distribution option fails to satisfy section 401(a)(9) at the time distributions commence.

(ii) ***Date distributions are treated as having begun.*** Except as otherwise provided in paragraph (a)(3)(iii) of this section and § 1.401(a)(9)-6(k), distributions to the employee are not treated as having begun in accordance with section 401(a)(9)(A)(ii) until the employee's required beginning date, as determined in accordance with paragraph (b)(1) or (3) of this section, whichever applies to the employee. The preceding sentence applies even if the employee has received distributions before the employee's required beginning date (either pursuant to plan terms that require distributions to begin by an earlier date or pursuant to the employee's election). Thus, even if payments have been made before the employee's required beginning date, the rules of § 1.401(a)(9)-3 will apply if the employee dies before that date. For example, if A is an employee who retires in 2023, the calendar year A attains age 71, and begins receiving installment distributions from a profit-sharing plan over a period not exceeding the joint life and last survivor expectancy of A and A's spouse, benefits are not treated as having begun in accordance with section 401(a)(9)(A)(ii) until April 1, 2026 (the April 1 following the calendar year in which A attains age 73). Consequently, if A dies before April 1, 2026 (A's required beginning date), distributions after A's death must be made in accordance with § 1.401(a)(9)-3 (addressing payments to beneficiaries pursuant to section 401(a)(9)(B)(ii), (iii), or (iv), whichever applies, in cases in which required distributions have not begun) rather than section 401(a)(9)(B)(i) (addressing payments to beneficiaries in cases in which required distributions have begun). This is the case without regard to whether, before A's death, the plan distributed the minimum distribution for the A's first distribution calendar year (as defined in § 1.401(a)(9)-5(a)(2)(ii)).

(iii) ***Exception for uniform required beginning date.*** If a plan provides, in accordance with paragraph (b)(4) of this section, that the required beginning date for purposes of section 401(a)(9) for all employees is April 1 of the calendar year following the calendar year described in paragraph (b)(1)(i) of this section, without regard to whether the employee is a 5-percent owner, then an employee who dies on or after the required beginning date determined under the plan terms is treated as dying after distributions have begun in accordance with section 401(a)(9)(A)(ii) (even if the employee dies before the April 1 following the calendar year in which the employee retires).

(4) ***Distributions after death.*** Section 401(a)(9)(B)(i) provides that, if the distribution of an employee's interest has begun in accordance with section 401(a)(9)(A)(ii), and the employee dies before the employee's entire interest has been distributed to the employee, the remaining portion of the employee's interest must be distributed at least as rapidly as under the distribution method being used under section 401(a)(9)(A)(ii) as of the date of the employee's death. For the method of determining the required minimum distribution in accordance with section 401(a)(9)(B)(i) from an individual account under a defined contribution plan, see § 1.401(a)(9)-5. In the case of annuity payments from a defined benefit plan or under an annuity contract (including an annuity contract purchased under a defined contribution plan), see § 1.401(a)(9)-6.

(b) ***Determination of required beginning date*** —

(1) ***General rule.*** Except as otherwise provided in this paragraph (b), the employee's required beginning date (within the meaning of section 401(a)(9)(C)) is April 1 of the calendar year following the later of—

(i) The calendar year in which the employee attains the applicable age; and

(ii) The calendar year in which the employee retires from employment with the employer maintaining the plan.

(2) ***Definition of applicable age*** —

(i) ***In general.*** The applicable age is determined using the employee's date of birth as set forth in this paragraph (b)(2).

(ii) ***Employees born before July 1, 1949.*** In the case of an employee born before July 1, 1949, the applicable age is age $70^{1}/_{2}$.

(iii) ***Other employees born before 1951.*** In the case of an employee born on or after July 1, 1949, but before January 1, 1951, the applicable age is age 72;

(iv) ***Employees born in 1951 through 1958.*** In the case of an employee born on or after January 1, 1951, but before January 1, 1959, the applicable age is age 73;

(v) [Reserved]

(vi) ***Employees born after 1959.*** In the case of an employee born on or after January 1, 1960, the applicable age is age 75.

(3) ***Required beginning date for 5-percent owner*** —

(i) ***In general.*** In the case of an employee who is a 5-percent owner, the employee's required beginning date is April 1 of the calendar year following the calendar year in which the employee attains the applicable age.

(ii) ***Definition of 5-percent owner.*** For purposes of section 401(a)(9), a 5-percent owner is an employee who is a 5-percent owner (as defined in section 416) with respect to the plan year ending in the calendar year in which the employee attains the applicable age.

(iii) ***No applicability to governmental plan or church plan.*** This paragraph (b)(3) does not apply in the case of a governmental plan (within the meaning of section 414(d)) or a church plan (within the meaning of § 1.401(a)(9)-6(g)(4)(i)).

(4) ***Uniform required beginning date.*** A plan is permitted to provide that the required beginning date for purposes of section 401(a)(9) for all employees is April 1 of the calendar year following the calendar year described in paragraph (b)(1)(i) of this section, without regard to whether the employee is a 5-percent owner.

(5) ***Plans maintained by more than one employer.*** In the case of a plan maintained by more than one employer, an employee who retires from employment with any of those employers but continues to be employed by another employer that maintains the plan is not treated as having retired for purposes of paragraph (b)(1)(ii) of this section.

[T.D. 8987, 67 FR 18994, Apr. 17, 2002, as amended by T.D. 9130, 69 FR 33293, June 15, 2004; T.D. 10001, 89 FR 58907, July 19, 2024]

§ 1.401(a)(9)-3 Death before required beginning date.

(a) ***Distribution requirements*** —

(1) ***In general.*** Except as otherwise provided in §§ 1.401(a)(9)-2(a)(3) and 1.401(a)(9)-6(k), if an employee dies before the employee's required beginning date (and thus before distributions are treated as having begun in accordance with section 401(a)(9)(A)(ii)), then—

(i) In the case of a defined benefit plan, distributions are required to be made in accordance with paragraph (b) of this section, and

(ii) In the case of a defined contribution plan, distributions are required to be made in accordance with paragraph (c) of this section.

(2) ***Special rule for designated Roth accounts.*** If an employee's entire interest under a defined contribution plan is in a designated Roth account (as described in section 402A(b)(2)), then no distributions are required to be made to the employee during the employee's lifetime. Upon the employee's death, that employee is treated as having died before his or her required beginning date (so that distributions must be made in accordance with the requirements of paragraph (c) of this section).

(b) ***Distribution requirements in the case of a defined benefit plan*** —

(1) ***In general.*** Distributions from a defined benefit plan are made in accordance with this paragraph (b) if the distributions satisfy either paragraph (b)(2) or (3) of this section, whichever applies with respect to the employee. The determination of whether paragraph (b)(2) or (3) of this section applies is made in accordance with paragraph (b)(4) of this section.

(2) ***5-year rule.*** Except as otherwise provided in § 1.401(a)(9)-6(j) (relating to defined benefit plans subject to limitations under section 436), distributions satisfy this paragraph (b)(2) if the employee's entire interest is distributed by the end of the calendar year that includes the fifth anniversary of the

date of the employee's death. For example, if an employee dies on any day in 2022, then in order to satisfy the 5-year rule in section 401(a)(9)(B)(ii), the entire interest generally must be distributed by the end of 2027.

(3) ***Annuity payments.*** Distributions satisfy this paragraph (b)(3) if annuity payments that satisfy the requirements of § 1.401(a)(9)-6 commence no later than the end of the calendar year following the calendar year in which the employee died, except as provided in paragraph (d) of this section (permitting a surviving spouse to delay the commencement of distributions).

(4) ***Determination of which rule applies*** —

(i) ***No plan provision.*** If a defined benefit plan does not provide for an optional provision described in paragraph (b)(4)(ii) or (b)(4)(iii) of this section specifying the method of distribution after the death of an employee, then distributions must be made as follows—

(A) If the employee has no designated beneficiary, as determined under § 1.401(a)(9)-4, distributions must satisfy paragraph (b)(2) of this section; and

(B) If the employee has a designated beneficiary, distributions must satisfy paragraph (b)(3) of this section.

(ii) ***Optional plan provisions.*** A defined benefit plan will not fail to satisfy section 401(a)(9) merely because it includes a provision specifying that the 5-year rule in paragraph (b)(2) of this section (rather than the annuity payment rule in paragraph (b)(3) of this section) will apply with respect to some or all of the employees who have a designated beneficiary.

(iii) ***Elections.*** A defined benefit plan will not fail to satisfy section 401(a)(9) merely because it includes a provision that applies with respect to some or all of the employees who have a designated beneficiary under which the employee (or designated beneficiary) is permitted to elect whether the 5-year rule in paragraph (b)(2) of this section or the annuity payment rule in paragraph (b)(3) of this section applies. If a plan provides for this type of an election, then—

(A) The plan must specify the method of distribution that applies if neither the employee nor the designated beneficiary makes the election unless that method is the method specified in paragraph (b)(4)(i) of this section;

(B) The election must be made no later than the end of the earlier of the calendar year by which distributions must be made in order to satisfy paragraph (b)(2) of this section and the calendar year in which distributions would be required to begin in order to satisfy the requirements of paragraph (b)(3) of this section or, if applicable, paragraph (d) of this section; and

(C) As of the last date the election may be made, the election must be irrevocable with respect to the beneficiary (and all subsequent beneficiaries) and must apply to all subsequent calendar years.

(c) ***Distributions in the case of a defined contribution plan*** —

(1) ***In general.*** The requirements of this paragraph (c) are satisfied if distributions are made in accordance with paragraph (c)(2), (3), or (4) of this section, whichever applies with respect to the employee. The determination of whether paragraph (c)(2), (3), or (4) of this section applies is made in accordance with paragraph (c)(5) of this section.

(2) ***5-year rule.*** Distributions satisfy this paragraph (c)(2) if the employee's entire interest is distributed by the end of the calendar year that includes the fifth anniversary of the date of the employee's death. For example, if an employee dies on any day in 2022, the entire interest must be distributed by the end of 2027 in order to satisfy the 5-year rule in section 401(a)(9)(B)(ii). For purposes of this paragraph (c)(2), if an employee died before January 1, 2020, then the 2020 calendar year is disregarded when determining the calendar year that includes the fifth anniversary of the date of the employee's death.

(3) ***10-year rule.*** Distributions satisfy this paragraph (c)(3) if the employee's entire interest is distributed by the end of the calendar year that includes the tenth anniversary of the date of the employee's death. For example, if an employee died on any day in 2021, the entire interest must be distributed by the end of 2031 in order to satisfy the 5-year rule in section 401(a)(9)(B)(ii), as extended to 10 years by section 401(a)(9)(H)(i).

(4) ***Life expectancy payments.*** Distributions satisfy this paragraph (c)(4) if annual distributions that satisfy the requirements of § 1.401(a)(9)-5 commence by the end of the calendar year following the calendar year in which the employee died, except as provided in paragraph (d) of this section (permitting a surviving spouse to delay the commencement of distributions). The requirement to take an annual distribution in accordance with the preceding sentence continues to apply for all subsequent calendar years until the employee's interest is fully distributed. Thus, a required minimum distribution is due for the calendar year of the eligible designated beneficiary's death, and that amount must be distributed during that calendar year to any beneficiary of the deceased eligible designated beneficiary to the extent it has not already been distributed to the eligible designated beneficiary.

(5) ***Determination of which rule applies*** —

(i) ***No plan provision.*** If a defined contribution plan does not include an optional provision described in paragraph (c)(5)(ii) or (c)(5)(iii) of this section specifying the method of distribution after the death of an employee, distributions must be made as follows—

(A) If the employee does not have a designated beneficiary, as determined under § 1.401(a)(9)-4, distributions must satisfy the 5-year rule described in paragraph (c)(2) of this section;

(B) If the employee dies on or after the effective date of section 401(a)(9)(H) (as determined in § 1.401(a)(9)-1(b)(2)(i) or (ii), whichever applies to the plan) and has a designated beneficiary who is not an eligible designated beneficiary (as determined under § 1.401(a)(9)-4(e)), distributions must satisfy the 10-year rule described in paragraph (c)(3) of this section; and

(C) If the employee has an eligible designated beneficiary, distributions must satisfy the life expectancy rule described in paragraph (c)(4) of this section.

(ii) ***Optional plan provisions.*** A defined contribution plan will not fail to satisfy section 401(a)(9) merely because it includes a provision specifying that the 10-year rule described in paragraph (c)(3) of this section (rather than the life expectancy rule described in paragraph (c)(4) of this section) will apply with respect to some or all of the employees who have an eligible designated beneficiary or will apply to some categories of eligible designated beneficiaries.

(iii) ***Elections.*** A defined contribution plan will not fail to satisfy section 401(a)(9) merely because it includes a provision that applies with respect to some or all of the employees who have an eligible designated beneficiary or to some categories of eligible designated beneficiaries, under which the employee (or eligible designated beneficiary) is permitted to elect whether the 10-year rule in paragraph (c)(3) of this section or the life expectancy rule in paragraph (c)(4) of this section applies. If a plan provides for this type of election, then—

(A) The plan must specify the method of distribution that applies if neither the employee nor the designated beneficiary makes the election unless that method is the method specified in paragraph (c)(5)(i) of this section;

(B) The election must be made no later than the end of the earlier of the calendar year by which distributions must be made in order to satisfy paragraph (c)(3) of this section and the calendar year in which distributions would be required to begin in order to satisfy the requirements of paragraph (c)(4) of this section (or, if applicable, paragraph (d) of this section); and

(C) As of the last date the election may be made, the election must be irrevocable with respect to the beneficiary (and all subsequent beneficiaries) and must apply to all subsequent calendar years.

(d) ***Permitted delay for surviving spouse beneficiaries.*** If the employee's surviving spouse is the employee's sole beneficiary, then the commencement of distributions under paragraph (b)(3) or (c)(4) of this section may be delayed until the end of the calendar year in which the employee would have attained the applicable age.

(e) ***Distributions that commence after surviving spouse's death*** —

(1) ***In general.*** If the employee's surviving spouse is the employee's sole beneficiary and dies before distributions have commenced under paragraph (d) of this section, then the 5-year rule in paragraph (b)(2) or (c)(2) of this section, the 10-year rule in paragraph (c)(3) of this section, the annuity payment rules in paragraph (b)(3) of this section, or the life expectancy rules in paragraph (c)(4) of this section, are to be applied as if the surviving spouse were the employee. For this purpose, the date of death of the surviving spouse is substituted for the date of death of the employee.

(2) ***Remarriage of surviving spouse.*** If the delayed commencement in paragraph (d) of this section applies to the surviving spouse of the employee, and the surviving spouse remarries but dies before distributions have begun, then the rules in paragraph (d) of this section are not available to the surviving spouse of the deceased employee's surviving spouse.

(3) ***When distributions are treated as having begun to surviving spouse.*** For purposes of section 401(a)(9)(B)(iv)(III), distributions are considered to have begun to the surviving spouse of an employee on the date, determined in accordance with paragraph (d) of this section, on which distributions are required to commence to the surviving spouse without regard to whether payments have actually been made before that date. However, see § 1.401(a)(9)-6(l) for an exception to this rule in the case of an annuity that commences early.

[T.D. 8987, 67 FR 18994, Apr. 17, 2002, as amended by T.D. 9130, 69 FR 33293, June 15, 2004; T.D. 10001, 89 FR 58907, July 19, 2024]

§ 1.401(a)(9)-4 Determination of the designated beneficiary.

(a) *Beneficiary designated under the plan* —

(1) ***In general.*** This section provides rules for purposes of determining the designated beneficiary under section 401(a)(9). For this purpose, a designated beneficiary is an individual who is a beneficiary designated under the plan.

(2) ***Entitlement to employee's interest in the plan.*** A beneficiary designated under the plan is a person who is entitled to a portion of an employee's benefit, contingent on the employee's death or another specified event. The determination of whether a beneficiary designated under the plan is taken into account for purposes of section 401(a)(9) is made in accordance with paragraph (c) of this section or, if applicable, paragraph (d) of this section.

(3) ***Specificity of beneficiary designation.*** A beneficiary need not be specified by name in the plan or by the employee to the plan in order for the beneficiary to be designated under the plan, provided that the person who is to be the beneficiary is identifiable pursuant to the designation. For example, a designation of the employee's children as beneficiaries of equal shares of the employee's interest in the plan is treated as a designation of beneficiaries under the plan even if the children are not specified by name. The fact that an employee's interest under the plan passes to a certain person under a will or otherwise under applicable State law does not make that person a beneficiary designated under the plan absent a designation under the plan.

(4) ***Affirmative and default elections of designated beneficiary.*** A beneficiary designated under the plan may be designated by a default election under the terms of the plan or, if the plan so provides, by an affirmative election of the employee (or the employee's surviving spouse). The choice of beneficiary is subject to the requirements of sections 401(a)(11), 414(p), and 417. See §§ 1.401(a)(9)-8(d) and (e) for rules that apply to qualified domestic relations orders.

(b) ***Designated beneficiary must be an individual.*** A person that is not an individual, such as the employee's estate, is not a designated beneficiary. If a person other than an individual is a beneficiary designated under the plan, the employee will be treated as having no designated beneficiary, even if individuals are also designated as beneficiaries. However, see paragraphs (f)(1) and (3) of this section for a rule under which certain beneficiaries of a see-through trust that is designated as the employee's beneficiary under the plan are treated as the employee's beneficiaries under the plan rather than the trust and § 1.401(a)(9)-8(a) for rules under which section 401(a)(9) is applied separately with respect to the separate interests of each of the employee's beneficiaries under the plan.

(c) *Rules for determining beneficiaries* —

(1) ***Time period for determining the beneficiary.*** Except as provided in paragraphs (d) and (f) of this section and § 1.401(a)(9)-6(b)(2)(i), a person is a beneficiary taken into account for purposes of section 401(a)(9) if, as of the date of the employee's death, that person is a beneficiary designated under the plan and none of the events described in paragraph (c)(2) of this section has occurred with respect to that person by September 30 of the calendar year following the calendar year of the employee's death.

(2) ***Circumstances under which a beneficiary is disregarded as a beneficiary of the employee.*** With respect to a beneficiary who was designated as a beneficiary under the plan as of the date of the employee's death (including a beneficiary who is treated as having been designated as a beneficiary pursuant to

paragraph (f) of this section), if any of the following events occurs by September 30 of the calendar year following the calendar year of the employee's death, then that beneficiary is not treated as a beneficiary—

(i) The beneficiary predeceases the employee;

(ii) The beneficiary is treated as having predeceased the employee pursuant to a simultaneous death provision under applicable State law or pursuant to a qualified disclaimer satisfying section 2518 that applies to the entire interest to which the beneficiary is entitled; or

(iii) The beneficiary receives the entire benefit to which the beneficiary is entitled.

(3) ***Examples.*** The following examples illustrate the rules of this paragraph (c).

(i) ***Example 1.*** Employer M maintains a defined contribution plan, Plan X. Employee A dies in 2024 having designated A's three children—B, C, and D—as beneficiaries, each with a one-third share of A's interest in Plan X. B executes a disclaimer of B's entire share of A's interest in Plan X within 9 months of A's death and the disclaimer satisfies the other requirements of a qualified disclaimer under section 2518. Pursuant to the qualified disclaimer, B is disregarded as a beneficiary.

(ii) ***Example 2.*** The facts are the same as in paragraph (c)(3)(i) of this section (*Example 1*), except that B does not execute the disclaimer until 10 months after A's death. Even if the disclaimer is executed by September 30 of the calendar year following the calendar year of A's death, the disclaimer is not a qualified disclaimer (because B does not meet the 9-month requirement of section 2518) and B remains a designated beneficiary of A.

(iii) ***Example 3.*** The facts are the same as in paragraph (c)(3)(i) of this section (*Example 1*) except that, in exchange for B's disclaimer of the one-third share of A's interest in Plan X, C transfers C's interest in real property to B. Because B has received consideration for B's disclaimer of the one-third share, it is not a qualified disclaimer under section 2518 and B remains a designated beneficiary.

(iv) ***Example 4.*** The facts are the same as in paragraph (c)(3)(i) of this section (*Example 1*), except that Charity E (an organization exempt from taxation under section 501(c)(3)) also is a beneficiary designated under the plan as of the date of A's death, with B, C, D, and Charity E each having a one-fourth share of A's interest in Plan X. Plan X distributes Charity E's one-fourth share of A's interest in the plan by September 30 of the calendar year following the calendar year of A's death. Accordingly, Charity E is disregarded as A's beneficiary, and B, C, and D are treated as A's designated beneficiaries.

(v) ***Example 5.*** The facts are the same as in paragraph (c)(3)(i) of this section (*Example 1*), except that A's spouse, F, also is a beneficiary designated under the plan. A and F were residents of State Z so that State Z law applies. The laws of State Z include a simultaneous death provision under which two individuals who die within a 120-hour period of one another are treated as predeceasing each other. F dies four hours after A and under the laws of State Z, F is treated as predeceasing A. Because, under applicable State law, F is treated as predeceasing A, F is disregarded as a beneficiary of A.

(vi) ***Example 6.*** The facts are the same as in paragraph (c)(3)(i) of this section (*Example 1*), except that B, who was alive as of the date of A's death, dies before September 30 of the calendar year following the calendar year of A's death. Prior to B's death, none of the events described in

paragraph (c)(2) of this section occurred with respect to B. Accordingly, B is still a beneficiary taken into account for purposes of section 401(a)(9) regardless of the identity of B's successor beneficiaries.

(d) ***Application of beneficiary designation rules to surviving spouse.*** This paragraph (d) applies in the case of distributions to which § 1.401(a)(9)-3(e) applies (because the employee's spouse is the employee's sole beneficiary as of September 30 of the calendar year following the calendar year of the employee's death, and the surviving spouse dies before distributions to the spouse have begun). If this paragraph (d) applies, then the determination of whether a person is a beneficiary of the surviving spouse is made using the rules of paragraph (c) of this section, except that the date of the surviving spouse's death is substituted for the date of the employee's death. Thus, a person is a beneficiary if, as of the date of the surviving spouse's death, that person is a beneficiary designated under the plan and remains a beneficiary as of September 30 of the calendar year following the calendar year of the surviving spouse's death.

(e) ***Eligible designated beneficiaries*** —

(1) ***In general.*** A designated beneficiary of the employee is an eligible designated beneficiary if, at the time of the employee's death, the designated beneficiary is—

(i) The surviving spouse of the employee;

(ii) A child of the employee (within the meaning of section 152(f)(1)) who has not reached the age of majority within the meaning of paragraph (e)(3) of this section;

(iii) Disabled within the meaning of paragraph (e)(4) of this section;

(iv) Chronically ill within the meaning of paragraph (e)(5) of this section;

(v) Not more than 10 years younger than the employee as determined under paragraph (e)(6) of this section; or

(vi) A designated beneficiary of an employee if the employee died before the effective date of section 401(a)(9)(H) described in § 1.401(a)(9)-1(b)(2)(i) and (ii), whichever applies to the plan.

(2) ***Multiple designated beneficiaries*** —

(i) ***In general.*** Except as provided in paragraphs (e)(2)(ii) and (iii) of this section and § 1.401(a)(9)-8(a) (relating to separate account treatment), if the employee has more than one designated beneficiary, and at least one of those beneficiaries is not an eligible designated beneficiary, then the employee is treated as not having an eligible designated beneficiary.

(ii) ***Special rule for children.*** If any of the employee's designated beneficiaries is an eligible designated beneficiary because the beneficiary is the child of the employee who had not reached the age of majority at the time of the employee's death, then the employee is treated as having an eligible designated beneficiary even if the employee has other designated beneficiaries who are not eligible designated beneficiaries.

(iii) ***Special rule for applicable multi-beneficiary trust.*** If a trust that is designated as the beneficiary of an employee under a plan is an applicable multi-beneficiary trust described in paragraph (g) of this section, then the trust beneficiaries described in paragraph (g)(1)(ii) of this section are treated as eligible designated beneficiaries even if one or more of the other trust beneficiaries are not eligible designated beneficiaries.

(3) ***Determination of age of majority.*** An individual reaches the age of majority on the individual's 21st birthday.

(4) ***Disabled individual*** —

(i) ***In general.*** Subject to the documentation requirements of paragraph (e)(7) of this section, an individual is disabled if, as of the date of the employee's death—

(A) The individual is described in paragraph (e)(4)(ii) or (iii) of this section; or

(B) Paragraph (e)(4)(iv) of this section applies to the individual.

(ii) ***Disability defined for individual who is age 18 or older.*** An individual who, as of the date of the employee's death, is age 18 or older is disabled if, as of that date, the individual is unable to engage in any substantial gainful activity by reason of any medically determinable physical or mental impairment that can be expected to result in death or to be of long-continued and indefinite duration.

(iii) ***Disability defined for individual who is not age 18 or older.*** An individual who, as of the date of the employee's death, is not age 18 or older is disabled if, as of that date, that individual has a medically determinable physical or mental impairment that results in marked and severe functional limitations and that can be expected to result in death or to be of long-continued and indefinite duration.

(iv) ***Use of social security disability determination.*** If the Commissioner of Social Security has determined that, as of the date of the employee's death, an individual is disabled within the meaning of 42 U.S.C. 1382c(a)(3), then that individual will be deemed to be disabled within the meaning of this paragraph (e)(4).

(5) ***Chronically ill individual.*** An individual is chronically ill if the individual is chronically ill within the definition of section 7702B(c)(2) and satisfies the documentation requirements of paragraph (e)(7) of this section. However, for purposes of the preceding sentence, an individual will be treated as chronically ill under section 7702B(c)(2)(A)(i) only if there is a certification from a licensed health care practitioner (as that term is defined in section 7702B(c)(4)) that, as of the date of the certification, the individual is unable to perform (without substantial assistance from another individual) at least 2 activities of daily living and the period of that inability is an indefinite one that is reasonably expected to be lengthy in nature.

(6) ***Individual not more than 10 years younger than the employee.*** Whether a designated beneficiary is not more than 10 years younger than the employee is determined based on the dates of birth of the employee and the beneficiary. Thus, for example, if an employee's date of birth is October 1, 1953, then the employee's beneficiary is not more than 10 years younger than the employee if the beneficiary was born on or before October 1, 1963.

(7) ***Documentation requirements for disabled or chronically ill individuals.*** This paragraph (e)(7) is satisfied with respect to an individual described in paragraph (e)(1)(iii) or (iv) of this section if documentation of the disability or chronic illness described in paragraph (e)(4) or (5) of this section, respectively, is provided to the plan administrator by October 31 of the calendar year following the calendar year of the employee's death (or October 31, 2025, if later). For individuals described in paragraph (e)(1)(iv) of this section, the documentation must include a certification from a licensed health care practitioner (as that term is defined in section 7702B(c)(4)).

(8) ***Applicability of definition of eligible designated beneficiary to beneficiary of surviving spouse.*** In a case to which § 1.401(a)(9)-3(e) applies, a designated beneficiary of the employee's surviving spouse is an eligible designated beneficiary provided that designated beneficiary would be an eligible designated beneficiary described in paragraph (e)(1) of this section if that paragraph were to be applied by substituting the surviving spouse for the employee.

(9) ***Examples.*** The following examples illustrate the rules of this paragraph (e).

(i) ***Example 1.*** Employer M maintains a defined contribution plan, Plan X. Employee A designates A's child, B, as the sole beneficiary of A's interest in Plan X. B will not reach the age of majority until 2024. A dies on July 1, 2022, after A's required beginning date. As of the date of A's death, B is disabled within the meaning of paragraph (e)(4) of this section. On November 1, 2024, B satisfies the requirements of paragraph (e)(7) of this section by providing the plan administrator a letter from a licensed health care practitioner stating that, as of July 1, 2022, B is unable to engage in any substantial gainful activity by reason of a physical impairment that can be expected to be of long-continued and indefinite duration. Due to B's disability, B remains an eligible designated beneficiary even after reaching the age of majority in 2024, and Plan X is not required to distribute A's remaining interest in the plan by the end of 2034 pursuant to the rules of § 1.401(a)(9)-5(e)(4), but instead may continue life expectancy payments to B during B's lifetime.

(ii) ***Example 2.*** The facts are the same as in paragraph (e)(9)(i) of this section (*Example 1*), except that the documentation requirements of paragraph (e)(7) of this section are not timely satisfied with respect to B. B ceases to be an eligible designated beneficiary upon reaching the age of majority in 2024, and Plan X is required to distribute A's remaining interest in the plan by the end of 2034 pursuant to the rules of § 1.401(a)(9)-5(e)(4).

(iii) ***Example 3.*** The facts are the same as in paragraph (e)(9)(i) of this section (*Example 1*), except that B becomes disabled in 2023 (after A's death in 2022). Because B was not disabled as of the date of A's death, B ceases to be an eligible designated beneficiary upon reaching the age of majority in 2024, and Plan X is required to distribute A's remaining interest in the plan by the end of 2034 pursuant to the rules of § 1.401(a)(9)-5(e)(4).

(f) ***Special rules for trusts*** —

(1) ***Look-through of trust to determine designated beneficiaries*** —

(i) ***In general.*** If a trust that is designated as the beneficiary of an employee under a plan meets the requirements of paragraph (f)(2) of this section, then certain beneficiaries of the trust that are described in paragraph (f)(3) of this section (and not the trust itself) are treated as having been designated as beneficiaries of the employee under the plan, provided that those beneficiaries are not disregarded under paragraph (c)(2) of this section. A trust described in the preceding sentence is referred to as a see-through trust.

(ii) ***Types of trusts.*** The determination of which beneficiaries of a see-through trust are treated as having been designated as beneficiaries of the employee under the plan depends on whether the see-through trust is a conduit trust or an accumulation trust. For this purpose—

(A) The term *conduit trust* means a see-through trust, the terms of which provide that, with respect to the deceased employee's interest in the plan, all distributions will, upon receipt by the trustee, be paid directly to, or for the benefit of, specified trust beneficiaries; and

(B) The term *accumulation trust* means any see-through trust that is not a conduit trust.

(2) ***Trust requirements.*** The requirements of this paragraph (f)(2) are met if, during any period for which required minimum distributions are being determined by treating the beneficiaries of the trust as having been designated as beneficiaries of the employee under the plan, the following requirements are met—

(i) The trust is a valid trust under State law or would be but for the fact that there is no corpus.

(ii) The trust is irrevocable or will, by its terms, become irrevocable upon the death of the employee.

(iii) The beneficiaries of the trust who are beneficiaries with respect to the trust's interest in the employee's interest in the plan are identifiable (within the meaning of paragraph (f)(5) of this section) from the trust instrument.

(iv) The documentation requirements in paragraph (h) of this section have been satisfied.

(3) ***Trust beneficiaries treated as beneficiaries of the employee*** —

(i) ***In general.*** Subject to the rules of paragraphs (f)(3)(ii) and (iii) of this section, the following beneficiaries of a see-through trust are treated as having been designated as beneficiaries of the employee under the plan—

(A) Any beneficiary that could receive amounts in the trust representing the employee's interest in the plan that are neither contingent upon, nor delayed until, the death of another trust beneficiary who did not predecease (and who is not treated as having predeceased) the employee; and

(B) Any beneficiary of an accumulation trust that could receive amounts in the trust representing the employee's interest in the plan that were not distributed to beneficiaries described in paragraph (f)(3)(i)(A) of this section.

(ii) ***Certain trust beneficiaries disregarded*** —

(A) ***Entitlement conditioned on death of beneficiary.*** Any beneficiary of an accumulation trust who could receive amounts from the trust representing the employee's interest in the plan solely because of the death of another beneficiary described in paragraph (f)(3)(i)(B) of this section is not treated as having been designated as a beneficiary of the employee under the plan. The preceding sentence does not apply if the deceased beneficiary described in paragraph (f)(3)(i)(B) of this section—

(*1*) Predeceased (or is treated as having predeceased) the employee; or

(*2*) Also is described in paragraph (f)(3)(i)(A) of this section.

(B) ***Entitlement conditioned on death of young individual.*** If a beneficiary of a see-through trust is an individual who is treated as a beneficiary of the employee under paragraph (f)(3)(i)(A) of this section, and the terms of the trust require full distribution of amounts in the trust representing the employee's interest in the plan to that individual by the later of the end of the calendar year following the calendar year of the employee's death or the end of the calendar year that includes the tenth anniversary of the date on which that individual reaches the age of majority (within the meaning of paragraph (e)(3) of this section), then any other beneficiary of the trust who could receive amounts in the trust representing the employee's interest in the plan if that individual dies before full

distribution to that individual is made is not treated as having been designated as a beneficiary of the employee under the plan. The preceding sentence does not apply if the beneficiary who could receive amounts in the trust conditioned on the death of that individual also is described in paragraph (f)(3)(i)(A) of this section.

(iii) ***Certain accumulations disregarded.*** For purposes of this paragraph (f)(3), a trust will not fail to be treated as a conduit trust merely because the trust terms requiring that distributions from the plan, upon receipt by the trustee, are paid directly to, or for the benefit of, trust beneficiaries do not apply after the death of all of the beneficiaries described in paragraph (f)(3)(i)(A) of this section.

(iv) ***Treatment of payments for the benefit of a trust beneficiary.*** For purposes of this paragraph (f)(3), a trust beneficiary will be treated as if the beneficiary could receive amounts in the trust representing the employee's interest in the plan regardless of whether those amounts could be paid to that beneficiary or for the benefit of that beneficiary. Thus, for example, if a trust beneficiary is a minor child of the employee, payments that could be made to a custodial account for the benefit of that child are treated as amounts that could be received by the child.

(4) ***Multiple trust arrangements.*** If a beneficiary of a see-through trust is another trust, the beneficiaries of the second trust will be treated as beneficiaries of the first trust, provided that the requirements of paragraph (f)(2) of this section are satisfied with respect to the second trust. In that case, the beneficiaries of the second trust are treated as having been designated as beneficiaries of the employee under the plan.

(5) ***Identifiability of trust beneficiaries*** —

(i) ***In general.*** Except as otherwise provided in this paragraph (f)(5), trust beneficiaries described in paragraph (f)(3) of this section are identifiable if it is possible to identify each person eligible to receive a portion of the employee's interest in the plan through the trust. For this purpose, the specificity requirements of paragraph (a)(3) of this section apply.

(ii) ***Power of appointment*** —

(A) ***Exercise or release of power of appointment by September 30.*** A trust does not fail to satisfy the identifiability requirements of this paragraph (f)(5) merely because an individual (powerholder) has the power to appoint a portion of the employee's interest to one or more beneficiaries that are not identifiable within the meaning of paragraph (f)(5)(i) of this section. If the power of appointment is exercised in favor of one or more identifiable beneficiaries by September 30 of the calendar year following the calendar year of the employee's death, then those identifiable beneficiaries are treated as beneficiaries designated under the plan. The preceding sentence also applies if, by that September 30, in lieu of exercising the power of appointment, the powerholder restricts it so that the power can be exercised at a later time in favor of only two or more identifiable beneficiaries (in which case, those identified beneficiaries are treated as beneficiaries designated under the plan). However, if, by that September 30, the power of appointment is not exercised (or restricted) in favor of one or more beneficiaries that are identifiable within the meaning of paragraph (f)(5)(i) of this section, then each taker in default (that is, any person that is entitled to the portion that represents the employee's interest in the plan subject to the power of appointment in the absence of the powerholder's exercise of the power) is treated as a beneficiary designated under the plan.

(B) ***Exercise of power of appointment after September 30 of the calendar year following the calendar year of the employee's death.*** If an individual has a power of appointment to appoint a portion of the employee's interest to one or more beneficiaries and the individual exercises the power of appointment after September 30 of the calendar year following the calendar year of the employee's death, then the rules of paragraph (f)(5)(iv) of this section apply with respect to any trust beneficiary that is added pursuant to the exercise of the power of appointment.

(iii) ***Modification of trust terms*** —

(A) ***State law will not cause trust to fail to satisfy identifiability requirement.*** A trust will not fail to satisfy the identifiability requirements of this paragraph (f)(5) merely because the trust is subject to State law that permits the trust terms to be modified after the death of the employee (such as through a court reformation or a permitted decanting) and thus, permits changing the beneficiaries of the trust.

(B) ***Modification of trust to remove trust beneficiaries.*** If a trust beneficiary described in paragraph (f)(3) of this section is removed pursuant to a modification of trust terms (such as through a court reformation or a permitted decanting) by September 30 of the calendar year following the calendar year of the employee's death, then that person is disregarded in determining the employee's designated beneficiary.

(C) ***Modification of trust to add trust beneficiaries.*** If a trust beneficiary described in paragraph (f)(3) of this section is added through a modification of trust terms (such as through a court reformation or a permitted decanting) on or before September 30 of the calendar year following the calendar year of the employee's death, then paragraph (c) of this section will apply taking into account the beneficiary that was added. If the beneficiary is added after that September 30, then the rules of paragraph (f)(5)(iv) of this section will apply with respect to the addition of that beneficiary.

(iv) ***Addition of beneficiary after September 30.*** If, after September 30 of the calendar year following the calendar year of the employee's death, a trust beneficiary described in paragraph (f)(3) of this section is added as a trust beneficiary (whether through the exercise of a power of appointment, the modification of trust terms, or otherwise), then—

(A) The addition of the beneficiary will not cause the trust to fail to satisfy the identifiability requirements of this paragraph (f)(5);

(B) Beginning in the calendar year following the calendar year in which the new trust beneficiary was added, the rules of § 1.401(a)(9)-5(f)(1) will apply taking into account the new beneficiary and all of the beneficiaries of the trust that were treated as beneficiaries of the employee before the addition of the new beneficiary; and

(C) Subject to paragraph (f)(5)(v) of this section, the rules of paragraphs (b) and (e)(2) of this section and § 1.401(a)(9)-5(f)(2) will apply taking into account the new beneficiary and all of the beneficiaries of the trust that were treated as beneficiaries of the employee before the addition of the new beneficiary.

(v) ***Delay in full distribution requirement.*** This paragraph (f)(5)(v) provides a special rule that applies if a full distribution of the employee's entire interest in the plan is not required in a calendar year pursuant to § 1.401(a)(9)-5(e), but a beneficiary is added in that calendar year. In that case, if, taking into account the added beneficiary pursuant to paragraph (f)(5)(iv)(C) of this section, a

full distribution of the employee's entire interest in the plan would have been required in that calendar year or an earlier calendar year, then a full distribution of the employee's entire interest in the plan will not be required until the end of the calendar year following the calendar year in which the beneficiary is added. For example, if life expectancy payments are being made to an eligible designated beneficiary and, more than 10 years after the employee's death, a beneficiary is added who is not an eligible designated beneficiary as described in paragraph (e) of this section, then the employee is treated as not having an eligible designated beneficiary for purposes of § 1.401(a)(9)-5(e)(2) (so that a full distribution of the employee's entire interest in the plan would have been required within 10 years of the employee's death). However, pursuant to this paragraph (f)(5)(v), the full distribution of the employee's entire interest in the plan is not required until the end of the calendar year following the calendar year in which the new trust beneficiary was added.

(6) ***Examples.*** The following examples illustrate the see-through trust rules of this paragraph (f).

(i) ***Example 1*** —

(A) ***Facts.*** Employer L maintains a defined contribution plan, Plan W. Unmarried Employee C died in 2024 at age 30. Prior to C's death, C named a testamentary trust (Trust T) that satisfies the requirements of paragraph (f)(2) of this section, as the beneficiary of C's interest in Plan W. The terms of Trust T require that all distributions received from Plan W, upon receipt by the trustee, be paid directly to D, C's sibling, who is 5 years older than C. The terms of Trust T also provide that, if D dies before C's entire account balance has been distributed to D, E will be the beneficiary of C's remaining account balance.

(B) ***Analysis.*** Pursuant to paragraph (f)(1)(ii)(A) of this section, Trust T is a conduit trust. Because Trust T is a conduit trust (meaning the residual beneficiary rule in paragraph (f)(3)(i)(B) of this section does not apply) and because E is only entitled to any portion of C's account if D dies before the entire account has been distributed, E is disregarded in determining C's designated beneficiary. Because D is an eligible designated beneficiary, D may use the life expectancy rule of § 1.401(a)(9)-3(c)(4). Accordingly, even if D dies before C's entire interest in Plan W is distributed to Trust T, D's life expectancy continues to be used to determine the applicable denominator. Note, however, that because § 1.401(a)(9)-5(e)(3) applies in this situation, a distribution of C's entire interest in Plan W will be required no later than the end of the calendar year that includes the tenth anniversary of D's death.

(ii) ***Example 2*** —

(A) ***Facts related to plan and beneficiary.*** Employer M maintains a defined contribution plan, Plan X. Employee A died in 2024 at the age of 55, survived by Spouse B, who was then 50 years old. A's account balance in Plan X is invested only in productive assets and was includible in A's gross estate under section 2039. A named a testamentary trust (Trust P) as the beneficiary of all amounts payable from A's account in Plan X after A's death. Trust P satisfies the see-through trust requirements of paragraph (f)(2) of this section.

(B) ***Facts related to trust.*** Under the terms of Trust P, all trust income is payable annually to B, and no one has the power to appoint or distribute Trust P principal to any person other than B. A's sibling, C, who is less than 10 years younger than A (and thus is an eligible designated beneficiary) and is younger than B, is the sole residual beneficiary of Trust P. Also, under the terms of Trust P, if C predeceases B, then, upon B's death, all Trust P

principal is distributed to Charity Z (an organization exempt from tax under section 501(c)(3)). No other person has a beneficial interest in Trust P. Under the terms of Trust P, B has the power, exercisable annually, to compel the trustee to withdraw from A's account balance in Plan X an amount equal to the income earned during the calendar year on the assets held in A's account in Plan X and to distribute that amount through Trust P to B. Plan X includes no prohibition on withdrawal from A's account of amounts in excess of the annual required minimum distributions under section 401(a)(9). In accordance with the terms of Plan X, the trustee of Trust P elects to take annual life expectancy payments pursuant to section 401(a)(9)(B)(iii). If B exercises the withdrawal power, the trustee must withdraw from A's account under Plan X the greater of the amount of income earned in the account during the calendar year or the required minimum distribution. However, under the terms of Trust P, and applicable State law, only the portion of the Plan X distribution received by the trustee equal to the income earned by A's account in Plan X is required to be distributed to B (along with any other trust income).

(C) ***Analysis.*** Because Trust P does not require that distributions from A's account in Plan X to Trust P, upon receipt by the trustee, be paid directly to (or for the benefit of) B, Trust P is not a conduit trust and accordingly is an accumulation trust (as described in paragraph (f)(1)(ii)(B) of this section). Pursuant to paragraph (f)(3)(i)(B) of this section, C, as the residual beneficiary of Trust P, is treated as a beneficiary designated under Plan X (even though access to those amounts is delayed until after B's death). Pursuant to paragraph (f)(2)(iii)(A) of this section, because Charity Z's entitlement to amounts in the trust is based on the death of a beneficiary described in paragraph (f)(3)(i)(B) of this section who is not also described in paragraph (f)(3)(i)(A) of this section, Charity Z is disregarded as a beneficiary of A. Under § 1.401(a)(9)-5(f)(1), the designated beneficiary used to determine the applicable denominator is the oldest of the designated beneficiaries of Trust P's interest in Plan X. B is the oldest of the beneficiaries of Trust P's interest in Plan X (including residual beneficiaries). Thus, the applicable denominator for purposes of section 401(a)(9)(B)(iii) is B's life expectancy. Because C is a beneficiary of A's account in Plan X in addition to B, B is not the sole beneficiary of A's account and the special rule in section 401(a)(9)(B)(iv) and § 1.401(a)(9)-3(d) is not available. Accordingly, the annual required minimum distributions from the account to Trust P must begin no later than the end of the calendar year following the calendar year of A's death.

(iii) ***Example 3*** —

(A) ***Facts.*** The facts are the same as in paragraph (f)(6)(ii) of this section (*Example 2*), except that C is more than 10 years younger than A, meaning that at least one of the beneficiaries of Trust P's interest in Plan X is not an eligible designated beneficiary.

(B) ***Analysis.*** Pursuant to paragraph (e)(2)(i) of this section, A is treated as not having an eligible designated beneficiary. Pursuant to § 1.401(a)(9)-3(c)(5), the trustee of Trust P is not permitted to make an election to take annual life expectancy distributions and the 10-year rule of § 1.401(a)(9)-3(c)(3) applies.

(iv) ***Example 4*** —

(A) ***Facts related to plan and beneficiary.*** Employer N maintains a defined contribution plan, Plan Y. Employee F died in 2025 at the age of 60. F named a testamentary trust (Trust Q), which was established under F's will, as the beneficiary of all amounts payable from F's account in Plan X after F's death. Trust Q satisfies the see-through trust requirements of paragraph (f)(2) of this section.

(B) ***Facts related to trust.*** Under the terms of Trust Q, all trust income is payable to F's surviving spouse G for life, no person has the power to appoint or distribute Trust Q principal to any person other than G, and G has a testamentary power of appointment to name the beneficiaries of the remainder in Trust Q. The power of appointment provides that, if G does not exercise the power, then upon G's death, F's descendants, per stirpes, are entitled to the remainder interest in Trust Q. As of the date of F's death, F has two children, K and L, neither of whom is disabled, chronically ill, or under age 21. Before September 30 of the calendar year following the calendar year in which F died, G irrevocably restricts G's power of appointment so that G may exercise the power to appoint the remainder beneficiaries of Trust Q only in favor of G's siblings (who all are less than 10 years younger than F and thus, are eligible designated beneficiaries).

(C) ***Analysis.*** Pursuant to paragraph (f)(5)(ii)(A) of this section, because G timely restricted the power of appointment so that G may exercise the power to appoint the residual interest in Trust Q only in favor of G's siblings, the designated beneficiaries are G and G's siblings. Because all of the designated beneficiaries are eligible designated beneficiaries, annual life expectancy payments are permitted under section 401(a)(9)(B)(iii). Note, however, that because § 1.401(a)(9)-5(e)(3) applies, a distribution of the remaining interest is required by no later than 10 years after the calendar year in which the oldest of G and G's siblings dies.

(v) ***Example 5*** —

(A) ***Facts.*** The facts are the same as in paragraph (f)(6)(iv) of this section (*Example 4*), except that G does not restrict the power by September 30 of the calendar year following the calendar year of F's death.

(B) ***Analysis.*** Pursuant to paragraph (f)(5)(ii)(A) of this section, G, K, and L are treated as F's beneficiaries. Pursuant to § 1.401(a)(9)-3(c)(5), because K and L are not eligible designated beneficiaries, the trustee of Trust Q is not permitted to make an election to take annual life expectancy distributions, and the 10-year rule of § 1.401(a)(9)-3(c)(3) applies.

(g) ***Applicable multi-beneficiary trust*** —

(1) ***Certain see-through trusts with disabled or chronically ill beneficiaries.*** An applicable multi-beneficiary trust is a see-through trust with more than one beneficiary and with respect to which—

(i) All of the trust beneficiaries are designated beneficiaries;

(ii) The trust terms identify one or more individuals, each of whom is disabled (as defined in paragraph (e)(1)(iii) of this section) or chronically ill (as defined in paragraph (e)(1)(iv) of this section), who are described in paragraph (f)(3)(i)(A) of this section; and

(iii) The terms of the trust provide that no beneficiary (other than an individual described in paragraph (g)(1)(ii) of this section) has any right to the employee's interest in the plan until the death of all of the eligible designated beneficiaries described in paragraph (g)(1)(ii) of this section.

(2) ***Termination of interest in trust.*** A provision in the trust agreement that permits the termination of the interest in the trust of a beneficiary described in paragraph (g)(1)(ii) of this section prior to that beneficiary's death will not cause the trust to fail to be treated as an applicable multi-beneficiary trust, but only if paragraph (g)(1)(iii) of this section continues to apply. Upon the death of the last to survive of the beneficiaries described in paragraph (g)(1)(ii) of this section, the trust is treated as having been modified as of the date of that death to add the other trust beneficiaries. Thus, if the death occurs after September 30 of the calendar year following the calendar year of the employee's death, the rules of paragraph (f)(5)(iv) of this section will apply.

(3) ***Special definition of designated beneficiary.*** For purposes of paragraph (g)(1)(i) of this section, any beneficiary that is an organization described in section 408(d)(8)(B)(i) (certain organizations to which a charitable contribution may be made) is treated as a designated beneficiary.

(h) ***Documentation requirements for trusts*** —

(1) ***General rule.*** The documentation requirements of this paragraph (h) are satisfied if—

(i) With respect to required minimum distributions for a distribution calendar year that begins on or before the date of the employee's death, paragraph (h)(2) of this section is satisfied no later than the first day of the distribution calendar year; or

(ii) With respect to required minimum distributions for a distribution calendar year that begins after the date of the employee's death, or that begins after the employee's surviving spouse has died in a case to which § 1.401(a)(9)-3(d) applies, paragraph (h)(3) of this section is satisfied no later than October 31 of the calendar year following the calendar year that includes the employee's date of death or the date of death of the employee's surviving spouse, respectively.

(2) ***Required minimum distributions while employee is still alive*** —

(i) ***In general.*** If an employee designates a trust as the beneficiary of the employee's entire benefit and the employee's spouse is the only beneficiary of the trust treated as a beneficiary of the employee pursuant to the rules of paragraph (f) of this section, then, in order to satisfy the documentation requirements of this paragraph (h)(2) (so that the applicable denominator for a distribution calendar year may be determined under the rules of § 1.401(a)(9)-5(c)(2), assuming the other requirements of paragraph (f)(2) of this section are satisfied), the employee must satisfy either the requirements of paragraph (h)(2)(ii) of this section (requiring the employee to provide a copy of the trust instrument) or the requirements of paragraph (h)(2)(iii) of this section (requiring the employee to provide a list of beneficiaries). The plan administrator may determine which of the two alternatives in the preceding sentence is available to the employee.

(ii) ***Employee to provide copy of trust instrument.*** An employee satisfies the requirements of this paragraph (h)(2)(ii) if the employee—

(A) Provides the plan administrator a copy of the trust instrument; and

(B) Agrees that, if the trust instrument is amended at any time in the future, the employee will, within a reasonable time, provide the plan administrator a copy of each amendment.

(iii) ***Employee to provide list of beneficiaries.*** An employee satisfies the requirements of this paragraph (h)(2)(iii) if the employee—

(A) Provides the plan administrator a list of all of the beneficiaries of the trust (including contingent beneficiaries) with a description of the conditions on their entitlement sufficient to establish that the spouse is the only beneficiary of the trust treated as a beneficiary of the employee pursuant to the rules of paragraph (f) of this section;

(B) Certifies that, to the best of the employee's knowledge, the list described in paragraph (h)(2)(iii)(A) of this section is correct and complete and that the requirements of paragraphs (f)(2)(i) through (iii) of this section are satisfied; and

(C) Agrees that, if the trust instrument is amended at any time in the future, the employee will, within a reasonable time, provide the plan administrator corrected certifications to the extent that the amendment changes any information previously certified; and

(D) Agrees to provide a copy of the trust instrument to the plan administrator upon request.

(3) ***Required minimum distributions after death*** —

(i) ***In general.*** In order to satisfy the documentation requirement of this paragraph (h)(3) for required minimum distributions after the death of the employee (or after the death of the employee's surviving spouse in a case to which § 1.401(a)(9)-3(d) applies), the trustee of the trust must satisfy the requirements of either paragraph (h)(3)(ii) (requiring the trustee to provide a list of beneficiaries) or paragraph (h)(3)(iii) of this section (requiring the trustee to provide a copy of the trust instrument). The plan administrator may determine which of the two alternatives in the preceding sentence is available for the trust.

(ii) ***Trustee to provide list of beneficiaries.*** A trustee satisfies the requirements of this paragraph (h)(3)(ii) if the trustee—

(A) Provides the plan administrator a final list of all beneficiaries of the trust as of September 30 of the calendar year following the calendar year of the death (including contingent beneficiaries) with a description of the conditions on their entitlement sufficient to establish which of those beneficiaries are treated as beneficiaries of the employee (or surviving spouse, if applicable);

(B) Certifies that, to the best of the trustee's knowledge, this list is correct and complete and that the requirements of paragraphs (f)(2)(i) through (iii) of this section are satisfied; and

(C) Agrees to provide a copy of the trust instrument to the plan administrator upon request.

(iii) ***Trustee to provide copy of trust instrument.*** A trustee satisfies the requirements of this paragraph (h)(3)(iii) if the trustee provides the plan administrator with a copy of the actual trust document for the trust that is named as a beneficiary of the employee under the plan as of the employee's date of death.

(4) ***Relief for discrepancy between trust instrument and employee certifications or earlier trust instruments*** —

(i) ***In general.*** If required minimum distributions are determined based on the information provided to the plan administrator in certifications or trust instruments described in paragraph (h)(2) or (3) of this section, a plan will not fail to satisfy section 401(a)(9) merely because the actual terms of the trust instrument are inconsistent with the information in those certifications or trust instruments previously provided to the plan administrator, but only if—

(A) The plan administrator reasonably relied on the information provided; and

(B) The required minimum distributions for calendar years after the calendar year in which the discrepancy is discovered are determined based on the actual terms of the trust instrument.

(ii) ***Excise tax.*** For purposes of determining the amount of the excise tax under section 4974, the required minimum distribution is determined for any year based on the actual terms of the trust in effect during the year.

[T.D. 8987, 67 FR 18994, Apr. 17, 2002, as amended by T.D. 9130, 69 FR 33293, June 15, 2004; T.D. 10001, 89 FR 58907, July 19, 2024]

§ 1.401(a)(9)-5 Required minimum distributions from defined contribution plans.

(a) ***General rules*** —

(1) ***In general.*** Subject to the rules of paragraph (e) of this section (requiring distribution of an employee's entire interest by a specified deadline in certain situations), if an employee's accrued benefit is in the form of an individual account under a defined contribution plan, the minimum amount required to be distributed for each distribution calendar year beginning with the first distribution calendar year for the employee or designated beneficiary (as determined under paragraph (a)(2) of this section) is equal to the quotient obtained by dividing the account balance (determined under paragraph (b) of this section) by the applicable denominator (determined under paragraph (c) or (d) of this section, whichever applies). However, the required minimum distribution amount will never exceed the entire account balance on the date of the distribution. See paragraph (g)(1) of this section for rules that apply if a portion of the employee's account is not vested.

(2) ***Distribution calendar year*** —

(i) ***In general.*** A calendar year for which a minimum distribution is required is a distribution calendar year.

(ii) ***First distribution calendar year for employee if employee dies on or after required beginning date.*** If an employee's required beginning date is April 1 of the calendar year following the calendar year in which the employee attains the applicable age, then the employee's first distribution calendar year is the year the employee attains the applicable age. If an employee's required beginning date is April 1 of the calendar year following the calendar year in which the employee retires, the employee's first distribution calendar year is the calendar year in which the employee retires.

(iii) ***First distribution calendar year for designated beneficiary if employee dies before required beginning date.*** In the case of an employee who dies before the required beginning date, if the life expectancy rule in § 1.401(a)(9)-3(c)(4) applies, then the first distribution calendar year for

the designated beneficiary is the calendar year following the calendar year in which the employee died (or, if applicable, the calendar year described in § 1.401(a)(9)-3(d)). See § 1.401(a)(9)-3(c)(5) to determine whether the life expectancy rule applies.

(3) ***Time for distributions.*** The distribution required for the employee's first distribution calendar year (as described in paragraph (a)(2)(ii) of this section) may be made on or before April 1 of the following calendar year. The required minimum distribution for any other distribution calendar year (including the required minimum distribution for the distribution calendar year in which the employee's required beginning date occurs or the first distribution calendar year for the designated beneficiary) must be made on or before the end of that distribution calendar year.

(4) ***Minimum distribution incidental benefit requirement.*** If distributions of an employee's account balance under a defined contribution plan are made in accordance with this section—

(i) With respect to the retirement benefits provided by that account balance, to the extent the incidental benefit requirement of § 1.401-1(b)(1)(i) requires distributions, that requirement is deemed satisfied; and

(ii) No additional distributions are required to satisfy section 401(a)(9)(G).

(5) ***Annuity contracts*** —

(i) ***Purchase of annuity contract permitted.*** A plan may satisfy section 401(a)(9) by the purchase of an annuity contract from an insurance company in accordance with § 1.401(a)(9)-6(d) with the employee's entire individual account, provided that the terms of the annuity satisfy § 1.401(a)(9)-6. However, a distribution of an annuity contract is not a distribution for purposes of this section.

(ii) ***Transition from defined contribution rules to defined benefit rules.*** If an annuity is purchased in accordance with paragraph (a)(5)(i) of this section after distributions are required to commence (the required beginning date, in the case of distributions commencing before death, or the calendar year determined under § 1.401(a)(9)-3(c)(4) or, if applicable, § 1.401(a)(9)-3(d), in the case of distributions commencing after death), then the plan will satisfy section 401(a)(9) only if, in the year of purchase, distributions from the individual account satisfy this section, and for calendar years following the year of purchase, payments under the annuity contract are made in accordance with § 1.401(a)(9)-6. Payments under the annuity contract during the year in which the annuity contract is purchased are treated as distributions from the individual account for purposes of determining whether the distributions from the individual account satisfy this section in the calendar year of purchase.

(iii) ***Bifurcation if annuity contract is purchased with portion of employee's account.*** A portion of an employee's account balance under a defined contribution plan is permitted to be used to purchase an annuity contract while another portion remains in the account, provided that the requirements of paragraphs (a)(5)(i) and (ii) of this section are satisfied (other than the requirement that the contract be purchased with the employee's entire individual account). In that case, in order to satisfy section 401(a)(9) for calendar years after the calendar year of purchase, the remaining account balance under the plan must be distributed in accordance with this section.

(iv) ***Optional aggregation rule.*** In the case of an annuity contract purchased with a portion of the employee's account balance, in lieu of applying section 401(a)(9) separately with respect to the annuity contract and the remaining account balance as described in paragraph (a)(5)(iii) of this section, a plan may permit an employee to elect to satisfy section 401(a)(9) for the annuity contract and that account balance in the aggregate by—

(A) Adding the fair market value of the contract to the remaining account balance determined under paragraph (b) of this section; and

(B) Treating payments under the annuity contract as distributions from the employee's individual account.

(v) [Reserved]

(6) ***Impact of additional distributions in prior years.*** If, for any distribution calendar year, the amount distributed exceeds the required minimum distribution for that calendar year, no credit towards a required minimum distribution will be given in subsequent calendar years for the excess distribution.

(b) ***Determination of account balance*** —

(1) ***General rule.*** In the case of an individual account under a defined contribution plan, the benefit used in determining the required minimum distribution for a distribution calendar year is the account balance as of the last valuation date in the calendar year preceding that distribution calendar year (valuation calendar year) adjusted in accordance with this paragraph (b). For this purpose, all of an employee's accounts under the plan are aggregated. Thus, all separate accounts, including a separate account for employee contributions under section 72(d)(2), are aggregated for purposes of this section.

(2) ***Adjustment for subsequent allocations and distributions*** —

(i) ***Subsequent allocations.*** The account balance is increased by the amount of any contributions or forfeitures allocated to the account balance as of dates in the valuation calendar year after the valuation date. For this purpose, contributions that are allocated to the account balance as of dates in the valuation calendar year after the valuation date, but that are not actually made during the valuation calendar year, may be excluded.

(ii) ***Subsequent distributions.*** The account balance is decreased by distributions made in the valuation calendar year after the valuation date.

(3) ***Adjustment for designated Roth accounts.*** For distribution calendar years up to and including the calendar year that includes the employee's date of death, the account balance does not include amounts held in a designated Roth account (as described in section 402A(b)(2)).

(4) ***Exclusion for QLAC.*** The account balance does not include the value of any qualifying longevity annuity contract (QLAC), defined in § 1.401(a)(9)-6(q), that is held under the plan.

(5) ***Treatment of rollovers.*** If an amount is distributed from a plan and rolled over to another plan (receiving plan), then the rules of § 1.401(a)(9)-7(b) apply for purposes of determining the benefit and required minimum distribution under the receiving plan. If an amount is transferred from one plan (transferor plan) to another plan (transferee plan) in a transfer to which section 414(l) applies, then the rules of §§ 1.401(a)(9)-7(c) and (d) apply for purposes of determining the amount of the benefit and required minimum distribution under both the transferor and transferee plans.

(c) ***Determination of applicable denominator during employee's lifetime*** —

(1) ***General rule.*** Except as provided in paragraph (c)(2) of this section (relating to a spouse beneficiary who is more than 10 years younger than the employee), the applicable denominator for required minimum distributions for each distribution calendar year beginning with the employee's first distribution calendar year (as described in paragraph (a)(2)(ii) of this section) is determined using the Uniform Lifetime Table in § 1.401(a)(9)-9(c) for the employee's age as of the employee's birthday in the relevant distribution calendar year. The requirement to take an annual distribution calculated in accordance with the preceding sentence applies for every distribution calendar year up to and including the calendar year that includes the employee's date of death. Thus, a required minimum distribution is due for the calendar year of the employee's death, and that amount must be distributed during that year to any beneficiary to the extent it has not already been distributed to the employee.

(2) ***Spouse is sole beneficiary*** —

(i) ***Determination of applicable denominator.*** If the employee's surviving spouse who is more than 10 years younger than the employee is the employee's sole beneficiary, then the applicable denominator is the joint and last survivor life expectancy for the employee and spouse determined using the Joint and Last Survivor Table in § 1.401(a)(9)-9(d) for the employee's and spouse's ages as of their birthdays in the relevant distribution calendar year (rather than the applicable denominator determined under paragraph (c)(1) of this section).

(ii) ***Spouse must be sole beneficiary at all times.*** Except as otherwise provided in paragraph (c)(2)(iii) of this section (relating to a death or divorce in a calendar year), the spouse is the sole beneficiary for purposes of determining the applicable denominator for a distribution calendar year during the employee's lifetime only if the spouse is the sole beneficiary of the employee's entire interest at all times during the distribution calendar year.

(iii) ***Change in marital status.*** If the employee and the employee's spouse are married on January 1 of a distribution calendar year, but do not remain married throughout that year (that is, the employee or the employee's spouse dies or they become divorced during that year), the employee will not fail to have a spouse as the employee's sole beneficiary for that year merely because they are not married throughout that year. However, the change in beneficiary due to the death or divorce of the spouse in a distribution calendar year will be effective for purposes of determining the applicable denominator under section 401(a)(9) and this paragraph (c) for the following calendar years.

(d) ***Applicable denominator after employee's death*** —

(1) ***Death on or after the employee's required beginning date*** —

(i) ***In general.*** If an employee dies after distribution has begun as determined under § 1.401(a)(9)-2(a)(3) (generally, on or after the employee's required beginning date), distributions must satisfy section 401(a)(9)(B)(i). In order to satisfy this requirement, the applicable denominator for distribution calendar years that begin after the employee's death is determined under the rules of this paragraph (d)(1) (or is determined under the rules of paragraph (g)(3) of this section, if applicable). The requirement to take an annual distribution in accordance with the preceding sentence continues to apply for every distribution calendar year until the employee's interest is fully distributed. Thus, a required minimum distribution is due for the calendar year of the beneficiary's death, and that amount must be distributed during that calendar year to any beneficiary of the deceased beneficiary to the extent it has not already been distributed to the deceased beneficiary. If section 401(a)(9)(H) applies to the employee's

interest in the plan, then the distributions also must satisfy either section 401(a)(9)(B)(ii) (applied by substituting 10 years for 5 years) or, if the beneficiary is an eligible designated beneficiary, section 401(a)(9)(B)(iii) (taking into account sections 401(a)(9)(E)(iii) and 401(a)(9)(H)(iii)). In order to satisfy those requirements, in addition to determining the applicable denominator under the rules of this paragraph (d)(1), the distributions must satisfy any applicable requirements under paragraph (e) of this section.

(ii) ***Employee with designated beneficiary.*** If the employee has a designated beneficiary as of the date determined under § 1.401(a)(9)-4(c), the applicable denominator is the greater of—

(A) The designated beneficiary's remaining life expectancy; and

(B) The employee's remaining life expectancy.

(iii) ***Employee with no designated beneficiary.*** If the employee does not have a designated beneficiary as of the date determined under § 1.401(a)(9)-4(c), the applicable denominator is the employee's remaining life expectancy.

(2) ***Death before an employee's required beginning date.*** If an employee dies before distributions have begun (as determined under § 1.401(a)(9)-2(a)(3)) and the life expectancy rule described in § 1.401(a)(9)-3(c)(4) applies, then the applicable denominator for distribution calendar years beginning with the first distribution calendar year for the designated beneficiary (as described in paragraph (a)(2)(iii) of this section) is the designated beneficiary's remaining life expectancy (or is determined under the rules of paragraph (g)(3) of this section, if applicable).

(3) ***Remaining life expectancy*** —

(i) ***Life expectancy table.*** For purposes of this paragraph (d), all life expectancies are determined using the Single Life Table in § 1.401(a)(9)-9(b).

(ii) ***Employee's life expectancy.*** The employee's remaining life expectancy is determined initially using the employee's age as of the employee's birthday in the calendar year of the employee's death. In subsequent calendar years, the remaining life expectancy is determined by reducing that initial life expectancy by one for each calendar year that has elapsed after that first calendar year.

(iii) ***Non-spouse designated beneficiary.*** If the designated beneficiary is not the employee's surviving spouse, then the designated beneficiary's remaining life expectancy is determined initially using the beneficiary's age as of the beneficiary's birthday in the calendar year following the calendar year of the employee's death. Except as otherwise provided in paragraph (d)(3)(iv) of this section, for subsequent calendar years, the designated beneficiary's remaining life expectancy is determined by reducing that initial life expectancy by one for each calendar year that has elapsed after that first calendar year.

(iv) ***Spouse as designated beneficiary.*** If the surviving spouse of the employee is the employee's sole beneficiary, then the surviving spouse's remaining life expectancy is redetermined each distribution calendar year up to and including the calendar year of the spouse's death using the surviving spouse's age as of the surviving spouse's birthday in the distribution calendar year. For each calendar year following the calendar year of the spouse's death, the spouse's remaining life expectancy is determined by reducing the spouse's remaining life expectancy in the calendar year of the spouse's death by one for each calendar year that has elapsed after that calendar year.

(e) *Distribution of employee's entire interest required* —

(1) ***In general.*** Except as provided in paragraph (f) of this section, if an employee's accrued benefit is in the form of an individual account under a defined contribution plan, then the entire interest of the employee must be distributed by the end of the earliest of the calendar years described in paragraph (e)(2), (3), or (4) of this section. However, the preceding sentence does not apply if section 401(a)(9)(H) does not apply with respect to the employee (for example, if both the employee and the employee's designated beneficiary died before January 1, 2020). See § 1.401(a)(9)-1(b) for rules relating to the section 401(a)(9)(H) effective date.

(2) ***10-year limit for designated beneficiary who is not an eligible designated beneficiary.*** If the employee's designated beneficiary is not an eligible designated beneficiary (as determined in accordance with § 1.401(a)(9)-4(e)), then the calendar year described in this paragraph (e)(2) is the calendar year that includes the tenth anniversary of the date of the employee's death.

(3) ***10-year limit following death of eligible designated beneficiary.*** If the employee's designated beneficiary is an eligible designated beneficiary (as determined in accordance with § 1.401(a)(9)-4(e)), then the calendar year described in this paragraph (e)(3) is the calendar year that includes the tenth anniversary of the date of the designated beneficiary's death.

(4) ***10-year limit after minor child of the employee reaches age of majority.*** If the employee's designated beneficiary is an eligible designated beneficiary only because the beneficiary is the child of the employee who has not reached the age of majority at the time of the employee's death, then the calendar year described in this paragraph (e)(4) is the calendar year that includes the tenth anniversary of the date the designated beneficiary reaches the age of majority.

(f) *Rules for multiple designated beneficiaries* —

(1) *Determination of applicable denominator* —

(i) ***General rule.*** Except as otherwise provided in paragraph (f)(1)(ii) of this section and § 1.401(a)(9)-8(a), if the employee has more than one designated beneficiary, then the determination of the applicable denominator under paragraph (d) of this section is made using the oldest designated beneficiary of the employee.

(ii) ***Applicable multi-beneficiary trusts.*** If an employee's beneficiary is an applicable multi-beneficiary trust described in § 1.401(a)(9)-4(g)(1), then only the trust beneficiaries described in § 1.401(a)(9)-4(g)(1)(ii) are taken into account in determining the oldest designated beneficiary for purposes of paragraph (f)(1)(i) of this section.

(2) *Determination of when entire interest is required to be distributed* —

(i) ***General rule.*** Except as otherwise provided in paragraphs (f)(2)(ii) and (iii) of this section and § 1.401(a)(9)-8(a), if an employee has more than one designated beneficiary, then paragraph (e)(1) of this section is applied with respect to the oldest of the employee's designated beneficiaries.

(ii) ***Special rule for employee's minor child.*** If any of the employee's designated beneficiaries is an eligible designated beneficiary because that designated beneficiary is described in § 1.401(a)(9)-4(e)(1)(ii) (relating to the child of the employee who has not reached the age of majority at the time of the employee's death), then—

(A) Paragraph (e)(2) of this section does not apply;

(B) Paragraph (e)(3) of this section applies as if the death of the employee's eligible designated beneficiary does not occur until the death of all of the designated beneficiaries who are described in § 1.401(a)(9)-4(e)(1)(ii); and

(C) Paragraph (e)(4) of this section applies as if the attainment of the age of majority of the employee's eligible designated beneficiary described in § 1.401(a)(9)-4(e)(1)(ii) does not occur until the youngest of those eligible designated beneficiaries reaches the age of majority.

(iii) ***Applicable multi-beneficiary trust.*** If an employee's beneficiary is an applicable multi-beneficiary trust described in § 1.401(a)(9)-4(g)(1), then paragraph (e)(3) of this section applies as if the death of the employee's eligible designated beneficiary does not occur until the death of the last to survive of the trust beneficiaries who are described in § 1.401(a)(9)-4(g)(1)(ii).

(g) ***Special rules*** —

(1) ***Treatment of nonvested amounts.*** If the employee's benefit is in the form of an individual account under a defined contribution plan, the benefit used to determine the required minimum distribution for any distribution calendar year will be determined in accordance with paragraph (a) of this section without regard to whether or not all of the employee's benefit is vested. If, as of the end of a distribution calendar year (or as of the employee's required beginning date, in the case of the employee's first distribution calendar year), the total amount of the employee's vested benefit is less than the required minimum distribution for the calendar year, only the vested portion, if any, of the employee's benefit is required to be distributed by the end of the calendar year (or, if applicable, by the employee's required beginning date). However, the required minimum distribution for the subsequent calendar year must be increased by the sum of amounts not distributed in prior calendar years because the employee's vested benefit was less than the required minimum distribution determined in accordance with paragraph (a) of this section.

(2) ***Distributions taken into account*** —

(i) ***General rule.*** Except as provided in this paragraph (g)(2), all amounts distributed from an individual account under a defined contribution plan are distributions that are taken into account in determining whether this section is satisfied for a calendar year, regardless of whether the amount is includible in income. Thus, for example, amounts that are excluded from income as recovery of investment in the contract under section 72 generally are taken into account for purposes of determining whether this section is satisfied for a calendar year. Similarly, amounts excluded from income as net unrealized appreciation on employer securities generally are taken into account for purposes of satisfying this section.

(ii) ***Amounts not eligible for rollover.*** An amount is not taken into account in determining whether this section is satisfied for a calendar year if that amount is described in § 1.402(c)-2(c)(3) (relating to amounts that are not treated as eligible rollover distributions).

(iii) [Reserved]

(iv) [Reserved]

(3) ***Surviving spouse election under section 401(a)(9)(B)(iv)*** —

(i) ***In general.*** A defined contribution plan may include a provision, applicable to an employee whose sole beneficiary is that employee's surviving spouse, under which the surviving spouse may elect to be treated as the employee for purposes of determining the required minimum distribution for a calendar year under this section.

(ii) [Reserved]

[T.D. 8987, 67 FR 18994, Apr. 17, 2002, as amended by T.D. 9130, 69 FR 33293, June 15, 2004; T.D. 9319, 72 FR 16894, Apr. 5, 2007;T.D. 9673, 79 FR 37639, July 2, 2014; T.D. 9930, 85 FR 72477, Nov. 12, 2020; T.D. 10001, 89 FR 58907, July 19, 2024]

§ 1.401(a)(9)-6 Required minimum distributions for defined benefit plans and annuity contracts.

(a) ***General rules*** —

(1) ***In general.*** In order to satisfy section 401(a)(9), except as otherwise provided in this section, distributions of the employee's entire interest under a defined benefit plan or under an annuity contract must be paid in the form of periodic annuity payments for the employee's life (or the joint lives of the employee and beneficiary) or over a period certain that does not exceed the maximum length of the period certain determined in accordance with paragraph (c) of this section. The interval between payments for the annuity must not exceed one year and, except as otherwise provided in this section, must be uniform over the entire distribution period. Once payments have commenced over a period, the period may only be changed in accordance with paragraph (n) of this section. Life (or joint and survivor) annuity payments must satisfy the minimum distribution incidental benefit requirements of paragraph (b) of this section. Except as otherwise provided in this section (for example, permitted increases described in paragraph (o) of this section), all payments (whether paid over an employee's life, joint lives, or a period certain) also must be nonincreasing.

(2) ***Definition of life annuity.*** An annuity described in this section may be a life annuity (or joint and survivor annuity) with a period certain, provided that the life annuity (or joint and survivor annuity, if applicable) and the period certain payments each meet the requirements of paragraph (a)(1) of this section. For purposes of this section, if distributions are permitted to be made over the lives of the employee and the designated beneficiary, references to a life annuity include a joint and survivor annuity.

(3) ***Annuity commencement*** —

(i) ***First payment and frequency.*** Annuity payments must commence on or before the employee's required beginning date (within the meaning of § 1.401(a)(9)-2(b)). The first payment, which must be made on or before the employee's required beginning date, must be the payment that is required for one payment interval. The second payment need not be made until the end of the next payment interval even if that payment interval ends in the next calendar year. Similarly, if the employee dies before the required beginning date, and distributions are to be made in accordance with section 401(a)(9)(B)(iii) (or, if applicable, section 401(a)(9)(B)(iv)), then the first payment, which must be made on or before the last day of the calendar year following the calendar year in which the employee died (or the date determined under § 1.401(a)(9)-3(d), if applicable), must be the payment that is required for one payment interval. Payment intervals are the periods for which payments are received, for example, bimonthly, monthly, semi-

annually, or annually. All benefit accruals as of the last day of the first distribution calendar year must be included in the calculation of the amount of annuity payments for payment intervals ending on or after the employee's required beginning date.

(ii) ***Example.*** A defined benefit plan (Plan X) provides monthly annuity payments for the life of unmarried participants with a 10-year period certain. An unmarried, retired participant A in Plan X attains age 73 in 2025. A's monthly annuity payment under this single life annuity based on accruals through December 31, 2025, is $500. In order to meet the requirements of this paragraph (a)(3), the first monthly payment of $500 must be made on behalf of A on or before April 1, 2026, and monthly payments must continue to be made thereafter for the life of A (or over the 10-year period certain, if longer).

(4) ***Single-sum distributions*** —

(i) ***In general.*** In the case of a single-sum distribution of an employee's entire accrued benefit during a distribution calendar year, the portion of the distribution that is the required minimum distribution for the distribution calendar year (and thus not an eligible rollover distribution pursuant to section 402(c)(4)(B)) is determined using the rule in either paragraph (a)(4)(ii) or (iii) of this section.

(ii) ***Treatment as individual account.*** The portion of the single-sum distribution that is a required minimum distribution is determined by treating the single-sum-distribution as a distribution from an individual account plan and treating the amount of the single-sum distribution as the employee's account balance as of the end of the relevant valuation calendar year. If the single-sum distribution is being made in the calendar year that includes the required beginning date and the required minimum distribution for the employee's first distribution calendar year has not been distributed, the portion of the single-sum distribution that represents the required minimum distribution for the employee's first and second distribution calendar years is not eligible for rollover.

(iii) ***Treatment as first annuity payment.*** The portion of the single-sum distribution that is a required minimum distribution is permitted to be determined by expressing the employee's benefit as an annuity that would satisfy this section with an annuity starting date that is the first day of the distribution calendar year for which the required minimum distribution is being determined, and treating one year of annuity payments as the required minimum distribution for that year (and therefore, not an eligible rollover distribution). If the single-sum distribution is being made in the calendar year that includes the required beginning date, and the required minimum distribution for the employee's first distribution calendar year has not been made, then the benefit must be expressed as an annuity with an annuity starting date that is the first day of the first distribution calendar year, and the payments for the first two distribution calendar years are treated as required minimum distributions (and therefore not eligible rollover distributions).

(5) ***Death benefits.*** The rule in paragraph (a)(1) of this section prohibiting increasing payments under an annuity applies to payments made upon the death of an employee. However, the payment of an ancillary death benefit described in this paragraph (a)(5) may be disregarded in determining whether annuity payments are increasing, and it can be excluded in determining an employee's entire interest. A death benefit with respect to an employee's benefit is an ancillary death benefit for purposes of this paragraph (a) if—

(i) It is not paid as part of the employee's accrued benefit or under any optional form of the employee's benefit; and

(ii) The death benefit, together with any other potential payments with respect to the employee's benefit that may be provided to a survivor, satisfies the incidental benefit requirement of § 1.401-1(b)(1)(i).

(6) ***Separate treatment of separate identifiable components.*** If an employee's benefit under a defined benefit plan or annuity contract consists of separate identifiable components that are subject to different distribution elections, then the rules of this section may be applied separately to each of those components.

(7) ***Additional guidance.*** Additional guidance regarding how distributions under a defined benefit plan must be paid in order to satisfy section 401(a)(9) may be issued by the Commissioner in revenue rulings, notices, or other guidance published in the Internal Revenue Bulletin. See § 601.601(d) of this chapter.

(b) ***Application of incidental benefit requirement*** —

(1) ***Life annuity for employee.*** If the employee's benefit is paid in the form of a life annuity for the life of the employee satisfying section 401(a)(9) without regard to the minimum distribution incidental benefit requirement under section 401(a)(9)(G) (MDIB requirement), then the MDIB requirement will be satisfied.

(2) ***Joint and survivor annuity*** —

(i) ***Determination of designated beneficiary.*** If the employee's benefit is paid in the form of a life annuity for the lives of the employee and a designated beneficiary, then the designated beneficiary is determined as of the annuity starting date.

(ii) ***Spouse beneficiary.*** If the employee's sole beneficiary is the employee's spouse and the distributions satisfy section 401(a)(9) without regard to the MDIB requirement, the distributions to the employee will be deemed to satisfy the MDIB requirement. For example, if an employee's benefit is being distributed in the form of a joint and survivor annuity for the lives of the employee and the employee's spouse and the spouse is the sole beneficiary of the employee, the amount of the periodic payment payable to the spouse would not violate the MDIB requirement if it were 100 percent of the annuity payment payable to the employee, regardless of the difference in the ages between the employee and the employee's spouse.

(iii) ***Joint and survivor annuity, non-spouse beneficiary.*** If distributions commence in the form of a joint and survivor annuity for the lives of the employee and a beneficiary other than the employee's spouse, and the employee is the applicable age or older on the employee's birthday in the calendar year that includes the annuity starting date, then the MDIB requirement will not be satisfied as of the date distributions commence unless, under the distribution option, the annuity payments satisfy the conditions of this paragraph (b)(2)(iii). The periodic annuity payments to the survivor satisfy this paragraph (b)(2)(iii) only if, at any time on or after the employee's required beginning date, those payments do not exceed the applicable percentage of the periodic annuity payment payable to the employee using the table in this paragraph (b)(2)(iii). The applicable percentage is based on the employee/beneficiary age difference, which is equal to the excess of the age of the employee over the age of the beneficiary based on their ages on their birthdays in the calendar year that includes the annuity starting date. In the case of an annuity that provides for increasing payments, the requirement of this paragraph (b)(2)(iii) will not be violated merely because benefit payments to the beneficiary increase, provided the increase is determined in the same manner for the employee and the beneficiary.

See paragraph (k)(2) of this section for rules regarding the application of the MDIB requirement in the case of annuity payments with an annuity starting date that is before the calendar year in which an employee attains the applicable age.

TABLE 1 TO PARAGRAPH (b)(2)(iii)

Employee/beneficiary age difference	Applicable percentage
10 years or less	100
11	96
12	93
13	90
14	87
15	84
16	82
17	79
18	77
19	75
20	73
21	72
22	70
23	68
24	67
25	66
26	64
27	63
28	62
29	61
30	60
31	59
32	59
33	58
34	57
35	56
36	56
37	55
38	55
39	54
40	54
41	53

Employee/beneficiary age difference	Applicable percentage
42	53
43	53
44 and greater	52

(3) ***Period certain and annuity features.*** If a distribution form includes a period certain, the amount of the annuity payments payable to the beneficiary need not be reduced during the period certain, but in the case of a joint and survivor annuity with a period certain, the amount of the annuity payments payable to the beneficiary must satisfy paragraph (b)(2)(iii) of this section after the expiration of the period certain.

(4) ***Deemed satisfaction of incidental benefit rule.*** Except in the case of distributions with respect to an employee's benefit that include an ancillary death benefit described in paragraph (a)(5) of this section, to the extent the incidental benefit requirement of § 1.401-1(b)(1)(i) requires a distribution, that requirement is deemed to be satisfied if distributions satisfy the MDIB requirement of this paragraph (b). If the employee's benefits include an ancillary death benefit described in paragraph (a)(5) of this section, the benefits (including the ancillary death benefit) must be distributed in accordance with the incidental benefit requirement described in § 1.401-1(b)(1)(i) and the benefits (excluding the ancillary death benefit) must also satisfy the MDIB requirement of this paragraph (b).

(c) ***Period certain annuity*** —

(1) ***Distributions commencing during the employee's life.*** If the employee is the applicable age or older on the employee's birthday in the calendar year that includes the annuity starting date, then the period certain is not permitted to exceed the applicable denominator for the calendar year that includes the annuity starting date that would apply pursuant to § 1.401(a)(9)-5(c) if the plan were a defined contribution plan. However, that applicable denominator is determined taking into account the rules of § 1.401(a)(9)-5(c)(2) (relating to a spouse who is more than 10 years younger than the employee) only if the period certain is not provided in conjunction with a life annuity under paragraph (a)(2) of this section. See paragraph (k) of this section for the rule for annuity payments with an annuity starting date that is before the calendar year in which the employee attains the applicable age.

(2) ***Distributions commencing after the employee's death.*** If the employee dies before the required beginning date and annuity distributions commence after the death of the employee under the life expectancy rule (under section 401(a)(9)(B)(iii) or (iv)), the period certain for any distributions commencing after death may not exceed the applicable denominator that would apply pursuant to § 1.401(a)(9)-5(d)(2) for the calendar year that includes the annuity starting date if the plan were a defined contribution plan.

(d) ***Use of annuity contract*** —

(1) ***In general.*** A plan will not fail to satisfy section 401(a)(9) merely because distributions are made from an annuity contract purchased from an insurance company that is licensed to do business under the laws of the State in which the contract is sold, provided that the payments satisfy the requirements of this section. Except in the case of a qualifying longevity annuity contract (QLAC) described in paragraph (q) of this section, if the annuity contract is purchased after the required

beginning date, then the first payment interval must begin on or before the purchase date and the payment that is made at the end of that payment interval is the amount required for one payment interval. If the payments actually made under the annuity contract do not meet the requirements of this section, the plan fails to satisfy section 401(a)(9). See also paragraph (o) of this section permitting certain increases under annuity contracts.

(2) *Applicability of section 401(a)(9)(H)* —

(i) ***Annuity contract subject to section 401(a)(9)(H).*** If an annuity contract is purchased under a defined contribution plan, or the annuity contract is otherwise subject to section 401(a)(9)(H), payments under that annuity contract cannot extend past the calendar year described in § 1.401(a)(9)-5(e).

(ii) ***Determination of an eligible designated beneficiary.*** If an annuity contract is described in paragraph (d)(2)(i) of this section, then the determination of whether a beneficiary is an eligible designated beneficiary under section 401(a)(9)(E)(ii), is made as of the annuity starting date. For example, if, as of the annuity starting date, the employee's beneficiary under the contract is the employee's spouse, then the spouse is treated as an eligible designated beneficiary for purposes of applying the rules of section 401(a)(9)(H) even if the employee and spouse are subsequently divorced.

(e) *Treatment of additional accruals* —

(1) ***General rule.*** If additional benefits accrue in a calendar year after the employee's first distribution calendar year, distribution of the amount that accrues in that later calendar year must commence in accordance with paragraph (a) of this section beginning with the first payment interval ending in the calendar year following the calendar year in which that amount accrues.

(2) ***Administrative delay.*** A plan will not fail to satisfy this section merely because there is an administrative delay in the commencement of the distribution of the additional benefits accrued in a calendar year, provided that—

(i) The payment commences no later than the end of the first calendar year following the calendar year in which the additional benefit accrues; and

(ii) The total amount paid during that first calendar year with respect to those additional benefits is no less than the total amount that was required to be paid during that year under paragraph (e)(1) of this section.

(f) ***Treatment of nonvested benefits.*** In the case of annuity distributions under a defined benefit plan, if any portion of the employee's benefit is not vested as of December 31 of a distribution calendar year, the portion that is not vested as of that date is treated as not having accrued for purposes of determining the required minimum distribution for that distribution calendar year. When an additional portion of the employee's benefit becomes vested, that portion will be treated as an additional accrual. See paragraph (e) of this section for the rules for distributing benefits that accrue under a defined benefit plan after the employee's first distribution calendar year.

(g) *Requirement for actuarial increase* —

(1) *General rule* —

(i) ***Applicability of increase.*** Except as otherwise provided in this paragraph (g), if an employee retires after the calendar year in which the employee attains age $70^1/_2$, then, in order to satisfy section 401(a)(9)(C)(iii), the employee's accrued benefit under a defined benefit plan must be actuarially increased for the period (if any) from the start date described in paragraph (g)(1)(ii) of this section to the end date described in paragraph (g)(1)(iii) of this section.

(ii) ***Start date for actuarial increase.*** The start date for the required actuarial increase is April 1 following the calendar year in which the employee attains age $70^1/_2$ (or January 1, 1997, if the employee attained $70^1/_2$ prior to January 1, 1997).

(iii) ***End date for actuarial increase.*** The end date for the required actuarial increase is the date on which benefits commence after retirement in a form that satisfies paragraphs (a) and (h) of this section.

(iv) ***Determination of when employee attains age $70^1/_2$.*** An employee attains age $70^1/_2$ as of the date six calendar months after the 70th anniversary of the employee's birth. For example, if the date of birth of an employee is June 30, 1955, the 70th anniversary of the employee's birth is June 30, 2025, and the employee attains age $70^1/_2$ in 2025. However, if the employee's date of birth is July 1, 1955, the 70th anniversary of the employee's birth is July 1, 2025, and the employee attains age $70^1/_2$ in 2026.

(2) ***Nonapplication to 5-percent owners.*** This paragraph (g) does not apply to an employee if that employee is a 5-percent owner (as defined in section 416) with respect to the plan year ending in the calendar year in which the employee attains the applicable age.

(3) ***Nonapplication to governmental plans.*** The actuarial increase required under this paragraph (g) does not apply to a governmental plan (within the meaning of section 414(d)).

(4) ***Nonapplication to church plans and church employees*** —

(i) ***Church plans.*** The actuarial increase required under this paragraph (g) does not apply to a church plan. For purposes of this paragraph (g)(4)—

(A) The term *church plan* means a plan maintained by a church (as defined in section 3121(w)(3)(A)) or a qualified church-controlled organization (as defined in section 3121(w)(3)(B)) for its employees; and

(B) A plan is treated as a church plan only if at least 85 percent of the individuals covered by the plan are employees of a church or a qualified church-controlled organization.

(ii) ***Determination of whether an individual is an employee of a church.*** For purposes of this paragraph (g)(4), the determination of whether an individual is an employee of a church or a qualified church-controlled organization is made in accordance with the rules of section 414(e)(3)(B) other than section 414(e)(3)(B)(ii).

(iii) ***Church employees covered in other plans.*** If a plan is not a church plan within the meaning of paragraph (g)(4)(i) of this section, then the actuarial increase required under this paragraph (g) does not apply to benefits accrued under the plan by an individual that are attributable to the service the individual performs as an employee of a church or a qualified church-controlled organization (including service performed as an employee described in section 414(e)(3)(B)(i)).

(h) ***Amount of actuarial increase*** —

(1) ***In general.*** In order to satisfy section 401(a)(9)(C)(iii), the retirement benefits payable with respect to an employee as of the end of the period for which actuarial increases must be provided as described in paragraph (g) of this section must be no less than—

(i) The actuarial equivalent of the employee's retirement benefits that would have been payable as of the start date described in paragraph (g)(1)(ii) of this section if benefits had commenced on that date; plus

(ii) The actuarial equivalent of any additional benefits accrued after that date; reduced by

(iii) The actuarial equivalent of any distributions made with respect to the employee's retirement benefits after that date.

(2) ***Actuarial equivalence basis.*** For purposes of this paragraph (h), actuarial equivalence is determined using reasonable actuarial assumptions. If the plan is subject to section 411, the plan's assumptions must be the same as the assumptions used for determining actuarial equivalence for purposes of satisfying section 411.

(3) ***Coordination with section 411 actuarial increase.*** Under section 411, in order for an employee's accrued benefit under a defined benefit plan to be nonforfeitable, the plan must make an actuarial adjustment to any portion of that accrued benefit, the payment of which is deferred past normal retirement age. The only exception to this rule is that, generally, no actuarial adjustment is required to reflect the period during which a benefit is suspended as permitted under section 411(a)(3)(B). The actuarial increase required under section 401(a)(9)(C)(iii) for the period (if any) described in paragraph (g)(1)(i) of this section generally is the same as, and not in addition to, the actuarial increase required for the same period under section 411 to reflect any delay in the payment of retirement benefits after normal retirement age. However, unlike the actuarial increase required under section 411, the actuarial increase required under section 401(a)(9)(C)(iii) must be provided even during any period during which an employee's benefit has been suspended in accordance with section 411(a)(3)(B).

(i) [Reserved]

(j) ***Distributions restricted pursuant to section 436*** —

(1) ***General rule.*** If an employee's entire interest is being distributed in accordance with the 5-year rule of section 401(a)(9)(B)(ii), a plan is not treated as failing to satisfy section 401(a)(9) merely because of the application of a payment restriction under section 436(d), provided that distributions of the employee's interest commence by the end of the calendar year that includes the fifth anniversary of the date of the employee's death and, after the annuity starting date, those distributions are paid in a form that is as accelerated as permitted under section 436(d), as described in paragraph (j)(2) or (3) of this section.

(2) ***Payments restricted under section 436(d)(3).*** If the payment restriction of section 436(d)(3) applies at the time benefits commence under paragraph (j)(1) of this section, then distributions are made in a form that is as accelerated as permitted under section 436(d) if the benefits are paid in a single-sum payment equal to the maximum amount allowed under section 436(d)(3), with the remainder paid as a life annuity to the beneficiary (or over the course of 240 months pursuant to § 1.436-1(j)(6)(ii) in the case of a beneficiary that is not an individual), subject to a requirement that the benefit remaining is commuted to a single-sum payment when the section 436(d)(3) payment restriction ceases to apply (to the extent that a single-sum payment is permitted under section 436(d)(1) and (2)).

(3) ***Payments restricted under section 436(d)(1) or (2).*** If a plan is subject to the payment restriction in section 436(d)(1) or (2) at the time benefits commence under paragraph (j)(1) of this section, then distributions are made in a form that is as accelerated as permitted under section 436(d) if the benefits are paid in the form of a life annuity to the beneficiary (or over the course of 240 months pursuant to § 1.436-1(j)(6)(ii), in the case of a beneficiary that is not an individual), subject to a requirement that the benefit remaining is commuted to a single-sum payment to the extent permitted under section 436(d) (for example, the maximum amount allowed under section 436(d)(3)) when the payment restriction under section 436(d)(1) or (2) ceases to apply.

(k) ***Treatment of early commencement*** —

(1) ***General rule.*** Generally, the determination of whether a stream of payments satisfies the requirements of this section is made as of the required beginning date. However, if distributions start prior to the required beginning date in a distribution form that is an annuity under which distributions are made in accordance with the provisions of paragraph (a) of this section and are made over a period permitted under section 401(a)(9)(A)(ii), then, except as provided in this paragraph (k), the annuity starting date will be treated as the required beginning date for purposes of applying the rules of this section and § 1.401(a)(9)-2. Thus, for example, the determination of the designated beneficiary and the amount of distributions will be made as of the annuity starting date. Similarly, if the employee dies after the annuity starting date but before the required beginning date determined under § 1.401(a)(9)-2(b), then after the employee's death—

(i) The remaining portion of the employee's interest must continue to be distributed in accordance with this section over the remaining period over which distributions commenced; and

(ii) The rules in § 1.401(a)(9)-3 relating to death before the required beginning date do not apply.

(2) ***Joint and survivor annuity, non-spouse beneficiary*** —

(i) ***Application of MDIB requirement.*** If distributions commence in the form of a joint and survivor annuity for the lives of the employee and a beneficiary other than the employee's spouse, and as of the employee's birthday in the calendar year that includes the annuity starting date, the employee is younger than the applicable age, then the MDIB requirement will not be satisfied as of the date distributions commence unless, under the distribution option, the annuity payments to be made on and after the employee's required beginning date satisfy the conditions of this paragraph (k)(2). The periodic annuity payments payable to the survivor satisfy this paragraph (k)(2) if, at all times on and after the employee's annuity starting date, those payments do not exceed the applicable percentage of the periodic annuity payment payable to the employee determined using the table in paragraph (b)(2)(iii) of this section (but based on the adjusted employee/beneficiary age difference). The adjusted employee/beneficiary age difference is determined by first calculating the employee/beneficiary age difference under paragraph (b)(2)(iii) of this section and then reducing that age difference by the number of years by which the employee is younger than the applicable age on the employee's birthday in the calendar year that includes the annuity starting date. In the case of an annuity that provides for increasing payments, the requirement of this paragraph (k)(2) will not fail to be satisfied merely because benefit payments to the beneficiary increase, provided the increase is determined in the same manner for the employee and the beneficiary.

(ii) ***Example*** —

(A) ***Facts.*** Distributions under a defined benefit plan commence on January 1, 2025, to an employee Z, born March 1, 1958. Z's daughter Y, born February 5, 1989, is Z's beneficiary. The distributions are in the form of a joint and survivor annuity for the lives of Z and Y with payments of $500 a month to Z and upon Z's death of $500 a month to Y (so that the monthly payment to Y is 100 percent of the monthly amount payable to Z).

(B) ***Analysis and conclusion.*** Z's required beginning date is April 1, 2032 (that is, April 1 of the calendar year following the calendar year in which Z will attain age 73). Under paragraph (k)(1) of this section, because distributions commence prior to Z's required beginning date and are in the form of a joint and survivor annuity for the lives of Z and Y, compliance with the rules of this section is determined as of the annuity starting date. Under this paragraph (k)(2), the adjusted employee/beneficiary age difference is calculated by taking the excess of the employee's age over the beneficiary's age and subtracting the number of years the employee is younger than the applicable age (in this case, age 73). In 2025, Z attains age 67 and Y attains age 36. Accordingly, the employee/beneficiary age difference is 31. Because Z is commencing benefits 6 years before attaining the applicable age, the adjusted employee/beneficiary age difference is 25 years. Under table 1 to paragraph (b)(2)(iii) of this section, the applicable percentage for a 25-year adjusted employee/beneficiary age difference is 66 percent. The plan does not satisfy the MDIB requirement because, as of January 1, 2025 (the annuity starting date), the distribution option provides that, as of Z's required beginning date, the monthly payment to Y upon Z's death will exceed 66 percent of Z's monthly payment.

(3) ***Limitation on period certain.*** If, as of the employee's birthday in the calendar year that includes the annuity starting date, the employee is younger than the applicable age, then the period certain may not exceed the limitation on the period certain for an individual who has attained the applicable age as specified in paragraph (c)(1) of this section, increased by the number of years by which the employee is younger than the applicable age on that birthday.

(l) ***Early commencement for surviving spouse.*** Generally, the determination of whether a stream of payments satisfies the requirements of this section is made as of the date on which distributions are required to commence. However, if the employee dies prior to the required beginning date, distributions commence to the surviving spouse of an employee over a period permitted under section 401(a)(9)(B)(iii)(II) prior to the date on which distributions are required to commence, and the distribution form is an annuity under which distributions are made in accordance with the provisions of paragraph (a) of this section, then the annuity starting date will be considered the required beginning date for purposes of section 401(a)(9)(B)(iv)(III). Thus, if the surviving spouse dies after commencing benefits and before the date described in 401(a)(9)(B)(iv)(II), then after the surviving spouse's death—

(1) The rules in § 1.401(a)(9)-3(e)(1) relating to the death of the surviving spouse before the required beginning date under section 401(a)(9)(B)(iv)(III) will not apply upon the death of the surviving spouse; and

(2) The annuity distributions must continue to be made in accordance with paragraph (a) of this section over the remaining period over which distributions commenced.

(m) ***Determination of entire interest under annuity contract*** —

(1) ***General rule.*** Prior to the date that an annuity contract under an individual account plan is annuitized, the interest of an employee or beneficiary under that contract is treated as an individual account for purposes of section 401(a)(9). Thus, the required minimum distribution for any year with respect to

that interest is determined under § 1.401(a)(9)-5 rather than this section. See § 1.401(a)(9)-5(a)(5) for rules relating to the satisfaction of section 401(a)(9) in the year that annuity payments commence (including situations in which an annuity contract is purchased with a portion of an employee's account balance) and § 1.401(a)(9)-5(b)(4) for rules relating to QLACs (as defined in paragraph (q) of this section).

(2) ***Entire interest.*** For purposes of applying the rules in § 1.401(a)(9)-5, the entire interest under the annuity contract as of December 31 of the relevant valuation calendar year is treated as the account balance for the valuation calendar year described in § 1.401(a)(9)-5(c). The entire interest under an annuity contract is the dollar amount credited to the employee or beneficiary under the contract (that is, the notional account balance) plus the actuarial present value of any additional benefits (for example, survivor benefits in excess of the dollar amount credited to the employee or beneficiary) that will be provided under the contract. However, paragraph (m)(3) of this section describes certain additional benefits that may be disregarded in determining the employee's entire interest under the annuity contract. The actuarial present value of any additional benefits described under this paragraph (m) is to be determined using reasonable actuarial assumptions, including reasonable assumptions as to future distributions, and without regard to an individual's health.

(3) ***Exclusions*** —

(i) ***Additional value does not exceed 20 percent.*** The actuarial present value of any additional benefits provided under an annuity contract described in paragraph (m)(2) of this section may be disregarded if the sum of the dollar amount credited to the employee or beneficiary under the contract and the actuarial present value of the additional benefits is no more than 120 percent of the dollar amount credited to the employee or beneficiary under the contract and the additional benefits are one or both of the following—

(A) Additional benefits that, in the case of a distribution, are reduced by an amount sufficient to ensure that the ratio of the sum to the dollar amount credited does not increase as a result of the distribution; and

(B) An additional benefit that is the right to receive a final payment upon death that does not exceed the amount by which the total consideration paid exceeds the amount of prior distributions.

(ii) ***Return of premium death benefit.*** If the only additional benefit provided under the contract is the additional benefit described in paragraph (m)(3)(i)(B) of this section, the additional benefit may be disregarded regardless of its value in relation to the dollar amount credited to the employee or beneficiary under the contract.

(iii) ***Additional guidance.*** The Commissioner, in revenue rulings, notices, or other guidance published in the Internal Revenue Bulletin (see § 601.601(d) of this chapter), may provide additional guidance on additional benefits that may be disregarded.

(4) ***Examples.*** The examples in this paragraph (m)(4), which use a 5 percent interest rate and the mortality table used for distributions subject to section 417(e)(3) provided in Notice 2019-67, 2019-52 IRB 1510, illustrate the application of the rules in this paragraph (m):

(i) ***Example 1*** —

(A) *Facts.* G is the owner of a variable annuity contract (Contract S) under an individual account plan that has not been annuitized. Contract S provides a death benefit until the end of the calendar year in which the owner attains the age of 84 equal to the greater of the current Contract S notional account balance (dollar amount credited to G under the contract) and the largest notional account balance at any previous policy anniversary reduced proportionally for subsequent partial distributions (High Water Mark). Contract S provides a death benefit in calendar years after the calendar year in which the owner attains age 84 equal to the current notional account balance. Contract S provides that assets within the contract may be invested in a Fixed Account at a guaranteed rate of 2 percent. Contract S provides no other additional benefits.

(B) *Actuarial calculations.* At the end of 2028, when G has an attained age of 78 and 9 months, the notional account balance of Contract S (after the distribution for 2028 of 4.55 percent of the notional account balance as of December 31, 2027) is $550,000, and the High Water Mark, before adjustment for any withdrawals from Contract S in 2028, is $1,000,000. Thus, Contract S will provide additional benefits (that is, the death benefits in excess of the notional account balance) through 2034, the year S turns 84. The actuarial present value of these additional benefits at the end of 2028 is determined to be $67,978 (12 percent of the notional account balance). In making this determination, the following assumptions are made: on average, deaths occur mid-year; the investment return on G's notional account balance is 2 percent per annum; and minimum required distributions (determined without regard to additional benefits under the Contract S) are made at the end of each year. The following two tables summarize the actuarial methodology used in determining the actuarial present value of the additional benefit.

TABLE 2 TO PARAGRAPH (m)(4)(i)(B)

Year	Death benefit during year	End-of-year notional account balance before withdrawal	Average notional account balance	Withdrawal at end of year	End-of-year notional account balance after withdrawal
2028	$1,000,000				$550,000
2029	[1] 954,545	[2] $561,000	[3] $555,500	[4] $26,606	534,934
2030	909,306	545,633	540,283	26,482	519,151
2031	864,291	529,534	524,342	26,760	502,774

[1] *$1,000,000 death benefit reduced 4.55 percent for withdrawal during 2028.*

[2] *Notional account balance at end of preceding year (after distribution) increased by 2 percent return for year.*

[3] *Average of $550,000 notional account balance at end of preceding year (after distribution) and $561,000 notional account balance at end of current year (before distribution).*

[4] *December 31, 2028 notional account balance (before distribution) divided by uniform lifetime table age 79 factor of 21.1.*

Year	Death benefit during year	End-of-year notional account balance before withdrawal	Average notional account balance	Withdrawal at end of year	End-of-year notional account balance after withdrawal
2032	819,740	512,829	507,801	27,177	485,652
2033	775,430	495,365	490,509	27,438	467,927
2034	731,620	477,286	472,606	27,853	449,433

[1] $1,000,000 death benefit reduced 4.55 percent for withdrawal during 2028.

[2] Notional account balance at end of preceding year (after distribution) increased by 2 percent return for year.

[3] Average of $550,000 notional account balance at end of preceding year (after distribution) and $561,000 notional account balance at end of current year (before distribution).

[4] December 31, 2028 notional account balance (before distribution) divided by uniform lifetime table age 79 factor of 21.1.

TABLE 3 TO PARAGRAPH (m)(4)(i)(B)

Year	Survivorship to start of year	Interest discount to end of 2028	Mortality rate during year	Discounted additional benefits within year
2028				
2029	1.00000	.97590	[5].03321	12,933
2030	.96679	[6].92943	.03739	[7] 12,398
2031	[8].93064	.88517	.04198	11,756
2032	.89157	.84302	.04715	11,055
2033	.84953	.80288	.05305	10,310
2034	.80446	.76464	.05979	9,526

[5] One-quarter age 78 rate plus three-quarters age 79 rate.

[6] Five percent discounted 18 months ($1.05^{(-1.5)}$).

[7] Blended age 79/age 80 mortality rate (.03739) multiplied by the $369,023 excess of death benefit over the average notional account balance ($909,306 less $540,283) multiplied by .96679 probability of survivorship to the start of 2030 multiplied by 18-month interest discount of .92943.

[8] Survivorship to start of preceding year (.96679) multiplied by probability of survivorship during prior year (1−.03739).

Year	Survivorship to start of year	Interest discount to end of 2028	Mortality rate during year	Discounted additional benefits within year
				$67,978

[5] *One-quarter age 78 rate plus three-quarters age 79 rate.*

[6] *Five percent discounted 18 months ($1.05^{(-1.5)}$).*

[7] *Blended age 79/age 80 mortality rate (.03739) multiplied by the $369,023 excess of death benefit over the average notional account balance ($909,306 less $540,283) multiplied by .96679 probability of survivorship to the start of 2030 multiplied by 18-month interest discount of .92943.*

[8] *Survivorship to start of preceding year (.96679) multiplied by probability of survivorship during prior year (1−.03739).*

(C) ***Conclusion.*** Because Contract S provides that, in the case of a distribution, the value of the additional death benefit (which is the only additional benefit available under the contract) is reduced by an amount that is at least proportional to the reduction in the notional account balance and, at age 78 and 9 months, the sum of the notional account balance (dollar amount credited to the employee under the contract) and the actuarial present value of the additional death benefit is no more than 120 percent of the notional account balance, the exclusion under paragraph (m)(3)(i) of this section applies for 2029. Therefore, for purposes of applying the rules in § 1.401(a)(9)-5, the entire interest under Contract S may be determined as the notional account balance (that is, without regard to the additional death benefit).

(ii) ***Example 2*** —

(A) ***Facts.*** The facts are the same as in paragraph (m)(4)(i) of this section (*Example 1*), except that the notional account balance is $550,000 at the end of 2028. In this instance, the actuarial present value of the death benefit in excess of the notional account balance in 2028 is determined to be $97,273 (24 percent of the notional account balance). The following two tables summarize the actuarial methodology used in determining the actuarial present value of the additional benefit.

TABLE 4 TO PARAGRAPH (m)(4)(ii)(A)

Year	Death benefit during year	End-of-year notional account balance before withdrawal	Average notional account balance	Withdrawal at end of year	End-of-year notional account balance after withdrawal
2028	$1,000,000				$400,000

Year	Death benefit during year	End-of-year notional account balance before withdrawal	Average notional account balance	Withdrawal at end of year	End-of-year notional account balance after withdrawal
2029	954,545	$408,000	$404,000	$18,957	389,043
2030	909,306	396,824	392,933	19,260	377,564
2031	864,291	385,115	381,339	19,462	365,653
2032	819,740	372,966	369,310	19,765	353,201
2033	775,430	360,265	356,733	19,955	340,310
2034	731,620	347,116	343,713	20,257	326,859

TABLE 5 TO PARAGRAPH (m)(4)(ii)(A)

Year	Survivorship to start of year	Interest discount to end of 2028	Mortality rate during year	Discounted additional benefits within year
2028				
2029	1.00000	.97590	.03321	$17,843
2030	.96679	.92943	.03739	17,349
2031	.93064	.88517	.04198	16,701
2032	.89157	.84302	.04715	15,963
2033	.84953	.80288	.05305	15,150
2034	.80446	.76464	.05979	14,267
				$97,273

(B) ***Conclusion.*** Because the sum of the notional account balance and the actuarial present value of the additional death benefit is more than 120 percent of the notional account balance, the exclusion under paragraph (m)(3)(i) of this section does not apply for 2029. Therefore, for purposes of applying the rules in § 1.401(a)(9)-5, the entire interest under Contract S must include the actuarial present value of the additional death benefit.

(n) ***Change in annuity payment period*** —

(1) ***In general.*** An annuity payment period may be changed in accordance with the reannuitization provisions set forth in paragraph (n)(2) of this section or in association with an annuity payment increase described in paragraph (o) of this section.

(2) ***Reannuitization.*** If, in a stream of annuity payments that otherwise satisfies section 401(a)(9), the annuity payment period is changed and the annuity payments are modified in association with that change, this modification will not cause the distributions to fail to satisfy section 401(a)(9) provided the conditions set forth in paragraph (n)(3) of this section are satisfied, and—

(i) The modification occurs at the time that the employee retires or in connection with a plan termination;

(ii) The annuity payments prior to modification are annuity payments paid over a period certain without life contingencies; or

(iii) The annuity payments after modification are paid under a qualified joint and survivor annuity over the joint lives of the employee and a designated beneficiary, the employee's spouse is the sole beneficiary, and the modification occurs in connection with the employee becoming married to that spouse.

(3) ***Conditions.*** In order to modify a stream of annuity payments in accordance with paragraph (n)(2) of this section, the following conditions must be satisfied—

(i) The future payments under the modified stream satisfy section 401(a)(9) and this section (determined by treating the date of the change as a new annuity starting date and the actuarial present value of the remaining payments prior to modification as the entire interest of the participant);

(ii) For purposes of sections 415 and 417, the modification is treated as a new annuity starting date;

(iii) After taking into account the modification, the annuity stream satisfies section 415 (determined at the original annuity starting date, using the interest rates and mortality tables applicable as of that date); and

(iv) The end point of the period certain, if any, for any modified payment period is not later than the end point available under section 401(a)(9) to the employee at the original annuity starting date.

(4) ***Examples.*** For the purposes of the examples in this paragraph (n)(4), assume that the applicable segment rates under section 417(e)(3) are 5.00 percent, 5.50 percent, and 6.00 percent, and the applicable mortality table under section 417(e)(3) is the mortality table provided in Notice 2023-73, 2023-45 IRB 232. In addition, assume that the section 415 limit at age 72 for a straight life annuity is $306,667 (which is the lesser of the annual benefit under section 415(b)(1)(A), as adjusted pursuant to section 415(d) and further adjusted for age 72 in accordance with § 1.415(b)-1(e)(1)(i), and 100 percent of the participant's average compensation for the participant's high 3 years):

(i) ***Example 1*** —

(A) ***Facts*** —

(*1*) ***Background.*** Participant D has 10 years of participation in a frozen defined benefit plan (Plan W). D is not retired and elects to receive distributions from Plan W in the form of a straight life annuity with annual payments of $310,000 per year beginning in 2025 at a date when D has an attained age of 72. Plan W offers non-retired employees in pay status the opportunity to modify their annuity payments due to an associated change in the payment period at retirement. Plan W treats the date of the

change in payment period as a new annuity starting date for purposes of sections 415 and 417. Thus, for example, the plan provides a new qualified and joint survivor annuity election and obtains spousal consent. Plan W determines modifications of annuity payment amounts at retirement so that the present value of future new annuity payment amounts (taking into account the new associated payment period) is actuarially equivalent to the present value of future pre-modification annuity payments (taking into account the pre-modification annuity payment period). Actuarial equivalency for this purpose is determined using the applicable segment rates under section 417(e)(3)(C) and the applicable mortality table as of the date of modification.

(2) ***Payment of retirement benefits to Participant D.*** D retires in 2029 at the age of 76 and, after receiving four annual payments of $310,000, elects to receive the remaining distributions from Plan W in the form of an immediate final lump sum payment of $2,795,732. Because payment of retirement benefits in the form of an immediate final lump sum payment satisfies (in terms of form) section 401(a)(9), the condition under paragraph (n)(3)(i) of this section is met.

(B) ***Analysis.*** Because Plan W treats a modification of an annuity payment stream at retirement as a new annuity starting date for purposes of sections 415 and 417, the condition under paragraph (n)(3)(ii) of this section is met. After taking into account the modification, the annuity stream determined as of the original annuity starting date consists of annual payments beginning at age 72 of $310,000, $310,000, $310,000, $310,000, and $2,795,732. This benefit stream is actuarially equivalent to a straight life annuity at age 72 of $315,145, calculated in accordance with section 415(b)(2)(E)(ii), which is an amount less than the section 415 limit determined at the original annuity starting date. Thus, the condition under paragraph (n)(3)(iii) of this section is met. In addition, because the modified payment period does not include a period certain, paragraph (n)(3)(iv) of this section does not apply.

(C) ***Conclusion.*** Because a stream of annuity payments in the form of a straight life annuity satisfies section 401(a)(9), and because each of the conditions under paragraph (n)(3) of this section are satisfied, the modification of annuity payments to D described in this example meets the requirements of this paragraph (n).

(ii) ***Example 2*** —

(A) ***Facts.*** The facts are the same as in paragraph (n)(4)(i) of this section (*Example 1*), except that the straight life annuity payments are paid at a rate of $330,000 per year and, after D retires, the lump sum payment at age 76 is $2,976,102. Thus, after taking into account the modification, the annuity stream determined as of the original annuity starting date consists of annual payments beginning at age 72 of $330,000, $330,000, $330,000, $330,000, and $2,976,102.

(B) ***Conclusion.*** The benefit stream described in paragraph (n)(4)(ii)(A) of this section is actuarially equivalent to a straight life annuity at age 72 of $335,477, calculated in accordance with section 415(b)(2)(E)(ii), which exceeds the section 415 limit determined at the original annuity starting date. Thus, the lump sum payment to D fails to satisfy the condition under paragraph (n)(3)(iii) of this section. Therefore, the lump sum payment to D fails to meet the requirements of this paragraph (n) and fails to satisfy the requirements of section 401(a)(9).

(iii) *Example 3* —

(A) *Facts* —

(*1*) ***Background.*** Participant E has 10 years of participation in Plan X, a frozen defined benefit plan. E retires in 2025 at a date when E's attained age is 72. E elects to receive annual distributions from Plan X in the form of a 27-year period certain annuity (that is, a 27-year annuity payment period without a life contingency) paid at a rate of $37,000 per year beginning in 2025 with future payments increasing at a rate of 4.00 percent per year (that is, the 2026 payment will be $38,480, the 2027 payment will be $40,019 and so on). Plan X offers participants in pay status whose annuity payments are in the form of a term-certain annuity the opportunity to modify their payment period at any time and treats the modifications as a new annuity starting date for the purposes of sections 415 and 417. Thus, for example, the plan provides a new qualified and joint survivor annuity election and obtains spousal consent.

(*2*) ***Plan provisions for determination of actuarial equivalence.*** Plan X determines modifications of annuity payment amounts so that the present value of future new annuity payment amounts (taking into account the new associated payment period) is actuarially equivalent to the present value of future pre-modification annuity payments (taking into account the pre-modification annuity payment period). Actuarial equivalency for this purpose is determined using 5.00 percent and the applicable mortality table as of the date of modification.

(*3*) ***Modification of retirement benefits paid to Participant E.*** In 2028, E, after receiving annual payments of $37,000, $38,480, and $40,019, elects to receive the remaining distributions from Plan W in the form of a straight life annuity paid with annual payments of $92,133 per year.

(B) ***Analysis.*** Because payment of retirement benefits in the form of a straight life annuity satisfies (in terms of form) section 401(a)(9), the condition under paragraph (n)(3)(i) of this section is met. Because Plan X treats a modification of an annuity payment stream at retirement as a new annuity starting date for purposes of sections 415 and 417, the condition under paragraph (n)(3)(ii) of this section is met. After taking into account the modification, the annuity stream determined as of the original annuity starting date consists of annual payments beginning at age 72 of $37,000, $38,480, and $40,019, and a straight life annuity beginning at age 75 of $92,133. This benefit stream is actuarially equivalent to a straight life annuity at age 72 of $81,924, calculated in accordance with section 415(b)(2)(E)(i), which is an amount less than the section 415 limit determined at the original annuity starting date. Thus, the condition under paragraph (n)(3)(iii) of this section is met. In addition, because the modified payment period does not include a period certain, paragraph (n)(3)(iv) of this section does not apply.

(C) ***Conclusion.*** Because a stream of annuity payments in the form of a straight life annuity satisfies section 401(a)(9), and each of the conditions under paragraph (n)(3) of this section are satisfied, the modification of annuity payments to E meets the requirements of this paragraph (n).

(o) *Increase in annuity payments* —

(1) ***General rules.*** Notwithstanding the general rule under paragraph (a)(1) of this section prohibiting increases in annuity payments, the following increases in annuity payments are permitted—

(i) An annual percentage increase that does not exceed the percentage increase in an eligible cost-of-living index (as defined in paragraph (o)(2) of this section) for a 12-month period ending in the year during which the increase occurs or the prior year;

(ii) A percentage increase that occurs at specified times (for example, at specified ages) and does not exceed the cumulative total of annual percentage increases in an eligible cost-of-living index (as defined in paragraph (o)(2) of this section) after the annuity starting date, or if later, the date of the most recent percentage increase;

(iii) An increase by a constant percentage, applied not less frequently than annually, at a rate that is less than 5 percent per year;

(iv) An increase eliminating some or all of the reduction in the amount of the employee's payments to provide for a survivor benefit, but only if there is no longer a survivor benefit because the beneficiary whose life was being used to determine the period described in section 401(a)(9)(A)(ii) over which payments were being made dies or is no longer the employee's beneficiary pursuant to a qualified domestic relations order within the meaning of section 414(p);

(v) An increase to pay increased benefits that result from a plan amendment;

(vi) An increase to allow a beneficiary to convert the survivor portion of a joint and survivor annuity into a single-sum distribution upon the employee's death;

(vii) An increase to the extent permitted in accordance with paragraph (o)(3) or (4); or

(viii) An increase resulting from the resumption of benefits that were suspended pursuant to section 411(a)(3)(B), 418E, or 432(e)(9).

(2) ***Eligible cost of living index*** —

(i) ***In general.*** For purposes of this paragraph (o), an eligible cost-of-living index means an index described in paragraph (o)(2)(ii), (iii), or (iv) of this section.

(ii) ***Consumer price index.*** An index is described in this paragraph (o)(2)(ii) if it is a consumer price index that is based on prices of all items (or all items excluding food and energy) and issued by the Bureau of Labor Statistics, including an index for a specific population (for example, urban consumers or urban wage earners and clerical workers) and an index for a geographic area or areas (for example, a metropolitan area or State).

(iii) ***Consumer price index with banking.*** An index is described in this paragraph (o)(2)(iii) if it is a percentage adjustment based on a cost-of-living index described in paragraph (o)(2)(ii) of this section, or a fixed percentage if less. In any year when the cost-of-living index is lower than the fixed percentage, the fixed percentage may be treated as an increase in an eligible cost-of-living index, provided it does not exceed the sum of—

(A) The cost-of-living index for that year, and

(B) The accumulated excess of the annual cost-of-living index from each prior year over the fixed annual percentage used in that year (reduced by any amount previously utilized under this paragraph (o)(2)(iii)(B)).

(iv) ***Adjustment based on compensation for position.*** An index is described in this paragraph (o)(2)(iv) if it is a percentage adjustment based on the increase in compensation for the position held by the employee at the time of retirement, and provided under either—

(A) The terms of a governmental plan (within the meaning of section 414(d)), or

(B) The terms of a nongovernmental plan, as in effect on April 17, 2002.

(3) ***Additional permitted increases for annuity contracts purchased from insurance companies.*** Payments made from an annuity contract purchased from an insurance company will not fail to satisfy the nonincreasing payment requirement in paragraph (a)(1) of this section merely because the payments are increased in accordance with one or more of the following—

(i) As a result of dividend payments or other payments that result from actuarial gains (within the meaning of paragraph (o)(5) of this section), but only if—

(A) Actuarial gain is measured no less frequently than annually;

(B) The resulting dividend payments or other payments are either paid no later than the year following the year for which the actuarial experience is measured or paid in the same form as the payment of the annuity over the remaining period of the annuity (beginning no later than the year following the year for which the actuarial experience is measured); and

(C) The issuer of the contract uses reasonable actuarial methods and assumptions, as determined in good faith, when calculating the initial annuity payments, the issuer's experience with respect to those factors, and the amount of the dividend payments or other payments;

(ii) As a result of a shortening of the payment period with respect to the annuity or a full or partial commutation of the future annuity payments, provided that the amount of the payment pursuant to the commutation is determined using reasonable actuarial methods and assumptions, as determined in good faith by the issuer of the contract.

(iii) To provide a final payment upon death that does not exceed the amount by which the total consideration paid for the contract exceeds the aggregate amount of prior distributions under the contract; or

(iv) To provide a short-term advance of payments under the annuity, under which annuity payments that would otherwise satisfy the requirements of this section are paid up to one year before the payments were scheduled to be made.

(4) ***Additional permitted increases for annuity payments from a qualified trust.*** Annuity payments made under a defined benefit plan qualified under section 401(a) (including payments under an annuity contract purchased from an insurance company that provides the same benefits that would have been payable under the defined benefit plan if an annuity contract had not been purchased, but not an annuity contract that provides other benefits) will not fail to satisfy the nonincreasing payment requirement in paragraph (a)(1) of this section merely because the payments are increased in accordance with one of the following—

(i) As a result of dividend payments or other payments that result from actuarial gains (within the meaning of paragraph (o)(5) of this section), but only if—

(A) The actuarial gain is measured no less frequently than annually;

(B) The resulting dividend payments or other payments are either paid no later than the year following the year for which the actuarial experience is measured or paid in the same form as the annuity over the remaining period of the annuity (beginning no later than the year following the year for which the actuarial experience is measured);

(C) The actuarial gain taken into account is limited to the actuarial gain from investment experience;

(D) The assumed interest used to calculate actuarial gains is not less than 3 percent; and

(E) The payments are not increasing by a constant percentage as described in paragraph (o)(1)(iii) of this section; or

(ii) To provide a final payment upon the death of the employee that does not exceed the excess of the actuarial present value of the employee's accrued benefit (within the meaning of section 411(a)(7)) calculated as of the annuity starting date using the applicable interest rate and the applicable mortality table under section 417(e) (or, if greater, the total amount of employee contributions plus interest) over the total of payments before the death of the employee.

(5) ***Actuarial gain defined.*** For purposes of this paragraph (o), actuarial gain means the difference between an amount determined using the actuarial assumptions (that is, investment return, mortality, expense, and other similar assumptions) used to calculate the initial payments before adjustment for any increases and the amount determined under the actual experience with respect to those factors. Actuarial gain also includes differences between the amount determined using actuarial assumptions when an annuity was purchased or commenced, and the amount determined using actuarial assumptions used in calculating payments at the time the actuarial gain is determined.

(6) ***Examples.*** This paragraph (o) is illustrated by the following examples.

(i) ***Example 1. Variable annuity*** —

(A) ***Facts.*** A retired participant Z1 in Plan X, a defined contribution plan, attains age 72 in 2021. Z1 elects to purchase Contract Y1 from Insurance Company W in 2025. Contract Y1 is a single life annuity contract with a 10-year period certain. Contract Y1 provides for an initial annual payment calculated with an assumed interest rate (AIR) of 3 percent, which is assumed for purposes of this example to be a reasonable interest rate selected in good faith. Subsequent payments are determined by multiplying the prior year's payment by a fraction, the numerator of which is 1 plus the actual return on the separate account assets underlying Contract Y1 since the preceding payment (which is reasonably determined in good faith) and the denominator of which is 1 plus the AIR during that period.

(B) ***Analysis.*** Under paragraph (o)(3)(i) of this section, payments made from an annuity contract purchased from an insurance company will not fail to satisfy the nonincreasing payment requirement on account of payment increases that result from actuarial gains (within the meaning of paragraph (o)(5) of this section), if the conditions set forth in paragraphs (o)(3)(i)(A) through (C) of this section are satisfied. The payment increases under Contract Y1 are the result of actuarial gain within the meaning of paragraph (o)(5) of this section because they are the result of the difference between investment experience and the 3 percent interest rate used to calculate the initial payments under Contract Y1. Contract Y1 satisfies the requirement of paragraph (o)(3)(i)(A) of this section because actuarial gain under Contract Y1 is measured annually. Contract Y1 satisfies the

requirement of paragraph (o)(3)(i)(B) of this section because the actuarial gains are paid over the remaining period of the annuity beginning in the year following the year for which the actuarial experience is measured. Contract Y1 satisfies the requirement of paragraph (o)(3)(i)(C) of this section because the issuer of Contract Y1 used reasonable actuarial methods and assumptions, as determined in good faith, when calculating the initial annuity payments, the issuer's experience with respect to those factors, and the amount of adjustments under Contract Y1.

(C) ***Conclusion.*** Because payments under Contract Y1 increase only as a result of actuarial gain, and those increases satisfy the conditions set forth in paragraphs (o)(3)(i)(A) through (C) of this section, those increases are described in paragraph (o)(3)(i) of this section and therefore are excepted from the nonincreasing payment requirement of paragraph (a)(1) of this section pursuant to the exception under paragraph (o)(1)(vii) of this section.

(ii) ***Example 2. Participating annuity*** —

(A) ***Facts.*** A retired participant Z2 in Plan X, a defined contribution plan, attains age 73 in 2025. Z2 elects to purchase Contract Y2 from Insurance Company W in 2025. Contract Y2 is a participating single life annuity contract with a 10-year period certain. Contract Y2 provides for level annual payments with dividends paid in a lump sum in the year after the year for which the actuarial experience is measured or paid out levelly beginning in the year after the year for which the actuarial gain is measured over the remaining lifetime and period certain (that is, the period certain ends at the same time as the original period certain). Dividends are determined annually by the Board of Directors of Company W based upon a comparison of actual actuarial experience to expected actuarial experience in the past year, with those amounts determined on a reasonable basis in good faith. The initial payment was determined in good faith using reasonable actuarial assumptions and methods.

(B) ***Analysis.*** Under paragraph (o)(3)(i) of this section, payments made from an annuity contract purchased from an insurance company will not fail to satisfy the nonincreasing payment requirement on account of payment increases that result from actuarial gains (within the meaning of paragraph (o)(5) of this section), if the conditions set forth in paragraphs (o)(3)(i)(A) through (C) of this section are satisfied. The payment increases under Contract Y2 are the result of actuarial gain within the meaning of paragraph (o)(5) of this section. Contract Y2 satisfies the requirement of paragraph (o)(3)(i)(A) of this section because actuarial gain under Contract Y2 is measured annually. Contract Y2 satisfies the requirement of paragraph (o)(3)(i)(B) of this section because the resulting increases are paid either in the form of a lump sum or over the remaining period of the annuity beginning in the year following the year for which the actuarial experience is measured. Contract Y2 satisfies the requirement of paragraph (o)(3)(i)(C) of this section because the issuer of Contract Y2 used reasonable actuarial methods and assumptions, as determined in good faith, when calculating the initial annuity payments, the issuer's experience with respect to those factors, and the amount of adjustments under Contract Y2.

(C) ***Conclusion.*** Because payments under Contract Y2 increase only as a result of actuarial gain, and those increases satisfy the conditions set forth in paragraphs (o)(3)(i)(A) through (C) of this section, those increases are described in paragraph (o)(3)(i) of this section and therefore are excepted from the nonincreasing payment requirement of paragraph (a)(1) of this section pursuant to the exception under paragraph (o)(1)(vii) of this section.

(iii) ***Example 3. Participating annuity with dividend accumulation*** —

(A) ***Facts.*** The facts are the same as in paragraph (o)(6)(ii) of this section (*Example 2*), except that the annuity provides a dividend accumulation option under which Z2 may defer receipt of the dividends to a time selected by Z2.

(B) ***Conclusion.*** Because the dividend accumulation option permits dividends to be paid commencing later than the end of the year following the year for which the actuarial experience is measured, the dividend accumulation option does not meet the requirements of paragraph (o)(3)(i)(B) of this section. Neither does the dividend accumulation option fit within any of the other permissible increases described in paragraph (o)(3) of this section. Accordingly, payment increases pursuant to the dividend accumulation option are not excepted from the nonincreasing payment requirement of paragraph (a)(1) of this section pursuant to the exception under paragraph (o)(1)(vii) of this section. Thus, Contract Y2, and consequently any distributions from the contract, fail to meet the requirements of this paragraph (o) and thus to fail to satisfy the requirements of section 401(a)(9).

(iv) ***Example 4. Participating annuity with dividends used to purchase additional death benefits*** —

(A) ***Facts.*** The facts are the same as in paragraph (o)(6)(ii) of this section (*Example 2*), except that the annuity provides an option under which actuarial gain under the contract is used to provide additional death benefit protection for Z2.

(B) ***Conclusion.*** Because this option permits payments as a result of actuarial gain to be paid commencing later than the end of the year following the year for which the actuarial experience is measured, the option does not meet the requirements of paragraph (o)(3)(i)(B) of this section. Neither does the option fit within any of the other permissible increases described in paragraph (o)(3) of this section. Accordingly, payment increases pursuant to the dividend accumulation option are not excepted from the nonincreasing payment requirement of paragraph (a)(1) of this section pursuant to the exception under paragraph (o)(1)(vii) of this section. Thus, Contract Y2, and consequently any distributions from the contract, fail to meet the requirements of this paragraph (o) and thus to fail to satisfy the requirements of section 401(a)(9).

(p) ***Payments to children*** —

(1) ***In general.*** Payments under a defined benefit plan or annuity contract that are made to an employee's child until the child reaches the age of majority as provided in paragraph (p)(2) of this section (or dies, if earlier) may be treated, for purposes of section 401(a)(9), as if the payments under the defined benefit plan or annuity contract were made to the surviving spouse to the extent they become payable to the surviving spouse upon cessation of the payments to the child. Thus, when payments described in this paragraph (p)(1) become payable to the surviving spouse because the

child attains the age of majority, there is not an increase in benefits under paragraph (a) of this section. Likewise, the age of the child receiving the payments described in this paragraph (p)(1) is not taken into consideration for purposes of the MDIB requirement of paragraph (b) of this section.

(2) *Age of majority* —

(i) ***General rule.*** Except as provided in paragraph (p)(2)(ii) of this section, the determination of when an employee's child attains the age of majority is made under the rules of § 1.401(a)(9)-4(e)(3).

(ii) ***Exception for preexisting plan terms.*** A defined benefit plan may apply a definition of the age of majority other than the definition in paragraph (p)(2)(i) of this section, but only if the plan terms regarding the age of majority—

(A) Were adopted on or before February 24, 2022; and

(B) Met the requirements of A-15 of 26 CFR 1.401(a)(9)-6 (as it appeared in the April 1, 2021, edition of 26 CFR part 1).

(q) *Qualifying longevity annuity contract* —

(1) ***Definition of qualifying longevity annuity contract.*** A qualifying longevity annuity contract (QLAC) is an annuity contract described in paragraph (d) of this section that is purchased from an insurance company for an employee and that, in accordance with the rules of application of paragraph (q)(4) of this section, satisfies each of the following requirements—

(i) Premiums for the contract satisfy the limitations of paragraph (q)(2) of this section;

(ii) The contract provides that distributions under the contract must commence not later than a specified annuity starting date that is no later than the first day of the month next following the 85th anniversary of the employee's birth;

(iii) The contract provides that, after distributions under the contract commence, those distributions must satisfy the requirements of this section (other than the requirement in paragraph (a)(3) of this section that annuity payments commence on or before the required beginning date);

(iv) After the required beginning date, the contract does not make available any commutation benefit, cash surrender right, or other similar feature (other than a right to rescind the contract within a period not exceeding 90 days from the date of purchase);

(v) No benefits are provided under the contract after the death of the employee other than the benefits described in paragraph (q)(3) of this section;

(vi) When the contract is issued (or December 31, 2016, if later), the contract (or a rider or endorsement with respect to that contract) states that the contract is intended to be a QLAC; and

(vii) The contract is not a variable contract under section 817, an indexed contract, or a similar contract, except to the extent provided by the Commissioner in revenue rulings, notices, or other guidance published in the Internal Revenue Bulletin (see § 601.601(d) of this chapter).

(2) *Limitation on premiums* —

(i) ***In general.*** The premiums paid with respect to the contract on a date (premium payment date) satisfy the limitation of this paragraph (q)(2) if they do not exceed the dollar limitation of paragraph (q)(2)(ii) of this section.

(ii) ***Dollar limitation.*** The dollar limitation as of a premium payment date is an amount by which $200,000 (as adjusted under paragraph (q)(4)(ii)(A) of this section), exceeds the sum of—

(A) The premiums paid before that date with respect to the contract, and

(B) The premiums paid on or before that date with respect to any other contract that is intended to be a QLAC and that is purchased for the employee under the plan, or any other plan, annuity, or account described in section 401(a), 403(a), 403(b), or 408 or eligible governmental plan under section 457(b).

(iii) ***Exchange of insurance contract for QLAC.*** For purposes of this paragraph (q)(2), if an insurance contract is exchanged for a contract intended to be a QLAC, the fair market value of the exchanged contract will be treated as a premium paid for the QLAC. However, if an insurance contract is surrendered for its cash value, the surrender extinguishes all benefits and other characteristics of the contract, and the cash is used to purchase a QLAC, then only the cash from the surrendered contract is treated as a premium paid for the QLAC.

(3) ***Payments after death of the employee*** —

(i) ***Surviving spouse is sole beneficiary*** —

(A) ***Death on or after annuity starting date.*** If the employee dies on or after the annuity starting date for the contract and the employee's surviving spouse is the sole beneficiary under the contract then, except as provided in paragraph (q)(3)(iv) of this section, the only benefit permitted to be paid after the employee's death is a life annuity payable to the surviving spouse under which the periodic annuity payment does not exceed 100 percent of the periodic annuity payment that was payable to the employee.

(B) ***Death before annuity starting date.*** If the employee dies before the annuity starting date and the employee's surviving spouse is the sole beneficiary under the contract, then, except as provided in paragraph (q)(3)(iv) of this section, the only benefit permitted to be paid after the employee's death is a life annuity payable to the surviving spouse under which the periodic annuity payment does not exceed 100 percent of the periodic annuity payment that would have been payable to the employee as of the date that benefits to the surviving spouse commence. However, the annuity is permitted to exceed 100 percent of the periodic annuity payment that would have been payable to the employee to the extent necessary to satisfy the requirement to provide a qualified preretirement survivor annuity (as defined under section 417(c)(2) of the Code or section 205(e)(2) of the Employee Retirement Income Security Act of 1974, Pub. L. 93-406, 88 Stat. 829, as amended (ERISA), pursuant to section 401(a)(11)(A)(ii) of the Code or section 205(a)(2) of ERISA). Any life annuity payable to the surviving spouse under this paragraph (q)(3)(i)(B) must commence no later than the date on which the annuity payable to the employee would have commenced under the contract if the employee had not died.

(ii) ***Surviving spouse is not sole beneficiary*** —

(A) ***Death on or after annuity starting date.*** If the employee dies on or after the annuity starting date for the contract and the employee's surviving spouse is not the sole beneficiary under the contract then, except as provided in paragraph (q)(3)(iv) of this section, the only benefit permitted to be paid after the employee's death is a life annuity payable to the designated beneficiary under which the periodic annuity payment does not exceed the applicable percentage (determined under paragraph (q)(3)(iii) of this section) of the periodic annuity payment that is payable to the employee.

(B) ***Death before annuity starting date.*** If the employee dies before the annuity starting date and the employee's surviving spouse is not the sole beneficiary under the contract, then, except as provided in paragraph (q)(3)(iv) of this section, the only benefit permitted to be paid after the employee's death is a life annuity payable to the designated beneficiary under which the periodic annuity payment is not in excess of the applicable percentage (determined under paragraph (q)(3)(iii) of this section) of the periodic annuity payment that would have been payable to the employee as of the date that benefits to the designated beneficiary commence under this paragraph (q)(3)(ii)(B). In any case in which the employee dies before the annuity starting date, any life annuity payable to a designated beneficiary under this paragraph (q)(3)(ii)(B) must commence by the last day of the calendar year following the calendar year of the employee's death.

(C) ***Designated beneficiary who is not an eligible designated beneficiary.*** Benefits paid to a designated beneficiary under this paragraph (q)(3)(ii) must satisfy the rules of section 401(a)(9)(H) and paragraph (d)(2) of this section.

(iii) ***Applicable percentage*** —

(A) ***Contracts without pre-annuity starting date death benefits.*** If, as described in paragraph (q)(3)(iii)(E) of this section, the contract does not provide for a pre-annuity starting date non-spousal death benefit, the applicable percentage is the percentage described in the table in paragraph (b)(3) of this section.

(B) ***Contracts with set beneficiary designation.*** If the contract provides for a set non-spousal beneficiary designation as described in paragraph (q)(3)(iii)(F) of this section (and is not a contract described in paragraph (q)(3)(iii)(E) of this section), the applicable percentage is the percentage described in table 6 to paragraph (q)(3)(iii)(D).

(C) ***Contracts providing for return of premium.*** If the contract provides for a return of premium as described in paragraph (q)(3)(v) of this section, the applicable percentage is 0.

(D) ***Applicable percentage table.*** The applicable percentage is the percentage specified in following table for the adjusted employee/beneficiary age difference, determined in the same manner as in paragraph (b)(2)(iii) of this section.

TABLE 6 TO PARAGRAPH (q)(3)(iii)(D)

Adjusted employee/beneficiary age difference	Applicable percentage
2 years or less	100
3	88
4	78
5	70
6	63
7	57
8	52
9	48
10	44
11	41
12	38
13	36
14	34
15	32
16	30
17	28
18	27
19	26
20	25
21	24
22	23
23	22
24	21
25 and greater	20

(E) ***No pre-annuity starting date non-spousal death benefit.*** A contract is described in this paragraph (q)(3)(iii)(E) if the contract provides that no benefit may be paid to a beneficiary other than the employee's surviving spouse after the employee's death—

(*1*) In any case in which the employee dies before the annuity starting date under the contract; and

(2) In any case in which the employee selects an annuity starting date that is earlier than the specified annuity starting date under the contract and the employee dies less than 90 days after making that election.

(F) ***Contracts permitting set non-spousal beneficiary designation.*** A contract provides for a set non-spousal beneficiary designation as described in this paragraph (q)(3)(iii)(F) if the contract provides that, if the beneficiary under the contract is not the employee's surviving spouse, then benefits are payable to the beneficiary only if the beneficiary was irrevocably designated on or before the later of the date of purchase and the employee's required beginning date. A contract does not fail to be described in the preceding sentence merely because the surviving spouse becomes the sole beneficiary before the annuity starting date. In those circumstances, the requirements of paragraph (q)(3)(i) of this section apply and not the requirements of this paragraph (q)(3)(iii).

(iv) ***Calculation of early annuity payments.*** For purposes of paragraphs (q)(3)(i)(B) and (ii)(B) of this section, to the extent the contract does not provide an option for the employee to select an annuity starting date that is earlier than the date on which the annuity payable to the employee would have commenced under the contract if the employee had not died, the contract must provide a way to determine the periodic annuity payment that would have been payable if the employee were to have an option to accelerate the payments and the payments had commenced to the employee immediately prior to the date that benefit payments to the surviving spouse or designated beneficiary commence.

(v) ***Return of premiums*** —

(A) ***In general.*** In lieu of a life annuity payable to a designated beneficiary under paragraph (q)(3)(i) or (ii) of this section, a QLAC may provide for a benefit to be paid to a beneficiary after the death of the employee up to the amount by which the premium payments made with respect to the QLAC exceed the payments already made under the QLAC.

(B) ***Payments after death of surviving spouse.*** If a QLAC is providing a life annuity to a surviving spouse (or will provide a life annuity to a surviving spouse) under paragraph (q)(3)(i) of this section, it may also provide for a benefit payable to a beneficiary after the death of both the employee and the spouse up to the amount by which the premium payments made with respect to the QLAC exceed the payments already made under the QLAC.

(C) ***Timing of return of premium payment and other rules.*** A return of premium payment under this paragraph (q)(3)(v) must be paid no later than the end of the calendar year following the calendar year in which the employee dies. If the employee's death is after the required beginning date, the return of premium payment is treated as a required minimum distribution for the year in which it is paid and is not eligible for rollover. If the return of premium payment is paid after the death of a surviving spouse who is receiving a life annuity (or after the death of a surviving spouse who has not yet commenced receiving a life annuity after the death of the employee), the return of premium payment under this paragraph (q)(3)(v) must be made no later than the end of the calendar year following the calendar year in which the surviving spouse dies. If the surviving spouse's death is after the required beginning date for the surviving spouse, then the return of premium payment is treated as a required minimum distribution for the year in which it is paid and is not eligible for rollover.

(vi) ***Multiple beneficiaries.*** If an employee has more than one designated beneficiary under a QLAC, the rules in § 1.401(a)(9)-8(a) apply for purposes of paragraphs (q)(3)(i) and (ii) of this section.

(vii) ***Treatment of former spouses*** —

(A) ***In general.*** The payment of survivor benefits to the employee's former spouse under an annuity contract will not cause the contract to fail to satisfy the requirements of this paragraph (q)(3) merely because the divorce between the employee and that former spouse occurred after the contract is purchased, provided that a qualified domestic relations order described in section 414(p) (or, to the extent provided in paragraph (q)(3)(vii)(B) of this section, a divorce or separation instrument) satisfying the requirements of paragraph (q)(3)(vii)(C) of this section has been issued in connection with the divorce.

(B) [Reserved]

(C) ***Applicable requirements.*** This paragraph (q)(3)(vii)(C) is satisfied if the qualified domestic relations order (or divorce or separation instrument) issued in connection with the divorce—

(*1*) Provides that the former spouse is entitled to the survivor benefits under the contract;

(*2*) Provides that the former spouse is treated as a surviving spouse for purposes of the contract;

(*3*) Does not modify the treatment of the former spouse as the beneficiary under the contract who is entitled to the survivor benefits; or

(*4*) Does not modify the treatment of the former spouse as the measuring life for the survivor benefits under the contract.

(4) ***Rules of application*** —

(i) ***Rules relating to premiums*** —

(A) ***Reliance on representations.*** For purposes of the limitation on premiums described in paragraph (q)(2) of this section, unless the plan administrator has actual knowledge to the contrary, the plan administrator may rely on an employee's representation (made in writing or such other form as may be prescribed by the Commissioner) of the amount of the premiums described in paragraph (q)(2)(ii)(B) of this section, but only with respect to premiums that are not paid under a plan, annuity, or contract that is maintained by the employer or an entity that is treated as a single employer with the employer under section 414(b), (c), (m), or (o).

(B) ***Consequences of excess premiums and correction.*** If an annuity contract fails to be a QLAC solely because a premium for the contract exceeds the limits under paragraph (q)(2) of this section, then the contract is not a QLAC beginning on the date on which the premium is paid and the value of the contract may not be disregarded under § 1.401(a)(9)-5(b)(4) as of the date on which the contract ceases to be a QLAC (unless the excess premium is returned to the non-QLAC portion of the employee's account in accordance with the next sentence). However, if the excess premium is returned (either in cash or in the form of a contract that is not intended to be a QLAC) to the non-QLAC portion of the employee's account by the end of the calendar year following the calendar year in which the excess

premium was originally paid, then the contract will not be treated as exceeding the limits under paragraph (q)(2) of this section at any time, and the value of the contract will not be included in the employee's account balance under § 1.401(a)(9)-5(b)(4). If the excess premium (including the fair market value of an annuity contract that is not intended to be a QLAC, if applicable) is returned to the non-QLAC portion of the employee's account after the last valuation date for the calendar year in which the excess premium was originally paid, then the employee's account balance for that calendar year must be increased to reflect that excess premium in the same manner as an employee's account balance is increased under § 1.401(a)(9)-7(b) to reflect a rollover received after the last valuation date. If the excess premium is returned to the non-QLAC portion of the employee's account as described in paragraph (q)(4)(ii)(B) of this section, it will not be treated as a violation of the requirement in paragraph (q)(1)(iv) of this section that the contract not provide a commutation benefit.

(ii) ***Dollar and age limitations subject to adjustments*** —

(A) ***Dollar limitation.*** The $200,000 amount under paragraph (q)(2)(ii) of this section will be adjusted at the same time and in the same manner as the limits are adjusted under section 415(d), except that—

(*1*) The base period is the calendar quarter beginning July 1, 2022; and

(*2*) The amount of any increment to the limit that is not a multiple of $10,000 will be rounded to the next lowest multiple of $10,000.

(B) ***Age limitation.*** The maximum age set forth in paragraph (q)(1)(ii) of this section may be adjusted to reflect changes in mortality, with any adjusted age to be prescribed by the Commissioner in revenue rulings, notices, or other guidance published in the Internal Revenue Bulletin. See § 601.601(d) of this chapter.

(C) ***Prospective application of adjustments.*** If a contract fails to be a QLAC because it does not satisfy the dollar limitation in paragraph (q)(2)(ii) of this section or the age limitation in paragraph (q)(1)(ii) of this section, any subsequent adjustment that is made pursuant to this paragraph (q)(4)(ii) will not cause the contract to become a QLAC.

(iii) ***Determination of whether contract is intended to be a QLAC*** —

(A) ***Structural deficiency.*** If a contract fails to be a QLAC at any time for a reason other than an excess premium described in paragraph (q)(4)(i)(B) of this section, then, as of the date of purchase, the contract will not be treated as a QLAC (for purposes of § 1.401(a)(9)-5(b)(4)) or as a contract that is intended to be a QLAC (for purposes of paragraph (q)(2) of this section).

(B) ***Roth IRAs.*** A contract that is purchased under a Roth IRA is not treated as a contract that is intended to be a QLAC for purposes of applying the dollar limitation rule in paragraph (q)(2)(ii) of this section. See A-14(d) of § 1.408A-6. If a QLAC is purchased or held under a plan, annuity, account, or traditional IRA, and that contract is later rolled over or converted to a Roth IRA, the contract is not treated as a contract that is intended to be a QLAC after the date of the rollover or conversion. Thus, premiums paid with respect to the contract will not be taken into account under paragraph (q)(2)(ii) of this section after the date of the rollover or conversion.

(iv) *Certain contract features permitted for QLACs* —

(A) ***Participating annuity contract.*** An annuity contract does not fail to satisfy the requirement of paragraph (q)(1)(vii) of this section merely because it provides for the payment of dividends described in paragraph (n)(3)(iii) of this section.

(B) ***Contracts with cost-of-living adjustments.*** An annuity contract does not fail to satisfy the requirement of paragraph (q)(1)(vii) of this section merely because it provides for a cost-of-living adjustment as described in paragraph (o)(2) of this section.

(v) ***Group annuity contract certificates.*** The requirement under paragraph (q)(1)(vi) of this section that the contract state that it is intended to be a QLAC when issued is satisfied if a certificate is issued under a group annuity contract and the certificate, when issued, states that the employee's interest under the group annuity contract is intended to be a QLAC.

[T.D. 9130, 69 FR 33293, June 15, 2004; 69 FR 68077, Nov. 23, 2004; T.D. 9459, 74 FR 45994, Sept. 8, 2009; T.D. 9673, 79 FR 37639, July 2, 2014; 79 FR 45683, Aug. 6, 2014. T.D. 9930, 85 FR 72477, Nov. 12, 2020; T.D. 10001, 89 FR 58907, July 19, 2024]

§ 1.401(a)(9)-7 Rollovers and transfers.

(a) ***Treatment of rollover from distributing plan.*** If an amount is distributed by a plan, then the amount distributed is still taken into account by the distributing plan for purposes of satisfying the requirements of section 401(a)(9), even if part of the distribution is rolled over into another eligible retirement plan described in section 402(c)(8). However, an amount that is a required minimum distribution under section 401(a)(9) is not eligible to be rolled over (and is therefore includible in the taxpayer's gross income under section 402). For this purpose, the amount that constitutes a required minimum distribution for a calendar year is determined in accordance with § 1.402(c)-2(f) for a distribution to an employee and § 1.402(c)-2(j) for a distribution to a beneficiary.

(b) ***Treatment of rollover by receiving plan.*** If an amount is distributed by one plan (distributing plan) and is rolled over to another plan (receiving plan), the benefit of the employee under the receiving plan is increased by the amount rolled over for purposes of determining the required minimum distribution for the calendar year following the calendar year in which the amount rolled over was distributed. If the amount rolled over is received after the last valuation date in the calendar year under the receiving plan, the benefit of the employee as of that valuation date, adjusted in accordance with § 1.401(a)(9)-5(b), is increased by the rollover amount valued as of the date of receipt. In addition, if the amount rolled over is received in a different calendar year from the calendar year in which it is distributed, the amount rolled over is deemed to have been received by the receiving plan on the last day of the calendar year in which it was distributed.

(c) *Treatment of transfer under transferor plan* —

(1) ***Generally not treated as distribution.*** In the case of a transfer of an amount of an employee's benefit from one plan (transferor plan) to another plan (transferee plan), the transfer is not treated as a distribution by the transferor plan for purposes of section 401(a)(9). Instead, the benefit of the employee under the transferor plan is decreased by the amount transferred. However, if any portion of an employee's benefit is transferred in a distribution calendar year with respect to that employee, in order to satisfy the requirements of section 401(a)(9), the transferor plan must determine the amount of the required minimum distribution with respect to that employee for the calendar year of the transfer using the employee's benefit under the transferor plan before the transfer. Additionally, if any portion of an employee's benefit is transferred in the employee's second distribution calendar

year, but on or before the employee's required beginning date, in order to satisfy section 401(a)(9), the transferor plan must determine the amount of the required minimum distribution for the employee's first distribution calendar year based on the employee's benefit under the transferor plan before the transfer. The transferor plan may satisfy the minimum distribution requirement for the calendar year of the transfer (and the prior year if applicable) by segregating the amount that must be distributed from the employee's benefit and not transferring that amount. That amount may be retained by the transferor plan and must be distributed on or before the date required under section 401(a)(9).

(2) ***Account balance decreased after transfer.*** For purposes of determining any required minimum distribution for the calendar year following the calendar year in which the transfer occurs, in the case of a transfer after the last valuation date for the calendar year of the transfer under the transferor plan, the benefit of the employee as of that valuation date, adjusted in accordance with § 1.401(a)(9)-5(b), is decreased by the amount transferred, valued as of the date of the transfer.

(d) ***Treatment of transfer under transferee plan.*** In the case of a transfer from a transferor plan to a transferee plan, the benefit of the employee under the transferee plan is increased by the amount transferred in the same manner as if it were a plan receiving a rollover contribution under paragraph (b) of this section.

(e) ***Treatment of spinoff or merger.*** For purposes of determining an employee's benefit and required minimum distribution under section 401(a)(9), a spinoff, a merger, or a consolidation (as defined in § 1.414(l)-1(b)) is treated as a transfer of the benefits of the employees involved. Consequently, the benefit and required minimum distribution with respect to each employee whose benefits are transferred will be determined in accordance with paragraphs (c) and (d) of this section.

[T.D. 8987, 67 FR 18994, Apr. 17, 2002, as amended by T.D. 10001, 89 FR 58907, July 19, 2024]

§ 1.401(a)(9)-8 Special rules.

(a) ***Use of separate accounts*** —

(1) ***Separate application of section 401(a)(9) for each beneficiary*** —

(i) ***In general.*** Except as otherwise provided in this paragraph (a)(1), for calendar years beginning after the calendar year in which the employee dies, section 401(a)(9) is applied separately with respect to the separate interests of each of the employee's beneficiaries under the plan provided that those interests are held in separate accounts that satisfy the separate accounting requirements of paragraphs (a)(2)(i) and (ii) of this section.

(ii) ***Separate accounting requirements not timely satisfied.*** If the separate accounts that satisfy the separate accounting requirements of paragraph (a)(2) of this section are not established until after the end of the calendar year following the calendar year of the employee's death, then for distribution calendar years after those requirements are satisfied—

(A) The aggregate required distribution for a distribution calendar year is determined without regard to the separate account rule in paragraph (a)(1)(i) of this section;

(B) The amount of the aggregate required distribution determined in accordance with paragraph (a)(1)(ii)(A) of this section is allocated among the beneficiaries based on each respective beneficiary's share of the total remaining balance of the employee's interest in the plan; and

(C) The allocated share for each beneficiary determined under paragraph (a)(2)(ii)(B) of this section is required to be distributed to that beneficiary.

(iii) ***Separate application of section 401(a)(9) for trust beneficiaries*** —

(A) ***General prohibition.*** Except as provided in paragraph (a)(1)(iii)(B) of this section, section 401(a)(9) may not be applied separately to the separate interests of each of the beneficiaries of a see-through trust described in § 1.401(a)(9)-4(f)(1)(i). For purposes of the excise tax under section 4974, unless the exception in paragraph (a)(1)(iii)(B) of this section applies, the trust is the payee with respect to the required distribution of the employee's interest in the plan.

(B) ***Exception for certain trusts divided upon the death of the employee.*** Section 401(a)(9) is applied separately with respect to the separate interests of the beneficiaries of a see-through trust if the terms of the trust provide that it is to be divided immediately upon the death of the employee, provided that the requirements in paragraph (a)(1)(iii)(C) of this section are satisfied. The preceding sentence applies only if the separate interests are held in separate see-through trusts (in which case the rules of §§ 1.401(a)(9)-4(f) and 1.401(a)(9)-5 will apply separately to each separate trust).

(C) ***Immediately divided defined.*** For purposes of paragraph (a)(1)(iii)(B) of this section, a trust is immediately divided upon the death of the employee only if, as of the date of death, the trust is terminated and there is no discretion as to the extent to which of the separate trusts post-death distributions attributable to the employee's interest in the plan are allocated. A trust does not fail to be immediately divided upon the death of the employee merely because there are administrative delays between the date of the employee's death and the date on which the trust is divided and terminated, provided that any amounts received by the trust during this period are allocated as if the trust had been divided on the date of the employee's death.

(2) ***Separate accounting requirements*** —

(i) ***Allocation of post-death distributions required.*** A separate accounting satisfies the requirements of this paragraph (a)(2)(i) only if all post-death distributions with respect to a beneficiary's interest are allocated to the separate account of the beneficiary receiving the distributions.

(ii) ***Allocation of other items.*** A separate accounting satisfies the requirements of this paragraph (a)(2)(ii) if all post-death investment gains and losses, contributions, forfeitures, and expenses for the period prior to the establishment of the separate accounts are allocated on a pro rata basis in a reasonable and consistent manner among the separate accounts. The separate accounting does not fail to satisfy the requirements of this paragraph (a)(2)(ii) merely because, in lieu of a pro rata allocation of investment gains and losses—

(A) Separate accounts are established that have separate investments; and

(B) The investment gains and losses attributable to assets held in each of those separate accounts are allocated only to that separate account.

(b) ***Application of consent requirements.*** Section 411(a)(11) and section 417(e) require employee and spousal consent to certain distributions of plan benefits while those benefits are immediately distributable. If an employee's normal retirement age is later than the employee's required beginning date and, therefore, benefits are still immediately distributable (within the meaning of § 1.411(a)-11(c)(4)), distributions must

be made to the employee (or, if applicable, to the employee's spouse) in a manner that satisfies the requirements of section 401(a)(9) even though the employee (or, if applicable, the employee's spouse) fails to consent to the distribution. In that case, the benefit may be distributed in the form of a qualified joint and survivor annuity (QJSA) or in the form of a qualified preretirement survivor annuity (QPSA), as applicable, and the consent requirements of sections 411(a)(11) and 417(e) are deemed to be satisfied if the plan has made reasonable efforts to obtain consent from the employee (or, if applicable, the employee's spouse) and if the distribution otherwise meets the requirements of section 417. If the distribution is not required to be in the form of a QJSA to an employee or a QPSA to a surviving spouse, the required minimum distribution amount may be paid to satisfy section 401(a)(9), and the consent requirements of sections 411(a)(11) and 417(e) are deemed to be satisfied if the plan has made reasonable efforts to obtain consent from the employee (or, if applicable, the employee's spouse) and the distribution otherwise meets the requirements of section 417.

(c) ***Definition of spouse.*** Except as otherwise provided in paragraph (d)(1) of this section (in the case of distributions of a portion of an employee's benefit payable to a former spouse of an employee pursuant to a qualified domestic relations order), for purposes of satisfying the requirements of section 401(a)(9), an individual is the spouse or surviving spouse of an employee if the marriage of the employee and individual is recognized for Federal tax purposes under the rules of § 301.7701-18. In the case of distributions after the death of an employee, for purposes of section 401(a)(9), the spouse of the employee is determined as of the date of death of the employee.

(d) ***Treatment of QDROs*** —

(1) ***Continued treatment of spouse.*** A former spouse to whom all or a portion of the employee's benefit is payable pursuant to a qualified domestic relations order described in section 414(p) (QDRO) is treated as a spouse (including a surviving spouse) of the employee for purposes of satisfying the requirements of section 401(a)(9), including the minimum distribution incidental benefit requirement under section 401(a)(9)(G), regardless of whether the QDRO specifically provides that the former spouse is treated as the spouse for purposes of sections 401(a)(11) and 417.

(2) ***Separate accounts*** —

(i) ***In general*** —

(A) ***Separate accounts while the employee is alive.*** If a QDRO provides that an employee's benefit is to be divided and a portion is to be allocated to an alternate payee, that portion will be treated as a separate account (or segregated share) that separately must satisfy the requirements of section 401(a)(9) and may not be aggregated with other separate accounts (or segregated shares) of the employee for purposes of satisfying section 401(a)(9). Except as otherwise provided in paragraph (f)(2)(ii) of this section, distribution of a separate account allocated to an alternate payee pursuant to a QDRO must be made in accordance with section 401(a)(9). For example, distributions of the separate account will satisfy section 401(a)(9)(A) if required minimum distributions from the separate account during the employee's lifetime begin no later than the employee's required beginning date and the required minimum distribution is determined in accordance with § 1.401(a)(9)-5 for each distribution calendar year using an applicable denominator determined under § 1.401(a)(9)-5(c) (determined by treating the spousal alternate payee as the employee's spouse).

(B) ***Separate accounts after the death of the employee.*** The determination of whether distributions from the separate account after the death of the employee to the alternate payee will be made in accordance with section 401(a)(9)(B)(i), or in accordance with section 401(a)(9)(B)(ii) or (iii) and (iv), will depend on whether distributions have begun as determined under § 1.401(a)(9)-2(a)(3) (which provides, in general, that distributions are not treated as having begun until the employee's required beginning date even though payments may actually have begun before that date). For example, if the alternate payee dies before the employee, and if distributions of the separate account allocated to the alternate payee pursuant to the QDRO are to be made to the alternate payee's beneficiary, then that beneficiary may be treated as a designated beneficiary for purposes of determining the required minimum distribution from the separate account after the death of the employee, provided that the beneficiary of the alternate payee is an individual who is a beneficiary under the plan or specified to or in the plan. Specification in or pursuant to the QDRO is treated as specification to the plan.

(ii) ***Satisfaction of section 401(a)(9) requirements.*** Distribution of the separate account allocated to an alternate payee pursuant to a QDRO satisfies the requirements of section 401(a)(9)(A)(ii) if the separate account is distributed, beginning no later than the employee's required beginning date, over the life of the alternate payee (or over a period not extending beyond the life expectancy of the alternate payee). Also, if, pursuant to § 1.401(a)(9)-3(b)(4)(iii) or (c)(5)(iii), the plan permits the employee to elect the distribution method that will apply upon the death of the employee, that election is to be made only by the alternate payee for purposes of distributing the alternate payee's separate account. If the alternate payee dies after distribution of the alternate payee's separate account has begun (determined under § 1.401(a)(9)-2(a)(3)) but before the employee dies, distribution of the remaining portion of that portion of the benefit allocated to the alternate payee must be made in accordance with the rules in § 1.401(a)(9)-5(c) or § 1.401(a)(9)-6(a) for distributions during the life of the employee. Only after the death of the employee is the amount of the required minimum distribution determined in accordance with the rules in § 1.401(a)(9)-5(d) or § 1.401(a)(9)-6(b).

(3) ***Other situations.*** If a QDRO does not provide that an employee's benefit is to be divided but provides that a portion of an employee's benefit (otherwise payable to the employee) is to be paid to an alternate payee, that portion is not treated as a separate account (or segregated share) of the employee. Instead, that portion is aggregated with any amount distributed to the employee and treated as having been distributed to the employee for purposes of determining whether section 401(a)(9) has been satisfied with respect to that employee.

(e) ***Application of section 401(a)(9) pending determination of whether a domestic relations order is a QDRO is being made.*** A plan does not fail to satisfy the requirements of section 401(a)(9) merely because it fails to distribute an amount otherwise required to be distributed by section 401(a)(9) during the period in which the issue of whether a domestic relations order is a QDRO is being determined pursuant to section 414(p)(7), provided that the period does not extend beyond the 18-month period described in section 414(p)(7)(E). To the extent that a distribution otherwise required under section 401(a)(9) is not made during this period, any segregated amounts, as defined in section 414(p)(7)(A), are treated as though the amounts are not vested during the period and any distributions with respect to those amounts must be made under the relevant rules for nonvested benefits described in either § 1.401(a)(9)-5(g)(1) or § 1.401(a)(9)-6(f), as applicable.

(f) ***Application of section 401(a)(9) when insurer is in State delinquency proceedings.*** A plan does not fail to satisfy the requirements of section 401(a)(9) merely because an individual's distribution from the plan is less than the amount otherwise required to satisfy section 401(a)(9) because distributions were being paid under an annuity contract issued by a life insurance company in State insurer delinquency proceedings and have been reduced or suspended by reason of those State proceedings. To the extent that a distribution otherwise required under section 401(a)(9) is not made during the State insurer delinquency proceedings, that amount and any additional amount accrued during that period are treated as though those amounts are not vested during that period and any distributions with respect to those amounts must be made under the relevant rules for nonvested benefits described in either § 1.401(a)(9)-5(g)(1) or § 1.401(a)(9)-6(f), as applicable.

(g) ***In-service distributions required to satisfy section 401(a)(9).*** A plan does not fail to qualify as a pension plan within the meaning of section 401(a) solely because the plan permits distributions to commence to an employee on or after the employee's required beginning date (as determined in accordance with § 1.401(a)(9)-2(b)) even though the employee has not retired or attained the normal retirement age under the plan as of the date on which the distributions commence. This rule applies without regard to whether the employee is a 5-percent owner with respect to the plan year ending in the calendar year in which distributions commence.

(h) ***TEFRA section 242(b) elections*** —

(1) ***In general.*** Even though the distribution requirements added by the Tax Equity and Fiscal Responsibility Act of 1982, Public Law 97-248, 96 Stat. 324 (1982) (TEFRA), were retroactively repealed in 1984, the transitional election rule in section 242(b) of TEFRA (referred to as a section 242(b)(2) election in this paragraph (h)) was preserved. While sections 401(a)(11) and 417 must be satisfied with respect to any distribution subject to those requirements, satisfaction of those requirements is not considered a revocation of the section 242(b) election.

(2) ***Application of section 242(b) election after transfer*** —

(i) ***Section 242(b)(2) election made under transferor plan.*** If an amount is transferred from one plan (transferor plan) to another plan (transferee plan), the amount transferred may be distributed in accordance with a section 242(b)(2) election made under the transferor plan if the employee did not elect to have the amount transferred and if the transferee plan separately accounts for the amount transferred. However, only the benefit attributable to the amount transferred, plus earnings thereon, may be distributed in accordance with the section 242(b)(2) election made under the transferor plan. If the employee elected to have the amount transferred or the transferee plan does not separately account for the amount transferred, the transfer is treated as a distribution and rollover of the amount transferred for purposes of this section.

(ii) ***Section 242(b)(2) election made under transferee plan.*** If an amount is transferred from one plan to another plan, the amount transferred may not be distributed in accordance with a section 242(b)(2) election made under the transferee plan. If a section 242(b)(2) election was made under the transferee plan, the transferee plan must separately account for the amount transferred. If the transferee plan does not separately account for the amount transferred, the section 242(b)(2) election under the transferee plan is revoked, and subsequent distributions by the transferee plan must satisfy section 401(a)(9).

(iii) ***Spinoff, merger, or consolidation treated as transfer.*** A spinoff, merger, or consolidation, as defined in § 1.414(l)-1(b), is treated as a transfer for purposes of the section 242(b)(2) election.

(3) ***Application of section 242(b) election after rollover.*** If an amount is distributed from one plan (distributing plan) and rolled over into another plan (receiving plan), the amount rolled over must be distributed from the receiving plan in accordance with section 401(a)(9) whether or not the employee made a section 242(b)(2) election under the distributing plan. Further, if the amount rolled over was not distributed in accordance with the election, the election under the distributing plan is revoked and all subsequent distributions by the distributing plan must satisfy section 401(a)(9). Finally, if the employee made a section 242(b)(2) election under the receiving plan and the election is still in effect, the receiving plan must separately account for the amount rolled over and distribute that amount in accordance with section 401(a)(9). If the receiving plan does not separately account for the amounts rolled over, any section 242(b)(2) election under the receiving plan is revoked and subsequent distributions under the receiving plan must satisfy section 401(a)(9).

(4) ***Revocation of section 242(b) election*** —

(i) ***In general.*** A section 242(b)(2) election may be revoked after the required beginning date under section 401(a)(9)(C). However, if the section 242(b)(2) election is revoked after the required beginning date, and the total amount of the distributions that would have been required prior to the date of the revocation in order to satisfy section 401(a)(9), but for the section 242(b)(2) election, have not been made, then—

(A) The catch-up distribution described in paragraph (h)(4)(ii) of this section must be made by the end of the calendar year following the calendar year in which the revocation occurs; and

(B) Distributions must continue in accordance with section 401(a)(9).

(ii) ***Catch-up distribution.*** The catch-up distribution must be equal to the total amount not yet distributed that would have been required to be distributed to satisfy the requirements of section 401(a)(9).

[T.D. 8987, 67 FR 18994, Apr. 17, 2002, as amended by T.D. 9130, 69 FR 33293, 33302, June 15, 2004; T.D. 9930, 85 FR 72477, Nov. 12, 2020; T.D. 10001, 89 FR 58907, July 17, 2024]

§ 1.401(a)(9)-9 Life expectancy and Uniform Lifetime tables.

(a) ***In general.*** This section specifies the life expectancy and Uniform Lifetime tables that apply for purposes of determining required minimum distributions under section 401(a)(9). Paragraphs (b), (c), and (d) of this section set forth these tables. Paragraph (e) of this section provides the mortality rates that are used to develop these tables. Paragraph (f) of this section provides applicability date rules.

(b) ***Single Life Table.*** The following table, referred to as the Single Life Table, sets forth the life expectancy of an individual at each age.

TABLE 1 TO PARAGRAPH (b)

Age	Life expectancy
0	84.6

Age	Life expectancy
1	83.7
2	82.8
3	81.8
4	80.8
5	79.8
6	78.8
7	77.9
8	76.9
9	75.9
10	74.9
11	73.9
12	72.9
13	71.9
14	70.9
15	69.9
16	69.0
17	68.0
18	67.0
19	66.0
20	65.0
21	64.1
22	63.1
23	62.1
24	61.1
25	60.2
26	59.2
27	58.2
28	57.3
29	56.3
30	55.3
31	54.4
32	53.4
33	52.5
34	51.5
35	50.5
36	49.6
37	48.6
38	47.7
39	46.7

Age	Life expectancy
40	45.7
41	44.8
42	43.8
43	42.9
44	41.9
45	41.0
46	40.0
47	39.0
48	38.1
49	37.1
50	36.2
51	35.3
52	34.3
53	33.4
54	32.5
55	31.6
56	30.6
57	29.8
58	28.9
59	28.0
60	27.1
61	26.2
62	25.4
63	24.5
64	23.7
65	22.9
66	22.0
67	21.2
68	20.4
69	19.6
70	18.8
71	18.0
72	17.2
73	16.4
74	15.6
75	14.8
76	14.1
77	13.3
78	12.6

Age	Life expectancy
79	11.9
80	11.2
81	10.5
82	9.9
83	9.3
84	8.7
85	8.1
86	7.6
87	7.1
88	6.6
89	6.1
90	5.7
91	5.3
92	4.9
93	4.6
94	4.3
95	4.0
96	3.7
97	3.4
98	3.2
99	3.0
100	2.8
101	2.6
102	2.5
103	2.3
104	2.2
105	2.1
106	2.1
107	2.1
108	2.0
109	2.0
110	2.0
111	2.0
112	2.0
113	1.9
114	1.9
115	1.8
116	1.8
117	1.6

Age	Life expectancy
118	1.4
119	1.1
120+	1.0

(c) ***Uniform Lifetime Table.*** The following table, referred to as the Uniform Lifetime Table, sets forth the applicable denominator that applies for lifetime distributions to an employee in situations in which the employee's surviving spouse is not the sole designated beneficiary. This table is also used if the employee's surviving spouse is the sole designated beneficiary but is not more than 10 years younger than the employee.

TABLE 2 TO PARAGRAPH (c)

Age of employee	Applicable denominator
72	27.4
73	26.5
74	25.5
75	24.6
76	23.7
77	22.9
78	22.0
79	21.1
80	20.2
81	19.4
82	18.5
83	17.7
84	16.8
85	16.0
86	15.2
87	14.4
88	13.7
89	12.9
90	12.2
91	11.5
92	10.8
93	10.1
94	9.5

Age of employee	Applicable denominator
95	8.9
96	8.4
97	7.8
98	7.3
99	6.8
100	6.4
101	6.0
102	5.6
103	5.2
104	4.9
105	4.6
106	4.3
107	4.1
108	3.9
109	3.7
110	3.5
111	3.4
112	3.3
113	3.1
114	3.0
115	2.9
116	2.8
117	2.7
118	2.5
119	2.3
120+	2.0

(d) ***Joint and Last Survivor Table.*** The following table, referred to as the Joint and Last Survivor Table, is used for determining the joint and last survivor life expectancy of two individuals.

Table 3 to Paragraph (d)

Ages	0	1	2	3	4	5	6	7	8
0	91.9	91.4	91.0	90.5	90.1	89.7	89.4	89.0	88.7
1	91.4	90.9	90.4	90.0	89.5	89.1	88.8	88.4	88.1
2	91.0	90.4	89.9	89.4	89.0	88.5	88.1	87.8	87.4
3	90.5	90.0	89.4	88.9	88.4	88.0	87.6	87.1	86.8
4	90.1	89.5	89.0	88.4	87.9	87.4	87.0	86.6	86.2
5	89.7	89.1	88.6	88.0	87.4	86.9	86.5	86.0	85.6
6	89.4	88.8	88.1	87.6	87.0	86.5	85.9	85.5	85.0
7	89.0	88.4	87.8	87.1	86.6	86.0	85.5	84.9	84.5
8	88.7	88.1	87.4	86.8	86.2	85.6	85.0	84.5	83.9
9	88.4	87.8	87.1	86.4	85.8	85.2	84.6	84.0	83.5
10	88.2	87.5	86.8	86.1	85.4	84.8	84.2	83.6	83.0
11	87.9	87.2	86.5	85.8	85.1	84.4	83.8	83.2	82.6
12	87.7	87.0	86.2	85.5	84.8	84.1	83.4	82.8	82.2
13	87.5	86.7	86.0	85.2	84.5	83.8	83.1	82.4	81.8
14	87.3	86.5	85.7	85.0	84.2	83.5	82.8	82.1	81.4
15	87.1	86.3	85.5	84.7	84.0	83.2	82.5	81.8	81.1
16	86.9	86.1	85.3	84.5	83.7	83.0	82.2	81.5	80.8
17	86.8	86.0	85.1	84.3	83.5	82.7	82.0	81.2	80.5
18	86.6	85.8	85.0	84.1	83.3	82.5	81.7	81.0	80.2
19	86.5	85.7	84.8	84.0	83.1	82.3	81.5	80.7	80.0
20	86.4	85.5	84.7	83.8	83.0	82.2	81.3	80.5	79.8
21	86.2	85.4	84.5	83.7	82.8	82.0	81.2	80.3	79.5
22	86.1	85.3	84.4	83.5	82.7	81.8	81.0	80.2	79.3
23	86.0	85.2	84.3	83.4	82.5	81.7	80.8	80.0	79.2
24	85.9	85.1	84.2	83.3	82.4	81.6	80.7	79.8	79.0
25	85.9	85.0	84.1	83.2	82.3	81.4	80.6	79.7	78.8
26	85.8	84.9	84.0	83.1	82.2	81.3	80.4	79.6	78.7
27	85.7	84.8	83.9	83.0	82.1	81.2	80.3	79.4	78.6
28	85.6	84.7	83.8	82.9	82.0	81.1	80.2	79.3	78.4
29	85.6	84.7	83.8	82.8	81.9	81.0	80.1	79.2	78.3
30	85.5	84.6	83.7	82.8	81.8	80.9	80.0	79.1	78.2
31	85.4	84.6	83.6	82.7	81.8	80.9	79.9	79.0	78.1
32	85.4	84.5	83.6	82.6	81.7	80.8	79.9	78.9	78.0

Ages	0	1	2	3	4	5	6	7	8
33	85.3	84.5	83.5	82.6	81.6	80.7	79.8	78.9	77.9
34	85.3	84.4	83.5	82.5	81.6	80.7	79.7	78.8	77.9
35	85.3	84.4	83.4	82.5	81.5	80.6	79.7	78.7	77.8
36	85.2	84.3	83.4	82.4	81.5	80.5	79.6	78.7	77.7
37	85.2	84.3	83.3	82.4	81.4	80.5	79.5	78.6	77.7
38	85.2	84.3	83.3	82.3	81.4	80.4	79.5	78.6	77.6
39	85.1	84.2	83.3	82.3	81.4	80.4	79.5	78.5	77.6
40	85.1	84.2	83.2	82.3	81.3	80.4	79.4	78.5	77.5
41	85.1	84.2	83.2	82.2	81.3	80.3	79.4	78.4	77.5
42	85.0	84.1	83.2	82.2	81.3	80.3	79.3	78.4	77.4
43	85.0	84.1	83.1	82.2	81.2	80.3	79.3	78.3	77.4
44	85.0	84.1	83.1	82.2	81.2	80.2	79.3	78.3	77.3
45	85.0	84.1	83.1	82.1	81.2	80.2	79.2	78.3	77.3
46	84.9	84.0	83.1	82.1	81.1	80.2	79.2	78.2	77.3
47	84.9	84.0	83.1	82.1	81.1	80.2	79.2	78.2	77.3
48	84.9	84.0	83.0	82.1	81.1	80.1	79.2	78.2	77.2
49	84.9	84.0	83.0	82.1	81.1	80.1	79.1	78.2	77.2
50	84.9	84.0	83.0	82.0	81.1	80.1	79.1	78.1	77.2
51	84.8	84.0	83.0	82.0	81.0	80.1	79.1	78.1	77.2
52	84.8	83.9	83.0	82.0	81.0	80.1	79.1	78.1	77.1
53	84.8	83.9	83.0	82.0	81.0	80.0	79.1	78.1	77.1
54	84.8	83.9	82.9	82.0	81.0	80.0	79.0	78.1	77.1
55	84.8	83.9	82.9	82.0	81.0	80.0	79.0	78.1	77.1
56	84.8	83.9	82.9	81.9	81.0	80.0	79.0	78.0	77.1
57	84.8	83.9	82.9	81.9	81.0	80.0	79.0	78.0	77.0
58	84.8	83.9	82.9	81.9	80.9	80.0	79.0	78.0	77.0
59	84.7	83.9	82.9	81.9	80.9	80.0	79.0	78.0	77.0
60	84.7	83.8	82.9	81.9	80.9	79.9	79.0	78.0	77.0
61	84.7	83.8	82.9	81.9	80.9	79.9	79.0	78.0	77.0
62	84.7	83.8	82.9	81.9	80.9	79.9	78.9	78.0	77.0
63	84.7	83.8	82.9	81.9	80.9	79.9	78.9	78.0	77.0
64	84.7	83.8	82.8	81.9	80.9	79.9	78.9	77.9	77.0
65	84.7	83.8	82.8	81.9	80.9	79.9	78.9	77.9	77.0
66	84.7	83.8	82.8	81.9	80.9	79.9	78.9	77.9	76.9
67	84.7	83.8	82.8	81.9	80.9	79.9	78.9	77.9	76.9
68	84.7	83.8	82.8	81.8	80.9	79.9	78.9	77.9	76.9

Ages	0	1	2	3	4	5	6	7	8
69	84.7	83.8	82.8	81.8	80.9	79.9	78.9	77.9	76.9
70	84.7	83.8	82.8	81.8	80.9	79.9	78.9	77.9	76.9
71	84.7	83.8	82.8	81.8	80.9	79.9	78.9	77.9	76.9
72	84.7	83.8	82.8	81.8	80.9	79.9	78.9	77.9	76.9
73	84.6	83.8	82.8	81.8	80.8	79.9	78.9	77.9	76.9
74	84.6	83.8	82.8	81.8	80.8	79.9	78.9	77.9	76.9
75	84.6	83.8	82.8	81.8	80.8	79.9	78.9	77.9	76.9
76	84.6	83.8	82.8	81.8	80.8	79.9	78.9	77.9	76.9
77	84.6	83.8	82.8	81.8	80.8	79.8	78.9	77.9	76.9
78	84.6	83.8	82.8	81.8	80.8	79.8	78.9	77.9	76.9
79	84.6	83.8	82.8	81.8	80.8	79.8	78.9	77.9	76.9
80	84.6	83.8	82.8	81.8	80.8	79.8	78.9	77.9	76.9
81	84.6	83.8	82.8	81.8	80.8	79.8	78.9	77.9	76.9
82	84.6	83.8	82.8	81.8	80.8	79.8	78.9	77.9	76.9
83	84.6	83.7	82.8	81.8	80.8	79.8	78.9	77.9	76.9
84	84.6	83.7	82.8	81.8	80.8	79.8	78.9	77.9	76.9
85	84.6	83.7	82.8	81.8	80.8	79.8	78.8	77.9	76.9
86	84.6	83.7	82.8	81.8	80.8	79.8	78.8	77.9	76.9
87	84.6	83.7	82.8	81.8	80.8	79.8	78.8	77.9	76.9
88	84.6	83.7	82.8	81.8	80.8	79.8	78.8	77.9	76.9
89	84.6	83.7	82.8	81.8	80.8	79.8	78.8	77.9	76.9
90	84.6	83.7	82.8	81.8	80.8	79.8	78.8	77.9	76.9
91	84.6	83.7	82.8	81.8	80.8	79.8	78.8	77.9	76.9
92	84.6	83.7	82.8	81.8	80.8	79.8	78.8	77.9	76.9
93	84.6	83.7	82.8	81.8	80.8	79.8	78.8	77.9	76.9
94	84.6	83.7	82.8	81.8	80.8	79.8	78.8	77.9	76.9
95	84.6	83.7	82.8	81.8	80.8	79.8	78.8	77.9	76.9
96	84.6	83.7	82.8	81.8	80.8	79.8	78.8	77.9	76.9
97	84.6	83.7	82.8	81.8	80.8	79.8	78.8	77.9	76.9
98	84.6	83.7	82.8	81.8	80.8	79.8	78.8	77.9	76.9
99	84.6	83.7	82.8	81.8	80.8	79.8	78.8	77.9	76.9
100	84.6	83.7	82.8	81.8	80.8	79.8	78.8	77.9	76.9
101	84.6	83.7	82.8	81.8	80.8	79.8	78.8	77.9	76.9
102	84.6	83.7	82.8	81.8	80.8	79.8	78.8	77.9	76.9
103	84.6	83.7	82.8	81.8	80.8	79.8	78.8	77.9	76.9
104	84.6	83.7	82.8	81.8	80.8	79.8	78.8	77.9	76.9

Ages	0	1	2	3	4	5	6	7	8
105	84.6	83.7	82.8	81.8	80.8	79.8	78.8	77.9	76.9
106	84.6	83.7	82.8	81.8	80.8	79.8	78.8	77.9	76.9
107	84.6	83.7	82.8	81.8	80.8	79.8	78.8	77.9	76.9
108	84.6	83.7	82.8	81.8	80.8	79.8	78.8	77.9	76.9
109	84.6	83.7	82.8	81.8	80.8	79.8	78.8	77.9	76.9
110	84.6	83.7	82.8	81.8	80.8	79.8	78.8	77.9	76.9
111	84.6	83.7	82.8	81.8	80.8	79.8	78.8	77.9	76.9
112	84.6	83.7	82.8	81.8	80.8	79.8	78.8	77.9	76.9
113	84.6	83.7	82.8	81.8	80.8	79.8	78.8	77.9	76.9
114	84.6	83.7	82.8	81.8	80.8	79.8	78.8	77.9	76.9
115	84.6	83.7	82.8	81.8	80.8	79.8	78.8	77.9	76.9
116	84.6	83.7	82.8	81.8	80.8	79.8	78.8	77.9	76.9
117	84.6	83.7	82.8	81.8	80.8	79.8	78.8	77.9	76.9
118	84.6	83.7	82.8	81.8	80.8	79.8	78.8	77.9	76.9
119	84.6	83.7	82.8	81.8	80.8	79.8	78.8	77.9	76.9
120+	84.6	83.7	82.8	81.8	80.8	79.8	78.8	77.9	76.9

Ages	9	10	11	12	13	14	15	16	17
0	88.4	88.2	87.9	87.7	87.5	87.3	87.1	86.9	86.8
1	87.8	87.5	87.2	87.0	86.7	86.5	86.3	86.1	86.0
2	87.1	86.8	86.5	86.2	86.0	85.7	85.5	85.3	85.1
3	86.4	86.1	85.8	85.5	85.2	85.0	84.7	84.5	84.3
4	85.8	85.4	85.1	84.8	84.5	84.2	84.0	83.7	83.5
5	85.2	84.8	84.4	84.1	83.8	83.5	83.2	83.0	82.7
6	84.6	84.2	83.8	83.4	83.1	82.8	82.5	82.2	82.0
7	84.0	83.6	83.2	82.8	82.4	82.1	81.8	81.5	81.2
8	83.5	83.0	82.6	82.2	81.8	81.4	81.1	80.8	80.5
9	82.9	82.5	82.0	81.6	81.2	80.8	80.4	80.1	79.8
10	82.5	81.9	81.5	81.0	80.6	80.2	79.8	79.4	79.1
11	82.0	81.5	80.9	80.5	80.0	79.6	79.2	78.8	78.4
12	81.6	81.0	80.5	79.9	79.5	79.0	78.6	78.2	77.8
13	81.2	80.6	80.0	79.5	79.0	78.5	78.0	77.6	77.2
14	80.8	80.2	79.6	79.0	78.5	78.0	77.5	77.0	76.6
15	80.4	79.8	79.2	78.6	78.0	77.5	77.0	76.5	76.0
16	80.1	79.4	78.8	78.2	77.6	77.0	76.5	76.0	75.5
17	79.8	79.1	78.4	77.8	77.2	76.6	76.0	75.5	75.0
18	79.5	78.8	78.1	77.4	76.8	76.2	75.6	75.0	74.5
19	79.2	78.5	77.8	77.1	76.4	75.8	75.2	74.6	74.0
20	79.0	78.2	77.5	76.8	76.1	75.4	74.8	74.2	73.6
21	78.8	78.0	77.2	76.5	75.8	75.1	74.4	73.8	73.2
22	78.5	77.8	77.0	76.2	75.5	74.8	74.1	73.4	72.8
23	78.3	77.5	76.8	76.0	75.2	74.5	73.8	73.1	72.5
24	78.2	77.3	76.5	75.8	75.0	74.2	73.5	72.8	72.1
25	78.0	77.2	76.4	75.6	74.8	74.0	73.3	72.5	71.8
26	77.8	77.0	76.2	75.4	74.6	73.8	73.0	72.3	71.5
27	77.7	76.8	76.0	75.2	74.4	73.6	72.8	72.0	71.3
28	77.6	76.7	75.8	75.0	74.2	73.4	72.6	71.8	71.0
29	77.4	76.6	75.7	74.9	74.0	73.2	72.4	71.6	70.8
30	77.3	76.4	75.6	74.7	73.9	73.0	72.2	71.4	70.6
31	77.2	76.3	75.5	74.6	73.7	72.9	72.0	71.2	70.4
32	77.1	76.2	75.3	74.5	73.6	72.7	71.9	71.0	70.2
33	77.0	76.1	75.2	74.3	73.5	72.6	71.7	70.9	70.0
34	77.0	76.0	75.1	74.2	73.3	72.5	71.6	70.7	69.9
35	76.9	76.0	75.0	74.1	73.2	72.4	71.5	70.6	69.7

Ages	9	10	11	12	13	14	15	16	17
36	76.8	75.9	75.0	74.0	73.1	72.2	71.4	70.5	69.6
37	76.7	75.8	74.9	74.0	73.1	72.1	71.3	70.4	69.5
38	76.7	75.7	74.8	73.9	73.0	72.1	71.2	70.3	69.4
39	76.6	75.7	74.7	73.8	72.9	72.0	71.1	70.2	69.3
40	76.6	75.6	74.7	73.7	72.8	71.9	71.0	70.1	69.2
41	76.5	75.6	74.6	73.7	72.8	71.8	70.9	70.0	69.1
42	76.5	75.5	74.6	73.6	72.7	71.8	70.8	69.9	69.0
43	76.4	75.5	74.5	73.6	72.6	71.7	70.8	69.8	68.9
44	76.4	75.4	74.5	73.5	72.6	71.6	70.7	69.8	68.8
45	76.4	75.4	74.4	73.5	72.5	71.6	70.6	69.7	68.8
46	76.3	75.4	74.4	73.4	72.5	71.5	70.6	69.7	68.7
47	76.3	75.3	74.4	73.4	72.4	71.5	70.5	69.6	68.7
48	76.3	75.3	74.3	73.4	72.4	71.5	70.5	69.6	68.6
49	76.2	75.3	74.3	73.3	72.4	71.4	70.5	69.5	68.6

Table 3 to Paragraph (d)

Ages	9	10	11	12	13	14	15	16	17
50	76.2	75.2	74.3	73.3	72.3	71.4	70.4	69.5	68.5
51	76.2	75.2	74.2	73.3	72.3	71.3	70.4	69.4	68.5
52	76.2	75.2	74.2	73.2	72.3	71.3	70.4	69.4	68.4
53	76.1	75.2	74.2	73.2	72.3	71.3	70.3	69.4	68.4
54	76.1	75.1	74.2	73.2	72.2	71.3	70.3	69.3	68.4
55	76.1	75.1	74.2	73.2	72.2	71.2	70.3	69.3	68.3
56	76.1	75.1	74.1	73.2	72.2	71.2	70.2	69.3	68.3
57	76.1	75.1	74.1	73.1	72.2	71.2	70.2	69.3	68.3
58	76.1	75.1	74.1	73.1	72.1	71.2	70.2	69.2	68.3
59	76.0	75.1	74.1	73.1	72.1	71.2	70.2	69.2	68.2
60	76.0	75.0	74.1	73.1	72.1	71.1	70.2	69.2	68.2
61	76.0	75.0	74.1	73.1	72.1	71.1	70.1	69.2	68.2
62	76.0	75.0	74.0	73.1	72.1	71.1	70.1	69.2	68.2
63	76.0	75.0	74.0	73.0	72.1	71.1	70.1	69.1	68.2
64	76.0	75.0	74.0	73.0	72.1	71.1	70.1	69.1	68.2
65	76.0	75.0	74.0	73.0	72.0	71.1	70.1	69.1	68.1
66	76.0	75.0	74.0	73.0	72.0	71.1	70.1	69.1	68.1
67	76.0	75.0	74.0	73.0	72.0	71.0	70.1	69.1	68.1
68	75.9	75.0	74.0	73.0	72.0	71.0	70.1	69.1	68.1
69	75.9	75.0	74.0	73.0	72.0	71.0	70.0	69.1	68.1
70	75.9	74.9	74.0	73.0	72.0	71.0	70.0	69.1	68.1
71	75.9	74.9	74.0	73.0	72.0	71.0	70.0	69.0	68.1
72	75.9	74.9	73.9	73.0	72.0	71.0	70.0	69.0	68.1
73	75.9	74.9	73.9	73.0	72.0	71.0	70.0	69.0	68.1
74	75.9	74.9	73.9	73.0	72.0	71.0	70.0	69.0	68.0
75	75.9	74.9	73.9	72.9	72.0	71.0	70.0	69.0	68.0
76	75.9	74.9	73.9	72.9	72.0	71.0	70.0	69.0	68.0
77	75.9	74.9	73.9	72.9	72.0	71.0	70.0	69.0	68.0
78	75.9	74.9	73.9	72.9	71.9	71.0	70.0	69.0	68.0
79	75.9	74.9	73.9	72.9	71.9	71.0	70.0	69.0	68.0
80	75.9	74.9	73.9	72.9	71.9	71.0	70.0	69.0	68.0
81	75.9	74.9	73.9	72.9	71.9	71.0	70.0	69.0	68.0
82	75.9	74.9	73.9	72.9	71.9	70.9	70.0	69.0	68.0

Ages	9	10	11	12	13	14	15	16	17
83	75.9	74.9	73.9	72.9	71.9	70.9	70.0	69.0	68.0
84	75.9	74.9	73.9	72.9	71.9	70.9	70.0	69.0	68.0
85	75.9	74.9	73.9	72.9	71.9	70.9	70.0	69.0	68.0
86	75.9	74.9	73.9	72.9	71.9	70.9	70.0	69.0	68.0
87	75.9	74.9	73.9	72.9	71.9	70.9	70.0	69.0	68.0
88	75.9	74.9	73.9	72.9	71.9	70.9	69.9	69.0	68.0
89	75.9	74.9	73.9	72.9	71.9	70.9	69.9	69.0	68.0
90	75.9	74.9	73.9	72.9	71.9	70.9	69.9	69.0	68.0
91	75.9	74.9	73.9	72.9	71.9	70.9	69.9	69.0	68.0
92	75.9	74.9	73.9	72.9	71.9	70.9	69.9	69.0	68.0
93	75.9	74.9	73.9	72.9	71.9	70.9	69.9	69.0	68.0
94	75.9	74.9	73.9	72.9	71.9	70.9	69.9	69.0	68.0
95	75.9	74.9	73.9	72.9	71.9	70.9	69.9	69.0	68.0
96	75.9	74.9	73.9	72.9	71.9	70.9	69.9	69.0	68.0
97	75.9	74.9	73.9	72.9	71.9	70.9	69.9	69.0	68.0
98	75.9	74.9	73.9	72.9	71.9	70.9	69.9	69.0	68.0
99	75.9	74.9	73.9	72.9	71.9	70.9	69.9	69.0	68.0
100	75.9	74.9	73.9	72.9	71.9	70.9	69.9	69.0	68.0
101	75.9	74.9	73.9	72.9	71.9	70.9	69.9	69.0	68.0
102	75.9	74.9	73.9	72.9	71.9	70.9	69.9	69.0	68.0
103	75.9	74.9	73.9	72.9	71.9	70.9	69.9	69.0	68.0
104	75.9	74.9	73.9	72.9	71.9	70.9	69.9	69.0	68.0
105	75.9	74.9	73.9	72.9	71.9	70.9	69.9	69.0	68.0
106	75.9	74.9	73.9	72.9	71.9	70.9	69.9	69.0	68.0
107	75.9	74.9	73.9	72.9	71.9	70.9	69.9	69.0	68.0
108	75.9	74.9	73.9	72.9	71.9	70.9	69.9	69.0	68.0
109	75.9	74.9	73.9	72.9	71.9	70.9	69.9	69.0	68.0
110	75.9	74.9	73.9	72.9	71.9	70.9	69.9	69.0	68.0
111	75.9	74.9	73.9	72.9	71.9	70.9	69.9	69.0	68.0
112	75.9	74.9	73.9	72.9	71.9	70.9	69.9	69.0	68.0
113	75.9	74.9	73.9	72.9	71.9	70.9	69.9	69.0	68.0
114	75.9	74.9	73.9	72.9	71.9	70.9	69.9	69.0	68.0
115	75.9	74.9	73.9	72.9	71.9	70.9	69.9	69.0	68.0
116	75.9	74.9	73.9	72.9	71.9	70.9	69.9	69.0	68.0
117	75.9	74.9	73.9	72.9	71.9	70.9	69.9	69.0	68.0
118	75.9	74.9	73.9	72.9	71.9	70.9	69.9	69.0	68.0

Ages	9	10	11	12	13	14	15	16	17
119	75.9	74.9	73.9	72.9	71.9	70.9	69.9	69.0	68.0
120+	75.9	74.9	73.9	72.9	71.9	70.9	69.9	69.0	68.0

Table 3 to Paragraph (d)

Ages	18	19	20	21	22	23	24	25	26
0	86.6	86.5	86.4	86.2	86.1	86.0	85.9	85.9	85.8
1	85.8	85.7	85.5	85.4	85.3	85.2	85.1	85.0	84.9
2	85.0	84.8	84.7	84.5	84.4	84.3	84.2	84.1	84.0
3	84.1	84.0	83.8	83.7	83.5	83.4	83.3	83.2	83.1
4	83.3	83.1	83.0	82.8	82.7	82.5	82.4	82.3	82.2
5	82.5	82.3	82.2	82.0	81.8	81.7	81.6	81.4	81.3
6	81.7	81.5	81.3	81.2	81.0	80.8	80.7	80.6	80.4
7	81.0	80.7	80.5	80.3	80.2	80.0	79.8	79.7	79.6
8	80.2	80.0	79.8	79.5	79.3	79.2	79.0	78.8	78.7
9	79.5	79.2	79.0	78.8	78.5	78.3	78.2	78.0	77.8
10	78.8	78.5	78.2	78.0	77.8	77.5	77.3	77.2	77.0
11	78.1	77.8	77.5	77.2	77.0	76.8	76.5	76.4	76.2
12	77.4	77.1	76.8	76.5	76.2	76.0	75.8	75.6	75.4
13	76.8	76.4	76.1	75.8	75.5	75.2	75.0	74.8	74.6
14	76.2	75.8	75.4	75.1	74.8	74.5	74.2	74.0	73.8
15	75.6	75.2	74.8	74.4	74.1	73.8	73.5	73.3	73.0
16	75.0	74.6	74.2	73.8	73.4	73.1	72.8	72.5	72.3
17	74.5	74.0	73.6	73.2	72.8	72.5	72.1	71.8	71.5
18	74.0	73.5	73.0	72.6	72.2	71.8	71.5	71.1	70.8
19	73.5	73.0	72.5	72.0	71.6	71.2	70.8	70.5	70.1
20	73.0	72.5	72.0	71.5	71.0	70.6	70.2	69.8	69.5
21	72.6	72.0	71.5	71.0	70.5	70.0	69.6	69.2	68.8
22	72.2	71.6	71.0	70.5	70.0	69.5	69.0	68.6	68.2
23	71.8	71.2	70.6	70.0	69.5	69.0	68.5	68.0	67.6
24	71.5	70.8	70.2	69.6	69.0	68.5	68.0	67.5	67.1
25	71.1	70.5	69.8	69.2	68.6	68.0	67.5	67.0	66.5
26	70.8	70.1	69.5	68.8	68.2	67.6	67.1	66.5	66.0
27	70.5	69.8	69.1	68.5	67.8	67.2	66.6	66.1	65.5
28	70.3	69.5	68.8	68.1	67.5	66.8	66.2	65.6	65.1
29	70.0	69.3	68.5	67.8	67.1	66.5	65.8	65.2	64.6
30	69.8	69.0	68.3	67.5	66.8	66.2	65.5	64.9	64.2
31	69.6	68.8	68.0	67.3	66.6	65.8	65.2	64.5	63.9
32	69.4	68.6	67.8	67.0	66.3	65.6	64.9	64.2	63.5

Ages	18	19	20	21	22	23	24	25	26
33	69.2	68.4	67.6	66.8	66.0	65.3	64.6	63.9	63.2
34	69.0	68.2	67.4	66.6	65.8	65.1	64.3	63.6	62.9
35	68.9	68.0	67.2	66.4	65.6	64.8	64.1	63.3	62.6
36	68.7	67.9	67.1	66.2	65.4	64.6	63.8	63.1	62.3
37	68.6	67.7	66.9	66.1	65.2	64.4	63.6	62.8	62.1
38	68.5	67.6	66.8	65.9	65.1	64.2	63.4	62.6	61.9
39	68.4	67.5	66.6	65.8	64.9	64.1	63.3	62.4	61.6
40	68.3	67.4	66.5	65.6	64.8	63.9	63.1	62.3	61.5
41	68.2	67.3	66.4	65.5	64.6	63.8	62.9	62.1	61.3
42	68.1	67.2	66.3	65.4	64.5	63.6	62.8	61.9	61.1
43	68.0	67.1	66.2	65.3	64.4	63.5	62.7	61.8	61.0
44	67.9	67.0	66.1	65.2	64.3	63.4	62.5	61.7	60.8
45	67.9	66.9	66.0	65.1	64.2	63.3	62.4	61.5	60.7
46	67.8	66.9	65.9	65.0	64.1	63.2	62.3	61.4	60.6
47	67.7	66.8	65.9	65.0	64.0	63.1	62.2	61.3	60.5
48	67.7	66.7	65.8	64.9	64.0	63.0	62.1	61.2	60.3
49	67.6	66.7	65.7	64.8	63.9	63.0	62.1	61.2	60.3
50	67.6	66.6	65.7	64.8	63.8	62.9	62.0	61.1	60.2
51	67.5	66.6	65.6	64.7	63.8	62.8	61.9	61.0	60.1
52	67.5	66.5	65.6	64.7	63.7	62.8	61.9	60.9	60.0
53	67.4	66.5	65.5	64.6	63.7	62.7	61.8	60.9	59.9
54	67.4	66.5	65.5	64.6	63.6	62.7	61.7	60.8	59.9
55	67.4	66.4	65.5	64.5	63.6	62.6	61.7	60.8	59.8
56	67.4	66.4	65.4	64.5	63.5	62.6	61.6	60.7	59.8
57	67.3	66.4	65.4	64.5	63.5	62.5	61.6	60.7	59.7
58	67.3	66.3	65.4	64.4	63.5	62.5	61.6	60.6	59.7
59	67.3	66.3	65.4	64.4	63.4	62.5	61.5	60.6	59.6
60	67.3	66.3	65.3	64.4	63.4	62.4	61.5	60.5	59.6
61	67.2	66.3	65.3	64.3	63.4	62.4	61.5	60.5	59.6
62	67.2	66.2	65.3	64.3	63.4	62.4	61.4	60.5	59.5
63	67.2	66.2	65.3	64.3	63.3	62.4	61.4	60.5	59.5
64	67.2	66.2	65.2	64.3	63.3	62.3	61.4	60.4	59.5
65	67.2	66.2	65.2	64.3	63.3	62.3	61.4	60.4	59.5
66	67.2	66.2	65.2	64.2	63.3	62.3	61.3	60.4	59.4
67	67.1	66.2	65.2	64.2	63.3	62.3	61.3	60.4	59.4
68	67.1	66.2	65.2	64.2	63.2	62.3	61.3	60.3	59.4

Ages	18	19	20	21	22	23	24	25	26
69	67.1	66.1	65.2	64.2	63.2	62.3	61.3	60.3	59.4
70	67.1	66.1	65.2	64.2	63.2	62.2	61.3	60.3	59.4
71	67.1	66.1	65.1	64.2	63.2	62.2	61.3	60.3	59.3
72	67.1	66.1	65.1	64.2	63.2	62.2	61.3	60.3	59.3
73	67.1	66.1	65.1	64.2	63.2	62.2	61.2	60.3	59.3
74	67.1	66.1	65.1	64.1	63.2	62.2	61.2	60.3	59.3
75	67.1	66.1	65.1	64.1	63.2	62.2	61.2	60.3	59.3
76	67.1	66.1	65.1	64.1	63.2	62.2	61.2	60.2	59.3
77	67.0	66.1	65.1	64.1	63.1	62.2	61.2	60.2	59.3
78	67.0	66.1	65.1	64.1	63.1	62.2	61.2	60.2	59.3
79	67.0	66.1	65.1	64.1	63.1	62.2	61.2	60.2	59.3
80	67.0	66.1	65.1	64.1	63.1	62.1	61.2	60.2	59.2
81	67.0	66.0	65.1	64.1	63.1	62.1	61.2	60.2	59.2
82	67.0	66.0	65.1	64.1	63.1	62.1	61.2	60.2	59.2
83	67.0	66.0	65.1	64.1	63.1	62.1	61.2	60.2	59.2
84	67.0	66.0	65.1	64.1	63.1	62.1	61.2	60.2	59.2
85	67.0	66.0	65.1	64.1	63.1	62.1	61.2	60.2	59.2
86	67.0	66.0	65.1	64.1	63.1	62.1	61.1	60.2	59.2
87	67.0	66.0	65.0	64.1	63.1	62.1	61.1	60.2	59.2
88	67.0	66.0	65.0	64.1	63.1	62.1	61.1	60.2	59.2
89	67.0	66.0	65.0	64.1	63.1	62.1	61.1	60.2	59.2
90	67.0	66.0	65.0	64.1	63.1	62.1	61.1	60.2	59.2
91	67.0	66.0	65.0	64.1	63.1	62.1	61.1	60.2	59.2
92	67.0	66.0	65.0	64.1	63.1	62.1	61.1	60.2	59.2
93	67.0	66.0	65.0	64.1	63.1	62.1	61.1	60.2	59.2
94	67.0	66.0	65.0	64.1	63.1	62.1	61.1	60.2	59.2
95	67.0	66.0	65.0	64.1	63.1	62.1	61.1	60.2	59.2
96	67.0	66.0	65.0	64.1	63.1	62.1	61.1	60.2	59.2
97	67.0	66.0	65.0	64.1	63.1	62.1	61.1	60.2	59.2
98	67.0	66.0	65.0	64.1	63.1	62.1	61.1	60.2	59.2
99	67.0	66.0	65.0	64.1	63.1	62.1	61.1	60.2	59.2
100	67.0	66.0	65.0	64.1	63.1	62.1	61.1	60.2	59.2
101	67.0	66.0	65.0	64.1	63.1	62.1	61.1	60.2	59.2
102	67.0	66.0	65.0	64.1	63.1	62.1	61.1	60.2	59.2
103	67.0	66.0	65.0	64.1	63.1	62.1	61.1	60.2	59.2
104	67.0	66.0	65.0	64.1	63.1	62.1	61.1	60.2	59.2

Ages	18	19	20	21	22	23	24	25	26
105	67.0	66.0	65.0	64.1	63.1	62.1	61.1	60.2	59.2
106	67.0	66.0	65.0	64.1	63.1	62.1	61.1	60.2	59.2
107	67.0	66.0	65.0	64.1	63.1	62.1	61.1	60.2	59.2
108	67.0	66.0	65.0	64.1	63.1	62.1	61.1	60.2	59.2
109	67.0	66.0	65.0	64.1	63.1	62.1	61.1	60.2	59.2
110	67.0	66.0	65.0	64.1	63.1	62.1	61.1	60.2	59.2
111	67.0	66.0	65.0	64.1	63.1	62.1	61.1	60.2	59.2
112	67.0	66.0	65.0	64.1	63.1	62.1	61.1	60.2	59.2
113	67.0	66.0	65.0	64.1	63.1	62.1	61.1	60.2	59.2
114	67.0	66.0	65.0	64.1	63.1	62.1	61.1	60.2	59.2
115	67.0	66.0	65.0	64.1	63.1	62.1	61.1	60.2	59.2
116	67.0	66.0	65.0	64.1	63.1	62.1	61.1	60.2	59.2
117	67.0	66.0	65.0	64.1	63.1	62.1	61.1	60.2	59.2
118	67.0	66.0	65.0	64.1	63.1	62.1	61.1	60.2	59.2
119	67.0	66.0	65.0	64.1	63.1	62.1	61.1	60.2	59.2
120+	67.0	66.0	65.0	64.1	63.1	62.1	61.1	60.2	59.2

Ages	27	28	29	30	31	32	33	34	35
0	85.7	85.6	85.6	85.5	85.4	85.4	85.3	85.3	85.3
1	84.8	84.7	84.7	84.6	84.6	84.5	84.5	84.4	84.4
2	83.9	83.8	83.8	83.7	83.6	83.6	83.5	83.5	83.4
3	83.0	82.9	82.8	82.8	82.7	82.6	82.6	82.5	82.5
4	82.1	82.0	81.9	81.8	81.8	81.7	81.6	81.6	81.5
5	81.2	81.1	81.0	80.9	80.9	80.8	80.7	80.7	80.6
6	80.3	80.2	80.1	80.0	79.9	79.9	79.8	79.7	79.7
7	79.4	79.3	79.2	79.1	79.0	78.9	78.9	78.8	78.7
8	78.6	78.4	78.3	78.2	78.1	78.0	77.9	77.9	77.8
9	77.7	77.6	77.4	77.3	77.2	77.1	77.0	77.0	76.9
10	76.8	76.7	76.6	76.4	76.3	76.2	76.1	76.0	76.0
11	76.0	75.8	75.7	75.6	75.5	75.3	75.2	75.1	75.0
12	75.2	75.0	74.9	74.7	74.6	74.5	74.3	74.2	74.1
13	74.4	74.2	74.0	73.9	73.7	73.6	73.5	73.3	73.2
14	73.6	73.4	73.2	73.0	72.9	72.7	72.6	72.5	72.4
15	72.8	72.6	72.4	72.2	72.0	71.9	71.7	71.6	71.5
16	72.0	71.8	71.6	71.4	71.2	71.0	70.9	70.7	70.6
17	71.3	71.0	70.8	70.6	70.4	70.2	70.0	69.9	69.7
18	70.5	70.3	70.0	69.8	69.6	69.4	69.2	69.0	68.9
19	69.8	69.5	69.3	69.0	68.8	68.6	68.4	68.2	

Table 3 to Paragraph (d)

Ages	27	28	29	30	31	32	33	34	35
20	69.1	68.8	68.5	68.3	68.0	67.8	67.6	67.4	67.2
21	68.5	68.1	67.8	67.5	67.3	67.0	66.8	66.6	66.4
22	67.8	67.5	67.1	66.8	66.6	66.3	66.0	65.8	65.6
23	67.2	66.8	66.5	66.2	65.8	65.6	65.3	65.1	64.8
24	66.6	66.2	65.8	65.5	65.2	64.9	64.6	64.3	64.1
25	66.1	65.6	65.2	64.9	64.5	64.2	63.9	63.6	63.3
26	65.5	65.1	64.6	64.2	63.9	63.5	63.2	62.9	62.6
27	65.0	64.5	64.1	63.7	63.2	62.9	62.5	62.2	61.9
28	64.5	64.0	63.5	63.1	62.7	62.3	61.9	61.5	61.2
29	64.1	63.5	63.0	62.6	62.1	61.7	61.3	60.9	60.5
30	63.7	63.1	62.6	62.0	61.6	61.1	60.7	60.3	59.9
31	63.2	62.7	62.1	61.6	61.1	60.6	60.1	59.7	59.3
32	62.9	62.3	61.7	61.1	60.6	60.1	59.6	59.1	58.7
33	62.5	61.9	61.3	60.7	60.1	59.6	59.1	58.6	58.1
34	62.2	61.5	60.9	60.3	59.7	59.1	58.6	58.1	57.6
35	61.9	61.2	60.5	59.9	59.3	58.7	58.1	57.6	57.1
36	61.6	60.9	60.2	59.5	58.9	58.3	57.7	57.2	56.6
37	61.3	60.6	59.9	59.2	58.6	57.9	57.3	56.7	56.2
38	61.1	60.3	59.6	58.9	58.2	57.6	56.9	56.3	55.7
39	60.9	60.1	59.4	58.6	57.9	57.2	56.6	55.9	55.3
40	60.7	59.9	59.1	58.4	57.6	56.9	56.3	55.6	55.0
41	60.5	59.7	58.9	58.1	57.4	56.7	56.0	55.3	54.6
42	60.3	59.5	58.7	57.9	57.1	56.4	55.7	55.0	54.3
43	60.1	59.3	58.5	57.7	56.9	56.2	55.4	54.7	54.0
44	60.0	59.1	58.3	57.5	56.7	55.9	55.2	54.4	53.7
45	59.8	59.0	58.1	57.3	56.5	55.7	54.9	54.2	53.4
46	59.7	58.8	58.0	57.2	56.3	55.5	54.7	54.0	53.2
47	59.6	58.7	57.9	57.0	56.2	55.4	54.5	53.7	53.0
48	59.5	58.6	57.7	56.9	56.0	55.2	54.4	53.6	52.8
49	59.4	58.5	57.6	56.7	55.9	55.0	54.2	53.4	52.6
50	59.3	58.4	57.5	56.6	55.8	54.9	54.1	53.2	52.4
51	59.2	58.3	57.4	56.5	55.6	54.8	53.9	53.1	52.2
52	59.1	58.2	57.3	56.4	55.5	54.7	53.8	52.9	52.1

Ages	27	28	29	30	31	32	33	34	35
53	59.0	58.1	57.2	56.3	55.4	54.6	53.7	52.8	52.0
54	59.0	58.0	57.1	56.2	55.3	54.5	53.6	52.7	51.8
55	58.9	58.0	57.1	56.2	55.3	54.4	53.5	52.6	51.7
56	58.8	57.9	57.0	56.1	55.2	54.3	53.4	52.5	51.6
57	58.8	57.9	56.9	56.0	55.1	54.2	53.3	52.4	51.5
58	58.7	57.8	56.9	56.0	55.0	54.1	53.2	52.3	51.4
59	58.7	57.8	56.8	55.9	55.0	54.1	53.2	52.2	51.3
60	58.7	57.7	56.8	55.9	54.9	54.0	53.1	52.2	51.3
61	58.6	57.7	56.7	55.8	54.9	54.0	53.0	52.1	51.2
62	58.6	57.6	56.7	55.8	54.8	53.9	53.0	52.1	51.1
63	58.6	57.6	56.7	55.7	54.8	53.9	52.9	52.0	51.1
64	58.5	57.6	56.6	55.7	54.8	53.8	52.9	52.0	51.0
65	58.5	57.5	56.6	55.7	54.7	53.8	52.8	51.9	51.0
66	58.5	57.5	56.6	55.6	54.7	53.7	52.8	51.9	50.9
67	58.5	57.5	56.5	55.6	54.7	53.7	52.8	51.8	50.9
68	58.4	57.5	56.5	55.6	54.6	53.7	52.7	51.8	50.9
69	58.4	57.5	56.5	55.6	54.6	53.7	52.7	51.8	50.8
70	58.4	57.4	56.5	55.5	54.6	53.6	52.7	51.7	50.8
71	58.4	57.4	56.5	55.5	54.6	53.6	52.7	51.7	50.8
72	58.4	57.4	56.5	55.5	54.5	53.6	52.6	51.7	50.8
73	58.4	57.4	56.4	55.5	54.5	53.6	52.6	51.7	50.7
74	58.3	57.4	56.4	55.5	54.5	53.6	52.6	51.7	50.7
75	58.3	57.4	56.4	55.5	54.5	53.5	52.6	51.6	50.7
76	58.3	57.4	56.4	55.4	54.5	53.5	52.6	51.6	50.7
77	58.3	57.3	56.4	55.4	54.5	53.5	52.6	51.6	50.7
78	58.3	57.3	56.4	55.4	54.5	53.5	52.6	51.6	50.6
79	58.3	57.3	56.4	55.4	54.5	53.5	52.5	51.6	50.6
80	58.3	57.3	56.4	55.4	54.4	53.5	52.5	51.6	50.6
81	58.3	57.3	56.4	55.4	54.4	53.5	52.5	51.6	50.6
82	58.3	57.3	56.3	55.4	54.4	53.5	52.5	51.6	50.6
83	58.3	57.3	56.3	55.4	54.4	53.5	52.5	51.6	50.6
84	58.3	57.3	56.3	55.4	54.4	53.5	52.5	51.5	50.6
85	58.3	57.3	56.3	55.4	54.4	53.5	52.5	51.5	50.6
86	58.2	57.3	56.3	55.4	54.4	53.5	52.5	51.5	50.6
87	58.2	57.3	56.3	55.4	54.4	53.4	52.5	51.5	50.6
88	58.2	57.3	56.3	55.4	54.4	53.4	52.5	51.5	50.6

Ages	27	28	29	30	31	32	33	34	35
89	58.2	57.3	56.3	55.4	54.4	53.4	52.5	51.5	50.6
90	58.2	57.3	56.3	55.4	54.4	53.4	52.5	51.5	50.6
91	58.2	57.3	56.3	55.3	54.4	53.4	52.5	51.5	50.6
92	58.2	57.3	56.3	55.3	54.4	53.4	52.5	51.5	50.6
93	58.2	57.3	56.3	55.3	54.4	53.4	52.5	51.5	50.6
94	58.2	57.3	56.3	55.3	54.4	53.4	52.5	51.5	50.6
95	58.2	57.3	56.3	55.3	54.4	53.4	52.5	51.5	50.6
96	58.2	57.3	56.3	55.3	54.4	53.4	52.5	51.5	50.6
97	58.2	57.3	56.3	55.3	54.4	53.4	52.5	51.5	50.6
98	58.2	57.3	56.3	55.3	54.4	53.4	52.5	51.5	50.6
99	58.2	57.3	56.3	55.3	54.4	53.4	52.5	51.5	50.6
100	58.2	57.3	56.3	55.3	54.4	53.4	52.5	51.5	50.6
101	58.2	57.3	56.3	55.3	54.4	53.4	52.5	51.5	50.6
102	58.2	57.3	56.3	55.3	54.4	53.4	52.5	51.5	50.6
103	58.2	57.3	56.3	55.3	54.4	53.4	52.5	51.5	50.5
104	58.2	57.3	56.3	55.3	54.4	53.4	52.5	51.5	50.5
105	58.2	57.3	56.3	55.3	54.4	53.4	52.5	51.5	50.5
106	58.2	57.3	56.3	55.3	54.4	53.4	52.5	51.5	50.5
107	58.2	57.3	56.3	55.3	54.4	53.4	52.5	51.5	50.5
108	58.2	57.3	56.3	55.3	54.4	53.4	52.5	51.5	50.5
109	58.2	57.3	56.3	55.3	54.4	53.4	52.5	51.5	50.5
110	58.2	57.3	56.3	55.3	54.4	53.4	52.5	51.5	50.5
111	58.2	57.3	56.3	55.3	54.4	53.4	52.5	51.5	50.5
112	58.2	57.3	56.3	55.3	54.4	53.4	52.5	51.5	50.5
113	58.2	57.3	56.3	55.3	54.4	53.4	52.5	51.5	50.5
114	58.2	57.3	56.3	55.3	54.4	53.4	52.5	51.5	50.5
115	58.2	57.3	56.3	55.3	54.4	53.4	52.5	51.5	50.5
116	58.2	57.3	56.3	55.3	54.4	53.4	52.5	51.5	50.5
117	58.2	57.3	56.3	55.3	54.4	53.4	52.5	51.5	50.5
118	58.2	57.3	56.3	55.3	54.4	53.4	52.5	51.5	50.5
119	58.2	57.3	56.3	55.3	54.4	53.4	52.5	51.5	50.5
120+	58.2	57.3	56.3	55.3	54.4	53.4	52.5	51.5	50.5

Ages	36	37	38	39	40	41	42	43	44
0	85.2	85.2	85.2	85.1	85.1	85.1	85.0	85.0	85.0
1	84.3	84.3	84.3	84.2	84.2	84.2	84.1	84.1	84.1
2	83.4	83.3	83.3	83.3	83.2	83.2	83.2	83.1	83.1
3	82.4	82.4	82.3	82.3	82.3	82.2	82.2	82.2	82.2
4	81.5	81.4	81.4	81.4	81.3	81.3	81.3	81.2	81.2
5	80.5	80.5	80.4	80.4	80.4	80.3	80.3	80.3	80.2
6	79.6	79.5	79.5	79.5	79.4	79.4	79.3	79.3	79.3
7	78.7	78.6	78.6	78.5	78.5	78.4	78.4	78.3	78.3
8	77.7	77.7	77.6	77.6	77.5	77.5	77.4	77.4	77.3
9	76.8	76.7	76.7	76.6	76.6	76.5	76.5	76.4	76.4
10	75.9	75.8	75.7	75.7	75.6	75.6	75.5	75.5	75.4
11	75.0	74.9	74.8	74.7	74.7	74.6	74.6	74.5	74.5
12	74.0	74.0	73.9	73.8	73.7	73.7	73.6	73.6	73.5
13	73.1	73.1	73.0	72.9	72.8	72.8	72.7	72.6	72.6
14	72.2	72.1	72.1	72.0	71.9	71.8	71.8	71.7	71.6
15	71.4	71.3	71.2	71.1	71.0	70.9	70.8	70.8	70.7
16	70.5	70.4	70.3	70.2	70.1	70.0	69.9	69.8	69.8
17	69.6	69.5	69.4	69.3	69.2	69.1	69.0	68.9	68.8
18	68.7	68.6	68.5	68.4	68.3	68.2	68.1	68.0	67.9
19	67.9	67.7	67.6	67.5	67.4	67.3	67.2	67.1	67.0
20	67.1	66.9	66.8	66.6	66.5	66.4	66.3	66.2	66.1
21	66.2	66.1	65.9	65.8	65.6	65.5	65.4	65.3	65.2
22	65.4	65.2	65.1	64.9	64.8	64.6	64.5	64.4	64.3
23	64.6	64.4	64.2	64.1	63.9	63.8	63.6	63.5	63.4
24	63.8	63.6	63.4	63.3	63.1	62.9	62.8	62.7	62.5
25	63.1	62.8	62.6	62.4	62.3	62.1	61.9	61.8	61.7
26	62.3	62.1	61.9	61.6	61.5	61.3	61.1	61.0	60.8
27	61.6	61.3	61.1	60.9	60.7	60.5	60.3	60.1	60.0
28	60.9	60.6	60.3	60.1	59.9	59.7	59.5	59.3	59.1
29	60.2	59.9	59.6	59.4	59.1	58.9	58.7	58.5	58.3
30	59.5	59.2	58.9	58.6	58.4	58.1	57.9	57.7	57.5
31	58.9	58.6	58.2	57.9	57.6	57.4	57.1	56.9	56.7
32	58.3	57.9	57.6	57.2	56.9	56.7	56.4	56.2	55.9
33	57.7	57.3	56.9	56.6	56.3	56.0	55.7	55.4	55.2
34	57.2	56.7	56.3	55.9	55.6	55.3	55.0	54.7	54.4
35	56.6	56.2	55.7	55.3	55.0	54.6	54.3	54.0	53.7

Ages	36	37	38	39	40	41	42	43	44
36	56.1	55.6	55.2	54.7	54.3	54.0	53.6	53.3	53.0
37	55.6	55.1	54.6	54.2	53.8	53.4	53.0	52.6	52.3
38	55.2	54.6	54.1	53.6	53.2	52.8	52.4	52.0	51.6
39	54.7	54.2	53.6	53.1	52.7	52.2	51.8	51.4	51.0

Table 3 to Paragraph (d)

Ages	36	37	38	39	40	41	42	43	44
40	54.3	53.8	53.2	52.7	52.2	51.7	51.2	50.8	50.4
41	54.0	53.4	52.8	52.2	51.7	51.2	50.7	50.2	49.8
42	53.6	53.0	52.4	51.8	51.2	50.7	50.2	49.7	49.2
43	53.3	52.6	52.0	51.4	50.8	50.2	49.7	49.2	48.7
44	53.0	52.3	51.6	51.0	50.4	49.8	49.2	48.7	48.2
45	52.7	52.0	51.3	50.7	50.0	49.4	48.8	48.3	47.7
46	52.4	51.7	51.0	50.3	49.7	49.0	48.4	47.8	47.3
47	52.2	51.5	50.7	50.0	49.3	48.7	48.0	47.4	46.8
48	52.0	51.2	50.5	49.7	49.0	48.4	47.7	47.1	46.4
49	51.8	51.0	50.2	49.5	48.8	48.1	47.4	46.7	46.1
50	51.6	50.8	50.0	49.2	48.5	47.8	47.1	46.4	45.7
51	51.4	50.6	49.8	49.0	48.3	47.5	46.8	46.1	45.4
52	51.3	50.4	49.6	48.8	48.0	47.3	46.5	45.8	45.1
53	51.1	50.3	49.5	48.6	47.8	47.1	46.3	45.6	44.8
54	51.0	50.1	49.3	48.5	47.7	46.9	46.1	45.3	44.6
55	50.9	50.0	49.1	48.3	47.5	46.7	45.9	45.1	44.3
56	50.7	49.9	49.0	48.2	47.3	46.5	45.7	44.9	44.1
57	50.6	49.8	48.9	48.0	47.2	46.3	45.5	44.7	43.9
58	50.5	49.7	48.8	47.9	47.1	46.2	45.4	44.5	43.7
59	50.5	49.6	48.7	47.8	46.9	46.1	45.2	44.4	43.6
60	50.4	49.5	48.6	47.7	46.8	46.0	45.1	44.3	43.4
61	50.3	49.4	48.5	47.6	46.7	45.8	45.0	44.1	43.3
62	50.2	49.3	48.4	47.5	46.6	45.7	44.9	44.0	43.1
63	50.2	49.3	48.3	47.4	46.5	45.7	44.8	43.9	43.0
64	50.1	49.2	48.3	47.4	46.5	45.6	44.7	43.8	42.9
65	50.1	49.1	48.2	47.3	46.4	45.5	44.6	43.7	42.8
66	50.0	49.1	48.2	47.2	46.3	45.4	44.5	43.6	42.7
67	50.0	49.0	48.1	47.2	46.3	45.4	44.4	43.5	42.6
68	49.9	49.0	48.1	47.1	46.2	45.3	44.4	43.5	42.6
69	49.9	49.0	48.0	47.1	46.2	45.2	44.3	43.4	42.5
70	49.9	48.9	48.0	47.0	46.1	45.2	44.3	43.3	42.4
71	49.8	48.9	47.9	47.0	46.1	45.1	44.2	43.3	42.4
72	49.8	48.9	47.9	47.0	46.0	45.1	44.2	43.2	42.3

Ages	36	37	38	39	40	41	42	43	44
73	49.8	48.8	47.9	46.9	46.0	45.1	44.1	43.2	42.3
74	49.8	48.8	47.9	46.9	46.0	45.0	44.1	43.2	42.2
75	49.7	48.8	47.8	46.9	45.9	45.0	44.1	43.1	42.2
76	49.7	48.8	47.8	46.9	45.9	45.0	44.0	43.1	42.2
77	49.7	48.8	47.8	46.9	45.9	45.0	44.0	43.1	42.1
78	49.7	48.7	47.8	46.8	45.9	44.9	44.0	43.0	42.1
79	49.7	48.7	47.8	46.8	45.9	44.9	44.0	43.0	42.1
80	49.7	48.7	47.8	46.8	45.9	44.9	43.9	43.0	42.1
81	49.7	48.7	47.7	46.8	45.8	44.9	43.9	43.0	42.0
82	49.7	48.7	47.7	46.8	45.8	44.9	43.9	43.0	42.0
83	49.6	48.7	47.7	46.8	45.8	44.9	43.9	43.0	42.0
84	49.6	48.7	47.7	46.8	45.8	44.9	43.9	42.9	42.0
85	49.6	48.7	47.7	46.8	45.8	44.8	43.9	42.9	42.0
86	49.6	48.7	47.7	46.7	45.8	44.8	43.9	42.9	42.0
87	49.6	48.7	47.7	46.7	45.8	44.8	43.9	42.9	42.0
88	49.6	48.7	47.7	46.7	45.8	44.8	43.9	42.9	42.0
89	49.6	48.7	47.7	46.7	45.8	44.8	43.9	42.9	41.9
90	49.6	48.6	47.7	46.7	45.8	44.8	43.9	42.9	41.9
91	49.6	48.6	47.7	46.7	45.8	44.8	43.9	42.9	41.9
92	49.6	48.6	47.7	46.7	45.8	44.8	43.8	42.9	41.9
93	49.6	48.6	47.7	46.7	45.8	44.8	43.8	42.9	41.9
94	49.6	48.6	47.7	46.7	45.8	44.8	43.8	42.9	41.9
95	49.6	48.6	47.7	46.7	45.8	44.8	43.8	42.9	41.9
96	49.6	48.6	47.7	46.7	45.8	44.8	43.8	42.9	41.9
97	49.6	48.6	47.7	46.7	45.8	44.8	43.8	42.9	41.9
98	49.6	48.6	47.7	46.7	45.8	44.8	43.8	42.9	41.9
99	49.6	48.6	47.7	46.7	45.8	44.8	43.8	42.9	41.9
100	49.6	48.6	47.7	46.7	45.8	44.8	43.8	42.9	41.9
101	49.6	48.6	47.7	46.7	45.8	44.8	43.8	42.9	41.9
102	49.6	48.6	47.7	46.7	45.8	44.8	43.8	42.9	41.9
103	49.6	48.6	47.7	46.7	45.8	44.8	43.8	42.9	41.9
104	49.6	48.6	47.7	46.7	45.8	44.8	43.8	42.9	41.9
105	49.6	48.6	47.7	46.7	45.7	44.8	43.8	42.9	41.9
106	49.6	48.6	47.7	46.7	45.7	44.8	43.8	42.9	41.9
107	49.6	48.6	47.7	46.7	45.7	44.8	43.8	42.9	41.9
108	49.6	48.6	47.7	46.7	45.7	44.8	43.8	42.9	41.9

Ages	36	37	38	39	40	41	42	43	44
109	49.6	48.6	47.7	46.7	45.7	44.8	43.8	42.9	41.9
110	49.6	48.6	47.7	46.7	45.7	44.8	43.8	42.9	41.9
111	49.6	48.6	47.7	46.7	45.7	44.8	43.8	42.9	41.9
112	49.6	48.6	47.7	46.7	45.7	44.8	43.8	42.9	41.9
113	49.6	48.6	47.7	46.7	45.7	44.8	43.8	42.9	41.9
114	49.6	48.6	47.7	46.7	45.7	44.8	43.8	42.9	41.9
115	49.6	48.6	47.7	46.7	45.7	44.8	43.8	42.9	41.9
116	49.6	48.6	47.7	46.7	45.7	44.8	43.8	42.9	41.9
117	49.6	48.6	47.7	46.7	45.7	44.8	43.8	42.9	41.9
118	49.6	48.6	47.7	46.7	45.7	44.8	43.8	42.9	41.9
119	49.6	48.6	47.7	46.7	45.7	44.8	43.8	42.9	41.9
120+	49.6	48.6	47.7	46.7	45.7	44.8	43.8	42.9	41.9

Ages	45	46	47	48	49	50	51	52	53
0	85.0	84.9	84.9	84.9	84.9	84.9	84.8	84.8	84.8
1	84.1	84.0	84.0	84.0	84.0	84.0	84.0	83.9	83.9
2	83.1	83.1	83.1	83.0	83.0	83.0	83.0	83.0	83.0
3	82.1	82.1	82.1	82.1	82.1	82.0	82.0	82.0	82.0
4	81.2	81.1	81.1	81.1	81.1	81.1	81.0	81.0	81.0
5	80.2	80.2	80.2	80.1	80.1	80.1	80.1	80.1	80.0
6	79.2	79.2	79.2	79.2	79.1	79.1	79.1	79.1	79.1
7	78.3	78.2	78.2	78.2	78.2	78.1	78.1	78.1	78.1
8	77.3	77.3	77.3	77.2	77.2	77.2	77.2	77.1	77.1
9	76.4	76.3	76.3	76.3	76.2	76.2	76.2	76.2	76.1
10	75.4	75.4	75.3	75.3	75.3	75.2	75.2	75.2	75.2
11	74.4	74.4	74.4	74.3	74.3	74.3	74.2	74.2	74.2
12	73.5	73.4	73.4	73.4	73.3	73.3	73.3	73.2	73.2
13	72.5	72.5	72.4	72.4	72.4	72.3	72.3	72.3	72.3
14	71.6	71.5	71.5	71.5	71.4	71.4	71.3	71.3	71.3
15	70.6	70.6	70.5	70.5	70.5	70.4	70.4	70.4	70.3
16	69.7	69.7	69.6	69.6	69.5	69.5	69.4	69.4	69.4
17	68.8	68.7	68.7	68.6	68.6	68.5	68.5	68.4	68.4
18	67.9	67.8	67.7	67.7	67.6	67.6	67.5	67.5	67.4
19	66.9	66.9	66.8	66.7	66.7	66.6	66.6	66.5	66.5
20	66.0	65.9	65.9	65.8	65.7	65.7	65.6	65.6	65.5
21	65.1	65.0	65.0	64.9	64.8	64.8	64.7	64.7	64.6
22	64.2	64.1	64.0	64.0	63.9	63.8	63.8	63.7	63.7
23	63.3	63.2	63.1	63.0	63.0	62.9	62.8	62.8	62.7
24	62.4	62.3	62.2	62.1	62.1	62.0	61.9	61.9	61.8
25	61.5	61.4	61.3	61.2	61.2	61.1	61.0	60.9	60.9
26	60.7	60.6	60.5	60.3	60.3	60.2	60.1	60.0	59.9
27	59.8	59.7	59.6	59.5	59.4	59.3	59.2	59.1	59.0
28	59.0	58.8	58.7	58.6	58.5	58.4	58.3	58.2	58.1
29	58.1	58.0	57.9	57.7	57.6	57.5	57.4	57.3	57.2
30	57.3	57.2	57.0	56.9	56.7	56.6	56.5	56.4	56.3
31	56.5	56.3	56.2	56.0	55.9	55.8	55.6	55.5	55.4
32	55.7	55.5	55.4	55.2	55.0	54.9	54.8	54.7	54.6
33	54.9	54.7	54.5	54.4	54.2	54.1	53.9	53.8	53.7
34	54.2	54.0	53.7	53.6	53.4	53.2	53.1	52.9	52.8
35	53.4	53.2	53.0	52.8	52.6	52.4	52.2	52.1	52.0

Ages	45	46	47	48	49	50	51	52	53
36	52.7	52.4	52.2	52.0	51.8	51.6	51.4	51.3	51.1
37	52.0	51.7	51.5	51.2	51.0	50.8	50.6	50.4	50.3
38	51.3	51.0	50.7	50.5	50.2	50.0	49.8	49.6	49.5
39	50.7	50.3	50.0	49.7	49.5	49.2	49.0	48.8	48.6
40	50.0	49.7	49.3	49.0	48.8	48.5	48.3	48.0	47.8
41	49.4	49.0	48.7	48.4	48.1	47.8	47.5	47.3	47.1
42	48.8	48.4	48.0	47.7	47.4	47.1	46.8	46.5	46.3
43	48.3	47.8	47.4	47.1	46.7	46.4	46.1	45.8	45.6
44	47.7	47.3	46.8	46.4	46.1	45.7	45.4	45.1	44.8
45	47.2	46.7	46.3	45.9	45.5	45.1	44.7	44.4	44.1
46	46.7	46.2	45.7	45.3	44.9	44.5	44.1	43.8	43.4
47	46.3	45.7	45.2	44.8	44.3	43.9	43.5	43.1	42.8
48	45.9	45.3	44.8	44.3	43.8	43.3	42.9	42.5	42.1
49	45.5	44.9	44.3	43.8	43.3	42.8	42.3	41.9	41.5
50	45.1	44.5	43.9	43.3	42.8	42.3	41.8	41.4	40.9
51	44.7	44.1	43.5	42.9	42.3	41.8	41.3	40.8	40.4
52	44.4	43.8	43.1	42.5	41.9	41.4	40.8	40.3	39.9
53	44.1	43.4	42.8	42.1	41.5	40.9	40.4	39.9	39.4
54	43.8	43.1	42.5	41.8	41.2	40.6	40.0	39.4	38.9
55	43.6	42.9	42.2	41.5	40.8	40.2	39.6	39.0	38.4
56	43.4	42.6	41.9	41.2	40.5	39.8	39.2	38.6	38.0
57	43.1	42.4	41.6	40.9	40.2	39.5	38.9	38.2	37.6
58	42.9	42.2	41.4	40.7	39.9	39.2	38.6	37.9	37.3
59	42.8	42.0	41.2	40.4	39.7	39.0	38.3	37.6	36.9

Table 3 to Paragraph (d)

Ages	45	46	47	48	49	50	51	52	53
60	42.6	41.8	41.0	40.2	39.5	38.7	38.0	37.3	36.6
61	42.4	41.6	40.8	40.0	39.2	38.5	37.7	37.0	36.3
62	42.3	41.5	40.6	39.8	39.0	38.3	37.5	36.8	36.1
63	42.2	41.3	40.5	39.7	38.9	38.1	37.3	36.6	35.8
64	42.1	41.2	40.4	39.5	38.7	37.9	37.1	36.3	35.6
65	41.9	41.1	40.2	39.4	38.6	37.7	36.9	36.2	35.4
66	41.8	41.0	40.1	39.3	38.4	37.6	36.8	36.0	35.2
67	41.8	40.9	40.0	39.1	38.3	37.5	36.6	35.8	35.0
68	41.7	40.8	39.9	39.0	38.2	37.3	36.5	35.7	34.9
69	41.6	40.7	39.8	38.9	38.1	37.2	36.4	35.5	34.7
70	41.5	40.6	39.7	38.8	38.0	37.1	36.2	35.4	34.6
71	41.5	40.6	39.7	38.8	37.9	37.0	36.1	35.3	34.5
72	41.4	40.5	39.6	38.7	37.8	36.9	36.0	35.2	34.3
73	41.4	40.4	39.5	38.6	37.7	36.8	36.0	35.1	34.2
74	41.3	40.4	39.5	38.6	37.7	36.8	35.9	35.0	34.1
75	41.3	40.3	39.4	38.5	37.6	36.7	35.8	34.9	34.1
76	41.2	40.3	39.4	38.5	37.5	36.6	35.7	34.9	34.0
77	41.2	40.3	39.3	38.4	37.5	36.6	35.7	34.8	33.9
78	41.2	40.2	39.3	38.4	37.5	36.5	35.6	34.7	33.9
79	41.1	40.2	39.3	38.3	37.4	36.5	35.6	34.7	33.8
80	41.1	40.2	39.2	38.3	37.4	36.5	35.5	34.6	33.7
81	41.1	40.1	39.2	38.3	37.3	36.4	35.5	34.6	33.7
82	41.1	40.1	39.2	38.3	37.3	36.4	35.5	34.6	33.7
83	41.1	40.1	39.2	38.2	37.3	36.4	35.4	34.5	33.6
84	41.0	40.1	39.2	38.2	37.3	36.3	35.4	34.5	33.6
85	41.0	40.1	39.1	38.2	37.3	36.3	35.4	34.5	33.6
86	41.0	40.1	39.1	38.2	37.2	36.3	35.4	34.5	33.5
87	41.0	40.1	39.1	38.2	37.2	36.3	35.4	34.4	33.5
88	41.0	40.0	39.1	38.2	37.2	36.3	35.3	34.4	33.5
89	41.0	40.0	39.1	38.1	37.2	36.3	35.3	34.4	33.5
90	41.0	40.0	39.1	38.1	37.2	36.3	35.3	34.4	33.5
91	41.0	40.0	39.1	38.1	37.2	36.2	35.3	34.4	33.5
92	41.0	40.0	39.1	38.1	37.2	36.2	35.3	34.4	33.5

Ages	45	46	47	48	49	50	51	52	53
93	41.0	40.0	39.1	38.1	37.2	36.2	35.3	34.4	33.4
94	41.0	40.0	39.1	38.1	37.2	36.2	35.3	34.4	33.4
95	41.0	40.0	39.1	38.1	37.2	36.2	35.3	34.4	33.4
96	41.0	40.0	39.1	38.1	37.2	36.2	35.3	34.3	33.4
97	41.0	40.0	39.1	38.1	37.2	36.2	35.3	34.3	33.4
98	41.0	40.0	39.1	38.1	37.2	36.2	35.3	34.3	33.4
99	41.0	40.0	39.1	38.1	37.2	36.2	35.3	34.3	33.4
100	41.0	40.0	39.0	38.1	37.1	36.2	35.3	34.3	33.4
101	41.0	40.0	39.0	38.1	37.1	36.2	35.3	34.3	33.4
102	41.0	40.0	39.0	38.1	37.1	36.2	35.3	34.3	33.4
103	41.0	40.0	39.0	38.1	37.1	36.2	35.3	34.3	33.4
104	41.0	40.0	39.0	38.1	37.1	36.2	35.3	34.3	33.4
105	41.0	40.0	39.0	38.1	37.1	36.2	35.3	34.3	33.4
106	41.0	40.0	39.0	38.1	37.1	36.2	35.3	34.3	33.4
107	41.0	40.0	39.0	38.1	37.1	36.2	35.3	34.3	33.4
108	41.0	40.0	39.0	38.1	37.1	36.2	35.3	34.3	33.4
109	41.0	40.0	39.0	38.1	37.1	36.2	35.3	34.3	33.4
110	41.0	40.0	39.0	38.1	37.1	36.2	35.3	34.3	33.4
111	41.0	40.0	39.0	38.1	37.1	36.2	35.3	34.3	33.4
112	41.0	40.0	39.0	38.1	37.1	36.2	35.3	34.3	33.4
113	41.0	40.0	39.0	38.1	37.1	36.2	35.3	34.3	33.4
114	41.0	40.0	39.0	38.1	37.1	36.2	35.3	34.3	33.4
115	41.0	40.0	39.0	38.1	37.1	36.2	35.3	34.3	33.4
116	41.0	40.0	39.0	38.1	37.1	36.2	35.3	34.3	33.4
117	41.0	40.0	39.0	38.1	37.1	36.2	35.3	34.3	33.4
118	41.0	40.0	39.0	38.1	37.1	36.2	35.3	34.3	33.4
119	41.0	40.0	39.0	38.1	37.1	36.2	35.3	34.3	33.4
120+	41.0	40.0	39.0	38.1	37.1	36.2	35.3	34.3	33.4

Ages	54	55	56	57	58	59	60	61	62
0	84.8	84.8	84.8	84.8	84.8	84.7	84.7	84.7	84.7
1	83.9	83.9	83.9	83.9	83.9	83.9	83.8	83.8	83.8
2	82.9	82.9	82.9	82.9	82.9	82.9	82.9	82.9	82.9
3	82.0	82.0	81.9	81.9	81.9	81.9	81.9	81.9	81.9
4	81.0	81.0	81.0	81.0	80.9	80.9	80.9	80.9	80.9
5	80.0	80.0	80.0	80.0	80.0	80.0	79.9	79.9	79.9
6	79.0	79.0	79.0	79.0	79.0	79.0	79.0	79.0	78.9
7	78.1	78.1	78.0	78.0	78.0	78.0	78.0	78.0	78.0

Table 3 to Paragraph (d)

Ages	54	55	56	57	58	59	60	61	62
8	77.1	77.1	77.1	77.0	77.0	77.0	77.0	77.0	77.0
9	76.1	76.1	76.1	76.1	76.1	76.0	76.0	76.0	76.0
10	75.1	75.1	75.1	75.1	75.1	75.1	75.0	75.0	75.0
11	74.2	74.2	74.1	74.1	74.1	74.1	74.1	74.1	74.0
12	73.2	73.2	73.2	73.1	73.1	73.1	73.1	73.1	73.1
13	72.2	72.2	72.2	72.2	72.1	72.1	72.1	72.1	72.1
14	71.3	71.2	71.2	71.2	71.2	71.2	71.1	71.1	71.1
15	70.3	70.3	70.2	70.2	70.2	70.2	70.2	70.1	70.1
16	69.3	69.3	69.3	69.3	69.2	69.2	69.2	69.2	69.2
17	68.4	68.3	68.3	68.3	68.3	68.2	68.2	68.2	68.2
18	67.4	67.4	67.4	67.3	67.3	67.3	67.3	67.2	67.2
19	66.5	66.4	66.4	66.4	66.3	66.3	66.3	66.3	66.2
20	65.5	65.5	65.4	65.4	65.4	65.4	65.3	65.3	65.3
21	64.6	64.5	64.5	64.5	64.4	64.4	64.4	64.3	64.3
22	63.6	63.6	63.5	63.5	63.5	63.4	63.4	63.4	63.4
23	62.7	62.6	62.6	62.5	62.5	62.5	62.4	62.4	62.4
24	61.7	61.7	61.6	61.6	61.6	61.5	61.5	61.5	61.4
25	60.8	60.8	60.7	60.7	60.6	60.6	60.5	60.5	60.5
26	59.9	59.8	59.8	59.7	59.7	59.6	59.6	59.6	59.5
27	59.0	58.9	58.8	58.8	58.7	58.7	58.7	58.6	58.6
28	58.0	58.0	57.9	57.9	57.8	57.8	57.7	57.7	57.6
29	57.1	57.1	57.0	56.9	56.9	56.8	56.8	56.7	56.7
30	56.2	56.2	56.1	56.0	56.0	55.9	55.9	55.8	55.8
31	55.3	55.3	55.2	55.1	55.0	55.0	54.9	54.9	54.8
32	54.5	54.4	54.3	54.2	54.1	54.1	54.0	54.0	53.9
33	53.6	53.5	53.4	53.3	53.2	53.2	53.1	53.0	53.0
34	52.7	52.6	52.5	52.4	52.3	52.2	52.2	52.1	52.1
35	51.8	51.7	51.6	51.5	51.4	51.3	51.3	51.2	51.1
36	51.0	50.9	50.7	50.6	50.5	50.5	50.4	50.3	50.2
37	50.1	50.0	49.9	49.8	49.7	49.6	49.5	49.4	49.3
38	49.3	49.1	49.0	48.9	48.8	48.7	48.6	48.5	48.4
39	48.5	48.3	48.2	48.0	47.9	47.8	47.7	47.6	47.5
40	47.7	47.5	47.3	47.2	47.1	46.9	46.8	46.7	46.6

Ages	54	55	56	57	58	59	60	61	62
41	46.9	46.7	46.5	46.3	46.2	46.1	46.0	45.8	45.7
42	46.1	45.9	45.7	45.5	45.4	45.2	45.1	45.0	44.9
43	45.3	45.1	44.9	44.7	44.5	44.4	44.3	44.1	44.0
44	44.6	44.3	44.1	43.9	43.7	43.6	43.4	43.3	43.1
45	43.8	43.6	43.4	43.1	42.9	42.8	42.6	42.4	42.3
46	43.1	42.9	42.6	42.4	42.2	42.0	41.8	41.6	41.5
47	42.5	42.2	41.9	41.6	41.4	41.2	41.0	40.8	40.6
48	41.8	41.5	41.2	40.9	40.7	40.4	40.2	40.0	39.8
49	41.2	40.8	40.5	40.2	39.9	39.7	39.5	39.2	39.0
50	40.6	40.2	39.8	39.5	39.2	39.0	38.7	38.5	38.3
51	40.0	39.6	39.2	38.9	38.6	38.3	38.0	37.7	37.5
52	39.4	39.0	38.6	38.2	37.9	37.6	37.3	37.0	36.8
53	38.9	38.4	38.0	37.6	37.3	36.9	36.6	36.3	36.1
54	38.4	37.9	37.5	37.1	36.7	36.3	36.0	35.7	35.4
55	37.9	37.4	36.9	36.5	36.1	35.7	35.3	35.0	34.7
56	37.5	36.9	36.5	36.0	35.5	35.1	34.8	34.4	34.1
57	37.1	36.5	36.0	35.5	35.0	34.6	34.2	33.8	33.4
58	36.7	36.1	35.5	35.0	34.5	34.1	33.6	33.2	32.8
59	36.3	35.7	35.1	34.6	34.1	33.6	33.1	32.7	32.3
60	36.0	35.3	34.8	34.2	33.6	33.1	32.6	32.2	31.7
61	35.7	35.0	34.4	33.8	33.2	32.7	32.2	31.7	31.2
62	35.4	34.7	34.1	33.4	32.8	32.3	31.7	31.2	30.8
63	35.1	34.4	33.8	33.1	32.5	31.9	31.3	30.8	30.3
64	34.9	34.2	33.5	32.8	32.2	31.5	31.0	30.4	29.9
65	34.6	33.9	33.2	32.5	31.9	31.2	30.6	30.0	29.5
66	34.4	33.7	33.0	32.3	31.6	30.9	30.3	29.7	29.1
67	34.2	33.5	32.7	32.0	31.3	30.6	30.0	29.4	28.7
68	34.1	33.3	32.5	31.8	31.1	30.4	29.7	29.1	28.4
69	33.9	33.1	32.3	31.6	30.9	30.1	29.4	28.8	28.1
70	33.8	33.0	32.2	31.4	30.7	29.9	29.2	28.5	27.9
71	33.6	32.8	32.0	31.2	30.5	29.7	29.0	28.3	27.6
72	33.5	32.7	31.9	31.1	30.3	29.5	28.8	28.1	27.4
73	33.4	32.6	31.7	30.9	30.1	29.4	28.6	27.9	27.2
74	33.3	32.4	31.6	30.8	30.0	29.2	28.4	27.7	27.0
75	33.2	32.4	31.5	30.7	29.9	29.1	28.3	27.5	26.8
76	33.1	32.3	31.4	30.6	29.8	29.0	28.2	27.4	26.6

Ages	54	55	56	57	58	59	60	61	62
77	33.0	32.2	31.3	30.5	29.7	28.8	28.0	27.3	26.5
78	33.0	32.1	31.2	30.4	29.6	28.7	27.9	27.1	26.4
79	32.9	32.0	31.2	30.3	29.5	28.7	27.8	27.0	26.2
80	32.9	32.0	31.1	30.3	29.4	28.6	27.8	26.9	26.1
81	32.8	31.9	31.1	30.2	29.3	28.5	27.7	26.9	26.0
82	32.8	31.9	31.0	30.1	29.3	28.4	27.6	26.8	26.0
83	32.7	31.8	31.0	30.1	29.2	28.4	27.5	26.7	25.9
84	32.7	31.8	30.9	30.0	29.2	28.3	27.5	26.7	25.8
85	32.7	31.8	30.9	30.0	29.1	28.3	27.4	26.6	25.8
86	32.6	31.7	30.9	30.0	29.1	28.2	27.4	26.6	25.7
87	32.6	31.7	30.8	29.9	29.1	28.2	27.4	26.5	25.7
88	32.6	31.7	30.8	29.9	29.0	28.2	27.3	26.5	25.6
89	32.6	31.7	30.8	29.9	29.0	28.2	27.3	26.4	25.6
90	32.6	31.7	30.8	29.9	29.0	28.1	27.3	26.4	25.6
91	32.5	31.6	30.7	29.9	29.0	28.1	27.3	26.4	25.6
92	32.5	31.6	30.7	29.8	29.0	28.1	27.2	26.4	25.5
93	32.5	31.6	30.7	29.8	29.0	28.1	27.2	26.4	25.5
94	32.5	31.6	30.7	29.8	28.9	28.1	27.2	26.3	25.5
95	32.5	31.6	30.7	29.8	28.9	28.1	27.2	26.3	25.5
96	32.5	31.6	30.7	29.8	28.9	28.0	27.2	26.3	25.5
97	32.5	31.6	30.7	29.8	28.9	28.0	27.2	26.3	25.5
98	32.5	31.6	30.7	29.8	28.9	28.0	27.2	26.3	25.5
99	32.5	31.6	30.7	29.8	28.9	28.0	27.2	26.3	25.4
100	32.5	31.6	30.7	29.8	28.9	28.0	27.1	26.3	25.4
101	32.5	31.6	30.7	29.8	28.9	28.0	27.1	26.3	25.4
102	32.5	31.6	30.7	29.8	28.9	28.0	27.1	26.3	25.4
103	32.5	31.6	30.7	29.8	28.9	28.0	27.1	26.3	25.4
104	32.5	31.6	30.7	29.8	28.9	28.0	27.1	26.3	25.4
105	32.5	31.6	30.7	29.8	28.9	28.0	27.1	26.3	25.4
106	32.5	31.6	30.7	29.8	28.9	28.0	27.1	26.3	25.4
107	32.5	31.6	30.7	29.8	28.9	28.0	27.1	26.3	25.4
108	32.5	31.6	30.7	29.8	28.9	28.0	27.1	26.3	25.4
109	32.5	31.6	30.7	29.8	28.9	28.0	27.1	26.3	25.4
110	32.5	31.6	30.7	29.8	28.9	28.0	27.1	26.3	25.4
111	32.5	31.6	30.7	29.8	28.9	28.0	27.1	26.3	25.4
112	32.5	31.6	30.7	29.8	28.9	28.0	27.1	26.3	25.4

Ages	54	55	56	57	58	59	60	61	62
113	32.5	31.6	30.7	29.8	28.9	28.0	27.1	26.3	25.4
114	32.5	31.6	30.7	29.8	28.9	28.0	27.1	26.3	25.4
115	32.5	31.6	30.7	29.8	28.9	28.0	27.1	26.3	25.4
116	32.5	31.6	30.7	29.8	28.9	28.0	27.1	26.3	25.4
117	32.5	31.6	30.7	29.8	28.9	28.0	27.1	26.3	25.4
118	32.5	31.6	30.7	29.8	28.9	28.0	27.1	26.3	25.4
119	32.5	31.6	30.7	29.8	28.9	28.0	27.1	26.2	25.4
120+	32.5	31.6	30.6	29.8	28.9	28.0	27.1	26.2	25.4

Ages	63	64	65	66	67	68	69	70	71
0	84.7	84.7	84.7	84.7	84.7	84.7	84.7	84.7	84.7
1	83.8	83.8	83.8	83.8	83.8	83.8	83.8	83.8	83.8
2	82.9	82.8	82.8	82.8	82.8	82.8	82.8	82.8	82.8
3	81.9	81.9	81.9	81.9	81.9	81.8	81.8	81.8	81.8
4	80.9	80.9	80.9	80.9	80.9	80.9	80.9	80.9	80.9
5	79.9	79.9	79.9	79.9	79.9	79.9	79.9	79.9	79.9
6	78.9	78.9	78.9	78.9	78.9	78.9	78.9	78.9	78.9
7	78.0	77.9	77.9	77.9	77.9	77.9	77.9	77.9	77.9
8	77.0	77.0	77.0	76.9	76.9	76.9	76.9	76.9	76.9
9	76.0	76.0	76.0	76.0	76.0	75.9	75.9	75.9	75.9
10	75.0	75.0	75.0	75.0	75.0	75.0	75.0	74.9	74.9
11	74.0	74.0	74.0	74.0	74.0	74.0	74.0	74.0	74.0
12	73.0	73.0	73.0	73.0	73.0	73.0	73.0	73.0	73.0
13	72.1	72.1	72.0	72.0	72.0	72.0	72.0	72.0	72.0
14	71.1	71.1	71.1	71.1	71.0	71.0	71.0	71.0	71.0
15	70.1	70.1	70.1	70.1	70.1	70.1	70.0	70.0	70.0
16	69.1	69.1	69.1	69.1	69.1	69.1	69.1	69.1	69.0
17	68.2	68.2	68.1	68.1	68.1	68.1	68.1	68.1	68.1
18	67.2	67.2	67.2	67.2	67.1	67.1	67.1	67.1	67.1
19	66.2	66.2	66.2	66.2	66.2	66.2	66.1	66.1	66.1
20	65.3	65.2	65.2	65.2	65.2	65.2	65.2	65.2	65.1
21	64.3	64.3	64.3	64.2	64.2	64.2	64.2	64.2	64.2
22	63.3	63.3	63.3	63.3	63.3	63.2	63.2	63.2	63.2
23	62.4	62.3	62.3	62.3	62.3	62.3	62.3	62.2	62.2
24	61.4	61.4	61.4	61.3	61.3	61.3	61.3	61.3	61.3
25	60.5	60.4	60.4	60.4	60.4	60.3	60.3	60.3	60.3
26	59.5	59.5	59.5	59.4	59.4	59.4	59.4	59.4	59.3
27	58.6	58.5	58.5	58.5	58.5	58.4	58.4	58.4	58.4

Table 3 to Paragraph (d)

Ages	63	64	65	66	67	68	69	70	71
28	57.6	57.6	57.5	57.5	57.5	57.5	57.5	57.4	57.4
29	56.7	56.6	56.6	56.6	56.5	56.5	56.5	56.5	56.5
30	55.7	55.7	55.7	55.6	55.6	55.6	55.6	55.5	55.5
31	54.8	54.8	54.7	54.7	54.7	54.6	54.6	54.6	54.6
32	53.9	53.8	53.8	53.7	53.7	53.7	53.7	53.6	53.6
33	52.9	52.9	52.8	52.8	52.8	52.7	52.7	52.7	52.7
34	52.0	52.0	51.9	51.9	51.8	51.8	51.8	51.7	51.7
35	51.1	51.0	51.0	50.9	50.9	50.9	50.8	50.8	50.8
36	50.2	50.1	50.1	50.0	50.0	49.9	49.9	49.9	49.8
37	49.3	49.2	49.1	49.1	49.0	49.0	49.0	48.9	48.9
38	48.3	48.3	48.2	48.2	48.1	48.1	48.0	48.0	47.9
39	47.4	47.4	47.3	47.2	47.2	47.1	47.1	47.0	47.0
40	46.5	46.5	46.4	46.3	46.3	46.2	46.2	46.1	46.1
41	45.7	45.6	45.5	45.4	45.4	45.3	45.2	45.2	45.1
42	44.8	44.7	44.6	44.5	44.4	44.4	44.3	44.3	44.2
43	43.9	43.8	43.7	43.6	43.5	43.5	43.4	43.3	43.3
44	43.0	42.9	42.8	42.7	42.6	42.6	42.5	42.4	42.4
45	42.2	42.1	41.9	41.8	41.8	41.7	41.6	41.5	41.5
46	41.3	41.2	41.1	41.0	40.9	40.8	40.7	40.6	40.6
47	40.5	40.4	40.2	40.1	40.0	39.9	39.8	39.7	39.7
48	39.7	39.5	39.4	39.3	39.1	39.0	38.9	38.8	38.8
49	38.9	38.7	38.6	38.4	38.3	38.2	38.1	38.0	37.9
50	38.1	37.9	37.7	37.6	37.5	37.3	37.2	37.1	37.0
51	37.3	37.1	36.9	36.8	36.6	36.5	36.4	36.2	36.1
52	36.6	36.3	36.2	36.0	35.8	35.7	35.5	35.4	35.3
53	35.8	35.6	35.4	35.2	35.0	34.9	34.7	34.6	34.5
54	35.1	34.9	34.6	34.4	34.2	34.1	33.9	33.8	33.6
55	34.4	34.2	33.9	33.7	33.5	33.3	33.1	33.0	32.8
56	33.8	33.5	33.2	33.0	32.7	32.5	32.3	32.2	32.0
57	33.1	32.8	32.5	32.3	32.0	31.8	31.6	31.4	31.2
58	32.5	32.2	31.9	31.6	31.3	31.1	30.9	30.7	30.5
59	31.9	31.5	31.2	30.9	30.6	30.4	30.1	29.9	29.7
60	31.3	31.0	30.6	30.3	30.0	29.7	29.4	29.2	29.0

Ages	63	64	65	66	67	68	69	70	71
61	30.8	30.4	30.0	29.7	29.4	29.1	28.8	28.5	28.3
62	30.3	29.9	29.5	29.1	28.7	28.4	28.1	27.9	27.6
63	29.8	29.4	28.9	28.5	28.2	27.8	27.5	27.2	26.9
64	29.4	28.9	28.4	28.0	27.6	27.2	26.9	26.6	26.3
65	28.9	28.4	28.0	27.5	27.1	26.7	26.3	26.0	25.7
66	28.5	28.0	27.5	27.0	26.6	26.2	25.8	25.4	25.1
67	28.2	27.6	27.1	26.6	26.1	25.7	25.3	24.9	24.5
68	27.8	27.2	26.7	26.2	25.7	25.2	24.8	24.3	24.0
69	27.5	26.9	26.3	25.8	25.3	24.8	24.3	23.9	23.4
70	27.2	26.6	26.0	25.4	24.9	24.3	23.9	23.4	22.9
71	26.9	26.3	25.7	25.1	24.5	24.0	23.4	22.9	22.5
72	26.7	26.0	25.4	24.8	24.2	23.6	23.1	22.5	22.0
73	26.5	25.8	25.1	24.5	23.9	23.3	22.7	22.2	21.6
74	26.2	25.5	24.9	24.2	23.6	23.0	22.4	21.8	21.3
75	26.1	25.3	24.6	24.0	23.3	22.7	22.1	21.5	20.9
76	25.9	25.2	24.4	23.7	23.1	22.4	21.8	21.2	20.6
77	25.7	25.0	24.3	23.5	22.9	22.2	21.5	20.9	20.3
78	25.6	24.8	24.1	23.4	22.7	22.0	21.3	20.6	20.0
79	25.5	24.7	23.9	23.2	22.5	21.8	21.1	20.4	19.8
80	25.3	24.6	23.8	23.1	22.3	21.6	20.9	20.2	19.6
81	25.2	24.5	23.7	22.9	22.2	21.5	20.7	20.0	19.4
82	25.2	24.4	23.6	22.8	22.1	21.3	20.6	19.9	19.2
83	25.1	24.3	23.5	22.7	22.0	21.2	20.5	19.7	19.0
84	25.0	24.2	23.4	22.6	21.9	21.1	20.4	19.6	18.9
85	25.0	24.1	23.3	22.6	21.8	21.0	20.3	19.5	18.8
86	24.9	24.1	23.3	22.5	21.7	20.9	20.2	19.4	18.7
87	24.9	24.0	23.2	22.4	21.6	20.9	20.1	19.3	18.6
88	24.8	24.0	23.2	22.4	21.6	20.8	20.0	19.2	18.5
89	24.8	24.0	23.1	22.3	21.5	20.7	20.0	19.2	18.4
90	24.7	23.9	23.1	22.3	21.5	20.7	19.9	19.1	18.4
91	24.7	23.9	23.1	22.3	21.5	20.7	19.9	19.1	18.3
92	24.7	23.9	23.0	22.2	21.4	20.6	19.8	19.0	18.3
93	24.7	23.8	23.0	22.2	21.4	20.6	19.8	19.0	18.2
94	24.7	23.8	23.0	22.2	21.4	20.6	19.8	19.0	18.2
95	24.6	23.8	23.0	22.2	21.4	20.6	19.7	18.9	18.2
96	24.6	23.8	23.0	22.2	21.3	20.5	19.7	18.9	18.1

Ages	63	64	65	66	67	68	69	70	71
97	24.6	23.8	23.0	22.1	21.3	20.5	19.7	18.9	18.1
98	24.6	23.8	22.9	22.1	21.3	20.5	19.7	18.9	18.1
99	24.6	23.8	22.9	22.1	21.3	20.5	19.7	18.9	18.1
100	24.6	23.8	22.9	22.1	21.3	20.5	19.7	18.9	18.1
101	24.6	23.8	22.9	22.1	21.3	20.5	19.7	18.9	18.1
102	24.6	23.7	22.9	22.1	21.3	20.5	19.7	18.8	18.0
103	24.6	23.7	22.9	22.1	21.3	20.5	19.6	18.8	18.0
104	24.6	23.7	22.9	22.1	21.3	20.5	19.6	18.8	18.0
105	24.6	23.7	22.9	22.1	21.3	20.5	19.6	18.8	18.0
106	24.6	23.7	22.9	22.1	21.3	20.5	19.6	18.8	18.0
107	24.6	23.7	22.9	22.1	21.3	20.5	19.6	18.8	18.0
108	24.6	23.7	22.9	22.1	21.3	20.5	19.6	18.8	18.0
109	24.6	23.7	22.9	22.1	21.3	20.4	19.6	18.8	18.0
110	24.6	23.7	22.9	22.1	21.3	20.4	19.6	18.8	18.0
111	24.6	23.7	22.9	22.1	21.3	20.4	19.6	18.8	18.0
112	24.6	23.7	22.9	22.1	21.3	20.4	19.6	18.8	18.0
113	24.6	23.7	22.9	22.1	21.3	20.4	19.6	18.8	18.0
114	24.6	23.7	22.9	22.1	21.3	20.4	19.6	18.8	18.0
115	24.6	23.7	22.9	22.1	21.3	20.4	19.6	18.8	18.0
116	24.6	23.7	22.9	22.1	21.3	20.4	19.6	18.8	18.0
117	24.6	23.7	22.9	22.1	21.2	20.4	19.6	18.8	18.0
118	24.5	23.7	22.9	22.1	21.2	20.4	19.6	18.8	18.0
119	24.5	23.7	22.9	22.1	21.2	20.4	19.6	18.8	18.0
120+	24.5	23.7	22.9	22.0	21.2	20.4	19.6	18.8	18.0

Ages	72	73	74	75	76	77	78	79	80
0	84.7	84.6	84.6	84.6	84.6	84.6	84.6	84.6	84.6
1	83.8	83.8	83.8	83.8	83.8	83.8	83.8	83.8	83.8
2	82.8	82.8	82.8	82.8	82.8	82.8	82.8	82.8	82.8
3	81.8	81.8	81.8	81.8	81.8	81.8	81.8	81.8	81.8
4	80.9	80.8	80.8	80.8	80.8	80.8	80.8	80.8	80.8
5	79.9	79.9	79.9	79.9	79.9	79.8	79.8	79.8	79.8
6	78.9	78.9	78.9	78.9	78.9	78.9	78.9	78.9	78.9
7	77.9	77.9	77.9	77.9	77.9	77.9	77.9	77.9	77.9
8	76.9	76.9	76.9	76.9	76.9	76.9	76.9	76.9	76.9
9	75.9	75.9	75.9	75.9	75.9	75.9	75.9	75.9	75.9
10	74.9	74.9	74.9	74.9	74.9	74.9	74.9	74.9	74.9
11	73.9	73.9	73.9	73.9	73.9	73.9	73.9	73.9	73.9
12	73.0	73.0	73.0	72.9	72.9	72.9	72.9	72.9	72.9
13	72.0	72.0	72.0	72.0	72.0	72.0	71.9	71.9	71.9
14	71.0	71.0	71.0	71.0	71.0	71.0	71.0	71.0	71.0
15	70.0	70.0	70.0	70.0	70.0	70.0	70.0	70.0	70.0
16	69.0	69.0	69.0	69.0	69.0	69.0	69.0	69.0	69.0
17	68.1	68.1	68.0	68.0	68.0	68.0	68.0	68.0	68.0
18	67.1	67.1	67.1	67.1	67.1	67.0	67.0	67.0	67.0
19	66.1	66.1	66.1	66.1	66.1	66.1	66.1	66.1	66.1
20	65.1	65.1	65.1	65.1	65.1	65.1	65.1	65.1	65.1
21	64.2	64.2	64.1	64.1	64.1	64.1	64.1	64.1	64.1
22	63.2	63.2	63.2	63.2	63.2	63.1	63.1	63.1	63.1
23	62.2	62.2	62.2	62.2	62.2	62.2	62.2	62.2	62.1
24	61.3	61.2	61.2	61.2	61.2	61.2	61.2	61.2	61.2
25	60.3	60.3	60.3	60.3	60.2	60.2	60.2	60.2	60.2
26	59.3	59.3	59.3	59.3	59.3	59.3	59.3	59.3	59.2
27	58.4	58.4	58.3	58.3	58.3	58.3	58.3	58.3	58.3
28	57.4	57.4	57.4	57.4	57.4	57.3	57.3	57.3	57.3
29	56.5	56.4	56.4	56.4	56.4	56.4	56.4	56.4	56.4
30	55.5	55.5	55.5	55.5	55.4	55.4	55.4	55.4	55.4
31	54.5	54.5	54.5	54.5	54.5	54.5	54.5	54.5	54.4
32	53.6	53.6	53.6	53.5	53.5	53.5	53.5	53.5	53.5
33	52.6	52.6	52.6	52.6	52.6	52.6	52.6	52.5	52.5
34	51.7	51.7	51.7	51.6	51.6	51.6	51.6	51.6	51.6
35	50.8	50.7	50.7	50.7	50.7	50.7	50.6	50.6	50.6

Ages	72	73	74	75	76	77	78	79	80
36	49.8	49.8	49.8	49.7	49.7	49.7	49.7	49.7	49.7
37	48.9	48.8	48.8	48.8	48.8	48.8	48.7	48.7	48.7
38	47.9	47.9	47.9	47.8	47.8	47.8	47.8	47.8	47.8
39	47.0	46.9	46.9	46.9	46.9	46.9	46.8	46.8	46.8
40	46.0	46.0	46.0	45.9	45.9	45.9	45.9	45.9	45.9
41	45.1	45.1	45.0	45.0	45.0	45.0	44.9	44.9	44.9
42	44.2	44.1	44.1	44.1	44.0	44.0	44.0	44.0	43.9
43	43.2	43.2	43.2	43.1	43.1	43.1	43.0	43.0	43.0
44	42.3	42.3	42.2	42.2	42.2	42.1	42.1	42.1	42.1
45	41.4	41.4	41.3	41.3	41.2	41.2	41.2	41.1	41.1
46	40.5	40.4	40.4	40.3	40.3	40.3	40.2	40.2	40.2
47	39.6	39.5	39.5	39.4	39.4	39.3	39.3	39.3	39.2

Table 3 to Paragraph (d)

Ages	72	73	74	75	76	77	78	79	80
48	38.7	38.6	38.6	38.5	38.5	38.4	38.4	38.3	38.3
49	37.8	37.7	37.7	37.6	37.5	37.5	37.5	37.4	37.4
50	36.9	36.8	36.8	36.7	36.6	36.6	36.5	36.5	36.5
51	36.0	36.0	35.9	35.8	35.7	35.7	35.6	35.6	35.5
52	35.2	35.1	35.0	34.9	34.9	34.8	34.7	34.7	34.6
53	34.3	34.2	34.1	34.1	34.0	33.9	33.9	33.8	33.7
54	33.5	33.4	33.3	33.2	33.1	33.0	33.0	32.9	32.9
55	32.7	32.6	32.4	32.4	32.3	32.2	32.1	32.0	32.0
56	31.9	31.7	31.6	31.5	31.4	31.3	31.2	31.2	31.1
57	31.1	30.9	30.8	30.7	30.6	30.5	30.4	30.3	30.3
58	30.3	30.1	30.0	29.9	29.8	29.7	29.6	29.5	29.4
59	29.5	29.4	29.2	29.1	29.0	28.8	28.7	28.7	28.6
60	28.8	28.6	28.4	28.3	28.2	28.0	27.9	27.8	27.8
61	28.1	27.9	27.7	27.5	27.4	27.3	27.1	27.0	26.9
62	27.4	27.2	27.0	26.8	26.6	26.5	26.4	26.2	26.1
63	26.7	26.5	26.2	26.1	25.9	25.7	25.6	25.5	25.3
64	26.0	25.8	25.5	25.3	25.2	25.0	24.8	24.7	24.6
65	25.4	25.1	24.9	24.6	24.4	24.3	24.1	23.9	23.8
66	24.8	24.5	24.2	24.0	23.7	23.5	23.4	23.2	23.1
67	24.2	23.9	23.6	23.3	23.1	22.9	22.7	22.5	22.3
68	23.6	23.3	23.0	22.7	22.4	22.2	22.0	21.8	21.6
69	23.1	22.7	22.4	22.1	21.8	21.5	21.3	21.1	20.9
70	22.5	22.2	21.8	21.5	21.2	20.9	20.6	20.4	20.2
71	22.0	21.6	21.3	20.9	20.6	20.3	20.0	19.8	19.6
72	21.6	21.1	20.7	20.4	20.0	19.7	19.4	19.2	18.9
73	21.1	20.7	20.3	19.9	19.5	19.1	18.8	18.6	18.3
74	20.7	20.3	19.8	19.4	19.0	18.6	18.3	18.0	17.7
75	20.4	19.9	19.4	18.9	18.5	18.1	17.8	17.4	17.1
76	20.0	19.5	19.0	18.5	18.1	17.7	17.3	16.9	16.6
77	19.7	19.1	18.6	18.1	17.7	17.2	16.8	16.4	16.1
78	19.4	18.8	18.3	17.8	17.3	16.8	16.4	16.0	15.6
79	19.2	18.6	18.0	17.4	16.9	16.4	16.0	15.6	15.2
80	18.9	18.3	17.7	17.1	16.6	16.1	15.6	15.2	14.7

Ages	72	73	74	75	76	77	78	79	80
81	18.7	18.1	17.4	16.9	16.3	15.8	15.3	14.8	14.4
82	18.5	17.9	17.2	16.6	16.0	15.5	15.0	14.5	14.0
83	18.3	17.7	17.0	16.4	15.8	15.2	14.7	14.2	13.7
84	18.2	17.5	16.8	16.2	15.6	15.0	14.4	13.9	13.4
85	18.1	17.4	16.7	16.0	15.4	14.8	14.2	13.6	13.1
86	17.9	17.2	16.5	15.9	15.2	14.6	14.0	13.4	12.9
87	17.8	17.1	16.4	15.7	15.1	14.4	13.8	13.2	12.7
88	17.7	17.0	16.3	15.6	14.9	14.3	13.7	13.1	12.5
89	17.7	16.9	16.2	15.5	14.8	14.2	13.5	12.9	12.3
90	17.6	16.9	16.1	15.4	14.7	14.1	13.4	12.8	12.2
91	17.5	16.8	16.1	15.3	14.6	14.0	13.3	12.7	12.1
92	17.5	16.7	16.0	15.3	14.6	13.9	13.2	12.6	11.9
93	17.4	16.7	15.9	15.2	14.5	13.8	13.1	12.5	11.9
94	17.4	16.6	15.9	15.2	14.4	13.7	13.1	12.4	11.8
95	17.4	16.6	15.9	15.1	14.4	13.7	13.0	12.3	11.7
96	17.4	16.6	15.8	15.1	14.3	13.6	12.9	12.3	11.6
97	17.3	16.6	15.8	15.0	14.3	13.6	12.9	12.2	11.6
98	17.3	16.5	15.8	15.0	14.3	13.6	12.9	12.2	11.5
99	17.3	16.5	15.7	15.0	14.3	13.5	12.8	12.2	11.5
100	17.3	16.5	15.7	15.0	14.2	13.5	12.8	12.1	11.5
101	17.3	16.5	15.7	15.0	14.2	13.5	12.8	12.1	11.4
102	17.3	16.5	15.7	14.9	14.2	13.5	12.8	12.1	11.4
103	17.3	16.5	15.7	14.9	14.2	13.5	12.8	12.1	11.4
104	17.2	16.5	15.7	14.9	14.2	13.5	12.7	12.0	11.4
105	17.2	16.5	15.7	14.9	14.2	13.4	12.7	12.0	11.4
106	17.2	16.5	15.7	14.9	14.2	13.4	12.7	12.0	11.4
107	17.2	16.5	15.7	14.9	14.2	13.4	12.7	12.0	11.4
108	17.2	16.5	15.7	14.9	14.2	13.4	12.7	12.0	11.4
109	17.2	16.4	15.7	14.9	14.2	13.4	12.7	12.0	11.3
110	17.2	16.4	15.7	14.9	14.2	13.4	12.7	12.0	11.3
111	17.2	16.4	15.7	14.9	14.2	13.4	12.7	12.0	11.3
112	17.2	16.4	15.7	14.9	14.2	13.4	12.7	12.0	11.3
113	17.2	16.4	15.7	14.9	14.2	13.4	12.7	12.0	11.3
114	17.2	16.4	15.7	14.9	14.1	13.4	12.7	12.0	11.3
115	17.2	16.4	15.7	14.9	14.1	13.4	12.7	12.0	11.3
116	17.2	16.4	15.6	14.9	14.1	13.4	12.7	12.0	11.3

Ages	72	73	74	75	76	77	78	79	80
117	17.2	16.4	15.6	14.9	14.1	13.4	12.7	12.0	11.3
118	17.2	16.4	15.6	14.9	14.1	13.4	12.6	11.9	11.3
119	17.2	16.4	15.6	14.8	14.1	13.4	12.6	11.9	11.2

Table 3 to Paragraph (d)

Ages	72	73	74	75	76	77	78	79	80
120+	17.2	16.4	15.6	14.8	14.1	13.3	12.6	11.9	11.2

Ages	81	82	83	84	85	86	87	88	89
0	84.6	84.6	84.6	84.6	84.6	84.6	84.6	84.6	84.6
1	83.8	83.8	83.7	83.7	83.7	83.7	83.7	83.7	83.7
2	82.8	82.8	82.8	82.8	82.8	82.8	82.8	82.8	82.8
3	81.8	81.8	81.8	81.8	81.8	81.8	81.8	81.8	81.8
4	80.8	80.8	80.8	80.8	80.8	80.8	80.8	80.8	80.8
5	79.8	79.8	79.8	79.8	79.8	79.8	79.8	79.8	79.8
6	78.9	78.9	78.9	78.9	78.8	78.8	78.8	78.8	78.8
7	77.9	77.9	77.9	77.9	77.9	77.9	77.9	77.9	77.9
8	76.9	76.9	76.9	76.9	76.9	76.9	76.9	76.9	76.9
9	75.9	75.9	75.9	75.9	75.9	75.9	75.9	75.9	75.9
10	74.9	74.9	74.9	74.9	74.9	74.9	74.9	74.9	74.9
11	73.9	73.9	73.9	73.9	73.9	73.9	73.9	73.9	73.9
12	72.9	72.9	72.9	72.9	72.9	72.9	72.9	72.9	72.9
13	71.9	71.9	71.9	71.9	71.9	71.9	71.9	71.9	71.9
14	71.0	70.9	70.9	70.9	70.9	70.9	70.9	70.9	70.9
15	70.0	70.0	70.0	70.0	70.0	70.0	70.0	69.9	69.9
16	69.0	69.0	69.0	69.0	69.0	69.0	69.0	69.0	69.0
17	68.0	68.0	68.0	68.0	68.0	68.0	68.0	68.0	68.0
18	67.0	67.0	67.0	67.0	67.0	67.0	67.0	67.0	67.0
19	66.0	66.0	66.0	66.0	66.0	66.0	66.0	66.0	66.0
20	65.1	65.1	65.1	65.1	65.1	65.1	65.0	65.0	65.0
21	64.1	64.1	64.1	64.1	64.1	64.1	64.1	64.1	64.1
22	63.1	63.1	63.1	63.1	63.1	63.1	63.1	63.1	63.1
23	62.1	62.1	62.1	62.1	62.1	62.1	62.1	62.1	62.1
24	61.2	61.2	61.2	61.2	61.2	61.1	61.1	61.1	61.1
25	60.2	60.2	60.2	60.2	60.2	60.2	60.2	60.2	60.2
26	59.2	59.2	59.2	59.2	59.2	59.2	59.2	59.2	59.2
27	58.3	58.3	58.3	58.3	58.3	58.2	58.2	58.2	58.2
28	57.3	57.3	57.3	57.3	57.3	57.3	57.3	57.3	57.3
29	56.4	56.3	56.3	56.3	56.3	56.3	56.3	56.3	56.3
30	55.4	55.4	55.4	55.4	55.4	55.4	55.4	55.4	55.4
31	54.4	54.4	54.4	54.4	54.4	54.4	54.4	54.4	54.4
32	53.5	53.5	53.5	53.5	53.5	53.5	53.4	53.4	53.4
33	52.5	52.5	52.5	52.5	52.5	52.5	52.5	52.5	52.5
34	51.6	51.6	51.6	51.5	51.5	51.5	51.5	51.5	51.5
35	50.6	50.6	50.6	50.6	50.6	50.6	50.6	50.6	50.6

Ages	81	82	83	84	85	86	87	88	89
36	49.7	49.7	49.6	49.6	49.6	49.6	49.6	49.6	49.6
37	48.7	48.7	48.7	48.7	48.7	48.7	48.7	48.7	48.7
38	47.7	47.7	47.7	47.7	47.7	47.7	47.7	47.7	47.7
39	46.8	46.8	46.8	46.8	46.8	46.7	46.7	46.7	46.7
40	45.8	45.8	45.8	45.8	45.8	45.8	45.8	45.8	45.8
41	44.9	44.9	44.9	44.9	44.8	44.8	44.8	44.8	44.8
42	43.9	43.9	43.9	43.9	43.9	43.9	43.9	43.9	43.9
43	43.0	43.0	43.0	42.9	42.9	42.9	42.9	42.9	42.9
44	42.0	42.0	42.0	42.0	42.0	42.0	42.0	42.0	41.9
45	41.1	41.1	41.1	41.0	41.0	41.0	41.0	41.0	41.0
46	40.1	40.1	40.1	40.1	40.1	40.1	40.1	40.0	40.0
47	39.2	39.2	39.2	39.2	39.1	39.1	39.1	39.1	39.1
48	38.3	38.3	38.2	38.2	38.2	38.2	38.2	38.2	38.1
49	37.3	37.3	37.3	37.3	37.3	37.2	37.2	37.2	37.2
50	36.4	36.4	36.4	36.3	36.3	36.3	36.3	36.3	36.3
51	35.5	35.5	35.4	35.4	35.4	35.4	35.4	35.3	35.3
52	34.6	34.6	34.5	34.5	34.5	34.5	34.4	34.4	34.4
53	33.7	33.7	33.6	33.6	33.6	33.5	33.5	33.5	33.5
54	32.8	32.8	32.7	32.7	32.7	32.6	32.6	32.6	32.6
55	31.9	31.9	31.8	31.8	31.8	31.7	31.7	31.7	31.7
56	31.1	31.0	31.0	30.9	30.9	30.9	30.8	30.8	30.8
57	30.2	30.1	30.1	30.0	30.0	30.0	29.9	29.9	29.9
58	29.3	29.3	29.2	29.2	29.1	29.1	29.1	29.0	29.0
59	28.5	28.4	28.4	28.3	28.3	28.2	28.2	28.2	28.2
60	27.7	27.6	27.5	27.5	27.4	27.4	27.4	27.3	27.3
61	26.9	26.8	26.7	26.7	26.6	26.6	26.5	26.5	26.4
62	26.0	26.0	25.9	25.8	25.8	25.7	25.7	25.6	25.6
63	25.2	25.2	25.1	25.0	25.0	24.9	24.9	24.8	24.8
64	24.5	24.4	24.3	24.2	24.1	24.1	24.0	24.0	24.0
65	23.7	23.6	23.5	23.4	23.3	23.3	23.2	23.2	23.1
66	22.9	22.8	22.7	22.6	22.6	22.5	22.4	22.4	22.3
67	22.2	22.1	22.0	21.9	21.8	21.7	21.6	21.6	21.5

Table 3 to Paragraph (d)

Ages	81	82	83	84	85	86	87	88	89
68	21.5	21.3	21.2	21.1	21.0	20.9	20.9	20.8	20.7
69	20.7	20.6	20.5	20.4	20.3	20.2	20.1	20.0	20.0
70	20.0	19.9	19.7	19.6	19.5	19.4	19.3	19.2	19.2
71	19.4	19.2	19.0	18.9	18.8	18.7	18.6	18.5	18.4
72	18.7	18.5	18.3	18.2	18.1	17.9	17.8	17.7	17.7
73	18.1	17.9	17.7	17.5	17.4	17.2	17.1	17.0	16.9
74	17.4	17.2	17.0	16.8	16.7	16.5	16.4	16.3	16.2
75	16.9	16.6	16.4	16.2	16.0	15.9	15.7	15.6	15.5
76	16.3	16.0	15.8	15.6	15.4	15.2	15.1	14.9	14.8
77	15.8	15.5	15.2	15.0	14.8	14.6	14.4	14.3	14.2
78	15.3	15.0	14.7	14.4	14.2	14.0	13.8	13.7	13.5
79	14.8	14.5	14.2	13.9	13.6	13.4	13.2	13.1	12.9
80	14.4	14.0	13.7	13.4	13.1	12.9	12.7	12.5	12.3
81	14.0	13.6	13.2	12.9	12.6	12.4	12.2	12.0	11.8
82	13.6	13.2	12.8	12.5	12.2	11.9	11.7	11.5	11.3
83	13.2	12.8	12.4	12.1	11.8	11.5	11.2	11.0	10.8
84	12.9	12.5	12.1	11.7	11.4	11.1	10.8	10.5	10.3
85	12.6	12.2	11.8	11.4	11.0	10.7	10.4	10.1	9.9
86	12.4	11.9	11.5	11.1	10.7	10.4	10.0	9.8	9.5
87	12.2	11.7	11.2	10.8	10.4	10.0	9.7	9.4	9.1
88	12.0	11.5	11.0	10.5	10.1	9.8	9.4	9.1	8.8
89	11.8	11.3	10.8	10.3	9.9	9.5	9.1	8.8	8.5
90	11.6	11.1	10.6	10.1	9.7	9.3	8.9	8.6	8.3
91	11.5	10.9	10.4	9.9	9.5	9.1	8.7	8.3	8.0
92	11.4	10.8	10.3	9.8	9.3	8.9	8.5	8.1	7.8
93	11.3	10.7	10.1	9.6	9.2	8.7	8.3	7.9	7.6
94	11.2	10.6	10.0	9.5	9.0	8.6	8.2	7.8	7.4
95	11.1	10.5	9.9	9.4	8.9	8.5	8.0	7.6	7.3
96	11.0	10.4	9.9	9.3	8.8	8.4	7.9	7.5	7.1
97	11.0	10.4	9.8	9.2	8.7	8.3	7.8	7.4	7.0
98	10.9	10.3	9.7	9.2	8.7	8.2	7.7	7.3	6.9
99	10.9	10.2	9.7	9.1	8.6	8.1	7.6	7.2	6.8
100	10.8	10.2	9.6	9.1	8.5	8.0	7.6	7.2	6.8

Ages	81	82	83	84	85	86	87	88	89
101	10.8	10.2	9.6	9.0	8.5	8.0	7.5	7.1	6.7
102	10.8	10.1	9.6	9.0	8.5	8.0	7.5	7.0	6.6
103	10.7	10.1	9.5	9.0	8.4	7.9	7.4	7.0	6.6
104	10.7	10.1	9.5	8.9	8.4	7.9	7.4	7.0	6.6
105	10.7	10.1	9.5	8.9	8.4	7.9	7.4	6.9	6.5
106	10.7	10.1	9.5	8.9	8.4	7.9	7.4	6.9	6.5
107	10.7	10.1	9.5	8.9	8.4	7.9	7.4	6.9	6.5
108	10.7	10.1	9.5	8.9	8.4	7.8	7.4	6.9	6.5
109	10.7	10.1	9.5	8.9	8.4	7.8	7.4	6.9	6.5
110	10.7	10.1	9.5	8.9	8.3	7.8	7.4	6.9	6.5
111	10.7	10.1	9.5	8.9	8.3	7.8	7.3	6.9	6.5
112	10.7	10.1	9.5	8.9	8.3	7.8	7.3	6.9	6.5
113	10.7	10.0	9.4	8.9	8.3	7.8	7.3	6.9	6.4
114	10.7	10.0	9.4	8.9	8.3	7.8	7.3	6.9	6.4
115	10.7	10.0	9.4	8.8	8.3	7.8	7.3	6.8	6.4
116	10.6	10.0	9.4	8.8	8.3	7.7	7.3	6.8	6.4
117	10.6	10.0	9.4	8.8	8.2	7.7	7.2	6.8	6.3
118	10.6	10.0	9.3	8.8	8.2	7.7	7.2	6.7	6.3
119	10.6	9.9	9.3	8.7	8.2	7.6	7.1	6.6	6.2
120+	10.5	9.9	9.3	8.7	8.1	7.6	7.1	6.6	6.1

Ages	90	91	92	93	94	95	96	97	98
0	84.6	84.6	84.6	84.6	84.6	84.6	84.6	84.6	84.6
1	83.7	83.7	83.7	83.7	83.7	83.7	83.7	83.7	83.7
2	82.8	82.8	82.8	82.8	82.8	82.8	82.8	82.8	82.8
3	81.8	81.8	81.8	81.8	81.8	81.8	81.8	81.8	81.8
4	80.8	80.8	80.8	80.8	80.8	80.8	80.8	80.8	80.8
5	79.8	79.8	79.8	79.8	79.8	79.8	79.8	79.8	79.8
6	78.8	78.8	78.8	78.8	78.8	78.8	78.8	78.8	78.8
7	77.9	77.9	77.9	77.9	77.9	77.9	77.9	77.9	77.9
8	76.9	76.9	76.9	76.9	76.9	76.9	76.9	76.9	76.9
9	75.9	75.9	75.9	75.9	75.9	75.9	75.9	75.9	75.9
10	74.9	74.9	74.9	74.9	74.9	74.9	74.9	74.9	74.9
11	73.9	73.9	73.9	73.9	73.9	73.9	73.9	73.9	73.9
12	72.9	72.9	72.9	72.9	72.9	72.9	72.9	72.9	72.9
13	71.9	71.9	71.9	71.9	71.9	71.9	71.9	71.9	71.9
14	70.9	70.9	70.9	70.9	70.9	70.9	70.9	70.9	70.9
15	69.9	69.9	69.9	69.9	69.9	69.9	69.9	69.9	69.9

Table 3 to Paragraph (d)

Ages	90	91	92	93	94	95	96	97	98
16	69.0	69.0	69.0	69.0	69.0	69.0	69.0	69.0	69.0
17	68.0	68.0	68.0	68.0	68.0	68.0	68.0	68.0	68.0
18	67.0	67.0	67.0	67.0	67.0	67.0	67.0	67.0	67.0
19	66.0	66.0	66.0	66.0	66.0	66.0	66.0	66.0	66.0
20	65.0	65.0	65.0	65.0	65.0	65.0	65.0	65.0	65.0
21	64.1	64.1	64.1	64.1	64.1	64.1	64.1	64.1	64.1
22	63.1	63.1	63.1	63.1	63.1	63.1	63.1	63.1	63.1
23	62.1	62.1	62.1	62.1	62.1	62.1	62.1	62.1	62.1
24	61.1	61.1	61.1	61.1	61.1	61.1	61.1	61.1	61.1
25	60.2	60.2	60.2	60.2	60.2	60.2	60.2	60.2	60.2
26	59.2	59.2	59.2	59.2	59.2	59.2	59.2	59.2	59.2
27	58.2	58.2	58.2	58.2	58.2	58.2	58.2	58.2	58.2
28	57.3	57.3	57.3	57.3	57.3	57.3	57.3	57.3	57.3
29	56.3	56.3	56.3	56.3	56.3	56.3	56.3	56.3	56.3
30	55.4	55.3	55.3	55.3	55.3	55.3	55.3	55.3	55.3
31	54.4	54.4	54.4	54.4	54.4	54.4	54.4	54.4	54.4
32	53.4	53.4	53.4	53.4	53.4	53.4	53.4	53.4	53.4
33	52.5	52.5	52.5	52.5	52.5	52.5	52.5	52.5	52.5
34	51.5	51.5	51.5	51.5	51.5	51.5	51.5	51.5	51.5
35	50.6	50.6	50.6	50.6	50.6	50.6	50.6	50.6	50.6
36	49.6	49.6	49.6	49.6	49.6	49.6	49.6	49.6	49.6
37	48.6	48.6	48.6	48.6	48.6	48.6	48.6	48.6	48.6
38	47.7	47.7	47.7	47.7	47.7	47.7	47.7	47.7	47.7
39	46.7	46.7	46.7	46.7	46.7	46.7	46.7	46.7	46.7
40	45.8	45.8	45.8	45.8	45.8	45.8	45.8	45.8	45.8
41	44.8	44.8	44.8	44.8	44.8	44.8	44.8	44.8	44.8
42	43.9	43.9	43.8	43.8	43.8	43.8	43.8	43.8	43.8
43	42.9	42.9	42.9	42.9	42.9	42.9	42.9	42.9	42.9
44	41.9	41.9	41.9	41.9	41.9	41.9	41.9	41.9	41.9
45	41.0	41.0	41.0	41.0	41.0	41.0	41.0	41.0	41.0
46	40.0	40.0	40.0	40.0	40.0	40.0	40.0	40.0	40.0
47	39.1	39.1	39.1	39.1	39.1	39.1	39.1	39.1	39.1
48	38.1	38.1	38.1	38.1	38.1	38.1	38.1	38.1	38.1

Ages	90	91	92	93	94	95	96	97	98
49	37.2	37.2	37.2	37.2	37.2	37.2	37.2	37.2	37.2
50	36.3	36.2	36.2	36.2	36.2	36.2	36.2	36.2	36.2
51	35.3	35.3	35.3	35.3	35.3	35.3	35.3	35.3	35.3
52	34.4	34.4	34.4	34.4	34.4	34.4	34.3	34.3	34.3
53	33.5	33.5	33.5	33.4	33.4	33.4	33.4	33.4	33.4
54	32.6	32.5	32.5	32.5	32.5	32.5	32.5	32.5	32.5
55	31.7	31.6	31.6	31.6	31.6	31.6	31.6	31.6	31.6
56	30.8	30.7	30.7	30.7	30.7	30.7	30.7	30.7	30.7
57	29.9	29.9	29.8	29.8	29.8	29.8	29.8	29.8	29.8
58	29.0	29.0	29.0	29.0	28.9	28.9	28.9	28.9	28.9
59	28.1	28.1	28.1	28.1	28.1	28.1	28.0	28.0	28.0
60	27.3	27.3	27.2	27.2	27.2	27.2	27.2	27.2	27.2
61	26.4	26.4	26.4	26.4	26.3	26.3	26.3	26.3	26.3
62	25.6	25.6	25.5	25.5	25.5	25.5	25.5	25.5	25.5
63	24.7	24.7	24.7	24.7	24.7	24.6	24.6	24.6	24.6
64	23.9	23.9	23.9	23.8	23.8	23.8	23.8	23.8	23.8
65	23.1	23.1	23.0	23.0	23.0	23.0	23.0	23.0	22.9
66	22.3	22.3	22.2	22.2	22.2	22.2	22.2	22.1	22.1
67	21.5	21.5	21.4	21.4	21.4	21.4	21.3	21.3	21.3
68	20.7	20.7	20.6	20.6	20.6	20.6	20.5	20.5	20.5
69	19.9	19.9	19.8	19.8	19.8	19.7	19.7	19.7	19.7
70	19.1	19.1	19.0	19.0	19.0	18.9	18.9	18.9	18.9
71	18.4	18.3	18.3	18.2	18.2	18.2	18.1	18.1	18.1
72	17.6	17.5	17.5	17.4	17.4	17.4	17.4	17.3	17.3
73	16.9	16.8	16.7	16.7	16.6	16.6	16.6	16.6	16.5
74	16.1	16.1	16.0	15.9	15.9	15.9	15.8	15.8	15.8
75	15.4	15.3	15.3	15.2	15.2	15.1	15.1	15.0	15.0
76	14.7	14.6	14.6	14.5	14.4	14.4	14.3	14.3	14.3
77	14.1	14.0	13.9	13.8	13.7	13.7	13.6	13.6	13.6
78	13.4	13.3	13.2	13.1	13.1	13.0	12.9	12.9	12.9
79	12.8	12.7	12.6	12.5	12.4	12.3	12.3	12.2	12.2
80	12.2	12.1	11.9	11.9	11.8	11.7	11.6	11.6	11.5
81	11.6	11.5	11.4	11.3	11.2	11.1	11.0	11.0	10.9
82	11.1	10.9	10.8	10.7	10.6	10.5	10.4	10.4	10.3
83	10.6	10.4	10.3	10.1	10.0	9.9	9.9	9.8	9.7
84	10.1	9.9	9.8	9.6	9.5	9.4	9.3	9.2	9.2

Ages	90	91	92	93	94	95	96	97	98
85	9.7	9.5	9.3	9.2	9.0	8.9	8.8	8.7	8.7
86	9.3	9.1	8.9	8.7	8.6	8.5	8.4	8.3	8.2
87	8.9	8.7	8.5	8.3	8.2	8.0	7.9	7.8	7.7
88	8.6	8.3	8.1	7.9	7.8	7.6	7.5	7.4	7.3
89	8.3	8.0	7.8	7.6	7.4	7.3	7.1	7.0	6.9
90	8.0	7.7	7.5	7.3	7.1	6.9	6.8	6.7	6.6
91	7.7	7.5	7.2	7.0	6.8	6.6	6.5	6.4	6.2
92	7.5	7.2	7.0	6.7	6.5	6.4	6.2	6.1	5.9
93	7.3	7.0	6.7	6.5	6.3	6.1	5.9	5.8	5.7
94	7.1	6.8	6.5	6.3	6.1	5.9	5.7	5.5	5.4
95	6.9	6.6	6.4	6.1	5.9	5.7	5.5	5.3	5.2
96	6.8	6.5	6.2	5.9	5.7	5.5	5.3	5.1	5.0
97	6.7	6.4	6.1	5.8	5.5	5.3	5.1	4.9	4.8
98	6.6	6.2	5.9	5.7	5.4	5.2	5.0	4.8	4.6
99	6.5	6.1	5.8	5.5	5.3	5.0	4.8	4.6	4.5
100	6.4	6.0	5.7	5.4	5.2	4.9	4.7	4.5	4.3
101	6.3	6.0	5.6	5.3	5.1	4.8	4.6	4.4	4.2
102	6.3	5.9	5.6	5.3	5.0	4.7	4.5	4.3	4.1
103	6.2	5.9	5.5	5.2	4.9	4.7	4.5	4.2	4.1
104	6.2	5.8	5.5	5.2	4.9	4.6	4.4	4.2	4.0
105	6.1	5.8	5.4	5.1	4.9	4.6	4.4	4.1	4.0
106	6.1	5.8	5.4	5.1	4.8	4.6	4.3	4.1	3.9
107	6.1	5.8	5.4	5.1	4.8	4.6	4.3	4.1	3.9
108	6.1	5.7	5.4	5.1	4.8	4.5	4.3	4.1	3.9
109	6.1	5.7	5.4	5.1	4.8	4.5	4.3	4.1	3.9
110	6.1	5.7	5.4	5.1	4.8	4.5	4.3	4.1	3.9
111	6.1	5.7	5.4	5.1	4.8	4.5	4.3	4.1	3.9
112	6.1	5.7	5.4	5.1	4.8	4.5	4.3	4.0	3.8
113	6.1	5.7	5.3	5.0	4.7	4.5	4.2	4.0	3.8
114	6.0	5.7	5.3	5.0	4.7	4.4	4.2	4.0	3.8
115	6.0	5.6	5.3	5.0	4.7	4.4	4.2	4.0	3.8
116	6.0	5.6	5.2	4.9	4.6	4.4	4.1	3.9	3.7
117	5.9	5.5	5.2	4.9	4.6	4.3	4.0	3.8	3.6
118	5.8	5.5	5.1	4.8	4.5	4.2	3.9	3.7	3.5
119	5.8	5.4	5.0	4.7	4.4	4.1	3.8	3.6	3.3
120+	5.7	5.3	4.9	4.6	4.3	4.0	3.7	3.4	3.2

Ages	99	100	101	102	103	104	105	106	107
0	84.6	84.6	84.6	84.6	84.6	84.6	84.6	84.6	84.6
1	83.7	83.7	83.7	83.7	83.7	83.7	83.7	83.7	83.7
2	82.8	82.8	82.8	82.8	82.8	82.8	82.8	82.8	82.8
3	81.8	81.8	81.8	81.8	81.8	81.8	81.8	81.8	81.8
4	80.8	80.8	80.8	80.8	80.8	80.8	80.8	80.8	80.8
5	79.8	79.8	79.8	79.8	79.8	79.8	79.8	79.8	79.8
6	78.8	78.8	78.8	78.8	78.8	78.8	78.8	78.8	78.8
7	77.9	77.9	77.9	77.9	77.9	77.9	77.9	77.9	77.9
8	76.9	76.9	76.9	76.9	76.9	76.9	76.9	76.9	76.9
9	75.9	75.9	75.9	75.9	75.9	75.9	75.9	75.9	75.9
10	74.9	74.9	74.9	74.9	74.9	74.9	74.9	74.9	74.9
11	73.9	73.9	73.9	73.9	73.9	73.9	73.9	73.9	73.9
12	72.9	72.9	72.9	72.9	72.9	72.9	72.9	72.9	72.9
13	71.9	71.9	71.9	71.9	71.9	71.9	71.9	71.9	71.9
14	70.9	70.9	70.9	70.9	70.9	70.9	70.9	70.9	70.9
15	69.9	69.9	69.9	69.9	69.9	69.9	69.9	69.9	69.9
16	69.0	69.0	69.0	69.0	69.0	69.0	69.0	69.0	69.0
17	68.0	68.0	68.0	68.0	68.0	68.0	68.0	68.0	68.0
18	67.0	67.0	67.0	67.0	67.0	67.0	67.0	67.0	67.0
19	66.0	66.0	66.0	66.0	66.0	66.0	66.0	66.0	66.0
20	65.0	65.0	65.0	65.0	65.0	65.0	65.0	65.0	65.0
21	64.1	64.1	64.1	64.1	64.1	64.1	64.1	64.1	64.1
22	63.1	63.1	63.1	63.1	63.1	63.1	63.1	63.1	63.1
23	62.1	62.1	62.1	62.1	62.1	62.1	62.1	62.1	62.1
24	61.1	61.1	61.1	61.1	61.1	61.1	61.1	61.1	61.1
25	60.2	60.2	60.2	60.2	60.2	60.2	60.2	60.2	60.2
26	59.2	59.2	59.2	59.2	59.2	59.2	59.2	59.2	59.2
27	58.2	58.2	58.2	58.2	58.2	58.2	58.2	58.2	58.2
28	57.3	57.3	57.3	57.3	57.3	57.3	57.3	57.3	57.3
29	56.3	56.3	56.3	56.3	56.3	56.3	56.3	56.3	56.3
30	55.3	55.3	55.3	55.3	55.3	55.3	55.3	55.3	55.3
31	54.4	54.4	54.4	54.4	54.4	54.4	54.4	54.4	54.4
32	53.4	53.4	53.4	53.4	53.4	53.4	53.4	53.4	53.4
33	52.5	52.5	52.5	52.5	52.5	52.5	52.5	52.5	52.5
34	51.5	51.5	51.5	51.5	51.5	51.5	51.5	51.5	51.5
35	50.6	50.6	50.6	50.6	50.5	50.5	50.5	50.5	50.5

Table 3 to Paragraph (d)

Ages	99	100	101	102	103	104	105	106	107
36	49.6	49.6	49.6	49.6	49.6	49.6	49.6	49.6	49.6
37	48.6	48.6	48.6	48.6	48.6	48.6	48.6	48.6	48.6
38	47.7	47.7	47.7	47.7	47.7	47.7	47.7	47.7	47.7
39	46.7	46.7	46.7	46.7	46.7	46.7	46.7	46.7	46.7
40	45.8	45.8	45.8	45.8	45.8	45.8	45.7	45.7	45.7
41	44.8	44.8	44.8	44.8	44.8	44.8	44.8	44.8	44.8
42	43.8	43.8	43.8	43.8	43.8	43.8	43.8	43.8	43.8
43	42.9	42.9	42.9	42.9	42.9	42.9	42.9	42.9	42.9
44	41.9	41.9	41.9	41.9	41.9	41.9	41.9	41.9	41.9
45	41.0	41.0	41.0	41.0	41.0	41.0	41.0	41.0	41.0
46	40.0	40.0	40.0	40.0	40.0	40.0	40.0	40.0	40.0
47	39.1	39.0	39.0	39.0	39.0	39.0	39.0	39.0	39.0
48	38.1	38.1	38.1	38.1	38.1	38.1	38.1	38.1	38.1
49	37.2	37.1	37.1	37.1	37.1	37.1	37.1	37.1	37.1
50	36.2	36.2	36.2	36.2	36.2	36.2	36.2	36.2	36.2
51	35.3	35.3	35.3	35.3	35.3	35.3	35.3	35.3	35.3
52	34.3	34.3	34.3	34.3	34.3	34.3	34.3	34.3	34.3
53	33.4	33.4	33.4	33.4	33.4	33.4	33.4	33.4	33.4
54	32.5	32.5	32.5	32.5	32.5	32.5	32.5	32.5	32.5
55	31.6	31.6	31.6	31.6	31.6	31.6	31.6	31.6	31.6
56	30.7	30.7	30.7	30.7	30.7	30.7	30.7	30.7	30.7
57	29.8	29.8	29.8	29.8	29.8	29.8	29.8	29.8	29.8
58	28.9	28.9	28.9	28.9	28.9	28.9	28.9	28.9	28.9
59	28.0	28.0	28.0	28.0	28.0	28.0	28.0	28.0	28.0
60	27.2	27.1	27.1	27.1	27.1	27.1	27.1	27.1	27.1
61	26.3	26.3	26.3	26.3	26.3	26.3	26.3	26.3	26.3
62	25.4	25.4	25.4	25.4	25.4	25.4	25.4	25.4	25.4
63	24.6	24.6	24.6	24.6	24.6	24.6	24.6	24.6	24.6
64	23.8	23.8	23.8	23.7	23.7	23.7	23.7	23.7	23.7
65	22.9	22.9	22.9	22.9	22.9	22.9	22.9	22.9	22.9
66	22.1	22.1	22.1	22.1	22.1	22.1	22.1	22.1	22.1
67	21.3	21.3	21.3	21.3	21.3	21.3	21.3	21.3	21.3
68	20.5	20.5	20.5	20.5	20.5	20.5	20.5	20.5	20.5

Ages	99	100	101	102	103	104	105	106	107
69	19.7	19.7	19.7	19.7	19.6	19.6	19.6	19.6	19.6
70	18.9	18.9	18.9	18.8	18.8	18.8	18.8	18.8	18.8
71	18.1	18.1	18.1	18.0	18.0	18.0	18.0	18.0	18.0
72	17.3	17.3	17.3	17.3	17.3	17.2	17.2	17.2	17.2
73	16.5	16.5	16.5	16.5	16.5	16.5	16.5	16.5	16.5
74	15.7	15.7	15.7	15.7	15.7	15.7	15.7	15.7	15.7
75	15.0	15.0	15.0	14.9	14.9	14.9	14.9	14.9	14.9
76	14.3	14.2	14.2	14.2	14.2	14.2	14.2	14.2	14.2
77	13.5	13.5	13.5	13.5	13.5	13.5	13.4	13.4	13.4
78	12.8	12.8	12.8	12.8	12.8	12.7	12.7	12.7	12.7
79	12.2	12.1	12.1	12.1	12.1	12.0	12.0	12.0	12.0
80	11.5	11.5	11.4	11.4	11.4	11.4	11.4	11.4	11.4
81	10.9	10.8	10.8	10.8	10.7	10.7	10.7	10.7	10.7
82	10.2	10.2	10.2	10.1	10.1	10.1	10.1	10.1	10.1
83	9.7	9.6	9.6	9.6	9.5	9.5	9.5	9.5	9.5
84	9.1	9.1	9.0	9.0	9.0	8.9	8.9	8.9	8.9
85	8.6	8.5	8.5	8.5	8.4	8.4	8.4	8.4	8.4
86	8.1	8.0	8.0	8.0	7.9	7.9	7.9	7.9	7.9
87	7.6	7.6	7.5	7.5	7.4	7.4	7.4	7.4	7.4
88	7.2	7.2	7.1	7.0	7.0	7.0	6.9	6.9	6.9
89	6.8	6.8	6.7	6.6	6.6	6.6	6.5	6.5	6.5
90	6.5	6.4	6.3	6.3	6.2	6.2	6.1	6.1	6.1
91	6.1	6.0	6.0	5.9	5.9	5.8	5.8	5.8	5.8
92	5.8	5.7	5.6	5.6	5.5	5.5	5.4	5.4	5.4
93	5.5	5.4	5.3	5.3	5.2	5.2	5.1	5.1	5.1
94	5.3	5.2	5.1	5.0	4.9	4.9	4.9	4.8	4.8
95	5.0	4.9	4.8	4.7	4.7	4.6	4.6	4.6	4.6
96	4.8	4.7	4.6	4.5	4.5	4.4	4.4	4.3	4.3
97	4.6	4.5	4.4	4.3	4.2	4.2	4.1	4.1	4.1
98	4.5	4.3	4.2	4.1	4.1	4.0	4.0	3.9	3.9
99	4.3	4.2	4.1	4.0	3.9	3.8	3.8	3.8	3.7
100	4.2	4.1	3.9	3.8	3.7	3.7	3.6	3.6	3.6
101	4.1	3.9	3.8	3.7	3.6	3.5	3.5	3.5	3.4
102	4.0	3.8	3.7	3.6	3.5	3.4	3.4	3.3	3.3
103	3.9	3.7	3.6	3.5	3.4	3.3	3.3	3.2	3.2
104	3.8	3.7	3.5	3.4	3.3	3.3	3.2	3.2	3.2

Ages	99	100	101	102	103	104	105	106	107
105	3.8	3.6	3.5	3.4	3.3	3.2	3.1	3.1	3.1
106	3.8	3.6	3.5	3.3	3.2	3.2	3.1	3.1	3.1
107	3.7	3.6	3.4	3.3	3.2	3.2	3.1	3.1	3.0
108	3.7	3.6	3.4	3.3	3.2	3.1	3.1	3.0	3.0
109	3.7	3.6	3.4	3.3	3.2	3.1	3.1	3.0	3.0
110	3.7	3.5	3.4	3.3	3.2	3.1	3.1	3.0	3.0
111	3.7	3.5	3.4	3.3	3.2	3.1	3.0	3.0	3.0
112	3.7	3.5	3.4	3.3	3.2	3.1	3.0	3.0	3.0
113	3.6	3.5	3.4	3.2	3.1	3.1	3.0	3.0	2.9
114	3.6	3.5	3.3	3.2	3.1	3.0	3.0	2.9	2.9
115	3.6	3.4	3.3	3.2	3.1	3.0	2.9	2.9	2.9
116	3.5	3.3	3.2	3.1	3.0	2.9	2.8	2.8	2.8
117	3.4	3.3	3.1	3.0	2.9	2.8	2.7	2.7	2.7
118	3.3	3.1	3.0	2.8	2.7	2.6	2.6	2.5	2.5
119	3.1	2.9	2.8	2.6	2.5	2.4	2.4	2.3	2.3
120+	3.0	2.8	2.6	2.5	2.3	2.2	2.1	2.1	2.1

Table 3 to Paragraph (d)

Ages	108	109	110	111	112	113	114	115	116
0	84.6	84.6	84.6	84.6	84.6	84.6	84.6	84.6	84.6
1	83.7	83.7	83.7	83.7	83.7	83.7	83.7	83.7	83.7
2	82.8	82.8	82.8	82.8	82.8	82.8	82.8	82.8	82.8
3	81.8	81.8	81.8	81.8	81.8	81.8	81.8	81.8	81.8
4	80.8	80.8	80.8	80.8	80.8	80.8	80.8	80.8	80.8
5	79.8	79.8	79.8	79.8	79.8	79.8	79.8	79.8	79.8
6	78.8	78.8	78.8	78.8	78.8	78.8	78.8	78.8	78.8
7	77.9	77.9	77.9	77.9	77.9	77.9	77.9	77.9	77.9
8	76.9	76.9	76.9	76.9	76.9	76.9	76.9	76.9	76.9
9	75.9	75.9	75.9	75.9	75.9	75.9	75.9	75.9	75.9
10	74.9	74.9	74.9	74.9	74.9	74.9	74.9	74.9	74.9
11	73.9	73.9	73.9	73.9	73.9	73.9	73.9	73.9	73.9
12	72.9	72.9	72.9	72.9	72.9	72.9	72.9	72.9	72.9
13	71.9	71.9	71.9	71.9	71.9	71.9	71.9	71.9	71.9
14	70.9	70.9	70.9	70.9	70.9	70.9	70.9	70.9	70.9
15	69.9	69.9	69.9	69.9	69.9	69.9	69.9	69.9	69.9
16	69.0	69.0	69.0	69.0	69.0	69.0	69.0	69.0	69.0
17	68.0	68.0	68.0	68.0	68.0	68.0	68.0	68.0	68.0
18	67.0	67.0	67.0	67.0	67.0	67.0	67.0	67.0	67.0
19	66.0	66.0	66.0	66.0	66.0	66.0	66.0	66.0	66.0
20	65.0	65.0	65.0	65.0	65.0	65.0	65.0	65.0	65.0
21	64.1	64.1	64.1	64.1	64.1	64.1	64.1	64.1	64.1
22	63.1	63.1	63.1	63.1	63.1	63.1	63.1	63.1	63.1
23	62.1	62.1	62.1	62.1	62.1	62.1	62.1	62.1	62.1
24	61.1	61.1	61.1	61.1	61.1	61.1	61.1	61.1	61.1
25	60.2	60.2	60.2	60.2	60.2	60.2	60.2	60.2	60.2
26	59.2	59.2	59.2	59.2	59.2	59.2	59.2	59.2	59.2
27	58.2	58.2	58.2	58.2	58.2	58.2	58.2	58.2	58.2
28	57.3	57.3	57.3	57.3	57.3	57.3	57.3	57.3	57.3
29	56.3	56.3	56.3	56.3	56.3	56.3	56.3	56.3	56.3
30	55.3	55.3	55.3	55.3	55.3	55.3	55.3	55.3	55.3
31	54.4	54.4	54.4	54.4	54.4	54.4	54.4	54.4	54.4
32	53.4	53.4	53.4	53.4	53.4	53.4	53.4	53.4	53.4

Ages	108	109	110	111	112	113	114	115	116
33	52.5	52.5	52.5	52.5	52.5	52.5	52.5	52.5	52.5
34	51.5	51.5	51.5	51.5	51.5	51.5	51.5	51.5	51.5
35	50.5	50.5	50.5	50.5	50.5	50.5	50.5	50.5	50.5
36	49.6	49.6	49.6	49.6	49.6	49.6	49.6	49.6	49.6
37	48.6	48.6	48.6	48.6	48.6	48.6	48.6	48.6	48.6
38	47.7	47.7	47.7	47.7	47.7	47.7	47.7	47.7	47.7
39	46.7	46.7	46.7	46.7	46.7	46.7	46.7	46.7	46.7
40	45.7	45.7	45.7	45.7	45.7	45.7	45.7	45.7	45.7
41	44.8	44.8	44.8	44.8	44.8	44.8	44.8	44.8	44.8
42	43.8	43.8	43.8	43.8	43.8	43.8	43.8	43.8	43.8
43	42.9	42.9	42.9	42.9	42.9	42.9	42.9	42.9	42.9
44	41.9	41.9	41.9	41.9	41.9	41.9	41.9	41.9	41.9
45	41.0	41.0	41.0	41.0	41.0	41.0	41.0	41.0	41.0
46	40.0	40.0	40.0	40.0	40.0	40.0	40.0	40.0	40.0
47	39.0	39.0	39.0	39.0	39.0	39.0	39.0	39.0	39.0
48	38.1	38.1	38.1	38.1	38.1	38.1	38.1	38.1	38.1
49	37.1	37.1	37.1	37.1	37.1	37.1	37.1	37.1	37.1
50	36.2	36.2	36.2	36.2	36.2	36.2	36.2	36.2	36.2
51	35.3	35.3	35.3	35.3	35.3	35.3	35.3	35.3	35.3
52	34.3	34.3	34.3	34.3	34.3	34.3	34.3	34.3	34.3
53	33.4	33.4	33.4	33.4	33.4	33.4	33.4	33.4	33.4
54	32.5	32.5	32.5	32.5	32.5	32.5	32.5	32.5	32.5
55	31.6	31.6	31.6	31.6	31.6	31.6	31.6	31.6	31.6
56	30.7	30.7	30.7	30.7	30.7	30.7	30.7	30.7	30.7
57	29.8	29.8	29.8	29.8	29.8	29.8	29.8	29.8	29.8
58	28.9	28.9	28.9	28.9	28.9	28.9	28.9	28.9	28.9
59	28.0	28.0	28.0	28.0	28.0	28.0	28.0	28.0	28.0
60	27.1	27.1	27.1	27.1	27.1	27.1	27.1	27.1	27.1
61	26.3	26.3	26.3	26.3	26.3	26.3	26.3	26.3	26.3
62	25.4	25.4	25.4	25.4	25.4	25.4	25.4	25.4	25.4
63	24.6	24.6	24.6	24.6	24.6	24.6	24.6	24.6	24.6
64	23.7	23.7	23.7	23.7	23.7	23.7	23.7	23.7	23.7
65	22.9	22.9	22.9	22.9	22.9	22.9	22.9	22.9	22.9
66	22.1	22.1	22.1	22.1	22.1	22.1	22.1	22.1	22.1
67	21.3	21.3	21.3	21.3	21.3	21.3	21.3	21.3	21.3
68	20.5	20.4	20.4	20.4	20.4	20.4	20.4	20.4	20.4

Ages	108	109	110	111	112	113	114	115	116
69	19.6	19.6	19.6	19.6	19.6	19.6	19.6	19.6	19.6
70	18.8	18.8	18.8	18.8	18.8	18.8	18.8	18.8	18.8
71	18.0	18.0	18.0	18.0	18.0	18.0	18.0	18.0	18.0
72	17.2	17.2	17.2	17.2	17.2	17.2	17.2	17.2	17.2
73	16.5	16.4	16.4	16.4	16.4	16.4	16.4	16.4	16.4
74	15.7	15.7	15.7	15.7	15.7	15.7	15.7	15.7	15.6
75	14.9	14.9	14.9	14.9	14.9	14.9	14.9	14.9	14.9
76	14.2	14.2	14.2	14.2	14.2	14.2	14.1	14.1	14.1
77	13.4	13.4	13.4	13.4	13.4	13.4	13.4	13.4	13.4
78	12.7	12.7	12.7	12.7	12.7	12.7	12.7	12.7	12.7
79	12.0	12.0	12.0	12.0	12.0	12.0	12.0	12.0	12.0
80	11.4	11.3	11.3	11.3	11.3	11.3	11.3	11.3	11.3
81	10.7	10.7	10.7	10.7	10.7	10.7	10.7	10.7	10.6
82	10.1	10.1	10.1	10.1	10.1	10.0	10.0	10.0	10.0
83	9.5	9.5	9.5	9.5	9.5	9.4	9.4	9.4	9.4
84	8.9	8.9	8.9	8.9	8.9	8.9	8.9	8.8	8.8
85	8.4	8.4	8.3	8.3	8.3	8.3	8.3	8.3	8.3
86	7.8	7.8	7.8	7.8	7.8	7.8	7.8	7.8	7.7
87	7.4	7.4	7.4	7.3	7.3	7.3	7.3	7.3	7.3
88	6.9	6.9	6.9	6.9	6.9	6.9	6.9	6.8	6.8
89	6.5	6.5	6.5	6.5	6.5	6.4	6.4	6.4	6.4
90	6.1	6.1	6.1	6.1	6.1	6.1	6.0	6.0	6.0
91	5.7	5.7	5.7	5.7	5.7	5.7	5.7	5.6	5.6
92	5.4	5.4	5.4	5.4	5.4	5.3	5.3	5.3	5.2
93	5.1	5.1	5.1	5.1	5.1	5.0	5.0	5.0	4.9
94	4.8	4.8	4.8	4.8	4.8	4.7	4.7	4.7	4.6
95	4.5	4.5	4.5	4.5	4.5	4.5	4.4	4.4	4.4
96	4.3	4.3	4.3	4.3	4.3	4.2	4.2	4.2	4.1
97	4.1	4.1	4.1	4.1	4.0	4.0	4.0	4.0	3.9
98	3.9	3.9	3.9	3.9	3.8	3.8	3.8	3.8	3.7
99	3.7	3.7	3.7	3.7	3.7	3.6	3.6	3.6	3.5
100	3.6	3.6	3.5	3.5	3.5	3.5	3.5	3.4	3.3
101	3.4	3.4	3.4	3.4	3.4	3.4	3.3	3.3	3.2
102	3.3	3.3	3.3	3.3	3.3	3.2	3.2	3.2	3.1
103	3.2	3.2	3.2	3.2	3.2	3.1	3.1	3.1	3.0
104	3.1	3.1	3.1	3.1	3.1	3.1	3.0	3.0	2.9

Ages	108	109	110	111	112	113	114	115	116
105	3.1	3.1	3.1	3.0	3.0	3.0	3.0	2.9	2.8
106	3.0	3.0	3.0	3.0	3.0	3.0	2.9	2.9	2.8
107	3.0	3.0	3.0	3.0	3.0	2.9	2.9	2.9	2.8
108	3.0	3.0	3.0	3.0	2.9	2.9	2.9	2.8	2.8
109	3.0	3.0	3.0	3.0	2.9	2.9	2.9	2.8	2.8
110	3.0	3.0	3.0	2.9	2.9	2.9	2.9	2.8	2.7
111	3.0	3.0	2.9	2.9	2.9	2.9	2.8	2.8	2.7
112	2.9	2.9	2.9	2.9	2.9	2.9	2.8	2.8	2.7
113	2.9	2.9	2.9	2.9	2.9	2.8	2.8	2.8	2.7
114	2.9	2.9	2.9	2.8	2.8	2.8	2.8	2.7	2.6
115	2.8	2.8	2.8	2.8	2.8	2.8	2.7	2.7	2.6
116	2.8	2.8	2.7	2.7	2.7	2.7	2.6	2.6	2.5
117	2.7	2.6	2.6	2.6	2.6	2.6	2.5	2.5	2.4
118	2.5	2.5	2.5	2.4	2.4	2.4	2.4	2.3	2.2
119	2.3	2.3	2.2	2.2	2.2	2.2	2.1	2.1	2.0
120+	2.0	2.0	2.0	2.0	2.0	1.9	1.9	1.8	1.8

Table 3 to Paragraph (d)

Ages	117	118	119	120+					
0	84.6	84.6	84.6	84.6					
1	83.7	83.7	83.7	83.7					
2	82.8	82.8	82.8	82.8					
3	81.8	81.8	81.8	81.8					
4	80.8	80.8	80.8	80.8					
5	79.8	79.8	79.8	79.8					
6	78.8	78.8	78.8	78.8					
7	77.9	77.9	77.9	77.9					
8	76.9	76.9	76.9	76.9					
9	75.9	75.9	75.9	75.9					
10	74.9	74.9	74.9	74.9					
11	73.9	73.9	73.9	73.9					
12	72.9	72.9	72.9	72.9					
13	71.9	71.9	71.9	71.9					
14	70.9	70.9	70.9	70.9					
15	69.9	69.9	69.9	69.9					
16	69.0	69.0	69.0	69.0					
17	68.0	68.0	68.0	68.0					
18	67.0	67.0	67.0	67.0					
19	66.0	66.0	66.0	66.0					
20	65.0	65.0	65.0	65.0					
21	64.1	64.1	64.1	64.1					
22	63.1	63.1	63.1	63.1					
23	62.1	62.1	62.1	62.1					
24	61.1	61.1	61.1	61.1					
25	60.2	60.2	60.2	60.2					
26	59.2	59.2	59.2	59.2					
27	58.2	58.2	58.2	58.2					
28	57.3	57.3	57.3	57.3					
29	56.3	56.3	56.3	56.3					
30	55.3	55.3	55.3	55.3					
31	54.4	54.4	54.4	54.4					
32	53.4	53.4	53.4	53.4					

Ages	117	118	119	120+				
33	52.5	52.5	52.5	52.5				
34	51.5	51.5	51.5	51.5				
35	50.5	50.5	50.5	50.5				
36	49.6	49.6	49.6	49.6				
37	48.6	48.6	48.6	48.6				
38	47.7	47.7	47.7	47.7				
39	46.7	46.7	46.7	46.7				
40	45.7	45.7	45.7	45.7				
41	44.8	44.8	44.8	44.8				
42	43.8	43.8	43.8	43.8				
43	42.9	42.9	42.9	42.9				
44	41.9	41.9	41.9	41.9				
45	41.0	41.0	41.0	41.0				
46	40.0	40.0	40.0	40.0				
47	39.0	39.0	39.0	39.0				
48	38.1	38.1	38.1	38.1				
49	37.1	37.1	37.1	37.1				
50	36.2	36.2	36.2	36.2				
51	35.3	35.3	35.3	35.3				
52	34.3	34.3	34.3	34.3				
53	33.4	33.4	33.4	33.4				
54	32.5	32.5	32.5	32.5				
55	31.6	31.6	31.6	31.6				
56	30.7	30.7	30.7	30.6				
57	29.8	29.8	29.8	29.8				
58	28.9	28.9	28.9	28.9				
59	28.0	28.0	28.0	28.0				
60	27.1	27.1	27.1	27.1				
61	26.3	26.3	26.2	26.2				
62	25.4	25.4	25.4	25.4				
63	24.6	24.5	24.5	24.5				
64	23.7	23.7	23.7	23.7				
65	22.9	22.9	22.9	22.9				
66	22.1	22.1	22.1	22.0				
67	21.2	21.2	21.2	21.2				
68	20.4	20.4	20.4	20.4				

Ages	117	118	119	120+				
69	19.6	19.6	19.6	19.6				
70	18.8	18.8	18.8	18.8				
71	18.0	18.0	18.0	18.0				
72	17.2	17.2	17.2	17.2				
73	16.4	16.4	16.4	16.4				
74	15.6	15.6	15.6	15.6				
75	14.9	14.9	14.8	14.8				
76	14.1	14.1	14.1	14.1				
77	13.4	13.4	13.4	13.3				
78	12.7	12.6	12.6	12.6				
79	12.0	11.9	11.9	11.9				
80	11.3	11.3	11.2	11.2				
81	10.6	10.6	10.6	10.5				
82	10.0	10.0	9.9	9.9				
83	9.4	9.3	9.3	9.3				
84	8.8	8.8	8.7	8.7				
85	8.2	8.2	8.2	8.1				
86	7.7	7.7	7.6	7.6				
87	7.2	7.2	7.1	7.1				
88	6.8	6.7	6.6	6.6				
89	6.3	6.3	6.2	6.1				
90	5.9	5.8	5.8	5.7				
91	5.5	5.5	5.4	5.3				
92	5.2	5.1	5.0	4.9				
93	4.9	4.8	4.7	4.6				
94	4.6	4.5	4.4	4.3				
95	4.3	4.2	4.1	4.0				
96	4.0	3.9	3.8	3.7				
97	3.8	3.7	3.6	3.4				
98	3.6	3.5	3.3	3.2				
99	3.4	3.3	3.1	3.0				
100	3.3	3.1	2.9	2.8				
101	3.1	3.0	2.8	2.6				
102	3.0	2.8	2.6	2.5				
103	2.9	2.7	2.5	2.3				
104	2.8	2.6	2.4	2.2				

Ages	117	118	119	120+					
105	2.7	2.6	2.4	2.1					
106	2.7	2.5	2.3	2.1					
107	2.7	2.5	2.3	2.1					
108	2.7	2.5	2.3	2.0					
109	2.6	2.5	2.3	2.0					
110	2.6	2.5	2.2	2.0					
111	2.6	2.4	2.2	2.0					
112	2.6	2.4	2.2	2.0					
113	2.6	2.4	2.2	1.9					
114	2.5	2.4	2.1	1.9					
115	2.5	2.3	2.1	1.8					
116	2.4	2.2	2.0	1.8					
117	2.3	2.1	1.9	1.6					
118	2.1	1.9	1.7	1.4					
119	1.9	1.7	1.3	1.1					
120+	1.6	1.4	1.1	1.0					

(e) *Mortality rates.* The following are the mortality rates used to calculate the tables set forth in paragraphs (b), (c), and (d) of this section.

TABLE 4 TO PARAGRAPH (e)

Age	Probability of death
0	0.001762
1	0.000441
2	0.000292
3	0.000232
4	0.000177
5	0.000161
6	0.000153
7	0.000145
8	0.000132
9	0.000127
10	0.000128
11	0.000135
12	0.000146
13	0.000164
14	0.000192
15	0.000223
16	0.000253
17	0.000276
18	0.000293
19	0.000304
20	0.000313
21	0.000343
22	0.000377
23	0.000421
24	0.000466
25	0.000520
26	0.000581
27	0.000630
28	0.000677
29	0.000720
30	0.000763
31	0.000799
32	0.000824
33	0.000833

Age	Probability of death
34	0.000830
35	0.000823
36	0.000819
37	0.000824
38	0.000836
39	0.000853
40	0.000879
41	0.000909
42	0.000945
43	0.000980
44	0.001019
45	0.001065
46	0.001132
47	0.001225
48	0.001345
49	0.001485
50	0.001656
51	0.001874
52	0.002121
53	0.002397
54	0.002701
55	0.003032
56	0.003390
57	0.003774
58	0.004181
59	0.004613
60	0.005071
61	0.005554
62	0.006071
63	0.006624
64	0.007225
65	0.007884
66	0.008238
67	0.008659
68	0.009163
69	0.009767
70	0.010491
71	0.011358
72	0.012385

Age	Probability of death
73	0.013598
74	0.015014
75	0.016670
76	0.018587
77	0.020815
78	0.023391
79	0.026387
80	0.029850
81	0.033883
82	0.038544
83	0.043880
84	0.049956
85	0.056799
86	0.064436
87	0.072882
88	0.082137
89	0.092172
90	0.102919
91	0.114344
92	0.126605
93	0.139936
94	0.154844
95	0.171902
96	0.187210
97	0.204659
98	0.222921
99	0.241884
100	0.261476
101	0.281536
102	0.301847
103	0.322371
104	0.342940
105	0.361261
106	0.372886
107	0.381098
108	0.383358
109	0.385709
110	0.388092
111	0.390353

Age	Probability of death
112	0.392822
113	0.395188
114	0.397567
115	0.400000
116	0.400000
117	0.400000
118	0.400000
119	0.400000
120	0.400000

(f) *Applicability dates* —

(1) ***In general.*** The life expectancy tables and Uniform Lifetime Table set forth in this section apply for distribution calendar years beginning on or after January 1, 2022. For life expectancy tables and the Uniform Lifetime Table applicable for earlier distribution calendar years, see § 1.401(a)(9)-9, as set forth in 26 CFR part 1 revised as of April 1, 2020 (formerly applicable § 1.401(a)(9)-9).

(2) *Application to life expectancies that may not be recalculated* —

(i) ***Redetermination of initial life expectancy using current tables.*** If an employee died before January 1, 2022, and, under the rules of § 1.401(a)(9)-5, the applicable denominator for a calendar year following the calendar year of the employee's death is equal to a single life expectancy calculated as of the calendar year of the employee's death (or, if applicable, the following calendar year), reduced by 1 for each subsequent year, then that life expectancy is reset as provided in paragraph (f)(2)(ii) of this section. Similarly, if an employee's sole beneficiary is the employee's surviving spouse, and the spouse dies before January 1, 2022, then the spouse's life expectancy for the calendar year of the spouse's death (which is used to determine the applicable denominator for later years) is reset as provided in paragraph (f)(2)(ii) of this section.

(ii) *Determination of applicable denominator* —

(A) ***Applicable denominator based on new life expectancy.*** With respect to a life expectancy described in paragraph (f)(2)(i) of this section, the applicable denominator for a distribution calendar year beginning on or after January 1, 2022, is determined by using the Single Life Table in paragraph (b) of this section to determine the initial life expectancy for the age of the relevant individual in the relevant calendar year and then reducing the resulting applicable denominator by 1 for each subsequent year.

(B) ***Example of redetermination.*** Assume that an employee died at age 80 in 2019 and the employee's designated beneficiary (who was not the employee's spouse) was age 75 in the year of the employee's death. For 2020, the denominator that would have applied for the beneficiary was 12.7 years (the life expectancy for a 76-year-old under the Single Life Table in formerly applicable § 1.401(a)(9)-9), and for 2021, it would have been 11.7 years (the original life expectancy, reduced by 1 year). For 2022, if the designated beneficiary is

still alive, then the applicable denominator would be 12.1 years (the 14.1-year life expectancy for a 76-year-old under the Single Life Table in paragraph (b) of this section, reduced by 2 years).

[T.D. 9930, 85 FR 72477, Nov. 12, 2020, as amended by T.D. 10001, 89 FR 58938, July 19, 2024]

§ 1.401(a)(17)-1 Limitation on annual compensation.

(a) ***Compensation limit requirement*** —

(1) ***In general.*** In order to be a qualified plan, a plan must satisfy section 401(a)(17). Section 401(a)(17) provides an annual compensation limit for each employee under a qualified plan. This limit applies to a qualified plan in two ways. First, a plan may not base allocations, in the case of a defined contribution plan, or benefit accruals, in the case of a defined benefit plan, on compensation in excess of the annual compensation limit. Second, the amount of an employee's annual compensation that may be taken into account in applying certain specified nondiscrimination rules under the Internal Revenue Code is subject to the annual compensation limit. These two limitations are set forth in paragraphs (b) and (c) of this section, respectively. Paragraph (d) of this section provides the effective dates of section 401(a)(17), the amendments made by section 13212 of the Omnibus Budget Reconciliation Act of 1993 (OBRA '93), and this section. Paragraph (e) of this section provides rules for determining post-effective-date accrued benefits under the fresh-start rules.

(2) ***Annual compensation limit for plan years beginning before January 1, 1994.*** For purposes of this section, for plan years beginning prior to the OBRA '93 effective date, annual compensation limit means $200,000, adjusted as provided by the Commissioner. The amount of the annual compensation limit is adjusted at the same time and in the same manner as under section 415(d). The base period for the annual adjustment is the calendar quarter ending December 31, 1988, and the first adjustment is effective on January 1, 1990. Any increase in the annual compensation limit is effective as of January 1 of a calendar year and applies to any plan year beginning in that calendar year. In any plan year beginning prior to the OBRA '93 effective date, if compensation for any plan year beginning prior to the statutory effective date is used for determining allocations or benefit accruals, or when applying any nondiscrimination rule, then the annual compensation limit for the first plan year beginning on or after the statutory effective date (generally $200,000) must be applied to compensation for that prior plan year.

(3) ***Annual compensation limit for plan years beginning on or after January 1, 1994*** —

(i) ***In general.*** For purposes of this section, for plan years beginning on or after the OBRA '93 effective date, annual compensation limit means $150,000, adjusted as provided by the Commissioner. The adjusted dollar amount of the annual compensation limit is determined by adjusting the $150,000 amount for changes in the cost of living as provided in paragraph (a)(3)(ii) of this section and rounding this adjusted dollar amount as provided in paragraph (a)(3)(iii) of this section. Any increase in the annual compensation limit is effective as of January 1 of a calendar year and applies to any plan year beginning in that calendar year. For example, if a plan has a plan year beginning July 1, 1994, and ending June 30, 1995, the annual compensation limit in effect on January 1, 1994 ($150,000), applies to the plan for the entire plan year.

(ii) ***Cost of living adjustment.*** The $150,000 amount is adjusted for changes in the cost of living by the Commissioner at the same time and in the same manner as under section 415(d). The base period for the annual adjustment is the calendar quarter ending December 31, 1993.

(iii) ***Rounding of adjusted compensation limit.*** After the $150,000, adjusted in accordance with paragraph (a)(3)(ii) of this section, exceeds the annual compensation limit for the prior calendar year by $10,000 or more, the annual compensation limit will be increased by the amount of such excess, rounded down to the next lowest multiple of $10,000.

(4) ***Additional guidance.*** The Commissioner may, in revenue rulings and procedures, notices, and other guidance, published in the Internal Revenue Bulletin (see § 601.601(d)(2)(ii)(*b*) of this chapter), provide any additional guidance that may be necessary or appropriate concerning the annual limits on compensation under section 401(a)(17).

(b) ***Plan limit on compensation*** —

(1) ***General rule.*** A plan does not satisfy section 401(a)(17) unless it provides that the compensation taken into account for any employee in determining plan allocations or benefit accruals for any plan year is limited to the annual compensation limit. For purposes of this rule, allocations and benefit accruals under a plan include all benefits provided under the plan, including ancillary benefits.

(2) ***Plan-year-by-plan-year requirement.*** For purposes of this paragraph (b), the limit in effect for the current plan year applies only to the compensation for that year that is taken into account in determining plan allocations or benefit accruals for the year. The compensation for any prior plan year taken into account in determining an employee's allocations or benefit accruals for the current plan year is subject to the applicable annual compensation limit in effect for that prior year. Thus, increases in the annual compensation limit apply only to compensation taken into account for the plan year in which the increase is effective. In addition, if compensation for any plan year beginning prior to the OBRA '93 effective date is used for determining allocations or benefit accruals in a plan year beginning on or after the OBRA '93 effective date, then the annual compensation limit for that prior year is the annual compensation limit in effect for the first plan year beginning on or after the OBRA '93 effective date (generally $150,000).

(3) ***Application of limit to a plan year*** —

(i) ***In general.*** For purposes of applying this paragraph (b), the annual compensation limit is applied to the compensation for the plan year on which allocations or benefit accruals are based.

(ii) ***Compensation for the plan year.*** If a plan determines compensation used in determining allocations or benefit accruals for a plan year based on compensation for the plan year, then the annual compensation limit that applies to the compensation for the plan year is the limit in effect for the calendar year in which the plan year begins. Alternatively, if a plan determines compensation used in determining allocations or benefit accruals for the plan year on the basis of compensation for a 12-consecutive-month period, or periods, ending no later than the last day of the plan year, then the annual compensation limit applies to compensation for each of those periods based on the annual compensation limit in effect for the respective calendar year in which each 12-month period begins.

(iii) ***Compensation for a period of less than 12-months*** —

(A) ***Proration required.*** If compensation for a period of less than 12 months is used for a plan year, then the otherwise applicable annual compensation limit is reduced in the same proportion as the reduction in the 12-month period. For example, if a defined benefit plan provides that the accrual for each month in a plan year is separately determined based on the compensation for that month and the plan year accrual is the sum of the accruals for all months, then the annual compensation limit for each month is $^{1}/_{12}$th of the annual compensation limit for the plan year. In addition, if the period for determining compensation used in calculating an employee's allocation or accrual for a plan year is a short plan year (i.e., shorter than 12 months), the annual compensation limit is an amount equal to the otherwise applicable annual compensation limit multiplied by a fraction, the numerator of which is the number of months in the short plan year, and the denominator of which is 12.

(B) ***No proration required for participation for less than a full plan year.*** Notwithstanding paragraph (b)(3)(iii)(A) of this section, a plan is not treated as using compensation for less than 12 months for a plan year merely because the plan formula provides that the allocation or accrual for each employee is based on compensation for the portion of the plan year during which the employee is a participant in the plan. In addition, no proration is required merely because an employee is covered under a plan for less than a full plan year, provided that allocations or benefit accruals are otherwise determined using compensation for a period of at least 12 months. Finally, notwithstanding paragraph (b)(3)(iii)(A) of this section, no proration is required merely because the amount of elective contributions (within the meaning of § 1.401(k)-6, matching contributions (within the meaning of § 1.401(m)-5, or employee contributions (within the meaning of § 1.401(m)-5 that is contributed for each pay period during a plan year is determined separately using compensation for that pay period.

(4) ***Limits on multiple employer and multiemployer plans.*** For purposes of this paragraph (b), in the case of a plan described in section 413(c) or 414(f) (a plan maintained by more than one employer), the annual compensation limit applies separately with respect to the compensation of an employee from each employer maintaining the plan instead of applying to the employee's total compensation from all employers maintaining the plan.

(5) ***Family aggregation.*** [Reserved]

(6) ***Examples.*** The following examples illustrate the rules in this paragraph (b).

Example 1. Plan X is a defined benefit plan with a calendar year plan year and bases benefits on the average of an employee's high 3 consecutive years' compensation. The OBRA '93 effective date for Plan X is January 1, 1994. Employee A's high 3 consecutive years' compensation prior to the application of the annual compensation limits is $160,000 (1994), $155,000 (1993), and $135,000 (1992). To satisfy this paragraph (b), Plan X cannot base plan benefits for Employee A in 1994 on compensation in excess of $145,000 (the average of $150,000 (A's 1994 compensation capped by the annual compensation limit), $150,000 (A's 1993 compensation capped by the $150,000 annual compensation limit applicable to all years before 1994), and $135,000 (A's 1992 compensation capped by the $150,000 annual compensation limit applicable to all years before 1994)). For purposes of determining the 1994 accrual, each year (1994, 1993, and 1992), not the average of the 3 years, is subject to the 1994 annual compensation limit of $150,000.

Example 2. Assume the same facts as Example 1, except that Employee A's high 3 consecutive years' compensation prior to the application of the limits is $185,000 (1997), $175,000 (1996), and $165,000 (1995). Assume that the annual compensation limit is first adjusted to $160,000 for plan years beginning on or after January 1, 1997. Plan X cannot base plan benefits for Employee A in 1997 on compensation in excess of $153,333 (the average of $160,000 (A's 1997 compensation capped by the 1997 limit), $150,000 (A's 1996 compensation capped by the 1996 limit), and $150,000 (A's 1995 compensation capped by the 1995 limit)).

Example 3. Plan Y is a defined benefit plan that bases benefits on an employee's high consecutive 36 months of compensation ending within the plan year. Employee B's high 36 months are the period September 1995 to August 1998, in which Employee B earned $50,000 in each month. Assume that the annual compensation limit is first adjusted to $160,000 for plan years beginning on or after January 1, 1997. The annual compensation limit is $150,000, $150,000, and $160,000 in 1995, 1996, and 1997, respectively. To satisfy this paragraph (b), Plan Y cannot base Employee B's plan benefits for the 1998 plan year on compensation in excess of $153,333. This amount is determined by applying the applicable annual compensation limit to compensation for each of the three 12-consecutive-month periods. The September 1995 to August 1996 period is capped by the annual compensation limit of $150,000 for 1995; the September 1996 to August 1997 period is capped by the annual compensation limit of $150,000 for 1996; and the September 1997 to August 1998 period is capped by the annual compensation limit of $160,000 for 1997. The average of these capped amounts is the annual compensation limit applicable in determining benefits for the 1998 year.

Example 4. (a) Employer P is a partnership. Employer P maintains Plan Z, a profit-sharing plan that provides for an annual allocation of employer contributions of 15 percent of plan year compensation for employees other than self-employed individuals, and 13.0435 percent of plan year compensation for self-employed individuals. The plan year of Plan Z is the calendar year. The OBRA '93 effective date for Plan Z is January 1, 1994. In order to satisfy section 401(a)(17), as amended by OBRA '93, the plan provides that, beginning with the 1994 plan year, the plan year compensation used in determining the allocation of employer contributions for each employee may not exceed the annual limit in effect for the plan year under OBRA '93. Plan Z defines compensation for self-employed individuals (employees within the meaning of section 401(c)(1)) as the self-employed individual's net profit from self-employment attributable to Employer P minus the amount of the self-employed individual's deduction under section 164(f) for one-half of self-employment taxes. Plan Z defines compensation for all other employees as wages within the meaning of section 3401(a). Employee C and Employee D are partners of Employer P and thus are self-employed individuals. Neither Employee C nor Employee D owns an interest in any other business or is a common-law employee in any business. For the 1994 calendar year, Employee C has net profit from self-employment of $80,000, and Employee D has net profit from self-employment of $175,000. The deduction for Employee C under section 164(f) for one-half of self-employment taxes is $4,828. The deduction for Employee D under section 164(f) for one-half of self-employment taxes is $6,101

(b) The plan year compensation under the plan formula for Employee C is $75,172 ($80,000 minus $4,828). The allocation of employer contributions under the plan allocation formula for 1994 for Employee C is $9,805 ($75,172 (Employee C's plan year compensation for 1994) multiplied by 13.0435%). The plan year compensation under the plan formula before application of the annual limit under section 401(a)(17) for Employee D is $168,899 ($175,000 minus $6101). After application of the annual limit, the plan year compensation for the 1994 plan year for Employee D is $150,000 (the annual limit for 1994). Therefore, the allocation of employer contributions under the plan allocation formula for 1994 for Employee D is $19,565 ($150,000 (Employee D's plan year compensation after application of the annual limit for 1994) multiplied by 13.0435%).

Example 5. The facts are the same as in *Example 4,* except that Plan Z provides that plan year compensation for self-employed individuals is defined as earned income within the meaning of section 401(c)(2) attributable to Employer P. In addition, Plan Z provides for an annual allocation of employer contributions of 15 percent of plan year compensation for all employees in the plan, including self-employed individuals, such as Employees C and D. The net profit from self-employment for Employee C and the net profit from self-employment for Employee D are the same as provided in *Example 4.* However, the earned income of Employee C determined in accordance with section 401(c)(2) is $65,367 ($80,000 minus $4,828 minus $9,805). The earned income of Employee D determined in accordance with section 401(c)(2) is $146,869 ($175,000 minus $6,101 minus $22,030). Therefore, the allocation of employer contributions under the plan allocation formula for 1994 for Employee C is $9,805 ($65,367 (Employee C's plan year compensation for 1994) multiplied by 15%). Employee D's earned income for 1994 does not exceed the 1994 annual limit of $150,000. Therefore, the allocation of employer contributions under the plan allocation formula for 1994 for Employee D is $22,030 ($146,869 (Employee D's plan year compensation for 1994) multiplied by 15%).

(c) ***Limit on compensation for nondiscrimination rules*** —

(1) ***General rule.*** The annual compensation limit applies for purposes of applying the nondiscrimination rules under sections 401(a)(4), 401(a)(5), 401(l), 401(k)(3), 401(m)(2), 403(b)(12), 404(a)(2) and 410(b)(2). The annual compensation limit also applies in determining whether an alternative method of determining compensation impermissibly discriminates under section 414(s)(3). Thus, for example, the annual compensation limit applies when determining a self-employed individual's total earned income that is used to determine the equivalent alternative compensation amount under § 1.414(s)-1(g)(1). This paragraph (c) provides rules for applying the annual compensation limit for these purposes. For purposes of this paragraph (c), compensation means the compensation used in applying the applicable nondiscrimination rule.

(2) ***Plan-year-by-plan-year requirement.*** For purposes of this paragraph (c), when applying an applicable nondiscrimination rule for a plan year, the compensation for each plan year taken into account is limited to the applicable annual compensation limit in effect for that year, and an employee's compensation for that plan year in excess of the limit is disregarded. Thus, if the nondiscrimination provision is applied on the basis of compensation determined over a period of more than one year (for example, average annual compensation), the annual compensation limit in effect for each of the plan years that is taken into account in determining the average applies to the respective plan year's

compensation. In addition, if compensation for any plan year beginning prior to the OBRA '93 effective date is used when applying any nondiscrimination rule in a plan year beginning on or after the OBRA '93 effective date, then the annual compensation limit for that prior year is the annual compensation limit for the first plan year beginning on or after the OBRA '93 effective date (generally $150,000).

(3) ***Plan-by-plan limit.*** For purposes of this paragraph (c), the annual compensation limit applies separately to each plan (or group of plans treated as a single plan) of an employer for purposes of the applicable nondiscrimination requirement. For this purpose, the plans included in the testing group taken into account in determining whether the average benefit percentage test of § 1.410(b)-5 is satisfied are generally treated as a single plan.

(4) ***Application of limit to a plan year.*** The rules provided in paragraph (b)(3) of this section regarding the application of the limit to a plan year apply for purposes of this paragraph (c).

(5) ***Limits on multiple employer and multiemployer plans.*** The rule provided in paragraph (b)(4) of this section regarding the application of the limit to multiple employer and multiemployer plans applies for purposes of this paragraph (c).

(d) ***Effective date*** —

(1) ***Statutory effective date*** —

(i) ***General rule.*** Except as otherwise provided in this paragraph (d), section 401(a)(17) applies to a plan as of the first plan year beginning on or after January 1, 1989. For purposes of this section, statutory effective date generally means the first day of the first plan year that section 401(a)(17) is applicable to a plan. In the case of governmental plans, statutory effective date means the first day of the first plan year for which the plan is not deemed to satisfy section 401(a)(17) by reason of paragraph (d)(4) of this section.

(ii) ***Exception for collectively bargained plans.*** In the case of a plan maintained pursuant to one or more collective bargaining agreements between employee representatives and one or more employers ratified before March 1, 1986, section 401(a)(17) applies to allocations and benefit accruals for plan years beginning on or after the earlier of—

(A) January 1, 1991; or

(B) The later of January 1, 1989, or the date on which the last of the collective bargaining agreements terminates (determined without regard to any extension or renegotiation of any agreement occurring after February 28, 1986). For purposes of this paragraph (d)(1)(ii), the rules of § 1.410(b)-10(a)(2) apply for purposes of determining whether a plan is maintained pursuant to one or more collective bargaining agreements, and any extension or renegotiation of a collective bargaining agreement, which extension or renegotiation is ratified after February 28, 1986, is to be disregarded in determining the date on which the agreement terminates.

(2) ***OBRA '93 effective date*** —

(i) ***In general.*** For purposes of this section, OBRA '93 effective date means the first day of the first plan year beginning on or after January 1, 1994, except as provided in this paragraph (d)(2).

(ii) ***Exception for collectively bargained plans*** —

(A) ***In general.*** In the case of a plan maintained pursuant to one or more collective bargaining agreements between employee representatives and 1 or more employers ratified before August 10, 1993, OBRA '93 effective date means the first day of the first plan year beginning on or after the earlier of—

(*1*) The latest of—

(*i*) January 1, 1994;

(*ii*) The date on which the last of such collective bargaining agreements terminates (without regard to any extension, amendment, or, modification of such agreements on or after August 10, 1993); or

(*iii*) In the case of a plan maintained pursuant to collective bargaining under the Railway Labor Act, the date of execution of an extension or replacement of the last of such collective bargaining agreements in effect on August 10, 1993; or

(*2*) January 1, 1997.

(B) ***Determination of whether plan is collectively bargained.*** For purposes of this paragraph (d)(2)(ii), the rules of § 1.410(b)-10(a)(2) apply for purposes of determining whether a plan is maintained pursuant to one or more collective bargaining agreements, except that August 10, 1993, is substituted for March 1, 1986, as the date before which the collective bargaining agreements must be ratified.

(3) ***Regulatory effective date.*** This § 1.401(a)(17)-1 applies to plan years beginning on or after the OBRA '93 effective date. However, in the case of a plan maintained by an organization that is exempt from income taxation under section 501(a), including plans subject to section 403(b)(12)(A)(i) (nonelective plans), this § 1.401(a)(17)-1 applies to plan years beginning on or after January 1, 1996. For plan years beginning before the effective date of these regulations and on or after the statutory effective date, a plan must be operated in accordance with a reasonable, good faith interpretation of section 401(a)(17), taking into account, if applicable, the OBRA '93 reduction to the annual compensation limit under section 401(a)(17).

(4) ***Special rules for governmental plans*** —

(i) ***Deemed satisfaction by governmental plans.*** In the case of governmental plans described in section 414(d), including plans subject to section 403(b)(12)(A)(i) (nonelective plans), section 401(a)(17) is considered satisfied for plan years beginning before the later of January 1, 1996, or 90 days after the opening of the first legislative session beginning on or after January 1, 1996, of the governing body with authority to amend the plan, if that body does not meet continuously. For purposes of this paragraph (d)(4), the term governing body with authority to amend the plan means the legislature, board, commission, council, or other governing body with authority to amend the plan.

(ii) ***Transition rule for governmental plans*** —

(A) ***In general.*** In the case of an eligible participant in a governmental plan (within the meaning of section 414(d)), the annual compensation limit under this section shall not apply to the extent that the application of the limitation would reduce the amount of compensation that is allowed to be taken into account under the plan below the amount that was allowed to be taken into account under the plan as in effect on July 1, 1993. Thus, for example, if a

plan as in effect on July 1, 1993, determined benefits without any reference to a limit on compensation, then the annual compensation limit in effect under this section will not apply to any eligible participant in any future year.

(B) ***Eligible participant.*** For purposes of this paragraph (d)(4)(ii), an eligible participant is an individual who first became a participant in the plan prior to the first day of the first plan year beginning after the earlier of—

(*1*) The last day of the plan year by which a plan amendment to reflect the amendments made by section 13212 of OBRA '93 is both adopted and effective; or

(*2*) December 31, 1995.

(C) ***Plan must be amended to incorporate limits.*** This paragraph (d)(4)(ii) shall not apply to any eligible participant in a plan unless the plan is amended so that the plan incorporates by reference the annual compensation limit under section 401(a)(17), effective with respect to noneligible participants for plan years beginning after December 31, 1995 (or earlier, if the plan amendment so provides).

(5) ***Benefits earned prior to effective date*** —

(i) ***In general.*** Allocations under a defined contribution plan or benefits accrued under a defined benefit plan for plan years beginning before the statutory effective date are not subject to the annual compensation limit. Allocations under a defined contribution plan or benefits accrued under a defined benefit plan for plan years beginning on or after the statutory effective date, but before the OBRA '93 effective date, are subject to the annual compensation limit under paragraph (a)(2) of this section. However, these allocations or accruals are not subject to the OBRA '93 reduction to the annual compensation limit described in paragraph (a)(3) of this section.

(ii) ***Allocation for a plan year.*** The allocations for a plan year include amounts described in § 1.401(a)(4)-2(c)(ii) or § 1.401(m)-1(f)(6) plus the earnings, expenses, gains, and losses attributable to those amounts.

(iii) ***Benefits accrued for years before the effective date.*** The benefits accrued for plan years prior to a specified date by any employee are the employee's benefits accrued under the plan, determined as if those benefits had been frozen (as defined in § 1.401(a)(4)-13(c)(3)(i)) as of the day immediately preceding such specified date. Thus, for example, benefits accrued for those plan years generally do not include any benefits accrued under an amendment increasing prior benefits that is adopted after the date on which the employee's benefits under the plan must be treated as frozen.

(e) ***Determination of post-effective-date accrued benefits*** —

(1) ***In general.*** The plan formula that is used to determine the amount of allocations or benefit accruals for plan years beginning on or after the dates described in paragraph (d)(1) or (2) must comply with section 401(a)(17) as in effect on such date. This paragraph (e) provides rules for applying section 401(a)(17) in the case of section 401(a)(17) employees who accrue additional benefits under a defined benefit plan in a plan year beginning on or after the relevant effective date. Paragraph (e)(2) of this section contains definitions used in applying these rules. Paragraphs (e)(3) and (e)(4) of this section explain the application of the fresh-start rules in § 1.401(a)(4)-13 to the determination of the accrued benefits of section 401(a)(17) employees.

(2) ***Definitions.*** For purposes of this paragraph (e), the following definitions apply:

(i) ***Section 401(a)(17) employee.*** An employee is a section 401(a)(17) employee as of a date, on or after the statutory effective date, if the employee's current accrued benefit as of that date is based on compensation for a year prior to the statutory effective date that exceeded the annual compensation limit for the first plan year beginning on or after the statutory effective date. In addition, an employee is a section 401(a)(17) employee as of a date, on or after the OBRA '93 effective date, if the employee's current accrued benefit as of that date is based on compensation for a year prior to the OBRA '93 effective date that exceeded the annual compensation limit for the first plan year beginning on or after the OBRA '93 effective date. For this purpose, a current accrued benefit is not treated as based on compensation that exceeded the relevant annual compensation limit, if a plan makes a fresh start using the formula with wear-away described in § 1.401(a)(4)-13(c)(4)(ii), and the employee's accrued benefit determined under § 1.401(a)(4)-13(c)(4)(ii)(B), taking into account the annual compensation limit, exceeds the employee's frozen accrued benefit (or, if applicable, the employee's adjusted accrued benefit) as of the fresh-start date.

(ii) ***Section 401(a)(17) fresh-start date.*** Section 401(a)(17) fresh-start date means a fresh-start date as defined in § 1.401(a)(4)-12 not earlier than the last day of the last plan year beginning before the statutory effective date, and not later than the last day of the last plan year beginning before the effective date of these regulations.

(iii) ***OBRA '93 fresh-start date.*** OBRA '93 fresh-start date means a fresh-start date as defined in § 1.401(a)(4)-12 not earlier than the last day of the last plan year beginning before the OBRA '93 effective date, and not later than the last day of the last plan year beginning before the effective date of these regulations.

(iv) ***Section 401(a)(17) frozen accrued benefit.*** Section 401(a)(17) frozen accrued benefit means the accrued benefit for any section 401(a)(17) employee frozen (as defined in § 1.401(a)(4)-13(c)(3)(i)) as of the last day of the last plan year beginning before the statutory effective date.

(v) ***OBRA '93 frozen accrued benefit.*** OBRA '93 frozen accrued benefit means the accrued benefit for any section 401(a)(17) employee frozen (as defined in § 1.401(a)(4)-13(c)(3)(i)) as of the OBRA '93 fresh-start date.

(3) ***Application of fresh-start rules*** —

(i) ***General rule.*** In order to satisfy section 401(a)(17), a defined benefit plan must determine the accrued benefit of each section 401(a)(17) employee by applying the fresh-start rules in § 1.401(a)(4)-13(c). The fresh-start rules must be applied using a section 401(a)(17) fresh-start date and using the plan benefit formula, after amendment to comply with section 401(a)(17) and this section, as the formula applicable to benefit accruals in the current plan year. In addition, the fresh-start rules must be applied to determine the accrued benefit of each section 401(a)(17) employee using an OBRA '93 fresh-start date and using the plan benefit formula, after amendment to comply with the reduction in the section 401(a)(17) annual compensation limit described in paragraph (a)(3) of this section, as the formula applicable to benefit accruals in the current plan year.

(ii) ***Consistency rules in § 1.401(a)(4)-13(c) and (d)*** —

(A) ***General rule.*** In applying the fresh-start rules of § 1.401(a)(4)-13(c) and (d), the group of section 401(a)(17) employees is a fresh-start group. See § 1.401(a)(4)-13(c)(5)(ii)(A). Thus, the consistency rules of those sections govern, unless otherwise provided. For example, if the plan is using a fresh-start date applicable to all employees and is not adjusting frozen accrued benefits under § 1.401(a)(4)-13(d) for employees who are not section 401(a)(17) employees, then the frozen accrued benefits for section 401(a)(17) employees may not be adjusted under § 1.401(a)(4)-13(d) or this paragraph (e).

(B) ***Determination of adjusted accrued benefit.*** If the fresh-start rules of § 1.401(a)(4)-13(c) and (d) are applied to determine the benefits of all employees after a fresh-start date, the plan will not fail to satisfy the consistency requirement of § 1.401(a)(4)-13(c)(5)(i) merely because the plan makes the adjustment described in § 1.401(a)(4)-13(d) to the frozen accrued benefits of employees who are not section 401(a)(17) employees, but does not make the adjustment to the frozen accrued benefits of section 401(a)(17) employees. In addition, the plan does not fail to satisfy the consistency requirement of § 1.401(a)(4)-13(c)(5)(i) merely because the plan makes the adjustment described in § 1.401(a)(4)-13(d) for section 401(a)(17) employees on the basis of the compensation formula that was used to determine the frozen accrued benefit (as required under paragraph (e)(4)(iii) of this section) but makes the adjustment for employees who are not section 401(a)(17) employees on the basis of any other method provided in § 1.401(a)(4)-13(d)(8).

(4) ***Permitted adjustments to frozen accrued benefit of section 401(a)(17) employees —***

(i) ***General rule.*** Except as otherwise provided in paragraphs (e)(4)(ii) and (iii) of this section, the rules in § 1.401(a)(4)-13(c)(3) (permitting certain adjustments to frozen accrued benefits) apply to section 401(a)(17) frozen accrued benefits or OBRA '93 frozen accrued benefits.

(ii) ***Optional forms of benefit.*** After either the section 401(a)(17) fresh-start date or the OBRA '93 fresh-start date, a plan may be amended either to provide a new optional form of benefit or to make an optional form of benefit available with respect to the section 401(a)(17) frozen accrued benefit or the OBRA '93 frozen accrued benefit, provided that the optional form of benefit is not subsidized. Whether an optional form is subsidized may be determined using any reasonable actuarial assumptions.

(iii) ***Adjusting section 401(a)(17) accrued benefits —***

(A) ***In general.*** If the plan adjusts accrued benefits for employees under the rules of § 1.401(a)(4)-13(d) as of a fresh-start date, the adjusted accrued benefit (within the meaning of section § 1.401(a)(4)-13(d)) for each section 401(a)(17) employee must be determined after the fresh-start date by reference to the plan's compensation formula that was actually used to determine the frozen accrued benefit as of the fresh-start date. For this purpose, the plan's compensation formula incorporates the plan's underlying compensation definition and compensation averaging period. In making the adjustment, the denominator of the adjustment fraction described in § 1.401(a)(4)-13(d)(8)(i) is the employee's compensation as of the fresh-start date using the plan's compensation formula as of that date and, in the case of an OBRA '93 fresh-start date, reflecting the annual compensation limits that applied as of the fresh-start date. The numerator of the adjustment fraction is the employee's updated compensation (i.e., compensation for the current plan year within the meaning of § 1.401(a)(4)-13(d)(8)), determined after applying the annual compensation limits to each year's compensation that is used in the plan's

compensation formula as of the fresh-start date. Similarly, in applying the alternative rule in § 1.401(a)(4)-13(d)(8)(v), the updated compensation that is substituted must be determined after applying the annual compensation limits to each year's compensation that is used in the plan's compensation formula. Thus, no adjustment will be permitted unless the updated compensation (determined after applying the annual compensation limit) exceeds the compensation that was used to determine the employee's frozen accrued benefit.

(B) ***Multiple fresh starts.*** If a plan makes more than one fresh start with respect to a section 401(a)(17) employee, the employee's frozen accrued benefit as of the latest fresh-start date will either be determined by applying the current benefit formula to the employee's total years of service as of that fresh-start date or will consist of the sum of the employee's frozen accrued benefit (or adjusted accrued benefit (as defined in § 1.401(a)(4)-13(d)(8)(i))) as of the previous fresh-start date plus additional frozen accruals since the previous fresh start. If the frozen accrued benefit consists of such a sum, in making the adjustments described in paragraph (e)(4)(iii)(A) of this section, separate adjustments must be made to that previously frozen accrued benefit (or adjusted accrued benefit) and the additional frozen accruals to the extent that the frozen accrued benefit and the additional accruals have been determined using different compensation formulas or different compensation limits (i.e., the section 401(a)(17) limit before and after the reduction in limit described in paragraph (a)(3) of this section). In this case, if the plan is applying the adjustment fraction of § 1.401(a)(4)-13(d)(8)(i), the denominator of the separate adjustment fraction for adjusting each portion of the frozen accrued benefit must reflect the actual compensation formula, and, if applicable, compensation limit, originally used for determining that portion. For example, the frozen accrued benefit of a section 401(a)(17) employee as of the OBRA '93 fresh-start date may be based on the sum of the section 401(a)(17) frozen accrued benefit (determined without any annual compensation limit) plus benefit accruals in the years between the statutory effective date and the OBRA '93 effective date (based on compensation that was subject to the annual compensation limits for those years). In this example, in adjusting the section 401(a)(17) frozen accrued benefit, the denominator of the adjustment fraction does not reflect any annual compensation limit. Similarly, in adjusting the frozen accruals for years between the statutory effective date and the OBRA '93 effective date, the denominator of the adjustment fraction reflects the level of the annual compensation limit in effect for those years.

(5) ***Examples.*** The following examples illustrate the rules in this paragraph (e).

> *Example 1.* (a) Employer X maintains Plan Y, a calendar year defined benefit plan providing an annual benefit for each year of service equal to 2 percent of compensation averaged over an employee's high 3 consecutive calendar years' compensation. Section 401(a)(17) applies to Plan Y in 1989. As of the close of the last plan year beginning before January 1, 1989 (i.e., the 1988 plan year), Employee A, with 5 years of service, had accrued a benefit of $25,000 which equals 10 percent (2 percent multiplied by 5 years of service) of average compensation of $250,000. Employer X decides to comply with the provisions of this section for plan years before the effective date of this section. Employer X decides to make the amendment effective for plan years beginning on or after January 1, 1989, and uses December 31, 1988

as the section 401(a)(17) fresh-start date. Plan Y, as amended, provides that, in determining an employee's benefit, compensation taken into account is limited in accordance with the provisions of this section to the annual compensation limit under section 401(a)(17), and that, for section 401(a)(17) employees, the employee's accrued benefit is the greater of
(i) The employee's benefit under the plan's benefit formula (after the plan formula is amended to comply with section 401(a)(17)) as applied to the employee's total years of service; and

(ii) The employee's accrued benefit as of December 31, 1988, determined as though the employee terminated employment on that date without regard to any plan amendments after that date.

Employer X decides not to amend Plan Y to provide for the adjustments permitted under § 1.401(a)(4)-13(d) to the accrued benefit of section 401(a)(17) employees as of December 31, 1988.

(b) Under Plan Y, Employee A's accrued benefit at the end of 1989 is $25,000, which is the greater of Employee A's accrued benefit as of the last day of the 1988 plan year ($25,000), and $24,000, which is Employee A's benefit based on the plan's benefit formula applied to Employee A's total years of service ($200,000 multiplied by (2 percent multiplied by 6 years of service)). The formula of Plan Y applicable to section 401(a)(17) employees for calculating their accrued benefits for years after the section 401(a)(17) fresh-start date is the formula in § 1.401(a)-13(c)(4)(ii) (formula with wear-away). The fresh-start formula is applied using a benefit formula for the 1989 plan year that satisfies section 401(a)(17) and this section, and the December 31, 1988 fresh-start date used for the plan is a section 401(a)(17) fresh-start date within the meaning of paragraph (e)(2)(ii) of this section. Thus, Plan Y, as amended, satisfies paragraph (e)(3)(i) of this section for plan years commencing prior to the OBRA '93 effective date.

Example 2. Assume the same facts as in *Example 1,* except that the plan formula provides that effective January 1, 1989, for section 401(a)(17) employees, an employee's benefit will equal the sum of the employee's accrued benefit as of December 31, 1988 (determined as though the employee terminated employment on that date and without regard to any amendments after that date), and 2 percent of compensation averaged over an employee's high 3 consecutive years' compensation times years of service taking into account only years of service after December 31, 1988. Thus, under Plan Y's formula, Employee A's accrued benefit as of December 31, 1989 is $29,000, which is equal to the sum of $25,000 (Employee A's accrued benefit as of December 31, 1988) plus $4,000 ($200,000 multiplied by (2 percent multiplied by 1 year of service)). The formula of Plan Y applicable to section 401(a)(17) employees for calculating their accrued benefits for years after the section 401(a)(17) fresh-start date is the formula in § 1.401(a)-13(c)(4)(i) (formula without wear-away). The fresh-start formula is applied using a benefit formula for the 1989 plan year that satisfies section 401(a)(17) and this section, and the December 31, 1988 fresh-start date used for the plan is a section 401(a)(17)

fresh-start date within the meaning of paragraph (e)(2)(ii) of this section. Thus, Plan Y, as amended, satisfies paragraph (e)(3)(i) of this section for plan years commencing prior to the OBRA '93 effective date.

Example 3. (a) Assume the same facts as in *Example 1,* except that the plan formula provides that effective January 1, 1989, an employee's benefit equals the greater of the plan formulas in *Example 1* and *Example 2.* The formula of Plan Y applicable to section 401(a)(17) employees for calculating their accrued benefits for years after the section 401(a)(17) fresh-start date is the formula in § 1.401(a)-13(c)(4)(iii) (formula with extended wear-away). The fresh-start formula is applied using a benefit formula for the 1989 plan year that satisfies section 401(a)(17) and this section, and the December 31, 1988 fresh-start date used for the plan is a section 401(a)(17) fresh-start date within the meaning of paragraph (e)(2)(ii) of this section. Thus, Plan Y, as amended, satisfies paragraph (e)(3)(i) of this section for plan years commencing prior to the OBRA '93 effective date.
(b) Assume that for each of the years 1991-93 Employee A's annual compensation under the plan compensation formula, disregarding the amendment to comply with section 401(a)(17) is $300,000. The annual compensation limit is adjusted to $222,220, $228,860, and $235,840 for plan years beginning January 1, 1991, 1992, and 1993, respectively. Because Employer X has decided to amend Plan Y to comply with the provisions of this section effective for plan years beginning on or after January 1, 1989, and has used December 31, 1988 as the section 401(a)(17) fresh-start date, the compensation that may be taken into account for plan benefits in 1993 cannot exceed $228,973 (the average of $222,220, $228,860, and $235,840). Therefore, as of December 31, 1993, the benefit determined under the fresh-start formula with wear-away would be $45,795 ($228,973 multiplied by (2 percent multiplied by 10 years of service)). The benefit determined under the fresh-start formula without wear-away would be $47,897, which is equal to $25,000 (Employee A's section 401(a)(17) frozen accrued benefit) plus $22,897 ($228,973 multiplied by (2 percent multiplied by 5 years of service)). Because Employee A's accrued benefit is being determined using the fresh-start formula with extended wear-away, Employee A's accrued benefit as of December 31, 1993, is equal to $47,897, the greater of the two amounts.

Example 4. (a) Assume the same facts as in *Example 3,* except that Plan Y satisfies § 1.401(a)(4)-13(d)(3) through (d)(7) and that the amendment to Plan Y effective for plan years beginning after December 31, 1988, also provided for adjustments to the section 401(a)(17) frozen accrued benefit in accordance with § 1.401(a)(4)-13(d) using the fraction described in § 1.401(a)(4)-13(d)(8)(i).
(b) As of December 31, 1993, the numerator of Employee A's compensation fraction is $228,973 (the average of Employee A's annual compensation for 1991, 1992, and 1993, as limited by the respective annual limit for each of those years). The denominator of Employee A's compensation fraction determined in accordance with paragraph (e)(4)(iii) of this section is $250,000 (the average of Employee A's high 3 consecutive calendar year compensation as of December 31, 1988, determined without regard to section 401(a)(17)). Therefore, Employee A's compensation fraction is $228,973/$250,000. Because the compensation adjustment fraction is less than 1, Employee A's section 401(a)(17) frozen accrued benefit

is not adjusted. Therefore, Employee A's accrued benefit as of December 31, 1993, would still be $47,897, which is equal to $25,000 (Employee A's section 401(a)(17) frozen accrued benefit) plus $22,897 ($228,973 multiplied by (2 percent multiplied by 5 years of service).

Example 5. (a) Assume the same facts as in *Example 3,* except that as of January 1, 1994, Plan Y is amended to provide that benefits will be determined based on compensation of $150,000 (the limit in effect under section 401(a)(17) for plan years beginning on or after the OBRA '93 effective date) and that for section 401(a)(17) employees, each employee's accrued benefit will be determined under § 1.401(a)(4)-13(c)(4)(i) (formula without wear-away) using December 31, 1993 as the OBRA '93 fresh-start date.
(b) Assume that for each of the years 1996-98 Employee A's annual compensation under the plan compensation definition, disregarding the amendment to comply with section 401(a)(17), is $400,000. Assume that the annual compensation limit is first adjusted to $160,000 for plan years beginning on or after January 1, 1997, and is not adjusted for the plan year beginning on or after January 1, 1998. The compensation that may be taken into account for the 1998 plan year cannot exceed $156,667 (the average of $150,000 for 1996, $160,000 for 1997, and $160,000 for 1998).

(c) Therefore, at the end of December 31, 1998, Employee A's accrued benefit is $63,564, which is equal to $47,897 (Employee A's OBRA '93 frozen accrued benefit) plus $15,667 ($156,667 multiplied by (2 percent multiplied by 5 years of service)).

Example 6. (a) Assume the same facts as in *Example 5,* except that, for the fresh-start group (in this case the section 401(a)(17) employees), the amendments to Plan Y provide for adjustments to the section 401(a)(17) frozen accrued benefit and the OBRA '93 frozen accrued benefit in accordance with § 1.401(a)(4)-13(d) using the fraction described in § 1.401(a)(4)-13(d)(8)(i).
(b) Employee A's frozen accrued benefit as of December 31, 1993, is adjusted as of December 31, 1998, as follows:

(1) Employee A's frozen accrued benefit as of December 31, 1993, is the sum of Employee A's section 401(a)(17) frozen accrued benefit ($25,000) and Employee A's frozen accruals for the years 1989-93 ($22,897).

(2) The numerator of Employee A's adjustment fraction is $156,667 (the average of $150,000, $160,000, and $160,000). The denominator of Employee A's adjustment fraction with respect to Employee A's section 401(a)(17) frozen accrued benefit is $250,000, and the denominator of Employee A's adjustment fraction with respect to the rest of Employee A's frozen accrued benefit is $228,973 (the average of Employee A's annual compensation for 1991, 1992, and 1993, as limited by the respective annual limit for each of those years).

(3) Employee A's section 401(a)(17) frozen accrued benefit as adjusted through December 31, 1998, remains $25,000. The compensation adjustment fraction determined in accordance with paragraph (e)(4)(iii) of this section is less than one ($156,667 divided by $250,000).

(4) Employee A's frozen accruals for the years 1989-93, as adjusted through December 31, 1998, remain $22,897 because the adjustment fraction is less than one ($156,667 divided by $228,973).

(5) Employee A's adjusted accrued benefit as of December 31, 1998, equals $47,897 (the sum of the $25,000 and $22,897 amounts from paragraphs (b)(3) and (b)(4), respectively, of this *Example*).

(c) Employee A's section 401(a)(17) frozen accrued benefit will not be adjusted for compensation increases until the numerator of the fraction used to adjust that frozen accrued benefit exceeds the denominator of $250,000 used in determining those accruals.

Similarly, the portion of Employee A's OBRA '93 frozen accrued benefit attributable to the frozen accruals for the years 1989-1993 will not be adjusted for compensation increases until the numerator of the fraction used to adjust those frozen accruals exceeds the denominator of $228,973 used in determining those accruals.

[T.D. 8547, 59 FR 32905, June 27, 1994, as amended by T.D. 9169, 69 FR 78153, Dec. 29, 2004]

§ 1.401(a)(26)-0 Table of contents.

This section contains a listing of the headings of §§ 1.401 (a)(26)-1 through 1.401(a)(26)-9.

§ 1.401(a)(26)-1 Minimum participation requirements

(a) General rule.

(b) Exceptions to section 401(a)(26).

(1) Plans that do not benefit any highly compensated employees.

(2) Multiemployer plans.

(i) In general.

(ii) Multiemployer plans covering noncollectively bargained employees.

(A) In general.

(B) Special testing rule.

(3) Certain underfunded defined benefit plans.

(i) In general.

(ii) Eligible plans.

(iii) Actuarial certification.

(iv) Cessation of all benefit accruals.

(4) Section 401(k) plan maintained by employers that include certain governmental or tax-exempt entities.

(5) Certain acquisitions or dispositions.

(i) General rule.

(ii) Special rule for transactions that occur in the plan year prior to the first plan year to which section 401(a)(26) applies.

(iii) Definition of “acquisition” or “disposition”.

(c) Additional rules.

§ 1.401(a)(26)-2 Minimum participation rule

(a) General rule.

(b) Frozen plans.

(c) Plan.

(d) Disaggregation of certain plans.

(1) Mandatory disaggregation.

(i) ESOPs and non-ESOPs.

(ii) Plans maintained by more than one employer.

(A) Multiple employer plans.

(B) Multiemployer plans.

(iii) Defined benefit plans with other arrangements.

(A) In general.

(B) Examples.

(iv) Plans benefiting employees of qualified separate lines of business.

(2) Permissive disaggregation.

(i) Plans benefiting collectively bargained employees.

(ii) Plans benefiting otherwise excludable employees.

§ 1.401(a)(26)-3 Rules applicable to a defined benefit plan's prior benefit structure

(a) General rule.

(b) Prior benefit structure.

(c) Testing a prior benefit structure.

(1) General rule.

(2) Meaningful benefits.

(d) Multiemployer plan rule.

§ 1.401(a)(26)-4 Testing former employees

(a) Scope.

(b) Minimum participation rule for former employees.

(c) Special rule.

(d) Excludable former employees.

(1) General rule.

(2) Exception.

§ 1.401(a)(26)-5 Employees who benefit under a plan

(a) Employees benefiting under a plan.

(1) In general.

(2) Sequential or concurrent benefit offset arrangements.

(i) In general.

(ii) Offset by sequential or grandfathered benefits.

(iii) Concurrent benefit offset arrangements.

(A) General rule.

(B) Special rules for certain section 414(n) employer-recipients.

(b) Former employees benefiting under a plan.

§ 1.401(a)(26)-6 Excludable employees

(a) In general.

(b) Excludable employees.

(1) Minimum age and service exclusions.

(i) In general.

(ii) Plans benefiting otherwise excludable employees.

(iii) Examples.

(2) Certain air pilots.

(3) Certain nonresident aliens.

(i) In general.

(ii) Special treaty rule.

(4) Employees covered pursuant to a collective bargaining agreement.

(5) Employees not covered pursuant to a collective bargaining agreement.

(6) Examples.

(7) Certain terminating employees.

(i) In general.

(ii) Hours of service.

(8) Employees of qualified separate lines of business.

(c) Former employees.

(1) In general.

(2) Employees terminated before a specified date.

(3) Previously excludable employees.

(4) Vested accrued benefits eligible for mandatory distribution.

(d) Certain police or firefighters.

§ 1.401(a)(26)-7 Testing methods

(a) Testing on each day of the plan year.

(b) Simplified testing method.

(c) Retroactive correction.

§ 1.401(a)(26)-8 Definitions

Collective bargaining agreement.

Collectively bargained employee.

Covered by a collective bargaining agreement.

Defined benefit plan.

Defined contribution plan.

Employee.

Employer.

ESOP.

Former employee.

Highly compensated employee.

Highly compensated former employee.

Multiemployer plan.

Noncollectively bargained employee.

Nonhighly compensated employee.

Nonhighly compensated former employee.

Plan.

Plan year.

Professional employee.

Section 401(k) plan.

Section 401(m) plan.

§ 1.401(a)(26)-9 Effective dates and transition rules

(a) In general.

(b) Transition rules.

(1) Governmental plans and certain section 403(b) annuities.

(2) Early retirement “window-period” benefits.

(3) Employees who do not benefit because of a minimum-period-of-service requirement or a last-day requirement.

(4) Certain plan terminations.

(i) In general.

(ii) Exception.

(5) ESOPs and non-ESOPs.

(c) Waiver of excise tax on reversions.

(1) In general.

(2) Termination date.

(3) Failure to satisfy section 401(a)(26).

(d) Special rule for collective bargaining agreements.

[T.D. 8375, 56 FR 63413, Dec. 4, 1991]

§ 1.401(a)(26)-1 Minimum participation requirements.

(a) ***General rule.*** A plan is a qualified plan for a plan year only if the plan satisfies section 401(a)(26) for the plan year. A plan that satisfies any of the exceptions described in paragraph (b) of this section passes section 401(a)(26) automatically for the plan year. A plan that does not satisfy one of the exceptions in paragraph (b) of this section must satisfy § 1.401(a)(26)-2(a). In addition, a defined benefit plan must satisfy § 1.401(a)(26)-3 with respect to its prior benefit structure. Finally, a defined benefit plan that benefits former employees (for example, a defined benefit plan that is amended to provide an ad hoc cost-of-living adjustment to former employees) must separately satisfy § 1.401(a)(26)-4 with respect to its former employees.

(b) ***Exceptions to section 401(a)(26)*** —

(1) ***Plans that do not benefit any highly compensated employees.*** A plan, other than a frozen defined benefit plan as defined in § 1.401(a)(26)-2(b), satisfies section 401(a)(26) for a plan year if the plan is not a top-heavy plan under section 416 and the plan meets the following requirements:

(i) The plan benefits no highly compensated employee or highly compensated former employee of the employer; and

(ii) The plan is not aggregated with any other plan of the employer to enable the other plan to satisfy section 401(a)(4) or 410(b). The plan may, however, be aggregated with the employer's other plans for purposes of the average benefit percentage test in section 410(b)(2)(A)(ii).

(2) ***Multiemployer plans*** —

(i) ***In genera1.*** The portion of a multiemployer plan that benefits only employees included in a unit of employees covered by a collective bargaining agreement may be treated as a separate plan that satisfies section 401(a)(26) for a plan year.

(ii) ***Multiemployer plans covering noncollectively bargained employees*** —

(A) ***In general.*** The rule provided in paragraph (b)(2)(i) does not apply to the portion of a multiemployer plan that benefits employees who are not included in any collective bargaining unit covered by a collective bargaining agreement. Thus, the portion of the plan benefiting these employees must separately satisfy section 401(a)(26).

(B) ***Special testing rule.*** A multiemployer plan that benefits employees who are not included in any collective bargaining unit covered by a collective bargaining agreement satisfies section 401(a)(26) if the plan benefits 50 employees. For purposes of this special testing rule, employees who are included in a unit of employees covered by a collective bargaining agreement may be included in determining whether the plan benefits 50 employees.

(3) ***Certain underfunded defined benefit plans*** —

(i) ***In general.*** A defined benefit plan is deemed to satisfy section 401(a)(26) for a plan year if all of the conditions of paragraphs (b)(3)(ii) through (b)(3)(iv) of this section are satisfied with respect to the plan for the plan year.

(ii) ***Eligible plans.*** This condition is satisfied for a plan year only if the plan is subject to title IV of the Employee Retirement Income Security Act of 1974 (ERISA) for the plan year or, if the plan is not a title IV plan under ERISA, it is not a top-heavy plan within the meaning of section 416. This condition does not apply for plan years beginning before January 1, 1992.

(iii) ***Actuarial certification.*** This condition is satisfied for a plan year only if the employer's timely filed actuarial report, as required by section 6059, evidences that the plan does not have sufficient assets to satisfy all liabilities under the plan (determined in accordance with section 401(a)(2)).

(iv) ***Cessation of all benefit accruals.*** This condition is satisfied for a plan year only if, for the plan year, no employee or former employee is benefiting within the meaning of § 1.401(a)(26)-5(a) or (b). For this purpose, an employee is not treated as benefiting solely by reason of being a non-key employee receiving minimum benefit accruals required by section 416.

(4) ***Section 401(k) plan maintained by employers that include certain governmental or tax-exempt entities.*** Section 401(k)(4)(B) prevents certain State and local governments and tax-exempt organizations from maintaining a qualified cash or deferred arrangement. A plan (or portion of a plan) that is either a section 401(k) plan or a section 401(m) plan that is provided under the same general arrangement as a section 401(k) plan may be treated as a separate plan that satisfies section 401(a)(26) for a plan year if the following requirements are satisfied:

(i) The section 401(k) plan is maintained by an employer who has employees precluded from being eligible employees under the arrangement by reason of section 401(k)(4)(B), and

(ii) More than 95 percent of the employees of the employer who are not precluded from being eligible employees under a section 401(k) plan by reason of section 401(k)(4)(B) benefit under the section 401(k) plan.

(5) ***Certain acquisitions or dispositions*** —

(i) ***General rule.*** Rules similar to the rules prescribed under section 410(b)(6)(C) apply under section 401(a)(26). Pursuant to these rules, the requirements of section 401(a)(26) are treated as satisfied for certain plans of an employer involved in an acquisition or disposition (transaction) for the transition period. The transition period begins on the date of the transaction and ends on the last day of the first plan year beginning after the date of the transaction.

(ii) ***Special rule for transactions that occur in the plan year prior to the first plan year to which section 401(a)(26) applies.*** Where there has been a transaction described in section 410(b)(6)(C) in the plan year prior to the first plan year in which section 401(a)(26) applies to a plan, the plan satisfies section 401(a)(26) for the transition period if the plan benefited 50 employees or 40 percent of the employees of the employer immediately prior to the transaction.

(iii) ***Definition of "acquisition" and "disposition."*** For purposes of this paragraph (b)(5), the terms "acquisition" and "disposition" refer to an asset or stock acquisition, merger, or other similar transaction involving a change in employer of the employees of a trade or business.

(c) ***Additional rules.*** The Commissioner may, in revenue rulings, notices, and other guidance of general applicability, provide any additional rules that may be necessary or appropriate in applying the minimum participation requirements of section 401(a)(26).

[T.D. 8375, 56 FR 63413, Dec. 4, 1991, as amended by T.D. 8487, 58 FR 46838, Sept. 3, 1993]

§ 1.401(a)(26)-2 Minimum participation rule.

(a) ***General rule.*** A plan satisfies this paragraph (a) for a plan year only if the plan benefits at least the lesser of—

(1) 50 employees of the employer, or

(2) 40 percent of the employees of the employer.

(b) ***Frozen plans.*** A plan under which no employee or former employee benefits (within the meaning of § 1.401(a)(26)-5 (a) or (b)), is a frozen plan for purposes of this section and satisfies paragraph (a) of this section automatically. Thus, a frozen defined contribution plan satisfies section 401(a)(26) automatically and a frozen defined benefit plan satisfies section 401(a)(26) for a plan year by satisfying the prior benefit structure requirements in § 1.401(a)(26)-3. For purposes of the rule in this paragraph (b), a defined benefit plan that provides only the minimum benefits for non-key employees required by section 416 is a frozen defined benefit plan.

(c) ***Plan.*** "Plan" means a plan within the meaning of § 1.401(b)-7 (a) and (b), after the application of the mandatory disaggregation rules of paragraph (d)(1) of this section and, if applicable, the permissive disaggregation rules of paragraph (d)(2) of this section.

(d) ***Disaggregation of certain plans*** —

(1) ***Mandatory disaggregation*** —

(i) ***ESOPs and non-ESOPs.*** The portion of a plan that is an ESOP and the portion of the plan that is not an ESOP are treated as separate plans for purposes of section 401(a)(26), except as otherwise permitted under § 54.4975-11(e) of this Chapter.

(ii) ***Plans maintained by more than one employer*** —

(A) ***Multiple employer plans.*** If a plan benefits employees of more than one employer and those employees are not included in a unit of employees covered by one or more collective bargaining agreements, the plan is a multiple employer plan. A multiple employer plan is treated as separate plans, each of which is maintained by a separate employer and must separately satisfy section 401(a)(26) by reference only to that employer's employees.

(B) ***Multiemployer plans.*** The portion of a multiemployer plan that benefits employees who are included in one or more units of employees covered by one or more collective bargaining agreements and the portion of that plan that benefits employees who are not included in a unit of employees covered pursuant to any collective bargaining agreement are treated as separate plans. The portion of a multiemployer plan that benefits employees who are not included in a unit of employees covered by a collective bargaining agreement is a multiple employer plan as described in paragraph (d)(1)(ii)(A) of this section. This paragraph (d)(1)(ii)(B) does not apply to the extent that the special testing rule in § 1.401(a)(26)-1(b)(2)(ii) applies. Also, this paragraph (d)(1)(B)(2) does not apply for purposes of prior benefit structure testing under § 1.401 (a)(26)-3.

(iii) ***Defined benefit plans with other arrangements*** —

(A) ***In general.*** A defined benefit plan is treated as comprising separate plans if, under the facts and circumstances, there is an arrangement (either under or outside the plan) that has the effect of providing any employee with a greater interest in a portion of the assets

of a plan in a way that has the effect of creating separate accounts. Separate plans are not created, however, merely because a partnership agreement provides for allocation among partners, in proportion to their partnership interests, of either the cost of funding the plan or surplus assets upon plan termination.

(B) ***Examples.*** The following examples illustrate certain situations in which other arrangements relating to a defined benefit plan are or are not treated as creating separate plans:

Example 1. Employer A maintains a defined benefit plan under which each highly compensated employee can direct the investment of the portion of the plan's assets that represents the accumulated contributions with respect to that employee's plan benefits. In addition, by agreement outside the plan, if the product of the employee's investment direction exceeds the value needed to fund that employee's benefits, Employer A agrees to make a special payment to the participant. In this case, each separate portion of the pool of assets over which an employee has investment authority is a separate plan for the employee.

Example 2. Employer B is a partnership that maintains a defined benefit plan. The partnership agreement provides that, upon termination of the plan, a special allocation of any excess plan assets after reversion is made to the partnership on the basis of partnership share. This arrangement does not create separate plans with respect to the partners.

(iv) ***Plans benefiting employees of qualified separate lines of business.*** If an employer is treated as operating qualified separate lines of business for purposes of section 401(a)(26) in accordance with § 1.414(r)-1(b), the portion of a plan that benefits employees of one qualified separate line of business is treated as a separate plan from the portions of the same plan that benefit employees of the other qualified separate lines of business of the employer. See §§ 1.414(r)-1(c)(3) and 1.414(r)-9 (separate application of section 401(a)(26) to the employees of a qualified separate line of business). The rule in this paragraph (d)(6) does not apply to a plan that is tested under the special rule for employer-wide plans in § 1.414(r)-1(c)(3)(ii) for a plan year.

(2) ***Permissive disaggregation*** —

(i) ***Plans benefiting collectively bargained employees.*** For purposes of section 401(a)(26), an employer may treat the portion of a plan that benefits employees who are included in a unit of employees covered by a collective bargaining agreement as a plan separate from the portion of a plan that benefits employees who are not included in such a collective bargaining unit. This paragraph (d)(2)(i) applies separately to each collective bargaining agreement. Thus, for example, the portion of a plan that benefits employees included in a unit of employees covered by one collective bargaining agreement may be treated as a plan that is separate from the portion of the plan that benefits employees included in a unit of employees covered by another collective bargaining agreement.

(ii) ***Plans benefiting otherwise excludable employees.*** If an employer applies section 401(a)(26) separately to the portion of a plan that benefits only employees who satisfy age and service conditions under the plan that are lower than the greatest minimum age and service conditions permissible under section 410(a), the plan is treated as comprising separate plans, one benefiting the employees who have not satisfied the lower minimum age and service but not

the greatest minimum age and service conditions permitted under section 410(a) and one benefiting employees who have satisfied the greatest minimum age and service conditions permitted under section 410(a). See § 1.401(a)(26)-6(b)(1)(ii) for rules concerning testing of otherwise excludable employees.

[T.D. 8375, 56 FR 63414, Dec. 4, 1991]

§ 1.401(a)(26)-3 Rules applicable to a defined benefit plan's prior benefit structure.

(a) ***General rule.*** A defined benefit plan that does not meet one of the exceptions in § 1.401(a)(26)-1(b) must satisfy paragraph (c) of this section with respect to its prior benefit structure. Defined contribution plans are not subject to this section.

(b) ***Prior benefit structure.*** Each defined benefit plan has only one prior benefit structure, and all accrued benefits under the plan as of the beginning of a plan year (including benefits rolled over or transferred to the plan) are included in the prior benefit structure for the year.

(c) ***Testing a prior benefit structure*** —

(1) ***General rule.*** A plan's prior benefit structure satisfies this paragraph if the plan provides meaningful benefits to a group of employees that includes the lesser of 50 employees or 40 percent of the employer's employees. Thus, a plan satisfies the requirements of this paragraph (c) if at least 50 employees or 40 percent of the employer's employees currently accrue meaningful benefits under the plan. Alternatively, a plan satisfies this paragraph if at least 50 employees and former employees or 40 percent of the employer's employees and former employees have meaningful accrued benefits under the plan.

(2) ***Meaningful benefits.*** Whether a plan is providing meaningful benefits, or whether individuals have meaningful accrued benefits under a plan, is determined on the basis of all the facts and circumstances. The relevant factors in making this determination include, but are not limited to, the following: the level of current benefit accruals; the comparative rate of accruals under the current benefit formula compared to prior rates of accrual under the plan; the projected accrued benefits under the current benefit formula compared to accrued benefits as of the close of the immediately preceding plan year; the length of time the current benefit formula has been in effect; the number of employees with accrued benefits under the plan; and the length of time the plan has been in effect. A rule for determining whether an offset plan provides meaningful benefits is provided in § 1.401(a)(26)-5(a)(2). A plan does not satisfy this paragraph (c) if it exists primarily to preserve accrued benefits for a small group of employees and thereby functions more as an individual plan for the small group of employees or for the employer.

(d) ***Multiemployer plan rule.*** A multiemployer plan is deemed to satisfy the prior benefit structure rule in paragraph (c)(1) of this section for a plan year if the multiemployer plan provides meaningful benefits to at least 50 employees for a plan year, or 50 employees have meaningful accrued benefits under the plan. For purposes of this paragraph, all employees benefiting under the multiemployer plan may be considered, whether or not these employees are included in a unit of employees covered pursuant to any collective bargaining agreement.

[T.D. 8375, 56 FR 63415, Dec. 4, 1991]

§ 1.401(a)(26)-4 Testing former employees.

(a) ***Scope.*** This section applies to any defined benefit plan that benefits former employees in a plan year within the meaning of § 1.401(a)(26)-5(b) and does not meet one of the exceptions in § 1.401(a)(26)-1(b).

(b) ***Minimum participation rule for former employees.*** Except as set forth in paragraph (c) of this section, a plan that is subject to this section must benefit at least the lesser of:

(1) 50 former employees of the employer, or

(2) 40 percent of the former employees of the employer.

(c) ***Special rule.*** A plan satisfies the minimum participation rule in paragraph (b) of this section if the plan benefits at least five former employees, and if either:

(1) More than 95 percent of all former employees with vested accrued benefits under the plan benefit under the plan for the plan year, or

(2) At least 60 percent of the former employees who benefit under the plan for the plan year are nonhighly compensated former employees.

(d) ***Excludable former employees*** —

(1) ***General rule.*** Whether a former employee is an excludable former employee for purposes of this section is determined under § 1.401(a)(26)-6(c).

(2) ***Exception.*** Solely for purposes of paragraph (c) of this section, the rule in § 1.401(a)(26)-6(c)(4) (regarding vested accrued benefits eligible for mandatory distribution) does not apply to any former employee having a vested accrued benefit. Thus, a former employee who has a vested accrued benefit is not an excludable former employee merely because that vested accrued benefit does not exceed the cash-out limit in effect under § 1.411(a)-11(c)(3)(ii).

[T.D. 8375, 56 FR 63416, Dec. 4, 1991, as amended by T.D. 8794, 63 FR 70338, Dec. 21, 1998; T.D. 8891, 65 FR 44682, July 19, 2000]

§ 1.401(a)(26)-5 Employees who benefit under a plan.

(a) ***Employees benefiting under a plan*** —

(1) ***In general.*** Except as provided in paragraph (a)(2) of this section, an employee is treated as benefiting under a plan for a plan year if and only if, for that plan year, the employee would be treated as benefiting under the provisions of § 1.410(b)-3(a), without regard to § 1.410(b)-3(a)(iv).

(2) ***Sequential or concurrent benefit offset arrangements*** —

(i) ***In general.*** An employee is treated as accruing a benefit under a plan that includes an offset or reduction of benefits that satisfies either paragraph (a)(2)(ii) or (a)(2)(iii) of this section if either the employee accrues a benefit under the plan for the year, or the employee would have accrued a benefit if the offset or reduction portion of the benefit formula were disregarded. In addition, an employee is treated as accruing a meaningful benefit for purposes of prior benefit structure testing under § 1.401(a)(26)-3 if the employee would have accrued a meaningful benefit if the offset or reduction portion of the benefit formula were disregarded.

(ii) ***Offset by sequential or grandfathered benefits.*** An offset or reduction of benefits under a defined benefit plan satisfies this paragraph (a)(2) if the benefit formula provides that an employee will not accrue additional benefits under the current portion of the benefit formula until the

employee has accrued, under such portion, a benefit in excess of such employee's benefit under one or more formulas in effect for prior years that are based wholly on prior years of service. The prior benefit may have accrued under the same or a separate plan, may be provided under the same or a separate plan and may relate to service with the same or previous employers. Benefits will not fail to be treated as based wholly on prior years if they are based, directly or indirectly, on compensation earned after such prior years (including compensation earned in the current year), if they are adjusted to reflect increases in the section 415 limitations, or if they are increased to provide an ad hoc cost of living adjustment designed to adjust, in whole or in part, for inflation. Furthermore, benefits do not fail to be treated as based wholly on prior years merely because the benefits (e.g., early retirement benefits) are subject to an age or years-of-service condition and, in applying the condition or conditions, the current and prior years are taken into account.

(iii) ***Concurrent benefit offset arrangements*** —

(A) ***General rule.*** An offset or reduction of benefits under a defined benefit plan satisfies the requirements of this paragraph (a)(2)(iii) if the benefit formula provides a benefit that is offset or reduced by contributions or benefits under another plan that is maintained by the same employer and the following additional requirements are met:

(*1*) The contributions or benefits under a plan that are used to offset or reduce the benefits under the positive portion of the fomu1a being tested accrued under such other plan;

(*2*) The employees who benefit under the formula being tested also benefit under the other plan on a reasonable and uniform basis; and

(*3*) The contributions or benefits under the plan that are used to offset or reduce the benefits under the formula being tested are not used to offset or reduce that employee's benefits under any other plan or any other formula.

(B) ***Special rules for certain section 414(n) employer-recipients.*** The same employer requirement in the concurrent benefit offset rule in paragraph (a)(2)(iii)(A) of this section is waived for certain section 414(n) employer-recipients. Under this exception, an employer-recipient (within the meaning of sections 414 (n) and (o)) may treat contributions or benefits under a plan maintained by a leasing organization as contributions or benefits accrued under the recipient organization plan provided the following requirements are met: the employer-recipient maintains a plan covering leased employees (which employees are treated as employees of the employer-recipient within the meaning of sections 414(n)(2) and 414(o)(2)); the leased employees are also covered under a plan maintained by the leasing organization; and contributions or benefits under the plan maintained by the employer-recipient are offset or reduced by the contributions or benefits under the leasing organization plan that are attributable to service with the recipient organization. Also, for purposes of the benefiting condition requirement in paragraph (a)(2)(iii)(A)(*2*) of this section, the employees of the employer-recipient who are not leased from the leasing organization are not required to benefit under the plan of the leasing organization.

(b) ***Former employees benefiting under a plan.*** A former employee is treated as benefiting for a plan year if and only if the former employee would be treated as benetiting under the rules in § 1.410(b)-3(b).

[T.D. 8375, 56 FR 63416, Dec. 4, 1991]

§ 1.401(a)(26)-6 Excludable employees.

(a) ***In general.*** For purposes of applying section 401(a)(26) with respect to either employees, former employees, or both employees and former employees, as applicable, all employees other than excludable employees described in paragraph (b) of this section, all former employees other than excludable former employees described in paragraph (c) of this section, or both, as the case may be, must be taken into account. Except as specifically provided otherwise in this section, the rules of this section are applied by reference only to the particular plan and must be applied on a uniform and consistent basis.

(b) ***Excludable employees.*** An employee is an excludable employee if the employee is covered by one or more of the following exclusions:

(1) ***Minimum age and service exclusions*** —

(i) ***In general.*** If a plan applies minimum age and service eligibility conditions permissible under section 410(a)(1) and excludes all employees who do not meet those conditions from benefiting under the plan, tbn all employees who fail to satisfy those conditions may be treated as excludable employees with respect to that plan. An employee is treated as meeting the age and service requirements on the date any employee with the same age and service would be eligible to commence participation in the plan, as provided in section 410(b)(4)(C).

(ii) ***Plans benefiting otherwise excludable employees.*** An employer may treat a plan benefiting otherwise excludable employees as two separate plans, one for the otherwise excludable employees and one for the other employees benefiting under the plan. The effect of this rule is that employees who would be excludable under paragraph (b)(1) of this section (applied without regard to section 410(a)(1)(B)), but for the fact that the plan does not apply the greatest permissible minimum age and service conditions, may be treated as excludable employees with respect to the plan. This treatment is only available if each of the following conditions is satisfied:

(A) The plan under which the otherwise excludable employees benefit also benefits employees who are not otherwise excludable.

(B) The plan under which the otherwise excludable employees benefit satisfies section 401(a)(26), both by reference only to otherwise excludable employees and by reference only to employees who are not otherwise excludable.

(C) The contributions or benefits provided to the otherwise excludable employees (expressed as percentages of compensation) are not greater than the contributions or benefits provided to the employees who are not otherwise excludable under the plan.

(D) No highly compensated employee is included in the group of otherwise excludable employees for more than one plan year.

(iii) ***Examples.*** The following examples illustrate some of the minimum-age-and-service exclusion requirements:

Example 1. Employer X maintains a defined contribution plan, Plan X, under which employees who have not completed 1 year of service are not eligible to participate. Employer X has six employees. Two of the employees participate in Plan X. The other four employees have not completed 1 year of service and are therefore not eligible to participate in Plan X. The

four employees who have not completed 1 year of service are excludable employees and may be disregarded for purposes of applying the minimum participation test. Therefore, Plan X satisfies section 401(a)(26) because both of the two employees who must be considered are participants in Plan X.

Example 2. Employer Y has 100 employees and maintains two plans, Plan 1 and Plan 2. Plan 1 provides that employees who have not completed 1 year of service are not eligible to participate. Plan 2 has no minimum age or service requirement. Twenty of Y's employees do not meet the minimum service requirement under Plan 1. Each plan satisfies the ratio test under section 410(b)(1)(B). In testing Plan 1 to determine whether it satisfies section 401(a)(26), the 20 employees not meeting the minimum age and service requirement under Plan 1 are treated as excludable employees. In testing Plan 2 to determine whether it satisfies section 401(a)(26), no employees are treated as excludable employees because Plan 2 does not have a minimum age or service requirement.

(2) ***Certain air pilots.*** An employee who is excluded from consideration under section 410(b)(3)(B) (relating to certain air pilots) may be treated as an excludable employee.

(3) ***Certain nonresident aliens*** —

(i) ***In general.*** An employee who is excluded from consideration under section 410(b)(3)(C) (relating to certain nonresident aliens) may be treated as an excludable employee.

(ii) ***Special treaty rule.*** In addition, an employee who is a nonresident alien (within the meaning of section 7701(b)(1)(B)) and who does receive earned income (within the meaning of section 911(d)(2)) from the employer that constitutes income from sources within the United States (within the meaning of section 861(a)(3)) is permitted to be excluded, if all of the employee's earned income from the employer from sources within the United States is exempt from United States income tax under an applicable income tax convention. This paragraph (b)(3)(ii) applies only if all employees described in the preceding sentence are so excluded.

(4) ***Employees covered pursuant to a collective bargaining agreement.*** When testing a plan benefiting only noncollectively bargained employees, an employee who is excluded from consideration under section 410(b)(3)(A) (exclusion for employees included in a unit of employees covered by a collective bargaining agreement) may be treated as an excludable employee. This rule may be applied separately to each collective bargaining agreement. See § 1.401(a)(26)-8 for the definitions of the terms "collective bargaining agreement", "collectively bargained employee," and "covered pursuant to a collective bargaining agreement".

(5) ***Employees not covered pursuant to a collective bargaining agreement.*** When testing a plan that benefits only employees who are included in a group of employees who are covered pursuant to a collective bargaining agreement, an employee who is not included in the group of employees who are covered by the collective bargaining agreement may be treated as an excludable employee.

(6) ***Examples.*** The following examples illustrate the excludable employee rules that relate to employees covered pursuant to collective bargaining agreements. For purposes of these examples assume that no other exclusion rules are applicable.

Example 1. Employer W has 70 collectively bargained employees and 30 non-collectively bargained employees. Employer W maintains Plan W, which benefits only the 30 non-collectively bargained employees. The 70 collectively bargained employees may be treated as excludable employees and thus may be disregarded in applying section 401(a)(26) to Plan W.

Example 2. Assume the same facts as *Example I,* except that the Commissioner has determined that the employee representative is not a bona fide employee representative under section 7701(a)(46) and thus there are no "collectively bargained employees." In this case, all employees of W must be considered in determining whether section 401(a)(26) is met.

Example 3. Employer X has collectively bargained employees and 70 noncollectively bargained employees. Employer X maintains Plan X, which benefits only the 30 collectively bargained employees. Employer X may treat the non-collectively bargained employees as excludable employees and disregard them in applying section 401(a)(26) to the collectively bargained plan.

Example 4. Assume the same facts as *Example 3,* except that the Commissioner has determined that the employee representative is not a bona fide employee representative under section 7701(a)(46) and thus there is no recognized collective bargaining agreement. In this case, Employer X may not treat the non-collectively bargained employees of X as excludable employees.

Example 5. Assume the same facts as *Example 3,* except that 3 percent of the 30 collectively bargained employees are professionals. In this case, Employer X may not treat the non-collectively bargained employees of X as excludable employees.

Example 6. Employer Y has 100 collectively bargained employees. Thirty of Y's employees are represented by Collective Bargaining Unit 1 and covered under Plan 1. Seventy of Y's employees are represented by Collective Bargaining Unit 2 and covered under Plan 2. For purposes of testing Plan 1, the employees of Collective Bargaining Unit 2 may be treated as excludable employees. Similarly, for purposes of testing Plan 2, the employees of Collective Bargaining Unit 1 may be treated as excludable employees.

(7) ***Certain terminating employees*** —

(i) ***In general.*** An employee may be treated as an excludable employee for a plan year with respect to a particular plan if—

(A) The employee does not benefit under the plan for the plan year,

(B) The employee is eligible to participate in the plan,

(C) The plan has a minimum period of service requirement or a requirement that an employee be employed on the last day of the plan year (last-day requirement) in order for an employee to accrue a benefit or receive an allocation for the plan year,

(D) The employee fails to accrue a benefit or receive an allocation under the plan solely because of the failure to satisfy the minimum period of service or last-day requirement,

(E) The employee terminates employment during the plan year with no more than 500 hours of service, and the employee is not an employee as of the last day of the plan year (for purposes of this paragraph (b)(7)(i)(E), a plan that uses the elapsed time method of determining years of service may use either 91 consecutive calendar days or 3 consecutive calendar months instead of 500 hours of service, provided it uses the same convention for all employees during a plan year), and

(F) If this paragraph (b)(7) is applied with respect to any employee with respect to a plan for a plan year, it is applied with respect to all employees with respect to the plan for the plan year.

(ii) ***Hours of service.*** For purposes of this paragraph (b)(7), the term "hour of service" has the same meaning as set forth in 29 CFR 2530.200b-2 under the general method of crediting service for the employee. If one of the equivalencies set forth in 29 CFR 2530.200b-3 is used for crediting service under the plan, the 500-hour requirement must be adjusted accordingly.

(8) ***Employees of qualified separate lines of business.*** If an employer is treated as operating qualified separate lines of business for purposes of section 401(a)(26) in accordance with § 1.414(r)-1(b), in testing a plan that benefits employees of one qualified separate line of business, the employees of the other qualified separate lines of business of the employer are treated as excludable employees. See §§ 1.414(r)-1(c)(3) and 1.414(r)-9 (separate application of section 401(a)(26) to the employees of a qualified separate line of business). The rule in this paragraph (b)(8) does not apply to a plan that is tested under the special rule for employer-wide plans in § 1.414(r)-l(c)(3)(ii) for a plan year.

(c) ***Former employees*** —

(1) ***In general.*** For purposes of applying section 401(a)(26) with respect to former employees, all former employees of the employer are taken into account, except that the employer may treat a former employee described in paragraph (c)(2) through (c)(4) of this section as an excludable former employee. If any of the former employee exclusion rules under paragraphs (c)(2) through (c)(4) of this section is applied, it must be applied to all former employees for the plan year on a consistent basis.

(2) ***Employees terminated before a specified date.*** The employer may treat a former employee as excludable if—

(i) The former employee became a former employee either prior to January 1, 1984, or prior to the tenth calendar year preceding the calendar year in which the current plan year begins, and

(ii) The former employee became a former employee in a calendar year that precedes the earliest calendar year in which any former employee who benefits under the plan in the current plan year became a former employee.

(3) ***Previously excludable employees.*** The employer may treat a former employee as excludable if the former employee was an excludable employee (or would have been an excludable employee if these regulations had been in effect) under the rules of paragraphs (a) and (b) of this section during the plan year in which the former employee became a former employee. If the employer treats a former employee as excludable pursuant to this paragraph (c)(3), the former employee is not taken into account with respect to a plan even if the former employee is benefiting under the plan.

(4) ***Vested accrued benefits eligible for mandatory distribution.*** A former employee may be treated as an excludable former employee if the present value of the former employee's vested accrued benefit does not exceed the cash-out limit in effect under § 1.411(a)-11(c)(3)(ii). This determination is made in accordance with the rules of sections 411(a)(11) and 417(e).

(d) ***Certain police or firefighters.*** An employer may apply section 401(a)(26) separately with respect to any classification of qualified public safety employees for whom a separate plan is maintained. Thus, for purposes of testing a separate plan covering a class of qualified public safety employees, all employees who are not in that classification are treated as excludable employees. Also, such employees need not be taken into account in determining whether or not any other plan satisfies section 401(a)(26). For purposes of this paragraph (d), *qualified public safety employee* means any employee of any police

department or fire department organized and operated by a State or political subdivision if the employee provides police protection, firefighting services, or emergency medical services for any area within the jurisdiction of a State or political subdivision.

[T.D. 8375, 56 FR 63416, Dec. 4, 1991, as amended by T.D. 8794, 63 FR 70338, Dec. 21, 1998; T.D. 8891, 65 FR 44682, July 19, 2000]

§ 1.401(a)(26)-7 Testing methods.

(a) ***Testing on each day of the plan year.*** A plan satisfies section 401(a)(26) for a plan year only if the plan satisfies section 401(a)(26) on each day of the plan year. An employee benefits on a day if the employee is a participant for such day and the employee benefits under the plan for the year under the rules in § 1.401(a)(26)-5.

(b) ***Simplified testing method.*** A plan is treated as satisfying the requirements of paragraph (a) of this section if it satisfies section 401(a)(26) on any single plan day during the plan year, but only if that day is reasonably representative of the employer's workforce and the plan's coverage. A plan does not have to be tested on the same day each plan year.

(c) ***Retroactive correction.*** If a plan fails to satisfy section 401(a)(26) for a plan year, the plan may be retroactively amended during the same period and under the same conditions as provided for in § 1.401(a)(4)-11(g)(3) through (g)(5) to satisfy section 401(a)(26). A plan merger that occurs by the end of the period provided in § l.401(a)(4)-11(g)(3)(iv) is treated solely for purposes of section 401(a)(26) as if it were effective as of the first day of the plan year. The rule of this paragraph (c) may be illustrated by the following example.

Example. Assume that an employer with 500 employees maintains two defined contribution plans. Plan A benefits 45 employees. Plan B benefits 50 employees. Immediately before the end of the period provided for in § 1.401(a)(4)-11(g)(3)(iv), the employer expands coverage under Plan A to benefit 20 more employees retroactively for the plan year. Thus, Plan A satisfies paragraph (a) of this section for the plan year. Alternatively, before the end of the period provided for in § 1.401(a)(4)-11(g)(3)(iv), or later if a later period is applicable under section 401(b), the employer could merge Plan A with Plan B to satisfy section 401(a)(26).

[T.D. 8375, 56 FR 63418, Dec. 4, 1991]

§ 1.401(a)(26)-8 Definitions.

In applying this section and §§ 1.401(a)(26)-1 through 1.401(a)(26)-9 the definitions in this section govern unless otherwise provided.

Collective bargaining agreement. Collective bargaining agreement means an agreement that the Secretary of Labor finds to be a collective bargaining agreement between employee representatives and the employer that satisfies § 301.7701-17T. Employees described in section 413(b)(8) who are employees of the union or the plan and are treated as employees of an employer are not employees covered pursuant to a collective bargaining agreement for purposes of section 401(a)(26) unless the employees are actually covered pursuant to such an agreement.

Collectively bargained employee. Collectively bargained employee means a collectively bargained employee within the meaning of § 1.410(b)-6(d)(2).

Covered by a collective bargaining agreement. Covered by a collective bargaining agreement means covered by a collective bargaining agreement within the meaning of § 1.410(b)-6(d)(2)(iii).

Defined benefit plan. Defined benefit plan means a defined benefit plan within the meaning of § 1.410(b)-9.

Defined contribution plan. Defined contribution plan means a defined contribution plan within the meaning of § 1.410(b)-9.

Employee. Employee means an employee, within the meaning of § 1.410(b)-9.

Employer. Employer means the employer within the meaning of § 1.410(b)-9.

ESOP. ESOP means an employee stock ownership plan within the meaning of section 4975(e)(7) or a tax credit employee stock ownership plan within the meaning of section 409(a).

Former employee. Former employee means a former employee within the meaning of § 1.410(b)-9.

Highly compensated employee. Highly compensated employee means an employee who is highly compensated within the meaning of section 414(q).

Highly compensated former employee. Highly compensated former employee means a former employee who is highly compensated within the meaning of section 414(q)(9).

Multiemployer plan. Multiemployer plan means a multiemployer plan within the meaning of section 414(f).

Noncollectively bargained employee. Noncollectively bargained employee means an employee who is not a collectively bargained employee.

Nonhighly compensated employee. Nonhighly compensated employee means an employee who is not a highly compensated employee.

Nonhighly compensated former employee. Nonhighly compensated former employee means a former employee who is not a highly compensated former employee.

Plan. Plan means plan as defined in § 1.401(a)(26)-2(c).

Plan year. Plan year means the plan year of the plan as defined in the written plan document. In the absence of a specifically designated plan year, the plan year is deemed to be the calendar year.

Professional employee. Professional employee means a professional employee as defined in § 1.410(b)-9.

Section 401(k) plan. Section 401(k) plan means a plan consisting of elective contributions described in § 1.401(k)-1 (g)(3) under a qualified cash or deferred arrangement described in § 1.401(k)-1(a)(4)(i).

Section 401(m) plan. Section 401(m) plan means a plan consisting of employee contributions described in § 1.401(m)-1(f)(6) or matching contributions described in § 1.401(m)-1(f)(12), or both.

[T.D. 8375, 56 FR 63418, Dec. 4, 1991]

§ 1.401(a)(26)-9 Effective dates and transition rules.

(a) ***In general.*** Except as provided in paragraphs (b), (c), and (d) of this section, section 401(a)(26) and the regulations thereunder apply to plan years beginning on or after January 1, 1989.

(b) ***Transition rules*** —

(1) ***Governmental plans and certain section 403(b) annuities.*** Section 401(a)(26) is treated as satisfied for plan years beginning before the later of January 1, 1996, or 90 days after the opening of the first legislative session beginning on or after January 1, 1996, of the governing body with authority to amend the plan, if that body does not meet continuously, in the case of governmental plans described in section 414(d), including plans subject to section 403(b)(12)(A)(i) (nonelective plans). For purposes of this paragraph (b)(1), the term "governing body with authority to amend the plan" means the legislature, board, commission, council, or other governing body with authority to amend the plan.

(2) ***Early retirement "window-period" benefits.*** Early retirement benefits available under a plan only to employees who retire within a limited period of time, not to exceed one year, are treated as satisfying section 401(a)(26) if such benefits are provided under plan terms that were adopted and in effect on or before March 14, 1989.

(3) ***Employees who do not benefit because of a minimum-period-of-service requirement or a last-day requirement.*** For the first plan year beginning after December 31, 1988, and before January 1, 1990, employees who are eligible to participate under the plan and who fail to accrue a benefit solely because of the failure to satisfy either a minimum-period-of-service requirement of 1000 hours of service or less or a last-day requirement may be treated as benefiting under the plan.

(4) ***Certain plan terminations*** —

(i) ***In general.*** Except as provided in paragraph (b)(4)(ii) of this section, if a plan terminates after section 401(a)(26) becomes effective with respect to the plan (as determined under paragraph (a) of this section), the plan is not treated as a qualified plan upon termination unless it complies with section 401(a)(26) and the regulations thereunder (to the extent they are applicable) for all periods for which section 401(a)(26) is effective with respect to the plan.

(ii) ***Exception.*** Notwithstanding paragraphs (a) and (b)(4)(i) of this section, a plan does not fail to be treated as a qualified plan upon termination merely because the plan fails to satisfy the requirements of section 401(a)(26) and the regulations thereunder if the plan is terminated with a termination date on or before December 31, 1989, and either of the following conditions is satisfied:

(A) In the case of a defined benefit plan, no highly compensated employee has an accrued benefit under the plan exceeding the lesser of either the benefit the employee had accrued as of the close of the last plan year beginning before January 1, 1989, or the benefit the employee would have accrued as of the close of the last plan year under the terms of the plan in effect and applicable with respect to the employee on December 13, 1988.

(B) In the case of a defined contribution plan, no highly compensated employee receives a contribution allocation for any plan year beginning after December 31, 1988. For this purpose, a contribution allocation with respect to an employee for a plan year beginning before January 1, 1989, may be treated as a contribution allocation for a plan year beginning after December 31, 1988, if the allocation for the prior year exceeds the allocation that the employee would have received for such year under the terms of the plan in effect and applicable with respect to the employee on December 13, 1988. An allocation of forfeitures to highly compensated employees with respect to contributions made for plan years beginning before January 1, 1988, does not cause a defined contribution plan to fail to satisfy the conditions of this paragraph (b)(4)(ii)(B).

(5) ***ESOPs and non-ESOPs.*** Notwithstanding paragraph (a) of this section and § 54.4975-11(a)(5) of this Chapter, an employer may treat the rule in § 1.401(a)(26)-2(d)(1)(i), regarding mandatory disaggregation of ESOPs and non-ESOPs as not effective for plan years beginning before January 1, 1990.

(c) ***Waiver of excise tax on reversions*** —

(1) ***In general.*** Pursuant to section 1112(e)(3) of the Tax Reform Act of 1986 (TRA '86), if certain conditions are satisfied, a waiver of the excise tax under section 4980 applies with respect to any employer reversion that occurs by reason of the termination or merger of a plan before the first year to which section 401(a)(26) applies to the plan. In general, the applicable conditions are that the plan must have been in existence on August 16, 1986; that if section 401(a)(26) was in effect for the plan year including August 16, 1986, the plan would have failed to satisfy the requirements of section 401(a)(26) and would have continued to fail the requirements at all times thereafter; that the plan satisfies the applicable conditions in paragraph (b)(4)(ii)(A) or (B) of this section; and that certain requirements regarding asset or liability transfers and mergers and spinoffs involving the plan after August 16, 1986, are satisfied.

(2) ***Termination date.*** An employer reversion with respect to a plan is eligible for the section 4980 excise tax waiver only if the employer reversion occurs by reason of the termination of the plan with a termination date prior to the first plan year for which section 401(a)(26) applies to the plan. Solely for purposes of this waiver, the employer reversion is treated as satisfying this paragraph (c)(2) even though the plan's termination date is during the first plan year for which section 401(a)(26) applies to the plan if the plan's termination date is on or before May 31, 1989. If the termination date occurs in the first plan year for which section 401(a)(26) applied to the plan and the employer receives a reversion that is eligible for the waiver of the section 4980 tax, the plan is subject to the interest rate restriction set forth in section 11 12(e)(3)(B) of TRA '86 as amended.

(3) ***Failure to satisfy section 401(a)(26).*** An employer reversion with respect to a plan is eligible for the excise tax waiver only if the plan was in existence on August 16, 1986, and, if section 401(a)(26) had applied to the plan for the plan year including such date, the plan would have failed to satisfy section 401(a)(26) for the plan year and continuously thereafter until the plan's termination or merger. For purposes of this paragraph (c)(3), a plan is treated as though it would have failed to satisfy section 401(a)(26) before such section actually applied to the plan only if the plan (as defined under section 414(1)) failed to benefit at least the lesser of 50 employees or 40 percent of the employer's employees. In general, this determination is to be made on the basis of only the applicable statutory provisions, without regard to the regulations under section 401(a)(26). Thus, for example, the prior benefit structure rules in § 1.401(a)(26)-3 do not apply in determining whether a plan would have failed to satisfy section 401(a)(26) for plan years beginning prior to the effective date of section 401(a)(26) with respect to the plan.

(d) ***Special rule for collective bargaining agreements.*** In the case of a plan maintained pursuant to one or more collective bargaining agreements (as defined in § 1.401(a)(26)-8(a)) that were ratified before March 1, 1986, section 401(a)(26) and the regulations thereunder shall not apply to plan years beginning before the earlier of—

(1) January 1, 1991, or

(2) The later of—

(i) January 1, 1989, or

(ii) The date on which the last of such collective bargaining agreements terminates. For purposes of this paragraph (d), any extension or renegotiation of any collective bargaining agreement that is ratified after February 28, 1986, is disregarded in determining the date on which such collective bargaining agreement terminates.

[T.D. 8375, 56 FR 63419, Dec. 4, 1991, as amended by T.D. 8487, 58 FR 46838, Sept. 3, 1993]

§ 1.401(a)(31)-1 Requirement to offer direct rollover of eligible rollover distributions; questions and answers.

The following questions and answers relate to the qualification requirement imposed by section 401(a)(31) of the Internal Revenue Code of 1986, pertaining to the direct rollover option for eligible rollover distributions from pension, profit-sharing, and stock bonus plans. Section 401(a)(31) was added by section 522(a) of the Unemployment Compensation Amendments of 1992, Public Law 102-318, 106 Stat. 290 (UCA). For additional UCA guidance under sections 402(c), 402(f), 403(b)(8) and (10), and 3405(c), see §§ 1.402(c)-2, 1.402(f)-1, and 1.403(b)-7(b), and § 31.3405(c)-1 of this chapter, respectively.

List of Questions

Q-1: What are the direct rollover requirements under section 401(a)(31)?

Q-2: Does section 401(a)(31) require that a qualified plan permit a direct rollover to be made to a qualified trust that is not part of a defined contribution plan?

Q-3: What is a *direct rollover* that satisfies section 401(a)(31), and how is it accomplished?

Q-4: Is providing a distributee with a check for delivery to an eligible retirement plan a reasonable means of accomplishing a direct rollover?

Q-5: Is an eligible rollover distribution that is paid to an eligible retirement plan in a direct rollover currently includible in gross income or subject to 20-percent withholding?

Q-6: What procedures may a plan administrator prescribe for electing a direct rollover, and what information may the plan administrator require a distributee to provide when electing a direct rollover?

Q-7: May the plan administrator treat a distributee as having made an election under a default procedure where the distributee does not affirmatively elect to make or not make a direct rollover within a certain time period?

Q-8: May the plan administrator establish a deadline after which the distributee may not revoke an election to make or not make a direct rollover?

Q-9: Must the plan administrator permit a distributee to elect to have a portion of an eligible rollover distribution paid to an eligible retirement plan in a direct rollover and to have the remainder of that distribution paid to the distributee?

Q-10: Must the plan administrator allow a distributee to divide an eligible rollover distribution into two or more separate distributions to be paid in direct rollovers to two or more eligible retirement plans?

Q-11: Will a plan satisfy section 401(a)(31) if the plan administrator does not permit a distributee to elect a direct rollover if his or her eligible rollover distributions during a year are reasonably expected to total less than $200?

Q-12: Is a plan administrator permitted to treat a distributee's election to make or not make a direct rollover with respect to one payment in a series of periodic payments as applying to all subsequent payments in the series?

Q-13: Is the eligible retirement plan designated by a distributee to receive a direct rollover distribution required to accept the distribution?

Q-14. If a plan accepts an invalid rollover contribution, whether or not as a direct rollover, how will the contribution be treated for purposes of applying the qualification requirements of section 401(a) or 403(a) to the plan?

Q-15: For purposes of applying the plan qualification requirements of section 401(a), is an eligible rollover distribution that is paid to an eligible retirement plan in a direct rollover a distribution and rollover or is it a transfer of assets and liabilities?

Q-16: Must a direct rollover option be provided for an eligible rollover distribution that is in the form of a plan loan offset amount?

Q-17: Must a direct rollover option be provided for an eligible rollover distribution from a qualified plan distributed annuity contract?

Q-18: What assumptions may a plan administrator make regarding whether a benefit is an eligible rollover distribution?

Q-19: When must a qualified plan be amended to comply with section 401(a)(31)?

Questions and Answers

Q-1: What are the direct rollover requirements under section 401(a)(31)?

A-1:

(a) ***General rule.*** To satisfy section 401(a)(31), added by UCA, a plan must provide that if the distributee of any eligible rollover distribution elects to have the distribution paid directly to an eligible retirement plan, and specifies the eligible retirement plan to which the distribution is to be paid, then the distribution will be paid to that eligible retirement plan in a direct rollover described in Q&A-3 of this section. Thus, the plan must give the distributee the option of having his or her distribution paid in a direct rollover to an eligible retirement plan specified by the distributee. For purposes of section 401(a)(31) and this section, eligible rollover distribution has the meaning set forth in section 402(c)(4) and § 1.402(c)-2, except as otherwise provided in Q&A-2 of this section, eligible retirement plan has the meaning set forth in section 402(c)(8)(B) and § 1.402(c)-2(a)(1)(iii).

(b) ***Related Internal Revenue Code provisions*** —

(1) ***Mandatory withholding.*** If a distributee of an eligible rollover distribution does not elect to have the eligible rollover distribution paid directly from the plan to an eligible retirement plan in a direct rollover under section 401(a)(31), the eligible rollover distribution is subject to 20-percent income tax withholding under section 3405(c). See § 31.3405(c)-1 of this chapter for guidance concerning the withholding requirements applicable to eligible rollover distributions.

(2) ***Notice requirement.*** Section 402(f) requires the plan administrator of a qualified plan to provide, within a reasonable period of time before making an eligible rollover distribution, a written explanation to the distributee of the distributee's right to elect a direct rollover and the withholding consequences of not making that election. The explanation also is required to provide certain other relevant information relating to the taxation of distributions. See § 1.402(f)-1 for guidance concerning the written explanation required under section 402(f).

(3) ***Section 403(b) annuities.*** Section 403(b)(10) provides that requirements similar to those imposed by section 401(a)(31) apply to annuities described in section 403(b). See § 1.403(b)-7(b) for guidance concerning the direct rollover requirements for distributions from annuities described in section 403(b).

(c) ***Effective date*** —

(1) ***Statutory effective date.*** Section 401(a)(31) applies to eligible rollover distributions made on or after January 1, 1993.

(2) ***Regulatory effective date.*** This section applies to eligible rollover distributions made on or after October 19, 1995. For eligible rollover distributions made on or after January 1, 1993 and before October 19, 1995, § 1.401(a)(31)-1T (as it appeared in the April 1, 1995 edition of 26 CFR part 1), applies. However, for any distribution made on or after January 1, 1993 but before October 19, 1995, a plan may satisfy section 401(a)(31) by substituting any or all provisions of this section for the corresponding provisions of § 1.401(a)(31)-1T, if any.

Q-2: Does section 401(a)(31) require that a qualified plan permit a direct rollover to be made to a qualified trust that is not part of a defined contribution plan?

A-2: No. Section 401(a)(31)(D) limits the types of qualified trusts that are treated as eligible retirement plans to defined contribution plans that accept eligible rollover distributions. Therefore, although a plan is permitted, at a participant's election, to make a direct rollover to any type of eligible retirement plan, as defined in section 402(c)(8)(B) (including a defined benefit plan), a plan will not fail to satisfy section 401(a)(31) solely because the plan will not permit a direct rollover to a qualified trust that is part of a defined benefit plan. In contrast, if a distributee elects a direct rollover of an eligible rollover distribution to an annuity plan described in section 403(a), that distribution must be paid to the annuity plan, even if the recipient annuity plan is a defined benefit plan.

Q-3: What is a direct rollover that satisfies section 401(a)(31), and how is it accomplished?

A-3: A direct rollover that satisfies section 401(a)(31) is an eligible rollover distribution that is paid directly to an eligible retirement plan for the benefit of the distributee. A direct rollover may be accomplished by any reasonable means of direct payment to an eligible retirement plan. Reasonable means of direct payment include, for example, a wire transfer or the mailing of a check to the eligible retirement plan. If payment is made by check, the check must be negotiable only by the trustee of the eligible retirement plan. If the payment is made by wire transfer, the wire transfer must be directed only to the trustee of the eligible retirement plan. In the case of an eligible retirement plan that does not have a trustee (such as a custodial

individual retirement account or an individual retirement annuity), the custodian of the plan or issuer of the contract under the plan, as appropriate, should be substituted for the trustee for purposes of this Q&A-3, and Q&A-4 of this section.

Q-4: Is providing a distributee with a check for delivery to an eligible retirement plan a reasonable means of accomplishing a direct rollover?

A-4: Providing the distributee with a check and instructing the distributee to deliver the check to the eligible retirement plan is a reasonable means of direct payment, provided that the check is made payable as follows: [Name of the trustee] as trustee of [name of the eligible retirement plan]. For example, if the name of the eligible retirement plan is “Individual Retirement Account of John Q. Smith,” and the name of the trustee is “ABC Bank,” the payee line of a check would read “ABC Bank as trustee of Individual Retirement Account of John Q. Smith.” Unless the name of the distributee is included in the name of the eligible retirement plan, the check also must indicate that it is for the benefit of the distributee. If the eligible retirement plan is not an individual retirement account or an individual retirement annuity, the payee line of the check need not identify the trustee by name. For example, the payee line of a check for the benefit of distributee Jane Doe might read, “Trustee of XYZ Corporation Savings Plan FBO Jane Doe.”

Q-5: Is an eligible rollover distribution that is paid to an eligible retirement plan in a direct rollover currently includible in gross income or subject to 20-percent withholding?

A-5: No. An eligible rollover distribution that is paid to an eligible retirement plan in a direct rollover is not currently includible in the distributee's gross income under section 402(c) and is exempt from the 20-percent withholding imposed under section 3405(c)(2). However, when any portion of the eligible rollover distribution is subsequently distributed from the eligible retirement plan, that portion will be includible in gross income to the extent required under section 402, 403, or 408.

Q-6: What procedures may a plan administrator prescribe for electing a direct rollover, and what information may the plan administrator require a distributee to provide when electing a direct rollover?

A-6:

(a) ***Permissible procedures.*** Except as otherwise provided in paragraph (b) of this Q&A-6, the plan administrator may prescribe any procedure for a distributee to elect a direct rollover under section 401(a)(31), provided that the procedure is reasonable. The procedure may include any reasonable requirement for information or documentation from the distributee in addition to the items of adequate information specified in § 31.3405(c)-1(b), Q&A-7 of this chapter. For example, it would be reasonable for the plan administrator to require that the distributee provide a statement from the designated recipient plan that the plan will accept the direct rollover for the benefit of the distributee and that the recipient plan is, or is intended to be, an individual retirement account, an individual retirement annuity, a qualified annuity plan described in section 403(a), or a qualified trust described in section 401(a), as applicable. In the case of a designated recipient plan that is a qualified trust, it also would be reasonable for the plan administrator to require a statement that the qualified trust is not excepted from the definition of an eligible retirement plan by section 401(a)(31)(D) (i.e., is not a defined benefit plan).

(b) ***Impermissible procedures.*** A plan will fail to satisfy section 401(a)(31) if the plan administrator prescribes any unreasonable procedure, or requires information or documentation, that effectively eliminates or substantially impairs the distributee's ability to elect a direct rollover. For example, it would effectively eliminate or substantially impair the distributee's ability to elect a direct rollover if the recipient plan required the distributee to obtain an opinion of counsel stating that the eligible retirement plan receiving the rollover is a qualified plan or individual retirement account. Similarly, it

would effectively eliminate or substantially impair the distributee's ability to elect a direct rollover if the distributing plan required a letter from the recipient eligible retirement plan stating that, upon request by the distributing plan, the recipient plan will automatically return any direct rollover amount that the distributing plan advises the recipient plan was paid incorrectly. It would also effectively eliminate or substantially impair the distributee's ability to elect a direct rollover if the distributing plan required, as a condition for making a direct rollover, a letter from the recipient eligible retirement plan indemnifying the distributing plan for any liability arising from the distribution.

Q-7: May the plan administrator treat a distributee as having made an election under a default procedure where the distributee does not affirmatively elect to make or not make a direct rollover within a certain time period?

A-7: Yes, the plan administrator may establish a default procedure whereby any distributee who fails to make an affirmative election is treated as having either made or not made a direct rollover election. However, the plan administrator may not make a distribution under any default procedure unless the distributee has received an explanation of the default procedure and an explanation of the direct rollover option as required under section 402(f) and § 1.402(f)-1, Q&A-1 and unless the timing requirements described in § 1.402(f)-1, Q&A-2 and Q&A-3 have been satisfied with respect to the explanations of both the default procedure and the direct rollover option.

Q-8: May the plan administrator establish a deadline after which the distributee may not revoke an election to make or not make a direct rollover?

A-8: Yes, but the plan administrator is not permitted to prescribe any deadline or time period with respect to revocation of a direct rollover election that is more restrictive for the distributee than that which otherwise applies under the plan to revocation of the form of distribution elected by the distributee.

Q-9: Must the plan administrator permit a distributee to elect to have a portion of an eligible rollover distribution paid to an eligible retirement plan in a direct rollover and to have the remainder of that distribution paid to the distributee?

A-9: Yes, the plan administrator must permit a distributee to elect to have a portion of an eligible rollover distribution paid to an eligible retirement plan in a direct rollover and to have the remainder paid to the distributee. However, the plan administrator is permitted to require that, if the distributee elects to have only a portion of an eligible rollover distribution paid to an eligible retirement plan in a direct rollover, that portion be equal to at least a specified minimum amount, provided the specified minimum amount is less than or equal to $500 or any greater amount as prescribed by the Commissioner in revenue rulings, notices, and other guidance published in the Internal Revenue Bulletin. See § 601.601(d)(2)(ii)(*b*) of this chapter. If the entire amount of the eligible rollover distribution is less than or equal to the specified minimum amount, the plan administrator need not allow the distributee to divide the distribution.

Q-10: Must the plan administrator allow a distributee to divide an eligible rollover distribution into two or more separate distributions to be paid in direct rollovers to two or more eligible retirement plans?

A-10: No. The plan administrator is not required (but is permitted) to allow the distributee to divide an eligible rollover distribution into separate distributions to be paid to two or more eligible retirement plans in direct rollovers. Thus, the plan administrator may require that the distributee select a single eligible retirement plan to which the eligible rollover distribution (or portion thereof) will be distributed in a direct rollover.

Q-11: Will a plan satisfy section 401(a)(31) if the plan administrator does not permit a distributee to elect a direct rollover if his or her eligible rollover distributions during a year are reasonably expected to total less than $200?

A-11: Yes. A plan will satisfy section 401(a)(31) even though the plan administrator does not permit any distributee to elect a direct rollover with respect to eligible rollover distributions during a year that are reasonably expected to total less than $200 or any lower minimum amount specified by the plan administrator. The rules described in § 31.3405(c)-1, Q&A-14 of this chapter (relating to whether withholding under section 3405(c) is required for an eligible rollover distribution that is less than $200) also apply for purposes of determining whether a direct rollover election under section 401(a)(31) must be provided for an eligible rollover distribution that is less than $200 or the lower specified amount.

Q-12: Is a plan administrator permitted to treat a distributee's election to make or not make a direct rollover with respect to one payment in a series of periodic payments as applying to all subsequent payments in the series?

A-12:

(a) Yes. A plan administrator is permitted to treat a distributee's election to make or not make a direct rollover with respect to one payment in a series of periodic payments as applying to all subsequent payments in the series, provided that:

(1) The employee is permitted at any time to change, with respect to subsequent payments, a previous election to make or not make a direct rollover; and

(2) The written explanation provided under section 402(f) explains that the election to make or not make a direct rollover will apply to all future payments unless the employee subsequently changes the election.

(b) See § 1.402(f)-1, Q&A-3 for further guidance concerning the rules for providing section 402(f) notices when eligible rollover distributions are made in a series of periodic payments.

Q-13: Is the eligible retirement plan designated by a distributee to receive a direct rollover distribution required to accept the distribution?

A-13: No. Although section 401(a)(31) requires qualified plans to provide distributees the option to make a direct rollover of their eligible rollover distributions to an eligible retirement plan, it imposes no requirement that any eligible retirement plan accept rollovers. Thus, a plan can refuse to accept rollovers. Alternatively, a plan can limit the circumstances under which it will accept rollovers. For example, a plan can limit the types of plans from which it will accept a rollover or limit the types of assets it will accept in a rollover (such as accepting only cash or its equivalent).

Q-14. If a plan accepts an invalid rollover contribution, whether or not as a direct rollover, how will the contribution be treated for purposes of applying the qualification requirements of section 401(a) or 403(a) to the plan?

A-14.

(a) ***Acceptance of invalid rollover contribution.*** If a plan accepts an invalid rollover contribution, the contribution will be treated, for purposes of applying the qualification requirements of section 401(a) or 403(a) to the receiving plan, as if it were a valid rollover contribution, if the following two conditions are satisfied. First, when accepting the amount from the employee as a rollover contribution, the plan administrator of the receiving plan reasonably concludes that the contribution is a valid rollover contribution. While evidence that the distributing plan is the subject of a determination letter from the Commissioner indicating that the distributing plan is qualified would be useful to the receiving plan administrator in reasonably concluding that the contribution is a valid rollover contribution, it is not necessary for the distributing plan to have such a determination letter

in order for the receiving plan administrator to reach that conclusion. Second, if the plan administrator of the receiving plan later determines that the contribution was an invalid rollover contribution, the amount of the invalid rollover contribution, plus any earnings attributable thereto, is distributed to the employee within a reasonable time after such determination.

(b) ***Definitions.*** For purposes of this Q&A-14:

(1) An *invalid rollover contribution* is an amount that is accepted by a plan as a rollover within the meaning of § 1.402(c)-2(a) (or as a rollover contribution within the meaning of section 408(d)(3)(A)(ii)) but that is not an eligible rollover distribution from a qualified plan (or an amount described in section 408(d)(3)(A)(ii)) or that does not satisfy the other requirements of section 401(a)(31), 402(c), or 408(d)(3) for treatment as a rollover or a rollover contribution.

(2) A *valid rollover contribution* is a contribution that is accepted by a plan as a rollover within the meaning of § 1.402(c)-2(a) or as a rollover contribution within the meaning of section 408(d)(3) and that satisfies the requirements of section 401(a)(31), 402(c), or 408(d)(3) for treatment as a rollover or a rollover contribution.

(c) ***Examples.*** The provisions of paragraph (a) of this Q&A-14 are illustrated by the following examples:

Example 1. (i) Employer X maintains for its employees Plan M, a profit sharing plan qualified under section 401(a). Plan M provides that any employee of Employer X may make a rollover contribution to Plan M. Employee A is an employee of Employer X, will not have attained age $70^1/_2$ by the end of the year, and has a vested account balance in Plan O (a plan maintained by Employee A's prior employer). Employee A elects a single sum distribution from Plan O and elects that it be paid to Plan M in a direct rollover.
(ii) Employee A provides the plan administrator of Plan M with a letter from the plan administrator of Plan O stating that Plan O has received a determination letter from the Commissioner indicating that Plan O is qualified.

(iii) Based upon such a letter, absent facts to the contrary, a plan administrator may reasonably conclude that Plan O is qualified and that the amount paid as a direct rollover is an eligible rollover distribution.

Example 2. (i) The facts are the same as *Example 1,* except that, instead of the letter provided in paragraph (ii) of *Example 1,* Employee A provides the plan administrator of Plan M with a letter from the plan administrator of Plan O representing that Plan O satisfies the requirements of section 401(a) (or representing that Plan O is intended to satisfy the requirements of section 401(a) and that the administrator of Plan O is not aware of any Plan O provision or operation that would result in the disqualification of Plan O).
(ii) Based upon such a letter, absent facts to the contrary, a plan administrator may reasonably conclude that Plan O is qualified and that the amount paid as a direct rollover is an eligible rollover distribution.

Example 3. (i) Same facts as *Example 1,* except that Employee A elects to receive the

distribution from Plan O and wishes to make a rollover contribution described in section 402 rather than a direct rollover.
(ii) When making the rollover contribution, Employee A certifies that, to the best of Employee A's knowledge, Employee A is entitled to the distribution as an employee and not as a beneficiary, the distribution from Plan O to be contributed to Plan M is not one of a series of periodic payments, the distribution from Plan O was received by Employee A not more than 60 days before the date of the rollover contribution, and the entire amount of the rollover contribution would be includible in gross income if it were not being rolled over.

(iii) As support for these certifications, Employee A provides the plan administrator of Plan M with two statements from Plan O. The first is a letter from the plan administrator of Plan O, as described in *Example 1,* stating that Plan O has received a determination letter from the Commissioner indicating that Plan O is qualified. The second is the distribution statement that accompanied the distribution check. The distribution statement indicates that the distribution is being made by Plan O to Employee A, indicates the gross amount of the distribution, and indicates the amount withheld as Federal income tax. The amount withheld as Federal income tax is 20 percent of the gross amount of the distribution. Employee A contributes to Plan M an amount not greater than the gross amount of the distribution stated in the letter from Plan O and the contribution is made within 60 days of the date of the distribution statement from Plan O.

(iv) Based on the certifications and documentation provided by Employee A, absent facts to the contrary, a plan administrator may reasonably conclude that Plan O is qualified and that the distribution otherwise satisfies the requirements of section 402(c) for treatment as a rollover contribution.

Example 4. (i) The facts are the same as in *Example 3,* except that, rather than contributing the distribution from Plan O to Plan M, Employee A contributes the distribution from Plan O to IRA P, an individual retirement account described in section 408(a). After the contribution of the distribution from Plan O to IRA P, but before the year in which Employee A attains age $70^{1}/_{2}$, Employee A requests a distribution from IRA P and decides to contribute it to Plan M as a rollover contribution. To make the rollover contribution, Employee A endorses the check received from IRA P as payable to Plan M.
(ii) In addition to providing the certifications described in *Example 3* with respect to the distribution from Plan O, Employee A certifies that, to the best of Employee A's knowledge, the contribution to IRA P was not made more than 60 days after the date Employee A received the distribution from Plan O, no amount other than the distribution from Plan O has been contributed to IRA P, and the distribution from IRA P was received not more than 60 days earlier than the rollover contribution to Plan M.

(iii) As support for these certifications, in addition to the two statements from Plan O described in *Example 3,* Employee A provides copies of statements from IRA P. The statements indicate that the account is identified as an IRA, the account was established within 60 days of the date of the letter from Plan O informing Employee A that an amount had been distributed, and the opening balance in the IRA does not exceed the amount of the distribution described in the letter from Plan O. There is no indication in the statements that any additional contributions have been made to IRA P since the account was opened. The date on the check from IRA P is less than 60 days before the date that Employee A makes the contribution to Plan M.

(iv) Based on the certifications and documentation provided by Employee A, absent facts to the contrary, a plan administrator may reasonably conclude that Plan O is qualified and that the contribution by Employee A is a rollover contribution described in section 408(d)(3)(A)(ii) that satisfies the other requirements of section 408(d)(3) for treatment as a rollover contribution.

Q-15: For purposes of applying the plan qualification requirements of section 401(a), is an eligible rollover distribution that is paid to an eligible retirement plan in a direct rollover a distribution and rollover or is it a transfer of assets and liabilities?

A-15: For purposes of applying the plan qualification requirements of section 401(a), a direct rollover is a distribution and rollover of the eligible rollover distribution and not a transfer of assets and liabilities. For example, if the consent requirements under section 411(a)(11) or sections 401(a)(11) and 417(a)(2) apply to the distribution, they must be satisfied before the eligible rollover distribution may be distributed in a direct rollover. Similarly, the direct rollover is not a transfer of assets and liabilities that must satisfy the requirements of section 414(l). Finally, a direct rollover is not a transfer of benefits for purposes of applying the requirements under section 411(d)(6), as described in § 1.411(d)-4, Q&A-3. Therefore, for example, the eligible retirement plan is not required to provide, with respect to amounts paid to it in a direct rollover, the same optional forms of benefits that were provided under the plan that made the direct rollover. The direct rollover requirements of section 401(a)(31) do not affect the ability of a qualified plan to make an elective or nonelective transfer of assets and liabilities to another qualified plan in accordance with applicable law (such as section 414(l)).

Q-16: Must a direct rollover option be provided for an eligible rollover distribution that is in the form of a plan loan offset amount?

A-16: A plan will not fail to satisfy section 401(a)(31) merely because the plan does not permit a distributee to elect a direct rollover of an eligible rollover distribution in the form of a plan loan offset amount. Section 1.402(c)-2(g) defines a plan loan offset amount, in general, as a distribution that occurs when, under the terms governing a plan loan, the participant's accrued benefit is reduced (offset) in order to repay the loan. A plan administrator is permitted to allow a direct rollover of a participant note for a plan loan to a qualified trust described in section 401(a) or a qualified annuity plan described in section 403(a). See § 1.402(c)-2, Q&A-9 for examples illustrating the rules for plan loan offset amounts that are set forth in this Q&A-16. See § 31.3405(c)-1, Q&A-11 of this chapter for guidance concerning special withholding rules that apply to a distribution in the form of a plan loan offset amount.

Q-17: Must a direct rollover option be provided for an eligible rollover distribution from a qualified plan distributed annuity contract?

A-17: Yes. If any amount to be distributed under a qualified plan distributed annuity contract is an eligible rollover distribution (in accordance with § 1.402(c)-2(h)) the annuity contract must satisfy section 401(a)(31) in the same manner as a qualified plan under section 401(a). Section 1.402(c)-2(h) defines a qualified plan distributed annuity contract as an annuity contract purchased for a participant, and distributed to the participant, by a qualified plan. In the case of a qualified plan distributed annuity contract, the payor under the contract is treated as the plan administrator. See § 31.3405(c)-1, Q&A-13 of this chapter concerning the application of mandatory 20-percent withholding requirements to distributions from a qualified plan distributed annuity contract.

Q-18: What assumptions may a plan administrator make regarding whether a benefit is an eligible rollover distribution?

A-18:

(a) ***General rule.*** For purposes of section 401(a)(31), a plan administrator may make the assumptions described in paragraphs (b) and (c) of this Q&A-18 in determining the amount of a distribution that is an eligible rollover distribution for which a direct rollover option must be provided. Section 31.3405(c)-1, Q&A-10 of this chapter provides assumptions for purposes of complying with section 3405(c). See § 1.402(c)-2(k)(2) concerning the effect of these assumptions for purposes of section 402(c).

(b) ***$5,000 death benefit.*** A plan administrator is permitted to assume that a distribution from the plan that qualifies for the $5,000 death benefit exclusion under section 101(b) is the only death benefit being paid with respect to a deceased employee that qualifies for that exclusion. Thus, to the extent that such a distribution would be excludible from gross income based on this assumption, the plan administrator is permitted to assume that it is not an eligible rollover distribution.

(c) ***Determination of designated beneficiary.*** For the purpose of determining the amount of the minimum distribution required to satisfy section 401(a)(9)(A) for any calendar year, the plan administrator is permitted to assume that there is no designated beneficiary.

Q-19: When must a qualified plan be amended to comply with section 401(a)(31)?

A-19: Even though section 401(a)(31) applies to distributions from qualified plans made on or after January 1, 1993, a qualified plan is not required to be amended before the last day by which amendments must be made to comply with the Tax Reform Act of 1986 and related provisions, as permitted in other administrative guidance of general applicability, provided that:

(a) In the interim period between January 1, 1993, and the date on which the plan is amended, the plan is operated in accordance with the requirements of section 401(a)(31); and

(b) The amendment applies retroactively to January 1, 1993.

[T.D. 8619, 60 FR 49204, Sept. 22, 1995, as amended by T.D. 8880, 65 FR 21314, Apr. 21, 2000; 65 FR 34534, May 30, 2000; T.D. 9340, 72 FR 41159, July 26, 2007; T.D. 10001, 89 FR 58906, July 19, 2024]

Editorial Note: By 89 FR 58906, July 19, 2024, § 1.401(a)(31)-1 was amended, however, the amendment to paragraph (b)(1) could not be incorporated due to inaccurate amendatory instruction.

§ 1.401(a)(35)-1 Diversification requirements for certain defined contribution plans.

(a) *General rule* —

(1) ***Diversification requirements.*** Section 401(a)(35) imposes diversification requirements on applicable defined contribution plans. A trust that is part of an applicable defined contribution plan is not a qualified trust under section 401(a) unless the plan—

(i) Satisfies the diversification election requirements for elective deferrals and employee contributions set forth in paragraph (b) of this section;

(ii) Satisfies the diversification election requirements for employer nonelective contributions set forth in paragraph (c) of this section;

(iii) Satisfies the investment option requirement set forth in paragraph (d) of this section; and

(iv) Does not apply any restrictions or conditions on investments in employer securities that violate the requirements of paragraph (e) of this section.

(2) ***Definitions, effective dates, and transition rules.*** The definitions of applicable defined contribution plan, employer security, parent corporation, and publicly traded are set forth in paragraph (f) of this section. Applicability dates and transition rules are set forth in paragraph (g) of this section.

(b) *Diversification requirements for elective deferrals and employee contributions invested in employer securities* —

(1) ***General rule.*** With respect to any individual described in paragraph (b)(2) of this section, if any portion of the individual's account under an applicable defined contribution plan attributable to elective deferrals (as described in section 402(g)(3)(A)), employee contributions, or rollover contributions is invested in employer securities, then the plan satisfies the requirements of this paragraph (b) if the individual may elect to divest those employer securities and reinvest an equivalent amount in other investment options. The plan may limit the time for divestment and reinvestment to periodic, reasonable opportunities occurring no less frequently than quarterly.

(2) ***Applicable individual with respect to elective deferrals and employee contributions.*** An individual is described in this paragraph (b)(2) if the individual is—

(i) A participant;

(ii) An alternate payee who has an account under the plan; or

(iii) A beneficiary of a deceased participant.

(c) *Diversification requirements for employer nonelective contributions invested in employer securities* —

(1) ***General rule.*** With respect to any individual described in paragraph (c)(2) of this section, if a portion of the individual's account under an applicable defined contribution plan attributable to employer nonelective contributions is invested in employer securities, then the plan satisfies the requirements of this paragraph (c) if the individual may elect to divest those employer securities and reinvest an equivalent amount in other investment options. The plan may limit the time for divestment and reinvestment to periodic, reasonable opportunities occurring no less frequently than quarterly.

(2) ***Applicable individual with respect to employer nonelective contributions.*** An individual is described in this paragraph (c)(2) if the individual is—

(i) A participant who has completed at least three years of service;

(ii) An alternate payee who has an account under the plan with respect to a participant who has completed at least three years of service; or

(iii) A beneficiary of a deceased participant.

(3) ***Completion of three years of service.*** For purposes of paragraph (c)(2) of this section, a participant completes three years of service on the last day of the vesting computation period provided for under the plan that constitutes the completion of the third year of service under section 411(a)(5). However, for a plan that uses the elapsed time method of crediting service for vesting purposes (or a plan that provides for immediate vesting without using a vesting computation period or the elapsed time method of determining vesting), a participant completes three years of service on the day immediately preceding the third anniversary of the participant's date of hire.

(d) ***Investment options.*** An applicable defined contribution plan must offer not less than three investment options, other than employer securities, to which an individual who has the right to divest under paragraph (b)(1) or (c)(1) of this section may direct the proceeds from the divestment of employer securities. Each of the three investment options must be diversified and have materially different risk and return characteristics. For this purpose, investment options that constitute a broad range of investment alternatives within the meaning of Department of Labor Regulation section 2550.404c-1(b)(3) are treated as being diversified and having materially different risk and return characteristics.

(e) ***Restrictions or conditions on investments in employer securities*** —

(1) ***Impermissible restrictions or conditions*** —

(i) ***General rule.*** Except as provided in paragraph (e)(2) of this section, an applicable defined contribution plan violates the requirements of this paragraph (e) if the plan imposes restrictions or conditions with respect to the investment of employer securities that are not imposed on the investment of other assets of the plan. A restriction or condition with respect to employer securities means—

(A) A restriction on an individual's right to divest an investment in employer securities that is not imposed on an investment that is not employer securities; or

(B) A benefit that is conditioned on investment in employer securities.

(ii) ***Indirect restrictions or conditions*** —

(A) Except as provided in paragraph (e)(3) of this section, a plan violates the requirements of this paragraph (e) if the plan imposes a restriction or condition described in paragraph (e)(1)(i)(A) or (B) of this section either directly or indirectly.

(B) A plan imposes an indirect restriction on an individual's right to divest an investment in employer securities if, for example, the plan provides that a participant who divests his or her account balance with respect to the investment in employer securities is not permitted for a period of time thereafter to reinvest in employer securities.

(C) A plan does not impose an indirect restriction or condition merely because there are tax consequences that result from an individual's divestment of an investment in employer securities. Thus, the loss of the special treatment for net unrealized appreciation provided under section 402(e)(4) with respect to employer securities is disregarded. Similarly, a plan does not impose an impermissible restriction or condition merely because it provides that an individual may not reinvest divested amounts in the same employer securities

account but is permitted to invest such divested amounts in another employer securities account where the only relevant difference between the separate accounts is the section 402(e)(4) cost (or other basis) of the trust in the shares held in each account. (See § 1.402(a)-1(b) for rules regarding section 402(e)(4).)

(2) ***Permitted restrictions or conditions*** —

(i) ***In general.*** An applicable defined contribution plan does not violate the requirements of this paragraph (e) merely because it imposes a restriction or a condition set forth in paragraph (e)(2)(ii) or (e)(2)(iii) of this section.

(ii) ***Securities laws.*** A plan is permitted to impose a restriction or condition on the divestiture of employer securities that is either required in order to ensure compliance with applicable securities laws or is reasonably designed to ensure compliance with applicable securities laws. For example, it is permissible for a plan to limit divestiture rights for participants who are subject to section 16(b) of the Securities Exchange Act of 1934 (15 U.S.C. 78f) to a reasonable period (such as 3 to 12 days) following publication of the employer's quarterly earnings statements because it is reasonably designed to ensure compliance with Rule 10b-5 of the Securities and Exchange Commission.

(iii) ***Deferred application of the diversification requirements*** —

(A) ***Becoming an applicable defined contribution plan.*** An applicable defined contribution plan is permitted to restrict the application of the diversification requirements of section 401(a)(35) and this section for up to 90 days after the plan becomes an applicable defined contribution plan (for example, a plan becoming an applicable defined contribution plan because the employer securities held under the plan become publicly traded).

(B) ***Loss of exception for indirect investments.*** In the case where an investment fund described in paragraph (f)(3)(ii)(A) of this section no longer meets the requirement in paragraph (f)(3)(ii)(B) of this section that the investment must be independent of the employer (including the situation where the fund no longer meets the percentage limitation rule in paragraph (f)(3)(ii)(C) of this section), the plan does not fail to satisfy the diversification requirements of section 401(a)(35) and this section merely because it does not offer those rights with respect to that investment fund for up to 90 days after the investment fund ceases to meet those requirements.

(3) ***Permitted indirect restrictions or conditions*** —

(i) ***In general.*** An applicable defined contribution plan does not violate the requirements of this paragraph (e) merely because it imposes an indirect restriction or condition set forth in this paragraph (e)(3).

(ii) ***Limitation on investment in employer securities.*** A plan is permitted to limit the extent to which an individual's account balance can be invested in employer securities, provided the limitation applies without regard to a prior exercise of rights to divest employer securities. For example, a plan does not impose a restriction that violates this paragraph (e) merely because the plan prohibits a participant from investing additional amounts in employer securities if more than 10 percent of that participant's account balance is invested in employer securities.

(iii) ***Trading frequency.*** A plan is permitted to impose reasonable restrictions on the timing and number of investment elections that an individual can make to invest in employer securities, provided that the restrictions are designed to limit short-term trading in the employer securities. For example, a plan could provide that a participant may not elect to invest in employer securities if the employee has elected to divest employer securities within a short period of time, such as seven days, prior to the election to invest in employer securities.

(iv) ***Fees.*** The plan has not provided an indirect benefit that is conditioned on investment in employer securities merely because the plan imposes fees on other investment options that are not imposed on the investment in employer securities. In addition, the plan has not provided a restriction on the right to divest an investment in employer securities merely because the plan imposes a reasonable fee for the divestment of employer securities.

(v) ***Stable value or similar fund.*** A plan is permitted to allow transfers to be made into or out of a stable value or similar fund more frequently than a fund invested in employer securities for purposes of paragraph (e)(1)(ii) of this section. Thus, a plan that includes a broad range of investment alternatives as described in paragraph (d) of this section, including a stable value or similar fund, does not impose an impermissible restriction under paragraph (e)(1)(ii) of this section merely because it permits transfers into or out of that fund more frequently than other funds under the plan, provided that the plan would otherwise satisfy this paragraph (e) (taking into account any restrictions or conditions imposed with respect to the other investment options under the plan). For purposes of this section, a stable value fund or similar fund means an investment product or fund designed to preserve or guarantee principal and provide a reasonable rate of return, while providing liquidity for benefit distributions or transfers to other investment alternatives (such as a product or fund described in Department of Labor Regulation § 2550.404c-5(e)(4)(iv)(A) or (v)(A)).

(vi) ***Transfers out of a qualified default investment alternative (QDIA).*** A plan is permitted to provide for transfers out of a QDIA within the meaning of Department of Labor Regulation section 2550.404c-5(e) more frequently than a fund invested in employer securities.

(vii) ***Frozen funds*** —

(A) ***General rule.*** A plan is permitted to prohibit any further investment in employer securities. Thus, a plan is not treated as imposing an indirect restriction merely because it provides that an employee that divests an investment in employer securities is not permitted to reinvest in employer securities, but only if the plan does not permit additional contributions or other investments to be invested in employer securities. For this purpose, a plan does not provide for further investment in employer securities merely because dividends paid on employer securities under the plan are reinvested in employer securities.

(B) ***Transitional relief for certain leveraged employee stock ownership plans (ESOPs).*** An employer stock fund does not fail to be a frozen fund under this paragraph (e)(3)(vii) merely because of the allocation of employer securities that are released as matching contributions from the plan's suspense account that holds employer securities acquired with an exempt loan under section 4975(d)(3). This paragraph (e)(3)(vii)(B) only applies to employer securities that were acquired in a plan year beginning before January 1, 2007, with the proceeds of an exempt loan within the meaning of section 4975(d)(3) which is not refinanced after the end of the last plan year beginning before January 1, 2007.

(4) ***Delegation of authority to Commissioner.*** The Commissioner may provide for additional permitted restrictions or conditions or permitted indirect restrictions or conditions in revenue rulings, notices, or other guidance published in the Internal Revenue Bulletin.

(f) ***Definitions*** —

(1) ***Application of definitions.*** This paragraph (f) contains definitions that are applicable for purposes of this section.

(2) ***Applicable defined contribution plan*** —

(i) ***General rule.*** Except as provided in this paragraph (f)(2), an applicable defined contribution plan means any defined contribution plan which holds employer securities that are publicly traded. See paragraph (f)(2)(iv) of this section for a special rule that treats certain plans that hold employer securities that are not publicly traded as applicable defined contribution plans and paragraph (f)(3)(ii) of this section for a special rule that treats certain plans as not holding publicly traded employer securities for purposes of this section.

(ii) ***Exception for certain ESOPs.*** An employee stock ownership plan (ESOP), as defined in section 4975(e)(7), is not an applicable defined contribution plan if the plan is a separate plan for purposes of section 414(l) with respect to any other defined benefit plan or defined contribution plan maintained by the same employer or employers and holds no contributions (or earnings thereunder) that are (or were ever) subject to section 401(k) or 401(m). Thus, an ESOP is an applicable defined contribution plan if the ESOP is a portion of a larger plan (whether or not that larger plan includes contributions that are subject to section 401(k) or 401(m)). For purposes of this paragraph (f)(2)(ii), a plan is not considered to hold amounts ever subject to section 401(k) or 401(m) merely because the plan holds amounts attributable to rollover amounts in a separate account that were previously subject to section 401(k) or 401(m).

(iii) ***Exception for one-participant plans.*** A one-participant plan, as defined in section 401(a)(35)(E)(iv), is not an applicable defined contribution plan.

(iv) ***Certain defined contribution plans treated as holding publicly traded employer securities*** —

(A) ***General rule.*** A defined contribution plan holding employer securities that are not publicly traded is treated as an applicable defined contribution plan if any employer maintaining the plan or any member of a controlled group of corporations that includes such employer has issued a class of stock which is publicly traded. For purposes of this paragraph (f)(2)(iv), a controlled group of corporations has the meaning given such term by section 1563(a), except that “50 percent” is substituted for “80 percent” each place it appears.

(B) ***Exception for certain plans.*** Paragraph (f)(2)(iv)(A) of this section does not apply to a plan if—

(*1*) No employer maintaining the plan (or a parent corporation with respect to such employer) has issued stock that is publicly traded; and

(*2*) No employer maintaining the plan (or parent corporation with respect to such employer) has issued any special class of stock which grants to the holder or issuer particular rights, or bears particular risks for the holder or issuer, with respect to any employer maintaining the plan (or any member of a controlled group of corporations that includes such employer) which has issued any stock that is publicly traded.

(3) ***Employer security*** —

(i) ***General rule.*** Employer security has the meaning given such term by section 407(d)(1) of the Employee Retirement Income Security Act of 1974, as amended (ERISA).

(ii) ***Certain defined contribution plans or investment funds not treated as holding employer securities*** —

(A) ***Exception for certain indirect investments.*** Subject to paragraphs (f)(3)(ii)(B) and (C) of this section, a plan (and an investment option described in paragraph (d) of this section) is not treated as holding employer securities for purposes of this section to the extent the employer securities are held indirectly as part of a broader fund that is—

(*1*) A regulated investment company described in section 851(a);

(*2*) A common or collective trust fund or pooled investment fund maintained by a bank or trust company supervised by a State or a Federal agency;

(*3*) A pooled investment fund of an insurance company that is qualified to do business in a State;

(*4*) An investment fund managed by an investment manager within the meaning of section 3(38) of ERISA for a multiemployer plan; or

(*5*) Any other investment fund designated by the Commissioner in revenue rulings, notices, or other guidance published in the Internal Revenue Bulletin.

(B) ***Investment must be independent.*** The exception set forth in paragraph (f)(3)(ii)(A) of this section applies only if the investment in the employer securities is held in a fund under which—

(*1*) There are stated investment objectives of the fund; and

(*2*) The investment is independent of the employer (or employers) and any affiliate thereof.

(C) ***Percentage limitation rule.*** For purposes of paragraph (f)(3)(ii)(B)(*2*) of this section, an investment in employer securities in a fund is not considered to be independent of the employer (or employers) and any affiliate thereof if the aggregate value of the employer securities held in the fund is in excess of 10 percent of the total value of all of the fund's investments for the plan year. The determination of whether the value of employer securities exceeds 10 percent of the total value of the fund's investments for the plan year is made as of the end of the preceding plan year. The determination can be based on the information in the latest disclosure of the fund's portfolio holdings that was filed with the Securities and Exchange Commission (SEC) in that preceding plan year.

(4) ***Parent corporation.*** Parent corporation has the meaning given such term by section 424(e).

(5) ***Publicly traded*** —

(i) ***In general.*** A security is publicly traded if it is readily tradable on an established securities market.

(ii) ***Readily tradable on an established securities market.*** For purposes of this paragraph (f)(5), except as provided by the Commissioner in revenue rulings, notices, or other guidance published in the Internal Revenue Bulletin, a security is readily tradable on an established securities market if—

(A) The security is traded on a national securities exchange that is registered under section 6 of the Securities Exchange Act of 1934 (15 U.S.C. 78f); or

(B) The security is traded on a foreign national securities exchange that is officially recognized, sanctioned, or supervised by a governmental authority and the security is deemed by the SEC as having a "ready market" under SEC Rule 15c3-1 (17 CFR 240.15c3-1).

(g) ***Applicability date and transition rules*** —

(1) ***Statutory effective date*** —

(i) ***General rule.*** Except as otherwise provided in this paragraph (g) and section 901(c)(3)(A) and (B) of the Pension Protection Act of 2006, Public Law 109-280 (120 Stat. 780 (2006)) (PPA '06), section 401(a)(35) is effective for plan years beginning after December 31, 2006.

(ii) ***Collectively bargained plans*** —

(A) ***Delayed statutory effective date.*** In the case of a plan maintained pursuant to one or more collective bargaining agreements between employee representatives and one or more employers ratified on or before August 17, 2006, section 401(a)(35) is effective for plan years beginning after the earlier of—

(*1*) The later of—

(*i*) December 31, 2007; or

(*ii*) The date on which the last such collective bargaining agreement terminates (determined without regard to any extension thereof); or

(*2*) December 31, 2008.

(B) ***Treatment of plans with both collectively bargained and non-collectively bargained employees.*** If a collective bargaining agreement applies to some, but not all, of the plan participants, the definition of whether the plan is considered a collectively bargained plan for purposes of this paragraph (g)(1)(ii) is made in the same manner as the definition of whether a plan is collectively bargained under section 436(f)(3).

(2) ***Regulatory effective/applicability date.*** This section is effective and applicable for plan years beginning on or after January 1, 2011.

(3) ***Statutory transition rules*** —

(i) ***General rule.*** Pursuant to section 401(a)(35)(H), in the case of the portion of an account to which paragraph (c) of this section applies and that consists of employer securities acquired in a plan year beginning before January 1, 2007, the requirements of paragraph (c) of this section only apply to the applicable percentage of such securities.

(ii) ***Applicable percentage*** —

(A) ***Phase-in percentage.*** For purposes of this paragraph (g)(3), the applicable percentage is determined as follows—

Plan year to which paragraph (c) of this section applies:	The applicable percentage is:
1st	33
2nd	66
3rd and following	100

(B) ***Special rule.*** For a plan for which the special effective date under section 901(c)(3) of PPA '06 applies, the applicable percentage under this paragraph (g)(3)(ii) is determined without regard to the delayed effective date in section 901(c)(3)(A) and (B) of PPA '06.

(iii) ***Nonapplication for participants age 55 with three years of service.*** Paragraph (g)(3)(i) of this section does not apply to an individual who is a participant who attained age 55 and had completed at least three years of service (as defined in paragraph (c)(3) of this section) before the first day of the first plan year beginning after December 31, 2005.

(iv) ***Separate application by class of securities.*** This paragraph (g)(3) applies separately with respect to each class of securities.

[T.D. 9484, 75 FR 27931, May 19, 2010]

§ 1.401(b)-1 Certain retroactive changes in plan.

(a) ***General rule.*** Under section 401(b) a stock bonus, pension, profit-sharing, annuity, or bond purchase plan which does not satisfy the requirements of section 401(a) on any day solely as a result of a disqualifying provision (as defined in paragraph (b) of this section) shall be considered to have satisfied such requirements on such date if, on or before the last day of the remedial amendment period (as determined under paragraphs (d), (e) and (f) of this section) with respect to such disqualifying provision, all provisions of the plan which are necessary to satisfy all requirements of sections 401(a), 403(a), or 405(a) are in effect and have been made effective for all purposes for the whole of such period. Under some facts and circumstances, it may not be possible to amend a plan retroactively so that all provisions of the plan which are necessary to satisfy the requirements of section 401(a) are in fact made effective for the whole remedial amendment period. If it is not possible, the requirements of this section will not be satisfied even if the employer adopts a retroactive plan amendment which, in form, appears to satisfy such requirements. Section 401(b) does not permit a plan to be made retroactively effective, for qualification purposes, for a taxable year prior to the taxable year of the employer in which the plan was adopted by such employer.

(b) ***Disqualifying provisions.*** For purposes of this section, with respect to a plan described in paragraph (a) of this section, the term “disqualifying provision” means:

(1) A provision of a new plan, the absence of a provision from a new plan, or an amendment to an existing plan, which causes such plan to fail to satisfy the requirements of the Code applicable to qualification of such plan as of the date such plan or amendment is first made effective.

(2) A plan provision which results in the failure of the plan to satisfy the qualification requirements of the Code by reason of a change in such requirements—

(i) Effected by the Employee Retirement Income Security Act of 1974 (Pub. L. 93-406, 88 Stat. 829), hereafter referred to as "ERISA," or the Tax Equity and Fiscal Responsibility Act of 1982 (Pub. L. 97-248, 96 Stat. 324), hereafter referred to as "TEFRA," or

(ii) Effective before the first day of the first plan year beginning after December 31, 1989 and that is effected by the Tax Reform Act of 1986 (Pub. L. 99-514, 100 Stat. 2085, 2489), hereafter referred to as "TRA '86," the Omnibus Budget Reconciliation Act of 1986, (Pub. L. 99-509, 100 Stat. 1874), hereafter referred to as "OBRA '86," or the Omnibus Budget Reconciliation Act of 1987 (Pub. L. 100-203, 101 Stat. 1330), hereafter referred to as "OBRA '87." For purposes of this paragraph (b)(2)(ii), a disqualifying provision includes any plan provision that is integral to a qualification requirement changed by TRA '86, OBRA '86, or OBRA '87 or any requirement treated by the Commissioner, directly or indirectly, as if section 1140 of TRA '86 applied to it, but only to the extent such provision is effective before the first day of the first plan year beginning after December 31, 1989. With respect to disqualifying provisions described in this paragraph (b)(2)(ii) effective before the first day of the first plan year which begins after December 31, 1988, there must be compliance with the conditions of section 1140 of TRA '86 (other than the requirement that the plan amendment be made on or before the last day of the first plan year beginning after December 31, 1988), including operation in accordance with the plan provision as of its effective date with respect to the plan.

(3) A plan provision designated by the Commissioner, at the Commissioner's discretion, as a disqualifying provision that either—

(i) Results in the failure of the plan to satisfy the qualification requirements of the Internal Revenue Code by reason of a change in those requirements; or

(ii) Is integral to a qualification requirement of the Internal Revenue Code that has been changed.

(c) *Special rules applicable to disqualifying provisions* —

(1) ***Absence of plan provision.*** For purposes of paragraphs (b)(2) and (3) of this section, a disqualifying provision includes the absence from a plan of a provision required by, or, if applicable, integral to the applicable change to the qualification requirements of the Internal Revenue Code, if the plan was in effect on the date the change became effective with respect to the plan.

(2) ***Method of designating disqualifying provisions.*** The Commissioner may designate a plan provision as a disqualifying provision pursuant to paragraph (b)(3) of this section only in revenue rulings, notices, and other guidance published in the Internal Revenue Bulletin. See § 601.601(d)(2) of this chapter.

(3) ***Authority to impose limitations.*** In the case of a provision that has been designated as a disqualifying provision by the Commissioner pursuant to paragraph (b)(3) of this section, the Commissioner may impose limits and provide additional rules regarding the amendments that may be made with respect to that disqualifying provision during the remedial amendment period. The Commissioner may provide guidance in revenue rulings, notices, and other guidance published in the Internal Revenue Bulletin. See § 601.601(d)(2) of this chapter.

(d) *Remedial amendment period.*

(1) The remedial amendment period with respect to a disqualifying provision begins:

(i) In the case of a provision of, or absence of a provision from, a new plan, described in paragraph (b)(1) of this section, the date the plan is put into effect,

(ii) In the case of an amendment to an existing plan, described in paragraph (b)(1) of this section, the date the plan amendment is adopted or put into effect (whichever is earlier),

(iii) In the case of a disqualifying provision described in paragraph (b)(2) of this section, the date on which the change effected by ERISA, TEFRA, TRA '86, OBRA '86, OBRA '87, or a qualification requirement that is treated, directly or indirectly, as subject to the conditions of section 1140 of TRA '86 described in paragraph (b)(2) of this section, became effective with respect to such plan or, in the case of a provision, described in paragraph (b)(2)(ii) of this section, that is integral to such qualification requirement, the first day on which the plan was operated in accordance with such provision, or

(iv) In the case of a disqualifying provision described in paragraph (b)(3)(i) of this section, the date on which the change effected by an amendment to the Internal Revenue Code became effective with respect to the plan; or

(v) In the case of a disqualifying provision described in paragraph (b)(3)(ii) of this section, the first day on which the plan was operated in accordance with such provision, as amended, unless another time is specified by the Commissioner in revenue rulings, notices, and other guidance published in the Internal Revenue Bulletin. See § 601.601(d)(2) of this chapter.

(2) Unless further extended as provided by paragraph (e) of this section, the remedial amendment period ends with the latest of:

(i) In the case of a plan maintained by one employer, the time prescribed by law, including extensions, for filing the income tax return (or partnership return of income) of the employer for the employer's taxable year in which falls the latest of:

(A) The date on which the remedial amendment period begins.

(B) The date on which a plan amendment described in paragraph (b)(1) of this section is adopted, or

(C) The date on which a plan amendment described in paragraph (b)(1) of this section is made effective,

(ii) In the case of a plan maintained by one employer, the last day of the plan year within which falls the latest of:

(A) The date on which the remedial amendment period begins,

(B) The date on which a plan amendment described in paragraph (b)(1) of this section is adopted, or

(C) The date on which a plan amendment described in paragraph (b)(1) of this section is made effective,

(iii) In the case of a plan maintained by more than one employer, the last day of the tenth month following the last day of the plan year in which falls the latest of:

(A) The date on which the remedial amendment period begins,

(B) The date on which a plan amendment described in paragraph (b)(1) of this section is adopted, or

(C) The date of which a plan amendment described in paragraph (b)(1) of this section is made effective, or

(iv) December 31, 1976, but only in the case of a plan to which section 411 (relating to minimum vesting standards) applies without regard to section 411(e)(2), and only in the case of a remedial amendment period which began on or after September 2, 1974.

(3) For purposes of paragraphs (d)(2)(i), (d)(2)(ii), and (d)(2)(iii) of this section, for any disqualifying provision described in paragraph (b)(2)(ii) of this section, the remedial amendment period shall be deemed to have begun with the first day of the first plan year which begins after December 31, 1988.

(4) For purposes of this paragraph (d)(2) of this section, a master or prototype plan shall not be considered to be a plan maintained by more than one employer, and whether or not a plan is maintained by more than one employer, shall be determined without regard to section 414 (b) and (c) except that if a plan is maintained solely by an affiliated group of corporations (within the meaning of section 1504) which files a consolidated income tax return pursuant to section 1501 for a taxable year within which falls the latest of the dates described in paragraph (d)(2)(i) of this section, such plan shall be deemed to be maintained by one employer.

(e) *Extensions of remedial amendment period* —

(1) ***Opinion letter request by sponsoring organization of master or prototype plan.*** In the case of an employer who has adopted a master or prototype plan, a remedial amendment period that began on or after September 2, 1974, shall not end prior to the later of:

(i) June 30, 1977, or

(ii) The last day of the month that is six months after the month in which:

(A) The opinion letter with respect to the request of the sponsoring organization is issued by the Internal Revenue Service,

(B) Such request is withdrawn, or

(C) Such request is otherwise disposed of by the Internal Revenue Service. The rules contained in this subparagraph apply only if the sponsoring organization of such master or prototype plan has, after September 2, 1974, and on or before December 31, 1976, filed a request for an opinion letter with respect to the initial or continuing qualification of the plan (or a trust which is part of the plan). The provisions of this paragraph (e)(1) apply to a master or prototype plan adopted to replace another plan even though the remedial amendment period applicable to the replaced plan has expired at the time of adoption of the replacement plan.

(2) ***Notification letter request by law firm sponsor of district-approved plan.*** In the case of an employer who has adopted a pattern plan, a remedial amendment period that began on or after September 2, 1974, shall not end prior to the later of:

(i) June 30, 1977, or

(ii) The last day of the month that is six months after the month in which:

(A) The notification letter with respect to the request of the sponsoring law firm is issued by the Internal Revenue Service,

(B) Such request is withdrawn, or

(C) Such request is otherwise disposed of by the Internal Revenue Service. The rules contained in this subparagraph shall apply only if the sponsoring law firm of such pattern plan has, on or before December 31, 1976, filed a request for a notification letter with the Internal Revenue Service with respect to the initial or continuing qualification of the plan (or a trust which is part of the plan). The provisions of this paragraph (e)(2) apply to a pattern plan adopted to replace another plan even though the remedial amendment period applicable to the replaced plan has expired at the time of the adoption of the replacement plan.

(3) ***Determination letter request by employer or plan administrator.*** If on or before the end of a remedial amendment period determined without regard to this paragraph (e), or in a case to which paragraph (e) (1) or (2) of this section applies, on or before the 90th day following the later of the dates described in paragraph (e) (1) or (2) of this section, the employer or plan administrator files a request pursuant to § 601.201(s) of this chapter (Statement of Procedural Rules) for a determination letter with respect to the initial or continuing qualification of the plan, or a trust which is part of such plan, such remedial amendment period shall be extended until the expiration of 91 days after:

(i) The date on which notice of the final determination with respect to such request for a determination letter is issued by the Internal Revenue Service, such request is withdrawn, or such request is otherwise finally disposed of by the Internal Revenue Service, or

(ii) If a petition is timely filed with the United States Tax Court for a declaratory judgment under section 7476 with respect to the final determination (or the failure of the Internal Revenue Service to make a final determination) in response to such request, the date on which the decision of the United States Tax Court in such proceeding becomes final.

(4) ***Transitional rule.*** In the case of a request for a determination letter described in and filed within the time prescribed in paragraph (e)(3) of this section with respect to which a final determination is issued by the Internal Revenue Service on or before September 28, 1976 the remedial amendment period described in paragraph (d) of this section shall not end prior to the expiration of 150 days beginning on the date of such final determination by the Internal Revenue Service.

(5) ***Disqualifying provision prior to September 2, 1974.*** If the remedial amendment period with respect to a disqualifying provision described in paragraph (b)(1) of this section began prior to September 2, 1974, and the provisions of paragraphs (e)(5)(i), (ii) and (iii) of this section are satisfied, the remedial amendment period described in paragraph (d) shall not end prior to December 31, 1976. This subparagraph shall apply only if—

(i) A request pursuant to § 601.201 of this chapter for a determination letter with respect to the initial or continuing qualification of the plan (or a trust which is part of the plan) was filed not later than the later of:

(A) The time prescribed by law, including extensions, for filing the income tax return (or partnership return of income) of the employer for the employer's taxable year in which falls the date on which the remedial amendment period began, or

(B) The date 6 months after the close of such taxable year,

(ii) The employer, either:

(A) While such request for a determination letter is or was under consideration by the Internal Revenue Service or,

(B) Promptly after the date on which notice of the final determination with respect to such request for a determination letter is issued by the Internal Revenue Service, such request is withdrawn, or such request is otherwise finally disposed of by the Internal Revenue Service, adopts or adopted either a plan amendment retroactive to the date on which the remedial amendment period began, or a prospective plan amendment, and

(iii) The amendment described in paragraph (e)(5)(ii) of this section would have resulted in the plan's satisfying the requirements of section 401(a) of the Code from the beginning of the remedial amendment period to the date such amendment was made if this section had been in effect during such period, and in the case of a prospective amendment, if such amendment had been made retroactive to such beginning date.

(f) ***Discretionary extensions.*** At his discretion, the Commissioner may extend the remedial amendment period or may allow a particular plan to be amended after the expiration of its remedial amendment period and any applicable extension of such period. In determining whether such an extension will be granted, the Commissioner shall consider, among other factors, whether substantial hardship to the employer would result if such an extension were not granted, whether such an extension is in the best interest of plan participants, and whether the granting of the extension is adverse to the interests of the Government. The mere absence of final regulations with respect to issues covered under the Special Reliance Procedure announced by the Internal Revenue Service in Technical Information Release 1416 on November 5, 1975, and as extended by Internal Revenue Service News Release IR-1616 on May 14, 1976, shall not be deemed to satisfy the criteria of this paragraph. With regard to a particular plan, a request for extension of time pursuant to this paragraph shall be submitted prior to the expiration of the remedial amendment period determined without regard to this paragraph, or within such time thereafter as the Internal Revenue Service may consider resonable under the circumstances. The request should be submitted to the appropriate District Director, determined under § 601.201(s)(3)(xii) of this chapter (Statement of Procedural Rules). This subparagraph applies to disqualifying provisions that were adopted or became effective prior to September 2, 1974, as well as disqualifying provisions adopted or made effective on or after September 2, 1974.

(Secs. 401(b), 7805, Internal Revenue Code of 1954 (88 Stat. 943, 68A Stat. 917; 26 U.S.C. 401(b), 7805))

[T.D. 7437, 41 FR 42653, Sept. 28, 1976, as amended by T.D. 7896, 48 FR 23817, May 27, 1983; T.D. 7997, 49 FR 50645, Dec. 31, 1984; T.D. 8217, 53 FR 29662, Aug. 8, 1988; T.D. 8727, 62 FR 41273, 41274, Aug. 1, 1997; T.D. 8871, 65 FR 5433, Feb. 4, 2000]

§ 1.401(f)-1 Certain custodial accounts and annuity contracts.

(a) ***Treatment of a custodial account or an annuity contract as a qualified trust.*** Beginning on January 1, 1974, a custodial account or an annuity contract may be used, in lieu of a trust, under any qualified pension, profitsharing, or stock bonus plan if the requirements of paragraph (b) of this section are met. A custodial account or an annuity contract may be used under such a plan, whether the plan covers common-law employees, self-employed individuals who are treated as employees by reason of section 401(c), or both. The use of a custodial account or annuity contract as part of a plan does not preclude the use of a trust or

another custodial account or another annuity contract as part of the same plan. A plan under which a custodial account or an annuity contract is used may be considered in connection with other plans of the employer in determining whether the requirements of section 401 are satisfied.

(b) ***Rules applicable to custodial accounts and annuity contracts.***

(1) Beginning on January 1, 1974, a custodial account or an annuity contract is treated as a qualified trust under section 401 if the following requirements are met:

(i) The custodial account or annuity contract would, except for that fact that it is not a trust, constitute a qualified trust under section 401; and

(ii) In the case of a custodial account, the custodian either is a bank or is another person who demonstrates, to the satisfaction of the Commissioner, that the manner in which he will hold the assets will be consistent with the requirements of section 401. This demonstration must be made in the same manner as the demonstration required by § 1.408-2(e).

(2) If a custodial account would, except for the fact that it is not a trust, constitute a qualified trust under section 401, it must, for example, be created pursuant to a written agreement which constitutes a valid contract under local law. In addition, the terms of the contract must make it impossible, prior to the satisfaction of all liabilities with respect to the employees and their beneficiaries covered by the plan. For any part of the funds of the custodial account to be used for, or diverted to, purposes other than for the exclusive benefit of the employees or their beneficiaries as provided for in the plan (see paragraph (a) of § 1.401-2).

(3) An annuity contract would, except for the fact that it is not a trust, constitute a qualified trust under section 401 if it is purchased by an employer for an employee under a plan which meets the requirements of section 404(a)(2) and the regulations thereunder, except that the plan may be either a pension or a profit-sharing plan.

(c) ***Effect of this section.***

(1)

(i) Any custodial account or annuity contract which satisfies the requirements of paragraph (b) of this section is treated as a qualified trust for all purposes of the Internal Revenue Code of 1954. Such a custodial account or annuity contract is treated as a separate legal person which is exempt from the income tax under section 501(a). In addition, the person holding the assets of such account or holding such contract is treated as the trustee thereof. Accordingly, such person is required to file the returns described in sections 6033 and 6047 and to supply any other information which the trustee of a qualified trust is required to furnish.

(ii) Any procedure which has the effect of merely substituting one custodian for another shall not be considered as terminating or interrupting the legal existence of a custodial account which otherwise satisfies the requirements of paragraph (b) of this section.

(2)

(i) The beneficiary of a custodial account which satisfies the requirements of paragraph (b) of this section is taxed in accordance with section 402. In determining whether the funds of a custodial account are distributed or made available to an employee or his beneficiary, the rules which under section 402(a) are applicable to trusts will also apply to the custodial account as though it were a separate legal person and not an agent of the employee.

(ii) If a custodial account which has qualified under section 401 fails to qualify under such section for any taxable year, such custodial account will not thereafter be treated as a separate legal person, and the funds in such account shall be treated as made available within the meaning of section 402(a)(1) to the employees for whom they are held.

(3) The beneficiary of an annuity contract which satisfies the requirements of paragraph (b) of this section is taxed as if he were the beneficiary of an annuity contract described in section 403(a).

(d) ***Definitions.*** For purposes of this section—

(1) The term *bank* means a bank as defined in section 408(n).

(2) The term *annuity* means an annuity as defined in section 401(g). Thus, any contract or certificate issued after December 31, 1962, which is transferable is not treated as a qualified trust under this section.

(e) ***Other contracts.*** For purposes of this section, other than the non-transferability restriction of paragraph (d)(2), a contract issued by an insurance company qualified to do business in a state shall be treated as an annuity contract. For purposes of the preceding sentence, the contract does not include a life, health or accident, property, casualty or liability insurance contract. For purposes of this paragraph, a contract which is issued by an insurance company will not be considered a life insurance contract merely because the contract provides incidental life insurance protection. The provisions of this paragraph are effective for taxable years beginning after December 31, 1975.

(f) ***Cross reference.*** For the requirement that the assets of an employee benefit plan be placed in trust, and exceptions thereto, see section 403 of the Employee Retirement Income Security Act of 1974, 29 U.S.C. 1103, and the regulations prescribed thereunder by the Secretary of Labor.

(Secs. 401(f)(2), 7805, Internal Revenue Code of 1954 (88 Stat. 939 and 68A Stat. 917; 26 U.S.C. 401(f)(2), 7805))

[43 FR 41204, Sept. 15, 1978. Redesignated and amended by T.D. 7748, 46 FR 1695, 1696, Jan. 7, 1981; T.D. 8635, 60 FR 65549, Dec. 20, 1995; T.D. 9849, 84 FR 9234, Mar. 14, 2019]

§ 1.401(k)-0 Table of contents.

This section contains first a list of section headings and then a list of the paragraphs in each section in §§ 1.401(k)-1 through 1.401(k)-6.

List of Sections

§ 1.401(k)-1 Certain cash or deferred arrangements.

§ 1.401(k)-2 ADP test.

§ 1.401(k)-3 Safe harbor requirements.

§ 1.401(k)-4 SIMPLE 401(k) plan requirements.

§ 1.401(k)-5 Special rules for mergers, acquisitions and similar events. [Reserved]

§ 1.401(k)-6 Definitions.

List of Paragraphs

§ 1.401(k)-1 Certain cash or deferred arrangements.

(a) General rules.

(1) Certain plans permitted to include cash or deferred arrangements.

(2) Rules applicable to cash or deferred arrangements generally.

(i) Definition of cash or deferred arrangement.

(ii) Treatment of after-tax employee contributions.

(iii) Treatment of ESOP dividend election.

(iv) Treatment of elective contributions as plan assets.

(3) Rules applicable to cash or deferred elections generally.

(i) Definition of cash or deferred election.

(ii) Automatic enrollment.

(iii) Rules related to timing.

(A) Requirement that amounts not be currently available.

(B) Contribution may not precede election.

(C) Contribution may not precede services.

(iv) Current availability defined.

(v) Certain one-time elections not treated as cash or deferred elections.

(vi) Tax treatment of employees.

(vii) Examples.

(4) Rules applicable to qualified cash or deferred arrangements.

(i) Definition of qualified cash or deferred arrangement.

(ii) Treatment of elective contributions as employer contributions.

(iii) Tax treatment of employees.

(iv) Application of nondiscrimination requirements to plan that includes a qualified cash or deferred arrangement.

(A) Exclusive means of amounts testing.

(B) Testing benefits, rights and features.

(C) Minimum coverage requirement.

(5) Rules applicable to nonqualified cash or deferred arrangements.

(i) Definition of nonqualified cash or deferred arrangement.

(ii) Treatment of elective contributions as nonelective contributions.

(iii) Tax treatment of employees.

(iv) Qualification of plan that includes a nonqualified cash or deferred arrangement.

(A) In general.

(B) Application of section 401(a)(4) to certain plans.

(v) Example.

(6) Rules applicable to cash or deferred arrangements of self-employed individuals.

(i) Application of general rules.

(ii) Treatment of matching contributions made on behalf of self-employed individuals.

(iii) Timing of self-employed individual's cash or deferred election.

(iv) Special rule for certain payments to self-employed individuals.

(b) Coverage and nondiscrimination requirements.

(1) In general.

(2) Automatic satisfaction by certain plans.

(3) Anti-abuse provisions.

(4) Aggregation and restructuring.

(i) In general.

(ii) Aggregation of cash or deferred arrangements within a plan.

(iii) Aggregation of plans.

(A) In general.

(B) Plans with inconsistent ADP testing methods.

(iv) Disaggregation of plans and separate testing.

(A) In general.

(B) Restructuring prohibited.

(v) Modifications to section 410(b) rules.

(A) Certain disaggregation rules not applicable.

(B) Permissive aggregation of collective bargaining units.

(C) Multiemployer plans.

(vi) Examples.

(c) Nonforfeitability requirements.

(1) General rule.

(2) Definition of immediately nonforfeitable.

(3) Example.

(d) Distribution limitation.

(1) General rule.

(2) Rules applicable to distributions upon severance from employment.

(3) Rules applicable to hardship distributions.

(i) Distribution must be on account of hardship.

(ii) Immediate and heavy financial need.

(A) In general.

(B) Deemed immediate and heavy financial need.

(C) Primary beneficiary under the plan.

(iii) Distribution necessary to satisfy financial need.

(A) Distribution may not exceed amount of need.

(B) No alternative means reasonably available.

(C) Additional conditions.

(iv) Commissioner may expand standards.

(v) Applicability date.

(A) General rule.

(B) Options for earlier application.

(C) Certain rules optional in 2019.

(4) Rules applicable to distributions upon plan termination.

(i) No alternative defined contribution plan.

(ii) Lump sum requirement for certain distributions.

(5) Rules applicable to all distributions.

(i) Exclusive distribution rules.

(ii) Deemed distributions.

(iii) ESOP dividend distributions.

(iv) Limitations apply after transfer.

(6) Examples.

(e) Additional requirements for qualified cash or deferred arrangements.

(1) Qualified plan requirement.

(2) Election requirements.

(i) Cash must be available.

(ii) Frequency of elections.

(3) Separate accounting requirement.

(i) General rule.

(ii) Satisfaction of separate accounting requirement.

(4) Limitations on cash or deferred arrangements of state and local governments.

(i) General rule.

(ii) Rural cooperative plans and Indian tribal governments.

(iii) Adoption after May 6, 1986.

(iv) Adoption before May 7, 1986.

(5) One-year eligibility requirement.

(6) Other benefits not contingent upon elective contributions.

(i) General rule.

(ii) Definition of other benefits.

(iii) Effect of certain statutory limits.

(iv) Nonqualified deferred compensation.

(v) Plan loans and distributions.

(vi) Examples.

(7) Plan provision requirement.

(f) Special rules for designated Roth contributions.

(1) In general.

(2) Inclusion treatment.

(3) Separate accounting required.

(4) Designated Roth contributions must satisfy rules applicable to elective contributions.

(i) In general.

(ii) Special rules for direct rollovers.

(5) Rules regarding designated Roth contribution elections.

(i) Frequency of elections.

(ii) Default elections.

(6) Effective date.

(g) Effective dates.

(1) General rule.

(2) Early implementation permitted.

(3) Collectively bargained plans.

(4) Applicability of prior regulations.

§ 1.401(k)-2 ADP Test

(a) Actual deferral percentage (ADP) Test.

(1) In general.

(i) ADP test formula.

(ii) HCEs as sole eligible employees.

(iii) Special rule for early participation.

(2) Determination of ADP.

(i) General rule.

(ii) Determination of applicable year under current year and prior year testing method.

(3) Determination of ADR.

(i) General rule.

(ii) ADR of HCEs eligible under more than one arrangement.

(A) General rule.

(B) Plans not permitted to be aggregated.

(iii) Examples.

(4) Elective contributions taken into account under the ADP test.

(i) General rule.

(ii) Elective contributions for partners and self-employed individuals.

(iii) Elective contributions for HCEs.

(5) Elective contributions not taken into account under the ADP test.

(i) General rule.

(ii) Elective contributions for NHCEs.

(iii) Elective contributions treated as catch-up contributions.

(iv) Elective contributions used to satisfy the ACP test.

(v) Additional elective contributions pursuant to section 414(u).

(vi) Default elective contributions pursuant to section 414(w).

(6) Qualified nonelective contributions and qualified matching contributions that may be taken into account under the ADP test.

(i) Timing of allocation.

(ii) Requirement that amount satisfy section 401(a)(4).

(iii) Aggregation must be permitted.

(iv) Disporportionate contributions not taken into account.

(A) General rule.

(B) Definition of representative contribution rate.

(C) Definition of applicable contribution rate.

(D) Special rule for prevailing wage contributions.

(v) Qualified matching contributions.

(vi) Contributions only used once.

(7) Examples.

(b) Correction of excess contributions.

(1) Permissible correction methods.

(i) In general.

(A) Qualified nonelective contributions or qualified matching contributions.

(B) Excess contributions distributed.

(C) Excess contributions recharacterized.

(ii) Combination of correction methods.

(iii) Exclusive means of correction.

(2) Corrections through distribution.

(i) General rule.

(ii) Calculation of total amount to be distributed.

(A) Calculate the dollar amount of excess contributions for each HCE.

(B) Determination of the total amount of excess contributions.

(C) Satisfaction of ADP.

(iii) Apportionment of total amount of excess contributions among the HCEs.

(A) Calculate the dollar amount of excess contributions for each HCE.

(B) Limit on amount apportioned to any individual.

(C) Apportionment to additional HCEs.

(iv) Income allocable to excess contributions.

(A) General rule.

(B) Method of allocating income.

(C) Alternative method of allocating plan year income.

(D) Plan years before 2008.

(E) Alternative method for allocating plan year and gap period income.

(v) Distribution.

(vi) Tax treatment of corrective distributions.

(A) Corrective distributions for plan years beginning on or after January 1, 2008.

(B) Corrective distributions for plan years beginning before January 1, 2008.

(C) Corrective distributions attributable to designated Roth contributions.

(vii) Other rules.

(A) No employee or spousal consent required.

(B) Treatment of corrective distributions as elective contributions.

(C) No reduction of required minimum distribution.

(D) Partial distributions.

(viii) Examples.

(3) Recharacterization of excess contributions.

(i) General rule.

(ii) Treatment of recharacterized excess contributions.

(iii) Additional rules.

(A) Time of recharacterization.

(B) Employee contributions must be permitted under plan.

(C) Treatment of recharacterized excess contributions.

(4) Rules applicable to all corrections.

(i) Coordination with distribution of excess deferrals.

(A) Treatment of excess deferrals that reduce excess contributions.

(B) Treatment of excess contributions that reduce excess deferrals.

(ii) Forfeiture of match on distributed excess contributions.

(iii) Permitted forfeiture of QMAC.

(iv) No requirement for recalculation.

(v) Treatment of excess contributions that are catch-up contributions.

(5) Failure to timely correct.

(i) Failure to correct within $2^{1}/_{2}$ months after end of plan year.

(ii) Failure to correct within 12 months after end of plan year.

(iii) Special rule for eligible automatic contribution arrangements.

(c) Additional rules for prior year testing method.

(1) Rules for change in testing method.

(i) General rule.

(ii) Situations permitting a change to the prior year testing method.

(2) Calculation of ADP under the prior year testing method for the first plan year.

(i) Plans that are not successor plans.

(ii) First plan year defined.

(iii) Successor plans.

(3) Plans using different testing methods for the ADP and ACP test.

(4) Rules for plan coverage changes.

(i) In general.

(ii) Optional rule for minor plan coverage changes.

(iii) Definitions.

(A) Plan coverage change.

(B) Prior year subgroup.

(C) Weighted average of the ADPs for the prior year subgroups.

(iv) Examples.

§ 1.401(k)-3 Safe harbor requirement

(a) ADP test safe harbor.

(1) Section 401(k)(12) safe harbor.

(2) Section 401(k)(13) safe harbor.

(3) Requirements applicable to safe harbor contributions.

(b) Safe harbor nonelective contribution requirement.

(1) General rule.

(2) Safe harbor compensation defined.

(c) Safe harbor matching contribution requirement.

(1) In general.

(2) Basic matching formula.

(3) Enhanced matching formula.

(4) Limitation on HCE matching contributions.

(5) Use of safe harbor match not precluded by certain plan provisions.

(i) Safe harbor matching contributions on employee contributions.

(ii) Periodic matching contributions.

(6) Permissible restrictions on elective contributions by NHCEs.

(i) General rule.

(ii) Restrictions on election periods.

(iii) Restrictions on amount of elective contributions.

(iv) Restrictions on types of compensation that may be deferred.

(v) Restrictions due to limitations under the Internal Revenue Code.

(7) Examples.

(d) Notice requirement.

(1) General rule.

(2) Content requirement.

(i) General rule.

(ii) Minimum content requirement.

(iii) References to SPD.

(3) Timing requirement.

(i) General rule.

(ii) Deemed satisfaction of timing requirement.

(e) Plan year requirement.

(1) General rule.

(2) Initial plan year.

(3) Change of plan year.

(4) Final plan year.

(f) Plan amendments adopting safe harbor nonelective contributions.

(1) General rule.

(2) Contingent notice provided.

(3) Follow-up notice requirement.

(g) Permissible reduction or suspension of safe harbor contributions.

(1) General rule.

(i) Matching contributions.

(ii) Nonelective contributions.

(2) Supplemental notice.

(h) Additional rules.

(1) Contributions taken into account.

(2) Use of safe harbor nonelective contributions to satisfy other nondiscrimination tests.

(3) Early participation rules.

(4) Satisfying safe harbor contribution requirement under another defined contribution plan.

(5) Contributions used only once.

(i) [Reserved]

(j) Qualified automatic contribution arrangement.

(1) Automatic contribution requirement.

(i) In general.

(ii) Automatic contribution arrangement.

(iii) Exception to automatic enrollment for certain current employees.

(2) Qualified percentage.

(i) In general.

(ii) Minimum percentage requirements.

(A) Initial-period requirement.

(B) Second-year requirement.

(C) Third-year requirement.

(D) Later years requirement.

(iii) Exception to uniform percentage requirement.

(iv) Treatment of periods without default contributions.

(k) Modifications to contribution requirements and notice requirements for automatic contribution safe harbor.

(1) In general.

(2) Lower matching requirement.

(3) Modified nonforfeiture requirement.

(4) Additional notice requirements.

(i) In general.

(ii) Additional information.

(iii) Timing requirements.

§ 1.401(k)-4 SIMPLE 401(k) Plan Requirements

(a) General rule.

(b) Eligible employer.

(1) General rule.

(2) Special rule.

(c) Exclusive plan.

(1) General rule.

(2) Special rule.

(d) Election and notice.

(1) General rule.

(2) Employee elections.

(i) Initial plan year of participation.

(ii) Subsequent plan years.

(iii) Election to terminate.

(3) Employee notices.

(e) Contributions.

(1) General rule.

(2) Elective contributions.

(3) Matching contributions.

(4) Nonelective contributions.

(5) SIMPLE compensation.

(f) Vesting.

(g) Plan year.

(h) Other rules.

§ 1.401(k)-5 Special Rules for Mergers, Acquisitions and Similar Events. [Reserved]

§ 1.401(k)-6 Definitions.

[T.D. 9169, 69 FR 78154, Dec. 29, 2004, as amended by T.D. 9237, 71 FR 9 Jan. 3, 2006; T.D. 9324, 72 FR 21109, Apr. 30, 2007; T.D. 9447, 74 FR 8207, Feb. 24, 2009; T.D. 9641, 78 FR 68737, Nov. 15, 2013; T.D. 9875, 84 FR 49657, Sept. 23, 2019]

§ 1.401(k)-1 Certain cash or deferred arrangements.

(a) *General rules* —

(1) ***Certain plans permitted to include cash or deferred arrangements.*** A plan, other than a profit-sharing, stock bonus, pre-ERISA money purchase pension, or rural cooperative plan, does not satisfy the requirements of section 401(a) if the plan includes a cash or deferred arrangement. A profit-sharing, stock bonus, pre-ERISA money purchase pension, or rural cooperative plan does not fail to satisfy the requirements of section 401(a) merely because the plan includes a cash or deferred arrangement. A cash or deferred arrangement is part of a plan for purposes of this section if any contributions to the plan, or accruals or other benefits under the plan, are made or provided pursuant to the cash or deferred arrangement.

(2) *Rules applicable to cash or deferred arrangements generally* —

(i) ***Definition of cash or deferred arrangement.*** Except as provided in paragraphs (a)(2)(ii) and (iii) of this section, a cash or deferred arrangement is an arrangement under which an eligible employee may make a cash or deferred election with respect to contributions to, or accruals or other benefits under, a plan that is intended to satisfy the requirements of section 401(a) (including a contract that is intended to satisfy the requirements of section 403(a)).

(ii) ***Treatment of after-tax employee contributions.*** A cash or deferred arrangement does not include an arrangement under which amounts contributed under a plan at an employee's election are designated or treated at the time of contribution as after-tax employee contributions (*e.g.*, by treating the contributions as taxable income subject to applicable withholding requirements). *See also* section 414(h)(1). A designated Roth contribution, however, is not treated as an after-tax contribution for purposes of this section, § 1.401(k)-2 through § 1.401(k)-6 and § 1.401(m)-1 through § 1.401(m)-5. A contribution can be an after-tax employee contribution under the rule of this paragraph (a)(2)(ii) even if the employee's election to make after-tax employee contributions is made before the amounts subject to the election are currently available to the employee.

(iii) ***Treatment of ESOP dividend election.*** A cash or deferred arrangement does not include an arrangement under an ESOP under which dividends are either distributed or invested pursuant to an election made by participants or their beneficiaries in accordance with section 404(k)(2)(A)(iii).

(iv) ***Treatment of elective contributions as plan assets.*** The extent to which elective contributions constitute plan assets for purposes of the prohibited transaction provisions of section 4975 and title I of the Employee Retirement Income Security Act of 1974 (88 Stat. 829), Public Law 93-406, is determined in accordance with regulations and rulings issued by the Department of Labor. *See* 29 CFR 2510.3-102.

(3) *Rules applicable to cash or deferred elections generally* —

(i) ***Definition of cash or deferred election.*** A cash or deferred election is any direct or indirect election (or modification of an earlier election) by an employee to have the employer either—

(A) Provide an amount to the employee in the form of cash (or some other taxable benefit) that is not currently available; or

(B) Contribute an amount to a trust, or provide an accrual or other benefit, under a plan deferring the receipt of compensation.

(ii) ***Automatic enrollment.*** For purposes of determining whether an election is a cash or deferred election, it is irrelevant whether the default that applies in the absence of an affirmative election is described in paragraph (a)(3)(i)(A) of this section (*i.e.*, the employee receives an amount in cash or some other taxable benefit) or in paragraph (a)(3)(i)(B) of this section (*i.e.*, the employer contributes an amount to a trust or provides an accrual or other benefit under a plan deferring the receipt of compensation).

(iii) ***Rules related to timing*** —

(A) ***Requirement that amounts not be currently available.*** A cash or deferred election can only be made with respect to an amount that is not currently available to the employee on the date of the election. Further, a cash or deferred election can only be made with respect to amounts that would (but for the cash or deferred election) become currently available after the later of the date on which the employer adopts the cash or deferred arrangement or the date on which the arrangement first becomes effective.

(B) ***Contribution may not precede election.*** A contribution is made pursuant to a cash or deferred election only if the contribution is made after the election is made.

(C) ***Contribution may not precede services*** —

(*1*) ***General rule.*** Contributions are made pursuant to a cash or deferred election only if the contributions are made after the employee's performance of service with respect to which the contributions are made (or when the cash or other taxable benefit would be currently available, if earlier).

(*2*) ***Exception for bona fide administrative considerations.*** The timing of contributions will not be treated as failing to satisfy the requirements of this paragraph (a)(3)(iii)(C) merely because contributions for a pay period are occasionally made before the services with respect to that pay period are performed, provided the contributions are made early in order to accommodate bona fide administrative considerations (for example, the temporary absence of the bookkeeper with responsibility to transmit contributions to the plan) and are not paid early with a principal purpose of accelerating deductions.

(iv) ***Current availability defined.*** Cash or another taxable benefit is currently available to the employee if it has been paid to the employee or if the employee is able currently to receive the cash or other taxable benefit at the employee's discretion. An amount is not currently available to an employee if there is a significant limitation or restriction on the employee's right to receive the amount currently. Similarly, an amount is not currently available as of a date if the employee may under no circumstances receive the amount before a particular time in the future. The determination of whether an amount is currently available to an employee does not depend on whether it has been constructively received by the employee for purposes of section 451.

(v) ***Certain one-time elections not treated as cash or deferred elections.*** A cash or deferred election does not include a one-time irrevocable election made no later than the employee's first becoming eligible under the plan or any other plan or arrangement of the employer that is described in section 219(g)(5)(A) (whether or not such other plan or arrangement has terminated), to have contributions equal to a specified amount or percentage of the employee's compensation (including no amount of compensation) made by the employer on the employee's behalf to the plan and a specified amount or percentage of the employee's compensation (including no amount of compensation) divided among all other plans or

arrangements of the employer (including plans or arrangements not yet established) for the duration of the employee's employment with the employer, or in the case of a defined benefit plan to receive accruals or other benefits (including no benefits) under such plans. Thus, for example, employer contributions made pursuant to a one-time irrevocable election described in this paragraph are not treated as having been made pursuant to a cash or deferred election and are not includible in an employee's gross income by reason of § 1.402(a)-1(d). In the case of an irrevocable election made on or before December 23, 1994—

(A) The election does not fail to be treated as a one-time irrevocable election under this paragraph (a)(3)(v) merely because an employee was previously eligible under another plan of the employer (whether or not such other plan has terminated); and

(B) In the case of a plan in which partners may participate, the election does not fail to be treated as a one-time irrevocable election under this paragraph (a)(3)(v) merely because the election was made after commencement of employment or after the employee's first becoming eligible under any plan of the employer, provided that the election was made before the first day of the first plan year beginning after December 31, 1988, or, if later, March 31, 1989.

(vi) ***Tax treatment of employees.*** An amount generally is includible in an employee's gross income for the taxable year in which the employee actually or constructively receives the amount. But for section 402(e)(3), an employee is treated as having received an amount that is contributed to an exempt trust or plan described in section 401(a) or 403(a) pursuant to the employee's cash or deferred election. This is the case even if the election to defer is made before the year in which the amount is earned, or before the amount is currently available. *See* § 1.402(a)-1(d).

(vii) ***Examples.*** The following examples illustrate the application of this paragraph (a)(3):

> *Example 1.* (i) An employer maintains a profit-sharing plan under which each eligible employee has an election to defer an annual bonus payable on January 30 each year. The bonus equals 10% of compensation during the previous calendar year. Deferred amounts are not treated as after-tax employee contributions. The bonus is currently available on January 30.
> (ii) An election made prior to January 30 to defer all or part of the bonus is a cash or deferred election, and the bonus deferral arrangement is a cash or deferred arrangement.

> *Example 2.* (i) An employer maintains a profit-sharing plan which provides for discretionary profit sharing contributions and under which each eligible employee may elect to reduce his compensation by up to 10% and to have the employer contribute such amount to the plan. The employer pays each employee every two weeks for services during the immediately preceding two weeks. The employee's election to defer compensation for a payroll period must be made prior to the date the amount would otherwise be paid. The employer contributes to the plan the amount of compensation that each employee elected to defer, at the time it would otherwise be paid to the employee, and does not treat the contribution as an after-tax employee contribution.

(ii) The election is a cash or deferred election and the contributions are elective contributions.

Example 3. (i) The facts are the same as in *Example 2,* except that the employer makes a $10,000 contribution on January 31 of the plan year that is in addition to the contributions that satisfy the employer's obligation to make contributions with respect to cash or deferred elections for prior payroll periods. Employee A makes an election on February 15 to defer $2,000 from compensation that is not currently available and the employer reduces the employee's compensation to reflect the election.
(ii) None of the additional $10,000 contributed January 31 is a contribution made pursuant to Employee A's cash or deferred election, because the contribution was made before the election was made. Accordingly, the employer must make an additional contribution of $2,000 in order to satisfy its obligation to contribute an amount to the plan pursuant to Employee A's election. The $10,000 contribution may be allocated under the plan terms providing for discretionary profit sharing contributions.

Example 4. (i) The facts are the same as in *Example 3,* except that Employee A had an outstanding election to defer $500 from each payroll period's compensation. The $10,000 additional payment that is contributed early is not made early in order to accommodate bona fide administrative considerations.
(ii) None of the additional $10,000 contributed January 31 is a contribution made pursuant to Employee A's cash or deferred election for future payroll periods, because the contribution was made before the earlier of Employee A's performance of services to which the contribution is attributable or when the compensation would be currently available. Furthermore, the exception for early contributions in paragraph (a)(3)(iii)(C)(2) of this section does not apply. Accordingly, the employer must make an additional contribution of $500 per payroll period in order to satisfy its obligation to contribute an amount to the plan pursuant to Employee A's election. The $10,000 contribution may be allocated under the plan terms providing for discretionary profit sharing contributions.

Example 5. (i) Employer B establishes a money purchase pension plan in 1986. This is the first qualified plan established by Employer B. All salaried employees are eligible to participate under the plan. Hourly-paid employees are not eligible to participate under the plan. In 2000, Employer B establishes a profit-sharing plan under which all employees (both salaried and hourly) are eligible. Employer B permits all employees on the effective date of the profit-sharing plan to make a one-time irrevocable election to have Employer B contribute 5% of compensation on their behalf to the plan and make no other contribution to any other plan of Employer B (including plans not yet established) for the duration of the employee's employment with Employer B, and have their salaries reduced by 5%.

(ii) The election provided under the profit-sharing plan is not a one-time irrevocable election within the meaning of paragraph (a)(3)(v) of this section with respect to the salaried employees of Employer B who, before becoming eligible to participate under the profit-sharing plan, became eligible to participate under the money purchase pension plan. The election under the profit-sharing plan is a one-time irrevocable election within the meaning of paragraph (a)(3)(v) of this section with respect to the hourly employees, because they were not previously eligible to participate under another plan of the employer.

(4) ***Rules applicable to qualified cash or deferred arrangements*** —

(i) ***Definition of qualified cash or deferred arrangement.*** A qualified cash or deferred arrangement is a cash or deferred arrangement that satisfies the requirements of paragraphs (b), (c), (d), and (e) of this section.

(ii) ***Treatment of elective contributions as employer contributions.*** Except as otherwise provided in § 1.401(k)-2(b)(3), elective contributions under a qualified cash or deferred arrangement (including designated Roth contributions) are treated as employer contributions. Thus, for example, elective contributions under such an arrangement are treated as employer contributions for purposes of sections 401(a), 401(k), 402, 404, 409, 411, 412, 415, 416, and 417.

(iii) ***Tax treatment of employees.*** Except as provided in section 402(g), 402A (effective for taxable years beginning after December 31, 2005), or § 1.401(k)-2(b)(3), elective contributions under a qualified cash or deferred arrangement are neither includible in an employee's gross income at the time the cash would have been includible in the employee's gross income (but for the cash or deferred election), nor at the time the elective contributions are contributed to the plan. *See* § 1.402(a)-1(d)(2)(i).

(iv) ***Application of nondiscrimination requirements to plan that includes a qualified cash or deferred arrangement*** —

(A) ***Exclusive means of amounts testing.*** Elective contributions (including elective contributions that are designated Roth contributions) under a qualified cash or deferred arrangement satisfy the requirements of section 401(a)(4) with respect to amounts if and only if the amount of elective contributions satisfies the nondiscrimination test of section 401(k) under paragraph (b)(1) of this section. *See* § 1.401(a)(4)-1(b)(2)(ii)(B).

(B) ***Testing benefits, rights and features.*** A plan that includes a qualified cash or deferred arrangement must satisfy the requirements of section 401(a)(4) with respect to benefits, rights and features in addition to the requirements regarding amounts described in paragraph (a)(4)(iv)(A) of this section. For example, the right to make each level of elective contributions under a cash or deferred arrangement and the right to make designated Roth contributions are rights or features subject to the requirements of section 401(a)(4). *See* § 1.401(a)(4)-4(e)(3)(i) and (iii)(D). Thus, for example, if all employees are eligible to make a stated level of elective contributions under a cash or deferred arrangement, but that level of contributions can only be made from compensation in excess of a stated

amount, such as the Social Security taxable wage base, the arrangement will generally favor HCEs with respect to the availability of elective contributions and thus will generally not satisfy the requirements of section 401(a)(4).

(C) ***Minimum coverage requirement.*** A qualified cash or deferred arrangement is treated as a separate plan that must satisfy the requirements of section 410(b). *See* § 1.410(b)-7(c)(1) for special rules. The determination of whether a cash or deferred arrangement satisfies the requirements of section 410(b) must be made without regard to the modifications to the disaggregation rules set forth in paragraph (b)(4)(v) of this section. *See also* § 1.401(a)(4)-11(g)(3)(vii)(A), relating to corrective amendments that may be made to satisfy the minimum coverage requirements of section 410(b).

(5) ***Rules applicable to nonqualified cash or deferred arrangements*** —

(i) ***Definition of nonqualified cash or deferred arrangement.*** A nonqualified cash or deferred arrangement is a cash or deferred arrangement that fails to satisfy one or more of the requirements in paragraph (b), (c), (d) or (e) of this section.

(ii) ***Treatment of elective contributions as nonelective contributions.*** Except as specifically provided otherwise, elective contributions under a nonqualified cash or deferred arrangement are treated as nonelective employer contributions. Thus, for example, the elective contributions under such an arrangement are treated as nonelective employer contributions for purposes of sections 401(a) (including section 401(a)(4)) and 401(k), 404, 409, 411, 412, 415, 416, and 417 and are not subject to the requirements of section 401(m).

(iii) ***Tax treatment of employees.*** Elective contributions under a nonqualified cash or deferred arrangement are includible in an employee's gross income at the time the cash or other taxable amount that the employee would have received (but for the cash or deferred election) would have been includible in the employee's gross income. *See* § 1.402(a)-1(d)(1).

(iv) ***Qualification of plan that includes a nonqualified cash or deferred arrangement*** —

(A) ***In general.*** A profit-sharing, stock bonus, pre-ERISA money purchase pension, or rural cooperative plan does not fail to satisfy the requirements of section 401(a) merely because the plan includes a nonqualified cash or deferred arrangement. In determining whether the plan satisfies the requirements of section 401(a)(4), the nondiscrimination tests of sections 401(k), paragraph (b)(1) of this section, section 401(m)(2) and § 1.401(m)-1(b) may not be used. *See* §§ 1.401(a)(4)-1(b)(2)(ii)(B) and 1.410(b)-9 (definition of section 401(k) plan).

(B) ***Application of section 401(a)(4) to certain plans.*** The amount of employer contributions under a nonqualified cash or deferred arrangement is treated as satisfying section 401(a)(4) if the arrangement is part of a collectively bargained plan that automatically satisfies the requirements of section 410(b). *See* §§ 1.401(a)(4)-(c)(5) and 1.410(b)-2(b)(7). Additionally, the requirements of sections 401(a)(4) and 410(b) do not apply to a governmental plan (within the meaning of section 414(d)) maintained by a State or local government or political subdivision thereof (or agency or instrumentality thereof). *See* sections 401(a)(5) and 410(c)(1)(A).

(v) ***Example.*** The following example illustrates the application of this paragraph (a)(5):

> *Example.* (i) For the 2006 plan year, Employer A maintains a collectively bargained plan

that includes a cash or deferred arrangement. Employer contributions under the cash or deferred arrangement do not satisfy the nondiscrimination test of section 401(k) and paragraph (b) of this section.
(ii) The arrangement is a nonqualified cash or deferred arrangement. The employer contributions under the cash or deferred arrangement are considered to be nondiscriminatory under section 401(a)(4), and the elective contributions are generally treated as employer contributions under paragraph (a)(5)(ii) of this section. Under paragraph (a)(5)(iii) of this section and under § 1.402(a)-1(d)(1), however, the elective contributions are includible in each employee's gross income.

(6) ***Rules applicable to cash or deferred arrangements of self-employed individuals*** —

(i) ***Application of general rules.*** Generally, a partnership or sole proprietorship is permitted to maintain a cash or deferred arrangement, and individual partners or owners are permitted to make cash or deferred elections with respect to compensation attributable to services rendered to the entity, under the same rules that apply to other cash or deferred arrangements. For example, any contributions made on behalf of an individual partner or owner pursuant to a cash or deferred arrangement of a partnership or sole proprietorship are elective contributions unless they are designated or treated as after-tax employee contributions. In the case of a partnership, a cash or deferred arrangement includes any arrangement that directly or indirectly permits individual partners to vary the amount of contributions made on their behalf. Consistent with § 1.402(a)-1(d), the elective contributions under such an arrangement are includible in income and are not deductible under section 404(a) unless the arrangement is a qualified cash or deferred arrangement (*i.e.*, the requirements of section 401(k) and this section are satisfied). Also, even if the arrangement is a qualified cash or deferred arrangement, the elective contributions are includible in gross income and are not deductible under section 404(a) to the extent they exceed the applicable limit under section 402(g). *See also* § 1.401(a)-30.

(ii) ***Treatment of matching contributions made on behalf of self-employed individuals.*** Under section 402(g)(8), matching contributions made on behalf of a self-employed individual are not treated as elective contributions made pursuant to a cash or deferred election, without regard to whether such matching contributions indirectly permit individual partners to vary the amount of contributions made on their behalf.

(iii) ***Timing of self-employed individual's cash or deferred election.*** For purposes of paragraph (a)(3)(iv) of this section, a partner's compensation is deemed currently available on the last day of the partnership taxable year and a sole proprietor's compensation is deemed currently available on the last day of the individual's taxable year. Accordingly, a self-employed individual may not make a cash or deferred election with respect to compensation for a partnership or sole proprietorship taxable year after the last day of that year. See § 1.401(k)-2(a)(4)(ii) for the rules regarding when these contributions are treated as allocated.

(iv) ***Special rule for certain payments to self-employed individuals.*** For purposes of sections 401(k) and 401(m), the earned income of a self-employed individual for a taxable year constitutes payment for services during that year. Thus, for example, if a partnership provides for cash advance payments during the taxable year to be made to a partner based on the value of the partner's services prior to the date of payment (and which do not exceed a reasonable estimate

of the partner's earned income for the taxable year), a contribution of a portion of these payments to a profit sharing plan in accordance with an election to defer the portion of the advance payments does not fail to be made pursuant to a cash or deferred election within the meaning of paragraph (a)(3)(iii) of this section merely because the contribution is made before the amount of the partner's earned income is finally determined and reported. However, see § 1.401(k)-2(a)(4)(ii) for rules on when earned income is treated as received.

(b) *Coverage and nondiscrimination requirements* —

(1) *In general.* A cash or deferred arrangement satisfies this paragraph (b) for a plan year only if—

(i) The group of eligible employees under the cash or deferred arrangement (including any employees taken into account for purposes of section 410(b) pursuant to § 1.401(a)(4)-11(g)(3)(vii)(A)) satisfies the requirements of section 410(b) (including the average benefit percentage test, if applicable); and

(ii) The cash or deferred arrangement satisfies—

(A) The ADP test of section 401(k)(3) described in § 1.401(k)-2;

(B) The ADP safe harbor provisions of section 401(k)(12) described in § 1.401(k)-3; or

(C) The ADP safe harbor provisions of section 401(k)(13) described in § 1.401(k)-3; or

(D) The SIMPLE 401(k) provisions of section 401(k)(11) described in § 1.401(k)-4.

(2) *Automatic satisfaction by certain plans.* Notwithstanding paragraph (b)(1) of this section, a governmental plan (within the meaning of section 414(d)) maintained by a State or local government or political subdivision thereof (or agency or instrumentality thereof) shall be treated as meeting the requirements of this paragraph (b).

(3) *Anti-abuse provisions.* This section and §§ 1.401(k)-2 through 1.401(k)-6 are designed to provide simple, practical rules that accommodate legitimate plan changes. At the same time, the rules are intended to be applied by employers in a manner that does not make use of changes in plan testing procedures or other plan provisions to inflate inappropriately the ADP for NHCEs (which is used as a benchmark for testing the ADP for HCEs) or to otherwise manipulate the nondiscrimination testing requirements of this paragraph (b). Further, this paragraph (b) is part of the overall requirement that benefits or contributions not discriminate in favor of HCEs. Therefore, a plan will not be treated as satisfying the requirements of this paragraph (b) if there are repeated changes to plan testing procedures or plan provisions that have the effect of distorting the ADP so as to increase significantly the permitted ADP for HCEs, or otherwise manipulate the nondiscrimination rules of this paragraph, if a principal purpose of the changes was to achieve such a result.

(4) *Aggregation and restructuring* —

(i) *In general.* This paragraph (b)(4) contains the exclusive rules for aggregating and disaggregating plans and cash or deferred arrangements for purposes of this section, and §§ 1.401(k)-2 through 1.401(k)-6.

(ii) *Aggregation of cash or deferred arrangements within a plan.* Except as otherwise specifically provided in this paragraph (b)(4), all cash or deferred arrangements included in a plan are treated as a single cash or deferred arrangement and a plan must apply a single test under paragraph (b)(1)(ii) of this section with respect to all such arrangements within the plan. Thus, for example, if two groups of employees are eligible for separate cash or deferred

arrangements under the same plan, all contributions under both cash or deferred arrangements must be treated as made under a single cash or deferred arrangement subject to a single test, even if they have significantly different features, such as different limits on elective contributions.

(iii) *Aggregation of plans* —

(A) ***In general.*** For purposes of this section and §§ 1.401(k)-2 through 1.401(k)-6, the term *plan* means a plan within the meaning of § 1.410(b)-7(a) and (b), after application of the mandatory disaggregation rules of § 1.410(b)-7(c), and the permissive aggregation rules of § 1.410(b)-7(d), as modified by paragraph (b)(4)(v) of this section. Thus, for example, two plans (within the meaning of § 1.410(b)-7(b)) that are treated as a single plan pursuant to the permissive aggregation rules of § 1.410(b)-7(d) are treated as a single plan for purposes of sections 401(k) and (m).

(B) ***Plans with inconsistent ADP testing methods.*** Pursuant to paragraph (b)(4)(ii) of this section, a single testing method must apply with respect to all cash or deferred arrangements under a plan. Thus, in applying the permissive aggregation rules of § 1.410(b)-7(d), an employer may not aggregate plans (within the meaning of § 1.410(b)-7(b)) that apply inconsistent testing methods. For example, a plan (within the meaning of § 1.410(b)-7(b)) that applies the current year testing method may not be aggregated with another plan that applies the prior year testing method. Similarly, an employer may not aggregate a plan (within the meaning of § 1.410(b)-7(b)) using the ADP safe harbor provisions of section 401(k)(12) and another plan that is using the ADP test of section 401(k)(3).

(iv) *Disaggregation of plans and separate testing* —

(A) ***In general.*** If a cash or deferred arrangement is included in a plan (within the meaning of § 1.410(b)-7(b)) that is mandatorily disaggregated under the rules of section 410(b) (as modified by this paragraph (b)(4)), the cash or deferred arrangement must be disaggregated in a consistent manner. For example, in the case of an employer that is treated as operating qualified separate lines of business under section 414(r), if the eligible employees under a cash or deferred arrangement are in more than one qualified separate line of business, only those employees within each qualified separate line of business may be taken into account in determining whether each disaggregated portion of the plan complies with the requirements of section 401(k), unless the employer is applying the special rule for employer-wide plans in § 1.414(r)-1(c)(2)(ii) with respect to the plan. Similarly, if a cash or deferred arrangement under which employees are permitted to participate before they have completed the minimum age and service requirements of section 410(a)(1) applies section 410(b)(4)(B) for determining whether the plan complies with section 410(b)(1), then the arrangement must be treated as two separate arrangements, one comprising all eligible employees who have met the age and service requirements of section 410(a)(1) and one comprising all eligible employees who have not met the age and service requirements under section 410(a)(1), unless the plan is using the rule in § 1.401(k)-2(a)(1)(iii)(A).

(B) ***Restructuring prohibited.*** Restructuring under § 1.401(a)(4)-9(c) may not be used to demonstrate compliance with the requirements of section 401(k). *See* § 1.401(a)(4)-9(c)(3)(ii).

(v) ***Modifications to section 410(b) rules*** —

(A) ***Certain disaggregation rules not applicable.*** The mandatory disaggregation rules relating to section 401(k) plans and section 401(m) plans set forth in § 1.410(b)-7(c)(1) and ESOP and non-ESOP portions of a plan set forth in § 1.410(b)-7(c)(2) shall not apply for purposes of this section and §§ 1.401(k)-2 through 1.401(k)-6. Accordingly, notwithstanding § 1.410(b)-7(d)(2), an ESOP and a non-ESOP which are different plans (within the meaning of section 414(l), as described in § 1.410(b)-7(b)) are permitted to be aggregated for these purposes.

(B) ***Permissive aggregation of collective bargaining units.*** Notwithstanding the general rule under section 410(b) and § 1.410(b)-7(c) that a plan that benefits employees who are included in a unit of employees covered by a collective bargaining agreement and employees who are not included in the collective bargaining unit is treated as comprising separate plans, an employer can treat two or more separate collective bargaining units as a single collective bargaining unit for purposes of this section and §§ 1.401(k)-2 through 1.401(k)-6, provided that the combinations of units are determined on a basis that is reasonable and reasonably consistent from year to year. Thus, for example, if a plan benefits employees in three categories (*e.g.*, employees included in collective bargaining unit A, employees included in collective bargaining unit B, and employees who are not included in any collective bargaining unit), the plan can be treated as comprising three separate plans, each of which benefits only one category of employees. However, if collective bargaining units A and B are treated as a single collective bargaining unit, the plan will be treated as comprising only two separate plans, one benefiting all employees who are included in a collective bargaining unit and another benefiting all other employees. Similarly, if a plan benefits only employees who are included in collective bargaining unit A and employees who are included in collective bargaining unit B, the plan can be treated as comprising two separate plans. However, if collective bargaining units A and B are treated as a single collective bargaining unit, the plan will be treated as a single plan. An employee is treated as included in a unit of employees covered by a collective bargaining agreement if and only if the employee is a collectively bargained employee within the meaning of § 1.410(b)-6(d)(2).

(C) ***Multiemployer plans.*** Notwithstanding § 1.410(b)-7(c)(4)(ii)(C), the portion of the plan that is maintained pursuant to a collective bargaining agreement (within the meaning of § 1.413-1(a)(2)) is treated as a single plan maintained by a single employer that employs all the employees benefiting under the same benefit computation formula and covered pursuant to that collective bargaining agreement. The rules of paragraph (b)(4)(v)(B) of this section (including the permissive aggregation of collective bargaining units) apply to the resulting deemed single plan in the same manner as they would to a single employer plan, except that the plan administrator is substituted for the employer where appropriate and that appropriate fiduciary obligations are taken into account. The noncollectively bargained portion of the plan is treated as maintained by one or more employers, depending on whether the noncollectively bargaining unit employees who benefit under the plan are employed by one or more employers.

(vi) ***Examples.*** The following examples illustrate the application of this paragraph (b)(4):

> *Example 1.* (i) Employer A maintains Plan V, a profit-sharing plan that includes a cash or

deferred arrangement in which all of the employees of Employer A are eligible to participate. For purposes of applying section 410(b), Employer A is treated as operating qualified separate lines of business under section 414(r) in accordance with § 1.414(r)-1(b). However, Employer A applies the special rule for employer-wide plans in § 1.414(r)-1(c)(2)(ii) to the portion of its profit-sharing plan that consists of elective contributions under the cash or deferred arrangement (and to no other plans or portions of plans).
(ii) Under these facts, the requirements of this section and §§ 1.401(k)-2 through 1.401(k)-6 must be applied on an employer-wide rather than a qualified separate line of business basis.

Example 2. (i) Employer B maintains Plan W, a profit-sharing plan that includes a cash or deferred arrangement in which all of the employees of Employer B are eligible to participate. For purposes of applying section 410(b), the plan treats the cash or deferred arrangement as two separate plans, one for the employees who have completed the minimum age and service eligibility conditions under section 410(a)(1) and the other for employees who have not completed the conditions. The plan provides that it will satisfy the section 401(k) safe harbor requirement of § 1.401(k)-3 with respect to the employees who have met the minimum age and service conditions and that it will meet the ADP test requirements of § 1.401(k)-2 with respect to the employees who have not met the minimum age and service conditions.
(ii) Under these facts, the cash or deferred arrangement must be disaggregated on a consistent basis with the disaggregation of Plan W. Thus, the requirements of § 1.401(k)-2 must be applied by comparing the ADP for eligible HCEs who have not completed the minimum age and service conditions with the ADP for eligible NHCEs for the applicable year who have not completed the minimum age and service conditions.

Example 3. (i) Employer C maintains Plan X, a stock-bonus plan including an ESOP. The plan also includes a cash or deferred arrangement for participants in the ESOP and non-ESOP portions of the plan.
(ii) Pursuant to paragraph (b)(4)(v)(A) of this section the ESOP and non-ESOP portions of the stock-bonus plan are a single cash or deferred arrangement for purposes of this section and §§ 1.401(k)-2 through 1.401(k)-6. However, as provided in paragraph (a)(4)(iv)(C) of this section, the ESOP and non-ESOP portions of the plan are still treated as separate plans for purposes of satisfying the requirements of section 410(b).

(c) ***Nonforfeitability requirements*** —

(1) ***General rule.*** A cash or deferred arrangement satisfies this paragraph (c) only if the amount attributable to an employee's elective contributions are immediately nonforfeitable, within the meaning of paragraph (c)(2) of this section, are disregarded for purposes of applying section 411(a)(2) to other contributions or benefits, and the contributions remain nonforfeitable even if the employee makes no additional elective contributions under a cash or deferred arrangement.

(2) ***Definition of immediately nonforfeitable.*** An amount is immediately nonforfeitable if it is immediately nonforfeitable within the meaning of section 411, and would be nonforfeitable under the plan regardless of the age and service of the employee or whether the employee is employed on a specific date. An amount that is subject to forfeitures or suspensions permitted by section 411(a)(3) does not satisfy the requirements of this paragraph (c).

(3) ***Example.*** The following example illustrates the application of this paragraph (c):

Example. (i) Employees B and C are covered by Employer Y's stock bonus plan, which includes a cash or deferred arrangement. All employees participating in the plan have a nonforfeitable right to a percentage of their account balance derived from all contributions (including elective contributions) as shown in the following table:

Years of service	Nonforfeitable percentage
Less than 1	0
1	20
2	40
3	60
4	80
5 or more	100

(ii) The cash or deferred arrangement does not satisfy paragraph (c) of this section because elective contributions are not immediately nonforfeitable. Thus, the cash or deferred arrangement is a nonqualified cash or deferred arrangement.

(d) ***Distribution limitation*** —

(1) ***General rule.*** A cash or deferred arrangement satisfies this paragraph (d) only if amounts attributable to elective contributions may not be distributed before one of the following events, and any distributions so permitted also satisfy the additional requirements of paragraphs (d)(2) through (5) of this section (to the extent applicable)—

(i) The employee's death, disability, or severance from employment;

(ii) In the case of a profit-sharing, stock bonus or rural cooperative plan—

(A) The employee's attainment of age $59^{1}/_{2}$; or

(B) In accordance with section 401(k)(14), the employee's hardship;

(iii) In accordance with section 401(k)(10), the termination of the plan; or

(iv) In the case of a qualified reservist distribution defined in section 72(t)(2)(G)(iii), the date the reservist was ordered or called to active duty.

(2) ***Rules applicable to distributions upon severance from employment.*** An employee has a severance from employment when the employee ceases to be an employee of the employer maintaining the plan. An employee does not have a severance from employment if, in connection with a change of employment, the employee's new employer maintains such plan with respect to the employee. For example, a new employer maintains a plan with respect to an employee by continuing or assuming sponsorship of the plan or by accepting a transfer of plan assets and liabilities (within the meaning of section 414(l)) with respect to the employee.

(3) ***Rules applicable to hardship distributions*** —

(i) ***Distribution must be on account of hardship.*** A distribution is treated as made after an employee's hardship for purposes of paragraph (d)(1)(ii) of this section if and only if it is made on account of the hardship. For purposes of this rule, a distribution is made on account of hardship only if the distribution both is made on account of an immediate and heavy financial need of the employee and is necessary to satisfy the financial need. The determination of the existence of an immediate and heavy financial need and of the amount necessary to meet the need must be made in accordance with nondiscriminatory and objective standards set forth in the plan.

(ii) ***Immediate and heavy financial need*** —

(A) ***In general.*** Whether an employee has an immediate and heavy financial need is to be determined based on all the relevant facts and circumstances. Generally, for example, the need to pay the funeral expenses of a family member would constitute an immediate and heavy financial need. A distribution made to an employee for the purchase of a boat or television would generally not constitute a distribution made on account of an immediate and heavy financial need. A financial need may be immediate and heavy even if it was reasonably foreseeable or voluntarily incurred by the employee.

(B) ***Deemed immediate and heavy financial need.*** A distribution is deemed to be made on account of an immediate and heavy financial need of the employee if the distribution is for—

(*1*) Expenses for (or necessary to obtain) medical care that would be deductible under section 213(d), determined without regard to the limitations in section 213(a) (relating to the applicable percentage of adjusted gross income and the recipients of the medical care) provided that, if the recipient of the medical care is not listed in section 213(a), the recipient is a primary beneficiary under the plan;

(*2*) Costs directly related to the purchase of a principal residence for the employee (excluding mortgage payments);

(*3*) Payment of tuition, related educational fees, and room and board expenses, for up to the next 12 months of post-secondary education for the employee, for the employee's spouse, child or dependent (as defined in section 152 without regard to section 152(b)(1), (b)(2) and (d)(1)(B)), or for a primary beneficiary under the plan;

(4) Payments necessary to prevent the eviction of the employee from the employee's principal residence or foreclosure on the mortgage on that residence;

(5) Payments for burial or funeral expenses for the employee's deceased parent, spouse, child or dependent (as defined in section 152 without regard to section 152(d)(1)(B)), or for a deceased primary beneficiary under the plan;

(6) Expenses for the repair of damage to the employee's principal residence that would qualify for the casualty deduction under section 165 (determined without regard to section 165(h)(5) and whether the loss exceeds 10% of adjusted gross income); or

(7) Expenses and losses (including loss of income) incurred by the employee on account of a disaster declared by the Federal Emergency Management Agency (FEMA) under the Robert T. Stafford Disaster Relief and Emergency Assistance Act, Public Law 100-707, provided that the employee's principal residence or principal place of employment at the time of the disaster was located in an area designated by FEMA for individual assistance with respect to the disaster.

(C) ***Primary beneficiary under the plan.*** For purposes of paragraph (d)(3)(ii)(B) of this section, a "primary beneficiary under the plan" is an individual who is named as a beneficiary under the plan and has an unconditional right, upon the death of the employee, to all or a portion of the employee's account balance under the plan.

(iii) ***Distribution necessary to satisfy financial need*** —

(A) ***Distribution may not exceed amount of need.*** A distribution is treated as necessary to satisfy an immediate and heavy financial need of an employee only to the extent the amount of the distribution is not in excess of the amount required to satisfy the financial need (including any amounts necessary to pay any federal, state, or local income taxes or penalties reasonably anticipated to result from the distribution).

(B) ***No alternative means reasonably available.*** A distribution is not treated as necessary to satisfy an immediate and heavy financial need of an employee unless each of the following requirements is satisfied—

(1) The employee has obtained all other currently available distributions (including distributions of ESOP dividends under section 404(k), but not hardship distributions) under the plan and all other plans of deferred compensation, whether qualified or nonqualified, maintained by the employer;

(2) The employee has provided to the plan administrator a representation in writing (including by using an electronic medium as defined in § 1.401(a)-21(e)(3)), or in such other form as may be prescribed by the Commissioner, that he or she has insufficient cash or other liquid assets reasonably available to satisfy the need; and

(3) The plan administrator does not have actual knowledge that is contrary to the representation.

(C) ***Additional conditions.*** A plan generally may provide for additional conditions, such as those described in 26 CFR 1.401(k)-1(d)(3)(iv)(B) and (C) (revised as of April 1, 2019), to demonstrate that a distribution is necessary to satisfy an immediate and heavy financial need of an employee. For example, a plan may provide that, before a hardship distribution may be made, an employee must obtain all nontaxable loans (determined at the time a

loan is made) available under the plan and all other plans maintained by the employer. However, a plan may not provide for a suspension of an employee's elective contributions or employee contributions under any plan described in section 401(a) or 403(a), any section 403(b) plan, or any eligible governmental plan described in § 1.457-2(f) as a condition of obtaining a hardship distribution.

(iv) ***Commissioner may expand standards.*** The Commissioner may prescribe additional guidance of general applicability, published in the Internal Revenue Bulletin (see § 601.601(d)(2) of this chapter), expanding the list of distributions deemed to be made on account of immediate and heavy financial needs and setting forth additional methods to demonstrate that a distribution is necessary to satisfy an immediate and heavy financial need.

(v) ***Applicability date*** —

(A) ***General rule.*** Except as otherwise provided in this paragraph (d)(3)(v), the rules in this paragraph (d)(3) apply to distributions made on or after January 1, 2020. For distributions made before January 1, 2020, the rules in 26 CFR 1.401(k)-1(d)(3) (revised as of April 1, 2019) apply.

(B) ***Options for earlier application.*** The rules in this paragraph (d)(3) may be applied to distributions made in plan years beginning after December 31, 2018, and the last sentence of paragraph (d)(3)(iii)(C) of this section (prohibiting the suspension of contributions as a condition of obtaining a hardship distribution) may be applied as of the first day of the first plan year beginning after December 31, 2018, even if the distribution was made in the prior plan year. Thus, for example, a calendar-year plan that provides for hardship distributions under the rules in 26 CFR 1.401(k)-1(d)(3)(iv)(E) (revised as of April 1, 2019) may be amended to provide that an employee who receives a hardship distribution in the second half of the 2018 plan year will be prohibited from making contributions only until January 1, 2019 (or may continue to provide that contributions will be suspended for the originally scheduled 6 months). In addition, paragraph (d)(3)(ii)(B) of this section (listing distributions deemed to be made on account of an immediate and heavy financial need) may be applied to distributions made on or after a date that is as early as January 1, 2018.

(C) ***Certain rules optional in 2019.*** If, in accordance with paragraph (d)(3)(v)(B) of this section, the rules in this paragraph (d)(3) are applied to distributions made before January 1, 2020, then the rules in paragraphs (d)(3)(iii)(B)(*2*) and (*3*) of this section (relating to an employee representation) and the last sentence of paragraph (d)(3)(iii)(C) of this section (prohibiting the suspension of contributions as a condition of obtaining a hardship distribution) may be disregarded with respect to such distributions.

(4) ***Rules applicable to distributions upon plan termination*** —

(i) ***No alternative defined contribution plan.*** A distribution may not be made under paragraph (d)(1)(iii) of this section if the employer establishes or maintains an alternative defined contribution plan. For purposes of the preceding sentence, the definition of the term “employer” contained in § 1.401(k)-6 is applied as of the date of plan termination, and a plan is an alternative defined contribution plan only if it is a defined contribution plan that exists at any time during the period beginning on the date of plan termination and ending 12 months after distribution of all assets from the terminated plan. However, if at all times during the 24-month period beginning 12 months before the date of plan termination, fewer than 2% of the employees who were eligible under the defined contribution plan that includes the cash or

deferred arrangement as of the date of plan termination are eligible under the other defined contribution plan, the other plan is not an alternative defined contribution plan. In addition, a defined contribution plan is not treated as an alternative defined contribution plan if it is an employee stock ownership plan as defined in section 4975(e)(7) or 409(a), a simplified employee pension as defined in section 408(k), a SIMPLE IRA plan as defined in section 408(p), a plan or contract that satisfies the requirements of section 403(b), or a plan that is described in section 457(b) or (f).

(ii) ***Lump sum requirement for certain distributions.*** A distribution may be made under paragraph (d)(1)(iii) of this section only if it is a lump sum distribution. The term lump sum distribution has the meaning provided in section 402(e)(4)(D) (without regard to section 402(e)(4)(D)(i)(I), (II), (III) and (IV)). In addition, a lump sum distribution includes a distribution of an annuity contract from a trust that is part of a plan described in section 401(a) and which is exempt from tax under section 501(a) or an annuity plan described in 403(a).

(5) ***Rules applicable to all distributions*** —

(i) ***Exclusive distribution rules.*** Amounts attributable to elective contributions may not be distributed on account of any event not described in this paragraph (d), such as completion of a stated period of plan participation or the lapse of a fixed number of years. For example, if excess deferrals (and income) for an employee's taxable year are not distributed within the time prescribed in § 1.402(g)-1(e)(2) or (3), the amounts may be distributed only on account of an event described in this paragraph (d). Pursuant to section 401(k)(8), the prohibition on distributions set forth in this section does not apply to a distribution of excess contributions under § 1.401(k)-2(b).

(ii) ***Deemed distributions.*** The cost of life insurance (determined under section 72) is not treated as a distribution for purposes of section 401(k)(2) and this paragraph (d). The making of a loan is not treated as a distribution, even if the loan is secured by the employee's accrued benefit attributable to elective contributions or is includible in the employee's income under section 72(p). However, the reduction, by reason of default on a loan, of an employee's accrued benefit derived from elective contributions is treated as a distribution.

(iii) ***ESOP dividend distributions.*** A plan does not fail to satisfy the requirements of this paragraph (d) merely by reason of a dividend distribution described in section 404(k)(2).

(iv) ***Limitations apply after transfer.*** The limitations of this paragraph (d) generally continue to apply to amounts attributable to elective contributions (including QNECs and qualified matching contributions taken into account for the ADP test under § 1.401(k)-2(a)(6)) that are transferred to another qualified plan of the same or another employer. Thus, the transferee plan will generally fail to satisfy the requirements of section 401(a) and this section if transferred amounts may be distributed before the times specified in this paragraph (d). In addition, a cash or deferred arrangement fails to satisfy the limitations of this paragraph (d) if it transfers amounts to a plan that does not provide that the transferred amounts may not be distributed before the times specified in this paragraph (d). The transferor plan does not fail to comply with the preceding sentence if it reasonably concludes that the transferee plan provides that the transferred amounts may not be distributed before the times specified in this paragraph (d). What constitutes a basis for a reasonable conclusion is determined under standards comparable to those under the rules related to acceptance of rollover distributions. See § 1.401(a)(31)-1, A-14. The limitations of this paragraph (d) cease to apply after the transfer, however, if the amounts could have been distributed at the time of the transfer (other than on

account of hardship), and the transfer is an elective transfer described in § 1.411(d)-4, Q&A-3(b)(1). The limitations of this paragraph (d) also do not apply to amounts that have been paid in a direct rollover to the plan after being distributed by another plan.

(6) ***Examples.*** The following examples illustrate the application of this paragraph (d):

(i) Employer M maintains Plan V, a profit-sharing plan that includes a cash or deferred arrangement. Elective contributions under the arrangement may be withdrawn for any reason after two years following the end of the plan year in which the contributions were made. Because the plan permits distributions of elective contributions before the occurrence of one of the events specified in section 401(k)(2)(B) and this paragraph (d), the cash or deferred arrangement is a nonqualified cash or deferred arrangement and the elective contributions are currently includible in income under section 402.

(ii)

(A) Employer N maintains Plan W, a profit-sharing plan that includes a cash or deferred arrangement. Plan W provides for distributions upon a participant's severance from employment, death or disability. All employees of Employer N and its wholly owned subsidiary, Employer O, are eligible to participate in Plan W. Employer N agrees to sell all issued and outstanding shares of Employer O to an unrelated entity, Employer T, effective on December 31, 2006. Following the transaction, Employer O will be a wholly owned subsidiary of Employer T. Additionally, individuals who are employed by Employer O on the effective date of the sale continue to be employed by Employer O following the sale. Following the transaction, all employees of Employer O will cease to participate in Plan W and will become eligible to participate in the cash or deferred arrangement maintained by Employer T, Plan X. No assets will be transferred from Plan W to Plan X, except in the case of a direct rollover within the meaning of section 401(a)(31).

(B) Employer O ceases to be a member of Employer N's controlled group as a result of the sale. Therefore, employees of Employer O who participated in Plan W will have a severance from employment and are eligible to receive a distribution from Plan W.

(iii) Employer R maintains a pre-ERISA money purchase pension plan that includes a cash or deferred arrangement that is not a rural cooperative plan. Elective contributions under the arrangement may be distributed to an employee on account of hardship. Under paragraph (d)(1) of this section, hardship is a permissible distribution event only in a profit-sharing, stock bonus or rural cooperative plan. Since elective contributions under the arrangement may be distributed before a permissible distribution event occurs, the cash or deferred arrangement does not satisfy this paragraph (d), and is not a qualified cash or deferred arrangement. Moreover, the plan is not a qualified plan because a money purchase pension plan may not provide for payment of benefits upon hardship. *See* § 1.401-1(b)(1)(i).

(e) ***Additional requirements for qualified cash or deferred arrangements*** —

(1) ***Qualified plan requirement.*** A cash or deferred arrangement satisfies this paragraph (e) only if the plan of which it is a part is a profit-sharing, stock bonus, pre-ERISA money purchase or rural cooperative plan that otherwise satisfies the requirements of section 401(a) (taking into account the cash or deferred arrangement). A plan that includes a cash or deferred arrangement may provide for other contributions, including employer contributions (other than elective contributions), employee contributions, or both. However, except as expressly permitted under section 401(m), 410(b)(2)(A)(ii) or 416(c)(2)(A), elective contributions and matching contributions taken into account under §

1.401(k)-2(a) may not be taken into account for purposes of determining whether any other contributions under any plan (including the plan to which the contributions are made) satisfy the requirements of section 401(a).

(2) *Election requirements* —

(i) ***Cash must be available.*** A cash or deferred arrangement satisfies this paragraph (e) only if the arrangement provides that the amount that each eligible employee may defer as an elective contribution is available to the employee in cash. Thus, for example, if an eligible employee is provided the option to receive a taxable benefit (other than cash) or to have the employer contribute on the employee's behalf to a profit-sharing plan an amount equal to the value of the taxable benefit, the arrangement is not a qualified cash or deferred arrangement. Similarly, if an employee has the option to receive a specified amount in cash or to have the employer contribute an amount in excess of the specified cash amount to a profit-sharing plan on the employee's behalf, any contribution made by the employer on the employee's behalf in excess of the specified cash amount is not treated as made pursuant to a qualified cash or deferred arrangement, but would be treated as a matching contribution. This cash availability requirement applies even if the cash or deferred arrangement is part of a cafeteria plan within the meaning of section 125.

(ii) ***Frequency of elections.*** A cash or deferred arrangement satisfies this paragraph (e) only if the arrangement provides an employee with an effective opportunity to make (or change) a cash or deferred election at least once during each plan year. Whether an employee has an effective opportunity is determined based on all the relevant facts and circumstances, including the adequacy of notice of the availability of the election, the period of time during which an election may be made, and any other conditions on elections.

(3) *Separate accounting requirement* —

(i) ***General rule.*** A cash or deferred arrangement satisfies this paragraph (e) only if the portion of an employee's benefit subject to the requirements of paragraphs (c) and (d) of this section is determined by an acceptable separate accounting between that portion and any other benefits. Separate accounting is not acceptable unless contributions and withdrawals are attributed to the separate accounts and gains, losses, and other credits or charges are separately allocated on a reasonable and consistent basis to the accounts subject to the requirements of paragraphs (c) and (d) of this section and to other accounts. Subject to section 401(a)(4), forfeitures are not required to be allocated to the accounts in which benefits are subject to paragraphs (c) and (d) of this section. The separate accounting requirement of this paragraph (e)(3)(i) applies at the time the elective contribution is contributed to the plan and continues to apply until the contribution is distributed under the plan.

(ii) ***Satisfaction of separate accounting requirement.*** The requirements of paragraph (e)(3)(i) of this section are treated as satisfied if all amounts held under a plan that includes a qualified cash or deferred arrangement (and, if applicable, under another plan to which QNECs and QMACs are made) are subject to the requirements of paragraphs (c) and (d) of this section.

(4) *Limitations on cash or deferred arrangements of state and local governments* —

(i) ***General rule.*** A cash or deferred arrangement does not satisfy the requirements of this paragraph (e) if the arrangement is adopted after May 6, 1986, by a State or local government or political subdivision thereof, or any agency or instrumentality thereof (a governmental unit).

For purposes of this paragraph (e)(4), an employer that has made a legally binding commitment to adopt a cash or deferred arrangement is treated as having adopted the arrangement on that date.

(ii) ***Rural cooperative plans and Indian tribal governments.*** This paragraph (e)(4) does not apply to a rural cooperative plan or to a plan of an employer which is an Indian tribal government (as defined in section 7701(a)(40)), a subdivision of an Indian tribal government (determined in accordance with section 7871(d)), an agency or instrumentality of an Indian tribal government or subdivision thereof, or a corporation chartered under Federal, State or tribal law which is owned in whole or in part by any of the entities in this paragraph (e)(4)(ii).

(iii) ***Adoption after May 6, 1986.*** A cash or deferred arrangement is treated as adopted after May 6, 1986, with respect to all employees of any employer that adopts the arrangement after such date.

(iv) ***Adoption before May 7, 1986.*** If a governmental unit adopted a cash or deferred arrangement before May 7, 1986, then any cash or deferred arrangement adopted by the unit at any time is treated as adopted before that date. If an employer adopted an arrangement prior to such date, all employees of the employer may participate in the arrangement.

(5) ***One-year eligibility requirement.*** A cash or deferred arrangement satisfies this paragraph (e) only if no employee is required to complete a period of service with the employer maintaining the plan extending beyond the period permitted under section 410(a)(1) (determined without regard to section 410(a)(1)(B)(i)) to be eligible to make a cash or deferred election under the arrangement.

(6) ***Other benefits not contingent upon elective contributions*** —

(i) ***General rule.*** A cash or deferred arrangement satisfies this paragraph (e) only if no other benefit is conditioned (directly or indirectly) upon the employee's electing to make or not to make elective contributions under the arrangement. The preceding sentence does not apply to—

(A) Any matching contribution (as defined in § 1.401(m)-1(a)(2)) made by reason of such an election;

(B) Any benefit, right or feature (such as a plan loan) that requires, or results in, an amount to be withheld from an employee's pay (*e.g.* to pay for the benefit or to repay the loan), to the extent the cash or deferred arrangement restricts elective contributions to amounts available after such withholding from the employee's pay (after deduction of all applicable income and employment taxes);

(C) Any reduction in the employer's top-heavy contributions under section 416(c)(2) because of matching contributions that resulted from the elective contributions; or

(D) Any benefit that is provided at the employee's election under a plan described in section 125(d) in lieu of an elective contribution under a qualified cash or deferred arrangement.

(ii) ***Definition of other benefits.*** For purposes of this paragraph (e)(6), other benefits include, but are not limited to, benefits under a defined benefit plan; nonelective contributions under a defined contribution plan; the availability, cost, or amount of health benefits; vacations or vacation pay; life insurance; dental plans; legal services plans; loans (including plan loans); financial planning services; subsidized retirement benefits; stock options; property subject to section 83; and dependent care assistance. Also, increases in salary, bonuses or other cash remuneration (other than the amount that would be contributed under the cash or deferred election) are

benefits for purposes of this paragraph (e)(6). The ability to make after-tax employee contributions is a benefit, but that benefit is not contingent upon an employee's electing to make or not make elective contributions under the arrangement merely because the amount of elective contributions reduces dollar-for-dollar the amount of after-tax employee contributions that may be made. Additionally, benefits under any other plan or arrangement (whether or not qualified) are not contingent upon an employee's electing to make or not to make elective contributions under a cash or deferred arrangement merely because the elective contributions are or are not taken into account as compensation under the other plan or arrangement for purposes of determining benefits.

(iii) ***Effect of certain statutory limits.*** Any benefit under an excess benefit plan described in section 3(36) of the Employee Retirement Income Security Act of 1974 (88 Stat. 829), Public Law 93-406, that is dependent on the employee's electing to make or not to make elective contributions is not treated as contingent. Deferred compensation under a nonqualified plan of deferred compensation that is dependent on an employee's having made the maximum elective deferrals under section 402(g) or the maximum elective contributions permitted under the terms of the plan also is not treated as contingent.

(iv) ***Nonqualified deferred compensation.*** Except as otherwise provided in paragraph (e)(6)(iii) of this section, participation in a nonqualified deferred compensation plan is treated as contingent for purposes of this paragraph (e)(6) to the extent that an employee may receive additional deferred compensation under the nonqualified plan to the extent the employee makes or does not make elective contributions.

(v) ***Plan loans and distributions.*** A loan or distribution of elective contributions is not a benefit conditioned on an employee's electing to make or not make elective contributions under the arrangement merely because the amount of the loan or distribution is based on the amount of the employee's account balance.

(vi) ***Examples.*** The following examples illustrate the application of this paragraph (e)(6):

Example 1. Employer T maintains a cash or deferred arrangement for all of its employees. Employer T also maintains a nonqualified deferred compensation plan for two highly paid executives, Employees R and C. Under the terms of the nonqualified deferred compensation plan, R and C are eligible to participate only if they do not make elective contributions under the cash or deferred arrangement. Participation in the nonqualified plan is a contingent benefit for purposes of this paragraph (e)(6), because R's and C's participation is conditioned on their electing not to make elective contributions under the cash or deferred arrangement.

Example 2. Employer T maintains a cash or deferred arrangement for all its employees. Employer T also maintains a nonqualified deferred compensation plan for two highly paid executives, Employees R and C. Under the terms of the arrangements, Employees R and C may defer a maximum of 10% of their compensation, and may allocate their deferral between the cash or deferred arrangement and the nonqualified deferred compensation plan in any way they choose (subject to the overall 10% maximum). Because the maximum deferral available under the nonqualified deferred compensation plan depends on the elective deferrals made under the cash or deferred arrangement, the right to participate in the nonqualified plan is a contingent benefit for purposes of this paragraph (e)(6).

(7) ***Plan provision requirement.*** A plan that includes a cash or deferred arrangement satisfies this paragraph (e) only if it provides that the nondiscrimination requirements of section 401(k) will be met. Thus, the plan must provide for satisfaction of one of the specific alternatives described in paragraph (b)(1)(ii) of this section and, if with respect to that alternative there are optional choices, which of the optional choices will apply. For example, a plan that uses the ADP test of section 401(k)(3), as described in paragraph (b)(1)(ii)(A) of this section, must specify whether it is using the current year testing method or prior year testing method. Additionally, a plan that uses the prior year testing method must specify whether the ADP for eligible NHCEs for the first plan year is 3% or the ADP for the eligible NHCEs for the first plan year. Similarly, a plan that uses the safe harbor method of section 401(k)(12), as described in paragraph (b)(1)(ii)(B) of this section, must specify whether the safe harbor contribution will be the nonelective safe harbor contribution or the matching safe harbor contribution and is not permitted to provide that ADP testing will be used if the requirements for the safe harbor are not satisfied. In addition, a plan that uses the safe harbor method of section 401(k)(13), as described in paragraph (b)(1)(ii)(C) of this section, must specify the default percentages that apply for the plan year and whether the safe harbor contribution will be the nonelective safe harbor contribution or the matching safe harbor contribution, and is not permitted to provide that ADP testing will be used if the requirements for the safe harbor are not satisfied. For purposes of this paragraph (e)(7), a plan may incorporate by reference the provisions of section 401(k)(3) and § 1.401(k)-2 if that is the nondiscrimination test being applied. The Commissioner may, in guidance of general applicability, published in the Internal Revenue Bulletin (see § 601.601(d)(2) of this chapter), specify the options that will apply under the plan if the nondiscrimination test is incorporated by reference in accordance with the preceding sentence.

(8) ***Section 415 compensation required.*** With respect to compensation that is paid (or would have been paid but for a cash or deferred election) in plan years beginning on or after July 1, 2007, a cash or deferred arrangement satisfies this paragraph (e) only if cash or deferred elections can only be made with respect to amounts that are compensation within the meaning of section 415(c)(3) and § 1.415(c)-2. Thus, for example, the arrangement is not a qualified cash or deferred arrangement if an eligible employee who is not in qualified military service (as that term is defined in section 414(u)) and who is not permanently and totally disabled (as defined in section 22(e)(3)) can make a cash or deferred election with respect to an amount paid after severance from employment, unless the amount is paid by the later of $2^1/_2$ months after severance from employment or the end of the year that includes the date of severance from employment and is described in § 1.415(c)-2(e)(3)(ii) or (iii).

(f) ***Special rules for designated Roth contributions*** —

(1) ***In general.*** The term designated Roth contribution means an elective contribution under a qualified cash or deferred arrangement that, to the extent permitted under the plan, is—

(i) Designated irrevocably by the employee at the time of the cash or deferred election as a designated Roth contribution that is being made in lieu of all or a portion of the pre-tax elective contributions the employee is otherwise eligible to make under the plan;

(ii) Treated by the employer as not excludible from the employee's gross income (in accordance with paragraph (f)(2) of this section);

(iii) Maintained by the plan in a separate account (in accordance with paragraph (f)(3) of this section).

(2) ***Inclusion treatment.*** An elective contribution is generally treated as not excludible from gross income if it is treated as includible in gross income by the employer (e.g., by treating the contribution as wages subject to applicable income tax withholding). However, in the case of a self-employed individual, an elective contribution is treated as not excludible from gross income only if the individual does not claim a deduction for such amount. If an elective contribution would not have been includible in gross income if the amount had been paid directly to the employee (rather than being subject to a cash or deferral election), the elective contribution is nevertheless permitted to be a designated Roth contribution, provided the employee is entitled to treat the amount as an investment in the contract pursuant to section 72(f)(2).

(3) ***Separate accounting required.*** Under the separate accounting requirement of this paragraph (f)(3), contributions and withdrawals of designated Roth contributions must be credited and debited to a designated Roth account maintained for the employee and the plan must maintain a record of the employee's investment in the contract (that is, designated Roth contributions that have not been distributed) with respect to the employee's designated Roth account. In addition, gains, losses, and other credits or charges must be separately allocated on a reasonable and consistent basis to the designated Roth account and other accounts under the plan. However, forfeitures may not be allocated to the designated Roth account and no contributions other than designated Roth contributions and rollover contributions described in section 402A(c)(3)(B) may be allocated to such account. The separate accounting requirement applies at the time the designated Roth contribution is contributed to the plan and must continue to apply until the designated Roth account is completely distributed. A-13 of § 1.402A-1 for additional requirements for separate accounting.

(4) ***Designated Roth contributions must satisfy rules applicable to elective contributions*** —

(i) ***In general.*** A designated Roth contribution must satisfy the requirements applicable to elective contributions made under a qualified cash or deferred arrangement. Thus, for example, a designated Roth contribution must satisfy the requirements of paragraphs (c) and (d) of this section and is treated as an employer contribution for purposes of sections 401(a), 401(k), 402, 404, 409, 411, 412, 415, 416 and 417. In addition, the designated Roth contributions are treated as elective contributions for purposes of the ADP test. Similarly, the designated Roth account under the plan is subject to the rules of section 401(a)(9)(A) and (B) in the same manner as an account that contains pre-tax elective contributions.

(ii) ***Special rules for direct rollovers.*** A direct rollover from a designated Roth account under a qualified cash or deferred arrangement may only be made to another designated Roth account under an applicable retirement plan described in section 402A(e)(1) or to a Roth IRA described in section 408A, and only to the extent the rollover is permitted under the rules of section 402(c). Moreover, a participant's designated Roth account and the participant's other accounts under a plan are treated as accounts held under two separate plans (within the meaning of section 414(l)) for purposes of applying the automatic rollover rules for mandatory distributions under section 401(a)(31)(B)(i)(I) and the special rules in A-9 through A-11 of § 1.401(a)(31)-1.

(5) ***Rules regarding designated Roth contribution elections*** —

(i) ***Frequency of elections.*** The rules under paragraph (e)(2)(ii) of this section regarding frequency of elections apply in the same manner to both pre-tax elective contributions and designated Roth contributions. Thus, an employee must have an effective opportunity to make (or change) an election to make designated Roth contributions at least once during each plan year.

(ii) ***Default elections*** —

(A) In the case of a plan that provides for both pre-tax elective contributions and designated Roth contributions and in which, under paragraph (a)(3)(ii) of this section, the default in the absence of an affirmative election is to make a contribution under the cash or deferred arrangement, the plan terms must provide the extent to which the default contributions are pre-tax elective contributions and the extent to which the default contributions are designated Roth contributions.

(B) If the default contributions under the plan are designated Roth contributions, then an employee who has not made an affirmative election is deemed to have irrevocably designated the contributions (in accordance with section 402A(c)(1)(B)) as designated Roth contributions.

(iii) ***Deemed Roth catch-up contribution elections.*** For taxable years beginning after December 31, 2023, a plan that satisfies the requirements of paragraph (f)(5)(iv) of this section may provide that an employee who is subject to the requirement under section 414(v)(7) to make any catch-up contributions as designated Roth contributions is deemed to have irrevocably designated any elective deferrals that are catch-up contributions as designated Roth contributions in accordance with paragraph (f)(1)(i) of this section. In such a case, the elective deferrals must be—

(A) Treated by the employer as not excludible from the employee's gross income, in accordance with paragraph (f)(2) of this section; and

(B) Maintained by the plan in a separate account, in accordance with paragraph (f)(3) of this section.

(iv) ***Election for employees subject to section 414(v)(7)(A).*** A plan satisfies the requirements of this paragraph (f)(5)(iv) only if under the plan—

(A) An employee who is described in paragraph (f)(5)(iii) of this section is provided an effective opportunity (as determined under paragraph (e)(2)(ii) of this section) to make a new election that is different than the deemed election described in paragraph (f)(5)(iii) of this section; and

(B) The deemed election described in paragraph (f)(5)(iii) of this section ceases to apply to an employee within a reasonable period of time following the date—

(*1*) The employee ceases to be subject to the requirement under section 414(v)(7) to make any catch-up contributions as designated Roth contributions; or

(*2*) An amended Form W-2 (Wage and Tax Statement) is filed or furnished to the employee indicating that the employee is not subject to the requirement under section 414(v)(7) to make any catch-up contributions as designated Roth contributions.

(v) ***Separate election plans.*** Subject to the rules in paragraphs (f)(5)(iii) and (iv) of this section, a plan utilizing a plan design that permits a participant to make a separate election to treat certain elective deferrals as catch-up contributions during each payroll period (without regard to whether the catch-up contributions are catch-up contributions under § 1.414(v)-1(c)(3)), including a plan design described in § 1.414(v)-1(e)(1)(ii)(A), is permitted to provide that a

participant who is subject to the requirement under section 414(v)(7) to make any catch-up contributions as designated Roth contributions is deemed to have irrevocably designated as Roth contributions any elective deferrals that are made pursuant to the separate election.

(6) ***Effective date.*** Section 402A and the provisions of this section 1.401(k)-1(f) apply to taxable years beginning after December 31, 2005.

(g) ***Effective dates*** —

(1) ***General rule.*** Except as otherwise provided in this paragraph (g), this section and §§ 1.401(k)-2 through 1.401(k)-6 apply to plan years that begin on or after January 1, 2006.

(2) ***Early implementation permitted.*** A plan is permitted to apply the rules of this section and §§ 1.401(k)-2 through 1.401(k)-6 to any plan year that ends after December 29, 2004, provided the plan applies all the rules of this section and §§ 1.401(k)-2 through 1.401(k)-6 and all the rules of §§ 1.401(m)-1 through 1.401(m)-5, to the extent applicable, for that plan year and all subsequent plan years.

(3) ***Collectively bargained plans.*** In the case of a plan maintained pursuant to one or more collective bargaining agreements between employee representatives and one or more employers in effect on the date described in paragraph (g)(1) of this section, the provisions of this section and §§ 1.401(k)-2 through 1.401(k)-6 apply to the later of the first plan year beginning after the termination of the last such agreement or the first plan year described in paragraph (g)(1) of this section.

(4) ***Applicability of prior regulations.*** For any plan year before a plan applies this section and §§ 1.401(k)-2 through 1.401(k)-6 (either the first plan year beginning on or after January 1, 2006, or such earlier year, as provided in paragraph (g)(2) of this section), § 1.401(k)-1 (as it appeared in the April 1, 2004 edition of 26 CFR part 1) applies to the plan to the extent that section, as it so appears, reflects the statutory provisions of section 401(k) as in effect for the relevant year.

(5) ***Applicability date for definitions of qualified matching contributions (QMACs) and qualified nonelective contributions (QNECs).*** The revisions to the second sentence in the definitions of QMACs and QNECs in § 1.401(k)-6 apply to plan years ending on or after July 20, 2018.

[T.D. 9169, 69 FR 78154, Dec. 29, 2004, as amended by T.D. 9237, 71 FR 9 Jan. 3, 2006; T.D. 9319, 72 FR 16894, Apr. 5, 2007; T.D. 9324, 72 FR 21109, Apr. 30, 2007; T.D. 9447, 74 FR 8207, Feb. 24, 2009; T.D. 9835 83 FR 34471, July 20, 2018; T.D. 9875, 84 FR 49657, Sept. 23, 2019; T.D. 10033, 90 FR 44546, Sept. 16, 2025]

§ 1.401(k)-2 ADP test.

(a) ***Actual deferral percentage (ADP) test*** —

(1) ***In general*** —

(i) ***ADP test formula.*** A cash or deferred arrangement satisfies the ADP test for a plan year only if—

(A) The ADP for the eligible HCEs for the plan year is not more than the ADP for the eligible NHCEs for the applicable year multiplied by 1.25; or

(B) The excess of the ADP for the eligible HCEs for the plan year over the ADP for the eligible NHCEs for the applicable year is not more than 2 percentage points, and the ADP for the eligible HCEs for the plan year is not more than the ADP for the eligible NHCEs for the applicable year multiplied by 2.

(ii) ***HCEs as sole eligible employees.*** If, for the applicable year for determining the ADP of the NHCEs for a plan year, there are no eligible NHCEs (*i.e.*, all of the eligible employees under the cash or deferred arrangement for the applicable year are HCEs), the arrangement is deemed to satisfy the ADP test for the plan year.

(iii) ***Special rule for early participation.*** If a cash or deferred arrangement provides that employees are eligible to participate before they have completed the minimum age and service requirements of section 410(a)(1)(A), and if the plan applies section 410(b)(4)(B) in determining whether the cash or deferred arrangement meets the requirements of section 410(b)(1), then in determining whether the arrangement meets the requirements under paragraph (a)(1) of this section, either—

(A) Pursuant to section 401(k)(3)(F), the ADP test is performed under the plan (determined without regard to disaggregation under § 1.410(b)-7(c)(3)), using the ADP for all eligible HCEs for the plan year and the ADP of eligible NHCEs for the applicable year, disregarding all NHCEs who have not met the minimum age and service requirements of section 410(a)(1)(A); or

(B) Pursuant to § 1.401(k)-1(b)(4), the plan is disaggregated into separate plans and the ADP test is performed separately for all eligible employees who have completed the minimum age and service requirements of section 410(a)(1)(A) and for all eligible employees who have not completed the minimum age and service requirements of section 410(a)(1)(A).

(2) ***Determination of ADP*** —

(i) ***General rule.*** The ADP for a group of eligible employees (either eligible HCEs or eligible NHCEs) for a plan year or applicable year is the average of the ADRs of the eligible employees in that group for that year. The ADP for a group of eligible employees is calculated to the nearest hundredth of a percentage point.

(ii) ***Determination of applicable year under current year and prior year testing method.*** The ADP test is applied using the prior year testing method or the current year testing method. Under the prior year testing method, the applicable year for determining the ADP for the eligible NHCEs is the plan year immediately preceding the plan year for which the ADP test is being performed. Under the prior year testing method, the ADP for the eligible NHCEs is determined using the ADRs for the eligible employees who were NHCEs in that preceding plan year, regardless of whether those NHCEs are eligible employees or NHCEs in the plan year for which the ADP test is being calculated. Under the current year testing method, the applicable year for determining the ADP for the eligible NHCEs is the same plan year as the plan year for which the ADP test is being performed. Under either method, the ADP for eligible HCEs is the average of the ADRs of the eligible HCEs for the plan year for which the ADP test is being performed. See paragraph (c) of this section for additional rules for the prior year testing method.

(3) ***Determination of ADR*** —

(i) ***General rule.*** The ADR of an eligible employee for a plan year or applicable year is the sum of the employee's elective contributions taken into account with respect to such employee for the year, determined under the rules of paragraphs (a)(4) and (5) of this section, and the qualified nonelective contributions and qualified matching contributions taken into account with respect to such employee under paragraph (a)(6) of this section for the year, divided by the employee's compensation taken into account for the year. The ADR is calculated to the nearest hundredth

of a percentage point. If no elective contributions, qualified nonelective contributions, or qualified matching contributions are taken into account under this section with respect to an eligible employee for the year, the ADR of the employee is zero.

(ii) ***ADR of HCEs eligible under more than one arrangement*** —

(A) ***General rule.*** Pursuant to section 401(k)(3)(A), the ADR of an HCE who is an eligible employee in more than one cash or deferred arrangement of the same employer is calculated by treating all contributions with respect to such HCE under any such arrangement as being made under the cash or deferred arrangement being tested. Thus, the ADR for such an HCE is calculated by accumulating all contributions under any cash or deferred arrangement (other than a cash or deferred arrangement described in paragraph (a)(3)(ii)(B) of this section) that would be taken into account under this section for the plan year, if the cash or deferred arrangement under which the contribution was made applied this section and had the same plan year. For example, in the case of a plan with a 12-month plan year, the ADR for the plan year of that plan for an HCE who participates in multiple cash or deferred arrangements of the same employer is the sum of all contributions during such 12-month period that would be taken into account with respect to the HCE under all such arrangements in which the HCE is an eligible employee, divided by the HCE's compensation for that 12-month period (determined using the compensation definition for the plan being tested), without regard to the plan year of the other plans and whether those plans are satisfying this section or § 1.401(k)-3.

(B) ***Plans not permitted to be aggregated.*** Cash or deferred arrangements under plans that are not permitted to be aggregated under § 1.401(k)-1(b)(4) (determined without regard to the prohibition on aggregating plans with inconsistent testing methods set forth in § 1.401(k)-1(b)(4)(iii)(B) and the prohibition on aggregating plans with different plan years set forth in § 1.410(b)-7(d)(5)) are not aggregated under this paragraph (a)(3)(ii).

(iii) ***Examples.*** The following examples illustrate the application of this paragraph (a)(3):

> *Example 1.* (i) Employee A, an HCE with compensation of $120,000, is eligible to make elective contributions under Plan S and Plan T, two profit-sharing plans maintained by Employer H with calendar year plan years, each of which includes a cash or deferred arrangement. During the current plan year, Employee A makes elective contributions of $6,000 to Plan S and $4,000 to Plan T.
> (ii) Under each plan, the ADR for Employee A is determined by dividing Employee A's total elective contributions under both arrangements by Employee A's compensation taken into account under the plan for the year. Therefore, Employee A's ADR under each plan is 8.33% ($10,000/$120,000).

> *Example 2.* (i) The facts are the same as in *Example 1*, except that Plan T defines compensation (for deferral and testing purposes) to exclude all bonuses paid to an employee. Plan S defines compensation (for deferral and testing purposes) to include bonuses paid to an employee. During the current year, Employee A's compensation included a $10,000 bonus. Therefore, Employee A's compensation under Plan T is $110,000 and Employee A's compensation under Plan S is $120,000.

(ii) Employee A's ADR under Plan T is 9.09% ($10,000/$110,000) and under Plan S, Employee A's ADR is 8.33% ($10,000/$120,000).

Example 3. (i) Employer J sponsors two profit-sharing plans, Plan U and Plan V, each of which includes a cash or deferred arrangement. Plan U's plan year begins on July 1 and ends on June 30. Plan V has a calendar year plan year. Compensation under both plans is limited to the participant's compensation during the period of participation. Employee B is an HCE who participates in both plans. Employee B's monthly compensation and elective contributions to each plan for the 2005 and 2006 calendar years are as follows:

Calendar year	Monthly compensation	Monthly elective contribution to Plan U	Monthly elective contribution to Plan V
2005	$10,000	$500	$400
2006	11,500	700	550

(ii) Under Plan U, Employee B's ADR for the plan year ended June 30, 2006, is equal to Employee B's total elective contributions under Plan U and Plan V for the plan year ending June 30, 2006, divided by Employee B's compensation for that period. Therefore, Employee B's ADR under Plan U for the plan year ending June 30, 2006, is (($900 × 6) + ($1,250 × 6)) / (($10,000 × 6) + ($11,500 × 6)), or 10%.
(iii) Under Plan V, Employee B's ADR for the plan year ended December 31, 2005, is equal to total elective contributions under Plan U and V for the plan year ending December 31, 2005, divided by Employee B's compensation for that period. Therefore, Employee B's ADR under Plan V for the plan year ending December 31, 2005, is ($10,800/$120,000), or 9%.

Example 4. (i) The facts are the same as *Example 3*, except that Employee B first becomes eligible to participate in Plan U on January 1, 2006.
(ii) Under Plan U, Employee B's ADR for the plan year ended June 30, 2006, is equal to Employee B's total elective contributions under Plan U and V for the plan year ending June 30, 2006, divided by Employee B's compensation for that period. Therefore, Employee B's ADR under Plan U for the plan year ending June 30, 2006, is (($400 × 6) + ($1,250 × 6)) / (($10,000 × 6) + ($11,500 × 6)), or 7.67%.

(4) ***Elective contributions taken into account under the ADP test*** —

(i) ***General rule.*** An elective contribution is taken into account in determining the ADR for an eligible employee for a plan year or applicable year only if each of the following requirements is satisfied—

(A) The elective contribution is allocated to the eligible employee's account under the plan as of a date within that year. For purposes of this rule, an elective contribution is considered allocated as of a date within a year only if—

(*1*) The allocation is not contingent on the employee's participation in the plan or performance of services on any date subsequent to that date; and

(*2*) The elective contribution is actually paid to the trust no later than the end of the 12-month period immediately following the year to which the contribution relates.

(B) The elective contribution relates to compensation that either—

(*1*) Would have been received by the employee in the year but for the employee's election to defer under the arrangement; or

(*2*) Is attributable to services performed by the employee in the year and, but for the employee's election to defer, would have been received by the employee within $2^{1}/_{2}$ months after the close of the year, but only if the plan provides for elective contributions that relate to compensation that would have been received after the close of a year to be allocated to such prior year rather than the year in which the compensation would have been received.

(ii) ***Elective contributions for partners and self-employed individuals.*** For purposes of this paragraph (a)(4), a partner's distributive share of partnership income is treated as received on the last day of the partnership taxable year and a sole proprietor's compensation is treated as received on the last day of the individual's taxable year. Thus, an elective contribution made on behalf of a partner or sole proprietor is treated as allocated to the partner's account for the plan year that includes the last day of the partnership taxable year, provided the requirements of paragraph (a)(4)(i) of this section are met.

(iii) ***Elective contributions for HCEs.*** Elective contributions of an HCE must include any excess deferrals, as described in § 1.402(g)-1(a), even if those excess deferrals are distributed, pursuant to § 1.402(g)-1(e).

(5) ***Elective contributions not taken into account under the ADP test*** —

(i) ***General rule.*** Elective contributions that do not satisfy the requirements of paragraph (a)(4)(i) of this section may not be taken into account in determining the ADR of an eligible employee for the plan year or applicable year with respect to which the contributions were made, or for any other plan year. Instead, the amount of the elective contributions must satisfy the requirements of section 401(a)(4) (without regard to the ADP test) for the plan year for which they are allocated under the plan as if they were nonelective contributions and were the only nonelective contributions for that year. *See* §§ 1.401(a)(4)-1(b)(2)(ii)(B) and 1.410(b)-7(c)(1).

(ii) ***Elective contributions for NHCEs.*** Elective contributions of an NHCE shall not include any excess deferrals, as described in § 1.402(g)-1(a), to the extent the excess deferrals are prohibited under section 401(a)(30). However, to the extent that the excess deferrals are not prohibited under section 401(a)(30), they are included in elective contributions even if distributed pursuant to § 1.402(g)-1(e).

(iii) ***Elective contributions treated as catch-up contributions.*** Elective contributions that are treated as catch-up contributions under section 414(v) because they exceed a statutory limit or employer-provided limit (within the meaning of § 1.414(v)-1(b)(1)) are not taken into account under paragraph (a)(4) of this section for the plan year for which the contributions were made, or for any other plan year.

(iv) ***Elective contributions used to satisfy the ACP test.*** Except to the extent necessary to demonstrate satisfaction of the requirement of § 1.401(m)-2(a)(6)(ii), elective contributions taken into account for the ACP test under § 1.401(m)-2(a)(6) are not taken into account under paragraph (a)(4) of this section.

(v) ***Additional elective contributions pursuant to section 414(u).*** Additional elective contributions made pursuant to section 414(u) by reason of an eligible employee's qualified military service are not taken into account under paragraph (a)(4) of this section for the plan year for which the contributions are made, or for any other plan year.

(vi) ***Default elective contributions pursuant to section 414(w).*** Default elective contributions made under an eligible automatic contribution arrangement (within the meaning of § 1.414(w)-1(b)) that are distributed pursuant to § 1.414(w)-1(c) for plan years beginning on or after January 1, 2008, are not taken into account under paragraph (a)(4) of this section for the plan year for which the contributions are made, or for any other plan year.

(6) ***Qualified nonelective contributions and qualified matching contributions that may be taken into account under the ADP test.*** Qualified nonelective contributions and qualified matching contributions may be taken into account in determining the ADR for an eligible employee for a plan year or applicable year but only to the extent the contributions satisfy the following requirements—

(i) ***Timing of allocation.*** The qualified nonelective contribution or qualified matching contribution is allocated to the employee's account as of a date within that year within the meaning of paragraph (a)(4)(i)(A) of this section. Consequently, under the prior year testing method, in order to be taken into account in calculating the ADP for the eligible NHCEs for the applicable year, a qualified nonelective contribution or qualified matching contribution must be contributed no later than the end of the 12-month period immediately following the applicable year even though the applicable year is different than the plan year being tested.

(ii) ***Requirement that amount satisfy section 401(a)(4).*** The amount of nonelective contributions, including those qualified nonelective contributions taken into account under this paragraph (a)(6) and those qualified nonelective contributions taken into account for the ACP test of section 401(m)(2) under § 1.401(m)-2(a)(6), satisfies the requirements of section 401(a)(4). *See* § 1.401(a)(4)-1(b)(2). The amount of nonelective contributions, excluding those qualified nonelective contributions taken into account under this paragraph (a)(6) and those qualified nonelective contributions taken into account for the ACP test of section 401(m)(2) under § 1.401(m)-2(a)(6), satisfies the requirements of section 401(a)(4). *See* § 1.401(a)(4)-1(b)(2). In the case of an employer that is applying the special rule for employer-wide plans in § 1.414(r)-1(c)(2)(ii) with respect to the cash or deferred arrangement, the determination of whether the qualified nonelective contributions satisfy the requirements of this paragraph (a)(6)(ii) must be made on an employer-wide basis regardless of whether the plans to which the qualified nonelective contributions are made are satisfying the requirements of section 410(b) on an employer-wide basis. Conversely, in the case of an employer that is treated as operating qualified separate lines of business, and does not apply the special rule for employer-wide plans in § 1.414(r)-1(c)(2)(ii) with respect to the cash or deferred arrangement, then the

determination of whether the qualified nonelective contributions satisfy the requirements of this paragraph (a)(6)(ii) is not permitted to be made on an employer-wide basis regardless of whether the plans to which the qualified nonelective contributions are made are satisfying the requirements of section 410(b) on that basis.

(iii) ***Aggregation must be permitted.*** The plan that contains the cash or deferred arrangement and the plan or plans to which the qualified nonelective contributions or qualified matching contributions are made, are plans that would be permitted to be aggregated under § 1.401(k)-1(b)(4). If the plan year of the plan that contains the cash or deferred arrangement is changed to satisfy the requirement under § 1.410(b)-7(d)(5) that aggregated plans have the same plan year, qualified nonelective contributions and qualified matching contributions may be taken into account in the resulting short plan year only if such qualified nonelective contributions and qualified matching contributions could have been taken into account under an ADP test for a plan with the same short plan year.

(iv) ***Disproportionate contributions not taken into account*** —

(A) ***General rule.*** Qualified nonelective contributions cannot be taken into account for a plan year for an NHCE to the extent such contributions exceed the product of that NHCE's compensation and the greater of 5% or two times the plan's representative contribution rate. Any qualified nonelective contribution taken into account under an ACP test under § 1.401(m)-2(a)(6) (including the determination of the representative contribution rate for purposes of § 1.401(m)-2(a)(6)(v)(B)), is not permitted to be taken into account for purposes of this paragraph (a)(6) (including the determination of the representative contribution rate under paragraph (a)(6)(iv)(B) of this section).

(B) ***Definition of representative contribution rate.*** For purposes of this paragraph (a)(6)(iv), the plan's representative contribution rate is the lowest applicable contribution rate of any eligible NHCE among a group of eligible NHCEs that consists of half of all eligible NHCEs for the plan year (or, if greater, the lowest applicable contribution rate of any eligible NHCE in the group of all eligible NHCEs for the plan year and who is employed by the employer on the last day of the plan year).

(C) ***Definition of applicable contribution rate.*** For purposes of this paragraph (a)(6)(iv), the applicable contribution rate for an eligible NHCE is the sum of the qualified matching contributions taken into account under this paragraph (a)(6) for the eligible NHCE for the plan year and the qualified nonelective contributions made for the eligible NHCE for the plan year, divided by the eligible NHCE's compensation for the same period.

(D) ***Special rule for prevailing wage contributions.*** Notwithstanding paragraph (a)(6)(iv)(A) of this section, qualified nonelective contributions that are made in connection with an employer's obligation to pay prevailing wages under the Davis-Bacon Act (46 Stat. 1494), Public Law 71-798, Service Contract Act of 1965 (79 Stat. 1965), Public Law 89-286, or similar legislation can be taken into account for a plan year for an NHCE to the extent such contributions do not exceed 10 percent of that NHCE's compensation.

(v) ***Qualified matching contributions.*** Qualified matching contributions satisfy this paragraph (a)(6) only to the extent that such qualified matching contributions are matching contributions that are not precluded from being taken into account under the ACP test for the plan year under the rules of § 1.401(m)-2(a)(5)(ii).

(vi) ***Contributions only used once.*** Qualified nonelective contributions and qualified matching contributions cannot be taken into account under this paragraph (a)(6) to the extent such contributions are taken into account for purposes of satisfying any other ADP test, any ACP test, or the requirements of § 1.401(k)-3, 1.401(m)-3 or 1.401(k)-4. Thus, for example, matching contributions that are made pursuant to § 1.401(k)-3(c) cannot be taken into account under the ADP test. Similarly, if a plan switches from the current year testing method to the prior year testing method pursuant to § 1.401(k)-2(c), qualified nonelective contributions that are taken into account under the current year testing method for a year may not be taken into account under the prior year testing method for the next year.

(7) ***Examples.*** The following examples illustrate the application of this paragraph (a):

Example 1. (i) Employer X has three employees, A, B, and C. Employer X sponsors a profit-sharing plan (Plan Z) that includes a cash or deferred arrangement. Each year, Employer X determines a bonus attributable to the prior year. Under the cash or deferred arrangement, each eligible employee may elect to receive none, all or any part of the bonus in cash. X contributes the remainder to Plan Z. The portion of the bonus paid in cash, if any, is paid 2 months after the end of the plan year and thus is included in compensation for the following plan year. Employee A is an HCE, while Employees B and C are NHCEs. The plan uses the current year testing method and defines compensation to include elective contributions and bonuses paid during each plan year. In February of 2005, Employer X determined that no bonuses will be paid for 2004. In February of 2006, Employer X provided a bonus for each employee equal to 10% of regular compensation for 2005. For the 2005 plan year, A, B, and C have the following compensation and make the following elections:

Employee	Compensation	Elective contribution
A	$100,000	$4,340
B	60,000	2,860
C	45,000	1,250

(ii) For each employee, the ratio of elective contributions to the employee's compensation for the plan year is:

Employee	Ratio of elective contribution to compensation	ADR (percent)
A	$4,340/$100,000	4.34
B	2,860/60,000	4.77

Employee	Ratio of elective contribution to compensation	ADR (percent)
C	1,250/45,000	2.78

(iii) The ADP for the HCEs (Employee A) is 4.34%. The ADP for the NHCEs is 3.78% ((4.77% + 2.78%)/2). Because 4.34% is less than 4.73% (3.78% multiplied by 1.25), the plan satisfies the ADP test under paragraph (a)(1)(i) of this section.

Example 2. (i) The facts are the same as in *Example 1,* except that elective contributions are made pursuant to a salary reduction agreement throughout the plan year, and no bonuses are paid. As provided by section 414(s)(2), Employer X includes elective contributions in compensation. During the year, B and C defer the same amount as in *Example 1,* but A defers $5,770. Thus, the compensation and elective contributions for A, B, and C are:

Employee	Compensation	Elective contributions	ADR (percent)
A	$100,000	$5,770	5.77
B	60,000	2,860	4.77
C	45,000	1,250	2.78

(ii) The ADP for the HCEs (Employee A) is 5.77%. The ADP for the NHCEs is 3.78% ((4.77% + 2.78%)/2). Because 5.77% exceeds 4.73% (3.78% × 1.25), the plan does not satisfy the ADP test under paragraph (a)(1)(i) of this section. However, because the ADP for the HCEs does not exceed the ADP for the NHCEs by more than 2 percentage points and the ADP for the HCEs does not exceed the ADP for the NHCEs multiplied by 2 (3.78% × 2 = 7.56%), the plan satisfies the ADP test under paragraph (a)(1)(ii) of this section.

Example 3. (i) Employees D through L are eligible employees in Plan T, a profit-sharing plan that contains a cash or deferred arrangement. The plan is a calendar year plan that uses the prior year testing method. Plan T provides that elective contributions are included in compensation (as provided under section 414(s)(2)). Each eligible employee may elect to defer up to 6% of compensation under the cash or deferred arrangement. Employees D and E are HCEs. The compensation, elective contributions, and ADRs of Employees D and E for the

2006 plan year are shown below:

Employee	Compensation for 2006 plan year	Elective contributions for 2006 plan year	ADR for 2006 plan year (percent)
D	$100,000	$10,000	10
E	95,000	4,750	5

(ii) During the 2005 plan year, Employees F through L were eligible NHCEs. The compensation, elective contributions and ADRs of Employees F through L for the 2005 plan year are shown in the following table:

Employee	Compensation for 2005 plan year	Elective contributions for 2005 plan year	ADR for 2005 plan year (percent)
F	$60,000	$3,600	6
G	40,000	1,600	4
H	30,000	1,200	4
I	20,000	600	3
J	20,000	600	3
K	10,000	300	3
L	5,000	150	3

(iii) The ADP for 2006 for the HCEs is 7.5%. Because Plan T is using the prior year testing method, the applicable year for determining the NHCE ADP is the prior plan year (*i.e.*, 2005). The NHCE ADP is determined using the ADRs for NHCEs eligible during the prior plan year (without regard to whether they are eligible under the plan during the plan year). The ADP for the NHCEs is 3.71% (the sum of the individual ADRs, 26%, divided by 7 employees). Because 7.5% exceeds 4.64% (3.71% × 1.25), Plan T does not satisfy the ADP test under paragraph (a)(1)(i) of this section. In addition, because the ADP for the HCEs exceeds the ADP for the NHCEs by more than 2 percentage points, Plan T does not satisfy the ADP test under paragraph (a)(1)(ii) of this section. Therefore, the cash or deferred arrangement fails to be a qualified cash or deferred arrangement unless the ADP failure is corrected under paragraph (b) of this section.

Example 4. (i) Plan U is a calendar year profit-sharing plan that contains a cash or deferred

arrangement and uses the current year testing method. Plan U provides that elective contributions are included in compensation (as provided under section 414(s)(2)). The following amounts are contributed under Plan U for the 2006 plan year: QNECs equal to 2% of each employee's compensation; Contributions equal to 6% of each employee's compensation that are not immediately vested under the terms of the plan; 3% of each employee's compensation that the employee may elect to receive as cash or to defer under the plan. Both types of nonelective contributions are made for the HCEs (employees M and N) and the NHCEs (employees O through S) for the plan year and are contributed after the end of the plan year and before the end of the following plan year. In addition, neither type of nonelective contributions is used for any other ADP or ACP test.
(ii) For the 2006 plan year, the compensation, elective contributions, and actual deferral ratios of employees M through S are shown in the following table:

Employee	Compensation	Elective contributions	Actual deferral ratio (percent)
M	$100,000	$3,000	3
N	100,000	2,000	2
O	60,000	1,800	3
P	40,000	0	0
Q	30,000	0	0
R	5,000	0	0
S	20,000	0	0

(iii) The elective contributions alone do not satisfy the ADP test of section 401(k)(3) and paragraph (a)(1) of this section because the ADP for the HCEs, consisting of employees M and N, is 2.5% and the ADP for the NHCEs is 0.6%.
(iv) The 2% QNECs satisfies the timing requirement of paragraph (a)(6)(i) of this section because it is paid within 12-month after the plan year for which allocated. All nonelective contributions also satisfy the requirements relating to section 401(a)(4) set forth in paragraph (a)(6)(ii) of this section (because all employees receive an 8% nonelective contribution and the nonelective contributions excluding the QNECs is 6% for all employees). In addition, the QNECs are not disproportionate under paragraph (a)(6)(iv) of this section because no QNEC for an NHCE exceeds the product of the plan's applicable contribution rate (2%) and that NHCE's compensation.

(v) Because the rules of paragraph (a)(6) of this section are satisfied, the 2% QNECs may be taken into account in applying the ADP test of section 401(k)(3) and paragraph (a)(1) of this section. The 6% nonelective contributions, however, may not be taken into account because they are not QNECs.

(vi) If the 2% QNECs are taken into account, the ADP for the HCEs is 4.5%, and the actual deferral percentage for the NHCEs is 2.6%. Because 4.5% is not more than two percentage points greater than 2.6 percent, and not more than two times 2.6, the cash or deferred arrangement satisfies the ADP test of section 401(k)(3) under paragraph (a)(1)(ii) of this section.

Example 5. (i) The facts are the same as *Example 4,* except the plan uses the prior year testing method. In addition, the NHCE ADP for the 2005 plan year (the prior plan year) is 0.8% and no QNECs are contributed for the 2005 plan year during 2005 or 2006.
(ii) In 2007, it is determined that the elective contributions alone do not satisfy the ADP test of section 401(k)(3) and paragraph (a)(1) of this section for 2006 because the 2006 ADP for the eligible HCEs, consisting of employees M and N, is 2.5% and the 2005 ADP for the eligible NHCEs is 0.8%. An additional QNEC of 2% of compensation is made for each eligible NHCE in 2007 and allocated for 2005.

(iii) The 2% QNECs that are made in 2007 and allocated for the 2005 plan year do not satisfy the timing requirement of paragraph (a)(6)(i) of this section for the applicable year for the 2005 plan year because they were not contributed before the last day of the 2006 plan year. Accordingly, the 2% QNECs do not satisfy the rules of paragraph (a)(6) of this section and may not be taken into account in applying the ADP test of section 401(k)(3) and paragraph (a)(1) of this section for the 2006 plan year. The cash or deferred arrangement fails to be a qualified cash or deferred arrangement unless the ADP failure is corrected under paragraph (b) of this section.

Example 6. (i) The facts are the same as *Example 4,* except that the ADP for the HCEs is 4.6% and there is no 6% nonelective contribution under the plan. The employer would like to take into account the 2% QNEC in determining the ADP for the NHCEs but not in determining the ADP for the HCEs.
(ii) The elective contributions alone fail the requirements of section 401(k) and paragraph (a)(1) of this section because the HCE ADP for the plan year (4.6%) exceeds 0.75% (0.6% × 1.25) and 1.2% (0.6% × 2).

(iii) The 2% QNECs may not be taken into account in determining the ADP of the NHCEs because they fail to satisfy the requirements relating to section 401(a)(4) set forth in paragraph (a)(6)(ii) of this section. This is because the amount of nonelective contributions, excluding those QNECs that would be taken into account under the ADP test, would be 2% of

compensation for the HCEs and 0% for the NHCEs. Therefore, the cash or deferred arrangement fails to be a qualified cash or deferred arrangement unless the ADP failure is corrected under paragraph (b) of this section.

Example 7. (i) The facts are the same as Example 6, except that Employee R receives a QNEC in an amount of $500 and no QNECs are made on behalf of the other employees.
(ii) If the QNEC could be taken into account under paragraph (a)(6) of this section, the ADP for the NHCEs would be 2.6% and the plan would satisfy the ADP test. The QNEC is disproportionate under paragraph (a)(6)(iv) of this section, and cannot be taken into account under paragraph (a)(6) of this section, to the extent it exceeds the greater of 5% and two times the plan's representative contribution rate (0%), multiplied by Employee R's compensation. The plan's representative contribution rate is 0% because it is the lowest applicable contribution rate among a group of NHCEs that is at least half of all NHCEs, or all the NHCEs who are employed on the last day of the plan year. Therefore, the QNEC may be taken into account under the ADP test only to the extent it does not exceed 5% times Employee R's compensation (or $250) and the cash or deferred arrangement fails to satisfy the ADP test and must correct under paragraph (b) of this section.

Example 8. (i) The facts are the same as in *Example 4* except that the plan changes from the current year testing method to the prior year testing method for the following plan year (2007 plan year). The ADP for the HCEs for the 2007 plan year is 3.5%.
(ii) The 2% QNECs may not be taken into account in determining the ADP for the NHCEs for the applicable year (2006 plan year) in satisfying the ADP test for the 2007 plan year because they were taken into account in satisfying the ADP test for the 2006 plan year. Accordingly, the NHCE ADP for the applicable year is 0.6%. The elective contributions for the plan year fail the requirements of section 401(k) and paragraph (a)(1) of this section because the HCE ADP for the plan year (3.5%) exceeds the ADP limit of 1.2% (the greater of 0.75% (0.6% × 1.25) and 1.2% (0.6% × 2)), determined using the applicable year ADP for the NHCEs. Therefore, the cash or deferred arrangement fails to be a qualified cash or deferred arrangement unless the ADP failure is corrected under paragraph (b) of this section.

Example 9. (i)(A) Employer N maintains Plan X, a profit sharing plan that contains a cash or deferred arrangement and that uses the current year testing method. Plan X provides for employee contributions, elective contributions, and matching contributions. Matching contributions on behalf of NHCEs are qualified matching contributions (QMACs) and are contributed during the 2005 plan year. Matching contributions on behalf of HCEs are not QMACs, because they fail to satisfy the nonforfeitability requirement of § 1.401(k)-1(c). The elective contributions and matching contributions with respect to HCEs for the 2005 plan

year are shown in the following table:

	Elective contributions	Total matching contributions	Matching contributions that are not QMACs	QMACs
Highly compensated employees	15%	5%	5%	0%

(B) The elective contributions and matching contributions with respect to the NHCEs for the 2005 plan year are shown in the following table:

	Elective contributions	Total matching contributions	Matching contributions that are not QMACs	QMACs
Nonhighly compensated employees	11%	4%	0%	4%

(ii) The plan fails to satisfy the ADP test of section 401(k)(3)(A) and paragraph (a)(1) of this section because the ADP for HCEs (15%) is more than 125% of the ADP for NHCEs (11%), and more than 2 percentage points greater than 11%. However, the plan provides that QMACs may be used to meet the requirements of section 401(k)(3)(A)(ii) provided that they are not used for any other ADP or ACP test. QMACs equal to 1% of compensation are taken into account for each NHCE in applying the ADP test. After this adjustment, the applicable ADP and ACP (taking into account the provisions of § 1.401(m)-2(a)(5)(ii)) for the plan year are as follows:

	Actual deferral percentage	Actual contribution percentage
HCEs	15	5
Nonhighly compensated employees	12	3

(iii) The elective contributions and QMACs taken into account for purposes of the ADP test of section 401(k)(3) satisfy the requirements of section 401(k)(3)(A)(ii) under paragraph

(a)(1)(ii) of this section because the ADP for HCEs (15%) is not more than the ADP for NHCEs multiplied by 1.25 (12% × 1.25 = 15%).

(b) *Correction of excess contributions* —

(1) *Permissible correction methods* —

(i) ***In general.*** A cash or deferred arrangement does not fail to satisfy the requirements of section 401(k)(3) and paragraph (a)(1) of this section if the employer, in accordance with the terms of the plan that includes the cash or deferred arrangement, uses any of the following correction methods—

(A) ***Qualified nonelective contributions or qualified matching contributions.*** The employer makes qualified nonelective contributions or qualified matching contributions that are taken into account under this section and, in combination with other amounts taken into account under paragraph (a) of this section, allow the cash or deferred arrangement to satisfy the requirements of paragraph (a)(1) of this section.

(B) ***Excess contributions distributed.*** Excess contributions are distributed in accordance with paragraph (b)(2) of this section.

(C) ***Excess contributions recharacterized.*** Excess contributions are recharacterized in accordance with paragraph (b)(3) of this section.

(ii) ***Combination of correction methods.*** A plan may provide for the use of any of the correction methods described in paragraph (b)(1)(i) of this section, may limit elective contributions in a manner designed to prevent excess contributions from being made, or may use a combination of these methods, to avoid or correct excess contributions. A plan may permit an HCE to elect whether any excess contributions are to be recharacterized or distributed. Similarly, a plan may permit an HCE with elective contributions for a year that includes both pre-tax elective contributions and designated Roth contributions to elect whether the excess contributions are to be attributed to pre-tax elective contributions or designated Roth contributions. If the plan uses a combination of correction methods, any contribution made under paragraph (b)(1)(i)(A) of this section must be taken into account before application of the correction methods in paragraph (b)(1)(i)(B) or (C) of this section.

(iii) ***Exclusive means of correction.*** A failure to satisfy the requirements of paragraph (a)(1) of this section may not be corrected using any method other than the ones described in paragraphs (b)(1)(i) and (ii) of this section. Thus, excess contributions for a plan year may not remain unallocated or be allocated to a suspense account for allocation to one or more employees in any future year. In addition, excess contributions may not be corrected using the retroactive correction rules of § 1.401(a)(4)-11(g). See § 1.401(a)(4)-11(g)(3)(vii) and (5).

(2) *Corrections through distribution* —

(i) ***General rule.*** This paragraph (b)(2) contains the rules for correction of excess contributions through a distribution from the plan. Correction through a distribution generally involves a 4-step process. First, the plan must determine, in accordance with paragraph (b)(2)(ii) of this section, the total amount of excess contributions that must be distributed under the plan. Second, the plan must apportion the total amount of excess contributions among HCEs in accordance with paragraph (b)(2)(iii) of this section. Third, the plan must determine the income allocable to excess contributions in accordance with paragraph (b)(2)(iv) of this section. Finally,

the plan must distribute the apportioned excess contributions and allocable income in accordance with paragraph (b)(2)(v) of this section. Paragraph (b)(2)(vi) of this section provides rules relating to the tax treatment of these distributions. Paragraph (b)(2)(vii) provides other rules relating to these distributions.

(ii) ***Calculation of total amount to be distributed.*** The following procedures must be used to determine the total amount of the excess contributions to be distributed—

(A) ***Calculate the dollar amount of excess contributions for each HCE.*** The amount of excess contributions attributable to a given HCE for a plan year is the amount (if any) by which the HCE's contributions taken into account under this section must be reduced for the HCE's ADR to equal the highest permitted ADR under the plan. To calculate the highest permitted ADR under a plan, the ADR of the HCE with the highest ADR is reduced by the amount required to cause that HCE's ADR to equal the ADR of the HCE with the next highest ADR. If a lesser reduction would enable the arrangement to satisfy the requirements of paragraph (b)(2)(ii)(C) of this section, only this lesser reduction is used in determining the highest permitted ADR.

(B) ***Determination of the total amount of excess contributions.*** The process described in paragraph (b)(2)(ii)(A) of this section must be repeated until the arrangement would satisfy the requirements of paragraph (b)(2)(ii)(C) of this section. The sum of all reductions for all HCEs determined under paragraph (b)(2)(ii)(A) of this section is the total amount of excess contributions for the plan year.

(C) ***Satisfaction of ADP.*** A cash or deferred arrangement satisfies this paragraph (b)(2)(ii)(C) if the arrangement would satisfy the requirements of paragraph (a)(1)(ii) of this section if the ADR for each HCE were determined after the reductions described in paragraph (b)(2)(ii)(A) of this section.

(iii) ***Apportionment of total amount of excess contributions among the HCEs.*** The following procedures must be used in apportioning the total amount of excess contributions determined under paragraph (b)(2)(ii) of this section among the HCEs:

(A) ***Calculate the dollar amount of excess contributions for each HCE.*** The contributions of the HCE with the highest dollar amount of contributions taken into account under this section are reduced by the amount required to cause that HCE's contributions to equal the dollar amount of the contributions taken into account under this section for the HCE with the next highest dollar amount of contributions taken into account under this section. If a lesser apportionment to the HCE would enable the plan to apportion the total amount of excess contributions, only the lesser apportionment would apply.

(B) ***Limit on amount apportioned to any individual.*** For purposes of this paragraph (b)(2)(iii), the amount of contributions taken into account under this section with respect to an HCE who is an eligible employee in more than one plan of an employer is determined by taking into account all contributions otherwise taken into account with respect to such HCE under any plan of the employer during the plan year of the plan being tested as being made under the plan being tested. However, the amount of excess contributions apportioned for a plan year with respect to any HCE must not exceed the amount of contributions actually contributed to the plan for the HCE for the plan year. Thus, in the case of an HCE who is an eligible employee in more than one plan of the same employer to which elective contributions are made and whose ADR is calculated in accordance with paragraph

(a)(3)(ii) of this section, the amount required to be distributed under this paragraph (b)(2)(iii) shall not exceed the contributions actually contributed to the plan and taken into account under this section for the plan year.

(C) ***Apportionment to additional HCEs.*** The procedure in paragraph (b)(2)(iii)(A) of this section must be repeated until the total amount of excess contributions determined under paragraph (b)(2)(ii) of this section has been apportioned.

(iv) ***Income allocable to excess contributions*** —

(A) ***General rule.*** For plan years beginning on or after January 1, 2008, the income allocable to excess contributions is equal to the allocable gain or loss through the end of the plan year. See paragraph (b)(2)(iv)(D) of this section for rules that apply to plan years beginning before January 1, 2008.

(B) ***Method of allocating income.*** A plan may use any reasonable method for computing the income allocable to excess contributions, provided that the method does not violate section 401(a)(4), is used consistently for all participants and for all corrective distributions under the plan for the plan year, and is used by the plan for allocating income to participant's accounts. See § 1.401(a)(4)-1(c)(8). A plan will not fail to use a reasonable method for computing the income allocable to excess contributions merely because the income allocable to excess contributions is determined on a date that is no more than 7 days before the distribution.

(C) ***Alternative method of allocating plan year income.*** A plan may allocate income to excess contributions for the plan year by multiplying the income for the plan year allocable to the elective contributions and other amounts taken into account under this section (including contributions made for the plan year), by a fraction, the numerator of which is the excess contributions for the employee for the plan year, and the denominator of which is the sum of the—

(*1*) Account balance attributable to elective contributions and other contributions taken into account under this section as of the beginning of the plan year, and

(*2*) Any additional amount of such contributions made for the plan year.

(D) ***Plan years before 2008.*** For plan years beginning before January 1, 2008, the income allocable to excess contributions is determined under § 1.401(k)-2(b)(2)(iv) (as it appeared in the April 1, 2007, edition of 26 CFR part 1).

(v) ***Distribution.*** Within 12 months after the close of the plan year in which the excess contribution arose, the plan must distribute to each HCE the excess contributions apportioned to such HCE under paragraph (b)(2)(iii) of this section and the allocable income. Except as otherwise provided in this paragraph (b)(2)(v) and paragraph (b)(4)(i) of this section, a distribution of excess contributions must be in addition to any other distributions made during the year and must be designated as a corrective distribution by the employer. In the event of a complete termination of the plan during the plan year in which an excess contribution arose, the corrective distribution must be made as soon as administratively feasible after the date of termination of the plan, but in no event later than 12 months after the date of termination. If the entire account balance of an HCE is distributed prior to when the plan makes a distribution of

excess contributions in accordance with this paragraph (b)(2), the distribution is deemed to have been a corrective distribution of excess contributions (and income) to the extent that a corrective distribution would otherwise have been required.

(vi) *Tax treatment of corrective distributions* —

(A) ***Corrective distributions for plan years beginning on or after January 1, 2008.*** Except as provided in this paragraph (b)(2)(vi), for plan years beginning on or after January 1, 2008, a corrective distribution of excess contributions (and allocable income) is includible in the employee's gross income for the employee's taxable year in which distributed. In addition, the corrective distribution is not subject to the early distribution tax of section 72(t). See paragraph (b)(5) of this section for additional rules relating to the employer excise tax on amounts distributed more than $2^1/_2$ months (6 months in the case of certain plans that include an eligible automatic contribution arrangement within the meaning of section 414(w)) after the end of the plan year. See also § 1.402(c)-2(c)(3) for restrictions on rolling over distributions that are excess contributions.

(B) ***Corrective distributions for plan years beginning before January 1, 2008.*** The tax treatment of corrective distributions for plan years beginning before January 1, 2008, is determined under § 1.401(k)-2(b)(2)(vi) (as it appeared in the April 1, 2007, edition of 26 CFR Part 1).

(C) ***Corrective distributions attributable to designated Roth contributions.*** Notwithstanding paragraphs (b)(2)(vi)(A) and (B) of this section, a distribution of excess contributions is not includible in gross income to the extent it represents a distribution of designated Roth contributions. However, the income allocable to a corrective distribution of excess contributions that are designated Roth contributions is included in gross income in accordance with paragraph (b)(2)(vi)(A) or (B) of this section (*i.e.,* in the same manner as income allocable to a corrective distribution of excess contributions that are pre-tax elective contributions).

(vii) *Other rules* —

(A) ***No employee or spousal consent required.*** A corrective distribution of excess contributions (and income) may be made under the terms of the plan without regard to any notice or consent otherwise required under sections 411(a)(11) and 417.

(B) ***Treatment of corrective distributions as elective contributions.*** Excess contributions are treated as employer contributions for purposes of sections 404 and 415 even if distributed from the plan.

(C) ***No reduction of required minimum distribution.*** A distribution of excess contributions (and income) is not treated as a distribution for purposes of determining whether the plan satisfies the minimum distribution requirements of section 401(a)(9). *See* §§ 1.401(a)(9)-5(g)(2)(ii) and 1.402(c)-2(c)(3).

(D) ***Partial distributions.*** Any distribution of less than the entire amount of excess contributions (and allocable income) with respect to any HCE is treated as a pro rata distribution of excess contributions and allocable income.

(viii) ***Examples.*** The following examples illustrate the application of this paragraph (b)(2). For purposes of these examples, none of the plans provide for catch-up contributions under section 414(v). The examples are as follows:

Example 1. (i) Plan P, a calendar year profit-sharing plan that includes a cash or deferred arrangement, provides for distribution of excess contributions to HCEs to the extent necessary to satisfy the ADP test. For the 2006 plan year, Employee A, an HCE, has elective contributions of $12,000 and $200,000 in compensation, for an ADR of 6%, and Employee B, a second HCE, has elective contributions of $8,960 and compensation of $128,000, for an ADR of 7%. The ADP for the NHCEs is 3% for the 2006 plan year. Under the ADP test, the ADP of the two HCEs under the plan may not exceed 5% (*i.e.*, 2 percentage points more than the ADP of the NHCEs under the plan). The ADP for the 2 HCEs under the plan is 6.5%. Therefore, there must be a correction of excess contributions for the 2006 plan year.
(ii) The total amount of excess contributions for the HCEs is determined under paragraph (b)(2)(ii) of this section as follows: the elective contributions of Employee B (the HCE with the highest ADR) are reduced by $1,280 in order to reduce his ADR to 6% ($7,680/$128,000), which is the ADR of Employee A.

(iii) Because the ADP of the HCEs determined after the $1,280 reduction to Employee B still exceeds 5%, further reductions in elective contributions are necessary in order to reduce the ADP of the HCEs to 5%. The elective contributions of Employee A and Employee B are each reduced by 1% of compensation ($2,000 and $1,280 respectively). Because the ADP of the HCEs determined after the reductions equals 5%, the plan would satisfy the requirements of (a)(1)(ii) of this section.

(iv) The total amount of excess contributions ($4,560 = $1,280 + $2,000 + $1,280) is apportioned among the HCEs under paragraph (b)(2)(iii) of this section first to the HCE with the highest amount of elective contributions. Therefore, Employee A is apportioned $3,040 (the amount required to cause Employee A's elective contributions to equal the next highest dollar amount of elective contributions).

(v) Because the total amount of excess contributions has not been apportioned, further apportionment is necessary. The balance ($1,520) of the total amount of excess contributions is apportioned equally among Employee A and Employee B ($760 to each).

(vi) Therefore, the cash or deferred arrangement will satisfy the requirements of paragraph (a)(1) of this section if, by the end of the 12 month period following the end of the 2006 plan year, Employee A receives a corrective distribution of excess contributions equal to $3,800 ($3,040 + $760) and allocable income and Employee B receives a corrective distribution of $760 and allocable income.

Example 2. (i) The facts are the same as in *Example 1,* except Employee A's ADR is based on $3,000 of elective contributions to this plan and $9,000 of elective contributions to another plan of the employer.

(ii) The total amount of excess contributions ($4,560 = $1,280 + $2,000 + $1,280) is apportioned among the HCEs under paragraph (b)(2)(iii) of this section first to the HCE with the highest amount of elective contributions. The amount of elective contributions for Employee A is $12,000. Therefore, Employee A is apportioned $3,040 (the amount required to cause Employee A's elective contributions to equal the next highest dollar amount of elective contributions). However, pursuant to paragraph (b)(2)(iii)(B) of this section, no more than the amount actually contributed to the plan may be apportioned to an HCE. Accordingly, no more than $3,000 may be apportioned to Employee A. Therefore, the remaining $1,560 must be apportioned to Employee B.

(iii) The cash or deferred arrangement will satisfy the requirements of paragraph (a)(1) of this section if, by the end of the 12 month period following the end of the 2006 plan year, Employee A receives a corrective distribution of excess contributions equal to $3,000 (total amount of elective contributions actually contributed to the plan for Employee A) and allocable income and Employee B receives a corrective distribution of $1,560 and allocable income.

(3) *Recharacterization of excess contributions* —

(i) ***General rule.*** Excess contributions are recharacterized in accordance with this paragraph (b)(3) only if the excess contributions that would have to be distributed under (b)(2) of this section if the plan was correcting through distribution of excess contributions are recharacterized as described in paragraph (b)(3)(ii) of this section, and all of the conditions set forth in paragraph (b)(3)(iii) of this section are satisfied.

(ii) ***Treatment of recharacterized excess contributions.*** Recharacterized excess contributions are includible in the employee's gross income as if such amounts were distributed under paragraph (b)(2) of this section. The recharacterized excess contributions are treated as employee contributions for purposes of section 72, sections 401(a)(4), 401(m), § 1.401(k)-1(d) and § 1.401(k)-2. This requirement is not treated as satisfied unless the payor or plan administrator reports the recharacterized excess contributions as employee contributions to the Internal Revenue Service and the employee by timely providing such Federal tax forms and accompanying instructions and timely taking such other action as is prescribed by the Commissioner in revenue rulings, notices and other guidance published in the Internal Revenue Bulletin (*see* § 601.601(d)(2) of this chapter) as well as the applicable Federal tax forms and accompanying instructions.

(iii) *Additional rules* —

(A) ***Time of recharacterization.*** Excess contributions may not be recharacterized under this paragraph (b)(3) after $2^1/_2$ months after the close of the plan year to which the recharacterization relates. Recharacterization is deemed to have occurred on the date on which the last of those HCEs with excess contributions to be recharacterized is notified in accordance with paragraph (b)(3)(ii) of this section.

(B) ***Employee contributions must be permitted under plan.*** The amount of recharacterized excess contributions, in combination with the employee contributions actually made by the HCE, may not exceed the maximum amount of employee contributions (determined without regard to the ACP test of section 401(m)(2)) permitted under the provisions of the plan as in effect on the first day of the plan year.

(C) ***Treatment of recharacterized excess contributions.*** Recharacterized excess contributions continue to be treated as employer contributions for all purposes under the Internal Revenue Code (other than those specified in paragraph (b)(3)(ii) of this section), including section 401(a) and sections 404, 409, 411, 412, 415, 416, and 417. Thus, for example, recharacterized excess contributions remain subject to the requirements of § 1.401(k)-1(c); must be deducted under section 404; and are treated as employer contributions described in section 415(c)(2)(A).

(4) ***Rules applicable to all corrections*** —

(i) ***Coordination with distribution of excess deferrals*** —

(A) ***Treatment of excess deferrals that reduce excess contributions.*** The amount of excess contributions (and allocable income) to be distributed under paragraph (b)(2) of this section or the amount of excess contributions recharacterized under paragraph (b)(3) of this section with respect to an employee for a plan year, is reduced by any amounts previously distributed to the employee from the plan to correct excess deferrals for the employee's taxable year ending with or within the plan year in accordance with section 402(g)(2).

(B) ***Treatment of excess contributions that reduce excess deferrals.*** Under § 1.402(g)-1(e), the amount required to be distributed to correct an excess deferral to an employee for a taxable year is reduced by any excess contributions (and allocable income) previously distributed or excess contributions recharacterized with respect to the employee for the plan year beginning with or within the taxable year. The amount of excess contributions includible in the gross income of the employee, and the amount of excess contributions reported by the payer or plan administrator as includible in the gross income of the employee, does not include the amount of any reduction under § 1.402(g)-1(e)(6).

(ii) ***Forfeiture of match on distributed excess contributions.*** A matching contribution is taken into account under section 401(a)(4) even if the match is with respect to an elective contribution that is distributed or recharacterized under this paragraph (b). This requires that, after correction of excess contributions, each level of matching contributions be currently and effectively available to a group of employees that satisfies section 410(b). *See* § 1.401(a)(4)-4(e)(3)(iii)(G). Thus, a plan that provides the same rate of matching contributions to all employees will not meet the requirements of section 401(a)(4) if elective contributions are distributed under this paragraph (b) to HCEs to the extent needed to meet the requirements of section 401(k)(3), while matching contributions attributable to those elective contributions remain allocated to the HCEs' accounts. Under section 411(a)(3)(G) and § 1.411(a)-4(b)(7), a plan may forfeit matching contributions attributable to excess contributions, excess aggregate contributions or excess deferrals to avoid a violation of section 401(a)(4). *See also* § 1.401(a)(4)-11(g)(3)(vii)(B) regarding the use of additional allocations to the accounts of NHCEs for the purpose of correcting a discriminatory rate of matching contributions.

(iii) ***Permitted forfeiture of QMAC.*** Pursuant to section 401(k)(8)(E), a qualified matching contribution is not treated as forfeitable under § 1.401(k)-1(c) merely because under the plan it is forfeited in accordance with paragraph (b)(4)(ii) of this section or § 1.414(w)-1(d)(2).

(iv) ***No requirement for recalculation.*** If excess contributions are distributed or recharacterized in accordance with paragraphs (b)(2) and (3) of this section, the cash or deferred arrangement is treated as meeting the nondiscrimination test of section 401(k)(3) regardless of whether the ADP for the HCEs, if recalculated after the distributions or recharacterizations, would satisfy section 401(k)(3).

(v) ***Treatment of excess contributions that are catch-up contributions.*** A cash or deferred arrangement does not fail to meet the requirements of section 401(k)(3) and paragraph (a)(1) of this section merely because excess contributions that are catch-up contributions because they exceed the ADP limit, as described in § 1.414(v)-1(b)(1)(iii), are not corrected in accordance with this paragraph (b).

(5) ***Failure to timely correct*** —

(i) ***Failure to correct within 2 1/2 months after end of plan year.*** If a plan does not correct excess contributions within 2 1/2 months after the close of the plan year for which the excess contributions are made, the employer will be liable for a 10% excise tax on the amount of the excess contributions. *See* section 4979 and § 54.4979-1 of this chapter. Qualified nonelective contributions and qualified matching contributions properly taken into account under paragraph (a)(6) of this section for a plan year may enable a plan to avoid having excess contributions, even if the contributions are made after the close of the 2 1/2 month period.

(ii) ***Failure to correct within 12 months after end of plan year.*** If excess contributions are not corrected within 12 months after the close of the plan year for which they were made, the cash or deferred arrangement will fail to satisfy the requirements of section 401(k)(3) for the plan year for which the excess contributions are made and all subsequent plan years during which the excess contributions remain in the trust.

(iii) ***Special rule for eligible automatic contribution arrangements.*** In the case of excess contributions under a plan that includes an eligible automatic contribution arrangement within the meaning of section 414(w), 6 months is substituted for 2 1/2 months in paragraph (b)(5)(i) of this section. The additional time described in this paragraph (b)(5)(iii) applies to a distribution of excess contributions for a plan year beginning on or after January 1, 2010 only where all the eligible NHCEs and eligible HCEs are covered employees under the eligible automatic contribution arrangement (within the meaning of § 1.414(w)-1(e)(3)) for the entire plan year (or for the portion of the plan year that the eligible NHCEs and eligible HCEs are eligible employees).

(c) ***Additional rules for prior year testing method*** —

(1) ***Rules for change in testing method*** —

(i) ***General rule.*** A plan is permitted to change from the prior year testing method to the current year testing method for any plan year. A plan is permitted to change from the current year testing method to the prior year testing method only in situations described in paragraph (c)(1)(ii) of this section. For purposes of this paragraph (c)(1), a plan that uses the safe harbor method described in § 1.401(k)-3 or a SIMPLE 401(k) plan is treated as using the current year testing method for that plan year.

(ii) ***Situations permitting a change to the prior year testing method.*** The situations described in this paragraph (c)(1)(ii) are:

(A) The plan is not the result of the aggregation of two or more plans, and the current year testing method was used under the plan for each of the 5 plan years preceding the plan year of the change (or if lesser, the number of plan years the plan has been in existence, including years in which the plan was a portion of another plan).

(B) The plan is the result of the aggregation of two or more plans, and for each of the plans that are being aggregated (the aggregating plans), the current year testing method was used for each of the 5 plan years preceding the plan year of the change (or if lesser, the number of plan years since that aggregating plan has been in existence, including years in which the aggregating plan was a portion of another plan).

(C) A transaction described in section 410(b)(6)(C)(i) and § 1.410(b)-2(f) occurs and—

(*1*) As a result of the transaction, the employer maintains both a plan using the prior year testing method and a plan using the current year testing method; and

(*2*) The change from the current year testing method to the prior year testing method occurs within the transition period described in section 410(b)(6)(C)(ii).

(2) ***Calculation of ADP under the prior year testing method for the first plan year*** —

(i) ***Plans that are not successor plans.*** If, for the first plan year of any plan (other than a successor plan), the plan uses the prior year testing method, the plan is permitted to use either that first plan year as the applicable year for determining the ADP for eligible NHCEs, or use 3% as the ADP for eligible NHCEs, for applying the ADP test for that first plan year. A plan (other than a successor plan) that uses the prior year testing method but has elected for its first plan year to use that year as the applicable year is not treated as changing its testing method in the second plan year and is not subject to the limitations on double counting on QNECs under paragraph (a)(6)(vi) of this section for the second plan year.

(ii) ***First plan year defined.*** For purposes of this paragraph (c)(2), the first plan year of any plan is the first year in which the plan provides for elective contributions. Thus, the rules of this paragraph (c)(2) do not apply to a plan (within the meaning of § 1.410(b)-7(b)) for a plan year if for such plan year the plan is aggregated under § 1.401(k)-1(b)(4) with any other plan that provided for elective contributions in the prior year.

(iii) ***Successor plans.*** A plan is a successor plan if 50% or more of the eligible employees for the first plan year were eligible employees under a qualified cash or deferred arrangement maintained by the employer in the prior year. If a plan that is a successor plan uses the prior year testing method for its first plan year, the ADP for the group of NHCEs for the applicable year must be determined under paragraph (c)(4) of this section.

(3) ***Plans using different testing methods for the ADP and ACP test.*** Except as otherwise provided in this paragraph (c)(3), a plan may use the current year testing method or prior year testing method for the ADP test for a plan year without regard to whether the current year testing method or prior year testing method is used for the ACP test for that year. For example, a plan may use the prior year testing method for the ADP test and the current year testing method for its ACP test for the plan year. However, plans that use different testing methods under this paragraph (c)(3) cannot use—

(i) The recharacterization method of paragraph (b)(3) of this section to correct excess contributions for a plan year;

(ii) The rules of § 1.401(m)-2(a)(6)(ii) to take elective contributions into account under the ACP test (rather than the ADP test); or

(iii) The rules of paragraph (a)(6)(v) of this section to take qualified matching contributions into account under the ADP test (rather than the ACP test).

(4) ***Rules for plan coverage changes*** —

(i) ***In general.*** A plan that uses the prior year testing method and experiences a plan coverage change during a plan year satisfies the requirements of this section for that year only if the plan provides that the ADP for the NHCEs for the plan year is the weighted average of the ADPs for the prior year subgroups.

(ii) ***Optional rule for minor plan coverage changes.*** If a plan coverage change occurs and 90% or more of the total number of the NHCEs from all prior year subgroups are from a single prior year subgroup, then, in lieu of using the weighted averages described in paragraph (c)(4)(i) of this section, the plan may provide that the ADP for the group of eligible NHCEs for the prior year under the plan is the ADP of the NHCEs for the prior year of the plan under which that single prior year subgroup was eligible.

(iii) ***Definitions.*** The following definitions apply for purposes of this paragraph (c)(4):

(A) ***Plan coverage change.*** The term *plan coverage change* means a change in the group or groups of eligible employees under a plan on account of—

(*1*) The establishment or amendment of a plan;

(*2*) A plan merger or spinoff under section 414(l);

(*3*) A change in the way plans (within the meaning of § 1.410(b)-7(b)) are combined or separated for purposes of § 1.401(k)-1(b)(4) (*e.g.*, permissively aggregating plans not previously aggregated under § 1.410(b)-7(d), or ceasing to permissively aggregate plans under § 1.410(b)-7(d));

(*4*) A reclassification of a substantial group of employees that has the same effect as amending the plan (*e.g.*, a transfer of a substantial group of employees from one division to another division); or

(*5*) A combination of any of paragraphs (c)(4)(iii)(A)(*1*) through (*4*) of this section.

(B) ***Prior year subgroup.*** The term *prior year subgroup* means all NHCEs for the prior plan year who, in the prior year, were eligible employees under a specific plan maintained by the employer that included a qualified cash or deferred arrangement and who would have been eligible employees in the prior year under the plan being tested if the plan coverage change had first been effective as of the first day of the prior plan year instead of first being effective during the plan year. The determination of whether an NHCE is a member of a prior year subgroup is made without regard to whether the NHCE terminated employment during the prior year.

(C) ***Weighted average of the ADPs for the prior year subgroups.*** The term *weighted average of the ADPs for the prior year subgroups* means the sum, for all prior year subgroups, of the adjusted ADPs for the plan year. The term *adjusted ADP with respect to a prior year subgroup* means the ADP for the prior plan year of the specific plan under which the members of the prior year subgroup were eligible employees on the first day of the prior plan year, multiplied by a fraction, the numerator of which is the number of NHCEs in the prior year subgroup and denominator of which is the total number of NHCEs in all prior year subgroups.

(iv) ***Examples.*** The following examples illustrate the application of this paragraph (c)(4):

Example 1. (i) Employer B maintains two calendar year plans, Plan O and Plan P, each of which includes a cash or deferred arrangement. The plans were not permissively aggregated under § 1.410(b)-7(d) for the 2005 plan year. Both plans use the prior year testing method. Plan O had 300 eligible employees who were NHCEs for the 2005 plan year, and their ADP for that year was 6%. Sixty of the eligible employees who were NHCEs for the 2005 plan year under Plan O, terminated their employment during that year. Plan P had 100 eligible employees who were NHCEs for 2005, and the ADP for those NHCEs for that plan was 4%. Plan O and Plan P are permissively aggregated under § 1.410(b)-7(d) for the 2006 plan year.
(ii) The permissive aggregation of Plan O and Plan P for the 2006 plan year under § 1.410(b)-7(d) is a plan coverage change that results in treating the plans as one plan (Plan OP) for purposes of § 1.401(k)-1(b)(4). Therefore, the prior year ADP for the NHCEs under Plan OP for the 2006 plan year is the weighted average of the ADPs for the prior year subgroups: the Plan O prior year subgroup and the Plan P prior year subgroup.

(iii) The Plan O prior year subgroup consists of the 300 employees who, in the 2005 plan year, were eligible NHCEs under Plan O and who would have been eligible under Plan OP for the 2005 plan year if Plan O and Plan P had been permissively aggregated for that plan year. The Plan P prior year subgroup consists of the 100 employees who, in the 2005 plan year, were eligible NHCEs under Plan P and would have been eligible under Plan OP for the 2005 plan year if Plan O and Plan P had been permissively aggregated for that plan year.

(iv) The weighted average of the ADPs for the prior year subgroups is the sum of the adjusted ADP for the Plan O prior year subgroup and the adjusted ADP for the Plan P prior year subgroup. The adjusted ADP for the Plan O prior year subgroup is 4.5%, calculated as follows: 6% (the ADP for the NHCEs under Plan O for the 2005 plan year) × 300/400 (the number of NHCEs in the Plan O prior year subgroup divided by the total number of NHCEs in all prior year subgroups). The adjusted ADP for the Plan P prior year subgroup is 1%, calculated as follows: 4% (the ADP for the NHCEs under Plan P for the 2005 plan year) × 100/400 (the number of NHCEs in the Plan P prior year subgroup divided by the total number of NHCEs in all prior year subgroups). Thus, the prior year ADP for NHCEs under Plan OP for the 2006 plan year is 5.5% (the sum of adjusted ADPs for the prior year subgroups, 4.5% plus 1%).

(v) As provided in paragraph (c)(4)(iii)(B) of this section, the determination of whether an NHCE is a member of a prior year subgroup is made without regard to whether that NHCE terminated employment during the prior year. Thus, the prior ADP for the NHCEs under Plan OP for the 2006 plan year is unaffected by the termination of the 60 NHCEs covered by Plan O during the 2005 plan year.

Example 2. (i) The facts are the same as *Example 1,* except that the 60 employees who terminated employment during the 2005 plan are instead spun-off to another plan.
(ii) The permissive aggregation of Plan O and Plan P for the 2006 plan year under § 1.410(b)-7(d) is a plan coverage change that results in treating the plans as one plan (Plan OP) for purposes of § 1.401(k)-1(b)(4) and the spin-off of the 60 employees is a plan coverage change. Therefore, the prior year ADP for the NHCEs under Plan OP for the 2006 plan year is the weighted average of the ADPs for the prior year subgroups: the Plan O prior year subgroup and the Plan P prior year subgroup.

(iii) For purposes of determining the prior year subgroups, the employees who would have been eligible employees in the prior year under the plan being tested are determined as if both plan coverage changes had first been effective as of the first day of the prior plan year. The Plan O prior year subgroup consists of the 240 employees who, in the 2005 plan year, were eligible NHCEs under Plan O and would have been eligible under Plan OP for the 2005 plan year if the spin-off had occurred at the beginning of the 2005 plan year and Plan O and Plan P had been permissively aggregated under § 1.410(b)-7(d) for that plan year. The Plan P prior year subgroup consists of the 100 employees who, in the 2005 plan year, were eligible NHCEs under Plan P and would have been eligible under Plan OP for the 2005 plan year if Plan O and Plan P had been permissively aggregated under § 1.410(b)-7(d) for that plan year.

(iv) The weighted average of the ADPs for the prior year subgroups is the sum of the adjusted ADP with respect to the prior year subgroup consisting of eligible NHCEs from Plan O and the adjusted ADP with respect to the prior year subgroup consisting of eligible NHCEs from Plan P. The adjusted ADP for the prior year subgroup consisting of eligible NHCEs under Plan O is 4.23%, calculated as follows: 6% (the ADP for the NHCEs under Plan O for the 2005 plan year) × 240/340 (the number of NHCEs in that prior year subgroup divided by the total number of NHCEs in all prior year subgroups). The adjusted ADP for the prior year subgroup consisting of the eligible NHCEs from Plan P is 1.18%, calculated as follows: 4% (the ADP for the NHCEs under Plan P for the 2005 plan year) × 100/340 (the number of NHCEs in that prior year subgroup divided by the total number of NHCEs in all prior year subgroups). Thus, the prior year ADP for NHCEs under Plan OP for the 2006 plan year is 5.41% (the sum of adjusted ADPs for the prior year subgroups, 4.23% plus 1.18%).

Example 3. (i) The facts are the same as in *Example 1,* except that instead of Plan O and Plan P being permissively aggregated for the 2006 plan year, 200 of the employees eligible under Plan O were spun-off from Plan O and merged into Plan P.
(ii) The spin-off from Plan O and merger to Plan P for the 2006 plan year are plan coverage changes for Plan P. Therefore, the prior year ADP for the NHCEs under Plan P for the 2006 plan year is the weighted average of the ADPs for the prior year subgroups under Plan P. There are 2 subgroups under Plan P for the

2006 plan year. The Plan O prior year subgroup consists of the 200 employees who, in the 2005 plan year, were eligible NHCEs under Plan O and who would have been eligible under Plan P for the 2005 plan year if the spin-off and merger had occurred on the first day of the 2005 plan year. The Plan P prior year subgroup consists of the 100 employees who, in the 2005 plan year, were eligible NHCEs under Plan P for the 2005 plan year.

(iii) The weighted average of the ADPs for the prior year subgroups is the sum of the adjusted ADP for the Plan O prior year subgroup and the adjusted ADP for the Plan P prior year subgroup. The adjusted ADP for the Plan O prior year subgroup is 4.0%, calculated as follows: 6% (the ADP for the NHCEs under Plan O for the 2005 plan year) × 200/300 (the number of NHCEs in the Plan O prior year subgroup divided by the total number of NHCEs in all prior year subgroups). The adjusted ADP for the Plan P prior year subgroup is 1.33%, calculated as follows: 4% (the ADP for the NHCEs under Plan P for the 2005 plan year) × 100/300 (the number of NHCEs in the Plan P prior year subgroup divided by the total number of NHCEs in all prior year subgroups). Thus, the prior year ADP for NHCEs under Plan P for the 2006 plan year is 5.33% (the sum of adjusted ADPs for the 2 prior year subgroups, 4.0% plus 1.33%).

(iv) The spin-off from Plan O for the 2006 plan year is a plan coverage change for Plan O. Therefore, the prior year ADP for the NHCEs under Plan O for the 2006 plan year is the weighted average of the ADPs for the prior year subgroups under Plan O. In this case, there is only one prior year subgroup under Plan O, the employees who were NHCEs of Employer B for the 2005 plan year and who were eligible for the 2005 plan year under Plan O. Because there is only one prior year subgroup under Plan O, the weighted average of the ADPs for the prior year subgroup under Plan O is equal to the NHCE ADP for the prior year (2005 plan year) under Plan O, or 6%.

Example 4. (i) Employer C maintains a calendar year plan, Plan Q, which includes a cash or deferred arrangement that uses the prior year testing method. Plan Q covers employees of Division A and Division B. In 2005, Plan Q had 500 eligible employees who were NHCEs, and the ADP for those NHCEs for 2005 was 2%. Effective January 1, 2006, Employer C amends the eligibility provisions under Plan Q to exclude employees of Division B effective January 1, 2006. In addition, effective on that same date, Employer C establishes a new calendar year plan, Plan R, which includes a cash or deferred arrangement that uses the prior year testing method. The only eligible employees under Plan R are the 100 employees of Division B who were eligible employees under Plan Q.
(ii) Plan R is a successor plan, within the meaning of paragraph (c)(2)(iii) of this section (because all of the employees were eligible employees under Plan Q in the prior year). Therefore, Plan R cannot use the first plan year rule set forth in paragraph (c)(2)(i) of this section.

(iii) The amendment to the eligibility provisions of Plan Q and the establishment of Plan R are plan coverage changes within the meaning of paragraph (c)(4)(iii)(A) of this section for Plan Q and Plan R. Accordingly, each plan must determine the NHCE ADP for the 2006 plan year under the rules set forth in paragraph (c)(4) of this section.

(iv) The prior year ADP for NHCEs under Plan Q is the weighted average of the ADPs for the prior year subgroups. Plan Q has only one prior year subgroup (because the only NHCEs who would have been eligible employees under Plan Q for the 2005 plan year if the amendment to the Plan Q eligibility provisions had occurred as of the first day of that plan year were eligible employees under Plan Q). Therefore, for purposes of the 2006 plan year under Plan Q, the ADP for NHCEs for the prior year is the weighted average of the ADPs for the prior year subgroups, or 2%, the same as if the plan amendment had not occurred.

(v) Similarly, Plan R has only one prior year subgroup (because the only NHCEs who would have been eligible employees under Plan R for the 2005 plan year if the plan were established as of the first day of that plan year were eligible employees under Plan Q). Therefore, for purposes of the 2006 testing year under Plan R, the ADP for NHCEs for the prior year is the weighted average of the ADPs for the prior year subgroups, or 2%, the same as that of Plan Q.

Example 5. (i) The facts are the same as in *Example 4,* except that the provisions of Plan R extend eligibility to 50 hourly employees who previously were not eligible employees under any qualified cash or deferred arrangement maintained by Employer C.
(ii) Plan R is a successor plan (because 100 of Plan R's 150 eligible employees were eligible employees under another qualified cash or deferred arrangement maintained by Employer C in the prior year). Therefore, Plan R cannot use the first plan year rule set forth in paragraph (c)(2)(i) of this section.

(iii) The establishment of Plan R is a plan coverage change that affects Plan R. Because the 50 hourly employees were not eligible employees under any qualified cash or deferred arrangement of Employer C for the prior plan year, they do not comprise a prior year subgroup. Accordingly, Plan R still has only one prior year subgroup. Therefore, for purposes of the 2006 testing year under Plan R, the ADP for NHCEs for the prior year is the weighted average of the ADPs for the prior year subgroups, or 2%, the same as that of Plan Q.

[T.D. 9169, 69 FR 78154, Dec. 29, 2004, as amended by T.D. 9237, 71 FR 10, Jan. 3, 2006; T.D. 9447, 74 FR 8207, Feb. 24, 2009; T.D. 10001, 89 FR 58906, July 19, 2024]

§ 1.401(k)-3 Safe harbor requirements.

(a) ***ADP test safe harbor*** —

(1) ***Section 401(k)(12) safe harbor.*** A cash or deferred arrangement satisfies the ADP safe harbor provision of section 401(k)(12) for a plan year if the arrangement satisfies the safe harbor contribution requirement of paragraph (b) or (c) of this section for the plan year, the notice requirement of paragraph (d) of this section, the plan year requirements of paragraph (e) of this section, and the additional rules of paragraphs (f), (g), and (h) of this section, as applicable.

(2) ***Section 401(k)(13) safe harbor.*** For plan years beginning on or after January 1, 2008, a cash or deferred arrangement satisfies the ADP safe harbor provision of section 401(k)(13) for a plan year if the arrangement is described in paragraph (j) of this section and satisfies the safe harbor contribution requirement of paragraph (k) of this section for the plan year, the notice requirement of paragraph (d) of this section (modified to include the information set forth in paragraph (k)(4) of this

section), the plan year requirements of paragraph (e) of this section, and the additional rules of paragraphs (f), (g), and (h) of this section, as applicable. A cash or deferred arrangement that satisfies the requirements of this paragraph (a)(2) is referred to as a qualified automatic contribution arrangement.

(3) ***Requirements applicable to safe harbor contributions.*** Pursuant to section 401(k)(12)(E)(ii) and section 401(k)(13)(D)(iv), the safe harbor contribution requirement of paragraph (b), (c), or (k) of this section must be satisfied without regard to section 401(l). The contributions made under paragraph (b) or (c) of this section (and the corresponding contributions under paragraph (k) of this section) are referred to as safe harbor nonelective contributions and safe harbor matching contributions.

(b) ***Safe harbor nonelective contribution requirement*** —

(1) ***General rule.*** The safe harbor nonelective contribution requirement of this paragraph is satisfied if, under the terms of the plan, the employer is required to make a qualified nonelective contribution on behalf of each eligible NHCE equal to at least 3% of the employee's safe harbor compensation.

(2) ***Safe harbor compensation defined.*** For purposes of this section, safe harbor compensation means compensation as defined in § 1.401(k)-6 (which incorporates the definition of compensation in § 1.414(s)-1); provided, however, that the rule in the last sentence of § 1.414(s)-1(d)(2)(iii) (which generally permits a definition of compensation to exclude all compensation in excess of a specified dollar amount) does not apply in determining the safe harbor compensation of NHCEs. Thus, for example, the plan may limit the period used to determine safe harbor compensation to the eligible employee's period of participation.

(c) ***Safe harbor matching contribution requirement*** —

(1) ***In general.*** The safe harbor matching contribution requirement of this paragraph (c) is satisfied if, under the plan, qualified matching contributions are made on behalf of each eligible NHCE in an amount determined under the basic matching formula of section 401(k)(12)(B)(i)(I), as described in paragraph (c)(2) of this section, or under an enhanced matching formula of section 401(k)(12)(B)(i)(II), as described in paragraph (c)(3) of this section.

(2) ***Basic matching formula.*** Under the basic matching formula, each eligible NHCE receives qualified matching contributions in an amount equal to the sum of—

(i) 100% of the amount of the employee's elective contributions that do not exceed 3% of the employee's safe harbor compensation; and

(ii) 50% of the amount of the employee's elective contributions that exceed 3% of the employee's safe harbor compensation but that do not exceed 5% of the employee's safe harbor compensation.

(3) ***Enhanced matching formula.*** Under an enhanced matching formula, each eligible NHCE receives a matching contribution under a formula that, at any rate of elective contributions by the employee, provides an aggregate amount of qualified matching contributions at least equal to the aggregate amount of qualified matching contributions that would have been provided under the basic matching formula of paragraph (c)(2) of this section. In addition, under an enhanced matching formula, the ratio of matching contributions on behalf of an employee under the plan for a plan year to the employee's elective contributions may not increase as the amount of an employee's elective contributions increases.

(4) ***Limitation on HCE matching contributions.*** The safe harbor matching contribution requirement of this paragraph (c) is not satisfied if the ratio of matching contributions made on account of an HCE's elective contributions under the cash or deferred arrangement for a plan year to those elective contributions is greater than the ratio of matching contributions to elective contributions that would apply with respect to any eligible NHCE with elective contributions at the same percentage of safe harbor compensation.

(5) ***Use of safe harbor match not precluded by certain plan provisions*** —

(i) ***Safe harbor matching contributions on employee contributions.*** The safe harbor matching contribution requirement of this paragraph (c) will not fail to be satisfied merely because safe harbor matching contributions are made on both elective contributions and employee contributions if safe harbor matching contributions are made with respect to the sum of elective contributions and employee contributions on the same terms as safe harbor matching contributions are made with respect to elective contributions. Alternatively, the safe harbor matching contribution requirement of this paragraph (c) will not fail to be satisfied merely because safe harbor matching contributions are made on both elective contributions and employee contributions if safe harbor matching contributions on elective contributions are not affected by the amount of employee contributions.

(ii) ***Periodic matching contributions.*** The safe harbor matching contribution requirement of this paragraph (c) will not fail to be satisfied merely because the plan provides that safe harbor matching contributions will be made separately with respect to each payroll period (or with respect to all payroll periods ending with or within each month or quarter of a plan year) taken into account under the plan for the plan year, provided that safe harbor matching contributions with respect to any elective contributions made during a plan year quarter are contributed to the plan by the last day of the immediately following plan year quarter.

(6) ***Permissible restrictions on elective contributions by NHCEs*** —

(i) ***General rule.*** The safe harbor matching contribution requirement of this paragraph (c) is not satisfied if elective contributions by NHCEs are restricted, unless the restrictions are permitted by this paragraph (c)(6).

(ii) ***Restrictions on election periods.*** A plan may limit the frequency and duration of periods in which eligible employees may make or change cash or deferred elections under a plan. However, an employee must have a reasonable opportunity (including a reasonable period after receipt of the notice described in paragraph (d) of this section) to make or change a cash or deferred election for the plan year. For purposes of this paragraph (c)(6)(ii), a 30-day period is deemed to be a reasonable period to make or change a cash or deferred election.

(iii) ***Restrictions on amount of elective contributions.*** A plan is permitted to limit the amount of elective contributions that may be made by an eligible employee under a plan, provided that each NHCE who is an eligible employee is permitted (unless the employee is restricted under paragraph (c)(6)(v) of this section) to make elective contributions in an amount that is at least sufficient to receive the maximum amount of matching contributions available under the plan for the plan year, and the employee is permitted to elect any lesser amount of elective contributions. However, a plan may require eligible employees to make cash or deferred elections in whole percentages of compensation or whole dollar amounts.

(iv) ***Restrictions on types of compensation that may be deferred.*** A plan may limit the types of compensation that may be deferred by an eligible employee under a plan, provided that each eligible NHCE is permitted to make elective contributions under a definition of compensation that would be a reasonable definition of compensation within the meaning of § 1.414(s)-1(d)(2). Thus, the definition of compensation from which elective contributions may be made is not required to satisfy the nondiscrimination requirement of § 1.414(s)-1(d)(3).

(v) ***Restrictions due to limitations under the Internal Revenue Code.*** A plan may limit the amount of elective contributions made by an eligible employee under a plan—

(A) Because of the limitations of section 402(g) or 415;

(B) Due to a suspension under section 414(u)(12)(B)(ii); or

(C) Because, on account of a hardship distribution made before January 1, 2020, an employee's ability to make elective contributions has been suspended for 6 months.

(7) ***Examples.*** The following examples illustrate the safe harbor contribution requirement of this paragraph (c):

> *Example 1.* (i) Beginning January 1, 2006, Employer A maintains Plan L covering employees in Divisions D and E, each of which includes HCEs and NHCEs. Plan L contains a cash or deferred arrangement and provides qualified matching contributions equal to 100% of each eligible employee's elective contributions up to 3% of compensation and 50% of the next 2% of compensation. For purposes of the matching contribution formula, safe harbor compensation is defined as all compensation within the meaning of section 415(c)(3) (a definition that satisfies section 414(s)). Also, each employee is permitted to make elective contributions from all safe harbor compensation within the meaning of section 415(c)(3) and may change a cash or deferred election at any time. Plan L limits the amount of an employee's elective contributions for purposes of section 402(g) and section 415. All contributions under Plan L are nonforfeitable and are subject to the withdrawal restrictions of section 401(k)(2)(B). Plan L provides for no other contributions and Employer A maintains no other plans. Plan L is maintained on a calendar-year basis, and all contributions for a plan year are made within 12 months after the end of the plan year.
> (ii) Based on these facts, matching contributions under Plan L are safe harbor matching contributions because they are qualified matching contributions equal to the basic matching formula. Accordingly, Plan L satisfies the safe harbor contribution requirement of this paragraph (c).

> *Example 2.* (i) The facts are the same as in *Example 1,* except that instead of providing a basic matching contribution, Plan L provides a qualified matching contribution equal to 100% of each eligible employee's elective contributions up to 4% of safe harbor compensation.
> (ii) Plan L's formula is an enhanced matching formula because each eligible NHCE receives safe harbor matching contributions at a rate that, at any rate of elective contributions, provides an aggregate amount of qualified matching contributions at least equal to the

aggregate amount of qualified matching contributions that would have been received under the basic safe harbor matching formula, and the rate of matching contributions does not increase as the rate of an employee's elective contributions increases. Accordingly, Plan L satisfies the safe harbor contribution requirement of this paragraph (c).

Example 3. (i) The facts are the same as in *Example 2,* except that instead of permitting each employee to make elective contributions from all compensation within the meaning of section 415(c)(3), each employee's elective contributions under Plan L are limited to 15% of the employee's basic compensation. *Basic compensation* is defined under Plan L as compensation within the meaning of section 415(c)(3), but excluding overtime pay.
(ii) The definition of basic compensation under Plan L is a reasonable definition of compensation within the meaning of § 1.414(s)-1(d)(2).

(iii) Plan L will not fail to satisfy the safe harbor contribution requirement of this paragraph (c) merely because Plan L limits the amount of elective contributions and the types of compensation that may be deferred by eligible employees, provided that each eligible NHCE may make elective contributions equal to at least 4% of the employee's safe harbor compensation.

Example 4. (i) The facts are the same as in *Example 1,* except that Plan L provides that only employees employed on the last day of the plan year will receive a safe harbor matching contribution.
(ii) Even if the plan that provides for employee contributions and matching contributions satisfies the minimum coverage requirements of section 410(b)(1) taking into account this last-day requirement, Plan L would not satisfy the safe harbor contribution requirement of this paragraph (c) because safe harbor matching contributions are not made on behalf of all eligible NHCEs who make elective contributions.

(iii) The result would be the same if, instead of providing safe harbor matching contributions, Plan L provides for a 3% safe harbor nonelective contribution that is restricted to eligible employees under the cash or deferred arrangement who are employed on the last day of the plan year.

Example 5. (i) The facts are the same as in *Example 1,* except that instead of providing qualified matching contributions under the basic matching formula to employees in both Divisions D and E, employees in Division E are provided qualified matching contributions under the basic matching formula, while safe harbor matching contributions continue to be provided to employees in Division D under the enhanced matching formula described in *Example 2.*

(ii) Even if Plan L satisfies § 1.401(a)(4)-4 with respect to each rate of matching contributions available to employees under the plan, the plan would fail to satisfy the safe harbor contribution requirement of this paragraph (c) because the rate of matching contributions with respect to HCEs in Division D at a rate of elective contributions between 3% and 5% would be greater than that with respect to NHCEs in Division E at the same rate of elective contributions. For example, an HCE in Division D who would have a 4% rate of elective contributions would have a rate of matching contributions of 100% while an NHCE in Division E who would have the same rate of elective contributions would have a lower rate of matching contributions.

(d) ***Notice requirement*** —

(1) ***General rule.*** The notice requirement of this paragraph (d) is satisfied for a plan year if each eligible employee is given notice of the employee's rights and obligations under the plan and the notice satisfies the content requirement of paragraph (d)(2) of this section and the timing requirement of paragraph (d)(3) of this section. The notice must be in writing or in such other form as may be approved by the Commissioner. See § 1.401(a)-21 of this chapter for rules permitting the use of electronic media to provide applicable notices to recipients with respect to retirement plans.

(2) ***Content requirement*** —

(i) ***General rule.*** The content requirement of this paragraph (d)(2) is satisfied if the notice is—

(A) Sufficiently accurate and comprehensive to inform the employee of the employee's rights and obligations under the plan; and

(B) Written in a manner calculated to be understood by the average employee eligible to participate in the plan.

(ii) ***Minimum content requirement.*** Subject to the requirements of paragraph (d)(2)(iii) of this section, a notice is not considered sufficiently accurate and comprehensive unless the notice accurately describes—

(A) The safe harbor matching contribution or safe harbor nonelective contribution formula used under the plan (including a description of the levels of safe harbor matching contributions, if any, available under the plan);

(B) Any other contributions under the plan or matching contributions to another plan on account of elective contributions or employee contributions under the plan (including the potential for discretionary matching contributions) and the conditions under which such contributions are made;

(C) The plan to which safe harbor contributions will be made (if different than the plan containing the cash or deferred arrangement);

(D) The type and amount of compensation that may be deferred under the plan;

(E) How to make cash or deferred elections, including any administrative requirements that apply to such elections;

(F) The periods available under the plan for making cash or deferred elections;

(G) Withdrawal and vesting provisions applicable to contributions under the plan; and

(H) Information that makes it easy to obtain additional information about the plan (including an additional copy of the summary plan description) such as telephone numbers, addresses and, if applicable, electronic addresses, of individuals or offices from whom employees can obtain such plan information.

(iii) ***References to SPD.*** A plan will not fail to satisfy the content requirements of this paragraph (d)(2) merely because, in the case of information described in paragraph (d)(2)(ii)(B) of this section (relating to any other contributions under the plan), paragraph (d)(2)(ii)(C) of this section (relating to the plan to which safe harbor contributions will be made) or paragraph (d)(2)(ii)(D) of this section (relating to the type and amount of compensation that may be deferred under the plan), the notice cross-references the relevant portions of a summary plan description that provides the same information that would be provided in accordance with such paragraphs and that has been provided (or is concurrently provided) to employees.

(3) ***Timing requirement*** —

(i) ***General rule.*** The timing requirement of this paragraph (d)(3) is satisfied if the notice is provided within a reasonable period before the beginning of the plan year (or, in the year an employee becomes eligible, within a reasonable period before the employee becomes eligible). The determination of whether a notice satisfies the timing requirement of this paragraph (d)(3) is based on all of the relevant facts and circumstances.

(ii) ***Deemed satisfaction of timing requirement.*** The timing requirement of this paragraph (d)(3) is deemed to be satisfied if at least 30 days (and no more than 90 days) before the beginning of each plan year, the notice is given to each eligible employee for the plan year. In the case of an employee who does not receive the notice within the period described in the previous sentence because the employee becomes eligible after the 90th day before the beginning of the plan year, the timing requirement is deemed to be satisfied if the notice is provided no more than 90 days before the employee becomes eligible (and no later than the date the employee becomes eligible). Thus, for example, the preceding sentence would apply in the case of any employee eligible for the first plan year under a newly established plan that provides for elective contributions, or would apply in the case of the first plan year in which an employee becomes eligible under an existing plan that provides for elective contributions. If it is not practicable for the notice to be provided on or before the date specified in the plan that an employee becomes eligible, the notice will nonetheless be treated as provided timely if it is provided as soon as practicable after that date and the employee is permitted to elect to defer from all types of compensation that may be deferred under the plan earned beginning on the date the employee becomes eligible.

(e) ***Plan year requirement*** —

(1) ***General rule.*** Except as provided in this paragraph (e) or in paragraph (f) of this section, a plan will fail to satisfy the requirements of sections 401(k)(12), 401(k)(13), and this section unless plan provisions that satisfy the rules of this section are adopted before the first day of the plan year and remain in effect for an entire 12-month plan year. In addition, except as provided in paragraph (g) of this section or in guidance of general applicability published in the Internal Revenue Bulletin (see § 601.601(d)(2)(ii)(*b*) of this chapter), a plan which includes provisions that satisfy the rules of this section will not satisfy the requirements of § 1.401(k)-1(b) if it is amended to change such provisions for that plan year. Moreover, if, as described under paragraph (h)(4) of this section, safe

harbor matching or nonelective contributions will be made to another plan for a plan year, provisions under that other plan specifying that the safe harbor contributions will be made and providing that the contributions will be QNECs or QMACs must also be adopted before the first day of that plan year.

(2) ***Initial plan year.*** A newly established plan (other than a successor plan within the meaning of § 1.401(k)-2(c)(2)(iii)) will not be treated as violating the requirements of this paragraph (e) merely because the plan year is less than 12 months, provided that the plan year is at least 3 months long (or, in the case of a newly established employer that establishes the plan as soon as administratively feasible after the employer comes into existence, a shorter period). Similarly, a cash or deferred arrangement will not fail to satisfy the requirement of this paragraph (e) if it is added to an existing profit sharing, stock bonus, or pre-ERISA money purchase pension plan for the first time during that year provided that—

(i) The plan is not a successor plan; and

(ii) The cash or deferred arrangement is made effective no later than 3 months prior to the end of the plan year.

(3) ***Change of plan year.*** A plan that has a short plan year as a result of changing its plan year will not fail to satisfy the requirements of paragraph (e)(1) of this section merely because the plan year has less than 12 months, provided that—

(i) The plan satisfied the requirements of this section for the immediately preceding plan year; and

(ii) The plan satisfies the requirements of this section (determined without regard to paragraph (g) of this section) for the immediately following plan year (or for the immediately following 12 months if the immediately following plan year is less than 12 months).

(4) ***Final plan year.*** A plan that terminates during a plan year will not fail to satisfy the requirements of paragraph (e)(1) of this section merely because the final plan year is less than 12 months, provided that the plan satisfies the requirement of this section through the date of termination and either—

(i) The plan would satisfy the requirements of paragraph (g) of this section, treating the termination of the plan as a reduction or suspension of safe harbor contributions, other than the requirements of paragraph (g)(1)(i)(A) or (g)(1)(ii)(A) of this section (relating to the employer's financial condition and information included in the initial notice for the plan year) and paragraph (g)(1)(i)(D) or (g)(1)(ii)(D) of this section (requiring that employees have a reasonable opportunity to change their cash or deferred elections and, if applicable, employee contribution elections); or

(ii) The plan termination is in connection with a transaction described in section 410(b)(6)(C) or the employer incurs a substantial business hardship comparable to a substantial business hardship described in section 412(c).

(f) ***Plan amendments adopting safe harbor nonelective contributions*** —

(1) ***General rule.*** Notwithstanding paragraph (e)(1) of this section, a plan that provides for the use of the current year testing method may be amended after the first day of the plan year and no later than 30 days before the last day of the plan year to adopt the safe harbor method of this section, effective as of the first day of the plan year, using nonelective contributions under paragraph (b) of this section, but only if the plan provides the contingent and follow-up notices described in this section. A plan amendment made pursuant to this paragraph (f)(1) for a plan year may provide for the use of the

safe harbor method described in this section solely for that plan year and a plan sponsor is not limited in the number of years for which it is permitted to adopt an amendment providing for the safe harbor method of this section using nonelective contributions under paragraph (b) of this section and this paragraph (f).

(2) ***Contingent notice provided.*** A plan satisfies the requirement to provide the contingent notice under this paragraph (f)(2) if it provides a notice that would satisfy the requirements of paragraph (d) of this section, except that, in lieu of setting forth the safe harbor contributions used under the plan as set forth in paragraph (d)(2)(ii)(A) of this section, the notice specifies that the plan may be amended during the plan year to include the safe harbor nonelective contribution and that, if the plan is amended, a follow-up notice will be provided.

(3) ***Follow-up notice requirement.*** A plan satisfies the requirement to provide a follow-up notice under this paragraph (f)(3) if, no later than 30 days before the last day of the plan year, each eligible employee is given a notice that states that the safe harbor nonelective contributions will be made for the plan year. The notice must be in writing or in such other form as may be prescribed by the Commissioner and is permitted to be combined with a contingent notice provided under paragraph (f)(2) of this section for the next plan year.

(g) ***Permissible reduction or suspension of safe harbor contributions*** —

(1) ***General rule*** —

(i) ***Matching contributions.*** A plan that provides for safe harbor matching contributions intended to satisfy the requirements of paragraph (c) of this section for a plan year will not fail to satisfy the requirements of section 401(k)(3) merely because the plan is amended during the plan year to reduce or suspend safe harbor matching contributions on future elective contributions (and, if applicable, employee contributions) provided that—

(A) In the case of plan years beginning on or after January 1, 2015, the employer either—

(*1*) Is operating at an economic loss as described in section 412(c)(2)(A) for the plan year; or

(*2*) Includes in the notice described in paragraph (d) of this section a statement that the plan may be amended during the plan year to reduce or suspend safe harbor matching contributions and that the reduction or suspension will not apply until at least 30 days after all eligible employees are provided notice of the reduction or suspension;

(B) All eligible employees are provided a supplemental notice that satisfies the requirements of paragraph (g)(2) of this section;

(C) The reduction or suspension of safe harbor matching contributions is effective no earlier than the later of the date the amendment is adopted or 30 days after eligible employees are provided the supplemental notice described in paragraph (g)(2) of this section;

(D) Eligible employees are given a reasonable opportunity (including a reasonable period after receipt of the supplemental notice) prior to the reduction or suspension of safe harbor matching contributions to change their cash or deferred elections and, if applicable, their employee contribution elections;

(E) The plan is amended to provide that the ADP test will be satisfied for the entire plan year in which the reduction or suspension occurs using the current year testing method described in § 1.401(k)-2(a)(2)(ii); and

(F) The plan satisfies the requirements of this section (other than this paragraph (g)) with respect to amounts deferred through the effective date of the amendment.

(ii) ***Nonelective contributions.*** For amendments adopted after May 18, 2009, a plan that provides for safe harbor nonelective contributions intended to satisfy the requirements of paragraph (b) of this section for the plan year will not fail to satisfy the requirements of section 401(k)(3) merely because the plan is amended during the plan year to reduce or suspend safe harbor nonelective contributions provided that—

(A) The employer either—

(*1*) Is operating at an economic loss, as described in section 412(c)(2)(A) for the plan year; or

(*2*) Includes in the notice described in paragraph (d) of this section a statement that the plan may be amended during the plan year to reduce or suspend safe harbor nonelective contributions and that the reduction or suspension will not apply until at least 30 days after all eligible employees are provided notice of the reduction or suspension;

(B) All eligible employees are provided a supplemental notice that satisfies the requirements of paragraph (g)(2) of this section;

(C) The reduction or suspension of safe harbor nonelective contributions is effective no earlier than the later of the date the amendment is adopted or 30 days after eligible employees are provided the supplemental notice described in paragraph (g)(2) of this section;

(D) Eligible employees are given a reasonable opportunity (including a reasonable period after receipt of the supplemental notice) prior to the reduction or suspension of nonelective contributions to change their cash or deferred elections and, if applicable, their employee contribution elections;

(E) The plan is amended to provide that the ADP test will be satisfied for the entire plan year in which the reduction or suspension occurs using the current year testing method described in § 1.401(k)-2(a)(2)(ii); and

(F) The plan satisfies the requirements of this section (other than this paragraph (g)) with respect to safe harbor compensation paid through the effective date of the amendment.

(2) ***Supplemental notice.*** The supplemental notice requirement of this paragraph (g)(2) is satisfied if each eligible employee is given a notice (in writing or such other form as prescribed by the Commissioner) that explains—

(i) The consequences of the amendment that reduces or suspends future safe harbor contributions;

(ii) The procedures for changing their cash or deferred elections and, if applicable, their employee contribution elections; and

(iii) The effective date of the amendment.

(h) *Additional rules* —

(1) ***Contributions taken into account.*** A contribution is taken into account for purposes of this section for a plan year if and only if the contribution would be taken into account for such plan year under the rules of § 1.401(k)-2(a) or 1.401(m)-2(a). Thus, for example, a safe harbor matching contribution must be made within 12 months of the end of the plan year. Similarly, an elective contribution that would be taken into account for a plan year under § 1.401(k)-2(a)(4)(i)(B)(*2*) must be taken into account for such plan year for purposes of this section, even if the compensation would have been received after the close of the plan year.

(2) ***Use of safe harbor nonelective contributions to satisfy other nondiscrimination tests.*** A safe harbor nonelective contribution used to satisfy the nonelective contribution requirement under paragraph (b) of this section may also be taken into account for purposes of determining whether a plan satisfies section 401(a)(4). Thus, these contributions are not subject to the limitations on qualified nonelective contributions under § 1.401(k)-2(a)(6)(ii), but are subject to the rules generally applicable to nonelective contributions under section 401(a)(4). See § 1.401(a)(4)-1(b)(2)(ii). However, pursuant to section 401(k)(12)(E)(ii) and section 401(k)(13)(D)(iv), to the extent they are needed to satisfy the safe harbor contribution requirement of paragraph (b) of this section, safe harbor nonelective contributions may not be taken into account under any plan for purposes of section 401(l) (including the imputation of permitted disparity under § 1.401(a)(4)-7).

(3) ***Early participation rules.*** Section 401(k)(3)(F) and § 1.401(k)-2(a)(1)(iii)(A), which provide an alternative nondiscrimination rule for certain plans that provide for early participation, do not apply for purposes of section 401(k)(12), section 401(k)(13), and this section. Thus, a plan is not treated as satisfying this section with respect to the eligible employees who have not completed the minimum age and service requirements of section 410(a)(1)(A) unless the plan satisfies the requirements of this section with respect to such eligible employees. However, a plan is permitted to apply the rules of section 410(b)(4)(B) to treat the plan as two separate plans for purposes of section 410(b) and apply the safe harbor requirements of this section to one plan and apply the requirements of § 1.401(k)-2 to the other plan. See § 1.401(k)-1(b)(4)(vi), *Example 2*.

(4) ***Satisfying safe harbor contribution requirement under another defined contribution plan.*** Safe harbor matching or nonelective contributions may be made to the plan that contains the cash or deferred arrangement or to another defined contribution plan that satisfies section 401(a) or 403(a). If safe harbor contributions are made to another defined contribution plan, the safe harbor plan must specify the plan to which the safe harbor contributions are made and the contribution requirement of paragraph (b) or (c) of this section must be satisfied in the other defined contribution plan in the same manner as if the contributions were made to the plan that contains the cash or deferred arrangement. Consequently, the plan to which the contributions are made must have the same plan year as the plan containing the cash and deferred arrangement and each employee eligible under the plan containing the cash or deferred arrangement must be eligible under the same conditions under the other defined contribution plan. The plan to which the safe harbor contributions are made need not be a plan that can be aggregated with the plan that contains the cash or deferred arrangement.

(5) ***Contributions used only once.*** Safe harbor matching or nonelective contributions cannot be used to satisfy the requirements of this section with respect to more than one plan.

(i) [Reserved]

(j) *Qualified automatic contribution arrangement* —

(1) *Automatic contribution requirement* —

(i) ***In general.*** A cash or deferred arrangement is described in this paragraph (j) if it is an automatic contribution arrangement described in paragraph (j)(1)(ii) of this section where the default election under that arrangement is a contribution equal to the qualified percentage described in paragraph (j)(2) of this section multiplied by the eligible employee's compensation from which elective contributions are permitted to be made under the cash or deferred arrangement. For plan years beginning on or after January 1, 2010, the compensation used for this purpose must be safe harbor compensation as defined under paragraph (b)(2) of this section.

(ii) ***Automatic contribution arrangement.*** An automatic contribution arrangement is a cash or deferred arrangement within the meaning of § 1.401(k)-1(a)(2) that provides that, in the absence of an eligible employee's affirmative election, a default election applies under which the employee is treated as having made an election to have a specified contribution made on his or her behalf under the plan. The default election begins to apply with respect to an eligible employee no earlier than a reasonable period of time after receipt of the notice describing the automatic contribution arrangement. The default election ceases to apply with respect to an eligible employee for periods of time with respect to which the employee has an affirmative election that is currently in effect to—

(A) Have elective contributions made in a different amount on his or her behalf (in a specified amount or percentage of compensation); or

(B) Not have any elective contributions made on his or her behalf.

(iii) ***Exception to automatic enrollment for certain current employees.*** An automatic contribution arrangement will not fail to be a qualified automatic contribution arrangement merely because the default election provided under paragraph (j)(1)(i) of this section is not applied to an employee who was an eligible employee under the cash or deferred arrangement (or a predecessor arrangement) immediately prior to the effective date of the qualified automatic contribution arrangement and on that effective date had an affirmative election in effect (that remains in effect) to—

(A) Have elective contributions made on his or her behalf (in a specified amount or percentage of compensation); or

(B) Not have elective contributions made on his or her behalf.

(2) ***Qualified percentage*** —

(i) ***In general.*** A percentage is a qualified percentage only if it—

(A) Is uniform for all employees (except to the extent provided in paragraph (j)(2)(iii) of this section);

(B) Does not exceed 10 percent; and

(C) Satisfies the minimum percentage requirements of paragraph (j)(2)(ii) of this section.

(ii) ***Minimum percentage requirements*** —

(A) ***Initial-period requirement.*** The minimum percentage requirement of this paragraph (j)(2)(ii)(A) is satisfied only if the percentage that applies for the initial period is at least 3 percent. For this purpose, the initial period begins when the employee first has

contributions made pursuant to a default election under an arrangement that is intended to be a qualified automatic contribution arrangement for a plan year and ends on the last day of the following plan year.

(B) ***Second-year requirement.*** The minimum percentage requirement of this paragraph (j)(2)(ii)(B) is satisfied only if the percentage that applies for the plan year immediately following the last day described in paragraph (j)(2)(ii)(A) of this section is at least 4 percent.

(C) ***Third-year requirement.*** The minimum percentage requirement of this paragraph (j)(2)(ii)(C) is satisfied only if the percentage that applies for the plan year immediately following the plan year described in paragraph (j)(2)(ii)(B) of this section is at least 5 percent.

(D) ***Later years requirement.*** A percentage satisfies the minimum percentage requirement of this paragraph (j)(2)(ii)(D) only if the percentage that applies for all plan years following the plan year described in paragraph (j)(2)(ii)(C) of this section is at least 6 percent.

(iii) ***Exception to uniform percentage requirement.*** A plan does not fail to satisfy the uniform percentage requirement of paragraph (j)(2)(i)(A) of this section merely because—

(A) The percentage varies based on the number of years (or portions of years) since the beginning of the initial period for an eligible employee;

(B) The rate of elective contributions under a cash or deferred election that is in effect for an employee immediately prior to the effective date of the default percentage under the qualified automatic contribution arrangement is not reduced;

(C) The rate of elective contributions is limited so as not to exceed the limits of sections 401(a)(17), 402(g) (determined with or without catch-up contributions described in section 402(g)(1)(C) or 402(g)(7)), and 415; or

(D) The default election provided under paragraph (j)(1)(i) of this section is not applied during the period an employee is not permitted to make elective contributions in order for the plan to satisfy the requirements of § 1.401(k)-3(c)(6)(v)(B).

(iv) ***Treatment of periods without default contributions.*** The minimum percentages described in paragraph (j)(2)(ii) of this section are based on the date the initial period begins, regardless of whether the employee is eligible to make elective contributions under the plan after that date. However, for purposes of determining the date the initial period described in paragraph (j)(2)(ii)(A) of this section begins, a plan is permitted to treat an employee who for an entire plan year did not have contributions made pursuant to a default election under the qualified automatic contribution arrangement as if the employee had not had such contributions made for any prior plan year as well.

(k) ***Modifications to contribution requirements and notice requirements for automatic contribution safe harbor*** —

(1) ***In general.*** A cash or deferred arrangement satisfies the contribution requirements of this paragraph (k) only if it satisfies the contribution requirements of either paragraph (b) or (c) of this section, as modified by the rules of paragraphs (k)(2) and (k)(3) of this section. In addition, a cash or deferred arrangement satisfies the notice requirement of section 401(k)(13)(E) only if the notice satisfies the additional requirements of paragraph (k)(4) of this section.

(2) ***Lower matching requirement.*** In applying the requirement of paragraph (c) of this section in the case of a cash or deferred arrangement, the basic matching formula is modified so that each eligible NHCE must receive the sum of—

(i) 100 percent of the employee's elective contributions that do not exceed 1 percent of the employee's safe harbor compensation; and

(ii) 50 percent of the employee's elective contributions that exceed 1 percent of the employee's safe harbor compensation but that do not exceed 6 percent of the employee's safe harbor compensation.

(3) ***Modified nonforfeiture requirement.*** A cash or deferred arrangement described in paragraph (j) of this section will not fail to satisfy the requirements of paragraph (b) or (c) of this section, as applicable, merely because the safe harbor contributions are not qualified nonelective contributions or qualified matching contributions provided that—

(i) The contributions are subject to the withdrawal restrictions that apply to QNECs and QMACs, as set forth in § 1.401(k)-1(d); and

(ii) Any employee who has completed 2 years of service (within the meaning of section 411(a)) has a nonforfeitable right to the account balance attributable to the safe harbor contributions.

(4) ***Additional notice requirements*** —

(i) ***In general.*** A notice satisfies the requirements of this paragraph (k)(4) only if it includes the additional information described in paragraph (k)(4)(ii) of this section and satisfies the timing requirements of paragraph (k)(4)(iii) of this section.

(ii) ***Additional information.*** A notice satisfies the additional information requirement of this paragraph (k)(4)(ii) only if it explains—

(A) The level of elective contributions which will be made on the employee's behalf if the employee does not make an affirmative election;

(B) The employee's right under the arrangement to elect not to have elective contributions made on the employee's behalf (or to elect to have such contributions made in a different amount or percentage of compensation); and

(C) How contributions under the arrangement will be invested (including, in the case of an arrangement under which the employee may elect among 2 or more investment options, how contributions will be invested in the absence of an investment election by the employee).

(iii) ***Timing requirements.*** A notice satisfies the timing requirements of this paragraph (k)(4)(iii) only if it is provided sufficiently early so that the employee has a reasonable period of time after receipt of the notice to make the elections described under paragraph (k)(4)(ii)(B) and (C) of this section. However, the requirement in the preceding sentence that an employee have a reasonable period of time after receipt of the notice to make an alternative election does not permit a plan to make the default election effective any later than the earlier of—

(A) The pay date for the second payroll period that begins after the date the notice is provided; and

(B) The first pay date that occurs at least 30 days after the notice is provided.

[T.D. 9169, 69 FR 78154, Dec. 29, 2004, as amended by T.D. 9294, 71 FR 61887, Oct. 20, 2006; T.D. 9447, 74 FR 8208, Feb. 24, 2009; T.D. 9641, 78 FR 68737, Nov. 15, 2013; T.D. 9875, 84 FR 49658, Sept. 23, 2019]

§ 1.401(k)-4 SIMPLE 401(k) plan requirements.

(a) ***General rule.*** A cash or deferred arrangement satisfies the SIMPLE 401(k) plan provision of section 401(k)(11) for a plan year if the arrangement satisfies the requirements of paragraphs (b) through (i) of this section for that year. A plan that contains a cash or deferred arrangement that satisfies this section is referred to as a SIMPLE 401(k) plan. Pursuant to section 401(k)(11), a SIMPLE 401(k) plan is treated as satisfying the ADP test of section 401(k)(3)(A)(ii) for that year.

(b) ***Eligible employer*** —

(1) ***General rule.*** A SIMPLE 401(k) plan must be established by an eligible employer. Eligible employer for purposes of this section means, with respect to any plan year, an employer that had no more than 100 employees who each received at least $5,000 of SIMPLE compensation, as defined in paragraph (e)(5) of this section, from the employer for the prior calendar year.

(2) ***Special rule.*** An eligible employer that establishes a SIMPLE 401(k) plan for a plan year and that fails to be an eligible employer for any subsequent plan year, is treated as an eligible employer for the 2 plan years following the last plan year the employer was an eligible employer. If the failure is due to any acquisition, disposition, or similar transaction involving an eligible employer, the preceding sentence applies only if the provisions of section 410(b)(6)(C)(i) are satisfied.

(c) ***Exclusive plan*** —

(1) ***General rule.*** The SIMPLE 401(k) plan must be the exclusive plan for each SIMPLE 401(k) plan participant for the plan year. This requirement is satisfied if there are no contributions made, or benefits accrued, for services during the plan year on behalf of any SIMPLE 401(k) plan participant under any other qualified plan maintained by the employer. Other qualified plan for purposes of this section means any plan, contract, pension, or trust described in section 219(g)(5)(A) or (B).

(2) ***Special rule.*** A SIMPLE 401(k) plan will not be treated as failing the requirements of this paragraph (c) merely because any SIMPLE 401(k) plan participant receives an allocation of forfeitures under another plan of the employer.

(d) ***Election and notice*** —

(1) ***General rule.*** An eligible employer establishing or maintaining a SIMPLE 401(k) plan must satisfy the election and notice requirements in paragraphs (d)(2) and (3) of this section.

(2) ***Employee elections*** —

(i) ***Initial plan year of participation.*** For the plan year in which an employee first becomes eligible under the SIMPLE 401(k) plan, the employee must be permitted to make a cash or deferred election under the plan during a 60-day period that includes either the day the employee becomes eligible or the day before.

(ii) ***Subsequent plan years.*** For each subsequent plan year, each eligible employee must be permitted to make or modify his cash or deferred election during the 60-day period immediately preceding such plan year.

(iii) ***Election to terminate.*** An eligible employee must be permitted to terminate his cash or deferred election at any time. If an employee does terminate his cash or deferred election, the plan is permitted to provide that such employee cannot have elective contributions made under the plan for the remainder of the plan year.

(3) ***Employee notices.*** The employer must notify each eligible employee within a reasonable time prior to each 60-day election period, or on the day the election period starts, that he or she can make a cash or deferred election, or modify a prior election, if applicable, during that period. The notice must state whether the eligible employer will make the matching contributions described in paragraph (e)(3) of this section or the nonelective contributions described in paragraph (e)(4) of this section.

(e) ***Contributions*** —

(1) ***General rule.*** A SIMPLE 401(k) plan satisfies the contribution requirements of this paragraph (e) for a plan year only if no contributions may be made to the SIMPLE 401(k) plan during such year, other than contributions described in this paragraph (e) and rollover contributions described in § 1.402(c)-2(a).

(2) ***Elective contributions.*** Subject to the limitations on annual additions under section 415, each eligible employee must be permitted to make an election to have up to $10,000 of elective contributions made on the employee's behalf under the SIMPLE 401(k) plan for a plan year. The $10,000 limit is increased beginning in 2006 in the same manner as the $160,000 amount is adjusted under section 415(d), except that pursuant to section 408(p)(2)(E)(ii) the base period shall be the calendar quarter beginning July 1, 2004 and any increase which is not a multiple of $500 is rounded to the next lower multiple of $500.

(3) ***Matching contributions.*** Each plan year, the eligible employer must contribute a matching contribution to the account of each eligible employee on whose behalf elective contributions were made for the plan year. The amount of the matching contribution must equal the lesser of the eligible employee's elective contributions for the plan year or 3% of the eligible employee's SIMPLE compensation for the entire plan year.

(4) ***Nonelective contributions.*** For any plan year, in lieu of contributing matching contributions described in paragraph (e)(3) of this section, an eligible employer may, in accordance with plan terms, contribute a nonelective contribution to the account of each eligible employee in an amount equal to 2% of the eligible employee's SIMPLE compensation for the entire plan year. The eligible employer may limit the nonelective contributions to those eligible employees who received at least $5,000 of SIMPLE compensation from the employer for the entire plan year.

(5) ***SIMPLE compensation.*** Except as otherwise provided, the term *SIMPLE compensation* for purposes of this section means the sum of wages, tips, and other compensation from the eligible employer subject to federal income tax withholding (as described in section 6051(a)(3)) and the employee's elective contributions made under any other plan, and if applicable, elective deferrals under a section 408(p) SIMPLE IRA plan, a section 408(k)(6) SARSEP, or a plan or contract that satisfies the requirements of section 403(b), and compensation deferred under a section 457 plan, required to be reported by the employer on Form W-2 (as described in section 6051(a)(8)). For self-employed individuals, SIMPLE compensation means net earnings from self-employment determined under section 1402(a) prior to subtracting any contributions made under the SIMPLE 401(k) plan on behalf of the individual.

(f) ***Vesting.*** All benefits attributable to contributions described in paragraph (e) of this section must be nonforfeitable at all times.

(g) ***Plan year.*** The plan year of a SIMPLE 401(k) plan must be the whole calendar year. Thus, in general, a SIMPLE 401(k) plan can be established only on January 1 and can be terminated only on December 31. However, in the case of an employer that did not previously maintain a SIMPLE 401(k) plan, the establishment date can be as late as October 1 (or later in the case of an employer that comes into existence after October 1 and establishes the SIMPLE 401(k) plan as soon as administratively feasible after the employer comes into existence).

(h) ***Other rules.*** A SIMPLE 401(k) plan is not treated as a top-heavy plan under section 416. See section 416(g)(4)(G).

[T.D. 9169, 69 FR 78154, Dec. 29, 2004, as amended by T.D. 10001, 89 FR 10001, July 19, 2024]

§ 1.401(k)-5 Special rules for mergers, acquisitions and similar events. [Reserved]

[T.D. 9169, 69 FR 78154, Dec. 29, 2004]

§ 1.401(k)-6 Definitions.

Unless otherwise provided, the definitions of this section govern for purposes of section 401(k) and the regulations thereunder.

Actual contribution percentage (ACP) test. Actual contribution percentage test or *ACP test* means the test described in § 1.401(m)-2(a)(1).

Actual deferral percentage (ADP). *Actual deferral percentage* or *ADP* means the ADP of the group of eligible employees as defined in § 1.401(k)-2(a)(2).

Actual deferral percentage (ADP) test. Actual deferral percentage test or *ADP test* means the test described in § 1.401(k)-2(a)(1).

Actual deferral ratio (ADR). *Actual deferral ratio* or *ADR* means the ADR of an eligible employee as defined in § 1.401(k)-2(a)(3).

Cash or deferred arrangement. *Cash or deferred arrangement* is defined in § 1.401(k)-1(a)(2).

Cash or deferred election. *Cash or deferred election* is defined in § 1.401(k)-1(a)(3).

Compensation. *Compensation* means compensation as defined in section 414(s) and § 1.414(s)-1. The period used to determine an employee's compensation for a plan year must be either the plan year or the calendar year ending within the plan year. Whichever period is selected must be applied uniformly to determine the compensation of every eligible employee under the plan for that plan year. A plan may, however, limit the period taken into account under either method to that portion of the plan year or calendar year in which the employee was an eligible employee, provided that this limit is applied uniformly to all eligible employees under the plan for the plan year. In the case of an HCE whose ADR is determined under § 1.401(k)-2(a)(3)(ii), period of participation includes periods under another plan for which elective contributions are aggregated under § 1.401(k)-2(a)(3)(ii). See also section 401(a)(17) and § 1.401(a)(17)-1(c)(1).

Current year testing method. Current year testing method means the testing method described in § 1.401(k)-2(a)(2)(ii) or 1.401(m)-2(a)(2)(ii) under which the applicable year is the current plan year.

Designated Roth account. Designated Roth account means a separate account maintained by a plan to which only designated Roth contributions (including income, expenses, gains and losses attributable thereto) are made.

Designated Roth contributions. Designated Roth contributions means designated Roth contributions as defined in § 1.401(k)-1(f)(1).

Elective contributions. *Elective contributions* means employer contributions made to a plan pursuant to a cash or deferred election under a cash or deferred arrangement (whether or not the arrangement is a qualified cash or deferred arrangement under § 1.401(k)-1(a)(4)).

Eligible employee —

(1) ***General rule. Eligible employee*** means an employee who is directly or indirectly eligible to make a cash or deferred election under the plan for all or a portion of the plan year. For example, if an employee must perform purely ministerial or mechanical acts (*e.g.*, formal application for participation or consent to payroll withholding) in order to be eligible to make a cash or deferred election for a plan year, the employee is an eligible employee for the plan year without regard to whether the employee performs the acts.

(2) ***Conditions on eligibility.*** An employee who is unable to make a cash or deferred election because the employee has not contributed to another plan is also an eligible employee. By contrast, if an employee must perform additional service (*e.g.*, satisfy a minimum period of service requirement) in order to be eligible to make a cash or deferred election for a plan year, the employee is not an eligible employee for the plan year unless the service is actually performed. See § 1.401(k)-1(e)(5), however, for certain limits on the use of minimum service requirements. Finally, an employee does not fail to be treated as an eligible employee merely because the employee may receive no additional annual additions because of section 415(c)(1).

(3) ***Certain one-time elections.*** An employee is not an eligible employee merely because the employee, no later than the employee's first becoming eligible to make a cash or deferred election under any plan or arrangement of the employer (described in section 219(g)(5)(A)), is given the one-time opportunity to elect, and the employee does in fact elect, not to be eligible to make a cash or deferred election under the plan or any other plan or arrangement maintained by the employer (including plans not yet established) for the duration of the employee's employment with the employer. This rule applies in addition to the rules in § 1.401(k)-1(a)(3)(v) relating to the definition of a cash or deferred election. In no event is an election made after December 23, 1994, treated as a one-time irrevocable election under this paragraph if the election is made by an employee who previously became eligible under another plan or arrangement (whether or not terminated) of the employer.

Eligible HCE. *Eligible HCE* means an eligible employee who is an HCE.

Eligible NHCE. *Eligible NHCE* means an eligible employee who is not an HCE.

Employee. *Employee* means an employee within the meaning of § 1.410(b)-9.

Employee stock ownership plan (ESOP). *Employee stock ownership plan* or *ESOP* means the portion of a plan that is an ESOP within the meaning of § 1.410(b)-7(c)(2).

Employer. *Employer* means an employer within the meaning of § 1.410(b)-9.

Excess contributions. *Excess contributions* means, with respect to a plan year, the amount of total excess contributions apportioned to an HCE under § 1.401(k)-2(b)(2)(iii).

Excess deferrals. *Excess deferrals* means excess deferrals as defined in § 1.402(g)-1(e)(3).

Highly compensated employee (HCE). *Highly compensated employee* or *HCE* has the meaning provided in section 414(q).

Matching contributions. *Matching contributions* means matching contributions as defined in § 1.401(m)-1(a)(2).

Nonelective contributions. *Nonelective contributions* means employer contributions (other than matching contributions) with respect to which the employee may not elect to have the contributions paid to the employee in cash or other benefits instead of being contributed to the plan.

Non-employee stock ownership plan (non-ESOP). *Non-employee stock ownership plan* or *non-ESOP* means the portion of a plan that is not an ESOP within the meaning of § 1.410(b)-7(c)(2).

Non-highly compensated employee (NHCE). *Non-highly compensated employee* or *NHCE* means an employee who is not an HCE.

Plan. *Plan* is defined in § 1.401(k)-1(b)(4).

Pre-ERISA money purchase pension plan.

(1) ***Pre-ERISA money purchase pension plan*** is a pension plan—

(i) That is a defined contribution plan (as defined in section 414(i));

(ii) That was in existence on June 27, 1974, and as in effect on that date, included a salary reduction agreement; and

(iii) Under which neither the employee contributions nor the employer contributions, including elective contributions, may exceed the levels (as a percentage of compensation) provided for by the contribution formula in effect on June 27, 1974.

(2) A plan was in existence on June 27, 1974, if it was a written plan adopted on or before that date, even if no funds had yet been paid to the trust associated with the plan.

Pre-tax elective contributions. *Pre-tax elective contributions* means elective contributions under a qualified cash or deferred arrangement that are not designated Roth contributions.

Prior year testing method. *Prior year testing method* means the testing method under which the applicable year is the prior plan year, as described in § 1.401(k)-2(a)(2)(ii) or 1.401(m)-2(a)(2)(ii).

Qualified matching contributions (QMACs). *Qualified matching contributions* or *QMACs* means matching contributions that satisfy the requirements of § 1.401(k)-1(c) and (d) as though the contributions were elective contributions, without regard to whether the contributions are actually taken into account under the ADP test under § 1.401(k)-2(a)(6) or the ACP test under § 1.401(m)-2(a)(6). Thus, the matching contributions must satisfy the nonforfeitability requirements of § 1.401(k)-1(c) and be subject to the distribution limitations of § 1.401(k)-1(d) when they are allocated to participants' accounts. See also § 1.401(k)-2(b)(4)(iii) for a rule providing that a matching contribution does not fail to qualify as a QMAC solely because it is forfeitable under section 411(a)(3)(G) as a result of being a matching contribution with respect to an excess deferral, excess contribution, or excess aggregate contribution, or it is forfeitable under § 1.414(w)-1(d)(2).

Qualified nonelective contributions (QNECs). Qualified nonelective contributions or *QNECs* means employer contributions, other than elective contributions or matching contributions, that satisfy the requirements of § 1.401(k)-1(c) and (d) as though the contributions were elective contributions, without regard to whether the contributions are actually taken into account under the ADP test under § 1.401(k)-2(a)(6) or the ACP test under § 1.401(m)-2(a)(6). Thus, the nonelective contributions must satisfy the nonforfeitability requirements of § 1.401(k)-1(c) and be subject to the distribution limitations of § 1.401(k)-1(d) when they are allocated to participants' accounts.

Rural cooperative plans. Rural cooperative plan means a plan described in section 401(k)(7).

[T.D. 9169, 69 FR 78154, Dec. 29, 2004, as amended by T.D. 9237, 71 FR 10, Jan. 3, 2006; T.D. 9447, 74 FR 8210, Feb. 24, 2009; T.D. 9835, 83 FR 34471, July 20, 2018; T.D. 9875, 84 FR 49658, Sept. 23, 2019]

§ 1.401(l)-0 Table of contents.

This section contains a listing of the headings of §§ 1.401(l)-1 through 1.401(l)-6.

§ 1.401(l)-1 Permitted disparity with respect to employer-provided contributions or benefits.

(a) Permitted disparity.

(1) In general.

(2) Overview.

(3) Exclusive rules.

(4) Exceptions.

(5) Additional rules.

(b) Relationship to other requirements.

(c) Definitions.

(1) Accumulation plan.

(2) Average annual compensation.

(3) Base benefit percentage.

(4) Base contribution percentage.

(5) Benefit formula.

(6) Benefit, right, or feature.

(7) Covered compensation.

(i) In general.

(ii) Special rules.

(A) Rounded table.

(B) Proposed regulation definition.

(iii) Period for using covered compensation amount.

(8) Defined benefit plan.

(9) Defined contribution plan.

(10) Disparity.

(11) Employee.

(12) Employer.

(13) Employer contributions.

(14) Excess benefit percentage.

(15) Excess contribution percentage.

(16) Excess plan.

(i) Defined benefit excess plan.

(ii) Defined contribution excess plan.

(17) Final average compensation.

(i) In general.

(ii) Limitations.

(iii) Determination of section 414(s) compensation.

(18) Gross benefit percentage.

(19) Highly compensated employee.

(20) Integration level.

(21) Nonexcludable employee.

(22) Nonhighly compensated employee.

(23) Offset level.

(24) Offset percentage.

(25) Offset plan.

(26) PIA.

(27) Plan.

(28) Plan year compensation.

(29) Qualified plan.

(30) Section 401(l) plan.

(31) Section 414(s) compensation.

(32) Social security retirement age.

(33) Straight life annuity.

(34) Taxable wage base.

(35) Year of service.

§ 1.401(l)-2 Permitted disparity for defined contribution plans.

(a) Requirements.

(1) In general.

(2) Excess plan requirement.

(3) Maximum disparity.

(4) Uniform disparity.

(5) Integration level.

(b) Maximum permitted disparity.

(1) In general.

(2) Maximum excess allowance.

(c) Uniform disparity.

(1) In general.

(2) Deemed uniformity.

(i) In general.

(ii) Overall permitted disparity.

(iii) Non-FICA employees.

(d) Integration level.

(1) In general.

(2) Taxable wage base.

(3) Single dollar amount.

(4) Intermediate amount.

(5) Prorated integration level for short plan year.

(e) Examples.

§ 1.401(l)-3 Permitted disparity for defined benefit plans.

(a) Requirements.

(1) In general.

(2) Excess or offset plan requirement.

(3) Maximum disparity.

(4) Uniform disparity.

(5) Integration or offset level.

(6) Benefits, rights, and features.

(b) Maximum permitted disparity.

(1) In general.

(2) Maximum excess allowance.

(3) Maximum offset allowance.

(4) Rules of application.

(i) Disparity provided for the plan year.

(ii) Reductions in disparity rate.

(iii) Normal and optional forms of benefit.

(A) In general.

(B) Level annuity forms.

(C) Other forms.

(D) Post-retirement cost-of-living adjustments.

(*1*) In general.

(*2*) Requirements.

(E) Section 417(e) exception.

(5) Examples.

(c) Uniform disparity.

(1) In general.

(2) Deemed uniformity.

(i) In general.

(ii) Use of fractional accrual and disparity for 35 years.

(iii) Use of fractional accrual and disparity for fewer than 35 years.

(iv) Different social security retirement ages.

(v) Reduction for integration level.

(vi) Overall permitted disparity.

(A) In general.

(B) Unit credit plans.

(C) Fractional accrual plans.

(vii) Non-FICA employees.

(viii) Average annual compensation adjustment for offset plan.

(ix) PIA offsets.

(3) Examples.

(d) Requirements for integration level or offset compensation.

(1) In general.

(2) Covered compensation.

(3) Uniform percentage of covered compensation.

(4) Single dollar amount.

(5) Intermediate amount.

(6) Intermediate amount safe harbor.

(7) Prorated integration level for short plan year.

(8) Demographic requirements.

(i) In general.

(ii) Attained age requirement.

(iii) Nondiscrimination requirement.

(A) Minimum percentage test.

(B) Ratio test.

(C) High dollar amount test.

(D) Individual disparity reductions.

(9) Reduction in the 0.75-percent factor if integration or offset level exceeds covered compensation.

(i) In general.

(ii) Uniform percentage of covered compensation.

(iii) Single dollar amount.

(A) Plan-wide reduction.

(B) Individual reductions.

(iv) Reductions.

(A) Table.

(B) Interpolation.

(10) Examples.

(e) Adjustments to the 0.75-percent factor for benefits commencing at ages other than social security retirement age.

(1) In general.

(2) Adjustments.

(i) Benefits commencing on or after age 55 and before social security retirement age.

(ii) Benefits commencing after social security retirement age and on or before age 70.

(iii) Benefits commencing before age 55.

(iv) Benefits commencing after age 70.

(3) Tables.

(4) Benefit commencement date.

(i) In general.

(ii) Qualified social security supplement.

(5) Examples.

(f) Benefits, rights, and features.

(1) Defined benefit excess plan.

(2) Offset plan.

(3) Examples.

(g) No reductions in 0.75-percent factor for ancillary benefits.

(h) Benefits attributable to employee contributions not taken into account.

(i) Multiple integration levels. [Reserved]

(j) Additional rules.

§ 1.401(l)-4 Special rules for railroad plans.

(a) In general.

(b) Defined contribution plans.

(1) In general.

(2) Single integration level method.

(i) In general.

(ii) Definitions.

(3) Two integration level method.

(i) In general.

(ii) Total disparity requirement.

(iii) Intermediate disparity requirement.

(iv) Definitions.

(c) Defined benefit excess plans.

(1) In general.

(2) Single integration level method.

(i) In general.

(ii) Definitions.

(3) Two integration level method.

(i) In general.

(ii) Employee with lower covered compensation.

(iii) Employee with lower railroad retirement covered compensation.

(iv) Definitions.

(d) Offset plans.

(1) In general.

(2) Maximum tier 2 and supplementary annuity offset allowance.

(e) Additional rules.

(1) Definitions.

(2) Adjustments to 0.75-percent factor.

(3) Adjustments to 0.56-percent factor.

(4) Overall permitted disparity.

§ 1.401(l)-5 Overall permitted disparity limits.

(a) Introduction.

(1) In general.

(2) Plan requirements.

(3) Plans taken into account.

(b) Annual overall permitted disparity limit.

(1) In general.

(2) Total annual disparity fraction.

(3) Annual defined contribution plan disparity fraction.

(4) Annual defined benefit excess plan disparity fraction.

(5) Annual offset plan disparity fraction.

(i) In general.

(ii) PIA offset plans.

(6) Annual imputed disparity fraction.

(7) Annual nondisparate fraction.

(8) Determination of fraction.

(i) General rule

(ii) Multiple formulas.

(iii) Offset arrangements.

(A) In general.

(B) Defined benefit plans.

(C) Defined contribution plans.

(iv) Applicable percentages.

(v) Fractional accrual plans.

(9) Examples.

(c) Cumulative permitted disparity limit.

(1) In general.

(i) Employees who benefit under defined benefit plans.

(ii) Employees who do not benefit under defined benefit plans.

(iii) Certain plan years disregarded.

(iv) Determination of type of plan.

(v) Applicable plan years.

(vi) Transition rule for defined contribution plans.

(2) Cumulative disparity fraction.

(3) Determination of total annual disparity fractions for prior years.

(4) Special rules for greater of formulas and offset arrangements.

(i) Greater of formulas.

(A) In general.

(B) Separate satisfaction by formulas.

(C) Single plan.

(ii) Offset arrangements.

(A) In general.

(B) Separate satisfaction by plans.

(C) No other plan.

(5) Examples.

(d) Additional rules.

§ 1.401(l)-6 Effective dates and transition rules.

(a) Statutory effective date.

(1) In general.

(2) Collectively bargained plans.

(b) Regulatory effective date.

(1) In general.

(2) Plans of tax-exempt organizations.

(3) Defined contribution plans.

(4) Defined benefit plans.

(c) Compliance during transition period.

[T.D. 8359, 56 FR 47617, Sept. 19, 1991; 57 FR 10818, Mar. 31, 1992, as amended by T.D. 8486, 58 FR 46830, Sept. 3, 1993]

§ 1.401(l)-1 Permitted disparity in employer-provided contributions or benefits.

(a) *Permitted disparity* —

(1) ***In general.*** Section 401(a)(4) provides that a plan is a qualified plan only if the amount of contributions or benefits provided under the plan does not discriminate in favor of highly compensated employees. See § 1.401(a)(4)-1(b)(2). Section 401(a)(5)(C) provides that a plan does not discriminate in favor of highly compensated employees merely because of disparities in employer-provided contributions or benefits provided to, or on behalf of, employees under the plan that are permitted under section 401(l). Thus, if a plan satisfies section 401(l), permitted disparities in employer-provided contributions or benefits under a plan are disregarded, by reason of section 401(a)(5)(C), in determining whether the plan satisfies any of the safe harbors under §§ 1.401(a)(4)-2(b)(2) and 1.401(a)(4)-3(b). However, even if disparities in employer-provided contributions or benefits under a plan are permitted under section 401(l) and thus do not cause the plan to fail to satisfy § 1.401(a)(4)-1(b)(2), the plan may still fail to satisfy section 401(a)(4) for other reasons. Similarly, even if disparities in employer-provided contributions or benefits under a plan are not permitted under section 401(l) and thus may not be disregarded under section 401(a)(4) by reason of section 401(l), the plan may still be found to be nondiscriminatory under the tests of section 401(a)(4), including the rules for imputing permitted disparity under § 1.401(a)(4)-7.

(2) ***Overview.*** Rules relating to disparities in employer-provided contributions under a defined contribution plan are provided in § 1.401(l)-2. For rules relating to disparities in employer-provided benefits under a defined benefit plan, see § 401(l)-3. For rules relating to the application of section 401(l) to a plan maintained by a railroad employer, see § 1.401(l)-4. For rules relating to the overall permitted disparity limits, see § 1.401(l)-5. For rules relating to the effective date of section 401(l), see § 1.401(l)-6.

(3) ***Exclusive rules.*** The rules provided in §§ 1.401(l)-1 through 1.401(l)-6 are the exclusive means for a plan to satisfy sections 401(l) and 401(a)(5)(C). Accordingly, a plan that provides disparities in employer-provided contributions or benefits that are not permitted under §§ 1.401(l)-1 through 1.401(l)-6 does not satisfy section 401(l) or 401(a)(5)(C).

(4) ***Exceptions.*** Sections 401(a)(5)(C) and 401(l) are not available in the following arrangements—

(i) A plan maintained by an employer, determined for purposes of the Federal Insurance Contributions Act or the Railroad Retirement Tax Act, as applicable, that does not pay any wages within the meaning of section 3121(a) or compensation within the meaning of section 3231(e). For this purpose, a plan maintained for a self-employed individual within the meaning of section 401(c)(1), who is also subject to the tax under section 1401, is deemed to be a plan maintained by an employer that pays wages within the meaning of section 3121(a).

(ii) A plan, or the portion of a plan, that is an employee stock ownership plan described in section 4975(e)(7) (an ESOP) or a tax credit employee stock ownership plan described in section 409(a) (a TRASOP), except as provided in § 54.4975-11(a)(7)(ii) of this chapter, which contains a limited exception to this rule for certain ESOPs in existence on November 1, 1977.

(iii) With respect to elective contributions as defined in § 1.401(k)-6 under a qualified cash or deferred arrangement as defined in § 1.401(k)-1(a)(4)(i) or with respect to employee or matching contributions defined in § 1.401(m)-1(a)(3) or (a)(2), respectively.

(iv) With respect to contributions to a simplified employee pension made under a salary reduction arrangement described in section 408(k)(6) (a SARSEP).

(5) ***Additional rules.*** The Commissioner may, in revenue rulings, notices, or other documents of general applicability, prescribe additional rules that may be necessary or appropriate to carry out the purposes of section 401(l), including rules applying section 401(l) with respect to an employer that pays wages within the meaning of section 3121(a) or compensation within the meaning of section 3231(e) for some years and not other years.

(b) ***Relationship to other requirements.*** Unless explicitly provided otherwise, section 401(l) does not provide an exception to any other requirement under section 401(a). Thus, for example, even if the plan complies with section 401(l), the plan may not provide a benefit lower than the minimum benefit required under section 416. Moreover, a plan may not adjust benefits in any manner that results in a decrease in any employee's accrued benefit in violation of section 411(d)(6) and section 411(b)(1)(G). However, a plan does not fail to satisfy section 401(l) merely because, in order to ensure compliance with section 411, an employee's accrued benefit under the plan is defined as the greater of the employee's previously accrued benefit and the benefit determined under a strict application of the plan's benefit formula and accrual method. See section 401(a)(15) for additional rules relating to circumstances under which plan benefits may not be decreased because of increases in social security benefits.

(c) ***Definitions.*** In applying §§ 1.401(l)-1 through 1.401(l)-6, the definitions in this paragraph (c) govern unless otherwise provided.

(1) ***Accumulation plan. Accumulation plan*** means an accumulation plan within the meaning of § 1.401(a)(4)-12.

(2) ***Average annual compensation. Average annual compensation*** means average annual compensation within the meaning of § 1.401(a)(4)-3(e)(2).

(3) ***Base benefit percentage. Base benefit percentage*** means the rate at which employer-provided benefits are determined under a defined benefit excess plan with respect to an employee's average annual compensation at or below the integration level (expressed as a percentage of such average annual compensation).

(4) ***Base contribution percentage. Base contribution percentage*** means the rate at which employer contributions are allocated to the account of an employee under a defined contribution excess plan with respect to the employee's plan year compensation at or below the integration level (expressed as a percentage of such plan year compensation).

(5) ***Benefit formula. Benefit formula*** means benefit formula within the meaning of § 1.401(a)(4)-12.

(6) ***Benefit, right, or feature. Benefit, right, or feature*** means a benefit, right, or feature within the meaning of § 1.401(a)(4)-12.

(7) ***Covered compensation*** —

(i) ***In general. Covered compensation*** for an employee means the average (without indexing) of the taxable wage bases in effect for each calendar year during the 35-year period ending with the last day of the calendar year in which the employee attains (or will attain) social security retirement age. A 35-year period is used for all individuals regardless of the year of birth of the individual. In determining an employee's covered compensation for a plan year, the taxable wage base for all calendar years beginning after the first day of the plan year is assumed to be the same as the taxable wage base in effect as of the beginning of the plan year. An employee's covered compensation for a plan year beginning after the 35-year period applicable under this paragraph (c)(7)(i) is the employee's covered compensation for the plan year during which the

35-year period ends. An employee's covered compensation for a plan year beginning before the 35-year period applicable under this paragraph (c)(7)(i) is the taxable wage base in effect as of the beginning of the plan year.

(ii) *Special rules* —

(A) ***Rounded table.*** For purposes of determining the amount of an employee's covered compensation under paragraph (c)(7)(i) of this section, a plan may use tables, provided by the Commissioner, that are developed by rounding the actual amounts of covered compensation for different years of birth.

(B) ***Proposed regulation definition.*** For plan years beginning before January 1, 1995, in lieu of the definition of covered compensation contained in paragraph (c)(7)(i) of this section, a plan may define covered compensation as the average (without indexing) of the taxable wage bases in effect for each calendar year during the 35-year period ending with the last day of the calendar year preceding the calendar year in which the employee attains (or will attain) social security retirement age.

(iii) ***Period for using covered compensation amount.*** A plan must generally provide that an employee's covered compensation is automatically adjusted for each plan year. However, a plan may use an amount of covered compensation for employees equal to each employee's covered compensation (as defined in paragraph (c)(7)(i) or (c)(7)(ii) of this section) for a plan year earlier than the current plan year, provided the earlier plan year is the same for all employees and is not earlier than the later of—

(A) The plan year that begins 5 years before the current plan year, and

(B) The plan year beginning in 1989.

In the case of an accumulation plan, the benefit accrued for an employee in prior years is not affected by changes in the employee's covered compensation that occur in later years.

(8) ***Defined benefit plan. Defined benefit plan*** means a defined benefit plan within the meaning of § 1.410(b)-9.

(9) ***Defined contribution plan. Defined contribution plan*** means a defined contribution plan within the meaning of § 1.410(b)-9. In addition, for purposes of §§ 1.401(l)-1 through 1.401(l)-6, a defined contribution plan includes a simplified employee pension as defined in section 408(k) (SEP), other than a SEP (or portion or a SEP) that is a salary reduction arrangement described in section 408(k)(6) (SARSEP).

(10) ***Disparity. Disparity*** means—

(i) In the case of a defined contribution excess plan, the amount by which the excess contribution percentage exceeds the base contribution percentage,

(ii) In the case of a defined benefit excess plan, the amount by which the excess benefit percentage exceeds the base benefit percentage, and

(iii) In the case of an offset plan, the offset percentage.

(11) ***Employee. Employee*** means employee within the meaning of § 1.401(a)(4)-12.

(12) ***Employer. Employer*** means the employer within the meaning of § 1.410(b)-9.

(13) ***Employer contributions. Employer contributions*** means all amounts taken into account with respect to an employee under a plan under § 1.401(a)(4)-2(c)(2)(ii).

(14) ***Excess benefit percentage. Excess benefit percentage*** means the rate at which employer-provided benefits are determined under a defined benefit excess plan with respect to an employee's average annual compensation above the integration level (expressed as a percentage of such average annual compensation).

(15) ***Excess contribution percentage. Excess contribution percentage*** means the rate at which employer contributions are allocated to the account of an employee under a defined contribution excess plan with respect to the employee's plan year compensation above the integration level (expressed as a percentage of such plan year compensation).

(16) ***Excess plan*** —

(i) ***Defined benefit excess plan. Defined benefit excess plan*** means a defined benefit plan under which the rate at which employer-provided benefits are determined with respect to average annual compensation above the integration level under the plan (expressed as a percentage of such average annual compensation) is greater than the rate at which employer-provided benefits are determined with respect to average annual compensation at or below the integration level (expressed as a percentage of such average annual compensation).

(ii) ***Defined contribution excess plan. Defined contribution excess plan*** means a defined contribution plan under which the rate at which employer contributions are allocated to the account of an employee with respect to plan year compensation above the integration level (expressed as a percentage of such plan year compensation) is greater than the rate at which employer contributions are allocated to the account of an employee with respect to plan year compensation at or below the integration level (expressed as a percentage of such plan year compensation).

(17) ***Final average compensation*** —

(i) ***In general. Final average compensation*** for an employee means the average of the employee's annual section 414(s) compensation for the 3-consecutive-year period ending with or within the plan year or for the employee's period of employment if shorter. The year in which an employee terminates employment may be disregarded in determining final average compensation. The definition of final average compensation used in the plan must be applied consistently with respect to all employees. For example, if the plan provides that the year in which the employee terminates employment is disregarded in determining final average compensation, the year must be disregarded for all employees who terminate employment in that year. The plan may specify any 3-consecutive-year period ending in the plan year, provided the period is determined consistently for all employees. See § 1.401(a)(4)-11(d)(3)(iii) and § 1.414(s)-1(f) for rules permitting service and compensation with another employer to be taken into account for purposes of nondiscrimination testing, including satisfying section 401(l).

(ii) ***Limitations.*** In determining an employee's final average compensation under this paragraph (c)(17), annual section 414(s) compensation for any year in excess of the taxable wage base in effect at the beginning of that year must not be taken into account. A plan may provide that each employee's final average compensation for a plan year is limited to the employee's average annual compensation for the plan year.

(iii) ***Determination of section 414(s) compensation.*** A plan must use the same definition of section 414(s) compensation to determine final average compensation as the plan uses to determine average annual compensation (or plan year compensation in the case of an accumulation plan).

(18) ***Gross benefit percentage. Gross benefit percentage*** means the rate at which employer-provided benefits are determined under an offset plan (before application of the offset) with respect to an employee's average annual compensation (expressed as a percentage of average annual compensation).

(19) ***Highly compensated employee. Highly compensated employee*** means HCE within the meaning of § 1.401(a)(4)-12.

(20) ***Integration level. Integration level*** means the dollar amount specified in an excess plan at or below which the rate of employer-provided contributions or benefits (expressed in each case as a percentage of an employee's plan year compensation or average annual compensation up to the specified dollar amount) under the plan is less than the rate of employer-provided contributions or benefits (expressed in each case as a percentage of the employee's plan year compensation or average annual compensation above the specified dollar amount) under the plan above such dollar amount.

(21) ***Nonexcludable employee. Nonexcludable employee*** means nonexcludable employee within the meaning of § 1.401(a)(4)-12.

(22) ***Nonhighly compensated employee. Nonhighly compensated employee*** means NHCE within the meaning of § 1.401(a)(4)-12.

(23) ***Offset level. Offset level*** means the dollar limit specified in the plan on the amount of each employee's final average compensation taken into account in determining the offset under an offset plan.

(24) ***Offset percentage. Offset percentage*** means the rate at which an employee's employer-provided benefit is reduced or offset under an offset plan (expressed as a percentage of the employee's final average compensation up to the offset level).

(25) ***Offset plan. Offset plan*** means a defined benefit plan that is not a defined benefit excess plan and that provides that each employee's employer-provided benefit is reduced or offset by a specified percentage of the employee's final average compensation up to the offset level under the plan.

(26) ***PIA. PIA*** **or** ***primary insurance amount*** means the old-age insurance benefit under section 202 of the Social Security Act (42 U.S.C. 402) payable to each employee at a single age that is not earlier than age 62 and not later than age 65. PIA must be determined under the Social Security Act as in effect at the time the employee's offset is determined. Thus, it is determined without assuming any future increases in compensation, any future increases in the taxable wage base, any changes in the formulas used under the Social Security Act to determine PIA (for example, changes in the breakpoints), or any future increases in the consumer price index. However, it may be assumed that the employee will continue to receive compensation at the same rate as that received at the time the offset is being determined, until reaching the single age described in the first sentence of this paragraph (c)(26). PIA must be determined in a consistent manner for all employees and in accordance with revenue rulings or other guidance provided by the Commissioner.

(27) ***Plan. Plan*** means a plan within the meaning of § 1.401(a)(4)-12 or a component plan treated as a plan under § 1.401(a)(4)-9(c).

(28) ***Plan year compensation. Plan year compensation*** means plan year compensation within the meaning of § 1.401(a)(4)-12.

(29) ***Qualified plan. Qualified plan*** means a qualified plan within the meaning of § 1.401(a)(4)-12.

(30) ***Section 401(l) plan. Section 401*** (l) *plan* means a section 401(l) plan within the meaning of § 1.401(a)(4)-12.

(31) ***Section 414(s) compensation. Section 414(s) compensation*** means section 414(s) compensation within the meaning of § 1.401(a)(4)-12.

(32) ***Social security retirement age. Social security retirement age*** for an employee means the social security retirement age of the employee as determined under section 415(b)(8).

(33) ***Straight life annuity. Straight life annuity*** means a straight life annuity within the meaning of § 1.401(a)(4)-12.

(34) ***Taxable wage base. Taxable wage base*** means the contribution and benefit base under section 230 of the Social Security Act (42 U.S.C. 430).

(35) ***Year of service. Year of service*** means a year of service as defined in the plan for purposes of the benefit formula and the accrual method under the plan, unless the context clearly indicates otherwise. See § 1.401(a)(4)-11(d)(3) for rules on years of service that may be taken into account for purposes of nondiscrimination testing, including satisfying section 401(l).

[T.D. 8359, 56 FR 47618, Sept. 19, 1991; 57 FR 10818, 10951, Mar. 31, 1992, as amended by T.D. 8486, 58 FR 46831, Sept. 3, 1993; T.D. 9169, 69 FR 78153, Dec. 29, 2004]

§ 1.401(l)-2 Permitted disparity for defined contribution plans.

(a) ***Requirements*** —

(1) ***In general.*** Disparity in the rates of employer contributions allocated to employees' accounts under a defined contribution plan is permitted under section 401(l) and this section for a plan year only if the plan satisfies paragraphs (a)(2) through (a)(5) of this section. A plan that otherwise satisfies this paragraph (a) will not be considered to fail section 401(l) merely because it contains one or more provisions described in § 1.401(a)(4)-2(b)(4). See § 1.401(a)(4)-8(b)(3)(i)(C) for special rules applicable to target benefit plans.

(2) ***Excess plan requirement.*** The plan must be a defined contribution excess plan.

(3) ***Maximum disparity.*** The disparity for all employees under the plan must not exceed the maximum permitted disparity prescribed in paragraph (b) of this section.

(4) ***Uniform disparity.*** The disparity for all employees under the plan must be uniform within the meaning of paragraph (c) of this section.

(5) ***Integration level.*** The integration level specified in the plan must satisfy paragraph (d) of this section.

(b) ***Maximum permitted disparity*** —

(1) ***In general.*** The disparity provided for the plan year must not exceed the maximum excess allowance as defined in paragraph (b)(2) of this section. In addition, the plan must satisfy the overall permitted disparity limits of § 1.401(l)-5.

(2) ***Maximum excess allowance.*** The maximum excess allowance for a plan year is the lesser of—

(i) The base contribution percentage, or

(ii) The greater of—

(A) 5.7 percent, reduced as required under paragraph (d) of this section, or

(B) The percentage rate of tax under section 3111(a), in effect as of the beginning of the plan year, that is attributable to the old age insurance portion of the Old Age, Survivors and Disability Insurance provisions of the Social Security Act, reduced as required under paragraph (d) of this section. For a year in which the percentage rate of tax described in this paragraph (b)(2)(ii)(B) exceeds 5.7 percent, the Commissioner will publish the rate of such tax and a revised table under paragraph (d)(4) of this section.

(c) ***Uniform disparity*** —

(1) ***In general.*** The disparity provided under a plan is uniform only if the plan uses the same base contribution percentage and the same excess contribution percentage for all employees in the plan.

(2) ***Deemed uniformity*** —

(i) ***In general.*** The disparity under a plan does not fail to be uniform for purposes of this paragraph (c) merely because the plan contains one or more of the provisions described in paragraphs (c)(2) (ii) and (iii) of this section.

(ii) ***Overall permitted disparity.*** The plan provides that, in the case of each employee who has reached the cumulative permitted disparity limit applicable to the employee under § 1.401(l)-5(c), employer contributions are allocated to the account of the employee with respect to the employee's total plan year compensation at the excess contribution percentage.

(iii) ***Non-FICA employees.*** The plan provides that, in the case of each employee under the plan with respect to whom none of the taxes under section 3111(a), section 3221, or section 1401 is required to be paid, employer contributions are allocated to the account of the employee with respect to the employee's total plan year compensation at the excess contribution percentage.

(d) ***Integration level*** —

(1) ***In general.*** The integration level under the plan must satisfy paragraph (d)(2), (d)(3), or (d)(4) of this section, as modified by paragraph (d)(5) of this section in the case of a short plan year. If a reduction applies to the disparity factor under this paragraph (d), the reduced factor is used for all purposes in determining whether the permitted disparity rules for defined contribution plans are satisfied.

(2) ***Taxable wage base.*** The requirement of this paragraph (d)(2) is satisfied only if the integration level under the plan for each employee is the taxable wage base in effect as of the beginning of the plan year.

(3) ***Single dollar amount.*** The requirement of this paragraph (d)(3) is satisfied only if the integration level under the plan for all employees is a single dollar amount (either specified in the plan or determined under a formula specified in the plan) that does not exceed the greater of $10,000 or 20 percent of the taxable wage base in effect as of the beginning of the plan year.

(4) ***Intermediate amount.*** The requirement of this paragraph (d)(4) is satisfied only if—

(i) The integration level under the plan for all employees is a single dollar amount (either specified in the plan or determined under a formula specified in the plan) that is greater than the highest amount determined under paragraph (d)(3) of this section and less than the taxable wage base, and

(ii) The plan adjusts the factor determined under paragraph (b)(2)(ii) of this section in accordance with the table below.

TABLE

If the integration level		The 5.7 percent factor in the maximum excess allowance is reduced to—
Is more than	But not more than	
Greater of $10,000 or 20% of taxable wage base	80% of taxable wage base	4.3%
80% of taxable wage base	Amount less than taxable wage base	5.4%

(5) ***Prorated integration level for short plan year.*** If a plan uses paragraph (2) or (4) of the definition of plan year compensation under § 1.401(a)(4)-12 (i.e., section 414(s) compensation for the plan year or the period of plan participation) and has a plan year that comprises fewer than 12 months, the integration level under the plan for each employee must be an amount equal to the otherwise applicable integration level described in paragraph (d)(2), (d)(3), or (d)(4) of this section, multiplied by a fraction, the numerator of which is the number of months in the plan year, and the denominator of which is 12. No adjustment to the maximum excess allowance is required as a result of the application of this paragraph (d)(5), other than any adjustment already required under paragraph (d)(4) of this section.

(e) ***Examples.*** The following examples illustrate this section. In each example, 5.7 percent exceeds the percentage rate of tax described in paragraph (b)(2)(ii)(B) of this section.

Example 1. Employer X maintains a profit-sharing plan with the calendar year as its plan year. For the 1989 plan year, the plan provides that the account of each employee who has plan year compensation in excess of the taxable wage base in effect at the beginning of the plan year will receive an allocation for the plan year of 5.7 percent of plan year compensation in excess of the taxable wage base. The plan provides that no allocation will be made to the account of any employee for the plan year with respect to plan year compensation not in excess of the taxable wage base. The maximum excess allowance is exceeded for the 1989 plan year because the excess contribution percentage (5.7 percent) for the plan year exceeds the base contribution percentage (0 percent) for the plan year by more than the lesser of the base contribution percentage (0 percent) or the percentage determined under paragraph (b)(2)(ii) of this section (5.7 percent) for the plan year.

Example 2. Employer Y maintains a money purchase pension plan with the calendar year as its plan year. For the 1990 plan year, the plan provides that the account of each employee will receive an allocation of 5 percent of the employee's plan year compensation up to the taxable wage base in effect at the

beginning of the plan year plus an allocation of 10 percent of the employee's plan year compensation in excess of the taxable wage base. The maximum excess allowance is not exceeded for the plan year because the excess contribution percentage (10 percent) for the plan year does not exceed the base contribution percentage (5 percent) for the plan year by more than the lesser of the base contribution percentage (5 percent) or the percentage determined under paragraph (b)(2)(ii) of this section (5.7 percent) for the plan year.

Example 3. Assume the same facts as in *Example 2,* except that the plan provides that, with respect to plan year compensation in excess of the taxable wage base, the account of each employee will receive an allocation for the plan year of 12 percent of such compensation. The maximum excess allowance is exceeded for the plan year because the excess contribution percentage (12 percent) for the plan year exceeds the base contribution percentage (5 percent) for the plan year by more than the lesser of the base contribution percentage (5 percent) or the percentage determined under paragraph (b)(2)(ii) of this section (5.7 percent) for the plan year.

Example 4. Employer Z maintains a money purchase pension plan with a plan year beginning July 1 and ending June 30. The taxable wage base for the 1990 calendar year is $51,300 and the taxable wage base for the 1991 calendar year is $53,400. For the plan year beginning July 1, 1990, and ending June 30, 1991, the plan provides that the account of each employee will receive an allocation of 4 percent of the employee's plan year compensation up to $53,400 plus an allocation of 6 percent of the employee's plan year compensation in excess of $53,400. Although the excess contribution percentage (6 percent) for the plan year does not exceed the base contribution percentage (4 percent) for the plan year by more than the lesser of the base contribution percentage (4 percent) or the percentage determined under paragraph (b)(2)(ii) of this section (5.7 percent), the plan does not satisfy paragraph (a)(5) of this section because the integration level of $53,400 exceeds the maximum permitted integration level of $51,300 (the taxable wage base in effect as of the beginning of the plan year).

Example 5. Assume the same facts as in *Example 4,* except that for the plan year beginning July 1, 1990, and ending June 30, 1991, the plan provides that the account of each employee will receive an allocation of 5 percent of the employee's plan year compensation up to $30,000 plus an allocation of 9 percent of the employee's plan year compensation in excess of $30,000. The integration level of $30,000 is 58 percent of the taxable wage base of $51,300 for the 1990 calendar year. The maximum excess allowance is not exceeded for the plan year because the excess contribution percentage (9 percent) for the plan year does not exceed the base contribution percentage (5 percent) for the plan year by more than the lesser of the base contribution percentage (5 percent) or the percentage determined under paragraphs (b)(2)(ii) and (d) of this section (4.3 percent) for the plan year.

[T.D. 8359, 56 FR 47621, Sept. 19, 1991; 57 FR 10818, 10951, Mar. 31, 1992, as amended by T.D. 8486, 58 FR 46832, Sept. 3, 1993]

§ 1.401(l)-3 Permitted disparity for defined benefit plans.

(a) ***Requirements*** —

(1) ***In general.*** Disparity in the rates of employer-provided benefits under a defined benefit plan is permitted under section 401(l) and this section for a plan year only if the plan satisfies paragraphs (a)(2) through (a)(6) of this section. A plan that otherwise satisfies this paragraph (a) will not be considered to fail section 401(l) merely because it contains one or more provisions described in § 1.401(a)(4)-3(b)(6) (such as multiple formulas). Section 401(a)(5)(D) and § 1.401(a)(5)-1(d) provide

other rules under which benefits provided under a defined benefit plan (including defined benefit excess and offset plans) may be limited. See § 1.401(a)(4)-3(b)(5)(viii) for special rules under which an insurance contract plan may satisfy § 1.401(a)(4)-1(b)(2) and section 401(l). See § 1.401(a)(4)-8(c)(3)(iii)(B) for special rules applicable to cash balance plans.

(2) ***Excess or offset plan requirement.*** The plan must be a defined benefit excess plan or an offset plan.

(3) ***Maximum disparity.*** The disparity for all employees under the plan must not exceed the maximum permitted disparity prescribed in paragraph (b) of this section.

(4) ***Uniform disparity.*** The disparity for all employees under the plan must be uniform within the meaning of paragraph (c) of this section.

(5) ***Integration or offset level.*** The integration or offset level specified in the plan must satisfy paragraph (d) of this section.

(6) ***Benefits, rights, and features.*** The benefits, rights, and features provided under the plan must satisfy paragraph (f)(1) of this section.

(b) ***Maximum permitted disparity*** —

(1) ***In general.*** In the case of a defined benefit excess plan, the disparity provided for the plan year may not exceed the maximum excess allowance as defined in paragraph (b)(2) of this section. In the case of an offset plan, the disparity provided for the plan year may not exceed the maximum offset allowance as defined in paragraph (b)(3) of this section. In addition, either type of plan must satisfy the overall permitted disparity limits of § 1.401(l)-5.

(2) ***Maximum excess allowance.*** The maximum excess allowance for a plan year is the lesser of—

(i) 0.75 percent, reduced as required under paragraphs (d) and (e) of this section, or

(ii) The base benefit percentage for the plan year.

(3) ***Maximum offset allowance.*** The maximum offset allowance for a plan year is the lesser of—

(i) 0.75 percent, reduced as required under paragraphs (d) and (e) of this section, or

(ii) One-half of the gross benefit percentage, multiplied by a fraction (not to exceed one), the numerator of which is the employee's average annual compensation, and the denominator of which is the employee's final average compensation up to the offset level.

(4) ***Rules of application*** —

(i) ***Disparity provided for the plan year.*** Disparity provided for the plan year generally means the disparity provided under the plan's benefit formula for the employee's year of service with respect to the plan year. However, if a plan determines each employee's accrued benefit under the fractional accrual method of section 411(b)(1)(C), disparity provided under the plan also means the disparity in the benefit accrued for the employee for the plan year. Thus, a plan using the fractional accrual method must satisfy this paragraph (b) with respect to the plan's benefit formula and with respect to the benefits accrued for the plan year.

(ii) ***Reduction in disparity rate.*** Any reductions in the 0.75-percent factor required under paragraphs (d) and (e) of this section are cumulative.

(iii) ***Normal and optional forms of benefit*** —

(A) ***In general.*** A plan satisfies the maximum permitted disparity requirement of this paragraph (b) only if the plan satisfies this paragraph (b) with respect to each optional form of benefit (including the normal form of benefit) provided under the plan.

(B) ***Level annuity forms.*** In the case of an optional form of benefit payable as a level annuity over a period of not less than the life of the employee, the optional form must satisfy the maximum permitted disparity requirement of this paragraph (b). Thus, for example, if the form of a defined benefit plan's normal retirement benefit is an annuity for life with a 10-year certain feature and the plan permits employees to elect an optional form of benefit in the form of a straight life annuity, the plan must satisfy the maximum disparity requirement of this paragraph (b) with respect to each of the optional forms of benefit. An annuity that decreases only after the death of the employee, or that decreases only after the death of either the employee or the joint annuitant, is considered a level annuity for purposes of this paragraph (b).

(C) ***Other forms.*** In the case of an optional form of benefit that is not described in paragraph (b)(4)(iii)(B) of this section, the optional form must satisfy the maximum permitted disparity requirement of this paragraph (b), when the respective portions of the optional form are normalized under the rules of § 1.401(a)(4)-12 to a straight life annuity commencing at the same time as the optional form of benefit, regardless of whether the straight life annuity form is actually provided under the plan. In the case of a defined benefit excess plan, the respective portions are the portion of the optional form attributable to average annual compensation up to the integration level (the “base portion”) and the portion of the optional form attributable to average annual compensation in excess of the integration level (the “excess portion”). In the case of an offset plan, the respective portions are the optional form determined without regard to the offset (the “gross amount”) and the offset applied to the gross amount to determine the optional form (the “offset amount”).

(D) ***Post-retirement cost-of-living adjustments—***

(*1*) ***In general.*** A benefit does not fail to be a level annuity described in paragraph (b)(4)(iii)(B) of this section merely because it provides an automatic post-retirement cost-of-living adjustment that satisfies paragraph (b)(4)(iii)(D)(*2*) of this section. Thus, increases in the employee's annuity pursuant to such a cost-of-living adjustment do not cause the disparity provided under the optional form of benefit to exceed the maximum disparity permitted under this paragraph (b). For rules on ad hoc post-retirement cost-of-living adjustments, see § 1.401(a)(4)-10(b).

(*2*) ***Requirements.*** A cost-of-living adjustment satisfies this paragraph (b)(4)(iii)(D)(*2*) if—

(*i*) It is included in the accrued benefit of all employees, and.

(*ii*) It increases, on a uniform and consistent basis, the benefits of all former employees who are no younger than age 62, at a rate no greater than adjustments to social security benefits under section 215(i)(2)(A) of the Social Security Act that have occurred since the later of the employee's attainment of age 62 or commencement of benefits.

(E) ***Section 417(e) exception.*** A plan will not fail to satisfy this paragraph (b) merely because the disparity in a benefit that is subject to the interest rate restrictions of sections 401(a)(11) and 417(e) exceeds the maximum disparity that would otherwise be allowed

under this paragraph (b) if the increase in disparity is required to satisfy § 1.417(e)-1(d). In applying the exception in this paragraph (b)(4)(iii)(E), for purposes of determining what is required under § 1.417(e)-1(d), a plan may use the rate described in § 1.417(e)-1(d)(2)(i) for all employees, without regard to whether the present value of an employee's vested benefit exceeds $25,000.

(5) ***Examples.*** The following examples illustrate this paragraph (b). Unless otherwise provided, the following facts apply. The plan is noncontributory and is the only plan ever maintained by the employer. The plan uses a normal retirement age of 65 and contains no provision that would require a reduction in the 0.75-percent factor under paragraph (b)(2) or (b)(3) of this section. In the case of a defined benefit excess plan, the plan uses each employee's covered compensation as the integration level; in the case of an offset plan, the plan uses each employee's covered compensation as the offset level and provides that an employee's final average compensation is limited to the employee's average annual compensation. Each example discusses the benefit formula applicable to an employee who has a social security retirement age of 65.

Example 1. Plan N is a defined benefit excess plan that provides a normal retirement benefit of 0.5 percent of average annual compensation in excess of the integration level, for each year of service. The plan provides no benefits with respect to average annual compensation up to the integration level. The disparity provided under the plan exceeds the maximum excess allowance because the excess benefit percentage (0.5 percent) exceeds the base benefit percentage (0 percent) by more than the base benefit percentage (0 percent).

Example 2. Plan O is an offset plan that provides a normal retirement benefit equal to 2 percent of average annual compensation, minus 0.75 percent of final average compensation up to the offset level, for each year of service up to 35. The disparity provided under the plan satisfies this paragraph (b) because the offset percentage (0.75 percent) does not exceed the maximum offset allowance equal to the lesser of 0.75 percent or one-half of the gross benefit percentage (1 percent).

Example 3. Plan P is a defined benefit excess plan that provides a normal retirement benefit of 0.5 percent of average annual compensation up to the integration level, plus 1.25 percent of average annual compensation in excess of the integration level, for each year of service up to 35. The disparity provided under the plan exceeds the maximum excess allowance because the excess benefit percentage (1.25 percent) exceeds the base benefit percentage (0.5 percent) by more than the base benefit percentage (0.5 percent).

Example 4. Plan Q is an offset plan that provides a normal retirement benefit of 1 percent of average annual compensation, minus 0.75 percent of final average compensation up to the offset level, for each year of service up to 35. The disparity under the plan exceeds the maximum offset allowance because the offset percentage exceeds one-half of the gross benefit percentage (0.5 percent).

Example 5. (a) Plan R is an offset plan that provides a normal retirement benefit of 1 percent of average annual compensation, minus 0.5 percent of final average compensation up to the offset level, for each year of service up to 35. The plan determines an employee's average annual compensation using an averaging period comprising five consecutive 12-month periods and taking into account the employee's compensation for the ten consecutive 12-month periods ending with the plan year. The

plan does not provide that an employee's final average compensation is limited to the employee's average annual compensation.
(b) Employee A has average annual compensation of $20,000, final average compensation of $25,000, and covered compensation of $32,000. The maximum offset allowance applicable to Employee A for the plan year under paragraph (b)(3) of this section is one-half of the gross benefit percentage multiplied by the ratio, not to exceed one, of Employee A's average annual compensation to Employee A's final average compensation up to the offset level. Thus, the maximum offset allowance is 0.4 percent ($^1/_2$ × 1 percent × $20,000/$25,000). With respect to Employee A, the benefit formula provides an offset that exceeds the maximum offset allowance. The plan must therefore reduce Employee A's offset percentage to 0.4 percent. (Under paragraph (c)(2)(viii) of this section, Employee A's adjusted disparity rate is deemed uniform.)

(c) Alternatively, under § 1.401(l)-1(c)(17)(ii) (the definition of final average compensation), the plan could specify that an employee's final average compensation is limited to the amount of the employee's average annual compensation. Thus, the ratio of average annual compensation to final average compensation would always be equal to at least one, and the maximum offset allowance under the plan would be one-half of the gross benefit percentage.

Example 6. Plan S is a defined benefit excess plan that provides a base benefit percentage of 1 percent of average annual compensation up to the integration level for each year of service. The plan also provides, for each of the first 10 years of service, an excess benefit percentage of 1.85 percent of average annual compensation in excess of the integration level. For each year of service after 10, the plan provides an excess benefit percentage of 1.65 percent of the employee's average annual compensation in excess of the integration level. The disparity provided under the plan exceeds the maximum excess allowance because the excess benefit percentage for each of the first ten years of service (1.85 percent) exceeds the base benefit percentage (1 percent) by more than 0.75 percent.

Example 7. The facts are the same as in *Example 6,* except that the plan provides an excess benefit percentage of 1.65 percent of average annual compensation in excess of the integration level for each of the first 10 years of service and an excess benefit percentage of 1.85 percent of average annual compensation in excess of the integration level for each year of service after 10. The disparity provided under the plan exceeds the maximum excess allowance because the excess benefit percentage for each year of service after 10 (1.85 percent) exceeds the base benefit percentage (1 percent) by more than 0.75 percent.

Example 8. Plan T is a defined benefit excess plan that provides a normal retirement benefit of 1.0 percent of average annual compensation up to the integration level, plus 1.7 percent of average annual compensation in excess of the integration level, for each year of service up to 35, payable in the form of a joint and survivor annuity. The plan also allows an employee to receive the retirement benefit in the form of an actuarially equivalent straight life annuity. The actuarially equivalent straight life annuity equals 1.09 percent of average annual compensation up to the integration level, plus 1.85 percent of average annual compensation in excess of the

integration level, for each year of service up to 35. The disparity provided under the plan with respect to the straight life annuity form of benefit (0.76 percent) exceeds the maximum excess allowance because the excess benefit percentage (1.85 percent) exceeds the base benefit percentage (1.09 percent) by more than 0.75 percent.

Example 9. Plan U is a defined benefit excess plan that provides a normal retirement benefit of 1.0 percent of average annual compensation up to the integration level, plus 1.7 percent of average annual compensation in excess of the integration level, for each year of service up to 35, payable in the form of a straight life annuity. Plan U provides a single sum optional form of benefit at normal retirement age equal to 100 times the monthly annuity payable at that age. Thus, if an employee elects the single sum optional form of benefit, the base portion of the single sum benefit is 8.33 percent (100 times 1.0 percent/12) of average annual compensation up to the integration level per year of service, and the excess portion of the single sum benefit is 14.17 percent (100 times 1.7 percent/12) of average annual compensation in excess of the integration level per year of service. Each respective portion of the single sum option is normalized to a straight life annuity commencing at normal retirement age, using 8-percent interest and the UP-84 mortality table. After normalization, the base portion of the benefit is 1.02 percent of average annual compensation up to the integration level, and the excess portion of the benefit is 1.73 percent of average annual compensation in excess of the integration level. The single sum optional form of benefit satisfies this paragraph (b) because the disparity provided in the optional form of benefit does not exceed the maximum excess allowance.

(c) ***Uniform disparity*** —

(1) ***In general.*** The disparity provided under a defined benefit excess plan is uniform only if the plan uses the same base benefit percentage and the same excess benefit percentage for all employees with the same number of years of service. The disparity provided under an offset plan is uniform only if the plan uses the same gross benefit percentage and the same offset percentage for all employees with the same number of years of service. The disparity provided under a plan that determines each employee's accrued benefit under the fractional accrual method of section 411(b)(1)(C) is uniform only if the plan satisfies one of the deemed uniformity rules of paragraph (c)(2) (ii) or (iii) of this section.

(2) ***Deemed uniformity*** —

(i) ***In general.*** The disparity provided under a plan does not fail to be uniform for purposes of this paragraph (c) merely because the plan contains one or more of the provisions described in paragraphs (c)(2) (ii) through (ix) of this section.

(ii) ***Use of fractional accrual and disparity for 35 years.*** The plan contains a benefit formula as described in paragraphs (c)(2)(ii) (A) and (B) of this section, and the plan determines each employee's accrued benefit under the method described in § 1.401(a)(4)-3(b)(4)(i)(B), i.e., by multiplying the employee's fractional rule benefit (within the meaning of § 1.411(b)-1(b)(3)(ii)(A)) by a fraction, the numerator of which is the employee's years of service determined as of the plan year, and the denominator of which is the employee's projected years of service as of normal retirement age.

(A) For each year of service at least up to 35, the benefit plan formula provides the same base benefit percentage and the same excess benefit percentage for all employees in the case of a defined benefit excess plan or the same gross benefit percentage and the same offset percentage for all employees in the case of an offset plan.

(B) For each additional year of service, the benefit formula provides a uniform percentage of all average annual compensation that is no greater than the excess benefit percentage or the gross benefit percentage under paragraph (c)(2)(ii)(A) of this section, whichever is applicable.

(iii) ***Use of fractional accrual and disparity for fewer than 35 years.*** The plan contains a benefit formula as described in paragraphs (c)(2)(iii) (A) through (C) of this section, and the plan determines each employee's accrued benefit under the method described in § 1.401(a)(4)-3(b)(4)(i)(B).

(A) For each year in the employee's initial period of service comprising fewer than 35 years, the benefit formula provides the same base benefit percentage and the same excess benefit percentage for all employees in the case of a defined benefit excess plan or the same gross benefit percentage and the same offset percentage for all employees in the case of an offset plan.

(B) For each year of service after the initial period and at least up to 35, the benefit formula provides a uniform percentage of all average annual compensation, that is equal to the excess benefit percentage or the gross benefit percentage under paragraph (c)(2)(iii)(A) of this section.

(C) For each year of service after the period described in paragraph (c)(2)(iii)(B) of this section, the benefit formula provides a uniform percentage of all average annual compensation that is no greater than the excess benefit percentage or the gross benefit percentage under paragraph (c)(2)(iii)(A) of this section.

(iv) ***Different social security retirement ages.*** The benefit formula uses the same excess benefit percentage or the same gross benefit percentage for all employees with the same number of years of service and, for employees with social security retirement ages later than age 65, adjusts the 0.75-percent factor in the maximum excess or offset allowance as required under paragraph (e)(1) of this section, by increasing the base benefit percentage in the case of a defined benefit excess plan, or reducing the offset percentage in the case of an offset plan.

(v) ***Reduction for integration level.*** The plan uses an integration level or offset level greater than each employee's covered compensation and makes individual reductions in the 0.75-percent factor, as permitted under paragraph (d)(9)(iii)(B) of this section, by increasing the base benefit percentage in the case of a defined benefit excess plan or reducing the offset percentage in the case of an offset plan.

(vi) ***Overall permitted disparity*** —

(A) ***In general.*** The benefit formula provides that, with respect to each employee's years of service after reaching the cumulative permitted disparity limit applicable to the employee under § 1.401(l)-5(c), employer-provided benefits are determined with respect to the employee's total average annual compensation at a rate equal to the nondisparate

percentage. For purposes of this paragraph (c)(2)(vi), the nondisparate percentage is generally the excess benefit percentage or gross benefit percentage otherwise applicable under the benefit formula to an employee with the same number of years of service.

(B) ***Unit credit plans.*** In the case of a unit credit plan described in § 1.401(a)(4)-3(b)(3), if the 411(b)(1)(B) limit percentage is less than the nondisparate percentage, the 411(b)(1)(B) limit percentage must be substituted for the nondisparate percentage. For this purpose, the 411(b)(1)(B) limit percentage is $133^{1}/_{3}$ percent of the smallest base benefit percentage, or $133^{1}/_{3}$ percent of the smallest difference between the gross benefit percentage and the offset percentage, whichever is applicable, where the smallest base benefit percentage or difference is determined by reference to the benefit formula as applied to employees with no more years of service than the employee.

(C) ***Fractional accrual plans.*** In the case of a fractional accrual plan described in § 1.401(a)(4)-3(b)(4), the benefit formula must provide for the nondisparate percentage with respect to years of service after the employee would reach the cumulative permitted disparity limit applicable to the employee under § 1.401(l)-5(c) as modified by this paragraph (c)(2)(vi)(C). Solely for purposes of this paragraph (c)(2)(vi)(C), the employee's annual disparity fractions (and thus the year in which the employee would reach the cumulative permitted disparity limit) are determined using the disparity provided under the benefit formula (rather than the special rule for fractional accrual plans in § 1.401(l)-5(b)(8)(v)).

(vii) ***Non-FICA employees.*** The plan provides that, in the case of each employee under the plan with respect to whom none of the taxes under section 3111(a), section 3221, or section 1401 is required to be paid, employer-provided benefits are determined with respect to the employee's total average annual compensation at the excess benefit percentage or gross benefit percentage applicable to an employee with the same number of years of service.

(viii) ***Average annual compensation adjustment for offset plan.*** In the case of each employee whose final average compensation exceeds the employee's average annual compensation, the plan adjusts the offset percentage as required under paragraph (b)(3)(ii) of this section in order to satisfy the maximum offset allowance.

(ix) ***PIA offsets.*** In the case of an offset plan, the plan provides that the offset applied to each employee's benefit is the lesser of a specified percentage of the employee's PIA and an offset that otherwise satisfies the requirements of this section (the “section 401(l) overlay”). The specified percentage of PIA must be the same for all employees with the same number of years of service. In the case of a plan that determines each employee's accrued benefit under the fractional accrual method of section 411(b)(1)(C), the specified percentage of PIA is deemed to be the same for all employees with the same number of years of service if the plan satisfies either of the deemed uniformity rules in paragraph (c)(2)(ii) or (iii) of this section, substituting “offset, expressed as a percentage of PIA, per year of service” for the term “offset percentage” (in addition to satisfying either of those rules with respect to the section 401(l) overlay).

(3) ***Examples.*** The following examples illustrate this paragraph (c). Unless otherwise provided, the following facts apply. The plan is noncontributory and is the only plan ever maintained by the employer. The plan uses a normal retirement age of 65 and contains no provision that would require a reduction in the 0.75-percent factor under paragraph (b)(2) or (b)(3) of this section. In the case of a defined benefit excess plan, the plan uses each employee's covered compensation as the integration level; in the case of an offset plan, the plan uses each employee's covered compensation as the

offset level and provides that an employee's final average compensation is limited to the employee's average annual compensation. Each example discusses the benefit formula applicable to an employee who has a social security retirement age of 65.

Example 1. Plan M is a defined benefit excess plan that satisfies the $133^{1}/_{3}$ percent accrual rule of section 411(b)(1)(B). The plan provides a normal retirement benefit of 1.0 percent of average annual compensation up to the integration level, plus 1.65 percent of average annual compensation in excess of the integration level, for each year of service up to 25. The plan also provides a benefit of 1.0 percent of all average annual compensation for each year of service in excess of 25. The disparity provided under the plan is uniform because the plan uses the same base and excess benefit percentages for all employees with the same number of years of service. If the plan formula were the same except that it used a different excess benefit percentage for some of the years of service between one and 25, the disparity under the plan would continue to be uniform.

Example 2. Plan O is a defined benefit excess plan that provides a normal retirement benefit of 50 percent of average annual compensation up to the integration level and 68.75 percent of average annual compensation in excess of the integration level, multiplied by a fraction, the numerator of which is the employee's service, up to 25 years, and the denominator of which is 25. The plan determines an employee's accrued benefit as described in § 1.401(a)(4)-3(b)(4)(i)(B). The benefit formula thus provides a base benefit percentage of 2 percent (50 percent × $^{1}/_{25}$) and an excess benefit percentage of 2.75 percent (68.75 percent × $^{1}/_{25}$) for each of an employee's first 25 years of service and no benefit for years of service after 25. The disparity provided under the plan is not uniform within the meaning of this paragraph (c) because the benefit formula does not satisfy either of the uniform disparity rules for fractional accrual plans under paragraphs (c)(2) (ii) and (iii) of this section.

Example 3. Plan P is an offset plan that provides a normal retirement benefit of 2 percent of average annual compensation for each year of service up to 35, minus 0.75 percent of the final average compensation up to the offset level for each year of service up to 25. The plan determines an employee's accrued benefit under the method described in § 1.401(a)(4)-3(b)(4)(i)(B). Because the formula under the plan provides the same gross benefit percentage and offset percentage for 25 years of service (fewer than 35) and, for years of service after 25 and up to 35, provides a benefit at a uniform rate (equal to the gross benefit percentage) of all average annual compensation, and the plan accrues the benefit ratably, the disparity under the plan is deemed to be uniform under paragraph (c)(2)(iii) of this section.

Example 4. Plan Q is an offset plan that benefits employees with social security retirement ages of 65, 66, and 67. For each year of service up to 35, the plan provides a normal retirement benefit equal to 2 percent of average annual compensation, minus an offset based on the employee's final average compensation up to the offset level. For employees with a social security retirement age of 65, the offset percentage is 0.75 percent; for employees with a social security retirement age of 66, the offset percentage is 0.70 percent; and for employees with a social security retirement age of 67, the offset percentage is 0.65 percent. The disparity under the plan is deemed to be uniform under paragraph (c)(2)(iv) of this section because the plan uses the same gross benefit percentage for all employees and reduces the offset percentage for employees with social security retirement ages of 66 and 67 to comply with the adjustments in the 0.75-percent factor in the maximum excess or offset allowance required under paragraph (e)(1) of this section. (Because Plan Q effectively provides unreduced benefits prior to the social security retirement age for employees with social security retirement ages of 66 and 67,

the 0.75-percent factor in the maximum offset allowance must be reduced to 0.70 percent and 0.65 percent, respectively.) Alternatively, Plan Q could satisfy this paragraph (c) if it provided a uniform offset percentage of 0.65 percent for all employees because 0.65 percent is the maximum offset allowance under the plan for an employee with a social security retirement age of 67.

Example 5. Plan R is an offset plan that provides a normal retirement benefit of 2 percent of average annual compensation, minus an offset determined as a percentage of total final average compensation, for each year of service up to 35. For an employee whose final average compensation does not exceed the employee's covered compensation, the offset percentage is 0.75 percent. For an employee whose final average compensation exceeds the employee's covered compensation, the plan reduces the offset percentage, as required by paragraph (d) of this section. The reduced offset percentage is determined by comparing the employee's final average compensation to the employee's covered compensation as permitted under paragraph (d)(9)(iii)(B) of this section. The disparity provided under the plan is deemed uniform under paragraph (c)(2)(v) of this section because the plan uses the same gross benefit percentage for all employees and makes individual reductions in the 0.75-percent factor, as permitted under paragraph (d)(9)(iii)(B) of this section, by reducing the offset percentage in the case of an employee whose final average compensation exceeds covered compensation.

(d) ***Requirements for integration or offset level*** —

(1) ***In general.*** The integration level under a defined benefit excess plan or the offset level under an offset plan must satisfy paragraphs (d)(2), (d)(3), (d)(4), (d)(5) or (d)(6) of this section, as modified by paragraph (d)(7) of this section in the case of a short plan year. Paragraph (d)(8) of this section contains demographic tests that apply to certain defined benefit plans. Paragraph (d)(9) of this section explains certain reductions required in the 0.75-percent factor under paragraph (b)(2) or (b)(3) of this section. Paragraph (d)(10) of this section contains examples. If a reduction applies to the 0.75-percent factor under this paragraph (d), the reduced factor is used for all purposes in determining whether the permitted disparity rules for defined benefit plans are satisfied.

(2) ***Covered compensation.*** The requirement of this paragraph (d)(2) is satisfied only if the integration or offset level under the plan for each employee is the employee's covered compensation.

(3) ***Uniform percentage of covered compensation.*** The requirement of this paragraph (d)(3) is satisfied only if—

(i) The integration or offset level under the plan for each employee is a uniform percentage (greater than 100 percent) of each employee's covered compensation,

(ii) In the case of a defined benefit excess plan, the integration level does not exceed the taxable wage base in effect for the plan year, and, in the case of an offset plan, the offset level does not exceed the employee's final average compensation, and

(iii) The plan adjusts the 0.75-percent factor in the maximum excess or offset allowance in accordance with paragraph (d)(9) of this section.

(4) ***Single dollar amount.*** The requirement of this paragraph (d)(4) is satisfied only if the integration or offset level under the plan for all employees is a single dollar amount (either specified in the plan or determined under a formula specified in the plan) that does not exceed the greater of $10,000 or one-half of the covered compensation of an individual who attains social security retirement age in the calendar year in which the plan year begins. In the case of a calendar year in which no individual

could attain social security retirement age, for example, the year 2003, this rule is applied using covered compensation of an individual attaining social security retirement age in the preceding calendar year.

(5) ***Intermediate amount.*** The requirement of this paragraph (d)(5) is satisfied only if—

(i) The integration or offset level under the plan for all employees is a single dollar amount (either specified in the plan or determined under a formula specified in the plan) that is greater than the highest amount determined under paragraph (d)(4) of this section,

(ii) In the case of a defined benefit excess plan, the single dollar amount does not exceed the taxable wage base in effect for the plan year, and, in the case of an offset plan, the single dollar amount does not exceed the employee's final average compensation,

(iii) The plan satisfies the demographic requirements of paragraph (d)(8) of this section, and

(iv) The plan adjusts the 0.75-percent factor in the maximum excess or offset allowance in accordance with paragraph (d)(9) of this section.

For purposes of this paragraph (d)(5), an offset level of each employee's final average compensation is considered a single dollar amount determined under a formula specified in the plan.

(6) ***Intermediate amount safe harbor.*** The requirement of this paragraph (d)(6) is satisfied only if—

(i) The integration or offset level under the plan for all employees is a single dollar amount described in paragraph (d)(5) of this section, and

(ii) The 0.75-percent factor in the maximum excess or offset allowance under paragraph (b)(2) or (b)(3) of this section is reduced to the lesser of the adjusted factor determined under paragraph (d)(9) of this section or 80 percent of the otherwise applicable factor under paragraph (b)(2) or (b)(3) of this section, determined without regard to paragraph (d)(9) of this section.

(7) ***Prorated integration level for short plan year.*** If an accumulation plan uses paragraph (2) or (4) of the definition of plan year compensation under § 1.401(a)(4)-12 (i.e., section 414(s) compensation for the plan year or the period of plan participation) and has a plan year that comprises fewer than 12 months, the integration or offset level under the plan for each employee must be an amount equal to the otherwise applicable integration or offset level described in paragraph (d)(2), (d)(3), (d)(4), (d)(5), or (d)(6) of this section, multiplied by a fraction, the numerator of which is the number of months in the plan year and the denominator of which is 12. No adjustment to the maximum excess or offset allowance is required as a result of the application of this paragraph (d)(7), other than any adjustment already required under paragraph (d)(6) or (d)(9) of this section.

(8) ***Demographic requirements*** —

(i) ***In general.*** A plan that satisfies the demographic requirements of paragraphs (d)(8)(ii) and (iii) of this section may use an integration level described in paragraph (d)(5) of this section.

(ii) ***Attained age requirement.*** The requirement of this paragraph (d)(8)(ii) is satisfied only if the average attained age of the nonhighly compensated employees in the plan is not greater than the greater of—

(A) Age 50, or

(B) 5 plus the average attained age of the highly compensated employees in the plan. For purposes of this paragraph (d)(8)(ii), attained ages are determined as of the beginning of the plan year.

(iii) ***Nondiscrimination requirement.*** The requirement of this paragraph (d)(8)(iii) is satisfied only if at least one of the following tests in paragraphs (d)(8)(iii) (A) through (D) of this section is satisfied.

(A) ***Minimum percentage test.*** This test is satisfied only if more than 50 percent of the nonhighly compensated employees in the plan have average annual compensation at least equal to 120 percent of the integration or offset level.

(B) ***Ratio test.*** This test is satisfied only if the percentage of nonhighly compensated nonexcludable employees, who are in the plan and who have average annual compensation at least equal to 120 percent of the integration or offset level, is at least 70 percent of the percentage of highly compensated nonexcludable employees who are employees in the plan.

(C) ***High dollar amount test.*** This test is satisfied only if the integration or offset level exceeds 150 percent of the covered compensation of an individual who attains social security retirement age in the calendar year in which the plan year begins. In the case of a calendar year in which no individual could attain social security retirement age, for example, the year 2003, this rule is applied using covered compensation of an individual attaining social security retirement age in the preceding calendar year.

(D) ***Individual disparity reductions.*** This test is satisfied only if the plan is an offset plan that uses an offset level of each employee's final average compensation and makes individual disparity reductions as permitted under paragraph (d)(9)(iii)(B) of this section.

(9) ***Reduction in the 0.75-percent factor if integration or offset level exceeds covered compensation*** —

(i) ***In general.*** If the integration or offset level specified under the plan is each employee's covered compensation as of the plan year, no reduction in the 0.75-percent factor in the maximum excess or offset allowance is required for the plan year under this paragraph (d)(9). If a plan specifies an integration or offset level that exceeds an employee's covered compensation, the 0.75-percent factor in the maximum excess or offset allowance must be reduced as required in paragraph (d)(9)(ii) or (iii) of this section. Paragraph (d)(9)(iv) of this section contains a table of the applicable reductions.

(ii) ***Uniform percentage of covered compensation.*** If a plan specifies an integration or offset level that is a uniform percentage (in excess of 100 percent) of each employee's covered compensation, the 0.75-percent factor in the maximum excess or offset allowance must be reduced in accordance with the table in paragraph (d)(9)(iv) of this section. Thus, for example, if a plan specifies an integration or offset level of 120 percent of each employee's covered compensation, the 0.75-percent factor in the maximum excess or offset allowance must be reduced to 0.69 percent in accordance with the table because the specified integration or offset level is more than covered compensation but not more than 125 percent of covered compensation.

(iii) ***Single dollar amount.*** If a plan specifies an integration or offset level of a single dollar amount as permitted under paragraph (d)(5) of this section (for example, $30,000), the applicable reduction in the maximum excess or offset allowance must be determined under paragraph (d)(9)(iii) (A) or (B) of this section, as specified under the plan.

(A) ***Plan-wide reduction.*** The applicable reduction in the maximum excess or offset allowance under the table in paragraph (d)(9)(iv) of this section may be determined by comparing the single dollar amount specified in the plan to the covered compensation of an individual attaining social security retirement age in the calendar year in which the plan year begins. Thus, for example, if a plan specifies a single integration or offset level of $30,000 that is uniformly applicable to all employees for a plan year and the covered compensation of an individual attaining social security retirement age in the calendar year in which the plan year begins is $20,000, the 0.75-percent factor in the maximum excess or offset allowance must be reduced to 0.60 percent for all employees in accordance with the table in paragraph (d)(9)(iv) of this section because the specified integration or offset level of $30,000 is more than 125 percent of $20,000 but not more than 150 percent of $20,000. In the case of a calendar year in which no individual could attain social security retirement age (for example, 2003), the comparison is made with covered compensation of an individual who attained social security retirement age in the preceding calendar year. If an offset plan uses an offset level of each employee's final average compensation, the reduction under this paragraph (d)(9)(iii)(A) is determined by comparing the highest possible amount of final average compensation to the covered compensation of an individual attaining social security retirement age in the calendar year in which the plan year begins.

(B) ***Individual reductions.*** The applicable reduction in the maximum excess or offset allowance under the table in paragraph (d)(9)(iv) of this section may be determined by comparing the single dollar amount specified in the plan to the covered compensation of each employee under the plan. Thus, for example, if a plan specifies a single integration or offset level of $30,000 that is uniformly applicable to all employees for a plan year, the 0.75-percent factor in the maximum excess or offset allowance must be reduced to 0.60 percent for an employee with covered compensation of $20,000, but need not be reduced for an employee whose covered compensation is $30,000 or greater.

(iv) ***Reductions —***

(A) ***Table.***

TABLE

If the integration or offset level is	The permitted disparity factor is
100 percent of covered compensation	0.75 percent
125 percent of covered compensation	0.69 percent
150 percent of covered compensation	0.60 percent
175 percent of covered compensation	0.53 percent

If the integration or offset level is	The permitted disparity factor is
200 percent of covered compensation	0.47 percent
The taxable wage base or final average compensation	0.42 percent

(B) ***Interpolation.*** If the integration or offset level used under a plan is between the percentages of covered compensation in the table, the permitted disparity factor applicable to the plan can be determined either by straight-line interpolation between the permitted disparity factors in the table or by rounding the integration or offset level up to the next highest percentage of covered compensation in the table.

(10) ***Examples.*** The following examples illustrate this paragraph (d). Unless otherwise provided, the following facts apply. The plan is noncontributory and is the only plan ever maintained by the employer. The plan uses a normal retirement age of 65 and contains no provision that would require a reduction in the 0.75-percent factor under paragraph (b)(2) or (b)(3) of this section. In the case of an offset plan, the plan provides that an employee's final average compensation is limited to the employee's average annual compensation. Each example discusses the benefit formula applicable to an employee who has a social security retirement age of 65.

> *Example 1.* (a) Plan M is a defined benefit excess plan that uses the calendar year as its plan year. For the 1989 plan year, the plan uses an integration level of $20,000, which is 118 percent of the 1989 covered compensation of $16,968 for an individual reaching social security retirement age in 1989. The plan may use that integration level without satisfying paragraph (d)(8) of this section, provided the adjustment to the 0.75-percent factor required under paragraph (d)(6) of this section is made. That adjustment is the lesser of the factor determined under paragraph (d)(9) of this section or 80 percent of the factor otherwise applicable under paragraph (b)(2) or (b)(3) of this section.
> (b) The plan determines the factor under paragraph (d)(9) of this section by comparing the integration level to the covered compensation of an individual attaining social security retirement age in the calendar year in which the plan year begins and by rounding the integration level up to 125 percent of that covered compensation amount. The 0.75-percent factor is therefore replaced by 0.69 percent pursuant to the table in paragraph (d)(9) of this section. The 0.69-percent factor is 92 percent of the 0.75-percent factor. Because the lesser of 80 percent and 92 percent is 80 percent, the 0.75-percent factor is reduced to 0.6 percent (80 percent of 0.75 percent) under paragraph (d)(6) of this section. The 0.6-percent factor applies to benefits commencing at age 65 for an employee with a social security retirement age of 65. In determining normal retirement benefits for employees with social security retirement ages of 66 or 67, the applicable factors for benefits commencing at age 65 are, respectively, 0.56 percent (80 percent of 0.7 percent) and 0.52 percent (80 percent of 0.65 percent).

(c) The plan could also determine the factor under paragraph (d)(9) of this section by comparing the integration level to the covered compensation of each employee under the plan, or by straight line interpolation between the disparity factors contained in the table in paragraph (d)(9) of this section, or both. (Of course, if the plan satisfied paragraph (d)(8) of this section, the plan could use the factor determined under paragraph (d)(9) of this section.)

Example 2. (a) Plan N, an accumulation plan, is a defined benefit excess plan that, for each year of service up to 35, accrues a normal retirement benefit of 1 percent of plan year compensation up to the taxable wage base, plus 1.75 percent of plan year compensation above the taxable wage base, for each year of service up to 35. An employee's total retirement benefit is the sum of the accruals for all years. The plan satisfies paragraph (d)(8) of this section.
(b) Because the plan uses the taxable wage base (an amount above covered compensation) as the integration level, it must reduce the 0.75-percent factor in the maximum excess allowance as required under paragraphs (d)(5) and (d)(9) of this section. The reduced factor, if determined on a plan-wide basis under paragraph (d)(9)(iii)(A) of this section, is 0.42 percent. The plan must therefore reduce the disparity in the plan so that it does not exceed 0.42 percent.

Example 3. (a) For the 1990 plan year, Plan O provides a normal retirement benefit of 2 percent of average annual compensation, minus a percentage of final average compensation up to $48,000, for each year of service up to 35. The plan satisfies paragraph (d)(8) of this section. As permitted under paragraph (d)(9) of this section, the plan provides that each employee's offset percentage is determined by comparing $48,000 to the employee's covered compensation and by rounding the result up to the next highest percentage of covered compensation.
(b) Employee A has a social security retirement age of 66 and covered compensation of $40,000. Because the plan provides for commencement of Employee A's benefit at age 65, the 0.75-percent factor in the maximum offset allowance is reduced to 0.7 percent under paragraph (e)(1) of this section (the “paragraph (e) factor”). In addition, because $48,000 is rounded up to 125 percent of Employee A's covered compensation, the 0.75-percent factor in the maximum offset allowance is reduced to 0.69 percent under paragraph (d)(9) of this section (the “paragraph (d) factor”). The reductions are cumulative under paragraph (b)(3)(ii) of this section.

(c) The cumulative reductions can be made by multiplying the paragraph (e) facdtor by the ratio of the paragraph (d) factor to 0.75 percent or by multiplying the paragraph (d) factor by the ratio of the paragraph (e) factor to 0.75 percent. The disparity factor for Employee A is therefore 0.64 percent ((0.7 percent × 0.69 percent/0.75 percent) or (0.69 percent × 0.7 percent/0.75 percent)).

Example 4. Plan P is an offset plan that uses the calendar year as the plan year and uses an offset level of each employee's final average compensation. Assume that the taxable wage bases for 1990-1992 are the following: 1990—$51,300 1991—$53.400 1992—$58,000 Employee B's final average compensation, determined as of the close of the 1992 plan year, is the average of Employee B's annual compensation for the period 1990-1992. Employee B's annual compensation for each year is the following: 1990—$47,000 1991—$59,000 1992—$65,000 For purposes of determining the offset applied to Employee B's employer-provided benefit under the plan. Employee's B's final average compensation as of the close of the 1992 plan year is $52,800 ($47,000 + $53,400 + $58,000/3). This is because annual compensation in excess of the taxable wage base in effect at the beginning of the year may not be taken into account in determining an employee's final average compensation or in determining the employee's offset. If the plan determines the offset applied to Employee B's benefit by reference to compensation in excess of $52,800, the plan fails to satisfy this paragraph (d).

(e) ***Adjustments to the 0.75-percent factor for benefits commencing at ages other than social security retirement age*** —

(1) ***In general.*** The 0.75-percent factor in the maximum excess allowance and in the maximum offset allowance applies to a benefit commencing at an employee's social security retirement age. Except as provided in paragraph (g) of this section, if a benefit payable to an employee under a defined benefit excess plan or a defined benefit offset plan commences at an age before the employee's social security retirement age (including a benefit payable at the normal retirement age under the plan), the 0.75-percent factor in the maximum excess allowance or in the maximum offset allowance, respectively, is reduced in accordance with paragraph (e)(2)(i) of this section. If a benefit payable to an employee under a defined benefit excess plan or a defined offset plan commences at an age after the employee's social security retirement age, the 0.75-percent factor in the maximum excess allowance or in the maximum offset allowance, respectively, may be increased in accordance with paragraph (e)(2)(ii) of this section. Paragraph (e)(4) of this section provides rules on the age at which a benefit commences. See paragraph (f) of this section for the requirements applicable to optional forms of benefit.

(2) ***Adjustments*** —

(i) ***Benefits commencing on or after age 55 and before social security retirement age.*** If benefits commence before an employee's social security retirement age, the 0.75-percent factor in the maximum excess allowance and in the maximum offset allowance must be reduced for such early commencement of benefits in accordance with the tables set forth in paragraph (e)(3) of this section.

(ii) ***Benefits commencing after social security retirement age and on or before age 70.*** If benefits commence after an employee's social security retirement age, the 0.75-percent factor in the maximum excess allowance and in the maximum offset allowance may be increased for such delayed commencement of benefits in accordance with the tables set forth in paragraph (e)(3) of this section.

(iii) ***Benefits commencing before age 55.*** If benefits commence before the employee attains age 55, the 0.75-percent factor in the maximum excess allowance and in the maximum offset allowance is further reduced (on a monthly basis to reflect the month in which benefits commence) to a factor that is the actuarial equivalent of the 0.75-percent factor, as adjusted under the tables in paragraph (e)(3) of this section, applicable to a benefit commencing in the month in which the employee attains age 55. In determining actuarial equivalence for this

purpose, a reasonable interest rate must be used. In addition, a reasonable mortality table must be used to determine the actuarial present value, as defined in § 1.401(a)(4)-12, of the benefits commencing at age 55 and at the earlier commencement age, and a reasonable mortality table may be used to determine the actuarial present value at the earlier commencement age of the benefits commencing at age 55. A standard interest rate and a standard mortality table, as defined in § 1.401(a)(4)-12, are considered reasonable.

(iv) ***Benefits commencing after age 70.*** If benefits commence after the employee attains age 70, the 0.75-percent factor in the maximum excess allowance and in the maximum offset allowance may be further increased (on a monthly basis to reflect the month in which benefits commence) to a factor that is the actuarial equivalent of the 0.75-percent factor (as adjusted in accordance with this paragraph (e)) applicable to a benefit commencing in the month in which the employee attains age 70. In determining actuarial equivalence for this purpose, a reasonable interest rate must be used. In addition, a reasonable mortality table must be used to determine the actuarial present value, as defined in § 1.401(a)(4)-12, of the benefits commencing at age 70 and at the later commencement age, and a reasonable mortality table may be used to determine the value at the later commencement age of the benefits commencing at age 70. A standard interest rate and a standard mortality table, as defined in § 1.401(a)(4)-12, are considered reasonable.

(3) ***Tables.*** Tables I, II, and III provide the adjustments in the 0.75-percent factor in the maximum excess allowance and in the maximum offset allowance applicable to benefits commencing on or after age 55 and on or before age 70 to an employee who has a social security retirement age of 65, 66 or 67. Table IV is a simplified table for a plan that uses a single disparity factor of 0.65 percent for all employees at age 65. The factors in the following tables are applicable to benefits that commence in the month the employee attains the specified age. Accordingly, if benefits commence in a month other than the month in which the employee attains the specified age, appropriate adjustments in the 0.75-percent factor in the maximum excess allowance and the maximum offset allowance must be made. For this purpose, adjustments may be based on straight-line interpolation from the factors in the tables or in accordance with the methods of adjustment specified in paragraphs (e)(2)(iii) and (iv) of this section.

TABLE I
[SOCIAL SECURITY RETIREMENT AGE 67]

Age at which benefits commence	Annual factor in maximum excess allowance and maximum offset allowance (percent)
70	1.002
69	0.908
68	0.825
67	0.750
66	0.700
65	0.650
64	0.600

Age at which benefits commence	Annual factor in maximum excess allowance and maximum offset allowance (percent)
63	0.550
62	0.500
61	0.475
60	0.450
59	0.425
58	0.400
57	0.375
56	0.344
55	0.316

TABLE II
[SOCIAL SECURITY RETIREMENT AGE 66]

Age at which benefits commence	Annual factor in maximum excess allowance and maximum offset allowance (percent)
70	1.101
69	0.998
68	0.907
67	0.824
66	0.750
65	0.700
64	0.650
63	0.600
62	0.550
61	0.500
60	0.475
59	0.450
58	0.425
57	0.400
56	0.375

Age at which benefits commence	Annual factor in maximum excess allowance and maximum offset allowance (percent)
55	0.344

TABLE III
[SOCIAL SECURITY RETIREMENT AGE 65]

Age at which benefits commence	Annual factor in maximum excess allowance and maximum offset allowance (percent)
70	1.209
69	1.096
68	0.996
67	0.905
66	0.824
65	0.750
64	0.700
63	0.650
62	0.600
61	0.550
60	0.500
59	0.475
58	0.450
57	0.425
56	0.400
55	0.375

TABLE IV
[SIMPLIFIED TABLE]

Age at which benefits commence	Annual factor in maximum excess allowance and maximum offset allowance (percent)
70	1.048
69	0.950
68	0.863

Age at which benefits commence	Annual factor in maximum excess allowance and maximum offset allowance (percent)
67	0.784
66	0.714
65	0.650
64	0.607
63	0.563
62	0.520
61	0.477
60	0.433
59	0.412
58	0.390
57	0.368
56	0.347
55	0.325

(4) *Benefit commencement date* —

(i) ***In general.*** Except as provided in paragraph (e)(4)(ii) of this section, a benefit commences for purposes of this paragraph (e) on the first day of the period for which the benefit is paid under the plan.

(ii) ***Qualified social security supplement.*** If a plan uses a qualified social security supplement, as defined in § 1.401(a)(4)-12, to provide an aggregate benefit at retirement before social security retirement age that is a uniform percentage of average annual compensation, benefits will be considered to commence on the first day of the period for which the qualified social security supplement is no longer payable. In order for this paragraph (e)(4)(ii) to apply, the uniform percentage must be equal to the excess benefit percentage in the case of an excess plan or the gross benefit percentage in the case of an offset plan.

(5) ***Examples.*** The following examples illustrate this paragraph (e). Unless otherwise provided, the following facts apply. The plan is noncontributory and is the only plan ever maintained by the employer. The plan uses a normal retirement age of 65 and contains no provision that would require a reduction in the 0.75-percent factor under paragraph (b)(2) or (b)(3) of this section. In the case of a defined benefit excess plan, the plan uses each employee's covered compensation as the integration level; in the case of an offset plan, the plan uses each employee's covered compensation as the offset level and provides that an employee's final average compensation is limited to the employee's average annual compensation. Each example discusses the benefit formula applicable to an employee who has a social security retirement age of 65.

Example 1. Plan M is a defined benefit excess plan that, for an employee with a social security retirement age of 65, provides a normal retirement benefit of 1.25 percent of average annual compensation up to the integration level, plus 2.0 percent of average annual compensation in excess of the integration level, for each year of service up to 35. For an employee with at least 20 years of service, the plan provides a benefit commencing at age 55 that is equal to the

benefit payable at age 65. For that employee, the disparity provided under the plan at age 55 is 0.75 percent (2 percent-1.25 percent). Because this disparity exceeds the 0.375 percent factor provided in the table for a benefit payable at age 55 to an employee with a social security retirement age of 65, the plan fails to satisfy paragraphs (b) and (e) of this section with respect to the early retirement benefit.

Example 2. Assume the same facts as in *Example 1,* except that the base benefit percentage under the plan is 1.75 percent. Thus, the disparity provided under the plan at age 55 is 0.25 percent (2 percent-1.75 percent). Because the disparity does not exceed the 0.375 percent factor provided in the table for a benefit payable at age 55 to an employee with a social security retirement age of 65, the plan does not fail to satisfy paragraphs (b) and (e) of this section with respect to the early retirement benefit.

Example 3. Plan N is an offset plan that, for an employee with a social security retirement age of 65, provides a normal retirement benefit of 1.75 percent of average annual compensation, minus 0.75 percent of final average compensation up to the offset level, for each year of service up to 35. For an employee with at least 20 years of service, the plan provides a benefit commencing at age 55 that is equal to the benefit payable at age 65. For that employee, the disparity provided under the plan at age 55 is 0.75 percent. Because this disparity exceeds the 0.375-percent factor provided in the table for an offset applied to a benefit payable at age 55 to an employee with a social security retirement age of 65, the plan fails to satisfy paragraphs (b) and (e) of this section with respect to the early retirement benefit. The plan would not fail to satisfy paragraphs (b) and (e) of this section with respect to the early retirement benefit if the applicable factor for determining the offset applied to the benefit were reduced to 0.375 percent.

Example 4. Plan O is a defined benefit excess plan that, for an employee with a social security retirement age of 65, provides a normal retirement benefit of 1.25 percent of average annual compensation up to the integration level, plus 2.0 percent of average annual compensation in excess of the integration level, for each year of service up to 35. The plan provides benefits commencing before normal retirement age with the following reductions:

Age	Percentage of normal retirement benefit (%)
64	90
63	85
62	80

Under the plan, a benefit payable at age 64 is equal to 90 percent of the normal retirement benefit payable at age 65. Thus, the excess benefit percentage under the plan is 1.8 percent, the base benefit percentage under the plan is 1.125 percent, and the disparity provided under the plan at age 64 is 0.675 percent. Similarly, a benefit payable at age 63 is equal to 85 percent of the normal retirement benefit payable at age 65. Thus,

the excess benefit percentage under the plan is 1.7 percent, the base benefit percentage under the plan is 1.0625 percent, and the disparity provided under the plan at age 63 is 0.6375 percent. Finally, a benefit payable at age 62 is equal to 80 percent of the normal retirement benefit payable at age 65. Thus, the excess benefit percentage under the plan is 1.6 percent, the base benefit percentage under the plan is 1.0 percent, and the disparity provided under the plan at age 62 is 0.6 percent. Because the disparities provided under the plan at each early commencement age do not exceed the factors provided in the applicable table in paragraph (e)(3) of this section, the plan does not fail to satisfy paragraphs (b) and (e) of this section with respect to the early retirement benefits.

Example 5. Plan P is a defined benefit excess plan that provides a normal retirement benefit of 0.75 percent of average annual compensation up to the integration level, plus 1.5 percent of average annual compensation in excess of the integration level, for each year of service up to 35. The plan does not provide any benefits, other than normal retirement benefits, commencing before an employee's social security retirement age. Employee A, born in 1947, has a social security retirement age of 66. Because the plan provides for the distribution of normal retirement benefits before Employee A's social security retirement age, the 0.75-percent factor in the maximum excess allowance applicable to Employee A must be reduced to 0.70 percent in accordance with this paragraph (e). Accordingly, the disparity provided to A under the plan exceeds the maximum excess allowance because the excess benefit percentage (1.5 percent) exceeds the base benefit percentage (0.75 percent) by more than the maximum excess allowance of 0.70 percent, as reduced in accordance with this paragraph (e).

Example 6. Assume the same facts as in *Example 5,* except that the plan also provides an early retirement benefit, commencing at age 62, to an employee who satisfies the conditions for early retirement specified in the plan. The early retirement benefit is based upon the employee's accrued benefit at early retirement age and equals the amount that would have been paid commencing at the employee's normal retirement age based upon the employee's average annual compensation, covered compensation and years of service at the date of the employee's early retirement. Employee B, who has a social security retirement age of 65, meets the conditions for early retirement under the plan and retires at age 62 with 30 years of service. At the time of early retirement, Employee B has average annual compensation of $20,000 and covered compensation of $16,000. Under the plan's benefit formula, Employee B has accrued a normal retirement benefit, commencing at age 65, of $5,400 ((22.5 percent × $16,000) + (45 percent × $4,000)) based on Employee B's average annual compensation, covered compensation and years of service at early retirement. Accordingly, under the plan's early retirement provisions, Employee B is entitled to receive, commencing at early retirement, a benefit of $5,400. Because the early retirement benefit is a benefit commencing at age 62 (before Employee B's social security retirement age), the 0.75-percent factor in the maximum excess allowance must be reduced to 0.60 percent in accordance with this paragraph (e). Accordingly, the disparity provided to Employee B under the plan at early retirement exceeds the maximum excess allowance.

Example 7. (a) Plan Q is a defined benefit excess plan that provides a normal retirement benefit of 1.35 percent of average annual compensation up to the integration level, plus

2 percent of average annual compensation in excess of the integration level, for each year of service up to 35. The plan provides that an employee with 10 years of service at age 55 may receive an unreduced retirement benefit. The plan also provides that employee with a supplemental benefit of 0.65 percent of average annual compensation up to the integration level for each year of service up to 35, payable from early retirement until age 65. The supplemental benefit is a qualified social security supplement under § 1.401(a)(4)-12. The effect of the supplement is to provide an employee with a uniform benefit of 2 percent of average annual compensation from early retirement until age 65, when the supplement is no longer payable. Therefore, for purposes of this paragraph (e), the employee's benefit will be considered to commence at age 65.
(b) Assume that Plan Q is instead an offset plan that provides a normal retirement benefit of 2 percent of average annual compensation, minus 0.65 percent of final average compensation up to the offset level, for each year of service up to 35. The plan provides the same early retirement benefit on the same conditions, except that the supplement is 0.65 percent of an employee's final average compensation up to the offset level. An employee at age 55 thus receives a uniform benefit of 2 percent of average annual compensation until age 65, when the supplement is no longer payable. Therefore, for purposes of this paragraph (e), the employee's benefit will be considered to commence at age 65.

(f) ***Benefits, rights, and features*** —

(1) ***Defined benefit excess plan.*** In the case of a defined benefit excess plan, each benefit, right, or feature provided under the plan with respect to employer-provided benefits attributable to average annual compensation above the integration level (an “excess benefit, right, or feature”) must also be provided on the same terms with respect to employer-provided benefits attributable to average annual compensation up to the integration level (a “base benefit, right, or feature”). Alternatively, an excess benefit, right, or feature may be provided on different terms than the base benefit, right, or feature, if the terms used to determine the base benefit, right, or feature produce a benefit, right, or feature of inherently equal or greater value than the benefit, right, or feature that would be produced under the terms used to determine the excess benefit, right, or feature.

(2) ***Offset plan.*** In the case of an offset plan, each benefit, right, or feature provided under the plan with respect to employer-provided benefits before application of the offset (a “gross benefit, right, or feature”) must be provided on the same terms as those used to determine the offset applied to the gross benefit, right, or feature. Alternatively, a gross benefit, right, or feature may be provided on different terms from those used to determine the offset applied to the gross benefit, right, or feature, if the terms used to determine the gross benefit, right, or feature produce a benefit, right, or feature of inherently equal or greater value than the benefit, right, or feature that would be produced under the terms used to determine the offset applied to the gross benefit, right, or feature. In addition, if benefits commence before an employee's normal retirement age, the gross benefit percentage under the plan must be reduced by a number of percentage points that is not less than the number of percentage points by which the offset percentage must be reduced, from normal retirement age to the age at which benefits commence, under the rules of paragraph (e) of this section.

(3) ***Examples.*** The following examples illustrate this paragraph (f). Unless otherwise provided, the following facts apply. The plan is noncontributory and is the only plan ever maintained by the employer. The plan uses a normal retirement age of 65 and contains no provision that would require a reduction in the 0.75-percent factor under paragraph (b)(2) or (b)(3) of this section. In the case of a defined benefit excess plan, the plan uses each employee's covered compensation as the integration level; in the case of an offset plan, the plan uses each employee's covered compensation as the offset level and provides that an employee's final average compensation is limited to the employee's average annual compensation. Each example discusses the benefit formula applicable to an employee who has a social security retirement age of 65. All optional forms of benefit under each plan are provided on the same terms.

Example 1. Plan M is a defined benefit excess plan that provides a normal retirement benefit of 1 percent of average annual compensation up to the integration level, plus 1.65 percent of average annual compensation above the integration level, for each year of service up to 35. The plan provides an early retirement benefit for any employee who terminates employment at or after age 55 with 10 or more years of service. In determining an employee's early retirement, the 1.65 percent excess benefit percentage is reduced in accordance with the table in paragraph (e)(3) of this section for a plan that uses a single disparity factor of 0.65 percent for all employees at age 65. However, a larger reduction factor is applied to determine the base benefit percentage at early retirement. The plan violates this paragraph (f) because the excess early retirement benefit is not provided on the same terms as the base early retirement benefit, nor do the terms used to determine the base early retirement benefit produce an early retirement benefit of inherently equal or greater value than the early retirement benefit that would be produced under the terms used to determine the excess benefit, right, or feature.

Example 2. The facts are the same as in *Example 1* except that the plan determines the early retirement benefit by applying the same reduction factors under paragraph (e)(3) of this section to the base and excess benefit percentages. Furthermore, if an employee terminates employment at or after age 55 with 30 or more years of service, the plan provides that the base benefit percentage of 1 percent is not reduced. Although the excess early retirement benefit is provided on different terms than the base early retirement benefit, the plan satisfies this paragraph (f) because the terms used to determine the base early retirement benefit produce an early retirement of inherently equal or greater value than the early retirement benefit that would be produced under the terms used to determine the excess benefit, right, or feature.

Example 3. Plan N is an offset plan that provides a normal retirement benefit of 2 percent of average annual compensation, minus 0.65 percent of final average compensation up to the offset level, for each year of service up to 35. In determining the qualified joint and survivor ("QJSA") form of the normal retirement benefit, the plan applies a factor of 80 percent to the gross benefit percentage and a factor of 100 percent to the offset percentage. Thus, the QJSA form is 1.6 percent of average annual compensation, minus 0.65 percent of final average compensation up to the offset level, for each year of service up to 35. The plan violates this paragraph (f) because the gross QJSA form is not provided on the same terms as the terms used to determine the offset applied to the QJSA, nor does it produce a QJSA benefit that is of inherently equal or greater value than the QJSA benefit that would be produced under the terms used to determine the offset under the plan.

Example 4. Plan O is a defined benefit excess plan that provides a normal retirement benefit of 1 percent of average annual compensation up to the integration level, plus 1.65 percent of average annual compensation above the integration level, for each year of service up to 35. The

plan also provides a single sum optional form of benefit determined by applying a single interest rate and mortality assumption to the entire normal retirement benefit. The plan satisfies this paragraph (f) because the excess optional form is provided on the same terms as the base optional form. The plan would also satisfy this paragraph (f) if it used a lower interest rate to determine the base optional form than used to determine the excess optional form because the lower interest rate would produce an optional form of inherently equal or greater value than the optional form produced by using the same interest rate.

Example 5. Plan R is a defined benefit excess plan that provides a normal retirement benefit of 1 percent of average annual compensation up to the integration level, plus 1.65 percent of average annual compensation above the integration level, for each year of service up to 35. If an employee continues to work after normal retirement age, the plan provides that the employee receives credit for additional years of service up to the service limit of 35. The plan also provides that the disparity provided under the plan will increase as permitted under paragraph (e) of this section for benefits commencing after social security retirement age. However, the plan does not provide an increase in the base benefit percentage to reflect the fact that the employee has delayed commencement of benefits past normal retirement age. Thus, for example, for an employee at age 68, the plan provides a benefit of 1 percent of average annual compensation up to the integration level, plus 1.86 percent of average annual compensation above the integration level, for each year of service up to 35. The plan violates this paragraph (f) because the excess benefit provided for an employee after normal retirement age is not provided on the same terms as the base benefit, nor do the terms used to determine the base benefit produce a benefit of inherently equal or greater value than the benefit that would be produced under the terms used to determine the excess benefit.

Example 6. Plan Q is an offset plan that provides a normal retirement benefit of 2 percent of average annual compensation, minus 0.65 percent of final average compensation up to the offset level, for each year of service up to 35. In accordance with paragraph (e) of this section, the plan reduces the offset percentage under the plan for early retirement and provides a benefit at age 55 of 2 percent of average annual compensation, minus 0.325 percent of final average compensation up to the offset level, for each year of service up to 35. However, the early retirement benefit does not meet this paragraph (f) because an employee's gross benefit percentage is not reduced for early retirement.

Example 7. The facts are the same as in *Example 6* except that the plan reduces the gross benefit percentage for early retirement at age 55 to 1.675 percent. Because the gross benefit percentage is reduced by 0.325 percent (from 2.0 percent to 1.675 percent), the same percentage point reduction made in the offset percentage (from 0.65 percent to 0.325 percent), the early retirement benefit meets this paragraph (f).

(g) ***No reductions in 0.75-percent factor for ancillary benefits.*** For purposes of applying the maximum excess allowance or the maximum offset allowance under paragraph (b)(2) or (3) of this section, no reduction is made to the 0.75-percent factor merely because the plan provides disparity in qualified disability benefits (within the meaning of section 411(a)(9)) or preretirement death benefits and the relevant benefits are payable before an employee's social security retirement age.

(h) ***Benefits attributable to employee contributions not taken into account.*** Benefits attributable to employee contributions to a defined benefit plan are not taken into account in determining whether the disparity provided under a defined benefit excess plan or an offset plan exceeds the maximum permitted disparity described in paragraph (b) of this section. See § 1.401(a)(4)-6(b) for methods of determining the

employer-provided benefit under a plan that includes employee contributions not allocated to separate accounts (i.e., a contributory DB plan), including § 1.401(a)(4)-6(b)(2)(iii)(B) for adjustments to the base and excess benefit percentages or the gross benefit percentage under a section 401(l) plan. If, after adjustment, the employee's base benefit percentage or gross benefit percentage (whichever is applicable) is less than zero, such percentage is deemed to be zero for purposes of the maximum excess allowance or maximum offset allowance under paragraph (b)(2) or (3) of this section.

(i) ***Multiple integration levels*** [Reserved]

(j) ***Additional rules.*** The Commissioner may, in revenue rulings, notices or other documents of general applicability, prescribe additional rules as may be necessary or appropriate to carry out the purposes of this section, including updated tables under paragraphs (d) and (e) of this section providing for reductions in the 0.75-percent factor in the maximum excess allowance and in the maximum offset allowance and rules in paragraph (h) of this section for determining the portion of an employee's benefit attributable to employee contributions.

[T.D. 8359, 56 FR 47622, Sept. 19, 1991; 57 FR 10818, 10819, 10951, 10952, Mar. 31, 1992, as amended by T.D. 8486, 58 FR 46832, Sept. 3, 1993]

§ 1.401(l)-4 Special rules for railroad plans.

(a) ***In general.*** Section 401(l)(6) provides that, in the case of a plan maintained by a railroad employer that covers employees who are entitled to benefits under the Railroad Retirement Act of 1974, in determining whether such a plan satisfies section 401(l), rules similar to the rules under section 401(l) apply and such rules take into account the employer-derived portion of tier 2 and supplemental annuity benefits provided under the railroad retirement system. In general, for purposes of determining whether a defined contribution plan or a defined benefit plan maintained by a railroad employer and covering employees described in te preceding sentence, satisfies section 401(l), the employer-derived portion of an employee's tier 2 benefits and supplementary annuity benefits under the Railroad Retirement Act of 1974 are treated as though such benefits were provided by the railroad employer under a qualified plan. Paragraph (b) of this section contains rules for defined contribution plans. Paragraph (c) of this section contains rules for defined benefit excess plans. Paragraph (d) of this section contains rules for offset plans. Paragraph (e) of this section contains definitions and additional rules of application.

(b) ***Defined contribution plans*** —

(1) ***In general.*** A defined contribution plan maintained by a railroad employer satisfies section 401(l) and § 1.401(l)-2 for a plan year only if the plan satisfies paragraph (b)(2) or (b)(3) of this section for the plan year.

(2) ***Single integration level method*** —

(i) ***In general.*** A plan satisfies this paragraph (b)(2) if—

(A) The plan specifies a single integration level for all employees that does not exceed the railroad retirement taxable wage base in effect as of the beginning of the plan year,

(B) The plan uses the same base contribution percentage and the same excess contribution percentage for all employees, and

(C) The excess contribution percentage does not exceed the sum of 11.4 percentage points and the base contribution percentage.

(ii) ***Definitions.*** The following definitions govern for purposes of this paragraph (b)(2).

(A) ***Base contribution percentage*** means the rate at which employer contributions are allocated to the account of an employee under the plan with respect to the employee's plan year compensation at or below the railroad retirement taxable wage base (expressed as a percentage of such plan year compensation).

(B) ***Excess contribution percentage*** means the rate at which employer contributions are allocated to the account of an employee under the plan with respect to the employee's plan year compensation above the railroad retirement taxable wage base (expressed as a percentage of such plan year compensation).

(3) ***Two integration level method*** —

(i) ***In general.*** A plan satisfies this paragraph (b)(3) if—

(A) The plan specifies two integration levels for all employees, equal to the railroad retirement taxable wage base in effect as of the beginning of the plan year and the taxable wage base in effect as of the beginning of the plan year, and

(B) The plan satisfies paragraphs (b)(3) (ii) and (iii) of this section.

(ii) ***Total disparity requirement.*** A plan satisfies this paragraph (b)(3)(ii) if—

(A) The plan uses the same base contribution percentage and the same excess contribution percentage for all employees, and

(B) The excess contribution percentage does not exceed the sum of 11.4 percentage points and the base contribution percentage.

(iii) ***Intermediate disparity requirement.*** A plan satisfies this paragraph (b)(3)(iii) if—

(A) The plan uses the same base contribution percentage and the same intermediate contribution percentage for all employees, and

(B) The intermediate contribution percentage does not exceed the sum of 5.7 percentage points and the base contribution percentage.

(iv) ***Definitions.*** The following definitions govern for purposes of this paragraph (b)(3).

(A) ***Base contribution percentage*** means the rate at which employer contributions are allocated to the account of an employee under the plan with respect to the employee's plan year compensation at or below the railroad retirement taxable wage base (expressed as a percentage of such plan year compensation).

(B) ***Intermediate contribution percentage*** means the rate at which employer contributions are allocated to the account of an employee under the plan with respect to the employee's plan year compensation between the railroad retirement taxable wage base and the taxable wage base (expressed as a percentage of such plan year compensation).

(C) ***Excess contribution percentage*** means the rate at which employer contributions are allocated to the account of an employee under the plan with respect to the employee's plan year compensation above the taxable wage base (expressed as a percentage of such plan year compensation).

(c) ***Defined benefit excess plans*** —

(1) ***In general.*** A defined benefit excess plan maintained by a railroad employer satisfies section 401(l) and § 1.401(l)-3 for a plan year only if the plan satisfies paragraph (c)(2) or (c)(3) of this section for the plan year.

(2) ***Single integration level method*** —

(i) ***In general.*** A plan satisfies this paragraph (c)(2) if—

(A) The plan specifies a single integration level for all employees that does not exceed railroad retirement covered compensation,

(B) The plan uses the same base benefit percentage and the same excess benefit percentage for all employees, and

(C) The excess benefit percentage does not exceed the lesser of—

(*1*) Two times the sum of 0.56 percent and the base benefit percentage, or

(*2*) 0.56 percent plus the base benefit percentage plus 0.75 percent.

(ii) ***Definitions.*** The following definitions govern for purposes of this paragraph (c)(2).

(A) ***Base benefit percentage*** means the rate at which employer-provided benefits are determined under the plan with respect to an employee's average annual compensation at or below the employee's railroad retirement covered compensation (expressed as a percentage of such average annual compensation).

(B) ***Excess benefit percentage*** means the rate at which employer-provided benefits are determined under the plan with respect to an employee's average annual compensation above the employee's railroad retirement covered compensation (expressed as a percentage of such average annual compensation).

(3) ***Two integration level method*** —

(i) ***In general.*** A plan satisfies this paragraph (c)(3) for a plan year if—

(A) The plan specifies two integration levels for all employees, equal to each employee's railroad retirement covered compensation and each employee's covered compensation, and

(B) The plan satisfies paragraph (c)(3) (ii) and (iii) of this section.

(ii) ***Employee with lower covered compensation.*** A plan satisfies this paragraph (c)(3)(ii) if, with respect to each employee whose lower integration level is the employee's covered compensation—

(A) The plan uses the same base benefit percentage and the same intermediate benefit percentage for all employees,

(B) The intermediate benefit percentage does not exceed the base benefit percentage by more than the lesser of 0.75 percent or the base benefit percentage,

(C) The plan uses the same intermediate benefit percentage and the same excess benefit percentage for all employees, and

(D) The excess benefit percentage does not exceed the intermediate benefit percentage by more than 0.56 percent.

(iii) ***Employee with lower railroad retirement covered compensation.*** A plan satisfies this paragraph (c)(3)(iii) if, with respect to each employee whose lower integration level is the employee's railroad retirement covered compensation—

(A) The plan uses the same base benefit percentage and the same excess benefit percentage for all employees,

(B) The excess benefit percentage does not exceed the lesser of—

(*1*) Two times the sum of 0.56 percent and the base benefit percentage, or

(*2*) The sum of 0.56 percent plus the base benefit percentage plus 0.75 percent,

(C) The plan uses the same the base benefit percentage and the same intermediate benefit percentage for all employees, and

(D) The intermediate benefit percentage does not exceed the sum of 0.56 percent plus the base benefit percentage.

(iv) ***Definitions.*** The following definitions govern for purposes of this paragraph (c)(3).

(A) ***Base benefit percentage*** means the rate at which employer-provided benefits are determined under the plan with respect to an employee's average annual compensation at or below the lower integration level specified in the plan (expressed as a percentage of such average annual compensation).

(B) ***Intermediate benefit percentage*** means the rate at which employer-provided benefits are determined under the plan with respect to an employee's average annual compensation between the lower and higher integration levels specified in the plan (expressed as a percentage of such average annual compensation).

(C) ***Excess benefit percentage*** means the rate at which employer-provided benefits are determined under the plan with respect to an employee's average annual compensation above the higher integration level specified in the plan (expressed as a percentage of such average annual compensation).

(d) ***Offset plans*** —

(1) ***In general.*** An offset plan maintained by a railroad employer satisfies section 401(l) and § 1.401(l)-3 for a plan year only if—

(i) The plan satisfies § 1.401(l)-3 for the plan year without regard to the offset for the employer-derived portion of tier 2 and supplementary annuity benefits provided under the railroad retirement system, and

(ii) The offset for the employer-derived portion of tier 2 and supplementary annuity benefits provided under the railroad retirement system does not exceed the maximum tier 2 and supplementary annuity offset allowance.

(2) ***Maximum tier 2 and supplementary annuity offset allowance.*** For purposes of paragraph (d)(1) of this section, the maximum tier 2 and supplementary annuity offset allowance for a plan year is equal to 0.56 percent of the employee's railroad retirement covered compensation for the plan year.

(e) ***Additional rules*** —

(1) ***Definitions.*** The following definitions govern for purposes of this section.

(i) ***Railroad retirement taxable wage base*** means the applicable base, as determined under section 3231(e)(2)B)(ii), for purposes of the tax under section 3221(b) (the tier 2 tax).

(ii) ***Railroad retirement covered compensation*** for an employee means 12 multiplied by the average of the 60 highest monthly railroad retirement taxable wage bases in effect for the employee's period of employment. The monthly railroad retirement taxable wage base is determined by dividing the railroad retirement taxable wage base for the calendar year in which the month occurs by 12. An employee's railroad retirement covered compensation for the plan year is determined as of the beginning of the plan year. A plan must provide that an employee's railroad retirement covered compensation is automatically adjusted for each plan year. See § 1.401(l)-1(b) for rules relating to prohibited decreases in an employee's accrued benefit within the meaning of section 411(d)(6) or section 411(b)(1)(G).

(2) ***Adjustments to 0.75-percent factor.*** The 0.75-percent factor in the maximum excess allowance and in the maximum offset allowance is subject to the reductions prescribed in § 1.401(l)-3 (d) and (e), except that in the case of an employee with at least 30 years of service with a railroad employer, the following tables are substituted for Tables I through III contained in § 1.401(l)-3(e)(3).

TABLE I
[SOCIAL SECURITY RETIREMENT AGE 67]

Age at which benefits commence	Annual factor in maximum excess allowance and maximum offset allowance (percent)
66	0.750
65	0.750
64	0.750
63	0.750
62	0.750
61	0.525
60	0.525
59	0.508
58	0.490
57	0.472
56	0.433

Age at which benefits commence	Annual factor in maximum excess allowance and maximum offset allowance (percent)
55	0.398

TABLE II
[SOCIAL SECURITY RETIREMENT AGE 66]

Age at which benefits commence	Annual factor in maximum excess allowance and maximum offset allowance (percent)
65	0.750
64	0.750
63	0.750
62	0.750
61	0.563
60	0.563
59	0.544
58	0.525
57	0.506
56	0.488
55	0.447

TABLE III
[SOCIAL SECURITY RETIREMENT AGE 65]

Age at which benefits commence	Annual factor in maximum excess allowance and maximum offset allowance (percent)
64	0.750
63	0.750
62	0.750
61	0.600
60	0.600
59	0.580
58	0.560
57	0.540

Age at which benefits commence	Annual factor in maximum excess allowance and maximum offset allowance (percent)
56	0.520
55	0.500

(3) *Adjustments to 0.56-percent factor.* The 0.56-percent factor for defined benefit excess plans and offset plans under paragraphs (c) and (d) of this section respectively is subject to the reductions prescribed in § 1.401(l)-3 (d) and (e), except that, for purposes of applying this paragraph (e)(3)—

(i) "Railroad retirement covered compensation" is substituted for "covered compensation" in § 1.401(l)-3(d),

(ii) The reductions under § 1.401(l)-3(d) are made by multiplying the 0.56-percent factor by the ratio of the applicable factor from the table in § 1.401(l)-(3)(d)(9)(iv)(A) to 0.75, and

(iii) The following tables are substituted for Tables I through III set forth in § 1.401(l)-3(e)(3).

(A) Tables applicable to 0.56% factor for employees covered by tier 2 of railroad retirement with 30 or more years of railroad service.

TABLE I
[SOCIAL SECURITY RETIREMENT AGE 67]

Age at which benefits commence	Annual factor in maximum excess allowance and maximum offset allowance (percent)
66	0.560
65	0.560
64	0.560
63	0.560
62	0.560
61	0.560
60	0.560
59	0.541
58	0.523
57	0.504
56	0.462

Age at which benefits commence	Annual factor in maximum excess allowance and maximum offset allowance (percent)
55	0.425

TABLE II
[SOCIAL SECURITY RETIREMENT AGE 66]

Age at which benefits commence	Annual factor in maximum excess allowance and maximum offset allowance (percent)
65	0.560
64	0.560
63	0.560
62	0.560
61	0.560
60	0.560
59	0.541
58	0.523
57	0.504
56	0.485
55	0.445

TABLE III
[SOCIAL SECURITY RETIREMENT AGE 65]

Age at which benefits commence	Annual factor in maximum excess allowance and maximum offset allowance (percent)
64	0.560
63	0.560
62	0.560
61	0.560
60	0.560
59	0.541
58	0.523
57	0.504

Age at which benefits commence	Annual factor in maximum excess allowance and maximum offset allowance (percent)
56	0.485
55	0.467

(B) Tables applicable to 0.56% factor for employees covered by tier 2 of railroad retirement with less than 30 years of railroad service.

TABLE I
[SOCIAL SECURITY RETIREMENT AGE 67]

Age at which benefits commence	Annual factor in maximum excess allowance and maximum offset allowance (percent)
66	0.523
65	0.485
64	0.448
63	0.420
62	0.392
61	0.379
60	0.366
59	0.353
58	0.340
57	0.327
56	0.300
55	0.275

TABLE II
[SOCIAL SECURITY RETIREMENT AGE 66]

Age at which benefits commence	Annual factor in maximum excess allowance and maximum offset allowance (percent)
65	0.523
64	0.485
63	0.448

Age at which benefits commence	Annual factor in maximum excess allowance and maximum offset allowance (percent)
62	0.420
61	0.392
60	0.378
59	0.364
58	0.350
57	0.336
56	0.322
55	0.295

TABLE III
[SOCIAL SECURITY RETIREMENT AGE 65]

Age at which benefits commence	Annual factor in maximum excess allowance and maximum offset allowance (percent)
64	0.523
63	0.485
62	0.448
61	0.418
60	0.388
59	0.373
58	0.358
57	0.343
56	0.329
55	0.314

(4) ***Overall permitted disparity.*** The overall permitted disparity rules of § 1.401(l)-5 apply to employees who benefit under a plan maintained by a railroad employer.

[T.D. 8359, 56 FR 47632, Sept. 19, 1991; 57 FR 10819, 10952, Mar. 31, 1992]

§ 1.401(l)-5 Overall permitted disparity limits.

(a) *Introduction* —

(1) ***In general.*** The maximum excess allowance and maximum offset allowance limit the disparity that can be provided under a plan for a plan year. The overall permitted disparity rules apply to limit the disparity provided for a plan year if an employee benefits under more than one plan maintained by

the employer (the "annual overall permitted disparity limit") and to limit the disparity provided for an employee's total years of service, either in a single plan or in more than one plan of the employer (the "cumulative overall permitted disparity limit"). The overall permitted disparity rules take into account the disparity provided under a section 401(l) plan and the permitted disparity imputed under a plan that satisfies section 401(a)(4) by relying on § 1.401(a)(4)-7. A plan that is not a section 401(l) plan is generally deemed to impute permitted disparity under § 1.401(a)(4)-7 unless established otherwise. Paragraph (b) of this section provides rules on the annual overall permitted disparity limit. Paragraph (c) of this section provides rules on the cumulative overall permitted disparity limit.

(2) ***Plan requirements.*** In order to satisfy section 401(l), a plan must provide that the overall permitted disparity limits may not be exceeded and must specify how employer-provided contributions or benefits under the plan are adjusted, if necessary, to satisfy the overall permitted disparity limits. Any adjustments made to satisfy the overall permitted disparity limits must be made in a uniform manner for all employees.

(3) ***Plans taken into account.*** For purposes of this section, all plans of the employer are taken into account. In addition, all plans of any other employer are taken into account for all periods of service with the other employer for which the employee receives credit for purposes of benefit accrual under any plan of the current employer.

(b) ***Annual overall permitted disparity limit*** —

(1) ***In general.*** If, in the plan year, an employee benefits under more than one plan, the annual overall permitted disparity limit is satisfied only if the employee's total annual disparity fraction, as defined in paragraph (b)(2) of this section, does not exceed one. Paragraphs (b)(3) through (b)(8) of this section explain the determination of an employee's annual disparity fractions. Paragraph (b)(9) of this section provides examples.

(2) ***Total annual disparity fraction.*** An employee's total annual disparity fraction is the sum of the employee's annual disparity fractions, as defined in paragraphs (b)(3) through (b)(7) of this section. An employee's total annual disparity fraction is determined as of the end of the current plan year, based on the employee's annual disparity fractions under all plans with plan years ending in the current plan year.

(3) ***Annual defined contribution plan disparity fraction.*** For a plan year, the annual defined contribution plan disparity fraction for an employee benefiting under a defined contribution plan that is a section 401(l) plan is a fraction—

(i) The numerator of which is the disparity provided under the plan for the plan year, and

(ii) The denominator of which is the maximum excess allowance under § 1.401(l)-2(b)(2) for the plan year.

(4) ***Annual defined benefit excess plan disparity fraction.*** For a plan year, the annual defined benefit excess plan disparity fraction for an employee benefiting under a defined benefit excess plan that is a section 401(l) plan is a fraction—

(i) The numerator of which is the disparity provided under the plan for the plan year, and

(ii) The denominator of which is the maximum excess allowance under § 1.401(l)-3(b)(2) for the plan year.

(5) ***Annual offset plan disparity fraction*** —

(i) ***In general.*** For a plan year, the annual offset plan disparity fraction for an employee benefiting under an offset plan that is a section 401(l) plan is a fraction—

(A) The numerator of which is the disparity provided under the plan for the plan year; and

(B) The denominator of which is the maximum offset allowance under § 1.401(l)-3(b)(3) for the plan year.

(ii) ***PIA offset plans.*** In the case of an offset plan that applies an offset of a specified percentage of the employee's PIA, as permitted under § 1.401(l)-3(c)(2)(ix), the numerator of the annual offset plan disparity fraction is the offset percentage used in the section 401(l) overlay under the plan.

(6) ***Annual imputed disparity fraction.*** For a plan year, the annual imputed disparity fraction for an employee benefiting under a plan that imputes permitted disparity with respect to the employee under § 1.401(a)(4)-7 is one.

(7) ***Annual nondisparate fraction.*** For a plan year, the annual nondisparate fraction for an employee benefiting under a plan that neither is a section 401(l) plan nor imputes permitted disparity under § 1.401(a)(4)-7 is zero.

(8) ***Determination of fraction*** —

(i) ***General rule.*** A separate annual disparity fraction is generally determined for each plan under which the employee benefits. Thus, for example, if two plans are aggregated and treated as a single plan for purposes of section 401(a)(4), a single annual disparity fraction applies to the aggregated plan.

(ii) ***Multiple formulas.*** If a plan provides an allocation or benefit equal to the sum of two or more formulas, each formula is considered a separate plan for purposes of this section. If a plan provides an allocation or benefit equal to the greater of two or more formulas, an annual disparity fraction is calculated for the employee under each formula and the largest of the fractions is the employee's annual disparity fraction under the plan.

(iii) ***Offset arrangements*** —

(A) ***In general.*** If an employee benefits under two plans taken into account under paragraph (a)(3) of this section as described in paragraph (b)(8)(iii)(B) or (C) of this section, the employee's annual disparity fraction under both plans is the larger of the annual disparity fractions calculated separately under each plan.

(B) ***Defined benefit plans.*** The employee's employer-provided accrued benefit under a defined benefit plan is offset by the employee's total employer-provided accrued benefit under another defined benefit plan or by the actuarial equivalent (as defined in § 1.401(a)(4)-12) of the employee's total account balance under a defined contribution plan that is attributable to employer contributions.

(C) ***Defined contribution plans.*** The amount allocated to the employee's account under a defined contribution plan is offset by the total amount allocated to the employee's account under another defined contribution plan.

(iv) ***Applicable percentages.*** The disparity provided under a plan is determined on the base and excess percentages under an excess plan and the offset percentage under an offset plan, regardless of whether the employee's plan year or average annual compensation exceeds the integration or offset level under the plan.

(v) ***Fractional accrual plans.*** If a section 401(l) plan determines each employee's accrued benefit under the fractional accrual method of section 411(b)(1)(C), the numerator of an employee's annual disparity fraction is based on the disparity provided in the benefit accrued for the employee for the plan year.

(9) ***Examples.*** The following examples illustrate this paragraph (b). Except as otherwise provided, each plan is a section 401(l) plan.

> *Example 1.* (a) Employee A benefits for the plan year under a defined contribution excess plan, Plan X, and a defined benefit excess plan, Plan Y, of the employer. Plans X and Y have the same plan year. Employee A benefits under no other plan of the employer for the plan year of any other plan ending in the plan year of Plans X and Y. Plan X provides a base contribution percentage of 5 percent and an excess contribution percentage of 7 percent, thus providing Employee A with disparity of 2 percent for the plan year. The maximum excess allowance for the plan year under Plan X is 5 percent. Plan Y provides a base benefit percentage of 1 percent and an excess benefit percentage of 1.35 percent, thus providing Employee A with disparity of 0.35 percent for the plan year. The maximum excess allowance for the plan year under Plan Y is 0.75 percent.
> (b) Employee A's annual defined contribution plan disparity fraction under Plan X for the plan year is 0.4 (2 percent divided by 5 percent). Employee A's annual defined benefit excess plan disparity fraction under Plan Y for the plan year is 0.47 (0.35 percent divided by 0.75 percent). Employee A's total annual disparity fraction is the sum of 0.4 and 0.47 or 0.87. Because Employee A's total annual disparity fraction does not exceed one, the plans satisfy the annual overall permitted disparity limit with respect to Employee A for the plan year.

> *Example 2.* (a) The facts are the same as in *Example 1,* except that Plan Y is a defined contribution plan, rather than a defined benefit plan. Plan X and Plan Y cover the same employees and are identical in their terms except for the base and excess contribution percentages provided under the plans. Plan Y provides a base contribution percentage of 3 percent and an excess contribution percentage of 6 percent, thus providing Employee A with disparity of 3 percent for the plan year. The maximum excess allowance for the plan year under Plan Y is 3 percent.
> (b) Employee A's annual defined contribution plan disparity fraction under Plan X for the plan year is 0.4 (2 percent divided by 5 percent). Employee A's annual defined contribution plan disparity fraction under Plan Y for the plan year is 1 (3 percent divided by 3 percent). Because Employee A's total annual disparity fraction (the sum of 0.4 and 1 or 1.4) exceeds one, the plans do not satisfy the annual overall permitted disparity requirements with respect to Employee A for the plan year.
>
> (c) Plan X and Plan Y are aggregated for purposes of section 401(a)(4) and form a single section 401(l) plan. Under the plan, the base contribution percentage is 8 percent (5 percent plus 3 percent), and the excess contribution percentage is 13 percent (7 percent plus 6

percent). A single annual defined contribution plan disparity fraction is determined for Employee A for the plan year, the numerator of which is the disparity of 5 percent provided under the plan (13 percent minus 8 percent), and the denominator of which is 5.7 percent, the maximum excess allowance that applies to the plan. Because Employee A's only annual disparity fraction of 0.88 (5 percent divided by 5.7 percent) does not exceed one, Employee A's total annual disparity fraction also does not exceed one. The plan thus satisfies the annual overall permitted disparity limit with respect to Employee A for the plan year.

Example 3. Assume the same facts as in *Example 2,* except that Plan X and Plan Y use different integration levels. Therefore, when Plan X and Plan Y are aggregated to form a single plan for purposes of section 401(a)(4), the single plan does not satisfy section 401(l). In applying the general test of § 1.401(a)(4)-2(c), the plan imputes disparity under § 1.401(a)(4)-7. Employee A's only annual disparity fraction is the annual imputed disparity fraction of one. Employee A's total annual disparity fraction is also one, and the plan satisfies the annual overall permitted disparity limit with respect to Employee A for the plan year.

Example 4. (a) Employee B participates in two plans: Plan M, which is a section 401(l) plan, and Plan N, which is subject to the general test under § 1.401(a)(4)-3(c). Plan M provides that the disparity provided an employee for the plan year will be reduced to the extent necessary to satisfy the annual overall permitted disparity limits. The employer wishes to impute permitted disparity under § 1.401(a)(4)-7 in order for Plan N to satisfy section 401(a)(4). Employee B's imputed disparity fraction under Plan N is therefore one, and Plan M provides no disparity for Employee B for the plan year. As a result, Plan M provides disparity that is neither uniform nor deemed uniform under § 1.401(l)-3(c); Plan M therefore does not satisfy section 401(l).
(b) Assume instead that Plan M provides that the annual overall permitted disparity limits must be satisfied without reducing the disparity provided for an employee under Plan M, thus requiring a reduction in the employee's annual disparity fraction under another plan. In that case, the disparity provided under Plan M would be uniform for the plan year and Plan M would continue to satisfy section 401(l). However, imputation of permitted disparity with respect to Employee B would not be allowed under Plan N.

(c) ***Cumulative permitted disparity limit*** —

(1) ***In general*** —

(i) ***Employees who benefit under defined benefit plans.*** In the case of an employee who has benefited under one or more defined benefit plans for a plan year described in paragraph (c)(1)(v) of this section, the cumulative permitted disparity limit is satisfied if the employee's cumulative disparity fraction, as defined in paragraph (c)(2) of this section, does not exceed 35.

(ii) ***Employees who do not benefit under defined benefit plans.*** In the case of an employee who has not benefited under a defined benefit plan for any plan year described in paragraph (c)(1)(v) of this section, the cumulative permitted disparity limit is satisfied.

(iii) ***Certain plan years disregarded.*** For purposes of this paragraph (c), an employee is not treated as benefiting under a defined benefit plan for a plan year described in paragraph (c)(1)(v) of this section if the employer can establish that for that plan year the defined benefit plan was not a section 401(l) plan and did not impute permitted disparity under § 1.401(a)(4)-7.

(iv) ***Determination of type of plan.*** For purposes of this paragraph (c), a target benefit plan that relies on the special rule of § 1.401(a)(4)-8(b)(3) to satisfy section 401(a)(4) and a DB/DC plan within the meaning of § 1.401(a)(4)-9(a) are treated as defined benefit plans. Similarly, a cash balance plan that relies on the special rule of § 1.401(a)(4)-8(c)(3) to satisfy section 401(a)(4) is treated as a defined contribution plan.

(v) ***Applicable plan years.*** In applying paragraphs (c)(1) (i), (ii), and (iii) of this section, for purposes of determining whether an employee benefits under a defined benefit plan, the applicable plan years are all plan years that begin on or after the regulatory effective date, as set forth in § 1.401(l)-6(b), or, in the case of governmental plans, as set forth in § 1.401(a)(4)-13(b).

(vi) ***Transition rule for defined contribution plans.*** A defined contribution plan is deemed to satisfy the cumulative permitted disparity limit for the first plan year to which these regulations apply, as set forth in § 1.401(l)-6(b), or, in the case of governmental plans, as set forth in § 1.401(a)(4)-13(b).

(2) ***Cumulative disparity fraction.*** An employee's cumulative disparity fraction is the sum of the employee's total annual disparity fractions, as defined in paragraph (b)(2) of this section, attributable to the employee's total years of service under all plans.

(3) ***Determination of total annual disparity fractions for prior years.*** For each of the employee's years of service credited as of the end of the last plan year beginning before January 1, 1989, not to exceed 35, under all plans as of that time that are taken into account under paragraph (a)(3) of this section (whether or not terminated), the employee's total annual disparity fraction is one. Therefore, if, before the first plan year beginning on or after January 1, 1989, an employee never participated in or benefited under any plan taken into account under paragraph (a)(3) of this section, the employee's total annual disparity fractions are determined without regard to this paragraph (c)(3). An employer may apply the rule in this paragraph (c)(3) with respect to all employees, using a year (including the current year) that is chosen by the employer and is later than 1989. Thus, for example, in lieu of calculating annual disparity fractions for all plan years, the employer may assume that the full disparity limit has been used in each prior plan year for which an employee has been credited with a year of service.

(4) ***Special rules for greater of formulas and offset arrangements —***

(i) ***Greater of formulas —***

(A) ***In general.*** A defined benefit plan that is a section 401(l) plan and that provides a benefit equal to the greater of the benefits determined under two or more formulas is deemed to satisfy the cumulative permitted disparity limit with respect to an employee if each of the requirements in paragraphs (c)(4)(i) (B) and (C) of this section is satisfied. For this purpose, a plan that uses a fresh-start formula that determines the accrued benefit as the greater of two amounts under § 1.401(a)(4)-13(c)(4) (ii) or (iii) provides a benefit equal to the greater of the benefits determined under two or more formulas.

(B) ***Separate satisfaction by formulas.*** Each formula under the plan would satisfy the cumulative permitted disparity limit if it were the only formula under the plan. In the case of a current formula that applies to the employee's total years of service (as, for example, under § 1.401(a)(4)-13(c)(4) (ii)(B) or (iii)(B)), for purposes of determining whether that formula would satisfy the cumulative permitted disparity limit if it were the only formula under the plan, the special rule for prior years under paragraph (c)(3) of this section may be disregarded.

(C) ***Single plan.*** The employee has never benefited under another plan taken into account under paragraph (a)(3) of this section that is a section 401(l) plan or that satisfies section 401(a)(4) by relying on § 1.401(a)(4)-7. For this purpose, if the benefit under the plan is offset in an offset arrangement described in paragraph (b)(8)(iii)(B) of this section, the other plan is disregarded. In addition, a plan does not fail the requirements of this paragraph (c)(4)(i)(C) merely because the employee benefits under another defined benefit plan, provided that—

(*1*) With respect to each benefit formula under the plan, no years of service taken into account under that benefit formula are taken into account under a benefit formula of the other plan; and

(*2*) Paragraph (c)(4)(i)(B) of this section would be satisfied if the plans were treated as a single plan that provided a benefit equal to the greater of the benefits provided under two or more formulas. For this purpose, a formula consists of the sum of a formula for the years of service taken into account under one plan and a formula for the years of service taken into account under the other plan. Thus, each possible combination of the formulas under the plans must satisfy paragraph (c)(4)(i)(B) of this section.

(ii) ***Offset arrangements*** —

(A) ***In general.*** If a defined benefit plan is a section 401(l) plan and the benefit under the plan (the gross benefit plan) is offset by the benefit under another plan (the offsetting plan) in an offset arrangement described in paragraph (b)(8)(iii)(B) of this section, the gross benefit plan is deemed to satisfy the cumulative permitted disparity limit with respect to an employee if each of the requirements in paragraphs (c)(4)(ii) (B) and (C) of this section is satisfied.

(B) ***Separate satisfaction by plans.*** This requirement is satisfied if the gross benefit plan would satisfy the cumulative disparity limit if no offset applied, and the offsetting plan satisfies the cumulative permitted disparity limit, not taking into account the gross benefit plan.

(C) ***No other plan.*** Except for the plans in the offset arrangement, the employee has never benefited under another plan taken into account under paragraph (a)(3) of this section that is a section 401(l) plan or that satisfies section 401(a)(4) by relying on § 1.401(a)(4)-7. An offset arrangement does not fail the requirements of this paragraph (c)(4)(ii)(C) merely because the employee benefits under another defined benefit plan, provided no years of service taken into account under a benefit formula of any plan in the offset arrangement are also taken into account under a benefit formula of the other plan.

(5) ***Examples.*** The following examples illustrate this paragraph (c). In each example the plan is noncontributory and, unless provided otherwise, is the only plan ever maintained by the employer. Each plan uses a normal retirement age of 65 and contains no provision that would require a reduction in the 0.75-percent factor under § 1.401(l)-3(b)(2) or (3). Each example discusses the benefit formula applicable to an employee who has a social security retirement age of 65.

Example 1. Plan M is a defined benefit excess plan that provides a normal retirement benefit of 1 percent of average annual compensation up to covered compensation, plus 1.75 percent of average annual compensation above covered compensation, for each year of service without limit. The disparity provided under the plan for the plan year is 0.75 percent, the excess benefit percentage of 1.75 percent minus the base benefit percentage of 1 percent. The maximum excess allowance for the plan year is 0.75 percent. Thus, each employee's annual defined benefit excess plan disparity fraction under the plan for each plan year is one. Because the plan contains no limit on the years of service taken into account under the plan, the sum of the total annual disparity fractions for a potential employee with more than 35 years of service will exceed 35. In addition, the plan does not provide that the overall permitted disparity limits may not be exceeded as required by paragraph (a)(2) of this section. The plan therefore does not satisfy the cumulative permitted disparity limit of this paragraph (c).

Example 2. Plan N is an offset plan that provides a normal retirement benefit of 2 percent of average annual compensation, minus 0.75 percent of final average compensation up to the lesser of covered compensation and average annual compensation, for each year of service up to 35. The disparity provided under the plan for the plan year is 0.75 percent, the offset percentage. The maximum offset allowance for the plan year is 0.75 percent. Thus, each employee's annual offset plan disparity fraction under the plan for each plan year is one. Because the plan limits the years of service taken into account under the plan to 35, the sum of the total annual disparity fractions for an employee cannot exceed 35. The plan therefore satisfies the cumulative permitted disparity limit of this paragraph (c).

Example 3. Plan O is a defined benefit excess plan that provides a normal retirement benefit of 0.75 percent of average annual compensation up to covered compensation, plus 1.25 percent of average annual compensation above covered compensation, for each year of service up to 45. The disparity provided under the plan for the plan year is 0.5 percent, the excess benefit percentage of 1.25 percent minus the base benefit percentage of 0.75 percent. The maximum excess allowance for the plan year is 0.75 percent. Thus, each employee's annual defined benefit excess plan disparity fraction under the plan for each plan year is 0.67 (0.5 percent divided by 0.75 percent). Because the plan limits the years of service taken into account under the plan to 45, the sum of the total annual disparity fractions for an employee cannot exceed 30 (0.67 × 45). The plan therefore satisfies the cumulative permitted disparity limit of this paragraph (c).

Example 4. (a) Plan P is a defined contribution excess plan. Plan P provides a base contribution percentage of 6 percent and an excess contribution percentage of 11.7 percent, thus providing disparity of 5.7 percent for the plan year. Because the maximum excess allowance for each plan year under Plan P is 5.7 percent, each employee's annual defined contribution plan disparity fraction under Plan P for each plan year is one. Plan Q is a defined benefit excess plan maintained by the same employer. Plan Q provides a base benefit percentage of 1 percent and an excess benefit percentage of 1.75 percent

for each year of service up to 35, thus providing disparity of 0.75 percent for the plan year. Because the maximum excess allowance for each plan year under Plan Q is 0.75 percent, each employee's annual defined benefit excess plan disparity fraction under Plan Q for each plan year is one.
(b) Employee A benefits under Plan P for the 1980 through the 1994 plan years. The sum of Employee A's total annual disparity fractions under Plan P is 15. (Under paragraph (c)(3)(i) of this section, Employee A's annual disparity fraction for each year of service as of the end of the 1988 plan year is one.) As of the 1995 plan year, Employee A no longer benefits under Plan P and begins to benefit under Plan Q for the first time. In order to satisfy the cumulative permitted disparity limit of this paragraph (c), Plan Q must provide that no disparity will be provided if the sum of an employee's total annual disparity fractions reaches 35, taking into account the employee's annual defined contribution plan disparity fractions under Plan P as well as the employee's annual defined benefit excess plan disparity fractions under Plan Q. Thus, after Employee A has benefited under Plan Q for 20 years, Plan Q may not provide any disparity in additional benefits accrued for Employee A.

Example 5. (a) Plan O is a noncontributory defined benefit excess plan. Plan O provides an employee whose social security retirement age is 65 with the greater of the benefits determined under two formulas. The first formula provides a benefit of 1 percent of average annual compensation up to covered compensation, plus 1.75 percent of average annual compensation above covered compensation, for each year of service up to 35. The second formula provides a benefit of 1 percent of average annual compensation up to covered compensation, plus 1.6 percent of average annual compensation above covered compensation, for each year of service up to 40.
(b) Under paragraph (b)(4) of this section, an employee's annual defined benefit excess plan fraction for each of the 35 years under the first formula is 0.75/0.75 or one, and an employee's annual defined benefit excess plan fraction for each of the 40 years under the second formula is 0.6/0.75 or 0.8. Under paragraph (b)(8)(ii) of this section, an employee's annual defined benefit excess plan fraction (and total annual disparity fraction because the employee benefits only under Plan O) for the plan year is the larger fraction under the two formulas or one. Therefore, after 35 years, the employee has a cumulative disparity fraction of 35. The disparity provided under the second formula for years of service after 35 thus exceeds the cumulative permitted disparity limit unless the plan qualifies for the special rule in paragraph (c)(4)(i) of this section.

(c) Assume the condition in paragraph (c)(4)(i)(C) of this section is satisfied because no employee has benefited under another plan taken into account under paragraph (a)(3) of this section. In addition, the largest cumulative disparity fraction possible under the first formula is 35 times one or 35, and the largest cumulative disparity fraction possible under the second formula is 40 times 0.8 or 32. Thus, the requirement of paragraph

(c)(4)(i)(B) of this section is also satisfied because each formula would satisfy the cumulative permitted disparity limit if it were the only formula under the plan. Under paragraph (c)(4)(i) of this section, the plan is deemed to satisfy the cumulative permitted disparity limit with respect to an employee whose social security retirement age is 65.

(d) ***Additional rules.*** The Commissioner may prescribe additional rules under this section as the Commissioner considers appropriate. Additional rules may include (without being limited to) rules for computing the fractions described in this section with respect to terminated plans, rules for applying the overall permitted disparity limits to employees who benefit under plans maintained by railroad employers, and rules for determining which plans do not satisfy section 401(l) if the overall permitted disparity limits are exceeded.

[T.D. 8359, 56 FR 47634, Sept. 19, 1991; 57 FR 10819, 10952, Mar. 31, 1992, as amended by T.D. 8486, 58 FR 46833, Sept. 3, 1993]

§ 1.401(l)-6 Effective dates and transition rules.

(a) ***Statutory effective date*** —

(1) ***In general.*** Except as otherwise provided in paragraph (a)(2) of this section, section 401(a)(5)(C) is effective for plan years beginning on or after January 1, 1989, and section 401(l) is effective with respect to plan years, and benefits attributable to plan years, beginning on or after January 1, 1989. The preceding sentence is applicable to a plan without regard to whether the plan was in existence as of a particular date.

(2) ***Collectively bargained plans.***

(i) In the case of a plan maintained pursuant to 1 or more collective bargaining agreements between employee representatives and 1 or more employers ratified before March 1, 1986, sections 401(a)(5) and 401(l) are applicable for plan years beginning on or after the later of—

(A) January 1, 1989; or

(B) The date on which the last of such collective bargaining agreements terminates (determined without regard to any extension of any such agreement occurring on or after March 1, 1986). However, notwithstanding the preceding sentence, sections 401(a)(5) and 401(l) apply to plans described in this paragraph (a)(2) no later than the first plan year beginning after January 1, 1991.

(ii) For purposes of paragraph (a)(2)(i)(B) of this section, a change made after October 22, 1986, in the terms or conditions of a collectively bargained plan, pursuant to a collective bargaining agreement ratified before March 1, 1986, is not treated as a change in the terms and conditions of the plan.

(iii) In the case of a collectively bargained plan described in paragraph (a)(2)(i) of this section, if the date in paragraph (a)(2)(i)(B) of this section precedes November 15, 1988, then the date in this paragraph (a)(2) is replaced with the date on which the last of any collective bargaining agreements in effect on November 15, 1988, terminates, provided that the plan complies during this period with a reasonable good faith interpretation of section 401(l).

(iv) Whether a plan is maintained pursuant to a collective bargaining agreement is determined under the principles applied under section 1017(c) of the Employee Retirement Income Security Act of 1974. See H.R. Rep. No. 1280, 93d Cong., 2d Sess. 266 (1974). In addition, a plan is not treated as maintained under a collective bargaining agreement unless the employee representatives satisfy section 7701(a)(46) of the Internal Revenue Code after March 31, 1984. See § 301.7701-17T of this chapter for other requirements for a plan to be considered to be collectively bargained.

(b) ***Regulatory effective date*** —

(1) ***In general.*** Except as otherwise provided in paragraph (b)(2) of this section, §§ 1.401(l)-1 through 1.401(l)-6 apply to plan years beginning on or after January 1, 1994.

(2) ***Plans of tax-exempt organizations.*** In the case of plans maintained by an organization exempt from income taxation under section 501(a), including plans subject to section 403(b)(12)(A)(i) (nonelective plans), §§ 1.401(l)-1 through 1.401(l)-6 apply to plan years beginning on or after January 1, 1996.

(3) ***Defined contribution plans.*** A defined contribution plan satisfies section 401(l) with respect to a plan year beginning on or after the effective date of these regulations, as set forth in paragraphs (b)(1) and (b)(2) of this section, if it satisfies the applicable requirements of §§ 1.401(l)-1 through 1.401(l)-5 for the plan year.

(4) ***Defined benefit plans.*** A defined benefit excess plan or offset plan satisfies section 401(l) with respect to all plan years, and benefits attributable to all plan years, beginning on or after the effective date of these regulations, as set forth in paragraphs (b)(1) and (b)(2) of this section, by satisfying the applicable requirements of §§ 1.401(l)-1 through 1.401(l)-5 and the requirements of § 1.401(a)(4)-13(c) (and § 1.401(a)(4)-13(d), if applicable), using a fresh-start date that is on or after December 31, 1988, and before the effective date of these regulations. A defined benefit excess plan or offset plan that does not satisfy section 401(l) with respect to all plan years beginning on or after the effective date of these regulations may, under the rules of § 1.401(a)(4)-13(c) (and § 1.401(a)(4)-13(d), if applicable), satisfy section 401(l) for plan years beginning after a fresh-start date by satisfying the applicable requirements of §§ 1.401(l)-1 through 1.401(l)-5 after the fresh-start date.

(c) ***Compliance during transition period.*** For plan years beginning on or after January 1, 1989, and before the effective date of these regulations, as set forth in paragraph (b) of this section, a plan must be operated in accordance with a reasonable, good faith interpretation of section 401(l). Whether a plan is operated in accordance with a reasonable, good faith interpretation of section 401(l) will generally be determined based on all of the relevant facts and circumstances, including the extent to which an employer has resolved unclear issues in its favor. A plan will be deemed to be operated in accordance with a reasonable, good faith interpretation of section 401(*l*) if it is operated in accordance with the terms of §§ 1.401(*l*)-1 through 1.401(*l*)-5.

[T.D. 8486, 58 FR 46835, Sept. 3, 1993]

§ 1.401(m)-0 Table of contents.

This section contains first a list of section headings and then a list of the paragraphs in each section in §§ 1.401(m)-1 through 1.401(m)-5.

List of Sections

§ 1.401(m)-1 Employee contributions and matching contributions.

§ 1.401(m)-2 ACP test.

§ 1.401(m)-3 Safe harbor requirements.

§ 1.401(m)-4 Special rules for mergers, acquisitions and similar events. [Reserved]

§ 1.401(m)-5 Definitions.

List of Paragraphs

§ 1.401(m)-1 Employee contributions and matching contributions.

(a) General nondiscrimination rules.

(1) Nondiscriminatory amount of contributions.

(i) Exclusive means of amounts testing.

(ii) Testing benefits, rights and features.

(2) Matching contributions.

(i) In general.

(ii) Employer contributions made on account of an employee contribution or elective deferral.

(iii) Employer contributions not on account of an employee contribution or elective deferral.

(A) General rule.

(B) Special rule for forfeitures and released ESOP shares.

(C) Exception for bona fide administrative considerations.

(3) Employee contributions.

(i) In general.

(ii) Certain contributions not treated as employee contributions.

(iii) Qualified cost-of-living arrangements.

(b) Nondiscrimination requirements for amount of contributions.

(1) Matching contributions and employee contributions.

(2) Automatic satisfaction by certain plans.

(3) Anti-abuse provisions.

(4) Aggregation and restructuring.

(i) In general.

(ii) Aggregation of employee contributions and matching contributions within a plan.

(iii) Aggregation of plans.

(A) In general.

(B) Arrangements with inconsistent ACP testing methods.

(iv) Disaggregation of plans and separate testing.

(A) In general.

(B) Restructuring prohibited.

(v) Certain disaggregation rules not applicable.

(c) Additional requirements.

(1) Separate testing for employee contributions and matching contributions.

(2) Plan provision requirement.

(d) Effective date.

(1) General rule.

(2) Early implementation permitted.

(3) Applicability of prior regulations.

§ 1.401(m)-2 ACP test.

(a) Actual contribution percentage (ACP) test.

(1) In general.

(i) ACP test formula.

(ii) HCEs as sole eligible employees.

(iii) Special rule for early participation.

(2) Determination of ACP.

(i) General rule.

(ii) Determination of applicable year under current year and prior year testing method.

(3) Determination of ACR.

(i) General rule.

(ii) ACR of HCEs eligible under more than one plan.

(A) General rule.

(B) Plans not permitted to be aggregated.

(iii) Example.

(4) Employee contributions and matching contributions taken into account under the ACP test.

(i) Employee contributions.

(ii) Recharacterized elective contributions.

(iii) Matching contributions.

(5) Employee contributions and matching contributions not taken into account under the ACP test.

(i) General rule.

(ii) Disproportionate matching contributions.

(A) Matching contributions in excess of 100%.

(B) Representative matching rate.

(C) Definition of matching rate.

(iii) Qualified matching contributions used to satisfy the ADP test.

(iv) Matching contributions taken into account under safe harbor provisions.

(v) Treatment of forfeited matching contributions.

(vi) Additional employee contributions or matching contributions pursuant to section 414(u).

(6) Qualified nonelective contributions and elective contributions that may be taken into account under the ACP test.

(i) Timing of allocation.

(ii) Elective contributions taken into account under the ACP test.

(iii) Requirement that amount satisfy section 401(a)(4).

(iv) Aggregation must be permitted.

(v) Disproportionate contributions not taken into account.

(A) General rule.

(B) Definition of representative contribution rate.

(C) Definition of applicable contribution rate.

(D) Special rule for prevailing wage contributions.

(vi) Contribution only used once.

(7) Examples.

(b) Correction of excess aggregate contributions.

(1) Permissible correction methods.

(i) In general.

(A) Additional contributions.

(B) Excess aggregate contributions distributed or forfeited.

(ii) Combination of correction methods.

(iii) Exclusive means of correction.

(2) Correction through distribution.

(i) General rule.

(ii) Calculation of total amount to be distributed.

(A) Calculate the dollar amount of excess aggregate contributions for each HCE.

(B) Determination of the total amount of excess aggregate contributions.

(C) Satisfaction of ACP.

(iii) Apportionment of total amount of excess aggregate contributions among the HCEs.

(A) Calculate the dollar amount of excess aggregate contributions for each HCE.

(B) Limit on amount apportioned to any HCE.

(C) Apportionment to additional HCEs.

(iv) Income allocable to excess aggregate contributions.

(A) General rule.

(B) Method of allocating income.

(C) Alternative method of allocating income for the plan year.

(D) Plan years before 2008.

(E) Alternative method of allocating plan year and gap period income.

(F) Allocable income for recharacterized elective contributions.

(v) Distribution and forfeiture.

(vi) Tax treatment of corrective distributions.

(A) Corrective distributions for plan years beginning on or after January 1, 2008.

(B) Corrective distributions for plan years beginning before January 1, 2008.

(C) Corrective distributions attributable to designated Roth contributions.

(3) Other rules.

(i) No employee or spousal consent required.

(ii) Treatment of corrective distributions and forfeited contributions as employer contributions.

(iii) No reduction of required minimum distribution.

(iv) Partial correction.

(v) Matching contributions on excess contributions, excess deferrals and excess aggregate contributions.

(A) Corrective distributions not permitted.

(B) Coordination with section 401(a)(4).

(vi) No requirement for recalculation.

(4) Failure to timely correct.

(i) Failure to correct within $2^{1}/_{2}$ months after end of plan year.

(ii) Failure to correct within 12 months after end of plan year.

(iii) Special rule for eligible automatic contribution arrangements.

(5) Examples.

(c) Additional rules for prior year testing method.

(1) Rules for change in testing method.

(2) Calculation of ACP under the prior year testing method for the first plan year.

(i) Plans that are not successor plans.

(ii) First plan year defined.

(iii) Plans that are successor plans.

(3) Plans using different testing methods for the ACP and ADP test.

(4) Rules for plan coverage change.

(i) In general.

(ii) Optional rule for minor plan coverage changes.

(iii) Definitions.

(A) Plan coverage change.

(B) Prior year subgroup.

(C) Weighted average of the ACPs for the prior year subgroups.

(iv) Examples.

§ 1.401(m)-3 Safe harbor requirements.

(a) ACP test safe harbor.

(1) Section 401(m)(11) safe harbor.

(2) Section 401(m)(12) safe harbor.

(3) Requirements applicable to safe harbor contributions.

(b) Safe harbor nonelective contribution requirement.

(c) Safe harbor matching contribution requirement.

(d) Limitation on contributions.

(1) General rule.

(2) Matching rate must not increase.

(3) Limit on matching contributions.

(4) Limitation on rate of match.

(5) HCEs participating in multiple plans.

(6) Permissible restrictions on elective deferrals by NHCEs.

(i) General rule.

(ii) Restrictions on election periods.

(iii) Restrictions on amount of contributions.

(iv) Restrictions on types of compensation that may be deferred.

(v) Restrictions due to limitations under the Internal Revenue Code.

(e) Notice requirement.

(f) Plan year requirement.

(1) General rule.

(2) Initial plan year.

(3) Change of plan year.

(4) Final plan year.

(g) Plan amendments adopting nonelective safe harbor contributions.

(h) Permissible reduction or suspension of safe harbor contributions.

(1) General rule.

(i) Matching contributions.

(ii) Nonelective contributions.

(2) Supplemental notice.

(j) Other rules.

(1) Contributions taken into account.

(2) Use of safe harbor nonelective contributions to satisfy other nondiscrimination tests.

(3) Early participation rules.

(4) Satisfying safe harbor contribution requirement under another defined contribution plan.

(5) Contributions used only once.

(6) Plan must satisfy ACP with respect to employee contributions.

§ 1.401(m)-4 Special rules for mergers, acquisitions and similar events. [Reserved]

§ 1.401(m)-5 Definitions.

[T.D. 9169, 69 FR 78184, Dec. 29, 2004, as amended by T.D. 9237, 71 FR 10, Jan. 3, 2006; T.D. 9447, 74 FR 8210, Feb. 24, 2009; T.D. 9641, 78 FR 68738, Nov. 15, 2013]

§ 1.401(m)-1 Employee contributions and matching contributions.

(a) *General nondiscrimination rules* —

(1) *Nondiscriminatory amount of contributions* —

(i) ***Exclusive means of amounts testing.*** A defined contribution plan does not satisfy section 401(a) for a plan year unless the amount of employee contributions and matching contributions to the plan for the plan year satisfies section 401(a)(4). The amount of employee contributions and matching contributions under a plan satisfies the requirements of section 401(a)(4) with respect to amounts if and only if the amount of employee contributions and matching contributions satisfies the nondiscrimination test of section 401(m) under paragraph (b) of this section and the plan satisfies the additional requirements of paragraph (c) of this section. See § 1.401(a)(4)-1(b)(2)(ii)(B).

(ii) ***Testing benefits, rights and features.*** A plan that provides for employee contributions or matching contributions must satisfy the requirements of section 401(a)(4) relating to benefits, rights and features in addition to the requirement regarding amounts described in paragraph (a)(1)(i) of this section. For example, the right to make each level of employee contributions and the right to each level of matching contributions under the plan are benefits, rights or features subject to the requirements of section 401(a)(4). See § 1.401(a)(4)-4(e)(3)(i) and (iii)(F) through (G).

(2) *Matching contributions* —

(i) ***In general.*** For purposes of section 401(m), this section and §§ 1.401(m)-2 through 1.401(m)-5, matching contributions are—

(A) Any employer contribution (including a contribution made at the employer's discretion) to a defined contribution plan on account of an employee contribution to a plan maintained by the employer;

(B) Any employer contribution (including a contribution made at the employer's discretion) to a defined contribution plan on account of an elective deferral; and

(C) Any forfeiture allocated on the basis of employee contributions, matching contributions, or elective deferrals.

(ii) ***Employer contributions made on account of an employee contribution or elective deferral.*** Whether an employer contribution is made on account of an employee contribution or an elective deferral is determined on the basis of all the relevant facts and circumstances, including the relationship between the employer contribution and employee actions outside the plan. An employer contribution made to a defined contribution plan on account of contributions made by an employee under an employer-sponsored savings arrangement that are not held in a plan that is intended to be a qualified plan or other arrangement described in § 1.402(g)-1(b) is not a matching contribution.

(iii) *Employer contributions not on account of an employee contribution or elective deferral* —

(A) ***General rule.*** Employer contributions are not matching contributions made on account of elective deferrals if they are contributed before the cash or deferred election is made or before the employees' performance of services with respect to which the elective deferrals are made (or when the cash that is subject to the cash or deferred elections

would be currently available, if earlier). In addition, an employer contribution is not a matching contribution made on account of an employee contribution if it is contributed before the employee contribution.

(B) ***Exceptions for forfeitures and released ESOP shares.*** The rule of paragraph (a)(3)(iii)(A) of this section does not apply to a forfeiture that is allocated as a matching contribution. In addition, an allocation of shares from an ESOP loan suspense account described in § 54.4975-11(c) and (d) of this chapter will not fail to be treated as a matching contribution solely because the employer contribution that resulted in the release and allocation of those shares from the suspense account is made before the employees' performance of services with respect to which the elective deferrals are made (or when the cash that is subject to the cash or deferred elections would be currently available, if earlier) provided that—

(*1*) The contribution is for a required payment that is due under the loan terms; and

(*2*) The contribution is not made early with a principal purpose of accelerating deductions.

(C) ***Exception for bona fide administrative considerations.*** The timing of contributions will not be treated as failing to satisfy the requirements of this paragraph (a)(3)(iii) merely because contributions are occasionally made before the employees' performance of services with respect to which the elective deferrals are made (or when the cash that is subject to the cash or deferred elections would be currently available, if earlier) in order to accommodate bona fide administrative considerations and are not paid early with a principal purpose of accelerating deductions.

(3) ***Employee contributions*** —

(i) ***In general.*** For purposes of section 401(m), this section and §§ 1.401(m)-2 through 1.401(m)-5, employee contributions are contributions to a plan that are designated or treated at the time of contribution as after-tax employee contributions (*e.g.*, by treating the contributions as taxable income subject to applicable withholding requirements) and are allocated to an individual account for each eligible employee to which attributable earnings and losses are allocated. See § 1.401(k)-1(a)(2)(ii). The term *employee contributions includes*—

(A) Employee contributions to the defined contribution portion of a plan described in section 414(k);

(B) Employee contributions applied to the purchase of whole life insurance protection or survivor benefit protection under a defined contribution plan;

(C) Amounts attributable to excess contributions within the meaning of section 401(k)(8)(B) that are recharacterized as employee contributions under § 1.401(k)-2(b)(3); and

(D) Employee contributions to a plan or contract that satisfies the requirements of section 403(b).

(ii) ***Certain contributions not treated as employee contributions.*** The term employee contributions does not include designated Roth contributions, repayment of loans, rollover contributions, repayment of distributions described in section 411(a)(7)(C), or employee contributions that are transferred to the plan from another plan.

(iii) ***Qualified cost-of-living arrangements.*** Employee contributions to a qualified cost-of-living arrangement described in section 415(k)(2)(B) are treated as employee contributions to a defined contribution plan, without regard to the requirement that the employee contributions be allocated to an individual account to which attributable earnings and losses are allocated.

(b) ***Nondiscrimination requirements for amount of contributions*** —

(1) ***Matching contributions and employee contributions.*** The matching contributions and employee contributions under a plan satisfy this paragraph (b) for a plan year only if the plan satisfies—

(i) The ACP test of section 401(m)(2) described in § 1.401(m)-2;

(ii) The ACP safe harbor provisions of section 401(m)(11) described in § 1.401(m)-3; or

(iii) The ACP safe harbor provisions of section 401(m)(12) described in § 1.401(m)-3; or

(iv) The SIMPLE 401(k) provisions of sections 401(k)(11) and 401(m)(10) described in § 1.401(k)-4.

(2) ***Automatic satisfaction by certain plans.*** Notwithstanding paragraph (b)(1) of this section, the requirements of this section are treated as satisfied with respect to employee contributions and matching contributions under a collectively bargained plan (or the portion of a plan) that automatically satisfies section 410(b). See §§ 1.401(a)(4)-1(c)(5) and 1.410(b)-2(b)(7). Additionally, the requirements of sections 401(a)(4) and 410(b) do not apply to a governmental plan (within the meaning of section 414(d)) maintained by a State or local government or political subdivision thereof (or agency or instrumentality thereof) and, accordingly such plans are not required to comply with this section. See sections 401(a)(5)(G), 403(b)(12)(C) and 410(c)(1)(A).

(3) ***Anti-abuse provisions.*** Sections 1.401(m)-1 through 1.401(m)-5 are designed to provide simple, practical rules that accommodate legitimate plan changes. At the same time, the rules are intended to be applied by employers in a manner that does not make use of changes in plan testing procedures or other plan provisions to inflate inappropriately the ACP for NHCEs (which is used as a benchmark for testing the ACP for HCEs) or to otherwise manipulate the nondiscrimination testing requirements of this paragraph (b). Further, this paragraph (b) is part of the overall requirement that benefits or contributions not discriminate in favor of HCEs. Therefore, a plan will not be treated as satisfying the requirements of this paragraph (b) if there are repeated changes to plan testing procedures or plan provisions that have the effect of distorting the ACP so as to increase significantly the permitted ACP for HCEs, or otherwise manipulate the nondiscrimination rules of this paragraph, if a principal purpose of the changes was to achieve such a result.

(4) ***Aggregation and restructuring*** —

(i) ***In general.*** This paragraph (b)(4) contains the exclusive rules for aggregating and disaggregating plans that provide for employee contributions and matching contributions for purposes of this section and §§ 1.401(m)-2 through 1.401(m)-5.

(ii) ***Aggregation of employee contributions and matching contributions within a plan.*** Except as otherwise specifically provided in this paragraph (b)(4) and § 1.401(m)-3(j)(6), a plan must be subject to a single test under paragraph (b)(1) of this section with respect to all employee contributions and matching contributions and all eligible employees under the plan. Thus, for example, if two groups of employees are eligible for matching contributions under a plan, all employee contributions and matching contributions under the plan must be subject to a single test, even if they have significantly different features, such as different rates of match.

(iii) *Aggregation of plans* —

(A) ***In general.*** The term *plan* means a plan within the meaning of § 1.410(b)-7(a) and (b), after application of the mandatory disaggregation rules of § 1.410(b)-7(c), and the permissive aggregation rules of § 1.410(b)-7(d), as modified by paragraph (b)(4)(v) of this section. Thus, for example, two plans (within the meaning of § 1.410(b)-7(b)) that are treated as a single plan pursuant to the permissive aggregation rules of § 1.410(b)-7(d) are treated as a single plan for purposes of sections 401(k) and 401(m).

(B) ***Arrangements with inconsistent ACP testing methods.*** Pursuant to paragraph (b)(4)(ii) of this section, a single testing method must apply with respect to all employee contributions and matching contributions and all eligible employees under a plan. Thus, in applying the permissive aggregation rules of § 1.410(b)-7(d), an employer may not aggregate plans (within the meaning of § 1.410(b)-7(b)) that apply inconsistent testing methods. For example, a plan (within the meaning of § 1.410(b)-7) that applies the current year testing method may not be aggregated with another plan that applies the prior year testing method. Similarly, an employer may not aggregate a plan (within the meaning of § 1.410(b)-7) that is using the ACP safe harbor provisions of section 401(m)(11) or 401(m)(12) and another plan that is using the ACP test of section 401(m)(2).

(iv) *Disaggregation of plans and separate testing* —

(A) ***In general.*** If employee contributions or matching contributions are included in a plan (within the meaning of § 1.410(b)-7(b)) that is mandatorily disaggregated under the rules of section 410(b) (as modified by this paragraph (b)(4)), the matching contributions and employee contributions under that plan must be disaggregated in a consistent manner. For example, in the case of an employer that is treated as operating qualified separate lines of business under section 414(r), if the eligible employees under a plan which provides for employee contributions or matching contributions are in more than one qualified separate line of business, only those employees within each qualified separate line of business may be taken into account in determining whether each disaggregated portion of the plan complies with the requirements of section 401(m), unless the employer is applying the special rule for employer-wide plans in § 1.414(r)-1(c)(2)(ii) with respect to the plan. Similarly, if a plan that provides for employee contributions or matching contributions under which employees are permitted to participate before they have completed the minimum age and service requirements of section 410(a)(1) applies section 410(b)(4)(B) for determining whether the plan complies with section 410(b)(1), then the plan must be treated as two separate plans, one comprising all eligible employees who have met the minimum age and service requirements of section 410(a)(1) and one comprising all eligible employees who have not met the minimum age and service requirements of section 410(a)(1), unless the plan is using the rule in § 1.401(m)-2(a)(1)(iii)(A).

(B) ***Restructuring prohibited.*** Restructuring under § 1.401(a)(4)-9(c) may not be used to demonstrate compliance with the requirements of section 401(m). See § 1.401(a)(4)-9(c)(3)(ii).

(v) ***Certain disaggregation rules not applicable.*** The mandatory disaggregation rules relating to section 401(k) plans and section 401(m) plans set forth in § 1.410(b)-7(c)(1) and to ESOP and non-ESOP portions of a plan set forth in § 1.410(b)-7(c)(2) shall not apply for purposes of this

section and §§ 1.401(m)-2 through 1.401(m)-5. Accordingly, notwithstanding § 1.410(b)-7(d)(2), an ESOP and a non-ESOP which are different plans (within the meaning of section 414(l), as described in § 1.410(b)-7(b)) are permitted to be aggregated for these purposes.

(c) *Additional requirements* —

(1) ***Separate testing for employee contributions and matching contributions.*** Under § 1.410(b)-7(c)(1), the group of employees who are eligible to make employee contributions or eligible to receive matching contributions must satisfy the requirements of section 410(b) as if those employees were covered under a separate plan. The determination of whether the separate plan satisfies the requirements of section 410(b) must be made without regard to the modifications to the disaggregation rules set forth in paragraph (b)(4)(v) of this section. In addition, except as expressly permitted under section 401(k), 410(b)(2)(A)(ii), or 416(c)(2)(A), employee contributions, matching contributions and elective contributions taken into account under § 1.401(m)-2(a)(6) may not be taken into account for purposes of determining whether any other contributions under any plan (including the plan to which the employee contributions or matching contributions are made) satisfy the requirements of section 401(a). See also § 1.401(a)(4)-11(g)(3)(vii) for special rules relating to corrections of violations of the minimum coverage requirements or discriminatory rates of matching contributions.

(2) ***Plan provision requirement.*** A plan that provides for employee contributions or matching contributions satisfies this section only if it provides that the nondiscrimination requirements of section 401(m) will be met. Thus, the plan must provide for satisfaction of one of the specific alternatives described in paragraph (b)(1) of this section and, if with respect to that alternative there are optional choices, which of the optional choices will apply. For example, a plan that uses the ACP test of section 401(m)(2), as described in paragraph (b)(1)(i) of this section, must specify whether it is using the current year testing method or prior year testing method. Additionally, a plan that uses the prior year testing method must specify whether the ACP for eligible NHCEs for the first plan year is 3% or the ACP for the eligible NHCEs for the first plan year. Similarly, a plan that uses the safe harbor method of section 401(m)(11) or 401(m)(12), as described in paragraphs (b)(1)(ii) and (b)(1)(iii) of this section, must specify the default percentages that apply for the plan year and whether the safe harbor contribution will be the nonelective safe harbor contribution or the matching safe harbor contribution, and is not permitted to provide that ACP testing will be used if the requirements for the safe harbor are not satisfied. For purposes of this paragraph (c)(2), a plan may incorporate by reference the provisions of section 401(m)(2) and § 1.401(m)-2 if that is the nondiscrimination test being applied. The Commissioner may, in guidance of general applicability, published in the Internal Revenue Bulletin (see § 601.601(d)(2) of this chapter), specify the options that will apply under the plan if the nondiscrimination test is incorporated by reference in accordance with the preceding sentence.

(d) *Effective date* —

(1) ***General rule.*** Except as otherwise provided in this paragraph (d), this section and §§ 1.401(m)-2 through 1.401(m)-5 apply to plan years that begin on or after January 1, 2006.

(2) ***Early implementation permitted.*** A plan is permitted to apply the rules of this section and §§ 1.401(m)-2 through 1.401(m)-5 to any plan year that ends after December 29, 2004, provided the plan applies all the rules of this section and §§ 1.401(m)-2 through 1.401(m)-5 and all the rules of §§ 1.401(k)-1 through 1.401(k)-6, to the extent applicable, for that plan year and all subsequent plan years.

(3) ***Applicability of prior regulations.*** For any plan year, before a plan applies this section and §§ 1.401(m)-2 through 1.401(m)-5 (either the first plan year beginning on or after January 1, 2006 or such earlier year, as provided in paragraph (d)(2) of this section), § 1.401(m)-1 and § 1.401(m)-2 (as they appeared in the April 1, 2004 edition of 26 CFR part 1) apply to the plan to the extent those sections, as they so appear, reflect the statutory provisions of section 401(m) as in effect for the relevant year.

(4) ***Effective date for definitions of qualified matching contributions (QMACs) and qualified nonelective contributions (QNECs).*** The revisions to the definitions of QMACs and QNECs in § 1.401(m)-5 apply to plan years ending on or after July 20, 2018.

[T.D. 9169, 69 FR 78184, Dec. 29, 2004, as amended by T.D. 9447, 74 FR 8210, Feb. 24, 2009; T.D. 9835, 83 FR 34471, July 20, 2018]

§ 1.401(m)-2 ACP test.

(a) ***Actual contribution percentage (ACP) test*** —

(1) ***In general***—

(i) ***ACP test formula.*** A plan satisfies the ACP test for a plan year only if—

(A) The ACP for the eligible HCEs for the plan year is not more than the ACP for the eligible NHCEs for the applicable year multiplied by 1.25; or

(B) The excess of the ACP for the eligible HCEs for the plan year over the ACP for the eligible NHCEs for the applicable year is not more than 2 percentage points, and the ACP for the eligible HCEs for the plan year is not more than the ACP for the eligible NHCEs for the applicable year multiplied by 2.

(ii) ***HCEs as sole eligible employees.*** If, for the applicable year there are no eligible NHCEs (*i.e.*, all of the eligible employees under the plan for the applicable year are HCEs), the plan is deemed to satisfy the ACP test.

(iii) ***Special rule for early participation.*** If a plan providing for employee contributions or matching contributions provides that employees are eligible to participate before they have completed the minimum age and service requirements of section 410(a)(1)(A), and if the plan applies section 410(b)(4)(B) in determining whether the plan meets the requirements of section 410(b)(1), then in determining whether the plan meets the requirements under paragraph (a)(1) of this section either—

(A) Pursuant to section 401(m)(5)(C), the ACP test is performed under the plan (determined without regard to disaggregation under § 1.410(b)-7(c)(3)), using the ACP for all eligible HCEs for the plan year and the ACP of eligible NHCEs for the applicable year, disregarding all NHCEs who have not met the minimum age and service requirements of section 410(a)(1)(A); or

(B) Pursuant to § 1.401(m)-1(b)(4), the plan is disaggregated into separate plans and the ACP test is performed separately for all eligible employees who have completed the minimum age and service requirements of section 410(a)(1)(A) and for all eligible employees who have not completed the minimum age and service requirements of section 410(a)(1)(A).

(2) ***Determination of ACP*** —

(i) ***General rule.*** The ACP for a group of eligible employees (either eligible HCEs or eligible NHCEs) for a plan year or applicable year is the average of the ACRs of eligible employees in the group for that year. The ACP for a group of eligible employees is calculated to the nearest hundredth of a percentage point.

(ii) ***Determination of applicable year under current year and prior year testing method.*** The ACP test is applied using the prior year testing method or the current year testing method. Under the prior year testing method, the applicable year for determining the ACP for the eligible NHCEs is the plan year immediately preceding the plan year for which the ACP test is being calculated. Under the prior year testing method, the ACP for the eligible NHCEs is determined using the ACRs for the eligible employees who were NHCEs in that preceding plan year, regardless of whether those NHCEs are eligible employees or NHCEs in the plan year for which the ACP test is being performed. Under the current year testing method, the applicable year for determining the ACP for eligible NHCEs is the same plan year as the plan year for which the ACP test is being calculated. Under either method, the ACP for the eligible HCEs is determined using the ACRs of eligible employees who are HCEs for the plan year for which the ACP test is being performed. See paragraph (c) of this section for additional rules for the prior year testing method.

(3) ***Determination of ACR*** —

(i) ***General rule.*** The ACR of an eligible employee for the plan year or applicable year is the sum of the employee contributions and matching contributions taken into account with respect to such employee (determined under the rules of paragraphs (a)(4) and (5) of this section), and the qualified nonelective and elective contributions taken into account under paragraph (a)(6) of this section for the year, divided by the employee's compensation taken into account for the year. The ACR is calculated to the nearest hundredth of a percentage point. If no employee contributions, matching contributions, elective contributions, or qualified nonelective contributions are taken into account under this section with respect to an eligible employee for the year, the ACR of the employee is zero.

(ii) ***ACR of HCEs eligible under more than one plan*** —

(A) ***General rule.*** Pursuant to section 401(m)(2)(B), the ACR of an HCE who is an eligible employee in more than one plan of an employer to which matching contributions or employee contributions are made is calculated by treating all contributions with respect to such HCE under any such plan as being made under the plan being tested. Thus, the ACR for such an HCE is calculated by accumulating all matching contributions and employee contributions under any plan (other than a plan described in paragraph (a)(3)(ii)(B) of this section) that would be taken into account under this section for the plan year, if the plan under which the contribution was made applied this section and had the same plan year. For example, in the case of a plan with a 12-month plan year, the ACR for the plan year of that plan for an HCE who participates in multiple plans of the same employer that provide for matching contributions or employee contributions is the sum of all such contributions during such 12-month period that would be taken into account with respect to the HCE under all plans in which the HCE is an eligible employee, divided by the HCE's compensation for that 12-month period (determined using the compensation definition for the plan being tested), without regard to the plan year of the other plans and whether those plans are satisfying this section or § 1.401(m)-3.

(B) ***Plans not permitted to be aggregated.*** Contributions under plans that are not permitted to be aggregated under § 1.401(m)-1(b)(4) (determined without regard to the prohibition on aggregating plans with inconsistent testing methods set forth in § 1.401(m)-1(b)(4)(iii)(B) and the prohibition on aggregating plans with different plan years set forth in § 1.410(b)-7(d)(5)) are not aggregated under this paragraph (a)(3)(ii).

(iii) ***Example.*** The following example illustrates the application of paragraph (a)(3)(ii) of this section. See also § 1.401(k)-2(a)(3)(iii) for additional examples of the application of the parallel rule under section 401(k)(3)(A). The example is as follows:

Example. Employee A, an HCE with compensation of $120,000, is eligible to make employee contributions under Plan S and Plan T, two calendar-year profit-sharing plans of Employer H. Plan S and Plan T use the same definition of compensation. Plan S provides a match equal to 50% of each employee's contributions and Plan T has no match. During the current plan year, Employee A elects to contribute $4,000 in employee contributions to Plan T and $4,000 in employee contributions to Plan S. There are no other contributions made on behalf of Employee A. Each plan must calculate Employee A's ACR by dividing the total employee contributions by Employee A and matching contributions under both plans by $120,000. Therefore, Employee A's ACR under each plan is 8.33% ($4,000 + $4,000 + $2,000/$120,000).

(4) ***Employee contributions and matching contributions taken into account under the ACP test*** —

(i) ***Employee contributions.*** An employee contribution is taken into account in determining the ACR for an eligible employee for the plan year or applicable year in which the contribution is made. For purposes of the preceding sentence, an amount withheld from an employee's pay (or a payment by the employee to an agent of the plan) is treated as contributed at the time of such withholding (or payment) if the funds paid are transmitted to the trust within a reasonable period after the withholding (or payment).

(ii) ***Recharacterized elective contributions.*** Excess contributions recharacterized in accordance with § 1.401(k)-2(b)(3) are taken into account as employee contributions for the plan year that includes the time at which the excess contribution is includible in the gross income of the employee under § 1.401(k)-2(b)(3)(ii).

(iii) ***Matching contributions.*** A matching contribution is taken into account in determining the ACR for an eligible employee for a plan year or applicable year only if each of the following requirements is satisfied—

(A) The matching contribution is allocated to the employee's account under the terms of the plan as of a date within that year;

(B) The matching contribution is made on account of (or the matching contribution is allocated on the basis of) the employee's elective deferrals or employee contributions for that year; and

(C) The matching contribution is actually paid to the trust no later than the end of the 12-month period immediately following the year that contains that date.

(5) ***Employee contributions and matching contributions not taken into account under the ACP test*** —

(i) ***General rule.*** Matching contributions that do not satisfy the requirements of paragraph (a)(4)(iii) of this section may not be taken into account in the ACP test for the plan year with respect to which the contributions were made, or for any other plan year. Instead, the amount of the matching contributions must satisfy the requirements of section 401(a)(4) (without regard to the ACP test) for the plan year for which they are allocated under the plan as if they were nonelective contributions and were the only nonelective contributions for that year. *See* §§ 1.401(a)(4)-1(b)(2)(ii)(B) and 1.410(b)-7(c)(1).

(ii) ***Disproportionate matching contributions*** —

(A) ***Matching contributions in excess of 100%.*** A matching contribution with respect to an elective deferral for an NHCE is not taken into account under the ACP test to the extent it exceeds the greatest of:

(*1*) 5% of compensation;

(*2*) the employee's elective deferrals for a year; and

(*3*) the product of 2 times the plan's representative matching rate and the employee's elective deferrals for a year.

(B) ***Representative matching rate.*** For purposes of this paragraph (a)(5)(ii), the plan's representative matching rate is the lowest matching rate for any eligible NHCE among a group of NHCEs that consists of half of all eligible NHCEs in the plan for the plan year who make elective deferrals for the plan year (or, if greater, the lowest matching rate for all eligible NHCEs in the plan who are employed by the employer on the last day of the plan year and who make elective deferrals for the plan year).

(C) ***Definition of matching rate.*** For purposes of this paragraph (a)(5)(ii), the matching rate for an employee generally is the matching contributions made for such employee divided by the employee's elective deferrals for the year. If the matching rate is not the same for all levels of elective deferrals for an employee, the employee's matching rate is determined assuming that an employee's elective deferrals are equal to 6 percent of compensation.

(D) ***Application to matching contributions that match employee contributions.*** If a plan provides a match with respect to the sum of the employee's employee contributions and elective deferrals, that sum is substituted for the amount of the employee's elective deferrals in paragraphs (a)(5)(ii) (A) and (C) of this section and employees who make either employee contributions or elective deferrals are taken into account under paragraph (a)(5)(ii)(B) of this section. Similarly, if a plan provides a match with respect to the employee's employee contributions, but not elective deferrals, the employee's employee contributions are substituted for the amount of the employee's elective deferrals in paragraphs (a)(5)(ii) (A) and (C) of this section and employees who make employee contributions are taken into account under paragraph (a)(5)(ii)(B) of this section.

(iii) ***Qualified matching contributions used to satisfy the ADP test.*** Qualified matching contributions that are taken into account for the ADP test of section 401(k)(3) under § 1.401(k)-2(a)(6) are not taken into account in determining an eligible employee's ACR.

(iv) ***Matching contributions taken into account under safe harbor provisions.*** A plan that satisfies the ACP safe harbor requirements of section 401(m)(11) or 401(m)(12) for a plan year but nonetheless must satisfy the requirements of this section because it provides for employee

contributions for such plan year is permitted to apply this section disregarding all matching contributions with respect to all eligible employees. In addition, a plan that satisfies the ADP safe harbor requirements of § 1.401(k)-3 for a plan year using qualified matching contributions but does not satisfy the ACP safe harbor requirements of section 401(m)(11) or 401(m)(12) for such plan year is permitted to apply this section by excluding matching contributions with respect to all eligible employees that do not exceed 4 percent ($3^1/_2$ percent in the case of a plan that satisfies the ADP safe harbor under section 401(k)(13)) of each employee's compensation. If a plan disregards matching contributions pursuant to this paragraph (a)(5)(iv), the disregard must apply with respect to all eligible employees.

(v) ***Treatment of forfeited matching contributions.*** A matching contribution that is forfeited because the contribution to which it relates is treated as an excess contribution, excess deferral, excess aggregate contribution, or default elective contribution that is distributed under section 414(w), is not taken into account for purposes of this section.

(vi) ***Additional employee contributions or matching contributions pursuant to section 414(u).*** Additional employee contributions and matching contributions made by reason of an eligible employee's qualified military service under section 414(u) are not taken into account under paragraph (a)(4) of this section for the plan year for which the contributions are made, or for any other plan year.

(6) ***Qualified nonelective contributions and elective contributions that may be taken into account under the ACP test.*** Qualified nonelective contributions and elective contributions may be taken into account in determining the ACR for an eligible employee for a plan year or applicable year, but only to the extent the contributions satisfy the following requirements—

(i) ***Timing of allocation.*** The qualified nonelective contribution is allocated to the employee's account as of a date within that year (within the meaning of § 1.401(k)-2(a)(4)(i)(A)) and the elective contribution satisfies § 1.401(k)-2(a)(4)(i). Consequently, under the prior year testing method, in order to be taken into account in calculating the ACP for the group of eligible NHCEs for the applicable year, a qualified nonelective contribution must be contributed no later than the end of the 12-month period following the applicable year even though the applicable year is different than the plan year being tested.

(ii) ***Elective contributions taken into account under the ACP test.*** Elective contributions may be taken into account for the ACP test only if the cash or deferred arrangement under which the elective contributions are made is required to satisfy the ADP test in § 1.401(k)-2(a)(1) and, then only to the extent that the cash or deferred arrangement would satisfy that test, including such elective contributions in the ADP for the plan year or applicable year. Thus, for example, elective deferrals made pursuant to a salary reduction agreement under an annuity described in section 403(b) are not permitted to be taken into account in an ACP test. Similarly, elective contributions under a cash or deferred arrangement that is using the section 401(k) safe harbor described in § 1.401(k)-3 cannot be taken into account in an ACP test. In addition, for plan years ending on or after November 8, 2007, elective contributions which are not permitted to be taken into account for the ADP test for the plan year under § 1.401(k)-2(a)(5)(ii), (iii), (v), or (vi) are not permitted to be taken into account for the ACP test.

(iii) ***Requirement that amount satisfy section 401(a)(4).*** The amount of nonelective contributions, including those qualified nonelective contributions taken into account under this paragraph (a)(6) and those qualified nonelective contributions taken into account for the ADP test under paragraph § 1.401(k)-2(a)(6), and the amount of nonelective contributions, excluding those

qualified nonelective contributions taken into account under this paragraph (a)(6) for the ACP test and those qualified nonelective contributions taken into account for the ADP test under paragraph § 1.401(k)-2(a)(6), satisfies the requirements of section 401(a)(4). See § 1.401(a)(4)-1(b)(2). In the case of an employer that is applying the special rule for employer-wide plans in § 1.414(r)-1(c)(2)(ii) with respect to the plan, the determination of whether the qualified nonelective contributions satisfy the requirements of this paragraph (a)(6)(iii) must be made on an employer-wide basis regardless of whether the plans to which the qualified nonelective contributions are made are satisfying the requirements of section 410(b) on an employer-wide basis. Conversely, in the case of an employer that is treated as operating qualified separate lines of business, and does not apply the special rule for employer-wide plans in § 1.414(r)-1(c)(2)(ii) with respect to the plan, then the determination of whether the qualifiednonelective contributions satisfy the requirements of this paragraph (a)(6)(iii) is not permitted to be made on an employer-wide basis regardless of whether the plans to which the qualified nonelective contributions are made are satisfying the requirements of section 410(b) on that basis.

(iv) ***Aggregation must be permitted.*** The plan that provides for employee or matching contributions and the plan or plans to which the qualified nonelective contributions or elective contributions are made are plans that would be permitted to be aggregated under § 1.401(m)-1(b)(4). If the plan year of the plan that provides for employee or matching contributions is changed to satisfy the requirement under § 1.410(b)-7(d)(5) that aggregated plans have the same plan year, qualified nonelective contributions and elective contributions may be taken into account in the resulting short plan year only if such qualified nonelective and elective contributions could have been taken into account under an ADP test for a plan with that same short plan year.

(v) ***Disproportionate contributions not taken into account*** —

(A) ***General rule.*** Qualified nonelective contributions cannot be taken into account for an applicable year for an NHCE to the extent such contributions exceed the product of that NHCE's compensation and the greater of 5% and 2 times the plan's representative contribution rate. Any qualified nonelective contribution taken into account in an ADP test under § 1.401(k)-2(a)(6) (including the determination of the representative contribution rate for purposes of § 1.401(k)-2(a)(6)(iv)(B)) is not permitted to be taken into account for purposes of this paragraph (a)(6) (including the determination of the representative contribution rate for purposes of paragraph (a)(6)(v)(B) of this section).

(B) ***Definition of representative contribution rate.*** For purposes of this paragraph (a)(6)(v), the plan's representative contribution rate is the lowest applicable contribution rate of any eligible NHCE among a group of eligible NHCEs that consists of half of all eligible NHCEs for the plan year (or, if greater, the lowest applicable contribution rate of any eligible NHCE in the group of all eligible NHCEs for the applicable year and who is employed by the employer on the last day of the applicable year).

(C) ***Definition of applicable contribution rate.*** For purposes of this paragraph (a)(6)(v), the applicable contribution rate for an eligible NHCE is the sum of the matching contributions taken into account under this section for the employee for the plan year and the qualified nonelective contributions made for that employee for the plan year, divided by that employee's compensation for the same period.

(D) ***Special rule for prevailing wage contributions.*** Notwithstanding paragraph (a)(6)(v)(A) of this section, qualified nonelective contributions that are made in connection with an employer's obligation to pay prevailing wages under the Davis-Bacon Act (46 Stat. 1494), Pub. L. 71-798, Service Contract Act of 1965 (79 Stat. 1965), Pub. L. 89-286, or similar legislation can be taken into account for a plan year for an NHCE to the extent such contributions do not exceed 10 percent of that NHCE's compensation.

(vi) ***Contribution only used once.*** Qualified nonelective contributions cannot be taken into account under this paragraph (a)(6) to the extent such contributions are taken into account for purposes of satisfying any other ACP test, any ADP test, or the requirements of § 1.401(k)-3, 1.401(m)-3 or 1.401(k)-4. Thus, for example, qualified nonelective contributions that are made pursuant to § 1.401(k)-3(b) cannot be taken into account under the ACP test. Similarly, if a plan switches from the current year testing method to the prior year testing method pursuant to § 1.401(m)-2(c)(1), qualified nonelective contributions that are taken into account under the current year testing method for a plan year may not be taken into account under the prior year testing method for the next plan year.

(7) ***Examples.*** The following examples illustrate the application of this paragraph (a). See § 1.401(k)-2(a)(6) for additional examples of the parallel rules under section 401(k)(3)(A). The examples are as follows:

Example 1. (i) Employer L maintains Plan U, a profit-sharing plan under which $.50 matching contributions are made for each dollar of employee contributions. Plan U uses the current year testing method. The chart below shows the average employee contributions (as a percentage of compensation) and matching contributions (as a percentage of compensation) for Plan U's HCEs and NHCEs for the 2006 plan year:

	Employee contributions (percentage)	Matching contributions (percentage)	Actual contribution (percentage)
Highly compensated employees	4	2	6
Nonhighly compensated employees	3	1.5	4.5

(ii) The matching rate for all NHCEs is 50% and thus the matching contributions are not disproportionate under paragraph (a)(5)(ii) of this section. Accordingly, they are taken into account in determining the ACR of eligible employees.

(iii) Because the ACP for the HCEs (6.0%) exceeds 5.63% (4.5% × 1.25), Plan U does not satisfy the ACP test under paragraph (a)(1)(i)(A) of this section. However, because the ACP for the HCEs does not exceed the ACP for the NHCEs by more than 2 percentage points and the ACP for the HCEs does not exceed the ACP for the NHCEs multiplied by 2 (4.5% × 2 = 9%), the plan satisfies the ACP test under paragraph (a)(1)(i)(B) of this section.

Example 2. (i) Employees A through F are eligible employees in Plan V, a profit-sharing plan of Employer M that includes a cash or deferred arrangement and permits employee contributions. Under Plan V, a $.50 matching contribution is made for each dollar of elective contributions and employee contributions. Plan V uses the current year testing method and does not provide for elective contributions to be taken into account in determining an eligible employee's ACR. For the 2006 plan year, Employees A and B are HCEs and the remaining employees are NHCEs. The compensation, elective contributions, employee contributions, and matching contributions for the 2006 plan year are shown in the following table:

Employee	Compensation	Elective contributions	Employee contributions	Matching contributions
A	$190,000	$15,000	$3,500	$9,250
B	100,000	5,000	10,000	7,500
C	85,000	12,000	0	6,000
D	70,000	9,500	0	4,750
E	40,000	10,000	0	5,000
F	10,000	0	0	0

(ii) The matching rate for all NHCEs is 50% and thus the matching contributions are not disproportionate under paragraph (a)(5)(ii) of this section. Accordingly, they are taken into account in determining the ACR of eligible employees, as shown in the following table:

Employee	Compensation	Employee contributions	Matching contributions	ACR (percent)
A	$190,000	$3,500	$9,250	6.71
B	100,000	10,000	7,500	17.50
C	85,000	0	6,000	7.06
D	70,000	0	4,750	6.79
E	40,000	0	5,000	12.50

Employee	Compensation	Employee contributions	Matching contributions	ACR (percent)
F	10,000	0	0	0

(iii) The ACP for the HCEs is 12.11% ((6.71% + 17.50%)/2). The ACP for the NHCEs is 6.59% ((7.06% + 6.79% + 12.50% + 0.%)/4). Plan V fails to satisfy the ACP test under paragraph (a)(1)(i)(A) of this section because the ACP of HCEs is more than 125% of the ACP of the NHCEs (6.59% × 1.25 = 8.24%). In addition, Plan V fails to satisfy the ACP test under paragraph (a)(1)(i)(B) of this section because the ACP for the HCEs exceeds the ACP of the other employees by more than 2 percentage points (6.59% + 2% = 8.59%). Therefore, the plan fails to satisfy the requirements of section 401(m)(2) and paragraph (a)(1) of this section unless the ACP failure is corrected under paragraph (b) of this section.

Example 3. (i) The facts are the same as *Example 2,* except that the plan provides that the NHCEs' elective contributions may be used to meet the requirements of section 401(m) to the extent needed under that section.
(ii) Pursuant to paragraph (a)(6)(ii) of this section, the $10,000 of elective contributions for Employee E may be taken into account in determining the ACP rather than the ADP to the extent that the plan satisfies the requirements of § 1.401(k)-2(a)(1) excluding from the ADP this $10,000. In this case, if the $10,000 were excluded from the ADP for the NHCEs, the ADP for the HCEs is 6.45% (7.89% + 5.00%) /2 and the ADP for the NHCEs would be 6.92% (14.12% + 13.57% + 0% + 0%)/4) and the plan would satisfy the requirements of § 1.401(k)-2(a)(1) excluding from the ADP the elective contributions for NHCEs that are taken into account under section 401(m).

(iii) After taking into account the $10,000 of elective contributions for Employee E in the ACP test, the ACP for the NHCEs is 12.84% (7.06% + 6.79% + 37.50 % + 0%) /4. Therefore the plan satisfies the ACP test because the ACP for the HCEs (12.11%) is less than 1.25 times the ACP for the NHCEs.

Example 4. (i) The facts are the same as *Example 2,* except that Plan V provides for a higher than 50% match rate on the elective contributions and employee contributions for all NHCEs. The match rate is defined as the rate, rounded up to the next whole percent, necessary to allow the plan to satisfy the ACP test, but not in excess of 100%. In this case, an increase in the match rate from 50% to 74% will be sufficient to allow the plan to satisfy the ACP test. Thus, for the 2006 plan year, the compensation, elective contributions, employee contributions, matching contributions at a 74% match rate of the eligible NHCEs (employees

C through F) are shown in the following table:

Employee	Compensation	Elective contributions	Employee contributions	Matching contributions
C	$85,000	$12,000	$0	$8,880
D	70,000	9,500	0	7,030
E	40,000	10,000	0	7,400
F	10,000	0	0	0

(ii) The matching rate for all NHCEs is 74% and thus the matching contributions are not disproportionate under paragraph (a)(5)(ii) of this section. Therefore, the matching contributions may be taken into account in determining the ACP for the NHCEs.
(iii) The ACP for the NHCEs is 9.75% (10.45% + 10.04% + 18.50% + 0%)/4. Because the ACP for the HCEs (12.11%) is less than 1.25 times the ACP for the NHCEs, the plan satisfies the requirements of section 401(m).

Example 5. (i) The facts are the same as *Example 4,* except that: Employee E's elective contributions are $2,000 (rather than $10,000) and pursuant to paragraph (a)(6)(ii) of this section, the $2,000 of elective contributions for Employee E are taken into account in determining the ACP rather than the ADP. In addition, Plan V provides that the higher match rate is not limited to 100% and applies only for a specified group of NHCEs. The only member of that group is Employee E. Under the plan provision, the higher match rate is a 400% match. Thus, for the 2006 plan year, the compensation, elective contributions, employee contributions, matching contributions of the eligible NHCEs (employees C through F) are shown in the following table:

Employee	Compensation	Elective contributions	Employee contributions	Matching contributions
C	$85,000	$12,000	$0	$6,000
D	70,000	9,500	0	4,750
E	40,000	2,000	0	8,000
F	10,000	0	0	0

(ii) If the entire matching contribution made on behalf of Employee E were taken into account under the ACP test, Plan V would satisfy the test, because the ACP for the NHCEs would be 9.71% (7.06% + 6.79% + 25.00% + 0%)/4. Because the ACP for the HCEs (12.11%) is less than

1.25 times what the ACP for the NHCEs would be, the plan would satisfy the requirements of section 401(m).
(iii) Pursuant to paragraph (a)(5)(ii) of this section, however, matching contributions for an eligible NHCE that exceed the greatest of 5% of compensation, the employee's elective deferrals and 2 times the product of the plan's representative matching rate and the employee's elective deferrals cannot be taken into account in applying the ACP test. The plan's representative matching rate is the lowest matching rate for any eligible employee in a group of NHCEs that is at least half of all eligible employees who are NHCEs in the plan for the plan year who make elective contributions for the plan year. For Plan V, the group of NHCEs who make such contributions consists of Employees C, D and E. The matching rates for these three employees are 50%, 50% and 400% respectively. The lowest matching rate for a group of NHCEs that is at least half of all the NHCEs who make elective contributions (or 2 NHCEs) is 50%. Because 400% is more than twice the plan's representative matching rate and the matching contributions exceed 5% of compensation, the full amount of matching contributions is not taken into account. Only $2,000 of the matching contributions made on behalf of Employee E (matching contributions that do not exceed the greatest of 5% of compensation, the employee's elective deferrals, or the product of 100% (2 times the representative matching rate) and the employee's elective deferrals) satisfy the requirements of paragraph (a)(5)(ii) of this section and may be taken into account under the ACP test. Accordingly, the ACP for the NHCEs is 5.96% (7.06% + 6.79% + 10% + 0%)/4 and the plan fails to satisfy the requirements of section 401(m)(2) and paragraph (a)(1) of this section unless the ACP failure is corrected under paragraph (b) of this section.

Example 6. (i) The facts are the same as *Example 2,* except that Plan V provides a QNEC equal to 13% of pay for Employee F that will be taken into account under the ACP test to the extent the contributions satisfy the requirements of paragraph (a)(6) of this section.
(ii) Pursuant to paragraph (a)(6)(v) of this section, a QNEC cannot be taken into account in determining an NHCE's ACR to the extent it exceeds the greater of 5% and the product of the employee's compensation and the plan's representative contribution rate. The plan's representative contribution rate is two times the lowest applicable contribution rate for any eligible employee in a group of NHCEs that is at least half of all eligible employees who are NHCEs in the plan for the plan year. For Plan V, the applicable contribution rates for Employees C, D, E and F are 7.06%, 6.79%, 12.5% and 13% respectively. The lowest applicable contribution rate for a group of NHCEs that is at least half of all the NHCEs is 12.50% (the lowest applicable contribution rate for the group of NHCEs that consists of Employees E and F).

(iii) Under paragraph (a)(6)(v)(B) of this section, the plan's representative contribution rate is 2 times 12.50% or 25.00%. Accordingly, the QNECs for Employee F can be taken into account under the ACP test only to the extent they do not exceed 25.00% of compensation. In this case, all of the QNECs for Employee F may be taken into account under the ACP test.

(iv) After taking into account the QNECs for Employee F, the ACP for the NHCEs is 9.84% (7.06% + 6.79% + 12.50% + 13%)/4. Because the ACP for the HCEs (12.11%) is less than 1.25 times the ACP for the NHCEs, the plan satisfies the requirements of section 401(m)(2) and paragraph (a)(1) of this section.

(b) *Correction of excess aggregate contributions* —

(1) *Permissible correction methods* —

(i) ***In general.*** A plan that provides for employee contributions or matching contributions does not fail to satisfy the requirements of section 401(m)(2) and paragraph (a)(1) of this section if the employer, in accordance with the terms of the plan, uses either of the following correction methods—

(A) ***Additional contributions.*** The employer makes additional contributions that are taken into account for the ACP test under this section that, in combination with the other contributions taken into account under this section, allow the plan to satisfy the requirements of paragraph (a)(1) of this section.

(B) ***Excess aggregate contributions distributed or forfeited.*** Excess aggregate contributions are distributed or forfeited in accordance with paragraph (b)(2) of this section.

(ii) ***Combination of correction methods.*** A plan may provide for the use of either of the correction methods described in paragraph (b)(1)(i) of this section, may limit employee contributions or matching contributions in a manner that prevents excess aggregate contributions from being made, or may use a combination of these methods, to avoid or correct excess aggregate contributions. If a plan uses a combination of correction methods, any contributions made under paragraph (b)(1)(i)(A) of this section must be taken into account before application of the correction method in paragraph (b)(1)(i)(B) of this section.

(iii) ***Exclusive means of correction.*** A failure to satisfy the requirements of paragraph (a)(1) of this section may not be corrected using any method other than one described in paragraph (b)(1)(i) or (ii) of this section. Thus, excess aggregate contributions for a plan year may not be corrected by forfeiting vested matching contributions, distributing nonvested matching contributions, recharacterizing matching contributions, or not making matching contributions required under the terms of the plan. Similarly, excess aggregate contributions for a plan year may not remain unallocated or be allocated to a suspense account for allocation to one or more employees in any future year. In addition, excess aggregate contributions may not be corrected using the retroactive correction rules of § 1.401(a)(4)-11(g). See § 1.401(a)(4)-11(g)(3)(vii) and (5).

(2) *Correction through distribution* —

(i) ***General rule.*** This paragraph (b)(2) contains the rules for correction of excess aggregate contributions through a distribution from the plan. Correction through a distribution generally involves a 4-step process. First, the plan must determine, in accordance with paragraph (b)(2)(ii) of this section, the total amount of excess aggregate contributions that must be distributed under the plan. Second, the plan must apportion the total amount of excess aggregate contributions among the HCEs in accordance with paragraph (b)(2)(iii) of this section. Third, the plan must determine the income allocable to excess aggregate contributions in accordance with paragraph (b)(2)(iv) of this section. Finally, the plan must distribute the

apportioned contributions, together with allocable income (or forfeit the apportioned matching contributions, if forfeitable) in accordance with paragraph (b)(2)(v) of this section. Paragraph (b)(2)(vi) of this section provides rules relating to the tax treatment of these distributions.

(ii) ***Calculation of total amount to be distributed.*** The following procedures must be used to determine the total amount of the excess aggregate contributions to be distributed—

(A) ***Calculate the dollar amount of excess aggregate contributions for each HCE.*** The amount of excess aggregate contributions attributable to an HCE for a plan year is the amount (if any) by which the HCE's contributions taken into account under this section must be reduced for the HCE's ACR to equal the highest permitted ACR under the plan. To calculate the highest permitted ACR under a plan, the ACR of the HCE with the highest ACR is reduced by the amount required to cause that HCE's ACR to equal the ACR of the HCE with the next highest ACR. If a lesser reduction would enable the plan to satisfy the requirements of paragraph (b)(2)(ii)(C) of this section, only this lesser reduction applies.

(B) ***Determination of the total amount of excess aggregate contributions.*** The process described in paragraph (b)(2)(ii)(A) of this section must be repeated until the plan would satisfy the requirements of paragraph (b)(2)(ii)(C) of this section. The sum of all reductions for all HCEs determined under paragraph (b)(2)(ii)(A) of this section is the total amount of excess aggregate contributions for the plan year.

(C) ***Satisfaction of ACP.*** A plan satisfies this paragraph (b)(2)(ii)(C) if the plan would satisfy the requirements of paragraph (a)(1)(i) of this section if the ACR for each HCE were determined after the reductions described in paragraph (b)(2)(ii)(A) of this section.

(iii) ***Apportionment of total amount of excess aggregate contributions among the HCEs.*** The following procedures must be used in apportioning the total amount of excess aggregate contributions determined under paragraph (b)(2)(ii) of this section among the HCEs—

(A) ***Calculate the dollar amount of excess aggregate contributions for each HCE.*** The contributions with respect to the HCE with the highest dollar amount of contributions taken account under this section are reduced by the amount required to cause that HCE's contributions to equal the dollar amount of contributions taken into account under this section for the HCE with the next highest dollar amount of such contributions. If a lesser apportionment to the HCE would enable the plan to apportion the total amount of excess aggregate contributions, only the lesser apportionment would apply.

(B) ***Limit on amount apportioned to any HCE.*** For purposes of this paragraph (b)(2)(iii), the contributions for an HCE who is an eligible employee in more than one plan of an employer to which matching contributions and employee contributions are made is determined by adding together all contributions otherwise taken into account in determining the ACR of the HCE under the rules of paragraph (a)(3)(ii) of this section. However, the amount of contributions apportioned with respect to an HCE must not exceed the amount of contributions taken into account under this section that were actually made on behalf of the HCE to the plan for the plan year. Thus, in the case of an HCE who is an eligible employee in more than one plan of the same employer to which employee contributions or matching contributions are made and whose ACR is calculated in accordance with paragraph (a)(3)(ii) of this section, the amount distributed under this paragraph (b)(2)(iii) will not exceed such contributions actually contributed to the plan for the plan year that are taken into account under this section for the plan year.

(C) ***Apportionment to additional HCEs.*** The procedure in paragraph (b)(2)(iii)(A) of this section must be repeated until the total amount of excess aggregate contributions have been apportioned.

(iv) ***Income allocable to excess aggregate contributions*** —

(A) ***General rule.*** For plan years beginning on or after January 1, 2008, the income allocable to excess aggregate contributions is equal to the allocable gain or loss through the end of the plan year. See paragraph (b)(2)(iv)(D) of this section for rules that apply to plan years beginning before January 1, 2008.

(B) ***Method of allocating income.*** A plan may use any reasonable method for computing the income allocable to excess aggregate contributions, provided that the method does not violate section 401(a)(4), is used consistently for all participants and for all corrective distributions under the plan for the plan year, and is used by the plan for allocating income to participants' accounts. See § 1.401(a)(4)-1(c)(8). A plan will not fail to use a reasonable method for computing the income allocable to excess contributions merely because the income allocable to excess aggregate contributions is determined on a date that is no more than 7 days before the distribution.

(C) ***Alternative method of allocating income for the plan year.*** A plan may allocate income to excess aggregate contributions for the plan year by multiplying the income for the plan year allocable to employee contributions, matching contributions and other amounts taken into account under this section (including the contributions for the year), by a fraction, the numerator of which is the excess aggregate contributions for the employee for the plan year, and the denominator of which is the sum of the—

(*1*) Account balance attributable to employee contributions and matching contributions and other amounts taken into account under this section as of the beginning of the plan year; and

(*2*) Any additional such contributions for the plan year.

(D) ***Plan years before 2008.*** For plan years beginning before January 1, 2008, the income allocable to excess aggregate contributions is determined under § 1.401(m)-2(b)(2)(iv) (as it appeared in the April 1, 2007, edition of 26 CFR part 1).

(E) ***Allocable income for recharacterized elective contributions.*** If recharacterized elective contributions are distributed as excess aggregate contributions, the income allocable to the excess aggregate contributions is determined as if recharacterized elective contributions had been distributed as excess contributions. Thus, income must be allocated to the recharacterized amounts distributed using the methods in § 1.401(k)-2(b)(2)(iv).

(v) ***Distribution and forfeiture.*** Within 12 months after the close of the plan year in which the excess aggregate contribution arose, the plan must distribute to each HCE the contributions apportioned to such HCE under paragraph (b)(2)(iii) of this section (and the allocable income) to the extent they are vested or forfeit such amounts, if forfeitable. Except as otherwise provided in this paragraph (b)(2)(v), a distribution of excess aggregate contributions must be in addition to any other distributions made during the year and must be designated as a corrective distribution by the employer. In the event of a complete termination of the plan during the plan year in which an excess aggregate contribution arose, the corrective distribution must be made

as soon as administratively feasible after the date of termination of the plan, but in no event later than 12 months after the date of termination. If the entire account balance of an HCE is distributed prior to when the plan makes a distribution of excess aggregate contributions in accordance with this paragraph (b)(2), the distribution is deemed to have been a corrective distribution of excess aggregate contributions (and income) to the extent that a corrective distribution would otherwise have been required.

(vi) *Tax treatment of corrective distributions* —

(A) ***Corrective distributions for plan years beginning on or after January 1, 2008.*** Except as otherwise provided in this paragraph (b)(2)(vi), for plan years beginning on or after January 1, 2008, a corrective distribution of excess aggregate contributions (and allocable income) is includible in the employee's gross income in the taxable year of the employee in which distributed. The portion of the distribution that is treated as an investment in the contract and is therefore not subject to tax under section 72 is determined without regard to any plan contributions other than those distributed as excess aggregate contributions. Regardless of when the corrective distribution is made, it is not subject to the early distribution tax of section 72(t). See paragraph (b)(4) of this section for additional rules relating to the employer excise tax on amounts distributed more than $2^1/_2$ months (6 months in the case of certain plans that include an eligible automatic contribution arrangement within the meaning of section 414(w)) after the end of the plan year. See also § 1.402(c)-2(c)(3) , prohibiting rollover of distributions that are excess aggregate contributions.

(B) ***Corrective distributions for plan years beginning before January 1, 2008.*** The tax treatment of corrective distributions for plan years beginning before January 1, 2008, is determined under § 1.401(m)-2(b)(2)(vi) (as it appeared in the April 1, 2007, edition of 26 CFR Part 1). If the total amount of excess aggregate contributions determined under this paragraph (b)(2), and excess contributions determined under § 1.401(k)-2(b)(2) distributed to a recipient under a plan for any plan year is less than $100 (excluding income), a corrective distribution of excess aggregate contributions (and income) is includible in gross income in the recipient's taxable year in which the corrective distribution is made, except to the extent the corrective distribution is a return of employee contributions, or as provided in paragraph (b)(2)(vi)(C) of this section.

(C) ***Corrective distributions attributable to designated Roth contributions.*** Notwithstanding paragraphs (b)(2)(vi)(A) and (B) of this section, a distribution of excess aggregate contributions is not includible in gross income to the extent it represents a distribution of designated Roth contributions. However, the income allocable to a corrective distribution of excess aggregate contributions that are designated Roth contributions is taxed in accordance with paragraph (b)(2)(vi)(A) or (B) of this section (*i.e.*, in the same manner as income allocable to a corrective distribution of excess aggregate contributions that are not designated Roth contributions).

(3) *Other rules* —

(i) ***No employee or spousal consent required.*** A distribution of excess aggregate contributions (and income) may be made under the terms of the plan without regard to any notice or consent otherwise required under sections 411(a)(11) and 417.

(ii) ***Treatment of corrective distributions and forfeited contributions as employer contributions.*** Excess aggregate contributions (other than amounts attributable to employee contributions), including forfeited matching contributions, are treated as employer contributions for purposes of sections 404 and 415 even if distributed from the plan. Forfeited matching contributions that are reallocated to the accounts of other participants for the plan year in which the forfeiture occurs are treated under section 415 as annual additions for the participants to whose accounts they are reallocated and for the participants from whose accounts they are forfeited.

(iii) ***No reduction of required minimum distribution.*** A distribution of excess aggregate contributions (and income) is not treated as a distribution for purposes of determining whether the plan satisfies the minimum distribution requirements of section 401(a)(9). See §§ 1.401(a)(9)-5(g)(2)(ii) and 1.402(c)-2(c)(3)

(iv) ***Partial correction.*** Any distribution of less than the entire amount of excess aggregate contributions (and allocable income) is treated as a pro rata distribution of excess aggregate contributions and allocable income.

(v) ***Matching contributions on excess contributions, excess deferrals and excess aggregate contributions*** —

(A) ***Corrective distributions not permitted.*** A matching contribution may not be distributed merely because the contribution to which it relates is treated as an excess contribution, excess deferral, or excess aggregate contribution.

(B) ***Coordination with section 401(a)(4).*** A matching contribution is taken into account under section 401(a)(4) even if the match is distributed, unless the distributed contribution is an excess aggregate contribution. This requires that, after correction of excess aggregate contributions, each level of matching contributions be currently and effectively available to a group of employees that satisfies section 410(b). See § 1.401(a)(4)-4(e)(3)(iii)(G). Thus, a plan that provides the same rate of matching contributions to all employees will not meet the requirements of section 401(a)(4) if employee contributions are distributed under this paragraph (b) to HCEs to the extent needed to meet the requirements of section 401(m)(2), while matching contributions attributable to employee contributions remain allocated to the HCEs' accounts. This is because the level of matching contributions will be higher for a group of employees that consists entirely of HCEs. Under section 411(a)(3)(G) and § 1.411(a)-4(b)(7), a plan may forfeit matching contributions attributable to excess contributions, excess aggregate contributions and excess deferrals to avoid a violation of section 401(a)(4). See also § 1.401(a)(4)-11(g)(3)(vii)(B) regarding the use of additional allocations to the accounts of NHCEs for the purpose of correcting a discriminatory rate of matching contributions. A plan is permitted to provide for which contributions are to be distributed to satisfy the ACP test so as to avoid discriminatory matching rates that would otherwise violate section 401(a)(4). For example, the plan may provide that unmatched employee contributions will be distributed before matched employee contributions.

(vi) ***No requirement for recalculation.*** If the distributions and forfeitures described in paragraph (b)(2) of this section are made, the employee contributions and matching contributions are treated as meeting the nondiscrimination test of section 401(m)(2) regardless of whether the ACP for the HCEs, if recalculated after the distributions and forfeitures, would satisfy section 401(m)(2).

(4) *Failure to timely correct* —

(i) ***Failure to correct within 2 1/2 months after end of plan year.*** If a plan does not correct excess aggregate contributions within 2 1/2 months after the close of the plan year for which the excess aggregate contributions are made, the employer will be liable for a 10% excise tax on the amount of the excess aggregate contributions. See section 4979 and § 54.4979-1 of this chapter. Qualified nonelective contributions properly taken into account under paragraph (a)(6) of this section for a plan year may enable a plan to avoid having excess aggregate contributions, even if the contributions are made after the close of the 2 1/2 month period.

(ii) ***Failure to correct within 12 months after end of plan year.*** If excess aggregate contributions are not corrected within 12 months after the close of the plan year for which they were made, the plan will fail to meet the requirements of section 401(a)(4) for the plan year for which the excess aggregate contributions were made and all subsequent plan years in which the excess aggregate contributions remain in the trust.

(iii) ***Special rule for eligible automatic contribution arrangements.*** In the case of excess aggregate contributions under a plan that includes an eligible automatic contribution arrangement (within the meaning of section 414(w)), 6 months is substituted for 2 1/2 months in paragraph (b)(4)(i) of this section. The additional time described in this paragraph (b)(4)(iii) applies to a distribution of excess aggregate contributions for a plan year beginning on or after January 1, 2010 only where all the eligible NHCEs and eligible HCEs are covered employees under the eligible automatic contribution arrangement (within the meaning of § 1.414(w)-1(e)(3)) for the entire plan year (or for the portion of the plan year that the eligible NHCEs and eligible HCEs are eligible employees).

(5) ***Examples.*** The following examples illustrate the application of this paragraph. See also § 1.401(k)-2(b) for additional examples of the parallel correction rules applicable to cash or deferred arrangements. For purposes of these examples, none of the plans provide for catch-up contributions under section 414(v). The examples are as follows:

Example 1. (i) Employer L maintains a plan that provides for employee contributions and fully vested matching contributions. The plan provides that failures of the ACP test are corrected by distribution. In 2006, the ACP for the eligible NHCEs is 6%. Thus, the ACP for the eligible HCEs may not exceed 8%. The three HCEs who participate have the following compensation, contributions, and ACRs:

Employee	Compensation	Employee contributions and matching contributions	Actual contribution ratio (percent)
A	200,000	14,000	7
B	150,000	13,500	9
C	100,000	12,000	12

Employee	Compensation	Employee contributions and matching contributions	Actual contribution ratio (percent)
			Average 9.33

(ii) The total amount of excess aggregate contributions for the HCEs is determined under paragraph (b)(2)(ii) of this section as follows: the matching and employee contributions of Employee C (the HCE with the highest ACR) is reduced by 3% of compensation (or $3,000) in order to reduce the ACR of that HCE to 9%, which is the ACR of Employee B.
(iii) Because the ACP of the HCEs determined after the $3,000 reduction still exceeds 8%, further reductions in matching contributions and employee contributions are necessary in order to reduce the ACP of the HCEs to 8%. The employee contributions and matching contributions for Employees B and C are reduced by an additional .5% of compensation or $1,250 ($750 and $500 respectively). Because the ACP of the HCEs determined after the reductions now equals 8%, the plan would satisfy the requirements of (a)(1)(ii) of this section.

(iv) The total amount of excess aggregate contributions ($4,250) is apportioned among the HCEs under paragraph (b)(2)(iii) of this section first to the HCE with the highest amount of matching contributions and employee contributions. Therefore, Employee A is apportioned $500 (the amount required to cause A's matching contributions and employee contributions to equal the next highest dollar amount of matching contributions and employee contributions).

(v) Because the total amount of excess aggregate contributions has not been apportioned, further apportionment is necessary. The balance ($3,750) of the total amount of excess aggregate contributions is apportioned equally among Employees A and B ($1,500 to each, the amount required to cause their contributions to equal the next highest dollar amount of matching contributions and employee contributions).

(vi) Because the total amount of excess aggregate contributions has not been apportioned, further apportionment is necessary. The balance ($750) of the total amount of excess aggregate contributions is apportioned equally among Employees A, B and C ($250 to each, the amount required to allocate the total amount of excess aggregate contributions for the plan).

(vii) Therefore, the plan will satisfy the requirements of paragraph (a)(1) of this section if, by the end of the 12 month period following the end of the 2006 plan year, Employee A receives a corrective distribution of excess aggregate contributions equal to $2,250 ($500 + $1,500 +

$250) and allocable income, Employee B receives a corrective distribution of $250 and allocable income and Employee C receives a corrective distribution of $1,750 ($1,500 + $250) and allocable income.

Example 2. (i) Employee D is the sole HCE who is eligible to participate in a cash or deferred arrangement maintained by Employer M. The plan that includes the arrangement, Plan X, permits employee contributions and provides a fully vested matching contribution equal to 50% of elective contributions. Plan X is a calendar year plan. Plan X corrects excess contributions by recharacterization and provides that failures of the ACP test are corrected by distribution. For the 2006 plan year, D's compensation is $200,000, and D's elective contributions are $15,000. The actual deferral percentages and actual contribution percentages for Employee D and the other eligible employees under Plan X are shown in the following table:

	Actual deferral percentage	Actual contribution percentage
Employee D	7.5	3.75
NHCEs	4	2

(ii) In February 2007, Employer M determines that D's actual deferral ratio must be reduced to 6%, or $12,000, which requires a recharacterization of $3,000 as an employee contribution. This increases D's actual contribution ratio to 5.25% ($7,500 in matching contributions plus $3,000 recharacterized as employee contributions, divided by $200,000 in compensation). Since D's actual contribution ratio must be limited to 4% for Plan X to satisfy the actual contribution percentage test, Plan X must distribute 1.25% or $2,500 of D's employee contributions and matching contributions together with allocable income. If $2,500 in matching contributions and allocable income is distributed, this will correct the excess aggregate contributions and will not result in a discriminatory rate of matching contributions. See *Example 8.*

Example 3. (i) The facts are the same as in *Example 2,* except that Employee D also had elective contributions under Plan Y, maintained by an employer unrelated to M. In January 2007, D requests and receives a distribution of $1,200 in excess deferrals from Plan X. Pursuant to the terms of Plan X, D forfeits the $600 match on the excess deferrals to correct a discriminatory rate of match.
(ii) The $3,000 that would otherwise have been recharacterized for Plan X to satisfy the actual deferral percentage test is reduced by the $1,200 already distributed as an excess deferral, leaving $1,800 to be recharacterized. See § 1.401(k)-2(b)(4)(i)(A). D's actual contribution ratio

is now 4.35% ($7,500 in matching contributions plus $1,800 in recharacterized contributions less $600 forfeited matching contributions attributable to the excess deferrals, divided by $200,000 in compensation).

(iii) The matching and employee contributions for Employee D must be reduced by .35% of compensation in order to reduce the ACP of the HCEs to 4%. The plan must provide for forfeiture of additional matching contributions to prevent a discriminatory rate of matching contributions. See *Example 8*.

Example 4. (i) The facts are the same as in *Example 3,* except that D does not request a distribution of excess deferrals until March 2007. Employer X has already recharacterized $3,000 as employee contributions.
(ii) Under § 1.402(g)-1(e)(6), the amount of excess deferrals is reduced by the amount of excess contributions that are recharacterized. Because the amount recharacterized is greater than the excess deferrals, Plan X is neither required nor permitted to make a distribution of excess deferrals, and the recharacterization has corrected the excess deferrals.

Example 5. (i) For the 2006 plan year, Employee F defers $10,000 under Plan M and $6,000 under Plan N. Plans M and N, which have calendar plan years are maintained by unrelated employers. Plan M provides a fully vested, 100% matching contribution, does not take elective contributions into account under section 401(m) or take matching contributions into account under section 401(k) and provides that excess contributions and excess aggregate contributions are corrected by distribution. Under Plan M, Employee F is allocated excess contributions of $600 and excess aggregate contributions of $1,600. Employee F timely requests and receives a distribution of the $1,000 excess deferral from Plan M and, pursuant to the terms of Plan M, forfeits the corresponding $1,000 matching contribution.
(ii) No distribution is required or permitted to correct the excess contributions because $1,000 has been distributed by Plan M as excess deferrals. The distribution required to correct the excess aggregate contributions (after forfeiting the matching contribution) is $600 ($1,600 in excess aggregate contributions minus $1,000 in forfeited matching contributions). If Employee F had corrected the excess deferrals of $1,000 by withdrawing $1,000 from Plan N, Plan M would have had to correct the $600 excess contributions in Plan M by distributing $600. Since Employee F then would have forfeited $600 (instead of $1,000) in matching contributions, Employee F would have had $1,000 ($1,600 in excess aggregate contributions minus $600 in forfeited matching contributions) remaining of excess aggregate contributions in Plan M. These would have been corrected by distributing an additional $1,000 from Plan M.

Example 6. (i) Employee G is the sole HCE in a profit sharing plan under which the employer matches 100% of employee contributions up to 2% of compensation, and 50% of employee contributions up to the next 4% of compensation. For the 2008 plan year, Employee G has

compensation of $100,000 and makes a 7% employee contribution of $7,000. Employee G receives a 4% matching contribution or $4,000. Thus, Employee G's actual contribution ratio (ACR) is 11%. The actual contribution percentage for the NHCEs is 5%, and the employer determines that Employee G's ACR must be reduced to 7% to comply with the rules of section 401(m).
(ii) In this case, the plan satisfies the requirements of section if it distributes the unmatched employee contributions of $1,000, and $2,000 of matched employee contributions with their related matches of $1,000. This would leave Employee G with 4% employee contributions, and 3% matching contributions, for an ACR of 7%. Alternatively, the plan could distribute all matching contributions and satisfy this section. However, the plan could not distribute $4,000 of Employee G's employee contributions without forfeiting the related matching contributions because this would result in a discriminatory rate of matching contributions. See also *Example 7*.

Example 7. (i) Employee H is an HCE in Employer X's profit sharing plan, which matches 100% of employee contributions up to 5% of compensation. The matching contribution is vested at the rate of 20% per year. In 2006, Employee H makes $5,000 in employee contributions and receives $5,000 of matching contributions. Employee H is 60% vested in the matching contributions at the end of the 2006 plan year. In February 2007, Employer X determines that Employee H has excess aggregate contributions of $1,000. The plan provides that only matching contributions will be distributed as excess aggregate contributions.
(ii) Employer X has two options available in distributing Employee H's excess aggregate contributions. The first option is to distribute $600 of vested matching contributions and forfeit $400 of nonvested matching contributions. These amounts are in proportion to Employee H's vested and nonvested interests in all matching contributions. The second option is to distribute $1,000 of vested matching contributions, leaving the nonvested matching contributions in the plan.

(iii) If the second option is chosen, the plan must also provide a separate vesting schedule for vesting these nonvested matching contributions. This is necessary because the nonvested matching contributions must vest as rapidly as they would have had no distribution been made. Thus, 50% must vest in each of the next 2 years.

(iv) The plan will not satisfy the nondiscriminatory availability requirement of section 401(a)(4) if only nonvested matching contributions are forfeited because the effect is that matching contributions for HCEs vest more rapidly than those for NHCEs. See § 1.401(m)-2(b)(3)(v)(B).

Example 8. (i) Employer Y maintains a calendar year profit sharing plan that includes a cash or deferred arrangement. Elective contributions are matched at the rate of 100%. After-tax employee contributions are permitted under the plan only for NHCEs and are matched at the

same rate. No employees make excess deferrals. Employee J, an HCE, makes an $8,000 elective contribution and receives an $8,000 matching contribution.
(ii) Employer Y performs the actual deferral percentage (ADP) and the actual contribution percentage (ACP). To correct failures of the ADP and ACP tests, the plan distributes to A $1,000 of excess contributions and $500 of excess aggregate contributions. After the distributions, Employee J's contributions for the year are $7,000 of elective contributions and $7,500 of matching contributions. As a result, Employee J has received a higher effective rate of matching contributions than NHCEs ($7,000 of elective contributions matched by $7,500 is an effective matching rate of 107 percent). If this amount remains in Employee J's account without correction, it will cause the plan to fail to satisfy section 401(a)(4), because only an HCE receives the higher matching contribution rate. The remaining $500 matching contribution may be forfeited (but not distributed) under section 411(a)(3)(G), if the plan so provides. The plan could instead correct the discriminatory rate of matching contributions by making additional allocations to the accounts of NHCEs. See § 1.401(a)(4)-11(g)(3)(vii)(B) and (6), Example 7.

(c) ***Additional rules for prior year testing method*** —

(1) ***Rules for change in testing method.*** A plan is permitted to change from the prior year testing method to the current year testing method for any plan year. A plan is permitted to change from the current year testing method to the prior year testing method only in situations described in § 1.401(k)-2(c)(1)(ii). For purposes of this paragraph (c)(1), a plan that uses the safe harbor method described in § 1.401(m)-3 or a SIMPLE 401(k) plan is treated as using the current year testing method for that plan year

(2) ***Calculation of ACP under the prior year testing method for the first plan year*** —

(i) ***Plans that are not successor plans.*** If, for the first plan year of any plan (other than a successor plan), a plan uses the prior year testing method, the plan is permitted to use either that first plan year as the applicable year for determining the ACP for the eligible NHCEs, or 3% as the ACP for eligible NHCEs, for applying the ACP test for that first plan year. A plan (other than a successor plan) that uses the prior year testing method but has elected for its first plan year to use that year as the applicable year for determining the ACP for the eligible NHCEs is not treated as changing its testing method in the second plan year and is not subject to the limitations on double counting under paragraph (a)(6)(vi) of this section for the second plan year.

(ii) ***First plan year defined.*** For purposes of this paragraph (c)(2), the first plan year of any plan is the first year in which the plan provides for employee contributions or matching contributions. Thus, the rules of this paragraph (c)(2) do not apply to a plan (within the meaning of § 1.410(b)-7) for a plan year if for such plan year the plan is aggregated under § 1.401(m)-1(b)(4) with any other plan that provides for employee or matching contributions in the prior year.

(iii) ***Plans that are successor plans.*** A plan is a successor plan if 50% or more of the eligible employees for the first plan year were eligible employees under another plan maintained by the employer in the prior year that provides for employee contributions or matching contributions.

If a plan that is a successor plan uses the prior year testing method for its first plan year, the ACP for the group of NHCEs for the applicable year must be determined under paragraph (c)(4) of this section.

(3) ***Plans using different testing methods for the ACP and ADP test.*** Except as otherwise provided in this paragraph (c)(3), a plan may use the current year testing method or prior year testing method for the ACP test for a plan year without regard to whether the current year testing method or prior year testing method is used for the ADP test for that year. For example, a plan may use the prior year testing method for the ACP test and the current year testing method for its ADP test for the plan year. However, plans that use different testing methods under this paragraph (c)(3) cannot use—

(i) The recharacterization method of § 1.401(k)-2(b)(3) to correct excess contributions for a plan year;

(ii) The rules of paragraph (a)(6)(ii) of this section to take elective contributions into account under the ACP test (rather than the ADP test); or

(iii) The rules of paragraph § 1.401(k)-2(a)(6) to take qualified matching contributions into account under the ADP test (rather than the ACP test).

(4) ***Rules for plan coverage change*** —

(i) ***In general.*** A plan that uses the prior year testing method that experiences a plan coverage change during a plan year satisfies the requirements of this section for that year only if the plan provides that the ACP for the NHCEs for the plan year is the weighted average of the ACPs for the prior year subgroups.

(ii) ***Optional rule for minor plan coverage changes.*** If a plan coverage change occurs and 90% or more of the total number of the NHCEs from all prior year subgroups are from a single prior year subgroup, then, in lieu of using the weighted averages described in paragraph (c)(4)(i) of this section, the plan may provide that the ACP for the group of eligible NHCEs for the prior year under the plan is the ACP of the NHCEs for the prior year of the plan under which that single prior year subgroup was eligible.

(iii) ***Definitions.*** The following definitions apply for purposes of this paragraph (c)(4)—

(A) ***Plan coverage change.*** The term *plan coverage change* means a change in the group or groups of eligible employees under a plan on account of—

(*1*) The establishment or amendment of a plan;

(*2*) A plan merger or spinoff under section 414(l);

(*3*) A change in the way plans (within the meaning of § 1.410(b)-7) are combined or separated for purposes of § 1.401(m)-1(b)(4) (*e.g.*, permissively aggregating plans not previously aggregated under § 1.410(b)-7(d), or ceasing to permissively aggregate plans under § 1.410(b)-7(d));

(*4*) A reclassification of a substantial group of employees that has the same effect as amending the plan (*e.g.*, a transfer of a substantial group of employees from one division to another division); or

(*5*) A combination of any of paragraphs (c)(4)(iii)(A)(*1*) through (*4*) of this section.

(B) ***Prior year subgroup.*** The term *prior year subgroup* means all NHCEs for the prior plan year who, in the prior year, were eligible employees under a specific plan that provides for employee contributions or matching contributions maintained by the employer and who would have been eligible employees in the prior year under the plan being tested if the plan coverage change had first been effective as of the first day of the prior plan year instead of first being effective during the plan year. The determination of whether an NHCE is a member of a prior year subgroup is made without regard to whether the NHCE terminated employment during the prior year.

(C) ***Weighted average of the ACPs for the prior year subgroups.*** The term *weighted average of the ACPs for the prior year subgroups* means the sum, for all prior year subgroups, of the adjusted ACPs for the plan year. The term *adjusted ACP with respect to a prior year subgroup* means the ACP for the prior plan year of the specific plan under which the members of the prior year subgroup were eligible employees on the first day of the prior plan year, multiplied by a fraction, the numerator of which is the number of NHCEs in the prior year subgroup and denominator of which is the total number of NHCEs in all prior year subgroups.

(iv) ***Example.*** The following example illustrate the application of this paragraph (c)(4). See also § 1.401(k)-2(c)(4) for examples of the parallel rules applicable to the ADP test. The example is as follows:

Example. (i) Employer B maintains two plans, Plan N and Plan P, each of which provides for employee contributions or matching contributions. The plans were not permissively aggregated under § 1.410(b)-7(d) for the 2005 testing year. Both plans use the prior year testing method. Plan N had 300 eligible employees who were NHCEs for 2005, and their ACP for that year was 6%. Plan P had 100 eligible employees who were NHCEs for 2005, and the ACP for those NHCEs for that plan was 4%. Plan N and Plan P are permissively aggregated under § 1.410(b)-7(d) for the 2006 plan year.
(ii) The permissive aggregation of Plan N and Plan P for the 2006 testing year under § 1.410(b)-7(d) is a plan coverage change that results in treating the plans as one plan (Plan NP). Therefore, the prior year ACP for the NHCEs under Plan NP for the 2006 testing year is the weighted average of the ACPs for the prior year subgroups.

(iii) The first step in determining the weighted average of the ACPs for the prior year subgroups is to identify the prior year subgroups. With respect to the 2006 testing year, an employee is a member of a prior year subgroup if the employee was an NHCE of Employer B for the 2005 plan year, was an eligible employee for the 2005 plan year under any section 401(k) plan maintained by Employer B, and would have been an eligible employee in the 2005 plan year under Plan NP if Plan N and Plan P had been permissively aggregated under § 1.410(b)-7(d) for that plan year. The NHCEs who were eligible employees under separate plans for the 2005 plan year comprise separate prior year subgroups. Thus, there are two prior year subgroups under Plan NP for the 2006 testing year: the 300 NHCEs who were eligible employees under Plan N for the 2005 plan year and the 100 NHCEs who were eligible employees under Plan P for the 2005 plan year.

(iv) The weighted average of the ACPs for the prior year subgroups is the sum of the adjusted ACP with respect to the prior year subgroup that consists of the NHCEs who were eligible employees under Plan N, and the adjusted ACP with respect to the prior year subgroup that consists of the NHCEs who were eligible employees under Plan P. The adjusted ACP for the prior year subgroup that consists of the NHCEs who were eligible employees under Plan N is 4.5%, calculated as follows: 6% (the ACP for the NHCEs under Plan N for the prior year) × 300/400 (the number of NHCEs in that prior year subgroup divided by the total number of NHCEs in all prior year subgroups), which equals 4.5%. The adjusted ACP for the prior year subgroup that consists of the NHCEs who were eligible employees under Plan P is 1%, calculated as follows: 4% (the ACP for the NHCEs under Plan P for the prior year) × 100/400 (the number of NHCEs in that prior year subgroup divided by the total number of NHCEs in all prior year subgroups), which equals 1%. Thus, the prior year ACP for NHCEs under Plan NP for the 2006 testing year is 5.5% (the sum of adjusted ACPs for the prior year subgroups, 4.5% plus 1%).

[T.D. 9169, 69 FR 78184, Dec. 29, 2004, as amended by T.D. 9237, 71 FR 10, Jan. 3, 2006; T.D. 9447, 74 FR 8210, Feb. 24, 2009; 74 FR 12551, Mar. 25, 2009; T.D. 10001, 89 FR 85906, July 19, 2024]

§ 1.401(m)-3 Safe harbor requirements.

(a) ***ACP test safe harbor*** —

(1) ***Section 401(m)(11) safe harbor.*** Matching contributions under a plan satisfy the ACP safe harbor provisions of section 401(m)(11) for a plan year if the plan satisfies the safe harbor contribution requirement of paragraph (b) or (c) of this section for the plan year, the limitations on matching contributions of paragraph (d) of this section, the notice requirement of paragraph (e) of this section, the plan year requirements of paragraph (f) of this section, and the additional rules of paragraphs (g), (h) and (j) of this section, as applicable.

(2) ***Section 401(m)(12) safe harbor.*** For a plan year beginning on or after January 1, 2008, matching contributions under a plan satisfy the ACP safe harbor provisions of section 401(m)(12) for a plan year if the matching contributions are made with respect to an automatic contribution arrangement described in paragraph § 1.401(k)-3(j) that satisfies the safe harbor requirements of § 1.401(k)-3, the limitations on matching contributions of paragraph (d) of this section, the notice requirement of paragraph (e) of this section, the plan year requirements of paragraph (f) of this section, and the additional rules of paragraphs (g), (h) and (j) of this section, as applicable.

(3) ***Requirements applicable to safe harbor contributions.*** Pursuant to sections 401(k)(12)(E)(ii) and 401(k)(13)(D)(iv), the safe harbor contribution requirement of paragraph (b) or (c) of this section and § 1.401(k)-3(k) must be satisfied without regard to section 401(l). The contributions made under paragraphs (b) and (c) of this section and § 1.401(k)-3(k) are referred to as safe harbor nonelective contributions and safe harbor matching contributions.

(b) ***Safe harbor nonelective contribution requirement.*** A plan satisfies the safe harbor nonelective contribution requirement of this paragraph (b) if it satisfies the safe harbor nonelective contribution requirement of § 1.401(k)-3(b).

(c) ***Safe harbor matching contribution requirement.*** A plan satisfies the safe harbor matching contribution requirement of this paragraph (c) if it satisfies the safe harbor matching contribution requirement of § 1.401(k)-3(c).

(d) *Limitation on contributions—*

(1) ***General rule.*** A plan that provides for matching contributions meets the requirements of this section only if it satisfies the limitations on contributions set forth in this paragraph (d).

(2) ***Matching rate must not increase.*** A plan that provides for matching contributions meets the requirements of this paragraph (d) only if the ratio of matching contributions on behalf of an employee under the plan for a plan year to the employee's elective deferrals and employee contributions, does not increase as the amount of an employee's elective deferrals and employee contributions increases.

(3) ***Limit on matching contributions.*** A plan that provides for matching contributions satisfies the requirements of this section only if—

(i) Matching contributions are not made with respect to elective deferrals or employee contributions that exceed 6% of the employee's safe harbor compensation (within the meaning of § 1.401(k)-3(b)(2)); and

(ii) Matching contributions that are discretionary do not exceed 4% of the employee's safe harbor compensation.

(4) ***Limitation on rate of match.*** A plan meets the requirements of this section only if the ratio of matching contributions on behalf of an HCE to that HCE's elective deferrals or employee contributions (or the sum of elective deferrals and employee contributions) for that plan year is no greater than the ratio of matching contributions to elective deferrals or employee contributions (or the sum of elective deferrals and employee contributions) that would apply with respect to any NHCE for whom the elective deferrals or employee contributions (or the sum of elective deferrals and employee contributions) are the same percentage of safe harbor compensation. An employee is taken into account for purposes of this paragraph (d)(4) if the employee is an eligible employee under the cash or deferred arrangement with respect to which the contributions required by paragraph (b) or (c) of this section are being made for a plan year. A plan will not fail to satisfy this paragraph (d)(4) merely because the plan provides that matching contributions will be made separately with respect to each payroll period (or with respect to all payroll periods ending with or within each month or quarter of a plan year) taken into account under the plan for the plan year, provided that matching contributions with respect to any elective deferrals or employee contributions made during a plan year quarter are contributed to the plan by the last day of the immediately following plan year quarter.

(5) ***HCEs participating in multiple plans.*** The rules of section 401(m)(2)(B) and § 1.401(m)-2(a)(3)(ii) apply for purposes of determining the rate of matching contributions under paragraph (d)(4) of this section. However, a plan will not fail to satisfy the safe harbor matching contribution requirements of this section merely because an HCE participates during the plan year in more than one plan that provides for matching contributions, provided that—

(i) The HCE is not simultaneously an eligible employee under two plans that provide for matching contributions maintained by an employer for a plan year; and

(ii) The period used to determine compensation for purposes of determining matching contributions under each such plan is limited to periods when the HCE participated in the plan.

(6) ***Permissible restrictions on elective deferrals by NHCEs —***

(i) ***General rule.*** A plan does not satisfy the safe harbor requirements of this section, if elective deferrals or employee contributions by NHCEs are restricted, unless the restrictions are permitted by this paragraph (d)(6).

(ii) ***Restrictions on election periods.*** A plan may limit the frequency and duration of periods in which eligible employees may make or change contribution elections under a plan. However, an employee must have a reasonable opportunity (including a reasonable period after receipt of the notice described in paragraph (e) of this section) to make or change a contribution election for the plan year. For purposes of this section, a 30-day period is deemed to be a reasonable period to make or change a contribution election.

(iii) ***Restrictions on amount of contributions.*** A plan is permitted to limit the amount of contributions that may be made by an eligible employee under a plan, provided that each NHCE who is an eligible employee is permitted (unless the employee is restricted under paragraph (d)(6)(v) of this section) to make contributions in an amount that is at least sufficient to receive the maximum amount of matching contributions available under the plan for the plan year, and the employee is permitted to elect any lesser amount of contributions. However, a plan may require eligible employees to make contribution elections in whole percentages of compensation or whole dollar amounts.

(iv) ***Restrictions on types of compensation that may be deferred.*** A plan may limit the types of compensation that may be deferred or contributed by an eligible employee under a plan, provided that each eligible NHCE is permitted to make contributions under a definition of compensation that would be a reasonable definition of compensation within the meaning of § 1.414(s)-1(d)(2). Thus, the definition of compensation from which contributions may be made is not required to satisfy the nondiscrimination requirement of § 1.414(s)-1(d)(3).

(v) ***Restrictions due to limitations under the Internal Revenue Code.*** A plan may limit the amount of contributions made by an eligible employee under a plan—

(A) Because of the limitations of section 402(g) or section 415;

(B) Due to a suspension under section 414(u)(12)(B)(ii); or

(C) Because, on account of a hardship distribution made before January 1, 2020, an employee's ability to make contributions has been suspended for 6 months.

(e) ***Notice requirement.*** A plan satisfies the notice requirement of this paragraph (e) if it satisfies the notice requirement of § 1.401(k)-3(d).

(f) ***Plan year requirement*** —

(1) ***General rule.*** Except as provided in this paragraph (f) or in paragraph (g) of this section, a plan will fail to satisfy the requirements of section 401(m)(11), section 401(m)(12), and this section unless plan provisions that satisfy the rules of this section are adopted before the first day of that plan year and remain in effect for an entire 12-month plan year. In addition, except as provided in paragraph (h) of this section or in guidance of general applicability published in the Internal Revenue Bulletin (see § 601.601(d)(2)(ii)(*b*) of this chapter), a plan which includes provisions that satisfy the rules of this section will not satisfy the requirements of § 1.401(m)-1(b) if it is amended to change such provisions for that plan year. Moreover, if, as described in paragraph (j)(4) of this section, safe harbor

matching or nonelective contributions will be made to another plan for a plan year, provisions under that other plan specifying that the safe harbor contributions will be made and providing that the contributions will be QNECs or QMACs must also be adopted before the first day of that plan year.

(2) ***Initial plan year.*** A newly established plan (other than a successor plan within the meaning of § 1.401(m)-2(c)(2)(iii)) will not be treated as violating the requirements of this paragraph (f) merely because the plan year is less than 12 months, provided that the plan year is at least 3 months long (or, in the case of a newly established employer that establishes the plan as soon as administratively feasible after the employer comes into existence, a shorter period). Similarly, a plan will not fail to satisfy the requirements of this paragraph (f) for the first plan year in which matching contributions are provided under the plan provided that—

(i) The plan is not a successor plan; and

(ii) The amendment providing for matching contributions is made effective at the same time as the adoption of a cash or deferred arrangement that satisfies the requirements of § 1.401(k)-3, taking into account the rules of § 1.401(k)-3(e)(2).

(3) ***Change of plan year.*** A plan that has a short plan year as a result of changing its plan year will not fail to satisfy the requirements of paragraph (f)(1) of this section merely because the plan year has less than 12 months, provided that—

(i) The plan satisfied the requirements of this section for the immediately preceding plan year; and

(ii) The plan satisfies the requirements of this section (determined without regard to paragraph (h) of this section) for the immediately following plan year or for the immediately following 12 months if the immediately following plan year is less than 12 months.

(4) ***Final plan year.*** A plan that terminates during a plan year will not fail to satisfy the requirements of paragraph (f)(1) of this section merely because the final plan year is less than 12 months, provided that the plan satisfies the requirement of this section through the date of termination and either—

(i) The plan would satisfy the requirements of paragraph (h) of this section, treating the termination of the plan as a reduction or suspension of safe harbor contributions, other than the requirements of paragraph (h)(1)(i)(A) or (h)(1)(ii)(A) of this section (relating to the employer's financial condition and information included in the initial notice for the plan year) and paragraph (h)(1)(i)(D) or (h)(1)(ii)(D) of this section (requiring that employees have a reasonable opportunity to change their cash or deferred elections and, if applicable, employee contribution elections); or

(ii) The plan termination is in connection with a transaction described in section 410(b)(6)(C) or the employer incurs a substantial business hardship, comparable to a substantial business hardship described in section 412(c).

(g) ***Plan amendments adopting nonelective safe harbor contributions.*** Notwithstanding paragraph (f)(1) of this section, a plan that provides for the use of the current year testing method may be amended after the first day of the plan year and no later than 30 days before the last day of the plan year to adopt the safe harbor method of this section, effective as of the first day of the plan year, using nonelective contributions under paragraph (b) of this section if the plan satisfies the requirements of § 1.401(k)-3(f).

(h) ***Permissible reduction or suspension of safe harbor contributions*** —

(1) ***General rule*** —

(i) ***Matching contributions.*** A plan that provides for safe harbor matching contributions intended to satisfy the requirements of paragraph (c) of this section for a plan year will not fail to satisfy the requirements of section 401(m)(2) merely because the plan is amended during the plan year to reduce or suspend safe harbor matching contributions on future elective deferrals (and, if applicable, employee contributions) provided that—

(A) In the case of plan years beginning on or after January 1, 2015, the employer either—

(*1*) Is operating at an economic loss as described in section 412(c)(2)(A) for the plan year; or

(*2*) Includes in the notice described in paragraph (e) of this section, a statement that the plan may be amended during the plan year to reduce or suspend safe harbor matching contributions and that the reduction or suspension will not apply until at least 30 days after all eligible employees are provided notice of the reduction or suspension;

(B) All eligible employees are provided a supplemental notice that satisfies the requirements of paragraph (h)(2) of this section;

(C) The reduction or suspension of safe harbor matching contributions is effective no earlier than the later of the date the amendment is adopted or 30 days after eligible employees are provided the supplemental notice described in paragraph (h)(2) of this section;

(D) Eligible employees are given a reasonable opportunity (including a reasonable period after receipt of the supplemental notice) prior to the reduction or suspension of safe harbor matching contributions to change their cash or deferred elections and, if applicable, their employee contribution elections;

(E) The plan is amended to provide that the ACP test will be satisfied for the entire plan year in which the reduction or suspension occurs using the current year testing method described in § 1.401(m)-2(a)(2)(ii); and

(F) The plan satisfies the requirements of this section (other than this paragraph (h)) with respect to amounts deferred through the effective date of the amendment.

(ii) ***Nonelective contributions.*** For plan amendments adopted after May 18, 2009, a plan that provides for safe harbor nonelective contributions intended to satisfy the requirements of paragraph (b) of this section will not fail to satisfy the requirements of section 401(m)(2) for the plan year merely because the plan is amended during the plan year to reduce or suspend safe harbor nonelective contributions provided that—

(A) The employer either—

(*1*) Is operating at an economic loss as described in section 412(c)(2)(A) for the plan year; or

(*2*) Includes in the notice described in paragraph (e) of this section a statement that the plan may be amended during the plan year to reduce or suspend safe harbor nonelective contributions and that the reduction or suspension will not apply until at least 30 days after all eligible employees are provided notice of the reduction or suspension;

(B) All eligible employees are provided a supplemental notice that satisfies the requirements of paragraph (h)(2) of this section;

(C) The reduction or suspension of safe harbor nonelective contributions is effective no earlier than the later of the date the amendment is adopted or 30 days after eligible employees are provided the supplemental notice described in paragraph (h)(2) of this section;

(D) Eligible employees are given a reasonable opportunity (including a reasonable period after receipt of the supplemental notice) prior to the reduction or suspension of nonelective contributions to change their cash or deferred elections and, if applicable, their employee contribution elections;

(E) The plan is amended to provide that the ACP test will be satisfied for the entire plan year in which the reduction or suspension occurs using the current year testing method described in § 1.401(m)-2(a)(2)(ii); and

(F) The plan satisfies the requirements of this section (other than this paragraph

(h)) with respect to safe harbor compensation paid through the effective date of the amendment.

(2) ***Supplemental notice.*** The supplemental notice requirement of this paragraph (h)(2) is satisfied if each eligible employee is given a notice that satisfies the requirements of § 1.401(k)-3(g)(2).

(i) [Reserved]

(j) ***Other rules*** —

(1) ***Contributions taken into account.*** A contribution is taken into account for purposes of this section for a plan year under the same rules as § 1.401(k)-3(h)(1).

(2) ***Use of safe harbor nonelective contributions to satisfy other nondiscrimination tests.*** A safe harbor nonelective contribution used to satisfy the nonelective contribution requirement under paragraph (b) of this section may also be taken into account for purposes of determining whether a plan satisfies section 401(a)(4) under the same rules as § 1.401(k)-3(h)(2).

(3) ***Early participation rules.*** Section 401(m)(5)(C) and § 1.401(m)-2(a)(1)(iii)(A), which provide an alternative nondiscrimination rule for certain plans that provide for early participation, do not apply for purposes of section 401(m)(11), section 401(m)(12), and this section. Thus, a plan is not treated as satisfying this section with respect to the eligible employees who have not completed the minimum age and service requirements of section 410(a)(1)(A) unless the plan satisfies the requirements of this section with respect to such eligible employees.

(4) ***Satisfying safe harbor contribution requirement under another defined contribution plan.*** Safe harbor matching or nonelective contributions may be made to another defined contribution plan under the same rules as § 1.401(k)-3(h)(4). Consequently, each NHCE under the plan providing for matching contributions must be eligible under the same conditions under the other defined contribution plan and the plan to which the contributions are made must have the same plan year as the plan providing for matching contributions.

(5) ***Contributions used only once.*** Safe harbor matching or nonelective contributions cannot be used to satisfy the requirements of this section with respect to more than one plan.

(6) ***Plan must satisfy ACP with respect to employee contributions.*** If the plan provides for employee contributions, in addition to satisfying the requirements of this section, it must also satisfy the ACP test of § 1.401(m)-2. See § 1.401(m)-2(a)(5)(iv) for special rules under which the ACP test is permitted to be performed disregarding some or all matching when this section is satisfied with respect to the matching contributions.

[T.D. 9169, 69 FR 78184, Dec. 29, 2004, as amended by T.D. 9447, 74 FR 8211, Feb. 24, 2009; T.D. 9641, 78 FR 68738, Nov. 15, 2013; T.D. 9875, 84 FR 49658, Sept. 23, 2019]

§ 1.401(m)-4 Special rules for mergers, acquisitions and similar events. [Reserved]

§ 1.401(m)-5 Definitions.

Unless otherwise provided, the definitions of this section govern for purposes of section 401(m) and the regulations thereunder.

Actual contribution percentage (ACP). Actual contribution percentage or *ACP* means the ACP of the group of eligible employees as defined in § 1.401(m)-2(a)(2)(i).

Actual contribution percentage (ACP) test. Actual contribution percentage test or *ACP test* means the test described in § 1.401(m)-2(a)(1).

Actual contribution ratio (ACR). Actual contribution ratio or *ACR* means the ACR of an eligible employee as defined in § 1.401(m)-2(a)(3).

Actual deferral percentage (ADP) test. Actual deferral percentage test or *ADP test* means the test described in § 1.401(k)-2(a)(1).

Compensation. Compensation means compensation as defined in section 414(s) and § 1.414(s)-1. The period used to determine an employee's compensation for a plan year must be either the plan year or the calendar year ending within the plan year. Whichever period is selected must be applied uniformly to determine the compensation of every eligible employee under the plan for that plan year. A plan may, however, limit the period taken into account under either method to that portion of the plan year or calendar year in which the employee was an eligible employee, provided that this limit is applied uniformly to all eligible employees under the plan for the plan year. See also section 401(a)(17) and § 1.401(a)(17)-1(c)(1). For this purpose, in case of an HCE whose ACR is determined under § 1.401(m)-2(a)(3)(ii), period of participation includes periods under another plan for which matching contributions or employee contributions are aggregated under § 1.401(m)-2(a)(3)(ii).

Current year testing method. Current year testing method means the testing method under which the applicable year is the current plan year, as described in § 1.401(k)-2(a)(2)(ii) or 1.401(m)-2(a)(2)(ii)

Designated Roth contributions. Designated Roth contributions means designated Roth contributions as defined in § 1.401(k)-1(f)(1).

Elective contributions. Elective contributions means elective contributions as defined in § 1.401(k)-6.

Elective deferrals. Elective deferrals means elective deferrals described in section 402(g)(3).

Eligible employee —

(1) ***General rule. Eligible employee*** means an employee who is directly or indirectly eligible to make an employee contribution or to receive an allocation of matching contributions (including matching contributions derived from forfeitures) under the plan for all or a portion of the plan year. For example, if an employee must perform purely ministerial or mechanical acts (*e.g.*, formal application for participation or consent to payroll withholding) in order to be eligible to make an employee contribution for a plan year, the employee is an eligible employee for the plan year without regard to whether the employee performs these acts.

(2) ***Conditions on eligibility.*** An employee who is unable to make employee contributions or to receive an allocation of matching contributions because the employee has not contributed to another plan is also an eligible employee. By contrast, if an employee must perform additional service (*e.g.*, satisfy a minimum period of service requirement) in order to be eligible to make an employee contribution or to receive an allocation of matching contributions for a plan year, the employee is not an eligible employee for the plan year unless the service is actually performed. An employee who would be eligible to make employee contributions but for a suspension due to a distribution, a loan, or an election not to participate in the plan, is treated as an eligible employee for purposes of section 401(m) for a plan year even though the employee may not make employee contributions or receive an allocation of matching contributions by reason of the suspension. Finally, an employee does not fail to be treated as an eligible employee merely because the employee may receive no additional annual additions because of section 415(c)(1).

(3) ***Certain one-time elections.*** An employee is not an eligible employee merely because the employee, no later than the employee's first becoming eligible under any plan or arrangement described in section 219(g)(5)(A) and providing for employee or matching contributions, is given a one-time opportunity to elect, and the employee in fact does elect, not to be eligible to make employee contributions or to receive allocations of matching contributions under the plan or any other plan or arrangement maintained by the employer (including plans not yet established) for the duration of the employee's employment with the employer. In no event is an election made after December 23, 1994, treated as a one-time irrevocable election under this paragraph if the election is made by an employee who previously became eligible under another plan or arrangement (whether or not terminated) of the employer.

Eligible HCE. Eligible HCE means an eligible employee who is an HCE.

Eligible NHCE. Eligible NHCE means an eligible employee who is not an HCE.

Employee. Employee means an employee within the meaning of § 1.410(b)-9.

Employee contributions. Employee contributions means employee contributions as defined in § 1.401(m)-1(a)(3).

Employee stock ownership plan (ESOP). Employee stock ownership plan or *ESOP* the portion of a plan that is an ESOP within the meaning of § 1.410(b)-7(c)(2).

Employer. Employer means an employer within the meaning of § 1.410(b)-9.

Excess aggregate contributions. Excess aggregate contributions means, with respect to a plan year, the amount of excess aggregate contributions apportioned to an HCE under § 1.401(m)-2(b)(2)(iii).

Excess contributions. Excess contributions means with respect to a plan year, the amount of excess contributions apportioned to an HCE under § 1.401(k)-2(b)(2)(iii).

Excess deferrals. Excess deferrals means excess deferrals as defined in § 1.402(g)-1(e)(3).

Highly compensated employee (HCE). Highly compensated employee or *HCE* has the meaning provided in section 414(q).

Matching contributions. Matching contribution is defined in § 1.401(m)-1(a)(2).

Nonelective contributions. Nonelective contributions means employer contributions (other than matching contributions) with respect to which the employee may not elect to have the contributions paid to the employee in cash or other benefits instead of being contributed to the plan.

Non-employee stock ownership plan (non-ESOP). Non-employee stock ownership plan or *non-ESOP* means the portion of a plan that is not an ESOP within the meaning of § 1.410(b)-7(c)(2).

Non-highly compensated employee (NHCE). Non-highly compensated employee or *NHCE* means an employee who is not an HCE.

Plan. Plan means plan as defined in § 1.401(m)-1(b)(4).

Prior year testing method. Prior year testing method means the testing method under which the applicable year is the prior plan year, as described in § 1.401(k)-2(a)(2)(ii) or 1.401(m)-2(a)(2)(ii)

Qualified matching contributions (QMACs). Qualified matching contributions or QMACs means qualified matching contributions or QMACs as defined in § 1.401(k)-6.

Qualified nonelective contributions (QNECs). Qualified nonelective contributions or QNECs means qualified nonelective contributions or QNECs as defined in § 1.401(k)-6.

[T.D. 9169, 69 FR 78184, Dec. 29, 2004, as amended by T.D. 9237, 71 FR 10, Jan. 3, 2006; T.D. 9835, 83 FR 34471, July 20, 2018]

§ 1.402(a)-1 Taxability of beneficiary under a trust which meets the requirements of section 401(a).

(a) ***In general.***

(1)

(i) Section 402 relates to the taxation of the beneficiary of an employees' trust. If an employer makes a contribution for the benefit of an employee to a trust described in section 401(a) for the taxable year of the employer which ends within or with a taxable year of the trust for which the trust is exempt under section 501(a), the employee is not required to include such contribution in his income except for the year or years in which such contribution is distributed or made available to him. It is immaterial in the case of contributions to an exempt trust whether the employee's rights in the contributions to the trust are forfeitable or nonforfeitable either at the time the contribution is made to the trust or thereafter.

(ii) The provisions of section 402(a) relate only to a distribution by a trust described in section 401(a) which is exempt under section 501(a) for the taxable year of the trust in which the distribution is made. With two exceptions, the distribution from such an exempt trust when received or made available is taxable to the distributee to the extent provided in section 72 (relating to annuities). First, for taxable years beginning before January 1, 1964, section 72(e)(3) (relating to the treatment of certain lump sums), as in effect before such date, shall not apply to such distributions. For taxable years beginning after December 31, 1963, such distributions may be taken into account in computations under sections 1301 through 1305 (relating to income averaging). Secondly, certain total distributions described in section

402(a)(2) are taxable as long-term capital gains. For the treatment of such total distributions, see subparagraph (6) of this paragraph. Under certain circumstances, an amount representing the unrealized appreciation in the value of the securities of the employer is excludable from gross income for the year of distribution. For the rules relating to such exclusion, see paragraph (b) of this section. Paragraph (e) of this section provides rules relating to use of a qualified pension, annuity, profit-sharing, or stock bonus plan to provide accident or health benefits or coverage otherwise described in sections 104, 105, or 106.

(iii) Except as provided in paragraph (b) of this section, a distribution of property by a trust described in section 401(a) and exempt under section 501(a) shall be taken into account by the distributee at its fair market value. In the case of a distribution of a life insurance contract, retirement income contract, endowment contract, or other contract providing life insurance protection, or any interest therein, the policy cash value and all other rights under such contract (including any supplemental agreements thereto and whether or not guaranteed) are included in determining the fair market value of the contract. In addition, in the case of a transfer of property that occurs on or after August 29, 2005 where a trust described in section 401(a) and exempt under section 501(a) transfers property to a plan participant or beneficiary in exchange for consideration and where the fair market value of the property transferred exceeds the value of the consideration, then the excess of the fair market value of the property transferred by the trust over the value of the consideration received by the trust is treated as a distribution to the distributee under the plan for all purposes under the Internal Revenue Code. Where such a transfer occurs before that date, the excess of the fair market value of the property transferred by the trust over the value of the consideration received by the trust is includible in the gross income of the participant or beneficiary under section 61. However, such a transfer of a life insurance contract, retirement income contract, endowment contract, or other contract providing life insurance protection occurring before that date is not treated as a distribution for purposes of applying the requirements of subchapter D of chapter 1 of subtitle A of the Internal Revenue Code.

(iv) If a trust is exempt for the taxable year in which the distribution occurs, but was not so exempt for one or more prior taxable years under section 501(a) (or under section 165(a) of the Internal Revenue Code of 1939 for years to which such section was applicable), the contributions of the employer which were includible in the gross income of the employee for the taxable year when made shall, in accordance with section 72(f), also be treated as part of the consideration paid by the employee.

(v) If the trust is not exempt at the time the distribution is received by or made available to the employee, see section 402(b) and paragraph (b) of § 1.402(b)-1.

(vi) For the treatment of amounts paid to provide medical benefits described in section 401(h) as defined in paragraph (a) of § 1.401-14, see paragraph (h) of § 1.72-15.

(2) If a trust described in section 401(a) and exempt under section 501(a) purchases an annuity contract for an employee and distributes it to the employee in a year in which the trust is exempt, and the contract contains a cash surrender value which may be available to an employee by surrendering the contract, such cash surrender value will not be considered income to the employee unless and until the contract is surrendered. For the rule as to nontransferability of annuity contracts issued after 1962, see § 1.401-9(b)(1). For additional requirements regarding distributions of annuity contracts, see, *e.g.*, §§ 1.401(a)-20, Q&A-2, 1.401(a)(31)-1, Q&A-17, and 1.401(a)(9)-6(d). However, the distribution of an annuity contract must be treated as a lump sum distribution for purposes of

determining the amount of tax under the 10-year averaging rule of section 402(e) (as in effect prior to amendment by the Tax Reform Act of 1986, Public Law 99-514, 100 Stat. 2085). If, however, the contract distributed by such exempt trust is a life insurance contract, retirement income contract, endowment contract, or other contract providing life insurance protection, the fair market value of the contract at the time of distribution must be included in the distributee's income in accordance with the provisions of section 402(a), except to the extent that, within 60 days after the distribution of the contract, all or any portion of such value is irrevocably converted into a contract under which no part of any proceeds payable on death at any time would be excludable under section 101(a) (relating to life insurance proceeds), or the contract is treated as a rollover contribution under section 402(c). If the contract distributed by such trust is a transferable annuity contract, or a retirement income, endowment, or other life insurance contract and such contract is not treated as a rollover contribution under section 402(c), then, notwithstanding the preceding sentence, the fair market value of the contract is includible in the distributee's gross income unless, within such 60 days, such contract is made nontransferable.

(3) For the rules applicable to premiums paid by a trust described in section 401(a) and exempt under section 501(a) for the purchase of retirement income, endowment, or other contracts providing life insurance protection payable upon the death of the employee-participant, see paragraph (b) of § 1.72-16.

(4) For the rules applicable to the amounts payable by reason of the death of an employee under a contract providing life insurance protection, or an annuity contract, purchased by a trust described in section 401(a) and exempt under section 501(a), see paragraph (c) of § 1.72-16.

(5) If pension or annuity payments or other benefits are paid or made available to the beneficiary of a deceased employee or a deceased retired employee by a trust described in section 401(a) which is exempt under section 501(a), such amounts are taxable in accordance with the rules of section 402(a) and this section. In case such amounts are taxable under section 72, the “investment in the contract” shall be determined by reference to the amount contributed by the employee and by applying the applicable rules of sections 72 and 101(b)(2)(D). In case the amounts paid to, or includible in the gross income of, the beneficiaries of the deceased employee or deceased retired employee constitute a distribution to which subparagraph (6) of this paragraph is applicable, the extent to which the distribution is taxable is determined by reference to the contributions of the employee, by reference to any prior distributions which were excludable from gross income as a return of employee contributions, and by applying the applicable rules of sections 72 and 101(b).

(6)

(i) If the total distributions payable with respect to any employee under a trust described in section 401(a) which in the year of distribution is exempt under section 501(a) are paid to, or includible in the gross income of, the distributee within one taxable year of the distributee on account of the employee's death or other separation from the service, or death after such separation from service, the amount of such distribution, to the extent it exceeds the net amount contributed by the employee, shall be considered a gain from the sale or exchange of a capital asset held for more than six months. The total distributions payable are includible in the gross income of the distributee within one taxable year if they are made available to such distributee and the distributee fails to make a timely election under section 72(h) to receive an annuity in lieu of such total distributions. The “net amount contributed by the employee” is the amount actually contributed by the employee plus any amounts considered to be contributed by the employee under the rules of section 72(f), 101(b), and subparagraph (3) of this paragraph, reduced by any

amounts theretofore distributed to him which were excludable from gross income as a return of employee contributions. See, however, paragraph (b) of this section for rules relating to the exclusion of amounts representing net unrealized appreciation in the value of securities of the employer corporation. In addition, all or part of the amount otherwise includible in gross income under this paragraph by a non-resident alien individual in respect of a distribution by the United States under a qualified pension plan may be excludable from gross income under section 402(a)(4). For rules relating to such exclusion, see paragraph (c) of this section. For additional rules relating to the treatment of total distributions described in this subdivision in the case of a nonresident alien individual, see sections 871 and 1441 and the regulations thereunder.

(ii) The term "total distributions payable" means the balance to the credit of an employee which becomes payable to a distributee on account of the employee's death or other separation from the service or on account of his death after separation from the service. Thus, distributions made before a total distribution (for example, annuity payments received by the employee after retirement), will not defeat application of the capital gains treatment with respect to the total distributions received by a beneficiary upon the death of the employee after retirement. However, a distribution on separation from service will not receive capital gains treatment unless it constitutes the total amount in the employee's account at the time of his separation from service. If the total amount in the employee's account at the time of his death or other separation from the service or death after separation from the service is paid or includible in the gross income of the distributee within one taxable year of the distributee, such amount is entitled to the capital gains treatment notwithstanding that in a later taxable year an additional amount, attributable to the last year of service, is credited to the account of the employee and distributed.

(iii) If an employee retires and commences to receive an annuity but subsequently, in some succeeding taxable year, is paid a lump sum in settlement of all future annuity payments, the capital gains treatment does not apply to such lump sum settlement paid during the lifetime of the employee since it is not a payment on account of separation from the service, or death after separation, but is on account of the settlement of future annuity payments.

(iv) If the "total distributions payable" are paid or includible in the gross income of several distributees within one taxable year on account of the employee's death or other separation from the service or on account of his death after separation from the service, the capital gains treatment is applicable. The total distributions payable are paid within one taxable year of the distributees when, for example, a portion of such total is distributed in cash to one distributee and the balance is used to purchase an annuity contract which is distributed to the other distributee. However, if the share of any distributee is not paid or includible in his gross income within the same taxable year in which the shares of the other distributees are paid or includible in their gross income, none of the distributees is entitled to the capital gains treatment, since the total distributions payable are not paid or includible in the distributees' gross income within one taxable year. For example, if the total distributions payable are made available to each of two distributees and one elects to receive his share in cash while the other makes a timely election under section 72(h) to receive his share in installment payments from the trust, the capital gains treatment does not apply to either distributee.

(v) [Reserved]

(vi) The term "total distributions payable" does not include United States Retirement Plan Bonds held by a trust to the credit of an employee. Thus, a distribution by a qualified trust may constitute a total distributions payable with respect to an employee even though the trust retains retirement plan bonds registered in the name of such employee. Similarly, the proceeds of a retirement plan bond received as a part of the total amount to the credit of an employee will not be entitled to capital gains treatment.

(vii) For purposes of determining whether the total distributions payable to an employee have been distributed within one taxable year, the term "total distributions payable" includes amounts held by a trust to the credit of an employee which are attributable to contributions on behalf of the employee while he was a self-employed individual in the business with respect to which the plan was established. Thus, a distribution by a qualified trust is not a total distributions payable with respect to an employee if the trust retains amounts which are so attributable.

(viii) The term "total distributions payable" does not include any amount which has been placed in a separate account for the funding of medical benefits described in section 401(h) as defined in paragraph (a) of § 1.401-14. Thus, a distribution by a qualified trust may constitute a total distributions payable with respect to an employee even though the trust retains amounts attributable to the funding of medical benefits described in section 401(h).

(7) The capital gains treatment provided by section 402(a)(2) and subparagraph (6) of this paragraph is not applicable to distributions paid to a distributee to the extent such distributions are attributable to contributions made on behalf of an employee while he was a self-employed individual in the business with respect to which the plan was established. For the taxation of such amounts, see § 1.72-18. For the rules for determining the amount attributable to contributions on behalf of an employee while he was self-employed, see paragraphs (b)(4) and (c)(2) of such section.

(8) For purposes of this section, the term "employee" includes a self-employed individual who is treated as an employee under section 401(c)(1), and paragraph (b) of § 1.401-10, and the term "employer" means the person treated as the employer of such individual under section 401(c)(4).

(b) ***Distributions including securities of the employer corporation*** —

(1) ***In general.***

(i) If a trust described in section 401(a) which is exempt under section 501(a) makes a distribution to a distributee, and such distribution includes securities of the employer corporation, the amount of any net unrealized appreciation in such securities shall be excluded from the distributee's income in the year of such distribution to the following extent:

(A) If the distribution constitutes a total distribution to which the regulations of paragraph (a)(6) of this section are applicable, the amount to be excluded is the entire net unrealized appreciation attributable to that part of the total distribution which consists of securities of the employer corporation; and

(B) If the distribution is other than a total distribution to which paragraph (a)(6) of this section is applicable, the amount to be excluded is that portion of the net unrealized appreciation in the securities of the employer corporation which is attributable to the amount considered to be contributed by the employee to the purchase of such securities.

The amount of net unrealized appreciation which is excludable under the regulations of (A) and (B) of this subdivision shall not be included in the basis of the securities in the hands of the distributee at the time of distribution for purposes of determining gain or loss on their subsequent disposition. In the case of a total distribution the amount of net unrealized appreciation which is not included in the basis of the securities in the hands of the distributee at the time of distribution shall be considered as a gain from the sale or exchange of a capital asset held for more than six months to the extent that such appreciation is realized in a subsequent taxable transaction. However, if the net gain realized by the distributee in a subsequent taxable transaction exceeds the amount of the net unrealized appreciation at the time of distribution, such excess shall constitute a long-term or short-term capital gain depending upon the holding period of the securities in the hands of the distributee.

(ii) For purposes of section 402(a) and of this section, the term “securities” means only shares of stock and bonds or debentures issued by a corporation with interest coupons or in registered form, and the term “securities of the employer corporation” includes securities of a parent or subsidiary corporation (as defined in subsections (e) and (f) of section 425) of the employer corporation.

(2) ***Determination of net unrealized appreciation.***

(i) The amount of net unrealized appreciation in securities of the employer corporation which are distributed by the trust is the excess of the market value of such securities at the time of distribution over the cost or other basis of such securities to the trust. Thus, if a distribution consists in part of securities which have appreciated in value and in part of securities which have depreciated in value, the net unrealized appreciation shall be considered to consist of the net increase in value of all of the securities included in the distribution. For this purpose, two or more distributions made by a trust to a distributee in a single taxable year of the distributee shall be treated as a single distribution.

(ii) For the purpose of determining the net unrealized appreciation on a distributed security of the employer corporation, the cost or other basis of such security to the trust shall be computed in accordance with whichever of the following rules is applicable:

(A) If a security was earmarked for the account of a particular employee at the time it was purchased by or contributed to the trust so that the cost or other basis of such security to the trust is reflected in the account of such employee, such cost or other basis shall be used.

(B) If as of the close of each taxable year of the trust (or other specified period of time not in excess of 12 consecutive calendar months) the trust allocates among the accounts of participating employees all securities acquired by the trust during the period (exclusive of securities unallocated under a plan providing for allocation in whole shares only), the cost or other basis to the trust of any securities allocated as of the close of a particular allocation period shall be the average cost or other basis to the trust of all securities of the same type which were purchased or otherwise acquired by the trust during such allocation period. For purposes of determining the average cost to the trust of securities included in a subsequent allocation, the actual cost to the trust of the securities unallocated as of the close of a prior allocation period shall be deemed to be the average cost or other basis to the trust of securities of the same type allocated as of the close of such prior allocation period.

(C) In a case where neither (*a*) nor (*b*) of this subdivision is applicable, if the trust fund, or a specified portion thereof, is invested exclusively in one particular type of security of the employer corporation, and if during the period the distributee participated in the plan none of such securities has been sold except for the purpose of paying benefits under the trust or for the purpose of enabling the trustee to obtain funds with which to exercise rights which have accrued to the trust, the cost or other basis to the trust of all securities distributed to such distributee shall be the total amount credited to the account of such distributee (or such portion thereof as was available for investment in such securities) reduced by the amount available for investment but uninvested on the date of distribution. If at the time of distribution to a particular distributee a portion of the amount credited to his account is forfeited, appropriate adjustment shall be made with respect thereto in determining the cost or other basis to the trust of the securities distributed.

(D)

(*1*) In all other cases, there shall be used the average cost (or other basis) to the trust of all securities of the employer corporation of the type distributed to the distributee which the trust has on hand at the time of the distribution, or which the trust had on hand on a specified inventory date which date does not precede the date of distribution by more than twelve calendar months. If a distribution includes securities of the employer corporation of more than one type, the average cost (or other basis) to the trust of each type of security distributed shall be determined. The average cost to the trust of securities of the employer corporation on hand on a specified inventory date (or on hand at the time of distribution) shall be computed on the basis of their actual cost, considering the securities most recently purchased to be those on hand, or by means of a moving average calculated by subtracting from the total cost of securities on hand immediately preceding a particular sale or distribution an amount computed by multiplying the number of securities sold or distributed by the average cost of all securities on hand preceding such sale or distribution.

(*2*) These methods of computing average cost may be illustrated by the following examples:

Example 1. A, a distributee who makes his income tax returns on the basis of a calendar year, receives on August 1, 1954, in a total distribution, to which paragraph (a)(6) of this section is applicable, ten shares of class D stock of the employer corporation. On July 1, 1954 (the specified inventory date of the trust), the trust had on hand 80 shares of class D stock. The average cost of the 10 shares distributed, on the basis of the actual cost method, is $100 computed as follows:

Shares	Purchase date	Cost per share	Total cost
20	June 24, 1954	$101	$2,020
40	Jan. 10, 1953	102	4,080

Shares	Purchase date	Cost per share	Total cost
20	Oct. 20, 1952	95	1,900
80		8,000	

Example 2. B, a distributee who makes his income tax returns on the basis of a calendar year, receives on October 31, 1954, in a total distribution, to which paragraph (a)(6) of this section is applicable, 20 shares of class E stock of the employer corporation. The specified inventory date of the trust is the last day of each calendar year. The trust had on hand on December 31, 1952, 1,000 shares of class E stock of the employer corporation. During the calendar year 1953 the trust distributed to four distributees a total of 100 shares of such stock and acquired, through a number of purchases, a total of 120 shares. The average cost of the 20 shares distributed to B, on the basis of the moving average method, is $52 computed as follows:

	Shares	Total cost	Average cost
On hand Dec. 31, 1952	1,000	$50,000	$50
Distributed during 1953 at average cost of $50	100	5,000	(0)
	900	45,000	(0)
Purchased during 1953	120	8,000	(0)
On hand Dec. 31, 1953	1,020	53,040	52

(3) ***Unrealized appreciation attributable to employee contributions.*** In any case in which it is necessary to determine the amount of net unrealized appreciation in securities of the employer corporation which is attributable to contributions made by an employee:

(*i*) The cost or other basis of the securities to the trust and the amount of net unrealized appreciation shall first be determined in accordance with the regulations in subparagraph (2) of this paragraph;

(*ii*) The amount contributed by the employee to the purchase of the securities shall be solely the portion of his actual contributions to the trust properly allocable to such securities, and shall not include any part of the increment in the trust fund expended in the purchase of the securities;

(*iii*) The amount of net unrealized appreciation in the securities distributed which is attributable to the contributions of the employee shall be that proportion of the net unrealized appreciation determined under the regulations of subparagraph (2) of this paragraph which the contributions of the employee properly allocable to such securities bear to the cost or other basis to the trust of the securities;

(*iv*) If a distribution consists solely of securities of the employer corporation, the contributions of the employee expended in the purchase of such securities shall be allocated to the securities distributed in a manner consistent with the principles set forth in subparagraph (2)(ii) (*a*), (*b*), (*c*), or (*d*) of this paragraph, whichever is applicable. Thus, the amount of the employee's contribution which can be identified as having been expended in the purchase of a particular security shall be allocated to such security, and the amount of such contribution which cannot be so identified shall be allocated ratably among the securities distributed. If a distribution consists in part of securities of the employer corporation and in part of cash or other property, appropriate allocation of a portion of the employee's contribution to such cash or other property shall be made unless such a location is inconsistent with the terms of the plan or trust.

(*v*) The application of this subparagraph may be illustrated by the following example:

Example. A trust distributes ten shares of stock issued by the employer corporation each of which has an average cost to the trust of $100, consisting of employee contributions in the amount of $60 and employer contributions in the amount of $40, and on the date of distribution has a fair market value of $180. The portion of the net unrealized appreciation attributable to the contributions of the employee with respect to each of the shares of stock is $48 computed as follows:

(1) Value of one share of stock on distribution date	$180
(2) Employee contributions	60
(3) Employer contributions	40
(4) Total contributions	100
(5) Net unrealized appreciation	80
(6) Portion of net unrealized appreciation attributable to employee contributions $^{60}/_{100}$ (amount of employee contributions (item 2) over total contributions (item 4) of	48

$80 (item 5)

(*vi*) For the purpose of determining gain or loss to the distributee in the year or years in which any share of stock referred to in the example in subdivision (*v*) of this subparagraph is sold or otherwise disposed of in a taxable transaction, the basis of each such share in the hands of the distributee at the time of the distribution by the trust will be $132 computed as follows:

(a) Employee contributions	$60
(b) Employer contributions (taxable as ordinary income in the year the securities were distributed)	40
(c) Portion of net unrealized appreciation attributable to employer contributions (item 5) minus (item 6) (taxable as ordinary income in the year the securities were distributed)	32
(d) Basis of stock	132

(*4*) ***Change in exempt status of trust.*** For principles applicable in making appropriate adjustments if the trust was not exempt for one or more years before the year of distribution, see paragraph (a) of this section.

(c) ***Certain distributions by United States to nonresident alien individuals.***

(1) This paragraph applies to a distribution—

(i) Which is made by the United States under a pension plan described in section 401(a);

(ii) Which is made in respect of services performed by an employee of the United States; and

(iii) Which is received by, or made available to, a nonresident alien individual (including a nonresident alien individual who is a beneficiary of a deceased employee) during a taxable year beginning after December 31, 1959.

The amount of such a distribution that is includible in the gross income of the nonresident alien individual under section 402(a) (1) or (2) shall not exceed an amount which bears the same ratio to the amount which would be includible in gross income if it were not for this paragraph, as—

(A) The aggregate basic salary paid by the United States to the employee for his services in respect of which the distribution is being made, reduced by the amount of such basic salary which was not includible in the employee's gross income by reason of being from sources without the United States, bears to

(B) The aggregate basic salary paid by the United States to the employee for his services in respect of which the distribution is being made.

See section 402(a)(4). See, also, paragraph (a) of this section for rules relating to the amount that is includible in gross income under section 402(a) (1) or (2) in the case of a distribution under a pension plan described in section 401(a).

(2) For purposes of applying section 402(a)(4) and this paragraph to distributions under the Civil Service Retirement Act (5 U.S.C. 2251), the term "basic salary" shall have the meaning provided in section 1(d) of such Act. In applying section 402(a)(4) and this paragraph to distributions under any other qualified pension plan of the United States, such term shall have a similar meaning. Thus, for example, "basic salary" does not, in any case, include bonuses, allowances, or overtime pay.

(3) The rules in this paragraph may be illustrated by the following examples:

Example 1. A, a retired employee of the United States who performed all of his services for the United States in a foreign country, receives, in respect of such services, a monthly pension of $200 under the Civil Service Retirement Act (a pension plan described in section 410(a)). A received an aggregate basic salary for his services for the United States of $100,000. A was a nonresident alien individual during the whole of his employment with the United States and, therefore, his basic salary from the United States was not includible in his gross income by reason of being from sources without the United States. A would be requited, under section 72 but without regard to section 402(a)(4) and this paragraph, to include $60 of each monthly pension payment in his gross income. The amount that is includible in A's gross income under section 402(a)(1) with respect to the monthly payments received during taxable years beginning after December 31, 1959, and while A is a nonresident alien individual, is computed as follows:

(i) Amount of distribution includible in gross income under section 72 without regard to section 402(a)(4)	$60
(ii) Aggregate basic salary for services for United States	100,000
(iii) Aggregate basic salary for services for United States reduced by amount of such salary not includible in A's gross income by reason of being from sources without the United States	0
(iv) Amount includible in A's gross income under section 402(a)(1) ((iii) ÷ (ii) × (i), or $0/$100,000 × $60)	0

Example 2. B, a retired employee of the United States who performed services for the United States both in a foreign country and in the United States, receives, in respect of such services, a monthly pension of $240 under the Civil Service Retirement Act. B received an aggregate basic salary for his services for the United States of $120,000; $80,000 of which was for his services performed in the United States, and $40,000 of which was for his services performed in the foreign country. B was a nonresident alien individual during the whole of his employment with the United States and, consequently, the $40,000 basic salary for his

services performed in the foreign country was not includible in his gross income by reason of being from sources without the United States. B would be required, under section 72 but without regard to section 402(a)(4) and this paragraph, to include $165 of each monthly pension in his gross income. The amount that is includible in B's gross income under section 402(a)(1) with respect to the monthly payments received during taxable years beginning after December 31, 1959, and while B is a nonresident alien individual, is computed as follows:

(i) Amount of distribution includible in gross income under section 72 without regard to section 402(a)(4)	$165
(ii) Aggregate basic salary for services for United States	120,000
(iii) Aggregate basic salary for services for United States reduced by amount of such salary not includible in B's gross income by reason of being from sources without the United States ($120,000−$40,000)	80,000
(iv) Amount includible in B's gross income under section 402(a)(1)(iii) ÷ (ii) × (i), or $80,000/$120,000 × $165)	110

(d) ***Salary reduction, cash or deferred arrangements*** —

(1) ***Inclusion in income.*** Whether a contribution to an exempt trust or plan described in section 401(a) or 403(a) is made by the employer or the employee is determined on the basis of the particular facts and circumstances of each case. Nevertheless, an amount contributed to a plan or trust will, except as otherwise provided under paragraph (d)(2) of this section, be treated as contributed by the employee if it was contributed at the employee's election, even though the election was made before the year in which the amount was earned by the employee or before the year in which the amount became currently available to the employee. Any amount treated as contributed by the employee is includible in the gross income of the employee for the year in which the amount would have been received by the employee but for the election. Thus, for example, amounts contributed to an exempt trust or plan by reason of a salary reduction agreement under a cash or deferred arrangement are treated as received by the employee when they would have been received by the employee but for the election to defer. Accordingly, they are includible in the gross income of the employee for that year (except as provided under paragraph (d)(2) of this section). See § 1.401(k)-1(a)(3)(iv) and (2)(iv) for the meaning of currently available and cash or deferred arrangement, respectively.

(2) ***Amounts not included in income*** —

(i) ***Qualified cash or deferred arrangement.*** Elective contributions as defined in § 1.401(k)-6 for a plan year made by an employer on behalf of an employee pursuant to a cash or deferred election under a qualified cash or deferred arrangement, as defined in § 1.401(k)-1(a)(4)(i), are not treated as received by or distributed to the employee or as employee contributions. For plan years beginning after December 31, 1992, whether a cash or deferred election is made under a qualified cash or deferred arrangement is determined without regard to the special rules for certain collectively bargained plans contained in § 1.401(k)-1(a)(5)(iv)(B). As a result, elective

contributions under these plans are treated as employee contributions for purposes of this section if the cash or deferred arrangement does not satisfy the actual deferral percentage test of section 401(k)(3) or otherwise fails to be a qualified cash or deferred arrangement.

(ii) ***Matching contributions.*** Matching contributions described in § 1.401(m)-1(a)(2) and section 401(m)(4) are not treated as contributed by an employee merely because they are made by the employer as a result of an employee's election.

(iii) ***Effect of certain one-time elections.*** Amounts contributed to an exempt plan or trust described in section 401(a) or 403(a) pursuant to the one-time irrevocable employee election to participate in a plan described in § 1.401(k)-1(a)(3)(v) are not treated as contributed by an employee. Similarly, amounts contributed to an exempt plan or trust described in section 401(a) or 403(a) in which self-employed individuals may participate pursuant to the one-time irrevocable election described in § 1.401(k)-1(a)(3)(v)(B) are not treated as contributed by an employee.

(3) ***Effective date and transition rules*** —

(i) ***Effective date.*** In the case of a plan or trust that does not include a salary reduction or cash or deferred arrangement in existence on June 27, 1974, this paragraph applies to taxable years ending after that date.

(ii) ***Transition rule for cash or deferred arrangements in existence on June 27, 1974*** —

(A) ***General rule.*** In the case of a plan or trust that includes a salary reduction or a cash or deferred arrangement in existence on June 27, 1974, this paragraph applies to plan years beginning after December 31, 1979 (or, in the case of a pre-ERISA money purchase plan, as defined in § 1.401(k)-1(g)(12), plan years beginning after July 18, 1984). For plan years beginning prior to January 1, 1980 (or, in the case of a pre-ERISA money purchase plan, plan years beginning before July 19, 1984), the taxable year of inclusion in gross income of the employee of any amount so contributed by the employer to the trust is determined in a manner consistent with Rev. Rul. 56-497, 1956-2 CB 284, Rev. Rul. 63-180, 1963-2 CB 189, and Rev. Rul. 68-89, 1968-1 CB 402.

(B) ***Meaning of cash or deferred arrangement in existence on June 27, 1974.*** A cash or deferred arrangement is considered as in existence on June 27, 1974, if, on or before that date, it was reduced to writing and adopted by the employer (including, in the case of a corporate employer, formal approval by the employer's board of directors and, if required, shareholders), even though no amounts had been contributed pursuant to the terms of the arrangement as of that date.

(iii) ***Reasonable interpretation for plan years beginning after 1979 and before 1992.*** For plan years beginning after December 31, 1979 (or in the case of a pre-ERISA money purchase plan, plan years beginning after July 18, 1984) and before January 1, 1992, a reasonable interpretation of the rules set forth in section 401(k) (as in effect during those years) may be relied upon to determine whether contributions were made under a qualified cash or deferred arrangement.

(iv) ***Special rule for collectively bargained plans.*** For plan years beginning before January 1, 1993, a nonqualified cash or deferred arrangement will be treated as satisfying section 401(k)(3) solely for purposes of paragraph (d)(2)(i) of this section if it is part of a plan (or portion of a plan) that automatically satisfies section 401(a)(4) under § 1.401(k)-1(a)(5)(iv)(B), relating to certain collectively bargained plans.

(v) ***Special rule for governmental plans.*** For plan years beginning before the later of January 1, 1996, or 90 days after the opening of the first legislative session beginning on or after January 1, 1996, of the governing body with authority to amend the plan, if that body does not meet continuously, in the case of governmental plans described in section 414(d), a nonqualified cash or deferred arrangement will be treated as satisfying section 401(k)(3) solely for purposes of paragraph (d)(2)(i) of this section if it is part of a plan adopted by a state or local government before May 6, 1986. For purposes of this paragraph (d)(3)(v), the term *governing body with authority to amend the plan* means the legislature, board, commission, council, or other governing body with authority to amend the plan.

(e) ***Medical, accident, etc. benefits paid from a qualified pension, annuity, profit-sharing, or stock bonus plan*** —

(1) ***Payment of premiums*** —

(i) ***General rule.*** Except as provided in paragraph (e)(1)(iii) of this section, a payment made from a qualified trust that is a premium for accident or health insurance (including a qualified long-term care insurance contract under section 7702B) constitutes a distribution under section 402(a) to the participant for whose benefit the premium is charged. The amount of the distribution equals the amount of the premium charged against the participant's benefits under the plan. If a defined contribution plan pays these premiums from a current year contribution or forfeiture that has not been allocated to a participant's account, then the amount of the premium for each participant is treated as first being allocated to the participant and then charged against the participant's benefits under the plan, so that the amount of the distribution is treated in the same manner as determined under the preceding sentence. Except as provided in paragraphs (e)(2) and (e)(3) of this section, a distribution described in this paragraph (e)(1) is not excludable from gross income.

(ii) ***Treatment of amounts received through accident or health insurance.*** To the extent that the payment of a premium for accident or health insurance constitutes a distribution under this paragraph (e)(1), amounts received through accident or health insurance are neither paid by the employer nor attributable to contributions by the employer that are excludable from the gross income of the employee. Accordingly, to the extent the premium for accident or health insurance constitutes a distribution under this paragraph (e)(1), amounts received through the accident or health insurance for personal injuries or sickness are excludable from gross income under section 104(a)(3) and are not treated as distributions from the plan. If those amounts are paid to the plan instead of to the employee, those amounts are treated as having been paid to the employee and then contributed by the employee to the plan (and must satisfy the qualification requirements applicable to employee contributions).

(iii) ***Exception for disability insurance that replaces retirement contributions.*** The rules of paragraph (e)(1)(i) of this section do not apply to the payment made from a qualified trust that is a premium paid to an insurance company for a contract providing for payment of benefits to be made to the trust in the event of an employee's inability to continue employment with the employer due to disability, provided that the payment of benefits with respect to the employee's account for each year does not exceed the reasonable expectation of the annual contributions that would have been made to the plan on the employee's behalf for the period of disability within that year, reduced by any other contributions made on the employee's behalf for the period of disability within that year. The payment of premiums described in the preceding sentence is not treated as a distribution under section 402(a), but instead constitutes incidental accident or health insurance as provided in § 1.401-1(b)(1)(ii). The Commissioner may issue

rules of general applicability in revenue rulings, notices, or other guidance published in the Internal Revenue Bulletin further describing the tax treatment of disability coverage described in this paragraph (e)(1)(iii).

(2) ***Medical benefits for retired employees provided under an account described in section 401(h).*** The payment of medical benefits under a pension or annuity plan from an account described in section 401(h) is treated in the same manner as a payment of accident or health benefits attributable to employer contributions, or employer-provided coverage under an accident or health plan. See § 1.401-14(a) for the definition of medical benefits described in section 401(h). Accordingly, amounts applied for the payment of accident or health benefits, or for the payment of accident or health coverage, from a section 401(h) account are not includible in the gross income of the participant on whose behalf such contributions are made to the extent they are excludible from gross income under section 104, 105, or 106.

(3) ***Distributions to eligible retired public safety officers.*** See section 402(l) (and any guidance issued under section 402(l)) for a limited exclusion from gross income for distributions used to pay for certain accident or health premiums (including premiums for qualified long-term care insurance contracts). This limited exclusion applies to eligible retired public safety officers, as defined in section 402(l)(4)(B).

(4) ***Effect of distribution of insurance premiums on plan qualification.*** See § 1.401-1(b)(1) for rules concerning the types and amount of medical coverage and benefits that are permitted to be provided under a plan that is part of a trust described in section 401(a). For example, § 1.401-1(b)(1)(ii) provides that a profit-sharing plan is primarily a plan of deferred compensation, but the amounts allocated to the account of a participant may be used to provide incidental accident or health insurance for the participant and the participant's family. See also section 401(k)(2)(B) for certain restrictions on the distribution of elective contributions.

(5) ***Applicability to beneficiaries and alternate payees.*** This paragraph (e) applies to the payment of premiums charged against the benefits of a beneficiary or an alternate payee in the same manner as the payment of premiums charged against the account of a participant.

(6) ***Examples.*** The provisions of this paragraph (e) are illustrated by the following examples:

> *Example 1.* (i) *Facts.* Employer A sponsors a profit-sharing plan qualified under section 401(a). The plan provides solely for non-elective employer profit-sharing contributions. The plan's trustee enters into a contract with a third-party insurance carrier to provide health insurance for certain plan participants. The insurance contract provides for the payment of medical expenses incurred by those participants. The plan limits the amounts used to provide medical benefits to comply with the incidental benefit rules. The trustee makes monthly payments of $1,000 to pay the premiums due for Participant P's health insurance and Participant P's account balance is reduced by $1,000 at the time of each premium payment. In June 2015, Participant P is admitted to the hospital for covered medical care, and in July 2015, the health insurer pays the hospital $5,000 for the medical care provided to Participant P in June.

(ii) *Conclusion.* Under paragraph (e)(1) of this section, each of the trustee's payments of $1,000 constitutes a taxable distribution under section 402(a) to Participant P on the date of each payment. The amount of these distributions may constitute payments for medical care under section 213. The $5,000 payment to the hospital is excludable from Participant P's gross income under section 104(a)(3) and is not treated as a distribution from the plan.

Example 2. (i) *Facts.* Employer B sponsors a profit-sharing plan qualified under section 401(a). The plan provides for elective contributions described in section 401(k) and matching contributions as well as non-elective employer profit-sharing contributions. The plan does not provide that a disabled participant's compensation for purposes of determining plan contributions includes amounts that the participant would have received in the absence of the disability, and accordingly Employer B does not make any contributions to the plan for the benefit of a disabled employee for the period of disability. The plan's trustee enters into a contract with a third-party insurance carrier to provide disability insurance for plan participants who elect to be covered under the insurance contract. The insurance contract provides for the payment of an amount to the trustee on a participant's behalf during the period of the participant's disability. Amounts to be paid to the trustee from the insurance contract with respect to a participant are equal to the sum of the elective, matching, and non-elective employer profit-sharing contributions that would have been made on the participant's behalf during the participant's disability (based on the participant's rate of compensation before becoming disabled) with the payments to continue for the duration of the disability until age 65 (or 5 years after the participant became disabled, if later). Participant Q elects to be covered under the insurance contract, and the trustee makes the periodic premium payments out of the account balance of Participant Q. In June 2015, Participant Q becomes disabled. During the period Participant Q is absent from employment due to disability, the insurer pays the trust the amount of the elective, matching, and non-elective employer profit-sharing contributions that would have been made to the trust with respect to Participant Q had Participant Q not been disabled. The amount of the premiums for the insurance contract satisfies the limitations on incidental benefits under § 1.401-1(b)(1)(ii).
(ii) *Conclusion.* The payment of premiums from the trust is described in paragraph (e)(1)(iii) of this section. Accordingly, none of the premium payments under the contract constitute a distribution under section 402(a) to Participant Q. Further, amounts paid from the insurance contract to the trust also do not constitute a distribution to Participant Q. However, when Participant Q's account balance is distributed from the trust, the distribution will be subject to taxation in the year of distribution in accordance with the rules in section 402.

(7) ***Effective/applicability date.*** This paragraph (e) applies for taxable years beginning on or after January 1, 2015.

[T.D. 6500, 25 FR 11675, Nov. 26, 1960]

Editorial Note: For FEDERAL REGISTER citations affecting § 1.402(a)-1, see the List of CFR Sections Affected, which appears in the Finding Aids section of the printed volume and at *www.govinfo.gov*.

§ 1.402(a)(5)-1T Rollovers of partial distributions from qualified trusts and annuities. (Temporary)

Q-1: Can an employee or the surviving spouse of a deceased employee roll over to an individual retirement account or annuity, described in section 408 (a) or (b), the taxable portion of a partial distribution from a qualifiedtrust described in section 401(a), a qualified plan described in section 403(a), or a tax-sheltered annuity contract under section 403(b)?

A-1: Yes. For distributions made after July 18, 1984, the taxable portion of a partial distribution may be rolled over within 60 days of the distribution to an individual retirement account or annuity.

Q-2: Are there special requirements applicable to rollovers of partial distributions?

A-2: Yes. Section 402(a)(5)(D)(i) specifies that no part of a partial distribution may be rolled over unless the distribution is equal to at least 50 percent of the balance to the credit of the employee in the contract or plan immediately before the distribution, and the distribution is not one of a series of periodic payments. For purposes of this section, the balance to the credit of an employee does not include any accumulated deductible employee contributions (within the meaning of section 72(o)). In addition, in calculating the balance to the credit for purposes of the 50 percent test, qualified plans are not to be aggregated with other qualified plans and tax-sheltered annuity contracts are not to be aggregated with other tax-sheltered annuity contracts. Also, in applying the 50 percent test to a surviving spouse, the balance to the credit is the maximum amount the spouse is entitled to receive under the plan or contract, rather than the total balance to the credit of the employee. The rollover of a partial distribution may result in adverse tax consequences; see section 402(a)(5)(D) (iii) and (iv).

Q-3: Are there any other requirements applicable to rollovers of partial distribution?

A-3: Yes. Section 402(a)(5)(D)(i)(III) requires the employee to elect, in conformance with Treasury regulations, to treat a contribution of a partial distribution to an IRA as a rollover contribution. An election is made by designating, in writing, to the trustee or issuer of the IRA at the time of the contribution that the contribution is to be treated as a rollover contribution. This requirement of a written designation to the trustee or issuer of the IRA is effective for contributions paid to the trustee or issuer of the IRA after March 20, 1986. For contributions paid to the trustee or issuer before March 21, 1986, an election is made by computing the individual's income tax liability on the income tax return for the taxable year in which the distribution occurs in a manner consistent with not including the distribution (or portion thereof) in gross income. Both such elections are irrevocable, except that an election made on an income tax return filed before March 21, 1986 is revocable.

Q-4: Does the election requirement apply to rollovers of qualified total distributions or rollover contributions described in section 402(a) (5) or (7), 403(a)(4), 403(b)(8), 405(d)(3), or 408(d)(3) to individual retirement accounts and annuities (IRAs)?

A-4: Yes. No amounts may be treated as a rollover contribution to an IRA under section 402(a)(5), 402(a)(7), 403(a)(4), 403(b)(8), 405(d)(3) (as amended by section 491(c) of the TRA of 1984), or 408(d)(3) unless the requirements described in Q & A-3 of this section are satisfied. Thus, once any portion of a total distribution is irrevocably designated as a rollover contribution, such distribution is not taxable under

section 402 or 403 and, therefore, is not eligible for the special capital gains and separate tax treatment under section 402 (a) and (e). Election requirements for rollover contributions to IRAs described in this Q &A-4 are subject to the same effective date rules set forth in Q &A-3.

[T.D. 8073, 51 FR 4320, Feb. 4, 1986]

§ 1.402(b)-1 Treatment of beneficiary of a trust not exempt under section 501(a).

(a) ***Taxation by reason of employer contributions made after August 1, 1969*** —

(1) ***Taxation of contributions.*** Section 402(b) provides rules for taxing an employee on contributions made on his behalf by an employer to an employees' trust that is not exempt under section 501(a). In general, any such contributions made after August 1, 1969, during a taxable year of the employer which ends within or with a taxable year of the trust for which it is not so exempt shall be included as compensation in the gross income of the employee for his taxable year during which the contribution is made, but only to the extent that the employee's interest in such contribution is substantially vested at the time the contribution is made. The preceding sentence does not apply to contracts referred to in the transitional rule of paragraph (d)(1) (ii) or (iii) of this section. For the definition of the terms “substantially vested” and “substantially nonvested” see § 1.83-3(b).

(2) ***Determination of amount of employer contributions.*** If, for an employee, the actual amount of employer contributions referred to in paragraph (a)(1) of this section for any taxable year of the employee is not determinable or for any other reason is not known, then, except as set forth in rules prescribed by the Commissioner in revenue rulings, notices, or other guidance published in the Internal Revenue Bulletin (see § 601.601(d)(2)(ii)(*b*) of this chapter), such amount shall be either—

(i) The excess of—

(A) The amount determined as of the end of such taxable year in accordance with the formula described in § 1.403(b)-1(d)(4), as it appeared in the April 1, 2006, edition of 26 CFR Part 1; over

(B) The amount determined as of the end of the prior taxable year in accordance with the formula described in paragraph (a)(2)(i)(A) of this section; or

(ii) The amount determined under any other method utilizing recognized actuarial principles that are consistent with the provisions of the plan under which such contributions are made and the method adopted by the employer for funding the benefits under the plan.

(b) ***Taxability of employee when rights under nonexempt trust change from nonvested to vested*** —

(1) ***In general.*** If rights of an employee under a trust become substantially vested during a taxable year of the employee (ending after August 1, 1969), and a taxable year of the trust for which it is not exempt under section 501(a) ends with or within such year, the value of the employee's interest in the trust on the date of such change shall be included in his gross income for such taxable year, to the extent provided in paragraph (b)(3) of this section. When an employees' trust that was exempt under section 501(a) ceases to be so exempt, an employee shall include in his gross income only amounts contributed to the trust during a taxable year of the employer that ends within or with a taxable year of the trust in which it is not so exempt (to the same extent as if the trust had not been so exempt in all prior taxable years).

(2) ***Value of an employee's interest in a trust.***

(i) For purposes of this section, the term "the value of an employee's interest in a trust" means the amount of the employee's beneficial interest in the net fair market value of all the assets in the trust as of any date on which some or all of the employee's interest in the trust becomes substantially vested. The net fair market value of all the assets in the trust is the total amount of the fair market values (determined without regard to any lapse restriction, as defined in § 1.83-3(h)) of all the assets in the trust, less the amount of all the liabilities (including taxes) to which such assets are subject or which the trust has assumed (other than the rights of any employee in such assets), as of the date on which some or all of the employee's interest in the trust becomes substantially vested.

(ii) If a separate account in a trust for the benefit of two or more employees is not maintained for each employee, the value of the employee's interest in such trust is determined in accordance with rules prescribed by the Commissioner under the authority in paragraph (a)(2) of this section.

(iii) If there is no valuation of a nonexempt trust's assets on the date of the change referred to in paragraph (b)(1) of this section, the value of an employee's interest in such trust is determined by taking the weighted average of the values on the nearest valuation dates occurring before and after the date of such change. The average is to be determined in the manner described in § 20.2031-2(b)(1).

(3) ***Extent to which value of an employee's interest is includible in gross income.*** For purposes of paragraph (b)(1) of this section, there shall be included in the gross income of the employee for his taxable year in which his rights under the trust become substantially vested only that portion of the value of his interest in the trust that is attributable to contributions made by the employer after August 1, 1969. However, the preceding sentence shall not apply—

(i) To the extent such value is attributable to a contribution made on the date of such change, and

(ii) To the extent such value is attributable to contributions described in paragraph (d)(1) (ii) or (iii) of this section (relating to contributions made pursuant to a binding contract entered into before April 22, 1969).

For purposes of this (3), if the value of an employee's interest in a trust which is attributable to contributions made by the employer after August 1, 1969, is not known, it shall be deemed to be an amount which bears the same ratio to the value of the employee's interest as the contributions made by the employer after such date bear to the total contributions made by the employer.

(4) ***Partial vesting.*** For purposes of paragraph (b)(1) of this section, if only part of an employee's interest in the trust becomes substantially vested during any taxable year, then only the corresponding part of the value of the employee's interest in such trust is includible in his gross income for such year. In such a case, it is first necessary to compute, under the rules in paragraphs (b) (1) and (2) of this section, the amount that would be includdible if his entire interest had changed to a substantially vested interest during such a year. The amount that is includible under this paragraph (4) is the amount determined under the preceding sentence multiplied by the percent of the employee's interest which became substantially vested during the taxable year.

(5) ***Basis.*** The basis of any employee's interest in a trust to which this section applies shall be increased by the amount included in his gross income under this section.

(6) ***Treatment as owner of trust.*** In general, a beneficiary of a trust to which this section applies may not be considered to be the owner under subpart E, part I, subchapter J, chapter I of the Code of any portion of such trust which is attributable to contributions to such trust made by the employer after August 1, 1969, or to incidental contributions made by the employee after such date. However, where contributions made by the employee are not incidental when compared to contributions made by the employer, such beneficiary shall be considered to be the owner of the portion of the trust attributable to contributions made by the employee, if the applicable requirements of such subpart E are satisfied. For purposes of this paragraph (6), contributions made by an employee are not incidental when compared to contributions made by the employer if the employee's total contributions as of any date exceed the employer's total contributions on behalf of the employee as of such date.

(7) ***Example.*** The provisions in this paragraph may be illustrated by the following example:

Example. On January 1, 1968 M corporation establishes an employees' trust, which is not exempt under section 501(a), for some of its employees, including A, reserving the right to discontinue contributions at any time. M corporation contributes $5,000 on A's behalf to the trust on February 1, 1968. At the time of contribution 50 percent of A's interest was substantially vested. On January 1, 1971, and January 1, 1974, M corporation makes additional $5,000 contributions to the trust on A's behalf. A's interest in the trust changed from a 50 percent substantially vested to a 100 percent substantialy vested interest in the trust on December 31, 1974. Assume that the value of A's interest in the trust on December 31, 1974, which is attributable to employer contributions made after August 1, 1969, is calculated to be $11,000 under paragraph (b)(3) of this section. The amount includible in A's gross income for 1971 and 1974 is computed as follows:
(i) Amount of M corporation's contribution made on January 1, 1971, to the trust which is includible in A's gross income under paragraph (b)(1) of this section (50 percent substantially vested interest in the trust times $5,000 contribution)—$2,500.

1974

(i) Amount of M corporation's contribution made on January 1, 1974, to the trust which is includible in A's gross income under paragraph (b)(1) of this section (50 percent substantially vested interest in the trust times $5,000 contribution)—$2,500.
(ii) Amount which would have been includible if A's entire interest had changed to a substantially vested interest (value of employee's interest in the trust attributable to employer contributions made after August 1, 1969—$11,000.

(iii) Percent of A's interest that became substantially vested on December 31, 1974—50 percent.

(iv) Amount includible in A's gross income for 1974 in respect of his percentage change from a substantially nonvested to a substantially vested interest in the trust (50 percent of $11,000)—$5,500.

(v) Total amount includible in A's gross income for 1974 ((i) plus (iv))—$8,000.

(c) *Taxation of distributions from trust not exempt under section 501(a)* —

(1) ***In general.*** Any amount actually distributed or made available to any distributee by an employees' trust in a taxable year in which it is not exempt under section 501(a) shall be taxable under section 72 (relating to annuities) to the distributee in the taxable year in which it is so distributed or made available. For taxable years beginning after December 31, 1963, such amounts may be taken into account in computations under sections 1301 through 1305 (relating to income averaging). If, for example, the distribution from such a trust consists of an annuity contract, the amount of the distribution shall be considered to be the entire value of the contract at the time of distribution. Such value is includible in the gross income of the distributee to the extent that such value exceeds the investment in the contract, determined by applying sections 72 and 101(b). The distributions by such a trust shall be taxed as provided in section 72 whether or not the employee's rights to the contributions become substantially vested beforehand. For rules relating to the treatment of employer contributions to a nonexempt trust as part of the consideration paid by the employee, see section 72(f). For rules relating to the treatment of the limited exclusion allowable under section 101(b)(2)(D) as additional consideration paid by the employee, see the regulations under that section.

(2) ***Distributions before annuity starting date.*** Any amount distributed or made available to any distributee before the annuity starting date (as defined in section 72(c)(4)) by an employees' trust in a taxable year in which it is not exempt under section 501(a) shall be treated as distributed in the following order—

(i) First, from that portion of the employee's interest in the trust attributable to contributions made by the employer after August 1, 1969 (other than those referred to in paragraph (d)(1) (ii) or (iii) of this section) that has not been previously includible in the employee's gross income, to the extent that such a distribution is permitted under the trust (or the plan of which the trust is a part);

(ii) Second, from that portion of the employee's interest in the trust attributable to contributions made by the employer on or before August 1, 1969 (or contributions referred to in paragraph (d)(1) (ii) or (iii) of this section);

(iii) Third, from the remaining portion of the employee's interest in the trust attributable to contributions made by the employer.

If the employee has made contributions to the trust, amounts attributable thereto shall be treated as distributed prior to any amounts attributable to the employer's contributions, to the extent provided by the trust (or the plan of which the trust is a part). However, the portion of such amounts attributable to income earned on the employee's contributions made after August 1, 1969, shall be treated as distributed prior to any return of such contributions.

(d) *Taxation by reason of employer contributions made on or before August 1, 1969.*

(1) Except as provided in section 402(d) (relating to taxable years beginning before January 1, 1977), any contribution to a trust made by an employer on behalf of an employee—

(i) On or before August 1, 1969, or

(ii) After such date, pursuant to a binding contract (as defined in § 1.83-3(b)(2)) entered into before April 22, 1969, or

(iii) After August 1, 1969, pursuant to a written plan in which the employee participated on April 22, 1969, and under which the obligation of the employer on such date was essentially the same as under a binding written contract, during a taxable year of the employer which ends within or with a taxable year of the trust for which the trust is not exempt under section 501(a) shall be included in income of the employee for his taxable year during which the contribution is made, if the employee's beneficial interest in the contribution is nonforfeitable at the time the contribution is made. If the employee's beneficial interest in the contribution is forfeitable at the time the contribution is made, even though his interest becomes nonforfeitable later the amount of such contribution is not required to be included in the income of the employee at the time his interest becomes nonforfeitable.

(2)

(i) An employee's beneficial interest in the contribution is nonforfeitable, within the meaning of sections 402(b), 403(c), and 404(a)(5) prior to the amendments made thereto by the Tax Reform Act of 1969 and section 403(b), at the time the contribution is made if there is no contingency under the plan that may cause the employee to lose his rights in the contribution. Similarly, an employee's rights under an annuity contract purchased for him by his employer change from forfeitable to nonforfeitable rights within the meaning of section 403(d) prior to the repeal thereof by the Tax Reform Act of 1969 at that time when, for the first time, there is no contingency which may cause the employee to lose his rights under the contract. For example, if under the terms of a pension plan, an employee upon termination of his services before the retirement date, whether voluntarily or involuntarily, is entitled to a deferred annuity contract to be purchased with the employer's contributions made on his behalf, or is entitled to annuity payments which the trustee is abligated to make under the terms of the trust instrument based on the contributions made by the employer on his behalf, the employee's beneficial interest in such contributions is nonforfeitable.

(ii) On the other hand, if, under the terms of a pension plan, an employee will lose the right to any annuity purchased from or to be provided by, contributions made by the employer if his services should be terminated before retirement, his beneficial interest in such contributions is nonforfeitable.

(iii) The mere fact that an employee may not live to the retirement date, or may live only a short period after the retirement date, and may not be able to enjoy the receipt of annuity or pension payments, does not make his beneficial interest in the contributions made by the employer on his behalf forfeitable. If the employer's contributions have been irrevocably applied to purchase an annuity contract for the employee, or if the trustee is obligated to use the employer's contributions to provide an annuity for the employee provide only that the employee is alive on the dates the annuity payments are due, the employee's rights in the employer's contributions are nonforfeitable.

(Secs. 83 and 7805 of the Internal Revenue Code of 1954 (83 Stat. 588; 68A Stat. 917; 26 U.S.C. 83 and 7805))

[T.D. 7554, 43 FR 31922, July 24, 1978, as amended by T.D. 9340, 72 FR 41140, July 26, 2007]

§ 1.402(c)-1 Taxability of beneficiary of certain foreign situs trusts.

Section 402(c) has the effect of treating, for purposes of section 402, the distributions from a trust which at the time of the distribution is located outside the United States in the same manner as distributions from a trust which is located in the United States. If the trust would qualify for exemption from tax under section 501(a) except for the fact that it fails to comply with the provisions of paragraph (a)(3)(i) of § 1.401-1, which restricts qualification to trusts created or organized in the United States and maintained here, section 402(a) and § 1.402(a)-1 are applicable to the distributions from such a trust. Thus, for example, a total distribution from such a trust is entitled to the long-term capital gains treatment of section 402(a)(2), except in the case of a nonresident alien individual (see section 871 and 1441 and the regulations thereunder). However, if the plan fails to meet any requirement of section 401 and the regulations thereunder in addition to paragraph (a)(3)(i) of § 1.401-1, section 402(b) and § 1.402(b)-1 are applicable to the distributions from such a trust.

[T.D. 6500, 25 FR 11679, Nov. 26, 1960]

§ 1.402(c)-2 Eligible rollover distributions.

(a) ***Overview of rollover and related statutory provisions*** —

(1) ***General rule*** —

(i) ***Rollover of distribution paid to employee.*** Under section 402(c), any portion of a distribution paid to an employee from a qualified plan that is an eligible rollover distribution described in section 402(c)(4) may be rolled over to an eligible retirement plan described in section 402(c)(8)(B). See paragraph (j) of this section for rules relating to distributions paid to a surviving spouse or a non-spousal beneficiary.

(ii) ***Exclusion from income.*** Except as otherwise provided in this section, if an eligible rollover distribution is paid to an employee, then the amount distributed is not currently includible in gross income, provided that it is contributed to an eligible retirement plan no later than the 60th day following the day on which the employee received the distribution. However, if all or any portion of the amount distributed (including any amount withheld as income tax under section 3405(c)) is not contributed as a rollover, it is included in the employee's gross income to the extent required under section 402(a), and also may be subject to the 10-percent additional income tax under section 72(t).

(iii) ***Definition of eligible retirement plan*** —

(A) ***In general.*** An eligible retirement plan means an IRA described in paragraph (a)(1)(iii)(B)(*1*) of this section or a qualified plan described in paragraph (a)(1)(iii)(B)(*2*) of this section. In addition, an eligible deferred compensation plan described in section 457(b) that is maintained by an employer described in section 457(e)(1)(A) is treated as an eligible retirement plan, but only if the plan separately accounts for the amount of the rollover.

(B) ***Definitions of IRA and qualified plan.*** For purposes of section 402(c) and this section—

(*1*) An IRA is an individual retirement account described in section 408(a) or an individual retirement annuity (other than an endowment contract) described in section 408(b); and

(2) A qualified plan is an employees' trust described in section 401(a) that is exempt from tax under section 501(a), an annuity plan described in section 403(a), or an annuity contract described in section 403(b).

(iv) ***Multiple distributions.*** If more than one distribution is received by an employee from a qualified plan during a taxable year, the 60-day deadline applies separately to each distribution. Because the amount withheld as income tax under section 3405(c) is considered an amount distributed under section 402(c), an amount equal to all or any portion of the amount withheld may be contributed as a rollover to an eligible retirement plan within the 60-day period in addition to the net amount of the eligible rollover distribution actually received by the employee.

(v) ***Definition of rollover.*** For purposes of section 402(c) and this section, a rollover is—

(A) A direct rollover as described in § 1.401(a)(31)-1, Q&A-3;

(B) A contribution of an eligible rollover distribution to an eligible retirement plan that, except as provided in paragraph (b)(2) of this section, satisfies the time period requirement in paragraph (a)(1)(ii) of this section and the designation requirement described in paragraph (k)(1) of this section; or

(C) A repayment of a distribution that is treated as a rollover, as described in paragraph (a)(1)(vi) of this section.

(vi) ***Certain repayments treated as rollovers.*** The repayment of a distribution is treated as a rollover if that treatment is prescribed under another statutory provision. For example, the repayment of a qualified disaster recovery distribution under section 72(t)(11)(C) is treated as a rollover for purposes of this section.

(2) ***Related Internal Revenue Code provisions*** —

(i) ***Direct rollover option.*** Section 401(a)(31) requires qualified plans to provide a distributee of an eligible rollover distribution the option to elect to have the distribution paid directly to an eligible retirement plan in a direct rollover. See § 1.401(a)(31)-1 for further guidance concerning this direct rollover option.

(ii) ***Notice requirement.*** Section 402(f) requires the plan administrator of a qualified plan to provide, within a reasonable time before making an eligible rollover distribution, a written explanation to the distributee of the distributee's right to elect a direct rollover and the withholding consequences of not making that election. The explanation also is required to provide certain other relevant information relating to the taxation of distributions. See § 1.402(f)-1 for guidance concerning the written explanation required under section 402(f).

(iii) ***Mandatory income tax withholding.*** If a distributee of an eligible rollover distribution does not elect to have the eligible rollover distribution paid directly from the plan to an eligible retirement plan in a direct rollover under section 401(a)(31), the eligible rollover distribution is subject to mandatory income tax withholding under section 3405(c). See § 31.3405(c)-1 of this chapter for provisions relating to the withholding requirements applicable to eligible rollover distributions.

(iv) ***Section 403(b) annuities.*** See § 1.403(b)-7(b) for guidance concerning the direct rollover requirements for distributions from annuities described in section 403(b).

(3) ***Applicability date*** —

(i) ***In general.*** The rules provided in this section apply to any distribution made on or after January 1, 2025.

(ii) ***Distributions prior to January 1, 2025.*** For any distribution made before January 1, 2025, the rules of 26 CFR 1.402(c)-2 and 26 CFR 1.402(c)-3 (as they appeared in the April 1, 2023, edition of 26 CFR part 1) apply. Alternatively, the rules provided in this section may be applied to those distributions.

(b) ***Special rules*** —

(1) ***Rules related to Roth accounts*** —

(i) ***Treatment of Roth conversions.*** If all or any portion of an eligible rollover distribution that is rolled over to a Roth IRA is not from a designated Roth account described in section 402A, then the amount rolled over to the Roth IRA is included in the employee's gross income to the extent required under section 402(a). However, the amount rolled over to a Roth IRA generally is not subject to the 10-percent additional income tax under section 72(t).

(ii) ***Treatment of distributions from designated Roth accounts.*** A distribution from a designated Roth account may be rolled over only to another designated Roth account or to a Roth IRA. See § 1.402A-1, Q&A-5 for rules that apply to such a rollover.

(2) ***Extensions of and exceptions to 60-day deadline*** —

(i) ***Waiver of 60-day deadline.*** The Commissioner may waive the 60-day deadline described in paragraph (a)(1)(ii) of this section if the failure to waive that requirement would be against equity or good conscience, including casualty, disaster, or other events beyond the reasonable control of the individual with respect to such requirement. See section 402(c)(3)(B).

(ii) ***Frozen deposits.*** The 60-day period described in paragraph (a)(1)(ii) of this section does not include any period during which the amount transferred to the employee is a frozen deposit described in section 402(c)(7)(B). The 60-day period also does not end earlier than 10 days after that amount ceases to be a frozen deposit.

(iii) ***Exception for qualified plan loan offsets.*** See paragraph (g) of this section for the timing requirements related to the rollover of a qualified plan loan offset amount.

(iv) ***Other distributions treated as rollovers.*** In the case of a repayment of a distribution treated as a rollover as described in paragraph (a)(1)(vi) of this section, see the applicable statutory provision and accompanying regulations, if any, for the timing requirements relating to the repayment.

(3) ***Special rules for distribution that includes basis*** —

(i) ***Rollover of basis to IRA.*** If an eligible rollover distribution includes some or all of an employee's basis (that is, the employee's investment in the contract), then the portion of the distribution that is allocable to the employee's basis may be rolled over to an IRA.

(ii) ***Rollover of basis to qualified trust must be done through direct trustee-to-trustee transfer.*** If an eligible rollover distribution includes some or all of an employee's basis, then the portion of an eligible rollover distribution that is allocable to the employee's basis may be rolled over to a qualified plan only through a direct trustee-to-trustee transfer. In that case, the qualified trust or

annuity contract must provide for separate accounting of the amount transferred (and earnings on that amount) including separately accounting for the portion of the distribution that includes an employee's basis and the portion of the distribution that does not include basis.

(iii) ***Rollover of basis to section 457(b) plans not permitted.*** The portion of an eligible rollover distribution that is allocable to an employee's basis may not be rolled over to an eligible deferred compensation plan described in section 457(b).

(iv) ***Rollover of portion of distribution.*** If an eligible rollover distribution includes some or all of an employee's basis and less than the entire distribution is being rolled over, then the amount rolled over is treated as consisting first of the portion of the distribution that is not allocable to the employee's basis.

(4) ***Special rules for distributions that include property*** —

(i) ***In general.*** Except as provided in paragraph (b)(4)(ii) of this section, if an eligible rollover distribution consists of property other than money, then, only that property may be rolled over to an eligible retirement plan.

(ii) ***Rollover of proceeds permitted.*** In the case of an eligible rollover distribution that consists of property other than money, the proceeds of the sale of that property may be rolled over to an eligible retirement plan. However, to the extent those proceeds exceed the property's fair market value at the time of the sale, that excess may not be rolled over. See section 402(c)(6)(C) and (D) for other rules relating to the sale of distributed property.

(c) ***Definition of eligible rollover distribution*** —

(1) ***General rule.*** Unless specifically excluded, an eligible rollover distribution means any distribution to an employee of all or any portion of the balance to the credit of the employee in a qualified plan. Thus, except as specifically provided in paragraph (c)(2) or (3) of this section, any amount distributed to an employee from a qualified plan is an eligible rollover distribution, regardless of whether it is a distribution of a benefit that is protected under section 411(d)(6).

(2) ***Exceptions.*** An eligible rollover distribution does not include the following:

(i) Any distribution that is one of a series of substantially equal periodic payments made (not less frequently than annually) over any one of the following periods—

(A) The life of the employee (or the joint lives of the employee and the employee's designated beneficiary);

(B) The life expectancy of the employee (or the joint life and last survivor expectancy of the employee and the employee's designated beneficiary); or

(C) A specified period of ten years or more;

(ii) Any distribution to the extent the distribution is a required minimum distribution under section 401(a)(9); or

(iii) Any distribution that is made on account of hardship.

(3) ***Other amounts not treated as eligible rollover distributions.*** The following amounts are not treated as eligible rollover distributions:

(i) Elective deferrals (as defined in section 402(g)(3)) and employee contributions that, pursuant to rules prescribed by the Commissioner in revenue rulings, notices, or other guidance published in the Internal Revenue Bulletin (see § 601.601(d) of this chapter), are returned to the employee (together with the income allocable thereto) in order to comply with the section 415 limitations;

(ii) Corrective distributions of excess deferrals as described in § 1.402(g)-1(e)(3), together with the income allocable to these corrective distributions;

(iii) Corrective distributions of excess contributions under a qualified cash or deferred arrangement described in § 1.401(k)-2(b)(2) and excess aggregate contributions described in § 1.401(m)-2(b)(2), together with the income allocable to these distributions;

(iv) Loans that are treated as deemed distributions pursuant to section 72(p);

(v) Subject to the rules of paragraph (c)(4) of this section, dividends paid on employer securities as described in section 404(k);

(vi) The costs of life insurance coverage includible in the employee's income under section 72(m)(3)(B);

(vii) Prohibited allocations that are treated as deemed distributions pursuant to section 409(p);

(viii) Distributions that are permissible withdrawals from an eligible automatic contribution arrangement within the meaning of section 414(w);

(ix) Distributions of premiums for accident or health insurance under § 1.402(a)-1(e)(1)(i) (other than distributions subject to section 402(l), as described in § 1.402(a)-1(e)(3));

(x) Amounts treated as distributed as a result of the purchase of a collectible pursuant to section 408(m); and

(xi) Similar items designated by the Commissioner in revenue rulings, notices, and other guidance published in the Internal Revenue Bulletin. *See* § 601.601(d) of this chapter.

(4) ***Dividends reinvested in employer securities.*** Dividends paid to an employee stock ownership plan (as defined in section 4975(e)(7)) that are reinvested in employer securities pursuant to a participant election under section 404(k)(2)(A)(iii)(II) are included in the participant's account balance and lose their character as dividends when subsequently distributed from the account. As a result, these amounts are eligible rollover distributions if they otherwise meet the requirements of this paragraph (c).

(d) ***Determination of substantially equal periodic payments*** —

(1) ***General rule.*** For purposes of paragraph (c)(2)(i) of this section, and except as provided in this paragraph (d) or paragraph (e) of this section, whether a series of payments is a series of substantially equal periodic payments over a specified period is determined at the time payments begin, and by following the principles of section 72(t)(2)(A)(iv), without regard to contingencies or modifications that have not yet occurred. Thus, for example, a joint and 50-percent survivor annuity will be treated as a series of substantially equal periodic payments at the time payments commence, as will a joint and survivor annuity that provides for increased payments to the employee if the employee's beneficiary dies before the employee. Similarly, for purposes of determining if a disability benefit payment is part of a series of substantially equal periodic payments for a period described in section 402(c)(4)(A), any contingency under which payments cease upon recovery from the disability may be disregarded.

(2) ***Certain supplements disregarded.*** For purposes of determining whether a distribution is one of a series of periodic payments that are substantially equal, social security supplements described in section 411(a)(9) are disregarded. For example, if a distributee receives a life annuity of $500 per month, plus a social security supplement consisting of payments of $200 per month until the distributee reaches the age at which social security benefits of not less than $200 a month begin, the $200 supplemental payments are disregarded and, therefore, each monthly payment of $700 made before the social security age and each monthly payment of $500 made after the social security age is treated as one of a series of substantially equal periodic payments for life. A series of periodic payments that are not substantially equal solely because the amount of each payment is reduced upon attainment of social security retirement age (or, alternatively, upon commencement of social security early retirement, survivor, or disability benefits) is also treated as substantially equal as long as the reduction in the actual payments is level and does not exceed the applicable social security benefit.

(3) ***Changes in the amount of payments or the distributee.*** If the amount (or, if applicable, the method of calculating the amount) of the payments changes so that subsequent payments are not substantially equal to prior payments, then a new determination must be made as to whether the remaining payments are a series of substantially equal periodic payments over a period specified in paragraph (c)(2)(i) of this section. This determination is made without taking into account payments made or the years of payment that elapsed prior to the change. However, a new determination is not made merely because, upon the death of the employee, the employee's beneficiary becomes the distributee. Thus, if distributions commence over a period that is at least as long as either the first annuitant's life or 10 years, then substantially equal payments to the survivor are not eligible rollover distributions even though the payment period remaining after the death of the employee is or may be less than the period described in section 402(c)(4)(A). For example, substantially equal periodic payments made under a life annuity with a five-year term certain would not be an eligible rollover distribution even when paid after the death of the employee with three years remaining under the term certain.

(4) ***Defined contribution plans.*** The following rules apply in determining whether a series of payments from a defined contribution plan constitutes a series of substantially equal periodic payments for a period described in section 402(c)(4)(A)—

(i) ***Declining balance of years.*** A series of payments from an account balance under a defined contribution plan over a period is considered a series of substantially equal periodic payments over that period if, for each year, the amount of the distribution is calculated by dividing the account balance by the number of years remaining in the period. For example, a series of payments is considered substantially equal payments over 10 years if the series is determined as follows. In year 1, the annual payment is the account balance divided by 10; in year 2, the annual payment is the remaining account balance divided by 9; and so on until year 10 when the entire remaining balance is distributed.

(ii) ***Reasonable actuarial assumptions.*** If an employee's account balance under a defined contribution plan is to be distributed in annual installments of a specified amount until the account balance is exhausted, then, for purposes of determining if the period of distribution is a period described in section 402(c)(4)(A), the period of years over which the installments will be distributed must be determined using reasonable actuarial assumptions. For example, if an employee has an account balance of $100,000, the employee elects distributions of $12,000 per year until the account balance is exhausted, and the future rate of return is assumed to be 5 percent per year, the account balance will be exhausted in approximately 12 years. Similarly, if

the same employee elects a fixed annual distribution amount and the fixed annual amount is less than or equal to $10,000, it is reasonable to assume that the future rate of return will be greater than 0 percent and, thus, the account will not be exhausted in less than 10 years.

(e) ***Determination of whether a payment is an independent payment*** —

(1) ***Definition of independent payments.*** Except as provided in paragraphs (e)(2) and (3) of this section, a payment is treated as independent of the payments in a series of substantially equal payments, and thus not part of the series described in paragraph (c)(2)(i) of this section, if the payment is substantially larger or smaller than the other payments in the series. An independent payment is an eligible rollover distribution if it is not otherwise excepted from the definition of eligible rollover distribution. This rule applies regardless of whether the payment is made before, with, or after payments in the series. For example, if an employee elects a single payment of half of the account balance with the remainder of the account balance paid over the life expectancy of the distributee, the single payment is treated as independent of the payments in the series and is an eligible rollover distribution unless otherwise excepted. Similarly, if an employee's surviving spouse receives a survivor life annuity of $1,000 per month plus a single payment on account of death of $7,500, the single payment is treated as independent of the payments in the annuity and is an eligible rollover distribution unless otherwise excepted.

(2) ***Special rules*** —

(i) ***Administrative error or delay.*** If, due solely to reasonable administrative error or delay in payment, there is an adjustment after the annuity starting date to the amount of any payment in a series of payments that otherwise would constitute a series of substantially equal payments described in section 402(c)(4)(A) and this section, the adjusted payment or payments are treated as part of the series of substantially equal periodic payments and are not treated as independent of the payments in the series. For example, if, due solely to reasonable administrative delay, the first payment of a life annuity is delayed by two months and reflects an additional two months' worth of benefits, that payment is treated as a substantially equal payment in the series rather than as an independent payment. The result does not change merely because the amount of the adjustment is paid in a separate supplemental payment.

(ii) ***Supplemental payments for annuitants.*** A supplemental payment from a defined benefit plan to an annuitant (that is, a retiree or beneficiary) is treated as part of a series of substantially equal payments, rather than as an independent payment, provided that the following conditions are met—

(A) The supplement is a benefit increase for annuitants;

(B) The amount of the supplement is determined in a consistent manner for all similarly situated annuitants;

(C) The supplement is paid to annuitants who are otherwise receiving payments that would constitute substantially equal periodic payments; and

(D) The aggregate supplement is less than or equal to the greater of 10 percent of the annual rate of payment for the annuity, or $750.

(iii) ***Final payment in a series.*** If a payment in a series of periodic payments from an account balance under a defined contribution plan is equal to the remaining balance in the account and is substantially less than the other payments in the series, the final payment must nevertheless

be treated as a payment in the series of substantially equal periodic payments and may not be treated as an independent payment if the other payments in the series are substantially equal and the payments are for a period described in section 402(c)(4)(A) based on the rules provided in paragraph (d)(4)(ii) of this section. Thus, the final payment will not be an eligible rollover distribution.

(3) ***Additional guidance.*** The Commissioner, in revenue rulings, notices, and other guidance published in the Internal Revenue Bulletin, may provide additional rules for determining what is an independent payment under paragraph (e)(1) of this section and may prescribe a higher amount than the $750 amount in paragraph (e)(2)(ii)(D) of this section. See § 601.601(d) of this chapter.

(f) ***Determination of whether a distribution is a required minimum distribution*** —

(1) ***Determination for calendar year of distribution.*** Except as provided in paragraphs (f)(2) and (3) of this section, if a minimum distribution is required for a calendar year, then the amounts distributed during that calendar year are treated as required minimum distributions under section 401(a)(9) to the extent that the total minimum distribution required under section 401(a)(9) for the calendar year has not been satisfied (and accordingly, those amounts are not eligible rollover distributions). For example, if an employee is required under section 401(a)(9) to receive a minimum distribution for a calendar year of $5,000 and the employee receives a total of $7,200 in that year, the first $5,000 distributed will be treated as the required minimum distribution and will not be an eligible rollover distribution, and the remaining $2,200 will be an eligible rollover distribution if it otherwise qualifies. If the total section 401(a)(9) required minimum distribution for a calendar year prior to the calendar year of the distribution is not distributed in that calendar year (for example, when the distribution for the calendar year in which the employee reaches the applicable age is made on April 1 of the following calendar year), then the amount that was required to be distributed, but not distributed, is added to the amount required to be distributed for the next calendar year in determining the portion of any distribution in the next calendar year that is a required minimum distribution (and, thus, is not an eligible rollover distribution).

(2) ***Distribution before first distribution calendar year.*** Any amount that is paid to an employee before January 1 of the first distribution calendar year for the employee (as described in § 1.401(a)(9)-5(a)(2)(ii)) is not treated as required under section 401(a)(9) and, thus, is an eligible rollover distribution if it otherwise qualifies.

(3) ***Special rule for annuities.*** In the case of annuity payments from a defined benefit plan, or under an annuity contract purchased from an insurance company (including a qualified plan distributed annuity contract (as defined in paragraph (h) of this section)), the entire amount of any annuity payment made on or after January 1 of the first distribution calendar year for the employee (as described in § 1.401(a)(9)-5(a)(2)(ii)) is treated as an amount required under section 401(a)(9) and, thus, is not an eligible rollover distribution.

(g) ***Treatment of plan loan offset amounts*** —

(1) ***General rule.*** A distribution of a plan loan offset amount, as defined in paragraph (g)(3)(i) of this section (including a qualified plan loan offset amount, a type of plan loan offset amount defined in paragraph (g)(3)(ii) of this section), is an eligible rollover distribution if it is described in paragraph (c) of this section. See § 1.401(a)(31)-1, Q&A-16, for guidance concerning the offering of a direct rollover of a plan loan offset amount. See also § 31.3405(c)-1, Q&A-11, of this chapter for guidance concerning special withholding rules with respect to plan loan offset amounts.

(2) ***Rollover period for a plan loan offset amount*** —

(i) ***Plan loan offset amount that is not a qualified plan loan offset amount.*** A distribution of a plan loan offset amount that is an eligible rollover distribution and that is not a qualified plan loan offset amount may be rolled over by the employee to an eligible retirement plan within the 60-day period set forth in section 402(c)(3)(A), as described in paragraph (a)(1)(ii) of this section.

(ii) ***Plan loan offset amount that is a qualified plan loan offset amount.*** A distribution of a plan loan offset amount that is an eligible rollover distribution and that is a qualified plan loan offset amount may be rolled over by the employee to an eligible retirement plan within the period set forth in section 402(c)(3)(C), which is the individual's tax filing due date (including extensions) for the taxable year in which the offset is treated as distributed from a qualified employer plan.

(3) ***Definitions*** —

(i) ***Plan loan offset amount.*** For purposes of section 402(c), a plan loan offset amount is the amount by which, under the plan terms governing a plan loan, an employee's accrued benefit is reduced (offset) in order to repay the loan (including the enforcement of the plan's security interest in an employee's accrued benefit). A distribution of a plan loan offset amount can occur in a variety of circumstances, for example, when the terms governing a plan loan require that, in the event of the employee's termination of employment or request for a distribution, the loan be repaid immediately or treated as in default. A distribution of a plan loan offset amount also occurs when, under the terms governing the plan loan, the loan is cancelled, accelerated, or treated as if it were in default (for example, when the plan treats a loan as in default upon an employee's termination of employment or within a specified period thereafter). A distribution of a plan loan offset amount is an actual distribution, not a deemed distribution under section 72(p).

(ii) ***Qualified plan loan offset amount.*** For purposes of section 402(c), a qualified plan loan offset amount is a plan loan offset amount that satisfies the following requirements:

(A) The plan loan offset amount is treated as distributed from a qualified employer plan to an employee or beneficiary solely by reason of the termination of the qualified employer plan, or the failure to meet the repayment terms of the loan because of the severance from employment of the employee; and

(B) The plan loan offset amount relates to a plan loan that met the requirements of section 72(p)(2) immediately prior to the termination of the qualified employer plan or the severance from employment of the employee, as applicable.

(iii) ***Qualified employer plan.*** For purposes of section 402(c) and this section, a qualified employer plan is a qualified employer plan as defined in section 72(p)(4).

(4) ***Special rules for qualified plan loan offset amounts*** —

(i) ***Definition of severance from employment.*** For purposes of paragraph (g)(3)(ii)(A) of this section, whether an employee has a severance from employment with the employer that maintains the qualified employer plan is determined in the same manner as under § 1.401(k)-1(d)(2). Thus, an employee has a severance from employment when the employee ceases to be an employee of the employer maintaining the plan.

(ii) ***Offset because of severance from employment.*** A plan loan offset amount is treated as distributed from a qualified employer plan to an employee or beneficiary solely by reason of the failure to meet the repayment terms of a plan loan because of severance from employment of the employee if the plan loan offset:

(A) Relates to a failure to meet the repayment terms of the plan loan, and

(B) Occurs within the period beginning on the date of the employee's severance from employment and ending on the first anniversary of that date.

(5) ***Examples.*** The following examples illustrate the rules with respect to plan loan offset amounts, including qualified plan loan offset amounts, in this paragraph (g) and in §§ 1.401(a)(31)-1, Q&A-16, and 31.3405(c)-1, Q&A-11, of this chapter. For purposes of these examples, each reference to a plan refers to a qualified employer plan as described in section 72(p)(4).

(i) ***Example 1*** —

(A) In 2025, Employee A has an account balance of $10,000 in Plan Y, of which $3,000 is invested in a plan loan to Employee A that is secured by Employee A's account balance in Plan Y. Employee A has made no after-tax employee contributions to Plan Y. The plan loan meets the requirements of section 72(p)(2). Plan Y does not provide any direct rollover option with respect to plan loans. Employee A severs from employment on June 15, 2025. After severance from employment, Plan Y accelerates the plan loan and provides Employee A 90 days to repay the remaining balance of the plan loan. Employee A, who is under the age set forth in section 401(a)(9)(C)(i)(I), does not repay the loan within the 90 days and instead elects a direct rollover of Employee A's entire account balance in Plan Y. On September 18, 2025 (within the 12-month period beginning on the date that Employee A severed from employment), Employee A's outstanding loan is offset against the account balance.

(B) In order to satisfy section 401(a)(31), Plan Y must make a direct rollover by paying $7,000 directly to the eligible retirement plan chosen by Employee A. When Employee A's account balance was offset by the amount of the $3,000 unpaid loan balance, Employee A received a plan loan offset amount (equivalent to $3,000) that is an eligible rollover distribution. However, under § 1.401(a)(31)-1, Q&A-16, Plan Y satisfies section 401(a)(31), even though a direct rollover option was not provided with respect to the $3,000 plan loan offset amount.

(C) No withholding is required under section 3405(c) on account of the distribution of the $3,000 plan loan offset amount because no cash or other property (other than the plan loan offset amount) is received by Employee A from which to satisfy the withholding.

(D) The $3,000 plan loan offset amount is a qualified plan loan offset amount within the meaning of paragraph (g)(3)(ii) of this section. Accordingly, Employee A may roll over up to the $3,000 qualified plan loan offset amount to an eligible retirement plan within the period that ends on the employee's tax filing due date (including extensions) for the taxable year in which the offset occurs.

(ii) ***Example 2*** —

(A) The facts are the same as in paragraph (g)(5)(i) of this section (*Example 1*), except that, rather than accelerating the plan loan, Plan Y permits Employee A to continue making loan installment payments after severance from employment. Employee A continues making loan installment payments until January 1, 2026, at which time Employee A does not make the loan installment payment due on January 1, 2026. In accordance with § 1.72(p)-1, Q&A-10, Plan Y allows a cure period that continues until the last day of the calendar quarter following the quarter in which the required installment payment was due. Employee A does not make a plan loan installment payment during the cure period. Plan Y offsets the unpaid $3,000 loan balance against Employee A's account balance on July 1, 2026 (which is after the 12-month period beginning on the date that Employee A severed from employment).

(B) The conclusion is the same as in paragraph (g)(5)(i) of this section (*Example 1*), except that the $3,000 plan loan offset amount is not a qualified plan loan offset amount (because the offset did not occur within the 12-month period beginning on the date that Employee A severed from employment). Accordingly, Employee A may roll over up to the $3,000 plan loan offset amount to an eligible retirement plan within the 60-day period provided in section 402(c)(3)(A) (rather than within the period that ends on Employee A's tax filing due date (including extensions) for the taxable year in which the offset occurs).

(iii) *Example 3* —

(A) The facts are the same as in paragraph (g)(5)(i) of this section (*Example 1*), except that the terms governing the plan loan to Employee A provide that, upon severance from employment, Employee A's account balance is automatically offset by the amount of any unpaid loan balance to repay the loan. Employee A severs from employment but does not request a distribution from Plan Y. Nevertheless, pursuant to the terms governing the plan loan, Employee A's account balance is automatically offset on June 15, 2025, by the amount of the $3,000 unpaid loan balance.

(B) The $3,000 plan loan offset amount is a qualified plan loan offset amount within the meaning of paragraph (g)(3)(ii) of this section. Accordingly, Employee A may roll over up to the $3,000 qualified plan loan offset amount to an eligible retirement plan within the period that ends on Employee A's tax filing due date (including extensions) for the taxable year in which the offset occurs.

(iv) *Example 4* —

(A) The facts are the same as in paragraph (g)(5)(i) of this section (*Example 1*), except that Employee A elects to receive a cash distribution of the account balance that remains after the $3,000 plan loan offset amount, instead of electing a direct rollover of the remaining account balance.

(B) The amount of the distribution received by Employee A is $10,000 ($3,000 relating to the plan loan offset and $7,000 relating to the cash distribution). Because the amount of the $3,000 plan loan offset amount attributable to the loan is included in determining the amount of the eligible rollover distribution to which withholding applies, withholding in the amount of $2,000 (20 percent of $10,000) is required under section 3405(c). The $2,000 is required to be withheld from the $7,000 to be distributed to Employee A in cash, so that Employee A actually receives a cash amount of $5,000.

(C) The $3,000 plan loan offset amount is a qualified plan loan offset amount within the meaning of paragraph (g)(3)(ii) of this section. Accordingly, Employee A may roll over up to the $3,000 qualified plan loan offset to an eligible retirement plan within the period that ends on Employee A's tax filing due date (including extensions) for the taxable year in which the offset occurs. In addition, Employee A may roll over up to $7,000 (the portion of the distribution that is not related to the offset) within the 60-day period provided in section 402(c)(3).

(v) *Example 5* —

(A) The facts are the same as in paragraph (g)(5)(iv) of this section (*Example 4*), except that the $7,000 distribution to Employee A after the offset consists solely of employer securities within the meaning of section 402(e)(4)(E).

(B) No withholding is required under section 3405(c) because the distribution consists solely of the $3,000 plan loan offset amount and the $7,000 distribution of employer securities. This is the result because the total amount required to be withheld does not exceed the sum of the cash and the fair market value of other property distributed, excluding plan loan offset amounts and employer securities.

(C) Employee A may roll over up to the $7,000 of employer securities to an eligible retirement plan within the 60-day period provided in section 402(c)(3). The $3,000 plan loan offset amount is a qualified plan loan offset amount within the meaning of paragraph (g)(3)(ii) of this section. Accordingly, Employee A may roll over up to the $3,000 qualified plan loan offset amount to an eligible retirement plan within the period that ends on Employee A's tax filing due date (including extensions) for the taxable year in which the offset occurs.

(vi) *Example 6* —

(A) Employee B, who is age 40, has an account balance in Plan Z. Plan Z does not provide for after-tax employee contributions. In 2025, Employee B receives a loan from Plan Z, the terms of which satisfy section 72(p)(2). The loan is secured by elective contributions subject to the distribution restrictions in section 401(k)(2)(B).

(B) Employee B fails to make an installment payment due on April 1, 2026, or any other monthly payments thereafter. In accordance with § 1.72(p)-1, Q&A-10, Plan Z allows a cure period that continues until the last day of the calendar quarter following the quarter in which the required installment payment was due (September 30, 2026). Employee B does not make a plan loan installment payment during the cure period. On September 30, 2026, pursuant to section 72(p)(1), Employee B is taxed on a deemed distribution equal to the amount of the unpaid loan balance. Pursuant to paragraph (c)(3)(iv) of this section, the deemed distribution is not an eligible rollover distribution.

(C) Because Employee B has not severed from employment or experienced any other event that permits the distribution under section 401(k)(2)(B) of the elective contributions that secure the loan, Plan Z is prohibited from executing on the loan. Accordingly, Employee B's account balance is not offset by the amount of the unpaid loan balance at the time of the deemed distribution. Thus, there is no distribution of an offset amount that is an eligible rollover distribution on September 30, 2026.

(vii) *Example 7* —

(A) The facts are the same as in paragraph (g)(5)(vi) of this section (*Example 6*), except that Employee B has a severance from employment on November 1, 2026. On that date, Employee B's unpaid loan balance is offset against the account balance on distribution.

(B) The plan loan offset amount is not a qualified plan loan offset amount. Although the offset occurred within 12 months after Employee B severed from employment, the plan loan does not meet the requirement in paragraph (g)(3)(ii)(B) of this section (that the plan loan meet the requirements of section 72(p)(2) immediately prior to Employee B's severance from employment). Instead, the loan was taxable on September 30, 2026 (prior to Employee B's severance from employment on November 1, 2026), because of the failure to meet the level amortization requirement in section 72(p)(2)(C). Accordingly, Employee B may roll over the plan loan offset amount to an eligible retirement plan within the 60-day period provided in section 402(c)(3)(A) (rather than within the period that ends on Employee B's tax filing due date (including extensions) for the taxable year in which the offset occurs).

(h) ***Qualified plan distributed annuity contract*** —

(1) ***Definition of a qualified plan distributed annuity contract.*** A qualified plan distributed annuity contract is an annuity contract purchased for a participant, and distributed to the participant, by a qualified plan.

(2) ***Treatment of amounts paid as eligible rollover distributions.*** Amounts paid under a qualified plan distributed annuity contract are payments of the balance to the credit of the employee for purposes of section 402(c) and are eligible rollover distributions if they otherwise qualify. Thus, for example, if the employee surrenders the contract for a single sum payment of its cash surrender value, the payment would be an eligible rollover distribution to the extent it is not a required minimum distribution under section 401(a)(9). This rule applies even if the annuity contract is distributed in connection with a plan termination. See § 1.401(a)(31)-1, Q&A-17 and § 31.3405(c)-1, Q&A-13 of this chapter concerning the direct rollover requirements and 20-percent withholding requirements, respectively, that apply to eligible rollover distributions from such an annuity contract.

(i) [Reserved]

(j) ***Treatment of distributions to beneficiary*** —

(1) ***Spousal distributee*** —

(i) ***In general.*** Pursuant to section 402(c)(9), if any distribution attributable to an employee is paid to the employee's surviving spouse, section 402(c) applies to the distribution in the same manner as if the spouse were the employee. The same rule applies if any distribution attributable to an employee is paid in accordance with a qualified domestic relations order (as defined in section 414(p)) (QDRO) to the employee's spouse or former spouse who is an alternate payee. Therefore, a distribution to the surviving spouse of an employee (or to a spouse or former spouse who is an alternate payee under a QDRO), including a distribution of ancillary death benefits attributable to the employee, is an eligible rollover distribution if it would be described in paragraph (c) of this section had it been paid to the employee. For this purpose, the amount excluded from the definition of eligible rollover distribution under paragraph (c)(2)(ii) of this section as a required minimum distribution is determined under the rules of paragraph (j)(3) of this section (or paragraph (j)(4) of this section, if applicable).

(ii) ***Rollovers to qualified plans must be in capacity of employee.*** If a surviving spouse rolls over a distribution to a qualified plan described in paragraph (a)(1)(iii)(B)(2) of this section or to an eligible deferred compensation plan described in section 457(b) that is maintained by an employer described in section 457(e)(1)(A), then, with respect to the amount rolled over, that amount is treated as the spouse's own interest under the receiving plan and not the interest of the decedent under the distributing plan. Thus, for example, in determining the required minimum distribution from the receiving plan with respect to the amount rolled over, distributions must satisfy section 401(a)(9)(A) and not section 401(a)(9)(B).

(2) ***Non-spousal distributee*** —

(i) ***Eligibility for rollover.*** A distributee other than the employee or the employee's surviving spouse (or a spouse or former spouse who is an alternate payee under a QDRO) is not permitted to roll over a distribution from a qualified plan. Therefore, a distribution to a non-spousal distributee does not constitute an eligible rollover distribution under section 402(c)(4).

(ii) ***Direct transfer permitted.*** Although a non-spousal distributee may not roll over a distribution, pursuant to section 402(c)(11), if the distributee is a designated beneficiary (as determined under § 1.401(a)(9)-4) who is not described in paragraph (j)(1) of this section and the distribution would be an eligible rollover distribution had it been paid to the employee, then the distributee may elect that the distribution be made in the form of a direct trustee-to-trustee transfer to an IRA established for the purpose of receiving that distribution. If a direct trustee-to-trustee transfer is made pursuant to section 402(c)(11) then—

(A) The transfer is treated as an eligible rollover distribution;

(B) The IRA is an inherited IRA described in section 408(d)(3)(ii); and

(C) Section 401(a)(9)(B) (other than section 401(a)(9)(B)(iv)) will apply to the IRA.

(iii) ***Applicability to see-through trusts.*** If a distributee described in paragraph (j)(2)(ii) of this section is a see-through trust described in § 1.401(a)(9)-4(f)(1)(i), then the beneficiaries of the trust that are treated as designated beneficiaries under § 1.401(a)(9)-4(f)(3) are also treated as designated beneficiaries for purposes of section 402(c)(11)(A).

(iv) ***Applicability of withholding rules.*** An amount that could have been transferred to a beneficiary IRA in accordance with section 402(c)(11), but instead, was paid directly to a non-spouse beneficiary, is treated as an eligible rollover distribution for purposes of section 3405(c). Thus, 20-percent withholding under section 3405(c) applies to a distribution made directly to a non-spouse beneficiary.

(3) ***Determination of amounts that constitute required minimum distributions for distributions to beneficiaries*** —

(i) ***In general*** —

(A) ***First portion of a distribution is treated as a required minimum distribution.*** If a minimum distribution is required to be made to a beneficiary in a calendar year, then the amounts distributed during that calendar year are treated as required minimum distributions under section 401(a)(9), to the extent that the total required minimum distribution under section 401(a)(9) for the calendar year has not been satisfied. Accordingly, those amounts are not

eligible rollover distributions. If the employee dies before the employee's required beginning date (within the meaning of § 1.401(a)(9)-2(b)), then no amount is a required minimum distribution for the year in which the employee dies.

(B) ***Determination of required minimum distribution based on distribution method.*** Except as otherwise provided in paragraphs (j)(3)(ii) and (4) of this section, if an employee dies before the employee's required beginning date, then the amount that is not an eligible rollover distribution because it is a required minimum distribution for the calendar year is determined under paragraph (j)(3)(i)(C), (D), or (E) of this section, whichever applies to the beneficiary. See § 1.401(a)(9)-3(b)(4) and (c)(5) to determine which rule applies. If an employee dies on or after the employee's required beginning date, then the amount that is not an eligible rollover distribution because it is a required minimum distribution for a calendar year is determined under paragraph (j)(3)(i)(F) of this section.

(C) ***Five-year rule in the case of death before required beginning date.*** If the 5-year rule described in § 1.401(a)(9)-3(b)(2) or (c)(2) applies to the beneficiary, then no amount is required to be distributed until the end of the calendar year that includes the fifth anniversary of the date of the employee's death. In that year, the entire amount to which the beneficiary is entitled under the plan must be distributed, and because it is a required minimum distribution, it is not an eligible rollover distribution. Thus, if the 5-year rule applies with respect to a designated beneficiary, then any distribution made before the calendar year that includes the fifth anniversary of the date of the employee's death is eligible for rollover if it otherwise meets the requirements of this section.

(D) ***Ten-year rule in the case of death before required beginning date.*** If the 10-year rule described in § 1.401(a)(9)-3(c)(3) applies to the beneficiary, then no amount is required to be distributed until the end of the calendar year that includes the tenth anniversary of the date of the employee's death. In that year, the entire amount to which the beneficiary is entitled under the plan must be distributed, and because it is treated as a required minimum distribution, it is not an eligible rollover distribution. Thus, if the 10-year rule applies with respect to a designated beneficiary, then any distribution made before the calendar year that includes the tenth anniversary of the date of the employee's death is eligible for rollover if it otherwise meets the requirements of this section.

(E) ***Life expectancy rule.*** If the life expectancy rule described in § 1.401(a)(9)-3(c)(4) (or, in the case of a defined benefit plan, the annuity payment rule described in § 1.401(a)(9)-3(b)(3)) applies to the designated beneficiary, then, in the first distribution calendar year for the beneficiary (as defined in § 1.401(a)(9)-5(a)(2)(iii)) and in each subsequent calendar year, the amount treated as a required minimum distribution and not eligible to be rolled over is determined in accordance in with § 1.401(a)(9)-5(d) and (e) (or, in the case of a defined benefit plan, § 1.401(a)(9)-6).

(F) ***Employee dies on or after required beginning date.*** If the employee dies on or after the employee's required beginning date, then, in the calendar year of the employee's death, the amount treated as a required minimum distribution and not eligible to be rolled over is determined in accordance with § 1.401(a)(9)-5(c) (or, in the case of a defined benefit plan, § 1.401(a)(9)-6). For each subsequent calendar year, the amount treated as a required minimum distribution and not eligible to be rolled over is determined in accordance with § 1.401(a)(9)-5(d) and (e) (or, in the case of a defined benefit plan, § 1.401(a)(9)-6).

(ii) ***Exception allowing beneficiary to change distribution method.*** If the 5-year rule or 10-year rule described in § 1.401(a)(9)-3(b)(2), (c)(2) or (c)(3) applies to a designated beneficiary under the plan, and the eligible designated beneficiary is using the exception under § 1.408-8(d)(2)(ii) to switch to the use of the life expectancy rule under the IRA to which the distribution is rolled over or transferred, then the designated beneficiary must determine the portion of the distribution that is a required minimum distribution that is not eligible for rollover using the life expectancy rule described in § 1.401(a)(9)-3(c)(4) (or, in the case of a defined benefit plan, the annuity payment rule described in § 1.401(a)(9)-3(b)(3)).

(4) ***Special rule applicable to a spouse beneficiary*** —

(i) ***In general.*** This paragraph (j)(4) provides a special rule relating to the determination of amounts treated as a required minimum distribution for distributions to an employee's surviving spouse to whom the 10-year rule described in § 1.401(a)(9)-3(c)(3) applies. This rule, which treats a portion of a distribution made before the last year of the 10-year period as a required minimum distribution, applies if—

(A) The distribution is made in or after the calendar year the surviving spouse attains the applicable age described in § 1.401(a)(9)-2(b)(2); and

(B) The surviving spouse rolls over a portion of that distribution to an eligible retirement plan under which the surviving spouse is not treated as the beneficiary of the employee.

(ii) ***Catch-up of missed required minimum distributions.*** If this paragraph (j)(4) applies to a distribution then, notwithstanding paragraph (j)(3)(i)(D) of this section, the portion of the distribution that is treated as a required minimum distribution, and thus is not an eligible rollover distribution, is the excess (if any) of—

(A) The sum of the hypothetical required minimum distributions determined under paragraph (j)(4)(iii) of this section for each year during the catch-up period with respect to that distribution (determined under paragraph (j)(4)(v) of this section), over

(B) The actual distributions made to the surviving spouse during those calendar years (other than the calendar year in which that distribution is made).

(iii) ***Calculation of hypothetical required minimum distributions for the catch-up period.*** This paragraph (j)(4)(iii) provides rules for determining the calculation of the hypothetical required minimum distribution for each calendar year during the catch-up period with respect to a distribution (determination year). The hypothetical required minimum distribution for a determination year is the amount that would have been the required minimum distribution for that year had the election under § 1.401(a)(9)-5(g)(3)(i) been in effect for the spouse. Thus, the hypothetical required minimum distribution is calculated using the applicable denominator determined under § 1.401(a)(9)-5(g)(3). However, in lieu of the account balance that would otherwise be used to determine the required minimum distribution for the determination year, an adjusted account balance is used for this purpose. The adjusted account balance for a determination year is calculated by reducing the account balance that would otherwise be used to determine the required minimum distribution for the calendar year in which the distribution is made by the excess (if any) of—

(A) The sum of the hypothetical required minimum distributions determined under this paragraph (j)(4)(iii) beginning with the first applicable year and ending with the calendar year preceding the determination year; over

(B) The actual distributions made to the surviving spouse during those calendar years.

(iv) ***Definition of first applicable year.*** The first applicable year is the later of—

(A) The calendar year in which the surviving spouse attains the applicable age, and

(B) The calendar year in which the employee would have attained the applicable age.

(v) ***Definition of catch-up period.*** The catch-up period with respect to a distribution is the period that—

(A) Begins with first applicable year, and

(B) Ends in the calendar year in which the distribution is made.

(vi) ***Reasonable assumptions by plan administrator.*** For purposes of section 402(f)(2)(A), a plan administrator is permitted to assume that a surviving spouse to whom this paragraph (j)(4) applies will roll over (to the extent permitted under the rules of this paragraph (j)(4)) the entire distribution to an eligible retirement plan under which that spouse is not treated as the beneficiary of the employee. Thus, a plan administrator may assume that the catch-up of missed required minimum distributions described in paragraph (j)(4)(ii) of this section applies to the distribution and treat only the remaining portion of the distribution as an eligible rollover distribution for purposes of sections 401(a)(31) and 3405(c). See paragraph (k)(2) of this section concerning the effect of this assumption for purposes of section 402(c).

(vii) [Reserved]

(k) ***Other rules*** —

(1) ***Designation must be irrevocable*** —

(i) ***Indirect rollover.*** In order for a contribution of an eligible rollover distribution to an individual retirement plan to constitute a rollover and, thus, to qualify for exclusion from gross income under section 402(c), a distributee must elect, at the time the contribution is made, to treat the contribution as a rollover contribution. An election is made by designating to the trustee, issuer, or custodian of the eligible retirement plan that the contribution is a rollover contribution. This election is irrevocable. Once any portion of an eligible rollover distribution has been contributed to an individual retirement plan and designated as a rollover distribution, taxation of the withdrawal of the contribution from the individual retirement plan is determined under section 408(d) rather than under section 402 or 403. Therefore, the eligible rollover distribution is not eligible for capital gains treatment, five-year or ten-year averaging, or the exclusion from gross income for net unrealized appreciation on employer stock.

(ii) ***Direct rollover.*** If an eligible rollover distribution is paid to an eligible retirement plan in a direct rollover at the election of the distributee, the distributee is deemed to have irrevocably designated that the direct rollover is a rollover contribution.

(2) ***Use of actual minimum required distribution calculation.*** The portion of any distribution that an employee (or spousal distributee) may roll over as an eligible rollover distribution under section 402(c) is determined based on the actual application of section 402 and other relevant provisions of the Internal Revenue Code. The actual application of these provisions may produce different results than any assumption described in paragraph (j)(4)(vi) of this section or § 1.401(a)(31)-1, Q&A-18, that is used by the plan administrator. Thus, for example, if the plan administrator assumes there is no designated beneficiary and calculates the portion of a distribution that is a required minimum

distribution using the Uniform Lifetime Table under § 1.401(a)(9)-9(c), but the portion of the distribution that is actually a required minimum distribution and thus not an eligible rollover distribution is determined by taking into account a spousal designated beneficiary who is more than 10 years younger than the employee, then a greater portion of the distribution is actually an eligible rollover distribution and the distributee may roll over the additional amount.

(3) ***Plan rollover not counted towards one rollover per year limitation.*** A distribution from a qualified plan that is rolled over to an individual retirement account or individual retirement annuity is not treated for purposes of section 408(d)(3)(B) as an amount received by an individual from an individual retirement account or individual retirement annuity that is not includible in gross income because of the application of section 408(d)(3).

[T.D. 8619, 60 FR 49208, Sept. 22, 1995, as amended by T.D. 8880, 65 FR 21315, Apr. 21, 2000; T.D. 9169, 69 FR 78153, Dec. 29, 2004; T.D. 9302, 71 FR 76137, Dec. 20, 2006; T.D. 9319, 72 FR 16894, Apr. 5, 2007; T.D. 9340, 72 FR 41159, July 26, 2007; T.D. 9447, 74 FR 8211, Feb. 24, 2009; T.D. 9665, 79 FR 26843, May 12, 2014; T.D. 10001, 89 FR 58939, July 19, 2024]

§ 1.402(d)-1 Effect of section 402(d).

(a) If the requirements of section 402(d) are met, a contribution made by an employer on behalf of an employee to a trust which is not exempt under section 501(a) shall not be included in the income of the employee in the year in which the contribution is made. Such contribution will be taxable to the employee, when received in later years, as provided in section 72 (relating to annuities). For taxable years beginning before January 1, 1964, section 72(e)(3) (relating to the treatment of certain lump sums), as in effect before such date, shall not apply to such contributions. For taxable years beginning after December 31, 1963, such contributions, when received, may be taken into account in computations under sections 1301 through 1305 (relating to income averaging). See paragraph (b) of § 1.403(c)-1. The intent and purpose of section 402(d) is to give those employees, covered under certain non-exempt trusts to which such section applies, essentially the same tax treatment as those covered by trusts described in section 401(a) and exempt under section 501(a), except that the capital gains treatment referred to in section 402(a)(2) does not apply.

(b) Every person claiming the benefit of section 402(d) must be able to demonstrate to the satisfaction of the Commissioner that all of the provisions of such section are met. The taxpayer must produce sufficient evidence to prove:

(1) That, before October 21, 1942, he was employed by the particular employer making the contribution in question and was at such time definitely covered by a written agreement, entered into before October 21, 1942, between himself and the employer, or between the employer and the trustee of a trust established by the employer before October 21, 1942, and that the contribution by the employer was made pursuant to such agreement. The fact that an employee may have been potentially covered is not sufficient. Evidence that the employment was entered into, or the agreement executed, “as of” a date before October 21, 1942, or that the agreement or trust instrument which did not theretofore meet the requirements of section 402(d) was modified or amended after October 20, 1942, so as to come within the provisions of such section, will not satisfy the requirements of section 402(d).

(2) That such contribution, pursuant to the terms of such agreement, was to be applied for the purchase of an annuity contract for the taxpayer. In the case of a contribution by the employer of an annuity contract purchased by such employer and transferred by him to the trustee of the trust, evidence

should be presented to prove that such contract was purchased for the taxpayer by the employer pursuant to the terms of a written agreement between the employer and the employee or between the employer and the trustee, entered into before October 21, 1942.

(3) That under the written terms of the trust agreement the taxpayer is not entitled during his lifetime, except with the consent of the trustee, to any payments other than annuity payments under the annuity contract or contracts purchased by the trustee or by the employer and transferred to the trustee, and that the trustee may grant or withhold such consent free from control by the taxpayer, the employer, or any other person. However, such control will not be presumed from the fact that the trustee is himself an officer or employee of the employer. As used in section 402(d) the phrase "if * * * under the terms of the trust agreement the employee is not entitled" means that the trust instrument must make it impossible for the prohibited distribution to occur whether by operation or natural termination of the trust, whether by power of revocation or amendment, other than with the consent of the trustee, whether by the happening of a contingency, by collateral arrangement, or any other means. It is not essential that the employer relinquish all power to modify or terminate the trust but it must be impossible, except with the consent of the trustee, to be received by the taxpayer contracts purchased by the trustee, or by the employer and transferred to the trustee, to be received by the taxpayer directly or indirectly, other than as annuity payments.

(4) The nature and amount of such contribution and the extent to which income taxes have been paid thereon before January 1, 1949, and not credited or refunded.

(5) If it is claimed that section 402(d) applies to amounts contributed to a trust after June 1, 1949, the taxpayer must prove to the satisfaction of the Commissioner that the trust did not, on June 1, 1949, qualify for exemption under section 165(a) of the Internal Revenue Code of 1939. Where an employer buys an annuity contract which is transferred to the trustee, the date of the purchase of the annuity contract and not the date of the transfer to the trustee is the controlling date in determining whether or not the contribution was made to the trust after June 1, 1949.

[T.D. 6500, 25 FR 11679, Nov. 26, 1960, as amended by T.D. 6885, 31 FR 7801, June 2, 1966]

§ 1.402(e)-1 [Reserved]

§ 1.402(f)-1 Required explanation of eligible rollover distributions; questions and answers.

The following questions and answers concern the written explanation requirement imposed by section 402(f) of the Internal Revenue Code of 1986 relating to distributions eligible for rollover treatment. Section 402(f) was amended by section 521(a) of the Unemployment Compensation Amendments of 1992, Public Law 102-318, 106 Stat. 290 (UCA). For additional UCA guidance under sections 401(a)(31), 402(c), 403(b)(8) and (10), and 3405(c), see §§ 1.401(a)(31)-1, 1.402(c)-2, 1.403(b)-7(b), and 31.3405(c)-1 of this chapter, respectively.

List of Questions

Q-1: What are the requirements for a written explanation under section 402(f)?

Q-2: When must the plan administrator provide the section 402(f) notice to a distributee?

Q-3: Must the plan administrator provide a separate section 402(f) notice for each distribution in a series of periodic payments that are eligible rollover distributions?

Q-4: May a plan administrator post the section 402(f) notice as a means of providing it to distributees?

Questions and Answers

Q-1: What are the requirements for a written explanation under section 402(f)?

A-1:

(a) ***General rule.*** Under section 402(f), as amended by UCA, the plan administrator of a qualified plan is required, within a reasonable period of time before making an eligible rollover distribution, to provide the distributee with the written explanation described in section 402(f) (section 402(f) notice). The section 402(f) notice must be designed to be easily understood and must explain the following: the rules under which the distributee may elect that the distribution be paid in the form of a direct rollover to an eligible retirement plan; the rules that require the withholding of tax on the distribution if it is not paid in a direct rollover; the rules under which the distributee may defer tax on the distribution if it is contributed in a rollover to an eligible retirement plan within 60 days of the distribution; and if applicable, certain special rules regarding the taxation of the distribution as described in section 402(d) (averaging with respect to lump sum distributions) and (e) (other rules including treatment of net unrealized appreciation). See § 1.401(a)(31)-1, Q&A-7 for additional information that must be provided if a plan provides a default procedure regarding the election of a direct rollover.

(b) ***Model section 402(f) notice.*** The plan administrator will be deemed to have complied with the requirements of paragraph (a) of this Q&A-1 relating to the contents of the section 402(f) notice if the plan administrator provides the applicable model section 402(f) notice published by the Internal Revenue Service for this purpose in a revenue ruling, notice, or other guidance published in the Internal Revenue Bulletin. See § 601.601(d)(2)(ii)(*b*) of this chapter.

(c) ***Delegation to Commissioner.*** The Commissioner, in revenue rulings, notices, and other guidance, published in the Internal Revenue Bulletin, may modify, or provide any additional guidance with respect to, the notice requirement of this section. See § 601.601(d)(2)(ii)(*b*) of this chapter.

(d) ***Effective date*** —

(1) ***Statutory effective date.*** Section 402(f) applies to eligible rollover distributions made after December 31, 1992.

(2) ***Regulatory effective date.*** This section applies to eligible rollover distributions made on or after October 19, 1995. For eligible rollover distributions made on or after January 1, 1993 and before October 19, 1995, § 1.402(c)-2T, Q&A-11 through 15 (as it appeared in the April 1, 1995 edition of 26 CFR part 1), apply. However, for any distribution made on or after January 1, 1993 but before October 19, 1995, a plan administrator or payor may satisfy the requirements of section 402(f) by substituting any or all provisions of this section for the corresponding provisions of § 1.402(c)-1T, Q&A-11 through 15, if any.

Q-2: When must the plan administrator provide the section 402(f) notice to a distributee?

A-2: The plan administrator must provide the section 402(f) notice to a distributee at a time that satisfies either paragraph (a) or (b) of this Q&A-2.

(a) This paragraph (a) is satisfied if the plan administrator provides a distributee with the section 402(f) notice no less than 30 days and no more than 90 days before the date of a distribution. However, if the distributee, after having received the section 402(f) notice, affirmatively elects a distribution, a

plan will not fail to satisfy section 402(f) merely because the distribution is made less than 30 days after the section 402(f) notice was provided to the distributee, provided the plan administrator clearly indicates to the distributee that the distributee has a right to consider the decision of whether or not to elect a direct rollover for at least 30 days after the notice is provided. The plan administrator may use any method to inform the distributee of the relevant time period, provided that the method is reasonably designed to attract the attention of the distributee. For example, this information could be either provided in the section 402(f) notice or stated in a separate document (e.g., attached to the election form) that is provided at the same time as the notice. For purposes of satisfying the requirement in the first sentence of paragraph (a) of this Q&A-2, the plan administrator may substitute the annuity starting date, within the meaning of § 1.401(a)-20, Q&A-10, for the date of the distribution.

(b) This paragraph (b) is satisfied if the plan administrator—

(1) Provides a distributee with the section 402(f) notice;

(2) Provides the distributee with a summary of the section 402(f) notice within the time period described in paragraph (a) of this Q&A-2; and

(3) If the distributee so requests after receiving the summary described in paragraph (b)(2) of this Q&A-2, provides the section 402(f) notice to the distributee without charge and no less than 30 days before the date of a distribution (or the annuity starting date), subject to the rules for the distributee's waiver of that 30-day period. The summary described in paragraph (b)(2) of this Q&A-2 must set forth a summary of the principal provisions of the section 402(f) notice, must refer the distributee to the most recent version of the section 402(f) notice (and, in the case of a notice provided in any document containing information in addition to the notice, must identify that document and must provide a reasonable indication of where the notice may be found in that document, such as by index reference or by section heading), and must advise the distributee that, upon request, a copy of the section 402(f) notice will be provided without charge.

Q-3: Must the plan administrator provide a separate section 402(f) notice for each distribution in a series of periodic payments that are eligible rollover distributions?

A-3: No. In the case of a series of periodic payments that are eligible rollover distributions, the plan administrator is permitted to satisfy section 402(f) with respect to each payment in the series by providing the section 402(f) notice prior to the first payment in the series, in accordance with the rules in Q&A-1 and Q&A-2 of this section, and providing the notice at least once annually for as long as the payments continue. However, see § 1.401(a)(31)-1, Q&A-12 for additional guidance if the plan administrator intends to treat a distributee's election to make or not make a direct rollover with respect to one payment in a series of periodic payments as applicable to all subsequent payments in the series (absent a subsequent change of election).

Q-4: May a plan administrator post the section 402(f) notice as a means of providing it to distributees?

A-4: No. The posting of the section 402(f) notice will not be considered provision of the notice. The written notice must be provided individually to any distributee of an eligible rollover distribution within the time period described in Q&A-2 and Q&A-3 of this section.

Q-5: Will the requirements of section 402(f) be satisfied if a plan administrator provides a distributee with the section 402(f) notice or the summary of the notice described in paragraph (b)(2) of Q&A-2 of this section other than through a written paper document?

A-5. Yes. See § 1.401(a)-21 of this chapter for rules permitting the use of electronic media to provide applicable notices to recipients with respect to retirement plans.

Example 1. (i) A qualified plan (Plan A) permits participants to request distributions by e-mail. Under Plan A's system for such transactions, a participant must enter his or her account number and personal identification number (PIN); this information must match that in Plan A's records in order for the transaction to proceed. If a participant requests a distribution from Plan A by e-mail and the distribution is an eligible rollover distribution, the plan administrator provides the participant with a section 402(f) notice by e-mail. The plan administrator also advises the participant that he or she may request the section 402(f) notice on a written paper document and that, if the participant requests the notice on a written paper document, it will be provided at no charge. To proceed with the distribution by e-mail, the participant must acknowledge receipt, review, and comprehension of the section 402(f) notice.
(ii) In *Example 1,* Plan A does not fail to satisfy the notice requirement of section 402(f) merely because the notice is provided to the participant other than through a written paper document.

Example 2. (i) A qualified plan (Plan B) permits participants to request distributions through the Plan B web site (Internet or intranet). Under Plan B's system for such transactions, a participant must enter his or her account number and personal identification number (PIN); this information must match that in Plan B's records in order for the transaction to proceed. A participant may request a distribution from Plan B by following the applicable instructions on the Plan B web site. After the participant has requested a distribution that is an eligible rollover distribution, the participant is automatically shown a page on the web site containing a section 402(f) notice. Although this page of the web site may be printed, the page also advises the participant that he or she may request the section 402(f) notice on a written paper document by calling a telephone number indicated on the web page and that, if the participant requests the notice on a written paper document, it will be provided at no charge. To proceed with the distribution by e-mail, the participant must acknowledge receipt, review, and comprehension of the section 402(f) notice.
(ii) In this *Example 2,* Plan B does not fail to satisfy the notice requirement of section 402(f) merely because the notice is provided to the participant other than through a written paper document.

Example 3. (i) A qualified plan (Plan C) permits participants to request distributions through Plan C's automated telephone system. Under Plan C's system for such transactions, a participant must enter his or her account number and personal identification number (PIN); this information must match that in Plan C's records in order for the transaction to proceed. Plan C provides the section 402(f) notice in the summary plan description, the most recent version of which was distributed to participants in 1997. A participant may request a distribution from Plan C by following the applicable instructions on the automated telephone system. In 1999, a participant, using Plan C's automated telephone system, requests a distribution that is an eligible rollover distribution. The automated telephone system refers the participant to the most recent version of the section 402(f) notice which was provided in the summary plan description, informs the participant where the section 402(f) notice may be located in the summary plan description, and provides an oral summary of the material provisions of the section 402(f) notice. The

system also advises the participant that the participant may request the section 402(f) notice on a written paper document and that, if the participant requests the notice on a written paper document, it will be provided at no charge. Before proceeding with the distribution, the participant must acknowledge receipt, review, and comprehension of the summary. Under Plan C's system for processing such transactions, the participant's distribution will be made no more than 90 days and no fewer than 30 days after the participant requests the distribution and receives the summary of the section 402(f) notice (unless the participant waives the 30-day period).
(ii) In this *Example 3,* Plan C does not fail to satisfy the notice requirement of section 402(f) merely because Plan C provides a summary of the section 402(f) notice or merely because the summary is provided to the participant other than through a written paper document.

Example 4. (i) Same facts as *Example 3,* except that, pursuant to Plan C's system for processing such transactions, a participant who so requests is transferred to a customer service representative whose conversation with the participant is recorded. The customer service representative provides the summary of the section 402(f) notice by reading from a prepared text.
(ii) In this *Example 4,* Plan C does not fail to satisfy the notice requirement of section 402(f) merely because Plan C provides a summary of the section 402(f) notice or merely because the summary of the section 402(f) notice is provided to the participant other than through a written paper document.

Example 5. (i) Same facts as *Example 3,* except that Plan C does not provide the section 402(f) notice in the summary plan description. Instead, the automated telephone system reads the section 402(f) notice to the participant.
(ii) In this *Example 5,* Plan C does not satisfy the notice requirement of section 402(f) because oral delivery alone of the section 402(f) notice through the automated telephone system is not sufficient.

Example 6. (i) The facts are the same as in *Example 1,* except that Participant D requested a distribution by e-mail, then terminated employment, and, following the termination, no longer has reasonable access to Plan A e-mail.
(ii) In this *Example 6,* Plan A does not satisfy the notice requirement of section 402(f) because the electronic medium through which the notice is provided is not reasonably accessible to Participant D. Plan A must provide the section 402(f) notice to Participant D in a written paper document or by an electronic means that is reasonably accessible to Participant D.

[T.D. 8619, 60 FR 49213, Sept. 22, 1995, as amended by T.D. 8873, 65 FR 6005, Feb. 8, 2000; T.D. 9294, 71 FR 61887, Oct. 20, 2006; T.D. 9340, 72 FR 41159, July 26, 2007]

§ 1.402(g)-0 Limitation on exclusion for elective deferrals, table of contents.

This section contains the captions that appear in § 1.402(g)-1.

§ 1.402(g)-1 Limitation on exclusion for elective deferrals.

(a) In general.

(b) Elective deferrals.

(c) Certain one-time irrevocable elections.

(d) Applicable limit.

(1) In general.

(2) Special adjustment for elective deferrals with respect to a section 403(b) annuity contract.

(3) Special adjustment for elective deferrals with respect to a section 403(b) annuity contract for certain long-term employees.

(4) Example.

(e) Treatment of excess deferrals.

(1) Plan qualification.

(i) Effect of excess deferrals.

(ii) Treatment of excess deferrals as employer contributions.

(iii) Definition of excess deferrals.

(2) Correction of excess deferrals after the taxable year.

(3) Correction of excess deferrals during taxable year.

(4) Plan provisions.

(5) Income allocable to excess deferrals.

(i) General rule.

(ii) Method of allocating income.

(iii) Alternative method of allocating income.

(iv) Safe harbor method of allocating gap period income.

(6) Coordination with distribution or recharacterization of excess contributions.

(7) No employee or spousal consent required.

(8) Tax treatment.

(i) Corrective distributions on or before April 15 after close of taxable year.

(ii) Special rule for 1987 and 1988 excess deferrals.

(iii) Distributions of excess deferrals after correction period.

(9) No reduction of required minimum distribution.

(10) Partial correction.

(11) Examples.

(f) Community property laws.

(g) Effective date.

(1) In general.

(2) Deferrals under collective bargaining agreements.

(3) Transition rule.

(4) Partnership cash or deferred arrangements.

[T.D. 8357, 56 FR 40545, Aug. 15, 1991]

§ 1.402(g)-1 Limitation on exclusion for elective deferrals.

(a) ***In general.*** The excess of an individual's elective deferrals for any taxable year over the applicable limit for the year may not be excluded from gross income under sections 402(a)(8), 402(h)(1)(B), 403(b), 408(k)(6), or 501(c)(18). Thus, an individual's elective deferrals in excess of the applicable limit for a taxable year (that is, the individual's excess deferrals for the year) must be included in gross income for the year, except to the extent the excess deferrals are comprised of designated Roth contributions, and thus, are already includible in gross income. A designated Roth contribution is treated as an excess deferral only to the extent that the total amount of designated Roth contributions for an individual exceeds the applicable limit for the taxable year or the designated Roth contributions are identified as excess deferrals and the individual receives a distribution of the excess deferrals and allocable income under paragraph (e)(2) or (e)(3) of this section.

(b) ***Elective deferrals.*** An individual's elective deferrals for a taxable year are the sum of the following:

(1) Any elective contribution under a qualified cash or deferred arrangement (as defined in section 401(k)) to the extent not includible in the individual's gross income for the taxable year on account of section 402(a)(8) (before applying the limits of section 402(g) or this section).

(2) Any employer contribution to a simplified employee pension (as defined in section 408(k)) to the extent not includible in the individual's gross income for the taxable year on account of section 402(h)(1)(B) (before applying the limits of section 402(g) or this section).

(3) Any employer contribution to an annuity contract under section 403(b) under a salary reduction agreement (within the meaning of section 3121(a)(5)(D)) to the extent not includible in the individual's gross income for the taxable year on account of section 403(b) (before applying the limits of section 402(g) or this section).

(4) Any employee contribution designated as deductible under a trust described in section 501(c)(18) to the extent deductible from the individual's income for the taxable year on account of section 501(c)(18) (before appying the limits of section 402(g) or this section). For purposes of this section, the employee contribution is treated as though it were excluded from the individual's gross income.

(5) Any designated Roth contributions described in section 402A (before applying the limits of section 402(g) or this section).

(6) Any elective employer contributions to a SIMPLE retirement account, on behalf of an employee pursuant to a qualified salary reduction arrangement as described in section 408(p)(2) (before applying the limits of section 402(g) or this section).

(c) ***Certain one-time irrevocable elections.*** An employer contribution is not treated as an elective deferral under paragraph (b) of this section if the contribution is made pursuant to a one-time irrevocable election made by the employee:

(1) In the case of an annuity contract under section 403(b), at the time of initial eligibility to participate in the salary reduction agreement;

(2) In the case of a qualified cash or deferred arrangement, at a time when, under § 1.401(k)-1(a)(3)(v), the election is not treated as a cash or deferred election;

(3) In the case of a trust described in section 501(c)(18), at the time of initial eligibility to have the employer contribute on the employee's behalf to the trust.

(d) ***Applicable limit*** —

(1) ***In general.*** Except as provided under paragraph (d)(2) of this section, the applicable limit for an individual's taxable year is the applicable dollar amount set forth in section 402(g)(1)(B). This applicable dollar amount is increased for the taxable year beginning in 2007 and later years in the same manner as the dollar amount under section 415(b)(1)(A) is adjusted pursuant to section 415(d). See § 1.402(g)-2 for the treatment of catch-up contributions described in section 414(v).

(2) ***Special adjustment for elective deferrals with respect to section 403(b) annuity contracts for certain long-term employees.*** The applicable limit for an individual who is a qualified employee (as defined in section 402(g)(7)(C)) and has elective deferrals described in paragraph (b)(3) or (5) of this section for a taxable year is adjusted by increasing the applicable limit otherwise determined under paragraph (d)(1) of this section in accordance with section 402(g)(7).

(e) ***Treatment of excess deferrals*** —

(1) ***Plan qualification*** —

(i) ***Effect of excess deferrals.*** For plan years beginning before January 1, 1988, a plan, annuity contract, simplified employee pension, or trust does not fail to meet the requirements of section 401(a), section 403(b), section 408(k), or section 501(c)(18), respectively, merely because excess deferrals are made with respect to the plan, contract, pension, or trust. For plan years beginning after December 3l, 1987, see section 401(a)(30) and § 1.401(a)-30 for the effect of excess deferrals on the qualification of a plan or trust under section 401(a). For purposes of determining whether a plan or trust complies in operation with section 401(a)(30), excess deferrals that are distributed under paragraph (e)(2) or (3) of this section are disregarded. Similar rules apply to annuity contracts under section 403(b), simplified employee pensions under section 408(k), and plans or trusts under section 501(c)(28).

(ii) ***Treatment of excess deferrals as employer contributions.*** For other purposes of the Code, including sections 401(a)(4), 401(k)(3), 404, 409, 411, 412, and 416, excess deferrals must be treated as employer contributions even if they are distributed in accordance with paragraph (e)(2) or (3) of this section. However, excess deferrals of a nonhighly compensated employee are not taken into account under section 401(k)(3) (the actual deferral percentage test) to the extent the excess deferrals are prohibited under section 401(a)(30). Excess deferrals are also treated as employer contributions for purposes of section 415 unless distributed under paragraph (e)(2) or (3) of this section.

(iii) ***Definition of excess deferrals.*** The term “excess deferrals” means the excess of an individual's elective deferrals for any taxable year, as defined in § 1.402(g)-1(b), over the applicable limit under section 402(g)(1) for the taxable year.

(2) ***Correction of excess deferrals after the taxable year.*** A plan may provide that if any amount is an excess deferral under paragraph (a) of this section:

(i) Not later than the first April 15 (or such earlier date specified in the plan) following the close of the individual's taxable year, the individual may notify each plan under which elective deferrals were made of the amount of the excess deferrals received by the plan. If any designated Roth contributions were made to a plan, the notification must also identify the extent, if any, to which the excess deferrals are comprised of designated Roth contributions. A plan may provide that an individual is deemed to have notified the plan of excess deferrals (including the portion of excess deferrals that are comprised of designated Roth contributions) to the extent the individual has excess deferrals for the taxable year calculated by taking into account only elective deferrals under the plan and other plans of the same employer and the plan may provide the extent to which such excess deferrals are comprised of designated Roth contributions. A plan may instead provide that the employer may notify the plan on behalf of the individual under these circumstances.

(ii) Not later than the first April 15 following the close of the taxable year, the plan may distribute to the individual the amount designated under paragraph (e)(2)(i) of this section (and any income allocable to that amount).

(3) ***Correction of excess deferrals during taxable year*** —

(i) A plan may provide that an individual who has excess deferrals for a taxable year may receive a corrective distribution of excess deferrals during the same year. This corrective distribution may be made only if all of the following conditions are satisfied:

(A) The individual designates the distribution as an excess deferral. A plan may provide that an individual is deemed to have designated the distribution to the extent the individual has excess deferrals for the taxable year calculated by taking into account only elective deferrals under the plan and other plans of the same employer. If any designated Roth contributions were made to a plan, the notification must identify the extent to which, if any, the excess deferrals are comprised of designated Roth contributions. A plan may provide that an individual is deemed to have notified the plan of excess deferrals (including the portion of excess deferrals that are comprised of designated Roth contributions) for the taxable year calculated by taking into account only elective deferrals under the plan and other plans of the same employer and the plan may provide the extent to which such excess deferrals are comprised of designated Roth contributions.

(B) The correcting distribution is made after the date on which the plan received the excess deferral.

(C) The plan designates the distribution as a distribution of excess deferrals.

(ii) The provisions of this paragraph (e)(3) are illustrated by the following example:

Example. S is a 62 year old individual who participates in Employer Y's qualified cash or deferred arrangement. In January 1991, S withdraws $5,000 from Y's cash or deferred arrangement. From February through September, S defers $900 per month. On October 1, S leaves Employer Y and becomes employed by Employer Z (unrelated to Y). During the remainder of 1991, S defers $1,800 under Z's qualified cash or deferred arrangement. In January 1992, S realizes that S has deferred a total of $9,000 in 1991, and therefore has a $525 excess deferral ($9,000 minus $8,475, the applicable limit for 1991). An additional $525 must be distributed to S before April 15, 1992, to correct the excess deferral. The $5,000 withdrawal did not correct the excess deferral because it occurred before the excess deferral was made.

(4) ***Plan provisions.*** In order to distribute excess deferrals pursuant to paragraphs (e)(2) or (e)(3) of this section, a plan must contain language permitting distribution of excess deferrals. A plan may require the notification in paragraphs (e)(2) and (e)(3) of this section to be in writing and may require that the employee certify or otherwise establish that the designated amount is an excess deferral. A plan need not permit distribution of excess deferrals.

(5) ***Income allocable to excess deferrals*** —

(i) ***General rule.*** The income allocable to excess deferrals for a taxable year that begins on or after January 1, 2007 is equal to the sum of the allocable gain or loss for the taxable year of the individual and, to the extent the excess deferrals are or will be credited with gain or loss for the period after the close of the taxable year and prior to the distribution (the gap period) if the total account were to be distributed, the allocable gain or loss during that period. The income allocable to excess deferrals for a taxable year that begins before 2007 is determined using the 1.402(g)-1(e)(5) (as it appeared in the April 1, 2006 edition of 26 CFR Part 1).

(ii) ***Method of allocating income.*** A plan may use any reasonable method for computing the income allocable to excess deferrals, provided that the method does not violate section 401(a)(4), is used consistently for all participants and for all corrective distributions under a plan for the plan year, and is used by the plan for allocating income to participants' accounts. See § 1.401(a)(4)-1(c)(8). A plan will not fail to use a reasonable method for computing the income allocable to excess deferrals merely because the income allocable to excess deferrals is determined on a date that is no more than 7 days before the distribution.

(iii) ***Alternative method of allocating taxable year income.*** A plan may determine the income allocable to excess deferrals for the taxable year by multiplying the income for the taxable year allocable to elective deferrals by a fraction. The numerator of the fraction is the excess deferrals by the employee for the taxable year. The denominator of the fraction is equal to the sum of:

(A) The total account balance of the employee attributable to elective deferrals as of the beginning of the taxable year, plus

(B) The employee's elective deferrals for the taxable year.

(iv) ***Safe harbor method of allocating gap period income.*** Under the safe harbor method, income on excess deferrals for the gap period is equal to 10 percent of the income allocable to excess deferrals for the taxable year (calculated under the method described in paragraph (e)(5)(iii) of this section), multiplied by the number of calendar months that have elapsed since the end of the taxable year. For purposes of calculating the number of calendar months that have elapsed under the safe harbor method, a corrective distribution that is made on or before the fifteenth day of the month is treated as made on the last day of the preceding month. A distribution made after the fifteenth day of the month is treated as made on the first day of the next month.

(v) ***Alternative method for allocating taxable year and gap period income.*** A plan may determine the allocable gain or loss for the aggregate of the taxable year and the gap period by applying the alternative method provided by paragraph (e)(5)(iii) of this section to this aggregate period. This is accomplished by substituting the income for the taxable year and the gap period for the income for the taxable year and by substituting the elective deferrals for the taxable year and the gap period for the elective deferrals for the taxable year in determining the fraction that is multiplied by that income.

(6) ***Coordination with distribution or recharacterization of excess contributions.*** The amount of excess deferrals that may be distributed under this paragraph (e) with respect to an employee for a taxable year is reduced by any excess contributions previously distributed or recharacterized with respect to the employee for the plan year beginning with or within the taxable year. In the event of a reduction under this paragraph (e)(6), the amount of excess contributions includible in the gross income of the employee and reported by the employer as a distribution of excess contributions is reduced by the amount of the reduction under this paragraph (e)(6). See § 1.401(k)-2(b)(4)(i). In no case may an individual receive from a plan as a corrective distribution for a taxable year under paragraph (e)(2) or (e)(3) of this section an amount in excess of the individual's total elective deferrals under the plan for the taxable year.

(7) ***No employee or spousal consent required.*** A corrective distribution of excess deferrals (and income) may be made under the terms of the plan without regard to any notice or consent otherwise required under sections 411(a)(11) or 417.

(8) ***Tax treatment*** —

(i) ***Corrective distributions on or before April 15 after close of taxable year.*** A corrective distribution of excess deferrals within the period described in paragraph (e)(2) or (e)(3) of this section is excludable from the employee's gross income. However, the income allocable to excess deferrals is includible in the employee's gross income for the taxable year in which the allocable income is distributed. The corrective distribution of excess deferrals (and income) is not subject to the early distribution tax of section 72(t) and is not treated as a distribution for purposes of applying the excise tax under section 4980A.

(ii) ***Special rule for 1987 and 1988 excess deferrals.*** Income on excess deferrals for 1987 or 1988 that were timely distributed on or before April 17, 1989, may be reported by the recipient either in the year described in paragraph (e)(8)(i) of this section, or in the year in which the employee would have received the elective deferrals had the employee originally elected to receive the amounts in cash.

(iii) ***Distributions of excess deferrals after correction period.*** If excess deferrals (and income) for a taxable year are not distributed within the period described in paragraphs (e)(2) and (e)(3) of this section, they may only be distributed when permitted under section 401(k)(2)(B). These amounts are includible in gross income when distributed, and are treated for purposes of the distribution rules otherwise applicable to the plan as elective deferrals (and income) that were excludable from the individual's gross income under section 402(g). Thus, any amount includible in gross income for any taxable year under this section that is not distributed by April 15 of the following taxable year is not treated as an investment in the contract for purposes of section 72 and is includible in the employee's gross income when distributed from the plan. Excess deferrals that are distributed under this paragraph (e)(8)(iii) are treated as employer contributions for purposes of section 415 when they are contributed to the plan.

(iv) ***Distributions of excess deferrals from a designated Roth account.*** The rules of paragraph (e)(8)(iii) of this section generally apply to distributions of excess deferrals that are designated Roth contributions and the attributable income. Thus, if a designated Roth account described in section 402A includes any excess deferrals, any distribution of amounts attributable to those excess deferrals are includible in gross income (without adjustment for any return of investment in the contract under section 72(e)(8)). In addition, such distributions cannot be qualified distributions described in section 402A(d)(2) and are not eligible rollover distributions within the meaning of section 402(c)(4). For this purpose, if a designated Roth account includes any excess deferrals, any distributions from the account are treated as attributable to those excess deferrals until the total amount distributed from the designated Roth account equals the total of such deferrals and attributable income.

(9) ***No reduction of required minimum distribution.*** A distribution of excess deferrals (and income) under paragraphs (e)(2) and (e)(3) of this section is not treated as a distribution for purposes of determining whether the plan meets the minimum distribution requirements of section 401(a)(9).

(10) ***Partial correction.*** Any distribution under paragraphs (e)(2) or (e)(3) of this section of less than the entire amount of excess deferrals (and income) is treated as a pro rata distribution of excess deferrals and income.

(11) ***Examples.*** The provisions of this paragraph are illustrated by the following examples. Assume in *Examples 1* and *2* that there is no income or loss allocable to the elective deferrals.

Example 1. Employee A is a 60-year old highly compensated employee who participates in Employer M's cash or deferred arrangement. During the period of January through September of 1988, A contributed $7,000 to the arrangement in elective deferrals. During the same period A also contributed $813 in elective deferrals under a plan of an unrelated employer. In December of 1988, A made a withdrawal of $1,000 from Employer M's plan but did not designate this as a withdrawal of an excess deferral. In January of 1989, A notifies Employer M of an excess deferral, specifying a distribution of $500 for 1988. To correct the excess deferrals, A must receive this additional $500 even though A has already withdrawn $1,000 for 1988. A may

exclude from income in 1988 only $7,313. However, if the $500 is distributed by April 25, 1989, the distribution is excludable from A's gross income in 1989. Even if A withdraws the $500, M must take into account the entire $7,000 in computing A's actual deferral percentage for 1988.

Example 2. (i) Corporation X maintains a cash or deferred arrangement. The plan year is the calendar year. For plan year 1989, all 10 of X's employees are eligible to participate in the plan. The employees' compensation, contributions, and actual deferral ratios are shown in the following table:

Employee	Compensation	Contribution	Actual deferral ratio (percent)
A	$140,000	$7,000	5.0
B	70,000	7,000	10.0
C	70,000	7,000	10.0
D	45,000	2,250	5.0
E	40,000	4,000	10.0
F	35,000	1,750	5.0
G	35,000	350	1.0
H	30,000	3,000	10.0
I	17,500	0	0
J	17,500	0	0.0

(ii) Employees A, B, and C are highly compensated employees within the meaning of section 414(q). Employees D, E, F, G, H, I, and J are nonhighly compensated employees. The actual deferral percentages for the highly compensated employees and nonhighly compensated employees are 8.33 percent and 4.43 percent, respectively. These percentages do not satisfy the requirements of section 401(k)(3)(A)(ii). The actual deferral percentage for the highly compensated employees may not exceed 6.43 percent.

(iii) The plan reduces the actual deferral ratios of B and C to 7.14 percent by distributing $2,002 ($7,000−.0714 × $70,000) to each in January 1990. Section 401(k)(3)(A)(ii) is therefore satisfied.

(iv) In February 1990, B notifies X that B made elective deferrals of $2,000 under a qualified cash or deferred arrangement maintained by an unrelated employer in 1989, and requests distribution of $2,000 from X's plan. However, since B has already received a distribution of $2,002 to meet the ADP test, no additional amounts are required or are permitted to be distributed as excess deferrals by this plan, and the prior distribution of excess contributions has corrected the excess deferrals. But X must report $2,000 as a distribution of an excess deferral and $2 as a distribution of an excess contribution.

Example 3. Employee T has excess deferrals of $1,000. The income attributable to excess deferrals is $100. T properly notifies the employer, and requests a distribution of the excess deferral (and income) on February 1. The plan distributes $1,000 to T by April 15. Because the plan did not distribute any additional amount as income, $909 is treated as a distribution of excess deferrals, and $91 is treated as a distribution of earnings. With respect to amounts remaining in the account, $91 is treated as an elective deferral and is not included in T's investment in the contract. Because it was not distributed by the required date, the $91 is includible in gross income upon distribution as well as in the year of deferral.

(f) ***Community property laws.*** This section is applied without regard to community property laws.

(g) ***Effective date*** —

(1) ***In general.*** Except as otherwise provided, the provisions of this section are effective for taxable years beginning after December 31, 1986.

(2) ***Deferrals under collective bargaining agreements.*** In the case of a plan maintained pursuant to one or more collective bargaining agreements between employee representatives and one or more employers ratified before March 1, 1986, the provisions of this section do not apply to contributions made pursuant to the collective bargaining agreement for taxable years beginning before the earlier of January 1, 1989, or the date on which the agreement terminates (determined without regard to any extension thereof after February 28, 1986). These contributions under a collective bargaining agreement are taken into account for purposes of applying this section to elective deferrals under plans not described in this paragraph (g)(2).

(3) ***Transition rule.*** For taxable years beginning before January 1, 1992, a plan or an individual may rely on a reasonable interpretation of the rules set forth in section 402(g), as in effect during those years.

(4) ***Partnership cash or deferred arrangements.*** For purposes of section 402(g), employer contributions for any plan year beginning after December 31, 1986, and before January 1, 1989, under an arrangement that directly or indirectly permits individual partners to vary the amount of contributions made on their behalf will be treated as elective contributions only if the arrangement was intended to satisfy and did satisfy the nondiscrimination test of section 401(k)(3) and § 1.401(k)-1(b) for the plan year.

[T.D. 8357, 56 FR 40546, Aug. 15, 1991, as amended by T.D. 8581, 59 FR 66180, Dec. 23, 1994; T.D. 9169, 69 FR 78153, Dec. 29, 2004; T.D. 9324, 72 FR 21110, Apr. 30, 2007]

§ 1.402(g)-2 Increased limit for catch-up contributions.

(a) ***General rule.*** Under section 402(g)(1)(C), in determining the amount of elective deferrals that are includible in gross income under section 402(g) for a catch-up eligible participant (within the meaning of § 1.414(v)-1(g)), the otherwise applicable dollar limit under section 402(g)(1)(B) (as increased under section 402(g)(7), to the extent applicable) shall be further increased by the applicable dollar catch-up limit as set forth under § 1.414(v)-1(c)(2).

(b) ***Participants in multiple plans.*** Paragraph (a) of this section applies without regard to whether the applicable employer plans (within the meaning of section 414(v)(6)) treat the elective deferrals as catch-up contributions. Thus, a catch-up eligible participant who makes elective deferrals under applicable employer plans of two or more employers that in total exceed the applicable dollar amount under section

402(g)(1) by an amount that does not exceed the applicable dollar catch-up limit under either plan may exclude the elective deferrals from gross income, even if neither applicable employer plan treats those elective deferrals as catch-up contributions.

(c) ***Effective date*** —

(1) ***Statutory effective date.*** Section 402(g)(1)(C) applies to contributions in taxable years beginning on or after January 1, 2002.

(2) ***Regulatory effective date.*** Paragraphs (a) and (b) of this section apply to contributions in taxable years beginning on or after January 1, 2004.

[T.D. 9072, 68 FR 40515, July 8, 2003]

§ 1.402(g)(3)-1 Employer contributions to purchase a section 403(b) contract under a salary reduction agreement.

(a) ***General rule.*** With respect to an annuity contract under section 403(b), except as provided in paragraph (b) of this section, an elective deferral means an employer contribution to purchase an annuity contract under section 403(b) under a salary reduction agreement within the meaning of section 3121(a)(5)(D).

(b) ***Special rule.*** Notwithstanding paragraph (a) of this section, for purposes of section 403(b), an elective deferral only includes a contribution that is made pursuant to a cash or deferred election (as defined at § 1.401(k)-1(a)(3)). Thus, for purposes of section 402(g)(3)(C), an elective deferral does not include a contribution that is made pursuant to an employee's one-time irrevocable election made on or before the employee's first becoming eligible to participate under the employer's plans or a contribution made as a condition of employment that reduces the employee's compensation.

(c) ***Applicable date.*** This section is applicable for taxable years beginning after December 31, 2008.

[T.D. 9340, 72 FR 41140, July 26, 2007]

§ 1.402A-1 Designated Roth Accounts.

Q-1. What is a designated Roth account?

A-1. A designated Roth account is a separate account under a qualified cash or deferred arrangement under a section 401(a) plan, or under a section 403(b) plan, to which designated Roth contributions are permitted to be made in lieu of elective contributions and that satisfies the requirements of § 1.401(k)-1(f) (in the case of a section 401(a) plan) or § 1.403(b)-3(c) (in the case of a section 403(b) plan).

Q-2. How is a distribution from a designated Roth account taxed?

A-2.

(a) The taxation of a distribution from a designated Roth account depends on whether or not the distribution is a qualified distribution. A qualified distribution from a designated Roth account is not includible in the distributee's gross income.

(b) Except as otherwise provided in paragraph (c) of this A-2, a qualified distribution is a distribution that is both—

(1) Made after the 5-taxable-year period of participation defined in A-4 of this section has been completed; and

(2) Made on or after the date the employee attains age $59^1/_2$, made to a beneficiary or the estate of the employee on or after the employee's death, or attributable to the employee's being disabled within the meaning of section 72(m)(7).

(c) A distribution from a designated Roth account is not a qualified distribution to the extent it consists of a distribution of excess deferrals and attributable income described in § 1.402(g)-1(e). See A-11 of this section for other amounts that are not treated as qualified distributions, including excess contributions described in section 401(k)(8), and excess aggregate contributions described in section 401(m)(8), and income, on any of these excess amounts.

Q-3. How is a distribution from a designated Roth account taxed if it is not a qualified distribution?

A-3. Except as provided in A-11 of this section, a distribution from a designated Roth account that is not a qualified distribution is taxable to the distributee under section 402 in the case of a plan qualified under section 401(a) and under section 403(b)(1) in the case of a section 403(b) plan. For this purpose, a designated Roth account is treated as a separate contract under section 72. Thus, except as otherwise provided in A-5 of this section for a rollover, if a distribution is before the annuity starting date, the portion of any distribution that is includible in gross income as an amount allocable to income on the contract and the portion not includible in gross income as an amount allocable to investment in the contract is determined under section 72(e)(8), treating the designated Roth account as a separate contract. Similarly, in the case of any amount received as an annuity, if a distribution is on or after the annuity starting date, the portion of any annuity payment that is includible in gross income as an amount allocable to income on the contract and the portion not includible in gross income as an amount allocable to investment in the contract is determined under section 72(b) or (d), as applicable, treating the designated Roth account as a separate contract. For purposes of section 72, designated Roth contributions are described in section 72(f)(1) or 72(f)(2), to the extent applicable.

Q-4. What is the 5-taxable-year period of participation described in A-2 of this section?

A-4.

(a) The 5-taxable-year period of participation described in A-2 of this section for a plan is the period of 5 consecutive taxable years that begins with the first day of the first taxable year in which the employee makes a designated Roth contribution to any designated Roth account established for the employee under the same plan and ends when 5 consecutive taxable years have been completed. For this purpose, the first taxable year in which an employee makes a designated Roth contribution is the year in which the amount is includible in the employee's gross income. Notwithstanding the preceding, however, a contribution that is returned as an excess deferral or excess contribution does not begin the 5 taxable-year period of participation. Similarly, a contribution returned as a permissible withdrawal under section 414(w) does not begin the 5 taxable-year period of participation.

(b) Generally, an employee's 5-taxable-year period of participation is determined separately for each plan (within the meaning of section 414(l)) in which the employee participates. Thus, if an employee has elective deferrals made to designated Roth accounts under two or more plans, the employee may have two or more different 5-taxable-year periods of participation, depending on when the employee first had contributions made to a designated Roth account under each plan. However, if a direct rollover contribution of a distribution from a designated Roth account under another plan is made by the employee to the plan, the 5-taxable-year period of participation begins on the first day of the

employee's taxable year in which the employee first had designated Roth contributions made to such other designated Roth account, if earlier than the first taxable year in which a designated Roth contribution is made to the plan. See A-5(c) of this section for additional rules on determining the start of the 5-taxable-year of participation in the case of an indirect rollover.

(c) The beginning of the 5-taxable-year period of participation is not redetermined for any portion of an employee's designated Roth account. This is true even if the entire designated Roth account is distributed during the 5-taxable-year period of participation and the employee subsequently makes additional designated Roth contributions under the plan.

(d) The rule in paragraph (c) of this section applies if the employee dies or the account is divided pursuant to a qualified domestic relations order (QDRO), and thus, a portion of the account is not payable to the employee and is payable to the employee's beneficiary or an alternate payee. In the case of distribution to an alternate payee or beneficiary, generally, the age, death, or disability of the employee is used to determine whether the distribution to an alternate payee or beneficiary is qualified. However, if an alternate payee or a spousal beneficiary rolls the distribution into a designated Roth account in a plan maintained by his or her own employer, such individual's age, disability, or death is used to determine whether a distribution from the recipient plan is qualified. In addition, if the rollover is a direct rollover contribution to the alternate payee's or spousal beneficiary's own designated Roth account, the 5-taxable-year period of participation under the recipient plan begins on the earlier of the date the employee's 5-taxable-year period of participation began under the distributing plan or the date the 5-taxable-year period of participation applicable to the alternate payee's or spousal beneficiary's designated Roth account began under the recipient plan.

(e) If a designated Roth contribution is made by a reemployed veteran for a year of qualified military service pursuant to section 414(u) that is before the year in which the contribution is actually made, the contribution is treated as having been made in the year of qualified military service to which the contribution relates, as designated by the reemployed veteran. Reemployed veterans may identify the year of qualified military service for which a contribution is made for other purposes, such as for entitlement to a match, and the treatment for the 5-taxable-year period of participation rule follows that identification. In the absence of such designation, for purposes of determining the first year of the five years of participation under section 402A(d)(2)(B), the contribution is treated as relating to the first year of qualified military service for which the reemployed veteran could have made designated Roth contributions under the plan, or if later the first taxable year in which designated Roth contributions could be made under the plan.

Q-5. How do the taxation rules apply to a distribution from a designated Roth account that is rolled over?

A-5.

(a) An eligible rollover distribution from a designated Roth account is permitted to be rolled over into another designated Roth account or a Roth IRA, and the amount rolled over is not currently includible in gross income. In accordance with section 402(c)(2), to the extent that a portion of a distribution from a designated Roth account is not includible in income (determined without regard to the rollover), if that portion of the distribution is to be rolled over into a designated Roth account, the rollover must be accomplished through a direct rollover (i.e., a 60-day rollover to another designated Roth account is not available for this portion of the distribution). If a distribution from a designated Roth account is instead made to the employee, the employee would still be able to roll over the entire amount (or any portion thereof) into a Roth IRA within the 60-day period described in section 402(c)(3). For distributions made prior to January 1, 2016, any amount paid in a direct rollover is

treated as a separate distribution from any amount paid directly to the employee, except that taxpayers may choose not to apply this sentence to distributions made on or after September 18, 2014, and before January 1, 2016.

(b) In the case of an eligible rollover distribution from a designated Roth account that is not a qualified distribution and not paid as a direct rollover contribution, if less than the entire amount of the distribution is rolled over, the part that is rolled over is deemed to consist first of the portion of the distribution that is attributable to income under section 72(e)(8).

(c) If an employee receives a distribution from a designated Roth account, the portion of the distribution that would be includible in gross income is permitted to be rolled over into a designated Roth account under another plan. In such a case, § 1.402A-2, A-3, provides for additional reporting by the recipient plan. In addition, the employee's period of participation under the distributing plan is not carried over to the recipient plan for purposes of satisfying the 5-taxable-year period of participation requirement under the recipient plan. Generally, the taxable year in which the recipient plan accepts such rollover contribution is the taxable year that begins the participant's new 5-taxable-year period of participation. However, if the participant is rolling over to a plan in which the participant already has a pre-existing designated Roth account with a longer period of participation, the starting date of the recipient account is used to measure the participant's 5-taxable-year period of participation.

(d) The following example illustrates the application of this A-5:

Example. Employee B receives a $14,000 eligible rollover distribution that is not a qualified distribution from B's designated Roth account, consisting of $11,000 of investment in the contract and $3,000 of income. Within 60 days of receipt, Employee B rolls over $7,000 of the distribution into a Roth IRA. The $7,000 is deemed to consist of $3,000 of income and $4,000 of investment in the contract. Because the only portion of the distribution that could be includible in gross income (the income) is rolled over, none of the distribution is includible in Employee B's gross income.

(e) This A-5 applies for taxable years beginning on or after January 1, 2006.

Q-6. In the case of a rollover contribution to a designated Roth account, how is the amount that is treated as investment in the contract under section 72 determined?

A-6.

(a) If a distribution from a designated Roth account is rolled over to another designated Roth account in a direct rollover, the amount of the rollover contribution allocated to investment in the contract in the recipient designated Roth account is the amount that would not have been includible in gross income (determined without regard to section 402(e)(4)) if the distribution had not been rolled over. Thus, if an amount that is a qualified distribution is rolled over, the entire amount of the rollover contribution is allocated to investment in the contract.

(b) If the entire account balance of a designated Roth account is rolled over to another designated Roth account in a direct rollover, and, at the time of the distribution, the investment in the contract exceeds the balance in the designated Roth account, the investment in the contract in the distributing plan is included in the investment in the contract of the recipient plan.

Q-7. After a qualified distribution from a designated Roth account has been made, how is the remaining investment in the contract of the designated Roth account determined under section 72?

A-7.

(a) The portion of any qualified distribution that is treated as a recovery of investment in the contract is determined in the same manner as if the distribution were not a qualified distribution. (See A-3 of this section) Thus, the remaining investment in the contract in a designated Roth account after a qualified distribution is determined in the same manner after a qualified distribution as it would be determined if the distribution were not a qualified distribution.

(b) The following example illustrates the application of this A-7:

Example. Employee C receives a $12,000 distribution, which is a qualified distribution that is attributable to the employee being disabled within the meaning of section 72(m)(7), from C's designated Roth account. Immediately prior to the distribution, the account consisted of $21,850 of investment in the contract (i.e., designated Roth contributions) and $1,150 of income. For purposes of determining recovery of investment in the contract under section 72, the distribution is deemed to consist of $11,400 of investment in the contract [$12,000 × 21,850/(1,150 + 21,850)], and $600 of income [$12,000 × 1,150/(1,150 + 21,850)]. Immediately after the distribution, C's designated Roth account consists of $10,450 of investment in the contract and $550 of income. This determination of the remaining investment in the contract will be needed if C subsequently is no longer disabled and takes a nonqualified distribution from the designated Roth account.

Q-8. What is the relationship between the accounting for designated Roth contributions as investment in the contract for purposes of section 72 and their treatment as elective deferrals available for a hardship distribution under section 401(k)(2)(B)?

A-8.

(a) There is no relationship between the accounting for designated Roth contributions as investment in the contract for purposes of section 72 and their treatment as elective deferrals available for a hardship distribution under section 401(k)(2)(B). A plan that makes a hardship distribution under section 401(k)(2)(B) from elective deferrals that includes designated Roth contributions must separately determine the amount of elective deferrals available for hardship and the amount of investment in the contract attributable to designated Roth contributions for purposes of section 72. Thus, the entire amount of a hardship distribution is treated as reducing the otherwise maximum distributable amount for purposes of applying the rule in section 401(k)(2)(B) and § 1.401(k)-1(d)(3)(ii) that generally limits hardship distributions to the principal amount of elective deferrals made less the amount of elective deferrals previously distributed from the plan, even if a portion of the distribution is treated as income under section 72(e)(8).

(b) The following example illustrates the application of this A-8:

Example. The facts are the same as in the *Example* in A-7 of this section, except that instead of being disabled, Employee C is receiving a hardship distribution. In addition, Employee C has made elective deferrals that are not designated Roth contributions totaling $20,000 and has received no previous distributions of elective deferrals from the plan. The adjustment to the investment in the contract is the same as in A-7 of this section, but for purposes of determining the amount of elective deferrals available for future hardship distribution, the entire amount of the distribution is subtracted from the maximum distributable amount. Thus, Employee C has only $29,850 ($41,850−$12,000) available for hardship distribution from C's designated Roth account.

Q-9. Can an employee have more than one separate contract for designated Roth contributions under a plan qualified under section 401(a) or a section 403(b) plan?

A-9.

(a) Except as otherwise provided in paragraph (b) of this A-9, for purposes of section 72, there is only one separate contract for an employee with respect to the designated Roth contributions under a plan. Thus, if a plan maintains one separate account for designated Roth contributions made under the plan and another separate account for rollover contributions received from a designated Roth account under another plan (so that the rollover account is not required to be subject to the distribution restrictions otherwise applicable to the account consisting of designated Roth contributions made under the plan), both separate accounts are considered to be one contract for purposes of applying section 72 to the distributions from either account.

(b) If a separate account with respect to an employee's accrued benefit consisting of designated Roth contributions is established and maintained for an alternate payee pursuant to a qualified domestic relations order and another designated Roth account is maintained for the employee, each account is treated as a separate contract for purposes of section 72. The alternate payee's designated Roth account is also a separate contract for purposes of section 72 with respect to any other account maintained for that alternate payee. Similarly, if separate accounts are established and maintained for different beneficiaries after the death of an employee, the separate account for each beneficiary is treated as a separate contract under section 72 and is also a separate contract with respect to any other account maintained for that beneficiary under the plan that is not a designated Roth account. When the separate account is established for an alternate payee or for a beneficiary (after an employee's death), each separate account must receive a proportionate amount attributable to investment in the contract.

Q-10. What is the tax treatment of employer securities distributed from a designated Roth account?

A-10.

(a) If a distribution of employer securities from a designated Roth account is not a qualified distribution, section 402(e)(4)(B) applies. Thus, in the case of a lump-sum distribution that includes employer securities, unless the taxpayer elects otherwise, net unrealized appreciation attributable to the employer securities is not includible in gross income; and such net unrealized appreciation is not included in the basis of the distributed securities and is capital gain to the extent such appreciation is realized in a subsequent taxable transaction.

(b) In the case of a qualified distribution of employer securities from a designated Roth account, the distributee's basis in the distributed securities for purposes of subsequent disposition is their fair market value at the time of distribution.

Q-11. Can an amount described in § 1.402(c)-2(c)(3) with respect to a designated Roth account be a qualified distribution?

A-11. No. An amount described in A-4 of § 1.402(c)-2 with respect to a designated Roth account cannot be a qualified distribution. Such an amount is taxable under the rules of §§ 1.72-16(b), 1.72(p)-1, A-11 through A-13, 1.402(g)-1(e)(8), 1.401(k)-2(b)(2)(vi), 1.401(m)-2(b)(2)(vi), or 1.404(k)-1T. Thus, for example, loans that are treated as deemed distributions pursuant to section 72(p), or dividends paid on employer securities as described in section 404(k) are not qualified distributions even if the deemed distributions occur or the dividends are paid after the employee attains age $59^{1}/_{2}$ and the 5-taxable-year period of participation defined in A-4 of this section has been satisfied. However, if a dividend is reinvested in accordance with section 404(k)(2)(A)(iii)(II), the amount of such a dividend is not precluded from being a qualified distribution if later distributed. Further, an amount is not precluded from being a qualified distribution merely because it is described in section 402(c)(4) as an amount not eligible for rollover. Thus, a hardship distribution is not precluded from being a qualified distribution.

Q-12. If any amount from a designated Roth account is included in a loan to an employee, do the plan aggregation rules of section 72(p)(2)(D) apply for purposes of determining the total amount an employee is permitted to borrow from the plan, even though the designated Roth account generally is treated as a separate contract under section 72?

A-12. Yes. If any amount from a designated Roth account is included in a loan to an employee, notwithstanding the general rule that the designated Roth account is treated as a separate contract under section 72, the plan aggregation rules of section 72(p)(2)(D) apply for purposes of determining the maximum amount the employee is permitted to borrow from the plan and such amount is based on the total of the designated Roth contribution amounts and the other amounts under the plan. To the extent a loan is from a designated Roth account, the repayment requirement of section 72(p)(2)(C) must be satisfied separately with respect to that portion of the loan and with respect to the portion of the loan from other accounts under the plan.

Q-13. Does a transaction or accounting methodology involving an employee's designated Roth account and any other accounts under the plan or plans of an employer that has the effect of transferring value from the other accounts into the designated Roth account violate the separate accounting requirement of section 402A?

A-13.

(a) Yes. Any transaction or accounting methodology involving an employee's designated Roth account and any other accounts under the plan or plans of an employer that has the effect of directly or indirectly transferring value from another account into the designated Roth account violates the separate accounting requirement under section 402A. However, any transaction that merely exchanges investments between accounts at fair market value will not violate the separate accounting requirement.

(b) In the case of an annuity contract which contains both a designated Roth account and any other accounts, the Commissioner may prescribe additional guidance of general applicability, published in the Internal Revenue Bulletin (see 601.601(d)(2) of this chapter), to provide additional rules for allocation of income, expenses, gains and losses among the accounts under the contract.

(c) This A-13 applies to designated Roth accounts for taxable years beginning on or after January 1, 2006.

Q-14. How is an annuity contract that is distributed from a designated Roth account treated for purposes of section 402A?

A-14. A qualified plan distributed annuity contract within the meaning of § 1.402(c)-2(h) that is distributed from a designated Roth account is not treated as a distribution for purposes of section 402 or 402A. Instead, the amounts paid under the annuity contract are treated as distributions for purposes of sections 402 and 402A. Thus, the period after the annuity contract is distributed and before a payment from the annuity contract is made is included in determining whether the five-year period of participation is satisfied. Further, for purposes of determining if a distribution is a qualified distribution, the determination of whether a distribution is made on or after the date the employee attains age $59^{1}/_{2}$, made to a beneficiary or the estate of the employee on or after the employee's death, or attributable to the employee's being disabled within the meaning of section 72(m)(7) is made based on the facts at the time the distribution is made from the annuity contract. Thus for example, if an employee first makes a designated Roth

contribution to a designated Roth account in 2006 at age 56, receives a distributed annuity contract within the meaning of § 1.402(c)-2, A-10(a) in 2007 purchased only with assets from the designated Roth account, and then receives a distribution from the contract in 2011 at age 60, the distribution is a qualified distribution.

Q-15. When are section 402A and this § 1.402A-1 applicable?

A-15. Section 402A is applicable for taxable years beginning on or after January 1, 2006. Except as otherwise provided in A-5 and A-13 of this section, the rules of this § 1.402A-1 apply for taxable years beginning on or after January 1, 2007.

[T.D. 9324, 72 FR 21111, Apr. 30, 2007; 72 FR 30974, June 5, 2007, as amended by T.D. 9340, 72 FR 41140, July 26, 2007; T.D. 9769, 81 FR 31166, May 18, 2016; T.D. 10001, 89 FR 58906, July 19, 2024]

§ 1.402A-2 Reporting and recordkeeping requirements with respect to designated Roth accounts.

Q-1. Who is responsible for keeping track of the 5-taxable-year period of participation and the investment in the contract, i.e., the amount of unrecovered designated Roth contributions for the employee?

A-1. The plan administrator or other responsible party with respect to a plan with a designated Roth account is responsible for keeping track of the 5-taxable-year period of participation for each employee and the amount of investment in the contract (unrecovered designated Roth contributions) on behalf of such employee. For purposes of the preceding sentence, in the absence of actual knowledge to the contrary, the plan administrator or other responsible party is permitted to assume that an employee's taxable year is the calendar year. In the case of a direct rollover from another designated Roth account, the plan administrator or other responsible party of the recipient plan can rely on reasonable representations made by the plan administrator or responsible party with respect to the plan with the other designated Roth account. See A-2 of this section for statements required in the case of rollovers.

Q-2. In the case of an eligible rollover distribution from a designated Roth account, what additional information must be provided with respect to such distribution?

A-2.

(a) Pursuant to section 6047(f), if an amount is distributed from a designated Roth account, the plan administrator or other responsible party with respect to the plan must provide a statement as described below in the following situations—

(1) In the case of a direct rollover of a distribution from a designated Roth account under a plan to a designated Roth account under another plan, the plan administrator or other responsible party must provide to the plan administrator or responsible party of the recipient plan either a statement indicating the first year of the 5-taxable-year period described in A-1 of this section and the portion of the distribution that is attributable to investment in the contract under section 72, or a statement that the distribution is a qualified distribution.

(2) If the distribution is not a direct rollover to a designated Roth account under another plan, the plan administrator or responsible party must provide to the employee, upon request, the same information described in paragraph (a)(1) of this A-2, except the statement need not indicate the first year of the 5-taxable-year period described in A-1 of this section.

(b) The statement described in paragraph (a) of this A-2 must be provided within a reasonable period following the direct rollover or distributee request but in no event later than 30 days following the direct rollover or distributee request.

Q-3. If a plan qualified under section 401(a) or a section 403(b) plan accepts a 60-day rollover of earnings from a designated Roth account, what report to the IRS must be provided with respect to such rollover contribution?

A-3. To the extent required in Forms and Instructions, if a plan qualified under section 401(a), or a section 403(b) plan, accepts a rollover contribution (other than a direct rollover contribution) under section 402(c)(2), or section 403(b)(8)(B), of the portion of a distribution from a designated Roth account that would have been includable in gross income, the plan administrator or other responsible party for the recipient plan must notify the Commissioner of its acceptance of the rollover contribution no later than the due date for filing Form 1099-R, " Distributions From Pensions, Annuities, Retirement or Profit-Sharing Plans, IRAs, Insurance Contracts, etc.,." The Forms and Instructions will specify the address to which the notification is required to be sent and will require inclusion of the employee's name and social security number, the amount rolled over, the year in which the rollover contribution was made, and such other information as the Commissioner may prescribe in order to determine that the amount rolled over is a valid rollover contribution.

Q-4. When is this § 1.402A-2 applicable?

A-4. The rules of this § 1.402A-2 are applicable for taxable years beginning on or after January 1, 2007.

[T.D. 9324, 72 FR 21111, Apr. 30, 2007; 72 FR 30974, June 5, 2007]

§ 1.403(a)-1 Taxability of beneficiary under a qualified annuity plan.

(a) An employee or retired or former employee for whom an annuity contract is purchased by his employer is not required to include in his gross income the amount paid for the contract at the time such amount is paid, whether or not his rights to the contract are forfeitable, if the annuity contract is purchased under a plan which meets the requirements of section 404(a)(2). For purposes of the preceding sentence, it is immaterial whether the employer deducts the amounts paid for the contract under such section 404(a)(2). See § 1.403(b)-1 through 1.403(b)-10 for rules relating to annuity contracts which are not purchased under qualified plans but which are purchased by organizations described in section 501(c)(3) and exempt under section 501(a) or which are purchased for employees who perform services for certain public schools.

(b) The amounts received by or made available to any employee referred to in paragraph (a) of this section under such annuity contract shall be included in gross income of the employee for the taxable year in which received or made available, as provided in section 72 (relating to annuities), except that certain total distributions described in section 403(a)(2) are taxable as long-term capital gains. For the treatment of such total distributions, see § 1.403(a)-2. However, for taxable years beginning before January 1, 1964, section 72(e)(3) (relating to the treatment of certain lump sums), as in effect before such date, shall not apply to such amounts. For taxable years beginning after December 31, 1963, such amounts may be taken into account in computations under sections 1301 through 1305 (relating to income averaging).

(c) If upon the death of an employee or of a retired employee, the widow or other beneficiary of such employee is paid, in accordance with the terms of the annuity contract relating to the deceased employee, an annuity or other death benefit, the extent to which the amounts received by or made available to the beneficiary must be included in the beneficiary's income under section 403(a) shall be determined in accordance with the rules presented in paragraph (a)(5) of § 1.402(a)-1.

(d) An individual contract issued after December 31, 1962, or a group contract, which provides incidental life insurance protection may be purchased under a qualified annuity plan. For the rules as to nontransferability of such contracts issued after December 31, 1962, see § 1.401-9. For the rules relating to the taxation of the cost of the life insurance protection and the proceeds thereunder, see § 1.72-16. Section 403(a) is not applicable to premiums paid after October 26, 1956, for individual contracts which were issued prior to January 1, 1963, and which provide life insurance protection.

(e) As to inclusion of full-time life insurance salesmen within the class of persons considered to be employees, see section 7701(a)(20).

(f) For purposes of this section and § 1.403(a)-2, the term “employee” includes a self-employed individual who is treated as an employee under section 401(c)(1) and paragraph (b) of § 1.401-10, and the term “employer” means the person treated as the employer of such individual under section 401(c)(4). For the rules relating to annuity plans covering self-employed individuals, see section 404(a)(2) and §§ 1.404(a)-8 and 1.401-10.

(g) The rules of § 1.402(a)-1(e) apply for purposes of determining the treatment of amounts paid to provide accident and health insurance benefits.

[T.D. 6500, 25 FR 11680, Nov. 26, 1960, as amended by T.D. 6676, 28 FR 10143, Sept. 17, 1963; T.D. 6722, 29 FR 5073, Apr. 14, 1964; T.D. 6783, 29 FR 18359, Dec. 24, 1964; T.D. 6885, 31 FR 7801, June 2, 1966; T.D. 9340, 72 FR 41159, July 26, 2007; T.D. 9665, 79 FR 26843, May 12, 2014; T.D. 9849, 84 FR 9234, Mar. 14, 2019]

§ 1.403(a)-2 Capital gains treatment for certain distributions.

(a) If the total amounts payable with respect to any employee for whom an annuity contract has been purchased by an employer under a plan which—

(1) Is a plan described in section 403(a)(1) and § 1.403(a)-1, and

(2) Requires that refunds of contributions with respect to annuity contracts purchased under such plan be used to reduce subsequent premiums on the contracts under the plan,

are paid to, or includible in gross income of, the payee within one taxable year of the payee by reason of the employee's death or other separation from the service, or death after such separation from the service, such total payments, to the extent they exceed the net amount contributed by the employee, shall be considered a gain from the sale or exchange of a capital asset held for more than six months. The “net amount contributed by the employee” is the amount actually contributed by the employee plus any amounts considered to be contributed by the employee under the rules of sections 72(f), 101(b), and paragraph (d) of § 1.403(a)-1, reduced by any amounts theretofore distributed to him which were excludable from his gross income as a return of employee contributions. For example, if under an annuity contract purchased under a plan described in this section, the total distributions payable to the employee's widow are paid to her in the year in which the employee dies, in the amount of $8,000, and if $5,000 thereof is excludable under section 101(b), and if the employee made contributions of $600 and had received no payments, the remaining amount of $2,400 will be considered a gain from the sale or exchange of a capital asset held for more than six months.

(b)

(1) The term “total amounts” means the balance to the credit of an employee with respect to all annuities under the annuity plan which becomes payable to the payee by reason of the employee's death or other separation from the service, or by reason of his death after separation from the service. If an employee commences to receive annuity payments on retirement and then a lump sum payment is made to his widow upon his death, the capital gains treatment applies to the lump sum payment, but it does not apply to amounts received before the time the “total amounts” become payable. However, if the total amount to the credit of the employee at the time of his death or other separation from the service or death after separation from the service is paid or includible in the gross income of the payee within one taxable year of the payee, such amount is entitled to the capital gains treatment notwithstanding that in a later taxable year an additional amount is credited to the employee and paid to the payee.

(2) If more than one annuity contract is received under the plan, the capital gains treatment does not apply to any amount received on the surrender thereof unless all contracts under the plan with respect to a particular employee are surrendered either at the time of the employee's death or other separation from the service or death after separation from the service. Thus, if an employee receives two contracts on separation from the service and surrenders one of them in the year of separation and receives payments under the other until his death, the capital gains treatment is applicable to the balance paid to his beneficiary on his death if paid within one taxable year of the beneficiary. The amount received by the employee on surrender of the contract in the year of his separation from the service, however, would not receive capital gains treatment since the balance to the credit of the employee with respect to all amounts under the plan did not become payable at that time.

(3) If an employee retires and commences to receive an annuity but subsequently in some succeeding taxable year, he is paid a lump sum in settlement of all future annuity payments, the capital gains treatment does not apply to such lump sum settlement paid during the lifetime of the employee since it is not a payment on account of separation from the service, or death after separation, but is on account of the settlement of future annuity payments.

(4) If the “total amounts” payable under all annuity contracts under the plan with respect to a particular employee are paid or includible in the gross income of several payees within one taxable year on account of the employee's death or other separation from the service or on account of his death after separation from the service, the capital gains treatment is applicable. Thus, if the balance to the credit of a deceased employee under all annuity contracts provided under an annuity plan becomes payable to two payees, the capital gains treatment is applicable provided the “total amounts” payable are received by or includible in the gross income of both payees within the same taxable year. However, if the “total amounts” payable are made available to each payee and one elects to receive his share in cash while the other makes a timely election under section 72(h) to receive his share as an annuity, the capital gains treatment does not apply to either payee.

(5) For purposes of determining whether the total amounts payable to an employee have been paid within one taxable year, the term “total amounts” includes amounts under a plan which are attributable to contributions on behalf of an individual while he was self-employed in the business with respect to which the plan was established. Thus, the “total amounts” payable are not paid within one taxable year if amounts remain payable which are so attributable.

(6) The term "total amounts" does not include any amount which has been placed in a separate account for the funding of benefits described in section 401(h). Thus, a distribution under a qualified annuity plan may constitute a distribution of the total amounts payable with respect to an employee even though amounts attributable to the funding of section 401(h) medical benefits as defined in paragraph (a) of § 1.401-14 are not so distributed.

(c) The provisions of this section are not applicable to any amounts paid to a payee to the extent such amounts are attributable to contributions made on behalf of an employee while he was a self-employed individual in the business with respect to which the plan was established. For the taxation of such amounts, see § 1.72-18. For the rules for determining the amount attributable to contributions on behalf of an employee while he was self-employed, see paragraphs (b)(4) and (c)(2) of such section.

[T.D. 6500, 25 FR 11681, Nov. 26, 1960, as amended by T.D. 6676, 28 FR 10143, Sept. 17, 1963; T.D. 6722, 29 FR 5073, Apr. 14, 1964]

§ 1.403(b)-0 Taxability under an annuity purchased by a section 501(c)(3) organization or a public school.

This section lists the headings that appear in §§ 1.403(b)-1 through 1.403(b)-11.

§ 1.403(b)-1 General overview of taxability under an annuity contract purchased by a section 501(c)(3) organization or a public school.

§ 1.403(b)-2 Definitions.

(a) Application of definitions.

(b) Definitions.

§ 1.403(b)-3 Exclusion for contributions to purchase section 403(b) contracts.

(a) Exclusion for section 403(b) contracts.

(b) Application of requirements.

(c) Special rules for designated Roth section 403(b) contributions.

(d) Effect of failure.

§ 1.403(b)-4 Contribution limitations.

(a) Treatment of contributions in excess of limitations.

(b) Maximum annual contribution.

(c) Section 403(b) elective deferrals.

(d) Employer contributions for former employees.

(e) Special rules for determining years of service.

(f) Excess contributions of deferrals.

§ 1.403(b)-5 Nondiscrimination rules.

(a) Nondiscrimination rules for contributions other than section 403(b) elective deferrals.

(b) Universal availability required for section 403(b) elective deferrals.

(c) Plan required.

(d) Church plans exception.

(e) Other rules.

§ 1.403(b)-6 Timing of distributions and benefits.

(a) Distributions generally.

(b) Distributions from contracts other than custodial accounts or amounts attributable to section 403(b) elective deferrals.

(c) Distributions from custodial accounts that are not attributable to section 403(b) elective deferrals.

(d) Distribution of section 403(b) elective deferrals.

(e) Minimum required distributions for eligible plans.

(f) Loans.

(g) Death benefits and other incidental benefits.

(h) Special rule regarding severance from employment.

§ 1.403(b)-7 Taxation of distributions and benefits.

(a) General rules for when amounts are included in gross income.

(b) Rollovers to individual retirement arrangements and other eligible retirement plans.

(c) Special rules for certain corrective distributions.

(d) Amounts taxable under section 72(p)(1).

(e) Special rules relating to distributions from a designated Roth account.

(f) Certain rules relating to employment taxes.

§ 1.403(b)-8 Funding.

(a) Investments.

(b) Contributions to the plan.

(c) Annuity contracts.

(d) Custodial accounts.

(e) Retirement income accounts.

(f) Combining assets.

§ 1.403(b)-9 Special rules for church plans.

(a) Retirement income accounts.

(b) Retirement income account defined.

(c) Special deduction rule for self-employed ministers.

§ 1.403(b)-10 Miscellaneous provisions.

(a) Plan terminations and frozen plans.

(b) Contract exchanges and plan-to-plan transfers.

(c) Qualified domestic relations orders.

(d) Rollovers to a section 403(b) contract.

(e) Deemed IRAs.

(f) Defined benefit plans.

(g) Other rules relating to section 501(c)(3) organizations.

§ 1.403(b)-11 Applicable date.

(a) General rule.

(b) Collective bargaining agreements.

(c) Church conventions.

(d) Special rules for plans that exclude certain types of employees from elective deferrals.

(e) Special rules for plans that permit in-service distributions.

(f) Special rule for life insurance contracts.

(g) Special rule for contracts received in an exchange.

[T.D. 9340, 72 FR 41140, July 26, 2007]

§ 1.403(b)-1 General overview of taxability under an annuity contract purchased by a section 501(c)(3) organization or a public school.

Section 403(b) and §§ 1.403(b)-2 through 1.403(b)-10 provide rules for the Federal income tax treatment of an annuity purchased for an employee by an employer that is either a tax-exempt entity under section 501(c)(3) (relating to certain religious, charitable, scientific, or other types of organizations) or a public school, or for a minister described in section 414(e)(5)(A). See section 403(a) (relating to qualified annuities) for rules regarding the taxation of an annuity purchased under a qualified annuity plan that meets the requirements of section 404(a)(2), and see section 403(c) (relating to nonqualified annuities) for rules regarding the taxation of other types of annuities.

[T.D. 9340, 72 FR 41141, July 26, 2007]

§ 1.403(b)-2 Definitions.

(a) ***Application of definitions.*** The definitions set forth in this section are applicable for purposes of § 1.403(b)-1, this section and §§ 1.403(b)-3 through 1.403(b)-11.

(b) ***Definitions*** —

(1) ***Accumulated benefit*** means the total benefit to which a participant or beneficiary is entitled under a section 403(b) contract, including all contributions made to the contract and all earnings thereon.

(2) ***Annuity contract*** means a contract that is issued by an insurance company qualified to issue annuities in a State and that includes payment in the form of an annuity. See § 1.401(f)-1(d)(2) and (e) for the definition of an annuity, and see § 1.403(b)-8(c)(3) for a special rule for certain State plans. See also §§ 1.403(b)-8(d) and 1.403(b)-9(a) for additional rules regarding the treatment of custodial accounts and retirement income accounts as annuity contracts.

(3) ***Beneficiary*** means a person who is entitled to benefits in respect of a participant following the participant's death or an alternate payee pursuant to a qualified domestic relations order, as described in § 1.403(b)-10(c).

(4) ***Catch-up*** amount or *catch-up* limitation for a participant for a taxable year means a section 403(b) elective deferral permitted under section 414(v) (as described in § 1.403(b)-4(c)(2)) or section 402(g)(7) (as described in § 1.403(b)-4(c)(3)).

(5) ***Church*** means a church as defined in section 3121(w)(3)(A) and a qualified church-controlled organization as defined in section 3121(w)(3)(B).

(6) ***Church-related organization*** means a church or a convention or association of churches, including an organization described in section 414(e)(3)(A).

(7) ***Elective deferral*** means an elective deferral under § 1.402(g)-1 (with respect to an employer contribution to a section 403(b) contract) and any other amount that constitutes an elective deferral under section 402(g)(3).

(8)

(i) ***Eligible employer*** means—

(A) A State, but only with respect to an employee of the State performing services for a public school;

(B) A section 501(c)(3) organization with respect to any employee of the section 501(c)(3) organization;

(C) Any employer of a minister described in section 414(e)(5)(A), but only with respect to the minister; or

(D) A minister described in section 414(e)(5)(A), but only with respect to a retirement income account established for the minister.

(ii) An entity is not an eligible employer under paragraph (a)(8)(i)(A) of this section if it treats itself as not being a State for any other purpose of the Internal Revenue Code, and a subsidiary or other affiliate of an eligible employer is not an eligible employer under paragraph (a)(8)(i) of this section if the subsidiary or other affiliate is not an entity described in paragraph (a)(8)(i) of this section.

(9) ***Employee*** means a common-law employee performing services for the employer, and does not include a former employee or an independent contractor. Subject to any rules in § 1.403(b)-1, this section, and §§ 1.403(b)-3 through 1.403(b)-11 that are specifically applicable to ministers, an employee also includes a minister described in section 414(e)(5)(A) when performing services in the exercise of his or her ministry.

(10) ***Employee performing services for a public school*** means an employee performing services as an employee for a public school of a State. This definition is not applicable unless the employee's compensation for performing services for a public school is paid by the State. Further, a person occupying an elective or appointive public office is not an employee performing services for a public school unless such office is one to which an individual is elected or appointed only if the individual has received training, or is experienced, in the field of education. The term *public office* includes any elective or appointive office of a State.

(11) ***Includible compensation*** means the employee's compensation received from an eligible employer that is includible in the participant's gross income for Federal income tax purposes (computed without regard to section 911) for the most recent period that is a year of service. Includible compensation for a minister who is self-employed means the minister's earned income as defined in section 401(c)(2) (computed without regard to section 911) for the most recent period that is a year of service. Includible compensation does not include any compensation received during a period when the employer is not an eligible employer. Includible compensation also includes any elective deferral or other amount contributed or deferred by the eligible employer at the election of the employee that would be includible in the gross income of the employee but for the rules of sections

125, 132(f)(4), 402(e)(2), 402(h)(1)(B), 402(k), or 457(b). The amount of includible compensation is determined without regard to any community property laws. See section 415(c)(3)(A) through (D) for additional rules, and see § 1.403(b)-4(d) for a special rule regarding former employees.

(12) ***Participant*** means an employee for whom a section 403(b) contract is currently being purchased, or an employee or former employee for whom a section 403(b) contract has previously been purchased and who has not received a distribution of his or her entire accumulated benefit under the contract.

(13) ***Plan*** means a plan as described in § 1.403(b)-3(b)(3).

(14) ***Public school*** means a State-sponsored educational organization described in section 170(b)(1)(A)(ii) (relating to educational organizations that normally maintain a regular faculty and curriculum and normally have a regularly enrolled body of pupils or students in attendance at the place where educational activities are regularly carried on).

(15) ***Retirement income account*** means a defined contribution program established or maintained by a church-related organization to provide benefits under section 403(b) for its employees or their beneficiaries as described in § 1.403(b)-9.

(16) ***Section 403(b) contract; section 403(b) plan*** —

(i) ***Section 403(b) contract*** means a contract that satisfies the requirements of § 1.403(b)-3. If for any taxable year an employer contributes to more than one section 403(b) contract for a participant or beneficiary, then, under section 403(b)(5), all such contracts are treated as one contract for purposes of section 403(b) and § 1.403(b)-1, this section, and §§ 1.403(b)-3 through 1.403(b)-11. See also § 1.403(b)-3(b)(1).

(ii) ***Section 403(b) plan*** means the plan of the employer under which the section 403(b) contracts for its employees are maintained.

(17) ***Section 403(b) elective deferral; designated Roth contribution*** —

(i) ***Section 403(b) elective deferral*** means an elective deferral that is an employer contribution to a section 403(b) plan for an employee. See § 1.403(b)-5(b) for additional rules with respect to a section 403(b) elective deferral.

(ii) ***Designated Roth contribution*** under a section 403(b) plan means a section 403(b) elective deferral that satisfies § 1.403(b)-3(c).

(18) ***Section 501(c)(3) organization*** means an organization that is described in section 501(c)(3) (relating to certain religious, charitable, scientific, or other types of organizations) and exempt from tax under section 501(a).

(19) ***Severance from employment*** means that the employee ceases to be employed by the employer maintaining the plan. See § 1.401(k)-1(d) for additional guidance concerning severance from employment. See also § 1.403(b)-6(h) for a special rule under which severance from employment is determined by reference to employment with the eligible employer.

(20) ***State*** means a State, a political subdivision of a State, or any agency or instrumentality of a State. For this purpose, the District of Columbia is treated as a State. In addition, for purposes of determining whether an individual is an employee performing services for a public school, an Indian tribal government is treated as a State, as provided under section 7871(a)(6)(B). See also section 1450(b) of the Small Business Job Protection Act of 1996 (110 Stat. 1755, 1814) for special rules treating

certain contracts purchased in a plan year beginning before January 1, 1995, that include contributions by an Indian tribal government as section 403(b) contracts, whether or not those contributions are for employees performing services for a public school.

(21) ***Year of service*** means each full year during which an individual is a full-time employee of an eligible employer, plus fractional credit for each part of a year during which the individual is either a full-time employee of an eligible employer for a part of the year or a part-time employee of an eligible employer. See § 1.403(b)-4(e) for rules for determining years of service.

[T.D. 9340, 72 FR 41141, July 26, 2007; 72 FR 54351, Sept. 25, 2007]

§ 1.403(b)-3 Exclusion for contributions to purchase section 403(b) contracts.

(a) ***Exclusion for section 403(b) contracts.*** Amounts contributed by an eligible employer for the purchase of an annuity contract for an employee are excluded from the gross income of the employee under section 403(b) only if each of the requirements in paragraphs (a)(1) through (9) of this section is satisfied. In addition, amounts contributed by an eligible employer for the purchase of an annuity contract for an employee pursuant to a cash or deferred election (as defined at § 1.401(k)-1(a)(3)) are not includible in an employee's gross income at the time the cash would have been includible in the employee's gross income (but for the cash or deferred election) if each of the requirements in paragraphs (a)(1) through (9) of this section is satisfied. However, the preceding two sentences generally do not apply to designated Roth contributions; see paragraph (c) of this section and § 1.403(b)-7(e) for special taxation rules that apply with respect to designated Roth contributions under a section 403(b) plan.

(1) ***Not a contract issued under qualified plan or eligible governmental plan.*** The annuity contract is not purchased under a qualified plan (under section 401(a) or 403(a)) or an eligible governmental plan under section 457(b).

(2) ***Nonforfeitability.*** The rights of the employee under the annuity contract (disregarding rights to future premiums) are nonforfeitable. An employee's rights under a contract fail to be nonforfeitable unless the employee for whom the contract is purchased has at all times a fully vested and nonforfeitable right (as defined in regulations under section 411) to all benefits provided under the contract. See paragraph (d)(2) of this section for additional rules regarding the nonforfeitability requirement of this paragraph (a)(2).

(3) ***Nondiscrimination.*** In the case of an annuity contract purchased by an eligible employer other than a church, the contract is purchased under a plan that satisfies section 403(b)(12) (relating to nondiscrimination requirements, including universal availability). See § 1.403(b)-5.

(4) ***Limitations on elective deferrals.*** In the case of an elective deferral, the contract satisfies section 401(a)(30) (relating to limitations on elective deferrals). A contract does not satisfy section 401(a)(30) as required under this paragraph (a)(4) unless the contract requires that all elective deferrals for an employee not exceed the limits of section 402(g)(1), including elective deferrals for the employee under the contract and any other elective deferrals under the plan under which the contract is purchased and under all other plans, contracts, or arrangements of the employer. See § 1.401(a)-30.

(5) ***Nontransferability.*** The contract is not transferable. This paragraph (a)(5) does not apply to a contract issued before January 1, 1963. See section 401(g).

(6) ***Minimum required distributions.*** The contract satisfies the requirements of section 401(a)(9) (relating to minimum required distributions). See § 1.403(b)-6(e).

(7) ***Rollover distributions.*** The contract provides that, if the distributee of an eligible rollover distribution elects to have the distribution paid directly to an eligible retirement plan, as defined in section 402(c)(8)(B), and specifies the eligible retirement plan to which the distribution is to be paid, then the distribution will be paid to that eligible retirement plan in a direct rollover. See § 1.403(b)-7(b)(2).

(8) ***Limitation on incidental benefits.*** The contract satisfies the incidental benefit requirements of section 401(a). See § 1.403(b)-6(g).

(9) ***Maximum annual additions.*** The annual additions to the contract do not exceed the applicable limitations of section 415(c) (treating contributions and other additions as annual additions). See paragraph (b) of this section and § 1.403(b)-4(b) and (f).

(b) ***Application of requirements*** —

(1) Aggregation of contracts. In accordance with section 403(b)(5), for purposes of determining whether this section is satisfied, all section 403(b) contracts purchased for an individual by an employer are treated as purchased under a single contract. Additional aggregation rules apply under section 402(g) for purposes of satisfying paragraph (a)(4) of this section and under section 415 for purposes of satisfying paragraph (a)(9) of this section.

(2) ***Disaggregation for excess annual additions.*** In accordance with the last sentence of section 415(a)(2), if an excess annual addition is made to a contract that otherwise satisfies the requirements of this section, then the portion of the contract that includes such excess annual addition fails to be a section 403(b) contract (as further described in paragraph (d)(1) of this section) and the remaining portion of the contract is a section 403(b) contract. This paragraph (b)(2) is not satisfied unless, for the year of the excess and each year thereafter, the issuer of the contract maintains separate accounts for each such portion. Thus, the entire contract fails to be a section 403(b) contract if an excess annual addition is made and a separate account is not maintained with respect to the excess.

(3) ***Plan in form and operation.***

(i) A contract does not satisfy paragraph (a) of this section unless it is maintained pursuant to a plan. For this purpose, a plan is a written defined contribution plan, which, in both form and operation, satisfies the requirements of § 1.403(b)-1, § 1.403(b)-2, this section, and §§ 1.403(b)-4 through 1.403(b)-11. For purposes of § 1.403(b)-1, § 1.403(b)-2, this section, and §§ 1.403(b)-4 through 1.403(b)-11, the plan must contain all the material terms and conditions for eligibility, benefits, applicable limitations, the contracts available under the plan, and the time and form under which benefit distributions would be made. For purposes of § 1.403(b)-1, § 1.403(b)-2, this section, and §§ 1.403(b)-4 through 1.403(b)-11, a plan may contain certain optional features that are consistent with but not required under section 403(b), such as hardship withdrawal distributions, loans, plan-to-plan or annuity contract-to-annuity contract transfers, and acceptance of rollovers to the plan. However, if a plan contains any optional provisions, the optional provisions must meet, in both form and operation, the relevant requirements under section 403(b), this section, and §§ 1.403(b)-4 through 1.403(b)-11.

(ii) The plan may allocate responsibility for performing administrative functions, including functions to comply with the requirements of section 403(b) and other tax requirements. Any such allocation must identify responsibility for compliance with the requirements of the Internal

Revenue Code that apply on the basis of the aggregated contracts issued to a participant under a plan, including loans under section 72(p) and the conditions for obtaining a hardship withdrawal under § 1.403(b)-6. A plan is permitted to assign such responsibilities to parties other than the eligible employer, but not to participants (other than employees of the employer a substantial portion of whose duties are administration of the plan), and may incorporate by reference other documents, including the insurance policy or custodial account, which thereupon become part of the plan.

(iii) This paragraph (b)(3) applies to contributions to an annuity contract by a church only if the annuity is part of a retirement income account, as defined in § 1.403(b)-9.

(4) *Exclusion limited for former employees* —

(i) ***General rule.*** Except as provided in paragraph (b)(4)(ii) of this section and in § 1.403(b)-4(d), the exclusion from gross income provided by section 403(b) does not apply to contributions made for former employees. For this purpose, a contribution is not made for a former employee if the contribution is with respect to compensation that would otherwise be paid for a payroll period that begins before severance from employment.

(ii) ***Exceptions.*** The exclusion from gross income provided by section 403(b) applies to contributions made for former employees with respect to compensation described in § 1.415(c)-2(e)(3)(i) (relating to certain compensation paid by the later of $2^1/_2$ months after severance from employment or the end of the limitation year that includes the date of severance from employment), and compensation described in § 1.415(c)-2(e)(4), § 1.415(c)-2(g)(4), or § 1.415(c)-2(g)(7) (relating to compensation paid to participants who are permanently and totally disabled or relating to qualified military service under section 414(u)).

(c) *Special rules for designated Roth section 403(b) contributions.*

(1) The rules of § 1.401(k)-1(f)(1), (2), (3), and (5) for designated Roth contributions under a qualified cash or deferred arrangement apply to designated Roth contributions under a section 403(b) plan. Thus, a designated Roth contribution under a section 403(b) plan is a section 403(b) elective deferral that is designated irrevocably by the employee at the time of the cash or deferred election as a designated Roth contribution that is being made in lieu of all or a portion of the section 403(b) elective deferrals the employee is otherwise eligible to make under the plan (or is deemed to be so irrevocably designated in accordance with § 1.401(k)-1(f)(5)(iii)); that is treated by the employer as includible in the employee's gross income at the time the employee would have received the amount in cash if the employee had not made the cash or deferred election (such as by treating the contributions as wages subject to applicable withholding requirements); and that is maintained in a separate account (within the meaning of § 1.401(k)-1(f)(3)).

(2) A designated Roth contribution under a section 403(b) plan must satisfy the requirements applicable to section 403(b) elective deferrals. Thus, for example, designated Roth contributions under a section 403(b) plan must satisfy the requirements of § 1.403(b)-6(d). Similarly, a designated Roth account under a section 403(b) plan is subject to the rules of sections 401(a)(9)(A) and (B) and § 1.403(b)-6(e).

(d) *Effect of failure* —

(1) *General rules.*

(i) If a contract includes any amount that fails to satisfy the requirements of section 403(b), § 1.403(b)-1, § 1.403(b)-2, this section, or §§ 1.403(b)-4 through 1.403(b)-11, then, except as otherwise provided in paragraph (d)(2) of this section (relating to failure to satisfy nonforfeitability requirements) or § 1.403(b)-4(f) (relating to excess contributions under section 415 and excess deferrals under section 402(g)), the contract is not a section 403(b) contract. In addition, section 403(b)(5) and paragraph (b)(1) of this section provide that, for purposes of determining whether a contract satisfies section 403(b), all section 403(b) contracts purchased for an individual by an employer are treated as purchased under a single contract. Thus, except as provided in paragraph (b)(2) of this section or as otherwise provided in this paragraph (d), a failure to satisfy section 403(b) with respect to any contract issued to an individual by an employer adversely affects all contracts issued to that individual by that employer.

(ii) In accordance with paragraph (b)(3) of this section, a failure to operate in accordance with the terms of a plan adversely affects all of the contracts issued by the employer to the employee or employees with respect to whom the operational failure occurred. Such a failure does not adversely affect any other contract if the failure is neither a failure to satisfy the nondiscrimination requirements of § 1.403(b)-5 (a nondiscrimination failure) nor a failure of the employer to be an eligible employer as defined in § 1.403(b)-2 (an employer eligibility failure). However, any failure that is not an operational failure adversely affects all contracts issued under the plan, including: a failure to have contracts issued pursuant to a written defined contribution plan which, in form, satisfies the requirements of § 1.403(b)-1, § 1.403(b)-2, this section, and §§ 1.403(b)-4 through 1.403(b)-11 (a written plan failure); a nondiscrimination failure; or an employer eligibility failure.

(iii) See other applicable Internal Revenue Code provisions for the treatment of a contract that is not a section 403(b) contract, such as sections 61, 83, 402(b), and 403(c). Thus, for example, section 403(c) (relating to nonqualified annuities) applies if any annuity contract issued by an insurance company fails to satisfy section 403(b), based on the value of the contract at the time of the failure. However, see paragraph (d)(2) of this section for special rules with respect to the nonforfeitability requirement of paragraph (a)(2) of this section.

(2) ***Failure to satisfy nonforfeitability requirement*** —

(i) ***Treatment before contract becomes nonforfeitable.*** If an annuity contract issued by an insurance company would qualify as a section 403(b) contract but for the failure to satisfy the nonforfeitability requirement of paragraph (a)(2) of this section, then the contract is treated as a contract to which section 403(c) applies. See § 1.403(b)-8(d)(4) for a rule under which a custodial account that fails to satisfy the nonforfeitability requirement of paragraph (a)(2) of this section is treated as a section 401(a) qualified plan for certain purposes.

(ii) ***Treatment when contract becomes nonforfeitable*** —

(A) ***In general.*** Notwithstanding paragraph (d)(2)(i) of this section, on or after the date on which the participant's interest in a contract described in paragraph (d)(2)(i) of this section becomes nonforfeitable, the contract may be treated as a section 403(b) contract if no election has been made under section 83(b) with respect to the contract, the participant's interest in the contract has been subject to a substantial risk of forfeiture (as defined in section 83) before becoming nonforfeitable, each contribution under the contract that is subject to a different vesting schedule is maintained in a separate account, and the contract has at all times satisfied the requirements of paragraph (a) of this section other than the nonforfeitability requirement of paragraph (a)(2) of this section.

Thus, for example, for the current year and each prior year, no contribution can have been made to the contract that would cause the contract to fail to be a section 403(b) contract as a result of contributions exceeding the limitations of section 415 (except to the extent permitted under paragraph (b)(2) of this section) or to fail to satisfy the nondiscrimination rules described in § 1.403(b)-5. See also § 1.403(b)-10(a)(1) for a special rule in connection with termination of a section 403(b) plan.

(B) ***Partial vesting.*** For purposes of applying this paragraph (d), if only a portion of a participant's interest in a contract becomes nonforfeitable in a year, then the portion that is nonforfeitable and the portion that fails to be nonforfeitable are each treated as separate contracts. In addition, for purposes of applying this paragraph (d), if a contribution is made to an annuity contract in excess of the limitations of section 415(c) and the excess is maintained in a separate account, then the portion of the contract that includes the excess contributions account and the remainder are each treated as separate contracts. Thus, if an annuity contract that includes an excess contributions account changes from forfeitable to nonforfeitable during a year, then the portion that is not attributable to the excess contributions account constitutes a section 403(b) contract (assuming it otherwise satisfies the requirements to be a section 403(b) contract) and is not included in gross income, and the portion that is attributable to the excess contributions account is included in gross income in accordance with section 403(c). See § 1.403(b)-4(f) for additional rules.

[T.D. 9340, 72 FR 41141, July 26, 2007; 72 FR 54352, Sept. 25, 2007; T.D. 10033, 90 FR 44547, Sept. 16, 2025]

§ 1.403(b)-4 Contribution limitations.

(a) ***Treatment of contributions in excess of limitations.*** The exclusion provided under § 1.403(b)-3(a) applies to a participant only if the amounts contributed by the employer for the purchase of an annuity contract for the participant do not exceed the applicable limit under sections 415 and 402(g), as described in this section. Under § 1.403(b)-3(a)(4), a section 403(b) contract is required to include the limits on elective deferrals imposed by section 402(g), as described in paragraph (c) of this section. See paragraph (f) of this section for special rules concerning excess contributions and deferrals. Rollover contributions made to a section 403(b) contract, as described in § 1.403(b)-10(d), are not taken into account for purposes of the limits imposed by section 415, § 1.403(b)-3(a)(9), section 402(g), § 1.403(b)-3(a)(4), and this section, but after-tax employee contributions are taken into account under section 415, § 1.403(b)-3(a)(9), and paragraph (b) of this section.

(b) ***Maximum annual contribution*** —

(1) ***General rule.*** In accordance with section 415(a)(2) and § 1.403(b)-3(a)(9), the contributions for any participant under a section 403(b) contract (namely, employer nonelective contributions (including matching contributions), section 403(b) elective deferrals, and after-tax employee contributions) are not permitted to exceed the limitations imposed by section 415. Under section 415(c), contributions are permitted to be made for participants in a defined contribution plan, subject to the limitations set forth therein (which are generally the lesser of a dollar limit for a year or the participant's compensation for the year). For purposes of section 415, contributions made for a participant are aggregated to the extent applicable under sections 414(b), (c), (m), (n), and (o). For purposes of section 415(a)(2), §§ 1.403(b)-1 through 1.403(b)-3, this section, and §§ 1.403(b)-5 through 1.403(b)-11, a contribution means any annual addition, as defined in section 415(c).

(2) ***Special rules.*** See section 415(k)(4) for a special rule under which contributions to section 403(b) contracts are generally aggregated with contributions under other arrangements in applying section 415. For purposes of applying section 415(c)(1)(B) (relating to compensation) with respect to a section 403(b) contract, except as provided in section 415(c)(3)(C), a participant's includible compensation (as defined in § 1.403(b)-2) is substituted for the participant's compensation, as described in section 415(c)(3)(E). Any age 50 catch-up contributions under paragraph (c)(2) of this section are disregarded in applying section 415.

(c) ***Section 403(b) elective deferrals*** —

(1) ***Basic limit under section 402(g)(1).*** In accordance with section 402(g)(1)(A), the section 403(b) elective deferrals for any individual are included in the individual's gross income to the extent the amount of such deferrals, plus all other elective deferrals for the individual, for the taxable year exceeds the applicable dollar amount under section 402(g)(1)(B). The applicable annual dollar amount under section 402(g)(1)(B) is $15,000, adjusted for cost-of-living after 2006 in the manner described in section 402(g)(4). See § 1.403(b)-5(b) for a universal availability rule that applies if any employee is permitted to have any section 403(b) elective deferrals made on his or her behalf.

(2) ***Age 50 catch-up*** —

(i) ***In general.*** In accordance with section 414(v) and the regulations thereunder, a section 403(b) contract may provide for catch-up contributions for a participant who is age 50 by the end of the year, provided that such age 50 catch-up contributions do not exceed the catch-up limit under section 414(v)(2) for the taxable year. The maximum amount of additional age 50 catch-up contributions for a taxable year under section 414(v) is $5,000, adjusted for cost-of-living after 2006 in the manner described in section 414(v)(2)(C). For additional requirements, see regulations under section 414(v).

(ii) ***Coordination with special section 403(b) catch-up.*** In accordance with sections 414(v)(6)(A)(ii) and 402(g)(7)(A), the age 50 catch-up described in this paragraph (c)(2) may apply for any taxable year in which a participant also qualifies for the special section 403(b) catch-up under paragraph (c)(3) of this section.

(3) ***Special section 403(b) catch-up for certain organizations*** —

(i) ***Amount of the special section 403(b) catch-up.*** In the case of a qualified employee of a qualified organization for whom the basic section 403(b) elective deferrals for any year are not less than the applicable dollar amount under section 402(g)(1)(B), the section 403(b) elective deferral limitation of section 402(g)(1) for the taxable year of the qualified employee is increased by the least of—

(A) $3,000;

(B) The excess of—

(*1*) $15,000, over

(*2*) The total elective deferrals described in section 402(g)(7)(A)(ii) made for the qualified employee by the qualified organization for prior years; or

(C) The excess of—

(*1*) $5,000 multiplied by the number of years of service of the employee with the qualified organization, over

(2) The total elective deferrals (as defined at § 1.403(b)-2) made for the employee by the qualified organization for prior years.

(ii) Qualified organization.

(A) For purposes of this paragraph (c)(3), *qualified organization* means an eligible employer that is—

(1) An educational organization described in section 170(b)(1)(A)(ii);

(2) A hospital;

(3) A health and welfare service agency (including a home health service agency);

(4) A church-related organization; or

(5) Any organization described in section 414(e)(3)(B)(ii).

(B) All entities that are in a church-related organization or an organization controlled by a church-related organization under section 414(e)(3)(B)(ii) are treated as a single qualified organization (so that years of service and any special section 403(b) catch-up elective deferrals previously made for a qualified employee for a church or other entity within a church-related organization or an organization controlled by the church-related organization are taken into account for purposes of applying this paragraph (c)(3) to the employee with respect to any other entity within the same church-related organization or organization controlled by a church-related organization).

(C) For purposes of this paragraph (c)(3)(ii), a *health and welfare service agency* means—

(1) An organization whose primary activity is to provide services that constitute medical care as defined in section 213(d)(1) (such as a hospice);

(2) A section 501(c)(3) organization whose primary activity is the prevention of cruelty to individuals or animals;

(3) An adoption agency; or

(4) An agency that provides substantial personal services to the needy as part of its primary activity (such as a section 501(c)(3) organization that either provides meals to needy individuals, is a home health service agency, provides services to help individuals who have substance abuse, or provides help to the disabled).

(iii) ***Qualified employee.*** For purposes of this paragraph (c)(3), *qualified employee* means an employee who has completed at least 15 years of service (as defined under paragraph (e) of this section) taking into account only employment with the qualified organization. Thus, an employee who has not completed at least 15 years of service (as defined under paragraph (e) of this section) taking into account only employment with the qualified organization is not a qualified employee.

(iv) ***Coordination with age 50 catch-up.*** In accordance with sections 402(g)(1)(C) and 402(g)(7), any catch-up amount contributed by an employee who is eligible for both an age 50 catch-up and a special section 403(b) catch-up is treated first as an amount contributed as a special section 403(b) catch-up to the extent a special section 403(b) catch-up is permitted, and then as an amount contributed as an age 50 catch-up (to the extent the catch-up amount exceeds the

maximum special section 403(b) catch-up after taking into account sections 402(g) and 415(c), this paragraph (c)(3), and any limitations on the special section 403(b) catch-up that are imposed by the terms of the plan).

(4) ***Coordination with designated Roth contributions.*** See regulations under section 402A for rules for determining whether an elective deferral is a pre-tax elective deferral or a designated Roth contribution.

(5) ***Examples.*** The provisions of this paragraph (c) are illustrated by the following examples:

> *Example 1.* (i) *Facts illustrating application of the basic dollar limit.* Participant B, who is 45, is eligible to participate in a State university section 403(b) plan in 2006. B is not a qualified employee, as defined in paragraph (c)(3)(iii) of this section. The plan permits section 403(b) elective deferrals, but no other employer contributions are made under the plan. The plan provides limitations on section 403(b) elective deferrals up to the maximum permitted under paragraphs (c)(1) and (3) of this section and the additional age 50 catch-up amount described in paragraph (c)(2) of this section. For 2006, B will receive includible compensation of $42,000 from the eligible employer. B desires to elect to have the maximum section 403(b) elective deferral possible contributed in 2006. For 2006, the basic dollar limit for section 403(b) elective deferrals under paragraph (c)(1) of this section is $15,000 and the additional dollar amount permitted under the age 50 catch-up is $5,000.
> (ii) *Conclusion.* B is not eligible for the age 50 catch-up in 2006 because B is 45 in 2006. B is also not eligible for the special section 403(b) catch-up under paragraph (c)(3) of this section because B is not a qualified employee. Accordingly, the maximum section 403(b) elective deferral that B may elect for 2006 is $15,000.

> *Example 2.* (i) *Facts illustrating application of the includible compensation limitation.* The facts are the same as in *Example 1,* except B's includible compensation is $14,000.
> (ii) *Conclusion.* Under section 415(c), contributions may not exceed 100 percent of includible compensation. Accordingly, the maximum section 403(b) elective deferral that B may elect for 2006 is $14,000.

> *Example 3.* (i) *Facts illustrating application of the age 50 catch-up.* Participant C, who is 55, is eligible to participate in a State university section 403(b) plan in 2006. The plan permits section 403(b) elective deferrals, but no other employer contributions are made under the plan. The plan provides limitations on section 403(b) elective deferrals up to the maximum permitted under paragraphs (c)(1) and (c)(3) of this section and the additional age 50 catch-up amount described in paragraph (c)(2) of this section. For 2006, C will receive includible compensation of $48,000 from the eligible employer. C desires to elect to have the maximum section 403(b) elective deferral possible contributed in 2006. For 2006, the basic dollar limit for section 403(b) elective deferrals under paragraph (c)(1) of this section is $15,000 and the additional dollar amount permitted under the age 50 catch-up is $5,000. C does not have 15

years of service and thus is not a qualified employee, as defined in paragraph (c)(3)(iii) of this section.
(ii) *Conclusion.* C is eligible for the age 50 catch-up in 2006 because C is 55 in 2006. C is not eligible for the special section 403(b) catch-up under paragraph (c)(3) of this section because C is not a qualified employee (as defined in paragraph (c)(3)(iii) of this section). Accordingly, the maximum section 403(b) elective deferral that C may elect for 2006 is $20,000 ($15,000 plus $5,000).

Example 4. (i) *Facts illustrating application of both the age 50 and the special section 403(b) catch-up.* The facts are the same as in *Example 3*, except that C is a qualified employee for purposes of the special section 403(b) catch-up provisions in paragraph (c)(3) of this section. For 2006, the maximum additional section 403(b) elective deferral for which C qualifies under the special section 403(b) catch-up under paragraph (c)(3) of this section is $3,000.
(ii) *Conclusion.* The maximum section 403(b) elective deferrals that C may elect for 2006 is $23,000. This is the sum of the basic limit on section 403(b) elective deferrals under paragraph (c)(1) of this section equal to $15,000, plus the $3,000 additional special section 403(b) catch-up amount for which C qualifies under paragraph (c)(3) of this section, plus the additional age 50 catch-up amount of $5,000.

Example 5. (i) *Facts illustrating calculation of years of service with a predecessor organization for purposes of the special section 403(b) catch-up.* Participant A is an employee of hospital H and is eligible to participate in a section 403(b) plan of H in 2006. A does not have 15 years of service with H, but A has previously made special section 403(b) catch-up deferrals to a section 403(b) plan maintained by hospital P which has since been acquired by H.
(ii) *Conclusion.* The special section 403(b) catch-up amount for which A qualifies under paragraph (c)(3) of this section must be calculated taking into account A's prior years of service and section 403(b) elective deferrals with the predecessor hospital if and only if A did not have any severance from service in connection with the acquisition.

Example 6. (i) *Facts illustrating application of the age 50 catch-up and the section 415(c) dollar limitation.* The facts are the same as in *Example 4*, except that the employer makes a nonelective contribution for each employee equal to 20 percent of C's compensation (which is $48,000). Thus, the employer makes a nonelective contribution for C for 2006 equal to $9,600. The plan provides that a participant is not permitted to make section 403(b) elective deferrals to the extent the section 403(b) elective deferrals would result in contributions in excess of the maximum permitted under section 415 and provides that contributions are reduced in the following order: the special section 403(b) catch-up elective deferrals under paragraph (c)(3) of this section are reduced first; the age 50 catch-up elective deferrals under paragraph (c)(2) of this section are reduced second; and then the basic section 403(b) elective deferrals under paragraph (c)(1) of this section are reduced. For 2006, the applicable

dollar limit under section 415(c)(1)(A) is $44,000.
(ii) *Conclusion.* The maximum section 403(b) elective deferral that C may elect for 2006 is $23,000. This is the sum of the basic limit on section 403(b) elective deferrals under paragraph (c)(1) of this section equal to $15,000, plus the $3,000 additional special section 403(b) catch-up amount for which C qualifies under paragraph (c)(3) of this section, plus the additional age 50 catch-up amount of $5,000. The limit in paragraph (b) of this section would not be exceeded because the sum of the $9,600 nonelective contribution and the $23,000 section 403(b) elective deferrals does not exceed the lesser of $49,000 (which is the sum of $44,000 plus the $5,000 additional age 50 catch-up amount) or $53,000 (which is the sum of C's includible compensation for 2006 ($48,000) plus the $5,000 additional age 50 catch-up amount).

Example 7. (i) *Facts further illustrating application of the age 50 catch-up and the section 415(c) dollar limitation.* The facts are the same as in *Example 6,* except that C's includible compensation for 2006 is $58,000 and the plan provides for a nonelective contribution equal to 50 percent of includible compensation, so that the employer nonelective contribution for C for 2006 is $29,000 (50 percent of $58,000).
(ii) *Conclusion.* The maximum section 403(b) elective deferral that C may elect for 2006 is $20,000. A section 403(b) elective deferral in excess of this amount would exceed the sum of the limit in section 415(c)(1)(A) plus the additional age 50 catch-up amount, because the sum of the employer's nonelective contribution of $29,000 plus a section 403(b) elective deferral in excess of $20,000 would exceed $49,000 (the sum of the $44,000 limit in section 415(c)(1)(A) plus the $5,000 additional age 50 catch-up amount). (Note that a section 403(b) elective deferral in excess of $20,000 would also exceed the limitations of section 402(g) unless a special section 403(b) catch-up were permitted.)

Example 8. (i) *Facts further illustrating application of the age 50 catch-up and the section 415(c) dollar limitation.* The facts are the same as in *Example 7,* except that the plan provides for a nonelective contribution for C equal to $44,000 (which is the limit in section 415(c)(1)(A)).
(ii) *Conclusion.* The maximum section 403(b) elective deferral that C may elect for 2006 is $5,000. A section 403(b) elective deferral in excess of this amount would exceed the sum of the limit in section 415(c)(1)(A) plus the additional age 50 catch-up amount ($5,000), because the sum of the employer's nonelective contribution of $44,000 plus a section 403(b) elective deferral in excess of $5,000 would exceed $49,000 (the sum of the $44,000 limit in section 415(c)(1)(A) plus the $5,000 additional age 50 catch-up amount).

Example 9. (i) *Facts illustrating application of the age 50 catch-up and the section 415(c) includible compensation limitation.* The facts are the same as in *Example 7,* except that C's includible compensation for 2006 is $28,000, so that the employer nonelective contribution for C for 2006 is $14,000 (50 percent of $28,000).

(ii) *Conclusion.* The maximum section 403(b) elective deferral that C may elect for 2006 is $19,000. A section 403(b) elective deferral in excess of this amount would exceed the sum of the limit in section 415(c)(1)(B) plus the additional age 50 catch-up amount, because C's includible compensation is $28,000 and the sum of the employer's nonelective contribution of $14,000 plus a section 403(b) elective deferral in excess of $19,000 would exceed $33,000 (which is the sum of 100 percent of C's includible compensation plus the $5,000 additional age 50 catch-up amount).

Example 10. (i) *Facts illustrating that section 403(b) elective deferrals cannot exceed compensation otherwise payable.* Employee D is age 60, has includible compensation of $14,000, and wishes to contribute section 403(b) elective deferrals of $20,000 for the year. No nonelective contributions are made for Employee D.
(ii) *Conclusion.* Because a contribution is a section 403(b) elective deferral only if it relates to an amount that would otherwise be included in the participant's compensation, the effective limitation on section 403(b) elective deferrals for a participant whose compensation is less than the basic dollar limit for section 403(b) elective deferrals is the participant's compensation. Thus, D cannot make section 403(b) elective deferrals in excess of D's actual compensation, which is $14,000, even though the basic dollar limit exceeds that amount.

Example 11. (i) *Facts illustrating calculation of the special section 403(b) catch-up.* For 2006, employee E, who is age 53, is eligible to participate in a section 403(b) plan of hospital H, which is a section 501(c)(3) organization. H's plan permits section 403(b) elective deferrals and provides for an employer contribution of 10 percent of a participant's compensation. The plan provides limitations on section 403(b) elective deferrals up to the maximum permitted under paragraphs (c)(1), (2), and (3) of this section. For 2006, E's includible compensation is $50,000. E wishes to elect to have the maximum section 403(b) elective deferral possible contributed in 2006. E has previously made $62,000 of section 403(b) elective deferrals under the plan, but has never made an election for a special section 403(b) catch-up elective deferral. For 2006, the basic dollar limit for section 403(b) elective deferrals under paragraph (c)(1) of this section is $15,000, the additional dollar amount permitted under the age 50 catch-up is $5,000, E's employer will make a nonelective contribution of $5,000 (10% of $50,000 compensation), and E is a qualified employee of a qualified employer as defined in paragraph (c)(3) of this section.
(ii) *Conclusion.* The maximum section 403(b) elective deferrals that E may elect under H's section 403(b) plan for 2006 is $23,000. This is the sum of the basic limit on section 403(b) elective deferrals for 2006 under paragraph (c)(1) of this section equal to $15,000, plus the $3,000 maximum additional special section 403(b) catch-up amount for which D qualifies in 2006 under paragraph (c)(3) of this section, plus the additional age 50 catch-up amount of $5,000. The limitation on the additional special section 403(b) catch-up amount is not less than $3,000 because the limitation at paragraph (c)(3)(i)(B) of this section is $15,000 ($15,000 minus zero) and the limitation at paragraph (c)(3)(i)(C) of this section is $13,000 ($5,000 times 15, minus $62,000 of total deferrals in prior years). These conclusions would be unaffected if H were an eligible governmental employer under section 457(b) that has a section 457(b) eligible governmental

plan and E were in the past to have made annual deferrals to that plan, because contributions to a section 457(b) eligible governmental plan do not constitute elective deferrals; and these conclusions would also be the same if H had a section 401(k) plan and E were in the past to have made elective deferrals to that plan, assuming that those elective deferrals did not exceed $10,000 ($5,000 times 15, minus the sum of $62,000 plus $10,000, equals $3,000), so as to result in the limitation at paragraph (c)(3)(i)(C) of this section being less than $3,000.

Example 12. (i) *Facts illustrating calculation of the special section 403(b) catch-up in the next calendar year.* The facts are the same as in *Example 11,* except that, for 2007, E has includible compensation of $60,000. For 2007, E now has previously made $85,000 of section 403(b) elective deferrals ($62,000 deferred before 2006, plus the $15,000 in basic section 403(b) elective deferrals in 2006, the $3,000 maximum additional special section 403(b) catch-up amount in 2006, plus the $5,000 age 50 catch-up amount in 2006). However, the $5,000 age 50 catch-up amount deferred in 2006 is disregarded for purposes of applying the limitation at paragraph (c)(3)(i)(C) of this section to determine the special section 403(b) catch-up amount. Thus, for 2007, only $80,000 of section 403(b) elective deferrals are taken into account in applying the limitation at paragraph (c)(3)(i)(C) of this section. For 2007, the basic dollar limit for section 403(b) elective deferrals under paragraph (c)(1) of this section is assumed to be $16,000, the additional dollar amount permitted under the age 50 catch-up is assumed to be $5,000, and E's employer contributes $6,000 (10% of $60,000) as a non-elective contribution.
(ii) *Conclusion.* The maximum section 403(b) elective deferral that D may elect under H's section 403(b) plan for 2007 is $21,000. This is the sum of the basic limit on section 403(b) elective deferrals under paragraph (c)(1) of this section equal to $16,000, plus the additional age 50 catch-up amount of $5,000. E is not entitled to any additional special section 403(b) catch-up amount for 2007 under paragraph (c)(3) of this section due to the limitation at paragraph (c)(3)(i)(C) of this section (16 times $5,000 equals $80,000, minus D's total prior section 403(b) elective deferrals of $80,000 equals zero).

(d) ***Employer contributions for former employees*** —

(1) ***Includible compensation deemed to continue for nonelective contributions.*** For purposes of applying paragraph (b) of this section, a former employee is deemed to have monthly includible compensation for the period through the end of the taxable year of the employee in which he or she ceases to be an employee and through the end of each of the next five taxable years. The amount of the monthly includible compensation is equal to one twelfth of the former employee's includible compensation during the former employee's most recent year of service. Accordingly, nonelective employer contributions for a former employee must not exceed the limitation of section 415(c)(1) up to the lesser of the dollar amount in section 415(c)(1)(A) or the former employee's annual includible compensation based on the former employee's average monthly compensation during his or her most recent year of service.

(2) ***Examples.*** The provisions of paragraph (d)(1) of this section are illustrated by the following examples:

Example 1. (i) *Facts.* Private college M is a section 501(c)(3) organization operated on the basis of a June 30 fiscal year that maintains a section 403(b) plan for its employees. In 2004,

M amends the plan to provide for a temporary early retirement incentive under which the college will make a nonelective contribution for any participant who satisfies certain minimum age and service conditions and who retires before June 30, 2006. The contribution will equal 110 percent of the participant's rate of pay for one year and will be payable over a period ending no later than the end of the fifth fiscal year that begins after retirement. It is assumed for purposes of this *Example 1* that, in accordance with § 1.401(a)(4)-10(b) and under the facts and circumstances, the post-retirement contributions made for participants who satisfy the minimum age and service conditions and retire before June 30, 2006, do not discriminate in favor of former employees who are highly compensated employees. Employee A retires under the early retirement incentive on March 12, 2006, and A's annual includible compensation for the period from March 1, 2005, through February 28, 2006 (which is A's most recent one year of service) is $30,000. The applicable dollar limit under section 415(c)(1)(A) is assumed to be $44,000 for 2006 and $45,000 for 2007. The college contributes $30,000 for A for 2006 and $3,000 for A for 2007 (totaling $33,000 or 110 percent of $30,000). No other contributions are made to a section 403(b) contract for A for those years.
(ii) *Conclusion.* The contributions made for A do not exceed A's includible compensation for 2006 or 2007.

Example 2. (i) *Facts.* Private college N is a section 501(c)(3) organization that maintains a section 403(b) plan for its employees. The plan provides for N to make monthly nonelective contributions equal to 20 percent of the monthly includible compensation for each eligible employee. In addition, the plan provides for contributions to continue for 5 years following the retirement of any employee after age 64 and completion of at least 20 years of service (based on the employee's average annual rate of base salary in the preceding 3 calendar years ended before the date of retirement). It is assumed for purposes of this *Example 2* that, in accordance with § 1.401(a)(4)-10(b) and under the facts and circumstances, the post-retirement contributions made for participants who satisfy the minimum age and service conditions do not discriminate in favor of former employees who are highly compensated employees. Employee B retires on July 1, 2006, at age 64 after completion of 20 or more years of service. At that date, B's annual includible compensation for the most recently ended fiscal year of N is $72,000 and B's average monthly rate of base salary for 2003 through 2005 is $5,000. N contributes $1,200 per month (20 percent of 1/12th of $72,000) from January of 2006 through June of 2006 and contributes $1,000 (20 percent of $5,000) per month for B from July of 2006 through June of 2011. The applicable dollar limit under section 415(c)(1)(A) is $44,000 for 2006 through 2011. No other contributions are made to a section 403(b) contract for B for those years.
(ii) *Conclusion.* The contributions made for B do not exceed B's includible compensation for any of the years from 2006 through 2010.

Example 3. (i) *Facts.* A public university maintains a section 403(b) under which it contributes annually 10% of compensation for participants, including for the first 5 calendar years following the date on which the participant ceases to be an employee. The plan provides that if a participant who is a former employee dies during the first 5 calendar years following the date on which the participant ceases to be an employee, a contribution is made that is equal to the lesser of—
(A) The excess of the individual's includible compensation for that year over the contributions previously made for the individual for that year; or

(B) The total contributions that would have been made on the individual's behalf thereafter if he or she had survived to the end of the 5-year period.

(ii) Individual C's annual includible compensation is $72,000 (so that C's monthly includible compensation is $6,000). A $600 contribution is made for C for January of the first taxable year following retirement (10% of individual C's monthly includible compensation of $6,000). Individual C dies during February of that year. The university makes a contribution for individual C for February equal to $11,400 (C's monthly includible compensation for January and February, reduced by $600).

(iii) *Conclusion.* The contribution does not exceed the amount of individual C's includible compensation for the taxable year for purposes of section 415(c), but any additional contributions would exceed C's includible compensation for purposes of section 415(c).

(3) ***Disabled employees.*** See also section 415(c)(3)(C) which sets forth a special rule under which compensation may be treated as continuing for purposes of section 415 for certain former employees who are disabled.

(e) ***Special rules for determining years of service*** —

(1) ***In general.*** For purposes of determining a participant's includible compensation under paragraph (b)(2) of this section and a participant's years of service under paragraphs (c)(3) (special section 403(b) catch-up for qualified employees of certain organizations) and (d) (employer contributions for former employees) of this section, an employee must be credited with a full year of service for each year during which the individual is a full-time employee of the eligible employer for the entire work period, and a fraction of a year for each part of a work period during which the individual is a full-time or part-time employee of the eligible employer. An individual's number of years of service equals the aggregate of the annual work periods during which the individual is employed by the eligible employer.

(2) ***Work period.*** A year of service is based on the employer's annual work period, not the employee's taxable year. For example, in determining whether a university professor is employed full time, the annual work period is the school's academic year. However, in no case may an employee accumulate more than one year of service in a twelve-month period.

(3) ***Service with more than one eligible employer*** —

(i) ***General rule.*** With respect to any section 403(b) contract of an eligible employer, except as provided in paragraph (e)(3)(ii) of this section, any period during which an individual is not an employee of that eligible employer is disregarded for purposes of this paragraph (e).

(ii) ***Special rule for church employees.*** With respect to any section 403(b) contract of an eligible employer that is a church-related organization, any period during which an individual is an employee of that eligible employer and any other eligible employer that is a church-related organization that has an association (as defined in section 414(e)(3)(D)) with that eligible employer is taken into account on an aggregated basis, but any period during which an individual is not an employee of a church-related organization or is an employee of a church-related organization that does not have an association with that eligible employer is disregarded for purposes of this paragraph (e).

(4) ***Full-time employee for full year.*** Each annual work period during which an individual is employed full time by the eligible employer constitutes one year of service. In determining whether an individual is employed full-time, the amount of work which he or she actually performs is compared with the amount of work that is normally required of individuals performing similar services from which substantially all of their annual compensation is derived.

(5) ***Other employees.***

(i) An individual is treated as performing a fraction of a year of service for each annual work period during which he or she is a full-time employee for part of the annual work period and for each annual work period during which he or she is a part-time employee either for the entire annual work period or for a part of the annual work period.

(ii) In determining the fraction that represents the fractional year of service for an individual employed full time for part of an annual work period, the numerator is the period of time (such as weeks or months) during which the individual is a full-time employee during that annual work period, and the denominator is the period of time that is the annual work period.

(iii) In determining the fraction that represents the fractional year of service of an individual who is employed part time for the entire annual work period, the numerator is the amount of work performed by the individual, and the denominator is the amount of work normally required of individuals who perform similar services and who are employed full time for the entire annual work period.

(iv) In determining the fraction representing the fractional year of service of an individual who is employed part time for part of an annual work period, the fractional year of service that would apply if the individual were a part-time employee for a full annual work period is multiplied by the fractional year of service that would apply if the individual were a full-time employee for the part of an annual work period.

(6) ***Work performed.*** For purposes of this paragraph (e), in measuring the amount of work of an individual performing particular services, the work performed is determined based on the individual's hours of service (as defined under section 410(a)(3)(C)), except that a plan may use a different measure of work if appropriate under the facts and circumstances. For example, a plan may provide for a university professor's work to be measured by the number of courses taught during an annual work period in any case in which that individual's work assignment is generally based on a specified number of courses to be taught.

(7) ***Most recent one-year period of service.*** For purposes of paragraph (d) of this section, in the case of a part-time employee or a full-time employee who is employed for only part of the year determined on the basis of the employer's annual work period, the employee's most recent periods of service are aggregated to determine his or her most recent one-year period of service. In such a case, there is first taken into account his or her service during the annual work period for which the last year of service's includible compensation is being determined; then there is taken into account his or her service during his or her next preceding annual work period based on whole months; and so forth until the employee's service equals, in the aggregate, one year of service.

(8) ***Less than one year of service considered as one year.*** If, at the close of a taxable year, an employee has, after application of all of the other rules in this paragraph (e), some portion of one year of service (but has accumulated less than one year of service), the employee is deemed to have one year of service. Except as provided in the previous sentence, fractional years of service are not rounded up.

(9) ***Examples.*** The provisions of this paragraph (e) are illustrated by the following examples:

> *Example 1.* (i) *Facts.* Individual G is employed half-time in 2004 and 2005 as a clerk by H, a hospital which is a section 501(c)(3) organization. G earns $20,000 from H in each of those years, and retires on December 31, 2005.
> (ii) *Conclusion.* For purposes of determining G's includible compensation during G's last year of service under paragraph (d) of this section, G's most recent periods of service are aggregated to determine G's most recent one-year period of service. In this case, since D worked half-time in 2004 and 2005, the compensation D earned in those two years are aggregated to produce D's includible compensation for D's last full year in service. Thus, in this case, the $20,000 that D earned in 2004 and 2005 for D's half-time work are aggregated, so that D has $40,000 of includible compensation for D's most recent one-year of service for purposes of applying paragraphs (b)(2), (c)(3), and (d) of this section.

> *Example 2.* (i) *Facts.* Individual H is employed as a part-time professor by public University U during the first semester of its two-semester 2004-2005 academic year. While H teaches one course generally for 3 hours a week during the first semester of the academic year, U's full-time faculty members generally teach for 9 hours a week during the full academic year.
> (ii) *Conclusion.* For purposes of calculating how much of a year of service H performs in the 2004-2005 academic year (before application of the special rules of paragraphs (e)(7) and (8) of this section concerning less than one year of service), paragraph (e)(5)(iv) of this section is applied as follows: since H teaches one course at U for 3 hours per week for 1 semester and other faculty members at U teach 9 hours per week for 2 semesters, H is considered to have completed $^{3}/_{18}$ or $^{1}/_{6}$ of a year of service during the 2004-2005 academic year, determined as follows:
>
> (A) The fractional year of service if H were a part-time employee for a full year is 3/9 (number of hours employed divided by the usual number of hours of work required for that position).

(B) The fractional year of service if H were a full-time employee for half of a year is $^{1}/_{2}$ (one semester, divided by the usual 2-semester annual work period).

(C) These fractions are multiplied to obtain the fractional year of service: $^{3}/_{9}$ times $^{1}/_{2}$, or $^{3}/_{18}$, equals $^{1}/_{6}$ of a year of service.

(f) *Excess contributions or deferrals* —

(1) ***Inclusion in gross income.*** Any contribution made for a participant to a section 403(b) contract for the taxable year that exceeds either the maximum annual contribution limit set forth in paragraph (b) of this section or the maximum annual section 403(b) elective deferral limit set forth in paragraph (c) of this section constitutes an excess contribution that is included in gross income for that taxable year. See § 1.403(b)-3(d)(1)(iii) and (2)(i) for additional rules, including special rules relating to contracts that fail to be nonforfeitable. See also section 4973 for an excise tax applicable with respect to excess contributions to a custodial account and section 4979(f)(2)(B) for a special rule applicable if excess matching contributions, excess after-tax employee contributions, and excess section 403(b) elective deferrals do not exceed $100.

(2) ***Separate account required for certain excess contributions; distribution of excess elective deferrals.*** A contract to which a contribution is made that exceeds the maximum annual contribution limit set forth in paragraph (b) of this section is not a section 403(b) contract unless the excess contribution is held in a separate account which constitutes a separate account for purposes of section 72. See also § 1.403(b)-3(a)(4) and paragraph (f)(4) of this section for additional rules with respect to the requirements of section 401(a)(30) and any excess deferral.

(3) ***Ability to distribute excess contributions.*** A contract does not fail to satisfy the requirements of § 1.403(b)-3, the distribution rules of § 1.403(b)-6 or 1.403(b)-9, or the funding rules of § 1.403(b)-8 solely by reason of a distribution made from a separate account under paragraph (f)(2) of this section or made under paragraph (f)(4) of this section.

(4) ***Excess section 403(b) elective deferrals.*** A section 403(b) contract may provide that any excess deferral as a result of a failure to comply with the limitation under paragraph (c) of this section for a taxable year with respect to any section 403(b) elective deferral made for a participant by the employer will be distributed to the participant, with allocable net income, no later than April 15 of the following taxable year or otherwise in accordance with section 402(g). See section 402(g)(2)(A) for rules permitting the participant to allocate excess deferrals among the plans in which the participant has made elective deferrals, and see section 402(g)(2)(C) for special rules to determine the tax treatment of such a distribution.

(5) ***Examples.*** The provisions of this paragraph (f) are illustrated by the following examples:

Example 1. (i) *Facts.* Individual D's employer makes a $46,000 contribution for 2006 to an individual annuity insurance policy for Individual D that would otherwise be a section 403(b) contract. The contribution does not include any elective deferrals and the applicable limit under section 415(c) is $44,000 for 2006. The $2,000 section 415(c) excess is put into a separate account under the policy. Employer includes $2,000 in D's gross income as wages for 2006 and, to the extent of the amount held in the separate account for the section 415(c) excess contribution, does not treat the account as a contract

to which section 403(b) applies.
(ii) *Conclusion.* The separate account for the section 415(c) excess contribution is a contract to which section 403(c) applies, but the excess contribution does not cause the rest of the contract to fail section 403(b).

Example 2. (i) *Facts.* Same facts as *Example 1*, except that the contribution is made to purchase mutual funds that are held in a custodial account, instead of an individual annuity insurance policy.
(ii) *Conclusion.* The conclusion is the same as in *Example 1*, except that the purchase constitutes a transfer described in section 83.

Example 3. (i) *Facts.* Same facts as *Example 1*, except that the amount held in the separate account for the section 415(c) excess contribution is subsequently distributed to D.
(ii) *Conclusion.* The distribution is included in gross income to the extent provided under section 72 relating to distributions from a section 403(c) contract.

Example 4. (i) *Facts.* Individual E makes section 403(b) elective deferrals totaling $15,500 for 2006, when E is age 45 and the applicable limit on section 403(b) elective deferrals is $15,000. On April 14, 2007, the plan refunds the $500 excess along with applicable earnings of $65.
(ii) *Conclusion.* The $565 payment constitutes a distribution of an excess deferral under paragraph (f)(4) of this section. Under section 402(g), the $500 excess deferral is included in E's gross income for 2006. The additional $65 is included in E's gross income for 2007 and, because the distribution is made by April 15, 2007 (as provided in section 402(g)(2)), the $65 is not subject to the additional 10 percent income tax on early distributions under section 72(t).

[T.D. 9340, 72 FR 41144, July 26, 2007, as amended by 72 FR 54352, Sept. 25, 2007; 75 FR 65566, Oct. 26, 2010]

§ 1.403(b)-5 Nondiscrimination rules.

(a) ***Nondiscrimination rules for contributions other than section 403(b) elective deferrals*** —

(1) ***General rule.*** Under section 403(b)(12)(A)(i), employer contributions and after-tax employee contributions to a section 403(b) plan must satisfy all of the following requirements (the nondiscrimination requirements) in the same manner as a qualified plan under section 401(a):

(i) Section 401(a)(4) (relating to nondiscrimination in contributions and benefits), taking section 401(a)(5) into account.

(ii) Section 401(a)(17) (limiting the amount of compensation that can be taken into account).

(iii) Section 401(m) (relating to matching and after-tax employee contributions).

(iv) Section 410(b) (relating to minimum coverage).

(2) ***Nonapplication to section 403(b) elective deferrals.*** The requirements of this paragraph (a) do not apply to section 403(b) elective deferrals.

(3) ***Compensation for testing.*** Except as may otherwise be specifically permitted under the provisions referenced in paragraph (a)(1) of this section, compliance with those provisions is tested using compensation as defined in section 414(s) (and without regard to section 415(c)(3)(E)). In addition, for purposes of paragraph (a)(1) of this section, there may be excluded employees who are permitted to be excluded under paragraph (b)(4)(ii)(D) and (E) of this section. However, as provided in paragraph (b)(4)(i) of this section, the exclusion of any employee listed in paragraph (b)(4)(ii)(D) or (E) of this section is subject to the conditions applicable under section 410(b)(4).

(4) ***Employer aggregation rules.*** See regulations under section 414(b), (c), (m), and (o) for rules treating entities as a single employer for purposes of the nondiscrimination requirements.

(5) ***Special rules for governmental plans.*** Paragraphs (a)(1)(i), (iii), and (iv) of this section do not apply to a governmental plan as defined in section 414(d) (but contributions to a governmental plan must comply with paragraphs (a)(1)(ii) and (b) of this section).

(b) ***Universal availability required for section 403(b) elective deferrals—***

(1) ***General rule.*** Under section 403(b)(12)(A)(ii), all employees of the eligible employer must be permitted to have section 403(b) elective deferrals contributed on their behalf if any employee of the eligible employer may elect to have the organization make section 403(b) elective deferrals. Further, the employee's right to make elective deferrals also includes the right to designate section 403(b) elective deferrals as designated Roth contributions.

(2) ***Effective opportunity required.*** For purposes of paragraph (b)(1) of this section, an employee is not treated as being permitted to have section 403(b) elective deferrals contributed on the employee's behalf unless the employee is provided an effective opportunity that satisfies the requirements of this paragraph (b)(2). Whether an employee has an effective opportunity is determined based on all the relevant facts and circumstances, including notice of the availability of the election, the period of time during which an election may be made, and any other conditions on elections. A section 403(b) plan satisfies the effective opportunity requirement of this paragraph (b)(2) only if, at least once during each plan year, the plan provides an employee with an effective opportunity to make (or change) a cash or deferred election (as defined at § 1.401(k)-1(a)(3)) between cash or a contribution to the plan. Further, an effective opportunity includes the right to have section 403(b) elective deferrals made on his or her behalf up to the lesser of the applicable limits in § 1.403(b)-4(c) (including any permissible catch-up elective deferrals under § 1.403(b)-4(c)(2) and (3)) or the applicable limits under the contract with the largest limitation, and applies to part-time employees as well as full-time employees. An effective opportunity is not considered to exist if there are any other rights or benefits (other than rights or benefits listed in § 1.401(k)-1(e)(6)(i)(A), (B), or (D)) that are conditioned (directly or indirectly) upon a participant making or failing to make a cash or deferred election with respect to a contribution to a section 403(b) contract.

(3) ***Special rules.***

(i) In the case of a section 403(b) plan that covers the employees of more than one section 501(c)(3) organization, the universal availability requirement of this paragraph (b) applies separately to each common law entity (that is, applies separately to each section 501(c)(3) organization). In the case of a section 403(b) plan that covers the employees of more than one State entity, this requirement applies separately to each entity that is not part of a common payroll. An eligible employer may condition the employee's right to have section 403(b) elective deferrals made on his or her behalf on the employee electing a section 403(b) elective deferral of more than $200 for a year.

(ii) For purposes of this paragraph (b)(3), an employer that historically has treated one or more of its various geographically distinct units as separate for employee benefit purposes may treat each unit as a separate organization if the unit is operated independently on a day-to-day basis. Units are not geographically distinct if such units are located within the same Standard Metropolitan Statistical Area (SMSA).

(4) *Exclusions* —

(i) ***Exclusions for special types of employees.*** A plan does not fail to satisfy the universal availability requirement of this paragraph (b) merely because it excludes one or more of the types of employees listed in paragraph (b)(4)(ii) of this section. However, the exclusion of any employee listed in paragraph (b)(4)(ii)(D) or (E) of this section is subject to the conditions applicable under section 410(b)(4). Thus, if any employee listed in paragraph (b)(4)(ii)(D) of this section has the right to have section 403(b) elective deferrals made on his or her behalf, then no employee listed in that paragraph (b)(4)(ii)(D) of this section may be excluded under this paragraph (b)(4) and, if any employee listed in paragraph (b)(4)(ii)(E) of this section has the right to have section 403(b) elective deferrals made on his or her behalf, then no employee listed in that paragraph (b)(4)(ii)(E) of this section may be excluded under this paragraph (b)(4).

(ii) ***List of special types of excludible employees.*** The following types of employees are listed in this paragraph (b)(4)(ii):

(A) Employees who are eligible under another section 403(b) plan, or a section 457(b) eligible governmental plan, of the employer which permits an amount to be contributed or deferred at the election of the employee.

(B) Employees who are eligible to make a cash or deferred election (as defined at § 1.401(k)-1(a)(3)) under a section 401(k) plan of the employer.

(C) Employees who are non-resident aliens described in section 410(b)(3)(C).

(D) Subject to the conditions applicable under section 410(b)(4) (including section 410(b)(4)(B) permitting separate testing for employees not meeting minimum age and service requirements), employees who are students performing services described in section 3121(b)(10).

(E) Subject to the conditions applicable under section 410(b)(4), employees who normally work fewer than 20 hours per week (or such lower number of hours per week as may be set forth in the plan).

(iii) ***Special rules.***

(A) A section 403(b) plan is permitted to take into account coverage under another plan, as permitted in paragraphs (b)(4)(ii)(A) and (B) of this section, only if the rights to make elective deferrals with respect to that coverage would satisfy paragraphs (b)(2) and (4)(i) of this section if that coverage were provided under the section 403(b) plan.

(B) For purposes of paragraph (b)(4)(ii)(E) of this section, an employee normally works fewer than 20 hours per week if and only if—

(*1*) For the 12-month period beginning on the date the employee's employment commenced, the employer reasonably expects the employee to work fewer than 1,000 hours of service (as defined in section 410(a)(3)(C)) in such period; and

(2) For each plan year ending after the close of the 12-month period beginning on the date the employee's employment commenced (or, if the plan so provides, each subsequent 12-month period), the employee worked fewer than 1,000 hours of service in the preceding 12-month period. (See, however, section 202(a)(1) of the Employee Retirement Income Security Act of 1974 (ERISA) (88 Stat. 829) Public Law 93-406, and regulations under section 410(a) of the Internal Revenue Code applicable with respect to plans that are subject to title I of ERISA.)

(c) ***Plan required.*** Contributions to an annuity contract do not satisfy the requirements of this section unless the contributions are made pursuant to a plan, as defined in § 1.403(b)-3(b)(3), and the terms of the plan satisfy this section.

(d) ***Church plans exception.*** This section does not apply to a section 403(b) contract purchased by a church (as defined in § 1.403(b)-2).

(e) ***Other rules.*** This section only reflects requirements of the Internal Revenue Code applicable for purposes of section 403(b) and does not include other requirements. Specifically, this section does not reflect the requirements of ERISA that may apply with respect to section 403(b) arrangements, such as the vesting requirements at 29 U.S.C. 1053.

[T.D. 9340, 72 FR 41144, July 26, 2007]

§ 1.403(b)-6 Timing of distributions and benefits.

(a) ***Distributions generally.*** This section provides special rules regarding the timing of distributions from, and the benefits that may be provided under, a section 403(b) contract, including limitations on when early distributions can be made (in paragraphs (b) through (d) of this section), required minimum distributions (in paragraph (e) of this section), and special rules relating to loans (in paragraph (f) of this section) and incidental benefits (in paragraph (g) of this section).

(b) ***Distributions from contracts other than custodial accounts or amounts attributable to section 403(b) elective deferrals.*** Except as provided in paragraph (c) of this section relating to distributions from custodial accounts, paragraph (d) of this section relating to distributions attributable to section 403(b) elective deferrals, § 1.403(b)-4(f) (relating to correction of excess deferrals), or § 1.403(b)-10(a) (relating to plan termination), a section 403(b) contract is permitted to distribute retirement benefits to the participant no earlier than upon the earlier of the participant's severance from employment or upon the prior occurrence of some event, such as after a fixed number of years, the attainment of a stated age, or disability. See § 1.401-1(b)(1)(ii) for additional guidance. This paragraph (b) does not apply to after-tax employee contributions or earnings thereon.

(c) ***Distributions from custodial accounts that are not attributable to section 403(b) elective deferrals.*** Except as provided in § 1.403(b)-4(f) (relating to correction of excess deferrals) or § 1.403(b)-10(a) (relating to plan termination), distributions from a custodial account, as defined in § 1.403(b)-8(d)(2), may not be paid to a participant before the participant has a severance from employment, dies, becomes disabled (within the meaning of section 72(m)(7)), or attains age $59^{1}/_{2}$. Any amounts transferred out of a custodial account to an annuity contract or retirement income account, including earnings thereon, continue to be subject to this paragraph (c). This paragraph (c) does not apply to distributions that are attributable to section 403(b) elective deferrals.

(d) ***Distribution of section 403(b) elective deferrals —***

(1) *Limitation on distributions* —

(i) ***General rule.*** Except as provided in § 1.403(b)-4(f) (relating to correction of excess deferrals) or § 1.403(b)-10(a) (relating to plan termination), distributions of amounts attributable to section 403(b) elective deferrals may not be paid to a participant earlier than the earliest of the date on which the participant has a severance from employment, dies, has a hardship, becomes disabled (within the meaning of section 72(m)(7)), or attains age 59½.

(ii) ***Special rule for pre-1989 section 403(b) elective deferrals.*** For special rules relating to amounts held as of the close of the taxable year beginning before January 1, 1989 (which does not apply to earnings thereon), see section 1123(e)(3) of the Tax Reform Act of 1986 (100 Stat. 2085, 2475) Public Law 99-514, and section 1011A(c)(11) of the Technical and Miscellaneous Revenue Act of 1988 (102 Stat. 3342, 3476) Public Law 100-647.

(2) ***Hardship rules.*** A hardship distribution under this paragraph (d) has the same meaning as a distribution on account of hardship under § 1.401(k)-1(d)(3) and is subject to the rules and restrictions set forth in § 1.401(k)-1(d)(3) (including limiting the amount of a distribution in the case of hardship to the amount necessary to satisfy the hardship). In addition, a hardship distribution is limited to the aggregate dollar amount of the participant's section 403(b) elective deferrals under the contract (and may not include any income thereon), reduced by the aggregate dollar amount of the distributions previously made to the participant from the contract.

(3) ***Failure to keep separate accounts.*** If a section 403(b) contract includes both section 403(b) elective deferrals and other contributions and the section 403(b) elective deferrals are not maintained in a separate account, then distributions may not be made earlier than the later of—

(i) Any date permitted under paragraph (d)(1) of this section; and

(ii) Any date permitted under paragraph (b) or (c) of this section with respect to contributions that are not section 403(b) elective deferrals (whichever applies to the contributions that are not section 403(b) elective deferrals).

(e) *Minimum required distributions for eligible plans* —

(1) ***In general.*** Under section 403(b)(10), a section 403(b) contract must meet the minimum distribution requirements of section 401(a)(9) (in both form and operation). See section 401(a)(9) for these requirements.

(2) ***Generally treated as IRAs.*** For purposes of applying the minimum distribution requirements of section 401(a)(9) to section 403(b) contracts, the minimum distribution requirements applicable to individual retirement annuities described in section 408(b) and individual retirement accounts described in section 408(a) apply to section 403(b) contracts. Consequently, except as otherwise provided in this paragraph (e), the minimum distribution requirements of section 401(a)(9) are applied to section 403(b) contracts in accordance with the provisions in § 1.408-8 that apply to an IRA that is not a Roth IRA.

(3) *Exceptions under which qualified plan rules will apply* —

(i) ***Required beginning date.*** The required beginning date for purposes of section 403(b)(10) is determined in accordance with § 1.401(a)(9)-2(b) (rather than § 1.408-8(b)(1)).

(ii) ***Amounts not taken into account.*** The amounts not taken into account in determining whether the minimum distribution requirement of section 401(a)(9) has been satisfied for a calendar year are the amounts described in § 1.402(c)-2(c)(3) (rather than the amounts described in § 1.408-8(g)(2)).

(iii) ***Designated Roth account.*** The rules of § 1.401(a)(9)-3(a)(2) (which provides that if an employee's entire interest under a defined contribution plan is in a designated Roth account, then no distributions are required during the employee's lifetime and, upon death, the employee is treated as having died before the required beginning date), § 1.401(a)(9)-5(b)(3) (which excludes amounts held in a designated Roth account from the employee's account balance), and § 1.401(a)(9)-5(g)(2)(iii) (regarding distributions from designated Roth accounts) apply to a designated Roth account in a section 403(b) contract (rather than the rules of § 1.408-8(b)(1)(ii) that apply to a Roth IRA).

(iv) ***Qualifying longevity annuity contracts.*** The rules in § 1.401(a)(9)-6(q)(2)(i) (relating to the limitation on premiums for a qualifying longevity annuity contract (QLAC), as defined in § 1.401(a)(9)-6(q)(1)) and § 1.401(a)(9)-6(q)(4)(i)(A) (relating to reliance on representations with respect to a QLAC) apply to the purchase of a QLAC under a section 403(b) plan (rather than the rules in § 1.408-8(h)(2) and (3)).

(4) ***Surviving spouse rule does not apply.*** The rule in § 1.408-8(c) (under which the surviving spouse of an IRA owner is permitted to treat an IRA of the decedent as the spouse's own IRA) does not apply to a section 403(b) contract. Thus, the surviving spouse of a participant is not permitted to treat a section 403(b) contract as the spouse's own section 403(b) contract, even if the spouse is the sole beneficiary.

(5) ***Retirement income accounts.*** For purposes of § 1.401(a)(9)-6(d) (relating to annuity contracts purchased under a defined contribution plan), annuity payments provided with respect to retirement income accounts do not fail to satisfy the requirements of section 401(a)(9) merely because the payments are not made under an annuity contract purchased from an insurance company that is licensed to do business under the laws of a State, provided that the relationship between the annuity payments and the retirement income accounts is not inconsistent with any rules prescribed by the Commissioner in revenue rulings, notices, or other guidance published in the Internal Revenue Bulletin (see § 601.601(d) of this chapter). See also § 1.403(b)-9(a)(5) for additional rules relating to annuities payable from a retirement income account.

(6) ***Special rules for benefits accruing before December 31, 1986*** —

(i) ***Non-applicability of section 401(a)(9) to pre-'87 account balance.*** The minimum distribution requirements of section 401(a)(9) do not apply to the undistributed portion of the account balance under a section 403(b) contract valued as of December 31, 1986, exclusive of subsequent earnings (pre-'87 account balance). The minimum distribution requirements of section 401(a)(9) apply to all benefits under any section 403(b) contract accruing after December 31, 1986 (post-'86 account balance), including earnings after December 31, 1986. Consequently, the post-'86 account balance includes earnings after December 31, 1986, on contributions made before January 1, 1987, in addition to the contributions made after December 31, 1986, and earnings thereon.

(ii) ***Recordkeeping required.*** The issuer or custodian of the section 403(b) contract must keep records that enable it to identify the pre-'87 account balance and subsequent changes as set forth in paragraph (e)(6)(iii) of this section and provide that information upon request to the relevant employee or beneficiaries with respect to the contract. If the issuer or custodian does not keep those records, the entire account balance is treated as subject to section 401(a)(9).

(iii) ***Applicability of section 401(a)(9) to post-'86 account balance.*** In applying the minimum distribution requirements of section 401(a)(9), only the post-'86 account balance is used to calculate the required minimum distribution for a calendar year. The amount of any distribution from a contract is treated as being paid from the post-'86 account balance to the extent the distribution is required to satisfy the minimum distribution requirement with respect to that contract for a calendar year. Any amount distributed in a calendar year from a contract in excess of the required minimum distribution for a calendar year with respect to that contract is treated as paid from the pre-'87 account balance, if any, of that contract.

(iv) ***Rollover of amounts from pre-'87 account balance.*** If an amount is distributed from the pre-'87 account balance and rolled over to another section 403(b) contract, the amount is treated as part of the post-'86 account balance in that second contract. However, if the pre-'87 account balance under a section 403(b) contract is directly transferred to another section 403(b) contract (as permitted under § 1.403(b)-10(b)), the amount transferred retains its character as a pre-'87 account balance, provided the issuer of the transferee contract satisfies the recordkeeping requirements of paragraph (e)(6)(ii) of this section.

(v) ***Relevance of distinction between pre-'87 and post-'86 account balance for purposes of section 72.*** The distinction between the pre-'87 account balance and the post-'86 account balance provided for under this paragraph (e)(6) has no relevance for purposes of determining the portion of a distribution that is includible in income under section 72.

(vi) ***Pre-'87 account balance distributions must satisfy incidental benefit requirement.*** The pre-'87 account balance must be distributed in accordance with the incidental benefit requirement of § 1.401-1(b)(1)(i). Distributions attributable to the pre-'87 account balance are treated as satisfying this requirement if all distributions from the section 403(b) contract (including distributions attributable to the post-'86 account balance) satisfy the requirements of § 1.401-1(b)(1)(i) without regard to this section, and distributions attributable to the post-'86 account balance satisfy the rules of this paragraph (e) (without regard to this paragraph (e)(6)). Distributions attributable to the pre-'87 account balance are treated as satisfying the incidental benefit requirement if all distributions from the section 403(b) contract (including distributions attributable to both the pre-'87 account balance and the post-'86 account balance) satisfy the rules of this paragraph (e) (without regard to this paragraph (e)(6)).

(7) ***Application to multiple contracts for an employee.*** The required minimum distribution must be determined separately for each section 403(b) contract of an employee. However, because, as provided in paragraph (e)(2) of this section, the minimum distribution requirements of section 401(a)(9) apply to section 403(b) contracts in accordance with the provisions in § 1.408-8, the required minimum distribution from one section 403(b) contract of an employee is permitted to be distributed from another section 403(b) contract in order to satisfy the minimum distribution requirements of section 401(a)(9). Thus, as provided in § 1.408-8(e), with respect to IRAs, the required minimum distribution amount from each contract is then totaled and the total minimum distribution taken from any one or more of the individual section 403(b) contracts. However, consistent with the rules in § 1.408-8(e), only amounts in section 403(b) contracts that an individual

holds as an employee may be aggregated. In addition, amounts in section 403(b) contracts that a person holds as a beneficiary of a decedent may be aggregated, but those amounts may not be aggregated with amounts held in section 403(b) contracts that the person holds as the employee or as the beneficiary of another decedent. Distributions from section 403(b) contracts do not satisfy the minimum distribution requirements for IRAs, nor do distributions from IRAs satisfy the minimum distribution requirements for section 403(b) contracts.

(8) ***Governmental plans.*** A section 403(b) contract that is part of a governmental plan (within the meaning of section 414(d)) is treated as having complied with section 401(a)(9) for all years to which section 401(a)(9) applies to the contract, if the terms of the contract reflect a reasonable, good faith interpretation of section 401(a)(9).

(9) ***Effective date.*** This paragraph (e) applies for purposes of determining required minimum distributions for calendar years beginning on or after January 1, 2025. For earlier calendar years, the rules of 26 CFR 1.403(b)-6(e) (as it appeared in the April 1, 2023, edition of 26 CFR part 1) apply.

(f) ***Loans.*** The determination of whether the availability of a loan, the making of a loan, or a failure to repay a loan made from an issuer of a section 403(b) contract to a participant or beneficiary is treated as a distribution (directly or indirectly) for purposes of this section, and the determination of whether the availability of the loan, the making of the loan, or a failure to repay the loan is in any other respect a violation of the requirements of section 403(b) and §§ 1.403(b)-1 through 1.403(b)-5, this section, and §§ 1.403(b)-7 through 1.403(b)-11, depends on the facts and circumstances. Among the facts and circumstances are whether the loan has a fixed repayment schedule and bears a reasonable rate of interest, and whether there are repayment safeguards to which a prudent lender would adhere. Thus, for example, a loan must bear a reasonable rate of interest in order to be treated as not being a distribution. However, a plan loan offset is a distribution for purposes of this section. See § 1.72(p)-1, Q&A-13. See also § 1.403(b)-7(d) relating to the application of section 72(p) with respect to the taxation of a loan made under a section 403(b) contract. (Further, see section 408(b)(1) of title I of ERISA and 29 CFR 2550.408b-1 of the Department of Labor regulations concerning additional requirements applicable with respect to plans that are subject to title I of ERISA.)

(g) ***Death benefits and other incidental benefits.*** An annuity is not a section 403(b) contract if it fails to satisfy the incidental benefit requirement of § 1.401-1(b)(1)(ii) (in form or in operation). For purposes of this paragraph (g), to the extent the incidental benefit requirement of § 1.401-1(b)(1)(ii) requires a distribution of the participant's or beneficiary's accumulated benefit, that requirement is deemed to be satisfied if distributions satisfy the minimum distribution requirements of section 401(a)(9). In addition, if a contract issued by an insurance company qualified to issue annuities in a State includes provisions under which, in the event a participant becomes disabled, benefits will be provided by the insurance carrier as if employer contributions were continued until benefit distribution commences, then that benefit is treated as an incidental benefit (as insurance for a deferred annuity benefit in the event of disability) that must satisfy the incidental benefit requirement of § 1.401-1(b)(1)(ii) (taking into account any other incidental benefits provided under the plan). The rules of § 1.402(a)-1(e) apply for purposes of determining when certain incidental benefits are treated as distributed and included in gross income. See §§ 1.72-15 and 1.72-16.

(h) ***Special rule regarding severance from employment.*** For purposes of this section, severance from employment occurs on any date on which an employee ceases to be an employee of an eligible employer, even though the employee may continue to be employed either by another entity that is treated as the same employer where either that other entity is not an entity that can be an eligible employer (such as transferring from a section 501(c)(3) organization to a for-profit subsidiary of the section 501(c)(3) organization) or in a capacity that is not employment with an eligible employer (for example, ceasing to be

an employee performing services for a public school but continuing to work for the same State employer). Thus, this paragraph (h) does not apply if an employee transfers from one section 501(c)(3) organization to another section 501(c)(3) organization that is treated as the same employer or if an employee transfers from one public school to another public school of the same State employer.

(i) ***Certain limitations do not apply to rollover contributions.*** The limitations on distributions in paragraphs (b) through (d) of this section do not apply to amounts held in a separate account for eligible rollover distributions as described in § 1.403(b)-10(d).

[T.D. 9340, 72 FR 41144, July 26, 2007, as amended by 72 FR 54352, Sept. 25, 2007; T.D. 9459, 74 FR 45994, Sept. 8, 2009; 75 FR 65566, Oct. 26, 2010; T.D. 9665, 79 FR 26843, May 12, 2014; T.D. 9673, 79 FR 37642, July 2, 2014; T.D. 10001, 89 FR 58946, July 19, 2024]

§ 1.403(b)-7 Taxation of distributions and benefits.

(a) ***General rules for when amounts are included in gross income.*** Except as provided in this section (or in § 1.403(b)-10(c) relating to payments pursuant to a qualified domestic relations order), amounts actually distributed from a section 403(b) contract are includible in the gross income of the recipient participant or beneficiary (in the year in which so distributed) under section 72 (relating to annuities). For an additional income tax that may apply to certain early distributions that are includible in gross income, see section 72(t).

(b) ***Rollovers to individual retirement arrangements and other eligible retirement plans*** —

(1) ***Timing of taxation of rollovers.*** In accordance with sections 402(c), 403(b)(8), and 403(b)(10), a direct rollover in accordance with section 401(a)(31) is not includible in the gross income of a participant or beneficiary in the year rolled over. In addition, any payment made in the form of an eligible rollover distribution (as defined in section 402(c)(4)) is not includible in gross income in the year paid to the extent the payment is contributed to an eligible retirement plan (as defined in section 402(c)(8)(B)) within 60 days, including the contribution to the eligible retirement plan of any property distributed. For this purpose, the rules of section 402(c)(2) through (7) and (c)(9) apply. Thus, to the extent that a portion of a distribution (including a distribution from a designated Roth account) would be excluded from gross income if it were not rolled over, if that portion of the distribution is to be rolled over into an eligible retirement plan that is not an IRA, the rollover must be accomplished through a direct rollover of the entire distribution to a plan qualified under section 401(a) or a section 403(b) plan and that plan must agree to separately account for the amount not includible in income (so that a 60-day rollover to a plan qualified under section 401(a) or another section 403(b) plan is not available for this portion of the distribution).

(2) ***Requirement that contract provide rollover options for eligible rollover distributions.*** As required in § 1.403(b)-3(a)(7), an annuity contract is not a section 403(b) contract unless the contract provides that if the distributee of an eligible rollover distribution elects to have the distribution paid directly to an eligible retirement plan (as defined in section 402(c)(8)(B)) and specifies the eligible retirement plan to which the distribution is to be paid, then the distribution will be paid to that eligible retirement plan in a direct rollover. For purposes of determining whether a contract satisfies this requirement, the provisions of section 401(a)(31) apply to the annuity as though it were a plan qualified under section 401(a) unless otherwise provided in section 401(a)(31). Thus, the special rule in § 1.401(k)-1(f)(3)(ii) with respect to distributions from a designated Roth account that are expected to

total less than $200 during a year applies to designated Roth accounts under a section 403(b) plan. In applying the provisions of this paragraph (b)(2), the payor of the eligible rollover distribution from the contract is treated as the plan administrator.

(3) ***Requirement that contract payor provide notice of rollover option to distributees.*** To ensure that the distributee of an eligible rollover distribution from a section 403(b) contract has a meaningful right to elect a direct rollover, section 402(f) requires that the distributee be informed of the option. Thus, within a reasonable time period before making the initial eligible rollover distribution, the payor must provide an explanation to the distributee of his or her right to elect a direct rollover and the income tax withholding consequences of not electing a direct rollover. For purposes of satisfying the reasonable time period requirement, the plan timing rule provided in section 402(f)(1) and § 1.402(f)-1 applies to section 403(b) contracts.

(4) ***Mandatory withholding upon certain eligible rollover distributions from contracts.*** If a distributee of an eligible rollover distribution from a section 403(b) contract does not elect to have the eligible rollover distribution paid directly to an eligible retirement plan in a direct rollover, the eligible rollover distribution is subject to 20-percent income tax withholding imposed under section 3405(c). See section 3405(c) and § 31.3405(c)-1 of this chapter for provisions regarding the withholding requirements relating to eligible rollover distributions.

(5) ***Automatic rollover for certain mandatory distributions under section 401(a)(31).*** In accordance with section 403(b)(10), a section 403(b) plan is required to comply with section 401(a)(31) (including automatic rollover for certain mandatory distributions) in the same manner as a qualified plan.

(c) ***Special rules.*** See section 402(g)(2)(C) for special rules to determine the tax treatment of a distribution of excess deferrals, and see § 1.401(m)-1(e)(3)(v) for the tax treatment of corrective distributions of after-tax employee contributions and matching contributions to comply with section 401(m). See sections 402(l) and 403(b)(2) for a special rule regarding distributions for certain retired public safety officers made from a governmental plan for the direct payment of certain premiums.

(d) ***Amounts taxable under section 72(p)(1).*** In accordance with section 72(p), the amount of any loan from a section 403(b) contract to a participant or beneficiary (including any pledge or assignment treated as a loan under section 72(p)(1)(B)) is treated as having been received as a distribution from the contract under section 72(p)(1), except to the extent set forth in section 72(p)(2) (relating to loans that do not exceed a maximum amount and that are repayable in accordance with certain terms) and § 1.72(p)-1. See generally § 1.72(p)-1. Thus, except to the extent a loan satisfies section 72(p)(2), any amount loaned from a section 403(b) contract to a participant or beneficiary (including any pledge or assignment treated as a loan under section 72(p)(1)(B)) is includible in the gross income of the participant or beneficiary for the taxable year in which the loan is made. A deemed distribution is not an actual distribution for purposes of § 1.403(b)-6, as provided at § 1.72(p)-1, Q&A-12 and Q&A-13. (Further, see section 408(b)(1) of title I of ERISA concerning the effect of noncompliance with title I loan requirements for plans that are subject to title I of ERISA.)

(e) ***Special rules relating to distributions from a designated Roth account.*** If an amount is distributed from a designated Roth account under a section 403(b) plan, the amount, if any, that is includible in gross income and the amount, if any, that may be rolled over to another section 403(b) plan is determined under § 1.402A-1. Thus, the designated Roth account is treated as a separate contract for purposes of section 72. For example, the rules of section 72(b) must be applied separately to annuity payments with respect to a designated Roth account under a section 403(b) plan and separately to annuity payments with respect to amounts attributable to any other contributions to the section 403(b) plan.

(f) ***Aggregation of contracts.*** In accordance with section 403(b)(5), the rules of this section are applied as if all annuity contracts for the employee by the employer are treated as a single contract.

(g) ***Certain rules relating to employment taxes.*** With respect to contributions under the Federal Insurance Contributions Act (FICA) under Chapter 21, see section 3121(a)(5)(D) for a special rule relating to section 403(b) contracts. With respect to income tax withholding on distributions from section 403(b) contracts, see section 3405 generally. However, see section 3401 for income tax withholding applicable to annuity contracts or custodial accounts that are not section 403(b) contracts or for cases in which an annuity contract or custodial account ceases to be a section 403(b) contract. See also § 1.72(p)-1, Q&A-15, and § 35.3405(c)-1, Q&A-11 of this chapter, for special rules relating to income tax withholding for loans made from certain employer plans, including section 403(b) contracts.

[T.D. 9340, 72 FR 41144, July 26, 2007, as amended by 75 FR 65566, Oct. 26, 2010]

§ 1.403(b)-8 Funding.

(a) ***Investments.*** Section 403(b) and § 1.403(b)-3(a) only apply to amounts held in an annuity contract (as defined in § 1.403(b)-2), including a custodial account that is treated as an annuity contract under paragraph (d) of this section, or a retirement income account that is treated as an annuity contract under § 1.403(b)-9.

(b) ***Contributions to the plan.*** Contributions to a section 403(b) plan must be transferred to the insurance company issuing the annuity contract (or the entity holding assets of any custodial or retirement income account that is treated as an annuity contract) within a period that is not longer than is reasonable for the proper administration of the plan. For purposes of this requirement, the plan may provide for section 403(b) elective deferrals for a participant under the plan to be transferred to the annuity contract within a specified period after the date the amounts would otherwise have been paid to the participant. For example, the plan could provide for section 403(b) elective deferrals under the plan to be contributed within 15 business days following the month in which these amounts would otherwise have been paid to the participant.

(c) ***Annuity contracts*** —

(1) ***Generally.*** As defined in § 1.403(b)-2, and except as otherwise permitted under this section, an annuity contract means a contract that is issued by an insurance company qualified to issue annuities in a State and that includes payment in the form of an annuity. This paragraph (c) sets forth additional rules regarding annuity contracts.

(2) ***Certain insurance contracts.*** Neither a life insurance contract, as defined in section 7702, an endowment contract, a health or accident insurance contract, nor a property, casualty, or liability insurance contract meets the definition of an annuity contract. See § 1.401(f)-4(e). If a contract issued by an insurance company qualified to issue annuities in a State provides death benefits as part of the contract, then that coverage is permitted, assuming that those death benefits do not cause the contract to fail to satisfy any requirement applicable to section 403(b) contracts, for example, assuming that those benefits satisfy the incidental benefit requirement of § 1.401-1(b)(1)(i), as required by § 1.403(b)-6(g).

(3) ***Special rule for certain contracts.*** This paragraph (c)(3) applies in the case of a contract issued under a State section 403(b) plan established on or before May 17, 1982, or for an employee who becomes covered for the first time under the plan after May 17, 1982, unless the Commissioner had before that date issued any written communication (either to the employer or financial institution) to the

effect that the arrangement under which the contract was issued did not meet the requirements of section 403(b). The requirement that the contract be issued by an insurance company qualified to issue annuities in a State does not apply to a contract described in the preceding sentence if one of the following two conditions is satisfied and that condition has been satisfied continuously since May 17, 1982—

(i) Benefits under the contract are provided from a separately funded retirement reserve that is subject to supervision of the State insurance department; or

(ii) Benefits under the contract are provided from a fund that is separate from the fund used to provide statutory benefits payable under a state retirement system and that is part of a State teachers retirement system (including a state university retirement system) to purchase benefits that are unrelated to the basic benefits provided under the retirement system, and the death benefit provided under the contract does not at any time exceed the larger of the reserve or the contribution made for the employee.

(d) *Custodial accounts* —

(1) ***Treatment as a section 403(b) contract.*** Under section 403(b)(7), a custodial account is treated as an annuity contract for purposes of §§ 1.403(b)-1 through 1.403(b)-7, this section and §§ 1.403(b)-9 through 1.403(b)-11. See section 403(b)(7)(B) for special rules regarding the tax treatment of custodial accounts and section 4973(c) for an excise tax that applies to excess contributions to a custodial account.

(2) ***Custodial account defined.*** A custodial account means a plan, or a separate account under a plan, in which an amount attributable to section 403(b) contributions (or amounts rolled over to a section 403(b) contract, as described in § 1.403(b)-10(d)) is held by a bank or a person who satisfies the conditions in section 401(f)(2), if—

(i) All of the amounts held in the account are invested in stock of a regulated investment company (as defined in section 851(a) relating to mutual funds);

(ii) The requirements of § 1.403(b)-6(c) (imposing restrictions on distributions with respect to a custodial account) are satisfied with respect to the amounts held in the account;

(iii) The assets held in the account cannot be used for, or diverted to, purposes other than for the exclusive benefit of plan participants or their beneficiaries (for which purpose, assets are treated as diverted to the employer if the employer borrows assets from the account); and

(iv) The account is not part of a retirement income account.

(3) ***Effect of definition.*** The requirement in paragraph (d)(2)(i) of this section is not satisfied if the account includes any assets other than stock of a regulated investment company.

(4) ***Treatment of custodial account.*** A custodial account is treated as a section 401 qualified plan solely for purposes of subchapter F of subtitle A and subtitle F of the Internal Revenue Code with respect to amounts received by it (and income from investment thereof). This treatment only applies to a custodial account that constitutes a section 403(b) contract under §§ 1.403(b)-1 through 1.403(b)-7, this section and §§ 1.403(b)-9 through 1.403(b)-11 or that would constitute a section 403(b) contract under §§ 1.403(b)-1 through 1.403(b)-7, this section and §§ 1.403(b)-9 through 1.403(b)-11 if the amounts held in the account were to satisfy the nonforfeitability requirement of § 1.403(b)-3(a)(2).

(e) ***Retirement income accounts.*** See § 1.403(b)-9 for special rules under which a retirement income account for employees of a church-related organization is treated as a section 403(b) contract for purposes of §§ 1.403(b)-1 through 1.403(b)-7, this section and §§ 1.403(b)-9 through 1.403(b)-11.

(f) ***Combining assets.*** To the extent permitted by the Commissioner in revenue rulings, notices, or other guidance published in the Internal Revenue Bulletin (see § 601.601(d)(2)(ii)(*b*) of this chapter), trust assets held under a custodial account and trust assets held under a retirement income account, as described in § 1.403(b)-9(a)(6), may be invested in a group trust with trust assets held under a qualified plan or individual retirement plan. For this purpose, a trust includes a custodial account that is treated as a trust under section 401(f).

[T.D. 9340, 72 FR 41144, July 26, 2007]

§ 1.403(b)-9 Special rules for church plans.

(a) ***Retirement income accounts*** —

(1) ***Treatment as a section 403(b) contract.*** Under section 403(b)(9), a retirement income account for employees of a church-related organization (as defined in § 1.403(b)-2) is treated as an annuity contract for purposes of §§ 1.403(b)-1 through 1.403(b)-8, this section, § 1.403(b)-10 and § 1.403(b)-11.

(2) ***Retirement income account defined*** —

(i) ***In general.*** A retirement income account means a defined contribution program established or maintained by a church-related organization under which—

(A) There is separate accounting for the retirement income account's interest in the underlying assets (namely, there must be sufficient separate accounting in order for it to be possible at all times to determine the retirement income account's interest in the underlying assets and to distinguish that interest from any interest that is not part of the retirement income account);

(B) Investment performance is based on gains and losses on those assets; and

(C) The assets held in the account cannot be used for, or diverted to, purposes other than for the exclusive benefit of plan participants or their beneficiaries (and for this purpose, assets are treated as diverted to the employer if there is a loan or other extension of credit from assets in the account to the employer).

(ii) ***Plan required.*** A retirement income account must be maintained pursuant to a program which is a plan (as defined in § 1.403(b)-3(b)(3)) and the plan document must state (or otherwise evidence in a similarly clear manner) the intent to constitute a retirement income account.

(3) ***Ownership or use constitutes distribution.*** Any asset of a retirement income account that is owned or used by a participant or beneficiary is treated as having been distributed to that participant or beneficiary. See §§ 1.403(b)-6 and 1.403(b)-7 for rules relating to distributions.

(4) ***Coordination of retirement income account with custodial account rules.*** A retirement income account that is treated as an annuity contract is not a custodial account (as defined in § 1.403(b)-8(d)(2)), even if it is invested solely in stock of a regulated investment company.

(5) ***Life annuities.*** A retirement income account may distribute benefits in a form that includes a life annuity only if—

(i) The amount of the distribution form has an actuarial present value, at the annuity starting date, equal to the participant's or beneficiary's accumulated benefit, based on reasonable actuarial assumptions, including regarding interest and mortality; and

(ii) The plan sponsor guarantees benefits in the event that a payment is due that exceeds the participant's or beneficiary's accumulated benefit.

(6) ***Combining retirement income account assets with other assets.*** For purposes of § 1.403(b)-8(f) relating to combining assets, retirement income account assets held in trust (including a custodial account that is treated as a trust under section 401(f)) are subject to the same rules regarding combining of assets as custodial account assets. In addition, retirement income account assets are permitted to be commingled in a common fund with amounts devoted exclusively to church purposes (such as a fund from which unfunded pension payments are made to former employees of the church). However, unless otherwise permitted by the Commissioner, no assets of the plan sponsor, other than retirement income account assets, may be combined with custodial account assets or any other assets permitted to be combined under § 1.403(b)-8(f). This paragraph (a)(6) is subject to any additional rules issued by the Commissioner in revenue rulings, notices, or other guidance published in the Internal Revenue Bulletin (see § 601.601(d)(2)(ii)(*b*) of this chapter).

(7) ***Trust treated as tax exempt.*** A trust (including a custodial account that is treated as a trust under section 401(f)) that includes no assets other than assets of a retirement income account is treated as an organization that is exempt from taxation under section 501(a).

(b) ***No compensation limitation up to $10,000.*** See section 415(c)(7) for special rules regarding certain annual additions not exceeding $10,000.

(c) ***Special deduction rule for self-employed ministers.*** See section 404(a)(10) for a special rule regarding the deductibility of a contribution made by a self-employed minister.

[T.D. 9340, 72 FR 41144, July 26, 2007]

§ 1.403(b)-10 Miscellaneous provisions.

(a) ***Plan terminations and frozen plans*** —

(1) ***In general.*** An employer is permitted to amend its section 403(b) plan to eliminate future contributions for existing participants or to limit participation to existing participants and employees (to the extent consistent with § 1.403(b)-5). A section 403(b) plan is permitted to contain provisions that provide for plan termination and that allow accumulated benefits to be distributed on termination. However, in the case of a section 403(b) contract that is subject to the distribution restrictions in § 1.403(b)-6(c) or (d) (relating to custodial accounts and section 403(b) elective deferrals), termination of the plan and the distribution of accumulated benefits is permitted only if the employer (taking into account all entities that are treated as the same employer under section 414(b), (c), (m), or (o) on the date of the termination) does not make contributions to any section 403(b) contract that is not part of the plan during the period beginning on the date of plan termination and ending 12 months after distribution of all assets from the terminated plan. However, if at all times during the period beginning 12 months before the termination and ending 12 months after distribution of all assets from the terminated plan, fewer than 2 percent of the employees who

were eligible under the section 403(b) plan as of the date of plan termination are eligible under the alternative section 403(b) contract, the alternative section 403(b) contract is disregarded. To the extent a contract fails to satisfy the nonforfeitability requirement of § 1.403(b)-3(a)(2) at the date of plan termination, the contact is not, and cannot later become, a section 403(b) contract. In order for a section 403(b) plan to be considered terminated, all accumulated benefits under the plan must be distributed to all participants and beneficiaries as soon as administratively practicable after termination of the plan. For this purpose, delivery of a fully paid individual insurance annuity contract is treated as a distribution. The mere provision for, and making of, distributions to participants or beneficiaries upon plan termination does not cause a contract to cease to be a section 403(b) contract. See § 1.403(b)-7 for rules regarding the tax treatment of distributions, including § 1.403(b)-7(b)(1) under which an eligible rollover distribution is not included in gross income if paid in a direct rollover to an eligible retirement plan or if transferred to an eligible retirement plan within 60 days.

(2) ***Employers that cease to be eligible employers.*** An employer that ceases to be an eligible employer may no longer contribute to a section 403(b) contract for any subsequent period, and the contract will fail to satisfy § 1.403(b)-3(a) if any further contributions are made with respect to a period after the employer ceases to be an eligible employer.

(b) ***Contract exchanges and plan-to-plan transfers*** —

(1) ***Contract exchanges and transfers*** —

(i) ***General rule.*** If the conditions in paragraph (b)(2) of this section are met, a section 403(b) contract held under a section 403(b) plan is permitted to be exchanged for another section 403(b) contract held under that section 403(b) plan. Further, if the conditions in paragraph (b)(3) of this section are met, a section 403(b) plan is permitted to provide for the transfer of its assets (including any assets held in a custodial account or retirement income account that are treated as section 403(b) contracts) to another section 403(b) plan. In addition, if the conditions in paragraph (b)(4) of this section (relating to permissive service credit and repayments under section 415) are met, a section 403(b) plan is permitted to provide for the transfer of its assets to a qualified plan under section 401(a). However, neither a qualified plan nor an eligible governmental plan under section 457(b) may transfer assets to a section 403(b) plan, and a section 403(b) plan may not accept such a transfer. In addition, a section 403(b) contract may not be exchanged for an annuity contract that is not a section 403(b) contract. Neither a plan-to-plan transfer nor a contract exchange permitted under this paragraph (b) is treated as a distribution for purposes of the distribution restrictions at § 1.403(b)-6. Therefore, such a transfer or exchange may be made before severance from employment or another distribution event. Further, no amount is includible in gross income by reason of such a transfer or exchange.

(ii) ***ERISA rules.*** See § 1.414(l)-1 for other rules that are applicable to section 403(b) plans that are subject to section 208 of the Employee Retirement Income Security Act of 1974 (88 Stat. 829, 865).

(2) ***Requirements for contract exchange within the same plan*** —

(i) ***General rule.*** A section 403(b) contract of a participant or beneficiary may be exchanged under paragraph (b)(1) of this section for another section 403(b) contract of that participant or beneficiary under the same section 403(b) plan if each of the following conditions are met:

(A) The plan under which the contract is issued provides for the exchange.

(B) The participant or beneficiary has an accumulated benefit immediately after the exchange that is at least equal to the accumulated benefit of that participant or beneficiary immediately before the exchange (taking into account the accumulated benefit of that participant or beneficiary under both section 403(b) contracts immediately before the exchange).

(C) The other contract is subject to distribution restrictions with respect to the participant that are not less stringent than those imposed on the contract being exchanged, and the employer enters into an agreement with the issuer of the other contract under which the employer and the issuer will from time to time in the future provide each other with the following information:

(*1*) Information necessary for the resulting contract, or any other contract to which contributions have been made by the employer, to satisfy section 403(b), including information concerning the participant's employment and information that takes into account other section 403(b) contracts or qualified employer plans (such as whether a severance from employment has occurred for purposes of the distribution restrictions in § 1.403(b)-6 and whether the hardship withdrawal rules of § 1.403(b)-6(d)(2) are satisfied).

(*2*) Information necessary for the resulting contract, or any other contract to which contributions have been made by the employer, to satisfy other tax requirements (such as whether a plan loan satisfies the conditions in section 72(p)(2) so that the loan is not a deemed distribution under section 72(p)(1)).

(ii) ***Accumulated benefit.*** The condition in paragraph (b)(2)(i)(B) of this section is satisfied if the exchange would satisfy section 414(l)(1) if the exchange were a transfer of assets.

(iii) ***Authority for future guidance.*** Subject to such conditions as the Commissioner determines to be appropriate, the Commissioner may issue rules of general applicability, in revenue rulings, notices, or other guidance published in the Internal Revenue Bulletin (see § 601.601(d)(2)(ii)(*b*) of this chapter), permitting an exchange of one section 403(b) contract for another section 403(b) contract for an exchange that does not satisfy paragraph (b)(2)(i)(C) of this section. Any such rules must require the resulting contract to set forth procedures that the Commissioner determines are reasonably designed to ensure compliance with those requirements of section 403(b) or other tax provisions that depend on either information concerning the participant's employment or information that takes into account other section 403(b) contracts or other employer plans (such as whether a severance from employment has occurred for purposes of the distribution restrictions in § 1.403(b)-6, whether the hardship withdrawal rules of § 1.403(b)-6(d)(2) are satisfied, and whether a plan loan constitutes a deemed distribution under section 72(p)).

(3) ***Requirements for plan-to-plan transfers*** —

(i) ***In general.*** A plan-to-plan transfer under paragraph (b)(1) of this section from a section 403(b) plan to another section 403(b) plan is permitted if each of the following conditions are met—

(A) In the case of a transfer for a participant, the participant is an employee or former employee of the employer (or the business of the employer) for the receiving plan.

(B) In the case of a transfer for a beneficiary of a deceased participant, the participant was an employee or former employee of the employer (or business of the employer) for the receiving plan.

(C) The transferor plan provides for transfers.

(D) The receiving plan provides for the receipt of transfers.

(E) The participant or beneficiary whose assets are being transferred has an accumulated benefit immediately after the transfer that is at least equal to the accumulated benefit of that participant or beneficiary immediately before the transfer.

(F) The receiving plan provides that, to the extent any amount transferred is subject to any distribution restrictions under § 1.403(b)-6, the receiving plan imposes restrictions on distributions to the participant or beneficiary whose assets are being transferred that are not less stringent than those imposed on the transferor plan.

(G) If a plan-to-plan transfer does not constitute a complete transfer of the participant's or beneficiary's interest in the section 403(b) plan, the transferee plan treats the amount transferred as a continuation of a pro rata portion of the participant's or beneficiary's interest in the section 403(b) plan (for example, a pro rata portion of the participant's or beneficiary's interest in any after-tax employee contributions).

(ii) ***Accumulated benefit.*** The condition in paragraph (b)(3)(i)(D) of this section is satisfied if the transfer would satisfy section 414(l)(1).

(4) ***Purchases of permissive service credit by contract-to-plan transfers from a section 403(b) contract to a qualified plan*** —

(i) ***General rule.*** If the conditions in paragraph (b)(4)(ii) of this section are met, a section 403(b) plan may provide for the transfer of assets held in the plan to a qualified defined benefit plan that is a governmental plan (as defined in section 414(d)).

(ii) ***Conditions for plan-to-plan transfers.*** A transfer may be made under this paragraph (b)(4) only if the transfer is either—

(A) For the purchase of permissive service credit (as defined in section 415(n)(3)(A)) under the receiving defined benefit plan; or

(B) A repayment to which section 415 does not apply by reason of section 415(k)(3).

(c) ***Qualified domestic relations orders.*** In accordance with the second sentence of section 414(p)(9), any distribution from an annuity contract under section 403(b) (including a distribution from a custodial account or retirement income account that is treated as a section 403(b) contract) pursuant to a qualified domestic relations order is treated in the same manner as a distribution from a plan to which section 401(a)(13) applies. Thus, for example, a section 403(b) plan does not fail to satisfy the distribution restrictions set forth in § 1.403(b)-6(b), (c), or (d) merely as a result of distribution made pursuant to a qualified domestic relations order under section 414(p), so that such a distribution is permitted without regard to whether the employee from whose contract the distribution is made has had a severance from employment or another event permitting a distribution to be made under section 403(b). In the case of a plan that is subject to title I of ERISA, see also section 206(d)(3) of ERISA under which the prohibition against assignment or alienation of plan benefits under section 206(d)(1) of ERISA does not apply to an order that is determined to be a qualified domestic relations order.

(d) ***Rollovers to a section 403(b) contract*** —

(1) ***General rule.*** A section 403(b) contract may accept a contribution that is an eligible rollover distribution (as defined in section 402(c)(4)) made from another eligible retirement plan (as defined in section 402(c)(8)(B)). Any amount contributed to a section 403(b) contract as an eligible rollover distribution is not taken into account for purposes of the limits in § 1.403(b)-4, but, except as otherwise specifically provided (for example, at § 1.403(b)-6(i)), is otherwise treated in the same manner as an amount held under a section 403(b) contract for purposes of §§ 1.403(b)-3 through 1.403(b)-9 and this section.

(2) ***Special rules relating to after-tax employee contributions and designated Roth contributions.*** A section 403(b) plan that receives an eligible rollover distribution that includes after-tax employee contributions or designated Roth contributions is required to obtain information regarding the employee's section 72 basis in the amount rolled over. A section 403(b) plan is permitted to receive an eligible rollover distribution that includes designated Roth contributions only if the plan permits employees to make elective deferrals that are designated Roth contributions.

(e) ***Deemed IRAs.*** See regulations under section 408(q) for special rules relating to deemed IRAs.

(f) ***Defined benefit plans*** —

(1) ***Defined benefit plans generally.*** Except for a TEFRA church defined benefit plan as defined in paragraph (f)(2) of this section, section 403(b) does not apply to any contributions or accrual under a defined benefit plan.

(2) ***TEFRA church defined benefit plans.*** See section 251(e)(5) of the Tax Equity and Fiscal Responsibility Act of 1982, Public Law 97-248, for a provision permitting certain arrangements established by a church-related organization and in effect on September 3, 1982 (a TEFRA church defined benefit plan) to be treated as section 403(b) contract even though it is a defined benefit arrangement. In accordance with section 403(b)(1), for purposes of applying section 415 to a TEFRA church defined benefit plan, the accruals under the plan are limited to the maximum amount permitted under section 415(c) when expressed as an annual addition, and, for this purpose, the rules at § 1.402(b)-1(a)(2) for determining the present value of an accrual under a nonqualified defined benefit plan also apply for purposes of converting the accrual under a TEFRA church defined benefit plan to an annual addition. See section 415(b) for additional limits applicable to TEFRA church defined benefit plans.

(g) ***Other rules relating to section 501(c)(3) organizations.*** See section 501(c)(3) and regulations thereunder for the substantive standards for tax-exemption under that section, including the requirement that no part of the organization's net earnings inure to the benefit of any private shareholder or individual. See also sections 4941 (self dealing), 4945 (taxable expenditures), and 4958 (excess benefit transactions), and the regulations thereunder, for rules relating to excise taxes imposed on certain transactions involving organizations described in section 501(c)(3).

[T.D. 9340, 72 FR 41144, July 26, 2007, as amended by 75 FR 65566, Oct. 26, 2010]

§ 1.403(b)-11 Applicable dates.

(a) ***General rule.*** Except as otherwise provided in this section, §§ 1.403(b)-1 through 1.403(b)-10 apply for taxable years beginning after December 31, 2008.

(b) ***Collective bargaining agreements.*** In the case of a section 403(b) plan maintained pursuant to one or more collective bargaining agreements that have been ratified and in effect on July 26, 2007, §§ 1.403(b)-1 through 1.403(b)-10 do not apply before the earlier of—

(1) The date on which the last of the collective bargaining agreements terminates (determined without regard to any extension thereof after July 26, 2007); or

(2) July 26, 2010.

(c) ***Church conventions; retirement income account.***

(1) In the case of a section 403(b) plan maintained by a church-related organization for which the authority to amend the plan is held by a church convention (within the meaning of section 414(e)), §§ 1.403(b)-1 through 1.403(b)-10 do not apply before the first day of the first plan year that begins after December 31, 2009.

(2) In the case of a loan or other extension of credit to the employer that was entered into under a retirement income account before July 26, 2007, the plan does not fail to satisfy § 1.403(b)-9(a)(2)(i)(C) on account of the loan or other extension of credit if the plan takes reasonable steps to eliminate the loan or other extension of credit to the employer before the applicable date for § 1.403(b)-9(a)(2) or as promptly as practical thereafter (including taking steps after July 26, 2007 and before the applicable date).

(d) ***Special rules for plans that exclude certain types of employees from elective deferrals.***

(1) If, on July 26, 2007, a plan excludes any of the following categories of employees, then the plan does not fail to satisfy § 1.403(b)-5(b) as a result of that exclusion before the first day of the first taxable year that begins after December 31, 2009:

(i) Employees who make a one-time election to participate in a governmental plan described in section 414(d) that is not a section 403(b) plan.

(ii) Professors who are providing services on a temporary basis to another educational organization (as defined under section 170(b)(1)(A)(ii)) for up to one year and for whom section 403(b) contributions are being made at a rate no greater than the rate each such professor would receive under the section 403(b) plan of the original educational organization.

(iii) Employees who are affiliated with a religious order and who have taken a vow of poverty where the religious order provides for the support of such employees in their retirement from eligibility to make elective deferrals.

(2) If, on July 26, 2007, a plan excludes employees who are covered by a collective bargaining agreement from eligibility to make elective deferrals, the plan does not fail to satisfy § 1.403(b)-5(b) (relating to universal availability) as a result of that exclusion before the later of—

(i) The first day of the first taxable year that begins after December 31, 2008; or

(ii) The earlier of—

(A) The date on which the related collective bargaining agreement terminates (determined without regard to any extension thereof after July 26, 2007); or

(B) July 26, 2010.

(3) In the case of a governmental plan (as defined in section 414(d)) for which the authority to amend the plan is held by a legislative body that meets in legislative session, the plan does not fail to satisfy § 1.403(b)-5(b) as a result of any exclusion in paragraph (d)(1)(i), (d)(1)(ii),(d)(1)(iii), or (d)(2) of this section before the earlier of —

(i) The close of the first regular legislative session of the legislative body with the authority to amend the plan that begins on or after January 1, 2009; or

(ii) January 1, 2011.

(e) ***Special rules for plans that permit in-service distributions.***

(1) Section 1.403(b)-6(b) does not apply to a contract issued by an insurance company before January 1, 2009.

(2) Any amendment to comply with the requirements of § 1.403(b)-6 (disregarding paragraph (e)(1) of this section) that is adopted before January 1, 2009, or such later date as may be permitted under guidance issued by the Commissioner in revenue rulings, notices, or other guidance published in the Internal Revenue Bulletin (see § 601.601(d)(2)(ii)(*b*) of this chapter), does not violate section 204(g) of the Employee Retirement Income Security Act of 1974 to the extent the amendment eliminates or reduces a right to receive benefit distributions during employment.

(f) ***Special rule for life insurance contracts.*** Section 1.403(b)-8(c)(2) does not apply to a contract issued before September 24, 2007.

(g) ***Special rule for contracts received in an exchange.*** Section 1.403(b)-10(b)(2) does not apply to a contract received in an exchange that occurred on or before September 24, 2007 if the exchange (including the contract received in the exchange) satisfies such rules as the Commissioner has prescribed in guidance of general applicability at the time of the exchange.

(h) ***Special rule for coordination with regulations under section 415.*** Section 1.403(b)-3(b)(4)(ii) is applicable for taxable years beginning on or after July 1, 2007.

(i) ***Special rule for coordination with regulations under section 402A.*** Sections 1.403(b)-3(c), 1.403(b)-7(e), and 1.403(b)-10(d)(2) are applicable with respect to taxable years beginning on or after January 1, 2007.

[T.D. 9340, 72 FR 41144, July 26, 2007; 72 FR 54352, Sept. 25, 2007]

§ 1.403(c)-1 Taxability of beneficiary under a nonqualified annuity.

(a) ***Taxability of vested interest in premiums.*** If after August 1, 1969, an employer (whether or not exempt under section 501(a)) pays premiums for an annuity contract for the benefit of an employee, the amount of such premiums shall be included as compensation in the gross income of the employee for the taxable year during which such premiums are paid, but only to the extent that the employees's rights in such premiums are substantially vested (as defined in § 1.83-3(b)) at the time such premiums are paid. The preceding sentence shall not apply to contracts referred to in the transitional rule of paragraph (d) (1), (ii), or (iii) of this section, or to premiums subject to § 1.403(a)-1(a) or excludible under § 1.403(b)-3. If any employer has purchased annuity contracts and transfered them to a trust (other than one described in section 401(a)) that is to provide annuity contracts or benefits for his employees, the amounts so paid shall be treated as contributions to a trust described in section 402(b). For the rules relating to the taxation of the cost of life insurance protection when rights in a life insurance contract are substantially nonvested, see § 1.83-1(a)(2).

(b) ***Taxability of employee when rights under annuity contract change from nonvested to vested*** —

(1) ***In general.*** If, during a taxable year of an employee ending after August 1, 1969, the rights of such employee under an annuity contract purchased for him by an employer (whether or not exempt under section 501(a) or 521(a)) become substantially vested, the value of the annuity contract on the date of such change shall be included in the employee's gross income for such year, to the extent provided in paragraph (b)(2) of this section. The preceding sentence shall not apply, however, to an annuity contract purchased and held as part of a plan which met at the time of such purchase, and continues to meet, the requirements of section 404(a)(2) or an annuity contract referred to in paragraph (d) (ii) or (iii) of this section. For purposes of this section, the value of an annuity contract on the date the employee's rights become substantially vested means the cash surrender value of such contract on such date.

(2) ***Extent to which value of annuity contract is includible in employee's gross income.*** For purposes of paragraph (b)(1) of this section, the only amount includible in the gross income of the employee is that the portion of the value of the contract on the date of the change that is attributable to premiums which were paid by the employer after August 1, 1969, and which were not excludible from the employer's gross income under § 1.403(b)-3. However, the includible portion does not include—

(i) The value attributable to a premium paid on the date of such change, and

(ii) The value attributable to premiums described in the transitional rule of paragraph (d)(1) (ii) or (iii) of this section.

See § 1.403(b)-3(c) for the treatment of an amount otherwise includible in gross income under section 403(c) as an employer contribution for purposes of the exclusion under section 403(b).

(3) ***Partial vesting.*** If, during any taxable year of an employee, only part of his beneficial interest in an annuity contract becomes substantially vested, then only the corresponding part of the value of the annuity contract on the date of such change is includible in the employee's gross income for such taxable year. In such a case, it is first necessary to compute, under the rules in paragraphs (b)(1) and (2) of this section but without regard to any exclusion allowable under § 1.403(b)-3, the amount which would be includible in the employee's gross income for the taxable year if his entire beneficial interest in the annuity contract had changed to a substantially vested interest during such year. The amount that is includible under this (3) (without regard to the section 403(b) exclusion) is equal to the amount determined under the preceding sentence multiplied by the percent of the employee's beneficial interest which became substantially vested during the taxable year.

(c) ***Amounts paid or made available under an annuity contract.*** The amounts paid or made available to the employee under an annuity contract subject to this section shall be included in the gross income of the employee for the taxable year in which paid or made available, as provided in section 72 (relating to annuities). Such amounts may be taken into account in computations under sections 1301 through 1305 (relating to income averaging). For rules relating to the treatment of employer contributions as part of the consideration paid by the employee, see section 72(f). See also section 101(b)(2)(D) for rules relating to the treatment of the limited exclusion provided thereunder as part of the consideration paid by the employee.

(d) ***Taxability of beneficiary under a nonqualified annuity on or before August 1, 1969.***

(1) Except as provided in section 402(d) (relating to taxable years beginning before Janaury 1, 1977), if an employer purchases an annuity contract and if the amounts paid for the contract.

(i) On or before August 1, 1969, or

(ii) After such date, if pursuant to a binding written contract (as defined in § 1.83-8(b)(2)) entered into before April 22, 1969, or

(iii) After August 1, 1969, pursuant to a written plan in which the employee participated on April 22, 1969 and under which the obligation of the employer is essentially the same as under a binding written contract, are not subject to paragraph (a) of § 1.403(a)-1 or paragraph (a) of § 1.403-1, the amount of such contribution shall, to the extent it is not excludible under paragraph (b) of § 1.403(b)-1, be included in the income of the employee for the taxable year during which such contribution is made if, at at the time the contribution is made, the employee's rights under the annuity contract are nonforfeitable, except for failure to pay future premiums. If the annuity contract was purchased by an employer which is not exempt from tax under section 501(a) or section 521(a), and if the employee's rights under the annuity contract in such a case were forfeitable at the time the employer's contribution was made for the annuity contract, even though they become nonforfeitable later the amount of such contribution is not required to be included in the income of the employee at the time his rights under the contract become nonforfeitable. On the other hand, if the annuity contract is purchased by an employer which is exempt from tax under section 501(a) or section 521(a), all or part of the value of the contract may be includible in the employee's gross income at the time his rights under the contract become nonforfeitable (see section 403(d) prior to the repeal thereof by the Tax Reform Act of 1969 and the regulations thereunder). As to what constitutes nonforfeitable rights of an employee, see § 1.402(b)-1(d)(2). The amounts received by or made available to the employee under the annuity contract shall be included in the gross income of the employee for the taxable year in which received or made available, as provided in section 72 (relating to annuities). For taxable years beginning before Janaury 1, 1964, sections 72(e)(3) (relating to the treatment of certain lump sums), as in effect before such date, shall not apply to such amounts. For taxable years beginning after December 31, 1963, such amounts may be taken into account in computations under sections 1301 through 1305 (relating to income averaging). For rules relating to the treatment of employer contributions as part of the consideration paid by the employee, see section 72(f). See also section 101(b)(2)(D) for rules relating to the treatment of the limited exclusion provided thereunder as part of the consideration paid by the employee.

(2) If an employer has purchased annuity contracts and transferred them to a trust, or if an employer has made contributions to a trust for the purpose of providing annuity contracts for his employees as provided in section 402(d) (see paragraph (a) of § 1.402(D)-1, the amount so paid or contributed is not required to be included in the income of the employee, but any amount received by or made available to the employee under the annuity contract shall be includible in the gross income of the employee for the taxable year in which received or made available, as provided in section 72 (relating to annuities). For taxable years beginning before January 1, 1964, section 72(e)(3) (relating to the treatment of certain lump sums), as in effect before such date, shall not apply to any amount received by or made available to the employee under the annuity contract. For taxable years beginning after December 31, 1963, amounts received by or made available to the employee under the annuity contract may be taken into account in computations under sections 1301 through 1305 (relating to income averaging). In such case the amount paid or contributed by the employer shall not constitute consideration paid by the employee for such annuity contract in determining the amount of annuity payments required to be included in his gross income under section 72 unless the employee has paid income tax for any taxable year beginning before January 1, 1949, with respect to

such payment or contribution by the employer for such year and such tax is not credited or refunded to the employee. In the event such tax has been paid and not creditid or refunded the amount paid or contributed by the employer for such year shall constitute consideration paid by the employee for the annuity contract in determining the amount of the annuity required to be included in the income of the employee under section 72.

(3) For taxable years beginning before January 1, 1958, the provisions contained in section 403(c) prior to the amendment made thereto by the Tax Reform Act of 1969 were included in section 403(b) of the Internal Revenue Code of 1954. Therefore, the regulations contained in this paragraph shall, for such taxable years, be considered as the regulations under section 403(b) as in effect for such taxable years. For the rules with respect to contributions paid after August 1, 1969, see paragraphs (a), (b), and (c) of this section.

(Secs. 83 and 7805 of the Internal Revenue Code of 1954 (83 Stat. 588; 68A Stat. 917; 26 U.S.C. 83 and 7805))

[T.D. 7554, 43 FR 31924, July 24, 1978, as amended by T.D. 9340, 72 FR 41159, July 26, 2007]

§ 1.404(a)-1 Contributions of an employer to an employees' trust or annuity plan and compensation under a deferred payment plan; general rule.

(a)

(1) Section 404(a) prescribes limitations upon deductions for amounts contributed by an employer under a pension, annuity, stock bonus, or profit-sharing plan, or under any plan of deferred compensation. It is immaterial whether the plan covers present employees only, or present and former employees, or only former employees. Section 404(a) also governs the deductibility of unfunded pensions and death benefits paid directly to former employees or their beneficiaries (see § 1.404(a)-12). For taxable years beginning after 1962, certain self-employed individuals may be covered by pension, annuity, or profit-sharing plans. For the rules relating to the deduction of contributions on behalf of such individuals, see paragraph (a)(2) of § 1.404(a)-8.

(2) Section 404(a) does not apply to a plan which does not defer the receipt of compensation. Furthermore, section 404(a) does not apply to deductions for contributions under a plan which is solely a dismissal wage or unemployment benefit plan, or a sickness, accident, hospitalization, medical expense, recreation, welfare, or similar benefit plan, or a combination thereof. For example, if under a plan an employer contributes 5 percent of each employee's compensation per month to a fund out of which employees who are laid off will be paid benefits for temporary periods, but employees who are not laid off have no rights to the funds, such a plan is an unemployment benefit plan, and the deductibility of the contributions to it is determined under section 162. As to the deductibility of such contributions, see § 1.162-9.

(3) If, however, the contributions to a pension, profit-sharing, stock bonus, or other plan of deferred compensation can be used to provide any of the benefits referred to in subparagraph (2) of this paragraph, then, except as provided in section 404(c), section 404(a) applies to the entire contribution to the plan. Thus, if in the example described in subparagraph (2) of this paragraph, the employer's contribution on behalf of each employee is set up as a separate account, and if any amount which remains in an employee's account at the time of retirement is paid to him at such time, the deductibility of the contributions to the plan is determined under section 404(a). For the regulations for determining whether the benefits referred to in subparagraph (2) of this paragraph can be included in a qualified pension or profit-sharing plan, see § 1.401-1(b).

(4) As to inclusion of full-time life insurance salesmen within the class of persons considered to be employees, see section 7701(a)(20).

(b) In order to be deductible under section 404(a), contributions must be expenses which would be deductible under section 162 (relating to trade or business expenses) or 212 (relating to expenses for production of income) if it were not for the provision in section 404(a) that they are deductible, if at all, only under section 404(a). Contributions may therefore be deducted under section 404(a) only to the extent that they are ordinary and necessary expenses during the taxable year in carrying on the trade or business or for the production of income and are compensation for personal services actually rendered. In no case is a deduction allowable under section 404(a) for the amount of any contribution for the benefit of an employee in excess of the amount which, together with other deductions allowed for compensation for such employee's services, constitutes a reasonable allowance for compensation for the services actually rendered. What constitutes a reasonable allowance depends upon the facts in the particular case. Among the elements to be considered in determining this are the personal services actually rendered in prior years as well as the current year and all compensation and contributions paid to or for such employee in prior years as well as in the current year. Thus, a contribution which is in the nature of additional compensation for services performed in prior years may be deductible, even if the total of such contributions and other compensation for the current year would be in excess of reasonable compensation for services performed in the current year, provided that such total plus all compensation and contributions paid to or for such employee in prior years represents a reasonable allowance for all services rendered by the employee by the end of the current year. A contribution under a plan which is primarily for the benefit of shareholders of the employer is not deductible. Such a contribution may constitute a dividend within the meaning of section 316. See also §§ 1.162-6 and 1.162-8. In addition to the limitations referred to above, deductions under section 404(a) are also subject to further conditions and limitations particularly provided therein.

(c) Deductions under section 404(a) are generally allowable only for the year in which the contribution or compensation is paid, regardless of the fact that the taxpayer may make his returns on the accrual method of accounting. Exceptions are made in the case of overpayments as provided in paragraphs (1), (3), and (7) of section 404(a), and, as provided by section 404(a)(6), in the case of payments made by a taxpayer on the accrual method of accounting not later than the time prescribed by law for filing the return for the taxable year of accrual (including extensions thereof). This latter provision is intended to permit a taxpayer on the accrual method to deduct such accrued contribution or compensation in the year of accrual, provided payment is actually made not later than the time prescribed by law for filing the return for the taxable year of accrual (including extensions thereof), but this provision is not applicable unless, during the taxable year on account of which the contribution is made, the taxpayer incurs a liability to make the contribution, the amount of which is accruable under section 461 for such taxable year. See section 461 and the regulations thereunder. There is another exception in the case of certain taxpayers who are required to make additional contributions as a result of the Act of June 15, 1955 (Public Law 74, 84th Cong., 69 Stat. 134), and the regulations thereunder.

[T.D. 6500, 25 FR 11682, Nov. 26, 1960, as amended by T.D. 6676, 28 FR 10144, Sept. 17, 1963; T.D. 9849, 84 FR 9234, Mar. 14, 2019]

§ 1.404(a)-1T Questions and answers relating to deductibility of deferred compensation and deferred benefits for employees. (Temporary)

Q-1: How does the amendment of section 404(b) by the Tax Reform Act of 1984 affect the deduction of contributions or compensation under section 404(a)?

A-1: As amended by the Tax Reform Act of 1984, section 404(b) clarifies that section 404(a) shall govern the deduction of contributions paid and compensation paid or incurred by the employer under a plan, or method or arrangement, deferring the receipt of compensation or providing for deferred benefits to employees, their spouses, or their dependents. See section 404(b) and § 1.404(b)-1T. Section 404 (a) and (d) requires that such a contribution or compensation be paid or incurred for purposes of section 162 or 212 and satisfy the requirements for deductibility under either of those sections. However, notwithstanding the above, section 404 does not apply to contributions paid or accrued with respect to a "welfare benefit fund" (as defined in section 419(e)) after July 18, 1984, in taxable years of employers (and payors) ending after that date. Also, section 463 shall govern the deduction of vacation pay by a taxpayer that has elected the application of such section. For rules relating to the deduction of contributions paid or accured with respect to a welfare benefit fund, see section 419, § 1.419-1T and § 1.419A-2T. For rules relating to the deduction of vacation pay for which an election is made under section 463, see § 301.9100-16T of this chapter and § 1.463-1T.

[T.D. 8073, 51 FR 4320, Feb. 4, 1986, as amended by T.D. 8435, 57 FR 43896, Sept. 23, 1992]

§ 1.404(a)-2 Information to be furnished by employer claiming deductions; taxable years ending before December 31, 1971.

(a) For the first taxable year for which a deduction from gross income is claimed under section 404(a) (1), (2), (3), or (7), the employer must file the following information (unless such information has been previously filed in accordance with the regulations under section 23(p) of the Internal Revenue Code of 1939) for each plan involved to establish that it meets the requirements of section 401(a) or 404(a)(2), and that deductions claimed do not exceed the amount allowable under paragraphs (1), (2), (3), and (7) of section 404(a), as the case may be:

(1) Verified copies of all the instruments constituting or evidencing the plan, including trust indentures, group annuity contracts, specimen copy of each type of individual contract, and specimen copy of formal announcement and comprehensive detailed description to employees, with all amendments to any such instruments.

(2) A statement describing the plan which identifies it and which sets forth the name or names of the employers, the effective date of the plan and of any amendments thereto, the method of distribution or of disbursing benefits (whether by trustee, insurance company, or otherwise), the dates when the instruments or amendments were executed, the date of formal announcement and the dates when comprehensive detailed description of the plan and of each amendment thereto were made available to employees generally, the dates when the plan and when the trust or the contract evidencing the plan and of any amendments thereto were put into effect so that contributions thereunder were irrevocable and a summary of the provisions and rules relating to—

(i) Employee eligibility requirements for participation in the plan,

(ii) Employee contributions,

(iii) Employer contributions,

(iv) The basis or formula for determining the amount of each type of benefit and the requirements for obtaining such benefits and the vesting conditions,

(v) The medium of funding (e. g., self-insured, unit purchase group annuity contract, individual level annual premium retirement endowment insurance contracts, etc.) and, if not wholly insured, the medium of contributions and the kind of investments, and

(vi) The discontinuance or modification of the plan and distributions or benefit payments upon liquidation or termination.

(3) A tabulation in columnar form showing the information specified below with respect to each of the 25 highest paid employees covered by the plan in the taxable year, listed in order of their nondeferred compensation (where there are several plans of deferred compensation, the information for each of the plans may be shown on a single tabulation without repetition of the information common to the several plans):

(i) Name.

(ii) Whether an officer.

(iii) Percentage of each class of stock owned directly or indirectly by the employee or members of his family.

(iv) Whether the principal duties consist in supervising the work of other employees.

(v) Year of birth.

(vi) Length of service for employer to the close of the year.

(vii) Total nondeferred compensation paid or accrued during the taxable year with a breakdown of such compensation into the following components:

(A) Basic compensation and overtime pay,

(B) Other direct payments, such as bonuses and commissions,

(C) Compensation paid other than in cash, such as goods, services, insurance not directly related to the benefits or provided from funds under the plan, etc.

(viii) Amount allocated during the year for the benefit of the employee or his beneficiary (including any insurance provided thereby or directly related thereto), less the employee's contributions during the year, under each other plan of deferred compensation.

(ix) Amount allocated during the year for the benefit of the employee or his beneficiary (including any insurance provided thereby or directly related thereto), less the employee's contributions during the year, under the plan. If a profit-sharing or stock bonus plan, also a breakdown of such amounts into the following components:

(A) Amounts originally allocated in the year, and

(B) Amounts reallocated in the year.

(x) Amounts of employee contributions during the year under the plan,

(xi) If a pension or annuity plan,

(A) The retirement age and date and the form of the retirement benefit,

(B) The annual rate or amount of the retirement benefit, and

(C) The aggregate of all of the employee's contributions under the plan,

all based, in the case of an employee who is not on retirement benefit under the plan, upon the assumption of his continued employment at his current rate of compensation until his normal retirement age (or the end of the current year if later) and retirement on such date with the normal form of retirement benefit under the plan.

(4) The following totals:

(i) Total nondeferred compensation paid or accrued during the taxable year for all employees covered under the plan and also for all employees of the employer.

(ii) Total amount allocated during the year for the benefit of employees, former or retired employees, or their beneficiaries (including any insurance provided thereby or directly related thereto), less employee contributions during the year under the plan and, if a profit-sharing or stock bonus plan, also a breakdown of such total into the following components:

(A) Amount originally allocated in the year, and

(B) Amount reallocated in the year.

(5) A schedule showing the total number of employees as of the close of the year for each of the following groups, based on reasonable estimates:

(i) All employees ineligible for coverage under the plan because of requirements as to employment classification, specifying the reasons applicable to the group (as, for example, temporary, seasonal, part time, hourly pay basis, etc.).

(ii) All employees ineligible for coverage under the plan because of requirements as to length of service and not included in subdivision (i) of this subparagraph.

(iii) All employees ineligible for coverage under the plan because of requirements as to minimum age and not included in subdivision (i) or (ii) of this subparagraph.

(iv) All employees ineligible for coverage under the plan solely because of requirements as to minimum rate of compensation.

(v) All employees ineligible for coverage under the plan other than those employees included in subdivision (i), (ii), (iii), or (iv) of this subparagraph, specifying the reason applicable to the group.

(vi) All employees ineligible for coverage under the plan for any reasons, which should be the sum of subdivisions (i) to (v), inclusive, of this subparagraph.

(vii) All employees eligible for coverage but not covered under the plan.

(viii) All employees covered under the plan.

(ix) All employees of the employer, which should be the sum of subdivisions (vi), (vii), and (viii) of this subparagraph.

If it is claimed that the requirements of section 401(a)(3)(A) are satisfied, also the data and computations necessary to show that such requirements are satisfied.

(6) In the case of a trust, a detailed balance sheet and a detailed statement of receipts and disbursements during the year; in the case of a nontrusteed annuity plan, a detailed statement of the names of the insurers, the contributions paid by the employer and by the employees, and a statement as to the amounts and kinds of premium refunds or similar credits made available and the disposition of such credits in the year.

(7) If a pension or annuity plan, a detailed description of all the methods, factors, and assumptions used in determining costs and in adjusting the costs for actual experience under the plan (including any loadings, contingency reserves, or special factors and the basis of any insured costs or liabilities involved therein) explaining their source and application in sufficient detail to permit ready analysis and verification thereof, and, in the case of a trust, a detailed description of the basis used in valuing the investments held.

(8) A statement of the applicable limitations under section 404(a) (1), (2), (3), or (7) and an explanation of the method of determining such limitations, a summary of the data, and a statement of computations necessary to determine the allowable deductions for the taxable year. Also, in the case of a pension or annuity plan, a summary of the costs or liabilities and adjustments for the year under the plan based on the application of the methods, factors, and assumptions used under the plan, in sufficient detail to permit ready verification of the reasonableness thereof.

(9) A statement of the contributions paid under the plan for the taxable year showing the date and amount of each payment. Also, a summary of the deductions claimed for the taxable year for the plan with a breakdown of the deductions claimed into the following components:

(i) For contributions paid in the taxable year before giving effect to the provisions of paragraph (7) of section 404(a).

(ii) For contributions paid in prior taxable years beginning after December 31, 1941, in accordance with the carryover provisions of paragraphs (1) and (3) of section 404(a), before giving effect to the provisions of paragraph (7) thereof, and in accordance with the carryover provisions of section 404(d).

(iii) Any reductions or increases in the deductions in accordance with the provisions of paragraph (7) of section 404(a). However, if the information in this subdivision is filed prior to the filing of the information required by subparagraph (8) of this paragraph, then, in determining the limit of deduction under paragraph (7) of section 404(a), the applicable percentage of the compensation otherwise paid or accrued during the year may be used.

(b) For taxable years subsequent to the year for which all of the applicable information under paragraph (a) of this section (or corresponding provisions of prior regulations) has been filed, information is to be filed only to the following extent:

(1) If there is any change in the plan, instruments, methods, factors, or assumptions upon which the data and information specified in paragraph (a) (1), (2), or (7) of this section are based, a detailed statement explaining the change and its effect is to be filed only for the taxable year in which the change is put into effect. However, if there is no such change, unless otherwise requested by the district director, merely a statement that there is no such change is to be filed.

(2) The information specified in paragraph (a)(3) of this section which has been filed for a taxable year, unless otherwise requested by the district director and so long as the plan and the method and basis of allocations are not changed, is to be filed for subsequent years only to the extent of showing in

the tabulation such information with respect to employees who, at any time in the taxable year, own, directly or indirectly, more than 5 percent of the voting stock, considering stock so owned by an individual's spouse or minor lineal descendant as owned by the individual for this purpose.

(3) The information specified in paragraph (a) (4), (5), (6), (8), and (9) of this section.

In the case of corporate employers, the information required to be submitted by this paragraph shall, except as otherwise provided by the Commissioner, be filed on Form 2950 for taxable years ending on or after December 31, 1961. In the case of other employers, the information required to be submitted by this paragraph shall, except as otherwise provided by the Commissioner, be filed on Form 2950 for taxable years ending on or after December 31, 1962.

(c) If a deduction is claimed under section 404(a)(5) for the taxable year, the taxpayer shall furnish such information as is necessary to show that the deduction is not allowable under the other paragraphs of section 404(a), that the amount paid is an ordinary and necessary expense or an expense for the production of income, and that the employees' rights to, or derived from, such employer's contribution or such compensation were nonforfeitable at the time the contribution or compensation was paid. In the case of corporate employers, the information required to be submitted by this paragraph shall, except as otherwise provided by the Commissioner, be filed on Form 2950 for taxable years ending on or after December 31, 1961. In the case of other employers, the information required to be submitted by this paragraph shall, except as otherwise provided by the Commissioner, be filed on Form 2950 for taxable years ending on or after December 31, 1962.

(d) For the purpose of the information required by this section, contributions paid in a taxable year shall include those deemed to be so paid in accordance with the provisions of section 404(a)(6) and shall exclude those deemed to be paid in the prior taxable year in accordance with such provisions. As used in this section, “taxable year” refers to the taxable year of the employer and, unless otherwise requested by the district director, a “year” which is not specified as a “taxable year” may be taken as the taxable year of the employer or as the plan, trust, valuation, or group contract year with respect to which deductions are being claimed provided the same rule is followed consistently so that there is no gap or overlap in the information furnished for each item. In any case the date or period to which each item of information furnished relates should be clearly shown. All the information required by this section should be filed with the tax return for the taxable year in which the deduction is claimed, except that, unless sooner requested by the district director, such information, other than that specified in paragraph (a)(4)(i) and (9) of this section, may be filed within 12 months after the close of the taxable year provided there is filed with the tax return a statement that the information cannot reasonably be filed therewith, setting forth the reasons therefor.

(e) In any case all the information and data required by this section must be filed in the office of the district director in which the employer files his tax returns and must be filed independently of any information and data otherwise submitted in connection with a determination of the qualification of the trust or plan under section 401(a). The district director may, in addition, require any further information that he considers necessary to determine allowable deductions under section 404 or qualification under section 401. For taxable years ending on or before December 31, 1961, the district director may waive the filing of such information required by this section which he finds unnecessary in a particular case. For taxable years ending after December 31, 1961, the Commissioner may waive the filing of such information.

(f) Records substantiating all data and information required by this section to be filed must be kept at all times available for inspection by internal revenue officers at the main office or place of business of the employer.

(g) In the case of a plan which covers employees, some or all of whom are self-employed individuals and with respect to which a deduction is claimed under section 404(a) (1), (2), (3), or (7), paragraphs (a) and (b) of this section, and the provision of paragraph (d) of this section relating to the time for filing the information required by this section, shall not apply, but in lieu of the information required to be submitted by paragraphs (a) and (b) of this section, the employer shall, with the return for the taxable year in which the deduction is claimed, submit the information required by the form provided by the Internal Revenue Service for such purpose.

(h) When a custodial account forms a part of a plan for which a deduction is claimed under section 404(a) (1), (2), (3), or (7), the information which under this section is to be submitted with respect to a qualified trust must be submitted with respect to such custodial account. Thus, for purposes of this section—

(1) The term “trust” includes custodial account,

(2) The term “trustee” includes custodian, and

(3) The term “trust indenture” includes custodial agreement.

(i) Except as provided under § 1.503(d)-1(a) and § 601.201 of this chapter (Statement of Procedural Rules) in the case of a request for the determination of qualification of a trust under section 401 and exemption under section 501, paragraphs (a) through (h) of this section shall not apply for taxable years ending on or after December 31, 1971. For information to be furnished for taxable years ending on or after December 31, 1971, and before December 31, 1975, see § 1.404(a)-2A of the Treasury Regulations in effect on April 1, 2017.

[T.D. 6500, 25 FR 11683, Nov. 26, 1960, as amended by T.D. 6599, 27 FR 4475, May 10, 1962; T.D. 6676, 28 FR 10144, Sept. 17, 1963; T.D. 7165, 37 FR 5025, Mar. 9, 1972; T.D. 7168, 37 FR 5491, Mar. 16, 1972; T.D. 9849, 84 FR 9234, Mar. 14, 2019]

§ 1.404(a)-3 Contributions of an employer to or under an employees' pension trust or annuity plan that meets the requirements of section 401(a); application of section 404(a)(1).

(a) If contributions are paid by an employer to or under a pension trust or annuity plan for employees and the general conditions and limitations applicable to deductions for such contributions are satisfied (see § 1.404(a)-1), the contributions are deductible under section 404(a) (1) or (2) if the further conditions provided therein are also satisfied. As used in this section, a “pension trust” means a trust forming part of a pension plan and an “annuity plan” means a pension plan under which retirement benefits are provided under annuity or insurance contracts without a trust. This section is also applicable to contributions to a foreign situs pension trust which could qualify for exemption under section 501(a) except that it is not created or organized and maintained in the United States. For the meaning of “pension plan” as used in this section, see paragraph (b)(1)(i) of § 1.401-1. Where disability pensions, insurance, or survivorship benefits incidental and directly related to the retirement benefits under a pension or annuity plan are provided for the employees or their beneficiaries by contributions under the plan, deductions on account of such incidental benefits are also covered under section 404(a) (1) or (2). See paragraph (b)(2) of § 1.72-16 as to taxability to employees of cost of incidental life insurance protection. Similarly, where medical benefits described in section 401(h) as defined in paragraph (a) of § 1.401-14 are provided for retired employees, their spouses, or their dependents under the plan, deductions on account of such subordinate benefits are also covered under section 404(a) (1) or (2). In order to be deductible under section 404(a)(1), contributions to a pension trust must be paid in a taxable year of the employer which ends with or within a year of the trust for which it is exempt under section 501(a). Contributions paid in such a taxable year of the employer may be carried over and deducted in a succeeding taxable year of the

employer in accordance with section 404(a)(1)(D), whether or not such succeeding taxable year ends with or within a taxable year of the trust for which it is exempt under section 501(a). See § 1.404(a)-8 as to conditions for deductions under section 404(a)(2) in the case of an annuity plan. In either case, the deductions are also subject to further limitations provided in section 404(a)(1). The limitations provided in section 404(a)(1) are, with an exception provided for certain years under subparagraph (A) thereof, based on the actuarial costs of the plan.

(b) In determining costs for the purpose of limitations under section 404(a)(1), the effects of expected mortality and interest must be discounted and the effects of expected withdrawals, changes in compensation, retirements at various ages, and other pertinent factors may be discounted or otherwise reasonably recognized. A properly weighted retirement age based on adequate analyses of representative experience may be used as an assumed retirement age. Different basic assumptions or rates may be used for different classes of risks or different groups where justified by conditions or required by contract. In no event shall costs for the purpose of section 404(a)(1) exceed costs based on assumptions and methods which are reasonable in view of the provisions and coverage of the plan, the funding medium, reasonable expectations as to the effects of mortality and interest, reasonable and adequate regard for other factors such as withdrawal and deferred retirement (whether or not discounted) which can be expected to reduce costs materially, reasonable expenses of operation, and all other relevant conditions and circumstances. In any case, in determining the costs and limitations, an adjustment shall be made on account of any experience more favorable than that assumed in the basis of limitations for prior years. Unless such adjustments are consistently made every year by reducing the limitations otherwise determined by any decrease in liability or cost arising from experience in the next preceding taxable year which was more favorable than the assumptions on which the costs and limitations were based, the adjustment shall be made by some other method approved by the Commissioner.

(c) The amount of a contribution to a pension or annuity plan that is deductible under section 404(a) (1) or (2) depends upon the methods, factors, and assumptions which are used to compute the costs of the plan and the limitation of section 404(a)(1) which is applied. Since the amount that is deductible for one taxable year may affect the amount that is deductible for other taxable years, the methods, factors, and assumptions used in determining costs and the method of determining the limitation which have been used for determining the deduction for a taxable year for which the return has been filed shall not be changed for such taxable year, except when the Commissioner determines that the methods, factors, assumptions, or limitations were not proper, or except when a change is necessitated by reason of the use of different methods, factors, assumptions, or limitations for another taxable year. However, different methods, factors, and assumptions, or a different method of determining the limitation, if they are proper, may be used in determining the deduction for a subsequent taxable year.

(d) Any expenses incurred by the employer in connection with the plan, such as trustee's and actuary's fees, which are not provided for by contributions under the plan are deductible by the employer under section 162 (relating to trade or business expenses), or 212 (relating to expenses for production of income) to the extent that they are ordinary and necessary.

(e) In case deductions are allowable under section 404(a)(3), as well as under section 404(a) (1) or (2), the limitations under section 404(a) (1) and (3) are determined and applied without giving effect to the provisions of section 404(a)(7) but the amounts allowable as deductions are subject to the further limitations provided in section 404(a)(7). See § 1.404(a)-13.

(f)

(1) Amounts contributed by an employer under the plan for the funding of medical benefits described in section 401(h) as defined in paragraph (a) of § 1.401-14 must satisfy the general requirements which are applicable to deductions allowable under section 404 and which are set forth in § 1.404(a)-1 including, for example, the requirements described in paragraph (b) of such section. Accordingly, such amounts must constitute an ordinary and necessary expense relating to either the trade or business or the production of income and must not, when added to all other compensation paid by the employer to the employee on whose behalf such a contribution is made, constitute more than reasonable compensation. However, in determining the amount which is deductible with respect to contributions to provide retirement benefits under the plan, amounts contributed for the funding of medical benefits described in section 401(h) shall not be taken into consideration.

(2) The amounts deductible with respect to employer contributions to fund medical benefits described in section 401(h) shall not exceed the total cost of providing such benefits. The total cost of providing such benefits shall be determined in accordance with any generally accepted actuarial method which is reasonable in view of the provisions and coverage of the plan, the funding medium, and other applicable considerations. The amount deductible for any taxable year with respect to such cost shall not exceed the greater of—

(i) An amount determined by distributing the remaining unfunded costs of past and current service credits as a level amount, or as a level percentage of compensation, over the remaining future service of each employee, or

(ii) 10 percent of the cost which would be required to completely fund or purchase such medical benefits.

In determining the amount deductible, an employer must apply either subdivision (i) of this subparagraph for all employees or subdivision (ii) of this subparagraph for all employees. If contributions paid by an employer in a taxable year to fund such medical benefits under a pension or annuity plan exceed the limitations of this subparagraph but otherwise satisfy the conditions for deduction under section 404, then the excess contributions are carried over and are deductible in succeeding taxable years of the employer which end with or within taxable years of the trust for which it is exempt under section 501(a) in order of time to the extent of the difference between the amount paid and deductible in each succeeding year and the limitation applicable to such year under this subparagraph. For purposes of subdivision (i) of this subparagraph, if the remaining future service of an employee is one year or less, it shall be treated as one year.

[T.D. 6500, 25 FR 11685, Nov. 26, 1960, as amended by T.D. 6722, 29 FR 5073, Apr. 14, 1964; T.D. 7165, 37 FR 5025, Mar. 9, 1972; T.D. 9849, 84 FR 9234, Mar. 14, 2019]

§ 1.404(a)-4-1.404(a)-7 [Reserved]

§ 1.404(a)-8 Contributions of an employer under an employees' annuity plan which meets the requirements of section 401(a); application of section 404(a)(2).

(a) If contributions are paid by an employer under an annuity plan for employees and the general conditions and limitations applicable to deductions for such contributions are satisfied (see § 1.404(a)-1), the contributions are deductible under section 404(a)(2) if the further conditions provided therein are satisfied. For the meaning of “annuity plan” as used here, see § 1.404(a)-3. In order that contributions by the employer may be deducted under section 404(a)(2), all of the following conditions must be satisfied:

(1) The contributions must be paid toward the purchase of retirement annuities (or for disability, severance, insurance, survivorship benefits incidental and directly related to such annuities, or medical benefits described in section 401(h) as defined in paragraph (a) of § 1.404(h)-1) under an annuity plan for the exclusive benefit of the employer's employees or their beneficiaries.

(2) The contributions must be paid in a taxable year of the employer which ends with or within a year of the plan for which it meets the applicable requirements set forth in section 401(a) (3), (4), (5), (6), (7), (8), (11), (12), (13), (14), (15), (16), and (19). In the case of a plan which covers a self-employed individual, the contributions must be paid in a taxable year of the employer which ends with or within a year of the plan for which it also meets the requrements of section 401(a), (9), (10), (17), and (18) and of section 401(d) (other than paragraph (1)). In the case of a plan which covers a shareholder-employee within the meaning of section 1379(d), the contributions must be paid in a taxable year of the employer which ends with or within a year of the plan for which it also meets the requirements of section 401(a) (17) and (18). See section 401(a) and the regulations thereunder for the requirements and the applicable effective dates of the respective paragraphs set forth in section 401(a). Any contributions of an employer which are paid in a taxable year of the employer ending with or within a year of the plan for which it meets the applicable requirements of section 401 may be carried over and deducted in a succeeding taxable year of the employer in accordance with section 404(a)(1)(D), whether or not such succeeding taxable year ends with or within a taxable year of the plan for which it meets the requirements set out in section 401 (a) and (d). See section 401(b) and the regulations thereunder for special rules allowing certain plan amendments to be given retroactive effect. See section 404(a)(6) for a special rule for determining the time when a contribution is deemed to have been made.

(3) There must be a definite written arrangement between the employer and the insurer that refunds of premiums, if any, shall be applied within the taxable year of the employer in which received or within the next succeeding taxable year toward the purchase of retirement annuities (or for disability, severance, insurance, survivorship benefits incidental and directly related to such annuities, or medical benefits described in section 401(h) as defined in paragraph (a) of § 1.401(h)-1 under the plan. For the purpose of this condition, “refunds of premiums” means payments by the insurer on account of credits such as dividends, experience rating credits, or surrender or cancellation credits. The arrangement may be in the form of contract provisions or written directions of the employer or partly in one form and partly in another. This condition will be considered satisfied where—

(i) All credits are applied regularly, as they are determined, toward the premiums next due under the contracts before any further employer contributions are so applied, and

(ii) Under the arrangement,

(A) No refund of premiums may be made during continuance of the plan unless applied as aforesaid, and

(B) If refunds of premiums may be made after discontinuance or termination, whichever is applicable, of the plan on account of surrenders or cancellations before all retirement annuities provided under the plan with respect to service before its discontinuance or termination have been purchased, such refunds will be applied in the taxable year of the employer in which received, or in the next succeeding taxable year, to purchase retirement annuities for employees by a procedure which does not contravene the conditions of section 401(a)(4). If the plan also includes medical benefits described in section 401(h) as

defined in paragraph (a) of § 1.401(h)-1, any refund of premiums attributable to such benefits must, in accordance with these rules, be applied toward the purchase of medical benefits described in section 401(h).

(4) Any amounts described in subparagraph (3) of this paragraph which are attributable to contributions on behalf of a self-employed individual must be applied toward the purchase of retirement benefits. Amounts which are so applied are not contributions and thus are not taken into consideration in determining—

(i) The amount deductible with respect to contributions on his behalf, nor

(ii) In the case of an owner-employee, the maximum amount of contributions that may be made on his behalf.

(b) Where the above conditions are satisfied, the amounts deductible under section 404(a)(2) are governed by the limitations provided in section 404(a)(1).

(Sec. 411 Internal Revenue Code of 1954 (88 Stat. 901; 26 U.S.C. 411))

[T.D. 7501, 42 FR 42321, Aug. 23, 1977, as amended by T.D. 9849, 84 FR 9234, Mar. 14, 2019]

§ 1.404(a)-9 [Reserved]

§ 1.404(a)-10 Profit-sharing plan of an affiliated group; application of section 404(a)(3)(B).

(a) Section 404(a)(3)(B) allows a corporation a deduction to the extent provided in paragraphs (b) and (c) of this section for a contribution which it makes for another corporation to a profit-sharing plan or a stock bonus plan under which contributions are determined by reference to profits, provided the following tests are met:

(1) The corporation for which the contribution is made and the contributing corporation are members of an affiliated group of corporations as defined in section 1504, relating to the filing of consolidated returns, and both such corporations participate in the plan. However, it is immaterial whether all the members of such group participate in the plan.

(2) The corporation for which the contribution is made is required under the plan to make the contribution, but such corporation is prevented from making such contribution because it has neither current nor accumulated earnings or profits, or because its current and accumulated earnings or profits are insufficient to make the required contribution. To the extent that such a corporation has any current or accumulated earnings or profits, it is not considered to be prevented from making its required contribution to the plan.

(3) The contribution is made out of the current or accumulated earnings or profits of the contributing corporation.

(b) The amount that is deductible under section 404(a)(3)(B) is determined by applying the rules of section 404(a)(3)(A) and as if the contribution were made by the corporation for which it is made. The contributing corporation may deduct the amount so determined subject to the limitations contained in paragraph (c) of this section. The contributing corporation shall not treat such amount as a contribution made by it in applying the rules of section 404(a)(3)(A) and either for the taxable year for which the contribution is made or for succeeding taxable years. The corporation for which the contribution is made shall treat the contribution as having been made by it in applying the rules of section 404(a)(3)(A) for succeeding taxable years.

(c) The allowance of the deduction under section 404(a)(3)(B) does not depend upon whether the affiliated group does or does not file a consolidated return. If a consolidated return is filed, it is immaterial which of the participating corporations makes the contribution and takes the deduction or how the contribution or the deduction is allocated among them. However, if a consolidated return is not filed, the contribution which is deductible under section 404(a)(3)(B) by each contributing corporation shall be limited to that portion of its total current and accumulated earnings or profits (adjusted for its contribution deductible without regard to section 404(a)(3)(B)) which the prevented contribution bears to the total current and accumulated earnings or profits of all the participating members of the group having such earnings or profits (adjusted for all contributions deductible without regard to section 404(a)(3)(B)). For the purpose of this section, current earnings or profits shall be computed as of the close of the taxable year without diminution by reason of any dividends during the taxable year, and accumulated earnings or profits shall be computed as of the beginning of the taxable year.

(d) The application of section 404(a)(3)(B) may be illustrated by the following example in which the affiliated group does not file a consolidated return:

(1)	(2)	(3)	(4)	(5)	(6)	(7)	(8)	(9)	(10)	(11)
A	($10,000)	($140,000)	($150,000)	$200,000	1/5	$6,000				
B	(5,000)	105,000	100,000	300,000	3/10	9,000	$9,000	$91,000	6/326 × 91,000	$1,674.85
C	75,000	175,000	250,000	500,000	1/2	15,000	15,000	235,000	6/326 × 235,000	4,325.15
Total	60,000	140,000	200,000	1,000,000		30,000	24,000	326,000		6,000.00

Column:

(1) Member.

(2) Earnings and profits of the taxable year.

(3) Accumulated earnings and profits at beginning of taxable year.

(4) Total current and accumulated earnings and profits (column 2 plus column 3).

(5) Compensation of participating employees.

(6) Contribution formula: 50 percent of consolidated earnings and profits, allocated among participating member in proportion of covered payroll of each to covered payroll of consolidated group.

(7) Individual contribution had it not been prevented.

(8) Individual contribution made by each employer for its own employees.

(9) Balance of accumulated earnings and profits (column 4 minus column 8).

(10) Proportion of make-up contribution.

(11) Make-up contribution.

[T.D. 6500, 25 FR 11688, Nov. 26, 1960, as amended by T.D. 9849, 84 FR 9234, Mar. 14, 2019]

§ 1.404(a)-11 Trusts created or organized outside the United States; application of section 404(a)(4).

In order that a trust may constitute a qualified trust under section 401(a) and be exempt under section 501(a), it must be created or organized in the United States and maintained at all times as a domestic trust. See paragraph (a) of § 1.401-1. Paragraph (4) of section 404(a) provides, however, that an employer which is a resident, a corporation, or other entity of the United States, making contributions to a foreign stock bonus, pension, or profit-sharing trust, shall be allowed deductions for such contributions, under the applicable conditions and within the prescribed limits of section 404(a), if such foreign trust would qualify for exemption under section 501(a) except for the fact that it is a trust created, organized, or maintained outside the United States. Moreover, if a nonresident alien individual, foreign corporation, or other entity is engaged in trade or business within the United States and makes contributions to a foreign stock bonus, pension, or profit-sharing trust, which would qualify under section 401(a) and be exempt under section 501(a) except that it is created, organized, or maintained outside the United States, such contributions are deductible subject to the conditions and limitations of section 404(a) and to the extent allowed by section 873 or 882(c).

[T.D. 6500, 25 FR 11689, Nov. 26, 1960]

§ 1.404(a)-12 Contributions of an employer under a plan that does not meet the requirements of section 401(a); application of section 404(a)(5).

(a) ***In general.*** Section 404(a)(5) covers all cases for which deductions are allowable under section 404(a) (for contributions paid by an employer under a stock bonus, pension, profit sharing, or annuity plan or for any compensation paid on account of any employee under a plan deferring the receipt of such compensation) but not allowable under paragraph (1), (2), (3), (4), or (7) of such section. For the rules with respect to the taxability of an employee when rights under a nonexempt trust become substantially vested, see section 402(b) and the regulations thereunder.

(b) ***Contributions made after August 1, 1969 —***

(1) ***In general.*** A deduction is allowable for a contribution paid after August 1, 1969, under section 404(a)(5) only in the taxable year of the employer in which or with which ends the taxable year of an employee in which an amount attributable to such contribution is includible in his gross income as compensation, and then only to the extent allowable under section 404(a). See § 1.404(a)-1. For example, if an employer A contributes $1,000 to the account of its employee E for its taxable (calendar) year 1977, but the amount in the account attributable to that contribution is not includible in E's gross income until his taxable (calendar) year 1980 (at which time the includible amount is $1,150), A's deduction for that contribution is $1,000 in 1980 (if allowable under section 404(a)). For purposes of this (1), a contribution is considered to be so includible where the employee or his beneficiary excludes it from his gross income under section 101(b) or subchapter N. To the extent that property of the employer is transferred in connection with such a contribution, such transfer will constitute a disposition of such property by the employer upon which gain or loss is recognized, except as provided in section 1032 and the regulations thereunder. The amount of gain or loss recognized from such disposition shall be the difference between the value of such property used to measure the deduction allowable under this section and the employer's adjusted basis in such property.

(2) ***Special rule for unfunded pensions and certain death benefits.*** If unfunded pensions are paid directly to former employees, such payments are includible in their gross income when paid, and accordingly, such amounts are deductible under section 404(a)(5) when paid. Similarly, if amounts are paid as a death benefit to the beneficiaries of an employee (for example, by continuing his salary for a reasonable period), and if such amounts meet the requirements of section 162 or 212, such amounts are deductible under section 404(a)(5) in any case when they are not includible under the other paragraphs of section 404(a).

(3) ***Separate accounts for funded plans with more than one employee.*** In the case of a funded plan under which more than one employee participates, no deduction is allowable under section 404(a)(5) for any contribution unless separate accounts are maintained for each employee. The requirement of separate accounts does not require that a separate trust be maintained for each employee. However, a separate account must be maintained for each employee to which employer contributions under the plan are allocated, along with any income earned thereon. In addition, such accounts must be sufficiently separate and independent to qualify as separate shares under section 663(c). Nothing shall preclude a trust which loses its exemption under section 501(a) from setting up such acounts and meeting the separate account requirement of section 404(a)(5) with respect to the taxable years in which such accounts are set up and maintained.

(c) ***Contributions paid on or before August 1, 1969.*** No deduction is allowable under section 404(a)(5) for any contribution paid on or before August 1, 1969, by an employer under a stock bonus, pension, profit-sharing, or annuity plan, or for any compensation paid on account of any employee under plan deferring the receipt of such compensation, except in the year when paid, and then only to the extent allowable under section 404(a). See § 1.404(a)-1. If payments are made under such a plan and the amounts are not deductible under the other paragraphs of section 404(a), they are deductible under section 404(a)(5) to the extent that the rights of individual employees to, or derived from, such employer's contribution or such compensation are nonforfeitable at the time the contribution or compensation is paid. If unfunded pensions are paid directly to former employees, their rights to such payments are nonforfeitable, and accordingly, such amounts are deductible under section 404(a)(5) when paid. Similarly, if amounts are paid as a death benefit to the beneficiaries of an employee (for example, by continuing his salary for a reasonable period), and if such amounts meet the requirements of section 162 or 212, such amounts are deductible under section 404(a)(5) in any case where they are not deductible under the other paragraphs of section 404(a). As to what constitutes nonforfeitable rights of an employee in other cases, see § 1.402(b)-1(d)(2). If an amount is accrued but not paid during the taxable year, no deduction is allowable for such amount for such year. If an amount is paid during the taxable year to a trust or under a plan and the employee's rights to such amount are forfeitable at the time the amount is paid, no deduction is allowable for such amount for any taxable year.

(Secs. 83 and 7805 of the Internal Revenue Code of 1954 (83 Stat. 588; 68A Stat. 917; 26 U.S.C. 83 and 7805))

[T.D. 7554, 43 FR 31926, July 24, 1978]

§ 1.404(a)-13 Contributions of an employer where deductions are allowable under section 404(a) (1) or (2) and also under section 404(a)(3); application of section 404(a)(7).

(a) Where deductions are allowable under section 404(a) (1) or (2) on account of contributions under a pension or annuity plan and deductions are also allowable under section 404(a)(3) for the same taxable year on account of contributions to a profit-sharing or stock bonus trust, the total deductions under these sections are subject to the provisions of section 404(a)(7) unless no employee who is a beneficiary under

the trusts or plans for which deductions are allowable under section 404(a) (1) or (2) is also a beneficiary under the trusts for which deductions are allowable under section 404(a)(3). The provisions of section 404(a)(7) apply only to deductions for overlapping trusts or plans, *i.e.,* for all trusts or plans for which deductions are allowable under section 404(a) (1), (2), or (3) except (1) any trust or plan for which deductions are allowable under section 404(a) (1) or (2) and which does not cover any employee who is also covered under a trust for which deductions are allowable under section 404(a) (3), and (2) any trust for which deductions are allowable under section 404(a)(3) and which does not cover any employee who is also covered under a trust or plan for which deductions are allowable under section 404(a) (1) or (2). The limitations under section 404(a)(7) for any taxable year of the employer are based on the compensation otherwise paid or accrued during the year by the employer to all employees who, in such year, are beneficiaries of the funds accumulated under one or more of the overlapping trusts or plans. For purposes of the preceding sentence, if the taxable year of the employer with respect to which the limitation is being computed ends with or within a taxable year of any of the overlapping trusts or plans during which any such trust is not exempt under section 501(a) or, in the case of a plan, during which it does not meet the requirements of section 404(a)(2), or if such taxable year of the employer ends after any such trust or plan has terminated, then, with respect to such trust or plan, those employees, and only those employees, who, at any time during the one-year period ending on the last day of the last calendar month during which the trust was exempt under section 501(a), or the plan met the requirements of section 404(a)(2), were beneficiaries of the funds accumulated under such trust or plan shall be considered the beneficiaries of such trust or plan in the taxable year of the employer with respect to which the limitation is being computed. For purposes of this paragraph, “compensation otherwise paid or accrued” means all of the compensation paid or accrued except that for which a deduction is allowable under a plan that qualifies under section 401(a), including a plan that qualifies under section 404(a)(2).

(b) Under section 404(a)(7), any excess of the total amount otherwise deductible for the taxable year under section 404(a) (1), (2), or (3) as contributions to overlapping trusts or plans over 25 percent of the compensation otherwise paid or accrued during the year to all the employees who are beneficiaries under such trusts or plans, is not deductible for such year but is deductible for succeeding taxable years, in order of time, so that the total deduction for contributions to such trusts or plans for a succeeding taxable year is equal to the lesser of—

(1) 30 percent of the compensation otherwise paid or accrued during the taxable year to all the employees who are beneficiaries under such trusts or plans in the year, or

(2) The sum of

(i) the smaller of (*a*) 25 percent of the compensation otherwise paid or accrued during the taxable year to all employees who are beneficiaries under such trusts or plans in the year, or (*b*) the total of the amounts otherwise deductible under section 404(a) (1), (2), or (3) for the year for such trusts or plans and

(ii) any carryover to the year from prior years under section 404(a)(7), i.e., any excess otherwise deductible under section 404(a) (1), (2), or (3), but not deducted for a prior taxable year because of the limitations under section 404(a)(7).

(c) The limitations under section 404(a)(7) are determined and applied after all the limitations, deductions otherwise allowable, and carryovers under section 404(a) (1), (2), and (3) have been determined and applied, and, in particular, after effect has been given to the carryover provision in section 404(a)(1)(D) and in the second and third sentences of section 404(a)(3)(A). Where the limitations under section 404(a)(7) reduce the total amount deductible, the excess deductible in succeeding years is treated as a carryover which is distinct from, and additional to, any excess contributions carried over and deductible in

succeeding years under the provisions in section 404(a)(1)(D) or in the third sentence of section 404(a)(3)(A). The application of the provisions of section 404(a)(7) and the treatment of carryovers for a case where the taxable years are calendar years and the overlapping trusts or plans consist of a pension trust and a profit-sharing trust put into effect in 1954 and covering the same employees may be illustrated as follows:

Illustration of Application of Provisions of Section 404(a)(7) and of Treatment of Carryovers for Overlapping Pension and Profit-Sharing Trusts Put Into Effect in 1954 and Covering the Same Employees (All Figures Represent Thousands of Dollars and all Taxable (Calendar) Years of the Employer are Years Which End With or Within A Taxable Year of the Trust for Which it is Exempt Under Section 501(a))

	Taxable calendar years			
	1954	1955	1956	1957
before giving effect to section 404(a)(7)				
Pension trust contributions and limitations, deductions, and carryovers under section 404(a)(1):				
1. Contributions paid in year	$215	$85	$140	$60
2. Contributions carried over from prior years	0	5	0	20
3. Total deductible for year subject to limitation	215	90	140	80
4. Limitation applicable to year	210	175	120	85
5. Amount deductible for year	210	90	120	80
6. Contributions carried over to succeeding years	5	0	20	0
Profit-sharing trust contributions and limitations, deductions, and carryovers under section 404(a)(3):				
7. Contributions paid in year	200	125	105	65
8. Contributions carried over from prior years	0	35	10	0
9. Total deductible for year subject to limitation	200	160	115	65
10. Limitation applicable to year	165	150	135	[1] 110
11. Amount deductible for year	165	150	115	65
12. Contributions carried over to succeeding years	35	10	0	0
application of section 404(a)(7)				
Totals for pension and profit-sharing trust:				

[1] *Includes carryover of 20 from 1956.*

[2] *Compensation otherwise paid or accrued during the year to the employees who are beneficiaries under the trusts in the year.*

[3] *30 percent limitation not applicable to first year of plan.*

	Taxable calendar years			
	1954	1955	1956	1957
13. Amount deductible for year under section 404(a)(7):				
(1) 30 percent of compensation covered in year [2]	([3])	300	270	180
(2) (i) (a) 25 percent of compensation covered in year [2]	275	250	225	150
(b) Total amount otherwise deductible for year: item 5 plus item 11	375	240	235	145
(c) Smaller of (a) or (b)	275	240	225	145
(ii) Carryover from prior years under section 404(a)(7)	0	100	40	10
(iii) Sum of (i)(c) and (ii)	275	340	265	155
(3) Amount deductible: Lesser of (1) or (2)(iii)	275	300	265	155
14. Carryover to succeeding years under section 404(a)(7): item 13(2)(ii) plus item 3(2)(i)(b) minus item 13(3)	100	40	10	0

[1] *Includes carryover of 20 from 1956.*

[2] *Compensation otherwise paid or accrued during the year to the employees who are beneficiaries under the trusts in the year.*

[3] *30 percent limitation not applicable to first year of plan.*

[T.D. 6500, 25 FR 11689, Nov. 26, 1960, as amended by T.D. 6534, 26 FR 517, Jan. 20, 1961]

§ 1.404(a)-14 Special rules in connection with the Employee Retirement Income Security Act of 1974.

(a) ***Purpose of this section.*** This section provides rules for determining the deductible limit under section 404(a)(1)(A) of the Internal Revenue Code of 1954 for defined benefit plans.

(b) ***Definitions.*** For purposes of this section—

(1) ***Section 404(a).*** The term “old section 404(a)” means section 404(a) as in effect on September 1, 1974. Any reference to section 404 without the designation “old” is a reference to section 404 as amended by the Employee Retirement Income Security Act of 1974.

(2) ***Ten-year amortization base.*** The term “10-year amortization base” means either the past service and other supplementary pension and annuity credits described in section 404(a)(1)(A)(iii) or any base established in accordance with paragraph (g) of this section. A plan may have several 10-year amortization bases to reflect different plan amendments, changes in actuarial assumptions, changes in funding method, and experience gains and losses of previous years.

(3) ***Limit adjustment.*** The term “limit adjustment” with respect to any 10-year amortization base is the lesser of—

(i) The level annual amount necessary to amortize the base over 10 years using the valuation rate, or

(ii) The unamortized balance of the base,

in each case using absolute values (solely for the purpose of determining which is the lesser). To compute the level amortization amount, the base may be divided by the present value of an annuity of one dollar, obtained from standard annuity tables on the basis of a given interest rate (the valuation rate) and a known period (the amortization period).

(4) ***Absolute value.*** The term "absolute value" for any number is the value of that number, treating negative numbers as if they were positive numbers. For example, the absolute value of 5 is 5 and the absolute value of minus 3 is 3. On the other hand, the true value of minus 3 is minus 3. This term is relevant to the computation of the limit adjustment described in paragraph (b)(3) and the remaining amortization period of combined bases described in paragraph (i)(3) of this section.

(5) ***Valuation rate.*** The term "valuation rate" means the assumed interest rate used to value plan liabilities.

(c) ***Use of plan in determining deductible limit for employer's taxable year.*** Although the deductible limit applies for an employer's taxable year, the deductible limit is determined on the basis of a plan year. If the employer's taxable year coincides with the plan year, the deductible limit for the taxable year is the deductible limit for the plan year that coincides with that year. If the employer's taxable year does not coincide with the plan year, the deductible limit under section 404(a)(1)(A) (i), (ii), or (iii) for a given taxable year of the employer is one of the following alternatives:

(1) The deductible limit determined for the plan year commencing within the taxable year.

(2) The deductible limit determined for the plan year ending within the taxable year, or

(3) A weighted average of alternatives (1) and (2). Such an average may be based, for example, upon the number of months of each plan year falling within the taxable year.

The employer must use the same alternative for each taxable year unless consent to change is obtained from the Commissioner under section 446 (e).

(d) ***Computation of deductible limit for a plan year*** —

(1) ***General rules.*** The computation of the deductible limit for a plan year is based on the funding methods, actuarial assumptions, and benefit structure used for purposes of section 412, determined without regard to section 412(g) (relating to the alternative minimum funding standard), for the plan year. The method of valuing assets for purposes of section 404 must be the same method of valuing assets used for purposes of section 412.

(2) ***Special adjustments of computations under section 412.*** To apply the rules of this section (*i.e.,* rules regarding the computation of normal cost with aggregate type funding methods, unfunded liabilities, and the full funding limitation described in paragraph (k) of the section, where applicable) with respect to a given plan year in computing deductible limits under section 404 (a)(1)(A), the following adjustments must be made:

(i) There must be excluded from the total assets of the plan the amount of any plan contribution for a plan year for which the plan was qualified under section 401(a), 403(a) or 405(a) that has not been previously deducted, even though that amount may have been credited to the funding standard account under section 412(b)(3). In the case of a plan using a spread gain funding method which maintains an unfunded liability (e.g., the frozen initial liability method, but not the aggregate method), the amount described in the preceding sentence must be included in the unfunded liability of the plan.

(ii) There must be included in the total assets of the plan for a plan year the amount of any plan contribution that has been deducted with respect to a prior plan year, even though that amount is considered under section 412 to be contributed in a plan year subsequent to that prior plan year. In the case of a plan using a spread gain funding method which does not maintain an unfunded liability, the amount described in the preceding sentence must be excluded from the unfunded liability of the plan.

The special adjustments described in paragraph (d)(2) (i) and (ii) of this section apply on a year-by-year basis for purposes of section 404(a)(1)(A) only. Thus, the adjustments have no effect on the computation of the minimum funding requirement under section 412.

(e) ***Special computation rules under section 404(a)(1)(A)(i)*** —

(1) ***In general.*** For purposes of determining the deductible limit under section 404(a)(1)(A)(i), the deductible limit with respect to a plan year is the sum of—

(i) The amount required to satisfy the minimum funding standard of section 412(a) (determined without regard to section 412(g)) for the plan year and

(ii) An amount equal to the includible employer contributions. The term "includible employer contributions" means employer contributions which were required by section 412 for the plan year immediately preceding such plan year, and which were not deductible under section 404(a) for the prior taxable year of the employer solely because they were not contributed during the prior taxable year (determine with regard to section 404(a)(6)).

(2) ***Rule for an employer using alternative minimum funding standard account and computing its deduction under section 404(a)(1)(A)(i).*** This paragraph (e)(2) applies if the minimum funding requirements for the plan are determined under the alternative minimum funding standard described in section 412(g) for both the current plan year and the immediately preceding plan year. In that case, the deductible limit under section 404(a)(1)(A)(i) (regarding the minimum funding requirement of section 412) for the current year is the sum of the amount determined under the rules of paragraph (e)(1) of this section.

(i) Plus the charge under section 412(b)(2)(D), and

(ii) Less the credit under section 412(b)(3)(D),

that would be required if in the current plan year the use of the alternative method were discontinued.

(f) ***Special computation rules under section*** 404(a)(1)(A) (ii) *and* (iii) — (1) *In general.* Subject to the full funding limitation described in paragraph (k) of this section, the deductible limit under section 404(a)(1)(A)(ii) and (iii) is the normal cost of the plan (determined in accordance with paragraph (d) of this section).

(2) ***Adjustments in calculating limit under section 404 (a)(1)(A)(iii).*** In calculating the deductible limit under section 404(a)(1)(A)(iii), the normal cost of the plan is—

(i) Decreased by the limit adjustments to any unamortized bases required by paragraph (g) of this section, for example, bases that are due to a net experience gain, a change in actuarial assumptions, a change in funding method, or a plan provision or amendment which decreases the accrued liability of the plan, and

(ii) Increased by the limit adjustments of any unamortized 10-year amortization bases required by paragraph (g) or (j) of this section, for example, bases that are due to a net experience loss, a change in actuarial assumptions, a change in funding method, or a plan provision or amendment which increases the accrued liability.

(3) ***Timing for computations and interest adjustments under section 404(a)(1)(A) (ii) and (iii).*** Regardless of the actual time when contributions are made to a plan, in computing the deductible limit under section 404(a)(1)(A) (ii) and (iii) the normal cost and limit adjustments shall be computed as of the date when contributions are assumed to be made ("the computation date") and adjusted for interest at the valuation rate from the computation date to the earlier of—

(i) The last day of the plan year used to compute the deductible limit for the taxable year, or

(ii) The last day of that taxable year. For additional provisions relating to the timing of computations and interest adjustments, see paragraph (h)(6) of this section (relating to the timing of computations and interest adjustments in the maintenance of 10-year amortization bases). For taxable years beginning before April 22, 1981, computations under the preceding sentence may, as an alternative, be based on prior published positions of the Internal Revenue Service under section 404(a).

(4) ***Special limit under section 404(a)(1)(A)(ii).*** If the deduction for the plan year is determined solely on the basis of section 404(a)(1)(A)(ii) (that is, without regard to clauses (i) or (iii)), the special limitation contained in section 404(a)(1)(A)(ii), regarding the unfunded cost with respect to any three individuals, applies, notwithstanding the rules contained in paragraphs (d)(2) and (f)(1) of this section.

(g) ***Establishment of a 10-year amortization base*** —

(1) ***Experience gains and losses.*** In the case of a plan valued by the use of a funding method which is an immediate gain type of funding method (and therefore separately amortizes rather than includes experience gains and losses as a part of the normal cost of the plan), a 10-year amortization base must be established in any plan year equal to the net experience gain or loss required under section 412 to be determined with respect to that plan year. The base is to be maintained in accordance with paragraph (h) of this section. Such a base must not be established if the deductible limit is determined by use of a funding method which is a spread gain type of funding method (under which experience gains and losses are spread over future periods as a part of the plan's normal cost). Examples of the immediate gain type of funding method are the unit credit method, entry age normal cost method, and the individual level premium cost method. Examples of the spread gain type of funding method are the aggregate cost method, frozen initial liability cost method, and the attained age normal cost method.

(2) ***Change in actuarial assumptions.***

(i) If the creation of an amortization base is required under the rules of section 412(b) (2)(B)(v) or (3)(B)(iii) (as applied to the funding method used by the plan), a 10-year amortization base must be established at the time of a change in actuarial assumptions used to value plan liabilities. The amount of the base is the difference between the accrued liability calculated on the basis of the new assumptions and the accrued liability calculated on the basis of the old assumptions. Both computations of accrued liability are made as of the date of the change in assumptions.

(ii) A plan using a funding method of the spread gain type does not directly determine an accrued liability. If a plan using such a method is required under section 412(b) (2)(B)(v) or (3)(B)(iii) to create an amortization base, it must establish a base as described in paragraph (g)(2)(i) of this section for a change in actuarial assumptions by determining an accrued liability on the basis of another funding method (of the immediate gain type) that does determine an accrued liability. (The aggregate method is an example of a funding method that is not required under section 412(b) (2)(B)(v) or (3)(B)(iii) to create an amortization base.) The funding method chosen to determine the accrued liability of the plan in these cases must be the same method used to establish all other 10-year amortization bases maintained by the plan, if any. These bases must be maintained in accordance with paragraph (h) of this section.

(3) ***Past service or supplemental credits.*** A 10-year base must be established when a plan is established or amended, if the creation of an amortizable base is required under the rules of section 412(b)(2)(B)(ii) or (iii), or (b)(3)(B)(i) (as applied to the funding method used by the plan). The amount of the base is the accrued liability arising from, or the decrease in accrued liability resulting from, the establishment or amendment of the plan. The base must be maintained in accordance with paragraph (h) of this section.

(4) ***Change in funding method.*** If a change in funding method results in an increase or decrease in an unfunded liability required to be amortized under section 412, a 10-year base must be established equal to the increase or decrease in unfunded liability resulting from the change in funding method. The base must be maintained in accordance with paragraph (h) of this section.

(h) ***Maintenance of 10-year amortization base*** —

(1) ***In general.*** Each time a 10-year amortization base is established, whether by a change in funding method, by plan amendment, by change in actuarial assumptions, or by experience gains and losses, the base must, except as provided in paragraph (i) of this section, be separately maintained in order to determine when the unamortized amount of the base is zero. The sum of the unamortized balances of all of the 10-year bases must equal the plan's unfunded liability with the adjustments described in paragraph (d) of this section, if applicable. When the unamortized amount of a base is zero, the deductible limit is no longer adjusted to reflect the amortization of the base.

(2) ***First year's base.*** See either paragraph (g) or paragraph (i) of this section for rules applicable with respect to the first year of a base.

(3) ***Succeeding year's base.*** For any plan year after the first year of a base, the unamortized amount of the base is equal to—

(i) The unamortized amount of the base as of the valuation date in the prior plan year, plus

(ii) Interest at the valuation rate from the valuation date in the prior plan year to the valuation date in the current plan year on the amount described in subdivision (i), minus

(iii) The contribution described in paragraph (h)(4) of this section with respect to the base for the prior plan year.

The valuation date is the date as of which plan liabilities are valued under section 412(c)(9). If such a valuation is performed less often than annually for purposes of section 412, bases must be adjusted for purposes of section 404 each year as of the date on which a section 412 valuation would be performed were it required on an annual basis. See paragraph (b)(3) of this section for the definition of valuation rate.

(4) ***Contribution allocation with respect to each base.*** A portion of the total contribution for the prior plan year is allocated to each base. Generally, this portion equals the product of—

(i) The total contribution described in paragraph (h)(6) of this section with respect to all bases, and

(ii) The ratio of the amount described in paragraph (b)(3)(i) of this section with respect to the base to the sum (using true rather than absolute values) of such amounts with respect to all remaining bases.

However, if the result of this computation with respect to a particular base exceeds the amount necessary to amortize such base fully, the smaller amount shall be deemed the contribution made with respect to such base. The unallocated excess with respect to a now fully amortized base shall be allocated among the other bases as indicated above.

(5) ***Other allocation methods.*** The Commissioner may authorize the use of methods other than the method described in paragraph (h)(4) of this section for allocating contributions to bases.

(6) ***Total contribution for all bases.*** The contribution with respect to all bases for the prior plan year (see paragraph (h)(3)(iii) of this section) is the difference between—

(i) The sum of

(A) the total deduction (including a carryover deduction) for the prior year,

(B) interest on the actual contributions for the prior year (whether or not deductible) at the valuation rate for the period between the dates as of which the contributions are credited under section 412 and the valuation date in the current plan year, and

(C) interest on the carryover described in section 404(a)(1)(D) that is available at the beginning of the prior taxable year at the valuation rate for the period between the current and prior valuation dates, and

(ii) The normal cost for the prior plan year and interest on it at the valuation rate from the date as of which the normal cost is calculated to the current valuation date.

(7) ***Effect of failure to contribute normal cost plus interest on unamortized amounts.*** The failure to make a contribution at least equal to the sum of the normal cost plus interest on the unamortized amounts has the following effects under the preceding rules of this section—

(i) It does not create a new base.

(ii) It results in an increase in the unamortized amount of each base and consequently extends the time before the base is fully amortized.

(iii) The limit adjustment for any base is not increased (in absolute terms) even if the unamortized amount computed under paragraph (h) of this section exceeds the initial 10-year amortization base. Thus, if the total unamortized amount of the plan's bases at the beginning of the plan year is $100,000 (which is also the unfunded liability of the plan), and a required $50,000 normal cost contribution is not made for the plan year, the following effects occur. The total unamortized balance of the plan's bases increases by the $50,000 normal cost for the year (adjusted for interest), plus interest on the $100,000 balance of the bases; and, because of that increase, it will take a longer period to amortize the remaining balance of the bases. (The annual amortization amount does not change.)

(8) ***Required adjustment to a 10-year base limit adjustment if valuation rate changed.*** If there is a change in the valuation rate, the limit adjustment for all unamortized 10-year amortization bases must be changed, in addition to establishing a new base as provided in paragraph (g)(2) of this section. The new limit adjustment for any base is the level amount necessary to amortize the unamortized amount of the base over the remaining amortization period using the new valuation rate. The remaining amortization period of the base is the number of years at the end of which the unamortized amount of the base would be zero if the contribution made with respect to that base equaled the limit adjustment each year. This calculation of the remaining period is made on the basis of the valuation rate used before the change. Both the remaining amortization period and the revised limit adjustment may be determined through the use of standard annuity tables. The remaining period may be computed in terms of fractional years, or it may be rounded off to a full year. The unamortized amount of the base as of the valuation date and the remaining amortization period of that base shall not be changed by any change in the valuation rate.

(i) ***Combining bases*** —

(1) ***General method.*** For purposes of section 404 only, and not for purposes of section 412, different 10-year amortization bases may be combined into a single 10-year amortization base if such single base satisfies all of the requirements of paragraph (i) (2), (3), and (4) of this section at the time of the combining of the different bases.

(2) ***Unamortized amount.*** The unamortized amount of the single base equals the sum, as of the date the combination is made, of the unamortized amount of the bases being combined (treating negative bases as having negative unamortized amounts).

(3) ***Remaining amortization period.*** The remaining amortization period of the single base is equal to (i) the sum of the separate products of (A) the unamortized amount of each of these bases (using absolute values) and (B) its remaining amortization period, divided by (ii) the sum of the unamortized amounts of each of the bases (using absolute values). For purposes of this paragraph (i)(3), the remaining amortization period of each base being combined is that number of years at the end of which the unamortized amount of the base would be zero if the contribution made with respect to that base equaled the limit adjustment of that base in each year. This number may be determined through the use of standard annuity tables. The remaining amortization period described in this paragraph may be computed in terms of fractional years, or it may be rounded off to a whole year.

(4) ***Limit adjustment.*** The limit adjustment for the single base is the level amount necessary to amortize the unamortized amount of the combined base over the remaining amortization period described in paragraph (i)(3) of this section, using the valuation rate. This amount may be determined through the use of standard annuity tables.

(5) ***Fresh start alternative.*** In lieu of combining different 10-year amortization bases, a plan may replace all existing bases with one new 10-year amortization base equal to the unfunded liability of the plan as of the time the new base is being established. This unfunded liability must be determined in accordance with the general rules of paragraphs (d) and (f) of this section. The unamortized amount of the base and the limit adjustment for the base will be determined as though the base were newly established.

(j) ***Initial 10-year amortization base for existing plan*** —

(1) *In general.* In the case of a plan in existence before the effective date of section 404(a), the 10-year amortization base on the effective date of section 404(a) is the sum of all 10 percent bases existing immediately before section 404(a) became effective for the plan, determined under the rules of old section 404(a).

(2) *Limit adjustment.* The limit adjustment for the initial base is the lesser of the unamortized amount of such base or the sum of the amounts determined under paragraph (b)(3) of this section using the original balances of the remaining bases (under old section 404(a) rules) as the amount to be amortized.

(3) *Unamortized amount.* The employer may choose either to establish a single initial base reflecting both all prior 10-percent bases and the experience gain or loss for the immediately preceding actuarial period, or to establish a separate base for the prior 10-percent bases and another for the experience gain or loss for the immediately preceding period. If the initial 10-year amortization base reflects the net experience gain or loss from the immediately preceding actuarial period, the unamortized amount of the initial base shall equal the total unfunded liability on the effective date of section 404(a) determined in accordance with the general rules of paragraphs (d) and (f) of this section. If, however, a separate base will be used to reflect that gain or loss, the unamortized amount of the initial base shall equal such unfunded liability on the effective date of section 404(a), reduced by the net experience loss or increased by the net experience gain for the immediately preceding actuarial period. In this case, a separate 10-year amortization base must be established on the effective date equal to the net experience gain or loss. Thus, if the effective date unfunded liability is $100,000 and an experience loss of $15,000 is recognized on that date, and if the loss is to be treated as a separate base, the unamortized balances of the two bases would be $85,000 and $15,000. If the unfunded liability were the same $100,000, but a gain of $15,000 instead of a loss were recognized on that date, the unamortized balances of the two bases would be $115,000 and a credit base of $15,000. In both cases, if only one 10-year base is to be established on the effective date, its unamortized balance would be $100,000 (the unfunded liability of the plan). See paragraphs (d) and (f) for rules for determining the unfunded liability of the plan.

(k) *Effect of full funding limit on 10-year-amortization bases.* The amount deductible under section 404(a)(1)(A) (i), (ii), or (iii) for a plan year may not exceed the full funding limitation for that year. See section 412 and paragraphs (d), (e), and (f) of this section for rules to be used in the computation of the full funding limitation. If the total deductible contribution (including carryover) for a plan year equals or exceeds the full funding limitation for the year, all 10-year amortization bases maintained by the plan will be considered fully amortized, and the deductible limit for subsequent plan years will not be adjusted to reflect the amortization of these bases.

(l) *Transitional rules* —

(1) *Plan years beginning before April 22, 1981.* In determining the deductible limit for plan years beginning before April 22, 1981, a contribution will be deductible under section 404(a)(1)(A) if the computation of the deductible limit is based on an interpretation of section 404(a)(1)(A) that is reasonable when considered with prior published positions of the Internal Revenue Service. A computation of the deductible limit may satisfy the preceding sentence even if it does not satisfy the rules contained in paragraphs (c) through (i) of this section.

(2) *Transitional approaches.* The deductible limit determined for the first plan year with respect to which a plan applies the rules contained in paragraphs (c) through (i) of this section must be computed using one of the following approaches—

(i) The plan (whether or not in existence before the effective date of section 404(a)) may apply the rules of paragraph (j) for establishing the initial base for an existing plan, treating 10-year bases (if any) as 10 percent bases in adding bases.

(ii) The plan may apply the fresh start alternative for combining bases under paragraph (i)(5).

(iii) The plan may retroactively establish 10-year amortization bases for years with respect to which section 404(a)(1)(A) and the rules of this section would have applied but for the transition rule contained in paragraph (l)(1) of this section. Contributions actually deducted are used in retroactively establishing and maintaining these bases under paragraph (h). However, a deduction already taken shall not be recomputed because of the retroactive establishment of a base.

(m) ***Effective date of section 404(a).*** In the case of a plan which was in existence on January 1, 1974, section 404(a) generally applies for contributions on account of taxable years of an employer ending with or within plan years beginning after December 31, 1974. In the case of a plan not in existence on January 1, 1974, section 404(a) generally applies for contributions on account of taxable years of an employer ending with or within plan years beginning after September 4, 1974. See § 1.410(a)-2(c) for rules concerning the time of plan existence. See also § 1.410(a)-2(d), which provides that a plan in existence on January 1, 1974, may elect to have certain provisions, including the amendments to section 404(a) contained in section 1013 of the Employee Retirement Income Security Act of 1974, apply to a plan year beginning after September 2, 1974, and before the otherwise applicable effective date contained in that section.

[T.D. 7760, 46 FR 6914, Jan. 22, 1981; 46 FR 15685, Mar. 9, 1981]

§ 1.404(b)-1 Method of contribution, etc., having the effect of a plan; effect of section 404(b).

Section 404(a) is not confined to formal stock bonus, pension, profit- sharing, and annuity plans, or deferred compensation plans, but it includes any method of contributions or compensation having the effect of a stock bonus, pension, profit-sharing, or annuity plan, or similar plan deferring the receipt of compensation. Thus, where a corporation pays pensions to a retired employee or employees or to their beneficiaries in such amounts as may be determined from time to time by the board of directors or responsible officers of the company, or where a corporation is under an obligation, whether funded or unfunded, to pay a pension or other deferred compensation to an employee or his beneficiaries, there is a method having the effect of a plan deferring the receipt of compensation for which deductions are governed by section 404(a). If an employer on the accrual basis defers paying any compensation to an employee until a later year or years under an arrangement having the effect of a stock bonus, pension, profit-sharing, or annuity plan, or similar plan deferring the receipt of compensation, he shall not be allowed a deduction until the year in which the compensation is paid. This provision is not intended to cover the case where an employer on the accrual basis defers payment of compensation after the year of accrual merely because of inability to pay such compensation in the year of accrual, as, for example, where the funds of the company are not sufficient to enable payment of the compensation without jeopardizing the solvency of the company, or where the liability accrues in the earlier year, but the amount payable cannot be exactly determined until the later year.

[T.D. 6500, 25 FR 11690, Nov. 26, 1960]

§ 1.404(b)-1T Method or arrangement of contributions, etc., deferring the receipt of compensation or providing for deferred benefits. (Temporary)

Q-1: As amended by the Tax Reform Act of 1984, what does section 404(b) of the Internal Revenue Code provide?

A-1: As amended, section 404(b) clarifies that any plan, or method or arrangement, deferring the receipt of compensation or providing for deferred benefits (other than compensation) is to be treated as a plan deferring the receipt of compensation for purposes of section 404 (a) and (d). Accordingly, section 404 (a) and (d) (in the case of employees and nonemployees; respectively) shall govern the deduction of contributions paid or compensation paid or incurred with respect to such a plan, or method or arrangement. Section 404 (a) and (d) requires that such a contribution or compensation be paid or incurred for purposes of section 162 or 212 and satisfy the requirements for deductibility under either of those sections. Thus, for example, under section 404 (a)(5) and (b), if otherwise deductible under section 162 or 212, a contribution paid or incurred with respect to a nonqualified plan, or method or arragement, providing for deferred benefits is deductible in the taxable year of the employer in which or with which ends the taxable year of the employee in which the amount attributable to the contribution is includible in the gross income of the employee (without regard to any applicable exclusion under Chapter 1, Subtitle A, of the Internal Revenue Code). Section 404 (a) and (d) applies to all compensation and benefit plans, or methods or arrangements, however denominated, which defer the receipt of any amount of compensation or benefit, including fees or other payments. Thus, a limited partnership (using the accrual method of accounting) may not accrue deductions for a fee owed to an unrelated person (using the cash method of accounting) who performs services for the partnership until the partnership taxable year in which or with which ends the taxable year of the service provider in which the fee is included in income. However, notwithstanding the above, section 404 does not apply to contributions paid or accrued with respect to a “welfare benefit fund” (as defined in section 419(e)) after July 18, 1984, in taxable years of employers (and payors) ending after that date. Also, section 463 shall govern the deduction of vacation pay by a taxpayer that has elected the application of such section. For rules relating to the deduction of contributions paid or accrued with respect to a welfare benefit fund, see section 419, § 1.419-1T and § 1.419A-2T. For rules relating to the deduction of vacation pay for which an election is made under section 463, see § 301.9100-16T of this chapter and § 1.463-1T.

Q-2: When does a plan, or method or arrangement, defer the receipt of compensation or benefits for purposes of section 404 (a), (b), and (d)?

A-2:

(a) For purposes of section 404 (a), (b), and (d), a plan, or method or arrangement, defers the receipt of compensation or benefits to the extent it is one under which an employee receives compensation or benefits more than a brief period of time after the end of the employer's taxable year in which the services creating the right to such compensation or benefits are performed. The determination of whether a plan, or method or arrangement, defers the receipts of compensation or benefits is made separately with respect to each employee and each amount of compensation or benefit. Compensation or benefits received by an employee's spouse or dependent or any other person, but taxable to the employee, are treated as received by the employee for purposes of section 404. An employee is determined to receive compensation or benefits within or beyond a brief period of time after the end of the employer's taxable year under the rules provided in this Q&A. For the treatment of expenses with respect to transactions between related taxpayers, see section 267.

(b)

(1) A plan, or method or arrangement, shall be presumed to be one deferring the receipt of compensation for more than a brief period of time after the end of an employer's taxable year to the extent that compensation is received after the 15th day of the 3rd calendar month after the end of the employer's taxable year in which the related services are rendered ("the $2^1/_2$ month period"). Thus, for example, salary under an employment contract or a bonus under a year-end bonus declaration is presumed to be paid under a plan, or method or arrangement, deferring the receipt of compensation, to the extent that the salary or bonus is received beyond the applicable $2^1/_2$ month period. Further, salary or a year-end bonus received beyond the applicable $2^1/_2$ month period by one employee shall be presumed to constitute payment under a plan, or method or arrangement, deferring the receipt of compensation for such employee even though salary or bonus payments to all other employees are not similarly treated because they are received within the $2^1/_2$ month period. Benefits are "deferred benefits" if, assuming the benefits were cash compensation, such benefits would be considered deferred compensation. Thus, a plan, or method or arrangement, shall be presumed to be one providing for deferred benefits to the extent benefits for services are received by an employee after the $2^1/_2$ month period following the end of the employer's taxable year in which the related services are rendered.

(2) The taxpayer may rebut the presumption established under the previous subparagraph with respect to an amount of compensation or benefits only by setting forth facts and circumstances the preponderance of which demonstrates that it was impracticable, either administratively or economically, to avoid the deferral of the receipt by an employee of the amount of compensation or benefits beyond the applicable $2^1/_2$ month period and that, as of the end of the employer's taxable year such impracticability was unforeseeable. For example, the presumption may be rebutted with respect to an amount of compensation to the extent that receipt of such amount is deferred beyond the applicable $2^1/_2$ month period

(i) either because the funds of the employer were not sufficient to make the payment within the $2^1/_2$ month period without jeopardizing the solvency of the employer or because it was not reasonably possible to determine within the $2^1/_2$ month period whether payment of such amount was to be made, and

(ii) the circumstance causing the deferral described in (i) was unforeseeable as of the close of the employer's taxable year. Thus, the presumption with respect to the receipt of an amount of compensation or benefit is not rebutted to the extent it was foreseeable, as of the end of the employer's taxable year, that the amount would be received after the applicable $2^1/_2$ month period. For example, if, as of the end of the employer's taxable year, it is foreseeable that calculation of a year-end bonus to be paid to an employee under a given formula will not be completed and thus the bonus will not be received (and is in fact not received) by the end of the applicable $2^1/_2$ month period, the presumption that the bonus is deferred compensation is not rebutted.

(c) A plan, or method or arrangement, shall not be considered as deferring the receipt of compensation or benefits for more than a brief period of time after the end of the employer's taxable year to the extent that compensation or benefits are received by the employee on or before the end of the applicable $2^1/_2$ month period. Thus, for example, salary under an employment contract or a bonus under a year-end bonus declaration is not considered paid under a plan, or method or arrangement, deferring the receipt of compensation to the extent that such salary or bonus is received by the employee on or before the end of the applicable $2^1/_2$ month period.

(d) Solely for purposes of applying the rules of paragraphs (b) and (c) of this Q&A, in the case of an employer's taxable year ending on or after July 18, 1984, and on or before March 21, 1986, compensation or benefits that relate to services rendered in such taxable year shall be deemed to have been received within the applicable $2^1/_2$ month period if such receipt actually occurs after such $2^1/_2$ month period but on or before March 21, 1986.

Q-3: When does section 404(b), as amended by the Tax Reform Act of 1984, become effective?

A-3: With the exceptions discussed below, section 404(b), as amended, and the rules under Q&A-2 are effective with respect to amounts paid or incurred after July 18, 1984, in taxable years of employers (and payors) ending after that date. In the case of an extended vacation pay plan maintained pursuant to a collective bargaining agreement

(a) between employee representatives and one or more employers, and

(b) in effect on June 22, 1984, section 404(b) is not effective before the date on which such collective bargaining agreement terminates (determined without regard to any extension thereof agreed to after June 22, 1984). For purposes of the preceding sentence, any plan amendment made pursuant to a collective bargaining agreement relating to the plan which amends the plan solely to conform to any requirement added under section 512 of the Tax Reform Act of 1984 shall not be treated as a termination of such collective bargaining agreement. For purposes of this section, an “extended vacation pay plan” is one under which covered employees gradually over a specified period of years earn the right to additional vacation benefits, no part of which, under the terms of the plan, can be taken until the end of the specified period.

[T.D. 8073, 51 FR 4321, Feb. 4, 1986; 51 FR 7262, Mar. 3, 1986; 51 FR 11303, Apr. 2, 1986, as amended by T.D. 8435, 57 FR 43896, Sept. 23, 1992]

§ 1.404(c)-1 Certain negotiated plans; effect of section 404(c).

(a) Section 404(a) does not apply to deductions for contributions paid by an employer under a negotiated plan which meets the following conditions:

(1) The contributions under the plan are held in trust for the purpose of paying, either from principal or income or both, for the benefit of employees and their families, at least medical or hospital care, and pensions on retirement or death of employees; and

(2) Such plan was established before January 1, 1954, as a result of an agreement between employee representatives and the Government of the United States during a period of Government operation, under seizure powers, of a major part of the productive facilities of the industry in which such employer is engaged.

If these conditions are met, such contributions shall be deductible under section 162, to the extent that they constitute ordinary and necessary business expenses.

(b) The term “as a result of an agreement” is intended primarily to cover a trust established under the terms of an agreement referred to in paragraph (a)(2) of this section. It will also include a trust established under a plan of an employer, or group of employers, who are in competition with the employers whose facilities were seized by reason of producing the same commodity, and who would therefore be expected to establish such a trust as a reasonable measure to maintain a sound position in the labor market

producing the commodity. Thus, for example, if a trust was established under such an agreement in the bituminous coal industry, a similar trust established about the same time in the anthracite coal industry would be covered by this provision.

(c) If any such trust becomes qualified for exemption under section 501(a), the deductibility of contributions by an employer to such trust on or after the date of such qualification would no longer be governed by section 404(c), even though the trust may later lose its exemption under section 501(a).

[T.D. 6500, 25 FR 11690, Nov. 26, 1960]

§ 1.404(d)-1T Questions and answers relating to deductibility of deferred compensation and deferred benefits for independent contractors. (Temporary)

Q-1: How does the amendment of section 404(b) by the Tax Reform Act of 1984 affect the deduction of contributions or compensation under section 404(d)?

A-1: As amended by the Tax Reform Act of 1984, section 404(b) clarifies that section 404(d) shall govern the deduction of contributions paid and compensation paid or incurred by a payor under a plan, or method or arrangement, deferring the receipt of compensation or providing for deferred benefits for service providers with respect to which there is no employer-employee relationship. In such a case, section 404 (a) and (b) and the regulations thereunder apply as if the person providing the services were the employee and the person to whom the services are provided were the employer. Section 404(a) requires that such a contribution or compensation be paid or incurred for purposes of section 162 or 212 and satisfy the requirements for deductibility under either of those sections. However, notwithstanding the above, section 404 does not apply to contributions paid or accrued with respect to a “welfare benefit fund” (as defined in section 419(e)) after June 18, 1984, in taxable years of employers (and payors) ending after that date. Also, section 463 shall govern the deduction of vacation pay by a taxpayer that has elected under such section. For rules relating to the deduction of contributions paid or accrued with respect to a welfare benefit fund, see section 419, § 1.419-1T and § 1.419A-2T. For rules relating to the deduction of vacation pay for which an election is made under section 463, see § 301.9100-16T of this chapter and § 1.463-1T.

[T.D. 8073, 51 FR 4322, Feb. 4, 1986, as amended by T.D. 8435, 57 FR 43896, Sept. 23, 1992]

§ 1.404(e)-1 [Reserved]

§ 1.404(e)-1A Contributions on behalf of a self-employed individual to or under a qualified pension, annuity, or profit-sharing plan.

(a) ***In general.*** This section provides rules relating to employer contributions to qualified plans on behalf of self-employed individuals described in subsections (a) (8) and (9), (e), and (f) of section 404. Unless otherwise specifically provided, this section applies to taxable years of an employer beginning after December 31, 1973. Paragraph (b) of this section provides general rules of deductibility, paragraph (c) provides rules relating to defined contribution plans, paragraph (d) provides rules relating to defined benefit plans, paragraph (e) provides rules relating to combinations of plans, paragraph (f) provides rules for partnerships, paragraph (g) provides rules for insurance, paragraph (h) provides rules for loans, and paragraph (i) provides definitions.

(b) ***Determination of the amount deductible.***

(1) If a defined contribution plan covers employees, some of whom are self-employed individuals, the determination of the amount deductible is made on the basis of independent consideration of the common-law employees and of the self-employed individuals. See subparagraphs (2) and (3) of this paragraph. For purposes of determining the amount deductible with respect to contributions on behalf of a self-employed individual, such contributions shall be considered to satisfy the conditions of section 162 (relating to trade or business expenses) or 212 (relating to expenses for the production of income), but only to the extent that such contributions do not exceed the earned income of such individual derived from the trade or business with respect to which the plan is established. However, the portion of such contribution, if any, attributable to the purchase of life, accident, health, or other insurance protection shall be considered payment of a personal expense which does not satisfy the requirements of section 162 or 212. See paragraph (g) of this section.

(2)

(i) If contributions are made on behalf of employees, some of whom are self-employed individuals, to a defined contribution plan described in section 414(i) and included in section 404(a) (1), (2), or (3), the amount deductible with respect to contributions on behalf of the common-law employees covered under the plan shall be determined as if such employees were the only employees for whom contributions and benefits are provided under the plan. Accordingly, for purposes of such determination, the percentage of compensation limitations of section 404(a) (3) and (7) are applicable only with respect to the compensation otherwise paid or accrued during the taxable year by the employer with respect to the common-law employees. Similarly, the costs referred to in section 404(a)(1) (A) and (B) shall be the costs of funding the benefits of the common-law employees. Also, the provisions of section 404(a)(1)(D), (3), and (7), relating to certain carryover deductions, shall be applicable only to amounts contributed or to the amounts deductible on behalf of such employees.

(ii) The amount deductible, by reason of contributions on behalf of employees to a defined benefit plan, shall be determined without regard to the self-employed or common law status of each employee.

(3)

(i) If contributions are made on behalf of individuals, some or all of whom are self-employed individuals, to a defined contribution plan described in section 414(i) and included in section 404(a) (1), (2), or (3), the amount deductible in any taxable year with respect to contributions on behalf of such individuals shall be determined as follows:

(A) The provisions of section 404(a) (1), (2), (3), and (7) shall be applied as if such individuals were the only participants for whom contributions and benefits are provided under the plan. Thus, the costs referred to in such provisions shall be the costs of funding the benefits of the self-employed individuals. If such costs are less than an amount equal to the amount determined under paragraph (c) of this section, the maximum amount deductible with respect to such individuals shall be the cost of their benefits.

(B) The provisions of section 404(a) (1), (D), the third sentence of section 404(a) (3), (A), and the second sentence of section 404(a)(7), relating to certain carryover deductions are applicable to contributions on behalf of self-employed individuals made in taxable years of an employer beginning after December 31, 1975.

(C) For any employer taxable year in applying the 15 percent limit on deductible contributions set forth section in 404(a)(3) and the 25 percent limit in section 404(a)(7) for any taxable year of the employer, the amount deductible under section 404(e)(4) and paragraph (c)(4) of this section (relating to the minimum deduction of $750 or 100 percent of earned income) shall be substituted for such limits with respect to the self-employed individuals on whose behalf contributions are deductible under section 404(e)(4) for the taxable year of the employer. In addition, although the limitations of section 415 are applicable to the plan for plan years beginning after December 31, 1975, the defined contribution compensation limitation described in section 415(c)(1)(B) shall not be less than the amount deductible under section 404(e)(4) and paragraph (c)(4) of this section with respect to any self-employed individual for the taxable year of the employer wnding with or within the limitation year. The special rule in the second sentence of paragraph (3)(A) of section 404(a) is not applicable in determining the amounts deductible on behalf of self-employed individuals.

(ii) The limitations of this subparagraph are not applicable to a defined benefit plan for self-employed individuals.

(c) ***Defined contribution plans.***

(1) Under section 404(e)(1) in the case of a defined contribution plan, as defined in section 414(i), the amount deductible for the taxable year of the employer with respect to contributions on behalf of a self-employed individual shall not exceed the lesser of $7,500 or 15 percent of the earned income derived by such individual for such taxable year from the trade or business with respect to which the plan is established.

(2) Under section 404(e)(2)(A) if a self-employed individual receives in any taxable year earned income with respect to which deductions are allowable to two or more employers under two or more defined contribution plans the aggregate amounts deductible shall not exceed the lesser of $7,500 or 15 percent of such earned income. This limitation does not apply to contributions made under a plan on behalf of an employee who is not self-employed in the trade or business with respect to which the plan is established.

(3) Under section 404(e)(2)(B) in any case in which the applicable limitation of subparagraph (2) of this paragraph reduces the amount otherwise deductible with respect to contributions on behalf of any employee within the meaning of section 401(c)(1), the amount deductible by each employer for such employee shall be that amount which bears the same ratio to the aggregate amount deductible for such employee with respect to all trades or businesses (as determined in subparagraph (1) of this paragraph) as his earned income derived from the employer bears to the aggregate of his earned income derived from all of the trades or businesses with respect to which plans are established.

Under section 404(e)(4), notwithstanding the provisions of subparagraphs (1) and (2) of this paragraph, the limitations on the amount deductible for the taxable year of the employer with respect to contributions on behalf of a self-employed individual shall not be less than the lesser of $750 or 100 percent of the earned income derived by such individual for such taxable year from the trade or business with respect to which the plan is established. If such individual receives in any taxable year earned income with respect to which deductions are allowable to two or more employers, 100 percent of such earned income shall be taken into account for purposes of the limitations determined under this subparagraph. This subparagraph does not apply to any taxable year beginning after December 31, 1975, to any employee whose adjusted gross income for that taxable

year is greater than $15,000. In applying the preceding sentence, the adjusted gross income of an employee for a taxable year is determined separately for each individual, without regard to any community property laws, and without regard to the deduction allowable under section 404(a).

(d) ***Defined benefit plans.*** In the case of a defined benefit plan, as defined in section 401(j), the special limitations provided by section 404(e) and paragraph (c) of this section do not apply. See section 401(j) for requirements applicable to defined benefit plans.

(e) ***Combination of plans.*** For special rules applied if a self-employed individual in any taxable year is a paraticipant in both a defined benefit plan and a defined contribution plan, see section 401(j) and the regulations thereunder.

(f) ***Partner's distributive share of contributions and deductions.***

(1) For purposes of sections 702(a)(8) and 704 in the case of a defined contribution plan, a partner's distributive share of contributions on behalf of self-employed individuals under such a plan is the contribution made on his behalf, and his distributive share of deductions allowed the partnership under section 404 for contributions on behalf of a self-employed individual is that portion of the deduction which is attributable to contributions made on his behalf under the plan. The contribution on behalf of a partner and the deduction with respect thereto must be accounted for separately by such partner, for his taxable year with or within which the partnership's taxable year ends, as an item described in section 702(a)(8).

(2) In the case of a defined benefit plan, a partner's distributive share of contributions on behalf of self-employed individuals and his distributive share of deductions allowed the partnership under section 404 for such contributions is determined in the same manner as his distributive share of partnership taxable income. See section 704, relating to the determination of the distributive share and the regulations thereunder.

(g) ***Contributions allocable to insurance protection.*** Under Section 404(e)(3), for purposes of determining the amount deductible with respect to contributions on behalf of a self-employed individual, amounts allocable to the purchase of life, accident, health, or other insurance protection shall not be taken into account. Such amounts are neither deductible nor considered as contributions for purposes of determining the maximum amount of contributions that may be made on behalf of an owner-employee. The amount of a contribution allocable to insurance shall be an amount equal to a reasonable net premium cost, as determined by the Commissioner, for such amount of insurance for the appropriate period. See paragraph (b)(5) of § 1.72-16.

(h) ***Rules applicable to loans.*** Under section 404(f), for purposes of section 404, any amount paid, directly or indirectly, by an owner-employee in repayment of any loan which under section 72(m)(4)(B) was treated as an amount received from a qualified trust or plan shall be treated as a contribution to such trust or under such plan on behalf of such owner-employee.

(i) ***Definitions.*** Under section 404(a)(8), for purposes of section 404 and the regulations thereunder—

(1) The term “employee” includes an employee as defined in section 401(c)(1) and the term “employer” means the person treated as the employer of such individual under section 401(c)(4);

(2) The term “owner-employee” means an owner-employee as defined in section 401(c)(3);

(3) The term “earned income” means earned income as defined in section 401(c)(2); and

(4) The term "compensation" when used with respect to an individual who is an employee described in subparagraph (1) of this paragraph shall be considered to be a reference to the earned income of such individual derived from the trade or business with respect to which the plan is established.

[T.D. 7636, 44 FR 47056, Aug. 10, 1979, as amended by T.D. 9849, 84 FR 9234, Mar. 14, 2019]

§ 1.404(g)-1 Deduction of employer liability payments.

(a) ***General rule.*** Employer liability payments shall be treated as contributions to a stock bonus, pension, profit-sharing, or annuity plan to which section 404 applies. Such payments that satisfy the limitations of this section shall be deductible under section 404 when paid without regard to any other limitations in section 404.

(b) ***Employer liability payments.*** For purposes of this section, employer liability payments mean:

(1) Any payment to the Pension Benefit Guaranty Corporation (PBGC) for termination or withdrawal liability imposed under section 4062 (without regard to section 4062(b)(2)), 4063, or 4064 of the Employee Retirement Insurance Security Act of 1974 (ERISA). Any bond or escrow payment furnished under section 4063 of ERISA shall not be considered as a payment of liability until applied against the liability of the employer.

(2) Any payment to a non-multiemployer plan pursuant to a commitment to the PBGC made in accordance with PBGC Determination of Plan Sufficiency and Termination of Sufficient Plans. See PBGC regulations, 29 CFR 2617.13(b) for rules concerning these commitments. Such payments shall not exceed an amount necessary to provide for, and used to fund, the benefits guaranteed under section 4022 of ERISA.

(3) Any payment to a multiemployer plan for withdrawal liability imposed under part 1 of subtitle E of title IV of ERISA. Any bond or escrow payment furnished under such part shall not be considered as a payment of liability until applied against the liability of the employer.

(c) ***Limitations, etc.*** —

(1) ***Permissible expenses.*** A payment shall be deductible under section 404(g) and this section only if the payment satisfies the conditions of section 162 or section 212. Payments made by an entity which is liable for such payments because it is a member of a commonly controlled group of corporations, or trades or businesses, within the meaning of section 414 (b) or (c), shall not fail to satisfy such conditions merely because the entity did not directly employ participants in the plan with respect to which the liability payments were made.

(2) ***Qualified plan.*** A payment shall be deductible under section 404(g) and this section only if the payment is made in a taxable year of the employer ending within or with a taxable year of the trust for which the trust is exempt under section 501(a). For purposes of this paragraph, the payment timing rules of section 404(a)(6) shall apply.

(3) ***Full funding limitation.***

(i) If the employer liability payment is to a plan, the total amount deductible for such payment and for other plan contributions may not exceed an amount equal to the full funding limitation as defined in section 412(c)(7) for the taxable year with respect to which the contributions are deemed made under section 404.

(ii) If the total contributions to the plan for the taxable year including the employer liability payment exceed the amount equal to this full funding limitation, the employer liability payment shall be deductible first.

(iii) Any amount paid in a taxable year in excess of the amount deductible in such year under the full funding limitation shall be treated as a liability payment and be deductible in the succeeding taxable years in order of time to the extent of the difference between the employer liability payments made in each succeeding year and the maximum amount deductible for such year under the full funding limitation.

(4) ***Maximum deduction allowable under section 404.*** The amount deductible under section 404 is limited to the higher of the maximum amount deductible by the employer under section 404(a) or the amount otherwise deductible under section 404(g). If the contributions are to a plan to which more than one employer contributes, this limit shall apply to each employer separately rather than all employers in the aggregate. Thus, each employer may deduct the greater of its allocable share of the deduction determined under sections 404(a) and 413(b)(7) or 413(c)(6) or its allocable share of the amount deductible under section 404(g). However, pursuant to the rule in subdivision (ii) of subparagraph (3), in determining each employer's allocable share under section 404(a), the total amount deductible under section 404(a) by all employers shall not exceed the difference between the full funding limitation and the total amount deductible by all employers under section 404(g).

(5) ***Example.*** The provisions of this paragraph may be illustrated by the following example:

Example. In the 1983 taxable year, Employer *A* makes a withdrawal liability payment of $700,000 to multiemployer Plan *X* to which Employer *A* and Employer *B* are required to contribute. Employer *A*'s allocable share of the deduction allowable under sections 404(a) and 413(b)(7) in the 1983 taxable year is $600,000. Employer *B*'s allocable share of the deduction allowable under section 404(a) and 413(b)(7) in the 1983 taxable year is $400,000. The full funding limitation for the 1983 taxable year is $1,000,000. Based on paragraph (c)(4) of this section, Employer *A* may deduct $700,000, the amount of the withdrawal liability payment. However, the deduction of Employer *B* is limited to $300,000, the difference between the full funding limitation and the amount deductible under section 404(g).

(d) ***Effective date, etc.*** —

(1) ***General rule.*** This section is effective for employer payments made after September 25, 1980.

(2) ***Transitional rule.*** For employer payments made before September 26, 1980, for purposes of section 404, any amount paid by an employer under section 4062, 4063, or 4064 of the Employee Retirement Income Security Act of 1974 shall be treated as a contribution to which section 404 applies by such employer to or under a stock bonus, pension, profit-sharing, or annuity plan.

[T.D. 8085, 51 FR 16297, May 2, 1986]

§ 1.404(k)-1T Questions and answers relating to the deductibility of certain dividend distributions. (Temporary)

Q-1: What does section 404(k) provide?

A-1: Section 404(k) allows a corporation a deduction for dividends actually paid in accordance with section 404(k)(2) with respect to stock of such corporation held by an employee stock ownership plan (as defined in section 4975(e)(7)) maintained by the corporation (or by any other corporation that is a member of a

"controlled group of corporations" within the meaning of section 409(l)(4) that includes the corporation), but only if such dividends may be immediately distributed under the terms of the plan and all of the applicable qualification and distribution rules. The deduction is allowed under section 404(k) for the taxable year of the corporation during which the dividends are received by the participants.

Q-2: Is the deductibility of dividends paid to plan participants under section 404(k) affected by a plan provision which permits participants to elect to receive or not receive payment of dividends?

A-2: No. Dividends actually paid in cash to plan participants in accordance with section 404(k) are deductible under section 404(k) despite such an election provision.

Q-3: Are dividends paid in cash directly to plan participants by the corporation and dividends paid to the plan and then distributed in cash to plan participants under section 404(k) treated as distributions under the plan holding stock to which the dividends relate for purposes of sections 72, 401 and 402?

A-3: Generally, yes. However, a deductible dividend under section 404(k) is treated for purposes of section 72 as paid under a contract separate from any other contract that is part of the plan. Thus, a deductible dividend is treated as a plan distribution and as paid under a separate contract providing only for payment of deductible dividends. Therefore, a deductible dividend under section 404(k) is a taxable plan distribution even though an employee has unrecovered employee contributions or basis in the plan.

[T.D. 8073, 51 FR 4322, Feb. 4, 1986]

§ 1.404(k)-3 Disallowance of deduction for reacquisition payments.

Q-1: Are payments to reacquire stock held by an ESOP applicable dividends that are deductible under section 404(k)(1)?

A-1:

(a) Payments to reacquire stock held by an ESOP, including reacquisition payments that are used to make benefit distributions to participants or beneficiaries, are not deductible under section 404(k) because—

(1) Those payments do not constitute applicable dividends under section 404(k)(2); and

(2) The treatment of those payments as applicable dividends would constitute, in substance, an avoidance or evasion of taxation within the meaning of section 404(k)(5).

(b) See also § 1.162(k)-1 concerning the disallowance of deductions for amounts paid or incurred by a corporation in connection with the reacquisition of its stock from an ESOP.

Q-2: What is the effective date of this section?

A-2: This section applies with respect to payments to reacquire stock that are made on or after August 30, 2006.

[T.D. 9282, 71 FR 51474, Aug. 30, 2006]

§ 1.406-1 Treatment of certain employees of foreign subsidiaries as employees of the domestic corporation.

(a) *Scope* —

(1) ***General rule.*** For purposes of applying the rules in part 1 of subchapter D of chapter 1 of subtitle A of the Code and the regulations thereunder with respect to a pension, profit-sharing, or stock bonus plan described in section 401(a), an annuity plan described in section 403(a), or a bond purchase plan described in section 405(a), of a domestic corporation, an individual who is a citizen of the United States and who is an employee of a foreign subsidiary (as defined in section 3121(1)(8) and the regulations thereunder) of such domestic corporation shall be treated as an employee of such domestic corporation if the requirements of paragraph (b) of this section are satisfied.

(2) ***Cross-references.*** For rules relating to nondiscrimination requirements and the determination of compensation, see paragraph (c) of this section. For rules under which termination of the status of an individual as an employe of the domestic corporation in certain instances will not be considered as separation from service for certain purposes, see paragraph (d) of this section. For rules regarding deductibility of contribution, see paragraph (e) of this section. For rules regarding treatment of such individual as an employee of the domestic corporation under related provisions, see paragraph (f) of this section.

(b) ***Application of this section*** —

(1) ***Requirements.*** This section shall apply and the employee of the foreign subsidiary shall be treated as an employee of domestic corporation for the purposes set forth in paragraph (a)(1) of this section only if each of the following requirements is satisfied:

(i) The domestic corporation must have entered into an agreement under section 3121(l) to provide social security coverage which applies to the foreign subsidiary of which such individual is an employee and which has not been terminated under section 3121(l)(3) or (4).

(ii) The plan, referred to in paragraph (a)(1) of this section, must expressly provide for contributions or benefits for individuals who are citizens of the United States and who are employees of one or more of its foreign subsidiaries to which an agreement entered into by such domestic corporation under section 3121(l) applies. The plan must apply to all of the foreign subsidiaries to which such agreement applies.

(iii) Contributions under a funded plan of deferred compensation (whether or not a plan described in section 401(a), 403(a), or 405(a)) must not be provided by any other person with respect to the remuneration paid to such individual by the foreign subsidiary.

(2) ***Supplementary rules.*** Subparagraph (l)(ii) of this paragraph does not modify the requirements for qualification of a plan described in section 401(a), 403(a), or 405(a) and the regulations thereunder. It is not necessary that the plan provide benefits or contributions for all United States citizens who are employees of such foreign subsidiaries. If the plan is amended to cover individuals who are employees by reason of paragraph (a)(1) of this section, the plan will not qualify unless it meets the coverage requirements of section 410(b)(1) (section 401(a)(3), as in effect on September 1, 1974, for plan years to which section 410 does not apply; see § 1.410(a)-2 for the effective dates of section 401) and the nondiscrimination requirements of section 401(a)(4). In addition, the administrative rules contained in § 1.401(a)-3(e) (relating to the determination of the contributions or benefits provided by the employer under the Social Security Act) will also apply for purposes of determining whether the plan meets the requirements of section 401. For purposes of subparagraph (1)(iii) of this paragraph, contributions will not be considered as provided under a funded plan merely because the foreign subsidiary is required under the laws of the foreign jurisdiction to pay social insurance taxes or to make similar payments with respect to the wages paid to the employee.

(c) ***Special rules*** —

(1) ***Nondiscrimination requirements.*** For purposes of applying sections 401(a)(4) and 410(b)(1)(B) (section 401(a)(3)(B), as in effect on September 1, 1974, for plan years to which section 410 does not apply) and the regulations thereunder (relating to nondiscrimination concerning benefits and contributions and coverage of employees) with respect to an employee of the foreign subsidiary who is treated as an employee of the domestic corporation under paragraph (a)(1) of this section—

(i) If the employee is an officer, shareholder, or (with respect to plan years to which section 410 does not apply) person whose principal duties consist in supervising the work of other employees of the foreign subsidiary of the domestic corporation, he shall be treated as having such capacity with respect to the domestic corporation; and

(ii) The determination as to whether the employee is a highly compensated employee shall be made by comparing his total compensation (determined under subparagraph (2) of this paragraph) with the compensation of all the employees of the domestic corporation (including individuals treated as employees of the domestic corporation pursuant to section 406 and this section).

(2) ***Determination of compensation.*** For purposes of applying section 401(a)(5) and the regulations thereunder, relating to classifications that will not be considered discriminatory, with respect to an employee of the foreign subsidiary who is treated as an employee of the domestic corporation under paragraph (a)(1) of this section—

(i) The total compensation of the employee shall be the remuneration of the employee from the foreign subsidiary (including any allowances that are paid to the employee because of his employment in a foreign country) which would constitute his total compensation if his services had been performed for the domestic corporation;

(ii) The basic or regular rate of compensation of the employee shall be determined for the employee in the same manner as it is determined under section 401 for other employees of the domestic corporation; and

(iii) The amount paid by the domestic corporation which is equivalent to the tax imposed with respect to the employee by section 3101 (relating to the tax on employees under the Federal Insurance Contributions Act) shall be treated as having been paid by the employee and shall be included in his compensation.

(d) ***Termination of status as deemed employee not to be treated as separation from service for purposes of capital gain provisions and limitation of tax.*** For purposes of applying the rules, relating to the treatment of certain distributions which are made after an employee's separation from service, set forth in section 72(n) as in effect on September 1, 1974 (with respect to taxable years ending after December 31, 1969, and to which section 402(e) does not apply), and in sections 402(a)(2) and (e) and 403(a)(2) with respect to distributions or payments made after December 31, 1973, and in taxable years beginning after December 31, 1973) with respect to an employee of a foreign subsidiary who is treated as an employee of a domestic corporation under paragraph (a)(1) of this section, the employee shall not be considered as separated from the service of the domestic corporation solely by reason of the occurrence of any one or more of the following events:

(1) The termination, under the provisions of section 3121(l), of the agreement entered into by the domestic corporation under that section which covers the employment of the employee;

(2) The employee's becoming an employee of another foreign subsidiary of the domestic corporation with respect to which such agreement does not apply,

(3) The employee's ceasing to be an employee of the foreign subsidiary by reason of which employment he was treated as an employee of such domestic corporation, if he becomes an employee of another corporation controlled by such domestic corporation; or

(4) The termination of the provision of the plan described in paragraph (b)(1)(ii) of this section, for coverage of United States citizens who are employees of foreign subsidiaries covered by an agreement under section 3121(l).

For purposes of subparagraph (3) of this paragraph, a corporation is considered to be controlled by a domestic corporation if such domestic corporation owns directly or indirectly more than 50 percent of the voting stock of the corporation.

(e) ***Deductibility of contributions*** —

(1) ***In general.*** For purposes of applying sections 404 and 405(c) with respect to the deduction for contributions made to or under a pension, profit-sharing, or stock bonus plan described in section 401(a), an annuity plan described in section 403(a), or a bond purchase plan described in section 405(a), by a domestic corporation, or by another corporation which is entitled to deduct its contributions under section 404(a)(3)(B), on behalf of an employee of a foreign subsidiary treated as an employee of the domestic corporation under paragraph (a)(1) of this section—

(i) Except as provided in subdivision (ii) of this subparagraph, no deduction shall be allowed to such domestic corporation or to any other corporation which would otherwise be entitled to deduct its contributions on behalf of such employee under one of such sections;

(ii) There shall be allowed as a deduction from the gross income of the foreign subsidiary which is effectively connected with the conduct of a trade or business within the United States (within the meaning of section 882 and the regulations thereunder) an amount which is allocable and apportionable to such gross income under the rules of § 1.861-8 and which in no event may exceed the amount which (but for subdivision (i) of this subparagraph) would be deductible under section 404 or section 405(c) by the domestic corporation if the individual were an employee of the domestic corporation and if his compensation were paid by the domestic corporation; and

(iii) Any reference to compensation shall be considered to be a reference to the total compensation of such individual (determined by applying paragraph (c)(2) of this section).

(2) ***Year of deduction.*** Any amount deductible by the foreign subsidiary under section 406(d) and this paragraph shall be deductible for its taxable year with or within which ends the taxable year of the domestic corporation for which the contribution was made.

(3) ***Special rules.*** Whether contributions to a plan on behalf of an employee of the foreign subsidiary who is treated as an employee of the domestic corporation under paragraph (a)(1) of this section, or whether forfeitures with regard to such employee, will require an inclusion in the income of the domestic corporation or an adjustment in the basis of its stock in the foreign subsidiary, shall be determined in accordance with the rules of general application of subtitle A of chapter 1 of the Code (relating to income taxes). For example, an unreimbursed contribution by the domestic corporation to a plan which meets the requirements of section 401(a) will be treated, to the extent each employee's rights to the contribution are nonforfeitable, as a contribution of capital to the foreign subsidiary to the extent that such contributions are made on behalf of the employees of such subsidiary.

(f) ***Treatment as an employee of the domestic corporation under related provisions.*** An individual who is treated as an employee of a domestic corporation under paragraph (a)(1) of this section shall also be treated as an employee of such domestic corporation, with respect to the plan having the provision described in paragraph (b)(1)(ii) of this section, for purposes of applying section 72(d) (relating to employees' annuities), section 72(f) (relating to special rules for computing employees' contributions), section 101(b) (relating to employees' death benefits), section 2039 (relating to annuities), and section 2517 (relating to certain annuities under qualified plans) and the regulations thereunder.

(g) ***Nonexempt trust.*** If the plan of the domestic corporation is a qualified plan described under section 401(a), the fact that a trust which forms a part of such plan is not exempt from tax under section 501(a) shall not affect the treatment of an employee of a foreign subsidiary as an employee of a domestic corporation under section 406(a) and paragraph (a)(1) of this section.

(Sec. 411 Internal Revenue Code of 1954 (88 Stat. 901; 26 U.S.C. 411))

[T.D. 7501, 42 FR 42321, Aug. 23, 1978]

§ 1.407-1 Treatment of certain employees of domestic subsidiaries engaged in business outside the United States as employees of the domestic parent corporation.

(a) ***Scope*** —

(1) ***General rule.*** For purposes of applying the rules in part 1 of subchapter D of chapter 1 of subtitle A of the Code and the regulations thereunder with respect to a pension, profit-sharing, or stock bonus plan described in section 401(a), an annuity plan described in section 403(a), or a bond purchase plan described in section 405(a), of a domestic parent corporation (as defined in paragraph (b)(3)(ii) of this section), an individual who is a citizen of the United States and who is an employee of a domestic subsidiary (as defined in paragraph (b)(3)(i) of this section) of such domestic parent corporation shall be treated as an employee of such domestic parent corporation if the requirements of paragraph (b) of this section are satisfied.

(2) ***Cross-references.*** For rules relating to nondiscrimination requirements and the determination of compensation, see paragraph (c) of this section. For rules under which termination of the status of an individual as an employee of the domestic parent corporation in certain instances will not be considered as separation from service for certain purposes, see paragraph (d) of this section. For rules regarding deductibility of contributions, see paragraph (e) of this section. For rules regarding treatment of such individual as an employee of the domestic parent corporation under related provisions, see paragraph (f) of this section.

(b) ***Application of this section*** —

(1) ***Requirements.*** This section shall apply and the employee of the domestic subsidiary shall be treated as an employee of the domestic parent corporation for the purposes set forth in paragraph (a)(1) of this section only if each of the following requirements is satisfied:

(i) The plan, referred to in paragraph (a)(1) of this section, must expressly provide for contributions of benefits for individuals who are citizens of the United States and who are employees of one or more of the domestic subsidiaries of the domestic parent corporation. The plan must apply to every domestic subsidiary.

(ii) Contributions under a funded plan of deferred compensation (whether or not a plan described in section 401(a), 403(a), or 405(a)) must not be provided by any other person with respect to the remuneration paid to such individual by the domestic subsidiary.

(2) ***Supplementary rules.*** Subparagraph (1)(i) of this paragraph does not modify the requirements for qualification of a plan described in section 401(a), 403(a), or 405(a) and the regulations thereunder. It is not necessary that the plan provide benefits or contributions for all United States citizens who are employees of such domestic subsidiaries. It the plan is amended to cover individuals who are employees by reason of paragraph (a)(1) of this section, the plan will not qualify unless it meets the coverage requirements of section 410(b)(1) (section 401(a)(3), as in effect on September 1, 1974, for plan years to which section 410 does not apply; see § 1.410 (a)-2 for the effective dates of section 401) and the nondiscrimination requirements of section 410(a)(4). The administrative rules contained in § 1.401 (a)-3(e) (relating to the determination of the contributions or benefits provided by the employer under the Social Security Act) will also apply for purposes of determining whether the plan meets the requirements of section 401. For purposes of subparagraph (1)(ii) of this paragraph, contributions will not be considered as provided under a funded plan merely because the domestic subsidiary employer pays the tax imposed by section 3111 (relating to tax on employers under the Federal Insurance Contributions Act) with respect to such employee or is required under the laws of a foreign jurisdiction to pay social insurance taxes or to make similar payments with respect to the wages paid to the employee.

(3) ***Definitions*** —

(i) ***Domestic subsidiary.*** For purposes of this section, a corporation shall be treated as a domestic subsidiary for any taxable year only if each of the following requirements is satisfied:

(A) It is a domestic corporation 80 percent or more of the outstanding voting stock of which is owned by another domestic corporation;

(B) 95 percent of more of its gross income for the three-year period immediately preceding the close of its taxable year which ends on or before the close of the taxable year of such other domestic corporation (or for such part of such period during which it was in existence) was derived from sources without the United States, determined pursuant to sections 861 through 864 and the regulations thereunder; and

(C) 90 percent or more of its gross income for such period (or such part) was derived from the active conduct of a trade or business.

If for the period (or part thereof) referred to in (B) and (C) of this subdivision such corporation has no gross income, the provisions of (B) and (C) shall be treated as satisfied if it is reasonable to anticipate that, with respect to the first taxable year thereafter for which such corporation has gross income, such provisions will be satisfied.

(ii) ***Domestic parent corporation.*** The domestic parent corporation of any domestic subsidiary is the domestic corporation which owns 80 percent or more of the outstanding voting stock of such domestic subsidiary.

(c) ***Special rules*** —

(1) ***Nondiscrimination requirements.*** For purposes of applying sections 401(a)(4) and 410(b)(1)(B) (section 401(a)(3)(B), as in effect on Septemeber 1, 1974, for plan years to which section 410 does not apply) and the regulation thereunder (relating to nondiscrimination concerning benefits and contributions and coverage of employees) with respect to an employee of the domestic subsidiary who is treated as an employee of the domestic parent corporation under paragraph (a)(1) of this section—

(i) If the employee is an officer, shareholder, or (with respect to plan years to which section 410 does not apply) a person whose principal duties consist in supervising the work of other employees of the domestic subsidiary of the domestic parent corporation, he shall be treated as having such capacity with respect to the domestic parent corporation; and

(ii) The determination as to whether the employee is a highly compensated employee shall be made by comparing his total compensation determined under subparagraph (2) of this paragraph with the compensation of all the employees of the domestic parent corporation (including individuals treated as employees of the domestic parent corporation pursuant to section 407 and this section).

(2) ***Determination of compensation.*** For purposes of applying section 401(a) (5) and the regulations thereunder, relating to classifications that will not be considered discriminatory, with respect to an employee of the domestic subsidiary who is treated as an employee of the domestic parent corporation under paragraph (a)(1) of this section—

(i) The total compensation of the employee shall be the remuneration of the employee from the domestic subsidiary (including any allowances that are paid to the employee because of his employment in a foreign country) which would constitute his total compensation if his services had been performed for such domestic parent corporation; and

(ii) The basic or regular rate of compensation of the employee shall be determined for the employee in the same manner as it is determined under section 401 for other employees of the domestic parent corporation.

(d) ***Termination of status as deemed employee not to be treated as separation from service for purposes of captial gain provisions and limitation of tax.*** For purposes of applying the rules, relating to treatment of certain distributions which are made after an employee's separation from service, set forth in section 72(n) as in effect on September 1, 1974 (with respect to taxable years ending after December 31, 1969, and to which section 402(e) does not apply), and in sections 402 (a)(2) and (e) and 403(a)(2) (with respect to distributions or payments made after December 31, 1973, and in taxable years beginning after December 31, 1973) with respect to an employee of a domestic subsidiary who is treated as an employee of a domestic parent corporation under paragraph (a)(1) of this section, the employee shall not be considered as separated from the service of the domestic parent corporation solely by reason of the occurrence of any one or more of the following events:

(1) The fact that the corporation of which such individual is an employee ceases, for any taxable year, to be a domestic subsidiary within the mean of paragraph (b)(3)(i) of this section;

(2) The employee' ceasing to be an employee of the domestic subsidiary of such domestic parent corporation, if he becomes an employee of another corporation controlled by such domestic parent corporation; or

(3) The termination of the provision of the plan described in paragraph (b)(1)(i) of this section, requiring coverage of the United States citizens who are employees of domestic subsidiaries of the domestic parent corporation.

For purposes of subparagraph (2) of this paragraph, a corporation is considered to be controlled by a domestic parent corporation if the domestic parent corporation owns directly or indirectly more than 50 percent of the voting stock of the corporation.

(e) ***Deductibility of contributions*** —

(1) ***In general.*** For purposes of applying sections 404 and 405(c) with respect to the deduction for contributions made to or under a pension, profit-sharing, or stock bonus plan described in section 401(a), and annuity plan described in section 403(a), or a bond purchase plan described in section 405(a), by a domestic parent corporation, or by another corporation which is entitled to deduct its contributions under section 404(a)(3)(B), on behalf of an employee of a domestic subsidiary treated as an employee of the domestic parent corporation under paragraph (a)(1) of this section—

(i) Except as provided in subdivision (ii) of this subparagraph, no deduction shall be allowed to the domestic parent corporation which would otherwise be entitled to deduct its contributions on behalf of such employee under one of such sections;

(ii) There shall be allowed as a deduction to the domestic subsidiary of which such individual is an employee an amount equal to the amount which (but for subdivision (i) of this subparagraph) would be deductible under section 404 or section 405(c) by the domestic parent corporation if the individual were an employee of the domestic parent corporation and if his compensation were paid by the domestic corporation; and

(iii) Any reference to compensation shall be considered to be a reference to the total compensation of such individual determined by applying paragraph (c)(2) of this section).

(2) ***Year of deduction.*** Any amount deductible by the domestic subsidiary under section 407(d) and this paragraph shall be deductible for its taxable year with or within which ends the taxable year of the domestic parent corporation for which the contribution was made.

(3) ***Special rules.*** Whether contributions to a plan on behalf of an employee of the domestic subsidiary who is treated as an employee of the domestic parent corporation under paragraph (a)(1) of this section, or whether forfeitures with regard to such employee, will require an inclusion in the income of the domestic parent corporation or an adjustment in the basis of its stock in the domestic subsidiary, shall be determined in accordance with the rules of general application of subtitle A of chapter 1 of the Code (relating to income taxes). For an example, and unreimbursed contribution by the domestic parent corporation to a plan which meets the requirements of section 401(a) will be treated, to the extent each employee's rights to the contribution are nonforfeitable, as a contribution of capital to the domestic subsidiary to the extent that such contributions are made on behalf of the employees of such subsidiary.

(f) ***Treatment as an employee of the domestic parent corporation under related provisions.*** An individual who is treated as an employee of a domestic parent corporation under paragraph (a)(1) of this section shall also be treated as an employee of such domestic corporation, with respect to the plan having the provision described in paragraph (b)(1)(i) of this section, for purposes of applying section 72(d) (relating to special rules for computing employees' contributions), section 72(f) (relating to special rules for computing

employees' contributions), section 101(b) (relating to employees' section 101(b) (relating to employees' death benefits), section 2039 (relating to annuities), and section 2517 (relating to certain annuities under qualified plans) and the regulations thereunder.

(g) ***Nonexempt trust.*** If the plan of the domestic parent corporation is a qualified plan described under section 401(a), the fact that a trust which forms a part of such plan is not exempt from tax under section 501(a) shall not affect the treatment of an employee of a domestic subsidiary as an employee of a domestic parent corporation under section 407(a) and paragraph (a)(1) of this section.

(Sec. 411 Internal Revenue Code of 1954 (88 Stat. 901; 26 U.S.C. 411))

[T.D. 7501, 42 FR 42323, Aug. 23, 1977]

§ 1.408-1 General rules.

(a) ***In general.*** Section 408 prescribes rules relating to individual retirement accounts and individual retirement annuities. In addition to the rules set forth in §§ 1.408-2 and 1.408-3, relating respectively to individual retirement accounts and individual retirement annuities, the rules set forth in this section shall also apply.

(b) ***Exemption from tax.*** The individual retirement account or individual retirement annuity is exempt from all taxes under subtitle A of the Code other than the taxes imposed under section 511, relating to tax on unrelated business income of charitable, etc., organizations.

(c) ***Sanctions*** —

(1) ***Excess contributions.*** If an individual retirement account or individual retirement annuity accepts and retains excess contributions, the individual on whose behalf the account is established or who is the owner of the annuity will be subject to the excise tax imposed by section 4973.

(2) ***Prohibited transactions by owner or beneficiary of individual retirement account*** —

(i) Under section 408(e)(2), if, during any taxable year of the individual for whose benefit any individual retirement account is established, that individual or the individual's beneficiary engages in any transaction prohibited by section 4975 with respect to such account, such account ceases to be an individual retirement account as of the first day of such taxable year. In any case in which any individual retirement account ceases to be an individual retirement account by reason of the preceding sentence as of the first day of any taxable year, section 408(d)(1) applies as if there were a distribution on such first day in an amount equal to the fair market value (on such first day) of all assets in the account (on such first day). The preceding sentence applies even though part of the fair market value of the individual retirement account as of the first day of the taxable year is attributable to excess contributions which may be returned tax-free under section 408(d)(4) or 408(d)(5).

(ii) If the trust with which the individual engages in any transaction described in subdivision (i) of this subparagraph is established by an employer or employee association under section 408(c), only the employee who engages in the prohibited transaction is subject to disqualification of his separate account.

(3) ***Prohibited transaction by person other than owner or beneficiary of account.*** If any person other than the individual on whose behalf an individual retirement account is established or the individual's beneficiary engages in any transaction prohibited by section 4975 with respect to such account, such person shall be subject to the taxes imposed by section 4975.

(4) ***Pledging account as security.*** Under section 408(e)(4), if, during any taxable year of the individual for whose benefit an individual retirement account is established, that individual uses the account or any portion thereof as security for a loan, the portion so used is treated as distributed to that individual.

(5) ***Borrowing on annuity contract.*** Under section 408(e)(3), if during any taxable year the owner of an individual retirement annuity borrows any money under or by use of such contract, the contract ceases to be an individual retirement annuity as of the first day of such taxable year. See § 1.408-3(c).

(6) ***Premature distributions.*** If a distribution (whether a deemed distribution or an actual distribution) is made from an individual retirement account, or individual retirement annuity, to the individual for whose benefit the account was established, or who is the owner of the annuity, before the individual attains age $59^1/_2$ (unless the individual has become disabled within the meaning of section 72(m)(7)), the tax under Chapter 1 of the Code for the taxable year in which such distribution is received is increased under section 408(f)(1) or (f)(2). The increase equals 10 percent of the amount of the distribution which is includible in gross income for the taxable year. Except in the case of the credits allowable under section 31, 39, or 42, no credit can be used to offset the increased tax described in this subparagraph. See, however, § 1.408-4(c)(3).

(d) ***Limitation on contributions and benefits.*** An individual retirement account or individual retirement annuity is subject to the limitation on contributions and benefits imposed by section 415 for years beginning after December 31, 1975.

(e) ***Community property laws.*** Section 408 shall be applied without regard to any community property laws.

[T.D. 7714, 45 FR 52790, Aug. 8, 1980]

§ 1.408-2 Individual retirement accounts.

(a) ***In general.*** An individual retirement account must be a trust or a custodial account (see paragraph (d) of this section). It must satisfy the requirements of paragraph (b) of this section in order to qualify as an individual retirement account. It may be established and maintained by an individual, by an employer for the benefit of his employees (see paragraph (c) of this section), or by an employee association for the benefit of its members (see paragraph (c) of this section).

(b) ***Requirements.*** An individual retirement account must be a trust created or organized in the United States (as defined in section 7701(a)(9)) for the exclusive benefit of an individual or his beneficiaries. Such trust must be maintained at all times as a domestic trust in the United States. The instrument creating the trust must be in writing and the following requirements must be satisfied.

(1) ***Amount of acceptable contributions.*** Except in the case of a contribution to a simplified employee pension described in section 408(k) and a rollover contribution described in section 408(d)(3), 402(a)(5), 402(a)(7), 403(a)(4), 403(b)(8) or 409(b)(3)(C), the trust instrument must provide that

contributions may not be accepted by the trustee for the taxable year in excess of $1,500 on behalf of any individual for whom the trust is maintained. An individual retirement account maintained as a simplified employee pension may provide for the receipt of up to $7,500 for a calendar year.

(2) ***Trustee.***

(i) The trustee must be a bank (as defined in section 408(n) and the regulations thereunder) or another person who demonstrates, in the manner described in paragraph (e) of this section, to the satisfaction of the Commissioner, that the manner in which the trust will be administered will be consistent with the requirements of section 408 and this section.

(ii) Section 11.408(a)(2)-1 of the Temporary Income Tax Regulations under the Employee Retirement Income Security Act of 1974 is superseded by this subparagraph (2).

(3) ***Life insurance contracts.*** No part of the trust funds may be invested in life insurance contracts. An individual retirement account may invest in annuity contracts which provide, in the case of death prior to the time distributions commence, for a payment equal to the sum of the premiums paid or, if greater, the cash value of the contract.

(4) ***Nonforfeitability.*** The interest of any individual on whose behalf the trust is maintained in the balance of his account must be nonforfeitable.

(5) ***Prohibition against commingling.***

(i) The assets of the trust must not be commingled with other property except in a common trust fund or common investment fund.

(ii) For purposes of this subparagraph, the term “common investment fund” means a group trust created for the purpose of providing a satisfactory diversification or investments or a reduction of administrative expenses for the individual participating trusts, and which group trust satisfies the requirements of section 408(c) (except that it need not be established by an employer or an association of employees) and the requirements of section 401(a) in the case of a group trust in which one of the individual participating trusts is an employees' trust described in section 401(a) which is exempt from tax under section 501(a).

(iii) For purposes of this subparagraph, the term “individual participating trust” means an employees' trust described in section 401(a) which is exempt from tax under section 501(a) or a trust which satisfies the requirements of section 408(a) provided that in the case of such an employees' trust, such trust would be permitted to participate in such a group trust if all the other individual participating trusts were employees' trusts described in section 401(a) which are exempt from tax under section 501(a).

(6) ***Distribution of interest.***

(i) The trust instrument must provide that the entire interest of the individual for whose benefit the trust is maintained must be distributed to him in accordance with paragraph (b)(6)(ii) or (iii) of this section.

(ii) Unless the provisions of paragraph (b)(6)(iii) of this section apply, the entire interest of the individual must be actually distributed to him not later than the close of his taxable year in which he attains age $70^{1}/_{2}$.

(iii) In lieu of distributing the individual's entire interest as provided in paragraph (b)(6)(ii) of this section, the interest may be distributed commencing not later than the taxable year described in such paragraph (b)(6)(ii). In such case, the trust must expressly provide that the entire interest of the individual will be distributed to the individual and the individual's beneficiaries, in a manner which satisfies the requirements of paragraph (b)(6)(v) of this section, over any of the following periods (or any combination thereof)—

(A) The life of the individual,

(B) The lives of the individual and spouse,

(C) A period certain not extending beyond the life expectancy of the individual, or

(D) A period certain not extending beyond the joint life and last survivor expectancy of the individual and spouse.

(iv) The life expectancy of the individual or the joint life and last survivor expectancy of the individual and spouse cannot exceed the period computed by use of the expected return multiples in § 1.72-9, or, in the case of payments under a contract issued by an insurance company, the period computed by use of the mortality tables of such company.

(v) If an individual's entire interest is to be distributed over a period described in paragraph (b)(6)(iii) of this section, beginning in the year the individual attains $70^1/_2$ the amount to be distributed each year must be not less than the lesser of the balance of the individual's entire interest or an amount equal to the quotient obtained by dividing the entire interest of the individual in the trust at the beginning of such year (including amounts not in the individual retirement account at the beginning of the year because they have been withdrawn for the purpose of making a rollover contribution to another individual retirement plan) by the life expectancy of the individual (or the joint life and last survivor expectancy of the individual and spouse (whichever is applicable)), determined in either case as of the date the individual attains age 70 in accordance with paragraph (b)(6)(iv) of this section, reduced by one for each taxable year commencing after the individual's attainment of age $70^1/_2$. An annuity or endowment contract issued by an insurance company which provides for non-increasing payments over one of the periods described in paragraph (b)(6)(iii) of this section beginning not later than the close of the taxable year in which the individual attains age $70^1/_2$ satisfies this provision. However, no distribution need be made in any year, or a lesser amount may be distributed, if beginning with the year the individual attains age $70^1/_2$ the aggregate amounts distributed by the end of any year are at least equal to the aggregate of the minimum amounts required by this subdivision to have been distributed by the end of such year.

(vi) If an individual's entire interest is distributed in the form of an annuity contract, then the requirements of section 408(a)(6) are satisfied if the distribution of such contract takes place before the close of the taxable year described in subdivision (ii) of this subparagraph, and if the individual's interest will be paid over a period described in subdivision (iii) of this subparagraph and at a rate which satisfies the requirements of subdivision (v) of this subparagraph.

(vii) In determining whether paragraph (b)(6)(v) of this section is satisfied, all individual retirement plans maintained for an individual's benefit (except those under which he is a beneficiary described in section 408(a)(7)) at the close of the taxable year in which he reaches age $70^1/_2$

must be aggregated. Thus, the total payments which such individual receives in any taxable year must be at least equal to the amount he would have been required to receive had all the plans been one plan at the close of the taxable year in which he attained age $70^{1}/_{2}$.

(7) ***Distribution upon death.***

(i) The trust instrument must provide that if the individual for whose benefit the trust is maintained dies before the entire interest in the trust has been distributed to him, or if distribution has been commenced as provided in paragraph (b)(6) of this section to the surviving spouse and such spouse dies before the entire interest has been distributed to such spouse, the entire interest (or the remaining part of such interest if distribution thereof has commenced) must, within 5 years after the individual's death (or the death of the surviving spouse) be distributed or applied to the purchase of an immediate annuity for this beneficiary or beneficiaries (or the beneficiary or beneficiaries of the surviving spouse) which will be payable for the life of such beneficiary or beneficiaries (or for a term certain not extending beyond the life expectancy of such beneficiary or beneficiaries) and which annuity contract will be immediately distributed to such beneficiary or beneficiaries. A contract described in the preceding sentence is not includible in gross income upon distribution. Section 1.408-4(e) provides rules applicable to the taxation of such contracts. The first sentence of this paragraph (b)(7) shall have no application if distributions over a term certain commenced before the death of the individual for whose benefit the trust was maintained and the term certain is for a period permitted under paragraph (b)(6)(iii) (C) or (D) of this section.

(ii) Each such beneficiary (or beneficiary of a surviving spouse) may elect to treat the entire interest in the trust (or the remaining part of such interest if distribution thereof has commenced) as an account subject to the distribution requirements of section 408(a)(6) and paragraph (b)(6) of this section instead of those of section 408(a)(7) and paragraph (b)(7) of this section. Such an election will be deemed to have been made if such beneficiary treats the account in accordance with the requirements of section 408(a)(6) and paragraph (b)(6) of this section. An election will be considered to have been made by such beneficiary if either of the following occurs:

(A) any amounts in the account (including any amounts that have been rolled over, in accordance with the requirements of section 408(d)(3)(A)(i), into an individual retirement account, individual retirement annuity, or retirement bond for the benefit of such individual) have not been distributed within the appropriate time period required by section 408(a)(7) and paragraph (b)(7) of this section; or

(B) any additional amounts are contributed to the account (or to the account, annuity, or bond to which the beneficiary has rolled such amounts over, as described in (1) above) which are subject, or deemed to be subject, to the distribution requirements of section 408(a)(6) and paragraph (b)(6) of this section.

(8) ***Definition of beneficiaries.*** The term “beneficiaries” on whose behalf an individual retirement account is established includes (except where the context indicates otherwise) the estate of the individual, dependents of the individual, and any person designated by the individual to share in the benefits of the account after the death of the individual.

(c) ***Accounts established by employers and certain association of employees*** —

(1) ***In general.*** A trust created or organized in the United States (as defined in section 7701(a)(9)) by an employer for the exclusive benefit of his employees or their beneficiaries, or by an association of employees for the exclusive benefit of its members or their beneficiaries, is treated as an individual

retirement account if the requirements of paragraphs (c)(2) and (c)(3) of this section are satisfied under the written governing instrument creating the trust. A trust described in the preceding sentence is for the exclusive benefit of employees or members even though it may maintain an account for former employees or members and employees who are temporarily on leave.

(2) ***General requirements.*** The trust must satisfy the requirements of paragraphs (b) (1) through (7) of this section.

(3) ***Special requirement.*** There must be a separate accounting for the interest of each employee or member.

(4) ***Definitions*** —

(i) ***Separate accounting.*** For purposes of paragraph (c)(3) of this section, the term "separate accounting" means that separate records must be maintained with respect to the interest of each individual for whose benefit the trust is maintained. The assets of the trust may be held in a common trust fund, common investment fund, or common fund for the account of all individuals who have an interest in the trust.

(ii) ***Employee association.*** For purposes of this paragraph and section 408(c), the term "employee association" means any organization composed of two or more employees, including but not limited to, an employee association described in section 501(c)(4). Such association may include employees within the meaning of section 401(c)(1). There must be, however, some nexus between the employees (e.g., employees of same employer, employees in the same industry, etc.) in order to qualify as an employee association described in this subdivision (ii).

(d) ***Custodial accounts.*** For purposes of this section and section 408(a), a custodial account is treated as a trust described in section 408(a) if such account satisfies the requirements of section 408(a) except that it is not a trust and if the assets of such account are held by a bank (as defined in section 401(d)(1) and the regulations thereunder) or such other person who satisfies the requirements of paragraph (b)(2)(ii) of this section. For purposes of this chapter, in the case of a custodial account treated as a trust by reason of the preceding sentence, the custodian of such account will be treated as the trustee thereof.

(e)

(1) ***In general.*** The trustee of a trust described in paragraph (b) of this section may be a person other than a bank if the person demonstrates to the satisfaction of the Commissioner that the manner in which the person will administer trusts will be consistent with the requirements of section 408. The person must demonstrate by written application that the requirements of paragraph (e)(2) to (e)(6) of this section will be met. The written application must be sent to address prescribed by the Commissioner in revenue rulings, notices, and other guidance published in the Internal Revenue Bulletin (see § 601.601(d)(2)(ii)(*b*) of this chapter). For procedural and administrative rules, see paragraph (e)(7) of this section.

(2) ***Fiduciary ability.*** The applicant must demonstrate in detail its ability to act within the accepted rules of fiduciary conduct. Such demonstration must include the following elements of proof:

(i) ***Continuity.***

(A) The applicant must assure the uninterrupted performance of its fiduciary duties nonwithstanding the death or change of its owners. Thus, for example, there must be sufficient diversity in the ownership of the applicant to ensure that the death or change of its owners will not interrupt the conduct of its business. Therefore, the applicant cannot be an individual.

(B) Sufficient diversity in the ownership of an incorporated applicant is demonstrated in the following circumstances:

(*1*) Individuals each of whom owns more than 20 percent of the voting stock in the applicant own, in the aggregate, no more than 50 percent of such stock;

(*2*) The applicant has issued securities registered under section 12 (b) of the Securities Exchange Act of 1934 (15 U.S.C. 78l (b)) or required to be registered under section 12(g) (1) of that Act (15 U.S.C. 78l (g)(1)); or

(*3*) The applicant has a parent corporation within the meaning of section 1563 (a) (1) that has issued securities registered under section 12 (b) of the Securities Exchange Act of 1934 (15 U.S.C. 78l (b)) or required to be registered under Section 12 (g) (1) of that Act (15 U.S.C. 78l (g)(1)).

(C) Sufficient diversity in the ownership of an applicant that is a partnership means that—

(*1*) Individuals each of whom owns more than 20 percent of the profits interest in the partnership own, in the aggregate, no more than 50 percent of such profits interest, and

(*2*) Individuals each of whom owns more than 20 percent of the capital interest in the partnership own, in the aggregate, no more than 50 percent of such capital interest.

(D) For purposes of this subdivision, the ownership of stock and of capital and profits interests shall be determined in accordance with the rules for constructive ownership of stock provided in section 1563 (e) and (f) (2). For this purpose, the rules for constructive ownership of stock provided in section 1563(e) and (f) (2) shall apply to a capital or profits interest in a partnership as if it were a stock interest.

(ii) ***Established location.*** The applicant must have an established place of business in the United States where it is accessible during every business day.

(iii) ***Fiduciary experience.*** The applicant must have fiduciary experience or expertise sufficient to ensure that it will be able to perform its fiduciary duties. Evidence of fiduciary experience must include proof that a significant part of the business of the applicant consists of exercising fiduciary powers similar to those it will exercise if its application is approved. Evidence of fiduciary expertise must include proof that the applicant employs personnel experienced in the administration of fiduciary powers similar to those the applicant will exercise if its application is approved.

(iv) ***Fiduciary responsibility.*** The applicant must assure compliance with the rules of fiduciary conduct set out in paragraph (e)(5) of this section.

(v) ***Financial responsibility.*** The applicant must exhibit a high degree of solvency commensurate with the obligations imposed by this paragraph. Among the factors to be taken into account are the applicant's net worth, its liquidity, and its ability to pay its debts as they come due.

(3) ***Capacity to account.*** The applicant must demonstrate in detail its experience and competence with respect to accounting for the interests of a large number of individuals (including calculating and allocating income earned and paying out distributions to payees). Examples of accounting for the interests of a large number of individuals include accounting for the interests of a large number of shareholders in a regulated investment company and accounting for the interests of a large number of variable annuity contract holders.

(4) ***Fitness to handle funds*** —

(i) ***In general.*** The applicant must demonstrate in detail its experience and competence with respect to other activities normally associated with the handling of retirement funds.

(ii) ***Examples.*** Examples of activities normally associated with the handling of retirement funds include:

(A) To Receive, issue receipts for, and safely keep securities;

(B) To collect income;

(C) To execute such ownership certificates, to keep such records, make such returns, and render such statements as are required for Federal tax purposes;

(D) To give proper notification regarding all collections;

(E) To collect matured or called principal and properly report all such collections;

(F) To exchange temporary for definitive securities;

(G) To give proper notification of calls, subscription rights, defaults in principal or interest, and the formation of protective committees;

(H) To buy, sell, receive, or deliver securities on specific directions.

(5) ***Rules of fiduciary conduct.*** The applicant must demonstrate that under applicable regulatory requirements, corporate or other governing instruments, or its established operating procedures:

(i) ***Administration of fiduciary powers.***

(A)

(*1*) The owners or directors of the applicant will be responsible for the proper exercise of fiduciary powers by the applicant. Thus, all matters pertinent thereto, including the determination of policies, the investment and disposition of property held in a fiduciary capacity, and the direction and review of the actions of all employees utilized by the applicant in the exercise of its fiduciary powers, will be the responsibility of the owners or directors. In discharging this responsibility, the owners or directors may assign to designated employees, by action duly recorded, the administration of such of the applicant's fiduciary powers as may be proper to assign.

(2) A written record will be made of the acceptance and of the relinquishment or closing out of all fiduciary accounts, and of the assets held for each account.

(3) If the applicant has the authority or the responsibility to render any investment advice with regard to the assets held in or for each fiduciary account, the advisability of retaining or disposing of the assets will be determined at least once during each period of 12 months.

(B) All employees taking part in the performance of the applicant's fiduciary duties will be adequately bonded. Nothing in this subdivision (i)(B) shall require any person to be bonded in contravention of section 412(d) of the Employee Retirement Income Security Act of 1974 (29 U.S.C. 1112(d)).

(C) The applicant will employ or retain legal counsel who will be readily available to pass upon fiduciary matters and to advise the applicant.

(D) In order to segregate the performance of its fiduciary duties from other business activities, the applicant will maintain a separate trust division under the immediate supervision of an individual designated for that purpose. The trust division may utilize the personnel and facilities of other divisions of the applicant, and other divisions of the applicant may utilize the personnel and facilities of the trust division, as long as the separate identity of the trust division is preserved.

(ii) ***Adequacy of net worth*** —

(A) ***Initial net worth requirement.*** In the case of applications received after January 5, 1995, no initial application will be accepted by the Commissioner unless the applicant has a net worth of not less than $250,000 (determined as of the end of the most recent taxable year). Thereafter, the applicant must satisfy the adequacy of net worth requirements of paragraph (e)(5)(ii)(B) and (C) of this section.

(B) No fiduciary account will be accepted by the applicant unless the applicant's net worth (determined as of the end of the most recent taxable year) exceeds the greater of—

(1) $100,000, or

(2) Four percent (or, in the case of a passive trustee described in paragraph (e)(6)(i)(A) of this section, two percent) of the value of all of the assets held by the applicant in fiduciary accounts (determined as of the most recent valuation date).

(C) The applicant will take whatever lawful steps are necessary (including the relinquishment of fiduciary accounts) to ensure that its net worth (determined as of the close of each taxable year) exceeds the greater of—

(1) $50,000, or

(2) Two percent (or, in the case of a passive trustee described in paragraph (e)(6)(i)(A) of this section, one percent) of the value of all of the assets held by the applicant in fiduciary accounts (determined as of the most recent valuation date).

(D) ***Assets held by members of SIPC*** —

(1) For purposes of satisfying the adequacy-of-net-worth requirement of this paragraph, a special rule is provided for nonbank trustees that are members of the Securities Investor Protection Corporation (SIPC) created under the Securities Investor Protection Act of 1970 (SIPA)(15 U.S.C. 78aaa *et seq.,* as amended). The amount that the net worth of a nonbank trustee that is a member of SIPC must exceed is reduced

by two percent for purposes of paragraph (e)(5)(ii)(B)(*2*), and one percent for purposes of paragraph (e)(5)(ii)(C)(*2*), of the value of assets (determined on an account-by-account basis) held for the benefit of customers (as defined in 15 U.S.C. 78fff-2(e)(4)) in fiduciary accounts by the nonbank trustee to the extent of the portion of each account that does not exceed the dollar limit on advances described in 15 U.S.C. 78fff-3(a), as amended, that would apply to the assets in that account in the event of a liquidation proceeding under the SIPA.

(*2*) The provisions of this special rule for assets held in fiduciary accounts by members of SIPC are illustrated in the following example.

Example: (a) Trustee X is a broker-dealer and is a member of the Securities Investment Protection Corporation. Trustee X also has been approved as a nonbank trustee for individual retirement accounts (IRAs) by the Commissioner but not as a passive nonbank trustee. Trustee X is the trustee for four IRAs. The total assets of each IRA (for which Trustee X is the trustee) as of the most recent valuation date before the last day of Trustee X's taxable year ending in 1995 are as follows: the total assets for IRA-1 is $3,000,000 (all of which is invested in securities); the value of the total assets for IRA-2 is $500,000 ($200,000 of which is cash and $300,000 of which is invested in securities), the value of the total assets for IRA-3 is $400,000 (all of which is invested in securities); and the value of the total assets of IRA-4 is $200,000 (all of which is cash). The value of all assets held in fiduciary accounts, as defined in § 1.408-2(e)(6)(viii)(A), is $4,100,000.
(b) The dollar limit on advances described in 15 U.S.C. § 78fff-3(a) that would apply to the assets in each account in the event of a liquidation proceeding under the Securities Investor Protection Act of 1970 in effect as of the last day of Trustee X's taxable year ending in 1995 is $500,000 per account (no more than $100,000 of which is permitted to be cash). Thus, the dollar limit that would apply to IRA-1 is $500,000; the dollar limit for IRA-2 is $400,000 ($100,000 of the cash and the $300,000 of the value of the securities); the dollar limit for IRA-3 is $400,000 (the full value of the account because the value of the account is less than $500,000 and no portion of the account is cash); and the dollar limit for IRA-4 is $100,000 (the entire account is cash and the dollar limit per account for cash is $100,000). The aggregate dollar limits of the four IRAs is $1,400,000.

(c) For 1996, the amount determined under § 1.408-2(e)(5)(ii)(B) is determined as follows for Trustee X: (1) four percent of $4,100,000 equals $164,000; (2) two percent of $1,400,000 equals $28,000; and (3) $164,000 minus $28,000

equals $136,000. Thus, because $136,000 exceeds $100,000, the minimum net worth necessary for Trustee X to accept new accounts for 1996 is $136,000.

(d) For 1996, the amount determined under § 1.408-2(e)(5)(ii)(C) for Trustee X is determined as follows: (1) two percent of $4,100,000 equals $82,000; (2) one percent of $1,400,000 equals $14,000; and (3) $82,000 minus $14,000 equals $68,000. Thus, because $68,000 exceeds $50,000, the minimum net worth necessary for Trustee X to avoid a mandatory relinquishment of accounts for 1996 is $68,000.

(E) The applicant will determine the value of the assets held by it in trust at least once in each calendar year and no more than 18 months after the preceding valuation. The assets will be valued at their fair market value, except that the assets of an employee pension benefit plan to which section 103(b)(3)(A) of the Employee Retirement Income Security Act of 1974 (29 U.S.C. 1023(b)(3)(A)) applies will be considered to have the value stated in the most recent annual report of the plan.

(iii) ***Audits.***

(A) At least once during each period of 12 months, the applicant will cause detailed audits of the fiduciary books and records to be made by a qualified public accountant. At that time, the applicant will ascertain whether the fiduciary accounts have been administered in accordance with law, this paragraph, and sound fiduciary principles. The audits shall be conducted in accordance with generally accepted auditing standards, and shall involve whatever tests of the fiduciary books and records of the applicant are considered necessary by the qualified public accountant.

(B) In the case of an applicant which is regulated, supervised, and subject to periodic examination by a State or Federal agency, such applicant may adopt an adequate continuous audit system in lieu of the periodic audits required by paragraph (e)(5)(iii)(A) of this section.

(C) A report of the audits and examinations required under this subdivision, together with the action taken thereon, will be noted in the fiduciary records of the applicant.

(iv) ***Funds awaiting investment or distribution.*** Funds held in a fiduciary capacity by the applicant awaiting investment or distribution will not be held uninvested or undistributed any longer than is reasonable for the proper management of the account.

(v) ***Custody of investments.***

(A) Except for investments pooled in a common investment fund in accordance with the provisions of paragraph (e)(5)(vi) of this section and for investments of accounts established under section 408(q) on or after August 1, 2003, the investments of each account will not be commingled with any other property.

(B) Assets of accounts requiring safekeeping will be deposited in an adequate vault. A permanent record will be kept of assets deposited in or withdrawn from the vault.

(vi) ***Common investment funds.*** The assets of an account may be pooled in a common investment fund (as defined in paragraph (e)(5)(viii)(C) of this section) if the applicant is authorized under applicable law to administer a common investment fund and if pooling the assets in a common investment fund is not in contravention of the plan documents or applicable law. The common investment fund must be administered as follows:

(A) Each common investment fund must be established and maintained in accordance with a written agreement, containing appropriate provisions as to the manner in which the fund is to be operated, including provisions relating to the investment powers and a general statement of the investment policy of the applicant with respect to the fund; the allocation of income, profits and losses; the terms and conditions governing the admission or withdrawal of participations in the funds; the auditing of accounts of the applicant with respect to the fund; the basis and method of valuing assets held by the fund, setting forth specific criteria for each type of asset; the minimum frequency for valuation of assets of the fund; the period following each such valuation date during which the valuation may be made (which period in usual circumstances may not exceed 10 business days); the basis upon which the fund may be terminated; and such other matters as may be necessary to define clearly the rights of participants in the fund. A copy of the agreement must be available at the principal office of the applicant for inspection during all business hours, and upon request a copy of the agreement must be furnished to the employer, the plan administrator, any participant or beneficiary of an account, or the individual for whose benefit the account is established or that individual's beneficiary.

(B) All participations in the common investment fund must be on the basis of a proportionate interest in all of the investments.

(C) Not less frequently than once during each period of 3 months the applicant must determine the value of the assets in the fund as of the date set for the valuation of assets. No participation may be admitted to or withdrawn from the fund except

(*1*) on the basis of such valuation and

(*2*) as of such valuation date. No participation may be admitted to or withdrawn from the fund unless a written request for or notice of intention of taking such action has been entered on or before the valuation date in the fiduciary records of the applicant. No request or notice may be canceled or countermanded after the valuation date.

(D)

(*1*) The applicant must at least once during each period of 12 months cause an adequate audit to be made of the common investment fund by a qualified public accountant.

(*2*) The applicant must at least once during each period of 12 months prepare a financial report of the fund which, based upon the above audit, must contain a list of investments in the fund showing the cost and current value of each investment; a statement for the period since the previous report showing purchases, with cost; sales, with profit or loss; any other investment changes; income and disbursements; and an appropriate notation as to any investments in default.

(3) The applicant must transmit and certify the accuracy of the financial report to the administrator of each plan participating in the common investment fund within 120 days after the end of the plan year.

(E) When participations are withdrawn from a common investment fund, distributions may be made in cash or ratably in kind, or partly in cash and partly in kind: *Provided,* That all distributions as of any one valuation date must be made on the same basis.

(F) If for any reason an investment is withdrawn in kind from a common investment fund for the benefit of all participants in the fund at the time of such withdrawal and such investment is not distributed ratably in kind, it must be segregated and administered or realized upon for the benefit ratably of all participants in the common investment fund at the time of withdrawal.

(vii) ***Books and records.***

(A) The applicant must keep its fiduciary records separate and distinct from other records. All fiduciary records must be so kept and retained for as long as the contents thereof may become material in the administration of any internal revenue law. The fiduciary records must contain full information relative to each account.

(B) The applicant must keep an adequate record of all pending litigation to which it is a party in connection with the exercise of fiduciary powers.

(viii) ***Definitions.*** For purposes of this paragraph (e)(5), and paragraph (e)(2)(v), and paragraph (e)(7) of this section—

(A) The term “account” or “fiduciary account” means a trust described in section 401(a) (including a custodial account described in section 401(f)), a custodial account described in section 403(b)(7), or an individual retirement account described in section 408(a) (including a custodial account described in section 408(h)).

(B) The term “plan administrator” means an administrator as defined in § 1.414(g)-1.

(C) The term “common investment fund” means a trust that satisfies the following requirements:

(1) The trust consists of all or part of the assets of several accounts that have been established with the applicant, and

(2) The trust is described in section 401(a) and is exempt from tax under section 501(a), or is a trust that is created for the purpose of providing a satisfactory diversification of investments or a reduction of administrative expenses for the participating accounts and that satisfies the requirements of section 408(c).

(D) The term “fiduciary records” means all matters which are written, transcribed, recorded, received or otherwise come into the possession of the applicant and are necessary to preserve information concerning the acts and events relevant to the fiduciary activities of the applicant.

(E) The term “qualified public accountant” means a qualified public accountant, as defined in section 103(a)(3)(D) of the Employee Retirement Income Security Act of 1974, 29 U.S.C. 1023(a)(3)(D), who is independent of the applicant.

(F) The term "net worth" means the amount of the applicant's assets less the amount of its liabilities, as determined in accordance with generally accepted accounting principles.

(6) *Special rules* —

(i) ***Passive trustee.***

(A) An applicant that undertakes to act only as a passive trustee may be relieved of one or more of the requirements of this paragraph upon clear and convincing proof that such requirements are not germane, under all the facts and circumstances, to the manner in which the applicant will administer any trust. A trustee is a passive trustee only if under the written trust instrument the trustee has no discretion to direct the investment of the trust funds or any other aspect of the business administration of the trust, but is merely authorized to acquire and hold particular investments specified by the trust instrument. Thus, for example, in the case of an applicant that undertakes merely to acquire and hold the stock of regulated investment companies, the requirements of paragraph (e)(5)(i)(A)(*3*) in its place, and (i)(D), and (vi) of this section shall not apply and no negative inference shall be drawn from the applicant's failure to demonstrate its experience of competence with respect to the activities described in paragraph (e)(4)(ii)(E) to (H) of this section.

(B) The notice of approval issued to an applicant that is approved by reason of this subdivision shall state that the applicant is authorized to act only as a passive trustee.

(ii) ***Federal or State regulation.*** Evidence that an applicant is subject to Federal or State regulation with respect to one or more relevant factors shall be given weight in proportion to the extent that such regulatory standards are consonant with the requirements of section 401. Such evidence may be submitted in addition to, or in lieu of, the specific proofs required by this paragraph.

(iii) ***Savings account.***

(A) An applicant will be approved to act as trustee under this subdivision if the following requirements are satisfied:

(*1*) The applicant is a credit union, industrial loan company, or other financial institution designated by the Commissioner;

(*2*) The investment of the trust assets will be solely in deposits in the applicant;

(*3*) Deposits in the applicant are insured (up to the dollar limit prescribed by applicable law) by an agency or instrumentality of the United States, or by an organization established under a special statute the business of which is limited to insuring deposits in financial institutions and providing related services.

(B) Any applicant that satisfies the requirements of this subdivision is hereby approved, and (notwithstanding subparagraph (2) of this paragraph) is not required to submit a written application. This approval takes effect on the first day after December 22, 1976, on which the applicant satisfies the requirements of this subdivision, and continues in effect for so long as the applicant continues to satisfy those requirements.

(C) If deposits are insured, but not in the manner provided in paragraph (e)(6)(iii)(A)(*3*) of this section, the applicant must submit an application. The application, notwithstanding subparagraph (2) of this paragraph, will be limited to a complete description of the insurance of applicant's deposits. The applicant will be approved if the Commissioner approves of the applicant's insurance.

(iv) ***Notification of Commissioner.*** The applicant must notify the Commissioner in writing of any change that affects the continuing accuracy of any representation made in the application required by this paragraph, whether the change occurs before or after the applicant receives a notice of approval. The notification must be addressed to address prescribed by the Commissioner in revenue rulings, notices, and other guidance published in the Internal Revenue Bulletin (see § 601.601(d)(2)(ii)(*b*) of this chapter.

(v) ***Substitution of trustee.*** No applicant will be approved unless the applicant undertakes to act as trustee only under trust instruments which contain a provision to the effect that the grantor is to substitute another trustee upon notification by the Commissioner that such substitution is required because the applicant has failed to comply with the requirements of this paragraph or is not keeping such records, or making such returns, or rendering such statements as are required by forms or regulations.

(7) ***Procedure and administration*** —

(i) ***Notice of approval.*** If the applicant is approved, a written notice of approval will be issued to the applicant. The notice of approval will state the day on which it becomes effective, and (except as otherwise provided therein) will remain effective until revoked. This paragraph does not authorize the applicant to accept any fiduciary account before such notice of approval becomes effective.

(ii) ***Notice of disapproval.*** If the applicant is not approved, a written notice will be furnished to the applicant containing a statement of the reasons why the applicant has not been approved.

(iii) ***Copy to be furnished.*** The applicant must not accept a fiduciary account until after the plan administrator or the person for whose benefit the account is to be established is furnished with a copy of the written notice of approval issued to the applicant. This provision is effective six months after April 20, 1979 for new accounts accepted thereafter. For accounts accepted before that date, the administrator must be notified before the later of the effective date of this provision or six months after acceptance of the account.

(iv) ***Grounds for revocation.*** The notice of approval issued to an applicant will be revoked if the Commissioner determines that the applicant is unwilling or unable to administer fiduciary accounts in a manner consistent with the requirements of this paragraph. Generally, the notice will not be revoked unless the Commissioner determines that the applicant has knowingly, willfully, or repeatedly failed to administer fiduciary accounts in a manner consistent with the requirements of this paragraph, or has administered a fiduciary account in a grossly negligent manner.

(v) ***Procedures for revocation.*** The notice of approval issued to an applicant may be revoked in accordance with the following procedures:

(A) If the Commissioner proposes to revoke the notice of approval issued to an applicant, the Commissioner will advise the applicant in writing of the proposed revocation and of the reasons therefor.

(B) Within 60 days after the receipt of such written advice, the applicant may protest the proposed revocation by submitting a written statement of facts, law, and arguments opposing such revocation to address prescribed by the Commissioner in revenue rulings, notices, and other guidance published in the Internal Revenue Bulletin (see § 601.601(d)(2)(ii)(*b*) of this chapter. In addition, the applicant may request a conference in the National Office.

(C) If the applicant consents to the proposed revocation, either before or after a National Office conference, or if the applicant fails to file a timely protest, the Commissioner will revoke the notice of approval that was issued to the applicant.

(D) If, after considering the applicant's protest and any information developed in conference, the Commissioner determines that the applicant is unwilling or unable to administer fiduciary accounts in a manner consistent with the requirements of this paragraph, the Commissioner will revoke the notice of approval that was issued to the applicant and will furnish the applicant with a written statement of findings on which the revocation is based.

(E) If at any time the Commissioner determines that immediate action is necessary to protect the interest of the Internal Revenue Service or of any fiduciary account, the notice of approval issued to the applicant will be suspended at once, pending a final decision to be based on the applicant's protest and any information developed in conference.

(8) *Special rules for governmental units* —

(i) ***In general.*** A governmental unit that seeks to qualify as a nonbank trustee of a deemed IRA that is part of its qualified employer plan must demonstrate to the satisfaction of the Commissioner that it is able to administer the trust in a manner that is consistent with the requirements of section 408. The demonstration must be made by written application to the Commissioner. Notwithstanding the requirement of paragraph (e)(1) of this section that a person must demonstrate by written application that the requirements of paragraphs (e)(2) through (e)(6) of this section will be met in order to qualify as a nonbank trustee, a governmental unit that maintains a plan qualified under section 401(a), 403(a), 403(b) or 457 need not demonstrate that all of these requirements will be met with respect to any individual retirement accounts maintained by that governmental unit pursuant to section 408(q). For example, a governmental unit need not demonstrate that it satisfies the net worth requirements of paragraph (e)(3)(ii) of this section if it demonstrates instead that it possesses taxing authority under applicable law. The Commissioner, in his discretion, may exempt a governmental unit from certain other requirements upon a showing that the governmental unit is able to administer the deemed IRAs in the best interest of the participants. Moreover, in determining whether a governmental unit satisfies the other requirements of paragraphs (e)(2) through (e)(6) of this section, the Commissioner may apply the requirements in a manner that is consistent with the applicant's status as a governmental unit.

(ii) ***Governmental unit.*** For purposes of this special rule, the term *governmental unit* means a state, political subdivision of a state, and any agency or instrumentality of a state or political subdivision of a state.

(iii) ***Additional rules.*** The Commissioner may in revenue rulings, notices, or other guidance of general applicability provide additional rules for governmental units seeking approval as nonbank trustees.

(iv) ***Effective/applicability date.*** This section is applicable for written applications made on or after June 18, 2007. The rules in this section also may be relied on for applications submitted on or after August 1, 2003 (or such earlier application as the Commissioner deems appropriate) and before June 18, 2007.

[T.D. 7714, 45 FR 52791, Aug. 8, 1980, as amended by T.D. 8635, 60 FR 65549, Dec. 20, 1995; 61 FR 11307, Mar. 20, 1996; T.D. 9142, 69 FR 43739, July 22, 2004; T.D. 9331, 72 FR 33388, June 18, 2007]

§ 1.408-3 Individual retirement annuities.

(a) ***In general.*** An individual retirement annuity is an annuity contract or endowment contract (described in paragraph (e)(1) of this section) issued by an insurance company which is qualified to do business under the law of the jurisdiction in which the contract is sold and which satisfies the requirements of paragraph (b) of this section. A participation certificate in a group contract issued by an insurance company described in this paragraph will be treated as an individual retirement annuity if the contract satisfies the requirements of paragraph (b) of this section; the certificate of participation sets forth the requirements of paragraphs (1) through (5) of section 408 (b); the contract provides for a separate accounting of the benefit allocable to each participant-owner; and the group contract is for the exclusive benefit of the participant owners and their beneficiaries. For purposes of this title, a participant-owner of a group contract described in this paragraph shall be treated as the owner of an individual retirement annuity. A contract will not be treated as other than an individual retirement annuity merely because it provides for waiver of premium on disability. An individual retirement annuity contract which satisfies the requirements of section 408 (b) need not be purchased under a trust if the requirements of paragraph (b) of this section are satisfied. An individual retirement endowment contract may not be held under a trust which satisfies the requirements of section 408 (a). Distribution of the contract is not a taxable event. Distributions under the contract are includible in gross income in accordance with the provisions of § 1.408-4 (e).

(b) ***Requirements*** —

(1) ***Transferability.*** The annuity or the endowment contract must not be transferable by the owner. An annuity or endowment contract is transferable if the owner can transfer any portion of his interest in the contract to any person other than the issuer thereof. Accordingly, such a contract is transferable if the owner can sell, assign, discount, or pledge as collateral for a loan or as security for the performance of an obligation or for any other purpose his interest in the contract to any person other than the issuer thereof. On the other hand, a contract is not to be considered transferable merely because the contract contains: a provision permitting the individual to designate a beneficiary to receive the proceeds in the event of his death, a provision permitting the individual to elect a joint and survivor annuity, or other similar provisions.

(2) ***Annual premium.*** Except in the case of a contribution to a simplified employee pension described in section 408 (k), the annual premium on behalf of any individual for the annuity or the endowment contract cannot exceed $1,500. Any refund of premiums must be applied before the close of the calendar year following the year of the refund toward the payment of future premiums or the purchase of additional benefits.

(3) ***Distribution.*** The entire interest of the owner must be distributed to him in the same manner and over the same period as described in § 1.408-2 (b) (6).

(4) ***Distribution upon death.*** If the owner dies before the entire interest has been distributed to him, or if distribution has commenced to the surviving spouse, the remaining interest must be distributed in the same manner, over the same period, and to the same beneficiaries as described in § 1.408-2 (b)(7).

(5) ***Nonforfeitability.*** The entire interest of the owner in the annuity or endowment contract must be nonforfeitable.

(6) ***Flexible premium.*** [Reserved]

(c) ***Disqualification.*** If during any taxable year the owner of an annuity borrows any money under the annuity or endowment contract or by use of such contract (including, but not limited to, pledging the contract as security for any loan), such contract will cease to be an individual retirement annuity as of the first day of such taxable year, and will not be an individual retirement annuity at any time thereafter. If an annuity or endowment contract which constitutes an individual retirement annuity is disqualified as a result of the preceding sentence, an amount equal to the fair market value of the contract as of the first day of the taxable year of the owner in which such contract is disqualified is deemed to be distributed to the owner. Such owner shall include in gross income for such year an amount equal to the fair market value of such contract as of such first day. The preceding sentence applies even though part of the fair market value of the individual retirement annuity as of the first day of the taxable year is attributable to excess contributions which may be returned tax-free under section 408(d)(4) or 408(d)(5).

(d) ***Premature distribution tax on deemed distribution.*** If the individual has not attained age $59^1/_2$ before the beginning of the year in which the disqualification described in paragraph (c) of this section occurs, see section 408(f)(2) for additional tax on premature distributions.

(e) ***Endowment contracts*** —

(1) ***Additional requirement for endowment contracts.*** No contract providing life insurance protection issued by a company described in paragraph (a) of this section shall be treated as an endowment contract for purposes of this section if—

(i) Such contract matures later than the taxable year in which the individual in whose name the contract is purchased attains the age of $70^1/_2$;

(ii) Such contract is not for the exclusive benefit of such individual or his beneficiaries;

(iii) Premiums under the contract may increase over the term of the contract;

(iv) When all premiums are paid when due, the case value of such contract at maturity is less than the death benefit payable under the contract at any time before maturity;

(v) The death benefit does not, at some time before maturity, exceed the greater of the cash value or the sum of premiums paid under the contract;

(vi) Such contract does not provide for a cash value;

(vii) Such contract provides that the life insurance element of such contract may increase over the term of such contract, unless such increase is merely because such contract provides for the purchase of additional benefits;

(viii) Such contract provides insurance other than life insurance and waiver of premiums upon disability; or

(ix) Such contract is issued after November 6, 1978.

(2) ***Treatment of proceeds under endowment contract upon death of individual.*** In the case of the payment of a death benefit under an endowment contract upon the death of the individual in whose name the contract is purchased, the portion of such payment which is equal to the cash value immediately before the death of such individual is not excludable from gross income under section 101(a) and is treated as a distribution from an individual retirement annuity. The remaining portion, if any, of such payment constitutes current life insurance protection and is excludable under section 101(a). If a death benefit is paid under an endowment contract at a date or dates later than the death of the individual, section 101(d) is applicable only to the portion of the benefit which is attributable to the amount excludable under section 101(a).

[T.D. 7714, 45 FR 52792, Aug. 8, 1980]

§ 1.408-4 Treatment of distributions from individual retirement arrangements.

(a) ***General rule*** —

(1) ***Inclusion in income.*** Except as otherwise provided in this section, any amount actually paid or distributed or deemed paid or distributed from an individual retirement account or individual retirement annuity shall be included in the gross income of the payee or distributee for the taxable year in which the payment or distribution is received.

(2) ***Zero basis.*** Notwithstanding section 1015(d) or any other provision of the Code, the basis (or investment in the contract) of any person in such an account or annuity is zero. For purposes of this section, an assignment of an individual's rights under an individual retirement account or an individual retirement annuity shall, except as provided in § 1.408-4(g) (relating to transfer incident to divorce), be deemed a distribution to such individual from such account or annuity of the amount assigned.

(b) ***Rollover contribution*** —

(1) ***To individual retirement arrangement.*** Paragraph (a)(1) of this section shall not apply to any amount paid or distributed from an individual retirement account or individual retirement annuity to the individual for whose benefit the account was established or who is the owner of the annuity if the entire amount received (including the same amount of money and any other property) is paid into an individual retirement account, annuity (other than an endowment contract), or bond created for the benefit of such individual not later than the 60th day after the day on which he receives the payment or distribution.

(2) ***To qualified plan.*** Paragraph (a)(1) of this section does not apply to any amount paid or distributed from an individual retirement account or individual retirement annuity to the individual for whose benefit the account was established or who is the owner of the annuity if—

(i) No amount in the account or no part of the value of the annuity is attributable to any source other than a rollover contribution from an employees' trust described in section 401(a) which is exempt from tax under section 501(a) or a rollover contribution from an annuity plan described in section 403(a) and the earnings on such sums, and

(ii) The entire amount received (including the same amount of money and any other property) represents the entire amount in the account and is paid into another such trust or plan (for the benefit of such individual) not later than the 60th day after the day on which the payment or distribution is received.

This subparagraph does not apply if any portion of the rollover contribution described in paragraph (b)(2)(i) of this section is attributable to an employees' trust forming part of a plan or an annuity under which the individual was an employee within the meaning of section 401(c)(1) at the time contributions were made on his behalf under the plan.

(3) ***To section 403(b) contract.*** [Reserved]

(4) ***Frequency limitation.***

(i) For taxable years beginning on or before December 31, 1977, paragraph (b)(1) of this section does not apply to any amount received by an individual from an individual retirement account, annuity or bond if at any time during the 3-year period ending on the day of receipt, the individual received any other amount from an individual retirement account, annuity or bond which was not includible in his gross income because of the application of paragraph (b)(1) of this section.

(ii) [Reserved]

(c) ***Excess contributions returned before due date of return*** —

(1) ***Excess contribution.*** The rules in this paragraph (c) apply for purposes of determining net income attributable to IRA contributions made before January 1, 2004, and returned pursuant to section 408(d)(4). The rules in § 1.408-11 apply for purposes of determining net income attributable to IRA contributions made on or after January 1, 2004, and returned pursuant to section 408(d)(4). For purposes of this paragraph, excess contributions are the excess of the amounts contributed to an individual retirement account or paid for an individual retirement annuity during the taxable year over the amount allowable as a deduction under section 219 or 220 for the taxable year.

(2) ***General rule.***

(i) Paragraph (a)(1) of this section does not apply to the distribution of any excess contribution paid during a taxable year to an account or annuity if: the distribution is received on or before the date prescribed by law (including extensions) for filing the individual's return for such taxable year; no deduction is allowed under section 219 or section 220 with respect to the excess contribution; and the distribution is accompanied by the amount of net income attributable to the excess contribution as of the date of the distribution as determined under subdivision (ii).

(ii) The amount of net income attributable to the excess contributions is an amount which bears the same ratio to the net income earned by the account during the computation period as the excess contribution bears to the sum of the balance of the account as of the first day of the taxable year in which the excess contribution is made and the total contribution made for such taxable year. For purposes of this paragraph, the term “computation period” means the period beginning on the first day of the taxable year in which the excess contribution is made and ending on the date of the distribution from the account.

(iii) For purposes of paragraph (c)(2)(ii), the net income earned by the account during the computation period is the fair market value of the balance of the account immediately after the distribution increased by the amount of distributions from the account during the computation period, and reduced (but not below zero) by the sum of:

(A) the fair market value of the balance of the account as of the first day of the taxable year in which the excess contribution is made and

(B) the contributions to the account made during the computation period.

(3) ***Time of inclusion.***

(i) For taxable years beginning before January 1, 1977, the amount of net income determined under subparagraph (2) is includible in the gross income of the individual for the taxable year in which it is received. The amount of net income thus distributed is subject to the tax imposed by section 408(f)(1) for the year includible in gross income.

(ii) [Reserved]

(4) ***Example.*** The provisions of this paragraph may be illustrated by the following example:

Example. On January 1, 1975, A, age 55, who is a calendar-year taxpayer, contributes $1,500 to an individual retirement account established for his benefit. For 1975, A is entitled to a deduction of $1,400 under section 219. For 1975, A does not claim as deductions any other items listed in section 62. A's gross income for 1975 is $9,334. On April 1, 1976, $107 is distributed to A from his individual retirement account. As of such date, the balance of the account is $1,498 [$1,605 − $107]. There were no other distributions from the account as of such date. The net amount of income earned by the account is $105 [$1,498 + $107 − (0 + $1,500)]. The net income attributable to the excess contribution is $7. [$105 × ($100/$1,500)]. A's adjusted gross income for 1975 is his gross income for 1975 ($9,334) reduced by the amount allowable to A as a deduction under section 219 ($1,400), or $7,934. A will include the $7 of the $107 distributed on April 1, 1976, in his gross income for 1976. Further, A will pay an additional income tax of $.70 for 1976 under section 408(f)(1).

(d) ***Deemed distribution*** —

(1) ***General rule.*** In any case in which an individual retirement account ceases to be an individual retirement account by reason of the application of section 408(e)(2), paragraph (a)(1) of this section shall apply as if there were a distribution on the first day of the taxable year in which such account ceases to be an individual retirement account of an amount equal to the fair market value on such day of all of the assets in the account on such day. In the case of a deemed distribution from an individual retirement annuity, see § 1.408-3(d).

(2) ***Using account as security.*** In any case in which an individual for whose benefit an individual retirement account is established uses, directly or indirectly, all or any portion of the account as security for a loan, paragraph (a)(1) of this section shall apply as if there were distributed on the first day of the taxable year in which the loan was made an amount equal to that portion of the account used as security for such loan.

(e) ***Distribution of annuity contracts.*** Paragraph (a)(1) of this section does not apply to any annuity contract which is distributed from an individual retirement account and which satisfies the requirements of paragraphs (b) (1), (3), (4) and (5) of section 408. Amounts distributed under such contracts will be taxable to the distributee under section 72. For purposes of applying section 72 to a distribution from such a contract, the investment in such contract is zero.

(f) ***Treatment of assets distributed from an individual retirement account for the purchase of an endowment contract.*** Under section 408(e)(5), if all, or any portion, of the assets of an individual retirement account are used to purchase an endowment contract described in § 1.408-3(e) for the benefit of the individual for whose benefit the account is established—

(1) The excess, if any, of the total amount of assets used to purchase such contract over the portion of the assets attributable to life insurance protection shall be treated as a rollover contribution described in section 408(d)(3), and

(2) The portion of the assets attributable to life insurance protection shall be treated as a distribution described in paragraph (a)(91) of this section, except that the provisions of section 408(f) shall not apply to such amount.

(g) *Transfer incident to divorce* —

(1) ***General rule.*** The transfer of an individual's interest, in whole or in part, in an individual retirement account, individual retirement annuity, or a retirement bond, to his former spouse under a valid divorce decree or a written instrument incident to such divorce shall not be considered to be a distribution from such an account or annuity to such individual or his former spouse; nor shall it be considered a taxable transfer by such individual to his former spouse notwithstanding any other provision of Subtitle A of the Code.

(2) ***Spousal account.*** The interest described in this paragraph (g) which is transferred to the former spouse shall be treated as an individual retirement account of such spouse if the interest is an individual retirement account; an individual retirement annuity of such spouse if such interest is an individual retirement annuity; and a retirement bond of such spouse if such interest is a retirement bond.

[T.D. 7714, 45 FR 52793, Aug. 8, 1980, as amended by T.D. 9056, 68 FR 23588, May 5, 2003]

§ 1.408-5 Annual reports by trustees or issuers.

(a) ***In general.*** The trustee of an individual retirement account or the issuer of an individual retirement annuity shall make annual calendar year reports concerning the status of the account or annuity. The report shall contain the information required in paragraph (b) and be furnished or filed in the manner and time specified in paragraph (c).

(b) ***Information required to be included in the annual reports.*** The annual calendar year report shall contain the following information for transactions occurring during the calendar year—

(1) The amount of contributions;

(2) The amount of distributions;

(3) In the case of an endowment contract, the amount of the premium paid allocable to the cost of life insurance;

(4) The name and address of the trustee or issuer; and

(5) Such other information as the Commissioner may require.

(c) ***Manner and time for filing.***

(1) The annual report shall be furnished to the individual on whose behalf the account is established or in whose name the annuity is purchased (or the beneficiary of the individual or owner). The report shall be furnished on or before the 30th day of June following the calendar year for which the report is required.

(2) The Commissioner may require the annual report to be filed with the Service at the time the Commissioner specifies.

(d) ***Penalties.*** Section 6693 prescribes penalties for failure to file the annual report.

(e) ***Effective date.*** This section shall apply to reports for calendar years after 1978.

(f) ***Reports for years prior to 1979.*** For years prior to 1979, a trustee or issuer shall make reports in the time and manner as the Commissioner requires.

[T.D. 7714, 45 FR 52795, Aug. 8, 1980]

§ 1.408-6 Disclosure statements for individual retirement arrangements.

(a) ***In general*** —

(1) ***General rule.*** Trustees and issuers of individual retirement accounts and annuities are, under the authority of section 408(i), required to provide disclosure statements. This section sets forth these requirements.

(2) [Reserved]

(b)-(c) [Reserved]

(d) ***Requirements.***

(1)-(3) [Reserved]

(4) ***Disclosure statements*** —

(i) Under the authority contained in section 408(i), a disclosure statement shall be furnished in accordance with the provisions of this subparagraph by the trustee of an individual retirement account described in section 408(a) or the issuer of an individual retirement annuity described in section 408(b) or of an endowment contract described in section 408(b) to the individual (hereinafter referred to as the “benefited individual”) for whom such an account, annuity, or contract is, or is to be, established.

(ii)

(A)

(*1*) The trustee or issuer shall furnish, or cause to be furnished, to the benefited individual, a disclosure statement satisfying the requirements of subdivisions (iii) through (viii) of this subparagraph, as applicable, and a copy of the governing instrument to be used in establishing the account, annuity, or endowment contract. The copy of such governing instrument need not be filled in with financial and other data pertaining to the benefited individual; however, such copy must be complete in all other respects. The disclosure statement and copy of the governing instrument must be received by the benefited individual at least seven days preceding the earlier of the date of establishment or purchase of the account, annuity, or endowment contract. A disclosure statement or copy of the governing instrument required by this subparagraph may be received by the benefited individual less than seven days preceding, but no later than, the earlier of the date of establishment or purchase, if

the benefited individual is permitted to revoke the account, annuity, or endowment contract pursuant to a procedure which satisfies the requirements of subdivision (ii)(A)(*2*) of this subparagraph.

(*2*) A procedure for revocation satisfies the requirements of this subdivision (ii)(A)(*2*) of this subparagraph if the benefited individual is permitted to revoke the account, or endowment contract by mailing or delivering, at his option, a notice of revocation on or before a day not less than seven days after the earlier of the date of establishment or purchase and, upon revocation, is entitled to a return of the entire amount of the consideration paid by him for the account, annuity, or endowment contract without adjustment for such items as sales commissions, administrative expenses or fluctuation in market value. The procedure may require that the notice be in writing or that it be oral, or it may require both a written and an oral notice. If an oral notice is required or permitted, the procedure must permit it to be delivered by telephone call during normal business hours. If a written notice is required or permitted, the procedure must provide that, if mailed, it shall be deemed mailed on the date of the postmark (or if sent by certified or registered mail, the date of certification or registration) if it is deposited in the mail in the United States in an envelope, or other appropriate wrapper, first class postage prepaid, properly addressed.

(B) If after a disclosure statement has been furnished, or caused to be furnished, to the benefited individual pursuant to paragraph (d)(4)(ii)(A) of this section and—

(*1*) On or before the earlier of the date of establishment or purchase, or

(*2*) On or before the last day on which the benefited individual is permitted to revoke the account, annuity, or endowment contract (if the benefited individual has a right to revoke the account, annuity, or endowment contract pursuant to the rules of subdivision (ii)(A) of this subparagraph).

there becomes effective a material adverse change in the information set forth in such disclosure statement or a material change in the governing instrument to be used in establishing the account, annuity, or contract, the trustee or issuer shall furnish, or cause to be furnished, to the benefited individual such amendments to any previously furnished disclosure statement or governing instrument as may be necessary to adequately inform the benefited individual of such change. The trustee or issuer shall be treated as satisfying this subdivision (ii)(B) of this subparagraph only if material required to be furnished by this subdivision is received by the benefited individual at least seven days preceding the earlier of the date of establishment or purchase of the account, annuity, or endowment contract or if the benefited individual is permitted to revoke the account, annuity, or endowment contract on or before a date not less than seven days after the date on which such material is received, pursuant to a procedure for revocation otherwise satisfying the provisions of subdivision (ii)(A)(*2*) of this subparagraph.

(C) If the governing instrument is amended after the account, annuity, or endowment contract is no longer subject to revocation pursuant to subdivision (ii)(A) or (B) of this subparagraph, the trustee or issuer shall not later than the 30th day after the later of the date on which the amendment is adopted or becomes effective, deliver or mail to the last known address of the benefited individual a copy of such amendment and, if such

amendment affects a matter described in subdivisions (iii) through (viii) of this subparagraph, a disclosure statement with respect to such matter meeting the requirements of subdivision (iv) of this subparagraph.

(D) For purposes of subdivision (ii) (A) and (B) of this subparagraph, if a disclosure statement, governing instrument, or an amendment to either, is mailed to the benefited individual, it shall be deemed (in the absence of evidence to the contrary) to be received by the benefited individual seven days after the date of mailing.

(E) In the case of a trust described in section 408(c) (relating to certain retirement savings arrangements for employees or members of associations of employees), the following special rules shall be applied:

(*1*) For purposes of this subparagraph, references to the benefited individual's account, annuity, or endowment contract shall refer to the benefited individual's interest in such trust, and

(*2*) The provisions of subdivision (ii) of this subparagraph shall be applied by substituting “the date on which the benefited individual's interest in such trust commences” for “the earlier of the date of establishment or purchase” wherever it appear therein.

Thus, for example, if an employer establishes a trust described in section 408(c) for the benefit of employees, and the trustee furnishes an employee with a disclosure statement and a copy of the governing instrument (as required by this subparagraph) on the date such employee's interest in the trust commences, such employee must be given a right to revoke such interest within a period of at least seven days. If any contribution has been made within such period (whether by the employee or by the employer), the full amount of such contribution must be paid to such employee pursuant to subdivision (ii)(A)(*2*) of this subparagraph.

(iii) The disclosure statement required by this subparagraph shall set forth in nontechnical language the following matters as such matters relate to the account, annuity, or endowment contract (as the case may be);

(A) Concise explanations of—

(*1*) The statutory requirements prescribed in section 408(a) (relating to an individual retirement account) or section 408(b) (relating to an individual retirement annuity and an endowment contract), and any additional requirements (whether or not required by law) that pertain to the particular retirement savings arrangement.

(*2*) The income tax consequences of establishing an account, annuity, or endowment contract (as the case may be) which meets the requirements of section 408(a) relating to an individual retirement account) or section 408(b) (relating to an individual retirement annuity and an endowment contract), including the deductibility of contributions to, the tax treatment of distributions (other than premature distributions) from, the availability of income tax free rollovers to and from, and the tax status of such account, annuity, or endowment contract.

(3) The limitations and restrictions on the deduction for retirement savings under section 219, including the ineligibility of certain individuals who are active participants in a plan described in section 219(b)(2)(A) or for whom amounts are contributed under a contract described in section 219(b)(2)(B) to make deductible contributions to an account or for an annuity or endowment contract.

(4) The circumstances under which the benefited individual may revoke the account, annuity, or endowment contract, and the procedure therefor (including the name, address, and telephone number of the person designated to receive notice of such revocation). Such explanation shall be prominently displayed at the beginning of the disclosure statement.

(B) Statements to the effect that—

(1) If the benefited individual or his beneficiary engages in a prohibited transaction, described in section 4975(c) with respect to an individual retirement account, the account will lose its exemption from tax by reason of section 408(e)(2)(A), and the benefited individual must include in gross income, for the taxable year during which the benefited individual or his beneficiary engages in the prohibited transaction the fair market value of the account.

(2) If the owner of an individual retirement annuity or endowment contract described in section 408(b) borrows any money under, or by use of, such annuity or endowment contract, then, under section 408(e)(3), such annuity or endowment contract loses its section 408(b) classification, and the owner must include in gross income, for the taxable year during which the owner borrows any money under, or by use of, such annuity or endowment contract, the fair market value of the annuity or endowment contract.

(3) If a benefited individual uses all or any portion of an individual retirement account as security for a loan, then, under section 408(e)(4), the portion so used is treated as distributed to such individual and the benefited individual must include such distribution in gross income for the taxable year during which he so uses such account.

(4) An additional tax of 10 percent is imposed by section 408(f) on distributions (including amounts deemed distributed as the result of a prohibited loan or use as security for a loan) made before the benefited individual has attained age $59^{1}/_{2}$, unless such distribution is made on account of death or disability, or unless a rollover contribution is made with such distribution.

(5) Sections 2039(e) (relating to exemption from estate tax of annuities under certain trusts and plans) and 2517 (relating to exemption from gift tax of specified transfers of certain annuities under qualified plans) apply (including the manner in which such sections apply) to the account, annuity, or endowment contract.

(6) Section 402(a)(2) and (e) (relating to tax on lump sum distributions) is not applicable to distributions from an account, annuity, or endowment contract.

(7) A minimum distribution is required under section 408(a) (6) or (7) and 408(b) (3) or (4) (including a brief explanation of the amount of minimum distribution) and that if the amount distributed from an account, annuity, or endowment contract during the

taxable year of the payee is less than the minimum required during such year, an excise tax, which shall be paid by the payee, is imposed under section 4974, in an amount equal to 50 percent of the excess of the minimum required to be distributed over the amount actually distributed during the year.

(*8*) An excise tax is imposed under section 4973 on excess contributions (including a brief explanation of an excess contribution).

(*9*) The benefited individual must file Form 5329 (Return for Individual Retirement Savings Arrangement) with the Internal Revenue for each taxable year during which the account, annuity, or endowment contract is maintained.

(*10*) The account or contract has or has not (as the case may be) been approved as to form for use as an account, annuity, or endowment contract by the Internal Revenue Service. For purposes of this subdivision, if a favorable opinion or determination letter with respect to the form of a prototype trust, custodial account, annuity, or endowment contract has been issued by the Internal Revenue Service, or the instrument which establishes an individual retirement trust account or an individual retirement custodial account utilizes the precise language of a form currently provided by the Internal Revenue Service (including any additional language permitted by such form), such account or contract may be treated as approved as to form.

(*11*) The Internal Revenue Service approval is a determination only as to the form of the account, annuity, or endowment contract, and does not represent a determination of the merits of such account, annuity, or endowment contract.

(*12*) The proceeds from the account, annuity or endowment contract may be used by the benefited individual as a rollover contribution to another account or annuity or retirement bond in accordance with the provisions of section 408(d)(3).

(*13*) In the case of an endowment contract described in section 408(b), no deduction is allowed under section 219 for that portion of the amounts paid under the contract for the taxable year properly allocable to the cost of life insurance.

(*14*) If applicable, in the event that the benefited individual revokes the account, annuity, or endowment contract, pursuant to the procedure described in the disclosure statement (see subdivision (A)(*4*) of this subdivision (iii)), the benefited individual is entitled to a return of the entire amount of the consideration paid by him for the account, annuity, or endowment contract without adjustment for such items as sales commissions, administrative expenses or fluctuation in market value.

(*15*) Further information can be obtained from any district office of the Internal Revenue Service.

To the extent that information on the matters described in subdivisions (iii) (A) and (B) of this subparagraph is provided in a publication of the Internal Revenue Service relating to individual retirement savings arrangements, such publication may be furnished by the trustee or issuer in lieu of providing information relating to such matters in a disclosure statement.

(C) The financial disclosure required by paragraph (d)(4) (v), (vi), and (vii) of this section.

(iv) In the case of an amendment to the terms of an account, annuity, or endowment contract described in paragraph (d)(4)(i) of this section, the disclosure statement required by this subparagraph need not repeat material contained in the statement furnished pursuant to paragraph (d)(4)(iii) of this section, but it must set forth in nontechnical language those matters described in paragraph (d)(4)(iii) of this section which are affected by such amendment.

(v) With respect to an account, annuity, or endowment contract described in paragraph (d)(4)(i) of this section (other than an account or annuity which is to receive only a rollover contribution described in paragraph (d)(4)(vi) of this section and to which no deductible contributions will be made), the disclosure statement must set forth in cases where either an amount is guaranteed over period of time (such as in the case of a nonparticipating endowment or annuity contract), or a projection of growth of the value of the account, annuity, or endowment contract can reasonably be made (such as in the case of a participating endowment or annuity contract (other than a variable annuity) or passbook savings account), the following:

(A) To the extent that an amount is guaranteed,

(*1*) The amount, determined without regard to any portion of a contribution which is not deductible, that would be guaranteed to be available to the benefited individual if

(*i*) level annual contributions in the amount of $1,000 were to be made on the first day of each year, and

(*ii*) the benefited individual were to withdraw in a single sum the entire amount of such account, annuity, or endowment contract at the end of each of the first five years during which contributions are to be made, at the end of the year in which the benefited individual attains the ages of 60, 65, and 70, and at the end of any other year during which the increase of the guaranteed available amount is less than the increase of the guaranteed available amount during any preceding year for any reason other than decrease of cessation of contributions, and

(*2*) A statement that the amount described in subdivision (v)(A)(*1*) of this subparagraph is guaranteed, and the period for which guaranteed;

(B) To the extent a projection of growth of the value of the account, annuity, or endowment contract can reasonably be made but the amounts are not guaranteed.

(*1*) The amount, determined without regard to any portion of a contribution which is not deductible, and upon the basis of an earnings rate no greater than, and terms no different from, those currently in effect, that would be available to the benefited individual if

(*i*) level annual contributions in the amount of $1,000 were to be made on the first day of each year, and

(*ii*) the benefited individual were to withdraw in a single sum the entire amount of such account, annuity, or endowment contract at the end of each of the first five years during which contributions are to be made, at the end of each of the years in which the benefited individual attains the ages of 60, 65, and 70, and at the end of any other year during which the increase of the available amount is less than the increase of the available amount during any preceding year for any reason other than decrease or cessation of contributions, and

(2) A statement that the amount described in paragraph (d)(4)(v)(B)(1) of this section is a projection and is not guaranteed and a statement of the earnings rate and terms on the basis of which the projection is made;

(C) The portion of each $1,000 contribution attributable to the cost of life insurance, which would not be deductible, for each year during which contributions are to be made; and

(D) The sales commission (including any commission attributable to the sale of life insurance), if any, to be charged in each year, expressed as a percentage of gross annual contributions (including any portion attributable to the cost of life insurance) to be made for each year.

(vi) With respect to an account or annuity described in paragraph (d)(4)(i) of this section to which a rollover contribution described in section 402(a)(5)(A), 403(a)(4)(A), 408(d)(3)(A) or 409(b)(3)(C) will be made, the disclosure statement must set forth, in cases where an amount is guaranteed over a period of time (such as in the case of a non-participating annuity contract, or a projection of growth of the value of the account or annuity can reasonably be made (such as in the case of a participating annuity contract (other than a variable annuity) or a passbook savings account), the following:

(A) To the extent guaranteed,

(1) The amount that would be guaranteed to be available to the benefited individual if

(i) Such a rollover contribution in the amount of $1,000 were to be made on the first day of the year,

(ii) No other contribution were to be made, and

(iii) The benefited individual were to withdraw in a single sum the entire amount of such account or annuity at the end of each of the first five years after the contribution is made, at the end of the year in which the benefited individual attains the ages of 60, 65, and 70, and at the end of any other year during which the increase of the guaranteed available amount is less than the increase of the guaranteed available amount during any preceding year, and

(2) A statement that the amount described in paragraph (d)(vi)(A)(1) of this section is guaranteed;

(B) To the extent that a projection of growth of the value of the account or annuity can reasonably be made but the amounts are not guaranteed,

(1) The amount, determined upon the basis of an earnings rate no greater than, and terms no different from, those currently in effect, that would be available to the benefited individual if

(i) such a rollover contribution in the amount of $1,000 were to be made on the first day of the year,

(ii) no other contribution were to be made, and

(iii) the benefited individual were to withdraw in a single sum the entire amount of such account or annuity at the end of each of the first five years after the contribution is made, at the end of each of the years in which the benefited

individual attains the ages 60, 65, 70, and at the end of any other year during which the increase of the available amount is less than the increase of the available amount during any preceding year, and

(2) A statement that the amount described in paragraph (d)(4)(vi)(B)(1) of this section is a projection and is not guaranteed and a statement of the earnings rate and terms on the basis of which the projection is made; and

(C) The sales commission, if any, to be charged in each year, expressed as a percentage of the assumed $1,000 contribution.

(vii) With respect to an account, annuity, or endowment contract described in paragraph (d)(4)(i) of this section, in all cases not subject to paragraph (d)(4) (v) or (vi) of this section (such as in the case of a mutual fund or variable annuity), the disclosure statement must set forth information described in subdivisions (A) through (C) of this subdivisions (vii) based (as applicable with respect to the type or types of contributions to be received by the account, annuity, or endowment contract) upon the assumption of (1) level annual contributions of $1,000 on the first day of each year, (2) a rollover contribution of $1,000 on the first day of the year and no other contributions, or (3) a rollover contribution of $1,000 on the first day of the year plus level annual contributions of $1,000 on the first day of each year.

(A) A description (in nontechnical language) with respect to the benefited individual's interest in the account, annuity, or endowment contract, of:

(1) Each type of charge, and the amount thereof, which may be made against a contribution,

(2) The method for computing and allocating annual earnings, and

(3) Each charge (other than those described in complying with paragraph (d)(4)(vii)(A)(1) of this section) which may be applied to such interest in determining the net amount of money available to the benefited individual and the method of computing each such charge;

(B) A statement that growth in value of the account, annuity, or endowment contract is neither guaranteed nor projected; and

(C) The portion of each $1,000 contribution attributable to the cost of life insurance, which would not be deductible, for every year during which contributions are to be made.

(viii) A disclosure statement, or an amendment thereto, furnished pursuant to the provisions of this subparagraph may contain information in addition to that required by paragraph (d)(4)(iii) through (vii) of this section. However, such disclosure statement will not be considered to comply with the provisions of this subparagraph if the substance of such additional material or the form in which it is presented causes such disclosure statement to be false or misleading with respect to the information required to be disclosed by this paragraph.

(ix) The provisions of section 6693, relating to failure to provide reports on individual retirement accounts or annuities, shall apply to any trustee or issuer who fails to furnish, or cause to be furnished, a disclosure statement, a copy of the governing instrument, or an amendment to either, as required by this paragraph.

(x) This section shall be effective for disclosure statements and copies of governing instruments mailed, or delivered without mailing, after February 14, 1977.

(xi) This section does not reflect the amendments made by section 1501 of the Tax Reform Act of 1976 (90 Stat. 1734) relating to retirement savings for certain married individuals.

[T.D. 7714, 45 FR 52795, Aug. 8, 1980; 45 FR 56802, Aug. 26, 1980]

§ 1.408-7 Reports on distributions from individual retirement plans.

(a) ***Requirement of report.*** The trustee of an individual retirement account or the issuer of an individual retirement annuity who makes a distribution during any calendar year to an individual from such account or under such annuity shall make a report on Form W-2P (in the case of distributions that are not total distributions) or Form 1099R (in the case of total distributions), and their related transmittal forms, for such year. The return must show the name and address of the person to whom the distribution was made, the aggregate amount of such distribution, and such other information as is required by the forms.

(b) ***Amount subject to this section.*** The amounts subject to reporting under paragraph (a) include all amounts distributed or made available to which section 408(d) applies.

(c) ***Time and place for filing.*** The report required under this section for any calendar year shall be filed after the close of that year and on or before February 28 of the following year with the appropriate Internal Revenue Service Center.

(d) ***Statement to recipients.***

(1) Each trustee or issuer required to file Form 1099R or Form W-2P under this section shall furnish to the person whose identifying number is (or should be) shown on the forms a copy of the form.

(2) Each statement required by this paragraph to be furnished to recipients shall be furnished to such person after November 30 of the year of the distribution and on or before January 31 of the following year. However, for a distribution after December 31, 2008, the February 15 due date under section 6045 applies to the statement if the statement is furnished in a consolidated reporting statement under section 6045. *See* §§ 1.6045-1(k)(3), 1.6045-2(d)(2), 1.6045-3(e)(2), 1.6045-4(m)(3), and 1.6045-5(a)(3)(ii).

(e) ***Effective date.*** This section is effective for calendar years beginning after December 31, 1977.

[T.D. 7714, 45 FR 52798, Aug. 8, 1980, as amended by T.D. 9504, 75 FR 64084, Oct. 18, 2010]

§ 1.408-8 Distribution requirements for individual retirement plans.

(a) ***Applicability of section 401(a)(9)*** —

(1) ***In general.*** An IRA is subject to the required minimum distribution requirements of section 401(a)(9). In order to satisfy section 401(a)(9), the rules of §§ 1.401(a)(9)-1 through 1.401(a)(9)-9 must be applied, except as otherwise provided in this section. For example, if the owner of an individual retirement account dies before the IRA owner's required beginning date, whether the 10-year rule or the life expectancy rule applies to distributions after the IRA owner's death is determined in accordance with § 1.401(a)(9)-3(c), and the rules of § 1.401(a)(9)-4 apply for purposes of determining an IRA owner's designated beneficiary. The amount of the minimum distribution required for each calendar year from an individual retirement account is determined in accordance

with § 1.401(a)(9)-5 and the minimum distribution required for each calendar year from an individual retirement annuity described in section 408(b) is determined in accordance with § 1.401(a)(9)-6 (including § 1.401(a)(9)-6(d)(2)).

(2) ***Definition of IRA and IRA owner.*** For purposes of this section, an IRA is an individual retirement account or annuity described in section 408(a) or (b), and the IRA owner is the individual for whom an IRA is originally established by contributions for the benefit of that individual and that individual's beneficiaries.

(3) ***Substitution of specific terms.*** For purposes of applying the required minimum distribution rules of §§ 1.401(a)(9)-1 through 1.401(a)(9)-9, the IRA trustee, custodian, or issuer is treated as the plan administrator, and the IRA owner is substituted for the employee.

(4) ***Treatment of SEPs and SIMPLE IRA Plans.*** IRAs that receive employer contributions under a SEP arrangement (within the meaning of section 408(k)) or a SIMPLE IRA plan (within the meaning of section 408(p)) are treated as IRAs, rather than employer plans, for purposes of section 401(a)(9) and are, therefore, subject to the distribution rules in this section.

(b) ***Different rules for IRAs and qualified plans*** —

(1) ***Determination of required beginning date*** —

(i) ***In general.*** An IRA owner's required beginning date is determined using the rules for employees who are 5-percent owners under § 1.401(a)(9)-2(b)(3). Thus, the IRA owner's required beginning date is April 1 of the calendar year following the calendar year in which the individual attains the applicable age.

(ii) ***Special rules for Roth IRAs.*** No minimum distributions are required to be made from a Roth IRA while the owner is alive. After the Roth IRA owner dies, the required minimum distribution rules apply to the Roth IRA as though the Roth IRA owner died before his or her required beginning date. In accordance with section 401(a)(9)(B)(iv)(II), if the sole beneficiary is the Roth IRA owner's surviving spouse, then the surviving spouse may delay distributions until the Roth IRA owner would have attained the applicable age.

(2) ***Account balance determination.*** For purposes of determining the required minimum distribution from an IRA for any calendar year, the account balance of the IRA as of December 31 of the calendar year preceding the calendar year for which distributions are required to be made is substituted for the account balance of the employee under § 1.401(a)(9)-5(b). Except as provided in paragraph (d) of this section, no adjustments are made for contributions or distributions after that date.

(3) ***Determination of portion of distribution that is a required minimum distribution.*** The portion of a distribution from an IRA that is a required minimum distribution and thus not eligible for rollover is determined in the same manner as provided in § 1.402(c)-2(f) and (j) for a distribution from a qualified plan. For example, if a minimum distribution to an IRA owner is required under section 401(a)(9)(A)(ii) for a calendar year, any amount distributed during a calendar year from an IRA of that IRA owner is treated as a required minimum distribution under section 401(a)(9) to the extent that the total required minimum distribution for the year under section 401(a)(9) from all of that IRA owner's IRAs has not been satisfied (either by a distribution from the IRA or, as permitted under paragraph (e) of this section, from another IRA).

(4) ***Documentation requirements*** —

(i) ***Disabled or chronically ill beneficiaries.*** In determining whether an IRA owner's designated beneficiary is disabled or chronically ill for purposes of § 1.401(a)(9)-4(e), the required documentation described in § 1.401(a)(9)-4(e)(7) need not be provided to the IRA trustee, custodian, or issuer.

(ii) ***Trust documentation.*** In determining whether the requirements of § 1.401(a)(9)-4(f)(2) are met (to determine whether a trust is a see-through trust), the trust documentation described in § 1.401(a)(9)-4(h) need not be provided to the IRA trustee, custodian, or issuer.

(c) ***Surviving spouse treating IRA as own*** —

(1) ***Election generally permitted*** —

(i) ***In general.*** The surviving spouse of an individual may elect, in the manner described in paragraph (c)(2) of this section, to treat the surviving spouse's entire interest as a beneficiary in the individual's IRA (or the remaining part of that interest if distributions have begun) as the surviving spouse's own IRA.

(ii) ***Eligibility to make election.*** In order to make the election described in this paragraph (c)(1), the surviving spouse must be the sole beneficiary of the IRA and have an unlimited right to withdraw amounts from the IRA. If a trust is named as beneficiary of the IRA, this requirement is not satisfied even if the surviving spouse is the sole beneficiary of the trust.

(iii) ***Timing of election.*** If § 1.402(c)-2(j)(4) (the special rule for catch-up distributions after a surviving spouse reaches the applicable age) would apply to the IRA owner's surviving spouse had a distribution been made directly to the surviving spouse in a calendar year, then, except as provided in paragraph (c)(1)(iv) of this section, the election described in this paragraph (c)(1) may not be made in that calendar year.

(iv) ***Exception for late elections.*** In the case of a surviving spouse who, pursuant to the timing rule in paragraph (c)(1)(iii) of this section, may not make the election described in paragraph (c)(1)(i) of this section in a calendar year, the spouse may nevertheless make the election in that calendar year provided that the election does not apply to amounts in the IRA that would be treated as required minimum distributions under § 1.402(c)-2(j)(4)(ii) had they been distributed in that calendar year. Thus, the election can be made in a calendar year only after the amounts treated as required minimum distributions under § 1.402(c)-2(j)(4)(ii) for that calendar year have been distributed from the IRA.

(2) ***Election procedures.*** The election described in paragraph (c)(1) of this section is made by the surviving spouse redesignating the account as an account in the name of the surviving spouse as IRA owner rather than as beneficiary. Alternatively, a surviving spouse eligible to make the election is deemed to have made the election if, at any time, either of the following occurs—

(i) Any amount in the IRA that would be required to be distributed to the surviving spouse as beneficiary under section 401(a)(9)(B) for a calendar year following the calendar year of the IRA owner's death is not distributed within the time period required under section 401(a)(9)(B); or

(ii) A contribution (other than a rollover of a distribution from an eligible retirement plan of the decedent) is made to the IRA.

(3) ***Effect of election.*** Following an election described in paragraph (c)(1) of this section, the surviving spouse is considered the IRA owner for whose benefit the trust is maintained for all purposes under the Internal Revenue Code (including section 72(t)). Thus, for example, the required minimum

distribution for the calendar year of the election and each subsequent calendar year is determined under section 401(a)(9)(A) with the spouse as IRA owner and not section 401(a)(9)(B) with the surviving spouse as the deceased IRA owner's beneficiary. However, if the election is made in the calendar year that includes the date of the IRA owner's death, the spouse is not required to take a required minimum distribution as the IRA owner for that calendar year. Instead, the spouse is required to take a required minimum distribution for that year, determined with respect to the deceased IRA owner under the rules of § 1.401(a)(9)-5(c), to the extent the distribution was not made to the IRA owner before death.

(d) *Treatment of rollovers and transfers* —

(1) *Treatment of rollovers* —

(i) ***In general.*** If a distribution is rolled over to an IRA, then the rules in § 1.401(a)(9)-7 apply for purposes of determining the account balance and the required minimum distribution for that IRA. However, because the value of the account balance is determined as of December 31 of the year preceding the year for which the required minimum distribution is being determined, and not as of a valuation date in the preceding year, the account balance of the IRA is adjusted only if the amount rolled over is not received in the calendar year in which the amount was distributed. If the amount rolled over is received in the calendar year following the calendar year in which the amount was distributed, then, for purposes of determining the required minimum distribution for that following calendar year, the account balance of the IRA as of December 31 of the calendar year in which the distribution was made must be adjusted by the amount received in accordance with § 1.401(a)(9)-7(b).

(ii) ***Spousal rollovers.*** A surviving spouse is permitted to roll over a distribution to an IRA as the beneficiary of the deceased employee or IRA owner, and the rules of paragraph (d)(1)(i) of this section apply to that IRA. A surviving spouse may also elect to treat that IRA as the spouse's own IRA in accordance with paragraph (c) of this section.

(2) *Special rules for death before required beginning date* —

(i) ***Carryover of election under qualified plan or IRA.*** If an employee or IRA owner dies before the required beginning date and the surviving spouse rolls over a distribution of the employee's or IRA owner's interest to an IRA in the spouse's capacity as a beneficiary of the deceased employee or IRA owner, then, except as provided in paragraph (d)(2)(ii) of this section, the method for determining required minimum distributions that applied to that surviving spouse under the distributing plan or IRA (such as when a beneficiary makes an election described in § 1.401(a)(9)-3(c)(5)(iii)) also applies to the receiving IRA. Thus, for example, if an employee who died before the required beginning date designated the employee's surviving spouse as a beneficiary of the employee's interest in the plan and the plan provides that the surviving spouse is subject to the 10-year rule described in § 1.401(a)(9)-3(c)(4), then the 10-year rule also applies to any IRA in the name of the decedent that receives a rollover of the employee's interest.

(ii) ***Change from 5-year rule or 10-year rule to life expectancy payments.*** If the 5-year rule or 10-year rule described in § 1.401(a)(9)-3(b)(2), (c)(2), or (c)(3), respectively, applies to a distributing plan or IRA and a distribution is made to the employee's surviving spouse before the deadline described in § 1.401(a)(9)-3(b)(4)(iii) or (c)(5)(iii) that would have applied had the distributing plan or IRA permitted the surviving spouse to make an election between the 5-year rule or 10-year rule and the life expectancy rule (or, in the case of a defined benefit plan, the annuity

payment rule), then the surviving spouse may elect to have the life expectancy rule described in § 1.401(a)(9)-3(c)(4) or the annuity payment rule described in § 1.401(a)(9)-3(b)(3) apply to any IRA to which any portion of that distribution is rolled over. However, see § 1.402(c)-2(j)(4)(ii) to determine the portion of that distribution that is treated as a required minimum distribution in the calendar year of the distribution and thus is not eligible for rollover.

(iii) ***Spousal rollover to spouse's own IRA.*** If an employee or IRA owner dies before the required beginning date and the surviving spouse rolls over a distribution described in paragraph (d)(2)(i) of this section from the surviving spouse's IRA in the capacity as the beneficiary of the decedent to the surviving spouse's own IRA, then, in determining the amount that is treated as a required minimum distribution under section 401(a)(9) and thus is not eligible for rollover, the rules of § 1.402(c)-2(j)(4) are applied as if the distribution was made directly from the decedent's interest in the plan or IRA to the surviving spouse's own IRA.

(3) ***Applicability of rollover rules to non-spouse beneficiary.*** The rules of paragraphs (d)(1)(i), (2)(i) and (ii) of this section apply to a non-spouse beneficiary who makes an election to have a distribution made in the form of a direct trustee-to-trustee transfer as described in section 402(c)(11) in the same manner as a rollover of a distribution made by a surviving spouse.

(4) ***Treatment of transfers.*** In the case of a trustee-to-trustee transfer from one IRA to another IRA that is not a distribution and rollover, the transfer is not treated as a distribution by the transferor IRA for purposes of section 401(a)(9). Accordingly, the minimum distribution requirement with respect to the transferor IRA must still be satisfied. After the transfer, the employee's account balance and the required minimum distribution under the transferee IRA are determined in the same manner that an account balance and required minimum distribution are determined under an IRA receiving a rollover contribution under paragraph (d)(1) of this section.

(e) ***Application of section 401(a)(9) for multiple IRAs —***

(1) ***Distribution from one IRA to satisfy total required minimum distribution —***

(i) ***In general.*** The required minimum distribution from one IRA is permitted to be distributed from another IRA in order to satisfy section 401(a)(9), subject to the limitations of paragraphs (e)(2) and (3) of this section. Except as provided in paragraph (e)(1)(ii) of this section, the required minimum distribution must be calculated separately for each IRA and the sum of those separately calculated required minimum distributions may be distributed from any one or more of the IRAs under the rules set forth in this paragraph (e).

(ii) ***Permitted aggregation of annuity contract and account balance.*** Subject to the limitations of paragraphs (e)(2) and (3) of this section, an individual who holds an IRA that is an annuity contract described in section 408(b) may elect to aggregate that IRA with one or more IRAs with account balances that the individual holds and apply the optional aggregation rule of § 1.401(a)(9)-5(a)(5)(iv) with respect to the annuity contract and the account balances under those IRAs as if the account balances were the remaining account balances following the purchase of the annuity contract with a portion of those account balances.

(2) ***IRAs eligible for aggregate treatment —***

(i) ***IRA owners.*** Generally, only amounts in IRAs that an individual holds as the IRA owner are aggregated for purposes of paragraph (e)(1) of this section. Except in the case of a surviving spouse electing to treat a decedent's IRA as the spouse's own IRA, an IRA that a beneficiary acquires as a result of the death of an individual is not treated as an IRA of the beneficiary but

rather as an IRA of the decedent for purposes of this paragraph (e). Thus, for example, for purposes of satisfying the minimum distribution requirements with respect to one IRA by making distributions from another IRA, IRAs for which the individual is the IRA owner are not aggregated with IRAs for which the individual is a beneficiary.

(ii) ***IRA beneficiaries.*** IRAs that a person holds as a beneficiary of a decedent are aggregated for purposes of paragraph (e)(1) of this section, but those amounts are not aggregated with IRAs that the person holds as the owner or as the beneficiary of a different decedent.

(3) ***Non-Roth IRAs are treated separately from section 403(b) contracts and Roth IRAs.*** Distributions from an IRA that is not a Roth IRA may not be used to satisfy the required minimum distribution requirements with respect to a Roth IRA, or a section 403(b) contract (as defined in § 1.403(b)-2(b)(16)(i)). Similarly, distributions from a Roth IRA do not satisfy the required minimum distribution requirements with respect to a section 403(b) contract or an IRA that is not a Roth IRA. In addition, distributions from a section 403(b) contract do not satisfy the required minimum distribution requirements with respect to an IRA.

(4) ***Allocation rule for partial distributions in year of death*** —

(i) ***Distribution required in year of IRA owner's death.*** This paragraph (e)(4) provides a special rule that applies if an IRA owner has multiple IRAs (which do not all have identical beneficiary designations) that are aggregated in accordance with paragraph (e)(1) of this section and that IRA owner dies before taking the total required minimum distribution for the calendar year of the IRA owner's death (that is, there is a shortfall). In that case, each of the owner's IRAs is subject to a requirement to distribute a proportionate share of the shortfall for the calendar year to a beneficiary of that IRA, with the proportions based on the account balances determined under paragraph (b)(2) of this section. This allocation of the shortfall to a particular IRA is made without regard to whether some of the required minimum distribution for the calendar year was already made to the IRA owner from that IRA.

(ii) ***Distribution requirement in the year of beneficiary's death.*** Rules similar to the rules of paragraph (e)(4)(i) of this section apply in the case of a beneficiary of multiple IRAs that are aggregated under paragraph (e)(1) of this section if a required minimum distribution is due for that beneficiary in the calendar year of the beneficiary's death, to the extent that the amount was not distributed to the beneficiary.

(iii) ***Example.*** Assume IRA owner X died on December 31, 2024, at the age of 75. At the time of X's death, X owned two separate IRAs, IRA Y and IRA Z, neither of which is a Roth IRA. The balance of IRA Y as of December 31, 2023, was $100,000 and the balance of IRA Z as of December 31, 2023, was $50,000. X died after X's required beginning date and under the rules of paragraph (e)(1) of this section, the total of the 2024 required minimum distributions for IRA Y and IRA Z is $6,097.56 ($150,000/24.6). X designated A as his beneficiary under IRA Y and B as his beneficiary under IRA Z. Prior to X's death, X had taken a $3,000 distribution from IRA Z in 2024. Under the rules of paragraph (e)(4)(i) of this section, the remaining portion of the 2024 required minimum distribution ($3,097.56) is allocated two-thirds to IRA Y and one-third to IRA Z. Thus, in the calendar year of X's death A is required to take a required minimum distribution of $2,065.04 from IRA Y and B is required to take a required minimum distribution of $1,032.52 from IRA Z.

(f) ***Reporting requirements.*** The trustee, custodian, or issuer of an IRA is required to report information with respect to the minimum amount required to be distributed from the IRA for each calendar year to individuals or entities, at the time, and in the manner, prescribed by the Commissioner in revenue rulings, notices, and other guidance published in the Internal Revenue Bulletin (see § 601.601(d) of this chapter), as well as the applicable Federal tax forms and accompanying instructions.

(g) ***Distributions taken into account*** —

(1) ***General rule.*** Except as provided in paragraph (g)(2) of this section, all amounts distributed from an IRA are taken into account in determining whether section 401(a)(9) is satisfied, regardless of whether the amount is includible in income. Thus, for example, a qualified charitable distribution made pursuant to section 408(d)(8) is taken into account in determining whether section 401(a)(9) is satisfied.

(2) ***Amounts not taken into account.*** The following amounts are not taken into account in determining whether the required minimum distribution with respect to an IRA for a calendar year has been made—

(i) Contributions returned pursuant to section 408(d)(4), together with the income allocable to these contributions;

(ii) Contributions returned pursuant to section 408(d)(5);

(iii) Corrective distributions of excess simplified employee pension contributions under section 408(k)(6)(C), together with the income allocable to these distributions;

(iv) Amounts that are treated as distributed pursuant to section 408(e);

(v) Amounts that are treated as distributed as a result of the purchase of a collectible pursuant to section 408(m);

(vi) Corrective distributions of excess deferrals as described in § 1.402(g)-1(e), together with the income allocable to these corrective distributions; and

(vii) Similar items designated by the Commissioner in revenue rulings, notices, and other guidance published in the Internal Revenue Bulletin. See § 601.601(d) of this chapter.

(h) ***Qualifying longevity annuity contracts*** —

(1) ***General rule.*** The special rule in § 1.401(a)(9)-5(b)(4) for a QLAC, defined in § 1.401(a)(9)-6(q), applies to an IRA, subject to the modifications set forth in this paragraph (h).

(2) ***Reliance on representations.*** For purposes of the limitation described in § 1.401(a)(9)-6(q)(2)(ii), unless the trustee, custodian, or issuer of an IRA has actual knowledge to the contrary, the trustee, custodian, or issuer may rely on the IRA owner's representation (made in writing or other form as may be prescribed by the Commissioner) of the amount of the premiums described in § 1.401(a)(9)-6(q)(2)(ii) that are not paid under the IRA.

(3) ***Permitted delay in setting beneficiary designation.*** In the case of a contract that is rolled over from a plan to an IRA before the required beginning date under the plan, the contract will not violate the rule in § 1.401(a)(9)-6(q)(3)(iii)(F) that a non-spouse beneficiary must be irrevocably selected on or before the later of the date of purchase and the required beginning date under the IRA, provided that the contract requires a beneficiary to be irrevocably selected by the end of the year following the year of the rollover.

(4) ***Roth IRAs.*** The rule in § 1.401(a)(9)-5(b)(4) does not apply to a Roth IRA. Accordingly, a contract that is purchased under a Roth IRA is not treated as a contract that is intended to be a QLAC for purposes of applying the dollar limitation rule in § 1.401(a)(9)-6(q)(2)(ii). If a QLAC is purchased or held under a plan, annuity, account, or traditional IRA, and that contract is later rolled over or converted to a Roth IRA, the contract is not treated as a contract that is intended to be a QLAC after the date of the rollover or conversion. Thus, premiums paid with respect to the contract will not be taken into account under § 1.401(a)(9)-6(q)(2)(ii) after the date of the rollover or conversion.

(i) [Reserved]

(j) ***Applicability date.*** This section applies for purposes of determining required minimum distributions for calendar years beginning on or after January 1, 2025. For earlier calendar years, the rules of 26 CFR 1.408-8 (as it appeared in the April 1, 2023, edition of 26 CFR part 1) apply.

[T.D. 8987, 67 FR 19024, Apr. 17, 2002, as amended by T.D. 9130, 69 FR 33293, June 15, 2004; T.D. 9673, 79 FR 37642, July 2, 2014; T.D. 10001, 89 FR 58948, July 19, 2024]

§ 1.408-11 Net income calculation for returned or recharacterized IRA contributions.

(a) ***Net income calculation for returned IRA contributions*** —

(1) ***General rule.*** For purposes of returned contributions under section 408(d)(4), the net income attributable to a contribution made to an IRA is determined by allocating to the contribution a *pro rata* portion of the earnings on the assets in the IRA during the period the IRA held the contribution. This attributable net income is calculated by using the following formula:

$$\text{Net Income} = \text{Contribution} \times \frac{(\text{Adjusted Closing Balance} - \text{Adjusted Opening Balance})}{\text{Adjusted Opening Balance.}}$$

(2) ***Special rule.*** If an IRA is established with a contribution and no other contributions, distributions or transfers are made to or from that IRA, then the subsequent distribution of the entire account balance of the IRA pursuant to section 408(d)(4) will satisfy the requirement of that Internal Revenue Code section that the return of a contribution be accompanied by the amount of net income attributable to the contribution.

(b) ***Definitions.*** For purposes of this section the following definitions apply:

(1) ***Adjusted opening balance.*** The term *adjusted opening balance* means the fair market value of the IRA at the beginning of the computation period plus the amount of any contributions or transfers (including the contribution that is distributed as a returned contribution pursuant to section 408(d)(4) and recharacterizations of contributions pursuant to section 408A(d)(6)) made to the IRA during the computation period.

(2) ***Adjusted closing balance.*** The term *adjusted closing balance* means the fair market value of the IRA at the end of the computation period plus the amount of any distributions or transfers (including recharacterizations of contributions pursuant to section 408A(d)(6)) made from the IRA during the computation period.

(3) ***Computation period.*** The term *computation period* means the period beginning immediately prior to the time that the contribution being returned was made to the IRA and ending immediately prior to the removal of the contribution. If more than one contribution was made as a regular contribution and is being returned from the IRA, the computation period begins immediately prior to the time the first contribution being returned was contributed.

(4) ***Regular contribution.*** The term *regular contribution* means an IRA contribution made by the IRA owner that is neither a trustee-to-trustee transfer from another IRA nor a rollover from another IRA or retirement plan.

(c) ***Additional rules.***

(1) When an IRA asset is not normally valued on a daily basis, the fair market value of the asset at the beginning of the computation period is deemed to be the most recent, regularly determined, fair market value of the asset, determined as of a date that coincides with or precedes the first day of the computation period. In addition, solely for purposes of this section, notwithstanding A-3 of § 1.408A-5, recharacterized contributions are taken into account for the period they are actually held in a particular IRA.

(2) In the case of an IRA that has received more than one regular contribution for a particular taxable year, the last regular contribution made to the IRA for the year is deemed to be the contribution that is distributed as a returned contribution under section 408(d)(4), up to the amount of the contribution identified by the IRA owner as the amount distributed as a returned contribution.

(3) In the case of an individual who owns multiple IRAs, the net income calculation is performed only on the IRA containing the contribution being returned, and that IRA is the IRA that must distribute the contribution.

(d) ***Examples.*** The following examples illustrate the net income calculation under section 408(d)(4) and this section:

> *Example 1.* (i) On May 1, 2004, when her IRA is worth $4,800, Taxpayer A makes a $1,600 regular contribution to her IRA. Taxpayer A requests that $400 of the May 1, 2004, contribution be returned to her pursuant to section 408(d)(4). Pursuant to this request, on February 1, 2005, when the IRA is worth $7,600, the IRA trustee distributes to Taxpayer A the $400 plus attributable net income. During this time, no other contributions have been made to the IRA and no distributions have been made.
> (ii) The adjusted opening balance is $6,400 [$4,800 + $1,600] and the adjusted closing balance is $7,600. Thus, the net income attributable to the $400 May 1, 2004, contribution is $75 [$400 × ($7,600−$6,400) ÷ $6,400]. Therefore, the total to be distributed on February 1, 2005, pursuant to § 408(d)(4) is $475.

> *Example 2.* (i) Beginning in January 2004, Taxpayer B contributes $300 on the 15th of each month to an IRA for 2004, resulting in an excess regular contribution of $600 for that year. Taxpayer B requests that the $600 excess regular contribution be returned to her pursuant to section 408(d)(4). Pursuant to this request, on March 1, 2005, when the IRA is worth $16,000, the IRA trustee distributes to Taxpayer B the $600 plus attributable net income. The excess regular contributions to be returned are deemed to be the last two made in 2004: the $300 December 15 contribution and the $300 November 15 contribution. On November 15 the IRA was worth $11,000 immediately prior to the contribution. No distributions or

> transfers have been made from the IRA and no contributions or transfers, other than the monthly contributions (including $300 in January and February 2005), have been made.
> (ii) As of the beginning of the computation period (November 15), the adjusted opening balance is $12,200 [$11,000 + $300 + $300 + $300 + $300] and the adjusted closing balance is $16,000. Thus, the net income attributable to the excess regular contributions is $187 [$600 × ($16,000 − $12,200) ÷ $12,200]. Therefore, the total to be distributed as returned contributions on March 1, 2005, to correct the excess regular contribution is $787 [$600 + $187].

[T.D. 9056, 68 FR 23588, May 5, 2003]

§ 1.408(q)-1 Deemed IRAs in qualified employer plans.

(a) ***In general.*** Under section 408(q), a qualified employer plan may permit employees to make voluntary employee contributions to a separate account or annuity established under the plan. If the requirements of section 408(q) and this section are met, such account or annuity is treated in the same manner as an individual retirement plan under section 408 or 408A (and contributions to such an account or annuity are treated as contributions to an individual retirement plan and not to the qualified employer plan). The account or annuity is referred to as a deemed IRA.

(b) ***Types of IRAs.*** If the account or annuity meets the requirements applicable to traditional IRAs under section 408, the account or annuity is deemed to be a traditional IRA, and if the account or annuity meets the requirements applicable to Roth IRAs under section 408A, the account or annuity is deemed to be a Roth IRA. Simplified employee pensions (SEPs) under section 408(k) and SIMPLE IRAs under section 408(p) may not be used as deemed IRAs.

(c) ***Separate entities.*** Except as provided in paragraphs (d) and (g) of this section, the qualified employer plan and the deemed IRA are treated as separate entities under the Internal Revenue Code and are subject to the separate rules applicable to qualified employer plans and IRAs, respectively. Issues regarding eligibility, participation, disclosure, nondiscrimination, contributions, distributions, investments, and plan administration are generally to be resolved under the separate rules (if any) applicable to each entity under the Internal Revenue Code.

(d) ***Exceptions.*** The following exceptions to treatment of a deemed IRA and the qualified employer plan as separate entities apply:

(1) The plan document of the qualified employer plan must contain the deemed IRA provisions and a deemed IRA must be in effect at the time the deemed IRA contributions are accepted. Notwithstanding the preceding sentence, employers that provided deemed IRAs for plan years beginning before January 1, 2004, (but after December 31, 2002) are not required to have such provisions in their plan documents before the end of such plan years.

(2) The requirements of section 408(a)(5) regarding commingling of assets do not apply to deemed IRAs. Accordingly, the assets of a deemed IRA may be commingled for investment purposes with those of the qualified employer plan. However, the restrictions on the commingling of plan and IRA assets with other assets apply to the assets of the qualified employer plan and the deemed IRA.

(e) ***Application of distribution rules.***

(1) Rules applicable to distributions from qualified employer plans under the Internal Revenue Code and regulations do not apply to distributions from deemed IRAs. Instead, the rules applicable to distributions from IRAs apply to distributions from deemed IRAs. Also, any restrictions that a trustee, custodian, or insurance company is permitted to impose on distributions from traditional and Roth IRAs may be imposed on distributions from deemed IRAs (for example, early withdrawal penalties on annuities).

(2) The required minimum distribution rules of section 401(a)(9) must be met separately with respect to the qualified employer plan and the deemed IRA. The determination of whether a qualified employer plan satisfies the required minimum distribution rules of section 401(a)(9) is made without regard to whether a participant satisfies the required minimum distribution requirements with respect to the deemed IRA that is established under such plan.

(f) *Additional rules* —

(1) ***Trustee.*** The trustee or custodian of an individual retirement account must be a bank, as required by section 408(a)(2), or, if the trustee is not a bank, as defined in section 408(n), the trustee must have received approval from the Commissioner to serve as a nonbank trustee or nonbank custodian pursuant to § 1.408-2(e). For further guidance regarding governmental units serving as nonbank trustees of deemed IRAs established under section 408(q), see § 1.408-2T(e)(8).

(2) ***Trusts.***

(i) General rule. Deemed IRAs that are individual retirement accounts may be held in separate individual trusts, a single trust separate from a trust maintained by the qualified employer plan, or in a single trust that includes the qualified employer plan. A deemed IRA trust must be created or organized in the United States for the exclusive benefit of the participants. If deemed IRAs are held in a single trust that includes the qualified employer plan, the trustee must maintain a separate account for each deemed IRA. In addition, the written governing instrument creating the trust must satisfy the requirements of section 408(a) (1), (2), (3), (4), and (6).

(ii) ***Application of section 408(a)(3).*** If deemed IRAs are held in a single trust that includes the qualified employer plan, section 408(a)(3) is treated as satisfied if no part of the separate accounts of any of the deemed IRAs is invested in life insurance contracts, regardless of whether the separate account for the qualified employer plan invests in life insurance contracts.

(iii) ***Separate accounts for traditional and Roth deemed IRAs.*** The rules of section 408A(b) and the regulations thereunder, requiring each Roth IRA to be clearly designated as a Roth IRA, will not fail to be satisfied solely because Roth deemed IRAs and traditional deemed IRAs are held in a single trust, provided that the trustee maintains separate accounts for the Roth deemed IRAs and traditional deemed IRAs of each participant, and each of those accounts is clearly designated as such.

(3) ***Annuity contracts.*** Deemed IRAs that are individual retirement annuities may be held under a single annuity contract or under separate annuity contracts. However, the contract must be separate from any annuity contract or annuity contracts of the qualified employer plan. In addition, the contract must satisfy the requirements of section 408(b) and there must be separate accounting for the interest of each participant in those cases where the individual retirement annuities are held under a single annuity contract.

(4) ***Deductibility.*** The deductibility of voluntary employee contributions to a traditional deemed IRA is determined in the same manner as if they were made to any other traditional IRA. Thus, for example, taxpayers with compensation that exceeds the limits imposed by section 219(g) may not be able to make contributions to deemed IRAs, or the deductibility of such contributions may be limited in accordance with sections 408 and 219(g). However, section 219(f)(5), regarding the taxable year in which amounts paid by an employer to an individual retirement plan are includible in the employee's income, is not applicable to deemed IRAs.

(5) ***Rollovers and transfers.*** The same rules apply to rollovers and transfers to and from deemed IRAs as apply to rollovers and transfers to and from other IRAs. Thus, for example, the plan may provide that an employee may request and receive a distribution of his or her deemed IRA account balance and may roll it over to an eligible retirement plan in accordance with section 408(d)(3), regardless of whether that employee may receive a distribution of any other plan benefits.

(6) ***Nondiscrimination.*** The availability of a deemed IRA is not a benefit, right or feature of the qualified employer plan under § 1.401(a)(4)-4.

(7) ***IRA assets and benefits not taken into account in determining benefits under or funding of qualified employer plan.*** Neither the assets held in the deemed IRA portion of the qualified employer plan, nor any benefits attributable thereto, shall be taken into account for purposes of:

(i) Determining the benefits of employees and their beneficiaries under the plan (within the meaning of section 401(a)(2)); or

(ii) Determining the plan's assets or liabilities for purposes of section 404 or 412.

(g) ***Disqualifying defects*** —

(1) ***Single trust.*** If the qualified employer plan fails to satisfy the qualification requirements applicable to it, either in form or operation, any deemed IRA that is an individual retirement account and that is included as part of the trust of that qualified employer plan does not satisfy section 408(q). Accordingly, any account maintained under such a plan as a deemed IRA ceases to be a deemed IRA at the time of the disqualifying event. In addition, the deemed IRA also ceases to satisfy the requirements of sections 408(a) and 408A. Also, if any one of the deemed IRAs fails to satisfy the applicable requirements of sections 408 or 408A, and the assets of that deemed IRA are included as part of the trust of the qualified employer plan, section 408(q) does not apply and the plan will fail to satisfy the plan's qualification requirements.

(2) ***Separate trusts and annuities.*** If the qualified employer plan fails to satisfy its qualification requirements, either in form or operation, but the assets of a deemed IRA are held in a separate trust (or where a deemed IRA is an individual retirement annuity), then the deemed IRA does not automatically fail to satisfy the applicable requirements of section 408 or 408A. Instead, its status as an IRA will be determined by considering whether the account or the annuity satisfies the applicable requirements of sections 408 and 408A (including, in the case of individual retirement accounts, the prohibition against the commingling of assets under section 408(a)(5)). Also, if a deemed IRA fails to satisfy the requirements of a qualified IRA and the assets of the deemed IRA are held in a separate trust (or where the deemed IRA is an individual retirement annuity), the qualified employer plan will not fail the qualification requirements applicable to it under the Code solely because of the failure of the deemed IRA.

(h) ***Definitions.*** The following definitions apply for purposes of this section:

(1) ***Qualified employer plan.*** A *qualified employer plan* is a plan described in section 401(a), an annuity plan described in section 403(a), a section 403(b) plan, or a governmental plan under section 457(b).

(2) ***Voluntary employee contribution.*** A *voluntary employee contribution* is any contribution (other than a mandatory contribution within the meaning of section 411(c)(2)(C)) which is made by an individual as an employee under a qualified employer plan that allows employees to elect to make contributions to deemed IRAs and with respect to which the individual has designated the contribution as a contribution to which section 408(q) applies.

(3) ***Employee.*** An *employee* includes any individual who is an employee under the rules applicable to the qualified employer plan under which the deemed IRA is established.

(i) ***Effective date.*** This section applies to accounts or annuities established under section 408(q) on or after August 1, 2003.

[T.D. 9142, 69 FR 43739, July 22, 2004]

§ 1.408A-0 Roth IRAs; table of contents.

This table of contents lists the regulations relating to Roth IRAs under section 408A of the Internal Revenue Code as follows:

§ 1.408A-1 Roth IRAs in general.

§ 1.408A-2 Establishing Roth IRAs.

§ 1.408A-3 Contributions to Roth IRAs.

§ 1.408A-4 Converting amounts to Roth IRAs.

§ 1.408A-5 Recharacterized contributions.

§ 1.408A-6 Distributions.

§ 1.408A-7 Reporting.

§ 1.408A-8 Definitions.

§ 1.408A-9 Effective date.

[T.D. 8816, 64 FR 5601, Feb. 4, 1999]

§ 1.408A-1 Roth IRAs in general.

This section sets forth the following questions and answers that discuss the background and general features of Roth IRAs:

Q-1. What is a Roth IRA?

A-1.

(a) A Roth IRA is a new type of individual retirement plan that individuals can use, beginning in 1998. Roth IRAs are described in section 408A, which was added by the Taxpayer Relief Act of 1997 (TRA 97), Public Law 105-34 (111 Stat. 788).

(b) Roth IRAs are treated like traditional IRAs except where the Internal Revenue Code specifies different treatment. For example, aggregate contributions (other than by a conversion or other rollover) to all an individual's Roth IRAs are not permitted to exceed $2,000 for a taxable year. Further, income earned on funds held in a Roth IRA is generally not taxable. Similarly, the rules of section 408(e), such as the loss of exemption of the account where the owner engages in a prohibited transaction, apply to Roth IRAs in the same manner as to traditional IRAs.

Q-2. What are the significant differences between traditional IRAs and Roth IRAs?

A-2. There are several significant differences between traditional IRAs and Roth IRAs under the Internal Revenue Code. For example, eligibility to contribute to a Roth IRA is subject to special modified AGI (adjusted gross income) limits; contributions to a Roth IRA are never deductible; qualified distributions from a Roth IRA are not includible in gross income; the required minimum distribution rules under section 408(a)(6) and (b)(3) (which generally incorporate the provisions of section 401(a)(9)) do not apply to a Roth IRA during the lifetime of the owner; and contributions to a Roth IRA can be made after the owner has attained age $70^{1}/_{2}$.

[T.D. 8816, 64 FR 5601, Feb. 4, 1999]

§ 1.408A-2 Establishing Roth IRAs.

This section sets forth the following questions and answers that provide rules applicable to establishing Roth IRAs:

Q-1. Who can establish a Roth IRA?

A-1. Except as provided in A-3 of this section, only an individual can establish a Roth IRA. In addition, in order to be eligible to contribute to a Roth IRA for a particular year, an individual must satisfy certain compensation requirements and adjusted gross income limits (see § 1.408A-3 A-3).

Q-2. How is a Roth IRA established?

A-2. A Roth IRA can be established with any bank, insurance company, or other person authorized in accordance with § 1.408-2(e) to serve as a trustee with respect to IRAs. The document establishing the Roth IRA must clearly designate the IRA as a Roth IRA, and this designation cannot be changed at a later date. Thus, an IRA that is designated as a Roth IRA cannot later be treated as a traditional IRA. However, see § 1.408A-4 A-1(b)(3) for certain rules for converting a traditional IRA to a Roth IRA with the same trustee by redesignating the traditional IRA as a Roth IRA, and see § 1.408A-5 for rules for recharacterizing certain IRA contributions.

Q-3. Can an employer or an association of employees establish a Roth IRA to hold contributions of employees or members?

A-3. Yes. Pursuant to section 408(c), an employer or an association of employees can establish a trust to hold contributions of employees or members made under a Roth IRA. Each employee's or member's account in the trust is treated as a separate Roth IRA that is subject to the generally applicable Roth IRA rules. The employer or association of employees may do certain acts otherwise required by an individual, for example, establishing and designating a trust as a Roth IRA.

Q-4. What is the effect of a surviving spouse of a Roth IRA owner treating an IRA as his or her own?

A-4. If the surviving spouse of a Roth IRA owner treats a Roth IRA as his or her own as of a date, the Roth IRA is treated from that date forward as though it were established for the benefit of the surviving spouse and not the original Roth IRA owner. Thus, for example, the surviving spouse is treated as the Roth IRA owner for purposes of applying the minimum distribution requirements under section 408(a)(6) and (b)(3). Similarly, the surviving spouse is treated as the Roth IRA owner rather than a beneficiary for purposes of determining the amount of any distribution from the Roth IRA that is includible in gross income and whether the distribution is subject to the 10-percent additional tax under section 72(t).

[T.D. 8816, 64 FR 5601, Feb. 4, 1999]

§ 1.408A-3 Contributions to Roth IRAs.

This section sets forth the following questions and answers that provide rules regarding contributions to Roth IRAs:

Q-1. What types of contributions are permitted to be made to a Roth IRA?

A-1. There are two types of contributions that are permitted to be made to a Roth IRA: regular contributions and qualified rollover contributions (including conversion contributions). The term regular contributions means contributions other than qualified rollover contributions.

Q-2. When are contributions permitted to be made to a Roth IRA?

A-2.

(a) The provisions of section 408A are effective for taxable years beginning on or after January 1, 1998. Thus, the first taxable year for which contributions are permitted to be made to a Roth IRA by an individual is the individual's taxable year beginning in 1998.

(b) Regular contributions for a particular taxable year must generally be contributed by the due date (not including extensions) for filing a Federal income tax return for that taxable year. (See § 1.408A-5 regarding recharacterization of certain contributions.)

Q-3. What is the maximum aggregate amount of regular contributions an individual is eligible to contribute to a Roth IRA for a taxable year?

A-3.

(a) The maximum aggregate amount that an individual is eligible to contribute to all his or her Roth IRAs as a regular contribution for a taxable year is the same as the maximum for traditional IRAs: $2,000 or, if less, that individual's compensation for the year.

(b) For Roth IRAs, the maximum amount described in paragraph (a) of this A-3 is phased out between certain levels of modified AGI. For an individual who is not married, the dollar amount is phased out ratably between modified AGI of $95,000 and $110,000; for a married individual filing a joint return, between modified AGI of $150,000 and $160,000; and for a married individual filing separately, between modified AGI of $0 and $10,000. For this purpose, a married individual who has lived apart from his or her spouse for the entire taxable year and who files separately is treated as not married. Under section 408A(c)(3)(A), in applying the phase-out, the maximum amount is rounded up to the next higher multiple of $10 and is not reduced below $200 until completely phased out.

(c) If an individual makes regular contributions to both traditional IRAs and Roth IRAs for a taxable year, the maximum limit for the Roth IRA is the lesser of—

(1) The amount described in paragraph (a) of this A-3 reduced by the amount contributed to traditional IRAs for the taxable year; and

(2) The amount described in paragraph (b) of this A-3. Employer contributions, including elective deferrals, made under a SEP or SIMPLE IRA Plan on behalf of an individual (including a self-employed individual) do not reduce the amount of the individual's maximum regular contribution.

(d) The rules in this A-3 are illustrated by the following examples:

Example 1. In 1998, unmarried, calendar-year taxpayer B, age 60, has modified AGI of $40,000 and compensation of $5,000. For 1998, B can contribute a maximum of $2,000 to a traditional IRA, a Roth IRA or a combination of traditional and Roth IRAs.

Example 2. The facts are the same as in *Example 1.* However, assume that B violates the maximum regular contribution limit by contributing $2,000 to a traditional IRA and $2,000 to a Roth IRA for 1998. The $2,000 to B's Roth IRA would be an excess contribution to B's Roth IRA for 1998 because an individual's contributions are applied first to a traditional IRA, then to a Roth IRA.

Example 3. The facts are the same as in *Example 1,* except that B's compensation is $900. The maximum amount B can contribute to either a traditional IRA or a Roth (or a combination of the two) for 1998 is $900.

Example 4. In 1998, unmarried, calendar-year taxpayer C, age 60, has modified AGI of $100,000 and compensation of $5,000. For 1998, C contributes $800 to a traditional IRA and $1,200 to a Roth IRA. Because C's $1,200 Roth IRA contribution does not exceed the phased-out maximum Roth IRA contribution of $1,340 and because C's total IRA contributions do not exceed $2,000, C's Roth IRA contribution does not exceed the maximum permissible contribution.

Q-4. How is compensation defined for purposes of the Roth IRA contribution limit?

A-4. For purposes of the contribution limit described in A-3 of this section, an individual's compensation is the same as that used to determine the maximum contribution an individual can make to a traditional IRA. This amount is defined in section 219(f)(1) to include wages, commissions, professional fees, tips, and other amounts received for personal services, as well as taxable alimony and separate maintenance payments received under a decree of divorce or separate maintenance. Compensation also includes earned income as defined in section 401(c)(2), but does not include any amount received as a pension or annuity or as deferred compensation. In addition, under section 219(c), a married individual filing a joint return is permitted to make an IRA contribution by treating his or her spouse's higher compensation as his or her own, but only to the extent that the spouse's compensation is not being used for purposes of the spouse making a contribution to a Roth IRA or a deductible contribution to a traditional IRA.

Q-5. What is the significance of modified AGI and how is it determined?

A-5. Modified AGI is used for purposes of the phase-out rules described in A-3 of this section and for purposes of the $100,000 modified AGI limitation described in § 1.408A-4 A-2(a) (relating to eligibility for conversion). As defined in section 408A(c)(3)(C)(i), modified AGI is the same as adjusted gross income under section 219(g)(3)(A) (used to determine the amount of deductible contributions that can be made to a traditional IRA by an individual who is an active participant in an employer-sponsored retirement

plan), except that any conversion is disregarded in determining modified AGI. For example, the deduction for contributions to an IRA is not taken into account for purposes of determining adjusted gross income under section 219 and thus does not apply in determining modified AGI for Roth IRA purposes.

Q-6. Is a required minimum distribution from an IRA for a year included in income for purposes of determining modified AGI?

A-6.

(a) Yes. For taxable years beginning before January 1, 2005, any required minimum distribution from an IRA under section 408(a)(6) and (b)(3) (which generally incorporate the provisions of section 401(a)(9)) is included in income for purposes of determining modified AGI.

(b) For taxable years beginning after December 31, 2004, and solely for purposes of the $100,000 limitation applicable to conversions, modified AGI does not include any required minimum distributions from an IRA under section 408(a)(6) and (b)(3).

Q-7. Does an excise tax apply if an individual exceeds the aggregate regular contribution limits for Roth IRAs?

A-7. Yes. Section 4973 imposes an annual 6-percent excise tax on aggregate amounts contributed to Roth IRAs that exceed the maximum contribution limits described in A-3 of this section. Any contribution that is distributed, together with net income, from a Roth IRA on or before the tax return due date (plus extensions) for the taxable year of the contribution is treated as not contributed. Net income described in the previous sentence is includible in gross income for the taxable year in which the contribution is made. Aggregate excess contributions that are not distributed from a Roth IRA on or before the tax return due date (with extensions) for the taxable year of the contributions are reduced as a deemed Roth IRA contribution for each subsequent taxable year to the extent that the Roth IRA owner does not actually make regular IRA contributions for such years. Section 4973 applies separately to an individual's Roth IRAs and other types of IRAs.

[T.D. 8816, 64 FR 5601, Feb. 4, 1999]

§ 1.408A-4 Converting amounts to Roth IRAs.

This section sets forth the following questions and answers that provide rules applicable to Roth IRA conversions:

Q-1. Can an individual convert an amount in his or her traditional IRA to a Roth IRA?

A-1.

(a) Yes. An amount in a traditional IRA may be converted to an amount in a Roth IRA if two requirements are satisfied. First, the IRA owner must satisfy the modified AGI limitation described in A-2(a) of this section and, if married, the joint filing requirement described in A-2(b) of this section. Second, the amount contributed to the Roth IRA must satisfy the definition of a qualified rollover contribution in section 408A(e) (i.e., it must satisfy the requirements for a rollover contribution as defined in section 408(d)(3), except that the one-rollover-per-year limitation in section 408(d)(3)(B) does not apply).

(b) An amount can be converted by any of three methods—

(1) An amount distributed from a traditional IRA is contributed (rolled over) to a Roth IRA within the 60-day period described in section 408(d)(3)(A)(i);

(2) An amount in a traditional IRA is transferred in a trustee-to-trustee transfer from the trustee of the traditional IRA to the trustee of the Roth IRA; or

(3) An amount in a traditional IRA is transferred to a Roth IRA maintained by the same trustee. For purposes of sections 408 and 408A, redesignating a traditional IRA as a Roth IRA is treated as a transfer of the entire account balance from a traditional IRA to a Roth IRA.

(c) Any converted amount is treated as a distribution from the traditional IRA and a qualified rollover contribution to the Roth IRA for purposes of section 408 and section 408A, even if the conversion is accomplished by means of a trustee-to-trustee transfer or a transfer between IRAs of the same trustee.

(d) A transaction that is treated as a failed conversion under § 1.408A-5 A-9(a)(1) is not a conversion.

Q-2. What are the modified AGI limitation and joint filing requirements for conversions?

A-2.

(a) An individual with modified AGI in excess of $100,000 for a taxable year is not permitted to convert an amount to a Roth IRA during that taxable year. This $100,000 limitation applies to the taxable year that the funds are paid from the traditional IRA, rather than the year they are contributed to the Roth IRA.

(b) If the individual is married, he or she is permitted to convert an amount to a Roth IRA during a taxable year only if the individual and the individual's spouse file a joint return for the taxable year that the funds are paid from the traditional IRA. In this case, the modified AGI subject to the $100,000 limit is the modified AGI derived from the joint return using the couple's combined income. The only exception to this joint filing requirement is for an individual who has lived apart from his or her spouse for the entire taxable year. If the married individual has lived apart from his or her spouse for the entire taxable year, then such individual can treat himself or herself as not married for purposes of this paragraph, file a separate return and be subject to the $100,000 limit on his or her separate modified AGI. In all other cases, a married individual filing a separate return is not permitted to convert an amount to a Roth IRA, regardless of the individual's modified AGI.

Q-3. Is a remedy available to an individual who makes a failed conversion?

A-3.

(a) Yes. See § 1.408A-5 for rules permitting a failed conversion amount to be recharacterized as a contribution to a traditional IRA. If the requirements in § 1.408A-5 are satisfied, the failed conversion amount will be treated as having been contributed to the traditional IRA and not to the Roth IRA.

(b) If the contribution is not recharacterized in accordance with § 1.408A-5, the contribution will be treated as a regular contribution to the Roth IRA and, thus, an excess contribution subject to the excise tax under section 4973 to the extent that it exceeds the individual's regular contribution limit. This is the result regardless of which of the three methods described in A-1(b) of this section applies to this transaction. Additionally, the distribution from the traditional IRA will not be eligible for the 4-year spread and will be subject to the additional tax under section 72(t) (unless an exception under that section applies).

Q-4. Do any special rules apply to a conversion of an amount in an individual's SEP IRA or SIMPLE IRA to a Roth IRA?

A-4.

(a) An amount in an individual's SEP IRA can be converted to a Roth IRA on the same terms as an amount in any other traditional IRA.

(b) An amount in an individual's SIMPLE IRA can be converted to a Roth IRA on the same terms as a conversion from a traditional IRA, except that an amount distributed from a SIMPLE IRA during the 2-year period described in section 72(t)(6), which begins on the date that the individual first participated in any SIMPLE IRA Plan maintained by the individual's employer, cannot be converted to a Roth IRA. Pursuant to section 408(d)(3)(G), a distribution of an amount from an individual's SIMPLE IRA during this 2-year period is not eligible to be rolled over into an IRA that is not a SIMPLE IRA and thus cannot be a qualified rollover contribution. This 2-year period of section 408(d)(3)(G) applies separately to the contributions of each of an individual's employers maintaining a SIMPLE IRA Plan.

(c) Once an amount in a SEP IRA or SIMPLE IRA has been converted to a Roth IRA, it is treated as a contribution to a Roth IRA for all purposes. Future contributions under the SEP or under the SIMPLE IRA Plan may not be made to the Roth IRA.

Q-5. Can amounts in other kinds of retirement plans be converted to a Roth IRA?

A-5. No. Only amounts in another IRA can be converted to a Roth IRA. For example, amounts in a qualified plan or annuity plan described in section 401(a) or 403(a) cannot be converted directly to a Roth IRA. Also, amounts held in an annuity contract or account described in section 403(b) cannot be converted directly to a Roth IRA.

Q-6. Can an individual who has attained at least age $70^{1}/_{2}$ by the end of a calendar year convert an amount distributed from a traditional IRA during that year to a Roth IRA before receiving his or her required minimum distribution with respect to the traditional IRA for the year of the conversion?

A-6.

(a) No. In order to be eligible for a conversion, an amount first must be eligible to be rolled over. Section 408(d)(3) prohibits the rollover of a required minimum distribution. If a minimum distribution is required for a year with respect to an IRA, the first dollars distributed during that year are treated as consisting of the required minimum distribution until an amount equal to the required minimum distribution for that year has been distributed.

(b) As provided in A-1(c) of this section, any amount converted is treated as a distribution from a traditional IRA and a rollover contribution to a Roth IRA and not as a trustee-to-trustee transfer for purposes of section 408 and section 408A. Thus, in a year for which a minimum distribution is required (including the calendar year in which the individual attains age $70^{1}/_{2}$), an individual may not convert the assets of an IRA (or any portion of those assets) to a Roth IRA to the extent that the required minimum distribution for the traditional IRA for the year has not been distributed.

(c) If a required minimum distribution is contributed to a Roth IRA, it is treated as having been distributed, subject to the normal rules under section 408(d)(1) and (2), and then contributed as a regular contribution to a Roth IRA. The amount of the required minimum distribution is not a conversion contribution.

Q-7. What are the tax consequences when an amount is converted to a Roth IRA?

A-7.

(a) Any amount that is converted to a Roth IRA is includible in gross income as a distribution according to the rules of section 408(d)(1) and (2) for the taxable year in which the amount is distributed or transferred from the traditional IRA. Thus, any portion of the distribution or transfer that is treated as a return of basis under section 408(d)(1) and (2) is not includible in gross income as a result of the conversion.

(b) The 10-percent additional tax under section 72(t) generally does not apply to the taxable conversion amount. But see § 1.408A-6 A-5 for circumstances under which the taxable conversion amount would be subject to the additional tax under section 72(t).

(c) Pursuant to section 408A(e), a conversion is not treated as a rollover for purposes of the one-rollover-per-year rule of section 408(d)(3)(B).

Q-8. Is there an exception to the income-inclusion rule described in A-7 of this section for 1998 conversions?

A-8. Yes. In the case of a distribution (including a trustee-to-trustee transfer) from a traditional IRA on or before December 31, 1998, that is converted to a Roth IRA, instead of having the entire taxable conversion amount includible in income in 1998, an individual includes in gross income for 1998 only one quarter of that amount and one quarter of that amount for each of the next 3 years. This 4-year spread also applies if the conversion amount was distributed in 1998 and contributed to the Roth IRA within the 60-day period described in section 408(d)(3)(A)(i), but after December 31, 1998. However, see § 1.408A-6 A-6 for special rules requiring acceleration of inclusion if an amount subject to the 4-year spread is distributed from the Roth IRA before 2001.

Q-9. Is the taxable conversion amount included in income for all purposes?

A-9. Except as provided below, any taxable conversion amount includible in gross income for a year as a result of the conversion (regardless of whether the individual is using a 4-year spread) is included in income for all purposes. Thus, for example, it is counted for purposes of determining the taxable portion of social security payments under section 86 and for purposes of determining the phase-out of the $25,000 exemption under section 469(i) relating to the disallowance of passive activity losses from rental real estate activities. However, as provided in § 1.408A-3 A-5, the taxable conversion amount (and any resulting change in other elements of adjusted gross income) is disregarded for purposes of determining modified AGI for section 408A.

Q-10. Can an individual who makes a 1998 conversion elect not to have the 4-year spread apply and instead have the full taxable conversion amount includible in gross income for 1998?

A-10. Yes. Instead of having the taxable conversion amount for a 1998 conversion included over 4 years as provided under A-8 of this section, an individual can elect to include the full taxable conversion amount in income for 1998. The election is made on Form 8606 and cannot be made or changed after the due date (including extensions) for filing the 1998 Federal income tax return.

Q-11. What happens when an individual who is using the 4-year spread dies, files separately, or divorces before the full taxable conversion amount has been included in gross income?

A-11.

(a) If an individual who is using the 4-year spread described in A-8 of this section dies before the full taxable conversion amount has been included in gross income, then the remainder must be included in the individual's gross income for the taxable year that includes the date of death.

(b) However, if the sole beneficiary of all the decedent's Roth IRAs is the decedent's spouse, then the spouse can elect to continue the 4-year spread. Thus, the spouse can elect to include in gross income the same amount that the decedent would have included in each of the remaining years of the 4-year period. Where the spouse makes such an election, the amount includible under the 4-year spread for the taxable year that includes the date of the decedent's death remains includible in the decedent's gross income and is reported on the decedent's final Federal income tax return. The election is made on either Form 8606 or Form 1040, in accordance with the instructions to the applicable form, for the taxable year that includes the decedent's date of death and cannot be changed after the due date (including extensions) for filing the Federal income tax return for the spouse's taxable year that includes the decedent's date of death.

(c) If a Roth IRA owner who is using the 4-year spread and who was married in 1998 subsequently files separately or divorces before the full taxable conversion amount has been included in gross income, the remainder of the taxable conversion amount must be included in the Roth IRA owner's gross income over the remaining years in the 4-year period (unless accelerated because of distribution or death).

Q-12. Can an individual convert a traditional IRA to a Roth IRA if he or she is receiving substantially equal periodic payments within the meaning of section 72(t)(2)(A)(iv) from that traditional IRA?

A-12. Yes. Not only is the conversion amount itself not subject to the early distribution tax under section 72(t), but the conversion amount is also not treated as a distribution for purposes of determining whether a modification within the meaning of section 72(t)(4)(A) has occurred. Distributions from the Roth IRA that are part of the original series of substantially equal periodic payments will be nonqualified distributions from the Roth IRA until they meet the requirements for being a qualified distribution, described in § 1.408A-6 A-1(b). The additional 10-percent tax under section 72(t) will not apply to the extent that these nonqualified distributions are part of a series of substantially equal periodic payments. Nevertheless, to the extent that such distributions are allocable to a 1998 conversion contribution with respect to which the 4-year spread for the resultant income inclusion applies (see A-8 of this section) and are received during 1998, 1999, or 2000, the special acceleration rules of § 1.408A-6 A-6 apply. However, if the original series of substantially equal periodic payments does not continue to be distributed in substantially equal periodic payments from the Roth IRA after the conversion, the series of payments will have been modified and, if this modification occurs within 5 years of the first payment or prior to the individual becoming disabled or attaining age $59^{1}/_{2}$, the taxpayer will be subject to the recapture tax of section 72(t)(4)(A).

Q-13. Can a 1997 distribution from a traditional IRA be converted to a Roth IRA in 1998?

A-13. No. An amount distributed from a traditional IRA in 1997 that is contributed to a Roth IRA in 1998 would not be a conversion contribution. See A-3 of this section regarding the remedy for a failed conversion.

Q-14. What is the amount that is treated as a distribution, for purposes of determining income inclusion, when a conversion involves an annuity contract?

A-14.

(a) *In general* —

(1) ***Distribution of Fair Market Value Upon Conversion.*** Notwithstanding § 1.408-4(e), when part or all of a traditional IRA that is an individual retirement annuity described in section 408(b) is converted to a Roth IRA, for purposes of determining the amount includible in gross income as a distribution under § 1.408A-4, A-7, the amount that is treated as distributed is the fair market value of the annuity contract on the date the annuity contract is converted. Similarly, when a

traditional IRA that is an individual retirement account described in section 408(a) holds an annuity contract as an account asset and the traditional IRA is converted to a Roth IRA, for purposes of determining the amount includible in gross income as a distribution under § 1.408A-4, A-7, the amount that is treated as distributed with respect to the annuity contract is the fair market value of the annuity contract on the date that the annuity contract is distributed or treated as distributed from the traditional IRA. The rules in this A-14 also apply to conversions from SIMPLE IRAs.

(2) ***Annuity contract surrendered.*** Paragraph (a)(1) of this paragraph A-14 does not apply to a conversion of a traditional IRA to the extent the conversion is accomplished by the complete surrender of an annuity contract for its cash value and the reinvestment of the cash proceeds in a Roth IRA, but only if the surrender extinguishes all benefits and other characteristics of the contract. In such a case, the cash from the surrendered contract is the amount reinvested in the Roth IRA.

(3) ***Definitions.*** The definitions set forth in § 1.408A-8 apply for purposes of this paragraph A-14.

(b) ***Determination of fair market value*** —

(1) ***Overview*** —

(i) ***Use of alternative methods.*** This paragraph (b) sets forth methods which may be used to determine the fair market value of an individual retirement annuity for purposes of paragraph (a)(1) of this paragraph A-14. However, if, because of the unusual nature of the contract, the value determined under one of these methods does not reflect the full value of the contract, that method may not be used.

(ii) ***Additional guidance.*** Additional guidance regarding the fair market value of an individual retirement annuity, including formulas to be used for determining fair market value, may be issued by the Commissioner in revenue rulings, notices, or other guidance published in the Internal Revenue Bulletin (see § 601.601(d)(2)(ii)(*b*)).

(2) ***Gift tax method*** —

(i) ***Cost of contract or comparable contract.*** If with respect to an annuity, there is a comparable contract issued by the company which sold the annuity, the fair market value of the annuity may be established by the price of the comparable contract. If the conversion occurs soon after the annuity was sold, the comparable contract may be the annuity itself, and thus, the fair market value of the annuity may be established through the sale of the particular contract by the company (that is, the actual premiums paid for such contract).

(ii) ***Use of reserves where no comparable contract available.*** If with respect to an annuity, there is no comparable contract available in order to make the comparison described in paragraph (b)(2)(i) of this paragraph A-14, the fair market value may be established through an approximation that is based on the interpolated terminal reserve at the date of the conversion, plus the proportionate part of the gross premium last paid before the date of the conversion which covers the period extending beyond that date.

(3) ***Accumulation method.*** As an alternative to the gift tax method described in paragraph (b)(2) of this paragraph A-14, this paragraph (b)(3) provides a method that may be used for an annuity contract which has not been annuitized. The fair market value of such an annuity contract is permitted to be determined using the methodology provided in § 1.401(a)(9)-6(m)(2), with the following modifications:

(i) All front-end loads and other non-recurring charges assessed in the twelve months immediately preceding the conversion must be added to the account value.

(ii) Future distributions are not to be assumed in the determination of the actuarial present value of additional benefits.

(iii) The exclusions provided under § 1.401(a)(9)-6(m)(3), are not to be taken into account.

(c) ***Effective/applicability date.*** The provisions of this paragraph A-14 are applicable to any conversion in which an annuity contract is distributed or treated as distributed from a traditional IRA on or after August 19, 2005. However, for annuity contracts distributed or treated as distributed from a traditional IRA on or before December 31, 2008, taxpayers may instead apply the valuation methods in § 1.408A-4T (as it appeared in the April 1, 2008, edition of 26 CFR part 1) and Revenue Procedure 2006-13 (2006-1 CB 315) (See § 601.601(d)(2)(ii)(*b*)).

[T.D. 8816, 64 FR 5603, Feb. 4, 1999, as amended by T.D. 9220, 70 FR 48871, Aug. 22, 2005; T.D. 9418, 73 FR 43862, July 29, 2008; T.D. 10001, 89 FR 58906, July 19, 2024]

§ 1.408A-5 Recharacterized contributions.

This section sets forth the following questions and answers that provide rules regarding recharacterizing IRA contributions:

Q-1. Can an IRA owner recharacterize certain contributions (i.e., treat a contribution made to one type of IRA as made to a different type of IRA) for a taxable year?

A-1.

(a) Yes. In accordance with section 408A(d)(6), except as otherwise provided in this section, if an individual makes a contribution to an IRA (the FIRST IRA) for a taxable year and then transfers the contribution (or a portion of the contribution) in a trustee-to-trustee transfer from the trustee of the FIRST IRA to the trustee of another IRA (the SECOND IRA), the individual can elect to treat the contribution as having been made to the SECOND IRA, instead of to the FIRST IRA, for Federal tax purposes. A transfer between the FIRST IRA and the SECOND IRA will not fail to be a trustee-to-trustee transfer merely because both IRAs are maintained by the same trustee. For purposes of section 408A(d)(6), redesignating the FIRST IRA as the SECOND IRA will be treated as a transfer of the entire account balance from the FIRST IRA to the SECOND IRA.

(b) This recharacterization election can be made only if the trustee-to-trustee transfer from the FIRST IRA to the SECOND IRA is made on or before the due date (including extensions) for filing the individual's Federal income tax return for the taxable year for which the contribution was made to the FIRST IRA. For purposes of this section, a conversion that is accomplished through a rollover of a distribution from a traditional IRA in a taxable year that, 60 days after the distribution (as described in section 408(d)(3)(A)(i)), is contributed to a Roth IRA in the next taxable year is treated as a contribution for the earlier taxable year.

Q-2. What is the proper treatment of the net income attributable to the amount of a contribution that is being recharacterized?

A-2.

(a) The net income attributable to the amount of a contribution that is being recharacterized must be transferred to the SECOND IRA along with the contribution.

(b) If the amount of the contribution being recharacterized was contributed to a separate IRA and no distributions or additional contributions have been made from or to that IRA at any time, then the contribution is recharacterized by the trustee of the FIRST IRA transferring the entire account balance of the FIRST IRA to the trustee of the SECOND IRA. In this case, the net income (or loss) attributable to the contribution being recharacterized is the difference between the amount of the original contribution and the amount transferred.

(c)

(1) If paragraph (b) of this A-2 does not apply, then, for purposes of determining net income attributable to IRA contributions, the net income attributable to the amount of a contribution is determined by allocating to the contribution a *pro rata* portion of the earnings on the assets in the IRA during the period the IRA held the contribution. This attributable net income is calculated by using the following formula:

$$\text{Net Income} = \text{Contribution} \times \frac{(\text{Adjusted Closing Balance} - \text{Adjusted Opening Balance})}{\text{Adjusted Opening Balance.}}$$

(2) For purposes of this paragraph (c), the following definitions apply:

(i) The term *adjusted opening balance* means the fair market value of the IRA at the beginning of the computation period plus the amount of any contributions or transfers (including the contribution that is being recharacterized pursuant to section 408A(d)(6) and any other recharacterizations) made to the IRA during the computation period.

(ii) The term *adjusted closing balance* means the fair market value of the IRA at the end of the computation period plus the amount of any distributions or transfers (including contributions returned pursuant to section 408(d)(4) and recharacterizations of contributions pursuant to section 408A(d)(6)) made from the IRA during the computation period.

(iii) The term *computation period* means the period beginning immediately prior to the time the particular contribution being recharacterized is made to the IRA and ending immediately prior to the recharacterizing transfer of the contribution. If a series of regular contributions was made to the IRA, and consecutive contributions in that series are being recharacterized, the computation period begins immediately prior to the time the first of the regular contributions being recharacterized was made.

(3) When an IRA asset is not normally valued on a daily basis, the fair market value of the asset at the beginning of the computation period is deemed to be the most recent, regularly determined, fair market value of the asset, determined as of a date that coincides with or precedes the first day of the computation period. In addition, solely for purposes of this paragraph (c), notwithstanding A-3 of this section, recharacterized contributions are taken into account for the period they are actually held in a particular IRA.

(4) In the case of an individual with multiple IRAs, the net income calculation is performed only on the IRA containing the particular contribution to be recharacterized, and that IRA is the IRA from which the recharacterizing transfer must be made.

(5) In the case of multiple contributions made to an IRA for a particular year that are eligible for recharacterization, the IRA owner can choose (by date and by dollar amount, not by specific assets acquired with those dollars) which contribution, or portion thereof, is to be recharacterized.

(6) The following examples illustrate the net income calculation under section 408A(d)(6) and this paragraph:

> *Example 1.* (i) On March 1, 2004, when her Roth IRA is worth $80,000, Taxpayer A makes a $160,000 conversion contribution to the Roth IRA. Subsequently, Taxpayer A discovers that she was ineligible to make a Roth conversion contribution in 2004 and so she requests that the $160,000 be recharacterized to a traditional IRA pursuant to section 408A(d)(6). Pursuant to this request, on March 1, 2005, when the IRA is worth $225,000, the Roth IRA trustee transfers to a traditional IRA the $160,000 plus allocable net income. No other contributions have been made to the Roth IRA and no distributions have been made.
> (ii) The adjusted opening balance is $240,000 [$80,000 + $160,000] and the adjusted closing balance is $225,000. Thus the net income allocable to the $160,000 is − $10,000 [$160,000 × ($225,000 − $240,000) ÷ $240,000]. Therefore, in order to recharacterize the March 1, 2004, $160,000 conversion contribution on March 1, 2005, the Roth IRA trustee must transfer from Taxpayer A's Roth IRA to her traditional IRA $150,000 [$160,000 − $10,000].

> *Example 2.* (i) On April 1, 2004, when her traditional IRA is worth $100,000, Taxpayer B converts the entire amount, consisting of 100 shares of stock in ABC Corp. and 100 shares of stock in XYZ Corp., by transferring the shares to a Roth IRA. At the time of the conversion, the 100 shares of stock in ABC Corp. are worth $50,000 and the 100 shares of stock in XYZ Corp. are also worth $50,000. Taxpayer B decides that she would like to recharacterize the ABC Corp. shares back to a traditional IRA. However, B may choose only by dollar amount the contribution or portion thereof that is to be recharacterized. On the date of transfer, November 1, 2004, the 100 shares of stock in ABC Corp. are worth $40,000 and the 100 shares of stock in XYZ Corp. are worth $70,000. No other contributions have been made to the Roth IRA and no distributions have been made.
> (ii) If B requests that $50,000 (which was the value of the ABC Corp. shares at the time of conversion) be recharacterized, the net income allocable to the $50,000 is $5,000 [$50,000 × ($110,000 − $100,000) ÷ $100,000]. Therefore, in order to recharacterize $50,000 of the April 1, 2004, conversion contribution on November 1, 2004, the Roth IRA trustee must transfer from Taxpayer B's Roth IRA to a traditional IRA assets with a value of $55,000 [$50,000 + $5,000].

(iii) If, on the other hand, B requests that $40,000 (which was the value of the ABC Corp. shares on November 1) be recharacterized, the net income allocable to the $40,000 is $4,000 [$40,000 × ($110,000 − $100,000) ÷ $100,000]. Therefore, in order to recharacterize $40,000 of the April 1, 2004, conversion contribution on November 1, 2004, the Roth IRA trustee must transfer from Taxpayer B's Roth IRA to a traditional IRA assets with a value of $44,000 [$40,000 + $4,000].

(iv) Regardless of the amount of the contribution recharacterized, the determination of that amount (or of the net income allocable thereto) is not affected by whether the recharacterization is accomplished by the transfer of shares of ABC Corp. or of shares of XYZ Corp.

(7) This paragraph (c) applies for purposes of determining net income attributable to IRA contributions, made on or after January 1, 2004. For purposes of determining net income attributable to IRA contributions made before January 1, 2004, *see* paragraph (c) of this A-2 of § 1.408A-5 (as it appeared in the April 1, 2003, edition of 26 CFR part 1).

Q-3. What is the effect of recharacterizing a contribution made to the FIRST IRA as a contribution made to the SECOND IRA?

A-3. The contribution that is being recharacterized as a contribution to the SECOND IRA is treated as having been originally contributed to the SECOND IRA on the same date and (in the case of a regular contribution) for the same taxable year that the contribution was made to the FIRST IRA. Thus, for example, no deduction would be allowed for a contribution to the FIRST IRA, and any net income transferred with the recharacterized contribution is treated as earned in the SECOND IRA, and not the FIRST IRA.

Q-4. Can an amount contributed to an IRA in a tax-free transfer be recharacterized under A-1 of this section?

A-4. No. If an amount is contributed to the FIRST IRA in a tax-free transfer, the amount cannot be recharacterized as a contribution to the SECOND IRA under A-1 of this section. However, if an amount is erroneously rolled over or transferred from a traditional IRA to a SIMPLE IRA, the contribution can subsequently be recharacterized as a contribution to another traditional IRA.

Q-5. Can an amount contributed by an employer under a SIMPLE IRA Plan or a SEP be recharacterized under A-1 of this section?

A-5. No. Employer contributions (including elective deferrals) under a SIMPLE IRA Plan or a SEP cannot be recharacterized as contributions to another IRA under A-1 of this section. However, an amount converted from a SEP IRA or SIMPLE IRA to a Roth IRA may be recharacterized under A-1 of this section as a contribution to a SEP IRA or SIMPLE IRA, including the original SEP IRA or SIMPLE IRA.

Q-6. How does a taxpayer make the election to recharacterize a contribution to an IRA for a taxable year?

A-6.

(a) An individual makes the election described in this section by notifying, on or before the date of the transfer, both the trustee of the FIRST IRA and the trustee of the SECOND IRA, that the individual has elected to treat the contribution as having been made to the SECOND IRA, instead of the FIRST IRA, for Federal tax purposes. The notification of the election must include the following information: the

type and amount of the contribution to the FIRST IRA that is to be recharacterized; the date on which the contribution was made to the FIRST IRA and the year for which it was made; a direction to the trustee of the FIRST IRA to transfer, in a trustee-to-trustee transfer, the amount of the contribution and net income allocable to the contribution to the trustee of the SECOND IRA; and the name of the trustee of the FIRST IRA and the trustee of the SECOND IRA and any additional information needed to make the transfer.

(b) The election and the trustee-to-trustee transfer must occur on or before the due date (including extensions) for filing the individual's Federal income tax return for the taxable year for which the recharacterized contribution was made to the FIRST IRA, and the election cannot be revoked after the transfer. An individual who makes this election must report the recharacterization, and must treat the contribution as having been made to the SECOND IRA, instead of the FIRST IRA, on the individual's Federal income tax return for the taxable year described in the preceding sentence in accordance with the applicable Federal tax forms and instructions.

(c) The election to recharacterize a contribution described in this A-6 may be made on behalf of a deceased IRA owner by his or her executor, administrator, or other person responsible for filing the final Federal income tax return of the decedent under section 6012(b)(1).

Q-7. If an amount is initially contributed to an IRA for a taxable year, then is moved (with net income attributable to the contribution) in a tax-free transfer to another IRA (the FIRST IRA for purposes of A-1 of this section), can the tax-free transfer be disregarded, so that the initial contribution that is transferred from the FIRST IRA to the SECOND IRA is treated as a recharacterization of that initial contribution?

A-7. Yes. In applying section 408A(d)(6), tax-free transfers between IRAs are disregarded. Thus, if a contribution to an IRA for a year is followed by one or more tax-free transfers between IRAs prior to the recharacterization, then for purposes of section 408A(d)(6), the contribution is treated as if it remained in the initial IRA. Consequently, an individual may elect to recharacterize an initial contribution made to the initial IRA that was involved in a series of tax-free transfers by making a trustee-to-trustee transfer from the last IRA in the series to the SECOND IRA. In this case the contribution to the SECOND IRA is treated as made on the same date (and for the same taxable year) as the date the contribution being recharacterized was made to the initial IRA.

Q-8. If a contribution is recharacterized, is the recharacterization treated as a rollover for purposes of the one-rollover-per-year limitation of section 408(d)(3)(B)?

A-8. No, recharacterizing a contribution under A-1 of this section is never treated as a rollover for purposes of the one-rollover-per-year limitation of section 408(d)(3)(B), even if the contribution would have been treated as a rollover contribution by the SECOND IRA if it had been made directly to the SECOND IRA, rather than as a result of a recharacterization of a contribution to the FIRST IRA.

Q-9. If an IRA owner converts an amount from a traditional IRA to a Roth IRA and then transfers that amount back to a traditional IRA in a recharacterization, may the IRA owner subsequently reconvert that amount from the traditional IRA to a Roth IRA?

A-9.

(a)

(1) Except as otherwise provided in paragraph (b) of this A-9, an IRA owner who converts an amount from a traditional IRA to a Roth IRA during any taxable year and then transfers that amount back to a traditional IRA by means of a recharacterization may not reconvert that

amount from the traditional IRA to a Roth IRA before the beginning of the taxable year following the taxable year in which the amount was converted to a Roth IRA or, if later, the end of the 30-day period beginning on the day on which the IRA owner transfers the amount from the Roth IRA back to a traditional IRA by means of a recharacterization (regardless of whether the recharacterization occurs during the taxable year in which the amount was converted to a Roth IRA or the following taxable year). Thus, any attempted reconversion of an amount prior to the time permitted under this paragraph (a)(1) is a failed conversion of that amount. However, see § 1.408A-4 A-3 for a remedy available to an individual who makes a failed conversion.

(2) For purposes of paragraph (a)(1) of this A-9, a failed conversion of an amount resulting from a failure to satisfy the requirements of § 1.408A-4 A-1(a) is treated as a conversion in determining whether an IRA owner has previously converted that amount.

(b)

(1) An IRA owner who converts an amount from a traditional IRA to a Roth IRA during taxable year 1998 and then transfers that amount back to a traditional IRA by means of a recharacterization may reconvert that amount once (but no more than once) on or after November 1, 1998 and on or before December 31, 1998; the IRA owner may also reconvert that amount once (but no more than once) during 1999. The rule set forth in the preceding sentence applies without regard to whether the IRA owner's initial conversion or recharacterization of the amount occurred before, on, or after November 1, 1998. An IRA owner who converts an amount from a traditional IRA to a Roth IRA during taxable year 1999 that has not been converted previously and then transfers that amount back to a traditional IRA by means of a recharacterization may reconvert that amount once (but no more than once) on or before December 31, 1999. For purposes of this paragraph (b)(1), a failed conversion of an amount resulting from a failure to satisfy the requirements of § 1.408A-4 A-1(a) is not treated as a conversion in determining whether an IRA owner has previously converted that amount.

(2) A reconversion by an IRA owner during 1998 or 1999 for which the IRA owner is not eligible under paragraph (b)(1) of this A-9 will be deemed an excess reconversion (rather than a failed conversion) and will not change the IRA owner's taxable conversion amount. Instead, the excess reconversion and the last preceding recharacterization will not be taken into account for purposes of determining the IRA owner's taxable conversion amount, and the IRA owner's taxable conversion amount will be based on the last reconversion that was not an excess reconversion (unless, after the excess reconversion, the amount is transferred back to a traditional IRA by means of a recharacterization). An excess reconversion will otherwise be treated as a valid reconversion.

(3) For purposes of this paragraph (b), any reconversion that an IRA owner made before November 1, 1998 will not be treated as an excess reconversion and will not be taken into account in determining whether any later reconversion is an excess reconversion.

(c) In determining the portion of any amount held in a Roth IRA or a traditional IRA that an IRA owner may not reconvert under this A-9, any amount previously converted (or reconverted) is adjusted for subsequent net income thereon.

Q-10. Are there examples to illustrate the rules in this section?

A-10. The rules in this section are illustrated by the following examples:

Example 1. In 1998, Individual C converts the entire amount in his traditional IRA to a Roth IRA. Individual C thereafter determines that his modified AGI for 1998 exceeded $100,000 so that he was ineligible to have made a conversion in that year. Accordingly, prior to the due date (plus extensions) for filing the individual's Federal income tax return for 1998, he decides to recharacterize the conversion contribution. He instructs the trustee of the Roth IRA (FIRST IRA) to transfer in a trustee-to-trustee transfer the amount of the contribution, plus net income, to the trustee of a new traditional IRA (SECOND IRA). The individual notifies the trustee of the FIRST IRA and the trustee of the SECOND IRA that he is recharacterizing his IRA contribution (and provides the other information described in A-6 of this section). On the individual's Federal income tax return for 1998, he treats the original amount of the conversion as having been contributed to the SECOND IRA and not the Roth IRA. As a result, for Federal tax purposes, the contribution is treated as having been made to the SECOND IRA and not to the Roth IRA. The result would be the same if the conversion amount had been transferred in a tax-free transfer to another Roth IRA prior to the recharacterization.

Example 2. In 1998, an individual makes a $2,000 regular contribution for 1998 to his traditional IRA (FIRST IRA). Prior to the due date (plus extensions) for filing the individual's Federal income tax return for 1998, he decides that he would prefer to contribute to a Roth IRA instead. The individual instructs the trustee of the FIRST IRA to transfer in a trustee-to-trustee transfer the amount of the contribution, plus attributable net income, to the trustee of a Roth IRA (SECOND IRA). The individual notifies the trustee of the FIRST IRA and the trustee of the SECOND IRA that he is recharacterizing his $2,000 contribution for 1998 (and provides the other information described in A-6 of this section). On the individual's Federal income tax return for 1998, he treats the $2,000 as having been contributed to the Roth IRA for 1998 and not to the traditional IRA. As a result, for Federal tax purposes, the contribution is treated as having been made to the Roth IRA for 1998 and not to the traditional IRA. The result would be the same if the conversion amount had been transferred in a tax-free transfer to another traditional IRA prior to the recharacterization.

Example 3. The facts are the same as in *Example 2,* except that the $2,000 regular contribution is initially made to a Roth IRA and the recharacterizing transfer is made to a traditional IRA. On the individual's Federal income tax return for 1998, he treats the $2,000 as having been contributed to the traditional IRA for 1998 and not the Roth IRA. As a result, for Federal tax purposes, the contribution is treated as having been made to the traditional IRA for 1998 and not the Roth IRA. The result would be the same if the contribution had been transferred in a tax-free transfer to another Roth IRA prior to the recharacterization, except that the only Roth IRA trustee the individual must notify is the one actually making the recharacterization transfer.

Example 4. In 1998, an individual receives a distribution from traditional IRA 1 and contributes the entire amount to traditional IRA 2 in a rollover contribution described in section 408(d)(3). In this case, the individual cannot elect to recharacterize the contribution by transferring the contribution amount, plus net income, to a Roth IRA, because an amount contributed to an IRA in a tax-free transfer cannot be recharacterized. However, the individual may convert (other than by recharacterization) the amount in traditional IRA 2 to a Roth IRA at any time, provided the requirements of § 1.408A-4 A-1 are satisfied.

[T.D. 8816, 64 FR 5605, Feb. 4, 1999, as amended by T.D. 9056, 68 FR 23589, May 5, 2003]

§ 1.408A-6 Distributions.

This section sets forth the following questions and answers that provide rules regarding distributions from Roth IRAs:

Q-1. How are distributions from Roth IRAs taxed?

A-1.

(a) The taxability of a distribution from a Roth IRA generally depends on whether or not the distribution is a qualified distribution. This A-1 provides rules for qualified distributions and certain other nontaxable distributions. A-4 of this section provides rules for the taxability of distributions that are not qualified distributions.

(b) A distribution from a Roth IRA is not includible in the owner's gross income if it is a qualified distribution or to the extent that it is a return of the owner's contributions to the Roth IRA (determined in accordance with A-8 of this section). A qualified distribution is one that is both—

(1) Made after a 5-taxable-year period (defined in A-2 of this section); and

(2) Made on or after the date on which the owner attains age $59^{1}/_{2}$, made to a beneficiary or the estate of the owner on or after the date of the owner's death, attributable to the owner's being disabled within the meaning of section 72(m)(7), or to which section 72(t)(2)(F) applies (exception for first-time home purchase).

(c) An amount distributed from a Roth IRA will not be included in gross income to the extent it is rolled over to another Roth IRA on a tax-free basis under the rules of sections 408(d)(3) and 408A(e).

(d) Contributions that are returned to the Roth IRA owner in accordance with section 408(d)(4) (corrective distributions) are not includible in gross income, but any net income required to be distributed under section 408(d)(4) together with the contributions is includible in gross income for the taxable year in which the contributions were made.

Q-2. When does the 5-taxable-year period described in A-1 of this section (relating to qualified distributions) begin and end?

A-2. The 5-taxable-year period described in A-1 of this section begins on the first day of the individual's taxable year for which the first regular contribution is made to any Roth IRA of the individual or, if earlier, the first day of the individual's taxable year in which the first conversion contribution is made to any Roth IRA of the individual. The 5-taxable-year period ends on the last day of the individual's fifth consecutive taxable year beginning with the taxable year described in the preceding sentence. For example, if an individual whose taxable year is the calendar year makes a first-time regular Roth IRA contribution any time between January 1, 1998, and April 15, 1999, for 1998, the 5-taxable-year period begins on January 1, 1998. Thus, each Roth IRA owner has only one 5-taxable-year period described in A-1 of this section for all the Roth IRAs of which he or she is the owner. Further, because of the requirement of the 5-taxable-year period, no qualified distributions can occur before taxable years beginning in 2003. For purposes of this A-2, the amount of any contribution distributed as a corrective distribution under A-1(d) of this section is treated as if it was never contributed.

Q-3. If a distribution is made to an individual who is the sole beneficiary of his or her deceased spouse's Roth IRA and the individual is treating the Roth IRA as his or her own, can the distribution be a qualified distribution based on being made to a beneficiary on or after the owner's death?

A-3. No. If a distribution is made to an individual who is the sole beneficiary of his or her deceased spouse's Roth IRA and the individual is treating the Roth IRA as his or her own, then, in accordance with § 1.408A-2 A-4, the distribution is treated as coming from the individual's own Roth IRA and not the deceased spouse's Roth IRA. Therefore, for purposes of determining whether the distribution is a qualified distribution, it is not treated as made to a beneficiary on or after the owner's death.

Q-4. How is a distribution from a Roth IRA taxed if it is not a qualified distribution?

A-4. A distribution that is not a qualified distribution, and is neither contributed to another Roth IRA in a qualified rollover contribution nor constitutes a corrective distribution, is includible in the owner's gross income to the extent that the amount of the distribution, when added to the amount of all prior distributions from the owner's Roth IRAs (whether or not they were qualified distributions) and reduced by the amount of those prior distributions previously includible in gross income, exceeds the owner's contributions to all his or her Roth IRAs. For purposes of this A-4, any amount distributed as a corrective distribution is treated as if it was never contributed.

Q-5. Will the additional tax under 72(t) apply to the amount of a distribution that is not a qualified distribution?

A-5.

(a) The 10-percent additional tax under section 72(t) will apply (unless the distribution is excepted under section 72(t)) to any distribution from a Roth IRA includible in gross income.

(b) The 10-percent additional tax under section 72(t) also applies to a nonqualified distribution, even if it is not then includible in gross income, to the extent it is allocable to a conversion contribution, if the distribution is made within the 5-taxable-year period beginning with the first day of the individual's taxable year in which the conversion contribution was made. The 5-taxable-year period ends on the last day of the individual's fifth consecutive taxable year beginning with the taxable year described in the preceding sentence. For purposes of applying the tax, only the amount of the conversion contribution includible in gross income as a result of the conversion is taken into account. The exceptions under section 72(t) also apply to such a distribution.

(c) The 5-taxable-year period described in this A-5 for purposes of determining whether section 72(t) applies to a distribution allocable to a conversion contribution is separately determined for each conversion contribution, and need not be the same as the 5-taxable-year period used for purposes of determining whether a distribution is a qualified distribution under A-1(b) of this section. For example, if a calendar-year taxpayer who received a distribution from a traditional IRA on December 31, 1998, makes a conversion contribution by contributing the distributed amount to a Roth IRA on February 25, 1999 in a qualifying rollover contribution and makes a regular contribution for 1998 on the same date, the 5-taxable-year period for purposes of this A-5 begins on January 1, 1999, while the 5-taxable-year period for purposes of A-1(b) of this section begins on January 1, 1998.

Q-6. Is there a special rule for taxing distributions allocable to a 1998 conversion?

A-6. Yes. In the case of a distribution from a Roth IRA in 1998, 1999 or 2000 of amounts allocable to a 1998 conversion with respect to which the 4-year spread for the resultant income inclusion applies (see § 1.408A-4 A-8), any income deferred as a result of the election to years after the year of the distribution is accelerated so that it is includible in gross income in the year of the distribution up to the amount of the distribution allocable to the 1998 conversion (determined under A-8 of this section). This amount is in addition to the amount otherwise includible in the owner's gross income for that taxable year as a result of the conversion. However, this rule will not require the inclusion of any amount to the extent it exceeds the total amount of income required to be included over the 4-year period. The acceleration of income inclusion described in this A-6 applies in the case of a surviving spouse who elects to continue the 4-year spread in accordance with § 1.408A-4 A-11(b).

Q-7. Is the 5-taxable-year period described in A-1 of this section redetermined when a Roth IRA owner dies?

A-7.

(a) No. The beginning of the 5-taxable-year period described in A-1 of this section is not redetermined when the Roth IRA owner dies. Thus, in determining the 5-taxable-year period, the period the Roth IRA is held in the name of a beneficiary, or in the name of a surviving spouse who treats the decedent's Roth IRA as his or her own, includes the period it was held by the decedent.

(b) The 5-taxable-year period for a Roth IRA held by an individual as a beneficiary of a deceased Roth IRA owner is determined independently of the 5-taxable-year period for the beneficiary's own Roth IRA. However, if a surviving spouse treats the Roth IRA as his or her own, the 5-taxable-year period with respect to any of the surviving spouse's Roth IRAs (including the one that the surviving spouse treats as his or her own) ends at the earlier of the end of either the 5-taxable-year period for the decedent or the 5-taxable-year period applicable to the spouse's own Roth IRAs.

Q-8. How is it determined whether an amount distributed from a Roth IRA is allocated to regular contributions, conversion contributions, or earnings?

A-8.

(a) Any amount distributed from an individual's Roth IRA is treated as made in the following order (determined as of the end of a taxable year and exhausting each category before moving to the following category)—

(1) From regular contributions;

(2) From conversion contributions, on a first-in-first-out basis; and

(3) From earnings.

(b) To the extent a distribution is treated as made from a particular conversion contribution, it is treated as made first from the portion, if any, that was includible in gross income as a result of the conversion.

Q-9. Are there special rules for determining the source of distributions under A-8 of this section?

A-9. Yes. For purposes of determining the source of distributions, the following rules apply:

(a) All distributions from all an individual's Roth IRAs made during a taxable year are aggregated.

(b) All regular contributions made for the same taxable year to all the individual's Roth IRAs are aggregated and added to the undistributed total regular contributions for prior taxable years. Regular contributions for a taxable year include contributions made in the following taxable year that are identified as made for the taxable year in accordance with § 1.408A-3 A-2. For example, a regular contribution made in 1999 for 1998 is aggregated with the contributions made in 1998 for 1998.

(c) All conversion contributions received during the same taxable year by all the individual's Roth IRAs are aggregated. Notwithstanding the preceding sentence, all conversion contributions made by an individual during 1999 that were distributed from a traditional IRA in 1998 and with respect to which the 4-year spread applies are treated for purposes of A-8(b) of this section as contributed to the individual's Roth IRAs prior to any other conversion contributions made by the individual during 1999.

(d) A distribution from an individual's Roth IRA that is rolled over to another Roth IRA of the individual in accordance with section 408A(e) is disregarded for purposes of determining the amount of both contributions and distributions.

(e) Any amount distributed as a corrective distribution (including net income), as described in A-1(d) of this section, is disregarded in determining the amount of contributions, earnings, and distributions.

(f) If an individual recharacterizes a contribution made to a traditional IRA (FIRST IRA) by transferring the contribution to a Roth IRA (SECOND IRA) in accordance with § 1.408A-5, then, pursuant to § 1.408A-5 A-3, the contribution to the Roth IRA is taken into account for the same taxable year for which it would have been taken into account if the contribution had originally been made to the Roth IRA and had never been contributed to the traditional IRA. Thus, the contribution to the Roth IRA is treated as contributed to the Roth IRA on the same date and for the same taxable year that the contribution was made to the traditional IRA.

(g) If an individual recharacterizes a regular or conversion contribution made to a Roth IRA (FIRST IRA) by transferring the contribution to a traditional IRA (SECOND IRA) in accordance with § 1.408A-5, then pursuant to § 1.408A-5 A-3, the contribution to the Roth IRA and the recharacterizing transfer are disregarded in determining the amount of both contributions and distributions for the taxable year with respect to which the original contribution was made to the Roth IRA.

(h) Pursuant to § 1.408A-5 A-3, the effect of income or loss (determined in accordance with § 1.408A-5 A-2) occurring after the contribution to the FIRST IRA is disregarded in determining the amounts described in paragraphs (f) and (g) of this A-9. Thus, for purposes of paragraphs (f) and (g), the amount of the contribution is determined based on the original contribution.

Q-10. Are there examples to illustrate the ordering rules described in A-8 and A-9 of this section?

A-10. Yes. The following examples illustrate these ordering rules:

Example 1. In 1998, individual B converts $80,000 in his traditional IRA to a Roth IRA. B has a basis of $20,000 in the conversion amount and so must include the remaining $60,000 in gross income. He decides to spread the $60,000 income by including $15,000 in each of the 4 years 1998-2001, under the rules of § 1.408A-4 A-8. B also makes a regular contribution of $2,000 in 1998. If a distribution of $2,000 is made to B anytime in 1998, it will be treated as made entirely from the regular contributions, so there will be no Federal income tax consequences as a result of the distribution.

Example 2. The facts are the same as in *Example 1,* except that the distribution made in 1998 is $5,000. The distribution is treated as made from $2,000 of regular contributions and $3,000 of conversion contributions that were includible in gross income. As a result, B must include $18,000 in gross income for 1998: $3,000 as a result of the acceleration of amounts that otherwise would have been included in later years under the 4-year-spread rule and $15,000 includible under the regular 4-year-spread rule. In addition, because the $3,000 is allocable to a conversion made within the previous 5 taxable years, the 10-percent additional tax under section 72(t) would apply to this $3,000 distribution for 1998, unless an exception applies. Under the 4-year-spread rule, B would now include in gross income $15,000 for 1999 and 2000, but only $12,000 for 2001, because of the accelerated inclusion of the $3,000 distribution.

Example 3. The facts are the same as in *Example 1,* except that B makes an additional $2,000 regular contribution in 1999 and he does not take a distribution in 1998. In 1999, the entire balance in the account, $90,000 ($84,000 of contributions and $6,000 of earnings), is distributed to B. The distribution is treated as made from $4,000 of regular contributions, $60,000 of conversion contributions that were includible in gross income, $20,000 of conversion contributions that were not includible in gross income, and $6,000 of earnings. Because a distribution has been made within the 4-year-spread period, B must accelerate the income inclusion under the 4-year-spread rule and must include in gross income the $45,000 remaining under the 4-year-spread rule in addition to the $6,000 of earnings. Because $60,000 of the distribution is allocable to a conversion made within the previous 5 taxable years, it is subject to the 10-percent additional tax under section 72(t) as if it were

includible in gross income for 1999, unless an exception applies. The $6,000 allocable to earnings would be subject to the tax under section 72(t), unless an exception applies. Under the 4-year-spread rule, no amount would be includible in gross income for 2000 or 2001 because the entire amount of the conversion that was includible in gross income has already been included.

Example 4. The facts are the same as in *Example 1,* except that B also makes a $2,000 regular contribution in each year 1999 through 2002 and he does not take a distribution in 1998. A distribution of $85,000 is made to B in 2002. The distribution is treated as made from the $10,000 of regular contributions (the total regular contributions made in the years 1998-2002), $60,000 of conversion contributions that were includible in gross income, and $15,000 of conversion contributions that were not includible in gross income. As a result, no amount of the distribution is includible in gross income; however, because the distribution is allocable to a conversion made within the previous 5 years, the $60,000 is subject to the 10-percent additional tax under section 72(t) as if it were includible in gross income for 2002, unless an exception applies.

Example 5. The facts are the same as in *Example 4,* except no distribution occurs in 2002. In 2003, the entire balance in the account, $170,000 ($90,000 of contributions and $80,000 of earnings), is distributed to B. The distribution is treated as made from $10,000 of regular contributions, $60,000 of conversion contributions that were includible in gross income, $20,000 of conversion contributions that were not includible in gross income, and $80,000 of earnings. As a result, for 2003, B must include in gross income the $80,000 allocable to earnings, unless the distribution is a qualified distribution; and if it is not a qualified distribution, the $80,000 would be subject to the 10-percent additional tax under section 72(t), unless an exception applies.

Example 6. Individual C converts $20,000 to a Roth IRA in 1998 and $15,000 (in which amount C had a basis of $2,000) to another Roth IRA in 1999. No other contributions are made. In 2003, a $30,000 distribution, that is not a qualified distribution, is made to C. The distribution is treated as made from $20,000 of the 1998 conversion contribution and $10,000 of the 1999 conversion contribution that was includible in gross income. As a result, for 2003, no amount is includible in gross income; however, because $10,000 is allocable to a conversion contribution made within the previous 5 taxable years, that amount is subject to the 10-percent additional tax under section 72(t) as if the amount were includible in gross income for 2003, unless an exception applies. The result would be the same whichever of C's Roth IRAs made the distribution.

Example 7. The facts are the same as in *Example 6,* except that the distribution is a qualified distribution. The result is the same as in Example 6, except that no amount would be subject to the 10-percent additional tax under section 72(t), because, to be a qualified distribution, the distribution must be made on or after the date on which the owner attains age $59^{1}/_{2}$, made to a beneficiary or the estate of the owner on or after the date of the owner's death, attributable to the owner's being disabled within the meaning of section 72(m)(7), or to which section 72(t)(2)(F) applies (exception for a first-time home purchase). Under section 72(t)(2), each of these conditions is also an exception to the tax under section 72(t).

Example 8. Individual D makes a $2,000 regular contribution to a traditional IRA on January 1, 1999, for 1998. On April 15, 1999, when the $2,000 has increased to $2,500, D recharacterizes the contribution by transferring the $2,500 to a Roth IRA (pursuant to § 1.408A-5 A-1). In this case, D's regular contribution to the Roth IRA for 1998 is $2,000. The $500 of earnings is not treated as a contribution to the Roth IRA. The results would be the same if the $2,000 had decreased to $1,500 prior to the recharacterization.

Example 9. In December 1998, individual E receives a distribution from his traditional IRA of $300,000 and in January 1999 he contributes the $300,000 to a Roth IRA as a conversion contribution. In April 1999, when the $300,000 has increased to $350,000, E recharacterizes the conversion contribution by transferring the $350,000 to a traditional IRA. In this case, E's conversion contribution for 1998 is $0, because the $300,000 conversion contribution and the earnings of $50,000 are disregarded. The results would be the same if the $300,000 had decreased to $250,000 prior to the recharacterization. Further, since the conversion is disregarded, the $300,000 is not includible in gross income in 1998.

Q-11. If the owner of a Roth IRA dies prior to the end of the 5-taxable-year period described in A-1 of this section (relating to qualified distributions) or prior to the end of the 5-taxable-year period described in A-5 of this section (relating to conversions), how are different types of contributions in the Roth IRA allocated to multiple beneficiaries?

A-11. Each type of contribution is allocated to each beneficiary on a pro-rata basis. Thus, for example, if a Roth IRA owner dies in 1999, when the Roth IRA contains a regular contribution of $2,000, a conversion contribution of $6,000 and earnings of $1,000, and the owner leaves his Roth IRA equally to four children, each child will receive one quarter of each type of contribution. Pursuant to the ordering rules in A-8 of this section, an immediate distribution of $2,000 to one of the children will be deemed to consist of $500 of regular contributions and $1,500 of conversion contributions. A beneficiary's inherited Roth IRA may not be aggregated with any other Roth IRA maintained by such beneficiary (except for other Roth IRAs the beneficiary inherited from the same decedent), unless the beneficiary, as the spouse of the decedent and sole beneficiary of the Roth IRA, elects to treat the Roth IRA as his or her own (see A-7 and A-14 of this section).

Q-12. How do the withholding rules under section 3405 apply to Roth IRAs?

A-12. Distributions from a Roth IRA are distributions from an individual retirement plan for purposes of section 3405 and thus are designated distributions unless one of the exceptions in section 3405(e)(1) applies. Pursuant to section 3405(a) and (b), nonperiodic distributions from a Roth IRA are subject to 10-percent withholding by the payor and periodic payments are subject to withholding as if the payments were wages. However, an individual can elect to have no amount withheld in accordance with section 3405(a)(2) and (b)(2).

Q-13. Do the withholding rules under section 3405 apply to conversions?

A-13. Yes. A conversion by any method described in § 1.408A-4 A-1 is considered a designated distribution subject to section 3405. However, a conversion occurring in 1998 by means of a trustee-to-trustee transfer of an amount from a traditional IRA to a Roth IRA established with the same or a different trustee is not required to be treated as a designated distribution for purposes of section 3405. Consequently, no withholding is required with respect to such a conversion (without regard to whether or not the individual elected to have no withholding).

Q-14. What minimum distribution rules apply to a Roth IRA?

A-14.

(a) No minimum distributions are required to be made from a Roth IRA under section 408(a)(6) and (b)(3) (which generally incorporate the provisions of section 401(a)(9)) while the owner is alive. The post-death minimum distribution rules under section 401(a)(9)(B) that apply to traditional IRAs, with the exception of the at-least-as-rapidly rule described in section 401(a)(9)(B)(i), also apply to Roth IRAs.

(b) The minimum distribution rules apply to the Roth IRA as though the Roth IRA owner died before his or her required beginning date. Thus, generally, the entire interest in the Roth IRA must be distributed by the end of the fifth calendar year after the year of the owner's death unless the interest is payable to a designated beneficiary over a period not greater than that beneficiary's life expectancy and distribution commences before the end of the calendar year following the year of death. If the sole beneficiary is the decedent's spouse, such spouse may delay distributions until the decedent would have attained age $70^{1}/_{2}$ or may treat the Roth IRA as his or her own.

(c) Distributions to a beneficiary that are not qualified distributions will be includible in the beneficiary's gross income according to the rules in A-4 of this section.

(d) The special rules in § 1.401(a)(9)-5(b)(4) and § 1.408-8(h) for a qualifying longevity annuity contract (QLAC), defined in § 1.401(a)(9)-6(q), do not apply to a Roth IRA.

Q-15. Does section 401(a)(9) apply separately to Roth IRAs and individual retirement plans that are not Roth IRAs?

A-15. Yes. An individual required to receive minimum distributions from his or her own traditional or SIMPLE IRA cannot choose to take the amount of the minimum distributions from any Roth IRA. Similarly, an individual required to receive minimum distributions from a Roth IRA cannot choose to take the amount of the minimum distributions from a traditional or SIMPLE IRA. In addition, an individual required to receive minimum distributions as a beneficiary under a Roth IRA can only satisfy the minimum distributions for one Roth IRA by distributing from another Roth IRA if the Roth IRAs were inherited from the same decedent.

Q-16. How is the basis of property distributed from a Roth IRA determined for purposes of a subsequent disposition?

A-16. The basis of property distributed from a Roth IRA is its fair market value (FMV) on the date of distribution, whether or not the distribution is a qualified distribution. Thus, for example, if a distribution consists of a share of stock in XYZ Corp. with an FMV of $40.00 on the date of distribution, for purposes of determining gain or loss on the subsequent sale of the share of XYZ Corp. stock, it has a basis of $40.00.

Q-17. What is the effect of distributing an amount from a Roth IRA and contributing it to another type of retirement plan other than a Roth IRA?

A-17. Any amount distributed from a Roth IRA and contributed to another type of retirement plan (other than a Roth IRA) is treated as a distribution from the Roth IRA that is neither a rollover contribution for purposes of section 408(d)(3) nor a qualified rollover contribution within the meaning of section 408A(e) to the other type of retirement plan. This treatment also applies to any amount transferred from a Roth IRA to any other type of retirement plan unless the transfer is a recharacterization described in § 1.408A-5.

Q-18. Can an amount be transferred directly from an education IRA to a Roth IRA (or distributed from an education IRA and rolled over to a Roth IRA)?

A-18. No amount may be transferred directly from an education IRA to a Roth IRA. A transfer of funds (or distribution and rollover) from an education IRA to a Roth IRA constitutes a distribution from the education IRA and a regular contribution to the Roth IRA (rather than a qualified rollover contribution to the Roth IRA).

Q-19. What are the Federal income tax consequences of a Roth IRA owner transferring his or her Roth IRA to another individual by gift?

A-19. A Roth IRA owner's transfer of his or her Roth IRA to another individual by gift constitutes an assignment of the owner's rights under the Roth IRA. At the time of the gift, the assets of the Roth IRA are deemed to be distributed to the owner and, accordingly, are treated as no longer held in a Roth IRA. In the case of any such gift of a Roth IRA made prior to October 1, 1998, if the entire interest in the Roth IRA is reconveyed to the Roth IRA owner prior to January 1, 1999, the Internal Revenue Service will treat the gift and reconveyance as never having occurred for estate tax, gift tax, and generation-skipping tax purposes and for purposes of this A-19.

[T.D. 8816, 64 FR 5607, Feb. 4, 1999, as amended by T.D. 9673, 79 FR 37643, July 2, 2014; T.D. 10001, 89 FR 58906, July 19, 2024]

§ 1.408A-7 Reporting.

This section sets forth the following questions and answers that relate to the reporting requirements applicable to Roth IRAs:

Q-1. What reporting requirements apply to Roth IRAs?

A-1. Generally, the reporting requirements applicable to IRAs other than Roth IRAs also apply to Roth IRAs, except that, pursuant to section 408A(d)(3)(D), the trustee of a Roth IRA must include on Forms 1099-R and 5498 additional information as described in the instructions thereto. Any conversion of amounts from an IRA other than a Roth IRA to a Roth IRA is treated as a distribution for which a Form 1099-R must be filed by the trustee maintaining the non-Roth IRA. In addition, the owner of such IRAs must report the conversion by completing Form 8606. In the case of a recharacterization described in § 1.408A-5 A-1, IRA owners must report such transactions in the manner prescribed in the instructions to the applicable Federal tax forms.

Q-2. Can a trustee rely on reasonable representations of a Roth IRA contributor or distributee for purposes of fulfilling reporting obligations?

A-2. A trustee maintaining a Roth IRA is permitted to rely on reasonable representations of a Roth IRA contributor or distributee for purposes of fulfilling reporting obligations.

[T.D. 8816, 64 FR 5610, Feb. 4, 1999]

§ 1.408A-8 Definitions.

This section sets forth the following question and answer that provides definitions of terms used in the provisions of §§ 1.408A-1 through 1.408A-7 and this section:

Q-1. Are there any special definitions that govern in applying the provisions of §§ 1.408A-1 through 1.408A-7 and this section?

A-1. Yes, the following definitions govern in applying the provisions of §§ 1.408A-1 through 1.408A-7 and this section. Unless the context indicates otherwise, the use of a particular term excludes the use of the other terms.

(a) ***Different types of IRAs*** —

(1) ***IRA.*** Sections 408(a) and (b), respectively, describe an individual retirement account and an individual retirement annuity. The term IRA means an IRA described in either section 408(a) or (b), including each IRA described in paragraphs (a)(2) through (5) of this A-1. However, the term IRA does not include an education IRA described in section 530.

(2) ***Traditional IRA.*** The term traditional IRA means an individual retirement account or individual retirement annuity described in section 408(a) or (b), respectively. This term includes a SEP IRA but does not include a SIMPLE IRA or a Roth IRA.

(3) ***SEP IRA.*** Section 408(k) describes a simplified employee pension (SEP) as an employer-sponsored plan under which an employer can make contributions to IRAs established for its employees. The term SEP IRA means an IRA that receives contributions made under a SEP. The term SEP includes a salary reduction SEP (SARSEP) described in section 408(k)(6).

(4) ***SIMPLE IRA.*** Section 408(p) describes a SIMPLE IRA Plan as an employer-sponsored plan under which an employer can make contributions to SIMPLE IRAs established for its employees. The term SIMPLE IRA means an IRA to which the only contributions that can be made are contributions under a SIMPLE IRA Plan or rollovers or transfers from another SIMPLE IRA.

(5) ***Roth IRA.*** The term Roth IRA means an IRA that meets the requirements of section 408A.

(b) ***Other defined terms or phrases*** —

(1) ***4-year spread.*** The term 4-year spread is described in § 1.408A-4 A-8.

(2) ***Conversion.*** The term conversion means a transaction satisfying the requirements of § 1.408A-4 A-1.

(3) ***Conversion amount or conversion contribution.*** The term conversion amount or conversion contribution is the amount of a distribution and contribution with respect to which a conversion described in § 1.408A-4 A-1 is made.

(4) ***Failed conversion.*** The term failed conversion means a transaction in which an individual contributes to a Roth IRA an amount transferred or distributed from a traditional IRA or Simple IRA (including a transfer by redesignation) in a transaction that does not constitute a conversion under § 1.408A-4 A-1.

(5) ***Modified AGI.*** The term modified AGI is defined in § 1.408A-3 A-5.

(6) ***Recharacterization.*** The term recharacterization means a transaction described in § 1.408A-5 A-1.

(7) ***Recharacterized amount or recharacterized contribution.*** The term recharacterized amount or recharacterized contribution means an amount or contribution treated as contributed to an IRA other than the one to which it was originally contributed pursuant to a recharacterization described in § 1.408A-5 A-1.

(8) ***Taxable conversion amount.*** The term taxable conversion amount means the portion of a conversion amount includible in income on account of a conversion, determined under the rules of section 408(d)(1) and (2).

(9) ***Tax-free transfer.*** The term tax-free transfer means a tax-free rollover described in section 402(c), 402(e)(6), 403(a)(4), 403(a)(5), 403(b)(8), 403(b)(10) or 408(d)(3), or a tax-free trustee-to-trustee transfer.

(10) ***Treat an IRA as his or her own.*** The phrase treat an IRA as his or her own means to treat an IRA for which a surviving spouse is the sole beneficiary as his or her own IRA after the death of the IRA owner in accordance with the terms of the IRA instrument or in the manner provided in the regulations under section 408(a)(6) or (b)(3).

(11) ***Trustee.*** The term trustee includes a custodian or issuer (in the case of an annuity) of an IRA (except where the context clearly indicates otherwise).

[T.D. 8816, 64 FR 5610, Feb. 4, 1999]

§ 1.408A-9 Effective date.

This section contains the following question and answer providing the effective date of §§ 1.408A-1 through 1.408A-8:

Q-1. To what taxable years do §§ 1.408A-1 through 1.408A-8 apply?

A-1 Sections 1.408A-1 through 1.408A-8 apply to taxable years beginning on or after January 1, 1998.

[T.D. 8816, 64 FR 5611, Feb. 4, 1999]

§ 1.408A-10 Coordination between designated Roth accounts and Roth IRAs.

Q-1. Can an eligible rollover distribution, within the meaning of section 402(c)(4), from a designated Roth account, as defined in A-1 of § 1.402A-1, be rolled over to a Roth IRA?

A-1. Yes. An eligible rollover distribution, within the meaning of section 402(c)(4), from a designated Roth account may be rolled over to a Roth IRA. For purposes of this section, a designated Roth account means a designated Roth account as defined in A-1 of § 1.402A-1.

Q-2. Can an eligible rollover distribution from a designated Roth account be rolled over to a Roth IRA even if the distributee is not otherwise eligible to make regular or conversion contributions to a Roth IRA?

A-2. Yes. An individual may establish a Roth IRA and roll over an eligible rollover distribution from a designated Roth account to that Roth IRA even if such individual is not eligible to make regular contributions or conversion contributions (as described in section 408A(c)(2) and (d)(3), respectively) because of the modified adjusted gross income limits in section 408A(b)(3).

Q-3. For purposes of the ordering rules on distributions from Roth IRAs, what portion of a distribution from a rollover contribution from a designated Roth account is treated as contributions?

A-3.

(a) Under section 408A(d)(4), distributions from Roth IRAs are deemed to consist first of regular contributions, then of conversion contributions, and finally, of earnings. For purposes of section 408A(d)(4), the amount of a rollover contribution that is treated as a regular contribution is the portion of the distribution that is treated as investment in the contract under A-6 of § 1.402A-1, and the remainder of the rollover contribution is treated as earnings. Thus, the entire amount of any qualified distribution from a designated Roth account that is rolled over into a Roth IRA is treated as a regular contribution to the Roth IRA. Accordingly, a subsequent distribution from the Roth IRA in the amount of that rollover contribution is not includible in gross income under the rules of A-8 of § 1.408A-6.

(b) If the entire account balance of a designated Roth account is distributed to an employee and only a portion of the distribution is rolled over to a Roth IRA within the 60-day period described in section 402(c)(3), and at the time of the distribution, the investment in the contract exceeds the balance in the designated Roth account, the portion of investment in the contract that exceeds the amount used to determine the taxable amount of the distribution is treated as a regular contribution for purposes of section 408A(d)(4).

Q-4. In the case of a rollover from a designated Roth account to a Roth IRA, when does the 5-taxable-year period (described in section 408A(d)(2)(B) and A-1 of § 1.408A-6) for determining qualified distributions from a Roth IRA begin?

A-4.

(a) The 5-taxable-year period for determining a qualified distribution from a Roth IRA (described in section 408A(d)(2)(B) and A-1 of § 1.408A-6) begins with the earlier of the taxable year described in A-2 of § 1.408A-6 or the taxable year in which a rollover contribution from a designated Roth account is made to a Roth IRA. The 5-taxable-year period described in this A-4 and the 5-taxable-year period of participation described in A-4 of § 1.402A-1 are determined independently.

(b) The following examples illustrate the application of this A-4:

Example 1. Employee D began making designated Roth contributions under his employer's 401(k) plan in 2006. Employee D, who is over age $59^{1}/_{2}$, takes a distribution from D's designated Roth account in 2008, prior to the end of the 5-taxable-year period of participation used to determine qualified distributions from a designated Roth account. The distribution is an eligible rollover distribution and D rolls it over in accordance with sections 402(c) and 402A(c)(3) to D's Roth IRA, which was established in 2003. Any subsequent distribution from the Roth IRA of the amount rolled in, plus earnings thereon, would not be includible in gross income (because it would be a qualified distribution within the meaning of section 408A(d)(2)).

Example 2. The facts are the same as in *Example 1*, except that the Roth IRA is D's first Roth IRA and is established with the rollover in 2008, which is the only contribution made to the Roth IRA. If a distribution is made from the Roth IRA prior to the end of the 5-taxable-year period used to determine qualified distributions from a Roth IRA (which begins in 2008, the year of the rollover which established the Roth IRA) the distribution would not be a qualified distribution within the meaning of section 408A(d)(2), and any amount of the distribution that exceeded the portion of the rollover contribution that consisted of investment in the contract is includible in D's gross income.

Example 3. The facts are the same as in *Example 2*, except that the distribution from the designated Roth account and the rollover to the Roth IRA occur in 2011 (after the end of the 5-taxable-year period of participation used to determine qualified distributions from a designated Roth account). If a distribution is made from the Roth IRA prior to the expiration of the 5-taxable-year period used to determine qualified distributions from a Roth IRA, the distribution would not be a qualified distribution within the meaning of section 408A(d)(2), and any amount of the distribution that exceeded the amount rolled in is includible in D's gross income.

Q-5. Can amounts distributed from a Roth IRA be rolled over to a designated Roth account as defined in A-1 of § 1.402A-1?

A-5. No. Amounts distributed from a Roth IRA may be rolled over or transferred only to another Roth IRA and are not permitted to be rolled over to a designated Roth account under a section 401(a) or section 403(b) plan. The same rule applies even if all the amounts in the Roth IRA are attributable to a rollover distribution from a designated Roth account in a plan.

Q-6. When is this § 1.408A-10 applicable?

A-6. The rules of this § 1.408A-10 apply for taxable years beginning on or after January 1, 2006.

[T.D. 9324, 72 FR 21115, Apr. 30, 2007]

§ 1.409-1 Retirement bonds.

(a) ***In general.*** Section 409 authorizes the issuance of bonds under the Second Liberty Bond Act the purchase price of which would be deductible under section 219. Section 409 also prescribes the tax treatment of such bonds. See paragraph (b) of this section.

(b) ***Income tax treatment of bonds*** —

(1) ***General rule.*** Except as provided in paragraph (b)(2) of this section, the entire proceeds upon redemption of a retirement bond described in section 409(a) shall be included in the gross income of the taxpayer entitled to such proceeds. If a bond has not been tendered for redemption by the registered owner before the close of the taxable year in which he attains age $70^1/_2$, he must include in his gross income for such taxable year the amount of the proceeds he would have received if the bond had been redeemed at age $70^1/_2$. The provisions of sections 72 and 1232 do not apply to a retirement bond.

(2) ***Exceptions.***

(i) If a retirement bond is redeemed within 12 months after the issue date, the proceeds are excluded from gross income if no deduction is allowed under section 219 on account of the purchase of such bond. For definition of issue date, see 31 CFR 346.1(c).

(ii) If a retirement bond is redeemed after the close of the taxable year in which the registered owner attains age $70^1/_2$ the proceeds from the redemption of the bond are excludable from the gross income of the registered owner or his beneficiary to the extent that such proceeds were includible in the gross income of the registered owner for such taxable year.

(iii) If a retirement bond is surrendered for reissuance in the same or lesser face amount, the difference between current redemption value of the bond surrendered for reissuance and the current surrender value of the bond reissued is includible in the gross income of the registered owner.

(3) ***Basis.*** The basis of a retirement bond is zero.

(c) ***Rollover.*** The first sentence of paragraph (b)(1) of this section shall not apply in any case in which a retirement bond is redeemed by the registered owner before the close of the taxable year in which he attains the age of $70^1/_2$ if he transfers the entire amount of the proceeds of such redemption to—

(1) An individual retirement account described in section 408(a) or an individual retirement annuity described in section 408(b) (other than an endowment contract described in § 1.408-3(e)), or

(2) An employees' trust which is described in section 401(a) which is exempt from tax under section 501(a), or an annuity plan described in section 403(a), for the benefit of the registered owner, on or before the 60th day after the day on which he received the proceeds of such redemption. This subparagraph shall not apply in the case of a transfer to a trust or plan described in (c)(2) of this section unless no part of the purchase price of the retirement bond redeemed is attributable to any source other than a rollover contribution from such an employees' trust or annuity plan (other than an annuity plan or employees' trust forming part of a plan under which the individual was an employee within the meaning of section 401(c)(1) at the time contributions were made on his behalf under the plan).

(d) ***Additional tax*** —

(1) ***Early redemption.*** Except as provided in paragraph (d)(2) of this section, under section 409(c) if a retirement bond is redeemed by the registered owner before he attains age $59^1/_2$, his tax under chapter 1 of the Code is increased by an amount equal to 10 percent of the proceeds of the redemption includible in his gross income for the taxable year. Except in the case of the credits allowable under sections 31, 39, or 42, no credit can be used to offset the tax described in the preceding sentence.

(2) ***Limitations.*** Paragraph (d)(1) of this section shall not apply if—

(i) During the taxable year of the registered owner in which a retirement bond is redeemed, the registered owner becomes disabled within the meaning of section 72(m)(7), or

(ii) A retirement bond is tendered for redemption in accordance with paragraph (b)(2)(i) of this section.

[T.D. 7714, 45 FR 52799, Aug. 8, 1980]

§ 1.409A-0 Table of contents.

This section lists captions contained in §§ 1.409A-1, 1.409A-2, 1.409A-3, 1.409A-4, 1.409A-5 and 1.409A-6.

§ 1.409A-1 Definitions and covered plans.

(a) Nonqualified deferred compensation plan.

(1) In general.

(2) Qualified employer plans.

(3) Certain foreign plans.

(i) Participation addressed by treaty.

(ii) Participation by nonresident aliens, certain resident aliens, and bona fide residents of possessions.

(iii) Participation by U.S. citizens and lawful permanent residents.

(iv) Plans subject to a totalization agreement and similar plans.

(v) Broad-based foreign retirement plan.

(4) Section 457 plans.

(5) Certain welfare benefits.

(b) Deferral of compensation

(1) In general.

(2) Earnings.

(3) Compensation payable pursuant to the service recipient's customary payment timing arrangement.

(4) Short-term deferrals.

(i) In general.

(ii) Certain delayed payments.

(iii) Examples.

(5) Stock options, stock appreciation rights, and other equity-based compensation.

(i) Stock rights.

(A) Nonstatutory stock options not providing for the deferral of compensation.

(B) Stock appreciation rights not providing for the deferral of compensation.

(C) Stock rights that may provide for the deferral of compensation.

(D) Feature for the deferral of compensation.

(E) Rights to dividends.

(ii) Statutory stock options.

(iii) Service recipient stock.

(A) In general.

(B) American depositary receipts.

(C) Mutual company units.

(D) Other entities.

(E) Eligible issuer of service recipient stock.

(*1*) In general.

(*2*) Investment vehicles.

(*3*) Corporate structures established or transactions undertaken for purposes of avoiding coverage under section 409A.

(*4*) Substitutions and assumptions by reason of a corporate transaction.

(iv) Determination of the fair market value of service recipient stock.

(A) Stock readily tradable on an established securities market.

(B) Stock not readily tradable on an established securities market.

(*1*) In general.

(*2*) Presumption of reasonableness.

(*3*) Use of alternative methods.

(v) Modifications, extensions, substitutions, and assumptions of stock rights.

(A) Treatment of modified and extended stock rights.

(B) Modification in general.

(C) Extensions.

(*1*) In general.

(*2*) Certain extensions before April 10, 2007.

(*3*) Examples.

(D) Substitutions and assumptions of stock rights by reason of a corporate transaction.

(E) Acceleration of date when exercisable.

(F) Discretionary added benefits.

(G) Change in underlying stock increasing value.

(H) Change in the number of shares purchasable.

(I) Rescission of changes.

(J) Successive modifications and extensions.

(K) Modifications and extensions in effect on October 23, 2004.

(vi) Meaning and use of certain terms.

(A) Option.

(B) Date of grant of option.

(C) Stock.

(D) Exercise price.

(E) Exercise.

(F) Transfer.

(G) Readily tradable.

(H) Application to stock appreciation rights.

(6) Restricted property, section 402(b) trusts, and section 403(c) annuities.

(i) In general.

(ii) Promises to transfer property.

(7) Arrangements between partnerships and partners. [Reserved]

(8) Certain foreign plans.

(i) Plans with respect to compensation covered by treaty or other international agreement.

(ii) Plans with respect to certain other compensation.

(iii) Tax equalization agreements.

(iv) Certain limited deferrals of a nonresident alien.

(v) Additional foreign plans.

(vi) Earnings.

(9) Separation pay plans.

(i) In general.

(ii) Collectively bargained separation pay plans.

(iii) Separation pay due to involuntary separation from service or participation in a window program.

(iv) Foreign separation pay plans.

(v) Reimbursements and certain other separation payments.

(A) In general.

(B) Medical benefits.

(C) In-kind benefits and direct service recipient payments.

(D) Limited payments.

(E) Limited period of time.

(vi) Window programs—definition.

(10) Certain indemnification and liability insurance plans.

(11) Legal settlements.

(12) Certain educational benefits.

(c) Plan.

(1) In general.

(2) Plan aggregation rules.

(i) In general.

(ii) Dual status.

(3) Establishment of plan.

(i) In general.

(ii) Initial deferral election provisions.

(iii) Subsequent deferral election provisions.

(iv) Payment accelerations.

(v) Six-month delay for specified employees.

(vi) Plan amendments.

(vii) Transition rule for written plan requirement.

(viii) Plan aggregation rules.

(d) Substantial risk of forfeiture.

(1) In general.

(2) Stock rights.

(3) Enforcement of forfeiture condition.

(i) In general.

(ii) Examples.

(e) Performance-based compensation.

(1) In general.

(2) Payments based upon subjective performance criteria.

(3) Equity-based compensation.

(f) Service provider.

(1) In general.

(2) Independent contractors.

(i) In general.

(ii) Related person.

(iii) Significant services.

(iv) Management services.

(v) Services provided to related persons.

(g) Service recipient.

(h) Separation from service.

(1) Employees.

(i) In general.

(ii) Termination of employment.

(2) Independent contractors.

(i) In general.

(ii) Special rule.

(3) Definition of service recipient and employer.

(4) Asset purchase transactions.

(5) Dual status.

(6) Collectively bargained plans covering multiple employers.

(i) Specified employee.

(1) In general.

(2) Definition of compensation.

(3) Specified employee identification date.

(4) Specified employee effective date.

(5) Alternative methods of satisfying the six-month delay rule.

(6) Corporate transactions.

(i) Mergers and acquisitions of public service recipients.

(ii) Mergers and acquisitions of nonpublic service recipients.

(iii) Spinoffs.

(iv) Public offerings and other corporate transactions.

(v) Alternative methods of compliance.

(7) Nonresident alien employees.

(8) Elections affecting the identification of specified employees.

(j) Nonresident alien.

(k) Established securities market.

(l) Stock right.

(m) Separation pay plan.

(n) Involuntary separation from service.

(1) In general.

(2) Separations from service for good reason.

(i) In general.

(ii) Safe harbor.

(3) Special rule for certain collectively bargained plans.

(o) Earnings.

(p) In-kind benefits.

(q) Application of definitions and rules.

§ 1.409A-2 Deferral elections.

(a) Initial elections as to the time and form of payment.

(1) In general.

(2) Service recipient elections.

(3) General rule.

(4) Initial deferral election with respect to short-term deferrals.

(5) Initial deferral election with respect to certain forfeitable rights.

(6) Initial deferral election with respect to fiscal year compensation.

(7) First year of eligibility.

(i) In general.

(ii) Eligibility to participate.

(iii) Application to excess benefit plans.

(8) Initial deferral election with respect to performance-based compensation.

(9) Nonqualified deferred compensation plans linked to qualified employer plans or certain other arrangements.

(10) Changes in elections under a cafeteria plan.

(11) Initial deferral election with respect to certain separation pay.

(12) Initial deferral election with respect to certain commissions.

(i) Sales commission compensation.

(ii) Investment commission compensation.

(iii) Commission compensation and related persons.

(13) Initial deferral election with respect to compensation paid for final payroll period.

(i) In general.

(ii) Transition rule.

(14) Elections to annualize recurring part-year compensation.

(15) USERRA rights.

(b) Subsequent changes in time and form of payment.

(1) In general.

(2) Definition of payments for purposes of subsequent changes in the time and form of payment.

(i) In general.

(ii) Life annuities.

(A) In general.

(B) Certain features disregarded.

(C) Subsidized joint and survivor annuities.

(D) Actuarial assumptions and methods.

(iii) Installment payments.

(iv) Transition rule.

(3) Beneficiaries.

(4) Domestic relations orders.

(5) Coordination with prohibition against acceleration of payments.

(6) Application to multiple payment events.

(7) Delay of payments under certain circumstances.

(i) Payments subject to section 162(m).

(ii) Payments that would violate Federal securities laws or other applicable law.

(iii) Other events and conditions.

(8) USERRA rights.

(9) Examples.

(c) Special rules for certain resident aliens.

§ 1.409A-3 Permissible payments

(a) In general.

(b) Designation of payment upon a permissible payment event.

(c) Designation of alternative specified dates or payment schedules based upon date of permissible event.

(d) When a payment is treated as made upon the designated payment date.

(e) Designation of time and form of payment with respect to earnings.

(f) Substitutions.

(g) Disputed payments and refusals to pay.

(h) Special rule for certain resident aliens.

(i) Definitions and special rules.

(1) Specified time or fixed schedule.

(i) In general.

(ii) Payment schedules with formula and fixed limitations.

(A) Individual limitations.

(B) Limitations on aggregate payments to all participants in substantially identical plans.

(iii) Payment schedules determined by timing of payments received by the service recipient.

(iv) Reimbursement or in-kind benefit plans.

(A) General rule.

(B) Medical reimbursement arrangements.

(v) Tax gross-up payments.

(vi) Examples.

(2) Separation from service—required delay in payment to a specified employee pursuant to a separation from service.

(i) In general.

(ii) Application of payment rules to delayed payments.

(3) Unforeseeable emergency.

(i) Definition.

(ii) Amount of payment permitted upon an unforeseeable emergency.

(iii) Payments due to an unforeseeable emergency.

(4) Disability.

(i) In general.

(ii) Limited plan definition of disability.

(iii) Determination of disability.

(5) Change in the ownership or effective control of a corporation, or a change in the ownership of a substantial portion of the assets of a corporation.

(i) In general.

(ii) Identification of relevant corporation.

(A) In general.

(B) Majority shareholder.

(C) Example.

(iii) Attribution of stock ownership.

(iv) Special rules for certain delayed payments pursuant to a change in control event.

(A) Certain transaction-based compensation.

(B) Certain nonvested compensation.

(v) Change in the ownership of a corporation.

(A) In general.

(B) Persons acting as a group.

(vi) Change in the effective control of a corporation.

(A) In general.

(B) Multiple change in control events.

(C) Acquisition of additional control.

(D) Persons acting as a group.

(vii) Change in the ownership of a substantial portion of a corporation's assets.

(A) In general.

(B) Transfers to a related person.

(C) Persons acting as a group.

(6) Certain back-to-back arrangements.

(i) In general.

(ii) Example.

(j) Prohibition on acceleration of payments.

(1) In general.

(2) Application to multiple payment events.

(3) Beneficiaries.

(4) Exceptions.

(i) In general.

(ii) Domestic relations order.

(iii) Conflicts of interest.

(A) Compliance with ethics agreements with the Federal government.

(B) Compliance with ethics laws or conflicts of interest laws.

(iv) Section 457 plans.

(v) Limited cashouts.

(vi) Payment of employment taxes.

(vii) Payment upon income inclusion under section 409A.

(viii) Cancellation of deferrals following an unforeseeable emergency or hardship distribution.

(ix) Plan terminations and liquidations.

(x) Certain distributions to avoid a nonallocation year under section 409(p).

(xi) Payment of state, local, or foreign taxes.

(xii) Cancellation of deferral elections due to disability.

(xiii) Certain offsets.

(xiv) Bona fide disputes as to a right to a payment.

(5) Nonqualified deferred compensation plans linked to qualified employer plans or certain other arrangements.

(6) Changes in elections under a cafeteria plan.

§ 1.409A-4 Calculation of income inclusion. [Reserved]

§ 1.409A-5 Funding. [Reserved]

§ 1.409A-6 Application of section 409A and effective dates.

(a) Statutory application and effective dates

(1) Application to amounts deferred.

(i) In general.

(ii) Collectively bargained plans.

(2) Identification of date of deferral for statutory effective date purposes.

(3) Calculation of amount of compensation deferred for statutory effective date purposes.

(i) Nonaccount balance plans.

(ii) Account balance plans.

(iii) Equity-based compensation plans.

(iv) Earnings.

(v) Definition of plan.

(4) Material modifications.

(i) In general.

(ii) Adoptions of new plans.

(iii) Suspension or termination of a plan.

(iv) Changes to investment measures—account balance plans.

(v) Stock rights.

(vi) Rescission of modifications.

(vii) Definition of plan.

(b) Regulatory applicability date.

[T.D. 9321, 72 FR 19276, Apr. 17, 2007]

§ 1.409A-1 Definitions and covered plans.

(a) ***Nonqualified deferred compensation plan*** —

(1) ***In general.*** Except as otherwise provided in this paragraph (a), the term *nonqualified deferred compensation plan* means any plan (within the meaning of paragraph (c) of this section) that provides for the deferral of compensation (within the meaning of paragraph (b) of this section). Whether a plan provides for the deferral of compensation generally is determined at the time the service provider obtains a legally binding right to the compensation under the plan, and is not affected by any retroactive change to the plan to characterize the right as one that does not provide for the deferral of compensation. For example, amounts deferred under a nonqualified deferred compensation plan do not become an excluded death benefit if the plan is amended so that the amounts are payable only upon the death of the service provider. If a principal purpose of a plan is to achieve a result with respect to a deferral of compensation that is inconsistent with the purposes of section 409A, the Commissioner may treat the plan as a nonqualified deferred compensation plan for purposes of section 409A and the regulations thereunder.

(2) ***Qualified employer plans.*** The term *nonqualified deferred compensation plan* does not include a qualified employer plan. The term *qualified employer plan* means any of the following plans:

(i) Any plan described in section 401(a) and a trust exempt from tax under section 501(a) or that is described in section 402(d).

(ii) Any annuity plan described in section 403(a).

(iii) Any annuity contract described in section 403(b).

(iv) Any simplified employee pension (within the meaning of section 408(k)).

(v) Any simple retirement account (within the meaning of section 408(p)).

(vi) Any plan under which an active participant makes deductible contributions to a trust described in section 501(c)(18).

(vii) Any eligible deferred compensation plan (within the meaning of section 457(b)).

(viii) Any plan described in section 415(m).

(ix) Any plan described in § 1022(i)(2) of the Employee Retirement Income Security Act of 1974, Public Law 93-406 (88 Stat. 829, 942) (Sept. 2, 1974) (ERISA).

(3) *Certain foreign plans* —

(i) ***Participation addressed by treaty.*** With respect to an individual for a taxable year, the term *nonqualified deferred compensation plan* does not include any scheme, trust, arrangement, or plan maintained with respect to such individual, to the extent contributions made by or on behalf of such individual to such scheme, trust, arrangement, or plan, or credited allocations, accrued benefits, earnings, or other amounts constituting income, of such individual under such scheme, trust, arrangement, or plan, are excludable by such individual for Federal income tax purposes pursuant to any bilateral income tax convention, or other bilateral or multilateral agreement, to which the United States is a party.

(ii) ***Participation by nonresident aliens, certain resident aliens, and bona fide residents of possessions.*** With respect to an alien individual for a taxable year during which such individual is a nonresident alien, a resident alien classified as a resident alien solely under section 7701(b)(1)(A)(ii) (and not section 7701(b)(1)(A)(i)), or a bona fide resident of a possession (within the meaning of section 937(a)), the term *nonqualified deferred compensation plan* does not include any broad-based foreign retirement plan (within the meaning of paragraph (a)(3)(v) of this section).

(iii) ***Participation by U.S. citizens and lawful permanent residents.*** With respect to an individual for a given taxable year during which such individual is a U.S. citizen or a resident alien classified as a resident alien under section 7701(b)(1)(A)(i), other than an individual who is also a bona fide resident of a possession (within the meaning of section 937(a)), the term *nonqualified deferred compensation plan* does not include a broad-based foreign retirement plan (within the meaning of paragraph (a)(3)(v) of this section), but only with respect to a plan, or a portion of a plan where such portion may be distinguished, providing for nonelective deferrals of modified foreign earned income, and earnings with respect to such nonelective deferrals, and only to the extent that the amounts deferred under all such plans of the service recipient, or all portions of such plans, in which the service provider participates in such taxable year, do not exceed the applicable limits under section 415(b) (applied to nonaccount balance plans as defined in paragraph (c)(2)(i)(C) of this section) and section 415(c) (applied to account balance plans as defined in paragraph (c)(2)(i)(A) of this section) that would be applicable if such plans were plans subject to section 415 and the modified foreign earned income of such individual were treated as compensation for purposes of applying section 415(b) and (c). For purposes of this paragraph (a)(3)(iii), the term *modified foreign earned income* means foreign earned income as defined in section 911(b)(1) without regard to section 911(b)(1)(B)(iv) and without regard to the requirement that the income be attributable to services performed during the period described in section 911(d)(1)(A) or (B). The provisions of this paragraph (a)(3)(iii) do not apply to any individual with respect to any taxable year in which the individual is simultaneously eligible to participate in a broad-based foreign retirement plan and a qualified employer plan described in paragraph (a)(2) of this section. For purposes of this paragraph (a)(3)(iii), an individual is eligible to participate in a qualified employer plan if under the terms of the plan and without further amendment or action by the plan sponsor, the individual is eligible to make or receive contributions or accrue benefits under the plan (regardless of whether the individual has elected to participate in the plan).

(iv) ***Plans subject to a totalization agreement and similar plans.*** The term *nonqualified deferred compensation plan* does not include any social security system of a jurisdiction to the extent that benefits provided under or contributions made to the system are subject to an agreement entered into pursuant to section 233 of the Social Security Act (42 U.S.C. 433) with any foreign

jurisdiction. In addition, the term *nonqualified deferred compensation plan* does not include a social security system of a foreign jurisdiction to the extent that benefits are provided under or contributions are made to a government-mandated plan as part of that foreign jurisdiction's social security system.

(v) ***Broad-based foreign retirement plan.*** The term *broad-based foreign retirement plan* means a scheme, trust, arrangement, or plan (regardless of whether sponsored by a U.S. person) that is written and that, in the case of an employer-maintained plan, satisfies the following conditions:

(A) The plan is nondiscriminatory insofar as the employees who, under the terms of the plan (alone or in combination with other comparable plans) and without further amendment or action by the employer, are eligible to make or receive contributions or accrue benefits under the plan other than earnings (regardless of whether the employee has elected to participate in the plan), are a wide range of employees, substantially all of whom are nonresident aliens, resident aliens classified as resident aliens solely under section 7701(b)(1)(A)(ii) (and not section 7701(b)(1)(A)(i)), or bona fide residents of a possession (within the meaning of section 937(a)), including rank and file employees.

(B) The plan (alone or in combination with other comparable plans) actually provides significant benefits for a substantial majority of such covered employees.

(C) The benefits actually provided under the plan to such covered employees are nondiscriminatory.

(D) The plan contains provisions or is the subject of tax law provisions or other legal restrictions that generally discourage employees from using plan benefits for purposes other than retirement or restrict access to plan benefits before separation from service, including (but not limited to), restricting in-service distributions except in events similar to an unforeseeable emergency (as defined in § 1.409A-3(i)(3)(i)) or hardship (as defined for purposes of section 401(k)(2)(B)(i)(IV)), or for educational purposes or the purchase of a primary residence.

(4) ***Section 457 plans.*** A nonqualified deferred compensation plan under section 457(f) may constitute a nonqualified deferred compensation plan for purposes of this paragraph (a). The rules of section 409A apply to nonqualified deferred compensation plans separately and in addition to any requirements applicable to such plans under section 457(f). In addition, nonelective deferred compensation of non-employees described in section 457(e)(12) and a grandfathered plan or arrangement described in § 1.457-2(k)(4) may constitute a nonqualified deferred compensation plan for purposes of this paragraph (a). The term *nonqualified deferred compensation plan* does not include a length of service award to a bona fide volunteer under section 457(e)(11)(A)(ii). For purposes of the application of section 409A to a plan to which section 457 applies, a payment under the plan generally means the provision of cash or property to the service provider, provided that for purposes of the application of the short-term deferral rule set forth in paragraph (b)(4) of this section, the inclusion in income of an amount under section 457(f) is treated as a payment of the amount.

(5) ***Certain welfare benefits.*** The term *nonqualified deferred compensation plan* does not include a plan, or a portion of a plan, to the extent that the plan provides bona fide vacation leave, sick leave, compensatory time, disability pay, or death benefits. For these purposes, the terms “disability pay” and “death benefits” have the same meanings as provided in § 31.3121(v)(2)-1(b)(4)(iv)(C) of this chapter, provided that for purposes of this paragraph, such disability pay and death benefits may be

provided through insurance and the lifetime benefits payable under the plan are not treated as including the value of any taxable term life insurance coverage or taxable disability insurance coverage provided under the plan. The term *nonqualified deferred compensation plan* also does not include any Archer Medical Savings Account as described in section 220, any Health Savings Account as described in section 223, or any other medical reimbursement arrangement, including a health reimbursement arrangement, that satisfies the requirements of section 105 and section 106 such that the benefits or reimbursements provided under such arrangement are not includible in income.

(b) ***Deferral of compensation*** —

(1) ***In general.*** Except as otherwise provided in paragraphs (b)(3) through (b)(12) of this section, a plan provides for the deferral of compensation if, under the terms of the plan and the relevant facts and circumstances, the service provider has a legally binding right during a taxable year to compensation that, pursuant to the terms of the plan, is or may be payable to (or on behalf of) the service provider in a later taxable year. Such compensation is deferred compensation for purposes of section 409A, this section and §§ 1.409A-2 through 1.409A-6. A legally binding right to an amount that will be excluded from income when and if received does not constitute a deferral of compensation, unless the service provider has received the right in exchange for, or has the right to exchange the right for, an amount that will be includible in income (other than due to participation in a cafeteria plan described in section 125). A service provider does not have a legally binding right to compensation to the extent that compensation may be reduced unilaterally or eliminated by the service recipient or other person after the services creating the right to the compensation have been performed. However, if the facts and circumstances indicate that the discretion to reduce or eliminate the compensation is available or exercisable only upon a condition, or the discretion to reduce or eliminate the compensation lacks substantive significance, a service provider will be considered to have a legally binding right to the compensation. Whether the discretion to reduce or eliminate the compensation lacks substantive significance depends on all the relevant facts and circumstances. However, where the service provider to whom the compensation may be paid has effective control of the person retaining the discretion to reduce or eliminate the compensation, or has effective control over any portion of the compensation of the person retaining the discretion to reduce or eliminate the compensation, or is a member of the family (as defined in section 267(c)(4) applied as if the family of an individual includes the spouse of any member of the family) of the person retaining the discretion to reduce or eliminate the compensation, the discretion to reduce or eliminate the compensation will not be treated as having substantive significance. For this purpose, compensation is not considered subject to unilateral reduction or elimination merely because it may be reduced or eliminated by operation of the objective terms of the plan, such as the application of a nondiscretionary, objective provision creating a substantial risk of forfeiture. Similarly, a service provider does not fail to have a legally binding right to compensation merely because the amount of compensation is determined under a formula that provides for benefits to be offset by benefits provided under another plan (including a plan that is qualified under section 401(a)), or because benefits are reduced due to actual or notional investment losses, or, in a final average pay plan, subsequent decreases in compensation.

(2) ***Earnings.*** References to the deferral of compensation or deferred compensation include references to earnings. When the right to earnings is specified under the terms of the plan, the legally binding right to earnings arises at the time of the deferral of the compensation to which the earnings relate. A plan may provide that the time and form of payment of earnings is treated separately from the time and form of payment of the underlying compensation, so that, provided that the rules of section

409A are otherwise met, a plan may provide that earnings will be paid at a separate time or in a separate form from the payment of the underlying compensation. For the application of the deferral election rules to current payments of earnings and dividend equivalents, see § 1.409A-3(e).

(3) ***Compensation payable pursuant to the service recipient's customary payment timing arrangement.*** A deferral of compensation does not occur solely because compensation is paid after the last day of the service provider's taxable year pursuant to the timing arrangement under which the service recipient normally compensates service providers for services performed during a payroll period described in section 3401(b), or with respect to a non-employee service provider, a period not longer than the payroll period described in section 3401(b) or if no such payroll period exists, a period not longer than the earlier of the normal timing arrangement under which the service provider normally compensates non-employee service providers or 30 days after the end of the service provider's taxable year.

(4) ***Short-term deferrals*** —

(i) ***In general.*** A deferral of compensation does not occur under a plan with respect to any payment (as defined in § 1.409A-2(b)(2)) that is not a deferred payment, provided that the service provider actually or constructively receives such payment on or before the last day of the applicable $2^1/_2$ month period. The following rules apply for purposes of this paragraph (b)(4)(i):

(A) The applicable $2^1/_2$ month period is the period ending on the later of the 15th day of the third month following the end of the service provider's first taxable year in which the right to the payment is no longer subject to a substantial risk of forfeiture or the 15th day of the third month following the end of the service recipient's first taxable year in which the right to the payment is no longer subject to a substantial risk of forfeiture.

(B) A payment is treated as actually or constructively received if the payment is includible in income, including if the payment is includible in income under section 83, the economic benefit doctrine, section 402(b), or section 457(f).

(C) A right to a payment that is never subject to a substantial risk of forfeiture is considered to be no longer subject to a substantial risk of forfeiture on the first date the service provider has a legally binding right to the payment.

(D) A payment is a deferred payment if it is made pursuant to a provision of a plan that provides for the payment to be made or completed on or after any date, or upon or after the occurrence of any event, that will or may occur later than the end of the applicable $2^1/_2$ month period, such as a separation from service, death, disability, change in control event, specified time or schedule of payment, or unforeseeable emergency, regardless of whether an amount is actually paid as a result of the occurrence of such a payment date or event during the applicable $2^1/_2$ month period. If a plan provides that the service provider or service recipient may make an election under the plan (including an election under § 1.409A-2(a)(4)) of a different payment date, schedule, or event, such right is disregarded for this purpose. In such cases, whether a plan provides for a deferred payment is determined based on the payment date, schedule, or event that would apply if no such election were made, except that if the plan would not provide for a deferred payment absent such an election, and the service provider or service recipient makes such an election, whether the plan provides for a deferred payment is determined based upon the payment date, schedule, or event that the service provider or service recipient in fact elected.

(E) A stock right provides for a deferred payment if such right includes any provision pursuant to which the holder of the stock right will or may have the right to exercise the stock right after the applicable $2^1/_2$ month period.

(F) This paragraph (b)(4)(i) is applied separately to each payment (as defined in § 1.409A-2(b)(2)) required to be made under a plan.

(G) If a plan provides for a deferred payment with respect to part of a payment (for example a life annuity or a series of installment amounts treated as a single payment), the plan provides for a deferred payment with respect to the entire payment.

(ii) ***Certain delayed payments.*** A payment that otherwise qualifies as a short-term deferral under paragraph (b)(4)(i) of this section but is made after the applicable $2^1/_2$ month period may continue to qualify as a short-term deferral if the taxpayer establishes that it was administratively impracticable to make the payment by the end of the applicable $2^1/_2$ month period and, as of the date upon which the legally binding right to the compensation arose, such impracticability was unforeseeable, or the taxpayer establishes that making the payment by the end of the applicable $2^1/_2$ month period would have jeopardized the ability of the service recipient to continue as a going concern, and provided further that the payment is made as soon as administratively practicable or as soon as the payment would no longer have such effect. For purposes of this paragraph (b)(4)(ii), an action or failure to act of the service provider or a person under the service provider's control, such as a failure to provide necessary information or documentation, is not an unforeseeable event. In addition, a payment that otherwise qualifies as a short-term deferral under paragraph (b)(4)(i) of this section but is made after the applicable $2^1/_2$ month period may continue to qualify as a short-term deferral if the taxpayer establishes that the service recipient reasonably anticipated that the service recipient's deduction with respect to such payment otherwise would not be permitted by application of section 162(m), and, as of the date the legally binding right to the payment arose, a reasonable person would not have anticipated the application of section 162(m) at the time of the payment, and provided further that the payment is made as soon as reasonably practicable following the first date on which the service recipient anticipates or reasonably should anticipate that, if the payment were made on such date, the service recipient's deduction with respect to such payment would no longer be restricted due to the application of section 162(m). For additional rules applicable to certain transaction-based compensation, see § 1.409A-3(i)(5)(iv)(A).

(iii) ***Examples.*** The following examples illustrate the provisions of this paragraph (b)(4). In these examples, except as otherwise noted, each employee and each employer has a calendar year taxable year and each employee is an individual who is employed by the specified employer.

Example 1. On November 1, 2008, Employer Z awards a bonus to Employee A such that Employee A has a legally binding right to the payment as of November 1, 2008, that is not subject to a substantial risk of forfeiture. The bonus plan does not provide for a payment date or a deferred payment. The bonus plan will not be considered to have provided for a deferral of compensation if the bonus is paid or made available to Employee A on or before March 15, 2009.

Example 2. Employer Y has a taxable year ending August 31. On November 1, 2008, Employer Y awards a bonus to Employee B so that Employee B has a legally binding right to the payment as of November 1, 2008, that is not subject to a substantial risk of forfeiture. The

bonus plan does not provide for a payment date or a deferred payment. The bonus plan will not be considered to have provided for a deferral of compensation if the bonus is paid or made available to Employee B on or before November 15, 2009.

Example 3. On November 1, 2008, Employer X awards a bonus to Employee C such that Employee C has a legally binding right to the payment as of November 1, 2008. Under the bonus plan, Employee C will forfeit the bonus unless Employee C continues performing services through December 31, 2010. The right to the payment is subject to a substantial risk of forfeiture through December 31, 2010. Employee C has the right to make a written election not later than December 31, 2009, to receive the bonus on or after December 31, 2015, but Employee C does not make such election. The bonus plan does not provide for a default payment date or a deferred payment in the absence of an election by Employee C. The bonus plan will not be considered to have provided for a deferral of compensation if the bonus is paid or made available to Employee C on or before March 15, 2011.

Example 4. On November 1, 2008, Employer W awards a bonus to Employee D such that Employee D has a legally binding right to the payment as of November 1, 2008. Under the bonus plan, the bonus will be determined based on services performed during the period from January 1, 2009 through December 31, 2010. The bonus is scheduled to be paid as a lump sum payment on February 15, 2011. Under the bonus plan, Employee D will forfeit the bonus unless Employee D continues performing services through the scheduled payment date (February 15, 2011). Provided that at all times before the scheduled payment date Employee D is required to continue to perform services to retain the right to the bonus, and the bonus is paid on or before March 15, 2012, the bonus plan will not be considered to have provided for a deferral of compensation.

Example 5. On November 1, 2008, Employer V awards a bonus to Employee E such that Employee E has a legally binding right to the payment as of November 1, 2008. Under the bonus plan, Employee E will forfeit the bonus unless Employee E continues performing services through December 31, 2010. Under the bonus plan, the bonus is scheduled to be paid as a lump sum payment on July 1, 2011. By specifying a payment date after the applicable $2^1/_2$ month period, the bonus plan provides for a deferred payment. The bonus plan provides for a deferral of compensation, and will not qualify as a short-term deferral regardless of whether the bonus is paid or made available on or before March 15, 2011 (and generally any payment before June 1, 2011 would constitute an impermissible acceleration of a payment).

Example 6. On November 1, 2008, Employer U awards a bonus to Employee F such that Employee F has a legally binding right to the payment as of November 1, 2008, that is not subject to a substantial risk of forfeiture. The bonus plan provides for a lump sum payment upon Employee F's separation from service. Because the separation from service is an event that may occur after the applicable $2^1/_2$ month period, the bonus plan provides for a deferred payment and therefore provides for a deferral of compensation. Accordingly, the bonus plan will not qualify as a short-term deferral regardless of whether Employee F separates from service and the bonus is paid or made available on or before March 15, 2009.

Example 7. On November 1, 2008, Employer T grants Employee G a legally binding right to the payment of a life annuity with the first annuity payment on November 1, 2013, provided that Employee G continues performing services for Employer T continuously through

November 1, 2013. Because the life annuity is treated as a single payment, and because all payments of the life annuity may not occur during the applicable $2^1/_2$ month period, the plan provides for a deferred payment and none of the amounts payable under the annuity will qualify as a short-term deferral, so that section 409A applies to all amounts that are payable under the plan.

Example 8. On November 1, 2008, Employer S grants Employee H a stock right providing for an exercise price less than the fair market value of the underlying stock on November 1, 2008. The stock right is subject to a substantial risk of forfeiture requiring services through November 1, 2010. The stock right becomes exercisable when the substantial risk of forfeiture lapses and expires on November 1, 2013. Employee H continues providing services through November 1, 2010, at which time the substantial risk of forfeiture lapses. The stock right provides for a deferred payment and will not qualify as a short-term deferral regardless of whether Employee H exercises the stock right on or before March 15, 2011.

(5) ***Stock options, stock appreciation rights, and other equity-based compensation*** —

(i) ***Stock rights*** —

(A) ***Nonstatutory stock options not providing for the deferral of compensation.*** An option to purchase service recipient stock does not provide for a deferral of compensation if—

(*1*) The exercise price may never be less than the fair market value of the underlying stock (disregarding lapse restrictions as defined in § 1.83-3(i)) on the date the option is granted and the number of shares subject to the option is fixed on the original date of grant of the option;

(*2*) The transfer or exercise of the option is subject to taxation under section 83 and § 1.83-7; and

(*3*) The option does not include any feature for the deferral of compensation other than the deferral of recognition of income until the later of the following:

(*i*) The exercise or disposition of the option under § 1.83-7.

(*ii*) The time the stock acquired pursuant to the exercise of the option first becomes substantially vested (as defined in § 1.83-3(b)).

(B) ***Stock appreciation rights not providing for the deferral of compensation.*** A right to compensation based on the appreciation in value of a specified number of shares of service recipient stock occurring between the date of grant and the date of exercise of such right (a stock appreciation right) does not provide for a deferral of compensation if—

(*1*) Compensation payable under the stock appreciation right cannot be greater than the excess of the fair market value of the stock (disregarding lapse restrictions as defined in § 1.83-3(i)) on the date the stock appreciation right is exercised over an amount specified on the date of grant of the stock appreciation right (the stock appreciation right exercise price), with respect to a number of shares fixed on or before the date of grant of the right;

(2) The stock appreciation right exercise price may never be less than the fair market value of the underlying stock (disregarding lapse restrictions as defined in § 1.83-3(i)) on the date the right is granted; and

(3) The stock appreciation right does not include any feature for the deferral of compensation other than the deferral of recognition of income until the exercise of the stock appreciation right.

(C) ***Stock rights that may provide for the deferral of compensation.*** An option to purchase stock other than service recipient stock, or a stock appreciation right with respect to stock other than service recipient stock, generally will provide for the deferral of compensation within the meaning of this paragraph (b). If under the terms of an option to purchase service recipient stock (other than an incentive stock option described in section 422 or a stock option granted under an employee stock purchase plan described in section 423), the exercise price is or could become less than the fair market value of the stock (disregarding lapse restrictions as defined in § 1.83-3(i)) on the date of grant, the grant of the option generally will provide for the deferral of compensation within the meaning of this paragraph (b). If under the terms of a stock appreciation right with respect to service recipient stock, the compensation payable under the stock appreciation right is or could be any amount greater than, with respect to a predetermined number of shares, the excess of the fair market value of the stock (disregarding lapse restrictions as defined in § 1.83-3(i)) on the date the stock appreciation right is exercised over the fair market value of the stock (disregarding lapse restrictions as defined in § 1.83-3(i)) on the date of grant of the stock appreciation right, the grant of the stock appreciation right generally will provide for a deferral of compensation within the meaning of this paragraph (b).

(D) ***Feature for the deferral of compensation.*** To the extent a stock right provides a right other than the right to receive cash or stock on the date of exercise and such additional right would otherwise allow compensation to be deferred beyond the date of exercise, the entire arrangement (including the underlying stock right) provides for the deferral of compensation. For purposes of this paragraph (b)(5)(i), neither the right to receive substantially nonvested stock (as defined in § 1.83-3(b)) upon the exercise of a stock right, nor the right to pay the exercise price with previously acquired shares, constitutes a feature for the deferral of compensation.

(E) ***Rights to dividends.*** For purposes of this paragraph (b)(5)(i), the right, directly or indirectly contingent upon the exercise of a stock right, to receive an amount equal to all or part of the dividends or other distributions (other than stock dividends described in paragraph (b)(5)(v)(H) of this section) declared and paid on the number of shares underlying the stock right between the date of grant and the date of exercise of the stock right constitutes an offset to the exercise price of the stock option or an increase in the amount payable under the stock appreciation right (generally causing such stock right to be subject to section 409A). A plan providing a right to dividends or other distributions declared and paid on the number of shares underlying a stock right, the payment of which is not contingent upon, or otherwise payable on, the exercise of the stock right, may provide for a deferral of compensation, but the existence of the right to receive such an amount will not be treated as a reduction to the exercise price of (or an increase to the compensation payable under) the stock right. Thus, a right to such dividends or distributions that is not contingent, directly or indirectly, upon the exercise of a stock right

will not cause the related stock right to fail to satisfy the requirements of the exclusion from the definition of a deferral of compensation provided in paragraphs (b)(5)(i)(A) and (B) of this section.

(ii) ***Statutory stock options.*** The grant of an incentive stock option as described in section 422, or the grant of an option under an employee stock purchase plan described in section 423 (including the grant of an option with an exercise price discounted in accordance with section 423(b)(6) and the accompanying regulations), does not constitute a deferral of compensation. However, the exclusion for statutory stock options under this paragraph (b)(5)(ii) does not apply to a modification, extension, or renewal of a statutory option that is treated as the grant of a new option that is not a statutory option. See § 1.424-1(e). In such event, the option is treated for purposes of this paragraph (b) as if it had been a nonstatutory stock option from the date of the original grant. Accordingly, if such modification, extension, or renewal of the stock option would have been treated as the grant of a new option or as causing the option to have had a deferral feature from the date of grant under paragraph (b)(5)(v) of this section, the modification, extension, or renewal of the stock option is treated as the grant of a new option or as causing the option to have had a deferral feature from the date of grant for purposes of this paragraph (b)(5).

(iii) ***Service recipient stock*** —

(A) ***In general.*** Except as otherwise provided in paragraphs (b)(5)(iii)(B), (C), and (D) of this section, the term *service recipient stock* means a class of stock that, as of the date of grant, is common stock for purposes of section 305 and the regulations thereunder of a corporation that is an eligible issuer of service recipient stock (as defined in paragraph (b)(5)(iii)(E) of this section). Notwithstanding the foregoing, the term *service recipient stock* does not include a class of stock that has any preference as to distributions other than distributions of service recipient stock and distributions in liquidation of the issuer. The term *service recipient stock* also does not include any stock that is subject to a mandatory repurchase obligation (other than a right of first refusal), or a put or call right that is not a lapse restriction as defined in § 1.83-3(i), if the stock price under such right or obligation is based on a measure other than the fair market value (disregarding lapse restrictions as defined in § 1.83-3(i)) of the equity interest in the corporation represented by the stock.

(B) ***American depositary receipts.*** An American depositary receipt or American depositary share may constitute service recipient stock, to the extent that the stock traded on a foreign securities market to which the American depositary receipt or American depositary share relates qualifies as service recipient stock.

(C) ***Mutual company units.*** Mutual company units may constitute service recipient stock. For this purpose, the term *mutual company unit* means a fixed percentage of the overall value of a non-stock mutual company or association. For purposes of determining the value of the mutual company unit, the unit may be valued in accordance with the rules set forth in paragraph (b)(5)(iv)(B) of this section governing valuation of service recipient stock the shares of which are not traded on an established securities market, applied as if the mutual company were a stock corporation with one class of common stock and the number of shares of such stock determined according to such fixed percentage. For example, an appreciation right based on the appreciation of 10 mutual company units, where each unit is defined as one percent of the overall value of the mutual company,

would be valued as if the appreciation right were based upon 10 shares of a corporation, with 100 shares of common stock (and no other class of stock), the shares of which are not readily tradable on an established securities market.

(D) ***Other entities.*** An interest in an entity other than a corporation or non-stock mutual company or association may constitute service recipient stock to the extent designated by the Commissioner in revenue procedures, notices, or other guidance published in the Internal Revenue Bulletin (see § 601.601(d)(2) of this chapter).

(E) ***Eligible issuer of service recipient stock*** —(*1*) *In general.* The term *eligible issuer of service recipient stock* means only the corporation for which the service provider provides direct services on the date of grant of the stock right (if the entity receiving such services is a corporation), and any corporation in a chain of corporations or other entities in which each corporation or other entity has a controlling interest in another corporation or other entity in the chain, ending with the corporation or other entity that has a controlling interest in the corporation or other entity for which the service provider provides direct services on the date of grant of the stock right. For this purpose, the term *controlling interest* has the same meaning as provided in § 1.414(c)-2(b)(2)(i), provided that the language “at least 50 percent” is used instead of “at least 80 percent” each place it appears in § 1.414(c)-2(b)(2)(i). In addition, where the use of such stock with respect to the grant of a stock right to such service provider is based upon legitimate business criteria, the term *controlling interest* has the same meaning as provided in § 1.414(c)-2(b)(2)(i), provided that the language “at least 20 percent” is used instead of “at least 80 percent” each place it appears in § 1.414(c)-2(b)(2)(i). For purposes of determining ownership of an interest in an organization, the rules of §§ 1.414(c)-3 and 1.414(c)-4 apply. The determination of whether a grant is based on legitimate business criteria is based on the facts and circumstances, focusing primarily on whether there is a sufficient nexus between the service provider and the issuer of the stock right so that the grant serves a legitimate non-tax business purpose other than simply providing compensation to the service provider that is excluded from the requirements of section 409A. For example, stock of a corporation that owns an interest in a joint venture involving an operating business, used with respect to stock rights granted to service providers of the joint venture who are former service providers of such corporation, generally will constitute use of service recipient stock based upon legitimate business criteria, and therefore could constitute service recipient stock with respect to such service providers if the corporation owns at least 20 percent of the joint venture and the other requirements of this paragraph (b)(5)(iii) are met. Similarly, the legitimate business criteria requirement generally would be met if the corporate venturer issued such a right to an employee of the joint venture who it reasonably expected would in the future become an employee of the corporate venturer. However, where a service provider has no real nexus with a corporate venturer, such as generally happens when the corporate venturer is a passive investor in the service recipient joint venture, a stock right issued to that employee on the investor corporation's stock generally would not be based upon legitimate business criteria. Similarly, where a corporation holds only a minority interest in an entity that in turn holds a minority interest in the entity for which the service provider performs services, such that the corporation holds only an insubstantial indirect interest in the entity receiving the services, legitimate business criteria generally would not exist for issuing a stock right on the corporation's stock to the service provider.

(*2*) *Investment vehicles.* Notwithstanding the provisions of paragraph (b)(5)(iii)(E)(*1*) of this section, except as to a service provider providing services directly to such corporation, for purposes of this paragraph (b)(5), an eligible issuer of service recipient stock does not include any corporation whose primary purpose is to serve as an investment vehicle with respect to the corporation's minority ownership interests in entities other than the service recipient.

(*3*) *Corporate structures established or transactions undertaken for purposes of avoiding coverage under section 409A.* Notwithstanding the provisions of paragraph (b)(5)(iii)(E)(*1*) of this section, an eligible issuer of service recipient stock does not include any corporation within a group of entities treated as a single service recipient if a purpose of the establishment of the structure of the ownership, or a purpose of a significant transaction between or among two or more entities comprising a single service recipient, is to provide deferred compensation not subject to the application of section 409A. If an entity becomes a member of a group of corporations or other entities treated as a single service recipient, and the primary source of income or value of such entity arises from the provision of management services to other members of the service recipient group, it is presumed that such structure was established for purposes of avoiding the application of section 409A if any stock rights are issued with respect to such entity.

(*4*) *Substitutions and assumptions by reason of a corporate transaction.* If the requirements of paragraph (b)(5)(v)(D) of this section are met such that the substitution of a new stock right pursuant to a corporate transaction for an outstanding stock right, or the assumption of an outstanding stock right pursuant to a corporate transaction, would not be treated as the grant of a new stock right or a change in the form of payment for purposes of this section and §§ 1.409A-2 through 1.409A-6, the stock underlying the stock right that replaced the stock right that is substituted or assumed will be treated as service recipient stock for purposes of applying this paragraph (b)(5) to the replacement stock rights if such underlying stock otherwise satisfies the requirements of paragraph (b)(5)(iii)(A) of this section. For example, if by reason of a spinoff transaction (under which the stock of a subsidiary corporation is distributed to the stockholders of a distributing corporation), a stock option to purchase distributing corporation stock is replaced with a stock option to purchase distributing corporation stock and a stock option to purchase the spun off subsidiary corporation's stock (each otherwise satisfying the requirements of paragraph (b)(5)(iii)(A) of this section), and where such substitution is not treated as a modification of the original stock option pursuant to paragraph (b)(5)(v)(D) of this section, both the distributing corporation stock and the subsidiary corporation stock are treated as service recipient stock for purposes of applying this paragraph (b)(5) to the replacement stock options.

(iv) ***Determination of the fair market value of service recipient stock*** —

(A) ***Stock readily tradable on an established securities market.*** For purposes of paragraph (b)(5)(i) of this section, in the case of service recipient stock that is readily tradable on an established securities market, the fair market value of the stock may be determined based upon the last sale before or the first sale after the grant, the closing price on the trading day before or the trading day of the grant, the arithmetic mean of the high and low prices on the trading day before or the trading day of the grant, or any other reasonable method using actual transactions in such stock as reported by such market. The determination of fair market value also may be determined using an average selling price during a specified

period that is within 30 days before or 30 days after the applicable valuation date, provided that the program under which the stock right is granted, including a program with a single participant, must irrevocably specify the commitment to grant the stock right with an exercise price set using such an average selling price before the beginning of the specified period. For this purpose, the term *average selling price* refers to the arithmetic mean of such selling prices on all trading days during the specified period, or the average of such prices over the specified period weighted based on the volume of trading of such stock on each trading day during such specified period. To satisfy this requirement, the service recipient must designate the recipient of the stock right, the number and class of shares of stock that are subject to the stock right, and the method for determining the exercise price including the period over which the averaging will occur, before the beginning of the specified averaging period. Notwithstanding the forgoing provisions of this paragraph (b)(5)(iv)(A), where applicable foreign law requires that a compensatory stock right be priced based upon a specific price averaging method and period, a stock right granted in accordance with such applicable foreign law will be treated as meeting the requirements of this paragraph (b)(5)(iv)(A), provided that the averaging period does not exceed 30 days.

(B) ***Stock not readily tradable on an established securities market*** —(*1*) *In general.* For purposes of paragraph (b)(5)(i) of this section, in the case of service recipient stock that is not readily tradable on an established securities market, the fair market value of the stock as of a valuation date means a value determined by the reasonable application of a reasonable valuation method. The determination whether a valuation method is reasonable, or whether an application of a valuation method is reasonable, is made based on the facts and circumstances as of the valuation date. Factors to be considered under a reasonable valuation method include, as applicable, the value of tangible and intangible assets of the corporation, the present value of anticipated future cash-flows of the corporation, the market value of stock or equity interests in similar corporations and other entities engaged in trades or businesses substantially similar to those engaged in by the corporation the stock of which is to be valued, the value of which can be readily determined through nondiscretionary, objective means (such as through trading prices on an established securities market or an amount paid in an arm's length private transaction), recent arm's length transactions involving the sale or transfer of such stock or equity interests, and other relevant factors such as control premiums or discounts for lack of marketability and whether the valuation method is used for other purposes that have a material economic effect on the service recipient, its stockholders, or its creditors. The use of a valuation method is not reasonable if such valuation method does not take into consideration in applying its methodology all available information material to the value of the corporation. Similarly, the use of a value previously calculated under a valuation method is not reasonable as of a later date if such calculation fails to reflect information available after the date of the calculation that may materially affect the value of the corporation (for example, the resolution of material litigation or the issuance of a patent) or the value was calculated with respect to a date that is more than 12 months earlier than the date for which the valuation is being used. The service recipient's consistent use of a valuation method to determine the value of its stock or assets for other purposes, including for purposes unrelated to compensation of service providers, is also a factor supporting the reasonableness of such valuation method.

(*2*) *Presumption of reasonableness.* For purposes of this paragraph (b)(5)(iv)(B), the use of any of the following methods of valuation is presumed to result in a reasonable valuation, provided that the Commissioner may rebut such a presumption upon a showing that either the valuation method or the application of such method was grossly unreasonable:

(*i*) A valuation of a class of stock determined by an independent appraisal that meets the requirements of section 401(a)(28)(C) and the regulations as of a date that is no more than 12 months before the relevant transaction to which the valuation is applied (for example, the date of grant of a stock option).

(*ii*) A valuation based upon a formula that, if used as part of a nonlapse restriction (as defined in § 1.83-3(h)) with respect to the stock, would be considered to be the fair market value of the stock pursuant to § 1.83-5, provided that such stock is valued in the same manner for purposes of any transfer of any shares of such class of stock (or any substantially similar class of stock) to the issuer or any person that owns stock possessing more than 10 percent of the total combined voting power of all classes of stock of the issuer (applying the stock attribution rules of § 1.424-1(d)), other than an arm's length transaction involving the sale of all or substantially all of the outstanding stock of the issuer, and such valuation method is used consistently for all such purposes, and provided further that this paragraph (b)(5)(iv)(B)(*2*)(*ii*) does not apply with respect to stock subject to a stock right payable in stock, where the stock acquired pursuant to the exercise of the stock right is transferable other than through the operation of a nonlapse restriction.

(*iii*) A valuation, made reasonably and in good faith and evidenced by a written report that takes into account the relevant factors described in paragraph (b)(5)(iv)(B)(*1*) of this section, of illiquid stock of a start-up corporation. For this purpose, illiquid stock of a start-up corporation means service recipient stock of a corporation that has no material trade or business that it or any predecessor to it has conducted for a period of 10 years or more and has no class of equity securities that are traded on an established securities market (as defined in paragraph (k) of this section), where such stock is not subject to any put, call, or other right or obligation of the service recipient or other person to purchase such stock (other than a right of first refusal upon an offer to purchase by a third party that is unrelated to the service recipient or service provider and other than a right or obligation that constitutes a lapse restriction as defined in § 1.83-3(i)), and provided that this paragraph (b)(5)(iv)(B)(*2*)(*iii*) does not apply to the valuation of any stock if the service recipient or service provider may reasonably anticipate, as of the time the valuation is applied, that the service recipient will undergo a change in control event as described in § 1.409A-3(i)(5)(v) or § 1.409A-3(i)(5)(vii) within the 90 days following the action to which the valuation is applied, or make a public offering of securities within the 180 days following the action to which the valuation is applied. For purposes of this paragraph (b)(5)(iv)(B)(*2*)(*iii*), a valuation will not be treated as made reasonably and in good faith unless the valuation is performed by a person or persons that the corporation reasonably determines is qualified to perform such a valuation based on the person's or persons" significant knowledge, experience, education, or training. Generally, a person will be qualified to perform such a valuation if a reasonable individual, upon being apprised of such knowledge, experience, education, and training, would reasonably rely on the advice of such person with respect to valuation

in deciding whether to accept an offer to purchase or sell the stock being valued. For this purpose, significant experience generally means at least five years of relevant experience in business valuation or appraisal, financial accounting, investment banking, private equity, secured lending, or other comparable experience in the line of business or industry in which the service recipient operates.

(*3*) *Use of alternative methods.* For purposes of this paragraph (b)(5), a different valuation method may be used for each separate action for which a valuation is relevant, provided that a single valuation method is used for each separate action and, once used, may not retroactively be altered. For example, one valuation method may be used to establish the exercise price of a stock option, and a different valuation method may be used to determine the value at the date of the repurchase of stock pursuant to a put or call right. However, once an exercise price or amount to be paid has been established, the exercise price or amount to be paid may not be changed through the retroactive use of another valuation method. In addition, notwithstanding the foregoing, where after the date of grant, but before the date of exercise or transfer, of the stock right, the service recipient stock to which the stock right relates becomes readily tradable on an established securities market, the service recipient must use the valuation method set forth in paragraph (b)(5)(iv)(A) of this section for purposes of determining the payment at the date of exercise or the purchase of the stock, as applicable.

(v) ***Modifications, extensions, substitutions, and assumptions of stock rights*** —

(A) ***Treatment of modified and extended stock rights.*** A modification of the terms of a stock right within the meaning of paragraph (b)(5)(v)(B) of this section is considered to be the grant of a new stock right. The new stock right may or may not constitute a deferral of compensation under paragraph (b)(5)(i) of this section, determined at the date of grant of the new stock right. If there is an extension of a stock right (within the meaning of paragraph (b)(5)(v)(C) of this section), the stock right is treated as having had an additional deferral feature from the original date of grant of the stock right, and therefore will be treated as a plan providing for the deferral of compensation from the original grant date for purposes of this paragraph (b).

(B) ***Modification in general.*** Except as otherwise provided in paragraph (b)(5)(v) of this section, the term *modification* means any change in the terms of the stock right (or change in the terms of the plan pursuant to which the stock right was granted or in the terms of any other agreement governing the stock right) that may provide the holder of the stock right with a direct or indirect reduction in the exercise price of the stock right regardless of whether the holder in fact benefits from the change in terms. A change in the terms of the stock right shortening the period during which the stock right is exercisable is not a modification. It is not a modification to add a feature providing the ability to tender previously acquired stock for the stock purchasable under the stock right, or to withhold or have withheld shares of stock to facilitate the payment of the exercise price or the employment taxes or required withholding taxes resulting from the exercise of the stock right. In addition, it is not a modification for the grantor to exercise discretion specifically reserved under a stock right with respect to the transferability of the stock right.

(C) *Extensions* —(*1*) *In general.* An extension of a stock right refers to the provision to the holder of an additional period of time within which to exercise the stock right beyond the time originally prescribed under the terms of the stock right, the conversion or exchange of a stock right for a legally binding right to compensation in a future taxable year, or the addition of any feature for the deferral of compensation not permitted in paragraph (b)(5)(i)(A)(*3*) of this section (in the case of a stock option) or not permitted in paragraph (b)(5)(i)(B)(*3*) of this section (in the case of a stock appreciation right) to the terms of the stock right, other than at a time when the exercise price of the stock right equals or exceeds the fair market value of the service recipient stock that could be purchased (in the case of an option) or the fair market value of the service recipient stock used to determine the payment to the service provider (in the case of a stock appreciation right), and includes a renewal of such right that has such effect. It is not an extension if the exercise period of a stock right is extended to a date no later than the earlier of the latest date upon which the stock right could have expired by its original terms under any circumstances or the 10th anniversary of the original date of grant of the stock right. If the exercise period of a stock right is extended at a time when the exercise price of the stock right equals or exceeds the fair market value of the service recipient stock that could be purchased (in the case of an option) or the fair market value of the service recipient stock used to determine the payment to the service provider (in the case of a stock appreciation right), it is not an extension of the original stock right. Instead, in such a case, the original stock right is treated as modified rather than extended and a new stock right is treated as having been granted for purposes of this section. In addition, it is not an extension of a stock right if the expiration of the stock right is tolled while the holder cannot exercise the stock right because such an exercise would violate an applicable Federal, state, local, or foreign law, or would jeopardize the ability of the service recipient to continue as a going concern, provided that the period during which the stock right may be exercised is not extended more than 30 days after the exercise of the stock right first would no longer violate an applicable Federal, state, local, and foreign laws or would first no longer jeopardize the ability of the service recipient to continue as a going concern. For this purpose, a provision of foreign law shall be considered applicable only to foreign earned income (as defined under section 911(b)(1) without regard to section 911(b)(1)(B)(iv) and without regard to the requirement that the income be attributable to services performed during the period described in section 911(d)(1)(A) or (B)) from sources within the foreign country that promulgated such law.

(*2*) *Certain extensions before April 10, 2007.* An extension of a stock right before April 10, 2007 solely in order to provide the holder of such stock right an additional period of time beyond the time originally prescribed under the terms of such stock right within which to exercise the stock right is disregarded for purposes of applying the rules contained in paragraph (b)(5)(v)(C)(*1*) of this section. For purposes of applying the rules contained in paragraph (b)(5)(v)(C)(*1*) of this section on and after April 10, 2007, such a stock right is treated as having specified at the date of grant the time within which to exercise such stock right that was prescribed under the terms of such stock right in effect on April 10, 2007. Nothing in this paragraph (b)(5)(v)(C)(*2*) affects any other action treated as the extension of a stock right, including the addition of a deferral feature.

(*3*) *Examples.* The following examples illustrate the provisions of this paragraph (b)(5)(v)(C). In the examples, each employee is an individual employed by the specified employer, and each employee and each employer has a calendar year taxable year.

Example 1. On July 1, 2009, Employer Z grants Employee A a nonstatutory stock option that does not provide for the deferral of compensation in accordance with paragraph (b)(5)(i)(A) of this section. The terms of the nonstatutory stock option provide that the exercise period of the stock option expires on the earlier of July 1, 2019, or 3 months after Employee A's separation from service. On July 1, 2011, Employee A separates from service. On the same day, Employee A and Employer Z change the exercise period of the option so that it expires on July 1, 2013. Because the exercise period of the stock right is not extended beyond July 1, 2019, the change is not an extension for purposes of this paragraph (b)(5)(v)(C).

Example 2. The facts are the same as in *Example 1* except that Employee A separates from service on July 1, 2018, and on the same day, Employee A and Employer Z change the exercise period of the option so that it expires on July 1, 2020. As of July 1, 2018, the fair market value of the underlying stock exceeds the exercise price. Because the exercise period of the stock right is extended beyond July 1, 2019, the change is an extension for purposes of this paragraph (b)(5)(v)(C).

Example 3. The facts are the same as in *Example 2* except that as of July 1, 2018, the fair market value of the underlying stock is less than the exercise price of the option. Because the exercise period of the stock right is extended at a time when the fair market value of the underlying stock is less than the exercise price, the change is not an extension for purposes of this paragraph (b)(5)(v)(C) and the change is treated as a modification of the option, resulting in the extension of the exercise period being treated as the grant of a new option on July 1, 2018.

Example 4. On July 1, 2009, Employer Y grants to Employee B a stock appreciation right with respect to 200 shares of Employer Y common stock that does not provide for the deferral of compensation in accordance with paragraph (b)(5)(i)(B) of this section. Upon exercise of the stock appreciation right, Employee B is entitled to receive the excess of the fair market value of a share of Employer Y common stock on the date of exercise over $100 (the fair market value of a share of Employer Y common stock on July 1, 2009), multiplied by the number of shares with respect to which Employee B is exercising the right. The exercise period of the right expires on the earlier of July 1, 2019, or 3 months after Employee B separates from service. Employee B cannot exercise the stock appreciation right with respect to more than 100 shares unless Employee B continues to be employed by Employer Y through June 30, 2014. On July 1, 2011, when the fair market value of a share of Employer Y common stock is $200, Employee B and Employer Y amend the stock appreciation right to provide that the right will be exercisable only during calendar year 2018, except that before January 1, 2017, Employee B may elect to designate calendar year 2023 or any subsequent calendar year before 2033 as the year in which the right will be exercisable. The amendment constitutes an extension of the stock appreciation right under paragraph (b)(5)(v)(C)(1) of this section. Under paragraph (b)(5)(v)(A) of this section, the stock appreciation right is treated as having had an additional deferral feature from the original date of grant (July 1, 2009) of the right, and therefore is treated as a plan providing for the deferral of compensation from that date. During the period from July 1, 2009, through June 30, 2011, the provisions of

the stock appreciation right relating to the time and form of payment did not satisfy the requirements of § 1.409A-3(a). Therefore, the stock appreciation right provides for a deferral of compensation that does not comply with section 409A.

(D) ***Substitutions and assumptions of stock rights by reason of a corporate transaction.*** If the requirements of § 1.424-1 (without regard to the requirement described in § 1.424-1(a)(2) that an eligible corporation be the employer of the optionee) would be met if the stock right were a statutory option, the substitution of a new stock right pursuant to a corporate transaction (as defined in § 1.424-1(a)(3)) for an outstanding stock right or the assumption of an outstanding stock right pursuant to a corporate transaction will not be treated as the grant of a new stock right or a change in the form of payment for purposes of this section and §§ 1.409A-2 through 1.409A-6. For purposes of the preceding sentence, the requirement of § 1.424-1(a)(5)(iii) will be deemed to be satisfied if the ratio of the exercise price to the fair market value of the shares subject to the stock right immediately after the substitution or assumption is not greater than the ratio of the exercise price to the fair market value of the shares subject to the stock right immediately before the substitution or assumption. In the case of a transaction described in section 355 in which the stock of the distributing corporation and the stock distributed in the transaction are both readily tradable on an established securities market immediately after the transaction, for purposes of this paragraph (b)(5)(v), the requirements of § 1.424-1(a)(5) related to the fair market value of the stock may be satisfied by—

(*1*) Using the last sale before or the first sale after the specified date as of which such valuation is being made, the closing price on the last trading day before or the trading day of a specified date, the arithmetic mean of the high and low prices on the last trading day before or the trading day of such specified date, or any other reasonable method using actual transactions in such stock as reported by such market on a specified date, for the stock of the distributing corporation and the stock distributed in the transaction, provided the specified date is designated before such specified date, and such specified date is not more than 60 days after the transaction;

(*2*) Using the arithmetic mean of such market prices on trading days during a specified period designated before the beginning of such specified period, where such specified period is not longer than 30 days and ends no later than 60 days after the transaction; or

(*3*) Using an average of such prices during such prespecified period weighted based on the volume of trading of such stock on each trading day during such prespecified period.

(E) ***Acceleration of date when exercisable.*** Although with respect to a stock right not immediately exercisable in full, a change in the terms of the right solely to accelerate or delay, within the original term of the stock right, the time at which the stock right (or any portion of such stock right) may be exercised is not a modification for purposes of this section, with respect to a stock right subject to section 409A, such an acceleration may constitute an impermissible acceleration of a payment date under § 1.409A-3(j) or a subsequent deferral under § 1.409A-2(b).

(F) ***Discretionary added benefits.*** If a change to a stock right provides, either by its terms or in substance, that the holder may receive an additional benefit under the stock right at the future discretion of the grantor, and the addition of such benefit would constitute a modification or extension, then the addition of such discretion is a modification or extension at the time that the stock right is changed to provide such discretion.

(G) ***Change in underlying stock increasing value.*** A change in the terms of the stock subject to a stock right that increases the value of the stock is a modification of such stock right, except to the extent that a new stock right is substituted for such stock right by reason of the change in the terms of the stock in accordance with paragraph (b)(5)(v)(D) of this section.

(H) ***Change in the number of shares purchasable.*** If a stock right is amended solely to increase the number of shares subject to the stock right, the increase is not considered a modification of the stock right but is treated as the grant of a new additional stock right to which the additional shares are subject. Notwithstanding the previous sentence, if the exercise price and number of shares subject to a stock right are proportionally adjusted to reflect a stock split (including a reverse stock split) or stock dividend, and the only effect of the stock split or stock dividend is to increase (or decrease) on a pro rata basis the number of shares owned by each shareholder of the class of stock subject to the stock right, then there is no modification of the stock right if it is proportionally adjusted to reflect the stock split or stock dividend and the aggregate exercise price of the stock right is not less than the aggregate exercise price before the stock split or stock dividend.

(I) ***Rescission of changes.*** A change to the terms of a stock right (or change in the terms of the plan pursuant to which the stock right was granted or in the terms of any other agreement governing the right) is not considered a modification or extension of the stock right to the extent the change in the terms of the stock right is rescinded by the earlier of the date the stock right is exercised or the last day of the service provider's taxable year during which such change occurred. Thus, for example, if the terms of a stock right granted to an individual employee with a calendar year taxable year are changed on March 1 in a manner that would result in an extension of the stock right, and the change is rescinded on November 1 of the same year, and the stock right is not exercised before the change is rescinded, the stock right is not considered extended under this paragraph (b)(5)(v).

(J) ***Successive modifications and extensions.*** The rules of this paragraph (b)(5)(v) apply as well to successive modifications and extensions.

(K) ***Modifications and extensions in effect on October 23, 2004.*** For purposes of the application of section 409A and these regulations to a stock right, if a legally binding right to a modification or extension of such stock right existed on October 23, 2004, such modification or extension is disregarded, and the stock right is treated as if granted with the terms and conditions in effect on October 23, 2004.

(vi) ***Meaning and use of certain terms*** —

(A) ***Option.*** The term *option* means the right or privilege of an individual to purchase stock from a corporation by virtue of an offer of the corporation continuing for a stated period of time, whether or not irrevocable, to sell such stock at a price determined under paragraph (b)(5)(vi)(D) of this section, such individual being under no obligation to purchase. While

no particular form of words is necessary, the option must express an offer to sell at the option price, the maximum number of shares purchasable under the option, and the period of time during which the offer remains open. The term *option* includes a warrant that meets the requirements of this paragraph (b)(5)(vi)(A). An option may be granted as part of or in conjunction with an employee stock purchase plan or subscription contract. An option must be in writing (in paper or electronic form) provided that such writing is adequate to establish an option right or privilege that is enforceable under applicable law.

(B) ***Date of grant of option.***

(*1*) The language the *date of grant of the option,* and similar phrases, refer to the date when the granting corporation completes the corporate action necessary to create the legally binding right constituting the option. A corporate action creating the legally binding right constituting the option is not considered complete until the date on which the maximum number of shares that can be purchased under the option and the minimum exercise price are fixed or determinable, and the class of underlying stock and the identity of the service provider is designated. Ordinarily, if the corporate action provides for an immediate offer of stock for sale to a service provider, or provides for a particular date on which such offer is to be made, the date of the granting of the option is the date of such corporate action if the offer is to be made immediately, or the date provided as the date of the offer, as the case may be. However, an unreasonable delay in the giving of notice of such offer to the service provider will be taken into account as indicating that the corporation provided that the offer was to be made at the subsequent date on which such notice is given.

(*2*) If the corporation imposes a condition on the granting of an option (as distinguished from a condition governing the exercise of the option), such condition generally will be given effect in accordance with the intent of the corporation. However, if the grant of an option is subject to approval by stockholders, the date of grant of the option will be determined as if the option had not been subject to such approval. A condition that does not require corporate action, such as the approval of, or registration with, some regulatory or government agency, for example, a stock exchange or the Securities and Exchange Commission, is ordinarily considered a condition upon the exercise of the option unless the corporate action clearly indicates that the option is not to be granted until such condition has been satisfied.

(*3*) In general, a condition imposed upon the exercise of an option will not operate to make ineffective the granting of the option. For example, on June 1, 2008, Corporation A grants to X, an employee, an option to purchase 5,000 shares of the corporation's common stock, exercisable by X on or after June 1, 2009, provided X is employed by the corporation on June 1, 2009, and provided that A's profits during the fiscal year preceding the year of exercise exceed $200,000. Such an option is granted to X on June 1, 2008, and will be treated as outstanding as of such date.

(C) ***Stock.*** The term *stock* means capital stock of any class, including voting or nonvoting common or preferred stock. Except as otherwise provided, the term stock includes both treasury stock and stock of original issue. Special classes of stock authorized to be issued to and held by employees are within the scope of the term stock for this purpose, provided such stock otherwise possesses the rights and characteristics of capital stock.

(D) ***Exercise price.*** The term *exercise price* means the consideration in cash or property that, pursuant to the terms of the option, is the price at which the stock subject to the option is purchased. The term *exercise price* does not include any amounts paid as interest under a deferred payment plan or treated as interest.

(E) ***Exercise.*** The term *exercise,* when used in reference to an option, means the act of acceptance by the holder of the option of the offer to sell contained in the option. In general, the time of exercise is the time when there is a sale or a contract to sell between the corporation and the individual. A promise to pay the exercise price does not constitute an exercise of the option unless the holder of the option is subject to personal liability on such promise. An agreement or undertaking by the service provider to make payments under a stock purchase plan does not constitute the exercise of an option to the extent the payments made remain subject to withdrawal by or refund to the service provider.

(F) ***Transfer.*** The term *transfer,* when used in reference to the transfer to an individual of a share of stock pursuant to the exercise of an option, means the transfer of ownership of such share, or the transfer of substantially all the rights of ownership. Such transfer must, within a reasonable time, be evidenced on the books of the corporation. A transfer may occur even if a share of stock is subject to a substantial risk of forfeiture or is not otherwise transferable immediately after the date of exercise. A transfer does not fail to occur merely because, under the terms of the arrangement, the individual may not dispose of the share for a specified period of time, or the share is subject to a right of first refusal or a right to acquire the share at the share's fair market value at the time of the sale.

(G) ***Readily tradable.*** For purposes of this section and §§ 1.409A-2 through 1.409A-6, stock is treated as readily tradable if it is regularly quoted by brokers or dealers making a market in such stock.

(H) ***Application to stock appreciation rights.*** For purposes of this section and §§ 1.409A-2 through 1.409A-6, the definitions provided in paragraphs (b)(5)(vi)(A) through (G) of this section may be applied by analogy to the issuance of, exercise of, or payment upon the exercise of, a stock appreciation right.

(6) ***Restricted property, section 402(b) trusts, and section 403(c) annuities*** —

(i) ***In general.*** If a service provider receives property from, or pursuant to, a plan maintained by a service recipient, there is no deferral of compensation merely because the value of the property is not includible in income by reason of the property being substantially nonvested (as defined in § 1.83-3(b)), or is includible in income solely due to a valid election under section 83(b). For purposes of this paragraph (b)(6)(i), a transfer of property includes the transfer of a beneficial interest in a trust or annuity plan, or a transfer to or from a trust or under an annuity plan, to the extent such a transfer is subject to section 83, section 402(b) or section 403(c). In addition, for purposes of this paragraph (b), a right to compensation income that will be required to be included in income under section 402(b)(4)(A) is not a deferral of compensation.

(ii) ***Promises to transfer property.*** A plan under which a service provider obtains a legally binding right to receive property in a future taxable year where the property will be substantially vested (as defined in § 1.83-3(b)) at the time of transfer of the property may provide for the deferral of compensation and, accordingly, may constitute a nonqualified deferred compensation plan. A legally binding right to receive property in a future taxable year where the property will be substantially nonvested (as defined in § 1.83-3(b)) at the time of transfer of the property will

not provide for the deferral of compensation and, accordingly, will not constitute a nonqualified deferred compensation plan unless offered in conjunction with another legally binding right that constitutes a deferral of compensation.

(7) ***Arrangements between partnerships and partners.*** [Reserved]

(8) ***Certain foreign plans*** —

(i) ***Plans with respect to compensation covered by treaty or other international agreement.*** A plan in which a service provider participates does not provide for a deferral of compensation for purposes of this paragraph (b) to the extent that the compensation under the plan would have been excluded from gross income for Federal income tax purposes under the provisions of any bilateral income tax convention or other bilateral or multilateral agreement to which the United States is a party if the compensation had been paid to the service provider at the time that the legally binding right to the compensation first arose or, if later, the time that the legally binding right was no longer subject to a substantial risk of forfeiture.

(ii) ***Plans with respect to certain other compensation.*** A plan in which a service provider participates does not provide for a deferral of compensation for purposes of this paragraph (b) to the extent that compensation under the plan would not have been includible in gross income for Federal tax purposes if it had been paid to the service provider at the time that the legally binding right to the compensation first arose or, if later, the time that the legally binding right was no longer subject to a substantial risk of forfeiture, due to one of the following:

(A) The service provider was a nonresident alien at such time and the compensation would not have been includible in gross income under section 872.

(B) The service provider was a qualified individual (as defined in section 911(d)(1)) at such time, the compensation would have been foreign earned income within the meaning of section 911(b)(1) (without regard to section 911(b)(1)(B)(iv)) if paid at such time, and the amount of such compensation was equal to or less than the excess (if any) of the maximum exclusion amount under section 911(b)(2)(D) for such taxable year over the amount of foreign earned income actually excluded from gross income by such qualified individual for such taxable year under section 911(a)(1).

(C) The compensation would have been excludible from gross income under section 893.

(D) The compensation would have been excludible from gross income under section 931 or section 933.

(iii) ***Tax equalization agreements.*** A tax equalization agreement does not provide for a deferral of compensation if payments made under such tax equalization agreement are made no later than the end of the second taxable year of the service provider beginning after the taxable year of the service provider in which the service provider's U.S. Federal income tax return is required to be filed (including any extensions) for the year to which the compensation subject to the tax equalization payment relates, or, if later, the second taxable year of the service provider beginning after the latest such taxable year in which the service provider's foreign tax return or payment is required to be filed or made for the year to which the compensation subject to the tax equalization payment relates. Where such payments arise due to an audit, litigation or similar proceeding, the right to the payments will not be treated as resulting in a deferral of compensation if the payments are scheduled and made in accordance with the provisions of § 1.409A-3(i)(1)(v) (timing of tax gross-up payments). For purposes of this paragraph (b)(8)(iii),

the term *tax equalization agreement* refers to an agreement, method, program, or other arrangement that provides payments intended to compensate the service provider for some or all of the excess of the taxes actually imposed by a foreign jurisdiction on the compensation paid by the service recipient to the service provider over the taxes that would be imposed if the compensation were subject solely to United States Federal, state, and local income tax, or some or all of the excess of the United States Federal, state, and local income tax actually imposed on the compensation paid by the service to the service provider over the taxes that would be imposed if the compensation were subject solely to taxes in the foreign jurisdiction, provided that the payment made under such agreement, method, program, or other arrangement may not exceed such excess and the amount necessary to compensate for the additional taxes on the amount paid under the agreement, method, program, or other arrangement.

(iv) ***Certain limited deferrals of a nonresident alien.*** With respect to a nonresident alien, a foreign plan does not provide for a deferral of compensation if the amounts deferred under the foreign plan based upon services performed by the nonresident alien in the United States (including amounts deferred based upon service credits or compensation received due to services performed in the United States) do not exceed the applicable dollar amount under section 402(g)(1)(B) for the taxable year. If the amounts deferred under the foreign plan based upon the services performed by the nonresident alien in the United States exceed the applicable dollar amount, an amount of such deferrals equal to such amount is treated as not deferred under a nonqualified deferred compensation plan. For purposes of this paragraph (b)(8)(iv), the term *foreign plan* means a plan that, together with all substantially similar plans, is maintained by a service recipient for a substantial number of participants, substantially all of whom are nonresident aliens or resident aliens classified as resident aliens solely under section 7701(b)(1)(A)(ii) (and not section 7701(b)(1)(A)(i)).

(v) ***Additional foreign plans.*** A plan in which a service provider participates does not provide for a deferral of compensation for purposes of this paragraph (b) to the extent designated by the Commissioner in revenue procedures, notices, or other guidance published in the Internal Revenue Bulletin (see § 601.601(d)(2) of this chapter).

(vi) ***Earnings.*** Earnings on compensation excluded from the definition of deferral of compensation pursuant to this paragraph (b)(8) are also not treated as a deferral of compensation.

(9) ***Separation pay plans*** —

(i) ***In general.*** A plan that otherwise provides for a deferral of compensation under this paragraph (b) does not fail to provide a deferral of compensation merely because the right to payment of the compensation is conditioned upon a separation from service. However, paragraphs (b)(9)(ii), (iii), (iv), and (v) of this section provide rules concerning the extent to which certain separation pay plans do not provide for the deferral of compensation. The exceptions contained in paragraphs (b)(9)(ii), (iii), (iv), and (v) of this section may be used in combination, such that compensation under a plan that would be excepted under one of those paragraphs may be treated as excepted under another of those paragraphs, so that other compensation under a plan may be treated as excepted under the first of such paragraphs. Notwithstanding any other provision of this paragraph (b)(9), any payment or benefit, or entitlement to a payment or benefit, that acts as a substitute for, or replacement of, amounts deferred by the service recipient under a separate nonqualified deferred compensation plan constitutes a payment or a deferral of compensation under the separate nonqualified deferred compensation plan, and

does not constitute a payment or deferral of compensation under a separation pay plan. If a service provider receives a payment at separation from service and also has a legally binding right to an amount of deferred compensation that would be forfeited upon the separation from service, whether the payment acts as an acceleration of vesting and substitute payment for the amount of deferred compensation forfeited, or whether the deferred compensation is treated as forfeited and the amount paid is treated as a separate payment of current compensation, is determined based on the facts and circumstances, provided that, where the separation from service is voluntary, it is presumed that the payment results from an acceleration of vesting followed by a payment of the deferred compensation that is subject to section 409A. Accordingly, any change in the payment schedule to accelerate or defer the payments would be subject to the rules of section 409A. The presumption that a right to a payment is not a new right, but is instead a right substituted for a pre-existing forfeited right, may be rebutted by demonstrating that the service provider would have obtained the right to the payment regardless of the forfeiture of the nonvested right. A factor indicating that the service provider would have obtained a right to a payment regardless of the forfeiture of the nonvested right is that the amount to which the service provider obtains a right is materially less than an amount equal to the present value of the forfeited amount multiplied by a fraction, the numerator of which is the period of service the service provider actually completed, and the denominator of which is the full period of service the service provider would have been required to complete to receive the full amount of the payment. For example, where a service provider is entitled to a future payment only if the service provider completes three years of service and at the time of termination the service provider has completed one year of service, the presumption could be rebutted if the payment to the service provider is materially less than the present value of one-third of the nonvested amount. Another such factor is that the payment to the service provider is of a type customarily made to service providers who separate from service with the service recipient and do not forfeit nonvested rights to deferred compensation (for example, a payment of accrued but unused leave or a payment for a release of actual or potential claims).

(ii) ***Collectively bargained separation pay plans.*** A separation pay plan does not provide for a deferral of compensation to the extent the plan is a collectively bargained separation pay plan that provides for separation pay only upon an involuntary separation from service or pursuant to a window program. Only the portion of the separation pay plan attributable to employees covered by a bona fide collective bargaining agreement is considered to be provided under a collectively bargained separation pay plan. A collectively bargained separation pay plan is a separation pay plan that meets the following conditions:

(A) The separation pay plan is contained within an agreement that the Secretary of Labor determines to be a collective bargaining agreement.

(B) The separation pay provided by the collective bargaining agreement was the subject of arm's length negotiations between employee representatives and one or more employers, and the agreement between employee representatives and one or more employers satisfies section 7701(a)(46).

(C) The circumstances surrounding the agreement evidence good faith bargaining between adverse parties over the separation pay to be provided under the agreement.

(iii) ***Separation pay due to involuntary separation from service or participation in a window program.*** A separation pay plan that is not described in paragraph (b)(9)(ii) of this section and that provides for separation pay only upon an involuntary separation from service (as defined in paragraph

(n) of this section) or pursuant to a window program does not provide for a deferral of compensation to the extent that the separation pay, or portion of the separation pay, provided under the plan meets the following requirements:

(A) The separation pay (other than amounts described in paragraphs (b)(9)(iv) and (v) of this section) does not exceed two times the lesser of—

(*1*) The sum of the service provider's annualized compensation based upon the annual rate of pay for services provided to the service recipient for the taxable year of the service provider preceding the taxable year of the service provider in which the service provider has a separation from service with such service recipient (adjusted for any increase during that year that was expected to continue indefinitely if the service provider had not separated from service); or

(*2*) The maximum amount that may be taken into account under a qualified plan pursuant to section 401(a)(17) for the year in which the service provider has a separation from service.

(B) The plan provides that the separation pay described in paragraph (b)(9)(iii)(A) of this section must be paid no later than the last day of the second taxable year of the service provider following the taxable year of the service provider in which occurs the separation from service.

(iv) ***Foreign separation pay plans.*** A separation pay plan (including a plan providing payments upon a voluntary separation from service) does not provide for deferred compensation to the extent the plan provides for amounts of separation pay required to be provided under the applicable law of a foreign jurisdiction. For this purpose, a provision of foreign law shall be considered applicable only to foreign earned income (as defined under section 911(b)(1) without regard to section 911(b)(1)(B)(iv) and without regard to the requirement that the income be attributable to services performed during the period described in section 911(d)(1)(A) or (B)) from sources within the foreign country that promulgated such law.

(v) ***Reimbursements and certain other separation payments*** —

(A) ***In general.*** To the extent a separation pay plan (including a plan providing payments upon a voluntary separation from service) entitles a service provider to payment by the service recipient of reimbursements that are not otherwise excludible from gross income for expenses that the service provider could otherwise deduct under section 162 or section 167 as business expenses incurred in connection with the performance of services (ignoring any applicable limitation based on adjusted gross income), or of reasonable outplacement expenses and reasonable moving expenses actually incurred by the service provider and directly related to the termination of services for the service recipient, such plan does not provide for a deferral of compensation to the extent such rights apply during a limited period of time (regardless of whether such rights extend beyond the limited period of time). For purposes of this paragraph (b)(9)(v)(A), the reimbursement of reasonable moving expenses includes the reimbursement of all or part of any loss the service provider actually incurs due to the sale of a primary residence in connection with a separation from service.

(B) ***Medical benefits.*** To the extent a separation pay plan (including a plan providing payments due to a voluntary separation from service) entitles a service provider to reimbursement by the service recipient of payments of medical expenses incurred and paid by the service

provider but not reimbursed by a person other than the service recipient and allowable as a deduction under section 213 (disregarding the requirement of section 213(a) that the deduction is available only to the extent that such expenses exceed 7.5 percent of adjusted gross income), such plan does not provide for a deferral of compensation to the extent such rights apply during the period of time during which the service provider would be entitled (or would, but for such plan, be entitled) to continuation coverage under a group health plan of the service recipient under section 4980B (COBRA) if the service provider elected such coverage and paid the applicable premiums.

(C) ***In-kind benefits and direct service recipient payments.*** A service provider's entitlement to in-kind benefits from the service recipient, or a payment by the service recipient directly to the person providing the goods or services to the service provider, is treated as not providing for a deferral of compensation for purposes of this paragraph (b), if a right to reimbursement by the service recipient for a payment for such benefits, goods, or services by the service provider would not be treated as providing for a deferral of compensation under this paragraph (b)(9)(v).

(D) ***Limited payments.*** If not otherwise excluded, a taxpayer may treat a right or rights under a separation pay plan to a payment or payments as not providing for a deferral of compensation to the extent such payments in the aggregate do not exceed the applicable dollar amount under section 402(g)(1)(B) for the year of the separation from service.

(E) ***Limited period of time.*** For purposes of paragraphs (b)(9)(v)(A) and (C) of this section, a limited period of time in which expenses may be incurred, or in which in-kind benefits may be provided by the service recipient or a third party that the service recipient will pay, does not include periods beyond the last day of the second taxable year of the service provider following the taxable year of the service provider in which the separation from service occurred, provided that the period during which the reimbursements for such expenses must be paid may not extend beyond the third taxable year of the service provider following the taxable year of the service provider in which the separation from service occurred.

(vi) ***Window programs—definition.*** The term *window program* refers to a program established by a service recipient in connection with an impending separation from service to provide separation pay, where such program is made available by the service recipient for a limited period of time (no longer than 12 months) to service providers who separate from service during that period or to service providers who separate from service during that period under specified circumstances. A program will not be considered a window program if a service recipient establishes a pattern of repeatedly providing for similar separation pay in similar situations for substantially consecutive, limited periods of time. Whether the recurrence of these programs constitutes a pattern is determined based on the facts and circumstances. Although no one factor is determinative, relevant factors include whether the benefits are on account of a specific business event or condition, the degree to which the separation pay relates to the event or condition, and whether the event or condition is temporary or discrete or is a permanent aspect of the employer's business.

(10) ***Certain indemnification and liability insurance plans.*** A plan in which a service provider participates does not provide for a deferral of compensation for purposes of this paragraph (b) to the extent that the plan provides (to the extent permissible under applicable law), for the indemnification of, or the purchase of an insurance policy providing for payments of, all or part of the expenses incurred or

damages paid or payable by a service provider with respect to a bona fide claim against the service provider or service recipient, including amounts paid or payable by the service provider upon the settlement of a bona fide claim against the service provider or service recipient, where such claim is based on actions or failures to act by the service provider in his or her capacity as a service provider of the service recipient.

(11) ***Legal settlements.*** An agreement to which a service provider is a party does not provide for a deferral of compensation for purposes of this paragraph (b) to the extent that the agreement provides for amounts paid as settlements or awards resolving bona fide legal claims based on wrongful termination, employment discrimination, the Fair Labor Standards Act, or worker's compensation statutes, including claims under applicable Federal, state, local, or foreign laws, or for reimbursements or payments of reasonable attorneys fees or other reasonable expenses incurred by the service provider related to such bona fide legal claims, regardless of whether such settlements, awards, or reimbursement or payment of expenses pursuant to such claims are treated as compensation or wages for Federal tax purposes. Whether the execution of a waiver of any or all of such types of claims indicates that the amounts are paid as an award or settlement of an actual bona fide claim for damages under applicable law is determined based on the facts and circumstances. This paragraph (b)(11) does not apply to any deferred amounts that did not arise as a result of an actual bona fide claim for damages under applicable law, such as amounts that would have been deferred or paid regardless of the existence of such claim, even if such amounts are paid or modified as part of a settlement or award resolving an actual bona fide claim. For this purpose, a provision of foreign law shall be considered applicable only to foreign earned income (as defined under section 911(b)(1) without regard to section 911(b)(1)(B)(iv) and without regard to the requirement that the income be attributable to services performed during the period described in section 911(d)(1)(A) or (B)) from sources within the foreign country that promulgated such law.

(12) ***Certain educational benefits.*** A plan in which a service provider participates does not provide for a deferral of compensation to the extent the plan provides for taxable educational benefits. For purposes of this paragraph (b)(12), the term *educational benefits* refers solely to benefits provided to a service provider, consisting solely of educational assistance for the education of the service provider, as defined in section 127(c) and the accompanying regulations, and does not refer to any benefits provided for the education of any other person, including any spouse, child, or other family member of the service provider.

(c) ***Plan*** —

(1) ***In general.*** The term *plan* includes any agreement, method, program, or other arrangement, including an agreement, method, program, or other arrangement that applies to one person or individual. A plan may be adopted unilaterally by the service recipient or may be negotiated or agreed to by the service recipient and one or more service providers or service provider representatives. An agreement, method, program, or other arrangement may constitute a plan regardless of whether it is an employee benefit plan under section 3(3) of ERISA, as amended (29 U.S.C. 1002(3)). The requirements of section 409A are applied as if a separate plan or plans is maintained for each service provider. For purposes of determining the terms of a plan, general provisions of the plan that purport to nullify noncompliant plan terms, or to supply any specific plan terms required by this section, § 1.409A-2 or § 1.409A-3, are disregarded.

(2) ***Plan aggregation rules*** —

(i) ***In general.*** Except as otherwise provided, the following rules apply with respect to the application of this section and §§ 1.409A-2 through 1.409A-6 to deferrals of compensation with respect to a service provider:

(A) All deferrals of compensation at the election of that service provider under all plans of the service recipient that are account balance plans, except to the extent that the plan is described in paragraph (c)(2)(i)(D), (E), (F), (G), or (H) of this section, are treated as deferred under a single plan. For purposes of this paragraph, the term *account balance plan* means—

(*1*) An agreement, method, program, or other arrangement that is an account balance plan as defined in § 31.3121(v)(2)-1(c)(1)(ii)(A) of this chapter, including mandatorily bifurcating the agreement, method, program, or other arrangement in accordance with the rules provided in § 31.3121(v)-1(c)(1)(iii)(B) of this chapter; or

(*2*) An agreement, method, program, or other arrangement that would be described in paragraph (c)(2)(i)(A)(*1*) of this section if the service provider were an employee.

(B) All deferrals of compensation other than at the election of that service provider, including deferrals reflecting matching by the service recipient with respect to amounts a service provider elects to defer, under all plans of the service recipient that are account balance plans, except to the extent the plan is described in paragraph (c)(2)(i)(D), (E), (F), (G), or (H) of this section, are treated as deferred under a single plan. For purposes of this paragraph (c)(2)(i)(B), the term “account balance plan” has the same meaning as provided in paragraph (c)(2)(i)(A) of this section.

(C) All deferrals of compensation with respect to that service provider under all plans of the service recipient that are nonaccount balance plans, except to the extent such plan is described in paragraph (c)(2)(i)(D), (E), (F), (G), or (H) of this section, are treated as deferred under a single plan. For purposes of this paragraph (c)(2)(i)(C), the term *nonaccount balance plan* means—

(*1*) An agreement, method, program, or other arrangement that is a nonaccount balance plan as defined in § 31.3121(v)(2)-1(c)(2)(i) of this chapter, including mandatorily bifurcating the agreement, method, program, or other arrangement in accordance with the rules provided in § 31.3121(v)-1(c)(1)(iii)(B) of this chapter; or

(*2*) An agreement, method, program, or other arrangement that would be described in paragraph (c)(2)(i)(C)(*1*) of this section if the service provider were an employee.

(D) All deferrals of compensation with respect to that service provider under all separation pay plans (as defined in paragraph (m) of this section) of the service recipient to the extent an amount deferred under the plans is not described in paragraph (c)(2)(i)(E) of this section and is payable solely upon an involuntary separation from service within the meaning of paragraph (n) of this section or as a result of participation in a window program, are treated as deferred under a single plan.

(E) All deferrals of compensation with respect to that service provider under all plans of the service recipient to the extent such amounts deferred consist of rights to in-kind benefits or reimbursements of expenses, such as membership fees, or expenses related to aircraft or vehicle usage, to the extent that the right to the in-kind benefit or reimbursement, separately or in the aggregate, does not constitute a substantial portion of either the

overall compensation earned by the service provider for performing services for the service recipient or the overall compensation received due to a separation from service, are treated as deferred under a single plan.

(F) All deferrals of compensation with respect to that service provider under all plans of the service recipient to the extent that the taxation of such compensation is governed by § 1.61-22 or § 1.7872-15 (split-dollar life insurance arrangements), or the taxation of such compensation would be governed by § 1.61-22 or § 1.7872-15 but for the operation of § 1.61-22(j) (effective date provisions), are treated as deferred under a single plan.

(G) All deferrals of compensation with respect to that service provider under all agreements, methods, programs, or other arrangements of the service recipient to the extent the deferrals under the agreements, methods, programs, or other arrangements are deferrals of amounts that would be treated as modified foreign earned income (meaning foreign earned income as defined under section 911(b)(1) without regard to section 911(b)(1)(B)(iv) and without regard to the requirement that the income be attributable to services performed during the period described in section 911(d)(1)(A) or (B)) if paid to the service provider at the time the amount is first deferred, and provided further that substantially all the participants in such agreements, methods, programs, or other arrangements and any substantially similar agreements, methods, programs, or other arrangements are nonresident aliens and that the service provider does not participate in a substantially identical agreement, method, program, or other arrangement that does not meet the requirements of this paragraph (c)(2)(i)(G) (a domestic arrangement), are treated as deferred under a single plan.

(H) All deferrals of compensation with respect to that service provider under all plans of the service recipient to the extent such plans are stock rights (as defined in paragraph (l) of this section) subject to section 409A, are treated as deferred under a single plan.

(I) All deferrals of compensation with respect to that service provider under all plans of the service recipient to the extent such plans are not described in paragraph (c)(2)(i)(A), (B), (C), (D), (E), (F), (G), or (H) of this section are treated as deferred under a single plan.

(ii) ***Dual status.*** Agreements, methods, programs, and other arrangements in which a service provider participates are not aggregated with other agreements, methods, programs, and other arrangements to the extent the service provider participates in one set of agreements, methods, programs, and other arrangements due to status as an employee of the service recipient (employee arrangements) and another set of agreements, methods, programs, and other arrangements due to status as an independent contractor of the service recipient (independent contractor arrangements). For example, where a service provider deferred amounts under an independent contractor arrangement while providing services as an independent contractor, and then becomes eligible for and defers amounts under a separate employee arrangement after being hired as an employee, the two arrangements will not be aggregated for purposes of this paragraph (c)(2). Where an employee also is a member of the board of directors of the service recipient (or a similar position with respect to a non-corporate service recipient), the arrangements under which the employee participates as a director (director arrangements) are not aggregated with employee arrangements, provided that the director arrangements are substantially similar to arrangements provided to service providers providing services only as directors (or similar positions with respect to non-corporate service recipients). For example, an employee director who participates in an employee arrangement

and a director arrangement generally may treat the two arrangements as separate plans, provided that the director arrangement is substantially similar to arrangements providing benefits to non-employee directors. To the extent a plan in which an employee director participates is not substantially similar to arrangements in which non-employee directors participate, such plan is treated as an employee plan for purposes of this paragraph (c)(2). Director plans and independent contractor plans are aggregated for purposes of this paragraph (c)(2).

(3) *Establishment of plan* —

(i) ***In general.*** A plan does not satisfy the requirements of section 409A and this section and §§ 1.409A-2 through 1.409A-3 and §§ 1.409A-5 through 1.409A-6, unless the plan is established and maintained by a service recipient in accordance with the requirements of this section, §§ 1.409A-2 through 1.409A-3 and §§ 1.409A-5 through 1.409A-6. For purposes of this paragraph (c)(3), a plan is established on the latest of the date on which it is adopted, the date on which it is effective, and the date on which the material terms of the plan are set forth in writing. The material terms of the plan may be set forth in writing in one or more documents. For purposes of this paragraph (c)(3)(i), a plan will be deemed to be set forth in writing if it is set forth in any other form that is approved by the Commissioner. The material terms of the plan include the amount (or the method or formula for determining the amount) of deferred compensation to be provided under the plan and the time and form of payment. Notwithstanding the foregoing, a plan will be deemed to be established as of the date the participant obtains a legally binding right to a deferral of compensation, provided that the plan is otherwise established under the rules of this paragraph (c)(3)(i) by the end of the taxable year of the service provider in which the legally binding right arises, or with respect to an amount not payable in the year immediately following the taxable year of the service provider in which the legally binding right arises (the subsequent year), the 15th day of the third month of the subsequent year.

(ii) ***Initial deferral election provisions.*** If a plan provides a service provider or a service recipient with an initial deferral election, the plan satisfies the requirements of this paragraph (c)(3) if the plan sets forth in writing, on or before the date the applicable election is required to be irrevocable to satisfy the requirements of § 1.409A-2(a), the conditions under which such election may be made.

(iii) ***Subsequent deferral election provisions.*** If a plan permits a subsequent deferral election described in § 1.409A-2(b), the plan satisfies the requirements of this paragraph (c)(3) if the plan sets forth in writing, on or before the date the election is required to be irrevocable to meet the requirements of § 1.409A-2(b), the conditions under which such election may be made.

(iv) ***Payment accelerations.*** Except as explicitly provided in § 1.409A-3, a plan is not required to set forth in writing the conditions under which a payment may be accelerated if such acceleration is permitted under § 1.409A-3(j)(4).

(v) ***Six-month delay for specified employees.*** A plan must provide that distributions to a specified employee may not be made before the date that is six months after the date of separation from service or, if earlier, the date of death (the six-month delay rule). The six-month delay rule, required for payments due to the separation from service of a specified employee, must be written in the plan. A plan does not fail to be established and maintained merely because it does not contain the six-month delay rule when the service provider who has a right to compensation deferred under such plan is not a specified employee. However, such provision must be set forth in writing on or before the date such service provider first becomes a

specified employee. In general, this means the provision must be set forth in writing on or before the specified employee effective date (as defined in paragraph (i)(3) of this section) for the first list of specified employees that includes such service provider.

(vi) ***Plan amendments.*** In the case of an amendment that increases the amount deferred under a nonqualified deferred compensation plan, the plan is not considered established with respect to the additional amount deferred until the plan, as amended, is established in accordance with paragraph (c)(3)(i) of this section.

(vii) ***Transition rule for written plan requirement.*** For purposes of this paragraph (c)(3), a legally enforceable unwritten plan that was adopted and effective before December 31, 2007, is treated as established under this section as of the later of the date on which it was adopted or became effective, provided that the material terms of the plan are set forth in writing on or before December 31, 2007.

(viii) ***Plan aggregation rules.*** The plan aggregation rules of paragraph (c)(2)(i) of this section do not apply to the written plan requirements of this paragraph (c)(3). Accordingly, deferrals of compensation under an agreement, method, program, or other arrangement that fails to meet the requirements of section 409A solely due to a failure to meet the written plan requirements of this paragraph (c)(3) are not aggregated with deferrals of compensation under other agreements, methods, programs, or other arrangements that meet such requirements.

(d) ***Substantial risk of forfeiture*** —

(1) ***In general.*** Compensation is subject to a substantial risk of forfeiture if entitlement to the amount is conditioned on the performance of substantial future services by any person or the occurrence of a condition related to a purpose of the compensation, and the possibility of forfeiture is substantial. For purposes of this paragraph (d), a condition related to a purpose of the compensation must relate to the service provider's performance for the service recipient or the service recipient's business activities or organizational goals (for example, the attainment of a prescribed level of earnings or equity value or completion of an initial public offering). For purposes of this paragraph (d), if a service provider's entitlement to the amount is conditioned on the occurrence of the service provider's involuntary separation from service without cause, the right is subject to a substantial risk of forfeiture if the possibility of forfeiture is substantial. An amount is not subject to a substantial risk of forfeiture merely because the right to the amount is conditioned, directly or indirectly, upon the refraining from the performance of services. Except as provided with respect to certain transaction-based compensation under § 1.409A-3(i)(5)(iv), the addition of any risk of forfeiture after the legally binding right to the compensation arises, or any extension of a period during which compensation is subject to a risk of forfeiture, is disregarded for purposes of determining whether such compensation is subject to a substantial risk of forfeiture. An amount will not be considered subject to a substantial risk of forfeiture beyond the date or time at which the recipient otherwise could have elected to receive the amount of compensation, unless the present value of the amount subject to a substantial risk of forfeiture (disregarding, in determining the present value, the risk of forfeiture) is materially greater than the present value of the amount the recipient otherwise could have elected to receive absent such risk of forfeiture. For this purpose, compensation that the service provider would receive for continuing to perform services regardless of whether the service provider elected to receive the amount that is subject to a substantial risk of forfeiture is not taken into account in determining whether the present value of the right to the amount subject to a substantial risk of forfeiture is materially greater than the amount the recipient otherwise could have elected to receive absent such risk of forfeiture. For example, a salary deferral generally may not be

made subject to a substantial risk of forfeiture. But, for example, where a bonus plan provides an election between a cash payment or restricted stock units with a present value that is materially greater (disregarding the risk of forfeiture) than the present value of such cash payment and that will be forfeited absent continued services for a period of years, the right to the restricted stock units generally will be treated as subject to a substantial risk of forfeiture.

(2) ***Stock rights.*** A stock right is not subject to a substantial risk of forfeiture at the earlier of the first date the holder may exercise the stock right and receive cash or property that is substantially vested (as defined in § 1.83-3(b)) or the first date that the stock right is not subject to a forfeiture condition that would constitute a substantial risk of forfeiture. Accordingly, a stock option that the service provider may exercise immediately and receive substantially vested stock is not subject to a substantial risk of forfeiture, even if the stock option automatically terminates upon the service provider's separation from service.

(3) ***Enforcement of forfeiture condition*** —

(i) ***In general.*** In determining whether the possibility of forfeiture is substantial in the case of rights to compensation granted by a service recipient to a service provider that owns a significant amount of the total combined voting power or value of all classes of equity of the service recipient (where the service provider's ownership is determined with application of the attribution rules under section 318 if the service recipient is a corporation, or if the service recipient is an entity that is not a corporation, with application by analogy of the attribution rules under section 318), all relevant facts and circumstances will be taken into account in determining whether the probability of the service recipient enforcing such condition is substantial, including—

(A) The service provider's relationship to other equity holders and the extent of their control, potential control and possible loss of control of the service recipient;

(B) The position of the service provider in the service recipient and the extent to which the service provider is subordinate to other service providers;

(C) The service provider's relationship to the officers and directors of the service recipient (or similar positions with respect to a noncorporate service recipient);

(D) The person or persons who must approve the service provider's discharge; and

(E) Past actions of the service recipient in enforcing the restrictions.

(ii) ***Examples.*** The following examples illustrate the rules of paragraph (d)(3)(i) of this section:

Example 1. A service provider would be considered as having deferred compensation subject to a substantial risk of forfeiture, but for the fact that the service provider owns 20 percent of the single class of stock in the transferor corporation. If the remaining 80 percent of the class of stock is owned by an unrelated individual (or members of such an individual's family) so that the possibility of the corporation enforcing a restriction on such rights is substantial, then such rights are subject to a substantial risk of forfeiture.

Example 2. A service provider would be considered as having deferred compensation subject to a substantial risk of forfeiture, but for the fact that the service provider, who is president of the corporation, also owns 4 percent of the voting power of all the stock of a corporation. If the remaining stock is so diversely held by the public that the president, in effect,

controls the corporation, then the possibility of the corporation enforcing a restriction on the right to deferred compensation of the president is not substantial, and such rights are not subject to a substantial risk of forfeiture.

(e) ***Performance-based compensation*** —

(1) ***In general.*** The term *performance-based compensation* means compensation the amount of which, or the entitlement to which, is contingent on the satisfaction of preestablished organizational or individual performance criteria relating to a performance period of at least 12 consecutive months. Organizational or individual performance criteria are considered preestablished if established in writing by not later than 90 days after the commencement of the period of service to which the criteria relates, provided that the outcome is substantially uncertain at the time the criteria are established. Performance-based compensation may include payments based on performance criteria that are not approved by a compensation committee of the board of directors (or similar entity in the case of a non-corporate service recipient) or by the stockholders or members of the service recipient. Performance-based compensation does not include any amount or portion of any amount that will be paid either regardless of performance, or based upon a level of performance that is substantially certain to be met at the time the criteria is established. In addition, except as provided in paragraph (e)(3) of this section, compensation is not performance-based compensation merely because the amount of such compensation is determined by reference to the value of the service recipient or the stock of the service recipient. Where a portion of an amount of compensation would qualify as performance-based compensation if the portion were the sole amount available under the plan, that portion of the award will not fail to qualify as performance-based compensation if that portion is designated separately or otherwise separately identifiable under the terms of the plan, and the amount of each portion is determined independently of the other. Compensation may be performance-based compensation where the amount will be paid regardless of satisfaction of the performance criteria due to the service provider's death, disability, or a change in control event (as defined in § 1.409A-3(i)(5)(i)), provided that a payment made under such circumstances without regard to the satisfaction of the performance criteria will not constitute performance-based compensation. For purposes of this paragraph (e)(1), a disability refers to any medically determinable physical or mental impairment resulting in the service provider's inability to perform the duties of his or her position or any substantially similar position, where such impairment can be expected to result in death or can be expected to last for a continuous period of not less than six months.

(2) ***Payments based upon subjective performance criteria.*** The term *performance-based compensation* includes payments based upon subjective performance criteria, provided that—

(i) The subjective performance criteria are bona fide and relate to the performance of the participant service provider, a group of service providers that includes the participant service provider, or a business unit for which the participant service provider provides services (which may include the entire organization); and

(ii) The determination that any subjective performance criteria have been met is not made by the participant service provider or a family member of the participant service provider (as defined in section 267(c)(4) applied as if the family of an individual includes the spouse of any member of the family), or a person under the effective control of the participant service provider or such a family member, and no amount of the compensation of the person making such determination is effectively controlled in whole or in part by the service provider or such a family member.

(3) ***Equity-based compensation.*** Compensation is performance-based compensation if it is based solely on an increase in the value of the service recipient, or a share of stock in the service recipient, after the date of a grant or award. However, compensation payable for a service period that is equal to the value of a predetermined number of shares of stock, and is variable only to the extent that the value of such shares appreciates or depreciates, generally will not be performance-based compensation. Notwithstanding the foregoing, the attainment of a prescribed value for the service recipient (or a portion thereof), or a share of stock in the service recipient, may be used as a preestablished organizational criterion for purposes of providing performance-based compensation, provided that the other requirements of paragraph (e)(1) of this section are satisfied. In addition, an award of equity-based compensation may constitute performance-based compensation if entitlement to the compensation is subject to a condition that would cause the award to otherwise qualify as performance-based compensation, such as a performance-based vesting condition. A provision that allows a service provider to defer compensation that would be realized upon the exercise of a stock right generally constitutes an additional deferral feature for purposes of the definition of a deferral of compensation under paragraph (b)(5) of this section.

(f) ***Service provider*** —

(1) ***In general.*** The term *service provider* includes an individual, corporation, subchapter S corporation, partnership, personal service corporation (as defined in section 269A(b)(1)), noncorporate entity that would be a personal service corporation if it were a corporation, qualified personal service corporation (as defined in section 448(d)(2)), and noncorporate entity that would be a qualified personal service corporation if it were a corporation, for any taxable year in which such individual, corporation, subchapter S corporation, partnership, or other entity accounts for gross income from the performance of services under the cash receipts and disbursements method of accounting. The term *service provider* generally includes a person who has separated from service (a former service provider).

(2) ***Independent contractors*** —

(i) ***In general.*** Except as otherwise provided in paragraph (f)(2)(iv) of this section, section 409A does not apply to an amount deferred under a plan between a service provider and service recipient with respect to a particular trade or business in which the service provider participates, including earnings credited to such deferred amount, if during the service provider's taxable year in which the service provider obtains a legally binding right to the payment of the amount deferred each of the following applies:

(A) The service provider is actively engaged in the trade or business of providing services, other than as an employee or as a member of the board of directors of a corporation (or similar position with respect to an entity that is not a corporation).

(B) The service provider provides significant services to two or more service recipients to which the service provider is not related and that are not related to one another (as defined in paragraph (f)(2)(ii) of this section).

(C) The service provider is not related to the service recipient, applying the definition of related person contained in paragraph (f)(2)(ii) of this section subject to the modification that the language “20 percent” is not used instead of “50 percent” each place “50 percent” appears in sections 267(b) and 707(b)(1).

(ii) ***Related person.*** For purposes of this paragraph (f)(2), a person is related to another person if the persons bear a relationship to each other that is specified in section 267(b) or 707(b)(1), subject to the modifications that the language "20 percent" is used instead of "50 percent" each place it appears in sections 267(b) and 707(b)(1), and section 267(c)(4) is applied as if the family of an individual includes the spouse of any member of the family; or the persons are engaged in trades or businesses under common control (within the meaning of section 52(a) and (b)). In addition, an individual is related to an entity if the individual is an officer of an entity that is a corporation, or holds a position substantially similar to an officer of a corporation with an entity that is not a corporation.

(iii) ***Significant services.*** Whether a service provider is providing significant services depends on the facts and circumstances of each case. However, for purposes of paragraph (f)(2)(i) of this section, a service provider who provides services to two or more service recipients to which the service provider is not related and that are not related to one another is deemed to be providing significant services to two or more of such service recipients for a given taxable year, if the revenues generated from the services provided to any service recipient or group of related service recipients during such taxable year do not exceed 70 percent of the total revenue generated by the service provider from the trade or business of providing such services. In addition, in the case of a service provider who has been providing services in a trade or business for a period of not less than three consecutive years, for purposes of paragraph (f)(2)(i) of this section, a service provider who provides services to two or more service recipients to which the service provider is not related and that are not related to one another is deemed to be providing significant services to two or more of such service recipients for a given taxable year if in each of the prior three taxable years the revenues generated from the services provided to any service recipient or group of related service recipients during such prior taxable years did not exceed 70 percent of the total revenue generated by the service provider from the trade or business of providing such services and, at the time an amount is deferred, the service provider does not know or have reason to anticipate that the revenues generated from the services provided to any service recipient or group of related service recipients during the current year will exceed 70 percent of the total revenue generated by the service provider from the trade or business of providing such services.

(iv) ***Management services.*** This paragraph (f)(2) does not apply to a service provider to the extent the service provider provides management services to a service recipient. For purposes of this paragraph (f)(2)(iv), the term *management services* means services that involve the actual or de facto direction or control of the financial or operational aspects of a trade or business of the service recipient, or investment management or advisory services provided to a service recipient whose primary trade or business includes the investment of financial assets (including investments in real estate), such as a hedge fund or a real estate investment trust.

(v) ***Services provided to related persons.*** Section 409A does not apply to an amount deferred under a plan that is a bona fide agreement, method, program, or other arrangement between a service provider and a related service recipient arising in the ordinary course of a particular trade or business in which the service provider is engaged to the extent that—

(A) The service provider provides services to the service recipient as an independent contractor;

(B) During the service provider's taxable year in which the amount is deferred, the service provider qualifies for the safe harbor provided in paragraph (f)(2)(iii) of this section with respect to such trade or business; and

(C) Such agreement, method, program, or other arrangement and the practices thereunder (including billing and collection practices), are substantially similar to the agreements, methods, programs, or other arrangements and practices applicable to one or more unrelated service recipients to whom the service provider provides substantial services and that produce a majority of the total revenue that the service provider earns from the trade or business of providing such services during the taxable year.

(g) ***Service recipient.*** Except as otherwise specifically provided in these regulations, the term *service recipient* means the person for whom the services are performed and with respect to whom the legally binding right to compensation arises, and all persons with whom such person would be considered a single employer under section 414(b) (employees of controlled group of corporations), and all persons with whom such person would be considered a single employer under section 414(c) (employees of partnerships, proprietorships, etc., under common control). For example, if the service provider is an employee, the service recipient generally is the employer (including all persons treated as a single employer under section 414(b) or (c)). Notwithstanding the foregoing, section 409A applies to a plan that provides for the deferral of compensation, even if the payment of the compensation is not made by the person for whom services are performed.

(h) ***Separation from service*** —(1) *Employees*—

(i) ***In general.*** An employee separates from service with the employer if the employee dies, retires, or otherwise has a termination of employment with the employer. However, for purposes of this paragraph (h)(1), the employment relationship is treated as continuing intact while the individual is on military leave, sick leave, or other bona fide leave of absence if the period of such leave does not exceed six months, or if longer, so long as the individual retains a right to reemployment with the service recipient under an applicable statute or by contract. For purposes of this paragraph (h)(1), a leave of absence constitutes a bona fide leave of absence only if there is a reasonable expectation that the employee will return to perform services for the employer. If the period of leave exceeds six months and the individual does not retain a right to reemployment under an applicable statute or by contract, the employment relationship is deemed to terminate on the first date immediately following such six-month period. Notwithstanding the foregoing, where a leave of absence is due to any medically determinable physical or mental impairment that can be expected to result in death or can be expected to last for a continuous period of not less than six months, where such impairment causes the employee to be unable to perform the duties of his or her position of employment or any substantially similar position of employment, a 29-month period of absence may be substituted for such six-month period.

(ii) ***Termination of employment.*** Whether a termination of employment has occurred is determined based on whether the facts and circumstances indicate that the employer and employee reasonably anticipated that no further services would be performed after a certain date or that the level of bona fide services the employee would perform after such date (whether as an employee or as an independent contractor) would permanently decrease to no more than 20 percent of the average level of bona fide services performed (whether as an employee or an independent contractor) over the immediately preceding 36-month period (or the full period of services to the employer if the employee has been providing services to the employer less than 36 months). Facts and circumstances to be considered in making this determination include, but are not limited to, whether

the employee continues to be treated as an employee for other purposes (such as continuation of salary and participation in employee benefit programs), whether similarly situated service providers have been treated consistently, and whether the employee is permitted, and realistically available, to perform services for other service recipients in the same line of business. An employee is presumed to have separated from service where the level of bona fide services performed decreases to a level equal to 20 percent or less of the average level of services performed by the employee during the immediately preceding 36-month period. An employee will be presumed not to have separated from service where the level of bona fide services performed continues at a level that is 50 percent or more of the average level of service performed by the employee during the immediately preceding 36-month period. No presumption applies to a decrease in the level of bona fide services performed to a level that is more than 20 percent and less than 50 percent of the average level of bona fide services performed during the immediately preceding 36-month period. The presumption is rebuttable by demonstrating that the employer and the employee reasonably anticipated that as of a certain date the level of bona fide services would be reduced permanently to a level less than or equal to 20 percent of the average level of bona fide services provided during the immediately preceding 36-month period or full period of services provided to the employer if the employee has been providing services to the service recipient for a period of less than 36 months (or that the level of bona fide services would not be so reduced). For example, an employee may demonstrate that the employer and employee reasonably anticipated that the employee would cease providing services, but that, after the original cessation of services, business circumstances such as termination of the employee's replacement caused the employee to return to employment. Although the employee's return to employment may cause the employee to be presumed to have continued in employment because the employee is providing services at a rate equal to the rate at which the employee was providing services before the termination of employment, the facts and circumstances in this case would demonstrate that at the time the employee originally ceased to provide services, the employee and the service recipient reasonably anticipated that the employee would not provide services in the future. Notwithstanding the foregoing provisions of this paragraph (h)(1)(ii), a plan may treat another level of reasonably anticipated permanent reduction in the level of bona fide services as a separation from service, provided that the level of reduction required must be designated in writing as a specific percentage, and the reasonably anticipated reduced level of bona fide services must be greater than 20 percent but less that 50 percent of the average level of bona fide services provided in the immediately preceding 36 months. The plan must specify the definition of separation from service on or before the date on which a separation from service is designated as a time of payment of the applicable amount deferred, and once designated, any change to the definition of separation from service with respect to such amount deferred will be subject to the rules regarding subsequent deferrals and the acceleration of payments. For purposes of this paragraph (h)(1)(ii), for periods during which an employee is on a paid bona fide leave of absence (as defined in paragraph (h)(1)(i) of this section) and has not otherwise terminated employment pursuant to paragraph (h)(1)(i) of this section, the employee is treated as providing bona fide services at a level equal to the level of services that the employee would have been required to perform to receive the compensation paid with respect to such leave of absence. Periods during which an employee is on an unpaid bona fide leave of absence (as defined in paragraph (h)(1)(i) of this section) and has not otherwise terminated employment pursuant to paragraph (h)(1)(i) of this section, are disregarded for purposes of this paragraph (h)(1)(ii) (including for purposes of determining the applicable 36-month (or shorter) period).

(2) *Independent contractors*—(i) *In general.* An independent contractor is considered to have a separation from service with the service recipient upon the expiration of the contract (or in the case of more than one contract, all contracts) under which services are performed for the service recipient if the expiration constitutes a good-faith and complete termination of the contractual relationship. An expiration does not constitute a good faith and complete termination of the contractual relationship if the service recipient anticipates a renewal of a contractual relationship or the independent contractor becoming an employee. For this purpose, a service recipient is considered to anticipate the renewal of the contractual relationship with an independent contractor if it intends to contract again for the services provided under the expired contract, and neither the service recipient nor the independent contractor has eliminated the independent contractor as a possible provider of services under any such new contract. Further, a service recipient is considered to intend to contract again for the services provided under an expired contract if the service recipient's doing so is conditioned only upon incurring a need for the services, the availability of funds, or both.

(ii) ***Special rule.*** Notwithstanding paragraph (h)(2)(i) of this section, a plan is considered to satisfy the requirement described in § 1.409A-3(a)(1) with respect to an amount payable upon a separation from service if, with respect to amounts payable to a service provider who is an independent contractor, the plan provides that—

(A) No amount will be paid to the service provider before a date at least 12 months after the day on which the contract expires under which the service provider performs services for the service recipient (or, in the case of more than one contract, all such contracts expire); and

(B) No amount payable to the service provider on that date will be paid to the service provider if, after the expiration of the contract (or contracts) and before that date, the service provider performs services for the service recipient as an independent contractor or an employee.

(3) *Definition of service recipient and employer.* For purposes of this paragraph (h), the term *service recipient* or *employer* means the service recipient as defined in paragraph (g) of this section, provided that in applying section 1563(a)(1), (2), and (3) for purposes of determining a controlled group of corporations under section 414(b), the language “at least 50 percent” is used instead of “at least 80 percent” each place it appears in section 1563(a)(1), (2), and (3), and in applying § 1.414(c)-2 for purposes of determining trades or businesses (whether or not incorporated) that are under common control for purposes of section 414(c), “at least 50 percent” is used instead of “at least 80 percent” each place it appears in § 1.414(c)-2. A plan may provide with respect to a deferral of compensation under the plan that in applying sections 1563(a)(1), (2), and (3) for purposes of determining a controlled group of corporations under section 414(b), another defined percentage greater than 50 percent, but not greater than 80 percent, is used instead of “at least 80 percent” at each place it appears in sections 1563(a)(1), (2), and (3), and in applying § 1.414(c)-2 for purposes of determining trades or businesses (whether or not incorporated) that are under common control for purposes of section 414(c), another defined percentage greater than 50 percent, but not greater than 80 percent, is used instead of “at least 80 percent” at each place it appears in § 1.414(c)-2. In addition, where the use of such definition of service recipient for purposes of determining a separation from service is based upon legitimate business criteria, the plan may provide that for purposes of a deferral of compensation under the plan that in applying sections 1563(a)(1), (2), and (3) for purposes of determining a controlled group of corporations under section 414(b), the language “at least 20 percent” or another defined percentage not less than 20 percent but not greater than 50 percent is used instead of “at least 80 percent” at each place it appears in sections

1563(a)(1), (2), and (3), and in applying § 1.414(c)-2 for purposes of determining trades or businesses (whether or not incorporated) that are under common control for purposes of section 414(c), the language "at least 20 percent" or another defined percentage not less than 20 percent but not greater than 50 percent is used instead of "at least 80 percent" at each place it appears in § 1.414(c)-2. Where a definition of service recipient or employer other than the definition provided in the first sentence of this paragraph (h)(3) (the 50 percent standard) is used, the plan must designate in writing the alternate definition no later than the last date at which the time and form of payment of the applicable amount deferred must be elected in accordance with § 1.409A-2(a), and any change in the definition for such amounts deferred will constitute a change in the time and form of payment subject to the rules governing subsequent deferral elections under § 1.409A-2(b) and the acceleration of payments under § 1.409A-3(j).

(4) *Asset purchase transactions.* Where as part of a sale or other disposition of assets by one service recipient (seller) to an unrelated service recipient (buyer), a service provider of the seller would otherwise experience a separation from service with the seller, the seller and the buyer may retain the discretion to specify, and may specify, whether a service provider providing services to the seller immediately before the asset purchase transaction and providing services to the buyer after and in connection with the asset purchase transaction has experienced a separation from service for purposes of this paragraph (h), provided that the asset purchase transaction results from bona fide, arm's length negotiations, all service providers providing services to the seller immediately before the asset purchase transaction and providing services to the buyer after and in connection with the asset purchase transaction are treated consistently (regardless of position at the seller) for purposes of applying the provisions of any nonqualified deferred compensation plan, and such treatment is specified in writing no later than the closing date of the asset purchase transaction. For purposes of this paragraph (h)(4), references to a sale or other disposition of assets, or an asset purchase transaction, refer only to a transfer of substantial assets, such as a plant or division or substantially all the assets of a trade or business. For purposes of this paragraph (h)(4), whether a service recipient is related to another service recipient is determined under the rules provided in paragraph (f)(2)(ii) of this section.

(5) *Dual status.* If a service provider provides services both as an employee of a service recipient and as an independent contractor of a service recipient, the service provider must separate from service both as an employee and as an independent contractor to be treated as having separated from service. If a service provider ceases providing services as an independent contractor and begins providing services as an employee, or ceases providing services as an employee and begins providing services as an independent contractor, the service provider will not be considered to have a separation from service until the service provider has ceased providing services in both capacities. Notwithstanding the foregoing, if a service provider provides services both as an employee of a service recipient and a member of the board of directors of a corporate service recipient (or an analogous position with respect to a non-corporate service recipient), the services provided as a director are not taken into account in determining whether the service provider has a separation from service as an employee for purposes of a nonqualified deferred compensation plan in which the service provider participates as an employee that is not aggregated with any plan in which the service provider participates as a director under paragraph (c)(2)(ii) of this section. In addition, if a service provider provides services both as an employee of a service recipient and a member of the board of directors of a corporate service recipient (or an analogous position with respect to a non-corporate service recipient), the services provided as an employee are not taken into

account in determining whether the service provider has a separation from service as a director for purposes of a nonqualified deferred compensation plan in which the service provider participates as a director that is not aggregated with any plan in which the service provider participates as an employee under paragraph (c)(2)(ii) of this section.

(6) *Collectively bargained plans covering multiple employers.* Notwithstanding the foregoing provisions of this paragraph (h), to the extent a plan is established pursuant to a bona fide collective bargaining agreement covering services performed by employees for multiple employers, such plan may define a separation from service in a reasonable manner that treats the employee as not having separated from service during periods in which the employee is not providing services but is available to perform services covered by the collective bargaining agreement for one or more employers, provided that the definition also provides that the employee must be deemed to have separated from service at a specified date not later than the end of any period of at least 12 consecutive months during which the employee has not provided any services covered by the collective bargaining agreement to any participating employer. This paragraph (h)(6) applies only if the definition of separation from service provided by the collective bargaining agreement was the subject of arm's length negotiations between employee representatives and two or more employers, the agreement between employee representatives and such employers satisfies section 7701(a)(46), and the circumstances surrounding the agreement evidence good faith bargaining between adverse parties over such definition.

(i) ***Specified employee*** —

(1) ***In general.*** The term *specified employee* means a service provider who, as of the date of the service provider's separation from service, is a key employee of a service recipient any stock of which is publicly traded on an established securities market or otherwise. For purposes of this paragraph (i)(1), a service provider is a key employee if the service provider meets the requirements of section 416(i)(1)(A)(i), (ii), or (iii) (applied in accordance with the regulations thereunder and disregarding section 416(i)(5)) at any time during the 12-month period ending on a specified employee identification date. If a service provider is a key employee as of a specified employee identification date, the service provider is treated as a key employee for purposes of this paragraph (i) for the entire 12-month period beginning on the specified employee effective date.

(2) ***Definition of compensation.*** For purposes of identifying a specified employee by applying the requirements of section 416(i)(1)(A)(i), (ii), and (iii), the definition of compensation under § 1.415(c)-2(a) is used, applied as if the service recipient were not using any safe harbor provided in § 1.415(c)-2(d), were not using any of the elective special timing rules provided in § 1.415(c)-2(e), and were not using any of the elective special rules provided in § 1.415(c)-2(g). Notwithstanding the foregoing, a service recipient may elect to use any available definition of compensation under section 415 and the regulations thereunder in accordance with the election requirements set forth in paragraph (i)(8) of this section, including any available safe harbor and any available election under the timing rules or special rules, provided that the definition is applied consistently to all employees of the service recipient for purposes of identifying specified employees. A service recipient may elect to use such an alternative definition regardless of whether another definition of compensation is being used for purposes of a qualified plan sponsored by the service recipient. However, once a list of specified employees has become effective, the service recipient cannot change the definition of compensation for purposes of identifying specified employees for the period with respect to which such list is effective.

(3) *Specified employee identification date.* Unless another date is designated in accordance with the requirements of this paragraph (i)(3) and paragraph (i)(8) of this section, the specified employee identification date is December 31. A service recipient may designate in accordance with the requirements of paragraph (i)(8) of this section any other date as the specified employee identification date, provided that a service recipient must use the same specified employee identification date with respect to all nonqualified deferred compensation plans, and any change to the specified employee identification date may not be effective for a period of at least 12 months. The service recipient may designate a specified employee identification date in each plan or in a separate document applicable to all plans, provided that the service recipient will not be treated as having designated a specified employee identification date before the designation is legally binding on the service recipient and all affected service providers. Any designation of a specified employee identification date made on or before December 31, 2007, may be applied to any separation from service occurring on or after January 1, 2005, unless and until subsequently changed pursuant to this paragraph (i)(3).

(4) *Specified employee effective date.* Unless another date is designated in accordance with the requirements of this paragraph (i)(4) and paragraph (i)(8) of this section, the specified employee effective date is the first day of the fourth month following the specified employee identification date. A service recipient may designate in accordance with the requirements of paragraph (i)(8) of this section any date following the specified employee identification date as the specified employee effective date, provided that such date may not be later than the first day of the fourth month following the specified employee identification date, and provided further that a service recipient must use the same specified employee effective date with respect to all nonqualified deferred compensation plans, and any change to the specified employee effective date may not be effective for a period of at least 12 months. The service recipient may designate a specified employee effective date through inclusion in each plan document or through a separate document applicable to all plans, provided that the service recipient will not be treated as having designated a specified employee effective date on any date before the designation is legally binding on the service recipient and all affected service providers. Any designation of a specified employee effective date made on or before December 31, 2007, may be applied to any separation from service occurring on or after January 1, 2005, unless and until subsequently changed pursuant to this paragraph (i)(4).

(5) *Alternative methods of satisfying the six-month delay rule.* A plan may provide, in accordance with the requirements of paragraph (i)(8) of this section, for an alternative method to identify service providers who will be subject to the six-month delay rule provided in section 409A(a)(2)(B)(i), provided that the alternative method is reasonably designed to include all specified employees (determined without respect to any available service recipient elections), the alternative method is an objectively determinable standard providing no direct or indirect election to any service provider regarding its application, and the alternative method results in either all service providers or no more than 200 service providers being identified in the class as of any date. Use of such an alternative method will not be treated as a change in the time and form of payment for purposes of § 1.409A-2(b) (the subsequent deferral rules), even if the service provider is not a specified employee when the payment is delayed.

(6) *Corporate transactions* —

(i) *Mergers and acquisitions of public service recipients.* If as a result of a corporate transaction, two or more separate service recipients, more than one of which has stock outstanding that is publicly traded on an established securities market or otherwise immediately before the transaction, become one service recipient, any stock of which is publicly traded on an

established securities market or otherwise immediately after the transaction (resulting public service recipient), the resulting public service recipient's next specified employee identification date and specified employee effective date following the corporate transaction are the specified employee identification date and specified employee effective date that the acquiring service recipient would have been required to use absent such transaction. For this purpose, in the case of a corporate merger, the acquiring service recipient is the service recipient that included the surviving corporation in such merger, in the case of an acquisition by a corporation of the stock of another corporation, the acquiring service recipient is the service recipient that included the corporation that acquired such stock, and in all other cases, the surviving service recipient is determined on the basis of all of the facts and circumstances. For the period between the transaction and the next specified employee effective date, the list of specified employees of the resulting public service recipient is determined by combining the lists of specified employees of all service recipients participating in the transaction that were in effect at the date of the corporate transaction, ranking such specified employees in order of the amount of compensation used to determine each specified employee's status as a specified employee, and treating the top 50 of such specified employees, plus any employees described in section 416(i)(1)(ii) or section 416(i)(1)(iii) and the regulations thereunder (relating to 1-percent and 5-percent owners) who are not included in such top 50 specified employees, as specified employees for the period between the corporate transaction and the next specified employee effective date. Alternatively, the resulting service recipient may elect in accordance with the requirements of paragraph (i)(8) of this section to use any reasonable method to determine the specified employees of the resulting service recipient, including the use of an alternative method of compliance described in paragraph (i)(5) of this section, provided that such method is adopted no later than 90 days after the corporate transaction and applied prospectively from the date the method is adopted.

(ii) ***Mergers and acquisitions of nonpublic service recipients.*** If as part of a corporate transaction a service recipient that does not have outstanding stock that is publicly traded on an established securities market or otherwise immediately before the transaction (initial private service recipient), and a service recipient with stock outstanding that is publicly traded on an established securities market or otherwise immediately before the transaction (initial public service recipient), become a single service recipient having stock that is publicly traded on an established securities market or otherwise immediately after the transaction (resulting public service recipient), the resulting public service recipient's next specified employee identification date and specified employee effective date following the corporate transaction are the specified employee identification date and specified employee effective date that the initial public service recipient would have been required to use absent such transaction. For the period after the date of the corporate transaction and before the next specified employee effective date, the specified employees of the initial public service recipient immediately before the transaction continue to be the specified employees of the resulting public service recipient, and no service providers of the initial private service recipient are required to be treated as specified employees.

(iii) ***Spinoffs.*** If as part of a corporate transaction, a service recipient with stock outstanding that is publicly traded on an established securities market or otherwise immediately before the transaction (initial public service recipient), becomes two or more separate service recipients, each with stock outstanding that is publicly traded on an established securities market or otherwise immediately after the transaction (post-transaction public service recipients), the next specified employee identification date of each of the post-transaction public service

recipients is the specified employee identification date that the initial public service recipient would have been required to use absent such transaction. For the period after the date of the corporate transaction and before the next specified employee effective date, the specified employees of the initial public service recipient immediately before the transaction continue to be the specified employees of the post-transaction public service recipients.

(iv) ***Public offerings and other corporate transactions.*** If as part of an initial public offering or corporate transaction not described in paragraph (i)(6)(ii) or (iii) of this section, a service recipient with no outstanding stock that is publicly traded on an established securities market or otherwise immediately before such offering or other transaction (initial private service recipient), becomes one or more service recipients with stock outstanding that is publicly traded on an established securities market or otherwise immediately after such offering or other transaction (post-transaction public service recipient), each post-transaction public service recipient has a specified employee identification date of December 31 and a specified employee effective date of April 1, effective retroactively to the December 31 and April 1 next preceding the offering or other transaction for purposes of identifying the specified employees between the corporation transaction and the next December 31. Alternatively, a post-transaction public service recipient may elect in accordance with the requirements of paragraph (i)(8) of this section, a specified employee identification date and specified employee effective date on or before the date of the offering or other transaction. If a public service recipient makes such an election, for the period after the offering or other transaction and before the next specified employee effective date, the specified employees of the post-transaction public service recipient consist of the service providers that at the time of the offering or other transaction would have been classified as specified employees of the initial private service recipient, had the initial private service recipient elected the same specified employee identification date and specified employee effective date as selected by the post-transaction public service recipient, and had such initial private service recipient had stock publicly traded on an established securities market or otherwise as of the specified employee identification date preceding the transaction.

(v) ***Alternative methods of compliance.*** For purposes of this paragraph (i)(6), references to specified employees as of a corporate transaction or offering include any specified employees identified through the use of an alternative method described in paragraph (i)(5) of this section, where the use of such alternative method was established and effective at the time of the corporate transaction or offering.

(7) ***Nonresident alien employees.*** For purposes of determining whether an employee meets the requirements of section 416(i)(1)(A)(i), (ii), or (iii) (applied in accordance with the regulations thereunder and disregarding section 416(i)(5)), and therefore is a key employee, the incorporation of the rules of § 1.415(c)-2(g)(5) regarding the definition of compensation applies. Accordingly, the rule of § 1.415(c)-2(g)(5)(i), generally requiring the treatment as compensation of certain compensation excludible from an employee's gross income due to the location of the services or the identity of the employer, applies. In addition, a service recipient may elect in accordance with paragraph (i)(8) of this section to apply the rule of § 1.415(c)-2(g)(5)(ii) to not treat as compensation certain compensation excludible from an employee's gross income on account of the location of the services or the identity of the employer that is not effectively connected with the conduct of a trade or business within the United States. A service recipient may elect to apply the rule of § 1.415-2(g)(5)(ii) regardless of whether the service recipient has elected to apply the rule to a qualified plan sponsored by the service recipient; however, once a list of specified employees has

become effective, any election of the rule for that period may not be changed. Notwithstanding the foregoing, any election of the rule made before January 1, 2008, may be effective with respect to any specified employee identification date on or before December 31, 2007.

(8) ***Elections affecting the identification of specified employees.*** The elections described in paragraphs (i)(2) through (7) of this section are effective only as of the date that all necessary corporate action has been taken to make such elections binding for purposes of all affected nonqualified deferred compensation plans in which the service providers of the service recipient that would become a specified employee due to the application of such election participate. Where a taxpayer attempts to make an election under paragraph (i)(2), (3), (4), (5), (6), or (7) of this section but such election is not binding on all the affected nonqualified deferred compensation plans and applied consistently to all such service providers, the election is not effective and the rule under paragraph (i)(2), (3), (4), (5), (6), or (7) of this section, as applicable, that would apply absent an election is applicable for identifying specified employees.

(j) ***Nonresident alien.***

(1) Except as provided in paragraph (j)(2) of this section, the term *nonresident alien* means an individual who is—

(i) A nonresident alien within the meaning of section 7701(b)(1)(B); or

(ii) A dual resident taxpayer within the meaning of § 301.7701(b)-7(a)(1) of this chapter with respect to any taxable year in which such individual is treated as a nonresident alien for purposes of computing the individual's U.S. income tax liability.

(2) The term *nonresident alien* does not include—

(i) A nonresident alien with respect to whom an election is in effect for the taxable year under section 6013(g) to be treated as a resident of the United States;

(ii) A former citizen or long-term resident (within the meaning of section 877(e)(2)) who expatriated after June 3, 2004, and has not complied with the requirements of section 7701(n); or

(iii) An individual who is treated as a citizen or resident of the United States for the taxable year under section 877(g).

(k) ***Established securities market.*** The term *established securities market* means an established securities market within the meaning of § 1.897-1(m).

(l) ***Stock right.*** The term *stock right* means a stock option (other than an incentive stock option described in section 422 or an option granted pursuant to an employee stock purchase plan described in section 423) or a stock appreciation right.

(m) ***Separation pay plan.*** The term *separation pay plan* means any plan that provides separation pay or, where a plan provides both amounts that are separation pay and that are not separation pay, that portion of the plan that provides separation pay. The term *separation pay* means any deferral of compensation (before the application of the exclusions from the definition of a deferral of compensation set forth in paragraph (b)(9) of this section) that will not be paid under any circumstances unless the service provider has had a separation from service, whether voluntary or involuntary, including payments in the form of reimbursements of expenses incurred, and the provision of in-kind benefits. A deferral of compensation that the service provider may receive without a separation from service does not become separation pay

merely because the service provider elects to receive or receives the payment after or upon a separation from service. A deferral of compensation does not fail to be separation pay merely because the payment is conditioned upon the execution of a release of claims, noncompetition or nondisclosure provisions, or other similar requirements. Notwithstanding the foregoing, any amount, or entitlement to any amount, that acts as a substitute for, or replacement of, amounts deferred by the service recipient under a nonqualified deferred compensation plan constitutes a payment of compensation or deferral of compensation under such nonqualified deferred compensation plan.

(n) ***Involuntary separation from service*** —

(1) ***In general.*** An involuntary separation from service means a separation from service due to the independent exercise of the unilateral authority of the service recipient to terminate the service provider's services, other than due to the service provider's implicit or explicit request, where the service provider was willing and able to continue performing services. An involuntary separation from service may include the service recipient's failure to renew a contract at the time such contract expires, provided that the service provider was willing and able to execute a new contract providing terms and conditions substantially similar to those in the expiring contract and to continue providing such services. The determination of whether a separation from service is involuntary is based on all the facts and circumstances. Any characterization of the separation from service as voluntary or involuntary by the service provider and the service recipient in the documentation of the separation from service is presumed to properly characterize the nature of the separation from service. However, the presumption may be rebutted where the facts and circumstances indicate otherwise. For example, if a separation from service is designated as a voluntary separation from service or resignation, but the facts and circumstances indicate that absent such voluntary separation from service the service recipient would have terminated the service provider's services, and that the service provider had knowledge that the service provider would be so terminated, the separation from service is involuntary.

(2) ***Separations from service for good reason*** —(i) *In general.* Notwithstanding paragraph (n)(1) of this section, a service provider's voluntary separation from service will be treated for purposes of this section and §§ 1.409A-2 through 1.409A-6 as an involuntary separation from service if the separation from service occurs under certain limited bona fide conditions, where the avoidance of the requirements of section 409A is not a purpose of the inclusion of these conditions in the plan or of the actions by the service recipient in connection with the satisfaction of these conditions, and a voluntary separation from service under such conditions effectively constitutes an involuntary separation from service. Generally such conditions will be prespecified under an agreement to provide compensation upon a separation from service for good reason. Such a good reason (or a similar condition) must be defined to require actions taken by the service recipient resulting in a material negative change to the service provider in the service relationship, such as the duties to be performed, the conditions under which such duties are to be performed, or the compensation to be received for performing such services. Other factors taken into account in determining whether a separation from service for good reason effectively constitutes an involuntary separation from service include the extent to which the payments upon a separation from service for good reason are in the same amount and are to be made at the same time and in the same form as payments available upon an actual involuntary separation from service, and whether the service provider is required to give the service recipient notice of the existence of the condition that would result in treatment as a separation from service for good reason and a reasonable opportunity to remedy the condition.

(ii) *Safe harbor.* For purposes of this section and §§ 1.409A-2 through 1.409A-6, if a plan provides that a voluntary separation from service will be treated as an involuntary separation from service if the separation from service occurs under certain express conditions, a separation from service satisfying the conditions set forth in the plan will be treated as an involuntary separation from the service if the necessary conditions (or set of conditions) require the following:

(A) The separation from service must occur during a pre-determined limited period of time not to exceed two years following the initial existence of one or more of the following conditions arising without the consent of the service provider:

(*1*) A material diminution in the service provider's base compensation.

(*2*) A material diminution in the service provider's authority, duties, or responsibilities.

(*3*) A material diminution in the authority, duties, or responsibilities of the supervisor to whom the service provider is required to report, including a requirement that a service provider report to a corporate officer or employee instead of reporting directly to the board of directors of a corporation (or similar governing body with respect to an entity other than a corporation).

(*4*) A material diminution in the budget over which the service provider retains authority.

(*5*) A material change in the geographic location at which the service provider must perform the services.

(*6*) Any other action or inaction that constitutes a material breach by the service recipient of the agreement under which the service provider provides services.

(B) The amount, time, and form of payment upon the separation from service must be substantially identical to the amount, time and form of payment payable due to an actual involuntary separation from service, to the extent such a right exists.

(C) The service provider must be required to provide notice to the service recipient of the existence of the condition described in paragraph (n)(2)(ii)(A) of this section within a period not to exceed 90 days of the initial existence of the condition, upon the notice of which the service recipient must be provided a period of at least 30 days during which it may remedy the condition and not be required to pay the amount.

(3) *Special rule for certain collectively bargained plans.* Notwithstanding the foregoing, for purposes of this paragraph (n), to the extent a plan is subject to a bona fide collective bargaining agreement covering services performed for multiple employers under which an employee must separate from service with all such employers in order to receive a payment, such plan may use any reasonable definition of involuntary separation from service, provided that such definition is consistent with any definition of a separation from service adopted under paragraph (h)(6) of this section, and provided further that the definition of an involuntary separation from service provided by the collective bargaining agreement was the subject of arm's length negotiations between employee representatives and two or more employers, the agreement between employee representatives and such employers satisfies section 7701(a)(46), and the circumstances surrounding the agreement evidence good faith bargaining between adverse parties over such definition.

(o) ***Earnings.*** Whether a deferred amount constitutes earnings on an amount deferred, or actual or notional income attributable to an amount deferred, is determined under the principles defining income attributable to the amount taken into account under § 31.3121(v)(2)-1(d)(2) of this chapter. Accordingly,

with respect to an account balance plan, earnings on an amount deferred generally include an amount credited on behalf of a service provider under the terms of the plan that reflects a rate of return that does not exceed either the rate of return on a predetermined actual investment or, if the income does not reflect the rate of return on a predetermined actual investment, a reasonable rate of interest. With respect to nonaccount balance plans, earnings on an amount deferred generally include an increase, due solely to the passage of time, in the present value of the future payments to which the service provider has obtained a legally binding right, the present value of which constituted the amount deferred (determined as of the date such amount was deferred), but only if the amount deferred was determined using reasonable actuarial assumptions and methods. A right to earnings on an amount deferred generally is treated as a right to a deferral of compensation for purposes of this section and §§ 1.409A-2 through 1.409A-6. However, for purposes of any provision of this section and §§ 1.409A-2 through 1.409A-6 referring to earnings on deferred compensation (or similar terms), the use of an unreasonable rate of return, or unreasonable actuarial assumptions and methods, generally will result in the treatment of some or all of such a right to deferred compensation as a right only to deferred compensation, and not a right to earnings on deferred compensation, so that the provision will not be applicable. With respect to plans that are neither account balance plans nor nonaccount balance plans, these rules apply by analogy.

(p) ***In-kind benefits.*** The term *in-kind benefits* refers to services provided to or on behalf of a service provider, such as financial planning services, or tangible personal or real property made available for use by or on behalf of the service provider, such as the use of an aircraft or vehicle, and does not refer to a transfer of property within the meaning of section 83 and the regulations thereunder, or a promise to transfer, or an option to purchase or receive, property in the future.

(q) ***Application of definitions and rules.*** The definitions and rules set forth in paragraphs (a) through (p) of this section apply for purposes of section 409A, this section, and §§ 1.409A-2 through 1.409A-6.

[T.D. 9321, 72 FR 19276, Apr. 17, 2007; 72 FR 41620, July 31, 2007]

§ 1.409A-2 Deferral elections.

(a) ***Initial elections as to the time and form of payment*** —

(1) ***In general.*** A plan that is, or constitutes part of, a nonqualified deferred compensation plan meets the requirements of section 409A(a)(4)(B) only if under the terms of the plan, compensation for services performed during a service provider's taxable year (the service year) may be deferred at the service provider's election only if the election to defer such compensation is made and becomes irrevocable not later than the latest date permitted in this paragraph (a). An election will not be considered to be revocable merely because the service provider or service recipient may make an election to change the time and form of payment pursuant to paragraph (b) of this section, or the service recipient may accelerate the time of payment pursuant to § 1.409A-3(j)(4) (exceptions to prohibition on accelerated payments). Whether a plan provides a service provider an opportunity to elect the time or form of payment of compensation is determined based upon all the facts and circumstances surrounding the determination of the time and form of payment of the compensation. For purposes of this section, an election to defer includes an election as to the time of the payment, an election as to the form of the payment or an election as to both the time and the form of the payment, but does not include an election as to the medium of payment (for example, an election between a payment of cash or a payment of property). Except as otherwise expressly provided in this section, an election will not be considered made until such election becomes irrevocable under the terms of the applicable plan. Accordingly, a plan may provide that an election to defer may be changed at any

time before the last permissible date for making such an election. Where a plan provides the service provider a right to make an initial deferral election, and further provides that the election remains in effect until terminated or modified by the service provider, the election will be treated as made as of the date such election becomes irrevocable as to compensation for services performed during the relevant service year. For example, where a plan provides that a service provider's election to defer a set percentage will remain in effect until changed or revoked, but that as of each December 31 the election becomes irrevocable with respect to salary payable in connection with services performed in the immediately following year, the initial deferral election with respect to salary payable with respect to services performed in the immediately following year will be deemed to have been made as of the December 31 upon which the election became irrevocable. For purposes of this paragraph (a), the reference to a service period or a performance period refers to the period of service for which the right to the compensation arises, and may include periods before the grant of a legally binding right to the compensation. For example, where a service recipient grants a bonus based upon services performed in the calendar year 2010, but retains the discretion to rescind the bonus until 2011 such that the promise of the bonus is not a legally binding right, the period of service or performance period to which the compensation relates is the calendar year 2010.

(2) ***Service recipient elections.*** A plan that provides for a deferral of compensation for services performed during a service provider's taxable year that does not provide the service provider with an opportunity to elect the time or form of payment of such compensation must designate the time and form of payment by no later than the later of the time the service provider first has a legally binding right to the compensation or, if later, the time the service provider would be required under this section to make such an election if the service provider were provided such an election. Such designation is treated as an initial deferral election for purposes of this section. Where a plan permits a service recipient to exercise discretion to disregard a service provider election as to the time or form of a payment, any service provider election that is subject to such discretion will be treated as revocable so long as such discretion may be exercised.

(3) ***General rule.*** A plan that is, or constitutes part of, a nonqualified deferred compensation plan meets the requirements of section 409A(a)(4)(B) if under the terms of the plan, compensation for services performed during a service provider's taxable year (the service year) may be deferred at the service provider's election only if the election to defer such compensation is made not later than the close of the service provider's taxable year next preceding the service year.

(4) ***Initial deferral election with respect to short-term deferrals.*** If a service provider has a legally binding right to a payment of compensation in a subsequent taxable year that, absent a deferral election, would be treated as a short-term deferral within the meaning of § 1.409A-1(b)(4), an election to defer such compensation may be made in accordance with the requirements of paragraph (b) of this section, applied as if the amount were a deferral of compensation and the scheduled payment date for the amount were the date the substantial risk of forfeiture lapses. Notwithstanding the requirements of paragraph (b) of this section, such a deferral election may provide that the deferred amounts will be payable upon a change in control event (as defined in § 1.409A-3(i)(5)) without regard to the five-year additional deferral requirement in paragraph (b) of this section.

(5) ***Initial deferral election with respect to certain forfeitable rights.*** If a service provider has a legally binding right to a payment in a subsequent year that is subject to a condition requiring the service provider to continue to provide services for a period of at least 12 months from the date the service provider obtains the legally binding right to avoid forfeiture of the payment, an election to defer such compensation may be made on or before the 30th day after the service provider obtains the legally binding right to the compensation, provided that the election is made at least 12 months in advance

of the earliest date at which the forfeiture condition could lapse. For purposes of this paragraph (a)(5), a condition will not be treated as failing to require the service provider to continue to provide services for a period of at least 12 months from the date the service provider obtains the legally binding right merely because the condition immediately lapses upon the death or disability (as defined in § 1.409A-3(i)(4)) of the service provider, or upon a change in control event (as defined in § 1.409A-3(i)(5)), provided that if death, disability, or a change in control event occurs and the condition lapses before the end of such 12-month period, a deferral election may be given effect only if the deferral election is permitted under this section without regard to this paragraph (a)(5).

(6) ***Initial deferral election with respect to fiscal year compensation.*** In the case of a service recipient with a taxable year that is not the same as the taxable year of the service provider, a plan may provide that fiscal year compensation may be deferred at the service provider's election if the election to defer such compensation is made not later than the close of the service recipient's taxable year immediately preceding the first taxable year of the service recipient in which any services are performed for which such compensation is payable. For purposes of this paragraph (a)(6), the term *fiscal year compensation* means compensation relating to a period of service coextensive with one or more consecutive taxable years of the service recipient, of which no amount is paid or payable during the service recipient's taxable year or years constituting the period of service. For example, fiscal year compensation generally would include a bonus to an individual employee with a calendar year taxable year that is based on a service period consisting of the service recipient's two consecutive taxable years ending September 30, 2011, where the amount will be paid after the end of the second of such taxable years, but would not include either a bonus based on a service period consisting of one or more calendar years or salary that would otherwise be paid during such taxable years of the service recipient.

(7) ***First year of eligibility*** —

(i) ***In general.*** In the case of the first year in which a service provider becomes eligible to participate in a plan, the service provider may make an initial deferral election within 30 days after the date the service provider becomes eligible to participate in such plan, with respect to compensation paid for services to be performed after the election. In the case of a plan that does not provide for service provider elections with respect to the time or form of a payment, the time and form of the payment must be specified on or before the date that is 30 days after the date the service provider first becomes eligible to participate in such plan. For compensation that is earned based upon a specified performance period (for example, an annual bonus), where a deferral election is made in the first year of eligibility but after the beginning of the performance period, the election must apply only to the compensation paid for services performed after the election. For this purpose, an election will be deemed to apply to compensation paid for services performed after the election if the election applies to no more than an amount equal to the total amount of the compensation for the performance period multiplied by the ratio of the number of days remaining in the performance period after the election over the total number of days in the performance period.

(ii) ***Eligibility to participate.*** For purposes of this paragraph (a)(7), a service provider is eligible to participate in a plan at any time during which, under the plan's terms and without further amendment or action by the service recipient, the service provider is eligible to accrue an amount of deferred compensation under the plan other than earnings on amounts previously deferred, even if the service provider has elected not to accrue (or has not elected to accrue) an amount of deferred compensation. Where a service provider has been paid all amounts deferred under a plan, and on and before the date of the last payment was not eligible to

continue (or to elect to continue) to participate in the plan for periods after the last payment (other than through an election of a different time and form of payment with respect to the amounts paid), the service provider may be treated as initially eligible to participate in a plan as of the first date following such payment that the service provider becomes eligible to accrue an additional amount of deferred compensation. Where a service provider has ceased being eligible to participate in a plan (other than the accrual of earnings), regardless of whether all amounts deferred under the plan have been paid, and subsequently becomes eligible to participate in the plan again, the service provider may be treated as being initially eligible to participate in the plan if the service provider had not been eligible to participate in the plan (other than the accrual of earnings) at any time during the 24-month period ending on the date the service provider again becomes eligible to participate in the plan.

(iii) ***Application to excess benefit plans.*** For purposes of this paragraph (a)(7), a service provider is treated as initially eligible to participate in an excess benefit plan as of the first day of the service provider's taxable year immediately following the first year the service provider accrues a benefit under the excess benefit plan; and any election made within 30 days following such date is treated as applying to benefits accrued under such plan for services performed before the election. For purposes of this paragraph (a)(7), the term *excess benefit plan* means all nonqualified deferred compensation plans in which a service provider participates, to the extent such plans do not provide for an election between current compensation (including a short-term deferral) and deferred compensation and solely provide deferred compensation equal to the excess of the benefits the service provider would have accrued under a qualified employer plan (as defined in § 1.409A-1(a)(2)) in which the service provider also participates, in the absence of one or more of the limits incorporated into the plan to reflect one or more of the limits on contributions or benefits applicable to the qualified employer plan under the Internal Revenue Code, over the benefits the service provider actually accrues under the qualified employer plan. For purposes of this paragraph (a)(7), once a service provider has accrued a benefit or deferred compensation under a plan in any year, the service provider will not become eligible for an initial deferral election based upon an accrual or deferral under an excess benefit plan in a subsequent year, even if the benefit or deferred compensation accrued in a previous year is forfeited or eliminated.

(8) ***Initial deferral election with respect to performance-based compensation.*** In the case of any performance-based compensation (as defined in § 1.409A-1(e)), an initial deferral election may be made with respect to such performance-based compensation on or before the date that is six months before the end of the performance period, provided that the service provider performs services continuously from the later of the beginning of the performance period or the date the performance criteria are established through the date an election is made under this paragraph (a)(8), and provided further that in no event may an election to defer performance-based compensation be made after such compensation has become readily ascertainable. For purposes of this paragraph (a)(8), if the performance-based compensation is a specified or calculable amount, the compensation is readily ascertainable if and when the amount is first substantially certain to be paid. If the performance-based compensation is not a specified or calculable amount because, for example, the amount may vary based upon the level of performance, the compensation, or any portion of the compensation, is readily ascertainable when the amount is first both calculable and substantially certain to be paid. For this purpose, the performance-based compensation is bifurcated between the portion that is readily ascertainable and the amount that is not readily ascertainable. Accordingly, in general any minimum amount that is both calculable and substantially certain to be paid will be treated as readily ascertainable.

(9) ***Nonqualified deferred compensation plans linked to qualified employer plans or certain other arrangements.*** If a nonqualified deferred compensation plan provides that the amount deferred under the plan is determined under the formula for determining benefits under a qualified employer plan (as defined in § 1.409A-1(a)(2)) or a broad-based foreign retirement plan (as defined in § 1.409A-1(a)(3)(v)) maintained by the service recipient but applied without regard to one or more limitations applicable to the qualified employer plan under the Internal Revenue Code or to the broad-based foreign retirement plan under other applicable law, or that the amount deferred under the nonqualified deferred compensation plan is determined as an amount offset by some or all of the benefits provided under the qualified employer plan or the broad-based foreign retirement plan, an increase in amounts deferred under the nonqualified deferred compensation plan that results directly from the operation of the qualified employer plan or broad-based foreign retirement plan (other than service provider actions described in paragraphs (a)(9)(iii) and (iv) of this section) including changes in benefit limitations applicable to the qualified employer plan or the broad-based foreign retirement plan under the Internal Revenue Code or other applicable law does not constitute a deferral election under the nonqualified deferred compensation plan, provided that such operation does not otherwise result in a change in the time or form of a payment under the nonqualified deferred compensation plan, and provided further that such change in the amounts deferred under the nonqualified deferred compensation plan does not exceed that change in the amounts deferred under the qualified employer plan or the broad-based foreign retirement plan, as applicable. In addition, with respect to such a nonqualified deferred compensation plan, the following actions or failures to act will not constitute a deferral election under the nonqualified deferred compensation plan even if in accordance with the terms of the nonqualified deferred compensation plan, the actions or inactions result in an increase in the amounts deferred under the plan, provided that such actions or inactions do not otherwise affect the time or form of payment under the nonqualified deferred compensation plan and provided further that with respect to actions or inactions described in paragraphs (a)(9)(i) or (ii), the change in the amount deferred under the nonqualified deferred compensation plan does not exceed the change in the amounts deferred under the qualified employer plan or the broad-based foreign retirement plan, as applicable:

(i) A service provider's action or inaction under the qualified employer plan or broad-based foreign retirement plan with respect to whether to elect to receive a subsidized benefit or an ancillary benefit under the qualified employer plan or broad-based foreign retirement plan.

(ii) The amendment of a qualified employer plan or broad-based foreign retirement plan to add or remove a subsidized benefit or an ancillary benefit, or to freeze or limit future accruals of benefits under the qualified plan or freeze or limit future accruals of benefits or reduce existing benefits under the broad-based foreign retirement plan.

(iii) A service provider's action or inaction under a qualified employer plan with respect to elective deferrals and other employee pre-tax contributions subject to the contribution restrictions under section 401(a)(30) or section 402(g), including an adjustment to a deferral election under such qualified employer plan, provided that for any given taxable year, the service provider's action or inaction does not result in an increase in the amounts deferred under all nonqualified deferred compensation plans in which the service provider participates (other than amounts described in paragraph (a)(9)(iv) of this section) in excess of the limit with respect to elective deferrals under section 402(g)(1)(A), (B), and (C) in effect for the taxable year in which such action or inaction occurs.

(iv) A service provider's action or inaction under a qualified employer plan with respect to elective deferrals and other employee pre-tax contributions subject to the contribution restrictions under section 401(a)(30) or section 402(g), and after-tax contributions by the service provider to a qualified employer plan that provides for such contributions, that affects the amounts that are credited under one or more nonqualified deferred compensation plans as matching amounts or other similar amounts contingent on such elective deferrals, employee pre-tax contributions, or after-tax contributions, provided that the total of such matching or contingent amounts, as applicable, never exceeds 100 percent of the matching or contingent amounts that would be provided under the qualified employer plan absent any plan-based restrictions that reflect limits on qualified plan contributions under the Internal Revenue Code.

(10) ***Changes in elections under a cafeteria plan.*** A change in an election under a cafeteria plan does not constitute a deferral election with respect to an amount deferred under a nonqualified deferred compensation plan to the extent that the change in the amount deferred under the nonqualified deferred compensation plan results solely from the application of the change in amount eligible to be treated as compensation under the terms of the nonqualified deferred compensation plan resulting from the election change under the cafeteria plan, to a benefit formula under the nonqualified deferred compensation plan based upon the service provider's eligible compensation, and only to the extent that such change applies in the same manner as any other increase or decrease in compensation would apply to such benefit formula.

(11) ***Initial deferral election with respect to certain separation pay.*** In the case of separation pay (as defined in § 1.409A-1(m)), where such separation pay is the subject of bona fide, arm's length negotiations at the time of the separation from service, an initial deferral election may be made at any time up to the time the service provider obtains a legally binding right to the payment. This paragraph (a)(11) does not apply to any separation pay to which the service provider obtained a legally binding right before the negotiations at the time of the separation from service, including a right to a payment subject to a condition such as that the service provider separate from service other than for cause. In the case of separation pay due to participation in a window program (as defined in § 1.409A-1(b)(9)(vi)), an initial deferral election may be made at any time before the time the election to participate in the window program becomes irrevocable.

(12) ***Initial deferral election with respect to certain commissions*** —

(i) ***Sales commission compensation.*** For purposes of this paragraph (a), a service provider earning sales commission compensation is treated as providing the services to which such compensation relates only in the service provider's taxable year in which the customer remits payment to the service recipient or, if applied consistently to all similarly situated service providers, the service provider's taxable year in which the sale occurs. For purposes of this paragraph (a)(12), the term *sales commission compensation* means compensation or portions of compensation earned by a service provider if a substantial portion of the services provided by such service provider to a service recipient consist of the direct sale of a product or service to an unrelated customer, the compensation paid by the service recipient to the service provider consists of either a portion of the purchase price for the product or service or an amount substantially all of which is calculated by reference to the volume of sales, and payment of the compensation is either contingent upon the service recipient receiving payment from an unrelated customer for the product or services or, if applied consistently to all similarly situated service providers, is contingent upon the closing of the sales transaction and such other requirements as may be specified by the service recipient before the closing of the sales transaction. For this purpose, a customer is treated as an unrelated customer only if the

customer is not related to either the service provider or the service recipient. A person is treated as related to another person if the person would be treated as related to the other person under § 1.409A-1(f)(2)(ii) or the person would be treated as providing management services to the other person under § 1.409A-1(f)(2)(iv).

(ii) ***Investment commission compensation.*** For purposes of this paragraph (a), a service provider earning investment commission compensation is treated as providing the services to which such compensation relates over the 12 months preceding the date as of which the overall value of the assets or asset accounts is determined for purposes of the calculation of the investment commission compensation. For purposes of this paragraph (a)(12), the term *investment commission compensation* means the compensation or the portion of compensation earned by a service provider if a substantial portion of the services provided by such service provider to a service recipient to which such compensation relates consists of sales of financial products or other direct customer services to an unrelated customer with respect to customer assets or customer asset accounts, the customer retains the right to terminate the customer relationship and may move or liquidate the assets or asset accounts without undue delay (which may be subject to a reasonable notice period), such compensation consists of a portion of the value of the overall assets or asset account balance, an amount substantially all of which is calculated by reference to the increase in the value of the overall assets or account balance during a specified period, or both, and the value of the overall assets or account balance and investment commission compensation is determined at least annually. For this purpose, a customer is treated as an unrelated customer only if the customer is not related to either the service provider or the service recipient. A person is treated as related to another person if the person would be treated as related to the other person under § 1.409A-1(f)(2)(ii) or the person would be treated as providing management services to the other person under § 1.409A-1(f)(2)(iv).

(iii) ***Commission compensation and related persons.*** The rules of paragraphs (a)(12)(i) and (ii) of this section apply to sales commission compensation and investment commission compensation involving a related customer, provided that substantial sales from which commission compensation arises are made, or substantial services from which commission compensation arises are provided, to unrelated customers by the service recipient, the sales and service arrangement and the commission arrangement with respect to the related customer are bona fide, arise from the service recipient's ordinary course of business, and are substantially the same, both in terms and in practice, as the terms and practices applicable to unrelated customers (as defined in such paragraphs) to which individually or in the aggregate substantial sales are made or substantial services provided by the service recipient.

(13) ***Initial deferral election with respect to compensation paid for final payroll period*** —

(i) ***In general.*** Unless a plan provides otherwise, compensation payable after the last day of the service provider's taxable year solely for services performed during the final payroll period described in section 3401(b) containing the last day of the service provider's taxable year or, with respect to a non-employee service provider, a period not longer than the payroll period described in section 3401(b), where such amount is payable pursuant to the timing arrangement under which the service recipient normally compensates service providers for services performed during a payroll period described in section 3401(b), or with respect to a non-employee service provider, a period not longer than the payroll period described in section 3401(b), is treated as compensation for services performed in the subsequent taxable year in which the payment is made. The preceding sentence does not apply to any compensation paid during such period for services performed during any period other than such final payroll

period, such as a payment of an annual bonus. Any amendment of a plan after December 31, 2007, to add a provision providing for a differing treatment of such compensation may not be effective for 12 months from the date the amendment is executed and enacted.

(ii) ***Transition rule.*** For purposes of this paragraph (a)(13), a plan that was adopted and effective before December 31, 2007, whether written or unwritten, will be treated as designating such compensation for services performed in the taxable year in which the payroll period ends, unless otherwise set forth in writing before December 31, 2007.

(14) ***Elections to annualize recurring part-year compensation.*** In the case of a service provider receiving recurring part-year compensation, an election to defer all or a portion of the recurring part-year compensation to be earned during a particular service period is considered to meet the requirements of this paragraph (a) if the election is made before the services for which the recurring part-year compensation is paid begin, and the election does not defer payment of any of the recurring part-year compensation to a date beyond the last day of the 13th month following the first date of the service period. For purposes of this paragraph (a)(14), the term *recurring part-year compensation* means compensation paid for services rendered in a position that the service recipient and service provider reasonably anticipate will continue on similar terms and conditions in subsequent years, and will require services to be provided during successive service periods each of which comprises less than 12 months (for example, a teacher providing services during a school year comprised of 10 consecutive months), and each of which periods begins in one taxable year of the service provider and ends in the next such taxable year. The rules of this paragraph (a)(14) apply to a particular amount of compensation only once, so that an amount deferred under this rule may not again be treated as recurring part-year compensation for purposes of this paragraph and subject to a second deferral election under this paragraph (a)(14).

(15) ***USERRA rights.*** The requirements of this paragraph (a) are deemed satisfied to the extent an initial deferral election is provided to satisfy the requirements of the Uniformed Service Employment and Reemployment Rights Act of 1994, as amended, 38 U.S.C. 4301-4334.

(b) ***Subsequent changes in time and form of payment*** —

(1) ***In general.*** A plan that permits under a subsequent election a delay in a payment or a change in the form of payment (a subsequent deferral election), including a subsequent deferral election made by a service provider or a service recipient, satisfies the requirements of section 409A(a)(4)(C) only if the conditions of this paragraph (b) are met. For purposes of this paragraph (b), except as otherwise expressly provided in this section, a subsequent deferral election is not considered made until such election becomes irrevocable under the terms of the plan. Accordingly, a plan may provide that a subsequent deferral election may be changed at any time before the last permissible date for making such a subsequent deferral election. Where a plan permits a subsequent deferral election, the requirements of this paragraph are satisfied only if the following conditions are met:

(i) The plan requires that such election not take effect until at least 12 months after the date on which the election is made.

(ii) In the case of an election related to a payment not described in § 1.409A-3(a)(2) (payment on account of disability), § 1.409A-3(a)(3) (payment on account of death), or § 1.409A-3(a)(6) (payment on account of the occurrence of an unforeseeable emergency), the plan requires that the payment with respect to which such election is made be deferred for a period of not less

than five years from the date such payment would otherwise have been paid (or in the case of a life annuity or installment payments treated as a single payment, five years from the date the first amount was scheduled to be paid).

(iii) The plan requires that any election related to a payment described in § 1.409A-3(a)(4) (payment at a specified time or pursuant to a fixed schedule) be made not less than 12 months before the date the payment is scheduled to be paid (or in the case of a life annuity or installment payments treated as a single payment, 12 months before the date the first amount was scheduled to be paid).

(2) ***Definition of payments for purposes of subsequent changes in the time or form of payment*** —

(i) ***In general.*** Except as provided in paragraphs (b)(2)(ii) and (iii) of this section, the term *payment* refers to each separately identified amount to which a service provider is entitled to payment under a plan on a determinable date, and includes amounts applied for the benefit of the service provider. An amount is separately identified only if the amount may be objectively determined under a nondiscretionary formula. For example, an amount identified as 10 percent of the account balance as of a specified payment date would be a separately identified amount. A payment includes the provision of any taxable benefit, including payment in cash or in kind. In addition, a payment includes, but is not limited to, the transfer, cancellation, or reduction of an amount of deferred compensation in exchange for benefits under a welfare benefit plan, a fringe benefit excludible under section 119 or section 132, or any other benefit that is excludible from gross income. For additional rules relating to the application of this paragraph (b) to amounts payable at a fixed time or pursuant to a fixed schedule, see § 1.409A-3(i)(1).

(ii) ***Life annuities*** —

(A) ***In general.*** The entitlement to a life annuity is treated as the entitlement to a single payment. Accordingly, an election to delay payment of a life annuity, or to change the form of payment of a life annuity, must be made at least 12 months before the scheduled commencement of the life annuity, and must defer the payment for a period of not less than five years from the originally scheduled commencement of the life annuity. For purposes of § 1.409A-1, this section, and §§ 1.409A-3 through 1.409A-6, the term *life annuity* means a series of substantially equal periodic payments, payable not less frequently than annually, for the life (or life expectancy) of the service provider, or a series of substantially equal periodic payments, payable not less frequently than annually, for the life (or life expectancy) of the service provider, followed upon the death or end of the life expectancy of the service provider by a series of substantially equal periodic payments, payable not less frequently than annually, for the life (or life expectancy) of the service provider's designated beneficiary (if any). Notwithstanding the foregoing, a schedule of payments does not fail to be an annuity solely because such plan provides for an immediate payment of the actuarial present value of all remaining annuity payments if the actuarial present value of the remaining annuity payments falls below a predetermined amount, and the immediate payment of such amount does not constitute an accelerated payment for purposes of § 1.409A-3(j), provided that such feature, including the predetermined amount, is established by no later than the time and form of payment is otherwise required to be established, and provided further that any change in such feature, including the predetermined amount, is a change in the time and form of payment. A change in designated beneficiary before any annuity payment has been made under the plan is not a change in the time or form of payment. A change in the form of a payment

before any annuity payment has been made under the plan, from one type of life annuity to another type of life annuity with the same scheduled date for the first annuity payment, is not considered a change in the time and form of a payment, provided that the annuities are actuarially equivalent applying reasonable actuarial methods and assumptions. For purposes of this paragraph (b)(2)(ii), a requirement that a service provider obtain the consent of a spouse or other potential recipient of a survivor annuity to change a beneficiary or form of payment is disregarded, so that any annuity form that the service recipient could elect to receive with such consent is considered currently available.

(B) ***Certain features disregarded.*** Notwithstanding the foregoing provisions of this paragraph (b)(2)(ii), the following features are disregarded for purposes of determining whether a payment form is a life annuity within the meaning of this paragraph (b)(2)(ii), but are not disregarded for purposes of determining whether a life annuity is the actuarial equivalent of another life annuity except as otherwise provided in this paragraph (b)(2)(ii):

(*1*) Term certain features under which annuity payments continue for the longer of the life of the annuitant or a fixed period of time.

(*2*) Pop-up features under which payments increase upon the death of the beneficiary or another event that eliminates the right to a survivor annuity.

(*3*) Cash refund features under which payment is provided upon the death of the last annuitant in an amount that is not greater than the excess of the present value of the annuity at the annuity starting date over the total of payments before the death of the last annuitant.

(*4*) Features under which an annuity form of payment provides higher periodic payments before the expected commencement of benefits under the Social Security Act (42 U.S.C. ch. 7) or the Railroad Retirement Act (45 U.S.C. 231 *et seq.*) and lower periodic payments after such expected commencement date, so that the combined periodic payments under the arrangement and the Social Security Act or the Railroad Retirement Act, as applicable, are approximately level before and after such expected commencement date (Social Security or Railroad Retirement leveling features).

(*5*) Features providing for an increase in the annuity payment in a manner described in § 1.401(a)(9)-6(o)(1)(i) or (ii) (eligible cost-of-living adjustments).

(C) ***Subsidized joint and survivor annuities.*** For purposes of this paragraph (b)(2)(ii), a joint and survivor annuity will not fail to be treated as actuarially equivalent to a single life annuity due solely to the value of a subsidized survivor annuity benefit, provided that the annual lifetime annuity benefit available to the service provider under the joint and survivor annuity is not greater than the annual lifetime annuity benefit available to the service provider under the single life annuity alternative, and provided that the annual survivor annuity benefit is not greater than the annual lifetime annuity benefit available to the service provider under the joint and survivor annuity.

(D) ***Actuarial assumptions and methods.*** For purposes of this paragraph (b)(2)(ii), at any given time the same actuarial assumptions and methods must be used in valuing each annuity payment option, in determining whether the payments are actuarially equivalent and such assumptions must be reasonable. This requirement applies over the entire term of the service provider's participation in the plan, such that the annuity payment must be actuarially equivalent at all times for the annuity payment options to be treated as one

time and form of payment. There is no requirement that the same actuarial methods and assumptions be used over the term of a service provider's participation in a plan. Accordingly, a plan may change the actuarial assumptions and methods used to determine the life annuity payments provided that all of the actuarial assumptions and methods are reasonable.

(iii) ***Installment payments.*** The entitlement to a series of installment payments that is not a life annuity is treated as the entitlement to a single payment, unless the plan provides at all times with respect to the amount deferred that the right to the series of installment payments is to be treated as a right to a series of separate payments. For purposes of § 1.409A-1, this section, and §§ 1.409A-3 through 1.409A-6, a series of installment payments refers to an entitlement to the payment of a series of substantially equal periodic amounts to be paid over a predetermined period of years, except to the extent any increase (or decrease) in the amount reflects reasonable earnings (or losses) through the date the amount is paid. For this purpose, a series of installment payments over a predetermined period and a series of installment payments over a shorter or longer period, or a series of installment payments over the same predetermined period but with a different commencement date, are different times and forms of payment. Accordingly, a change in the predetermined period or the commencement date is a change in the time and form of payment. Notwithstanding the foregoing, a schedule of payments does not fail to be an installment payment solely because such plan provides for an immediate payment of all remaining installments if the present value of the deferred amount to be paid in the remaining installment payments falls below a predetermined amount, and the immediate payment of such amount does not constitute an accelerated payment for purposes of § 1.409A-3(j), provided that such feature including the predetermined amount is established by no later than the time and form of payment is otherwise required to be established, and provided further that any change in such feature including the predetermined amount is a change in the time and form of payment.

(iv) ***Transition rule.*** For purposes of this section, a plan that was adopted and effective before December 31, 2007, whether written or unwritten, that fails to make a designation as to whether the entitlement to a series of payments is to be treated as an entitlement to a series of separate payments under paragraph (b)(2)(iii) of this section, may make such designation on or before December 31, 2007, provided such designation is set forth in writing on or before December 31, 2007.

(3) ***Beneficiaries.*** The rules of this paragraph (b) governing changes in the time and form of payment apply to elections by beneficiaries with respect to the time and form of payment, as well as elections by service providers or service recipients with respect to the time and form of payment to beneficiaries. An election to change the identity of a beneficiary does not constitute a change in the time and form of payment merely because the election changes the identity of the recipient of the payment, if the time and form of the payment is not otherwise changed. In addition, an election to change the identity of a beneficiary before the initial payment of a life annuity does not constitute a change in the time and form of payment if the change in the time of payments stems solely from the different life expectancy of the new beneficiary, such as in the case of a joint and survivor annuity.

(4) ***Domestic relations orders.*** The rules of this paragraph (b) governing changes in the time and form of payment do not apply to elections by individuals other than a service provider, with respect to payments to a person other than the service provider, to the extent such elections are reflected in, or made in accordance with, the terms of a domestic relations order (as defined in section 414(p)(1)(B)).

(5) ***Coordination with prohibition against acceleration of payments.*** For purposes of applying the prohibition against the acceleration of payments in § 1.409A-3(j), the definition of payment is the same as the definition in paragraph (b)(2) of this section. Accordingly, a change in the form of a payment that results in a more rapid schedule for payments generally will not constitute an acceleration of a payment, if the change in the form of payment is made in compliance with the subsequent deferral rules. For example, a change in form from a 10-year installment payment treated as a single payment to a lump-sum payment would not constitute an acceleration if the change in the form of the payment is made in compliance with the requirements of paragraph (b)(1) of this section, generally meaning that the election to change to a lump-sum payment must be made at least 12 months before the installment payments were scheduled to commence and the lump-sum payment could not be made until at least five years after the date the installment payments were scheduled to commence. See § 1.409A-3(j)(4)(i) with respect to situations in which the failure to accelerate a payment or the modification of a plan term relating to certain accelerated payments will not be subject to the rules of this paragraph (b).

(6) ***Application to multiple payment events.*** In the case of a plan that permits a payment upon each of a number of potential permissible payment events, such as the earlier of a fixed date or separation from service, the requirements of paragraph (b)(1) of this section are applied separately to each payment (as defined in paragraph (b)(2) of this section) due upon each payment event. Notwithstanding the foregoing, the addition or deletion of a permissible payment event to a plan under which amounts were previously deferred is subject to the rules of this paragraph (b) where the addition or deletion of the permissible payment event may result in a change in the time or form of payment of the amount deferred. For application of the rules governing accelerations of payments to the addition of a permissible payment event to amounts deferred, see § 1.409A-3(j).

(7) ***Delay of payments under certain circumstances.*** A payment may be delayed to a date after the designated payment date under any of the circumstances described in this paragraph (b)(7), and the provision will not fail to meet the requirements of establishing a permissible payment event and the delay in the payment will not constitute a subsequent deferral election, so long as the service recipient treats all payments to similarly situated service providers on a reasonably consistent basis.

(i) ***Payments subject to section 162(m).*** A payment may be delayed to the extent that the service recipient reasonably anticipates that if the payment were made as scheduled, the service recipient's deduction with respect to such payment would not be permitted due to the application of section 162(m), provided that the payment is made either during the service provider's first taxable year in which the service recipient reasonably anticipates, or should reasonably anticipate, that if the payment is made during such year, the deduction of such payment will not be barred by application of section 162(m) or during the period beginning with the date of the service provider's separation from service and ending on the later of the last day of the taxable year of the service recipient in which the service provider separates from service or the 15th day of the third month following the service provider's separation from service, and provided further that where any scheduled payment to a specific service provider in a service recipient's taxable year is delayed in accordance with this paragraph, the delay in payment will be treated as a subsequent deferral election unless all scheduled payments to that service provider that could be delayed in accordance with this paragraph are also delayed. Where the payment is delayed to a date on or after the service provider's separation from service, the payment will be considered a payment upon a separation from service for purposes of the rules under § 1.409A-3(i)(2) (payments to specified employees upon a separation from service) and, in the case of a specified employee, the date that is six months after a service provider's

separation from service is substituted for any reference to a service provider's separation from service in the first sentence of this paragraph. No election may be provided to the service provider with respect to the timing of the payment under this paragraph (b)(7)(i).

(ii) ***Payments that would violate Federal securities laws or other applicable law.*** A payment may be delayed where the service recipient reasonably anticipates that the making of the payment will violate Federal securities laws or other applicable law; provided that the payment is made at the earliest date at which the service recipient reasonably anticipates that the making of the payment will not cause such violation. The making of a payment that would cause inclusion in gross income or the application of any penalty provision or other provision of the Internal Revenue Code is not treated as a violation of applicable law.

(iii) ***Other events and conditions.*** A service recipient may delay a payment upon such other events and conditions as the Commissioner may prescribe in generally applicable guidance published in the Internal Revenue Bulletin (see § 601.601(d)(2) of this chapter). For additional rules applicable to certain delayed payments pursuant to a change in control event, see § 1.409A-3(i)(5)(iv). For additional rules applicable to amounts payable because of an unforeseeable emergency, see § 1.409A-3(i)(3).

(8) ***USERRA rights.*** The requirements of this paragraph (b) are deemed met to the extent an election to change the time or form of a payment of deferred compensation is provided to satisfy the requirements of the Uniformed Services Employment and Reemployment Rights Act of 1994, as amended, 38 U.S.C. 4301-4344.

(9) ***Examples.*** The following examples illustrate the application of the provisions of this section. For purposes of these examples, each employee is an individual with a calendar year taxable year, and is employed by the specified employer:

Example 1. Initial election to defer salary. Employer ZZ sponsors a plan under which Employee A may elect to defer a percentage of Employee A's salary. Employee A has participated in the plan in prior years. To satisfy the requirements of this section with respect to salary earned in calendar year 2008, if Employee A elects to defer any amount of such salary, the deferral election (including an election as to the time and form of payment) must be made no later than December 31, 2007.

Example 2. Designation of time and form of payment where an initial deferral election is not provided.

Employer YY has a taxable year ending September 30. On July 1, 2008, Employer YY enters into a legally binding obligation to pay Employee B a $10,000 bonus. The amount is not subject to a substantial risk of forfeiture and does not qualify as performance-based compensation as described in § 1.409A-1(e). Employer YY does not provide Employee B an election as to the time and form of payment. Unless the amount is to be paid in accordance with the short-term deferral rule of § 1.409A-1(b)(4), Employer YY must specify the time and form of payment on or before July 1, 2008, to satisfy the requirements of this section.

Example 3. Initial election to defer bonus payable based on services during calendar year. Employer XX has a taxable year ending September 30. Employee C participates in a bonus plan under which Employee C is entitled to a bonus for services performed during the calendar year that, absent an election by Employee C, will be paid on March 15 of the following year. The amount is not subject to a substantial risk of forfeiture and does not qualify as performance-based compensation as described in § 1.409A-1(e). If Employee C elects to defer the payment of the

bonus with respect to services rendered during calendar year 2008, Employee C must elect the time and form of payment not later than December 31, 2007, to satisfy the requirements of this section.

Example 4. Initial election to defer bonus payable based on services during fiscal year other than calendar year.

Employer WW has a taxable year ending September 30. Employee D participates in a bonus plan under which Employee D is entitled to a bonus for services performed during Employer WW's fiscal year that, absent an election by Employee D, will be paid on December 15 of the calendar year in which the fiscal year ends. The amount is not subject to a substantial risk of forfeiture and does not qualify as performance-based compensation as described in § 1.409A-1(e). The amount qualifies as fiscal year compensation. If Employee D elects to defer the payment of the amount related to the fiscal year ending September 30, 2009, to satisfy the requirements of this section Employee D must elect the time and form of payment not later than September 30, 2008.

Example 5. Initial election to defer bonus payable only if service provider completes at least 12 months of services after the election.

Employer VV has a calendar year taxable year. On March 1, 2008, Employer VV grants Employee E a $10,000 bonus, payable on March 1, 2010 (with reasonable interest), provided that Employee E continues performing services as an employee of Employer VV through March 1, 2010. The amount does not qualify as performance-based compensation as described in § 1.409A-1(e), and Employee E already participates in another account balance nonqualified deferred compensation plan. Employee E may make an initial deferral election on or before March 31, 2008 (within 30 days after obtaining a legally binding right), because at least 12 months of additional services are required after the date of election for the risk of forfeiture to lapse.

Example 6. Initial election to defer bonus that would otherwise constitute a short-term deferral. The same facts as Example 5, except that Employee E does not make an initial deferral election on or before March 31, 2008. Because the right to the compensation would not be treated as a deferral of compensation pursuant to § 1.409A-1(b)(4) absent a deferral election (because the arrangement would be treated as a short-term deferral), Employee E may make an initial deferral election provided that the election may not become effective for 12 months and must defer the payment at least 5 years from March 1, 2010 (the first date the payment could become substantially vested). Accordingly, Employee E may make an election before March 1, 2009, provided that the election defers the payment to a date on or after March 1, 2015 (other than a payment due to death, disability, unforeseeable emergency, or a change in control event).

Example 7. Initial election to defer sales commissions. Employer UU has a calendar year taxable year. As part of Employee F's services for Employer UU, Employee F sells refrigerators to customers unrelated to Employee F or Employer UU. Under the employment arrangement, Employee F is entitled to 10% of the sales price of any refrigerator Employee F sells, payable only upon the receipt of payment from the customer who purchased the refrigerator. For purposes of the initial deferral rule, Employee F is treated as performing the services related to each refrigerator sale in the calendar year in which each customer pays for the refrigerator.

Example 8. Initial election to defer renewal sales commissions. The same facts as *Example 7*, except that Employee F also sells warranties related to the refrigerators sold. Under the warranty arrangement, refrigerator warranty customers are entitled in a future year to extend the

warranty for an additional cost to be paid at the time of the extension. Under Employee F's arrangement with Employer UU, Employee F is entitled to 10% of the amount paid for an extension of any warranty, payable upon the receipt of payment from the customer extending the warranty. For purposes of the initial deferral election rule, Employee F is treated as performing the services related to the amount paid for the extension of the warranty in the taxable year in which the customer pays for the warranty extension.

Example 9. Initial election to defer investment commissions. Employer TT is in the trade or business of managing financial assets for customer accounts. Customers who deposit funds in an account with Employer TT are entitled to remove the account balance of such account upon 60 days notice to Employer TT. Employee G sells financial products and provides continuing customer service to certain unrelated customers involving the deposit and maintenance of funds in customer accounts managed by Employer TT. Under the employment arrangement, Employee G is entitled to a set percentage of the aggregate value of the assets held in the accounts of customers to whom Employee G sold financial products and provides customer service. Under the arrangement, the aggregate value of the assets held in the accounts is determined as of June 30 of each year, and unless Employee G elects to defer the payment, the amount is payable to Employee G in a lump sum on December 31 of the year in which the valuation is made. Employee G has no control over the valuation of the assets held in the accounts, or the calculation of the amount due Employee G. For purposes of the initial deferral rule, Employee G is treated as providing the services to which a payment relates during the July 1 through June 30 period ending on the June 30 date as of which the assets held in the account are valued.

Example 10. Initial election to defer part-year compensation. Employee H provides services as a teacher to Employer SS, a school system. The period of services routinely begins on the second Monday of August of one year and ends on the first Friday of June of the subsequent year. Employer SS provides an election to Employee H to receive the compensation for the period of services ratably over the period beginning on the second Monday of August of one year and ending on the last day of August of the subsequent year. Because the compensation constitutes recurring part-year compensation, as defined in paragraph (a)(14) of this section, and because the schedule will provide that all of the recurring part-year compensation is paid no later than September 30 of the subsequent year, Employee H will be deemed to have made a timely deferral election with respect to such recurring part-year compensation if Employee H elects before the first day of the service period to have the recurring part-year compensation paid under such schedule.

Example 11. Initial election to defer negotiated separation pay. Employer RR decides to terminate Employee J's employment involuntarily. As part of the process of terminating Employee J, Employer RR enters into bona fide, arm's length negotiations with respect to the terms of Employee J's termination of employment. As part of the process, Employer RR offers Employee J an amount that is in addition to any amounts to which Employee J is otherwise entitled, payable either as a lump sum payment at the end of 3 years or in 3 annual payments starting at the date of termination of employment. The election of the time and form of payment by Employee J may be made at any time before Employee J accepts the offer and obtains a legally binding right to the additional amount. The election may not apply to any amount to which Employee J already had a legally binding right.

Example 12. Election of time and form of payments under a window program. Employer QQ establishes a window program, as defined in § 1.409A-1(b)(9)(vi). Individuals who elect to terminate employment under the window program are entitled to receive an amount equal to 2 weeks pay

multiplied by every year of service with Employer QQ. The individuals participating in the window program may elect to receive the payment as either a lump sum payment payable on the first day of the month after making the election to participate in the window program, or as a payment of 3 equal annual installments on each January 1 of the first 3 years following the election to participate in the window program. Employee K is eligible to participate in the window program. Employee K will be treated as making a timely deferral election if the election as to the time and form of payment is made on or before the date Employee K's election to participate in the window program becomes irrevocable.

Example 13. Initial election to defer salary earned during final payroll period beginning in one calendar year and ending in the subsequent calendar year.

Employer PP pays the salary of its employees, including Employee L, on a bi-weekly basis. One bi-weekly payroll period runs from December 24, 2008, through January 6, 2009, with a scheduled payment date of January 13, 2009. Employer PP sponsors, and Employee L participates in, a nonqualified deferred compensation plan under which Employee L may defer a specified percentage of his annual salary. The plan does not specify that any salary compensation paid for the payroll period in which falls January 1 is to be treated as compensation for services performed during the year preceding the year in which falls that January 1. For purposes of applying the initial deferral election rules, Employee L is deemed to have performed the services for the payroll period December 24, 2008, through January 6, 2009, during the calendar year 2009.

Example 14. Application of deferral election rules and anti-acceleration rules to a nonqualified deferred compensation plan linked to a qualified plan.

Employee M participates in a qualified retirement plan that is a defined benefit plan that offers a subsidized early retirement benefit to employees who have attained age 55 and completed 30 years of service. Employee M, who has attained age 55 and completed 30 years of service, also participates in a nonqualified deferred compensation plan, under which the benefit payable is calculated under a formula, with that benefit then reduced by any benefit that Employee M has accrued under the qualified retirement plan. In 2008, Employee M fails to elect the subsidized early retirement benefit under the qualified retirement plan, with the effect that the amounts payable under the nonqualified deferred compensation plan are increased by an amount equal to the reduction in the benefit payable under the qualified plan. In 2009, Employer NN amends the qualified retirement plan to increase benefits under the plan, resulting in a decrease in the amounts payable under the nonqualified deferred compensation plan equal to the increase in the benefit payable under the qualified plan. Neither of these actions constitutes a deferral election or an acceleration of a payment under the nonqualified deferred compensation plan.

Example 15. Subsequent deferral election. Employee N participates in a nonqualified deferred compensation plan. Employee N elects to be paid in a lump sum payment at the earlier of age 65 or separation from service. Employee N anticipates that he will work after age 65, and wishes to defer payment to a later date. Provided that Employee N continues in employment and makes the election by his 64th birthday, Employee N may elect to receive a lump sum payment at the earlier of age 70 or separation from service.

Example 16. Subsequent deferral election rule—change in form of payment from lump sum payment to life annuity.

Employee P participates in a nonqualified deferred compensation plan. Employee P elects to be paid in a lump sum payment at age 65. Employee P wishes to change the payment form to a life annuity. Provided that Employee P makes the election on or before his 64th birthday, Employee P may elect to receive a life annuity commencing at age 70.

Example 17. Subsequent deferral election rule—change in form of payment from life annuity to lump sum payment.

Employee Q participates in a nonqualified deferred compensation plan. Employee Q elects to be paid in a life annuity at age 65. Employee Q wishes to change the payment form to a lump sum payment. Provided that Employee Q makes the election on or before his 64th birthday, Employee Q may elect to receive a lump sum payment at age 70.

Example 18. Subsequent deferral election rule—installment payments designated as separate payments.

Employee R, whose taxable year is the calendar year, participates in a nonqualified deferred compensation plan that provides for payment in a series of 5 equal annual amounts, each designated as a separate payment. The first payment is scheduled to be made on January 1, 2010. Provided that Employee R makes the election on or before January 1, 2009, Employee R may elect for the first payment scheduled to be made on January 1, 2010, to be made on January 1, 2015. If Employee R makes that election, but does not elect to defer the remaining payments, the remaining payments continue to be due upon January 1 of the 4 consecutive calendar years commencing on January 1, 2011.

Example 19. Subsequent deferral election rule—change in form of payment from installment payments not designated as separate payments to lump sum payment.

Employee S participates in a nonqualified deferred compensation plan that provides for payment in a series of 5 equal annual amounts that are not designated as a series of 5 separate payments. The first amount is scheduled to be paid on January 1, 2010. Employee S wishes to receive the entire amount equal to the sum of all 5 of the amounts to be paid as a lump sum payment. Provided that Employee S makes the election on or before January 1, 2009, Employee S may elect to receive a lump sum payment on or after January 1, 2015.

Example 20. Subsequent deferral election rule—change in form of payment from installment payments designated as separate payments to lump sum payment.

Employee T participates in a nonqualified deferred compensation plan that provides for payment in a series of 5 equal annual amounts each of which is designated as a separate payment. The first amount is scheduled to be paid on January 1, 2010. Employee T wishes to receive the entire amount equal to the sum of all 5 of the amounts in a single lump sum payment. Provided that Employee T makes the election on or before January 1, 2009, Employee T may elect to receive a lump sum payment on or after January 1, 2019.

Example 21. Subsequent deferral election rule—change in form of payment from one life annuity form to another life annuity form.

Employee U participates in a nonqualified deferred compensation plan that permits Employee U to elect before Employee U's separation from service whether to be paid in the form of a single life annuity beginning on the first day of the month following Employee U's separation from service, or an annuity beginning on the first day of the month following Employee U's separation from service under which annuity payments continue for Employee U's lifetime but not less than 10 years. The two types of annuities are actuarially equivalent at all times applying

reasonable actuarial methods and assumptions. For purposes of this section, the two types of annuities are treated as a single form of payment. Accordingly, the election provided under the plan is not treated as providing a subsequent deferral election or accelerated payment, and an election by Employee U under the plan between the two annuity options made before the first scheduled payment date for an annuity payment is not treated as a subsequent deferral election or an acceleration of a payment.

Example 22. Subsequent deferral election rule—change in time of payment from payment at specified age to payment at later of specified age or separation from service.

Employee V participates in a nonqualified deferred compensation plan that provides for a lump sum payment at age 65. Employee V wishes to modify the plan so that the deferred amount will be payable upon the later of Employee V's attainment of a specified age or separation from service. Provided that Employee V makes such election on or before his 64th birthday, Employee V may modify the plan so Employee V will receive a lump sum payment upon the later of age 70 or separation from service.

Example 23. Subsequent deferral election rule—change in time of payment from payment at separation from service to payment at later of separation from service or specified age.

Employee W participates in a nonqualified deferred compensation plan that provides for a lump sum payment at separation from service. Employee W wishes to make the payment payable upon the later of separation from service or a predetermined age. Provided that Employee W makes such election on or before the date 1 year before a separation from service, Employee W may elect to receive a lump sum payment upon the later of the date 5 years following a separation from service or at a specified age.

Example 24. Subsequent deferral election rule—change in time of payment from payment at separation from service to payment at a change in control event.

Employee X participates in a nonqualified deferred compensation plan that provides for a lump sum payment at separation from service. Employee X wishes to change the payment provision such that the payment is payable upon a change in control event. A change in the distribution provision to provide for a payment only upon a change in control event will violate the rules governing payment provisions, because the change could result in an acceleration if the change in control event occurs before Employee X separates from service, or a subsequent deferral if the change in control does not occur until after Employee X separates from service. However, provided that Employee X makes such election on or before the date 1 year before a separation from service, Employee X may elect to receive a payment upon the later of a change in control event or 5 years following a separation from service.

(c) ***Special rules for certain resident aliens.*** For the first taxable year of an individual in which such individual is a resident alien, a nonqualified deferred compensation plan is deemed to meet the requirements of paragraph (a) of this section if, with respect to compensation payable for services performed during that first taxable year or with respect to compensation the right to which is subject to a substantial risk of forfeiture as of the first day of that first taxable year, an initial deferral election is made by the end of such first taxable year, provided that the initial deferral election may not apply to amounts that have already been paid or made available to the service provider before the election is made. For any year after the first taxable year in which an individual is classified as a resident alien, this paragraph (c) does not apply, provided that a taxable year may again be treated as the first taxable year in which an individual is classified as a resident alien if such individual is classified as a resident alien in that taxable year and has not been classified as a resident alien for the three consecutive taxable years immediately preceding that taxable year.

[T.D. 9321, 72 FR 19276, Apr. 17, 2007; 72 FR 41621, July 31, 2007; T.D. 10001, 89 FR 58906, July 19, 2024]

§ 1.409A-3 Permissible payments.

(a) ***In general.*** The requirements of section 409A(a)(2)(A) are met only if the plan provides that an amount of deferred compensation under the plan may be paid only upon an event or at a time set forth in this paragraph (a):

(1) The service provider's separation from service (as defined in § 1.409A-1(h) and in accordance with paragraph (i)(2) of this section).

(2) The service provider becoming disabled (in accordance with paragraph (i)(4) of this section).

(3) The service provider's death.

(4) A time or a fixed schedule specified under the plan (in accordance with paragraph (i)(1) of this section).

(5) A change in the ownership or effective control of the corporation, or in the ownership of a substantial portion of the assets of the corporation (in accordance with paragraph (i)(5) of this section).

(6) The occurrence of an unforeseeable emergency (in accordance with paragraph (i)(3) of this section).

(b) ***Designation of payment upon a permissible payment event.*** Except as otherwise specified in this section, a plan provides for the payment upon an event described in paragraph (a)(1), (2), (3), (5), or (6) of this section if the plan provides the date of the event is the payment date, or specifies another payment date that is objectively determinable and nondiscretionary at the time the event occurs. A plan may also provide that a payment upon an event described in paragraph (a)(1), (2), (3), (5), or (6) of this section is to be made in accordance with a schedule that is objectively determinable and nondiscretionary based on the date the event occurs and that would qualify as a fixed schedule under paragraph (i)(1) of this section if the payment event were instead a fixed date, provided that the schedule must be fixed at the time the permissible payment event is designated. In addition, a plan may provide that a payment, including a payment that is part of a schedule, is to be made during a designated taxable year of the service provider that is objectively determinable and nondiscretionary at the time the payment event occurs such as, for example, a schedule of three substantially equal payments payable during the first three taxable years following the taxable year in which a separation from service occurs. A plan may also provide that a payment, including a payment that is part of a schedule, is to be made during a designated period objectively determinable and nondiscretionary at the time the payment event occurs, but only if the designated period both begins and ends within one taxable year of the service provider or the designated period is not more than 90 days and the service provider does not have a right to designate the taxable year of the payment (other than an election that complies with the subsequent deferral election rules of § 1.409A-2(b)). Where a plan provides for a period of more than one day following a payment event during which a payment may be made, such as within 90 days following the date of the event, the payment date for purposes of the subsequent deferral rules under § 1.409A-2(b) is treated as the first possible date upon which a payment could be made under the terms of the plan. A plan may provide for payment upon the earliest or latest of more than one event or time, provided that each event or time is described in paragraphs (a)(1) through (6) of this section. For examples illustrating the provisions of this paragraph, see paragraph (i)(1)(vi) of this section.

(c) ***Designation of alternative specified dates or payment schedules based upon date of permissible event.*** Except as otherwise provided in this paragraph (c), for an amount of deferred compensation under a plan, the plan may designate only one time and form of payment upon the occurrence of each event described

in paragraph (a)(1), (2), (3), (5), or (6) of this section. For example, a plan does not satisfy the requirements of this paragraph (c) if it provides for one payment date or schedule of payments if a specified event occurs on a Monday, but another payment date or schedule of payments if the event occurs on any other day of the week. However, a plan that provides for a payment upon an event described in paragraph (a)(2), (3), (5), or (6) of this section may allow for an alternative payment schedule if the event occurs on or before one (but not more than one) specified date, provided that the addition or deletion of such a different time and form of payment applicable to an existing deferral is subject to § 1.409A-2(b) (subsequent deferral elections) and paragraph (j) of this section (accelerated payments). For example, a plan may provide that a service provider will receive a lump sum payment of the service provider's entire benefit under the plan on the first day of the month following a change in control event that occurs before the service provider attains age 55, but will receive 5 substantially equal annual payments commencing on the first day of the month following a change in control event that occurs on or after the service provider attains age 55. In the case of a plan that provides that a payment upon an event described in paragraph (a)(1) of this section (a payment upon a separation from service), a different time and form of payment may be designated with respect to a separation from service under each of the following conditions, provided that the addition or deletion of such a different time and form of payment applicable to an existing deferral is subject to § 1.409A-2(b) and paragraph (j) of this section:

(1) A separation from service during a limited period of time not to exceed two years following a change in control event (as defined in paragraph (i)(5) of this section).

(2) A separation from service before or after a specified date (for example, the attainment of a specified age), or a separation from service before or after a combination of a specified date, such as attaining a specified age, and a specified period of service determined under a predetermined, nondiscretionary, objective formula or pursuant to the method for crediting service under a qualified plan sponsored by the service recipient.

(3) A separation from service not described in paragraphs (c)(1) or (c)(2) of this section.

(d) ***When a payment is treated as made upon the designated payment date.*** Except as otherwise specified in this section, a payment is treated as made upon the date specified under the plan (including a date specified under paragraph (a)(4) of this section) if the payment is made at such date or a later date within the same taxable year of the service provider or, if later, by the 15th day of the third calendar month following the date specified under the plan and the service provider is not permitted, directly or indirectly, to designate the taxable year of the payment. In addition, a payment is treated as made upon the date specified under the plan (including a date specified under paragraph (a)(4) of this section) and is not treated as an accelerated payment if the payment is made no earlier than 30 days before the designated payment date and the service provider is not permitted, directly or indirectly to designate the taxable year of the payment. For purposes of this paragraph, if the date specified is only a designated taxable year of the service provider, or a period of time during such a taxable year, the date specified under the plan is treated as the first day of such taxable year or the first day of the period of time during such taxable year, as applicable. The payment with respect to a stock right generally occurs upon the exercise of the stock right, so that where a stock right designates a fixed exercise date, the stock right will be deemed to have been paid at such date if the exercise and payment occur on such date or a later date within the same taxable year of the service provider or, if later, by the 15th day of the third calendar month following the exercise date specified under the plan. If calculation of the amount of the payment is not administratively practicable due to events beyond the control of the service provider (or service provider's beneficiary), the payment will be treated as made upon the date specified under the plan if the payment is made during the first taxable year of the service provider in which the calculation of the amount of the payment is administratively practicable. For purposes of this paragraph, the inability of a service recipient to calculate

the amount or timing of a payment due to a failure of a service provider (or service provider's beneficiary) to provide reasonably available information necessary to make such calculation does not constitute an event beyond the control of the service provider. Similarly, if the making of the payment at the date specified under the plan would jeopardize the ability of the service recipient to continue as a going concern, the payment will be treated as made upon the date specified under the plan if the payment is made during the first taxable year of the service provider in which the making of the payment would not have such effect.

(e) ***Designation of time and form of payment with respect to earnings.*** A nonqualified deferred compensation plan that provides for actual or notional earnings to be credited on amounts of deferred compensation may specify, in accordance with the requirements of § 1.409A-2(a) (initial deferral elections), that such earnings are treated separately from the right to the other amounts deferred under the plan for purposes of designating the time and form of payments under such plan, provided that to satisfy the requirements of this paragraph (e), actual or notional earnings must be credited at least annually. For these purposes, a right to dividend equivalents may be treated analogously to a right to actual or notional earnings on an amount of deferred compensation. For purposes of this paragraph (e), the term *dividend equivalents* means the right to an amount equal to all or a specified portion of dividends declared and paid, if any, on a specified number of shares of stock.

(f) ***Substitutions.*** Except as otherwise provided under these regulations, the payment of an amount as a substitute for a payment of deferred compensation will be treated as a payment of the deferred compensation. A forfeiture or voluntary relinquishment of an amount of deferred compensation will not be treated as a payment of the compensation, but there is no forfeiture or voluntary relinquishment for this purpose if an amount is paid, or a legally binding right to a payment is created, that acts as a substitute for the forfeited or voluntarily relinquished amount. Whether a payment or a right to a payment acts as a substitute for a payment of deferred compensation is determined based on all the facts and circumstances. However, where the payment of an amount results in an actual or potential reduction of, or current or future offset to, an amount of deferred compensation, or if the service provider receives a loan the repayment of which is secured by or may be accomplished through an offset of or a reduction in an amount deferred under a nonqualified deferred compensation plan, the payment or loan is a substitute for the deferred compensation. In addition, where a service provider's right to deferred compensation is made subject to anticipation, alienation, sale, transfer, assignment, pledge, encumbrance, attachment, or garnishment by creditors of the service provider or the service provider's beneficiary, the deferred compensation is treated as having been paid. For the treatment of certain offsets, see paragraph (j)(4)(xiii) of this section. Even where there is no explicit reduction or offset, the payment of an amount or creation of a new right to a payment proximate to the purported forfeiture or voluntary relinquishment of a right to deferred compensation is presumed to be a substitute for the deferred compensation. The presumption is rebuttable by a showing that the compensation paid would have been received regardless of the forfeiture or voluntary relinquishment of the right to deferred compensation. Factors indicating that a payment would have been received regardless of such forfeiture or voluntarily relinquishment include that the amount paid is materially less than the forfeited or relinquished amount, or consists of a type of payment customarily made in the ordinary course of business of the service recipient to service providers who do not forfeit or relinquish deferred compensation (for example, a payment of accrued but unused leave or a payment for a release of actual or potential claims). See § 1.409A-1(b)(9)(i) with respect to certain separation pay plans.

(g) ***Disputed payments and refusals to pay.*** If a service recipient fails to make a payment in whole or in part as of the date specified under a plan, either intentionally or unintentionally, other than with the express or implied consent of the service provider, the payment will be treated as made upon the date specified

under the plan if the service provider accepts the portion (if any) of the payment that the service recipient is willing to make (unless such acceptance will result in a relinquishment of the claim to all or part of the remaining amount), makes prompt and reasonable, good faith efforts to collect the remaining portion of the payment, and any further payment (including payment of a lesser amount that satisfies the obligation to make the payment) is made no later than the end of the first taxable year of the service provider in which the service recipient and the service provider enter into a legally binding settlement of such dispute, the service recipient concedes that the amount is payable, or the service recipient is required to make such payment pursuant to a final and nonappealable judgment or other binding decision. For purposes of this paragraph (g), efforts to collect the payment will be presumed not to be prompt, reasonable, good faith efforts, unless the service provider provides notice to the service recipient within 90 days of the latest date upon which the payment could have been timely made in accordance with the terms of the plan and these regulations, and unless, if not paid, the service provider takes further enforcement measures within 180 days after such latest date. For purposes of this paragraph (g), a service recipient is not treated as having failed to make a payment where pursuant to the terms of the plan the service provider is required to request payment, or otherwise provide information or take any other action, and the service provider has failed to take such action. In addition, for purposes of this paragraph (g), the service provider is deemed to have requested that a payment not be made, rather than the service recipient having failed to make such payment, where the service recipient's decision to refuse to make the payment is made by the service provider or a member of the service provider's family (as defined in section 267(c)(4) applied as if the family of an individual includes the spouse of any member of the family), or any person or group of persons over whom the service provider or service provider's family member has effective control, or any person any portion of whose compensation is controlled the service provider or service provider's family member.

(h) ***Special rule for certain resident aliens.*** An agreement, method, program, or other arrangement that is, or constitutes part of, a nonqualified deferred compensation plan is deemed to meet the requirements of this section with respect to any amount payable in the first taxable year of the service provider in which a service provider is a resident alien, and with respect to any amount payable in a subsequent taxable year if no later than the last day of the first taxable year of the service provider in which the service provider is a resident alien, the plan is amended as necessary so that the times and forms of payment of amounts payable in a subsequent year comply with the provisions of this section. For any year after the first taxable year of an individual in which the individual is a resident alien, this paragraph (h) does not apply, provided that a taxable year may again be treated as the first taxable year in which an individual is a resident alien if such individual has not been a resident alien for at least three consecutive taxable years immediately preceding the taxable year in which the service provider is again a resident alien.

(i) ***Definitions and special rules*** —

(1) ***Specified time or fixed schedule*** —

(i) ***In general.*** Amounts are payable at a specified time or pursuant to a fixed schedule if objectively determinable amounts are payable at a date or dates that are nondiscretionary and objectively determinable at the time the amount is deferred. An amount is objectively determinable for this purpose if the amount is specifically identified or if the amount may be determined at the time payment is due pursuant to an objective, nondiscretionary formula specified at the time the amount is deferred (for example, 50 percent of a specified account balance). Except as otherwise provided in paragraph (i)(1) of this section, an amount is not objectively determinable if the amount of the payment is based all or in part upon the occurrence of an event, including the consummation of a transaction by, or a payment of an amount to, a service recipient. If an amount is payable in a service provider's taxable year (or pursuant to a fixed schedule of

taxable years of the service provider) that is designated at the time the amount is deferred and that is objectively determinable, the amount is treated as payable at a specified time (or pursuant to a fixed schedule), provided that for purposes of the application of the subsequent deferral rules contained in § 1.409A-2(b), the specified time or fixed schedule of payments is deemed to refer to the first day of the relevant taxable year or years. A specified time or fixed schedule also includes the designation at the time the amount is deferred of a defined period or periods within the service provider's taxable year or taxable years that are objectively determinable, provided that no such defined period may begin within one taxable year and end within another taxable year, and provided further that for purposes of the application of the subsequent deferral rules contained in § 1.409A-2(b), the specified time or fixed schedule of payments is deemed to refer to the first day of the relevant period in which the payment will be made. A plan may provide that a payment upon the lapse of a substantial risk of forfeiture is to be made in accordance with a fixed schedule that is objectively determinable based on the date the substantial risk of forfeiture lapses (disregarding any discretionary acceleration of the lapse of the substantial risk of forfeiture), provided that the schedule must be fixed on the date the time and form of payment are designated, and any change in the fixed schedule will constitute a change in the time and form of payment. For example, a plan that provides for a bonus payment subject to the condition that the service provider complete three years of service, and subject to the further condition that such requirement of continued services will lapse upon the occurrence of an initial public offering, which condition if applied alone would constitute a substantial risk of forfeiture, may provide that a service provider is entitled to substantially equal payments on each of the first three anniversaries of the date the substantial risk of forfeiture lapses (the earlier of three years of service or the date of an initial public offering).

(ii) ***Payment schedules with formula and fixed limitations*** —

(A) ***Individual limitations.*** A schedule of payments does not fail to be a fixed schedule of payments where the amount of a payment or payments that may be paid at a specified time or during a specified period is limited by an objective nondiscretionary formula or a specified amount that is not under the effective control of the service provider and is not subject to the exercise of discretion by the service recipient, where such limitation is established on or before the date the time and form of payment is otherwise required to be set under these regulations, and the plan specifies the time and form of any payment that will be made or completed after its original payment date due to the application of the limitation. A change in the limitation or a change in the time and form of any payment that exceeds the limitation is subject to the requirements of § 1.409A-2(b) (subsequent deferral elections) and paragraph (j) of this section (accelerated payments). For purposes of this paragraph, a plan provision that reduces a schedule of periodic payments on a dollar-for-dollar basis by the amount of Social Security payments received or receivable may be treated as a nondiscretionary, objective formula limitation, if such reduction does not otherwise affect the time of payment of the deferred compensation (other than a forfeiture due to the reduction), including changes based on the service provider's eligibility or elections related to Social Security benefits. Similarly, a plan provision that reduces a schedule of periodic payments on a dollar-for-dollar basis by the amount of bona fide disability pay (within the meaning of § 1.409A-1(a)(5)) received or receivable may be treated as a nondiscretionary, objective formula limitation, if the disability payments are made pursuant to a plan sponsored by the service recipient that covers a substantial number of service providers and was established before the service provider became disabled, and if such reduction does not otherwise affect the time of payment of

the deferred compensation (other than a forfeiture due to the reduction). Whether an amendment to, or other change in the benefit payable under, such bona fide disability plan results in an acceleration of a payment for purposes of paragraph (j) of this section or a subsequent election to delay the time or change the form of payment for purposes of § 1.409A-2(b) is determined based on all of the relevant facts and circumstances.

(B) ***Limitations on aggregate payments to all participants in substantially identical plans.*** A schedule of payments does not fail to be a fixed schedule of payments where the amount of the aggregate payments that will be made during a specified period of time to all participants in substantially identical plans is limited by an objective nondiscretionary formula or specified amount that is not under the effective control of the service provider and is not subject to the exercise of discretion by the service recipient, where the limit is established on or before the date the time and form of payment of the amount deferred is otherwise required to be set under these regulations, the method of allocating payments among the participants where there is an overall limitation on the aggregate amount that may be paid to a group of service providers during a specified period is an objective nondiscretionary allocation method that is not under the effective control of the service provider and is not subject to the exercise of discretion by the service recipient, the method is established on or before the date the time and form of payment of the amount deferred is otherwise required to be set, and the plan specifies the time and form of any payment of any amount that will be paid after its original payment date due to the application of the limitation. A change in the limitation or a change in the time and form of payment of any payment that is not otherwise made at the scheduled payment date due to application of the formula limitation is subject to the requirements of § 1.409A-2(b) (subsequent deferral elections) and paragraph (j) of this section (accelerated payments).

(iii) ***Payment schedules determined by timing of payments received by the service recipient.*** A payment schedule determined by reference to the timing of payments received by the service recipient (not including payments from one entity to another entity where both entities are treated as part of a single service recipient), meets the requirements of a specified date or fixed schedule of payments if the following conditions are met:

(A) The payments due to the service recipient arise from bona fide and routine transactions in the ordinary course of business of the service recipient.

(B) The service provider does not have effective control of the service recipient, the person from whom such amounts are due, or the collection of any of the amounts due to the service recipient.

(C) The payment schedule provides an objective, nondiscretionary method of identification of the payments to the service recipient from which the amount of the payment from the service recipient to the service provider is determined.

(D) The payment schedule provides an objective, nondiscretionary schedule under which the payments will be made to the service provider.

(E) The payments to the service recipient from which the amount of the payments from service recipient to the service provider are determined result from sales of a type that the service recipient is in the trade or business of making and makes frequently, and either all

such sales by the service recipient are taken into account for purposes of determining the payment to the service provider, or there is a legitimate, non-tax business reason for identifying the specific sales taken into account.

(iv) ***Reimbursement or in-kind benefit plans*** —

(A) ***General rule.*** A plan that provides for reimbursements of expenses incurred by a service provider, or in-kind benefits, meets the requirements of a specified date or fixed schedule of payments with respect to such reimbursements or benefits if the following conditions are met:

(*1*) The plan provides an objectively determinable nondiscretionary definition of the expenses eligible for reimbursement or of the in-kind benefits to be provided.

(*2*) The plan provides for the reimbursement of expenses incurred or for the provision of the in-kind benefits during an objectively and specifically prescribed period (including the lifetime of the service provider).

(*3*) The plan provides that the amount of expenses eligible for reimbursement, or in-kind benefits provided, during a service provider's taxable year may not affect the expenses eligible for reimbursement, or in-kind benefits to be provided, in any other taxable year.

(*4*) The reimbursement of an eligible expense is made on or before the last day of the service provider's taxable year following the taxable year in which the expense was incurred.

(*5*) The right to reimbursement or in-kind benefits is not subject to liquidation or exchange for another benefit.

(B) ***Medical reimbursement arrangements.*** Notwithstanding the foregoing, an arrangement providing for the reimbursement of expenses referred to in section 105(b) will not be deemed to fail to meet the requirements of paragraph (i)(1)(iv)(A)(*3*) of this section solely because the arrangement provides for a limit on the amount of expenses that may be reimbursed under such arrangement over some or all of the period in which the reimbursement arrangement remains in effect.

(v) ***Tax gross-up payments.*** A plan providing a right to a tax gross-up payment will be treated as providing for payment at a specified time or on a fixed schedule of payments if the plan provides that payment will be made, and the payment is made, by the end of the service provider's taxable year next following the service provider's taxable year in which the service provider remits the related taxes. For purposes of this paragraph (i)(1)(v), the term *tax gross-up payment* refers to a payment to reimburse the service provider in an amount equal to all or a designated portion of the Federal, state, local, or foreign taxes imposed upon the service provider as a result of compensation paid or made available to the service provider by the service recipient, including the amount of additional taxes imposed upon the service provider due to the service recipient's payment of the initial taxes on such compensation. In addition, a right to the reimbursement of expenses incurred due to a tax audit or litigation addressing the existence or amount of a tax liability, whether Federal, state, local, or foreign, satisfies the requirement of a fixed time and form of payment if the right to the reimbursement provides that payment will be made, and the payment is made, by the end of the service provider's taxable year following the service provider's taxable year in which the taxes that are the subject of the

audit or litigation are remitted to the taxing authority, or where as a result of such audit or litigation no taxes are remitted, the end of the service provider's taxable year following the service provider's taxable year in which the audit is completed or there is a final and nonappealable settlement or other resolution of the litigation. Nothing in this paragraph (i)(1)(v) otherwise alters the application of section 409A to the underlying compensation arrangement or other arrangement that results in the taxes subject to the right to the tax gross-up payment.

(vi) ***Examples.*** The following examples (in which each employee is an individual whose taxable year is the calendar year) illustrate the principles of paragraphs (a), (b), (c), (d), and (i)(1) of this section:

Example 1. Employee A provides services as an employee of Employer Z, but is not a specified employee. Employee A participates in a nonqualified deferred compensation plan providing for a lump sum payment payable on or before December 31 of the calendar year in which Employee A separates from service. The plan provides for a payment upon a separation from service in compliance with this section.

Example 2. Employee B provides services as an employee of Employer Y, but is not a specified employee. Employee B participates in a nonqualified deferred compensation plan providing for a lump sum payment payable on or before the 90th day immediately following the date upon which Employee B separates from service. Employer Y retains the sole discretion to determine when during the 90-day period the payment will be made. Although the plan does not specify a period during one calendar year in which the payment will be made, the plan provides for a payment upon a separation from service in compliance with this section because the period over which the payment may be made is not longer than 90 days.

Example 3. Employee C provides services as an employee of Employer X, but is not a specified employee. Employee C participates in a nonqualified deferred compensation plan providing for a lump sum payment payable on or before the 180th day following the date upon which Employee C separates from service. Employer X retains the sole discretion to determine when during the 180-day period the payment will be made. Because the plan does not specify a period during one calendar year in which the payment will be made, and because the period over which the payment may be made is longer than 90 days, the plan does not provide for a payment upon a separation from service that complies with this section.

Example 4. Employee D provides services as an employee of Employer W, but is not a specified employee. Employee D participates in a nonqualified deferred compensation plan providing for 10 installment payments payable on the first 10 anniversaries of the date Employee D separates from service, provided that no installment payment in any year may be more than 1% of Employer W's net income for the previous calendar year, and provided further that the excess over such limit that would otherwise be payable but is not paid due to application of the limit will become payable as of the first installment payment date at which time such amount, in combination with any installment payment otherwise due Employee D, does not exceed 1% of Employer W's net income for the previous calendar year. Provided that Employee D does not retain effective control of the calculation of Employer W's net income or the amount that Employee D will not be paid due to application of the limit, the plan provides for a schedule of payments upon a separation from service that complies with this section.

Example 5. Employee E and Employee F provide services as employees of Employer V, but neither is a specified employee. Employee E and Employee F both participate in substantially identical nonqualified deferred compensation plans providing for 10 installment payments payable on the first 10 anniversaries of the date the respective employee separates from service, provided that the total amount of installment payments in any year may not be more than 1% of Employer V's net income for the previous year, that where any payments are not made due to application of the limit the determination of the amount not paid to a particular employee will be made by applying the overall limit proportionately based upon the installment payment due the employee that year, and that the excess over such limit that would otherwise be payable but is not paid due to application of the limit will become payable as of the first installment payment date at which time such amount, in combination with any installment payments otherwise due the participants, does not exceed 1% of Employer V's net income for the previous calendar year. Provided that neither Employee E nor Employee F retains effective control of the calculation of Employer V's net income or the amount that the respective employee will not be paid due to application of the limit, the plan provides for a schedule of payments upon a separation from service that complies with this section.

Example 6. Employee G provides services as an employee of Employer U, but is not a specified employee. As a bona fide part of this employment relationship, Employee G provides professional services to clients of Employer U as part of the bona fide, ordinary course of Employer U's trade or business. Under an arrangement between Employee G and Employer U, Employer U agrees to pay Employee G upon Employee G's separation from service an amount equal to 5% of any amount collected from Company T, a client of Employer U for which Employee G performed services during his employment with Employer U, during the 36 months following Employee G's separation from service. Under the arrangement, the amounts due to Employee G based upon payments received by Employer U during any calendar year are payable to Employee G on April 1 of the subsequent calendar year. Provided that Employee G does not have effective control of Employer U, Company T, or the collection of any amounts due Employer Y from Company T, the arrangement provides for a schedule of payments upon a separation from service that complies with this section.

Example 7. Employee H provides services as an employee of Employer S, but is not a specified employee. Under a plan sponsored by Employer S, Employee H has a legally binding right upon a separation from service to the reimbursement of country club dues paid in the calendar year of the separation from service and each of the next 3 calendar years following the separation from service in an amount not to exceed $30,000 in any calendar year, provided that the amount of dues paid in any calendar year that are eligible for reimbursement equals only the amount actually expended during such calendar year, and the maximum amount available for reimbursement in any calendar year will not be increased or decreased to reflect the amount expended or reimbursed in a prior or subsequent calendar year. The plan further provides that any reimbursement must be paid to Employee H by December 31 of the calendar year following the year in which Employee H pays the country club dues. The reimbursement plan provides for a schedule of payments upon a separation from service that complies with this section.

Example 8. Employee J provides services as an employee of Employer Q, but is not a specified employee. Under a plan sponsored by Employer Q, Employee J has a legally binding right upon a separation from service to the reimbursement of country club dues paid during the calendar year in which the separation from service occurs and the next 3 calendar years in a total amount not to exceed $90,000. The plan further provides that any reimbursement must be paid to Employee J by December 31 of the calendar year following the year in which Employee J pays the country club dues. Because the reimbursement of a payment of country club dues in one calendar year may affect the amount of country club dues available for reimbursement in another calendar year, the plan does not provide for a schedule of payments upon a separation from service that complies with this section.

(2) ***Separation from service—required delay in payment to a specified employee pursuant to a separation from service*** —

(i) ***In general.*** In the case of any service provider who is a specified employee (as defined in § 1.409A-1(i)) as of the date of a separation from service, the requirements of paragraph (a)(1) of this section permitting a payment upon a separation from service are satisfied only if payments may not be made before the date that is six months after the date of separation from service (or, if earlier than the end of the six-month period, the date of death of the specified employee). For this purpose, a service provider who is not a specified employee as of the date of a separation from service will not be treated as subject to this requirement even if the service provider would have become a specified employee if the service provider had continued to provide services through the next specified employee effective date. Similarly, a service provider who is treated as a specified employee as of the date of a separation from service will be subject to this requirement even if the service provider would not have been treated as a specified employee after the next specified employee effective date had the specified employee continued providing services through the next specified employee effective date. Notwithstanding the foregoing, this paragraph (i)(2)(i) does not apply to a payment made under the circumstances described in paragraph (j)(4)(ii) (domestic relations order), (j)(4)(iii) (conflicts of interest), or (j)(4)(vi) (payment of employment taxes) of this section.

(ii) ***Application of payment rules to delayed payments.*** The required delay in payment is met if payments to which a specified employee would otherwise be entitled during the first six months following the date of separation from service are accumulated and paid on the first day of the seventh month following the date of separation from service, or if each payment to which a specified employee is otherwise entitled upon a separation from service is delayed by six months. A service recipient may retain discretion to choose which method will be implemented, provided that no direct or indirect election as to the method may be provided to the service provider. For an affected specified employee, a date upon which the plan or the service recipient designates that the payment will be made after the six-month delay is treated as a fixed payment date for purposes of paragraph (d) of this section once the separation from service has occurred.

(3) ***Unforeseeable emergency*** —

(i) ***Definition.*** For purposes of §§ 1.409A-1 and 1.409A-2, this section, and §§ 1.409A-4 through 1.409A-6, an *unforeseeable emergency* is a severe financial hardship to the service provider resulting from an illness or accident of the service provider, the service provider's spouse, the service provider's beneficiary, or the service provider's dependent (as defined in section 152, without regard to section 152(b)(1), (b)(2), and (d)(1)(B)); loss of the service provider's property

due to casualty (including the need to rebuild a home following damage to a home not otherwise covered by insurance, for example, not as a result of a natural disaster); or other similar extraordinary and unforeseeable circumstances arising as a result of events beyond the control of the service provider. For example, the imminent foreclosure of or eviction from the service provider's primary residence may constitute an unforeseeable emergency. In addition, the need to pay for medical expenses, including non-refundable deductibles, as well as for the costs of prescription drug medication, may constitute an unforeseeable emergency. Finally, the need to pay for the funeral expenses of a spouse, a beneficiary, or a dependent (as defined in section 152, without regard to section 152(b)(1), (b)(2), and (d)(1)(B)) may also constitute an unforeseeable emergency. Except as otherwise provided in this paragraph (i)(3)(i), the purchase of a home and the payment of college tuition are not unforeseeable emergencies. Whether a service provider is faced with an unforeseeable emergency permitting a distribution under this paragraph (i)(3)(i) is to be determined based on the relevant facts and circumstances of each case, but, in any case, a distribution on account of unforeseeable emergency may not be made to the extent that such emergency is or may be relieved through reimbursement or compensation from insurance or otherwise, by liquidation of the service provider's assets, to the extent the liquidation of such assets would not cause severe financial hardship, or by cessation of deferrals under the plan. A plan may provide for a payment upon a specific type or types of unforeseeable emergency, without providing for payment upon all unforeseeable emergencies, provided that any event upon which a payment may be made qualifies as an unforeseeable emergency.

(ii) ***Amount of payment permitted upon an unforeseeable emergency.*** Distributions because of an unforeseeable emergency must be limited to the amount reasonably necessary to satisfy the emergency need (which may include amounts necessary to pay any Federal, state, local, or foreign income taxes or penalties reasonably anticipated to result from the distribution). Determinations of amounts reasonably necessary to satisfy the emergency need must take into account any additional compensation that is available if the plan provides for cancellation of a deferral election upon a payment due to an unforeseeable emergency. See paragraph (j)(4)(viii) of this section. However, the determination of amounts reasonably necessary to satisfy the emergency need is not required to take into account any additional compensation that is available from a qualified employer plan as defined in § 1.409A-1(a)(2) (including any amount available by obtaining a loan under the plan), or that due to the unforeseeable emergency is available under another nonqualified deferred compensation plan (including a plan that would provide for deferred compensation except due to the application of the effective date provisions under § 1.409A-6). The payment may be made from any plan in which the service provider participates that provides for payment upon an unforeseeable emergency, provided that the plan under which the payment was made must be designated at the time of payment.

(iii) ***Payments due to an unforeseeable emergency.*** A service provider may retain discretion with respect to whether to apply for a payment upon an unforeseeable emergency, and a service recipient may retain discretion with respect to whether to make a payment available under the plan due to an unforeseeable emergency. A service provider who has experienced an unforeseeable emergency will not be treated as making a subsequent deferral election under § 1.409A-2(b) (subsequent deferral election rules) if the service provider does not apply for or elect to receive a payment available under the plan. A service recipient will not be treated as making a subsequent deferral election under § 1.409A-2(b) (subsequent deferral election rules) if the service recipient exercises its discretion not to make a payment otherwise available due to an unforeseeable emergency.

(4) *Disability* —

(i) ***In general.*** For purposes of §§ 1.409A-1 and 1.409A-2, this section, and §§ 1.409A-4 through 1.409A-6, except as otherwise specifically provided, a service provider is considered disabled if the service provider meets one of the following requirements:

(A) The service provider is unable to engage in any substantial gainful activity by reason of any medically determinable physical or mental impairment that can be expected to result in death or can be expected to last for a continuous period of not less than 12 months.

(B) The service provider is, by reason of any medically determinable physical or mental impairment that can be expected to result in death or can be expected to last for a continuous period of not less than 12 months, receiving income replacement benefits for a period of not less than three months under an accident and health plan covering employees of the service provider's employer.

(ii) ***Limited plan definition of disability.*** A plan may provide for a payment upon any disability, and need not provide for a payment upon all disabilities, provided that any disability upon which a payment may be made under the plan complies with the provisions of this paragraph (i)(4).

(iii) ***Determination of disability.*** A plan may provide that a service provider will be deemed disabled if determined to be totally disabled by the Social Security Administration or Railroad Retirement Board. A plan may also provide that a service provider will be deemed disabled if determined to be disabled in accordance with a disability insurance program, provided that the definition of disability applied under such disability insurance program complies with the requirements of this paragraph (i)(4).

(5) *Change in the ownership or effective control of a corporation, or a change in the ownership of a substantial portion of the assets of a corporation* —

(i) ***In general.*** Pursuant to section 409A(a)(2)(A)(v), a plan may permit a payment upon the occurrence of a change in the ownership of the corporation (as defined in paragraph (i)(5)(v) of this section), a change in effective control of the corporation (as defined in paragraph (i)(5)(vi) of this section), or a change in the ownership of a substantial portion of the assets of the corporation (as defined in paragraph (i)(5)(vii) of this section) (collectively referred to as a change in control event). To qualify as a change in control event, the occurrence of the event must be objectively determinable and any requirement that any other person or group, such as a plan administrator or compensation committee, certify the occurrence of a change in control event must be strictly ministerial and not involve any discretionary authority. The plan may provide for a payment on a particular type or types of change in control events, and need not provide for a payment on all such events, provided that each event upon which a payment is provided qualifies as a change in control event. For rules regarding the ability of the service recipient to terminate the plan and pay amounts of deferred compensation upon a change in control event, see paragraph (j)(4)(ix)(B) of this section.

(ii) *Identification of relevant corporation* —

(A) ***In general.*** To constitute a change in control event with respect to the service provider, the change in control event must relate to—

(*1*) The corporation for whom the service provider is performing services at the time of the change in control event;

(*2*) The corporation that is liable for the payment of the deferred compensation (or all corporations liable for the payment if more than one corporation is liable) but only if either the deferred compensation is attributable to the performance of service by the service provider for such corporation (or corporations) or there is a bona fide business purpose for such corporation or corporations to be liable for such payment and, in either case, no significant purpose of making such corporation or corporations liable for such payment is the avoidance of Federal income tax; or

(*3*) A corporation that is a majority shareholder of a corporation identified in paragraph (i)(5)(ii)(A)(*1*) or (*2*) of this section, or any corporation in a chain of corporations in which each corporation is a majority shareholder of another corporation in the chain, ending in a corporation identified in paragraph (i)(5)(ii)(A)(*1*) or (*2*) of this section.

(B) ***Majority shareholder.*** For purposes of this paragraph (i)(5)(ii), a majority shareholder is a shareholder owning more than 50 percent of the total fair market value and total voting power of such corporation.

(C) ***Example.*** The following example illustrates the rules of this paragraph (i)(5)(ii):

Example. Corporation A is a majority shareholder of Corporation B, which is a majority shareholder of Corporation C. A change in ownership of Corporation B constitutes a change in control event to service providers performing services for Corporation B or Corporation C, and to service providers for which Corporation B or Corporation C is solely liable for payments under the plan (for example, former employees), but is not a change in control event as to Corporation A or any other corporation of which Corporation A is a majority shareholder unless the sale constitutes a change in the ownership of a substantial portion of Corporation A's assets (see paragraph (i)(5)(vii) of this section).

(iii) ***Attribution of stock ownership.*** For purposes of paragraph (i)(5) of this section, section 318(a) applies to determine stock ownership. Stock underlying a vested option is considered owned by the individual who holds the vested option (and the stock underlying an unvested option is not considered owned by the individual who holds the unvested option). For purposes of the preceding sentence, however, if a vested option is exercisable for stock that is not substantially vested (as defined by § 1.83-3(b) and (j)), the stock underlying the option is not treated as owned by the individual who holds the option.

(iv) ***Special rules for certain delayed payments pursuant to a change in control event*** —

(A) ***Certain transaction-based compensation.*** Payments of compensation related to a change in control event described in paragraph (i)(5)(v) of this section (change in the ownership of a corporation) or paragraph (i)(5)(vii) of this section (change in the ownership of a substantial portion of a corporation's assets), that occur because a service recipient purchases its stock held by the service provider or because the service recipient or a third party purchases a stock right held by a service provider, or that are calculated by reference to the value of stock of the service recipient (collectively, transaction-based compensation), may be treated as paid at a designated date or pursuant to a payment schedule that complies with the requirements of section 409A if the transaction-based compensation is paid on the same schedule and under the same terms and conditions as apply to payments to shareholders generally with respect to stock of the service recipient pursuant to a change in control event described in paragraph (i)(5)(v) of this section

(change in the ownership of a corporation) or as apply to payments to the service recipient pursuant to a change in control event described in paragraph (i)(5)(vii) of this section (change in the ownership of a substantial portion of a corporation's assets), and to the extent that the transaction-based compensation is paid not later than five years after the change in control event, the payment of such compensation will not violate the initial or subsequent deferral election rules set out in § 1.409A-2(a) and (b) solely as a result of such transaction-based compensation being paid pursuant to such schedule and terms and conditions. If before and in connection with a change in control event described in paragraph (i)(5)(v) or (i)(5)(vii) of this section, transaction-based compensation that would otherwise be payable as a result of such event is made subject to a condition on payment that constitutes a substantial risk of forfeiture (as defined in § 1.409A-1(d), without regard to the provisions of that section under which additions or extensions of forfeiture conditions are disregarded) and the transaction-based compensation is payable under the same terms and conditions as apply to payments made to shareholders generally with respect to stock of the service recipient pursuant to a change in control event described in paragraph (i)(5)(v) of this section or to payments to the service recipient pursuant to a change in control event described in paragraph (i)(5)(vii) of this section, for purposes of determining whether such transaction-based compensation is a short-term deferral the requirements of § 1.409A-1(b)(4) are applied as if the legally binding right to such transaction-based compensation arose on the date that it became subject to such substantial risk of forfeiture.

(B) ***Certain nonvested compensation.*** Notwithstanding the provisions of § 1.409A-1(d) (definition of a substantial risk of forfeiture) that disregard the extension or modification of a condition for purposes of determining whether a condition on payment constitutes a substantial risk of forfeiture, a condition that is a substantial risk of forfeiture that otherwise would lapse as a result of a change in control event described in paragraph (i)(5)(v) or (i)(5)(vii) of this section may be extended or modified before and in connection with such event to provide for a condition on payment that will not lapse as a result of such change in control event, and such extended or modified condition will be treated as continuing to subject the amount to a substantial risk of forfeiture, provided that the transaction constituting the change in control event is a bona fide arm's length transaction between the service recipient or its shareholders and one or more parties who are unrelated to the service recipient and service provider (applying the rules of § 1.409A-1(f)(2)(ii)) and the modified or extended condition to which the payment is subject would otherwise be treated as a substantial risk of forfeiture under § 1.409A-1(d) (without regard to the provisions disregarding additions or extensions of forfeiture conditions). In such a case, the continued application of a fixed schedule of payments based upon the lapse of the substantial risk of forfeiture, so that payments commence upon the lapse of the modified or extended condition on payment, will not be treated as a change in the fixed schedule of payments for purposes of § 1.409A-2(b) (subsequent deferral elections) or paragraph (j) of this section (prohibition on the acceleration of payments).

(v) ***Change in the ownership of a corporation*** —

(A) ***In general.*** Except as provided in paragraph (i)(5)(vi)(C) of this section, a change in the ownership of a corporation occurs on the date that any one person, or more than one person acting as a group (as defined in paragraph (i)(5)(v)(B) of this section), acquires ownership of stock of the corporation that, together with stock held by such person or

group, constitutes more than 50 percent of the total fair market value or total voting power of the stock of such corporation. A nonqualified deferred compensation plan may provide that amounts payable upon a change in the ownership of a corporation will be paid only if the conditions in the preceding sentence are satisfied but substituting a percentage specified in the plan that is higher than 50 percent for the words "50 percent" in the preceding sentence, but only if the provision is set forth in the plan no later than the date by which the time and form of payment must be established under § 1.409A-2. However, if any one person, or more than one person acting as a group, is considered to own more than 50 percent of the total fair market value or total voting power of the stock of a corporation (or such higher percentage specified in accordance with the preceding sentence), the acquisition of additional stock by the same person or persons is not considered to cause a change in the ownership of the corporation (or to cause a change in the effective control of the corporation (within the meaning of paragraph (i)(5)(vi) of this section)). An increase in the percentage of stock owned by any one person, or persons acting as a group, as a result of a transaction in which the corporation acquires its stock in exchange for property will be treated as an acquisition of stock for purposes of this section. This section applies only when there is a transfer of stock of a corporation (or issuance of stock of a corporation) and stock in such corporation remains outstanding after the transaction (see paragraph (i)(5)(vii) of this section for rules regarding the transfer of assets of a corporation). See § 1.280G-1, Q&A-27(d), *Example 1*, *Example 2*, *Example 5*, and *Example 6*.

(B) ***Persons acting as a group.*** For purposes of paragraph (i)(5)(v)(A) of this section, persons will not be considered to be acting as a group solely because they purchase or own stock of the same corporation at the same time, or as a result of the same public offering. However, persons will be considered to be acting as a group if they are owners of a corporation that enters into a merger, consolidation, purchase or acquisition of stock, or similar business transaction with the corporation. If a person, including an entity, owns stock in both corporations that enter into a merger, consolidation, purchase or acquisition of stock, or similar transaction, such shareholder is considered to be acting as a group with other shareholders only with respect to the ownership in that corporation before the transaction giving rise to the change and not with respect to the ownership interest in the other corporation. See § 1.280G-1, Q&A-27(d), *Example 3* and *Example 4*.

(vi) ***Change in the effective control of a corporation*** —

(A) ***In general.*** Notwithstanding that a corporation has not undergone a change in ownership under paragraph (i)(5)(v) of this section, a change in the effective control of the corporation occurs only on either of the following dates:

(*1*) The date any one person, or more than one person acting as a group (as determined under paragraph (i)(5)(v)(B) of this section), acquires (or has acquired during the 12-month period ending on the date of the most recent acquisition by such person or persons) ownership of stock of the corporation possessing 30 percent or more of the total voting power of the stock of such corporation. A nonqualified deferred compensation plan may provide that amounts payable upon an effective change in control of a corporation will be paid only if the conditions in the preceding sentence are satisfied but substituting a percentage specified in the plan that is higher than 30

percent for the word “30 percent” in the preceding sentence, but only if the percentage is set forth in the plan no later than the date by which the time and form of payment must be established under § 1.409A-2).

(2) The date a majority of members of the corporation's board of directors is replaced during any 12-month period by directors whose appointment or election is not endorsed by a majority of the members of the corporation's board of directors before the date of the appointment or election, provided that for purposes of this paragraph (i)(5)(vi)(A) the term *corporation* refers solely to the relevant corporation identified in paragraph (i)(5)(ii) of this section for which no other corporation is a majority shareholder for purposes of that paragraph. For example, if Corporation A is a publicly held corporation with no majority shareholder, and Corporation A is the majority shareholder of Corporation B, which is the majority shareholder of Corporation C, the term *corporation* for purposes of this paragraph (i)(5)(vi)(A)(2) would refer solely to Corporation A. A nonqualified deferred compensation plan may provide that amounts payable upon a change in the effective control of a corporation will be paid only if the conditions in the first sentence of this paragraph are satisfied substituting a portion of the members of the corporation's board of directors that is higher than the words “a majority of the members of the corporation's board of directors” in the first sentence of this paragraph, but only if the higher portion is set forth in the plan no later than the date by which the time and form of payment must be established under § 1.409A-2(a)).

(B) ***Multiple change in control events.*** A change in effective control may occur in a transaction in which one of the two corporations involved in the transaction has a change in control event under paragraph (i)(5)(v) or (i)(5)(vii) of this section. Thus, for example, assume Corporation P transfers more than 40 percent of the total gross fair market value of its assets to Corporation O in exchange for 35 percent of O's stock. P has undergone a change in ownership of a substantial portion of its assets under paragraph (i)(5)(vii) of this section and O has a change in effective control under this paragraph (i)(5)(vi).

(C) ***Acquisition of additional control.*** If any one person, or more than one person acting as a group, is considered to effectively control a corporation (within the meaning of this paragraph (i)(5)(vi)), the acquisition of additional control of the corporation by the same person or persons is not considered to cause a change in the effective control of the corporation (or to cause a change in the ownership of the corporation within the meaning of paragraph (i)(5)(v) of this section).

(D) ***Persons acting as a group.*** Persons will not be considered to be acting as a group solely because they purchase or own stock of the same corporation at the same time, or as a result of the same public offering. However, persons will be considered to be acting as a group if they are owners of a corporation that enters into a merger, consolidation, purchase or acquisition of stock, or similar business transaction with the corporation. If a person, including an entity, owns stock in both corporations that enter into a merger, consolidation, purchase or acquisition of stock, or similar transaction, such shareholder is considered to be acting as a group with other shareholders in a corporation only with respect to the ownership in that corporation before the transaction giving rise to the change and not with respect to the ownership interest in the other corporation. See § 1.280G-1, Q&A-27(d), *Example 4*.

(vii) ***Change in the ownership of a substantial portion of a corporation's assets*** —

(A) ***In general.*** A change in the ownership of a substantial portion of a corporation's assets occurs on the date that any one person, or more than one person acting as a group (as determined in paragraph (i)(5)(v)(B) of this section), acquires (or has acquired during the 12-month period ending on the date of the most recent acquisition by such person or persons) assets from the corporation that have a total gross fair market value equal to or more than 40 percent of the total gross fair market value of all of the assets of the corporation immediately before such acquisition or acquisitions (or such higher amount specified by the plan no later than the date by which the time and form of payment must be established under § 1.409A-2). For this purpose, gross fair market value means the value of the assets of the corporation, or the value of the assets being disposed of, determined without regard to any liabilities associated with such assets.

(B) ***Transfers to a related person*** —

(*1*) There is no change in control event under this paragraph (i)(5)(vii) when there is a transfer to an entity that is controlled by the shareholders of the transferring corporation immediately after the transfer, as provided in this paragraph (i)(5)(vii)(B). A transfer of assets by a corporation is not treated as a change in the ownership of such assets if the assets are transferred to—

(*i*) A shareholder of the corporation (immediately before the asset transfer) in exchange for or with respect to its stock;

(*ii*) An entity, 50 percent or more of the total value or voting power of which is owned, directly or indirectly, by the corporation;

(*iii*) A person, or more than one person acting as a group, that owns, directly or indirectly, 50 percent or more of the total value or voting power of all the outstanding stock of the corporation; or

(*iv*) An entity, at least 50 percent of the total value or voting power of which is owned, directly or indirectly, by a person described in paragraph (i)(5)(vii)(B)(*1*)(*iii*) of this section.

(*2*) For purposes of this paragraph (i)(5)(vii)(B) and except as otherwise provided in this paragraph (i), a person's status is determined immediately after the transfer of the assets. For example, a transfer to a corporation in which the transferor corporation has no ownership interest before the transaction, but that is a majority-owned subsidiary of the transferor corporation after the transaction is not treated as a change in the ownership of the assets of the transferor corporation.

(C) ***Persons acting as a group.*** Persons will not be considered to be acting as a group solely because they purchase assets of the same corporation at the same time. However, persons will be considered to be acting as a group if they are owners of a corporation that enters into a merger, consolidation, purchase or acquisition of assets, or similar business transaction with the corporation. If a person, including an entity shareholder, owns stock in both corporations that enter into a merger, consolidation, purchase or acquisition of assets, or similar transaction, such shareholder is considered to be acting as a group with

other shareholders in a corporation only to the extent of the ownership in that corporation before the transaction giving rise to the change and not with respect to the ownership interest in the other corporation. See § 1.280G-1, Q&A-27(d), *Example 4*.

(6) ***Certain back-to-back arrangements*** —

(i) ***In general.*** This paragraph (i)(6) applies where a service provider is providing services to a service recipient (the intermediate service recipient), who in turn is providing services to another service recipient (the ultimate service recipient), the services provided by the service provider to the intermediate service recipient are closely related to the services provided by the intermediate service recipient to the ultimate service recipient, there is a nonqualified deferred compensation plan providing for payments by the ultimate service recipient to the intermediate service recipient (the ultimate service recipient plan), there is a nonqualified deferred compensation plan or other agreement, method, program, or other arrangement providing for payments of compensation by the intermediate service recipient to the service provider (the intermediate service recipient plan), and the intermediate service recipient plan provides for a payment upon the occurrence of an event described in paragraph (a)(1), (2), (3), (5), or (6) of this section. In such a case, notwithstanding the generally applicable limits on payments in paragraph (a) of this section, the ultimate service recipient plan may provide for a payment to the intermediate service recipient upon the occurrence of a payment event under the intermediate service recipient plan described in paragraph (a)(1), (2), (3), (5), or (6) of this section if the time and form of payment is defined as the same time and form of payment provided under the intermediate service recipient plan, the amount of the payment under the ultimate service recipient plan does not exceed the amount of the payment under the intermediate service recipient plan, and the ultimate service recipient plan and the intermediate service recipient plan otherwise satisfy the requirements of section 409A (regardless of whether such plan is subject to section 409A).

(ii) ***Example.*** The provisions of paragraph (i)(6)(i) of this section are illustrated by the following example:

Example. Company B (intermediate service recipient) provides services to Company C (ultimate service recipient). Employee A (service provider) provides services to Company B that are closely related to the services Company B provides to Company C. Pursuant to a nonqualified deferred compensation plan meeting the requirements of section 409A, Employee A is entitled to a payment of deferred compensation upon a separation from service with Company B (the intermediate service recipient plan). Under an arrangement between Company B and Company C (the ultimate service recipient plan), Company C agrees to pay an amount of deferred compensation to Company B upon Employee A's separation from service with Company B, in accordance with the time, form and amount of payment provided in the intermediate service recipient plan. Provided that the intermediate service recipient plan and the ultimate service recipient plan otherwise comply with the requirements of section 409A (regardless of whether such arrangements are subject to section 409A), Company C's payment to Company B of the amount due under the ultimate service recipient plan upon the separation from service of Employee A from Company B may constitute a permissible payment event for purposes of paragraph (a) of this section.

(j) ***Prohibition on acceleration of payments*** —

(1) *In general.* Except as provided in paragraph (j)(4) of this section, a nonqualified deferred compensation plan may not permit the acceleration of the time or schedule of any payment or amount scheduled to be paid pursuant to the terms of the plan, and no such accelerated payment may be made whether or not provided for under the terms of such plan. For purposes of determining whether a payment of deferred compensation has been made, the rules of paragraph (f) of this section (substituted payments) apply. For purposes of this paragraph (j), an impermissible acceleration does not occur if payment is made in accordance with plan provisions or an election as to the time and form of payment in effect at the time of initial deferral (or added in accordance with the rules applicable to subsequent deferral elections under § 1.409A-2(b)) pursuant to which payment is required to be made on an accelerated schedule as a result of an intervening event that is an event described in paragraph (a)(1), (2), (3), (5), or (6) of this section. For example, a plan may provide that a participant will receive six installment payments commencing at separation from service, and also provide that if the participant dies after such payments commence but before all payments have been made, all remaining amounts will be paid in a lump sum payment. Additionally, it is not an acceleration of the time or schedule of payment of a deferral of compensation if a service recipient waives or accelerates the satisfaction of a condition constituting a substantial risk of forfeiture applicable to such deferral of compensation, provided that the requirements of section 409A (including the requirement that the payment be made upon a permissible payment event) are otherwise satisfied with respect to such deferral of compensation. For example, if a nonqualified deferred compensation plan provides for a lump sum payment of the vested benefit upon separation from service, and the benefit vests under the plan only after 10 years of service, it is not a violation of the requirements of section 409A if the service recipient reduces the vesting requirement to five years of service, even if a service provider becomes vested as a result and receives a payment in connection with a separation from service before the service provider would have completed 10 years of service. However, if the plan in this example had provided for a payment at a fixed date, rather than at separation from service, the date of payment could not be accelerated due to the accelerated vesting. For the definition of a payment for purposes of this paragraph (j), see § 1.409A-2(b)(5) (coordination of the subsequent deferral election rules with the prohibition on acceleration of payments). For other permissible payments, see § 1.409A-2(b)(2)(iii) (certain immediate payments of remaining installments) and paragraph (d) of this section (certain payments made no more than 30 days before the designated payment date).

(2) *Application to multiple payment events.* Generally, the addition of a permissible payment event, the deletion of a permissible payment event, or the substitution of one permissible payment event for another permissible payment event, results in an acceleration of a payment if the addition, deletion, or substitution could result in the payment being made at an earlier date than such payment would have been made absent such addition, deletion, or substitution. Notwithstanding the previous sentence, the addition of death, disability (as defined in paragraph (i)(4) of this section), or an unforeseeable emergency (as defined in paragraph (i)(3) of this section), as a potentially earlier alternative payment event to an amount previously deferred will not be treated as resulting in an acceleration of a payment, even if such addition results in the payment being paid at an earlier time than such payment would have been made absent the addition of the payment event. However, the addition of such a payment event as a potentially later alternative payment event generally is subject to the rules governing changes in the time and form of payment (see § 1.409A-2(b)).

(3) *Beneficiaries.* The rules of this paragraph (j) apply to elections by beneficiaries with respect to the time and form of payment, as well as elections by service providers or service recipients with respect to the time and form of payment to beneficiaries. An election to change the identity of a beneficiary does not constitute an acceleration of a payment merely because the election changes

the identity of the recipient of the payment, if the time and form of the payment is not otherwise changed. In addition, an election before the commencement of a life annuity to change the identity of a beneficiary does not constitute an acceleration of a payment if the change in the time of payments stems solely from the different life expectancy of the new beneficiary, such as in the case of a joint and survivor annuity, and does not change the commencement date of the life annuity.

(4) *Exceptions* —

(i) ***In general.*** Except as otherwise expressly provided, a plan may provide for the acceleration of a payment in accordance with paragraphs (j)(4)(ii) through (xiv) of this section, or may provide a service recipient discretion to accelerate payments in accordance with the provisions of paragraphs (j)(4)(ii) through (xiv) of this section. A plan may not provide a service provider discretion with respect to whether a payment will be accelerated, and a service recipient may not provide a service provider a direct or indirect election as to whether the service recipient's discretion to accelerate a payment will be exercised, even if such acceleration would be permitted under paragraphs (j)(4)(ii) through (xiv) of this section. Whether a service recipient has provided a service provider an election as to whether the service recipient's discretion to accelerate a payment will be exercised is determined based on all the facts and circumstances, including whether similarly situated service providers have been treated differently. Except as otherwise provided in paragraphs (j)(4)(ii) through (xiv) of this section, the plan need not set forth the exception in writing, and provided all other requirements of this section are met, the making of such a payment or the addition of a plan term permitting the making of such a payment will not constitute the acceleration of a payment, and the failure to make such a payment or the deletion or modification of a plan term permitting the making of such a payment will not be subject to the rules regarding a change in the time and form of payment under § 1.409A-2(b).

(ii) ***Domestic relations order.*** A plan may provide for acceleration of the time or schedule of a payment under the plan to an individual other than the service provider, or a payment under such plan may be made to an individual other than the service provider, to the extent necessary to fulfill a domestic relations order (as defined in section 414(p)(1)(B)).

(iii) *Conflicts of interest* —

(A) ***Compliance with ethics agreements with the Federal government.*** A plan may provide for acceleration of the time or schedule of a payment under the plan, or a payment may be made under a plan, to the extent necessary for any Federal officer or employee in the executive branch to comply with an ethics agreement with the Federal government.

(B) ***Compliance with ethics laws or conflicts of interest laws.*** A plan may provide for acceleration of the time or schedule of a payment under the plan, or a payment may be made under a plan, to the extent reasonably necessary to avoid the violation of an applicable Federal, state, local, or foreign ethics law or conflicts of interest law (including where such payment is reasonably necessary to permit the service provider to participate in activities in the normal course of his or her position in which the service provider would otherwise not be able to participate under an applicable rule). A payment is reasonably necessary to avoid the violation of a Federal, state, local, or foreign ethics law or conflicts of interest law if the payment is a necessary part of a course of action that results in compliance with a Federal, state, local, or foreign ethics law or conflicts of interest law that would be violated absent such course of action, regardless of whether other actions would also result in compliance with the Federal, state, local, or foreign ethics law or

conflicts of interest law. For this purpose, a provision of foreign law is considered applicable only to foreign earned income (as defined under section 911(b)(1) without regard to section 911(b)(1)(B)(iv) and without regard to the requirement that the income be attributable to services performed during the period described in section 911(d)(1)(A) or (B)) from sources within the foreign country that promulgated such law.

(iv) ***Section 457 plans.*** A plan subject to section 457(f) may provide for an acceleration of the time or schedule of a payment to a service provider, or a payment may be made under such a plan, to pay Federal, state, local, and foreign income taxes due upon a vesting event, provided that the amount of such payment is not more than an amount equal to the Federal, state, local, and foreign income tax withholding that would have been remitted by the employer if there had been a payment of wages equal to the income includible by the service provider under section 457(f) at the time of the vesting.

(v) ***Limited cashouts.*** A plan may require or provide a service recipient discretion to require (or be amended to require or to provide a service recipient discretion to require), a mandatory lump sum payment of amounts deferred under the plan that do not exceed a specified amount, provided that such plan term or amendment is executed and effective, and any required exercise of service recipient discretion is evidenced in writing, no later than the date of such payment, and provided that—

(A) The payment results in the termination and liquidation of the entirety of the service provider's interest under the plan, including all agreements, methods, programs, or other arrangements with respect to which deferrals of compensation are treated as having been deferred under a single nonqualified deferred compensation plan under § 1.409A-1(c)(2); and

(B) The payment is not greater than the applicable dollar amount under section 402(g)(1)(B).

(vi) ***Payment of employment taxes.*** A plan may provide for the acceleration of the time or schedule of a payment, or a payment may be made under the plan, to pay the Federal Insurance Contributions Act (FICA) tax imposed under section 3101, section 3121(a), and section 3121(v)(2), or the Railroad Retirement Act tax imposed under section 3201, section 3211, section 3231(e)(1), and section 3231(e)(8), where applicable, on compensation deferred under the plan (the FICA or RRTA amount). Additionally, a plan may provide for the acceleration of the time or schedule of a payment, or a payment may be made under the plan, to pay the income tax at source on wages imposed under section 3401 or the corresponding withholding provisions of applicable state, local, or foreign tax laws as a result of the payment of the FICA or RRTA amount, and to pay the additional income tax at source on wages attributable to the pyramiding section 3401 wages and taxes. However, the total payment under this acceleration provision must not exceed the aggregate of the FICA or RRTA amount, and the income tax withholding related to such FICA or RRTA amount.

(vii) ***Payment upon income inclusion under section 409A.*** A plan may provide for the acceleration of the time or schedule of a payment, or a payment under such plan may be made, at any time the plan fails to meet the requirements of section 409A and these regulations. Such payment may not exceed the amount required to be included in income as a result of the failure to comply with the requirements of section 409A and these regulations.

(viii) ***Cancellation of deferrals following an unforeseeable emergency or hardship distribution.*** A plan may provide for a cancellation of a service provider's deferral election, or such a cancellation may be made, due to an unforeseeable emergency or a hardship distribution pursuant to § 1.401(k)-1(d)(3). The deferral election must be cancelled, not merely postponed or otherwise delayed. Accordingly, any later deferral election will be subject to the provisions governing initial deferral elections. See § 1.409A-2(a).

(ix) ***Plan terminations and liquidations.*** A plan may provide for the acceleration of the time and form of a payment, or a payment under such plan may be made, where the acceleration of the payment is made pursuant to a termination and liquidation of the plan in accordance with one of the following:

(A) The service recipient's termination and liquidation of the plan within 12 months of a corporate dissolution taxed under section 331, or with the approval of a bankruptcy court pursuant to 11 U.S.C. § 503(b)(1)(A), provided that the amounts deferred under the plan are included in the participants' gross incomes in the latest of the following years (or, if earlier, the taxable year in which the amount is actually or constructively received).

(*1*) The calendar year in which the plan termination and liquidation occurs.

(*2*) The first calendar year in which the amount is no longer subject to a substantial risk of forfeiture.

(*3*) The first calendar year in which the payment is administratively practicable.

(B) The service recipient's termination and liquidation of the plan pursuant to irrevocable action taken by the service recipient within the 30 days preceding or the 12 months following a change in control event (as defined in paragraph (i)(5) of this section), provided that this paragraph will only apply to a payment under a plan if all agreements, methods, programs, and other arrangements sponsored by the service recipient immediately after the time of the change in control event with respect to which deferrals of compensation are treated as having been deferred under a single plan under § 1.409A-1(c)(2) are terminated and liquidated with respect to each participant that experienced the change in control event, so that under the terms of the termination and liquidation all such participants are required to receive all amounts of compensation deferred under the terminated agreements, methods, programs, and other arrangements within 12 months of the date the service recipient irrevocably takes all necessary action to terminate and liquidate the agreements, methods, programs, and other arrangements. Solely for purposes of this paragraph (j)(4)(ix)(B), the applicable service recipient with the discretion to liquidate and terminate the agreements, methods, programs, and other arrangements is the service recipient that is primarily liable immediately after the transaction for the payment of the deferred compensation.

(C) The service recipient's termination and liquidation of the plan, provided that—

(*1*) The termination and liquidation does not occur proximate to a downturn in the financial health of the service recipient;

(*2*) The service recipient terminates and liquidates all agreements, methods, programs, and other arrangements sponsored by the service recipient that would be aggregated with any terminated and liquidated agreements, methods, programs, and other

arrangements under § 1.409A-1(c) if the same service provider had deferrals of compensation under all of the agreements, methods, programs, and other arrangements that are terminated and liquidated;

(3) No payments in liquidation of the plan are made within 12 months of the date the service recipient takes all necessary action to irrevocably terminate and liquidate the plan other than payments that would be payable under the terms of the plan if the action to terminate and liquidate the plan had not occurred;

(4) All payments are made within 24 months of the date the service recipient takes all necessary action to irrevocably terminate and liquidate the plan; and

(5) The service recipient does not adopt a new plan that would be aggregated with any terminated and liquidated plan under § 1.409A-1(c) if the same service provider participated in both plans, at any time within three years following the date the service recipient takes all necessary action to irrevocably terminate and liquidate the plan.

(D) Such other events and conditions as the Commissioner may prescribe in generally applicable guidance published in the Internal Revenue Bulletin (see § 601.601(d)(2) of this chapter).

(x) ***Certain distributions to avoid a nonallocation year under section 409(p).*** A plan may provide for an acceleration of the time and form of a payment, or a payment may be made under such plan, to prevent the occurrence of a nonallocation year (within the meaning of section 409(p)(3)) in the plan year of an employee stock ownership plan next following the plan year in which such payment is made, provided that the amount distributed may not exceed 125 percent of the minimum amount of distribution necessary to avoid the occurrence of a nonallocation year. Solely for purposes of determining permissible distributions under this paragraph (j)(4)(x), synthetic equity (within the meaning of section 409(p)(6)(C) and § 1.409(p)-1(f)) granted during the plan year of the employee stock ownership plan in which such payment is made is disregarded for purposes of determining whether the subsequent plan year would result in a nonallocation year.

(xi) ***Payment of state, local, or foreign taxes.*** A plan may provide for an acceleration of the time and form of a payment, or a payment may be made under such plan, to reflect payment of state, local, or foreign tax obligations arising from participation in the plan that apply to an amount deferred under the plan before the amount is paid or made available to the participant (the state, local, or foreign tax amount). Such payment may not exceed the amount of such taxes due as a result of participation in the plan. Such payment may be made by distributions to the participant in the form of withholding pursuant to provisions of applicable state, local, or foreign law or by distribution directly to the participant. Additionally, an arrangement may provide for the acceleration of the time or schedule of payment, or a payment may be made under such arrangement, to pay the income tax at source on wages imposed under section 3401 as a result of such payment and to pay the additional income tax at source on wages imposed under section 3401 attributable to such additional section 3401 wages and taxes. However, the total payment under this acceleration provision must not exceed the aggregate of the state, local, and foreign tax amount, and the income tax withholding related to such state, local, and foreign tax amount.

(xii) ***Cancellation of deferral elections due to disability.*** A plan may provide for a cancellation of a service provider's deferral election, or a cancellation of such election may be made, where such cancellation occurs by the later of the end of the taxable year of the service provider or the 15th day of the third month following the date the service provider incurs a disability. For purposes of this paragraph, a disability refers to any medically determinable physical or mental impairment resulting in the service provider's inability to perform the duties of his or her position or any substantially similar position, where such impairment can be expected to result in death or can be expected to last for a continuous period of not less than six months.

(xiii) ***Certain offsets.*** A plan may provide for the acceleration of the time or schedule of a payment, or a payment may be made under such plan, as satisfaction of a debt of the service provider to the service recipient, where such debt is incurred in the ordinary course of the service relationship between the service recipient and the service provider, the entire amount of reduction in any of the service recipient's taxable years does not exceed $5,000, and the reduction is made at the same time and in the same amount as the debt otherwise would have been due and collected from the service provider.

(xiv) ***Bona fide disputes as to a right to a payment.*** A plan may provide for the acceleration of the time or schedule of one or more payments, or a payment may be made under such plan, where such payments occur as part of a settlement between the service provider and the service recipient of an arm's length, bona fide dispute as to the service provider's right to the deferred amount. Discretion to accelerate payments, other than due to an arm's length settlement of a bona fide dispute as to the service provider's right to the deferred amount, is not permitted under this paragraph (j)(4)(xiv). Whether a payment qualifies for the exception under this paragraph is based on all relevant facts and circumstances. A payment will be presumed not to meet this exception unless the payment is subject to a substantial reduction in the value of the payment made in relation to the amount that would have been payable had there been no dispute as to the service provider's right to the payment. For this purpose, a reduction that is less than 25 percent of the present value of the deferred amount in dispute generally is not a substantial reduction. In addition, a payment will be presumed not to meet this exception if the payment is made proximate to a downturn in the financial health of the service recipient.

(5) ***Nonqualified deferred compensation plans linked to qualified employer plans or certain other arrangements.*** If a nonqualified deferred compensation plan provides that the amount deferred under the plan is the amount determined under the formula determining benefits under a qualified employer plan (as defined in § 1.409A-1(a)(2)), or a broad-based foreign retirement plan (as defined in § 1.409A-1(a)(3)(v)) maintained by the service recipient but applied without regard to one or more limitations applicable to the qualified employer plan under the Internal Revenue Code or to the broad-based foreign retirement plan under other applicable law, or that the amount deferred under the nonqualified deferred compensation plan is determined as an amount offset by some or all of the benefits provided under the qualified employer plan or broad-based foreign retirement plan, a decrease in amounts deferred under the nonqualified deferred compensation plan that results directly from the operation of the qualified employer plan or broad-based foreign retirement plan (other than service provider actions described in paragraphs (j)(5)(iii) and (iv) of this section) including changes in benefit limitations applicable to the qualified employer plan or the broad-based foreign retirement plan under the Internal Revenue Code or other applicable law does not constitute an acceleration of a payment under the nonqualified deferred compensation plan, provided that such operation does not otherwise result in a change in the time or form of a payment under the nonqualified deferred compensation plan, and provided further that the change in the amounts

deferred under the nonqualified deferred compensation plan does not exceed such change in the amounts deferred under the qualified employer plan or the broad-based foreign retirement plan, as applicable. In addition, with respect to such a nonqualified deferred compensation plan, the following actions or failures to act will not constitute an acceleration of a payment under the nonqualified deferred compensation plan even if in accordance with the terms of the nonqualified deferred compensation plan, the actions or inactions result in a decrease in the amounts deferred under the plan, provided that such actions or inactions do not otherwise affect the time or form of payment under the nonqualified deferred compensation plan, and provided further that with respect to actions or inactions described in paragraphs (j)(5)(i) and (ii) of this section, the change in the amount deferred under the nonqualified deferred compensation plan does not exceed the change in the amounts deferred under the qualified employer plan or the broad-based foreign retirement plan, as applicable:

(i) A service provider's action or inaction under the qualified employer plan or broad-based foreign retirement plan with respect to whether to elect to receive a subsidized benefit or an ancillary benefit under the qualified employer plan or broad-based foreign retirement plan.

(ii) The amendment of a qualified employer plan or broad-based foreign retirement plan to increase benefits provided under such plan, or to add or remove a subsidized benefit or an ancillary benefit.

(iii) A service provider's action or inaction under a qualified employer plan with respect to elective deferrals and other employee pre-tax contributions subject to the contribution restrictions under section 401(a)(30) or section 402(g), including an adjustment to a deferral election under such qualified employer plan, provided that for any given taxable year, the service provider's action or inaction does not result in a decrease in the amounts deferred under all nonqualified deferred compensation plans in which the service provider participates (other than amounts described in paragraph (j)(5)(iv) of this section) in excess of the limit with respect to elective deferrals under section 402(g)(1)(A), (B), and (C) in effect for the taxable year in which such action or inaction occurs.

(iv) A service provider's action or inaction under a qualified employer plan with respect to elective deferrals and other employee pre-tax contributions subject to the contributions restrictions under section 401(a)(30) or section 402(g), and after-tax contributions by the service provider to a qualified employer plan that provides for such contributions, that affects the amounts that are credited under one or more nonqualified deferred compensation plans as matching amounts or other similar amounts contingent on such elective deferrals, pre-tax contributions, or after-tax contributions, provided that the total of such matching or contingent amounts, as applicable, never exceeds 100 percent of the matching or contingent amounts that would be provided under the qualified employer plan absent any plan-based restrictions that reflect limits on qualified plan contributions under the Internal Revenue Code.

(6) ***Changes in elections under a cafeteria plan.*** A change in an election under a cafeteria plan (as defined in section 125(d)) does not result in an accelerated payment of an amount deferred under a nonqualified deferred compensation plan to the extent that the change in the amount deferred under the nonqualified deferred compensation plan results solely from the application of the change in amount eligible to be treated as compensation under the terms of the nonqualified deferred compensation plan resulting from the election change under the cafeteria plan, to a benefit formula

under the nonqualified deferred compensation plan based upon the service provider's eligible compensation, and only to the extent that such change applies in the same manner as any other increase or decrease in compensation would apply to such benefit formula.

[T.D. 9321, 72 FR 19276, Apr. 17, 2007; 72 FR 41622, July 31, 2007]

§ 1.409A-4 Calculation of income inclusion. [Reserved]

§ 1.409A-5 Funding. [Reserved]

§ 1.409A-6 Application of section 409A and effective dates.

(a) ***Statutory application and effective dates*** —

(1) ***Application to amounts deferred*** —

(i) ***In general.*** Except as otherwise provided in this section, section 409A applies with respect to amounts deferred in taxable years beginning after December 31, 2004, and with respect to amounts deferred in taxable years beginning before January 1, 2005, if the plan under which the deferral is made is materially modified after October 3, 2004. For amounts deferred in taxable years beginning before January 1, 2005, under a plan that is materially modified after October 3, 2004, whether the plan complies with the requirements of section 409A and these regulations is determined by reference to the terms of the plan in effect as of, and any actions taken under the plan on or after, the date of the material modification. Section 409A is applicable with respect to earnings on amounts deferred only to the extent that section 409A is applicable with respect to the amounts deferred. Accordingly, section 409A does not apply with respect to earnings on amounts deferred before January 1, 2005, unless section 409A applies with respect to the amounts deferred. For this purpose, a right to earnings that is subject to a substantial risk of forfeiture (as defined in § 1.83-3(c)) or a requirement to perform further services, on an amount deferred that is not subject to a substantial risk of forfeiture (as defined in § 1.83-3(c)) or a requirement to perform further services, is not treated as earnings on the amount deferred, but a separate right to compensation. Except as otherwise provided in applicable guidance (see § 601.601(d)(2) of this chapter), the provisions of §§ 1.409A-1 through 1.409A-5 and this section provide the exclusive means of identifying agreements, methods, programs, or other arrangements subject to section 409A, and the exclusive means of satisfying the requirements of section 409A with respect to such agreements, methods, programs, or other arrangements.

(ii) ***Collectively bargained plans.*** Section 409A does not apply with respect to amounts deferred under a plan maintained pursuant to one or more bona fide collective bargaining agreements in effect on October 3, 2004, for the period ending on the earlier of the date on which the last of such collective bargaining agreements terminates (determined without regard to any extension thereof after October 3, 2004) or December 31, 2009.

(2) ***Identification of date of deferral for statutory effective date purposes.*** For purposes of determining whether section 409A is applicable with respect to an amount, the amount is considered deferred before January 1, 2005, if before January 1, 2005, the service provider had a legally binding right to be paid the amount, and the right to the amount was earned and vested. For purposes of this paragraph (a)(2), a right to an amount was earned and vested only if the amount was not subject to a substantial risk of forfeiture (as defined in § 1.83-3(c)) or a requirement to perform further services. Amounts to which the service provider did not have a legally binding right before January 1, 2005

(for example, because the service recipient retained discretion to reduce the amount), will not be considered deferred before January 1, 2005. In addition, amounts to which the service provider had a legally binding right before January 1, 2005, but the right to which was subject to a substantial risk of forfeiture or a requirement to perform further services after December 31, 2004, are not considered deferred before January 1, 2005, for purposes of the effective date. Notwithstanding the foregoing, an amount to which the service provider had a legally binding right before January 1, 2005, but for which the service provider was required to continue performing services to retain the right only through the completion of the payroll period (as defined in § 1.409A-1(b)(3)) that includes December 31, 2004, is not treated as subject to a requirement to perform further services (or a substantial risk of forfeiture) for purposes of the effective date. For purposes of this paragraph (a)(2), a stock option, stock appreciation right, or similar compensation that on or before December 31, 2004, was immediately exercisable for cash or substantially vested property (as defined in § 1.83-3(b)) is treated as earned and vested, regardless of whether the right would terminate if the service provider ceased providing services for the service recipient.

(3) ***Calculation of amount of compensation deferred for statutory effective date purposes*** —

(i) ***Nonaccount balance plans.*** The amount of compensation deferred before January 1, 2005, under a nonqualified deferred compensation plan that is a nonaccount balance plan (as defined in § 1.409A-1(c)(2)(i)(C)), equals the present value of the amount to which the service provider would have been entitled under the plan if the service provider voluntarily terminated services without cause on December 31, 2004, and received a payment of the benefits available from the plan on the earliest possible date allowed under the plan to receive a payment of benefits following the termination of services, and received the benefits in the form with the maximum value.

Notwithstanding the foregoing, for any subsequent taxable year of the service provider, the grandfathered amount may increase to equal the present value of the benefit the service provider actually becomes entitled to, in the form and at the time actually paid, determined under the terms of the plan (including applicable limits under the Internal Revenue Code), as in effect on October 3, 2004, without regard to any further services rendered by the service provider after December 31, 2004, or any other events affecting the amount of or the entitlement to benefits (other than a participant election with respect to the time or form of an available benefit). For purposes of calculating the present value of a benefit under this paragraph (a)(3)(i), reasonable actuarial assumptions and methods must be used. Whether assumptions and methods are reasonable for this purpose is determined as of each date the benefit is valued for purposes of determining the grandfathered benefit, provided that any reasonable actuarial assumptions and methods that were used by the service recipient with respect to such benefit as of December 31, 2004, will continue to be treated as reasonable assumptions and methods for purposes of calculating the grandfathered benefit.

Actuarial assumptions and methods will be presumed reasonable if they are the same as those used to value benefits under a qualified plan sponsored by the service recipient the benefits under which are part of the benefit formula under, or otherwise impact the amount of benefits under, the nonaccount balance nonqualified deferred compensation plan.

(ii) ***Account balance plans.*** The amount of compensation deferred before January 1, 2005, under a nonqualified deferred compensation plan that is an account balance plan (as defined in § 1.409A-1(c)(2)(i)(A)), equals the portion of the service provider's account balance as of December 31, 2004, the right to which was earned and vested (as defined in paragraph (a)(2) of

this section) as of December 31, 2004, plus any future contributions to the account, the right to which was earned and vested (as defined in paragraph (a)(2) of this section) as of December 31, 2004, to the extent such contributions are actually made.

(iii) ***Equity-based compensation plans.*** For purposes of determining the amounts deferred before January 1, 2005, under an equity-based compensation plan, the rules of paragraph (a)(3)(ii) of this section governing account balance plans are applied except that the account balance is deemed to be the amount of the payment available to the service provider on December 31, 2004 (or that would be available to the service provider if the right were immediately exercisable) the right to which is earned and vested (as defined in paragraph (a)(2) of this section) as of December 31, 2004. For this purpose, the payment available to the service provider excludes any exercise price or other amount that must be paid by the service provider.

(iv) ***Earnings.*** Earnings on amounts deferred under a plan before January 1, 2005, include only income (whether actual or notional) attributable to the amounts deferred under a plan as of December 31, 2004, or to such income. For example, notional interest earned under the plan on amounts deferred in an account balance plan as of December 31, 2004, generally will be treated as earnings on amounts deferred under the plan before January 1, 2005. Similarly, an increase in the amount of payment available pursuant to a stock option, stock appreciation right, or other equity-based compensation above the amount of payment available as of December 31, 2004, due to appreciation in the underlying stock after December 31, 2004, or accrual of other earnings such as dividends, is treated as earnings on the amount deferred. In the case of a nonaccount balance plan, earnings include the increase, due solely to the passage of time, in the present value of the future payments to which the service provider has obtained a legally binding right, the present value of which constituted the amounts deferred under the plan before January 1, 2005. Thus, for each year, there will be an increase (determined using the same interest rate used to determine the amounts deferred under the plan before January 1, 2005) resulting from the shortening of the discount period before the future payments are made, plus, if applicable, an increase in the present value resulting from the service provider's survivorship during the year. However, an increase in the potential benefits under a nonaccount balance plan due to, for example, an application of an increase in compensation after December 31, 2004, to a final average pay plan or subsequent eligibility for an early retirement subsidy, does not constitute earnings on the amounts deferred under the plan before January 1, 2005.

(v) ***Definition of plan.*** For purposes of paragraphs (a)(1), (2), and (3) of this section, the term “plan” has the meaning provided in § 1.409A-1(c), except that the plan aggregation rules do not apply for purposes of the actuarial assumptions and methods used in paragraph (a)(3)(i) of this section. Accordingly, different reasonable actuarial assumptions and methods may be used to calculate the amounts deferred by a service provider in two different agreements, methods, programs, or other arrangements each of which constitutes a nonaccount balance plan.

(4) ***Material modifications*** —

(i) ***In general.*** Except as otherwise provided, a modification of a plan is a material modification if a benefit or right existing as of October 3, 2004, is materially enhanced or a new material benefit or right is added, and such material enhancement or addition affects amounts earned and vested before January 1, 2005. Such material benefit enhancement or addition is a material modification whether it occurs pursuant to an amendment or to the service recipient's exercise of discretion under the terms of the plan. For example, an amendment to a plan to add a

provision that payments of deferred amounts earned and vested before January 1, 2005, may be allowed upon request if service providers are required to forfeit 20 percent of the amount of the payment (a haircut) would be a material modification to the plan. Similarly, a material modification would occur if a service recipient exercised discretion to accelerate vesting of a benefit under the plan to a date on or before December 31, 2004. However, it is not a material modification for a service recipient to exercise discretion over the time and manner of payment of a benefit to the extent such discretion is provided under the terms of the plan as of October 3, 2004. It is not a material modification for a service provider to exercise a right permitted under the plan as in effect on October 3, 2004. The amendment of a plan to bring the plan into compliance with the provisions of section 409A will not be treated as a material modification. However, a plan amendment or the exercise of discretion under the terms of the plan that materially enhances an existing benefit or right or adds a new material benefit or right will be considered a material modification even if the enhanced or added benefit would be permitted under section 409A. For example, the addition of a right to a payment upon an unforeseeable emergency of an amount earned and vested before January 1, 2005, would be considered a material modification. The reduction of an existing benefit is not a material modification. For example, the removal of a haircut provision generally would not constitute a material modification. The following modifications also are not material modifications for purposes of this paragraph (a)(4)(i):

(A) The establishment of or contributions to a trust or other arrangement from which benefits under the plan are to be paid is not a material modification of the plan, provided that the contribution to the trust or other arrangement would not otherwise cause an amount to be includible in the service provider's gross income.

(B) The modification of a provision requiring the immediate cancellation of a current deferral election, to require the cancellation of deferrals for the same length of time beginning with the first date at which the application of such cancellation would not violate section 409A (for example, the first date of the service provider's first taxable year following the cancellation).

(C) Compliance with a domestic relations order (as defined in § 1.409A-3(j)(4)(ii)) with respect to payments to an individual other than the service provider, or an amendment to a plan to require compliance with a domestic relations order with respect to payments to an individual other than the service provider.

(D) The modification of a plan providing a life annuity form of payment to permit an election between the existing life annuity form of payment and other forms of annuity payments that would be treated as a single form of payment with the existing life annuity form of payment under § 1.409A-2(b)(2)(ii).

(E) The modification of a grandfathered plan to add a limited cashout feature consistent with § 1.409A-3(j)(4)(v) (exception to prohibition on accelerated payments).

(ii) *Adoptions of new plans.* It is presumed that the adoption of a new plan or the grant of an additional benefit under an existing plan after October 3, 2004, and before January 1, 2005, constitutes a material modification of a plan. However, the presumption may be rebutted by demonstrating that the adoption of the plan or grant of the additional benefit was consistent with the service recipient's historical compensation practices. For example, the presumption that the grant of a discounted stock option on November 1, 2004, is a material modification of a plan may be rebutted by demonstrating that the grant was consistent with the historic practice

of granting substantially similar discounted stock options (both as to terms and amounts) each November for a significant number of years. Notwithstanding paragraph (a)(4)(i) of this section and this paragraph (a)(4)(ii), the grant of an additional benefit under an existing plan that consists of a deferral of additional compensation not otherwise provided under the plan as of October 3, 2004, will be treated as a material modification of the plan only as to the additional deferral of compensation, if the plan explicitly identifies the additional deferral of compensation and provides that the additional deferral of compensation is subject to section 409A. Accordingly, amendments to conform a plan to the requirements of section 409A with respect to deferrals under a plan occurring after December 31, 2004, will not constitute a material modification of the plan with respect to amounts deferred that are earned and vested on or before December 31, 2004, provided that there is no concurrent material modification with respect to the amount of, or rights to, amounts deferred that were earned and vested on or before December 31, 2004. Similarly, a grant of an additional benefit under a new plan adopted after October 3, 2004, and before January 1, 2005, will not be treated as a material modification of an existing plan to the extent that the new plan explicitly identifies additional deferrals of compensation and provides that the additional deferrals of compensation are subject to section 409A.

(iii) ***Suspension or termination of a plan.*** A cessation of deferrals under, or termination of, a plan, pursuant to the provisions of such plan, is not a material modification. Amending a plan to provide participants an election whether to terminate participation in a plan generally constitutes a material modification of the plan.

(iv) ***Changes to investment measures—account balance plans.*** With respect to an account balance plan (as defined in § 1.409A-1(c)(2)(i)(A)), it is not a material modification to change a notional investment measure to, or to add to an existing investment measure, an investment measure that qualifies as a predetermined actual investment within the meaning of § 31.3121(v)(2)-1(d)(2) of this chapter or, for any given taxable year, reflects a reasonable rate of interest (determined in accordance with § 31.3121(v)(2)-1(d)(2)(i)(C) of this chapter).

(v) ***Stock rights.*** The modification, extension, or renewal of a stock right will not constitute a material modification of the stock right, if the modification, extension, or renewal would not be treated as the grant of a new stock right under § 1.409A-1(b)(5)(v)(A), and would not result in the stock right being treated as having had a deferral feature from the date of grant pursuant to § 1.409A-1(b)(5)(v)(C).

(vi) ***Rescission of modifications.*** Any modification to the terms of a plan that would inadvertently result in treatment as a material modification under this section is not considered a material modification of the plan to the extent the modification in the terms of the plan is rescinded by the earlier of a date before the right is exercised (if the change grants a discretionary right) or the last day of the taxable year of the service provider during which such change occurred. Thus, for example, if a service recipient modifies the terms of a plan on March 1 to allow an individual employee to elect a new change in the time or form of payment without realizing that such a change constituted a material modification that would subject the plan to the requirements of section 409A, and the modification is rescinded on November 1, then if no change in the time or form of payment has been made pursuant to the modification before November 1, the plan is not considered materially modified under this section.

(vii) ***Definition of plan.*** For purposes of this paragraph (a)(4), the term "plan" has the same meaning provided in § 1.409A-1(c), except that the plan aggregation rules of § 1.409A-1(c)(2) do not apply.

(b) ***Regulatory applicability date.*** § 1.409A-1, § 1.409A-2, § 1.409A-3 and this section are applicable for taxable years beginning on or after January 1, 2008.

[T.D. 9321, 72 FR 19276, Apr. 17, 2007; 72 FR 41623, July 31, 2007; 73 FR 54945, Sept. 24, 2008; 73 FR 58438, Oct. 7, 2008]

§ 1.409(p)-1 Prohibited allocation of securities in an S corporation.

(a) ***Organization of this section and definition*** —

(1) ***Organization of this section.*** Section 409(p) applies if a nonallocation year occurs in an ESOP that holds shares of stock of an S corporation that are employer securities. Paragraph (b) of this section sets forth the general rule under section 409(p)(1) and (2) prohibiting any accrual or allocation to a disqualified person in a nonallocation year. Paragraph (c) of this section sets forth rules under section 409(p)(3), (5), and (7) for determining whether a year is a nonallocation year, generally based on whether disqualified persons own at least 50 percent of the shares of the S corporation, either taking into account only the outstanding shares of the S corporation (including shares held by the ESOP) or taking into account both the outstanding shares and synthetic equity of the S corporation. Paragraphs (d), (e), and (f) of this section contain definitions of disqualified person under section 409(p)(4) and (5), deemed-owned ESOP shares under section 409(p)(4)(C), and synthetic equity under section 409(p)(6)(C). Paragraph (g) of this section contains a standard for determining when the principal purpose of the ownership structure of an S corporation constitutes an avoidance or evasion of section 409(p).

(2) ***Definitions.*** The following definitions apply for purposes of section 409(p) and this section, as well as for purposes of section 4979A, which imposes an excise tax on certain events.

(i) ***Deemed-owned ESOP shares*** has the meaning set forth in paragraph (e) of this section.

(ii) ***Disqualified person*** has the meaning set forth in paragraph (d) of this section.

(iii) ***Employer*** has the meaning set forth in § 1.410(b)-9.

(iv) ***Employer securities*** means employer securities within the meaning of section 409(l).

(v) ***ESOP*** means an employee stock ownership plan within the meaning of section 4975(e)(7).

(vi) ***Prohibited allocation*** has the meaning set forth in paragraph (b)(2) of this section.

(vii) ***S corporation*** means S corporation within the meaning of section 1361.

(viii) ***Synthetic equity*** has the meaning set forth in paragraph (f) of this section.

(b) ***Prohibited allocation in a nonallocation year*** —

(1) ***General rule.*** Section 409(p)(1) provides that an ESOP holding employer securities consisting of stock in an S corporation must provide that no portion of the assets of the plan attributable to (or allocable in lieu of) such employer securities may, during a nonallocation year, accrue under the ESOP, or be allocated directly or indirectly under any plan of the employer (including the ESOP) meeting the requirements of section 401(a), for the benefit of any disqualified person.

(2) ***Additional rules*** —

(i) ***Prohibited allocation definition.*** For purposes of section 409(p) and this section, a *prohibited allocation* means an impermissible accrual or an impermissible allocation. Whether there is impermissible accrual is determined under paragraph (b)(2)(ii) of this section and whether there is an impermissible allocation is determined under paragraph (b)(2)(iii) of this section. The amount of the prohibited allocation is equal to the sum of the amount of the impermissible accrual plus the amount of the impermissible allocation.

(ii) ***Impermissible accrual.*** There is an impermissible accrual to the extent that employer securities consisting of stock in an S corporation owned by the ESOP and any assets attributable thereto are held under the ESOP for the benefit of a disqualified person during a nonallocation year. For this purpose, assets attributable to stock in an S corporation owned by an ESOP include any distributions, within the meaning of section 1368, made on S corporation stock held in a disqualified person's account in the ESOP (including earnings thereon), plus any proceeds from the sale of S corporation securities held for a disqualified person's account in the ESOP (including any earnings thereon). Thus, in the event of a nonallocation year, all S corporation shares and all other ESOP assets attributable to S corporation stock, including distributions, sales proceeds, and earnings on either distributions or proceeds, held for the account of such disqualified person in the ESOP during that year are an impermissible accrual for the benefit of that person, whether attributable to contributions in the current year or in prior years.

(iii) ***Impermissible allocation.*** An impermissible allocation occurs during a nonallocation year to the extent that a contribution or other annual addition (within the meaning of section 415(c)(2)) is made with respect to the account of a disqualified person, or the disqualified person otherwise accrues additional benefits, directly or indirectly under the ESOP or any other plan of the employer qualified under section 401(a) (including a release and allocation of assets from a suspense account, as described at § 54.4975-11(c) and (d) of this chapter) that, for the nonallocation year, would have been added to the account of the disqualified person under the ESOP and invested in employer securities consisting of stock in an S corporation owned by the ESOP but for a provision in the ESOP that precludes such addition to the account of the disqualified person, and investment in employer securities during a nonallocation year.

(iv) ***Effects of prohibited allocation*** —

(A) ***Deemed distribution.*** If a plan year is a nonallocation year, the amount of any prohibited allocation in the account of a disqualified person as of the first day of the plan year, as determined under this paragraph (b)(2), is treated as distributed from the ESOP (or other plan of the employer) to the disqualified person on the first day of the plan year. In the case of an impermissible accrual or impermissible allocation that is not in the account of the disqualified person as of the first day of the plan year, the amount of the prohibited allocation, as determined under this paragraph (b)(2), is treated as distributed on the date of the prohibited allocation. Thus, the fair market value of assets in the disqualified person's account that constitutes an impermissible accrual or allocation is included in gross income (to the extent in excess of any investment in the contract allocable to such amount) and is subject to any additional income tax that applies under section 72(t). A deemed distribution under this paragraph (b)(2)(iv)(A) is not an actual distribution from the ESOP. Thus, the amount of the prohibited allocation is not an eligible rollover distribution under section 402(c). However, for purposes of applying sections 72 and 402 with respect to any subsequent distribution from the ESOP, the amount that the disqualified person previously took into account as income as a result of the deemed distribution is treated as investment in the contract.

(B) ***Other effects.*** If there is a prohibited allocation, then the plan fails to satisfy the requirements of section 4975(e)(7) and ceases to be an ESOP. In such a case, the exemption from the excise tax on prohibited transactions for loans to leveraged ESOPs contained in section 4975(d)(3) would cease to apply to any loan (with the result that the employer would owe an excise tax with respect to the previously exempt loan). As a result of these failures, the plan would lose the prohibited transaction exemption for loans to an ESOP under section 4975(d)(3) of the Code and section 408(b)(3) of title I of the Employee Retirement Income Security Act of 1974, as amended (ERISA). Finally, a plan that does not operate in accordance with its terms to reflect section 409(p) fails to satisfy the qualification requirements of section 401(a), which would cause the corporation's S election to terminate under section 1362. See also section 4979A(a) which imposes an excise tax in certain events, including a prohibited allocation under section 409(p).

(C) ***Example.*** The rules of this paragraph (b)(2)(iv) are illustrated by the following example:

> *Example.* (i) *Facts.* Corporation M, an S corporation under section 1361, establishes Plan P as an ESOP in 2006, with a calendar plan year. Plan P is a qualified plan that includes terms providing that a prohibited allocation will not occur during a nonallocation year in accordance with section 409(p). On December 31, 2006, all of the 1,000 outstanding shares of stock of Corporation M, with a fair market value of $30 per share, are contributed to Plan P and allocated among accounts established within Plan P for the benefit of Corporation M's three employees, individuals A, B, and C, based on their compensation for 2006. As a result, on December 31, 2006, participant A's account includes 800 of the shares ($24,000); participant B's account includes 140 of the shares ($4,200); and participant C's account includes the remaining 60 shares ($1,800). The plan year 2006 is a nonallocation year, participants A and B are disqualified persons on December 31, 2006, and a prohibited allocation occurs for A and B on December 31, 2006.
> (ii) *Conclusion.* On December 31, 2006, participants A and B each have a deemed distribution as a result of the prohibited allocation, resulting in income of $24,000 for participant A and $4,200 for participant B. Corporation M owes an excise tax under section 4979A, based on an amount involved of $28,200. Plan P ceases to be an ESOP on the date of the prohibited allocation (December 31, 2006) and also fails to satisfy the qualification requirements of section 401(a) on that date due to the failure to comply with the provisions requiring compliance with section 409(p). As a result of having an ineligible shareholder under section 1361(b)(1)(B), Corporation M ceases to be an S corporation under section 1361 on December 31, 2006.

(v) ***Prevention of prohibited allocation*** —

(A) ***Transfer of account to non-ESOP.*** An ESOP may prevent a nonallocation year or a prohibited allocation during a nonallocation year by providing for assets (including S corporation securities) allocated to the account of a disqualified person (or a person reasonably

expected to become a disqualified person absent a transfer described in this paragraph (b)(2)(v)(A)) to be transferred into a separate portion of the plan that is not an ESOP, as described in § 54.4975-11(a)(5) of this chapter, or to another plan of the employer that satisfies the requirements of section 401(a) and that is not an ESOP. Any such transfer must be effectuated by an affirmative action taken no later than the date of the transfer, and all subsequent actions (including benefit statements) generally must be consistent with the transfer having occurred on that date. In the event of such a transfer involving S corporation securities, the recipient plan is subject to tax on unrelated business taxable income under section 512.

(B) ***Relief from nondiscrimination requirement.*** Pursuant to this paragraph (b)(2)(v)(B), if a transfer described in paragraph (b)(2)(v)(A) of this section is made from an ESOP to a separate portion of the plan or to another qualified plan of the employer that is not an ESOP, then both the ESOP and the plan or portion of a plan that is not an ESOP do not fail to satisfy the requirements of § 1.401(a)(4)-4 merely because of the transfer. Further, subsequent to the transfer, that plan will not fail to satisfy the requirements of § 1.401(a)(4)-4 merely because of the benefits, rights, and features with respect to the transferred benefits if those benefits, rights, and features would satisfy the requirements of § 1.401(a)(4)-4 if the mandatory disaggregation rule for ESOPs at § 1.410(b)-7(c)(2) did not apply.

(c) ***Nonallocation year.*** A year is a nonallocation year if it is described in the general definition in paragraph (c)(1) of this section or if the special rule of paragraph (c)(3) of this section applies.

(1) ***General definition.*** For purposes of section 409(p) and this section, a *nonallocation year* means a plan year of an ESOP during which, at any time, the ESOP holds any employer securities that are shares of an S corporation and either—

(i) Disqualified persons own at least 50 percent of the number of outstanding shares of stock in the S corporation (including deemed-owned ESOP shares); or

(ii) Disqualified persons own at least 50 percent of the sum of:

(A) The outstanding shares of stock in the S corporation (including deemed-owned ESOP shares); and

(B) The shares of synthetic equity in the S corporation owned by disqualified persons.

(2) ***Attribution rules.*** For purposes of this paragraph (c), the rules of section 318(a) apply to determine ownership of shares in the S corporation (including deemed-owned ESOP shares) and synthetic equity. However, for this purpose, section 318(a)(4) (relating to options to acquire stock) is disregarded and, in applying section 318(a)(1), the members of an individual's family include members of the individual's family under paragraph (d)(2) of this section. In addition, an individual is treated as owning deemed-owned ESOP shares of that individual notwithstanding the employee trust exception in section 318(a)(2)(B)(i). If the attribution rules in paragraph (f)(1) of this section apply, then the rules of paragraph (f)(1) of this section are applied before (and in addition to) the rules of this paragraph (c)(2).

(3) ***Special rule for avoidance or evasion.***

(i) Any ownership structure described in paragraph (g)(3) of this section results in a nonallocation year. In addition, each individual referred to in paragraph (g)(3) of this section is treated as a disqualified person and the individual's interest in the separate entity described in paragraph (g)(3) of this section is treated as synthetic equity.

(ii) Pursuant to section 409(p)(7)(B), the Commissioner, in revenue rulings, notices, and other guidance published in the Internal Revenue Bulletin (see § 601.601(d)(2)(ii)(*b*) of this chapter), may provide that a nonallocation year occurs in any case in which the principal purpose of the ownership structure of an S corporation constitutes an avoidance or evasion of section 409(p). For any year that is a nonallocation year under this paragraph (c)(3), the Commissioner may treat any person as a disqualified person. See paragraph (g) of this section for guidance regarding when the principal purpose of an ownership structure of an S corporation involving synthetic equity constitutes an avoidance or evasion of section 409(p).

(4) ***Special rule for certain stock rights.***

(i) For purposes of paragraph (c)(1) of this section, a person is treated as owning stock if the person has an exercisable right to acquire the stock, the stock is both issued and outstanding, and the stock is held by persons other than the ESOP, the S corporation, or a related entity (as defined in paragraph (f)(3) of this section).

(ii) This paragraph (c)(4) applies only if treating persons as owning the shares described in paragraph (c)(4)(i) of this section results in a nonallocation year. This paragraph (c)(4) does not apply to a right to acquire stock of an S corporation held by a shareholder that is subject to Federal income tax that, under § 1.1361-1(l)(2)(iii)(A) or (l)(4)(iii)(C), would not be taken into account in determining if an S corporation has a second class of stock, provided that a principal purpose of the right is not the avoidance or evasion of section 409(p). Under the last sentence of paragraph (f)(2)(i) of this section, this paragraph (c)(4)(ii) does not apply for purposes of determining ownership of deemed-owned ESOP shares or whether an interest constitutes synthetic equity.

(5) ***Application with respect to shares treated as owned by more than one person.*** For purposes of applying paragraph (c)(1) of this section, if, by application of the rules of paragraph (c)(2), (c)(4), or (f)(1) of this section, any share is treated as owned by more than one person, then that share is counted as a single share and that share is treated as owned by disqualified persons if any of the owners is a disqualified person.

(6) ***Effect of nonallocation year.*** See paragraph (b) of this section for a prohibition applicable during a nonallocation year. See also section 4979A for an excise tax applicable in certain cases, including section 4979A(a)(3) and (4) which applies during a nonallocation year (whether or not there is a prohibited allocation during the year).

(d) ***Disqualified persons.*** A person is a disqualified person if the person is described in paragraph (d)(1), (d)(2), or (d)(3) of this section.

(1) ***General definition.*** For purposes of section 409(p) and this section, a *disqualified person* means any person for whom—

(i) The number of such person's deemed-owned ESOP shares of the S corporation is at least 10 percent of the number of the deemed-owned ESOP shares of the S corporation;

(ii) The aggregate number of such person's deemed-owned ESOP shares and synthetic equity shares of the S corporation is at least 10 percent of the sum of—

(A) The total number of deemed-owned ESOP shares of the S corporation; and

(B) The person's synthetic equity shares of the S corporation;

(iii) The aggregate number of the S corporation's deemed-owned ESOP shares of such person and of the members of such person's family is at least 20 percent of the number of deemed-owned ESOP shares of the S corporation; or

(iv) The aggregate number of the S corporation's deemed-owned ESOP shares and synthetic equity shares of such person and of the members of such person's family is at least 20 percent of the sum of—

(A) The total number of deemed-owned ESOP shares of the S corporation; and

(B) The synthetic equity shares of the S corporation owned by such person and the members of such person's family.

(2) ***Treatment of family members; definition*** —

(i) ***Rule.*** Each member of the family of any person who is a disqualified person under paragraph (d)(1)(iii) or (iv) of this section and who owns any deemed-owned ESOP shares or synthetic equity shares is a disqualified person.

(ii) ***General definition.*** For purposes of section 409(p) and this section, *member of the family* means, with respect to an individual—

(A) The spouse of the individual;

(B) An ancestor or lineal descendant of the individual or the individual's spouse;

(C) A brother or sister of the individual or of the individual's spouse and any lineal descendant of the brother or sister; and

(D) The spouse of any individual described in paragraph (d)(2)(ii)(B) or (C) of this section.

(iii) ***Spouse.*** A spouse of an individual who is legally separated from such individual under a decree of divorce or separate maintenance is not treated as such individual's spouse under paragraph (d)(2)(ii) of this section.

(3) ***Special rule for certain nonallocation years.*** See paragraph (c)(3) of this section (relating to avoidance or evasion of section 409(p)) for special rules under which certain persons are treated as disqualified persons.

(4) ***Example.*** The rules of this paragraph (d) are illustrated by the following examples:

> *Example 1.* (i) *Facts.* An S corporation has 800 outstanding shares, of which 100 are owned by individual O and 700 are held in an employee stock ownership plan (ESOP) during 2006, including 200 shares held in the ESOP account of O, 65 shares held in the ESOP account of participant P, 65 shares held in the ESOP account of participant Q who is P's spouse, and 14 shares held in the ESOP account of R, who is the daughter of P and Q. There are no unallocated suspense account shares in the ESOP. The S corporation has no synthetic equity.

(ii) *Conclusion.* Under paragraph (d)(1)(i) of this section, O is a disqualified person during 2006 because O's account in the ESOP holds at least 10% of the shares owned by the ESOP (200 is 28.6% of 700). During 2006, neither P, Q, nor R is a disqualified person under paragraph (d)(1)(i) of this section, because each of their accounts holds less than 10% of the shares owned by the ESOP. However, each of P, Q, and R is a disqualified person under paragraph (d)(1)(iii) of this section because P and members of P's family own at least 20% of the deemed-owned ESOP shares (144 (the sum of 65, 65 and 14) is 20.6% of 700). As a result, disqualified persons own at least 50% of the outstanding shares of the S corporation during 2006 (O's 100 directly owned shares, O's 200 deemed-owned shares, P's 65 deemed-owned shares, Q's 65 deemed-owned shares, and R's 14 deemed-owned shares are 55.5% of 800).

Example 2. (i) *Facts.* An S corporation has shares that are owned by an ESOP and various individuals. Individuals S and T are married and have a son, U. Individuals V and W are married and have a daughter, X. Individuals U and X are married. Individual V has a brother Y. Their percentages of the deemed-owned ESOP shares of the S corporation are as follows: T has 6%; U has 7%; and V has 8%. Neither S, W, X, nor Y has any deemed-owned ESOP shares and the S corporation has no synthetic equity. However, individual S and individual Y each own directly a number of shares of the outstanding shares of the S corporation.
(ii) *Conclusion.* In this example, individual U is a disqualified person under paragraph (d)(1) of this section (because U's family consists of S, T, U, V, W, and X, and, in the aggregate, those persons own more than 20% of the deemed-owned ESOP shares) and individual X is also a disqualified person under paragraph (d)(1) of this section (because T's family consists of S, T, U, V, W, and X, and, in the aggregate, those persons own more than 20% of the deemed-owned ESOP shares). Further, individuals T and V are each a disqualified person under paragraph (d)(2) of this section because each is a member of a family that includes one or more disqualified persons and each has deemed-owned ESOP shares. However, individuals S, W, and Y are not disqualified persons under this paragraph (d). For example, S does not own more than 10% of the deemed-owned ESOP shares, and S's family, which consists of S, T, U, and X, owns, in the aggregate, only 13% of the deemed-owned ESOP shares (X's parents are not members of S's family because the family members of a person do not include the parents-in-law of the person's descendants). Further, note that, for purposes of determining whether the ESOP has a nonallocation year under paragraph (c) of this section, the shares directly owned by S and Y would be taken into account as shares owned by disqualified persons under the attribution rules in paragraph (c)(2) of this section.

(e) ***Deemed-owned ESOP shares.*** For purposes of section 409(p) and this section, a person is treated as owning his or her deemed-owned ESOP shares. Deemed-owned ESOP shares owned by a person mean, with respect to any person—

(1) Any shares of stock in the S corporation constituting employer securities that are allocated to such person's account under the ESOP; and

(2) Such person's share of the stock in the S corporation that is held by the ESOP but is not allocated to the account of any participant or beneficiary (with such person's share to be determined in the same proportion as the shares released and allocated from a suspense account, as described at § 54.4975-11(c) and (d) of the Excise Tax Regulations, under the ESOP for the most recently ended plan year for which there were shares released and allocated from a suspense account, or if there has been no such prior release and allocation from a suspense account, then determined in proportion to a reasonable estimate of the shares that would be released and allocated in the first year of a loan repayment).

(f) *Synthetic equity and rights to acquire stock of the S corporation* —

(1) *Ownership of synthetic equity.* For purposes of section 409(p) and this section, synthetic equity means the rights described in paragraph (f)(2) of this section. Synthetic equity is treated as owned by the person that has any of the rights specified in paragraph (f)(2) of the section. In addition, the attribution rules as set forth in paragraph (c)(2) of this section apply for purposes of attributing ownership of synthetic equity.

(2) *Synthetic equity* —

(i) *Rights to acquire stock of the S corporation* —

(A) *General rule.* Synthetic equity includes any stock option, warrant, restricted stock, deferred issuance stock right, stock appreciation right payable in stock, or similar interest or right that gives the holder the right to acquire or receive stock of the S corporation in the future. Rights to acquire stock in an S corporation with respect to stock that is, at all times during the period when such rights are effective, both issued and outstanding, and held by a person other than the ESOP, the S corporation, or a related entity are not synthetic equity but only if that person is subject to federal income taxes. (See also paragraph (c)(4) of this section.)

(B) *Exception for certain rights of first refusal.* A right of first refusal to acquire stock held by an ESOP is not treated as a right to acquire stock of an S corporation under this paragraph if the right to acquire stock would not be taken into account under § 1.1361-1(l)(2)(iii)(A) in determining if an S corporation has a second class of stock and the price at which the stock is acquired under the right of first refusal is not less than the price determined under section 409(h). See § 54.4975-11(d)(5) of the Excise Tax Regulations. The right of first refusal must also comply with the requirements of § 54.4975-7(b)(9) of the Excise Tax Regulations. This paragraph (f)(2)(i)(B) does not apply if, based on the facts and circumstances, the Commissioner finds that the right to acquire stock held by the ESOP constitutes an avoidance or an evasion of section 409(p). See also section 408(d) of ERISA, under which the exemption provided by section 408(e) of ERISA (and the related exemption at section 4975(d)(13) of the Code) does not apply to an owner-employee, including an employee or officer of an S corporation who is a 5 percent owner.

(ii) *Special rule for certain stock rights.* Synthetic equity also includes a right to a future payment (payable in cash or any other form other than stock of the S corporation) from an S corporation that is based on the value of the stock of the S corporation, such as appreciation in such value. Thus, for example, synthetic equity includes a stock appreciation right with respect to stock of an S corporation that is payable in cash or a phantom stock unit with respect to stock of an S corporation that is payable in cash.

(iii) ***Rights to acquire interests in or assets of an S corporation or a related entity.*** Synthetic equity includes a right to acquire stock or other similar interests in a related entity to the extent of the S corporation's ownership. Synthetic equity also includes a right to acquire assets of an S corporation or a related entity other than either rights to acquire goods, services, or property at fair market value in the ordinary course of business or fringe benefits excluded from gross income under section 132.

(iv) ***Special rule for nonqualified deferred compensation.***

(A) Synthetic equity also includes any of the following with respect to an S corporation or a related entity: any remuneration to which section 404(a)(5) applies; remuneration for which a deduction would be permitted under section 404(a)(5) if separate accounts were maintained; any right to receive property, as defined in § 1.83-3(e) of the Income Tax Regulations (including a payment to a trust described in section 402(b) or to an annuity described in section 403(c)) in a future year for the performance of services; any transfer of property in connection with the performance of services to which section 83 applies to the extent that the property is not substantially vested within the meaning of § 1.83-3(i) by the end of the plan year in which transferred; and a split-dollar life insurance arrangement under § 1.61-22(b) entered into in connection with the performance of services (other than one under which, at all times, the only economic benefit that will be provided under the arrangement is current life insurance protection as described in § 1.61-22(d)(3)). Synthetic equity also includes any other remuneration for services under a plan, method, or arrangement deferring the receipt of compensation to a date that is after the 15th day of the 3rd calendar month after the end of the entity's taxable year in which the related services are rendered. However, synthetic equity does not include benefits under a plan that is an eligible retirement plan within the meaning of section 402(c)(8)(B).

(B) For purposes of applying paragraph (f)(2)(iv)(A) of this section with respect to an ESOP, synthetic equity does not include any interest described in such paragraph (f)(2)(iv)(A) of this section to the extent that—

(*1*) The interest is nonqualified deferred compensation (within the meaning of section 3121(v)(2)) that was outstanding on December 17, 2004;

(*2*) The interest is an amount that was taken into account (within the meaning of § 31.3121(v)(2)-1(d) of this chapter) prior to January 1, 2005, for purposes of taxation under chapter 21 of the Internal Revenue Code (or income attributable thereto); and

(*3*) The interest was held before the first date on which the ESOP acquires any employer securities.

(v) ***No overlap among shares of deemed-owned ESOP shares or synthetic equity.*** Synthetic equity under this paragraph (f)(2) does not include shares that are deemed-owned ESOP shares (or any rights with respect to deemed-owned ESOP shares to the extent such rights are specifically provided under section 409(h)). In addition, synthetic equity under a specific subparagraph of this paragraph (f)(2) does not include anything that is synthetic equity under a preceding provision of paragraph (f)(2)(i), (ii), (iii), or (iv) of this section.

(3) ***Related entity.*** For purposes of this paragraph (f), *related entity* means any entity in which the S corporation holds an interest and which is a partnership, a trust, an eligible entity that is disregarded as an entity that is separate from its owner under § 301.7701-3 of this chapter, or a qualified subchapter S subsidiary under section 1361(b)(3).

(4) *Number of synthetic shares* —

(i) ***Synthetic equity determined by reference to S corporation shares.*** In the case of synthetic equity that is determined by reference to shares of stock of the S corporation, the person who is entitled to the synthetic equity is treated as owning the number of shares of stock deliverable pursuant to such synthetic equity. In the case of synthetic equity that is determined by reference to shares of stock of the S corporation, but for which payment is made in cash or other property (besides stock of the S corporation), the number of shares of synthetic equity treated as owned is equal to the number of shares of stock having a fair market value equal to the cash or other property (disregarding lapse restrictions as described in § 1.83-3(i)). Where such synthetic equity is a right to purchase or receive S corporation shares, the corresponding number of shares of synthetic equity is determined without regard to lapse restrictions as described in § 1.83-3(i) or to any amount required to be paid in exchange for the shares. Thus, for example, if a corporation grants an employee of an S corporation an option to purchase 100 shares of the corporation's stock, exercisable in the future only after the satisfaction of certain performance conditions, the employee is the deemed owner of 100 synthetic equity shares of the corporation as of the date the option is granted. If the same employee were granted 100 shares of restricted S corporation stock (or restricted stock units), subject to forfeiture until the satisfaction of performance or service conditions, the employee would likewise be the deemed owner of 100 synthetic equity shares from the grant date. However, if the same employee were granted a stock appreciation right with regard to 100 shares of S corporation stock (whether payable in stock or in cash), the number of synthetic equity shares the employee is deemed to own equals the number of shares having a value equal to the appreciation at the time of measurement (determined without regard to lapse restrictions).

(ii) ***Synthetic equity determined by reference to shares in a related entity.*** In the case of synthetic equity that is determined by reference to shares of stock (or similar interests) in a related entity, the person who is entitled to the synthetic equity is treated as owning shares of stock of the S corporation with the same aggregate value as the number of shares of stock (or similar interests) of the related entity (with such value determined without regard to any lapse restriction as defined at § 1.83-3(i)).

(iii) *Other synthetic equity* —

(A) ***General rule.*** In the case of any synthetic equity to which neither paragraph (f)(4)(i) of this section nor paragraph (f)(4)(ii) of this section apply, the person who is entitled to the synthetic equity is treated as owning on any date a number of shares of stock in the S corporation equal to the present value (on that date) of the synthetic equity (with such value determined without regard to any lapse restriction as defined at § 1.83-3(i)) divided by the fair market value of a share of the S corporation's stock as of that date.

(B) ***Use of annual or more frequent determination dates.*** A year is a nonallocation year if the thresholds in paragraph (c) of this section are met at any time during that year. However, for purposes of this paragraph (f)(4)(iii), an ESOP may provide that the number of shares of S corporation stock treated as owned by a person who is entitled to synthetic equity to which this paragraph (f)(4)(iii) applies is determined annually (or more frequently), as of the first day of the ESOP's plan year or as of any other reasonable determination date or dates during a plan year. If the ESOP so provides, the number of shares of synthetic equity to which this paragraph (f)(4)(iii) applies that are treated as owned by that person for any

period from a given determination date through the date immediately preceding the next following determination date is the number of shares treated as owned on the given determination date.

(C) ***Use of triennial recalculations.***

(*1*) Although an ESOP must have a determination date that is no less frequent than annually, if the terms of the ESOP so provide, then the number of shares of synthetic equity with respect to grants of synthetic equity to which this paragraph (f)(4)(iii) applies may be fixed for a specified period from a determination date identified under the ESOP through the day before a determination date that is not later than the third anniversary of the identified determination date. Thus, the ESOP must provide for the number of shares of synthetic equity to which this paragraph (f)(4)(iii) applies to be re-determined not less frequently than every three years, based on the S corporation share value on a determination date that is not later than the third anniversary of the identified determination date and the aggregate present value of the synthetic equity to which this paragraph (f)(4)(iii) applies (including all grants made during the three-year period) on that determination date.

(*2*) However, additional accruals, allocations, or grants (to which this paragraph (f)(4)(iii) applies) that are made during such three-year period are taken into account on each determination date during that period, based on the number of synthetic equity shares resulting from the additional accrual, allocation, or grant (determined as of the determination date on or next following the date of the accrual, allocation, or grant). See *Example 3* of paragraph (h) of this section for an example illustrating this paragraph (f)(4)(iii)(C).

(*3*) If, as permitted under this paragraph (f)(4)(iii)(C), an ESOP provides for the number of shares of synthetic equity to be fixed for a specified period from a determination date to a subsequent determination date, then that subsequent determination date can be changed to a new determination date, subject to the following conditions:

(*i*) The change in the subsequent determination date must be effectuated through a plan amendment adopted before the new determination date;

(*ii*) The new determination date must be earlier than the prior determination date (that is, the new determination date must be earlier than the determination date applicable in the absence of the plan amendment);

(*iii*) The conditions in paragraph (f)(4)(iii)(C)(*2*) of this section must be satisfied measured from the new determination date; and

(*iv*) Except to the extent permitted by the Commissioner in revenue rulings, notices, or other guidance published in the Internal Revenue Bulletin (see § 601.601(d)(2)(ii)(b) of this chapter), the change must be adopted in connection with either a change in the plan year of the ESOP or a merger, consolidation, or transfer of plan assets of the ESOP under section 414(l) (and the new determination date must consistent with that plan year change or section 414(l) event).

(4) ***Conditions for application of rules.*** This paragraph (f)(4)(iii)(C) only applies with respect to grants of synthetic equity to which this paragraph (f)(4)(iii) applies. In addition, paragraph (f)(4)(iii)(C) of this section applies only if the fair market value of a share of the S corporation securities on any determination date is not unrepresentative of the value of the S corporation securities throughout the rest of the plan year and only if the terms of the ESOP include provisions conforming to paragraph (f)(4)(iii)(C)(*1*) of this section which are consistently used by the ESOP for all persons. In addition, paragraph (f)(4)(iii)(C)(*1*) of this section applies only if the terms of the ESOP include provisions conforming to paragraphs (f)(4)(iii)(C)(*1*) of this section which are consistently used by the ESOP for all persons.

(iv) ***Adjustment of number of synthetic equity shares where ESOP owns less than 100 percent of S corporation.*** The number of synthetic shares otherwise determined under this paragraph (f)(4) is decreased ratably to the extent that shares of the S corporation are owned by a person who is not an ESOP and who is subject to Federal income taxes. For example, if an S corporation has 200 outstanding shares, of which individual A owns 50 shares and the ESOP owns the other 150 shares, and individual B would be treated under this paragraph (f)(4) as owning 100 synthetic equity shares of the S corporation but for this paragraph (f)(4)(iv), then, under the rule of this paragraph (f)(4)(iv), the number of synthetic shares treated as owned by B under this paragraph (f)(4) is decreased from 100 to 75 (because the ESOP only owns 75 percent of the outstanding stock of the S corporation, rather than 100 percent).

(v) ***Special rule for shares with greater voting power than ESOP shares.*** Notwithstanding any other provision of this paragraph (f)(4), if a synthetic equity right includes (directly or indirectly) a right to purchase or receive shares of S corporation stock that have per-share voting rights greater than the per-share voting rights of one or more shares of S corporation stock held by the ESOP, then the number of shares of deemed owned synthetic equity attributable to such right is not less than the number of shares that would have the same voting rights if the shares had the same per-share voting rights as shares held by the ESOP with the least voting rights. For example, if shares of S corporation stock held by the ESOP have one voting right per share, then an individual who holds an option to purchase one share with 100 voting rights is treated as owning 100 shares of synthetic equity.

(g) ***Avoidance or evasion of section 409(p) involving synthetic equity*** —

(1) ***General rule.*** Paragraph (g)(2) of this section sets forth a standard for determining whether the principal purpose of the ownership structure of an S corporation involving synthetic equity constitutes an avoidance or evasion of section 409(p). Paragraph (g)(3) of this section identifies certain specific ownership structures that constitute an avoidance or evasion of section 409(p). See also paragraph (c)(3) of this section for a rule under which the ownership structures in paragraph (g)(3) of this section result in a nonallocation year for purposes of section 409(p).

(2) ***Standard for determining when there is an avoidance or evasion of section 409(p) involving synthetic equity.*** For purposes of section 409(p) and this section, whether the principal purpose of the ownership structure of an S corporation involving synthetic equity constitutes an avoidance or evasion of section 409(p) is determined by taking into account all the surrounding facts and circumstances, including all features of the ownership of the S corporation's outstanding stock and related obligations (including synthetic equity), any shareholders who are taxable entities, and the cash distributions made to shareholders, to determine whether, to the extent of the ESOP's stock ownership, the ESOP receives the economic benefits of ownership in the S corporation that occur

during the period that stock of the S corporation is owned by the ESOP. Among the factors indicating that the ESOP receives those economic benefits include shareholder voting rights, the right to receive distributions made to shareholders, and the right to benefit from the profits earned by the S corporation, including the extent to which actual distributions of profits are made from the S corporation to the ESOP and the extent to which the ESOP's ownership interest in undistributed profits and future profits is subject to dilution as a result of synthetic equity. For example, the ESOP's ownership interest is not subject to dilution if the total amount of synthetic equity is a relatively small portion of the total number of shares and deemed-owned shares of the S corporation.

(3) ***Specific transactions that constitute an avoidance or evasion of section 409(p) involving segregated profits.*** Taking into account the standard in paragraph (g)(2) of this section, the principal purpose of the ownership structure of an S corporation constitutes an avoidance or evasion of section 409(p) in any case in which—

(i) The profits of the S corporation generated by the business activities of a specific individual or individuals are not provided to the ESOP, but are instead substantially accumulated and held for the benefit of the individual or individuals on a tax-deferred basis within an entity related to the S corporation, such as a partnership, trust, or corporation (such as in a subsidiary that is a disregarded entity), or any other method that has the same effect of segregating profits for the benefit of such individual or individuals (such as nonqualified deferred compensation described in paragraph (f)(2)(iv) of this section);

(ii) The individual or individuals for whom profits are segregated have rights to acquire 50 percent or more of those profits directly or indirectly (for example, by purchase of the subsidiary); and

(iii) A nonallocation year would occur if this section were separately applied with respect to either the separate entity or whatever method has the effect of segregating profits of the individual or individuals, treating such entity as a separate S corporation owned by an ESOP (or in the case of any other method of segregation of profits by treating those profits as the only assets of a separate S corporation owned by an ESOP).

(h) ***Examples.*** The rules of this section are illustrated by the following examples:

> *Example 1. Relating to determination of disqualified persons and nonallocation year if there is no synthetic equity.* (i) *Facts.* Corporation X is a calendar year S corporation that maintains an ESOP. X has a single class of common stock, of which there are a total of 1,200 shares outstanding. X has no synthetic equity. In 2006, individual A, who is not an employee of X (and is not related to any employee of X), owns 100 shares directly, B, who is an employee of *X*, owns 100 shares directly, and the remaining 1,000 shares are owned by an ESOP maintained by X for its employees. The ESOP's 1,000 shares are allocated to the accounts of individuals who are employees of X

(none of whom are related), as set forth in columns 1 and 2 in the following table:

1 Shareholders	2 Deemed-owned ESOP shares (total of 1,000)	3 Percentage deemed-owned ESOP shares	4 Disqualified person
B	330	33	Yes.
C	145	14.5	Yes.
D	75	7.5	No.
E	30	3	No.
F	20	2	No.
Other participants	[1] 400	([2])	No.

[1] *None exceed 10 shares.*

[2] *1% or less.*

(ii) *Conclusion with respect to disqualified persons.* As shown in column 4 in the table contained in paragraph (i) of *Example 1*, individuals B and C are disqualified persons for 2006 under paragraph (d)(1) of this section because each owns at least 10% of X's deemed-owned ESOP shares. However, the synthetic equity shares owned by any person do not affect the calculation for any other person's ownership of shares.

(iii) *Conclusion with respect to nonallocation year.* 2006 is not a nonallocation year under section 409(p) because disqualified persons do not own at least 50% of X's outstanding shares (the 100 shares owned directly by B, B's 330 deemed-owned ESOP shares, plus C's 145 deemed-owned ESOP shares equal only 47.9% of the 1,200 outstanding shares of X).

Example 2. Relating to determination of disqualified persons and nonallocation year if there is synthetic equity. (i) *Facts.* The facts are the same as in *Example 1*, except that, as shown in column 4 of the table in this *Example 2*, individuals E and F have options to acquire 110 and 130

shares, respectively, of the common stock of X from X:

1 Shareholder	2 Deemed-owned ESOP shares (total of 1,000)	3 Percentage deemed-owned ESOP shares	4 Options (240)	5 Shareholder percentage of deemed-owned ESOP plus synthetic equity shares	6 Disqualified person
B	330	33			Yes (col. 3).
C	145	14.5			Yes (col. 3).
D	75	7.5			No.
E	30	3	110	11.1% ([30 + 91.7] divided by 1,091.7)	Yes (col. 5).
F	20	2	130	11.6% ([20 + 108.3] divided by 1,108.3)	Yes (col. 5).
Other participants	[1] 400	([2])			No.

[1] *None exceeds 10 shares.*

[2] *1% or less.*

(ii) *Conclusion with respect to disqualified persons.* Individual E's synthetic equity shares are counted in determining whether E is a disqualified person for 2006, and individual F's synthetic equity shares are counted in determining whether F is a disqualified person for 2006. Applying the rule of paragraph (f)(4)(iv) of this section, E's option to acquire 110 shares of the S corporation converts under paragraph (f)(4)(iv) of this section, into 91.7 shares of synthetic equity (110 times the ratio of the 1,000 deemed-owned ESOP shares to the sum of the 1,000 deemed-owned ESOP shares plus the 200 shares held outside the ESOP by A and B). Similarly, F's option to acquire 130 shares of the S corporation converts into 108.3 shares of synthetic equity (130 times the ratio of the 1,000 deemed-owned ESOP shares to the sum of the 1,000 deemed-owned ESOP shares plus the 200 shares held outside the ESOP by A and B). However, the synthetic equity shares owned by any person do not affect the calculation for any other person's ownership of shares. Accordingly, as shown in column 6 in the table contained in paragraph (i) of *Example 2*, individuals B, C, E, and F are disqualified persons for 2006.

(iii) *Conclusion with respect to nonallocation year.* The 100 shares owned directly by B, B's 330 deemed-owned ESOP shares, C's 145 deemed-owned ESOP shares, E's 30 deemed-owned ESOP shares, E's 91.7 synthetic equity shares, F's 20 deemed-owned ESOP shares, plus F's 108.3 synthetic equity shares total 825, which equals 58.9% of 1,400, which is the sum of the 1,200 outstanding shares of X and the 200 shares of synthetic equity shares of X held by disqualified persons. Thus, 2006 is a nonallocation year for X's ESOP under section 409(p) because

disqualified persons own at least 50% of the total shares of outstanding stock of X and the total synthetic equity shares of X held by disqualified persons. In addition, independent of the preceding conclusion, 2006 would be a nonallocation year because disqualified persons own at least 50% of X's outstanding shares because the 100 shares owned directly by B, B's 330 deemed-owned ESOP shares, C's 145 deemed-owned ESOP shares, E's 30 deemed-owned ESOP shares, plus F's 20 deemed-owned ESOP shares equal 52.1% of the 1,200 outstanding shares of X.

Example 3. Relating to determination of number of shares of synthetic equity. (i) *Facts.* Corporation Y is a calendar year S corporation that maintains an ESOP. Y has a single class of common stock, of which there are a total of 1,000 shares outstanding, all of which are owned by the ESOP. Y has no synthetic equity, except for four grants of nonqualified deferred compensation that are made to an individual during the period from 2005 through 2011, as set forth in column 2 in the following table. The ESOP provides for the special rules in paragraph (f)(4)(iii) of this section to determine the number of shares of synthetic equity owned by that individual with a determination date of January 1 and the triennial rule redetermining value, as shown in columns 4 and 5:

1	2	3	4	5
Determination date	**Present value of nonqualified deferred compensation on determination date**	**Share value on determination date**	**New shares of synthetic equity on determination date**	**Aggregate number of synthetic equity shares on determination date**
January 1, 2005	A grant is made on January 1, 2005, with a present value of $1,000. An additional grant of nonqualified deferred compensation with a present value of $775 is made on March 1, 2005	$10 per share	100	100
January 1, 2006	An additional grant is made on December 31, 2005, which has a present value of $800 on January 1, 2006. The March 1, 2005, grant has a present value on January 1, 2006, of $800	$8 per share	200	300
January 1, 2007	No new grants made	$12 per share		300

1	2	3	4	5
Determination date	**Present value of nonqualified deferred compensation on determination date**	**Share value on determination date**	**New shares of synthetic equity on determination date**	**Aggregate number of synthetic equity shares on determination date**
January 1, 2008	An additional grant is made on December 31, 2007, which has a present value of $3,000 on January 1, 2008. The grants made during 2005 through 2007 have an aggregate present value on January 1, 2008, of $3,750	$15 per share	200	450
January 1, 2009	No new grants are made	$11 per share		450
January 1, 2010	No new grants are made	$22 per share		450
January 1, 2011	No new grants are made. The grants made during 2005 through 2008 have an aggregate present value on January 1, 2011, of $7,600	$20 per share		380

(ii) *Conclusion.* The grant made on January 1, 2005, is treated as 100 shares until the determination date in 2008. The grant made on March 1, 2005, is not taken into account until the 2006 determination date and its present value on that date, along with the then present value of the grant made on December 31, 2005, is treated as a number of shares that are based on the $8 per share value on the 2006 determination date, with the resulting number of shares continuing to apply until the determination date in 2008. On the January 1, 2008, determination date, the grant made on the preceding day is taken into account at its present value of $3,000 on January 1, 2008 and the $15 per share value on that date with the resulting number of shares (200) continuing to apply until the next determination date. In addition, on the January 1, 2008, determination date, the number of shares determined under other grants made between January 1, 2005 and December 31, 2007, must be revalued. Accordingly, the aggregate value of all nonqualified deferred compensation granted during that period is determined to be $3750 on January 1, 2008, and the corresponding number of shares of synthetic equity based on the $15 per share value is determined to be 250 shares on the 2008 determination date, with the resulting aggregate number of shares (450) continuing to apply until the determination date in 2011. On the January 1, 2011,

> determination date, the aggregate value of all nonqualified deferred compensation is determined to be $7,600 and the corresponding number of shares of synthetic equity based on the $20 per share value on the 2011 determination date is determined to be 380 shares (with the resulting number of shares continuing to apply until the day before the determination date in 2014, assuming no further grants are made).

(i) ***Effective dates*** —

(1) ***Statutory effective date.***

(i) Except as otherwise provided in paragraph (i)(1)(ii) of this section, section 409(p) applies for plan years ending after March 14, 2001.

(ii) If an ESOP holding stock in an S corporation was established on or before March 14, 2001, and the election under section 1362(a) with respect to that S corporation was in effect on March 14, 2001, section 409(p) applies for plan years beginning on or after January 1, 2005.

(2) ***Regulatory effective date.*** This section applies for plan years beginning on or after January 1, 2006. For plan years beginning before January 1, 2006, § 1.409(p)-1T (as it appeared in the April 1, 2005, edition of 26 CFR part 1) applies.

[T.D. 9302, 71 FR 76137, Dec. 20, 2006]

§ 1.409(p)-1T Prohibited allocations of securities in an S corporation (temporary).

(a) ***Organization of this section.*** Section 409(p) applies if a nonallocation year occurs in an employee stock ownership plan (ESOP), as defined in section 4975(e)(7), that holds shares of stock of an S corporation, as defined in section 1361, that are employer securities as defined in section 409(l). Paragraph (b) of this section sets forth the general rule under section 409(p)(1) and (2) prohibiting any accrual or allocation to a disqualified person in a nonallocation year. Paragraph (c) of this section sets forth rules under section 409(p)(3), (5), and (7) for determining whether a year is a nonallocation year, generally based on whether disqualified persons own at least 50 percent of the shares of the S corporation, either taking into account only the outstanding shares of the S corporation (including shares held by the ESOP) or taking into account both the outstanding shares and synthetic equity of the S corporation. Paragraphs (d), (e), and (f) of this section contain definitions of disqualified person under section 409(p)(4) and (5), deemed-owned ESOP shares under section 409(p)(4)(C), and synthetic equity under section 409(p)(6)(C). Paragraph (g) of this section contains a standard for determining when the principal purpose of the ownership structure of an S corporation constitutes an avoidance or evasion of section 409(p). The definitions used in section 409(p) and this section are also applicable for purposes of section 4979A, which imposes an excise tax on certain events, including a nonallocation year under section 409(p).

(b) ***Prohibited allocation in a nonallocation year*** —

(1) ***General rule.*** An ESOP holding employer securities consisting of stock in an S corporation must provide that no portion of the assets of the plan attributable to (or allocable in lieu of) such employer securities may, during a nonallocation year, accrue under the ESOP, or be allocated directly or indirectly under any plan of the employer (including the ESOP) meeting the requirements of section 401(a), for the benefit of any disqualified person (a prohibited allocation).

(2) ***Additional rules*** —

(i) ***Prohibited allocation definition.*** For purposes of section 409(p)(2)(A) and paragraph (b)(1) of this section, there is a prohibited allocation (*i.e.*, assets accrue or are allocated as prohibited under paragraph (b)(1) of this section) if there is either an impermissible accrual as defined in paragraph (b)(2)(ii) of this section or an impermissible allocation as defined in paragraph (b)(2)(iii) of this section. The amount of the prohibited allocation is equal to the sum of the impermissible accrual plus the amount of the impermissible allocation (if any).

(ii) ***Impermissible accrual.*** There is an impermissible accrual to the extent (and only to the extent) that employer securities consisting of stock in an S corporation owned by the ESOP and any assets attributable thereto are held under the ESOP for the benefit of a disqualified person during a nonallocation year. For this purpose, assets attributable to S corporation securities include any distributions, within the meaning of section 1368, made on S corporation stock held in a disqualified person's account in the ESOP (including earnings thereon), plus any proceeds from the sale of S corporation securities held for a disqualified person's account in the ESOP (including any earnings thereon). Thus, for example, in the event of a nonallocation year, all S corporation shares and all other ESOP assets attributable to S corporation stock, including distributions, sales proceeds, and earnings on either the distribution or proceeds, held for the account of such disqualified person in the ESOP during that year are an impermissible accrual for the benefit of that person, whether attributable to contributions in the current year or in prior years.

(iii) ***Impermissible allocation.*** An impermissible allocation means any allocation for a disqualified person directly or indirectly under any plan of the employer qualified under section 401(a) that occurs during a nonallocation year to the extent that a contribution or other annual addition is made, or the disqualified person otherwise accrues additional benefits, under the ESOP or any other plan of the employer qualified under section 401(a) (including a release and allocation of assets from a suspense account, as described at § 54.4975-11(c) and (d) of this chapter) that, for the nonallocation year, would otherwise have been added to the account of the disqualified person under the ESOP and invested in employer securities consisting of stock in an S corporation owned by the ESOP but for a provision in the ESOP to comply with section 409(p).

(iv) ***Effects of prohibited allocation*** —

(A) ***Deemed distribution.*** If there is a prohibited allocation, the amount of the prohibited allocation, as determined under this paragraph (b)(2), is treated as distributed from the ESOP (or other plan of the employer) to the disqualified person on the first day of the plan year on which there is an impermissible accrual or on the date of the allocation in the case of an additional impermissible accrual or impermissible allocation during the plan year but after the first day of the plan year. Thus, the fair market value of assets in the disqualified person's account that constitutes an impermissible accrual or allocation is included in gross income (to the extent in excess of any investment in the contract allocable to such amount) and is subject to any additional income tax that applies under section 72(t). A deemed distribution under this paragraph (b)(2)(iv)(A) is not an actual distribution from the ESOP. Thus, the amount of the prohibited allocation is not an eligible rollover distribution under section 402(c). However, for purposes of applying sections 72 and 402 with respect to any subsequent distribution from the ESOP, the amount that the disqualified person previously took into account as income as a result of the deemed distribution is treated as an investment in the contract.

(B) ***Other effects.*** If there is a prohibited allocation, then the plan fails to satisfy the requirements of section 4975(e)(7) and ceases to be an ESOP. In such a case, the exemption from the excise tax on prohibited transactions for loans to leveraged ESOPs contained in section 4975(d)(3) would cease to apply to any loan (with the result that the employer would owe an excise tax with respect to the previously exempt loan) and, further, the exception in section 512(e)(3) would not apply to the plan (with the result that the plan may owe income tax as a result of unrelated business taxable income under section 512 with respect to S corporation stock held by the plan). See also section 4979A(a) which imposes an excise tax in certain events, including a prohibited allocation under section 409(p).

(v) ***Prevention of prohibited allocation*** —

(A) ***Transfer of account to non-ESOP.*** An ESOP may prevent a nonallocation year or a prohibited allocation during a nonallocation year by permitting assets (including S corporation securities) allocated to the account of a disqualified person (or a person reasonably expected to become a disqualified person absent a transfer described in this paragraph (b)(2)(v)(A)) to be transferred into a separate portion of the plan that is not an ESOP, as described in § 54.4975-11(a)(5) of this chapter, or to another plan of the employer that satisfies the requirements of section 401(a) (and that is not an ESOP). In the event of such a transfer involving S corporation securities, the recipient plan is subject to tax on unrelated business taxable income under section 512.

(B) ***Relief from nondiscrimination requirement.*** Pursuant to this paragraph (b)(2)(v)(B), if a transfer described in paragraph (b)(2)(v)(A) of this section is made from an ESOP to a separate portion of the plan or to another qualified plan of the employer that is not an ESOP, then both the ESOP and the plan or portion of a plan that is not an ESOP will not fail to satisfy the requirements of § 1.401(a)(4)-4 merely because of the transfer. Further, subsequent to the transfer, that plan will not fail to satisfy the requirements of § 1.401(a)(4)-4 merely because of the benefits, rights, or features with respect to the transferred benefits if those benefits, rights, or features would satisfy the requirements of § 1.401(a)(4)-4 if the mandatory disaggregation rule for ESOPs at § 1.410(b)-7(c)(2) did not apply.

(c) ***Nonallocation year*** —

(1) ***Definition generally.*** For purposes of section 409(p) and this section, a *nonallocation year* means a plan year of an ESOP during which, at any time, the ESOP holds any employer securities that are shares of an S corporation and either—

(i) Disqualified persons own at least 50 percent of the number of outstanding shares of stock in the S corporation (including deemed-owned ESOP shares); or

(ii) Disqualified persons own at least 50 percent of the sum of:

(A) The outstanding shares of stock in the S corporation (including deemed-owned ESOP shares), plus

(B) The shares of synthetic equity in the S corporation owned by disqualified persons.

(2) ***Attribution rules.*** For purposes of this paragraph (c), the rules of section 318(a) apply to determine ownership of shares in the S corporation (including deemed-owned ESOP shares) and synthetic equity. However, for this purpose, section 318(a)(4) (relating to options to acquire stock) is disregarded and, in applying section 318(a)(1), the members of an individual's family include members of the individual's family under paragraph (d)(2) of this section. In addition, an individual is treated as owning deemed-owned ESOP shares of that individual notwithstanding the employee trust exception in section 318(a)(2)(B)(i). If the attribution rules in paragraph (f)(1) of this section apply, then the rules of paragraph (f)(1) of this section are applied before the rules of this paragraph (c)(2).

(3) ***Special rule for avoidance or evasion.***

(i) The ownership structures described in paragraph (g)(3) of this section result in a nonallocation year. In addition, under the ownership structures described in paragraph (g)(3) of this section, the individual referred to in paragraph (g)(3) of this section is treated as a disqualified person and that person's interest in the separate entity is treated as synthetic equity.

(ii) Under section 409(p)(7)(B), the Commissioner, in revenue rulings, notices, and other guidance published in the Internal Revenue Bulletin (*see* § 601.601(d)(2)(ii)(*b*) of this chapter), may provide that a nonallocation year occurs in any case in which the principal purpose of the ownership structure of an S corporation constitutes an avoidance or evasion of section 409(p). For any year that is a nonallocation year under this paragraph (c)(3), the Commissioner may treat any person as a disqualified person. See paragraph (g) of this section for guidance regarding when the principal purpose of an ownership structure of an S corporation involving synthetic equity constitutes an avoidance or evasion of section 409(p).

(4) ***Special rule for certain stock rights.***

(i) For purposes of paragraph (c)(1) of this section, a person is treated as owning stock that the person has a right to acquire if, at all times during the period when such right is effective, the stock that the person has the right to acquire is both issued and outstanding and is held by persons other than the ESOP, the S corporation, or a related entity (as defined in paragraph (f)(3) of this section).

(ii) This paragraph (c)(4) applies only if treating persons as owning the shares described in paragraph (c)(4)(i) of this section results in a nonallocation year. This paragraph (c)(4) does not apply to a right to acquire stock of an S corporation held by a shareholder subject to Federal income tax that, under § 1.1361-1(l)(2)(iii) or (l)(4)(iii)(C), would not be taken into account in determining if an S corporation has a second class of stock provided that a principal purpose of the right is not the avoidance or evasion of section 409(p). Under the last sentence of paragraph (f)(2)(i) of this section, this paragraph (c)(4)(ii) does not apply for purposes of determining ownership of deemed-owned ESOP shares or whether an interest constitutes synthetic equity.

(5) ***Application with respect to shares treated as owned by more than one person.*** For purposes of applying paragraph (c)(1) of this section, if, by application of the rules of paragraph (c)(2), (c)(4), or (f)(1) of this section, any share is treated as owned by more than one person, then that share is counted as a single share and that share is treated as owned by disqualified persons if any of the owners is a disqualified person.

(6) ***Effect of nonallocation year.*** See paragraph (b) of this section for a prohibition applicable during a nonallocation year. See also section 4979A for an excise tax applicable in certain cases, including section 4979A(a)(3) and (4) which applies during a nonallocation year (whether or not there is a prohibited allocation during the year).

(d) ***Disqualified persons*** —

(1) ***General definition.*** For purposes of section 409(p) and this section, a *disqualified person* means any person for whom—

(i) The number of such person's deemed-owned ESOP shares of the S corporation is at least 10 percent of the number of the deemed-owned ESOP shares of the S corporation;

(ii) The aggregate number of such person's deemed-owned ESOP shares and synthetic equity shares of the S corporation is at least 10 percent of the sum of:

(A) The total number of deemed-owned ESOP shares; and

(B) The person's synthetic equity shares of the S corporation;

(iii) The aggregate number of the S corporation's deemed-owned ESOP shares of such person and of the members of such person's family is at least 20 percent of the number of deemed-owned ESOP shares of the S corporation; or

(iv) The aggregate number of the S corporation's deemed-owned ESOP shares and synthetic equity shares of such person and of the members of such person's family is at least 20 percent of the sum of:

(A) The total number of deemed-owned ESOP shares, and

(B) The synthetic equity shares of the S corporation owned by such person and the members of such person's family.

(2) ***Treatment of family members; definition*** —

(i) ***Rule.*** Each member of the family of any person who is a disqualified person under paragraph (d)(1) (iii) or (iv) of this section is a disqualified person.

(ii) ***General definition.*** For purposes of section 409(p) and this section, *member of the family* means, with respect to an individual—

(A) The spouse of the individual;

(B) An ancestor or lineal descendant of the individual or the individual's spouse;

(C) A brother or sister of the individual or of the individual's spouse and any lineal descendant of the brother or sister; and

(D) The spouse of any individual described in paragraph (d)(2)(ii) (B) or (C) of this section.

(iii) ***Spouse.*** A spouse of an individual who is legally separated from such individual under a decree of divorce or separate maintenance is not treated as such individual's spouse under paragraph (d)(2)(ii)(A) of this section.

(3) ***Special rule for certain nonallocation years.*** See paragraph (c)(3) of this section (relating to avoidance or evasion of section 409(p)) for special rules permitting certain persons to be treated as disqualified persons in certain nonallocation years.

(4) ***Example.*** The rules of this paragraph (d) are illustrated by the following example:

> *Example.* (i) *Facts.* An S corporation has 800 outstanding shares of which 100 are owned by individual O and 700 are held in an employee stock ownership plan (ESOP) during 2005, including 200 shares held in the ESOP account of O, 65 shares held in the ESOP account of participant P, and 40 shares held in the ESOP account of participant Q who is P's spouse. The S corporation has no synthetic equity.
> (ii) *Conclusion.* O is a disqualified person during 2005 because O's account in the ESOP holds at least 10 percent of the shares owned by the ESOP (200 is 28.6 percent of 700). In addition, P is a disqualified person during 2005 because, under paragraph (d)(2) of this section, P is treated as owning the shares held by Q and P's total deemed-owned shares are thus at least 10 percent of the shares owned by the plan (65 plus 40 is more than 10 percent of 700). In addition, Q is a disqualified person as a result of the rules in paragraph (d)(2) of this section. As a result, disqualified persons own at least 50 percent of the outstanding shares of the S corporation during 2005 (O's 100 directly owned shares, O's 200 deemed-owned shares, P's 65 deemed-owned shares, plus Q's 40 deemed owned shares are 50.6 percent of 800).

(e) ***Deemed-owned ESOP shares.*** For purposes of section 409(p) and this section, a person is treated as owning his or her deemed-owned ESOP shares.

Deemed-owned ESOP shares mean, with respect to any person—

(1) Any shares of stock in the S corporation constituting employer securities that are allocated to such person's account under the ESOP; and

(2) Such person's share of the stock in the S corporation that is held by the ESOP but is not allocated to the account of any participant or beneficiary (with such person's share to be determined in the same proportion as the shares released and allocated from a suspense account, as described at § 54.4975-11(c) and (d) of this chapter, under the ESOP for the most recently ended plan year for which there were shares released and allocated from a suspense account, or if there has been no such prior release and allocation from a suspense account, then determined in proportion to a reasonable estimate of the shares that would be released and allocated in the first year of loan repayment).

(f) ***Synthetic equity*** —

(1) ***Ownership of synthetic equity.*** For purposes of section 409(p) and this section, synthetic equity is treated as owned by a person in the same manner as stock is treated as owned by a person, directly or under the rules of section 318(a)(2) and (3). *Synthetic equity* means the rights described in paragraph (f)(2) of this section.

(2) ***Synthetic equity*** —

(i) ***Rights to acquire stock of the S corporation.*** Synthetic equity includes any stock option, warrant, restricted stock, deferred issuance stock right, stock appreciation right payable in stock, or similar interest or right that gives the holder the right to acquire or receive stock of the S corporation in the future. Rights to acquire stock in an S corporation with respect to stock that

is, at all times during the period when such rights are effective, both issued and outstanding and held by persons (who are subject to federal income taxes) other than the ESOP, the S corporation, or a related entity are not synthetic equity (but see paragraph (c)(4) of this section).

(ii) ***Special rule for certain stock rights. Synthetic equity*** also includes a right to a future payment (payable in cash or any other form other than stock of the S corporation) from an S corporation that is based on the value of the stock of the S corporation, such as appreciation in such value. Thus, synthetic equity includes a stock appreciation right with respect to stock of an S corporation that is payable in cash or a phantom stock unit with respect to stock of an S corporation that is payable in cash.

(iii) ***Rights to acquire interests in or assets of an S corporation or a related entity.*** Synthetic equity includes a right to acquire stock or other similar interests in a related entity to the extent of the S corporation's ownership. Synthetic equity also includes a right to acquire assets of an S corporation or a related entity other than either rights to acquire goods, services, or property at fair market value in the ordinary course of business or fringe benefits excluded from gross income under section 132.

(iv) ***Special rule for nonqualified deferred compensation.***

(A) Synthetic equity also includes any of the following with respect to an S corporation or a related entity: any remuneration to which section 404(a)(5) applies; remuneration for which a deduction would be permitted under section 404(a)(5) if separate accounts were maintained; any right to receive property to which section 83 applies (including a payment to a trust described in section 402(b) or to an annuity described in section 403(c)) in a future year for the performance of services; any transfer of property (to which section 83 applies) in connection with the performance of services to the extent that the property is not substantially vested within the meaning of § 1.83-3(i) by the end of the plan year in which transferred; and a split-dollar life insurance arrangement under § 1.61-22(b) entered into in connection with the performance of services (other than one under which, at all times, the only economic benefit that will be provided under the arrangement is current life insurance protection as described in § 1.61-22(d)(3)). Synthetic equity also includes any other remuneration for services under a plan, or method or arrangement, deferring the receipt of compensation to a date that is after the 15th day of the 3rd calendar month after the end of the entity's taxable year in which the related services are rendered. However, synthetic equity does not include benefits under a plan that is an eligible retirement plan within the meaning of section 402(c)(8)(B).

(B) For purposes of applying paragraph (f)(2)(iv)(A) of this section with respect to an ESOP, synthetic equity does not include any interest described in such paragraph (f)(2)(iv)(A) of this section to the extent that—

(*1*) The interest is nonqualified deferred compensation (within the meaning of section 3121(v)(2)) that was outstanding on December 17, 2004;

(*2*) The interest is an amount that was taken into account (within the meaning of § 31.3121(v)(2)-1(d) of this chapter) prior to January 1, 2005, for purposes of taxation under chapter 21 of the Internal Revenue Code (or income attributable thereto); and

(*3*) The interest was held before the first date on which the ESOP acquires any employer securities.

(v) ***No overlap among shares of deemed-owned ESOP shares or synthetic equity.*** Synthetic equity under this paragraph (f)(2) does not include shares that are deemed-owned ESOP shares (or any rights with respect to deemed-owned ESOP shares to the extent such rights are specifically permitted under section 409(h)). In addition, synthetic equity under a specific subparagraph of this paragraph (f)(2) does not include anything that is synthetic equity under paragraph (f)(2)(i), (ii), (iii) or (iv) of this section.

(3) ***Related entity.*** For purposes of this paragraph (f), *related entity* means any entity in which the S corporation holds an interest and which is a partnership, a trust, an eligible entity that is disregarded as an entity that is separate from its owner under § 301.7701-3 of this chapter, or a Qualified Subchapter S Subsidiary under section 1361(b)(3).

(4) ***Number of synthetic shares*** —

(i) ***Synthetic equity determined by reference to S corporation shares.*** In the case of synthetic equity that is determined by reference to shares of stock of the S corporation, the person who is entitled to the synthetic equity is treated as owning the number of shares of stock deliverable pursuant to such synthetic equity. In the case of synthetic equity that is determined by reference to shares of stock of the S corporation, but for which payment is made in cash or other property (besides stock of the S corporation), the number of shares of synthetic equity treated as owned is equal to the number of shares of stock having a fair market value equal to the cash or other property (disregarding lapse restrictions as described in § 1.83-3(i)). Where such synthetic equity is a right to purchase or receive S corporation shares, the corresponding number of shares of synthetic equity is determined without regard to lapse restrictions as described in § 1.83-3(i) or to any amount required to be paid in exchange for the shares. Thus, for example, if a corporation grants an employee of an S corporation an option to purchase 100 shares of the corporation's stock, exercisable in the future only after the satisfaction of certain performance conditions, the employee is the deemed owner of 100 synthetic equity shares of the corporation as of the date the option is granted. If the same employee were granted 100 shares of restricted S corporation stock (or restricted stock units), subject to forfeiture until the satisfaction of performance or service conditions, the employee would likewise be the deemed owner of 100 synthetic equity shares from the grant date. However, if the same employee were granted a stock appreciation right with regard to 100 shares of S corporation stock (whether payable in stock or in cash), the number of synthetic equity shares the employee is deemed to own equals the number of shares having a value equal to the appreciation at the time of measurement (determined without regard to lapse restrictions).

(ii) ***Synthetic equity determined by reference to shares in a related entity.*** In the case of synthetic equity that is determined by reference to shares of stock (or similar interests) in a related entity, the person who is entitled to the synthetic equity is treated as owning shares of stock of the S corporation with the same aggregate value as the number of shares of stock (or similar interests) of the related entity (with such value determined without regard to any lapse restriction as defined at § 1.83-3(i)).

(iii) ***Other synthetic equity*** —

(A) ***General rule.*** In the case of any synthetic equity to which neither paragraph (f)(4)(i) nor paragraph (f)(4)(ii) of this section apply, the person who is entitled to the synthetic equity is treated as owning on any date a number of shares of stock in the S corporation equal to

the present value (on that date) of the synthetic equity (with such value determined without regard to any lapse restriction as defined at § 1.83-3(i)) divided by the fair market value of a share of the S corporation's stock as of that date.

(B) *Special rules* —

(*1*) ***Use of annual or more frequent determination dates.*** For purposes of this paragraph (f)(4)(iii), while the determination of whether there is a nonallocation year depends on day-by-day determinations under paragraph (c) of this section, the number of shares of S corporation stock treated as owned by a person who is entitled to synthetic equity to which this paragraph (f)(4)(iii) applies is permitted to be determined only annually (or more frequently), as of the first day of the ESOP's plan year or as of any other reasonable determination date or dates during a plan year. If the ESOP so provides, the number of shares of synthetic equity to which this paragraph (f)(4)(iii) applies that are treated as owned by that person for any period from a given determination date through the date immediately preceding the next following determination date is the number of shares treated as owned on the given determination date.

(*2*) ***Use of triannual recalculations.*** In addition, if the terms of the ESOP so provide, then the number of shares of synthetic equity with respect to grants of synthetic equity to which this paragraph (f)(4)(iii) applies may be fixed for a specified period from a determination date identified under the ESOP through a date that is not later than the day before the determination date that is on or immediately preceding the third anniversary of the identified determination date. Additional accruals, allocations, or grants (to which this paragraph (f)(4)(iii) applies) that are made during such three-year period are taken into account on each determination date during that period, based on the number of synthetic equity shares resulting from the additional accrual, allocation, or grant (determined as of the determination date on or next following the date of the accrual, allocation, or grant). However, the ESOP must provide for the number of shares of synthetic equity to which this paragraph (f)(4)(iii) applies to be re-determined not less frequently than every three years, based on the S corporation share value on a determination date that is not later than the third anniversary of the identified determination date and the aggregate present value of the synthetic equity to which this paragraph (f)(4)(iii) applies (including all grants made during the three-year period) on that determination date. See *Example 3* of paragraph (h) of this section for an example illustrating this paragraph (f)(4)(iii)(B)(*2*).

(*3*) ***Conditions for application of rules.*** Paragraph (f)(4)(iii)(B) of this section only applies with respect to grants of synthetic equity to which this paragraph (f)(4)(iii) applies. In addition, paragraph (f)(4)(iii)(B)(*1*) of this section applies only if the fair market value of a share of the S corporation securities on any determination date is not unrepresentative of the value of the S corporation securities throughout the rest of the plan year and only if the terms of the ESOP include provisions conforming to paragraph (f)(4)(iii)(B)(*1*) of this section which are consistently used by the ESOP for all persons. In addition, paragraph (f)(4)(iii)(B)(*2*) of this section applies only if the terms of the ESOP include provisions conforming to paragraphs (f)(4)(iii)(B)(*1*) and (*2*) of this section which are consistently used by the ESOP for all persons.

(iv) ***Adjustment of number of synthetic equity shares where ESOP owns less than 100% of S corporation.*** Under this paragraph (f)(4)(iv), the number of synthetic shares otherwise determined under this paragraph (f)(4) is decreased ratably to the extent that shares of the S corporation are owned by a person who is not an ESOP (and who is subject to Federal income taxes). For example, if an S corporation has 200 outstanding shares, of which individual A owns 50 shares and the ESOP owns the other 150 shares, and individual B would be treated under this paragraph (f)(4) as owning 200 synthetic equity shares of the S corporation but for this paragraph (f)(4)(iv), then, under the rule of this paragraph (f)(4)(iv), the number of synthetic shares treated as owned by B under this paragraph (f)(4) is decreased from 200 to 150 (because the ESOP only owns 75% of the outstanding stock of the S corporation, rather than 100%).

(v) ***Special rule for shares with greater voting power than ESOP shares.*** Notwithstanding any other provision of this paragraph (f)(4), if a synthetic equity right includes (directly or indirectly) a right to purchase or receive shares of S corporation stock that have per-share voting rights greater than the per-share voting rights of one or more shares of S corporation stock held by the ESOP, then the number of shares of deemed owned synthetic equity attributable to such right is not less than the number of shares that would have the same voting rights if the shares had the same per-share voting rights as shares held by the ESOP with the least voting rights. For example, if shares of S corporation stock held by the ESOP have one voting right per share, then an individual who holds an option to purchase one share with 100 voting rights is treated as owning 100 shares of synthetic equity.

(g) ***Avoidance or evasion of section 409(p) involving synthetic equity*** —

(1) ***General rule.*** Paragraph (g)(2) of this section sets forth a standard for determining whether the principal purpose of the ownership structure of an S corporation involving synthetic equity constitutes an avoidance or evasion of section 409(p). Paragraph (g)(3) of this section identifies certain specific ownership structures that constitute an avoidance or evasion of section 409(p). See also paragraph (c)(3) of this section for a rule under which the ownership structures in paragraph (g)(3) result in a nonallocation year for purposes of section 409(p).

(2) ***Standard for determining when there is an avoidance or evasion of section 409(p) involving synthetic equity*** —For purposes of section 409(p) and this section, whether the principal purpose of the ownership structure of an S corporation involving synthetic equity constitutes an avoidance or evasion of section 409(p) is determined by taking into account all the surrounding facts and circumstances, including all features of the ownership of the S corporation's outstanding stock and related obligations (including synthetic equity), any shareholders who are taxable entities, and the cash distributions made to shareholders, to determine whether, to the extent of the ESOP's stock ownership, the ESOP receives the economic benefits of ownership in the S corporation that occur during the period that stock of the S corporation is owned by the ESOP. Among the factors indicating that the ESOP receives these economic benefits include shareholder voting rights, the right to receive distributions made to shareholders, and the right to benefit from the profits earned by the S corporation, including the extent to which actual distributions of profits are made from the S corporation to the ESOP and the extent to which the ESOP's ownership interest in undistributed profits and future profits is subject to dilution as a result of synthetic equity, for example, the ESOP's ownership interest is not subject to dilution if the total amount of synthetic equity is a relatively small portion of the total number of shares and deemed-owned shares of the S corporation.

(3) ***Specific transactions that constitute an avoidance or evasion of section 409(p) involving segregated profits.*** Taking into account the standard in paragraph (g)(2) of this section, the principal purpose of the ownership structure of an S corporation constitutes an avoidance or evasion of section 409(p) in any case in which—

(i) The profits of the S corporation generated by the business activities of a specific individual or individuals are not provided to the ESOP, but are instead substantially accumulated and held for the benefit of that individual or individuals on a tax-deferred basis within an entity related to the S corporation, such as a partnership, trust, or corporation (such as in a subsidiary that is a disregarded entity), or any other method that has the same effect of segregating profits for the benefit of such individual or individuals (such as nonqualified deferred compensation described in paragraph (f)(2)(iv) of this section);

(ii) The individual or individuals for whom profits are segregated have rights to acquire 50 percent or more of those profits directly or indirectly (for example, by purchase of the subsidiary); and

(iii) A nonallocation year would occur if this section were separately applied with respect to either the separate entity or whatever method has the effect of segregating profits of the individual or individuals, treating such entity as a separate S corporation owned by an ESOP (or in the case of any other method of segregation of profits by treating those profits as the only assets of a separate S corporation owned by an ESOP).

(h) ***Examples.*** The rules of this section are illustrated by the following examples:

Example 1. Relating to determination of disqualified persons and nonallocation year if there is no synthetic equity. (i) *Facts.* Corporation X is a calendar year S corporation that maintains an ESOP. X has a single class of common stock, of which there are a total of 1,200 shares outstanding. X has no synthetic equity. In 2006, individual A, who is not an employee of X (and is not related to any employee of X), owns 100 shares directly, individual B owns 100 shares directly, and the remaining 1,000 shares are owned by an ESOP maintained by X for its employees. The ESOP's 1,000 shares are allocated to the accounts of individuals who are employees of X (none of whom are related), as set forth in columns 1 and 2 in the following table:

1 Shareholders	2 Deemed-owned ESOP shares (total of 1,000)	3 Percentage deemed-owned ESOP shares	4 Disqualified person
B	330	33	Yes.
C	145	14.5	Yes.
D	75	7.5	No.
E	30	3	No.
F	20	2	No.
Other participants	400 (none exceed 10 shares)	1 or less	No.

(ii) *Conclusion with respect to disqualified persons.* As shown in column 4 in the table above,

individuals B and C are disqualified persons for 2006 under paragraph (d)(1) of this section because each owns at least 10% of X's deemed-owned ESOP shares.
(iii) *Conclusion with respect to nonallocation year.* However, 2006 is not a nonallocation year under section 409(p) because disqualified persons do not own at least 50% of X's outstanding shares (the 100 shares owned directly by B, B's 330 deemed-owned ESOP shares, plus C's 145 deemed-owned ESOP shares equal only 47.9% of the 1,200 outstanding shares of X).

Example 2. Relating to determination of disqualified persons and nonallocation year if there is synthetic equity. (i) *Facts.* The facts are the same as in *Example 1*, except that, as shown in column 4 of the table in this *example 2*, individuals E and F have options to acquire 110 and 130 shares, respectively, of the common stock of X from X:

1 Shareholders	2 Deemed-owned ESOP shares (total of 1,000)	3 Percentage deemed-owned ESOP shares	4 Options (240)	5 Shareholder percentage of deemed-owned ESOP plus synthetic equity shares	6 Disqualified person
B	330	33			Yes (col. 3).
C	145	14.5			Yes (col. 3).
D	75	7.5			No.
E	30	3	110	11.1% ([30 + 91.7] divided by 1,091.7)	Yes (col. 5).
F	20	2	130	11.6% ([20 + 108.3] divided by 1,108.3)	Yes (col. 5).
Other participants	400 (none exceeds 10 shares)	1 or less			No.

(ii) *Conclusion with respect to disqualified persons.* Applying the rule of paragraph (f)(4)(iv) of this section, E's option to acquire 110 shares of the S corporation converts into 91.7 shares of synthetic equity (110 times the ratio of the 1,000 deemed-owned ESOP shares to the sum of the 1,000 deemed-owned ESOP shares plus the 200 shares held outside the ESOP by A and B). Similarly, F's option to acquire 130 shares of the S corporation converts into 108.3 shares of synthetic equity (130 times the ratio of the 1,000 deemed-owned ESOP shares to the sum of the 1,000 deemed-owned ESOP shares plus the 200 shares held outside the ESOP by A and B). Accordingly, as shown in column 6 in the table above, individual E's synthetic equity shares are

counted in determining whether E is a disqualified person for 2006, and individual F's synthetic equity shares are counted in determining whether F is a disqualified person for 2006, but the synthetic equity shares owned by any person do not affect the calculation for any other person's ownership of shares. Accordingly, individuals B, C, E, and F are disqualified persons for 2006.
(iii) *Conclusion with respect to nonallocation year.* The 100 shares owned directly by B, B's 330 deemed-owned ESOP shares, C's 145 deemed-owned ESOP shares, E's 30 deemed-owned ESOP shares, E's 91.7 synthetic equity shares, F's 20 deemed-owned ESOP shares, plus F's 108.3 synthetic equity shares total 825, which equals 58.9% of 1,400, which is the sum of the 1,200 outstanding shares of X and the 200 shares of synthetic equity shares of X held by disqualified persons. Thus, 2006 is a nonallocation year for X's ESOP under section 409(p) because disqualified persons own at least 50% of the total shares of outstanding stock of X and the total synthetic equity shares of X held by disqualified persons. In addition, independent of the preceding conclusion, 2006 would be a nonallocation year because disqualified persons own at least 50% of X's outstanding shares because the 100 shares owned directly by B, B's 330 deemed-owned ESOP shares, C's 145 deemed-owned ESOP shares, E's 30 deemed-owned ESOP shares, plus F's 20 deemed-owned ESOP shares equal 52.1% of the 1,200 outstanding shares of X.

Example 3. Relating to determination of number of shares of synthetic equity. (i) *Facts.* Corporation Y is a calendar year S corporation that maintains an ESOP. Y has a single class of common stock, of which there are a total of 1,000 shares outstanding, all of which are owned by the ESOP. Y has no synthetic equity, except for four grants of nonqualified deferred compensation that are made to an individual during the period from 2005 through 2011, as set forth in column 2 in the following table, and the ESOP uses the special rules in paragraph (f)(4)(iii) of this section to determine the number of shares of synthetic equity owned by that individual, as shown in columns 4 and 5:

1 Determination date	2 Present value of nonqualified deferred compenstion on determination date	3 Share value on determination date	4 New shares of synthetic equity on determination date	5 Aggregate number of synthetic equity shares on determination date
January 1, 2005	A grant is made on January 1, 2005 with a present value of $1,000. An additional grant of nonqualified deferred compensation with a present value of $775 is made on	$10 per share	100	100

1 Determination date	2 Present value of nonqualified deferred compenstion on determination date	3 Share value on determination date	4 New shares of synthetic equity on determination date	5 Aggregate number of synthetic equity shares on determination date
	March 1, 2005			
January 1, 2006	An additional grant is made on December 31, 2005 which has a present value of $800 on January 1, 2006. The March 1, 2005 grant has a present value on January 1, 2006 of $800	$8 per share	200	300
January 1, 2007	No new grants made	$12 per share		300
January 1, 2008	An additional grant is made on December 31, 2007 which has a present value of $3,000 on January 1, 2008. The grants made during 2005 through 2007 have an aggregate present value on January 1, 2008 of $3,750	$15 per share	200	450
January 1, 2009	No new grants are made	$11 per share		450
January 1, 2010	No new grants are made	$22 per share		450
January 1, 2011	No new grants are made. The grants made during 2005 through 2008 have an aggregate present value on January 1, 2011 of $7,600	$20 per share		380

(ii) *Conclusion.* The grant made on January 1, 2005, is treated as 100 shares until the determination date in 2008. The grant made on March 1, 2005, is not taken into account until the 2006 determination date and its present value on that date, along with the then present value of the grant made on the preceding day, is treated as a number of shares that are based on the $8 per share value on the 2006 determination date, with the resulting number of shares continuing to apply until the determination date in 2008. On the January 1, 2008, determination date, the grant made on the preceding day is taken into account at its present value of $3,000 on January 1, 2008

and the $15 per share value on that date with the resulting number of shares (200) continuing to apply until the next determination date. In addition, on the January 1, 2008, determination date, the number of shares determined under other grants made between January 1, 2005 and December 31, 2007, must be revalued. Accordingly, the aggregate value of all nonqualified deferred compensation granted during that period is determined to be $3750 on January 1, 2008, and the corresponding number of shares of synthetic equity based on the $15 per share value is determined to be 250 shares on the 2008 determination date, with the resulting aggregate number of shares (450) continuing to apply until the determination date in 2011. On the January 1, 2011, determination date, the aggregate value of all nonqualified deferred compensation is determined to be $7,600 and the corresponding number of shares of synthetic equity based on the $20 per share value on the 2011 determination date is determined to be 380 shares (with the resulting number of shares continuing to apply until the determination date in 2014, assuming no further grants are made).

(i) ***Effective dates*** —

(1) ***Statutory effective date.***

(i) Except as otherwise provided in paragraph (i)(1)(ii) of this section, section 409(p) applies for plan years ending after March 14, 2001.

(ii) If an ESOP holding stock in an S corporation was established on or before March 14, 2001, and the election under section 1362(a) with respect to that S corporation was in effect on March 14, 2001, section 409(p) applies for plan years beginning on or after January 1, 2005.

(2) ***Regulation effective date*** —

(i) ***General effective date.*** Except as otherwise provided in paragraph (i)(2)(ii) of this section, this section applies for plan years beginning on or after January 1, 2005.

(ii) ***Rules for plan years beginning before January 1, 2005.***

(A) Except as provided in this paragraph (i)(2)(ii), § 1.409(p)-1T as in effect prior to December 17, 2004 (*see* § 1.409(p)-1T in 26 CFR part 1 revised as of April 1, 2004) applies for plan years ending after October 20, 2003, and beginning before January 1, 2005.

(B) Paragraphs (c)(3) and (g) of this section apply for plan years ending on or after December 31, 2004, but do not apply with respect to an interest held in a qualified subchapter S subsidiary (QSUB) of an S corporation or another entity to which paragraph (g)(3) of this section applies before March 15, 2004 if:

(*1*) All interests in the entity held by individuals who would be disqualified persons under paragraph (g)(3) of this section or under guidance issued by the Commissioner before March 15, 2004 are distributed to those individuals as compensation on or before March 15, 2004; and

(*2*) No such individual has been a participant in the ESOP of the S corporation at any time after October 20, 2003 and before March 15, 2004.

(C) Paragraph (f)(2)(iv)(B) of this section (providing that synthetic equity does not include certain preexisting nonqualified deferred compensation) applies for plan years ending before January 1, 2005.

(D) Paragraph (f)(4)(iv) of this section (permitting an adjustment of the number of synthetic equity shares where an ESOP owns less than 100% of an S corporation) applies for plan years ending before January 1, 2005.

(E) In no event does this paragraph (i)(2)(ii) apply for any plan year ending before January 1, 2005, for an ESOP holding stock in an S corporation that was established on or before March 14, 2001, if the election under section 1362(a) with respect to that S Corporation was in effect on March 14, 2001.

(iii) *Transition rules.*

(A) Assets held in the account of a disqualified person as of the last day of the first plan year beginning before January 1, 2005, will not be treated as an impermissible accrual with respect to that disqualified person under paragraph (b)(2)(ii) of this section for the first plan year beginning on or after January 1, 2005, to the extent those assets are not held in that person's account on or after July 1, 2005. Thus, for example, to the extent the assets allocated to the account of a disqualified person as of the last day of the first plan year beginning before January 1, 2005, are transferred to a non-ESOP portion of the plan as described in paragraph (b)(2)(v)(A) of this section before July 1, 2005, those assets will not be treated as an impermissible accrual under paragraph (b)(2)(ii) of this section for the period from the first day of the first plan year beginning on or after January 1, 2005 through June 30, 2005. However, see section 4979A(a)(3), (a)(4), and (e)(2)(C) for excise tax provisions that apply to all deemed-owned shares during the first nonallocation year for the ESOP.

(B) An individual is not treated as a disqualified person during the period from the first day of the first plan year beginning on or after January 1, 2005 through June 30, 2005 if that person would not be a disqualified person during that period under the modified rules of this paragraph (i)(2)(iii)(B) as of any date during that same period. Further, solely for the purpose of determining whether the first plan year beginning on or after January 1, 2005 is a nonallocation year under section 409(p) and this section, if that plan year would not have been a nonallocation year under the modified rules of this paragraph (i)(2)(iii)(B), then synthetic equity that is not owned by a person on July 1, 2005 is disregarded during the period from the first day of the first plan year beginning on or after January 1, 2005 through June 30, 2005. For purposes of this paragraph (i)(2)(iii)(B), the *modified rules of this paragraph (i)(2)(iii)(B)* are the rules in § 1.409(p)-1T as in effect prior to December 17, 2004 (see § 1.409(p)-1T in 26 CFR Part 1 revised as of April 1, 2004), modified to exclude from the definition of synthetic equity any stock option, stock appreciation right (payable in cash or stock), or similar rights with respect to shares of the S corporation or a related entity where the facts and circumstances indicate that there is no reasonable likelihood that the holder of the right will receive the shares (or equivalent value). For this purpose, there is no reasonable likelihood that the holder of the right will receive the shares (or equivalent value) in any case in which the option is based on an exercise price that is more than 200% of the fair market value of the shares on the date of grant or the right (in the

case of a stock appreciation right or similar right to acquire shares of the S corporation or a related entity) is payable only if the appreciation exceeds 100% of the fair market value of the shares on the date of grant.

(C) For the period from the first day of the first plan year beginning on or after January 1, 2005 through June 30, 2005, there is no nonallocation year under this section if there would be no nonallocation year under this section during that period if this section were applied without regard to paragraph (f)(4)(v) of this section (relating to voting rights).

(D) This paragraph (iii) does not apply to an ESOP for which the first plan year beginning on or after January 1, 2005 begins after June 30, 2005.

[T.D. 9164, 69 FR 75460, Dec. 17, 2004; 70 FR 11121, Mar. 8, 2005]

DEFERRED COMPENSATION, ETC.

PENSION, PROFIT-SHARING, STOCK BONUS PLANS, ETC.

§ 1.410(a)-1 Minimum participation standards; general rules.

(a) ***In general.*** A plan is not a qualified plan (and a trust forming a part of such plan is not a qualified trust) unless the plan satisfies—

(1) The minimum age and service requirements of section 410(a)(1) and § 1.410(a)-3,

(2) The maximum age requirements of section 410(a)(2) and § 1.410(a)-4, and

(3) The minimum coverage requirements of section 410(b)(1) and §§ 1.410(b)-2 through 1.410(b)-10.

(b) ***Organization of regulations relating to minimum participation standards—***

(1) ***General rules.*** This section prescribes general rules relating to the minimum participation standards provided by Section 410.

(2) ***Effective dates.*** Section 1.410(a)-2 provides rules under section 1017 of the Employee Retirement Income Security Act of 1974 relating to effective dates under section 410.

(3) ***Age and service conditions.*** Section 1.410(a)-3 provides rules under section 410(a)(1) relating to minimum age and service conditions.

(4) ***Maximum age and time of participation.*** Section 1.410(a)-4 provides rules under section 410(a) (2) and (4) relating to maximum age and time of participation.

(5) ***Year of service; breaks in service.*** For rules relating to years of service and breaks in service, see 29 CFR Part 2530 (Department of Labor regulations relating to minimum standards for employee pension benefit plans). See § 1.410(a)-5 for rules under section 410(a)(3)(B) relating to seasonal industries and for certain rules under section 410(a)(5) relating to breaks in service.

(6) ***Breaks in service.*** Section 1.410(a)-6 provides special rules under section 1017(f) of the Employee Retirement Income Security Act of 1974 relating to amendment of break in service rules.

(7) ***Elapsed time.*** Section 1.410 (a)-7 provides rules under sections 410 and 411 relating to the elapsed time method of crediting years of service.

(8) ***Coverage.*** Sections 1.410(b)-2 through 1.410(b)-10 provide rules relating to the minimum coverage requirements provided by section 410(b)(1).

(9) ***Church election.*** Section 1.410(d)-1 provides rules relating to the election by a church to have participation, vesting, funding, etc., provisions apply.

(c) ***Application of participation standards to certain plans*** —

(1) ***General rule.*** Except as provided in subparagraph (2) of this paragraph, section 410 does not apply to—

(i) A governmental plan (within the meaning of section 414(d) and the regulations thereunder),

(ii) A church plan (within the meaning of section 414(e) and the regulations thereunder) which has not made the election provided by section 410(d) and the regulations thereunder,

(iii) A plan which has not provided for employer contributions at any time after September 2, 1974, and

(iv) A plan established and maintained by a society, order, or association described in section 501(c) (8) or (9), if no part of the contributions to or under such plan are made by employers of participants in such plan.

(2) ***Participation requirements.*** A plan described in subparagraph (1) of this paragraph shall, for purposes of section 401(a), be treated as meeting the requirements of section 410 if such plan meets the coverage requirements resulting from the application of section 401(a)(3) as in effect on September 1, 1974. In applying the rules of that paragraph (d) to plans described in this paragraph (c) employees whose principal duties consist in supervising the work of other employees shall be treated as officers, shareholders, and highly compensated employees.

(d) ***Supersession.*** Section 11.410(a)-1 through 11.410(d)-1 inclusive, of the Temporary Income Tax Regulation under the Employee Retirement Income Security Act of 1974 are superseded by this section and §§ 1.410(a)-2 through 1.410(d)-1.

(Sec. 410 (88 Stat. 898; 26 U.S.C. 410))

[T.D. 7508, 42 FR 47193, Sept. 20, 1977, as amended by T.D. 7703, 45 FR 40980, June 17, 1980; T.D. 7735, 45 FR 74722, Nov. 12, 1980; T.D. 9849, 84 FR 9234, Mar. 14, 2019]

§ 1.410(a)-2 Effective dates.

(a) ***Plans not in existence on January 1, 1974.*** Under section 1017(a) of the Employee Retirement Income Security Act of 1974, in the case of a plan which was not in existence on January 1, 1974, section 410 and the regulations thereunder apply for plan years beginning after September 2, 1974. See paragraph (c) of this section for time plan is considered in existence.

(b) ***Plans in existence on January 1, 1974.*** Under section 1017(b) of the Employee Retirement Income Security Act of 1974, in the case of a plan which was in existence on January 1, 1974, section 410 and the regulations thereunder apply for plan years beginning after December 31, 1975. See paragraph (c) of this section for time plan is considered to be in existence.

(c) ***Time of plan existence*** —

(1) ***General rule.*** For purposes of this section, a plan is considered to be in existence on a particular day if—

(i) The plan on or before that day was reduced to writing and adopted by the employer (including, in the case of a corporate employer, formal approval by the employer's board of directors and, if required, shareholder), even though no amounts had been contributed under the plan as of such day, and

(ii) The plan was not terminated on or before that day.

(2) ***Collectively bargained plan.*** Notwithstanding subparagraph (1) of this paragraph, a plan described in section 413(a), relating to a plan maintained pursuant to a collective bargaining agreement, is considered to be in existence on a particular day if—

(i) On or before that day there is a legally enforceable agreement to establish such a plan signed by the employer, and

(ii) The employer contributions to be made to the plan are set forth in the agreement.

(3) ***Special rule.*** If a plan is considered to be in existence on January 1, 1974, under subparagraph (1) of this paragraph, any other plan with which such existing plan is merged or consolidated shall also be considered to be in existence on such date.

(d) ***Certain existing plans may elect new provisions*** —

(1) ***In general.*** The plan administrator (as defined in section 414(g)) of a plan that was in existence on January 1, 1974, may elect to have the provisions of the Code relating to participation, vesting, funding, and form of benefit (as in effect from time to time) apply to a plan year selected by the plan year selected by the plan administrator which begins after September 2, 1974, but before the otherwise applicable effective dates determined under section 1017 (b) or (c), 1021, or 1024 of the Employee Retirement Income Security Act of 1974, and to all subsequent plan years. The provisions referred to are the amendments to the Code made by sections 1011, 1012, 1013, 1015, 1016(a) (1) through (11) and (13) through (27), 1021, and 1022(b) of the Employee Retirement Income Security Act of 1974.

(2) ***Election is irrevocable.*** Any election made under this paragraph, once made shall be irrevocable.

(3) ***Procedure and time for making election.*** An election under this paragraph shall be made by attaching a statement to either the annual return required under section 6058(a) (or an amended return) with respect to the plan which is filed for the first plan year for which the election is effective or to a written request for a determination letter relating to the qualification of the plan under section 401(a), 403(a), or 405(a) of the Code and, if trusteed, the exempt status under section 501(a) of the Code of a trust consituting a part of the plan. If the election is made with a written request for a determination letter, the election may be conditioned upon issuance of a favorable determination letter and will become irrevocable upon issuance of such letter. The statement shall indicate that the election is made under section 1017(d) of the Employee Retirement Income Security Act of 1974 and the first plan year for which the election is effective.

(e) ***Examples.*** The rules of this section are illustrated by the following examples:

Example 1. A plan is adopted on January 2, 1974, effective as of Janurary 1, 1974. The plan is not considered to have been in existence on Janurary 1, 1974.

Example 2. A plan was in existence on January 1, 1974, and was amended on November 1, 1974, to increase benefits. The fact that the plan was amended is not relevant and the amended plan is considered to be in existence on January 1, 1974.

Example 3. (i) A subsidiary business corporation is a member of a controlled group of corporations within the meaning of IRC section 1563(a). On November 1, 1974, the plan of the parent corporation is amended to provide coverage for employees of the subsidiary corporation. This amendment of the parent corporation's plan does not affect the effective date of section 410 with respect to the parent corporation's plan. No distinction is made for this purpose between employees of the parent corporation and employees of the subsidiary corporation.
(ii) If the subsidiary adopted a separate plan on November 1, 1974, under paragraph (a) of this section, section 410 would apply to that plan for its first plan year beginning after September 2, 1974. However, the adoption of a different plan by the subsidiary would not affect the time section 410 applies to the plan of the parent corporation. If, instead of adopting its own separate plan, the subsidiary merely executed an adoption agreement under the terms of the parent plan providing that a subsidiary, upon the execution of an adoption agreement, will become part of the parent plan, the effective date of section 410 with respect to such plan will not be affected by the adoption of the plan by the subsidiary.

(Sec. 410 (88 Stat. 898; 26 U.S.C. 410))

[T.D. 7508, 42 FR 47194, Sept. 20, 1977]

§ 1.410(a)-3 Minimum age and service conditions.

(a) ***General rule.*** Except as provided by paragraph (b) or (c) of this section, a plan is not a qualified plan (and a trust forming a part of such plan is not a qualified trust) if the plan requires, as a condition of participation in the plan, that an employee complete a period of service with the employer or employers maintaining the plan extending beyond the later of—

(1) ***Age 25.*** The date on which the employee attains the age of 25; or

(2) ***One year of service.*** The date on which the employee completes 1 year of service.

(b) ***Special rule for plan with 3-year 100 percent vesting.*** A plan which provides that after not more than 3 years of service each participant's right to his accrued benefit under the plan is completely nonforfeitable (within the meaning of section 411 and the regulations thereunder) at the time such benefit accrues satisfies the requirements of paragraph (a) of this section if the period of service required by the plan as a condition of participation does not extend beyond the later of—

(1) ***Age 25.*** The date on which the employee attains the age of 25; or

(2) ***Three years of service.*** The date on which the employee completes 3 years of service.

(c) ***Special rule for employees of certain educational institutions.*** A plan maintained exclusively for employees of an educational institution (as defined in section 170(b)(1)(A)(ii)) by an employer exempt from tax under section 501(a) which provides that after 1 year of service each participant's right to his accrued benefit

under the plan is completely nonforfeitable (within the meaning of section 411 and the regulations thereunder) at the time such benefit accrues satisfies the requirements of paragraph (a) of this section if the period of service required by the plan as a condition of participation does not extend beyond the later of—

(1) ***Age 30.*** The date on which the employee attains the age of 30; or

(2) ***One year of service.*** The date on which the employee completes 1 year of service.

(d) ***Other conditions.*** Section 410(a), § 1.410(a)-4, and this section relate solely to age and service conditions and do not preclude a plan from establishing conditions, other than conditions relating to age or service, which must be satisfied by plan participants. For example, such provisions would not preclude a qualified plan from requiring, as a condition of participation, that an employee be employed within a specified job classification. See section 410(b) and the regulations thereunder for rules with respect to coverage of employees under qualified plans.

(e) ***Age and service requirements*** —

(1) ***General rule.*** For purposes of applying the rules of this section, plan provisons may be treated as imposing age or service requirements even though the provisions do not specifically refer to age or service. Plan provisions which have the effect of requiring an age or service requirement with the employer or employers maintaing the plan will be treated as if they imposed an age or service requirement. In general, a plan under which an employee cannot participate unless he retires will impose an age and service requirement. However, a plan may provide benefits which supplement benefits provided for employees covered under a pension plan, as defined in section 3(2) of the Employee Retirement Income Security Act of 1974, satisfying the requirements of section 410(a)(1) without violating the age and service rules.

(2) ***Examples.*** The rules of this paragraph are illustrated by the following examples:

Example 1. Corporation A is divided into two divisions. In order to work in division 2 an employee must first have been employed in division 1 for 5 years. A plan provision which required division 2 employment for participation will be treated as a service requirement because such a provision has the effect of requiring 5 years of service.

Example 2. Plan B requires as a condition of participation that each employee have had a driver's license for 15 years or more. This provision will be treated as an age requirement because such a provision has the effect of requiring an employee to attain a specified age.

Example 3. A plan which requires 1 year of service as a condition of participation also excludes a part-time or seasonal employee if his customary employment is for not more than 20 hours per week or 5 months in any plan year. The plan does not qualify because the provision could result in the exclusion by reason of a minimum service requirement of an employee who has completed a year of service. The plan would not qualify even though after excluding all such employees, the plan satisfied the coverage requirements of section 410(b).

Example 4. Employer A establishes a plan which covers employees after they retire and does not cover current employees unless they retire. Any employee who works past age 60 is treated as retired. The plan fails to satisfy the requirements of section 410(a) because the plan imposes a minimum age and service requirement in excess of that allowed by this section.

Example 5. Employer B establishes plan X, which provides that employees covered by qualified plan Y will receive benefits supplementing their benefits under plan Y to take into account cost of living increases after retirement. Plan X is not treated as imposing an age of service requirement.

Example 6. Employer C establishes a qualified plan satisfying the minimum age and service requirements. At a later time, entry into the plan is frozen so that employees not covered at that time cannot participate in the plan. The limitation on new participants is not treated as imposing a minimum age and service requirement.

(Sec. 410 (88 Stat. 898; 26 U.S.C. 410))

[T.D. 7508, 42 FR 47194, Sept. 20, 1977]

§ 1.410(a)-3T Minimum age and service conditions (temporary).

(a) [Reserved]

(b) ***Special rule for plan with 2-year 100 percent vesting.*** A plan which provides that after not more than 2 years of service each participant's right to his or her accrued benefit under the plan is completely nonforeitable (within the meaning of section 411 and the regulations thereunder) at the time such benefit accrues satisfies the requirements of paragraph (a) of this section if the period of service required by the plan as a condition of participation does not extend beyond the later of—

(1) [Reserved]

(2) ***Two years of service.*** The date on which the employee completes 2 years of service. For employees not described in § 1.411(a)-3T(e)(1), which describes employees with one hour of service in any plan year beginning after December 31, 1988, or later in the case of certain collectively bargained plans, the preceding sentence shall be applied by substituting "3 years of service" for "2 years of service".

[T.D. 8170, 53 FR 239, Jan. 6, 1988]

§ 1.410(a)-4 Maximum age conditions and time of participation.

(a) ***Maximum age conditions*** —

(1) ***General rule.*** A plan is not a qualified plan (and a trust forming a part of such plan is not a qualified trust) if the plan excludes from participation (on the basis of age) an employee who has attained an age specified by the plan unless—

(i) The plan is a defined benefit plan or a target benefit plan, and

(ii) The employee begins employment with the employer after the employee has attained an age specified by the plan, which age is not more than 5 years before normal retirement age (within the meaning of section 411(a)(8) and § 1.411(a)-7.

For purposes of this paragraph, a target benefit plan is a defined contribution plan under which the amount of employer contributions allocated to each participant is determined under a plan formula which does not allow employer discretion and on the basis of the amount necessary to provide a target benefit specified by the plan for such participant. Such target benefit must be the type of benefit which is provided by a defined benefit plan and the targeted benefit must not discriminate in favor of employees who are officers, shareholders, or highly compensated. For purposes of this

paragraph, in the determination of the time an employee begins employment, any such time which is included in a period of service which may be disregarded under the break in service rules need not be taken into account.

(2) ***Examples.*** The rules provided by this paragraph are illustrated by the following examples:

Example 1. A defined benefit plan provides that an employee will become a participant upon completion of 3 years of service if at such time the employee is less than age 60. The normal retirement age under the plan is age 65. The plan also provides full and immediate vesting for each of the plan's participants. Under the plan, an employee hired at age 58 would be denied participation on account of service for the first 3 years and on account of maximum age for the remaining years even though the employee was hired more than 5 years prior to the normal retirement date. The plan therefore does not satisfy section 410(a)(2).

Example 2. A defined benefit plan provides a normal retirement age of the later of age 65 or completion of 10 years of service. Because no employee could ever be hired within 5 years of his normal retirement age, the plan could not exclude employees for being over a specified age.

Example 3. Prior to the effective date of section 410, a defined benefit plan with a normal retirement age of 65 contained a maximum age 55 requirement for participation. Because of the maximum age requirement, and employee hired at age 58 was excluded from the plan. This employee is age 61 at the time that section 410 first applies to the plan. The employee cannot be excluded from participation because of age. The exclusion under section 410(a)(2) is not applicable in this instance because the employee's age at the time of hire, 58, was not within 5 years of the normal retirement age specified in the plan.

Example 4. Employee A was hired at age 50 and participated in a defined benefit plan until separating from service at age 55 with 5 years of service and with no vested benefit. At age 61, employee A was rehired within 5 years of the normal retirement age of 65 after he incurred 6 consecutive breaks in service. Because A's consecutive number of 1-year breaks (6) exceeds his years of service prior to such breaks (5), his service before the breaks may be disregarded. Consequently, A's initial employment date falling within such period may be disregarded and the plan could exclude A on account of his age because his employment commenced within 5 years of normal retirement age.

(b) ***Time of participation*** —

(1) ***General rule.*** A plan is not a qualified plan (and a trust forming a part of such plan is not a qualified trust) unless under the plan any employee who has satisfied the applicable minimum age and service requirements specified in § 1.410(a)-3, and who is otherwise entitled to participate in the plan, commences participation in the plan no later than the earlier of—

(i) The first day of the first plan year beginning after the date on which such employee first satisfied such requirements, or

(ii) The date 6 months after the date on which he first satisfied such requirements,

unless such employee was separated from service and has not returned before the date referred to in subdivision (i) or (ii), whichever is applicable. If such separated employee returns to service after either of such dates without incurring a 1-year break in service, the employee must commence participation immediately upon his return. In the case of a plan using the elapsed time method described in § 1.410(a)-7, such an employee who has a period of absence commencing before the

date referred to in subdivision (i) or (ii) (whichever is applicable) must commence participation as of such applicable date no later than the date such absence ended. However, if an employee's prior service is disregarded on account of the plan's break-in-service rules then, for purposes of this subparagraph, such service is also disregarded for purposes of determining the date on which such employee first satisfied the minimum age and service requirements.

(2) ***Examples.*** The rules provided by this paragraph are illustrated by the following examples:

Example 1. A calendar year plan provides that an employee may enter the plan only on the first semi-annual entry date, January 1 or July 1, after he has satisfied the applicable minimum age and service requirements specified in section 410(a)(1). The plan satisfies the requirements of this paragraph because an employee is eligible to participate no later than the earlier of (1) the first day of the first plan year beginning after he satisfied the applicable minimum age and service requirements, or (2) the date 6 months after he satisfied such requirements.

Example 2. A plan provides that an employee is not eligible to participate until the first day of the first plan year beginning after he has satisfied the minimum age and service requirements of section 410(a)(1). In this case, an employee who satisfies the “6 month” rule described in subparagraph (1) of this paragraph will not be eligible to participate in the plan. Therefore, the plan does not satisfy the requirements of this paragraph.

Example 3. A calendar year plan provides that an employee may enter the plan only on the first semi-annual entry date, January 1 or July 1, after he has satisfied the applicable minimum age and service requirements specified in section 410(a)(1). Employee A after 10 years of service separated from service in 1976 with a vested benefit. On February 1, 1990, A returns to employment covered by the plan. Assuming A completes a year of service after his return, A must participate immediately on his return, February 1. A's prior service cannot be disregarded, because he had a vested benefit when he separated from service. Therefore, the plan may not postpone his participation until July 1.

Example 4. Assume the same facts as in example (3). The plan has the break-in-service rule described in section 410(a)(5)(D) and § 1.410(a)-5(c)(4). Employee B, after he had 5 years of service but no vested benefit incurs 5 consecutive 1-year breaks. Because B's prior service can be disregarded, the plan may postpone B's participation in the plan under the rule described in section 410(a)(4) and this paragraph.

(Sec. 410 (88 Stat. 898; 26 U.S.C. 410))

[T.D. 7508, 42 FR 47195, Sept. 20, 1977, as amended by T.D. 7703, 45 FR 40980, June 17, 1980]

§ 1.410(a)-5 Year of service; break in service.

(a) ***Year of service.*** For the rules relating to years of service under subparagraphs (A), (C), and (D) of section 410(a)(3), see regulations prescribed by the Secretary of Labor under 29 CFR Part 2530, relating to minimum standards for employee pension benefit plans.

Rules relating to a general rule for a year of service, hours of service, and maritime industries apply for purposes of section 410(a) and the regulations thereunder.

(b) ***Seasonal industries.*** For rules which relate to seasonal industries under section 410(a)(3)(B), see regulations prescribed by the Secretary of Labor under 29 CFR Part 2530, relating to minimum standards for employee pension benefits plans.

(c) *Breaks in service* —

(1) ***General rule.*** This paragraph provides rules with respect to breaks in service under section 410(a)(5). Except as provided in subparagraphs (2), (3), (4), and (5) of this paragraph, all of an employee's years of service with the employer or employers maintaining a plan are taken into account in computing his period of service under the plan for purposes of section 410(a)(1) and § 1.410(a)-3.

(2) ***Employees under 3-year 100 percent vesting schedule*—**

(i) ***General rule.*** In the case of an employee who incurs a 1-year break in service under a plan which provides that after not more than 3 years of service, each participant's right to his accrued benefit under the plan is completely nonforfeitable (within the meaning of section 411 and the regulations thereunder) at the time such benefit accrues, the employee's service before the break in service is not required to be taken into account after the break in service in determining the employee's years of service under section 410(a)(1) and § 1.410(a)-3 if such employee has not satisfied such service requirement.

(ii) ***Example.*** The rules of this subparagraph are illustrated by the following example.

Example. A qualified plan computing service by the actual counting of hours provides full and immediate vesting. The plan can not require as a condition of participation that an employee complete 3 consecutive years of service with the employer because the requirement as to consecutive years is not permitted under section 410(a) (5). However, such a plan can require 3 years without a break in service, i.e., 3 years with no intervening years in which the employee fails to complete more than 500 hours of service. Under a plan containing such a participation requirement, the following example illustrates when employees whould become eligible to participate.

Year	Hours of service completed		
	Employee A	Employee B	Employee C
1	1,000	1,000	1,000
2	1,000	1,000	500
3	1,000	700	1,000
4	1,000	1,000	700
5	1,000	1,000	1,000
6	1,000	1,000	1,000

Note. *Employee A will have satisfied the plan's service requirement at the end of year 3. Employee B at the end of year 4, and Employee C at the end of year 6.*

(3) *One-year break in service* —

(i) ***In general.*** In computing the period of service of an employee who has incurred a 1-year break in service, for purposes of section 410(a)(1) and § 1.410(a)-3, a plan may disregard the employee's service before the break until the employee completes a year of service after such break in service.

(ii) ***Examples.*** The rules provided by this subparagraph are illustrated by the following examples.

Example 1. Employee A completes a year of service under a plan computing service by the actual counting of hours for the 12-month period ending December 31, 1980, and incurs a 1-year break in service for the 12-month period ending December 31, 1981. The plan does not contain the provisions permitted by section 410(a)(5)(B) (relating to 3-year 100 percent vesting) and section 410(a)(5)(D) (relating to nonvested participants). Thereafter, he does not complete a year of service. As of January 1, 1982, in computing his period of service under the plan his service prior to December 31, 1981, is not required to be taken into account for purposes of section 410(a)(1) and § 1.410 (a)-3.

Example 2. The employee in example (1) completes a year of service for the 12-month period ending December 31, 1982. Prior to December 31, 1982, in computing the employee's period of service as of any date occurring in 1982, the employee's service before December 31, 1981, is not required to be taken into account for purposes of section 410(a)(1) and § 11.410(a)-3. Because the employee completed a year of service for the 12-month period ending December 31, 1982, however, his period of service is redetermined as of January 1, 1982. Upon completion of a year of service for 1982, the employee's period of service, determined as of any date occurring in 1982, includes service prior to December 31, 1981.

(4) ***Nonvested participants*** —

(i) ***General rule.*** In the case of a participant in a plan who does not have any nonforfeitable right under the plan to his employer-derived accrued benefit and who incurs a 1-year break in service, for purposes of section 410(a)(1) and § 1.410.(a)-3 the plan may disregard his years of service prior to such break if the number of his consecutive 1-year breaks in service equals or exceeds his aggregate number of years of service prior to such break. In the case of a plan using the elapsed time method described in Department of Labor regulations, the plan may disregard such years of service prior to such break if the period of severance is at least 1 year and the period of severance equals or exceeds the prior period of service, whether or not consecutive, completed before such period of severance. The plan may in computing such aggregate number of years of service prior to such break disregard any years of service which could have been disregarded under this subparagraph by reason of any prior break in service.

(ii) ***Examples.*** The rules of this subparagraph are illustrated by the following example:

Example. In 1980, A, who was hired at age 35, separates from the service of X Corporation after completing 4 years of service. At this time A had no vested benefits. In 1985, after incurring 5 consecutive one-year breaks in service, A was reemployed. Under section 410(a)(5)(D), A's 4 years of service may be disregarded because they are exceeded by the number of years of consecutive one-year breaks (5) after such service.

(d) ***Special continuity rule for certain plans.*** For special rules for computing years of service in the case of a plan maintained by more than one employer, see regulations prescribed by the Secretary of Labor under 29 CFR Part 2530, relating to minimum standards for employee pension benefit plans.

(Sec. 410 (88 Stat. 898; 26 U.S.C. 410))

[T.D. 7508, 42 FR 47196, Sept. 20, 1977; T.D. 7508, 42 FR 57123, Nov. 1, 1977, as amended by T.D. 7703, 45 FR 40980, June 17, 1980]

§ 1.410(a)-6 Amendment of break in service rules; Transition period.

(a) ***In general.*** Under section 1017(f) (1) of the Employee retirement Income Security Act of 1974, a plan is not a qualified plan (and a trust forming a part of such plan is not a qualified trust) if the rules of the plan relating to breaks in service are amended, and—

(1) Such amendment is effective after January 1, 1974, and before the date on which section 410 becomes applicable to the plan, and

(2) Under such amendment, any employee's participation in the plan commences at any date later than the later of—

(i) The date on which his participation would commence under the break in service rules of section 410(a)(5), or

(ii) The earliest date on which his participation would commence under the plan as in effect on or after January 1, 1974.

(b) ***Break in service rules.*** For purposes of paragraph (a), the term “break in service rules” means the rules provided by a plan relating to circumstances under which a period of an employee's service or plan participation is disregarded for purposes of determining his rights to participate in the plan, if under such rules such service is disregarded by reason of the employee's failure to complete a required period of service within a specified period of time.

(Sec. 410 (88 Stat. 898; 26 U.S.C. 410))

[T.D. 7508, 42 FR 47197, Sept. 20, 1977; 43 FR 2721, Jan. 19, 1978]

§ 1.410(a)-7 Elapsed time.

(a) ***In general*** —

(1) ***Introduction to elapsed time method of crediting service.*** (i) 29 CFR 2530.200b-2 sets forth the general method of crediting service for an employee. The general method is based upon the actual counting of hours of service during the applicable 12-consecutive-month computation period. The equivalencies set forth in 29 CFR 2530.200b-3 are also methods for crediting hours of service during computation periods. Under the general method and the equivalencies an employee receives a year's credit (in units of years of service or years of participation) for a computation period during which the employee is credited with a specified number of hours of service. In general, an employee's statutory entitlement with respect to eligibility to participate, vesting and benefit accrual is determined by totalling the number of years' credit to which an employee is entitled.

(ii) Under the alternative method set forth in this section, by contrast, an employee's statutory entitlement with respect to eligibility to participate, vesting and benefit accrual is not based upon the actual completion of a specified number of hours of service during a 12-consecutive-month period. Instead, such entitlement is determined generally with reference to the total period of time which elapses while the employee is employed (i.e., while the employment

relationship exists) with the employer or employers maintaining the plan. The alternative method set forth in this section is designed to enable a plan to lessen the administrative burdens associated with the maintenance of records of an employee's hours of service by permitting each employee to be credited with his or her total period of service with the employer or employers maintaining the plan, irrespective of the actual hours of service completed in any 12-consecutive-month period.

(2) ***Overview of the operation of the elapsed time method.***

(i) Under the elapsed time method of crediting service, a plan is generally required to take into account the period of time which elapses while the employee is employed (*i.e.,* while the employment relationship exists) with the employer or employers maintaining the plan, regardless of the actual number of hours he or she completes during such period. Under this alternative method of crediting service, an employee's service is required to be taken into account for purposes of eligibility to participate and vesting as of the date he or she first performs an hour of service within the meaning of 29 CFR 2530.200b-2 (a) (1) for the employer or employers maintaining the plan. Service is required to be taken into account for the period of time from the date the employee first performs such an hour of service until the date he or she severs from service with the employer or employers maintaining the plan.

(ii) The date the employee severs from service is the earlier of the date the employee quits, is discharged, retires or dies, or the first anniversary of the date the employee is absent from service for any other reason (e.g., disability, vacation, leave of absence, layoff, etc.). Thus, for example, if an employee quits, the severance from service date is the date the employee quits. On the other hand, if an employee is granted a leave of absence (and if no intervening event occurs), the severance from service date will occur one year after the date the employee was first absent on leave, and this one year of absence is required to be taken into account as service for the employer or employers maintaining the plan. Because the severance from service date occurs on the earlier of two possible dates (*i.e.,* quit, discharge, retirement or death *or* the first anniversary of an absence from service for any other reason), a quit, discharge, retirement or death within the year after the beginning of an absence for any other reason results in an immediate severance from service. Thus, for example, if an employee dies at the end of a four-week absence resulting from illness, the severance from service date is the date of death, rather than the first anniversary date of the first day of absence for illness.

(iii) In addition, for purposes of eligibility to participate and vesting under the elapsed time method of crediting service, an employee who has severed from service by reason of a quit, discharge or retirement may be entitled to have a period of time of 12 months or less taken into account by the employer or employers maintaining the plan if the employee returns to service within a certain period of time and performs an hour of service within the meaning of 29 CFR 2530.200b-2 (a) (1). In general, the period of time during which the employee must return to service begins on the date the employee severs from service as a result of a quit, discharge or retirement and ends on the first anniversary of such date. However, if the employee is absent for any other reason (e.g., layoff) and then quits, is discharged or retires, the period of time during which the employee may return and receive credit begins on the severance from service date and ends one year after the first day of absence (e.g., first day of layoff). As a result of the operation of these rules, a severance from service (e.g., a quit), or an absence (e.g., layoff) followed by a severance from service, never results in a period of time of more than one year being required to be taken into account after an employee severs from service or is absent from service.

(iv) For purposes of benefit accrual under the elapsed time method of crediting service, an employee is entitled to have his or her service taken into account from the date he or she begins to participate in the plan until the severance from service date. Periods of severance under any circumstances are not required to be taken into account. For example, a participant who is discharged on December 14, 1980 and rehired on October 14, 1981 is not required to be credited with the 10 month period of severance for benefit accrual purposes.

(3) ***Overview of certain concepts relating to the elapsed time method*** —

(i) ***In general.*** The rules with respect to the elapsed time method of crediting service are based on certain concepts which are defined in paragraph (b) of this section. These concepts are applied in the substantive rules contained in paragraphs (c), (d), (e), (f) and (g) of this section. The purpose of this subparagraph is to summarize these concepts.

(ii) ***Employment commencement date.***

(A) A concept which is necessary in order to credit service accurately under any service crediting method is the establishment of a starting point for crediting service. The employment commencement date, which is the date on which an employee first performs an hour of service within the meaning of 29 CFR 2530.200b-2 (a) (1) for the employer or employers maintaining the plan, is used to establish the date upon which an employee must begin to receive credit for certain purposes (e.g., eligibility to participate and vesting).

(B) In order to credit accurately an employee's total service with an employer or employers maintaining the plan, a plan also may provide for an “adjusted” employment commencement date (*i.e.,* a recalculation of the employment commencement date to reflect noncreditable periods of severance) or a reemployment commencement date as defined in paragraph (b) (3) of this section. Fundamentally, all three concepts rely upon the performance of an hour of service to provide a starting point for crediting service. One purpose of these three concepts is to enable plans to satisfy the requirements of this section in a variety of ways.

(C) The fundamental rule with respect to these concepts is that any plan provision is permissible so long as it satisfies the minimum standards. Thus, for example, although the rules of this section provide that credit must begin on the employment commencement date, a plan is permitted to “adjust” the employment commencement date to reflect periods of time for which service is not required to be credited. Similarly, a plan may wish to credit service under the elapsed time method as discrete periods of service and provide for a reemployment commencement date. Certain plans may wish to provide for both concepts, although it is not a requirement of this section that plans so provide.

(iii) ***Severance from service date.*** Another fundamental concept of the elapsed time method of crediting service is the severance from service date, which is defined as the earlier of the date on which an employee quits, retires, is discharged or dies, or the first anniversary of the first date of absence for any other reason. One purpose of the severance from service date is to provide the endpoint for crediting service under the elapsed time method. As a general proposition, service is credited from the employment commencement date (*i.e.,* the starting point) until the severance from service date (*i.e.,* the endpoint). A complementary purpose of the severance from service date is to establish the starting point for measuring a period of

severance from service in order to determine a "break in service" (see paragraph (a)(3)(v) of this section). A third purpose of such date is to establish the starting point for measuring the period of time which may be required to be taken into account under the service spanning rules (see paragraph (a)(3)(vi) of this section).

(iv) ***Period of service.*** A third elapsed time concept is the use of the "period of service" rather than the "year of service" in determining service to be taken into account for purposes of eligibility to participate, vesting and benefit accrual. For purposes of eligibility to participate and vesting, the period of service runs from the employment commencement date or reemployment commencement date until the severance from service date. For purposes of benefit accrual, a period of service runs from the date that a participant commences participation under the plan until the severance from service date. Because the endpoint of the period of service is marked by the severance from service date, an employee is credited with the period of time which runs during any absence from service (other than for reason of a quit, retirement, discharge or death) which is 12 months or less. Thus, for example, a three week absence for vacation is taken into account as part of a period of service and does not trigger a severance from service date.

(v) ***Period of severance.*** A period of severance begins on the severance from service date and ends when an employee returns to service with the employer or employers maintaining the plan. The purpose of the period of severance is to apply the statutory "break in service" rules to an elapsed time method of crediting service.

(vi) ***Service spanning.*** Under the elapsed time method of crediting service, a plan is required to credit periods of service and, under the service spanning rules, certain periods of severance of 12 months or less for purposes of eligibility to participate and vesting. Under the first service spanning rule, if an employee severs from service as a result of quit, discharge or retirement and then returns to service within 12 months, the period of severance is required to be taken into account. Also, a situation may arise in which an employee is absent from service for any reason other than quit, discharge, retirement or death and during the absence a quit, discharge or retirement occurs. The second service spanning rule provides in that set of circumstances that a plan is required to take into account the period of time between the severance from service date (*i.e.,* the date of quit, discharge or retirement) and the first anniversary of the date on which the employee was first absent, if the employee returns to service on or before such first anniversary date.

(4) ***Organization and applicability.***

(i) The substantive rules for crediting service under the elapsed time method with respect to eligibility to participate are contained in paragraph (c), the rules with respect to vesting are contained in subparagraph (d), and the rules with respect to benefit accrual are contained in paragraph (e). The format of the rules is designed to enable a plan to use the elapsed time method of crediting service either for all purposes or for any one or combination of purposes under sections 410 and 411. Thus, for example, a plan may credit service for eligibility to participate purposes by the use of the general method of crediting service set forth in 29 CFR 2530.200b-2 or by the use of any of the equivalences set forth in 29 CFR 2530.200b-3, while the plan may credit service for vesting and benefit accrual purposes by the use of the elapsed time method of crediting service.

(ii) A plan using the elapsed time method of crediting service for one or more classifications of employees covered under the plan may use the general method of crediting service set forth in 29 CFR 2530.200b-2 or any of the equivalencies set forth in 29 CFR 2530.200b-3 for other classifications of employees, provided that such classifications are reasonable and are consistently applied. Thus, for example, a plan may provide that part-time employees are credited under the general method of crediting service set forth in 29 CFR 2530.200b-2 and full-time employees are credited under the elapsed time method. A classification, however, will not be deemed to be reasonable or consistently applied if such classification is designed with an intent to preclude an employee or employees from attaining his or her statutory entitlement with respect to eligibility to participate, vesting or benefit accrual. For example, a classification applied so that any full-time employee credited with less than 1,000 hours of service during a given 12-consecutive-month period would be considered part-time and subject to the general method of crediting service rather than the elapsed time method would not be reasonable.

(iii) Notwithstanding paragraph (a) (4) (i) and (ii) of this section, the use of the elapsed time method for some purposes or the use of the elapsed time method for some employees may, under certain circumstances, result in discrimination prohibited under section 401(a)(4), even though the use of the elapsed time method for such purposes, and for such employees, is permitted under this section.

(5) ***More than one employer plans.*** For special rules for computing years of service in the case of a plan maintained by more than one employer, see 29 CFR Part 2530 (Department of Labor regulations relating to minimum standards for employee pension benefit plans).

(b) ***Definitions*** —

(1) ***Employment commencement date.*** For purposes of this section, the term "employment commencement date" shall mean the date on which the employee first performs an hour of service within the meaning of 29 CFR 2530.200b-2 (a)(1) for the employer or employers maintaining the plan.

(2) ***Severance from service date.*** For purposes of this section, a "severance from service" shall occur on the earlier of—

(i) The date on which an employee quits, retires, is discharged or dies; or

(ii) The first anniversary of the first date of a period in which an employee remains absent from service (with or without pay) with the employer or employers maintaining the plan for any reason other than quit, retirement, discharge or death, such as vacation, holiday, sickness, disability, leave of absence or layoff.

(3) ***Reemployment commencement date.*** For purposes of this section, the term "reemployment commencement date" shall mean the first date, following a period of severance from service which is not required to be taken into account under the service spanning rules in paragraphs (c)(2)(iii) and (d)(1)(iii) of this section, on which the employee performs an hour of service within the meaning of 29 CFR 2530.200b-2(a)(1) for the employer or employers maintaining the plan.

(4) ***Participation commencement date.*** For purposes of this section, the term "participation commencement date" shall mean the date a participant first commences participation under the plan.

(5) ***Period of severance.*** For purposes of this section, the term "period of severance" shall mean the period of time commencing on the severance from service date and ending on the date on which the employee again performs an hour of service within the meaning of 29 CFR 2530.200b-2(a)(1) for an employer or employers maintaining the plan.

(6) ***Period of service*** —

(i) ***General rule.*** For purposes of this section, the term "period of service" shall mean a period of service commencing on the employee's employment commencement date or reemployment commencement date, whichever is applicable, and ending on the severance from service date.

(ii) ***Aggregation rule.*** Unless a plan provides in some manner for an "adjusted" employment commencement date or similar method of consolidating periods of service, periods of service shall be aggregated unless such periods may be disregarded under section 410(a)(5) or 411(a)(4).

(iii) ***Other federal law.*** Nothing in this section shall be construed to alter, amend, modify, invalidate, impair or supersede any law of the United States or any rule or regulation issued under such law. Thus, for example, nothing in this section shall be construed as denying an employee credit for a "period of service" if credit is required by a separate federal law. Furthermore, the nature and extent of such credit shall be determined under such law.

(c) ***Eligibility to participate*** —

(1) ***General rule.*** For purposes of section 410(a)(1)(A), a plan generally may not require as a condition of participation in the plan that an employee complete a period of service with the employer or employers maintaining the plan extending beyond the later of—

(i) The date on which the employee attains the age of 25; or

(ii) The date on which the employee completes a one-year period of service. See the regulations under section 410(a) (relating to eligibility to participate).

(2) ***Determination of one-year period of service.***

(i) For purposes of determining the date on which an employee satisfies the service requirement for initial eligibility to participate under the plan, a plan using the elapsed time method of crediting service shall provide that an employee who completes the 1-year period of service requirement on the first anniversary of his employment commencement date satisfies the minimum service requirement as of such date. In the case of an employee who fails to complete a one-year period of service on the first anniversary of his employment commencement date, a plan which does not contain a provision permitted by section 410(a)(5)(D) (rule of parity) shall provide for the aggregation of periods of service so that a one-year period of service shall be completed as of the date the employee completes 12 months of service (30 days are deemed to be a month in the case of the aggregation of fractional months) or 365 days of service.

(ii) For purposes of section 410(a)(1)(B)(i), a "3-year period of service" shall be deemed to be "3 years of service."

(iii) ***Service spanning rules.*** In determining a 1-year period of service for purposes of initial eligibility to participate and a period of service for purposes of retention of eligibility to participate, in addition to taking into account an employee's period of service, a plan shall take into account the following periods of severance—

(A) If an employee severs from service by reason of a quit, discharge or retirement and the employee then performs an hour of service within the meaning of 29 CFR 2530.200b-2(a)(1) within 12 months of the severance from service date, the plan is required to take into account the period of severance; and

(B) Notwithstanding paragraph (c)(2)(iii)(A) of this section, if an employee severs from service by reason of a quit, discharge or retirement during an absence from service of 12 months or less for any reason other than a quit, discharge, retirement or death, and then performs an hour of service within the meaning of 29 CFR 2530.200b-2(a)(1) within 12 months of the date on which the employee was first absent from service, the plan is required to take into account the period of severance.

(iv) For purposes of determining an employee's retention of eligibility to participate in the plan, a plan shall take into account an employee's entire period of service unless certain periods of service may be disregarded under section 410(a)(5) of the Code.

(v) ***Example.*** Employee W, age 31, completed 6 months of service and was laid off. After 2 months of layoff, W quit. Five months later, W returned to service. For purposes of eligibility to participate, W was required to be credited with 13 months of service (8 months of service and 5 months of severance). If, on the other hand, W had not returned to service within the first 10 months of severance (*i.e.,* within 12 months after the first day of layoff), W would be required to be credited with only 8 months of service.

(3) ***Entry date requirements*** —

(i) ***General rule.*** For purposes of section 410(a)(4), it is necessary for a plan to provide that any employee who has satisfied the minimum age and service requirements, and who is otherwise entitled to participate in the plan, commences participation in the plan no later than the earlier of—

(A) The first day of the first plan year beginning after the date on which such employee satisfied such requirements, or

(B) The date six months after the date on which he satisfied such requirements, unless such employee was separated from service before the date referred to in subdivision (i) (A) or (B), whichever is applicable. See the regulations under section 410(a) (relating to eligibility to participate).

(ii) ***Separation from service*** —

(A) ***Definition.*** For purposes of this section, the term “separated from service” includes a severance from service or an absence from service for any reason other than a quit, discharge, retirement or death, regardless of the duration of such absence. Accordingly, if an employee is laid off for a period of six weeks, the employee shall be deemed to be “separated from service” during such period for purposes of the entry date requirements.

(B) ***Application.*** A period of severance which is taken into account under the service spanning rules in paragraph (c)(2)(iii) of this section or an absence of 12 months or less may result in an employee satisfying the plan's minimum service requirement during such period of time. In addition, once an employee satisfies the plan's minimum service requirement, either before or during such period of time, such period of time may contain an entry date applicable to such employee. In the case of an employee whose period of severance is taken into account and such period contains an entry date applicable to the employee, he or she shall be made a participant in the plan (if otherwise eligible) no later than the date on which he or she ended the period of severance. In the case of an employee whose period of absence contains an entry date applicable to such employee, he or she, no later than the date such absence ended, shall be made a participant in the plan (if otherwise eligible) as of the first applicable entry date which occurred during such absence from service.

(iii) ***Examples.*** For purposes of the following examples, assume that the plan provides for a minimum age requirement of 25 and a minimum service requirement of one year, and provides for semi-annual entry dates.

(A) Employee A, age 35, worked for 10 months in a job classification covered under the plan, became disabled for nine consecutive months and then returned to service. During the period of absence, A completed a 1-year period of service and passed a semi-annual entry date after satisfying the minimum service requirement. Accordingly, the plan is required to make A a participant no later than his return to service effective as of the applicable entry date.

(B) Employee B, after satisfying the minimum age and service requirements, quit work before the next semi-annual entry date, and then returned to service before incurring a 1-year period of severance, but after such semi-annual entry date. Employee B is entitled to become a participant immediately upon his return to service effective as of the date of his return.

(4) ***Break in service.*** For purposes of applying the break in service rules under section 410(a)(5) (B) and (C), the term “1-year period of severance” shall be substituted for the term “1-year break in service”. A 1-year period of severance shall be determined on the basis of a 12-consecutive-month period beginning on the severance from service date and ending on the first anniversary of such date, provided that the employee during such 12-consecutive-month period does not perform an hour of service within the meaning of 29 CFR 2530.200b-2(a)(1) for the employer or employers maintaining the plan.

(5) ***One-year hold-out*** —

(i) ***General rule.***

(A) For purposes of section 410(a)(5)(C), in determining the period of service of an employee who has incurred a 1-year period of severance, a plan may disregard the employee's period of service before such period of severance until the employee completes a 1-year period of service after such period of severance.

(B) ***Example.*** Assume that a plan provides for a minimum service requirement of 1-year and provides for semi-annual entry dates, but does not contain the provisions permitted by section 410(a)(5)(D) (relating to the rule of parity). Employee G, age 40, completed a seven-month period of service, quit and then returned to service 15 months later, thereby

incurring a 1-year period of severance. After working four months, G was laid off for nine months and then returned to work again. Although the plan may hold employee G out from participation in the plan until the completion of a 1-year period of service after the 1-year (or greater) period of severance, once the 1-year hold-out is completed, the plan is required to provide the employee with such statutory entitlement as arose during the 1-year hold-out. Accordingly, employee G satisfied the 1-year hold-out requirement as of the eighth month of layoff, and G is entitled to become a participant in the plan immediately upon his return to service after the nine-month layoff effective as of the first applicable entry date occurring after the date on which he satisfied the 1-year of service requirement (*i.e.,* the first applicable entry date after the first month of layoff). See the regulations under section 410 (a) (relating to eligibility to participate).

(6) ***Rule of parity*** —

(i) ***General rule.*** For purposes of section 410(a)(5)(D), in the case of a participant who does not have any nonforfeitable right under the plan to his accrued benefit derived from employer contributions and who incurs a 1-year period of severance, a plan, in determining an employee's period of service for purposes of section 410(a)(1), may disregard his period of service if his latest period of severance equals or exceeds his prior periods of service, whether or not consecutive, completed before such period of severance. See the regulations under section 410(a) (relating to eligibility to participate).

(ii) In determining whether a completely nonvested employee's service may be disregarded under the rule of parity, a plan is not permitted to apply the rule until the employee incurs a 1-year period of severance. Accordingly, a plan may not disregard a period of service of less than one year until an employee has incurred a period of severance of at least one year.

(iii) ***Example.*** Assume that a plan provides for a minimum service requirement of one year and provides for the rule of parity. An employee works for three months, quits and then is rehired 10 months later. Such employee is entitled to receive 13 months of credit for purposes of eligibility to participate and vesting (see the service spanning rules). Although the period of severance exceeded the period of service, the three months of service may not be disregarded because no 1-year period of severance occurred.

(d) ***Vesting*** —

(1) ***General rule.***

(i) For purposes of section 411(a)(2), relating to vesting in accrued benefits derived from employer contributions, a plan which determines service to be taken in account on the basis of elapsed time shall provide that an employee is credited with a number of years of service equal to at least the number of whole years of the employee's period of service, whether or not such periods of service were completed consecutively.

(ii) In order to determine the number of whole years of an employee's period of service, a plan shall provide that non-successive periods of service must be aggregated and that less than whole year periods of service (whether or not consecutive) must be aggregated on the basis that 12 months of service (30 days are deemed to be a month in the case of the aggregation of fractional months) or 365 days of service equal a whole year of service.

(iii) ***Service spanning rules.*** In determining a participant's period of service for vesting purposes, a plan shall take into account the following periods of severance—

(A) If an employee severs from service by reason of a quit, discharge or retirement and the employee then performs an hour of service within the meaning of 29 CFR 2530.200b-2(a)(1) within 12 months of the severance from service date, the plan is required to take into account the period of severance; and

(B) Nothwithstanding paragraph (d)(1)(iii)(A) of this section, if an employee severs from service by reason of a quit, discharge or retirement during an absence from service of 12 months or less for any reason other than a quit, discharge, retirement or death, and then performs an hour of service within the meaning of 29 CFR 2530.200b-2(a)(1) within 12 months of the date on which the employee was first absent from service, the plan is required to take into account the period of severance.

(iv) For purposes of determining an employee's nonforfeitable percentage of accrued benefits derived from employer contributions, a plan, after calculating an employee's period of service in the manner prescribed in this paragraph, may disregard any remaining less than whole year, 12-month or 365-day period of service. Thus, for example, if a plan provides for the statutory five to fifteen year graded vesting, an employee with a period (or periods) of service which yield 5 whole year periods of service and an additional 321-day period of service is twenty-five percent vested in his or her employer-derived accrued benefits (based solely on the 5 whole year periods of service).

(2) ***Service which may be disregarded.***

(i) For purposes of section 411(a)(4), in determining the nonforfeitable percentage of an employee's right to his or her accrued benefits derived from employer contributions, all of an employee's period or periods of service with an employer or employers maintaining the plan shall be taken into account unless such service may be disregarded under paragraph (d)(2)(ii) of this section.

(ii) For purposes of paragraph (d)(2)(i) of this section, the following periods of service may be disregarded—

(A) The period of service completed by an employee before the date on which he attains age 22;

(B) In the case of a plan which requires mandatory employee contributions, the period of service which falls within the period of time to which a particular employee contribution relates, if the employee had the opportunity to make a contribution for such period of time and failed to do so;

(C) The period of service during any period for which the employer did not maintain the plan or a predecessor plan;

(D) The period of service which is not required to be taken into account by reason of a period of severance which constitutes a break in service within the meaning of paragraph (d)(4) of this section;

(E) The period of service completed by an employee prior to January 1, 1971, unless the employee completes a period of service of at least 3 years at any time after December 31, 1970; and

(F) The period of service completed before the first plan year for which this section applies to the plan, if such service would have been disregarded under the plan rules relating to breaks in service in effect at that time. See the regulations under section 411(a) (relating to vesting).

(3) ***Seasonal industry.*** [Reserved]

(4) ***Break in service.*** For purposes of applying the break in service rules, the term "1-year period of severance" shall be substituted for the term "1-year break in service". A 1-year period of severance shall be a 12-consecutive-month period beginning on the severance from service date and ending on the first anniversary of such date, provided that the employee during such 12-consecutive-month period fails to perform an hour of service within the meaning of 29 CFR 2530.200b-2(a)(1) for an employer or employers maintaining the plan.

(5) ***One-year hold-out.*** For purposes of section 411(a)(6)(B), in determining the nonforfeitable percentage of the right to accrued benefits derived from employer contributions of an employee who has incurred a 1-year period of severance, the period of service completed before such period of severance is not required to be taken into account until the employee has completed a 1-year period of service after his return to service. See the regulations under section 411(a) (relating to vesting).

(6) ***Vesting in pre-break accruals.*** For purposes of section 411(a)(6)(C), a "1-year period of severance" shall be deemed to constitute a "1-year break in service." See the regulations under section 411(a) (relating to vesting).

(7) ***Rule of partity*** —(i) *General rule.* For purposes of section 411(a)(6)(D), in the case of an employee who is a nonvested participant in employer-derived benefits at the time he incurs a 1-year period of severance, the period of service completed by such participant before such period of severance is not required to be taken into account for purposes of determining the vested percentage of his or her right to employer-derived benefits if at such time the consecutive period of severance equals or exceeds his prior periods of service, whether or not consecutive, completed before such period of severance. See the regulations under section 411(a) (relating to vesting).

(e) ***Benefit accrual.***

(1) For purposes of section 411(b), a plan may provide that a participant's service with an employer or employers maintaining the plan shall be determined on the basis of the participant's total period of service beginning on the participation commencement date and ending on the severance from service date.

(2) Under section 411(b)(3)(A), a defined benefit pension plan may determine an employee's service for purposes of benefit accrual on any basis which is reasonable and consistent and which takes into account all service during the employee's participation in the plan which is included in a period of service required to be taken into account under section 410(a)(5) (relating to service which must be taken into account for purposes of determining an employee's eligibility to participate). A plan which provides for the determination of an employee's service with an employer or employers maintaining the plan on the basis permitted under paragraph (e)(1) of this section will be deemed to meet the requirements of section 411(b)(3)(A), provided that the plan meets the requirements of 29 CFR 2530.204-3, relating to plans which determine an employee's service for purposes of benefit accrual on a basis other than computation periods. Specifically, under 29 CFR 2530.204-3, it must be possible to prove that, despite the fact that benefit accrual under such a plan is not based on computation periods, the plan's provisions meet at least one of the three benefit accrual rules of section 411(b)(1) under all circumstances. Further, 29 CFR 2530.204-3 prohibits such a plan from

disregarding service under section 411(b)(3)(C) (which would otherwise permit a plan to disregard service performed by an employee during a computation period in which the employee is credited with less than 1,000 hours). See the regulations under section 411(b) (relating to benefit accrual).

(f) *Transfers between methods of crediting service* —

(1) ***Single plan.*** A plan may provide that an employee's service for purposes of eligibility to participate, vesting or benefit accrual shall be determined on the basis of computation periods under the general method set forth in 29 CFR 2530.200b-2 for certain classes of employees but under the alternative method permitted under this section for other classes of employees if the plan provides as follows—

(i) In the case of an employee who transfers from a class of employees whose service is determined on the basis of computation periods to a class of employees whose service is determined on the alternative basis permitted under this section, the employee shall receive credit for a period of service consisting of—

(A) A number of years equal to the number of years of service credited to the employee before the computation period during which the transfer occurs; and

(B) The greater of

(*1*) the period of service that would be credited to the employee under the elapsed time method for his service during the entire computation period in which the transfer occurs or

(2) the service taken into account under the computation periods method as of the date of the transfer.

In addition, the employee shall receive credit for service subsequent to the transfer commencing on the day after the last day of the computation period in which the transfer occurs.

(ii) In the case of an employee who transfers from a class of employees whose service is determined on the alternative basis permitted under this section to a class of employees whose service is determined on the basis of computation periods—

(A) The employee shall receive credit, as of the date of the transfer, for a number of years of service equal to the number of 1-year periods of service credited to the employee as of the date of the transfer, and

(B) The employee shall receive credit, in the computation period which includes the date of the transfer, for a number of hours of service determined by applying one of the equivalencies set forth in 29 CFR 2530.200b-3 (e) (1) to any fractional part of a year credited to the employee under this section as of the date of the transfer. Such equivalency shall be set forth in the plan and shall apply to all similarly situated employees.

(2) ***More than one plan.*** In the case of an employee who transfers from a plan using either the general method of determining service on the basis of computation periods set forth in 29 CFR 2530.200b-2 or the method of determining service permitted under this section to a plan using the other method of determining service, all service required to be credited under the plan to which the employee transfers shall be determined by applying the rules of paragraph (f)(1) of this section.

(g) ***Amendments to change method of crediting service.*** A plan may be amended to change the method of crediting service for any purpose or for any class of employees between the general method set forth in 29 CFR 2530.200-2 and the method permitted under this section, if such amendment contains provisions under which each employee with respect to whom the method of crediting service is changed is treated in the same manner as an employee who transfers from one class of employees to another under paragraph (f)(1) of this section.

(h) ***Transitional rule.*** For plans in existence on [insert the date of the publication of this document], the provisions of paragraph (f) of this section are effective for plan years beginning after December 31, 1983.

[T.D. 7703, 45 FR 40980, June 17, 1980]

§ 1.410(a)-8 Five consecutive 1-year breaks in service, transitional rules under the Retirement Equity Act of 1984.

Sections 410(a)(5)(D) and 411(a)(6)(D), as amended by the Retirement Equity Act of 1984 (REA 1984), permit a plan to disregard years of service that were disregarded under the plan provisions satisfying those sections (as in effect on August 22, 1984) as of the day before the REA amendments apply to the plan. Under section 302(a) of REA 1984, the new break-in-service rules generally apply to plan years beginning after December 31, 1984. Thus, for example, assume a plan has a calendar plan year and disregarded years of service as permitted by sections 410(a)(5)(D) and 411(a)(6)(D) as in effect on August 22, 1984. An employee completed two years of service in 1981 and 1982, and then incurred two consecutive 1-year breaks in service in 1983 and 1984. The plans may disregard the prior years of service even though the employee did not incur five consecutive 1-year breaks in service. On the other hand, assume the employee completed three consecutive years of service beginning in 1980, and incurred two 1-year breaks in service in 1983 and 1984. Because, as of December 31, 1984, the years of service credited before 1983 could not be disregarded, whether the plan may subsequently disregard those years of service would be governed by the rules enacted by REA 1984.

[T.D. 8219, 53 FR 31851, Aug. 22, 1988; 53 FR 48534, Dec. 1, 1988]

§ 1.410(a)-8T Year of service; break in service (temporary).

(a)-(b) [Reserved]

(c) ***Breaks in service.***

(1) [Reserved]

(2) ***Employees under 2-year 100 percent vesting schedule —***

(i) ***General rule.*** In the case of an employee who incurs a 1-year break in service under a plan which provides that after not more than 2 years of service each participant's right to his accrued benefit under the plan is completely nonforfeitable (within the meaning of section 411 and the regulations thereunder) at the time such benefit accrues, the employee's service before the break in service is not required to be taken into account after the break in service in determining the employee's years of service under section 410(a)(1) and § 1.410(a)-3 if such employee has not satisfied such service requirement.

(ii) ***Example.*** The rules of this subparagraph are illustrated by the following example:

> *Example.* A qualified plan computing service by the actual counting of hours provides

full and immediate vesting. The plan can not require as a condition of participation that an employee complete 2 consecutive years of service with the employer because the requirement as to consecutive years is not permitted under section 410(a)(5). However, such a plan can require 2 years without a break in service, i.e., 2 years with no intervening years in which the employee fails to complete more than 500 hours of service. Under a plan containing such a participation requirement, the following example illustrates when employees would become eligible to participate.

Year	Hours of service completed		
	Employee A	Employee B	Employee C
1	1,000	1,000	1,000
2	1,000	700	500
3	1,000	1,000	1,000
4	1,000	1,000	700
5	1,000	1,000	1,000

Note: Employee A will have satisfied the plan's service requirement at the end of year 2, Employee B at the end of year 3, and Employee C at the end of year 5.

(3) *One-year break in service* —

(i) [Reserved]

(ii) ***Examples.*** The rules provided by this subparagraph are illustrated by the following examples:

Example 1. Employee A completes a year of service under a plan computing service by the actual counting of hours for the 12-month period ending December 31, 1989, and incurs a 1-year break in service for the 12-month period ending December 31, 1990. The plan does not contain the provisions permitted by section 410(a)(5)(B) (relating to 2-year 100 percent vesting) and section 410(a)(5)(D) (relating to nonvested participants). Thereafter, he does not complete a year of service. As of January 1, 1991, in computing his period of service under the plan his service prior to December 31, 1990, is not required to be taken into account for purposes of section 410(a)(1) and § 1.410(a)-3.

[T.D. 8170, 53 FR 239, Jan. 6, 1988]

§ 1.410(a)-9 Maternity and paternity absence.

(a) *Elapsed time* —

(1) ***Rule.*** For purposes of applying the rules of § 1.410(a)-7 (relating to the elapsed time method of crediting service) to absences described in sections 410(a)(5)(E) and 411(a)(6)(E) (relating to maternity or paternity absence), the severance from service date of an employee who is absent from

service beyond the first anniversary of the first day of absence by reason of a maternity or paternity absence described in section 410(a)(5)(E)(i) or 411(a)(6)(E)(i) is the second anniversary of the first day of such absence. The period between the first and second anniversaries of the first day of absence from work is neither a period of service nor a period of severance. This rule applies to maternity and paternity absences beginning on or after the first day of the first plan year in which the plan is required to credit service under sections 410(a)(5)(E) and 411(a)(6)(E).

(2) ***Example.*** The rules of this section are illustrated by the following example:

> Assume an individual works until June 30, 1986; is first absent from employment on July 1, 1986, on account of maternity or paternity absence; and on July 1, 1989, performs an hour of service. The period of service must include the period from employment commencement date until June 30, 1987 (one year after the date of separation for any reason other than a quit, discharge, retirement, or death). The period from July 1, 1987, to June 30, 1988, is neither a period of service nor a period of severance. The period of severance would be from July 1, 1988, to June 30, 1989.

(b) ***Other methods.*** This paragraph provides a safe harbor for plans that compute years of service under the hours of service methods or permitted equivalencies. Such a plan will be treated as satisfying the requirements of sections 410(a)(5)(E) and 411(a)(6)(E) if the plan increases the minimum period of consecutive 1-year breaks required to disregard any service (or deprive any employee of any right) by one. Thus, a plan will satisfy sections 410(a)(5)(E) and 411(a)(6)(E) without having to compute service for maternity or paternity and sections 410(a)(5)(D) and 411 (a)(4)(D) and (a)(6)(C), by increasing the period of consecutive breaks-in-service from 5 to 6.

[T.D. 8219, 53 FR 31852, Aug. 22, 1988; 53 FR 48534, Dec. 1, 1988]

§ 1.410(a)-9T Elapsed time (temporary).

(a)-(b) [Reserved]

(c) ***Eligibility to participate.***

(1) [Reserved]

(2) ***Determination of one-year period of service.***

(i) [Reserved]

(ii) For purposes of section 410(a)(1)(B)(i), a “2-year period of service” shall be deemed to be “2 years of service.”

(d) ***Vesting*** —(1) *General rule.*

(i)-(iii) [Reserved]

(iv) For purposes of determining an employee's nonforfeitable percentage of accrued benefits derived from employer contributions, a plan, after calculating an employee's period of service in the manner prescribed in this paragraph, may disregard any remaining less than whole year, 12-month or 365-day period of service. Thus, for example, if a plan provides for the statutory three to seven year graded vesting, an employee with a period (or periods) of service which yields 3 whole year periods of service and an additional 321-day period of service is twenty percent vested in his or her employer-derived accrued benefits (based solely on the 3 whole year periods of service).

[T.D. 8170, 53 FR 239, Jan. 6, 1988]

§ 1.410(b)-0 Table of contents.

This section contains a listing of the major headings of §§ 1.410(b)-2 through 1.410(b)-10.

§ 1.410(b)-2 Minimum coverage requirements (after 1993).

(a) In general.

(b) Requirements with respect to employees.

(1) In general.

(2) Ratio percentage test.

(i) In general.

(ii) Examples.

(3) Average benefit test.

(4) Certain tax credit employee stock ownership plans.

(5) Employers with no nonhighly compensated employees.

(6) Plans benefiting no highly compensated employees.

(7) Plans benefiting collectively bargained employees.

(c) Requirements with respect to former employees.

(1) Former employees tested separately.

(2) Testing former employees.

(d) Nonelective contributions under section 403(b) plans.

(e) Certain governmental and church plans.

(f) Certain acquisitions or dispositions.

(g) Additional rules.

§ 1.410(b)-3 Employees and former employees who benefit under a plan.

(a) Employees benefiting under a plan.

(1) In general.

(2) Exceptions to allocation or accrual requirement.

(i) Section 401(k) and 401(m) plans.

(ii) Section 415 limits.

(iii) Certain employees treated as benefiting.

(iv) Section 412(i) plans.

(3) Examples.

(b) Former employees benefiting under a plan.

(1) In general.

(2) Examples.

§ 1.410(b)-4 Nondiscriminatory classification test.

(a) In general.

(b) Reasonable classification established by the employer.

(c) Nondiscriminatory classification.

(1) General rule.

(2) Safe harbor.

(3) Facts and circumstances.

(i) General rule.

(ii) Factual determination.

(4) Definitions.

(i) Safe harbor percentage.

(ii) Unsafe harbor percentage.

(iii) Nonhighly compensated employee concentration percentage.

(iv) Table.

(5) Examples.

§ 1.410(b)-5 Average benefit percentage test.

(a) General rule.

(b) Determination of average benefit percentage.

(c) Determination of actual benefit percentage.

(d) Determination of employee benefit percentages.

(1) Overview.

(2) Employee contributions and employee-provided benefits disregarded.

(3) Plans and plan years taken into account.

(i) Testing group.

(ii) Testing period.

(4) Contributions or benefits basis.

(5) Determination of employee benefit percentage.

(i) General rule.

(ii) Plans with differing plan years.

(iii) Options and consistency requirements.

(6) Permitted disparity.

(i) In general.

(ii) Plans which may not use permitted disparity.

(7) Requirements for certain plans providing early retirement benefits.

(i) General rule.

(ii) Exception.

(e) Additional optional rules.

(1) Overview.

(2) Determination of employee benefit percentages as the sum of separately determined rates.

(i) In general.

(ii) Exception from consistency requirement.

(iii) Permitted inconsistencies.

(3) Determination of employee benefit percentages without regard to plans of another type.

(i) General rule.

(ii) Restriction on use of separate testing group determination method.

(iii) Treatment of permitted disparity.

(iv) Example.

(4) Simplified method for determining employee benefit percentages for certain defined benefit plans.

(i) In general.

(ii) Simplified method.

(5) Three-year averaging period.

(6) Alternative methods of determining compensation.

(f) Special rule for certain collectively bargained plans.

§ 1.410(b)-6 Excludable employees.

(a) Employees.

(1) In general.

(2) Rules of application.

(b) Minimum age and service exclusions.

(1) In general.

(2) Multiple age and service conditions.

(3) Plans benefiting certain otherwise excludable employees.

(i) In general.

(ii) Testing portion of plan benefiting otherwise excludable employees.

(4) Examples.

(c) Certain nonresident aliens.

(1) General rule.

(2) Special treaty rule.

(d) Collectively bargained employees.

(1) General rule.

(2) Definition of collectively bargained employee.

(1) In general.

(ii) Special rules for certain employees in multiemployer plans.

(iii) Covered by a collective bargaining agreement.

(iv) Examples.

(e) Employees of qualified separate lines of business.

(f) Certain terminating employees.

(1) In general.

(2) Hours of service.

(3) Examples.

(g) Employees of certain governmental or tax-exempt entities.

(1) Plans covered.

(2) Employees of governmental entities.

(3) Employees of tax-exempt entities.

(h) Former employees.

(1) In general.

(2) Employees terminated before a specified date.

(3) Previously excludable employees.

(i) Former employees treated as employees.

§ 1.410(b)-7 Definition of plan and rules governing plan disaggregation and aggregation.

(a) In general.

(b) Separate asset pools are separate plans.

(c) Mandatory disaggregation of certain plans.

(1) Section 401(k) and section 401(m) plans.

(2) ESOPs and non-ESOPs.

(3) Plans benefiting otherwise excludable employees.

(4) Plans benefiting certain disaggregation populations of employees.

(i) In general.

(ii) Definition of disaggregation population.

(5) Additional rules for plans benefiting employees of more than one qualified separate line of business.

(d) Permissive aggregation for ratio percentage and nondiscriminatory classification tests.

(1) In general.

(2) Rules of disaggregation.

(3) Duplicative aggregation.

(4) Special rule for plans benefiting employees of a qualified separate line of business.

(5) Same plan year requirement.

(e) Determination of plans in testing group for average benefit percentage test.

(1) In general.

(2) Example.

(f) Section 403(b) plans.

§ 1.410(b)-8 Additional rules.

(a) Testing methods.

(1) In general.

(2) Daily testing option.

(3) Quarterly testing option.

(4) Annual testing option.

(5) Example.

(b) Family member aggregation rule.

§ 1.410(b)-9 Definitions.

Collectively bargained employee.

Defined benefit plan.

Defined contribution plan.

Employee.

Employer.

ESOP.

Former employee.

Highly compensated employee.

Highly compensated former employee.

Multiemployer plan.

Noncollectively bargained employee.

Nonhighly compensated employee.

Nonhighly compensated former employee.

Plan year.

Plan year compensation.

Professional employee.

Ratio percentage.

Section 401(k) plan.

Section 401(*l*) plan.

Section 401(m) plan.

§ 1.410(b)-10 Effective dates and transition rules.

(a) Statutory effective dates.

(1) In general.

(2) Special statutory effective date for collective bargaining agreements.

(i) In general.

(ii) Example.

(iii) Plan maintained pursuant to a collective bargaining agreement.

(b) Regulatory effective dates.

(1) In general.

(2) Plans of tax-exempt organizations.

(c) Compliance during transition period.

(d) Effective date for governmental plans.

[T.D. 8363, 56 FR 47641, Sept. 19, 1991; 57 FR 10954, Mar. 31, 1992, as amended by T.D. 8487, 58 FR 46838, Sept. 3, 1993; T.D. 8548, 59 FR 32914, June 27, 1994; T.D. 9275, 71 FR 41359, July 21, 2006; T.D. 9849, 84 FR 9234, Mar. 14, 2019]

§ 1.410(b)-1 [Reserved]

§ 1.410(b)-2 Minimum coverage requirements (after 1993).

(a) ***In general.*** A plan is a qualified plan for a plan year only if the plan satisfies section 410(b) for the plan year. A plan satisfies section 410(b) for a plan year if and only if it satisfies paragraph (b) of this section with respect to employees for the plan year and paragraph (c) of this section with respect to former employees for the plan year. The rules in paragraphs (a), (b), and (c) of this section apply to all plans as a condition of qualification, including plans under which no employee is able to accrue any additional

benefits (for example, frozen plans). Paragraphs (d), (e), and (f) of this section provide special rules for nonelective section 403(b) plans subject to section 403(b)(12)(A)(i), for governmental and church plans subject to section 410(c), and for certain acquisitions or dispositions, respectively. See § 1.410(b)-7 for rules for determining the "plan" subject to section 410(b).

(b) ***Requirements with respect to employees*** —

(1) ***In general.*** A plan satisfies this paragraph (b) for a plan year if and only if it satisfies at least one of the tests in paragraphs (b)(2) through (b)(7) of this section for the plan year.

(2) ***Ratio percentage test*** —

(i) ***In general.*** A plan satisfies this paragraph (b)(2) for a plan year if and only if the plan's ratio percentage for the plan year is at least 70 percent. This test incorporates both the percentage test of section 410(b)(1)(A) and the ratio test of section 410(b)(1)(B). See § 1.410(b)-9 for the definition of ratio percentage.

(ii) ***Examples.*** The following examples illustrate the ratio percentage test of this paragraph (b)(2).

Example 1. For a plan year, Plan A benefits 70 percent of an employer's nonhighly compensated employees and 100 percent of the employer's highly compensated employees. The plan's ratio percentage for the year is 70 percent (70 percent/100 percent), and thus the plan satisfies the ratio percentage test.

Example 2. For a plan year, Plan B benefits 40 percent of the employer's nonhighly compensated employees and 60 percent of the employer's highly compensated employees. Plan B fails to satisfy the ratio percentage test because the plan's ratio percentage is only 66.67 percent (40 percent/60 percent).

(3) ***Average benefit test.*** A plan satisfies this paragraph (b)(3) for a plan year if and only if the plan satisfies both the nondiscriminatory classification test of § 1.410(b)-4 and the average benefit percentage test of § 1.410(b)-5 for the plan year.

(4) ***Certain tax credit employee stock ownership plans.*** A plan satisfies this paragraph (b)(4) for a plan year if and only if the plan—

(i) Is a tax credit employee stock ownership plan (as defined in section 409(a)),

(ii) Is the only plan of the employer that is intended to qualify under section 401(a), and

(iii) Is a plan that satisfies the rule set forth in section 410(b)(6)(D).

This paragraph (b)(4) is available only for plan years for which the tax credit employee stock ownership plan receives contributions for which the employer is allowed a tax credit under section 41 (as in effect prior to its repeal by the Tax Reform Act of 1986) or section 48(n) (as in effect prior to its amendment by the Tax Reform Act of 1984). The requirement of this paragraph (b)(4) that the plan be the only plan of the employer that is intended to qualify under section 401(a) is not satisfied if the employer has only one plan, but that plan is treated as two or more separate plans under the mandatory disaggregation rules of § 1.410(b)-7(c).

(5) ***Employers with no nonhighly compensated employees.*** A plan satisfies this paragraph (b)(5) for a plan year if and only if the plan is maintained by an employer that has no nonhighly compensated employees at any time during the plan year.

(6) ***Plans benefiting no highly compensated employees.*** A plan satisfies this paragraph (b)(6) for a plan year if and only if the plan benefits no highly compensated employees for the plan year.

(7) ***Plans benefiting collectively bargained employees.*** A plan that benefits solely collectively bargained employees for a plan year satisfies this paragraph (b)(7) for the plan year. If a plan (within the meaning of § 1.410(b)-7(b)) benefits both collectively bargained employees and noncollectively bargained employees for a plan year, § 1.410(b)-7(c)(4) provides that the portion of the plan that benefits collectively bargained employees is treated as a separate plan from the portion of the plan that benefits noncollectively bargained employees. Thus, the mandatorily disaggregated portion of the plan that benefits the collectively bargained employees automatically satisfies this paragraph (b)(7) for the plan year and hence section 410(b). See § 1.410(b)-9 for the definitions of collectively bargained employee and noncollectively bargained employee.

(c) ***Requirements with respect to former employees*** —

(1) ***Former employees tested separately.*** Former employees are tested separately from employees for purposes of section 410(b). Thus, former employees are disregarded in applying the ratio percentage test, the nondiscriminatory classification test, and the average benefit percentage test with respect to the coverage of employees under a plan, and employees are disregarded in applying this section with respect to the coverage of former employees under a plan.

(2) ***Testing former employees.*** A plan satisfies section 410(b) with respect to former employees if and only if, under all of the relevant facts and circumstances (including the group of nonexcludable former employees not benefiting under the plan), the group of former employees benefiting under the plan does not discriminate significantly in favor of highly compensated former employees.

(d) ***Nonelective contributions under section 403(b) plans.*** For plan years beginning on or after January 1, 1989, a plan subject to section 403(b)(12)(A)(i) with respect to nonelective contributions (i.e., contributions not made pursuant to a salary reduction agreement) is treated as a plan subject to the requirements of this section. For this purpose, a plan described in the preceding sentence must satisfy the requirements of this section without regard to section 410(c) and paragraph (e) of this section. For plan years beginning before the effective date set forth in § 1.410(b)-10(d), any plan described in section 410(c)(1)(A) (regarding governmental plans) satisfies the requirements of this section.

(e) ***Certain governmental and church plans.*** The requirements of section 410(b) do not apply to a plan described in section 410(c)(1) (other than a plan subject to section 403(b)(12)(A)(i) or a plan with respect to which an election has been made under section 410(d)). Such a plan must satisfy section 401(a)(3) as in effect on September 1, 1974. For this purpose, a plan that satisfies section 410(b) (without regard to this paragraph (e)) is treated as satisfying section 401(a)(3) as in effect on September 1, 1974. For plan years beginning before the effective date set forth in § 1.410(b)-10(d), any plan described in section 410(c)(1)(A) (regarding governmental plans) satisfies the requirements of this section and is thus treated as satisfying the requirements of section 401(a)(3) as in effect on September 1, 1974. See § 1.410(b)-10(b)(2) for a special rule for plans of tax-exempt organizations.

(f) ***Certain acquisitions or dispositions.*** Section 410(b)(6)(C) (relating to certain acquisitions or dispositions) provides a special rule whereby a plan may be treated as satisfying section 410(b) for a limited period of time after an acquisition or disposition if it satisfies section 410(b) (without regard to the special rule) immediately before the acquisition or disposition and there is no significant change in the plan or in the coverage of the plan other than the acquisition or disposition. For purposes of section 410(b)(6)(C) and this paragraph (f), the terms “acquisition” and “disposition” refer to an asset or stock acquisition, merger, or other similar transaction involving a change in employer of the employees of a trade or business.

(g) ***Additional rules.*** The Commissioner may, in revenue rulings, notices, and other guidance of general applicability, provide any additional rules that may be necessary or appropriate in applying the minimum coverage requirements of section 410(b), including (without limitation) additional rules limiting or expanding the methods in § 1.410(b)-5(d) and (e) for determining employee benefit percentages.

[T.D. 8363, 56 FR 47643, Sept. 19, 1991; 57 FR 10817, Mar. 31, 1992, as amended by T.D. 8487, 58 FR 46839, Sept. 3, 1993; T.D. 8548, 59 FR 32914, June 27, 1994]

§ 1.410(b)-3 Employees and former employees who benefit under a plan.

(a) ***Employees benefiting under a plan —***

(1) ***In general.*** Except as provided in paragraph (a)(2) of this section, an employee is treated as benefiting under a plan for a plan year if and only if for that plan year, in the case of a defined contribution plan, the employer receives an allocation taken into account under § 1.401(a)(4)-2(c)(2)(ii), or in the case of a defined benefit plan, the employee has an increase in a benefit accrued or treated as an accrued benefit under section 411(d)(6).

(2) ***Exceptions to allocation or accrual requirement —***

(i) ***Section 401(k) and 401(m) plans.*** Notwithstanding paragraph (a)(1) of this section, an employee is treated as benefiting under a section 401(k) plan for a plan year if and only if the employee is an eligible employee as defined in § 1.401(k)-6 under the plan. Similarly, an employee is treated as benefiting under a section 401(m) plan for a plan year if and only if the employee is an eligible employee as defined in § 1.401(m)-5 under the plan for the plan year.

(ii) ***Section 415 limits —***

(A) ***General rule for defined benefit plans.*** In determining whether an employee is treated as benefiting under a defined benefit plan for a plan year, plan provisions that implement the limits of section 415 are disregarded. Any plan provision that provides for increases in an employee's accrued benefit under the plan due solely to adjustments under section 415(d)(1), additional years of participation or service under section 415(b)(5), or changes in the defined contribution fraction under section 415(e) is also disregarded, but only if such provision applies uniformly to all employees in the plan.

(B) ***Defined benefit plans taking section 415 limits into account under section 401(a)(4) testing.*** Paragraph (a)(2)(ii)(A) of this section does not apply in the case of a defined benefit plan that uses the option in § 1.401(a)(4)-3(d)(2)(ii)(B) to take into account plan provisions implementing the provisions of section 415 in determining accrual rates under the section 401(a)(4) general test.

(C) ***Defined contribution plans.*** A defined contribution plan is permitted to apply the rule in the first sentence of paragraph (a)(2)(ii)(A) of this section in determining whether an employee is treated as benefiting under the plan, provided it applies the rule on a consistent basis for all employees in the plan.

(iii) ***Certain employees treated as benefiting —***

(A) ***In general.*** An employee is treated as benefiting under a plan for a plan year if the employee satisfies all of the applicable conditions for accruing a benefit or receiving an allocation for the plan year but fails to have an increase in accrued benefit or to receive an allocation solely because of one or more of the conditions set forth in paragraphs (a)(2)(iii) (B) through (F) of this section.

(B) ***Certain plan limits.*** The employee's benefit would otherwise exceed a limit that is applicable on a uniform basis to all employees in the plan. Thus, for example, if the formula under a defined benefit plan takes into account only the first 30 years of service for accrual purposes, an employee who has completed more than 30 years of service is still treated as benefiting under the plan.

(C) ***Benefits previously accrued.*** The benefit previously accrued by the employee is greater than the benefit that would be determined under the plan if the benefit previously accrued were disregarded. This could happen, for example, when the plan is applying the wear-away formula of § 1.401(a)(4)-13(c)(4)(ii) and the employee's frozen accrued benefit exceeds the benefit determined under the current formula.

(D) ***Benefit offset arrangements.*** The plan offsets the employee's current benefit accrual under an offset arrangement described in § 1.401(a)(4)-3(f)(9) (without regard to whether the offset is attributable to pre-participation service or past service).

(E) ***Target benefit plans.*** In the case of a target benefit plan that satisfies the nondiscriminatory amount requirement of § 1.401(a)(4)-1(b)(2) by satisfying the safe harbor in § 1.401(a)(4)-8(b)(3), the employee's theoretical reserve is greater than or equal to the actuarial present value of the fractional rule benefit.

(F) ***Post-normal retirement age adjustments.*** The employee has attained normal retirement age under a defined benefit plan and fails to accrue a benefit because of the provisions of section 411(b)(1)(H)(iii) regarding adjustments for delayed retirement.

(iv) *Section 412(i) plans —*

(A) ***General rule.*** Notwithstanding paragraph (a)(1) of this section, an employee is treated as benefiting under an insurance contract plan within the meaning of section 412(i) for a plan year if and only if a premium is paid on behalf of the employee for the plan year.

(B) ***Exceptions.*** Notwithstanding paragraph (a)(2)(iv)(A) of this section, an employee is treated as benefiting under an insurance contract plan within the meaning of section 412(i) for a plan year if the sole reason that a premium is not paid on behalf of the employee is one of the reasons described in paragraph (a)(2)(iii) of this section. In addition, an employee is treated as benefiting under an insurance contract plan, within the meaning of section 412(i), that is a defined benefit plan if a premium is not paid on behalf of the employee solely because the insurance contracts that have previously been purchased on behalf of the employee guarantee to provide for the employee's projected normal retirement benefit without regard to future premium payments.

(3) ***Examples.*** The following examples illustrate the determination of whether an employee is benefiting under a plan for purposes of section 410(b).

Example 1. An employer has 35 employees who are eligible under a defined benefit plan. The plan requires 1,000 hours of service to accrue a benefit. Only 30 employees satisfy the 1,000-hour requirement and accrue a benefit. The five employees who do not satisfy the 1,000-hour requirement during the plan year are taken into account in testing the plan under section 410(b) but are treated as not benefiting under the plan.

Example 2. An employer maintains a section 401(k) plan. Only employees who are at least age 21 and who complete one year of service are eligible employees under the plan within the meaning of § 1.401(k)-6. Under the rule of paragraph (a)(2)(i) of this section, only employees who have satisfied these age and service conditions are treated as benefiting under the plan.

Example 3. The facts are the same as in *Example 2,* except that the employer also maintains a section 401(m) plan that provides matching contributions contingent on elective contributions under the section 401(k) plan. The matching contributions are contingent on employment on the last day of the plan year. Under § 1.401(m)-5, because matching contributions are contingent on employment on the last day of the plan year, not all employees who are eligible employees under the section 401(k) plan are eligible employees under the section 401(m) plan. Thus, employees who have satisfied the age and service conditions but who do not receive a matching contribution because they are not employed on the last day of the plan year are treated as not benefiting under the section 401(m) portion of the plan.

(b) ***Former employees benefiting under a plan*** —

(1) ***In general.*** A former employee is treated as benefiting for a plan year if and only if the plan provides an allocation or benefit increase described in paragraph (a)(1) of this section to the former employee for the plan year. Thus, for example, a former employee benefits under a defined benefit plan for a plan year if the plan is amended to provide an ad hoc cost-of-living adjustment in the former employee's benefits. In contrast, because an increase in benefits payable under a plan pursuant to an automatic cost-of-living provision adopted and effective before the beginning of the plan year is previously accrued, a former employee is not treated as benefiting in a subsequent plan year merely because the former employee receives an increase pursuant to such an automatic cost-of-living provision. Any accrual or allocation for an individual during the plan year that arises from the individual's status as an employee is treated as an accrual or allocation of an employee. Similarly, any accrual or allocation for an individual during the plan year that arises from the individual's status as a former employee is treated as an accrual or allocation of a former employee. It is possible for an individual to accrue a benefit both as an employee and as a former employee in a given plan year. During the plan year in which an individual ceases performing services for the employer, the individual is treated as an employee in applying section 410(b) with respect to employees and is treated as a former employee in applying section 410(b) with respect to former employees.

(2) ***Examples.*** The following examples illustrate the determination of whether a former employee benefits under a plan for purposes of section 410(b).

Example 1. Employer A amends its defined benefit plan in the 1995 plan year to provide an ad hoc cost-of-living increase of 5 percent for all retirees. Former employees who receive this increase are treated as benefiting under the plan for the 1995 plan year.

Example 2. Employer B maintains a defined benefit plan with a calendar plan year. In the 1995 plan year, Employer B amends the plan to provide that an employee who has reached early retirement age under the plan and who retires before July 31 of the 1995 plan year will receive an unreduced benefit, even though the employee has not yet reached normal retirement age.

This early retirement window benefit is provided to employees based on their status as employees. Thus, although individuals who take advantage of the benefit become former employees, the window benefit is treated as provided to employees and is not treated as a benefit for former employees.

Example 3. The facts are the same as *Example 2,* except that on September 1, 1995, Employer B also amends the defined benefit plan to provide an ad hoc cost-of-living increase effective for all former employees. An individual who ceases performing services for the employer before July 31, 1995, under the early retirement window, and then receives the ad hoc cost-of-living increase, is treated as benefiting for the 1995 plan year both as an employee with respect to the early retirement window, and as a former employee with respect to the ad hoc COLA.

[T.D. 8363, 56 FR 47644, Sept. 19, 1991; 57 FR 10954, Mar. 31, 1992, as amended by T.D. 8487, 58 FR 46839, Sept. 3, 1993; T.D. 9169, 69 FR 78153, 78154, Dec. 29, 2004]

§ 1.410(b)-4 Nondiscriminatory classification test.

(a) ***In general.*** A plan satisfies the nondiscriminatory classification test of this section for a plan year if and only if, for the plan year, the plan benefits the employees who qualify under a classification established by the employer in accordance with paragraph (b) of this section, and the classification of employees is nondiscriminatory under paragraph (c) of this section.

(b) ***Reasonable classification established by the employer.*** A classification is established by the employer in accordance with this paragraph (b) if and only if, based on all the facts and circumstances, the classification is reasonable and is established under objective business criteria that identify the category of employees who benefit under the plan. Reasonable classifications generally include specified job categories, nature of compensation (i.e., salaried or hourly), geographic location, and similar bona fide business criteria. An enumeration of employees by name or other specific criteria having substantially the same effect as an enumeration by name is not considered a reasonable classification.

(c) ***Nondiscriminatory classification*** —

(1) ***General rule.*** A classification is nondiscriminatory under this paragraph (c) for a plan year if and only if the group of employees included in the classification benefiting under the plan satisfies the requirements of either paragraph (c)(2) or (c)(3) of this section for the plan year.

(2) ***Safe harbor.*** A plan satisfies the requirement of this paragraph (c)(2) for a plan year if and only if the plan's ratio percentage is greater than or equal to the employer's safe harbor percentage, as defined in paragraph (c)(4)(i) of this section. See § 1.410(b)-9 for the definition of a plan's ratio percentage.

(3) ***Facts and circumstances*** —

(i) ***General rule.*** A plan satisfies the requirements of this paragraph (c)(3) if and only if—

(A) The plan's ratio percentage is greater than or equal to the unsafe harbor percentage, as defined in paragraph (c)(4)(ii) of this section, and

(B) The classification satisfies the factual determination of paragraph (c)(3)(ii) of this section.

(ii) ***Factual determination.*** A classification satisfies this paragraph (c)(3)(ii) if and only if, based on all the relevant facts and circumstances, the Commissioner finds that the classification is nondiscriminatory. No one particular fact is determinative. Included among the facts and circumstances relevant in determining whether a classification is nondiscriminatory are the following—

(A) The underlying business reason for the classification. The greater the business reason for the classification, the more likely the classification is to be nondiscriminatory. Reducing the employer's cost of providing retirement benefits is not a relevant business reason.

(B) The percentage of the employer's employees benefiting under the plan. The higher the percentage, the more likely the classification is to be nondiscriminatory.

(C) Whether the number of employees benefiting under the plan in each salary range is representative of the number of employees in each salary range of the employer's workforce. In general, the more representative the percentages of employees benefiting under the plan in each salary range, the more likely the classification is to be nondiscriminatory.

(D) The difference between the plan's ratio percentage and the employer's safe harbor percentage. The smaller the difference, the more likely the classification is to be nondiscriminatory.

(E) The extent to which the plan's average benefit percentage (determined under § 1.410(b)-5) exceeds 70 percent.

(4) ***Definitions*** —

(i) ***Safe harbor percentage.*** The safe harbor percentage of an employer is 50 percent, reduced by $^{3}/_{4}$ of a percentage point for each whole percentage point by which the nonhighly compensated employee concentration percentage exceeds 60 percent. See paragraph (c)(4)(iv) for a table that illustrates the safe harbor percentage and unsafe harbor percentage.

(ii) ***Unsafe harbor percentage.*** The unsafe harbor percentage of an employer is 40 percent, reduced by $^{3}/_{4}$ of a percentage point for each whole percentage point by which the nonhighly compensated employee concentration percentage exceeds 60 percent. However, in no case is the unsafe harbor percentage less than 20 percent.

(iii) ***Nonhighly compensated employee concentration percentage.*** The nonhighly compensated employee concentration percentage of an employer is the percentage of all the employees of the employer who are nonhighly compensated employees. Employees who are excludable employees for purposes of the average benefit test are not taken into account.

(iv) ***Table.*** The following table sets forth the safe harbor and unsafe harbor percentages at each nonhighly compensated employee concentration percentage:

Nonhighly compensated employee concentration percentage	Safe harbor percentage	Unsafe harbor percentage
0-60	50.00	40.00

Nonhighly compensated employee concentration percentage	Safe harbor percentage	Unsafe harbor percentage
61	49.25	39.25
62	48.50	38.50
63	47.75	37.75
64	47.00	37.00
65	46.25	36.25
66	45.50	35.50
67	44.75	34.75
68	44.00	34.00
69	43.25	33.25
70	42.50	32.50
71	41.75	31.75
72	41.00	31.00
73	40.25	30.25
74	39.50	29.50
75	38.75	28.75
76	38.00	28.00
77	37.25	27.25
78	36.50	26.50
79	35.75	25.75
80	35.00	25.00
81	34.25	24.25
82	33.50	23.50
83	32.75	22.75
84	32.00	22.00
85	31.25	21.25
86	30.50	20.50
87	29.75	20.00
88	29.00	20.00
89	28.25	20.00
90	27.50	20.00
91	26.75	20.00
92	26.00	20.00
93	25.25	20.00
94	24.50	20.00
95	23.75	20.00
96	23.00	20.00
97	22.25	20.00
98	21.50	20.00

Nonhighly compensated employee concentration percentage	Safe harbor percentage	Unsafe harbor percentage
99	20.75	20.00

(5) ***Examples.*** The following examples illustrate the rules in this paragraph (c).

Example 1. Employer A has 200 nonexcludable employees, of whom 120 are nonhighly compensated employees and 80 are highly compensated employees. Employer A maintains a plan that benefits 60 nonhighly compensated employees and 72 highly compensated employees. Thus, the plan's ratio percentage is 55.56 percent ([60/120]/[72/80] = 50%/90% = 0.5556), which is below the percentage necessary to satisfy the ratio percentage test of § 1.410(b)-2(b)(2). The employer's nonhighly compensated employee concentration percentage is 60 percent (120/200); thus, Employer A's safe harbor percentage is 50 percent and its unsafe harbor percentage is 40 percent. Because the plan's ratio percentage is greater than the safe harbor percentage, the plan's classification satisfies the safe harbor of paragraph (c)(2) of this section.

Example 2. The facts are the same as in *Example 1,* except that the plan benefits only 40 nonhighly compensated employees. The plan's ratio percentage is thus 37.03 percent ([40/120]/[72/80] = 33.33%/90% = 0.3703). Under these facts, the plan's classification is below the unsafe harbor percentage and is thus considered discriminatory.

Example 3. The facts are the same as in *Example 1,* except that the plan benefits 45 nonhighly compensated employees. The plan's ratio percentage is thus 41.67 percent ([45/120]/[72/80] = 37.50%/90% = 0.4167), above the unsafe harbor percentage (40 percent) and below the safe harbor percentage (50 percent). The Commissioner may determine that the classification is nondiscriminatory after considering all the relevant facts and circumstances.

Example 4. Employer B has 10,000 nonexcludable employees, of whom 9,600 are nonhighly compensated employees and 400 are highly compensated employees. Employer B maintains a plan that benefits 600 nonhighly compensated employees and 100 highly compensated employees. Thus, the plan's ratio percentage is 25.00 percent ([600/9,600]/[100/400] = 6.25%/25% = 0.2500), which is below the percentage necessary to satisfy the ratio percentage test of § 1.410(b)-2(b)(2). Employer B's nonhighly compensated employee concentration percentage is 96 percent (9,600/10,000); thus, Employer B's safe harbor percentage is 23 percent, and its unsafe harbor percentage is 20 percent. Because the plan's ratio percentage (25.00 percent) is greater than the safe harbor percentage (23.00 percent), the plan's classification satisfies the safe harbor of paragraph (c)(2) of this section.

Example 5. The facts are the same as in *Example 4,* except that the plan benefits only 400 nonhighly compensated employees. The plan's ratio percentage is thus 16.67 percent ([400/9,600]/[100/400] = 4.17%/25% = 0.1667). The plan's ratio percentage is below the unsafe harbor percentage and thus the classification is considered discriminatory.

Example 6. The facts are the same as in *Example 4,* except that the plan benefits 500 nonhighly compensated employees. The plan's ratio percentage is thus 20.83 percent ([500/9,600]/[100/400] = 5.21%/25% = 0.2083), above the unsafe harbor percentage (20 percent) and below the safe harbor percentage (23 percent). The Commissioner may determine that the classification is nondiscriminatory after considering all the facts and circumstances.

[T.D. 8363, 56 FR 47645, Sept. 19, 1991; 57 FR 10954, Mar. 31, 1992]

§ 1.410(b)-5 Average benefit percentage test.

(a) ***General rule.*** A plan satisfies the average benefit percentage test of this section for a plan year if and only if the average benefit percentage of the plan for the plan year is at least 70 percent. A plan is deemed to satisfy this requirement if it satisfies paragraph (f) of this section for the plan year.

(b) ***Determination of average benefit percentage.*** The average benefit percentage of a plan for a plan year is the percentage determined by dividing the actual benefit percentage of the nonhighly compensated employees in plans in the testing group for the testing period that includes the plan year by the actual benefit percentage of the highly compensated employees in plans in the testing group for that testing period. See paragraph (d)(3)(ii) of this section for the definition of testing period.

(c) ***Determination of actual benefit percentage.*** The actual benefit percentage of a group of employees for a testing period is the average of the employee benefit percentages, calculated separately with respect to each of the employees in the group for the testing period. All nonexcludable employees of the employer are taken into account for this purpose, even if they are not benefiting under any plan that is taken into account.

(d) ***Determination of employee benefit percentages*** —

(1) ***Overview.*** This paragraph (d) provides rules for determining employee benefit percentages. See paragraph (e) of this section for alternative methods for determining employee benefit percentages.

(2) ***Employee contributions and employee-provided benefits disregarded.*** Only employer-provided contributions and benefits are taken into account in determining employee benefit percentages. Therefore, employee contributions (including both employee contributions allocated to separate accounts and employee contributions not allocated to separate accounts), and benefits derived from such contributions, are not taken into account in determining employee benefit percentages.

(3) ***Plans and plan years taken into account*** —

(i) ***Testing group.*** All plans included in the testing group under § 1.410(b)-7(e)(1), and only those plans, are taken into account in determining an employee's employee benefit percentage.

(ii) ***Testing period.*** An employee's employee benefit percentage is determined on the basis of plan years ending with or within the same calendar year. These plan years are referred to in this section as the relevant plan years or, in the aggregate, as the testing period.

(4) ***Contributions or benefits basis.*** Employee benefit percentages may be determined on either a contributions or a benefits basis. Employee benefit percentages for any testing period must be determined on the same basis (contributions or benefits) for all plans in the testing group.

(5) ***Determination of employee benefit percentage*** —

(i) ***General rule.*** The employee benefit percentage for an employee for a testing period is the rate that would be determined for that employee for purposes of applying the general test for nondiscrimination in §§ 1.401(a)(4)-2, 1.401(a)(4)-3, 1.401(a)(4)-8 or 1.401(a)(4)-9, if all the plans in the testing group were aggregated for purposes of section 410(b). Thus, if employee benefit percentages are determined on a contributions basis, each employee's employee benefit percentage is the aggregate normal allocation rate that would be determined for the employee under § 1.401(a)(4)-9(b)(2)(ii)(A) (if the plans in the testing group include both defined benefit and defined contribution plans), the allocation rate that would be determined for the employee under § 1.401(a)(4)-2(c)(2) (if the plans in the testing group include only defined contribution plans), or the equivalent normal allocation rate that would be determined for the employee under § 1.401(a)(4)-8(c)(2) (if the plans in the testing group include only defined benefit plans). Similarly, if employee benefit percentages are determined on a benefits basis, each employee's employee benefit percentage is the aggregate normal accrual rate that would be determined for the employee under § 1.401(a)(4)-9(b)(2)(ii)(B), the normal accrual rate that would be determined for the employee under § 1.401(a)(4)-3(d), or the equivalent accrual rate that would be determined for the employee under § 1.401(a)(4)-8(b)(2), depending on whether the plans in the testing group include both defined benefit and defined contribution plans, only defined benefit plans, or only defined contribution plans.

(ii) ***Plans with differing plan years.*** If not all the plans in the testing group share the same plan year, § 1.410(b)-7(d)(5) would ordinarily prohibit them from being aggregated for purposes of section 410(b). In such a case, employee benefit percentages are determined by applying the rules of paragraph (d)(5)(i) of this section separately to each subset of plans in the testing group that share the same plan year (or the same accrual computation period) and aggregating the results for all plans in the testing group. Thus, an employee's employee benefit percentage is determined as the sum of these separate employee benefit percentages that are determined consistently for all the plans in the testing group (except for differences attributable solely to the differences in plan years).

(iii) ***Options and consistency requirements.*** In determining employee benefit percentages under this paragraph (d)(5), any optional or alternative methods or rules available for determining rates in §§ 1.401(a)(4)-2, 1.401(a)(4)-3, 1.401(a)(4)-8, or 1.401(a)(4)-9, whichever is applicable, may be applied. Thus, for example, employee benefit percentages may generally be calculated using any of the alternative methods of determining average annual compensation or plan year compensation under § 1.401(a)(4)-12, and using any underlying definition of compensation that satisfies section 414(s). Except as otherwise specifically permitted, the determination of employee benefit percentages must be made on a consistent basis for all employees and for all plans in the testing group as required by §§ 1.401(a)(4)-2(c)(2)(vi), 1.401(a)(4)-3(d)(2)(i), 1.401(a)(4)-8(b)(2)(iv), 1.401(a)(4)-8(c)(2)(iv) or 1.401(a)(4)-9(b)(2)(iv).

(6) ***Permitted disparity*** —

(i) ***In general.*** Permitted disparity may be imputed in determining employee benefit percentages as provided in §§ 1.401(a)(4)-2, 1.401(a)(4)-3, 1.401(a)(4)-8, or 1.401(a)(4)-9, whichever is applicable. When separate employee benefit percentages are determined for individual plans under paragraph (e)(2) of this section (or for subsets of plans that have the same plan year as described in paragraph (d)(5)(ii) of this section), permitted disparity may be imputed for an employee only in one individual plan (or subset of plans) and may not be imputed for the same employee in another individual plan (or subset of plans). However, if the same average annual

compensation or plan year compensation is used to determine employee benefit percentages in more than one plan, the employee's employee benefit percentages for those plans may be summed prior to imputing permitted disparity.

(ii) ***Plans which may not use permitted disparity.*** Permitted disparity may be reflected in the determination of rates only to the extent that the plans for which rates are being determined are plans for which the permitted disparity of section 401(l) is available. Thus, for example, if a section 401(k) plan is included in the testing group and permitted disparity is imputed under § 1.401(a)(4)-2(c)(iv), then employee benefit percentages are determined by first calculating an adjusted allocation rate (within the meaning of § 1.401(a)(4)-7(b)(1)) without regard to the amount of allocations under the section 401(k) plan and adding to it the allocation rate for the section 401(k) plan. See § 1.401(l)-1(a)(4) for a list of types of plans for which permitted disparity is not available.

(7) ***Requirements for certain plans providing early retirement benefits*** —

(i) ***General rule.*** If any defined benefit plan in the testing group provides for early retirement benefits in addition to normal retirement benefits to any highly compensated employee, and the average actuarial reduction for any one of these benefits commencing in the five years prior to the plan's normal retirement age is less than four percent per year, then the aggregate most valuable allocation rate, equivalent most valuable allocation rate, aggregate most valuable accrual rate, or most valuable accrual rate must be substituted for the related normal rates in paragraph (d)(5) of this section.

(ii) ***Exception.*** Paragraph (d)(7)(i) of this section does not apply if early retirement benefits with average actuarial reductions described in that paragraph are currently available, within the meaning of § 1.401(a)(4)-4(b), under plans in the testing group to a percentage of nonhighly compensated employees that is at least 70 percent of the percentage of highly compensated employees to whom these benefits are currently available.

(e) ***Additional optional rules*** —

(1) ***Overview.*** This paragraph (e) contains various alternative methods for determining employee benefit percentages for a testing period.

(2) ***Determination of employee benefit percentages as the sum of separately determined rates*** —

(i) ***In general.*** Employee benefit percentages may be determined as the sum of separately determined employee benefit percentages for each of the plans in the testing group that are aggregated under paragraphs (d)(5) (i) or (ii) of this section, provided that these employee benefit percentages are determined on a consistent basis for all of these plans pursuant to paragraph (d)(5)(iii) of this section.

(ii) ***Exception from consistency requirement.*** The consistency requirement of paragraph (e)(2)(i) of this section is not violated merely because employee benefit percentages are not determined in a consistent manner for all of the plans in the testing group and the inconsistencies in determination of rates among plans are described in paragraph (e)(2)(iii) of this section. The exception in this paragraph (e)(2)(ii) applies only if it is reasonable to believe that the inconsistencies do not result in an average benefit percentage that is significantly higher than the average benefit percentage that would be determined had employee benefit percentages been determined on a consistent basis pursuant to paragraph (d)(5)(iii) of this section.

(iii) ***Permitted inconsistencies.*** The following inconsistencies between plans are permitted under this paragraph (e)(2)—

(A) Use of different underlying definitions of section 414(s) compensation in the determination of rates;

(B) Use of different definitions of average annual compensation;

(C) Use of different testing ages;

(D) Use of different fresh-start dates;

(E) Use of different actuarial assumptions for normalization; or

(F) Disregard of actuarial increases after normal retirement age and QPSA charges without regard to any requirement for uniformity in the actuarial increases or QPSA charges.

(3) ***Determination of employee benefit percentages without regard to plans of another type*** —

(i) ***General rule.*** Employee benefit percentages may be determined under plans of one type (i.e., defined benefit plans or defined contribution plans) by treating all plans of the other type (i.e., defined contribution plans or defined benefit plans, respectively) as if they were not part of the testing group, using the method provided in this paragraph (e)(3). If this method is used to determine whether a defined contribution plan satisfies the average benefit percentage test, employee benefit percentages under all defined contribution plans in the testing group must be determined on a contributions basis, and benefits under any defined benefit plans may not be included in the employee benefit percentage. Similarly, if this method is used to determine whether a defined benefit plan satisfies the average benefit percentage test, employee benefit percentages under all defined benefit plans in the testing group must be determined on a benefits basis, and allocations under any defined contribution plans may not be included in the employee benefit percentage.

(ii) ***Restriction on use of separate testing group determination method.*** A plan does not satisfy the average benefit percentage test using the method provided in this paragraph (e)(3) unless each of the plans in the testing group of the other type (i.e., defined benefit plan or defined contribution plan) than the plan being tested satisfies the average benefit test of § 1.410(b)-2(b)(3) using the method in this paragraph (e)(3) or satisfies the ratio percentage test of § 1.410(b)-2(b)(2).

(iii) ***Treatment of permitted disparity.*** Although under the general rule of this paragraph (e)(3) plans of another type are disregarded in determining employee benefit percentages, the permitted disparity used by those plans (including any permitted disparity that is used by those plans to satisfy § 1.401(a)(4)-1(b)(2)) is nonetheless taken into account in determining the extent to which permitted disparity may be used in determining employee benefit percentages.

(iv) ***Example.*** The following example illustrates the rules of this paragraph (e)(3):

Example. Employer A maintains two defined benefit plans, neither of which covers a group of employees that satisfies the ratio percentage test of § 1.410(b)-2(b)(2), and a profit-sharing plan and a section 401(k) plan, each of which benefits a group of employees that satisfies the ratio percentage test of § 1.410(b)-2(b)(2). The defined benefit plans will satisfy the average benefit percentage test if the actual benefit percentage of all nonexcludable nonhighly compensated employees, computed on a benefits basis without

regard to contributions under the profit-sharing plan or the section 401(k) plan, is at least 70 percent of the actual benefit percentage of all nonexcludable highly compensated employees, computed on a benefits basis without regard to contributions under the profit-sharing plan or the section 401(k) plan.

(4) ***Simplified method for determining employee benefit percentages for certain defined benefit plans*** —

(i) ***In general.*** An employee's employee benefit percentage with respect to a plan may be determined under the simplified method of paragraph (e)(4)(ii) of this section, provided the following conditions are satisfied:

(A) The only plans included in the testing group are defined benefit plans, and employee benefit percentages under these plans are determined on a benefits basis.

(B) Employee benefit percentages under the plans in the testing group are not required to be determined by taking into account early retirement benefits under paragraph (d)(7) of this section.

(C) The plan is a safe harbor defined benefit plan described in § 1.401(a)(4)-3(b).

(ii) ***Simplified method*** —

(A) ***Section 401(l) plans.*** Under the simplified method of this paragraph (e)(4)(ii), an employee's employee benefit percentage with respect to a section 401(l) plan described in § 1.401(a)(4)-3(b)(3) (i.e., a unit credit plan) may be deemed equal to the employee's excess benefit percentage or gross benefit percentage (as defined in § 1.401(*l*)-1(c) (14) or (18), respectively), whichever is applicable under the plan's benefit formula in the plan year. In the case of a section 401(l) plan described in § 1.401(a)(4)-3(b)(4) (i.e., a fractional accrual plan), an employee's employee benefit percentage with respect to that plan may be deemed equal to the rate at which the excess or gross benefit, whichever is applicable, accrues for the employee in the plan year, taking into account the plan's benefit formula and the employee's projected service at normal retirement age. The use of this simplified method will be treated as an imputation of permitted disparity. See paragraph (d)(6) of this section for a restriction on multiple use of permitted disparity.

(B) ***Other plans.*** Under the simplified method of this paragraph (e)(4)(ii), an employee's employee benefit percentage with respect to a plan described in § 1.401(a)(4)-3(b)(3) that is not a section 401(*l*) plan and that is not imputing permitted disparity may be deemed equal to the employee's benefit rate in the plan year under the plan's benefit formula. In the case of a plan described in § 1.401(a)(4)-3(b)(4) that is not a section 401(*l*) plan and that is not imputing permitted disparity, an employee's employee benefit percentage with respect to that plan may be deemed equal to the rate at which the benefit accrues for the employee in the plan year, taking into account the plan's benefit formula and an employee's projected service at normal retirement age.

(5) ***Three-year averaging period.*** An employee's employee benefit percentage may be determined for a testing period as the average of the employee's employee benefit percentages determined separately for the testing period and for the immediately preceding one or two testing periods (referred to in this section as an averaging period). Employee benefit percentages of a particular employee that are averaged together within an averaging period must be determined on a consistent basis for all testing periods within the averaging period.

(6) ***Alternative methods of determining compensation.*** Employee benefit percentages may be determined on the basis of any definition of compensation that satisfies § 1.414(s)-1(d) (without regard to whether the definition satisfies § 1.414(s)-1(d)(3)), provided that the same definition is used for all employees and it is reasonable to believe that the definition does not result in an average benefit percentage that is significantly higher than the average benefit percentage that would be determined had employee benefit percentages been determined using a definition of compensation that also satisfies § 1.414(s)-1(d)(3).

(f) ***Special rule for certain collectively bargained plans.*** A plan (as determined without regard to the mandatory disaggregation rule of § 1.410(b)-7(c)(5)) that benefits both collectively bargained employees and noncollectively bargained employees is deemed to satisfy the average benefit percentage test of this section if—

(1) The provisions of the plan applicable to each employee in the plan are identical to the provisions of the plan applicable to every other employee in the plan, including the plan benefit or allocation formula, any optional forms of benefit, any ancillary benefit, and any other right or feature under the plan, and

(2) The plan would satisfy the ratio percentage test of § 1.410(b)-2(b)(2), if §§ 1.410(b)-6(d) and 1.410(b)-7(c)(5) (the excludable employee and mandatory disaggregation rules for collectively bargained and noncollectively bargained employees) did not apply.

[T.D. 8363, 56 FR 47646, Sept. 19, 1991; 57 FR 10817, 10954, Mar. 31, 1992, as amended by T.D. 8487, 58 FR 46840, Sept. 3, 1993]

§ 1.410(b)-6 Excludable employees.

(a) ***Employees*** —

(1) ***In general.*** For purposes of applying section 410(b) with respect to employees, all employees of the employer, other than the excludable employees described in paragraphs (b) through (i) of this section, are taken into account. Excludable employees are not taken into account with respect to a plan even if they are benefiting under the plan, except as otherwise provided in paragraph (b) of this section.

(2) ***Rules of application.*** Except as specifically provided otherwise, excludable employees are determined separately with respect to each plan for purposes of testing that plan under section 410(b). Thus, in determining whether a particular plan satisfies the ratio percentage test of § 1.410(b)-2(b)(2), paragraphs (b) through (i) of this section are applied solely with reference to that plan. Similarly, in determining whether two or more plans that are permissively aggregated and treated as a single plan under § 1.410(b)-7(d) satisfy the ratio percentage test of § 1.410(b)-2(b)(2), paragraphs (b) through (i) of this section are applied solely with reference to the deemed single plan. In determining whether a plan satisfies the average benefit percentage test of § 1.410(b)-5, the rules of this section are applied by treating all plans in the testing group as a single plan.

(b) ***Minimum age and service exclusions*** —

(1) ***In general.*** If a plan applies minimum age and service eligibility conditions permissible under section 410(a)(1) and excludes all employees who do not meet those conditions from benefiting under the plan, then all employees who fail to satisfy those conditions are excludable employees with respect to that plan. An employee is treated as meeting the age and service requirements on the date that

any employee with the same age and service (including service permitted to be taken into account for purposes of nondiscrimination testing under § 1.401(a)(4)-11(d)(3)) would be eligible to commence participation in the plan, as provided in section 410(b)(4)(C).

(2) ***Multiple age and service conditions.*** If a plan, including a plan for which an employer chooses the treatment under paragraph (b)(3) of this section, has two or more different sets of minimum age and service eligibility conditions, those employees who fail to satisfy all of the different sets of age and service conditions are excludable employees with respect to the plan. Except as provided in paragraph (b)(3) of this section, an employee who satisfies any one of the different sets of conditions is not an excludable employee with respect to the plan. Differences in the manner in which service is credited (e.g., hours of service calculated in accordance with 29 CFR 2530.200b-2 for hourly employees and elapsed time calculated in accordance with § 1.410(a)-7 for salaried employees) for purposes of applying a service condition are not taken into account in determining whether multiple age and service eligibility conditions exist.

(3) ***Plans benefiting certain otherwise excludable employees*** —

(i) ***In general.*** An employer may treat a plan benefiting otherwise excludable employees as two separate plans, one for the otherwise excludable employees and one for the other employees benefiting under the plan. See § 1.410(b)-7(c)(3) regarding permissive disaggregation of plans benefiting otherwise excludable employees. The effect of this rule is that employees who would be excludable under paragraph (b)(1) of this section (applied without regard to section 410(a)(1)(B)) but for the fact that the plan does not apply the greatest permissible minimum age and service conditions may be treated as excludable employees with respect to the plan. This treatment is available only if the plan satisfies section 410(b) and § 1.410(b)-2 with respect to these otherwise excludable employees in the manner described in paragraph (b)(3)(ii) of this section.

(ii) ***Testing portion of plan benefiting otherwise excludable employees.*** In determining whether the plan that benefits employees who would otherwise be excludable under paragraph (b)(1) of this section (applied without regard to section 410(a)(1)(B)) satisfies section 410(b) and § 1.410(b)-2, employees who have satisfied the greatest permissible minimum age and service conditions with respect to the plan are excludable employees. In addition, if the plan being tested applies minimum age and service conditions and those conditions are less than the maximum permissible minimum age and service conditions, employees who have not satisfied the lower minimum age and service conditions actually provided for in the plan are excludable employees. Thus, for example, if the plan requires attainment of age 18 and 3 months of service, employees who have not attained age 18 or 3 months of service with the employer are excludable employees.

(4) ***Examples.*** The following examples illustrate the minimum age and service condition rules of this paragraph (b). In each example, the employer is not treated as operating qualified separate lines of business under section 414(r).

Example 1. An employer maintains Plan A for hourly employees and Plan B for salaried employees. Plan A has no minimum age or service condition. Plan B has no minimum age condition and requires 1 year of service. The employer treats Plans A and B as a single plan for purposes of section 410(b). Because Plan A imposes no minimum age or service condition, all employees of the employer automatically satisfy the minimum age and service conditions of Plan A. Therefore, no employees are excludable under this paragraph (b) in testing Plans A and B for purposes of section 410(b).

Example 2. An employer maintains three plans. Plan C benefits employees in Division C who satisfy the plan's minimum age and service condition of age 21 and 1 year of service. Plan D benefits employees in Division D who satisfy the plan's minimum age and service condition of age 18 and 1 year of service. Plan E benefits employees in Division E who satisfy the plan's minimum age and service condition of age 21 and 6 months of service. The employer treats Plans D and E as a single plan for purposes of section 410(b). In testing Plan C under the ratio percentage test or the nondiscriminatory classification test of section 410(b), employees who are not at least age 21 or who do not have at least 1 year of service are excludable employees under paragraph (b)(1) of this section. In testing Plans D and E, employees who do not satisfy the age and service requirements of either of the two plans are excludable employees under paragraph (b)(2) of this section. Thus, an employee is excludable with respect to Plans D and E only if the employee is not at least age 18 with at least 1 year of service or is not at least age 21 with at least 6 months of service. Thus, an employee who is 19 years old and has 11 months of service is excludable. Similarly, an employee who is 17 years old and has performed 2 years of service is also excludable.

Example 3. An employer maintains three plans. Plan F benefits all employees in Division F (the plan does not apply any minimum age or service condition). Plan G benefits employees in Division G who satisfy the plan's minimum age and service condition of age 18 and 1 year of service. Plan H benefits employees in Division H who satisfy the plan's minimum age and service condition of age 21 and 6 months of service. In testing the employer's plans under the average benefit percentage test provided in § 1.410(b)-5, Plans F, G, and H are treated as a single plan and, as such, use the lowest minimum age and service condition under the rule of paragraph (b)(2) of this section. Therefore, because Plan F does not apply any minimum age or service condition, no employee is excludable under this paragraph (b).

Example 4. An employer maintains Plan J, which does not apply any minimum age or service conditions. Plan J benefits all employees in Division 1 but does not benefit employees in Division 2. Although Plan J has no minimum age or service condition, the employer wants to exclude employees whose age and service is below the permissible minimums provided in section 410(b)(1)(A). The employer has 110 employees who either do not have 1 year of service or are not at least age 21. Of these 110 employees, 10 are highly compensated employees and 100 are nonhighly compensated employees. Five of these highly compensated employees, or 50 percent, work in Division 1 and thus benefit under Plan J. Thirty-five of these nonhighly compensated employees, or 35 percent, work in Division 1 and thus benefit under Plan J. Plan J satisfies the ratio percentage test of section 410(b) with respect to employees who do not satisfy the greatest permissible minimum age and service requirement because the ratio percentage of that group of employees is 70 percent. Thus, in determining whether or not Plan J satisfies section 410(b), the 110 employees may be treated as excludable employees in accordance with paragraph (b)(3)(i) of this section.

(c) ***Certain nonresident aliens*** —

(1) ***General rule.*** An employee who is a nonresident alien (within the meaning of section 7701(b)(1)(B)) and who receives no earned income (within the meaning of section 911(d)(2)) from the employer that constitutes income from sources within the United States (within the meaning of section 861(a)(3)) is treated as an excludable employee.

(2) ***Special treaty rule.*** In addition, an employee who is a nonresident alien (within the meaning of section 7701(b)(1)(B)) and who does receive earned income (within the meaning of section 911(d)(2)) from the employer that constitutes income from sources within the United States (within the meaning of section 861(a)(3)) is permitted to be excluded, if all of the employee's earned income from the employer from sources within the United States is exempt from United States income tax under an applicable income tax convention. This paragraph (c)(2) applies only if all employees described in the preceding sentence are so excluded.

(d) ***Collectively bargained employees*** —

(1) ***General rule.*** A collectively bargained employee is an excludable employee with respect to a plan that benefits solely noncollectively bargained employees. If a plan (within the meaning of § 1.410(b)-7(b)) benefits both collectively bargained employees and noncollectively bargained employees for a plan year, § 1.410(b)-7(c)(4) provides that the portion of the plan that benefits the collectively bargained employees is treated as a separate plan from the portion of the plan that benefits the noncollectively bargained employees. Thus, a collectively bargained employee is always an excludable employee with respect to the mandatorily disaggregated portion of any plan that benefits noncollectively bargained employees.

(2) ***Definition of collectively bargained employee*** —

(i) ***In general.*** A collectively bargained employee is an employee who is included in a unit of employees covered by an agreement that the Secretary of Labor finds to be a collective bargaining agreement between employee representatives and one or more employers, provided that there is evidence that retirement benefits were the subject of good faith bargaining between employee representatives and the employer or employers. An employee is a collectively bargained employee regardless of whether the employee benefits under any plan of the employer. See section 7701(a)(46) and § 301.7701-17T of this chapter for additional requirements applicable to the collective bargaining agreement. An employee who performs hours of service during the plan year as both a collectively bargained employee and a noncollectively bargained employee is treated as a collectively bargained employee with respect to the hours of service performed as a collectively bargained employee and a noncollectively bargained employee with respect to the hours of service performed as a noncollectively bargained employee. See § 1.410(b)-7(c) for disaggregation rules for plans benefiting collectively bargained and noncollectively bargained employees.

(ii) ***Special rules for certain employees in multiemployer plans*** —

(A) ***In general.*** For purposes of this paragraph (d), in testing the disaggregated portion of a multiemployer plan benefiting noncollectively bargained employees, a noncollectively bargained employee who benefits under the plan may be treated as a collectively bargained employee with respect to all of the employee's hours of service under the rules of paragraphs (d)(2)(ii) (B) through (E) of this section, if the employee is or was a member of a unit of employees covered by a collective bargaining agreement and that agreement or a successor agreement provides for the employee to benefit under the plan in the current plan year. For this purpose, provisions of a participation agreement or similar document are taken into account in determining whether a collective bargaining agreement provides for an employee to benefit under a multiemployer plan.

(B) ***Employees who were collectively bargained employees during a portion of the current plan year.*** An employee described in paragraph (d)(2)(ii)(A) of this section who performs services for one or more employers that are parties to the collective bargaining agreement, for the plan, or for the employee representative both as a collectively bargained employee and as a noncollectively bargained employee during a plan year may be treated as a collectively bargained employee for the plan year, provided that at least half of the employee's hours of service during the plan year are performed as a collectively bargained employee.

(C) ***Employees who were collectively bargained employees during the collective bargaining agreement.*** An employee described in paragraph (d)(2)(ii)(A) of this section who was a collectively bargained employee with respect to all of the employee's hours of service during a plan year (including employees who are treated as collectively bargained employees with respect to all of their hours of service during a plan year under paragraph (d)(2)(ii) (B) or (E) of this section) may be treated as a collectively bargained employee with respect to all of the employee's hours of service for the duration of the collective bargaining agreement applicable for such plan year or, if later, until the end of the following plan year. For this purpose, a collective bargaining agreement is applicable for a plan year if it provided for the employee to benefit in the plan and was effective for any portion of that plan year. This paragraph (d)(2)(ii)(C) does not apply unless the terms of the plan providing for benefit accruals treat the employee in a manner that is generally no more favorable than similarly-situated employees who are collectively bargained employees.

(D) ***Employees who previously were collectively bargained employees.*** An employee who was treated as a collectively bargained employee pursuant to paragraph (d)(2)(ii)(C) of this section may be treated as a collectively bargained employee with respect to all of the employee's hours of service after the end of the period described in paragraph (d)(2)(ii)(C) of this section, provided that the employee is performing services for one or more employers that are parties to the collective bargaining agreement, for the plan, or for the employee representative. This paragraph (d)(2)(ii)(D) does not apply unless the terms of the plan providing for benefit accruals treat the employee in a manner that is generally no more favorable than similarly-situated employees who are collectively bargained employees, and no more than five percent of the employees covered under the multiemployer plan are noncollectively bargained employees (determined without regard to this paragraph (d)(2)(ii)(D)). In determining whether more than five percent of the employees covered under the multiemployer plan are noncollectively bargained employees, those employees who are described in paragraphs (d)(2)(ii) (B) and (C) of this section are treated as collectively bargained employees.

(E) ***Transition rule.*** For a plan year beginning before the applicable effective date of these regulations as set forth in § 1.410(b)-10 (b) or (d), any employee described in paragraph (d)(2)(ii)(A) of this section may be treated as a collectively bargained employee with respect to all of the employee's hours of service for that plan year.

(F) ***Consistency requirement.*** The rules in paragraphs (d)(2) (i) and (ii) of this section must be applied to all employees on a reasonable and consistent basis for the plan year.

(iii) ***Covered by a collective bargaining agreement*** —

(A) ***General rule.*** For purposes of paragraph (d)(2)(i) of this section, an employee is included in a unit of employees covered by a collective bargaining agreement if and only if the employee is represented by a bona fide employee representative that is a party to the collective bargaining agreement under which the plan is maintained. Thus, for example, an employee of either a plan or the employee representative that is a party to the collective bargaining agreement under which the plan is maintained is not included in a unit of employees covered by the collective bargaining agreement under which the plan is maintained merely because the employee is covered under the plan pursuant to an agreement entered into by the plan or employee representative on behalf of the employee (other than in the capacity of an employee representative with respect to the employee). This is the case even if all of such employees benefiting under the plan constitute only a de minimis percentage of the total employees benefiting under the plan.

(B) ***Plans covering professional employees*** —

(*1*) ***In general.*** An employee is not considered included in a unit of employees covered by a collective bargaining agreement for a plan year for purposes of paragraph (d)(2)(iii)(A) of this section if, for the plan year, more than 2 percent of the employees who are covered pursuant to the agreement are professionals. This rule applies to all employees under the agreement, nonprofessionals as well as professionals. Thus, no employees covered by such an agreement are excludable employees with respect to employees who are not covered by a collective bargaining agreement.

(*2*) ***Multiple collective bargaining agreements.*** This paragraph (d)(2)(iii)(B) is applied separately with respect to each collective bargaining agreement. Thus, for example, if a plan benefits two groups of employees, one included in a unit of employees covered by collective bargaining agreement X, more than 2 percent of whom are professionals, and another included in a unit of employees covered by collective bargaining agreement Y, none of whom are professionals, the group covered by agreement X is not considered covered by a collective bargaining agreement and the group covered by agreement Y is considered covered by a collective bargaining agreement.

(*3*) ***Application of minimum coverage tests.*** If a plan covers more than 2 percent professional employees, no employees in the plan are treated as covered by a collective bargaining agreement. A plan that covers more than 2 percent professional employees must satisfy section 410(b) without regard to section 413(b) and the special rule in § 1.410(b)-2(b)(7) of this section (regarding collectively bargained plans). In such cases, all nonexcludable employees must be taken into account. For this purpose, employees included in other collective bargaining units are excludable employees. However, the employees who are not covered by a collective bargaining agreement and the employees who are covered by an agreement that has more than 2 percent professionals are not excludable employees.

(iv) ***Examples.*** The following examples illustrate the collective bargaining unit rules of this section.

> ***Example 1.*** An employer has 700 collectively bargained employees (none of whom is a professional employee) and 300 noncollectively bargained employees (200 of whom are highly compensated employees). For purposes of applying the ratio percentage test of §

1.410(b)-2(b)(2) to Plan X, which benefits only the 300 noncollectively bargained employees, the 700 collectively bargained employees are treated as excludable employees pursuant to paragraph (d) of this section.

Example 2. (i) An employer has 1,500 employees in the following categories:

	Noncollectively bargained employees	Collectively bargained employees	Total
Highly compensated employees	100	100	200
Nonhighly compensated employees	900	400	1,300
Total	1,000	500	1,500

The employer maintains Plan Y, which benefits 1,100 employees, including all of the noncollectively bargained employees (except for 100 nonhighly compensated employees who are noncollectively bargained employees), and 200 of the collectively bargained employees (including the 100 highly compensated employees who are collectively bargained employees). There are no professional employees covered by the collective bargaining agreement. In accordance with § 1.410(b)-7(c)(4), the employer must apply the ratio percentage test of § 1.410(b)-2(b)(2) to Plan Y as if the plan were two separate plans, one benefiting the noncollectively bargained employees and the other benefiting the collectively bargained employees.
(ii) In testing the portion of Plan Y that benefits the noncollectively bargained employees, the collectively bargained employees are excludable employees. That portion's ratio percentage is 88.89 percent ([800/900] /[100/100] = 88.89%/100% = 0.8889), and thus it satisfies the ratio percentage test. The portion of Plan Y that benefits collectively bargained employees automatically satisfies section 410(b) under the special rule in § 1.410(b)-2(b)(7).

(e) ***Employees of qualified separate lines of business.*** If an employer is treated as operating qualified separate lines of business for purposes of section 410(b) in accordance with § 1.414(r)-1 (b), in testing a plan that benefits employees of one qualified separate line of business, the employees of the other qualified separate lines of business of the employer are treated as excludable employees. The rule in this paragraph (e) does not apply for purposes of satisfying the nondiscriminatory classification requirement of section 410(b)(5)(B). See §§ 1.414(r)-1(c)(2) and 1.414(r)-8 (separate application of section 410(b) to the employees of a qualified separate line of business). In addition, the rule in this paragraph (e) does not apply to a plan that is tested under the special rule for employer-wide plans in § 1.414(r)-1(c) (2) (ii) for a plan year.

(f) *Certain terminating employees* —

(1) ***In general.*** An employee may be treated as an excludable employee for a plan year with respect to a particular plan if—

(i) The employee does not benefit under the plan for the plan year,

(ii) The employee is eligible to participate in the plan,

(iii) The plan has a minimum period of service requirement or a requirement that an employee be employed on the last day of the plan year (last-day requirement) in order for an employee to accrue a benefit or receive an allocation for the plan year,

(iv) The employee fails to accrue a benefit or receive an allocation under the plan solely because of the failure to satisfy the minimum period of service or last-day requirement,

(v) The employee terminates employment during the plan year with no more than 500 hours of service, and the employee is not an employee as of the last day of the plan year (for purposes of this paragraph (f)(1)(v), a plan that uses the elapsed time method of determining years of service may use either 91 consecutive calendar days or 3 consecutive calendar months instead of 500 hours of service, provided it uses the same convention for all employees during a plan year), and

(vi) If this paragraph (f) is applied with respect to any employee with respect to a plan for a plan year, it is applied with respect to all employees with respect to the plan for the plan year.

(2) ***Hours of service.*** For purposes of this paragraph (f), the term "hours of service" has the same meaning as provided for such term by 29 CFR 2530.200b-2 under the general method of crediting service for the employee. If one of the equivalencies set forth in 29 CFR 2530.200b-3 is used for crediting service under the plan, the 500-hour requirement must be adjusted accordingly.

(3) ***Examples.*** The following examples illustrate the provision of this paragraph (f).

Example 1. An employer has 35 employees who are eligible to participate under a defined contribution plan. The plan provides that an employee will not receive an allocation of contributions for a plan year unless the employee is employed by the employer on the last day of the plan year. Only 30 employees are employed by the employer on the last day of the plan year. Two of the five employees who terminated employment before the last day of the plan year had 500 or fewer hours of service during the plan year, and the remaining three had more than 500 hours of service during the year. Of the five employees who were no longer employed on the last day of the plan year, the two with 500 hours of service or less during the plan year are treated as excludable employees for purposes of section 410(b), and the remaining three who had over 500 hours of service during the plan year are taken into account in testing the plan under section 410(b) but are treated as not benefiting under the plan.

Example 2. An employer has 30 employees who are eligible to participate under a defined contribution plan. The plan requires 1,000 hours of service to receive an allocation of contributions or forfeitures. Ten employees do not receive an allocation because of their failure to complete 1,000 hours of service. Three of the 10 employees who failed to satisfy the minimum service requirement completed 500 or fewer hours of service and terminated their employment. Two of the employees completed more than 500, but fewer than 1,000 hours of service and terminated their employment. The remaining five employees did not terminate employment. Under the rule in paragraph (f) of this section, the three terminated employees who completed 500 or fewer

hours of service are treated as excludable employees for the portion of the plan year they are employed. The other seven employees who do not receive an allocation are taken into account in testing the plan under section 410(b) but are treated as not benefiting under the plan.

Example 3. An employer maintains two plans, Plan A for salaried employees and Plan B for hourly employees. Of the 100 salaried employees, two do not receive an allocation under Plan A for the plan year because they terminate employment before completing 500 hours of service. Of the 300 hourly employees, 50 do not receive an allocation under Plan B for the plan year because they terminate employment before completing 500 hours. In applying section 410(b) to Plan A, the two employees who did not receive an allocation under Plan A are excludable employees, but the 50 who did not receive an allocation under Plan B are not excludable employees, because they were not eligible to participate under Plan A.

(g) ***Employees of certain governmental or tax-exempt entities*** —

(1) ***Plans covered.*** For purposes of testing either a section 401(k) plan, or a section 401(m) plan that is provided under the same general arrangement as a section 401(k) plan, an employer may treat as excludable those employees described in paragraphs (g)(2) and (3) of this section.

(2) ***Employees of governmental entities.*** Employees of governmental entities who are precluded from being eligible employees under a section 401(k) plan by reason of section 401(k)(4)(B)(ii) may be treated as excludable employees if more than 95 percent of the employees of the employer who are not precluded from being eligible employees by reason of section 401(k)(4)(B)(ii) benefit under the plan for the year.

(3) ***Employees of tax-exempt entities.*** Employees of an organization described in section 403(b)(1)(A)(i) who are eligible to make salary reduction contributions under section 403(b) may be treated as excludable with respect to a section 401(k) plan, or a section 401(m) plan that is provided under the same general arrangement as a section 401(k) plan, if—

(i) No employee of an organization described in section 403(b)(1)(A)(i) is eligible to participate in such section 401(k) plan or section 401(m) plan; and

(ii) At least 95 percent of the employees who are neither employees of an organization described in section 403(b)(1)(A)(i) nor employees of a governmental entity who are precluded from being eligible employees under a section 401(k) plan by reason of section 401(k)(4)(B)(ii) are eligible to participate in such section 401(k) plan or section 401(m) plan.

(h) ***Former employees*** —

(1) ***In general.*** For purposes of applying section 410(b) with respect to former employees, all former employees of the employer are taken into account, except that the employer may treat a former employee described in paragraph (h)(2) or (h)(3) of this section as an excludable former employee. If either (or both) of the former employee exclusion rules under paragraphs (h)(2) and (h)(3) of this section is applied, it must be applied to all former employees for the plan year on a consistent basis.

(2) ***Employees terminated before a specified date.*** The employer may treat a former employee as excludable if—

(i) The former employee became a former employee either prior to January 1, 1984, or prior to the tenth calendar year preceding the calendar year in which the current plan year begins, and

(ii) The former employee became a former employee in a calendar year that precedes the earliest calendar year in which any former employee who benefits under the plan in the current plan year became a former employee.

(3) ***Previously excludable employees.*** The employer may treat a former employee as excludable if the former employee was an excludable employee (or would have been an excludable employee if these regulations had been in effect) under the rules of paragraphs (b) through (g) of this section during the plan year in which the former employee became a former employee. If the employer treats a former employee as excludable pursuant to this paragraph (h)(3), the former employee is not taken into account with respect to a plan even if the former employee is benefiting under the plan.

(i) ***Former employees treated as employees.*** An employer may treat as excludable employees all formerly nonhighly compensated employees who are treated as employees of the employer under § 1.410(b)-9 solely because they have increases in accrued benefits under a defined benefit plan that are based on ongoing service or compensation credits (including imputed service or compensation) after they cease to perform services for the employer.

[T.D. 8363, 56 FR 47652, Sept. 19, 1991, as amended by T.D. 8376, 56 FR 63433, Dec. 4, 1991; T.D. 8363, 57 FR 10817, Mar. 31, 1992; T.D. 8487, 58 FR 46842, Sept. 3, 1993; T.D. 8487, 59 FR 16984, Apr. 11, 1994; T.D. 8548, 59 FR 32914, June 27, 1994; T.D. 9275, 71 FR 41359, July 21, 2006]

§ 1.410(b)-7 Definition of plan and rules governing plan disaggregation and aggregation.

(a) ***In general.*** This section provides a definition of "plan." First, this section sets forth a definition of plan within the meaning of section 401(a) or 403(a). Then certain mandatory disaggregation and permissive aggregation rules are applied. The result is the definition of plan that applies for purposes of sections 410(b) and 401(a)(4). Thus, in general, the term "plan" as used in this section initially refers to a plan described in section 414(l) and to an annuity plan described in section 403(a), and the term "plan" as used in other sections under these regulations means the plan determined after application of this section. Paragraph (b) of this section provides that each single plan under section 414(l) is treated as a single plan for purposes of section 410(b). Paragraph (c) of this section describes the rules for certain plans that must be treated as comprising two or more separate plans, each of which is a single plan subject to section 410(b). Paragraph (d) of this section provides a rule permitting an employer to aggregate certain separate plans to form a single plan for purposes of section 410(b). Paragraph (e) of this section provides rules for determining the testing group of plans taken into account in determining whether a plan satisfies the average benefit percentage test of § 1.410(b)-5.

(b) ***Separate asset pools are separate plans.*** Each single plan within the meaning of section 414(l) is a separate plan for purposes of section 410(b). See § 1.414(l)-1(b). For example, if only a portion of the assets under a defined benefit plan is available, on an ongoing basis, to provide the benefits of certain employees, and the remaining assets are available only in certain limited cases to provide such benefits (but are available in all cases for the benefit of other employees), there are two separate plans. Similarly, the defined contribution portion of a plan described in section 414(k) is a separate plan from the defined benefit portion of that same plan. A single plan under section 414(l) is a single plan for purposes of section 410(b), even though the plan comprises separate written documents and separate trusts, each of which receives a separate determination letter from the Internal Revenue Service. A defined contribution plan does not comprise separate plans merely because it includes more than one trust, or merely because it provides for separate accounts and permits employees to direct the investment of the amounts allocated to their accounts. Further, a plan does not comprise separate plans merely because assets are separately invested in individual insurance or annuity contracts for employees.

(c) *Mandatory disaggregation of certain plans* —

(1) ***Section 401(k) and 401(m) plans.*** The portion of a plan that is a section 401(k) plan and the portion that is not a section 401(k) plan are treated as separate plans for purposes of section 410(b). Similarly, the portion of a plan that is a section 401(m) plan and the portion that is not a section 401(m) plan are treated as separate plans for purposes of section 410(b). Thus, a plan that consists of elective contributions under a section 401(k) plan, employee and matching contributions under a section 401(m) plan, and contributions other than elective, employee, or matching contributions is treated as three separate plans for purposes of section 410(b). In addition, the portion of a plan that consists of contributions described in § 1.401(k)-2(a)(5) (i.e., contributions that fail to satisfy the allocation or compensation requirements applicable to elective contributions and are therefore required to be tested separately) and the portion of the plan that does not consist of such contributions are treated as separate plans for purposes of section 410(b). Similarly, the portion of a plan that consists of contributions described in § 1.410(m)-1(b)(4)(ii) (i.e., matching contributions that fail to satisfy the allocation and other requirements applicable to matching contributions and are therefore required to be tested separately) and the portion of the plan that does not consist of such contributions are treated as separate plans for purposes of section 410(b).

(2) ***ESOPs and non-ESOPs.*** The portion of a plan that is an ESOP and the portion of the plan that is not an ESOP are treated as separate plans for purposes of section 410(b), except as otherwise permitted under § 54.4975-11(e) of this Chapter.

(3) ***Plans benefiting otherwise excludable employees.*** If an employer applies section 410(b) separately to the portion of a plan that benefits only employees who satisfy age and service conditions under the plan that are lower than the greatest minimum age and service conditions permissible under section 410(a), the plan is treated as comprising separate plans, one benefiting the employees who have satisfied the lower minimum age and service conditions but not the greatest minimum age and service conditions permitted under section 410(a) and one benefiting employees who have satisfied the greatest minimum age and service conditions permitted under section 410(a). See § 410(b)-6(b)(3)(ii) for rules about testing otherwise excludable employees.

(4) *Plans benefiting certain disaggregation populations of employees* —

(i) *In general* —

(A) ***Single plan must be treated as separate plans.*** If a plan (*i.e.,* a single plan within the meaning of section 414(l)) benefits employees of more than one disaggregation population, the plan must be disaggregated and treated as separate plans, each separate plan consisting of the portion of the plan benefiting the employees of each disaggregation population. See paragraph (c)(4)(ii) of this section for the definition of disaggregation population.

(B) ***Benefit accruals or allocations attributable to current status.*** Except as otherwise provided in paragraph (c)(4)(i)(C) of this section, in applying the rule of paragraph (c)(4)(i)(A) of this section, the portion of the plan benefiting employees of a disaggregation population consists of all benefits accrued by, or all allocations made to, employees while they were members of the disaggregation population.

(C) *Exceptions for certain benefit accruals* —

(1) ***Attribution of benefits to first disaggregation population.*** If employees benefiting under a plan change from one disaggregation population to a second disaggregation population, benefits they accrue while members of the second disaggregation population that are attributable to years of service previously credited while the employees were members of the first disaggregation population may be treated as provided to them in their status as members of the first disaggregation population and thus included in the portion of the plan benefiting employees of the first disaggregation population. This special treatment is available only if it is applied on a consistent basis, if it does not result in significant discrimination in favor of highly compensated employees, and if the plan provision providing the additional benefits applies on the same terms to all similarly-situated employees. For example, if all formerly collectively bargained employees accrue additional benefits under a plan after becoming noncollectively bargained employees, then those benefit increases may be treated as included in the portion of the plan benefiting collectively bargained employees if they are attributable to years of service credited while the employees were collectively bargained (e.g., where the additional benefits result from compensation increases that occur while the employees are noncollectively bargained or from plan amendments affecting benefits earned while collectively bargained that are adopted while the employees are noncollectively bargained) and if such treatment does not result in significant discrimination in favor of highly compensated employees.

(2) ***Attribution of benefits to current disaggregation population.*** If employees benefiting under a plan change from one disaggregation population to another disaggregation population, benefits they accrue while members of the first disaggregation population may be treated as provided to them in their current status and thus included in the portion of the plan benefiting employees of the disaggregation population of which they are currently members. This special treatment is available only if it is applied on a consistent basis and if it does not result in significant discrimination in favor of highly compensated employees.

(D) ***Change in disaggregation populations*** —

(1) ***Reasonable treatment.*** If, in previous years, the configuration of a plan's disaggregation populations differed from their configuration for the current year, for purposes of the benefits accrued by, or allocations made to, an employee for those years, the employee's status as a member of a current disaggregation population for those years must be determined on a reasonable basis. A different configuration occurs, for example, if disaggregation populations exist for the first time, such as when an employer is first treated as operating qualified separate lines of business, or if the existing disaggregation populations change, such as when an employer redesignates its qualified separate lines of business.

(2) ***Example.*** The following example illustrates the application of this paragraph (c)(4)(i)(D).

> *Example.* (a) Employer X operates Divisions M and N, which are treated as qualified separate lines of business for the first time in 1998. Thus, the disaggregation populations of employees of Division M and employees of

Division N exist for the first time. Since 1981 Employer X has maintained a defined benefit plan, Plan P, for employees of Division M. Plan P provides a normal retirement benefit of one percent of average annual compensation for each year of service up to 25. Employee A has worked for Division M since 1981 and has never worked for Division N. Employee B has worked for Division N since 1989 and worked for Division M from 1981 to 1988. Employee C has worked in the headquarters of Employer X since 1981. For the period 1981 to 1988 Employee C was credited with years of service under Plan P.
(b) For purposes of the benefits accrued by Employee A under Plan P during years 1981 through 1997, Employee A is reasonably treated as having been a member of the Division M disaggregation population for those years. For purposes of the benefits accrued by Employee B under Plan P during years 1981 through 1988, Employee B is reasonably treated as having been a member of the Division M disaggregation population for 1981 through 1988 and as having changed to the Division N disaggregation population for 1989 through 1997. For purposes of the benefits accrued by Employee C under Plan P during years 1981 through 1988, Employee C is reasonably treated as having been a member of the Division M disaggregation population for those years. Moreover, any benefit accruals for Employee B and Employee C in years after 1988, that result from increases in average annual compensation after 1988 and that are attributable to years of service credited for 1981 through 1988, may be treated as provided to Employee B and Employee C in their status as members of the Division M disaggregation population if the requirements of paragraph (c)(4)(i)(C)(*1*) of this section are otherwise met.

(ii) ***Definition of disaggregation population*** —

(A) ***Plan benefiting employees of qualified separate lines of business.*** If an employer is treated as operating qualified separate lines of business for purposes of section 410(b) in accordance with § 1.414(r)-1(b), and a plan benefits employees of more than one qualified separate line of business, the employees of each qualified separate line of business are separate disaggregation populations. In this case, the portion of the plan benefiting the employees of each qualified separate line of business is treated as a separate plan maintained by that qualified separate line of business. However, employees of different qualified separate lines of business who are benefiting under a plan that is tested under the special rule for employer-wide plans in § 1.414(r)-1(c)(2)(ii) for a plan year are not separate disaggregation populations merely because they are employees of different qualified separate lines of business.

(B) ***Plan benefiting collectively bargained employees.*** If a plan benefits both collectively bargained employees and noncollectively bargained employees, the collectively bargained employees are one disaggregation population and the noncollectively bargained employees are another disaggregation population. If the population of collectively

bargained employees includes employees covered under different collective bargaining agreements, the population of employees covered under each collective bargaining agreement is also a separate disaggregation population.

(C) ***Plan maintained by more than one employer.*** If a plan benefits employees of more than one employer, the employees of each employer are separate disaggregation populations. In this case, the portion of the plan benefiting the employees of each employer is treated as a separate plan maintained by that employer, which must satisfy section 410(b) by reference only to that employer's employees. However, for purposes of this paragraph (c)(4)(ii)(C), if the plan of one employer (or, in the case of a plan maintained by more than one employer, the plan provisions applicable to the employees of one employer) treats compensation or service with another employer as compensation or service with the first employer, then the current accruals attributable to that compensation or service are treated as provided to an employee of the first employer under the plan of the first employer (or the portion of a plan maintained by more than one employer benefiting employees of the first employer), and the provisions of paragraph (c)(4)(i)(C) of this section do not apply to those accruals. Thus, for example, if Plan A maintained by Employer X imputes service or compensation for an employee of Employer Y, then Plan A is not treated as benefiting the employees of more than one employer merely because of this imputation.

(5) ***Additional rule for plans benefiting employees of more than one qualified separate line of business.*** If a plan benefiting employees of more than one qualified separate line of business satisfies the reasonable classification requirement of § 1.410(b)-4(b) before the application of paragraph (c)(4) of this section, then any portion of the plan that is treated as a separate plan as a result of the application of paragraphs (c)(4)(i)(A) and (ii)(A) of this section is deemed to satisfy that requirement.

(d) ***Permissive aggregation for ratio percentage and nondiscriminatory classification tests*** —

(1) ***In general.*** Except as provided in paragraphs (d)(2) and (d)(3) of this section, for purposes of applying the ratio percentage test of § 1.410(b)-2(b)(2) or the nondiscriminatory classification test of § 1.410(b)-4, an employer may designate two or more separate plans (determined after application of paragraph (b) of this section) as a single plan. If an employer treats two or more separate plans as a single plan under this paragraph, the plans must be treated as a single plan for all purposes under sections 401(a)(4) and 410(b).

(2) ***Rules of disaggregation.*** An employer may not aggregate portions of a plan that are disaggregated under the rules of paragraph (c) of this section. Similarly, an employer may not aggregate two or more separate plans that would be disaggregated under the rules of paragraph (c) of this section if they were portions of the same plan. In addition, an employer may not aggregate an ESOP with another ESOP, except as permitted under § 54.4975-11(e) of this Chapter.

(3) ***Duplicative aggregation.*** A plan may not be combined with two or more plans to form more than one single plan. Thus, for example, an employer that maintains plans A, B, and C may not aggregate plans A and B and plans A and C to form two single plans. However, the employer may apply the permissive aggregation rules of this paragraph (d) to form any one (and only one) of the following combinations: plan ABC, plans AB and C, plans AC and B, or plans A and BC.

(4) ***Special rule for plans benefiting employees of a qualified separate line of business.*** For purposes of paragraph (d)(1) of this section, an employer that is treated as operating qualified separate lines of business for purposes of section 410(b) in accordance with § 1.414(r)-1(b) is permitted to aggregate the portions of two or more plans that benefit employees of the same qualified separate line of business (regardless of whether the employer elects to aggregate the portions of the same plans that benefit employees of the other qualified separate lines of business of the employer), provided that none of the plans is tested under the special rule for employer-wide plans in § 1.414(r)-1(c)(2)(ii). Thus, the employer is permitted to apply paragraph (d)(1) of this section with respect to two or more separate plans determined after the application of paragraphs (b) and (c)(4) of this section, but may not aggregate a plan that is tested under the special rule for employer-wide plans in § 1.414(r)-1(c)(2)(ii) for a plan year with any portion of a plan that does not rely on that special rule for the plan year. In all other respects, the provisions of this paragraph (d) regarding permissive aggregation apply, including (but not limited to) the disaggregation rules under paragraph (d)(2) of this section (including the mandatory disaggregation rule of paragraph (c)(4) of this section), and the prohibition on duplicative aggregation under paragraph (d)(3) of this section. This paragraph (d)(4) applies only in the case of an employer that is treated as operating qualified separate lines of business for purposes of section 410(b) in accordance with § 1.414(r)-1(b). See §§ l.414(r)-1(c)(2) and 1.414(r)-8 (separate application of section 410(b) to the employees of a qualified separate line of business).

(5) ***Same plan year requirement.*** Two or more plans may not be aggregated and treated as a single plan under this paragraph (d) unless they have the same plan year.

(e) ***Determination of plans in testing group for average benefit percentage test*** —

(1) ***In general.*** For purposes of applying the average benefit percentage test of § 1.410(b)-5 with respect to a plan, all plans in the testing group must be taken into account. For this purpose, the plans in the testing group are the plan being tested and all other plans of the employer that could be permissively aggregated with that plan under paragraph (d) of this section. Whether two or more plans could be permissively aggregated under paragraph (d) of this section is determined

(i) without regard to the rule in paragraph (d)(4) of this section that portions of two or more plans benefiting employees of the same line of business may not be aggregated if any of the plans is tested under the special rule for employer-wide plans in § 1.414(r)-1(c)(2)(ii),

(ii) without regard to paragraph (d)(5) of this section, and

(iii) by applying paragraph (d)(2) of this section without regard to paragraphs (c)(1) and (c)(2) of this section.

(2) ***Examples.*** The following example illustrates the rules of this paragraph (e).

> *Example 1.* Employer X is treated as operating two qualified separate lines of business for purposes of section 410(b) in accordance with section 414(r), QSLOB1 and QSLOB2. Employer X must apply the rules in § 1.414(r)-8 to determine whether its plans satisfy section 410(b) on a qualified-separate-line-of-business basis. Employer X maintains the following plans:
> (a) Plan A, the portion of Employer X' s employer-wide section 401(k) plan that benefits all noncollectively bargained employees of QSLOB1,

(b) Plan B, the portion of Employer X' s employer-wide section 401(k) plan that benefits all noncollectively bargained employees of QSLOB2,

(c) Plan C, a defined benefit plan that benefits all hourly noncollectively bargained employees of QSLOB1,

(d) Plan D, a defined benefit plan that benefits all collectively bargained employees of QSLOB1,

(e) Plan E, an ESOP that benefits all noncollectively bargained employees of QSLOB1,

(f) Plan F, a profit-sharing plan that benefits all salaried noncollectively bargained employees of QSLOB1.

Assume that Plan F does not satisfy the ratio percentage test of § 1.410(b)-2(b)(2) on a qualified-separate-line-of-business basis, but does satisfy the nondiscriminatory classification test of § 1.410(b)-4 on both an employer-wide and a qualified-separate-line-of-business basis. Therefore, to satisfy section 410(b), Plan F must satisfy the average benefit percentage test of § 1.410(b)-5 on a qualifiedseparatelineofbu5ine55 basis. The plans in the testing group used to determine whether Plan F satisfies the average benefit percentage test of § 1.4 10(b)-5 are Plans A, C, E, and F.

Example 2. The facts are the same as in *Example 1,* except that Employer X applies the special rule for employer-wide plans in § 1.414(r)-1(c)(2)(ii) to its employer-wide section 401(k) plan. To satisfy section 410(b), Plan F must satisfy the average benefit percentage test of § 1.4 10(b)-5. Since paragraph (c)(4) of this section no longer applies to Plans A and B, they are treated as a single plan (Plan AB). The plans in the testing group used to determine whether Plan F satisfies the average benefit percentage test of § 1.4 10(b)-5 are therefore Plans A, B, C, E, and F. However, the employees of QSLOB 2 continue to be excludable employees for purposes of determining whether Plan F satisfies the average benefit percentage test. See § 1.410(b)-6(e).

(f) ***Section 403(b) plans.*** In determining whether a plan satisfies section 410(b), a plan subject to section 403(b)(12)(A)(i) is disregarded. However, in determining whether a plan subject to section 403(b)(12)(A)(i) satisfied section 410(b), plans that are not subject to section 403(b)(12)(A)(i) may be taken into account.

[T.D. 8363, 56 FR 47655, Sept. 19, 1991, as amended by T.D. 8376, 56 FR 63433, Dec. 4, 1991; T.D. 8363, 57 FR 10819, 10954, Mar. 31, 1992; T.D. 8487, 58 FR 46843, Sept. 3, 1993; T.D. 8548, 59 FR 32914, June 27, 1994; T.D. 9169, 69 FR 78153, Dec. 29, 2004]

§ 1.410(b)-8 Additional rules.

(a) ***Testing methods*** —

(1) ***In general.*** A plan must satisfy section 410(b) for a plan year using one of the testing options in paragraphs (a)(2) through (a)(4) of this section. Whichever testing option is used for the plan year must also be used for purposes of applying section 401(a)(4) to the plan for the plan year. The

annual testing option in paragraph (a)(4) of this section must be used in applying section 410(b) to a section 401(k) plan or a section 401(m) plan, and in applying the average benefit percentage test of § 1.410(b)-5. For purposes of this paragraph (a), the plan provisions and other relevant facts as of the last day of the plan year regarding which employees benefit under the plan for the plan year are applied to the employees taken into account under the testing option used for the plan year. For this purpose, amendments retroactively correcting a plan in accordance with § 1.401(a)(4)-11(g) are taken into account as plan provisions in effect as of the last day of the plan year.

(2) ***Daily testing option.*** A plan satisfies section 410(b) for a plan year if it satisfies § 1.410(b)-2 on each day of the plan year, taking into account only those employees (or former employees) who are employees (or former employees) on that day.

(3) ***Quarterly testing option.*** A plan is deemed to satisfy section 410(b) for a plan year if the plan satisfies § 1.410(b)-2 on at least one day in each quarter of the plan year, taking into account for each of those days only those employees (or former employees) who are employees (or former employees) on that day. The preceding sentence does not apply if the plan's eligibility rules or benefit formula operate to cause the four quarterly testing days selected by the employer not to be reasonably representative of the coverage of the plan over the entire plan year.

(4) ***Annual testing option.*** A plan satisfies section 410(b) for a plan year if it satisfies § 1.410(b)-2 as of the last day of the plan year, taking into account all employees (or former employees) who were employees (or former employees) on any day during the plan year.

(5) ***Example.*** The following example illustrates this paragraph (a).

Example. Plan A is a defined contribution plan that is not a section 401(k) plan or a section 401(m) plan, and that conditions allocations on an employee's employment on the last day of the plan year. Plan A is being tested for the 1995 calendar plan year using the daily testing option in paragraph (a)(2) of this section. In testing the plan for compliance with section 410(b) on March 11, 1995, Employee X is taken into account because he was an employee on that day and was not an excludable employee with respect to Plan A on that day. Employee X was a participant in Plan A on March 11, 1995, was employed on December 31, 1995, and received an allocation under Plan A for the 1995 plan year. Under these facts, Employee X is treated as benefiting under Plan A on March 11, 1995, even though Employee X had not satisfied all of the conditions for receiving an allocation on that day, because Employee X satisfied all of those conditions as of the last day of the plan year.

(b) ***Family member aggregation rule.*** For purposes of section 410(b), and in accordance with section 414(q)(6), a highly compensated employee who is a 5-percent owner or one of the ten most highly compensated employees and any family member (or members) of such a highly compensated employee who is also an employee of the employer are to be treated as a single highly compensated employee. If any member of that group is benefiting under a plan, the deemed single employee is treated as benefiting under the plan. If no member of that group is benefiting under a plan, the deemed single employee is treated as not benefiting under the plan.

[T.D. 8363, 56 FR 47656, Sept. 19, 1991]

§ 1.410(b)-9 Definitions.

In applying this section and §§ 1.410(b)-2 through 1.410(b)-10, the definitions in this section govern unless otherwise provided.

Collectively bargained employee. Collectively bargained employee means a collectively bargained employee within the meaning of § 1.410(b)-6(d)(2).

Defined benefit plan. Defined benefit plan means a defined benefit plan within the meaning of section 414(j). The portion of a plan described in section 414(k) that does not consist of separate accounts is treated as a defined benefit plan.

Defined contribution plan. Defined contribution plan means a defined contribution plan within the meaning of section 414(i). The portion of a plan described in section 414(k) that consists of separate accounts is treated as a defined contribution plan.

Employee. Employee means an individual who performs services for the employer who is either a common law employee of the employer, a self-employed individual who is treated as an employee pursuant to section 401(c)(1), or a leased employee (not excluded under section 414(n)(5)) who is treated as an employee of the employer-recipient under section 414(n)(2) or 414(o)(2). Individuals that an employer treats as employees under section 414(n) pursuant to the requirements of section 414(o) are considered to be leased employees for purposes of this rule. In addition, an individual must be treated as an employee with respect to allocations under a defined contribution plan taken into account under § 1.401(a)(4)-2(c)(ii) and with respect to increases in accrued benefits (within the meaning of 411(a)(7)) under a defined benefit plan that are based on ongoing service or compensation (including imputed service or compensation) credits.

Employer. Employer means the employer maintaining the plan and those employers required to be aggregated with the employer under sections 414(b), (c), (m), or (o). An individual who owns the entire interest of an unincorporated trade or business is treated as an employer. Also, a partnership is treated as the employer of each partner and each employee of the partnership.

ESOP. ESOP or *employee stock ownership plan* means an employee stock ownership plan within the meaning of section 4975(e)(7) or a tax credit employee stock ownership plan within the meaning of section 409(a).

Former employee. Former employee means an individual who was, but has ceased to be, an employee of the employer (i.e., the individual has ceased performing services as an employee for the employer). An individual is treated as a former employee beginning on the day after the day on which the individual ceases performing services as an employee for the employer. Thus, an individual who ceases performing services as an employee for an employer during a plan year is both an employee and a former employee for the plan year. Notwithstanding the foregoing, an individual is an employee (and not a former employee) to the extent that the individual is treated as an employee with respect to the plan for the plan year under the definition of employee in this section.

Highly compensated employee. Highly compensated employee means an employee who is a highly compensated employee within the meaning of section 414(q) or a former employee treated as an employee under the definition of employee in this section who is a highly compensated former employee within the meaning of section 414(q).

Highly compensated former employee. Highly compensated former employee means a former employee who is a highly compensated former employee within the meaning of section 414(q).

Multiemployer plan. Multiemployer plan means a multiemployer plan within the meaning of section 414(f).

Noncollectively bargained employee. Noncollectively bargained employee means an employee who is not a collectively bargained employee.

Nonhighly compensated employee. Nonhighly compensated employee means an employee who is not a highly compensated employee.

Nonhighly compensated former employee. Nonhighly compensated former employee means a former employee who is not a highly compensated former employee.

Plan year. Plan year means the plan year of the plan as defined in the written plan document. In the absence of a specifically designated plan year, the plan year is deemed to be the calendar year.

Plan year compensation. Plan year compensation means plan year compensation within the meaning of § 1.401(a)(4)-12.

Professional employee. Professional employee means any highly compensated employee who, on any day of the plan year, performs professional services for the employer as an actuary, architect, attorney, chiropodist, chiropractor, dentist, executive, investment banker, medical doctor, optometrist, osteopath, podiatrist, psychologist, certified or other public accountant, stockbroker, or veterinarian, or in any other professional capacity determined by the Commissioner in a notice or other document of general applicability to constitute the performance of services as a professional.

Ratio percentage. With respect to a plan for a plan year, a plan's *ratio percentage* means the percentage (rounded to the nearest hundredth of a percentage point) determined by dividing the percentage of the nonhighly compensated employees who benefit under the plan by the percentage of the highly compensated employees who benefit under the plan. The percentage of the nonhighly compensated employees who benefit under the plan is determined by dividing the number of nonhighly compensated employees benefiting under the plan by the total number of nonhighly compensated employees of the employer. The percentage of the highly compensated employees who benefit under the plan is determined by dividing the number of highly compensated employees benefiting under the plan by the total number of highly compensated employees of the employer.

Section 401(k) plan. Section 401(k) plan means a plan consisting of elective contributions described in § 1.40(k)-1(g)(3) under a qualified cash or deferred arrangement described in § 1.401(k)-1(a)(4)(i). Thus, a section 401(k) plan does not include a plan (or portion of a plan) that consists of contributions under a nonqualified cash or deferred arrangement, or qualified nonelective or qualified matching contributions treated as elective contributions under § 1.401(k)-1(a)(6).

Section 401 (l) *plan. Section 401* (l) *plan* means a plan that—

(1) Provides for a disparity in employer-provided benefits or contributions that satisfies section 401(l) in form, and

(2) Relies on one of the safe harbors of § 1.401(a)(4)-2(b)(2), 1.401(a)(4)-3(b), 1.401(a)(4)-8(b)(3), or 1.401(a)(4)-8(c)(3)(iii)(B) to satisfy section 401(a)(4).

Section 401(m) plan. Section 401(m) plan means a plan consisting of employee contributions described in § 1.401(m)-1(f)(6) or matching contributions described in § 1.40(m)-1(f)(12), or both. Thus, a section 401(m) plan does not include a plan (or portion of a plan) that consists of elective contributions or qualified nonelective contributions treated as matching contributions under § 1.401(m)-1(b)(5).

[T.D. 8363, 56 FR 47657, Sept. 19, 1991; 57 FR 10817, 10954, Mar. 31, 1992, as amended by T.D. 8487, 58 FR 46843, Sept. 3, 1993; T.D. 9169, 69 FR 78153, Dec. 29, 2004]

§ 1.410(b)-10 Effective dates and transition rules.

(a) *Statutory effective dates* —

(1) ***In general.*** Except as set forth in paragraph (a)(2) of this section, the minimum coverage rules of section 410(b) as amended by section 1112 of the Tax Reform Act of 1986 apply to plan years beginning on or after January 1, 1989.

(2) *Special statutory effective date for collective bargaining agreements* —

(i) ***In general.*** As provided for by section 1112(e)(2) of the Tax Reform Act of 1986, in the case of a plan maintained pursuant to one or more collective bargaining agreements between employee representatives and one or more employers ratified before March 1, 1986, the minimum coverage rules of section 410(b) as amended by section 1112 of the Tax Reform Act of 1986 do not apply to employees covered by any such agreement in plan years beginning before the earlier of—

(A) January 1, 1991; or

(B) The later of January 1, 1989, or the date on which the last of such collective bargaining agreements terminates (determined without regard to any extension thereof after February 28, 1986). For purposes of this paragraph (a)(2), any extension or renegotiation of a collective bargaining agreement, which extension or renegotiation is ratified after February 28, 1986, is to be disregarded in determining the date on which the agreement terminates.

(ii) ***Example.*** The following example illustrates this paragraph (a)(2).

Example. Employer A maintains Plan 1 pursuant to a collective bargaining agreement. Plan 1 covers 100 of Employer A's noncollectively bargained employees and 900 of Employer A's collectively bargained employees. Employer A also maintains Plan 2, which covers Employer A's other 400 noncollectively bargained employees. The collective bargaining agreement under which Plan 1 is maintained was entered into on January 1, 1986, and expires December 31, 1992. Because Plan 1 is a plan maintained pursuant to a collective bargaining agreement, section 410(b) applies to the first plan year beginning on or after January 1, 1991. In applying section 410(b) to Plan 2, the 100 noncollectively bargained employees in Plan 1 must be taken into account. The deferred effective date for plans maintained pursuant to a collective bargaining agreement is not applicable in determining how section 410(b) is applied to a plan that is not maintained pursuant to a collective bargaining agreement.

(iii) ***Plan maintained pursuant to a collective bargaining agreement.*** For purposes of this paragraph (a)(2), a plan is maintained pursuant to one or more collective bargaining agreements between employee representatives and one or more employers, if one or more of the agreements were ratified before March 1, 1986. Only plans maintained pursuant to agreements that the Secretary of Labor finds to be collective bargaining agreements and that satisfy section 7701(a)(46) are eligible for the deferred effective date under this paragraph (a)(2). A plan will not be treated as a plan maintained pursuant to one or more collective bargaining agreements eligible for the deferred effective date under this paragraph (a)(2) unless the plan would be a plan maintained pursuant to one or more collective bargaining agreements under the principles applied under section 1017(c) of the Employee Retirement Income Security Act of 1974. See H.R. Rep. No. 1280, 93rd Cong. 2d Sess. 266 (1974).

(b) *Regulatory effective dates* —

(1) *In general.* Except as otherwise provided in this section, §§ 1.410(b)-2 through 1.410(b)-9 apply to plan years beginning on or after January 1, 1994.

(2) *Plans of tax-exempt organizations.* In the case of plans maintained by organizations exempt from income taxation under section 501(a), including plans subject to section 403(b)(12)(A)(i) (nonelective plans), §§ 1.410(b)-2 through 1.410(b)-9 apply to plan years beginning on or after January 1, 1996, to the extent such plans are subject to section 410(b).

(c) *Compliance during transition period.* For plan years beginning before the effective date of these regulations, as set forth in paragraph (b) of this section, and on or after the statutory effective date as set forth in paragraph (a) of this section, a plan must be operated in accordance with a reasonable, good faith interpretation of section 410(b). Whether a plan is operated in accordance with a reasonable, good faith interpretation of section 410(b) will generally be determined based on all of the relevant facts and circumstances, including the extent to which an employer has resolved unclear issues in its favor. If a plan's classification has been determined by the Commissioner to be nondiscriminatory and there have been no significant changes in or omissions of a material fact, the classification will be treated as nondiscriminatory for the relevant plan year. A plan will be deemed to be operated in accordance with a reasonable, good faith interpretation of section 410(b) if it is operated in accordance with the terms of §§ 1.410(b)-2 through 1.410(b)-9.

(d) *Effective date for governmental plans.* In the case of governmental plans described in section 414(d), including plans subject to section 403(b)(12)(A)(i) (nonelective plans) § 1.410(b)-2 through § 1.410(b)-10 apply to plan years beginning on or after January 1, 1996, or 90 days after the opening of the first legislative session beginning on or after January 1, 1996, of the governing body with authority to amend the plan, if that body does not meet continuously. Such plans are deemed to satisfy section 410(b) (and in the case of such plans that are not subject to section 403(b)(12)(A)(i), section 401(a)(3) as in effect on September 1, 1974) for plan years before that effective date. For purposes of this section, the governing body with authority to amend the plan is the legislature, board, commission, council, or other governing body with authority to amend the plan. See § 1.410(b)-2(d) and (e).

(e) *Effective date for provisions relating to exclusion of employees of certain tax-exempt entities.* The provisions in § 1.410(b)-6(g) apply to plan years beginning after December 31, 1996. For plan years to which § 1.410(b)-6 applies that begin before January 1, 1997, § 1.410(b)-6(g) (as it appeared in the April 1, 2005 edition of 26 CFR part 1) applies.

[T.D. 8487, 58 FR 46844, Sept. 3, 1993, as amended by T.D. 9275, 71 FR 41359, July 21, 2006]

§ 1.410(d)-1 Election by church to have participation, vesting, funding, etc. provisions apply.

(a) *In general.* If a church or convention or association of churches which maintains any church plan, as defined in section 414(e), makes an election under this section, certain provisions of the Code and title I of the Employee Retirement Income Security Act of 1974 (the “Act”) shall apply to such church plan as if such plan were not a church plan. The provisions of the Code referred to are section 410 (relating to minimum participation standards), section 411 (relating to minimum vesting standards), section 412 (relating to minimum funding standards), section 4975 (relating to prohibited transactions), and paragraphs (11), (12), (13), (14), (15), and (19) of section 401(a) (relating to joint and survivor annuities, mergers and consolidations, assignment or alienation of benefits, time of benefit commencement, certain social security increases, and withdrawals of employee contributions, respectively).

(b) ***Election is irrevocable.*** An election under this section with respect to any church plan shall be binding with respect to such plan and, once made, shall be irrevocable.

(c) ***Procedure for making election*** —

(1) ***Time of election.*** An election under this section may be made for plan years for which the provisions of section 410(d) of the Code apply to the church plan. By reason of section 1017(b) of the Act section 410(d) does not apply to a plan in existence on January 1, 1974, for plan years beginning before January 1, 1976. Section 1017(d) of the Act permits a plan administrator to elect to have certain provisions of the Code (including section 410(d)) apply to a plan before the otherwise applicable effective dates of such provisions. See § 1.410(a)-2(d). Therefore, for a plan in existence on Janurary 1, 1974, an election under section 410(d) of the Code may be made for a plan year beginning before January 1, 1976, only if an election has been made under section 1017(d) of the Act with respect to that plan year.

(2) ***By whom election is to be made.*** The election provided by this section may be made only by the plan administrator of the church plan.

(3) ***Manner of making election.*** The plan administrator may elect to have the provisions of the Code described in paragraph (a) of this section apply to the church plan as it is were not a church plan by attaching the statement described in subparagraph (5) of this paragraph to either

(i) the annual return required under section 6058(a) (or an amended return) with respect to the plan which is filed for the first plan year for which the election is effective or

(ii) a written request for a determination letter relating to the qualification of the plan under section 401(a), 403(a), or 405(a) of the Code and if trusteed, the exempt status under section 501(a) of the Code of a trust constituting a part of the plan.

(4) ***Conditional election.*** If an election is made with a written request for a determination letter, the election may be conditioned upon issuance of a favorable determination letter and will become irrevocable upon issuance of such letter.

(5) ***Statement.*** The statement described in subparagraph (3) of this paragraph shall indicate

(i) that the election is made under section 410(d) of the Code and

(ii) the first plan year for which it is effective.

(Sec. 410 (88 Stat. 898; 26 U.S.C. 410))

[T.D. 7508, 42 FR 47198, Sept. 20, 1977]

§ 1.411(a)-1 Minimum vesting standards; general rules.

(a) ***In general.*** A plan is not a qualified plan (and a trust forming a part of such plan is not a qualified trust) unless—

(1) The plan provides that an employee's right to his normal retirement benefit (see § 1.411(a)-7(c)) is nonforfeitable (see § 1.411(a)-4) upon and after the attainment of normal retirement age (see § 1.411(a)-7(b)),

(2) The plan provides that an employee's rights in his accrued benefit derived from his own contributions (see § 1.411(c)-1) are nonforfeitable at all times, and

(3) The plan satisfies the requirements of—

(A) Section 411(a)(2) and § 1.411(a)-3 (relating to vesting in accrued benefit derived from employer contributions), and

(B) In the case of a defined benefit plan, section 411(b)(1) and § 1.411(b)-1 (relating to accrued benefit).

(b) *Organization of regulations relating to minimum vesting standards* —

(1) ***General rules.*** This section prescribes general rules relating to the minimum vesting standards provided by section 411.

(2) ***Effective dates.*** Section 1.411(a)-2 provides rules under section 1017 of the Employee Retirement Income Security Act of 1974 relating to effective dates under section 411.

(3) ***Employer contributions.*** Section 1.411(a)-3 provides rules under section 411(a)(2) relating to vesting in employer-derived accrued benefits.

(4) ***Certain forfeitures.*** Section 1.411(a)-4 provides rules under section 411(a)(3) relating to certain permitted forfeitures, suspensions, etc. under qualified plans.

(5) ***Nonforfeitable percentage.*** Section 1.411(a)-5 provides rules under section 411(a)(4) relating to service included in the determination of an employee's nonforfeitable percentage under section 411(a)(2) and § 1.411(a)-3.

(6) ***Years of service; break in service.*** Section 1.411(a)-6 provides rules under section 411(a) (5) and (6) of the Internal Revenue Code of 1954 relating to years of service and breaks in service. Rules prescribed by the Secretary of Labor, relating to years of service and breaks in service under part 2 of subtitle B of title I of the Employee Retirement Income Security Act of 1974 are provided under 29 CFR Part 2530 (Department of Labor regulations relating to minimum standards for employee pension benefit plans).

(7) ***Definitions and special rules.*** Section 1.411(a)-7 provides definitions and special rules under section 411(a) (7), (8), and (9), for purposes of section 411 and the regulations thereunder.

(8) ***Changes in vesting schedule.*** Section 1.411(a)-8 provides rules under section 411(a)(10) relating to changes in the vesting schedule of a plan.

(9) [Reserved]

(10) ***Accrued benefits.*** See § 1.411(b)-1 for rules under section 411(b) relating to accrued benefit requirements under defined benefit plans.

(11) ***Allocation of accrued benefits.*** See § 1.411(c)-1 for rules under section 411(c) relating to allocation of accrued benefits between employer and employee contributions.

(12) ***Discrimination, etc.*** See § 1.411(d)-1 for rules relating to the coordination of section 411 with section 401(a)(4) (relating to discrimination) and other rules under section 411(d).

(c) *Application of standards to certain plans* —

(1) ***General rule.*** Except as provided in subparagraph (2) of this paragraph, section 411 does not apply to—

(i) A governmental plan (within the meaning of section 414(d) and the regulations thereunder),

(ii) A church plan (within the meaning of section 414(e) and the regulations thereunder) which has not made the election provided by section 410(d) and the regulations thereunder,

(iii) A plan which has not provided for employer contributions at any time after September 2, 1974, and

(iv) A plan established and maintained by a society, order, or association described in section 501(c) (8) or (9), if no part of the contributions to or under such plan are made by employers of participants in such plan.

(2) ***Vesting requirements.*** A plan described in subparagraph (1) of this paragraph shall, for purposes of section 401(a), be treated as meeting the requirements of section 411 if such plan meets the vesting requirements resulting from the application of section 401(a)(4) and section 401(a)(7) as in effect on September 1, 1974.

(d) ***Supersession.*** Sections 11.411(a)-1 through 11.411(d)-3, inclusive, of the Temporary Income Tax Regulations under the Employee Retirement Income Security Act of 1974 are superseded by this section and §§ 1.411(a)-2 through 1.411(d)-3.

(Sec. 411 (88 Stat. 901; 26 U.S.C. 411))

[T.D. 7501, 42 FR 42324, Aug. 23, 1977, as amended by T.D. 9849, 84 FR 9234, Mar. 14, 2019]

§ 1.411(a)-2 Effective dates.

(a) ***Plan not in existence on January 1, 1974.*** Under section 1017(a) of the Employee Retirement Income Security Act of 1974, in the case of a plan which was not in existence on January 1, 1974, section 411 and the regulations thereunder apply for plan years beginning after September 2, 1974. See paragraph (c) of this section for time plan is considered in existence.

(b) ***Plans in existence on January 1, 1974.*** Under section 1017(b) of the Employee Retirement Income Security Act of 1974, in the case of a plan which was in existence on January 1, 1974, section 411 and the regulations thereunder apply for plan years beginning after December 31, 1975. See paragraph (c) of this section for time plan is considered to be in existence.

(c) ***Time of plan existence*** —

(1) ***General rule.*** For purposes of this section, a plan is considered to be in existence on a particular day if—

(i) The plan on or before that day was reduced to writing and adopted by the employer (including, in the case of a corporate employer, formal approval by the employer's board of directors and, if required, shareholders), even though no amounts had been contributed under the plan as of such day, and

(ii) The plan was not terminated on or before that day.

For example, if a plan was adopted on January 2, 1974, effective as of January 1, 1974, the plan is not considered to have been in existence on January 1, 1974, because it was not both adopted and in writing on January 1, 1974.

(2) ***Collectively-bargained plan.*** Notwithstanding paragraph (c) (1) of this section, a plan described in section 413 (a), relating to a plan maintained pursuant to a collective-bargaining agreement, is considered to be in existence on a particular day if—

(i) On or before that day there is a legally enforceable agreement to establish such a plan signed by the employer, and

(ii) The employer contributions to be made to the plan are set forth in the agreement.

(3) ***Special rule.*** If a plan is considered to be in existence under subparagraph (1) of this paragraph, any other plan with which such existing plan is merged or consolidated shall also be considered to be in existence on such date.

(d) ***Existing plans under collective-bargaining agreements.*** For a special effective date rule for certain plans maintained pursuant to a collective bargaining agreement, see section 1017(c)(1) of the Employee Retirement Income Security Act of 1974 (88 Stat. 932).

(e) ***Certain existing plans may elect new provisions.*** The plan administrator may elect to have the provisions of the Code relating to participation, vesting, funding, and form of benefit apply to a selected plan year. See § 1.410(a)-2(d) for rules relating to such an election.

(f) ***Application of rules.*** The requirements of section 411 do not apply to employees who separate from service with the employer prior to the first plan year to which such requirements apply and who never return to service with the employer in a plan year to which section 411 applies.

(Sec. 411 (88 Stat. 901; 26 U.S.C. 411))

[T.D. 7501, 42 FR 42325, Aug. 23, 1977]

§ 1.411(a)-3 Vesting in employer-derived benefits.

(a) ***In general*** —

(1) ***Alternative requirements.*** A plan is not a qualified plan (and a trust forming a part of such plan is not a qualified trust) unless the plan satisfies the requirements of section 411(a)(2) and this section. A plan satisfies the requirements of this section if is satisfies the requirements of paragraph (b), (c), or (d) of this section.

(2) ***Composite arrangements.*** A plan will not be considered to satisfy the requirements of paragraph (b), (c), or (d) of this section unless it satisfies all requirements of a particular one of such paragraphs with respect to all of an employee's years of service. A plan which, for example, satisfies the requirements of paragraph (b) (but not (c) or (d)) for an employee's first 9 years of service and satisfies the requirements of paragraph (c) (but not (b)) for all of his remaining years of service, does not satisfy the requirements of this section. A plan is not precluded from satisfying the requirement of one such paragraph with respect to one group of employees and another such paragraph with respect to another group provided that the groups are not so structured as to evade the requirements of this paragraph. For example, if plan A provides that employees who commence participation before age 30 are subject to the “rule of 45” vesting schedule and employees who commence participation after age 30 are subject to the full vesting after 10 years schedule, plan A would be so structured as to evade the requirements of this paragraph.

(3) ***Plan amendments.*** A plan which satisfies the requirements of a particular one of such paragraphs for each of an employee's years of service and which is amended so that, as amended, it satisfies the requirements of another such paragraph for all such years of service, satisfies the requirements of

this section even though, as amended, it does not satisfy the requirements of the paragraph which were satisfied prior to the amendment. See § 1.411(a)-8 for rules relating to employee election where the vesting schedule is amended.

(b) *10-year vesting.* A plan satisfies the requirements of section 411(a)(2) (A) and this paragraph if an employee who has completed 10 years of service has a nonforfeitable right to 100 percent of his accrued benefit derived from employer contributions.

(c) *5- to 15-year vesting.* A plan satisfies the requirements of section 411(a)(2) (B) and this paragraph if an employee who has completed at least 5 years of service has a nonforfeitable right to a percentage of his accrued benefit derived from employer contribution which percentage is not less than the nonforfeitable percentage determined under the following table:

Completed years of service	Nonforfeitable percentage
5	25
6	30
7	35
8	40
9	45
10	50
11	60
12	70
13	80
14	90
15 or more	100

(d) *Rule of 45.* A plan satisfies the requirements of section 411(a)(2)(C) and this paragraph if an employee is entitled to the greater of the two percentages determined under paragraph (d) (1) or (2) of this section.

(1) *Age and service test.* An employee who is not separated from the service, who has completed at least 5 years of service, and with respect to whom the sum of his age and years of service equals of exceeds 45, has a nonforfeit- able right to a percentage of his accrued benefit derived from employer contributions which is not less than the nonforfeitable percentage corresponding to his number of completed years of service to the sum of his age and completed years of service (whichever percentage is the lesser) determined under the following table:

Completed years of service	Sum of age and service	Nonforfeitable percentage
5	45 or 46	50
6	47 or 48	60
7	49 or 50	70
8	51 or 52	80

Completed years of service	Sum of age and service	Nonforfeitable percentage
9	53 or 54	90
10 or more	55 or more	100

(2) ***Service test.*** An employee who has completed at least 10 years of service has a nonforfeitable right to a percentage of his accrued benefit derived from employer contributions determined under the following table:

Completed years of service	Nonforfeitable percentage
10	50
11	60
12	70
13	80
14	90
15	100

(3) ***Computation of age.*** For purposes of subparagraph (1) of this paragraph, the age of an employee is his age on his last birthday.

(e) ***Examples.*** The rules provided by this section are illustrated by the following examples:

Example 1. Plan B provides that each employee's rights to his employer-derived accrued benefit are nonforfeitable as follows:

Completed years of service	Nonforfeitable percentage
2 or less	0
3	30
4	35
5	40
6	45
7	50
8	55
9	60
10	65
11	70

Completed years of service	Nonforfeitable percentage
12	75
13	80
14	85
15	100

Plan B does not satisfy the requirements of paragraph (c) of this section (relating to 5-15-year vesting) because the nonforfeitable percentage provided by the plan after completion of 14 years of service (85 percent) is less than the percentage required by paragraph (c) of this section at that time (90 percent). The fact that the nonforfeitable percentage provided by the plan for years prior to the 13th year of service is greater than the percentage required under paragraph (c) of this section is immaterial. The plan fails to satisfy the requirements of paragraph (c) of this section even if it is demonstrated that the value of the vesting provided by the plan to the employee is at least equal to the value of the vesting rate required by that paragraph.

Example 2. Plan C provides for plan participation after the completion of 1 year of service. The plan provides that each employee's rights to his employer-derived accrued benefit are 100 percent nonforfeitable after 10 years of plan participation rather than service. The plan does not satisfy the requirements of paragraph (b) of this section because, under the plan, an employee obtains a 100 percent nonforfeitable right to his employer-derived accrued benefit only after completion of more than 10 years of service.

Example 3. Plan D provides that each employee's rights to his employer-derived accrued benefit are nonforfeitable in accordance with the following schedule:

Completed years of service	Nonforfeitable percentage
0-9	0
10	50
11	60
12	70
13	80
14	90
15	100

The plan does not satisfy the requirements of paragraph (b) of this section after the 9th year of service. It does not satisfy the requirements of paragraph (c) of this section for years prior to the 10th year of service. It does not satisfy the requirements of paragraph (d)(1) of this

> section for any year of service prior to the 10th year. The plan does not satisfy the requirements of this section because it does not satisfy the requirements of a particular one of the three paragraphs for each of an employee's years of service.

Example 4. Plan G provides that each employee's rights to his employer-derived accrued benefit are 100 percent nonforfeitable upon completion of 5 years of service. The plan satisfies the requirements of paragraphs (b), (c), and (d) of this section and, because it satisfies the requirements of at least one of such paragraphs for all of an employee's years of service, it satisfies the requirements of this section.

(Sec. 411 (88 Stat. 901; 26 U.S.C. 411))

[T.D. 7501, 42 FR 42325, Aug. 23, 1977]

§ 1.411(a)-3T Vesting in employer-derived benefits (temporary).

(a) ***In general*** —

(1) [Reserved]

(2) ***Composite arrangements.*** A plan will not be considered to satisfy the requirements of paragraph (b), (c), or (d) of this section unless it satisfies all requirements of a particular one of such paragraphs with respect to all of an employee's years of service. A plan which, for example, satisfies the requirements of paragraph (b) (but not (c) or (d)) for an employee's first 4 years of service and satisfies the requirements of paragraph (c) (but not (b)) for all of his remaining years of service does not satisfy the requirements of this section. A plan is not precluded from satisfying the requirements of one such paragraph with respect to one group of employees and another such paragraph with respect to another group provided that the groups are not so structured as to evade the requirements of this paragraph.

(b) ***5-year vesting.*** A plan satisfies the requirements of section 411(a)(2)(A) and this paragraph if an employee who has completed 5 years of service has a nonforfeitable right to 100 percent of his or her accrued benefits derived from employer contributions.

(c) ***3- to 7-year vesting.*** A plan satisfies the requirements of section 411(a)(2)(B) and this paragraph if an employee who has completed at least 3 years of service has a nonforfeitable right to a percentage of his accrued benefit derived from employer contributions, which percentage is not less than the nonforfeitable percentage determined under the following table:

Completed years of service	Nonforfeitable percentage
3	20
4	40
5	60
6	80

Completed years of service	Nonforfeitable percentage
7 or more	100

(d) ***Multiemployer plans.*** A plan satisfies the requirements of section 411(a)(2)(C) and this paragraph if—

(1) The plan is a multiemployer plan (within the meaning of section 414(f)), and

(2) Under the plan—

(i) An employee who is covered pursuant to a collective bargaining agreement described in section 414(f)(1)(B) has a nonforfeitable right to 100 percent of the employee's accrued benefit derived from employer contributions not later than upon completion of 10 years of service, and

(ii) The requirements of paragraph (b) or (c) of this section are met with respect to employees who are not covered pursuant to a collective bargaining agreement described in section 414(f)(1)(B).

(iii) For purposes of this provision, an employee is not covered pursuant to a collective bargaining agreement unless the employee is represented by a bona fide employee representative that is a party to the collective bargaining agreement pursuant to which the multiemployer plan is maintained. Thus, for example, an employee of either the multiemployer plan or the employee representative is not covered pursuant to the collective bargaining agreement under which the plan is maintained even if the employee is covered pursuant to an agreement entered into by the multiemployer plan or employee representative on behalf of the employee and even if all such employees covered under the plan constitute only a de minimis percentage of the total employees covered under the plan.

(e) ***Effective date.***

(1) The provisions of this section apply to all employees who have one hour of service in any plan year beginning after—

(i) December 31, 1988, or

(ii) In the case of a plan maintained pursuant to one or more collective bargaining agreements between employee representatives and one or more employers ratified before March 1, 1986, for employees covered by any such agreement, the earlier of—

(A) The later of—

(*1*) January 1, 1989, or

(*2*) The date on which the last of such collective bargaining agreements terminates (determined without regard to any extension thereof after February 28, 1986), or

(B) January 1, 1991.

(2) For employees not described in paragraph (e)(1), above, the regulations in effect prior to January 1, 1989, shall be applied to determine the requirements of this section.

(f) ***Examples.*** The rules provided by this section are illustrated by the following examples:

Example 1. Plan B provides that each employee's rights to his employer-derived accrued benefit are nonforfeitable as follows:

Completed years of service	Nonforfeitable percentage
1	0
2	10
3	25
4	45
5	65
6	75
7	100

Plan B does not satisfy the requirements of paragraph (c) of this section (relating to 3- to 7-year vesting) because the nonforfeitable percentage provided by the plan after completion of 6 years of service (75 percent) is less than the percentage required by paragraph (c) of this section at that time (80 percent). The fact that the nonforfeitable percentage provided by the plan for years prior to the 6th year of service is greater than the percentage required under paragraph (c) of this section is immaterial. The plan fails to satisfy the requirements of paragraph (c) of this section even if it is demonstrated that the value of the vesting provided by the plan to the employees is at least equal to the value of the vesting rate required by this paragraph.

Example 2. Plan C provides for plan participation after the completion of 1 year of service. The plan provides that each employee's rights to his employer-derived accrued benefits are 100 percent nonforfeitable after 5 years of plan participation rather than service. The plan does not satisfy the requirements of paragraph (b) of this section because, under the plan, an employee obtains a 100 percent nonforfeitable right to his or her employer-derived accrued benefit only after completion of more than 5 years of service.

Example 3. Plan D provides that each employee's rights to his employer-derived accrued benefits are nonforfeitable in accordance with the following schedule:

Completed years of service	Nonforfeitable percentage
0 to 4	0
5	60
6	80

Completed years of service	Nonforfeitable percentage
7	100

The plan does not satisfy the requirements of paragraph (b) of this section after the 4th year of service. It does not satisfy the requirements of paragraph (c) of this section for years prior to the 5th year of service. The plan does not satisfy the requirements of this section because it does not satisfy the requirements of a particular one of the two paragraphs for each of an employee's years of service.

Example 4. Plan G provides that each employee's rights to his employer-derived accrued benefit are 100 percent nonforfeitable upon completion of 3 years of service. The plan satisfies the requirements of paragraphs (b) and (c) of this section and, because it satisfies the requirements of at least one of such paragraphs for all of an employee's years of service, it satisfies the requirements of this section.

[T.D. 8170, 53 FR 240, Jan. 6, 1988]

§ 1.411(a)-4 Forfeitures, suspensions, etc.

(a) ***Nonforfeitability.*** Certain rights in an accrued benefit must be nonforfeitable to satisfy the requirements of section 411(a). This section defines the term "nonforfeitable" for purposes of these requirements. For purposes of section 411 and the regulations thereunder, a right to an accrued benefit is considered to be nonforfeitable at a particular time if, at that time and thereafter, it is an unconditional right. Except as provided by paragraph (b) of this section, a right which, at a particular time, is conditioned under the plan upon a subsequent event, subsequent performance, or subsequent forbearance which will cause the loss of such right is a forfeitable right at that time. Certain adjustments to plan benefits such as adjustments in excess of reasonable actuarial reductions, can result in rights being forfeitable. Rights which are conditioned upon a sufficiency of plan assets in the event of a termination or partial termination are considered to be forfeitable because of such condition. However, a plan does not violate the nonforfeitability requirements merely because in the event of a termination an employee does not have any recourse toward satisfaction of his nonforfeitable benefits from other than the plan assets or the Pension Benefit Guaranty Corporation. Furthermore, nonforfeitable rights are not considered to be forfeitable by reason of the fact that they may be reduced to take into account benefits which are provided under the Social Security Act or under any other Federal or State law and which are taken into account in determining plan benefits. To the extent that rights are not required to be nonforfeitable to satisfy the minimum vesting standards, or the nondiscrimination requirements of section 401(a)(4), they may be forfeited without regard to the limitations on forfeitability required by this section. The right of an employee to repurchase his accrued benefit for example under section 411(a)(3)(D), is an example of a right which is required to satisfy such standards. Accordingly, such a right is subject to the limitations on forfeitability. Rights which are required to be prospectively nonforfeitable under the vesting standards are nonforfeitable and may not be forfeited until it is determined that such rights are, in fact, in excess of the vesting standards. Thus, employees have a right to vest in the accrued benefits if they continue in employment of employers maintaining the plan unless a forfeitable event recognized by section 411

occurs. For example, if a plan covered employees in Division A of Corporation X under a plan utilizing a 10-year 100 percent vesting schedule, the plan could not forfeit employees' rights on account of their moving to service in Division B of Corporation X prior to completion of 10 years of service even though employees are not vested at that time.

(b) ***Special rules.*** For purposes of paragraph (a) of this section a right is not treated as forfeitable—

(1) ***Death*** —

(i) ***General rule.*** In the case of a participant's right to his employer-derived accrued benefit, merely because such accrued benefit is forfeitable by the participant to the extent it has not been paid or distributed to him prior to his death. This subparagraph shall not apply to a benefit which must be paid to a survivor in order to satisfy the requirements of section 401(a)(11).

(ii) ***Employee contributions.*** A participant's right in his accrued benefit derived from his own contributions must be nonforfeitable at all times. Such a right is not treated as forfeitable merely because, after commencement of annuity or pension payments in a benefit form provided under the plan, the participant dies without receiving payments equal in amount to his nonforfeitable accrued benefit derived from his contributions determined at the time of commencement.

(2) ***Suspension of benefits upon reemployment of retiree.*** In the case of certain suspensions of benefits under section 411(a)(3)(B), see regulations prescribed by the Secretary of Labor under 29 CFR Part 2530 (Department of Labor regulations relating to minimum standards for employee pension benefit plans).

(3) ***Retroactive plan amendment.*** In the case of a participant's right to his employer-derived accrued benefit, merely because such benefit is subject to reduction to the extent provided by a plan amendment described in section 412(c)(8) and the regulations thereunder, which amendment is given retroactive effect in accordance with such section.

(4) ***Other forfeiture rules*** —

(i) ***Withdrawal of mandatory contributions.*** For rules allowing forfeitures on account of the withdrawal of mandatory contributions, see § 1.411(a)-7(d) (2) and (3).

(ii) ***Additional requirements.*** For additional requirements relating to nonforfeitability of benefits in the event of a withdrawal by the employee, see section 401(a)(19) and § 1.401(a)-19.

(5) ***Multiemployer plan.*** In the case of a multiemployer plan described in section 414(f), merely because an employee's accrued benefit which results from service with an employer before such employer was required to contribute to the plan is forfeitable on account of the cessation of contributions by the employer of the employee. This subparagraph shall not apply to an employee's accrued benefit with respect to an employer which accrued under a plan maintained by that employer prior to the adoption by that employer of the multiemployer plan.

(6) ***Lost beneficiary; escheat.*** In the case of a benefit which is payable, merely because the benefit is forfeitable on account of the inability to find the participant or beneficiary to whom payment is due, provided that the plan provides for reinstatement of the benefit if a claim is made by the participant or beneficiary for the forfeited benefit. In addition, a benefit which is lost by reason of escheat under applicable state law is not treated as a forfeiture.

(7) ***Certain matching contributions.*** A matching contribution (within the meaning of section 401(m)(4)(A) and § 1.401(m)-1(a)(2)) is not treated as forfeitable even if under the plan it may be forfeited under § 1.401(m)-2(b)(1) because the contribution to which it relates is treated as an excess contribution (within the meaning of §§ 1.401(k)-2(b)(2)(ii) and 1.401(k)-6), excess deferral (within the meaning of § 1.402(g)-1(e)(1)(iii)), excess aggregate contribution (within the meaning of § 1.401(m)-5), or a default elective contribution (within the meaning of § 1.414(w)-1(e)) that is withdrawn in accordance with the requirements of § 1.414(w)-1(c).

(c) ***Examples.*** The rules of this section are illustrated by the following examples:

Example 1. Corporation A's plan provides that an employee is fully vested in his employer-derived accrued benefit after completion of 5 years of service. The plan also provides that, if an employee works for a competitor he forfeits his rights in the plan. Such provision could result in the forfeiture of an employee's rights which are required to be nonforfeitable under section 411 and therefore the plan would not satisfy the requirements of section 411. If the plan limited the forfeiture to employees who completed less than 10 years of service, the plan would not fail to satisfy the requirements of section 411 because the forfeitures under this provision are limited to rights which are in excess of the minimum required to be nonforfeitable under section 411(a)(2)(A).

Example 2. Plan B provides that if an employee does not apply for benefits within 5 years after the attainment of normal retirement age, the employee loses his plan benefits. Such a plan provision could result in forfeiture of an employee's rights which are required to be nonforfeitable under section 411 and, therefore, the plan would not satisfy the requirements of section 411.

(Sec. 411 (88 Stat. 901; 26 U.S.C. 411))

[T.D. 7501, 42 FR 42326, Aug. 23, 1977, as amended by T.D. 8357, 56 FR 40549, Aug. 15, 1991; T.D. 9169, 69 FR 78153, Dec. 29, 2004; T.D. 9219, 70 FR 47126, Aug. 12, 2005; T.D. 9447, 74 FR 8211, Feb. 24, 2009]

§ 1.411(a)-4T Forfeitures, suspensions, etc. (temporary).

(a) ***Nonforfeitability.*** Certain rights in an accrued benefit must be nonforfeitable to satisfy the requirements of section 411(a). This section defines the term “nonforfeitable” for purposes of these requirements. For purposes of section 411 and the regulations thereunder, a right to an accrued benefit is considered to be nonforfeitable at a particular time if, at that time and thereafter, it is an unconditional right. Except as provided by paragraph (b) of this section, a right which, at a particular time, is conditioned under the plan upon a subsequent event, subsequent performance, or subsequent forbearance which will cause the loss of such right is a forfeitable right at that time. Certain adjustments to plan benefits, such as adjustments in excess of reasonable actuarial reductions, can result in rights being forfeitable. Rights which are conditioned upon a sufficiency of plan assets in the event of a termination or partial termination are considered to be forfeitable because of such condition. However, a plan does not violate the nonforfeitability requirements merely because in the event of a termination an employee does not have any recourse toward satisfaction of his nonforfeitable benefits from other than the plan assets, the Pension Benefit Guaranty Corporation, or a trust established and maintained pursuant to sections 4041(c)(3)(B) (ii) or (iii) and section 4049 of ERISA with respect to the plan. Furthermore, nonforfeitable rights are not considered to be forfeitable by reason of the fact that they may be reduced as allowed under sections 401(a)(5) and 401(l). To the extent that rights are not required to be nonforfeitable to satisfy the minimum vesting standards, or the nondiscrimination requirements of section 401(a)(4), they may be forfeited without regard to the limitations on forfeitability required by this section. The right of an employee to repurchase his accrued benefit for example under section 411(a)(3)(D), is an example of a

right which is required to satisfy such standards. Accordingly, such a right is subject to the limitations on forfeitability. Rights which are required to be prospectively nonforfeitable under the vesting standards are nonforfeitable and may not be forfeited until it is determined that such rights are, in fact, in excess of the vesting standards. Thus, employees have a right to vest in the accrued benefits if they continue in employment of employers maintaining the plan unless a forfeitable event recognized by section 411 occurs. For example, if a plan covered employees in Division A of Corporation X under a plan utilizing a 5-year 100 percent vesting schedule, the plan could not forfeit employees' rights on account of their moving to service in Division B of Corporation X prior to completion of 5 years of service even though employees are not vested at that time.

(b) [Reserved]

(c) ***Examples.*** The rules of this section ae illustrated by the following examples:

Example 1. Corporation A's plan provides that an employee is fully vested in his employer-derived accrued benefit after completion of 3 years of service. The plan also provides that if the employee works for a competitor he forfeits his rights in the plan. Such provision could result in the forfeiture of an employee's rights which are required to be nonforfeitable under section 411 and therefore the plan would not satisfy the requirements of section 411. If the plan limited the forfeiture to employees who completed less than 5 years of service, the plan would not fail to satisfy the requirements of section 411 because the forfeitures under this provision are limited to rights which are in excess of the minimum required to be nonforfeitable under section 411(a)(2)(A).

[T.D. 8170, 53 FR 241, Jan. 6, 1988]

§ 1.411(a)-5 Service included in determination of nonforfeitable percentage.

(a) ***In general.*** Under section 411(a)(4), for purposes of determining the nonforfeitable percentage of an employee's right to his employer-derived accrued benefit under section 411(a)(2) and § 1.411(a)-3, all of an employee's years of service with an employer or employers maintaining the plan shall be taken into account except that years of service described in paragraph (b) of this section may be disregarded.

(b) ***Certain service.*** For purposes of paragraph (a) of this section, the following years of service may be disregarded:

(1) ***Service before age 22.***

(i) In the case of a plan which satisfies the requirements of section 411(a)(2) (A) or (B) (relating to 10-year vesting and 5-15-year vesting, respectively), a year of service completed by an employee before he attains age 22.

(ii) In the case of a plan which does not satisfy the requirements of section 411(a)(2) (A) or (B), a year of service completed by an employee before he attains age 22 if the employee is not a participant (for purposes of section 410) in the plan at any time during such year.

(iii) For purposes of this subparagraph in the case of a plan utilizing computation periods, service during a computation period described in section 411(a)(5)(A) within which the employee attains age 22 may not be disregarded. In the case of a plan utilizing the elapsed time method described in § 1.410(a)-7, service on or after the date on which the employee attains age 22 may not be disregarded.

(2) ***Contributory plans.*** In the case of a plan utilizing computation periods, a year of service completed by an employee under a plan which requires mandatory contributions (within the meaning of section 411(c)(2)(C) and § 1.411(c)-1(c)(4)) to be made by the employee for such year, if the employee does not participate for such year solely because of his failure to make all mandatory contributions to the plan for such year. If the employee contributes any part of the mandatory contributions for the year, such year may not be excluded by reason of this subparagraph. In the case of a plan utilizing the elapsed time method described in § 1.410(a)-7, the service which may be disregarded is the period with respect to which the mandatory contribution is not made.

(3) ***Plan not maintained*** —

(i) ***In general.*** An employee's years of service with an employer during any period for which the employer did not maintain the plan or a predecessor plan may be disregarded for purposes of section 411(a)(2). Paragraph (b)(3)(ii) of this section provides rules regarding the period prior to the adoption of a plan. Paragraph (b)(3)(iii) of this section provides rules regarding the period after the termination of a plan. Paragraph (b)(3)(iv) of this section provides rules regarding employers who have certain relationships with other employers maintaining the plan.

(ii) ***Period prior to adoption.*** The period for which a plan is not maintained by an employer includes the period before the plan was established. For purposes of this subdivision, a plan is established on the first day of the plan year in which the plan is adopted even though the plan is adopted after such first day. Except as provided in paragraph (b)(3)(iv) of this section if an employer adopts a plan which has previously been established by another employer or group of employers, the plan is not maintained by the adopting employer prior to the first day of the plan year in which the plan is adopted by the adopting employer. In the case of a transfer of assets or liabilities (including a merger or consolidation) involving two plans maintained by a single employer, the successor (or transferee) plan is treated as if it was established at the same time as the date of the establishment of the earliest component plan. In the case of a plan merger, consolidation, or transfer of plan assets or liabilities involving plans of two or more employers, the successor plan is treated as if it were established on each of the separate dates on which such component plan was established for the employees of each employer. Thus, for example, if employer A establishes a plan January 1, 1970, and employer B establishes a plan January 1, 1980, and the plans were subsequently merged, then the merged plan would be treated as if it were in existence on January 1, 1970, with respect to A's employees and as if it were in existence on January 1, 1980, with respect to B's employees.

(iii) ***Period after termination or withdrawal.*** The period for which a plan is not maintained by an employer includes the period after the plan is terminated. For purposes of this section, a plan is terminated at the date there is a termination of the plan within the meaning of section 411(d)(3)(A) and the regulations thereunder. Notwithstanding the preceding sentence, if contributions to or under a plan are made after termination, the plan is treated as being maintained until such contributions cease, whether or not accruals are made after such termination. If, after termination of a plan in circumstances under which the employer may be liable to the Pension Benefit Guaranty Corporation under section 4062 of the Act, employer contributions are made to or under the plan to fund benefits accrued at the time of termination, such contributions shall, for purposes of this paragraph, be deemed to be payments in satisfaction of employer liability to such Corporation rather than contributions to or under the plan. In the case of a plan maintained by more than one employer, the period for which the plan is not maintained by the withdrawing employer includes the period after the withdrawal from the plan.

(iv) ***Certain employers.*** For purposes of this subparagraph—

(A) ***Predecessor employers.*** Service with a predecessor employer who maintained the plan of the current employer is treated as service with such current employer (see section 414(a)(1) and the regulations thereunder), and certain service with a predecessor employer who did not maintain the plan of the current employer is treated as service with the current employer (see section 414(a)(2) and the regulations thereunder).

(B) ***Related employers.*** Service with an employer is treated as service for certain related employers for the period during which the employers are related. These related employers include members of a controlled group of corporations (within the meaning of section 1563(a), determined without regard to subsections (a)(4) and (e)(3) (C) thereof) and trades or businesses (whether or not incorporated) which are under common control (see section 414 (b) and (c) and 29 CFR Part 2530, Department of Labor regulations relating to minimum standards for employee pension benefits plans).

(C) ***Plan maintained by more than one employer.*** Service with an employer who maintains a plan is treated as service for each other employer who maintains that plan for the period during which the employers are maintaining the plan (see section 413 (b)(4) and (c)(3) and 29 CFR Part 2530, Department of Labor regulations relating to minimum standards for employee pension benefit plans).

(v) ***Predecessor plan*** —

(A) ***General rule.*** In the case of an employee who was covered by a predecessor plan, the time the successor of such plan is maintained for such employee includes the time the predecessor plan was maintained if, as of the later of the time the predecessor plan is terminated or the successor plan is established, the employee's years of service under the predecessor plan are not equalled or exceeded by the aggregate number of consecutive 1-year breaks in service occuring after such years of service. Years of service and breaks in service, without regard to whether the employee has nonforfeitable rights under the predecessor plan, are determined under section 411(a) (5) and (6) except that years between the termination date of the predecessor plan and the date of establishment of the successor plan do not count as years of service.

(B) ***Definition of predecessor plan.*** For purposes of this section, if—

(1) An employer establishes a retirement plan (within the meaning of section 7476(d)) qualified under subchapter D of chapter 1 of the Code within the 5-year period immediately preceding or following the date another such plan terminates, and

(2) The other plan is terminated during a plan year to which this section applies.

The terminated plan is a predecessor plan with respect to such other plan.

(C) ***Example.*** The rules provided by this subparagraph are illustrated by the following example:

> *Example.* (1) Employer X's qualified plan A terminated on January 1, 1977, Employer X established qualified plan B on January 1, 1981. Under paragraph (b)(3)(v)(B) of this section, plan A is a predecessor plan with respect to plan B because plan B is established within the 5-year period immediately following the

date plan A terminated.
(2) Employee C was not covered by the A plan. Under the general rule in subdivision (v)(A) of this subparagraph, plan B is not maintained until January 1, 1981, with respect to Employee C.

(3) Employee D was covered by the A plan. On December 31, 1976, D had 4 years of service. D had 4 consecutive 1-year breaks in service because, during the years between the termination of plan A and the establishment of plan B, he did not have more than 500 hours of service in any applicable computation period. Because D's consecutive 1-year breaks (4) equal his years of service prior to his breaks (4), plan B is not maintained until January 1, 1981, with respect to employee D.

(4) Employee E was covered by the A plan. On December 31, 1975, E had 6 years of service. E had a 1-year break in service in 1976. E also had 4 consecutive 1-year breaks in service for the period between plan A's termination and plan B's establishment. Because E's years of service (6) are not less than his consecutive 1-year breaks (5), plan B is maintained for E as of the establishment date of plan A.

(4) ***Break in service.*** A year of service which is not required to be taken into account by reason of a break in service (within the meaning of section 411(a)(6) and § 1.411(a)-6)).

(5) ***Service before January 1, 1971.*** A year of service completed by an employee prior to January 1, 1971, unless the employee completes at least 3 years of service at any time after December 31, 1970. For purposes of determining if an employee completes 3 years of service, whether or not consecutive, the exceptions of section 411(a)(4) are not applicable. For the meaning of the term “year of service”, see regulations prescribed by the Secretary of Labor under 29 CFR Part 2530, relating to minimum standards for employee pension benefit plans.

(6) ***Service before effective date.*** A year of service completed before the first plan year for which this section applies to the plan, if such service would have been disregarded under the plan rules relating to breaks in service (whether or not such rules are so designated in the plan) as such rules were in effect from time to time under the plan. For this purpose, plan rules which result in the loss of prior vesting or benefit accruals of an employee, or which deny an employee eligibility to participate, by reason of separation or failure to complete a required period of service within a specified priod of time (e.g., 300 hours in one year) will be considered break in service rules.

(i) [Reserved]

(ii) ***Examples.*** The rules of this subparagraph are illustrated by the following examples:

Example 1. The A plan in 1971 provides for immediate participation and vesting at normal retirement age. Employees accrue a unit benefit based on their compensation in each year. The plan provides that if an employee is not employed on the last day of the calendar year, he loses all accrued benefits. The requirement of employment on the last day of the year is a break in service rule because employees can lose benefits by reason of their separation. Accordingly, in the case of employees who separate and do not return by the close of the year, service which is completed prior to separation may be disregarded.

Example 2. The B plan in 1971 excludes from plan participation employees who work less than 1,200 hours per year. Because years of less than 1,200 hours are not taken into account under the B plan for eligibility to participate, such years are excluded under rules relating to breaks in service. Therefore, the years can be disregarded under this subparagraph.

Example 3. The C plan in 1971 provides for immediate participation and provides accruals and vesting credit for 1,200 hours or more in a given year. The plan provides that if a participant works less than 300 hours in a given year, he loses all prior vesting and benefit credits. The 300 hour rule is a break in service rule because the failure to complete 300 hours results in the loss of vesting and prior service credit. The 1,200 hour requirement is not a break in service rule because even though employees do not increase vesting or accrue benefits for service between 300 and 1,200 hours, they cannot lose prior vesting or benefits for such service. Accordingly, the C plan can disregard completed years only on account of less than 300 hours of service by an employee.

(c) ***Special continuity rule for certain plans.*** For special rules for computing years of service in the case of a plan maintained by more than one employer, see 29 CFR Part 2530 (Department of Labor regulations relating to minimum standards for employee pension benefit plans).

(Sec. 411 (88 Stat. 901, 26 U.S.C. 411))

[T.D. 7501, 42 FR 42327, Aug. 23, 1977, as amended by T.D. 7703, 45 FR 40985, June 17, 1980; T.D. 9849, 84 FR 9234, Mar. 14, 2019]

§ 1.411(a)-6 Year of service; hours of service; breaks in service.

(a) ***Year of service.*** Under section 411 (a)(5)(A), for purposes of the regulations thereunder, the term "year of service" is defined in regulations prescribed by the Secretary of Labor under section 203(b)(2)(A) of the Employee Retirement Income Security Act of 1974. For special rules applicable to seasonal industries and maritime industries, see regulations prescribed by the Secretary of Labor under subparagraphs (C) and (D) of section 203(b)(2) of the Employee Retirement Income Security Act of 1974.

(b) ***Hours of service.*** Under section 411(a)(5)(B), for purposes of the regulations thereunder, the term "hours of service" has the meaning provided by section 410(a)(3)(C). See regulations prescribed by the Secretary of Labor under 29 CFR Part 2530, relating to minimum standards for employee pension benefit plans.

(c) ***Breaks in service.*** Under section 411(a)(6), for purposes of § 1.411(a)-5(b)(4) and of this paragraph—

(1) ***In general*** —

(i) ***Year of service after 1-year break in service.*** In the case of any employee who has incurred a 1-year break in service, years of service completed before such break are not required to be taken into account until the employee has completed one year of service after his return to service.

(ii) ***Defined contribution plan.*** In the case of a participant in a defined contribution plan or in an insured defined benefit plan (which plan satisfies the requirements of section 411 (b)(1)(F) and § 1.411(b)-1) who has incurred a 1-year break in service, years of service completed after such break are not required to be taken into account for purposes of determining the nonforfeitable percentage of the participant's right to employer-derived benefits which accrued before such

break. This subdivision does not permit years of service completed before a 1-year break in service to be disregarded in determining the nonforfeitable percentage of a participant's right to employer-derived benefits which accrue after such break.

(iii) ***Nonvested participants.*** In the case of an employee who is a nonvested participant in employer-derived benefits at the time he incurs a 1-year break in service, years of service completed by such participant before such break are not required to be taken into account for purposes of determining the nonforfeitable percentage of his right to employer-derived benefits if at such time the number of consecutive 1-year breaks in service included in his most recent break in service equals or exceeds the aggregate number of his years of service, whether or not consecutive, completed before such break. In the case of a plan utilizing the elapsed time method described in § 1.410(a)-7, the condition in the preceding sentence shall be satisfied if the period of severance is at least one year and the consecutive period of severance equals or exceeds his prior period of service, whether or not consecutive, completed before such period of severance. In computing the aggregate number of years of service prior to such break, years of service which could have been disregarded under this subdivision by reason of any prior break in service may be disregarded.

(2) ***One-year break in service defined.*** The term "1-year break in service" means a calendar year, plan year, or other 12-consecutive month period designated by a plan (and not prohibited under regulations prescribed by the Secretary of Labor) during which the participant has not completed more than 500 hours of service. In the case of a plan utilizing the elapsed time method, the term "1-year break in service" means a 12-consecutive month period beginning on the severance from service date or any anniversary thereof and ending on the next succeeding anniversary of such date; provided, however, that the employee during such 12-consecutive-month period does not complete any hours of service within the meaning of 29 CFR Part 2530.200b-2(a) for the employer or employers maintaining the plan. See regulations prescribed by the Secretary of Labor under 29 CFR Part 2530, relating to minimum standards for employee pension benefit plans.

(d) ***Examples.*** The rules provided by this section are illustrated by the following examples:

Example 1. (i) X Corporation maintains a defined contribution plan to which section 411 applies. The plan uses the calendar year as the vesting computation period. In 1980, Employee A, who was hired at age 35, separates from the service of X Corporation after completing 4 years of service. At the time of his separation, Employee A had a nonforfeitable right to 25 percent of his employer-derived accrued benefit which was not distributed. In 1985, after incurring 5 consecutive one-year breaks in service. Employee A is re-employed by X Corporation and becomes an active participant in the plan. The plan provides that, for 1985 and all subsequent years, Employee A's previous years of service will not be taken into account for purposes of computing the nonforfeitable percentage of his employer-derived accrued benefit, solely because of his break in service.
(ii) The plan fails to satisfy section 411. Section 411(a)(6)(B) would permit the plan to disregard Employee A's prior service for purposes of computing his nonforfeitable percentage in 1985 only, but such service must be taken into account in subsequent years unless there is another break in service. Under section 411(a)(6)(C), the plan is not required to take Employee A's post-break service into account for purposes of computing his nonforfeitable right to his prebreak employer-derived accrued benefits. This provision, however, would not permit the plan to disregard pre-break service in determining his nonforfeitable right to

his benefit accrued after the break. The exception provided by section 411(a)(6)(D) does not apply in the case of a participant who has any nonforfeitable right to his accrued benefit derived from employer contributions.

Example 2. (i) X Corporation maintains a qualified plan to which sections 410 and 411 (relating to minimum participation standards and minimum vesting standards, respectively) apply. The plan permits participation upon completion of a year of service and provides that 100% of an employee's employer-derived accrued benefit vests after 10 years of service. The plan uses the calendar year as the vesting computation period. The plan provides that an employee who completes at least 1,000 hours of service in a 12-month period is credited with a year of service for participation and vesting purposes. The plan also provides that an employee who does not complete more than 500 hours of service in that 12-month period incurs a one-year break in service. The plan includes the rule described in section 411 (a)(6)(D) for participation and vesting purposes. Under this rule, an employee's years of service prior to a break in service may be disregarded under certain circumstances if he has no vested right to any employer-derived benefit under the plan. The plan does not contain the rule described in section 411(a)(6)(B) (relating to the requirement of one year of service after a one-year break in service).
(ii) Employee A commences employment with the X Corporation on January 1, 1977. Employee A's employment history for 1977 through 1989 is as follows:

Year ending December 31	Hours of service completed
1977	1,000
1978	800
1979	1,000
1980	400
1981	1,000
1982	0
1983	400
1984	1,000
1985	0
1986	0
1987	500
1988	200
1989	1,000

Employee A's status as a participant during this period is determined as follows:

1978: Employee A was a plan participant on January 1, 1978, because he completed a year of service (1,000 hours) in 1977. He did not complete a year of service in 1978 because he completed fewer than 1,000 hours in that year. Because he completed more than 500 hours of service in 1978, however,

Employee A did not incur a one-year break in service that year.
1979: Employee A completes a year of service in 1979. Because he did not incur a one-year break in service in 1978, the plan may not disregard his 1977 service for purposes of determining his years of service as of January 1, 1979.

1980: Employee A incurs a one-year break in service in 1980.

1981: Because Employee A had completed 2 years of service prior to 1981 and had incurred one 1-year break in service prior to 1981, under section 411(a)(6)(D), the plan may not disregard his pre-1980 service in 1981. Employee A completes a year of service in 1981.

1982: Employee A incurs a one-year break in service in 1982.

1983: Employee A incurs a one-year break in service in 1983. As of the end of 1983, he has completed 3 years of service and has incurred 2 consecutive one-year breaks in service.

1984: Employee A completes a year of service in 1984. Under section 411(a)(6)(D), his pre-1982 service may not be disregarded in 1984 because, as of the beginning of 1984, his pre-1984 years of service (3) exceed his consecutive one-year breaks in service (2).

1984-1988: Employee A incurs 4 consecutive one-year breaks in service during the years 1985 through 1988.

1989: Employee A's pre-1989 service is disregarded in 1989 and all subsequent plan years because his years of service as of January 1, 1989, equal the number of consecutive one-year breaks he has incurred as of that date. Therefore, as of the beginning of 1989, Employee A is not a plan participant. Employee A completes a year of service in 1989. (Although section 411(a)(6)(D) does not prohibit the plan provision under which Employee A's pre-1989 service is disregarded, that section does not require such a provision in a qualified plan.)

(Sec. 411 (88 Stat. 901; 26 U.S.C. 411))

[T.D. 7501, 42 FR 42329, Aug. 23, 1977, as amended by T.D. 7703, 45 FR 40985, June 17, 1980]

§ 1.411(a)-7 Definitions and special rules.

(a) ***Accrued benefit.*** For purposes of section 411 and the regulations thereunder, the term “accrued benefit” means—

(1) ***Defined benefit plan.*** In the case of a defined benefit plan—

(i) If the plan provides an accrued benefit in the form of an annual benefit commencing at normal retirement age, such accrued benefit, or

(ii) If the plan does not provide an accured benefit in the form described in subdivision (i) of this subparagraph, an annual benefit commencing at normal retirement age which is the actuarial equivalent (determined under section 411(c)(3) and § 1.411(c)-(5) of the accrued benefit determined under the plan. In general, the term "accrued benefits" refers only to pension or retirement benefits. Consequently, accrued benefits do not include ancillary benefits not directly related to retirement benefits such as payment of medical expenses (or insurance premiums for such expenses), disability benefits not in excess of the qualified disability benefit (see section 411(a)(9) and paragraph (c)(3) of this section), life insurance benefits payable as a lump sum, incidental death benefits, current life insurance protection, or medical benefits described in section 401(h). For purposes of this paragraph a subsidized early retirement benefit which is provided by a plan is not taken into account, except to the extent of determining the normal retirement benefit under the plan (see section 411(a)(9) and paragraph (c) of this section). The accrued benefit includes any optional settlement at normal retirement age under actuarial assumptions no less favorable than those which would be applied if the employee were terminating his employment at normal retirement age. The accrued benefit does not include any subsidized value in a joint and survivor annuity to the extent that the annual benefit of the joint and survivor annuity does not exceed the annual benefit of a single life annuity.

(2) ***Defined contribution plan.*** In the case of a defined contribution plan, the balance of the employee's account held under the plan.

(b) ***Normal retirement age*** —

(1) ***General rule.*** For the purposes of section 411 and the regulations thereunder, the term "normal retirement age" means the earlier of—

(i) The time specified by a plan at which a plan participant attains normal retirement age, or

(ii) The later of—

(A) The time the plan participant attains age 65, or

(B) The 10th anniversary of the date the plan participant commences participation in the plan.

If a plan, or the employer sponsoring the plan, imposes a requirement that an employee retire upon reaching a certain age, the normal retirement age may not exceed that mandatory retirement age. The preceding sentence will apply if the employer consistently enforces a mandatory retirement age rule, whether or not set forth in the plan or any related document. For purposes of subdivision (i) of this subparagraph, if an age is not specified by a plan as the normal retirement age then the normal retirement age under the plan is the earliest age beyond which the participant's benefits under the plan are not greater solely on account of his age or service. For purposes of paragraph (b)(1)(ii)(B) of this section, participation commences on the first day of the first year in which the participant commenced his participation in the plan, except that years which may be disregarded under section 410(a)(5)(D) may be disregarded in determining when participation commenced.

(2) ***Examples.*** The provisions of this paragraph are illustrated by the following examples:

Example 1. Plan A defines normal retirement age as age 65. Under the plan, benefits payable to participants who retire at or after age 60 are not reduced on account of early retirement. For purposes of section 411 and the vesting regulations, normal retirement age under Plan A is age 65 (determined under subparagraph (1)(i) of this paragraph). This is true even if in operation all participants retire at age 60.

Example 2. Plan B does not specify any age as the normal retirement age. Under the plan, participants who have attained age 55 are entitled to benefits commencing upon retirement but the benefits of participants who retire before attaining age 70 are subject to reduction on account of early retirement. For purposes of section 411 and the vesting regulations the normal retirement age under Plan B is the later of

(i) age 65, or

(ii) the 10th anniversary of the date a plan participant commences participation in the plan (assuming such date is prior to age 70).

Example 3. The facts are the same as in example (2). Employee X first became a participant in Plan B on January 1, 1980 at age 53. His participation continued until December 31, 1980, when he separated from the service with no vested benefits. After incurring 5 consecutive 1-year breaks in service, Employee X again becomes an employee and a plan participant on January 1, 1986, at age 59. For purposes of section 411, Employee X's normal retirement age under Plan B is age 69, the 10th anniversary of the date on which his year of plan participation commenced. His participation in 1980 may be disregarded under the last sentence of paragraph (b)(1) of this section.

(c) ***Normal retirement benefit*** —

(1) ***In general.*** For purposes of section 411 and the regulations thereunder, the term "normal retirement benefit" means the periodic benefit under the plan commencing upon early retirement (if any) or at normal retirement age, whichever benefit is greater.

(2) ***Periodic benefit.*** For purposes of subparagraph (1) of this paragraph—

(i) In the case of a plan under which a benefit is payable as an annuity in the same form upon early retirement and at normal retirement age, the greater benefit is determined by comparing the amount of such annuity payments.

(ii) In the case of a plan under which an annuity benefit payable upon early retirement is not in the same form as an annuity benefit payable at normal retirement age, the greater benefit is determined by converting the annuity benefit payable upon early retirement age into the same form of annuity benefit as is payable at normal retirement age and by comparing the amount of the converted early retirement benefit payment with the amount of the normal retirement benefit payment.

(iii) In the case of a plan which is integrated with the Social Security Act or any other Federal or State law, the periodic benefit payable upon and after early retirement age is adjusted for any increases in such benefits occurring on or after early retirement age which are taken into account under the plan. See however, section 401(a)(15) and the regulations thereunder.

(3) ***Benefits included.*** For purposes of this paragraph, the normal retirement benefit under a plan shall be determined without regard to ancillary benefits not directly related to retirement benefits such as medical benefits or disability benefits not in excess of the qualified disability benefit; see section

411(a)(7) and paragraph (a)(1) of this section. For this purpose, a qualified disability benefit is a disability benefit which is not in excess of the amount of the benefit which would be payable to the participant if he separated from service at normal retirement age.

(4) ***Early retirement benefit; social security supplement.***

(i) For purposes of this paragraph, the early retirement benefit under a plan shall be determined without regard to any social security supplement.

(ii) For purposes of this subparagraph, a social security supplement is a benefit for plan participants which—

(A) Commences before the age and terminates before the age when participants are entitled to old-age insurance benefits, unreduced on account of age, under title II of the Social Security Act, as amended (see section 202 (a) and (g) of such Act), and

(B) Does not exceed such old-age insurance benefit.

(5) ***Special limitation.*** If a defined benefit plan bases its normal retirement benefits on employee compensation, the compensation must reflect the compensation which would have been paid for a full year of participation within the meaning of section 411(b)(3). If an employee works less than a full year of participation, the compensation used to determine benefits under the plan for such year of participation must be multiplied by the ratio of the number of hours for a complete year of participation to the number of hours worked in such year. A plan whose benefit formula is computed on a computation base which cannot decrease is not required to adjust employee compensation in the manner described in the previous sentence. Thus, for example, if a plan provided a benefit based on an employee's compensation for his highest five consecutive years or a separate benefit for each year of participation based on the employee's compensation for such year the plan would not have to so adjust compensation. However, if a plan provided a benefit based on an employee's compensation for the employee's last five years or the five highest consecutive years out of the last 10 years, the compensation, would have to be so adjusted. For special rules for applying the limitations on proration of a year of participation for benefit accrual, see regulations prescribed by the Secretary of Labor under 29 CFR Part 2530, relating to minimum standards for employee pension benefit plans.

(6) ***Examples.*** The provisions of this paragraph are illustrated by the following examples:

Example 1. Plan A provides for a benefit equal to 1% of high 5 years compensation for each year of service and a normal retirement age of 65. The plan also provides for a full unreduced accrued benefit without any actuarial reduction for any employee at age 55 with 30 years of service. Even though the actuarial value of the early retirement benefit could exceed the value of the benefit at the normal retirement age, the normal retirement benefit would not include the greater value of the early retirement benefit because actuarial subsidies are ignored.

Example 2. Plan B provides the following benefits: (1) at normal retirement age 65, $300/mo. for life and (2) at early retirement age 60, $400/mo. for life. The normal retirement benefit is $400/mo., the greater of the benefit payable at normal retirement age ($300) or early retirement ($400).

Example 3. Assume the same facts as example (2) except that the early retirement benefit of $400 is reduced to $300 upon attainment of age 65. If each employee's social security benefit at age 65 is not less than $100, the $100 would be considered to be a social security supplement and would therefore be ignored. Consequently, the normal retirement benefit would be $300.

Example 4. Plan C provides a benefit at normal retirement age equal to 1% per year of service, multiplied by the participant's compensation averaged over the 5 years immediately prior to retirement. An early retirement benefit is provided upon attainment of age 60 equal to the benefit accrued to date of early retirement reduced by 4 percent for each year by which the early retirement date precedes the normal retirement age of 65. Employee A was hired at age 30, participated immediately, and retired at age 65. Employee A's annual compensation was $50,000 between ages 55-60 and was reduced to $33,000 after age 60. The following table indicates the amount of annual benefit that would have been provided by the plan formula if the employee retired at or after age 60:

Age	Final average computated	Percent accrued benefit	Reduction	Annual benefit
	(1)—	(2)—	(3)—	(4)—
60	$50,000	30	0.80	*$12,000
61	46,600	31	.84	12,135
62	43,200	32	.88	12,165
63	39,800	33	.92	12,083
64	36,400	34	.96	11,881
65	33,000	35	1.00	11,550

Note. *Col. (1) times col. (2) times col. (3) equals col. (4).*

The normal retirement benefit is the greater of the benefit payable at normal retirement age or the early retirment benefit. Employee A's normal retirement benefit is $12,165, the greatest annual benefit Employee A would be entitled to.

(d) ***Rules relating to certain distributions and cash-outs of accrued benefits*** —

(1) ***In general.*** This paragraph sets forth vesting rules applicable to certain distributions from qualified plans and their related trusts (other than class year plans). Subparagraphs (2) and (3) set forth the exceptions to nonforfeitability on account of withdrawal of mandatory contributions provided by section 411(a)(3)(D). When a plan utilizes these exceptions with respect to a given participant's accrued benefit, such accrued benefit is not subject to the cash-out rules or vesting rules of subparagraphs (4) or (5), respectively. Section 411 prescribes certain requirements with respect to accrued benefits under a qualified plan. These requirements would generally not be satisfied if the plan disregarded service in computing accrued benefits even though amounts were distributed on account of such service. Subparagraph (4) of this paragraph sets forth rules under section 411(a)(7)(B) which allow a plan to make distributions and compute accrued benefits without regard to the accrued benefit attributable to the distribution. When a defined contribution plan utilizes this exception with respect to an accrued benefit, the plan is not required to satisfy the rules of

subparagraph (5) of this paragraph. Subparagraph (5) of this paragraph sets forth a vesting requirement applicable to certain distributions from defined contribution plans. Subparagraph (6) sets forth other rules which pertain to the distribution rules of this paragraph.

(2) ***Withdrawal of mandatory contribution*** —

(i) ***General rule.*** In the case of a participant's right to his employer-derived accrued benefit, a right is not treated as forfeitable merely because all or a portion of such benefit may be forfeited on account of the withdrawal by the participant of any amount attributable to his accrued benefit derived from his mandatory contributions (within the meaning of section 411(c)(2)(C) and § 1.411(c)-1) before he has become a 50 percent vested participant (within the meaning of § 1.401(a)-19(b)(2)). For purposes of determining the vested percentage, the plan may disregard service after the withdrawal. For example, assume that a plan utilizes 1000 hours for computing years of service and that for the computation period employee A had 1000 hours of service. If A was 40 percent vested at the beginning of the period but only had 800 hours at the time of the withdrawal, the plan could treat A as only 40 percent vested because service after the withdrawal can be disregarded. On the other hand, if A had 1000 hours at the time of the withdrawal, he must receive a year of service for the computation period, even though service is not taken into account until the end of such period.

(ii) ***Plan repayment provision.***

(A) Subdivision (i) of this subparagraph shall not apply unless, at the time the amount described in such subdivision is withdrawn by the participant, the plan provides the employee with a right to restoration of his employer-derived accrued benefit to the extent forfeited in accordance with such subdivision upon repayment to the plan of the full amount of the withdrawal.

(B) In the case of a defined benefit plan (as defined in section 414(j)) the restoration of the employee's employer-derived accrued benefit may be conditioned upon repayment of interest on the full amount of the distribution. Such interest shall be computed on the amount of the distribution from the date of such distribution to the date of repayment, compounded annually from the date of distribution, at the rate determined under section 411(c)(2)(C) in effect on the date of repayment. A plan may provide for repayment of interest which is less than the amount determined under the preceding sentence.

(C) In the case of both defined benefit plans and defined contribution plans, the plan repayment provision described in this subparagraph may provide that the employee must repay the full amount of the distribution in order to have the forfeited benefit restored. The plan provision may not require that such repayment be made sooner than the time described in paragraph (d)(2)(ii)(D) of this section.

(D)

(*1*) If a distribution is on account of separation from service, the time for repayment may not end before the earlier of—

(*i*) 5 years after the first day the employee is subsequently employed, or

(*ii*) The close of the first period of consecutive 1-year breaks in service commencing after the distribution.

If the distribution occurs for any other reason, the time for repayment may not end earlier than 5 years after the date of distribution. Nevertheless, a plan provision may provide for a longer period in which the employee may repay. For example, a plan could allow repayments to be made at any time before normal retirement age.

(2) In the case of a plan utilizing the elapsed time method, described in § 1.410(a)-7, the minimum time for repayment shall be determined as in paragraph (d)(2)(ii)(D)(*1*) of this section except as provided in this subdivision. The 5 consecutive 1-year break periods shall be determined by substituting the term “1-year period of severance” for the term “1-year break in service”. Also, the repayment period both commences and closes in a manner determined by the Commissioner that is consistent with the rules in § 1.410(a)-7 and the substitution in section 411(a)(6) (C) and (D) of a 5-year break-in-service rule for the former 1-year break-in-service rule.

(E) A defined benefit plan using the break-in-service rule described in section 410(a)(5)(D) or a defined contribution plan using the break-in-service rule described in section 411(a)(6)(C) for determining employees' accrued benefits is not required to provide for repayment by an employee whose accrued benefit is disregarded by reason of a plan provision using these rules.

(iii) ***Computation of benefit.*** In the case of a defined contribution plan, the employer-derived accrued benefit required to be restored by this subparagraph shall not be less than the amount in the account balance of the employee which was forfeited, unadjusted by any subsequent gains or losses.

(iv) ***Delayed forfeiture.*** A defined contribution plan may, in lieu of the forfeiture and restoration described in this subparagraph, provide that the forfeiture does not occur until the expiration of the time for repayment described in subdivision (ii) of this subparagraph provided that the conditions of this subparagraph are satisfied.

(3) ***Withdrawal of mandatory contributions; accruals before September 2, 1974*** —

(i) ***General rule.*** In the case of a participant's right to the portion of the employer-derived benefit which accrued prior to September 2, 1974, a right is not treated as forfeitable merely because all or part of such portion may be forfeited on account of the withdrawal by the participant of an amount attributable to his benefit derived from mandatory contributions (within the meaning of section 411(c)(2)(C) and § 1.411(c)-1(c)(4)) made by the participant before September 2, 1974, if the amount so subject to forfeiture is no more than proportional to such amounts withdrawn. This subparagraph shall not apply to any plan to which any mandatory contribution (within the meaning of section 411(c)(2)(C) and § 1.411(c)-1(c)(4)) is made after September 2, 1974.

(ii) ***Defined contribution plan.*** In the case of a defined contribution plan, the portion of a participant's employer-derived benefit which accrued prior to September 2, 1974, shall be determined on the basis of a separate accounting between benefits accruing before and after such date. Gains, losses, withdrawals, forfeitures, and other credits or charges must be separately allocated to such benefits. Any allocation made on a reasonable and consistent basis prior to September 1, 1977, shall satisfy the requirements of this subdivision.

(iii) ***Defined benefit plan.*** In the case of a defined benefit plan, the portion of a participant's employer-derived benefit which accrued prior to September 2, 1974, shall be determined in a manner consistent with the determination of an accrued benefit under section 411(b)(1)(D) (see § 1.411(b)-1(c)). Any method of determining such accrued benefit which the Commissioner finds to be reasonable shall satisfy the requirements of this subdivision.

(4) ***Certain cash-outs of accrued benefits*** —

(i) ***Involuntary cash-outs.*** For purposes of determining an employee's right to an accrued benefit derived from employer contributions under a plan, the plan may disregard service performed by the employee with respect to which—

(A) The employee receives a distribution of the present value of his entire nonforfeitable benefit at the time of the distribution;

(B) The requirements of section 411(a)(11) are satisfied at the time of the distribution;

(C) The distribution is made due to the termination of the employee's participation in the plan; and

(D) The plan has a repayment provision which satisfies the requirements of paragraph (d)(4)(iv) of this section in effect at the time of the distribution.

(ii) ***Voluntary cash-outs.*** For purposes of determining an employee's accrued benefit derived from employer contributions under a plan, the plan may disregard service performed by the employee with respect to which—

(A) The employee receives a distribution of the present value of his nonforfeitable benefit attributable to such service at the time of such distribution,

(B) The employee voluntarily elects to receive such distribution,

(C) The distribution is made on termination of the employee's participation in the plan, and

(D) The plan has a repayment provision in effect at the time of the distribution which satisfies the requirements of subdivision (iv) of this subparagraph.

A distribution shall be deemed to be made on termination of participation in the plan if it is made not later than the close of the second plan year following the plan year in which such termination occurs. For purposes of determining the nonforfeitable benefit, the plan may disregard service after the distribution as illustrated in subparagraph (2)(i) of this subparagraph.

(iii) ***Disregard of service.*** Service of an employee permitted to be disregarded under subdivision (i) or (ii) of the subparagraph is not required to be taken into account in computing the employee's accrued benefit under the plan. In the case of a voluntary distribution described in subdivision (ii) of this subparagraph which is less than the present value of the employee's total nonforfeitable benefit immediately prior to the distribution, the accrued benefit not required to be taken into account is such total accrued benefit multiplied by a fraction, the numerator of which is the amount of the distribution and the denominator of which is the present value of his total nonforfeitable benefit immediately prior to such distribution. For example, A who is 50 percent vested in an account balance of $1,000 receives a voluntary distribution of $250. The

accrued benefit which can be disregarded equals $1,000 times $250/$500, or $500. However, such service may not by reason of this paragraph be disregarded for purposes of determining an employee's years of service under sections 410(a)(3) and 411(a)(4).

(iv) ***Plan repayment provision.***

(A) A plan repayment provision satisfies the requirements of this subdivision if, under the provision, the accrued benefit of an employee that is disregarded by a plan under this subparagraph is restored upon repayment to the plan by the employee of the full amount of the distribution. An accrued benefit is not restored unless all of the optional forms of benefit and subsidies relating to such benefit are also restored. A plan is not required to provide for repayment of an accrued benefit unless the employee—

(*1*) Received a distribution that is in a plan year to which section 411 applies (see § 1.411(a)-2), which distribution is less than the amount of his accrued benefit determined under the same optional form of benefit as the distribution was made, and

(*2*) Resumes employment covered under the plan.

(B) ***Example.*** Plan A provides a single sum distribution equal to the present value of the normal form of the accrued benefit payable at normal retirement age which is a single life annuity. Plan A also provides a subsidized joint and survivor annuity and a subsidized early retirement annuity benefit. A participant who is fully vested and receives a single sum distribution equal to the present value of the single life annuity normal retirement benefit is not required to be provided the right under the plan to repay the distribution upon subsequent reemployment even though the participant received a distribution that did not reflect the value of the subsidy in the joint and survivor annuity or the value of the early retirement annuity subsidy. This is true whether or not the participant had satisfied at the time of the distribution all of the conditions necessary to receive the subsidies. However, if a participant does not receive his total accrued benefit in the optional form of benefit under which his benefit was distributed, the plan must provide for repayment. If the employee repays the distribution in accordance with section 411(a)(7), the plan must restore the employee's accrued benefit which would include the right to receive the subsidized joint and survivor annuity and the subsidized early retirement annuity benefit.

(C) A plan may impose the same conditions on repayments for the restoration of employer-derived accrued benefits that are allowed as conditions for restoration of employer-derived accrued benefits upon repayment of mandatory contributions under paragraphs (d)(2)(ii) (B), (C), (D) and (E) of this section.

(v) In the case of a defined contribution plan, the employer-derived accrued benefit required to be restored by this subparagraph shall not be less than the amount in the account balance of the employee, both the amount distributed and the amount forfeited, unadjusted by any subsequent gains or losses. Thus, for example, if an employee received a distribution of $250 when he was 25 percent vested in an account balance of $1,000, upon repayment of $250 the account balance may not be less than $1,000 even if, because of plan losses, the account balance, if not distributed, would have been reduced to $500.

(vi) For purposes of paragraph (d)(4)(i) of this section, a distribution shall be deemed to be made due to the termination of an employee's participation in the plan if it is made no later than the close of the second plan year following the plan year in which such termination occurs, or if

such distribution would have been made under the plan by the close of such second plan year but for the fact that the present value of the nonforfeitable accrued benefit then exceeded the cash-out limit in effect under § 1.411(a)-11(c)(3)(ii). For purposes of determining the entire nonforfeitable benefit, the plan may disregard service after the distribution, as illustrated in paragraph (d)(2)(i) of this section.

(vii) ***Effective date.*** Paragraphs (d)(4)(i) and (vi) of this section apply to distributions made on or after March 22, 1999. However, an employer is permitted to apply paragraphs (d)(4)(i) and (vi) of this section to plan years beginning on or after August 6, 1997. Otherwise, for distributions prior to March 22, 1999, §§ 1.411(a)-7 and 1.411(a)-7T, in effect prior to October 17, 2000 (as contained in 26 CFR part 1, revised as of April 1, 2000) apply.

(5) ***Vesting requirement for defined contribution plans*** —

(i) ***Application.*** The requirements of this subparagraph apply to a defined contribution plan which makes distributions to employees from their accounts attributable to employer contributions at a time when—

(A) Employees are less than 100 percent vested in such accounts, and

(B) Under the plan, employees can increase their percentage of vesting in such accounts after the distributions.

(ii) ***Requirements.*** In order for a plan, to which this subparagraph applies, to satisfy the vesting requirements of section 411, account balances under the plan (with respect to which percentage vesting can increase) must be computed in a manner which satisfies either subdivision (iii) (A) or (B) of this subparagraph.

(iii) ***Permissible methods.*** A plan many provide for either of the following methods, but not both, for computing account balances with respect to which percentage vesting can increase and from which distributions are made:

(A)

(*1*) A separate account is established for the employee's interest in the plan as of the time of the distribution, and

(*2*) At any relevant time the employee's vested portion of the separate account is not less than an amount (“X”) determined by the formula: $X = P(AB + (R \times D)) - (R \times D)$. For purposes of applying the formula: P is the vested percentage at the relevant time; AB is the account balance at the relevant time; D is the amount of the distribution; R is the ratio of the account balance at the relevant time to the account balance after distribution; and the relevant time is the time at which, under the plan, the vested percentage in the account cannot increase.

A plan is not required to provide for separate accounts provided that account balances are maintained under a method that has the same effect as under this subdivision.

(B) At any relevant time the employee's vested portion is not less than an amount (“X”) determined by the formula: $X = P(AB + D) - D$. For purposes of applying the formula, the terms have the same meaning as under subdivision (iii)(A)(*2*) of this subparagraph.

(C) An application of the methods described in subdivisions (iii) (A) and (B) of this subparagraph is illustrated by the following examples:

Example 1. The X defined contribution plan uses the method described in subdivision (iii)(A) of this subparagraph for computing account balances and the break in service rule described in section 411(a)(6)(C) (service after a 1-year break does not increase the vesting percentage in account balances accrued prior to the break). The plan distributes $250 to A when A's account balance prior to the distribution equals $1,000 and he is 25 percent vested. At the time of the distribution, A has not incurred a 1-year break so that his vesting percentage can increase. Six years later, when A is 60 percent vested, he incurs a 1-year break so that his vesting percentage cannot increase. At this time his separate account balance equals $1,500. R = $1,500/$750 or 2. A's separate account must equal 60 percent ($1,500 + (2 × $250))−(2 × $250) or 60 percent ($1,500 + $500)−$500, or $1,200−$500 equals $700.

Example 2. The Y defined contribution plan uses the method descirbed in subdivision (iii)(B) of this subparagraph for computing account balances and the break in service rule described in section 411(a)(6)(C). The plan distributes $250 to B when B's account balance prior to the distribution equals $1,000 and he is 25 percent vested. At the time of the distribution, B has not incurred a 1-year break so that his vesting percentage can increase. Six years later, when A is 60 percent vested, he incurs a 1-year break so that his vesting percentage cannot increase. At this time his account balance equals $1,500. B's separate account must equal 60 percent ($1,500 + $250)−$250, 60% of $1,750−$250 equals $800.

(6) ***Other rules*** —

(i) ***Distributions on separation or other event.*** None of the rules of this paragraph preclude distributions to employees upon separation from service or any other event recognized by the plan for commencing distributions. Such a distribution must, of course, satisfy the applicable qualification requirements pertaining to such distributions. For example, a profitsharing plan could pay the vested portion of an account balance to an employee when he separated from service, but in order to satisfy section 411 the plan might not be able to forfeit the nonvested account balance until the employee has a 1-year break in service. Similarly, the fact that a plan cannot disregard an accrued benefit attributable to service for which an employee has received a distribution because the plan does not satisfy the cash-out requirements of subparagraph (4) of this paragraph does not mean that the employee's accrued benefit (computed by taking into account such service) cannot be offset by the accrued benefit attributable to the distribution.

(ii) ***Joint and survivor requirements.*** See § 1.401(a)-11(a)(2) (relating to joint and survivor annuities) for special rules applicable to certain distributions described in this paragraph.

(iii) ***Plan repayments.***

(A) Under subparagraphs (2) and (4) of this paragraph, a plan may be required to restore accrued benefits in the event of repayment by an employee.

(B) For purposes of applying the limitations of section 415 (c) and (e), in the case of a defined contribution plan, the repayment by the employee and the restoration by the employer shall not be treated as annual additions.

(C) In the case of a defined contribution plan, the permissible sources for restoration of the accrued benefit are: income or gain to the plan, forfeitures, or employer contributions. Notwithstanding the provisions of § 1.401-1(b)(1)(ii), contributions may be made for such an accrued benefit by a profit-sharing plan even though there are no profits. In order for such a plan to be qualified, account balances (accrued benefits) generally must correspond to assets in the plan. Accordingly, there cannot be an unfunded account

balance. However, an account balance will not be deemed to be unfunded in the case of a restoration if assets for the restored benefit are provided by the end of the plan year following the plan year in which the repayment occurs.

(Sec. 411 (88 Stat. 901; 26 U.S.C. 411))

[T.D. 7501, 42 FR 42329, Aug. 23, 1977, as amended by T.D. 8038, 50 FR 29374, July 19, 1985; T.D. 8219, 53 FR 31852, Aug. 22, 1988; 53 FR 48534, Dec. 1, 1988; T.D. 8794, 63 FR 70337, Dec. 21, 1998; T.D. 8891, 65 FR 44681, July 19, 2000]

§ 1.411(a)-8 Changes in vesting schedule.

(a) ***Requirement of prior schedule.*** Under section 411(a)(10)(A), for plan years for which section 411 applies, a plan will be treated as not meeting the minimum vesting standards of section 411(a)(2) if the plan does not satisfy the requirements of this paragraph. If the vesting schedule of a plan is amended, then as of the date such amendment is adopted, the plan satisfies the requirements of this paragraph if, under the plan as amended, in the case of an employee who is a participant on—

(1) The date the amendment is adopted, or

(2) The date the amendment is effective, if later.

The nonforfeitable percentage (determined as of such date) of such employee's right to his employer-derived accrued benefit is not less than his percentage computed under the plan without regard to such amendment.

(b) ***Election of former schedule*** —

(1) ***In general.*** Under section 411 (a)(10)(B), for plan years for which section 411 applies, if the vesting schedule of a plan is amended, the plan will not be treated as meeting the minimum vesting standards of section 411 (a)(2) unless the plan as amended, provides that each participant whose nonforfeitable percentage of his accrued benefit derived from employer contributions is determined under such schedule, and who has completed at least 5 years of service with the employer, may elect, during the election period, to have the nonforfeitable percentage of his accrued benefit derived from employer contributions determined without regard to such amendment. Notwithstanding the preceding sentence, no election need be provided for any participant whose nonforfeitable percentage under the plan, as amended, at any time cannot be less than such percentage determined without regard to such amendment.

(2) ***Election period.*** For purposes of subparagraph (1) of this paragraph, the election period under the plan must begin no later than the date the plan amendment is adopted and end no earlier than the latest of the following dates:

(i) The date which is 60 days after the day the plan amendment is adopted,

(ii) The date which is 60 days after the day the plan amendment becomes effective, or

(iii) The date which is 60 days after the day the participant is issued written notice of the plan amendment by the employer or plan administrator.

(3) ***Service requirement.*** For purposes of subparagraph (1) of this paragraph, a participant shall be considered to have completed 5 years of service if such participant has completed 5 years of service, whether or not consecutive, without regard to the exceptions of section 411(a)(4) prior to

the expiration of the election period described in subparagraph (2) of this paragraph. For the meaning of the term "year of service", see regulations prescribed by the Secretary of Labor under 29 CFR Part 2530, relating to minimum standards for employee pension benefit plans.

(4) ***Election only by participant.*** The election described in subparagraph (1) of this paragraph is available only to an individual who is a participant in the plan at the time such election is made.

(5) ***Election may be irrevocable.*** A plan, as amended, shall not fail to meet the minimum vesting standards of section 411(a)(2) by reason of section 411(a)(10)(B) merely because such plan provides that the election described in subparagraph (1) of this paragraph is irrevocable.

(6) ***Relationship with section 411(a)(2).*** The election described in subparagraph (1) of this paragraph is available for a vesting schedule which does not satisfy the requirements of section 411(a)(2) only if under such schedule all participants have a 50 percent nonforfeitable right after 10 years of service, and a 100 percent nonforfeitable right after 15 years of service, in their employer-derived accrued benefit. If the vesting schedule provides less vesting than the percentages required by the preceding sentence, the plan can be amended to provide for such vesting.

(c) ***Special rules*** —

(1) ***Amendment of vesting schedule.*** For purposes of this section, an amendment of a vesting schedule is each plan amendment which directly or indirectly affects the computation of the nonforfeitable percentage of employees' rights to employer-derived accrued benefits. Consequently, such an amendment, for example, includes each change in the plan which affects either the plan's computation of years of service or of vesting percentages for years of service.

(2) ***Aggregation of amendments.*** All plan amendments which are:

(i) amendments of a vesting schedule within the meaning of subparagraph (1) of this paragraph and

(ii) adopted and effective at the same time, shall be deemed to be a single amendment for purposes of applying the rules in paragraphs (a) and (b) of this section.

(3) ***Relationship with section 411(d)(6).*** For additional requirements relating to section 411(d)(6), see § 1.411(d)-3(a)(3).

(Sec. 411 (88 Stat. 901; 26 U.S.C. 411))

[T.D. 7501, 42 FR 42333, Aug. 23, 1977, as amended by T.D. 9280, 71 FR 45383, Aug. 9, 2006]

§ 1.411(a)-8T Changes in vesting schedule (temporary).

(a) [Reserved]

(b) ***Election of former schedule*** —

(1) ***In general.*** Under section 411(a)(10)(B), for plan years for which section 411 applies, if the vesting schedule of a plan is amended, the plan will not be treated as meeting the minimum vesting standards of section 411(a)(2) unless the plan as amended provides that each participant whose nonforfeitable percentage of his accrued benefit derived from employer contributions is determined under such schedule, and who has completed at least 3 years of service with the employer, may elect, during the election period, to have the nonforfeitable percentage of his accrued benefit derived from employer contributions determined without regard to such amendment. Notwithstanding the

preceding sentence, no election need be provided for any participant whose nonforfeitable percentage under the plan, as amended, at any time cannot be less than such percentage determined without regard to such amendment. For employees not described in § 1.411(a)-3T(e)(1), this section shall be applied by substituting "5 years of service" for "3 years of service" where such language appears.

(2) ***Election period.*** For purposes of subparagraph (1) of this paragraph, the election period under the plan must begin no later than the date the plan amendment is adopted and end no earlier than the latest of the following dates:

(i) The date which is 60 days after the day the plan amendment is adopted,

(ii) The date which is 60 days after the day the plan amendment becomes effective, or

(iii) The date which is 60 days after the day the participant is issued written notice of the plan amendment by the employer or plan administrator.

(3) ***Service requirement.*** For purposes of subparagraph (1) of this paragraph, a participant shall be considered to have completed 3 years of service if such participant has completed 3 years of service, whether or not consecutive, without regard to the exceptions of section 411(a)(4) prior to the expiration of the election period described in subparagraph (2) of this paragraph. For the meaning of the term "year of service", see regulations prescribed by the Secretary of Labor under 29 CFR Part 2530, relating to minimum standards for employee pension benefit plans.

[T.D. 8170, 53 FR 241, Jan. 6, 1988]

§ 1.411(a)-9 [Reserved]

§ 1.411(a)-11 Restriction and valuation of distributions.

(a) ***Scope*** —

(1) ***In general.*** Section 411(a)(11) restricts the ability of a plan to distribute any portion of a participant's accrued benefit without the participant's consent. Section 411(a)(11) also restricts the ability of defined benefit plans to distribute any portion of a participant's accrued benefit in optional forms of benefit without complying with specified valuation rules for determining the amount of the distribution. If the consent requirements or the valuation rules of this section are not satisfied, the plan fails to satisfy the requirements of section 411(a).

(2) ***Accrued benefit.*** For purposes of this section, an accrued benefit is valued taking into consideration the particular optional form in which the benefit is to be distributed. The value of an accrued benefit is the present value of the benefit in the distribution form determined under the plan. For example, a plan that provides a subsidized early retirement annuity benefit may specify that the optional single sum distribution form of benefit available at early retirement age is the present value of the subsidized early retirement annuity benefit. In this case, the subsidized early retirement annuity benefit must be used to apply the valuation requirements of this section and the resulting amount of the single sum distribution. However, if a plan that provides a subsidized early retirement annuity benefit specifies that the single sum distribution benefit available at early retirement age is the present value of the normal retirement annuity benefit, then the normal retirement annuity benefit is used to apply the valuation requirements of this section and the resulting amount of the single sum distribution available at early retirement age.

(b) ***General consent rules.*** A plan must satisfy the participant consent requirement with respect to the distribution of a participant's nonforfeitable accrued benefit with a present value in excess of the cash-out limit in effect under paragraph (c)(3)(ii) of this section. See paragraphs (c) (3) and (4) for situations where no consent is required.

(c) ***Consent, etc. requirements*** —

(1) ***General rule.*** If an accrued benefit is immediately distributable, section 411(a)(11) permits plans to provide for the distribution of any portion of a participant's nonforfeitable accrued benefits only if the applicable consent requirements are satisfied.

(2) ***Consent.***

(i) No consent is valid unless the participant has received a general description of the material features of the optional forms of benefit available under the plan. In addition, so long as a benefit is immediately distributable, a participant must be informed of the right, if any, to defer receipt of the distribution. Furthermore, consent is not valid if a significant detriment is imposed under the plan on any participant who does not consent to a distribution. Whether or not a significant detriment is imposed shall be determined by the Commissioner by examining the particular facts and circumstances.

(ii) Consent of the participant to the distribution must not be made before the participant receives the notice of his or her rights specified in this paragraph (c)(2) and must not be made more than 90 days before the date the distribution commences.

(iii) A plan must provide a participant with notice of the rights specified in this paragraph (c)(2) at a time that satisfies either paragraph (c)(2)(iii)(A) or (B) of this section:

(A) This paragraph (c)(2)(iii)(A) is satisfied if the plan provides a participant with notice of the rights specified in this paragraph (c)(2) no less than 30 days and no more than 90 days before the date the distribution commences. However, if the participant, after having received this notice, affirmatively elects a distribution, a plan will not fail to satisfy the consent requirement of section 411(a)(11) merely because the distribution commences less than 30 days after the notice was provided to the participant, provided the plan administrator clearly indicates to the participant that the participant has a right to at least 30 days to consider whether to consent to the distribution.

(B) This paragraph (c)(2)(iii)(B) is satisfied if the plan—

(*1*) Provides the participant with notice of the rights specified in this paragraph (c)(2);

(*2*) Provides the participant with a summary of the notice within the time period described in paragraph (c)(2)(iii)(A) of this section; and

(*3*) If the participant so requests after receiving the summary described in paragraph (c)(2)(iii)(B)(*2*) of this section, provides the notice to the participant without charge and no less than 30 days before the date the distribution commences, subject to the rules for the participant's waiver of that 30-day period. The summary described in paragraph (c)(2)(iii)(B)(*2*) of this section must advise the participant of the right, if any, to defer receipt of the distribution, must set forth a summary of the distribution options under the plan, must refer the participant to the most recent version of the notice (and, in the case of a notice provided in any document containing information in addition to the notice, must identify that document and must provide a reasonable

indication of where the notice may be found in that document, such as by index reference or by section heading), and must advise the participant that, upon request, a copy of the notice will be provided without charge.

(iv) For purposes of satisfying the requirements of this paragraph (c)(2), the plan administrator may substitute the annuity starting date, within the meaning of § 1.401(a)-20, Q&A-10, for the date the distribution commences.

(v) See § 1.401(a)-20, Q&A-24 for a special rule applicable to consents to plan loans.

(3) ***Cash-out limit.***

(i) Written consent of the participant is required before the commencement of the distribution of any portion of an accrued benefit if the present value of the nonforfeitable total accrued benefit is greater than the cash-out limit in effect under paragraph (c)(3)(ii) of this section on the date the distribution commences. The consent requirements are deemed satisfied if such value does not exceed the cash-out limit, and the plan may distribute such portion to the participant as a single sum. Present value for this purpose must be determined in the same manner as under section 417(e); see § 1.417(e)-1(d).

(ii) The cash-out limit in effect for a date is the amount described in section 411(a)(11)(A) for the plan year that includes that date. The cash-out limit in effect for dates in plan years beginning on or after August 6, 1997, is $5,000. The cash-out limit in effect for dates in plan years beginning before August 6, 1997, is $3,500.

(iii) ***Effective date.*** Paragraphs (c)(3)(i) and (ii) of this section apply to distributions made on or after October 17, 2000. However, an employer is permitted to apply the $5,000 cash-out limit described in paragraph (c)(3)(ii) of this section to plan years beginning on or after August 6, 1997. Otherwise, for distributions prior to October 17, 2000, §§ 1.411(a)-11 and 1.411(a)-11T in effect prior to October 17, 2000 (as contained in 26 CFR Part 1 revised as of April 1, 2000) apply.

(4) ***Immediately distributable.*** Participant consent is required for any distribution while it is immediately distributable, *i.e.,* prior to the later of the time a participant has attained normal retirement age (as defined in section 411(a)(8)) or age 62. Once a distribution is no longer immediately distributable, a plan may distribute the benefit in the form of a QJSA in the case of a benefit subject to section 417 or in the normal form in other cases without consent.

(5) ***Death of participant.*** The consent requirements of section 411(a)(11) do not apply after the death of the participant.

(6) ***QDROs.*** The consent requirements of section 411(a)(11) do not apply to payments to an alternate payee, defined in section 414(p)(8), except as provided in a qualified domestic relations order pursuant to section 414(p).

(7) ***Section 401(a)(9), etc.*** The consent requirements of section 411(a)(11) do not apply to the extent that a distribution is required to satisfy the requirements of section 401(a)(9) or 415. See section 401(a)(9) and the regulations thereunder and § 1.401(a)-20 Q&A 23 for guidance on these requirements. Notwithstanding any provision to the contrary in section 401(a)(14) or § 1.401(a)-14, a plan may not distribute a participant's nonforfeitable accrued benefit with a present value in excess of the cash-out limit in effect under paragraph (c)(3)(ii) of this section while the benefit is

immediately distributable unless the participant consents to such distribution. The failure of a participant to consent is deemed to be an election to defer commencement of payment of the benefit for purposes of section 401(a)(14) and § 1.401(a)-14.

(8) ***Delegation to Commissioner.*** The Commissioner, in revenue rulings, notices, and other guidance published in the Internal Revenue Bulletin, may modify, or provide additional guidance with respect to, the notice and consent requirements of this section. See § 601.601(d)(2)(ii)(*b*) of this chapter.

(d) ***Distribution valuation requirements.*** In determining the present value of any distribution of any accrued benefit from a defined benefit plan, the plan must take into account specified valuation rules. For this purpose, the valuation rules are the same valuation rules for valuing distributions as set forth in section 417(e); see § 1.417(e)-1(d). This paragraph (d) applies both before and after the participant's death regardless of whether the accrued benefit is immediately distributable. This paragraph also applies whether or not the participant's consent is required under paragraphs (b) and (c) of this section.

(e) ***Special rules*** —

(1) ***Plan termination.*** The requirements of this section apply before, on and after a plan termination. If a defined contribution plan terminates and the plan does not offer an annuity option (purchased from a commercial provider), then the plan may distribute a participant's accrued benefit without the participant's consent. The preceding sentence does not apply if the employer, or any entity within the same controlled group as the employer, maintains another defined contribution plan, other than an employee stock ownership plan (as defined in section 4975(e)(7)). In such a case, the participant's accrued benefit may be transferred without the participant's consent to the other plan if the participant does not consent to an immediate distribution from the terminating plan. See section 411(d)(6) and the regulations thereunder for other rules applicable to transferee plans and plan terminations.

(2) ***ESOP dividends.*** The requirements of this section do not apply to any distribution of dividends to which section 404(k) applies.

(3) ***Other rules.*** See § 1.401(a)-20 Q&As 14, 17 and 24 for other rules that apply to the section 411(a)(11) requirements.

(f) ***Medium for notice and consent*** —

(1) ***Notice.*** The notice of a participant's rights described in paragraph (c)(2) of this section or the summary of that notice described in paragraph (c)(2)(iii)(B)(2) of this section must be provided on a written paper document. However, see § 1.401(a)-21 of this chapter for rules permitting the use of electronic media to provide applicable notices to recipients with respect to retirement plans.

(2) ***Consent.*** The consent described in paragraphs (c)(2) and (3) of this section must be given on a written paper document. However, see § 1.401(a)-21 of this chapter for rules permitting the use of electronic media to make participant elections with respect to retirement plans.

[T.D. 8219, 53 FR 31853, Aug. 22, 1988; 53 FR 48534, Dec. 1, 1988, as amended by T.D. 8620, 60 FR 49221, Sept. 22, 1995; T.D. 8796, 63 FR 70011, Dec. 18, 1998; T.D. 8794, 63 FR 70338, Dec. 21, 1998; T.D. 8873, 65 FR 6006, Feb. 8, 2000; T.D. 8891, 65 FR 44681, 44682, July 19, 2000; T.D. 9294, 71 FR 61887, Oct. 20, 2006]

§ 1.411(a)(13)-1 Statutory hybrid plans.

(a) ***In general.*** This section sets forth certain rules that apply to statutory hybrid plans under section 411(a)(13). Paragraph (b) of this section describes special rules for certain statutory hybrid plans that determine benefits under a lump sum-based benefit formula. Paragraph (c) of this section describes the vesting requirement for statutory hybrid plans. Paragraphs (d) and (e) of this section contain definitions and effective/applicability dates, respectively.

(b) ***Calculation of benefit by reference to hypothetical account balance or accumulated percentage*** —

(1) ***Payment of a current balance or current value under a lump sum-based benefit formula.*** Pursuant to section 411(a)(13)(A), a statutory hybrid plan that determines any portion of a participant's benefits under a lump sum-based benefit formula is not treated as failing to meet the following requirements solely because, with respect to benefits determined under that formula, the present value of those benefits is, under the terms of the plan, equal to the then-current balance of the hypothetical account maintained for the participant or to the then-current value of the accumulated percentage of the participant's final average compensation under that formula—

(i) Section 411(a)(2); or

(ii) With respect to the participant's accrued benefit derived from employer contributions, section 411(a)(11), 411(c), or 417(e).

(2) ***General rules with respect to current account balance or current value*** —

(i) ***Benefit after normal retirement age.*** The relief of section 411(a)(13) does not override the requirement for a plan that, with respect to a participant with an annuity starting date after normal retirement age, the plan either provide an actuarial increase after normal retirement age or satisfy the requirements for suspension of benefits under section 411(a)(3)(B). Accordingly, with respect to such a participant, a plan with a lump sum based benefit formula violates the requirements of section 411(a) if the balance of the hypothetical account or the value of the accumulated percentage of the participant's final average compensation is not increased sufficiently to satisfy the requirements of section 411(a)(2) for distributions commencing after normal retirement age, unless the plan suspends benefits in accordance with section 411(a)(3)(B).

(ii) ***Reductions limited.*** The relief of section 411(a)(13) does not permit the accumulated benefit under a lump sum-based benefit formula to be reduced in a manner that would be prohibited if that reduction were applied to the accrued benefit. Accordingly, the only reductions that can apply to the balance of the hypothetical account or accumulated percentage of the participant's final average compensation are reductions as a result of—

(A) Benefit payments;

(B) Qualified domestic relations orders under section 414(p);

(C) Forfeitures that are permitted under section 411(a) (such as charges for providing a qualified preretirement survivor annuity);

(D) Amendments that would reduce the accrued benefit but that are permitted under section 411(d)(6);

(E) Adjustments resulting in a decrease in the balance of the hypothetical account due to the application of interest credits (as defined in § 1.411(b)(5)-1(d)(1)(ii)(A)) that are negative for an interest crediting period;

(F) In the case of a formula that expresses the accumulated benefit as an accumulated percentage of the participant's final average compensation, adjustments resulting in a decrease in the dollar amount of the accumulated percentage of the participant's final average compensation—

(*1*) Due to a decrease in the dollar amount of the participant's final average compensation; or

(*2*) Due to an increase in the integration level, under a formula that is integrated with Social Security (for example, as a result of an increase in the Social Security taxable wage base or in Social Security covered compensation); or

(G) Other reductions to the extent provided by the Commissioner in revenue rulings, notices, or other guidance published in the Internal Revenue Bulletin (see § 601.601(d)(2)(ii)(*b*)).

(3) ***Payment of benefits based on current account balance or current value*** —

(i) ***Optional forms that are actuarially equivalent.*** With respect to the benefits under a lump sum-based benefit formula, the relief of paragraph (b)(1) of this section applies to an optional form of benefit that is determined as of the annuity starting date as the actuarial equivalent, using reasonable actuarial assumptions, of the then-current balance of a hypothetical account maintained for the participant or the then-current value of an accumulated percentage of the participant's final average compensation.

(ii) ***Optional forms that are subsidized.*** With respect to the benefits under a lump sum-based benefit formula, if an optional form of benefit is payable in an amount that is greater than the actuarial equivalent, determined using reasonable actuarial assumptions, of the then-current balance of a hypothetical account maintained for the participant or the then-current value of an accumulated percentage of the participant's final average compensation, then the plan satisfies the requirements of sections 411(a)(2), 411(a)(11), 411(c) and 417(e) with respect to the amount of that optional form of benefit. However, see § 1.411(b)(5)-1(b)(1)(iii) for rules relating to early retirement subsidies.

(iii) ***Optional forms that are less valuable.*** Except as otherwise provided in paragraph (b)(4)(i) of this section, if an optional form of benefit is not at least the actuarial equivalent, using reasonable actuarial assumptions, of the then-current balance of a hypothetical account maintained for the participant or the then-current value of an accumulated percentage of the participant's final average compensation, then the relief under section 411(a)(13) (permitting a plan to treat the account balance or accumulated percentage as the actuarial equivalent of the portion of the accrued benefit determined under the lump sum-based benefit formula) does not apply in determining whether the optional form of benefit is the actuarial equivalent of the portion of the accrued benefit determined under the lump sum-based benefit formula. As a result, payment of that optional form of benefit must satisfy the rules applicable to payment of the accrued benefit generally under a defined benefit plan (without regard to the special rules of section 411(a)(13)(A) and paragraph (b)(1) of this section), including the requirements of section 411(a)(2) and, for optional forms subject to the minimum present value requirements of section 417(e)(3), those minimum present value requirements.

(4) *Rules of application* —

(i) ***Relief applies on proportionate basis with respect to payment of only a portion of the benefit under a lump sum-based benefit formula.*** The relief of paragraph (b)(1) of this section applies on a proportionate basis to a payment of a portion of the benefit under a lump sum-based benefit formula, such as a payment of a specified dollar amount or percentage of the then-current balance of a hypothetical account maintained for the participant or then-current value of an accumulated percentage of the participant's final average compensation. Thus, for example, if a plan that expresses the participant's entire accumulated benefit as the balance of a hypothetical account distributes 40 percent of the participant's then-current hypothetical account balance in a single payment, the plan is treated as satisfying the requirements of section 411(a) and the minimum present value rules of section 417(e) with respect to 40 percent of the participant's then-current accrued benefit.

(ii) ***Relief applies only to portion of benefit determined under lump sum-based benefit formula.*** The relief of paragraph (b)(1) of this section generally applies only to the portion of the participant's benefit that is determined under a lump sum-based benefit formula and generally does not apply to any portion of the participant's benefit that is determined under a formula that is not a lump sum-based benefit formula. The following rules apply for purposes of satisfying section 417(e):

(A) ***"Greater-of" formulas.*** If the participant's accrued benefit equals the greater of the accrued benefit under a lump sum-based benefit formula and the accrued benefit under another formula that is not a lump-sum based benefit formula, a single-sum payment of the participant's entire benefit must be no less than the greater of the then-current accumulated benefit under the lump sum-based benefit formula and the present value, determined in accordance with section 417(e), of the benefit under the other formula. For example, assume that the accrued benefit under a plan is determined as the greater of the accrued benefit attributable to the balance of a hypothetical account and the accrued benefit equal to a pro rata portion of a normal retirement benefit determined by projecting the hypothetical account balance (including future principal and interest credits) to normal retirement age. In such a case, a single-sum payment of the participant's entire benefit must be no less than the greater of the then-current balance of the hypothetical account and the present value, determined in accordance with section 417(e), of the pro rata benefit determined by projecting the hypothetical account balance to normal retirement age.

(B) ***"Sum-of" formulas.*** If the participant's accrued benefit equals the sum of the accrued benefit under a lump sum-based benefit formula and the accrued benefit under another formula that is not a lump-sum based benefit formula, a single-sum payment of the participant's entire benefit must be no less than the sum of the then-current accumulated benefit under the lump sum-based benefit formula and the present value, determined in accordance with section 417(e), of the benefit under the other formula. For example, assume that the accrued benefit under a plan is determined as the sum of the accrued benefit attributable to the balance of a hypothetical account and the accrued benefit equal to the excess of the benefit under another formula over the benefit under the hypothetical account formula. In such a case, a single-sum payment of the participant's entire benefit must be no less than the sum of the then-current balance of the hypothetical account and the present value, determined in accordance with section 417(e), of the excess of the benefit under the other formula over the benefit under the hypothetical account formula.

(C) ***"Lesser-of" formulas.*** If the participant's accrued benefit equals the lesser of the accrued benefit under a lump sum-based benefit formula and the accrued benefit under another formula that is not a lump-sum based benefit formula, a single-sum payment of the participant's entire benefit must be no less than the lesser of the then-current accumulated benefit under the lump sum-based benefit formula and the present value, determined in accordance with section 417(e), of the benefit under the other formula. For example, assume that the accrued benefit under a plan is determined as the accrued benefit attributable to the balance of a hypothetical account, but no greater than an accrued benefit payable at normal retirement age in the form of a straight life annuity of $100,000 per year. In such a case, a single-sum payment of the participant's entire benefit must be no less than the lesser of the then-current balance of the hypothetical account and the present value, determined in accordance with section 417(e), of a benefit payable at normal retirement age in the form of a straight life annuity of $100,000 per year. If the formula that is not a lump sum-based benefit formula is the maximum annual benefit described in section 415(b), then the single-sum payment of the participant's entire benefit must not exceed the then-current accumulated benefit under the lump sum-based benefit formula.

(c) ***Three-year vesting requirement*** —

(1) ***In general.*** Pursuant to section 411(a)(13)(B), if any portion of the participant's accrued benefit under a defined benefit plan is determined under a statutory hybrid benefit formula, the plan is treated as failing to satisfy the requirements of section 411(a)(2) unless the plan provides that the participant has a nonforfeitable right to 100 percent of the participant's accrued benefit if the participant has three or more years of service. Thus, this 3-year vesting requirement applies with respect to the entire accrued benefit of a participant under a defined benefit plan even if only a portion of the participant's accrued benefit under the plan is determined under a statutory hybrid benefit formula. Similarly, if the participant's accrued benefit under a defined benefit plan is, under the plan's terms, the larger of two (or more) benefit amounts, where each amount is determined under a different benefit formula (including a benefit determined pursuant to an offset among formulas within the plan or a benefit determined as the greater of a protected benefit under section 411(d)(6) and another benefit amount) and at least one of those formulas is a statutory hybrid benefit formula, the participant's entire accrued benefit under the defined benefit plan is subject to the 3-year vesting rule of section 411(a)(13)(B) and this paragraph (c). The rule described in the preceding sentence applies even if the larger benefit is ultimately the benefit determined under a formula that is not a statutory hybrid benefit formula.

(2) ***Examples.*** The provisions of this paragraph (c) are illustrated by the following examples:

Example 1. Employer M sponsors Plan X, a defined benefit plan under which each participant's accrued benefit is equal to the sum of the benefit provided under two benefit formulas. The first benefit formula is a statutory hybrid benefit formula, and the second formula is not. Because a portion of each participant's accrued benefit provided under Plan X is determined under a statutory hybrid benefit formula, the 3-year vesting requirement described in paragraph (c)(1) of this section applies to each participant's entire accrued benefit provided under Plan X.

Example 2. The facts are the same as in *Example 1*, except that the benefit formulas described in *Example 1* only apply to participants for service performed in Division A of Employer M and a different benefit formula applies to participants for service performed in Division B of Employer M. Pursuant to the terms of Plan X, the accrued benefit of a participant attributable to service

performed in Division B is based on a benefit formula that is not a statutory hybrid benefit formula. Therefore, the 3-year vesting requirement described in paragraph (c)(1) of this section does not apply to a participant with an accrued benefit under Plan X if the participant's benefit is solely attributable to service performed in Division B.

Example 3. Employer N sponsors defined benefit Plan Y, an independent plan that provides benefits based solely on a lump sum-based benefit formula, and defined benefit Plan Z, which provides benefits based on a formula which is not a statutory hybrid benefit formula, but which is a floor plan that provides for the benefits payable to a participant under Plan Z to be reduced by the amount of the vested accrued benefit payable under Plan Y. The formula under Plan Y is a statutory hybrid benefit formula. Accordingly, Plan Y is subject to the 3-year vesting requirement described in paragraph (c)(1) of this section. The formula provided under Plan Z, even taking into account the offset for vested accrued benefits under Plan Y, is not a statutory hybrid benefit formula. Therefore, Plan Z is not subject to the 3-year vesting requirement in paragraph (c)(1) of this section.

(d) ***Definitions*** —

(1) ***In general.*** The definitions in this paragraph (d) apply for purposes of this section.

(2) ***Accumulated benefit.*** A participant's accumulated benefit at any date means the participant's benefit, as expressed under the terms of the plan, accrued to that date. For this purpose, if a participant's benefit is expressed under the terms of the plan as the current balance of a hypothetical account or the current value of an accumulated percentage of the participant's final average compensation, the participant's accumulated benefit is expressed in that manner regardless of how the plan defines the participant's accrued benefit. Thus, for example, the accumulated benefit of a participant may be expressed under the terms of the plan as either the current balance of a hypothetical account or the current value of an accumulated percentage of the participant's final average compensation, even if the plan defines the participant's accrued benefit as an annuity beginning at normal retirement age that is actuarially equivalent to that balance or value.

(3) ***Lump sum-based benefit formula*** —

(i) ***In general.*** A lump sum-based benefit formula means a benefit formula used to determine all or any part of a participant's accumulated benefit under a defined benefit plan under which the accumulated benefit provided under the formula is expressed as the current balance of a hypothetical account maintained for the participant or as the current value of an accumulated percentage of the participant's final average compensation. A benefit formula is expressed as the current balance of a hypothetical account maintained for the participant if it is expressed as a current single-sum dollar amount equal to that balance. A benefit formula is expressed as the current value of an accumulated percentage of the participant's final average compensation if it is expressed as a current single-sum dollar amount equal to a percentage of the participant's final average compensation or, for plan years described in paragraph (e)(2)(ii)(A) or (e)(2)(ii)(B) of this section, as applicable (or any earlier date as elected by the taxpayer), a percentage of the participant's highest average compensation (regardless of whether the plan applies a limitation on the past period for which compensation is taken into account in determining highest average compensation). Whether a benefit formula is a lump sum-based benefit formula is determined based on how the accumulated benefit of a participant is expressed under the terms of the plan, and does not depend on whether the plan provides an optional form of benefit in the form of a single-sum payment. However, for plan years described in paragraph (e)(2)(ii)(A) or (e)(2)(ii)(B) of this section (as applicable), a benefit formula does not

constitute a lump sum-based benefit formula unless a distribution of the benefits under that formula in the form of a single-sum payment equals the accumulated benefit under that formula (except to the extent the single-sum payment is greater to satisfy the requirements of section 411(d)(6)). In addition, for plan years described in paragraph (e)(2)(ii)(A) or (e)(2)(ii)(B) of this section (as applicable), a benefit formula does not constitute a lump sum-based benefit formula unless the portion of the participant's accrued benefit that is determined under that formula and the then-current balance of the hypothetical account or the then-current value of the accumulated percentage of the participant's final average compensation are actuarially equivalent (determined using reasonable actuarial assumptions) either—

(A) Upon attainment of normal retirement age; or

(B) At the annuity starting date for a distribution with respect to that portion.

(ii) ***Exception for employee contributions.*** For purposes of the definition of a lump sum-based benefit formula in paragraph (d)(3)(i) of this section, the benefit properly attributable to after-tax employee contributions, rollover contributions from eligible retirement plans under section 402(c)(8), and other similar employee contributions (such as repayments of distributions pursuant to section 411(a)(7)(C) and employee contributions that are pickup contributions pursuant to section 414(h)(2)) is disregarded. However, a benefit is not properly attributable to contributions described in this paragraph (d)(3)(ii) if the contributions are credited with interest at a rate that exceeds a reasonable rate of interest or if the conversion factors used to calculate such benefit are not actuarially reasonable. See section 411(c) for an example of a calculation of a benefit that is properly attributable to employee contributions.

(4) ***Statutory hybrid benefit formula*** —

(i) ***In general.*** A statutory hybrid benefit formula means a benefit formula that is either a lump sum-based benefit formula or a formula that is not a lump sum-based benefit formula but that has an effect similar to a lump sum-based benefit formula.

(ii) ***Effect similar to a lump sum-based benefit formula*** —

(A) ***In general.*** Except as provided in paragraphs (d)(4)(ii)(B) through (E) of this section, a benefit formula under a defined benefit plan that is not a lump sum-based benefit formula has an effect similar to a lump sum-based benefit formula if the formula provides that a participant's accumulated benefit is expressed as a benefit that includes the right to adjustments (including a formula that provides for indexed benefits under § 1.411(b)(5)-1(b)(2)) for a future period and the total dollar amount of those adjustments is reasonably expected to be smaller for the participant than for any similarly situated, younger individual (within the meaning of § 1.411(b)(5)-1(b)(5)) who is or could be a participant in the plan. For this purpose, the right to adjustments for a future period means, for plan years described in paragraph (e)(2)(ii)(A) or (e)(2)(ii)(B) of this section (as applicable), the right to any changes in the dollar amount of benefits over time, regardless of whether those adjustments are denominated as interest credits. A benefit formula that does not include adjustments for any future period is treated as a formula with an effect similar to a lump sum-based benefit formula if the formula would be described in this paragraph (d)(4)(ii)(A) except for the fact that the adjustments are provided pursuant to a pattern of repeated plan amendments. See § 1.411(d)-4, A-1(c)(1).

(B) ***Exception for post-retirement benefit adjustments.*** Post-annuity starting date adjustments in the amount payable to a participant (such as cost-of-living increases) are disregarded in determining whether a benefit formula under a defined benefit plan has an effect similar to a lump sum-based benefit formula.

(C) ***Exception for certain variable annuity benefit formulas.*** If a variable annuity benefit formula adjusts benefits by reference to the difference between a rate of return on plan assets (or specified market indices) and a specified assumed interest rate of 5 percent or higher, then the variable annuity benefit formula is not treated as being reasonably expected to provide a smaller total dollar amount of future adjustments for the participant than for any similarly situated, younger individual who is or could be a participant in the plan, and thus such a variable annuity benefit formula does not have an effect similar to a lump sum-based benefit formula. For plan years described in paragraph (e)(2)(ii)(A) or (e)(2)(ii)(B) of this section (as applicable) (or any earlier date as elected by the taxpayer), the rate of return on plan assets (or specified market index) by reference to which the benefit formula adjusts must be a rate of return described in § 1.411(b)(5)-1(d)(5) (which includes, in the case of a benefit formula determined with reference to an annuity contract for an employee issued by an insurance company licensed under the laws of a State, the rate of return on the market index specified under that contract).

(D) ***Exception for employee contributions.*** Benefits that are disregarded under paragraph (d)(3)(ii) of this section (benefits properly attributable to certain employee contributions) are also disregarded for purposes of determining whether a benefit formula has an effect similar to a lump sum-based benefit formula.

(E) ***Exception for certain actuarial reductions for early commencement under traditional formula.*** A defined benefit formula is not treated as having an effect similar to a lump sum-based benefit formula with respect to a participant merely because the formula provides for a reduction in the benefit payable at early retirement due to early commencement (with the result that the benefit payable at normal retirement age is greater than the benefit payable at early retirement), provided that the benefit payable at normal retirement age to the participant cannot be less than the benefit payable at normal retirement age to any similarly situated, younger individual who is or could be a participant in the plan. Thus, for example, a plan that provides a benefit equal to 1 percent of final average pay per year of service, payable as a life annuity at normal retirement age, is not treated as having an effect similar to a lump sum-based benefit formula by reason of an actuarial reduction in the benefit payable under the plan for early commencement.

(5) ***Statutory hybrid plan.*** A statutory hybrid plan means a defined benefit plan that contains a statutory hybrid benefit formula.

(6) ***Variable annuity benefit formula.*** A variable annuity benefit formula means any benefit formula under a defined benefit plan which provides that the amount payable is periodically adjusted by reference to the difference between a rate of return and a specified assumed interest rate.

(e) ***Effective/applicability date*** —

(1) ***Statutory effective/applicability date*** —

(i) ***In general.*** Except as provided in paragraphs (e)(1)(ii) and (e)(1)(iii) of this section, section 411(a)(13) applies for periods beginning on or after June 29, 2005.

(ii) ***Calculation of benefits.*** Section 411(a)(13)(A) applies to distributions made after August 17, 2006.

(iii) ***Vesting*** —

(A) ***Plans in existence on June 29, 2005*** —

(*1*) ***General rule.*** In the case of a plan that is in existence on June 29, 2005 (regardless of whether the plan is a statutory hybrid plan on that date), section 411(a)(13)(B) applies to plan years that begin on or after January 1, 2008.

(*2*) ***Exception for plan sponsor election. See*** § 1.411(b)(5)-1(f)(1)(iii)(A)(*2*) for a special election for early application of section 411(a)(13)(B).

(B) ***Plans not in existence on June 29, 2005.*** In the case of a plan not in existence on June 29, 2005, section 411(a)(13)(B) applies to plan years that end on or after June 29, 2005.

(C) ***Collectively bargained plans.*** Notwithstanding paragraphs (e)(1)(iii)(A) and (B) of this section, in the case of a collectively bargained plan maintained pursuant to one or more collective bargaining agreements between employee representatives and one or more employers ratified on or before August 17, 2006, the requirements of section 411(a)(13)(B) do not apply to plan years that begin before the earlier of—

(*1*) The later of—

(*i*) The date on which the last of those collective bargaining agreements terminates (determined without regard to any extension thereof on or after August 17, 2006); or

(*ii*) January 1, 2008; or

(*2*) January 1, 2010.

(D) ***Treatment of plans with both collectively bargained and non-collectively bargained employees.*** In the case of a plan with respect to which a collective bargaining agreement applies to some, but not all, of the plan participants, the plan is considered a collectively bargained plan for purposes of paragraph (e)(1)(iii)(C) of this section if it is considered a collectively bargained plan under the rules of § 1.436-1(a)(5)(ii)(B).

(E) ***Hour of service required.*** Section 411(a)(13)(B) does not apply to a participant who does not have an hour of service after section 411(a)(13)(B) would otherwise apply to the participant under the rules of paragraph (e)(1)(iii)(A), (B), or (C) of this section.

(2) ***Effective/applicability date of regulations*** —

(i) ***In general.*** Except as provided in paragraph (e)(2)(ii) of this section, this section applies to plan years that begin on or after January 1, 2011. For the periods after the statutory effective date set forth in paragraph (e)(1) of this section and before the regulatory effective date set forth in the preceding sentence, the relief of section 411(a)(13)(A) applies and the 3-year vesting requirement of section 411(a)(13)(B) must be satisfied. During these periods, a plan is permitted to rely on the provisions of this section for purposes of applying the relief of section 411(a)(13)(A) and satisfying the requirements of section 411(a)(13)(B).

(ii) ***Special effective date*** —

(A) ***In general.*** Except as otherwise provided in this paragraph (e)(2)(ii), paragraphs (b)(2), (3), and (4) of this section apply to plan years that begin on or after January 1, 2017.

(B) ***Collectively bargained plans.*** In the case of a plan maintained pursuant to one or more collective bargaining agreements between employee representatives and one or more employers ratified on or before November 13, 2015, that constitutes a collectively bargained plan under the rules of § 1.436-1(a)(5)(ii)(B), paragraphs (b)(2), (3), and (4) of this section apply to plan years that begin on or after the later of—

(*1*) January 1, 2017; and

(*2*) The earlier of—

(*i*) January 1, 2019; and

(*ii*) The date on which the last of those collective bargaining agreements terminates (determined without regard to any extension thereof on or after November 13, 2015).

(iii) ***Hour of service required.*** A benefit formula is not treated as having an effect similar to a lump sum-based benefit formula under paragraph (d)(4)(ii) of this section with respect to a participant who does not have an hour of service after the regulatory effective date set forth in paragraph (e)(2)(i) of this section.

[T.D. 9505, 75 FR 64135, Oct. 19, 2010, as amended by 76 FR 4244, Jan. 25, 2011; T.D. 9693, 79 FR 56457, Sept. 19, 2014; T.D. 9743, 80 FR 70683, 70684, Nov. 16, 2015]

§ 1.411(b)-1 Accrued benefit requirements.

(a) ***Accrued benefit requirements*** —

(1) ***In general.*** Under section 411(b), for plan years beginning after the applicable effective date of section 411, rules are provided for the determination of the accrued benefit to which a participant is entitled under a plan. Under a defined contribution plan, a participant's accrued benefit is the balance to the credit of the participant's account. Under a defined benefit plan, a participant's accrued benefit is his accrued benefit determined under the plan. A defined benefit plan is not a qualified plan unless the method provided by the plan for determining accrued benefits satisfies at least one of the alternative methods (described in paragraph (b) of this section) for determining accrued benefits with respect to all active participants under the plan. A defined benefit plan may provide that accrued benefits for participants are determined under more than one plan formula. In such a case, the accrued benefits under all such formulas must be aggregated in order to determine whether or not the accrued benefits under the plan for participants satisfy one of the alternative methods. A plan may satisfy different methods with respect to different classifications of employees, or separately satisfy one method with respect to the accrued benefits for each such classification, provided that such classifications are not so structured as to evade the accrued benefit requirements of section 411(b) and this section. (For example, if a plan provides that employees who commence participation at or before age 40 accrue benefits in a manner which satisfies the $133^{1}/_{3}$ percent method of determining accrued benefits and employees who commence participation after age 40 accrue benefits in a manner which satisfies the 3 percent method of determining accrued benefits, the plan would be so structured as to evade the requirements of section 411(b).) A defined benefit plan does not satisfy the requirements of section 411(b) and this section merely because the

accrued benefit is defined as the "reserve under the plan". Special rules are provided for the first two years of service by a participant, certain insured defined benefit plans, and certain reductions in accrued benefits due to increasing age or service. In addition, a special rule is provided with respect to accruals for service before the effective date of section 411.

(2) *Cross references* —

(i) ***3 percent method.*** For rules relating to the 3 percent method of determining accrued benefits, see paragraph (b)(1) of this section.

(ii) ***133 1/3 percent method.*** For rules relating to the 133 1/3 percent method of determining accrued benefits, see paragraph (b)(2) of this section.

(iii) ***Fractional method.*** For rules relating to the fractional method of determining accrued benefits, see paragraph (b)(3) of this section.

(iv) ***Accruals before effective date.*** For rules relating to accruals for service before the effective date of section 411, see paragraph (c) of this section.

(v) ***First 2 years of service.*** For special rules relating to determination of accrued benefit for first 2 continuous years of service, see paragraph (d)(1) of this section.

(vi) ***Certain insured plans.*** For special rules relating to determination of accrued benefit under a defined benefit plan funded exclusively by insurance contracts, see paragraph (d)(2) of this section.

(vii) ***Accruals decreased by increasing age or service.*** For special rules relating to prohibition of decrease in accrued benefit on account of increasing age or service, see paragraph (d)(3) of this section.

(viii) ***Separate accounting.*** For rules relating to requirements for separate accounting, see paragraph (e) of this section.

(ix) ***Year of participation.*** For definition of "year of participation", see paragraph (f) of this section.

(b) ***Defined benefit plans.*** A defined benefit plan satisfies the requirements of section 411(b)(1) and this paragrah for a plan year to which section 411 and this section apply if it satisfies the requirements of subparagraph (1), (2), or (3) of this paragraph for such year.

(1) *3 percent method* —

(i) ***General rule.*** A defined benefit plan satisfies the requirements of this paragraph for a plan year if, as of the close of the plan year, the accrued benefit to which each participant is entitled, computed as if the participant separated from the service as of the close of such plan year, is not less than 3 percent of the 3 percent method benefit, multiplied by the number of years (not in excess of 33 1/3) of his participation in the plan including years after his normal retirement age. For purposes of this subparagraph, the "3 percent method benefit" is the normal retirement benefit to which the participant would be entitled if he commenced participation at the earliest possible entry age for any individual who is or could be a participant under the plan and if he served continuously until the earlier of age 65 or the normal retirement age under the plan.

(ii) *Special rules* —

(A) ***Compensation.*** In the case of a plan providing a retirement benefit based upon compensation during any period, the normal retirement benefit to which a participant would be entitled is determined as if he continued to earn annually the average rate of compensation which he earned during consecutive years of service, not in excess of 10, for which his compensation was the highest. For purposes of this subdivision (A), the number of consecutive years of service used in computing average compensation shall be the number of years of service specified under the plan (not in excess of 10) for computing normal retirement benefits.

(B) ***Social security, etc.*** For purposes of this subparagraph, for any plan year, social security benefits and all relevant factors used to compute benefits, e.g., consumer price index, are treated as remaining constant as of the beginning of the current plan year for all subsequent plan years.

(C) ***Computation in certain cases.*** In the case of any plan to which the provisions of section 411(b)(1)(D) and paragraph (c) of this section are applicable, for any plan year the accrued benefit of any participant shall not be less than the accrued benefit otherwise determined under this subparagraph, reduced by the excess of the accrued benefit determined under this subparagraph as of the first day of the first plan year to which section 411 applies over the accrued benefit determined under section 411(b)(1)(D) and paragraph (c) of this section and increased by the amount determined under paragraph (c)(2)(v) of this section.

(iii) ***Examples.*** The application of this subparagraph is illustrated by the following examples.

Example 1. The M Corporation's defined benefit benefit plan provides an annual retirement benefit commencing at age 65 or $4 per month for each year of participation. As a condition of participation, the plan requires that an employee have attained age 25. The normal retirement age specified under the plan is age 65. The plan provides for no limit on the number of years of credited service. A, age 40, is a participant in the M Corporation's plan. A has completed 12 years of participation in the plan of the M Corporation as of the close of the plan year. Under subdivision (i) of this subparagraph, the normal retirement benefit commencing at age 65 to which a participant would be entitled if he commenced participation at the earliest possible entry age (25) under the plan and served continuously until normal retirement age (65) is an annual benefit of $1,920 [40 × (12 × $4)]. Under paragraph (b)(1)(i) of this section, the plan does not satisfy the requirements of this subparagraph unless A has accrued an annual benefit of at least $691 [0.03 × ($1,920 × 12)] as of the close of the plan year. Under the M Corporation plan, A is entitled to an accrued benefit of $576 [(12 × 12) × $4] as of the close of the plan year. Thus, with respect to A, the accrued benefit provided under the M Corporation plan does not satisfy the requirements of this subparagraph.

Example 2. Assume the same facts as in example (1) except that the M Corporation's plan provides that only the first 30 years of participation are taken into account. Under subdivision (i) of this subparagraph, the normal retirement benefit commencing at age 65 to which a participant would be entitled if he commenced participation at the earliest possible entry age under the plan (25) and served continuously until normal retirement age (65) is an annual benefit of $1.440 [30 × $48]. Under paragraph (b)(1)(i) of this section, the plan does not satisfy the requirements of this subparagraph unless A has accrued an annual benefit of at least $518 [0.03 × ($1,440 × 12)] as of the close of the plan

year. Under the M Corporation plan, A is entitled to an accrued benefit of $576 [(12 × $48]. Thus, with respect to A, the accrued benefit provided under the M Corporation plan satisfies the requirements of this subparagraph.

Example 3. The N Corporation's defined benefit plan provides an annual retirement benefit commencing at age 65 of 50 percent of average compensation for the highest 3 consecutive years of compensation for an employee with 25 years of participation. A participant who separates from service before age 65 is entitled to 2 percent of average compensation for the highest 3 consecutive years of compensation for each year of participation not in excess of 25. The plan has no minimum age or service requirement for participation. The normal retirement age specified under the plan is age 65. On December 31, 1990, B, age 40, is a participant in the N Corporation's plan. B began employment with the N Corporation and became a participant in the N Corporation's plan on January 1, 1980. Under this subparagraph, the normal retirement benefit to which a participant would be entitled if he commenced participation at the earliest possible entry age (0) under the plan and served continuously until normal retirement age (65) is 50 percent of average compensation for the highest 3 consecutive years of compensation per year commencing at age 65. Under this subparagraph, B must have accrued an annual benefit of at least 16.5 percent of his highest 3 consecutive years of compensation per year commencing at age 65 [0.03 × 50 percent of average compensation for the highest 3 consecutive years of compensation × 11] as of the close of the plan year. Under the N Corporation plan, B has accrued an annual benefit of 22 percent of average compensation for his highest 3 consecutive years of compensation per year commencing at age 65. Thus, with respect to B, the accrued benefit under the N Corporation plan satisfies the requirements of this subparagraph.

Example 4. The P Corporation's defined benefit plan provides an annual retirement benefit commencing at age 65 of 50 percent of average compensation for the 3 consecutive years of compensation from the P Corporation next preceding normal retirement age. The plan has no minimum age or service requirement for participation. The normal retirement age under the plan is age 65. On December 31, 1990, C, age 55, separates from service with the P Corporation. C began employment with the P Corporation and became a participant in the P Corporation's plan on January 1, 1980. As of December 31, 1990. C's average compensation for the 3 consecutive years preceding his separation from service is $15,000. Under this subparagraph, the normal retirement benefit to which a participant would be entitled if he commenced participation at the earliest possible entry age (0) under the plan and served continuously until normal retirement age (65) is an annual benefit of 50 percent of average compensation for the 3 consecutive years of compensation from the P Corporation next preceding normal retirement age commencing at age 65. C must have accrued an annual benefit of at least $2,475 commencing at age 65 [0.03 × (0.050 × $15,000) × 11] as of his separation from the service with the P Corporation in order for the P Corporation's plan to satisfy the requirements of this subparagraph with respect to C.

Example 5. On December 31, 1985, the R Corporation's defined benefit plan provided an annual retirement benefit commencing at age 65 of $100 for each year of participation, not to exceed 30. As a condition of participation, the plan requires that an employee have attained age 25. The normal retirement age specified under the plan is age 65. The appropriate computation period is the calendar year. On January 1, 1986, the plan is

amended to provide an annual retirement benefit commencing at age 65 of $200 for each year of participation (before and after the amendment), not to exceed 30. B, age 40, is a participant in the R Corporation's plan. B has completed 15 years of participation in the plan of the R Corporation as of December 31, 1990. Under paragraph (b)(1)(i) of this section, the normal retirement benefit commencing at age 65 to which a participant would be entitled if he commenced participation at the earliest possible entry age (25) under the plan and served continuously until normal retirement age (65) is an annual benefit of $6,000 [30 × 200]. Under subdivision (i) of this subparagraph, the plan does not satisfy the requirements of this subparagraph unless B has accrued an annual benefit of at least $2,700 [0.03 × $6,000 × 15] as of December 31, 1990. Under the R Corporation plan, B is entitled to an accrued benefit of $3,000 [$200 × 15] as of December 31, 1990. Thus, with respect to B, the accrued benefit provided under the R Corporation plan satisfies the requirements of this subparagraph.

Example 6. On December 31, 1995, the J Corporation's defined benefit plan provided an annual retirement benefit commencing at age 65 of $4,800 after 30 years of participation. The normal retirement age specified under the plan is age 65. The appropriate computation period is the calendar year. On January 1, 1996, the plan is amended to provide an annual retirement benefit commencing at age 65 of $6,000. A, age 40, is a participant in the J Corporation's plan since its adoption on January 1, 1986. Under paragraph (b)(1)(i) of this section, on December 31, 1995, the normal retirement benefit commencing at age 5 to which a participant would be entitled if he commenced participation at the earliest possible entry age (0) under the plan and served continuously until normal retirement age (65) is an annual benefit of $4,800. Under paragraph (b)(1)(i) of this section, on January 1, 1996, the normal retirement benefit commencing at age 65 to which a participant would be entitled if he commenced participation at the earliest possible entry age (0) under the plan and served continuously until normal retirement age (65) is an annual benefit of $6,000. Under subdivision (i) of this subparagraph, the plan does not satisfy the requirements of this subparagraph unless A has an accrued benefit on December 31, 1995 of at least $1,440 [$4,800 × 0.02 × 10] and an accrued benefit on January 1, 1996 of at least $1,800 [$6,000 × 0.03 × 10].

Example 7. The X Company's defined benefit plan provides an annual retirement benefit commencing at age 65 of $4 per month for each year of participation (not to exceed 30). As a condition of participation, the plan requires that an employee have attained age 25. The normal retirement age specified under the plan is age 65. D, age 68, is a participant in the X Company's plan. D has completed 20 years of participation in the X Company plan as of the close of the plan year. Under paragraph (b)(1)(i) of this section, the normal retirement benefit commencing at age 65 to which a participant would be entitled if he commenced participation at the earliest possible entry age (25) under the plan and served continuously until normal retirement age (65) is an annual benefit, commencing at age 65, of $1,440 [30 × $48]. Under paragraph (b)(1)(i) of this section, the plan does not satisfy the requirements of this subparagraph unless D has accrued an annual benefit, commencing at age 65, of $864 [0.03 × $1,440 × 20] as of the close of the plan year. Under the X Company plan, D has accrued an annual benefit, commencing at age 65, of $960 [20 × $48]. Thus, with respect to D the accrued benefit provided under the X Company plan satisfies the requirements of this subparagraph.

Example 8. Assume the same facts as in example (7) except that for purposes of determining accrued benefits under the plan the X Company's plan disregards all years of participation after normal retirement age. Under paragraph (b)(1)(i) of this section, the normal retirement benefit commencing at age 65 to which a participant would be entitled if he commenced participation at the earliest possible entry age (25) under the plan and served continuously until normal retirement age (65) is an annual benefit of $1,440 [30 × $48]. Under paragraph (b)(1)(i) of this section the plan does not satisfy the requirements of this subparagraph unless D has accrued an annual benefit, commencing at age 65, of $864 [0.03 × $1,440 × 20] as of the close of the plan year. Under the X Company's plan D has accrued an annual benefit commencing at age 65, of $816 [17 × $48]. Thus, with respect to D, the accrued benefit provided under the X Company plan does not satisfy the requirements of this subparagraph.

(2) ***133 1/3 percent rule*** —

(i) ***General rule.*** A defined benefit plan satisfies the requirements of this subparagraph for a particular plan year if—

(A) Under the plan the accrued benefit payable at the normal retirement age (determined under the plan) is equal to the normal retirement benefit (determined under the plan), and

(B) The annual rate at which any individual who is or could be a participant can accrue the retirement benefits payable at normal retirement age under the plan for any later plan year cannot be more than 133 1/3 percent of the annual rate at which he can accrue benefits for any plan year beginning on or after such particular plan year and before such later plan year.

(ii) ***Special rules.*** For purposes of this subparagraph—

(A) ***Plan amendments.*** Any amendment to the plan which is in effect for the current plan year shall be treated as if it were in effect for all other plan years.

(B) ***Change in accrual rate.*** Any change in an accrual rate which change does not apply to any individual who is of could be a participant in the plan year is disregarded. Thus, for example, if for its plan year beginning January 1, 1980, a defined benefit plan provides an accrued benefit in plan year 1980 of 2 percent of a participant's average compensation for his highest 3 years of compensation for each year of service and provides that in plan year 1981 the accrued benefit will be 3 percent of such average compensation, the plan will not be treated as failing to satisfy the requirements of this subparagraph for plan year 1980 because in plan year 1980 the change in the accrual rate does not apply to any individual who is or could be a participant in plan year 1980. However, if, for example, a defined benefit plan provided for an accrued benefit of 1 percent of a participant's average compensation for his highest 3 years of compensation for each of the first 10 years of service and 1.5 percent of such average compensations for each year of service thereafter, the plan will be treated as failing to satisfy the requirements of this subparagraph for the plan year even though no participant is actually accruing at the 1.5 percent rate because an individual who could be a participant and who had over 10 years of service would accrue at the 1.5 percent rate, which rate exceeds 133 1/3 percent of the 1 percent rate.

(C) ***Early retirement benefits.*** The fact that certain benefits under the plan may be payable to certain participants before normal retirement age is disregarded. Thus, the requirements of subdivision (i) of this subparagraph must be satisfied without regard to any benefit payable prior to the normal retirement benefit (such as an early retirement benefit which is not the normal retirement benefit (see § 1.411(a)-7(c).

(D) ***Social security, etc.*** For purposes of this paragraph, for any plan year, social security benefits and all relevant factors used to compute benefits, e.g., consumer price index, are treated as remaining constant as of the beginning of the current plan year for all subsequent plan years.

(E) ***Postponed retirement.*** A plan shall not be treated as failing to satisfy the requirements of this subparagraph for a plan year merely because no benefits under the plan accrue to a participant who continues service with the employer after such participant has attained normal retirement age.

(F) ***Computation of benefit.*** A plan shall not satisfy the requirements of this subparagraph if the base for the computation of retirement benefits changes solely by reason of an increase in the number of years of participation. Thus, for example, a plan will not satisfy the requirements of this subparagraph if it provides a benefit, commencing at normal retirement age, of the sum of (*1*) 1 percent of average compensation for a participant's first 3 years of participation multiplied by his first 10 years of participation (or, if less than 10 his total years of participation) and (*2*) 1 percent of average compensation for a participant's 3 highest years of participation multiplied by each year of participation subsequent to the 10th year.

(G) ***Variable interest crediting rate under a statutory hybrid benefit formula.*** For plan years that begin on or after January 1, 2012 (or an earlier date as elected by the taxpayer), a plan that determines any portion of the participant's accrued benefit pursuant to a statutory hybrid benefit formula (as defined in § 1.411(a)(13)-1(d)(4)) that utilizes an interest crediting rate described in § 1.411(b)(5)-1(d) that is a variable rate that was less than zero for the prior plan year is not treated as failing to satisfy the requirements of paragraph (b)(2) of this section for the current plan year merely because the plan assumes for purposes of paragraph (b)(2) of this section that the variable rate is zero for the current plan year and all future plan years.

(H) ***Special rule for multiple formulas.*** [Reserved]

(iii) ***Examples.*** The application of this subparagraph is illustrated by the following examples:

Example 1. On January 1, 1980, the R Corporation's defined benefit plan provides for an annual benefit (commencing at age 65) of a percentage of a participant's average compensation for the period of 5 consecutive years of participation for which his compensation is the highest. The percentage is 2 percent for each of the first 20 years of participation and 1 percent per year thereafter. The appropriate computation period is the calendar year. The R Corporation's plan satisfies the requirements of this subparagraph because the $133^{1}/_{3}$ percent rule does not restrict subsequent accrual rate decreases.

Example 2. On January 1, 1980, the J Corporation's defined benefit plan provides for an annual benefit (commencing at age 65) of a percentage of a participant's average compensation for the period of his final 5 consecutive years of participation. The percentage is 1 percent

for each of the first 5 years of participation; $1^{1}/_{3}$ percent for each of the next 5 years of participation; and $1^{7}/_{9}$ percent for each year thereafter. The appropriate computation period is the calendar year. Even though no single accrual rate under the J Corporation's plan exceeds $133^{1}/_{3}$ percent of the immediately preceding accrual rate, the J Corporation's plan does not satisfy the requirements of this subparagraph because the rate of accrual for all years of participation in excess of 10 ($1^{7}/_{9}$ percent) exceeds $133^{1}/_{3}$ percent of the rate of accrual for any of the first 5 years of participation (1 percent).

Example 3. On January 1, 1980, the C Corporation's defined benefit plan provides for an annual benefit (commencing at age 65) of a percentage of a participant's average compensation for the period of 3 consecutive years of participation for which his compensation is the highest. The percentage is 2 percent for each of the first 5 years of participation; 1 percent for each of the next 5 years of participation; and $1^{1}/_{2}$ percent for each year thereafter. The appropriate computation period is the calendar year. Even though the average rate of accrual under the C Corporation's plan is not less rapidly than ratably, the C Corporation's plan does not satisfy the requirements of this subparagraph because the rate of accrual for all years of participation in excess of 10 ($1^{1}/_{2}$ percent) for any employee who is actually accruing benefits or who could accrue benefits exceeds $133^{1}/_{3}$ percent of the rate of accrual for the sixth through tenth years of participation, respectively (1 percent).

(3) ***Fractional rule*** —

(i) ***In general.*** A defined benefit plan satisfies the requirements of this paragraph if the accrued benefit to which any participant is entitled is not less than the fractional rule benefit multiplied by a fraction (not exceeding 1)—

(A) The numerator of which is his total number of years of participation in the plan, and

(B) The denominator of which is the total number of years he would have participated in the plan if he separated from the service at the normal retirement age under the plan.

(ii) ***Special rules.*** For purposes of this subparagraph—

(A) ***Fractional rule benefit.*** The "fractional rule benefit" is the annual benefit commencing at the normal retirement age under the plan to which a participant would be entitled if he continued to earn annually until such normal retirement age the same rate of compensation upon which his normal retirement benefit would be computed. Such rate of compensation shall be computed on the basis of compensation taken into account under the plan (but taking into account average compensation for no more than the 10 years of service immediately preceding the determination). For purposes of this subdivision (A), the normal retirement benefit shall be determined as if the participant had attained normal retirement age on the date any such determination is made.

(B) ***Social security, etc.*** For purposes of this subparagraph, for any plan year, social security benefits and all relevant factors used to compute benefits, e.g., consumer price index, are treated as remaining constant as of the beginning of the current plan year for all subsequent plan years.

(C) ***Postponed retirement.*** A plan shall not be treated as failing to satisfy the requirements of this subparagraph merely because no benefits under the plan accrue to a participant who continues service with the employer after such participant has attained normal retirement age under the plan.

(D) ***Computation in certain cases.*** In the case of any plan to which the provisions of section 411(b)(1)(D) and paragraph (c) of this section are applicable, for any plan year the accrued benefit of any participant shall not be less than the accrued benefit otherwise determined under this subparagraph, reduced by the excess of the accrued benefit determined under this subparagraph as of the first day of the first plan year to which section 411 applies over the accrued benefit determined under section 411(b)(1)(D) and paragraph (c) of this section and increased by the amount determined under paragraph (c)(2)(v) of this section.

(iii) ***Examples.*** The application of this subparagraph is illustrated by the following examples:

Example 1. The R Corporation's defined benefit plan provides an annual retirement benefit commencing at age 65 of 30 percent of a participant's average compensation for his highest 3 consecutive years of participation. If a participant separates from service prior to normal retirement age, the R Corporation's plan provides a benefit equal to an amount which bears the same ratio to 30 percent of such average compensation as the participant's actual number of years of participation in the plan bears to the number of years the participant would have participated in the plan had he separated from service at age 65. The plan further provides that normal retirement age is age 65. A, age 55, is a participant in the R Corporation's plan for the current year, and A has 15 years of participation in the R Corporation's plan. As of the current year, A's average compensation for his highest 3 years of compensation is $20,000. The R Corporation's plan satisfies the requirements of this subparagraph because if A separates from the service in the current year he will be entitled to an annual benefit of $3,600 commencing at age 65 [0.3 × $20,000 × 15/25].

Example 2. The J Corporation's defined benefit plan provides a normal retirement benefit of 1 percent per year of a participant's average compensation from the employer. In the case of a participant who separates from service prior to normal retirement age (65), the plan provides that the annual benefit is an amount which is equal to 1 percent of such compensation multiplied by the number of years of plan participation actually completed by the participant. The plan year of the J Corporation's plan is the calendar year. B, age 55, is a participant in the J Corporation's plan for the current year. B became a participant in the J Corporation's plan on January 1, 1980. As of December 31, 1990, B's compensation history is as follows:

Year	Compensation
1980	$17,000
1981	18,000
1982	20,000
1983	20,000
1984	21,000

Year	Compensation
1985	22,000
1986	23,000
1987	25,000
1988	26,000
1989	29,000
1990	32,000

If B separates from service on December 31, 1990, he would be entitled to an annual benefit of $2,530 commencing at age 65. Because the J Corporation's plan does not limit the number of years of compensation to be taken into account in determining the normal retirement benefit, B's rate of compensation for purposes of determining his normal retirement benefit is $23,600 [$18,000 + $20,000 + $20,000 + $21,000 + $22,000 + $23,000 + $25,000 + $26,000 + $29,000 + $32,000]/10. Under this subparagraph, B's accrued benefit under the J Corporation's plan as of December 31, 1990 must be not less than $2,561 per year commencing at age 65 [0.01 × ($17,000 + $18,000 + $20,000 + $20,000 + $21,000 + $22,000 + $23,000 + $25,000 + $26,000 + $29,000 + $32,000 + ($23,600 × 10)) × 11/21]. Thus, the J Corporation's plan would not satisfy the requirements of this subparagraph.

(c) *Accruals for service before effective date* —

(1) *General rule.* For a plan year to which section 411 applies, a defined benefit plan does not satisfy the requirements of section 411(b)(1) and this section unless, under the plan, the accrued benefit of each participant for plan years beginning before section 411 applies is not less than the greater of—

(i) Such participant's accrued benefit (as of the day before section 411 applies) determined under the plan as in effect from time to time prior to September 2, 1974 (without regard to any amendment adopted after such date), or

(ii) One-half of the accrued benefit that would be determined with respect to the participant as of the day before section 411 applies if the participant's accrued benefit were computed for such prior plan years under a method which satisfies the requirements of section 411(b)(1) (A), (B), or (C) and paragraph (b) (1), (2), or (3) of this section. See 29 CFR Part 2530, Department of Labor regulations relating to minimum standards for employee pension benefit plans, for time participation deemed to begin.

(2) *Special rules* —

(i) A plan shall not be deemed to fail to satisfy the requirements of section 411(b) and this section merely because the method for computing the accrued benefit of a participant for years of participation prior to the first plan year for which section 411 is effective with respect to the plan is not the same method for computing the accrued benefit of a participant for years of participation subsequent to such plan year.

(ii) For purposes of paragraph (c)(1)(ii) of this section, section 411(b)(1)(A) and paragraph (b)(1) of this section shall be applied as if the participant separated from service with the employer on the day before the first day of the first plan year to which section 411 applies.

(iii) For purposes of paragraph (c)(1)(ii) of this section, section 411(b)(1)(B) and paragraph (b)(2) of this section shall be applied in the following manner:

(A) Except as provided in (c)(2)(iii)(B) of this section, section 411(b)(1)(B) and paragraph (b)(2) of this section shall be applied as if the participant separated from service with the employer on the day before the first day of the first plan year to which section 411 applies.

(B) In the case that the plan does not satisfy the requirements of section 411(b)(1)(B) and paragraph (b)(2) of this section at any time prior to the day specified in (c)(2)(iii)(A) of this section, the plan shall be deemed revised to the extent necessary to satisfy the requirements of section 411(b)(1)(B) and paragraph (b)(2) of this section for all plan years beginning before the applicable effective date of section 411 and this section. For purposes of the preceding sentence, a plan shall not be deemed revised to the extent necessary to satisfy the requirements of section 411(b)(1)(B) and paragraph (b)(2) of this section for a plan year if the benefit a participant would receive if he were employed until normal retirement age is reduced by such revision or if the revised rate of accrual with respect to such accrued benefit does not otherwise satisfy the requirements of section 411(b)(1)(B) and paragraph (b)(2) of this section.

(iv) For purposes of paragraph (c)(1)(ii) of this section, section 411(b)(1)(C) and paragraph (b)(3) of this section shall be applied as if the participant separated from service on the day before the first day of the first plan year to which section 411 applies.

(v) The excess of the accrued benefit payable at normal retirement age of any participant determined under section 411(b)(1) (A), (B), or (C) (without regard to section 411(b)(1)(D)), and paragraph (b)(1), (2), or (3) of this section (without regard to this paragraph) as of the day before the first day of the first plan year to which section 411 and this section applies over the accrued benefit determined under paragraph (c)(1) of this section shall be accrued in accordance with the provisions of the plan as in effect after the applicable effective date of section 411, as if the plan had been initially adopted on such effective date.

(d) *Special rules* —

(1) ***First 2 years of service.*** Notwithstanding paragraphs (1), (2), and (3) of paragraph (b) of this section, under section 411(b)(1)(E) and this subparagraph, a plan shall not be treated as failing to satisfy the requirements of paragraph (b) of this section solely because the accrual of benefits under the plan does not become effective until the employee has completed 2 continuous years of service. For purposes of this subparagraph, continuous years of service are years of service (within the meaning of section 410(a)(3)(A)) which are not separated by a break in service (within the meaning of section 410(a)(5)). For years of service beginning after such 2 years of service, the accrued benefit of an employee shall not be less than that to which the employee would be entitled if section 411(b)(1)(E) and this subparagraph did not apply. Thus, for example, a plan which otherwise satisfies the requirements of paragraph (b)(2) of this section provides for a rate of accrual of 1 percent of average compensation for the highest 3 years of compensation beginning with the third year of service of a participant shall not be treated as satisfying paragraph (b)(2) of this section because as of the time the employee completes 3 continuous years of service there is no accrual during the first 2 years of service. In addition, a plan which otherwise satisfies the requirements of paragraph (b)(1)

of this section and which requires that an employee must attain age 25 and complete 1 year of service prior to becoming a participant will not satisfy the requirements of paragraph (b)(1) of this section if an employee who completes 2 years of service prior to attaining age 25 does not begin accruals immediately upon commencement of participation in the plan. For rules relating to years of service, see 29 CFR part 2530, Department of Labor regulations relating to minimum standards for employee pension benefit plans.

(2) ***Certain insured defined benefit plans.*** Notwithstanding paragraphs (b) (1), (2), and (3) of this section, a defined benefit plan satisfies the requirements of paragraph (b) of this section if such plan is funded exclusively by the purchase of contracts from a life insurance company and such contracts satisfy the requirements of sections 412(i) (2) and (3) and the regulations thereunder. The preceding sentence is applicable only if an employee's accrued benefit as of any applicable date is not less than the cash surrender value such employee's insurance contracts would have on such applicable date if the requirements of section 412(i) (4), (5), and (6) and the regulations thereunder were satisfied.

(3) ***Accrued benefit may not decrease on account of increasing age or service.*** Notwithstanding paragraphs (b) (1), (2), and (3) of this section and paragraphs (d) (1) and (2) of this section, a defined benefit plan shall be treated as not satisfying the requirements of paragraphs (b) and (d) of this section if the participant's accrued benefit is reduced on account of any increase in his age or years of service. The preceding sentence shall not apply to social security supplements described in § 1.411(a)-7(c)(4).

(e) ***Separate accounting.*** A plan satisfies the requirements of this paragraph if the requirements of paragraph (e) (1) or (2) of this paragraph are met.

(1) ***Defined benefit plan.*** In the case of a defined benefit plan, the requirements of this paragraph are satisfied if the plan requires separate accounting for the portion of each employee's accrued benefit derived from any voluntary employee contributions permitted under the plan. For purposes of this subparagraph the term “voluntary employee contributions” means all employee contributions which are not mandatory contributions within the meaning of section 411(c)(2)(C) and the regulations thereunder. See § 1.411(c)-1(b)(1) for rules requiring the determination of such an accrued benefit by the use of a separate account.

(2) ***Defined contribution plan.*** In the case of a defined contribution plan, the requirements of this paragraph are not satisfied unless the plan requires separate accounting for each employee's accrued benefit. If a plan utilizes the break in service rule of section 411(a)(6)(C), an employee could have different percentages of vesting between pre-break and post-break accrued benefits. In such a case, the requirements of this paragraph are not satisfied unless the plan computes accrued benefits in a manner which takes into account different percentages. A plan which provides separate accounts for pre-break and post-break accrued benefits will be deemed to compute benefits in a reasonable manner.

(f) ***Year of participation*** —

(1) ***In general.*** This paragraph is inapplicable to a defined contribution plan. For purposes of determining an employee's accrued benefit, a “year of participation” is a period of service determined under regulations prescribed by the Secretary of Labor in 29 CFR Part 2530, relating to minimum standards for employee pension benefit plans.

(2) ***Additional rule relating to year of participation.*** A trust shall not constitute a qualified trust if the plan of which such trust is a part provides for the crediting of a year of participation, or part thereof, and such credit results in the discrimination prohibited by section 401(a)(4).

(g) ***Additional illustrations.*** The application of this section may be illustrated by the following example:

> *Example.* (i) The S Corporation established a defined benefit plan on January 1, 1980. The plan provides a minimum age for participation of age 25. The normal retirement age under the plan is age 65. The appropriate computation periods are the calendar year. The plan provides an annual benefit, commencing at age 65, equal to $96 per year of service for the first 25 years of service, and $48 per year of service for each additional year of service.
> (ii) The plan of the S Corporation does not satisfy the requirements of section 411(b)(1)(A) and paragraph (b)(1) of this section because the accrued benefit under the plan at some point will be less than the accrued benefit required under section 411(b)(1)(A) and paragraph (b)(1) of this section (i.e., 3 percent × normal retirement benefit × years of participation).
>
> (iii) The plan of the S Corporation does satisfy the requirements of section 411(b)(1)(B) and paragraph (b)(2) of this section because the rate of benefit accrual is equal in each of the first 25 years of service and the rate decreases thereafter.
>
> (iv) The plan of the S Corporation does satisfy the requirements of section 411(b)(1)(C) and paragraph (b)(3) of this section because the accrued benefit under the plan will equal or exceed the normal retirement benefit multiplied by the fraction described in paragraph (b)(3)(i) of this section.

(Sec. 411 (88 Stat. 901; 26 U.S.C. 411))

[T.D. 7501, 42 FR 42334, Aug. 23, 1977, as amended by T.D. 9693, 79 FR 56459, Sept. 19, 2014]

§ 1.411(b)(5)-1 Reduction in rate of benefit accrual under a defined benefit plan.

(a) ***In general*** —

(1) ***Organization of regulation.*** This section sets forth certain rules for determining whether a reduction occurs in the rate of benefit accrual under a defined benefit plan because of the attainment of any age for purposes of section 411(b)(1)(H)(i). Paragraph (b) of this section describes safe harbors for certain plan designs (including statutory hybrid plans) that are deemed to satisfy the age discrimination rules under section 411(b)(1)(H). Paragraph (c) of this section describes rules relating to statutory hybrid plan conversion amendments. Paragraph (d) of this section describes rules restricting interest credits (or equivalent amounts) under a statutory hybrid plan to a market rate of return. Paragraph (e) of this section contains additional rules related to market rates of return. Paragraph (f) of this section contains effective/applicability dates.

(2) ***Definitions.*** The definitions of accumulated benefit, lump sum-based benefit formula, statutory hybrid benefit formula, statutory hybrid plan, and variable annuity benefit formula in § 1.411(a)(13)-1(d) apply for purposes of this section.

(b) ***Safe harbors for certain plan designs*** —

(1) *Accumulated benefit testing* —

(i) ***In general.*** Pursuant to section 411(b)(5)(A), and subject to paragraph (b)(1)(ii) of this section, a plan is not treated as failing to meet the requirements of section 411(b)(1)(H)(i) with respect to an individual who is or could be a participant if, as of any date, the accumulated benefit of the individual would not be less than the accumulated benefit of any similarly situated, younger individual who is or could be a participant. Thus, this test involves a comparison of the accumulated benefit of an individual who is or could be a participant in the plan with the accumulated benefit of each similarly situated, younger individual who is or could be a participant in the plan. See paragraph (b)(5) of this section for rules regarding whether a younger individual who is or could be a participant is similarly situated to a participant. The comparison described in this paragraph (b)(1)(i) is based on any one of the following benefit measures, each of which is referred to as a *safe-harbor formula measure:*

(A) The annuity payable at normal retirement age (or current age, if later) if the accumulated benefit of the participant under the terms of the plan is an annuity payable at normal retirement age (or current age, if later).

(B) The current balance of a hypothetical account maintained for the participant if the accumulated benefit of the participant is the current balance of a hypothetical account.

(C) The current value of an accumulated percentage of the participant's final average compensation if the accumulated benefit of the participant is the current value of an accumulated percentage of the participant's final average compensation.

(ii) *Benefit formulas for comparison* —

(A) ***In general.*** Except as provided in paragraphs (b)(1)(ii)(B), (C), (D) and (E) of this section, the safe harbor provided by section 411(b)(5)(A) and paragraph (b)(1)(i) of this section is available only with respect to a participant if the participant's accumulated benefit under the plan is expressed in terms of only one safe-harbor formula measure and no similarly situated, younger individual who is or could be a participant has an accumulated benefit that is expressed in terms of any measure other than that same safe-harbor formula measure. Thus, for example, if a plan provides that the accumulated benefit of participants who are age 55 or older is expressed under the terms of the plan as a life annuity payable at normal retirement age (or current age if later) as described in paragraph (b)(1)(i)(A) of this section and the plan provides that the accumulated benefit of participants who are younger than age 55 is expressed as the current balance of a hypothetical account as described in paragraph (b)(1)(i)(B) of this section, then the safe harbor described in section 411(b)(5)(A) and paragraph (b)(1)(i) of this section does not apply to individuals who are or could be participants and who are age 55 or older.

(B) ***Sum-of benefit formulas.*** If a plan provides that a participant's accumulated benefit is expressed as the sum of benefits determined in terms of two or more benefit formulas, each of which is expressed in terms of a different safe-harbor formula measure, then the plan is deemed to satisfy paragraph (b)(1)(i) of this section with respect to the participant, provided that the plan satisfies the comparison described in paragraph (b)(1)(i) of this section separately for benefits determined in terms of each safe-harbor formula measure and no accumulated benefit of a similarly situated, younger individual who is or could be a participant is expressed other than as—

(1) The sum of benefits under two or more benefit formulas, each of which is expressed in terms of one of those same safe-harbor formula measures as is used for the participant's “sum-of” benefit;

(2) The greater of benefits under two or more benefit formulas, each of which is expressed in terms of any one of those same safe-harbor formula measures;

(3) The choice of benefits under two or more benefit formulas, each of which is expressed in terms of any one of those same safe-harbor formula measures;

(4) A benefit that is determined in terms of only one of those same safe-harbor formula measures; or

(5) The lesser of benefits under two or more benefit formulas, at least one of which is expressed in terms of one of those same safe-harbor formula measures.

(C) ***Greater-of benefit formulas.*** If a plan provides that a participant's accumulated benefit is expressed as the greater of benefits under two or more benefit formulas, each of which is determined in terms of a different safe-harbor formula measure, then the plan is deemed to satisfy paragraph (b)(1)(i) of this section with respect to the participant, provided that the plan satisfies the comparison described in paragraph (b)(1)(i) of this section separately for benefits determined in terms of each safe-harbor formula measure and no accumulated benefit of a similarly situated, younger individual who is or could be a participant is expressed other than as—

(1) The greater of benefits determined under two or more benefit formulas, each of which is expressed in terms of one of those same safe-harbor formula measures as is used for the participant's “greater-of” benefit;

(2) The choice of benefits determined under two or more benefit formulas, each of which is expressed in terms of one of those same safe-harbor formula measures;

(3) A benefit that is determined in terms of only one of those same safe-harbor formula measures; or

(4) The lesser of benefits under two or more benefit formulas, at least one of which is expressed in terms of one of those same safe-harbor formula measures.

(D) ***Choice-of benefit formulas.*** If a plan provides that a participant's accumulated benefit is determined pursuant to a choice by the participant between benefits determined in terms of two or more different safe-harbor formula measures, then the plan is deemed to satisfy paragraph (b)(1)(i) of this section with respect to the participant, provided that the plan satisfies the comparison described in paragraph (b)(1)(i) of this section separately for benefits determined in terms of each safe-harbor formula measure and no accumulated benefit of a similarly situated, younger individual who is or could be a participant is expressed other than as—

(1) The choice of benefits determined under two or more benefit formulas, each of which is expressed in terms of one of those same safe-harbor formula measures as is used for the participant's “choice-of” benefit;

(2) A benefit that is determined in terms of only one of those same safe-harbor formula measures; or

(*3*) The lesser of benefits under two or more benefit formulas, at least one of which is expressed in terms of one of those same safe-harbor formula measures.

(E) ***Lesser-of benefit formulas.*** If a plan provides that a participant's accumulated benefit is expressed as a single safe-harbor formula measure and no accumulated benefit of a similarly situated, younger individual who is or could be a participant is expressed other than as a benefit that is determined under the same safe-harbor formula measure or as the lesser of benefits under two or more benefit formulas, at least one of which is expressed in terms of the same safe-harbor formula measure, then the plan is deemed to satisfy paragraph (b)(1)(i) of this section with respect to the participant only if the plan satisfies the comparison described in paragraph (b)(1)(i) of this section for benefits determined in terms of the same safe-harbor formula measure. Similarly, if a plan provides that a participant's accumulated benefit is expressed as the lesser of benefits under two or more benefit formulas, each of which is determined in terms of a different safe-harbor formula measure, then the plan is deemed to satisfy paragraph (b)(1)(i) of this section with respect to the participant only if the plan satisfies the comparison described in paragraph (b)(1)(i) of this section separately for benefits determined in terms of each safe-harbor formula measure and no accumulated benefit of a similarly situated, younger individual who is or could be a participant is expressed other than as the lesser of benefits under two or more benefit formulas, expressed in terms of all of those same safe-harbor formula measures (and any other additional formula measures).

(F) ***Limitations on plan formulas that provide for hypothetical accounts or accumulated percentages of final average compensation.*** For plan years described in paragraph (f)(2)(i)(B)(*1*) or (f)(2)(i)(B)(*3*) of this section (as applicable), a benefit measure is a safe harbor formula measure described in paragraph (b)(1)(i)(B) or (C) of this section only if the formula under which the balance of a hypothetical account or the accumulated percentage of final average compensation is determined is a lump-sum based benefit formula.

(iii) ***Disregard of certain subsidized benefits.*** For purposes of paragraph (b)(1)(i) of this section, any subsidized portion of an early retirement benefit that is included in a participant's accumulated benefit is disregarded. For this purpose, an early retirement benefit includes a subsidized portion only if it provides a higher actuarial present value on account of commencement before normal retirement age. However, for plan years described in paragraph (f)(2)(i)(B)(*1*) or (f)(2)(i)(B)(*3*) of this section (as applicable), if the annual benefit payable before normal retirement age is greater for a participant than the annual benefit under the corresponding form of benefit for any similarly situated, older individual who is or could be a participant and who is currently at or before normal retirement age, then that excess is not part of the subsidized portion of an early retirement benefit and, accordingly, is not disregarded under this paragraph (b)(1)(iii). For purposes of determining whether the annual benefit payable before normal retirement age is greater for a participant than the annual benefit under the corresponding form of benefit for any similarly situated, older individual who is or could be a participant, social security leveling options and social security supplements are disregarded. In addition, a plan is not treated as providing a greater annual benefit to a participant than to a similarly situated, older individual who is or could be a participant merely because the reduction (based on actuarial equivalence, using reasonable actuarial assumptions) in the amount of an annuity to reflect a survivor benefit is smaller for the participant than for a similarly situated, older individual who is or could be a participant.

(iv) ***Examples.*** The provisions of this paragraph (b)(1) are illustrated by the following examples:

> *Example 1.* (i) *Facts relating to formulas described in paragraph (b)(1)(i)(A) of this section.* Employer X maintains a defined benefit plan that provides a straight life annuity payable commencing at normal retirement age (which is age 65) equal to 1 percent of the participant's highest 3 consecutive years' compensation times years of service and provides for suspension of benefits as permitted under section 411(a)(3)(B). In the case of a participant whose service continues after normal retirement age, the amount payable is the greater of (i) the benefit payable at normal retirement age, and for each year thereafter, actuarially increased to account for delayed commencement, and (ii) the retirement benefit determined under the formula at the date the employee's service ceases (calculated by including years of service and increases in compensation after normal retirement age).
> (ii) *Conclusion.* Under these facts, the plan formula is a formula described in paragraph (b)(1)(i)(A) of this section. The formula is not a statutory hybrid benefit formula merely because the plan formula includes a benefit that is based on the participant's benefit at normal retirement age (and each year thereafter) that is actuarially increased for commencement after attainment of normal retirement age. In addition, the plan formula would satisfy the comparison under paragraph (b)(1)(i) of this section for each individual who is or could be a participant because, as of any date (including any date after normal retirement age), the accumulated benefit of the individual would not be less than the accumulated benefit of any similarly situated, younger individual who is or could be a participant.

> *Example 2.* (i) *Facts relating to formulas described in paragraph (b)(1)(i)(B) of this section.* Employer Y maintains a defined benefit plan that expresses each participant's accumulated benefit as the balance of a hypothetical account. Under the formula, the hypothetical account balance of each participant is credited monthly with interest at a specified rate and the hypothetical account balance of each employee who is a participant is also credited with a pay credit under the plan equal to 7 percent of the participant's compensation for the month.
> (ii) *Conclusion.* The plan formula is a lump sum-based benefit formula described in paragraph (b)(1)(i)(B) of this section and the formula would satisfy the comparison under paragraph (b)(1)(i) of this section for each individual who is or could be a participant because, as of any date, the hypothetical account balance of the individual would not be less than the hypothetical account balance of any similarly situated, younger individual who is or could be a participant.

> *Example 3.* (i) *Facts where plan suspends interest credits after normal retirement age.* The facts are the same as in *Example 2* except that the plan provides for suspension of

benefits as permitted under section 411(a)(3)(B). Pursuant to the plan's suspension of benefits provision, the plan provides for interest credits to cease during service after normal retirement age or for the amount of the interest credits during this service to be reduced to reflect principal credits credited.
(ii) *Conclusion.* The plan does not satisfy the safe harbor in paragraph (b)(1)(i) of this section. Applying the rule of paragraph (b)(1)(i) of this section, the plan formula would fail to satisfy the safe harbor comparison under paragraph (b)(1)(i) of this section with respect to an individual whose benefits have been suspended because, as of any date after attainment of normal retirement age, the hypothetical account balance of this individual would be less than the hypothetical account balance of one or more similarly situated individuals who have not attained normal retirement age.

Example 4. (i) *Facts providing greater-of benefits as described in paragraph (b)(1)(ii)(C) of this section.* Employer Z sponsors a defined benefit plan that provides an accumulated benefit expressed as a straight life annuity commencing at the plan's normal retirement age (age 65), based on a percentage of average annual compensation times the participant's years of service. On November 2, 2011, the plan is amended effective as of January 1, 2012, to provide participants who have attained age 55 by January 1, 2012, with a benefit that is the greater of the benefit under the average annual compensation formula and a benefit that is based on the balance of a hypothetical account, which provides for annual pay credits of a specified percentage of the participant's compensation and annual interest credits based on the third segment rate.
(ii) *Conclusion where plan provides greater-of benefits to older participants.* The plan satisfies the safe harbor of paragraph (b)(1)(i) of this section with respect to all individuals who are or could be participants. Pursuant to the rules of paragraph (b)(1)(ii)(C) of this section, the plan satisfies the safe harbor with respect to individuals who have attained age 55 by January 1, 2012, because (A) with respect to the benefit described in paragraph (b)(1)(i)(A) of this section (the benefit based on average annual compensation, disregarding the benefit based on the balance of a hypothetical account), the accumulated benefit for any individual who is or could be a participant and who is at least age 55 on January 1, 2012, would in no event be less than the accumulated benefit for a similarly situated, younger individual who is or could be participant and who has not yet attained age 55 by January 1, 2012, (B) with respect to the benefit described in paragraph (b)(1)(i)(B) of this section (the benefit based on the balance of a hypothetical account, disregarding the benefit based on average annual compensation), the accumulated benefit for any individual who is or could be a participant and who is at least age 55 on January 1, 2012, would in no event be less than the accumulated benefit for a similarly situated, younger individual who is or could be a participant and who has not yet attained age 55 by January 1, 2012, and (C) the benefit of any individual who is or could be a participant who has not yet attained age 55 by January 1, 2012, is only

expressed as an annuity payable at normal retirement age as described in paragraph (b)(1)(i)(A) of this section, and this safe-harbor formula measure applies also to participants who have attained age 55 by January 1, 2012. Furthermore, the plan satisfies the safe harbor with respect to individuals who have not yet attained age 55 by January 1, 2012, because the benefit of these individuals satisfies the general rule of paragraph (b)(1)(ii)(A) of this section.

(iii) *Conclusion where plan provides greater-of benefits only to younger participants.* If, instead of the facts in paragraph (i) of this *Example 4,* the plan had been amended to provide only participants who have not yet attained age 55 by January 1, 2012, with a benefit that is the greater of the benefit under the average annual compensation formula and a benefit that is based on the balance of a hypothetical account, then the safe harbor would not be satisfied with respect to individuals who have attained age 55 by January 1, 2012. Under paragraph (b)(1)(ii)(A) of this section, except as provided in paragraphs (b)(1)(ii)(B), (C), and (D) of this section, the safe harbor of paragraph (b)(1)(i) of this section is available only with respect to individuals over age 55, whose benefit is expressed in terms of only one safe-harbor formula measure, if no similarly situated, younger individual has an accumulated benefit that is expressed in terms of any measure other than that same safe-harbor formula measure. This is not the case under these facts. The greater-of rule of paragraph (b)(1)(ii)(C) of this section would not apply to individuals who have attained age 55 because the accumulated benefits of these individuals is not equal to the greater of benefits under two or more benefit formulas.

Example 5. (i) *Facts where plan provides choice-of benefits to older participants.* The facts are the same as in paragraph (i) of *Example 4,* except that for service after December 31, 2011, the amendment permits participants who have attained age 55 by January 1, 2012, to choose between benefits under the average annual compensation benefit formula or benefits under the hypothetical account balance formula (but, if a participant chooses the hypothetical account balance formula, his or her benefit under the plan is in no event to be less than the benefit determined under the average annual compensation benefit formula for service before January 1, 2012), while other participants receive benefits solely under the hypothetical account balance formula (but individuals who are participants on December 31, 2011, are in no event to receive less than the benefit determined under the average annual compensation benefit formula for service before January 1, 2012).
(ii) *Conclusion where plan provides choice to older participants.* The plan satisfies the safe harbor with respect to all individuals who are or could be participants. Pursuant to the rule of paragraph (b)(1)(ii)(D) of this section, the plan satisfies the safe harbor of paragraph (b)(1)(i) of this section with respect to individuals who have attained age 55

by January 1, 2012, and, pursuant to the rule of paragraph (b)(1)(ii)(A), the plan satisfies the safe harbor with respect to individuals who have not yet attained 55 by January 1, 2012.

(iii) *Conclusion where plan provides choice-of benefits to older workers and greater-of benefits to younger participants.* If, in addition to the facts in paragraph (i) of this *Example 5,* the plan were also to provide participants who had not yet attained age 55 by January 1, 2012, the greater of the benefits under the average annual compensation benefit formula or the benefits under the hypothetical account balance formula, then pursuant to the rules of paragraph (b)(1)(ii)(A) and (D) of this section, the safe harbor would not be satisfied with respect to participants who have attained age 55 by January 1, 2012.

(2) ***Indexed benefits*** —

(i) ***In general.*** Except as provided in paragraph (b)(2)(iii) of this section, pursuant to section 411(b)(5)(E) and this paragraph (b)(2)(i), a defined benefit plan is not treated as failing to meet the requirements of section 411(b)(1)(H) with respect to a participant solely because a benefit formula (other than a lump sum-based benefit formula) under the plan provides for the periodic adjustment of the participant's accrued benefit under the plan by means of the application of a recognized index or methodology. An indexing rate that does not exceed a market rate of return, as defined in paragraph (d) of this section, is deemed to be a recognized index or methodology for purposes of the preceding sentence. In addition, for plan years described in paragraph (f)(2)(i)(B)(*1*) or (f)(2)(i)(B)(*3*) of this section, as applicable (or an earlier date as elected by the taxpayer), any subsidized portion of any early retirement benefit under such a plan that meets the requirements of paragraph (b)(1)(iii) is disregarded in determining whether the plan meets the requirements of section 411(b)(1)(H). However, such a plan must satisfy the qualification requirements otherwise applicable to statutory hybrid plans, including the requirements of § 1.411(a)(13)-1(c) (relating to minimum vesting standards) and paragraph (c) of this section (relating to plan conversion amendments) if the plan has an effect similar to a lump sum-based benefit formula, pursuant to the rules of § 1.411(a)(13)-1(d)(4)(ii).

(ii) ***Similarly situated participant test.*** Paragraph (b)(2)(i) of this section does not apply unless the aggregate adjustments made to a participant's accrued benefit under the plan (determined as a percentage of the unadjusted accrued benefit) in a period would not be less than the aggregate adjustments for any similarly situated, younger participant. This test requires a comparison, for each period, of the aggregate adjustments for each individual who is or could be a participant in the plan for the period with the aggregate adjustments of each other similarly situated, younger individual who is or could be a participant in the plan for that period. See paragraph (b)(5) of this section for rules regarding whether each younger individual who is or could be a participant is similarly situated to a participant.

(iii) ***Protection against loss*** —

(A) ***In general.*** Paragraph (b)(2)(i) of this section does not apply unless the plan satisfies section 411(b)(5)(E)(ii) and paragraph (d)(2) of this section (relating to preservation of capital).

(B) ***Exception for variable annuity benefit formulas.*** The requirement to satisfy section 411(b)(5)(B)(i)(II), as set forth in paragraph (d)(2) of this section, as well as section 411(b)(5)(E)(ii), as set forth in this paragraph (b)(2)(iii), does not apply in the case of a benefit provided under a variable annuity benefit formula as defined in § 1.411(a)(13)-1(d)(6).

(3) ***Certain offsets permitted.*** A plan is not treated as failing to meet the requirements of section 411(b)(1)(H) solely because the plan provides offsets against benefits under the plan to the extent the offsets are allowable in applying the requirements of section 401(a) and the applicable requirements of the Employee Retirement Income Security Act of 1974, Public Law 93-406 (88 Stat. 829 (1974)), and the Age Discrimination in Employment Act of 1967, Public Law 90-202 (81 Stat. 602 (1967)).

(4) ***Permitted disparities in plan contributions or benefits.*** A plan is not treated as failing to meet the requirements of section 411(b)(1)(H) solely because the plan provides a disparity in contributions or benefits with respect to which the requirements of section 401(l) are met.

(5) ***Definition of similarly situated.*** For purposes of paragraphs (b)(1) and (b)(2) of this section, an individual is similarly situated to another individual if the individual is identical to that other individual in every respect that is relevant in determining a participant's benefit under the plan (including period of service, compensation, position, date of hire, work history, and any other respect) except for age. In determining whether an individual is similarly situated to another individual, any characteristic that is relevant for determining benefits under the plan and that is based directly or indirectly on age is disregarded. For example, if a particular benefit formula applies to a participant on account of the participant's age, an individual to whom the benefit formula does not apply and who is identical to the participant in all other respects is similarly situated to the participant. By contrast, an individual is not similarly situated to a participant if a different benefit formula applies to the individual and the application of the different formula is not based directly or indirectly on age.

(c) ***Special rules for plan conversion amendments*** —

(1) ***In general.*** Pursuant to section 411(b)(5)(B)(ii), (iii), and (iv), if there is a conversion amendment within the meaning of paragraph (c)(4) of this section with respect to a defined benefit plan, then the plan is treated as failing to meet the requirements of section 411(b)(1)(H) unless the plan, after the amendment, satisfies the requirements of paragraph (c)(2) of this section.

(2) ***Separate calculation of post-conversion benefit*** —

(i) ***In general.*** A statutory hybrid plan satisfies the requirements of this paragraph (c)(2) if the plan provides that, in the case of an individual who was a participant in the plan immediately before the date of adoption of the conversion amendment, the participant's benefit at any subsequent annuity starting date is not less than the sum of—

(A) The participant's section 411(d)(6) protected benefit (as defined in § 1.411(d)-3(g)(14)) with respect to service before the effective date of the conversion amendment, determined under the terms of the plan as in effect immediately before the effective date of the conversion amendment; and

(B) The participant's section 411(d)(6) protected benefit with respect to service on and after the effective date of the conversion amendment, determined under the terms of the plan as in effect after the effective date of the conversion amendment.

(ii) ***Rules of application.*** For purposes of this paragraph (c)(2), except as provided in paragraph (c)(3) of this section, the benefits under paragraphs (c)(2)(i)(A) and (c)(2)(i)(B) of this section must each be determined in the same manner as if they were provided under separate plans that are independent of each other (for example, without any benefit offsets), and, except to the extent permitted under § 1.411(d)-3 or § 1.411(d)-4 (or other applicable law), each optional form of payment provided under the terms of the plan with respect to a participant's section 411(d)(6) protected benefit as in effect before the conversion amendment must be available thereafter to the extent of the plan's benefits for service prior to the effective date of the conversion amendment.

(3) ***Establishment of opening hypothetical account balance or opening accumulated percentage*** —

(i) Provided that the requirements of paragraph (c)(3)(ii) of this section are satisfied, a statutory hybrid plan under which an opening hypothetical account balance or opening accumulated percentage of the participant's final average compensation is established as of the effective date of the conversion amendment does not fail to satisfy the requirements of paragraph (c)(2) of this section merely because benefits attributable to that opening hypothetical account balance or opening accumulated percentage (that is, benefits that are not described in paragraph (c)(2)(i)(B) of this section) are substituted for benefits described in paragraph (c)(2)(i)(A) of this section.

(ii) ***Comparison of benefits at annuity starting date*** —

(A) ***Testing requirement.*** The requirements of this paragraph (c)(3)(ii) are satisfied with respect to an optional form of benefit payable at an annuity starting date only if the plan provides that the amount of the benefit payable in that optional form under the lump sum-based benefit formula that is attributable to the opening hypothetical account balance or opening accumulated percentage as described in paragraph (c)(3)(i) of this section is not less than the benefit under the comparable optional form of benefit under paragraph (c)(2)(i)(A) of this section. To satisfy this requirement, if the benefit under the optional form attributable to the opening hypothetical account balance or opening accumulated percentage is less than the benefit under the comparable optional form of benefit described in paragraph (c)(2)(i)(A) of this section, then the benefit attributable to the opening hypothetical account balance or opening accumulated percentage must be increased to the extent necessary to provide the minimum benefit described in this paragraph (c)(3)(ii). Thus, if a plan is using the option under this paragraph (c)(3)(ii) to satisfy paragraph (c)(2) of this section with respect to a participant, the participant must receive a benefit equal to not less than the sum of—

(*1*) The benefit described in paragraph (c)(2)(i)(B) of this section; and

(*2*) The greater of—

(*i*) The benefit attributable to the opening hypothetical account balance or attributable to the opening accumulated percentage of the participant's final average compensation as described in this paragraph (c)(3)(ii); or

(*ii*) The benefit described in paragraph (c)(2)(i)(A) of this section.

(B) ***Comparable optional form of benefit.*** If there was an optional form of benefit within the same generalized optional form of benefit (within the meaning of § 1.411(d)-3(g)(8)) that would have been available to the participant at that annuity starting date under the terms of the plan as in effect immediately before the effective date of the conversion amendment, then that optional form of benefit is the comparable optional form of benefit.

(C) ***Special rule for new post-conversion optional forms of benefit.*** If an optional form of benefit is available on the annuity starting date with respect to the benefit attributable to the opening hypothetical account balance or opening accumulated percentage, but no optional form within the same generalized optional form of benefit (within the meaning of § 1.411(d)-3(g)(8)) was available at that annuity starting date under the terms of the plan as in effect immediately prior to the effective date of the conversion amendment, then, for purposes of this paragraph (c)(3)(ii), the plan is treated as if such an optional form of benefit were available immediately prior to the effective date of the conversion amendment for purposes of this paragraph (c)(3)(ii). Thus, for example, if a single-sum optional form of payment is not available under the plan terms applicable to the accrued benefit described in paragraph (c)(2)(i)(A) of this section, but a single-sum optional form of payment is available with respect to the benefit attributable to the opening hypothetical account balance or opening accumulated percentage as of the annuity starting date, then, for purposes of this paragraph (c)(3)(ii), the plan is treated as if a single sum (which satisfies the requirements of section 417(e)(3)) were available under the terms of the plan as in effect immediately prior to the effective date of the conversion amendment.

(4) ***Conversion amendment*** —

(i) ***In general.*** An amendment is a conversion amendment that is subject to the requirements of this paragraph (c) with respect to a participant if—

(A) The amendment reduces or eliminates the benefits that, but for the amendment, the participant would have accrued after the effective date of the amendment under a benefit formula that is not a statutory hybrid benefit formula (and under which the participant was accruing benefits prior to the amendment); and

(B) After the effective date of the amendment, all or a portion of the participant's benefit accruals under the plan are determined under a statutory hybrid benefit formula.

(ii) ***Rules of application*** —

(A) ***In general.*** Paragraphs (c)(4)(iii), (iv), and (v) of this section describe special rules that treat certain arrangements as conversion amendments. The rules described in those paragraphs apply both separately and in combination. Thus, for example, in an acquisition described in § 1.410(b)-2(f), if the buyer adopts an amendment under which a participant's benefits under the seller's plan that is not a statutory hybrid plan are coordinated with a separate plan of the buyer that is a statutory hybrid plan, such as through an offset of the participant's benefit under the buyer's plan by the participant's benefit under the seller's plan, the seller and buyer are treated as a single employer under paragraph (c)(4)(iv) of this section and they are treated as having adopted a conversion amendment under paragraph (c)(4)(iii) of this section. However, pursuant to paragraph (c)(4)(iii) of this section, if there is no coordination between the two plans, there is no conversion amendment.

(B) ***Covered amendments.*** Only amendments that eliminate or reduce accrued benefits described in section 411(a)(7), or a retirement-type subsidy described in section 411(d)(6)(B)(i), that would otherwise accrue as a result of future service are treated as amendments described in paragraph (c)(4)(i)(A) of this section.

(C) ***Operation of plan terms treated as covered amendment.*** If, under the terms of a plan, a change in the conditions of a participant's employment results in a reduction of the participant's benefits that would have accrued in the future under a benefit formula that is not a statutory hybrid benefit formula, the plan is treated for purposes of this paragraph (c)(4) as if such plan terms constitute an amendment that reduces the participant's benefits that would have accrued after the effective date of the change under a benefit formula that is not a statutory hybrid benefit formula. Thus, for example, if a participant transfers from an operating division that is covered by a non-statutory hybrid benefit formula to an operating division that is covered by a statutory hybrid benefit formula, there has been a conversion amendment and the effective date of the conversion amendment is the date of the transfer. For purposes of applying the effective date rule of paragraph (f)(1)(ii) of this section, the date that the relevant plan terms were adopted is treated as the adoption date of the amendment.

(iii) ***Multiple plans.*** An employer is treated as having adopted a conversion amendment if the employer adopts an amendment under which a participant's benefits under a plan that is not a statutory hybrid plan are coordinated with a separate plan that is a statutory hybrid plan, such as through a reduction (offset) of the benefit under the plan that is not a statutory hybrid plan.

(iv) ***Multiple employers.*** If the employer of an employee changes as a result of a transaction described in § 1.410(b)-2(f), then the two employers are treated as a single employer for purposes of this paragraph (c)(4).

(v) ***Multiple amendments*** —

(A) ***In general*** —

(*1*) ***General rule.*** For purposes of this paragraph (c)(4), a conversion amendment includes multiple amendments that result in a conversion amendment even if the amendments are not conversion amendments individually. For example, an employer is treated as having adopted a conversion amendment if the employer first adopts an amendment described in paragraph (c)(4)(i)(A) of this section and, at a later date, adopts an amendment that adds a benefit under a statutory hybrid benefit formula as described in paragraph (c)(4)(i)(B) of this section, if they are consolidated under paragraph (c)(4)(v)(A)(*2*) of this section.

(*2*) ***Delay between plan amendments.*** In determining whether a conversion amendment has been adopted, an amendment to provide a benefit under a statutory hybrid benefit formula is consolidated with a prior amendment to reduce non-statutory hybrid benefit formula benefits if the amendment providing benefits under a statutory hybrid benefit formula is adopted within three years after adoption of the amendment reducing non-statutory hybrid benefit formula benefits. Thus, the later adoption of the statutory hybrid benefit formula will cause the earlier amendment to be treated as part of a conversion amendment. In the case of an amendment to provide a benefit under a statutory hybrid benefit formula that is adopted more than three years after adoption of an amendment to reduce benefits under a non-statutory hybrid benefit

formula, there is a presumption that the amendments are not consolidated unless the facts and circumstances indicate that adoption of the amendment to provide a benefit under a statutory hybrid benefit formula was intended at the time of reduction in the non-statutory hybrid benefit formula.

(B) ***Multiple conversion amendments.*** If an employer adopts multiple amendments reducing benefits described in paragraph (c)(4)(i)(A) of this section, each amendment is treated as a separate conversion amendment, provided that paragraph (c)(4)(i)(B) of this section is applicable at the time of the amendment (taking into account the rules of this paragraph (c)(4)).

(vi) ***Effective date of a conversion amendment.*** The effective date of a conversion amendment is, with respect to a participant, the date as of which the reduction of the participant's benefits described in paragraph (c)(4)(i)(A) of this section occurs. In accordance with section 411(d)(6), the date of a reduction of those benefits cannot be earlier than the date of adoption of the conversion amendment.

(5) ***Examples.*** The following examples illustrate the application of this paragraph (c):

Example 1. (i) *Facts where plan does not establish opening hypothetical account balance for participants and participant elects life annuity at normal retirement age.* Employer N sponsors Plan E, a defined benefit plan that provides an accumulated benefit, payable as a straight life annuity commencing at age 65 (which is Plan E's normal retirement age), based on a percentage of highest average compensation times the participant's years of service. Plan E permits any participant who has had a severance from employment to elect payment in the following optional forms of benefit (with spousal consent if applicable), with any payment not made in a straight life annuity converted to an equivalent form based on reasonable actuarial assumptions: A straight life annuity; and a 50 percent, 75 percent, or 100 percent joint and survivor annuity. The payment of benefits may commence at any time after attainment of age 55, with an actuarial reduction if the commencement is before normal retirement age. In addition, the plan offers a single-sum payment after attainment of age 55 equal to the present value of the normal retirement benefit using the applicable interest rate and mortality table under section 417(e)(3) in effect under the terms of the plan on the annuity starting date.
(ii) *Facts relating to the conversion amendment.* On January 1, 2012, Plan E is amended to eliminate future accruals under the highest average compensation benefit formula and to base future benefit accruals under a hypothetical account balance formula. For service on or after January 1, 2012, each participant's hypothetical account balance is credited monthly with a pay credit equal to a specified percentage of the participant's compensation during the month and also with interest based on the third segment rate described in section 430(h)(2)(C)(iii). With respect to benefits under the hypothetical account balance attributable to service on and after January 1, 2012, a participant is permitted to elect (with spousal consent if applicable) payment in the same generalized optional forms of benefit (even though different actuarial factors apply) as under the terms of the plan in effect before January 1, 2012, and also as a single-sum distribution. The plan provides for the benefit

attributable to service before January 1, 2012, to be determined under the terms of the plan as in effect immediately before the effective date of the amendment, and the benefit attributable to service on and after January 1, 2012, to be determined separately, under the terms of the plan as in effect after the effective date of the amendment, with neither benefit offsetting the other in any manner. Thus, each participant's benefit is equal to the sum of the benefit attributable to service before January 1, 2012 (to be determined under the terms of the plan as in effect immediately before the effective date of the amendment), plus the benefit attributable to the participant's hypothetical account balance.

(iii) *Facts relating to an affected participant.* Participant A is age 62 on January 1, 2012. On December 31, 2011, A's benefit for years of service before January 1, 2012, payable as a straight life annuity commencing at A's normal retirement age (age 65), which is January 1, 2015, is $1,000 per month. On January 1, 2015, when Participant A has a severance from employment, the then-current hypothetical account balance, with pay credits and interest from January 1, 2012, to January 1, 2015, is $11,000. Using the conversion factors applicable under the plan on January 1, 2015, that balance is equivalent to a straight life annuity of $100 per month commencing on January 1, 2015. This benefit is in addition to the benefit attributable to service before January 1, 2012. Participant A elects (with spousal consent) a straight life annuity of $1,100 per month commencing January 1, 2015.

(iv) *Conclusion.* Participant A's benefit satisfies the requirements of paragraph (c) of this section because Participant A's benefit is not less than the sum of Participant A's section 411(d)(6) protected benefit (as defined in § 1.411(d)-3(g)(14)) with respect to service before the effective date of the conversion amendment, determined under the terms of the plan as in effect immediately before the effective date of the amendment, and Participant A's section 411(d)(6) protected benefit with respect to service on and after the effective date of the conversion amendment, determined under the terms of the plan as in effect after the effective date of the amendment.

Example 2. (i) *Facts involving plan's establishment of opening hypothetical account balance and payment of pre-conversion accumulated benefit in life annuity at normal retirement age.* Except as indicated in this *Example 2,* the facts are the same as the facts under paragraph (i) of *Example 1*.
(ii) *Facts relating to the conversion amendment.* On January 1, 2012, Plan E is amended to eliminate future accruals under the highest average compensation benefit formula and to provide future benefit accruals under a hypothetical account balance formula. An opening hypothetical account balance is established for each participant, and, under the plan's terms, that balance is equal to the present value of the participant's accumulated benefit on December 31, 2011 (payable as a straight life annuity at normal retirement age or immediately, if later), using the applicable interest rate and applicable mortality table under section 417(e)(3) on January 1, 2012. Under Plan E, the account based on this opening

hypothetical account balance is maintained as a separate account from the account for accruals on or after January 1, 2012. The hypothetical account balance maintained for each participant for accruals on or after January 1, 2012, is credited monthly with a pay credit equal to a specified percentage of the participant's compensation during the month. A participant's hypothetical account balance (including both of the separate accounts) is credited monthly with interest based on the third segment rate described in section 430(h)(2)(C)(iii).

(iii) *Facts relating to optional forms of benefit.* Following severance from employment and attainment of age 55, a participant is permitted to elect (with spousal consent, if applicable) payment in the same generalized optional forms of benefit as under the plan in effect prior to January 1, 2012, with the amount payable calculated based on the hypothetical account balance on the annuity starting date and the applicable interest rate and applicable mortality table on the annuity starting date. The single-sum distribution is equal to the hypothetical account balance.

(iv) *Facts relating to conversion protection.* The plan provides that, as of a participant's annuity starting date, the plan will determine whether the benefit attributable to the opening hypothetical account balance payable in the particular optional form of benefit selected is equal to or greater than the benefit accrued under the plan through the date of conversion and payable in the same generalized optional form of benefit with the same annuity starting date. If the benefit attributable to the opening hypothetical account balance is equal to or greater than the pre-conversion benefit, the plan provides that such benefit is paid in lieu of the pre-conversion benefit, together with the benefit attributable to post-conversion pay-based principal credits. If the benefit attributable to the opening hypothetical account balance is less than the pre-conversion benefit, the plan provides that such benefit is increased sufficiently to provide the pre-conversion benefit, together with the benefit attributable to post-conversion pay-based principal credits.

(v) *Facts relating to an affected participant.* On January 1, 2012, the opening hypothetical account balance established for Participant A is $80,000, which is the present value of Participant A's straight life annuity of $1,000 per month commencing at January 1, 2015, using the applicable interest rate and applicable mortality table under section 417(e)(3) in effect on January 1, 2012. On January 1, 2012, the applicable interest rate for Participant A is equivalent to a level rate of 5.5 percent. Thereafter, Participant A's hypothetical account balance for subsequent accruals is credited monthly with a pay credit equal to a specified percentage of the participant's compensation during the month. In addition, Participant A's hypothetical account balance (including both of the separate accounts) is credited monthly with interest based on the third segment rate described in section 430(h)(2)(C)(iii).

(vi) *Facts relating to calculation of the participant's benefit.* Participant A has a severance from employment on January 1, 2015 at age 65, and elects (with spousal consent) a straight life annuity commencing January 1, 2015. On January 1, 2015, the opening hypothetical account balance, with interest credits from January 1, 2012, to January 1, 2015, has become $95,000, which, using the conversion factors under the plan on January 1, 2015, is equivalent to a straight life annuity of $1,005 per month commencing on January 1, 2015 (which is greater than the $1,000 a month payable at age 65 under the terms of the plan in effect before January 1, 2012). This benefit is in addition to the benefit determined using the hypothetical account balance for service after January 1, 2012.

(vii) *Conclusion.* The benefit satisfies the requirements of paragraph (c)(3)(ii)(A) of this section with respect to Participant A because A's benefit is not less than the sum of (A) the greater of Participant A's benefits attributable to the opening hypothetical account balance and A's section 411(d)(6) protected benefit (as defined in § 1.411(d)-3(g)(14)) with respect to service before the effective date of the conversion amendment, determined under the terms of the plan as in effect immediately before the effective date of the amendment, and (B) Participant A's section 411(d)(6) protected benefit with respect to service on and after the effective date of the conversion amendment, determined under the terms of the plan as in effect after the effective date of the amendment.

Example 3. (i) *Facts involving a subsequent decrease in interest rates.* The facts are the same as in *Example 2,* except that, because of a decrease in bond rates after January 1, 2012, and before January 1, 2015, the rate of interest credited in that period averages less than 5.5 percent, and, on January 1, 2015, the effective applicable interest rate under section 417(e)(3) under the plan's terms is 4.7 percent. As a result, Participant A's opening hypothetical account balance plus attributable interest credits has increased to only $87,000 on January 1, 2015, and, using the conversion factors under the plan on January 1, 2015, is equivalent to a straight life annuity commencing on January 1, 2015, of $775 per month. Under the terms of Plan E, the benefit attributable to A's opening hypothetical account balance is increased so that A's straight life annuity commencing on January 1, 2015, is $1,000 per month. This benefit is in addition to the benefit attributable to the hypothetical account balance for service after January 1, 2012.
(ii) *Conclusion.* The benefit satisfies the requirements of paragraph (c)(3)(ii)(A) of this section with respect to Participant A because A's benefit is not less than the sum of—

(A) The greater of A's benefits attributable to the opening hypothetical account balance and A's section 411(d)(6) protected benefit (as defined in § 1.411(d)-3(g)(14)) with respect to service before the effective date of the conversion amendment, determined under the terms of the plan as in effect immediately before the effective date of the amendment; and

(B) A's section 411(d)(6) protected benefit with respect to service on and after the effective date of the conversion amendment, determined under the terms of the plan as in effect after the effective date of the amendment.

Example 4. (i) *Facts involving payment of a subsidized early retirement benefit.* The facts are the same as in *Example 2,* except that under the terms of Plan E on December 31, 2011, a participant who retires before age 65 and after age 55 with 30 years of service has only a 3 percent per year actuarial reduction. Participant A has a severance from employment on January 1, 2013, when A is age 63 and has 30 years of service. On January 1, 2013, A's opening hypothetical account balance, with interest from January 1, 2012, to January 1, 2013, has become $86,000, which, using the conversion factors under the plan (as amended) on January 1, 2013, is equivalent to a straight life annuity commencing on January 1, 2013, of $850 per month.
(ii) *Facts relating to calculation of the participant's benefit.* Under the terms of Plan E on December 31, 2011, Participant A is entitled to a straight life annuity commencing on January 1, 2013, equal to at least $940 per month ($1,000 reduced by 3 percent for each of the 2 years that A's benefits commence before normal retirement age). Under the terms of Plan E, the benefit attributable to A's opening account balance is increased so that A is entitled to a straight life annuity of $940 per month commencing on January 1, 2015. This benefit is in addition to the benefit determined using the hypothetical account balance for service after January 1, 2012.

(iii) *Conclusion.* The benefit satisfies the requirements of paragraph (c)(3)(ii)(A) of this section with respect to Participant A because A's benefit is not less than the sum of—

(A) The greater of Participant A's benefits attributable to the opening hypothetical account balance (increased by attributable interest credits) and A's section 411(d)(6) protected benefit (as defined in § 1.411(d)-3(g)(14)) with respect to service before the effective date of the conversion amendment, determined under the terms of the plan as in effect immediately before the effective date of the amendment; and

(B) Participant A's section 411(d)(6) protected benefit with respect to service on and after the effective date of the conversion amendment, determined under the terms of the plan as in effect after the effective date of the amendment.

Example 5. (i) *Facts involving addition of a single-sum payment option.* The facts are the same as in *Example 2,* except that, before January 1, 2012, Plan E did not offer payment in a single-sum distribution for amounts in excess of $5,000. Plan E, as amended on January 1, 2012, offers payment in any of the available annuity distribution forms commencing at any time following severance from employment as were provided under Plan E before January 1, 2012. In addition, Plan E, as amended on January 1, 2012, offers payment in the form of a

single sum attributable to service before January 1, 2012, which is the greater of the opening hypothetical account balance (increased by attributable interest credits) or a single-sum distribution of the straight life annuity payable at age 65 using the same actuarial factors as are used for mandatory cashouts for amounts equal to $5,000 or less under the terms of the plan on December 31, 2011. Participant B is age 40 on January 1, 2012, and B's opening hypothetical account balance (increased by attributable interest credits) is $33,000 (which is the present value, using the conversion factors under the plan (as amended) on January 1, 2012, of Participant B's straight life annuity of $1,000 per month commencing at January 1, 2037, which is when B will be age 65). Participant B has a severance from employment on January 1, 2015, and elects (with spousal consent) an immediate single-sum distribution. Participant B's opening hypothetical account balance (increased by attributable interest) on January 1, 2015, is $45,000. The present value, on January 1, 2015, of Participant B's benefit of $1,000 per month, commencing immediately using the actuarial factors for mandatory cashouts under the terms of the plan on December 31, 2011, would result in a single-sum payment of $44,750. Participant B is paid a single-sum distribution equal to the sum of $45,000 plus an amount equal to B's January 1, 2015, hypothetical account balance for benefit accruals for service after January 1, 2012.
(ii) *Conclusion.* Because, under Plan E, Participant B is entitled to the sum of—

(A) The greater of the $45,000 opening hypothetical account balance (increased by attributable interest credits) and $44,750 (present value of the benefit with respect to service prior to January 1, 2012, using the actuarial factors for mandatory cashout distributions under the terms of the plan on December 31, 2011); and

(B) An amount equal to B's hypothetical account balance for benefit accruals for service after January 1, 2012, the benefit satisfies the requirements of paragraph (c)(3)(ii)(A) of this section with respect to Participant B. If Participant B's hypothetical account balance under Plan E was instead less than $44,750 on January 1, 2015, Participant B would be entitled to a single-sum payment equal to the sum of $44,750 and an amount equal to B's hypothetical account balance for benefit accruals for service after January 1, 2012.

Example 6. (i) *Facts involving addition of new annuity optional form of benefit.* The facts are the same as in *Example 2,* except that, after December 31, 2011, and before January 1, 2015, Plan E is amended to offer payment in a 5-, 10-, or 15-year term certain and life annuity, using the same actuarial assumptions that apply for other optional forms of distribution. When Participant A has a severance from employment on January 1, 2015, A elects (with spousal consent) a 5-year term certain and life annuity commencing immediately equal to $935 per month. Application of the same actuarial assumptions to Participant A's benefit of $1,000 per month (under Plan E as in effect on December 31, 2011), commencing immediately on January 1, 2015, would result in a 5-year term certain and life annuity commencing

immediately equal to $955 per month. Under the terms of Plan E, the benefit attributable to A's opening account balance is increased so that, using the conversion factors under the plan (as amended) on January 1, 2015, A's opening hypothetical account balance (increased by attributable interest credits) produces a 5-year term certain and life annuity commencing immediately equal to $955 per month commencing on January 1, 2015. This benefit is in addition to the benefit determined using the January 1, 2015, hypothetical account balance for service after January 1, 2012.
(ii) *Conclusion.* This benefit satisfies the requirements of paragraph (c)(3)(ii)(A) of this section with respect to Participant A.

Example 7. (i) *Facts involving addition of distribution option before age 55.* The facts are the same as in *Example 5,* except that Participant B (age 43) elects (with spousal consent) a straight life annuity commencing immediately on January 1, 2015. Under Plan E, the straight life annuity attributable to Participant B's opening hypothetical account balance at age 43 is $221 per month. Application of the same actuarial assumptions to Participant B's benefit of $1,000 per month commencing at age 65 (under Plan E as in effect on December 31, 2011) would result in a straight life annuity commencing immediately on January 1, 2015, equal to $219 per month.
(ii) *Conclusion.* Because, under its terms, Plan E provides that Participant B is entitled to an amount not less than the present value (using the same actuarial assumptions as apply on January 1, 2015, in converting the $45,000 hypothetical account balance attributable to the opening hypothetical account balance to the $221 straight life annuity) of Participant B's straight life annuity of $1,000 per month commencing at age 65, and the $221 straight life annuity is in addition to the benefit accruals for service after January 1, 2012, payment of the $221 monthly annuity would satisfy the requirements of paragraph (c)(3)(ii)(A) of this section with respect to Participant B.

Example 8. (i) *Facts involving establishment of opening hypothetical account balance.* A defined benefit plan provides an accrued benefit expressed as a straight life annuity commencing at the plan's normal retirement age (age 65), based on a percentage of average annual compensation multiplied by the participant's years of service. On January 1, 2009, a conversion amendment is adopted that converts the plan to a statutory hybrid plan. Participant A, age 55, had an accrued benefit under the pre-conversion formula of $1,500 per month payable at normal retirement age. In conjunction with this conversion, the plan provides each participant with an opening hypothetical account balance equal to the present value, determined in accordance with section 417(e)(3) of the participant's pre-conversion benefit. Participant A's opening hypothetical account balance was calculated as $121,146. The opening account balance (along with any subsequent amounts credited to the hypothetical account) is credited annually with interest credits at the rate of 5.0 percent up to the annuity starting date of each participant.

(ii) *Facts relating to changes between establishment of opening hypothetical account balance and age 65.* Upon attainment of age 65, Participant A elects to receive Participant A's entire benefit under the plan as a single sum distribution. At the annuity starting date, Participant A's hypothetical account balance attributable to Participant A's opening account balance has increased to $197,334. However, under the terms of the plan and in accordance with section 417(e)(3), the present value at the annuity starting date of Participant A's pre-conversion benefit of $1,500 per month is $221,383.

(iii) *Conclusion.* Pursuant to paragraph (c)(3)(ii)(A) of this section, Participant A must receive the benefit attributable to post-conversion service, plus the greater of the benefit attributable to the opening hypothetical account balance and the pre-conversion benefit (with the determination as to which is greater made at the annuity starting date). Accordingly the single-sum distribution must equal the benefit attributable to post-conversion service plus $221,383.

(d) ***Market rate of return*** —

(1) ***In general*** —

(i) ***Basic test.*** Subject to the rules of paragraph (e) of this section, a statutory hybrid plan satisfies the requirements of section 411(b)(1)(H) and this paragraph (d) only if, for any plan year, the interest crediting rate with respect to benefits determined under a statutory hybrid benefit formula is not greater than a market rate of return.

(ii) ***Definitions relating to market rate of return*** —

(A) ***Interest credit.*** Subject to other rules in this paragraph (d), an interest credit for purposes of this paragraph (d) and section 411(b)(5)(B) means the following adjustments to a participant's accumulated benefit under a statutory hybrid benefit formula, to the extent not conditioned on current service and not made on account of imputed service (as defined in § 1.401(a)(4)-11(d)(3)(ii)(B))—

(*1*) Any increase or decrease for a period, under the terms of the plan at the beginning of the period, that is calculated by applying a rate of interest or rate of return (including a rate of increase or decrease under an index) to the participant's accumulated benefit (or a portion thereof) as of the beginning of the period; and

(*2*) Any other increase for a period, under the terms of the plan at the beginning of the period.

(B) ***Treatment of plan amendments.*** An increase to a participant's accumulated benefit is not treated as an interest credit to the extent the increase is made as a result of a plan amendment providing for a one-time adjustment to the participant's accumulated benefit. However, a pattern of repeated plan amendments each of which provides for a one-time adjustment to a participant's accumulated benefit will cause such adjustments to be treated as provided on a permanent basis under the terms of the plan. *See* § 1.411(d)-4, A-1(c)(1).

(C) ***Interest crediting rate.*** Except as otherwise provided in this paragraph (d), the interest crediting rate, or effective rate of return, for a period with respect to a participant equals the total amount of interest credits for the period divided by the participant's accumulated benefit at the beginning of the period.

(D) ***Principal credit.*** For purposes of this paragraph (d), a principal credit means any increase to a participant's accumulated benefit under a statutory hybrid benefit formula that is not an interest credit. Thus, for example, a principal credit includes an increase to a participant's accumulated benefit to the extent the increase is conditioned on current service or made on account of imputed service. As a result, a principal credit includes an increase to the value of an accumulated percentage of the participant's final average compensation. For indexed benefits described in paragraph (b)(2) of this section, a principal credit includes an increase to the participant's accrued benefit other than an increase provided by indexing. In addition, pursuant to the rule in paragraph (d)(1)(ii)(B) of this section, a principal credit generally includes an increase to a participant's accumulated benefit to the extent the increase is made as a result of a plan amendment providing for a one-time adjustment to the participant's accumulated benefit. As a result, a principal credit includes an opening hypothetical account balance or opening accumulated percentage of the participant's final average compensation, as described in paragraph (c)(3) of this section.

(iii) ***Market rate of return for single rates.*** Except as otherwise provided in this paragraph (d)(1), an interest crediting rate is not in excess of a market rate of return only if the plan terms provide that the interest credit for each plan year is determined using one of the following specified interest crediting rates:

(A) The interest rate on long-term investment grade corporate bonds (as described in paragraph (d)(3) of this section).

(B) An interest rate that, under paragraph (d)(4) of this section, is deemed to be not in excess of the interest rate described in paragraph (d)(3) of this section.

(C) A rate of return that, under paragraph (d)(5) of this section, is not in excess of a market rate of return.

(iv) ***Timing and other rules related to interest crediting rate*** —

(A) ***In general.*** A plan that provides interest credits must specify how the plan determines interest credits and must specify how and when interest credits are credited. The plan must specify the method for determining interest credits in accordance with the requirements of paragraph (d)(1)(iv)(B) of this section, the frequency of interest crediting in accordance with the requirements of paragraph (d)(1)(iv)(C) of this section, and the treatment of interest credits on distributed amounts, as well as other debits and credits during the period, in accordance with the rules of paragraph (d)(1)(iv)(D) of this section. In addition, a plan is permitted to round the calculated interest rate or rate of return in accordance with paragraph (d)(1)(iv)(E) of this section. See paragraph (e) of this section for additional rules that apply to changes in the interest crediting rate.

(B) ***Methods to determine interest credits.*** A plan that is using any specified interest crediting rate can determine interest credits for each current interest crediting period based on the effective periodic interest crediting rate that applies over the period. Alternatively, a plan that is using one of the interest crediting rates described in paragraph (d)(3) or (d)(4) of

this section can determine interest credits for a stability period based on the interest crediting rate for a specified lookback month with respect to that stability period. For purposes of the preceding sentence, the stability period and lookback month must satisfy the rules for selecting the stability period and lookback month under § 1.417(e)-1(d)(4), although the interest crediting rate can be any one of the rates in paragraph (d)(3) or (d)(4) of this section and the stability period and lookback month need not be the same as those used under the plan for purposes of section 417(e)(3).

(C) ***Frequency of interest crediting.*** Interest credits under a plan must be provided on an annual or more frequent periodic basis and interest credits for each interest crediting period must be credited as of the end of the period. If a plan provides for the crediting of interest more frequently than annually (for example, daily, monthly or quarterly) based on one of the annual interest rates described in paragraph (d)(3) or (d)(4) of this section, then the plan generally provides an above market rate of return unless each periodic interest credit is determined using an interest crediting rate that is no greater than a pro rata portion of the applicable annual interest crediting rate. However, a plan that credits interest daily based on one of the annual interest rates described in paragraph (d)(3) or (d)(4) of this section is not treated as providing an above market rate of return merely because the plan determines each daily interest credit using a daily interest crediting rate that is $^{1}/_{360}$ of the applicable annual interest crediting rate. In addition, interest credits determined, under the terms of a plan, based on one of the annual interest rates described in paragraph (d)(3) or (d)(4) of this section are not treated as creating an effective rate of return that is in excess of a market rate of return merely because an otherwise permissible interest crediting rate for a plan year is compounded more frequently than annually. Thus, for example, if a plan's terms provide for interest to be credited monthly and for the interest crediting rate to be equal to the interest rate on long-term investment grade corporate bonds (as described in paragraph (d)(3) of this section) and the applicable annual rate on these bonds for the plan year is 6 percent, then the accumulated benefit at the beginning of each month could be increased as a result of interest credits by as much as 0.5 percent per month during the plan year without resulting in an interest crediting rate that is in excess of a market rate of return.

(D) ***Debits and credits during the interest crediting period.*** A plan is not treated as failing to meet the requirements of this paragraph (d) merely because the plan does not provide for interest credits on amounts distributed prior to the end of the interest crediting period. Furthermore, a plan is not treated as failing to meet the requirements of this paragraph (d) merely because the plan calculates increases or decreases to the participant's accumulated benefit by applying a rate of interest or rate of return (including a rate of increase or decrease under an index) to the participant's adjusted accumulated benefit (or portion thereof) for the period. For this purpose, the participant's adjusted accumulated benefit equals the participant's accumulated benefit as of the beginning of the period, adjusted for debits and credits (other than interest credits) made to the accumulated benefit prior to the end of the interest crediting period, with appropriate weighting for those debits and credits based on their timing within the period. For plans that calculate increases or decreases to the participant's accumulated benefit by applying a rate of interest or rate of return to the participant's adjusted accumulated benefit (or portion thereof) for the period, interest credits include these increases and decreases, to the extent provided under the terms of the plan at the beginning of the period and to the extent not conditioned on current service and not made on account of imputed service (as

defined in § 1.401(a)(4)-11(d)(3)(ii)(B)), and the interest crediting rate with respect to a participant equals the total amount of interest credits for the period divided by the participant's adjusted accumulated benefit for the period.

(E) ***Rounding of interest crediting rate.*** A plan is not treated as failing to meet the requirements of this paragraph (d) merely because the plan determines interest credits for an interest crediting period by rounding the calculated interest rate or rate of return in accordance with this paragraph (d)(1)(iv)(E). An annual rate may be rounded to the nearest multiple of 25 basis points (or a smaller rounding interval). If a plan provides for the crediting of interest more frequently than annually, then the rounding interval must not exceed a pro-rata portion of 25 basis points. Notwithstanding the preceding sentence, a plan is permitted to round to the nearest basis point regardless of the length of the interest crediting period.

(v) ***Lesser rates.*** An interest crediting rate is not in excess of a market rate of return if the rate can never be in excess of a particular rate that is described in paragraph (d)(1)(iii) of this section. Thus, for example, an interest crediting rate that always equals the rate described in paragraph (d)(3) of this section minus 200 basis points is not in excess of a market rate of return because it can never be in excess of the rate described in paragraph (d)(3) of this section. Similarly, an interest crediting rate that always equals the lesser of the yield on 30-year Treasury Constant Maturities and a fixed 7 percent interest rate is not in excess of a market rate of return because it can never be in excess of the yield on 30-year Treasury Constant Maturities.

(vi) ***Greater-of rates.*** If a statutory hybrid plan determines an interest credit by applying the greater of 2 or more different rates to the accumulated benefit, the effective interest crediting rate is not in excess of a market rate of return only if each of the different rates would separately satisfy the requirements of this paragraph (d) and the requirements of paragraph (d)(6) of this section are also satisfied.

(vii) ***Blended rates.*** A statutory hybrid plan does not provide an effective interest crediting rate that is in excess of a market rate of return merely because the plan determines an interest credit by applying different rates to different predetermined portions of the accumulated benefit, provided each rate would separately satisfy the requirements of this paragraph (d) if the rate applied to the entire accumulated benefit.

(viii) ***Increases to existing rates and addition of other rates*** —

(A) ***Increases to existing rates.*** The Commissioner may, in guidance published in the Internal Revenue Bulletin, see § 601.601(d)(2)(ii)(*b*) of this chapter, increase an interest crediting rate set forth in this paragraph (d), so that the increased rate is treated as satisfying the requirement that the rate not exceed a market rate of return for purposes of this paragraph (d) and section 411(b)(5)(B). For this purpose, these increases can include increases to the maximum permitted margin that can be added to one or more of the safe harbor rates set forth in paragraph (d)(4) of this section, increases to the maximum permitted fixed rate set forth in paragraph (d)(4)(v) of this section, or increases to a maximum permitted annual floor set forth in paragraph (d)(6) of this section.

(B) ***Additional rates.*** The Commissioner may, in guidance published in the Internal Revenue Bulletin, see § 601.601(d)(2)(ii)(*b*) of this chapter, provide for additional interest crediting rates that satisfy the requirement that they not exceed a market rate of return for purposes of this paragraph (d) and section 411(b)(5)(B) (including providing for additional

combinations of rates, such as annual minimums in conjunction with rates that are based on rates described in paragraph (d)(5) of this section but that are reduced in order to ensure that the effective rate of return does not exceed a market rate of return).

(2) ***Preservation of capital requirement*** —

(i) ***General rule.*** A statutory hybrid plan satisfies the requirements of section 411(b)(1)(H) only if the plan provides that the participant's benefit under the statutory hybrid benefit formula determined as of the participant's annuity starting date is no less than the benefit determined as if the accumulated benefit were equal to the sum of all principal credits (as described in paragraph (d)(1)(ii)(D) of this section) credited under the plan to the participant as of that date (including principal credits that were credited before the applicable statutory effective date of paragraph (f)(1) of this section). This paragraph (d)(2) applies only as of an annuity starting date, within the meaning of § 1.401(a)-20, A-10(b), with respect to which a distribution of the participant's entire vested benefit under the plan's statutory hybrid benefit formula as of that date commences. For a participant who has more than one annuity starting date, paragraph (d)(2)(ii) of this section provides rules to account for prior annuity starting dates when applying this paragraph (d)(2)(i).

(ii) ***Application to multiple annuity starting dates*** —

(A) ***In general.*** If the comparison under paragraph (d)(2)(ii)(B) of this section results in the sum of all principal credits credited to the participant (as of the current annuity starting date) exceeding the sum of the amounts described in paragraphs (d)(2)(ii)(B)(*1*) through (d)(2)(ii)(B)(*3*) of this section, then the participant's benefit to be distributed at the current annuity starting date must be no less than would be provided if that excess were included in the current accumulated benefit.

(B) ***Comparison to reflect prior distributions.*** For a participant who has more than one annuity starting date, the sum of all principal credits credited to the participant under the plan, as of the current annuity starting date, is compared to the sum of—

(*1*) The remaining balance of the participant's accumulated benefit as of the current annuity starting date;

(*2*) The amount of the reduction to the participant's accumulated benefit under the statutory hybrid benefit formula that is attributable to any prior distribution of the participant's benefit under that formula; and

(*3*) Any amount that was treated as included in the accumulated benefit under the rules of this paragraph (d)(2) as of any prior annuity starting date.

(C) ***Special rule for participants with 5 or more breaks in service.*** A plan is permitted to provide that, in the case of a participant who receives a distribution of the entire vested benefit under the plan and thereafter completes 5 consecutive 1-year breaks in service, as defined in section 411(a)(6)(A), the rules of this paragraph (d)(2) are applied without regard to the prior period of service. Thus, in the case of such a participant, the plan is permitted to provide that the rules of this paragraph (d)(2) are applied disregarding the principal credits and distributions that occurred before the breaks in service.

(iii) ***Exception for variable annuity benefit formulas. See*** paragraph (b)(2)(iii)(B) of this section for an exception to this paragraph (d)(2).

(3) ***Long-term investment grade corporate bonds.*** For purposes of this paragraph (d), the rate of interest on long-term investment grade corporate bonds means the third segment rate described in section 417(e)(3)(D) or 430(h)(2)(C)(iii) (determined with or without regard to section 430(h)(2)(C)(iv) and with or without regard to the transition rules of section 417(e)(3)(D)(ii) or 430(h)(2)(G)). However, for plan years beginning prior to January 1, 2008, the rate of interest on long-term investment grade corporate bonds means the rate described in section 412(b)(5)(B)(ii)(II) prior to amendment by the Pension Protection Act of 2006, Public Law 109-280 (120 Stat. 780 (2006)) (PPA '06).

(4) ***Safe harbor rates of interest*** —

(i) ***In general.*** This paragraph (d)(4) identifies interest rates that are deemed to be not in excess of the interest rate described in paragraph (d)(3) of this section. The Commissioner may, in guidance of general applicability, specify additional interest crediting rates that are deemed to be not in excess of the rate described in paragraph (d)(3) of this section. See § 601.601(d)(2)(ii)(*b*).

(ii) ***Rates based on government bonds with margins.*** An interest crediting rate is deemed to be not in excess of the interest rate described in paragraph (d)(3) of this section if the rate is equal to the sum of any of the following rates of interest for bonds and the associated margin for that interest rate:

Interest rate bond index	Associated margin
The discount rate on 3-month Treasury Bills	175 basis points.
The discount rate on 12-month or shorter Treasury Bills	150 basis points.
The yield on 1-year Treasury Constant Maturities	100 basis points.
The yield on 3-year or shorter Treasury Constant Maturities	50 basis points.
The yield on 7-year or shorter Treasury Constant Maturities	25 basis points.
The yield on 30-year or shorter Treasury Constant Maturities	0 basis points.

(iii) ***Eligible cost-of-living indices.*** An interest crediting rate is deemed to be not in excess of the interest rate described in paragraph (d)(3) of this section if the rate is adjusted no less frequently than annually and is equal to the rate of increase with respect to an eligible cost-of-living index described in § 1.401(a)(9)-6(o)(2), except that, for purposes of this paragraph (d)(4)(iii), the eligible cost-of-living index described in § 1.401(a)(9)-6(o)(2)(ii) is increased by 300 basis points.

(iv) ***Short and mid-term investment grade corporate bonds.*** An interest crediting rate equal to the first segment rate is deemed to be not in excess of the interest rate described in paragraph (d)(3) of this section. Similarly, an interest crediting rate equal to the second segment rate is deemed to be not in excess of the interest rate described in paragraph (d)(3) of this section. For this purpose, the first and second segment rates mean the first and second segment rates described in section 417(e)(3)(D) or 430(h)(2)(C), determined with or without regard to section 430(h)(2)(C)(iv) and with or without regard to the transition rules of section 417(e)(3)(D)(ii) or 430(h)(2)(G).

(v) ***Fixed rate of interest.*** An annual interest crediting rate equal to a fixed 6 percent is deemed to be not in excess of the interest rate described in paragraph (d)(3) of this section.

(5) ***Other rates of return*** —

(i) ***General rule.*** This paragraph (d)(5) sets forth additional methods for determining an interest crediting rate that is not in excess of a market rate of return.

(ii) ***Actual rate of return on plan assets*** —

(A) ***In general.*** An interest crediting rate equal to the actual rate of return on the aggregate assets of the plan, including both positive returns and negative returns, is not in excess of a market rate of return if the plan's assets are diversified so as to minimize the volatility of returns. This requirement that plan assets be diversified so as to minimize the volatility of returns does not require greater diversification than is required under section 404(a)(1)(C) of Title I of the Employee Retirement Income Security Act of 1974, Public Law 93-406 (88 Stat. 829 (1974)), as amended (ERISA), with respect to defined benefit pension plans.

(B) ***Subset of plan assets.*** An interest crediting rate equal to the actual rate of return on the assets within a specified subset of plan assets, including both positive and negative returns, is not in excess of a market rate of return if—

(*1*) The subset of plan assets is diversified so as to minimize the volatility of returns, within the meaning of paragraph (d)(5)(ii)(A) of this section (thus, this requirement is satisfied if the subset of plan assets is diversified such that it would meet the requirements of paragraph (d)(5)(ii)(A) of this section if the subset were aggregate plan assets);

(*2*) The aggregate fair market value of qualifying employer securities and qualifying employer real property (within the meaning of section 407 of ERISA) held in the subset of plan assets does not exceed 10 percent of the fair market value of the aggregate assets in the subset; and

(*3*) The fair market value of the assets within the subset of plan assets approximates the liabilities for benefits that are adjusted by reference to the rate of return on the assets within the subset, determined using reasonable actuarial assumptions.

(C) ***Examples.*** The following examples illustrate the application of paragraph (d)(5)(ii)(B) of this section:

> *Example 1.* (i) *Facts.* (a) Employer A sponsors a defined benefit plan under which benefit accruals are determined under a formula that is not a statutory hybrid benefit formula. Effective January 1, 2015, the plan is amended to cease future accruals under the existing formula and to provide future benefit accruals under a statutory hybrid benefit formula that uses hypothetical accounts. For service on or after January 1, 2015, the terms of the plan provide that each participant's hypothetical account balance is credited monthly with a pay credit equal to a specified percentage of the participant's compensation during the month. The plan also provides that hypothetical account balance is increased or decreased by an interest credit, which is calculated as the product of the account balance at the

beginning of the period and the net rate of return on the assets within a specified subset of plan assets during that period. Under the terms of the plan, the net rate of return is equal to the actual rate of return adjusted to reflect a reduction for specified plan expenses. The plan does not provide for interest credits on amounts that are distributed prior to the end of an interest crediting period.
(b) As of the effective date of the amendment, there are no assets in the specified subset of plan assets. Under the terms of the plan, an amount is added to the specified subset at the time each subsequent contribution for any plan year starting on or after the effective date of the amendment is made to the plan. The amount added (the formula contribution) is the amount deemed necessary to fund benefit accruals under the statutory hybrid benefit formula. Investment of the specified subset is diversified so as to minimize the volatility of returns, within the meaning of paragraph (d)(5)(ii)(A) of this section, and no qualifying employer securities or qualifying employer real property (within the meaning of section 407 of ERISA) are held in the subset. Benefits accrued under the statutory hybrid benefit formula are paid from the specified subset. However, if assets of the specified subset are insufficient to pay benefits accrued under the statutory hybrid benefit formula, the plan provides that assets of the residual legacy subset of plan assets (from which benefits accrued before January 1, 2015 are paid) are available to pay those benefits in accordance with the requirement that all assets of the plan be available to pay all plan benefits. Except as described in this paragraph, no other amounts are added to or subtracted from the specified subset of plan assets.

(c) The formula contribution for each plan year that is added to the specified subset of plan assets is an amount equal to the sum of the target normal cost of the statutory hybrid benefit formula for the plan year plus an additional amount intended to reflect gains or losses. This additional amount is equal to the annual amount necessary to amortize the difference between the funding target attributable to the statutory hybrid benefit formula portion of the plan for the plan year over the value of plan assets included in the specified subset of plan assets for the plan year in level annual installments over a 7-year period. For this purpose, target normal cost and funding target are determined under the rules of § 1.430(d)-1 as if the statutory hybrid benefit formula portion of the plan were the entire plan and without regard to special rules that are applicable to a plan in at-risk status, even if the plan is in at-risk status for a plan year. If the formula contribution for a plan year exceeds the amount of the actual contribution to the plan for a year (such as could be the case if all or a portion of the contribution is offset by all or a portion of the plan's prefunding balance), then an amount equal to the excess of the formula contribution over the actual contribution is transferred from the residual legacy subset of plan assets to the specified subset of plan assets on the plan's due date for the minimum required contribution for the year.

(ii) *Conclusion.* The specified subset is diversified so as to minimize the volatility of returns (within the meaning of paragraph (d)(5)(ii)(A) of this section). The aggregate fair market value of qualifying employer securities and qualifying employer real property (within the meaning of section 407 of ERISA) held in the specified subset do not exceed 10 percent of the fair market value of the aggregate assets in the subset. The fair market value of the assets within the specified subset of plan assets approximates the liabilities for benefits that are adjusted by reference to the rate of return on the assets within the subset, determined using reasonable actuarial assumptions, within the meaning of paragraph (d)(5)(ii)(B)(*3*) of this section. Therefore, the interest crediting rate under the statutory hybrid benefit formula portion of Employer A's defined benefit plan is not in excess of a market rate of return.

Example 2. (i) *Facts.* (a) Pursuant to a collective bargaining agreement, Employer X, Employer Y and Employer Z maintain and contribute to a multiemployer plan (as defined in section 414(f)) that is established as of January 1, 2015 under which benefit accruals are determined under a variable annuity benefit formula. The plan provides that, on an annual basis, the benefit of each participant who has not yet retired is adjusted by reference to the difference between the actual return on the assets within a specified subset of plan assets and 4 percent. A participant's benefits are fixed at retirement and thereafter are not adjusted.
(b) As of the effective date of the plan, there are no assets in the specified subset. Under the terms of the plan, any amount contributed to the plan by a contributing employer is added to the specified subset at the time of the contribution. Investment of the specified subset is diversified so as to minimize the volatility of returns, within the meaning of paragraph (d)(5)(ii)(A) of this section, and no qualifying employer securities or qualifying employer real property (within the meaning of section 407 of ERISA) are held in the subset. The plan provides that, at the time of a participant's retirement, an amount equal to the present value of the liability for benefits payable to that participant is transferred to a separate subset of plan assets (the retiree pool). The retiree pool is invested in high-quality bonds in an attempt to achieve cash-flow matching of the retiree liabilities. Benefits are paid from the retiree pool. However, if assets of the retiree pool are insufficient to pay benefits, the plan provides that assets of the specified subset are available to pay benefits in accordance with the requirement that all assets of the plan be available to pay all plan benefits. Except as described in this paragraph, no other amounts are added to or subtracted from the specified subset of plan assets.

(ii) *Conclusion.* The specified subset is diversified so as to minimize the volatility of returns (within the meaning of paragraph (d)(5)(ii)(A) of this section). The aggregate fair market value of qualifying employer securities and qualifying

> employer real property (within the meaning of section 407 of ERISA) held in the specified subset do not exceed 10 percent of the fair market value of the aggregate assets in the subset. The fair market value of the assets within the specified subset of plan assets approximates the liabilities for benefits that are adjusted by reference to the rate of return on the assets within the subset, determined using reasonable actuarial assumptions, within the meaning of paragraph (d)(5)(ii)(B)(*3*) of this section. Therefore, the methodology used to adjust participant benefits under the plan's variable annuity benefit formula, which is a statutory hybrid benefit formula under § 1.411(a)(13)-1(d)(4), is not in excess of a market rate of return.

(iii) ***Annuity contract rates.*** The rate of return on the annuity contract for the employee issued by an insurance company licensed under the laws of a State is not in excess of a market rate of return. However, this paragraph (d)(5)(iii) does not apply if the Commissioner determines that the annuity contract has been structured to provide an interest crediting rate that is in excess of a market rate of return.

(iv) ***Rate of return on certain RICs.*** An interest crediting rate is not in excess of a market rate of return if it is equal to the rate of return on a regulated investment company (RIC), as defined in section 851, that is reasonably expected to be not significantly more volatile than the broad United States equities market or a similarly broad international equities market. For example, a RIC that has most of its assets invested in securities of issuers (including other RICs) concentrated in an industry sector or a country other than the United States generally would not meet this requirement. Likewise a RIC that uses leverage, or that has significant investment in derivative financial products, for the purpose of achieving returns that amplify the returns of an unleveraged investment, generally would not meet this requirement. Thus, a RIC that has most of its investments concentrated in the semiconductor industry or that uses leverage in order to provide a rate of return that is twice the rate of return on the Standard & Poor's 500 index (S&P 500) would not meet this requirement. On the other hand, a RIC with investments that track the rate of return on the S&P 500, a broad-based “small-cap” index (such as the Russell 2000 index), or a broad-based international equities index would meet this requirement.

(6) ***Combinations of rates of return*** —

(i) ***In general.*** A plan that determines interest credits based, in whole or in part, on the greater of two or more different interest crediting rates provides an effective interest crediting rate in excess of a market rate of return unless the combination of rates is described in paragraph (d)(6)(ii), (d)(6)(iii), (e)(3)(iii), or (e)(4) of this section. However, a plan is not treated as providing the greater of two or more interest crediting rates merely because the plan satisfies the requirements of paragraph (d)(2) of this section. In addition, a plan is not treated as providing the greater of two or more interest crediting rates merely because a rate of return described in paragraph (d)(5)(iii) of this section is itself based on the greater of two or more rates.

(ii) ***Annual or more frequent floor*** —

(A) ***Application to segment rates.*** An interest crediting rate under a plan does not fail to be described in paragraph (d)(3) or (d)(4)(iv) of this section for an interest crediting period merely because the plan provides that the interest crediting rate for that interest crediting period equals the greater of—

(1) An interest crediting rate described in paragraph (d)(3) or (d)(4)(iv) of this section; and

(2) An annual interest rate of 4 percent or less (or a pro rata portion of an annual interest rate of 4 percent or less for plans that provide interest credits more frequently than annually).

(B) ***Application to other bond-based rates.*** An interest crediting rate under a plan does not fail to be described in paragraph (d)(4) of this section for an interest crediting period merely because the plan provides that the interest crediting rate for that interest crediting period equals the greater of—

(1) An interest crediting rate described in paragraph (d)(4)(ii) or (d)(4)(iii) of this section; and

(2) An annual interest rate of 5 percent or less (or a pro rata portion of an annual interest rate of 5 percent or less for plans that provide interest credits more frequently than annually).

(iii) ***Cumulative floor applied to investment-based or bond-based rates*** —

(A) ***In general.*** A plan that determines interest credits under a statutory hybrid benefit formula using a particular interest crediting rate described in paragraph (d)(3), (d)(4), or (d)(5) of this section (or an interest crediting rate that can never be in excess of a particular interest crediting rate described in paragraph (d)(3), (d)(4) or (d)(5) of this section) does not provide an effective interest crediting rate in excess of a market rate of return merely because the plan provides that the participant's benefit under the statutory hybrid benefit formula determined as of the participant's annuity starting date is equal to the benefit determined as if the accumulated benefit were equal to the greater of—

(1) The accumulated benefit determined using the interest crediting rate; and

(2) The accumulated benefit determined as if the plan had used a fixed annual interest crediting rate equal to 3 percent (or a lower rate) for all principal credits that are credited under the plan to the participant during the guarantee period (minimum guarantee amount).

(B) ***Guarantee period defined.*** The guarantee period is the prospective period that begins on the date the cumulative floor described in this paragraph (d)(6)(iii) begins to apply to the participant's benefit and that ends on the date on which that cumulative floor ceases to apply to the participant's benefit.

(C) ***Application to multiple annuity starting dates.*** The determination under this paragraph (d)(6)(iii) is made only as of an annuity starting date, within the meaning of § 1.401(a)-20, A-10(b), with respect to which a distribution of the participant's entire vested benefit under the plan's statutory hybrid benefit formula as of that date commences. For a participant who has more than one annuity starting date, paragraph (d)(6)(iii)(D) of this section provides rules to account for prior annuity starting dates when applying paragraph (d)(6)(iii)(A) of this section. If the comparison under paragraph (d)(6)(iii)(D) of this section results in the minimum guarantee amount exceeding the sum of the amounts described in

paragraphs (d)(6)(iii)(D)(*1*) through (d)(6)(iii)(D)(*3*) of this section, then the participant's benefit to be distributed at the current annuity starting date must be no less than would be provided if that excess were included in the current accumulated benefit.

(D) ***Comparison to reflect prior distributions.*** For a participant who has more than one annuity starting date, the minimum guarantee amount (described in paragraph (d)(6)(iii)(A)(*2*) of this section), as of the current annuity starting date, is compared to the sum of—

(*1*) The remaining balance of the participant's accumulated benefit, as of the current annuity starting date, to which a minimum guaranteed rate described in paragraph (d)(6)(iii)(A)(*2*) of this section applies;

(*2*) The amount of the reduction to the participant's accumulated benefit under the statutory hybrid benefit formula that is attributable to any prior distribution of the participant's benefit under that formula and to which a minimum guaranteed rate described in paragraph (d)(6)(iii)(A)(*2*) of this section applied, together with interest at that minimum guaranteed rate annually from the prior annuity starting date to the current annuity starting date; and

(*3*) Any amount that was treated as included in the accumulated benefit under the rules of this paragraph (d)(6)(iii) as of any prior annuity starting date, together with interest annually at the minimum guaranteed rate that applied to the prior distribution from the prior annuity starting date to the current annuity starting date.

(E) ***Application to portion of participant's benefit.*** A cumulative floor described in this paragraph (d)(6)(iii) may be applied to a portion of a participant's benefit, provided the requirements of this paragraph (d)(6)(iii) are satisfied with respect to that portion of the benefit. If a cumulative floor described in this paragraph (d)(6)(iii) applies to a portion of a participant's benefit, only the principal credits that are attributable to that portion of the participant's benefit are taken into account in determining the amount of the guarantee described in paragraph (d)(6)(iii)(A)(*2*) of this section.

(e) ***Other rules regarding market rates of return*** —

(1) ***In general.*** This paragraph (e) sets forth additional rules regarding the application of the market rate of return requirement with respect to benefits determined under a statutory hybrid benefit formula.

(2) ***Plan termination*** —

(i) ***In general.*** This paragraph (e)(2) provides special rules that apply for purposes of determining certain plan factors under a statutory hybrid benefit formula after the plan termination date of a statutory hybrid plan. The terms of a statutory hybrid plan must reflect the requirements of this paragraph (e)(2). Paragraph (e)(2)(ii) of this section sets forth rules relating to the interest crediting rate for interest crediting periods that end after the plan termination date. Paragraph (e)(2)(iii) of this section sets forth rules for converting a participant's accumulated benefit to an annuity after the plan termination date. Paragraph (e)(2)(iv) of this section sets forth rules of application. Paragraph (e)(2)(v) of this section contains examples. The Commissioner may, in revenue rulings, notices, or other guidance published in the Internal Revenue Bulletin, provide for additional rules that apply for purposes of this paragraph (e)(2) and the plan termination provisions of section 411(b)(5)(B)(vi). See § 601.601(d)(2)(ii)(*b*) of this chapter. See also regulations of the Pension Benefit Guaranty Corporation for additional rules that apply when a pension plan subject to Title IV of ERISA is terminated.

(ii) *Interest crediting rates used to determine accumulated benefits* —

(A) ***General rule.*** The interest crediting rate used under the plan to determine a participant's accumulated benefit for interest crediting periods that end after the plan termination date must be equal to the average of the interest rates used under the plan during the 5-year period ending on the plan termination date. Except as otherwise provided in this paragraph (e)(2)(ii), the actual annual interest rate (taking into account minimums, maximums, and other adjustments) used to determine interest credits under the plan for each of the interest crediting periods is used for purposes of determining the average of the interest rates.

(B) *Special rule for variable interest crediting rates that are other rates of return* —

(*1*) ***Application to interest crediting periods.*** This paragraph (e)(2)(ii)(B) applies for an interest crediting period if the interest crediting rate that was used for that interest crediting period was a rate of return described in paragraph (d)(5) of this section. This paragraph (e)(2)(ii)(B) also applies for an interest crediting period that begins before the first plan year described in paragraph (f)(2)(i)(B)(*1*) or (f)(2)(i)(B)(*3*) of this section (as applicable), if the interest crediting rate that was used for that interest crediting period had the potential to be negative. For this purpose, a rate is not treated as having the potential to be negative if it is a rate described in paragraph (d)(3) or (d)(4) of this section or is any other rate that is based solely on current bond yields.

(*2*) ***Use of substitution rate.*** For any interest crediting period to which this paragraph (e)(2)(ii)(B) applies, for purposes of determining the average of the interest rates under this paragraph (e)(2)(ii), the interest rate used under the plan for the interest crediting period is deemed to be equal to the substitution rate (as described in paragraph (e)(2)(ii)(C) of this section) for the period.

(C) ***Definition of substitution rate.*** The substitution rate for any interest crediting period equals the second segment rate under section 430(h)(2)(C)(ii) (determined without regard to section 430(h)(2)(C)(iv)) for the last calendar month ending before the beginning of the interest crediting period, as adjusted to account for any minimums or maximums that applied in the period (other than cumulative floors under paragraph (d)(6)(iii) of this section), but without regard to other reductions that applied in the period. Thus, for example, if the actual interest crediting rate in an interest crediting period is equal to the rate of return on plan assets, but not greater than 5 percent, then the substitution rate for that interest crediting period is equal to the lesser of the applicable second segment rate for the period and 5 percent. However, if the actual interest crediting rate for an interest crediting period is equal to the rate of return on plan assets minus 200 basis points, then the substitution rate for that interest crediting period is equal to the applicable second segment rate for the period.

(D) ***Cumulative floors.*** Cumulative floors under paragraph (d)(6)(iii) of this section that applied during the 5-year period ending on the plan termination date are not taken into account for purposes of determining the average of the interest rates under this paragraph (e)(2)(ii). However, the rules of paragraph (d)(6)(iii) of this section continue to apply to determine benefits as of annuity starting dates on or after the plan termination date. Thus, if, as of an annuity starting date on or after the plan termination date, the benefit provided by applying an applicable cumulative minimum rate under paragraph (d)(6)(iii)(A)(*2*) of this section

exceeds the benefit determined by applying interest credits to the participant's accumulated benefit (with interest credits for interest crediting periods that end after the plan termination date determined under this paragraph (e)(2)), then that cumulative minimum rate is used to determine benefits as of that annuity starting date.

(iii) *Annuity conversion rates and factors* —

(A) *Conversion factors where a separate mortality table was used prior to plan termination* —

(*1*) ***Use of a separate mortality table.*** This paragraph (e)(2)(iii)(A) applies for purposes of converting a participant's accumulated benefit to an annuity after the plan termination date if, for the entire 5-year period ending on the plan termination date, the plan provides for a mortality table in conjunction with an interest rate to be used to convert a participant's accumulated benefit (or a portion thereof) to an annuity. If this paragraph (e)(2)(iii)(A) applies, then the plan is treated as meeting the requirements of section 411(b)(5)(B)(i) and paragraph (d)(1) of this section only if, for purposes of converting a participant's accumulated benefit (or portion thereof) to an annuity for annuity starting dates after the plan termination date, the mortality table used is the table described in paragraph (e)(2)(iii)(A)(*2*) of this section and the interest rate is the rate described in paragraph (e)(2)(iii)(A)(*3*) of this section.

(*2*) ***Specific mortality table.*** The mortality table used is the mortality table specified under the plan for purposes of converting a participant's accumulated benefit to an annuity as of the termination date. This mortality table is used regardless of whether it was used during the entire 5-year period ending on the plan termination date. For purposes of applying this paragraph (e)(2)(iii)(A)(*2*), if the mortality table specified in the plan, as of the plan termination date, is a mortality table that is updated to reflect expected improvements in mortality experience (such as occurs with the applicable mortality table under section 417(e)(3)), then the table used for an annuity starting date after the plan termination date takes into account updates through the annuity starting date.

(*3*) ***Specific interest rate.*** The interest rate used is the interest rate specified under the plan for purposes of converting a participant's accumulated benefit to an annuity for annuity starting dates after the plan termination date. However, if the interest rate used under the plan for purposes of converting a participant's accumulated benefit to an annuity has not been the same fixed rate during the 5-year period ending on the plan termination date, then the interest rate used for purposes of converting a participant's accumulated benefit to an annuity for annuity starting dates after the plan termination date is the average interest rate that applied for this purpose during the 5-year period ending on the plan termination date.

(B) ***Tabular factors.*** If, as of the plan termination date, a tabular annuity conversion factor (i.e., a single conversion factor that combines the effect of interest and mortality) is used to convert a participant's accumulated benefit (or a portion thereof) to an annuity and that same fixed tabular annuity conversion factor has been used during the entire 5-year period ending on the plan termination date, then the plan satisfies the requirements of this paragraph (e)(2)(iii) only if that same tabular annuity conversion factor continues to apply after the plan termination date. However, if the tabular annuity conversion factor used to convert a participant's accumulated benefit (or a portion thereof) to an annuity is not described in the preceding sentence (including any case in which the tabular annuity

conversion factor was a fixed conversion factor that changed during the 5-year period ending on the plan termination date), then the plan satisfies the requirements of this paragraph (e)(2)(iii) only if the tabular annuity conversion factor used to convert a participant's accumulated benefit (or a portion thereof) to an annuity for annuity starting dates after the plan termination date is equal to the average of the tabular annuity conversion factors used under the plan for that purpose during the 5-year period ending on the plan termination date.

(C) ***Factor applicable where a separate mortality table was not used for entire 5-year period prior to plan termination.*** If paragraph (e)(2)(iii)(A) of this section does not apply (including any case in which a separate mortality table was used in conjunction with a separate interest rate to convert a participant's accumulated benefit (or a portion thereof) to an annuity for only a portion of the 5-year period ending on the plan termination date), then the plan is treated as having used a tabular annuity conversion factor to convert a participant's accumulated benefit (or a portion thereof) to an annuity for the entire 5-year period ending on the plan termination date. As a result, the rules of paragraph (e)(2)(iii)(B) of this section apply to determine the annuity conversion factor used for purposes of converting a participant's accumulated benefit (or portion thereof) to an annuity for annuity starting dates after the plan termination date. For this purpose, if a separate mortality table and separate interest rate applied for a portion of the 5-year period, that mortality table and interest rate are used to calculate an annuity conversion factor and that factor is treated as having been the tabular annuity conversion factor that applied for that portion of the 5-year period for purposes of this paragraph (e)(2)(iii).

(D) ***Separate application with respect to optional forms.*** This paragraph (e)(2)(iii) applies separately with respect to each optional form of benefit on the date of plan termination. For this purpose, the term optional form of benefit has the meaning given that term in § 1.411(d)-3(g)(6)(ii), except that a change in the annuity conversion factor used to determine a particular benefit is disregarded in determining whether different optional forms exist. Thus, for example, if, for the entire 5-year period ending on the plan termination date, the plan provides for a mortality table in conjunction with an interest rate to be used to determine annuities other than qualified joint and survivor annuities, but for specified tabular factors to apply to determine annuities that are qualified joint and survivor annuities, then paragraph (e)(2)(iii)(A) of this section applies for purposes of annuities other than qualified joint and survivor annuities and paragraph (e)(2)(iii)(B) of this section applies for purposes of annuities that are qualified joint and survivor annuities. In addition, if the annuity conversion factor used to determine a particular qualified joint and survivor annuity has changed in the 5-year period ending on the plan termination date, the different factors are averaged for purposes of determining the annuity conversion factor that applies after plan termination for that particular qualified joint and survivor annuity.

(iv) ***Rules of application*** —

(A) ***Average of interest rates for crediting interest*** —

(*1*) ***In general.*** For purposes of determining the average of the interest rates under paragraph (e)(2)(ii) of this section, an interest crediting period is taken into account if the interest crediting date for the interest crediting period is within the 5-year period ending on the plan termination date. The average of the interest rates is determined

as the arithmetic average of the annual interest rates used for those interest crediting periods. If the interest crediting periods taken into account are not all the same length, then each rate is weighted to reflect the length of the interest crediting period in which it applied. If the plan provides for the crediting of interest more frequently than annually, then interest credits after the plan termination date must be prorated in accordance with the rules of paragraph (d)(1)(iv)(C) of this section.

(2) ***Section 411(d)(6) protected accumulated benefit.*** In general, the interest rate that was used for each interest crediting period is the ongoing interest crediting rate that was specified under the plan for that period, without regard to any interest rate that was used prior to an amendment changing the interest crediting rate with respect to a section 411(d)(6) protected benefit. However, if, as of the end of the last interest crediting period that ends on or before the plan termination date, the participant's accumulated benefit is based on a section 411(d)(6) protected benefit that results from a prior amendment to change the rate of interest crediting applicable under the plan, then the pre-amendment interest rate is treated as having been used for each interest crediting period after the date of the interest crediting rate change (so that the amendment is disregarded).

(B) ***Average annuity conversion rates and factors*** —

(1) ***In general.*** For purposes of determining average annuity conversion interest rates and average tabular annuity conversion factors under paragraph (e)(2)(iii) of this section, an interest rate or tabular annuity conversion factor is taken into account if the rate or conversion factor applied under the terms of the plan to convert a participant's accumulated benefit (or a portion thereof) to a benefit payable in the form of an annuity during the 5-year period ending on the plan termination date. The average is determined as the arithmetic average of the interest rates or tabular factors used during that period. If the periods in which the rates or factors that are averaged are not all the same length, then each rate or factor is weighted to reflect the length of the period in which it applied.

(2) ***Section 411(d)(6) protected annuity conversion factors.*** In general, the annuity conversion interest rate or tabular annuity conversion factor that was used for each period is the ongoing interest rate or tabular factor that was specified under the plan for that period, without regard to any rate or factor that was used under the plan prior to an amendment changing the rate or factor with respect to a section 411(d)(6) protected benefit. However, if, as of the plan termination date, the participant's annuity benefit for an annuity commencing at that date would be based on a section 411(d)(6) protected benefit that results from a prior amendment to change the rate or factor under the plan, then the pre-amendment rate or factor is treated as having been used after the date of the amendment (so that the amendment is disregarded).

(C) ***Blended rates.*** If, as of the plan termination date, the plan determines interest credits by applying different rates to two or more different predetermined portions of the accumulated benefit, then the interest crediting rate that applies after the plan termination date is determined separately with respect to each portion under the rules of paragraph (e)(2)(ii) of this section.

(D) ***Participants with less than 5 years of interest credits upon plan termination.*** If the plan provided for interest credits for any interest crediting period in which, pursuant to the terms of the plan, an individual was not eligible to receive interest credits (including because the individual was not a participant or beneficiary in the relevant interest crediting period), then, for purposes of determining the individual's average interest crediting rate under paragraph (e)(2)(ii) of this section, the individual is treated as though the individual received interest credits in that period using the interest crediting rate that applied in that period under the terms of the plan to a similarly situated participant or beneficiary who was eligible to receive interest credits.

(E) ***Plan termination date*** —

(*1*) ***Plans subject to Title IV of ERISA.*** In the case of a plan that is subject to Title IV of ERISA, the plan termination date for purposes of this paragraph (e)(2) means the plan's termination date established under section 4048(a) of ERISA.

(*2*) ***Other plans.*** In the case of a plan that is not subject to Title IV of ERISA, the plan termination date for purposes of this paragraph (e)(2) means the plan's termination date established by the plan administrator, provided that the plan termination date may be no earlier than the date on which the actions necessary to effect the plan termination—other than the distribution of plan benefits—are taken. However, a plan is not treated as terminated on the plan's termination date if the assets are not distributed as soon as administratively feasible after that date. See Rev. Rul. 89-87 (1989-2 CB 2), (see § 601.601(d)(2)(ii)(*b*) of this chapter).

(v) ***Examples.*** The following examples illustrate the rules of this paragraph (e)(2). In each case, it is assumed that the plan is terminated in a standard termination.

> *Example 1.* (i) *Facts.* (A) Plan A is a defined benefit plan with a calendar plan year that expresses each participant's accumulated benefit in the form of a hypothetical account balance to which principal credits are made at the end of each calendar quarter and to which interest is credited at the end of each calendar quarter based on the balance at the beginning of the quarter. Interest credits under Plan A are based on a rate of interest fixed at the beginning of each plan year equal to the third segment rate for the preceding December, except that the plan used the rate of interest on 30-year Treasury bonds (instead of the third segment rate) for plan years before 2013. The plan is terminated on March 3, 2017.
> (B) The third segment rate credited under Plan A from January 1, 2013, through December 31, 2016, is assumed to be: 6 percent annually for each of the four quarters in 2016; 6.5 percent annually for each of the four quarters in 2015; 6 percent annually for each of the four quarters in 2014; and 5.5 percent annually for each of the four quarters in 2013. The rate of interest on 30-year Treasury bonds credited under Plan A for each of the four quarters in 2012 is assumed to be 4.4 percent annually.

(ii) *Conclusion.* Pursuant to paragraph (e)(2)(ii) of this section, the interest crediting rate used to determine accrued benefits under the plan on and after the date of plan termination is an annual rate of 5.68 percent (which is the arithmetic average of 6 percent, 6.5 percent, 6 percent, 5.5 percent, and 4.4 percent). In accordance with the rules of paragraph (d)(1)(iv)(C) of this section, the quarterly interest crediting rate after the plan termination date is 1.42 percent (5.68 divided by 4).

Example 2. (i) *Facts.* The facts are the same as *Example 1.* Participant S, who terminated employment before January 1, 2017, has a hypothetical account balance of $100,000 when the plan is terminated on March 3, 2017. Participant S commences distribution in the form of a straight life annuity commencing on January 1, 2020. For the entire 5-year period ending on the plan termination date, the plan has provided that the applicable section 417(e) rates for the preceding August are applied on the annuity starting date in order to convert the hypothetical account balance to an annuity. Based on the 5-year averages of the first segment rates, the second segment rates, and the third segment rates as of the plan termination date, and the applicable mortality table for the year 2020, the resulting conversion rate at the January 1, 2020 annuity starting date is 166.67 for a monthly straight life annuity payable to a participant whose age is the age of Participant S on January 1, 2020.
(ii) *Conclusion.* In accordance with the conclusion in *Example 1,* the interest crediting rate after the plan termination date is 1.42 percent for each of the 12 quarterly interest crediting dates in the period from March 3, 2017, through December 31, 2019, so that Participant S's account balance is $118,436 on December 31, 2019. As a result, using the annuity conversion rate of 166.67, the amount payable to Participant S commencing on January 1, 2020 is $711 per month.

Example 3. (i) *Facts.* The facts are the same as *Example 1.* In addition, Participant T commenced participation in Plan A on April 17, 2014.
(ii) *Conclusion.* In accordance with the conclusion in *Example 1* and the rule of paragraph (e)(2)(iv)(D) of this section, the quarterly interest crediting rate used to determine Participant T's accrued benefits under Plan A on and after the date of plan termination is 1.42 percent, which is the same rate that applies to all participants and beneficiaries in Plan A after the termination date (and that would have applied to Participant T if Participant T had participated in the plan during the 5-year period preceding the date of plan termination).

Example 4. (i) *Facts.* (A) Plan B is a defined benefit plan with a calendar plan year that expresses each participant's accumulated benefit in the form of a hypothetical account balance to which principal credits are made at the end of each calendar year and to which interest is credited at the end of each calendar year based on the balance at the

end of the preceding year. The plan is terminated on January 27, 2018.
(B) The plan's interest crediting rate for each calendar year during the entire 5-year period ending on the plan termination date is equal to (A) 50 percent of the greater of the rate of interest on 3-month Treasury Bills for the preceding December and an annual rate of 4 percent, plus (B) 50 percent of the rate of return on plan assets. The rate of interest on 3-month Treasury Bills credited under Plan B is assumed to be: 3.4 Percent for 2017; 4 percent for 2016; 4.5 percent for 2015; 3.5 percent for 2014; and 4.2 percent for 2013. Each of these rates applied under Plan B for purposes of determining the interest credits described in clause (A) of this paragraph (i), except that the 4 percent minimum rate applied for 2017 and 2014. The second segment rate is assumed to be: 6 percent for December 2016; 6 percent for December 2015; 6.5 percent for December 2014; 6 percent for December 2013; and 5.5 percent for December 2012.

(ii) *Conclusion.* Pursuant to paragraph (e)(2)(ii) of this section, the interest crediting rate used to determine accrued benefits under the plan on and after the date of plan termination is 5.07 percent. This number is equal to the sum of 50 percent of 4.14 percent (which is the sum of 4 percent, 4 percent, 4.5 percent, 4 percent, and 4.2 percent, divided by 5), and 50 percent of 6 percent (which is the average second segment rate applicable for the 5 interest crediting periods ending within the 5-year period, as applied pursuant to the substitution rule described in paragraphs (e)(2)(ii)(B) and (C) of this section).

Example 5. (i) *Facts.* The facts are the same as in *Example 4,* except that the plan had credited interest before January 1, 2016, using the rate of return on a specified RIC and had been amended effective January 1, 2016, to base interest credits for all plan years after 2015 on the interest rate formula described in paragraph (i) of *Example 4.* In order to comply with section 411(d)(6), the plan provides that, for each participant or beneficiary who was a participant on December 31, 2015, benefits at any date are based on either the ongoing hypothetical account balance on that date (which is based on the December 31, 2015 balance, with interest credited thereafter at the rate described in the first sentence of paragraph (i) of *Example 4* and taking principal credits after 2015 into account) or a special hypothetical account balance (the pre-2016 balance) on that date, whichever balance is greater. For each participant, the pre-2016 balance is a hypothetical account balance equal to the participant's December 31, 2015 balance, with interest credited thereafter at the RIC rate of return, but with no principal credits after 2015. There are 10 participants for whom the pre-2016 balance exceeds the ongoing hypothetical account balance at the end of 2017 (which is the end of the last interest crediting period that ends on or before the January 27, 2018, plan termination date).

(ii) *Conclusion.* Because Plan B credited interest prior to 2016 using the rate of return on a RIC (a rate described in paragraph (d)(5) of this section), for purposes of determining the average interest crediting rate upon plan termination, the interest crediting rate used to determine accrued benefits under Plan B for all participants during those periods (for the calendar years 2013, 2014, and 2015) is equal to the second segment rate for December of the calendar year preceding each interest crediting period. In addition, because the pre-2016 balances exceeded the ongoing hypothetical account balance for 10 participants in the last interest crediting period prior to plan termination, for purposes of determining the average interest crediting rate upon plan termination, the interest crediting rate used to determine accrued benefits under Plan B for 2016 and 2017 for those participants is equal to the second segment rate for December 2015 and December 2016, respectively. For all other participants, for purposes of determining the average interest crediting rate upon plan termination, the interest crediting rate used to determine accrued benefits under Plan B for 2016 and 2017 is based on the ongoing interest crediting rate (as described in *Example 4*).

(3) ***Rules relating to section 411(d)(6)*** —

(i) ***General rule.*** The right to future interest credits determined in the manner specified under the plan and not conditioned on future service is a factor that is used to determine the participant's accrued benefit, for purposes of section 411(d)(6). Thus, to the extent that benefits have accrued under the terms of a statutory hybrid plan that entitle the participant to future interest credits, an amendment to the plan to change the interest crediting rate must satisfy section 411(d)(6) if the revised rate under any circumstances could result in interest credits that are smaller as of any date after the applicable amendment date (within the meaning of § 1.411(d)-3(g)(4)) than the interest credits that would be provided without regard to the amendment. For additional rules, see § 1.411(d)-3(b). Paragraphs (e)(3)(ii) through (e)(3)(vi) of this section set forth special rules that apply regarding the interaction of section 411(d)(6) and changes to a plan's interest crediting rate. The Commissioner may, in guidance of general applicability, prescribe additional rules regarding the interaction of section 411(d)(6) and section 411(b)(5), including changes to a plan's interest crediting rate. See § 601.601(d)(2)(ii)(*b*).

(ii) ***Adoption of long-term investment grade corporate bond rate.*** For purposes of applying section 411(d)(6) and this paragraph (e) to an amendment to change to the interest crediting rate described in paragraph (d)(3) of this section, a plan is not treated as providing interest credits that are smaller as of any date after the applicable amendment date than the interest credits that would be provided using an interest crediting rate described in paragraph (d)(4) of this section merely because the plan credits interest after the applicable amendment date using the interest crediting rate described in paragraph (d)(3) of this section, provided—

(A) The amendment only applies to interest credits to be credited after the effective date of the amendment;

(B) The effective date of the amendment is at least 30 days after adoption of the amendment;

(C) On the effective date of the amendment, the new interest crediting rate is not lower than the interest crediting rate that would have applied in the absence of the amendment; and

(D) For plan years described in paragraph (f)(2)(i)(B)(*1*) or (f)(2)(i)(B)(*3*) of this section (as applicable), if prior to the amendment the plan used a fixed annual floor in connection with a rate described in paragraph (d)(4)(ii), (iii) or (iv) of this section (as permitted under paragraph (d)(6)(ii) of this section), the floor is retained after the amendment to the maximum extent permissible under paragraph (d)(6)(ii)(A) of this section.

(iii) ***Coordination of section 411(d)(6) and market rate of return limitation*** —

(A) ***In general.*** An amendment to a statutory hybrid plan that preserves a section 411(d)(6) protected benefit is subject to the rules under paragraph (d) of this section relating to market rate of return. However, in the case of an amendment to change a plan's interest crediting rate for periods after the applicable amendment date from one interest crediting rate (the old rate) that satisfies the requirements of paragraph (d) of this section to another interest crediting rate (the new rate) that satisfies the requirements of paragraph (d) of this section, the plan's effective interest crediting rate is not in excess of a market rate of return for purposes of paragraph (d) of this section merely because the plan provides for the benefit of any participant who is benefiting under the plan (within the meaning of § 1.410(b)-3(a)) on the applicable amendment date to never be less than what it would be if the old rate had continued but without taking into account any principal credits (as defined in paragraph (d)(1)(ii)(D) of this section) after the applicable amendment date.

(B) ***Multiple amendments.*** A pattern of repeated plan amendments each of which provides for a prospective change in the plan's interest crediting rate with respect to the benefit as of the applicable amendment date will be treated as resulting in the ongoing plan terms providing for an effective interest crediting rate that is in excess of a market rate of return. See § 1.411(d)-4, A-1(c)(1).

(iv) ***Change in lookback month or stability period used to determine interest credits*** —

(A) ***Section 411(d)(6) anti-cutback relief.*** With respect to a plan using an interest crediting rate described in paragraph (d)(3) or (d)(4) of this section, notwithstanding the general rule of paragraph (e)(3)(i) of this section, if a plan amendment changes the lookback month or stability period used to determine interest credits, the amendment is not treated as reducing accrued benefits in violation of section 411(d)(6) merely on account of this change if the conditions of this paragraph (e)(3)(iv)(A) are satisfied. If the plan amendment is effective on or after the adoption date, any interest credits credited for the one-year period commencing on the date the amendment is effective must be determined using the lookback month and stability period provided under the plan before the amendment or the lookback month and stability period after the amendment, whichever results in the larger interest credits. If the plan amendment is adopted retroactively (that is, the amendment is effective prior to the adoption date), the plan must use the lookback month and stability period resulting in the larger interest credits for the period beginning with the effective date and ending one year after the adoption date.

(B) ***Section 411(b)(5)(B)(i)(I) market rate of return relief.*** The plan's effective interest crediting rate is not in excess of a market rate of return for purposes of paragraph (d) of this section merely because a plan amendment complies with the requirements of paragraph (e)(3)(iv)(A) of this section. However, a pattern of repeated plan amendments each of which provides for a change in the lookback month or stability period used to determine

interest credits will be treated as resulting in the ongoing plan terms providing for an effective interest crediting rate that is in excess of a market rate of return. See § 1.411(d)-4, A-1(c)(1).

(v) ***RIC ceasing to exist.*** This paragraph (e)(3)(v) applies in the case of a statutory hybrid plan that credits interest using an interest crediting rate equal to the rate of return on a RIC (pursuant to paragraph (d)(5)(iv) of this section) that ceases to exist, whether as a result of a name change, liquidation, or otherwise. In such a case, the plan is not treated as violating section 411(d)(6) provided that the rate of return on the successor RIC is substituted for the rate of return on the RIC that no longer exists, for purposes of crediting interest for periods after the date the RIC ceased to exist. In the case of a name change or merger of RICs, the successor RIC means the RIC that results from the name change or merger involving the RIC that no longer exists. In all other cases, the successor RIC is a RIC selected by the plan sponsor that has reasonably similar characteristics, including characteristics related to risk and rate of return, as the RIC that no longer exists.

(vi) ***Transitional amendments needed to satisfy the market rate of return rules*** —

(A) ***In general.*** Notwithstanding the requirements of section 411(d)(6), if the requirements set forth in this paragraph (e)(3)(vi) are satisfied, a plan may be amended to change its interest crediting rate with respect to benefits that have already accrued in order to comply with the requirements of section 411(b)(5)(B)(i) and paragraph (d) of this section. A plan amendment is eligible for the treatment provided under this paragraph (e)(3)(vi)(A) to the extent that the amendment modifies an interest crediting rate that does not satisfy the requirements of section 411(b)(5)(B)(i) and paragraph (d) of this section in the manner specified in paragraph (e)(3)(vi)(C) of this section.

(B) ***Rules of application*** —

(*1*) ***Multiple noncompliant features.*** If a plan's interest crediting rate has more than one noncompliant feature as described in paragraph (e)(3)(vi)(C) of this section, then each noncompliant feature must be addressed separately in the manner specified in paragraph (e)(3)(vi)(C) of this section.

(*2*) ***Definition of investment-based rate.*** The application of the rules of paragraph (e)(3)(vi)(C) of this section to an interest crediting rate depends on whether the interest crediting rate is an investment-based rate. For purposes of this paragraph (e)(3)(vi), an investment-based rate is a rate based on either a rate of return provided by actual investments (taking into account the return attributable to any change in the value of the underlying investments) or a rate of return for an index that measures the change in the value of investments. A rate is an investment-based rate even if it is based only in part on a rate described in the preceding sentence.

(*3*) ***Timing rules for permitted amendments.*** The rules under this paragraph (e)(3)(vi) apply only to a plan amendment that is adopted prior to and effective no later than the first day of the first plan year described in paragraph (f)(2)(i)(B)(*1*) or (f)(2)(i)(B)(*3*) of this section, as applicable. In addition, the rules under this paragraph (e)(3)(vi) apply to a plan amendment only with respect to interest credits that are credited for interest crediting periods that begin on or after the applicable amendment date (within the meaning of § 1.411(d)-3(g)(4)).

(*4*) ***Amendments that provide for greater interest crediting rates.*** If a plan is amended in accordance with paragraphs (e)(3)(vi)(C)(*1*) through (*10*) of this section to switch from a noncompliant rate to a compliant rate and is subsequently amended to switch to a second compliant rate that can never be less than the first compliant rate, then the second amendment does not violate section 411(d)(6). If, instead, the plan is amended to switch from the noncompliant rate to the second compliant rate in a single amendment, that amendment also does not violate section 411(d)(6). For example, if it is permitted under paragraph (e)(3)(vi)(C) of this section to first amend the plan to credit interest using the lesser of the current rate and a rate described in paragraph (d)(3) of this section, it is then permissible to amend the plan to credit interest using that rate described in paragraph (d)(3) of this section. In such a case, it is also permissible to amend the plan to switch from the current rate to a rate described in paragraph (d)(3) of this section in a single amendment.

(*5*) ***Cumulative floors, including floors resulting from a prior change in rates with section 411(d)(6) protection.*** This paragraph (e)(3)(vi)(B)(*5*) applies to a plan that takes into account a minimum rate of return that applies less frequently than annually. This paragraph (e)(3)(vi)(B)(*5*) also applies to a plan that determines the participant's benefit as of the annuity starting date as the benefit provided by the greatest of two or more account balances (for example, in order to comply with section 411(d)(6) in connection with a prior amendment to change the plan's interest crediting rate). In either case, this paragraph (e)(3)(vi)(B)(*5*) applies with respect to a participant only if the requirements of paragraph (d)(6) of this section are not satisfied with respect to that participant. If this paragraph (e)(3)(vi)(B)(*5*) applies with respect to a participant, the plan must be amended to provide that the benefit for the participant is based solely on the benefit (and the associated interest crediting rate with respect to that benefit) that is greatest for that participant as of the applicable amendment date for the amendment made pursuant to this paragraph (e)(3)(vi). In addition, the plan must be further amended pursuant to the other rules in this paragraph (e)(3)(vi) if the remaining interest crediting rate does not satisfy the requirements of paragraph (d) of this section.

(*6*) ***Plans that permit participant direction of interest crediting rates.*** This paragraph (e)(3)(vi)(B)(*6*) applies in the case in which a plan permits a participant to choose an interest crediting rate from among a menu of hypothetical investment options and at least one of those hypothetical investment options provides for an interest crediting rate that is not permitted under paragraph (d) of this section (so that the plan fails to satisfy the requirements of paragraph (d) of this section). In such a case, the rules of this paragraph (e)(3)(vi) may be applied separately to correct each impermissible investment option. Alternatively, with respect to such a plan that permitted a participant to choose an interest crediting rate from among a menu of hypothetical investment options on September 18, 2014, pursuant to plan provisions that were adopted on or before September 18, 2014, the entire menu of investment options may be treated as an impermissible investment-based rate for which there is no permitted investment-based rate with similar risk and return characteristics (so that the rule of paragraph (e)(3)(vi)(C)(*7*) of this section does not apply). As a result, plans described in the preceding sentence may be amended to eliminate a participant's ability to choose an interest crediting rate from among a menu of hypothetical investment options in accordance with paragraph (e)(3)(vi)(C)(*9*) of this section.

(C) ***Noncompliant feature and amendment to bring plan into compliance*** —

(*1*) ***Timing or other rules related to determining interest credits not satisfied.*** If a plan has an underlying interest rate that generally satisfies the rules of paragraph (d) of this section but that does not satisfy the rules relating to how interest credits are determined and credited as set forth in paragraph (d)(1)(iv) of this section, then the plan must be amended either—

(*i*) To correct the aspect of the plan's interest crediting rate that fails to comply with the rules of paragraph (d)(1)(iv) of this section with respect to its underlying interest crediting rate; or

(*ii*) If the plan's interest crediting rate is a variable rate that is not an investment-based rate of return, to provide that the plan's interest crediting rate is the lesser of that variable rate and a rate described in paragraph (d)(3) of this section that satisfies the rules of paragraph (d)(1)(iv) of this section.

(*2*) ***Fixed rate in excess of 6 percent.*** If a plan's interest crediting rate is a fixed rate in excess of the rate described in paragraph (d)(4)(v) of this section, then the plan must be amended to reduce the interest crediting rate to an annual interest crediting rate of 6 percent.

(*3*) ***Bond-based rate with margin exceeding maximum permitted margin.*** If a plan's interest crediting rate is a noncompliant rate that consists of an underlying rate described in paragraph (d)(3) or (d)(4) of this section except that the plan applies a margin that exceeds the maximum permitted margin under paragraph (d)(3) or (d)(4) of this section to the underlying rate, then the plan must be amended either—

(*i*) To reduce the margin to the maximum permitted margin for the underlying rate used by the plan; or

(*ii*) To provide that the plan's interest crediting rate is the lesser of the plan's noncompliant rate and a rate described in paragraph (d)(3) of this section (together with any fixed minimum rate that was part of the noncompliant rate, reduced to the extent necessary to comply with paragraph (d)(6)(ii) of this section).

(*4*) ***Bond-based rate with fixed minimum rate applied on an annual or more frequent basis in excess of the highest permitted fixed minimum rate.*** If a plan's interest crediting rate is a composite rate that consists of a variable rate described in paragraph (d)(3) or (d)(4) of this section in combination with a fixed minimum rate in excess of the highest permitted fixed minimum rate under paragraph (d)(6)(ii)(A)(*2*) or (B)(*2*) of this section (as applicable), then the plan must be amended in one of the following manners:

(*i*) To reduce the fixed minimum rate to the highest permitted fixed minimum rate that may be used in combination with the plan's variable rate;

(*ii*) To credit interest using an annual interest crediting rate of 6 percent; or

(*iii*) To provide that the plan's interest crediting rate is the lesser of the plan's noncompliant composite rate and a rate described in paragraph (d)(3) of this section (together with a fixed minimum rate of 4 percent).

(*5*) ***Greatest of two or more variable bond-based rates.*** If a plan's interest crediting rate is a composite rate that is the greatest of two or more variable rates described in paragraph (d)(3) or (d)(4) of this section, then the plan must be amended to provide for an interest crediting rate that is the lesser of the composite rate and a rate described in paragraph (d)(3) of this section.

(*6*) ***Other impermissible bond-based rates.*** If, after application of the rules of paragraphs (e)(3)(vi)(C)(*1*) through (*5*) of this section, a plan's interest crediting rate is a variable rate that is not an investment-based rate of return and is not described in paragraph (d)(3) or (d)(4) of this section, then the plan must be amended either—

(*i*) To provide for an interest crediting rate based on a variable rate described in paragraph (d)(3) or (d)(4) of this section that has similar duration and quality characteristics as the plan's variable rate, if such a rate can be selected; or

(*ii*) To provide for an interest crediting rate that is the lesser of the plan's variable rate and a rate described in paragraph (d)(3) of this section.

(*7*) ***Impermissible investment-based rate that can be replaced with a permissible rate that has similar risk and return characteristics.*** If a plan's interest crediting rate is an investment-based rate of return that is not described in paragraph (d)(5) of this section and a permitted investment-based rate described in paragraph (d)(5)(ii)(A), (d)(5)(ii)(B), or (d)(5)(iv) of this section that has similar risk and return characteristics as the plan's impermissible investment-based rate can be selected, then the plan must be amended to provide for an interest crediting rate based on such a permitted investment-based rate.

(*8*) ***Investment-based rate with an annual or more frequent minimum rate that is either a fixed rate or a non-investment based variable rate.*** If a plan's interest crediting rate is an investment-based rate of return that would be described in paragraph (d)(5) of this section except that the plan uses an annual or more frequent minimum rate that is either a fixed rate or a non-investment based variable rate in conjunction with the investment-based rate, then the plan must be amended either—

(*i*) To credit interest using that investment-based rate of return described in paragraph (d)(5) of this section without the minimum rate and eliminating any reduction (or other adjustment) to the investment-based rate; or

(*ii*) To provide that the plan's interest crediting rate is a rate described in paragraph (d)(3) of this section (together with any fixed minimum rate, reduced to the extent necessary to comply with paragraph (d)(6)(ii) of this section).

(*9*) ***Other impermissible investment-based rates.*** If, after application of the rules of paragraphs (e)(3)(vi)(C)(*1*), (*7*), and (*8*) of this section, a plan's interest crediting rate is an investment-based rate that is not described in paragraph (d)(5) of this section, then the plan must be amended either—

(*i*) To provide for an interest crediting rate that is an investment-based rate that is described in paragraph (d)(5) of this section and that is otherwise similar to the plan's impermissible investment-based rate but without the risk and return

characteristics of the impermissible investment-based rate that caused it to be impermissible (generally requiring the use of a rate that is less volatile than the plan's impermissible investment-based rate but is otherwise similar to that rate); or

(*ii*) To provide that the plan's interest crediting rate is a rate described in paragraph (d)(3) of this section with a fixed minimum rate of 4 percent.

(D) ***Examples.*** The following examples illustrate the application of the rules of this paragraph (e)(3)(vi). Each plan has a plan year that is the calendar year, and all amendments are adopted on October 1, 2016, and become effective for interest crediting periods beginning on or after January 1, 2017. Except as otherwise provided, the interest crediting rate under the plan satisfies the timing and other rules related to crediting interest under paragraph (d)(1)(iv) of this section.

> *Example 1.* (i) *Facts.* A plan determines interest credits for a plan year using the average yield on 30-year Treasury Constant Maturities for the last week of the preceding plan year (which is an impermissible lookback period for this purpose pursuant to paragraph (d)(1)(iv)(B) of this section because it is not a month).
> (ii) *Conclusion.* Pursuant to paragraph (e)(3)(vi)(C)(*1*) of this section, the plan must be amended in one of two manners. It may be amended to determine interest credits for a plan year using the average yield on 30-year Treasury Constant Maturities for a lookback month that complies with the requirements of paragraph (d)(1)(iv)(B) of this section. Alternatively, the plan may be amended to cap the existing rate so that it cannot exceed a third segment rate described in paragraph (d)(3) of this section for a period that complies with the requirements of paragraph (d)(1)(iv)(B) of this section.

> *Example 2.* (i) *Facts.* A plan determines interest credits for a plan year using the average yield on 30-year Treasury Constant Maturities for the last week of the preceding plan year, plus 50 basis points.
> (ii) *Conclusion.* Pursuant to paragraph (e)(3)(vi)(B)(*1*) of this section, the plan must be amended to correct both the impermissible lookback period and the excess margin. Accordingly, pursuant to paragraph (e)(3)(vi)(C)(*1*) and (*3*) of this section, the plan may be amended to determine interest credits for a plan year using the average yield on 30-year Treasury Constant Maturities (with no margin) for a period that complies with the requirements of paragraph (d)(1)(iv)(B) of this section. Alternatively, the plan may be amended to cap the existing rate so that it cannot exceed a third segment rate described in paragraph (d)(3) of this section for a period that complies with the requirements of paragraph (d)(1)(iv)(B) of this section.

> *Example 3.* (i) *Facts.* A plan credits interest for a plan year using the rate of return on plan assets for the preceding plan year.

(ii) *Conclusion.* Pursuant to paragraph (e)(3)(vi)(C)(*1*) of this section, the plan must be amended to determine interest credits for each plan year using the rate of return on plan assets for that plan year.

Example 4. (i) *Facts.* A plan credits interest using the average yield on 30-year Treasury Constant Maturities for December of the preceding plan year with a minimum rate of 5.5 percent per year.
(ii) *Conclusion.* Pursuant to paragraph (e)(3)(vi)(C)(*4*) of this section, the plan must be amended to change the plan's interest crediting rate. The new interest crediting rate under the plan may be the average yield on 30-year Treasury Constant Maturities for December of the preceding plan year with a minimum rate of 5 percent per year. Alternatively, the new interest crediting rate under the plan may be an annual interest crediting rate of 6 percent. As another alternative, the existing noncompliant composite rate may be capped so that it cannot exceed a third segment rate described in paragraph (d)(3) of this section, with a minimum rate of 4 percent as a floor on the entire resulting rate.

Example 5. (i) *Facts.* A plan credits interest using the greater of the unadjusted yield on 30-year Treasury Constant Maturities and the yield on 1-year Treasury Constant Maturities plus 100 basis points.
(ii) *Conclusion.* Pursuant to paragraph (e)(3)(vi)(C)(*5*) of this section, the plan must be amended to cap the existing composite “greater-of” rate so that the composite rate cannot exceed a third segment rate described in paragraph (d)(3) of this section.

Example 6. (i) *Facts.* A plan credits interest using a broad-based index that measures the yield to maturity on a group of intermediate-term investment grade corporate bonds.
(ii) *Conclusion.* Pursuant to paragraph (e)(3)(vi)(C)(*6*) of this section, the plan must be amended in one of two manners. The plan may be amended to credit interest using a second segment rate described in paragraph (d)(4)(iv) of this section. Alternatively, the plan may be amended to cap the existing rate so that it cannot exceed a third segment rate described in paragraph (d)(3) of this section.

Example 7. (i) *Facts.* A plan credits interest using the rate of return for a broad-based index that measures the yield to maturity on a group of short-term non-investment grade corporate bonds.
(ii) *Conclusion.* Pursuant to paragraph (e)(3)(vi)(C)(*6*)(*ii*) of this section, the plan must be amended to cap the existing rate so that it cannot exceed a third segment rate described in paragraph (d)(3) of this section.

Example 8. (i) *Facts.* A plan credits interest using the rate of return for the S&P 500 index. To bring the plan into compliance with the market rate of return rules, the plan sponsor amends the plan to credit interest based on the rate of return on a RIC that is designed to track the rate of return on the S&P 500 index.
(ii) *Conclusion.* The amendment satisfies the rule of paragraph (e)(3)(vi)(C)(*7*) of this section.

Example 9. (i) *Facts.* A plan credits interest based on the rate of return on a collective trust that holds a portfolio of equity investments, which provides a rate of return that is reasonably expected to be not significantly more volatile than the broad U.S. equities market or a similarly broad international equities market. To bring the plan into compliance with the market rate of return rules, the plan sponsor amends the plan to credit interest based on the actual rate of return on the assets within a specified subset of the plan's assets that is invested in the collective trust and that satisfies the requirements of paragraph (d)(5)(ii)(B) of this section.
(ii) *Conclusion.* The amendment satisfies the rule of paragraph (e)(3)(vi)(C)(*7*) of this section.

Example 10. (i) *Facts.* A plan credits interest for a plan year using the rate of return on a RIC that has most of its investments concentrated in the semiconductor industry.
(ii) *Conclusion.* Pursuant to paragraph (e)(3)(vi)(C)(*9*) of this section, the plan must be amended in one of two manners. The plan may be amended to provide for an interest crediting rate that is an investment-based rate that is described in paragraph (d)(5) of this section and that is similar to the plan's impermissible investment-based rate except to the extent that the risk and return characteristics of the impermissible investment-based rate caused it to be impermissible. Thus, the plan may be amended to provide for an interest crediting rate based on the rate of return on a RIC that is invested in a broader sector of the market than the semiconductor industry (such as the overall technology sector of the market), provided that the sector in which the RIC is invested is broad enough that the volatility requirements of paragraph (d)(5)(iv) of this section are satisfied. Alternatively, the plan may be amended to provide that the plan's interest crediting rate is a third segment rate described in paragraph (d)(3) of this section with a fixed minimum rate of 4 percent.

Example 11. (i) *Facts.* A plan was amended in 2014 to change its interest crediting rate for all interest crediting periods after the applicable amendment date of the amendment. The amendment changed the rate from the yield on 30-year Treasury Constant Maturities to the rate of return on aggregate plan assets under paragraph (d)(5)(ii)(A) of this section. The amendment also provided for section 411(d)(6) protection with respect to the account balance as of the applicable amendment date (by providing that the account balance after the applicable amendment date will never be smaller than the account balance as of the applicable amendment date credited with interest using the yield on 30-year Treasury Constant Maturities).

(ii) *Conclusions.* (A) *Participants benefiting under the plan.* With respect to those participants who were benefiting under the plan as of the applicable amendment date of the amendment described in paragraph (i) of this *Example 11,* the requirements of paragraph (e)(3)(iii) of this section (which provides a special market rate of return rule to permit certain changes in rates for participants benefiting under the plan) are satisfied. Accordingly, no amendment is required under this paragraph (e)(3)(vi) with respect to those participants.

(B) *Participants not benefiting under the plan.* With respect to those participants who were not benefiting under the plan as of the applicable amendment date of the amendment described in paragraph (i) of this *Example 11,* the requirements of paragraph (e)(3)(iii) of this section are not satisfied and, accordingly, the "greater-of" rate resulting from the section 411(d)(6) protection does not satisfy the requirements of paragraph (d)(6) of this section. As a result, pursuant to paragraph (e)(3)(vi)(B)(*5*) of this section, it must be determined on a participant-by-participant basis which account balance provides the benefit that is greater as of the applicable amendment date for the amendment made pursuant to this paragraph (e)(3)(iv) (the transitional amendment). If, as of the applicable amendment date for the transitional amendment, the account balance credited with interest after the change in rates using the yield on 30-year Treasury Constant Maturities is greater, then the plan must be amended to provide that the participant's benefit is based solely on that account balance credited with interest using the yield on 30-year Treasury Constant Maturities. On the other hand, if, as of the applicable amendment date for the transitional amendment, the account balance using the rate of return on aggregate plan assets is greater, then the plan must be amended to provide that the participant's benefit is based solely on that account balance credited with interest at the rate of return on aggregate plan assets.

(vii) ***Plan termination amendments.*** A plan amendment with an applicable amendment date on or before the first day of the first plan year described in paragraph (f)(2)(i)(B)(*1*) or (*3*) of this section (as applicable) is not treated as reducing accrued benefits in violation of section 411(d)(6) merely because the amendment changes the rules that apply upon plan termination in order to satisfy the requirements of paragraph (e)(2) of this section.

(4) ***Actuarial increases after normal retirement age.*** A statutory hybrid plan is not treated as providing an effective interest crediting rate that is in excess of a market rate of return for purposes of paragraph (d) of this section merely because the plan provides that the participant's benefit, as of each annuity starting date after normal retirement age, is equal to the greater of—

(i) The benefit based on the accumulated benefit determined using an interest crediting rate that is not in excess of a market rate of return under paragraph (d) of this section; and

(ii) The benefit that satisfies the requirements of section 411(a)(2).

(5) ***Plans that permit participant direction of interest crediting rates.*** [Reserved]

(f) ***Effective/applicability date*** —

(1) ***Statutory effective/applicability dates*** —

(i) ***In general.*** Except as provided in paragraph (f)(1)(iii) of this section, section 411(b)(5) applies for periods beginning on or after June 29, 2005.

(ii) ***Conversion amendments.*** The requirements of section 411(b)(5)(B)(ii), 411(b)(5)(B)(iii), and 411(b)(5)(B)(iv) apply to a conversion amendment (as defined in paragraph (c)(4) of this section) that both is adopted on or after June 29, 2005, and takes effect on or after June 29, 2005.

(iii) ***Market rate of return*** —

(A) ***Plans in existence on June 29, 2005*** —

(*1*) ***In general.*** In the case of a plan that was in existence on June 29, 2005 (regardless of whether the plan was a statutory hybrid plan on that date), section 411(b)(5)(B)(i) applies to plan years that begin on or after January 1, 2008.

(*2*) ***Exception for plan sponsor election.*** Notwithstanding paragraph (f)(1)(iii)(A)(*1*) of this section, a plan sponsor of a plan that was in existence on June 29, 2005 (regardless of whether the plan was a statutory hybrid plan on that date) may elect to have the requirements of section 411(a)(13)(B) and section 411(b)(5)(B)(i) apply for any period on or after June 29, 2005, and before the first plan year beginning after December 31, 2007. In accordance with section 1107 of the PPA '06, an employer is permitted to adopt an amendment to make this election as late as the last day of the first plan year that begins on or after January 1, 2009 (January 1, 2011, in the case of a governmental plan as defined in section 414(d)) if the plan operates in accordance with the election.

(B) ***Plans not in existence on June 29, 2005.*** In the case of a plan not in existence on June 29, 2005, section 411(b)(5)(B)(i) applies to the plan on and after the later of June 29, 2005, and the date the plan becomes a statutory hybrid plan.

(iv) ***Collectively bargained plans*** —

(A) ***In general.*** Notwithstanding paragraph (f)(1)(iii) of this section, in the case of a collectively bargained plan maintained pursuant to one or more collective bargaining agreements between employee representatives and one or more employers ratified on or before August 17, 2006, the requirements of section 411(b)(5)(B)(i) do not apply to plan years that begin before the earlier of—

(*1*) The later of—

(*i*) The date on which the last of those collective bargaining agreements terminates (determined without regard to any extension thereof on or after August 17, 2006); or

(*ii*) January 1, 2008; or

(*2*) January 1, 2010.

(B) ***Treatment of plans with both collectively bargained and non-collectively bargained employees.*** In the case of a plan with respect to which a collective bargaining agreement applies to some, but not all, of the plan participants, the plan is considered a collectively bargained plan for purposes of this paragraph (f)(1)(iv) if it is considered a collectively bargained plan under the rules of § 1.436-1(a)(5)(ii)(B).

(2) ***Effective/applicability date of regulations*** —

(i) *In general* —

(A) ***General effective date.*** Except as provided in paragraph (f)(2)(i)(B) of this section, this section applies to plan years that begin on or after January 1, 2011.

(B) *Special effective date* —

(*1*) ***In general.*** Except as otherwise provided in this paragraph (f)(2)(i)(B), paragraphs (d)(1)(iii), (d)(1)(iv)(D) and (E), (d)(1)(vi), (d)(2)(ii) and (v), (d)(5)(ii)(B), (d)(5)(iv), (d)(6), (e)(2), (e)(3)(iii), (iv) and (v), and (e)(4) of this section apply to plan years that begin on or after January 1, 2017 (or an earlier date as elected by the taxpayer).

(*2*) ***Transitional amendments.*** Paragraphs (e)(3)(vi) and (vii) of this section apply to plan amendments made on or after September 18, 2014 (or an earlier date as elected by the taxpayer).

(*3*) ***Collectively bargained plans.*** In the case of a plan maintained pursuant to one or more collective bargaining agreements between employee representatives and one or more employers ratified on or before November 13, 2015, that constitutes a collectively bargained plan under the rules of § 1.436-1(a)(5)(ii)(B), the paragraphs referenced in paragraph (f)(2)(i)(B)(*1*) of this section apply to plan years that begin on or after the later of—

(*i*) January 1, 2017; and

(*ii*) The earlier of January 1, 2019; and the date on which the last of those collective bargaining agreements terminates (determined without regard to any extension thereof on or after November 13, 2015).

(ii) ***Conversion amendments.*** With respect to a conversion amendment (within the meaning of paragraph (c)(4) of this section), where the effective date of the conversion amendment (as defined in paragraph (c)(4)(vi) of this section) is on or after the statutory effective date set forth in paragraph (f)(1)(ii) of this section, the requirements of paragraph (c)(2) of this section apply only to a participant who has an hour of service on or after the regulatory effective date set forth in paragraph (f)(2)(i) of this section.

(iii) ***Reliance before regulatory effective date.*** For the periods after the statutory effective date set forth in paragraph (f)(1) of this section and before the regulatory effective date set forth in paragraph (f)(2)(i) of this section, the safe harbor and other relief of section 411(b)(5) apply and the market rate of return and other requirements of section 411(b)(5) must be satisfied. During these periods, a plan is permitted to rely on the provisions of this section for purposes of applying the relief and satisfying the requirements of section 411(b)(5).

[T.D. 9505, 75 FR 64137, Oct. 19, 2010, as amended by T.D. 9505, Dec. 28, 2010; T.D. 9693, 79 FR 56460, Sept. 19, 2014; T.D. 9743, 80 FR 70684, Nov. 16, 2015; T.D. 10001, 89 FR 58906, July 19, 2024]

§ 1.411(c)-1 Allocation of accrued benefits between employer and employee contributions.

(a) ***Accrued benefit derived from employer contributions.*** For purposes of section 411 and the regulations thereunder, under section 411(c)(1), an employee's accrued benefit derived from employer contributions under a plan as of any applicable date is the excess, if any, of—

(1) The total accrued benefit under the plan provided for the employee as of such date, over

(2) The accrued benefit provided for the employee, derived from contributions made by the employee under the plan as of such date.

For computation of accrued benefit derived from employee contributions to a defined contribution plan or from voluntary employee contributions to a defined benefit plan, see paragraph (b) of this section. For computation of accrued benefit derived from mandatory employee contributions to a defined benefit plan, see paragraph (c) of this section.

(b) ***Accrued benefit derived from employee contribution to defined contribution plan, etc.*** For purposes of section 411 and the regulations thereunder, under section 411(c)(2)(A) the accrued benefit derived from employee contributions to a defined contribution plan is determined under paragraph (b) (1) or (2) of this section, whichever applies. Under section 411(d)(5), the accrued benefit derived from voluntary employee contributions to a defined benefit plan is determined under paragraph (b)(1) of this section.

(1) ***Separate accounts maintained.*** If a separate account is maintained with respect to an employee's contributions and all income, expenses, gains, and losses attributable thereto, the accrued benefit determined under this subparagraph as of any applicable date is the balance of such account as of such date.

(2) ***Separate accounts not maintained.*** If a separate account is not maintained with respect to an employee's contributions and the income, expenses, gains, and losses attributable thereto, the accrued benefit determined under this subparagraph is the employee's total accrued benefit determined under the plan multiplied by a fraction—

(i) The numerator of which is the total amount of the employee's contributions under the plan less withdrawals, and

(ii) The denominator of which is the sum of

(A) the amount described in paragraph (b)(2)(i) of this section, and

(B) the total contributions made under the plan by the employer on behalf of the employee less withdrawals.

For purposes of this subparagraph, contributions include all amounts which are contributed to the plan even if such amounts are used to provide ancillary benefits, such as incidental life insurance, health insurance, or death benefits, and withdrawals include only amounts distributed to the employee and do not reflect the cost of any death benefits under the plan.

(c) ***Accrued benefit derived from mandatory employee contributions to a defined benefit plan*** —

(1) ***General rule.*** In the case of a defined benefit plan (as defined in section 414(j)) the accrued benefit derived from contributions made by an employee under the plan as of any applicable date is an annual benefit, in the form of a single life annuity (without ancillary benefits) commencing at normal retirement age, equal to the amount of the employee's accumulated contributions (determined under paragraph (c)(3) of this section) multiplied by the appropriate conversion factor (determined under paragraph (c)(2) of this section). Paragraph (e) of this section provides rules for actuarial adjustments where the benefit is to be determined in a form other than the form described in this paragraph.

(2) ***Appropriate conversion factor.*** For purposes of this paragraph, the term "appropriate conversion factor" means the factor necessary to convert an amount equal to the accumulated contributions to a single life annuity (without ancillary benefits) commencing at normal retirement age and shall be 10 percent for a normal retirement age of 65 years. For other normal retirement ages the appropriate conversion factor shall be the factor as determined by the Commissioner.

(3) ***Accumulated contributions.*** For purposes of section 411(c) and this section, the term "accumulated contributions" means the total of—

(i) All mandatory contributions made by the employee (determined under paragraph (c)(4) of this section),

(ii) Interest (if any) on such contributions, computed at the rate provided by the plan to the end of the last plan year to which section 411(a)(2) does not apply (by reason of the applicable effective date), and

(iii) Interest on the sum of the amounts determined under paragraphs (c)(3)(i) and (ii) of this section compounded annually at the rate of 5 percent per annum from the beginning of the first plan year to which section 411(a)(2) applies (by reason of the applicable effective date) to the date on which the employee would attain normal retirement age.

For example, if under section 1017 of the Employee Retirement Income Security Act of 1974, section 411(a)(2) of the Code applies for plan years beginning after December 31, 1975, and for plan years beginning before 1975, the plan provided for 3 percent interest on employee contributions, an employee's accumulated contributions would be computed by crediting interest at the rate provided by the plan (3 percent) for plan years beginning before 1976 and by crediting interest at the rate of 5 percent (or another rate prescribed under section 411(c)(2)(D)) thereafter. Section 1017 of the Employee Retirement Income Security Act of 1974 and § 1.411(a)-2 provide the effective dates for the application of section 411(a)(2).

(4) ***Mandatory contributions.*** For purposes of section 411(c) and this section the term "mandatory contributions" means amounts contributed to the plan by the employee which are required as a condition of his employment, as a condition of his participation in the plan, or as a condition of obtaining benefits (or additional benefits) under the plan attributable to employer contributions. For example, if the benefit derived from employer contributions depends upon a specified level of employee contributions, employee contributions up to that level would be treated as mandatory contributions. Mandatory contributions, otherwise satisfying the requirements of this subparagraph, include amounts contributed to the plan which are used to provide ancillary benefits such as incidental life insurance, health insurance, or death benefits.

(d) ***Limitation on accrued benefit.*** The accrued benefit derived from mandatory employee contributions under a defined benefit plan (determined under paragraph (c) of this section) shall not exceed the greater of—

(1) The accrued benefit of the employee under the plan, or

(2) The accrued benefit derived from employee contributions determined without regard to any interest under section 411(c)(2)(C) (ii) and (iii) and under paragraphs (c)(3) (ii) and (iii) of this section.

(e) ***Actuarial adjustments for defined benefit plans*** —

(1) ***Accrued benefit.*** In the case of a defined benefit plan (as defined in section 414(j)) if an employee's accrued benefit is to be determined as an amount other than an annual benefit commencing at normal retirement age, such benefit (determined under section 411(c)(1) and paragraph (a) of this section) shall be the actuarial equivalent of such benefit, as determined by the Commissioner.

(2) ***Accrued benefit derived from employee contributions.*** In the case of a defined benefit plan (as defined in section 414(j) if the accrued benefit derived from mandatory contributions made by an employee is to be determined with respect to a benefit other than an annual benefit in the form of a single life annuity (without ancillary benefits) commencing at normal retirement age, such benefit shall be the actuarial equivalent of such benefit (determined under section 411(c)(2)(B) and paragraph (c) of this section) as determined by the Commissioner.

(f) ***Suspension of benefits, etc.*** —

(1) ***Suspensions.*** No adjustment to an accrued benefit is required on account of any suspension of benefits if such suspension is permitted under section 203(a)(3)(B) of the Employee Retirement Income Security Act of 1974 (88 Stat. 855) (Code section 411(a)(3)(B)).

(2) ***Employment after retirement.*** No actuarial adjustment to an accrued benefit is required on account of employment after normal retirement age. For example, if a plan with a normal retirement age of 65 provides a benefit of $400 a month payable at age 65 the same $400 benefit (with no upward adjustment) could be paid to an employee who retires at age 68.

(Sec. 411 (88 Stat. 901; 26 U.S.C. 411))

[T.D. 7501, 42 FR 42338, Aug. 23, 1977]

§ 1.411(d)-1 Coordination of vesting and discrimination requirements. [Reserved]

§ 1.411(d)-2 Termination or partial termination; discontinuance of contributions.

(a) ***General rule*** —

(1) ***Required nonforfeitability.*** A plan is not a qualified plan (and a trust forming a part of such plan is not a qualified trust) unless the plan provides that—

(i) Upon the termination or partial termination of the plan, or

(ii) In addition, in the case of a plan to which section 412 (relating to minimum funding standards) does not apply, upon the complete discontinuance of contributions under the plan,

the rights of each affected employee to benefits accrued to the date of such termination or partial termination (or, in the case of a plan to which section 412 does not apply, discontinuance), to the extent funded, or the rights of each employee to the amounts credited to his account at such time, are nonforfeitable (within the meaning of § 1.411(a)-4.

(2) ***Required allocation.***

(i) A plan is not a qualified plan (and a trust forming a part of such plan is not a qualified trust) unless the plan provides for the allocation of any previously unallocated funds to the employes covered by the plan upon the termination or partial termination of the plan (or, in the case of a plan to which section 412 does not apply, upon the complete discontinuance of contributions under the plan). Such provision may be incorporated in the plan at its inception or by an amendment made prior to the termination or partial termination of the plan for the

discontinuance of contributions thereunder. In the case of a defined contribution plan under which unallocated forfeitures are held in a suspense account in order to satisfy the requirements of section 415, this subdivision shall not require such plan to provide for allocations from the suspense account to the extent that such allocations would result in annual additions to participants' accounts in excess of amounts permitted under section 415 for the year for which such allocations would be made.

(ii) Any provision for the allocation of unallocated funds which is found by the Secretary of Labor or the Pension Benefit Guaranty Corporation (whichever is appropriate) to satisfy the requirements of section 4044 or section 403(d)(1) of the Employee Retirement Income Security Act of 1974 is acceptable if it specifies the method to be used and does not conflict with the provisions of section 401(a)(4) of the Internal Revenue Code of 1954 and the regulations thereunder. Any allocation of funds required by paragraph (1), (2), (3), or (4)(A) of section 4044(a) of such Act shall be deemed not to result in discrimination prohibited by section 401(a)(4) of the Code (see, however, paragraph (e) of this section). Notwithstanding the preceding sentence, in the case of a plan which establishes subclasses or categories pursuant to section 4044(b)(6) of such Act, the allocation of funds by the use of such subclasses or categories shall not be deemed not to result in discrimination prohibited by the Code. The allocation of unallocated funds may be in cash or in the form of other benefits provided under the plan. However, the allocation of the funds contributed by the employer among the employees need not necessarily benefit all the employees covered by the plan.

(iii) Paragraphs (a)(2) (i) and (ii) of this section do not require the allocation of amounts to the account of any employee if such amounts are not required to be used to satisfy the liabilities with respect to employees and their beneficiaries under the plan (see section 401(a)(2)).

(b) *Partial termination* —

(1) ***General rule.*** Whether or not a partial termination of a qualified plan occurs (and the time of such event) shall be determined by the Commissioner with regard to all the facts and circumstances in a particular case. Such facts and circumstances include: the exclusion, by reason of a plan amendment or severance by the employer, of a group of employees who have previously been covered by the plan; and plan amendments which adversely affect the rights of employees to vest in benefits under the plan.

(2) ***Special rule.*** If a defined benefit plan ceases or decreases future benefit accruals under the plan, a partial termination shall be deemed to occur if, as a result of such cessation or decrease, a potential reversion to the employer, or employers, maintaining the plan (determined as of the date such cessation or decrease is adopted) is created or increased. If no such reversion is created or increased, a partial termination shall be deemed not to occur by reason of such cessation or decrease. However, the Commissioner may determine that a partial termination of such a plan occurs pursuant to subparagraph (1) of this paragraph for reasons other than such cessation or decrease.

(3) ***Effect of partial termination.*** If a termination of a qualified plan occurs, the provisions of section 411(d)(3) apply only to the part of the plan that is terminated.

(c) *Termination* —

(1) ***Application.*** This paragraph applies to a plan other than a plan described in section 411(e)(1) (relating to governmental, certain church plans, etc.).

(2) ***Plans subject to termination insurance.*** For purposes of this section, a plan to which title IV of the Employee Retirement Income Security Act of 1974 applies is considered terminated on a particular date if, as of that date—

(i) The plan is voluntarily terminated by the plan administrator under section 4041 of the Employee Retirement Income Security Act of 1974, or

(ii) The Pension Benefit Guaranty Corporation terminates the plan under section 4042 of the Employee Retirement Income Security Act of 1974.

For purposes of this subparagraph, the particular date of termination shall be the date of termination determined under section 4048 of such Act.

(3) ***Other plans.*** In the case of a plan not described in paragraph (c)(2) of this section, a plan is considered terminated on a particular date if, as of that date, the plan is voluntarily terminated by the employer, or employers, maintaining the plan.

(d) ***Complete discontinuance*** —

(1) ***General rule.*** For purposes of this section, a complete discontiuance of contributions under the plan is contrasted with a suspension of contributions under the plan which is merely a temporary cessation of contributions by the employer. A complete discontinuance of contributions may occur although some amounts are contributed by the employer under the plan if such amounts are not substantial enough to reflect the intent on the part of the employer to continue to maintain the plan. The determination of whether a complete discontinuance of contributions under the plan has occurred will be made with regard to all the facts and circumstances in the particular case, and without regard to the amount of any contributions made under the plan by employees. Among the factors to be considered in determining whether a suspension constitutes a discontinuance are:

(i) Whether the employer may merely be calling an actual discontinuance of contributions a suspension of such contributions in order to avoid the requirement of full vesting as in the case of a discontinuance, or for any other reason;

(ii) Whether contributions are recurring and substantial; and

(iii) Whether there is any reasonable probability that the lack of contributions will continue indefinitely.

(2) ***Time of discontinuance.*** In any case in which a suspension of a profit-sharing plan maintained by a single employer is considered a discontinuance, the discontinuance becomes effective not later than the last day of the taxable year of the employer following the last taxable year of such employer for which a substantial contribution was made under the profit-sharing plan. In the case of a profit-sharing plan maintained by more than one employer, the discontinuance becomes effective not later than the last day of the plan year following the plan year within which any employer made a substantial contribution under the plan.

(e) ***Contributions or benefits which remain forfeitable.*** Under section 411 (d) (2) and (3), section 411(a) and this section do not apply to plan benefits which may not be provided for designated employees in the event of early termination of the plan under provisions of the plan adopted pursuant to regulations prescribed by the Secretary or his delegate to preclude the discrimination prohibited by section 401(a)(4). Accordingly, in such a case, plan benefits may be required to be reallocated without regard to this section.

(Sec. 411 (88 Stat. 901; 26 U.S.C. 411))

[T.D. 7501, 42 FR 42339, Aug. 23, 1977; T.D. 9849, 84 FR 9234, Mar. 14, 2019]

§ 1.411(d)-3 Section 411(d)(6) protected benefits.

(a) ***Protection of accrued benefits*** —

(1) ***General rule.*** Under section 411(d)(6)(A), a plan is not a qualified plan (and a trust forming a part of such plan is not a qualified trust) if a plan amendment decreases the accrued benefit of any plan participant, except as provided in section 412(d)(2) (section 412(c)(8) for plan years beginning before January 1, 2008), section 4281 of the Employee Retirement Income Security Act of 1974 as amended (ERISA), or other applicable law (see, for example, sections 418D and 418E of the Internal Revenue Code, and section 1107 of the Pension Protection Act of 2006, Public Law 109-280 (120 Stat. 780, 1063)). For purposes of this section, a plan amendment includes any changes to the terms of a plan, including changes resulting from a merger, consolidation, or transfer (as defined in section 414(l)) or a plan termination. The protection of section 411(d)(6) applies to a participant's entire accrued benefit under the plan as of the applicable amendment date, without regard to whether the entire accrued benefit was accrued before a participant's severance from employment or whether any portion was the result of an increase in the accrued benefit of the participant pursuant to a plan amendment adopted after the participant's severance from employment.

(2) ***Plan provisions taken into account*** —

(i) ***Direct or indirect reduction in accrued benefit.*** For purposes of determining whether a participant's accrued benefit is decreased, all of the amendments to the provisions of a plan affecting, directly or indirectly, the computation of accrued benefits are taken into account. Plan provisions indirectly affecting the computation of accrued benefits include, for example, provisions relating to years of service and compensation.

(ii) ***Amendments effective with the same applicable amendment date.*** In determining whether a reduction in a participant's accrued benefit has occurred, all plan amendments with the same applicable amendment date are treated as one amendment. Thus, if two amendments have the same applicable amendment date and one amendment, standing alone, increases participants' accrued benefits and the other amendment, standing alone, decreases participants' accrued benefits, the amendments are treated as one amendment and will only violate section 411(d)(6) if, for any participant, the net effect is to decrease participants' accrued benefit as of that applicable amendment date.

(iii) ***Multiple amendments*** —

(A) ***General rule.*** A plan amendment violates the requirements of section 411(d)(6) if it is one of a series of plan amendments that, when taken together, have the effect of reducing or eliminating a section 411(d)(6) protected benefit in a manner that would be prohibited by section 411(d)(6) if accomplished through a single amendment.

(B) ***Determination of the time period for combining plan amendments.*** For purposes of applying the rule in paragraph (a)(2)(iii)(A) of this section, generally only plan amendments adopted within a 3-year period are taken into account.

(3) ***Application of section 411(a) nonforfeitability provisions with respect to section 411(d)(6) protected benefits*** —

(i) ***In general.*** The rules of this paragraph (a) apply to a plan amendment that decreases a participant's accrued benefits, or otherwise places greater restrictions or conditions on a participant's rights to section 411(d)(6) protected benefits, even if the amendment merely adds a restriction or condition that is permitted under the vesting rules in section 411(a)(3) through (11). However, such an amendment does not violate section 411(d)(6) to the extent it applies with respect to benefits that accrue after the applicable amendment date. See section 411(a)(10) and § 1.411(a)-8 for additional rules relating to changes in a plan's vesting schedule.

(ii) ***Exception for changes in a plan's vesting computation period.*** Notwithstanding paragraph (a)(3)(i) of this section, a plan amendment that satisfies the applicable requirements under 29 CFR 2530.203-2(c) (rules relating to vesting computation periods) does not fail to satisfy the requirements of section 411(d)(6) merely because the plan amendment changes the plan's vesting computation period.

(4) ***Changes in lookback months and stability periods for mortality table and interest rate.*** Subject to the rules of this paragraph (a)(4), a defined benefit plan may be amended by an amendment that is adopted on or after January 19, 2024 to change the stability period described in § 1.417(e)-1(d)(4)(ii) from one stability period to a different stability period or to change the lookback month described in § 1.417(e)-1(d)(4)(iii) from one lookback month to a different lookback month (including an indirect change to the stability period or lookback month as a result of a change in plan year). The amendments described in this paragraph (a)(4) may be made with respect to any plan provision under which an interest rate or mortality table is specified by reference to a stability period or a lookback month, provided that any distribution for which the annuity starting date occurs on or after the effective date of the amendment and before the end of the one-year period commencing on the applicable amendment date for the amendment is equal to the greater of—

(i) The amount determined using the pre-amendment stability period and lookback month; and

(ii) The amount determined using the post-amendment stability period and lookback month.

(5) ***Examples.*** The following examples illustrate the application of this paragraph (a):

> *Example 1.* (i) *Facts.* Plan A provides an annual benefit of 2% of career average pay times years of service commencing at normal retirement age (age 65). Plan A is amended on November 1, 2006, effective as of January 1, 2007, to provide for an annual benefit of 1.3% of final pay times years of service, with final pay computed as the average of a participant's highest 3 consecutive years of compensation. As of January 1, 2007, Participant M has 16 years of service, M's career average pay is $37,500, and the average of M's highest 3 consecutive years of compensation is $67,308. Thus, Participant M's accrued benefit as of the applicable amendment date is increased from $12,000 per year at normal retirement age (2% times $37,500 times 16 years of service) to $14,000 per year at normal retirement age (1.3% times $67,308 times 16 years of service). As of January 1, 2007, Participant N has 6 years of service, N's career average pay is $50,000, and the average of N's highest 3 consecutive years of compensation is $51,282. Participant N's accrued benefit as of the applicable amendment date is decreased from $6,000 per year at normal retirement age (2% times $50,000 times 6 years of service) to $4,000 per year at normal retirement age (1.3% times $51,282 times 6 years of service).

(ii) *Conclusion.* While the plan amendment increases the accrued benefit of Participant M, the plan amendment fails to satisfy the requirements of section 411(d)(6)(A) because the amendment decreases the accrued benefit of Participant N below the level of the accrued benefit of Participant N immediately before the applicable amendment date.

Example 2. (i) *Facts.* The facts are the same as Example 1, except that Plan A includes a provision under which Participant N's accrued benefit cannot be less than what it was immediately before the applicable amendment date (so that Participant N's accrued benefit could not be less than $6,000 per year at normal retirement age).
(ii) *Conclusion.* The amendment does not violate the requirements of section 411(d)(6)(A) with respect to Participant M (whose accrued benefit has been increased) or with respect to Participant N (although Participant N would not accrue any benefits until the point in time at which the new formula amount would exceed the amount payable under the minimum provision, approximately 3 years after the amendment becomes effective).

Example 3. (i) *Facts.* Employer N maintains Plan C, a qualified defined benefit plan under which an employee becomes a participant upon completion of 1 year of service and is vested in 100% of the employer-derived accrued benefit upon completion of 5 years of service. Plan C provides that a former employee's years of service prior to a break in service will be reinstated upon completion of 1 year of service after being rehired. Plan C has participants who have fewer than 5 years of service and who are accordingly 0% vested in their employer-derived accrued benefits. On December 31, 2007, effective January 1, 2008, Plan C is amended, in accordance with section 411(a)(6)(D), to provide that any nonvested participant who has at least 5 consecutive 1-year breaks in service and whose number of consecutive 1-year breaks in service exceeds his or her number of years of service before the breaks will have his or her pre-break service disregarded in determining vesting under the plan.
(ii) *Conclusion.* Under paragraph (a)(3) of this section, the plan amendment does not satisfy the requirements of this paragraph (a), and thus violates section 411(d)(6), because the amendment places greater restrictions or conditions on the rights to section 411(d)(6) protected benefits, as of January 1, 2008, for participants who have fewer than 5 years of service, by restricting the ability of those participants to receive further vesting protections on benefits accrued as of that date.

Example 4. (i) *Facts.* (A) Employer O sponsors Plan D, a qualified profit sharing plan under which each employee has a nonforfeitable right to a percentage of his or her employer-

derived accrued benefit based on the following table:

Completed years of service	Nonforfeitable percentage
Fewer than 3	0
3	20
4	40
5	60
6	80
7	100

(B) In January 2006, Employer O acquires Company X, which maintains Plan E, a qualified profit sharing plan under which each employee who has completed 5 years of service has a nonforfeitable right to 100% of the employer-derived accrued benefit. In 2007, Plan E is merged into Plan D. On the effective date for the merger, Plan D is amended to provide that the vesting schedule for participants of Plan E is the 7-year graded vesting schedule of Plan D. In accordance with section 411(a)(10)(A), the plan amendment provides that any participant of Plan E who had completed 5 years of service prior to the amendment is fully vested. In addition, as required under section 411(a)(10)(B), the amendment provides that any participant in Plan E who has at least 3 years of service prior to the amendment is permitted to make an irrevocable election to have the vesting of his or her nonforfeitable right to the employer-derived accrued benefit determined under either the 5-year cliff vesting schedule or the 7-year graded vesting schedule. Participant G, who has an account balance of $10,000 on the applicable amendment date, is a participant in Plan E with 2 years of service as of the applicable amendment date. As of the date of the merger, Participant G's nonforfeitable right to G's employer-derived accrued benefit is 0% under both the 7-year graded vesting schedule of Plan D and the 5-year cliff vesting schedule of Plan E.
(ii) *Conclusion.* Under paragraph (a)(3) of this section, the plan amendment does not satisfy the requirements of this paragraph (a) and violates section 411(d)(6), because the amendment places greater restrictions or conditions on the rights to section 411(d)(6) protected benefits with respect to G and any participant who has fewer than 5 years of service and who elected (or was made subject to) the new vesting schedule. A method of avoiding a section 411 (d)(6) violation with respect to account balances attributable to benefits accrued as of the applicable amendment date and earnings thereon would be for Plan D to provide for the vested percentage of G and each other participant in Plan E to be no less than the greater of the vesting percentages under the two vesting schedules (for example, for G and each other participant in Plan E to be 20% vested upon completion of 3 years of service, 40% vested upon completion of 4 years of service, and fully vested upon completion of 5 years of service) for those account balances and earnings.

(b) *Protection of section 411(d)(6)(B) protected benefits* —

(1) *General rule*—

(i) ***Prohibition against plan amendments eliminating or reducing section 411(d)(6)(B) protected benefits.*** Except as provided in this section, a plan is treated as decreasing an accrued benefit if it is amended to eliminate or reduce a section 411(d)(6)(B) protected benefit as defined in paragraph (g)(15) of this section. This paragraph (b)(1) applies to participants who satisfy (either before or after the plan amendment) the preamendment conditions for a section 411(d)(6)(B) protected benefit.

(ii) ***Contingent benefits.*** The rules of paragraph (b)(1)(i) of this section apply to participants who satisfy (either before or after the plan amendment) the preamendment conditions for the section 411(d)(6)(B) protected benefit even if the condition on which the eligibility for the section 411(d)(6)(B) protected benefit depends is an unpredictable contingent event (*e.g.*, a plant shutdown).

(iii) ***Application of general rules in paragraph (a) of this section to section 411(d)(6)(B) protected benefits.*** For purposes of determining whether a participant's section 411(d)(6)(B) protected benefit is eliminated or reduced, the rules of paragraph (a) of this section apply to section 411(d)(6)(B) protected benefits in the same manner as they apply to accrued benefits described in section 411(d)(6)(A). As an example of the application of paragraph (a)(2)(ii) of this section to section 411(d)(6)(B) protected benefits, if there are two amendments with the same applicable amendment date and one amendment increases accrued benefits and the other amendment decreases the early retirement factors that are used to determine the early retirement annuity, the amendments are treated as one amendment and only violate section 411(d)(6) if, after the two amendments, the net dollar amount of any early retirement annuity with respect to the accrued benefit of any participant as of the applicable amendment date is lower than it would have been without the two amendments. As an example of the application of paragraph (a)(2)(iii) of this section to section 411(d)(6)(B) protected benefits, a series of amendments made within a 3-year period that, when taken together, have the effect of reducing or eliminating early retirement benefits or retirement-type subsidies in a manner that adversely affects the rights of any participant in a more than *de minimis* manner violates section 411(d)(6)(B) even if each amendment would be permissible pursuant to paragraphs (c), (d), or (f) of this section.

(2) *Permissible elimination of section 411(d)(6)(B) protected benefits*—

(i) ***In general.*** A plan is permitted to be amended to eliminate a section 411(d)(6)(B) protected benefit if the elimination is in accordance with this section or § 1.411(d)-4.

(ii) ***Increases in payment amounts do not eliminate an optional form of benefit.*** An amendment is not treated as eliminating an optional form of benefit or eliminating or reducing an early retirement benefit or retirement-type subsidy under the plan, if, effective after the plan amendment, there is another optional form of benefit available to the participant under the plan that is of inherently equal or greater value (within the meaning of § 1.401(a)(4)-4(d)(4)(i)(A)). Thus, for example, a change in the method of calculating a joint and survivor annuity from using a 90% adjustment factor on account of the survivorship payment at particular ages for a participant and a spouse to using a 91% adjustment factor at the same ages is not treated as an elimination of an optional form of benefit. Similarly, a plan that offers a subsidized qualified joint and survivor annuity option for married participants under which the amount payable

during the participant's lifetime is not less than the amount payable under the plan's straight life annuity is permitted to be amended to eliminate the straight life annuity option for married participants.

(3) ***Permissible elimination of benefits that are not section 411(d)(6) protected benefits*** —

(i) ***In general.*** Section 411(d)(6) does not provide protection for benefits that are ancillary benefits, other rights and features, or any other benefits that are not described in section 411(d)(6). See § 1.411(d)-4, Q&A-1(d). However, a plan may not be amended to recharacterize a retirement-type benefit as an ancillary benefit. Thus, for example, a plan amendment to recharacterize any portion of an early retirement subsidy as a social security supplement that is an ancillary benefit violates section 411(d)(6).

(ii) ***No protection for future benefit accruals.*** Section 411(d)(6) only protects benefits that accrue before the applicable amendment date. Thus, a plan is permitted to be amended to eliminate or reduce an early retirement benefit, a retirement-type subsidy, or an optional form of benefit with respect to benefits that accrue after the applicable amendment date without violating section 411(d)(6). However, section 4980F(e) of the Internal Revenue Code and section 204(h) of ERISA require notice of an amendment to an applicable pension plan that either provides for a significant reduction in the rate of future benefit accrual or that eliminates or significantly reduces an early retirement benefit or a retirement-type subsidy. See § 54.4980F-1 of this chapter generally, and see § 54.4980F-1, Q&A-7(b) and Q&A-8(c) of this chapter, with respect to the circumstances under which such notice is required for a reduction in an early retirement benefit or retirement-type subsidy.

(4) ***Examples.*** The following examples illustrate the application of this paragraph (b):

> *Example 1.* (i) *Facts involving amendments to an early retirement subsidy.* Plan A provides an annual benefit of 2% of career average pay times years of service commencing at normal retirement age (age 65). Plan A is amended on November 1, 2006, effective as of January 1, 2007, to provide for an annual benefit of 1.3% of final pay times years of service, with final pay computed as the average of a participant's highest 3 consecutive years of compensation. Participant M is age 50, M has 16 years of service, M's career average pay is $37,500, and the average of M's highest 3 consecutive years of compensation is $67,308. Thus, M's accrued benefit as of the effective date of the amendment is increased from $12,000 per year at normal retirement age (2% times $37,500 times 16 years of service) to $14,000 per year at normal retirement age (1.3% times $67,308 times 16 years of service). (These facts are similar to the facts in *Example 1* in paragraph (a)(4) of this section.) Before the amendment, Plan A permitted a former employee to commence distribution of benefits as early as age 55 and, for a participant with at least 15 years of service, actuarially reduced the amount payable in the form of a straight life annuity commencing before normal retirement age by 3% per year from age 60 to age 65 and by 7% per year from age 55 through age 59. Thus, before the amendment, the amount of M's early retirement benefit that would be payable for commencement at age 55 was $6,000 per year ($12,000 per year minus 3% for 5 years and minus 7% for 5 more years). The amendment also alters the actuarial reduction factor so that, for a participant with at least 15 years of service, the amount payable in a straight life annuity

commencing before normal retirement age is reduced by 6% per year. As a result, the amount of M's early retirement benefit at age 55 becomes $5,600 per year after the amendment ($14,000 minus 6% for 10 years).
(ii) *Conclusion.* The straight life annuity payable under Plan A at age 55 is an optional form of benefit that includes an early retirement subsidy. The plan amendment fails to satisfy the requirements of section 411(d)(6)(B) because the amendment decreases the optional form of benefit payable to Participant M below the level that Participant M was entitled to receive immediately before the effective date of the amendment. If instead Plan A had included a provision under which M's straight life annuity payable at any age could be not be less than what it was immediately before the amendment (so that M's straight life annuity payable at age 55 could not be less than $6,000 per year), then the amendment would not fail to satisfy the requirements of section 411(d)(6)(B) with respect to M's straight life annuity payable at age 55 (although the straight life annuity payable to M at age 55 would not increase until the point in time at which the new formula amount with the new actuarial reduction factors exceeds the amount payable under the minimum provision, approximately 14 months after the amendment becomes effective).

Example 2. (i) *Facts involving plant shutdown benefits.* Plan B permits participants who have a severance from employment before normal retirement age (age 65) to commence distributions at any time after age 55 with the amount payable to be actuarially reduced using reasonable actuarial assumptions regarding interest and mortality specified in the plan, but provides that the annual reduction for any participant who has at least 20 years of service and who has a severance from employment after age 55 is only 3% per year (which is a smaller reduction than would apply under reasonable actuarial reductions). Plan B also provides 2 plant shutdown benefits to participants who have a severance of employment as a result of a plant shutdown. First, the favorable 3% per year actuarial reduction applies for commencement of benefits after age 55 and before age 65 for any participant who has at least 10 years of service and who has a severance from employment as a result of a plant shutdown. Second, all participants who have at least 20 years of service and who have a severance from employment after age 55 (and before normal retirement age at age 65) as a result of a plant shutdown will receive supplemental payments. Under the supplemental payments, an additional amount equal to the participant's estimated old-age insurance benefit under the Social Security Act is payable until age 65. The supplemental payments are not a QSUPP, as defined in § 1.401(a)(4)-12, because the plan's terms do not state that the supplement is treated as an early retirement benefit that is protected under section 411(d)(6).
(ii) *Conclusion with respect to plant shutdown benefits.* The benefits payable with the 3% annual reduction are retirement-type benefits. The excess of the actuarial present value of the early retirement benefit using the 3% annual reduction over the actuarial present value of the normal retirement benefit is a retirement-type subsidy and the right to receive payments of the benefit at age 55 is an early retirement benefit. These conclusions apply not only with

respect to the rights that apply to participants who have at least 20 years of service, but also to participants with at least 10 years of service who have a severance from employment as a result of a plant shutdown. Thus, the right to receive benefits based on a 3% annual reduction for participants with at least 10 years of service at the time of a plant shutdown is an early retirement benefit that provides a retirement-type subsidy and is a section 411(d)(6)(B) protected benefit (even though no plant shutdown has occurred). Therefore, a plan amendment cannot eliminate this benefit with respect to benefits accrued before the applicable amendment date, even before the occurrence of the plant shutdown. Because the plan provides that the supplemental payments cannot exceed the OASDI benefit under the Social Security Act, the supplemental payments constitute a social security supplement (but not a QSUPP as defined in § 1.401(a)(4)-12), which is an ancillary benefit that is not a section 411(d)(6)(B) protected benefit and accordingly is not taken into account in determining whether a prohibited reduction has occurred.

Example 3. (i) *Facts.* Plan C, a multiemployer defined benefit plan in which participation is limited to electricians in the construction industry, provides that a participant may elect to commence distributions only if the participant is not currently employed by a participating employer and provides that, if the participant has a specified number of years of service and attains a specified age, the distribution is without any actuarial reduction for commencement before normal retirement age. Since the plan's inception, Plan C has provided for suspension of pension benefits during periods of disqualifying employment (ERISA section 203(a)(3)(B) service). Before 2007, the plan defined disqualifying employment to include any job as an electrician in the particular industry and geographic location to which Plan C applies. This definition of disqualifying employment did not cover a job as an electrician supervisor. In 2005, Participant E, having rendered the specified number of years of service and attained the specified age to retire with a fully subsidized early retirement benefit, retires from E's job as an electrician with Employer Y and starts a position with Employer Z as an electrician supervisor. Employer Z is not a participating employer in Plan C but is an employer in the same industry and geographic location as Employer Y. When E left service with Employer Y, E's position as an electrician supervisor was not disqualifying employment for purposes of Plan C's suspension of pension benefit provision, and E elected to commence benefit payments in 2005. In 2006, effective January 1, 2007, Plan C is amended to expand the definition of disqualifying employment to include any job (including supervisory positions) as an electrician in the same industry and geographic location to which Plan C applies. The plan's definition of disqualifying employment satisfies the requirements of section 411(a)(3)(B). On January 1, 2007, E's pension benefits are suspended because of E's disqualifying employment as an electrician supervisor.
(ii) *Conclusion.* Under paragraphs (a)(3) and (b)(1) of this section, the 2007 plan amendment violates section 411(d)(6), because the amendment places greater restrictions or conditions on a participant's rights to section 411(d)(6) protected benefits to the extent it applies with

> respect to benefits that accrued before January 1, 2007. The result would be the same even if the amendment did not apply to former employees and instead applied only to participants who were actively employed at the time of the applicable amendment.

(c) ***Permissible elimination of optional forms of benefit that are redundant*** —

(1) ***General rule.*** Except as otherwise provided in paragraph (c)(5) of this section, a plan is permitted to be amended to eliminate an optional form of benefit for a participant with respect to benefits accrued before the applicable amendment date if—

(i) The optional form of benefit is redundant with respect to a retained optional form of benefit, within the meaning of paragraph (c)(2) of this section;

(ii) The plan amendment is not applicable with respect to an optional form of benefit with an annuity commencement date that is earlier than the number of days in the maximum QJSA explanation period (as defined in paragraph (g)(9) of this section) after the date the amendment is adopted; and

(iii) The requirements of paragraph (e) of this section are satisfied in any case in which either:

(A) The retained optional form of benefit for the participant does not commence on the same annuity commencement date as the optional form of benefit that is being eliminated; or

(B) As of the date the amendment is adopted, the actuarial present value of the retained optional form of benefit for the participant is less than the actuarial present value of the optional form of benefit that is being eliminated.

(2) ***Similar types of optional forms of benefit are redundant*** —

(i) ***General rule.*** An optional form of benefit is redundant with respect to a retained optional form of benefit if, after the amendment becomes applicable—

(A) There is a retained optional form of benefit available to the participant that is in the same family of optional forms of benefit, within the meaning of paragraphs (c)(3) and (4) of this section, as the optional form of benefit being eliminated; and

(B) The participant's rights with respect to the retained optional form of benefit are not subject to materially greater restrictions (such as conditions relating to eligibility, restrictions on a participant's ability to designate the person who is entitled to benefits following the participant's death, or restrictions on a participant's right to receive an in-kind distribution) than applied to the optional form of benefit being eliminated.

(ii) ***Special rule for core options.*** An optional form of benefit that is a core option as defined in paragraph (g)(5) of this section may not be eliminated as a redundant benefit under the rules of this paragraph (c) unless the retained optional form of benefit and the eliminated core option are identical except for differences described in paragraph (c)(3)(ii) of this section. Thus, for example, a particular 10-year term certain and life annuity may not be eliminated by plan amendment unless the retained optional form of benefit is another 10-year term certain and life annuity.

(3) ***Family of optional forms of benefit*** —

(i) ***In general.*** Paragraph (c)(4) of this section describes certain families of optional forms of benefits. Not every optional form of benefit that is offered under a plan necessarily fits within a family of optional forms of benefit as described in paragraph (c)(4) of this section. Each optional form of benefit that is not included in any particular family of optional forms of benefit listed in paragraph (c)(4) of this section is in a separate family of optional forms of benefit with other optional forms of benefit that would be identical to that optional form of benefit but for differences that are disregarded under paragraph (c)(3)(ii) of this section.

(ii) ***Certain differences among optional forms of benefit*** —

(A) ***Differences in actuarial factors and annuity starting dates.*** The determination of whether two optional forms of benefit are within a family of optional forms of benefit is made without regard to actuarial factors or annuity starting dates. Thus, any optional forms of benefit that are part of the same generalized optional form (within the meaning of paragraph (g)(8) of this section) are in the same family of optional forms of benefit. For example, if a plan has a single-sum distribution option for some participants that is calculated using a 5% interest rate and a specific mortality table (but no less than the minimum present value as determined under section 417(e)) and another single-sum distribution option for other participants that is calculated using the applicable interest rate as defined in section 417(e)(3)(A)(ii)(II) and the applicable mortality table as defined in section 417(e)(3)(A)(ii)(I), both single-sum distribution options are part of the same generalized optional form and thus in the same family of optional forms of benefit under the rules of paragraph (c)(3)(i) of this section. However, differences in actuarial factors and annuity starting dates are taken into account for purposes of the requirements in paragraph (e)(3) of this section.

(B) ***Differences in pop-up provisions and cash refund features for joint and contingent options.*** The determination of whether two optional forms of benefit are within a family of optional forms of benefit relating to joint and contingent families (as described in paragraph (c)(4)(i) and (ii) of this section) is made without regard to the following features—

(*1*) Pop-up provisions (under which payments increase upon the death of the beneficiary or another event that causes the beneficiary not to be entitled to a survivor annuity);

(*2*) Cash refund features (under which payment is provided upon the death of the last annuitant in an amount that is not greater than the excess of the present value of the annuity at the annuity starting date over the total of payments before the death of the last annuitant); or

(*3*) Term-certain provisions for optional forms of benefit within a joint and contingent family.

(C) ***Differences in social security leveling features, refund of employee contributions features, and retroactive annuity starting date features.*** The determination of whether 2 optional forms of benefit are within a family of optional forms of benefit is made without regard to social security leveling features, refund of employee contributions features, or retroactive annuity starting date features. But see paragraph (c)(5) of this section for special rules relating to social security leveling, refund of employee contributions, and retroactive annuity starting date features in optional forms of benefit.

(4) ***List of families.*** The following are families of optional forms of benefit for purposes of this paragraph (c):

(i) ***Joint and contingent options with continuation percentages of 50% to 100%.*** An optional form of benefit is within the 50% or more joint and contingent family if it provides a life annuity to the participant and a survivor annuity to an individual that is at least 50% and no more than 100% of the annuity payable during the joint lives of the participant and the participant's survivor.

(ii) ***Joint and contingent options with continuation percentages less than 50%.*** An optional form of benefit is within the less than 50% joint and contingent family if it provides a life annuity to the participant and a survivor annuity to an individual that is less than 50% of the annuity payable during the joint lives of the participant and the participant's survivor.

(iii) ***Term certain and life annuity options with a term of 10 years or less.*** An optional form of benefit is within the 10 years or less term certain and life family if it is a life annuity with a guarantee that payments will continue to the participant's beneficiary for the remainder of a fixed period that is 10 years or less if the participant dies before the end of the fixed period.

(iv) ***Term certain and life annuity options with a term longer than 10 years.*** An optional form of benefit is within the longer than 10 years term certain and life family if it is a life annuity with a guarantee that payments will continue to the participant's beneficiary for the remainder of a fixed period that is in excess of 10 years if the participant dies before the end of the fixed period.

(v) ***Level installment payment options over a period of 10 years or less.*** An optional form of benefit is within the 10 years or less installment family if it provides for substantially level payments to the participant for a fixed period of at least 2 years and not in excess of 10 years with a guarantee that payments will continue to the participant's beneficiary for the remainder of the fixed period if the participant dies before the end of the fixed period.

(vi) ***Level installment payment options over a period of more than 10 years.*** An optional form of benefit is within the more than 10 years installment family if it provides for substantially level payments to the participant for a fixed period that is in excess of 10 years with a guarantee that payments will continue to the participant's beneficiary for the remainder of the fixed period if the participant dies before the end of the fixed period.

(5) ***Special rules for certain features included in optional forms of benefit.*** For purposes of applying this paragraph (c), to the extent an optional form of benefit that is being eliminated includes either a social security leveling feature or a refund of employee contributions feature, the retained optional form of benefit must also include that feature, and, to the extent that the optional form of benefit that is being eliminated does not include a social security leveling feature or a refund of employee contributions feature, the retained optional form of benefit must not include that feature. For purposes of applying this paragraph (c), to the extent an optional form of benefit that is being eliminated does not include a retroactive annuity starting date feature, the retained optional form of benefit must not include the feature.

(6) ***Separate application of redundancy rules for bifurcated benefits.*** If a plan permits the participant to make different distribution elections with respect to two or more separate portions of the participant's benefit, the rules of this paragraph (c) are permitted to be applied separately to each such portion of the participant's benefit as if that portion were the participant's entire benefit. Thus, for example, if one set of distribution elections applies to a portion of the participant's accrued benefit and another set of distribution elections applies to the other portion of the participant's accrued benefit, then with respect to one portion of the participant's benefit, the determination of whether any optional form of benefit is within a family of optional forms of benefit is permitted to be

made disregarding elections that apply to the other portion of the participant's benefit. Similarly, if a participant can elect to receive any portion of the accrued benefit in a single sum and the remainder pursuant to a set of distribution elections, the rules of this paragraph (c) are permitted to be applied separately to the set of distribution elections that apply to the portion of the participant's accrued benefit that is not payable in a single sum (for example, for the portion of a participant's benefit that is not paid in a single sum, the determination of whether any optional form of benefit is within a family of optional forms of benefit is permitted to be made disregarding the fact that the other portion of the participant's benefit is paid in a single sum).

(d) ***Permissible elimination of noncore optional forms of benefit where core options are offered*** —

(1) ***General rule.*** Except as otherwise provided in paragraph (d)(2) of this section, a plan is permitted to be amended to eliminate an optional form of benefit for a participant with respect to benefits accrued before the applicable amendment date if—

(i) After the amendment becomes applicable, each of the core options described in paragraph (g)(5) of this section is available to the participant with respect to benefits accrued before and after the amendment;

(ii) The plan amendment is not applicable with respect to an optional form of benefit with an annuity commencement date that is earlier than 4 years after the date the amendment is adopted; and

(iii) The requirements of paragraph (e) of this section are satisfied in any case in which either:

(A) One or more of the core options are not available commencing on the same annuity commencement date as the optional form of benefit that is being eliminated; or

(B) As of the date the amendment is adopted, the actuarial present value of the benefit payable under any core option with the same annuity commencement date is less than the actuarial present value of benefits payable under the optional form of benefit that is being eliminated.

(2) ***Special rules*** —

(i) ***Treatment of certain features included in optional forms of benefit.*** For purposes of applying this paragraph (d), to the extent an optional form of benefit that is being eliminated includes either a social security leveling feature or a refund of employee contributions feature, at least one of the core options must also be available with that feature, and, to the extent that the optional form of benefit that is being eliminated does not include a social security leveling feature or a refund of employee contributions feature, each of the core options must be available without that feature. For purposes of applying this paragraph (d), to the extent an optional form of benefit that is being eliminated does not include a retroactive annuity starting date feature, each of the core options must be available without that feature.

(ii) ***Eliminating the most valuable option for a participant with a short life expectancy.*** For purposes of applying this paragraph (d), if the most valuable option for a participant with a short life expectancy (as defined in paragraph (g)(5)(iii) of this section) is eliminated, then, after the plan amendment, an optional form of benefit that is identical, except for differences described in paragraph (c)(3)(ii) of this section, must be available to the participant. However, such a plan amendment cannot eliminate a refund of employee contributions feature from the most valuable option for a participant with a short life expectancy.

(iii) ***Single-sum distributions.*** A plan amendment is not treated as satisfying this paragraph (d) if it eliminates an optional form of benefit that includes a single-sum distribution that applies with respect to at least 25% of the participant's accrued benefit as of the date the optional form of benefit is eliminated. But see § 1.411(d)-4, Q&A-2(b)(2)(v), relating to involuntary single-sum distributions for benefits with a present value not in excess of the maximum dollar amount in section 411(a)(11).

(iv) ***Application of multiple amendment rule to core option rule.*** Notwithstanding paragraph (a)(2)(iii)(B) of this section, if a plan is amended to eliminate an optional form of benefit using the core options rule in this paragraph (d), then the employer must wait 3 years after the first annuity commencement date for which the optional form of benefit is no longer available before making any changes to the core options offered under the plan (other than a change that is not treated as an elimination under paragraph (b)(2)(ii) of this section). Thus, for example, if a plan amendment eliminates an optional form of benefit for a participant using the core options rule under this paragraph (d), with an adoption date of January 1, 2006 and an effective date of January 1, 2010, the plan would not be permitted to be amended to make changes to the core options offered under the plan (and the core options would continue to apply with respect to the participant's accrued benefit) until January 1, 2013.

(v) ***Special rule for joint and contingent annuity core option.*** If a plan offers joint and contingent annuities under which a participant is entitled to a life annuity with a survivor annuity for the individual designated by the participant (including a non-spousal contingent annuitant) with continuation percentage options of both 50% and 100% (after adjustments permitted under paragraph (g)(5)(ii) of this section to comply with applicable law), the plan is permitted to treat both of these options as core options for purposes of this paragraph (d), in lieu of a 75% joint and contingent annuity. Thus, such a plan is permitted to use the rules of this paragraph (d) if the plan satisfies all of the requirements of this paragraph (d) (taking into account the modification rule in paragraph (g)(5)(ii) of this section) other than the requirement of offering a 75% joint and contingent annuity as described in paragraph (g)(5)(i)(B) of this section.

(e) ***Permissible plan amendments under paragraphs (c) and (d) eliminating or reducing section 411(d)(6)(B) protected benefits that are burdensome and of de minimis value —***

(1) ***In general.*** A plan amendment that, pursuant to paragraph (c)(1)(iii) or (d)(1)(iii) of this section, is required to satisfy this paragraph (e) satisfies this paragraph (e) if—

(i) The amendment eliminates section 411(d)(6)(B) protected benefits that create significant burdens or complexities for the plan and its participants as described in paragraph (e)(2) of this section; and

(ii) The amendment does not adversely affect the rights of any participant in a more than *de minimis* manner as described in paragraph (e)(3) of this section.

(2) ***Plan amendments eliminating section 411(d)(6)(B) protected benefits that create significant burdens and complexities —***

(i) ***Facts and circumstances analysis —***

(A) ***In general.*** The determination of whether a plan amendment eliminates section 411(d)(6)(B) protected benefits that create significant burdens or complexities for the plan and its participants is based on facts and circumstances.

(B) ***Early retirement benefits.*** In the case of an amendment that eliminates an early retirement benefit, relevant factors include whether the annuity starting dates under the plan considered in the aggregate are burdensome or complex (*e.g.*, the number of categories of early retirement benefits, whether the terms and conditions applicable to the plan's early retirement benefits are difficult to summarize in a manner that is concise and readily understandable to the average plan participant, and whether those different early retirement benefits were added to the plan as a result of a plan merger, transfer, or consolidation), and whether the effect of the plan amendment is to reduce the number of categories of early retirement benefits.

(C) ***Retirement-type subsidies and actuarial factors.*** In the case of a plan amendment eliminating a retirement-type subsidy or changing the actuarial factors used to determine optional forms of benefit, relevant factors include whether the actuarial factors used for determining optional forms of benefit available under the plan considered in the aggregate are burdensome or complex (*e.g.*, the number of different retirement-type subsidies and other actuarial factors available under the plan, whether the terms and conditions applicable to the plan's retirement-type subsidies are difficult to summarize in a manner that is concise and readily understandable to the average plan participant, whether the plan is eliminating one or more generalized optional forms, whether the plan is replacing a complex optional form of benefit that contains a retirement-type subsidy with a simpler form, and whether the different retirement-type subsidies and other actuarial factors were added to the plan as a result of a plan merger, transfer, or consolidation), and whether the effect of the plan amendment is to reduce the number of categories of retirement-type subsidies or other actuarial factors.

(D) ***Example.*** The following example illustrates the application of this paragraph (e)(2)(i):

> *Example.* (i) *Facts.* Plan A is a defined benefit plan under which employees may select a distribution in the form of a straight life annuity, a straight life annuity with cost-of-living increases, a 50% qualified joint and survivor annuity with a pop-up provision, or a 10-year term certain and life annuity. On January 15, 2007, Plan A is amended, effective June 1, 2007, to eliminate the 50% qualified joint and survivor annuity with a pop-up provision as described in paragraph (c)(3)(ii)(B)(*1*) of this section and replace it with a 50% qualified joint and survivor annuity without the pop-up provision (and using the same actuarial factor).
> (ii) *Conclusion.* Plan A satisfies the requirements of paragraph (e)(2)(i)(B) of this section because, based on the relevant facts and circumstances (*e.g.*, the amendment replaces a complex optional form of benefit with a simpler form), the amendment eliminates section 411(d)(6)(B) protected benefits that create significant burdens and complexities. Accordingly, the plan amendment is permitted to eliminate the pop-up provision, provided that the plan amendment satisfies all the other applicable requirements in paragraph (c) or (d) of this section. For example, the plan amendment must not eliminate the most valuable option for a participant with a short life expectancy (as defined in paragraph (g)(5)(iii) of this section) and the plan amendment must not adversely affect the rights of any

> participant in a more than *de minimis* manner, taking into account the actuarial factors for the joint and survivor annuity with the pop-up provision and the joint and survivor annuity without the pop-up provision, as described in paragraph (e)(3) of this section.

(ii) ***Presumptions for certain amendments*** —

(A) ***Presumption for amendments eliminating certain annuity starting dates.*** If the annuity starting dates under the plan considered in the aggregate are burdensome or complex, then elimination of any one of the annuity starting dates is presumed to eliminate section 411(d)(6)(B) protected benefits that create significant burdens or complexities for the plan and its participants. However, if the effect of a plan amendment with respect to a set of optional forms of benefit is merely to substitute one set of annuity starting dates for another set of annuity starting dates, without any reduction in the number of different annuity starting dates, then the plan amendment does not satisfy the requirements of this paragraph (e)(2).

(B) ***Presumption for amendments changing certain actuarial factors.*** If the actuarial factors used for determining benefit distributions available under a generalized optional form considered in the aggregate are burdensome or complex, then replacing some of the actuarial factors for the generalized optional form is presumed to eliminate section 411(d)(6)(B) protected benefits that create significant burdens or complexities for the plan and its participants. However, if the effect is merely to substitute one set of actuarial factors for another set of actuarial factors, without any reduction in the number of different actuarial factors or the complexity of those factors, then the plan amendment does not satisfy the requirements of this paragraph (e)(2) unless the change of actuarial factors is merely to replace one or more of the plan's actuarial factors for determining optional forms of benefit with new actuarial factors that are more accurate (*e.g.*, reflecting more recent mortality experience or more recent market rates of interest).

(iii) ***Restrictions against creating burdens or complexities.*** See paragraphs (a)(2)(iii) and (b)(1)(iii) of this section for general rules applicable to multiple amendments. In accordance with these rules, a plan amendment does not eliminate a section 411(d)(6)(B) protected benefit that creates burdens and complexities for a plan and its participants if, less than 3 years earlier, a plan was previously amended to add another retirement-type subsidy in order to facilitate the elimination of the original retirement-type subsidy, even if the elimination of the other subsidy would not adversely affect the rights of any plan participant in a more than *de minimis* manner as provided in paragraph (e)(3) of this section.

(3) ***Elimination of early retirement benefits or retirement-type subsidies that are de minimis*** —

(i) ***Rules for retained optional forms of benefit under paragraph (c) of this section.*** For purposes of paragraph (c) of this section, the elimination of an optional form of benefit does not adversely affect the rights of any participant in a more than *de minimis* manner if—

(A) The retained optional form of benefit described in paragraph (c) of this section has substantially the same annuity commencement date as the optional form of benefit that is being eliminated, as described in paragraph (e)(4) of this section; and

(B) Either the actuarial present value of the benefit payable in the optional form of benefit that is being eliminated does not exceed the actuarial present value of the benefit payable in the retained optional form of benefit by more than a *de minimis* amount, as described in paragraph (e)(5) of this section, or the amendment satisfies the requirements of paragraph (e)(6) of this section relating to a delayed effective date.

(ii) ***Rules for core options under paragraph (d) of this section.*** For purposes of paragraph (d) of this section, the elimination of an optional form of benefit does not adversely affect the rights of any participant in a more than *de minimis* manner if, with respect to each of the core options—

(A) The core option is available after the amendment with substantially the same annuity commencement date as the optional form of benefit that is being eliminated, as described in paragraph (e)(4) of this section; and

(B) Either the actuarial present value of the benefit payable in the optional form of benefit that is being eliminated does not exceed the actuarial present value of the benefit payable under the core option by more than a *de minimis* amount, as described in paragraph (e)(5) of this section, or the amendment satisfies the requirements of paragraph (e)(6) of this section.

(4) ***Definition of substantially the same annuity starting dates.*** For purposes of applying paragraphs (e)(3)(i)(A) and (ii)(A) of this section, annuity starting dates are considered substantially the same if they are within 6 months of each other.

(5) ***Definition of de minimis difference in actuarial present value.*** For purposes of applying paragraph (e)(3)(i)(B) and (ii)(B) of this section, a difference in actuarial present value between the optional form of benefit being eliminated and the retained optional form of benefit or core option is not more than a *de minimis* amount if, as of the date the amendment is adopted, the difference between the actuarial present value of the eliminated optional form of benefit and the actuarial present value of the retained optional form of benefit or core option is not more than the greater of—

(i) 2% of the present value of the retirement-type subsidy (if any) under the eliminated optional form of benefit prior to the amendment; or

(ii) 1% of the greater of the participant's compensation (as defined in section 415(c)(3)) for the prior plan year or the participant's average compensation for his or her high 3 years (within the meaning of section 415(b)(1)(B) and (b)(3)).

(6) ***Delayed effective date*** —

(i) ***General rule.*** For purposes of applying paragraph (e)(3)(i)(B) and (ii)(B) of this section, an amendment that eliminates an optional form of benefit satisfies the requirements of this paragraph (e)(6) if the elimination of the optional form of benefit is not applicable to any annuity commencement date before the end of the expected transition period for that optional form of benefit.

(ii) ***Determination of expected transition period*** —

(A) ***General rule.*** The expected transition period for a plan amendment eliminating an optional form of benefit is the period that begins when the amendment is adopted and ends when it is reasonable to expect, with respect to a section 411(d)(6)(B) protected benefit (*i.e.*, not

taking into account benefits that accrue in the future), that the form being eliminated would be subsumed by another optional form of benefit after taking into account expected future benefit accruals.

(B) ***Determination of expected transition period using conservative actuarial assumptions.*** The expected transition period for a plan amendment eliminating an optional form of benefit must be determined in accordance with actuarial assumptions that are reasonable at the time of the amendment and that are conservative (*i.e.*, reasonable actuarial assumptions that are likely to result in the longest period of time until the eliminated optional form of benefit would be subsumed). For this purpose, actuarial assumptions are not treated as conservative unless they include assumptions that a participant's compensation will not increase and that future benefit accruals will not exceed accruals in recent periods.

(C) ***Effect of subsequent amendments reducing future benefit accruals on the expected transition period.*** If, during the expected transition period for a plan amendment eliminating an optional form of benefit, the plan is subsequently amended to reduce the rate of future benefit accrual (or otherwise to lengthen the expected transition period), thus that subsequent plan amendment must provide that the elimination of the optional form of benefit is void or must provide for the effective date for elimination of the optional form of benefit to be further extended to a new expected transition period that satisfies this paragraph (e)(6) taking into account the subsequent amendment.

(iii) ***Applicability of the delayed effective date rule limited to employees who continue to accrue benefits through the end of expected transition period.*** An amendment eliminating an optional form of benefit under this paragraph (e)(6) must be limited to participants who continue to accrue benefits under the plan through the end of the expected transition period. Thus, for example, the plan amendment may not apply to any participant who has a severance from employment during the expected transition period.

(iv) ***Special rule for section 204(h) notice.*** See § 54.4980F-1(b), Q&A-8(c) of this chapter for a special rule relating to this paragraph (e)(6).

(f) ***Utilization test*** —

(1) ***General rule.*** A plan is permitted to be amended to eliminate all of the optional forms of benefit that comprise a generalized optional form (as defined in paragraph (g)(8) of this section) for a participant with respect to benefits accrued before the applicable amendment date if—

(i) None of the optional forms of benefit being eliminated is a core option, within the meaning of paragraph (g)(5) of this section;

(ii) The plan amendment is not applicable with respect to an optional form of benefit with an annuity commencement date that is earlier than the number of days in the maximum Qualified Joint and Survivor Annuity explanation period (as defined in paragraph (g)(9) of this section) after the date the amendment is adopted;

(iii) During the look-back period—

(A) The generalized optional form has been available to at least the applicable number of participants who are taken into account under paragraph (f)(3) and (4) of this section; and

(B) No participant has elected any optional form of benefit that is part of the generalized optional form with an annuity commencement date that is within the look-back period.

(2) *Look-back period* —

(i) ***In general.*** For purposes of this paragraph (f), the look-back period is the period that includes—

(A) The portion of the plan year in which such plan amendment is adopted that precedes the date of adoption (the pre-adoption period); and

(B) The 2 plan years immediately preceding the pre-adoption period.

(ii) *Special look-back period rules* —

(A) ***12-month plan year.*** In the look-back period, at least 1 of the plan years must be a 12-month plan year.

(B) ***Permitted 3-month exclusion in the pre-adoption period.*** A plan is permitted to exclude from the look-back period the calendar month in which the amendment is adopted and the preceding 1 or 2 calendar months to the extent those preceding months are contained within the pre-adoption period.

(C) ***Permission to extend the look-back period.*** In order to have a look-back period that satisfies the minimum applicable number of participants requirement in paragraph (f)(1)(iii)(A) of this section, the look-back period described in paragraph (f)(2)(i)(B) of this section is permitted to be expanded, so as to include the 3, 4, or 5 plan years immediately preceding the plan year in which the amendment is adopted. Thus, in determining the look-back period, a plan is permitted to substitute the 3, 4, or 5 plan years immediately preceding the pre-adoption period for the 2 plan years described in paragraph (f)(2)(i)(B) of this section. However, if a plan does not satisfy the minimum applicable number of participants requirement of paragraph (f)(1)(iii)(A) of this section using the pre-adoption period and the immediately preceding 5 plan years, the plan is not permitted to be amended in accordance with the utilization test in this paragraph (f).

(3) ***Participants taken into account.*** A participant is taken into account for purposes of this paragraph (f) only if the participant was eligible to elect to commence payment of an optional form of benefit that is part of the generalized optional form being eliminated with an annuity commencement date that is within the look-back period. However, a participant is not taken into account if the participant—

(i) Did not elect any optional form of benefit with an annuity commencement date that was within the look-back period;

(ii) Elected an optional form of benefit that included a single-sum distribution that applied with respect to at least 25% of the participant's accrued benefit;

(iii) Elected an optional form of benefit that was only available during a limited period of time and that contained a retirement-type subsidy where the subsidy that is part of the generalized optional form being eliminated was not extended to any optional form of benefit with the same annuity commencement date; or

(iv) Elected an optional form of benefit with an annuity commencement date that was more than 10 years before normal retirement age.

(4) ***Determining the applicable number of participants.*** For purposes of applying the rules in this paragraph (f), the applicable number of participants is 50 participants. However, notwithstanding paragraph (f)(3)(ii) of this section, a plan is permitted to take into account any participant who

elected an optional form of benefit that included a single-sum distribution that applied with respect to at least 25% of the participant's accrued benefit, but only if the applicable number of participants is increased to 1,000 participants.

(5) ***Default elections.*** For purposes of this paragraph (f), an election includes the payment of an optional form of benefit that applies in the absence of an affirmative election.

(g) ***Definitions and use of terms.*** The definitions in this paragraph (g) apply for purposes of this section.

(1) ***Actuarial present value.*** The term *actuarial present value* means actuarial present value (within the meaning of § 1.401(a)(4)-12) determined using reasonable actuarial assumptions.

(2) ***Ancillary benefit.*** The term *ancillary benefit* means—

(i) A social security supplement under a defined benefit plan (other than a QSUPP as defined in § 1.401(a)(4)-12);

(ii) A benefit payable under a defined benefit plan in the event of disability (to the extent that the benefit exceeds the benefit otherwise payable), but only if the total benefit payable in the event of disability does not exceed the maximum qualified disability benefit, as defined in section 411(a)(9);

(iii) A life insurance benefit;

(iv) A medical benefit described in section 401(h);

(v) A death benefit under a defined benefit plan other than a death benefit which is a part of an optional form of benefit; or

(vi) A plant shutdown benefit or other similar benefit in a defined benefit plan that does not continue past retirement age and does not affect the payment of the accrued benefit, but only to the extent that such plant shutdown benefit, or other similar benefit (if any), is permitted in a qualified pension plan (see § 1.401-1(b)(1)(i)).

(3) ***Annuity commencement date.*** The term *annuity commencement date* generally means the annuity starting date, except that, in the case of a retroactive annuity starting date under section 417(a)(7), *annuity commencement date* means the date of the first payment of benefits pursuant to a participant election of a retroactive annuity starting date, as defined in § 1.417(e)-1(b)(3)(iv).

(4) ***Applicable amendment date.*** The term *applicable amendment date*, with respect to a plan amendment, means the later of the effective date of the amendment or the date the amendment is adopted.

(5) ***Core options*** —

(i) ***General rule.*** With respect to a plan, the term *core options* means—

(A) A straight life annuity generalized optional form under which the participant is entitled to a level life annuity with no benefit payable after the participant's death;

(B) A 75% joint and contingent annuity generalized optional form under which the participant is entitled to a life annuity with a survivor annuity for any individual designated by the participant (including a non-spousal contingent annuitant) that is 75% of the amount payable during the participant's life (but see paragraph (d)(2)(v) of this section for a special rule relating to the joint and contingent annuity core option);

(C) A 10-year term certain and life annuity generalized optional form under which the participant is entitled to a life annuity with a guarantee that payments will continue to any person designated by the participant for the remainder of a fixed period of 10 years if the participant dies before the end of the 10-year period; and

(D) The most valuable option for a participant with a short life expectancy (as defined in paragraph (g)(5)(iii) of this section).

(ii) ***Modification of core options to satisfy other requirements.*** An annuity does not fail to be a core option (*e.g.*, a joint and contingent annuity described in paragraph (g)(5)(i)(B) of this section or a 10-year term certain and life annuity described in paragraph (g)(5)(i)(C) of this section) as a result of differences to comply with applicable law, such as limitations on death benefits to comply with the incidental benefit requirement of § 1.401-1(b)(1)(i) or on account of the spousal consent rules of section 417.

(iii) ***Most valuable option for a participant with a short life expectancy*** —

(A) ***General definition.*** Except as provided in paragraph (g)(5)(iii)(B) of this section, *most valuable option for a participant with a short life expectancy* means, for an annuity starting date, the optional form of benefit that is reasonably expected to result in payments that have the largest actuarial present value in the case of a participant who dies shortly after the annuity starting date, taking into account both payments due to the participant prior to the participant's death and any payments due after the participant's death. For this purpose, a plan is permitted to assume that the spouse of the participant is the same age as the participant. In addition, a plan is permitted to assume that the optional form of benefit that is the most valuable option for a participant with a short life expectancy when the participant is age $70^{1}/_{2}$ also is the most valuable option for a participant with a short life expectancy at all older ages, and that the most valuable option for a participant with a short life expectancy at age 55 is the most valuable option for a participant with a short life expectancy at all younger ages.

(B) ***Safe harbor hierarchy*** —

(*1*) A plan is permitted to treat a single-sum distribution option with an actuarial present value that is not less than the actuarial present value of any optional form of benefit eliminated by the plan amendment as the most valuable option for a participant with a short life expectancy for all of a participant's annuity starting dates if such single-sum distribution option is available at all such dates, without regard to whether the option was available before the plan amendment.

(*2*) If the plan before the amendment does not offer a single-sum distribution option as described in paragraph (g)(5)(iii)(B)(*1*) of this section, a plan is permitted to treat a joint and contingent annuity with a continuation percentage that is at least 75% and that is at least as great as the highest continuation percentage available before the amendment as the most valuable option for a participant with a short life expectancy for all of a participant's annuity starting dates if such joint and contingent annuity is available at all such dates, without regard to whether the option was available before the plan amendment.

(*3*) If the plan before the amendment offers neither a single-sum distribution option as described in paragraph (g)(5)(iii)(B)(*1*) of this section nor a joint and contingent annuity with a continuation percentage as described in paragraph (g)(5)(iii)(B)(*2*) of

this section, a plan is permitted to treat a term certain and life annuity with a term certain period no less than 15 years as the most valuable option for a participant with a short life expectancy for each annuity starting date if such 15-year term certain and life annuity is available at all annuity starting dates, without regard to whether the option was available before the plan amendment.

(6) ***Definitions of types of section 411(d)(6)(B) protected benefits*** —

(i) ***Early retirement benefit.*** The term *early retirement benefit* means the right, under the terms of a plan, to commence distribution of a retirement-type benefit at a particular date after severance from employment with the employer and before normal retirement age. Different early retirement benefits result from differences in terms relating to timing.

(ii) ***Optional form of benefit*** —

(A) ***In general.*** The term *optional form of benefit* means a distribution alternative (including the normal form of benefit) that is available under the plan with respect to an accrued benefit or a distribution alternative with respect to a retirement-type benefit. Different optional forms of benefit exist if a distribution alternative is not payable on substantially the same terms as another distribution alternative. The relevant terms include all terms affecting the value of the optional form, such as the method of benefit calculation and the actuarial factors or assumptions used to determine the amount distributed. Thus, for example, different optional forms of benefit may result from differences in terms relating to the payment schedule, timing, commencement, medium of distribution (*e.g.*, in cash or in kind), election rights, differences in eligibility requirements, or the portion of the benefit to which the distribution alternative applies. Likewise, differences in the normal retirement ages of employees or in the form in which the accrued benefit of employees is payable at normal retirement age under a plan are taken into account in determining whether a distribution alternative constitutes one or more optional forms of benefit.

(B) ***Death benefits.*** If a death benefit is payable after the annuity starting date for a specific optional form of benefit and the same death benefit would not be provided if another optional form of benefit were elected by a participant, then that death benefit is part of the specific optional form of benefit and is thus protected under section 411(d)(6). A death benefit is not treated as part of a specific optional form of benefit merely because the same benefit is not provided to a participant who has received his or her entire accrued benefit prior to death. For example, a $5,000 death benefit that is payable to all participants except any participant who has received his or her accrued benefit in a single-sum distribution is not part of a specific optional form of benefit.

(iii) ***Retirement-type benefit.*** The term *retirement-type benefit* means—

(A) The payment of a distribution alternative with respect to an accrued benefit; or

(B) The payment of any other benefit under a defined benefit plan (including a QSUPP as defined in § 1.401(a)(4)-12) that is permitted to be in a qualified pension plan, continues after retirement, and is not an ancillary benefit.

(iv) ***Retirement-type subsidy.*** The term *retirement-type subsidy* means the excess, if any, of the actuarial present value of a retirement-type benefit over the actuarial present value of the accrued benefit commencing at normal retirement age or at actual commencement date, if

later, with both such actuarial present values determined as of the date the retirement-type benefit commences. Examples of retirement-type subsidies include a subsidized early retirement benefit and a subsidized qualified joint and survivor annuity.

(v) ***Subsidized early retirement benefit or early retirement subsidy.*** The terms *subsidized early retirement benefit* or *early retirement subsidy* mean the right, under the terms of a plan, to commence distribution of a retirement-type benefit at a particular date after severance from employment with the employer and before normal retirement age where the actuarial present value of the optional forms of benefit available to the participant under the plan at that annuity starting date exceeds the actuarial present value of the accrued benefit commencing at normal retirement age (with such actuarial present values determined as of the annuity starting date). Thus, an early retirement subsidy is an early retirement benefit that provides a retirement-type subsidy.

(7) ***Eliminate; elimination; reduce; reduction.*** The terms *eliminate* or *elimination* when used in connection with a section 411(d)(6)(B) protected benefit mean to eliminate or the elimination of an optional form of benefit or an early retirement benefit and to reduce or a reduction in a retirement-type subsidy. The terms *reduce* or *reduction* when used in connection with a retirement-type subsidy mean to reduce or a reduction in the amount of the subsidy. For purposes of this section, an *elimination* includes a *reduction* and a *reduction* includes an *elimination.*

(8) ***Generalized optional form.*** The term *generalized optional form* means a group of optional forms of benefit that are identical except for differences due to the actuarial factors that are used to determine the amount of the distributions under those optional forms of benefit and the annuity starting dates.

(9) ***Maximum QJSA explanation period.*** The term *maximum QJSA explanation period* means the maximum number of days before an annuity starting date for a qualified joint and survivor annuity for which a written explanation relating to the qualified joint and survivor annuity would satisfy the timing requirements of section 417(a)(3) and § 1.417(e)-1(b)(3)(ii).

(10) ***Other right and feature.*** The term *other right or feature* has the meaning set forth at § 1.401(a)(4)-4(e)(3)(ii).

(11) ***Refund of employee contributions feature.*** The term *refund of employee contributions features* means a feature with respect to an optional form of benefit that provides for employee contributions and interest thereon to be paid in a single sum at the annuity starting date with the remainder to be paid in another form beginning on that date.

(12) ***Retirement; retirement age.*** For purposes of this section, the date of *retirement* means the annuity starting date. Thus, *retirement age* means a participant's age at the annuity starting date.

(13) ***Retroactive annuity starting date feature.*** The term *retroactive annuity starting date* feature means a feature with respect to an optional form of benefit under which the annuity starting date for the distribution occurs on or before the date the written explanation required by section 417(a)(3) is provided to the participant.

(14) ***Section 411(d)(6) protected benefit.*** The term *section 411(d)(6) protected benefit* means the accrued benefit of a participant as of the applicable amendment date described in section 411(d)(6)(A) and any section 411(d)(6)(B) protected benefit.

(15) ***Section 411(d)(6)(B) protected benefit.*** The term *section 411(d)(6)(B) protected benefit* means the portion of an early retirement benefit, a retirement-type subsidy, or an optional form of benefit attributable to benefits accrued before the applicable amendment date.

(16) ***Social security leveling feature.*** The term *social security leveling feature* means a feature with respect to an optional form of benefit commencing prior to a participant's expected commencement of social security benefits that provides for a temporary period of higher payments which is designed to result in an approximately level amount of income when the participant's estimated old age benefits from Social Security are taken into account.

(h) ***Examples.*** The following examples illustrate the application of paragraphs (c) through (g) of this section:

Example 1. (i) *Facts involving elimination of optional forms of benefit as redundant.* Plan C is a defined benefit plan under which employees may elect to commence distributions at any time after the later of termination of employment or attainment of age 55. At each potential annuity commencement date, Plan C permits employees to select, with spousal consent where required, a straight life annuity or any of a number of actuarially equivalent alternative forms of payment, including a straight life annuity with cost-of-living increases and a joint and contingent annuity with the participant having the right to select any beneficiary and any continuation percentage from 1% to 100%, subject to modification to the extent necessary to satisfy the requirements of the incidental benefit requirement of § 1.401-1(b)(1)(i). The amount of any alternative payment is determined as the actuarial equivalent of the straight life annuity payable at the same age using reasonable actuarial assumptions. On June 2, 2006, Plan C is amended to delete all continuation percentages for joint and contingent options other than 25%, 50%, 75%, or 100%, effective with respect to annuity commencement dates that are on or after January 1, 2007.
(ii) *Conclusion*—(A) *Categorization of family members under the redundancy rule.* The optional forms of benefit described in paragraph (i) of this *Example 1* are members of 4 families: a straight life annuity; a straight life annuity with cost-of-living increases; joint and contingent options with continuation percentages of less than 50%; and joint and contingent options with continuation percentages of 50% or more. The amendment does not affect either of the first 2 families, but affects the 2 families relating to joint and contingent options.

(B) *Conclusion for elimination of optional forms of benefit as redundant.* The amendment satisfies the requirements of paragraph (c) of this section. First, the eliminated optional forms of benefit are redundant with respect to the retained optional forms of benefit because each eliminated joint and contingent annuity option with a continuation percentage of less than 50% is redundant with respect to the 25% continuation option and each eliminated joint and contingent annuity option with a continuation percentage of 50% or higher is redundant with respect to any one of the retained 50%, 75%, or 100% continuation options. In addition, to the extent that the optional form of benefit that is being eliminated does not include a social security leveling feature, return of employee contribution feature, or retroactive annuity starting date feature, the retained optional form of benefit does not include that feature. Second, the amendment is not effective with respect to annuity commencement dates before September 1, 2006, as required under paragraph (c)(1)(ii)

of this section. Third, the plan amendment does not eliminate any available core option, including the most valuable option for a participant with a short life expectancy, treating a joint and contingent annuity with a 100% continuation percentage as this optional form of benefit pursuant to paragraph (g)(5)(iii)(B)(2) of this section. Finally, the amendment need not satisfy the requirements of paragraph (e) of this section because the retained optional forms of benefit are available on the same annuity commencement dates and have the same actuarial present value as the optional forms of benefit that are being eliminated.

Example 2. (i) *Facts involving elimination of optional forms of benefit as redundant if additional restrictions are imposed.* The facts are the same as *Example 1,* except that the plan amendment also restricts the class of beneficiaries that may be elected under the 4 retained joint and contingent annuities to the employee's spouse.
(ii) *Conclusion.* The amendment fails to satisfy the requirements of paragraph (c)(2)(i)(B) of this section because the retained joint and contingent annuities have materially greater restrictions on the beneficiary designation than did the eliminated joint and contingent annuities. Thus, the joint and contingent annuities being eliminated are not redundant with respect to the retained joint and contingent annuities. In addition, the amendment fails to satisfy the requirements of the core option rules in paragraph (d) of this section because the amendment fails to be limited to annuity commencement dates that are at least 4 years after the date the amendment is adopted, the amendment fails to include the core option in paragraph (g)(5)(i)(B) of this section because the participant does not have the right to designate any beneficiary, and the amendment fails to include the core option described in paragraph (g)(5)(i)(C) of this section because the plan does not provide a 10-year term certain and life annuity.

Example 3. (i) *Facts involving elimination of a social security leveling feature and a period certain annuity as redundant.* Plan D is a defined benefit plan under which participants may elect to commence distributions in the following actuarially equivalent forms, with spousal consent if applicable: a straight life annuity; a 50%, 75%, or 100% joint and contingent annuity; a 5-year, 10-year, or a 15-year term certain and life annuity; and an installment refund annuity (*i.e.*, an optional form of benefit that provides a period certain, the duration of which is based on the participant's age), with the participant having the right to select any beneficiary. In addition, each annuity offered under the plan, if payable to a participant who is less than age 65, is available both with and without a social security leveling feature. The social security leveling feature provides for an assumed commencement of social security benefits at any age selected by the participant between age 62 and 65. Plan D is amended on June 2, 2006, effective as of January 1, 2007, to eliminate the installment refund form of benefit and to restrict the social security leveling feature to an assumed social security commencement age of 65.
(ii) *Conclusion.* The amendment satisfies the requirements of paragraph (c) of this section. First, the installment refund annuity option is redundant with respect to the 15-year certain and life annuity (except for advanced ages where, because of shorter life expectancies, the installment

refund annuity option is redundant with respect to the 5-year certain and life annuity and also redundant with respect to the 10-year certain and life annuity). Second, with respect to restricting the social security leveling feature to an assumed social security commencement age of 65, under paragraph (c)(3)(ii)(C) of this section, straight life annuities with social security leveling features that have different social security commencement ages are treated as members of the same family as straight life annuities without social security leveling features. To the extent an optional form of benefit that is being eliminated includes a social security leveling feature, the retained optional form of benefit must also include that feature, but it is permitted to have a different assumed age for commencement of social security benefits. Third, to the extent that the optional form of benefit that is being eliminated does not include a social security leveling feature, a return of employee contribution feature, or retroactive annuity starting date feature, the retained optional form of benefit must not include that feature. Fourth, the plan amendment does not eliminate any available core option, including the most valuable option for a participant with a short life expectancy, treating a joint and contingent annuity with a 100% continuation percentage as this optional form of benefit pursuant to paragraph (g)(5)(iii)(B)(2) of this section. Fifth, the amendment is not effective with respect to annuity commencement dates before September 1, 2006, as required under paragraph (c)(1)(ii) of this section. The amendment need not satisfy the requirements of paragraph (e) of this section because the retained optional forms of benefit are available on the same annuity commencement dates and have the same actuarial present value as the optional forms of benefit that are being eliminated.

Example 4. (i) *Facts involving elimination of noncore options.* Employer N sponsors Plan E, a defined benefit plan that permits every participant to elect payment in the following actuarially equivalent optional forms of benefit (Plan E's uniformly available options), with spousal consent if applicable: a straight life annuity; a 50%, 75%, or 100% joint and contingent annuity with no restrictions on designation of beneficiaries; and a 5-, 10-, or 15-year term certain and life annuity. In addition, each can be elected in conjunction with a social security leveling feature, with the participant permitted to select a social security commencement age from age 62 to age 67. None of Plan E's uniformly available options include a single-sum distribution. The plan has been in existence for over 30 years, during which time Employer N has acquired a large number of other businesses, including merging over 20 defined benefit plans of acquired entities into Plan E. Many of the merged plans offered optional forms of benefit that were not among Plan E's uniformly available options, including some plans funded through insurance products, often offering all of the insurance annuities that the insurance carrier offers, and with some of the merged plans offering single-sum distributions. In particular, under the XYZ acquisition that occurred in 1990, the XYZ acquired plan offered a single-sum distribution option that was frozen at the time of the acquisition. On April 1, 2006, each single-sum distribution option applies to less than 25% of the XYZ participants' accrued benefits. Employer N has generally, but not uniformly, followed the practice of limiting the optional forms of benefit for an acquired unit to an employee's service before the date of the merger, and has uniformly followed this practice with respect to each of the

early retirement subsidies in the acquired unit's plan. As a result, as of April 1, 2007, Plan E includes a large number of generalized optional forms which are not members of families of optional forms of benefit identified in paragraph (c)(4) of this section, but there are no participants who are entitled to any early retirement subsidies because any subsidies have been subsumed by the actuarially reduced accrued benefit. Plan E is amended in April of 2007 to eliminate all of the optional forms of benefit that Plan E offers other than Plan E's uniformly available options, except that the amendment does not eliminate any single-sum distribution option except with respect to XYZ participants and permits any commencement date that was permitted under Plan E before the amendment. Plan E also eliminates the single-sum distribution option for XYZ participants. Further, each of Plan E's uniformly available options has an actuarial present value that is not less than the actuarial present value of any optional form of benefit offered before the amendment. The amendment is effective with respect to annuity commencement dates that are on or after May 1, 2011.

(ii) *Conclusion.* The amendment satisfies the requirements of paragraph (d) of this section. First, Plan E, as amended, does not eliminate any single-sum distribution option as provided in paragraph (d)(2)(iii) of this section except for single-sum distribution options that apply to less than 25% of a plan participant's accrued benefit as of the date the option is eliminated (May 1, 2011). Second, Plan E, as amended, includes each of the core options as defined in paragraph (g)(5) of this section, including offering the most valuable option for a participant with a short life expectancy (treating the 100% joint and contingent annuity as this benefit, under paragraph (g)(5)(iii)(B)(2) of this section). The 100% joint and contingent annuity option (and not the grandfathered single-sum distribution option) is the most valuable option for a participant with a short life expectancy because the grandfathered single-sum distribution option is not available with respect to a participant's entire accrued benefit. In addition, as required under paragraph (d)(2) of this section, to the extent an optional form of benefit that is being eliminated includes either a social security leveling feature or a refund of employee contributions feature, at least one of the core options is available with that feature and, to the extent that the optional form of benefit that is being eliminated does not include a social security leveling feature or a refund of employee contributions feature, each of the core options is available without that feature. Third, the amendment is not effective with respect to annuity commencement dates that are less than 4 years after the date the amendment is adopted. Finally, the amendment need not satisfy the requirements of paragraph (e) of this section because the retained optional forms of benefit are available on the same annuity commencement date and have the same actuarial present value as the optional forms of benefit that are being eliminated. The conclusion that the amendment satisfies the requirements of paragraph (d) of this section assumes that no amendments are made to change the core options before May 1, 2014.

Example 5. (i) *Facts involving reductions in actuarial present value.* (A) Plan F is a defined benefit plan providing an accrued benefit of 1% of the average of a participant's highest 3 consecutive years' pay times years of service, payable as a straight life annuity beginning at the normal

retirement age at age 65. Plan F permits employees to elect to commence actuarially reduced distributions at any time after the later of termination of employment or attainment of age 55. At each potential annuity commencement date, Plan F permits employees to select, with spousal consent, either a straight life annuity, a joint and contingent annuity with the participant having the right to select any beneficiary and a continuation percentage of 50%, 66 2/3%, 75%, or 100%, or a 10-year certain and life annuity with the participant having the right to select any beneficiary, subject to modification to the extent necessary to satisfy the requirements of the incidental benefit requirement of § 1.401-1(b)(1)(i). The amount of any joint and contingent annuity and the 10-year certain and life annuity is determined as the actuarial equivalent of the straight life annuity payable at the same age using reasonable actuarial assumptions. The plan covers employees at 4 divisions, one of which, Division X, was acquired on January 1, 1999. The plan provides for distributions before normal retirement age to be actuarially reduced, but, if a participant retires after attainment of age 55 and completion of 10 years of service, the applicable early retirement reduction factor is 3% per year for the years between age 65 and 62 and 6% per year for the ages from 62 to 55 for all employees at any division, except for employees who were in Division X on January 1, 1999, for whom the early retirement reduction factor for retirement after age 55 and 10 years of service is 5% for each year before age 65. On June 2, 2006, effective January 1, 2007, Plan F is amended to change the early retirement reduction factors for all employees of Division X to be the same as for other employees, effective with respect to annuity commencement dates that are on or after January 1, 2008, but only with respect to participants who are employees on or after January 1, 2008 and only if Plan F continues accruals at the current rate through January 1, 2008 (or the effective date of the change in reduction factors is delayed to reflect the change in the accrual rate). For purposes of this *Example 5,* it is assumed that an actuarially equivalent early retirement factor would have a reduction shown in column 4 of the following table, which compares the reduction factors for Division X before and after the amendment:

Age (1)	Old division X factor (as a %) (2)	New factor (as a %) (3)	Actuarially equivalent factor (as a %) (4)	Column 3 minus column 2 (5)
65	NA	NA	NA	NA
64	95	97	91.1	+ 2
63	90	94	83.2	+ 4
62	85	91	76.1	+ 5
61	80	85	69.8	+ 5
60	75	79	64.1	+ 4
59	70	73	59.0	+ 3
58	65	67	54.3	+ 2

Age (1)	Old division X factor (as a %) (2)	New factor (as a %) (3)	Actuarially equivalent factor (as a %) (4)	Column 3 minus column 2 (5)
57	60	61	50.1	+ 1
56	55	55	46.3	0
55	50	49	42.8	-1

(B) On January 1, 2007, the employee with the largest number of years of service is Employee E, who is age 54 and has 20 years of service. For 2006, Employee E's compensation is $80,000 and E's highest 3 consecutive years of pay on January 1, 2007 is $75,000. Employee E's accrued benefit as of the January 1, 2007 effective date of the amendment is a life annuity of $15,000 per year at normal retirement age (1% times $75,000 times 20 years of service) and E's early retirement benefit commencing at age 55 has a present value of $91,397 as of January 1, 2007. It is assumed for purposes of this example that the longest expected transition period for any active employee does not exceed 5 months (20 years and 5 months, times 1% times 49% exceeds 20 years times 1% times 50%). Finally, it is assumed for purposes of this example that the amendment reduces optional forms of benefit which are burdensome or complex.

(ii) *Conclusion concerning application of section 411(d)(6)(B).* The amendment reducing the early retirement factors has the effect of eliminating the existing optional forms of benefit (where the amount of the benefit is based on preamendment early retirement factors in any case where the new factors result in a smaller amount payable) and adding new optional forms of benefit (where the amount of benefit is based on the different early retirement factors). Accordingly, the elimination must satisfy the requirements of paragraph (c) or (d) of this section if the amount payable at any date is less than would have been payable under the plan before the amendment.

(iii) *Conclusion concerning application of redundancy rules.* The amendment satisfies the requirements of paragraph (c)(1)(i) and (ii) of this section (see paragraphs (iv) through (vi) of this *Example 5* below for the requirements of paragraph (c)(1)(iii) of this section). First, with respect to each eliminated optional form of benefit (*i.e.*, with respect to each optional form of benefit with the Old Division X Factor), after the amendment there is a retained optional form of benefit that is in the same family of optional forms of benefit (*i.e.*, the optional form of benefit with the New Factor). Second, the amendment is not effective with respect to annuity commencement dates that are less than the time period required under paragraph (c)(1)(ii) of this section. Third, to the extent that the plan amendment eliminates the most valuable option for a participant with a short life expectancy, the retained optional form of benefit is identical except for differences in actuarial factors.

(iv) *Conclusion concerning application of the requirements under paragraph (e) of this section.* The plan amendment must satisfy the requirements of paragraph (e) of this section because, as of the December 2, 2006 adoption date, the actuarial present value of the early retirement subsidy is less than the actuarial present value of the early retirement subsidy being eliminated. The plan amendment satisfies the requirements under paragraph (e)(1)(i) and (2) of this section because the amendment eliminates optional forms of benefit that create significant burdens or complexities for the plan and its participants. See below for the *de minimis* requirement under paragraph (e)(1)(ii) and (3) of this section.

(v) *Conclusion concerning application of de minimis rules under paragraph (e)(5) of this section.* In order to satisfy the requirements under paragraph (e)(1)(ii) and (3) of this section, the amendment must satisfy the requirements of either paragraph (e)(5) or paragraph (e)(6) of this section. The amendment does not satisfy the requirements of paragraph (e)(5) of this section because the reduction in the actuarial present value is more than a *de minimis* amount under paragraph (e)(5) of this section. For example, for Employee E, the amount of the joint and contingent annuity payable at age 55 is reduced from $7,500 (50% of $15,000) to $7,350 (49% of $15,000) and the reduction in present value as a result of the amendment is $1,828 ($91,397—$89,569). In this case, the retirement-type subsidy at age 55 is the excess of the present value of the 50% early retirement benefit over the present value of the deferred payment of the accrued benefit, or $13,921 ($97,269—$83,348) and the present value at age 54 of the retirement-type subsidy is $13,081. The reduction in present value is more than the greater of 2% of the present value of the retirement-type subsidy and 1% of E's compensation because the reduction in present value exceeds $800 (the greater of $262, which is 2% of the present value of the retirement-type subsidy for the benefit being eliminated, and $800, which is 1% of E's compensation of $80,000).

(vi) *Conclusion involving application of de minimis rules under paragraph (e)(6) of this section relating to expected transition period.* The amendment satisfies the requirements of paragraph (e)(6) of this section and, thus, satisfies the requirements of paragraph (c) of this section, including the requirement in paragraph (c)(1)(iii) of this section that paragraph (e) of this section be satisfied. First, as assumed under the facts above, the amendment reduces optional forms of benefit that are burdensome or complex. Second, the plan amendment is not effective for annuity commencement dates before January 1, 2008, and that date is not earlier than the longest expected transition period for any participant in Plan F on the date of the amendment. Third, the amendment does not apply to any participant who has a severance from employment during the transition period. If, however, a later plan amendment reduces accruals under Plan F, the initial plan amendment will no longer satisfy the requirements of paragraph (e)(6) of this section (and must be voided) unless, as part of the later amendment, the expected transition period is extended to reflect the reduction in accruals under Plan F.

Example 6. (i) *Facts involving elimination of noncore options using utilization test*—(A) *In general.* Plan G is a calendar year defined benefit plan under which participants may elect to commence

distributions after termination of employment in the following actuarially equivalent forms, with spousal consent, if applicable: a straight life annuity; a 50%, 75%, or 100% joint and contingent annuity; or a 5-year, 10-year, or a 15-year term certain and life annuity. A participant is permitted to elect a single-sum distribution if the present value of the participant's nonforfeitable accrued benefit is not greater than $5,000. The annuities offered under the plan are generally available both with and without a social security leveling feature. The social security leveling feature provides for an assumed commencement of social security benefits at any age selected by the participant between the ages of 62 and 67. Under Plan G, the normal retirement age is defined as age 65.
(B) *Utilization test.* In 2007, the plan sponsor of Plan G, after reviewing participants' benefit elections, determines that, during the period from January 1, 2005, through June 30, 2007, no participant has elected a 5-year term certain and life annuity with a social security leveling option. During that period, Plan G has made the 5-year term certain and life annuity with a social security leveling option available to 142 participants who were at least age 55 and who elected optional forms of benefit with an annuity commencement dates during that period. In addition, during that period, 20 of the 142 participants elected a single-sum distribution and there was no retirement-type subsidy available for a limited period of time. Plan G, in accordance with paragraph (f)(1) of this section, is amended on September 15, 2007, effective as of January 1, 2008, to eliminate all 5-year term certain and life annuities with a social security leveling option for all annuity commencement dates on or after January 1, 2008.

(ii) *Conclusion.* The amendment satisfies the requirements of paragraph (f) of this section. First, the 5-year term certain and life annuity with a social security leveling option is not a core option as defined in paragraph (g)(5) of this section. Second, the plan amendment is not applicable with respect to an optional form of benefit with an annuity commencement date that is earlier than the number of days in the maximum QJSA explanation period after the date the amendment is adopted. Third, the 5-year term certain and life annuity with a social security leveling option has been available to at least 50 participants who are taken into account for purposes of paragraph (f) of this section during the look-back period. Fourth, during the look-back period, no participant elected any optional form that is part of the generalized optional form being eliminated (for example, the 5-year term and life annuity with a social security leveling option).

(i) [Reserved]

(j) ***Effective dates*** —

(1) ***General effective date.*** Except as otherwise provided in this paragraph (j), the rules of this section apply to amendments adopted on or after August 12, 2005.

(2) ***Effective date for rules relating to contingent event benefits.*** Paragraph (b)(1)(ii) of this section applies to amendments adopted after December 31, 2005.

(3) ***Effective dates for rules relating to section 411(a) nonforfeitability provisions*** —

(i) ***Application of suspension of benefit rules to section 411(d)(6) protected benefits.*** With respect to a plan amendment that places greater restrictions or conditions on a participant's rights to section 411(d)(6) protected benefits by adding or modifying a plan provision relating to suspension of benefit payments during a period of employment or reemployment, the rules provided in paragraph (a)(3) of this section apply to periods beginning on or after June 7, 2004.

(ii) ***Application of section 411(a) nonforfeitability provisions to section 411(d)(6) protected benefits.*** With respect to a plan amendment that places greater restrictions or conditions on a participant's rights to section 411(d)(6) protected benefits other than a plan amendment described in paragraph (j)(3)(i) of this section, the rules provided in paragraph (a)(3) of this section apply to plan amendments adopted after August 9, 2006.

(4) ***Effective date for change to redundancy rule regarding bifurcation of benefits.*** The rules provided in paragraph (c)(6) of this section are applicable for amendments adopted after August 9, 2006.

(5) ***Effective date for rules relating to utilization test.*** The rules provided in paragraph (f) of this section are applicable for amendments adopted after December 31, 2006.

[T.D. 9219, 70 FR 47116, Aug. 12, 2005, as amended by T.D. 9280, 71 FR 45383, Aug. 9, 2006; 71 FR 55108, Sept. 21, 2006; T.D. 9472, 74 FR 61276, Nov. 24, 2009; T.D. 9987, 89 FR 3357, Jan. 19, 2024]

§ 1.411(d)-4 Section 411(d)(6) protected benefits.

Q-1: What are “section 411(d)(6) protected benefits”?

A-1:

(a) ***In general.*** The term “section 411(d)(6) protected benefit” includes any benefit that is described in one or more of the following categories—

(1) Benefits described in section 411(d)(6)(A),

(2) Early retirement benefits (as defined in § 1.411(d)-3(g)(6)(i)) and retirement-type subsidies (as defined in § 1.411(d)-3(g)(6)(iv)), and

(3) Optional forms of benefit described in section 411(d)(6)(B)(ii).

Such benefits, to the extent they have accrued, are subject to the protection of section 411(d)(6) and, where applicable, the definitely determinable requirement of section 401(a) (including section 401(a)(25)) and cannot, therefore, be reduced, eliminated, or made subject to employer discretion except to the extent permitted by regulations.

(b) ***Optional forms of benefit*** —

(1) ***In general.*** The term *optional form of benefit* has the same meaning as in § 1.411(d)-3(g)(6)(ii). Under this definition, different optional forms of benefit exist if a distribution alternative is not payable on substantially the same terms as another distribution alternative. Thus, for example, different optional forms of benefit may result from differences in terms relating to the payment schedule, timing, commencement, medium of distribution (*e.g.*, in cash or in kind), election rights, differences in eligibility requirements, or the portion of the benefit to which the distribution alternative applies.

(2) ***Examples.*** The following examples illustrate the meaning of the term "optional form of benefit." Other issues, such as the requirement that the optional forms satisfy section 401(a)(4), are not addressed in these examples and no inferences are intended with respect to such requirements. Assume that the distribution forms, including those not described in these examples, provided under the plan in each of the following examples are identical in all respects not described.

Example 1. A plan permits each participant to receive his benefit under the plan as a single sum distribution; a level monthly distribution schedule over 15 years; a single life annuity; a joint and 50 percent survivor annuity; a joint and 75 percent survivor annuity; a joint and 50 percent survivor annuity with a benefit increase for the participant if the beneficiary dies before a specified date; and joint and 50 percent survivor annuity with a 10 year certain feature. Each of these benefit distribution options is an optional form of benefit (without regard to whether the values of these options are actuarially equivalent).

Example 2. A plan permits each participant who is employed by division A to receive his benefit in a single sum distribution payable upon termination from employment and each participant who is employed by division B in a single sum distribution payable upon termination from employment on or after the attainment of age 50. This plan provides two single sum optional forms of benefit.

Example 3. A plan permits each participant to receive his benefit in a single life annuity that commences in the month after the participant's termination from employment or in a single life annuity that commences upon the completion of five consecutive one year breaks in service. These are two optional forms of benefit.

Example 4. A profit-sharing plan permits each participant who is employed by division A to receive an in-service distribution upon the satisfaction of objective criteria set forth in the plan designed to determine whether the participant has a heavy and immediate financial need, and each participant who is employed by division B to receive an in-service distribution upon the satisfaction of objective criteria set forth in the plan designed to determine whether the participant has a heavy and immediate financial need attributable to extraordinary medical expenses. These in-service distribution options are two optional forms of benefits.

Example 5. A profit-sharing plan permits each participant who is employed by division A to receive an in-service distribution up to $5,000 and each participant who is employed by division B to receive an in-service distribution of up to his total benefit. These in-service distribution options differ as to the portion of the accrued benefit that may be distributed in a particular form and are, therefore, two optional forms of benefit.

Example 6. A profit-sharing plan provides for a single sum distribution on termination of employment. The plan is amended in 1991 to eliminate the single sum optional form of benefit with respect to benefits accrued after the date of amendment. This single sum optional form of benefit continues to be a single optional form of benefit although, over time, the percentage of various employees' accrued benefits that are potentially payable under this single sum may vary because the form is only available with respect to benefits accrued up to and including the date of the amendment.

Example 7. A profit-sharing plan permits each participant to receive a single sum distribution of his benefit in cash or in the form of a specified class of employer stock. This plan provides two single sum distribution optinal forms of benefit.

Example 8. A stock bonus plan permits each participant to receive a single sum distribution of his benefit in cash or in the form of the property in which such participant's benefit was invested prior to the distribution. This plan's single sum distribution option provides two optional forms of benefit.

Example 9. A defined benefit plan provides for an early retirement benefit payable upon termination of employment after attainment of age 55 and either after ten years of service or, if earlier, upon plan termination to employees of Division A and provides for an identical early retirement benefit payable on the same terms with the exception of payment on plan termination to employees of Division B. The plan provides for two optional forms of benefit.

Example 10. A profit-sharing plan provides for loans secured by an employee's account balance. In the event of default on such a loan, there is an execution on such account balances. Such execution is a distribution of the employee's accrued benefits under the plan. A distribution of an accrued benefit contingent on default under a plan loan secured by such accrued benefits is an optional form of benefit under the plan.

(c) *Plan terms* —

(1) ***General rule.*** Generally, benefits described in section 411(d)(6)(A), early retirement benefits, retirement-type subsidies, and optional forms of benefit are section 411(d)(6) protected benefits only if they are provided under the terms of a plan. However, if an employer establishes a pattern of repeated plan amendments providing for similar benefits in similar situations for substantially consecutive, limited periods of time, such benefits will be treated as provided under the terms of the plan, without regard to the limited periods of time, to the extent necessary to carry out the purposes of section 411(d)(6) and, where applicable, the definitely determinable requirement of section 401(a), including section 401(a)(25). A pattern of repeated plan amendments providing that a particular optional form of benefit is available to certain named employees for a limited period of time is within the scope of this rule and may result in such optional form of benefit being treated as provided under the terms of the plan to all employees covered under the plan without regard to the limited period of time and the limited group of named employees.

(2) ***Effective date.*** The provisions of paragraph (c)(1)of this Q&A-1 are effective as of July 11, 1988. Thus, patterns or repeated plan amendments adopted and effective before July 11, 1988 will be disregarded in determining whether such amendments have created an ongoing optional form of benefit under the plan.

(d) ***Benefits that are not section 411(d)(6) protected benefits.*** The following benefits are examples of items that are not section 411(d)(6) protected benefits:

(1) Ancillary life insurance protection;

(2) Accident or health insurance benefits;

(3) Social security supplements described in section 411(a)(9), except qualified social security supplements as defined in § 1.401(a)(4)-12;

(4) The availability of loans (other than the distribution of an employee's accrued benefit upon default under a loan);

(5) The right to make after-tax employee contributions or elective deferrals described in section 402(g)(3);

(6) The right to direct investments;

(7) The right to a particular form of investment (e.g., investment in employer stock or securities or investment in certain types of securities, commercial paper, or other investment media);

(8) The allocation dates for contributions, forfeitures, and earnings, the time for making contributions (but not the conditions for receiving an allocation of contributions or forfeitures for a plan year after such conditions have been satisfied), and the valuation dates for account balances;

(9) Administrative procedures for distributing benefits, such as provisions relating to the particular dates on which notices are given and by which elections must be made; and

(10) Rights that derive from administrative and operational provisions, such as mechanical procedures for allocating investment experience among accounts in defined contribution plans.

Q-2: To what extent may section 411(d)(6) protected benefits under a plan be reduced or eliminated?

A-2:

(a) ***Reduction or elimination of section 411(d)(6) protected benefits*** —

(1) ***In general.*** A plan is not permitted to be amended to eliminate or reduce a section 411(d)(6) protected benefit that has already accrued, except as provided in § 1.411(d)-3 or this section. This is generally the case even if such elimination or reduction is contingent upon the employee's consent. However, a plan may be amended to eliminate or reduce section 411(d)(6) protected benefits with respect to benefits not yet accrued as of the later of the amendment's adoption date or effective date without violating section 411(d)(6).

(2) ***Selection of optional forms of benefit*** —

(i) ***General rule.*** A plan may treat a participant as receiving his entire nonforfeitable accrued benefit under the plan if the participant receives his benefit in an optional form of benefit in an amount determined under the plan that is at least the actuarial equivalent of the employee's nonforfeitable accrued benefit payable at normal retirement age under the plan. This is true even though the participant could have elected to receive an optional form of benefit with a greater actuarial value than the value of the optional form received, such as an optional form including retirement-type subsidies, and without regard to whether such other, more valuable optional form could have commenced immediately or could have become available only upon the employee's future satisfaction of specified eligibility conditions.

(ii) ***Election of an optional form.*** Except as provided in paragraph (a)(2)(iii) of this Q&A-2, a plan does not violate section 411(d)(6) merely because an employee's election to receive a portion of his nonforfeitable accrued benefit in one optional form of benefit precludes the employee from receiving that portion of his benefit in another optional form of benefit. Such employee retains all 411(d)(6) protected rights with respect to the entire portion of

such employee's nonforfeitable accrued benefit for which no distribution election was made. For purposes of this rule, an elective transfer of an otherwise distributable benefit is treated as the selection of an optional form of benefit. See Q&A-3 of this section.

(iii) ***Buy-back rule.*** Notwithstanding paragraph (a)(2)(ii) of this Q&A-2, an employee who received a distribution of his nonforfeitable benefit from a plan that is required to provide a repayment opportunity to such employee if he returns to service within the applicable period pursuant to the requirements of section 411(a)(7) and who, upon subsequent reemployment, repays the full amount of such distribution in accordance with section 411(a)(7)(C) must be reinstated in the full array of section 411(d)(6) protected benefits that existed with respect to such benefit prior to distribution.

(iv) ***Examples.*** The rules in this paragraph (a)(2) can be illustrated by the following examples:

Example 1. Defined benefit plan X provides, among its optional forms of benefit, for a subsidized early retirement benefit payable in the form of an annuity and available to employees who terminate from employment on or after their 55th birthdays. In addition plan X provides for a single sum distribution available on termination from employment or termination of the plan. The single sum distribution is determined on the basis of the present value of the accrued normal retirement benefit and does not take the early retirement subsidy into account. Plan X is terminated December 31, 1991. Employees U, age 47, V, age 55, and W, age 47, all continue in the service of the employer. Employees X, age 47, Y, age 55 and Z, age 47, terminate from employment with the employer during 1991. Employees U and V elect to take the single sum optional form of distribution at the time of plan termination. Employees X and Y elect to take the single sum distribution on termination from employment with the employer. The elimination of the subsidized early retirement benefit with respect to employees U, V, X and Y does not result in a violation of section 411(d)(6). This is the result even though employees U and X had not yet satisfied the conditions for the subsidized early retirement benefit. Because employees W and Z have not selected an optional form of benefit, they continue to have a 411(d)(6) protected right to the full array of section 411(d)(6) protected benefits provided under the plan, including the single sum distribution form and the subsidized early retirement benefit.

Example 2. A partially vested employee receives a single sum distribution of the present value of his entire nonforfeitable benefit on account of separation from service under a defined benefit plan providing for a repayment provision. Upon reemployment with the employer such employee makes repayment in the required amount in accordance with section 411(a)(7). Such employee may, upon subsequent termination of employment, elect to take such repaid benefits in any optional form provided under the plan as of the time of the employee's initial separation from service. If the plan was amended prior to such repayment, to eliminate the single sum optional form of benefit with respect to benefits accrued after the date of the amendment, such participant has a 411(d)(6) protected right to take distribution of the repaid benefit in the form of a single sum distribution.

(3) ***Certain transactions*** —

(i) ***Plan mergers and benefit transfers.*** The prohibition against the reduction or elimination of section 411(d)(6) protected benefits already accrued applies to plan mergers, spinoffs, transfers, and transactions amending or having the effect of amending a plan or plans to

transfer plan benefits. Thus, for example, if plan A, a profit-sharing plan that provides for distribution of plan benefits in annual installments over ten or twenty years, is merged with plan B, a profit-sharing plan that provides for distribution of plan benefits in annual installments over life expectancy at time of retirement, the merged plan must retain the ten or twenty year installment option for participants with respect to benefits already accrued under plan A as of the merger and the installments over life expectancy for participants with benefits already accrued under plan B. Similarly, for example, if an employee's benefit under a defined contribution plan is transferred to another defined contribution plan (whether or not of the same employer), the optional forms of benefit available with respect to the employee's benefit accrued under the transferor plan may not be eliminated or reduced except as otherwise permitted under this regulation. See Q&A-3 of this section with respect to the transfer of benefits between and among defined benefit and defined contribution plans.

(ii) ***Annuity contracts*** —

(A) ***General rule.*** The right of a participant to receive a benefit in the form of cash payments from the plan and the right of a participant to receive that benefit in the form of the distribution of an annuity contract that provides for cash payments that are identical in all respects to the cash payments from the plan except with respect to the source of the payments are not separate optional forms of benefit. Therefore, for example, if a plan includes an optional form of benefit under which benefits are distributed in the medium of an annuity contract that provides for cash payments, that optional form of benefit may be modified by a plan amendment that substitutes cash payments from the plan for the annuity contract, where those cash payments from the plan are identical to the cash payments payable from the annuity contract in all respects except with respect to the source of the payments. The protection provided by section 411(d)(6) may not be avoided by the use of annuity contracts. Thus, section 411(d)(6) protected benefits already accrued may not be eliminated or reduced merely because a plan uses annuity contracts to provide such benefits, without regard to whether the plan, a participant, or a beneficiary of a participant holds the contract or whether such annuity contracts are purchased as a result of the termination of the plan. However, to the extent that an annuity contract constitutes payment of benefits in a particular optional form elected by the participant, the plan does not violate section 411(d)(6) merely because it provides that other optional forms are no longer available with respect to such participant. See paragraph (a)(2) of this Q&A-2.

(B) ***Examples.*** The provisions of this paragraph (a)(3)(ii) can be illustrated by the following examples:

Example 1. A profit-sharing plan that is being terminated satisfies section 411(d)(6) only if the plan makes available to participants annuity contracts that provide for all section 411(d)(6) protected benefits under the plan that may not otherwise be reduced or eliminated pursuant to this Q&A-2. Thus, if such a plan provided for a single sum distribution upon attainment of early retirement age, and a provision for payment in the form of 10 equal annual installments, the plan would satisfy section 411(d)(6) only if the participants had the opportunity

to elect to have their benefits provided under an annuity contract that provided for the same single sum distribution upon the attainment of the participant's early retirement age and the same 10 year installment optional form of benefit.

Example 2. A defined benefit plan permits each participant who separates from service on or after age 62 to receive a qualified joint and survivor annuity or a single life annuity commencing 45 days after termination from employment. For a participant who separates from service before age 62, payments under these optional forms of benefit commence 45 days after the participant's 62nd birthday. Under the plan, a participant is to elect among these optional forms of benefit during the 90-day period preceding the annuity starting date. However, during such period, a participant may defer both benefit commencement and the election of a particular benefit form to any later date, subject to section 401(a)(9). In January 1990, the employer decides to terminate the plan as of July 1, 1990. The plan will fail to satisfy section 411(d)(6) unless the optional forms of benefit provided under the plan are preserved under the annuity contract purchased on plan termination. Thus, such annuity contract must provide a participant the same optional benefit commencement rights that the plan provided. In addition, such contract must provide the same election rights with respect to such benefit options. This is the case even if, for example, in conjunction with the termination, the employer amended the plan to permit participants to elect a qualified joint and survivor annuity, single life annuity, or single sum distribution commencing on July 1, 1990.

(4) ***Benefits payable to a spouse or beneficiary.*** Section 411(d)(6) protected benefits may not be eliminated merely because they are payable with respect to a spouse or other beneficiary.

(b) ***Section 411(d)(6) protected benefits that may be eliminated or reduced only as permitted by the Commissioner*** —

(1) ***In general.*** The Commissioner may, consistent with the provisions of this section, provide for the elimination or reduction of section 411(d)(6) protected benefits that have already accrued only to the extent that such elimination or reduction does not result in the loss to plan participants of either a valuable right or an employer-subsidized optional form of benefit where a similar optional form of benefit with a comparable subsidy is not provided or to the extent such elimination or reduction is necessary to permit compliance with other requirements of section 401(a) (e.g., sections 401(a)(4), 401(a)(9) and 415). The Commissioner may exercise this authority only through the publication of revenue rulings, notices, and other documents of general applicability.

(2) ***Section 411(d)(6) protected benefits that may be eliminated or reduced.*** The elimination or reduction of certain section 411(d)(6) protected benefits that have already accrued in the following situations does not violate section 411(d)(6). The rules with respect to permissible eliminations and reductions provided in this paragraph (b)(2) generally are effective January 30, 1986; however, the rules of paragraphs (b)(2)(iii) (A) and (B) and (b)(2)(viii) of this Q&A-2 are effective for plan amendments that are adopted and effective on or after September 6, 2000. These exceptions create no inference with respect to whether any other applicable requirements are satisfied (for example, requirements imposed by section 401(a)(9) and section 401(a)(14)).

(i) ***Change in statutory requirement.*** A plan may be amended to eliminate or reduce a section 411(d)(6) protected benefit if the following three requirements are met: the amendment constitutes timely compliance with a change in law affecting plan qualification; there is an exercise of section 7805(b) relief by the Commissioner; and the elimination or reduction is made only to the extent necessary to enable the plan to continue to satisfy the requirements for qualified plans. In general, the elimination or reduction of a section 411(d)(6) protected benefit will not be treated as necessary if it is possible through other modifications to the plan (e.g., by expanding the availability of an optional form of benefit to additional employees) to satisfy the applicable qualification requirement.

(ii) ***Joint and survivor annuity.*** A plan that provides a range of three or more actuarially equivalent joint and survivor annuity options may be amended to eliminate any of such options, other than the options with the largest and smallest optional survivor payment percentages, even if the effect of such amendment is to change which of the options is the qualified joint and survivor annuity under section 417. Thus, for example, if a money purchase pension plan provides three joint and survivor annuity options with survivor payments of 50%, 75% and 100%, respectively, that are uniform with respect to age and are actuarially equivalent, then the employer may eliminate the option with the 75% survivor payment, even if this option had been the qualified joint and survivor annuity under the plan.

(iii) ***In-kind distributions*** —

(A) ***In-kind distributions payable under defined contribution plans in the form of marketable securities other than employer securities.*** If a defined contribution plan includes an optional form of benefit under which benefits are distributed in the form of marketable securities, other than securities of the employer, that optional form of benefit may be modified by a plan amendment that substitutes cash for the marketable securities as the medium of distribution. For purposes of this paragraph (b)(2)(iii)(A) and paragraph (b)(2)(iii)(B) of this Q&A-2, the term *marketable securities* means marketable securities as defined in section 731(c)(2), and the term *securities of the employer* means securities of the employer as defined in section 402(e)(4)(E)(ii).

(B) ***Amendments to defined contribution plans to specify medium of distribution.*** If a defined contribution plan includes an optional form of benefit under which benefits are distributable to a participant in a medium other than cash, the plan may be amended to limit the types of property in which distributions may be made to the participant to the types of property specified in the amendment. For this purpose, the types of property specified in the amendment must include all types of property (other than marketable securities that are not securities of the employer) that are allocated to the participant's account on the effective date of the amendment and in which the participant would be able to receive a distribution immediately before the effective date of the amendment if a distributable event occurred. In addition, a plan amendment may provide that the participant's right to receive a distribution in the form of specified types of property is limited to the property allocated to the participant's account at the time of distribution that consists of property of those specified types.

(C) ***In-kind distributions after plan termination.*** If a plan includes an optional form of benefit under which benefits are distributed in specified property, that optional form of benefit may be modified for distributions after plan termination by substituting cash for the specified property as the medium of distribution to the extent that, on plan termination, an employee has the opportunity to receive the optional form of benefit in the form of the specified property. This exception is not available, however, if the employer that maintains the terminating plan also maintains another plan that provides an optional form of benefit under which benefits are distributed in the specified property.

(D) ***Examples.*** The following examples illustrate the application of this paragraph (b)(2)(iii):

> *Example 1.* (i) An employer maintains a profit-sharing plan under which participants may direct the investment of their accounts. One investment option available to participants is a fund invested in common stock of the employer. The plan provides that the participant has the right to a distribution in the form of cash upon termination of employment. In addition, the plan provides that, to the extent a participant's account is invested in the employer stock fund, the participant may receive an in-kind distribution of employer stock upon termination of employment. On October 18, 2000, the plan is amended, effective on January 1, 2001, to remove the fund invested in employer common stock as an investment option under the plan and to provide for the stock held in the fund to be sold. The amendment permits participants to elect how the sale proceeds are to be reallocated among the remaining investment options, and provides for amounts not so reallocated as of January 1, 2001, to be allocated to a specified investment option.
> (ii) The plan does not fail to satisfy section 411(d)(6) solely on account of the plan amendment relating to the elimination of the employer stock investment option, which is not a section 411(d)(6) protected benefit. See paragraph (d)(7) of Q&A-1 of this section. Moreover, because the plan did not provide for distributions of employer securities except to the extent participants' accounts were invested in the employer stock fund, the plan is not required operationally to offer distributions of employer securities following the amendment. In addition, the plan would not fail to satisfy section 411(d)(6) on account of a further plan amendment, effective after the plan has ceased to provide for an employer stock fund investment option (and participants' accounts have ceased to be invested in employer securities), to eliminate the right to a distribution in the form of employer stock. See paragraph (b)(2)(iii)(B) of this Q&A-2.

> *Example 2.* (i) An employer maintains a profit-sharing plan under which a participant, upon termination of employment, may elect to receive benefits in a

single-sum distribution either in cash or in kind. The plan's investments are limited to a fund invested in employer stock, a fund invested in XYZ mutual funds (which are marketable securities), and a fund invested in shares of PQR limited partnership (which are not marketable securities).
(ii) The following alternative plan amendments would not cause the plan to fail to satisfy section 411(d)(6):

(A) A plan amendment that limits non-cash distributions to a participant on termination of employment to a distribution of employer stock and shares of PQR limited partnership. See paragraph (b)(2)(iii)(A) of this Q&A-2.

(B) A plan amendment that limits non-cash distributions to a participant on termination of employment to a distribution of employer stock and shares of PQR limited partnership, and that also provides that only participants with employer stock allocated to their accounts as of the effective date of the amendment have the right to distributions in the form of employer stock, and that only participants with shares of PQR limited partnership allocated to their accounts as of the effective date of the amendment have the right to distributions in the form of shares of PQR limited partnership. To comply with the plan amendment, the plan administrator retains a list of participants with employer stock allocated to their accounts as of the effective date of the amendment, and a list of participants with shares of PQR limited partnership allocated to their accounts as of the effective date of the amendment. See paragraphs (b)(2)(iii) (A) and (B) of this Q&A-2.

(C) A plan amendment that limits non-cash distributions to a participant on termination of employment to a distribution of employer stock and shares of PQR limited partnership to the extent that those assets are allocated to the participant's account at the time of the distribution. See paragraphs (b)(2)(iii) (A) and (B) of this Q&A-2.

(D) A plan amendment that limits non-cash distributions to a participant on termination of employment to a distribution of employer stock and shares of PQR limited partnership, and that provides that only participants with employer stock allocated to their accounts as of the effective date of the amendment have the right to distributions in the form of employer stock, and that only participants with shares of PQR limited partnership allocated to their accounts as of the effective date of the amendment have the right to distributions in the form of shares of PQR limited partnership, and that further provides that the distribution of that stock or those shares is available only to the extent that those assets are allocated to those participants' accounts at the time of the

distribution. To comply with the plan amendment, the plan administrator retains a list of participants with employer stock allocated to their accounts as of the effective date of the amendment, and a list of participants with shares of PQR limited partnership allocated to their accounts as of the effective date of the amendment. See paragraphs (b)(2)(iii) (A) and (B) of this Q&A-2.

Example 3. (i) An employer maintains a stock bonus plan under which a participant, upon termination of employment, may elect to receive benefits in a single-sum distribution in employer stock. This is the only plan maintained by the employer under which distributions in employer stock are available. The employer decides to terminate the stock bonus plan.
(ii) If the plan makes available a single-sum distribution in employer stock on plan termination, the plan will not fail to satisfy section 411(d)(6) solely because the optional form of benefit providing a single-sum distribution in employer stock on termination of employment is modified to provide that such distribution is available only in cash. See paragraph (b)(2)(iii)(C) of this Q&A-2.

(iv) ***Coordination with diversification requirement.*** A tax credit employee stock ownership plan (as defined in section 409(a)) or an employee stock ownership plan (as defined in section 4975(e)(7)) may be amended to provide that a distribution is not available in employer securities to the extent that an employee elects to diversify benefits pursuant to section 401(a)(28).

(v) ***Involuntary distributions.*** A plan may be amended to provide for the involuntary distribution of an employee's benefit to the extent such involuntary distribution is permitted under sections 411(a)(11) and 417(e). Thus, for example, an involuntary distribution provision may be amended to require that an employee who terminates from employment with the employer receive a single sum distribution in the event that the present value of the employee's benefit is not more than $3,500, by substituting the cash-out limit in effect under § 1.411(a)-11(c)(3)(ii) for $3,500, without violating section 411(d)(6). In addition, for example, the employer may amend the plan to reduce the involuntary distribution threshold from the cash-out limit in effect under § 1.411(a)-11(c)(3)(ii) to any lower amount and to eliminate the involuntary single sum option for employees with benefits between the cash-out limit in effect under § 1.411(a)-11(c)(3)(ii) and such lower amount without violating section 411(d)(6). This rule does not permit a plan provision permitting employer discretion with respect to optional forms of benefit for employees the present value of whose benefit is less than the cash-out limit in effect under § 1.411(a)-11(c)(3)(ii).

(vi) ***Distribution exception for certain profit-sharing plans*** —

(A) ***In general.*** If a defined contribution plan that is not subject to section 412 and does not provide for an annuity option is terminated, the plan may be amended to provide for the distribution of a participant's accrued benefit upon termination in a single

sum optional form without the participant's consent. The preceding sentence does not apply if the employer maintains any other defined contribution plan (other than an employee stock ownership plan as defined in section 4975(e)(7)).

(B) ***Examples.*** The provisions of this paragraph (b)(2)(vi) can be illustrated by the following examples:

Example 1. Employer X maintains a defined contribution plan that is not subject to section 412. The plan provides for distribution in the form of equal installments over five years or equal installments over twenty years. X maintains no other defined contribution plans. X terminates its defined contribution plan after amending the plan to provide for the distribution of all participants' accrued benefits in the form of single sum distributions, without obtaining participant consent. Pursuant to the rule in this paragraph (b)(2)(iv), this amendment does not violate the requirements of section 411(d)(6).

Example 2. Corporations X and Y are members of controlled group employer XY. Both X and Y maintain defined contribution plans. X's plan, which is not subject to section 412, covers only employees working for X. Y's plan, which is subject to section 412, covers only employees working for Y. X terminates its defined contribution plan. Because employer XY maintains another defined contribution plan, plan X may not provide for the distribution of participants' accrued benefits upon termination without a participants' consent.

(vii) ***Distribution of benefits on default of loans.*** Notwithstanding that the distribution of benefits arising from an execution on an account balance used to secure a loan on which there has been a default is an optional form of benefit, a plan may be amended to eliminate or change a provision for loans, even if such loans would be secured by an employee's account balance.

(viii) ***Provisions for transfer of benefits between and among defined contribution plans and defined benefit plans.*** A plan may be amended to eliminate provisions permitting the transfer of benefits between and among defined contribution plans and defined benefit plans.

(ix) ***De minimis change in the timing of an optional form of benefit.*** A plan may be amended to modify an optional form of benefit by changing the timing of the availability of such optional form if, after the change, the optional form is available at a time that is within two months of the time such optional form was available before the amendment. To the extent the optional form of benefit is available prior to termination of employment, six months may be substituted for two months in the prior sentence. Thus, for example, a plan that makes in-service distributions available to employees once every month may be amended to make such in-service distributions available only once every six months. This exception to section 411(d)(6) relates only to the timing of the availability of the optional form of benefit. Other aspects of an optional form of benefit may not be modified and the value of such optional form may not be reduced merely because of an amendment permitted by this exception.

(x) ***Amendment of hardship distribution standards.*** A qualified cash or deferred arrangement that permits hardship distributions under § 1.401(k)-1(d)(3) may be amended to specify or modify nondiscriminatory and objective standards for determining the existence of an

immediate and heavy financial need, the amount necessary to meet the need, or other conditions relating to eligibility to receive a hardship distribution. For example, a plan will not be treated as violating section 411(d)(6) merely because it is amended to specify or modify the resources an employee must exhaust to qualify for a hardship distribution or to require employees to provide additional statements or representations to establish the existence of a hardship. A qualified cash or deferred arrangement may also be amended to eliminate hardship distributions. The provisions of this paragraph also apply to profit-sharing or stock bonus plans that permit hardship distributions, whether or not the hardship distributions are limited to those described in § 1.401(k)-1(d)(3).

(xi) ***Section 415 benefit limitations.*** Accrued benefits under a plan as of the first day of the first limitation year beginning after December 31, 1986, that exceed the benefit limitations under section 415 (b) or (e), effective on the first day of the plan's first limitation year beginning after December 31, 1986, because of a change in the terms and conditions of the plan made after May 5, 1986, or the establishment of a plan after that date, may be reduced to the level permitted under section 415 (b) or (e).

(xii) ***Prohibited payment option under single-employer defined benefit plan of plan sponsor in bankruptcy.*** A single-employer plan that is covered under section 4021 of the Employee Retirement Income Security Act of 1974, Public Law 93-406 (88 Stat. 829 (1974)), as amended (ERISA), may be amended, effective for a plan amendment that is both adopted and effective after November 8, 2012, to eliminate an optional form of benefit that includes a prohibited payment described in section 436(d)(5), provided that the following conditions are satisfied on the applicable amendment date (as defined in § 1.411(d)-3(g)(4)):

(A) The enrolled actuary of the plan has certified that the plan's adjusted funding target attainment percentage (as defined in section 436(j)(2)) for the plan year that contains the applicable amendment date is less than 100 percent.

(B) The plan is not permitted to pay any prohibited payment, due to application of the requirements of section 436(d)(2) of the Internal Revenue Code and section 206(g)(3)(B) of ERISA, because the plan sponsor is a debtor in a bankruptcy case (that is, a case under title 11, United States Code, or under similar Federal or State law).

(C) The court overseeing the bankruptcy case has issued an order, after notice to the affected parties (as defined in section 4001(a)(21) of ERISA) and a hearing, within the meaning of 11 U.S.C. 102(1), finding that the adoption of the amendment eliminating that optional form of benefit is necessary to avoid a distress termination of the plan pursuant to section 4041(c) of ERISA or an involuntary termination of the plan pursuant to section 4042 of ERISA before the plan sponsor emerges from bankruptcy (or before the bankruptcy case is otherwise completed).

(D) The Pension Benefit Guaranty Corporation has issued a determination that—

(*1*) The adoption of the amendment eliminating that optional form of benefit is necessary to avoid a distress or involuntary termination of the plan before the plan sponsor emerges from bankruptcy (or before the bankruptcy case is otherwise completed); and

(2) The plan is not sufficient for guaranteed benefits within the meaning of section 4041(d)(2) of ERISA.

(c) *Multiple amendments* —

(1) ***General rule.*** A plan amendment violates the requirements of section 411(d)(6) if it is one of a series of plan amendments that, when taken together, have the effect of reducing or eliminating a section 411(d)(6) protected benefit in a manner that would be prohibited by section 411(d)(6) if accomplished through a single amendment.

(2) ***Determination of time period for combining plan amendments.*** For purposes of paragraph (c)(1) of this Q&A-2, generally only plan amendments adopted within a 3-year period are taken into account. But see Q&A-1(c)(1) of this section for rules relating to repeated plan amendments.

(d) *ESOP and stock bonus plan exception* —

(1) ***In general.*** Subject to the limitations in paragraph (d)(2) of this Q&A-2, a tax credit employee stock ownership plan (as defined in section 409(a)) or an employee stock ownership plan (as defined in section 4975(e)(7)) will not be treated as violating the requirements of section 411(d)(6) merely because of any of the circumstances described in paragraphs (d)(1)(i) through (d)(1)(iv) of this Q&A-2. In addition, a stock bonus plan that is not an employee stock ownership plan will not be treated as violating the requirements of section 411(d)(6) merely because of any of the circumstances described in paragraphs (d)(1)(ii) and (d)(1)(iv) of this Q&A-2.

(i) ***Single sum or installment optional forms of benefit.*** The employer eliminates, or retains the discretion to eliminate, with respect to all participants, a single sum optional form or installment optional form with respect to benefits that are subject to section 409(h)(1)(B), provided such elimination or retention of discretion is consistent with the distribution and payment requirements otherwise applicable to such plans (e.g., those required by section 409).

(ii) ***Employer becomes substantially employee-owned or is an S corporation.*** The employer eliminates, or retains the discretion to eliminate, with respect to all participants, optional forms of benefit by substituting cash distributions for distributions in the form of employer stock with respect to benefits subject to section 409(h) in the circumstances described in paragraph (d)(1)(ii)(A) or (B) of this Q&A-2, but only if the employer otherwise meets the requirements of section 409(h)(2)—

(A) The employer becomes substantially employee-owned; or

(B) For taxable years of the employer beginning after December 31, 1997, the employer is an S corporation as defined in section 1361.

(iii) ***Employer securities become readily tradable.*** The employer eliminates, or retains the discretion to eliminate, with respect to all participants, in cases in which the employer securities become readily tradable, optional forms of benefit by substituting distributions in the form of employer securities for distributions in cash with respect to benefits that are subject to section 409(h).

(iv) ***Employer securities cease to be readily tradable or certain sales.*** The employer eliminates, or retains the discretion to eliminate, with respect to all participants, optional forms of benefit by substituting cash distributions for distributions in the form of employer stock with respect to benefits that are subject to section 409(h) in the following circumstances:

(A) The employer stock ceases to be readily tradable;

(B) The employer stock continues to be readily tradable but there is a sale of substantially all of the stock of the employer or a sale of substantially all of the assets of a trade or business of the employer and, in either situation, the purchasing employer continues to maintain the plan.

In the situation described in paragraph (d)(1)(iv)(B) of this Q&A-2, the employer may also substitute distributions in the purchasing employer's stock for distributions in the form of employer stock of the predecessor employer.

(2) ***Limitations on ESOP and stock bonus plan exceptions*** —

(i) ***Nondiscrimination requirement.*** Plan amendments and the retention and exercise of discretion permitted under the exceptions in paragraph (d)(1) must meet the nondiscrimination requirements of section 401(a)(4).

(ii) ***ESOP investment requirement.*** Except as provided in paragraph (d)(2)(iii) of this Q&A-2, benefits provided by employee stock ownership plans will not be eligible for the exceptions in paragraph (d)(1) of this Q&A-2 unless the benefits have been held in a tax credit employee stock ownership plan (as defined in section 409 (a)) or an employee stock ownership plan (as defined in section 4975 (e)(7)) subject to section 409 (h) for the five-year period prior to the exercise of employer discretion or any amendment affecting such benefits and permitted under paragraph (d)(1) of this Q&A-2. For purposes of the preceding sentence, if benefits held under an employee stock ownership plan are transferred to a plan that is an employee stock ownership plan at the time of transfer, then the consecutive periods under the transferor and transferee employee stock ownership plans may be aggregated for purposes of meeting the five-year requirement. If the benefits are held in an employee stock ownership plan throughout the entire period of their existence, and such total period of existence is less than five years, then such lesser period may be substituted for the five year requirement.

(3) ***Effective date.*** The provisions of this paragraph (d) are effective beginning with the first day of the first plan year commencing on or after January 1, 1989. Prior to this effective date the reduction or elimination of a section 411(d)(6) protected benefit by a tax credit employee stock ownership plan (as defined in section 409(a)) or an employee stock ownership plan (as defined in section 4975(e)(7)) will not be treated as violating the requirements of section 411(d)(6) if such reduction or elimination reflects a reasonable interpretation of the statutory language of section 411(d)(6)(C).

(4) ***Additional exceptions and requirements.*** The Commissioner may, in revenue rulings, notices or other documents of general applicability, prescribe such additional rules and exceptions, consistent with the purposes of this section, as may be necessary or appropriate.

(e) ***Permitted plan amendments affecting alternative forms of payment under defined contribution plans*** —

(1) ***General rule.*** A defined contribution plan does not violate the requirements of section 411(d)(6) merely because the plan is amended to eliminate or restrict the ability of a participant to receive payment of accrued benefits under a particular optional form of benefit for distributions with annuity starting dates after the date the amendment is adopted if, after the plan amendment is effective with respect to the participant, the alternative forms of payment available to the participant include payment in a single-sum distribution form that is otherwise identical to the optional form of benefit that is being eliminated or restricted.

(2) ***Otherwise identical single-sum distribution.*** For purposes of this paragraph (e), a single-sum distribution form is otherwise identical to an optional form of benefit that is eliminated or restricted pursuant to paragraph (e)(1) of this Q&A-2 only if the single-sum distribution form is identical in all respects to the eliminated or restricted optional form of benefit (or would be identical except that it provides greater rights to the participant) except with respect to the timing of payments after commencement. For example, a single-sum distribution form is not otherwise identical to a specified installment form of benefit if the single-sum distribution form is not available for distribution on the date on which the installment form would have been available for commencement, is not available in the same medium of distribution as the installment form, or imposes any condition of eligibility that did not apply to the installment form. However, an otherwise identical distribution form need not retain rights or features of the optional form of benefit that is eliminated or restricted to the extent that those rights or features would not be protected from elimination or restriction under section 411(d)(6) or this section.

(3) ***Example.*** The following example illustrates the application of this paragraph (e):

> *Example.* (i) P is a participant in Plan M, a qualified profit-sharing plan with a calendar plan year that is invested in mutual funds. The distribution forms available to P under Plan M include a distribution of P's vested account balance under Plan M in the form of distribution of various annuity contract forms (including a single life annuity and a joint and survivor annuity). The annuity payments under the annuity contract forms begin as of the first day of the month following P's severance from employment (or as of the first day of any subsequent month, subject to the requirements of section 401(a)(9)). P has not previously elected payment of benefits in the form of a life annuity, and Plan M is not a direct or indirect transferee of any plan that is a defined benefit plan or a defined contribution plan that is subject to section 412. Distributions on the death of a participant are made in accordance with plan provisions that comply with section 401(a)(11)(B)(iii)(I). On September 2, 2005, Plan M is amended so that, effective for payments that begin on or after November 1, 2005, P is no longer entitled to any distribution in the form of the distribution of an annuity contract. However, after the amendment is effective, P is entitled to receive a single-sum cash distribution of P's vested account balance under Plan M payable as of the first day of the month following P's severance from employment (or as of the first day of any subsequent month, subject to the requirements of section 401(a)(9)).

> (ii) Plan M does not violate the requirements of section 411(d)(6) (or section 401(a)(11)) merely because, as of November 1, 2005, the plan amendment has eliminated P's option to receive a distribution in any of the various annuity contract forms previously available.

(4) ***Effective date.*** This paragraph (e) is applicable on January 25, 2005.

Q-3 Does the transfer of benefits between and among defined benefit plans and defined contribution plans (or similar transactions) violate the requirements of section 411(d)(6)?

A-3

(a) ***Transfers and similar transactions*** —

(1) ***General rule.*** Section 411(d)(6) protected benefits may not be eliminated by reason of transfer or any transaction amending or having the effect of amending a plan or plans to transfer benefits. Thus, for example, except as otherwise provided in this section, an employer who maintains a money purchase pension plan that provides for a single sum optional form of benefit may not establish another plan that does not provide for this optional form of benefit and transfer participants' account balances to such new plan.

(2) ***Defined benefit feature and separate account feature.*** The defined benefit feature of an employee's benefit under a defined benefit plan and the separate account feature of an employee's benefit under a defined contribution plan are section 411(d)(6) protected benefits. Thus, for example, the elimination of the defined benefit feature of an employee's benefit under a defined benefit plan, through transfer of benefits from a defined benefit plan to a defined contribution plan or plans, will violate section 411(d)(6).

(3) ***Waiver prohibition.*** In general, except as provided in paragraph (b) of this Q&A-3, a participant may not elect to waive section 411(d)(6) protected benefits. Thus, for example, the elimination of the defined benefit feature of a participant's benefit under a defined benefit plan by reason of a transfer of such benefits to a defined contribution plan pursuant to a participant election, at a time when the benefit is not distributable to the participant, violates section 411(d)(6).

(4) ***Direct rollovers.*** A direct rollover described in Q&A-3 of § 1.401(a)(31)-1 that is paid to a qualified plan is not a transfer of assets and liabilities that must satisfy the requirements of section 414(l), and is not a transfer of benefits for purposes of applying the requirements under section 411(d)(6) and paragraph (a)(1) of this Q&A-3. Therefore, for example, if such a direct rollover is made to another qualified plan, the receiving plan is not required to provide, with respect to amounts paid to it in a direct rollover, the same optional forms of benefit that were provided under the plan that made the direct rollover. See § 1.401(a)(31)-1, Q&A-14.

(b) ***Elective transfers of benefits between defined contribution plans*** —

(1) ***General rule.*** A transfer of a participant's entire benefit between qualified defined contribution plans (other than any direct rollover described in Q&A-3 of § 1.401(a)(31)-1) that results in the elimination or reduction of section 411(d)(6) protected benefits does not violate section 411(d)(6) if the following requirements are met—

(i) ***Voluntary election.*** The plan from which the benefits are transferred must provide that the transfer is conditioned upon a voluntary, fully-informed election by the participant to transfer the participant's entire benefit to the other qualified defined contribution plan. As an alternative to the transfer, the participant must be offered the opportunity to retain the

participant's section 411(d)(6) protected benefits under the plan (or, if the plan is terminating, to receive any optional form of benefit for which the participant is eligible under the plan as required by section 411(d)(6)).

(ii) ***Types of plans to which transfers may be made.*** To the extent the benefits are transferred from a money purchase pension plan, the transferee plan must be a money purchase pension plan. To the extent the benefits being transferred are part of a qualified cash or deferred arrangement under section 401(k), the benefits must be transferred to a qualified cash or deferred arrangement under section 401(k). To the extent the benefits being transferred are part of an employee stock ownership plan as defined in section 4975(e)(7), the benefits must be transferred to another employee stock ownership plan. Benefits transferred from a profit-sharing plan other than from a qualified cash or deferred arrangement, or from a stock bonus plan other than an employee stock ownership plan, may be transferred to any type of defined contribution plan.

(iii) ***Circumstances under which transfers may be made.*** The transfer must be made either in connection with an asset or stock acquisition, merger, or other similar transaction involving a change in employer of the employees of a trade or business (*i.e.,* an acquisition or disposition within the meaning of § 1.410(b)-2(f)) or in connection with the participant's change in employment status to an employment status with respect to which the participant is not entitled to additional allocations under the transferor plan.

(2) ***Applicable qualification requirements.*** A transfer described in this paragraph (b) is a transfer of assets or liabilities within the meaning of section 414(l)(1) and, thus, must satisfy the requirements of section 414(l). In addition, this paragraph (b) only provides relief under section 411(d)(6); a transfer described in this paragraph must satisfy all other applicable qualification requirements. Thus, for example, if the survivor annuity requirements of sections 401(a)(11) and 417 apply to the plan from which the benefits are transferred, as described in this paragraph (b), but do not otherwise apply to the receiving plan, the requirements of sections 401(a)(11) and 417 must be met with respect to the transferred benefits under the receiving plan. In addition, the vesting provisions under the receiving plan must satisfy the requirements of section 411(a)(10) with respect to the amounts transferred.

(3) ***Status of elective transfer as other right or feature.*** A right to a transfer of benefits from a plan pursuant to the elective transfer rules of this paragraph (b) is an other right or feature within the meaning of § 1.401(a)(4)-4(e)(3), the availability of which is subject to the nondiscrimination requirements of section 401(a)(4) and § 1.401(a)(4)-4. However, for purposes of applying the rules of § 1.401(a)(4)-4, the following conditions are to be disregarded in determining the employees to whom the other right or feature is available—

(i) A condition restricting the availability of the transfer to benefits of participants who are transferred to a different employer in connection with a specified asset or stock disposition, merger, or other similar transaction involving a change in employer of the employees of a trade or business (*i.e.,* a disposition within the meaning of § 1.410(b)-2(f)), or in connection with any such disposition, merger, or other similar transaction.

(ii) A condition restricting the availability of the transfer to benefits of participants who have a change in employment status to an employment status with respect to which the participant is not entitled to additional allocations under the transferor plan.

(c) ***Elective transfers of certain distributable benefits between qualified plans*** —

(1) ***In general.*** A transfer of a participant's benefits between qualified plans that results in the elimination or reduction of section 411(d)(6) protected benefits does not violate section 411(d)(6) if—

(i) The transfer occurs at a time at which the participant's benefits are distributable (within the meaning of paragraph (c)(3) of this Q&A-3);

(ii) For a transfer that occurs on or after January 1, 2002, the transfer occurs at a time at which the participant is not eligible to receive an immediate distribution of the participant's entire nonforfeitable accrued benefit in a single-sum distribution that would consist entirely of an eligible rollover distribution within the meaning of section 401(a)(31)(C);

(iii) The voluntary election requirements of paragraph (b)(1)(i) of this Q&A-3 are met;

(iv) The participant is fully vested in the transferred benefit in the transferee plan;

(v) In the case of a transfer from a defined contribution plan to a defined benefit plan, the defined benefit plan provides a minimum benefit, for each participant whose benefits are transferred, equal to the benefit, expressed as an annuity payable at normal retirement age, that is derived solely on the basis of the amount transferred with respect to such participant; and

(vi) The amount of the benefit transferred, together with the amount of any contemporaneous section 401(a)(31) direct rollover to the transferee plan, equals the entire nonforfeitable accrued benefit under the transferor plan of the participant whose benefit is being transferred, calculated to be at least the greater of the single-sum distribution provided for under the plan for which the participant is eligible (if any) or the present value of the participant's accrued benefit payable at normal retirement age (calculated by using interest and mortality assumptions that satisfy the requirements of section 417(e) and subject to the limitations imposed by section 415).

(2) ***Treatment of transfer*** —

(i) ***In general.*** A transfer of benefits pursuant to this paragraph (c) generally is treated as a distribution for purposes of section 401(a). For example, the transfer is subject to the cash-out rules of section 411(a)(7), the early termination requirements of section 411(d)(2), and the survivor annuity requirements of sections 401(a)(11) and 417. A transfer pursuant to the elective transfer rules of this paragraph (c) is not treated as a distribution for purposes of the minimum distribution requirements of section 401(a)(9).

(ii) ***Status of elective transfer as optional form of benefit.*** A right to a transfer of benefits from a plan pursuant to the elective transfer rules of this paragraph (c) is an optional form of benefit under section 411(d)(6), the availability of which is subject to the nondiscrimination requirements of section 401(a)(4) and § 1.401(a)(4)-4.

(3) ***Distributable benefits.*** For purposes of paragraph (c)(1)(i) of this Q&A-3, a participant's benefits are distributable on a particular date if, on that date, the participant is eligible, under the terms of the plan from which the benefits are transferred, to receive an immediate distribution of these benefits (e.g., in the form of an immediately commencing annuity) from that plan under provisions of the plan not inconsistent with section 401(a).

(d) ***Effective date.*** This Q&A-3 is applicable for transfers made on or after September 6, 2000.

Q-4: May a plan provide that the employer may, through the exercise of discretion, deny a participant a section 411(d)(6) protected benefit for which the participant is otherwise eligible?

A-4:

(a) ***In general.*** Except as provided in paragraph (d) of Q&A-2 of this section with respect to certain employee stock ownership plans, a plan that permits the employer, either directly or indirectly, through the exercise of discretion, to deny a participant a section 411(d)(6) protected benefit provided under the plan for which the participant is otherwise eligible (but for the employer's exercise of discretion) violates the requirements of section 411(d)(6). A plan provision that makes a section 411(d)(6) protected benefit available only to those employees as the employer may designate is within the scope of this prohibition. Thus, for example, a plan provision under which only employees who are designated by the employer are eligible to receive a subsidized early retirement benefit constitutes an impermissible provision under section 411(d)(6). In addition, a pension plan that permits employer discretion to deny the availability of a section 411(d)(6) protected benefit violates the definitely determinable requirement of section 401(a), including section 401(a)(25). See § 1.401-1(b)(1)(i). This is the result even if the plan specifically limits the employer's discretion to choosing among section 411(d)(6) protected benefits, including optional forms of benefit, that are actuarially equivalent. In addition, the provisions of sections 411(a)(11) and 417(e) that allow a plan to make involuntary distributions of certain amounts are not excepted from this limitation on employer discretion. Thus, for example, a plan may not permit employer discretion with respect to whether benefits will be distributed involuntarily in the event that the present value of the employee's benefit is not more than the cash-out limit in effect under § 1.411(a)-11(c)(3)(ii) within the meaning of sections 411(a)(11) and 417(e). (An exception is provided for such provisions with respect to the nondiscrimination requirements of section 401(a)(4). See § 1.401(a)(4)-4(b)(2)(ii)(C).)

(b) ***Exception for administrative discretion.*** A plan may permit limited discretion with respect to the ministerial or mechanical administration of the plan, including the application of objective plan criteria specifically set forth in the plan. Such plan provisions do not violate the requirements of section 411(d)(6) or the definitely determinable requirement of section 401(a), including section 401(a)(25). For example, these requirements are not violated by the following provisions that permit limited administrative discretion:

(1) Commencement of benefit payments as soon as administratively feasible after a stated date or event;

(2) Employer authority to determine whether objective criteria specified in the plan (e.g., objective criteria designed to identify those employees with a heavy and immediate financial need or objective criteria designed to determine whether an employee has a permanent and total disability) have been satisfied; and

(3) Employer authority to determine, pursuant to specific guidelines set forth in the plan, whether the participant or spouse is dead or cannot be located.

Q-5: When will the exercise of discretion by some person or persons, other than the employer, be treated as employer discretion?

A-5: For purposes of applying the rules of this section and § 1.401(a)-4, the term “employer” includes plan administrator, fiduciary, trustee, actuary, independent third party, and other persons. Thus, if a plan permits any person, other than the participant (and other than the participant's spouse), the discretion to deny or limit the availability of a section 411(d)(6) protected benefit for which the employee is otherwise

eligible under the plan (but for the exercise of such discretion), such plan violates the requirements of sections 401(a), including section 411(d)(6) and, where applicable, the definitely determinable requirement of section 401(a), including section 401(a)(25).

Q-6: May a plan condition the availability of a section 411(d)(6) protected benefit on the satisfaction of objective conditions that are specifically set forth in the plan?

A-6:

(a) ***Certain objective conditions permissible*** —

(1) ***In general.*** The availability of a section 411(d)(6) protected benefit may be limited to employees who satisfy certain objective conditions provided the conditions are ascertainable, clearly set forth in the plan and not subject to the employer's discretion except to the extent reasonably necessary to determine whether the objective conditions have been met. Also, the availability of the section 411(d)(6) protected benefit must meet the nondiscrimination requirements of section 401(a)(4). See § 1.401(a)-4.

(2) ***Examples of permissible conditions.*** The following examples illustrate of permissible objective conditions: a plan may deny a single sum distribution form to employees for whom life insurance is not available at standard rates as defined under the terms of the plan at the time the single sum distribution would otherwise be payable; a plan may provide that a single sum distribution is available only if the employee is in extreme financial need as defined under the terms of the plan at the time the single sum distribution would otherwise be payable; a plan my condition the availability of a single sum distribution on the execution of a covenant not to compete, provided that objective conditions with respect to the terms of such covenant and the employees and circumstances requiring execution of such covenant are set forth in the plan.

(b) ***Conditions based on factors within employer's discretion generally impermissible.*** A plan may not limit the availability of section 411(d)(6) protected benefits permitted under the plan on objective conditions that are within the employer's discretion. For example, the availability of section 411(d)(6) protected benefits in a plan may not be conditioned on a determination with respect to the level of the plan's funded status, because the amount of plan funding is within the employer's discretion. However, for example, although conditions based on the plan's funded status are impermissible, a plan may limit the availability of a section 411(d)(6) protected benefit (e.g., a single sum distribution) in an objective manner, such as the following:

(1) Single sum distributions of $25,000 and less are available without limit; and

(2) Single sum distributions in excess of $25,000 are available for a year only to the extent that the total amount of such single sum distributions for the year is not greater than $5,000,000; and

(3) An objective and nondiscriminatory method for determining which particular single sum distributions will not be available during a year in order for the $5,000,000 limit to be satisfied is set forth in the plan.

Q-7: May a plan be amended to add employer discretion or conditions restricting the availability of a section 411(d)(6) protected benefit?

A-7: No. The addition of employer discretion or objective conditions with respect to a section 411(d)(6) protected benefit that has already accrued violates section 411(d)(6). Also, the addition of conditions (whether or not objective) or any change to existing conditions with respect to section 411(d)(6) protected benefits that results in any further restriction violates section 411(d)(6). However, the addition

of objective conditions to a section 411(d)(6) protected benefit may be made with respect to benefits accrued after the later of the adoption or effective date of the amendment. In addition, objective conditions may be imposed on section 411(d)(6) protected benefits accrued as of the date of an amendment where permitted under the transitional rules of § 1.401(a)-4 Q&A-5 and Q&A-8 of this section. Finally, objective conditions may be imposed on section 411(d)(6) protected benefits to the extent permitted by the permissible benefit cutback provisions of Q&A-2 of this section.

Q-8: If a plan contains an impermissible employer discretion provision with respect to a section 411(d)(6) protected benefit, what acceptable alternative exist for amending the plan without violating the requirements of section 411(d)(6)?

A-8:

(a) ***In general.*** The following rules apply for purposes of making necessary amendments to existing plans (as defined in Q&A-9 of this section) that contain discretion provisions with respect to the availability of section 411(d)(6) protected benefits that violate the requirements of section 401(a), including sections 401(a)(25) and 411(d)(6), and this section. These transitional rules are provided under the authority of section 411(d)(6) and section 7805(b).

(b) ***Transitional alternatives.*** If the availability of an optional forms of benefit, early or late retirement benefit, or retirement-type subsidy under an existing plan is conditioned on the exercise of employer discretion, the plan must be amended either to eliminate the optional form of benefit, early or late retirement benefit, or retirement-type subsidy to make such benefit available to all participants without limitation, or to apply objective and nondiscriminatory conditions to the availability of the optional form of benefit, early or later retirement benefit, or retirement-type subsidy. See paragraph (d) of this Q&A-8 for rules limiting the period during which section 411(d)(6) protected benefits may be eliminated or reduced under this paragraph.

(c) ***Compliance and amendment date provisions*** —

(1) ***Operational compliance requirement.*** On or before the applicable effective date for the plan (as determined under Q&A-9 of this section), the plan sponsor must select one of the alternatives permitted under paragraph (b) of the Q&A-8 with respect to each affected section 411(d)(6) protected benefit and the plan must be operated in accordance with this selection. This is an operational requirement and does not require a plan amendment prior to the period set forth in paragraph (c)(2) of this Q&A-8. There are no special reporting requirements under the Code or this section with respect to this selection.

(2) ***Deferred amendment date.*** If paragraph (c)(1) of this Q&A-8 is satisfied, a plan amendment conforming the plan to the particular alternative selected under paragraph (b) of this Q&A-8 must be adopted within the time period permitted for amending plans in order to meet the requirements of section 410(b) as amended by TRA '86. The plan amendment to conform the plan to these regulations may be made at an earlier date. Such conforming amendment must be consistent with the sponsor's selection as reflected by plan practice during the period from the effective date to the date the amendment is adopted. Thus, for example, if any existing calendar year noncollectively bargained defined benefit plan has a single sum distribution option that is subject to employer discretion as of August 1, 1986, and such employer makes one or more single sum distributions available on or after January 1, 1989 and before the effective date by which plan amendment is required pursuant to this section, then such employer may not adopt a plan amendment eliminating the single sum distribution, but rather must adopt an amendment eliminating the discretion provision. Any objective conditions that

are adopted as part of such amendment must not be inconsistent with the plan practice for the applicable period prior to the amendment. A conforming amendment under this paragraph (c)(2) must be made with respect to each section 411(d)(6) protected benefit for which such amendment is required and must be retroactive to the applicable effective date.

(d) ***Limitation on transitional alternatives.*** The transitional alternatives permitting the elimination or reduction of section 411(d)(6) protected benefits are only permissible until the applicable effective date for the plan (see Q&A-9 of this section). After the applicable effective date, any amendment (other than one permitted under paragraph (c)(2) of this Q&A-8) that eliminates or reduces a section 411(d)(6) protected benefit or imposes new objective conditions on the availability of such benefit will fail to qualify for the exception to section 411(d)(6) provided in this Q&A-8. This is the case without regard to whether the section 411(d)(6) protected benefit is subject to employer discretion.

Q-9: What are the applicable effective date rules for purposes of this section?

A-9:

(a) ***General effective date.*** Except as otherwise provided in this section, the provisions of this section are effective January 30, 1986.

(b) ***New plans*** —

(1) ***In general.*** Unless otherwise provided in paragraph (b)(2) of this Q&A-9, plans that are either adopted or made effective on or after August 1, 1986, are “new plans”. With respect to such new plans, this section is effective August 1, 1986. This effective date is applicable to such plans whether or not they are collectively bargained.

(2) ***Exception with respect to certain new plans.*** Plans that are new plans as defined in paragraph (b)(1) of this Q&A-9; under which the availability of a section 411(d)(6) protected benefit is subject to employer discretion; and that receive a favorable determination letter that covered such plan provisions with respect to an application submitted prior to July 11, 1988, will be treated as existing plans with respect to such section 411(d)(6) protected benefit for purposes of the transitional rules of this section. Thus, such plans are eligible for the compliance and amendment alternatives set forth in the transitional rule in Q&A-8 of this section.

(c) ***Existing plans*** —

(1) ***In general.*** Plans, including plans that are adoptions of master or prototype plans, that are both adopted and in effect prior to August 1, 1986, are “existing plans” for purposes of this section. In addition, a plan that is established after July 31, 1986, but before January 1, 1989, as an initial adoption of a master or prototype plan for which a favorable opinion letter was issued by the Service after July 18, 1985 and before January 1, 1989, will be deemed to be an existing plan for purposes of this section. See sections 4.01 and 4.02 of Rev. Proc. 84-23, 1984-1 C.B. 457, 459, for the definitions of master prototype plans. However, if such plan ceases to be covered under an opinion letter of the type described above, as a result of amendment of the plan or adoption of a new plan, prior to the first day of the first plan year beginning on or after January 1, 1989, then the effective date for such plan will be determined as though the plan were a new plan initially adopted as of the date of such amendment or adoption of a new plan. Finally, new plans described in paragraph (b)(2) of this Q&A-9 are treated as existing plans with respect to certain section 411(d)(6) protected benefits. Subject to the limitations in paragraph (c) of this Q&A-9, the effective dates set forth in paragraphs (c)(2), (c)(3), and (c)(4) of this Q&A-9 apply to these existing plans for purposes of this section:

(2) ***Existing noncollectively bargained plans.*** With respect to existing plans other than collectively bargained plans this section is effective for the first day of the first plan year commencing on or after January 1, 1989.

(3) ***Existing collectively bargained plans.*** With respect to existing collectively bargained plans this section is effective for the later of the first day of the first plan year commencing on or after January 1, 1989, or the first day of the first plan year that the requirements of section 410(b) as amended by TRA '86 apply to such plan.

(4) ***Existing master and prototype plans.*** With respect to existing plans that are adoptions of master or prototype plans the effective date will be the first day of the first plan year commencing on or after January 1, 1989.

(d) ***Delayed effective date not applicable to new alternatives or conditions*** —

(1) ***In general.*** The delayed effective dates in paragraphs (c)(2) and (c)(3) of this Q&A-9 for existing plans are only applicable with respect to a section 411(d)(6) protected benefit if both the section 411(d)(6) protected benefit and the condition providing employer discretion as to the availability of such benefit are both adopted and in effect prior to August 1, 1986. If the preceding sentence is not satisfied with respect to a particular section 411(d)(6) protected benefit, this section is effective with respect to such section 411(d)(6) protected benefit as if the plan were a new plan.

(2) ***Addition of discretion on or after January 30, 1986.*** The delayed effective dates in paragraphs (c)(2) and (c)(3) of this Q&A-9 are not available with respect to any section 411(d)(6) protected benefit if the section 411(d)(6) protected benefit was provided for in the plan prior to January 30, 1986, and the availability of such benefit was made subject to the exercise of employer discretion on or after January 30, 1986. If the conditions set forth in this paragraph are not satisfied with respect to a particular section 411(d)(6) protected benefit, this section is effective with respect to such section 411(d)(6) protected benefit as if the plan were a new plan. A limited exception is provided with respect to existing plans that provided a particular section 411(d)(6) protected benefit prior to January 30, 1986, and then amended the plan after January 30, 1986, and before August 1, 1986, to add a provision for employer discretion with respect to the availability of such benefit. Such plans are required to have been amended retroactively by December 31, 1987, to remove such provision for employer discretion, and, if the benefit made subject to such discretion was subsequently eliminated, the plan is required to have been further amended, by the same date, to retroactively reinstate the benefit.

(3) ***Exception for certain amendments covered by a favorable determination letter.*** If an amendment adding a section 411(d)(6) protected benefit subject to employer discretion was adopted or made effective after August 1, 1986, and the plan receives a favorable determination letter covering such provision with respect to an application for such letter made prior to July 11, 1988, then the effective date for purposes of amending such provision under the transitional rules is the applicable effective date determined under the rules with respect to existing plans.

(e) ***Transitional rule effective date.*** The transitional rule provided in Q&A-8 of this section is effective January 30, 1986.

Q-10: If a plan provides for an age $70^{1}/_{2}$ distribution option that commences prior to retirement from employment with the employer maintaining the plan, to what extent may the plan be amended to eliminate this distribution option?

A-10:

(a) ***In general.*** The right to commence benefit distributions in a particular form and at a particular time prior to retirement from employment with the employer maintaining the plan is a separate optional form of benefit within the meaning of section 411(d)(6)(B) and Q&A-1 of this section, even if the plan provision creating this right was included in the plan solely to comply with section 401(a)(9), as in effect for years before January 1, 1997. Therefore, except as otherwise provided in paragraph (b) of this Q&A-10 or any other Q&A in this section, a plan amendment violates section 411(d)(6) if it eliminates an age $70^1/_2$ distribution option (within the meaning of paragraph (c) of this Q&A-10) to the extent that it applies to benefits accrued as of the later of the adoption date or effective date of the amendment.

(b) ***Permitted elimination of age $70^1/_2$ distribution option.*** An amendment of a plan will not violate the requirements of section 411(d)(6) merely because the amendment eliminates an age $70^1/_2$ distribution option to the extent that the option provides for distribution to an employee prior to retirement from employment with the employer maintaining the plan, provided that—

(1) The amendment eliminating this optional form of benefit applies only to benefits with respect to employees who attain age $70^1/_2$ in or after a calendar year, specified in the amendment, that begins after the later of—

(i) December 31, 1998; or

(ii) The adoption date of the amendment;

(2) The plan does not, except to the extent required by section 401(a)(9), preclude an employee who retires after the calendar year in which the employee attains age $70^1/_2$ from receiving benefits in any of the same optional forms of benefit (except for the difference in the timing of the commencement of payments) that would have been available had the employee retired in the calendar year in which the employee attained age $70^1/_2$; and

(3) The amendment is adopted no later than—

(i) The last day of the remedial amendment period that applies to the plan for changes under the Small Business Job Protection Act of 1996 (110 Stat. 1755); or

(ii) Solely in the case of a plan maintained pursuant to one or more collective bargaining agreements between employee representatives and one or more employers ratified before September 3, 1998, the last day of the twelfth month beginning after the date on which the last of such collective bargaining agreements terminates (determined without regard to any extension thereof on or after September 3, 1998), if later than the date described in paragraph (b)(3)(i) of this Q&A-10. For purposes of this paragraph (b)(3)(ii), the rules of § 1.410(b)-10(a)(2) apply for purposes of determining whether a plan is maintained pursuant to one or more collective bargaining agreements, except that September 3, 1998 is substituted for March 1, 1986, as the date before which the collective bargaining agreements must be ratified.

(c) ***Age $70^1/_2$ distribution option.*** For purposes of this Q&A-10, an age $70^1/_2$ distribution option is an optional form of benefit under which benefits payable in a particular distribution form (including any modifications that may be elected after benefit commencement) commence at a time during the period that begins on or after January 1 of the calendar year in which an employee attains age $70^1/_2$ and ends April 1 of the immediately following calendar year.

(d) ***Examples.*** The provisions of this Q&A-10 are illustrated by the following examples:

Example 1. Plan A, a defined benefit plan, provides each participant with a qualified joint and survivor annuity (QJSA) that is available at any time after the later of age 65 or retirement. However, in accordance with section 401(a)(9) as in effect prior to January 1, 1997, Plan A provides that if an employee does not retire by the end of the calendar year in which the employee attains age $70^1/_2$, then the QJSA commences on the following April 1. On October 1, 1998, Plan A is amended to provide that, for an employee who is not a 5-percent owner and who attains age $70^1/_2$ after 1998, benefits may not commence before the employee retires but must commence no later than the April 1 following the later of the calendar year in which the employee retires or the calendar year in which the employee attains age $70^1/_2$. This amendment satisfies this Q&A-10 and does not violate section 411(d)(6).

Example 2. Plan B, a money purchase pension plan, provides each participant with a choice of a QJSA or a single sum distribution commencing at any time after the later of age 65 or retirement. In addition, in accordance with section 401(a)(9) as in effect prior to January 1, 1997, Plan B provides that benefits will commence in the form of a QJSA on April 1 following the calendar year in which the employee attains age $70^1/_2$, except that, with spousal consent, a participant may elect to receive annual installment payments equal to the minimum amount necessary to satisfy section 401(a)(9) (calculated in accordance with a method specified in the plan) until retirement, at which time a participant may choose between a QJSA and a single sum distribution (with spousal consent). On June 30, 1998, Plan B is amended to provide that, for an employee who is not a 5-percent owner and who attains age $70^1/_2$ after 1998, benefits may not commence prior to retirement but benefits must commence no later than April 1 after the later of the calendar year in which the employee retires or the calendar year in which the employee attains age $70^1/_2$. The amendment further provides that the option described above to receive annual installment payments prior to retirement will not be available under the plan to an employee who is not a 5-percent owner and who attains age $70^1/_2$ after 1998. This amendment satisfies this Q&A-10 and does not violate section 411(d)(6).

Example 3. Plan C, a profit-sharing plan, contains two distribution provisions. Under the first provision, in any year after an employee attains age $59^1/_2$, the employee may elect a distribution of any specified amount not exceeding the balance of the employee's account. In addition, the plan provides a section 401(a)(9) override provision under which, if, during any year following the year that the employee attains age $70^1/_2$, the employee does not elect an amount at least equal to the minimum amount necessary to satisfy section 401(a)(9) (calculated in accordance with a method specified in the plan), Plan C will distribute the difference by December 31 of that year (or for the year the employee attains age $70^1/_2$, by April 1 of the following year). On December 31, 1996, Plan C is amended to provide that, for an employee other than an employee who is a 5-percent owner in the year the employee attains age $70^1/_2$, in applying the section 401(a)(9) override provision, the later of the year of retirement or year of attainment of age $70^1/_2$, is substituted for the year of attainment of age $70^1/_2$. After the amendment, Plan C still permits each employee to elect to receive the same amount as was available before the amendment. Because this amendment does not eliminate an optional form of benefit, the amendment does not violate section 411(d)(6). Accordingly, the amendment is not required to satisfy the conditions of paragraph (b) of this Q&A-10.

(e) ***Effective date.*** This Q&A-10 applies to amendments adopted and effective after June 5, 1998.

Q-11: To what extent may a plan amendment that is made pursuant to the Taxpayer Relief Act of 1997 (TRA '97) (Public Law 105-34, 111 Stat. 788), reduce or eliminate section 411(d)(6) protected benefits?

A-11: A plan amendment does not violate the requirements of section 411(d)(6) merely because the plan amendment reduces or eliminates section 411(d)(6) protected benefits as of the effective date of the plan amendment, provided that—

(a) The plan amendment is made pursuant to an amendment made by title XV, or subtitle H of title X, of TRA '97; and

(b) The plan amendment is adopted no later than the last day of any remedial amendment period that applies to the plan pursuant to §§ 1.401(b)-1 and 1.401(b)-1T for changes under TRA '97.

Q-12. Is there a transition period during which a plan is permitted to eliminate a right to in-service distributions in connection with an amendment to ensure that the plan's normal retirement age satisfies the requirements of § 1.401(a)-1(b)(2)?

A-12.

(a) ***In general.*** A plan amendment that changes the normal retirement age under the plan to a later normal retirement age pursuant to § 1.401(a)-1(b)(2) does not violate section 411(d)(6) merely because it eliminates a right to an in-service distribution prior to the amended normal retirement age. However, this paragraph does not provide relief from any other applicable requirements; for example, this relief does not permit the amendment to violate section 411(a)(9) (requiring that the normal retirement benefit not be less than the greater of any early retirement benefit payable under the plan or the benefit under the plan commencing at normal retirement age), section 411(a)(10) (if the amendment changes the plan's vesting rules), section 411(d)(6) (other than elimination of the right to an in-service distribution prior to the amended normal retirement age), or section 4980F (relating to an amendment that reduces the rate of future benefit accrual). This paragraph only applies to a plan amendment that is adopted after May 22, 2007 and on or before the last day of the applicable remedial amendment period under § 1.401(b)-1 with respect to the requirements of § 1.401(a)-1(b)(2) and (3).

(b) ***Example.*** The following example illustrates the application of this section:

(i) *Facts.* (A) Plan A is a defined benefit plan intended to be qualified under section 401(a). Plan A is maintained by a calendar year taxpayer and has a normal retirement age that is age 45. For employees who cease employment before normal retirement age with a vested benefit, Plan A permits benefits to commence at any date after the attainment of normal retirement age through attainment of age $70^{1}/_{2}$ and provides for benefits to be actuarially increased to the extent they commence after normal retirement age. For employees who continue employment after attainment of normal retirement age, Plan A provides for benefits to continue to accrue and permits benefits to commence at any time, with an actuarial increase in benefits to apply to the extent benefits do not commence after normal retirement age. Age 45 is an age that is earlier than the earliest age that is reasonably representative of the typical retirement age for the industry in which the covered workforce is employed.

(B) On February 18, 2008, Plan A is amended, effective May 22, 2007, to change its normal retirement age to the later of age 65 or the fifth anniversary of participation in the plan. The amendment provides full vesting for any participating employee who is employed on May 21, 2007, and who terminates employment on or after attaining age 45. The amendment provides employees who cease employment before the revised normal retirement age and who are entitled to a vested benefit with the right to be able to commence benefits at any

date from age 45 to age 70½. The plan amendment also revises the plan's benefit accrual formula so that the benefit for prior service (payable commencing at the revised normal retirement age or any other age after age 45) is not less than would have applied under the plan's formula before the amendment (also payable commencing at the corresponding dates), based on the benefit accrued on May 21, 2007, and provides for service thereafter to have the same rate of future benefit accrual. Thus, for any participant employed on May 21, 2007, with respect to benefits accrued for service after May 21, 2007, the amount payable under the plan (as amended) at any benefit commencement date after age 45 is the same amount that would have been payable at that benefit commencement date under the plan prior to amendment. The plan amendment also eliminates the right to an in-service distribution between age 45 and the revised normal retirement age. Plan A has been operated since May 22, 2007, in conformity with the amendment adopted on February 18, 2008.

(ii) *Conclusion.* The plan amendment does not violate section 411(d)(6). Although the amendment eliminates the right to commence benefits in-service between age 45 and the revised normal retirement age, the amendment is made before the last day of the remedial amendment period applicable to the plan under § 1.401(b)-1 with respect to the requirements of § 1.401(a)-1(b)(2) and (3), and therefore the amendment is permitted under paragraph (a) of this A-12. Further, the amendment does not result in a reduction in any benefit for service after May 22, 2007.

Thus, the amendment does not result in a reduction in any benefit for future service, and advance notice of a significant reduction in the rate of future benefit accrual is not required under section 4980F.

[53 FR 26058, July 11, 1988]

Editorial Note: For FEDERAL REGISTER citations affecting § 1.411(d)-4, see the List of CFR Sections Affected, which appears in the Finding Aids section of the printed volume and at *www.govinfo.gov*.

§ 1.411(d)-5 [Reserved]

§ 1.412(b)-2 Amortization of experience gains in connection with certain group deferred annuity contracts.

(a) ***Experience gain treatment.*** Dividends, rate credits, and credits for forfeitures arising in a plan described in paragraph (b) of this section are experience gains described in section 412(b)(3)(B)(ii) (relating to the amortization of experience gains).

(b) ***Plan.*** A plan is described in this paragraph (b) if—

(1) The plan is funded solely through a group deferred annuity contract,

(2) The annual single premium required under the contract for the purchase of the benefits accruing during the plan year is treated as the normal cost of the plan for that year, and

(3) The amount necessary to pay in equal annual installments, over the appropriate amortization period, an amount equal to the single premium necessary to provide all past service benefits not initially funded, together with interest thereon, is treated as the annual amortization amount determined under section 412(b)(2)(B) (i), (ii) or (iii).

(c) ***Effective date.*** This section applies for the first plan year to which section 412 applies that begins after May 22, 1981.

[T.D. 7764, 46 FR 6923, Jan. 22, 1981]

§ 1.412(c)(1)-1 Determinations to be made under funding method—terms defined.

(a) ***Actuarial cost method and funding method.*** Section 3 (31) of the Employee Retirement Income Security Act of 1974 ("ERISA") provides certain acceptable (and unacceptable) actuarial cost methods which may (or may not) be used by employee plans. The term "funding method" when used in section 412 has the same meaning as the term "actuarial cost method" in section 3 (31) of ERISA. For shortfall method for certain collectively bargained plans, see § 1.412(c)(1)-2; for principles applicable to funding methods in general, see regulations under section 412(c)(3).

(b) ***Computations included in funding method.*** The funding method of a plan includes not only the overall funding method used by the plan but also each specific method of computation used in applying the overall method. However, the choice of which actuarial assumptions are appropriate to the overall method or to the specific method of computation is not a part of the funding method. For example, the decision to use or not to use a mortality factor in the funding method of a plan is not a part of such funding method. Similarly, the specific mortality rate determined to be applicable to a particular plan year is not part of the funding method. See section 412(c)(5) for the requirement of approval to change the funding method used by a plan.

[T.D. 7733, 45 FR 75202, Nov. 14, 1980]

§ 1.412(c)(1)-2 Shortfall method.

(a) ***In general*** —

(1) ***Shortfall method.*** The shortfall method is a funding method that adapts a plan's underlying funding method for purposes of section 412. As such, the use of the shortfall method is subject to section 412(c)(3). A plan described in paragraph (a)(2) of this section may elect to determine the charges to the funding standard account required by section 412(b) under the shortfall method. These charges are computed on the basis of an estimated number of units of service or production (for which a certain amount per unit is to be charged). The difference between the net amount charged under this method and the net amount that otherwise would have been charged under section 412 for the same period is a shortfall loss (gain) and is to be amortized over certain subsequent plan years.

(2) ***Eligibility for use of shortfall.*** No plan may use the shortfall method unless—

(i) The plan is a collectively bargained plan described in section 413(a), and

(ii) Contributions to the plan are made at a rate specified under the terms of a legally binding agreement applicable to the plan.

For purposes of this section, a plan maintained by a labor organization which is exempt from tax under section 501(c)(5) is treated as a collectively bargained plan and the governing rules of the organization (such as its constitution, bylaws, or other document that can be altered only through action of a convention of the organization) are treated as a collectively bargained agreement.

(b) ***Computation and effect of net shortfall charge*** —

(1) ***In general.*** The "net shortfall charge" to the funding standard account under the shortfall method is the product of

(i) the estimated unit charge described in paragraph (c) of this section that applies for a particular plan year, multiplied by

(ii) the actual number of base units (for example, units of service or production) which occurred during that plan year. When the shortfall method is used, the net shortfall charge is a substitute for the specific charges and credits to the funding standard account described in section 412 (b)(2) and (3)(B).

(2) ***Example.*** Paragraph (b)(1) of this section may be illustrated by the following example:

Example. A pension plan uses the calendar year as the plan year and the shortfall method. Its estimated unit charge applicable to 1980 is 80 cents per hour of covered employment. During 1980, there were 125,000 hours of covered employment. The net shortfall charge for the plan year is $100,000 (*i.e.,* 125,000 × $.80), regardless of the amount which would be charged and credited to the funding standard account under section 412 (b)(2) and (3)(B) had the shortfall method not applied. The funding standard account for 1980 will be separately credited for the amount considered contributed for the plan year under section 412 (b)(3)

(A) . The other items which may be credited, if applicable, are a waived funding deficiency and the alternative minimum funding standard credit adjustment under section 412(b)(3)(C) and (D) because these items are not credits under section 412(b)(3)(B).

(3) ***Plans with more than one contract, contribution rate, employer, or benefit level*** —

(i) ***General rule.*** A single plan with more than one contract, contribution rate, employer, or benefit level may compute a separate net shortfall charge for each contract, contribution rate, each employer, or each benefit level. The sum of these charges is the plan's total net shortfall charge. under § 1.412(c)(1)-1(b), the use of separate computations would be a specific method of computation used in applying the overall funding method. See also paragraph (f)(5) of this section.

(ii) ***Single valuation.*** Only one actuarial valuation shall be made for the single plan on each actuarial valuation date.

(iii) ***Reasonableness test.*** The specific method of computation of the net shortfall charge must be reasonable, determined in the light of the facts and circumstances.

(c) ***Estimated unit charge.*** The estimated unit charge is the annual computation charge described in paragraph (d) of this section divided by the estimated base units of service or production described in paragraph (e) of this section.

(d) ***Annual computation charge.*** The annual computation charge for a plan year is the sum of the following amounts:

(1) The net charges and credits which, but for using the shortfall method, would be made under section 412 (b)(2) and (b)(3)(B).

(2) The amount described in paragraph (g)(3) of this section, if applicable, for amortization of shortfall gain or loss.

(e) ***Estimated base units*** —

(1) ***In general.*** The estimated base units are the expected units of service or production for a plan year (hours, days, tons, dollars of compensation, etc.), determined as of the base unit estimation date for that plan year under paragraph (f) of this section. This estimate must be based on the past experience of the plan and the reasonable expectations of the plan for the plan year. The specific type of unit used must be described in the statement of funding method for the plan year. (See paragraph (i)(3) of this section for reporting requirements.)

(2) ***Reasonable expectations.*** The reasonableness of expectations used under paragraph (e)(1) of this section is determined under the facts and circumstances of the plan for each plan year as of the relevant base unit estimation date. Expectations will be considered unreasonable if, for example, they do not reflect a consistent and substantial decline or growth in actual base units that has occurred over the course of recent years and that is likely to continue beyond the base unit estimation date. This determination of reasonableness is independent of determinations made under section 412(c)(3) of the reasonableness of actuarial assumptions.

(f) ***Base unit estimation date*** —

(1) ***In general.*** The base unit estimation date for the current plan year is determined under this paragraph (f). This date shall be an actuarial valuation date no earlier than the last actuarial valuation date occurring at least one year before the earliest date any current collectively bargained agreement in existence during the plan year came into effect.

(2) ***Four-month rule.*** For purposes of this paragraph (f), a current collectively bargained agreement is one in effect during at least four months of the current plan year.

(3) ***Effective date of agreement.*** For purposes of this paragraph (f), a collectively bargained agreement shall be deemed to have come into effect on the effective date of the agreement containing the currently effective provision for contributions to the plan or the benefits provided under the plan.

(4) ***Long-term contract rule.*** The effective date of a collectively bargained agreement shall be deemed not to occur prior to the first day of the third plan year preceding the current year.

(5) ***Special rule for plans computing separate net shortfall charge.*** A plan that computes a separate net shortfall charge for each contract, contribution rate, employer, or benefit level under paragraph (b)(3) of this section shall determine the base unit estimation date for each separate charge without regard to any collectively bargained agreement that does not relate to that contract, contribution rate, employer, or benefit level. If a collective bargaining agreement requiring contributions by a certain employer, or prescribing a certain benefit level, is in effect on December 31, 1980, the preceding sentence shall not apply to the computation of a separate net shortfall charge for that employer or benefit level until the earlier of—

(i) The first plan year beginning after the date on which expires the collective bargaining agreement requiring contributions by that employer (or the last collective bargaining agreement relating to that benefit level), or

(ii) The first plan year beginning after December 31, 1983.

(6) ***Example.*** The rules contained in paragraph (f) of this section are illustrated by the following table. In the table, “V” signifies actuarial valuation date (January 1 in each case shown); “B” signifies beginning of a contract; and “E” signifies end of a contract. The table shows the resulting earliest base unit estimation date with respect to the following assumed items:

Computation of Earliest Base Unit Estimation Date

Example	Plan year (calendar year basis)											
	1973	1974	1975	1976	1977	1978	1979	1980	1981	1982	1983	1984
Plan A	V			V			V			V		
Contract 1			E/B			E/B		E/B				E/B
Base unit estimation date [1]				1973	1973	1973	1976	1976	1979	1979	1979	1979
Plan B	V			V			V			V		
Contract 2	[2]	[2]	[2]	B*		E/B				E/B*		
Contract 3	E/B			E/B			E/B			E/B		
Base unit estimation date [1]				1973	1973	1973	1976	1976	1976	1976	1979	1979
Plan C	V	V	V	V	V	V	V	V	V	V	V	V
Contract 4			E/B			E/B*				E/B*		
Contract 5			E/B			E/B*					E/B*	
Base unit estimation date [1]				1974	1974	1977	1977	1977	1977	1978	1979	1981

[1] *The base unit estimation date may be on or any time after the actuarial valuation date in the year indicated on this line.*

[2] *No contract.*

** Denotes that a prior contract ends and a new contract begins prior to the fifth month of a plan year.*

(g) *Amortization of shortfall gain or loss* —

(1) ***Definition.*** The shortfall gain for a plan is the excess for the plan year of—

(i) The net shortfall charge computed under paragraph (b) of this section over

(ii) The annual computation charge described in paragraph (d) of this section.

The shortfall loss for a plan is the excess for the plan year of the annual computation charge over the net shortfall charge.

(2) *Shortfall amortization period* —

(i) ***First year.*** The plan year in which the amortization of a shortfall gain or loss must begin is the earlier of two years: the fifth plan year following the plan year in which the shortfall gain or loss arose, or the first plan year beginning after the latest scheduled expiration date of a collectively bargained agreement in effect with respect to the plan during the plan year in which the shortfall gain or loss arose. For purposes of this subparagraph, a contract expiring on the last day of a plan year shall be deemed to be renewed on such last day for the same period of years as the contract that succeeds the expiring contract.

(ii) ***Last year.*** The plan year in which the amortization of a shortfall gain or loss must end is the 15th plan year following the plan year in which the shortfall gain or loss arose. For a multiemployer plan described in section 414(f), the amortization must end with the 20th plan year instead of the 15th.

(3) ***Annual amortization amount.*** The shortfall gain or loss must be amortized in equal annual installments. The total amount to be amortized must be adjusted for interest at the rate used for determining the plan's normal cost.

(4) *Shortfall gain or loss under spread gain type of funding method* —

(i) ***In general.*** A spread gain type of funding method spreads experience gains and losses over future periods as part of a plan's normal cost. (Examples of spread gain types of funding methods are the aggregate cost method, the frozen initial liability method, and the attained age normal method.) However, a shortfall gain or loss is not an experience gain or loss. Therefore, a plan using a spread gain type of funding method together with the shortfall method must amortize shortfall gains and losses and otherwise meet the requirements of paragraph (g) of this section.

(ii) ***Asset adjustment for aggregate method.*** A plan using the shortfall method with the aggregate cost method of funding must adjust its plan assets for a shortfall gain or loss in calculating normal cost. The unamortized portion of any shortfall gain is subtracted from plan assets. The unamortized portion of any shortfall loss is added to plan assets.

(5) ***Reconciliation of shortfall gain or loss with funding standard account.*** At the beginning of each year, the actual unfunded liability under the method used by the plan must equal the outstanding balance of all amortization bases, including bases for shortfall gains and losses, less the credit balance under the funding standard account at the end of the prior year.

(6) ***Example.*** This paragraph is illustrated by the following examples:

> *Example 1.* A multiemployer plan described in section 414 (f) is maintained with the

calendar year as the plan year and uses the shortfall method. The plan uses the frozen initial liability funding method. A five percent interest assumption is used by the plan, with payments computed as of the first day of each plan year for all items. The expiration dates of contracts in effect during plan years 1976, 1977, and 1978 are such that the amortization of gains or losses for each year must begin in the fifth following plan year. The assumed plan costs and estimated base units for selected years, and the computations under this section which follow from such assumptions are shown in the following table. In the table, "*" denotes an assumed item. The remaining figures have been calculated on the basis of these assumptions.

(A) Computation of Net Shortfall Charge and Shortfall Gain or Loss

Plan year	1976	1977	1978
1. Normal cost*	$100,000	$100,000	$100,000
2. Amortization of unfunded liability*	50,000	50,000	50,000
3. Total annual computation charges	$150,000	$150,000	$150,000
4. Estimated base units*	100,000	100,000	100,000
5. Estimated unit charge (line 3 ÷ line 4)	$1.50	$1.50	$1.50
6. Actual units during year*	80,000	90,000	110,000
7. Net shortfall charge for year (line 5 × line 6)	120,000	135,000	165,000
8. Shortfall (gain) or loss (line 3−line 7)	30,000	15,000	($15,000)

(B) Annual Amortization Amount

9. Year of shortfall gain or loss	1976	1977	1978
10. First year of amortization	1981	1982	1983
11. Last year of amortization	1996	1997	1998
12. (Gain) or loss adjusted for interest to year amortization begins (1-1-76 to 1-1-81, etc.)	$38,288	$19,144	($19,144)

13. Annual amortization (16 years)	$3,364	$1,682	($1,682)

(C) Computation of Net Shortfall Charges for Selected Years (Including Shortfall Amortization)

Plan year	1981	1982	1983
14. Normal cost*	$120,000	$125,000	$130,000
15. Amortization of unfunded liability*	50,000	50,000	50,000
16. Shortfall amortization (see line 13) from:			
1976	3,364	3,364	3,364
1977		1,682	1,682
1978			(1,682)
17. Total annual computation charges	173,364	180,046	183,364
18. Estimated base units*	110,000	110,000	110,000
19. Estimated unit charge (line 17 ÷ line 18)	1.576	1.637	1.667
20. Actual units during year*	105,000	110,000	105,000
21. Net shortfall charge for year (line 19 × line 20)	165,480	180,070	175,035
22. Shortfall (gain) loss (line 17−line 21)	7,884	(24)	8,329

The amounts in line 22 will be amortized beginning 1986, 1987, and 1988, respectively. The $24 gain in 1982 results from rounding the estimated unit charge.

Example 2. Assume the facts in Example 1. Also assume that the plan uses the frozen initial liability funding method, that the unfunded liability as of January 1, 1976 (corresponding to a 40-year charge of $50,000 due at the beginning of the year) is $900,850, and that actual contributions at the rate of $1.75 per unit are paid at mid-year in 1976.

(A) Computation of the Unfunded Liability as of December 31, 1976

1. Unfunded liability as of 1/1/76	$900,850
2. Normal cost (that used in the calculation of the total annual computation charges)	100,000

3. Interest at 5% due on items 1 and 2	50,043
4. Contribution with interest: $1.75 × 80,000 × 1.025 (actual contribution rate times acutal base units times interest adjustment from mid-year)	143,500
5. Unfunded liability as of 12/31/76: item 1 + item 2 + item 3 −item 4	907,393

(B) Computation of the Outstanding Balance of the Bases as of December 31, 1976

1. Original base: ($900,850−$50,000) × 1.05	$893,393
2. Shortfall loss $30,000 × 1.05	31,500
3. Total	924,893

(C) Computation of the Credit Balance as of December 31, 1976

1. Net shortfall charge (§ 1.412 (c) (1)-2 (b)) adjusted for interest: $120,000 × 1.05	$126,000
2. Actual contributions with interest	143,500
3. Credit balance as of 12/31/76: item 2−item 1	17,500

(D) Reconciliation of computations

As of January 1, 1977, the unfunded liability ($907,393) equals the outstanding balance of the bases minus the credit balance ($924,893−$17,500 = $907,393).

(h) *Amortization of experience gain or loss* —

(1) *General rule.* In the case of a plan using an immediate gain type of funding method, an experience gain or loss shall be amortized pursuant to section 412 (b)(2)(B)(iv) or (b)(3)(B)(ii). (Examples of the immediate gain type of funding method are the unit credit method, the entry age normal cost method, and the individual level premium cost method.) For purposes of this section, a shortfall gain or loss is not an experience gain or loss. The amount of the experience gain or loss must be adjusted for interest at the rate used for determining the plan's normal cost.

(2) *Experience amortization period under shortfall method* —

(i) ***First year.*** The plan year in which the amortization of an experience gain or loss must begin in the case of a plan using the shortfall method is the earlier of two years: the fifth plan year following the plan year in which the experience gain or loss arose, or the first plan year beginning after the last scheduled expiration date of a contract in effect during the plan year in which the experience gain or loss arose. For purposes of this subparagraph a contract expiring on the last day of the plan year shall be deemed to be renewed on such last day for the same period of years as the contract that succeeds the expiring contract.

(ii) ***Last year.*** The plan year in which the amortization of an experience gain or loss must end in the case of a plan using the shortfall method is the 15th plan year following the plan year in which the experience gain or loss arose. For a multi-employer plan described in section 414 (f), the amortization must end with the 20th plan year instead of the 15th.

(3) ***Use of annual computation charge in determining experience gain or loss.*** In the case of a plan using an immediate gain type of funding method, an experience gain or loss is the difference between the expected unfunded liability and the actual unfunded liability under the plan. The expected unfunded liability as of the end of a plan year equals the actual unfunded liability as of the beginning of the year plus normal cost, minus contributions, all adjusted for interest. If the plan adopts the shortfall method, the expected unfunded liability is computed by using the normal cost applicable for the plan year in determining the annual computation charge under paragraph (d) of this section. The same normal cost is used in computing the unfunded liability under the frozen initial liability funding method.

(4) ***Example.*** This paragraph is illustrated by the following example:

Example. Assume the facts in Example 2 from paragraph (g) (6) of this section, except that the entry age normal funding method is used. Also assume that as of December 31, 1976, the actual unfunded liability is $900,000.

(A) Computation of Expected Unfunded Liability

1. Actual unfunded liability as of 1-1-76	$900,850
2. Normal cost portion of annual computation charge as of 1-1-76	100,000
3. Interest at 5% due on items 1 and 2	50,043
4. Contribution received with interest: $1.75 × 80,000 × 1.025 (actual contribution rate times actual base units times interest adjustment at mid-year)	143,500
5. Expected unfunded liability as of 12-31-76 (item 1 + item 2 + item 3 − item	907,393

4)

(B) Computation of Gain or Loss

1. Expected unfunded liability as of 12-31-76	$907,393
2. Actual unfunded liability as of 12-31-76	900,000
3. Gain (or loss) (item 1 − item 2)	7,393

(i) ***Election procedure*** —

(1) ***In general.*** To elect the shortfall method, a collectively bargained plan must attach a statement to the annual report required under section 6058 (a) for the first plan year to which it is applied. The statement shall state that the shortfall method is adopted, beginning with the plan year covered by such report. Advance approval from the Internal Revenue Service is not required if the shortfall method is first adopted on or before the later of—

(i) The first plan year to which section 412 applies or

(ii) The last plan year commencing before December 31, 1981.

However, approval must be received pursuant to section 412(c)(5) prior to the adoption of the shortfall method at a later time, or the discontinuance of such method, once adopted.

(2) ***Use of specific computation method.*** A specific method of computation under the shortfall method is described in paragraph (b)(3) of this section, regarding the treatment of more than one contract, employer, or benefit level under the plan. This specific method may be adopted with respect to any plan year to which the shortfall method applies. Approval from the Commissioner must be received under section 412(c)(5) prior to the adoption of this specific computation method for a plan year subsequent to the first plan year to which the shortfall method applies, or prior to the discontinuance of a specific computation method, once adopted.

(3) ***Reporting requirements.*** Each annual report required by section 6058(a) and periodic report of the actuary required by section 6059 must include all additional information relevant to the use of the shortfall method as may be required by the applicable forms and the instructions for such forms.

(j) ***Transitional rule.*** In lieu of paragraphs (g)(2) and (h)(2) of this section relating to the amortization period for shortfall and experience gains and losses, for gains and losses arising in plan years beginning before January 1, 1981, a plan may rely on the prior published position of the Internal Revenue Service with respect to the amortization period for shortfall and experience gains and losses.

(k) ***Supersession.*** This section and § 1.412 (c) (1)-1 supersede §§ 11.412 (c) (1)-1 and (c) (1)-2 of the Temporary Income Tax Regulations Under the Employee Retirement Income Security Act of 1974.

(Secs. 412, 7805, Internal Revenue Code of 1954 (88 Stat. 914 and 68A Stat. 917; (26 U.S.C. 412 and 7805)), and sec. 3 (31) of the Employee Retirement Income Security Act of 1974 (88 Stat. 837; (29 U.S.C. 1002)))

[T.D. 7733, 45 FR 75202, Nov. 14, 1980]

§ 1.412(c)(1)-3 Applying the minimum funding requirements to restored plans.

(a) ***In general*** —

(1) ***Restoration method.*** The restoration method is a funding method that adapts the underlying funding method of section 412 in the case of certain plans that are or have been terminated and are later restored by the Pension Benefit Guaranty Corporation (PBGC). The normal operation of the funding standard account, and all other provisions of section 412 and the regulations thereunder, are unchanged except as provided in this § 1.412(c)(1)-3. Under the restoration method, the PBGC shall determine a restoration payment schedule, extending over no more than 30 years, that replaces all charges and credits to the funding standard account attributable to pre-restoration amortization bases. The restoration payment schedule is determined on the basis of an actuarial valuation of the accrued liability of the plan on the initial post-restoration valuation date less the actuarial value of the plan assets on that date. The initial post-restoration valuation date is the date of the valuation that falls in the first plan year beginning on or after the date of the restoration order.

(2) ***Applicability of restoration method.*** A plan must use the restoration method if, and only if—

(i) The plan is being or has been terminated pursuant to section 4041(c) or section 4042 of the Employee Retirement Income Security Act of 1974 (ERISA); and

(ii) The plan has been restored by the PBGC pursuant to its authority under section 4047 of ERISA.

(b) ***Computation and effect of the initial restoration amortization base*** —

(1) ***In general.*** The initial restoration amortization base is determined under the underlying funding method used by the plan. When the plan uses a spread gain funding method that does not maintain an unfunded liability, the plan must change either to an immediate gain method that directly calculates an accrued liability or to a spread gain method that maintains an unfunded liability. A plan may adopt any cost method that satisfies this requirement and that is acceptable under section 412 and the regulations thereunder, provided that the plan administrator follows the procedures established by the Commissioner for changes in funding methods. The initial restoration amortization base is determined using the valuation for the plan year in which the initial post-restoration valuation date falls. The initial restoration amortization base equals the accrued liability with respect to plan benefit liabilities returned by the PBGC less the value of the plan assets returned by the PBGC. The initial restoration amortization base replaces all prior amortization bases including those under section 412(b)(2) (B), (C), and (D) and under section 412(b)(3)(B). Any base resulting from a change in funding method, including a change required under this paragraph, is treated as a prior amortization base within the meaning of this paragraph (b). Any accumulated funding deficiency or credit balance in the funding standard account is set equal to zero when the initial restoration amortization base is established.

(2) ***Example.*** The following example illustrates the provisions of this paragraph (b):

Example. A pension plan uses the calendar year as its plan year, makes its annual periodic valuation as of January 1, and uses the unit credit actuarial cost method for funding purposes. The plan is in the process of being terminated. By order of the PBGC the plan is restored as of July 1,

1991. The initial post-restoration valuation date is January 1, 1992, and a restoration payment schedule order is issued on October 31, 1992. If, as of January 1, 1992, the accrued liability of the plan is $1,000,000 and the value of the plan assets is $200,000, the initial restoration amortization base is $800,000.

(c) ***Establishment of a restoration payment schedule*** —

(1) ***Certification requirement.*** When the PBGC establishes a restoration payment schedule, the Executive Director of the PBGC must certify to the PBGC's Board of Directors, and to the Internal Revenue Service, that the PBGC has reviewed the funding of the plan, the financial condition of the plan sponsor and its controlled group members, the payments required under the restoration payment schedule (taking into account the availability of deferrals authorized under paragraph (c)(4) of this section), and any other factor that the PBGC deems relevant, and, based on that review, determines that it is in the best interests of participants and beneficiaries of the plan and the pension insurance program that the restored plan not be reterminated.

(2) ***Requirements for restoration payment schedule*** —

(i) ***Amortization of base over period of no more than 30 years.*** The restoration payment schedule must be prescribed in an order requiring the employer to make stated contributions to the plan sufficient to amortize the initial restoration amortization base over a period extending not more than 30 years after the initial post-restoration valuation date (the restoration payment period). Payments included in the restoration payment schedule order are charged to the funding standard account of the plan at the end of each plan year in accordance with paragraph (d) of this section. The restoration payment schedule must provide for total charges that are sufficient to amortize the entire amount of the initial restoration amortization base by the end of the restoration payment period. The scheduled charges need not be in level amounts, but the present value of the prescribed charges on the initial post-restoration valuation date, computed with interest at the valuation rate, must equal the initial restoration amortization base.

(ii) ***Minimum annual charge.*** The restoration payment schedule must prescribe annual charges that are sufficient to prevent the outstanding balance of the initial restoration amortization base from exceeding whichever of the following amounts is applicable—

(A) During the first 10 plan years on the restoration payment schedule, the amount of the initial restoration amortization base on the date the base was established; or

(B) During plan years 11 through 20 on the restoration payment schedule, the maximum permitted outstanding balance of the initial restoration amortization base at the end of the tenth plan year, as calculated under paragraph (c)(2)(iii) of this section; or

(C) During plan years 21 through the end of the restoration payment schedule, the maximum permitted outstanding balance of the initial restoration amortization base at the end of the twentieth plan year, as calculated under paragraph (c)(2)(iii) of this section.

(iii) ***Interim amortization requirements.*** The restoration payment schedule must provide for sufficient periodic charges so that the outstanding balance of the initial restoration amortization base at the end of the tenth plan year and at the end of the twentieth plan year of the restoration payment period will not be larger than the outstanding balance that would have remained at the end of the tenth plan year and at the end of the twentieth plan year, respectively, if the initial restoration amortization base had been amortized in level annual amounts over the restoration payment period at the valuation rate.

(3) ***Amendments to the restoration payment schedule.*** The order establishing the restoration payment schedule may be amended by the PBGC from time to time with respect to any remaining payments, provided that no amendment may extend the restoration payment period beyond 30 years from the initial post-restoration valuation date, and provided further that the restoration payment schedule, as amended, satisfies the requirements of paragraph (c)(2) of this section.

(4) ***Deferral of minimum scheduled annual payment amounts*** —

(i) ***Authority to grant deferral.*** Not later than $2^{1}/_{2}$ months following the end of the plan year, the PBGC may grant a deferral of the charges required in the restoration payment schedule for that plan year if the requirements in paragraph (c)(4)(ii) of this section are satisfied. The PBGC may require the plan sponsor and its controlled group members to provide security to the plan as a condition to granting a deferral.

(ii) ***Determination of business hardship.*** Before granting a deferral under this paragraph (c)(4), the PBGC must make a determination that the granting of the deferral is in the best interests of plan participants and the plan termination insurance system, and that the plan sponsor and its controlled group members are unable to make the scheduled restoration payments without experiencing temporary substantial business hardship. In making these determinations, the factors the PBGC shall consider, include, but are not limited to, the following—

(A) Whether the plan sponsor and its controlled group members are operating at an economic loss;

(B) Whether there is substantial unemployment or underemployment in the trades or businesses of the plan sponsor and its controlled group members;

(C) Whether the sales and profits of the industry or industries are depressed or declining; and

(D) Whether it is reasonable to expect that the plan termination insurance system will suffer a greater loss if the plan is terminated than if it is continued as a restored plan.

(iii) ***Amount of deferral.*** The amount of the deferral for any particular plan year may not exceed the lesser of the amount that would have been required to be contributed under the restoration payment schedule for that year or interest at the valuation rate on the outstanding balance of the initial restoration amortization base for that year. An amortization payment for a deferral granted for a prior plan year may not be deferred. No deferral may extend the overall restoration payment period beyond 30 years.

(iv) ***Modification of payment schedule.*** The restoration payment schedule must be adjusted to reflect any deferral granted for a plan year in the manner prescribed in this paragraph (c). The charge otherwise specified in the schedule is reduced by the amount of any deferral. The charges under the restoration payment schedule for the subsequent plan years are increased by the amounts in paragraph (c)(4)(v) of this section.

(v) ***Amortization of deferred amount.*** The amount of any deferral granted by the PBGC for any plan year must be amortized in level amounts over five years or such shorter period as may be prescribed by the PBGC, at the valuation rate, beginning with the plan year following the year of the deferral.

(vi) ***Number of deferrals permitted.*** The PBGC may not grant more than five deferrals of the minimum scheduled payments as required by this section during the restoration payment period and no more than three of these deferrals may be granted during the first ten years of that period.

(vii) ***Deferrals override minimum annual charges and interim amortization requirements.*** In determining the minimum annual charge under paragraph (c)(2)(ii) of this section and in applying the interim amortization requirements of paragraph (c)(2)(iii) of this section, the unamortized balances of any deferrals granted by the PBGC under this paragraph shall be added to the outstanding balance of the initial restoration amortization base otherwise allowable.

(d) ***Charging the scheduled restoration payments to the funding standard account.*** In addition to any other charges and credits prescribed in the normal operation of the funding standard account under section 412, the amount of each payment specified in the restoration payment schedule shall be charged against the funding standard account of the plan for the plan year to which that payment is attributed in the restoration payment schedule. To the extent that the restoration payment schedule provides for payments before the end of the plan year, the annual charge to the funding standard account attributable to the restoration payment schedule is equal to the sum of the periodic payments for the plan year accumulated with interest at the valuation rate to the last day of the plan year.

(e) ***Changes in actuarial assumptions or methods.*** The plan administrator must notify the PBGC of any changes in the actuarial assumptions or methods used by the plan. Upon notification of any such change, the PBGC may make any changes to the restoration payment schedule that it deems appropriate.

(f) ***Change to restoration method.*** A plan that has been restored must use the restoration method until the initial restoration amortization base has been fully amortized. The use of this method does not require prior approval from the Commissioner. A plan using the restoration method must compute the charges to the funding standard account to amortize the initial restoration amortization base in accordance with the order of the PBGC and in accordance with this section.

(g) ***Deficit reduction contribution*** —

(1) ***Calculation of deficit reduction contribution.*** For any plan using the restoration method, the deficit reduction contribution under section 412(l)(2) is equal to the sum of—

(i) The unfunded section 412(l) restoration liability amount; plus

(ii) The unfunded new liability amount.

(2) ***Unfunded section 412(l) restoration liability amount.*** The unfunded section 412(l) restoration liability amount is the amount necessary to amortize fully the unfunded section 412(l) restoration liability in installments, as prescribed by the PBGC, over not more than 30 years. The annual amount need not be level, but at all times the present value of the future amortization charges prescribed under the restoration payment schedule, at the current liability interest rate, must equal the outstanding balance of the unfunded section 412(l) restoration liability and the schedule must provide that at the end of no more than 30 years the entire amount of the unfunded section 412(l) restoration liability base will have been fully amortized. The schedule prescribed for amortization of the unfunded section 412(l) restoration liability must comply with the requirements imposed in paragraph (c) of this section on the restoration payment schedule, except as provided in paragraph (g)(7) of this section and except that the maximum permitted outstanding balance of the unfunded section 412(l) restoration liability at the end of the tenth plan year must not be greater than the outstanding

balance of the section 412(l) restoration liability that would have remained at the end of the tenth plan year if the unfunded section 412(l) restoration liability had been amortized in level amounts over the restoration payment period at the actual current liability interest rate for each year, increased by the current liability interest rate differential as defined under paragraph (g)(7) of this section. The unfunded section 412(l) restoration liability amount for the tenth plan year otherwise prescribed under the restoration payment schedule is increased by any outstanding current liability interest rate differential. By issuing an appropriate order, the PBGC may permit the outstanding current liability interest rate differential to be amortized over the tenth through the fourteenth plan years. If the PBGC permits the amortization of the outstanding current liability interest rate differential, then the unfunded section 412(l) restoration liability amount for each year to which an amortization payment is attributed under the order shall be increased by such payment. The outstanding balance otherwise required by paragraph (g)(2) of this section is increased by the outstanding balance, if any, of the base resulting from the amortization of the current liability interest rate differential. The PBGC may amend the amortization schedule for the unfunded section 412(l) restoration liability subject to the limits on amendments to the amortization schedule prescribed for the initial restoration amortization base.

(3) ***Establishment of unfunded section 412(l) restoration liability.*** In the plan year in which the initial post-restoration valuation date falls, the unfunded section 412(l) restoration liability is equal to the unfunded current liability of the plan.

(4) ***Unfunded new liability amount.*** In the case of a plan using the restoration method, the unfunded new liability amount is the applicable percentage, as defined in section 412(l)(4)(C), of the unfunded new liability determined under paragraph (g)(5) of this section.

(5) ***Unfunded new liability.*** The unfunded new liability of a plan using the restoration method is the excess, if any, of the unfunded current liability of the plan, within the meaning of section 412(l)(8)(A) for the plan year (determined without taking into account any unpredictable contingent event benefits, even if the event has occurred) over the outstanding balance of the unfunded section 412(l) restoration liability determined under paragraph (g)(3) of this section.

(6) ***Offset of amortization charges.*** The amounts charged to the funding standard account pursuant to the restoration payment schedule in order to amortize the initial restoration base, as described in paragraph (d) of this section, must be offset against the deficit reduction contribution in paragraph (g)(1) of this section along with any other applicable amounts provided in section 412(l)(1)(A)(ii).

(7) ***Interest rate differential.*** During the first 10 plan years after the initial post-restoration valuation date, the restoration payment schedule must prescribe an unfunded section 412(l) restoration liability amount for each plan year that is sufficient to prevent the outstanding balance of the unfunded section 412(l) restoration liability from exceeding the initial amount of the unfunded section 412(l) restoration liability increased by the current liability interest rate differential. The current liability interest rate differential at any point during the first ten years of the restoration payment period is the excess, if any, of the outstanding balance of the unfunded section 412(l) restoration liability determined using the actual current liability interest rate for each year, taking into account the charges described in paragraph (d) of this section, over the outstanding balance of the unfunded section 412(l) restoration liability determined using the lowest, for each year, of the initial current liability interest rate, the current liability interest rate for the computation year, and the valuation interest rate, taking into account the charges described in paragraph (d) of this section.

(h) ***Election of the alternative minimum funding standard.*** A plan using the restoration method may not elect the alternative minimum funding standard under section 412(g).

(i) ***Funding review by the PBGC.*** The PBGC must review the funding of any plan using the restoration method at least once in each plan year. As a result of a funding review, the PBGC may amend the restoration payment schedule as provided in paragraph (c)(3) of this section. As part of the funding review, the Executive Director of the PBGC must certify to the PBGC's Board of Directors, and to the Internal Revenue Service, that the PBGC has reviewed the funding of the plan, the financial condition of the plan sponsor and its controlled group members, the payments required under the restoration payment schedule (taking into account the availability of deferrals authorized under paragraph (c)(4) of this section), and any other factor that the PBGC deems relevant, and, based on that review, determines that it is in the best interests of participants and beneficiaries of the plan and the pension insurance program that the restored plan not be reterminated.

[T.D. 8494, 58 FR 54491, Oct. 22, 1993]

§ 1.412(c)(2)-1 Valuation of plan assets; reasonable actuarial valuation methods.

(a) ***Introduction*** —

(1) ***In general.*** This section prescribes rules for valuing plan assets under an actuarial valuation method which satisfies the requirements of section 412(c)(2)(A). An actuarial valuation method is a funding method within the meaning of section 412(c)(3) and the regulations thereunder. Therefore, certain changes affecting the actuarial valuation method are identified in this section as changes in a plan's funding method.

(2) ***Exception for certain bonds, etc.*** The rules of this section do not apply to bonds or other evidences of indebtedness for which the election described in section 412(c)(2)(B) has been made, nor are such assets counted in applying paragraphs (b) or (c) of this section. Also, an election under section 412(c)(2)(B) is not a change in funding method within the meaning of section 412(c)(5).

(3) ***Money purchase pension plan.*** A money purchase pension plan must value assets for the purpose of satisfying the requirements of section 412(c)(2)(A) solely on the basis of their fair market value (under paragraph (c) of this section).

(4) ***Defined benefit plans.***

(i) To satisfy the requirements of section 412(c)(2)(A), an actuarial method valuing assets of a defined benefit plan must meet the requirements of paragraph (b) of this section.

(ii) In general, the purpose of paragraph (b) of this section is to permit use of reasonble actuarial valuation methods designed to mitigate short-run changes in the fair market value of plan assets. The funding of plan benefits and the charges and credits to the funding standard account required by section 412 are generally based upon the assumption that the defined benefit plan will be continued by the employer. Thus, short-run changes in the value of plan assets presumably will offset one another in the long term. Accordingly, in the determination of the amount required to be contributed under section 412 it is generally not necessary to recognize fully each change in fair market value of the assets in the period in which it occurs.

(iii) The asset valuation rules contained in paragraph (b) produce a “smoothing” effect. Thus, investment performance, including appreciation or depreciation in the market value of the assets occurring in each plan year, may be recognized gradually over several plan years. This “smoothing” is in addition to the “smoothing” effect which results, for example, from amortizing experience losses and gains over 15 or 20 years under section 412(b)(2 (B)(iv) and (3)(B)(ii).

(b) *Asset valuation method requirements* —

(1) *Consistent basis.*

(i) The actuarial asset valuation method must be applied on a consistent basis. Any change in meeting the requirements of this paragraph (b) is a change in funding method subject to section 412(c)(5).

(ii) A method may satisfy the consistency requirement even though computations are based only on the period elapsed since the adoption of the method or on asset values occurring during that period.

(2) *Statement of plan's method.* The method of determining the actuarial value (but not fair market value) of the assets must be specified in the plan's actuarial report (required under section 6059). The method must be described in sufficient detail so that another actuary employing the method described would arrive at a reasonably similar result. Whether a deviation from the stated actuarial valuation method is a change in funding method is to be determined in accordance with section 412(c)(5) and the regulations thereunder. A deviation to include a type of asset not previously held by the plan would not be a change in funding method.

(3) *Consistent valuation dates.* The same day or days (such as the first or the last day of a plan year) must be used for all purposes to value the plan's assets for each plan year, or portion of plan year, for which a valuation is made. For purposes of this section, each such day is a valuation date. A change in the day or days used is a change in funding method.

(4) *Reflect fair market value.* The valuation method must take into account fair market value by making use of the—

(i) Fair market value (determined under paragraph (c) of this section), or

(ii) Average value (determined under paragraph (b)(7) of this section) of the plan's assets as of the applicable asset valuation date. This is done either directly in the computation of their actuarial value or indirectly in the computation of upper or lower limits placed on that value.

(5) *Results above and below fair market or average value.* A method will not satisfy the requirements of this paragraph (b) if it is designed to produce a result which will be consistently above or below the values described in paragraph (b)(4) (i) and (ii). However, a method designed to produce a result which consistently falls between fair market value and average value will satisfy this requirement. See Example 5 in paragraph (b)(9) of this section for an illustration of a method described in the preceding sentence.

(6) *Corridor limits.*

(i) Regardless of how the method reflects fair market value under paragraph (b)(4), the method must result in an actuarial value of the plan's assets which is not less than a minimum amount and not more than a maximum amount. The minimum amount is the lesser of 80 percent of the current fair market value of plan assets as of the applicable asset valuation date or 85 percent of the average value (as described in subparagraph (7)) of plan assets as of that date. The maximum amount is the greater of 120 percent of the current fair market value of plan assets as of the applicable asset valuation date or 115 percent of the average value of plan assets as of that date.

(ii) Under a plan's method, a preliminary computation of the expected actuarial value may fall outside the prescribed corridor. A method meets the requirements of paragraph (b)(6)(i) of this section is such a case only by adjusting the expected actuarial value to the nearest corridor limit applicable under the method. A plan may use an actuarial valuation method with a narrower corridor than the general corridor required under paragraph (b)(6)(i). The adjustment to the nearest corridor limit of such a method for purposes of this subdivision (ii) would be determined by the narrower corridor stated in the description of the plan's method.

(7) ***Average value.*** the average value of plan assets is computed by—

(i) Determining the fair market value of plan assets at least annually,

(ii) Adding the current fair market value of the assets (as of the applicable valuation date) and their adjusted values (as described in paragraph (b)(8) of this section) for a stated period not to exceed the five most recent plan years (including the current year), and

(iii) Dividing this sum by the number of values (including the current fair market value) considered in computing the sum described in subdivision (ii).

(8) ***Adjusted value.***

(i) the adjusted value of plan assets for a prior valuation date is their fair market value on that date with certain positive and negative adjustments. These adjustments reflect changes that occur between the prior asset valuation date and the current valuation date. However, no adjustment is made for increases or decreases in the total value of plan assets that result from the purchase, sale, or exchange of plan assets or from the receipt of payment on a debt obligation held by the plan.

(ii) In determining the adjusted value of plan assets for a prior valuation date, there is added to the fair market value of the plan assets of that date the sum of all additions to the plan assets since that date, excluding appreciation in the fair market value of the assets. The additions would include, for example, any contribution to the plan; any interest or dividend paid to the plan; and any asset not taken into account in a prior valuation of assets, but taken into account for the current year, in computing the fair market value of plan assets under paragraph (c) of this section.

(iii) In determining the adjusted value of plan assets for a prior valuation date, there is subtracted from the fair market value of the plan assets on that date the sum of all reductions in plan assets since that date, excluding depreciation in the fair market value of the assets. The reductions would include, for example, any benefit paid from plan assets; any expense paid from plan assets; and any asset taken into account in a prior valuation of assets but not taken into account for the current year, in computing the fair market value of plan assets under paragraph (c) of this section.

(9) ***Examples.*** This paragraph (b) may be illustrated by the following examples. In each example, assume that the pension plan uses a consistent actuarial method of valuing its assets within the meaning of paragraph (b)(1), (2), and (3) of this section.

Example 1. Plan A considers the value of its assets to be initial cost, increased by an assumed rate of growth of X percent annually. Under the circumstances, the X-percent factor used by the plan is a reasonable assumption. Thus, this method is not designed to produce results consistently above or below fair market value as prohibited by paragraph (b)(5) of this section. Also, the

method requires that the actuarial value be adjusted as required to fall within the corridor under paragraph (b) (6) and (7) of this section. Therefore, the method reflects fair market value as required by paragraph (b)(4) of this section.

Example 2. Plan B computes the actuarial value of its assets as follows: It determines the fair market value of the plan assets. Then the fair market value is adjusted to the extent necessary to make the actuarial value fall within a "5 percent" corridor. This corridor is plus or minus 5 percent of the following amount: the fair market value of the assets at the beginning of the valuation period plus an assumed annual growth of 4 percent with adjustments for contributions and benefit payments during the period. This method reflects fair market value in a manner prescribed by paragraph (b)(4) of this section. If the 4 percent factor used by the plan is a reasonable assumption, this method is not designed to produce results consistently above or below fair market value, and thus it satisfies paragraph (b)(5). However, this method is unacceptable because in some instances it may result in an actuarial value outside the corridor described in paragraph (b)(6) of this section. This method would be permitted if a second corridor were imposed which would adjust the value of the total plan assets to the corridor limits as required by paragraph (b)(6).

Example 3. Plan C values its assets by multiplying their fair market value by an index number. The use of the index results in the hypothetical average value that plan assets present on the valuation date would have had if they had been held during the current and four preceding years, and had appreciated or depreciated at the actual yield rates including appreciation and depreciation experienced by the plan during that period. However, the method requires an adjustment to the extent necessary to bring the resulting actuarial value of the assets inside the corridor described in the statement of the plan's actuarial valuation method. In this case, the stated corridor is 90 to 110 percent of fair market value, a corridor narrower than that described in paragraph (b)(7) of this section. This method is permitted.

Example 4. Plan D values its assets by multiplying their fair market value by 95 percent. Although the method reflects fair market value and the results of this method will always be within the required corridor, it is not acceptable because it will consistently result in a value less than fair market value.

Example 5. Plan E values its assets by using a five-year average method with appropriate adjustments for the period. Under the particular method used by Plan E, assets are not valued below 80 percent of fair market value or above 100 percent of fair market value. If the average produces a value that exceeds 100 percent of fair market value, the excess between 100 and 120 percent is recorded in a "value reserve account." In years after one in which the average exceeds 100 percent of fair market value, amounts are subtracted from this account and added, to the extent necessary, to raise the value produced by the average for that year to 100 percent of fair market value. This method is permitted because it reflects fair market value under paragraph (b)(4) of this section by appropriately computing an average value, it satisfies paragraph (b)(5) by producing a result that falls consistently between fair market value and average value, and it properly reflects the corridor described in paragraph (b)(7).

> *Example 6.* All assets of Plan F are invested in a trust fund and the plan year is the calendar year. The actuarial value is determined by averaging fair market value over 4 years. An actuarial valuation is performed as of December 31, 1988.

(i) The average value as of December 31, 1988, is computed as follows:

	1986	1986	1987	1987	1988	1988
Fair market value: Jan. 1		$150,000		$196,500		$238,000
Contributions	$65,000		$62,000		$66,000	
Benefit payments	(22,000)		(24,000)		(25,000)	
Expenses	(6,500)		(7,000)		(7,500)	
Interest and dividends	8,000	44,500	7,500	38,500	7,000	240,500
Net realized gains (losses)		(2,000)		6,000		(8,000)
Balancing item [1]		4,000		(3,000)		(42,000)
Fair market value: Dec. 31		196,500		238,000		228,000

[1] *This equals the increase (decrease) in unrealized appreciation.*

Adjusted values	1985	1986	1987	1988
Fair market value: Dec. 31	$150,000	$196,500	$238,000	$228,000
Net adjustments:				
1988	40,500	40,500	40,500	
1987	38,500	38,500		
1986	44,500			
Total	273,500	275,500	278,500	228,000
Average value: 1988 = $273,500 + $275,500 + $278,500 + $228,000 ÷ 4 = $263,875				

(ii) Plan F properly determines an average value under paragraph (b)(7) of this section for use as an actuarial value. Therefore, the valuation method meets the requirements of this section.

Example 7. Plan G computes the actuarial value of the plan assets as follows: The current fair market value of the plan assets is averaged with the most recent prior adjusted actuarial value. This average value is adjusted up or down toward the current fair market value by 20 percent of the difference between it and the current fair market value of the assets. This value is further adjusted to the extent necessary to fall within the corridor described in the statement of the plan's actuarial valuation method. The lower end of the corridor is the lesser of 80 percent of the fair market value of the plan assets or 85 percent of the average value of the plan assets. The higher end of the corridor is the greater of 120 percent of the fair market value of plan

assets or 115 percent of the average value of plan assets. Average value for purposes of the corridor is determined under paragraph (b)(7) of this section. Assuming the numerical data of Example 6, the application of the corridor is as follows. The actuarial asset value as of December 31, 1988, must not be less than $182,400 (80 percent of current fair market value, $228,000) nor greater than $303,456 (115 percent of average value, 263,875). This method is permitted because it reflects fair market value in a manner permitted by paragraph (b)(4) of this section, it produces an actuarial value which is neither consistently above nor consistently below fair market or average value to satisfy paragraph (b)(5), and it is appropriately limited by the corridor described in paragraph (b)(6).

(c) ***Fair market value of assets*** —(1) *General rules.* Except as otherwise provided in this paragraph (c), the fair market value of a plan's assets for purposes of this section is the price at which the property would change hands between a willing buyer and a willing seller, neither being under any compulsion to buy or sell and both having reasonable knowledge of relevant facts.

(d) ***Methods for taking into account the fair market value of certain agreements.*** [Reserved]

(e) ***Effective date and transition rules*** —

(1) ***Effective date.*** This section applies to plan years to which section 412, or section 302 of the Employee Retirement Income Security Act of 1974, applies.

(2) ***Special rule for certain plan years.*** For plan years beginning prior to November 12, 1980, the amounts required to be determined under section 412 may be computed on the basis of any reasonable actuarial method of asset valuation which takes into account the fair market value of the plan's assets, even if the method does not meet all of the requirements of paragraphs (a) through (c) of this section.

(3) ***Plan years beginning on or after November 12, 1980.*** Paragraphs (a) through (c) of this section apply beginning with the first valuation of plan assets made for a plan year to which section 412 applies that begins on or after November 12, 1980. The statement of the plan's actuarial asset valuation method required by paragraph (b)(2) of this section must be included with the plan's actuarial report for that year, in addition to any subsequent reports.

(4) ***Effect of change of asset valuation method.*** A plan which is required to change its asset valuation method to comply with paragraphs (a) through (c) of this section must make the change no later than the time when the plan is first required to comply with this section under paragraph (e)(3). A method of adjustment must be used to take account of any difference in the actuarial value of the plan's assets based on the old and new valuation methods. The plan may use either—

(i) A method of adjustment described in paragraph (e)(5) or (e)(6) of this section without prior approval by the Commissioner, or

(ii) Any other method of adjustment if the Commissioner gives prior approval under section 412(c)(5).

(5) ***Retroactive recomputation method.***

(i) Under this method of adjustment, the plan recomputes the balance of the funding standard account as of the beginning of the first plan year for which it uses its new asset valuation method to comply with paragraphs (a) through (c) of this section. This new balance is recomputed by retroactively applying the plan's new method as of the first day of the first plan year to which section 412 applies.

(ii) Beginning with the first plan year for which it uses its new method, the plan computes the normal cost and amortization charges and credits to the funding standard account based on the retroactive application of its new method as of the first day of the first plan year to which section 412 applies.

(iii) If the recomputed aggregate charges exceed the recomputed aggregate credits to the funding standard account as of the end of the first plan year for which the plan uses its new method, an additional contribution to the plan may be necessary to avoid an accumulated funding deficiency in that year. The use of the retroactive recomputation method may also result in an accumulated funding deficiency for years prior to that first year. In such cases, the rules of section 412(c)(10), relating to the time when certain contributions are deemed to have been made, apply.

(6) ***Prospective gain or loss adjustment method.***

(i) Under this method of adjustment the plan values its assets under its new method no later than the valuation date for the first plan year beginning after [the publication date of this section]

(ii) Regardless of the type of funding method used by a plan, the difference in the value of the assets under the old and the new asset valuation methods may be treated as arising from an experience loss or gain; or alternatively it may be treated as arising from a change in actuarial assumptions.

(iii) The treatment of this difference as an experience gain or loss or as a change in actuarial assumptions must be consistent with the treatment of such gains, losses, or changes under the funding method used by the plan. Thus, if a plan uses a spread gain type funding method other than the aggregate cost method, the difference in the value of assets under the old and the new asset valuation methods may be either amortized or spread over future periods as a part of normal cost. Examples of this type of funding method are the frozen initial liability cost method and the attained age normal cost method. With an aggregate method, the difference in the value of assets under the old and the new asset valuation methods must be spread over future periods as a part of normal cost.

(Secs. 412(c)(2) and 7805 of the Internal Revenue Code of 1954 (88 Stat. 916 and 68A Stat. 917; 26 U.S.C. 412(c)(2) and 7805))

[T.D. 7734, 45 FR 74718, Nov. 12, 1980]

§ 1.412(c)(3)-1 Reasonable funding methods.

(a) ***Introduction*** —

(1) ***In general.*** This section prescribes rules for determining whether or not, in the case of an ongoing plan, a funding method is reasonable for purposes of section 412(c)(3). A method is unreasonable only if it is found to be inconsistent with a rule prescribed in this section. The term “reasonable funding method” under this section has the same meaning as the term “acceptable actuarial cost method” under section 3(31) of the Employee Retirement Income Security Act of 1974 (ERISA).

(2) ***Computations included in method.*** See § 1.412(c)(1)-1(b) for a discussion of matters that are, and are not, included in the funding method of a plan.

(3) ***Plans using shortfall.*** The shortfall method is a method of determining charges to the funding standard account by adapting the underlying funding method of certain collectively bargained plans in the manner described in § 1.412(c)(1)-2. As such, the shortfall method is a funding method. The underlying method of a plan that uses the shortfall method must be a reasonable funding method under this section. The rules contained in this section, relating to cost under a reasonable funding method, apply in the shortfall method to the annual computation charge under § 1.412(c)(1)-2(d).

(4) ***Scope of funding method.*** Except for the shortfall method, a reasonable funding method is applied to the computation of—

(i) The normal cost of a plan for a plan year; and, if applicable,

(ii) The bases established under section 412(b)(2)(B), (C), and (D), and (3) (B) ("amortizable bases").

(b) ***General rules for reasonable funding methods*** —

(1) ***Basic funding formula.*** At any time, except as provided by the Commissioner, the present value of future benefits under a reasonable funding method must equal the sum of the following amounts:

(i) The present value of normal costs (taking into account future mandatory employee contributions, within the meaning of section 411(c)(2)(C), in the case of a contributory plan) over the future working lifetime of participants;

(ii) The sum of the unamortized portions of amortizable bases, if any, treating credit bases under section 412(b)(3)(B) as negative numbers; and

(iii) The plan assets, decreased by a credit balance (and increased by a debit balance) in the funding standard account under section 412(b).

(2) ***Normal cost.*** Normal cost under a reasonable funding method must be expressed as—

(i) A level dollar amount, or a level percentage of pay, that is computed from year to year on either an individual basis or an aggregate basis; or

(ii) An amount equal to the present value of benefits accruing under the method for a particular plan year.

(3) ***Application to shortfall.*** Paragraph (b)(2) will not fail to be satisfied merely because an amount described in (i) or (ii) is expressed as permitted under the shortfall method.

(c) ***Additional requirements*** —

(1) ***Inclusion of all liabilities.*** Under a reasonable funding method, all liabilities of the plan for benefits, whether vested or not, must be taken into account.

(2) ***Production of experience gains and losses.*** If each actuarial assumption is exactly realized under a reasonable funding method, no experience gains or losses are produced.

(3) ***Plan population*** —

(i) ***In general.*** Under a reasonable funding method, the plan population must include three classes of individuals: participants currently employed in the service of the employer; former participants who either terminated service with the employer, or retired, under the plan; and all other individuals currently entitled to benefits under the plan. See § 1.412(c)(3)-1(d)(2) for rules concerning anticipated future participants.

(ii) ***Limited exclusion for certain recent participants.*** Under a reasonable funding method, certain individuals may be excluded from the first class of individuals described in paragraph (c)(3)(i) of this section unless otherwise provided by the Commissioner. The excludable individuals are participants who would be excluded from participation by the minimum age or service requirement of section 410 but who, under the terms of the plan, participate immediately upon entering the service of the employer.

(iii) ***Special exclusion for "rule of parity" cases.*** Under a reasonable funding method, certain individuals may be excluded from the second class of individuals described in paragraph (c)(3)(i) of this section. The excludable individuals are those former participants who have terminated service with the employer without vested benefits and whose service might be taken into account in future years because the "rule of parity" of section 411(a)(6)(D) does not permit that service to be disregarded. However if the plan's experience as to separated employees' returning to service has been such that the exclusion described in this subparagraph would be unreasonable, the exclusion would no longer apply.

(4) ***Use of salary scale*** —

(i) ***General acceptability.*** The use of a salary scale assumption is not inappropriate merely because of the funding method with which it is used. Therefore, in determining whether actuarial assumptions are reasonable, a salary scale will not be considered to be prohibited merely because a particular funding method is being used.

(ii) ***Projection to appropriate salary.*** Under a reasonable funding method, salary scales reflected in projected benefits must be the expected salary on which benefits would be based under the plan at the age when the receipt of benefits is expected to begin.

(5) ***Treatment of allocable items.*** Under a reasonable funding method that allocates assets to individual participants to determine costs, the allocation of assets among participants must be reasonable. An initial allocation of assets among participants will be considered reasonable only if it is in proportion to related liabilities. However, the Commissioner may determine, based on the facts and circumstances, that it is unreasonable to continue to allocate assets on this basis beyond the initial year. Under a reasonable funding method that allocates liabilities among different elements of past and future service, the allocation of liabilities must be reasonable.

(d) ***Prohibited considerations under a reasonable funding method*** —

(1) ***Anticipated benefit changes*** —

(i) ***In general.*** Except as otherwise provided by the Commissioner, a reasonable funding method does not anticipate changes in plan benefits that become effective, whether or not retroactively, in a future plan year or that become effective after the first day of, but during, a current plan year.

(ii) ***Exception for collectively bargained plans.*** A collectively bargained plan described in section 413(a) may on a consistent basis anticipate benefit increases scheduled to take effect during the term of the collective-bargaining agreement applicable to the plan. A plan's treatment of benefit increases scheduled in a collective bargaining agreement is part of its funding method. Accordingly, a change in a plan's treatment of such benefit increases (for example, ignoring anticipated increases after taking them into account) is a change of funding method.

(2) ***Anticipated future participants.*** A reasonable funding method must not anticipate the affiliation with the plan of future participants not employed in the service of the employer on the plan valuation date. However, a reasonable funding method may anticipate the affiliation with the plan of current employees who have not satisfied the participation requirements of the plan.

(e) ***Special rules for certain funding methods*** —

(1) ***Applicability of special rules.*** Paragraph (e) of this section applies to a funding method that determines normal cost under paragraph (b)(2)(ii) of this section.

(2) ***Use of salary scale.*** For rules relating to use of a salary scale assumption, see paragraph (c)(4) of this section.

(3) ***Allocation of liabilities.*** In determining a plan's normal cost and accrued liability for a particular plan year, the projected benefits of the plan must be allocated between past years and future years. Except in the case of a career average pay plan, this allocation must be in proportion to the applicable rates of benefit accrual under the plan. Thus, the allocation to past years is effected by multiplying the projected benefit by a fraction. The numerator of the fraction is the participant's credited years of service. The denominator is the participant's total credited years of service at the anticipated benefit commencement date. Adjustments are made to account for changes in the rate of benefit accrual. An allocation based on compensation is not permitted. In the case of a career average pay plan, an allocation between past and future service benefits must be reasonable.

(f) ***Treatment of ancillary benefit costs*** —

(1) ***General rule.*** Under a reasonable funding method, except as otherwise provided by this paragraph (f), ancillary benefit costs must be computed by using the same method used to compute retirement benefit costs under a plan.

(2) ***Ancillary benefit defined.*** For purposes of this paragraph an ancillary benefit is a benefit that is paid as a result of a specified event which—

(i) Occurs not later than a participant's separation from service, and

(ii) Was detrimental to the participant's health.

Thus, for example, benefits payable if a participant dies or becomes disabled prior to separation from service are ancillary benefits because the events giving rise to the benefits are detrimental to the participant's health. However, an early retirement benefit, a social security supplement (as defined in § 1.411(a)-7(c)(4)(ii)), and the vesting of plan benefits (even if more rapid than is required by section 411) are not ancillary benefits because those benefits do not result from an event which is detrimental to the participant's health.

(3) ***Exception for certain insurance contracts.*** Under a reasonable funding method, regardless of the method used to compute retirement benefit costs, the cost of an ancillary benefit may equal the premium paid for that benefit under an insurance contract if—

(i) The ancillary benefit is provided under the contract, and

(ii) The benefit is guaranteed under the contract.

(4) ***Exception for 1-year term funding and other approved methods.*** [Reserved]

(5) ***Section 401(h) benefits.*** Section 412 does not apply to benefits that are described in section 401(h) and for which a separate account is maintained.

(g) ***Examples.*** The principles of this section are illustrated by the following examples:

Example 1. Assume that a plan, using funding method A, is in its first year. No contributions have been made to the plan, other than a nominal contribution to establish a corpus for the plan's trust. There is no past service liability, and the normal cost is a constant percentage of an annually determined amount. The constant percentage is 99 percent, and the annually determined amount is the excess of the present value of future benefits over plan assets. The present value of future benefits is $10,000. Under paragraph (b)(1) of this section, the present value of future benefits must equal the present value of future normal costs plus plan assets. (No amortizable bases exist, nor are there credit or debit balances.) Under method A, the present value of future normal costs would equal the sum of a series of annually decreasing amounts. Because of the constant percentage factor, the present value of future normal costs over the years can never equal $10,000, the present value of future benefits. In effect, then, assets under method A can never equal the present value of future benefits if all assumptions are exactly realized. Therefore, method A is not a reasonable funding method.

Example 2. Assume that a plan, using funding method B, determines normal cost by computing the present value of benefits expected to be accrued under the plan by the end of 10 years after the valuation date and adding to this the present value of benefits expected to be paid within these 10 years. Plan assets are subtracted from the sum of the two present value amounts. The difference then is divided by the present value of salaries projected over the 10 years. Under paragraph (c)(1) of this section, all liabilities of a plan must be taken into account. Because method B takes into account only benefits paid or accrued by the end of 10 years, it is not a reasonable funding method.

Example 3. Assume that a plan, using funding method C, determines normal cost as a constant percentage of compensation. (This percentage is determined as follows: The excess of projected benefits over accrued benefits is computed. Then the present value of this excess is divided by the present value of future salaries.) However, the accrued liability is computed each year as the present value of accrued benefits. (This computation does not reflect normal cost as a constant percentage of compensation. Thus, normal cost under the plan does not link accrued liabilities under the plan for consecutive years as would be the case, for example, under a unit credit cost method.) In determining gains and losses, method C compares the actual unfunded liability (the accrued liability less assets) with the expected unfunded liability (the sum of the actual unfunded liability in the previous year and the normal cost for the previous year less the contribution made for the previous year, all adjusted for interest). Under paragraph (c)(2) of this section, if actuarial assumptions are exactly realized, experience gains and losses must not be produced. Under method C, the use of a constant percentage in computing normal cost (and the expected unfunded liability) coupled with the manner of computing the accrued liability (and the actual unfunded liability) generally produces gains in the earlier years and losses in the later years if each actuarial assumption is exactly realized. Therefore, method C is not a reasonable funding method.

Example 4. Assume that a plan, using funding method D, bases benefits on final average pay. Under method D, the past service liability on any date equals the present value of the accrued benefit on that date based on compensation as of that date. The normal cost for any year equals the present value of a certain amount. That amount is the excess of the projected accrued benefit as of the end of the year over the actual accrued benefit at the beginning of the year. Accrued benefits, projected as of the end of a year, reflect a 1-year salary projection. Under paragraph (c)(4) of this section, salary scales reflected in projected benefits must project salaries to the salary on which benefits would be based under the plan at the age when the receipt of benefits under the plan is expected to begin. Because the plan is not a career average pay plan and compensation is projected only 1 year,

method D is not a reasonable funding method. (Under paragraph (c)(4) of this section, the use of a salary scale assumption could be required with a unit credit method if, without the use of a salary scale, assumptions in the aggregate are unreasonable.)

Example 5. Assume that a plan, using method E, a unit credit funding method, calculates a participant's accrued benefit according to the following formula: 2 percent of final salary for the first 10 years of service and 1 percent of final salary for the years of service in excess of 10. Under the plan, no employee may be credited with more than 25 years of service. The actuarial assumptions for the valuation include a salary scale of 5 percent per year. For a participant at age 40 with 15 years of service, a current salary of $20,000 and a normal retirement age of 65, the accrued liability for the retirement benefit is the present value of an annuity of $16,932 per year, commencing at age 65. The $16,932 is calculated as follows:

$$\$20{,}000 \times 3.3864 \times 35\% \times \frac{(10 \times 2) + (5 \times 1)}{(10 \times 2) - (15 \times 1) + (15 \times 0)}$$

(3.3864 is 1.05 raised to the 25th power; the 25th power reflects the difference between normal retirement age and attained age (65-40).)

Salary under this method is projected to the age when the receipt of benefits is expected to begin. Therefore, method E meets the requirement of paragraph (c)(4) of this section. Also, the allocation of benefits under method E between past and future years of service meets the requirements of paragraph (e)(3) of this section.

Example 6. Assume that a plan that has two participants and that previously used the unit credit cost method wishes to change the funding method at the beginning of the plan year to funding method F, a modification of the aggregate cost method. The modification involves determining normal cost for each of the two participants under the plan. Therefore, it requires an allocation of assets to each participant for valuation purposes. The actuary proposes to allocate the assets on hand at the beginning of the plan year of the change in funding method in proportion to the accrued liabilities calculated under the unit credit cost method. The relevant results of the calculations are shown below:

	Employees		Totals
	M	N	
Accrued Liabilities (unit credit method):			
Dollar amount	15,670	906	16,576
Per cent of total	94.53	5.47	100.00
Assets:			
Dollar amount	7,835	453	8,288

	Employees		Totals
	M	N	
per cent of total	94.53	5.47	100.00

The proposed allocation in proportion to the accrued liabilities under the unit credit cost method satisfies the requirements of paragraph (c)(5) of this section at the beginning of the first plan year for which the new method is used.

Example 7. The facts are the same as in Example 6. However, the actuary proposes to allocate all the assets to employee M, the older employee. Method F, under these facts, is not an acceptable funding method because the allocation is not in proportion to related liabilities as required under paragraph (c)(5) of this section.

[T.D. 7746, 45 FR 86430, Dec. 31, 1980]

§ 1.412(c)(3)-2 Effective dates and transitional rules relating to reasonable funding methods.

(a) ***Introduction.*** This section prescribes effective dates for rules relating to reasonable funding methods, under section 412(c)(3) and § 1.412(c)(3)-1. Also, this section sets forth rules concerning adjustments to a plan's funding standard account that are necessitated by a change in funding method, and a provision setting forth procedural requirements for use of an optional phase-in of required changes.

(b) ***Effective date*** —

(1) ***General rule.*** Except as otherwise provided by subparagraph (2) of this paragraph, § 1.412(c)(3)-1 applies to any valuation of a plan's liabilities (within the meaning of section 412(c)(9)) as of a date after April 30, 1981.

(2) ***Exception.*** If a collective bargaining agreement which determines contributions to a plan is in effect on April 30, 1981, then § 1.412(c)(3)-1 applies to any valuation of that plan's liabilities as of a date after the earlier of the date on which the last such collective bargaining agreement expires or April 30, 1984.

(3) ***Transitional rule.*** The reasonableness of a funding method used in making a valuation of a plan's liability as of a date before the effective date determined under subparagraph (1) or (2) of this paragraph is determined on the basis of such published guidance as was available on the date as of which the valuation was made.

(c) ***Change of funding method without approval*** —

(1) ***In general.*** A plan that is required to change its funding method to comply with § 1.412(c)(3)-1 is not required to submit the change of funding method for approval as otherwise required by section 412(c)(5). However, this change must be described on Form 5500, Schedule B for the plan year with respect to which the change is first effective.

(2) ***Amortization base.*** An amortization base must be established in the plan year of the change in method equal to the change in the unfunded liability due to the change (where both unfunded liabilities are based on the same actuarial assumptions). Such a base must be amortized over 30 years in determining the charges or credits to the funding standard account, unless the Commissioner upon application permits amortization over a shorter period.

(d) ***Phase-in of additional funding required by new method*** —

(1) ***In general.*** A plan that is required to change its funding method to comply with § 1.412(c)(3)-1 may elect to charge and credit the funding standard account as provided in this paragraph. An election under this paragraph shall be irrevocable.

(2) ***Credit in year of change.*** In the plan year of the change in method the funding standard account may be credited with an amount not in excess of 0.8 multiplied by the excess (if any) of—

(i) The normal cost under the new method plus the amortization charge (or minus the amortization credit) computed as described in § 1.412(c)(3)-2(c)(2), over

(ii) The normal cost under the prior method, for the plan year of the change in method.

(3) ***Credits in the next three years.*** In the three years following the year of the change the funding standard account may be credited with an amount not in excess of 0.6, 0.4, and 0.2 respectively in the first, second, and third years, multiplied by either of the following amounts, computed as of the last day of the year of credit—

(i) The excess described in § 1.412(c)(3)-2(d)(2) multiplied by a fraction (not greater than 1), the numerator of which is the number of participants in the year of the credit and the denominator of which is the number of participants in the year of the change, or, at the option of the plan,

(ii) The excess (if any) in the year of credit of—

(A) The net charge to the funding standard account based on the new method, over

(B) The net charge to the funding standing account based on the prior method.

(4) ***Computational rules.*** For purposes of the calculation described in § 1.412(c)(3)-2(d)(3)(ii), the net charge is the excess of charges under section 412(b)(2) (A) and (B) over the credits under section 412(b)(3)(B) (including the charge or credit described in § 1.412(c)(3)-2(c)) which would be required using the actuarial assumptions and plan benefit structure in effect on the last day of the plan year of change.

(5) ***Fifteen-year amortization of credits.*** The funding standard account shall be charged with 15-year amortization of each credit described in § 1.412(c)(3)-2(d) (2) and (3) beginning in the year following each such credit.

(6) ***Manner of election.*** An election under this paragraph shall be made by the claiming of the credits described in § 1.412(c)(3)-2(d) (2) and (3) on Schedule B to Form 5500 and by filing such other information as may be required by the Commissioner.

(e) ***Effect on shortfall method.*** The charges and credits described in this section apply in the shortfall method to the annual computation charge described in § 1.412(c)(1)-2(d). The amounts described in § 1.412(c)(3)-2(d) shall be determined before the application of the shortfall method.

(Sec. 3(31) of the Employee Retirement Income Security Act of 1974 (88 Stat. 837; 29 U.S.C. 1002) and sec. 7805 of the Internal Revenue Code of 1954 (68A Stat. 917; 26 U.S.C. 7805))

[T.D. 7746, 45 FR 86432, Dec. 31, 1980]

§ 1.412(i)-1 Certain insurance contract plans.

(a) ***In general.*** Under section 412(h)(2) of the Internal Revenue Code of 1954, as added by section 1013(a) of the Employee Retirement Income Security Act of 1974 (88 Stat. 914) (hereinafter referred to as "the Act"), an insurance contract plan described in section 412(i) for a plan year is not subject to the minimum funding requirements of section 412 for that plan year. Consequently, if an individual or group insurance contract plan satisfies all of the requirements of paragraph (b)(2) or (c)(2) of this section, whichever are applicable, for the plan year, the plan is not subject to the requirements of section 412 for that plan year. The effective date for section 412 of the Code is determined under section 1017 of the Act. In general, in the case of a plan which was not in existence on January 1, 1974, this section applies for plan years beginning after September 2, 1974, and in the case of a plan in existence on January 1, 1974, to plan years beginning after December 31, 1975.

(b) ***Individual insurance contract plans.***

(1) An individual insurance contract plan is described in section 412(i) during a plan year if the plan satisfies the requirements of paragraph (b)(2) of this section for the plan year.

(2) The requirements of this paragraph are:

(i) The plan must be funded exclusively by the purchase from an insurance company or companies (licensed under the law of a State or the District of Columbia to do business with the plan) of individual annuity or individual insurance contracts, or a combination thereof. The purchase may be made either directly by the employer or through the use of a custodial account or trust. A plan shall not be considered to be funded otherwise than exclusively by the purchase of individual annuity or individual insurance contracts merely because the employer makes a payment necessary to comply with the provisions of section 411(c)(2) (relating to accrued benefit from employee contributions).

(ii) The individual annuity or individual insurance contracts issued under the plan must provide for level annual, or more frequent, premium payments to be paid under the plan for the period commencing with the date each individual participating in the plan became a participant and ending not later than the normal retirement age for that individual or, if earlier, the date the individual ceases his participation in the plan. Premium payments may be considered to be level even though items such as experience gains and dividends are applied against premiums. In the case of an increase in benefits, the contracts must provide for level annual payments with respect to such increase to be paid for the period commencing at the time the increase becomes effective. If payment commences on the first payment date under the contract occurring after the date an individual becomes a participant or after the effective date of an increase in benefits, the requirements of this subdivision will be satisfied even though payment does not commence on the date on which the individual's participation commenced or on the effective date of the benefit increase, whichever is applicable. If an individual accrues benefits after his normal retirement age, the requirements of this subdivision are satisfied if payment is made at the time such benefits accrue. If the provisions required by this subdivision are set forth in a separate agreement with the issuer of the individual contracts, they need not be included in the individual contracts.

(iii) The benefits provided by the plan for each individual participant must be equal to the benefits provided under his individual contracts at his normal retirement age under the plan provisions.

(iv) The benefits provided by the plan for each individual participant must be guaranteed by the life insurance company, described in paragraph (b)(2)(i) of this section, issuing the individual contracts to the extent premiums have been paid.

(v) Except as provided in the following sentence, all premiums payable for the plan year, and for all prior plan years, under the insurance or annuity contracts must have been paid before lapse. If the lapse has occurred during the plan year, the requirements of this subdivision will be considered to have been met if reinstatement of the insurance policy, under which the individual insurance contracts are issued, occurs during the year of the lapse and before distribution is made or benefits commence to any participant whose benefits are reduced because of the lapse.

(vi) No rights under the individual contracts may have been subject to a security interest at any time during the plan year. This subdivision shall not apply to contracts which have been distributed to participants if the security interest is created after the date of distribution.

(vii) No policy loans, including loans to individual participants, on any of the individual contracts may be outstanding at any time during the plan year. This subdivision shall not apply to contracts which have been distributed to participants if the loan is made after the date of distribution. An application of funds by the issuer to pay premiums due under the contracts shall be deemed not to be a policy loan if the amount of the funds so applied, and interest thereon, is repaid during the plan year in which the funds are applied and before distribution is made or benefits commence to any participant whose benefits are reduced because of such application.

(c) ***Group insurance contract plans.***

(1) A group insurance contract plan is described in section 412(i) during a plan year if the plan satisfies the requirements of subparagraph (2) for the plan year.

(2) The requirements of this subparagraph are:

(i) The plan must be funded exclusively by the purchase from an insurance company or companies, described in paragraph (b)(2)(i) of this section, of group annuity or group insurance contracts, or a combination thereof. The purchase may be made either directly by the employer or through the use of a custodial account or trust. A plan shall not be considered to be funded otherwise than exclusively by the purchase of group annuity or group insurance contracts merely because the employer makes a payment necessary to comply with the provisions of section 411 (c)(2) (relating to accrued benefit derived from employee contributions).

(ii) In the case of a plan funded by a group insurance contract or a group annuity contract the requirements of paragraph (b)(2)(ii) of this section must be satisfied by the group contract issued under the plan. Thus, for example, each individual participant's benefits under the group contract must be provided for by level annual, or more frequent, payments equivalent to the payments required to satisfy such paragraph. The requirements of this subdivision will not be satisfied if benefits for any individual are not provided for by level payments made on his behalf under the group contract.

(iii) The group annuity or group insurance contract must satisfy the requirements of clauses (iii), (iv), (v), (vi), and (vii) of paragraph (b)(2). Thus, for example, each participant's benefits provided by the plan must be equal to his benefits provided under the group contract at his normal retirement age.

(iv)

(A) If the plan is funded by a group annuity contract, the value of the benefits guaranteed by the insurance company issuing the contract under the plan with respect to each participant under the contract must not be less than the value of such benefits which the cash surrender value would provide for that participant under any individual annuity contract plan satisfying the requirements of paragraph (b) and approved for sale in the State where the principal office of the plan is located.

(B) If the plan is funded by a group insurance contract, the value of the benefits guaranteed by the insurance company issuing the contract under the plan with respect to each participate under the contract must not be less than the value of such benefits which the cash surrender value would provide for that participant under any individual insurance contract plan satisfying the requirements of paragraph (b) and approved for sale in the State where the principal office of the plan is located.

(v) Under the group annuity or group insurance contract, premiums or other consideration received by the insurance company (and, if a custodial account or trust is used, the custodian or trustee thereof) must be allocated to purchase individual benefits for participants under the plan. A plan which maintains unallocated funds in an auxiliary trust fund or which provides that an insurance company will maintain unallocated funds in a separate account, such as a group deposit administration contract, does not satisfy the requirements of this subdivision.

(d) ***Combination of plans.*** A plan which is funded by a combination of individual contracts and a group contract shall be treated as a plan described in section 412 (i) for the plan year if the combination, in the aggregate, satisfies the requirements of this section for the plan year.

[T.D. 7746, 45 FR 47676, July 16, 1980; 45 FR 50563, July 30, 1980]

§ 1.413-1 Special rules for collectively bargained plans.

(a) ***Application of section 413(b) to certain collectively bargained plans*** —

(1) ***In general.*** Section 413(b) sets forth special rules applicable to certain pension, profit-sharing, and stock bonus plans (and each trust which is a part of such a plan), hereinafter referred to as "section 413(b) plans", described in paragraph (a)(2) of this section. Notwithstanding any other provision of the Code, a section 413(b) plan is subject to the special rules of section 413(b) (1) through (8) and paragraphs (b) through (i) of this section.

(2) ***Requirements.*** Section 413(b) applies to a plan (and each trust which is a part of such plan) if the plan is a single plan which is maintained pursuant to one or more agreements which the Secretary of Labor finds to be a collective bargaining agreement between employee representatives and one or more employers. A plan which provides benefits for employees of more than one employer is considered a single plan subject to the requirements of section 413(b) and this section if the plan is considered a single plan for purposes of applying section 414(l) (see § 1.414(l)-1(b)(1)). For purposes of determining whether one or more plans (or agreements) are a single plan, under sections 413(a) and 414(l), it is irrelevant that there are in form two or more separate plans (or agreements). For example, a single plan will be considered to exist where agreements are entered into separately by a national labor organization (or one or more local units of such organization), on one hand, and individual employers, on the other hand, if the plan is considered a single plan for purposes of applying section 414(*l*).

(3) *Additional rules and effective dates.*

(i) If a plan is a section 413(b) plan at a relevant time, the rules of section 413(b) and this section apply, and the rules of section 413(c) and § 1.413-2 do not apply to the plan.

(ii) The qualification of a section 413(b) plan, at any relevant time, under section 401(a), 403(a), or 405(a), as modified by sections 413(b) and this section, is determined with respect to all employers maintaining the plan. Consequently, the failure by one employer maintaining the plan (or by the plan itself) to satisfy an applicable qualification requirement will result in the disqualification of the plan for all employers maintaining the plan.

(iii) Except as otherwise provided, section 413 (a) and (b) and this section apply to a plan for plan years beginning after December 31, 1953.

(b) *Participation.* Section 410 and the regulations thereunder shall be applied as if all employees of each of the employers who are parties to the collective-bargaining agreement and all such employees who are subject to the same benefit computation formula under the plan were employed by a single employer.

(c) *Discrimination, etc.* —

(1) *General rule.* Section 401(a)(4) (relating to prohibited discrimination) and section 411(d)(3) (relating to vesting required on termination, partial termination, or discontinuance of contributions) shall be applied as if all the participants in the plan, who are subject to the same benefit computation formula and who are employed by employers who are parties to the collective bargaining agreement, are employed by a single employer.

(2) *Application of discrimination rules.* Under section 401(a)(4) and the regulations thereunder a plan is not qualified unless the contributions or benefits provided under the plan do not discriminate in favor of officers, shareholders or highly compensated employees (hereinafter referred to collectively as "the prohibited group"). The presence or absence of such discrimination under a plan to which this section applies at any time shall not be determined on an employer-by-employer basis, but rather by testing separately each group of employees who are subject to the same benefit computation formula to determine if there is discrimination within such group. Consequently, discrimination in contributions or benefits among two or more different groups or among employees in different groups covered by the plan may be present without causing the plan to be disqualified. However, the presence of prohibited discrimination within one such group will result in the disqualification of the plan for all groups. Section 401(a)(4) and the regulations thereunder provide rules relating to the determination of which employees are members of the prohibited group and to the determination of discrimination in contributions or benefits which are applicable to a plan to which this section applies. The determination of whether or not an individual employee is a highly compensated employee shall be based on the relationship of the compensation of the employee to the compensation of all the other employees of all employers who are maintaining the plan and have employees covered under the same benefit computation formula, whether or not such other employees are covered by the plan or are covered under the same benefit computation formula, rather than to the compensation of all the other employees of the employer of such individual employee.

(3) *Application of termination, etc. rules.* Section 411(d)(3) and the regulations thereunder (relating to vesting required in the case of a termination, partial termination, or complete discontinuance of contributions) apply to a plan subject to the provisions of this section. The requirements of section 411(d)(3) shall be applied as if all participants in the plan who are subject to the same benefit computation formula and who are employed by employers who are parties to the collective

bargaining agreement are employed by a single employer. The determination of whether or not there is a termination, partial termination, or complete discontinuance of contributions shall be made separately for each such group of participants who are treated as employed by a single employer. Consequently, if there are two or more groups of participants, a termination, partial termination, or complete discontinuance can take place under a plan with respect to one group of participants but not with respect to another such group of participants or for the entire plan. See § 1.411(d)-2 for rules prescribed under section 411(d)(3).

(4) ***Effective dates and transitional rules.***

(i) Section 413(b)(2) and this paragraph apply to a plan for plan years beginning after December 31, 1953.

(ii) In applying the rules of this paragraph to a plan for plan years to which section 411 does not apply, section 401(a)(7) (as in effect on September 1, 1974) shall be substituted for section 411(d)(3). See § 1.401-6 for rules prescribed under section 401(a)(7) as in effect on September 1, 1974. See § 1.411(a)-2 for the effective dates of section 411.

(5) ***Examples.*** The provisions of this paragraph are illustrated by the following examples:

Example 1. Plan A is a defined benefit plan subject to the provisions of this section and covers two groups of participants, local unions 1 and 2. Each local union has negotiated its own bargaining agreement with employers X, Y, and Z to provide its own benefit computation formula. The following table indicates the composition of the plan A participants:

	Employer X	Employer Y	Employer Z	Total
Local union 1	20	10	70	100
Local union 2	30	70	100	200

Under the rules of subparagraph (2) of this paragraph, the determination of whether contributions or benefits provided under the plan discriminate in favor of the prohibited group is made by applying the rules of section 401(a)(4) separately to participants who are members of local union 1 and local union 2. Thus, plan A will satisfy the qualification requirements of section 401(a)(4) if, within local union 1 and local union 2, respectively, plan benefits do not discriminate in favor of participants who are prohibited group employees within local union 1 and local union 2. Under the rules of subparagraph (2) of this paragraph, the determination under section 401(a)(4) of whether or not any individual employee, included within the 300 participants in plan A, is a highly compensated employee is based on the relationship of the compensation of such individual employee to the compensation of all the employees of Employers X, Y, and Z, whether or not such employees are participants in plan A. Thus, if there are 20 participants who are prohibited group employees within the 100 participants of local union 1, discrimination is determined by comparing the benefits of the 20 prohibited group participants to the benefits of the other 80 participants within local union 1.

> The same comparison would have to be made for the local union 2 participants between the prohibited group participants and the other participants in local union 2. Discrimination in benefits, if any, between the participants in local union 1 and local union 2, or among the employees of X, Y, or Z, would not affect the qualification of plan A under section 401(a)(4).

Example 2. Assume the same facts as in example (1). Employer X withdraws from the plan. Under subparagraph (3) of this paragraph, whether or not as a result of the withdrawal there is a partial termination under section 411(d)(3) is to be determined by applying the requirements of such section separately to the local union 1 and local union 2 participants. See § 1.411(d)-2 for the requirements relating to partial terminations. The application of such requirements raises the following possibilities with respect to the plan: (1) A partial termination as to local union 1, (2) a partial termination as to local union 2, (3) a partial termination as to both local unions 1 and 2, or (4) no partial termination for either local union.

Example 3. Assume the same facts as in example (1). Plan A is amended to cease future benefit accruals under the plan for local union 1 participants. Under subparagraph (3) of the paragraph, whether or not as a result of the cessation there is a partial termination under section 411(d)(3) is to be determined by applying the requirements of such section separately to the local union 1 and local union 2 participants.

Example 4. Plan A is a defined benefit plan that provides for two normal retirement benefits, X and 2X. A participant receives benefit X if the collective bargaining agreement covering his employment provides for a contribution rate, M. If such agreement provides for a contribution rate of N, the participant receives benefit 2X. Benefit X and benefit 2X constitute separate benefit computation formulas.

Example 5. Plan B is a defined benefit plan that provides for a normal retirement benefit, X. Benefit X is provided for all plan participants even though there are two collective bargaining agreements providing for different contribution rates, M and N. Plan B has a single benefit computation formula, even though there are two contribution rates.

(d) ***Exclusive benefit.*** Under section 401(a), a plan is not qualified unless the plan is for the exclusive benefit of the employees (and their beneficiaries) of the employer establishing and maintaining the plan. Other qualification requirements under section 401(a) require the application of the exclusive benefit rule (for example, section 401(a)(2), which precludes diversion of plan assets). For purposes of applying the requirements of section 401(a) in determining whether a plan subject to this section is, with respect to each employer establishing and maintaining the plan, for the exclusive benefit of its employees (and their beneficiaries), all of the employees participating in the plan shall be treated as employees of each such employer. Thus, for example, contributions by employer A to a plan subject to this section could be allocated to employees of other employers maintaining the plan without violating the requirements of section 401(a)(2), because all the employees participating in the plan are deemed to be employees of A.

(e) ***Vesting.*** Section 411 (other than section 411(d)(3) relating to termination or partial termination; discontinuance of contributions) and the regulations thereunder shall be applied as if all employers who have been parties to the collective-bargaining agreement constituted a single employer. The application of any rules with respect to breaks in service under section 411 shall be made under regulations prescribed by the Secretary of Labor. Thus, for example, all the hours which an employee worked for each

employer in a collectively-bargained plan would be aggregated in computing the employee's hours of service under the plan. See also 29 CFR Part 2530 (Department of Labor regulations relating to minimum standards for employee pension benefit plans.)

(f)-(h) [Reserved]

(i) ***Employees of labor unions*** —

(1) ***General rule.*** For purposes of section 413(b) and this section, employees of employee representatives shall be treated as employees of an employer establishing and maintaining a plan to which section 413(b) and this section apply if, with respect to the employees of such representatives, the plan satisfies the nondiscrimination requirements of section 401(a)(4) (determined without regard to section 413(b)(2)) and the minimum participation and coverage requirements of section 410 (determined without regard to section 413(b)(1)). For purposes of the preceding sentence, the plan and any affiliated employee health or welfare plan shall be deemed to be an employee representative. If employees of employee representatives, the plan, or an affiliated employee health or welfare plan are covered by the plan and are not treated as employees of an employer establishing and maintaining the plan under the provisions of this paragraph, the plan fails to satisfy the qualification requirements of section 401(a). In addition, in order for such a plan to be qualified, the plan must satisfy the requirements of section 413(b) (1) and (2), relating to participation and discrimination, respectively; see paragraphs (b) and (c) of this section. For purposes of this paragraph, an affiliated health or welfare plan is a health or welfare plan that is maintained under the same collective bargaining agreement or agreements, and that covers the same membership.

(2) ***Effective dates and transitional rules.***

(i) Section 413(b)(8) and this paragraph apply to a plan for plan years beginning after December 31, 1953.

(ii) In applying the rules of this paragraph to a plan for plan years to which section 410 does not apply, section 401(a)(3) (as in effect on September 1, 1974) shall be substituted for section 410. See § 1.401-3 for rules prescribed under section 401(a)(3) as in effect on September 1, 1974. See § 1.410(a)-2 for the effective dates of section 410.

(3) ***Examples.*** The provisions of this paragraph are illustrated by the following examples:

Example 1. Plan A is a defined benefit plan, maintained pursuant to a collective bargaining agreement between employers, X, Y, and Z and labor union, L, which covers members of L employed by X, Y, and Z. In 1978, plan A is amended to cover, under the same benefit formula, all five employees of L who have satisfied the minimum age and service requirements of the plans (age 25 and 1 year of service). Assume that plan A is subject to section 413(b) and satisfies the requirements of section 413(b) (1) and (2). Assume further that with respect to employees of L, plan A

(i) satisfies the nondiscrimination requirements of section 401(a)(4),

(ii) meets the minimum participation requirements of section 410(a), and

(iii) meets the minimum coverage requirements of section 410(b)(1)(A). Under the rules of subparagraph (1) of this paragraph, because such requirements are all satisfied, the employees of L are treated as employees of an employer establishing and maintaining plan A.

Example 2. Assume the same facts as example (1), except that plan A is amended to cover only one of the five employees of L, none of whom is covered by any other plan. Assume further that, under plan A, L does not satisfy the minimum percentage coverage requirement of section 410(b)(1)(A) with respect to employees of L. Assume further that the compensation of the one L employee who is covered by the plan is such that he is highly compensated relative to the four employees of L not covered by the plan. Consequently, L does not satisfy the minimum coverage requirements of section 410(b)(1)(B), with respect to employees of L. Under the rules of subparagraph (1) of this paragraph, the employees of L cannot be treated as employees of an employer establishing and maintaining the A plan because such coverage requirements are not satisfied by L. Consequently, the A plan fails to satisfy the qualification requirements of section 401(a).

(Sec. 411 (88 Stat. 901; 26 U.S.C. 411))

[T.D. 7501, 42 FR 42340, Aug. 23, 1977, as amended by 42 FR 47198, Sept. 20, 1977; T.D. 7654, 44 FR 65063, Nov. 9, 1979]

§ 1.413-2 Special rules for plans maintained by more than one employer.

(a) ***Application of section 413(c)*** —

(1) ***In general.*** Section 413(c) describes certain plans (and each trust which is a part of any such plan) hereinafter referred to as "section 413(c) plans." A plan (and each trust which is a part of such plan) is deemed to be a section 413(c) plan if it is described in subparagraph (2) of this paragraph. Notwithstanding any other provision of the code (not specifically in conflict with the special rules hereinafter mentioned), a section 413(c) plan is subject to the special rules of section 413(c) (1) through (6) and paragraphs (b) through (g) of this section.

(2) ***Section 413(c) plan.*** A plan (and each trust which is a part of such plan) is a section 413(c) plan if—

(i) The plan is a single plan, within the meaning of section 413(a) and § 1.413-1(a)(2), and

(ii) The plan is maintained by more than one employer.

For purposes of subdivision (ii) of this subparagraph, the number of employers maintaining the plan is determined by treating any employers described in section 414(b) (relating to a controlled group of corporations) or any employers described in section 414(c) (relating to trades or businesses under common control), whichever is applicable, as if such employers are a single employer. See § 1.411(a)-5(b)(3) for rules relating to the time when an employer maintains a plan. A master or prototype plan is not a section 413(c) plan unless such a plan is described in this subparagraph. Similarly, the mere fact that a plan, or plans, utilizes a common trust fund or otherwise pools plan assets for investment purposes does not, by itself, result in a particular plan being treated as a section 413(c) plan.

(3) ***Additional rules.***

(i) If a plan is a collectively bargained plan described in § 1.413-1(a), the rules of section 413(c) and this section do not apply, and the rules of section 413(b) and § 1.413-1 do apply to the plan.

(ii) The special rules of section 413(b)(1) and § 1.413-1(b) relating to the application of section 410, other than the rules of section 410(a), do not apply to a section 413(c) plan. Thus, for example, the minimum coverage requirements of section 410(b) are generally applied to a section 413(c) plan on an employer-by-employer basis, taking into account the generally applicable rules such as section 401(a)(5) and section 414 (b) and (c).

(iii) The special rules of section 413(b)(2) and § 1.413-1(c) (relating to (A) section 401(a)(4) and prohibited discrimination, and (B) 411(d)(3) and vesting required on termination, partial termination, or discontinuance of contributions) do not apply to a section 413(c) plan. Thus, for example, the determination of whether or not there is a termination, within the meaning of section 411(d)(3), of a section 413(c) plan is made solely by reference to the rules of sections 411(d)(3) and 413(c)(3).

(iv) The qualification of a section 413(c) plan, at any relevant time, under section 401(a), 403(a) or 405(a), as modified by section 413(c) and this section, is determined with respect to all employers maintaining the section 413(c) plan. Consequently, the failure by one employer maintaining the plan (or by the plan itself) to satisfy an applicable qualification requirement will result in the disqualification of the section 413(c) plan for all employers maintaining the plan.

(4) ***Effective dates.*** Except as otherwise provided, section 413(c) and this section apply to a plan for plan years beginning after December 31, 1953.

(b) ***Participation.*** Section 410(a) and the regulations thereunder shall be applied as if all employees of each of the employers who maintain the plan were employed by a single employer.

(c) ***Exclusive benefit.*** In the case of a plan subject to this section, the exclusive benefit requirements of section 401(a) shall be applied to the plan in the same manner as under section 413(b)(3) and § 1.413-1(d).

(d) ***Vesting.*** Section 411 and the regulations thereunder shall be applied as if all employers who maintain the plan constituted a single employer. The application of any rules with respect to breaks in service under section 411 shall be made under regulations prescribed by the Secretary of Labor. Thus, for example, all the hours which an employee worked for each employer maintaining the plan would be aggregated in computing the employee's hours of service under the plan. See also 29 CFR Part 2530 (Department of Labor regulations relating to minimum standards for employee pension benefit plans).

(Sec. 411 (88 Stat. 901; 26 U.S.C. 411))

[T.D. 7501, 42 FR 42340, Aug. 23, 1977, as amended by 42 FR 47198, Sept. 20, 1977; T.D. 7654, 44 FR 65065, Nov. 9, 1979]

§ 1.414(b)-1 Controlled group of corporations.

(a) ***Defintion of controlled group of corporations.*** For purposes of this section, the term “controlled group of corporations” has the same meaning as is assigned to the term in section 1563(a) and the regulations thereunder, except that

(1) the term “controlled group of corporations” shall not include an “insurance group” described in section 1563(a)(4), and

(2) section 1563(e)(3)(C) (relating to stock owned by certain employees' trusts) shall not apply. For purposes of this section, the term “members of a controlled group” means two or more corporations connected through stock ownership described in section 1563(a) (1), (2), or (3), whether or not such

corporations are "component members of a controlled group" within the meaning of section 1563(b). Two or more corporations are members of a controlled group at any time such corporations meet the requirements of section 1563(a) (as modified by this paragraph). For purposes of this section, if a corporation is a member of more than one controlled group of corporations, such corporation shall be treated as a member of each controlled group.

(b) ***Single plan adopted by two or more members.*** If two or more members of a controlled group of corporations adopt a single plan for a plan year, then the minimum funding standard provided in section 412, the tax imposed by section 4971, and the applicable limitations provided by section 404(a) shall be determined as if such members were a single employer. In such a case, the amount of such items and the allocable portion attributable to each member shall be determined in the manner provided in regulations under sections 412, 4971, and 404(a).

(c) ***Cross reference.*** For rules relating to the application of sections 401, 408(k), 410, 411, 415, and 416 with respect to two or more trades or businesses which are under common control, see section 414(c) and the regulations thereunder.

[T.D. 8179, 53 FR 6605, Mar. 2, 1988]

§ 1.414(c)-1 Commonly controlled trades or businesses.

For purposes of applying the provisions of sections 401 (relating to qualified pension, profit-sharing, and stock bonus plans), 408(k) (relating to simplified employee pensions), 410 (relating to minimum participation standards), 411 (relating to minimum vesting standards), 415 (relating to limitations on benefits and contributions under qualified plans), and 416 (relating to top-heavy plans), all employees of two or more trades or businesses under common control within the meaning of § 1.414(c)-2 for any period shall be treated as employed by a single employer. See sections 401, 408(k), 410, 411, 415, and 416 and the regulations thereunder for rules relating to employees of trades or businesses which are under common control. See § 1.414(c)-5 for effective date.

[T.D. 8179, 53 FR 6606, Mar. 2, 1988]

§ 1.414(c)-2 Two or more trades or businesses under common control.

(a) ***In general.*** For purposes of this section, the term "two or more trades or businesses under common control" means any group of trades or businesses which is either a "parent-subsidiary group of trades or businesses under common control" as defined in paragraph (b) of this section, a "brother-sister group of trades or businesses under common control" as defined in paragraph (c) of this section, or a "combined group of trades or businesses under common control" as defined in paragraph (d) of this section. For purposes of this section and §§ 1.414(c)-3 and 1.414(c)-4, the term "organization" means a sole proprietorship, a partnership (as defined in section 7701(a)(2)), a trust, an estate, or a corporation.

(b) ***Parent-subsidiary group of trades or businesses under common control*** —

(1) ***In general.*** The term "parent-subsidiary group of trades or businesses under common control" means one or more chains of organizations conducting trades or businesses connected through ownership of a controlling interest with a common parent organization if—

(i) A controlling interest in each of the organizations, except the common parent organization, is owned (directly and with the application of § 1.414(c)-4(b)(1), (2), and (3)) by one or more of the other organizations; and

(ii) The common parent organization owns (directly and with the application of § 1.414(c)-4(b)(1), (2), and (3)) a controlling interest in at least one of the other organizations, excluding, in computing such controlling interest, any direct ownership interest by such other organizations.

(2) ***Controlling interest defined*** —

(i) ***Controlling interest.*** For purposes of paragraphs (b) and (c) of this section, the phrase "controlling interest" means:

(A) In the case of an organization which is a corporation, ownership of stock possessing at least 80 percent of total combined voting power of all classes of stock entitled to vote of such corporation or at least 80 percent of the total value of shares of all classes of stock of such corporation;

(B) In the case of an organization which is a trust or estate, ownership of an actuarial interest of at least 80 percent of such trust or estate;

(C) In the case of an organization which is a partnership, ownership of at least 80 percent of the profits interest or capital interest of such partnership; and

(D) In the case of an organization which is a sole proprietorship, ownership of such sole proprietorship.

(ii) ***Actuarial interest.*** For purposes of this section, the actuarial interest of each beneficiary of trust or estate shall be determined by assuming the maximum exercise of discretion by the fiduciary in favor of such beneficiary. The factors and methods prescribed in § 20.2031-7 or, for certain prior periods, § 20.2031-7A (Estate Tax Regulations) for use in ascertaining the value of an interest in property for estate tax purposes shall be used for purposes of this subdivision in determining a beneficiary's actuarial interest.

(c) ***Brother-sister group of trades or businesses under common control*** —

(1) ***In general.*** The term "brother-sister group of trades or businesses under common control" means two or more organizations conducting trades or businesses if

(i) the same five or fewer persons who are individuals, estates, or trusts own (directly and with the application of § 1.414(c)-4) a controlling interest in each organization, and

(ii) taking into account the ownership of each such person only to the extent such ownership is identical with respect to each such organization, such persons are in effective control of each organization. The five or fewer persons whose ownership is considered for purposes of the controlling interest requirement for each organization must be the same persons whose ownership is considered for purposes of the effective control requirement.

(2) ***Effective control defined.*** For purposes of this paragraph, persons are in "effective control" of an organization if—

(i) In the case of an organization which is a corporation, such persons own stock possessing more than 50 percent of the total combined voting power of all classes of stock entitled to vote or more than 50 percent of the total value of shares of all classes of stock of such corporation;

(ii) In the case of an organization which is a trust or estate, such persons own an aggregate actuarial interest of more than 50 percent of such trust or estate;

(iii) In the case of an organization which is a partnership, such persons own an aggregate of more than 50 percent of the profits interest or capital interest of such partnership; and

(iv) In the case of an organization which is a sole proprietorship, one of such persons owns such sole proprietorship.

(d) ***Combined group of trades or businesses under common control.*** The term "combined group of trades or businesses under common control" means any group of three or more organizations, if

(1) each such organization is a member of either a parent-subsidiary group of trades or businesses under common control or a brother-sister group of trades or businesses under common control, and

(2) at least one such organization is the common parent organization of a parent-subsidiary group of trades or businesses under common control and is also a member of a brother-sister group of trades or businesses under common control.

(e) ***Examples.*** The definitions of parent-subsidiary group of trades or businesses under common control, brother-sister group of trades or businesses under common control, and combined group of trades or businesses under common control may be illustrated by the following examples.

> *Example 1.* (a) The ABC partnership owns stock possessing 80 percent of the total combined voting power of all classes of stock entitled to voting of S corporation. ABC partnership is the common parent of a parent-subsidiary group of trades or businesses under common control consisting of the ABC partnership and S Corporation.
> (b) Assume the same facts as in (a) and assume further that S owns 80 percent of the profits interest in the DEF Partnership. The ABC Partnership is the common parent of a parent-subsidiary group of trades or businesses under common control consisting of the ABC Partnership, S Corporation, and the DEF Partnership. The result would be the same if the ABC Partnership, rather than S, owned 80 percent of the profits interest in the DEF Partnership.

Example 2. L Corporation owns 80 percent of the only class of stock of T Corporation, and T, in turn, owns 40 percent of the capital interest in the GHI Partnership. L also owns 80 percent of the only class of stock of N Corporation and N, in turn, owns 40 percent of the capital interest in the GHI Partnership. L is the common parent of a parent-subsidiary group of trades or businesses under common control consisting of L Corporation, T Corporation, N Corporation, and the GHI Partnership.

Example 3. ABC Partnership owns 75 percent of the only class of stock of X and Y Corporations; X owns all the remaining stock of Y, and Y owns all the remaining stock of X. Since interorganization ownership is excluded (that is, treated as not outstanding) for purposes of determining whether ABC owns a controlling interest of at least one of the other organizations, ABC is treated as the owner of stock possessing 100 percent of the voting power and value of all classes of stock of X and of Y for purposes of paragraph (b)(1)(ii) of this section. Therefore, ABC is the common parent of a parent-subsidiary group of trades or businesses under common control consisting of the ABC Partnership, X Corporation, and Y Corporation.

> *Example 4.* Unrelated individuals A, B, C, D, E, and F own an interest in sole proprietorship A, a capital interest in the GHI Partnership, and stock of corporations M, W, X, Y, and Z (each of which has only one class of stock outstanding) in the following proportions:

ORGANIZATIONS

Individuals	A	GHI	M	W	X	Y	Z
A	100%	50%	100%	60%	40%	20%	60%
B	—	40%	—	15%	40%	50%	30%
C	—	—	—	—	10%	10%	10%
D	—	—	—	25%	—	20%	—
E	—	10%	—	—	10%	—	—
	100%	100%	100%	100%	100%	100%	100%

Under these facts the following four brother-sister groups of trades or businesses under common control exist: GHI, X and Z; X, Y and Z; W and Y; A and M. In the case of GHI, X, and Z, for example, A and B together have effective control of each organization because their combined identical ownership of GHI, X and Z is greater than 50%. (A's identical ownership of GHI, X and Z is 40% because A owns at least a 40% interest in each organization. B's identical ownership of GHI, X and Z is 30% because B owns at least a 30% interest in each organization.) A and B (the persons whose ownership is considered for purposes of the effective control requirement) together own a controlling interest in each organization because they own at least 80% of the capital interest of partnership GHI and at least 80% of the total combined voting power of corporations X and Z. Therefore, GHI, X and Z comprise a brother-sister group of trades or businesses under common control. Y is not a member of this group because neither the effective control requirement nor the 80% controlling interest requirement are met. (The effective control requirement is not met because A's and B's combined identical ownership in GHI, X, Y and Z (20% for A and 30% for B) does not exceed 50%. The 80% controlling interest test is not met because A and B together only own 70% of the total combined voting power of the stock of Y.) A and M are not members of this group because B owns no interest in either organization and A's ownership of GHI, X and Z, considered alone, is less than 80%.

Example 5. The outstanding stock of corporations U and V, which have only one class of stock outstanding, is owned by the following unrelated individuals:

CORPORATIONS

Individuals	U	V
	(percent)	(percent)
A	12	12
B	12	12
C	12	12
D	12	12
E	13	13
F	13	13
G	13	13
H	13	13

Individuals	U	V
	(percent)	(percent)
	100	100

Any group of five of the shareholders will own more than 50 percent of the stock in each corporation, in identical holdings. However, U and V are not members of a brother-sister group of trades or businesses under common control because at least 80 percent of the stock of each corporation is not owned by the same five or fewer persons.

Example 6. A, an individual, owns a controlling interest in ABC Partnership and DEF Partnership. ABC, in turn, owns a controlling interest in X Corporation. Since ABC, DEF, and X are each members of either a parent-subsidiary group or a brother-sister group of trades or businesses under common control, and ABC is the common parent of a parent-subsidiary group of trades or businesses under common control consisting of ABC and X, and also a member of a brother-sister group of trades or businesses under common control consisting of ABC and DEF, ABC Partnership, DEF Partnership, and X Corporation are members of the same combined group of trades or businesses under common control.

[T.D. 8179, 53 FR 6606, Mar. 2, 1988, as amended by T.D. 8540, 59 FR 30102, June 10, 1994; T.D. 10018, 89 FR 106851, Dec. 30, 2024]

§ 1.414(c)-3 Exclusion of certain interests or stock in determining control.

(a) ***In general.*** For purposes of § 1.414(c)-2 (b)(2)(i) and (c)(2), the term "interest" and the term "stock" do not include an interest which is treated as not outstanding under paragraph (b) of this section in the case of a parent-subsidiary group of trades or businesses under common control or under paragraph (c) of this section in the case of a brother-sister group of trades or businesses under common control. In addition, the term "stock" does not include treasury stock or nonvoting stock which is limited and preferred as to dividends. For definitions of certain terms used in this section, see paragraph (d) of this section.

(b) ***Parent-subsidiary group of trades or businesses under common control*** —

(1) ***In general.*** If an organization (hereinafter in this section referred to as "parent organization") owns (within the meaning of paragraph (b)(2) of this section)—

(i) In the case of a corporation, 50 percent or more of the total combined voting power of all classes of stock entitled to vote or 50 percent or more of the total value of shares of all classes of stock of such corporation.

(ii) In the case of a trust or an estate, an actuarial interest (within the meaning of § 1.414(c)-2(b)(2)(ii)) of 50 percent or more of such trust or estate, and

(iii) In the case of a partnership, 50 percent or more of the profits or capital interest of such partnership, then for purposes of determining whether the parent organization or such other organization (hereinafter in this section referred to as "subsidiary organization") is a member of

a parent-subsidiary group of trades or businesses under common control, an interest in such subsidiary organization excluded under paragraph (b) (3), (4), (5), or (6) of this section shall be treated as not outstanding.

(2) ***Ownership.*** For purposes of paragraph (b)(1) of this section, a parent organization shall be considered to own an interest in or stock of another organization which it owns directly or indirectly with the application of § 1.414(c)-4(b)(1) and—

(i) In the case of a parent organization which is a partnership, a trust, or an estate, with the application of paragraphs (b) (2), (3), and (4) of § 1.414(c)-4, and

(ii) In the case of a parent organization which is a corporation, with the application of § 1.414(c)-4(b)(4).

(3) ***Plan of deferred compensation.*** An interest which is an interest in or stock of the subsidiary organization held by a trust which is part of a plan of deferred compensation (within the meaning of section 406(a)(3) and the regulations thereunder) for the benefit of the employees of the parent organization or the subsidiary organization shall be excluded.

(4) ***Principal owners, officers, etc.*** An interest which is an interest in or stock of the subsidiary organization owned (directly and with the application of § 1.414(c)-4) by an individual who is a principal owner, officer, partner, or fiduciary of the parent organization shall be excluded.

(5) ***Employees.*** An interest which is an interest in or stock of the subsidiary organization owned (directly and with the application of § 1.414(c)-4) by an employee of the subsidiary organization shall be excluded if such interest or such stock is subject to conditions which substantially restrict or limit the employee's right (or if the employee constructively owns such interest or such stock, the direct or record owner's right) to dispose of such interest or such stock and which run in favor of the parent or subsidiary organization.

(6) ***Controlled exempt organization.*** An interest which is an interest in or stock of the subsidiary organization shall be excluded if owned (directly and with the application of § 1.414(c)-4) by an organization (other than the parent organization):

(i) To which section 501 (relating to certain educational and charitable organizations which are exempt from tax) applies, and

(ii) Which is controlled directly or indirectly (within the meaning of paragraph (d)(7) of this section) by the parent organization or subsidiary organization, by an individual, estate, or trust that is a principal owner of the parent organization, by an officer, partner, or fiduciary of the parent organization, or by any combination thereof.

(c) ***Brother-sister group of trades or businesses under common control*** —

(1) ***In general.*** If five or fewer persons (hereinafter in this section referred to as “common owners”) who are individuals, estates, or trusts own (directly and with the application of § 1.414(c)-4)—

(i) In the case of a corporation, 50 percent or more of the total combined voting power of all classes of stock entitled to vote or 50 percent or more of the total value of shares of all classes of stock or such corporation,

(ii) In the case of a trust or an estate, an actuarial interest (within the meaning of § 1.414(c)-2(b)(2)(ii)) of 50 percent or more of such trust or estate, and

(iii) In the case of a partnership, 50 percent or more of the profits or capital interest of such partnership, then for purposes of determining whether such organization is a member of a brother-sister group of trades or businesses under common control, an interest in such organization excluded under paragraph (c) (2), (3), or (4) of this section shall be treated as not outstanding.

(2) ***Exempt employees' trust.*** An interest which is an interest in or stock of such organization held by an employees' trust described in section 401(a) which is exempt from tax under section 501(a) shall be excluded if such trust is for the benefit of the employees of such organization.

(3) ***Employees.*** An interest which is an interest in or stock of such organization owned (directly and with the application of § 1.414(c)-4) by an employee of such organization shall be excluded if such interest or stock is subject to conditions which run in favor of a common owner of such organization or in favor of such organization and which substantially restrict or limit the employee's right (or if the employee constructively owns such interest or stock, the direct or record owner's right) to dispose of such interest or stock.

(4) ***Controlled exempt organization.*** An interest which is an interest in or stock of such organization shall be excluded if owned (directly and with the application of § 1.414(c)-4) by an organization:

(i) To which section 501(c)(3) (relating to certain educational and charitable organizations which are exempt from tax) applies, and

(ii) Which is controlled directly or indirectly (within the meaning of paragraph (d)(7) of this section) by such organization, by an individual, estate, or trust that is a principal owner of such organization, by an officer, partner, or fiduciary of such organization, or by any combination thereof.

(d) ***Definitions*** —

(1) ***Employee.*** For purposes of this section, the term “employee” has the same meaning such term is given in section 3306(i) of the Code (relating to definitions for purposes of the Federal Unemployment Tax Act).

(2) ***Principal owner.*** For purposes of this section, the term “principal owner” means a person who owns (directly and with the application of § 1.414(c)-4)—

(i) In the case of a corporation, 5 percent or more of the total combined voting power of all classes of stock entitled to vote in such corporation or 5 percent of more of the total value of shares of all classes of stock of such corporation;

(ii) In the case of a trust or estate, an actuarial interest of 5 percent or more of such trust or estate; or

(iii) In the case of a partnership, 5 percent or more of the profits or capital interest of such partnership.

(3) ***Officer.*** For purposes of this section, the term “officer” includes the president, vice-presidents, general manager, treasurer, secretary, and comptroller of a corporation, and any other person who performs duties corresponding to those normally performed by persons occupying such positions.

(4) ***Partner.*** For purposes of this section, the term “partner” means any person defined in section 7701(a)(2) (relating to definitions of partner).

(5) ***Fiduciary.*** For purposes of this section and § 1.414(c)-4, the term "fiduciary" has the same meaning as such term is given in section 7701(a)(6) and the regulations thereunder.

(6) ***Substantial conditions.***

(i) ***In general.*** For purposes of this section, an interest in or stock of an organization is subject to conditions which substantially restrict or limit the right to dispose of such interest or stock and which run in favor of another person if the condition extends directly or indirectly to such person preferential rights with respect to the acquisition of the direct owner's (or the record owner's) interest or stock. For a condition to be in favor of another person it is not necessary that such person be extended a discriminatory concession with respect to price. A right of first refusal with respect to an interest or stock in favor of another person is a condition which substantially restricts or limits the direct or record owner's right of disposition which runs in favor of such person. Further, any legally enforceable condition which prohibits the direct or record owner from disposing of his or her interest or stock without the consent of another person will be considered to be a substantial limitation running in favor of such person.

(ii) ***Special rule.*** For purposes of paragraph (c)(3) of this section only, if a condition which restricts or limits an employee's right (or direct or record owner's right) to dispose of his or her interest or stock also applies to the interest or stock in such organization held by a common owner pursuant to a bonafide reciprocal purchase arrangement, such condition shall not be treated as a substantial limitation or restriction. An example of a reciprocal purchase arrangement is an agreement whereby a common owner and the employee are given a right of first refusal with respect to stock of the employer corporation owned by the other party. If, however, the agreement also provides that the common owner has the right to purchase the stock of the employer corporation owned by the employee in the event the corporation should discharge the employee for reasonable cause, the purchase arrangement would not be reciprocal within the meaning of this subdivision.

(7) ***Control.*** For purposes of paragraphs (b)(6) and (c)(4) of this section, the term "control" means control in fact. The determination of whether there exists control in fact will depend upon all of the facts and circumstances of each case, without regard to whether such control is legally enforceable and irrespective of the method by which such control is exercised or exercisable.

(e) ***Examples.*** The provisions of this section may be illustrated by the following examples:

Example 1. ABC Partnership owns 70 percent of the capital interest and of the profits interest in the DEF Partnership. The remaining capital interest and profits interest in DEF is owned as follows: 4 percent by A (a general partner in ABC), and 26 percent by D (a limited partner in ABC). ABC satisfies the 50-percent capital interest or profits interest ownership requirement of paragraph (b)(1)(iii) of this section with respect to DEF. Since A and D are partners of ABC, under paragraph (b)(4) of this section the capital and profits interests in DEF owned by A and D are treated as not outstanding for purposes of determining whether ABC and DEF are members of a parent-subsidiary group of trades or businesses under common control under § 1.414 (c)-2(b). Thus, ABC is considered to own 100 percent (70 ÷ 70) of the capital interest and profits interest in DEF. Accordingly, ABC and DEF are members of a parent-subsidiary group of trades or businesses under common control.

Example 2. Assume the same facts as in example (1) and assume further that A owns 15 shares of the 100 shares of the only class of stock of S Corporation and DEF Partner-ship owns 75 shares of such stock. ABC satisfies the 50 percent stock requirement of paragraph (b)(1)(i) of this section with respect to S since ABC is considered as owning 52.5 percent (70 percent × 75 percent) of the S

stock with the application of § 1.414 (c)-4(b)(2). Since A is a partner of ABC, the S stock owned by A is treated as not outstanding for purposes of determining whether S is a member of a parent-subsidiary group of trades or businesses under common control. Thus, DEF Partnership is considered to own stock possessing 88.2 percent (75 ÷ 85) of the voting power and value of the S stock. Accordingly, ABC Partnership, DEF Partnership, and S Corporation are members of a parent-subsidiary group of trades or businesses under common control.

Example 3. ABC Partnership owns 60 percent of the only class of stock of Corporation Y. D, the president of Y, owns the remaining 40 percent of the stock of Y. D has agreed that if she offers her stock in Y for sale she will first offer the stock to ABC at a price equal to the fair market value of the stock on the first date the stock is offered for sale. Since D is an employee of Y within the meaning of section 3306(i) of the Code and her stock in Y is subject to a condition which substantially restricts or limits her right to dispose of such stock and runs in favor of ABC Partnership, under paragraph (b)(5) of this section such stock is treated as not outstanding for purposes of determining whether ABC and Y are members of a parent-subsidiary group of trades or businesses under common control. Thus, ABC Partnership is considered to own stock possessing 100 percent of the voting power and value of the stock of Y. Accordingly, ABC Partnership and Y Corporation are members of a parent-subsidiary group of trades or businesses under common control. The result would be the same if D's husband, instead of D, owned directly the 40 percent stock interest in Y and such stock was subject to a right of first refusal running in favor of ABC Partnership.

(f) ***Exception*** —

(1) ***In general.*** If an interest in an organization (including stock of a corporation) is owned by a person directly or with the application of the rules of paragraph (b) of § 1.414 (c)-4 and such ownership results in the membership of that organization in a group of two or more trades or businesses under common control for any period, then the interest will not be treated as an excluded interest under paragraph (b) or (c) of this section if the result of applying such provisions is that the organization is not a member of a group of two or more trades or businesses under common control for the period.

(2) ***Example.*** The provisions of this paragraph may be illustrated by the following example:

Example. Corporation P owns directly 50 of the 100 shares of the only class of stock of corporation S. A, an officer of P, owns directly 30 shares of S stock which P has an option to acquire. If, under paragraph (b)(4) of this section, the 30 shares owned directly by A are treated as not outstanding, P would be treated as owning stock possessing only 71 percent (50/70) of the total voting power and value of S stock, and S should not be a member of a parent-subsidiary group of trades or businesses under common control. However, because the 30 shares owned by A that P has an option to purchase are considered as owned by P under paragraph (b)(2) of this section, and that ownership plus P's direct ownership of 50 shares result in S's membership in a parent-subsidiary group of trades or businesses under common control for 1985, the provisions of this paragraph apply. Therefore, A's stock is not treated as an excluded interest and S is a member of a parent-subsidiary group consisting of P and S.

[T.D. 8179, 53 FR 6607, Mar. 2, 1988; 53 FR 8302, Mar. 14, 1988]

§ 1.414(c)-4 Rules for determining ownership.

(a) ***In general.*** In determining the ownership of an interest in an organization for purposes of § 1.414(c)-2 and § 1.414(c)-3, the constructive ownership rules of paragraph (b) of this section shall apply, subject to the operating rules contained in paragraph (c). For purposes of this section the term "interest" means: in the case of a corporation, stock; in the case of a trust or estate, an actuarial interest; in the case of a partnership, an interest in the profits or capital; and in the case of a sole proprietorship, the proprietorship.

(b) ***Constructive ownership*** —

(1) ***Options.*** If a person has an option to acquire any outstanding interest in an organization, such interest shall be considered as owned by such person. For this purpose, an option to acquire an option, and each one of a series of such options shall be considered as an option to acquire such interest.

(2) ***Attribution from partnerships*** —

(i) ***General.*** An interest owned, directly or indirectly, by or for a partnership shall be considered as owned by any partner having an interest of 5 percent or more in either the profits or capital of the partnership in proportion to such partner's interest in the profits or capital, whichever such proportion is greater.

(ii) ***Example.*** The provisions of paragraph (b)(2)(i) of this section may be illustrated by the following example:

> *Example.* A, B, and C, unrelated individuals, are partners in the ABC Partnership. The partners' interest in the capital and profits of ABC are as follows:
>
> (IN PERCENT)
>
> | Partner | Capital | Profits |
> |---|---|---|
> | A | 36 | 25 |
> | B | 60 | 71 |
> | C | 4 | 4 |
>
> The ABC Partnership owns the entire outstanding stock (100 shares) of X Corporation. Under paragraph (b)(2)(i) of this section, A is considered to own the stock of X owned by the partnership in proportion to his interest in capital (36 percent) or profits (25 percent), whichever such proportion is greater. Therefore, A is considered to own 36 shares of X stock. Since B has a greater interest in the profits of the partnership than in the capital, B is considered to own X stock in proportion to his interest in such profits. Therefore, B is considered to own 71 shares of X stock. Since C does not have an interest of 5 percent or more in either the capital or profits of ABC, he is not considered to own any shares of

> X stock.

(3) *Attribution from estates and trusts* —

(i) ***In general.*** An interest in an organization (hereinafter called an "organization interest") owned, directly or indirectly, by or for an estate or trust shall be considered as owned by any beneficiary of such estate or trust who has an actuarial interest of 5 percent or more in such organization interest, to the extent of such actuarial interest. For purposes of this subparagraph, the actuarial interest of each beneficiary shall be determined by assuming the maximum exercise of discretion by the fiduciary in favor of such beneficiary and the maximum use of the organization interest to satisfy the beneficiary's rights. A beneficiary of an estate or trust who cannot under any circumstances receive any part of an organization interest held by the estate or trust, including the proceeds from the disposition thereof, or the income therefrom, does not have an actuarial interest in such organization interest. Thus, where stock owned by a decedent's estate has been specifically bequeathed to certain beneficiaries and the remainder of the estate has been specifically bequeathed to other beneficiaries, the stock is attributable only to the beneficiaries to whom it is specifically bequeathed. Similarly a remainderman of a trust who cannot under any circumstances receive any interest in the stock of a corporation which is a part of the corpus of the trust (including any accumulated income therefrom or the proceeds from a disposition thereof) does not have an actuarial interest in such stock. However, an income beneficiary of a trust does have an actuarial interest in stock if he has any right to the income from such stock even though under the terms of the trust instrument such stock can never be distributed to him. The factors and methods prescribed in § 20.2031-7 or, for certain prior periods, § 20.2031-7A (Estate Tax Regulations) for use in ascertaining the value of an interest in property for estate tax purposes shall be used for purposes of this subdivision in determining a beneficiary's actuarial interest in an organization interest owned directly or indirectly by or for an estate or trust.

(ii) ***Special rules for estates.***

(A) For purposes of this paragraph (b)(3) with respect to an estate, property of a decedent shall be considered as owned by his or her estate if such property is subject to administration by the executor or administrator for the purposes of paying claims against the estate and expenses of administration notwithstanding that, under local law, legal title to such property vests in the decedent's heirs, legatees or devisees immediately upon death.

(B) For purposes of this paragraph (b)(3) with respect to an estate, the term "beneficiary" includes any person entitled to receive property of a decedent pursuant to a will or pursuant to laws of descent and distribution.

(C) For purposes of this paragraph (b)(3) with respect to an estate, a person shall no longer be considered a beneficiary of an estate when all the property to which he or she is entitled has been received by him or her, when he or she no longer has a claim against the estate arising out of having been a beneficiary, and when there is only a remote possibility that it will be necessary for the estate to seek the return of property from him or her or to seek payment from him or her by contribution or otherwise to satisfy claims against the estate or expenses of administration.

(iii) ***Grantor trusts, etc.*** An interest owned, directly or indirectly, by or for any portion of a trust of which a person is considered the owner under subpart E, part I, subchapter J of the Code (relating to grantors and others treated as substantial owners) is considered as owned by such person.

(4) ***Attribution from corporations*** —

(i) ***General.*** An interest owned, directly or indirectly, by or for a corporation shall be considered as owned by any person who owns (directly and, in the case of a parent-subsidiary group of trades or businesses under common control, with the application of paragraph (b)(1) of this section, or in the case of a brother-sister group of trades or business under common control, with the application of this section), 5 percent or more in value of the stock in that proportion which the value of the stock which such person so owns bears to the total value of all the stock in such corporation.

(ii) ***Example.*** The provisions of paragraph (b)(4)(i) of this section may be illustrated by the following example:

Example. B, an individual, owns 60 of the 100 shares of the only class of outstanding stock of corporation P. C, an individual, owns 4 shares of the P stock, and corporation X owns 36 shares of the P stock. Corporation P owns, directly and indirectly, 50 shares of the stock of corporation S. Under this subparagraph, B is considered to own 30 shares of the S stock (60/100 × 50), and X is considered to own 18 shares of S stock (36/100 × 50). Since C does not own 5 percent or more in the value of P stock, he is not considered as owning any of the S stock owned by P. If in this example, C's wife had owned directly 1 share of the P stock, C and his wife would each be considered as owning 5 shares of the P stock, and therefore C and his wife would be considered as owning 2.5 shares of the S stock (5/100 × 50).

(5) ***Spouse*** —

(i) ***General rule.*** Except as provided in paragraph (b)(5)(ii) of this section, an individual shall be considered to own an interest owned, directly or indirectly, by or for his or her spouse, other than a spouse who is legally separated from the individual under a decree of divorce, whether interlocutory or final, or a decree of separate maintenance.

(ii) ***Exception.*** An individual shall not be considered to own an interest in an organization owned, directly or indirectly, by or for his or her spouse on any day of a taxable year of such organization, provided that each of the following conditions are satisfied with respect to such taxable year:

(A) Such individual does not, at any time during such taxable year, own directly any interest in such organization;

(B) Such individual is not a member of the board of directors, a fiduciary, or an employee of such organization and does not participate in the management of such organization at any time during such taxable year;

(C) Not more than 50 percent of such organization's gross income for such taxable year was derived from royalties, rents, dividends, interest, and annuities; and

(D) Such interest in such organization is not, at any time during such taxable year, subject to conditions which substantially restrict or limit the spouse's right to dispose of such interest and which run in favor of the individual or the individual's children who have not attained the age of 21 years. The principles of § 1.414(c)-3(d)(6)(i) shall apply in determining whether a condition is a condition described in the preceding sentence.

(iii) ***Definitions.*** For purposes of paragraph (b)(5)(ii)(C) of this section, the gross income of an organization shall be determined under section 61 and the regulations thereunder. The terms "interest", "royalties", "rents", "dividends", and "annuities" shall have the same meaning such terms are given for purposes of section 1244(c) and § 1.1244(c)-1(e)(1).

(6) ***Children, grandchildren, parents, and grandparents*** —

(i) ***Children and parents.*** An individual shall be considered to own an interest owned, directly or indirectly, by or for the individual's children who have not attained the age of 21 years, and if the individual has not attained the age of 21 years, an interest owned, directly or indirectly, by or for the individual's parents.

(ii) ***Children, grandchildren, parents, and grandparents.*** If an individual is in effective control (within the meaning of § 1.414(c)-2(c)(2)), directly and with the application of the rules of this paragraph without regard to this subdivision, of an organization, then such individual shall be considered to own an interest in such organization owned, directly or indirectly, by or for the individual's parents, grandparents, grandchildren, and children who have attained the age of 21 years.

(iii) ***Adopted children.*** For purposes of this section, a legally adopted child of an individual shall be treated as a child of such individual.

(iv) ***Example.*** The provisions of this subparagraph (6) may be illustrated by the following example:

> *Example:* (A) *Facts.* Individual F owns directly 40 percent of the profits interest of the DEF Partnership. His son, M, 20 years of age, owns directly 30 percent of the profits interest of DEF, and his son, A, 30 years of age, owns directly 20 percent of the profits interest of DEF. The 10 percent remaining of the profits interest and 100 percent of the capital interest of DEF is owned by an unrelated person.
> (B) *F's ownership.* F owns 40 percent of the profits interest in DEF directly and is considered to own the 30 percent profits interest owned directly by M. Since, for purposes of the effective control test contained in paragraph (b)(6)(ii) of this section, F is treated as owning 70 percent of the profits interest of DEF, F is also considered as owning the 20 percent profits interest of DEF owned by his adult son, A. Accordingly, F is considered as owning a total of 90 percent of the profits interest in DEF.
>
> (C) *M's ownership.* Minor son, M. owns 30 percent of the profits interest in DEF directly, and is considered to own the 40 percent profits interest owned directly by his father, F. However, M is not considered to own the 20 percent profits interest of DEF owned directly by his brother, A, and constructively by F, because an interest constructively owned by F by reason of family attribution is not considered as owned by him for

purposes of making another member of his family the constructive owner of such interest. (See paragraph (c)(2) of this section.) Accordingly, M is considered as owning a total of 70 percent of the profits interest of the DEF Partnership.

(D) *A's ownership.* Adult son, A, owns 20 percent of the profits interest in DEF directly. Since, for purposes of determining whether A effectively controls DEF under paragraph (b)(6)(ii) of this section, A is treated as owning only the percentage of profits interest he owns directly, he does not satisfy the condition precedent for the attribution of the DEF profits interest from his father. Accordingly, A is considered as owning only the 20 percent profits interest in DEF which he owns directly.

(c) ***Operating rules*** —

(1) ***In general.*** Except as provided in paragraph (c)(2) of this section, an interest constructively owned by a person by reason of the application of paragraph (b) (1), (2), (3), (4), (5), or (6) of this section shall, for the purposes of applying such paragraph, be treated as actually owned by such person.

(2) ***Members of family.*** An interest constructively owned by an individual by reason of the application of paragraph (b) (5) or (6) of this section shall not be treated as owned by such individual for purposes of again applying such subparagraphs in order to make another the constructive owner of such interest.

(3) ***Precedence of option attribution.*** For purposes of this section, if an interest may be considered as owned under paragraph (b)(1) of this section (relating to option attribution) and under any other subparagraph of paragraph (b) of this section, such interest shall be considered as owned by such person under paragraph (b)(1) of this section.

(4) ***Examples.*** The provisions of this paragraph may be illustrated by the following examples:

Example 1. A, 30 years of age, has a 90 percent interest in the capital and profits of DEF Partnership. DEF owns all the outstanding stock of corporation X and X owns 60 shares of the 100 outstanding shares of corporation Y. Under paragraph (c)(1) of this section, the 60 shares of Y constructively owned by DEF by reason of paragraph (b)(4) of this section are treated as actually owned by DEF for purposes of applying paragraph (b)(2) of this section. Therefore, A is considered as owning 54 shares of the Y stock (90 percent of 60 shares).

Example 2. Assume the same facts as in example (1). Assume further that B, who is 20 years of age and the brother of A, directly owns 40 shares of Y stock. Although the stock of Y owned by B is considered as owned by C (the father of A and B) under paragraph (b)(6)(i) of this section, under paragraph (c)(2) of this section such stock may not be treated as owned by C for purposes of applying paragraph (b)(6)(ii) of this section in order to make A the constructive owner of such stock.

Example 3. Assume the same facts as in example (2), and further assume that C has an option to acquire the 40 shares of Y stock owned by his son, B. The rule contained in paragraph (c)(2) of this section does not prevent the reattribution of such 40 shares to A because, under paragraph (c)(3) of this section, C is considered as owning the 40 shares by reason of option attribution

and not by reason of family attribution. Therefore, since A is in effective control of Y under paragraph (b)(6)(ii) of this section, the 40 shares of Y stock constructively owned by C are reattributed to A. A is considered as owning a total of 94 shares of Y stock.

[T.D. 8179, 53 FR 6609, Mar. 2, 1988; 53 FR 8302, Mar. 14, 1988, as amended by T.D. 8540, 59 FR 30102, June 10, 1994]

§ 1.414(c)-5 Certain tax-exempt organizations.

(a) ***Application.*** This section applies to an organization that is exempt from tax under section 501(a). The rules of this section only apply for purposes of determining when entities are treated as the same employer for purposes of section 414(b), (c), (m), and (o) (including the sections referred to in section 414(b), (c), (m), (o), and (t)), and are in addition to the rules otherwise applicable under section 414(b), (c), (m), and (o) for determining when entities are treated as the same employer. Except to the extent set forth in paragraphs (d), (e), and (f) of this section, this section does not apply to any church, as defined in section 3121(w)(3)(A), or any qualified church-controlled organization, as defined in section 3121(w)(3)(B).

(b) ***General rule.*** In the case of an organization that is exempt from tax under section 501(a) (an exempt organization) whose employees participate in a plan, the employer with respect to that plan includes the exempt organization whose employees participate in the plan and any other organization that is under common control with that exempt organization. For this purpose, common control exists between an exempt organization and another organization if at least 80 percent of the directors or trustees of one organization are either representatives of, or directly or indirectly controlled by, the other organization. A trustee or director is treated as a representative of another exempt organization if he or she also is a trustee, director, agent, or employee of the other exempt organization. A trustee or director is controlled by another organization if the other organization has the general power to remove such trustee or director and designate a new trustee or director. Whether a person has the power to remove or designate a trustee or director is based on facts and circumstances. To illustrate the rules of this paragraph (b), if exempt organization A has the power to appoint at least 80 percent of the trustees of exempt organization B (which is the owner of the outstanding shares of corporation C, which is not an exempt organization) and to control at least 80 percent of the directors of exempt organization D, then, under this paragraph (b) and § 1.414(b)-1, entities A, B, C, and D are treated as the same employer with respect to any plan maintained by A, B, C, or D for purposes of the sections referenced in section 414(b), (c), (m), (o), and (t).

(c) ***Permissive aggregation with entities having a common exempt purpose*** —

(1) ***General rule.*** For purposes of this section, exempt organizations that maintain a plan to which section 414(c) applies that covers one or more employees from each organization may treat themselves as under common control for purposes of section 414(c) (and, thus, as a single employer for all purposes for which section 414(c) applies) if each of the organizations regularly coordinates their day-to-day exempt activities. For example, an entity that provides a type of emergency relief within one geographic region and another exempt organization that provides that type of emergency relief within another geographic region may treat themselves as under common control if they have a single plan covering employees of both entities and regularly coordinate their day-to-day exempt activities. Similarly, a hospital that is an exempt organization and another exempt organization with which it coordinates the delivery of medical services or medical research may treat themselves as under common control if there is a single plan covering employees of the hospital and employees of the other exempt organization and the coordination is a regular part of their day-to-day exempt activities.

(2) ***Authority to permit aggregation.***

(i) For determining when entities are treated as the same employer under section 414(b), (c), (m), and (o), the Commissioner may issue rules of general applicability, in revenue rulings, notices, or other guidance published in the Internal Revenue Bulletin (see § 601.601(d)(2)(ii)(*b*) of this chapter), permitting other types of combinations of entities that include exempt organizations to elect to be treated as under common control for one or more specified purposes if:

(A) There are substantial business reasons for maintaining each entity in a separate trust, corporation, or other form; and

(B) Such treatment would be consistent with the anti-abuse standards in paragraph (f) of this section.

(ii) For example, this authority might be exercised in any situation in which the organizations are so integrated in their operations as to effectively constitute a single coordinated employer for purposes of section 414(b), (c), (m), and (o), including common employee benefit plans.

(d) ***Permissive disaggregation between qualified church controlled organizations and other entities.*** In the case of a church plan (as defined in section 414(e)) to which contributions are made by more than one common law entity, any employer may apply paragraphs (b) and (c) of this section to those entities that are not a church (as defined in section 403(b)(12)(B) and § 1.403(b)-2) separately from those entities that are churches. For example, in the case of a group of entities consisting of a church (as defined in section 3121(w)(3)(A)), a secondary school (that is treated as a church under § 1.403(b)-2), and several nursing homes each of which receives more than 25 percent of its support from fees paid by residents (so that none of them is a qualified church-controlled organization under § 1.403(b)-2 and section 3121(w)(3)(B)), the nursing homes may treat themselves as being under common control with each other, but not as being under common control with the church and the school, even though the nursing homes would be under common control with the school and the church under paragraph (b) of this section.

(e) ***Application to certain church entities under section 3121(w)(3).*** [Reserved]

(f) ***Anti-abuse rule.*** In any case in which the Commissioner determines that the structure of one or more exempt organizations (which may include an exempt organization and an entity that is not exempt from income tax) or the positions taken by those organizations has the effect of avoiding or evading any requirements imposed under section 401(a), 403(b), or 457(b), or any applicable section (as defined in section 414(t)), or any other provision for which section 414(c) applies, the Commissioner may treat an entity as under common control with the exempt organization.

(g) ***Examples.*** The provisions of this section are illustrated by the following examples:

> *Example 1.* (i) *Facts.* Organization A is a tax-exempt organization under section 501(c)(3) which owns 80% or more of the total value of all classes of stock of corporation B, which is a for profit organization.
> (ii) *Conclusion.* Under paragraph (a) of this section, this section does not alter the rules of section 414(b) and (c), so that organization A and corporation B are under common control under § 1.414(c)-2(b).

> *Example 2.* (i) *Facts.* Organization M is a hospital which is a tax-exempt organization under section 501(c)(3) and organization N is a medical clinic which is also a tax-exempt organization

under section 501(c)(3). N is located in a city and M is located in a nearby suburb. There is a history of regular coordination of day-to-day activities between M and N, including periodic transfers of staff, coordination of staff training, common sources of income, and coordination of budget and operational goals. A single section 403(b) plan covers professional and staff employees of both the hospital and the medical clinic. While a number of members of the board of directors of M are also on the board of directors of N, there is less than 80% overlap in board membership. Both organizations have approximately the same percentage of employees who are highly compensated and have appropriate business reasons for being maintained in separate entities.
(ii) *Conclusion.* M and N are not under common control under this section, but, under paragraph (c) of this section, may chose to treat themselves as under common control, assuming both of them act in a manner that is consistent with that choice for purposes of § 1.403(b)-5(a), sections 401(a), 403(b), and 457(b), and any other applicable section (as defined in section 414(t)), or any other provision for which section 414(c) applies.

Example 3. (i) *Facts.* Organizations O and P are each tax-exempt organizations under section 501(c)(3). Each organization maintains a qualified plan for its employees, but one of the plans would not satisfy section 410(b) (or section 401(a)(4)) if the organizations were under common control. The two organizations are closely related and, while the organizations have several trustees in common, the common trustees constitute fewer than 80 percent of the trustees of either organization. Organization O has the power to remove any of the trustees of P and to select the slate of replacement nominees.
(ii) *Conclusion.* Under these facts, pursuant to paragraphs (b) and (f) of this section, the Commissioner treats the entities as under common control.

(h) ***Applicable date.*** This section applies for plan years beginning after December 31, 2008.

[T.D. 9340, 72 FR 41158, July 26, 2007; 72 FR 54352, Sept. 25, 2007]

§ 1.414(c)-6 Effective date.

(a) ***General rule.*** Except as provided in paragraph (b), (c), (e), (f), or (g) of this section, the provisions of § 1.414(b)-1 and §§ 1.414(c)-1 through 1.414(c)-4 apply for plan years beginning after September 2, 1974.

(b) ***Existing plans.*** In the case of a plan in existence on January 1, 1974, unless paragraph (c) of this section applies, the provisions of "§ 1.414 (b)-1 and §§ 1.414(c)-1 through 1.414(c)-4 shall apply for plan years beginning after December 31, 1975. For definition of the term "existing plan", see § 1.410(a)-2(c).

(c) ***Existing plans electing new provisions.*** In the case of a plan in existence on January 1, 1974, for which the plan administrator makes an election under § 1.410 (a)-2(d), the provisions of § 1.414(b)-1 and §§ 1.414 (c)-1 through 1.414(c)-4 shall apply to the plan years elected under § 1.410 (a)-2 (d).

(d) ***Application.*** For purposes of the Employee Retirement Income Security Act of 1974, the provisions of § 1.414(b)-1 and §§ 1.414(c)-1 through 1.414(c)-4 do not apply for any period of time before the plan years described in paragraph (a), (b), or (c) of this section, whichever is applicable.

(e) ***Special rule.*** Notwithstanding paragraph (a), (b), or (c) of this section, § 1.414(c)-3 (f) is effective April 1, 1988.

(f) ***Transitional rule*** —

(1) ***In general.*** The amendments made by T.D. 8179 apply to the plan years or period described in paragraphs (a), (b), or (c) of this section, whichever is applicable.

(2) ***Exception.*** In the case of a plan year or period beginning before March 2, 1988, if an organization—

(i) Is a member of a brother-sister group of trades or businesses under common control under § 11.414(c)-2(c), as in effect before removal by T.D. 8179 ("old group"), for such plan year or period, and

(ii) Is not such a member for such plan year or period because of the amendments made by such Treasury decision,

such member (whether or not a corporation) nevertheless will be treated as a member of such old group for purposes of section 414(c) for that plan year or period to the extent provided in § 1.1563-1 (d)(2). Also, such member will be treated as a member of an old group for all purposes of the Code for such plan year or period if all the organizations (whether or not corporations) that are members of the old group meet all the requirements of § 1.1563-1(d)(3) with respect to such plan year or period.

(g) ***Special rule.*** Notwithstanding paragraph (a), (b), or (c) of this section, § 1.414(c)-2(b)(1) applies to plan years beginning on or after January 1, 2025.

[T.D. 8179, 53 FR 6611, Mar. 2, 1988. Redesignated by T.D. 9340, 72 FR 41158, July 26, 2007; T.D. 10018, 89 FR 106851, Dec. 30, 2024]

§ 1.414(e)-1 Definition of church plan.

(a) ***General rule.*** For the purposes of part I of subchapter D of chapter 1 of the Code and the regulations thereunder, the term "church plan" means a plan established and at all times maintained for its employees by a church or by a convention or association of churches (hereinafter included within the term "church") which is exempt from tax under section 501(a), provided that such plan meets the requirements of paragraphs (b) and (if applicable) (c) of this section. If at any time during its existence a plan is not a church plan because of a failure to meet the requirements set forth in this section, it cannot thereafter become a church plan.

(b) ***Unrelated businesses*** —

(1) ***In general.*** A plan is not a church plan unless it is established and maintained primarily for the benefit of employees (or their beneficiaries) who are not employed in connection with one or more unrelated trades or businesses (within the meaning of section 513).

(2) ***Establishment or maintenance of a plan primarily for persons not employed in connection with one or more unrelated trades or businesses.***

(i)

(A) A plan, other than a plan in existence on September 2, 1974, is established primarily for the benefit of employees (or their beneficiaries) who are not employed in connection with one or more unrelated trades or businesses if on the date the plan is established the number

of employees employed in connection with the unrelated trades or businesses eligible to participate in the plan is less than 50 percent of the total number of employees of the church eligible to participate in the plan.

(B) A plan in existence on September 2, 1974, is to be considered established as a plan primarily for the benefit of employees (or their beneficiaries) who are not employed in connection with one or more unrelated trades or businesses if it meets the requirements of both paragraphs (b)(2)(ii) (A) and (B) (if applicable) in either of its first 2 plan years ending after September 2, 1974.

(ii) For plan years ending after September 2, 1974, a plan will be considered maintained primarily for the benefit of employees of a church who are not employed in connection with one or more unrelated trades or businesses if in 4 out of 5 of its most recently completed plan years—

(A) Less than 50 percent of the persons participating in the plan (at any time during the plan year) consist of and in the same year

(B) Less than 50 percent of the total compensation paid by the employer during the plan year (if benefits or contributions are a function of compensation) to employees participating in the plan is paid to,

employees employed in connection with an unrelated trade or business. The determination that the plan is not a church plan will apply to the second year (within a 5 year period) for which the plan fails to meet paragraph (b)(2)(ii) (A) or (B) (if applicable) and to all plan years thereafter unless, taking into consideration all of the facts and circumstances as described in paragraph (b)(2)(iii) of this section, the plan is still considered to be a church plan. A plan that has not completed 5 plan years ending after September 2, 1974, shall be considered maintained primarily for the benefit of employees not employed in connection with an unrelated trade or business unless it fails to meet paragraphs (b)(2)(ii) (A) and (B) in at least 2 such plan years.

(iii) Even though a plan does not meet the provisions of paragraph (b)(2)(ii) of this section, it nonetheless will be considered maintained primarily for the benefit of employees who are not employed in connection with one or more unrelated trades or businesses if the church maintaining the plan can demonstrate that based on all of the facts and circumstances such is the case. Among the facts and circumstances to be considered in evaluating each case are:

(A) The margin by which the plan fails to meet the provisions of paragraph (b)(2)(ii) of this section, and

(B) Whether the failure to meet such provisions was due to a reasonable mistake as to what constituted an unrelated trade or business or whether a particular person or group of persons were employed in connection with one or more unrelated trades or businesses.

(iv) For purposes of this section, an employee will be considered eligible to participate in a plan if such employee is a participant in the plan or could be a participant in the plan upon making mandatory employee contributions to the plan.

(3) ***Employment in connection with one or more unrelated trades or businesses.*** An employee is employed in connection with one or more unrelated trades or businesses of a church if a majority of such employee's duties and responsibilities in the employ of the church are directly or indirectly related to the carrying on of such trades or businesses. Although an employee's duties and responsibilities may be insignificant with respect to any one unrelated trade or business, such employee will

nonetheless be considered as employed in connection with one or more unrelated trades or businesses if such employee's duties and responsibilities with respect to all of the unrelated trades or businesses of the church represent a majority of the total of such person's duties and responsibilities in the employ of the church.

(c) ***Plans of two or more employers.*** The term “church plan” does not include a plan which, during the plan year, is maintained by two or more employers unless—

(1) Each of the employers is a church that is exempt from tax under section 501(a), and

(2) With respect to the employees of each employer, the plan meets the provisions of paragraph (b)(2)(ii) of this section or would be determined to be a church plan based on all the facts and circumstances described in paragraph (b)(2)(iii) of this section.

Thus, if with respect to a single employer the plan fails to meet any provision of this paragraph, the entire plan ceases to be a church plan unless that employer ceases maintaining the plan for all plan years beginning after the plan year in which it receives a final notification from the Internal Revenue Service that it does not meet the provisions of this paragraph. If the employer does cease maintaining the plan in accordance with this paragraph, the fact that the employer formerly did maintain the plan will not prevent the plan from being a church plan for prior years.

(d) ***Special rule.***

(1) Notwithstanding paragraph (c)(1) of this section, a plan maintained by a church and one or more agencies of such church for the employees of such church and of such agency or agencies, that is in existence on January 1, 1974, shall be treated as a church plan for plan years ending after September 2, 1974, and beginning before January 1, 1983, provided that the plan is described in paragraph (c) of this section without regard to paragraph (c)(1) of this section, and the plan is not maintained by an agency which did not maintain the plan on January 1, 1974.

(2) For the purposes of section 414(e) and this section, an agency of a church means an organization which is exempt from tax under section 501 and which is either controlled by, or associated with, a church. For example, an organization, a majority of whose officers or directors are appointed by a church's governing board or by officials of a church, is controlled by a church within the meaning of this paragraph. An organization is associated with a church if it shares common religious bonds and convictions with that church.

(e) ***Religious orders and religious organizations.*** For the purpose of this section the term “church” includes a religious order or a religious organization if such order or organization

(1) is an integral part of a church, and

(2) is engaged in carrying out the functions of a church, whether as a civil law corporation or otherwise.

(f) ***Separately incorporated fiduciaries.*** A plan which otherwise meets the provisions of this section shall not lose its status as a church plan because of the fact that it is administered by a separately incorporated fiduciary such as a pension board or a bank.

(g) ***Cross reference.***

(1) For rules relating to treatment of church plans, see section 410(c), 411(e), 412(h), 4975(g), and the regulations thereunder.

(2) For rules relating to church plan elections, see section 410(d) and the regulations thereunder.

[T.D. 7688, 45 FR 20797, Mar. 31, 1980]

§ 1.414(f)-1 Definition of multiemployer plan.

(a) ***General rule.*** For purposes of part I of subchapter D of chapter 1 of the Code and the regulations thereunder, a plan is a multiemployer plan for a plan year if all of the following requirements are satisfied:

(1) ***Number of contributing employers.*** More than one employer is required by the plan instrument or other agreement to contribute (or to have contributions made on its behalf) to the plan for the plan year.

(2) ***Collective bargaining agreement.*** The plan is maintained for the plan year pursuant to one or more collective bargaining agreements between employee representatives and more than one employer.

(3) ***Amount of contributions.*** Except as provided by paragraph (c) of this section (relating to the special rule for contributions exceeding 50 percent), the amount of contributions made under the plan for the plan year by or on behalf of each employer is less than 50 percent of the total amount of contributions made under the plan for such plan year by or on behalf of all employers.

(4) ***Benefits.*** The plan provides that the amount of benefits payable with respect to each employee participating in the plan is determined without regard to whether or not his employer continues as a member of the plan. If benefits accrued as a result of the participant's service with his employer during a period before such employer was a member of the plan, this requirement does not apply to the amount of those benefits, except that this requirement does apply to the amount of those benefits

(i) which are accrued benefits derived from employee contributions, or

(ii) which are accrued under a plan maintained by an employer prior to the time such employer became a member of the plan to which the requirements of this paragraph (a) are applied.

(5) ***Other requirements.*** The plan satisfies such other requirements as the Secretary of Labor by regulations prescribes under the authority of section 414(f)(1)(E) of the Code and section 3(37) of the Employee Retirement Income Security Act of 1974 (Pub. L. 93-406, 88 Stat. 839). See 29 CFR 2510.3-37.

(b) ***Special rules*** —

(1) ***Amount of contributions.*** For purposes of paragraphs (a)(3) and (c) of this section, the amount of contributions made under the plan for the plan year by or on behalf of each employer shall be the sum of such contributions made on or before the last day of the plan year. For purposes of determining whether contributions are made on or before the last day of the plan year, the rule of section 412(c)(10) and the regulations thereunder (relating to the treatment of certain contributions made after the last day of the plan year as made on such last day) shall apply.

(2) ***Benefits.***

(i) For purposes of paragraph (a)(4) of this section, certain benefit amounts are treated as accrued as a result of the participant's service with an employer during a period before such employer was a member of the plan. The amount of such a benefit so treated is the difference (if any) between two calculated amounts. The first calculated amount is the participant's total accrued benefit calculated under the plan as of the date the employer ceased to be a member of the plan. The second calculated amount is the participant's accrued benefit calculated without

regard to his service with such employer during the period before such employer was a member of the plan. However, under a special limitation, this difference may not exceed the benefit a participant accrued from service before his employer became a member of the plan. For purposes of this limitation, this benefit is the benefit accrued as of the date the employer ceases to be a member of the plan. An employer shall be deemed to be a member of the plan in a plan year if the employer is required by the plan instrument or other agreement to contribute (or to have contributions made on its behalf) to the plan for such plan year or if an employee of the employer accrues a benefit, on account of service with the employer during such plan year, under the plan for that plan year.

(ii) The provisions of paragraphs (a)(4) and (b)(2)(i) of this section are illustrated by the following example:

Example. On January 1, 1976, employer W became a member of the noncontributory XYZ pension plan which uses the calendar year as the plan year. W did not maintain any plan prior to that date. The plan provided for benefits of $4 per month per year of service (including service with W before January 1, 1976). On January 1, 1980, following adoption of a new collective bargaining agreement, the benefits were increased to $12 per month per year of service for all years of service (including service with W before January 1, 1976). On January 1, 1991, W ceased to be a member of the plan.
A, an employee of W, had 15 years of service before January 1, 1976, 4 years of service between January 1, 1976, and December 31, 1979, and 11 years of service between January 1, 1980, and December 31, 1990. On December 31, 1990, A's accrued benefit was $360 per month ($12 per month × 30). On January 1, 1991, the portion of A's accrued benefit retained and the portion forfeited under the terms of the XYZ pension plan were determined as follows:

Years	Monthly accrued benefit retained	Monthly accrued benefit forfeited
Before Jan. 1, 1976		$12 × 15 years = $180
Jan. 1, 1976 to Dec. 31, 1979	$4 × 4 years = $16	$8 × 4 years = $32
Jan. 1, 1980 to Dec. 31, 1990	$12 × 11 years = $132	
Total	$148	$212

The XYZ plan does not satisfy the requirements of paragraphs (a)(4) and (b)(2)(i) of this section because no benefit can be forfeited with respect to service after W began participating in the plan. Thus, the maximum accrued benefit that may be forfeited is $180 per month (the accrued benefit with respect to A's service prior to January 1, 1976). Therefore, in order for the plan to meet the requirements of paragraphs (a)(4) and

(b)(2)(i) of this section, the plan must provide for A's accrued benefit after W ceased to be a member of the plan to be at least $180 per month ($360 per month total accrued benefit less $180 per month benefit accrued for service prior to W's membership in the plan).

(iii) For purposes of paragraphs (a)(4) and (b)(2) of this section, if an employer for a period employs two or more individuals who, solely by reason of their employment, are participants in the plan and who do not belong to the same collective bargaining unit, the dates on which the employer became and ceased to be a member of the plan shall be determined separately on a class basis for individuals who belong to separate collective bargaining units, as separate classes, and for individuals who do not belong to a collective bargaining unit, as a further single separate class. Thus, such dates shall be determined with respect to individuals as a class who belong to the same collective bargaining unit (or who do not belong to a collective bargaining unit) without consideration of the employment by the employer of, or the participation in the plan by, other individuals (who do not belong to such collective bargaining unit and who may belong to another collective bargaining unit) or whether the employer is a member of the plan with respect to such other individuals. In no event, however, may service not attributable to service with a particular collective bargaining unit be disregarded under paragraphs (a)(4) and (b)(2) of this section merely because the employer ceases to maintain the plan with respect to such unit. Thus, for example, paragraphs (a)(4) and (b)(2) of this section do not permit the disregard of a period of service of an individual belonging to a collective bargaining unit prior to the time the employer became a member of the plan with respect to such unit to the extent that, during such period of service, the individual belonged to another collective bargaining unit with respect to which the employer was a member of the plan.

(3) ***Controlled groups.*** For purposes of section 414(f) and this section, all corporations which are members of a controlled group of corporations (within the meaning of section 1563(a) and the regulations thereunder, but determined without regard to section 1563(e)(3)(C) and the regulations thereunder) are deemed to be one employer.

(c) ***Contributions exceeding 50 percent.*** If a plan was a multiemployer plan as defined in this section for any plan year (including plan years ending prior to September 3, 1974), “75 percent” shall be substituted for “50 percent” in applying paragraph (a)(3) of this section for subsequent plan years until the first plan year following a plan year in which the amount contributed by or on behalf of one employer is 75 percent or more of the total amount of contributions made under the plan for that plan year by or on behalf of all of the employers making contributions. In such case “75 percent” shall not again be substituted for “50 percent” until the plan has met the requirements of paragraph (a) of this section (determined without regard to this paragraph) for one plan year.

(d) ***Examples.*** The application of this section is illustrated by the following examples. For purposes of these examples, assume that the plan meets the requirements of paragraphs (a) (1), (2), (4), and (5) of this section for each plan year.

Example 1. On January 1, 1970, U, V, and W, three employers none of which is a member of a controlled group of corporations with any of the other two employers, establish a plan with a plan year corresponding to the calendar year. U, V, and W each contribute less than one-half of the total contributions made under the plan for each of the years 1970, 1971, and 1972. For the years 1973, 1974, and 1975, U contributes 70 percent and V and W each contribute 15 percent of the total

contributions made under the plan for each year. The plan is a multiemployer plan under section 414(f) and this section for 1975 because no employer has contributed 75 percent or more of the total amount contributed for each of the plan years subsequent to 1972.

Example 2. (i) *First plan year.* On January 1, 1975, X, Y, and Z, three employers none of which is a member of a controlled group of corporations with any of the other two employers, establish a plan with a plan year corresponding to the calendar year. X, Y, and Z each contribute less than one-half of the total contributions made under the plan for 1975. The plan is a multiemployer plan for 1975 because it meets the 50 percent contribution requirement of paragraph (a)(3) of this section.
(ii) *Second plan year.* For the second plan year, 1976, X contributes 70 percent and Y and Z each contribute 15 percent of the total contributions made under the plan. The plan is a multiemployer plan for 1976 because it was a multiemployer plan for the preceding plan year and satisfies the 75 percent contribution requirement of paragraph (c) of this section.

(iii) *Third plan year.* For the third plan year, 1977, X contributes 80 percent and Y and Z each contribute 10 percent of the total contributions made under the plan. The plan is not a multiemployer plan for 1977 because it fails to satisfy the 75 percent contribution requirement of paragraph (c) of this section.

(iv) *Fourth plan year.* For the fourth plan year, 1978, Y contributes 60 percent and X and Z each contribute 20 percent of the total contributions made under the plan. The 75 percent contribution requirement of paragraph (c) of this section does not apply. The plan is not a multiemployer plan for 1978 because it fails to satisfy the 50 percent contribution requirement of paragraph (a)(3) of this section.

(v) *Fifth plan year.* For the fifth plan year, 1979, X, Y, and Z each contribute less than one-half of the total contributions made under the plan. The 75 percent contribution requirement of paragraph (c) of this section does not apply. The plan is a multiemployer plan for 1979 because it again meets the 50 percent contribution requirement of paragraph (a)(3) of this section.

(vi) *Sixth plan year.* For the sixth plan year, 1980, the plan will continue to be a multiemployer plan, provided that no employer contributes 75 percent or more of the total amount of contributions made under the plan for the plan year.

(e) ***Retention of records.***

(1) For plan years ending prior to September 3, 1974, a plan may be required to furnish proof that it met the requirements of section 414(f) and this section for each plan year ending prior to that date to the extent necessary to show the applicability of the 75 percent test provided in paragraph (c) of this section.

(2) For plan years ending after September 2, 1974, a plan may be required to furnish proof that it met the requirements of section 414(f) and this section for 6 immediately preceding plan years.

(Secs. 414(f) and 7805 of the Internal Revenue Code of 1954 (88 Stat. 927, 26 U.S.C. 414(f); 68A Stat. 917; 26 U.S.C. 7805))

[T.D. 7552, 43 FR 29940, July 12, 1978]

§ 1.414(g)-1 Definition of plan administrator.

(a) ***In general.*** For purposes of part I of subchapter D of chapter 1 of the Code and the regulations thereunder, if the instrument under which the plan is operated for a plan year specifically designates a person or a group of persons as plan administrator, the person or group of persons collectively is the plan administrator for the plan year. The instrument may specifically designate a plan administrator—

(1) By name,

(2) By reference to the person or group of persons holding a named position or positions,

(3) By reference to a procedure established under the terms of the instrument pursuant to which a plan administrator is designated, or

(4) By reference to the person or group of persons charged with specific responsibilities of plan administrator. Consistent with the provisions of section 405 (c) (1) of the Employee Retirement Income Security Act of 1974 (29 U.S.C. 1105 (c) (1)), a plan may provide for the allocation of specific responsibilities of plan administrator among named persons and for named persons to designate others to carry out such responsibilities. A person or group of persons may be designated as plan administrator in accordance with the rules of this paragraph even though the person or group of persons does not carry the specific title “plan administrator”. In the absence of a person or group of persons designated as the plan administrator (individually, collectively, or by designation of different specific administrative responsibilities), the plan administrator for the plan year is the person or group of persons specified in paragraph (b) of this section.

(b) ***Plan administrator not specifically designated.*** If no person or group of persons is specifically designated as the plan administrator for a plan year by the instrument under which the plan is operated, the plan administrator for such year is the person or group of persons determined under the following rules:

(1) ***Single employer.*** In the case of a plan maintained by a single employer, the employer is the plan administrator. If the employer is a corporation, the corporation is the plan administrator. However, the corporation's board of directors may authorize a person or group of persons to fulfill responsibilities of the corporation as plan administrator. In the absence of such authorization, any corporate officer authorized under law, corporate by-laws, or resolution of the board of directors to act on behalf of the corporation with respect to contracts of a value equivalent to the fair market value of the assets of the plan shall be presumed to have authority to fulfill responsibilities of the corporation as plan administrator. For purposes of this paragraph (b) (1), “employer” means the “employer” as defined in section 3 (5) of the Employee Retirement Income Security Act of 1974 (29 U.S.C. 1003 (5)).

(2) ***Employee organization.*** In the case of a plan maintained by an employee organization, the employee organization is the plan administrator.

(3) ***Group representing the parties.*** In the case of a plan maintained by two or more employers, or jointly by one or more employers and one or more employee organizations, the association, committee, joint board of trustees, or other similar group of representatives of the parties who maintain the plan, as the case may be, is the plan administrator. For purposes of this subparagraph (3), a plan shall be considered maintained by two or more employers or jointly by one or more employers and one or more employee organizations only if none of the parties has the express power, under the terms of the instrument under which the plan is operated, to terminate the plan unilaterally.

(4) ***Person in control of assets.*** In any case where a plan administrator may not be determined by application of paragraphs (a) and (b), (1), (2), and (3) of this section, the plan administrator is the person or persons actually responsible, whether or not under the terms of the plan, for the control, disposition, or management of the cash or property received by or contributed to the plan, irrespective of whether such control, disposition, or management is exercised directly by such person or persons or indirectly through an agent or trustee designated by such person or persons.

(Secs. 414(g) and 7805 of the Internal Revenue Code of 1954 (88 Stat. 927, 68A Stat 917; 26 U.S.C. 414(g), 7805))

[T.D. 7618, 44 FR 27657, May 11, 1979]

§ 1.414(l)-1 Mergers and consolidations of plans or transfers of plan assets.

(a) ***In general*** —

(1) ***Scope of the regulations.*** Sections 401(a)(12) and 414(l) apply only to plans to which section 411 applies without regard to section 411(e)(2). Thus, for example, these sections do not apply to a governmental plan within the meaning of section 414(d); a church plan, within the meaning of section 414(e), for which there has not been made the election under section 410(d) to have the participation, vesting, funding, etc. requirements apply; or a plan which at no time after September 2, 1974, provided for employer contributions.

(2) ***General rule.*** Under section 414(l),

(i) A trust which forms a part of a plan will not constitute a qualified trust under section 401, and

(ii) A plan will not be treated as being qualified under section 403 (a) and 405 (a), unless, in the case of a merger or consolidation (as defined in paragraph (b)(2) of this section), or a transfer of assets or liabilities (as defined in paragraph (b)(3) of this section), the following condition is satisfied. This condition requires that each participant receive benefits on a termination basis (as defined in paragraph (b)(5) of this section) from the plan immediately after the merger, consolidation or transfer which are equal to or greater than the benefits the participant would receive on a termination basis immediately before the merger, consolidation, or transfer.

(b) ***Definitions.*** For purposes of this section:

(1) ***Single plan.*** A plan is a “single plan” if and only if, on an ongoing basis, all of the plan assets are available to pay benefits to employees who are covered by the plan and their beneficiaries. For purposes of the preceding sentence, all the assets of a plan will not fail to be available to provide all the benefits of a plan merely because the plan is funded in part or in whole with allocated insurance instruments. A plan will not fail to be a single plan merely because of the following:

(i) The plan has several distinct benefit structures which apply either to the same or different participants,

(ii) The plan has several plan documents,

(iii) Several employers, whether or not affiliated, contribute to the plan,

(iv) The assets of the plan are invested in several trusts or annuity contracts, or

(v) Separate accounting is maintained for purposes of cost allocation but not for purposes of providing benefits under the plan.

However, more than one plan will exist if a portion of the plan assets is not available to pay some of the benefits. This will be so even if each plan has the same benefit structure or plan document, or if all or part of the assets are invested in one trust with separate accounting with respect to each plan.

(2) ***Merger or consolidation.*** The terms "merger" or "consolidation" means the combining of two or more plans into a single plan. A merger or consolidation will not occur merely because one or more corporations undergo a reorganization (whether or not taxable). Furthermore, a merger or consolidation will not occur if two plans are not combined into a single plan, such as by using one trust which limits the availability of assets of one plan to provide benefits to participants and beneficiaries of only that plan.

(3) ***Transfer of assets or liabilities.*** A "transfer of assets or liabilities" occurs when there is a diminution of assets or liabilities with respect to one plan and the acquisition of these assets or the assumption of these liabilities by another plan. For example, the shifting of assets or liabilities pursuant to a reciprocity agreement between two plans in which one plan assumes liabilities of another plan is a transfer of assets or liabilities. However, the shifting of assets between several funding media used for a single plan (such as between trusts, between annuity contracts, or between trusts and annuity contracts) is not a transfer of assets or liabilities.

(4) ***Spinoff.*** The term "spinoff" means the splitting of a single plan into two or more plans.

(5) ***Benefits on a termination basis.***

(i) The term "benefits on a termination basis" means the benefits that would be provided exclusively by the plan assets pursuant to section 4044 of the Employee Retirement Income Security Act of 1974 ("ERISA") and the regulations thereunder if the plan terminated. Thus, the term does not include benefits that are guaranteed by the Pension Benefit Guaranty Corporation, but not provided by the plan assets.

(ii) For purposes of determining the benefits on a termination basis, the allocation of assets to various priority categories under section 4044 of ERISA must be made on the basis of reasonable actuarial assumptions. The assumptions used by the Pension Benefit Guaranty Corporation as of the date of the merger or spinoff are deemed reasonable for this purpose.

(iii) If a change in the benefit structure of a plan in conjunction with a merger, consolidation, or transfer of assets or liabilities alters the benefits on a termination basis, the change should be designated, at the time the merger, consolidation, or transfer occurs, to be effective either immediately before or immediately after that occurrence. In the event that no designation is made, the change in the benefit structure will be deemed to occur immediately after the merger, consolidation, or transfer of assets or liabilities.

(6) ***Lower funded plan.***

(i) The term "lower funded plan" generally means the plan which, immediately prior to the merger, would have its assets exhausted in a higher priority category than the other plan.

(ii) Where two plans, immediately prior to the merger, would have their assets exhausted in the same priority category of section 4044 of ERISA in the event of termination, the lower funded plan is the one in which the assets would satisfy a lesser proportion of the liability allocated to that priority category.

(7) ***Priority category.*** The term "priority category" means the category of benefits described in each paragraph of section 4044(a) of ERISA. References to higher or highest priority categories refer to those priority categories which receive the first allocation of asserts, i.e. the lowest paragraph numbers in section 4044(a).

(8) ***Separate accounting of assets.*** The term "separate accounting of assets" means the maintenance of an asset account with respect to a given group of participants which is:

(i) Credited with contributions made to the plan on behalf of the participants and with its allocable share of investment income, if any, and

(ii) Charged with benefits paid to the participants, and with its allocable share of investment losses or expenses.

(9) ***Present value of accrued benefit.*** For purposes of this section, the present value of an accrued benefit must be determined on the basis of reasonable actuarial assumptions. For this purpose, the assumptions used by the Pension Benefit Guaranty Corporation as of the date of the merger or spinoff are deemed reasonable.

(10) ***Valuation of plan assets.*** In determining the value of a plan's assets, the standards set forth in regulations prescribed by the Pension Benefit Guaranty Corporation (29 CFR Part 2611) shall be applied.

(11) ***Date of merger or spinoff.*** The actual date of a merger or spinoff shall be determined on the basis of the facts and circumstances of the particular situation. For purposes of this determination, the following factors, none of which is necessarily controlling, are relevant:

(i) The date on which the affected employees stop accruing benefits under one plan and begin coverage and benefit accruals under another plan.

(ii) The date as of which the amount of assets to be eventually transferred is calculated.

(iii) If the merger or spinoff agreement provides that interest is to accrue from a certain date to the date of actual transfer, the date from which such interest will accrue.

(c) ***Application of section 414(l)*** —

(1) ***Two or more plans.***

(i) Section 414(l) does not apply unless more than a single plan is involved. It also does not apply unless at least a single plan assumes liabilities from another plan or obtains assets from another plan (as in a merger or spinoff). For purposes of section 414(l), a transfer of assets or liabilities will not be deemed to occur merely because a defined contribution plan is amended to become a defined benefit plan. This rule will apply even if, under the facts and circumstances of a particular case, a termination of the defined contribution plan will be considered to have occurred for purposes of other provisions of the Code.

(ii) The requirements of this subparagraph may be illustrated as follows:

Example. After acquiring Corporation B, Corporation A amends Corporation B's defined benefit plan (Plan B) to provide the same benefits as Corporation A's defined benefit plan (Plan A). The assets of Plan B are transferred to the trust containing the assets of Plan A in such a manner that the assets of each plan: (1) are separately accounted for, and (2) are not available to pay benefits of the other plan. Because of condition (2) there are still two plans and, therefore, a merger did not occur. As a result, section 414(l) does not apply. If at some later date Corporation A were to sell Corporation B and transfer the assets of Plan B that were separately accounted for to another trust or to an annuity contract solely for the purpose of providing Plan B's benefits, this transfer would also not involve section 414(l). This is so because Plan B was a separate plan before the entire transaction and because no plan assumed liabilities or obtained assets from another plan. If, on the other hand, Corporation A merged Plan A and Plan B at the time of the acquisition of Corporation B by deleting condition (2) above, then section 414(l) would apply both to the merger of Plan A and Plan B and to the spinoff of Plan B from the merged plan. The spinoff would have to satisfy the requirements of paragraph (n) of this section, even if the assets attributable to Plan A and Plan B were separately accounted for in order to allocate funding costs.

(2) ***Multiemployer plans.*** Except to the extent provided by regulations of the Pension Benefit Guaranty Corporation, section 114(l) does not apply to any transaction to the extent that participants either before or after that transaction are covered under a multiemployer plan within the meaning of section 414(f). Until these regulations are issued, section 414(l) does not apply to any of the following situations:

(i) A multiemployer plan is split into two or more plans, one or more of which are not multiemployer plans, or

(ii) A single employer plan is merged into a multiemployer plan.

Therefore, if some (but not all) of the participants in a single employer plan become participants in a multiemployer plan under an agreement in which the multiemployer plan assumes all the liabilities of the single employer plan with respect to these participants and in which some or all of the assets of the single employer plan are transferred to the multiemployer plan, section 414(l) applies, but only with respect to the participants in the single employer plan who did not transfer to the multiemployer plan.

(d) ***Merger of defined contribution plans.*** In the case of a merger of two or more defined contribution plans, the requirements of section 414(l) will be satisfied if all of the following conditions are met:

(1) The sum of the account balances in each plan equals the fair market value (determined as of the date of the merger) of the entire plan assets.

(2) The assets of each plan are combined to form the assets of the plan as merged.

(3) Immediately after the merger, each participant in the plan as merged has an account balance equal to the sum of the account balances the participant had in the plans immediately prior to merger.

(e) ***Merger of defined benefit plans*** —

(1) ***General rule.*** Section 414(l) compares the benefits on a termination basis before and after the merger. If the sum of the assets of all plans is not less than the sum of the present values of the accrued benefit (whether or not vested) of all plans, the requirements of section 414(l) will be satisfied merely by combining the assets and preserving each participant's accrued benefits. This is

so because all the accrued benefits of the plan as merged are provided on a termination basis by the plan as merged. However, if the sum of the assets of all plans is less than the sum of the present values of the accrued benefits (whether or not vested) in all plans, the accrued benefits in the plan as merged are not provided on a termination basis.

(2) ***Special schedule of benefits.*** Generally, for some participants, the benefits provided on a termination basis for the plan as merged would be different from the benefits provided on a termination basis in the plans prior to merger if the assets were merely combined and if each participant retained his accrued benefit. Some participants would, therefore, receive greater benefits on a termination basis as a result of the merger and some other participants would receive smaller benefits. Accordingly, the requirements of section 414(l) would not be satisfied unless the distribution on termination were modified in some manner to prevent any participant from receiving smaller benefits on a termination basis as a result of the merger. This is accomplished through modifying the application of section 4044 of ERISA by inserting a special schedule of benefits.

(f) ***Operational rules for the special schedule.*** The application of section 4044 of ERISA as modified by the schedule of benefits is accomplished by the following steps:

(1) Section 4044 is applied in the plan as merged through the priority categories fully satisfied by the assets of the lower funded plan immediately prior to the merger.

(2) The assets in the plan as merged are then allocated to the next priority category as a percentage of the value of the benefits that would otherwise be allocated to that priority category. That percentage is the ratio of

(i) the assets allocated to the first priority category not fully satisfied by the lower funded plan immediately prior to the merger to

(ii) the assets that would have been allocated had that priority category been fully satisfied.

(3) A schedule of benefits is formed listing participants and scheduled accrued benefits. The scheduled accrued benefit is the excess of the benefits provided on a termination basis with respect to any participant from the plans immediately prior to the merger, over the benefits provided on a termination basis in subparagraphs (1) and (2) of this paragraph immediately after the merger. After allocating the assets in accordance with subparagraph (2) of this paragraph, the assets are allocated to the schedule of benefits as follows:

(i) First the assets are allocated to the scheduled benefits to the extent that the participant would have benefits provided in subparagraph (4) of this paragraph if there were no scheduled benefits.

(ii) Then the assets are allocated to the scheduled benefits to the extent that the participant would have benefits provided pursuant to subparagraph (5) of this paragraph if there were no scheduled benefits.

These assets should be allocated first to those scheduled benefits that are in the highest priority category under section 4044.

(4) The assets are then allocated to those benefits in the priority category described in subparagraph (2) of this paragraph with respect to which assets were not allocated. This allocation is made to the extent that these benefits are not associated with benefits in the schedule.

(5) Finally, the assets are allocated in accordance with section 4044 with respect to priority categories lower than the priority category described in subparagraph (4) of this paragraph. This allocation is made to the extent that these benefits are not associated with benefits in the schedule.

(g) *Successive mergers* —

(1) ***In general.*** In the case of a current merger of a defined benefit plan with another defined benefit plan which as a result of a previous merger has a special schedule, the rules of paragraphs (e) and (f) of this section apply as if the schedule were considered a category described in section 4044 of ERISA. Thus, a second schedule may be formed as a result of the current merger. The second schedule will be inserted in the priority category of section 4044 described in paragraph (f)(2) of this section as of the date of the current merger. This priority category may be higher, lower, or within the schedule of benefits existing on account of a previous merger. If this priority schedule is inserted within a schedule of benefits, a new single schedule of benefits replacing the old schedule of benefits would in effect be created.

(2) ***Allocation of assets.*** Assets in the new schedule of benefits are allocated as follows:

(i) First to the benefits remaining in the old schedule to the extent that there are assets immediately prior to the second merger to satisfy the original benefits,

(ii) Then to the benefits provided on a termination basis from the plans immediately prior to the second merger to the extent that they are not provided before the schedule after the second merger or in subdivision (i) of this subparagraph,

(iii) Then to benefits remaining in the original schedule not included in subdivision (i) of this subparagraph.

(h) *De minimis rule for merger of defined benefit plan* —

(1) ***In general.*** In the case of a merger of a defined benefit plan ("smaller plan") whose liabilities (*i.e.,* the present value of accrued benefits, whether or not vested) are less than 3 percent of the assets of another defined benefit plan ("larger plan") as of at least one day in the larger plan's plan year in which the merger of the two plans occurs, section 414(l) will be deemed to be satisfied if the following condition is met. The condition requires that a special schedule of benefits (consisting of all the benefits that would be provided by the smaller plan on a termination basis just prior to the merger) be payable in a priority category higher than the highest priority category in section 4044 of ERISA. Assets will be allocated to that schedule in accordance with the allocation of assets to scheduled benefits in paragraph (f)(3) of this section.

(2) ***Application to a series of mergers.*** In the case of a series of such mergers in a given plan year of the larger plan, the rule described in subparagraph (1) of this paragraph will apply only if the sum of the liabilities (whether or not vested) assumed by the larger plan are less than 3 percent of the assets of the larger plan as of at least one day in the plan year of the larger plan in which the mergers occurred.

(3) ***Application to a merger occurring over more than one plan year.*** In the case of a merger of a smaller plan or a portion thereof with a larger plan designed to occur in steps over more than one plan year of the larger plan, the entire transaction will be deemed to occur in the plan year of the larger plan which contains the first of these steps.

(4) ***Liabilities of the smaller plan.*** For purposes of subparagraphs (2) and (3) of this paragraph, mergers satisfying paragraphs (e), (f) or (g) of this section will be ignored in determining the sum of the liabilities assumed by the larger plan.

(i) ***Data maintenance*** —

(1) ***Alternative to the special schedule.*** In the case of a merger which would require the creation of a special schedule in order to satisfy section 414(l), the schedule need not be created at the time of the merger if data sufficient to create the schedule is maintained. The schedule would only have to be created in the event of a subsequent plan termination or a subsequent spinoff. In that case the schedule must be determined as of the date of the merger.

(2) ***Required data.*** The data that must be maintained depends on the plan, and care should be taken to ensure that all necessary data is maintained. Furthermore, in order to take advantage of the data maintenance alternative provided in this paragraph, an enrolled actuary must certify to the plan administrator that each element of data necessary to determine the schedule as of the date of the merger is maintained. This certification must be based either upon the enrolled actuary's independent examination of the data, or upon his reliance, which under the circumstances of the particular situation must be reasonable, upon a written statement of the plan administrator concerning what data is actually being maintained.

(j) ***Five year rule*** —

(1) ***Limitation on the required use of the special schedule.*** A plan will not fail to satisfy the requirements of section 414(l) merely because the effects of the special schedule created pursuant to paragraphs (e)(2) or (h) of this section are ignored 5 years after the date of a merger. Furthermore, the date maintained pursuant to paragraph (i) of this section need not be maintained for more than 5 years after the merger, if the plan does not have a spinoff or a termination within 5 years.

(2) ***Illustration.*** If Plans A and B merge to form Plan AB and if Plan AB merges with Plan C 3 years later to form Plan ABC and if Plan ABC terminates 4 years later, the data relating to the merger of Plans A and B need not be maintained for more than 5 years after the merger of Plans A and B. In addition, after 5 years have elapsed after the merger of Plans A and B, the effect of any special schedule created by the merger of Plans A and B on the schedule created by the merger of Plans AB and C may be ignored in determining the later schedule.

(k) ***Examples.*** The provisions of paragraphs (e) through (j) of this section may be illustrated by the following examples:

> *Example 1.* Plan A, whose assets are $220,000, is to be merged with Plan B, whose assets are $200,000. Plan A has three employees. Plan B has two employees. If Plans A and B were to terminate just prior to the merger, the benefits provided on a termination basis would be as follows:

PLAN A

Priority category of section 4044 of ERISA	(1)—Annual accrued benefits			(2)—Present value of accrued benefits			(3)—Fair market value of assets allocated to priority category	(4)—Benefits on a termination basis		
	EE_1	EE_2	EE_3	EE_1	EE_2	EE_3		EE_1	EE_2	EE_3
3	$10,000			$120,000			$120,000	$10,000		
4	2,000	$4,000		24,000	$44,000		68,000	2,000	$4,000	
5		3,000	$4,000		33,000	$40,000	32,000		[1] 1,315	[2] $1,753
6			1,000			10,000				
Total							220,000	12,000	5,315	1,753

[1] *$3,000 × $32,000 ÷ $73,000 i.e. accrued benefit × assets available for priority category 5—Total present value of accrued benefits in category 5.*

[2] *$4,000 × $32,000 ÷ $73,000.*

PLAN B

Priority category of section 4044 of ERISA	(1)—Annual accrued benefits					(2)—Present value of accrued benefits					(3)—Fair market value of assets allocated to priority category	(4)—Benefits on a termination basis				
	EE_1	EE_2	EE_3	EE_4	EE_5	EE_1	EE_2	EE_3	EE_4	EE_5		EE_1	EE_2	EE_3	EE_4	EE_5
3				$15,000					$195,000		$195,000				$15,000	
4					$5,000					$50,000	5,000					[1] $500
5					8,000					80,000						
Total											200,000				15,000	500

[1] *$5,000 ÷ $5,000 × $50,000.*

Because Plan B's assets are exhausted in a higher priority category than Plan A's assets, Plan B is the lower funded plan. A schedule will, therefore, be inserted in Priority Category 4 of the plan as merged after providing 10% of the benefits provided in category 4, i.e. the ratio of $5,000 assets in Plan B allocated to category 4 to the $50,000 liability in category 4. The schedule would be constructed as follows:

EE	(1)—Benefits on a termination basis before merger	(2)—Benefits provided from priority categories higher than Category 4	(3)—10% of benefits provided in priority Category 4	(4)—Benefits provided before schedule (2) + (3)	(5)—Schedule of benefits (1) − (4)
1	$12,000	$10,000	$200	$10,200	$1,800
2	5,315		400	400	4,915
3	1,753				1,753
4	15,000	15,000		15,000	
5	500		500	500	

Example 2. The facts are the same as in Example 1. The plan, however, terminates one year later. Furthermore, no employee has accrued additional benefits during the year except that the $2,000 benefit for EE_1, that was originally in category 4 is now in category 3. The assets would be allocated to the priority categories to the extent that there are assets to cover the following benefits.

Priority termination category	EE_1	EE_2	EE_3	EE_4	EE_5
3	$12,000			$15,000	
10% of 4		$400			$500
Schedule of benefits included in balance of Category 4		3,600			
Schedule of benefits included in Category 5		1,315	$1,753		
Schedule of benefits included in Category 6					
Balance of Category 4 not included in schedule					4,500
Balance of Category 5 not included in schedule		1,685	2,247		8,000

Priority termination category	EE_1	EE_2	EE_3	EE_4	EE_5
Balance of Category 6 not included in schedule			1,000		

(l) ***Merger of defined benefit and defined contribution plan.*** In the case of a merger of a defined benefit plan with a defined contribution plan, one of the plans before the merger should be converted into the other type of plan (*i.e.,* the defined benefit converted into a defined contribution or the defined contribution converted into a defined benefit) and either paragraph (d) or paragraphs (e) through (j) of this section, whichever is appropriate, should be applied.

(m) ***Spinoff of a defined contribution plan.*** In the case of a spinoff of a defined contribution plan, the requirements of section 414(l) will be satisfied if after the spinoff—

(1) The sum of the account balances for each of the participants in the resulting plans equals the account balance of the participant in the plan before the spinoff, and

(2) The assets in each of the plans immediately after the spinoff equals the sum of the account balances for all participants in that plan.

(n) ***Spinoff of a defined benefit plan*** —

(1) ***General rule.*** In the case of a spinoff of a defined benefit plan, the requirements of section 414(l) will be satisfied if—

(i) All of the accrued benefits of each participant are allocated to only one of the spun off plans, and

(ii) The value of the assets allocated to each of the spun off plans is not less than the sum of the present value of the benefits on a termination basis in the plan before the spin off for all participants in that spun off plan.

(2) ***De minimis rule.*** In the case of a spin off the requirements of section 414(l) will be deemed to be satisfied if the value of the assets spun off—

(i) Equals the present value of the accrued benefits spun off (whether or not vested), and

(ii) In conjunction with other assets spun off during the plan year in which the spinoff occurs in accordance with this subparagraph, is less than 3 percent of the assets as of at least one day in that year.

Spinoffs occurring in previous or subsequent plan years are ignored if they are not part of a single spinoff designed to occur in steps over more than one plan year.

(3) ***Special temporary rule.*** In the case of a defined benefit plan maintained for different groups of employees, which is a single plan (as defined in paragraph (b)(l) of this section) and under which there has been separate accounting of assets for each group, a spinoff of the plan on or before July 1, 1978, into a separate plan for each group will be deemed to satisfy section 414 (l) if—

(i) All the liabilities with respect to each group of employees are allocated to a separate plan for that group of employees, and

(ii) The assets that are separately accounted for with respect to each group of employees are allocated to the separate plan for that group of employees.

For purposes of this subparagraph, a separate accounting of assets will not be considered to have occurred to the extent that the assets allocated to each single plan are determined by an historical re-creation of benefits, contributions, investment gains, etc.

(o) ***Transfers of assets or liabilities.*** Any transfer of assets or liabilities will for purposes of section 414 (l) be considered as a combination of separate mergers and spinoffs using the rules of paragraphs (d), (e) through (j), (l), (m), or (n) of this section, whichever is appropriate. Thus, for example, if in accordance with the transfer of one or more employees, a block of assets and liabilities are transferred from Plan A to Plan B, each of which is a defined benefit plan, the transaction will be considered as a spinoff from Plan A and a merger of one of the spinoff plans with Plan B. The spinoff and merger described in the previous sentence would be subject to the requirements of paragraphs (n) and (e) through (j) of this section respectively.

[T.D. 7638, 44 FR 48195, Aug. 17, 1979]

§ 1.414(q)-1 Highly compensated employee.

Q&A-1—Q&A-8: [Reserved]. See § 1.414(q)-1T, Q&A-1 through Q&A-8 for further guidance.

Q-9: How is the top-paid group determined?

A-9: (a) [Reserved]. See § 1.414(q)-1T, Q&A-9(a) for further guidance.

(b) ***Number of employees in the top-paid group*** —

(1) ***Exclusions.*** The number of employees who are in the top-paid group for a year is equal to 20 percent of the total number of active employees of the employer for such year. However, solely for purposes of determining the total number of active employees in the top-paid group for a year, the employees described in § 1.414(q)-1T, A-9(b)(1) (i), (ii) and (iii)(B) are disregarded. Paragraph (g) of this A-9 provides rules for determining those employees who are excluded for purposes of applying section 414(r)(2)(A), relating to the 50-employee requirement applicable to a qualified separate line of business.

(i)-(iii) [Reserved]. See § 1.414(q)-1T, Q&A-9(b)(1) (i) through (iii) for further guidance.

(2) ***Alternative exclusion provisions*** —

(i)-(ii) [Reserved]. See § 1.414(q)-1T, Q&A-9(b)(2) (i) and (ii) for further guidance.

(iii) ***Method of election.*** The elections in this paragraph (b)(2) must be provided for in all plans of the employer and must be uniform and consistent with respect to all situations in which the section 414(q) definition is applicable to the employer. Thus, with respect to all plan years beginning in the same calendar year, the employer must apply the test uniformly for purposes of determining its top-paid group with respect to all its qualified plans and employee benefit plans. If either election is changed during the determination year, no recalculation of the look-back year based on the new election is required, provided the change in election does not result in discrimination in operation.

(c)-(f) [Reserved]. See § 1.414(q)-1T, Q&A-9 (c) through (f) for further guidance.

(g) *Excluded employees under section 414(r)(2)(A)* —

(1) ***In general.*** This paragraph (g) provides the rules for determining which employees are excluded employees for purposes of applying section 414(r)(2)(A), relating to the 50-employee requirement applicable to a qualified separate line of business.

(2) *Excluded employees* —

(i) ***Age and service exclusion.*** All employees are excluded who are described in § 1.414(q)-1T, A-9(b)(1)(i) (relating to exclusions based on age or service). For this purpose, the rules in § 1.414(q)-1T, A-9 (e) and (f) (relating respectively to the $17^1/_2$-hour rule and the 6-month rule) apply. However, the election in § 1.414(q)-1T, A-9(b)(2)(i) (permitting the employer to elect reduced minimum age or service requirements) does not apply.

(ii) ***Nonresident alien exclusion.*** All employees are excluded who are described in § 1.414(q)-1T, A-9(b)(1)(ii) (relating to the exclusion of nonresident aliens with no U.S.- source income from the employer).

(iii) ***Inclusion of employees covered under a collective bargaining agreement.*** All employees are included who are described in § 1.414(q)-1T, A-9(b)(1)(iii)(A) (relating to employees covered under a collective bargaining agreement) and who are not otherwise described in paragraph (g)(2) (i) or (ii) of this A-9. For this purpose, the exclusion in § 1.414(q)-1T, A-9(b)(1)(iii)(B) and the related election in § 1.414(q)-1T, A-9(b)(2)(ii) do not apply.

(3) ***Applicable period.*** The determination of which employees are excluded employees is made on the basis of the testing year specified in the regulations under section 414(r) and not on the basis of the determination year or the look-back year under section 414(q).

(h) ***Effective date.*** The provisions of this A-9 apply to plan years and testing years beginning on or after January 1, 1994.

Q&A-10 through Q&A-15: [Reserved]. See § 1.414(q)-1T, Q&A-10 through Q&A-15 for further guidance.

[T.D. 8548, 59 FR 32915, June 27, 1994]

§ 1.414(q)-1T Highly compensated employee (temporary).

The following questions and answers relate to the definition of “highly compensated employee” provided in section 414(q). The definitions and rules provided in these questions and answers are provided solely for purposes of determining the group of highly compensated employees.

Table of contents.

Q&A-1 General applicability of section 414(q).

Q&A-2 Definition of highly compensated employees.

Q&A-3 Definition of highly compensated active employees.

Q&A-4 Definition of highly compensated former employees.

Q&A-5 Definition of separation year.

Q&A-6 Definition of employer.

Q&A-7 Definition of employee.

Q&A-8 Definition of 5-percent owner.

Q&A-9 Definition of top-paid group.

Q&A-10 Definition of officer and rules on inclusion of officers in highly compensated group.

Q&A-11 Rules with respect to family aggregation.

Q&A-12 Definition of family member.

Q&A-13 Definition of compensation.

Q&A-14 Rules with respect to the relevant determination periods.

Q&A-15 Transition rule applicable to plan years beginning in 1987 and 1988 for certain employers that have plans that must comply with the provisions of section 401(k)(3) or 401(m)(2).

Q-1: To what employee benefit plans and statutory provisions is the definition of highly compensated employee contained in section 414(q) applicable?

A-1:

(a) ***In general.*** This definition is applicable to statutory provisions that incorporate the definition by reference.

(b) ***Qualified retirement plans*** —

(1) ***In general.*** Generally, this definition is incorporated in many of the nondiscrimination requirements applicable to pension, profit-sharing, and stock bonus plans qualified under section 401(a). *See, e.g.,* the nondiscrimination provisions of sections 401(a) (4) and (5), 401(k)(3), 401(l), 401(m), 406(b), 407(b), 408(k), 410(b) and 411(d)(1). The definition is also incorporated by certain other provisions with respect to such plans, including the aggregation rules of section 414(m) and section 4975 (tax on prohibited transactions).

(2) ***Not applicable where not incorporated by reference.*** This definition is not applicable to qualified plan provisions that do not incorporate it. *See, e.g.,* section 415 (limitations on contributions and benefits), with the exception of section 415(c)(3)(C) and 415(c)(6) (special rules for permanent and total disability and employee stock ownership plans respectively).

(c) ***Other employee benefit plans or arrangements.*** This definition is incorporated by various sections relating to employee benefit provisions. *See, e.g.,* section 89 (certain other employee benefit plans), section 106 (accident and health plans), 117(d) (qualified tuition reduction), section 125 (cafeteria plans), section 129 (dependent care assistance programs), section 132 (certain fringe benefits), section 274 (certain entertainment, etc. expenses), section 423(b) (employee stock purchase plan

provisions), section 501(c) (17) and (18) (certain exempt trusts providing benefits to employees), and section 505 (certain exempt organizations or trusts providing benefits to individuals). See the respective sections for the applicable effective dates.

(d) ***ERISA.*** This definition is not determinative with respect to any provisions of title I of the Employee Retirement Income Security Act of 1974 (ERISA), unless it is explicitly incorporated by reference (e.g., section 408(b)(1)(B)).

Q-2: Who is a highly compensated employee?

A-2: The group of employees (including former employees) who are highly compensated employees consists of both highly compensated active employees (see A-3 of this § 1.414(q)-1T) and highly compensated former employees (see A-4 of this § 1.414(q)-1T). In many circumstances, highly compensated active employees and highly compensated former employees are considered separately in applying the provisions for which the definition of highly compensated employees in section 414(q) is applicable. Specific rules with respect to the treatment of highly compensated active employees and highly compensated former employees will be provided in the regulations with respect to the sections to which the definition of highly compensated employees is applicable.

Q-3: Who is a highly compensated active employee?

A-3:

(a) ***General rule.*** For purposes of the year for which the determination is being made (the determination year), a highly compensated active employee is any employee who, with respect to the employer, performs services during the determination year and is described in any one or more of the following groups applicable with respect to the look-back year calculation and/or determination year calculation for such determination year. See A-14 for rules relating to the periods for which the look-back year calculation and determination year calculation are to be made.

(1) ***Look-back year calculation.***

(i) ***5-percent owner.*** The employee is a 5-percent owner at any time during the look-back year (i.e., generally, the 12-month period immediately preceding the determination year; see A-14. (See A-8 of this § 1.414(q)-1T.)

(ii) ***Compensation above $75,000.*** The employee receives compensation in excess of $75,000 during the look-back year.

(iii) ***Compensation above $50,000 and top-paid group.*** The employee receives compensation in excess of $50,000 during the look-back year and is a member of the top-paid group for the look-back year. (See A-9 of this § 1.414(q)-1T.)

(iv) ***Officer.*** The employee is an “includible officer” during the look-back year. (See A-10 of this § 1.414(q)-1T.)

(2) ***Determination year calculation.***

(i) ***5-percent owner.*** The employee is a 5-percent owner at any time during the determination year. (See A-8 of this § 1.414(q)-1T.)

(ii) ***Top-100 employees.*** The employee is both

(A) described in paragraph (a)(1)(i), (ii) and/or (iv) of this A-3, when such paragraphs are modified to substitute the determination year for the look-back year, and

(B) one of the 100 employees who receive the most compensation from the employer during the determination year.

(b) ***Rounding and tie-breaking rules.*** In making the look-back year and determination year calculations for a determination year, it may be necessary for an employer to adopt a rule for rounding calculations (e.g., in determining the number of employees in the top-paid group). In addition, it may be necessary to adopt a rule breaking ties among two or more employees (e.g., in identifying those particular employees who are in the top-paid group or who are among the 100 most highly compensated employees). In such cases, the employer may adopt any rounding or tie-breaking rules it desires, so long as such rules are reasonable, nondiscriminatory, and uniformly and consistently applied.

(c) ***Adjustments to dollar thresholds*** —

(1) ***Indexing of dollar thresholds.*** The dollar amounts in paragraph (a)(1) (i) and (ii) of this A-3 are indexed at the same time and in the same manner as the section 415(b)(1)(A) dollar limitation for defined benefit plans.

(2) ***Applicable dollar threshold.*** The applicable dollar amount for a particular determination year or look-back year is the dollar amount for the calendar year in which such determination year or look-back year begins. Thus, the dollar amount for purposes of determining the highly compensated active employees for a particular look-back year is based on the calendar year in which such look-back year begins, not the calendar year in which such look-back year ends or in which the determination year with respect to such look-back year begins.

(d) ***Employees described in more than one group.*** An individual who is a highly compensated active employee for a determination year, by reason of being described in one group in paragraph (a) of this A-3, under either the look-back year calculation or the determination year calculation, is not disregarded in determining whether another individual is a highly compensated active employee by reason of being described in another group under paragraph (a). For example, an individual who is a highly compensated active employee for a determination year, by reason of being a 5-percent owner during such year, who receives compensation in excess of $50,000 during both the look-back year and the determination year, is taken into account in determining the group of employees who are highly compensated active employees for such determination year by reason of receiving more than $50,000, and being in the top-paid group under either or both the look-back year calculation or determination year calculation for such determination year.

(e) ***Examples.*** The following examples, in which the determination year and look-back year are the calendar year, are illustrative of the rules in paragraph (a) of this A-3. For purposes of these examples, the threshold dollar amounts in paragraph (a)(1) (ii) and (iii) of this A-3 are not increased pursuant to paragraph (c) of this A-3.

> *Example 1.* Employee A, who is not at any time a 5-percent owner, an officer, or a member of the top-100 within the meaning of paragraph (a)(1) (i), or (iv), or (a)(2) (i) or (ii), but who was a member of the top-paid group for each year, is included in or excluded from the highly

compensated groups as specified below for the following years:

Year	Compensation	Status	Comments
1986	$45,000	N/A	Although prior to 414(q) effective date, 1986 constitutes the look-back year for purposes of determining the highly compensated group for the 1987 determination year.
1987	80,000	Excl	Excluded because A was not an employee described in paragraph (a)(1) (ii) or (iii) of this A-3 for the look-back year (1986).
1988	80,000	Incl	Included because A was an employee described in paragraph (a)(1) (ii) or (iii) of this A-3 for the look-back year (1987).
1989	45,000	Incl	Included because A was an employee described in paragraph (a)(1) (ii) or (iii) of this A-3 for the look-back year (1988).
1990	45,000	Excl	Excluded because A was not an employee described in paragraph (a)(1) (ii) or (iii) of this A-3 for the look-back year (1989).

Example 2. Assuming the same facts as those given in *Example 1,* except that A is a member of the top-100 employees within the meaning of paragraph (a)(2)(ii) of this A-3 for the 1987 year and 1990 year, the results are as follows:

Year	Compensation	Status	Comments
1986	$45,000	N/A	Although prior to 414(q) effective date, 1986 constitutes the look-back year for purposes of determining the highly compensated group for the 1987 determination year.
1987	80,000	Incl	Included because A was an employee described in paragraph (a)(1)(ii) or (iii) of this A-3 for the determination year (1987) and was described in paragraph (a)(2)(ii) of this A-3 in that year.
1988	80,000	Incl	Included because A was an employee described in paragraph (a)(1)(ii) or (iii) of this A-3 for the look-back year (1987).
1989	45,000	Incl	Included because A was an employee described in paragraph (a)(1)(ii) or (iii) of this A-3 for the look-back year (1988).
1990	45,000	Excl	Excluded even though in top-100 employees during 1990

Year	Compensation	Status	Comments
			determination year because A was not an employee described in paragraph (a)(1)(ii) or (iii) of this A-3 for the look-back year (1989) or for the determination year (1990).

A-4: Who is a highly compensated former employee?

Q-4:

(a) ***General rule.*** Except to the extent provided in paragraph (d) of this A-4, a highly compensated former employee for a determination year is any former employee who, with respect to the employer, had a separation year (as defined in A-5 of this § 1.414(q)-1T) prior to the determination year and was a highly compensated active employee as defined in A-3 of this § 1.414(q)-1T for either such employee's separation year or any determination year ending on or after the employee's 55th birthday. Thus, for example, an employee who is a highly compensated active employee for such employee's separation year, by reason of receiving over $75,000 during the look-back year, is a highly compensated former employee for determination years after such employee's separation year.

(b) ***Special rule for employees who perform no services for the employer in the determination year.*** For purposes of this rule, employees who perform no services for an employer during a determination year are treated as former employees. Thus, for example, an employee who performed no services for the employer during a determination year, by reason of a leave of absence during such year, is treated as a former employee for such year.

(c) ***Dollar amounts for pre-1987 determination years.*** For determination years beginning before January 1, 1987, the dollar amounts in paragraph (a)(1)(B) and (C) of A-2 of this § 1.414(q)-1T are $75,000 and $50,000 respectively.

(d) ***Special rule for employees who separated from service before January 1, 1987*** —

(1) ***Election of special rule.*** Employers may elect to apply paragraph (d)(2) of this A-4 in lieu of paragraph (a) of this A-4 in determining whether former employees who separated from service prior to January 1, 1987, are highly compensated former employees. If this election is made with respect to any qualified plan, it must be provided for in the plan. If the employer makes this election with respect to any employee benefit plan, such election must be used uniformly for all purposes for which the section 414(q) definition is applicable. The election, once made, cannot be changed without the consent of the Commissioner.

(2) ***Special definition of highly compensated former employee.*** A highly compensated former employee includes any former employee who separated from service with the employer prior to January 1, 1987, and was described in any one or more of the following groups during either the employee's separation year (or the year preceding such separation year) or any year ending on or after such individual's 55th birthday (or the last year ending before such employee's 55th birthday):

(i) ***5-percent owner.*** The employee was a 5-percent owner of the employer at any time during the year.

(ii) ***Compensation amount.*** The employee received compensation is excess of $50,000 during the year.

The determinations provided for in this paragraph (b)(2) may be made on the basis of the calendar year, the plan year, or any other twelve month period selected by the employer and applied on a reasonable and consistent basis.

(e) ***Rules with respect to former employees*** —

(1) ***In general.*** For specific provisions with respect to the treatment of former employees and of highly compensated former employees, refer to the rules with respect to which the section 414(q) definition of highly compensated employee is applicable.

(2) ***Former employees excluded in determining top-paid group, top-100 employees and includible officers.*** Former employees are not included in the top-paid group, the group of the top-100 employees, or the group of includible officers for purposes of applying section 414(q) to active employees. In addition, former employees are not counted as employees for purposes of determining the number of employees in the top-paid group.

Q-5: What is a separation year for purposes of section 414(q)?

A-5:

(a) ***Separation year*** —

(1) ***In general.*** The separation year generally is the determination year during which the employee separates from service with the employer. For purposes of this rule, an employee who performs no services for the employer during a determination year will be treated as having separated from service with the employer in the year in which such employee last performed services for the employer. Thus, for example, an employee who performs no services for the employer by reason of being on a leave of absence throughout the determination year is considered to have separated from service with the employer in the year in which such employee last performed services prior to beginning the leave of absence.

(2) ***Deemed separation.*** An employee who performs services for the employer during a determination year may be deemed to have separated from service with the employer during such year pursuant to the rules in paragraph (a)(3) of this A-5. Such deemed separation year is relevant for purposes of determining whether such employee is a highly compensated former employee after such employee actually separates from service, not for purposes of identifying such employee as either an active or former employee. Because employees to whom the provisions of paragraph (a)(2) of this A-5 apply are still performing services for the employer during the determination year, they are treated as active employees. Thus, for example, an employee who has a deemed separation year in 1989, a year during which he was a highly compensated employee, who continues to work for the employer until he retires from employment in 1995, is an active employee of the employer until 1995 and is either highly compensated or not highly compensated for any determination year during such period based on the rules with respect to highly compensated active employees. For determination years after the year of such employee's retirement, such employee is a highly compensated former employee because such employee was a highly compensated active employee for the deemed separation year.

(3) ***Deemed separation year.*** An employee will be deemed to have a separation year if, in a determination year prior to attainment of age 55, the employee receives compensation in an amount less than 50% of the employee's average annual compensation for the three consecutive calendar years preceding such determination year during which the employee received the greatest amount of compensation from the employer (or the total period of the employee's service with the employer, if less).

(4) ***Leave of absence.*** The deemed separation rules contained in paragraph (a)(2) and (3) of this A-5 apply without regard to whether the reduction in compensation occurs on account of a leave of absence.

(b) ***Deemed resumption of employment.*** An employee who is treated as having a deemed separation year by reason of the provisions of paragraph (a) of this A-5 will not be treated as a highly compensated former employee (by reason of such deemed separation year) after such employee actually separates from service with the employer if, after such deemed separation year, and before the year of actual separation, such employee's services for and compensation from the employer for a determination year increase significantly so that such employee is treated as having a deemed resumption of employment. The determination of whether an employee who has incurred a deemed separation year has an increase in services and compensation sufficient to result in a deemed resumption of employment will be made on the basis of all the surrounding facts and circumstances pertaining to each individual case. At a minimum, there must be an increase in compensation from the employer to the extent that such compensation would not result in a deemed separation year under the tests in paragraph (a)(2) of this A-5 using the same three-year period taken into account in such paragraph.

(c) ***Examples.*** Paragraphs (a) and (b) of this A-5 are illustrated by the following examples based on calendar years. For purposes of these examples the threshold dollar amounts in A-5(a) of this § 1.414(q)-1T have not been increased pursuant to A-5(b) of this § 1.414(q)-1T.

Example 1. Assume that in 1990 A is a highly compensated employee of X by reason of having earned more than $75,000 during the 1989 look-back year. In 1987, 1988 and 1989, A's years of greatest compensation received from X, A received $76,000, $80,000 and $79,000 respectively. In February of 1990, A received $30,000 in compensation. Because A's compensation during the 1990 determination year is less than 50% of A's average annual compensation from X during A's high three prior determination years, A is deemed to have a separation year during the 1990 determination year pursuant to the provisions of paragraph (a) of this A-5. Since A is a highly compensated employee for X in 1990, A's deemed separation year, A will be treated as a highly compensated former employee after A actually separates from service with the employer unless A experiences a deemed resumption of employment within the meaning of paragraph (b) of this A-5.

Example 2. Assume that in 1990 A is a highly compensated employee by reason of having been an officer (with annual compensation in excess of the section 415(c)(1)(A) dollar limitation) during the 1989 look-back year. A's compensation from X during 1990 is $37,000. A's average compensation from X for the three-year period ending with or within January, 1990, was $60,000. A's compensation during the 1990 determination year is not less than 50% of the compensation earned during the test period. Therefore, A is not deemed to have a separation year under paragraph (a)(2)(i) of this A-5.

Example 3. Assume that in 1990 C is 35 and a highly compensated employee of Z for the reasons given in *Example 1* with the same compensation set forth in that example. During 1990, C leaves C's 40 hour a week position as director of the actuarial division of Z and starts working as an actuary for the same division, producing actuarial reports approximately 15 to 20 hours a week, approximately half of these hours at home. C contemplates returning to full-time employment with Z when C's child enters school. During the 1990 determination year, C's compensation is less than 50% of C's compensation during her high three preceding determination years. Therefore, C has a deemed separation year during the 1990 determination year. In 1991 C commences working 32 hours a week for X at X's place of business and receives compensation in an amount equal to 80 percent of her average annual compensation during her high three prior determination years. The C's increased compensation, considered in conjunction with the reasons for the reduction in service, the nature and extent of the services performed before and after the reduction in services, and the lack of proximity of C's age to age 55 at the time of the reduction are sufficient to establish that C has a deemed resumption of employment within the meaning of paragraph (b) of this A-5. Therefore, when C separates from service with the employer, C will not be treated as a highly compensated former employee by reason of C's deemed separation year in 1990.

Q-6: Who is the employer?

A-6:

(a) ***Aggregation of certain entities.*** The employer is the entity employing the employees and includes all other entities aggregated with such employing entity under the aggregation requirements of section 414(b), (c), (m) and (o). Thus, the following entities must be taken into account as a single employer for purposes of determining the employees who are "highly compensated employees" within the meaning of section 414(q):

(1) All corporations that are members of a controlled group of corporations (as defined in section 414(b)) that includes the employing entity.

(2) All trades or businesses (whether or not incorporated) that are under common control (as defined in section 414(c)) which group includes the employing entity.

(3) All organizations (whether or not incorporated) that are members of an affiliated service group (as defined in section 414(m)) that includes the employing entity.

(4) Any other entities required to be aggregated with the employing entity pursuant to section 414(o) and the regulations thereunder.

(b) ***Priority of aggregation provisions.*** The aggregation requirements of paragraph (a) of this A-6 and of A-7(b) of this section with respect to leased employees are applied before the application of any of the other provisions of section 414(q) and this section.

(c) ***Line of business rules.*** The section 414(r) rules with respect to separate lines of business are not applicable in determining the group of highly compensated employees.

Q-7: Who is an employee for purposes of section 414(q)?

A-7:

(a) ***General rule.*** Except as provided in paragraph (b) of this A-7, the term "employee" for purposes of section 414(q) refers to individuals who perform services for the employer and are either common-law employees of the employer or self-employed individuals who are treated as employees pursuant to section 401(c)(1). This rule with respect to the inclusion of certain self-employed individuals in the group of highly compensated employees is applicable whether or not such individuals are eligible to participate in the plan or benefit arrangement being tested.

(b) ***Leased employees*** —

(1) ***In general.*** The term "employee" includes a leased employee who is treated as an employee of the recipient pursuant to the provisions of section 414(n)(2) or 414(o)(2). Employees that an employer treats as leased employees under section 414(n), pursuant to the requirements of section 414(o), are considered to be leased employees for purposes of this rule.

(2) ***Safe-harbor exception.*** For purposes of qualified retirement plans, if an employee who would be a leased employee within the meaning of section 414(n)(2) is covered in a safe-harbor plan described in section 414(n)(5) (a qualified money purchase pension plan maintained by the leasing organization), and not otherwise covered under a qualified retirement plan of the employer, then such employee is excluded from the term "employee" unless the employer elects to include such employee pursuant to the provisions of paragraph (4) of this paragraph (b).

(3) ***Other employee benefit plans.*** The exception in paragraph (b)(2) of this A-7 is not applicable to the determination of the highly compensated employee group for purposes of the sections enumerated in section 414(n)(3)(C). Thus, for example, a leased employee covered by a safe-harbor plan is considered to be an employee in applying the nondiscrimination provisions of section 89 to statutory benefit plans. Consequently, an employer with leased employees covered in a safe-harbor plan may have 2 groups of highly compensated employees, one with respect to its retirement plans and another with respect to its statutory benefit plans.

(4) ***Election with respect to leased employee exclusion.*** An employer may elect to include the employees excepted under the provisions of paragraph (b)(2) of this A-7 in determining the highly compensated group with respect to an employer's retirement plans. Thus, for example, by electing to forego the exception in paragraph (b)(2) of this A-7, an employer may achieve more uniform highly compensated employee groups for purposes of its retirement plans and welfare benefit plans. The election to include such employees must be made on a reasonable and consistent basis and must be provided for in the plan.

Q-8: Who is a 5-percent owner of the employer?

A-8: An employee is a 5-percent owner of the employer for a particular year if, at any time during such year, such employee is a 5-percent owner as defined in section 416(i)(B)(i) and § 1.416-1 A T-17&18. Thus, if the employer is a corporation, a 5-percent owner is any employee who owns (or is considered as owning within the meaning of section 318) more than 5 percent of the value of the outstanding stock of the corporation or stock possessing more than 5 percent of the total combined voting power of all stock of the corporation. If the employer is not a corporation, a 5-percent owner is any employee who owns more than 5 percent of the capital or profits interest in the employer. The rules of subsections (b), (c), and (m) of section 414 do not apply for purposes of determining who is a 5-percent owner. Thus, for example, an individual who is a 5-percent owner of a subsidiary corporation that is part of a controlled group of corporations within the meaning of section 414(b) is treated as a 5-percent owner for purposes of these rules.

Q-9: How is the "top-paid group" determined?

A-9:

(a) ***General rule.*** An employee is in the top-paid group of employees for a particular year if such employee is in the group consisting of the top 20 percent of the employer's employees when ranked on the basis of compensation received from the employer during such year. The identification of the particular employees who are in the top-paid group for a year involves a two-step procedure:

(1) The determination of the number of employees that corresponds to 20 percent of the employer's employees, and

(2) The identification of the particular employees who are among the number of employees who receive the most compensation during this year.

Employees who perform no services for the employer during a year are not included in making either of these determinations for such year.

(b) ***Number of employees in the top-paid group*** —

(1) ***Exclusions.*** [Reserved]. See § 1.414(q)-1, Q&A-9(b)(1) for further information.

(i) ***Age and service exclusion.*** The following employees are excluded on the basis of age or service absent an election by the employer pursuant to the rules in paragraph (b)(2) of this A-9:

(A) Employees who have not completed 6 months of service by the end of such year. For purposes of this paragraph (A), an employee's service in the immediately preceding year is added to service in the current year in determining whether the exclusion is applicable with respect to a particular employee in the current year. For example, given a plan with a calendar determination year, if employee A commences work August 1, 1989, and terminates employment May 31, 1990, A may be excluded under this paragraph (b)(1)(i)(A) in 1989 because A completed only 5 months of service by December 31, 1989. However, A cannot be excluded pursuant to this rule in 1990 because A has completed 10 months of service, for purposes of this rule, by the end of 1990.

(B) Employees who normally work less than $17^{1}/_{2}$ hours per week as defined in paragraph (d) of this A-9 for such year.

(C) Employees who normally work during less than 6 months during any year as defined in paragraph (e) of this A-9 for such year.

(D) Employees who have not had their 21st birthdays by the end of such year.

(ii) ***Nonresident alien exclusion.*** Employees who are nonresident aliens and who receive no earned income (within the meaning of section 911(d)(2)) from the employer that constitutes income from sources within the United States (within the meaning of section 861(a)(3)) are excluded.

(iii) ***Collective bargaining exclusion*** —

(A) ***In general.*** Except as provided in paragraph (B) of this paragraph (b)(1)(iii), employees who are included in a unit of employees covered by an agreement that the Secretary of Labor finds to be a collective bargaining agreement between employee

representatives and the employer, which agreement satisfies section 7701(a)(46) and § 301.7701-17T (Temporary), are included in determining the number of employees in the top-paid group.

(B) ***Percentage exclusion provision.*** If 90 percent or more of the employees of the employer are covered under collective bargaining agreements that the Secretary of Labor finds to be collective bargaining agreements between employee representatives and the employer, which agreements satisfy section 7701(a)(46) and § 301.7701-17T (Temporary), and the plan being tested covers only employees who are not covered under such agreements, then the employees who are covered under such collective bargaining agreements are not counted in determining the number of noncollective bargaining employees who will be included in the top-paid group for purposes of testing such plan. In addition, such employees are not included in the top-paid group for such purposes. Thus, if the conditions of this paragraph (b)(1)(iii)(B) are satisfied, a separate calculation is required to determine the number and identity of noncollective bargaining employees who will be highly compensated employees by reason of receiving over $50,000 and being in the top-paid group of employees for purposes of testing those plans that cover only noncollective bargaining employees.

(2) ***Alternative exclusion provisions*** —

(i) ***Age and service exclusion election.*** An employer may elect, on a consistent and uniform basis, to modify the permissible exclusions set forth in paragraph (b)(1)(i) (A), (B), (C), and (D) of this A-9 by substituting any shorter period of service or lower age than that specified in such paragraph. These exclusions may be modified to substitute a zero service or age requirement.

(ii) ***Election not to apply percentage exclusion provision.*** An employer may elect not to exclude employees under the rules in paragraph (b)(1)(iii)(B) of this A-9.

(iii) ***Method of election.*** [Reserved]. See § 1.414(q)-1, Q&A-9(b)(2)(iii) for further information.

(c) ***Identification of top-paid group members.*** With the exception of the paragraph (b)(1)(iii) of this A-9 exclusion for certain employees covered by collective bargaining agreements, the exclusions in paragraph (b)(1) of this A-9 are not applicable for purposes of identifying the particular employees in the top-paid group. Thus, for example, even if an employee who normally works for less than $17\frac{1}{2}$ hours is excluded in determining the number of employees in the top-paid group such employee may be a member of the top-paid group. Similarly, if during a determination year, employee A receives over $75,000 and is one of the top-100 employees ranked by compensation, then employee A is a highly compensated active employee for such determination year. This is true even though employee A has worked less than six months and thus may be excluded in determining the number of persons in the top-paid group for the determination year.

(d) ***Example.*** Paragraphs (b) and (c) of this A-9 are illustrated by the following example:

Example. Employer X has 200 active employees during the 1989 determination year, 100 of whom normally work less than $17\frac{1}{2}$ hours per week during such year and 80 of whom normally work less than 15 hours per week during such year. X elects to exclude all employees who normally work less than 15 hours per week in determining the number of employees in the top-paid group. Thus, X excludes 80 employees in determining the number of employees in the top-paid

group. X's top-paid group for the 1989 determination year consists of 20% of 120 or 24 employees. All 200 of X's employees must then be ranked in order by compensation received during the year, and the 24 employees X paid the greatest amount of compensation during the year are top-paid employees with respect to X for the 1989 determination year.

(e) *$17^1/_2$ hour rule* —

(1) ***In general.*** The determination of whether an employee normally works less than $17^1/_2$ hours per week is made independently for each year based on the rules in paragraph (e)(2) and (3) of this A-9. In making this determination, weeks during which the employee did not work for the employer are not considered. Thus, for example, if an employee normally works twenty hours a week for twenty-five weeks during the fall and winter school quarters, 10 hours a week for the 12 week spring quarter, and does not work for the employer during the three-month summer quarter, such employee is treated as normally working more than $17^1/_2$ hours per week under the rule of this paragraph (e).

(2) ***Deemed above $17^1/_2$.*** An employee who works $17^1/_2$ hours a week or more, for more than fifty percent of the total weeks worked by such employee during the year, is deemed to normally work more than $17^1/_2$ hours a week for purposes of this rule.

(3) ***Deemed below $17^1/_2$.*** An employee who works less than $17^1/_2$ hours a week for fifty percent or more of the total weeks worked by such employee during the year is deemed to normally work less than $17^1/_2$ hours a week for purposes of this rule.

(4) ***Application.*** The determination provided for in paragraph (e)(1), (2), and (3) of this A-9 may be made separately with respect to each employee, or on the basis of groups of employees who fall within particular job categories as established by the employer on a reasonable basis. For example, under the rule of this paragraph (e)(4) an employer may exclude all office cleaning personnel if, for the year in question, the employees performing this function normally work less than $17^1/_2$ hours a week. This is true even though one or more employees within this group normally work in excess of $17^1/_2$ hours. The election to make this determination on the basis of individuals or groups is operational and does not require a plan provision.

(5) ***Application based on groups.***

(i) Groups of employees who perform the same job are not required to be considered as one category for purposes of the rule in paragraph (e)(4) of this A-9. Thus, for example, an employer supermarket may determine its highly compensated employees by excluding part-time grocery checkers if such personnel normally work less than $17^1/_2$ hours a week while continuing to include full-time personnel performing this function. In general, 80 percent of the positions within a particular job category must be filled by employees who normally work less than $17^1/_2$ hours a week before any employees may be excluded under this rule on the basis of their membership in that job category.

(ii) Alternatively, an employer may exclude employees who are members of a particular job category if the median number of hours of service credited to employees in that category during a determination or look-back year is 500 or less.

(f) *6-month rule* —

(1) ***In general.*** The determination of whether employees normally work during not more than 6 months in any year is made on the basis of the facts and circumstances of the particular employer as evidenced by the employer's customary experience in the years preceding the determination year. An employee who works on one day during a month is deemed to have worked during that month.

(2) ***Application of prior year experience.*** In making the determination under this paragraph (f), the experience for years immediately preceding the determination year will generally be weighed more heavily than that of earlier years. However, this emphasis on more recent years is not appropriate if the data for a particular year reflects unusual circumstances. For example, if fishermen working for employer X worked 9 months in 1987 and 1988, 8 months in 1989, and then, because of abnormal ice conditions, worked only 5 months in 1990, such fishermen could not be excluded under this rule in 1990. Furthermore, the data with respect to 1990 would not be weighed more heavily in making a determination with respect to subsequent years.

(3) ***Individual or group basis.*** This determination may be made separately with respect to each employee or on the basis of groups of employees who fall within particular job categories in the manner set forth in paragraph (e)(4) of this A-8.

Q-10. For purposes of determining the group of highly compensated employees, which employees are officers and which officers must be included in the highly compensated group?

A-10:

(a) ***In general.*** Subject to the limitations set forth in paragraph (b) of this A-10 and the top-100 employee rule set forth in A-2, an employee is an includible officer for purposes of this section and is a member of the group of highly compensated employees if such employee is an officer of the employer (within the meaning of section 416(i) and § 1.416-1 A-T 13 & A-T 15) at any time during the determination year or look-back year and receives compensation during such year that is greater than 150 percent of the dollar limitation in effect under section 415(c)(1)(A) for the calendar year in which the determination or look-back year begins. In addition, an officer who does not meet the 415(c)(1)(A) dollar limitation requirement may be an includible officer based on the minimum inclusion rules set forth in paragraph (c) of this A-10.

(b) ***Maximum limitation*** —

(1) ***In general.*** Nor more than 50 employees (or, if lesser, the greater of 3 employees or 10 percent of the employees without regard to any exclusions) shall be treated as officers for purposes of this provision in determining the group of highly compensated employees for any determination year or look-back year.

(2) ***Total number of employees.*** The total number of employees for purposes of the limitation in this paragraph (b) is the number of employees the employer has during the particular determination year or look-back year. For purposes of this A-10, employees include only those individuals who perform services for the employer during the determination or look-back year. The exclusions applicable for purposes of determining the number of employees in the top-paid group are not applicable for purposes of the limitations in this paragraph (b).

(3) ***Inclusion ranking.*** If the number of the employer's officers who satisfy paragraph (a) of this A-10 during either the determination year or the look-back year exceeds the limitation under this paragraph (b), then the officers who will be considered as includible officers for purposes of

this rule are those who receive the greatest compensation from the employer during such determination or look-back year. The definition of compensation in A-13 is to be used for this purpose.

(c) ***Minimum inclusion rule.*** This paragraph (c) is applicable when no officer of the employer satisfies the compensation requirements of paragraph (a) of this A-10 during either a determination year or look-back year. In such case, the highest paid officer of the employer for such year is treated as a highly compensated employee by reason of being an officer, without regard to the amount of compensation paid to such officer in relation to the section 415(c)(1)(A) dollar amount for the year. This is true whether or not such employee is also a highly compensated employee on any other basis. Thus, for example, if no officer of employer X meets the compensation requirements of paragraph (a) of this A-10 during the 1989 look-back year, and employee A is both the highest paid officer during such year and a 5-percent owner, employee A is treated as an includible officer satisfying the minimum inclusion rules of this paragraph.

(d) ***Separate application.*** The maximum and minimum officer inclusion rules of paragraphs (b) and (c) of this A-10 apply separately with respect to the determination year calculation and the look-back year calculation. Thus, for example, if no officer of employer X receives compensation above the threshold amount in paragraph (a) of this A-10 during either the determination year or look-back year, application of the minimum inclusion rule would result in the officer of employer X who received the greatest compensation during the look-back year being treated as a highly compensated employee and, in addition, the officer of employer X who receives the most compensation during the determination year would be included in the highly compensated group if such officer is also in the top-100 employees of employer X for such year. Thus, two officers may be treated as highly compensated active employees for a determination year by reason of the provisions of the minimum inclusion rule.

Q-11: To what extent must family members who are employed by the same employer be aggregated for purposes of section 414(q)?

A-11:

(a) ***Family aggregation*** —

(1) ***In general.*** Aggregation is required with respect to an employee who is, during a particular determination year or look-back year, a family member (as defined in A-12) of either

(i) a 5-percent owner who is an active or former employee or

(ii) a highly compensated employee who is one of the ten most highly compensated employees ranked on the basis of compensation paid by the employer during such year.

(2) ***Aggregation of contributions or benefits.*** As prescribed in regulations under the provisions to which section 414(q) is applicable, a family member and a 5-percent owner or top-10 highly compensated employee aggregated under this rule are generally treated as a single employee receiving an amount of compensation and a plan contribution or benefit that is based on the compensation, contributions, and benefits of such family member and 5-percent owner or top-10 highly compensated employee.

(b) ***Exclusion status irrelevant.*** Family members are subject to this aggregation rule whether or not they fall within the categories of employees that may be excluded for purposes of determining the number of employees in the top-paid group and whether or not they are highly compensated employees when considered separately.

(c) ***Order of determination*** —

(1) ***Determination of highly compensated employees.*** The determination of which employees are highly compensated employees and which highly compensated employees are among the ten most highly compensated employees in making the look-back year calculation or the determination year calculation for a determination year will be made prior to the application of the rules in paragraph (a) of this A-11.

(2) ***Determination of top-paid group and top-100 employees.*** The determination of the number and identity of employees in the top-paid group under the look-back year calculation or the determination year calculation for a determination year and the identity of individuals in the top-100 employees under the determination year calculation for a determination year is made prior to application of the rules in paragraph (a) of this A-11.

(d) ***Determination period.*** The rules under paragraph (a) of this A-11 apply separately to the determination year and the look-back year. Thus, assuming there are no 5-percent owners, if employees A, B, C, D, E, F, G, H, I and J are the top 10 highly compensated employees in the 1988 look-back year, and employees F, G, H, I, J, K, L, M, N and O are the top 10 highly compensated employees in the 1989 determination year, then family aggregation would be required with respect to all fifteen of such employees (i.e. employees A, B, C, D, E, F, G, H, I, J, K, L, M, N, and O).

Q-12: Which individuals are family members for purposes of the aggregation rules in section 414(a)(6)(A) and A-11?

A-12:

(a) ***Definition of family member.*** Individuals who are family members for purposes of these provisions include, with respect to any employee or former employee, such employee's or former employee's spouse and lineal ascendants or descendants and the spouses of such lineal ascendants and descendants. In determining whether an individual is a family member with respect to an employee or former employee, legal adoptions shall be taken into account.

(b) ***Test period.*** If an individual is a family member with respect to an employee or former employee on any day during the year, such individual is treated as a family member for the entire year. Thus, for example, if an individual is a family member with respect to an employee on the first day of a year, such individual continues to be a family member with respect to such employee throughout the year even though their relationship changes as a result of death or divorce.

Q-13: How is “compensation” determined for purposes of determining the group of “highly compensated employees.”

A-13:

(a) ***In general.*** For purposes of section 414(q), the term “compensation” means compensation within the meaning of section 415(c)(3) without regard to sections 125, 402(a)(8), and 402(h)(1)(B) and, in the case of employer contributions made pursuant to a salary reduction agreement, without regard to section 403(b). Thus, compensation includes elective or salary reduction contributions to a cafeteria plan, cash or deferred arrangement or tax-sheltered annuity.

(b) ***Determination period.*** For purposes of determining the group of highly compensated employees, compensation must be calculated on the basis of the applicable period for the determination year and look-back year respectively.

(c) ***Compensation taken into account.*** Only compensation received by an employee during the determination year or during the look-back year is considered in determining whether such employee is a highly compensated active employee under either the look-back year calculation or determination year calculation for such determination year. Thus, compensation is not annualized for purposes of determining an employee's compensation in the determination year or the look-back year in applying the rules of paragraph (a) of this A-13.

Q-14: What periods must be used for determining who is a highly compensated employee for a determination year?

A-14:

(a) ***Determination year and look-back year*** —

(1) ***In general.*** For purposes of determining the group of highly compensated employees for a determination year, the determination year calculation is made on the basis of the applicable year of the plan or other entity for which a determination is being made and the look-back year calculation is made on the basis of the twelve month period immediately preceding such year. Thus, in testing plans X and Y of an employer, if plan X has a calendar year plan year and plan Y has a July 1 to June 30 plan year, the determination year calculation and look-back year calculation for plan X must be made on the basis of the calendar year. Similarly, the determination year calculation and look-back year calculation for plan Y must be made on the basis of the July 1 to June 30 year.

(2) ***Applicable year.*** For purposes of this A-14, the applicable year is the plan year of the qualified plan or other employee benefit arrangement to which the definition of highly compensated employees is applicable as defined in the written plan document or otherwise identified in regulations pursuant to sections to which the definition of highly compensated employees is applicable. To the extent that the definition of highly compensated employees is applicable to entities of other arrangements that do not have an otherwise identified plan year, then either the calendar year of the employer's fiscal year may be treated as the plan year.

(3) ***Look-back year.*** The look-back year is never less than a twelve month period.

(b) ***Calendar year calculation election*** —

(1) ***In general.*** An employer may elect to make the look-back year calculation for a determination year on the basis of the calendar year ending with or within the applicable determination year (or, in the case of a determination year that is shorter than twelve months, the calendar year ending with or within the twelve-month period ending with the end of the applicable determination year). In such case, the employer must make the determination year calculation for the determination year on the basis of the period (if any) by which the applicable determination year extends beyond such calendar year (i.e., the lag period). If the applicable year for which the determination is being made is the calendar year, the employer still may elect to make the calendar year calculation election under this A-14(b). In such case, the look-back year calculation is made on the basis of the calendar year determination year and, because there is no lag period, a separate determination year calculation under A-3(a)(2) of this § 1.414(q)-1 is not required.

(2) ***Lag period calculation.*** In making the determination year calculation under A-3(a)(2) of this § 1.414(q)-1 on the basis of the lag period, the dollar amounts applicable under A-3(a)(1) (B) and (C) of this § 1.414(q)-1 are to be adjusted by multiplying such dollar amounts by a fraction, the numerator of which is the number of calendar months that are included in the lag period and the denominator of which is twelve.

(3) ***Determination of active employees.*** An employee will be considered an active employee for purposes of a determination year for which the calendar year calculation election is in effect so long as such employee performs services for the employer during the applicable year for which the determination is being made. This is the case even if such employee does not perform services for the employer during the lag-period for such determination year.

(4) ***Election requirement.*** If the employer elects to make the calendar year calculation election with respect to one plan, entity, or arrangement, such election must apply with respect to all plans, entities, and arrangements of the employer. In addition, such election must be provided for in the plan.

(c) ***Change in applicable years.*** Where there is a change in the applicable year for which a determination is being made with respect to a plan entity, or other arrangement that is not subject to the calendar year calculation election, the look-back year calculation for the short applicable year is to be made on the basis of the twelve month period preceding the short applicable year (i.e., generally, the old applicable year) and the determination year calculation for the short applicable year is to be made on the basis of the short applicable year. In addition, the dollar amounts under A-3(a)(1) (B) and (C) are to be adjusted for such determination year calculation as if the short applicable year were a lag period under paragraph (b)(2) of this A-14.

(d) ***Example.*** The following examples illustrates the rules of this A-14:

Example 1. Employer X has a single plan (Plan A) with an April 1 to March 31 plan year. Employer X makes no election to use the calendar year for the determination period. Therefore, in determining the group of highly compensated employees for the April 1, 1989 to March 31, 1990 plan year, the determination year is the plan year ending March 31, 1990 and the look-back year is the plan year ending March 31, 1989.

Example 2. Assume the same facts given above. With respect to the plan year beginning in 1990, employer X elects to use the calendar year for the determination period. Therefore, in determining the group of highly compensated employees for the April 1, 1990 to March 31, 1991 plan year, the lag-period determination year is the period from January 1, 1991, through March 31, 1991, and the applicable look-back year is the 1990 calendar year.

Example 3. Employer Y has a single plan (Plan B) with a calendar plan year. With respect to the plan year beginning in 1990, employer Y elects to make the look-back year calculation for the 1990 determination year on the basis of the calendar year ending with or within the 1990 determination year. Because employer Y's determination year is the 1990 calendar year there is no lag period and employer Y determines the group of highly compensated employees for purposes of the 1990 calendar plan year on the basis of such plan year alone.

Q-15: Is there any transition rule in determining the group of highly compensated employees for 1987 and 1988?

A-15:

(a) ***In general.*** Solely for purposes of section 401(k)(3) and (m)(2) and solely for twelve-month plan years beginning in 1987 and 1988, an eligible employer may elect to define the group of highly compensated employees as the group consisting of 5-percent owners of the employer at any time during the plan year and employees who receive compensation in excess of $50,000 during the plan year. This rule would apply in lieu of the look-back year calculation and determination year calculation otherwise applicable under A-3(a) of this § 1.44(q)-1. In addition, an eligible employer may elect to make the determinations permitted under this transition rule on the basis of the calendar year ending in the plan year and the period by which such plan year extends beyond such calendar year, in accordance with the rules of A-14(b), in lieu of making the determinations under this transition rule on the basis of the plan year for which the determinations are being made.

(b) ***Eligible employers.*** An employer is an eligible employer under this A-15 if such employer satisfies both of the following requirements:

(1) The employer does not maintain any top-heavy plan within the meaning of section 416 at any time during 1987 and 1988; and

(2) Under each plan of the employer to which section 401(k)(3) or 401(m)(2) is applicable, the group of eligible employees that comprises the highest 25% of eligible employees ranked on the basis of compensation includes at least one employee whose compensation is $50,000 or below. This requirement must be met separately with respect to each such plan of the employer.

(c) ***Uniformity requirement.*** An eligible employer may not make the election under paragraph (a) of this A-15 unless the election applies to all of the plans maintained by the employer to which section 401(k)(3) or 401(m)(2) applies.

(d) ***Election requirements.*** This election is operational and does not require a plan provision.

[T.D. 8173, 53 FR 4967, Feb. 19, 1988, as amended by T.D. 8334, 56 FR 3977, Feb. 1, 1991; T.D. 8548, 59 FR 32916, June 27, 1994]

§ 1.414(r)-0 Table of contents.

(a) ***In general.*** Sections 1.414(r)-1 through 1.414(r)-11 provide rules for determining whether an employer is treated as operating qualified separate lines of business under section 414(r) of the Internal Revenue Code of 1986 as added to the Code by section 1115(a) of the Tax Reform Act of 1986 (Pub. L. No. 99-514), as well as rules for applying the requirements of sections 410(b), 401(a)(26), and 129(d)(8) separately with respect to the employees of each qualified separate line of business of an employer. Paragraph (b) of this section contains a listing of the headings of §§ 1.414(r)-1 through 1.414(r)-11. Paragraph (c) of this section provides a flowchart showing how the major provisions of §§ 1.414(r)-1 through 1.414(r)-6 are applied.

(b) ***Table of contents.*** The following is a listing of the headings of §§ 1.414(r)-1 through 1.414(r)-11.

§ 1.414(r)-1 Requirements applicable to qualified separate lines of business.

(a) In general.

(b) Conditions under which an employer is treated as operating qualified separate lines of business.

(1) In general.

(2) Qualified separate line of business.

(i) In general.

(ii) Line of business.

(iii) Separate line of business.

(iv) Qualified separate line of business.

(A) In general.

(B) Fifty-employee requirement.

(C) Notice requirement.

(D) Requirement of administrative scrutiny.

(3) Determining the employees of a qualified separate line of business.

(c) Separate application of certain Code requirements to employees of a qualified separate line of business.

(1) In general.

(2) Separate application of section 410(b).

(i) General rule.

(ii) Special rule for employer-wide plans.

(3) Separate application of section 401(a)(26).

(i) General rule.

(ii) Special rule for employer-wide plans.

(4) Separate application of section 129(d)(8). [Reserved]

(5) Separate application of other Code requirements.

(d) Application of requirements.

(1) In general.

(2) Interpretation.

(3) Separate operating units.

(4) Certain mergers and acquisitions.

(5) Governmental and tax-exempt employers.

(i) General rule.

(ii) Additional rules. [Reserved]

(6) Testing year basis of application.

(i) Section 414(r).

(ii) Sections 410(b), 401(a)(26), and 129(d)(8).

(7) Averaging rules.

(8) Definitions.

(9) Effective dates.

(i) General rule.

(ii) Reasonable compliance.

(A) In general.

(B) Determination of reasonable compliance.

(C) Effect on other plans.

(e) Additional rules.

§ 1.414(r)-2 Line of business.

(a) General rule.

(b) Employer determination of its lines of business.

(1) In general.

(2) Property and services provided to customers.

(i) In general.

(ii) Timing of provision of property or services.

(3) Employer designation.

(i) In general.

(ii) Ability to combine unrelated types of property or services in a single line of business.

(iii) Ability to separate related types of property or services into two or more lines of business.

(iv) Affiliated service groups.

(c) Examples.

(1) In general.

(2) Examples illustrating employer designation.

(3) Examples illustrating property and services provided to customers.

§ 1.414(r)-3 Separate line of business.

(a) General rule.

(b) Separate organization and operation.

(1) In general.

(2) Separate organizational unit.

(3) Separate financial accountability.

(4) Separate employee workforce.

(5) Separate management.

(c) Supplementary rules.

(1) In general.

(2) Determination of separate employee workforce.

(3) Determination of separate management.

(4) Employees taken into account.

(5) Services taken into account.

(i) Provision of services to a separate line of business.

(ii) Period for which services are provided.

(iii) Optional rule for employees who change status.

(A) In general.

(B) Change in employee's status.

(6) Examples of the separate employee workforce requirement.

(7) Examples of the separate management requirement.

(d) Optional rule for vertically integrated lines of business.

(1) In general.

(2) Requirements.

(3) Optional rule.

(i) Treatment of employees.

(ii) Purposes for which optional rule applies.

(4) Examples.

§ 1.414(r)-4 Qualified separate line of business—fifty-employee and notice requirements.

(a) In general.

(b) Fifty-employee requirement.

(c) Notice requirement.

(1) General rule.

(2) Effect of notice.

§ 1.414(r)-5 Qualified separate line of business—administrative scrutiny requirement—safe harbors.

(a) In general.

(b) Statutory safe harbor.

(1) General rule.

(2) Highly compensated employee percentage ratio.

(3) Employees taken into account.

(4) Ten-percent exception.

(5) Determination based on preceding testing year.

(6) Examples.

(c) Safe harbor for separate lines of business in different industries.

(1) In general.

(2) Optional rule for foreign operations.

(3) Establishment of industry categories.

(4) Examples.

(d) Safe harbor for separate lines of business that are acquired through certain mergers and acquisitions.

(1) General rule.

(2) Employees taken into account.

(3) Transition period.

(4) Examples.

(e) Safe harbor for separate lines of business reported as industry segments.

(1) In general.

(2) Reported as an industry segment in conformity with Form 10-K or Form 20-F.

(3) Timely filing of Form 10-K or 20-F.

(4) Examples.

(f) Safe harbor for separate lines of business that provide same average benefits as other separate lines of business.

(1) General rule.

(2) Separate lines of business benefiting disproportionate number of nonhighly compensated employees.

(i) Applicability of safe harbor.

(ii) Requirement.

(3) Separate lines of business benefiting disproportionate number of highly compensated employees.

(i) Applicability of safe harbor.

(ii) Requirement.

(4) Employees taken into account.

(5) Example.

(g) Safe harbor for separate lines of business that provide minimum or maximum benefits.

(1) In general.

(2) Minimum benefit required.

(i) Applicability.

(ii) Requirement.

(iii) Defined benefit minimum.

(A) In general.

(B) Normal form and equivalent benefits.

(C) Compensation definition.

(D) Average compensation requirement.

(E) Special rules.

(iv) Defined contribution minimum.

(A) In general.

(B) Modified allocation definition for averaging.

(3) Maximum benefit permitted.

(i) Applicability.

(ii) Requirement.

(iii) Defined benefit maximum.

(A) In general.

(B) Determination of defined benefit maximum.

(C) Adjustment for different compensation definitions.

(D) Adjustment for certain subsidies.

(iv) Defined contribution maximum.

(4) Duplication of benefits or contributions.

(i) Plans of the same type.

(ii) Plans of different types.

(iii) Special rule for floor-offset arrangements.

(5) Certain contingency provisions ignored.

(6) Employees taken into account.

§ 1.414(r)-6 Qualified separate line of business—administrative scrutiny requirement—individual determinations.

(a) In general.

(b) Authority to establish procedures.

§ 1.414(r)-7 Determination of the employees of an employer's qualified separate lines of business.

(a) Introduction.

(1) In general.

(2) Purposes for which this section applies.

(b) Assignment procedure.

(1) In general.

(2) Assignment for the first testing day.

(3) Assignment of new employees for subsequent testing days.

(4) Special rule for employers using annual option under section 410(b).

(c) Assignment and allocation of residual shared employees.

(1) In general.

(2) Dominant line of business method of allocation.

(i) In general.

(ii) Dominant line of business.

(iii) Employee assignment percentage.

(A) Determination of percentage.

(B) Employees taken into account.

(iv) Option to apply reduced percentage.

(v) Examples.

(3) Pro-rata method of allocation.

(i) In general.

(ii) Allocation procedure.

(iii) Examples.

(4) HCE percentage ratio method of allocation.

(i) In general.

(ii) Highly compensated employee percentage assignment ratio.

(iii) Allocation procedure.

(5) Small group method.

(i) In general.

(ii) Size of group.

(iii) Composition of qualified separate line of business.

(iv) Reasonable allocation.

§ 1.414(r)-8 Separate application of section 410(b).

(a) General rule.

(b) Rules of separate application.

(1) In general.

(2) Satisfaction of section 410(b)(5)(B) on an employer-wide basis.

(i) General rule.

(ii) Application of facts and circumstances requirements under nondiscriminatory classification test.

(iii) Modification of unsafe harbor percentage for plans satisfying ratio percentage test at 90 percent level.

(A) General Rule.

(B) Facts and circumstances alternative.

(3) Satisfaction of section 410(b) on a qualified-separate-line-of-business basis.

(4) Examples.

(c) Coordination of section 401(a)(4) with section 410(b).

(1) General rule.

(2) Examples.

(d) Supplementary rules.

(1) In general.

(2) Definition of plan.

(3) Employees of a qualified separate line of business.

(4) Consequences of failure.

§ 1.414(r)-9 Separate application of section 401(a)(26).

(a) General rule.

(b) Requirements applicable to a plan.

(c) Supplementary rules.

(1) In general.

(2) Definition of plan.

(3) Employees of a qualified separate line of business.

(4) Consequences of failure.

§ 1.414(r)-10 Separate application of section 129(d)(8). [Reserved]

§ 1.414(r)-11 Definitions and special rules.

(a) In general.

(b) Definitions.

(1) In general.

(2) Substantial-service employee.

(3) Top-paid employee.

(4) Residual shared employee.

(5) Testing year.

(6) Testing day.

(7) First testing day.

(8) Section 401(a)(26) testing day.

(c) Averaging rules.

(1) In general.

(2) Specified provisions.

(3) Averaging of large fluctuations not permitted.

(4) Consistency requirements.

(c) ***Flowchart.*** The following is a flowchart showing how the major provisions of §§ 1.414(r)-1 through 1.414(r)-6 are applied.

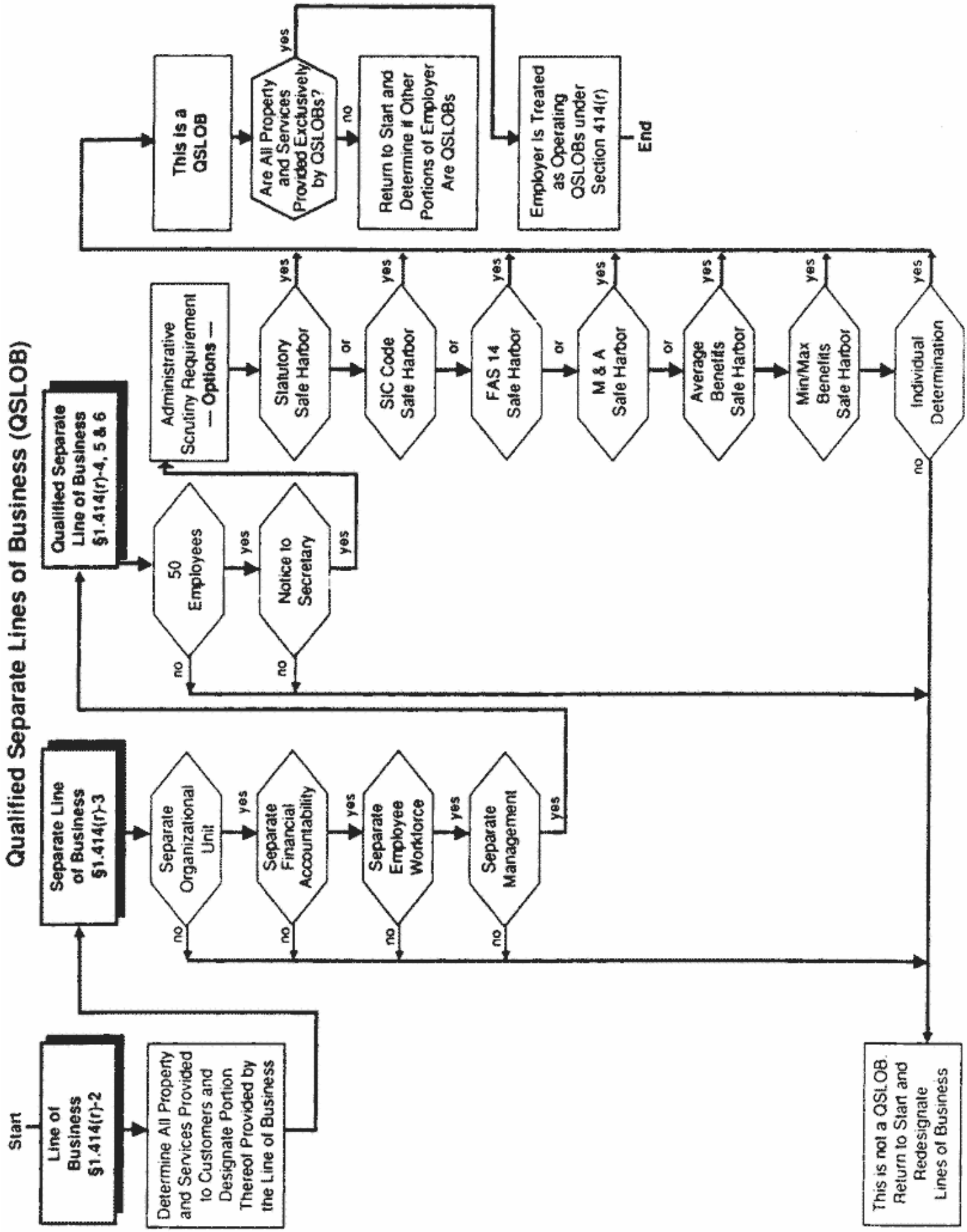
Qualified Separate Lines of Business (QSLOB)
Start
Line of Business §1.414(r)-2
Determine All Property and Services Provided to Customers and Designate Portion Thereof Provided by the Line of Business
Separate Line of Business §1.414(r)-3
Separate Organizational Unit
Separate Financial Accountability
Separate Employee Workforce
Separate Management
yes
no
Qualified Separate Line of Business §1.414(r)-4, 5 & 6
50 Employees
Notice to Secretary
Administrative Scrutiny Requirement — Options —
Statutory Safe Harbor
or
SIC Code Safe Harbor
FAS 14 Safe Harbor
M & A Safe Harbor
Average Benefits Safe Harbor
Min/Max Benefits Safe Harbor
Individual Determination
This is a QSLOB
Are All Property and Services Provided Exclusively by QSLOBs?
Return to Start and Determine if Other Portions of Employer Are QSLOBs
Employer Is Treated as Operating QSLOBs under Section 414(r)
End
This is not a QSLOB. Return to Start and Redesignate Lines of Business

[T.D. 8376, 56 FR 63434, Dec. 4, 1991, as amended by T.D. 8548, 59 FR 32916, June 27, 1994]

§ 1.414(r)-1 Requirements applicable to qualified separate lines of business.

(a) ***In general.*** Section 414(r) prescribes the conditions under which an employer is treated as operating qualified separate lines of business. If an employer is treated as operating qualified separate lines of business under section 414(r), certain requirements under the Code may be applied separately with respect to the employees of each qualified separate line of business. These requirements are limited to the minimum coverage requirements of section 410(b) (including the nondiscrimination requirements of section 401(a)(4)), the minimum participation requirements of section 401(a)(26), and the 55-percent average benefits test of section 129(d)(8). This section provides the exclusive rules for determining whether an employer is treated as operating qualified separate lines of business under section 414(r), as well as rules for applying the requirements of sections 410(b), 401(a)(26), and 129(d)(8) separately with respect to the employees of a qualified separate line of business.

(b) ***Conditions under which an employer is treated as operating qualified separate lines of business*** —

(1) ***In general.*** An employer is treated as operating qualified separate lines of business under section 414(r) only if all property and services provided by the employer to its customers are provided exclusively by qualified separate lines of business. Thus, once an employer has determined its qualified separate lines of business under paragraph (b)(2) of this section, no portion of the employer may remain that is not included in a qualified separate line of business. In addition, once the employer has determined the employees of its qualified separate lines of business under paragraph (b)(3) of this section, every employee must be treated as an employee of a qualified separate line of business, and no employee may be treated as an employee of more than one qualified separate line of business.

(2) ***Qualified separate line of business*** —

(i) ***In general.*** A qualified separate line of business is a portion of the employer that is a line of business within the meaning of paragraph (b)(2)(ii) of this section, that is also a separate line of business within the meaning of paragraph (b)(2)(iii) of this section, and, finally, that satisfies the requirements of section 414(r)(2) in accordance with paragraph (b)(2)(iv) of this section.

(ii) ***Line of business.*** A line of business is a portion of an employer that is identified by the property or services it provides to customers of the employer. For this purpose, the employer is permitted to determine the lines of business it operates by designating the property and services that each of its lines of business provides to customers of the employer. Rules for determining an employer's lines of business are provided in § 1.414(r)-2.

(iii) ***Separate line of business.*** A separate line of business is a line of business that is organized and operated separately from the remainder of the employer. The determination of whether a line of business is organized and operated separately from the remainder of the employer is made on the basis of objective criteria. These criteria generally require that the line of business be organized into one or more separate organizational units (e.g., corporations, partnerships, or divisions), that the line of business constitute one or more distinct profit centers within the employer, and that no more than a moderate overlap exist between the employee workforce and management employed by the line of business and those employed by the remainder of the employer. Rules for determining whether a line of business is organized and operated

separately from the remainder of the employer and thus constitutes a separate line of business are provided in § 1.414(r)-3. These rules include an optional rule for vertically integrated lines of business.

(iv) ***Qualified separate line of business*** —

(A) ***In general.*** A qualified separate line of business must satisfy the three statutory requirements in section 414(r)(2). A separate line of business that satisfies these three statutory requirements in accordance with paragraphs (b)(2)(iv)(B) through (b)(2)(iv)(D) of this section constitutes a qualified separate line of business.

(B) ***Fifty-employee requirement.*** Under section 414(r)(2)(A), a separate line of business must have at least 50 employees. Rules for determining whether this requirement is satisfied are provided in § 1.414(r)-4(b).

(C) ***Notice requirement.*** Under section 414(r)(2)(B), the employer must notify the Secretary that it treats itself as operating qualified separate lines of business under section 414(r) for purposes of applying the requirements of section 410(b), 401(a)(26), or 129(d)(8) separately with respect to the employees of the separate line of business. Rules and procedures for complying with this requirement are provided in § 1.414(r)-4(c).

(D) ***Requirement of administrative scrutiny.*** Under section 414(r)(2)(C), a separate line of business must pass administrative scrutiny. A separate line of business may satisfy this requirement in one of two ways. First, a separate line of business that satisfies any of the safe harbors in § 1.414(r)-5 satisfies the requirement of administrative scrutiny. These safe harbors implement the statutory safe harbor of section 414(r)(3) as well as the guidelines prescribed under section 414(r)(2)(C). Second, a separate line of business that does not satisfy any of the safe harbors in § 1.414(r)-5 nonetheless satisfies the requirement of administrative scrutiny if the employer requests and receives an individual determination from the Commissioner that the separate line of business satisfies the requirement of administrative scrutiny. Rules and procedures applicable to requesting and receiving an individual determination are provided in § 1.414(r)-6. A separate line of business is permitted to satisfy the requirement of administrative scrutiny in any manner permitted under this paragraph (b)(2)(iv)(D), regardless of how any other separate line of business of the employer satisfies the requirement.

(3) ***Determining the employees of a qualified separate line of business.*** In order to apply certain provisions under these regulations, it is necessary to determine the employees of a qualified separate line of business. For these purposes, the employees of a qualified separate line of business consist of all employees who are substantial-service employees with respect to the qualified separate line of business, and all other employees who are assigned to the qualified separate line of business. Rules for making these determinations are provided in § 1.414(r)-7. These rules apply solely for the purposes specified in these regulations (see § 1.414(r)-7(a)(2) for a comprehensive listing of these purposes). These rules do not apply for any other purpose (e.g., the determination under § 1.414(r)-3 of whether a line of business is organized and operated separately from the remainder of the employer).

(c) ***Separate application of certain Code requirements to employees of a qualified separate line of business*** —

(1) ***In general.*** If an employer is treated as operating qualified separate lines of business under section 414(r) in accordance with paragraph (b) of this section, the requirements of sections 410(b), 401(a)(26), and 129(d)(8) may be applied separately with respect to the employees of each qualified

separate line of business. Paragraphs (c)(2) through (c)(4) of this section provide for the separate application of these requirements. In general, the requirements of a Code section are applied separately with respect to the employees of a qualified separate line of business by treating those employees as if they were the only employees of the employer. Paragraph (c)(5) of this section prescribes the limited conditions under which other Code requirements may be applied separately with respect to the employees of a qualified separate line of business.

(2) ***Separate application of section 410(b)*** —

(i) ***General rule.*** Except as provided in paragraph (c)(2)(ii) of this section, an employer is permitted to apply the requirements of section 410(b) separately with respect to the employees of each qualified separate line of business operated by the employer only if the employer does so with respect to all its plans, all its employees, and all its qualified separate lines of business. For this purpose, the requirements of section 410(b) encompass the requirements of section 401(a)(4) (including, but not limited to, the permitted disparity rules of section 401(*l*), the actual deferral percentage test of section 401(k)(3) and the actual contribution percentage test of section 401(m)(2)). Rules for applying section 410(b) separately with respect to the employees of a qualified separate line of business are provided in § 1.414(r)-8. An employer may apply the rules of section 414(r) for purposes of section 410(b) even if it does not apply the rules of section 414(r) for purposes of section 401(a)(26).

(ii) ***Special rule for employer-wide plans.*** Notwithstanding paragraph (c)(2)(i) of this section, an employer that is treated as operating qualified separate lines of business for purposes of section 410(b) in accordance with paragraph (b) of this section may apply the requirements of section 410(b) on an employer-wide rather than a qualified-separate-line-of-business basis with respect to any plan (within the meaning of § 1.414(r)-8(d)(2), but without regard to the mandatory disaggregation rule of § 1.410(b)-7(c)(4) for portions of a plan that benefit employees of different qualified separate lines of business) that benefits a group of employees that satisfies the percentage test of section 410(b)(1)(A) (i.e., benefits at least 70 percent of the employer's nonexcludable nonhighly compensated employees). If section 401(a)(4) requires that a group of employees under the plan described in the preceding sentence satisfy section 410(b) for purposes of satisfying section 401(a)(4), the percentage test of section 410(b)(1)(A) must be satisfied by each such group of employees. See § 1.414(r)-8(c). The rules of this paragraph (c)(2)(ii) are illustrated by the following example.

Example. Employer A maintains a single profit-sharing plan, Plan W, and three pension plans, Plans X, Y and Z, each benefiting employees of a different one of Employer A's three qualified separate lines of business. Contributions to the profit-sharing plan are made pursuant to a cash or deferred arrangement in which all employees of Employer A are eligible to participate. Assume that, as a result, Plan W satisfies the requirements to be tested under this paragraph (c)(2)(ii). None of the pension plans benefits more than 70 percent of the nonexcludable nonhighly compensated employees of Employer A. Employer A is treated as operating qualified separate lines of business for purposes of applying section 410(b) to its qualified plans. The requirements of sections 410(b) and 401(a)(4) must therefore be applied to Plans X, Y and Z separately with respect to the employees of each of the three qualified separate line of business operated by Employer A. Since Plan W benefits at least 70 percent of the nonexcludable nonhighly compensated employees of Employer A, however, the requirements of sections 410(b) and 401(a)(4) (including section 401(k)) may be applied to Plan W on an employer-wide basis.

(3) *Separate application of section 401(a)(26)* —

(i) ***General rule.*** Except as provided in paragraph (c)(3)(ii) of this section, an employer is permitted to apply the requirements of section 401(a)(26) separately with respect to the employees of each qualified separate line of business operated by the employer only if the employer does so with respect to all its plans, all its employees, and all its qualified separate lines of business. Rules for applying the requirements of section 401(a)(26) separately with respect to the employees of a qualified separate line of business are provided in § 1.414(r)-9. An employer may apply the rules of section 414(r) for purposes of section 401(a)(26) even if it does not apply the rules of section 414(r) for purposes of section 410(b).

(ii) ***Special rule for employer-wide plans.*** Notwithstanding the first sentence of paragraph (c)(3)(i) of this section, an employer that is treated as operating qualified separate lines of business in accordance with paragraph (b) of this section for purposes of both sections 410(b) and 401(a)(26) may apply the requirements of section 401(a)(26) on an employer-wide rather than a qualified-separate-line-of-business basis with respect to any plan (within the meaning of § 1.414(r)-9(c)(2), but without regard to the mandatory disaggregation rule of § 1.401(a)(26)-2(d)(1)(iv) for portions of a plan that benefit employees of different qualified separate lines of business), but only if the special rule for employer-wide plans in paragraph (c)(2)(ii) of this section is applied to the same plan for the same plan year.

(4) *Separate application of section 129(d)(8).* [Reserved]

(5) ***Separate application of other Code requirements.*** Under no circumstance may the requirements of any section of the Code (other than a section described in paragraphs (c)(2) through (c)(4) of this section) be applied separately with respect to the employees of a qualified separate line of business unless the section specifically cross-references, or is specifically cross-referenced by, section 414(r). The Code sections whose requirements may not be applied separately with respect to the employees of a qualified separate line of business include, but are not limited to, sections 79(d)(3), 105(h), 117(d)(3), 120(c)(2), 125(g)(3), 127(b)(2), 129(d)(3), 132, 195, 401(a)(3) (as in effect on September 1, 1974), 414(q)(4), 501(c)(17)(A)(ii), 501(c)(17)(B)(iii), 501(c)(18)(B), and 505(b)(1)(A).

(d) *Application of requirements* —

(1) ***In general.*** The requirements of paragraphs (b) and (c) of this section must be applied in accordance with the rules in this paragraph (d).

(2) ***Interpretation.*** The provisions of this section and of §§ 1.414(r)-2 through 1.414(r)-11 are to be interpreted in a reasonable manner consistent with the purpose of section 414(r) to recognize an employer's operation of qualified separate lines of business for bona fide business reasons and not for reasons of evading the requirements of any section of the Code, including sections 410(b), 401(a)(26), and 129(d)(8). See section 414(r)(1) and (r)(7). Thus, for example, an employer is not permitted to apply these regulations in a manner that may literally comply with the other provisions of this section and of §§ 1.414(r)-2 through 1.414(r)-11, but that does not reflect the employer's operation of qualified separate lines of business for bona fide business reasons.

(3) ***Separate operating units.*** No additional requirements beyond those provided in these regulations apply to a separate operating unit. Thus, a separate operating unit that satisfies the requirements of paragraph (b)(2) of this section is deemed to satisfy the geographic separation requirement of section 414(r)(7) and accordingly is treated as a qualified separate line of business for all purposes under this section, including the separate application of section 401(a)(26).

(4) ***Certain mergers and acquisitions.*** A portion of an employer that is acquired in a transaction described in section 410(b)(6)(C) and § 1.410(b)-2(f) (i.e., an asset or stock acquisition, merger, or other similar transaction involving a change in the employer of the employees of a trade or business) is deemed to satisfy the requirements to be a qualified separate line of business, other than the 50-employee requirement and the notice requirement of pararaphs (b)(2)(iv)(R) and (b)(2)(iv)(C) of this section, respectively. In addition, the acquired employees are not taken into account, and the property and services provided by the acquired portion to customers of the employer are disregarded, for purposes of determining whether the employer's remaining lines of business satisfy the requirements of §§ 1.414(r)-3 through 1.414(r)-6. The rules in this paragraph (d)(4) apply only for those testing years with first testing days that fall within the transition period described in section 410(b)(6)(C). For this purpose, the transition period described in section 410(b)(6)(C) lasts only for so long as the conditions in that section are satisfied. For the definition of "first testing day," see § 1.414(r)-11(b)(7). See § 1.414(r)-5(d)(4), *Example 1,* for an example of the application of the rule in this paragraph (d)(4). See also § 1.414(r)-5(d) for an administrative scrutiny safe harbor applicable to certain separate lines of business acquired in a transaction described in this section.

(5) ***Governmental and tax-exempt employers*** —

(i) ***General rule.*** Except as provided in paragraph (d)(5)(ii) of this section, the rules of this section are applicable in determining whether section 401(a)(26) is satisfied by a plan maintained by an employer that is exempt from tax under Subtitle A of the Internal Revenue Code (including a governmental plan within the meaning of section 414(d)). Similarly, except as provided in paragraph (d)(5)(ii) of this section, the rules of this section are applicable in determining whether section 410(b) is satisfied by a plan that is subject to section 410(b) (including by virtue of § 1410(b)-2(e)) and is maintained by an employer that is exempt from tax under Subtitle A of the Internal Revenue Code (including a governmental plan within the meaning of section 414(d)).

(ii) ***Additional rules.*** [Reserved]

(6) ***Testing year basis of application*** —

(i) ***Section 414(r).*** Whether an employer is treated as operating qualified separate lines of business under section 414(r) in accordance with paragraph (b) of this section is determined on a year-by-year basis with respect to the testing year. It is therefore possible for an employer to satisfy paragraph (b) of this section for one testing year and to fail to satisfy it for another testing year. It is also possible for an employer to satisfy paragraph (b) of this section for two testing years but to have designated its lines of business differently in each of those two testing years. In determining whether an employer satisfies paragraph (b) of this section for a testing year, the requirements of that paragraph are applied solely with respect to the testing year. Thus, all property and services provided by the employer to its customers during the testing year must be provided exclusively by portions of the employer that for the testing year constitute qualified separate lines of business. Furthermore, each employee of the employer must respectively be treated as an employee of one and only one of those qualified separate lines of business for all purposes with respect to the testing year.

(ii) ***Sections 410(b), 401(a)(26), and 129(d)(8).*** For purposes of paragraph (c) of this section, relating to the separate application of sections 410(b), 401(a)(26), and 129(d)(8) to the employees of a qualified separate line of business, the determination whether an employer operates qualified separate lines of business in accordance with paragraph (b) of this section

for a testing year generally applies for all plan years beginning in the testing year. Rules for the separate application of sections 410(b), 401(a)(26), and 129(d)(8) are respectively provided in §§ 1.414(r)-8, 1.414(r)-9, and 1.414(r)-10.

(7) ***Averaging rules.*** The employer is permitted to apply certain provisions of these regulations on the basis of a consecutive-year average (not to exceed five consecutive years) under the averaging rules of § 1.414(r)-11(c).

(8) ***Definitions.*** In applying the provisions of this section and of §§ 1.414(r)-2 through 1.414(r)-11, the definitions in §§ 1.414(r)-11(b) and 1.410(b)-9 govern, unless otherwise provided.

(9) ***Effective*** —

(i) ***General rule.*** The provisions of this section and of §§ 1.414(r)-2 through 1.414(r)-11 apply to plan years and testing years beginning on or after January 1, 1994 (or January 1, 1996, in the case of plans maintained by organizations exempt from income taxation under section 501(a), including plans subject to section 403(b)(12)(A)(i) (nonelective plans)).

(ii) ***Reasonable compliance*** —

(A) ***In general.*** With respect to plan years beginning before the date on which the Commissioner begins issuing determinations under section 414(r)(2)(C), and on or after the first day of the first plan year to which section 414(r) applies under section 1112(a) of the Tax Reform Act of 1986, an employer is treated as operating qualified separate lines of business if the employer reasonably determines that it meets the requirements of section 414(r) (other than the requirement of administrative scrutiny under section 414(r)(2)(C)).

(B) ***Determination of reasonable compliance.*** Whether an employer reasonably determines that it meets the requirements of section 414(r) generally will be determined on the basis of all relevant facts and circumstances, including the extent to which the employer has resolved unclear issues in its favor. For the period described in paragraph (d)(9)(ii)(A) of this section, the Internal Revenue Service will consider the employer's compliance with the terms of these final regulations (other than the requirement of administrative scrutiny under paragraph (b)(2)(iv)(D) of this section) to constitute a reasonable determination that the employer meets the requirements of section 414(r) (other than the requirement of administrative scrutiny under section 414(r)(2)(C)).

(C) ***Effect on other plans.*** If an employer sponsors a plan that has a plan year beginning within the period decribed in paragraph (d)(9)(ii)(A) of this section, the employer's reasonable determination of its qualified separate lines of business for the testing year in which that plan year begins, and the allocation of employees to those qualified separate lines of business, must also be used for purposes of applying § 1.414(r)-8 and § 1.414(r)-9 for plan years that begin in that testing year but after the end of the period described in paragraph (d)(9)(ii)(A) of this section.

(e) ***Additional rules.*** The Commissioner may, in revenue rulings, notices, and other guidance of general applicability, provide any additional rules that may be necessary or appropriate in applying the qualified separate line of business requirements of section 414(r). These additional rules may include, for example, new safe harbors in § 1.414(r)-5.

[T.D. 8376, 56 FR 63437, Dec. 4, 1991, as amended by T.D. 8548, 59 FR 32916, June 27, 1994]

§ 1.414(r)-2 Line of business.

(a) ***General rule.*** A line of business is a portion of an employer that is identified by the property or services it provides to customers of the employer. For this purpose, an employer is permitted to determine its lines of business by designating the property or services that each of its lines of business provides to customers of the employer. Paragraph (b) of this section explains how an employer determines its lines of business for a testing year. Paragraph (c) of this section provides examples illustrating the application of this section.

(b) ***Employer determination of its lines of business*** —

(1) ***In general.*** An employer determines its lines of business for a testing year first by identifying all the property and services it provides to its customers during the testing year, and then by designating which portion of the property and services is provided by each of its lines of business.

(2) ***Property and services provided to customers*** —

(i) ***In general.*** Property, whether real or personal, tangible or intangible, is provided by an employer to a customer if the employer provides the property to or on behalf of the customer for consideration. Similarly, services are provided by an employer to a customer if the employer renders the services to or on behalf of the customer for consideration. An individual item of property or service is taken into account under this paragraph (b)(2) only if the employer provides the item to a person other than the employer in the ordinary course of a trade or business conducted by the employer and the person to whom the employer provides the item is acting in the capacity of a customer of the employer. A type of tangible property is deemed to be provided to customers of the employer for purposes of this section if, with respect to a business that produces or manufactures that type of tangible property, the employer satisfies the special rule in § 1.414(r)-3(d)(2)(iii)(B) for vertically integrated businesses.

(ii) ***Timing of provision of property or services.*** Generally an employer determines its lines of business on the basis of the property and services it provides to its customers for consideration during the testing year. However, it is not necessary both that property or services actually be provided, and that consideration for the property or services actually be paid, during the current testing year. For an employer to be considered to provide property or services to customers for consideration during a testing year under this paragraph (b)(2), it is sufficient that the property or services actually be provided to customers during the testing year, the consideration actually be paid during the testing year, or the employer actually incur significant costs during the testing year associated with the provision of the property or services to a specified customer or specified customers.

(3) ***Employer designation*** —

(i) ***In general.*** Once the employer has identified all the property and services it provides to its customers during the testing year under paragraph (b)(2) of this section, the employer determines its lines of business for the testing year by designating which portion of those property and services is provided by each of its lines of business. For this purpose, the employer must apportion all the property and services identified under paragraph (b)(2) of this section among its lines of business. An employer generally is not required to designate its lines of business for the testing year in the same manner as it designates its lines of business for any other testing year.

(ii) ***Ability to combine unrelated types of property or services in a single line of business.*** For purposes of this paragraph (b)(3), there is no requirement that a line of business provide only one type of property or service, or only related types of property or services. Nor is there any requirement that a line of business provide solely property or solely services. Thus, the employer is permitted to combine in a single line of business dissimilar types of property or services that are otherwise unrelated to one another.

(iii) ***Ability to separate related types of property or services into two or more lines of business.*** For purposes of this paragraph (b)(3), there is no requirement that all property or services of related types or the same type be provided by a single line of business. Thus, the employer is permitted to designate two or more lines of business that provide related types of property or services, or the same type of property or service. An employer might designate two or more lines of business that provide property or services of related types or the same type, for example, where the lines of business manufacture, prepare, or provide the property or services in different geographic areas (e.g., in different regions of the country or the world), or at different levels in the chain of commercial distribution (e.g., wholesale versus retail), or in different types of transactions (e.g, sale versus lease), or for different types of customers (e. g., governmental versus private), or subject to different legal constraints (e. g., regulated versus unregulated), or if the lines of business have developed differently (e.g., one line of business was acquired while another line of business developed internally). Notwithstanding the foregoing, an employer is not permitted to designate two or more lines of business that provide property or services of related types or the same type, if the employer's designation is unreasonable. An employer's designation would be unreasonable, for example, if the designation separated two types of property or services in different lines of business, but the employer did not provide those types of property or services separately from one another to its customers. Similarly, an employer's designation would be unreasonable if it separated two types of property or services in different lines of business, but the provision of one type of property or service was merely ancillary or incidental to, or regularly associated with, the provision of the other type of property or service. See generally § 1.414(r)-1(d)(2) (requiring an employer's operation of qualified separate lines of business to be for bona fide business reasons).

(iv) ***Affiliated service groups.*** An employer is not permitted to designate its lines of business in a manner that results in separating employees of an affiliated service group (within the meaning of section 414(m)) from other employees of the employer. See section 414(r)(8).

(c) ***Examples*** —

(1) ***In general.*** Paragraphs (c)(2) and (c)(3) of this section provide examples that illustrate the application of this section.

(2) ***Examples illustrating employer designation.*** The following examples illustrate the application of paragraph (b)(3) of this section relating to an employer's designation of the property or services provided to customers by each of its lines of business.

Example 1. Employer A is a domestic conglomerate engaged in the manufacture and sale of consumer food and beverage products and the provision of data processing services to private industry. Employer A provides no other property or services to its customers. Pursuant to paragraph (b)(3) of this section, Employer A apportions all the property and services it provides to its customers among three lines of business, one providing all its consumer food products, a second providing all its consumer beverage products, and a third providing all its data processing services. Employer A has three lines of business for purposes of this section.

Example 2. The facts are the same as in *Example 1,* except that Employer A determines that neither the consumer food products line of business nor the consumer beverage products line of business would satisfy the separateness criteria of § 1.414(r)-3 for recognition as a separate line of business. Accordingly, pursuant to paragraph (b)(3) of this section, Employer A apportions all the property and services it provides to its customers between only two lines of business, one providing all its consumer food and beverage products, and a second providing all its data processing services. Employer A has two lines of business for purposes of this section.

Example 3. The facts are the same as in *Example 2,* except that Employer A also owns and operates a regional commuter airline, a professional basketball team, a pharmaceutical manufacturer, and a leather tanning company. Pursuant to paragraph (b)(3) of this section, Employer A apportions all the property and services it provides to its customers among three lines of business, one providing all its consumer food and beverage products, a second providing all its data processing services, and a third providing all the other property and services provided to customers through Employer A's regional commuter airline, professional basketball team, pharmaceutical manufacturer, and leather tanning company. Even though the third line of business includes dissimilar types of property and services that are otherwise unrelated to one another, paragraph (b)(3)(ii) of this section permits Employer A to combine these property and services in a single line of business. Employer A has three lines of business for purposes of this section.

Example 4. The facts are the same as in *Example 2,* except that Employer A has recently acquired Corporation L, whose only product is a well-known brand of gourmet ice cream. Although Employer A manufactures and sells other ice cream products, it does not manufacture or market the newly acquired brand of gourmet ice cream except through Corporation L. Pursuant to paragraph (b)(3) of this section, Employer A apportions all the property and services it provides to its customers among three lines of business, one providing only the newly acquired brand of gourmet ice cream, a second providing all its other consumer food and beverage products (including the other ice cream products manufactured and sold by Employer A) and a third providing all its data processing services. Even though the gourmet ice cream line of business provides the same type of property as the consumer food and beverage line of business (i.e., ice cream), paragraph (b)(3)(iii) of this section permits Employer A to separate its ice cream products between two different lines of business. Employer A has three lines of business for purposes of this section.

Example 5. The facts are the same as in *Example 2,* except that Employer A operates the data processing services portion of its business in two separate subsidiaries, one serving customers in the eastern half of the United States and the other serving customers in the western half of the United States. Pursuant to paragraph (b)(3) of this section, Employer A apportions all the property and services it provides to its customers among three lines of business, one providing all its consumer food and beverage products, a second providing data processing services to customers in the eastern half of the United States, and a third providing data processing services to customers in the western half of the United States. Even though the second and third lines of business provide the same type of service (i.e., data processing services), paragraph (b)(3)(iii) of this section permits Employer A to separate its data processing services into two lines of business. Employer A has three lines of business for purposes of this section.

Example 6. Employer B is a diversified engineering firm offering civil, chemical, and aeronautical engineering services to government and private industry. Employer B provides no other property or services to its customers. Employer B operates the aeronautical engineering services portion of its business as two separate divisions, one serving federal government customers and the other serving customers in private industry. Pursuant to paragraph (b)(3) of this section, Employer B apportions all the property and services it provides to its customers among four lines of business, one providing all its civil engineering services, a second providing all its chemical engineering services, a third providing aeronautical engineering services to federal government customers, and a fourth providing aeronautical engineering services to customers in private industry. Even though the third and fourth lines of business include the same type of service (i.e., aeronautical engineering services), paragraph (b)(3)(iii) of this section permits Employer B to separate its aeronautical engineering services into two lines of business. Employer B has four lines of business for purposes of this section.

Example 7. Among its other business activities, Employer C manufacturers industrial diesel generators. At no additional cost to its buyers, Employer C warrants the proper functioning of its diesel generators for a one-year period following sale. Pursuant to its warranty, Employer C provides labor and parts to repair or replace any components that malfunction within the one-year warranty period. Because Employer C does not provide the industrial diesel generators, on the one hand, and the warranty repair services and replacement parts, on the other hand, separately from one another to its customers, under paragraph (b)(3)(iii) of this section it would be unreasonable for Employer C to separate these property and services in different lines of business.

Example 8. Among its other business activities, Employer D leases office photocopying equipment. Employer D also provides photo-copying supplies and repair services to its lessees for a separate charge. Employer D generally does not provide such supplies and repair services to persons other than its lessees. Lessees of Employer D's equipment are permitted to use photo-copying supplies and repair services from suppliers other than Employer D. Because the provision of the photo-copying supplies and repair services are merely ancillary or incidental to the provision of the leased photo-copiers, under paragraph (b)(3)(iii) of this section it would be unreasonable for Employer D to separate these property and services in different lines of business.

Example 9. Employer E operates a medical clinic. The employees of the clinic include physicians, nurses, and laboratory technicians, all of whom participate in providing medical and related services to patients of the clinic. Under paragraph (b)(3)(iii) of this section, it would be unreasonable for Employer E to separate the services of the physicians, nurses, and laboratory technicians in different lines of business.

Example 10. Employer F is a law firm. The employees of the firm include lawyers, paralegals, and secretaries, all of whom participate in rendering legal and related services to clients of the firm. Under paragraph (b)(3)(iii) of this section, it would be unreasonable for Employer F to separate the services of the lawyers, paralegals, and secretaries in different lines of business.

Example 11. Employer G is a management consulting firm. The employees of the firm include management consultants, secretaries, and other support staff personnel, all of whom participate in rendering management consulting and related services to clients of the firm.

Under paragraph (b)(3)(iii) of this section, it would be unreasonable for Employer G to separate the services of the management consultants, secretaries, and other support staff personnel in different lines of business.

(3) ***Examples illustrating property and services provided to customers.*** The following examples illustrate the application of paragraph (b)(2) of this section relating to property and services provided to customers of the employer.

Example 1. Employer H operates several dairy farms and dairy product processing plants. The dairy farms provide part of their output of milk and milk by-products to Employer H's dairy product processing plants and also sell part to retail distributors unrelated to Employer H. The dairy farms' provision of milk and milk by-products to Employer H's dairy product processing plants does not constitute the provision of property or services to customers of Employer H because the milk and milk by-products are not provided to a person other than employer H. However, the dairy farms' provision of milk and milk by-products to independent retail distributors does constitute the provision of property or services to customers of Employer H under paragraph (b)(2) of this section.

Example 2. The facts are the same as in *Example 1,* except that the dairy farms provide their entire output of milk and milk by-products to Employer H's dairy product processing plants. The dairy farms' provision of milk and milk by-products to the dairy product processing plants generally does not constitute the provision of property or services to customers of Employer H because the milk and milk by-products are not provided to a person other than Employer H. However, paragraph (b)(2)(i) of this section provides a special rule for vertically integrated businesses that satisfy § 1.414(r)-3(d)(2)(iii)(B). If § 1.414(r)-3(d)(2)(iii)(B) is satisfied, then, under the special rule of paragraph (b)(2)(i) of this section, the milk and milk by-products are deemed to be provided to customers of Employer H.

Example 3. Among its other business activities, Employer J manufactures automobiles. Employer J operates a cafeteria at one of its automobile manufacturing facilities. The cafeteria is intended primarily for use by employees of Employer J, but nonemployees are not prohibited from using the cafeteria. The cafeteria charges the same prices to employees and non-employees. Under paragraph (b)(2) of this section, the provision of cafeteria services to employees of Employer J does not constitute the provision of property or services to customers of Employer J, because the cafeteria services are provided to the employees in their capacity as employees of Employer J and not as customers of Employer J.

Example 4. Employer K sells books and periodicals to members of the public and provides telecommunications services to private industry. Employer K periodically acquires and disposes of businesses in both asset and stock transactions. In addition, for its own investment purposes, Employer K acquires and disposes of corporate and other securities. Under paragraph (b)(2) of this section, the sale by Employer K of businesses and investment securities does not constitute the provision of property or services to customers of Employer K, because the sales are not made in the ordinary course of a trade or business conducted by Employer K. However, the sale of published materials and the provision of telecommunications services to persons unrelated to Employer K does constitute the provision of property or services to customers of Employer K.

Example 5. Employer L is active in the financial services industry. Subsidiary 1 of Employer L is a brokerage firm that is regulated as a broker-dealer under applicable federal and state law. In its capacity as a dealer, Subsidiary 1 holds in its own inventory securities of unrelated corporations and regularly sells these securities to unrelated persons. Under paragraph (b)(2) of this section, the sale by Subsidiary 1 of the securities to unrelated persons constitutes the provision of property or services to customers of Employer L, because the sales are made in the ordinary course of Subsidiary 1's trade or business as a broker-dealer.

Example 6. The facts are the same as in *Example 5.* Subsidiary 2 of Employer L is an insurance company that is regulated under applicable state insurance laws. In managing its investments, Subsidiary 2 regularly makes use of the brokerage services of Subsidiary 1 (which Subsidiary 1 regularly provides to unrelated persons as well). Under paragraph (b)(2) of this section, Subsidiary 1's provision of brokerage services to Subsidiary 2 does not constitute the provision of property or services to customers of Employer L, because the brokerage services are not provided to a person other than Employer L. However, Subsidiary 1's provision of brokerage services to unrelated persons does constitute the provision of property or services to customers of Employer L.

Example 7. Employer M is a shipbuilder. In a testing year, Employer M enters into a contract with a customer to construct a new cargo ship for delivery two years later. Employer M incurs significant costs designing and planning for the production of the new ship during the testing year, but receives no payments from the customer during that year. Under paragraph (b)(2) of this section, Employer M is treated as providing the cargo ship to the customer during the testing year.

Example 8. The facts are the same as in *Example 7,* except that, pursuant to a request from the customer, Employer M also incurred significant costs developing a prototype and submitting a bid on the new cargo ship in the prior testing year, and that these costs were not reimbursed by the customer. Under paragraph (b)(2) of this section, Employer M is also treated as providing the cargo ship to the customer in the prior testing year.

[T.D. 8376, 56 FR 63439, Dec. 4, 1991, as amended by T.D. 8548, 59 FR 32917, June 27, 1994]

§ 1.414(r)-3 Separate line of business.

(a) ***General rule.*** A separate line of business is a line of business (as determined under § 1.414(r)-2) that is organized and operated separately from the remainder of the employer. Paragraph (b) of this section sets forth the rules for determining whether a line of business is organized and operated separately from the remainder of the employer. Paragraph (c) of this section provides certain supplementary rules necessary to apply the requirements of paragraph (b) of this section, as well as examples illustrating the application of those requirements. Paragraph (d) of this section provides an optional rule for lines of business that are vertically integrated.

(b) ***Separate organization and operation*** —

(1) ***In general.*** A line of business is organized and operated separately from the remainder of the employer for a testing year only if it satisfies all the requirements of paragraphs (b)(2) through (b)(5) of this section for the testing year.

(2) ***Separate organizational unit.*** The line of business must be formally organized as a separate organizational unit or group of separate organizational units within the employer. For this purpose, an organizational unit is a corporation, partnership, division, or other unit having a similar degree of organizational formality. This requirement must be satisfied on every day of the testing year.

(3) ***Separate financial accountability.*** The line of business must be a separate profit center or group of separate profit centers within the employer. This requirement must be satisfied on every day of the testing year. In addition, the employer must maintain books and records that provide separate revenue and expense information that is used for internal planning and control with respect to each profit center comprising the line of business.

(4) ***Separate employee workforce.*** The line of business must have its own separate employee workforce. A line of business has its own separate workforce only if at least 90 percent of the employees who provide services to the line of business, and who are not substantial-service employees with respect to any other line of business, are substantial-service employees with respect to the line of business. See paragraph (c)(2) of this section to determine how the percentage in the preceding sentence is calculated for the testing year.

(5) ***Separate management.*** The line of business must have its own separate management. A line of business has its own separate management only if at least 80 percent of the employees who are top-paid employees with respect to the line of business are substantial-service employees with respect to the line of business. See paragraph (c)(3) of this section to determine how the percentage in the preceding sentence is calculated for the testing year.

(c) ***Supplementary rules*** —

(1) ***In general.*** This paragraph (c) provides certain supplementary rules necessary to apply the requirements of paragraph (b) of this section, as well as examples illustrating the application of those requirements.

(2) ***Determination of separate employee workforce.*** The percentage in paragraph (b)(4) of this section is the fraction (expressed as a percentage)—

(i) The numerator of which is the number of substantial-service employees with respect to the line of business within the meaning of § 1.414(r)-11(b)(2); and

(ii) The denominator of which is the total number of employees who provide services to the line of business within the meaning of paragraph (c)(5) of this section and who are not substantial-service employees with respect to any other line of business.

(3) ***Determination of separate management.*** The percentage in paragraph (b)(5) of this section is the fraction (expressed as a percentage)—

(i) The numerator of which is the number of employees who are both top-paid employees and substantial-service employees with respect to the line of business within the meaning of § 1.414(r)-11(b)(3) and (2), respectively; and

(ii) The denominator of which is the total number of top-paid employees with respect to the line of business within the meaning of § 1.414(r)-11(b)(3).

(4) ***Employees taken into account.*** For purposes of applying this paragraph (c), only employees who are employees on the first testing day are taken into account. For this purpose, there are no excludable employees except nonresident aliens described in section 410(b)(3)(C). Consequently, all other employees who are employees on the first testing day are taken into account, including collectively bargained employees. For the definition of first testing day, see § 1.414(r)-11(b)(7).

(5) ***Services taken into account*** —

(i) ***Provision of services to a line of business.*** An employee provides services to a line of business if more than a negligible portion of the employee's services contributes to providing the property or services provided by the line of business to customers of the employer. All of the services of each employee who provides services to the employer contribute, whether directly or indirectly,

to the provision of property or services to customers of the employer, and therefore each employee who provides services to the employer must be treated as providing more than a negligible portion of the employee's services to one or more lines of business operated by the employer.

(ii) ***Period for which services are provided.*** Only services performed by an employee during the testing year that contribute to providing the property or services provided by a line of business to customers are taken into account. An employee's services during the testing year are considered to contribute to providing the property or services provided by a line of business to customers of the employer if—

(A) The employee's services during the testing year contribute to providing such property or services to customers of the employer during the testing year; or

(B) It is reasonably anticipated that the employee's services during the testing year will contribute to providing such property and services to customers of the employer after the close of the testing year.

(iii) ***Optional rule for employees who change status*** —

(A) ***In general.*** Solely for purposes of the separateness rules of this section and the assignment rules of § 1.414(r)-7, if an employee changes status as described in paragraph (c)(5)(iii)(B) of this section, an employer may, for up to three consecutive testing years after the base year (within the meaning of paragraph (c)(5)(iii)(B) (*1*) or (*2*) of this section), treat the employee as providing the same level of service to its lines of business as the employee provided in the base year.

(B) ***Change in employee's status.*** An employee changes status as described in this paragraph (c)(5)(iii)(B) if—

(*1*) For a testing year (the base year), the employee was a substantial-service employee with respect to a qualified separate line of business of the employer (prior line of business) and, for the immediately succeeding testing year, the employee is not a substantial-service employee with respect to that prior line of business; or

(*2*) For a testing year (the base year), the employee was a residual shared employee and, for the immediately succeeding testing year, the employee is a substantial-service employee with respect to a qualified separate line of business.

(6) ***Examples of the separate employee workforce requirement.*** The following examples illustrate the application of the separate employee workforce requirement in paragraph (b)(4) of this section and the supplementary rules of this paragraph (c). Unless otherwise specified, it is assumed that the employees and their services described in these examples are taken into account under paragraphs (c) (4) and (5) of this section for the testing year and that the employer does not use the option under § 1.414(r)-11(b)(2) to treat employees who provide less than 75 percent of their services to a line of business as substantial-service employees with respect to the line of business.

Example 1. Employer A operates three lines of business as determined under § 1.414(r)-2. One of Employer A's lines of business manufactures and sells tires and other automotive products. Employee M is a tire press operator in Employer A's tire factory. Employee N is the manager of

the tire factory. Under these facts, the services of Employees M and N contribute to providing tires to customers of Employer A. Both employees therefore provide services to Employer A's tire and automotive products line of business within the meaning of paragraph (c)(5) of this section.

Example 2. The facts are the same as in *Example 1.* In addition, none of the services of Employees M and N that contribute to providing property or services to customers contribute to providing any property or service other than tires to customers of Employer A. Under these facts, Employees M and N provide at least 75 percent of their respective services to Employer A's tire and automotive products line of business. Therefore Employees M and N are substantial-service employees with respect to Employer A's tire and automotive products line of business within the meaning of § 1.414(r)-11(b)(2), and do not provide any services within the meaning of paragraph (c)(5) of this section to any of Employer A's other lines of business. Moreover, because Employees M and N provide at least 75 percent of their services to Employer A's tire and automotive products line of business and are substantial-service employees with respect to that line, they are disregarded in applying paragraph (b)(4) of this section to any other line of business, even if they provide services to the other line.

Example 3. The facts are the same as in *Example 2.* Employer A's second line of business manufactures and sells construction machinery, and Employer A's third line of business manufactures and sells agricultural equipment. As part of these lines of business, Employer A operates a construction machinery factory and an agricultural equipment factory on the same site as the tire factory described in *Example 2.* Employer A's facilities at the site include a health clinic and a fitness center that serve the employees of the construction machinery factory, the agricultural equipment factory, and the tire factory. Employee O is a nurse in the health clinic, and Employee P is a fitness instructor in the fitness center. Both employees therefore provide services within the meaning of paragraph (c)(5) of this section to Employer A's tire and automotive products line of business, construction machinery line of business, and agricultural equipment line of business. In addition, under these facts, Employer A determines that approximately 33 percent of the services of Employees O and P are provided to each of Employer A's three lines of business. As a result, neither Employee O or P provide at least 75 percent of their respective services to any of Employer A's lines of business. Therefore, Employees O and P are not substantial-service employees with respect to any of Employer A's three lines of business within the meaning of § 1.414(r)-11(b)(2).

Example 4. The facts are the same as in *Example 3.* Employee Q is the president and chief executive officer of Employer A and is responsible for reviewing the performance of all Employer A's lines of business. Under these facts, the services of Employee Q contributes to providing property and services to customers of each of Employer A's three lines of business. Employee Q therefore provides services to each of these three lines of business. Employer A determines that Employee Q provides the following percentages of his services to Employer A's three lines of business: tire and automotive products—40 percent; construction machinery—40 percent, and agricultural equipment—20 percent. Employee Q does not provide at least 75 percent of his services to any of Employer A's lines of business. Therefore, Employee Q is not a substantial-service employee with respect to any of Employer A's three lines of business within the meaning of § 1.414(r)-11(b)(2).

Example 5. The facts are the same as in *Example 4,* except that Employer A also owns 75 percent of Corporation X. Corporation X is not treated as part of Employer A within the meaning of § 1.410(b)-9. Employee R is an accountant in the accounting department of Employer A.

Employee R devotes all of his time to maintaining the accounting books and records of the tire and automotive products line of business of Employer A and the accounting books and records of Corporation X. Employer A determines that Employee R provides 40 percent of his services directly to the tire and automotive products line of business. Employer A also determines that Employee R provides the following percentages of the remainder of Employee R's services (i.e., his provision of services of maintaining the accounting books and records of Corporation X) indirectly to Employer A's three lines of business by virtue of the services he provides to Corporation X: tire and automotive products—25 percent; construction machinery—20 percent, and agricultural equipment—15 percent. Therefore, Employee R provides 65 percent of his services to the tire and automotive products line of business of Employer A (i.e., 40 percent directly and 25 percent indirectly). Under the definition of substantial-service employee in § 1.414(r)-11(b)(2), Employer A may treat Employee R as a substantial-service employee with respect to the tire and automotive products line of business because Employee R provides at least 50 percent of his services to that line. In that case, Employee R would be disregarded in applying paragraph (b)(4) of this section to the construction machinery and agricultural equipment lines of business.

Example 6. The facts are the same as in *Example 5.* Employee S is a lawyer in the legal department located at the headquarters who devotes all her time to product liability suits filed against the construction machinery line of business. Under these facts, the services of Employee S contribute to providing property and services to customers of Employer A in the construction machinery line of business, and therefore Employee S provides services to that line of business. Because Employee S's services do not contribute to providing property or services in any other of Employer A's lines of business within the meaning of paragraph (c)(5) of this section, Employee S provides more than 75 percent of her services to the construction machinery line of business and therefore is a substantial-service employee with respect to Employer A's construction machinery line of business within the meaning of § 1.414(r)-11(b)(2).

Example 7. The facts are the same as in *Example 6.* Employer A also maintains a separate facility that houses a centralized procurement, marketing, and billing operation for all of its lines of business. None of the procurement, marketing, or billing employees specializes in any particular line of business. Under these facts, the services of the procurement, marketing, and billing employees contribute to providing property and services to customers of Employer A in each of Employer A's three lines of business. Employer A determines that each of the procurement, marketing, and billing employees provides approximately an equal proportion of their services to each of Employer A's three lines of business. These employees therefore provide services to all of Employer A's lines of business within the meaning of paragraph (c)(5) of this section. However, none of them provides at least 75 percent of his services to any line of business. Therefore, these employees are not substantial-service employees with respect to any of Employer A's three lines of business within the meaning of § 1.414(r)-11(b)(2).

Example 8. The facts are the same as in *Example 7.* Employee T works for the construction machinery line of business. During the testing year, he is temporarily detailed to the agricultural equipment line of business. His temporary detail lasts for one week, after which he returns to his regular duties with the construction machinery line of business. Under these facts, Employee T does not provide more than a negligible portion of his services during the testing year to the agricultural equipment line of business. Accordingly, Employee T does not provide services to the agricultural equipment line of business within the meaning of paragraph (c)(5) of this

section. In addition, because Employee T provides at least 75 percent of his services to the construction machinery line of business, Employee T is a substantial-service employee with respect to Employer A's agricultural equipment line of business within the meaning of § 1.414(r)-11(b)(2).

Example 9. The facts are the same as in *Example 8,* except that, during the testing year but before the first testing day, Employee T retires from employment with Employer A. Under paragraph (c)(5)(ii) of this section, Employee T is not taken into account in determining whether Employer A's construction machinery line of business has its own separate employee workforce within the meaning of paragraph (b)(4) of this section.

Example 10. Employer B is a multinational controlled group of corporations that engages in the exploration, production, refining, and marketing of petrochemical products. Employer B operates two lines of business as determined under § 1.414(r)-2. The first line of business (the "exploration, production, and refining line of business") provides lubricating oil, gasoline, and other petrochemical products to wholesale customers of Employer B as well as to the second line of business. The wholesale customers of Employer B include independent jobbers, independent franchisees that operate retail filling stations under Employer B's trademark and tradename, as well as chemical and plastics manufacturers. The second line of business (the "retail marketing line of business") provides lubricating oil and gasoline products to retail customers of Employer B through filling stations owned and operated by Employer B. Employee U is an attendant at a filling station owned and operated by Employer B. Employee U performs no other services for Employer B, Under these facts, Employee U provides at least 75 percent of his services to Employer B's retail marketing line of business and therefore is a substantial-service employee with respect to that line of business within the meaning of § 1.414(r)-11(b)(2), and does not provide any services within the meaning of paragraph (c)(5) of this section to any of Employer B's other lines of business.

Example 11. The facts are the same as in *Example 10.* Employer B operates a refinery that produces lubricating oil, gasoline, and other petrochemical products. Employee V is an operating engineer at the refinery who is involved at a stage in the refining process before lubricating oil and gasoline products have been separated from other types of petrochemical products. Employee V performs no other services for Employer B. Under these facts, Employee V's services contribute to providing property and services to customers of Employer B in both the exploration, production, and refining line of business and the retail marketing line of business. Employee V therefore provides services to both lines of business within the meaning of paragraph (c)(5) of this section. See paragraph (d) of this section, however, for an optional rule for vertically integrated lines of business.

Example 12. The facts are the same as in *Example 11.* Employee W is a petroleum engineer who conducts geological studies of potential future drilling sites. Although Employee W's services during the testing year will not contribute to providing lubricating oil, gasoline, and other petrochemical products to customers of Employer B during the testing year, it is reasonably anticipated (in accordance with paragraph (c)(5)(ii)(B) of this section) that her services during the testing year will contribute to providing such products to customers of Employer B after the close of the testing year. Under these facts, Employee W provides her services to both of Employer B's lines of business within the meaning of paragraph (c)(5) of this section.

(7) ***Examples of the separate management requirement.*** The following examples illustrate the application of the separate management requirement in paragraph (b)(5) of this section and the supplementary rules of this paragraph (c). Unless otherwise specified, it is assumed that employees who provide services to a line of business are not substantial-service employees with respect to any other line of business and that, in determining the top-paid employees with respect to a line of business, the employer is using the option under § 1.414(r)-11(b)(3) to disregard all employees who provide less than 25 percent of their services to that line of business.

> *Example 1.* (a) Employer C operates three lines of business as determined under § 1.414(r)-2. One of its lines of business is the operation of a chain of athletic equipment and apparel stores. Of Employer C's total workforce, 12,000 employees provide more than a negligible amount of the services they provide to Employer C to the athletic equipment and apparel stores line of business, within the meaning of paragraph (c)(5) of this section. Of the 1,200 employees who constitute the top ten percent by compensation of those 12,000 employees, 930 are substantial-service employees with respect to that line of business. Because 930 is 77.5 percent of 1,200, less than 80 percent of the top-paid employees with respect to the line of business are substantial-service employees with respect to that line of business. Therefore, Employer C's athletic equipment and apparel stores line of business does not have its own separate management under paragraph (b)(5) of this section.
> (b) Assume that, in determining the top-paid employees with respect to the athletic equipment and apparel stores line of business, Employer C chooses to disregard all employees who provide less than 25 percent of their services to the line of business as permitted under the definition in § 1.414(r)-11(b)(3). Of the 12,000 employees who provide more than a negligible amount of their services to the athletic equipment and apparel stores line of business, 10,000 provide at least 25 percent of their services to that line. Of the 1,000 employees who constitute the top ten percent by compensation of those 10,000 employees, 930 are substantial-service employees with respect to the athletic equipment and apparel stores line of business. Because 930 is 93 percent of 1,000, at least 80 percent of the top-paid employees with respect to the line of business are substantial-service employees with respect to that line of business. Therefore, Employer C's athletic equipment and apparel stores line of business has its own separate management and satisfies the requirement of paragraph (b)(5) of this section.

Example 2. The facts are the same as in *Example 1*. Employee X is a vice president of the accounting department located at the headquarters, who devotes all of his time supervising the staff of Employer C's accounting department. Employer C determines that 10 percent of Employee X's services contribute to providing property and services to customers of Employer C's athletic equipment and apparel stores line of business and 45 percent of Employee X's services contribute to providing property and services to customers to each of Employer C's other two lines of business. Because Employee X does not provide at least 25 percent of his services to Employer C's athletic equipment and apparel stores line of business, Employee X is not one of the 10,000 employees described in *Example 1* and therefore cannot be a top-paid employee within the meaning of § 1.414(r)-11(b)(3) with respect to the athletic equipment and apparel stores line of business.

Therefore, Employee X is not taken into account in determining whether the athletic equipment and apparel stores line of business satisfies the separate management requirement of paragraph (b)(5) of this section.

Example 3. The facts are the same as in *Example 2* except that Employee X provides 60 percent of his services to Employer C's second line of business, an athletic equipment factory, and 30 percent of his service to Employer C's third line of business, a fast-food chain. Because Employee X provides at least 50 percent of his services to the athletic equipment factory line of business, Employer C chooses to treat him as a substantial- service employee with respect to that line of business, as permitted under § 1.414(r)-11(b)(2). Thus, Employee X is taken into account as a substantial-service employee with respect to the athletic equipment factory line of business and is disregarded in applying the separate workforce and separate management requirements under paragraphs (b) (4) and (5) to the fast-food chain line of business.

Example 4. Employer D operates four lines of business as determined under § 1.414(r)-2. One of its lines of business is a machine tool shop. Sixty of Employer D's employees provide at least 25 percent of their services to the machine tool shop line of business. Of the six employees who constitute the top 10 percent by compensation of those 60 employees, four are substantial-service employees with respect to the line of business. Because four is 67 percent of six, 80 percent of the top-paid employees with respect to the machine tool shop line of business are not substantial-service employees with respect to that line of business. Therefore the machine tool shop line of business does not satisfy the separate management requirement of paragraph (b)(5) of this section.

Example 5. The facts are the same as in *Example 4,* except that, in addition, another of Employer D's lines of business is an automotive repair shop, and 80 of Employer D's employees provide at least 25 percent of their services to that line of business. Employer D combines the machine shop line of business with the automotive repair shop line of business and treats them as a single line of business. As a result, Employer D has three lines of business as determined under § 1.414(r)-2. Assume that 150 of Employer D's employees provide more than 25 percent of their services to the machine tool shop/ automotive repair shop line of business within the meaning of paragraph (c)(5) of this section. Of the 15 employees who constitute the top 10 percent by compensation of these 150 employees, 12 are substantial-service employees with respect to that line of business. Because 12 is 80 percent of 15, at least 80 percent of the top-paid employees with respect to the machine tool shop/automotive repair shop line of business are substantial-service employees with respect to that line of business. Therefore, the machine tool shop/automotive repair shop line of business satisfies the separate management requirement of paragraph (b)(5) of this section.

(d) ***Optional rule for vertically integrated lines of business*** —

(1) ***In general.*** If two lines of business satisfy the requirements of this paragraph (d) with respect to a type of property or service for a testing year, the employer is permitted to apply the optional rule in this paragraph (d) for the testing year.

(2) ***Requirements.*** Two lines of business satisfy the requirements of this paragraph (d) with respect to a type of property or service only if—

(i) One of the lines of business (the upstream line of business) provides a type of property or service to the other line of business (the downstream line of business);

(ii) The downstream line of business either—

(A) Uses, consumes, or substantially modifies the property or service in the course of itself providing property or services to customers of the employer; or

(B) Provides the same property or service to customers of the employer at a different level in the chain of commercial distribution from the upstream line of business (e.g., retail versus wholesale); and

(iii) The upstream line of business either—

(A) Provides the same type of property or service to customers of the employer, and at least 25 percent of the total number of units of the same type of property or service provided by the upstream line of business to all persons (including customers of the employer, the downstream line of business, and all other lines of business of the employer) are provided to customers of the employer by the upstream line of business, when measured on a uniform basis; or

(B) Provides to the downstream line of business property consisting primarily of a type of tangible property (i.e., goods, not services) that it produces or manufactures, and some entities outside the employer's controlled group that are engaged in a similar business as the upstream line of business provide the same type of tangible property to unrelated customers (i.e., customers outside those entities' respective controlled groups).

(3) *Optional rule* —

(i) ***Treatment of employees.*** For purposes of determining the lines of business to which an employee provides services under paragraph (c)(5) of this section, an employee is not treated as providing services to the downstream line of business if—

(A) The employee is considered to provide services to the downstream line of business under paragraph (c)(5) of this section (applied without regard to the optional rule in this paragraph (d)); and

(B) The employee is so considered solely because the employee's services contribute to providing the property or service from the upstream line of business to the downstream line of business.

(ii) ***Purposes for which optional rule applies.*** If an employee applies the optional rule in this paragraph (d), the treatment specified in paragraphs (d)(3)(i) (A) and (B) of this section applies for all the following purposes and only for the following purposes—

(A) The separate employee workforce and separate management requirements of paragraphs (b)(4) and (b)(5) of this section;

(B) The 50-employee requirement of § 1.414(r)-4(b); and

(C) The determination of the employees of a qualified separate line of business under § 1.414(r)-7.

(4) ***Examples.*** The following examples illustrate the application of the optional rule in this paragraph (d).

Example 1. Employer E operates two lines of business as determined under § 1.414(r)-2, one engaged in upholstery textile manufacturing and the other in furniture manufacturing. During the testing year, the upholstery textile line of business provides its entire output of upholstery textiles to the furniture line of business. The furniture line of business uses the upholstery textiles in the

manufacture of upholstered furniture for sale to customers of Employer E. The furniture line of business thus substantially modifies the upholstery textiles provided to it by the upholstery textile line of business in providing upholstered furniture products to customers of Employer E. In addition, although the upholstery textile line of business does not provide upholstery textiles to customers of Employer E, some entities engaged in upholstery textile manufacturing provide upholstery textiles to customers outside their controlled groups. Under these facts, Employer E's two lines of business satisfy the requirements of this paragraph (d) with respect to upholstery textiles for the testing year.

Example 2. Employer B is a multinational controlled group of corporations that engages in the exploration, production, refining, and marketing of petrochemical products. See *Example 10* under paragraph (c)(7) of this section. Employer B operates two lines of business as determined under § 1.414(r)-(2). The first line of business ("the exploration, production, and refining line of business") provides lubricating oil, gasoline, and other petrochemical products to wholesale customers of Employee B as well as the second line of business. The wholesale customers of Employee B include independent jobbers, independent franchisees that operate retail filling stations under Employee B's trademark and tradename, as well as chemical and plastics manufacturers. The second line of business (the "retail marketing line of business") provides lubricating oil and gasoline products to retail customers of Employee B through filing stations owned and operated by Employee B. During the testing year, the exploration, production and refining line of business provides 25,000 gallons of lubricating oil, 100,000 gallons of unleaded and 150,000 gallons of leaded gasoline to the retail marketing line of business, and 75,000 gallons of lubricating oil, 500,000 gallons of unleaded gasoline and 15,000 gallons of leaded gasoline to wholesale customers of Employer B. Thus, the exploration, production, and refining line of business provides 75 percent of its output of lubricating oil during the testing year to wholesale customers of Employer B. In addition, because unleaded and leaded gasoline is the same type of property (i.e., gasoline), the exploration, production, and refining line of business provides 67 percent of its output of gasoline products during the testing year to wholesale customers of Employer B. Furthermore, the retail line of business provides lubricating oil and gasoline products to customers of Employer B at different levels in the chain of commercial distribution than the exploration, production, and refining line of business. Under these facts, Employer B's two lines of business satisfy the requirements of this paragraph (d) with respect to both lubricating oil and gasoline products for the testing year.

Example 3. The facts are the same as in *Example 2.* Employer B operates a refinery that produces lubricating oil, gasoline, and other petrochemical products. Employee V is an operating engineer at the refinery who is involved at a stage in the refining process before lubricating oil and gasoline products have been separated from other types of petrochemical products. Employee V performs no other services for Employer B. Absent application of the optional rule in this paragraph (d), Employee V would be considered to provide services to both of Employer B's lines of business. See *Example 11* under paragraph (c)(7) of this section. However, because Employee V's services to the retail marketing line of business contribute solely to providing lubricating oil and gasoline products from the exploration, production, and refining line of business to the retail marketing line of business, under the optional rule in paragraph (d)(3)(i) of this section Employee V is not treated as providing services to the retail marketing line of business.

Example 4. The facts are the same as in *Example 3.* Employee W is a petroleum engineer who conducts geological studies of potential future drilling sites. Employee W performs no other services for Employer B. Absent application of the optional rule in this paragraph (d), Employee W would be considered to provide services to both of Employer B's lines of business. See *Example 12* under paragraph (c)(7) of this Section. However, because Employee W's services to the retail marketing line of business contribute solely to providing lubricating oil and gasoline products from the exploration, production, and refining line of business to the retail marketing line of business, under the optional rule in paragraph (d)(3)(i) of this section Employee W is not treated as providing services to the retail marketing line of business.

Example 5. The facts are the same as in *Example 4.* Employee Y is a vice president in Employer B's home office. As part of his senior management responsibilities, Employee Y helps to set the rate of production at Employer B's refineries in the United States and also helps to set the price charged at the pump at the retail filling stations owned and operated by Employer B in this country. Absent application of the optional rule in this paragraph (d), Employee X would be considered to provide services to both of Employer B's lines of business within the meaning of paragraph (c)(5) of this section for purposes of satisfying the separate workforce requirement of paragraph (b)(4) of this section. Because Employee X helps to set the price charged at the pump by Employer B's retail marketing line of business, Employee X's services to the retail marketing line of business are not limited to contributing solely to providing lubricating oil and gasoline products from the exploration, production, and refining line of business to the retail marketing line of business, as required under paragraph (d)(3)(i)(B) of this section. Accordingly, even though Employer B's two lines of business satisfy the requirements of this paragraph (d) with respect to both lubricating oil and gasoline products for the testing year, and even though Employer B applies the optional rule in this paragraph (d), Employee X is still considered to provide services to both of Employer B's lines of business.

[T.D. 8376, 56 FR 63442, Dec. 4, 1991, as amended by T.D. 8548, 59 FR 32917, June 27, 1994]

§ 1.414(r)-4 Qualified separate line of business—fifty-employee and notice requirements.

(a) ***In general.*** This section sets forth the rules for determining whether a separate line of business (as determined under § 1.414(r)-3) satisfies the 50-employee and notice requirements of § 1.414(r-1(b)(2)(iv)(B) and (C), respectively.

(b) ***Fifty-employee requirement.*** A separate line of business satisfies the 50-employee requirement of § 1.414(r)-1(b)(2)(iv)(B) for a testing year only if on each day of the testing year there are at least 50 employees who provide services to the separate line of business for the testing year and do not provide services to any other separate line of business of the employer for the testing year within the meaning of § 1.414(r)-3(c)(5). For this purpose, all employees of the employer are taken into account (including collectively bargained employees), except employees described in § 1.414(q)-1, Q&A-9(g)(i.e., the same employees, subject to certain modifications, who are excluded in determining the number of employees in the top-paid group under section 414(q)(4)).

(c) ***Notice requirement*** —

(1) ***General rule.*** A separate line of business satisfies the notice requirement of § 1.414(r)-1(b)(2)(iv)(C) for a testing year only if the employer notifies the Secretary that it treats itself as operating qualified separate lines of business for the testing year in accordance with § 1.414(r)-1(b). The employer's notice for the testing year must specify each of the qualified separate lines of business operated by

the employer and the section or sections of the Code to be applied on a qualified-separate-line-of-business basis. See § 1.414(r)-1(c). The employer's notice must take the form, must be filed at the time and the place, and must contain any additional information prescribed by the Commissioner in revenue procedures, notices, or other guidance of general applicability. No other notice, whether actual or constructive, satisfies the requirement of this paragraph (c).

(2) ***Effect of notice.*** Once an employer has provided the notice prescribed in this paragraph (c) for a testing year, and the time for filing the notice for the testing year has expired without its being modified, withdrawn, or revoked, the employer is deemed to have irrevocably elected to apply the requirements of the section or sections of the Code specified in the notice separately with respect to the employees of each qualified separate line of business specified in the notice for all plan years that begin in the testing year. The Commissioner may, in revenue procedures, notices, or other guidance of general applicability, provide for exceptions to the rule in this paragraph (c)(2) as well as for the effect that will be given to the employer's notice for purposes of any future testing year.

[T.D. 8376, 56 FR 63446, Dec. 4, 1991, as amended by T.D. 8548, 59 FR 32919, June 27, 1994]

§ 1.414(r)-5 Qualified separate line of business—administrative scrutiny requirement—safe harbors.

(a) ***In general.*** A separate line of business (as determined under § 1.414(r)-3 satisfies the administrative scrutiny requirement of § 1.414(r)-1(b)(2)(iv)(D) for a testing year if the separate line of business satisfies any of the safe harbors in paragraphs (b) through (g) of this section for the testing year. The safe harbor in paragraph (b) of this section implements the statutory safe harbor of section 414(r)(3). The safe harbors in paragraphs (c) through (g) of this section constitute the guidelines provided for under section 414(r)(2)(C). A separate line of business that does not satisfy any of the safe harbors in this section nonetheless satisfies the requirement of administrative scrutiny if the employer requests and receives an individual determination from the Commissioner under § 1.414(r)-6 that the separate line of business satisfies the requirement of administrative scrutiny.

(b) ***Statutory safe harbor*** —

(1) ***General rule.*** A separate line of business satisfies the safe harbor in this paragraph (b) for the testing year only if the highly compensated employee percentage ratio of the separate line of business is—

(i) At least 50 percent; and

(ii) Non more than 200 percent.

(2) ***Highly compensated employee percentage ratio.*** For purposes of this paragraph (b), the highly compensated employee percentage ratio of a separate line of business is the fraction (expressed as a percentage), the numerator of which is the percentage of the employees of the separate line of business who are highly compensated employees, and the denominator of which is the percentage of all employees of the employer who are highly compensated employees.

(3) ***Employees taken into account.*** For purposes of this paragraph (b), the employees taken into account are the same employees who are taken into account for purposes of applying section 410(b) with respect to the first testing day. For this purpose, employees described in section 410 (b)(3) and (b)(4) are excluded. However, section 410(b)(4) is applied with reference to the lowest minimum age requirement applicable under any plan of the employer, and with reference to the lowest service requirement applicable under any plan of the employer, as if all the plans were a single plan under §

1.410(b)-6(b)(2). The employees of the separate line of business are determined by applying § 1.414(r)-7 to the employees taken into account under this paragraph (b)(3). An employee is treated as a highly compensated employee for purposes of this paragraph (b) if the employee is treated as a highly compensated employee for purposes of applying section 410(b) with respect to the first testing day. For the definition of "first testing day," see § 1.414(r)-11(b)(7).

(4) ***Ten-percent exception.*** A separate line of business is deemed to satisfy paragraph (b)(1)(i) of this section for the testing year if at least 10 percent of all highly compensated employees of the employer provide services to the separate line of business during the testing year and do not provide services to any other separate line of business of the employer during the testing year within the meaning of § 1.414(r)-3(c)(5).

(5) ***Determination based on preceding testing year.*** A separate line of business that satisfied this safe harbor for the immediately preceding testing year (without taking into account the special rule in this paragraph (b)(5)) is deemed to satisfy the safe harbor for the current testing year. The preceding sentence applies to a separate line of business only if the employer designated the same line of business in the immediately preceding testing year as in the current testing year and either—

(i) The highly compensated employee percentage ratio of the separate line of business for the current testing year does not deviate by more than 10 percent (not 10 percentage points) from the highly compensated employee percentage ratio of the separate line of business for the immediately preceding testing year; or

(ii) No more than five percent of the employees of the separate line of business for the current testing year were employees of a different separate line of business for the immediately preceding testing year, and no more than five percent of the employees of the separate line of business for the immediately preceding testing year are employees of a different separate line of business for the current testing year.

(6) ***Examples.*** The following examples illustrate the application of the safe harbor in this paragraph (b).

Example 1. (i) Employer A operates three separate lines of business as determined under § 1.414(r)-3, that respectively consist of a railroad, an insurance company, and a newspaper. Employer A employs a total of 400 employees, 100 of whom are highly compensated employees. Thus, the percentage of all employees of Employer A who are highly compensated employees in 25 percent. After applying § 1.414(r)-7, the distribution of highly and nonhighly compensated employees among Employer A's separate lines of business is as follows:

	Employer-wide	Railroad	Insurance company	Newspaper
Number of Employees	400	100	150	150
Number of HCEs	100	20	50	30
Number of Non-HCEs	300	80	100	120
HCE Percentage	25%	20%	33%	20%
	(100/400)	(20/100)	(50/150)	(30/150)

	Employer-wide	Railroad	Insurance company	Newspaper
HCE Percentage Ratio	N/A	80% (20%/25%)	133% (33%/25%)	80% (20%/25%)

(ii) Because the highly compensated employee percentage ratio of each separate line of business is at least 50 percent and no more than 200 percent, each of Employer A's separate lines of business satisfies the requirements of the safe harbor in this paragraph (b).

Example 2. (i) Employer B operates three separate lines of business as determined under § 1.414(r)-3, that respectively consist of a dairy products manufacturer, a candy manufacturer, and a chain of housewares stores. Employer B employs a total of 1,000 employees, 100 of whom are highly compensated employees. Thus, the percentage of all employees of Employer B who are highly compensated employees is 10 percent. After applying § 1.414(r)-7, the distribution of highly and nonhighly compensated employees among Employer B's separate lines of business is as follows:

	Employer-wide	Dairy products	Candy	Housewares stores
Number of Employees	1,000	200	500	300
Number of HCEs	100	5	50	45
Number of Non-HCEs	900	195	450	255
HCE Percentage	10% (100/1,000)	2.5% (5/200)	10% (50/500)	15% (45/300)
HCE Percentage Ratio	N/A	25% (2.5%/10%)	100% (10%/10%)	150% (15%/10%)

(ii) Because the highly compensated employee percentage ratio for the dairy products line of business is less than 50 percent, it does not satisfy the requirements of the statutory safe harbor in this paragraph (b). However, because Employer B's other two separate lines of business (candy manufacturing and housewares stores) each has a highly compensated employee percentage ratio that is no less than 50 percent and no greater than 200 percent, they each satisfy the statutory safe harbor in this paragraph (b).

Example 3. (i) The facts are the same as in *Example 2,* except that Employer B operates only

two separate lines of business as determined under § 1.414(r)-3, one consisting of the dairy products manufacturer and the candy manufacturer, and the other consisting of the chain of housewares stores. After applying § 1.414(r)-7, the distribution of highly and nonhighly compensated employees among Employer B's separate lines of business is as follows:

	Employer-Wide	Candy/Dairy Products	Housewares Stores
Number of Employees	1,000	700	300
Number of HCEs	100	55	45
Number of Non-HCEs	900	645	255
HCE Percentage	10%	7.9%	15%
	(100/1,000)	(55/700)	(45/300)
HCE Percentage Ratio	N/A	79%	150%
		(7.9%/10%)	(15%/10%)

(ii) Because the highly compensated employee percentage ratio for both of Employer B's separate lines of business is at least 50 percent and no more than 200 percent, they each satisfy the requirements of the statutory safe harbor in this paragraph (b).

(c) ***Safe harbor for separate lines of business in different industries*** —

(1) ***In general.*** A separate line of business satisfies the safe harbor in this paragraph (c) for the testing year if it is in a different industry or industries from every other separate line of business of the employer. For this purpose, a separate line of business is in a different industry or industries from every other separate line of business of the employer only if—

(i) The property or services provided to customers of the employer by the separate line of business (as designated by the employer for the testing year under § 1.414(r)-2) fall exclusively within one or more industry categories established by the Commissioner for purposes of this paragraph (c); and

(ii) None of the property or services provided to customers of the employer by any of the employer's other separate lines of business (as designated by the employer for the testing year under § 1.414(r)-2) falls within the same industry category or categories.

(2) ***Optional rule for foreign operations.*** For purposes of satisfying this paragraph (c), an employer is permitted to disregard any property or services provided to customers of the employer during the testing year by a foreign corporation or foreign partnership (as defined in section 7701(a)(5)), to the extent that income from the provision of the property or services is not effectively connected with the conduct of the trade or business within the United States within the meaning of section 864(c). Thus, for example, an employer is permitted to take into account only property and services provided to customers of the employer by its domestic subsidiaries and property and services provided by its foreign subsidiaries that generate income effectively connected with the conduct of a trade or business within the United States in determining whether the property or services provided to

customers of the employer by a separate line of business fall exclusively within one or more industry categories and also whether the property or services provided by any other separate line of business fall within the same industry category or categories.

(3) ***Establishment of industry categories.*** The Commissioner shall, by revenue procedure or other guidance of general applicability, establish industry categories for purposes of this paragraph (c).

(4) ***Examples.*** The following examples illustrate the application of the safe harbor in this paragraph (c). For purposes of these examples, it is assumed that, pursuant to paragraph (c)(3) of this section, the Commissioner has established the following industry categories (among others): transportation equipment and services; banking, insurance, and finance; machinery and electronics; and entertainment, sports, and hotels.

Example 1. Among its other business activities, Employer C operates a commercial airline that constitutes a separate line of business under § 1.414(r)-3. In addition, no other separate line of business of Employer C provides to customers of Employer C any property or services in the transportation equipment and services industry category. Under these facts, the separate line of business described in this example satisfies the safe harbor in this paragraph (c).

Example 2. The facts are the same as in *Example 1,* except that Employer C also operates a trucking company that constitutes another separate line of business of Employer C under § 1.414(r)-3. Because the commercial airline and the trucking company both provide to customers of Employer C services in the transportation equipment and services industry category, neither separate line of business satisfies the safe harbor in this paragraph (c).

Example 3. Among its other business activities, Employer D operates a commercial bank and luxury hotel that together constitute a single separate line of business under § 1.414(r)-3. No other separate line of business of employer D provides to customers of Employer D property or services in either the banking, insurance, or financial industry category, or the entertainment, sports, or hotel industry category. Under these facts, the separate line of business described in this example satisfies the safe harbor in this paragraph (c).

Example 4. The facts are the same as in *Example 3,* except that Employer D also manufactures computers in the United States and abroad. Employer D apportions its computer operations by designating these operations between two separate lines of business, one consisting of its domestic operations located in the United States and the second consisting of its foreign operations by a foreign subsidiary. Because both lines of business provide property and services in the machinery and electronics industry category to customers of Employer D, neither separate line of business would satisfy the safe harbor in this paragraph (c). However, pursuant to the optional rule in paragraph (c)(2) of his section, Employer D disregards the property and services provided by its foreign computer subsidiary. As a result, no other separate line of business of Employer D provides to customers of Employer D any property or services in the machinery and electronics industry category. Under these facts, Employer D's domestic computer operations separate line of business satisfies the safe harbor in this paragraph (c).

(d) ***Safe harbor for separate lines of business that are acquired through certain mergers and acquisitions*** —

(1) ***General rule.*** A portion of the employer that is acquired through a transaction described in section 410(b)(6)(C) and § 1.410(b)-2(f) (i.e., an asset or stock acquisition, merger, or other similar transaction involving a change in the employer of the employees of a trade or business) (the

"acquired line of business") satisfies the safe harbor in this paragraph (d) for each testing year in the transition period provided in paragraph (d)(3) of this section if each of the following requirements is satisfied—

(i) For each testing year within the transition period the employer designates the acquired line of business as a line of business within the meaning of § 1.414(r)-2;

(ii) On the first testing day in each testing year in the transition period:

(A) The acquired line of business constitutes a separate line of business within the meaning of § 1.414(r)-3 (taking into account § 1.414(r)-1(d)(4));

(B) No more than 10 percent of the employees who are substantial-service employees with respect to the acquired line of business were substantial-service employees with respect to a different separate line of business for the immediately preceding testing year; and

(C) No more than 10 percent of the employees who were substantial-service employees with respect to the acquired line of business for the immediately preceding testing year are substantial-service employees with respect to a different separate line of business in the respective testing year.

(iii) If the transaction described in paragraph (d)(1) of this section occurs after the first testing day in a testing year, the determinations required by paragraphs (d)(1)(ii) (B) and (C) of this section with respect to that testing year are made as of the date of the transaction.

(2) ***Employees taken into account.*** For purposes of this paragraph (d), the employees taken into account are the same employees who are taken into account for purposes of applying section 410(b) with respect to the first testing day. For this purpose, employees described in section 410(b)(3) and (b)(4) are excluded. However, section 410(b)(4) is applied with reference to the lowest minimum age requirement, and with reference to the lowest service requirement applicable under any plan of the employer that benefits employees of the separate line of business, as if all the plans were a single plan under § 1.410(b)-6(b)(2). The employees of the separate line of business are determined by applying § 1.414(r)-7 to the employees taken into account under this paragraph (d)(2). 0

(3) ***Transition period.*** The transition period for purposes of this safe harbor is the period that begins with the first testing year beginning after the date that the transaction described in paragraph (d)(1) of this section occurs. The employer is permitted, but not required, to extend the transition period to include one, two, or three of the testing years immediately succeeding that first testing year.

(4) ***Examples.*** The following examples illustrate the application of the safe harbor in this paragraph (d).

Example 1. Employer E is treated as operating three qualified separate lines of business pursuant to § 1.414(r)-1(b). In 1996, Employer E acquires a company that employs 4,000 employees who manufacture and sell pharmaceutical supplies, and designates that portion as a line of business under § 1.414(r)-2. Under § 1.414(r)-1(d)(4), the pharmaceutical supplies line of business is deemed to satisfy the requirements to be a qualified separate line of business (other than the 50-employee and notice requirements) for testing year 1996. In addition, the determination of whether Employer E's remaining three lines of business constitute qualified separate lines of business for testing year 1996 is made without taking into account the acquired employees and by disregarding the property and services provided to customers of Employer E by the pharmaceutical supplies line of business.

Example 2. The facts are the same as in *Example 1* except that, by the first testing day in 1997 (Transition Year 1), there are 300 additional substantial-service employees with respect to the pharmaceutical supplies line of business, increasing the total number to 4,300. Of those 300 employees, 250 were substantial-service employees with respect to a different separate line of business for testing year 1996 and 50 are new hires. Assume that, on the first testing day in Transition Year 1, the pharmaceutical supplies line of business satisfies the requirements of § 1.414(r)-3 (taking into account § 1.414(r)-1(d)(4)) and therefore constitutes a separate line of business. Because 250 is 6 percent of 4,300, no more than ten percent of the employees who are substantial-service employees with respect to the pharmaceutical supplies line of business were substantial- service employees with respect to a different separate line of business for the immediately preceding testing year. The 50 newly hired employees are disregarded in making this determination. Under these facts, the pharmaceutical supplies separate line of business satisfies the safe harbor in this paragraph (d) for Transition Year 1.

Example 3. The facts are the same as in *Example 2,* except that, before the first day of the next testing year ("Transition Year 2"), Employer E permanently transfers 200 of the 4,300 employees who were substantial-service employees with respect to the pharmaceutical line of business on the first testing day in Transition Year 1 to a different line of business and does not hire any additional employees for the pharmaceutical supplies line of business. Therefore, by the first testing day in Transition Year 2, the number of employees who are substantial-service employees with respect to the pharmaceutical line of business of Employer E has decreased from 4,300 to 4,100. Assume that, on that first testing day in Transition Year 2, the pharmaceutical supplies line of business constitutes a separate line of business within the meaning of § 1.414(r)-3. Because 200 is approximately 5 percent of 4,300, no more than 10 percent of the employees who were substantial-service employees of the pharmaceutical line of business for Transition Year 1 are not substantial-service employees of the pharmaceutical line of business in Transition Year 2. Under these facts, the pharmaceutical supplies separate line of business continues to satisfy the safe harbor in this paragraph (d) for Transition Year 2.

(e) ***Safe harbor for separate lines of business reported as industry segments*** —

(1) ***In general.*** A separate line of business satisfies the safe harbor in this paragraph (e) for the testing year if, for the employer's fiscal year ending latest in the testing year, the separate line of business is reported as one or more industry segments on its annual report required to be filed in conformity with either—

(i) Form 10-K, annual Report Pursuant to Section 13 or 15(d) of the Securities Exchange Act of 1934 ("Form 10-K"); or

(ii) Form 20-F, Annual Report Pursuant to Section 13(a) or 15(d) of the Securities Exchange Act of 1934 with Item 18 financials ("Form 20-F"), and the employer timely files either the Form 10-K or Form 20-F with the Securities and Exchange Commission ("SEC").

(2) ***Reported as an industry segment in conformity with Form 10-K or Form 20-F.*** For purposes of this paragraph (e), a separate line of business is reported as one or more industry segments in conformity with either Form 10-K or Form 20-F only if—

(i) The separate line of business consists of one or more industry segments within the meaning of paragraphs 10(a), 11(b), and 12 through 14 of the Statement of Financial Accounting Standards No. 14, Financial Reporting for Segments of a Business Enterprise ("FAS 14"); and

(ii) The property or services provided to customers of the employer by the separate line of business (as designated by the employer for the testing year under § 1.414(r)-2) is identical to the property or services provided to customers of the employer by the industry segment or segments (as determined under paragraphs 10(a), 11(b), and 12 through 14 of FAS 14).

(3) ***Timely filing of Form 10-K or Form 20-F.*** For purposes of this paragraph (e), a Form 10-K of Form 20-F is timely filed with the SEC if it is filed within the required period as provided under 17 CFR 240.12b-25(b)(2)(ii). Therefore, the required period for timely filing of the Form 10-K is the 90-day period after the end of the fiscal year covered by the annual report (including the 15-day extension), and the required period for timely filing of the Form 20-F is the 6-month period after the end of the fiscal year covered by the annual report (including the 15-day extension).

(4) ***Examples.*** The following examples illustrate the application of the safe harbor in this paragraph (e).

Example 1. Among its other business activities, Employer F operates a bearing manufacturing firm that constitutes a separate line of business under § 1.414(r)-3. Employer F is required to file an annual Form 10-K with the SEC. On its timely filed Form 10-K, Employer F reports its bearing manufacturing operations as an industry segment in accordance of FAS 14 (as determined under paragraphs 10(a), 11(b), and 12 through 14 of FAS 14). The group of bearing products provided by the separate line of business (as designated by Employer F under § 1.414(r)-2) is identical to the group of bearing products provided by the industry segment (as determined under paragraphs 10(a), 11(b), and 12 through 14 of FAS 14). Under these facts, the separate line of business described in this example satisfies the safe harbor in this paragraph (e).

Example 2. The facts are the same as in *Example 1,* except that Employer F has apportioned its bearing manufacturing operations between two separate lines of business as determined under § 1.414(r)-3, one engaged in the manufacture of bearings for use in the automotive industry, and a second engaged in the manufacture of bearings for use in the aerospace industry. Because neither separate line of business provides a group of property or services to customers of Employer F that is identical to the group of bearing products provided by the industry segment reported on Employer F's annual Form 10-K, neither separate line of business described in this example satisfies the safe harbor in this paragraph (e).

(f) ***Safe harbor for separate lines of business that provide the same average benefits as other separate lines of business —***

(1) ***General rule.*** A separate line of business satisfies the safe harbor in this paragraph (f) for the testing year only if the level of benefits provided to employees of the separate line of business satisfies paragraph (f)(2) or (f)(3) of this section, whichever is applicable.

(2) ***Separate lines of business with a disproportionate number of nonhighly compensated employees —***

(i) ***Applicability of safe harbor.*** This paragraph (f)(2) applies to a separate line of business that for the testing year has a highly compensated employee percentage ratio of less than 50 percent (as determined under paragraph (b)(2) of this section).

(ii) ***Requirement.*** A separate line of business satisfies this paragraph (f)(2) only if the actual benefit percentage of the group of nonhighly compensated employees of the separate line of business for the testing period that ends with or within the testing year is at least as great as the actual benefit percentage of the group of all other nonhighly compensated employees of the employer for the same testing period. See § 1.410 (b)-5(c) and (d)(3)(ii) for the definitions of actual benefit percentage and testing period, respectively. In determining actual benefit percentages

for purposes of this paragraph (f)(2)(ii), the special rule in § 1.410(b)-5(e)(3) (permitting an employer to determine employee benefit percentages separately for defined contribution and defined benefit plans) may not be used.

(3) ***Separate lines of business with a disproportionate number of highly compensated employees*** —

(i) ***Applicability of safe harbor.*** This paragraph (f)(3) applies to a separate line of business that for the testing year has a highly compensated employee percentage ratio of more than 200 percent (as determined under paragraph (b)(2) of this section).

(ii) ***Requirement.*** A separate line of business satisfies this paragraph (f)(3) only if the actual benefit percentage of the group of highly compensated employees of the separate line of business for the testing period that ends with or within the testing year is no greater than the actual benefit percentage of the group of all other highly compensated employees of the employer for the same testing period. See § 1.410 (b)-5(c) and (d)(3)(ii) for the definitions of actual benefit percentage and testing period, respectively. In determining actual benefit percentages for purposes of this paragraph (f)(3)(ii), the special rule in § 1.410(b)-5(e)(3) (permitting an employer to determine employee benefit percentages separately for defined contribution and defined benefit plans) may not be used.

(4) ***Employees taken into account.*** An employee of a separate line of business (as determined under § 1.414(r)-7 is taken into account for a testing period for purposes of this paragraph (f) only if the employee is an employee of the separate line of business on the first testing day, and would not be an excludable employee for purposes of applying the average benefit percentage test of § 1.410(b)-5 to a plan for a plan year included in that testing period. In determining whether an employee is an excludable employee for purposes of the average benefit percentage test, the employer is assumed not to be operating qualified separate lines of business under § 1.414(r)-1(b). An employee is treated as a highly compensated employee for purposes of this paragraph (f) if the employee is treated as a highly compensated employee for purposes of applying section 410(b) on the first testing day. See § 1.414(r)-11(b)(7) for the definition of “first testing day”.

(5) ***Example.*** The rules of this paragraph (f) are illustrated by the following example.

> *Example.* (i) Employer G is treated as operating two separate lines of business, Line 1 and Line 2, in accordance with § 1.414(r)-1(b). Employer G maintains three qualified plans. Plan A is a calendar-year profit-sharing plan that benefits all employees of Employer G. Plan B is a defined benefit plan with a plan year ending March 31 that benefits all employees of Line 1. Plan C is a defined benefit plan with a plan year ending November 30 that benefits all employees of Line 2.
> (ii) In 1995, Line 1 has a highly compensated employee percentage ratio of 25 percent. Employer G's first testing day is March 31. After applying the rules of § 1.414(r)-7, the nonhighly compensated employees of Line 1 and Line 2 on March 31, 1995, are N1-N80 and N81-N100, respectively. N1 is an excludable employee under § 1.410(b)-6 for purposes of the average benefit percentage test during the testing period that includes the plan years of Plans A, B, and C that end in 1995 (the “1995 testing period”), and would therefore not be taken into account in determining whether any of those plans satisfied the average benefit percentage test of § 1.410(b)-5 for plan years included in that testing period, because N1 does not satisfy

the minimum age and service conditions under any plan of the employer. All other employees of Line 1 and Line 2 on March 31, 1995 are nonexcludable employees for purposes of the average benefit percentage test during the 1995 testing period.

(iii) In order for Line 1 to satisfy the requirements of this paragraph (f) for 1995, the actual benefit percentage of N2-N80 for the 1995 testing period under Plans A, B and C must be at least as great as the actual benefit percentage of N81-N100 for the same testing period under the same plans. N1 is not taken into account because N1 is an excludable employees for purposes of the average benefit percentage test for the 1995 testing period. Any other employees who were taken into account for purposes of the average benefit percentage test for the 1995 testing period are excluded because they are not employees of Line 1 or Line 2 on March 31, 1995.

(g) *Safe harbor for separate lines of business that provide minimum or maximum benefits* —

(1) ***In general.*** A separate line of business satisfied the safe harbor in this paragraph (g) for the testing only if the level of benefits provided to employees of the separate line of business satisfies paragraph (g)(2) or (g)(3) of this section, whichever is applicable. For this purpose, the level of benefits is determined with respect to all qualified plans of the employer that benefit employees of the separate line of business for plan years that begin in the testing year.

(2) *Minimum benefit required* —

(i) ***Applicability.*** This paragraph (g)(2) applies to a separate line of business that for the test year has a highly compensated employee percentage ratio of less than 50 percent (as determined under paragraph (b)(2) of this section).

(ii) ***Requirement.*** A separate line of business satisfies this paragraph (g)(2) only if one of the following requirements is satisfied—

(A) At least 80 percent of all nonhighly compensated employees of the separate line of business either accrue a benefit for the plan year that equals or exceeds the defined benefit minimum in paragraph (g)(2)(iii) of this section, receive all allocation for the plan year that equal or exceeds the defined contribution minimum in paragraph (g)(2)(iv) of this section, or accrue a benefit and receive an allocation that together equal or exceed the combined plan minimum in paragraph (g)(4) of this section. The defined benefit minimum must be provided in a defined plan, and the defined contribution minimum must be provided in a defined contribution plan.

(B) The separate line of business would satisfy the requirements of paragraph (g)(2)(ii)(A) of this section if the 80 percent threshold were reduced to 60 percent, and the average of the accrual rates or allocation rates of all nonhighly compensated employees in the separate line of business equals or exceeds the minimum amount described for each individual employee in paragraph (g)(2)(ii)(A) of this section.

(iii) *Defined benefit minimum* —

(A) ***In general.*** The defined benefit minimum for a plan year is the employer-derived accrual that would result in a normal accrual rate for the plan year equal to 0.75 percent of compensation. For purposes of this paragraph (g)(2)(iii), the normal accrual rate is the

percentage (not less than 0) determined by subtracting the employee's normalized accrued benefit as of the end of the prior plan year (expressed as a percentage of average annual compensation as of the end of the prior plan year) from the employee's normalized accrued benefit as of the end of the plan year (expressed as a percentage of average annual compensation as of the end of the plan year).

(B) ***Normal form and equivalent benefits.*** The benefit that is tested for purposes of this paragraph (g)(2)(iii) is the accrued retirement benefit commencing at normal retirement age. If the normal form of benefit for a plan being tested is other than a straight life annuity beginning at a normal retirement age of 65, the benefit must be normalized (within the meaning of § 1.401(a)(4)-12) to a straight life annuity commencing at age 65. No adjustment is permitted for early retirement benefits or for any ancillary benefit, including disability benefits.

(C) ***Compensation definition.*** The underlying definition of compensation used for purposes of determining accrual rates under this paragraph (g)(2)(iii) must be a definition of compensation that automatically satisfies section 414(s) without a test for nondiscrimination (see § 1.414(s)-1(c)).

(D) ***Average compensation requirement.*** For purposes of determining accrual rates, compensation must be average annual compensation within the meaning of § 1.401(a)(4)-3(e)(2) determined using a five-year averaging period. The compensation history to be taken into account are all years beginning with the first year in which the employee benefits under the plan, and ending with the last plan year in which the employee participates in the plan. However, a plan may disregard in a reasonable and consistent manner: years before the effective date of these regulations as set forth in § 1.414(r)-1(d)(9)(i), years more than 10 years preceding the current plan year, and years for which the employer does not use this paragraph (g)(2) to satisfy this safe harbor with respect to the separate line of business. If a plan provides a defined benefit minimum that uses three consecutive years (in lieu of five) for calculating average annual compensation, the 0.75 percent annual accrual in paragraph (g)(2)(iii)(A) of this section is multiplied by 93.3 percent, resulting in a normal accrual rate equal to 0.70 percent. If a plan provides a defined benefit minimum that uses more than five consecutive years for calculating average annual compensation or the plan is an accumulation plan as defined in § 1.401(a)(4)-12, the 0.75 percent annual accrual rate in paragraph (g)(2)(iii)(A) of this section is multiplied by 133.3 percent, resulting in a normal accrual rate equal to 1.0 percent.

(E) ***Special rules.*** The special rules of § 1.401(a)(4)-3(f) apply for purposes of determining whether a benefit accrual satisfies the minimum benefit requirement. For example, benefits may be determined on other than a plan year basis as permitted by § 1.401(a)(4)-3(f)(6). A plan described in section 412(i) may be used to provide the defined benefit minimum described in this paragraph (g)(2). In such case, the rules in § 1.416-1, M-17, apply to such a plan. For purposes of this paragraph (g)(2)(iii) an employee is treated as accruing a benefit equal to the minimum benefit in paragraph (g)(2)(iii)(A) of this section if the reason that the employee does not accrue such a benefit is either—

(*1*) The application of a plan provision that applies uniformly to all employees in the plan and limits the service used for purposes of benefit accrual to a specified maximum no less than 25 years, or

(2) The employee has attained normal retirement age and fails to accrue a benefit solely because of the provisions of section 411(b)(1)(H)(iii) regarding adjustments for delayed retirement.

(iv) ***Defined contribution minimum*** —

(A) ***In general.*** The defined contribution minimum for a plan year is an allocation that results in an allocation rate for the plan year (within the meaning of § 1.401(a)(4)-2(c)) equal to three percent of an employee's plan year compensation. Plan year compensation must be based on a definition of compensation that automatically satisfies section 414(s) without a test for nondiscrimination (see § 1.414(s)-1(c)). For this purpose, allocations that are taken into account to do not include matching contributions described in § 1.401(m)-1(a)(2), elective contributions described in § 1.401(k)-6, any adjustment in allocation rates permitted under section 401(*l*) or imputed disparity under § 1.401(a)(4)-7.

(B) ***Modified allocation definition for averaging.*** For purposes of determining whether the average allocation rates for all nonhighly compensated employees of the separate line of business satisfy the minimum benefit requirement in paragraph (g)(2)(ii)(B) of this section, matching contributions described in § 1.401(m)-1(a)(2) are treated as employer allocations.

(3) ***Maximum benefit permitted—***

(i) ***Applicability.*** This paragraph (g)(3) applies to a separate line of business that for the testing year has a highly compensated employee percentage ratio that exceeds 200 percent (as determined under paragraph (b)(2) of this section).

(ii) ***Requirement.*** A separate line of business satisfies this paragraph (g)(3) only if one of the following requirements is satisfied—

(A) No highly compensated employee of the separate line of business accrues a benefit for the plan year that results in an accrual rate that exceeds the defined benefit maximum in paragraph (g)(3)(iii) of this section, receives an allocation that exceeds the defined contribution maximum in paragraph (g)(3)(iv) of this section, or accrues a benefit and receives an allocation that together exceed the combined plan maximum in paragraph (g)(4) of this section. All benefits provided by qualified defined benefit plans are subject to the defined benefit maximum, and all benefits provided by qualified defined contribution plans are subject to the defined contribution maximum.

(B) The average of the accrual rates or allocation rates of all highly compensated employees of the separate line of business is no more than 80 percent of the maximum amount described for any individual employee in paragraph (g)(3)(ii)(A) of this section.

(iii) ***Defined benefit maximum*** —

(A) ***In general.*** The defined benefit maximum is the employer-derived accrued benefit that would result from calculating a normal accrual rate equal to 2.5 percent of compensation.

(B) ***Determination of defined benefit maximum.*** The accrual rate used for the defined benefit maximum is determined in the same manner as the normal accrual rate used for the defined benefit minimum is determined under paragraph (g)(2)(iii) of this section, except as provided below. Thus, a defined benefit plan may provide, in addition to the defined

benefit maximum, any benefit the value of which is not taken into account under paragraph (g)(2)(iii) of this section. For example, a plan may provide qualified disability benefits described in section 411(a)(9) or ancillary benefits described in § 1.401(a)(4)-4(e)(2).

(C) ***Adjustment for different compensation definitions.*** If a plan subject to the defined benefit maximum determines accrual rates by using three consecutive years (in lieu of five) for purposes of determining average annual compensation, the 2.5 percent annual accrual rate in paragraph (g)(3)(iii)(B) of this section is multiplied by 93.3 percent, resulting in a maximum accrual rate equal to 2.33 percent. Compensation may be less inclusive than the compensation described in paragraph (g)(2)(iii)(C) of this section. However, no adjustment is made to the maximum normal accrual rate because of the use of a definition of compensation that is less inclusive than the compensation described in paragraph (g)(2)(iii)(C) of this section. In addition, no adjustment is made to the maximum normal accrual rate because the plan uses more than five consecutive years for calculating average annual compensation or the plan is an accumulation plan as defined in § 1.401(a)(4)-12.

(D) ***Adjustment for certain subsidies.*** If the plan provides subsidized optional forms of benefit, the accrual rate for purposes of this paragraph (g)(3) must be determined by taking those subsidies into account. An optional form of benefit is considered subsidized if the normalized optional form of benefit is larger than the normalized normal retirement benefit under the plan. In the case of a plan with subsidized optional forms, the determination of accrual rate for the plan year under paragraph (g)(2)(iii)(A) of this section is the percentage (not less than 0) determined by subtracting the largest of the sums of the employee's normalized QJSAs and QSUPPs determined for each age under § 1.401(a)(4)-3(d)(1)(ii) as of the end of the prior plan year (expressed as a percentage of average annual compensation as of the end of the prior plan year) from the largest of the sums of the employee's normalized QJSAs and QSUPPs determined for each age under § 1.401(a)(4)-3(d)(1)(ii) as of the end of the plan year (expressed as a percentage of average annual compensation as of the end of the plan year).

(iv) ***Defined contribution maximum.*** The defined contribution maximum is an allocation that results in an allocation rate for the plan year (within the meaning of § 1.401(a)(4)-2(c)) equal to 10 percent of an employee's plan year compensation. Compensation may be less inclusive than the compensation described in paragraph (g)(2)(iv)(A) of this section. However, no adjustment is made to the defined contribution maximum because of the use of a definition of compensation that is less inclusive than the compensation described in paragraph (g)(2)(iv)(A) of this section. For this purpose, allocations that are taken into account do not include elective contributions described in § 1.401(k)-6, any adjustment in allocation rates permitted under section 401(*l*) or imputed disparity under § 1.401(a)(4)-7 but do include employer matching contributions under § 1.401(m)-1(f)(12).

(4) ***Duplication of benefits or contributions*** —

(i) ***Plans of the same type.*** In the case of an employee who benefits under more than one defined benefit plan, the defined benefit minimum required or the defined benefit maximum permitted under this paragraph (g) is determined by reference to the employee's aggregate employer-provided benefit under all qualified defined benefit plans of the employer. In the case of an employee who benefits under more than one defined contribution plan, the defined contribution

minimum required or the defined contribution maximum permitted under this paragraph (g) is determined by reference to the employee's aggregate employer-provided allocations under all qualified defined contribution plans of the employer.

(ii) ***Plans of different types.*** In the case of an employee who benefits under both a defined benefit plan and a defined contribution plan, a percentage of the minimum benefit required or the maximum benefit permitted under this paragraph (g) may be provided in each type of plan as long as the combined percentage equals at least 100 percent in the case of the minimum benefit required and does not exceed 100 percent in the case of the maximum benefit permitted. Thus, for example, if a highly compensated employee benefits under both types of plans and accrues an aggregate adjusted normal accrual rate equal to 1.25 percent of average annual compensation under all defined benefit plans of the employer (i.e, 50 percent of the defined benefit maximum described in paragraph (g)(3)(iii) of this section), in order to comply with the maximum benefit safe harbor, the employee may not receive an aggregate allocation under all defined contribution plans of the employer in excess of five percent of plan year compensation (i.e., 50 percent of the defined contribution maximum described in paragraph (g)(3)(iv) of this section).

(iii) ***Special rule for floor-offset arrangements.*** In the case of a floor-offset arrangement (as described in § 1.401(a)(4)-8(d)), the minimum or maximum benefit rules are applied to each plan as if the other plan did not exist. Thus, the defined benefit plan must provide at least 100 percent of the defined benefit minimum (or no more than 100 percent of the defined benefit maximum) based on the gross benefit prior to offset, and the defined contribution plan must provide at least 100 percent of the defined contribution minimum (or no more than 100 percent of the defined contribution maximum).

(5) ***Certain contingency provisions ignored.*** For purposes of this paragraph (g), an employee's accrual or allocation rate is determined without regard to any minimum benefit or any maximum benefit limitation that is applicable to the employee only if the separate line of business fails otherwise to satisfy the requirement of administrative scrutiny.

(6) ***Employees taken into account.*** For purposes of this paragraph (g), an employee is taken into account if the employee is taken into account for purposes of applying section 410(b) with respect to any testing day for the testing year. For this purpose, employees described in section 410 (b)(3) and (b)(4) are excluded. However, section 410(b)(4) is applied with reference to the lowest minimum age requirement applicable, and with reference to the lowest service requirement applicable under any plan of the employer that benefits employees of the separate line of business, as if all the plans were a single plan under § 1.410(b)-6(b)(2). For purposes of the minimum benefit requirement of paragraph (g)(2) of this section, section 410(b)(4) may be applied with reference to the lowest minimum age requirement, and with reference to the lowest minimum service requirement, applicable under any plan of the employer that benefits highly compensated employees of the separate line of business, as if all the plans were a single plan under § 1.410(b)-6(b)(2), or, if no plan of the employer benefits highly compensated employees of the separate line of business, with reference to the greatest age and service requirements permitted under section 410(a)(1)(A). The employees of the separate line of business are determined by applying § 1.414(r)-7 to the employees taken into account under this paragraph (g)(6). An employee is treated as a highly compensated employee for purposes of this paragraph (g) if the employee is treated as a highly compensated employee for purposes of applying section 410(b) on any testing day for the testing year. For the definition of “testing day,” see § 1.414(r)-11(b)(6).

[T.D. 8376, 56 FR 63446, Dec. 4, 1991, as amended by T.D. 8548, 59 FR 32919, June 27, 1994; T.D. 9169, 69 FR 78153, Dec. 29, 2004]

§ 1.414(r)-6 Qualified separate line of business—administrative scrutiny requirement—individual determinations.

(a) ***In general.*** A separate line of business (as determined under § 1.414(r)-3) that does not satisfy any of the safe harbors in § 1.414(r)-5 for a testing year nonetheless satisfies the administrative scrutiny requirement of § 1.414(r)-1(b)(2)(iv)(D) if the employer requests and receives from the Commissioner an individual determination under this section that the separate line of business satisfies the requirement of administrative scrutiny for the testing year. This section implements the individual determinations provided for under section 414(r)(2)(C). The Commissioner shall issue such an individual determination only when it is consistent with the purpose of section 414(r), taking into account the nondiscrimination requirements of sections 401(a)(4) and 410(b). Paragraph (b) of this section authorizes the Commissioner to establish procedures for requesting and granting individual determinations.

(b) ***Authority to establish procedures.*** The Commissioner may, in revenue rulings and procedures, notices, and other guidance, published in the Internal Revenue Bulletin (see § 601.601(d)(2)(ii)(b) of this chapter), provide any additional guidance that may be necessary or appropriate for requesting and granting individual determinations under this section. For example, such guidance may specify the circumstances in which an employer may request an individual determination and factors to be taken into account in deciding whether to grant a favorable individual determination. In addition, such guidance may describe situations that automatically fail the administrative scrutiny requirement.

[T.D. 8376, 56 FR 63452, Dec. 4, 1991, as amended by T.D. 8548, 59 FR 32920, June 27, 1994]

§ 1.414(r)-7 Determination of the employees of an employer's qualified separate lines of business.

(a) ***Introduction*** —

(1) ***In general.*** This section provides the rules for determining the employees of each qualified separate line of business operated by an employer. Paragraph (a)(2) of this section lists the specific provisions of the regulations for which these rules apply. Paragraph (b) of this section provides the procedure for assigning the employees of the employer among the qualified separate lines of business of the employer and for determining the day or days on which such assignments must be made. Under this procedure, each employee (i.e., a substantial-service employee or a residual shared employee as defined in § 1.414(r)-11(b)(2) and (4)) is assigned to a single qualified separate line of business in a consistent manner for all purposes listed in paragraph (a)(2) of this section with respect to the testing year and plan years beginning within the testing year. Paragraph (c) of this section provides methods for allocating residual shared employees among qualified separate lines of business.

(2) ***Purposes for which this section applies.*** This section applies solely for purposes of determining whether—

(i) A separate line of business satisfies the statutory safe harbor of § 1.414(r)-5(b) for a testing year (see § 1.414(r)-5(b)(3) for the employees taken into account for this purpose);

(ii) A separate line of business satisfies the merger and acquisition safe harbor of § 1.414(r)-5(d) for a testing year (see § 1.414(r)-5(d)(2) for the employees taken into account for this purpose);

(iii) A separate line of business satisfies the average benefits safe harbor of § 414(r)-5(f) for a testing year (see § 414(r)-5(f)(4) for the employees taken into account for this purpose);

(iv) A separate line of business satisfies the minimum or maximum benefits safe harbor of § 414(r)-5(g) for a testing year (see § 1.414(r)-5(g)(6) for the employees taken into account for this purpose);

(v) A plan of the employer satisfies sections 410(b) and 401(a)(4) for a plan year (see § 414(r)-8(d)(3) for the employees taken into account for this purpose); or

(vi) A plan of the employer satisfies section 401(a)(26) for a plan year (see § 414(r)-9(c)(3) for the employees taken into account for this purpose).

(b) ***Assignment procedure*** —

(1) ***In general.*** To apply the provisions listed in paragraph (a)(2) of this section with respect to a testing year or plan year, as the case may be, each of the employees taken into account under that provision must be assigned to a qualified separate line of business of the employer on one or more testing days (or section 401(a)(26) testing days) during the year. The first day for which this assignment procedure is required for a testing year is the first testing day. See § 414(r)-11(b)(6), (7) and (8) (definitions of "testing day", "first testing day" and "section 401(a)(26) testing day"). Section § 414(r)-8 may require that the assignment procedure be repeated for testing days that fall after the first testing day (including testing days that fall after the close of the testing year in a plan year that begins in the testing year). Accordingly, new employees may be taken into account for the first time on these later testing days who were not taken into account on the first testing day. Section § 414(r)-9 may have the same effect with respect to section 401(a)(26) testing days that fall after the first testing day.

(2) ***Assignment for the first testing day.*** The employees taken into account under a provision described in paragraph (a)(2) of this section with respect to the first testing day for a testing year are assigned among the employer's qualified separate lines of business by applying the following procedure to each of those employees—

(i) An employee who is a substantial-service employee with respect to a qualified separate line of business within the meaning of § 414(r)-11(b)(2) must be assigned to that qualified separate line of business;

(ii) An employee who is a residual shared employee within the meaning of § 414(r)-11(b)(4) must be assigned to a qualified separate line of business under paragraph (c) of this section.

Each employee assigned to a qualified separate line of business under paragraph (b)(2)(i) of this section or this paragraph (b)(2)(ii) remains assigned to the same qualified separate line of business for all purposes with respect to the testing year listed in paragraph (a)(2) of this section and for all plan years beginning in that testing year. Once an employee is assigned to a qualified separate line of business with respect to a particular testing day or section 401(a)(26) testing day, that employee remains assigned to that qualified separate line of business after the employee terminates employment. However, after the employee terminates employment, that employee will in most cases not be taken into account with respect to a subsequent testing day or section 401(a)(26) testing day for purposes of applying one or more of the provisions in paragraph (a)(2) of this section.

(3) ***Assignment of new employees for subsequent testing days.*** After the first testing day for the testing year, the employees taken into account under a provision described in paragraph (a)(2) of this section with respect to a subsequent testing day (or a section 401(a)(26) testing day) for the testing year may include one or more employees who previously have not been assigned to a qualified separate line of business for any purpose listed in paragraph (a)(2) of this section with respect to the testing year. An employee may not previously have been assigned to a qualified separate line of business for any purpose with respect to the testing year if, for example, the employee has just been hired or has just become a nonexcludable employee. Previously unassigned employees are assigned among the employer's qualified separate lines of business by applying the procedure in paragraph (b)(2) of this section to those employees. In determining whether an employee who is not employed by the employer during the testing year is a substantial-service or a residual shared employee with respect to a qualified separate line of business, § 414(r)-3(c)(5) is applied with reference to services performed by the employee during a period in the immediately succeeding testing year that are reasonably representative of the employee's services for the employer.

(4) ***Special rule for employers using annual option under section 410(b).*** Notwithstanding the fact that paragraphs (b)(1) through (b)(3) of this section generally only require employees to be assigned on testing days beginning with the first testing day, if a plan is tested under section 410(b) using the annual option of § 410(b)-8(a)(4) (including for purposes of the average benefit percentage test), employees must be assigned on every day of the plan year of that plan for purposes of this paragraph (b). Thus, all employees who provide services at any time during the plan year of a plan that is tested using the annual option of § 1.410(b)-8(a)(4) must be assigned to a line of business even if they terminate employment before the first testing day within the meaning of § 414(r)-11(b)(7) of the testing year in which the plan year begins.

(c) ***Assignment and allocation of residual shared employees*** —

(1) ***In general.*** All residual shared employees must be allocated among an employer's qualified separate lines of business under one of the allocation methods provided in paragraphs (c)(2) through (5) of this section. An employer is permitted to select which method of allocation to apply for the testing year to residual shared employees. However, the same allocation method must be used for all of the employer's residual shared employees and for all purposes listed in paragraph (a)(2) of this section with respect to the testing year.

(2) ***Dominant line of business method of allocation*** —

(i) ***In general.*** Under the method of allocation in this paragraph (c)(2), all residual shared employees are allocated to the employer's dominant line of business. This method does not apply unless the employer has a dominant line of business within the meaning of paragraph (c)(2)(ii) or (c)(2)(iv) of this section. If an employer has more than one dominant line of business under this paragraph (c), the employer must select which qualified separate lines of business is its dominant line of business.

(ii) ***Dominant line of business.*** An employer's dominant line of business is that qualified separate line of business that has an employee assignment percentage of at least 50 percent.

(iii) ***Employee assignment percentage*** —

(A) ***Determination of percentage.*** The employee assignment percentage of a qualified separate line of business is the fraction (expressed as a percentage)—

(1) The numerator of which is the number of substantial-service employees with respect to the qualified separate line of business who are assigned to that line of business under paragraph (b) of this section; and

(2) The denominator of which is the total number of substantial-service employees who are assigned to all qualified separate lines of business of the employer under paragraph (b) of this section.

(B) ***Employees taken into account.*** The employee assignment percentage is calculated solely with respect to employees who are taken into account for purposes of satisfying section 410(b) with respect to the first testing day. Therefore, this percentage is calculated only once for all purposes with respect to a testing year. The employees described in section 410(b)(3) and (4) are excluded. However, section 410(b)(4) is applied with reference to the lowest minimum age requirement applicable under any plan of the employer, and with reference to the lowest service requirement applicable under any plan of the employer, as if all the plans were a single plan under § 1.410(b)-6(b)(2).

(iv) ***Option to apply reduced percentage.*** An employer is permitted to determine whether it has a dominant line of business by substituting 25 percent for 50 percent in paragraph (c)(2)(ii) of this section. This option is available for a testing year only if the qualified separate line of business satisfies one of the following requirements:

(A) The qualified separate line of business accounts for at least 60 percent of the employer's gross revenues for the employer's latest fiscal year ending in the testing year.

(B) The employee assignment percentage of the qualified separate line of business would be at least 60 percent if collectively bargained employees were taken into account.

(C) Each qualified separate line of business of the employer satisfies the statutory safe harbor of § 1.414(r)-5(b), the average benefits safe harbor of § 1.414(r)-5(f), or the minimum or maximum benefits safe harbor of § 1.414(r)-5(g). Whether a qualified separate line of business satisfies one of these safe harbors is determined after the application of this section, including the assignment of all residual shared employees under this paragraph (c)(2).

(D) The employee assignment percentage of the qualified separate line of business is at least twice the employee assignment percentages of each of the employer's other qualified separate lines of business.

(v) ***Examples.*** The following examples illustrate the application of the method of allocation in this paragraph (c)(2).

> *Example 1.* (i) Employer A operates four qualified separate lines of business as determined under § 1.414(r)-1(b) for the testing year, consisting of a software developer, a health food products supplier, a real estate developer, and a ski equipment manufacturer. In applying this section for the first testing day with respect to the testing year, Employer A determines that it has a total of 21,000 employees, of whom 10,000 are substantial-service employees not excludable under section 410(b)(3) or (b)(4). Pursuant to paragraph (b) of this section, these 10,000 employees are assigned among

Employer A's qualified separate lines of business as follows:

	Software developer	Health food	Real estate	Ski equipment
Substantial-Service Employees	2,500	1,000	2,500	4,000
Percentage Assigned to QSLOB	25%	10%	25%	40%

(ii) Under these facts, Employer A is not permitted to apply the method of allocation in paragraph (c)(2)(ii) of this section, because none of its qualified separate lines of business satisfies the 50 percent requirement in paragraph (c)(3)(ii) of this section.

Example 2. The facts are the same as in *Example 1,* except that, after allocating all residual shared employees to the ski equipment line of business, the software, ski equipment and health food supplier lines of business each would satisfy the statutory safe harbor of § 1.414(r)-5(b), and that the real estate development line of business would satisfy the minimum or maximum benefits safe harbor of § 1.414(r)-5(g). Under these facts, Employer A is permitted to apply the method of allocation in this paragraph (c)(2) to allocate all its residual shared employees to the ski equipment line of business, because the employee assignment percentage of the ski equipment line of business exceeds 25 percent and each qualified separate line of business satisfies either the statutory safe harbor of § 1.414(r)-5(b) or the minimum or maximum benefits safe harbor of § 1.414(r)-5(g).

Example 3. (i) The facts are the same as in *Example 1,* except that, Employer A chooses not to satisfy the minimum or maximum benefits safe harbor of § 1.414(r)-5(g). Instead, Employer A combines the real estate developer and ski equipment manufacturer into a single line of business. As a result, Employer A has three qualified separate lines of business as determined under § 1.414(r)-1(b). Assume that no residual shared employee becomes a substantial-service employee as a result of the new combination. Employer A's substantial-service employees are assigned among Employer A's qualified separate lines of business as follows:

	Software developer	Health food	Real estate/ski equipment
Substantial-Service Employees	2,500	1,000	6,500

	Software developer	Health food	Real estate/ski equipment
Percentage Assigned to QSLOB	25%	10%	65%

(ii) Under these facts, Employer A is permitted to apply the method of allocation in this paragraph (c)(2) to allocate all its residual shared employees to the combined real estate development and ski equipment manufacturing line of business, because more than 50 percent of Employer A's substantial-service employees that are taken into account for the first testing day are assigned to that qualified separate line of business.

Example 4. (i) The facts are the same as in *Example 1,* except that, of the remaining 11,000 employees of Employer A, 10,000 employees are substantial-service employees who are collectively bargained employees. Pursuant to paragraph (b) of this section, the 10,000 substantial-service employees and the 10,000 substantial-service employees who are collectively bargained employees are assigned among Employer A's qualified separate lines of business as follows:

	Software developer	Health food	Real estate	Ski equipment
Substantial-Service Employees	2,500	1,000	2,500	4,000
Percentage of total substantial-service employees assigned to QSLOB	25%	10%	25%	40%
Substantial-Service Employees (including collectively bargained employees)	2,500	1,000	2,500	14,000
Percentage of total employees (including collectively bargained employees) assigned to QSLOB	12.5%	5%	12.5%	70%

(ii) Thus, the ski equipment line of business satisfies the 25-percent threshold in paragraph (c)(2)(iv) of this section. In addition, the ski equipment's percentage of substantial-service employees is at least 60 percent when taking into account substantial-service employees who are collectively bargained employees and therefore satisfies the requirement under paragraph (c)(2)(iv)(B) of this section.

> Under these facts, Employer A is permitted to apply the method of allocation in this paragraph (c)(2) to allocate all its residual shared employees to the ski equipment line of business.

(3) ***Pro-rata method of allocation*** —

(i) ***In general.*** Under the method of allocation in this paragraph (c)(3), all residual shared employees are allocated among an employer's qualified separate lines of business in proportion to the employee assignment percentage of each qualified separate line of business, as determined under paragraph (c)(2)(iii) of this section.

(ii) ***Allocation procedure.*** The procedure for allocating residual shared employees under the method in this paragraph (c)(3) is as follows—

(A) The number of highly compensated residual shared employees who are allocated to each qualified separate line of business is equal to the product determined by multiplying the total number of highly compensated residual shared employees of the employer by the employee assignment percentage determined with respect to the qualified separate line of business under paragraph (c)(3)(i) of this section;

(B) The number of nonhighly compensated residual shared employees who are allocated to each qualified separate line of business is equal to the product determined by multiplying the total number of nonhighly compensated residual shared employees of the employer by the employee assignment percentage determined with respect to the qualified separate line of business under paragraph (c)(3)(i) of this section;

(C) For purposes of this procedure, the employer is permitted to determine which highly compensated residual shares employees and which nonhighly compensated residual shared employees are allocated to each qualified separate line of business, provided that the required number of highly and nonhighly compensated residual shared employees are allocated to each qualified separate line of business.

(iii) ***Examples.*** The following example illustrates the application of the method of allocation in this paragraph (c)(4).

> *Example 1.* The facts that are the same as in *Example 1* under paragraph (c)(2)(v) of this section except that there are no additional residual shared employees after the first testing day. Of Employer A's 1,000 residual shared employees, 800 are highly compensated employees and 200 are nonhighly compensated employees. Employer A applies the pro-rata method of allocation in this paragraph (c)(3). Under these facts, the 1,000 residual shared employees are allocated among Employer A's qualified separate

lines of business as follows:

	Software developer	Health food	Real estate	Ski equipment
Substantial-Service Employees	2,500	1,000	2,500	4,000
Percentage Assigned to QSLOB ("employee assignment percentage")	25%	10%	25%	40%
Residual Shared HCEs	200	80	200	320
Allocated to QSLOB	(25%X800)	(10%X800)	(25%X800)	(40%X200)
Residual Shared NHCEs	50	20	50	80
Allocated to QSLOB	(25%X200)	(10%X200)	(25%X200)	(40%X200)

(4) ***HCE percentage ratio method of allocation*** —

(i) ***In general.*** Under the method of allocation in this paragraph (c)(4), all residual shared employees are allocated among an employer's qualified separate lines of business according to the highly compensated employee percentage assignment ratio of each qualified separate line of business.

(ii) ***Highly compensated employee percentage assignment ratio.*** For purposes of this paragraph (c)(4), the highly compensated employee percentage assignment ratio of a qualified separate line of business is the fraction expressed as a percentage)—

(A) The numerator of which is the percentage of all employees who have previously been assigned to the qualified separate line of business under this section with respect to the testing year who are highly compensated employees; and

(B) The denominator of which is the percentage of all employees who have previously been assigned to any qualified separate line of business under this section with respect to the testing year who are highly compensated employees.

Thus, the highly compensated employee percentage assignment ratio of each of the employer's qualified separate lines of business is recalculated each time a residual shared employee is allocated to a qualified separate line of business under this paragraph (c)(5).

(iii) ***Allocation procedure.*** The procedure for allocating all residual shared employees under the method in this paragraph (c)(4) is as follows—

(A) If there are any qualified separate lines of business with a highly compensated employee percentage assignment ratio of less than 50 percent (as determined immediately before the employee is allocated to a qualified separate line of business), the highly compensated residual shared employee must be allocated to one of these qualified separate lines of business;

(B) If there are any qualified separate lines of business with a highly compensated employee percentage assignment ratio of greater than 200 percent (as determined immediately before the employee is allocated to a qualified separate line of business), the nonhighly compensated residual shared employee must be allocated to one of these qualified separate lines of business;

(C) If there are no qualified separate lines of business with a highly compensated employee percentage assignment ratio less than 50 percent, a highly compensated residual shared employee may be allocated to any qualified separate line of business with a highly compensated employee percentage assignment ratio of no more than 200 percent, provided that the employee's allocation to the qualified separate line of business does not cause its highly compensated employee percentage assignment ratio to exceed 200 percent (as determined immediately after the employee is allocated to the qualified separate line of business);

(D) If there are no qualified separate lines of business with a highly compensated employee percentage assignment ratio greater than 200 percent, a nonhighly compensated residual shared employee may be allocated to any qualified separate line of business with a highly compensated employee percentage assignment ratio of no less than 50 percent, provided that the employee's allocation to the qualified separate line of business does not cause its highly compensated employee percentage assignment ratio to fall below 50 percent (as determined immediately after the employee is allocated to the qualified separate line of business);

(E) For purposes of this procedure, the employer is permitted to determine which highly compensated residual shared employees and which nonhighly compensated residual shared employees are allocated to each qualified separate line of business, provided that the requirements of this paragraph (c)(4)(iii) are satisfied.

(5) *Small group method* —

(i) ***In general.*** Under the method of allocation provided for in this paragraph (c)(5), each residual shared employee is allocated to a qualified separate line of business chosen by the employer. This method does not apply unless all of the requirements of paragraphs (c)(5)(ii), (iii), and (iv) of this section are satisfied.

(ii) ***Size of group.*** The total number of the employer's residual shared employees allocated under this paragraph (c) must not exceed three percent of all of the employer's employees. For this purpose, the employer's employees include only those employees taken into account under paragraph (c)(2)(iii)(B) of this section.

(iii) ***Composition of qualified separate line of business.*** The qualified separate line of business to which the residual shared employee is allocated must have an employee assignment percentage under paragraph (c)(2)(iii) of this section of at least ten percent. In addition, the qualified separate line of business to which the residual shared employee is allocated must satisfy the statutory safe harbor under § 1.414(r)-5(b) after the employee is so allocated.

(iv) ***Reasonable allocation.*** The allocation of residual shared employees under the small group method provided for in this paragraph (c)(5) must be reasonable. Reasonable allocations generally include allocations that are based on the level of services that the residual shared employees provide to the employer's qualified separate lines of business, the similar treatment of similarly situated residual shared employees, and other bona fide business criteria; in

contrast, an allocation that is designed to maximize benefits for select employees is not considered a reasonable allocation. For example, allocation of all residual shared employees who work in the same department, or at the same location, to the same qualified separate line of business would be an indication of reasonableness. However, allocation of a group of similarly situated residual shared employees to a qualified separate line of business for which they provide minimal services might not be considered reasonable. In addition, the allocation of the professional employees of a department to one qualified separate line of business and the allocation of the support staff of the same department to a different qualified separate line of business would not be reasonable.

[T.D. 8376, 56 FR 63453, Dec. 4, 1991, as amended by T.D. 8548, 59 FR 32920, June 27, 1994]

§ 1.414(r)-8 Separate application of section 410(b).

(a) ***General rule.*** If an employer is treated as operating qualified separate lines of business for purposes of section 410(b) in accordance with § 1.414(r)-1(b) for a testing year, the requirements of section 410(b) must be applied in accordance with this section separately with respect to the employees of each qualified separate line of business for purposes of testing all plans of the employer for plan years that begin in the testing year (other than a plan tested under the special rule for employer-wide plans in § 1.414(r)-(c)(2)(ii) for such a plan year). Conversely, if an employer is not treated as operating qualified separate lines of business for purposes of section 410(b) in accordance with § 1.414(r)-1(b) for a testing year, the requirements of section 410(b) must be applied on an employer-wide basis for purposes of testing all plans of the employer for plan years that begin in the testing year. See § 1.414(r)-1(c)(2) and (d)(6). Paragraph (b) of this section explains how the requirements of section 410(b) are applied separately with respect to the employees of a qualified separate line of business for purposes of testing a plan. Paragraph (c) of this section explains the coordination between sections 410(b) and 401(a)(4). Paragraph (d) of this section provides certain supplementary rules necessary for the application of this section.

(b) ***Rules of separate application*** —

(1) ***In general.*** If the requirements of section 410(b) are applied separately with respect to the employees of each qualified separate line of business operated by the employer for a testing year, a plan (other than a plan that is tested under the special rule for employer-wide plans in § 1.414(r)-1(c)(2)(ii) for a plan year) satisfies the requirements of section 410(b) only if—

(i) The plan satisfies section 410(b)(5)(B) of an employer-wide basis; and

(ii) The plan satisfies section 410(b) on a qualified-separate-line-of-business basis.

(2) ***Satisfaction of section 410(b)(5)(B) on an employer-wide basis*** —

(i) ***General rule.*** Section 410(b)(5)(B) provides that a plan is not permitted to be tested separately with respect to the employees of a qualified separate line of business unless the plan benefits a classification of employees found by the Secretary to be nondiscriminatory. A plan satisfies this requirement only if the plan satisfies either the ratio percentage test of § 1.410(b)-2(b)(2) or the nondiscriminatory classification test of § 1.410(b)-4 (without regard to the average benefit percentage test of § 1.410(b)-5), taking into account the other applicable provisions of §§ 1.410(b)-2 through 1.410(b)-10. For this purpose, the nonexcludable employees of the employer taken into account in testing the plan under section 410(b) are determined under § 1.410(b)-6, without regard to the exclusion in § 1.410(b)-6(e) for employees of other qualified separate

lines of business of the employer. Thus, in testing a plan separately with respect to the employees of one qualified separate line of business under this paragraph (b)(2), the otherwise nonexcludable employees of the employer's other qualified separate lines of business are not treated as excludable employees. However, under the definition of "plan" in paragraph (d)(2) of this section, these employees are not treated as benefiting under the plan for purposes of applying this paragraph (b)(2).

(ii) ***Application of facts and circumstances requirements under nondiscriminatory classification test.*** The fact that an employer has satisfied the qualified-separate-line-of-business requirements in §§ 1.414(r)-1 through 1.414(r)-7 is taken into account in determining whether a classification of employees benefiting under a plan that falls between the safe and unsafe harbors satisfies § 1.410(b)-4(c)(3) (facts and circumstances requirements). Except in unusual circumstances, this fact will be determinative.

(iii) ***Modification of unsafe harbor percentage for plans satisfying ratio percentage test at 90 percent level —***

(A) ***General rule.*** If a plan benefits a group of employees for a plan year that would satisfy the ratio percentage test of § 1.410(b)-2(b)(2) on a qualified-separate-line-of-business basis under paragraph (b)(3) of this section if the percentage in § 1.410(b)-2(b)(2) were increased to 90 percent, the unsafe harbor percentage in § 1.410(b)-4(c)(4)(ii) for the plan is reduced by five percentage points (not five percent) for the plan year and is applied without regard to the requirement that the unsafe harbor percentage not be less than 20 percent. Thus, if the requirements of this paragraph (b)(2)(iii)(A) are satisfied, the unsafe harbor percentage in § 1.410(b)-4(c)(4)(ii) is treated as 35 percent, reduced by $^{3}/_{4}$ of a percentage point for each whole percentage point by which the nonhighly compensated employee concentration percentage exceeds 60 percent.

(B) ***Facts and circumstances alternative.*** If a plan satisfies the requirements of paragraph (b)(2)(iii)(A) of this section, but has a ratio percentage on an employer-wide basis that falls below the unsafe harbor percentage determined under paragraph (b)(2)(iii)(A) of this section, the plan nonetheless is deemed to satisfy section 410(b)(5)(B) on an employer-wide basis if the Commissioner determines that, on the basis of all of the relevant facts and circumstances, the plan benefits such employees as qualify under a classification of employees that does not discriminate in favor of highly compensated employees.

(3) ***Satisfaction of section 410(b) on a qualified-separate-line-of-business basis.*** A plan satisfies section 410(b) on a qualified-separate-line-of-business basis only if the plan satisfies either the ratio percentage test of § 1.410(b)-2(b)(2) or the average benefit test of § 1.410(b)-2(b)(3) (including the nondiscriminatory classification test of § 1.410(b)-4 and the average benefit percentage test of § 1.410(b)-5), taking into account the other applicable provisions of §§ 1.410(b)-2 through 1.410(b)-10. For this purpose, the non-excludable employees of the employer taken into account in testing the plan under section 40(b) are determined under § 1.410(b)-6, taking into account the exclusion in § 1.410(b)-6(e) for employees of other qualified separate lines of business of the employer. Thus, in testing a plan separately with respect to the employees of one qualified separate line of business under this paragraph (b)(3), all employees of the employer's other qualified separate lines of business are treated as excludable employees.

(4) ***Examples.*** The following examples illustrate the application of this paragraph (b).

Example 1. (i) Employer A is treated as operating qualified separate lines of business for purposes of section 410(b) in accordance with § 1.414(r)-1(b) for the 1994 testing year with respect to all of its plans. Employer A operates two qualified separate lines of business as determined under § 1.414(r)-1(b)(2), Line 1 and Line 2. Employer A maintains only two plans, Plan X which benefits solely employees of Line 1, and Plan Y which benefits solely employees of Line 2. In testing Plan X under section 410(b) with respect to the first testing day for the plan year of Plan X beginning in the 1994 testing year, it is determined that Employer A has 2,100 nonexcludable employees, of whom 100 are highly compensated employees and 2,000 are nonhighly compensated employees. After applying § 1.414(r)-7 to these employees, 50 of the highly compensated employees and 100 of the nonhighly compensated employees are treated as employees of Line 2, and the remaining 50 highly compensated employees and the remaining 1,900 nonhighly compensated employees are treated as employees of Line 1.
(ii) All of the highly compensated employees and 1,300 of the nonhighly compensated employees who are treated as employees of Line 1 benefit under Plan X. Thus, on an employer-wide basis, Plan X benefits 50 percent of all Employer A's highly compensated employees (50 out of 100) and 65 percent of all Employer A's nonhighly compensated employees (1,300 out of 2,000). Plan X consequently has a ratio percentage determined on an employer-wide basis of 130 percent (65% ÷ 50%), see § 1.410(b)-9, and could satisfy section 410(b) under the ratio percentage test of § 1.410(b)-2(b)(2) if that section were applied on an employer-wide basis without regard to the provisions of this paragraph (b). Under paragraph (a) of this section, however, the requirements of section 410(b) must be applied separately with respect to the employees of each qualified separate line of business operated by Employer A for all plans of Employer A for plan years that begin in the 1994 testing year. This rule does not apply to plans tested under the special rule for employer-wide plans in § 1.414(r)-1(c)(2)(ii). Plan X benefits only 65 percent of the nonhighly compensated employees of Employer A, however, and therefore cannot satisfy the 70 percent requirement necessary to be tested under that rule. As a result, for the plan year of Plan X beginning in the 1994 testing year, Plan X is not permitted to satisfy section 410(b) on an employer-wide basis and, instead, is only permitted to satisfy section 410(b) separately with respect to the employees of each qualified separate line of business operated by Employer A, in accordance with paragraphs (b)(2) and (b)(3) of this section.

Example 2. The facts are the same as in *Example 1.* All of the 50 highly compensated employees treated as employees of Line 2 benefit under Plan Y, and 80 of the 100 nonhighly compensated employees treated as employees of Line 2 benefit under Plan Y. Thus, Plan Y benefits 50 percent of all Employer A's highly compensated employees (50 out of 100) and only 4 percent of all Employer A's nonhighly compensated employees (80 out of 2,000). Thus, while Plan Y has a ratio percentage of 80 percent (80% ÷ 100%) on a qualified-separate-line-of-business basis, it has a ratio percentage of only 8 percent (4% ÷ 50%) on an employer-wide basis. See § 1.410(b)-9. Under § 1.410(b)-4(c)(4)(iii), the nonhighly compensated employee concentration percentage is 2,000/2,100 or 95 percent. Because 8 percent is less than 20 percent (the unsafe harbor percentage applicable to Employer A under § 1.410(b)-4(c)(4)(ii)), Plan Y does not

satisfy the nondiscriminatory classification test of § 1.410(b)-4 on an employer-wide basis. Nor does Plan Y satisfy the ratio percentage test of § 1.410(b)-2(b)(2) on an employer-wide basis, since 8 percent is less than 70 percent. Under these facts, Plan Y does not satisfy section 410(b)(5)(B) on an employer-wide basis in accordance with paragraph (b)(2) of this section for the plan year of Plan Y beginning in the 1994 testing year, and therefore fails to satisfy section 410(b) for that year. This is true even though Plan Y satisfies section 410(b) on a qualified-separate-line-of-business basis in accordance with paragraph (b)(3) of this section.

Example 3. The facts are the same as in *Example 2,* except that all of the employees treated as employees of Line 2 benefit under Plan Y. Thus, Plan Y benefits 50 percent of all of Employer A's highly compensated employees (50 out of 100) and 5 percent of all of Employer A's nonhighly compensated employees (100 out of 2,000). Plan Y therefore has a ratio percentage of 100 percent (100% ÷ 100%) on a qualified-separate-line-of-business basis and a ratio percentage of 10 percent (5% ÷ 50%) on an employer-wide basis. Because Plan Y has a ratio percentage of at least 90 percent on a qualified-separate-line-of-business basis, a reduced unsafe harbor percentage applies to Plan Y under paragraph (b)(2)(iii)(A) of this section. The reduced unsafe harbor percentage applicable to Plan Y is 8.75 percent because Employer A's nonhighly compensated employee concentration percentage is 95 percent. Plan Y's employer-wide ratio percentage of 10 percent therefore exceeds the unsafe harbor percentage. Plan Y thus satisfies section 410(b)(5)(B) on an employer-wide basis in accordance with paragraph (b)(2) of this section for the plan year of Plan Y beginning in the 1994 testing year. Plan Y also satisfies section 410(b) on a qualified-separate-line-of-business basis in accordance with paragraph (b)(3) of this section.

Example 4. The facts are the same as in *Example 3,* except that Employer A's total nonexcludable nonhighly compensated employees are 2,500 (rather than 2,000), of whom 100 are treated as employees of Line 2 and of whom 90 benefit under Plan Y. Plan Y has a ratio percentage of 90 percent (90% ÷ 100%) on a qualified-separate-line-of-business basis, and Employer A's nonhighly compensated employee concentration percentage is 2,500/2,600 or 96 percent. Thus, the reduced unsafe harbor percentage applicable to Plan Y under paragraph (b)(2)(iii)(A) of this section is 8 percent. Plan Y benefits 50 percent of all of Employer A's highly compensated employees (50 out of 100) and 3.6 percent of all of Employer A's nonhighly compensated employees (90 out of 2,500). Plan Y therefore has a ratio percentage of only 7.2 percent (3.6% ÷ 50%) on an employer-wide basis, which falls below the reduced unsafe harbor percentage of 8 percent. Nonetheless, under paragraph (b)(2)(iii)(B) of this section, Plan Y will be deemed to satisfy section 410(b)(5)(B) on an employer-wide basis if the Commissioner determines that, on the basis of all of the relevant facts and circumstances, the plan benefits such employees as qualify under a classification of employees that does not discriminate in favor of highly compensated employees.

Example 5. (i) The facts are the same as in *Example 1,* except that Plan X benefits only 950 of the employees of Line 1. Assume Plan X satisfies the reasonable classification requirement of § 1.410(b)-4(b) on an employer-wide basis. Plan X benefits 50 percent of all Employer A's highly compensated employees (50 out 100) and 47.5 percent of all Employer A's nonhighly compensated employees (950 out of 2,000). Plan X consequently has a ratio percentage determined on an employer-wide basis of 95 percent (47.5% ÷ 50%), see § 1.410(b)-9, and thus satisfies section 410(b)(5)(B) on an

employer-wide basis.
(ii) Plan X has a ratio percentage determined on a qualified-separate-line-of-business basis of 50 percent (50% ÷ 100%). Because 50 percent is less than 70 percent, Plan X must satisfy the nondiscriminatory classification test of § 1.410(b)-4 and the average benefit percentage test of § 1.410(b)-5 on a qualified-separate-line-of-business basis in order to satisfy the other requirements of section 410(b). Plan X satisfies the nondiscriminatory classification requirement of § 1.410(b)-4(c) on a qualified-separate-line-of-business because its ratio percentage determined on a qualified-separate-line-of-business basis is more than 22.25 percent, the safe harbor percentage applicable to Line 1 under § 1.410(b)-4(c)(4)(i). Because Plan X satisfies the reasonable classification requirement of § 1.410(b)-4(b) on an employer-wide basis, it is also deemed to satisfy this requirement on a qualified-separate-line-of-business basis. See § 1.410(b)-7(c)(5). In determining whether Plan X satisfies the average benefit percentage test of § 1.410(b)-5, only Plan X and only employees of Line 1 are taken into account. See §§ 1.410(b)-6(e) and 1.410(b)-7(e).

Example 6. The facts are the same as in *Example 2,* except that, prior to the 1994 testing year, Employer A merges Plan X and Plan Y so that they form a single plan within the meaning of section 414(*l*). Under the definition of "plan" in paragraph (d)(2) of this section, however, the portion of the newly merged plan that benefits employees of Line 2 (former Plan Y) is still treated as a separate plan from the portion of the newly merged plan that benefits employees of Line 1 (former Plan X). The portion of the newly merged plan that benefits employees of Line 2 (former Plan Y) fails to satisfy section 410(b) for the reasons stated in *Example 2.* Under these facts, because the portion of the newly merged plan that benefits employees of Line 2 fails to satisfy section 410(b), the entire newly merged plan fails to satisfy section 410(b) for the plan year of the newly merged plan that begins in the 1994 testing year. See paragraph (d)(5) of this section.

(c) ***Coordination of section 401(a)(4) with section 410(b)*** —

(1) ***General rule.*** For purposes of these regulations, the requirements of section 410(b) encompass the requirements of section 401(a)(4) (including, but not limited to, the permitted disparity rules of section 401(*l*), the actual deferral percentage test of section 401(k)(3), and the actual contribution percentage test of section 401(m)(2)). Therefore, if the requirements of section 410(b) are applied separately with respect to the employees of each qualified separate line of business of an employer for purposes of testing one or more plans of the employer for plan years that begin in a testing year, the requirements of section 401(a)(4) must also be applied separately with respect to the employees of the same qualified separate lines of business for purposes of testing the same plans for the same plan years. Furthermore, if section 401(a)(4) requires that a group of employees under the plan satisfy section 410(b) for purposes of satisfying section 401(a)(4), section 410(b) must be applied for this purpose in the same manner provided in paragraph (b) of this section. See, for example, §§ 1.401(a)(4)-2(c)(1) and 1.401(a)(4)-3(c)(1) (requiring each rate group of employees under a plan to satisfy section 410(b)), § 1.401(a)(4)-4(b) (requiring the group of employees to whom each benefit, right, or feature is currently available under a plan to satisfy section 410(b)), and § 1.401(a)(4)-9(c)(1) (requiring the group of employees included in each component plan into which a plan is restructured to satisfy section 410(b)). Thus, the group of employees must satisfy section

410(b)(5)(B) on an employer-wide basis in accordance with paragraph (b)(2) of this section and also must satisfy section 410(b) on a qualified-separate-line-of-business basis in accordance with paragraph (b)(3) of this section, in both cases as if the group of employees were the only employees benefiting under the plan.

(2) ***Examples.*** The following examples illustrate the application of the rule in this paragraph (c).

Example 1. Employer B is treated as operating qualified separate lines of business for purposes of section 410(b) in accordance with § 1.414(r)-1(b) for the 1993 testing year. Employer B operates two qualified separate lines of business as determined under § 1.414(r)-1(b)(2), Line 1 and Line 2. Employer B maintains Plan Z, which benefits employees in both Line 1 and Line 2. Under the definition of "plan" in paragraph (d)(2) of this section, the portion of Plan Z that benefits employees of Line 1 is treated as a separate plan from the portion of Plan Z that benefits employees of Line 2. Under this paragraph (c), this result applies for purposes of both section 410(b) and section 401(a)(4).

Example 2. The facts are the same as in *Example 1,* except that Plan Z benefits solely employees of Line 1. In testing Plan Z under section 401(a)(4) for the plan year of Plan Z beginning in the 1993 testing year, Employer B restructures Plan Z into several component plans (within the meaning of § 1.401(a)(4)-9(c)). Under § 1.401(a)(4)-9(c)(1), each of these component plans is required to satisfy section 410(b). This paragraph (c) requires that each of the component plans be tested separately with respect to the employees of each qualified separate line of business operated by Employer B. This testing must be done in accordance with paragraph (b) of this section. Consequently, each component plan must satisfy section 410(b)(5)(B) on an employer-wide basis in accordance with paragraph (b)(2) of this section and must also satisfy section 410(b) on a qualified-separate-line-of-business basis in accordance with paragraph (b)(3) of this section.

Example 3. The facts are the same as in *Example 1,* except that Plan Z is a profit-sharing plan, and contributions to Plan Z are made pursuant to cash or deferred arrangement in which all employees of Employer B are eligible to participate. Assume that, as a result, Plan Z satisfies the requirements to be tested under the special rule for employer-wide plans in § 1.414(r)-1(c)(2)(ii). Under these facts, the requirements of sections 410(b), 401(a)(4) and 401(k), including the actual deferral percentage test of section 401(k)(3) and § 1.401(k)-1(b), would generally be required to be applied separately to the portions of Plan Z that benefit the employees of Line 1 and Line 2, respectively. However, if Plan Z is tested under the special rule in § 1.414(r)-1(c)(2)(ii), these requirements must be applied on an employer-wide basis.

(d) ***Supplementary rules*** —

(1) ***In general.*** This paragraph (d) provides certain supplementary rules necessary for the application of this section.

(2) ***Definition of plan.*** For purposes of this section, the term *plan* means a plan within the meaning of § 1.410(b)-7(a) and (b), after application of the mandatory disaggregation rules of § 1.410(b)-7(c) (including the mandatory disaggregation rule for portions of a plan that benefit employees of different qualified separate lines of business) and the permissive aggregation rules of § 1.410(b)-7(d). Thus, for purposes of this section, the portion of a plan that benefits employees of

one qualified separate line of business is treated as a separate plan from the other portions of the same plan that benefit employees of other qualified separate lines of business of the employer, unless the plan is tested under the special rule for employer-wide plans in § 1.414(r)-1(c)(2)(ii) for the plan year.

(3) ***Employees of a qualified separate line of business.*** For purposes of applying paragraph (b) of this section with respect to a testing day, the employees of each qualified separate line of business of the employer are determined by applying § 1.414(r)-7 to the employees of the employer otherwise taken into account under section 410(b) for the testing day. For purposes of applying paragraph (c) of this section with respect to a testing day, the employees of each qualified separate line of business of the employer are determined by applying § 1.414(r)-7 to the employees of the employer otherwise taken into account under section 410(a)(4) for the testing day. For the definition of *testing day,* see § 1.414(r)-11(b)(6).

(4) ***Consequences of failure.*** If a plan fails to satisfy either paragraph (b)(2), (b)(3), or (c)(1) of this section, the plan (and any plan of which it constitutes a portion) fails to satisfy section 401(a). However, this failure alone does not cause the employer to fail to be treated as operating qualified separate lines of business in accordance with § 1.414(r)-1(b), unless the employer is relying on benefits provided under the plan to satisfy the minimum benefit portion of the safe harbor in § 1.414(r)-5(g)(2) with respect to at least one of its qualified separate lines of business.

[T.D. 8376, 56 FR 63457, Dec. 4, 1991, as amended by T.D. 8376, 57 FR 52591, Nov. 4, 1992; T.D. 8548, 59 FR 32921, June 27, 1994; T.D. 9849, 84 FR 9234, Mar. 14, 2019]

§ 1.414(r)-9 Separate application of section 401(a)(26).

(a) ***General rule.*** If an employer is treated as operating qualified separate lines of business for purposes of section 401(a)(26) in accordance with § 1.414(r)-1(b) for a testing year, the requirements of section 401(a)(26) must be applied separately with respect to the employees of each qualified separate line of business for purposes of testing all plans of the employer for plan years that begin in the testing year (other than a plan tested under the special rule for employer-wide plans in § 1.414(r)-1(c)(3)(ii) for such a plan year). Conversely, if an employer is not treated as operating qualified separate lines of business for purposes of section 401(a)(26) in accordance with § 1.414(r)-1(b) for a testing year, the requirements of section 401(a)(26) must be applied on an employer-wide basis for purposes of testing all plans of the employer for plan years that begin in the testing years. See § 1414(r)-1(c)(3) and (d)(6). Paragraph (b) of this section explains how the requirements of section 401(a)(26) are applied separately with respect to the employees of a qualified separate line of business for purposes of testing a plan. Paragraph (c) of this section provides certain supplementary rules necessary for the application of this section.

(b) ***Requirements applicable to a plan.*** If the requirements of section 401(a)(26) are applied separately with respect to the employees of a qualified separate line of business for a testing year, a plan (other than a plan that is tested under the special rule for employer-wide plans in § 1.414(r)-1(c)(3)(ii) for a plan year) satisfies section 401(a)(26) only if it satisfies the requirements of §§ 1.401(a)(26)-1 through 1.401(a)(26)-9 on a qualified-separate-line-of-business basis. For this purpose, the nonexcludable employees of the employer taken into account in testing the plan under section 401(a)(26) are determined under § 1.401(a)(26)-6(b), taking into account the exclusion in § 1.401(a)(26)-6(b)(8) for employees of other qualified separate lines of business of the employer. Thus, in testing a plan separately with respect to the employees of one qualified separate line of business under this paragraph (b), all employees of the employer's other qualified separate lines of business are treated as excludable employees.

(c) *Supplementary rules* —

(1) ***In general.*** This paragraph (c) provides certain supplementary rules necessary for the application of this section.

(2) ***Definition of plan.*** For purposes of this section, the term *plan* mean a plan within the meaning of § 1.401(a)(26)-2(c) and (d), including the mandatory disaggregation rule of § 1.401(a)(26)-2(d)(6) for portions of a plan that benefit employees of different qualified separate lines of business. Thus, for purposes of this section, the portion of a plan that benefits employees of one qualified separate line of business is treated as a separate plan from the other portions of the same plan that benefit employees of other qualified separate lines of business of the employer, unless the plan is tested under the special rule for employer-wide plans in § 1.414(r)-1(c)(3)(ii) for the plan year.

(3) ***Employees of a qualified separate line of business.*** For purposes of applying paragraph (b)(2) of this section with respect to a section 401(a)(26) testing day, the employees of each qualified separate line of business of the employer are determined by applying § 1.414(r)-7 to the employees of the employer otherwise taken into account under section 401(a)(26) for the section 401(a)(26) testing day. For the definition of *section 401(a)(26) testing day,* see § 1.414(r)-11(b)(8).

(4) ***Consequences of failure.*** If a plan fails to satisfy paragraph (b)(2) of this section, the plan (and any plan of which it constitutes a portion) fails to satisfy section 401(a). However, this failure alone would not cause the employer to fail to be treated as operating qualified separate lines of business in accordance with § 1.414(r)-1(b), unless the employer is relying on benefits provided under the plan to satisfy the minimum benefit portion of the safe harbor in § 1.414(r)-5(g)(2) with respect to at least one of its qualified separate lines of business.

[T.D. 8376, 56 FR 63459, Dec. 4, 1991]

§ 1.414(r)-10 Separate application of section 129(d)(8). [Reserved]

§ 1.414(r)-11 Definitions and special rules.

(a) ***In general.*** This section contains certain definitions and special rules applicable under these regulations. Paragraph (b) of this section provides certain definitions that apply for purposes of these regulations. Paragraph (c) of this section provides averaging rules under which certain provisions of these regulations may be applied on the basis of a two-year or a three-year average.

(b) *Definitions* —

(1) ***In general.*** In applying the provisions of this section and of §§ 1.414(r)-1 through 1.414(r)-10, unless otherwise provided, the definitions in this paragraph (b) govern in addition to the definitions in § 1.410(b)-9.

(2) ***Substantial-service employee.*** An employee is a substantial-service employee with respect to a line of business for a testing year if at least 75 percent of the employee's services are provided to that line of business for that testing year within the meaning of § 1.414(r)-3(c)(5). In addition, if an employee provides at least 50% and less than 75% of the employee's services to a line of business for the testing year within the meaning of § 1.414(r)-3(c)(5), the employer may treat that employee as a substantial-service employee with respect to that line of business provided the employee is so treated for all purposes of these regulations. The employer may choose such treatment separately with respect to each employee.

(3) ***Top-paid employee.*** Generally, an employee is a top-paid employee with respect to a line of business for a testing year if the employee is among the top 10 percent by compensation of those employees who provide services to that line of business for that testing year within the meaning of § 1.414(r)-3(c)(5) and who are not substantial-service employees within the meaning of paragraph (b)(2) of this section with respect to any other line of business. In addition, in determining the group of top-paid employees, the employer may choose to disregard all employees who provide less than 25 percent of their services to the line of business. For purposes of this paragraph (b)(3), an employee's compensation is the compensation used to determine the employee's status as a highly or nonhighly compensated employee under section 414(q) for purposes of applying section 410(b) with respect to the first testing day. For this purpose, only compensation received during the determination year (within the meaning of § 1.414(q)-1T, Q&A-13) is taken into account. See § 1.414(r)-3(c)(7) for examples of the determination of top-paid employee.

(4) ***Residual shared employee.*** An employee is a residual shared employee for a testing year if the employee is not a substantial-service employee with respect to any line of business for the testing year.

(5) ***Testing year.*** The term *testing year* means the calendar year.

(6) ***Testing day.*** The term *testing day* means any day on which § 1.410(b)-8(a)(1) requires any plan (within the meaning of § 1.414(r)-8(d)(2)) of the employer actually to satisfy section 410(b) with respect to plan year that begins in the testing year. Thus, if a plan is required to satisfy section 410(b) on one day within each quarter of the plan year under the quarterly testing option of § 1.410(b)-8(a)(3), each of those four days is a testing day. Similarly, if a plan is required to satisfy section 410(b) on every day of the plan year under the daily testing option of § 1.410(b)-8(a)(2), every day of the plan year is a testing day.

(7) ***First testing day.*** The term *first testing day* means the testing day that occurs earliest in time of all the testing days under all plans of the employer with respect to the testing year. If a plan is tested under the annual testing option of § 1.410(b)-8(a)(4) (other than for purposes of the average benefit percentage test of § 1.410(b)-5) for a plan year that begins in a testing year, then, solely for purposes of determining the first testing day in a testing year, the employer may treat any day in the plan year as a testing day, provided that the coverage of each plan of the employer on the day selected is reasonably representative of the coverage of the plan over the entire plan year. The first testing day with respect to a testing year must fall within that testing year.

(8) ***Section 401(a)(26) testing day.*** The term *section 401(a)(26) testing day* means any day on which § 1.401(a)(26)-7(a) or (b) requires any plan of the employer actually to satisfy section 401(a)(26) with respect to a plan year that begins in the testing year. In no event may a section 401(a)(26) testing day with respect to a testing year fall before the first testing day for that testing year. For purposes of this paragraph (b)(8), the term *plan* has the same meaning as in § 1.414(r-9(c)(2).

(c) ***Averaging rules*** —

(1) ***In general.*** The provisions specified in this paragraph (c) are permitted to be applied based on the average of the percentages for the current testing year and the consecutive testing years (not to exceed four consecutive testing years) immediately preceding the current testing year.

(2) ***Specified provisions.*** The provisions specified in this paragraph (c) are—

(i) The 90-percent separate employee workforce requirement of § 1.414(r)-3(b)(4);

(ii) The 80-percent separate management requirement of § 1.414(r)-3(b)(5);

(iii) The 25-percent provision-to-customers requirement of § 1.414(r)-3(d)(2)(iii);

(iv) The minimum and maximum highly compensated employee percentage ratios under the statutory safe harbor of § 1.414(r)-5(b)(1)(i) and (ii) (50 percent and 200 percent, respectively), but not the 10-percent exception in § 1.414(r)-5(b)(4);

(v) The employee assignment percentage applied for purposes of the dominant line of business method of allocating residual shared employees under § 1.414(r)-7(c)(2) and the pro-rata method for allocating residual shared employees under § 1.414(r)-7(c)(3).

(3) ***Averaging of large fluctuations not permitted.*** A provision is not permitted to be applied based on an average determined under this paragraph (c) if the percentage for any testing year taken into account in calculating the average falls below a minimum percentage, or exceeds a maximum percentage, by more than 10 percent (not 10 percentage points) of the respective minimum or maximum percentage. Thus, for example, the statutory safe harbor of § 1.414(r)-5(b) is not permitted to be applied based on an average determined under this paragraph (c) if the percentage for any testing year taken into account in calculating the average falls below 45 percent (which is 10 percent below the 50-percent minimum) or exceeds 220 percent (which is 10 percent above the 200-percent maximum).

(4) ***Consistency requirements.*** A provision is permitted to be applied on an averaging basis under this paragraph (c) regardless of how any other provision is applied, except in the case of the separate employee workforce and separate management requirements of § 1.414(r)-3(b)(4) and (5), which each must be applied on the same basis as the other. A provision is also permitted to be applied on an averaging basis under this paragraph (c) for a testing year, regardless of how the provision is applied for any other testing year. However, once a provision is applied on an averaging basis under this paragraph (c) for a testing year, it must be applied on the same basis to all the employer's lines of business to which the provision is applied for the testing year. The percentage for a preceding testing year may be taken into account under this paragraph (c) only if—

(i) The employer calculates the percentage for the preceding testing year in the same manner as the employer calculates the percentage for the current testing year;

(ii) The employer is treated as operating qualified separate lines of business in accordance with § 1.414(r)-1(b) for the preceding testing year; and

(iii) The employer designated the same lines of business in the preceding testing year as in the current testing year.

[T.D. 8376, 56 FR 63460, Dec. 4, 1991, as amended by T.D. 8548, 59 FR 32922, June 27, 1994]

§ 1.414(s)-1 Definition of compensation.

(a) ***Introduction*** —

(1) ***In general.*** Section 414(s) and this section provide rules for defining compensation for purposes of applying any provision that specifically refers to section 414(s) or this section. For example, section 414(s) is referred to in many of the nondiscrimination provisions applicable to pension, profit-sharing, and stock bonus plans qualified under section 401(a). In accordance with section 414(s)(1), this section defines compensation as compensation within the meaning of section 415(c)(3). It also

implements the election provided in section 414(s)(2) to treat certain deferrals as compensation and exercises the authority granted to the Secretary in section 414(s)(3) to prescribe alternative nondiscriminatory definitions of compensation.

(2) ***Limitations on scope of section 414(s).*** Section 414(s) and this section do not apply unless a provision specifically refers to section 414(s) or this section. For example, even though a definition of compensation permitted under section 414(s) must be used in determining whether the contributions or benefits under a pension, profit-sharing, or stock bonus plan satisfy a certain applicable provision (such as section 401(a)(4)), except as otherwise specified, the plan is not required to use a definition of compensation that satisfies section 414(s) in calculating the amount of contributions or benefits actually provided under the plan.

(3) ***Overview.*** Paragraph (b) of this section provides rules of general application that govern a definition of compensation that satisfies section 414(s). Paragraph (c) of this section contains specific definitions of compensation that satisfy section 414(s) without satisfying any additional nondiscrimination requirement under section 414(s). Paragraph (d) of this section provides rules permitting the use of alternative definitions of compensation that satisfy section 414(s) as long as the nondiscrimination requirement and other requirements described in paragraph (d) of this section are satisfied. Paragraph (e) and (f) of this section provide special rules permitting the use of rate of compensation, or prior-employer compensation or imputed compensation, rather than actual compensation, under a definition of compensation that satisfies section 414(s). Paragraph (g) of this section provides other special rules, including a special rule for determining the compensation of a self-employed individual under an alternate definition of compensation. Paragraph (h) of this section provides definitions for certain terms used in this section.

(b) ***Rules of general application*** —

(1) ***Use of a definition.*** Any definition of compensation that satisfies section 414(s) may be used when a provision explicitly refers to section 414(s) unless the reference or this section specifically indicates otherwise.

(2) ***Consistency rule*** —

(i) ***General rule.*** A definition of compensation selected by an employer for use in satisfying an applicable provision must be used consistently to define the compensation of all employees taken into account in satisfying the requirements of the applicable provision for the determination period. For example, although any definition of compensation that satisfies section 414(s) may be used for section 401(a)(4) purposes, the same definition of compensation generally must be used consistently to define the compensation of all employees taken into account in determining whether a plan satisfies section 401(a)(4). Furthermore, a different definition of compensation that satisfies section 414(s) is permitted to be used to determine whether another plan maintained by the same employer separately satisfies the requirements of section 401(a)(4). Although a definition of compensation must be used consistently, an employer may change its definition of compensation for a subsequent determination period with respect to the applicable provision. Rules provided under any applicable provision may modify the consistency requirements of this paragraph (b)(2).

(ii) ***Scope of consistency rule.*** Compensation will not fail to be defined consistently for a group of employees merely because some employees do not receive one or more of the types of compensation included in the definition. For example, a definition of compensation that includes salary, regular or scheduled pay, overtime, and specified types of bonuses will not fail

to define compensation consistently merely because only salaried employees receive salary and these specified types of bonuses and only hourly employees receive regular or scheduled pay and overtime.

(3) ***Self-employed individuals.*** Notwithstanding paragraph (b)(1) of this section, self-employed individuals' compensation can only be determined under paragraph (c)(2) of this section (with or without the modification permitted by paragraph (c)(4) of this section or a modification permitted by paragraph (c)(5) of this section) or by using an equivalent alternative compensation amount determined in accordance with paragraph (g)(1) of this section. These limitations on self-employed individuals do not affect their common-law employees. Thus, the compensation of common-law employees of a partnership or sole proprietorship may be defined using an alternative definition, provided the definition otherwise satisfies paragraph (c)(3), (d), (e), or (f) of this section. If an alternative definition of compensation under paragraph (c)(3), (d), (e), or (f) of this section is used for other employees to satisfy an applicable provision, the consistency requirement is only met if paragraph (g) of this section is used for the self-employed individuals.

(c) ***Specific definitions of compensation that satisfy section 414(s)*** —

(1) ***General rules.*** The definitions of compensation provided in paragraphs (c)(2) and (c)(3) of this section satisfy section 414(s) and need not satisfy any additional requirements under section 414(s). Paragraph (c)(2) of this section describes definitions of compensation within the meaning of section 415(c)(3). Paragraph (c)(3) of this section provides a safe harbor alternative definition that excludes certain additional items of compensation. Paragraph (c)(4) of this section permits any definition provided in paragraph (c)(2) or (c)(3) of this section to include certain types of elective contributions and deferred compensation. Paragraph (c)(5) of this section permits certain modifications to a definition otherwise provided under this paragraph (c).

(2) ***Compensation within the meaning of section 415(c)(3).*** A definition of compensation that includes all compensation within the meaning of section 415(c)(3) and excludes all other compensation satisfies section 414(s). Sections 1.415(c)-2(b) and (c) provide rules for determining items of compensation included in and excluded from compensation within the meaning of section 415(c)(3). In addition, section 414(s) is satisfied by the safe harbor definitions provided in § 1.415(c)-2(d)(2), (d)(3) and (d)(4) and any additional definitions of compensation prescribed by the Commissioner under the authority provided in § 1.415(c)-2(d)(1) that are treated as satisfying section 415(c)(3).

(3) ***Safe harbor alternative definition.*** Under the safe harbor alternative definition in this paragraph (c)(3), compensation is compensation as defined in paragraph (c)(2) of this section, reduced by all of the following items (even if includible in gross income): reimbursements or other expense allowances, fringe benefits (cash and noncash), moving expenses, deferred compensation, and welfare benefits.

(4) ***Inclusion of certain deferrals in compensation.*** Any definition of compensation provided in paragraph (c)(2) or (c)(3) of this section satisfies section 414(s) even though it is modified to include all of the following types of elective contributions and all of the following types of deferred compensation—

(i) Elective contributions that are made by the employer on behalf of its employees that are not includible in gross income under section 125, section 402(e)(3), section 402(h), and section 403(b);

(ii) Compensation deferred under an eligible deferred compensation plan within the meaning of section 457(b) (deferred compensation plans of state and local governments and tax-exempt organizations); and

(iii) Employee contributions (under governmental plans) described in section 414(h)(2) that are picked up by the employing unit and thus are treated as employer contributions.

(5) ***Exclusions applicable solely to highly compensated employees.*** Any definition of compensation that satisfies paragraph (c)(2) or (c)(3) of this section, with or without the modification permitted by paragraph (c)(4) of this section, may be modified to exclude any portion of the compensation of some or all of the employer's highly compensated employees (including, for example, any one or more of the types of elective contributions or deferred compensation described in paragraph (c)(4) of this section).

(d) ***Alternative definitions of compensation that satisfy section 414(s)*** —

(1) ***General rule.*** In addition to the definitions provided in paragraph (c) of this section, any definition of compensation satisfies section 414(s) with respect to employees (other than self-employed individuals treated as employees under section 401(c)(1)) if the definition of compensation does not by design favor highly compensated employees, is reasonable within the meaning of paragraph (d)(2) of this section, and satisfies the nondiscrimination requirement in paragraph (d)(3) of this section.

(2) ***Reasonable definition of compensation*** —

(i) ***General rule.*** An alternative definition of compensation under this paragraph (d) is reasonable under section 414(s) if it is a definition of compensation provided in paragraph (c) of this section, modified to exclude all or any portion of one or more of the types of compensation described in paragraph (d)(2)(ii) of this section. See paragraph (e) of this section, however, for special rules that permit definitions of compensation based on employees' rates of compensation and paragraph (f) of this section for special rules that permit definitions of compensation that include prior-employer compensation or imputed compensation.

(ii) ***Items that may be excluded.*** A reasonable definition of compensation is permitted to exclude, on a consistent basis, all or any portion of irregular or additional compensation, including (but not limited to) one or more of the following: Any type of additional compensation for employees working outside their regularly scheduled tour of duty (such as overtime pay, premiums for shift differential, and call-in premiums), bonuses, or any one or more of the types of compensation excluded under the safe harbor alternative definition in paragraph (c)(3) of this section. Whether a type of compensation is irregular or additional is determined based on all the relevant facts and circumstances. A reasonable definition is also permitted to include, on a consistent basis, all or any portion of the types of elective contributions or deferred compensation described in paragraph (c)(4) of this section and, thus, need not include all those types of elective contributions or deferred compensation as otherwise required under paragraph (c)(4) of this section.

(iii) ***Limits on the amount excluded from compensation.*** A definition of compensation is not reasonable if it provides that each employee's compensation is a specified portion of the employee's compensation measured for the otherwise applicable determination period under another definition. For example, a definition of compensation that specifically limits each employee's compensation for a determination period to 95 percent of the employee's compensation using a definition provided in paragraph (c) of this section is not reasonable. Similarly, a definition of compensation that limits each employee's compensation used to satisfy an applicable provision with a 12-month determination period to compensation under a

definition provided in paragraph (c) of this section for one month is not a reasonable definition of compensation. However, a definition of compensation is not unreasonable merely because it excludes all compensation in excess of a specified dollar amount.

(3) ***Nondiscrimination requirement*** —

(i) ***In general.*** An alternative definition of compensation under this paragraph (d) is nondiscriminatory under section 414(s) for a determination period if the average percentage of total compensation included under the alternative definition of compensation for an employer's highly compensated employees, as a group for the determination period does not exceed by more than a de minimis amount the average percentage of total compensation included under the alternative definition for the employer's nonhighly compensated employees as a group.

(ii) ***Total compensation*** —

(A) ***General rule.*** For purposes of this paragraph (d)(3), total compensation must be determined using a definition of compensation provided in paragraph (c)(2) of this section, either with or without the modification permitted by paragraph (c)(4) of this section. Thus, total compensation does not include prior-employer compensation or imputed compensation described in paragraph (f)(1) of this section (including imputed compensation for a period during which an employee performs services for another employer). Total compensation taken into account for each employee (including, if added, the elective contributions and deferred compensation described in paragraph (c)(4) of this section) may not exceed the annual compensation limit of section 401(a)(17).

(B) ***Alternative definitions with exclusions applicable solely to highly compensated employees.*** If an alternative definition of compensation contains a provision that excludes amounts from compensation and, as described in paragraph (c)(5) of this section, the provision only applies in defining the compensation of some highly compensated employees, then, for purposes of this paragraph (d)(3), the total compensation of any highly compensated employee subject to the provision must be reduced by any amount excluded from the employee's compensation as a result of the provision. However, if the provision applies consistently in defining the compensation of all highly compensated employees, this adjustment to total compensation is not required.

(iii) ***Employees taken into account*** —

(A) ***General rule.*** In applying the requirement of this paragraph (d)(3), the employees taken into account are the same employees taken into account in satisfying the requirements of the applicable provision for the determination period. For example, in determining whether a plan satisfies section 401(a)(4), an alternative definition must satisfy this paragraph (d)(3) taking into account all employees who benefit under the plan for the plan year (within the meaning of § 1.410(b)-3(a)). If an employer is using the same alternative definition of compensation to determine whether more than one separate plan satisfies section 401(a)(4), the employer is permitted to take into account all the employees who benefit under all of those plans for the plan year in determining whether the alternative definition of compensation being used satisfies this paragraph (d)(3).

(B) ***Exclusion of self-employed individuals.*** In applying the requirement of this paragraph (d)(3), self-employed individuals are disregarded.

(C) ***Certain employees disregarded.*** If an employee's total compensation for the determination period, determined under paragraph (d)(3)(ii) and (d)(3)(vi)(B) of this section, is zero, the employee is disregarded in determining whether the nondiscrimination requirement of paragraph (d)(3) of this section is satisfied for that determination period. For example, an employee who does not receive any actual compensation during a determination period because the employee is on unpaid leave of absence for the entire period, but who is credited with imputed compensation described in paragraph (f)(1) of this section, is disregarded in determining whether the nondiscrimination requirement of this paragraph (d)(3) is satisfied for that determination period.

(iv) ***Calculation of average percentages*** —

(A) ***General rule.*** To determine the average percentages described in paragraph (d)(3)(i) of this section, an individual compensation percentage must be calculated for each employee in a group, and then the average of the separately calculated compensation percentages for each employee in the group must be determined. The individual compensation percentage for an employee is calculated by dividing the amount of the employee's compensation that is included under the alternative definition by the amount of the employee's total compensation.

(B) ***Other reasonable methods.*** Notwithstanding paragraph (d)(3)(iv)(A) of this section, any other reasonable method is permitted to be used to determine the average percentages described in paragraph (d)(3)(i) of this section for either or both of the groups (i.e., highly compensated employees and nonhighly compensated employees), provided that the method cannot reasonably be expected to create a significant variance from the average percentage for that group determined using the individual-percentage method provided in paragraph (d)(3)(iv)(A) of this section. The same method is not required to be used for calculating the two average percentages. For example, to determine the average percentage for nonhighly compensated employees as a group, an employer may calculate an aggregate compensation percentage by dividing the aggregate amount of compensation of nonhighly compensated employees that are included under the alternative definition by the aggregate amount of total compensation of nonhighly compensated employees, provided the resulting percentage is not reasonably expected to vary significantly from the average percentage produced using the individual-percentage method provided in paragraph (d)(3)(iv)(A) of this section because of the extra weight given employees with higher compensation.

(v) ***Facts and circumstances determination.*** The determination of whether the average percentage of total compensation included for the employer's highly compensated employees as a group for a determination period exceeds by more than a de minimis amount the average percentage of total compensation included for the employer's nonhighly compensated employees as a group is based on all the relevant facts and circumstances. The differences between the percentages for prior determination periods may be considered in determining whether the amount of the difference between the percentages is more than de minimis. In addition, an isolated instance of a more than de minimis difference between the compensation percentages that is due to an extraordinary unforeseeable event (such as overtime payments to employees of a public utility due to a major hurricane) will be disregarded if the amount of the difference in prior determination periods was de minimis.

(vi) *Special rules for definitions of compensation based on rate of compensation or that include prior-employer or imputed compensation* —

(A) *Special rule for determining compensation included under an alternative definition.* If an alternative definition uses rate of compensation or includes prior-employer compensation or imputed compensation, the amount of each employee's compensation for a determination period that is treated as included under the alternative definition for purposes of determining the average percentages for the nondiscrimination requirement (i.e. the amount used in the numerator) must not be more than 100 percent of the employee's total compensation for that period, determined under paragraph (d)(3)(ii) and (d)(3)(vi)(B) of this section. This limit on the amount of compensation treated as included under the alternative definition applies even if the amount of compensation actually credited to the employee for the determination period under the definition and, thus, used as compensation within the meaning of section 414(s), exceeds the employee's total compensation for the period.

(B) *Special rule for determining total compensation.* If an alternative definition uses rate of compensation or includes prior-employer compensation or imputed compensation, each employee's total compensation for purposes of determining the average percentages for the nondiscrimination requirement (i.e. the amount used in the denominator) must include all the types of elective contributions and deferred compensation described in paragraph (c)(4) of this section.

(e) *Rate of compensation* —

(1) *General rule.* A definition of compensation satisfies section 414(s) as a reasonable definition of compensation even though it defines the amount of each employee's basic or regular compensation using the employee's basic or regular rate of compensation rather than using the employee's actual basic or regular compensation from the employer if the definition satisfies the requirements specified in paragraph (e)(3) of this section and otherwise satisfies the requirements of paragraph (d) of this section, including the nondiscrimination test in paragraph (d)(3) of this section. For this purpose, the employee's rate of compensation must be determined using an hourly pay scale, weekly salary, or similar unit of basic or regular compensation applicable to the employee. A definition will not fail to satisfy the requirements of this paragraph (e) merely because it defines compensation as including each employee's basic or regular compensation, the amount of which is determined using each employee's basic or regular rate of compensation, plus actual amounts of irregular or additional compensation, such as overtime or bonuses. In addition, a definition of compensation will not fail to satisfy section 414(s) merely because it defines compensation for each employee as the greater of the employee's actual compensation, the amount of which is determined using a definition that would otherwise satisfy paragraph (c) or (d)(2) of this section, or the employee's basic or regular compensation, the amount of which is determined using the employee's basic or regular rate of compensation.

(2) *Not applicable to certain contributions.* This paragraph (e) does not apply to a definition of compensation used in determining whether elective deferrals (as defined in section 402(g)(3)), matching contributions (as defined in section 401(m)(4)), or employee contributions subject to section 401(m) satisfy any applicable provision. Thus, for example, a definition of compensation that defines compensation based on each employee's basic or regular rate of compensation may not be used to measure compensation for purposes of determining if a qualified cash or deferred arrangement satisfies the actual deferral percentage test in section 401(k)(3).

(3) *Requirements for definitions of compensation based on rate of compensation* —

(i) ***Benefit determination.*** The definition of compensation must actually be used to calculate the benefits, contributions, or other amounts, that are subject to the applicable provision. For example, a definition of compensation that defines compensation based on each employee's basic or regular rate of compensation may not be used to determine whether a plan satisfies section 401(a)(4) unless the benefits, contributions, or other amounts for each employee in the plan are determined using that definition of compensation.

(ii) ***Period for determining compensation.*** The amount of each employee's basic or regular compensation for the determination period must be determined using the employee's basic or regular rate of compensation as of a designated date in the determination period. For example, if the determination period is a calendar year, this requirement would be satisfied if the amount of each employee's basic or regular compensation for the calendar year is determined using the employee's basic or regular rate of compensation as of January 1 of the calendar year. Alternatively, the amount of each employee's basic or regular compensation for a determination period can be the sum of the amounts separately determined for shorter specified periods (e.g., weeks or months) within the determination period provided the amount of each employee's basic or regular compensation for each specified period is determined using the employee's basic or regular rate of compensation as of a designated date within the specified period.

(iii) ***Dates for determining rate of compensation.*** One or more dates may be used to determine employees' rates of compensation for a determination period or specified period provided that, if the same date is not used for all employees, the dates selected are designed to determine the rates of compensation for that period on a consistent basis for all employees taken into account for the determination period. For example, if annual compensation increases are provided to different groups of employees on different dates during the year, it would be consistent to choose a different date for each group in order to include the annual increase in the employees' rates of compensation for the determination period. In addition, the date or dates selected, by themselves, must not cause the portion of total compensation included to vary significantly among employees.

(iv) ***Periods without compensation or with reduced compensation.*** An employee's compensation may generally only be determined using the employee's rate of compensation for employment periods during which the employer actually compensates the employee. However, if an employee terminates employment or otherwise stops performing services (such as for a leave of absence, layoff or similar event) either without compensation or with reduced compensation during a determination period, the employer may continue to credit the employee with compensation based on the employee's rate of compensation for a period of up to 31 days after the event, but not beyond the end of the determination period. Paragraph (f) of this section contains special rules for crediting imputed compensation for periods extending beyond 31 days during which an employee is not compensated or an employee's compensation is reduced. See also the definition of *Section 414(s) compensation* in § 1.401(a)(4)-12 that, for purposes of satisfying section 401(a)(4), permits adjustments to compensation to reflect the equivalent of full-time compensation to the extent necessary to satisfy the requirements of 29 CFR 2530.204-2(d) (regarding double proration of service and compensation).

(f) *Prior-employer compensation and imputed compensation* —

(1) ***General rule.*** Solely for purposes of determining whether a defined benefit plan, as defined in § 1.410(b)-9, satisfies section 401(a)(4) or 410(b), an alternative definition that includes prior-employer compensation or imputed compensation satisfies section 414(s) as a reasonable alternative definition if the definition satisfies the requirements specified in paragraphs (f) (2) and (3) of this section. For this purpose, prior-employer compensation is compensation from an employer other than the employer (determined at the time that the compensation is paid) maintaining the plan that is credited for periods prior to the employee's employment with the employer maintaining the plan and during which the employee performed services for the other employer. For this purpose, imputed compensation is compensation credited for periods after an employee has commenced or recommenced participation in a plan while the employee is not compensated by the employer maintaining the plan or is compensated at a reduced rate by that employer because the employee is not performing services as an employee for the employer (including a period in which the employee performs services for another employer, e.g., a joint venture) or because the employee has a reduced work schedule.

(2) ***Requirements for definitions of compensation crediting prior-employer compensation or imputed compensation*** —

(i) ***General requirement.*** The definition must otherwise be described in paragraph (c) of this section or must otherwise satisfy the requirements of paragraph (d) or (e) of this section for alternative definitions of compensation, including the nondiscrimination requirement in paragraph (d)(3) of this section.

(ii) ***Benefit determination.*** A definition of compensation that credits prior-employer compensation or imputed compensation must actually be used to calculate the benefits under the plan. For example, the definition may not be used to determine whether a defined benefit plan satisfies section 401(a)(4) unless the benefits for each employee in the plan are determined using that definition of compensation.

(iii) ***Provision applied to all similarly-situated employees.*** A provision in a plan's definition of compensation crediting prior-employer compensation or imputed compensation must apply on the same terms to all similarly-situated employees in the plan. The criteria for determining whether employees are similarly situated for this purpose are the same as the criteria for determining whether a plan provision crediting pre-participation or imputed service satisfies the requirements of § 1.401(a)(4)-11(d)(3)(iii)(A).

(iv) ***Legitimate business purpose.*** There must be a legitimate business purpose, based on all of the relevant facts and circumstances, for crediting prior-employer compensation or imputed compensation to an employee for the period being credited. The standard for determining whether crediting prior-employer compensation or imputed compensation satisfies this requirement is the same as the standard for determining whether crediting pre-participation or imputed service under a plan satisfies the requirements of § 1.401(a)(4)-11(d)(3)(iii)(B) and whether crediting imputed service satisfies the additional requirements of § 1.401(a)(4)-11(d)(3)(iv)(A). However, if the legitimate business reason for crediting imputed compensation relates to the services the employee is performing for another employer and the reason satisfies the standard in § 1.401(a)(4)-11(d)(3)(iii)(B), the additional requirements of § 1.401(a)(4)-11(d)(3)(iv)(A) are deemed to be satisfied. For example, if an employee becomes employed by another employer as a result of a merger, acquisition or similar transaction with the other employer and imputed compensation is credited to the employee while the employee is performing services for the other employer, the crediting of imputed compensation to the

employee satisfies the standard in § 1.401(a)(4)-11(d)(3)(iii)(B). Thus, under that example, crediting the imputed compensation to the employee is deemed to satisfy the additional requirements of § 1.401(a)(4)-11(d)(3)(iv)(A), even if the employee is not performing those services under an arrangement that provides an ongoing business benefit to the employer maintaining the plan.

(v) ***No significant discrimination.*** Based on all of the relevant facts and circumstances, crediting prior-employer compensation or imputed compensation must not by design or in operation discriminate significantly in favor of highly compensated employees. The standard for determining whether crediting prior-employer compensation or imputed compensation satisfies this requirement is the same as the standard for determining whether crediting pre-participation or imputed service satisfies the requirement in § 1.401(a)(4)-11(d)(3)(iii)(C) and whether crediting imputed service satisfies the additional requirement of § 1.401(a)(4)-11(d)(3)(iv)(B).

(3) ***Reasonable method*** —

(i) ***General rule.*** Any reasonable method may be used to determine the amount of prior-employer compensation or imputed compensation provided that the requirements of paragraph (f)(3) (ii) or (iii) of this section are satisfied, whichever is applicable.

(ii) ***Requirements for prior-employer compensation.*** Prior-employer compensation credited to an employee for a period that an employee is performing services for another employer must be compensation for the employee from the other employer (or be based on the employee's basic or regular rate of compensation from the other employer) for that period. In addition, prior employer compensation credited to an employee must not exceed the amount of compensation from the other employer that would have been included under the definition of compensation in effect for that period for compensation from the employer maintaining the plan. Reasonable assumptions may be made in determining the amount of compensation received from another employer for a period that would have been included under the definition of compensation in effect for that period for compensation from the employer maintaining the plan.

(iii) ***Requirements for imputed compensation*** —

(A) ***General rule.*** The amount of imputed compensation credited to an employee during any period, when combined with the amount of any actual compensation being included, must not exceed an amount that, based on all of the relevant facts and circumstances, is reasonably representative of the amount of compensation that the employee would have received and that would have been included under the definition of compensation in effect for the period if the employee had continued to perform services for the employer during that period at the same level as the employee was performing before the employee stopped performing services or changed to a reduced work schedule. The relevant facts and circumstances include the compensation that the employee was receiving immediately before the employee stopped performing services or changed to a reduced work schedule, and, if applicable, the rate of compensation in effect while the employee is not performing services or has a reduced work schedule that is applicable to the employee's specific job grade immediately before the change occurred.

(B) ***Imputed compensation from another employer.*** Imputed compensation credited for a period that an employee is performing services for another employer is deemed to satisfy paragraph (f)(3)(iii)(A) of this section if the amount of compensation credited satisfies the requirements of paragraph (f)(3)(ii) of this section for prior-employer compensation. Thus, for example, the amount of imputed compensation credited to an employee for a period that the employee is performing services for another employer is deemed to satisfy paragraph (f)(3)(iii)(A) of this section if the amount credited is compensation for the employee from the other employer (or is based on the employee's basic or regular rate of compensation from the other employer) for that period, and the amount credited does not exceed the compensation from the other employer that would be included for the employee under the definition of compensation in effect for that period for compensation from the employer maintaining the plan.

(4) ***Special nondiscrimination rule for safe harbor definitions.*** If a definition of compensation crediting prior-employer or imputed compensation is otherwise described in paragraph (c) of this section, and the prior-employer compensation or imputed compensation credited satisfies the requirements of paragraphs (f) (1), (2), and (3) of this section, then the definition is deemed to satisfy paragraph (d) of this section (i.e., it is deemed to be nondiscriminatory).

(g) ***Special rules*** —

(1) ***Self-employed individuals*** —

(i) ***General rule.*** If an alternative definition of compensation under paragraph (c)(3), (d), (e), or (f) of this section is used to satisfy an applicable provision, an equivalent alternative compensation amount must be determined for any self-employed individual who is in the group of employees for whom paragraph (b) of this section requires a single definition of compensation to be used. This equivalent alternative compensation amount is determined by multiplying the self-employed individual's total earned income (as defined in section 401 (c)(2)) for the determination period by the percentage of total compensation (as defined in paragraph (d)(3)(ii) of this section) included under the alternative definition for the employer's nonhighly compensated common-law employees as a group (determined in a manner consistent with the rules in paragraph (d)(3)(iii) of this section and, if applicable, paragraph (d)(3)(vi) of this section). Thus, for purposes of this determination, highly compensated common-law employees must be disregarded. This equivalent alternative compensation amount will be treated as the self-employed individual's compensation under the alternative definition of compensation for the determination period.

(ii) ***Inclusion of elective contributions.*** If the alternative definition of compensation includes any types of elective contributions described in paragraph (c)(4) of this section, the self-employed individual's earned income for this determination must be increased by the amount of elective contributions made by the employer on behalf of the self-employed individual, and the definition of total compensation for this determination must include all the types of elective contributions described in paragraph (c)(4) of this section made by the employees (other than highly compensated employees.

(iii) ***Reductions in equivalent alternative compensation amount applicable only to highly compensated employees.*** An alternative definition of compensation may provide that compensation under the alternative definition for some or all self-employed individuals who are highly compensated employees is a specified portion of, rather than equal to, the equivalent compensation amount determined under paragraph (g)(1)(i).

(2) ***Leased employees.*** [Reserved]

(h) ***Definitions.*** The following definitions apply for purposes of this section:

(1) ***Applicable provision.*** Applicable provision means a provision that specifically refers to section 414(s) or this section.

(2) ***Determination period.*** Determination period means a period during which the amount of compensation is measured for use in determining whether the requirements of an applicable provision are satisfied. If no period is provided under the applicable provision for measuring compensation, the determination period is the period for which the applicable provision must be satisfied. The applicable provision may provide additional rules concerning the determination period to be used for satisfying the nondiscrimination requirement in paragraph (d) of this section.

(3) ***Employee.*** Employee means employee within the meaning of § 1.410(b)-9.

(4) ***Highly compensated employee.*** Highly compensated employee means highly compensated employee within the meaning of § 1.410(b)-9.

(5) ***Nonhighly compensated employee.*** Nonhighly compensated employee means nonhighly compensated employee within the meaning of § 1.410(b)-9.

(6) ***Self-employed individual.*** Self-employed individual means self-employed individual within the meaning of section 401(c)(1).

(i) ***Additional rules.*** The Commissioner may in revenue rulings, notices, and other guidance of general applicability provide additional rules for defining compensation within the meaning of section 414(s), including additional definitions of compensation that satisfy section 414(s).

(j) ***Effective date and transition rules*** —

(1) ***Statutory effective date.*** Section 414(s) applies to years beginning on or after January 1, 1987.

(2) ***Regulatory effective date*** —

(i) ***In general.*** Except as otherwise provided in paragraph (j)(2)(ii) of this section, § 1.414(s)-1 (a) through (i) apply to years beginning on or after January 1, 1994.

(ii) ***Plans of tax-exempt organizations.*** In the case of a plan maintained by an organization that is exempt from income taxation pursuant to section 501(a), including plans subject to section 403(b)(12)(A)(i) (nonelective plans), § 1.414(s)-1 (a) through (i) apply to plan years beginning on or after January 1, 1996.

(3) ***Compliance during transition period.*** For plan years beginning before the effective date of these regulations, as set forth in paragraph (j)(2) of this section, and on or after the statutory effective date as set forth in paragraph (j)(1) of this section, a plan must be operated in accordance with a reasonable, good faith interpretation of section 414(s). Whether a plan is operated in accordance with a reasonable, good faith interpretation of section 414(s) will generally be determined based on all relevant facts and circumstances, including the extent to which an employer has resolved unclear issues in its favor. A plan will be deemed to be operated in accordance with a reasonable, good faith interpretation of section 414(s)(1) and (2) if it is operated in accordance with the terms of § 1.414(s)-1 (a) through (i). For years beginning on or after the statutory effective date and before the effective date of these regulations, a definition of compensation is also deemed to satisfy section 414(s) as an alternative method of determining compensation under section 414(s)(3) if the

definition satisfies the requirements of § 1.414(s)-1 (a) through (i) or if the definition satisfies the prior regulation provisions of § 1.414(s)-1T. (See § 1.414(s)-1T as contained in the CFR edition revised as of April 1, 1991.) In addition, for those transition years, a definition of compensation is deemed to satisfy section 414(s) as an alternative method of determining compensation under section 414(s)(3) if, based on all the relevant facts and circumstances in effect for the year, use of the definition does not cause discrimination in favor of highly compensated employees.

[T.D. 8361, 56 FR 47662, Sept. 19, 1991; 57 FR 10815, 10953, Mar. 31, 1992, as amended by T.D. 8488, 58 FR 47063, Sept. 7, 1993; T.D. 9319, 72 FR 16894, Apr. 5, 2007]

§ 1.414(v)-1 Catch-up contributions.

(a) ***Catch-up contributions*** —

(1) ***General rule.*** An applicable employer plan shall not be treated as failing to meet any requirement of the Internal Revenue Code solely because the plan permits a catch-up eligible participant to make catch-up contributions in accordance with section 414(v) and this section. With respect to an applicable employer plan, catch-up contributions are elective deferrals made by a catch-up eligible participant that exceed any of the applicable limits set forth in paragraph (b) of this section and that are treated under the applicable employer plan as catch-up contributions, but only to the extent they do not exceed the catch-up contribution limit described in paragraph (c) of this section (determined in accordance with the special rules for employers that maintain multiple applicable employer plans in paragraph (f) of this section, if applicable). To the extent provided under paragraph (d) of this section, catch-up contributions are disregarded for purposes of various statutory limits. In addition, unless otherwise provided in paragraph (e) of this section, all catch-up eligible participants of the employer must be provided the opportunity to make catch-up contributions in order for an applicable employer plan to comply with the universal availability requirement of section 414(v)(4). The definitions in paragraph (g) of this section apply for purposes of this section and §§ 1.414(v)-2 and 1.402(g)-2.

(2) ***Treatment as elective deferrals.*** Except as specifically provided in this section, elective deferrals treated as catch-up contributions remain subject to statutory and regulatory rules otherwise applicable to elective deferrals. For example, catch-up contributions under an applicable employer plan that is a section 401(k) plan are subject to the distribution and vesting restrictions of section 401(k)(2)(B) and (C). In addition, the plan is permitted to provide a single election for catch-up eligible participants, with the determination of whether elective deferrals are catch-up contributions being made under the terms of the plan.

(3) ***Coordination with section 457(b)(3).*** In the case of an applicable employer plan that is a section 457 eligible governmental plan, the catch-up contributions permitted under this section shall not apply to a catch-up eligible participant for any taxable year for which a higher limitation applies to such participant under section 457(b)(3). For additional guidance, see regulations under section 457.

(4) ***Catch-up contributions must be designated Roth contributions for certain participants.*** For provisions relating to the requirement under section 414(v)(7) that catch-up contributions made by certain catch-up eligible participants must be designated Roth contributions, *see* § 1.414(v)-2.

(b) ***Elective deferrals that exceed an applicable limit*** —

(1) ***Applicable limits.*** An applicable limit for purposes of determining catch-up contributions for a catch-up eligible participant is any of the following:

(i) ***Statutory limit.*** A statutory limit is a limit on elective deferrals or annual additions permitted to be made (without regard to section 414(v) and this section) with respect to an employee for a year provided in section 401(a)(30), 402(h), 403(b), 408, 415(c), or 457(b)(2) (without regard to section 457(b)(3)), as applicable.

(ii) ***Employer-provided limit.*** An employer-provided limit is any limit on the elective deferrals an employee is permitted to make (without regard to section 414(v) and this section) that is contained in the terms of the plan, but which is not required under the Internal Revenue Code. Thus, for example, if, in accordance with the terms of the plan, highly compensated employees are limited to a deferral percentage of 10% of compensation, this limit is an employer-provided limit that is an applicable limit with respect to the highly compensated employees.

(iii) ***Actual deferral percentage (ADP) limit.*** In the case of a section 401(k) plan that would fail the ADP test of section 401(k)(3) if it did not correct under section 401(k)(8), the ADP limit is the highest amount of elective deferrals that can be retained in the plan by any highly compensated employee under the rules of section 401(k)(8)(C) (without regard to paragraph (d)(2)(iii) of this section). In the case of a simplified employee pension (SEP) with a salary reduction arrangement (within the meaning of section 408(k)(6)) that would fail the requirements of section 408(k)(6)(A)(iii) if it did not correct in accordance with section 408(k)(6)(C), the ADP limit is the highest amount of elective deferrals that can be made by any highly compensated employee under the rules of section 408(k)(6) (without regard to paragraph (d)(2)(iii) of this section).

(2) ***Contributions in excess of applicable limit*** —

(i) ***Plan year limits*** —

(A) ***General rule.*** Except as provided in paragraph (b)(2)(ii) of this section, the amount of elective deferrals in excess of an applicable limit is determined as of the end of the plan year by comparing the total elective deferrals for the plan year with the applicable limit for the plan year. In addition, except as provided in paragraph (b)(2)(i)(B) of this section, in the case of a plan that provides for separate employer-provided limits on elective deferrals for separate portions of plan compensation within the plan year, the applicable limit for the plan year is the sum of the dollar amounts of the limits for the separate portions. For example, if a plan sets a deferral percentage limit for each payroll period, the applicable limit for the plan year is the sum of the dollar amounts of the limits for the payroll periods.

(B) ***Alternative method for determining employer-provided limit*** —

(*1*) ***General rule.*** If the plan limits elective deferrals for separate portions of the plan year, then, solely for purposes of determining the amount that is in excess of an employer-provided limit, the plan is permitted to provide that the applicable limit for the plan year is the product of the employee's plan year compensation and the time-weighted average of the deferral percentage limits, rather than determining the employer-provided limit as the sum of the limits for the separate portions of the year. Thus, for example, if, in accordance with the terms of the plan, highly compensated employees are limited to 8% of compensation during the first half of the plan year and 10% of compensation for the second half of the plan year, the plan is permitted to provide that the applicable limit for a highly compensated employee is 9% of the employee's plan year compensation.

(2) ***Alternative definition of compensation permitted.*** A plan using the alternative method in this paragraph (b)(2)(i)(B) is permitted to provide that the applicable limit for the plan year is determined as the product of the catch-up eligible participant's compensation used for purposes of the ADP test and the time-weighted average of the deferral percentage limits. The alternative calculation in this paragraph (b)(2)(i)(B)(2) is available regardless of whether the deferral percentage limits change during the plan year.

(ii) ***Other year limit.*** In the case of an applicable limit that is applied on the basis of a year other than the plan year (e.g., the calendar-year limit on elective deferrals under section 401(a)(30)), the determination of whether elective deferrals are in excess of the applicable limit is made on the basis of such other year.

(c) ***Catch-up contribution limit*** —

(1) ***General rule.*** Elective deferrals with respect to a catch-up eligible participant in excess of an applicable limit under paragraph (b) of this section are treated as catch-up contributions under this section as of a date within a taxable year only to the extent that such elective deferrals do not exceed the catch-up contribution limit described in paragraphs (c)(1) and (2) of this section, reduced by elective deferrals previously treated as catch-up contributions for the taxable year, determined in accordance with paragraph (c)(3) of this section. The catch-up contribution limit for a taxable year is generally the applicable dollar catch-up limit for such taxable year, as set forth in paragraph (c)(2) of this section. However, an elective deferral is not treated as a catch-up contribution to the extent that the elective deferral, when added to all other elective deferrals for the taxable year under any applicable employer plan of the employer, exceeds the participant's compensation (determined in accordance with section 415(c)(3)) for the taxable year. See also paragraph (f) of this section for special rules for employees who participate in more than one applicable employer plan maintained by the employer.

(2) ***Applicable dollar catch-up limit*** —

(i) ***Plans other than SIMPLE Plans*** —

(A) ***In general.*** Except as provided in paragraph (c)(2)(i)(B) of this section, the applicable dollar catch-up limit that applies under an applicable employer plan, other than a SIMPLE 401(k) plan described in section 401(k)(11) or a SIMPLE IRA plan described in section 408(p), for a taxable year is $5,000, as adjusted for changes in the cost of living under paragraph (c)(2)(iii)(A) of this section.

(B) ***Higher limit applicable during the taxable year of attainment of age 60 through 63.*** For a taxable year beginning after 2024, with respect to a catch-up eligible participant who would attain age 60, 61, 62, or 63 during the taxable year, the applicable dollar catch-up limit for the taxable year under an applicable employer plan described in paragraph (c)(2)(i)(A) of this section is $11,250 (which is 150 percent of the applicable dollar catch-up limit described in paragraph (c)(2)(i)(A) of this section for a taxable year beginning in 2024), as adjusted for changes in the cost of living under paragraph (c)(2)(iii)(B) of this section.

(ii) ***SIMPLE plans*** —

(A) ***In general.*** Except as provided in paragraph (c)(2)(ii)(B) or (C) of this section, the applicable dollar catch-up limit that applies under a SIMPLE 401(k) plan described in section 401(k)(11) or a SIMPLE IRA plan described in section 408(p) for a taxable year is $2,500, as adjusted for changes in the cost of living under paragraph (c)(2)(iii)(A) of this section.

(B) ***Higher limit applicable during the taxable year of attainment of age 60 through 63.*** For a taxable year beginning after 2024, with respect to a catch-up eligible participant who would attain age 60, 61, 62, or 63 during the taxable year, the applicable dollar catch-up limit for the taxable year under an applicable employer plan described in paragraph (c)(2)(ii)(A) of this section is $5,250 (which is 150 percent of the applicable dollar catch-up limit under paragraph (c)(2)(ii)(A) of this section for a taxable year beginning in 2025), as adjusted for changes in the cost of living under paragraph (c)(2)(iii)(B) of this section.

(C) ***Higher limit for certain SIMPLE plans.*** For a taxable year beginning after 2023, the applicable dollar catch-up limit under an applicable employer plan described in paragraph (c)(2)(ii)(A) of this section that is maintained by an eligible employer meeting the requirements in section 408(p)(2)(E)(iv) is $3,850 (which is 110 percent of the applicable dollar catch-up limit in effect under paragraph (c)(2)(ii)(A) of this section for a taxable year beginning in 2024), as adjusted for changes in the cost of living under paragraph (c)(2)(iii)(C) of this section. The preceding sentence applies with respect to a taxable year only if the taxable year begins in a calendar year for which the eligible employer is described in section 408(p)(2)(E)(i)(I) or makes the election described in section 408(p)(2)(E)(i)(II).

(iii) ***Cost-of-living adjustments*** —

(A) ***In general.*** For a taxable year beginning after 2006, the applicable dollar catch-up limit under paragraph (c)(2)(i)(A) or (c)(2)(ii)(A) of this section (whichever applies to the plan) is the initial amount ($5,000 or $2,500, respectively), increased for changes in the cost of living. The increase is made at the same time and in the same manner as adjustments under section 415(d), except that the base period is the calendar quarter beginning July 1, 2005, and any increase that is not a multiple of $500 is rounded to the next lower multiple of $500.

(B) ***Adjustments to higher limit applicable during the taxable year of attainment of age 60 through 63.*** For a taxable year beginning after 2025, the applicable dollar catch-up limit under paragraph (c)(2)(i)(B) or (c)(2)(ii)(B) of this section (whichever applies to the plan) is the initial amount ($11,250 in the case of paragraph (c)(2)(i)(B) of this section and $5,250 in the case of paragraph (c)(2)(ii)(B) of this section), increased for changes in the cost of living. The increase is made at the same time and in the same manner as adjustments under section 415(d), except that the base period is the calendar quarter beginning July 1, 2024, and any increase that is not a multiple of $500 is rounded to the next lower multiple of $500.

(C) ***Adjustments to higher limit for certain SIMPLE plans.*** For a taxable year beginning after 2024, the applicable dollar catch-up limit under paragraph (c)(2)(ii)(C) of this section is the initial amount ($3,850), increased for changes in the cost of living. The increase is made at the same time and in the same manner as adjustments under section 415(d), except that the base period is the calendar quarter beginning July 1, 2023, and any increase that is not a multiple of $500 is rounded to the next lower multiple of $500.

(3) ***Timing rules.*** For purposes of determining the maximum amount of permitted catch-up contributions for a catch-up eligible participant, the determination of whether an elective deferral is a catch-up contribution is made as of the last day of the plan year (or in the case of section 415, as of the last day of the limitation year), except that, with respect to elective deferrals in excess of an applicable limit that is tested on the basis of the taxable year or calendar year (e.g., the section 401(a)(30) limit on elective deferrals), the determination of whether such elective deferrals are treated as catch-up contributions is made at the time they are deferred.

(d) ***Treatment of catch-up contributions*** —

(1) ***Contributions not taken into account for certain limits.*** Catch-up contributions are not taken into account in applying the limits of section 401(a)(30), 402(h), 403(b), 408, 415(c), or 457(b)(2) (determined without regard to section 457(b)(3)) to other contributions or benefits under an applicable employer plan or any other plan of the employer.

(2) ***Contributions not taken into account in application of ADP test*** —

(i) ***Calculation of ADR.*** Elective deferrals that are treated as catch-up contributions pursuant to paragraph (c) of this section with respect to a section 401(k) plan because they exceed a statutory or employer-provided limit described in paragraph (b)(1)(i) or (ii) of this section, respectively, are subtracted from the catch-up eligible participant's elective deferrals for the plan year for purposes of determining the actual deferral ratio (ADR) (as defined in regulations under section 401(k)) of a catch-up eligible participant. Similarly, elective deferrals that are treated as catch-up contributions pursuant to paragraph (c) of this section with respect to a SEP because they exceed a statutory or employer-provided limit described in paragraph (b)(1)(i) or (ii) of this section, respectively, are subtracted from the catch-up eligible participant's elective deferrals for the plan year for purposes of determining the deferral percentage under section 408(k)(6)(D) of a catch-up eligible participant.

(ii) ***Adjustment of elective deferrals for correction purposes.*** For purposes of the correction of excess contributions in accordance with section 401(k)(8)(C), elective deferrals under the plan treated as catch-up contributions for the plan year and not taken into account in the ADP test under paragraph (d)(2)(i) of this section are subtracted from the catch-up eligible participant's elective deferrals under the plan for the plan year.

(iii) ***Excess contributions treated as catch-up contributions.*** A section 401(k) plan that satisfies the ADP test of section 401(k)(3) through correction under section 401(k)(8) must retain any elective deferrals that are treated as catch-up contributions pursuant to paragraph (c) of this section because they exceed the ADP limit in paragraph (b)(1)(iii) of this section. In addition, a section 401(k) plan is not treated as failing to satisfy section 401(k)(8) merely because elective deferrals described in the preceding sentence are not distributed or recharacterized as employee contributions. Similarly, a SEP is not treated as failing to satisfy section 408(k)(6)(A)(iii) merely because catch-up contributions are not treated as excess contributions with respect to a catch-up eligible participant under the rules of section 408(k)(6)(C). Notwithstanding the fact that elective deferrals described in this paragraph (d)(2)(iii) are not distributed, such elective deferrals are still considered to be excess contributions under section 401(k)(8), and accordingly, matching contributions with respect to such elective deferrals are permitted to be forfeited under the rules of section 411(a)(3)(G).

(3) ***Contributions not taken into account for other nondiscrimination purposes*** —

(i) ***Application for top-heavy.*** Catch-up contributions with respect to the current plan year are not taken into account for purposes of section 416. However, catch-up contributions for prior years are taken into account for purposes of section 416. Thus, catch-up contributions for prior years are included in the account balances that are used in determining whether the plan is top-heavy under section 416(g).

(ii) ***Application for section 410(b).*** Catch-up contributions with respect to the current plan year are not taken into account for purposes of section 410(b). Thus, catch-up contributions are not taken into account in determining the average benefit percentage under § 1.410(b)-5 for the year if benefit percentages are determined based on current year contributions. However, catch-up contributions for prior years are taken into account for purposes of section 410(b). Thus, catch-up contributions for prior years would be included in the account balances that are used in determining the average benefit percentage if allocations for prior years are taken into account.

(4) ***Availability of catch-up contributions.*** An applicable employer plan does not violate § 1.401(a)(4)-4 merely because the group of employees for whom catch-up contributions are currently available (*i.e.,* the catch-up eligible participants) is not a group of employees that would satisfy section 410(b) (without regard to § 1.410(b)-5). In addition, a catch-up eligible participant is not treated as having a right to a different rate of allocation of matching contributions merely because an otherwise nondiscriminatory schedule of matching rates is applied to elective deferrals that include catch-up contributions. The rules in this paragraph (d)(4) also apply for purposes of satisfying the requirements of section 403(b)(12).

(e) ***Universal availability requirement*** —

(1) ***General rule*** —

(i) ***Effective opportunity.*** An applicable employer plan that offers catch-up contributions and that is otherwise subject to section 401(a)(4) (including a plan that is subject to section 401(a)(4) pursuant to section 403(b)(12)) will not satisfy the requirements of section 401(a)(4) unless all catch-up eligible participants who participate under any applicable employer plan maintained by the employer are provided with an effective opportunity to make the same dollar amount of catch-up contributions. A plan fails to provide an effective opportunity to make catch-up contributions if it has an applicable limit (e.g., an employer-provided limit) that applies to a catch-up eligible participant and does not permit the participant to make elective deferrals in excess of that limit. An applicable employer plan does not fail to satisfy the universal availability requirement of this paragraph (e) solely because an employer-provided limit does not apply to all employees or different limits apply to different groups of employees under paragraph (b)(2)(i) of this section. However, a plan may not provide lower employer-provided limits for catch-up eligible participants.

(ii) ***Certain practices permitted*** —

(A) ***Proration of limit.*** An applicable employer plan does not fail to satisfy the universal availability requirement of this paragraph (e) merely because the plan allows participants to defer an amount equal to a specified percentage of compensation for each payroll period and for each payroll period permits each catch-up eligible participant to defer a pro-rata share of the applicable dollar catch-up limit in addition to that amount.

(B) ***Cash availability.*** An applicable employer plan does not fail to satisfy the universal availability requirement of this paragraph (e) merely because it restricts the elective deferrals of any employee (including a catch-up eligible participant) to amounts available after other withholding from the employee's pay (e.g., after deduction of all applicable income and employment taxes). For this purpose, an employer limit of 75% of compensation or higher will be treated as limiting employees to amounts available after other withholdings.

(iii) ***Plans providing the statutory maximum catch-up contributions.*** An applicable employer plan that provides each catch-up eligible participant who participates under any applicable employer plan maintained by the employer with an effective opportunity to make the maximum amount of catch-up contributions permitted for that participant under section 414(v) or, if applicable, section 1081.01(d)(7) of the Puerto Rico Internal Revenue Code of 2011 (13 L.P.R.A. section 30391(d)(7)), as amended, does not fail to satisfy the universal availability requirement of this paragraph (e) merely because of differences among catch-up eligible participants as to the dollar amount of catch-up contributions they are permitted to make. For example, an applicable employer plan does not fail to satisfy the universal availability requirement of this paragraph (e) merely because the plan permits catch-up eligible participants who would attain age 60, 61, 62, or 63 during a taxable year to make catch-up contributions up to the increased applicable dollar catch-up limit in section 414(v)(2)(E) while only permitting other catch-up eligible participants to make catch-up contributions up to the applicable dollar catch-up limit in section 414(v)(2)(B) without regard to section 414(v)(2)(E).

(2) ***Certain employees disregarded.*** An applicable employer plan does not fail to satisfy the universal availability requirement of this paragraph (e) merely because employees described in section 410(b)(3) (for example, collectively bargained employees) are not provided the opportunity to make catch-up contributions (or are provided the opportunity to make catch-up contributions to a lesser extent than other employees).

(3) ***Exception for certain plans.*** An applicable employer plan does not fail to satisfy the universal availability requirement of this paragraph (e) merely because another applicable employer plan that is a section 457 eligible governmental plan does not provide for catch-up contributions to the extent set forth in section 414(v)(6)(C) and paragraph (a)(3) of this section.

(4) ***Exception for section 410(b)(6)(C)(ii) period.*** If an applicable employer plan satisfies the universal availability requirement of this paragraph (e) before an acquisition or disposition described in § 1.410(b)-2(f) and would fail to satisfy the universal availability requirement of this paragraph (e) merely because of such event, then the applicable employer plan shall continue to be treated as satisfying this paragraph (e) through the end of the period determined under section 410(b)(6)(C)(ii).

(f) ***Special rules for an employer that sponsors multiple plans*** —

(1) ***General rule.*** For purposes of paragraph (c) of this section, all applicable employer plans, other than section 457 eligible governmental plans, maintained by the same employer are treated as one plan and all section 457 eligible governmental plans maintained by the same employer are treated as one plan. Thus, the total amount of catch-up contributions under all applicable employer plans of an employer (other than section 457 eligible governmental plans) is limited to the applicable dollar catch-up limit for the taxable year, and the total amount of catch-up contributions for all section 457 eligible governmental plans of an employer is limited to the applicable dollar catch-up limit for the taxable year.

(2) ***Coordination of employer-provided limits.*** An applicable employer plan is permitted to allow a catch-up eligible participant to defer amounts in excess of an employer-provided limit under that plan without regard to whether elective deferrals made by the participant have been treated as catch-up contributions for the taxable year under another applicable employer plan aggregated with such plan under this paragraph (f). However, to the extent elective deferrals under another plan maintained by the employer have already been treated as catch-up contributions during the taxable year, the elective deferrals under the plan may be treated as catch-up contributions only up to the amount remaining under the catch-up limit for the year. Any other elective deferrals that exceed the employer-provided limit may not be treated as catch-up contributions and must satisfy the otherwise applicable nondiscrimination rules. For example, the right to make contributions in excess of the employer-provided limit is another right or feature which must satisfy § 1.401(a)(4)-4 to the extent that the contributions are not catch-up contributions. Also, contributions in excess of the employer provided limit are taken into account under the ADP test to the extent they are not catch-up contributions.

(3) ***Allocation rules.*** If a catch-up eligible participant makes additional elective deferrals in excess of an applicable limit under paragraph (b)(1) of this section under more than one applicable employer plan that is aggregated under the rules of this paragraph (f), the applicable employer plan under which elective deferrals in excess of an applicable limit are treated as catch-up contributions is permitted to be determined in any manner that is not inconsistent with the manner in which such amounts were actually deferred under the plan.

(g) ***Definitions*** —

(1) ***Applicable employer plan.*** The term applicable employer plan means a section 401(k) plan, a SIMPLE IRA plan as defined in section 408(p), a simplified employee pension plan as defined in section 408(k) (SEP), a plan or contract that satisfies the requirements of section 403(b), or a section 457 eligible governmental plan.

(2) ***Elective deferral.*** The term elective deferral means an elective deferral within the meaning of section 402(g)(3) or any contribution to a section 457 eligible governmental plan.

(3) ***Catch-up eligible participant.*** An employee is a catch-up eligible participant for a taxable year if—

(i) The employee is eligible to make elective deferrals under an applicable employer plan (without regard to section 414(v) or this section); and

(ii) The employee's 50th or higher birthday would occur before the end of the employee's taxable year.

(4) ***Other definitions.***

(i) The terms employer, employee, section 401(k) plan, and highly compensated employee have the meanings provided in § 1.410(b)-9.

(ii) The term section 457 eligible governmental plan means an eligible deferred compensation plan described in section 457(b) that is established and maintained by an eligible employer described in section 457(e)(1)(A).

(h) ***Examples.*** The following examples illustrate the application of this section. For purposes of these examples, the limit under section 401(a)(30) is $15,000 and the applicable dollar catch-up limit is $5,000 and, except as specifically provided, the plan year is the calendar year. In addition, it is assumed that the participant's elective deferrals under all plans of the employer do not exceed the participant's section

415(c)(3) compensation, that the taxable year of the participant is the calendar year and that any correction pursuant to section 401(k)(8) is made through distribution of excess contributions. The examples are as follows:

Example 1. (i) Participant A is eligible to make elective deferrals under a section 401(k) plan, Plan P. Plan P does not limit elective deferrals except as necessary to comply with sections 401(a)(30) and 415. In 2006, Participant A is 55 years old. Plan P also provides that a catch-up eligible participant is permitted to defer amounts in excess of the section 401(a)(30) limit up to the applicable dollar catch-up limit for the year. Participant A defers $18,000 during 2006.
(ii) Participant A's elective deferrals in excess of the section 401(a)(30) limit ($3,000) do not exceed the applicable dollar catch-up limit for 2006 ($5,000). Under paragraph (a)(1) of this section, the $3,000 is a catch-up contribution and, pursuant to paragraph (d)(2)(i) of this section, it is not taken into account in determining Participant A's ADR for purposes of section 401(k)(3).

Example 2. (i) Participants B and C, who are highly compensated employees each earning $120,000, are eligible to make elective deferrals under a section 401(k) plan, Plan Q. Plan Q limits elective deferrals as necessary to comply with section 401(a)(30) and 415, and also provides that no highly compensated employee may make an elective deferral at a rate that exceeds 10% of compensation. However, Plan Q also provides that a catch-up eligible participant is permitted to defer amounts in excess of 10% during the plan year up to the applicable dollar catch-up limit for the year. In 2006, Participants B and C are both 55 years old and, pursuant to the catch-up provision in Plan Q, both elect to defer 10% of compensation plus a pro-rata portion of the $5,000 applicable dollar catch-up limit for 2006. Participant B continues this election in effect for the entire year, for a total elective contribution for the year of $17,000. However, in July 2006, after deferring $8,500, Participant C discontinues making elective deferrals.
(ii) Once Participant B's elective deferrals for the year exceed the section 401(a)(30) limit ($15,000), subsequent elective deferrals are treated as catch-up contributions as they are deferred, provided that such elective deferrals do not exceed the catch-up contribution limit for the taxable year. Since the $2,000 in elective deferrals made after Participant B reaches the section 402(g) limit for the calendar year does not exceed the applicable dollar catch-up limit for 2006, the entire $2,000 is treated as a catch-up contribution.

(iii) As of the last day of the plan year, Participant B has exceeded the employer-provided limit of 10% (10% of $120,000 or $12,000 for Participant B) by an additional $3,000. Since the additional $3,000 in elective deferrals does not exceed the $5,000 applicable dollar catch-up limit for 2006, reduced by the $2,000 in elective deferrals previously treated as catch-up contributions, the entire $3,000 of elective deferrals is treated as a catch-up contribution.

(iv) In determining Participant B's ADR, the $5,000 of catch-up contributions are subtracted from Participant B's elective deferrals for the plan year under paragraph (d)(2)(i) of this section. Accordingly, Participant B's ADR is 10% ($12,000/$120,000). In addition, for purposes of applying the rules of section 401(k)(8), Participant B is treated as having elective deferrals of $12,000.

(v) Participant C's elective deferrals for the year do not exceed an applicable limit for the plan year. Accordingly, Participant C's $8,500 of elective deferrals must be taken into account in determining Participant C's ADR for purposes of section 401(k)(3).

Example 3. (i) The facts are the same as in *Example 2,* except that Plan Q is amended to change the maximum permitted deferral percentage for highly compensated employees to 7%, effective for deferrals after April 1, 2006. Participant B, who has earned $40,000 in the first 3 months of the year and has been deferring at a rate of 10% of compensation plus a pro-rata portion of the $5,000 applicable dollar catch-up limit for 2006, reduces the 10% of pay deferral rate to 7% for the remaining 9 months of the year (while continuing to defer a pro-rata portion of the $5,000 applicable dollar catch-up limit for 2006). During those 9 months, Participant B earns $80,000. Thus, Participant B's total elective deferrals for the year are $14,600 ($4,000 for the first 3 months of the year plus $5,600 for the last 9 months of the year plus an additional $5,000 throughout the year).
(ii) The employer-provided limit for Participant B for the plan year is $9,600 ($4,000 for the first 3 months of the year, plus $5,600 for the last 9 months of the year). Accordingly, Participant B's elective deferrals for the year that are in excess of the employer-provided limit are $5,000 (the excess of $14,600 over $9,600), which does not exceed the applicable dollar catch-up limit of $5,000.

(iii) Alternatively, Plan Q may provide that the employer-provided limit is determined as the time-weighted average of the different deferral percentage limits over the course of the year. In this case, the time-weighted average limit is 7.75% for all participants, and the applicable limit for Participant B is 7.75% of $120,000, or $9,300. Accordingly, Participant B's elective deferrals for the year that are in excess of the employer-provided limit are $5,300 (the excess of $14,600 over $9,300). Since the amount of Participant B's elective deferrals in excess of the employer-provided limit ($5,300) exceeds the applicable dollar catch-up limit for the taxable year, only $5,000 of Participant B's elective deferrals may be treated as catch-up contributions. In determining Participant B's actual deferral ratio, the $5,000 of catch-up contributions are subtracted from Participant B's elective deferrals for the plan year under paragraph (d)(2)(i) of this section. Accordingly, Participant B's actual deferral ratio is 8% ($9,600/$120,000). In addition, for purposes of applying the rules of section 401(k)(8), Participant B is treated as having elective deferrals of $9,600.

Example 4. (i) The facts are the same as in *Example 1.* In addition to Participant A, Participant D is a highly compensated employee who is eligible to make elective deferrals under Plan P. During

2006, Participant D, who is 60 years old, elects to defer $14,000.
(ii) The ADP test is run for Plan P (after excluding the $3,000 in catch-up contributions from Participant A's elective deferrals), but Plan P needs to take corrective action in order to pass the ADP test. After applying the rules of section 401(k)(8)(C) to allocate the total excess contributions determined under section 401(k)(8)(B), the maximum deferrals which may be retained by any highly compensated employee in Plan P is $12,500.

(iii) Pursuant to paragraph (b)(1)(iii) of this section, the ADP limit under Plan P of $12,500 is an applicable limit. Accordingly, $1,500 of Participant D's elective deferrals exceed the applicable limit. Similarly, $2,500 of Participant A's elective deferrals (other than the $3,000 of elective deferrals treated as catch-up contributions because they exceed the section 401(a)(30) limit) exceed the applicable limit.

(iv) The $1,500 of Participant D's elective deferrals that exceed the applicable limit are less than the applicable dollar catch-up limit and are treated as catch-up contributions. Pursuant to paragraph (d)(2)(iii) of this section, Plan P must retain Participant D's $1,500 in elective deferrals and Plan P is not treated as failing to satisfy section 401(k)(8) merely because the elective deferrals are not distributed to Participant D.

(v) The $2,500 of Participant A's elective deferrals that exceed the applicable limit are greater than the portion of the applicable dollar catch-up limit ($2,000) that remains after treating the $3,000 of elective deferrals in excess of the section 401(a)(30) limit as catch-up contributions. Accordingly, $2,000 of Participant A's elective deferrals are treated as catch-up contributions. Pursuant to paragraph (d)(2)(iii) of this section, Plan P must retain Participant A's $2,000 in elective deferrals and Plan P is not treated as failing to satisfy section 401(k)(8) merely because the elective deferrals are not distributed to Participant A. However, $500 of Participant A's elective deferrals cannot be treated as catch-up contributions and must be distributed to Participant A in order to satisfy section 401(k)(8).

Example 5. (i) Participant E is a highly compensated employee who is a catch-up eligible participant under a section 401(k) plan, Plan R, with a plan year ending October 31, 2006. Plan R does not limit elective deferrals except as necessary to comply with section 401(a)(30) and section 415. Plan R permits all catch-up eligible participants to defer an additional amount equal to the applicable dollar catch-up limit for the year ($5,000) in excess of the section 401(a)(30) limit. Participant E did not exceed the section 401(a)(30) limit in 2005 and did not exceed the ADP limit for the plan year ending October 31, 2005. Participant E made $3,200 of deferrals in the period November 1, 2005 through December 31, 2005 and an additional $16,000 of deferrals in the first 10 months of 2006, for a total of $19,200 in elective deferrals for the plan year.
(ii) Once Participant E's elective deferrals for the calendar year 2006 exceed $15,000, subsequent elective deferrals are treated as catch-up contributions at the time they are deferred, provided that such elective deferrals do not exceed the applicable dollar catch-up limit for the taxable year.

Since the $1,000 in elective deferrals made after Participant E reaches the section 402(g) limit for the calendar year does not exceed the applicable dollar catch-up limit for 2006, the entire $1,000 is a catch-up contribution. Pursuant to paragraph (d)(2)(i) of this section, $1,000 is subtracted from Participant E's $19,200 in elective deferrals for the plan year ending October 31, 2006 in determining Participant E's ADR for that plan year.

(iii) The ADP test is run for Plan R (after excluding the $1,000 in elective deferrals in excess of the section 401(a)(30) limit), but Plan R needs to take corrective action in order to pass the ADP test. After applying the rules of section 401(k)(8)(C) to allocate the total excess contributions determined under section 401(k)(8)(C), the maximum deferrals that may be retained by any highly compensated employee under Plan R for the plan year ending October 31, 2006 (the ADP limit) is $14,800.

(iv) Under paragraph (d)(2)(ii) of this section, elective deferrals that exceed the section 401(a)(30) limit under Plan R are also subtracted from Participant E's elective deferrals under Plan R for purposes of applying the rules of section 401(k)(8). Accordingly, for purposes of correcting the failed ADP test, Participant E is treated as having contributed $18,200 of elective deferrals in Plan R. The amount of elective deferrals that would have to be distributed to Participant E in order to satisfy section 401(k)(8)(C) is $3,400 ($18,200 minus $14,800), which is less than the excess of the applicable dollar catch-up limit ($5,000) over the elective deferrals previously treated as catch-up contributions under Plan R for the taxable year ($1,000). Under paragraph (d)(2)(iii) of this section, Plan R must retain Participant E's $3,400 in elective deferrals and is not treated as failing to satisfy section 401(k)(8) merely because the elective deferrals are not distributed to Participant E.

(v) Even though Participant E's elective deferrals for the calendar year 2006 have exceeded the section 401(a)(30) limit, Participant E can continue to make elective deferrals during the last 2 months of the calendar year, since Participant E's catch-up contributions for the taxable year are not taken into account in applying the section 401(a)(30) limit for 2006. Thus, Participant E can make an additional contribution of $3,400 ($15,000 minus ($16,000 minus $4,400)) without exceeding the section 401(a)(30) for the calendar year and without regard to any additional catch-up contributions. In addition, Participant E may make additional catch-up contributions of $600 (the $5,000 applicable dollar catch-up limit for 2006, reduced by the $4,400 ($1,000 plus $3,400) of elective deferrals previously treated as catch-up contributions during the taxable year). The $600 of catch-up contributions will not be taken into account in the ADP test for the plan year ending October 31, 2007.

Example 6. (i) The facts are the same as in *Example 5,* except that Participant E exceeded the section 401(a)(30) limit for 2005 by $1,300 prior to October 31, 2005, and made $600 of elective deferrals in the period November 1, 2005, through December 31, 2005 (which were catch-up contributions for 2005). Thus, Participant E made $16,600 of elective deferrals for the plan year

ending October 31, 2006.
(ii) Once Participant E's elective deferrals for the calendar year 2006 exceed $15,000, subsequent elective deferrals are treated as catch-up contributions as they are deferred, provided that such elective deferrals do not exceed the applicable dollar catch-up limit for the taxable year. Since the $1,000 in elective deferrals made after Participant E reaches the section 402(g) limit for calendar year 2006 does not exceed the applicable dollar catch-up limit for 2006, the entire $1,000 is a catch-up contribution. Pursuant to paragraph (d)(2)(i) of this section, $1,000 is subtracted from Participant E's elective deferrals in determining Participant E's ADR for the plan year ending October 31, 2006. In addition, the $600 of catch-up contributions from the period November 1, 2005 to December 31, 2005 are subtracted from Participant E's elective deferrals in determining Participant E's ADR. Thus, the total elective deferrals taken into account in determining Participant E's ADR for the plan year ending October 31, 2006, is $15,000 ($16,600 in elective deferrals for the current plan year, less $1,600 in catch-up contributions).

(iii) The ADP test is run for Plan R (after excluding the $1,600 in elective deferrals in excess of the section 401(a)(30) limit), but Plan R needs to take corrective action in order to pass the ADP test. After applying the rules of section 401(k)(8)(C) to allocate the total excess contributions determined under section 401(k)(8)(C), the maximum deferrals that may be retained by any highly compensated employee under Plan R (the ADP limit) is $14,800.

(iv) Under paragraph (d)(2)(ii) of this section, elective deferrals that exceed the section 401(a)(30) limit under Plan R are also subtracted from Participant E's elective deferrals under Plan R for purposes of applying the rules of section 401(k)(8). Accordingly, for purposes of correcting the failed ADP test, Participant E is treated as having contributed $15,000 of elective deferrals in Plan R. The amount of elective deferrals that would have to be distributed to Participant E in order to satisfy section 401(k)(8)(C) is $200 ($15,000 minus $14,800), which is less than the excess of the applicable dollar catch-up limit ($5,000) over the elective deferrals previously treated as catch-up contributions under Plan R for the taxable year ($1,000). Under paragraph (d)(2)(iii) of this section, Plan R must retain Participant E's $200 in elective deferrals and is not treated as failing to satisfy section 401(k)(8) merely because the elective deferrals are not distributed to Participant E.

(v) Even though Participant E's elective deferrals for calendar year 2006 have exceeded the section 401(a)(30) limit, Participant E can continue to make elective deferrals during the last 2 months of the calendar year, since Participant E's catch-up contributions for the taxable year are not taken into account in applying the section 401(a)(30) limit for 2006. Thus Participant E can make an additional contribution of $200 ($15,000 minus ($16,000 minus $1,200)) without exceeding the section 401(a)(30) for the calendar year and without regard to any additional catch-up contributions. In addition, Participant E may make additional catch-up contributions of $3,800 (the $5,000 applicable dollar catch-up limit for 2006, reduced by the $1,200 ($1,000 plus $200) of

elective deferrals previously treated as catch-up contributions during the taxable year). The $3,800 of catch-up contributions will not be taken into account in the ADP test for the plan year ending October 31, 2007.

Example 7. (i) Participant F, who is 58 years old, is a highly compensated employee who earns $100,000 per year. Participant F participates in a section 401(k) plan, Plan S, for the first 6 months of the year and then transfers to another section 401(k) plan, Plan T, sponsored by the same employer, for the second 6 months of the year. Plan S limits highly compensated employees' elective deferrals to 6% of compensation for the period of participation, but permits catch-up eligible participants to defer amounts in excess of 6% during the plan year, up to the applicable dollar catch-up limit for the year. Plan T limits highly compensated employees' elective deferrals to 8% of compensation for the period of participation, but permits catch-up eligible participants to defer amounts in excess of 8% during the plan year, up to the applicable dollar catch-up limit for the year. Participant F earned $50,000 in the first 6 months of the year and deferred $6,000 under Plan S. Participant F also deferred $6,500 under Plan T.
(ii) As of the last day of the plan year, Participant F has $3,000 in elective deferrals under Plan S that exceed the employer-provided limit of $3,000. Under Plan T, Participant F has $2,500 in elective deferrals that exceed the employer-provided limit of $4,000. The total amount of elective deferrals in excess of employer-provided limits, $5,500, exceeds the applicable dollar catch-up limit by $500. Accordingly, $500 of the elective deferrals in excess of the employer-provided limits are not catch-up contributions and are treated as regular elective deferrals (and are taken into account in the ADP test). The determination of which elective deferrals in excess of an applicable limit are treated as catch-up contributions is permitted to be made in any manner that is not inconsistent with the manner in which such amounts were actually deferred under Plan S and Plan T.

Example 8. (i) Employer X sponsors Plan P, which provides for matching contributions equal to 50% of elective deferrals that do not exceed 10% of compensation. Elective deferrals for highly compensated employees are limited, on a payroll-by-payroll basis, to 10% of compensation. Employer X pays employees on a monthly basis. Plan P also provides that elective contributions are limited in accordance with section 401(a)(30) and other applicable statutory limits. Plan P also provides for catch-up contributions. Under Plan P, for purposes of calculating the amount to be treated as catch-up contributions (and to be excluded from the ADP test), amounts in excess of the 10% limit for highly compensated employees are determined at the end of the plan year based on compensation used for purposes of ADP testing (testing compensation), a definition of compensation that is different from the definition used under the plan for purposes of calculating elective deferrals and matching contributions during the plan year (deferral compensation).
(ii) Participant A, a highly compensated employee, is a catch-up eligible participant under Plan P with deferral compensation of $10,000 per monthly payroll period. Participant A defers 10% per payroll period for the first 10 months of the year, and is allocated a matching contribution each

payroll period of $500. In addition, Participant A defers an additional $4,000 during the first 10 months of the year. Participant A then reduces deferrals during the last 2 months of the year to 5% of compensation. Participant A is allocated a matching contribution of $250 for each of the last 2 months of the plan year. For the plan year, Participant A has $15,000 in elective deferrals and $5,500 in matching contributions.

(iii) A's testing compensation is $118,000. At the end of the plan year, based on 10% of testing compensation, or $11,800, Plan P determines that A has $3,200 in deferrals that exceed the 10% employer provided limit. Plan P excludes $3,200 from ADP testing and calculates A's ADR as $11,800 divided by $118,000, or 10%. Although A has not been allocated a matching contribution equal to 50% of $11,800, because Plan P provides that matching contributions are calculated based on elective deferrals during a payroll period as a percentage of deferral compensation, Plan P is not required to allocate an additional $400 of matching contributions to A.

(i) ***Applicability dates*** —

(1) ***In general.*** Except as described in paragraph (i)(2) of this section or § 1.414(v)-2(e), section 414(v) applies to contributions in taxable years beginning on or after January 1, 2002. Except as provided in paragraph (i)(2) of this section, paragraphs (a) through (h) of this section apply to contributions in taxable years beginning on or after January 1, 2004.

(2) ***Increases in applicable dollar catch-up limit under section 414(v)(2)*** —

(i) ***Higher limit during the taxable year of attainment of age 60 through 63.*** The amendments to section 414(v)(2) made by section 109 of Division T of the Consolidated Appropriations Act, 2023, Public Law 117-328, 136 Stat. 4459 (2022), known as the SECURE 2.0 Act of 2022 (SECURE 2.0 Act) to provide for a higher applicable dollar catch-up limit for individuals who attain age 60, 61, 62, or 63 during the taxable year apply to contributions in taxable years beginning after December 31, 2024. Paragraphs (c)(2)(i)(B), (c)(2)(ii)(B), and (c)(2)(iii)(B) of this section apply to contributions in taxable years beginning after December 31, 2026 (or, at the election of the taxpayer, taxable years beginning after December 31, 2024). Except as provided in paragraph (i)(2)(ii) of this section, for taxable years beginning on or before December 31, 2024, the applicable dollar catch-up limit is determined under § 1.414(v)-1(c)(2) as it appeared in the April 1, 2025, edition of 26 CFR part 1.

(ii) ***Higher limit for certain SIMPLE plans.*** The amendments to section 414(v)(2) made by section 117 of the SECURE 2.0 Act to provide for a higher applicable dollar catch-up limit for certain SIMPLE plans apply to contributions in taxable years beginning after December 31, 2023. Paragraphs (c)(2)(ii)(C) and (c)(2)(iii)(C) of this section apply to contributions in taxable years beginning after December 31, 2026 (or, at the election of the taxpayer, taxable years beginning after December 31, 2023). For taxable years beginning on or before December 31, 2023, the applicable dollar catch-up limit for a SIMPLE 401(k) plan described in section 401(k)(11) or a SIMPLE IRA plan described in section 408(p) is determined under § 1.414(v)-1(c)(2)(ii) as it appeared in the April 1, 2025, edition of 26 CFR part 1.

[T.D. 9072, 68 FR 40515, July 8, 2003, as amended by T.D. 10033, 90 FR 44547, Sept. 16, 2025]

§ 1.414(v)-2 Catch-up contributions required to be designated Roth contributions under section 414(v)(7).

(a) *Section 414(v)(7) Roth catch-up contribution requirement* —

(1) ***Organization of this section.*** Paragraphs (a)(2) through (6) of this section provide general rules relating to the requirements of section 414(v)(7). Paragraph (b) of this section provides certain rules of operation for implementing the requirements of section 414(v)(7) addressed in this paragraph (a). Paragraph (c) of this section provides rules relating to the treatment of pre-tax catch-up contributions that were required to be designated Roth contributions under section 414(v)(7). Paragraph (d) of this section provides examples illustrating the application of the rules of this section. Paragraph (e) of this section sets forth the statutory and regulatory applicability dates relating to the section 414(v)(7) Roth catch-up requirement.

(2) ***Roth catch-up contribution requirement in general.*** For a taxable year beginning on or after January 1, 2024, if, for the calendar year preceding the calendar year in which the taxable year begins, a catch-up eligible participant in an applicable employer plan had wages from the employer sponsoring the plan (as determined under paragraph (b)(4) of this section) that exceeded the Roth catch-up wage threshold for the calendar year preceding the calendar year in which the taxable year begins, then § 1.414(v)-1(a)(1) applies only if that participant's catch-up contributions (as described in § 1.414(v)-1(a)(1)) under the plan are designated Roth contributions (as defined in section 402A(c)(1)). For this purpose, wages taken into account are wages as defined in section 3121(a) for purposes of the taxes imposed by sections 3101(a) and 3111(a) for the year the wages are required to be taken into account for purposes of chapter 21 of the Internal Revenue Code. The Roth catch-up wage threshold that applies for a calendar year is $145,000, as adjusted for changes in the cost of living under paragraph (a)(3) of this section.

(3) ***Cost-of-living adjustment.*** For a calendar year beginning after December 31, 2024, the Roth catch-up wage threshold in paragraph (a)(2) of this section is the initial amount ($145,000), increased for changes in the cost of living. The increase is made at the same time and in the same manner as adjustments under section 415(d), except that the base period is the calendar quarter beginning July 1, 2023, and any increase that is not a multiple of $5,000 is rounded to the next lower multiple of $5,000.

(4) ***Certain plans not subject to section 414(v)(7).*** Paragraph (a)(2) of this section does not apply to a plan described in section 408(k) or (p).

(5) ***Availability of designated Roth catch-up contributions.*** If, under an applicable employer plan, any catch-up eligible participant who is subject to the Roth catch-up requirement under paragraph (a)(2) of this section is permitted to make catch-up contributions as designated Roth contributions for a plan year, then all catch-up eligible participants in the plan must be permitted to make catch-up contributions as designated Roth contributions for the plan year.

(6) ***Special rule for participants subject to the Puerto Rico Code.*** Paragraphs (a)(2) and (5) of this section are treated as satisfied for a taxable year with respect to a catch-up eligible participant who is subject to section 1081.01 of the Puerto Rico Internal Revenue Code of 2011 (13 L.P.R.A. section 30391), as amended (Puerto Rico Code), if that taxable year begins before the effective date of an amendment to the Puerto Rico Code to provide for designated Roth contributions.

(b) *Rules of operation* —

(1) ***Determination of catch-up contributions subject to section 414(v)(7) Roth requirement.*** For a participant who is subject to the Roth catch-up requirement under paragraph (a)(2) of this section for a plan year, an elective deferral that, in accordance with § 1.414(v)-1(c)(3), is treated as a catch-up contribution at the time of deferral (for example, an elective deferral that is a catch-up contribution because it exceeds the section 401(a)(30) limit on elective deferrals) is required to be a designated Roth contribution only to the extent the participant has not previously made elective deferrals that are designated Roth contributions during the taxable year equal to the applicable dollar catch-up limit under § 1.414(v)-1(c)(2). Thus, for example, if a participant who is subject to the Roth catch-up requirement under paragraph (a)(2) of this section has already made elective deferrals that are designated Roth contributions during the taxable year that equal or exceed the applicable dollar catch-up limit at the time the participant's elective deferrals for the taxable year reach the section 401(a)(30) limit on elective deferrals, section 414(v)(7) would not require the participant's subsequent elective deferrals for the taxable year to be designated Roth contributions even though they are treated as catch-up contributions under § 1.414(v)-1(c)(3).

(2) ***Treatment of plans without qualified Roth contribution programs.*** For purposes of § 1.414(v)-1(e)(1)(iii), if an applicable employer plan does not include a qualified Roth contribution program (within the meaning of section 402A(b)), then, for a catch-up eligible participant who is subject to the Roth catch-up requirement under paragraph (a)(2) of this section, the maximum amount of catch-up contributions permitted under section 414(v) is $0. Such a plan does not fail to satisfy the universal availability requirement of § 1.414(v)-1(e) merely because the plan (or another applicable employer plan maintained by the employer that does not include a qualified Roth contribution program) does not permit catch-up contributions for participants who are subject to the Roth catch-up requirement under paragraph (a)(2) of this section.

(3) ***Application of nondiscrimination requirements*** —

(i) ***Plans without qualified Roth contribution programs.*** If an applicable employer plan is described in paragraph (b)(2) of this section, then § 1.414(v)-1(d)(4) does not apply to the plan. As a result, a plan that has one or more highly compensated employees (as defined in section 414(q)) who are not subject to the Roth catch-up requirement under paragraph (a)(2) of this section may need to provide that one or more of those highly compensated employees is not permitted to make catch-up contributions in order to facilitate satisfaction of § 1.401(a)(4)-4 with respect to the availability of catch-up contributions. For this purpose, a plan will be deemed to satisfy § 1.401(a)(4)-4 with respect to the availability of catch-up contributions if the plan provides that no catch-up eligible participants who are highly compensated employees with net earnings from self-employment for the preceding calendar year from the employer sponsoring the plan above the Roth catch-up wage threshold are permitted to make catch-up contributions. A plan is not treated as failing to satisfy the universal availability requirement of § 1.414(v)-1(e) merely because the plan precludes one or more highly compensated employees from making catch-up contributions in accordance with the second sentence of this paragraph (b)(3)(i) or precludes all catch-up eligible participants who are highly compensated employees with net earnings from self-employment for the preceding calendar year from the employer sponsoring the plan above the Roth catch-up wage threshold from making catch-up contributions.

(ii) ***Plans limiting pre-tax catch-up contributions for employees not subject to section 414(v)(7).*** The rules of paragraph (b)(3)(i) of this section also apply to a plan that includes a qualified Roth contribution program and, in accordance with an optional plan term providing for aggregation of wages under § 1.414(v)-2(b)(4)(ii), (b)(4)(iii), or (b)(4)(iv)(A), does not permit pre-tax catch-up contributions for one or more employees who are not subject to section 414(v)(7).

(4) ***Determination of employer sponsoring the plan*** —

(i) ***General rule.*** Except as provided in paragraphs (b)(4)(ii) and (iii) of this section, and subject to paragraphs (b)(4)(iv) and (v) of this section, for purposes of determining the employer sponsoring the plan with respect to a catch-up eligible participant, the employer is the participant's common law employer.

(ii) ***Optional aggregation for employers using a common paymaster.*** If the employer described in paragraph (b)(4)(i) of this section uses a common paymaster in accordance with section 3121(s), then the plan may provide that the employee's common law employer is aggregated with one or more other specified employers using that common paymaster and treat the aggregated employers as a single employer sponsoring the plan for purposes of section 414(v)(7) and this section. In such a case, the employee's wages from the common law employer and from the one or more other employers that are aggregated with the common law employer are treated as wages from the employer sponsoring the plan.

(iii) ***Optional aggregation for other controlled group members.*** If the employer described in paragraph (b)(4)(i) of this section is a member of a group of employers that are treated as a single employer under the rules of section 414(b), (c), (m), or (o), then the plan may provide that the employee's common law employer is aggregated with one or more other specified employers in that group of employers and treat the aggregated employers as a single employer sponsoring the plan for purposes of section 414(v)(7) and this section. In such a case, the employee's wages from the common law employer and from the one or more other employers that are aggregated with the common law employer are treated as wages from the employer sponsoring the plan.

(iv) ***Optional aggregation in the year of an asset purchase.*** The following optional provisions apply for a calendar year for which wages paid to an employee by a predecessor employer are attributed to the employee's common law employer who is a successor employer in accordance with § 31.3121(a)(1)-1(b) of this chapter:

(A) ***Successor employer reports all calendar year wages paid by predecessor and successor employers on single Form W-2.*** A plan sponsored by the successor employer (or an entity aggregated with the successor employer in accordance with paragraph (b)(4)(ii) or (iii) of this section) may provide that the wages paid by the predecessor employer to the employee in the calendar year of the asset purchase and attributed to the successor employer are treated as wages from the employer sponsoring the plan for purposes of section 414(v)(7)(A) and paragraph (a)(2) of this section if such wages are reported on a Form W-2 (Wage and Tax Statement) filed by the successor employer for the calendar year in which the asset purchase occurs.

(B) ***Predecessor and successor employers report respective wages paid on separate Forms W-2.*** If the predecessor employer and the successor employer report the wages each pays to the employee during the calendar year in which the asset purchase occurs on separate Forms W-2, a plan sponsored by the successor employer (or an entity aggregated with the

successor employer in accordance with paragraph (b)(4)(ii) or (iii) of this section) may provide that the wages paid by the successor employer that are treated as wages from the employer sponsoring the plan for purposes of section 414(v)(7)(A) and paragraph (a)(2) of this section do not exceed the difference between the Social Security wage base limit for the calendar year and the wages paid in the calendar year by the predecessor employer, as reported on the Form W-2 filed by the successor employer.

(v) ***Disregarded entities.*** In the case of an employee who receives wages from an entity that is disregarded as an entity separate from its owner in accordance with § 301.7701-2(c)(2)(i) of this chapter (that is, the entity has not made an election under § 301.7701-3(b)(1)(ii) of this chapter to be classified as a corporation), the owner is treated as the employer sponsoring the plan for purposes of applying this paragraph (b)(4). In such a case, the employee's wages from the employer sponsoring the plan include the employee's wages from the disregarded entity and from its owner.

(5) ***Plans with more than one employer sponsoring the plan.*** If, after application of paragraph (b)(4) of this section, an applicable employer plan has more than one employer sponsoring the plan that are not treated as one employer under paragraph (b)(4)(ii) or (iii), then—

(i) A catch-up eligible participant's wages for the calendar year preceding the calendar year in which the taxable year begins from one employer sponsoring the plan are not aggregated with the wages from another employer sponsoring the plan for purposes of determining whether the participant's wages for that preceding calendar year exceeded the Roth catch-up wage threshold in paragraph (a)(2) of this section; and

(ii) Even if a catch-up eligible participant's wages for the calendar year preceding the calendar year in which the taxable year begins from an employer sponsoring the plan exceeded the Roth catch-up wage threshold in paragraph (a)(2) of this section, elective deferrals made from the participant's compensation from another employer sponsoring the plan that are catch-up contributions are required to be designated Roth contributions only if the participant's wages for that preceding calendar year from that other employer also exceeded that wage threshold.

(6) ***Coordination with Code section 402A(b)(1) and (c)(1).*** With respect to an employee who is subject to the Roth catch-up requirement set forth in paragraph (a)(2), the rules of this section apply notwithstanding the requirements regarding elections to make designated Roth contributions in section 402A(b)(1) and (c)(1).

(c) ***Treatment of pre-tax catch-up contributions that are required to be designated Roth contributions*** —

(1) ***Permitted correction.*** A pre-tax elective deferral in excess of an applicable limit described in § 1.414(v)-1(b)(1) that, in accordance with paragraph (a)(2) of this section, is a catch-up contribution only if it is a designated Roth contribution does not cause an applicable employer plan to fail to satisfy any requirement of the Internal Revenue Code if—

(i) The failure to be a designated Roth contribution is corrected in accordance with paragraph (c)(2) of this section; or

(ii) No correction is required under the rules of paragraph (c)(4) of this section.

(2) ***Correction of section 414(v)(7) failures*** —

(i) ***In general.*** For purposes of this paragraph (c), if an elective deferral that exceeds a statutory limit, employer-provided limit, or ADP limit (as such terms are defined in § 1.414(v)-1(b)(1)) fails to be a catch-up contribution under section 414(v)(1) solely because the elective deferral is not a designated Roth contribution, then the failure to satisfy section 414(v)(7) is referred to as a "section 414(v)(7) failure." In such a case, subject to paragraph (c)(3) of this section, the section 414(v)(7) failure may be corrected in accordance with this paragraph (c)(2). A plan may provide for either of the correction methods described in paragraphs (c)(2)(ii) and (iii) of this section, but must apply the same correction method for similarly situated participants, and the selection of which correction method applies may not be based on the investment returns earned in participants' accounts. For example, a plan may provide that a section 414(v)(7) failure is corrected using the correction method described in paragraph (c)(2)(ii) of this section for all participants for whom the Forms W-2 for that year have not been filed or furnished and is corrected using the correction method described in paragraph (c)(2)(iii) of this section for all other participants.

(ii) ***Permitted correction on Form W-2.*** A plan may correct a section 414(v)(7) failure by transferring the catch-up contribution (adjusted for earnings and losses in accordance with § 1.402(g)-1(e)(5)) from the participant's pre-tax account to the participant's designated Roth account and reporting the contribution (not adjusted for earnings and losses) as an elective deferral that is a designated Roth contribution on the participant's Form W-2 for the year in which the elective deferral was originally excluded from the participant's gross income. However, this correction method may be used only if the participant's Form W-2 for that year has not been filed or furnished to the participant.

(iii) ***Permitted correction by in-plan Roth rollover.*** As an alternative to the correction method permitted under paragraph (c)(2)(ii) of this section, a plan may correct a section 414(v)(7) failure by directly rolling over the elective deferrals that would be catch-up contributions if they had been designated Roth contributions (adjusted for earnings and losses in accordance with § 1.402(g)-1(e)(5)) from the participant's pre-tax account to the participant's designated Roth account. Under this correction method, the rules of section 402A(c)(4)(E)(ii) and (iii) will apply and the direct rollover must be reported as such on Form 1099-R (Distributions from Pensions, Annuities, Retirement or Profit-Sharing Plans, IRAs, Insurance Contracts, etc.) for the year of the rollover.

(3) ***General correction requirements*** —

(i) ***Practices and procedures designed to avoid section 414(v)(7) violations*** —

(A) ***In general.*** For a plan to be eligible to use either of the correction methods described under paragraph (c)(2) of this section with respect to an elective deferral that is a catch-up contribution because it exceeds a statutory limit described in § 1.414(v)-1(b)(1)(i), the plan sponsor or plan administrator must have in place practices and procedures designed to result in compliance with section 414(v)(7) at the time the elective deferral is made.

(B) ***Catch-up contributions relating to section 401(a)(30) limit.*** As part of the practices and procedures described in paragraph (c)(3)(i)(A) of this section, the plan must provide that a participant who is subject to the Roth catch-up requirement under paragraph (a)(2) of this section is deemed to have irrevocably designated any elective deferrals that are catch-up contributions as designated Roth contributions once the participant's elective deferrals (or, at the option of the plan, only the participant's pre-tax elective deferrals) made during the calendar year exceed the section 401(a)(30) limit on elective deferrals for the taxable

year that begins in the calendar year, provided that the plan provides such an employee an effective opportunity to make a new election that is different than the deemed election. If a plan implements a participant's affirmative pre-tax catch-up contribution election that is not permitted under paragraph (a)(2) of this section (taking into account the application of paragraph (b)(1) of this section), then, except as provided in paragraph (c)(4) of this section, the section 414(v)(7) failure must be corrected in accordance with paragraph (c)(2) of this section.

(C) ***Catch-up contributions for employees with higher section 402(g)(7) limit.*** In the case of a section 403(b) plan maintained by a qualified organization described in section 402(g)(7)(B), the plan is permitted to provide that the automatic treatment of additional elective deferrals described in section 414(v) as designated Roth contributions applies to a qualified employee described in section 402(g)(7)(C) once the qualified employee's elective deferrals (or, at the option of the plan, only the qualified employee's pre-tax elective deferrals) under the plan for the calendar year exceed the section 401(a)(30) limit on elective deferrals for the taxable year that begins in the calendar year, increased by the amount described in section 402(g)(7)(A).

(D) ***Catch-up contributions relating to section 457(b) limit.*** In the case of an eligible governmental section 457(b) plan, rules similar to the rules of paragraph (c)(3)(i)(B) of this section apply with respect to the section 457(b)(2) limit, except that a plan is permitted to provide that the automatic treatment of additional elective deferrals described in section 414(v) as designated Roth contributions applies after the amount deferred under the plan for the taxable year exceeds the section 457(b)(3) limit for the employee.

(ii) ***Reliance on Form W-2.*** A plan sponsor or plan administrator does not fail to have in place practices and procedures in accordance with paragraph (c)(3)(i) of this section merely because a plan determines the applicability of the section 414(v)(7)(A) Roth catch-up requirement to a participant on the basis of a timely-filed Form W-2 with respect to the participant.

(iii) ***Deadlines for corrections of section 414(v)(7) failures under paragraph (c)(2) of this section*** —

(A) ***Elective deferrals in excess of a statutory limit.*** If the section 414(v)(7) failure arises with respect to an elective deferral that is a catch-up contribution because it exceeds a statutory limit (within the meaning of § 1.414(v)-1(b)(1)), the deadline to complete all corrective steps required under paragraph (c)(2) of this section in order to avoid a qualification failure is the last day of the taxable year following the taxable year for which the elective deferral was made. However, any applicable earlier correction deadline related to other tax consequences continues to apply to the excess deferral. For example, in the case of an elective deferral that is a catch-up contribution because it exceeds the section 401(a)(30) limit on elective deferrals, if all corrective steps required under paragraph (c)(2) of this section are not completed by April 15 following the close of the taxable year for which the elective deferral was made, then the excess deferral will not be treated as having been corrected by the deadline in § 1.402(g)-1(e)(2)(ii). Thus, the tax treatment rules of § 1.402(g)-1(e)(8)(iii) would apply to the excess deferral.

(B) ***Elective deferrals in excess of an employer-provided limit.*** If the section 414(v)(7) failure arises with respect to an elective deferral that is a catch-up contribution because it exceeds an employer-provided limit as described in § 1.414(v)-1(b)(1)(ii), the deadline to complete the corrective steps required under paragraph (c)(2) of this section in order to avoid a qualification failure is the last day of the plan year following the plan year for

which the catch-up contribution was made. However, the contribution is not excluded from being taken into account as a catch-up contribution for purposes of the ADP test of section 401(k)(3) pursuant to § 1.401(k)-2(a)(5)(iii) before the correction occurs.

(C) ***Elective deferrals in excess of the ADP limit.*** If the section 414(v)(7) failure arises with respect to an elective deferral that is a catch-up contribution because it exceeds the ADP limit, the deadline to complete the corrective steps required under paragraph (c)(2) of this section in order to avoid a qualification failure is the last day of the plan year following the plan year for which the catch-up contribution was made. However, the contribution is not excluded from the requirement to distribute excess contributions as a catch-up contribution pursuant to § 1.401(k)-2(b)(4)(v) before the correction occurs. Thus, the plan must distribute the excess contribution if the correction for the ADP failure is made before the correction for the section 414(v)(7) failure is made, but the distribution need not be made if the section 414(v)(7) failure is corrected before the excess contribution is distributed. If a plan does not correct excess contributions within 2-2 months after the close of the plan year for which the excess contributions are made (as extended to 6 months under § 1.401(k)-2(b)(5)(iii) in the case of certain applicable employer plans that include an eligible automatic contribution arrangement within the meaning of section 414(w)), then the employer will be liable for a 10% excise tax on the amount of the excess contributions. *See* section 4979 and § 54.4979-1 of this chapter.

(4) ***Correction not required in certain circumstances*** —

(i) ***De minimis section 414(v)(7) failures.*** A section 414(v)(7) failure with respect to a participant does not need to be corrected if the amount of the pre-tax elective deferral that was required to be a designated Roth contribution does not exceed $250. In such a case, the section 414(v)(7) failure is disregarded, and the elective deferral is treated as a catch-up contribution.

(ii) ***Failures attributable to an amended Form W-2.*** A section 414(v)(7) failure with respect to a participant does not need to be corrected if the participant became subject to section 414(v)(7)(A) solely because the participant's wages taken into account under paragraph (a)(2) of this section for the calendar year preceding the calendar year in which the taxable year begins were not determined to exceed the Roth catch-up wage threshold until after the deadline for correction in paragraph (c)(3)(iii) of this section. In such a case, the section 414(v)(7) failure is disregarded, and the elective deferral is treated as a catch-up contribution.

(d) ***Examples.*** The following examples illustrate the application of this section. For purposes of these examples, assume that the participant's elective deferrals under all plans of the employer do not exceed the participant's section 415(c)(3) compensation, the participant's annual additions for a limitation year do not exceed the section 415(c) limit, the taxable year of the participant is the calendar year, the plan includes a qualified Roth contribution program, does not provide for the optional aggregation provision described in paragraph (b)(4)(iii) of this section, and the plan year is the calendar year (except as specifically provided). Assume further that this section applies to contributions in taxable years beginning in 2027, the section 401(a)(30) limit on elective deferrals for 2027 is $25,000, the applicable dollar catch-up limit for 2027 that is applicable to each participant in the examples is $8,000, and the Roth catch-up wage threshold to be applied to 2026 FICA wages for determining applicability of the Roth catch-up requirement under section 414(v)(7)(A) for a taxable year beginning in 2027 is $155,000.

(1) ***Example 1: Application of Roth catch-up wage threshold*** —

(i) ***Facts.*** In January 2026, Participant A became an employee of an accounting firm that is structured as a partnership. Through October 2026, A had $156,000 of FICA wages from the accounting firm. In November 2026, Participant A became a partner in the accounting firm, and, for 2026, Participant A had a $30,000 distributive share of partnership income from the accounting firm, all of which was self-employment income. Participant A is a partner with the accounting firm for all of 2027.

(ii) ***Analysis.*** Although Participant A is a partner with the accounting firm for the last two months of 2026 and for all of 2027 (and thus has self-employment income rather than FICA wages for that period), Participant A had more than $155,000 in FICA wages from the accounting firm for 2026. Thus, Participant A is subject to section 414(v)(7)(A) for 2027, and if Participant A makes elective deferrals in excess of an applicable limit for 2027 under a plan sponsored by the accounting firm, those elective deferrals must be designated Roth contributions.

(2) ***Example 2: Application of Roth catch-up wage threshold*** —

(i) ***Facts.*** The facts are the same as in paragraph (d)(1) of this section (*Example 1*), except that Participant A became a partner of the accounting firm in May 2026, and had FICA wages from the firm of $60,000 before becoming partner. In addition, for 2026, Participant A had a $155,000 distributive share of partnership income from the accounting firm, all of which was self-employment income.

(ii) ***Analysis.*** Although Participant A had total compensation of $215,000 for the services Participant A performed for the accounting firm in 2026, only $60,000 of that amount were FICA wages. Because Participant A did not have more than $155,000 of FICA wages from the accounting firm for 2026, any elective deferrals in excess of an applicable limit that Participant A makes for 2027 under a plan sponsored by the accounting firm are not required to be designated Roth contributions.

(3) ***Example 3: Application of section 414(v)(7)(B) to a plan with a plan year other than the calendar year*** —

(i) ***Facts.*** Participant B participates in an applicable employer plan sponsored by Employer E. The plan year begins on July 1 and ends on June 30. Participant B had $160,000 in wages within the meaning of section 3121(a) from Employer E for calendar year 2026, and is a catch-up eligible participant for calendar year 2027. For the plan year beginning July 1, 2026, the plan allows all catch-up eligible participants to make catch-up contributions and requires that any elective deferrals in excess of an applicable limit made by catch-up eligible participants who are subject to the requirements of section 414(v)(7)(A) be designated Roth contributions.

(ii) ***Analysis.*** Because Participant B's FICA wages from Employer E for calendar year 2026 exceeded $155,000, Participant B is subject to the requirements of section 414(v)(7)(A) for 2027, and any catch-up contributions that Participant B makes under the plan during 2027 (which includes the second half of the plan year beginning July 1, 2026) must be designated Roth contributions. Because Participant B is permitted to make catch-up contributions that are designated Roth contributions under the plan for the plan year beginning July 1, 2026 (after Participant B reaches an applicable limit (as defined in § 1.414(v)-1(b)(1)), all catch-up eligible participants under the plan must be permitted to make catch-up contributions that are designated Roth contributions for the plan year. Furthermore, if the plan continues to permit catch-up contributions for the plan year beginning July 1, 2027, then any catch-up contributions

that Participant B makes under the plan during the first half of that plan year must be designated Roth contributions (as well as any catch-up contributions in the second half of the plan year if Participant B had wages exceeding the applicable threshold in 2027).

(4) ***Example 4: Plans with more than one employer sponsoring the plan*** —

(i) ***Facts.*** Employer F and Employer G are members of a controlled group of corporations within the meaning of section 414(b). Participant C was hired by Employer F on January 1, 2026, and remained employed by Employer F through October 31, 2026. Effective November 1, 2026, Participant C transferred to Employer G and was employed by Employer G for the remainder of 2026. Participant C is employed by Employer G for all of 2027, the year in which Participant C attains age 55. Employer F reported $160,000 of FICA wages on a Form W-2 for Participant C for 2026. Employer G reported $35,000 of FICA wages on a Form W-2 for Participant C for 2026. Employers F and G are participating employers in a section 401(k) plan, Plan P. Participant C becomes eligible to participate in Plan P on January 1, 2027, and all of Participant C's elective deferrals for 2027 are made from compensation paid by Employer G.

(ii) ***Analysis.*** Employers F and G are common law employers of Participant C during different portions of 2026, and, under paragraph (b)(3) of this section, they are both employers sponsoring the plan. Because Plan P does not provide for the optional aggregation provision described in paragraph (b)(4)(iii) of this section, and Participant C's FICA wages from Employer G in 2026 did not exceed $155,000, Participant C is not subject to the requirements of section 414(v)(7)(A) with respect to elective deferrals that are made from compensation paid by Employer G in 2027. Accordingly, Participant C is not required to designate any catch-up contributions made for 2027 under Plan P as designated Roth contributions. This is the case even though Participant C had wages from Employer F (an employer sponsoring the plan) that exceeded $155,000 for 2026.

(5) ***Example 5: Correction of section 414(v)(7) failure*** —

(i) ***Facts.*** Participant D, who attains age 55 in 2027, participates in a section 401(k) plan, Plan Q, sponsored by Employer H. Plan Q does not limit elective deferrals except as necessary to comply with sections 401(a)(30) and 415(c). Plan Q does not provide catch-up eligible participants with a separate election for elective deferrals that are in excess of the section 401(a)(30) limit and provides that such a participant is permitted to defer amounts in excess of the section 401(a)(30) limit on elective deferrals up to the applicable dollar catch-up limit for the year. For 2026, Participant D had $156,000 in wages (within the meaning of section 3121(a)) from Employer H. For 2027, Participant D elects to defer $1,250 into Participant D's account in Plan Q for each of 24 pay periods. Employer H has in place practices and procedures that are designed to prevent section 414(v)(7) failures and to result in compliance with the section 414(v)(7) Roth catch-up requirement at the time an elective deferral is made, and Plan Q provides for a deemed Roth catch-up election as described in paragraph (c)(3)(i) of this section. Nonetheless, Employer H discovers that all of Participant D's elective deferrals under Plan Q during 2027 (a total of $30,000) were pre-tax elective deferrals.

(ii) ***Analysis.*** Because Participant D had over $155,000 in wages from Employer H for 2026, under section 414(v)(7)(A), Participant D's catch-up contributions under Plan Q for 2027 (that is, the elective deferrals that exceed the section 401(a)(30) limit) are required to be designated Roth contributions. Thus, $5,000 of Participant D's elective deferrals for 2027 (that is, the elective deferrals in excess of the section 401(a)(30) limit of $25,000) are required to be designated Roth contributions. To keep these contributions in the plan, Employer H must correct the

section 414(v)(7) failure with respect to $5,000 of Participant D's pre-tax elective deferrals for 2027 using one of the methods set forth under paragraph (c)(2) of this section. If all corrective steps required under paragraph (c)(2) of this section are not completed by April 15, 2028, then the excess deferral will not be treated as having been corrected by the deadline in § 1.402(g)-1(e)(2)(ii). Thus, the tax treatment rules of § 1.402(g)-1(e)(8)(iii) would apply to the excess deferral.

(6) ***Example 6: Designated Roth contributions that can satisfy the section 414(v)(7) Roth catch-up requirement*** —

(i) ***Facts.*** The facts are the same as in paragraph (d)(5) of this section (*Example 5*), except that the first $3,750 of the $30,000 total elective deferrals Participant D makes for 2027 are designated Roth contributions. (Thus, during each of the first 3 pay periods in 2027, Participant D makes $1,250 of elective deferrals that are designated Roth contributions, and then subsequently makes $26,250 in pre-tax elective deferrals ratably over the remaining 21 pay periods.) Participant D reaches the section 401(a)(30) limit on elective deferrals during the twentieth pay period of 2027 and does not make any designated Roth contributions after reaching the section 401(a)(30) limit on elective deferrals in 2027.

(ii) ***Analysis.*** In accordance with paragraph (b)(1) of this section, the $3,750 in elective deferrals that are designated Roth contributions that Participant D made at the beginning of 2027 can be taken into account for purposes of satisfying Participant D's Roth catch-up requirement under section 414(v)(7). Thus, the portion of Participant D's pre-tax elective deferrals that are required to be corrected is $1,250 ($5,000 of elective deferrals that are in excess of the section 401(a)(30) limit, minus $3,750 of elective deferrals that were made as designated Roth contributions within the taxable year), and Employer H must correct the section 414(v)(7) failure with respect to only $1,250 of Participant D's pre-tax elective deferrals. To keep the $1,250 in the plan, Employer H must correct the section 414(v)(7) failure using one of the methods set forth under paragraph (c)(2) of this section. If all corrective steps required under paragraph (c)(2) of this section are not completed by April 15, 2028, then the excess deferral will not be treated as having been corrected by the deadline in § 1.402(g)-1(e)(2)(ii). Thus, the tax treatment rules of § 1.402(g)-1(e)(8)(iii) would apply to the excess deferral.

(e) ***Applicability dates*** —

(1) ***Statutory applicability date.*** Section 414(v)(7) applies to contributions in taxable years beginning after December 31, 2023.

(2) ***Regulatory applicability dates*** —

(i) ***General rule.*** Except as provided in paragraphs (e)(2)(ii) through (iv) of this section, this section applies to contributions in taxable years beginning after December 31, 2026. For prior taxable years, a reasonable, good faith interpretation standard applies with respect to section 414(v)(7).

(ii) ***Collectively bargained plans.*** In the case of an applicable employer plan maintained pursuant to one or more collective bargaining agreements, paragraphs (a) through (d) of this section shall not apply until the first taxable year described in paragraph (e)(2)(i) of this section, or, if later, the first taxable year beginning after the date on which the last collective bargaining agreement related to the plan that is in effect on December 31, 2025, terminates (determined without regard to any extension to those agreements). Further, if that plan is a multiemployer plan as defined in section 414(f), section 414(v)(7) is deemed satisfied until the first taxable year

beginning after the date on which the last collective bargaining agreement related to the plan that is in effect on November 17, 2025 terminates (determined without regard to any extension to those agreements).

(iii) ***Governmental plan.*** In the case of a governmental plan within the meaning of section 414(d), paragraphs (a) through (d) of this section shall not apply until the first taxable year described in paragraph (e)(2)(i) of this section, or, if later, the first taxable year beginning after the close of the first regular legislative session of the legislative body with the authority to amend the plan that begins after December 31, 2025.

(iv) ***Early implementation permitted.*** A plan is permitted to apply the rules of this section to contributions in any taxable year beginning after December 31, 2023.

[T.D. 10033, 90 FR 44548, Sept. 16, 2025]

§ 1.414(w)-1 Permissible withdrawals from eligible automatic contribution arrangements.

(a) ***Overview.*** Section 414(w) provides rules under which certain employees are permitted to elect to make a withdrawal of default elective contributions from an eligible automatic contribution arrangement. This section sets forth the rules applicable to permissible withdrawals from an eligible automatic contribution arrangement within the meaning of section 414(w). Paragraph (b) of this section defines an eligible automatic contribution arrangement. Paragraph (c) of this section describes a permissible withdrawal and addresses which employees are eligible to elect a withdrawal, the timing of the withdrawal election, and the amount of the withdrawal. Paragraph (d) of this section describes the tax and other consequences of the withdrawal. Paragraph (e) of this section includes the definitions applicable to this section.

(b) ***Eligible automatic contribution arrangement*** —

(1) ***In general.*** An eligible automatic contribution arrangement is an automatic contribution arrangement under an applicable employer plan that is intended to be an eligible automatic contribution arrangement for the plan year and that satisfies the uniformity requirement under paragraph (b)(2) of this section, and the notice requirement under paragraph (b)(3) of this section. An eligible automatic contribution arrangement need not cover all employees who are eligible to elect to have contributions made on their behalf under the applicable employer plan.

(2) ***Uniformity requirement*** —

(i) ***In general.*** An eligible automatic contribution arrangement must provide that the default elective contribution is a uniform percentage of compensation.

(ii) ***Exception to uniform percentage requiremen*** t. An arrangement does not violate the uniformity requirement of paragraph (b)(2)(i) of this section merely because the percentage varies in a manner that is permitted under § 1.401(k)-3(j)(2)(iii), except that the rule of § 1.401(k)-3(j)(2)(iii)(B) is applied without regard to whether the arrangement is intended to be a qualified automatic contribution arrangement.

(iii) ***Rules of application.*** For purposes of this paragraph (b)(2), all automatic contribution arrangements that are intended to be eligible automatic contribution arrangements within a plan (or within the disaggregated plan under § 1.410(b)-7, in the case of a plan subject to section 410(b)) are aggregated. Thus, for example, if a single plan within the meaning of section 414(l) covering employees in two separate divisions has two different automatic

contribution arrangements that are intended to be eligible automatic contributions arrangements, the two automatic contribution arrangements can constitute eligible automatic contribution arrangements only if the default elective contributions under the arrangements are the same percentage of compensation. However, if the different automatic contribution arrangements cover employees in portions of the plan that are mandatorily disaggregated under the rules of section 410(b), then there is no requirement to aggregate those automatic contribution arrangements under the uniformity requirements of this paragraph (b)(2).

(3) ***Notice requirement*** —

(i) ***General rule.*** The notice requirement of this paragraph (b)(3) is satisfied for a plan year if each covered employee is given notice of the employee's rights and obligations under the arrangement. The notice must be sufficiently accurate and comprehensive to apprise the employee of such rights and obligations, and be written in a manner calculated to be understood by the average employee to whom the arrangement applies. The notice must be in writing; however, see § 1.401(a)-21 for rules permitting the use of electronic media to provide applicable notices.

(ii) ***Content requirement.*** The notice must include the provisions found in § 1.401(k)-3(d)(2)(ii) to the extent those provisions apply to the arrangement. A notice is not considered sufficiently accurate and comprehensive unless the notice accurately describes—

(A) The level of the default elective contributions which will be made on the employee's behalf if the employee does not make an affirmative election;

(B) The employee's rights to elect not to have default elective contributions made to the plan on his or her behalf or to have a different percentage of compensation or different amount of contribution made to the plan on his or her behalf;

(C) How contributions made under the arrangement will be invested in the absence of any investment election by the employee; and

(D) The employee's rights to make a permissible withdrawal, if applicable, and the procedures to elect such a withdrawal.

(iii) ***Timing*** —

(A) ***General rule.*** The timing requirement of this paragraph (b)(3)(iii) is satisfied if the notice is provided within a reasonable period before the beginning of each plan year or, in the plan year the employee is first eligible to make a cash or deferred election (or first becomes covered under the automatic contribution arrangement as a result of a change in employment status), within a reasonable period before the employee becomes a covered employee. In addition, a notice satisfies the timing requirements of paragraph (b)(3) of this section only if it is provided sufficiently early so that the employee has a reasonable period of time after receipt of the notice in order to make the election described under paragraph (e)(2)(i) or (e)(2)(ii) of this section.

(B) ***Deemed satisfaction of timing requirement.*** The timing requirement of this paragraph (b)(3)(iii) is satisfied if at least 30 days (and no more than 90 days) before the beginning of each plan year, the notice is given to each employee covered under the automatic contribution arrangement for the plan year. In the case of an employee who does not receive the notice within the period described in the previous sentence because the

employee becomes eligible to make a cash or deferred election (or becomes covered under the automatic contribution arrangement as a result of a change in employment status) after the 90th day before the beginning of the plan year, the timing requirement is deemed to be satisfied if the notice is provided no more than 90 days before the employee becomes eligible to make a cash or deferred election (or becomes covered under the automatic contribution arrangement as a result of a change in employment status), and no later than the date that affords the employee a reasonable period of time after receipt of the notice to make the election described under paragraph (e)(2)(i) or (e)(2)(ii) of this section. If it is not practicable for the notice to be provided on or before the date specified in the plan that an employee becomes eligible to make a cash or deferred election, the notice will nonetheless be treated as provided timely if it is provided as soon as practicable after that date and the employee is permitted to elect to defer from all types of compensation that may be deferred under the plan earned beginning on that date.

(c) *Permissible withdrawal* —

(1) ***In general.*** If the plan so provides, any employee who has default elective contributions made under the eligible automatic contribution arrangement may elect to make a withdrawal of such contributions (and earnings attributable thereto) in accordance with the requirements of this paragraph (c). An applicable employer plan that includes an eligible automatic contribution arrangement will not fail to satisfy the prohibition on in-service withdrawals under section 401(k)(2)(B), 403(b)(7), 403(b)(11), or 457(d)(1) merely because it permits withdrawals that satisfy the timing requirement of paragraph (c)(2) of this section and the amount requirement of paragraph (c)(3) of this section.

(2) *Timing* —

(i) ***Last date to make election.*** A covered employee's election to withdraw default elective contributions must be made no later than 90 days after the date of the first default elective contribution under the eligible automatic contribution arrangement and must be effective no later than the date set forth in paragraph (c)(2)(iii) of this section. A plan is permitted to set an earlier deadline for making this election, but if a plan provides that a covered employee may withdraw default elective contributions, then the election period for the covered employee must be at least 30 days.

(ii) ***Determination of date of first default elective contribution.*** For purposes of this paragraph (c)(2), the date of the first default elective contribution is the date that the compensation that is subject to the cash or deferred election would otherwise have been included in gross income.

(iii) ***Latest effective date of the election.*** The effective date of an election described in this paragraph (c)(2) cannot be after the earlier of—

(A) The pay date for the second payroll period that begins after the date the election is made; and

(B) The first pay date that occurs at least 30 days after the election is made.

(iv) *Special rules* —

(A) ***Treatment of periods without default elective contributions.*** For purposes of determining the date of the first default elective contribution under the eligible automatic contribution arrangement, a plan is permitted to treat an employee who for an entire plan year did not have default elective contributions made under the eligible automatic contribution arrangement as if the employee had not had such contributions for any prior plan year as well.

(B) ***Treatment relating to aggregation of arrangements.*** The determination of whether an election is made no later than 90 days after the date of the first default elective contribution under the eligible automatic contribution arrangement must take into account any other eligible automatic contribution arrangement that is required to be aggregated with the eligible automatic contribution arrangement under the rules of paragraph (b)(2)(iii) of this section.

(3) ***Amount and timing of distributions*** —

(i) ***In general.*** A distribution satisfies the requirement of this paragraph (c)(3) if the distribution is equal to the amount of default elective contributions made under the eligible automatic contribution arrangement through the effective date of the election described in paragraph (c)(2) of this section (adjusted for allocable gains and losses to the date of distribution). If default elective contributions are separately accounted for in the participant's account, the amount of the distribution will be the total amount in that account. However, if default elective contributions are not separately accounted for under the plan, the amount of the allocable gains and losses will be determined under rules similar to those provided under § 1.401(k)-2(b)(2)(iv) for the distribution of excess contributions.

(ii) ***Fees.*** The distribution amount as determined under this paragraph (c)(3) may be reduced by any generally applicable fees. However, the plan may not charge a higher fee for a distribution under section 414(w) than would apply to any other distributions of cash.

(iii) ***Date of distribution.*** The distribution must be made in accordance with the plan's ordinary timing procedures for processing distributions and making distributions.

(d) ***Consequences of the withdrawal*** —

(1) ***Income tax consequences*** —

(i) ***Year of inclusion.*** The amount of the withdrawal is includible in the eligible employee's gross income for the taxable year in which the distribution is made. However, any portion of the distribution consisting of designated Roth contributions is not included in an employee's gross income a second time. The portion of the withdrawal that is treated as an investment in the contract is determined without regard to any plan contributions other than those distributed as a withdrawal of default elective contributions.

(ii) ***No additional tax on early distributions from qualified retirement plans.*** The withdrawal is not subject to the additional tax under section 72(t).

(iii) ***Reporting.*** The amount of the withdrawal is reported on Form 1099-R, “Distributions From Pensions, Annuities, Retirement or Profit-Sharing Plans, IRAs, Insurance Contracts, etc.,” as described in the applicable instructions.

(iv) ***Disregarded for purposes of section 402(g).*** The amount of the withdrawal is not taken into account in determining the limitation on elective deferrals under section 402(g).

(2) ***Forfeiture of matching contributions.*** In the case of any withdrawal made under paragraph (c) of this section, employer matching contributions with respect to the amount withdrawn that have been allocated to the participant's account (adjusted for allocable gains and losses) must be forfeited. A plan is permitted to provide that employer matching contributions will not be made with respect to any withdrawal made under paragraph (c) of this section if the withdrawal has been made prior to the date as of which the match would otherwise be allocated.

(3) ***Consent rules.*** A withdrawal made under paragraph (c) of this section may be made without regard to any notice or consent otherwise required under section 401(a)(11) or 417.

(e) ***Definitions.*** Unless indicated otherwise, the following definitions apply for purposes of section 414(w) and this section.

(1) ***Applicable employer plan.*** An applicable employer plan means a plan that—

(i) Is qualified under section 401(a);

(ii) Satisfies the requirements of section 403(b);

(iii) Is a section 457(b) eligible governmental plan described in § 1.457-2(f);

(iv) Is a simplified employee pension the terms of which provide for a salary reduction arrangement described in section 408(k)(6); or

(v) Is a SIMPLE described in section 408(p).

(2) ***Automatic contribution arrangement.*** An automatic contribution arrangement means an arrangement that provides for a cash or deferred election and which specifies that, in the absence of a covered employee's affirmative election, a default election applies under which the employee is treated as having elected to have default elective contributions made on his or her behalf under the plan. The default election begins to apply with respect to an eligible employee no earlier than a reasonable period of time after receipt of the notice describing the automatic contribution arrangement. This default election ceases to apply with respect to an eligible employee for periods of time with respect to which the employee has an affirmative election that is currently in effect to—

(i) Not have any default elective contributions made on his or her behalf; or

(ii) Have contributions made in a different amount or percentage of compensation.

(3) ***Covered employee.*** Covered employee means an employee who is covered under the automatic contribution arrangement, determined under the terms of the plan. A plan must provide whether an employee who makes an affirmative election remains a covered employee. If a plan provides that an employee who makes an affirmative election described in paragraph (e)(2)(i) or (e)(2)(ii) of this section remains a covered employee, then the employee must continue to receive the notice described in paragraph (b)(3) of this section and the plan may be eligible for the excise tax relief with respect to excess amounts distributed within 6 months after the end of the plan year under section 4979(f)(1). Such an employee will also have the default election reapply if the plan provides that the employee's prior affirmative election no longer remains in effect and the employee does not make a new affirmative election.

(4) ***Default elective contributions.*** Default elective contributions means the contributions that are made at a specified level or amount under an automatic contribution arrangement in the absence of a covered employee's affirmative election that are—

(i) Contributions described in section 402(g)(3); or

(ii) Contributions made to an eligible governmental plan within the meaning of § 1.457-2(f) that would be elective contributions if they were made under a qualified plan.

(f) *Effective/applicability date* —

(1) ***Statutory effective date.*** Section 414(w) applies to plan years beginning on or after January 1, 2008.

(2) ***Regulatory effective date.*** This section applies to plan years beginning on or after January 1, 2010. For plan years that begin in 2008, a plan must operate in accordance with a good faith interpretation of section 414(w). For this purpose, a plan that operates in accordance with this section will be treated as operating in accordance with a good faith interpretation of section 414(w).

[T.D. 9447, 74 FR 8212, Feb. 24, 2009]

§ 1.415(a)-1 General rules with respect to limitations on benefits and contributions under qualified plans.

(a) ***Trusts.*** Under sections 415 and 401(a)(16), a trust that forms part of a pension, profit-sharing, or stock bonus plan will not be qualified under section 401(a) if any of the following conditions exists:

(1) In the case of a defined benefit plan, the annual benefit with respect to any participant for any limitation year exceeds the limitations of section 415(b) and § 1.415(b)-1.

(2) In the case of a defined contribution plan, the annual additions credited with respect to any participant for any limitation year exceed the limitations of section 415(c) and § 1.415(c)-1.

(3) The trust has been disqualified under section 415(g) and § 1.415(g)-1 for any year.

(b) *Certain annuities and accounts* —

(1) ***In general.*** Under section 415, an employee annuity plan described in section 403(a), an annuity contract described in section 403(b), or a simplified employee pension described in section 408(k) will not be considered to be described in the otherwise applicable section if any of the following conditions exists:

(i) The annual benefit under a defined benefit plan with respect to any participant for any limitation year exceeds the limitations of section 415(b) and § 1.415(b)-1.

(ii) The contributions and other additions credited under a defined contribution plan with respect to any participant for any limitation year exceed the limitations of section 415(c) and § 1.415(c)-1.

(iii) The employee annuity plan, annuity contract, or simplified employee pension has been disqualified under section 415(g) and § 1.415(g)-1 for any year.

(2) ***Special rule for section 403(b) annuity contracts.*** If the contributions and other additions under an annuity contract that otherwise satisfies the requirements of section 403(b) exceed the limitations of section 415(c) and § 1.415(c)-1 with respect to any participant for any limitation year (regardless of whether the annuity contract is a defined contribution plan or a defined benefit plan), then the portion of the contract that includes such excess annual addition fails to be a section 403(b) annuity contract, and the remaining portion of the contract is a section 403(b) annuity contract. However, the status of the remaining portion of the contract as a section 403(b) annuity contract is not retained unless, for the year of the excess and each year thereafter, the issuer of the contract maintains

separate accounts for each such portion. In addition, if the benefit under an annuity contract that is a defined benefit plan and that otherwise satisfies the requirements of section 403(b) exceeds the limitations of section 415(b) and § 1.415(b)-1 with respect to any participant for any limitation year, then the contract fails to be a section 403(b) annuity contract.

(3) ***Section 403(b) annuity contract.*** For purposes of section 415 and regulations promulgated under section 415, the term *section 403(b) annuity contract* includes arrangements that are treated as annuity contracts for purposes of section 403(b). Thus, such term includes custodial accounts described in section 403(b)(7) and retirement income accounts described in section 403(b)(9).

(c) ***Regulations*** —

(1) ***In general.*** This section provides general rules regarding the application of section 415. For further rules regarding the application of section 415, see—

(i) Section 1.415(b)-1 (for general rules regarding the limits applicable to defined benefit plans);

(ii) Section 1.415(b)-2 (for special rules for defined benefit plans where a participant has multiple annuity starting dates);

(iii) Section 1.415(c)-1 (for general rules regarding the limits applicable to defined contribution plans);

(iv) Section 1.415(c)-2 (for rules regarding the definition of compensation for purposes of section 415);

(v) Section 1.415(d)-1 (for rules regarding cost-of-living adjustments to the various limits of section 415);

(vi) Section 1.415(f)-1 (for rules for aggregating plans for purposes of section 415);

(vii) Section 1.415(g)-1 (for rules regarding disqualification of plans that fail to satisfy the requirements of section 415); and

(viii) Section 1.415(j)-1 (for rules regarding limitation years).

(2) ***Cross references to special rules for section 403(b) annuity contracts.*** For special rules relating to section 403(b) annuity contracts, see—

(i) Section 1.415(c)-2(g)(1) and (3) (relating to the definition of compensation for section 403(b) annuity contracts);

(ii) Section 1.415(f)-1(f) (relating to rules for section 403(b) annuity contracts for purposes of aggregating plans);

(iii) Section 1.415(g)-1(b)(3)(iv)(C) (regarding disqualification of a section 403(b) annuity contract aggregated with a qualified defined contribution plan if the aggregated plans exceed the limitations of section 415(c));

(iv) Section 1.415(g)-1(c) (relating to the plan year for section 403(b) annuity contracts); and

(v) Section 1.415(j)-1(e) (relating to the limitation year for section 403(b) annuity contracts).

(3) ***Cross references to special rules for governmental plans.*** For special rules relating to governmental plans, see—

(i) Paragraph (f)(4) of this section (regarding permissive service credits);

(ii) Paragraph (g)(2) of this section (providing a delayed effective date for governmental plans);

(iii) Section 1.415(b)-1(a)(6)(i) (providing an exception from the compensation-based limit of section 415(b)(1)(B) for governmental plans);

(iv) Section 1.415(b)-1(a)(7)(ii) (regarding a special limitation for certain governmental plans making an election during 1990);

(v) Section 1.415(b)-1(b)(4) (regarding qualified governmental excess benefit arrangements);

(vi) Section 1.415(b)-1(d)(3) and (4) (regarding age adjustments to the dollar limit of section 415(b)(1)(A) for employees of police and fire departments and members of the Armed Forces of the United States, and for survivor and disability benefits);

(vii) Section 1.415(b)-1(g)(3) (regarding adjustments to applicable limitations for years of participation, and adjustments to applicable limitations for years of service for survivor and disability benefits under governmental plans);

(viii) Section 1.415(c)-1(b)(2)(ii) and (3)(iii) (regarding amounts not treated as annual additions under governmental plans); and

(ix) Section 1.415(c)-2(e)(5) (providing an alternative rule for inclusion of compensation after a severance from employment for governmental plans).

(4) ***Cross references to special rules for multiemployer plans.*** For special rules relating to multiemployer plans as defined in section 414(f), see—

(i) Paragraph (e) of this section (regarding benefits or contributions taken into account where a plan is maintained by more than one employer);

(ii) Paragraph (f)(5)(ii) of this section (providing a special definition of severance from employment for multiemployer plans);

(iii) Section 1.415(b)-1(a)(6)(ii) (providing an exception from the compensation-based limit for multiemployer plans);

(iv) Section 1.415(b)-1(f)(3) (regarding the application of the minimum $10,000 limitation on benefits in the case of a multiemployer plan);

(v) Section 1.415(f)-1(g) (providing special rules for aggregating multiemployer plans with other plans); and

(vi) Section 1.415(g)-1(b)(3)(ii) (regarding plan disqualification rules where a multiemployer plan is aggregated with a plan that is not a multiemployer plan and the aggregated plans exceed the limitations of section 415).

(5) ***Cross references to special rules for plans that are not subject to the requirements of section 411.*** For special rules relating to plans that are not subject to the requirements of section 411, see—

(i) Paragraph (d)(1) of this section and § 1.415(b)-1(a)(7)(iii) (providing that the rule limiting accruals to the section 415(b) limits does not apply to plans that are not subject to the requirements of section 411); and

(ii) Section 1.415(b)-1(b)(2)(iii) (providing rules for applying the section 411(c) factors in determining the annual benefit attributable to employee contributions for plans that are not subject to the requirements of section 411).

(6) ***Cross references to special rules for plans maintained by churches.*** For special rules relating to plans maintained by churches as defined in section 3121(w)(3)(A), see §§ 1.415(b)-1(a)(6)(iv) and 1.415(b)-1(a)(7)(iv) (providing an exception from the compensation-based limit for participants who have never been a highly compensated employee of the church).

(d) ***Plan provisions*** —

(1) ***In general.*** Although no specific plan provision is required under section 415 in order for a plan to establish or maintain its qualification, the plan provisions must preclude the possibility that any distribution under a defined benefit plan or annual addition under a defined contribution plan will exceed the limitations of section 415. In addition, a defined benefit plan that is subject to the requirements of section 411 must preclude the possibility that any accrual under the plan will exceed the limitations of section 415. A defined benefit plan may include provisions that automatically freeze or reduce the rate of benefit accrual (or limit the benefit payable in the case of a plan that is not subject to the requirements of section 411), and a defined contribution plan may include provisions that automatically limit the annual addition to a level necessary to prevent the limitations of section 415 from being exceeded with respect to any participant. For rules relating to this type of plan provision and the definitely determinable benefit requirement for pension plans, see § 1.401(a)-1(b)(1)(iii). Because § 1.401(a)-1(b)(1)(iii) requires that the operation of such a provision preclude discretion by the employer, if two defined benefit plans that are aggregated under the rules of section 415(f) would otherwise provide for aggregate benefits that might exceed the limits of section 415(b), the plan provisions must specify (without involving employer discretion) how benefits will be limited to prevent a violation of section 415(b).

(2) ***Special rule for profit-sharing and stock bonus plans.*** A provision of a profit-sharing or stock bonus plan that automatically freezes or reduces the amount of annual additions to ensure that the limitations of section 415 will not be exceeded must comply with the requirement set forth in § 1.401-1(b)(1)(ii) or (iii) (as applicable) that such plans provide a definite predetermined formula for allocating the contributions made to the plan among the participants. If the operation of a provision that automatically freezes or reduces the amount of annual additions to ensure that the limitations of section 415 are not exceeded does not involve discretionary action on the part of the employer, the definite predetermined allocation formula requirement is not violated by the provision. If the operation of such a provision involves discretionary action on the part of the employer, the definite predetermined allocation formula requirement is violated. For example, if two profit-sharing plans of one employer otherwise provide for aggregate contributions which may exceed the limits of section 415(c), the plan provisions must specify (without involving employer discretion) under which plan contributions and allocations will be reduced to prevent an excess annual addition and how the reduction will occur.

(3) ***Incorporation by reference*** —

(i) ***In general.*** A plan is permitted to incorporate by reference the limitations of section 415, and will not fail to meet the definitely determinable benefit requirement or the definite predetermined allocation formula requirement, whichever applies to the plan, merely because it incorporates the limits of section 415 by reference.

(ii) ***Section 415 can be applied in more than one manner, but a statutory or regulatory default rule exists.*** Where a provision of section 415 is permitted to be applied in more than one manner but is to be applied in a specified manner in the absence of contrary plan provisions (in other words, a default rule exists), if a plan incorporates the limitations of section 415 by reference with respect to that provision of section 415 and does not specifically vary from the default

rule, then the default rule applies. With respect to a provision of section 415 for which a default rule exists, if the limitations of section 415 are to be applied in a manner other than using the default rule, the plan must specify the manner in which the limitation is to be applied in addition to generally incorporating the limitations of section 415 by reference. For example, if a plan generally incorporates the limitations of section 415 by reference and does not restrict the accrued benefits to which the amendments to section 415(b)(2)(E) made by the Uruguay Round Agreements Act of 1994, Public Law 103-465 (108 Stat. 4809) (GATT), apply (as permitted by Q&A-12 of Rev. Rul. 98-1 (1998-1 CB 249) (see § 601.601(d)(2) of this chapter), which reflects the amendments to section 767 of GATT made by section 1449 of the Small Business Job Protection Act of 1996, Public Law 104-188 (110 Stat. 1755)), then the amendments to section 415(b)(2)(E) made by GATT apply to all benefits under the plan.

(iii) ***Section 415 can be applied in more than one manner with no statutory or regulatory default.*** If a limitation of section 415 may be applied in more than one manner, and if there is no governing principle pursuant to which that limitation is applied in the absence of contrary plan provisions, then the plan must specify the manner in which the limitation is to be applied in addition to generally incorporating the limitations of section 415 by reference. For example, if an employer maintains two profit-sharing plans, and if any participant participates in more than one such plan, then both plans must specify (in a consistent manner) under which of the employer's two profit-sharing plans annual additions must be reduced if aggregate annual additions would otherwise exceed the limitations of section 415(c).

(iv) ***Former requirements.*** A plan is not permitted to incorporate by reference formerly applicable requirements of section 415 that are no longer in force (such as the limits of former section 415(e)).

(v) ***Cost-of-living adjustments*** —

(A) ***In general.*** A plan is permitted to incorporate by reference the annual adjustments to the limitations of section 415 that are made pursuant to section 415(d). See § 1.415(d)-1 for additional rules relating to cost-of-living adjustments under section 415(d).

(B) ***Cost-of-living adjustments not included in accrued benefit until effective.*** Notwithstanding that a plan incorporates the increases to the applicable limits under section 415(d) by reference, the accrued benefit of a participant for purposes of section 411 and any amount payable to a participant for purposes of § 1.415(b)-1(a)(1) are not permitted to reflect increases pursuant to the annual increase under section 415(d) of the dollar limitation described in section 415(b)(1)(A) or the compensation limit described in section 415(b)(1)(B) for any period before the annual increase becomes effective. See § 1.415(d)-1(a)(3) for rules relating to when the annual adjustments to the dollar and compensation limitations are effective. A plan amendment does not violate the requirements of section 411(d)(6) merely because it eliminates the incorporation by reference of the increases under section 415(d) with respect to increases that have not yet occurred.

(C) ***Application of increase in defined benefit dollar limit to participants who have incurred a severance from employment or commenced receiving benefits.*** If a plan incorporates by reference the annual adjustments to the limitations of section 415 pursuant to this paragraph (d)(3)(v), the plan will be treated as applying the section 415(d) cost-of-living adjustments to the maximum extent permitted under the safe harbor described in § 1.415(d)-1(a)(5), except to the extent provided in this paragraph (d)(3)(v)(C). Thus, such a

plan is not subject to the requirements of § 1.415(b)-1(b)(1)(iii) (providing special rules for determining the annual benefit of an employee in the case of multiple annuity starting dates) with respect to benefit increases that result solely from an increase in the section 415(b) limits pursuant to section 415(d). If a plan incorporates by reference the annual adjustments to the limitations of section 415 pursuant to this paragraph (d)(3)(v), the annual increase under section 415(d) of the dollar limitation described in section 415(b)(1)(A) does not apply with respect to a participant if the increase is effective after the participant's severance from employment with the employer maintaining the plan (or, if earlier, after the annuity starting date in the case of a participant who has commenced receiving benefits), unless the plan specifies that this annual increase applies. Similarly, if a plan incorporates by reference the annual adjustments to the limitations of section 415 pursuant to this paragraph (d)(3)(v), the annual increase under section 415(d) of the compensation-based limitation described in section 415(b)(1)(B) does not apply with respect to a participant for increases that are effective after the participant's severance from employment with the employer maintaining the plan (or, if earlier, after the annuity starting date in the case of a participant who has commenced receiving benefits), unless the plan specifies that this annual increase applies.

(D) ***Treatment of cost-of-living adjustments for funding and deduction purposes.*** In general, the annual increase under section 415(d) of the dollar limitation described in section 415(b)(1)(A) and the compensation limitation described in section 415(b)(1)(B) is treated as a plan amendment, regardless of whether the plan reflects the increase automatically through operation of plan provisions in accordance with this paragraph (d)(3)(v) or the plan is amended to reflect the increase (pursuant to § 1.415(d)-1(a)(5)). However, where a plan reflects the annual increase under section 415(d) of the dollar limitation described in section 415(b)(1)(A) or the compensation limitation described in section 415(b)(1)(B) automatically through operation of plan provisions pursuant to this paragraph (d)(3)(v), the funding method for the plan is permitted to provide for this annual increase to be treated as an experience loss for purposes of applying sections 404, 412, and 431.

(e) ***Rules for plans maintained by more than one employer.*** Except as provided in § 1.415(f)-1(g)(2)(i) (regarding aggregation of multiemployer plans with plans other than multiemployer plans), for purposes of applying the limitations of section 415 with respect to a participant in a plan maintained by more than one employer, benefits and contributions attributable to such participant from all of the employers maintaining the plan must be taken into account. Furthermore, in applying the limitations of section 415 with respect to a participant in such a plan, the total compensation received by the participant from all of the employers maintaining the plan is taken into account under the plan, unless the plan specifies otherwise.

(f) ***Special rules*** —

(1) ***Affiliated employers.*** Pursuant to section 414(b) and § 1.414(b)-1, all employees of all corporations that are members of a controlled group of corporations (within the meaning of section 1563(a), as modified by section 1563(f)(5), and determined without regard to section 1563(a)(4) and (e)(3)(C)) are treated as employed by a single employer for purposes of section 415. Similarly, pursuant to section 414(c) and regulations promulgated under section 414(c), all employees of trades or businesses that are under common control are treated as employed by a single employer. Thus, any defined benefit plan or defined contribution plan maintained by any member of a controlled group of corporations (within the meaning of section 414(b)) or by any trade or business (whether or not incorporated) that is part of a group of trades or businesses that are under common control (within

the meaning of section 414(c)) is deemed maintained by all such members or such trades or businesses. Pursuant to section 415(h), for purposes of section 415, sections 414(b) and 414(c) are applied by using the phrase "more than 50 percent" instead of the phrase "at least 80 percent" each place the latter phrase appears in section 1563(a)(1) and in the regulations under section 414(c) (except for purposes of determining whether two or more organizations are a brother-sister group of trades or businesses under common control under the rules in § 1.414(c)-2(c)).

(2) ***Affiliated service groups.*** Any defined benefit plan or defined contribution plan maintained by any member of an affiliated service group (within the meaning of section 414(m)) is deemed maintained by all members of that affiliated service group.

(3) ***Leased employees*** —

(i) ***In general.*** Pursuant to section 414(n), except as provided in paragraph (f)(3)(ii) of this section, with respect to any person (referred to as the recipient) for whom a leased employee (within the meaning of section 414(n)(2)) performs services, the leased employee is treated as an employee of the recipient, but contributions or benefits provided by the leasing organization that are attributable to services performed for the recipient are treated as provided under a plan maintained by the recipient.

(ii) ***Exception for leased employees covered by safe harbor plans.*** Pursuant to section 414(n)(5), the rule of paragraph (f)(3)(i) of this section does not apply to a leased employee with respect to services performed for a recipient if—

(A) The leased employee is covered by a plan that is maintained by the leasing organization and that meets the requirements of section 414(n)(5)(B); and

(B) Leased employees (determined without regard to this paragraph (f)(3)(ii)) do not constitute more than 20 percent of the recipient's nonhighly compensated workforce.

(4) ***Permissive service credit under governmental plans.*** See section 415(n) for rules regarding the application of the limitations of sections 415(b) and (c) where a participant makes contributions (including a transfer described in section 403(b)(13) or section 457(e)(17)) to a defined benefit governmental plan to purchase permissive service credit under the plan.

(5) ***Definition of severance from employment*** —

(i) ***General rule.*** For purposes of this section and §§ 1.415(b)-1, 1.415(b)-2, 1.415(c)-1, 1.415(c)-2, 1.415(d)-1, 1.415(f)-1, 1.415(g)-1, and 1.415(j)-1, whether an employee has a severance from employment with the employer that maintains a plan is determined in the same manner as under § 1.401(k)-1(d)(2) except that, for purposes of determining the employer of an employee, the modifications provided under section 415(h) (described in paragraph (f)(1) of this section) to the employer aggregation rules apply. Thus, an employee has a severance from employment when the employee ceases to be an employee of the employer maintaining the plan, and an employee does not have a severance from employment if, in connection with a change of employment, the employee's new employer maintains such plan with respect to the employee. The determination of whether an employee ceases to be an employee of the employer maintaining the plan is based on all of the relevant facts and circumstances.

(ii) ***Multiemployer plans.*** A participant in a multiemployer plan (within the meaning of section 414(f)) is not treated as having incurred a severance from employment with the employer maintaining the multiemployer plan for purposes of this section and §§ 1.415(b)-1, 1.415(b)-2, 1.415(c)-1, 1.415(c)-2, 1.415(d)-1, 1.415(f)-1, 1.415(g)-1, and 1.415(j)-1 if the participant continues to be an employee of another employer maintaining the multiemployer plan.

(6) ***Qualified domestic relations orders.*** A benefit provided to an alternate payee (as defined in section 414(p)(8)) of a participant pursuant to a qualified domestic relations order (as defined in section 414(p)(1)(A)) is treated as if it were provided to the participant for purposes of applying the limitations of section 415. See § 1.401(a)-13(g)(4)(iv).

(7) ***Effect on other requirements.*** Except as provided in § 1.417(e)-1(d)(1), the application of section 415 does not relieve a plan from the obligation to satisfy other applicable qualification requirements. Accordingly, the terms of the plan must provide for the plan to satisfy section 415 as well as all other applicable requirements. For example, if a defined benefit plan has a normal retirement age of 62, and if a participant's benefit remains unchanged between the ages of 62 and 65 because of the application of the section 415(b)(1)(A) dollar limit, the plan satisfies the requirements of section 411 only if the plan either commences distribution of the participant's benefit at normal retirement age (without regard to severance from employment) or provides for a suspension of benefits at normal retirement age that satisfies the requirements of section 411(a)(3)(B) and 29 CFR 2530.203-3. Similarly, if the increase to a participant's benefit under a defined benefit plan in a year after the participant has attained normal retirement age is less than the actuarial increase to the participant's previously accrued benefit because of the application of the section 415(b)(1)(B) compensation limitation (which is not adjusted for commencement after age 65), the plan satisfies the requirements of section 411 only if the plan either commences distribution of the participant's benefit at normal retirement age (without regard to severance from employment) or provides for a suspension of benefits at normal retirement age that satisfies the requirements of section 411(a)(3)(B) and 29 CFR 2530.203-3.

(g) ***Effective date*** —

(1) ***General rule.*** Except as otherwise provided, this section and §§ 1.415(b)-1, 1.415(c)-1, 1.415(c)-2, 1.415(d)-1, 1.415(f)-1, 1.415(g)-1, and 1.415(j)-1 apply to limitation years beginning on or after July 1, 2007.

(2) ***Governmental plans.*** In the case of a governmental plan as defined in section 414(d), this section and §§ 1.415(b)-1, 1.415(c)-1, 1.415(c)-2, 1.415(d)-1, 1.415(f)-1, 1.415(g)-1, and 1.415(j)-1 apply to limitation years that begin more than 90 days after the close of the first regular legislative session of the legislative body with authority to amend the plan that begins on or after July 1, 2007. A governmental plan is permitted to apply the provisions of this section and §§ 1.415(b)-1, 1.415(c)-1, 1.415(c)-2, 1.415(d)-1, 1.415(f)-1, 1.415(g)-1, and 1.415(j)-1 to limitation years beginning on or after July 1, 2007, provided the plan applies all the applicable provisions of this section and §§ 1.415(b)-1, 1.415(c)-1, 1.415(c)-2, 1.415(d)-1, 1.415(f)-1, 1.415(g)-1, and 1.415(j)-1 for such limitation years.

(3) ***Option to apply regulations earlier.*** A plan may apply the rules in § 1.415(c)-2(e) regarding post-severance compensation payments for limitation years prior to the effective date described in paragraphs (g)(1) and (2) of this section. This early application affects the rules relating to the definition of compensation in § 1.401(k)-1(e)(8) and § 1.457-4(d).

(4) ***Grandfather rule for preexisting benefits.*** A defined benefit plan is considered to satisfy the limitations of section 415(b) for a participant with respect to benefits accrued or payable under the plan as of the end of the limitation year that is immediately prior to the effective date of final regulations under this section and §§ 1.415(b)-1, 1.415(c)-1, 1.415(c)-2, 1.415(d)-1, 1.415(f)-1, 1.415(g)-1, and 1.415(j)-1 (as provided under paragraph (g)(1) or (2) of this section) pursuant to plan provisions (including plan provisions relating to the plan's limitation year) that were both adopted and in effect before April 5, 2007, but only if such plan provisions meet the applicable requirements of statutory provisions, regulations, and other published guidance relating to section 415 in effect immediately before the effective date of final regulations under this section and §§ 1.415(b)-1, 1.415(c)-1, 1.415(c)-2, 1.415(d)-1, 1.415(f)-1, 1.415(g)-1, and 1.415(j)-1 (as provided under paragraph (g)(1) or (2) of this section). Plan provisions will not be treated as failing to satisfy these requirements merely because the plan has not been amended to reflect changes to section 415(b) made by the Pension Funding Equity Act of 2004, Public Law 108-218 (118 Stat. 596), and the Pension Protection Act of 2006, Public Law 109-280 (120 Stat. 780). In addition, plan provisions will not be treated as failing to satisfy these requirements merely because the plan's definition of compensation for a limitation year that is used for purposes of applying the limitations of section 415(b)(1)(B) reflects compensation for a plan year that is in excess of the limitation under section 401(a)(17) that applies to that plan year. If benefits under a plan are accrued after the applicable effective date under paragraph (g)(1) or (2) of this section, then the sum of the benefits grandfathered under the first sentence of this paragraph (g)(4) and benefits accrued after the applicable effective date must satisfy the requirements of section 415, taking into account the requirements of this section and §§ 1.415(b)-1, 1.415(c)-1, 1.415(c)-2, 1.415(d)-1, 1.415(f)-1, 1.415(g)-1, and 1.415(j)-1.

[T.D. 9319, 72 FR 16895, Apr. 5, 2007]

§ 1.415(b)-1 Limitations for defined benefit plans.

(a) ***General rules*** —

(1) ***Maximum limitations.*** Except as otherwise provided under this section, a defined benefit plan fails to satisfy the requirements of section 415(a) for a limitation year if, during the limitation year, either the annual benefit (as defined in paragraph (b)(1)(i) of this section) accrued by a participant (whether or not the benefit is vested) or the annual benefit payable to a participant at any time under the plan exceeds the lesser of—

(i) $160,000 (as adjusted pursuant to section 415(d), § 1.415(d)-1(a), and this section); or

(ii) 100 percent of the participant's average compensation for the period of the participant's high-3 years of service (as adjusted pursuant to section 415(d), § 1.415(d)-1(a), and this section).

(2) ***Defined benefit plan.*** For purposes of section 415 and regulations promulgated under section 415, a defined benefit plan is any plan, contract, or account to which section 415 applies pursuant to § 1.415(a)-1(a) or (b) (or any portion thereof) that is not a defined contribution plan within the meaning of § 1.415(c)-1(a)(2). In addition, a section 403(b) annuity contract that is not described in section 414(i) is treated as a defined benefit plan for purposes of section 415 and regulations promulgated under section 415.

(3) ***Plan provisions.*** As required in § 1.415(a)-1(d)(1), in order to satisfy the limitations on benefits under this section, the plan provisions (including the provisions of any annuity) must preclude the possibility that any annual benefit exceeding these limitations will be accrued (except as provided in

paragraph (a)(7)(iii) of this section), distributed, or otherwise payable in any optional form of benefit (including the normal form of benefit) at any time (from the plan, from an annuity contract that will make distributions to the participant on behalf of the plan, or from an annuity contract that has been distributed under the plan). Thus, for example, a plan that is subject to the requirements of section 411 will fail to satisfy the limitations of this section if the plan does not contain terms that preclude the possibility that any annual benefit exceeding these limitations will be accrued or payable in any optional form of benefit (including the normal form of benefit) at any time, even though no participant has actually accrued a benefit in excess of these limitations.

(4) ***Adjustments to dollar limitation for commencement before age 62 or after age 65.*** The age-adjusted section 415(b)(1)(A) dollar limit computed pursuant to paragraph (d) or (e) of this section is used in place of the dollar limitation described in section 415(b)(1)(A) and paragraph (a)(1)(i) of this section in the case of a benefit with an annuity starting date that occurs before the participant attains age 62 or after the participant attains age 65.

(5) ***Average compensation for period of high-3 years of service*** —

(i) ***In general.*** Except as otherwise provided in this paragraph (a)(5), for purposes of applying the limitation on benefits described in this section, the period of a participant's high-3 years of service is the period of 3 consecutive calendar years (taking into account the rule in paragraph (a)(5)(iii) of this section) during which the employee had the greatest aggregate compensation (as defined in § 1.415(c)-2) from the employer, and the average compensation for the period of a participant's high-3 years of service is determined by dividing the aggregate compensation for this period by 3. For purposes of this paragraph (a)(5), in determining a participant's high-3 years of service, the plan may use any 12-month period to determine a year of service instead of the calendar year, provided that it is uniformly and consistently applied in a manner that is specified under the terms of the plan. As provided under § 1.415(c)-2(f), because a plan is not permitted to base benefits on compensation in excess of the limitation under section 401(a)(17), a plan's definition of compensation for a year that is used for purposes of applying the limitations of section 415 is not permitted to reflect compensation for a year that is in excess of the limitation under section 401(a)(17) that applies to that year. See §§ 1.401(a)(17)-1(a)(3)(i) and 1.401(a)(17)-1(b)(3)(ii) for rules regarding the effective date of increases in the section 401(a)(17) compensation limitation for a plan year and for a 12-month period other than the plan year.

(ii) ***Short periods of service.*** For a participant who is employed with an employer for less than 3 consecutive years, the period of the participant's high-3 years of service is the actual number of consecutive years of service (including fractions of years, but not less than one year). In such a case, the limitation of section 415(b)(1)(B) of 100 percent of the participant's average compensation for the period of the participant's high-3 years of service is computed by dividing the participant's compensation during the participant's longest consecutive period of service by the number of years in that period (including fractions of years, but not less than one year). The rule in paragraph (a)(5)(iii) of this section is used for purposes of determining a participant's consecutive years of service.

(iii) ***Break in service.*** In the case of a participant who has had a severance from employment with an employer that maintains the plan and who is subsequently rehired by the employer, the period of the participant's high-3 years of service is calculated by excluding all years for which the participant performs no services for and receives no compensation from the employer maintaining the plan (referred to as the break period), and by treating the year of service

immediately prior to and the year of service immediately after the break period as if such years of service were consecutive. See § 1.415(d)-1(a)(2)(iii) for a special rule for determining a rehired participant's section 415(b)(1)(B) compensation limit in the case of a plan that adjusts the compensation limit for limitation years after the limitation year in which the participant incurs a severance from employment.

(iv) ***Examples.*** For purposes of these examples, except as otherwise stated, the plan year and the limitation year are the calendar year, and the plan uses the calendar year for purposes of determining the period of high-3 years of service. In addition, except as otherwise stated, it is assumed that the plan's normal retirement age is 65, and all participants discussed in these examples have at least ten years of service with the employer and at least ten years of participation in the plan at issue. It is also assumed that none of the plans in the examples are governmental plans. The following examples illustrate the rules of this paragraph (a)(5):

> *Example 1.* (i) *Facts.* Plan A, which was established on January 1, 2008, covers Participant M, who was hired on January 1, 1990. Participant M's compensation (as defined in § 1.415(c)-2) from the employer maintaining the plan is $140,000 each year for 1990 through 1992, is $120,000 each year for 1993 through 2007, and is $165,000 for 2008 and 2009. Assume that for Plan A's 2008 and 2009 limitation years, the section 415(b)(1)(A) age-adjusted dollar limit for M is $185,000 and $190,000, respectively, prior to the reduction of the age-adjusted dollar limit pursuant to paragraph (g)(1) of this section (which requires a reduction in the dollar limit if a participant has less than 10 years of participation in the plan).
> (ii) *Conclusion.* As of the end of the 2008 limitation year, the period of M's high-3 consecutive years of service runs from January 1, 1990, through December 31, 1992, and M's average compensation for this period is $140,000. Thus, the limitation under section 415(b)(1)(B) for the 2008 limitation year is $140,000. As of the end of the 2009 limitation year, the period of M's high-3 consecutive years of service runs from January 1, 2007, through December 31, 2009, and M's average compensation for this period is $150,000. Thus, the limitation under section 415(b)(1)(B) for the 2009 limitation year is $150,000.

> *Example 2* (i) *Facts.* Participant N is a participant in Plan B. N's compensation for 2008, 2009, and 2010 is $300,000 for each year. N's average compensation for the period of N's high-3 years of service (determined before the application of section 401(a)(17)) is $300,000, based on N's compensation for 2008, 2009, and 2010. For all years before 2008, Participant N's compensation was less than the then-applicable section 401(a)(17) limit. On January 1, 2011, N commences receiving benefits from Plan B at the age of 75, 10 years after attaining N's normal retirement age under Plan B, when the age-adjusted section 415(b)(1)(A) dollar limit for benefits commencing at that age is $293,453.

(ii) *Conclusion.* Pursuant to § 1.415(c)-2(f) and section 401(a)(17), Plan B is not permitted to provide for a definition of compensation that includes compensation for a year that is in excess of the limitation under section 401(a)(17) that applies to that year. Accordingly, the limitation under section 415(b)(1)(B) based on N's average compensation for the period of N's high three years of service must not reflect compensation for a year that is in excess of the limitation under section 401(a)(17) that applies to that year. Thus, if the limitation under section 401(a)(17) for years beginning in 2008, 2009, and 2010 is $230,000, $235,000, and $240,000, respectively, then the limitation under section 415(b)(1)(B) based on N's average compensation for the period of N's high three years of service is $235,000.

Example 3. (i) *Facts.* The facts are the same as in *Example 2*, except that N commences receiving benefits from Plan B on January 1, 2008, at the age of 75, 10 years after attaining N's normal retirement age under Plan B. In addition, N's period of high three years of service is from January 1, 2003, through December 31, 2005, and N's average compensation for this period is $300,000. The section 401(a)(17) limits for 2003, 2004 and 2005 are $200,000, $205,000, and $210,000, respectively. As of December 31, 2007, pursuant to plan provisions adopted and in effect on January 1, 2007, N's accrued benefit under Plan B, payable in the form of a straight life annuity, actuarially adjusted to reflect commencement 10 years after normal retirement age, is $300,000. Plan B has not been amended during 2007, and that as of December 31, 2007, Plan B satisfied all of the requirements of section 415(b) with respect to N's accrued benefit, pursuant to statutory provisions, regulations, and other published guidance in effect immediately before the limitation year beginning on January 1, 2008.
(ii) *Conclusion.* Under § 1.415(a)-1(g)(4), Plan B is considered to satisfy the section 415(b)(1)(B) compensation limit with respect to N's benefit payable at age 75 of $300,000 (which N accrued prior to January 1, 2008), for limitation years beginning after December 31, 2007. This is because § 1.415(a)-1(g)(4) provides that plan provisions will not be treated as failing to satisfy the requirements of section 415(b)(1)(B) merely because the plan's definition of compensation that is used for purposes of applying the limitations of section 415(b)(1)(B) reflects compensation in excess of the section 401(a)(17) limitation for limitation years beginning before January 1, 2008. N, however, cannot accrue any additional benefits under Plan B for limitation years beginning after December 31, 2007, until N's section 415(b)(1)(B) compensation limit, as limited by § 1.415(c)-2(f) and section 401(a)(17), increases above $300,000.

Example 4. (i) *Facts.* Participant O participates in Plan C, maintained by Employer X. Plan C does not adjust a participant's section 415(b)(1)(B) compensation limit for limitation years after the limitation year in which the participant incurs a severance from employment. Prior to separating from employment with X in 2010, O's average

compensation for O's period of high-3 years of service is $50,000, based on O's compensation for 2007, 2008, and 2009, which was $50,000 for each year. O's compensation for 2010 was $45,000. O's compensation is $0 for 2011. In 2012, O is rehired by X and resumes participation in Plan C. O's compensation in 2012 is $45,000, and is $70,000 in 2013.
(ii) *Conclusion.* As of the end of the 2013 limitation year, O's average compensation for O's period of high-3 years of service is $53,333, based on O's compensation in 2010, 2012, and 2013. See paragraph (a)(5)(iii) of this section.

Example 5. (i) *Facts.* The facts are the same as in *Example 4,* except that, in accordance with § 1.415(a)-1(d)(3)(v), Plan C incorporates by reference section 415(d) adjustments to a participant's section 415(b)(1)(B) compensation limit for limitation years after the limitation year in which the participant incurs a severance from employment. Assume that the annual adjustment factor described in § 1.415(d)-1(a)(2)(ii) for 2011 through 2013 is 1.03 for each year. Thus, disregarding O's rehire by X, O's average compensation for O's period of high-3 years of service for the 2013 limitation year is equal to $54,636 ($50,000 * 1.03 * 1.03 * 1.03).
(ii) *Conclusion.* Under § 1.415(d)-1(a)(2)(iii), O's average compensation for O's period of high-3 years of service for the 2013 limitation year is $54,636.

(6) ***Exceptions from compensation limit.*** The limit under paragraph (a)(1)(ii) of this section (100 percent of the participant's average compensation for the participant's high-3 years of service) does not apply to—

(i) A governmental plan (as defined in section 414(d));

(ii) A multiemployer plan (as defined in section 414(f));

(iii) A collectively bargained plan that is described in section 415(b)(7); or

(iv) A participant in a plan maintained by an organization described in section 3121(w)(3)(A) who has never been a highly compensated employee (within the meaning of section 414(q)) of the organization.

(7) ***Special rules*** —

(i) ***Total benefits not in excess of $10,000.*** See section 415(b)(4) and paragraph (f) of this section for an exception from the limits of section 415(b)(1) and paragraph (a)(1) of this section with respect to retirement benefits that do not exceed $10,000 for the limitation year.

(ii) ***Governmental plans electing during 1990.*** For a special limitation applicable to certain governmental plans electing the application of this rule during the first plan year beginning after December 31, 1989, see section 415(b)(10).

(iii) ***Defined benefit plans not subject to the requirements of section 411.*** In the case of a defined benefit plan that is not subject to the requirements of section 411, the limitations described in this paragraph (a) are not required to be applied to the annual benefit accrued by a participant

before the benefit is payable. However, such a defined benefit plan is subject to the limitations described in this paragraph (a) with respect to the annual benefit payable to a participant at any time under the plan.

(iv) ***Application of compensation limitation exception to a church employee who becomes a highly compensated employee*** —

(A) ***In general.*** If a participant who was described in paragraph (a)(6)(iv) of this section for a prior limitation year later becomes a highly compensated employee (within the meaning of section 414(q)) of the organization that maintains the defined benefit plan, the plan is not treated as failing to satisfy the compensation-based limitation described in paragraph (a)(1)(ii) of this section with respect to the participant if the requirements of paragraph (a)(7)(iv)(B) of this section are satisfied with respect to the participant.

(B) ***Limitation on accruals.*** The requirements of this paragraph (a)(7)(iv)(B) are satisfied with respect to a participant if no plan amendments increasing the participant's benefits are adopted during the limitation year in which the participant first becomes a highly compensated employee (within the meaning of section 414(q)) of the organization that maintains the plan, and there is no increase in the participant's accrued benefit derived from employer contributions (including increases as a result of increased compensation or service) in subsequent limitation years.

(b) ***Annual benefit*** —

(1) ***In general*** —

(i) ***Definition of annual benefit*** —

(A) ***Straight life annuities.*** For purposes of this section and § 1.415(b)-2, the term *annual benefit* means a benefit that is payable in the form of a straight life annuity. A *straight life annuity* means an annuity payable in equal installments for the life of the participant that terminates upon the participant's death. Examples of benefits that are not in the form of a straight life annuity include an annuity with a post-retirement death benefit and an annuity providing a guaranteed number of payments. If a benefit is payable in the form of a straight life annuity, no adjustment is made to the benefit to account for differences in the timing of payments during a year (for example, no adjustment is made on account of the annuity being payable in annual or monthly installments).

(B) ***Other benefit forms.*** With respect to a benefit payable in a form other than a straight life annuity, the annual benefit is determined as the straight life annuity payable on the first day of each month that is actuarially equivalent to the benefit payable in such other form, determined under the rules of paragraph (c) of this section.

(ii) ***Rules for determination of annual benefit.*** The annual benefit does not include the annual benefit attributable to either employee contributions or rollover contributions (as described in sections 401(a)(31), 402(c)(1), 403(a)(4), 403(b)(8), 408(d)(3), and 457(e)(16)), determined pursuant to the rules of paragraph (b)(2) of this section. The treatment of transferred benefits is determined under the rules of paragraph (b)(3) of this section. Paragraph (b)(4) of this section discusses the treatment of qualified governmental excess benefit arrangements.

(iii) ***Determination of annual benefit in the case of multiple annuity starting dates*** —

(A) ***General rule.*** If a participant has or will have distributions commencing at more than one annuity starting date, then the limitations of section 415 must be satisfied as of each of the annuity starting dates, taking into account the benefits that have been or will be provided at all of the annuity starting dates. This will happen, for example, where benefit distributions to a participant have previously commenced under a plan that is aggregated for purposes of section 415 with a plan under which the participant receives current accruals. In determining the annual benefit for such a participant as of a particular annuity starting date, the plan must actuarially adjust the past and future distributions with respect to the benefits that commenced at the other annuity starting dates. For limitation years to which § 1.415(b)-2 applies, these adjustments must be made using the rules of § 1.415(b)-2. For purposes of this paragraph (b)(1)(iii) and § 1.415(b)-2, the determination of whether a new annuity starting date has occurred is made without regard to the rule of § 1.401(a)-20, Q&A-10(d) (under which the commencement of certain distributions may not give rise to a new annuity starting date).

(B) ***Scope of multiple annuity starting date rules.*** The rules provided in this paragraph (b)(1)(iii) and § 1.415(b)-2 apply for purposes of determining the annual benefit of a participant where a new distribution election is effective during the current limitation year with respect to a distribution that previously commenced. The rules of this paragraph (b)(1)(iii) and § 1.415(b)-2 also apply for determining the annual benefit of a participant for purposes of applying the limitations of section 415(b) and this section where benefit payments are increased as a result of plan terms or a plan amendment applying a cost-of-living adjustment or similar benefit increase, unless the increase is described in paragraph (b)(1)(iii)(C) of this section.

(C) ***Safe harbors for certain benefit increases.*** An increase to benefit payments as a result of plan terms or a plan amendment applying a cost-of-living adjustment or similar benefit increase is described in this paragraph (b)(1)(iii)(C) if the increase—

(*1*) Has previously been accounted for as part of the annual benefit under the rules of paragraph (c) of this section;

(*2*) Is not required to be accounted for as part of the annual benefit, pursuant to the exception for certain automatic benefit increase features under paragraph (c)(5) of this section;

(*3*) Is pursuant to a plan provision that automatically incorporates section 415(d) cost-of-living adjustments under § 1.415(a)-1(d)(3)(v); or

(*4*) Complies with one of the safe harbors described in § 1.415(d)-1(a)(5) or (6) (providing safe harbors for annual and other periodic adjustments to distributions).

(2) ***Determination of annual benefit attributable to employee contributions and rollover contributions*** —

(i) ***In general.*** If employee contributions (other than contributions described in paragraph (b)(2)(ii) of this section) or rollover contributions are made to the plan, the annual benefit attributable to these contributions is determined as provided in this paragraph (b)(2).

(ii) ***Certain employee contributions disregarded.*** For purposes of this paragraph (b)(2), the following are not treated as employee contributions:

(A) Contributions that are picked up by a governmental employer as provided under section 414(h)(2).

(B) Repayment of any loan made to a participant from the plan.

(C) Repayment of a previously distributed amount as described in section 411(a)(7)(B) in accordance with section 411(a)(7)(C).

(D) Repayment of a withdrawal of employee contributions as provided under section 411(a)(3)(D).

(E) Repayments that would have been described in paragraph (b)(2)(ii)(C) or (b)(2)(ii)(D) of this section except that the plan does not restrict the timing of repayments to the maximum extent permitted by section 411(a).

(iii) ***Annual benefit attributable to mandatory employee contributions.*** In the case of mandatory employee contributions as defined in section 411(c)(2)(C) and § 1.411(c)-1(c)(4) (or contributions that would be mandatory employee contributions if section 411 applied to the plan), the annual benefit attributable to those contributions is determined by applying the factors applicable to mandatory employee contributions as described in section 411(c)(2)(B) and (C) and regulations promulgated under section 411 to those contributions to determine the amount of a straight life annuity commencing at the annuity starting date, regardless of whether the requirements of sections 411 and 417 apply to that plan. For purposes of applying such factors to a plan that is not subject to the requirements of section 411, the applicable effective date of section 411(a)(2) (which is used under § 1.411(c)-1(c)(3) to determine the beginning date from which statutorily specified interest must be credited to mandatory employee contributions) must be determined as if section 411 applied to the plan, and in determining the annual benefit that is actuarially equivalent to these accumulated contributions, the plan must determine the interest rate that would have been required under section 417(e)(3) as if section 417 applied to the plan. See § 1.415(c)-1(a)(2)(ii)(B) and (b)(3) for rules regarding treatment of mandatory employee contributions to a defined benefit plan as annual additions under a defined contribution plan.

(iv) ***Voluntary employee contributions.*** If voluntary employee contributions are made to the plan, the portion of the plan to which voluntary employee contributions are made is treated as a defined contribution plan pursuant to section 414(k) and, accordingly, is a defined contribution plan pursuant to § 1.415(c)-1(a)(2)(i). Accordingly, the portion of a plan to which voluntary employee contributions are made is not a defined benefit plan within the meaning of paragraph (a)(2) of this section and is not taken into account in determining the annual benefit under the portion of the plan that is a defined benefit plan.

(v) ***Annual benefit attributable to rollover contributions.*** The annual benefit attributable to rollover contributions from an eligible retirement plan, as defined in section 402(c)(8)(B) (for example, a contribution received pursuant to a direct rollover under section 401(a)(31)(A)), is determined in the same manner as the annual benefit attributable to mandatory employee contributions if the plan provides for a benefit derived from the rollover contribution (other than a benefit derived from a separate account to be maintained with respect to the rollover contribution and actual earnings and losses thereon). Thus, in the case of rollover contributions from a defined contribution plan to a defined benefit plan to provide an annuity distribution, the annual benefit attributable to those rollover contributions for purposes of section 415(b) is determined by applying the rules of section 411(c) as described in paragraph (b)(2)(iii) of this section,

regardless of the assumptions used to compute the annuity distribution under the plan and regardless of whether the plan is subject to the requirements of sections 411 and 417. Accordingly, in such a case, if the plan uses more favorable factors than those specified in section 411(c) to determine the amount of annuity payments arising from rollover contributions, the annual benefit under the plan would reflect the excess of those annuity payments over the amounts that would be payable using the factors specified in section 411(c). See § 1.415(c)-1(b)(3)(i) for rules excluding rollover contributions maintained in a separate account that is treated as a defined contribution plan pursuant to section 414(k) from annual additions to a defined contribution plan.

(3) ***Treatment of transferred benefits*** —

(i) ***In general*** —

(A) ***Treatment of transferor plan if transferred benefits are aggregated with transferor plan.*** Except as provided in paragraph (b)(3)(ii) of this section, when there has been a transfer of benefits from one defined benefit plan to another plan, to the extent the benefits transferred to the transferee plan are otherwise required to be taken into account pursuant to section 415(f) and § 1.415(f)-1 in determining whether the transferor plan satisfies the limitations of section 415(b) for a limitation year, the transferred benefits are not treated as being provided under the transferor plan. This will occur, for example, if the employer sponsoring the transferor plan and the employer sponsoring the transferee plan are in the same controlled group within the meaning of section 414(b).

(B) ***Treatment of transferor plan if transferred benefits are not aggregated with transferor plan.*** Except as provided in paragraph (b)(3)(ii) of this section, when there has been a transfer of benefits from one defined benefit plan to another plan, to the extent the benefits transferred to the transferee plan are not otherwise required to be taken into account pursuant to section 415(f) and § 1.415(f)-1 in determining whether the transferor plan satisfies the limitations of section 415(b) for a limitation year, the transferred benefits are treated by the transferor plan as if such benefits were provided under annuities purchased to provide benefits under a plan that must be aggregated with the transferor plan and that terminated immediately prior to the transfer with sufficient assets to pay all benefit liabilities under the plan, in accordance with the rules of paragraph (b)(5)(i) of this section. This will occur, for example, in the case of a transfer of benefits between defined benefit plans maintained by employers that are not required to be aggregated under sections 414(b) and (c) (as modified by section 415(h)) or sections 414(m).

(C) ***Treatment of transferee plan.*** Except as provided in paragraph (b)(3)(ii) of this section, where there has been a transfer of benefits from one defined benefit plan to another defined benefit plan, the transferee plan must take into account the transferred benefits in determining whether it satisfies the limitations of section 415(b).

(ii) ***Elective transfer of distributable benefit.*** Where, as described in § 1.411(d)-4, Q&A-3(c) (permitting certain elective transfers of distributable benefits), a distributable benefit is transferred to a defined benefit plan from either a defined contribution plan or a defined benefit plan, the amount transferred is treated as a benefit paid from the transferor plan, and the annual benefit provided by the transferee defined benefit plan does not include the annual benefit attributable to the amount transferred (determined as if the transferred amount were a rollover contribution subject to the rules of paragraph (b)(2)(v) of this section). The rule in the preceding sentence applies regardless of whether the requirements of section 411 apply to the

plan and, in the case of a transfer from a defined contribution plan that is not subject to the requirements of section 411 (such as a governmental plan) to a defined benefit plan, the rule applies even if the participant's benefits are not distributable from the defined contribution plan at the time of the transfer.

(4) ***Treatment of qualified governmental excess benefit arrangements.*** Pursuant to section 415(m), in determining whether a governmental plan (as defined in section 414(d)) meets the requirements of this section, the annual benefit does not include benefits provided under a qualified governmental excess benefit arrangement, as defined in section 415(m)(3). Thus, the limitation of section 415(b) does not apply to benefits to the extent the benefits are provided under a qualified governmental excess benefit arrangement.

(5) ***Treatment of benefits provided under a terminated plan*** —

(i) ***Terminated plan with sufficient assets.*** If a defined benefit plan is terminated with sufficient assets for the payment of the benefit liabilities of all plan participants and a participant in the plan has not yet commenced benefits under the plan, for purposes of satisfying section 415(b) with respect to the participant, all other defined benefit plans maintained by the employer that maintained the terminated plan are required to take into account the benefits provided pursuant to the annuities purchased to provide benefits under the terminated plan at each possible annuity starting date. In such a case, see paragraph (b)(1)(iii) of this section for rules regarding the determination of a participant's annual benefit if the participant commences receiving benefits under the terminated plan.

(ii) ***Terminated plan with insufficient assets.*** If a defined benefit plan is terminated and there are not sufficient assets for the payment of the benefit liabilities of all plan participants, for purposes of satisfying section 415(b) with respect to a participant, all other defined benefit plans maintained by the employer that maintained the terminated plan are required to take into account the benefits that are actually provided to the participant under the terminated plan. For example, in the case of a plan that is subject to title IV of the Employee Retirement Income Security Act of 1974 (88 Stat. 829), Public Law 93-406 (ERISA), and that terminates with insufficient assets for the payment of the benefit liabilities of all plan participants, all other defined benefit plans maintained by the employer that maintained the terminating plan must take into account benefits that are paid by the Pension Benefit Guaranty Corporation. In such a case, see paragraph (b)(1)(iii) of this section for rules regarding the determination of a participant's annual benefit if the participant commences receiving benefits under the terminated plan.

(iii) ***Other guidance.*** The Commissioner may provide guidance regarding the rules applicable to terminated plans (and plans that are deemed to have been terminated pursuant to paragraph (b)(3)(i)(B) of this section) in revenue rulings, notices, and other guidance published in the Internal Revenue Bulletin. See § 601.601(d) of this chapter.

(c) ***Adjustment to form of benefit for forms other than a straight life annuity*** —

(1) ***In general.*** This paragraph (c) provides rules for adjusting a form of benefit other than a straight life annuity to an actuarially equivalent straight life annuity beginning at the same time for purposes of determining the annual benefit described in paragraph (b) of this section. Paragraph (c)(2) of this section describes how to adjust a benefit paid in a form to which section 417(e)(3) does not apply. Paragraph (c)(3) of this section describes how to adjust a benefit paid in a form to which section 417(e)(3) applies. Paragraph (c)(4) of this section describes benefit forms for which no adjustment

is required. Paragraph (c)(5) of this section provides an exception from the requirements of this paragraph (c) with respect to certain automatic benefit increase features. Paragraph (c)(6) of this section sets forth examples illustrating the application of this paragraph (c). The Commissioner may, in revenue rulings, notices, or other guidance published in the Internal Revenue Bulletin set forth simplified methods for adjusting a form of benefit other than a straight life annuity to an actuarially equivalent straight life annuity beginning at the same time for purposes of determining the annual benefit described in paragraph (b) of this section. See § 601.601(d)(2) of this chapter.

(2) ***Benefits paid in a form to which section 417(e)(3) does not apply.*** For a benefit paid in a form to which section 417(e)(3) does not apply, the actuarially equivalent straight life annuity benefit is the greater of—

(i) The annual amount of the straight life annuity (if any) payable to the participant under the plan commencing at the same annuity starting date as the form of benefit payable to the participant; or

(ii) The annual amount of the straight life annuity commencing at the same annuity starting date that has the same actuarial present value as the form of benefit payable to the participant, computed using a 5 percent interest assumption and the applicable mortality table described in § 1.417(e)-1(d)(2) for that annuity starting date.

(3) ***Benefits paid in a form to which section 417(e)(3) applies*** —

(i) ***In general.*** Except as otherwise provided in this paragraph (c)(3), for a benefit paid in a form to which section 417(e)(3) applies, the actuarially equivalent straight life annuity benefit is the greatest of:

(A) The annual amount of the straight life annuity commencing at the annuity starting date that has the same actuarial present value as the particular form of benefit payable, computed using the interest rate and mortality table, or tabular factor, specified in the plan for actuarial equivalence;

(B) The annual amount of the straight life annuity commencing at the annuity starting date that has the same actuarial present value as the particular form of benefit payable, computed using a 5.5 percent interest assumption and the applicable mortality table for the distribution under § 1.417(e)-1(d)(2); or

(C) The annual amount of the straight life annuity commencing at the annuity starting date that has the same actuarial present value as the particular form of benefit payable (computed using the applicable interest rate for the distribution under § 1.417(e)-1(d)(3) and the applicable mortality table for the distribution under § 1.417(e)-1(d)(2)), divided by 1.05.

(ii) ***Special rule for distributions in plan years beginning in 2004 and 2005.*** For a distribution to which section 417(e)(3) applies and which has an annuity starting date occurring in plan years beginning in 2004 or 2005, except as provided in section 101(d)(3) of the Pension Funding Equity Act of 2004, Public Law 108-218 (118 Stat. 596), the actuarially equivalent straight life annuity benefit is the greater of—

(A) The annual amount of the straight life annuity commencing at the annuity starting date that has the same actuarial present value as the particular form of benefit payable, computed using the interest rate and mortality table, or tabular factor, specified in the plan for actuarial equivalence; or

(B) The annual amount of the straight life annuity commencing at the annuity starting date that has the same actuarial present value as the particular form of benefit payable, computed using a 5.5 percent interest assumption and the applicable mortality table for the distribution under § 1.417(e)-1(d)(2).

(4) *Certain benefit forms for which no adjustment is required* —

(i) ***In general.*** For purposes of the adjustments described in this paragraph (c), the following benefits are not taken into account:

(A) Survivor benefits payable to a surviving spouse under a qualified joint and survivor annuity (as defined in section 417(b)) to the extent that such benefits would not be payable if the participant's benefit were not paid in the form of a qualified joint and survivor annuity.

(B) Ancillary benefits that are not directly related to retirement benefits, such as preretirement disability benefits not in excess of the qualified disability benefit, preretirement incidental death benefits (including a qualified preretirement survivor annuity), and post-retirement medical benefits.

(ii) *Rules of application* —

(A) ***Social security supplements.*** Although a social security supplement described in section 411(a)(9) and § 1.411(a)-7(c)(4) may be an ancillary benefit, it is included in determining the annual benefit because it is payable upon retirement and therefore is directly related to retirement income benefits.

(B) ***Qualified joint and survivor annuities combined with other distributions.*** If benefits are paid partly in the form of a qualified joint and survivor annuity (QJSA) and partly in some other form (such as a single-sum distribution), the rule of paragraph (c)(4)(i)(A) of this section (under which survivor benefits are not included in determining the annual benefit) applies to the survivor annuity payments under the portion of the benefit that is paid in the form of a QJSA.

(5) *Exception for certain automatic benefit increase features* —

(i) ***General rule.*** Notwithstanding paragraph (b)(1)(i)(B) of this section, no adjustment is required to a benefit that is paid in a form that is not a straight life annuity to take into account the inclusion in that form of an automatic benefit increase feature, as described in paragraph (c)(5)(ii) of this section, if:

(A) The benefit is paid in a form to which section 417(e)(3) does not apply.

(B) The plan satisfies the requirements of paragraph (c)(5)(iii) of this section.

(ii) ***Definition of automatic benefit increase feature.*** An automatic benefit increase feature is included in a form of benefit if that form provides for automatic, periodic increases to the benefits paid in that form, such as a form of benefit that automatically increases the benefit

paid under that form annually according to a specified percentage or objective index, or a form of benefit that automatically increases the benefit paid in that form to share favorable investment returns on plan assets.

(iii) ***Requirements.*** A plan satisfies the requirements of this paragraph (c)(5)(iii) with respect to a form of benefit that includes an automatic benefit increase feature if the form of benefit without regard to the automatic benefit increase feature satisfies the requirements of section 415(b) and this section, and the plan provides that in no event will the amount payable to the participant under the form of benefit in any limitation year be greater than the section 415(b) limit applicable at the annuity starting date (which is the lesser of the age-adjusted section 415(b)(1)(A) dollar limit described in paragraph (a)(1)(i) of this section or the section 415(b)(1)(B) compensation limit described in paragraph (a)(1)(ii) of this section), as increased in subsequent years pursuant to section 415(d) and § 1.415(d)-1. If the form of benefit without regard to the automatic benefit increase feature is not a straight life annuity, then the preceding sentence is applied by reducing the section 415(b) limit applicable at the annuity starting date to an actuarially equivalent amount (determined using the assumptions specified in paragraph (c)(2)(ii) of this section) that takes into account the death benefits under the form of benefit (other than the survivor portion of a QJSA).

(6) ***Examples.*** The following examples illustrate the provisions of this paragraph (c). For purposes of these examples, except as otherwise stated, actuarial equivalence under the plan is determined using a 5 percent interest assumption and the mortality table that applies under section 417(e)(3) as of January 1, 2003. It is assumed for purposes of these examples that the interest rate that applies under section 417(e)(3) and § 1.417(e)-1(d)(3) for relevant time periods is 5.25 percent and that the mortality table that applies under section 417(e)(3) and § 1.417(e)-1(d)(2) for relevant time periods is the mortality table that applies under section 417(e)(3) as of January 1, 2003. In addition, it is assumed that all participants discussed in these examples have at least ten years of service with the employer and at least ten years of participation in the plan at issue, all payments other than a payment of a single sum are made monthly, on the first day of each calendar month, and each plan's normal retirement age is 65. The examples are as follows:

Example 1. (i) *Facts.* Plan A provides a single-sum distribution determined as the actuarial present value of the straight life annuity payable at the actual retirement date. Plan A provides that a participant's single sum is determined as the greater of the present value determined using the otherwise applicable actuarial assumptions of the plan and the present value determined using the applicable interest rate and the applicable mortality table for the distribution under section 417(e)(3). In accordance with § 1.417(e)-1(d)(1), Plan A also provides that the single sum is not less than the actuarial present value of the accrued benefit payable at normal retirement age, determined using the applicable interest rate and the applicable mortality table under section 417(e)(3) and § 1.417(e)-1(d). Participant M retires at age 65 with a benefit under the plan formula (and before the application of section 415) of $152,619 and elects to receive a distribution in the form of a single sum. Under the plan and before the application of section 415, the amount of the single sum is $1,800,002 (which is based on the 5 percent interest rate and applicable mortality table as of January 1, 2003, since that present value is greater than the present value that would have been determined

using the applicable interest rate (5.25 percent) and the applicable mortality table (the January 1, 2003, table) for the distribution under section 417(e)(3)).
(ii) *Conclusion.* For purposes of this section, the annual benefit is the greatest of the annual amount of the actuarially equivalent straight life annuity commencing at the same age (determined using the plan's actuarial factors), the annual amount of the actuarially equivalent straight life annuity commencing at the same age (determined using a 5.5 percent interest assumption and the applicable mortality table for the distribution under § 1.417(e)-1(d)(2)), and the annual amount of the actuarially equivalent straight life annuity commencing at the same age (determined using the applicable interest rate and applicable mortality table for the distribution under §§ 1.417(e)-1(d)(2) and (d)(3)) divided by 1.05. Based on the factors used in the plan to determine the actuarially equivalent lump sum (in this case, an interest rate of 5 percent and the applicable mortality table as of January 1, 2003), $1,800,002 payable as a single sum is actuarially equivalent to an immediate straight life annuity at age 65 of $152,619. A single sum payment of $1,800,002 is actuarially equivalent to an immediate straight life annuity at age 65 of $159,105, using a 5.5 percent interest assumption and the applicable mortality table under § 1.417(e)-1(d)(2). Based on the applicable interest rate and the applicable mortality table for the distribution under §§ 1.417(e)-1(d)(2) and (d)(3), $1,800,002 payable as a single sum is actuarially equivalent to an immediate straight life annuity at age 65 of $155,853. $148,432 is the result when this annual amount is divided by 1.05. With respect to the single-sum distribution, M's annual benefit for purposes of section 415(b) is equal to the greatest of the three resulting amounts ($152,619, $159,105, and $148,432), or $159,105.

Example 2. (i) *Facts.* The facts are the same as in *Example 1,* except that Participant M elects to receive his benefit in the form of a 10-year certain and life annuity. Applying the plan's actuarial equivalence factors, the benefit payable in this form is $146,100.
(ii) *Conclusion.* Since the form of benefit elected by M is a form of benefit to which section 417(e)(3) does not apply, the annual benefit for purposes of this section is the greater of the annual amount of the plan's straight life annuity commencing at the same age or the annual amount of the actuarially equivalent straight life annuity commencing at the same age, determined using a 5 percent interest rate and the applicable mortality table described in § 1.417(e)-1(d)(2) for that annuity starting date. In this case, the straight life annuity payable under the plan commencing at the same age is $152,619. Because the plan's factors for actuarial equivalence in this case are the same standardized actuarial factors required to be applied to determine the actuarially equivalent straight life annuity, the actuarially equivalent straight life annuity using the required standardized factors is also $152,619. With respect to the 10-year certain and life annuity distribution, M's annual benefit is equal to the greater of the two resulting amounts ($152,619 and $152,619), or $152,619.

Example 3. (i) *Facts.* The facts are the same as in *Example 1.* Participant M retires at age 62 with a benefit under the plan (before the application of section 415) of $100,000 (after

application of the plan's early retirement factors) and a Social Security supplement of $10,000 per year payable until age 65. N chooses to receive the accrued benefit in the form of a straight life annuity. The Plan has no provisions under which the actuarial value of the Social Security supplement can be paid as a level annuity for life.
(ii) *Conclusion.* Because the form of benefit elected by M is a form of benefit to which section 417(e)(3) does not apply and because the plan does not provide for a straight life annuity beginning at age 62, the annual benefit for purposes of this section is the annual amount of the straight life annuity commencing at age 62 that is actuarially equivalent to the distribution stream of $110,000 for three years and $100,000 thereafter, where actuarial equivalence is determined using a 5 percent interest rate and the applicable mortality table described in § 1.417(e)-1(d)(2) for the annuity starting date. In this case, the actuarially equivalent straight life annuity is $102,180. Accordingly, with respect to this distribution stream, N's annual benefit is equal to $102,180. The results are the same without regard to whether the Social Security supplement is a QSUPP (as defined in § 1.401(a)(4)-12).

Example 4. (i) *Facts.* Plan B is a defined benefit plan that provides a benefit equal to 100 percent of a participant's average compensation for the period of the participant's high-3 years of service, payable as a straight life annuity. For a married participant who does not elect another form of benefit, the benefit is payable in the form of a joint and 100 percent survivor annuity benefit that is a QJSA within the meaning of section 417 and that is reduced from the straight life annuity. For purposes of determining the amount of this QJSA, the plan provides that the reduction is only half of the reduction that would normally apply under the actuarial assumptions specified in the plan for determining actuarial equivalence of optional forms. The plan also provides that a married participant can elect to receive the plan benefits as a straight life annuity, or in the form of a single sum distribution that is the actuarial equivalent of the joint and 100 percent survivor annuity determined using the applicable interest rate and the applicable mortality table under section 417(e)(3) and § 1.417(e)-1(d). Participant O elects, with spousal consent, a single-sum distribution.
(ii) *Conclusion.* The special rule that disregards the value of the survivor portion of a QJSA set forth in paragraph (c)(4)(i) of this section only applies to a benefit that is payable in the form of a qualified joint and survivor annuity. Any other form of benefit must be adjusted to a straight life annuity in accordance with paragraph (c)(1) of this section. Accordingly, because the benefit payable under the plan in the form of a single-sum distribution is actuarially equivalent to a straight life annuity that is greater than 100 percent of a participant's average compensation for the period of the participant's high-3 years of service, the limitation of section 415(b)(1)(B) has been exceeded.

Example 5. (i) *Facts.* Plan C is a defined benefit plan that provides an option to receive the benefit in the form of a joint and 100 percent survivor annuity with a 10-year certain feature, where the survivor beneficiary is the participant's spouse.

(ii) *Conclusion.* Since this form of benefit is not subject to section 417(e)(3), for a participant at age 65, the annual benefit with respect to the joint and 100 percent survivor annuity with a 10-year certain feature is determined for purposes of this section as the greater of the annual amount of the straight life annuity payable to the participant under the plan at age 65 (if any), or the annual amount of the straight life annuity commencing at age 65 that has the same actuarial present value as the joint and 100 percent survivor annuity with a 10-year certain feature (but excluding the survivor annuity payments pursuant to paragraph (c)(4)(i)(A) of this section), computing using a 5 percent interest assumption and the applicable mortality table described in § 1.417(e)-1(d)(2) for the annuity starting date. This latter amount is equal to the product of the annual payments under this optional form of benefit and the factor that provides for actuarial equivalence between a straight life annuity and a 10-year certain and life annuity (with no annuity for the survivor) computed using a 5 percent interest rate and the applicable mortality table described in § 1.417(e)-1(d)(2) for the annuity starting date.

Example 6. (i) *Facts.* Plan E provides a benefit at age 65 of a straight life annuity equal to the lesser of 90 percent of the participant's average compensation for the period of the participant's high-3 years of service and $148,500. Upon retirement at age 65, the optional forms of benefit available to a participant include payment of a QJSA with annual payments equal to 50 percent of the annual payments under the straight life annuity, along with a single-sum distribution that is actuarially equivalent (determined as the greater of the single sum calculated using a 5 percent interest assumption and the section 417(e)(3)(A)(ii)(I) mortality table in effect on January 1, 2003, and the single sum calculated using the section 417(e)(3)(A)(ii)(II) applicable interest rate and the section 417(e)(3)(A)(ii)(I) applicable mortality table for the distribution) to 50 percent of the annual payments under the straight life annuity. Participant Q retires at age 65. Q's average compensation for the period of Q's high-3 years of service is $100,000. Q elects to receive a distribution in the optional form of benefit described above, under which the annual payments under the QJSA are $45,000 and the single-sum distribution is equal to $530,734. Q's spouse is 3 years younger than Q.
(ii) *Determination of annual benefit.* Q's annual benefit under Plan E for purposes of section 415(b) is determined as the sum of the annual benefit attributable to the QJSA portion of the distribution and the annual benefit attributable to the single-sum portion of the distribution.

(iii) *Annual benefit attributable to QJSA portion.* Because survivor benefits are not taken into account in determining the annual benefit attributable to the QJSA portion of the distribution, the annual benefit attributable to the QJSA portion of the distribution is determined as if that distribution were a straight life annuity of $45,000 per year commencing at age 65. Thus, no form adjustment is needed to determine the annual benefit attributable to the QJSA portion of the distribution, and the annual benefit attributable to the QJSA portion of the benefit is $45,000.

(iv) *Annual benefit attributable to single sum portion.* The annual benefit attributable to the single sum portion of the distribution is determined as the greatest of the annual amount of the actuarially equivalent straight life annuity commencing at the same age (determined using the plan's actuarial factors), the annual amount of the actuarially equivalent straight life annuity commencing at the same age (determined using a 5.5 percent interest assumption and the applicable mortality table under § 1.417(e)-1(d)(2) for the distribution), and the annual amount of the actuarially equivalent straight life annuity commencing at the same age (determined using the applicable interest rate and applicable mortality table under section 417(e)(3) and §§ 1.417(e)-1(d)(2) and (d)(3) for the distribution) divided by 1.05. With respect to the single-sum distribution, the annual amount of the actuarially equivalent straight life annuity commencing at the same age determined using the plan's actuarial factors is equal to $45,000. The annual amount of the actuarially equivalent straight life annuity commencing at the same age determined using a 5.5 percent interest assumption and the applicable mortality table under § 1.417(e)-1(d)(2) for the distribution is $46,912. The actuarially equivalent straight life annuity commencing at the same age determined using the applicable interest rate and the applicable mortality table under section 417(e)(3) and §§ 1.417(e)-1(d)(2) and (d)(3) for the distribution is equal to $45,954. This amount divided by 1.05 is equal to $43,766. Thus, the annual benefit attributable to the single sum portion of the benefit is $46,912.

(v) *Conclusion.* Q's annual benefit under the optional form of benefit for purposes of section 415(b) is equal to the sum of the annual benefit attributable to the QJSA portion of the distribution and the annual benefit attributable to the single sum portion of the distribution, or $91,912. Because Q's average compensation for the period of Q's high-3 years of service is $100,000, the distribution satisfies the compensation limit of section 415(b)(1)(B).

Example 7. (i) *Facts.* Plan D is a defined benefit plan with a normal retirement age of 65. The normal retirement benefit under Plan D (and the only life annuity available under Plan D) is a life annuity with a fixed increase of 2 percent per year. The increase applies to the benefit provided in the prior year and is thus compounded. The plan provides that the benefit is limited to the lesser of 84 percent of the participant's average compensation for the period of the participant's high-3 years of service or 84 percent of the age-adjusted section 415(b)(1)(A) dollar limit (which is assumed to be $180,000 at age 65). Plan D does not incorporate the section 415(d) cost-of-living adjustments to the section 415(b) limits for limitation years following the limitation year in which a participant incurs a severance from employment. Participant P retires at age 65, at which time P's average compensation for the period of P's high-3 years of service is $165,000. Under Plan D, P commences receiving benefits in the form of a life annuity of $138,600 with a fixed increase of 2 percent per year.
(ii) *Conclusion.* Because Plan D does not provide for a straight life annuity and the form of benefit is not subject to section 417(e)(3), P's annual benefit for purposes of section 415(b) is the annual amount of the straight life annuity, commencing at age 65, that is actuarially

equivalent to the distribution stream of $138,600 with a fixed increase of 2 percent per year, where actuarial equivalence is determined using a 5 percent interest rate and the applicable mortality table for the distribution under section 417(e)(3) and § 1.417(e)-1(d)(2). In order to satisfy the requirements of section 415 and this section, this annual benefit must not exceed 100 percent of the average compensation for the period of the participant's high-3 years of service, or $165,000. Using a 5 percent interest rate and the section 417(e)(3) applicable mortality table for the distribution, the actuarially equivalent straight life annuity is $165,453, which exceeds $165,000. Accordingly, the plan fails to satisfy the compensation-based limitation of section 415(b)(1)(B).

Example 8. (i) *Facts.* The facts are the same as in *Example* 7, except that Plan D incorporates by reference the section 415(d) cost-of-living adjustments to the section 415(b) limits as described in § 1.415(a)-1(d)(3)(v) and Plan D provides that the benefit is limited to the applicable section 415(b) limit. Under Plan D, P commences receiving benefits at age 65 in the form of a life annuity of $138,221 with a fixed increase of 2 percent per year.
(ii) *Conclusion.* Because Plan D does not provide for a straight life annuity and the form of benefit is not subject to section 417(e)(3), P's annual benefit for purposes of section 415(b) is the annual amount of the straight life annuity, commencing at age 65, that is actuarially equivalent to the distribution stream of $138,221 with a fixed increase of 2 percent per year, where actuarial equivalence is determined using a 5 percent interest rate and the applicable mortality table for P's annuity starting date under section 417(e)(3) and § 1.417(e)-1(d)(2). In order to satisfy the requirements of section 415(b) and this section, this annual benefit must not exceed 100 percent of P's average compensation for the period of P's high-3 years of service, or $165,000. Using a 5 percent interest rate and the section 417(e)(3) applicable mortality table for the distribution, the actuarially equivalent straight life annuity is $165,000, which does not exceed $165,000. Accordingly, the plan satisfies the compensation-based limitation of section 415(b)(1)(B).

(iii) *Section 415(d) adjustments.* In addition to the fixed 2 percent per year automatic increase, P's benefit will be increased in limitation years following the limitation year in which P retires in accordance with the plan provisions that incorporate by reference the section 415(d) cost-of-living adjustments to the section 415(b) limits (or, if Plan D did not incorporate by reference the section 415(d) adjustments, P's benefit may be increased pursuant to plan amendments that comply with the safe harbors provided in § 1.415(d)-1(a)(5) or (6)), and such increases will not cause P's benefit to violate the requirements of section 415(b). For example, if in a later limitation year the applicable section 415(b) limit is increased by 3 percent pursuant to section 415(d) and § 1.415(d)-1, P's benefit payable under Plan D will be increased by both the fixed automatic 2 percent per year increase and by the 3 percent section 415(d) cost-of-living adjustment. The effect of the combined increases may result in P's benefits for a year exceeding the then applicable dollar limit under section 415(b), but the plan will not violate section 415(b).

Example 9. (i) *Facts.* The facts are the same as in *Example 7*, except that the plan provides that benefits are limited to the lesser of 100 percent of the participant's average compensation for the period of the participant's high-3 years of service or 100 percent of the age-adjusted section 415(b)(1)(A) dollar limit. Assume that P retires at age 65 with a benefit in the form of a life annuity of $165,000 per year with a fixed increase of 2 percent per year. Additionally, assume that Plan D incorporates by reference the section 415(d) cost-of-living adjustments to the section 415(b) limits as described in § 1.415(a)-1(d)(3)(v) and the plan provides pursuant to paragraph (c)(5) of this section that in no event will a benefit payable from the plan, as increased by the fixed increase of 2 percent per year, be greater than the section 415(b) limit applicable as of the annuity starting date for the benefit (increased pursuant to the rules of section 415(d) and § 1.415(d)-1).
(ii) *Conclusion.* The benefit payable to P at age 65 is not required to be adjusted to take into account the fixed increase of 2 percent per year. This is because the benefit payable to P satisfies the requirements of section 415(b) without regard to the fixed increase of 2 percent per year, and pursuant to paragraph (c)(5) of this section, the plan provides that the benefit payable to P, as increased by the fixed increase of 2 percent per year, will never be greater than the section 415(b) limit applicable as of P's annuity starting date (increased in subsequent limitation years pursuant to the rules of section 415(d) and § 1.415(d)-1).

(iii) *Section 415(d) adjustments.* In addition to the fixed 2 percent per year automatic increase, P's benefit will be increased in limitation years following the limitation year in which P retires in accordance with the plan provisions that incorporate by reference the section 415(d) cost-of-living adjustments to the section 415(b) limits (or, if Plan D did not incorporate by reference the section 415(d) adjustments, P's benefit may be increased pursuant to plan amendments that comply with the safe harbors provided in § 1.415(d)-1(a)(5) or (6)), and such increases will not cause P's benefit to violate the requirements of section 415(b). However, pursuant to paragraph (c)(5)(iii) of this section, P's benefit during any limitation year, as increased by the 2 percent per year automatic increase feature and any plan provisions that incorporate by reference the section 415(d) cost-of-living adjustments or any plan amendments that increase P's benefits, cannot exceed the then applicable section 415(b) limit (as increased pursuant to section 415(d) and § 1.415(d)-1).

Example 10. (i) *Facts.* Employer T maintains a defined benefit plan. Under the terms of the plan, all benefits in pay status (other than single sum payments) are adjusted upwards or downwards annually depending on an annual comparison of actual return on plan assets and an assumed interest rate of 4 percent. Thus, the plan does not offer a straight life annuity form of benefit, and the plan must determine for purposes of applying the section 415(b) limits the actuarially equivalent straight life annuity for benefits provided under the plan.

(ii) *Conclusion.* Benefits under the plan are paid in a form to which section 417(e)(3) does not apply. In determining the actuarially equivalent straight life annuity of benefits that are subject to the annual investment performance adjustment, the plan must assume a 5 percent return on plan assets. See paragraph (c)(2) of this section. Therefore, in determining the actuarially equivalent straight life annuity, the plan must assume that the form of benefit payable under the plan will be an annuity that increases annually by a factor equal to 1.05 divided by 1.04. This increasing annuity is then converted to an actuarially equivalent straight life annuity under paragraph (c)(2) of this section using a 5 percent interest rate and the applicable mortality table described in § 1.417(e)-1(d)(2) for the relevant annuity starting date.

Example 11. (i) *Facts.* R is a participant in a defined benefit plan maintained by R's employer. Under the terms of the plan, R must make contributions to the plan in a stated amount to accrue benefits derived from employer contributions.
(ii) *Conclusion.* R's contributions are mandatory employee contributions within the meaning of section 411(c)(2)(C) and, thus, the annual benefit attributable to these contributions is not taken into account for purposes of testing the annual benefit derived from employer contributions against the applicable limitation on benefits. However, these contributions are treated as contributions to a defined contribution plan maintained by R's employer for purposes of section 415(c). See § 1.415(c)-1(a)(2)(ii)(B). Accordingly, with respect to the current limitation year, the limitation on benefits (as described in paragraph (a)(1) of this section) is applicable to the annual benefit attributable to employer contributions to the defined benefit plan, and the limitation on contributions and other additions (as described in § 1.415(c)-1) is applicable to the portion of the plan treated as a defined contribution plan, which consists of R's mandatory contributions. These same limitations would also apply if, instead of providing for mandatory employee contributions, the plan permitted voluntary employee contributions, because the portion of the plan attributable to voluntary employee contributions and earnings thereon is treated as a defined contribution plan maintained by the employer pursuant to section 414(k), and thus is not subject to the limitations of section 415(b).

Example 12. (i) *Facts.* V is a participant in a defined benefit plan maintained by V's employer. Under the terms of the plan, V must make contributions to the plan in a stated amount to accrue benefits derived from employer contributions. V's contributions are mandatory employee contributions within the meaning of section 411(c)(2)(C). Thus, the annual benefit attributable to these contributions is not taken into account for purposes of testing the annual benefit derived from employer contributions against the applicable limitation on benefits. V terminates employment and receives a distribution from the plan that includes V's mandatory employee contributions. Subsequently, V resumes employment with the employer maintaining the plan. V recommences participation in the plan and repays the prior distribution from the plan (including the portion of the distribution that included V's prior mandatory employee contributions to the plan) with reasonable interest.
(ii) *Conclusion.* In determining V's annual benefit under the plan for purposes of applying the limitations of section 415(b), no portion of V's repayment of the prior distribution is treated as employee contributions. See paragraphs (b)(2)(ii)(C), (D) and (E) of this section. However, V's annual benefit under the plan is

> determined by excluding the portion of the annual benefit attributable to V's employee contributions to the plan made both prior to the first distribution and during V's subsequent recommencement of plan participation.

(d) ***Adjustment to section 415(b)(1)(A) dollar limit for commencement before age 62*** —

(1) ***General rule*** —

(i) ***Calculation using statutory factors.*** For a distribution with an annuity starting date that occurs before the participant attains the age of 62, the age-adjusted section 415(b)(1)(A) dollar limit generally is determined as the actuarial equivalent of the annual amount of a straight life annuity commencing at the annuity starting date that has the same actuarial present value as a deferred straight life annuity commencing at age 62, where annual payments under the straight life annuity commencing at age 62 are equal to the dollar limitation of section 415(b)(1)(A) (as adjusted pursuant to section 415(d) and § 1.415(d)-1 for the limitation year), and where the actuarially equivalent straight life annuity is computed using a 5 percent interest rate and the applicable mortality table under § 1.417(e)-1(d)(2) that is effective for that annuity starting date (and expressing the participant's age based on completed calendar months as of the annuity starting date). However, if the plan has an immediately commencing straight life annuity payable both at age 62 and the age of benefit commencement, then the age-adjusted section 415(b)(1)(A) dollar limit is equal to the lesser of—

(A) The limit as otherwise determined under this paragraph (d)(1)(i); and

(B) The amount determined under paragraph (d)(1)(ii) of this section.

(ii) ***Calculation using plan factors.*** The amount determined under this paragraph (d)(1)(ii) is equal to the section 415(b)(1)(A) dollar limit (as adjusted pursuant to section 415(d) and § 1.415(d)-1 for the limitation year) multiplied by the ratio of the annual amount of the immediately commencing straight life annuity under the plan to the annual amount of the straight life annuity under the plan commencing at age 62, with both annual amounts determined without applying the rules of section 415.

(2) ***Mortality adjustments*** —

(i) ***In general.*** For purposes of determining the actuarially equivalent amount described in paragraph (d)(1)(i) of this section, to the extent that a forfeiture does not occur upon the participant's death before the annuity starting date, no adjustment is made to reflect the probability of the participant's death between the annuity starting date and the participant's attainment of age 62, unless the plan provides for such an adjustment. To the extent that a forfeiture occurs upon the participant's death before the annuity starting date, an adjustment must be made to reflect the probability of the participant's death between the annuity starting date and the participant's attainment of age 62.

(ii) ***No forfeiture deemed to occur where qualified preretirement survivor annuity payable.*** For purposes of paragraphs (d)(2)(i) and (e)(2)(i) of this section, a plan is permitted to treat no forfeiture as occurring upon a participant's death if the plan does not charge participants for providing a qualified preretirement survivor annuity (QPSA) (as defined in section 417(c)) on the participant's death, but only if the plan applies this treatment both for adjustments before age 62 and adjustments after age 65. Thus, in such a case, the plan is permitted to provide that, in

computing the adjusted dollar limitation under section 415(b)(1)(A), no adjustment is made to reflect the probability of a participant's death after the annuity starting date and before age 62 or after age 65 and before the annuity starting date.

(3) ***Exception for certain participants of certain governmental plans.*** Pursuant to section 415(b)(2)(G) and (H), no age adjustment is made to the dollar limit for commencement before age 62 for any qualified participant. For this purpose, a qualified participant is a participant in a defined benefit plan that is maintained by a state, Indian tribal government (as defined in section 7701(a)(40)), or any political subdivision of a state or Indian tribal government with respect to whom the service taken into account in determining the amount of the benefit under the defined benefit plan includes at least 15 years of service of the participant—

(i) As a full-time employee of any police department or fire department that is organized and operated by the state, Indian tribal government, or political subdivision maintaining such defined benefit plan to provide police protection, firefighting services, or emergency medical services for any area within the jurisdiction of such state, Indian tribal government, or political subdivision; or

(ii) As a member of the Armed Forces of the United States.

(4) ***Exception for survivor and disability benefits under governmental plans.*** Pursuant to section 415(b)(2)(I), no age adjustment is made to the dollar limit for commencement before age 62 for a distribution from a governmental plan (as defined in section 414(d)) on account of the participant's becoming disabled by reason of personal injuries or sickness, or as a result of the death of the participant.

(5) ***Special rule for commercial airline pilots.*** Pursuant to section 415(b)(9), no age adjustment is made to the dollar limit for early commencement on or after age 60 for a participant if—

(i) The participant is a commercial airline pilot;

(ii) The participant separates from service upon or after attaining age 60; and

(iii) As of the time of the participant's retirement, regulations prescribed by the Federal Aviation Administration require an individual to separate from service as a commercial airline pilot after attaining any age occurring on or after age 60 and before age 62.

(6) ***No decrease in age-adjusted section 415(b)(1)(A) dollar limit on account of age or service.*** Notwithstanding any other provision of this paragraph (d), the age-adjusted section 415(b)(1)(A) dollar limit applicable to a participant does not decrease on account of an increase in age or the performance of additional service.

(7) ***Examples.*** The following examples illustrate the application of this paragraph (d). For purposes of these examples, it is assumed that the dollar limitation under section 415(b)(1)(A) for all relevant years is $180,000, that the normal form of benefit under the plan is a straight life annuity payable beginning at age 65, and that all payments other than a payment of a single sum are made monthly, on the first day of each calendar month. The examples are as follows:

> *Example 1.* (i) Plan A provides that early retirement benefits are determined by reducing the accrued benefit by 4 percent for each year that the early retirement age is less than age 65. Participant M retires at age 60 with exactly 30 years of service with a benefit (prior to the application of section 415) in the form of a straight life annuity of $100,000 payable at age

65, and is permitted to elect to commence benefits at any time between M's retirement and M's attainment of age 65. For example, M can elect to commence benefits at age 60 in the amount of $80,000, can wait until age 62 and commence benefits in the amount of $88,000, or can wait until age 65 and commence benefits in the amount of $100,000. Plan A provides a QPSA to all married participants without charge. Plan A provides (consistent with paragraph (d)(2)(ii) of this section) that, for purposes of adjusting the dollar limitation under section 415(b)(1)(A) for commencement before age 62 or after age 65, no forfeiture is treated as occurring upon a participant's death before retirement and, therefore, in computing the adjusted dollar limitation under section 415(b)(1)(A), no adjustment is made to reflect the probability of a participant's death after the annuity starting date and before age 62 or after age 65 and before the annuity starting date.
(ii) The age-adjusted section 415(b)(1)(A) dollar limit that applies for commencement of M's benefit at age 60 is the lesser of the section 415(b)(1)(A) dollar limit multiplied by the ratio of the annuity payable at age 60 to the annuity payable at age 62, or the straight life annuity payable at age 60 that is actuarially equivalent, using 5 percent interest and the applicable mortality table effective for that annuity starting date under section 417(e)(3)(A)(ii)(I) and § 1.417(e)-1(d)(2), to the deferred annuity payable at age 62 of $180,000 per year. In this case, the age-adjusted section 415(b)(1)(A) dollar limit at age 60 is $156,229 (the lesser of $163,636 ($180,000* $80,000/$88,000) and $156,229 (the straight life annuity at age 60 that is actuarially equivalent to a deferred annuity of $180,000 commencing at age 62, determined using 5 percent interest and the applicable mortality table, without a mortality decrement for the period between 60 and 62)).

Example 2. (i) The facts are the same as in *Example 1,* except that participant M elects to retire at age 60, 6 months, and 21 days.
(ii) Under paragraph (d)(1)(i) of this section, M is treated as age 60 and 6 months (or, age 60.5). Absent the rule provided in paragraph (d)(6) of this section, the age-adjusted section 415(b)(1)(A) dollar limit that applies for commencement of M's benefit at age 60.5 is the lesser of the section 415(b)(1)(A) dollar limit multiplied by the ratio of the annuity payable at age 60.5 to the annuity payable at age 62, or the straight life annuity payable at age 60.5 that is actuarially equivalent, using 5 percent interest and the applicable mortality table for that annuity starting date under section 417(e)(3)(A)(ii)(I) and § 1.417(e)-1(d)(2), to the deferred annuity payable at age 62 of $180,000 per year. The age-adjusted section 415(b)(1)(A) dollar limit at age 60.5 is $161,769 (the lesser of $167,727 ($180,000* $82,000/$88,000) and $161,769 (the straight life annuity at age 60.5 that is actuarially equivalent to a deferred annuity of $180,000 commencing at age 62, determined using 5 percent interest and the applicable mortality table, without a mortality decrement for the period between 60.5 and 62).

Example 3. (i) The facts are the same as in *Example 1*, except the plan provides that, if a participant has 30 or more years of service, no reduction applies for benefits commencing at

age 62 and later.
(ii) Absent the rule provided in paragraph (d)(6) of this section, the age-adjusted section 415(b)(1)(A) dollar limit that applies for commencement of M's benefit at age 60 is the lesser of the section 415(b)(1)(A) dollar limit multiplied by the ratio of the annuity payable at age 60 to the annuity payable at age 62, or the straight life annuity payable at age 60 that is actuarially equivalent, using 5 percent interest and the applicable mortality table for that annuity starting date under section 417(e)(3)(A)(ii)(I) and § 1.417(e)-1(d)(2), to the deferred annuity payable at age 62 of $180,000 per year. In this case, because M has 30 years of service and would be eligible for the unreduced early retirement benefit at age 62, the age-adjusted section 415(b)(1)(A) dollar limit at age 60 would be $144,000 (the lesser of $144,000 ($180,000* $80,000/$100,000) and $156,229 (the straight life annuity at age 60 that is actuarially equivalent to a deferred annuity of $180,000 commencing at age 62, determined using 5 percent interest and the applicable mortality table, without a mortality decrement for the period between 60 and 62)).

(iii) However, at age $59^{11}/_{12}$ with $29^{11}/_{12}$ years of service, the age-adjusted section 415(b)(1)(A) dollar limit for M is $155,311 (the lesser of $162,955 ($180,000* $79,667/$88,000) and $155,311 (the straight life annuity at age $59^{11}/_{12}$ that is actuarially equivalent to a deferred annuity of $180,000 commencing at age 62, determined using 5 percent interest and the applicable mortality table, without a mortality decrement for the period between 59 and 62)). Thus, after applying the rule provided in paragraph (d)(6) of this section, the age-adjusted section 415(b)(1)(A) dollar limit that applies for commencement of M's benefit at age 60 is $155,311.

Example 4. (i) The facts are the same as in *Example 1,* except that the plan provides that, if a participant has 30 or more years of service, then no reduction is made in early retirement benefits if the early retirement age is at least age 62 and, in the case of an early retirement age before age 62, the early retirement benefit is determined by reducing the accrued benefit by 4 percent for each year that the early retirement age is less than age 62.
(ii) The age-adjusted section 415(b)(1)(A) dollar limit that applies for commencement of M's benefit at age 60 is the lesser of the section 415(b)(1)(A) dollar limit multiplied by the ratio of the annuity payable at age 60 to the annuity payable at age 62, or the straight life annuity payable at age 60 that is actuarially equivalent, using 5 percent interest and the applicable mortality table for that annuity starting date under section 417(e)(3)(A)(ii)(I) and § 1.417(e)-1(d)(2), to the deferred annuity payable at age 62 of $180,000 per year. In this case, because M has 30 years of service and would be eligible for the unreduced early retirement benefit at age 62, the age-adjusted section 415(b)(1)(A) dollar limit at age 60 is $156,229 (the lesser of $165,600 ($180,000* $92,000/$100,000) and $156,229 (the straight life annuity at

age 60 that is actuarially equivalent to a deferred annuity of $180,000 commencing at age 62, determined using 5 percent interest and the applicable mortality table, without a mortality decrement for the period between 60 and 62)).

Example 5. (i) The facts are the same as in *Example 1*, except that Participant M chooses to receive benefits in the form of a 10-year certain and life annuity under which payments are 97 percent of the periodic payments that would be made under the immediately commencing straight life annuity. Annual payments to M are 97 percent of $80,000, or $77,600. Additionally, M's average compensation for the period of M's high-3 years of service is $120,000. As in *Example 1*, the age-adjusted section 415(b)(1)(A) dollar limit at age 60 is $156,229.
(ii) In the case of a form of benefit to which section 417(e)(3) does not apply, the annual benefit for purposes of this section is the greater of the annual amount of the plan's straight life annuity commencing at the same age or the annual amount of the actuarially equivalent straight life annuity commencing at the same age, determined using a 5 percent interest rate and the applicable mortality table for that annuity starting date under section 417(e)(3)(A)(ii)(I) and § 1.417(e)-1(d)(2). In this case, the straight life annuity payable under the plan commencing at the same age is $80,000. The annual amount of the straight life annuity that is actuarially equivalent to the $77,600 benefit payable as a 10-year certain and life annuity is determined by applying the required standardized factors (a 5 percent interest assumption and the applicable mortality under section 417(e)(3)(A)(ii)(I) and § 1.417(e)-1(d)(2), and is $79,416. With respect to the 10-year certain and life annuity commencing at age 62, M's annual benefit is equal to the greater of the two resulting amounts ($80,000 and $79,416), or $80,000. Because M's annual benefit is less than the age-adjusted section 415(b)(1)(A) dollar limit and is less than the section 415(b)(1)(B) compensation limit, M's benefit satisfies section 415.

Example 6. (i) Participant O is a full-time civilian employee of the Harbor Police Division of the State of X Port Authority. The Harbor Police Division provides police protection services. O performs clerical services for the Harbor Police Division. O is a participant in the defined benefit plan that is maintained by the State of X with respect to whom the years of service taken into account in determining the amount of the benefit under the plan includes 10 years of service working for the Harbor Police Division and 5 years of service as a member of the Armed Forces of the United States.
(ii) For a distribution with an annuity starting date that occurs before O attains the age of 62, there is no age adjustment to the section 415(b)(1)(A) dollar limit.

Example 7. (i) Participant R is a full-time employee of the Emergency Medical Service Department of County Y (which is not a part of a police or fire department) who performs services as a driver of an ambulance. R is a participant in the defined benefit plan that is

> maintained by County Y with respect to whom the years of service taken into account in determining the amount of the benefit under the plan includes 15 years of service working for County Y. R does not have service credit for time in the Armed Forces of the United States.
> (ii) The age adjustments to the limitations of section 415(b)(1)(A) pursuant to section 415(b)(2)(C) and (D) will apply if R commences receiving a distribution at an age to which either of those adjustments applies.

(e) ***Adjustment to section 415(b)(1)(A) dollar limit for commencement after age 65*** —

(1) ***General rule*** —

(i) ***Calculation using statutory factors.*** For a distribution with an annuity starting date that occurs after the participant attains the age of 65, the age-adjusted section 415(b)(1)(A) dollar limit generally is determined as the actuarial equivalent of the annual amount of a straight life annuity commencing at the annuity starting date that has the same actuarial present value as a straight life annuity commencing at age 65, where annual payments under the straight life annuity commencing at age 65 are equal to the dollar limitation of section 415(b)(1)(A) (as adjusted pursuant to section 415(d) and § 1.415(d)-1 for the limitation year), and where the actuarially equivalent straight life annuity is computed using a 5 percent interest rate and the applicable mortality table under § 1.417(e)-1(d)(2) that is effective for that annuity starting date (and expressing the participant's age based on completed calendar months as of the annuity starting date). However, if the plan has an immediately commencing straight life annuity payable as of the annuity starting date and an immediately commencing straight life annuity payable at age 65, then the age-adjusted section 415(b)(1)(A) dollar limit is equal to the lesser of—

(A) The limit as otherwise determined under this paragraph (e)(1)(i); and

(B) The amount determined under paragraph (e)(1)(ii) of this section.

(ii) ***Calculation using plan factors.*** The amount determined under this paragraph (e)(1)(ii) is equal to the section 415(b)(1)(A) dollar limit (as adjusted pursuant to section 415(d) and § 1.415(d)-1 for the limitation year) multiplied by the adjustment ratio described in paragrap. (e)(2)(i) of this section.

(2) ***Adjustment ratio*** —

(i) ***General rule.*** For purposes of applying the rule of paragraph (e)(1)(ii) of this section, the adjustment ratio is equal to the ratio of the annual amount of the adjusted immediately commencing straight life annuity under the plan described in paragraph (e)(2)(ii) of this section to the adjusted age 65 straight life annuity described in paragraph (e)(2)(iii) of this section.

(ii) ***Adjusted immediately commencing straight life annuity.*** The adjusted immediately commencing straight life annuity that is used for purposes of paragraph (e)(2)(i) of this section is the annual amount of the immediately commencing straight life annuity payable to the participant, computed disregarding the participant's accruals after age 65 but including actuarial adjustments even if those actuarial adjustments are applied to offset accruals. For this purpose, the annual amount of the immediately commencing straight life annuity is determined without applying the rules of section 415.

(iii) ***Adjusted age 65 straight life annuity.*** The adjusted age 65 straight life annuity that is used for purposes of paragraph (e)(2)(i) of this section is the annual amount of the straight life annuity that would be payable under the plan to a hypothetical participant who is 65 years old and has the same accrued benefit (with no actuarial increases for commencement after age 65) as the participant receiving the distribution (determined disregarding the participant's accruals after age 65 and without applying the rules of section 415).

(3) ***Mortality adjustments*** —

(i) ***In general.*** For purposes of determining the actuarially equivalent amount described in paragraph (e)(1)(i) of this section, to the extent that a forfeiture does not occur upon the participant's death before the annuity starting date, no adjustment is made to reflect the probability of the participant's death between the participant's attainment of age 65 and the annuity starting date. To the extent that a forfeiture occurs upon the participant's death before the annuity starting date, an adjustment must be made to reflect the probability of the participant's death between the participant's attainment of age 65 and the annuity starting date.

(ii) ***No forfeiture deemed to occur where QPSA payable.*** See paragraph (d)(2)(ii) of this section for a rule deeming no forfeiture to occur if the plan does not charge participants for providing a QPSA on the participant's death.

(4) ***Examples.*** The following examples illustrate the application of this paragraph (e):

> *Example 1.* (i) Plan A provides that monthly benefits payable upon commencement after normal retirement age (which is age 65) are increased by 0.5 percent for each month of delay in commencement after attainment of normal retirement age. Plan A provides a QPSA to all married participants without charge. Plan A provides (consistent with paragraph (d)(2)(ii) of this section) that, for purposes of adjusting the dollar limitation under section 415(b)(1)(A) for commencement before age 62 or after age 65, no adjustment is made to reflect the probability of a participant's death between the annuity starting date and the participant's attainment of age 62 or between the age of 65 and the annuity starting date. The normal form of benefit under Plan A is a straight life annuity commencing at age 65. Plan A does not provide additional benefit accruals once a participant is credited with 30 years of service. Participant M was credited with 30 years of service under Plan A when M attained age 65. M retires at age 70 on January 1, 2008, with a benefit (prior to the application of section 415) that is payable monthly in the form of a straight life annuity of $195,000, which reflects the actuarial increase of 30 percent applied to the accrued benefit of $150,000. It is assumed that all payments under Plan A, other than a payment of a single sum, are made monthly, on the first day of each calendar month. It is also assumed that the dollar limit in 2008 is $185,000. (ii) The age-adjusted section 415(b)(1)(A) dollar limit at age 70 is the lesser of the section 415(b)(1)(A) dollar limit multiplied by the ratio of the adjusted immediately commencing straight life annuity payable at age 70 (computed disregarding the rules of section 415 and accruals after age 65, but including actuarial adjustments) to the adjusted age 65 straight life annuity (computed disregarding the rules of section 415 and any accruals after age 65), or

the straight life annuity payable at age 70 that is actuarially equivalent, using 5 percent interest and the applicable mortality table for that annuity starting date under section 417(e)(3)(A)(ii)(I) and § 1.417(e)-1(d)(2), to the straight life annuity payable at age 65, where annual payments under the straight life annuity payable at age 65 are equal to the dollar limitation of section 415(b)(1)(A). In this case, the age-adjusted section 415(b)(1)(A) dollar limit at age 70 is $240,500 (the lesser of $240,500 ($185,000* $195,000/$150,000) and $271,444 (the straight life annuity at age 70 that is actuarially equivalent to an annuity of $185,000 commencing at age 65, determined using 5 percent interest and the applicable mortality table, without a mortality decrement for the period between 65 and 70)).

Example 2. (i) The facts are the same as in Example 1, except that Plan A does not limit benefit accruals to 30 years of credited service, and thus M accrues benefits between ages 65 and 70.
(ii) Since M's accruals after attaining age 65 are disregarded for purposes of determining the age-adjusted section 415(b)(1)(A) dollar limit applicable to M at age 70, the result is the same as in *Example 1*.

Example 3. (i) The facts are the same as in *Example 1*, except that Plan A does not limit benefit accruals to 30 years of credited service. However, benefit accruals after an employee has reached normal retirement age (age 65), are offset by the actuarial increase that the plan provides for commencement of benefits after normal retirement age.
(ii) The result is the same as in *Example 1*, even if the actuarial increases for post-age 65 benefit commencement provided under Plan A do or do not fully offset M's benefit accruals after attaining age 65. This is because benefit accruals after age 65 are disregarded for purposes of determining the age-adjusted section 415(b)(1)(A) dollar limit applicable to M after age 65.

(f) ***Total annual payments not in excess of $10,000*** —

(1) ***In general.*** Pursuant to section 415(b)(4), the annual benefit (without regard to the age at which benefits commence) payable with respect to a participant under any defined benefit plan is not considered to exceed the limitations on benefits described in section 415(b)(1) and in paragraph (a)(1) of this section if—

(i) The benefits (other than benefits not taken into account in the computation of the annual benefit under the rules of paragraph (b) or (c) of this section) payable with respect to the participant under the plan and all other defined benefit plans of the employer do not in the aggregate exceed $10,000 (as adjusted under paragraph (g) of this section) for the limitation year, or for any prior limitation year; and

(ii) The employer (or a predecessor employer) has not at any time maintained a defined contribution plan in which the participant participated.

(2) ***Computation of benefits for purposes of applying the $10,000 amount.*** For purposes of paragraph (f)(1)(i) of this section, the benefits payable with respect to the participant under a plan for a limitation year reflect all amounts payable under the plan for the limitation year (other than benefits not taken into account in the computation of the annual benefit under the rules of paragraph (b) or (c) of this section), and are not adjusted for form of benefit or commencement date.

(3) ***Special rule with respect to participants in multiemployer plans.*** The special $10,000 exception set forth in paragraph (f)(1) of this section applies to a participant in a multiemployer plan described in section 414(f) without regard to whether that participant ever participated in one or more other plans maintained by an employer who also maintains the multiemployer plan, provided that none of such other plans were maintained as a result of collective bargaining involving the same employee representative as the multiemployer plan.

(4) ***Special rule with respect to employee contributions.*** Notwithstanding §§ 1.415(c)-1(a)(2)(ii)(B) and 1.415(c)-1(b)(3), mandatory employee contributions under a defined benefit plan described in paragraph (b)(2)(iii) of this section are not considered a separate defined contribution plan maintained by the employer for purposes of paragraph (f)(1)(ii) of this section. Thus, the special dollar limitation provided for in this paragraph (f) applies to a contributory defined benefit plan.

Similarly, for purposes of this paragraph (f), an individual medical account under section 401(h) or an account for postretirement medical benefits established pursuant to section 419A(d)(1) is not considered a separate defined contribution plan maintained by the employer.

(5) ***Examples.*** The application of this paragraph (f) may be illustrated by the following examples. For purposes of these examples, it is assumed that each participant has 10 years of participation in the plan and service with the employer. The examples are as follows:

> *Example 1.* (i) B is a participant in a defined benefit plan maintained by X Corporation, which provides for a benefit payable in the form of a straight life annuity beginning at age 65. B's average compensation for the period of B's high-3 years of service is $6,000. The plan does not provide for mandatory employee contributions, and at no time has B been a participant in a defined contribution plan maintained by X. With respect to the current limitation year, B's benefit under the plan (before the application of section 415) is $9,500.
> (ii) Because annual payments under B's benefit do not exceed $10,000, and because B has at no time participated in a defined contribution plan maintained by X, the benefits payable under the plan are not considered to exceed the limitation on benefits otherwise applicable to B ($6,000).
>
> (iii) This result would remain the same even if, under the terms of the plan, B's benefit of $9,500 were payable at age 60, or if the plan provided for mandatory employee contributions.

> *Example 2.* (i) The facts are the same as in *Example 1*, except that the plan provides for a benefit payable in the form of a life annuity with a 10-year certain feature with annual payments of $9,500. Assume that, after the adjustment described in paragraph (c) of this section, B's actuarially equivalent straight life annuity (which is the annual benefit used for demonstrating compliance with section 415) for the current limitation year is $10,400.

(ii) For purposes of applying the special rule provided in this paragraph for total benefits not in excess of $10,000, there is no adjustment required if the retirement benefit payable under the plan is not in the form of a straight life annuity. Therefore, because B's retirement benefit does not exceed $10,000, B may receive the full $9,500 benefit without the otherwise applicable benefit limitations of this section being exceeded.

Example 3. (i) The facts are the same as in *Example 1*, except that the plan provides for a benefit payable in the form of a single sum and the amount of the single sum that is the actuarial equivalent of the straight life annuity payable to B ($9,500 annually), determined in accordance with the rules of section 417(e)(3) and § 1.417(e)-1(d), is $95,000.
(ii) Because the amount payable to B for the limitation year would exceed $10,000, the rule of this paragraph (f) does not provide an exception from the generally applicable limits of section 415(b)(1) for the single-sum distribution. Thus, the otherwise applicable limits apply to the single-sum distribution, and a single-sum distribution of $95,000 would not satisfy the requirements of section 415(b). Limiting the single-sum distribution to $60,000 (the present value of the annuity that complies with the compensation-based limitation of section 415(b)(1)(B)) in order to satisfy section 415 would be an impermissible forfeiture under the requirements of section 411(a). Accordingly, the plan should not provide for a single-sum distribution in these circumstances.

(g) ***Special rule for participation or service of less than 10 years*** —

(1) ***Proration of dollar limit based on years of participation*** —

(i) ***In general.*** Pursuant to section 415(b)(5)(A), where a participant has less than 10 years of participation in the plan, the dollar limit described in paragraph (a)(1)(i) of this section (as adjusted pursuant to section 415(d), § 1.415(d)-1, and paragraphs (d) and (e) of this section) is reduced by multiplying the otherwise applicable limitation by a fraction—

(A) The numerator of which is the number of years of participation in the plan (or 1, if greater); and

(B) The denominator of which is 10.

(ii) ***Years of participation.*** The following rules apply for purposes of determining a participant's years of participation for purposes of this paragraph (g)(1)—

(A) A participant is credited with a year of participation (computed to fractional parts of a year) for each accrual computation period for which the participant is credited with at least the number of hours of service (or period of service if the elapsed time method is used for benefit accrual purposes) required under the terms of the plan in order to accrue a benefit for the accrual computation period, and the participant is included as a plan participant under the eligibility provisions of the plan for at least one day of the accrual computation period. If these two conditions are met, the portion of a year of participation credited to the participant is equal to the amount of benefit accrual service credited to the participant for such accrual computation period. For example, if under the terms of a plan, a participant receives $^{1}/_{10}$ of a year of benefit accrual service for an accrual computation

period for each 200 hours of service, and the participant is credited with 1,000 hours of service for the period, the participant is credited with 1/2 a year of participation for purposes of section 415(b)(5)(A) and this paragraph (g)(1).

(B) A participant who is permanently and totally disabled within the meaning of section 415(c)(3)(C)(i) for an accrual computation period is credited with a year of participation with respect to that period for purposes of section 415(b)(5)(A) and this paragraph (g)(1).

(C) For a participant to receive a year of participation (or part thereof) for an accrual computation period for purposes of section 415(b)(5)(A) and this paragraph (g)(1), the plan must be established no later than the last day of such accrual computation period.

(D) No more than one year of participation may be credited for any 12-month period for purposes of section 415(b)(5)(A) and this paragraph (g)(1).

(2) ***Proration of compensation limit and special rule for total annual payments less than $10,000 based on years of service*** —

(i) ***In general.*** Pursuant to section 415(b)(5)(B), where a participant has less than 10 years of service with the employer, the compensation limit described in paragraph (a)(1)(ii) of this section and the $10,000 amount under the special rule for small annual payments under paragraph (f) of this section are reduced by multiplying the otherwise applicable limitation by a fraction—

(A) The numerator of which is the number of years of service with the employer (or 1, if greater); and

(B) The denominator of which is 10.

(ii) ***Years of service*** —

(A) ***In general.*** For purposes of applying this paragraph (g)(2), years of service must be determined on a reasonable and consistent basis. A plan is considered to be determining years of service on a reasonable and consistent basis for this purpose if, subject to the limits of paragraph (g)(2)(ii)(B) of this section, a participant is credited with a year of service (computed to fractional parts of a year) for each accrual computation period for which the participant is credited with at least the number of hours of service (or period of service if the elapsed time method is used for benefit accrual purposes) required under the terms of the plan in order to accrue a benefit for the accrual computation period.

(B) ***Rules of application.*** No more than one year of service may be credited for any 12-month period for purposes of section 415(b)(5)(B). In addition, only the participant's service with the employer or a predecessor employer (as defined in § 1.415(f)-1(c)) may be taken into account in determining the participant's years of service for this purpose. Thus, if an employer does not maintain a former employer's plan, a participant's service with the former employer may be taken into account in determining the participant's years of service for purposes of this paragraph (g)(2) only if the former employer is a predecessor employer with respect to the employer pursuant to § 1.415(f)-1(c)(2) (which defines predecessor employer to include, under certain circumstances, a former entity that antedates the employer).

(C) ***Period of disability.*** Notwithstanding the rules of paragraph (g)(2)(ii)(B) of this section, a plan is permitted to provide that a participant who is permanently and totally disabled within the meaning of section 415(c)(3)(C)(i) for an accrual computation period is credited with service with respect to that period for purposes of section 415(b)(5)(B).

(3) ***Exception for survivor and disability benefits under governmental plans.*** The requirements of this paragraph (g) (regarding participation or service of less than 10 years) do not apply to a distribution from a governmental plan (as defined in section 414(d)) on account of the participant's becoming disabled by reason of personal injuries or sickness, or as a result of the death of the participant.

(4) ***Examples.*** The provisions of this paragraph (g) may be illustrated by the following examples:

> *Example 1.* (i) C begins employment with Employer A on January 1, 2005, at the age of 58. Employer A maintains only a noncontributory defined benefit plan which provides for a straight life annuity beginning at age 65 and uses the calendar year for the limitation and plan year. Employer A has never maintained a defined contribution plan. C becomes a participant in Employer A's plan on January 1, 2006, and works through December 31, 2011, when C is age 65. C begins to receive benefits under the plan in 2012. C's average compensation for the period of C's high-3 years of service is $40,000. Furthermore, under the terms of Employer A's plan, for purposes of computing C's nonforfeitable percentage in C's accrued benefit derived from employer contributions, C has only 7 years of service with Employer A (2005-2011).
> (ii) Because C has only 7 years of service with Employer A at the time he begins to receive benefits under the plan, the maximum permissible annual benefit payable with respect to C is $28,000 ($40,000 multiplied by 7/10).

> *Example 2.* (i) The facts are the same as in *Example 1*, except that C's average compensation for the period of his high-3 years of service is $8,000.
> (ii) Because C has only 7 years of service with Employer A at the time he begins to receive benefits, the maximum benefit payable with respect to C would be reduced to $5,600 ($8,000 multiplied by 7/10). However, the special rule for total benefits not in excess of $10,000, provided in paragraph (f) of this section, is applicable in this case. Accordingly, C may receive an annual benefit of $7,000 ($10,000 multiplied by 7/10) without the benefit limitations of this section being exceeded.

> *Example 3.* (i) Employer B maintains a defined benefit plan. Benefits under the plan are computed based on months of service rather than years of service. Accordingly, for purposes of applying the reduction based on years of service less than 10 to the limitations under section 415(b), the plan provides that the otherwise applicable limitation is multiplied by a fraction, the numerator of which is the number of completed months of service with the employer (but not less than 12 months), and the denominator of which is 120. The plan further provides that months of service are computed in the same manner for this purpose as for purposes of computing plan benefits.

(ii) The manner in which the plan applies the reduction based on years of service less than 10 to the limitations under section 415(b) is consistent with the requirements of this paragraph (g).

Example 4. (i) G begins employment with Employer D on January 1, 2003, at the age of 58. Employer D maintains a noncontributory defined benefit plan which provides for a straight life annuity beginning at age 65 and uses the calendar year for the limitation and plan year. G becomes a participant in Employer D's plan on January 1, 2004, and works through December 31, 2009, when G is age 65. G performs sufficient service to be credited with a year of service under the plan for each year during 2003 through 2009 (although G is not credited with a year of service for 2003 because G is not yet a plan participant). G begins to receive benefits under the plan during 2010. The plan's accrual computation period is the plan year. The plan provides that, for purposes of applying the rules of section 415(b)(5)(B), a participant is credited with a year of service (computed to fractional parts of a year) for each plan year for which the participant is credited with sufficient service to accrue a benefit for the plan year. G's average compensation for the period of G's high-3 years of service is $200,000. It is assumed for purposes of this example that the dollar limitation of section 415(b)(1)(A) for limitation years ending in 2010 is $195,000.
(ii) G has 7 years of service and 6 years of participation in the plan at the time G begins to receive benefits under the plan. Accordingly, the limitation under section 415(b)(1)(B) based on G's average compensation for the period of G's high-3 years of service that applies pursuant to the adjustment required under section 415(b)(5)(B) is $140,000 ($200,000 multiplied by 7/10), and the dollar limitation under section 415(b)(1)(A) that applies to G pursuant to the adjustment required under section 415(b)(5)(A) is $117,000 ($195,000 multiplied by 6/10).

(h) ***Retirement Protection Act of 1994 transition rules.*** For special rules affecting the actuarial adjustment for form of benefit under paragraph (c) of this section and the adjustment to the dollar limit for early or late commencement under paragraphs (d) and (e) of this section for certain plans adopted and in effect before December 8, 1994, see section 767(d)(3)(A) of the Uruguay Round Agreements Act of 1994, Public Law 103-465 (108 Stat. 4809) as amended by section 1449(a) of the Small Business Job Protection Act of 1996, Public Law 104-188 (110 Stat. 1755). The Commissioner may provide guidance regarding these special rules in revenue rulings, notices, and other guidance published in the Internal Revenue Bulletin. See § 601.601(d) of this chapter.

[T.D. 9319, 72 FR 16899, Apr. 5, 2007; 72 FR 28854, May 23, 2007]

§ 1.415(b)-2 Multiple annuity starting dates. [Reserved]

§ 1.415(c)-1 Limitations for defined contribution plans.

(a) ***General rules*** —

(1) ***Maximum limitations.*** Under section 415(c) and this section, to satisfy the provisions of section 415(a) for any limitation year, except as provided by paragraph (a)(3) of this section, the annual additions (as defined in paragraph (b) of this section) credited to the account of a participant in a defined contribution plan for the limitation year must not exceed the lesser of—

(i) $40,000 (adjusted pursuant to section 415(d) and § 1.415(d)-1(b)); or

(ii) 100 percent of the participant's compensation (as defined in § 1.415(c)-2) for the limitation year.

(2) ***Defined contribution plan*** —

(i) ***Definition.*** For purposes of section 415 and regulations promulgated under section 415, the term *defined contribution plan* means a defined contribution plan within the meaning of section 414(i) (including the portion of a plan treated as a defined contribution plan under the rules of section 414(k)) that is—

(A) A plan described in section 401(a) which includes a trust which is exempt from tax under section 501(a);

(B) An annuity plan described in section 403(a); or

(C) A simplified employee pension described in section 408(k).

(ii) ***Additional plans treated as defined contribution plans*** —

(A) ***In general.*** Contributions to the types of arrangements described in paragraphs (a)(2)(ii)(B) through (D) of this section are treated as contributions to defined contribution plans for purposes of section 415 and regulations promulgated under section 415.

(B) ***Employee contributions to a defined benefit plan.*** Mandatory employee contributions (as defined in section 411(c)(2)(C) and § 1.411(c)-1(c)(4), regardless of whether the plan is subject to the requirements of section 411) to a defined benefit plan are treated as contributions to a defined contribution plan. For this purpose, contributions that are picked up by the employer as described in section 414(h)(2) are not considered employee contributions.

(C) ***Individual medical benefit accounts under section 401(h).*** Pursuant to section 415(l)(1), contributions allocated to any individual medical benefit account which is part of a pension or annuity plan established pursuant to section 401(h) are treated as contributions to a defined contribution plan.

(D) ***Post-retirement medical accounts for key employees.*** Pursuant to section 419A(d)(2), amounts attributable to medical benefits allocated to an account established for a key employee (any employee who, at any time during the plan year or any preceding plan year, is or was a key employee as defined in section 416(i)) pursuant to section 419A(d)(1) are treated as contributions to a defined contribution plan.

(iii) ***Section 403(b) annuity contracts.*** Annual additions under an annuity contract described in section 403(b) are treated as annual additions under a defined contribution plan for purposes of this section.

(3) ***Alternative contribution limitations*** —

(i) ***Church plans.*** For alternative contribution limitations relating to church plans, see paragraph (d) of this section.

(ii) ***Special rules for medical benefits.*** For additional rules relating to certain medical benefits, see paragraph (e) of this section.

(iii) ***Employee stock ownership plans.*** For additional rules relating to employee stock ownership plans, see paragraph (f) of this section.

(b) ***Annual additions*** —

(1) ***In general*** —

(i) ***General definition.*** The term *annual addition* means, for purposes of this section, the sum, credited to a participant's account for any limitation year, of—

(A) Employer contributions;

(B) Employee contributions; and

(C) Forfeitures.

(ii) ***Certain excess amounts treated as annual additions.*** Contributions do not fail to be annual additions merely because they are excess contributions (as described in section 401(k)(8)(B)) or excess aggregate contributions (as described in section 401(m)(6)(B)), or merely because excess contributions or excess aggregate contributions are corrected through distribution.

(iii) ***Direct transfers.*** The direct transfer of a benefit or employee contributions from a qualified plan to a defined contribution plan does not give rise to an annual addition.

(iv) ***Reinvested employee stock ownership plan dividends.*** The reinvestment of dividends on employer securities under an employee stock ownership plan pursuant to section 404(k)(2)(A)(iii)(II) does not give rise to an annual addition.

(2) ***Employer contributions*** —

(i) ***Amounts treated as an annual addition.*** For purposes of paragraph (b)(1)(i)(A) of this section, the term *annual addition* includes employer contributions credited to the participant's account for the limitation year and other allocations described in paragraph (b)(4) of this section that are made during the limitation year. See paragraph (b)(6) of this section for timing rules applicable to annual additions with respect to employer contributions.

(ii) ***Amounts not treated as annual additions*** —

(A) ***Certain restorations of accrued benefits.*** The restoration of an employee's accrued benefit by the employer in accordance with section 411(a)(3)(D) or section 411(a)(7)(C) or resulting from the repayment of cashouts (as described in section 415(k)(3)) under a governmental plan (as defined in section 414(d)) is not considered an annual addition for the limitation year in which the restoration occurs. This treatment of a restoration of an employee's accrued benefit as not giving rise to an annual addition applies regardless of whether the plan restricts the timing of repayments to the maximum extent allowed by section 411(a).

(B) ***Catch-up contributions.*** A catch-up contribution made in accordance with section 414(v) and § 1.414(v)-1 does not give rise to an annual addition.

(C) ***Restorative payments.*** A restorative payment that is allocated to a participant's account does not give rise to an annual addition for any limitation year. For this purpose, restorative payments are payments made to restore losses to a plan resulting from actions by a fiduciary for which there is reasonable risk of liability for breach of a fiduciary duty under title I of the Employee Retirement Income Security Act of 1974 (88 Stat. 829), Public Law 93-406 (ERISA) or under other applicable federal or state law, where plan participants who are similarly situated are treated similarly with respect to the payments. Generally, payments to a defined contribution plan are restorative payments only if the payments are made in order to restore some or all of the plan's losses due to an action (or a failure to act) that creates a reasonable risk of liability for such a breach of fiduciary duty (other than a breach of fiduciary duty arising from failure to remit contributions to the plan). This includes payments to a plan made pursuant to a Department of Labor order, the Department of Labor's Voluntary Fiduciary Correction Program, or a court-approved settlement, to restore losses to a qualified defined contribution plan on account of the breach of fiduciary duty (other than a breach of fiduciary duty arising from failure to remit contributions to the plan). Payments made to a plan to make up for losses due merely to market fluctuations and other payments that are not made on account of a reasonable risk of liability for breach of a fiduciary duty under title I of ERISA are not restorative payments and generally constitute contributions that give rise to annual additions under paragraph (b)(4) of this section.

(D) ***Excess deferrals.*** Excess deferrals that are distributed in accordance with § 1.402(g)-1(e)(2) or (3) do not give rise to annual additions.

(3) ***Employee contributions.*** For purposes of paragraph (b)(1)(i)(B) of this section, the term *annual addition* includes mandatory employee contributions (as defined in section 411(c)(2)(C) and regulations promulgated under section 411) as well as voluntary employee contributions. The term *annual addition* does not include—

(i) Rollover contributions (as described in sections 401(a)(31), 402(c)(1), 403(a)(4), 403(b)(8), 408(d)(3), and 457(e)(16));

(ii) Repayments of loans made to a participant from the plan;

(iii) Repayments of amounts described in section 411(a)(7)(B) (in accordance with section 411(a)(7)(C)) and section 411(a)(3)(D) or repayment of contributions to a governmental plan (as defined in section 414(d)) as described in section 415(k)(3);

(iv) Repayments that would have been described in paragraph (b)(3)(iii) of this section except that the plan does not restrict the timing of repayments to the maximum extent permitted by section 411(a); or

(v) Employee contributions to a qualified cost of living arrangement within the meaning of section 415(k)(2)(B).

(4) ***Transactions with plan.*** The Commissioner may in an appropriate case, considering all of the facts and circumstances, treat transactions between the plan and the employer, transactions between the plan and the employee, or certain allocations to participants' accounts as giving rise to annual additions. Further, where an employee or employer transfers assets to a plan in exchange for consideration that is less than the fair market value of the assets transferred to the plan, there is an

annual addition in the amount of the difference between the value of the assets transferred and the consideration. A transaction described in this paragraph (b)(4) may constitute a prohibited transaction with the meaning of section 4975(c)(1).

(5) ***Contributions other than cash.*** For purposes of this paragraph (b), a contribution by the employer or employee of property rather than cash is considered to be a contribution in an amount equal to the fair market value of the property on the date the contribution is made. For this purpose, the fair market value is the price at which the property would change hands between a willing buyer and a willing seller, neither being under any compulsion to buy or to sell and both having reasonable knowledge of relevant facts. In addition, a contribution described in this paragraph (b)(5) may constitute a prohibited transaction within the meaning of section 4975(c)(1).

(6) ***Timing rules*** —

(i) ***In general*** —

(A) ***Date of allocation.*** For purposes of this paragraph (b), an annual addition is credited to the account of a participant for a particular limitation year if it is allocated to the participant's account under the terms of the plan as of any date within that limitation year. Similarly, an annual addition that is made pursuant to a corrective amendment that complies with the requirements of § 1.401(a)(4)-11(g) is credited to the account of a participant for a particular limitation year if it is allocated to the participant's account under the terms of the corrective amendment as of any date within that limitation year. However, if the allocation of an annual addition is dependent upon the satisfaction of a condition (such as continued employment or the occurrence of an event) that has not been satisfied by the date as of which the annual addition is allocated under the terms of the plan, then the annual addition is considered allocated for purposes of this paragraph (b) as of the date the condition is satisfied.

(B) ***Date of employer contributions.*** For purposes of this paragraph (b), employer contributions are not treated as credited to a participant's account for a particular limitation year unless the contributions are actually made to the plan no later than 30 days after the end of the period described in section 404(a)(6) applicable to the taxable year with or within which the particular limitation year ends. If, however, contributions are made by an employer exempt from Federal income tax (including a governmental employer), the contributions must be made to the plan no later than the 15th day of the tenth calendar month following the end of the calendar year or fiscal year (as applicable, depending on the basis on which the employer keeps its books) with or within which the particular limitation year ends. If contributions are made to a plan after the end of the period during which contributions can be made and treated as credited to a participant's account for a particular limitation year, allocations attributable to those contributions are treated as credited to the participant's account for the limitation year during which those contributions are made.

(C) ***Date of employee contributions.*** For purposes of this paragraph (b), employee contributions, whether voluntary or mandatory, are not treated as credited to a participant's account for a particular limitation year unless the contributions are actually made to the plan no later than 30 days after the close of that limitation year.

(D) ***Date for forfeitures.*** A forfeiture is treated as an annual addition for the limitation year that contains the date as of which it is allocated to a participant's account as a forfeiture.

(E) ***Treatment of elective contributions as plan assets.*** The extent to which elective contributions constitute plan assets for purposes of the prohibited transaction provisions of section 4975 and title I of ERISA, is determined in accordance with regulations and rulings issued by the Department of Labor. See 29 CFR 2510.3-102.

(ii) ***Special timing rules*** —

(A) ***Corrective contributions.*** For purposes of this section, if, in a particular limitation year, an employer allocates an amount to a participant's account because of an erroneous forfeiture in a prior limitation year, or because of an erroneous failure to allocate amounts in a prior limitation year, the corrective allocation will not be considered an annual addition with respect to the participant for that particular limitation year, but will be considered an annual addition for the prior limitation year to which it relates. An example of a situation in which an employer contribution might occur under the circumstances described in the preceding sentence is a retroactive crediting of service for an employee under 29 CFR 2530.200b-2(a)(3) in accordance with an award of back pay. For purposes of this paragraph (b)(6)(ii), if the amount so contributed in the particular limitation year takes into account actual investment gains attributable to the period subsequent to the year to which the contribution relates, the portion of the total contribution that consists of such gains is not considered as an annual addition for any limitation year.

(B) ***Contributions for accumulated funding deficiencies and previously waived contributions*** —

(*1*) ***Accumulated funding deficiency.*** In the case of a defined contribution plan to which the rules of section 412 apply, a contribution made to reduce an accumulated funding deficiency will be treated as if it were timely made for purposes of determining the limitation year in which the annual additions arising from the contribution are made, but only if the contribution is allocated to those participants who would have received an annual addition if the contribution had been timely made.

(*2*) ***Previously waived contributions.*** In the case of a defined contribution plan to which the rules of section 412 apply and for which there has been a waiver of the minimum funding standard in a prior limitation year in accordance with section 412(d), that portion of an employer contribution in a subsequent limitation year which, if not for the waiver, would have otherwise been required in the prior limitation year under section 412(a) will be treated as if it were timely made (without regard to the funding waiver) for purposes of determining the limitation year in which the annual additions arising from the contribution are made, but only if the contribution is allocated to those participants who would have received an annual addition if the contribution had been timely made (without regard to the funding waiver).

(*3*) ***Interest.*** For purposes of determining the amount of the annual addition under paragraphs (b)(6)(ii)(B)(*1*) and (*2*) of this section, a reasonable amount of interest paid by the employer is disregarded. However, any interest paid by the employer that is in excess of a reasonable amount, as determined by the Commissioner, is taken into account as an annual addition for the limitation year during which the contribution is made.

(C) ***Simplified employee pensions.*** For purposes of this paragraph (b), amounts contributed to a simplified employee pension described in section 408(k) are treated as allocated to the individual's account as of the last day of the limitation year ending with or within the taxable year for which the contribution is made.

(D) ***Treatment of certain contributions made pursuant to veterans' reemployment rights.*** If, in a particular limitation year, an employer contributes an amount to an employee's account with respect to a prior limitation year and such contribution is required by reason of such employee's rights under chapter 43 of title 38, United States Code, resulting from qualified military service, as specified in section 414(u)(1), then such contribution is not considered an annual addition with respect to the employee for that particular limitation year in which the contribution is made, but, in accordance with section 414(u)(1)(B), is considered an annual addition for the limitation year to which the contribution relates.

(c) ***Examples.*** The following examples illustrate the rules of paragraphs (a) and (b) of this section:

Example 1. (i) P is a participant in a qualified profit-sharing plan maintained by his employer, ABC Corporation. The limitation year for the plan is the calendar year. P's compensation (as defined in § 1.415(c)-2) for the current limitation year is $30,000.
(ii) Because the compensation limitation described in section 415(c)(1)(B) applicable to P for the current limitation year is lower than the dollar limitation described in section 415(c)(1)(A), the maximum annual addition which can be allocated to P's account for the current limitation year is $30,000 (100 percent of $30,000).

Example 2. (i) The facts are the same as in *Example 1,* except that P's compensation for the current limitation year is $140,000.
(ii) The maximum amount of annual additions that may be allocated to P's account in the current limitation year is the lesser of $140,000 (100 percent of P's compensation) or the dollar limitation of section 415(c)(1)(A) as in effect as of January 1 of the calendar year in which the current limitation year ends. If, for example, the dollar limitation of section 415(c)(1)(A) in effect as of January 1 of the calendar year in which the current limitation year ends is $45,000, then the maximum annual addition that can be allocated to P's account for the current limitation year is $45,000.

Example 3. (i) Employer N maintains a qualified profit-sharing plan that uses the calendar year as its plan year and its limitation year. N's taxable year is a fiscal year beginning June 1 and ending May 31. Under the terms of the profit-sharing plan maintained by N, employer contributions are made to the plan two months after the close of N's taxable year and are allocated as of the last day of the plan year ending within the taxable year (and are not dependent on the satisfaction of a condition). Thus, employer contributions for the 2008 calendar year limitation year are made on July 31, 2009 (the date that is two months after the close of N's taxable year ending May 31, 2009) and are allocated as of December 31, 2008.

(ii) Because the employer contributions are actually made to the plan no later than 30 days after the end of the period described in section 404(a)(6) with respect to N's taxable year ending May 31, 2009, the contributions will be considered annual additions for the 2008 calendar year limitation year.

Example 4. (i) The facts are the same as in *Example 3,* except that the plan year for the profit-sharing plan maintained by N is the 12-month period beginning on February 1 and ending on January 31. The limitation year continues to be the calendar year. Under the terms of the plan, an employer contribution which is made to the plan on July 31, 2009, is allocated to participants' accounts as of January 31, 2009.
(ii) Because the last day of the plan year is in the 2009 calendar year limitation year, and because, under the terms of the plan, employer contributions are allocated to participants' accounts as of the last day of the plan year, the contributions are considered annual additions for the 2009 calendar year limitation year.

Example 5. (i) XYZ Corporation maintains a profit-sharing plan to which a participant may make voluntary employee contributions for any year not to exceed 10 percent of the participant's compensation for the year. The plan permits a participant to make retroactive make-up contributions for any year for which the participant contributed less than 10 percent of compensation. XYZ uses the calendar year as the plan year and the limitation year. Under the terms of the plan, voluntary employee contributions are credited to a participant's account for a particular limitation year if such contributions are allocated to the participant's account as of any date within that limitation year. Participant A's compensation is as follows—

Limitation year	Compensation
2008	$30,000
2009	$32,000
2010	$34,000
2011	$36,000

(ii) Participant A makes no voluntary employee contributions during limitation years 2008, 2009, and 2010. On October 1, 2011, participant A makes a voluntary employee contribution of $13,200 (10 percent of A's aggregate compensation for limitation years 2008, 2009, 2010, and 2011 of $132,000). Under the terms of the plan, $3,000 of this 2011 contribution is allocated to A's account as of limitation year 2008; $3,200 is allocated to A's account of limitation year 2009; $3,400 is allocated to A's account as of limitation year 2010, and $3,600 is allocated to A's account as of limitation year 2011.

(iii) Under the rule set forth in paragraph (b)(6)(i)(C) of this section, employee contributions will not be considered credited to a participant's account for a particular limitation year for section 415 purposes unless the contributions are actually made to the plan no later than 30 days after the close of that limitation year. Thus, A's voluntary employee contribution of $13,200 made on October 1, 2011, would be considered as credited to A's account only for the 2011 calendar year limitation year, notwithstanding the plan provisions.

(d) ***Special rules relating to church plans*** —

(1) ***Alternative contribution limitation*** —

(i) ***In general.*** Pursuant to section 415(c)(7)(A), notwithstanding the general rule of paragraph (a)(1) of this section, additions for a section 403(b) annuity contract for a year with respect to a participant who is an employee of a church or a convention or association of churches, including an organization described in section 414(e)(3)(B)(ii), when expressed as an annual addition to such participant's account, are treated as not exceeding the limitation of paragraph (a)(1) of this section if such annual additions for the year are not in excess of $10,000.

(ii) ***$40,000 aggregate limitation.*** With respect to any participant, the total amount of annual additions that are in excess of the limitation of paragraph (a)(1) of this section but, pursuant to the rule of paragraph (d)(1)(i) of this section, are treated as not exceeding that limitation (taking into account the rule of paragraph (d)(3) of this section) cannot exceed $40,000. Thus, the aggregate of annual additions for all limitation years that would exceed the limitation of this section but for this paragraph (d)(1) is limited to $40,000.

(2) ***Years of service taken into account for duly ordained, commissioned, or licensed ministers or lay employees.*** For purposes of this paragraph (d)—

(i) All years of service by an individual as an employee of a church, or a convention or association of churches, including an organization described in section 414(e)(3)(B)(ii), are considered as years of service for one employer; and

(ii) All amounts contributed for annuity contracts by each such church (or convention or association of churches) during such years for the employee are considered to have been contributed by one employer.

(3) ***Foreign missionaries.*** Pursuant to section 415(c)(7)(C), in the case of any individual described in paragraph (d)(1) of this section performing any services for the church outside the United States during the limitation year, additions for an annuity contract under section 403(b) for any year are not treated as exceeding the limitation of paragraph (a)(1) of this section if such annual additions for the year do not exceed $3,000. The preceding sentence shall not apply with respect to any taxable year to any individual whose adjusted gross income for such taxable year (determined separately and without regard to community property law) exceeds $17,000.

(4) ***Church, convention or association of churches.*** For purposes of this paragraph (d), the terms “church” and “convention or association of churches” have the same meaning as when used in section 414(e).

(5) ***Examples.*** The following examples illustrate the rules of this paragraph (d):

Example 1. (i) E is an employee of ABC Church earning $7,000 during each calendar year. E

participates in a section 403(b) annuity contract maintained by ABC Church beginning in the year 2008. E's taxable year is the calendar year, and the limitation year for the plan coincides with the calendar year. ABC Church contributes $10,000 to be allocated to E's account under the plan for the year 2008.
(ii) Under paragraph (d)(1) of this section, this allocation is treated as not violating the limits established in paragraph (a)(1) of this section because it does not exceed $10,000. Moreover, since an annual addition of $10,000 would otherwise exceed the limitation of paragraph (a)(1) of this section by $3,000, $3,000 is counted toward the aggregate limitation specified in paragraph (d)(1)(ii) of this section for year 2008. Accordingly, ABC Church may make such allocations for 13 years (for example, for years 2008 through 2020) without exceeding the aggregate limitation of $40,000 specified in paragraph (d) of this section. For the fourteenth year, ABC Church could allocate only $8,000 to E's account (the sum of the $7,000 limitation computed under paragraph (a)(1)(ii) of this section and the remaining $1,000 of the $40,000 aggregate limitation under paragraph (d)(1)(ii) of this section on annual additions in excess of the limits under paragraph (a)(1) of this section).

Example 2. (i) F is an employee of XYZ Church and F's taxable year is the calendar year. F earns $2,000 during each calendar year for services he provides to XYZ Church, all of which are performed outside the United States during each calendar year. F participates in a section 403(b) annuity contract maintained by ABC Church beginning in the year 2008. The limitation year for the plan coincides with the calendar year. ABC Church contributes $10,000 to be allocated to F's account under the plan for the year 2008. F's adjusted gross income for each taxable year (determined separately and without regard to community property law) does not exceed $17,000.
(ii) Under paragraph (d)(1) of this section, this allocation is treated as not violating the limits established in paragraph (a)(1) of this section because it does not exceed $10,000. Moreover, since an annual addition of $10,000 would otherwise exceed the limitation of paragraph (a)(1) of this section by $7,000 (the excess of $10,000 over the greater of the $2,000 compensation limitation under section 415(c)(1)(B) or the $3,000 section 415(c)(7)(C) amount), XYZ Church may make such allocations for 5 years (for example, for years 2008 through 2012) without exceeding the aggregate limitation of $40,000 specified in paragraph (d) of this section. In year 2013, XYZ church may contribute $8,000 to be allocated to F's account under the plan (the sum of the $3,000 limitation computed under paragraph (d)(3) of this section and the remaining $5,000 of the $40,000 aggregate limitation under paragraph (d)(1)(ii) of this section on annual additions in excess of the limits under paragraph (a)(1) of this section). For years after 2013, pursuant to paragraph (d)(3) of this section, XYZ Church could allocate $3,000 per year to F's account.

(e) ***Special rules for medical benefits.*** The limit under paragraph (a)(1)(ii) of this section (100 percent of the participant's compensation for the limitation year) does not apply to—

(1) An individual medical benefit account (as defined in section 415(l)); or

(2) A post-retirement medical benefits account for a key employee (as defined in section 419A(d)(1)).

(f) *Special rules for employee stock ownership plans* —

(1) ***In general.*** Special rules apply to employee stock ownership plans, as provided in paragraphs (f)(2) through (f)(4) of this section.

(2) *Determination of annual additions for leveraged employee stock ownership plans* —

(i) ***In general.*** Except as provided in this paragraph (f) of this section, in the case of an employee stock ownership plan to which an exempt loan as described in § 54.4975-7(b) of this chapter has been made, the amount of employer contributions that is considered an annual addition for the limitation year is calculated with respect to employer contributions of both principal and interest used to repay that exempt loan for the limitation year.

(ii) ***Employer stock that has decreased in value.*** A plan may provide that, in lieu of computing annual additions in accordance with paragraph (f)(2)(i) of this section, annual additions with respect to a loan repayment described in paragraph (f)(2)(i) of this section are determined as the fair market value of shares released from the suspense account on account of the repayment and allocated to participants for the limitation year if that amount is less than the amount determined in accordance with paragraph (f)(2)(i) of this section.

(3) *Exclusions from annual additions for certain employee stock ownership plans that allocate to a broad range of participants* —

(i) ***General rule.*** Pursuant to section 415(c)(6), in the case of an employee stock ownership plan (as described in section 4975(e)(7)) that meets the requirements of paragraph (f)(3)(ii) of this section for a limitation year, the limitations imposed by this section do not apply to—

(A) Forfeitures of employer securities (within the meaning of section 409(l)) under such an employee stock ownership plan if such securities were acquired with the proceeds of a loan (as described in section 404(a)(9)(A)); or

(B) Employer contributions to such an employee stock ownership plan which are deductible under section 404(a)(9)(B) and charged against the participant's account.

(ii) ***Employee stock ownership plans to which the special exclusion applies.*** An employee stock ownership plan meets the requirements of this paragraph (f)(3)(ii) for a limitation year if no more than one-third of the employer contributions for the limitation year that are deductible under section 404(a)(9) are allocated to highly compensated employees (within the meaning of section 414(q)).

(4) ***Gratuitous transfers under section 664(g)(1).*** The amount of any qualified gratuitous transfer (as defined in section 664(g)(1)) allocated to a participant for any limitation year is not taken into account in determining whether any other annual addition exceeds the limitations imposed by this section, but only if the amount of the qualified gratuitous transfer does not exceed the limitations imposed by section 415.

[T.D. 9319, 72 FR 16911, Apr. 5, 2007]

§ 1.415(c)-2 Compensation.

(a) ***General definition.*** Except as otherwise provided in this section, *compensation from the employer within the meaning of section 415(c)(3), which is used for purposes of section 415 and regulations promulgated under section 415*, means all items of remuneration described in paragraph (b) of this section, but excludes the items of remuneration described in paragraph (c) of this section. Paragraph (d) of this section provides safe harbor definitions of compensation that are permitted to be provided in a plan in lieu of the generally applicable definition of compensation. Paragraph (e) of this section provides timing rules relating to compensation. Paragraph (f) of this section provides rules regarding the application of the rules of section 401(a)(17) to the definition of compensation for purposes of section 415. Paragraph (g) of this section provides special rules relating to the determination of compensation, including rules for determining compensation for a section 403(b) annuity contract, rules for determining the compensation of employees of controlled groups or affiliated service groups, rules for disabled employees, rules relating to foreign compensation, rules regarding deemed section 125 compensation, rules for employees in qualified military service, and rules relating to back pay.

(b) ***Items includible as compensation.*** For purposes of applying the limitations of section 415, except as otherwise provided in this section, the term *compensation* means remuneration for services of the following types—

(1) The employee's wages, salaries, fees for professional services, and other amounts received (without regard to whether or not an amount is paid in cash) for personal services actually rendered in the course of employment with the employer maintaining the plan, to the extent that the amounts are includible in gross income (or to the extent amounts would have been received and includible in gross income but for an election under section 125(a), 132(f)(4), 402(e)(3), 402(h)(1)(B), 402(k), or 457(b)). These amounts include, but are not limited to, commissions paid to salespersons, compensation for services on the basis of a percentage of profits, commissions on insurance premiums, tips, bonuses, fringe benefits, and reimbursements or other expense allowances under a nonaccountable plan as described in § 1.62-2(c).

(2) In the case of an employee who is an employee within the meaning of section 401(c)(1) and regulations promulgated under section 401(c)(1), the employee's earned income (as described in section 401(c)(2) and regulations promulgated under section 401(c)(2)), plus amounts deferred at the election of the employee that would be includible in gross income but for the rules of section 402(e)(3), 402(h)(1)(B), 402(k), or 457(b).

(3) Amounts described in section 104(a)(3), 105(a), or 105(h), but only to the extent that these amounts are includible in the gross income of the employee.

(4) Amounts paid or reimbursed by the employer for moving expenses incurred by an employee, but only to the extent that at the time of the payment it is reasonable to believe that these amounts are not deductible by the employee under section 217.

(5) The value of a nonstatutory option (which is an option other than a statutory option as defined in § 1.421-1(b)) granted to an employee by the employer, but only to the extent that the value of the option is includible in the gross income of the employee for the taxable year in which granted.

(6) The amount includible in the gross income of an employee upon making the election described in section 83(b).

(7) Amounts that are includible in the gross income of an employee under the rules of section 409A or section 457(f)(1)(A) or because the amounts are constructively received by the employee.

(c) ***Items not includible as compensation.*** The term *compensation* does not include—

(1) Contributions (other than elective contributions described in section 402(e)(3), section 408(k)(6), section 408(p)(2)(A)(i), or section 457(b)) made by the employer to a plan of deferred compensation (including a simplified employee pension described in section 408(k) or a simple retirement account described in section 408(p), and whether or not qualified) to the extent that the contributions are not includible in the gross income of the employee for the taxable year in which contributed. In addition, any distributions from a plan of deferred compensation (whether or not qualified) are not considered as compensation for section 415 purposes, regardless of whether such amounts are includible in the gross income of the employee when distributed. However, if the plan so provides, any amounts received by an employee pursuant to a nonqualified unfunded deferred compensation plan are permitted to be considered as compensation for section 415 purposes in the year the amounts are actually received, but only to the extent such amounts are includible in the employee's gross income.

(2) Amounts realized from the exercise of a nonstatutory option (which is an option other than a statutory option as defined in § 1.421-1(b)), or when restricted stock or other property held by an employee either becomes freely transferable or is no longer subject to a substantial risk of forfeiture (see section 83 and regulations promulgated under section 83).

(3) Amounts realized from the sale, exchange, or other disposition of stock acquired under a statutory stock option (as defined in § 1.421-1(b)).

(4) Other amounts that receive special tax benefits, such as premiums for group-term life insurance (but only to the extent that the premiums are not includible in the gross income of the employee and are not salary reduction amounts that are described in section 125).

(5) Other items of remuneration that are similar to any of the items listed in paragraphs (c)(1) through (c)(4) of this section.

(d) ***Safe harbor rules with respect to plan's definition of compensation*** —

(1) ***In general.*** Paragraphs (d)(2) through (4) of this section contain safe harbor definitions of compensation that are automatically considered to satisfy section 415(c)(3) if specified in the plan. The Commissioner may, in revenue rulings, notices, and other guidance of general applicability published in the Internal Revenue Bulletin (see § 601.601(d)(2) of this chapter), provide additional definitions of compensation that are treated as satisfying section 415(c)(3).

(2) ***Simplified compensation.*** The safe harbor definition of compensation under this paragraph (d)(2) includes only those items specified in paragraph (b)(1) or (2) of this section and excludes all those items listed in paragraph (c) of this section.

(3) ***Section 3401(a) wages.*** The safe harbor definition of compensation under this paragraph (d)(3) includes wages within the meaning of section 3401(a) (for purposes of income tax withholding at the source), plus amounts that would be included in wages but for an election under section 125(a), 132(f)(4), 402(e)(3), 402(h)(1)(B), 402(k), or 457(b). However, any rules that limit the remuneration included in wages based on the nature or location of the employment or the services performed (such as the exception for agricultural labor in section 3401(a)(2)) are disregarded for this purpose.

(4) ***Information required to be reported under sections 6041, 6051 and 6052.*** The safe harbor definition of compensation under this paragraph (d)(4) includes amounts that are compensation under the safe harbor definition of paragraph (d)(3) of this section, plus all other payments of compensation to an employee by his employer (in the course of the employer's trade or business) for which the employer

is required to furnish the employee a written statement under sections 6041(d), 6051(a)(3), and 6052. See §§ 1.6041-1(a), 1.6041-2(a)(1), 1.6052-1, and 1.6052-2, and also see § 31.6051-1(a)(1)(i)(C) of this chapter. This safe harbor definition of compensation may be modified to exclude amounts paid or reimbursed by the employer for moving expenses incurred by an employee, but only to the extent that, at the time of the payment, it is reasonable to believe that these amounts are deductible by the employee under section 217.

(e) *Timing rules* —

(1) *In general* —

(i) ***Payment during the limitation year.*** Except as otherwise provided in this paragraph (e), in order to be taken into account for a limitation year, compensation within the meaning of section 415(c)(3) must be actually paid or made available to an employee (or, if earlier, includible in the gross income of the employee) within the limitation year. For this purpose, compensation is treated as paid on a date if it is actually paid on that date or it would have been paid on that date but for an election under section 125, 132(f)(4), 401(k), 403(b), 408(k), 408(p)(2)(A)(i), or 457(b).

(ii) ***Payment prior to severance from employment.*** Except as otherwise provided in this paragraph (e), in order to be taken into account for a limitation year, compensation within the meaning of section 415(c)(3) must be paid or treated as paid to the employee (in accordance with the rules of paragraph (e)(1)(i) of this section) prior to the employee's severance from employment with the employer maintaining the plan. See § 1.415(a)-1(f)(5) for the definition of severance from employment.

(2) ***Certain minor timing differences.*** Notwithstanding the provisions of paragraph (e)(1)(i) of this section, a plan may provide that compensation for a limitation year includes amounts earned during that limitation year but not paid during that limitation year solely because of the timing of pay periods and pay dates if—

(i) These amounts are paid during the first few weeks of the next limitation year;

(ii) The amounts are included on a uniform and consistent basis with respect to all similarly situated employees; and

(iii) No compensation is included in more than one limitation year.

(3) *Compensation paid after severance from employment* —

(i) ***In general.*** Any compensation described in paragraph (e)(3)(ii) of this section does not fail to be compensation (within the meaning of section 415(c)(3)) pursuant to the rule of paragraph (e)(1)(ii) of this section merely because it is paid after the employee's severance from employment with the employer maintaining the plan, provided the compensation is paid by the later of $2^1/_2$ months after severance from employment with the employer maintaining the plan or the end of the limitation year that includes the date of severance from employment with the employer maintaining the plan. In addition, the plan may provide that amounts described in paragraph (e)(3)(iii) of this section are included in compensation (within the meaning of section 415(c)(3)) if—

(A) Those amounts are paid by the later of $2^1/_2$ months after severance from employment with the employer maintaining the plan or the end of the limitation year that includes the date of severance from employment with the employer maintaining the plan; and

(B) Those amounts would have been included in the definition of compensation if they were paid prior to the employee's severance from employment with the employer maintaining the plan.

(ii) ***Regular pay after severance from employment.*** An amount is described in this paragraph (e)(3)(ii) if—

(A) The payment is regular compensation for services during the employee's regular working hours, or compensation for services outside the employee's regular working hours (such as overtime or shift differential), commissions, bonuses, or other similar payments; and

(B) The payment would have been paid to the employee prior to a severance from employment if the employee had continued in employment with the employer.

(iii) ***Leave cashouts and deferred compensation.*** An amount is described in this paragraph (e)(3)(iii) if the amount is either—

(A) Payment for unused accrued bona fide sick, vacation, or other leave, but only if the employee would have been able to use the leave if employment had continued; or

(B) Received by an employee pursuant to a nonqualified unfunded deferred compensation plan, but only if the payment would have been paid to the employee at the same time if the employee had continued in employment with the employer and only to the extent that the payment is includible in the employee's gross income.

(iv) ***Other post-severance payments.*** Any payment that is not described in paragraph (e)(3)(ii) or (iii) of this section is not considered compensation under paragraph (e)(3)(i) of this section if paid after severance from employment with the employer maintaining the plan, even if it is paid within the time period described in paragraph (e)(3)(i) of this section. Thus, compensation does not include severance pay, or parachute payments within the meaning of section 280G(b)(2), if they are paid after severance from employment with the employer maintaining the plan, and does not include post-severance payments under a nonqualified unfunded deferred compensation plan unless the payments would have been paid at that time without regard to the severance from employment.

(4) ***Salary continuation payments for military service and disabled participants.*** The rule of paragraph (e)(1)(ii) of this section does not apply to payments to an individual who does not currently perform services for the employer by reason of qualified military service (as that term is used in section 414(u)(1)) to the extent those payments do not exceed the amounts the individual would have received if the individual had continued to perform services for the employer rather than entering qualified military service, but only if the plan so provides. In addition, the rule of paragraph (e)(1)(ii) of this section does not apply to compensation paid to a participant who is permanently and totally disabled (as defined in section 22(e)(3)) if the conditions set forth in paragraph (g)(4)(ii)(A) of this section are satisfied (applied by substituting a continuation of compensation for the continuation of contributions), but only if the plan so provides.

(5) ***Special rule for governmental plans.*** For purposes of applying the rules of paragraph (e)(3) of this section, a governmental plan (as defined in section 414(d)) may provide for the substitution of the calendar year in which the severance from employment with the employer maintaining the plan occurs for the limitation year in which the severance from employment with the employer maintaining the plan occurs.

(6) ***Examples.*** The provisions of this paragraph (e) are illustrated by the following examples:

> *Example 1.* (i) *Facts.* Participant A was a common law employee of Employer X, performing services as a script writer for Employer X from January 1, 2005 to December 31, 2005. Pursuant to a collective bargaining agreement, Employer X, Employer Y and Employer Z maintain and contribute to Plan T, a multiemployer plan (as defined in section 414(f)) in which Participant A participates. Under the collective bargaining agreement, Participant A is entitled to residual payments whenever television shows that Participant A wrote are re-used commercially (These residual payments constitute compensation described in paragraph (b) of this section and do not constitute compensation described in paragraph (c) of this section.). In the year 2008, Participant A receives residual payments from Employer X for television programs using the scripts that Participant A wrote in the year 2005 that were rebroadcast in the year 2008. In the years 2006, 2007, and 2008, Participant A was a common law employee of Employer Y, and did not perform any services for Employer X.
> (ii) *Conclusion.* The residual payments received from Employer X by Participant A in the year 2008 are compensation for purposes of section 415(c)(3). The payments are not treated as made after severance from employment because Plan T is a multiemployer plan (as defined in section 414(f)) and Participant A continues to be employed by an employer maintaining Plan T.

> *Example 2.* (i) *Facts.* The facts are the same as in *Example 1*, except that Participant A: ceased employment with Employer Y in the year 2006; subsequently moved away from the area in which A formerly worked; performs no services as an employee for any employer; and commenced receiving distributions under Plan T in March, 2006.
> (ii) *Conclusion.* Based on the facts and circumstances, A has ceased employment with any employer maintaining Plan T. Pursuant to paragraph (e)(1)(ii) of this section, compensation must be paid prior to an employee's severance from employment with the employer maintaining the plan. Accordingly, the residual payments received by Participant A in the year 2008 are not compensation for purposes of section 415(c)(3).

(f) ***Interaction with section 401(a)(17).*** Because a plan may not base allocations (in the case of a defined contribution plan) or benefits (in the case of a defined benefit plan) on compensation in excess of the limitation under section 401(a)(17), a plan's definition of compensation for a year that is used for purposes of applying the limitations of section 415 is not permitted to reflect compensation for a year that is in excess of the limitation under section 401(a)(17) that applies to that year. See §§ 1.401(a)(17)-1(a)(3)(i) and 1.401(a)(17)-1(b)(3)(ii) for rules regarding the effective date of increases in the section 401(a)(17) compensation limitation for a plan year and for a 12-month period other than the plan year.

(g) ***Special rules —***

(1) ***Compensation for section 403(b) annuity contract.*** In the case of an annuity contract described in section 403(b), the term *participant's compensation* means the participant's includible compensation determined under section 403(b)(3). Accordingly, the rules for determining a participant's compensation pursuant to section 415(c)(3) (other than section 415(c)(3)(E)) and this section do not apply to a section 403(b) annuity contract.

(2) ***Employees of controlled groups of corporations, etc.*** In the case of an employee of two or more corporations which are members of a controlled group of corporations (as defined in section 414(b) as modified by section 415(h)), the term *compensation* for such employee includes compensation from all employers that are members of the group, regardless of whether the employee's particular employer has a qualified plan. This special rule is also applicable to an employee of two or more trades or businesses (whether or not incorporated) that are under common control (as defined in section 414(c) as modified by section 415(h)), to an employee of two or more members of an affiliated service group as defined in section 414(m), and to an employee of two or more members of any group of employers who must be aggregated and treated as one employer pursuant to section 414(o).

(3) ***Aggregation of section 403(b) annuity with qualified plan of controlled employer.*** If a section 403(b) annuity contract is aggregated with a qualified plan of a controlled employer in accordance with § 1.415(f)-1(f)(2), then, in applying the limitations of section 415(c) in connection with the aggregation of the section 403(b) annuity with a qualified plan, the total compensation from both employers is permitted to be taken into account.

(4) ***Permanent and total disability of defined contribution plan participant*** —

(i) ***In general.*** Pursuant to section 415(c)(3)(C), if the conditions set forth in paragraph (g)(4)(ii) of this section are satisfied, then, in the case of a participant in any defined contribution plan who is permanently and totally disabled (as defined in section 22(e)(3)), the *participant's compensation* means the compensation the participant would have received for the year if the participant was paid at the rate of compensation paid immediately before becoming permanently and totally disabled, if such compensation is greater than the participant's compensation determined without regard to this paragraph (g)(4).

(ii) ***Conditions for deemed disability compensation.*** The rule of paragraph (g)(4)(i) of this section applies only if the following conditions are satisfied—

(A) Either the participant is not a highly compensated employee (as defined in section 414(q)) immediately before becoming disabled, or the plan provides for the continuation of contributions on behalf of all participants who are permanently and totally disabled for a fixed or determinable period;

(B) The plan provides that the rule of this paragraph (g)(4) (treating certain amounts as compensation for a disabled participant) applies with respect to the participant; and

(C) Contributions made with respect to amounts treated as compensation under this paragraph (g)(4) are nonforfeitable when made.

(5) ***Foreign compensation, etc.*** —

(i) ***In general.*** Amounts paid to an individual as compensation for services do not fail to be treated as compensation under paragraphs (b)(1) and (2) of this section (and are not excluded from the definition of compensation pursuant to paragraph (c)(4) of this section) merely because

those amounts are not includible in the individual's gross income on account of the location of the services. Similarly, compensation for services do not fail to be treated as compensation under paragraphs (b)(1) and (2) of this section (and are not excluded from the definition of compensation pursuant to paragraph (c)(4) of this section) merely because those amounts are paid by an employer with respect to which all compensation paid to the participant by such employer is excluded from gross income. Thus, for example, the determination of whether an amount is treated as compensation under paragraph (b)(1) or (2) of this section is made without regard to the exclusions from gross income under sections 872, 893, 894, 911, 931, and 933.

(ii) ***Exclusion of non-participant compensation by the plan.*** With respect to a nonresident alien who is not a participant in a plan, the plan may provide that the compensation described in paragraph (g)(5)(i) of this section is not treated as compensation for purposes of paragraphs (b)(1) and (b)(2) of this section to the extent the compensation is excludable from gross income and is not effectively connected with the conduct of a trade or business within the United States, but only if the plan applies this rule uniformly to all such employees. For purposes of this paragraph (g)(5)(ii), nonresident alien has the same meaning as in section 7701(b)(1)(B).

(6) ***Deemed section 125 compensation*** —

(i) ***General rule.*** A plan is permitted to provide that deemed section 125 compensation (as defined in paragraph (g)(6)(ii) of this section) is compensation within the meaning of section 415(c)(3), but only if the plan applies this rule uniformly to all employees with respect to whom amounts subject to section 125 are included in compensation.

(ii) ***Definition of deemed section 125 compensation.*** Deemed section 125 compensation is an amount that is excludable from the income of the participant under section 106 that is not available to the participant in cash in lieu of group health coverage under a section 125 arrangement solely because that participant is not able to certify that the participant has other health coverage. Under this definition, amounts are deemed section 125 compensation only if the employer does not otherwise request or collect information regarding the participant's other health coverage as part of the enrollment process for the health plan.

(7) ***Employees in qualified military service.*** See section 414(u)(7) for special rules regarding compensation of employees who are in qualified military service within the meaning of section 414(u)(5).

(8) ***Back pay.*** Payments awarded by an administrative agency or court or pursuant to a bona fide agreement by an employer to compensate an employee for lost wages are compensation within the meaning of section 415(c)(3) for the limitation year to which the back pay relates, but only to the extent such payments represent wages and compensation that would otherwise be included in compensation under this section.

[T.D. 9319, 72 FR 16916, Apr. 5, 2007]

§ 1.415(d)-1 Cost-of-living adjustments.

(a) ***Defined benefit plans*** —

(1) ***Dollar limitation*** —

(i) ***Determination of adjusted limit.*** Under section 415(d)(1)(A), the dollar limitation described in section 415(b)(1)(A) applicable to defined benefit plans is adjusted annually to take into account increases in the cost of living. The adjustment of the dollar limitation is made by multiplying the adjustment factor for the year, as described in paragraph (a)(1)(ii)(A) of this section, by $160,000, and rounding the result in accordance with paragraph (a)(1)(iii) of this section. The adjusted dollar limitation is prescribed by the Commissioner and published in the Internal Revenue Bulletin. See § 601.601(d)(2) of this chapter.

(ii) ***Determination of adjustment factor*** —

(A) ***Adjustment factor.*** The adjustment factor for a calendar year is equal to a fraction, the numerator of which is the value of the applicable index for the calendar quarter ending September 30 of the preceding calendar year, and the denominator of which is the value of such index for the base period. The applicable index is determined consistent with the procedures used to adjust benefit amounts under section 215(i)(2)(A) of the Social Security Act, Public Law 92-336 (86 Stat. 406), as amended. If, however, the value of that fraction is less than one for a calendar year, then the adjustment factor for the calendar year is equal to one.

(B) ***Base period.*** For the purpose of adjusting the dollar limitation pursuant to paragraph (a)(1)(ii)(A) of this section, the base period is the calendar quarter beginning July 1, 2001.

(iii) ***Rounding.*** Any increase in the $160,000 amount specified in section 415(b)(1)(A) which is not a multiple of $5,000 is rounded to the next lowest multiple of $5,000.

(2) ***Average compensation for high-3 years of service limitation*** —

(i) ***Determination of adjusted limit.*** Under section 415(d)(1)(B), with regard to participants who have had a severance from employment with the employer maintaining the plan, the compensation limitation described in section 415(b)(1)(B) is permitted to be adjusted annually to take into account increases in the cost of living. For any limitation year beginning after the severance occurs, the adjustment of the compensation limitation is made by multiplying the annual adjustment factor (as defined in paragraph (a)(2)(ii) of this section) by the compensation limitation applicable to the participant in the prior limitation year. The annual adjustment factor is prescribed by the Commissioner and published in the Internal Revenue Bulletin. See § 601.601(d)(2) of this chapter.

(ii) ***Annual adjustment factor.*** The annual adjustment factor for a calendar year is equal to a fraction, the numerator of which is the value of the applicable index for the calendar quarter ending September 30 of the preceding calendar year, and the denominator of which is the value of such index for the calendar quarter ending September 30 of the calendar year prior to that preceding calendar year. The applicable index is determined consistent with the procedures used to adjust benefit amounts under section 215(i)(2)(A) of the Social Security Act. If the value of the fraction described in the first sentence of this paragraph (a)(2)(ii) is less than one for a calendar year, then the adjustment factor for the calendar year is equal to one. In such a case, the annual adjustment factor for future calendar years will be determined in accordance with revenue rulings, notices, or other published guidance prescribed by the Commissioner and published in the Internal Revenue Bulletin. See § 601.601(d)(2) of this chapter.

(iii) ***Special rule for rehired employees.*** If, after having a severance from employment with the employer maintaining the plan, an employee is rehired by the employer maintaining the plan, the employee's compensation limit under section 415(b)(1)(B) is the greater of—

(A) 100 percent of the participant's average compensation for the period of the participant's high-3 years of service, as determined prior to the employee's severance from employment with the employer maintaining the plan, as adjusted pursuant to paragraph (a)(2)(i) of this section (if the plan so provides); or

(B) 100 percent of the participant's average compensation for the period of the participant's high-3 years of service, with the period of the participant's high-3 years of service determined pursuant to § 1.415(b)-1(a)(5)(iii).

(3) ***Effective date of adjustment.*** The adjusted dollar limitation applicable to defined benefit plans and the adjusted compensation limit applicable to a participant are effective as of January 1 of each calendar year and apply with respect to limitation years ending with or within that calendar year. However, benefit payments (and, in the case of plans that are subject to the requirements of section 411, accrued benefits for a limitation year) cannot exceed the currently applicable dollar limitation or compensation limitation (as in effect before the January 1 adjustment) prior to January 1. Thus, where there is an increase in the limitation under section 415(b)(1), any increase in a participant's benefits associated with the limitation increase is permitted to occur as of a date no earlier than January 1 of the calendar year for which the increase in the limitation is effective, and can only be applied for payments due on or after January 1 of such calendar year. For example, assume that a participant in a defined benefit plan is currently receiving a benefit in the form of a straight life annuity, payable monthly, in an amount equal to the section 415(b)(1)(A) dollar limit, and the defined benefit plan has a limitation year that runs from July 1 to June 30. If the plan is amended to reflect the section 415(d) increase to the section 415(b)(1)(A) dollar limit that is effective as of January 1, 2009, the associated increase in the participant's monthly benefit payments is only effective for payments due on or after January 1, 2009, and the participant's benefit cannot be increased to reflect the section 415(d) increase that is effective January 1, 2009, with respect to any monthly payment due prior to January 1, 2009.

(4) ***Application of adjusted figure*** —

(i) ***In general.*** If the dollar limitation of section 415(b)(1)(A) or the compensation limitation of section 415(b)(1)(B) is adjusted pursuant to section 415(d) for a limitation year, the adjustment is applied as provided in this paragraph (a)(4).

(ii) ***Application of adjusted limitations to benefits that have not commenced.*** An adjustment to the dollar limitation of section 415(b)(1)(A) is permitted to be applied to a participant who has not commenced benefits before the date on which the adjustment is effective. Annual adjustments to the compensation limit of section 415(b)(1)(B) as described in paragraph (a)(2) of this section are permitted to be made for all limitation years that begin after the participant's severance from employment, and apply to distributions that commence after the effective dates of such adjustments. However, no adjustment to the compensation limit of section 415(b)(1)(B) is made for any limitation year that begins on or before the date of the participant's severance from employment with the employer maintaining the plan.

(iii) ***Application of adjusted dollar limitation to remaining payments under benefits that have commenced.*** With respect to a distribution of accrued benefits that commenced before the date on which an adjustment to the section 415(b)(1)(A) dollar limitation is effective, a plan is permitted to apply the adjusted limitations to that distribution, but only to the extent that benefits have not been paid. Thus, for example, a plan cannot provide that the adjusted dollar limitation applies to a participant who has previously received the entire plan benefit in a single-sum distribution. However, a plan can provide for an increase in benefits to a participant who

accrues additional benefits under the plan that could have been accrued without regard to the adjustment of the dollar limitation (including benefits that accrue as a result of a plan amendment) on or after the effective date of the adjusted limitation.

(iv) ***Manner of adjustment for benefits that have commenced.*** If a plan is amended to increase benefits payable under the plan in accordance with paragraphs (a)(5) or (a)(6) of this section (or the plan is treated as applying paragraph (a)(5) of this section because the plan incorporates the section 415(d) cost-of-living adjustments automatically by reference pursuant to § 1.415(a)-1(d)(3)(v)), or if benefits payable under the plan are increased pursuant to a form of benefit that is described in § 1.415(b)-1(c)(5), then the distribution as increased will be treated as continuing to satisfy the requirements of section 415(b). If benefits payable under a plan are increased in a manner other than as described in the preceding sentence, the plan must satisfy the requirements of § 1.415(b)-1(b)(1)(iii), treating the commencement of the additional benefit as the commencement of a new distribution that gives rise to a new annuity starting date.

(5) ***Safe harbor for annual adjustments to distributions.*** An amendment to a plan to incorporate adjustments to the section 415(b) limits that increases a distribution that has previously commenced is described in this paragraph (a)(5) if—

(i) The employee has received one or more distributions that satisfy the requirements of section 415(b) before the date the adjustment to the applicable limits is effective (as determined under paragraph (a)(3) of this section);

(ii) The increased distribution is solely as a result of the amendment of the plan to reflect the adjustment to the applicable limits pursuant to section 415(d); and

(iii) The amounts payable to the employee on and after the effective date of the adjustment (as determined under paragraph (a)(3) of this section) are not greater than the amounts that would otherwise be payable without regard to the adjustment, multiplied by a fraction determined for the limitation year, the numerator of which is the limitation under section 415(b) (which is the lesser of the applicable dollar limitation under section 415(b)(1)(A), as adjusted for age at commencement, and the applicable compensation-based limitation under section 415(b)(1)(B)) in effect with respect to the distribution taking into account the section 415(d) adjustment, and the denominator of which is the limitation under section 415(b) in effect for the distribution immediately before the adjustment.

(6) ***Safe harbor for periodic adjustments to distributions*** —

(i) ***General rule.*** An amendment to a plan that increases a distribution that has previously commenced is made using the safe harbor methodology of this paragraph (a)(6) if—

(A) The employee has received one or more distributions that satisfy the requirements of section 415(b) before the date on which the increase is effective; and

(B) The amounts payable to the employee on and after the effective date of the increase are not greater than the amounts that would otherwise be payable without regard to the increase, multiplied by the cumulative adjustment fraction.

(ii) ***Cumulative adjustment fraction.*** The cumulative adjustment fraction for purposes of this paragraph (a)(6) is equal to the product of all of the fractions described in paragraph (a)(5)(iii) of this section that would have applied after benefits commence if the plan had been amended

each year to incorporate the section 415(d) adjustments to the applicable section 415(b) limits and had otherwise satisfied the safe harbor methodology described in paragraph (a)(5) of this section. For purposes of the preceding sentence, if for the limitation year for which the increase to the section 415(b)(1)(A) dollar limitation pursuant to section 611(a)(1)(A) of the Economic Growth and Tax Relief Reconciliation Act of 2001 (115 Stat. 38), Public Law 107-16 (EGTRRA), is first effective (generally, the first limitation year beginning after December 31, 2001), the section 415(b)(1)(A) dollar limit applicable to a participant is less than the section 415(b)(1)(B) compensation limit for the participant, then the fraction described in paragraph (a)(5)(iii) of this section for that limitation year is 1.0.

(7) ***Examples.*** The following examples illustrate the application of this paragraph (a):

Example 1. (i) X is a participant in a qualified defined benefit plan maintained by X's employer. The plan has a calendar year limitation year. Under the terms of the plan, X is entitled to a benefit consisting of a straight life annuity equal to 100 percent of X's average compensation for the period of X's high-3 years of service. X's average compensation for the period of X's high-3 years of service is $50,000. X incurs a severance from employment with the employer maintaining the plan on October 3, 2007, at age 65 with a nonforfeitable right to the accrued benefit after more than 10 years of participation in the plan. X begins to receive annual benefit payments (payable monthly) of $50,000, commencing on November 1, 2007. The dollar limitation for the 2007 limitation year (as adjusted pursuant to section 415(d)) is $180,000. Assume that the dollar limitation for the 2008 limitation year (as adjusted pursuant to section 415(d)) is $185,000 and the annual adjustment factor for adjusting the compensation limitation of section 415(b)(1)(B) for the 2008 limitation year is 1.0334. Effective January 1, 2008, the plan is amended to incorporate these adjustments to the dollar and compensation limitations, and accordingly, X's annual benefit payment is increased, effective for payments due on or after January 1, 2008. Prior to the plan amendment incorporating the application of the adjusted dollar and compensation limitations, X has received one or more distributions that satisfy the requirements of section 415(b). In addition, the adjustment to X's annual benefit payments is solely on account of the plan amendment incorporating the adjusted limitations.
(ii) For the limitation year beginning January 1, 2008, the dollar limit applicable to X under section 415(b)(1)(A) is $185,000, and the compensation limit applicable to X under section 415(b)(1)(B) is $51,670 ($50,000 multiplied by the annual adjustment factor of 1.0334). Accordingly, the adjustment to X's benefit satisfies the safe harbor for cost-of-living adjustments under paragraph (a)(5) of this section if, after the adjustment, X's benefit payable in the 2008 limitation year is no greater than $50,000 multiplied by $51,670 (X's section 415(b) limitation for 2008)/$50,000 (X's section 415(b) limitation for 2007).

Example 2. (i) The facts are the same as in *Example 1,* except that X's average compensation for the period of X's high-3 consecutive years of service is $200,000. Consequently, X's annual benefit payments commencing on November 1, 2007, are limited to

$180,000.
(ii) For the limitation year beginning January 1, 2008, the dollar limit applicable to X under section 415(b)(1)(A) is $185,000, and the compensation limit applicable to X under section 415(b)(1)(B) is $206,680 ($200,000 multiplied by the annual adjustment factor of 1.0334). Accordingly, the adjustment to X's benefit satisfies the safe harbor for cost-of-living adjustments under paragraph (a)(5) of this section if, after the adjustment, X's benefit payable in 2008 is no greater than $180,000 multiplied by $185,000 (X's section 415(b) limitation for 2008)/$180,000 (X's section 415(b) limitation for 2007).

Example 3. (i) X is a participant in Plan T, a qualified defined benefit plan maintained by X's employer. In the year 2008, X receives a single-sum distribution of X's entire accrued benefit under the plan. At the time that X receives the single-sum distribution, X's accrued benefit under Plan T is limited by the section 415(b)(1)(A) age-adjusted dollar limit. X accrues no further benefits under Plan T after X receives the single-sum distribution. In the 2009 limitation year, pursuant to section 415(d) and § 1.415(d)-1, the section 415(b)(1)(A) dollar limit is increased.
(ii) In the 2009 limitation year, Plan T may not provide additional benefits to X on account of the increase in the section 415(b)(1)(A) dollar limit pursuant to section 415(d) and § 1.415(d)-1.

Example 4. (i) X is a participant in Plan T, a qualified defined benefit plan maintained by X's employer, Employer S. Plan T has a calendar limitation year. In 2008, X incurs a severance from employment with Employer S and X commences receiving distributions from Plan T in the form of a single life annuity in an annual amount of $30,000. At the time that X commences receiving distributions from Plan T, X's accrued benefit under Plan T is limited by the section 415(b)(1)(B) compensation limit. In 2009, the annual adjustment factor described in paragraph (a)(2) of this section (which is the factor for adjusting the compensation limit described in section 415(b)(1)(B)) is 1.03. Employer S amends Plan T, effective as of January 1, 2009, to increase the annual benefit of all participants who, prior to January 1, 2009, incurred a severance from employment with Employer S and who have commenced receiving benefits from Plan T by a factor of 1.015. Assume that for limitation years prior to 2009, X's distributions from Plan T satisfy the requirements of section 415(b).
(ii) The increase in X's annual benefit pursuant to the amendment effective January 1, 2009, is within the safe harbor described in paragraph (a)(6) of this section. This is because the amount payable to X under Plan T for the 2009 limitation year and limitation years thereafter (as increased by the amendment effective January 1, 2009) is not greater than the product of the amount payable to X under Plan T for such limitation years (as determined without regard to the amendment increasing X's benefit effective January 1, 2009) and the cumulative adjustment fraction (which, in X's case, is 1.03). Thus, X's annual benefit, as increased by the amendment, is not determined pursuant to the rules of § 1.415(b)-1(b)(1)(iii).

Example 5. (i) Participant P participated in Plan A, maintained by Employer M, for more than 10 years. Plan A uses a calendar year limitation year and Plan A automatically adjusts a participant's section 415(b)(1)(B) compensation limit for limitation years after the limitation year in which the participant incurs a severance from employment as described in § 1.415(a)-1(d)(3)(v). Prior to separating from employment with M in 2010, P's average compensation for P's period of high-3 years while a participant in Plan A is $50,000, based on P's compensation for 2007, 2008, and 2009, which was $50,000 for each year. P's compensation for year 2010 was $45,000. In year 2012, P is rehired by M and resumes participation in Plan A. P's compensation in year 2012 is $45,000, and is $70,000 in year 2013. Assume that the annual adjustment factor described in § 1.415(d)-1(a)(2)(ii) for the limitation years 2011 through 2013 is 1.03 for each year. Thus, disregarding P's rehire by M, P's average compensation for P's period of high-3 years while a participant in Plan A for the 2013 limitation year would be equal to $54,636 (or 1.03 * 1.03 * 1.03 * $50,000). See § 1.415(b)-1(a)(5)(iii).
(ii) Under § 1.415(d)-1(a)(2)(iii), P's average compensation for P's period of high-3 years while a participant in Plan A for the 2013 limitation year is $54,636.

(b) ***Defined contribution plans*** —

(1) ***In general.*** Under section 415(d)(1)(C), the dollar limitation described in section 415(c)(1)(A) is adjusted annually to take into account increases in the cost of living. The adjusted dollar limitation is prescribed by the Commissioner and published in the Internal Revenue Bulletin. See § 601.601(d)(2) of this chapter.

(2) ***Determination of adjusted limit*** —

(i) ***Base period.*** The base period taken into account for purposes of adjusting the dollar limitation pursuant to paragraph (b)(2)(ii) of this section is the calendar quarter beginning July 1, 2001.

(ii) ***Method of adjustment*** —

(A) ***In general.*** The dollar limitation is adjusted with respect to a calendar year based on the increase in the applicable index for the calendar quarter ending September 30 of the preceding calendar year over such index for the base period. Adjustment procedures similar to the procedures used to adjust benefit amounts under section 215(i)(2)(A) of the Social Security Act will be used.

(B) ***Rounding.*** Any increase in the $40,000 amount specified in section 415(c)(1)(A) which is not a multiple of $1,000 shall be rounded to the next lowest multiple of $1,000.

(iii) ***Effective date of adjustment.*** The adjusted dollar limitation applicable to defined contribution plans is effective as of January 1 of each calendar year and applies with respect to limitation years ending with or within that calendar year. Annual additions for a limitation year cannot exceed the currently applicable dollar limitation (as in effect before the January 1 adjustment) prior to January 1. However, after a January 1 adjustment is made, annual additions for the entire limitation year are permitted to reflect the dollar limitation as adjusted on January 1.

(c) ***Application of rounding rules to other cost-of-living adjustments.*** Pursuant to section 415(d)(4)(A), the $5,000 rounding methodology of paragraph (a)(1)(iii) of this section is used for purposes of any provision of chapter 1 of subtitle A of the Internal Revenue Code that provides for adjustments in accordance with section 415(d), except to the extent provided by that provision. Thus, the $5,000 rounding methodology of paragraph (a)(1)(iii) of this section is used for purposes of—

(1) Determining the level of compensation specified in section 414(q)(1)(B) that is used to determine whether an employee is a highly compensated employee;

(2) Calculating the amounts used pursuant to section 409(o)(1)(C) to determine the maximum period over which distributions from an employee stock ownership plan may be made without participant consent; and

(3) Determining the levels of compensation specified in § 1.61-21(f)(5)(i) and (iii) used in determining whether an employee is a control employee of a nongovernmental employer for purposes of the commuting valuation rule of § 1.61-21(f).

(d) ***Implementation of cost-of-living adjustments.*** A plan is permitted to be amended to reflect any of the adjustments described in this section at any time after those limitations become applicable. Alternatively, a plan is permitted to incorporate by reference any of the adjustments described in this section in accordance with the rules of § 1.415(a)-1(d)(3)(v). Because the accrued benefit of a participant can reflect increases in the applicable limitations only after those increases become effective, a pattern of repeated plan amendments increasing annual benefits to reflect the increases in the section 415(b) limitations pursuant to section 415(d) does not result in any protection under section 411(d)(6) for future increases to reflect increases in the section 415(b) limitations pursuant to § 1.411(d)-4, Q&A-1(c)(1). Thus, a plan does not violate the requirements of section 411(d)(6) merely because the plan has been amended annually for a number of years to increase annual benefits to reflect the increases in the section 415(b) limitations pursuant to section 415(d) and subsequently is not amended to reflect later increases in the section 415(b) limitations.

[T.D. 9319, 72 FR 16919, Apr. 5, 2007]

§ 1.415(f)-1 Aggregating plans.

(a) ***In general.*** Except as provided in paragraph (g) of this section (regarding multiemployer plans), and taking into account the rules of paragraph (b)(2) (regarding the break-up of affiliated employers and affiliated service groups), paragraph (c) (regarding predecessor employers), and paragraph (d)(1) (regarding nonduplication rules) of this section, section 415(f) and this section require that for purposes of applying the limitations of sections 415(b) and (c) applicable to a participant for a particular limitation year—

(1) All defined benefit plans (without regard to whether a plan has been terminated) ever maintained by the employer (or a predecessor employer within the meaning of paragraphs (c)(1) and (c)(2) of this section) under which the participant has accrued a benefit are treated as one defined benefit plan;

(2) All defined contribution plans (without regard to whether a plan has been terminated) ever maintained by the employer (or a predecessor employer within the meaning of paragraphs (c)(1) and (c)(2) of this section) under which the participant receives annual additions are treated as one defined contribution plan; and

(3) All section 403(b) annuity contracts purchased by an employer (including plans purchased through salary reduction contributions) for the participant are treated as one section 403(b) annuity contract.

(b) ***Affiliated employers, affiliated service groups, and leased employees*** —

(1) ***General rule.*** See § 1.415(a)-1(f)(1) and (2) for rules regarding aggregation of employers in the case of affiliated employers and affiliated service groups. See § 1.415(a)-1(f)(3) for rules regarding the treatment of leased employees.

(2) ***Special rule in the case of the break-up of an affiliated employer or an affiliated service group*** —

(i) ***In general.*** A formerly affiliated plan of an employer is taken into account for purposes of applying paragraph (a) of this section to the employer, but the formerly affiliated plan is treated as if it had terminated immediately prior to the cessation of affiliation with sufficient assets to pay benefit liabilities under the plan, and had purchased annuities to provide plan benefits. See § 1.415(b)-1(b)(5)(i) for rules determining annual benefits under a terminated defined benefit plan under which annuities are purchased to provide plan benefits.

(ii) ***Definitions.*** For purposes of this paragraph (b)(2), a *formerly affiliated plan of an employer* is a plan that, immediately prior to the cessation of affiliation, was actually maintained by one or more of the entities that constitute the employer (as determined under the employer affiliation rules described in § 1.415(a)-1(f)(1) and (2)), and immediately after the cessation of affiliation, is not actually maintained by any of the entities that constitute the employer (as determined under the employer affiliation rules described in § 1.415(a)-1(f)(1) and (2)). For purposes of this paragraph (b)(2), a *cessation of affiliation* means the event that causes an entity to no longer be aggregated with one or more other entities as a single employer under the employer affiliation rules described in § 1.415(a)-1(f)(1) and (2) (such as the sale of a subsidiary outside a controlled group), or that causes a plan to not actually be maintained by any of the entities that constitute the employer under the employer affiliation rules of § 1.415(a)-1(f)(1) and (2) (such as a transfer of plan sponsorship outside of a controlled group).

(c) ***Predecessor employer*** —

(1) ***Where plan is maintained by successor.*** For purposes of section 415 and regulations promulgated under section 415, a former employer is a predecessor employer with respect to a participant in a plan maintained by an employer if the employer maintains a plan under which the participant had accrued a benefit while performing services for the former employer (for example, the employer assumed sponsorship of the former employer's plan, or the employer's plan received a transfer of benefits from the former employer's plan), but only if that benefit is provided under the plan maintained by the employer. In such a case, in applying the limitations of section 415 to a participant in a plan maintained by the employer, paragraph (a) of this section requires the plan to take into account benefits provided to the participant under plans that are maintained by the predecessor employer and that are not maintained by the employer. For this purpose, the formerly affiliated plan rules in paragraph (b)(2) of this section apply as if the employer and predecessor employer constituted a single employer under the rules described in § 1.415(a)-1(f)(1) and (2) immediately prior to the cessation of affiliation (and as if they constituted two, unrelated employers under the rules described in § 1.415(a)-1(f)(1) and (2) immediately after the cessation of affiliation) and cessation of affiliation was the event that gives rise to the predecessor employer relationship, such as a transfer of benefits or plan sponsorship.

(2) ***Where plan is not maintained by successor.*** With respect to an employer of a participant, a former entity that antedates the employer is a predecessor employer with respect to the participant if, under the facts and circumstances, the employer constitutes a continuation of all or a portion of the trade or business of the former entity. This will occur, for example, where formation of the employer

constitutes a mere formal or technical change in the employment relationship and continuity otherwise exists in the substance and administration of the business operations of the former entity and the employer.

(d) *Special rules* —

(1) ***Nonduplication.*** In applying the limitations of section 415 to a plan maintained by an employer, if the plan is aggregated with another plan pursuant to the aggregation rules of paragraph (a) of this section, a participant's benefits are not counted more than once in determining the participant's aggregate annual benefit or annual additions. For example, if a defined benefit plan is treated as if it terminated immediately prior to a cessation of affiliation under paragraph (b)(2) of this section, the plans maintained by the employer (as determined after the cessation of affiliation) that actually maintains the plan do not double count the annual benefit provided under the plan by aggregating under paragraph (a) of this section both the participant's annual benefit provided under the plan and the participant's annual benefit under the plan as a formerly affiliated plan (which is a plan that the employers formerly affiliated with the employer must take into account as a terminated plan under the rules of paragraph (b)(2) of this section). Instead, the plans maintained by the employer include the annual benefit provided to the participant under the actual plan that the employer maintains. Similarly, if a defined benefit plan maintained by an employer (the transferee plan) receives a transfer of benefits from a defined benefit plan maintained by a predecessor employer (the transferor plan) and the transfer is described in § 1.415(b)-1(b)(3)(i)(B) (which requires the transferred benefits to be treated by the transferor plan as if the benefits were provided under a plan that must be aggregated with the transferor plan that terminated immediately prior to the transfer), the transferee plan does not double count the transferred benefits under paragraph (a) of this section by taking into account both the actual benefit provided under the transferee plan and the benefit provided under the deemed terminated plan that the predecessor employer is treated as maintaining (and that otherwise would have to be taken into account by the transferee plan under the predecessor employer aggregation rules of paragraph (a) of this section). Instead, the transferee plan takes into account the transferred benefits that are actually provided under the transferee plan (see § 1.415(b)-1(b)(3)(i)(C)) and, pursuant to paragraph (c)(1) of this section, any nontransferred benefits provided under plans maintained by the predecessor employer with respect to a participant whose benefits have been transferred to the transferee plan.

(2) ***Determination of years of participation for multiple plans.*** If two or more defined benefit plans are aggregated under section 415(f) and this section for a particular limitation year, in applying the reduction for participation of less than ten years (as described in section 415(b)(5)(A)) to the dollar limitation under section 415(b)(1)(A), time periods that are counted as years of participation under any of the plans are counted in computing the limitation of the aggregated plans under this section.

(3) ***Determination of years of service for multiple plans.*** If two or more defined benefit plans are aggregated under section 415(f) and this section for a particular limitation year, in applying the reduction for service of less than ten years (as described in section 415(b)(5)(B)) to the compensation limitation under section 415(b)(1)(B), time periods that are counted as years of service under any of the plans are counted in computing the limitation of the aggregated plans under this section.

(e) *Previously unaggregated plans* —

(1) ***In general.*** This paragraph (e) provides rules for those situations in which two or more existing plans, which previously were not required to be aggregated pursuant to section 415(f) and this section, are aggregated during a particular limitation year and, as a result, the limitations of section 415(b) or (c)

are exceeded for that limitation year. Paragraph (e)(2) of this section provides rules for defined contribution plans that are first required to be aggregated pursuant to section 415(f) and this section in a plan year. Paragraph (e)(3) of this section provides rules for defined benefit plans that are first required to be aggregated pursuant to section 415(f) and this section, and for defined benefit plans under which a participant's benefit is frozen following aggregation.

(2) ***Defined contribution plans.*** Two or more defined contribution plans that are not required to be aggregated pursuant to section 415(f) and this section as of the first day of a limitation year do not fail to satisfy the requirements of section 415 with respect to a participant for the limitation year merely because they are aggregated later in that limitation year, provided that no annual additions are credited to the participant's account after the date on which the plans are required to be aggregated.

(3) ***Defined benefit plans*** —

(i) ***First year of aggregation.*** Two or more defined benefit plans that are not required to be aggregated pursuant to section 415(f) and this section as of the first day of a limitation year do not fail to satisfy the requirements of section 415 for the limitation year merely because they are aggregated later in that limitation year, provided that no plan amendments increasing benefits with respect to the participant under either plan are made after the occurrence of the event causing the plan to be aggregated.

(ii) ***All years of aggregation in which accrued benefits are frozen.*** Two or more defined benefit plans that are required to be aggregated pursuant to section 415(f) and this section during a limitation year subsequent to the limitation year during which the plans were first aggregated do not fail to satisfy the requirements of section 415 with respect to a participant for the limitation year merely because they are aggregated if there have been no increases in the participant's accrued benefit derived from employer contributions (including increases as a result of increased compensation or service) under any of the plans within the period during which the plans have been aggregated.

(f) ***Section 403(b) annuity contracts*** —

(1) ***In general.*** In the case of a section 403(b) annuity contract, except as provided in paragraph (f)(2) of this section, the participant on whose behalf the annuity contract is purchased is considered for purposes of section 415 to have exclusive control of the annuity contract. Accordingly, except as provided in paragraph (f)(2) of this section, the participant, and not the participant's employer who purchased the section 403(b) annuity contract, is deemed to maintain the annuity contract, and such a section 403(b) annuity contract is not aggregated with a qualified plan that is maintained by the participant's employer.

(2) ***Special rules under which the employer is deemed to maintain the annuity contract*** —

(i) ***In general.*** Where a participant on whose behalf a section 403(b) annuity contract is purchased is in control of any employer for a limitation year as defined in paragraph (f)(2)(ii) of this section (regardless of whether the employer controlled by the participant is the employer maintaining the section 403(b) annuity contract), the annuity contract for the benefit of the participant is treated as a defined contribution plan maintained by both the controlled employer and the participant for that limitation year. Accordingly, where a participant on whose behalf a section 403(b) annuity contract is purchased is in control of any employer for a limitation year, the section 403(b) annuity contract is aggregated with all other defined contribution plans maintained by that employer. In addition, in such a case, the section 403(b) annuity contract is

aggregated with all other defined contribution plans maintained by the employee or any other employer that is controlled by the employee. Thus, for example, if a doctor is employed by a non-profit hospital to which section 501(c)(3) applies and which provides him with a section 403(b) annuity contract, and the doctor also maintains a private practice as a shareholder owning more than 50 percent of a professional corporation, then any qualified defined contribution plan of the professional corporation must be aggregated with the section 403(b) annuity contract for purposes of applying the limitations of section 415(c) and § 1.415(c)-1. For purposes of this paragraph (f)(2), it is immaterial whether the section 403(b) annuity contract is purchased as a result of a salary reduction agreement between the employer and the participant.

(ii) ***Determination of when a participant is in control of an employer.*** For purposes of paragraph (f)(2)(i) of this section, a participant is in control of an employer for a limitation year if, pursuant to § 1.415(a)-1(f)(1) and (2), a plan maintained by that employer would have to be aggregated with a plan maintained by an employer that is 100 percent owned by the participant. Thus, for example, if a participant owns 60 percent of the common stock of a corporation, the participant is considered to be in control of that employer for purposes of applying paragraph (f)(2)(i) of this section.

(3) ***Aggregation of section 403(b) annuity with qualified plan of controlled employer.*** If a section 403(b) annuity contract is aggregated with a qualified plan of a controlled employer in accordance with paragraph (f)(2) of this section, the plans must satisfy the limitations of section 415(c) both separately and on an aggregate basis. In applying separately the limitations of section 415 to the qualified plan and to the section 403(b) annuity contract, compensation from the controlled employer may not be aggregated with compensation from the employer purchasing the section 403(b) annuity contract (that is, without regard to § 1.415(c)-2(g)(3)).

(g) ***Multiemployer plans —***

(1) ***Multiemployer plan aggregated with another multiemployer plan.*** Pursuant to section 415(f)(3)(B), multiemployer plans, as defined in section 414(f), are not aggregated with other multiemployer plans for purposes of applying the limits of section 415.

(2) ***Multiemployer plan aggregated with other plan —***

(i) ***Aggregation only for benefits provided by the employer.*** Notwithstanding the rule of § 1.415(a)-1(e), a multiemployer plan, as defined in section 414(f), is permitted to provide that only the benefits under that multiemployer plan that are provided by an employer are aggregated with benefits under plans maintained by that employer that are not multiemployer plans. If the multiemployer plan so provides, then, where an employer maintains both a plan which is not a multiemployer plan and a multiemployer plan, only the benefits under the multiemployer plan that are provided by the employer are aggregated with benefits under the employer's plans other than multiemployer plans (in lieu of including benefits provided by all employers under the multiemployer plan pursuant to the generally applicable rule of § 1.415(a)-1(e)).

(ii) ***Exception from aggregation for purposes of applying section 415(b)(1)(B) compensation limit.*** Pursuant to section 415(f)(3)(A), a multiemployer plan, as defined in section 414(f), is not aggregated with any other plan that is not a multiemployer plan for purposes of applying the compensation limit of section 415(b)(1)(B) and § 1.415(b)-1(a)(1)(ii).

(h) ***Special rules for aggregating certain plans, etc.*** If a plan, annuity contract or arrangement is subject to a special limitation in addition to, or instead of, the regular limitations described in section 415(b) or (c), and is aggregated under this section with a plan which is subject only to the regular section 415(b) or (c) limitations, the following rules apply:

(1) Each plan, annuity contract or arrangement which is subject to a special limitation must meet its own applicable limitation and each plan subject to the regular limitations of section 415 must meet its applicable limitation.

(2) The limitation for the aggregated plans is the larger of the applicable limitations for the separate plans.

(i) [Reserved]

(j) ***Examples.*** The following examples illustrate the rules of this section. Except to the extent otherwise stated in an example, each entity is not and has never been affiliated with another entity under the employer affiliation rules of § 1.415(a)-1(f)(1) and (2), each entity has never maintained a qualified plan (other than the plans specifically mentioned in the example), and the limitation year for each qualified plan is the calendar year.

Example 1. (i) *Facts.* M was formerly an employee of ABC Corporation and is currently an employee of XYZ Corporation. ABC maintains a qualified defined benefit plan (Plan ABC) and a qualified defined contribution plan in which M participates and XYZ maintains a qualified defined benefit plan (Plan XYZ) and a qualified defined contribution plan in which M participates. ABC Corporation owns 60 percent of XYZ Corporation.
(ii) *Treatment as a single employer.* ABC Corporation and XYZ Corporation are members of a controlled group of corporations within the meaning of section 414(b) as modified by section 415(h). Because ABC Corporation and XYZ Corporation are members of a controlled group of corporations within the meaning of section 414(b) as modified by section 415(h), M is treated as being employed by a single employer under § 1.415(a)-1(f)(1).

(iii) *Plan aggregation.* Under paragraph (a)(1) of this section, the sum of M's annual benefit under Plan ABC and M's annual benefit under Plan XYZ is not permitted to exceed the limitations of section 415(b) and § 1.415(b)-1; and, under paragraph (a)(2) of this section, the sum of the annual additions to M's account under the defined contribution plans maintained by ABC and XYZ may not exceed the limitations of section 415(c) and § 1.415(c)-1. For purposes of determining the limitations of section 415(b) and § 1.415(b)-1 for the aggregated plans, a year of service for either employer is considered as a year of service for purposes of § 1.415(b)-1(g)(2) (phase-in rules for the compensation limit) and a year of participation under either plan is considered as a year of participation for purposes of § 1.415(b)-1(g)(1) (phase-in rules for the dollar limit).

Example 2. (i) *Facts.* The facts are the same as in *Example 1,* except that ABC Corporation and XYZ Corporation do not maintain defined contribution plans. In addition, Participant O was formerly an employee of ABC Corporation and is currently an employee of XYZ Corporation. Participant O has an accrued benefit under the ABC Plan, but Participant O has no accrued benefit under the XYZ Plan. Effective

January 1, 2010, ABC Corporation sells all of its shares of stock of XYZ Corporation to an unaffiliated entity, LMN Corporation (the 2010 stock sale). After the 2010 stock sale, XYZ Corporation continues to maintain Plan XYZ. LMN Corporation maintains a qualified defined benefit plan (Plan LMN). After the 2010 stock sale, M begins to accrue benefits under Plan LMN, but O does not participate in Plan LMN.
(ii) *Affiliated employer status of the corporations.* Immediately after the 2010 stock sale, ABC Corporation and XYZ Corporation are no longer members of a controlled group of corporations under section 414(b) (as modified by section 414(h)) and accordingly are no longer treated as a single employer under the employer affiliation rules of § 1.415(a)-1(f)(1). Immediately after the 2010 stock sale, LMN Corporation and XYZ Corporation are members of a controlled group of corporations under section 414(b) (as modified by section 414(h)) and accordingly are treated as a single employer under the employer affiliation rules of § 1.415(a)-1(f)(1).

(iii) *Treatment of plans maintained by ABC Corporation after the 2010 stock sale.* Under § 1.415(a)-1(f)(1), any plan maintained by any member of a controlled group of corporations is deemed maintained by all members of the controlled group, and paragraph (a)(1) of this section requires that, for purposes of applying the limitations of section 415(b), all defined benefit plans ever maintained by an employer (as determined under the affiliation rules of § 1.415(a)-1(f)(1) and (2)) are treated as one defined benefit plan. Therefore, defined benefit plans maintained by ABC Corporation must take into account the annual benefit of a participant provided under Plan XYZ in applying the limitations of section 415(b) to the participant because Plan XYZ is a plan that had once been maintained by ABC Corporation. However, beginning with the 2010 limitation year, the aggregation of the annual benefit accrued by a participant under Plan XYZ for purposes of testing defined benefit plans maintained by ABC Corporation is limited to the annual benefit accrued by the participant under Plan XYZ immediately prior to the 2010 stock sale. This is because paragraph (b)(2)(i) of this section provides that a formerly affiliated plan of an employer is treated as if it had terminated immediately prior to the cessation of affiliation with sufficient assets to pay benefit liabilities under the plan, and had purchased annuities to provide plan benefits. The 2010 stock sale is a cessation of affiliation under paragraph (b)(2)(ii) of this section because this event caused XYZ Corporation to no longer be affiliated with ABC Corporation under the employer affiliation rules of § 1.415(a)-1(f)(1) and (2). Immediately after the 2010 stock sale, Plan XYZ is a formerly affiliated plan with respect to ABC Corporation under paragraph (b)(2)(ii) of this section because immediately prior to the cessation of affiliation, Plan XYZ was actually maintained by XYZ Corporation (which together with ABC Corporation constituted a single employer under the employer affiliation rules of § 1.415(a)-1(f)(1) and (2)), and immediately after the cessation of affiliation, Plan XYZ is not actually maintained by ABC Corporation or any other entity affiliated with it.

(iv) *Application of rules to Participants M and O with respect to plans maintained by ABC Corporation after the 2010 stock sale.* In applying the limitations of section 415(b) to Participant M for the 2010 limitation year and later limitation years, Plan ABC must take into account the annual benefit provided under Plan ABC to Participant M and the annual benefit provided under Plan XYZ to Participant M, but treating Plan XYZ as if it had terminated immediately prior to the 2010 stock sale with sufficient assets to pay benefit

liabilities under the plan, and had purchased annuities to provide plan benefits. The aggregation of Plan XYZ with Plan ABC is irrelevant for purposes of Participant O because Participant O does not have any accrued benefit under Plan XYZ (as determined prior to the 2010 stock sale).

(v) *Treatment of plans maintained by LMN Corporation and XYZ Corporation after the 2010 stock sale.* Under § 1.415(a)-1(f)(1) and paragraph (a)(1) of this section, when applying the limitations of section 415(b) to a participant under Plans LMN and XYZ for the 2010 limitation year and later years, the annual benefit provided to the participant under Plans LMN, XYZ and ABC must be aggregated. Benefits under Plan ABC must be included in this aggregation because XYZ Corporation is deemed to have once maintained Plan ABC pursuant to § 1.415(a)-1(f)(1), and since LMN Corporation and XYZ Corporation constitute a single employer under § 1.415(a)-1(f)(1), paragraph (a)(1) of this section requires the aggregation of all defined benefit plans ever maintained by LMN Corporation and XYZ Corporation. However, in performing this aggregation, a participant's annual benefit under Plan ABC is limited to the annual benefit accrued by the participant immediately prior to the 2010 stock sale. This is because, pursuant to paragraph (b)(2)(i) of this section, Plan ABC is a formerly affiliated plan of LMN Corporation and XYZ Corporation.

(vi) *Application of rules to Participants M and O with respect to plans maintained by LMN Corporation and XYZ Corporation after the 2010 stock sale.* In applying the limitation of section 415(b) to Participant M for the 2010 limitation year and later limitation years, Plan LMN and Plan XYZ must take into account the annual benefit provided under Plans LMN and XYZ to Participant M and the annual benefit provided under Plan ABC to Participant M as if Plan ABC had terminated immediately prior to the 2010 stock sale with sufficient assets to pay benefit liabilities under the plan, and had purchased annuities to provide plan benefits. Participant O does not have an accrued benefit under Plan LMN or Plan XYZ, so the aggregation of Plan ABC with Plans LMN and XYZ is currently irrelevant with respect to Participant O. However, if Participant O were to ever participate in Plans LMN or XYZ after the 2010 stock sale, Participant O's annual benefit under Plan ABC (determined as if Plan ABC terminated immediately prior to the 2010 stock sale) would have to be aggregated with any annual benefit that Participant O accrues under Plan LMN or Plan XYZ.

(vii) *Application of nonduplication rule.* In applying paragraph (a)(1) of this section to plans maintained by ABC Corporation after 2010 stock sale, plans maintained by ABC Corporation do not take into account the deemed termination of Plan ABC since ABC Corporation maintains Plan ABC after the cessation of affiliation. Similarly, in applying paragraph (a)(1) of this section to plans maintained by LMN Corporation and XYZ Corporation after the 2010 stock sale, plans maintained by LMN Corporation and XYZ Corporation do not take into account the deemed termination of Plan XYZ since XYZ Corporation maintains Plan XYZ after the cessation of affiliation. See paragraph (d)(1) of this section.

Example 3. (i) *Facts.* The facts are the same as in *Example 2*, except that on January 1, 2009, Plan ABC transfers Participant M's benefit to Plan XYZ.

(ii) *Treatment of plans maintained by ABC Corporation.* Pursuant to § 1.415(b)-1(b)(3)(i)(A), M's benefit that is transferred from Plan ABC to Plan XYZ is not treated as being provided under Plan ABC for the limitation year in which the transfer occurs (2009). This is because M's transferred benefit is otherwise required to be taken into account by Plan ABC for the 2009 limitation year since Plan XYZ must be aggregated with Plan ABC pursuant to paragraph (a)(1) of this section. This result does not change for the 2010 limitation year and later limitation years, where pursuant to paragraph (b)(2)(i) of this section, Plan XYZ becomes a formerly affiliated plan with respect to ABC Corporation due to the 2010 stock sale. Under paragraph (b)(2)(i) of this section, Plan XYZ (the formerly affiliated plan) is treated from the perspective of plans maintained by ABC Corporation (Plan ABC) as if Plan XYZ terminated immediately prior to the 2010 stock sale with sufficient assets to pay benefit liabilities under the plan, and had purchased annuities to provide plan benefits. However, the pre-2010 stock sale benefits of Plan XYZ include the January 1, 2009, transfer of Participant M's benefit. Thus, in the 2010 limitation year, M's transferred benefit is still otherwise required to be taken into account by Plan ABC on account of the aggregation of Plan XYZ with Plan ABC pursuant to paragraph (a)(1) of this section, and therefore the transferred benefit is not treated as being provided by Plan ABC.

(iii) *Treatment of plans maintained by LMN Corporation and XYZ Corporation.* Pursuant to § 1.415(b)-1(b)(3)(i)(C), Participant M's benefit that is transferred to Plan XYZ from Plan ABC must be treated as provided under Plan XYZ for purposes of applying the limitations of section 415 to Plan XYZ with respect to Participant M for the limitation year in which the transfer occurs and later years. This result does not change on account of the 2010 stock sale. When applying the limitation of section 415 to Plans LMN and XYZ for the 2010 limitation year and later years, Plans LMN and XYZ must aggregate the annual benefit provided to a participant under each plan along with the participant's benefit under Plan ABC pursuant to § 1.415(a)-1(f)(1) and paragraph (a)(1) of this section. However, under paragraph (b)(2)(i) of this section, for the 2010 limitation year and later years, this aggregation of M's Plan ABC benefit only includes the annual benefit attributable to a participant's accrued benefit under Plan ABC immediately prior to the 2010 stock sale, which (due to the 2009 transfer) is zero.

Example 4. (i) *Facts.* The facts are the same as in *Example 2,* except that on January 1, 2011, Plan ABC transfers Participant M's benefit to Plan XYZ.
(ii) *Treatment of plans maintained by ABC Corporation for the 2011 limitation year and later years.* Pursuant to § 1.415(b)-1(b)(3)(i)(B), M's benefit that is transferred from Plan ABC to Plan XYZ during the 2011 limitation year is treated by Plan ABC for the 2011 limitation year and later years as if the transferred benefit were provided under a plan that must be aggregated with Plan ABC that terminated immediately prior to the transfer with sufficient assets to pay benefit liabilities under the plan, and had purchased annuities to provide plan benefits. This is because M's transferred benefit is not otherwise required to be taken into account by Plan ABC for the 2011 limitation year and later years pursuant to paragraphs (a)(1) and (b)(2)(i) of this section. While Plan ABC must take into account Participant M's annual benefit under Plan XYZ under paragraph (a)(1) of this section, Participant M's annual benefit for this purpose is limited

under paragraph (b)(2)(i) of this section to M's accrued benefit under Plan XYZ immediately prior to the 2010 stock sale, and Participant M's pre-2010 stock sale accrued benefit under Plan XYZ excludes the 2011 transfer.

(iii) *Treatment of plans maintained by LMN Corporation and XYZ Corporation for the 2011 limitation year and later years.* Pursuant to § 1.415(b)-1(b)(3)(i)(C), Participant M's benefit that is transferred to Plan XYZ from Plan ABC must be treated as provided under Plan XYZ for purposes of applying the limitations of section 415 to Plan XYZ with respect to Participant M for the limitation year in which the transfer occurs and later years. In applying the limitations of section 415(b) to Plans LMN and XYZ with respect to Participant M for the 2010 limitation year and later years, the annual benefit of Participant M under Plans ABC, LMN, and XYZ must be aggregated pursuant to § 1.415(a)-1(f)(1) and paragraph (a)(1) of this section, but for this purpose, Participant M's benefit under Plan ABC is treated as if it were provided under a plan that terminated immediately prior to the cessation of affiliation of ABC Corporation and XYZ Corporation with sufficient assets to pay benefit liabilities under the plan, and had purchased an annuity to provide Participant M's benefits. (See paragraph (b)(2)(i) of this section and *Example 2.*) In applying the limitations of section 415(b) to Plans LMN and XYZ with respect to Participant M for the 2011 limitation year and later years, the annual benefit of Participant M under Plans ABC, LMN, and XYZ still must be aggregated pursuant to § 1.415(a)-1(f)(1) and paragraph (a)(1) of this section. However, beginning with the 2011 limitation year, ABC Corporation is a predecessor employer with respect to LMN Corporation and XYZ Corporation with respect to Participant M on account of the transfer of benefits from Plan ABC to Plan XYZ, pursuant to paragraph (c)(1) of this section. Therefore, Plans LMN and XYZ must take into account benefits that Participant M accrued under Plan ABC after the January 1, 2010, cessation of affiliation of ABC Corporation and XYZ Corporation that were not transferred to Plan XYZ on January 1, 2011, pursuant to paragraphs (c)(1) and (d)(1) of this section. Since all of Participant M's benefit in Plan ABC is transferred to Plan XYZ on January 1, 2011, Participant M's annual benefit from Plan ABC for purposes of aggregating Plan ABC with Plans LMN and XYZ is zero.

Example 5. (i) *Facts.* The facts are the same as in *Example 2,* except that instead of the 2010 stock sale, XYZ Corporation sells some of its operating assets to LMN Corporation (and, under the facts and circumstances, the sale does not result in XYZ Corporation constituting a predecessor employer of LMN Corporation under the rules of paragraph (c)(2) of this section), and in connection with the asset sale, LMN Corporation assumes sponsorship of Plan XYZ in place of XYZ Corporation, effective January 1, 2010.
(ii) *Treatment of plans maintained by ABC Corporation and XYZ Corporation.* Pursuant to paragraph (a)(1) of this section, all defined benefit plans ever maintained by ABC Corporation and XYZ Corporation must be aggregated as a single defined benefit plan for purposes of applying the limitations of section 415(b). However, for purposes of determining the annual benefit under Plan XYZ for the 2010 limitation year and later years, the aggregation of a participant's benefit under Plan XYZ is limited to the participant's annual benefit accrued immediately prior to the January 1, 2010, transfer of sponsorship of Plan XYZ. This is because paragraph (b)(2)(i) of this section provides that a formerly affiliated plan of an employer is treated as if it were a plan that terminated immediately prior to the cessation of affiliation with sufficient assets to pay benefit liabilities under the plan, and had purchased annuities to provide plan benefits. The January 1,

2010, transfer of sponsorship of Plan XYZ is a cessation of affiliation under paragraph (b)(2)(ii) of this section because this event causes Plan XYZ to no longer actually be maintained by either ABC Corporation or XYZ Corporation. Effective immediately after the January 1, 2010, transfer of sponsorship, Plan XYZ is a formerly affiliated plan with respect to ABC Corporation and XYZ Corporation under paragraph (b)(2)(ii) of this section because immediately prior to the cessation of affiliation, Plan XYZ was actually maintained by XYZ Corporation, and immediately after the cessation of affiliation, Plan XYZ is not actually maintained by either XYZ Corporation or ABC Corporation. Therefore, in applying the limitation of section 415(b) to Participant M for the 2010 limitation year and later limitation years, Plan ABC must take into account the annual benefit provided under Plan ABC to Participant M and the annual benefit provided under Plan XYZ to Participant M as if Plan XYZ had terminated immediately prior to the 2010 stock sale with sufficient assets to pay benefit liabilities under the plan, and had purchased annuities to provide plan benefits. The aggregation of Plan XYZ with Plan ABC is irrelevant for purposes of Participant O because Participant O does not have any accrued benefit under Plan XYZ (as determined prior to the 2010 transfer of sponsorship).

(iii) *Treatment of plans maintained by LMN Corporation.* Under paragraph (a)(1) of this section, all defined benefit plans ever maintained by LMN Corporation or a predecessor employer must be aggregated as a single plan for purposes of applying the limitations of section 415(b). ABC Corporation and XYZ Corporation constitute a predecessor employer pursuant to paragraph (c)(1) of this section with respect to the participants who participate in Plan XYZ on the date of the transfer of sponsorship of Plan XYZ (the transferred participants) from XYZ Corporation to LMN Corporation, such as Participant M. This is because, effective with the January 1, 2010, transfer of sponsorship, LMN Corporation maintains a plan (Plan XYZ) under which the participants accrued a benefit while performing services for XYZ Corporation (which is in turn affiliated with ABC Corporation under § 1.415(a)-1(f)(1)) and such benefits are provided under a plan maintained by LMN Corporation. Therefore, for the 2010 limitation year and later years, the annual benefit under Plan ABC of the transferred participants (such as Participant M) must be aggregated with the annual benefit provided to such participants under Plans XYZ and LMN for purposes of determining whether Plan LMN or Plan XYZ satisfies the limitations of section 415(b). However, the aggregation of the transferred participants' Plan ABC annual benefits is limited to the annual benefit accrued under Plan ABC immediately prior to January 1, 2010, transfer of sponsorship. This is because, pursuant to paragraph (c)(1) of this section, Plan ABC is treated from the perspective of plans maintained by LMN Corporation as if Plan ABC had terminated immediately prior to the transfer of sponsorship of Plan ABC to LMN Corporation with sufficient assets to pay benefit liabilities under the plan, and had purchased annuities to provide plan benefits. ABC Corporation and XYZ Corporation do not constitute a predecessor employer with respect to Participant O. Thus, if Participant O is a participant in Plan LMN or becomes a participant in Plan XYZ after the 2010 transfer of sponsorship, neither plan aggregates Participant O's Plan ABC benefits for purposes of satisfying section 415(b). In applying paragraph (a)(1) of this section to a participant, plans maintained by LMN Corporation do not double count the participant's annual benefit. See paragraph (d)(1) of this section. Thus, such plans do not aggregate the annual benefit provided under Plan

XYZ with the annual benefit from the deemed termination of Plan XYZ that LMN Corporation's predecessor employer (which is ABC and XYZ Corporations) must take into account in applying paragraph (a)(1) of this section, and instead consider the annual benefit actually provided under Plan XYZ.

Example 6. (i) *Facts.* N is employed by a hospital which purchases an annuity contract described in section 403(b) on N's behalf for the current limitation year. N is in control of the hospital within the meaning of section 414(b) or (c), as modified by section 415(h). The hospital also maintains a qualified defined contribution plan during the current limitation year in which N participates.
(ii) *Conclusion.* Under section 415(k)(4), the hospital, as well as N, is considered to maintain the annuity contract. Accordingly, for N the sum of the annual additions under the qualified defined contribution plan and the annuity contract must satisfy the limitations of section 415(c) and § 1.415(c)-1.

Example 7. (i) *Facts.* The facts are the same as in *Example 6,* except that instead of being in control of the hospital, N is the 100 percent owner of a professional corporation P, which maintains a qualified defined contribution plan in which N participates.
(ii) *Conclusion.* Under section 415(k)(4), the professional corporation, as well as N, is considered to maintain the annuity contract. Accordingly, the sum of the annual additions under the qualified defined contribution plan maintained by professional corporation P and the annuity contract must satisfy the limitations of section 415(c) and § 1.415(c)-1. See § 1.415(g)-1(b)(3)(iv)(C)(2) for an example of the treatment of a contribution to a section 403(b) annuity contract that exceeds the limits of section 415(c) by reason of the aggregation required by this section.

Example 8. (i) *Facts.* J is an employee of two corporations, N and M, each of which has employed J for more than 10 years. N and M are not required to be aggregated pursuant to section 415(f) and this section. Each corporation has a qualified defined benefit plan in which J has participated for more than 10 years. Each plan provides a benefit which is equal to 75 percent of a participant's average compensation for the period of the participant's high-3 years of service and is payable in the form of a straight life annuity beginning at age 65. J's average compensation for the period of his high-3 years of service from each corporation is $160,000. In July 2008, N Corporation becomes a wholly owned subsidiary of M Corporation.
(ii) *Plan aggregation analysis.* As a result of the acquisition of N Corporation by M Corporation, J is treated as being employed by a single employer under section 414(b). Therefore, because section 415(f)(1)(A) requires that all defined benefit plans of an employer be treated as one defined benefit plan, the two plans must be aggregated for purposes of applying the limitations of section 415. However, under paragraph (e)(3)(i) of this section, since the plans were not aggregated as of the first day of the 2008 limitation year (January 1, 2008), they will not be considered aggregated until the limitation year beginning January 1, 2009, provided that no plan amendment increasing benefits with respect to participant J is made after the acquisition of N by M.

(iii) *Application to Participant J.* J has a total benefit under the two plans of $240,000, which, as a result of the plan aggregation, is in excess of the section 415(b) limit. However, under paragraph (e)(3)(ii) of this section, the limitations of section 415(b) and § 1.415(b)-1 applicable to J may be exceeded in this situation without plan disqualification so long as J's accrued benefit derived from employer contributions is not increased (that is, J's accrued benefit does not increase on account of increased compensation, service, participation, or other accruals) during the period within which the limitations are being exceeded.

Example 9. (i) *Facts.* A, age 30, owns all of the stock of X Corporation and also owns 10 percent of the stock of Z Corporation. F, A's father, directly owns 75 percent of the stock of Z Corporation. Both corporations have qualified defined contribution plans in which A participates. A's compensation (within the meaning of § 1.415(c)-2) for 2008 is $20,000 from Z Corporation and $150,000 from X Corporation. During the period January 1, 2008 through June 30, 2008, annual additions of $20,000 are credited to A's account under the plan of Z Corporation, while annual additions of $40,000 are credited to A's account under the plan of X Corporation. In both instances, the amount of annual additions represent the maximum allowable under section 415(c) and § 1.415(c)-1. On July 15, 2008, F dies, and A inherits all of F's stock in Z in 2008.
(ii) *Conclusion.* As of July 15, 2008, A is considered to be in control of X and Z Corporations, and the two plans must be aggregated for purposes of applying the limitations of section 415. However, even though A's total annual additions for 2008 are $60,000, the limitations of section 415(c) and § 1.415(c)-1 are not violated for 2008, provided no annual additions are credited to A's accounts after July 15, 2008 (the date that A is first in control of Z) for the remainder of the 2008 limitation year.

Example 10. (i) *Facts.* P is a key employee of employer XYZ who participates in a qualified defined contribution plan (Plan X). P is also provided post-retirement medical benefits, and XYZ has taken into account a reserve for those benefits under section 419A(c)(2). In the 2008 limitation year, P's compensation is $30,000 and P's annual additions under Plan X are $5,000. Pursuant to section 419A(d), a separate account is maintained for P, and that account is credited with an allocation of $32,000 for the 2008 limitation year. It is assumed that the section 415(c)(1)(A) dollar limit for 2008 is $46,000.
(ii) *Separate testing analysis.* Under paragraph (h)(1) of this section, Plan X and the individual medical account must separately satisfy the requirements of section 415(c), taking into account any special limit applicable to that arrangement. In this case, the contributions to Plan X separately satisfy the limitations of section 415(c). While the individual medical account is treated as a defined contribution plan subject to the rules of section 415(c), it is not subject to the 100 percent of compensation limit of section 415(c)(1)(B), so the contributions to that account satisfy the limitations of section 415(c).

(iii) *Aggregation analysis.* The sum of the annual additions under Plan X and the amounts contributed to the separate account on P's behalf must satisfy the requirements of section 415(c). Under paragraph (h)(2) of this section, the limit applicable to the aggregated plan is equal to the greater of the limits applicable to the separate plans. In this case, the limit applicable to the medical account is $46,000 (which is greater than the limit of $30,000 applicable to the qualified plan), so the limit that applies to the aggregated plan is $46,000, and the aggregated plan satisfies the requirements of section 415.

[T.D. 9319, 72 FR 16922, Apr. 5, 2007; 72 FR 28854, May 23, 2007]

§ 1.415(g)-1 Disqualification of plans and trusts.

(a) ***Disqualification of plans*** —

(1) ***In general.*** Under section 415(g) and this section, with respect to a particular limitation year, a plan (and the trust forming part of the plan) is disqualified in accordance with the rules provided in paragraph (b) of this section, if the conditions described in paragraph (a)(2) or (a)(3) of this section apply. For purposes of this paragraph (a), the determination of whether a plan or a group of aggregated plans exceeds the limitations imposed by section 415 for a particular limitation year is, except as otherwise provided, made by taking into account the aggregation of plan rules provided in section 415(f) and § 1.414(f)-1.

(2) ***Defined contribution plans.*** A plan is disqualified in accordance with the rules provided in paragraph (b) of this section if annual additions (as defined in § 1.415(c)-1(b)) with respect to the account of any participant in a defined contribution plan maintained by the employer exceed the limitations of section 415(c) and § 1.415(c)-1.

(3) ***Defined benefit plans.*** A plan is disqualified in accordance with the rules provided in paragraph (b) of this section if the annual benefit (as defined in § 1.415(b)-1(b)(1)) of a participant in a defined benefit plan maintained by the employer exceeds the limitations of section 415(b) and § 1.415(b)-1.

(b) ***Rules for disqualification of plans and trusts*** —

(1) ***In general.*** If any plan (including a trust which forms part of such plan) is disqualified for a particular limitation year under the rules set forth in this paragraph (b), then the disqualification is effective as of the first day of the first plan year containing any portion of the particular limitation year.

(2) ***Single plan.*** In the case of a single qualified defined benefit plan (determined without regard to section 415(f) and § 1.415(f)-1) maintained by the employer that provides an annual benefit (as defined in § 1.415(b)-1(b)(1)) in excess of the limitations of section 415(b) and § 1.415(b)-1 for any particular limitation year, such plan is disqualified in that limitation year. Similarly, if the employer only maintains a single defined contribution plan (determined without regard to section 415(f) and § 1.415(f)-1) under which annual additions (as defined in § 1.415(c)-1(b)) allocated to the account of any participant exceed the limitations of section 415(c) and § 1.415(c)-1 for any particular limitation year, such plan is also disqualified in that limitation year.

(3) ***Multiple plans*** —

(i) ***In general.*** If the limitations of section 415(b) and § 1.415(b)-1, or section 415(c) and § 1.415(c)-1, are exceeded for a particular limitation year with respect to any participant solely because of the application of the aggregation rules of section 415(f)(1) and § 1.415(f)-1 (taking into account the rules of § 1.415(a)-1(f)), then one or more of the plans is disqualified in accordance with the ordering rules set forth in paragraph (b)(3)(ii) of this section, applied in accordance with the rules of application set forth in paragraph (b)(3)(iii) of this section, subject to the special rules set forth in paragraph (b)(3)(iv) of this section, until, without regard to annual benefits or annual additions under the disqualified plan or plans, the remaining plans satisfy the applicable limitations of section 415.

(ii) ***Ordering rules*** —

(A) ***Disqualification of ongoing plans other than multiemployer plans.*** If there are two or more plans that have not been terminated at any time including the last day of the particular limitation year, and if one or more of those plans is a multiemployer plan described in section 414(f), then one or more of the plans (as needed to satisfy the limitations of section 415) that has not been terminated and is not a multiemployer plan is disqualified in that limitation year. For purposes of the preceding sentence, the determination of whether a plan is a multiemployer plan described in section 414(f) is made as of the last day of the particular limitation year.

(B) ***Disqualification of ongoing multiemployer plans.*** If, after the application of paragraph (b)(3)(ii)(A) of this section, there are two or more plans and one or more of the plans has been terminated at any time including the last day of the particular limitation year, then one or more of the plans (as needed to satisfy the applicable limitations of section 415) that has not been so terminated (regardless of whether the plan is a multiemployer plan described in section 414(f)) is disqualified in that limitation year.

(iii) ***Rules of application*** —

(A) ***Employer elects which plan is disqualified.*** If there are two or more plans of an employer within a group of plans one or more of which is to be disqualified pursuant to paragraph (b)(3)(ii)(A) or (B) of this section, then the employer may elect, in a manner determined by the Commissioner, which plan or plans are disqualified. If those two or more plans are involved because of the application of § 1.415(a)-1(f), the employers involved may elect, in a manner determined by the Commissioner, which plan or plans are disqualified. However, the election described in the preceding sentence is not effective unless made by all of those employers.

(B) ***Commissioner determines which plan is disqualified.*** If the election described in paragraph (b)(3)(iii)(A) of this section is not made with respect to the two plans described in paragraph (b)(3)(iii)(A) of this section, then the Commissioner, taking into account all of the facts and circumstances, has the discretion to determine the plan that is disqualified in the particular limitation year. In making this determination, some of the factors that will be taken into account include, but are not limited to, the number of participants in each plan, the amount of benefits provided on an overall basis by each plan, and the extent to which benefits are distributed or retained in each plan.

(iv) ***Special rules*** —

(A) ***Simplified employee pensions.*** If there are two or more plans one or more of which is to be disqualified pursuant to paragraph (b)(3)(ii)(A) or (B) of this section, and if one of the plans is a simplified employee pension (as defined in section 408(k)), then the simplified employee pension is not disqualified until all of the other plans have been disqualified. However, if one of the plans has been terminated, then the simplified employee pension is disqualified before the terminated plan. For purposes of this paragraph (b)(3)(iv)(A), the disqualification of a simplified employee pension means that the simplified employee pension is no longer described under section 408(k).

(B) ***Aggregating medical accounts with defined contribution plans.*** In the event that aggregating a medical account described in § 1.415(c)-1(a)(2)(ii)(C) or (D) and a defined contribution plan other than such a medical account causes the limitations of section

415(c) and § 1.415(c)-1 applicable to a participant to be exceeded for a particular limitation year, the defined contribution plan other than the medical account is disqualified for the limitation year.

(C) ***Aggregating section 403(b) annuity contract and qualified defined contribution plan*** —

(1) ***In general.*** In the event that aggregating a section 403(b) annuity contract and a qualified defined contribution plan under the provisions of section 415(f)(1)(B) causes the limitations of section 415(c) and § 1.415(c)-1 applicable to a participant under the aggregated defined contribution plans to be exceeded for a particular limitation year, the excess of the contributions to the annuity contract plus the annual additions to the qualified plan over such limitations is attributed to the annuity contract and therefore includable in the gross income of the participant for the taxable year with or within which that limitation year ends. See § 1.415(a)-1(b)(2) for rules regarding the treatment of a contribution to a section 403(b) annuity contract that exceeds the limitations of section 415.

(2) ***Example.*** The following example illustrates the application of this paragraph (b)(3)(iv)(C). It is assumed for purposes of this example that the dollar limitation under section 415(c)(1)(A) that applies for all relevant limitation years is $45,000. The example is as follows:

> *Example.* (i) N is employed by a hospital which purchases an annuity contract described in section 403(b) on N's behalf for the current limitation year. N is also the 100 percent owner of a professional corporation P that maintains a qualified defined contribution plan during the current limitation year in which N participates. (The facts of this example are the same as in § 1.415(f)-1(j) *Example 7.*) N's compensation (within the meaning of § 1.415(c)-2) from the hospital for the current limitation year is $150,000. For the current limitation year, the hospital contributes $30,000 for the section 403(b) annuity contract on N's behalf, which is within the limitations applicable to N under the annuity contract (specifically, the limit under the annuity contract is $45,000)). Professional corporation P also contributes $20,000 to the qualified defined contribution plan on N's behalf for the current limitation year (which represents the only annual additions allocated to N's account under the plan for such year), which is within the $45,000 limitation of section 415(c)(1) applicable to N under the plan.
> (ii) Under section 415(k)(4), the professional corporation, as well as N, is considered to maintain the annuity contract. Accordingly, the sum of the annual additions under the qualified defined contribution plan maintained by professional corporation P and the annuity contract must satisfy the limitations of section 415(c) and § 1.415(c)-1.

(iii) Because the total aggregate contributions ($50,000) exceed the section 415(c) limitation applicable to N ($45,000), $5,000 of the $30,000 contributed to the section 403(b) annuity contract is considered an excess contribution and therefore currently includable in N's gross income. The contract continues to be a section 403(b) annuity contract only if, for the current limitation year and all years thereafter, the issuer of the contract maintains separate accounts for each portion attributable to such excess contributions. See §§ 1.415(a)-1(b)(2).

(c) ***Plan year for certain annuity contracts and individual retirement plans.*** For purposes of this section, unless the plan under which the annuity contract or individual retirement plan is provided specifies that a different twelve-month period is considered to be the plan year—

(1) An annuity contract described in section 403(b) is considered to have a plan year coinciding with the taxable year of the individual on whose behalf the contract has been purchased; and

(2) A simplified employee pension described in section 408(k) is considered to have a plan year coinciding with the year under the plan that is used pursuant to section 408(k)(7)(C).

[T.D. 9319, 72 FR 16927, Apr. 5, 2007]

§ 1.415(j)-1 Limitation year.

(a) ***In general.*** Unless the terms of a plan provide otherwise, the limitation year, with respect to any qualified plan maintained by the employer, is the calendar year.

(b) ***Alternative limitation year election.*** The terms of a plan may provide for the use of any other consecutive twelve month period as the limitation year. This includes a fiscal year with an annual period varying from 52 to 53 weeks, so long as the fiscal year satisfies the requirements of section 441(f). A plan may only provide for one limitation year regardless of the number or identity of the employers maintaining the plan.

(c) ***Multiple limitation years*** —

(1) ***In general.*** Where an employer maintains more than one qualified plan, those plans may provide for different limitation years. The rule described in this paragraph (c) also applies to a controlled group of employers (within the meaning of section 414(b) or (c), as modified by section 415(h)). If the plans of an employer (or a controlled group of employers whose plans are aggregated) have different limitation years, section 415 is applied in accordance with the rule of paragraphs (c)(2) and (3) of this section.

(2) ***Testing rule for defined contribution plans.*** If a participant is credited with annual additions in only one defined contribution plan, in determining whether the requirements of section 415(c) are satisfied, only the limitation year applicable to that plan is considered. However, if a participant is credited with annual additions in more than one defined contribution plan, each such plan satisfies the requirements of section 415(c) only if the limitations of section 415(c) are satisfied with respect to amounts that are annual additions for the limitation year with respect to the participant under the plan, plus amounts credited to the participant's account under all other plans required to be

aggregated with the plan pursuant to section 415(f) and § 1.415(f)-1 that would have been considered annual additions for the limitation year under the plan if they had been credited under the plan rather than an aggregated plan.

(3) ***Testing rule for defined benefit plans.*** If a participant has participated in only one defined benefit plan, in determining whether the requirements of section 415(b) are satisfied, only the limitation year applicable to that plan is considered. However, if a participant has participated in more than one defined benefit plan, a plan satisfies the requirements of section 415(b) only if the annual benefit under all plans required to be aggregated pursuant to section 415(f) and § 1.415(f)-1 for the limitation year of that plan with respect to the participant satisfy the applicable limitations of section 415(b). Thus, for example, the dollar limitation of section 415(b)(1)(A) applicable to the limitation year for each plan must be applied to annual benefits under all aggregated plans to determine whether the plan satisfies the requirements of section 415(b).

(d) ***Change of limitation year*** —

(1) ***In general.*** Once established, the limitation year may be changed only by amending the plan. Any change in the limitation year must be a change to a 12-month period commencing with any day within the current limitation year. For purposes of this section, the limitations of section 415 are to be applied in the normal manner to the new limitation year.

(2) ***Application to short limitation period.*** Where there is a change of limitation year, the limitations of section 415 are to be separately applied to a limitation period which begins with the first day of the current limitation year and which ends on the day before the first day of the first limitation year for which the change is effective. In the case of a defined contribution plan, the dollar limitation with respect to this limitation period is determined by multiplying the applicable dollar limitation for the calendar year in which the limitation period ends by a fraction, the numerator of which is the number of months (including any fractional parts of a month) in the limitation period, and the denominator of which is 12. In the case of a defined benefit plan, no adjustment is made to the section 415(b) limitations to reflect a short limitation period.

(3) ***Deemed change of limitation year.*** If a defined contribution plan is terminated effective as of a date other than the last day of the plan's limitation year, the plan is treated for purposes of this section as if the plan was amended to change its limitation year. Thus, the rules of this paragraph (d) apply to the terminating plan's final limitation year.

(e) ***Limitation year for individuals on whose behalf section 403(b) annuity contracts have been purchased.*** The limitation year of an individual on whose behalf a section 403(b) annuity contract has been purchased by an employer is determined in the following manner.

(1) If the individual is not in control of any employer (within the meaning of § 1.415(f)-1(f)(2)(ii)), the limitation year is the calendar year. However, the individual may elect to change the limitation year to another twelve-month period. To do this, the individual must attach a statement to his or her income tax return filed for the taxable year in which the change is made. Any change in the limitation year must comply with the rules set forth in paragraph (d) of this section.

(2) If the individual is in control of an employer (within the meaning of § 1.415(f)-1(f)(2)(ii)), the limitation year is the limitation year of that employer.

(f) ***Limitation year for individuals on whose behalf individual retirement plans are maintained.*** The limitation year of an individual on whose behalf an individual retirement plan (within the meaning of section 7701(a)(37)) is maintained is determined in the manner described in paragraph (e) of this section.

(g) ***Examples.*** The following examples illustrate the application of this section:

> *Example 1.* (i) Participant M is employed by both Employer A and Employer B, each of which maintains a qualified defined contribution plan. M participates in both of these plans. The limitation year for Employer A's plan is January 1 through December 31, and the limitation year for Employer B's plan is April 1 through March 31. Employer A and Employer B are both corporations, and Corporation X owns 100 percent of the stock of Employer A and Employer B.
> (ii) The two plans in which M participates are required under section 415(f) to be aggregated for purposes of applying the limitations of section 415(c) to annual additions made with respect to M. Thus, for example, for the limitation year of Employer A's plan that begins January 1, 2008, annual additions with respect to M that are subject to the limitations of section 415(c) include both amounts that are annual additions with respect to M under Employer A's plan for the period beginning January 1, 2008, and ending December 31, 2008, and amounts contributed to Employer B's plan with respect to M that would have been considered annual additions for the period beginning January 1, 2008, and ending December 31, 2008, under Employer A's plan if those amounts had instead been contributed to Employer A's plan.

Example 2. In 2008, an employer with a qualified defined contribution plan using the calendar year as the limitation year elects to change the limitation year to a period beginning July 1 and ending June 30. Because of this change, the plan must satisfy the limitations of section 415(c) for the limitation period beginning January 1, 2008, and ending June 30, 2008. In applying the limitations of section 415(c) to this limitation period, the amount of compensation taken into account may only include compensation for this period. Furthermore, the dollar limitation for this period is the otherwise applicable dollar limitation for calendar year 2008, multiplied by 6/12.

[T.D. 9319, 72 FR 16928, Apr. 5, 2007]

§ 1.416-1 Questions and answers on top-heavy plans.

The following questions and answers relate to special rules for top-heavy plans under section 416 of the Internal Revenue Code of 1954, as added by section 240 of the Tax Equity and Fiscal Responsibility Act of 1982 (Pub. L. 97-248) (TEFRA), and amended by sections 524 and 713(f) of the Tax Reform Act of 1984 (Pub. L. 98-369):

Table of Contents

G—General Provisions

T—Top-Heaviness Determinations

V—Vesting Rules for Top-Heavy Plans

M—Minimum Benefits Under Top-Heavy Plans

G. General Provisions

G-1 Q. What requirement plans are subject to the top-heavy rules added to the Code by the Tax Equity and Fiscal Responsibility Act and amended by the Tax Reform Act of 1984?

A. All stock bonus, pension, or profit-sharing plans intended to qualify under section 401(a), annuity contracts described in section 403(a), and simplified employee pensions described in section 408(k) are subject to the new top-heavy rules added to the Code by the Tax Equity and Fiscal Responsibility Act and amended by the Tax Reform Act ("TRA") of 1984.

G-2 Q. Is a multiple employer plan subject to the top-heavy requirements of section 416?

A. A multiple employer plan is subject to the requirements of section 416, but only with respect to each individual employer. Thus, if twelve employers contribute to a multiple employer plan and the accrued benefits for the key employees of one employer exceed 60 percent of the accrued benefits of all employees for such employer, the plan is top-heavy with respect to that employer. A failure by the multiple employer plan to satisfy section 416 with respect to the employees of such employer means that all employers are maintaining a plan that is not a qualified plan.

G-3 Q. As of what date must plan amendments to comply with top-heavy rules be effective?

A. Amendments required to comply with the top-heavy rules must be effective as of the first day of the first plan year which begins after 1983. See § 1.401(b)-1 for the date by which such amendments must be adopted.

T. Top-Heaviness Determinations

T-1 Q. What factors must be considered in determining whether a plan is top-heavy?

A. (a) In order to determine whether a plan is top-heavy for a plan year, it is necessary to determine which employers will be treated as a single employer for purposes of section 416; what the determination date is for the plan year; which employees are or formerly were key employees; which former employees have not performed any service for the employer maintaining the plan at any time during the five-year period ending on the determination date; which plans of such employers are required or permitted to be aggregated to determine top-heavy status; and the present value of the accrued benefits (including distributions made during the plan year containing the determination date and the four preceding plan years) of key employees, former key employees, and non-key employees.

(b) All employers that are aggregated under section 414 (b), (c), and (m) must be taken into account as a single employer for the plan year in question, and those employees in all plans maintained by the employers that are aggregated must be categorized as key employees, as former key employees, or as non-key employees. See Question and Answer T-12 for the determination of which employees are or were key employees. All plans maintained by the employers in which a key employee participates, and certain other plans, must then be aggregated (the required aggregation group). See Question and Answer T-6 for rules concerning required aggregation. Other plans may in some cases be aggregated with the required aggregation group. See Question and Answer T-7 for rules concerning such permissive aggregation.

(c) Once aggregated, all plans that are required to be aggregated will either be top-heavy or not top-heavy, depending upon whether the aggregation group is top-heavy. A plan or aggregation group will be considered top-heavy if the sum of the present value of the accrued benefits for key employees is more than 60 percent of the sum of the present value of accrued benefits of all employees.

(d) Except as otherwise stated, for purposes of section 416(g), an employee is an individual currently or formerly employed by an employer. Former key employees are non-key employees and are excluded entirely from the calculation to determine top-heaviness. In all cases, the present value of accrued benefits includes distributions made during the plan year containing the determination date and the preceding four plan years. See Questions and Answers T-24 and T-25 for rules concerning the account balances and present value of accrued benefits. For plan years beginning after December 31, 1984, the accrued benefit of an employee who has not performed any sevice for the employer maintaining the plan at any time during the five-year period ending on the determination date is excluded from the calculation to determine top-heaviness. However, if an employee performs no services for five years and then performs sevices, such employee's total accrued benefit is included in the calculation for top-heaviness.

T-2 Q. To what extent are multiemployer plans and multiple employer plans to which an employer makes contributions on behalf of its employees treated as plans of that employer for top-heavy purposes?

A. Multiemployer plans described in section 414(f) and multiple employer plans described in section 413(c) to which an employer makes contributions on behalf of its employees are treated as plans of that employer to the extent that benefits under the plan are provided to employees of the employer because of service with that employer.

T-3 Q. Must a collectively-bargained plan be aggregated with other plans of the employer to determine whether some or all of the employer's plans are top-heavy?

A. A collectively-bargained plan that includes a key employee of an employer must be included in the required aggregation group for that employer. See Question and Answer T-6 for rules concerning required aggregation. A collectively-bargained plan that does not include a key employee may be included in a permissive aggregation group. See Question and Answer T-7 for rules concerning permissive aggregation. However, the special rules in section 416 (b), (c), or (d) applicable to top-heavy plans do not apply with respect to any employee included in a unit of employees covered by an agreement which the Secretary of Labor finds to be a collective-bargaining agreement between employee representatives and one or more employers if there is evidence that retirement benefits were the subject of good faith bargaining between such employee representatives and such employer or employers. In determining whether there is a collective-bargaining agreement between employee representatives and one or more employers, the additional condition of section 7701(a)(46) must be satisfied after March 31, 1984.

T-4 Q. How is a terminated plan treated for purposes of the top-heavy rules?

A. A terminated plan is treated like any other plan for purposes of the top-heavy rules. For purposes of section 416, a terminated plan is one that has been formally terminated, has ceased crediting service for benefit accruals and vesting, and has been or is distributing all plan assets to participants or their beneficiaries as soon as administratively feasible. Such a plan must be aggregated with other plans of the employer if it was maintained within the last five years ending on the determination date for the plan year in question and would, but for the fact that it terminated, be part of a required aggregation group for such plan year. Distributions which have taken place within the five years ending on the determination date must be accounted for in accordance with section 416(g)(3). No additional vesting, benefit accruals or contributions must be provided for participants in a terminated plan.

T-5 Q. How are frozen plans treated for purposes of the top-heavy rules?

A. For purposes of section 416, a frozen plan is one in which benefit accruals have ceased but all assets have not been distributed to participants or their beneficiaries. Such plans are treated, for purposes of the top-heavy rules, as any non-frozen plan. That is, such plans must provide minimum contributions or benefit accruals, limit the amount of compensation which can be taken into account in providing benefits, and provide top-heavy vesting. A frozen defined contribution plan may not be required to provide additional contributions because of the rule in section 416(c)(2)(B).

T-6 Q. What is a required aggregation group?

A. For purposes of determining whether the plans of an employer are top-heavy for a particular plan year, the required aggregation group includes each plan of the employer in which a key employee participates in the plan year containing the determination date, or any of the four preceding plan years. In addition, each other plan of the employer which, during this period, enables any plan in which a key employee participates to meet the requirements of section 401(a)(4) or 410 is part of the required aggregation group. This concept may be illustrated by the following examples:

Example 1. An employer maintains two plans. Key employees participate in one plan, but not in the other. If the plan containing key employees independently satisfies the coverage and non-discrimination rules of sections 410 and 401(a)(4), it may be tested independently to determine whether it is top-heavy. Also, the plan not covering key employees would not be part of a required aggregation group and would not need to be tested to determine whether it is top-heavy. However, if the plan containing key employees satisfies the coverage requirements of section 410(b) or the non-discrimination requirements of section 401(a)(4) only when it is considered together with the other plan in accordance with § 1.410(b)-7(d), the plan not covering key employees would be part of the required aggregation group.

Example 2. A sole proprietor terminated a Keogh plan in 1981. In 1982, the sole proprietor incorporated and established a corporate plan with a calendar-year plan year. For purposes of determining whether the corporate plan is top-heavy for its 1984 plan year, the terminated Keogh plan and the corporate plan would be part of a required aggregation group. The sole proprietor and the corporation would be treated as a single employer under section 414(c). Under Question and Answer T-4, the terminated plan would be aggregated with the corporate plan because it was maintained within the five-year period ending on the determination date for the 1984 plan year and because, but for the fact that it terminated, it would be aggregated with the corporate plan because it covered a key employee.

T-7 Q. What is a permissive aggregation group?

A. A permissive aggregation group consists of plans of the employer that are required to be aggregated, plus one or more plans of the employer that are not part of a required aggregation group but that satisfy the requirements of sections 401(a)(4) and 410 when considered together with the required aggregation group. This concept may be illustrated by the following examples:

> *Example 1.* (a) An employer maintains two plans:
> 1. Plan A covers key employees and independently satisfies the requirements of sections 410 and 401(a)(4).
>
> 2. Plan B covers no key employees. It also independently satisfies the requirements of sections 410 and 401(a)(4).

(b) As indicated in Question and Answer T-6, Plan B is not required to be aggregated with Plan A. Further, if Plan B provided contributions or benefits that were not at least comparable to the contributions or benefits provided under Plan A, then Plan B could not be permissively aggregated with Plan A because the contributions and benefits would discriminate if the two plans were considered as a unit. However, if the benefits or contributions under Plan B were comparable to those under Plan A, the two plans would be permitted to be aggregated to determine whether or not the group consisting of both plans is top-heavy. If Plan A and Plan B are permitted to be aggregated, and if the permissive aggregation group is not top-heavy, then neither Plan A nor Plan B would be considered top-heavy.

Example 2. (a) Employer W maintains two plans.
1. Plan C covers salaried employees and independently satisfies the requirements of sections 410 and 401(a)(4).

2. Plan D covers employees who are included in a unit of employees covered by an agreement which the Secretary of Labor has found to be a collective-bargaining agreement between employee representatives and the employer and retirement benefits were bargained for between employee representatives and the employer.

(b) The fact that Plan D is a collectively-bargained plan does not necessarily mean that it may be permissively aggregated with Plan C. In order to be permissively aggregated with Plan C, Plan D must provide contributions or benefits with respect to service with Employer W that are at least comparable to the contributions or benefits provided under Plan C.

T-8 Q. May an employer permissively aggregate multiemployer plans, multiple employer plans and simplified employee pension plans to which the employer contributes with a plan covering key employees or a required aggregated group?

A. Yes. Multiemployer plans, multiple employer plans and simplified employee pensions to which an employer makes contributions may be permissively aggregated with a plan covering key employees or with a required aggregation group if the contributions or benefits provided under the multiemployer plan, multiple employer plan or simplified employee pension by the employer are comparable to the contributions or benefits provided under the plan covering key employees or the plans in the required aggregation group. In making this determination, only the employer's contribution to the simplified employee pension may be used.

T-9 Q. What plans will be treated as top-heavy if they are part of a required aggregation group that is top-heavy?

A. In the case of plans that are required to be aggregated, each plan in the required aggregation group will be top-heavy if the group is top-heavy. No plan in the required aggregation group will be top-heavy if the group is not top-heavy.

T-10 Q. If a required aggregation group is top-heavy, and one plan of the group satisfies the requirements of sections 416 (b), (c), and (d), may other plans in the group include provisions which do not satisfy sections 416 (b), (c) and (d)?

A. No. Each plan in a required aggregation group is top-heavy if the group is top-heavy. Thus, each plan must contain provisions satisfying the requirements of sections 416 (b) and (d). If all the plans are defined contribution plans, only one plan need satisfy the requirements of section 416(c)(2) with respect to any non-key employee who participates in more than one of the plans. If all the plans are defined benefit plans, only one plan need satisfy the requirements of section 416(c)(1) with respect to any non-key employee who participates in more than one of the plans. However, in the case of non-key employees who do not participate in more than one plan, each plan must separately provide the applicable minimum contribution or benefit with respect to each such employee. See Question and Answer M-12 in the case of employees who are covered under both a defined benefit and a defined contribution plan.

T-11 Q. What plans will be treated as top-heavy if a permissive aggregation group is top-heavy?

A. If a permissive aggregation group is top-heavy, only those plans that are part of the required aggregation group will be subject to the requirements of section 416 (b), (c) and (d). Plans that are not part of the required aggregation group will not be subject to these requirements. Thus, if an employer wishes to demonstrate that the plans maintained by the employer are not top-heavy, the employer need consider only the required aggregation group. If, after considering the required aggregation group, it is determined that the plans are not top-heavy, the requirements of section 416 (b), (c) and (d) will not apply to any of the plans. If, on the other hand, the plans required to be aggregated are top-heavy, the employer may wish to determine whether there are any plans that may be permissively aggregated to demonstrate that the plans are not top-heavy. Assuming that there are plans that are eligible for permissive aggregation, the employer may take these plans into consideration. If, after taking such plans into consideration, the net result is that the entire group is not top-heavy, the top-heavy requirements do not apply to any plan in the group.

T-12 Q. For purposes of determining whether a plan is top-heavy for a plan year, who is a key employee?

A. Under section 416(i)(1), a key employee is any employee (including any deceased employee) who at any time during the plan year containing the determination date for the plan year in question or the four preceding plan years (including plan years before 1984) is:

1. An officer of the employer having annual compensation from the employer for a plan year greater than 150 percent of the dollar limitation in effect under section 415(c)(1)(A) for the calendar year in which such plan year ends (see Questions and Answers T-13, T-14, and T-15),

2. One of the ten employees having annual compensation from the employer for a plan year greater than the dollar limitation in effect under section 415(c)(1)(A) for the calendar year in which such plan year ends and owning (or considered as owning within the meaning of section 318) both more than a $^{1}/_{2}$ percent interest and the largest interests in the employer (see Question and Answer T-19),

3. A 5-percent owner of the employer, or

4. A 1-percent owner of the employer having annual compensation from the employer for a plan year more than $150,000 (see Questions and Answers T-16 and T-21).

An individual may be considered a key employee in a plan year for more than one reason. For example, an individual may be both an officer and one of the ten largest owners. However, in testing whether a plan or group is top-heavy, an individual's accrued benefit is counted only once. The terms key employee, former key employee, and non-key employee include the beneficiaries of such individuals. This Question and Answer is illustrated by the following examples:

Example 1. An employer maintains a calendar-year plan. An individual who was an employee of the employer and a 5-percent owner of the employer in 1986 was neither an employee nor an owner in 1987 or thereafter. Even though the individual is no longer an employee or owner of the employer, the individual would be treated as a key employee for purposes of determining whether the plan is top-heavy for each plan year through the 1991 plan year. However, for purposes of determining whether the plan is top-heavy for the 1992 plan year and for subsequent plan years, the individual would be treated as a former key employee.

Example 2. The facts are the same as in example (1), except that the individual died in early 1987 and his total benefit under the plan was distributed to his beneficiary in 1987. Such distribution would be treated as the accrued benefit of the individual for each year through the 1991 plan year. However, such individual would be treated as a former key employee for purposes of determining whether the plan is top-heavy for the 1992 plan year and for subsequent plan years. The conclusions are not affected by whether the beneficiary of the individual is a non-key employee or a key employee of the employer.

T-13 Q. For purposes of defining a key employee, who is an officer?

A. Whether an individual is an officer shall be determined upon the basis of all the facts, including, for example, the source of his authority, the term for which elected or appointed, and the nature and extent of his duties. Generally, the term officer means an administrative executive who is in regular and continued service. The term officer implies continuity of service and excludes those employed for a special and single transaction. An employee who merely has the title of an officer but not the authority of an officer is not considered an officer for purposes of the key employee test. Similarly, an employee who does not have the title of an officer but has the authority of an officer is an officer for purposes of the key employee test. In the case of one or more employers treated as a single employer under sections 414(b), (c), or (m), whether or not an individual is an officer shall be determined based upon his responsibilities with respect to the employer or employers for which he is directly employed, and not with respect to the controlled group of corporations, employers under common control or affiliated service group. A partner of a partnership will not be treated as an officer for purposes of the key employee test merely because he owns a capital or profits interest in the partnership, exercises his voting rights as a partner, and may, for limited purposes, be authorized and does in fact act as an agent of the partnership.

T-14 Q. For purposes of determining whether a plan is top-heavy for a plan year, how many officers must be taken into account?

A. There is no minimum number of officers that must be taken into account. Only individuals who are in fact officers within the meaning of Question and Answer T-13 must be considered. For example, a corporation with only one officer and two employees would have only one officer for purposes of section 416(i)(1)(A)(i). After aggregating all employees (including leased employees within the meaning of section 414(n)) of employers required to be aggregated under section 414(b), (c) or (m), there is a maximum limit to the number of officers that are to be taken into account as officers for the entire group of employers that are so aggregated. The number of employees an employer (including all employers required to be aggregated under section 414(b), (c), or (m)) has for the plan year containing the determination date is the greatest number of employees it had during that plan year or any of the four preceding plan years. For purposes of this Question and Answer, employees include only those individuals who perform services for the employer during a plan year. If the number of employees (including part-time employees) of all the employers aggregated under section 414(b), (c) or (m) is less than 30 employees, no more than three individuals shall be treated as key employees for the plan year containing the determination date by reason of being officers. If the number of employees of all organizations aggregated under section 414(b), (c) or (m) is greater than 30 but less than 500, no more than 10% of the

number of employees will be treated as key employees by reason of being officers. (If 10% of the number of employees is not an integer, the maximum number of individuals to be treated as key employees by reason of being officers shall be increased to the next integer). If the number of employees of employers aggregated under section 414 (b), (c) and (m) exceeds 500, no more than 50 employees are to be considered as key employees by reason of being officers. This limited number of officers is comprised of the individual officers, selected from the group of all individuals who were officers in the plan year containing the determination date or any one of the four preceding plan years, who had annual plan year compensation (in the officer year) in excess of 150 percent of the dollar limitation in effect under section 415(c)(1)(A) for the calendar year in which the plan year ends and who had the largest annual plan-year compensation in that five-year period. (The definition of compensation contained in Question and Answer T-21 is to be used for this purpose.) In determining the officers of an employer, an employee who is an officer shall be counted as an officer for key employee purposes without regard to whether the employee is a key employee for any other reason. However, in testing whether the plan(s) is top-heavy, an individual's present value of accrued benefits is counted only once.

Example. A company is testing to see if its plan is top-heavy for the 1985 plan year. In each year from 1980 through 1984 it has more than 500 employees. Assume that

(1) because of rapid turnover among officers, the individuals who are officers each year are different from the individuals who are officers in any preceding year, and

(2) the annual plan year compensation of each officer exceeds 150 percent of the dollar limitation in effect under section 415(c)(1)(A) for the calendar year in which the plan year ends. Under the limitations, only a total of 50 individuals would be considered to be key employees by virtue of being officers in testing for top-heaviness for the 1985 plan year. Further, the 50 individuals considered as key employees under this test would be determined by selecting the 50 out of 250 individuals (50 different officers each year) who had the highest annual plan-year compensation during the 1980-1984 period (while officers).

T-15 Q. For purposes of section 416, do organizations other than corporations have officers?

A. Yes. For purposes of the top-heavy rules, sole proprietorships, partnerships, associations, trusts, and labor organizations may have officers. This rule is effective for purposes of determining whether a plan is top-heavy for plan years which begin after February 28, 1985.

T-16 Q. Who is a 1-percent owner of the employer?

A. (a) If the employer is a corporation, a 1-percent owner is any employee who owns (or is considered as owning within the meaning of section 318) more than 1 percent of the value of the outstanding stock of the corporation or stock possessing more than 1 percent of the total combined voting power of all stock of the corporation. If the employer is not a corporation, a 1-percent owner is any employee who owns more than 1 percent of the capital or profits interest in the employer. The rules of subsections (b), (c), and (m) of section 414 do not apply for purposes of determining who is a 1-percent owner.

(b) For purposes of determining who is a 1-percent owner, 5-percent owner, or top-ten owner, value means fair market value taking into account all facts and circumstances.

T-17 Q. Who is a 5-percent owner of the employer?

A. If the employer is a corporation, a 5-percent owner is any employee who owns (or is considered as owning within the meaning of section 318) more than 5 percent of the value of the outstanding stock of the corporation or stock possessing more than 5 percent of the total combined voting power of all stock of the corporation. If the employer is not a corporation, a 5-percent owner is any employee who owns more than 5 percent of the capital or profits interest in the employer. The rules of subsections (b), (c), and (m) of section 414 do not apply for purposes of determining who is a 5-percent owner.

T-18 Q. How do the rules of section 318 apply for purposes of determining ownership in an entity other than a corporation?

A. For purposes of determining ownership is an entity other than a corporation, the rules of section 318 apply in a manner similar to the way in which they apply for purposes of determining ownership in a corporation. For non-corporate interests, capital or profits interest must be substituted for stock.

T-19 Q. Which employees will be considered one of the top ten owners?

A. (a) For purposes of determining whether a plan is top-heavy for a plan year, the top ten owners are the ten employees who (1) own (or are considered as owning within the meaning of section 318) during the plan year containing the determination date or any of the four preceding plan years both more than a $^{1}/_{2}$ percent ownership interest in value and the largest percentage ownership interests in value of any of the employers required to be aggregated under section 414(b), (c), or (m), and (2) have during the plan year of ownership annual plan year compensation from the employer more than the limitation in effect under section 415(c)(1)(A) for the calendar year in which such plan year ends. The five years for which the test is made will be referred to as the "testing period." An employee whose annual plan year compensation exceeds the section 415(c)(1)(A) limit in effect for the calendar year in which a plan year in the testing period ends who has an ownership interest greater than $^{1}/_{2}$ percent in that plan year is considered to be one of the top ten owners unless at least ten other employees own a greater interest in the employer during any year of the testing period and have annual plan year compensation during such plan year of ownership greater than the section 415(c)(1)(A) limit in effect for the calendar year in which such plan year ends. Ownership each plan year is determined on the basis of percentage of ownership interest in total ownership value and not dollar amounts. Thus, an employee whose stock interest is valued at 15 percent of the total stock value of a corporation in year one that was worth $15,000 is ranked higher than an employee whose stock interest is valued at 5 percent of the total stock value of the same corporation in year three which is now worth $50,000.

(b) If an employee's ownership interest changes during a plan year, his ownership interest for the year is the largest interest owned at any time during the year. If two employees have the same ownership interest in the employer during the testing period, the employee having the largest annual compensation from the employer for the plan year during any part of which that ownership interest existed shall be treated as having a larger interest. Thus, if 25 employees each own 4 percent in value of the employer during the testing period, the 10 employees with the largest single plan year compensation during this period will be considered the top ten owners. For purposes of this Question and Answer, compensation has the meaning set forth in Question and Answer T-21. This Question and Answer is illustrated by the following examples:

Example 1. Corporation K maintains a calendar year defined contribution plan. On January 1, 1986, Corporation K has five owners who owned the following value percentages of K stock: A = 50%, B = 20%, C = 15%, D = 10%, and E = 5%. On June 30, 1987, the five owners of Corporation K sold all of their shares of stock. The new owners and their respective ownership percentages were: F = 40%, G = 30%, H = 10%, I = 10%, and J = 10%. Assume that, for 1986, A, B, C, D, and E had annual compensation from Corporation K greater than the section 415(c)(1)(A) limit and that, for 1987, F, G, H, I, and J also had compensation from Corporation K greater than the section 415(c)(1)(A) limit. For purposes of determining whether the plan is top-heavy for the 1991 plan year, the top ten owners will include A, B, C, D, E, F, G, H, I, and J because no 10 individuals during the testing period, 1986-1990, had a greater ownership interest than these individuals.

Example 2. Assume the same facts in *Example 1,* except that on June 1, 1988, F, G, H, I, and J sold their interests to new owners, K, L, M, N, and O. K, L, M, N, and O owned, respectively, 30%, 30%, 30%, 5% and 5% of the value of the shares of X. Assume also that for 1988 K, L, M, N, and O earned more than the section 415(c)(1)(A) limitation. For purposes of determining whether the plan is top-heavy for the 1991 plan year, the top ten owners will include: A, B, F, K, G, L, M, and C because these eight individuals owned the highest value percentages of the Corporation K stock. Since D, H, I, and J owned equal 10% interests in value, the two employees of this group who had the largest annual plan year compensation during the plan years of their ownership will be the last 2 top ten owners.

T-20 Q. For purposes of determining whether an employee is a key employee under section 416(i)(1)(A), what aggregation rules apply?

A. In the case of ownership percentages, each employer that would otherwise be aggregated under section 414 (b), (c) and (m) is treated as a separate employer. (See section 416(i)(1)(C).) However, for purposes of determining whether an individual has compensation of $150,000, or whether an individual is a key employee by reason of being an officer or a top ten owner, compensation from each entity required to be aggregated under sections 414 (b), (c) and (m) is taken into account. These rules may be illustrated by the following example:

Example. An individual owns two percent of the value of a professional corporation, which in turn owns a $^{1}/_{10}$th of 1 percent interest in a partnership. The entities must be aggregated in accordance with section 414(m). The individual performs services for the professional corporation and for the partnership. The individual receives compensation of $125,000 from the professional corporation and $26,000 from the partnership. The individual is considered to be a key employee with respect to the employer that comprises both the professional corporation and the partnership because he has a two percent interest in the professional corporation and because his combined compensation from both the professional corporation and the partnership is more than $150,000.

T-21. Q. For purposes of testing whether an individual has compensation of more than $150,000, what definition of compensation must be used?

A. The definition of compensation to be used is the definition in § 1.415(c)-2, however, compensation must be determined for a plan year, not a limitation year. Alternatively, compensation that would be stated on an employee's Form W-2, "Wage and Tax Statement," for the calendar year that ends with or within the plan year may be used, although amounts that would have been stated on the employee's Form W-2 but for an election under section 125, 132(f)(4), 401(k), 403(b), 408(k), 408(p)(2)(A)(i), or 457(b) must be included. A plan must use the same definition of compensation for all top-heavy plan purposes for which the definition in this Q and A must be used.

T-22 Q. In the case of an employer who maintains a single plan, when must the determination whether the plan is top-heavy be made?

A. Whether a plan is top-heavy for a particular plan year is determined as of the determination date for such plan year. The determination date with respect to a plan year is defined in section 416(g)(4)(C) as (1) the last day of the preceding plan year, or (2) in the case of the first plan year, the last day of such plan year. Distributions made and the present value of accrued benefits are generally determined as of the determination date. (See Questions and Answers T-24 and T-25 for more specific rules.)

T-23 Q. In the case of an aggregation group, when must the determination whether the group is top-heavy be made?

A. When two or more plans constitute an aggregation group in accordance with section 416(g)(2), the following procedures are used to determine whether the plans are top-heavy for a particular plan year. First, the present value of the accrued benefits (including distributions for key employees and all employees) is determined separately for each plan as of each plan's determination date. The plans are then aggregated by adding together the results for each plan as of the determination dates for such plans that fall within the same calendar year. The combined results will indicate whether or not the plans so aggregated are top-heavy. These rules may be illustrated by the following example:

Example. An employer maintains Plan A and Plan B, each containing a key employee. Plan A's plan year commences July 1 and ends June 30. Plan B's plan year is the calendar year. For Plan A's plan year commencing July 1, 1984, the determination date is June 30, 1984. For Plan B's plan year in 1985, the determination date is December 31, 1984. These plans are required to be aggregated. For each of these plans as of their respective determination dates, the present value of the accrued benefits for key employees and all employees are separately determined. The two determination dates, June 30, 1984, and December 31, 1984, fall within the same calendar year. Accordingly, the present values of accrued benefits as of each of these determination dates are combined for purposes of determining whether the group is top-heavy. If, after combining the two present values, the total results show that the group is top-heavy, Plan A will be top-heavy for the plan year commencing July 1, 1984, and Plan B will be top-heavy for the 1985 calendar year.

T-24 Q. How is the present value of an accrued benefit determined in a defined contribution plan?

A. The present value of accrued benefits as of the determination date for any individual is the sum of (a) the account balance as of the most recent valuation date occurring within a 12-month period ending on the determination date, and (b) an adjustment for contributions due as of the determination date. In the case of a plan not subject to the minimum funding requirements of section 412, the adjustment in (b) is generally the amount of any contributions actually made after the valuation date but on or before the determination date. However, in the first plan year of the plan, the adjustment in (b) should also reflect the amount of any contributions made after the determination date that are allocated as of a date in that first plan year. In the case of a plan that is subject to the minimum funding requirements, the account balance in (a) should include contributions that would be allocated as of a date not later than the determination date, even though those amounts are not yet required to be contributed. Thus, the account balance will include contributions waived in prior years as reflected in the adjusted account balance and contributions not paid that resulted in a funding deficiency. The adjusted account balance is described in Rev. Rul. 78-223, 1978-1 C.B. 125. Also, the adjustment in (b) should reflect the amount of any contribution actually made (or due to be made) after the valuation date but before the expiration of the extended payment period in section 412(c)(10).

T-25. Q. How is the present value of an accrued benefit determined in a defined benefit plan?

A. The present value of an accrued benefit as of a determination date must be determined as of the most recent valuation date which is within a 12-month period ending on the determination date. In the first plan year of a plan, the accrued benefit for a current employee must be determined either (i) as if the individual terminated service as of the determination date or (ii) as if the individual terminated service as of the valuation date, but taking into account the estimated accrued benefit as of the determination date. For the second plan year of a plan, the accrued benefit taken into account for a current participant must not be less than the accrued benefit taken into account for the first plan year unless the difference is attributable to using an estimate of the accrued benefit as of the determination date for the first plan year and using the actual accrued benefit as of the determination date for the second plan year. For any other plan year, the accrued benefit for a current employee must be determined as if the individual terminated service as of such valuation date. For this purpose, the valuation date must be the same valuation date for computing plan costs for minimum funding, regardless of whether a valuation is performed that year.

T-26. Q. What actuarial assumptions are used for determining the present value of accrued benefits for defined benefit plans?

A. (a) There are no specific prescribed actuarial assumptions that must be used for determining the present value of accrued benefits. The assumptions used must be reasonable and need not relate to the actual plan and investment experience. The assumptions need not be the same as those used for minimum funding purposes or for purposes of determining the actuarial equivalence of optional benefits under the plan. The accrued benefit for each current employee is computed as if the employee voluntarily terminated service as of the valuation date. The present value must be computed using an interest and a post-retirement mortality assumption. Pre-retirement mortality and future increases in cost of living (but not in the maximum dollar amount permitted by section 415) may also be assumed. However, assumptions as to future withdrawals or future salary increases may not be used. In the case of a plan providing a qualified joint and survivor annuity within the meaning of section 401(a)(11) as a normal form of benefit, for purposes of determining the present value of the accrued benefit, the spouse of the participant may be assumed to be the same age as the participant.

(b) Except in the case where the plan provides for a nonproportional subsidy, the present value should reflect a benefit payable commencing at normal retirement age (or attained age, if later). Thus, benefits not relating to retirement benefits, such as pre-retirement death and disability benefits and post-retirement medical benefits, must not be taken into account. Further, subsidized early retirement benefits and subsidized benefit options must not be taken into account unless they are nonproportional subsidies. See Question and Answer

T-27.

(c) Where the plan provides for a nonproportional subsidy, the benefit should be assumed to commence at the age at which the benefit is most valuable. In the case of two or more defined benefit plans which are being tested for determining whether an aggregation group is top-heavy, the actuarial assumptions used for all plans within the group must be the same. Any assumptions which reflect a reasonable mortality experience and an interest rate not less than five percent or greater than six percent will be considered as reasonable. Plans, however, are not required to use an interest rate in this range.

T-27 Q. In determining the present value of accrued benefits in a defined benefit plan, what standards are applied toward determining whether a subsidy is nonproportional?

A. A subsidy is nonproportional unless the subsidy applies to a group of employees that would independently satisfy the requirements of section 410(b). If two or more plans are considered as a unit for comparability purposes under § 1.410(b)-1(d)(3), subsidies may be necessary in both plans or else the

subsidy may be nonproportional. Thus, for example, in the case of a plan which provides an early retirement benefit after age 55 and 20 years of service equal to the normal retirement benefit without actuarial reduction and if the employees who may conceivably reach age 55 with 20 years of service would, as a group, satisfy the requirements of section 410(b), that subidy is proportional. However, in contrast, consider a plan that provides an early retirement benefit that is the actuarial equivalent of the normal retirement benefit. In determining the early retirement benefit, the plan imposes the section 415 limits only on the early retirement benefit (not on the normal retirement benefit before applying the early retirement reduction factors). In such a plan, a participant with a normal retirement benefit (before limitation by section 415) in excess of the section 415 limits will receive a subsidized early retirement benefit, whereas a participant with a lower normal retirement benefit will not. Thus, such a benefit would be a nonproportional subsidy if the group of individuals who are limited by the limitations under section 415 do not, by themselves, constitute a cross section of employees that could satisfy section 410(b).

T-28 Q. For purposes of determining the present value of accrued benefits in either a defined benefit or defined contribution plan, are the accrued benefits attributable to employee contributions considered to be part of the accrued benefits?

A. The accrued benefits attributable to employee contributions are considered to be part of the accrued benefits without regard to whether such contributions are mandatory or voluntary. However, the amounts attributable to deductible employee contributions (as defined in section 72(o)(5)(A)) are not considered to be part of the accrued benefits.

T-29 Q. How are plans described in section 401(k) treated for purposes of the top-heavy rules?

A. No special top-heavy rules are provided for plans described in section 401(k), except a transitional rule. For plan years beginning after December 31, 1984, amounts which an employee elects to defer are treated as employer contributions for purposes of determining minimum required contributions under section 416(c)(2). However, for plan years beginning prior to January 1, 1985, amounts which an employee elects to have contributed to a plan described in section 401(k) are not treated as employer contributions for these purposes. A plan described in section 401(k) which is top-heavy must provide minimum contributions by the employer and limit the amount of compensation which can be taken into account in providing benefits under the plan.

T-30 Q. What distributions are added to the present value of accrued benefits in determining whether a plan is top-heavy for a particular plan year?

A. Under section 416(g)(3)(A), distributions made within the plan year that includes the determination date and within the four preceding plan years are added to the present value of accrued benefits of key employees and non-key employees in testing for top-heaviness. However, in the case of distributions made after the valuation date and prior to the determination date, such distributions are not included as distributions in section 416(g)(3)(A) to the extent that such distributions are included in the present value of the accrued benefits as of the valuation date. In the case of the distribution of an annuity contract, the amount of such distribution is deemed to be the current actuarial value of the contract, determined on the date of the distribution. Certain distributions that are rolled over by the employee are not included as distributions. See Question and Answer T-32. A distribution will not fail to be considered in determining the present value of accrued benefits merely because it was made before the effective date of section 416. For purposes of this question and answer, distributions mean all distributions made by a plan, including all distributions of employee contributions made during and before the plan year.

T-31 Q. Are benefits paid on account of death treated as distributions for purposes of section 416(g)(3)?

A. Benefits paid on account of death are treated as distributions for purposes of section 416(g)(3) to the extent such benefits do not exceed the present value of accrued benefits existing immediately prior to death; benefits paid on account of death are not treated as distributions for purposes of section 416(g)(3) to the extent such benefits exceed the present value of accrued benefits existing immediately prior to death. The distribution from a defined contribution plan (including the cash value of life insurance policies) of a participant's account balance on account of death will be treated as a distribution for purposes of section 416(g)(3).

T-32 Q. How are rollovers and plan-to-plan transfers treated in testing whether a plan is top-heavy?

A. The rules for handling rollovers and transfers depend upon whether they are unrelated (both initiated by the employee and made from a plan maintained by one employer to a plan maintained by another employer) or related (a rollover or transfer either not initiated by the employee or made to a plan maintained by the same employer). Generally, a rollover or transfer made incident to a merger or consolidation of two or more plans or the division of a single plan into two or more plans will not be treated as being initiated by the employee. The fact that the employer initiated the distribution does not mean that the rollover was not initiated by the employee. For purposes of determining whether two employers are to be treated as the same employer, all employers aggregated under section 414(b), (c) or (m) are treated as the same employer. In the case of unrelated rollovers and transfers, (1) the plan making the distribution or transfer is to count the distribution as a distribution under section 416(g)(3), and (2) the plan accepting the rollover or transfer is not to consider the rollover or transfer as part of the accrued benefit if such rollover or transfer was accepted after December 31, 1983, but is to consider it as part of the accrued benefit if such rollover or transfer was accepted prior to January 1, 1984. In the case of related rollovers and transfers, the plan making the distribution or transfer is not to count the distribution or transfer under section 416(g)(3) and the plan accepting the rollover or transfer counts the rollover or transfer in the present value of the accrued benefits. Rules for related rollovers and transfers do not depend on whether the rollover or transfer was accepted prior to January 1, 1984.

T-33 Q. How are the aggregate defined benefit and defined contribution limits under section 415(e) affected by the top-heavy rules?

A. Section 416(h) modifies the aggregate limits in section 415(e) for super top-heavy plans and for top-heavy plans that are not super top-heavy but do not provide for an additional minimum contribution or benefit. A plan is a super top-heavy plan if the present value of accrued benefits for key employees exceeds 90% of the present value of the accrued benefits for all employees. In the case of a top-heavy aggregation group, the test is applied to all plans in the group as a whole. These present values are computed using the same rules as are used for determining whether the plan is top-heavy. In the case of a super top-heavy plan, in computing the denominators of the defined benefit and defined contribution fractions under section 415(e), a factor of 1.0 is used instead of 1.25 for all employees. In the case of a top-heavy plan that is not super top-heavy, the same rule applies unless each non-key employee who is entitled to a minimum contribution or benefit receives an additional minimum contribution or benefit. In the case of a defined benefit plan, the additional minimum benefit is one percentage point (up to a maximum of ten percentage points) for each year of service described in Question and Answer M-2 of the participant's average compensation for the years described in Question and Answer M-2. In the case of a defined contribution plan, the additional minimum contribution is one percent of the participant's compensation. If a plan does not provide the applicable additional one percent minimum or if a plan is super top-heavy, the factor of 1.25 may be used for an individual only if there are both no further accruals for that individual under any defined benefit plan and no further annual additions for that individual under any defined contribution plan until the combined fraction satisfies the rules of section

415(e) using the 1.0 factor for that individual. The rules contained in this Question and Answer apply for each limitation year that contains any portion of a plan year for which the plan is top-heavy. This Question and Answer may be illustrated by the following example:

Example. A Corporation maintains a profit-sharing plan and a defined benefit plan, and these plans constitute a required aggregation group. Both plans use the calendar year for the plan year and the limitation year under section 415. The plans were determined to be top-heavy for plan year 1986. The plans use the 1.25 factor under section 415(e), and non-key employees covered by both the profit-sharing and the defined benefit plan accrue, under the defined benefit plan, 3% of compensation for each year of service (up to a maximum of 30%). The plans become super top-heavy for the 1990 plan year. In order to satisfy section 415, no further accruals and no further annual additions may take place for any employee covered by both plans until the combined defined benefit-defined contribution fraction for such employee is less than 1.0, using the 1.0 factor in place of 1.25.

T-34 Q. May plans be permissively aggregated to avoid being super top-heavy?

A. Yes, plans may be permissively aggregated to avoid being super top-heavy.

T-35 Q. What provisions must be contained in a plan to comply with the top-heavy requirements?

A. Section 401(a)(10)(B) provides that a plan will qualify only if it contains provisions which will take effect if the plan becomes top-heavy and which meet the requirements of section 416. See Questions and Answers T-39 and T-40 for rules on what provisions must be included. Under section 401(a)(10)(B)(ii), regulations may waive this requirement for some plans. See Question and Answer T-38 for a description of plans that need not include such provisions.

T-36 Q. For an employer who has no employee who has participated or is eligible to participate in both a defined benefit and defined contribution plan (or a simplified employee pension, "SEP") of that employer, what provisions must be in the plan(s) to comply with the top-heavy requirements?

A. (a) If the defined benefit plan has no participants who are or could be participants in a defined contribution plan of the employer (or vice versa), the defined benefit plan (or defined contribution plan) need not include provisions describing the defined benefit or defined contribution fractions for purposes of section 415 and, thus, the plan need not contain provisions to determine whether the plan is super top-heavy or to change any plan provisions if the plan becomes super top-heavy. Furthermore, if the plan contains a single benefit structure that satisfies the requirements of section 416 (b), (c), and (d) for each plan year without regard to whether the plan is top-heavy for such year, the plan need not include separate provisions to determine whether the plan is top-heavy or that apply if the plan is top-heavy. If the plan's single benefit structure does not assure that section 416 (b), (c), and (d) will be satisfied in all cases, then the plan must include three types of provisions.

(b) First, the plan must contain provisions describing how to determine whether the plan is top-heavy. These provisions must include (1) the criteria for determining which employees are key employees (or non-key employees), (2) in the case of a defined benefit plan, the actuarial assumptions and benefits considered to determine the present value of accrued benefits, (3) a description of how the top-heavy ratio is computed, (4) a description of what plans (or types of plans) will be aggregated in testing whether the plan is top-heavy, and (5) a definition of the determination date and the valuation date applicable to the determination date. These determinations must be based on standards that are uniformly and consistently applied and that satisfy the rules set forth in section 416 and these Questions and Answers. The provisions in (1) and (3) above may be incorporated in the plan by reference to the applicable sections of the Internal Revenue Code without adversely affecting the qualification of the plan. However, the plan must state the definition of compensation for purposes of determining who is a key employee.

(c) Second, the plan must specifically contain the following provisions that will become effective if the plan becomes top-heavy: vesting that satisfies the minimum vesting requirements of section 416(b), benefits that will not be less than the minimum benefits set forth in section 416(c), and the compensation limitation described in section 416(d). The compensation limitation described in section 416(d) may be incorporated by reference. If a plan always meets the requirements of either section 416(b), (c) or (d), the plan need not include additional provisions to meet any such requirements.

(d) Third, the plan must include provisions insuring that any change in the plan's benefit structure (including vesting schedules) resulting from a change in the plan's top-heavy status will not violate section 411(a)(10). Thus, if a plan ceases being top-heavy, certain restrictions apply with respect to the change in the applicable vesting schedule.

T-37 Q. For an employer who maintains or has maintained both a defined benefit and a defined contribution plan (or a simplified employee pension, “SEP”) and some participants do or could participate in both types of plan, what provisions must be in the plans to comply with the top-heavy requirements?

A. If an employer maintains (or has maintained) both a defined benefit plan and a defined contribution plan (or SEP), and the plans have or could have participants who participate in both types of plans, then the plans must contain more provisions than those described in Question and Answer T-36. First, the plans may exclude rules to determine whether the plan is top-heavy (or to apply when the plan is top-heavy) only if both plans contain a single benefit structure that satisfies sections 416 (b), (c), and (d) without regard to whether the plans are top-heavy. Second, unless the plans always satisfy the requirements of section 415(e) using the 1.0 factor in the defined benefit and defined contribution fractions as described in section 416(h)(i), the plans must include provisions similar to those in Question and Answer T-36 (for top-heavy) to determine whether the plan is super top-heavy and to satisfy section 416(h) if it is.

T-38 Q. Are any plans exempted from including top-heavy provisions?

A. Section 401(a)(10)(B) exempts governmental plans (as defined in section 414(d)) from the top-heavy requirements and provides that regulations may exempt certain plans from including the top-heavy provisions. A plan need not include any top-heavy provisions if the plan: (1) is not top-heavy, and (2) covers only employees who are included in a unit of employees covered by a collective-bargaining agreement (if retirement benefits were the subject of good faith bargaining) or employees of employee representatives. The requirement set forth in section 7701(a)(46) must be met before an agreement will be considered a collective-bargaining agreement after March 31, 1984.

T-39 Q. Must ratios be computed each year to determine whether a plan is top-heavy?

A. No. In order to administer the plan, the plan administrator must know whether the plan is top-heavy. However, precise top-heavy ratios need not be computed every year. If, on examination, the Internal Revenue Service requests a demonstration as to whether the plan is top-heavy (or super top-heavy; see Question and Answer T-33) the employer must demonstrate to the Service's satisfaction that the plan is not operating in violation of section 401(a)(10)(B). For purposes of any demonstration, the employer may use computations that are not precisely in accordance with this section but which mathematically prove that the plan is not top-heavy. For example, if the employer determined the present value of accrued benefits for key employees in a simplified manner which overstated that value, determined the present value for non-key employees in a simplified manner which understated that value, and the ratio of the key employee present value divided by the sum of the present values was less than 60 percent, the plan would

not be considered top-heavy. This would be a sufficient demonstration because the simplified fraction could be shown to be greater than the exact fraction and, thus, the exact fraction must also be less than 60 percent.

Several methods that may be used to simplify the determinations are indicated below.

(1) If the top-heavy ratio, computed considering all the key employees and only some of the non-key employees, is less than 60 percent, then it is not necessary to accumulate employee data on the remaining non-key employees. Inclusion of additional non-key employees would only further decrease the ratio.

(2) If the number of key employees is known but the identity of the key employees is not known (i.e. if the only key employees are officers and the limit on officers is applicable), the numerator may be determined by using a hypothetical “worst case” basis. Thus, in the case of a defined benefit plan, if the numerator of the top-heavy ratio were determined assuming each key employee's present value of accrued benefits were equal to the maximum section 415 benefits at the age that would maximize such present value, that assumption would only overstate the present value of accrued benefits for key employees. Thus, if that ratio is less than 60 percent, the plan is not top-heavy and accurate data on the key employees need not be collected.

(3) If the employer has available present value of accrued benefit computations for key and non-key employees in a defined benefit plan, and these values differ from those that would be produced under Question and Answer T-25 only by inclusion of a withdrawal assumption, the present value for the key employees (but not the non-key employees) may be adjusted to a “worst case” value by dividing by the lowest possible probability of not withdrawing from plan participation before normal retirement age. If the top-heavy ratio based on this inflated key employee value is less than 60 percent, the present value need not be recomputed without the withdrawal assumption. The methods set forth in this answer may also be used to determine whether a plan is super top-heavy by inserting “90%” for “60%” in the appropriate places.

T-40 Q. Will a plan fail to qualify if it provides that the $200,000 maximum amount of annual compensation taken into account under section 416(d) for any plan year that the plan is top-heavy may be automatically increased in accordance with regulations under section 416?

A. No.

T-41 Q. If a plan provides benefits based on compensation in excess of $200,000 and the plan becomes top-heavy, must any accrued benefits attributable to this excess compensation be eliminated?

A. No. For any year that a plan is top-heavy, section 416(d) provides that compensation in excess of $200,000 must not be taken into account. However, a top-heavy plan may continue to provide for any benefits attributable to compensation in excess of $200,000 to the extent such benefits were accrued before the plan was top-heavy. Furthermore, section 411(d)(6) will be violated if any individual's pre-top-heavy benefit is reduced by either (1) a plan amendment adding the $200,000 restriction, or (2) an automatic change in the plan benefits structure imposing the $200,000 restriction due to the plan's becoming top-heavy.

T-42 Q. Under a top-heavy defined benefit plan, are the requirements of section 416(d) satisfied if the annual compensation of an employee taken into account to determine plan benefits is limited to the amount currently described in section 416(d) for years during which the plan is top-heavy but higher compensation is taken into account for years before the plan became top-heavy?

A. No. For the top-heavy plan to meet the requrements of section 416(d), compensation for all years, including years before the plan became top-heavy, that is taken into account to determine plan benefits must not exceed the amount currently described in section 416(d). However, if the accrued benefit as of the end of the last plan year before the plan became top-heavy (ignoring any plan amendments after that date) is greater than the accrued benefit determined by limiting compensation in accordance with section 416(d), that higher accrued benefit as of the end of the last plan year before the plan became top-heavy must not be reduced. Providing such higher accrued benefit will not cause the plan to violate section 416(d).

T-43 Q. What happens to an individual who has ceased employment before a plan becomes top-heavy?

A. If an individual has ceased employment before a plan becomes top-heavy, such individual would not be required to receive any additional benefit accruals, contributions, or vesting, unless the individual returned to employment with the employer. See Questions and Answers V-3, M-4, and M-10. In addition, if the individual is receiving benefits based on annual compensation greater than $200,000, such benefits cannot be decreased.

V. Vesting Rules for Top-Heavy Plans

V-1 Q. What vesting must be provided under a top-heavy plan?

A. Under section 416(b), the accrued benefits attributable to employer contributions must be nonforfeitable in accordance with one of two statutory standards. Either such accrued benefits must be nonforfeitable after 3 years of service or the nonforfeitable portion of accrued benefits must be at least 20 percent after 2 years of service, 40 percent after 3 years of service, 60 percent after 4 years of service, 80 percent after 5 years of service, and 100 percent after 6 years of service. The accrued benefits attributable to employer contributions has the same meaning as under section 411(c) of the Code. As under section 411(a), the accrued benefits attributable to employee contributions must be nonforfeitable at all times.

V-2 Q. What service must be counted in determining vesting requirements?

A. All service required to be counted under section 411(a) must be counted for these purposes. All service permitted to be disregarded under section 411(a)(4) may similarly be disregarded under the schedules of section 416(b).

V-3 Q. What benefits must be subject to the minimum vesting schedule of section 416(b)?

A. All accrued benefits within the meaning of section 411(a)(7) must be subject to the minimum vesting schedule. These accrued benefits include benefits accrued before the effective date of section 416 and benefits accrued before a plan becomes top-heavy. However, when a plan becomes top-heavy, the accrued benefits of any employee who does not have an hour of service after the plan becomes top-heavy are not required to be subject to the minimum vesting schedule. Accrued benefits which have been forfeited before a plan becomes top-heavy need not vest when a plan becomes top-heavy.

V-4 Q. May a top-heavy plan provide a minimum eligibility requirement of the later of age 21 or the completion of 3 years of service and provide that all benefits are nonforfeitable when accrued?

A. Yes. For plan years which begin after December 31, 1984, a top-heavy plan may provide a minimum eligibility requirement of the later of age 21, or the completion of 3 years of service, and provide that all benefits are nonforfeitable when accrued. For plan years which begin before January 1, 1985, “25” may be substituted for “21” in the preceding sentence.

V-5 Q. What does nonforfeitable mean?

A. In general, nonforfeitable has the same meaning as in section 411(a). However, the minimum benefits required under section 416 (to the extent required to be nonforfeitable under section 416(b)) may not be forfeited under section 411(a)(3) (B) or (D). Thus, if benefits are suspended (ceased) during a period of reemployment, the benefit payable upon the subsequent resumption of payments must be actuarially increased to reflect the nonpayment of benefits during such period of re-employment.

V-6 Q. Will a class-year plan automatically satisfy the minimum vesting requirements in section 416(b) if it provides that contributions with respect to any plan year become nonforfeitable no later than the end of the third plan year following the plan year for which the contribution was made?

A. No. Although this vesting schedule is similar to the 3-year minimum vesting schedule permitted by section 416(b)(1)(A), it does not satisfy that minimum. The 3-year vesting schedule in section 416(b)(1)(A) requires that, after completion of 3 years of service, the entire accrued benefit of a participant be nonforfeitable. Under the class-year vesting schedule described above, a portion of a participant's accrued benefit (that portion attributable to contributions for the prior 3 years) is forfeitable regardless of the participant's years of service.

V-7 Q. When a top-heavy plan ceases to be a top-heavy, may the vesting schedule be altered to a vesting schedule permitted without regard to section 416?

A. When a top-heavy plan ceases to be top-heavy, the vesting schedule may be changed to one that would otherwise be permitted. However, in changing the vesting schedule, the rules described in section 411(a)(10) apply. Thus, the nonforfeitable percentage of the accrued benefit before the plan ceased to be top-heavy must not be reduced; also, any employee with five or more years of service must be given the option of remaining under the prior (i.e., top-heavy) vesting schedule.

M. Minimum Benefits under Top-heavy Plans

M-1 Q. Which employees must receive minimum contributions or benefits in a top-heavy plan?

A. Generally, every non-key employee who is a participant in a top-heavy plan must receive minimum contributions or benefits under such plan. However, see Questions and Answers M-4 and M-10 for certain exceptions. Different minimums apply for defined benefit and defined contribution plans.

M-2 Q. What is the defined benefit minimum?

A. (a) The defined benefit minimum requires that the accrued benefit at any point in time must equal at least the product of (i) an employee's average annual compensation for the period of consecutive years (not exceeding five) when the employee had the highest aggregate compensation from the employer and (ii) the lesser of 2% per year of service with the employer or 20%.

(b) For purposes of the defined benefit minimum, years of service with the employer are generally determined under the rules of section 411(a) (4), (5) and (6). However, a plan may disregard any year of service if the plan was not top-heavy for any plan year ending during such year of service, or if the year of service was completed in a plan year beginning before January 1, 1984.

(c) In determining the average annual compensation for a period of consecutive years during which the employee had the largest aggregate compensation, years for which the employee did not earn a year of service under the rules of section 411(a) (4), (5), and (6) are to be disregarded. Thus, if an employee has received compensation from the employer during years one two, and three, and for each of these years the employee earned a year of service, then the employee's average annual compensation is determined by dividing the employee's aggregate compensation for these three years by three. If the employee fails to earn a year of service in the next year, but does earn a year of service in the fifth year, the employee's average annual compensation is calculated by dividing the employee's aggregate compensation for years one, two, three, and five by four. The compensation required to be taken into account is the compensation described in Question and Answer T-21. In addition, compensation received for years ending in plan years beginning before January 1, 1984, and compensation received for years beginning after the close of the last plan year in which the plan is top-heavy may be disregarded.

(d) The defined benefit minimum is expressed as a life annuity (with no ancillary benefits) commencing at normal retirement age. Thus, if post-retirement death benefits are also provided, the 2% minimum annuity benefit may be adjusted. (See Question and Answer M-3.) The 2% minimum annuity benefit may not be adjusted due to the provision of pre-retirement ancillary benefits. Normal retirement age has the same meaning as under section 411(a)(8).

(e) Any accruals of employer-derived benefits, whether or not attributable to years for which the plan is top-heavy, may be used to satisfy the defined benefit minimums. Thus, if a non-key employee had already accrued a benefit of 20 percent of final average pay at the time the plan became top-heavy, no additional minimum accruals are required (although the accrued benefit would increase as final average pay increased). Accrued benefits attributable to employee contributions must be ignored. Accrued benefits attributable to employer and employee contributions have the same meaning as under section 411(c).

M-3 Q. What defined benefit minimum must be received if an employee receives a benefit in a form other than a single life annuity or a benefit other than at normal retirement age?

A. If the form of benefit is other than a single life annuity, the employee must receive an amount that is the actuarial equivalent of the minimum single life annuity benefit. If the benefit commences at a date other than at normal retirement age, the employee must receive at least an amount that is the acturial equivalent of the minimum single life annuity benefit commencing at normal retirement age. Thus, the employee may receive a lower benefit if the benefit commences before the normal retirement age and the employee must receive a higher benefit if the benefit commences after the normal retirement age. No specific actuarial assumptions are mandated providing different actuarial equivalents. However, the assumptions must be reasonable.

M-4 Q. Which employees must accrue a minimum benefit in a top-heavy defined benefit plan?

A. Each non-key employee who is a participant in a top-heavy defined benefit plan and who has at least one thousand hours of service (or equivalent service as determined under Department of Labor regulations, 29 CFR 2530.200b-3) for an accrual computation period must accrue a minimum benefit in a top-heavy defined benefit plan for that accrual computation period. If the accrual computation period does not coincide with the plan year, a minimum benefit must be provided, if required, for both accrual

periods within the top-heavy plan year. For a top-heavy plan that does not base accruals on accrual computation periods, minimum benefits must be credited for all periods of service required to be credited for benefit accrual. (See § 1.410(a)-7). A non-key employee may not fail to accrue a minimum benefit merely because the employee was not employed on a specified date. Similarly, a non-key employee may not fail to accrue a minimum benefit because either (1) an employee is excluded from participation (or accrues no benefit) merely because the employee's compensation is less than a stated amount, or (2) the employee is excluded from participation (or accrues no benefit) merely because of a failure to make mandatory employee contributions.

M-5 Q. Would the defined benefit minimum be satisfied if the plan provides a normal retirement benefit equal to the greater of the plan's projected formula or the projected minimum benefit and if benefits accrue in accordance with the fractional rule described in section 411(b)(1)(C)?

A. No. The fact that this fractional rule would not satisfy the defined benefit minimum may be illustrated by the following example. Consider a non-key employee, age 25, entering a top-heavy plan in which the projected minimum for the employee is greater than the projected benefit under the normal formula. Under the fractional rule, the employee's accrued benefit ten years later at age 35 would be 5% (20% × (10/40)). Under section 416, the employee's minimum accrued benefit after ten years of service must be at least 20%. Thus, because the 5% benefit is less than the 20% benefit required under section 416, such benefit would not satisfy the required minimum.

M-6 Q. What benefit must an employer provide in a top-heavy defined benefit employee pay-all plan?

A. The defined benefit minimum in an employee pay-all top-heavy plan is the same as that for a plan which has employer contributions. That is, the employer must provide the benefits specified in Question and Answer M-2.

M-7 Q. What is the defined contribution minimum?

A. The sum of the contributions and forfeitures allocated to the account of any non-key employee who is a participant in a top-heavy defined contribution plan must equal at least 3% of such employee's compensation (see Question and Answer T-21 for the definition of compensation) for that plan year or for the calendar year ending within the plan year. However, a lower minimum is permissible where the largest contribution made or required to be made for key employees is less than 3%. The preceding sentence does not apply to any plan required to be included in an aggregation group if such plan enables a defined benefit plan required to be included in such group to meet the requirements of section 401(a)(4) or 410. The contribution made or required to be made on behalf of any key employee is equal to the ratio of the sum of the contributions made or required to be made and forfeitures allocated for such key employee divided by the compensation (not in excess of $200,000) for such key employee. Thus, the defined contribution minimum that must be provided for any non-key employee for a top-heavy plan year is the largest percentage of compensation (not in excess of $200,000) provided on behalf of any key employee for that plan year (if the largest percentage of compensation provided on behalf of any key employee for that plan year is less than 3%).

M-8 Q. If an employer maintains two top-heavy defined contribution plans, must both plans provide the defined contribution minimum for each non-key employee who is a participant in both plans?

A. No. If one of the plans provides the defined contribution minimum for each non-key employee who participates in both plans, the other plan need not provide an additional contribution for such employees. However, the other plan must provide the vesting required by section 416(b) and must limit compensation (based on all compensation from all aggregated employers) in providing benefits as required by section 416(d).

M-9 Q. In the case of the waiver of minimum funding standards of section 412(d), how does section 416 treat the defined contribution minimum?

A. For purposes of determining the contribution that is required to be made on behalf of a key employee, a waiver of the minimum funding requirements is disregarded. Thus, if a defined contribution plan receives a waiver of the minimum funding requirement, and if the minimum contribution required under the plan without regard to the waiver exceeds 3%, the exception described in Question and Answer M-7 does not apply even though no key employee receives a contribution in excess of 3% and even though the amount required to be contributed on behalf of the key employee has been waived. Also, a waiver of the minimum funding requirements will not alter the requirements of section 416. Thus, in the case of the top-heavy defined contribution plan in which the non-key employee must receive an allocation, a waiver of the minimum funding requirements may eliminate a funding violation and such waiver will preclude a violation under section 416 even though the required contribution is not made. However, the adjusted account balance (as described in Rev. Rul. 78-223, 1978-1 C.B. 125) of the non-key employees must reflect the required minimum contribution even though such contribution was not made.

M-10 Q. Which employees must receive the defined contribution minimum?

A. Those non-key employees who are participants in a top-heavy defined contribution plan who have not separated from service by the end of the plan year must receive the defined contribution minimum. Non-key employees who have become participants but who subsequently fail to complete 1,000 hours of service (or the equivalent) for an accrual computation period must receive the defined contribution minimum. A non-key employee may not fail to receive a defined contribution minimum because either (1) the employee is excluded from participation (or accrues no benefit) merely because the employee's compensation is less than a stated amount, or (2) the employee is excluded from participation (or accrues no benefit) merely because of a failure to make mandatory employee contributions or, in the case of a cash or deferred arrangement, elective contributions.

M-11 Q. May either the defined benefit minimum or the defined contribution minimum be integrated with social security?

A. No.

M-12 Q. What minimum contribution or benefit must be received by a non-key employee who participates in a top-heavy plan?

A. In the case of an employer maintaining only one plan, if such plan is a defined benefit plan, each non-key employee covered by that plan must receive the defined benefit minimum. If such plan is a defined contribution plan (including a target benefit plan), each non-key employee covered by the plan must receive the defined contribution minimum. In the case of an employer who maintains more than one plan, employees covered under only the defined benefit plan must receive the defined benefit minimum. Employees covered under only the defined contribution plan must receive the defined contribution minimum. In the case of employees covered under both defined benefit and defined contribution plans, the rules are more complicated. Section 416(f) precludes, in the case of employees covered under both defined benefit and defined contribution plans, either required duplication or inappropriate omission. Therefore, such employees need not receive both the defined benefit and the defined contribution minimums.

There are four safe harbor rules a plan may use in determining which minimum must be provided to a non-key employee who is covered by both defined benefit and defined contribution plans. Since the defined benefit minimums are generally more valuable, if each employee covered under both a top-heavy defined benefit plan and a top-heavy defined contribution plan receives the defined benefit minimum, the

defined benefit and defined contribution minimums will be satisfied. Another approach that may be used is a floor offset approach (see Rev. Rul. 76-259, 1976-2 C.B. 111) under which the defined benefit minimum is provided in the defined benefit plan and is offset by the benefits provided under the defined contribution plan. Another approach that may be used in the case of employees covered under both defined benefit and defined contribution plans is to prove, using a comparability analysis (see Rev. Rul. 81-202, 1981-2 C.B. 93) that the plans are providing benefits at least equal to the defined benefit minimum. Finally, in order to preclude the cost of providing the defined benefit minimum alone, the complexity of a floor offset plan and the annual fluctuation of a comparability analysis, a safe haven minimum defined contribution is being provided. If the contributions and forfeitures under the defined contribution plan equal 5% of compensation for each plan year the plan is top-heavy, such minimum will be presumed to satisfy the section 416 minimums.

M-13 Q. An employer maintains a defined benefit plan and a profit-sharing plan. Both plans are top-heavy and are members of a required aggregation group. In order to meet the minimum contribution/minimum benefit requirements, the employer decides to contribute 5% of compensation to the profit-sharing plan. What happens if for a particular plan year there are no profits out of which to make contributions to the profit-sharing plan?

A. In this particular situation, in order to satisfy the requirements of section 416(c), the employer must provide the defined contribution minimum, 5% of compensation. This rule is an exception to the general rule that an employer cannot make a contribution to a profit-sharing plan if there are no profits. Alternatively, the employer may provide the defined benefit minimum for this year.

M-14 Q. What minimum contribution or benefit must be received by a non-key employee when he is covered under both a defined benefit plan and defined contribution plan (both of which are top-heavy) of an employer and the employer desires to use a factor of 1.25 in computing the denominators of the defined benefit and defined contribution fractions under section 415(e)?

A. In this particular situation, the employer may use one of the four rules set forth in Question and Answer M-12, subject to the following modifications. The defined benefit minimum must be increased by one percentage point (up to a maximum of ten percentage points) for each year of service described in Question and Answer M-2 of the participant's average compensation for the years described in Question and Answer M-2. The defined contribution minimum is increased to $7^{1}/_{2}$ percent of compensation. If the floor offset or comparability analysis approach is used, the defined benefit minimum must be increased by one percentage point (up to a maximum of ten percentage points) for each year of service described in Question and Answer M-2 of the participant's average compensation for the years described in Question and Answer M-2.

M-15 Q. May an employer use a different method each year to meet the requirements of Question and Answer M-12 or Question and Answer M-14 without amending the plans each year?

A. No. An employer must set forth in the plan document the method he will use to meet the requirements of Question and Answer M-12 or M-14, as the case may be. If an employer desires to change the method, the plan document must be amended.

M-16 Q. Will target benefit plans be treated as defined benefit or defined contribution plans for purposes of the top-heavy rules?

A. Target benefit plans will be treated as defined contribution plans for purposes of the top-heavy rules.

M-17 Q. Can a plan described in section 412(i) (funded exclusively by level premium insurance contracts) also satisfy the minimum benefit requirements of section 416?

A. The accrued benefits provided for a non-key employee under most level premium insurance contracts might not provide a benefit satisfying the defined benefit minimum because of the lower cash values in early years under most level premium insurance contracts, and because such contracts normally provide for level premiums until normal retirement age. However, a plan will not be considered to violate the requirements of section 412(i) merely because it funds certain benefits through either an auxiliary fund or deferred annuity contracts, if the following conditions are met:

(1) The targeted benefit at normal retirement age under the level premium insurance contract is determined, taking into account the defined benefit minimum that would be required assuming the current top-heavy (or non top-heavy) status of the plan continues until normal retirement age; and

(2) The benefits provided by the auxiliary fund or deferred annuity contracts do not exceed the excess of the defined benefit minimum benefits over the benefits provided by the level premium insurance contract.

If the above conditions are satisfied, then the plan is still exempt from the minimum funding requirements under section 412 and may still utilize the special accrued benefit rule in section 411(b)(1)(F) subject to the following modifications: Although the portion of the plan funded by the level premium annuity contract is exempt from the minimum funding requirements, the portion funded by an auxiliary fund is subject to those requirements. (Thus, a funding standard account must be maintained and a Schedule B must be filed with the annual report). The accrued benefit for any participant may be determined using the rule in section 411(b)(1)(F) but must not be less than the defined benefit minimum.

M-18 Q. May qualified nonelective contributions described in section 401(m)(4)(C) be treated as employer contributions for purposes of the minimum contribution or benefit requirement of section 416?

A. Yes. This is the case even if the qualified nonelective contributions are taken into account under the actual deferral percentage test of § 1.401(k)-1(b)(2) or under the actual contribution percentage test of § 1.401(m)-1(b).

M-19 Q. May matching contributions described in section 40l(m)(4)(A) be treated as employer contributions for purposes of the minimum contribution or benefit requirement of section 416?

A. Matching contributions allocated to key employees are treated as employer contributions for purposes of determining the minimum contribution or benefit under section 416. However, if a plan uses contributions allocated to employees other than key employees on the basis of employee contributions or elective contributions to satisfy the minimum contribution requirement, these contributions are not treated as matching contributions for purposes of applying the requirements of sections 401(k) and 401(m) for plan years beginning after December 31, 1988. Thus these contributions must meet the nondiscrimination requirements of section 401(a)(4) without regard to section 401(m). See § 1.401(m)-1(f)(12)(iii).

M-20 Q. May elective contributions be treated as employer contributions for purposes of satisfying the minimum contribution or benefit requirement of section 416(c)(2)?

A. Elective contributions on behalf of key employees are taken into account in determining the minimum required contribution under section 416(c)(2). However, elective contributions on behalf of employees other than key employees may not be treated as employer contributions for purposes of the minimum contribution or benefit requirement of section 416. See section 401(k)(4)(C) and the regulations thereunder. This Question and Answer is effective for plan years beginning after December 31, 1988.

[T.D. 7997, 49 FR 50646, Dec. 31, 1984, as amended by T.D. 8357, 56 FR 40550, Aug. 15, 1991; T.D. 9319, 72 FR 16929, Apr. 5, 2007; T.D. 9849, 84 FR 9234, Mar. 14, 2019]

§ 1.417(a)(3)-1 Required explanation of qualified joint and survivor annuity and qualified preretirement survivor annuity.

(a) ***Written explanation requirement*** —

(1) ***General rule.*** A plan meets the survivor annuity requirements of section 401(a)(11) only if the plan meets the requirements of section 417(a)(3) and this section regarding the written explanation required to be provided a participant with respect to a QJSA or a QPSA. A written explanation required to be provided to a participant with respect to either a QJSA or a QPSA under section 417(a)(3) and this section is referred to in this section as a section 417(a)(3) explanation. See § 1.401(a)-20, Q&A-37, for exceptions to the written explanation requirement in the case of a fully subsidized QPSA or QJSA, and § 1.401(a)-20, Q&A-38, for the definition of a fully subsidized QPSA or QJSA.

(2) ***Time for providing section 417(a)(3) explanation*** —

(i) ***QJSA explanation.*** See § 1.417(e)-1(b)(3)(ii) for rules governing the timing of the QJSA explanation.

(ii) ***QPSA explanation.*** See § 1.401(a)-20, Q&A-35, for rules governing the timing of the QPSA explanation.

(3) ***Required method for providing section 417(a)(3) explanation.*** A section 417(a)(3) explanation must be a written explanation. First class mail to the last known address of the participant is an acceptable delivery method for a section 417(a)(3) explanation. Likewise, hand delivery is acceptable. However, the posting of the explanation is not considered provision of the section 417(a)(3) explanation. But see § 1.401(a)-21 of this chapter for rules permitting the use of electronic media to provide applicable notices to recipients with respect to retirement plans.

(4) ***Understandability.*** A section 417(a)(3) explanation must be written in a manner calculated to be understood by the average participant.

(b) ***Required content of section 417(a)(3) explanation*** —

(1) ***Content of QPSA explanation.*** The QPSA explanation must contain a general description of the QPSA, the circumstances under which it will be paid if elected, the availability of the election of the QPSA, and, except as provided in paragraph (d)(3) of this section, a description of the financial effect of the election of the QPSA on the participant's benefits (*i.e.,* an estimate of the reduction to the participant's estimated normal retirement benefit that would result from an election of the QPSA).

(2) ***Content of QJSA explanation.*** The QJSA explanation must satisfy either paragraph (c) or paragraph (d) of this section. Under paragraph (c) of this section, the QJSA explanation must contain certain specific information relating to the benefits available under the plan to the particular participant. Alternatively, under paragraph (d) of this section, the QJSA explanation can contain generally applicable information in lieu of specific participant information, provided that the participant has the right to request additional information regarding the participant's benefits under the plan.

(c) ***Participant-specific information required to be provided*** —

(1) ***In general.*** A QJSA explanation satisfies this paragraph (c) if it provides the following information with respect to each of the optional forms of benefit presently available to the participant (i.e., optional forms of benefit for which the QJSA explanation applies that have an annuity starting date after the providing of the QJSA explanation and optional forms of benefit with retroactive annuity starting dates that are available with payments commencing at that same time)—

(i) A description of the optional form of benefit;

(ii) A description of the eligibility conditions for the optional form of benefit;

(iii) A description of the financial effect of electing the optional form of benefit (i.e., the amounts and timing of payments to the participant under the form of benefit during the participant's lifetime, and the amounts and timing of payments after the death of the participant);

(iv) In the case of a defined benefit plan, a description of the relative value of the optional form of benefit compared to the value of the QJSA, in the manner described in paragraph (c)(2) of this section; and

(v) A description of any other material features of the optional form of benefit.

(2) ***Requirement for numerical comparison of relative values*** —

(i) ***In general.*** The description of the relative value of an optional form of benefit compared to the value of the QJSA under paragraph (c)(1)(iv) of this section must be expressed to the participant in a manner that provides a meaningful comparison of the relative economic values of the two forms of benefit without the participant having to make calculations using interest or mortality assumptions. Thus, in performing the calculations necessary to make this comparison, the benefits under one or both optional forms of benefit must be converted, taking into account the time value of money and life expectancies, so that the values of both optional forms of benefit are expressed in the same form. For example, such a comparison may be expressed to the participant using any of the following techniques—

(A) Expressing the actuarial present value of the optional form of benefit as a percentage or factor of the actuarial present value of the QJSA;

(B) Stating the amount of the annuity that is the actuarial equivalent of the optional form of benefit and that is payable at the same time and under the same conditions as the QJSA; or

(C) Stating the actuarial present value of both the optional form of benefit and the QJSA.

(ii) ***Use of one form for both married and unmarried individuals*** —

(A) ***In general.*** Under the rules of this paragraph (c)(2)(ii), in lieu of providing different QJSA explanations for married and unmarried individuals, the plan may provide a QJSA explanation to an individual that does not vary based on the participant's marital status. Except as specifically provided in this section, any reference in this section to comparing the relative value of an optional form of benefit to the value of the QJSA may be satisfied using the substitution permitted under paragraph (c)(2)(ii)(B) or (C) of this section.

(B) ***Substitution of single life annuity for married individual.*** For a married participant, in lieu of comparing the value of each optional form of benefit presently available to the participant to the value of the QJSA, the plan can compare the value of each optional form of benefit (including the QJSA) to the value of a QJSA for an unmarried participant (*i.e.,* a single life annuity), but only if that same single life annuity is available to that married participant.

(C) ***Substitution of joint and survivor annuity for unmarried individual.*** For an unmarried participant, in lieu of comparing the value of each optional form of benefit presently available to the participant to the value of the QJSA for that individual (which is a single life annuity), the plan can compare the value of each optional form of benefit (including the single life annuity) to the value of the joint and survivor annuity that is the QJSA for a married participant, but only if that same joint and survivor annuity is available to that unmarried participant.

(iii) ***Simplified presentations permitted*** —

(A) ***Grouping of certain optional forms.*** Two or more optional forms of benefit that have approximately the same value may be grouped for purposes of a required numerical comparison described in this paragraph (c)(2). For this purpose, two or more optional forms of benefit have approximately the same value if none of those optional forms of benefit vary in relative value in comparison to the value of the QJSA by more than 5 percentage points when the relative value comparison is made by expressing the actuarial present value of each of those optional forms of benefit as a percentage of the actuarial present value of the QJSA. For such a group of optional forms of benefit, the requirement relating to disclosing the relative value of each optional form of benefit compared to the value of the QJSA can be satisfied by disclosing the relative value of any one of the optional forms in the group compared to the value of the QJSA, and disclosing that the other optional forms of benefit in the group are of approximately the same value. If a single-sum distribution is included in such a group of optional forms of benefit, the single-sum distribution must be the distribution form that is used for purposes of this comparison.

(B) ***Representative relative value for grouped optional forms.*** If, in accordance with paragraph (c)(2)(iii)(A) of this section, two or more optional forms of benefits are grouped, the relative values for all of the optional forms of benefit in the group can be stated using a representative relative value as the approximate relative value for the entire group. For this purpose, a representative relative value is any relative value that is not less than the relative value of the member of the group of optional forms of benefit with the lowest relative value and is not greater than the relative value of the member of that group with the highest relative value when measured on a consistent basis. For example, if three grouped optional forms have relative values of 87.5 percent, 89 percent, and 91 percent of the value of the QJSA, all three optional forms can be treated as having a relative value of approximately 90 percent of the value of the QJSA. As required under paragraph (c)(2)(iii)(A) of this section, if a single-sum distribution is included in the group of optional forms of benefit, the 90 percent relative factor of the value of the QJSA must be disclosed as the approximate relative value of the single sum, and the other forms can be described as having the same approximate value as the single sum.

(C) ***Special rule for optional forms of benefit that are close in value to the QJSA.*** The relative value of all optional forms of benefit that have an actuarial present value that is at least 95% of the actuarial present value of the QJSA and no greater than 105% of the actuarial present value of the QJSA is permitted to be described by stating that those optional forms of benefit are approximately equal in value to the QJSA, or that all of those forms of benefit and the QJSA are approximately equal in value.

(iv) ***Actuarial assumptions used to determine relative values.*** For the purpose of providing a numerical comparison of the value of an optional form of benefit to the value of the immediately commencing QJSA under this paragraph (c)(2), the following rules apply—

(A) If an optional form of benefit is subject to the requirements of section 417(e)(3) and § 1.417(e)-1(d), any comparison of the value of the optional form of benefit to the value of the QJSA must be made using the applicable mortality table and the applicable interest rate as defined in § 1.417(e)-1(d)(2) and (3) (or, at the option of the plan, another reasonable interest rate and reasonable mortality table used under the plan to calculate the amount payable under the optional form of benefit); and

(B) All other optional forms of benefit payable to the participant must be compared with the QJSA using a single set of interest and mortality assumptions that are reasonable and that are applied uniformly with respect to all such optional forms payable to the participant (regardless of whether those assumptions are actually used under the plan for purposes of determining benefit payments). For this purpose, the reasonableness of interest and mortality assumptions is determined without regard to the circumstances of the individual participant. In addition, the applicable mortality table and the applicable interest rate as defined in § 1.417(e)-1(d)(2) and (3) are considered reasonable actuarial assumptions for this purpose and thus are permitted (but not required) to be used.

(v) ***Required disclosure of assumptions*** —

(A) ***Explanation of concept of relative value.*** The notice must provide an explanation of the concept of relative value, communicating that the relative value comparison is intended to allow the participant to compare the total value of distributions paid in different forms, that the relative value comparison is made by converting the value of the optional forms of benefit presently available to a common form (such as the QJSA or a single-sum distribution), and that this conversion uses interest and life expectancy assumptions. The explanation of relative value must include a general statement that all comparisons provided are based on average life expectancies, and that the relative value of payments ultimately made under an annuity optional form of benefit will depend on actual longevity.

(B) ***Disclosure of assumptions.*** A required numerical comparison of the value of the optional form of benefit to the value of the QJSA under this paragraph (c)(2) is required to include a disclosure of the interest rate that is used to develop the comparison. If all optional forms of benefit are permitted to be grouped under paragraph (c)(2)(iii)(A) of this section, then the requirement of this paragraph (c)(2)(v)(B) does not apply for any optional form of benefit not subject to the requirements of section 417(e)(3) and § 1.417(e)-1(d)(3).

(C) ***Offer to provide actuarial assumptions.*** If the plan does not disclose the actuarial assumptions used to calculate the numerical comparison required under paragraph (c)(2) of this section, then, the notice must be accompanied by a statement that includes an offer to provide, upon the participant's request, the actuarial assumptions used to calculate the relative value of optional forms of benefit under the plan.

(3) ***Permitted estimates of financial effect and relative value*** —

(i) ***General rule.*** For purposes of providing a description of the financial effect of the distribution forms available to a participant as required under paragraph (c)(1)(iii) of this section, and for purposes of providing a description of the relative value of an optional form of benefit compared to the value of the QJSA for a participant as required under paragraph (c)(1)(iv) of this section, the plan is permitted to provide reasonable estimates (e.g., estimates based on data as of an earlier date than the annuity starting date, a reasonable assumption for the age of the participant's spouse, or, in the case of a defined contribution plan, reasonable estimates of amounts that would be payable under a purchased annuity contract), including reasonable estimates of the applicable interest rate under section 417(e)(3).

(ii) ***Right to more precise calculation.*** If a QJSA notice uses a reasonable estimate under paragraph (c)(3)(i) of this section, the QJSA explanation must identify the estimate and explain that the plan will, upon the request of the participant, provide a more precise calculation and the plan must provide the participant with a more precise calculation if so requested. Thus, for example, if a plan provides an estimate of the amount of the QJSA that is based on a reasonable assumption concerning the age of the participant's spouse, the participant can request a calculation that takes into account the actual age of the spouse, as provided by the participant.

(iii) ***Revision of prior information.*** If a more precise calculation described in paragraph (c)(3)(ii) of this section materially changes the relative value of an optional form compared to the value of the QJSA, the revised relative value of that optional form must be disclosed, regardless of whether the financial effect of selecting the optional form is affected by the more precise calculation. For example, if a participant provides a plan with the age of the participant's spouse and that information materially changes the relative value of an optional form of benefit (such as a single sum) compared to the value of the QJSA, then the revised relative value of the optional form of benefit and the value of the QJSA must be disclosed, regardless of whether the amount of the payment under that optional form of benefit is affected by the more precise calculation.

(4) ***Special rules for disclosure of financial effect for defined contribution plans.*** For a written explanation provided by a defined contribution plan, a description of financial effect required by paragraph (c)(1)(iii) of this section with respect to an annuity form of benefit must include a statement that the annuity will be provided by purchasing an annuity contract from an insurance company with the participant's account balance under the plan. If the description of the financial effect of the optional form of benefit is provided using estimates rather than by assuring that an insurer is able to provide the amount disclosed to the participant, the written explanation must also disclose this fact.

(5) ***Simplified presentations of financial effect and relative value to enhance clarity for participants*** —

(i) ***In general.*** This paragraph (c)(5) permits certain simplified presentations of financial effect and relative value of optional forms of benefit to permit more useful presentations of information to be provided to participants in certain cases in which a plan offers a range of optional forms of benefit. Paragraph (c)(5)(ii) of this section permits simplified presentations of financial effect

and relative value for a plan that offers a significant number of substantially similar optional forms of benefit. Paragraph (c)(5)(iii) of this section permits simplified presentations of financial effect and relative value for a plan that permits the participant to make separate benefit elections with respect to parts of a benefit.

(ii) ***Disclosure for plans offering a significant number of substantially similar optional forms of benefit*** —

(A) ***In general.*** If a plan offers a significant number of substantially similar optional forms of benefit within the meaning of paragraph (c)(5)(ii)(B) of this section and disclosing the financial effect and relative value of each such optional form of benefit would provide a level of detail that could be overwhelming rather than helpful to participants, then the financial effect and relative value of those optional forms of benefit can be disclosed by disclosing the relative value and financial effect of a representative range of examples of those optional forms of benefit as described in paragraph (c)(5)(ii)(C) of this section if the requirements of paragraph (c)(5)(ii)(D) of this section (relating to additional information available upon request) are satisfied.

(B) ***Substantially similar optional forms of benefit.*** For purposes of this paragraph (c)(5)(ii), optional forms of benefit are substantially similar if those optional forms of benefit are identical except for a particular feature or features (with associated adjustment factors) and the feature or features vary linearly. For example, if a plan offers joint and survivor annuity options with survivor payments available in every whole number percentage between 50% and 100%, those joint and survivor annuity options are substantially similar optional forms of benefit. Similarly, if a participant is entitled under the plan to receive a particular form of benefit with an annuity starting date that is the first day of any month beginning three years before commencement of a distribution and ending on the date of commencement of the distribution, those forms of benefit are substantially similar optional forms of benefit.

(C) ***Representative range of examples.*** A range of examples with respect to substantially similar optional forms of benefit as permitted under this paragraph (c)(5) is representative only if it includes examples illustrating the financial effect and relative value of the optional forms of benefit that reflect each varying feature at both extremes of its linear range, plus at least one example illustrating the financial effect and relative value of the optional forms of benefit that reflects each varying feature at an intermediate point. However, if one intermediate example is insufficient to illustrate the pattern of variation in relative value with respect to a varying feature, examples sufficient to illustrate such pattern must be provided. Thus, for example, if a plan offers joint and survivor annuity options with survivor payments available in every whole number percentage between 50% and 100%, and if all such optional forms of benefit would be permitted to be disclosed as approximately equal in value as described in paragraph (c)(5)(ii)(B) of this section, the plan could satisfy the requirement to disclose the financial effect and relative value of a representative range of examples of those optional forms of benefit by disclosing the financial effect and relative value with respect to the joint and 50% survivor annuity, the joint and 75% survivor annuity, and the joint and 100% survivor annuity.

(D) ***Requirement to provide information with respect to other optional forms of benefit upon request.*** If a QJSA explanation discloses the financial effect and relative value of substantially similar optional forms of benefit by disclosing the financial effect and

relative value of a representative range of examples in accordance with this paragraph (c)(5)(ii), the QJSA explanation must explain that the plan will, upon the request of the participant, disclose the financial effect and relative value of any particular optional form of benefit from among the substantially similar optional forms of benefit and the plan must provide the participant with the financial effect and relative value of any such optional form of benefit if the participant so requests.

(iii) ***Separate presentations permitted for elections that apply to parts of a benefit.*** If the plan permits the participant to make separate benefit elections with respect to two or more portions of the participant's benefit, the description of the financial effect and relative values of optional forms of benefit can be made separately for each such portion of the benefit, rather than for each optional form of benefit (i.e., each combination of possible elections).

(d) ***Substitution of generally applicable information for participant information in the section 417(a)(3) explanation —***

(1) ***Forms of benefit available.*** In lieu of providing the information required under paragraphs (c)(1)(i) through (v) of this section for each optional form of benefit presently available to the participant as described in paragraph (c) of this section, the QJSA explanation may contain the information required under paragraphs (c)(1)(i) through (v) of this section for the QJSA and each other optional form of benefit generally available under the plan, along with a reference to where a participant may readily obtain the information required under paragraphs (c)(1)(i) through (v) of this section for any other optional forms of benefit that are presently available to the participant.

(2) ***Financial effect and comparison of relative values —***

(i) ***General rule.*** In lieu of providing a statement of the financial effect of electing an optional form of benefit as required under paragraph (c)(1)(iii) of this section, or a comparison of relative values as required under paragraph (c)(1)(iv) of this section, based on the actual age and benefit of the participant, the QJSA explanation is permitted to include a chart (or other comparable device) showing the financial effect and relative value of optional forms of benefit in a series of examples specifying the amount of the optional form of benefit payable to a hypothetical participant at a representative range of ages and the comparison of relative values at those same representative ages. Each example in this chart must show the financial effect of electing the optional form of benefit pursuant to the rules of paragraph (c)(1)(iii) of this section, and a comparison of the relative value of the optional form of benefit to the value of the QJSA pursuant to the rules of paragraph (c)(2) of this section, using reasonable assumptions for the age of the hypothetical participant's spouse and any other variables that affect the financial effect, or relative value, of the optional form of benefit. The requirement to show the financial effect of electing an optional form can be satisfied through the use of other methods (e.g., expressing the amount of the optional form as a percentage or a factor of the amount payable under the normal form of benefit), provided that the method provides sufficient information so that a participant can determine the amount of benefits payable in the optional form. The chart (or other comparable device) must be accompanied by the disclosures described in paragraph (c)(2)(v) of this section explaining the concept of relative value and disclosing certain interest assumptions. In addition, the chart (or other comparable device) must be accompanied by a general statement describing the effect of significant variations between the assumed ages or other variables on the financial effect of electing the optional form of benefit and the comparison of the relative value of the optional form of benefit to the value of the QJSA.

(ii) ***Actual benefit must be disclosed.*** The generalized notice described in this paragraph (d)(2) will satisfy the requirements of paragraph (b)(2) of this section only if the notice includes either the amount payable to the participant under the normal form of benefit or the amount payable to the participant under the normal form of benefit adjusted for immediate commencement. For this purpose, the normal form of benefit is the form under which payments due to the participant under the plan are expressed under the plan, prior to adjustments for form of benefit. For example, assuming that a plan's benefit accrual formula is expressed as a straight life annuity, the generalized notice must provide the amount of either the straight life annuity commencing at normal retirement age or the straight life annuity commencing immediately. Reasonable estimates of the type described in paragraph (c)(3)(i) of this section may be used to determine the amount payable to the participant under the normal form of benefit for purposes of this paragraph (d)(2)(ii) if the requirements of paragraphs (c)(3)(ii) and (iii) of this section are satisfied with respect to those estimates.

(iii) ***Ability to request additional information.*** The generalized notice described in this paragraph (d)(2) must be accompanied by a statement that includes an offer to provide, upon the participant's request, a statement of financial effect and a comparison of relative values that is specific to the participant for any presently available optional form of benefit, and a description of how a participant may obtain this additional information.

(3) ***Financial effect of QPSA election.*** In lieu of providing a specific description of the financial effect of the QPSA election, the QPSA explanation may provide a general description of the financial effect of the election. Thus, for example, the description can be in the form of a chart showing the reduction to a hypothetical participant's normal retirement benefit at a representative range of participant ages as a result of the QPSA election (using a reasonable assumption for the age of the hypothetical participant's spouse relative to the age of the hypothetical participant). In addition, this chart must be accompanied by a statement that includes an offer to provide, upon the participant's request, an estimate of the reduction to the participant's estimated normal retirement benefit, and a description of how a participant may obtain this additional information.

(4) ***Additional information required to be furnished at the participant's request*** —The generalized notice described in paragraph (d)(2) of this section must be accompanied by a statement that includes an offer to provide, upon the participant's request, information described in this paragraph (d)(4)(i) and (ii), and a description of how a participant may obtain this additional information.

(i) ***Explanation of QJSA.*** If, as permitted under paragraphs (d)(1) and (2) of this section, the content of a QJSA explanation does not include all the items described in paragraph (c) of this section, then, upon a participant's request for any of the information required under paragraphs (c)(1)(i) through (v) of this section for one or more presently available optional forms (including a request for all optional forms presently available to the participant), the plan must furnish the information required under paragraphs (c)(1)(i) through (v) of this section with respect to those optional forms. Thus, with respect to those optional forms of benefit, the participant must receive a QJSA explanation specific to the participant that is based on the participant's actual age and benefit. In addition, the plan must comply with paragraph (c)(3)(iii) of this section. Further, if as permitted under paragraph (c)(2)(v)(B) of this section, the plan does not disclose the actuarial assumptions used to calculate the numerical comparison required under paragraph (c)(2) of this section, then, upon request, the plan must provide the actuarial assumptions used to calculate the relative value of optional forms of benefit under the plan.

(ii) ***Explanation of QPSA.*** If, as permitted under paragraph (d)(3) of this section, the content of a QPSA explanation does not include all the items described in paragraph (b)(1) of this section, then, upon a participant's request, the plan must furnish an estimate of the reduction to the participant's estimated normal retirement benefit that would result from a QPSA election.

(5) ***Use of participant-specific information in generalized notice.*** A QJSA explanation does not fail to satisfy the requirements of this paragraph (d) merely because it contains an item of participant-specific information in place of the corresponding generally applicable information.

(e) ***Examples.*** The following examples illustrate the application of this section. Solely for purposes of these examples, the applicable interest rate that applies to any distribution that is subject to the rules of section 417(e)(3) is assumed to be $52^1/_2$ percent, and the applicable mortality table under section 417(e)(3) and § 1.417(e)-1(d)(2) is assumed to be the table that applies as of January 1, 2003. In addition, solely for purposes of these examples, assume that a plan which determines actuarial equivalence using 6 percent interest and the applicable mortality table under section 417(e)(3) and § 1.417(e)-1(d)(2) that applies as of January 1, 1995, is using reasonable actuarial assumptions. The examples are as follows:

Example 1. (i) Participant M participates in Plan A, a qualified defined benefit plan. Under Plan A, the QJSA is a joint and 100 percent survivor annuity, which is actuarially equivalent to the single life annuity determined using 6 percent interest and the section 417(e)(3) applicable mortality table that applies as of January 1, 1995. On October 1, 2004, M will terminate employment at age 55. When M terminates employment, M will be eligible to elect an unreduced early retirement benefit, payable as either a single life annuity or the QJSA. M will also be eligible to elect a single-sum distribution equal to the actuarial present value of the single life annuity payable at normal retirement age (age 65), determined using the applicable mortality table and the applicable interest rate under section 417(e)(3).
(ii) Consistent with paragraph (c) of this section, Participant M is provided with a QJSA explanation that describes the single life annuity, the QJSA, and single-sum distribution options under the plan, and any eligibility conditions associated with these options. Participant M is married when the explanation is provided. The explanation indicates that, if Participant M commenced benefits at age 55 and had a spouse age 55, the monthly benefit under an immediately commencing single life annuity is $3,000, the monthly benefit under the QJSA is estimated to be 89.96 percent of the monthly benefit under the immediately commencing single life annuity or $2,699, and the single sum is estimated to be 74.7645 times the monthly benefit under the immediately commencing single life annuity or $224,293.

(iii) The QJSA explanation indicates that the single life annuity and the QJSA are of approximately the same value, but that the single-sum option is equivalent in value to a monthly benefit under the QJSA of $1,215. (This amount is 45 percent of the value of the QJSA at age 55 ($1,215 divided by 89.96 percent of $3,000 equals 45 percent).) The explanation states that the relative value comparison converts the value of the single life annuity and the single-sum options to the value of each if paid in the form of the QJSA and that this conversion uses interest and life expectancy assumptions. The explanation specifies that the calculations relating to the single-sum distribution were prepared using 5.5 percent interest and average life expectancy, that the other

calculations were prepared using a 6 percent interest rate and that the relative value of actual annuity payments for an individual can vary depending on how long the individual and spouse live. The explanation notes that the calculation of the QJSA assumed that the spouse was age 55, that the amount of the QJSA will depend on the actual age of the spouse (for example, annuity payments will be significantly lower if the spouse is significantly younger than the participant), and that the amount of the single-sum payment will depend on the interest rates that apply when the participant actually takes a distribution. The explanation also includes an offer to provide a more precise calculation to the participant taking into account the spouse's actual age.

(iv) In accordance with paragraph (c)(3)(ii) of this section, Participant M requests a more precise calculation of the financial effect of choosing a QJSA taking into account that Participant M's spouse is 50 years of age. Using the actual age of Participant M's spouse, Plan A determines that the monthly payments under the QJSA are 87.62 percent of the monthly payments under the single life annuity, or $2,628.60 per month, and provides this information to M. Plan A is not required to provide an updated calculation of the relative value of the single sum because the value of single sum continues to be 45 percent of the value of the QJSA.

Example 2. (i) The facts are the same as in *Example 1,* except that the comparison of the relative values of optional forms of benefit to the value of the QJSA is not expressed as a percentage of the actuarial present value of the QJSA, but instead is expressed by disclosing the actuarial present values of the optional forms and the QJSA. In addition, the Plan uses the applicable interest rate and the applicable mortality table under section 417(e)(3) for all comparison purposes.
(ii) Accordingly, the QJSA explanation indicates that the QJSA has an actuarial present value of $498,089, while the single-sum payment has an actuarial present value of $224,293 (*i.e.* the amount of the single sum is $224,293) and that the single life annuity is approximately equal in value to the QJSA. The explanation states that the relative value comparison converts the value of single life annuity and the QJSA into an amount payable in the form of the single-sum option (even though a single-sum distribution in that amount is not available under the plan) and that this conversion uses interest and life expectancy assumptions. The explanation specifies that the calculations were prepared using 5.5 percent interest and average life expectancy, and that the relative value of actual annuity payments for an individual can vary depending on how long the individual and spouse live. The explanation notes that the calculation of the QJSA assumed that the spouse was age 55, that the amount of the QJSA will depend on the actual age of the spouse (for example, annuity payments will be significantly lower if the spouse is significantly younger than the participant), and that the amount of the single-sum payment will depend on the interest rates that apply when the participant actually takes a distribution. The explanation also includes an offer to provide a more precise calculation to the participant taking into account the spouse's actual age.

Example 3. (i) The facts are the same as in *Example 1,* except that, in lieu of providing

information specific to Participant M in the QJSA notice as set forth in paragraph (c) of this section, Plan A satisfies the QJSA explanation requirement in accordance with paragraph (d)(2) of this section by providing M with a statement that M's monthly benefit under an immediately commencing single life annuity (which is the normal form of benefit under Plan A, adjusted for immediate commencement) is $3,000, along with the following chart. The chart shows the financial effect of electing each optional form of benefit for a hypothetical participant with a $1,000 benefit and a spouse who is the same age as the participant. Instead of showing the relative value of these optional forms of benefit compared to the value of the QJSA, the chart shows the relative value of these optional forms of benefit compared to the value of the single life annuity. Separate charts are provided for ages 55, 60, and 65 as follows:

Age 55 Commencement

Optional form	Amount of distribution per $1,000 of immediate single life annuity	Relative value
Life Annuity	$1,000 per month	n/a.
QJSA (Joint and 100 percent survivor annuity)	$900 per month ($900 per month for survivor annuity)	Approximately the same value as the Life Annuity.
Lump sum	$74,764	Approximately 45 percent of the value of the Life Annuity.

Age 60 Commencement

Optional form	Amount of distribution per $1,000 of immediate single life annuity	Relative value
Life Annuity	$1,000 per month	n/a.
QJSA (Joint and 100 percent survivor annuity)	$878 per month ($878 per month for survivor annuity)	Approximately the same value as the Life Annuity.
Lump sum	$99,792	Approximately 66 percent of the

Optional form	Amount of distribution per $1,000 of immediate single life annuity	Relative value
		value of the Life Annuity.

AGE 65 COMMENCEMENT

Optional form	Amount of distribution per $1,000 of immediate single life annuity	Relative value
Life Annuity	$1,000 per month	n/a.
QJSA (Joint and 100 percent survivor annuity)	$852 per month ($852 per month for survivor annuity)	Approximately the same value as the Life Annuity.
Lump sum	$135,759	Approximately the same value as the Life Annuity.

(ii) In accordance with paragraph (d)(4)(i) of this section, when Participant M requests specific information regarding the amounts payable under the QJSA, the joint and 100 percent survivor annuity, and the single-sum distribution and provides the age of M's spouse, Plan A determines that M's QJSA is $2,628.60 per month and the single-sum distribution is $224,293. The actuarial present value of the QJSA (determined using the 5.5 percent interest and the section 417(e)(3) applicable mortality table) is $498,896 and the actuarial present value of the single life annuity is $497,876. Accordingly, the specific information discloses that the single-sum distribution has a value that is 45 percent of the value of the single life annuity available to M on October 1, 2004. In accordance with paragraph (c)(2)(iii)(C) of this section, the QJSA notice provides that the QJSA is of approximately the same value as the single life annuity.

Example 4. (i) The facts are the same as in *Example 1,* except that under Plan A, the single-sum distribution is determined as the actuarial present value of the immediately commencing single life annuity. In addition, Plan A provides a joint and 75 percent survivor annuity that is reduced from the single life annuity and that is the QJSA under Plan A. For purposes of determining the amount of the QJSA, if the participant is married the reduction is only half of the reduction that would normally apply under the actuarial assumptions specified in Plan A for determining actuarial equivalence of optional forms.

(ii) In lieu of providing information specific to Participant M in the QJSA notice as set forth in paragraph (c) of this section, Plan A satisfies the QJSA explanation requirement in accordance with paragraph (d)(2) of this section by providing M with a statement that M's monthly benefit under an immediately commencing single life annuity (which is the normal form of benefit under Plan A, adjusted for immediate commencement) is $3,000, along with the following chart showing the financial effect and the relative value of the optional forms of benefit compared to the QJSA for a hypothetical participant with a $1,000 benefit and a spouse who is three years younger than the participant. For each optional form generally available under the plan, the chart shows the financial effect and the relative value, using the grouping rules of paragraph (c)(2)(iii) of this section. Separate charts are provided for ages 55, 60, and 65, as follows:

AGE 55 COMMENCEMENT

Optional form	Amount of distribution per $1,000 of immediate single life annuity	Relative value
Life Annuity	$1,000 per month	Approximately the same value as the QJSA.
QJSA (joint and 75 percent survivor annuity for a participant who is married)	$956 per month ($717 per month for survivor annuity)	n/a.
Joint and 100 percent survivor annuity	$886 per month ($886 per month for survivor annuity)	Approximately the same value as the QJSA.
Lump sum	$165,959	Approximately the same value as the QJSA.

AGE 60 COMMENCEMENT

Optional form	Amount of distribution per $1,000 of immediate single life annuity	Relative value
Life Annuity	$1,000 per month	Approximately 94 percent of the value of the QJSA.

Optional form	Amount of distribution per $1,000 of immediate single life annuity	Relative value
QJSA (joint and 75 percent survivor annuity for a participant who is married)	$945 per month ($709 per month for survivor annuity)	n/a.
Joint and 100 percent survivor annuity	$859 per month ($859 per month for survivor annuity)	Approximately 94 percent of the value of the QJSA.
Lump sum	$151,691	Approximately the same value as the QJSA.

AGE 65 COMMENCEMENT

Optional form	Amount of distribution per $1,000 of immediate single life annuity	Relative value
Life Annuity	$1,000 per month	Approximately 93 percent of the value of the QJSA.
QJSA (joint and 75 percent survivor annuity for a participant who is married)	$932 per month ($699 per month for survivor annuity)	n/a.
Joint and 100 percent survivor annuity	$828 per month ($828 per month for survivor annuity)	Approximately 93 percent of the value of the QJSA.
Lump sum	$135,759	Approximately 93 percent of the value of the QJSA.

(iii) The chart disclosing the financial effect and relative value of the optional forms specifies that the calculations were prepared assuming that the spouse is three years younger than the participant, that the calculations relating to the single-sum distribution were prepared using 5.5 percent interest and average life expectancy, that the other calculations were prepared using a 6 percent interest rate, and that the relative value of actual payments for an individual can vary depending on how long the individual and spouse live. The explanation states that the relative

value comparison converts the single life annuity, the joint and 100 percent survivor annuity, and the single-sum options to value of each if paid in the form of the QJSA and that this conversion uses interest and life expectancy assumptions. The explanation notes that the calculation of the QJSA depends on the actual age of the spouse (for example, annuity payments will be significantly lower if the spouse is significantly younger than the participant), and that the amount of the single-sum payment will depend on the interest rates that apply when the participant actually takes a distribution. The explanation also includes an offer to provide a calculation specific to the participant upon request, and an offer to provide mortality tables used in preparing calculations upon request.
(iv) In accordance with paragraph (d)(4)(i) of this section, Participant M requests specific information regarding the amounts payable under the QJSA, the joint and 100 percent survivor annuity, and the single sum.

(v) Based on the information about the age of Participant M's spouse, Plan A determines that M's QJSA is $2,856.30 per month, the joint and 100 percent survivor annuity is $2,628.60 per month, and the single sum is $497,876. The actuarial present value of the QJSA (determined using the 5.5 percent interest and the section 417(e)(3) applicable mortality table, the actuarial assumptions required under section 417) is $525,091. Accordingly, the value of the single-sum distribution available to M on October 1, 2004, is 94.8 percent of the actuarial present value of the QJSA. In addition, the actuarial present value of the life annuity and the 100 percent joint and survivor annuity are 95.0 percent of the actuarial present value of the QJSA.

(vi) Plan A provides M with a QJSA explanation that incorporates these more precise calculations of the financial effect and relative value of the optional forms for which M requested information.

(f) ***Effective date*** —

(1) ***General effective date for QJSA explanations*** —

(i) ***In general.*** Except as otherwise provided in this paragraph (f), this section applies to a QJSA explanation with respect to any distribution with an annuity starting date that is on or after February 1, 2006.

(ii) ***Reasonable, good faith transition rule.*** Except with respect to any portion of a QJSA explanation that is subject to the earlier effective date rule of paragraph (f)(2) of this section, a reasonable, good faith effort to comply with these regulations will be deemed to satisfy the requirements of these regulations for QJSA explanations provided before January 1, 2007, with respect to distributions with annuity starting dates that are on or after February 1, 2006. For this purpose, a reasonable, good faith effort to comply with these regulations includes substantial compliance with § 1.417(a)(3)-1 as it appeared in 26 CFR part 1 revised April 1, 2004.

(2) ***Special effective date for certain QJSA explanations*** —

(i) ***Application to QJSA explanations with respect to certain optional forms that are less valuable than the QJSA.*** This section also applies to a QJSA explanation with respect to any distribution with an annuity starting date that is on or after October 1, 2004, and before February 1, 2006, if

the actuarial present value of any optional form of benefit that is subject to the requirements of section 417(e)(3) is less than the actuarial present value (as determined under § 1.417(e)-1(d)) of the QJSA. For purposes of this paragraph (f)(2)(i), the actuarial present value of an optional form is treated as not less than the actuarial present value of the QJSA if—

(A) Using the applicable interest rate and applicable mortality table under § 1.417(e)-1(d)(2) and (3), the actuarial present value of that optional form is not less than the actuarial present value of the QJSA for an unmarried participant; and

(B) Using reasonable actuarial assumptions, the actuarial present value of the QJSA for an unmarried participant is not less than the actuarial present value of the QJSA for a married participant.

(ii) ***Requirement to disclose differences in value for certain optional forms.*** A QJSA explanation with respect to any distribution with an annuity starting date that is on or after October 1, 2004, and before February 1, 2006, is only required to be provided under this section with respect to—

(A) An optional form of benefit that is subject to the requirements of section 417(e)(3) and that has an actuarial present value that is less than the actuarial present value of the QJSA (as described in paragraph (f)(2)(i) of this section); and

(B) The QJSA (determined without application of paragraph (c)(2)(ii) of this section).

(iii) ***Application to QJSA explanations with respect to optional forms that are approximately equal in value to the QJSA.*** Paragraph (c)(2)(iii)(C) of this section, relating to disclosures of optional forms of benefit that are permitted to be described as approximately equal in value to the QJSA, is not applicable to a QJSA explanation provided before January 1, 2007. However, § 1.417(a)(3)-1(c)(2)(iii)(C), as it appeared in 26 CFR part 1 revised April 1, 2004, applies to a QJSA explanation with respect to any distribution with an annuity starting date that is on or after October 1, 2004, and that is provided before January 1, 2007.

(3) ***Annuity starting date.*** For purposes of paragraphs (f)(1) and (2) of this section, in the case of a retroactive annuity starting date under section 417(a)(7), as described in § 1.417(e)-1(b)(3)(vi), the date of commencement of the actual payments based on the retroactive annuity starting date is substituted for the annuity starting date.

(4) ***Effective date for QPSA explanations.*** This section applies to any QPSA explanation provided on or after July 1, 2004.

[T.D. 9099, 68 FR 70144, Dec. 17, 2003, as amended by T.D. 9256, 71 FR 14802, Mar. 24, 2006; 71 FR 26688, May 8, 2006; T.D. 9294, 71 FR 61888, Oct. 20, 2006]

§ 1.417(e)-1 Restrictions and valuations of distributions from plans subject to sections 401(a)(11) and 417.

(a) ***Scope*** —

(1) ***In general.*** A plan does not satisfy the requirements of sections 401(a)(11) and 417 unless it satisfies the consent requirements, the determination of present value requirements and the other requirements set forth in this section. See section 401(a)(11) and § 1.401(a)-20 for other rules regarding the survivor annuity requirements.

(2) ***Additional requirements.*** See § 1.411(a)-11 for other rules applicable to the consent requirements.

(3) ***Accrued benefit.*** The definition of "accrued benefit" in § 1.411(a)-11 applies when that term is used in this section.

(b) ***Consent, etc. requirements*** —

(1) ***General rule.*** Generally plans may not commence the distribution of any portion of a participant's accrued benefit in any form unless the applicable consent requirements are satisfied. No consent of the participant or spouse is needed for distribution of a QJSA or QPSA after the benefit is no longer immediately distributable (after the participant attains (or would have attained if not dead) the later of normal retirement age (as defined in section 411(a)(8)) or age 62). No consent of the spouse is needed for distribution of a QJSA at any time. After the participant's death, a benefit may be paid to a nonspouse beneficiary without the beneficiary's consent. A distribution cannot be made at any time in a form other than a QJSA unless such QJSA has been waived by the participant and such waiver has been consented to by the spouse. A QJSA is an annuity that commences immediately. Thus, for example, a plan may not offer a participant separating from service at age 45 a choice only between a single sum distribution at separation of service and a joint and survivor annuity that satisfies all the requirements of a QJSA except that it commences at normal retirement age rather than immediately. To satisfy this section, the plan must also offer a QJSA (*i.e.,* an annuity that satisfies all the requirements for a QJSA including the requirement that it commences immediately).

(2) ***Consent.***

(i) Written consent of the participant and, if the participant is married at the annuity starting date and the benefit is to be paid in a form other than a QJSA, the participant's spouse (or, if either the participant or the spouse has died, the survivor) is required before the commencement of the distribution of any part of an accrued benefit if the present value of the nonforfeitable benefit is greater than the cash-out limit in effect under § 1.411(a)-11(c)(3)(ii). No consent is valid unless the participant has received a general description of the material features, and an explanation of the relative values of, the optional forms of benefit available under the plan in a manner which would satisfy the notice requirements of section 417(a)(3). *See* § 1.417(a)(3)-1. No consent is required before the annuity starting date if the present value of the nonforfeitable benefit is not more than the cash-out limit in effect under § 1.411(a)-11(c)(3)(ii). After the annuity starting date, consent is required for the immediate distribution of the present value of the accrued benefit being distributed in any form, including a qualified joint and survivor annuity or a qualified preretirement survivor annuity, regardless of the amount of such present value.

(ii) In determining the present value of any nonforfeitable accrued benefit, a defined benefit plan is limited by the interest rate restriction as set forth in paragraph (d) of this section.

(iii) Paragraph (b)(2)(i) of this section applies to distributions made on or after October 17, 2000. For distributions prior to October 17, 2000, § 1.417(e)-1(b)(2)(i) in effect prior to October 17, 2000 (as contained in 26 CFR part 1 revised as of April 1, 2000) applies.

(3) ***Time of consent.***

(i) Written consent of the participant and the participant's spouse to the distribution must be made not more than 90 days before the annuity starting date, and, except as otherwise provided in paragraphs (b)(3)(iii) and (b)(3)(iv) of this section, no later than the annuity starting date.

(ii) A plan must provide participants with the written explanation of the QJSA required by section 417(a)(3) no less than 30 days and no more than 90 days before the annuity starting date, except as provided in paragraph (b)(3)(iv) of this section regarding retroactive annuity starting

dates. However, if the participant, after having received the written explanation of the QJSA, affirmatively elects a form of distribution and the spouse consents to that form of distribution (if necessary), a plan will not fail to satisfy the requirements of section 417(a) merely because the written explanation was provided to the participant less than 30 days before the annuity starting date, provided that the following conditions are met:

(A) The plan administrator provides information to the participant clearly indicating that (in accordance with the first sentence of this paragraph (b)(3)(ii)) the participant has a right to at least 30 days to consider whether to waive the QJSA and consent to a form of distribution other than a QJSA.

(B) The participant is permitted to revoke an affirmative distribution election at least until the annuity starting date, or, if later, at any time prior to the expiration of the 7-day period that begins the day after the explanation of the QJSA is provided to the participant.

(C) The annuity starting date is after the date that the explanation of the QJSA is provided to the participant.

(D) Distribution in accordance with the affirmative election does not commence before the expiration of the 7-day period that begins the day after the explanation of the QJSA is provided to the participant.

(iii) The plan may permit the annuity starting date to be before the date that any affirmative distribution election is made by the participant (and before the date that distribution is permitted to commence under paragraph (b)(3)(ii)(D) of this section), provided that, except as otherwise provided in paragraph (b)(3)(vii) of this section regarding administrative delay, distributions commence not more than 90 days after the explanation of the QJSA is provided.

(iv) ***Retroactive annuity starting dates.***

(A) Notwithstanding the requirements of paragraphs (b)(3)(i) and (ii) of this section, pursuant to section 417(a)(7), a defined benefit plan is permitted to provide benefits based on a retroactive annuity starting date if the requirements described in paragraph (b)(3)(v) of this section are satisfied. A defined benefit plan is not required to provide for retroactive annuity starting dates. If a plan does provide for a retroactive annuity starting date, it may impose conditions on the availability of a retroactive annuity starting date in addition to those imposed by paragraph (b)(3)(v) of this section, provided that imposition of those additional conditions does not violate any of the rules applicable to qualified plans. For example, a plan that includes a single sum payment as a benefit option may limit the election of a retroactive annuity starting date to those participants who do not elect the single sum payment. A defined contribution plan is not permitted to have a retroactive annuity starting date.

(B) For purposes of this section, a “retroactive annuity starting date” is an annuity starting date affirmatively elected by a participant that occurs on or before the date the written explanation required by section 417(a)(3) is provided to the participant. In order for a plan to treat a participant as having elected a retroactive annuity starting date, future periodic payments with respect to a participant who elects a retroactive annuity starting date must be the same as the future periodic payments, if any, that would have been paid with respect to the participant had payments actually commenced on the retroactive annuity starting date. The participant must receive a make-up payment to reflect any missed payment or payments for the period from the retroactive annuity starting date to the date

of the actual make-up payment (with an appropriate adjustment for interest from the date the missed payment or payments would have been made to the date of the actual make-up payment). Thus, the benefit determined as of the retroactive annuity starting date must satisfy the requirements of sections 417(e)(3), if applicable, and section 415 with the applicable interest rate and applicable mortality table determined as of that date. Similarly, a participant is not permitted to elect a retroactive annuity starting date that precedes the date upon which the participant could have otherwise started receiving benefits (e.g., in the case of an ongoing plan, the earlier of the participant's termination of employment or the participant's normal retirement age) under the terms of the plan in effect as of the retroactive annuity starting date. A plan does not fail to treat a participant as having elected a retroactive annuity starting date as described in this paragraph (b)(3)(iv)(B) merely because the distributions are adjusted to the extent necessary to satisfy the requirements of paragraph (b)(3)(v)(B) and (C) of this section relating to sections 415 and 417(e)(3).

(C) If the participant's spouse as of the retroactive annuity starting date would not be the participant's spouse determined as if the date distributions commence was the participant's annuity starting date, consent of that former spouse is not needed to waive the QJSA with respect to the retroactive annuity starting date, unless otherwise provided under a qualified domestic relations order (as defined in section 414(p)).

(D) A distribution payable pursuant to a retroactive annuity starting date election is treated as excepted from the present value requirements of paragraph (d) of this section under paragraph (d)(6) of this section if the distribution form would have been described in paragraph (d)(6) of this section had the distribution actually commenced on the retroactive annuity starting date. Similarly, annuity payments that otherwise satisfy the requirements of a QJSA under section 417(b) will not fail to be treated as a QJSA for purposes of section 415(b)(2)(B) merely because a retroactive annuity starting date is elected and a make-up payment is made. Also, for purposes of section 72(t)(2)(A)(iv), a distribution that would otherwise be one of a series of substantially equal periodic payments will be treated as one of a series of substantially equal periodic payments notwithstanding the distribution of a make-up payment provided for in paragraph (b)(3)(iv)(B) of this section.

(E) The following example illustrates the application of paragraph (b)(3)(iv)(D) of this section:

Example. Under the terms of a defined benefit plan, participant A is entitled to a QJSA with a monthly payment of $1,500 beginning as of his annuity starting date. Due to administrative error, the QJSA explanation is provided to A after the annuity starting date. After receiving the QJSA explanation A elects a retroactive annuity starting date. Pursuant to this election, A begins to receive a monthly payment of $1,500 and also receives a make-up payment of $10,000. Under these circumstances the monthly payments may be treated as a QJSA for purposes of section 415(b)(2)(B). In addition, the monthly payments of $1,500 and the make-up payment of $10,000 may be treated as part of as series of substantially equal periodic payments for purpose of section 72(t)(2)(A)(iv).

(v) ***Requirements applicable to retroactive annuity starting dates.*** A distribution is permitted to have a retroactive annuity starting date with respect to a participant's benefit only if the following requirements are met:

(A) The participant's spouse (including an alternate payee who is treated as the spouse under a qualified domestic relations order (QDRO), as defined in section 414(p)), determined as if the date distributions commence were the participant's annuity starting date, consents to the distribution in a manner that would satisfy the requirements of section 417(a)(2). The spousal consent requirement of this paragraph (b)(3)(v)(A) is satisfied if such spouse consents to the distribution under paragraph (b)(2)(i) of this section. The spousal consent requirement of this paragraph (b)(3)(v)(A) does not apply if the amount of such spouse's survivor annuity payments under the retroactive annuity starting date election is no less than the amount that the survivor payments to such spouse would have been under an optional form of benefit that would satisfy the requirements to be a QJSA under section 417(b) and that has an annuity starting date after the date that the explanation was provided.

(B) The distribution (including appropriate interest adjustments) provided based on the retroactive annuity starting date would satisfy the requirements of section 415 if the date the distribution commences is substituted for the annuity starting date for all purposes, including for purposes of determining the applicable interest rate and the applicable mortality table. However, in the case of a form of benefit that would have been excepted from the present value requirements of paragraph (d) of this section under paragraph (d)(6) of this section if the distribution had actually commenced on the retroactive annuity starting date, the requirement to apply section 415 as of the date distribution commences set forth in this paragraph (b)(3)(v)(B) does not apply if the date distribution commences is twelve months or less from the retroactive annuity starting date.

(C) In the case of a form of benefit that would have been subject to section 417(e)(3) and paragraph (d) of this section if distributions had commenced as of the retroactive annuity starting date, the distribution is no less than the benefit produced by applying the applicable interest rate and the applicable mortality table determined as of the date the distribution commences to the annuity form that corresponds to the annuity form that was used to determine the benefit amount as of the retroactive annuity starting date. Thus, for example, if a distribution paid pursuant to an election of a retroactive annuity starting date is a single-sum distribution that is based on the present value of the straight life annuity payable at normal retirement age, then the amount of the distribution must be no less than the present value of the annuity payable at normal retirement age, determined as of the distribution date using the applicable mortality table and applicable interest rate that apply as of the distribution date. Likewise, if a distribution paid pursuant to an election of a retroactive annuity starting date is a single-sum distribution that is based on the present value of the early retirement annuity payable as of the retroactive annuity starting date, then the amount of the distribution must be no less than the present value of the early retirement annuity payable as of the distribution date, determined as of the distribution date using the applicable mortality table and applicable interest rate that apply as of the distribution date.

(vi) ***Timing of notice and consent requirements in the case of retroactive annuity starting dates.*** In the case of a retroactive annuity starting date, the date of the first actual payment of benefits based on the retroactive annuity starting date is substituted for the annuity starting date for purposes of satisfying the timing requirements for giving consent and providing an explanation of the QJSA provided in paragraphs (b)(3)(i) and (ii) of this section, except that the substitution does not apply for purposes of paragraph (b)(3)(iii) of this section. Thus, the written

explanation required by section 417(a)(3)(A) must generally be provided no less than 30 days and no more than 90 days before the date of the first payment of benefits and the election to receive the distribution must be made after the written explanation is provided and on or before the date of the first payment. Similarly, the written explanation may also be provided less than 30 days prior to the first payment of benefits if the requirements of paragraph (b)(3)(ii) of this section would be satisfied if the date of the first payment is substituted for the annuity starting date.

(vii) ***Administrative delay.*** A plan will not fail to satisfy the 90-day timing requirements of paragraphs (b)(3)(iii) and (vi) of this section merely because, due solely to administrative delay, a distribution commences more than 90 days after the written explanation of the QJSA is provided to the participant.

(viii) The following example illustrates the provisions of this paragraph (b)(3):

Example. Employee E, a married participant in a defined benefit plan who has terminated employment, is provided with the explanation of the QJSA on November 28. Employee E elects (with spousal consent) on December 2 to waive the QJSA and receive an immediate distribution in the form of a single life annuity. The plan may permit Employee E to receive payments with an annuity starting date of December 1, provided that the first payment is made no earlier than December 6 and the participant does not revoke the election before that date. The plan can make the remaining monthly payments on the first day of each month thereafter in accordance with its regular payment schedule.

(ix) The additional rules of this paragraph (b)(3) concerning the notice and consent requirements of section 417 apply to distributions on or after September 22, 1995. For distributions before September 22, 1995, the additional rules concerning the notice and consent requirements of section 417 in § 1.417(e)-1(b)(3) in effect prior to September 22, 1995 (see § 1.417(e)-1 (b)(3) in 26 CFR Part 1 revised as of April 1, 1995) apply.

(4) ***Delegation to Commissioner.*** The Commissioner, in revenue rulings, notices, and other guidance published in the Internal Revenue Bulletin, may modify, or provide additional guidance with respect to, the notice and consent requirements of this section. See § 601.601(d)(2)(ii)(*b*) of this chapter.

(c) ***Permitted distributions.*** A plan may not require that a participant or surviving spouse begin to receive benefits without satisfying paragraph (b) of this section while such benefits are immediately distributable, (see paragraph (b)(1) of this section). Once benefits are no longer immediately distributable, all benefits that the plan requires to begin must be provided in the form of a QJSA and QPSA unless the applicable written explanation, election and consent requirements of section 417 are satisfied.

(d) ***Present value requirement*** —

(1) ***General rule*** —

(i) ***Defined benefit plans*** —

(A) ***In general.*** A defined benefit plan must provide that the present value of any accrued benefit and the amount (subject to sections 411(c)(3) and 415) of any distribution, including a single-sum distribution, must not be less than the amount calculated using the applicable mortality table described in paragraph (d)(2) of this section and the applicable interest rate described in paragraph (d)(3) of this section, as determined for the month described in paragraph (d)(4) of this section. In the case of an optional form of benefit

payable before normal retirement age, the present value of the optional form determined in accordance with the preceding sentence may not be less than the present value of the accrued benefit payable at normal retirement age. In the case of an optional form of benefit payable on or after normal retirement age, the present value of the optional form determined in accordance with the first sentence of this paragraph (d)(1)(i)(A) may not be less than the present value of the immediate annuity (payable in the same form as the accrued benefit is expressed). The present value determined under this paragraph (d) also applies for purposes of determining whether consent for a distribution is required under paragraph (b) of this section.

(B) ***Payment of a portion of a participant's benefit.*** The rules of this paragraph (d)(1) apply with respect to a payment of only a portion of the accrued benefit in the same manner as these rules would apply to a distribution of the entire accrued benefit. See paragraph (d)(7) of this section for rules relating to such a bifurcation of a participant's accrued benefit.

(C) ***Special rules for applicable defined benefit plans.*** See section 411(a)(13) and § 1.411(a)(13)-1 for an exception from the rules of section 417(e)(3) and this paragraph (d) that applies to certain distributions from plans with lump sum-based benefit formulas.

(ii) ***Defined contribution plans.*** Because the accrued benefit under a defined contribution plan equals the account balance, a defined contribution plan is not subject to the requirements of this paragraph (d), regardless of whether the requirements of section 401(a)(11) apply to the plan.

(2) ***Applicable mortality table*** —

(i) ***In general.*** The applicable mortality table for a calendar year is the mortality table that is prescribed by the Commissioner in guidance published in the Internal Revenue Bulletin. *See* § 601.601(d) of this chapter. This mortality table is to be based on the table specified under section 430(h)(3)(A), but without regard to section 430(h)(3)(C) or (D).

(ii) ***Mortality discounts*** —

(A) ***In general.*** Except as provided in paragraph (d)(2)(ii)(B) of this section, the probability of death under the applicable mortality table is taken into account for purposes of determining the present value under this paragraph (d) without regard to the death benefits provided under the plan (other than a death benefit that is part of the normal form of benefit or part of another optional form of benefit, as described in § 1.411(d)-3(g)(6)(ii)(B), for which present value is determined).

(B) ***Special rule for employee-provided benefit.*** For purposes of determining the present value under this paragraph (d) with respect to the portion of the accrued benefit derived from employee contributions (that is determined in accordance with the rules of section 411(c)), the probability of death during the assumed deferral period, if any, is not taken into account. For purposes of the preceding sentence, the assumed deferral period is the period between the date of the present value determination and the assumed commencement date for the annuity attributable to the accrued benefit derived from employee contributions.

(C) ***Exception from requirement that QJSA be most valuable form of benefit.*** An optional form of benefit that is subject to the minimum present value requirement of this section is not treated as failing the requirement under § 1.401(a)-20, Q&A-16, that an optional form of

benefit for a married participant may not be more valuable than the qualified joint and survivor annuity payable at the same time merely because, in applying the rules of this section in determining the amount of the optional form of benefit, the amount payable is calculated—

(*1*) Taking into account both the probability of death before retirement and any death benefit under the plan, or

(*2*) Using the present value factor for the employee-provided portion of the benefit determined under paragraph (d)(2)(ii)(B) of this section as the present value factor for the employer-provided portion of the benefit.

(3) ***Applicable interest rate*** —

(i) ***In general.*** The applicable interest rate for a month is determined using the first, second, and third segment rates for that month under section 430(h)(2)(C), as modified pursuant to section 417(e)(3)(D) (and without regard to the segment rate stabilization rules of section 430(h)(2)(C)(iv)). These section 417(e) segment rates are specified by the Commissioner in revenue rulings, notices, or other guidance published in the Internal Revenue Bulletin and are applied under rules similar to the rules under § 1.430(h)(2)-1(b). Thus, for example, in determining the present value of a straight life annuity, the first segment rate is applied with respect to payments expected to be made during the 5-year period beginning on the annuity starting date, the second segment rate is applied with respect to payments expected to be made during the 15-year period following the end of that 5-year period, and the third segment rate is applied with respect to payments expected to be made after the end of that 15-year period. The section 417(e) segment rates that are published by the Commissioner are to be used for this purpose without further adjustment.

(ii) ***Examples.*** The following examples illustrate the rules of paragraphs (d)(2) and (d)(3)(i) of this section:

(A) ***Example 1*** —(*1*) *Facts.* Plan A is a non-contributory defined benefit plan with a calendar-year plan year. The normal retirement age is 65, and all participant elections are made with proper spousal consent. Plan A includes an optional form of benefit that provides a single-sum distribution equal to the present value of the participant's accrued benefit. Plan A provides that the applicable interest rate for any distribution is determined using the segment rates as specified by the Commissioner for the month preceding the month containing the annuity starting date of the distribution. The applicable mortality table is the table specified by the Commissioner for the calendar year that contains the annuity starting date.

(*2*) *Analysis of minimum amount of single-sum distribution.* Participant P retires in November 2024 at age 60 and elects (with spousal consent) to receive a single-sum distribution. P has an accrued benefit of $2,000 per month payable as a life annuity beginning at the plan's normal retirement age of 65. The applicable mortality rates for 2024 apply. For purposes of this paragraph (d)(3)(ii)(A) (*Example 1*), the section 417(e) segment rates published by the Commissioner for October 2024 are assumed to be 3.00 percent, 4.00 percent, and 5.00 percent for the first, second, and third segment rates, respectively. The present value factor for a participant, age 60, for a deferred annuity payable at age 65, calculated based on these interest rates and the applicable mortality

table for 2024, is 10.432. To satisfy the requirements of section 417(e)(3) and this paragraph (d), the single-sum distribution received by P cannot be less than $250,368 (that is, $2,000 × 12 × 10.432).

(B) ***Example 2*** —(*1*) *Facts.* The facts are the same as in paragraph (d)(3)(ii)(A)(*1*) of this section (*Example 1*), except that Plan A provides for mandatory employee contributions. Participant Q retires in November 2024 at age 60 and elects (with spousal consent) to receive a single-sum distribution of Q's entire accrued benefit. Q has an accrued benefit of $2,000 per month payable as a life annuity beginning at Plan A's normal retirement age of 65, consisting of an accrued benefit derived from employee contributions determined in accordance with section 411(c)(2) (Q's employee-provided accrued benefit) of $500 per month and an accrued benefit derived from employer contributions (Q's employer-provided accrued benefit) of $1,500 per month.

(*2*) *Analysis of minimum amount of the employee-provided portion of the single-sum distribution.* Pursuant to paragraph (d)(2)(ii)(B) of this section, the single-sum distribution used to settle Q's employee-provided accrued benefit may not be less than the present value of the employee-provided portion of Q's accrued benefit determined using the applicable interest and mortality rates described in paragraphs (d)(2)(i) and (d)(3)(i) of this section, but without taking into account the probability of death during the assumed deferral period in accordance with paragraph (d)(2)(ii)(B) of this section. The present value factor for a participant, age 60, for a deferred annuity payable at age 65, calculated based on the interest and mortality rates specified in paragraph (d)(3)(ii)(A) of this section (*Example 1*), taking the probability of death only after age 65 into account, is 10.704. To satisfy the requirement of section 417(e)(3) and this paragraph (d), the single-sum distribution received by Q with respect to the employee-provided portion of the accrued benefit may not be less than $64,224 (that is, $500 × 12 × 10.704).

(*3*) *Analysis of minimum amount of the employer-provided portion of the single-sum distribution.* The single-sum distribution made to settle Q's employer-provided accrued benefit may not be less than the present value of that portion of Q's accrued benefit determined using the applicable interest and mortality rates. However, for this purpose, Plan A is permitted to take into account the probability of death during the assumed deferral period in accordance with paragraph (d)(2)(ii)(A) of this section. The single-sum distribution received by Q with respect to the employer-provided portion of the accrued benefit may not be less than $187,776 (that is, $1,500 × 12 × 10.432).

(*4*) ***Analysis of minimum amount of the total single-sum distribution.*** To satisfy the requirements of section 417(e)(3) and this paragraph (d), the total single-sum distribution received by Q may not be less than the sum of the minimum single-sum distribution with respect to the employee-provided and employer-provided portions of the accrued benefit, or $252,000 ($64,224 + $187,776).

(*5*) ***Analysis of minimum amount of partial single-sum distribution.*** If Q were to receive a partial single-sum distribution (that is, a single-sum distribution that is less than $252,000) with the balance payable as an annuity, then, in accordance with paragraph (d)(7)(iii)(D) of this section, the plan must specify the portion of the participant's accrued benefit that is settled by that distribution of the partial single-sum distribution (unless the plan uses the same single-sum factor with respect to all portions of the accrued benefit). Because the present value factor for the employee-provided benefit cannot take into account the probability of death before age 65, the plan may use the same present value factor to determine the portion of the accrued benefit that is settled by the single-sum

distribution that applies to both the employee-provided and the employer-provided portions of the accrued benefit only if the factor that is used does not take into account the probability of death before age 65.

(4) *Time for determining interest rate and mortality table*—(i) *Interest rate general rule.* Except as provided in paragraphs (d)(4)(v) or (vi) of this section, the applicable interest rate to be used for a distribution is the applicable interest rate determined under paragraph (d)(3) of this section for the applicable lookback month. The applicable lookback month for a distribution is the lookback month (as described in paragraph (d)(4)(iv) of this section) for the stability period (as described in paragraph (d)(4)(iii) of this section) that contains the annuity starting date for the distribution. The time and method for determining the applicable interest rate for each participant's distribution must be determined in a consistent manner that is applied uniformly to all participants in the plan.

(ii) ***Mortality table general rule.*** The applicable mortality table to be used for a distribution is the mortality table that is described in paragraph (d)(2)(i) of this section for the calendar year during which the stability period containing the annuity starting date begins.

(iii) ***Stability period.*** A plan must specify the period for which the applicable interest rate remains constant (the stability period). This stability period may be one calendar month, one plan quarter, one calendar quarter, one plan year, or one calendar year. This same stability period also applies to the applicable mortality table.

(iv) ***Lookback month.*** A plan must specify the lookback month that is used to determine the applicable interest rate with respect to a stability period. The lookback month may be the first, second, third, fourth, or fifth full calendar month preceding the first day of the stability period.

(v) ***Permitted average interest rate.*** A plan may apply the rules of paragraph (d)(4)(i) of this section by substituting a permitted average applicable interest rate with respect to the plan's stability period for the applicable interest rate determined under paragraph (d)(3) of this section for the applicable lookback month with respect to the plan's stability period. For this purpose, a permitted average applicable interest rate with respect to a stability period is the applicable interest rate that is computed using the average of the section 417(e) segment rates described in paragraph (d)(3) of this section for two or more consecutive months from among the first, second, third, fourth, and fifth calendar months preceding the first day of the stability period. For this paragraph (d)(4)(v) to apply, a plan must specify the manner in which the permitted average interest rate is computed.

(vi) ***Additional determination dates.*** The Commissioner may prescribe, in guidance published in the Internal Revenue Bulletin, other times that a plan may provide for determining the applicable interest rate. *See* § 601.601(d) of this chapter.

(vii) ***Example of determination of applicable interest rate*** —

(A) ***Facts.*** The facts are the same as in paragraph (d)(3)(ii)(A)(*1*) of this section (*Example 1*), except that Plan A provides that the applicable interest rate for any annuity starting date is determined using the segment rates specified by the Commissioner for the third calendar month preceding the beginning of the plan quarter that contains the annuity starting date. Plan A also provides that the applicable mortality table is the table specified by the Commissioner for the calendar year that contains the beginning of the quarterly stability period.

(B) ***Analysis.*** The segment rates that apply for annuity starting dates during the period beginning October 1, 2024, and ending December 31, 2024, are the segment rates for July 2024. This plan design permits the applicable interest rate to be fixed for each plan quarter and for the applicable interest rate for all distributions made during each plan quarter to be determined before the beginning of the plan quarter.

(5) ***Use of alternative interest rate and mortality table.*** If a plan provides for use of an interest rate or mortality table other than the applicable interest rate or the applicable mortality table, the plan must provide that a participant's benefit must be at least as great as the benefit produced by using the applicable interest rate and the applicable mortality table. For example, if a plan provides for use of an interest rate of 7% and the UP-1984 Mortality Table (see § 1.401(a)(4)-12, *Standard mortality table*) in calculating single-sum distributions, the plan must provide that any single-sum distribution is calculated as the greater of the single-sum benefit calculated using 7% and the UP-1984 Mortality Table and the single-sum benefit calculated using the applicable interest rate and the applicable mortality table.

(6) ***Exceptions*** —

(i) ***In general.*** This paragraph (d) (other than the provisions relating to section 411(d)(6) requirements in paragraph (d)(9) of this section) does not apply to the amount of a distribution paid in the form of an annual benefit that—

(A) Does not decrease during the life of the participant, or, in the case of a QPSA, the life of the participant's spouse; or

(B) Decreases during the life of the participant merely because of—

(*1*) The death of the survivor annuitant (but only if the reduction is to a level not below 50 percent of the annual benefit payable before the death of the survivor annuitant); or

(*2*) The cessation or reduction of a Social Security supplement or qualified disability benefit (as defined in section 411(a)(9)).

(ii) ***Example of Social Security level income option*** —

(A) ***Facts.*** The facts are the same as in paragraph (d)(3)(ii)(A)(*1*) of this section (*Example 1*). Plan A also provides for an optional distribution in the form of a Social Security level income option that is actuarially equivalent to the straight life annuity payable at the same commencement date. Under this optional form, the participant receives a larger monthly payment until age 65, and a smaller monthly payment afterward, so that it is estimated that the participant will receive level monthly payments for life (taking into account the participant's estimated Social Security benefit beginning at age 65). Based on the plan's early retirement reduction factor of 0.65 at age 60, Participant R's reduced early retirement benefit payable as a straight life annuity benefit commencing at age 60 is $1,300 per month (which is less than the early retirement benefit that is actuarially equivalent to the accrued benefit determined using the applicable interest and mortality rates under section 417(e)(3)). Participant R's estimated Social Security benefit is $1,000 per month beginning at age 65. Plan A provides that actuarial equivalence is determined using a 6 percent interest rate and the mortality table set forth in Revenue Ruling 2001-62, 2001-53 IRB 632.

(B) ***Analysis of benefit calculation using plan factors.*** Using the plan's terms for determining actuarial equivalence (an interest rate of 6 percent and the mortality table set forth in Revenue Ruling 2001-62), the present value factor for a participant, age 60, with lifetime benefits commencing at age 65 is 7.800, and the present value factor for a temporary annuity payable to that participant until age 65 is 4.278. The benefit payable to Participant R in the form of a Social Security level income option (with a decrease of $1,000 occurring at age 65) that is actuarially equivalent to the early retirement benefit of $1,300 is $1,945.80 per month until age 65 and $945.80 per month thereafter.

(C) ***Analysis of minimum present value.*** Because the benefit payable under the Social Security level income option decreases at age 65 and the decrease is not on account of the death of the participant or a beneficiary or the cessation or reduction of a Social Security supplement or a qualified disability benefit, the exception under this paragraph (d)(6) from the minimum present value requirements of section 417(e)(3) does not apply to the benefits payable under the plan's Social Security level income option. As illustrated in paragraph (d)(3)(ii)(A) of this section (*Example 1*), to satisfy the requirements of section 417(e)(3) and this paragraph (d), the minimum present value of a benefit payable to Participant R at age 60 cannot be less than $250,368 (that is, $2,000 × 12 × 10.432).

(D) ***Conclusion.*** Based on the applicable interest rate and applicable mortality table under section 417(e)(3) that are assumed in paragraph (d)(3)(ii)(A) of this section (*Example 1*), the present value factor for a participant, age 60, with lifetime benefits commencing at age 65 is 10.432, and the present value factor for a temporary annuity payable until age 65 is 4.604. The present value of the benefit payable to Participant R under the Social Security level income option is $225,901 ($1,945.80 × 4.604 × 12 + $945.80 × 10.432 × 12). Because this present value is less than the minimum present value of a benefit payable to Participant R at age 60 ($250,368), the plan would fail to satisfy the minimum present value requirement of section 417(e)(3). However, see paragraph (d)(7)(ii)(C) of this section for a rule permitting a plan to provide for implicit bifurcation of a Social Security level income option.

(7) ***Application to portion of a participant's benefit*** —

(i) ***In general.*** This paragraph (d)(7) provides rules under which the requirements of this paragraph (d) apply to the distribution of only a portion of a participant's accrued benefit. Paragraph (d)(7)(ii) of this section provides rules for how a participant's accrued benefit may be bifurcated into separate components for purposes of applying this paragraph (d). Paragraph (d)(7)(iii) of this section provides rules of application. Paragraph (d)(7)(iv) of this section provides certain limited section 411(d)(6) relief, and paragraph (d)(7)(v) of this section provides examples of the application of the rules of this paragraph (d)(7).

(ii) ***Bifurcation of accrued benefit*** —

(A) ***Explicit plan-specified bifurcation.*** A plan is permitted to provide that the requirements of this paragraph (d) apply to a specified portion of a participant's accrued benefit as if that portion were the participant's entire accrued benefit. For example, a plan is permitted to provide that a distribution in the form of a single-sum payment described in this paragraph (d)(7)(ii)(A) is made to settle a specified percentage of the participant's accrued benefit. As another example, a plan is permitted to provide that a distribution in the form of a single-sum payment described in this paragraph (d)(7)(ii)(A) is made to settle the accrued benefit derived from contributions made by an employee. In both examples, the

distribution must satisfy the requirements of this paragraph (d) with respect to the specified portion of the accrued benefit, and the remaining portion of the accrued benefit (the participant's total accrued benefit less the portion of the accrued benefit settled by the single-sum payment) can be paid in some other form of distribution that is available under the plan.

(B) ***Distribution of specified amount.*** A plan that provides for a distribution of a single-sum payment that is not described in paragraph (d)(7)(ii)(A) of this section satisfies the requirements of this paragraph (d) with respect to that distribution if the portion of the participant's accrued benefit, expressed in the normal form of benefit under the plan and commencing at normal retirement age (or at the current date, if later), that is not settled by the distribution is no less than the excess of—

(*1*) The participant's total accrued benefit expressed in that form; over

(*2*) The annuity payable in that form that is actuarially equivalent to the single-sum payment, determined using the applicable interest rate and the applicable mortality table.

(C) ***Bifurcation of Social Security level income option.*** A plan that provides for a Social Security level income option satisfies the requirements of this paragraph (d) with respect to the temporary annuity portion of the Social Security level income option if, under the terms of the plan—

(*1*) The portion of the participant's accrued benefit, expressed in the normal form of benefit under the plan and commencing at normal retirement age (or at the current date, if later), that is not paid in the form of the temporary annuity is no less than the excess, if any, of—

(*i*) The participant's total accrued benefit under the plan expressed in that form and commencing at that age; over

(*ii*) The annuity payable in that form commencing at that age that is actuarially equivalent to that temporary annuity, determined using the applicable interest rate and the applicable mortality table; and

(*2*) The portion of the participant's immediate annuity (payable in the same form as the accrued benefit is expressed) that is not paid in the form of the temporary annuity is no less than the excess, if any, of—

(*i*) The participant's immediate annuity (payable in the same form as the accrued benefit is expressed); over

(*ii*) The immediate annuity payable in that form that is actuarially equivalent to that temporary annuity, determined using the applicable interest rate and the applicable mortality table.

(D) ***Social Security level income option.*** For purposes of paragraph (d)(7)(ii)(C) of this section, a Social Security level income option is an optional form of benefit under which a participant's accrued benefit is paid in the form of an annuity for the life of the participant with additional temporary annuity payments that cease at the participant's assumed Social Security commencement age and that do not exceed the participant's estimated Social Security benefit at that age. For this purpose, a participant's estimated Social

Security benefit is the estimated amount of old-age insurance benefits for the participant under title II of the Social Security Act (as amended) and the assumed Social Security commencement age is an age that is not later than the age as of which the participant is entitled to those benefits without reduction on account of age.

(iii) ***Rules of operation*** —

(A) ***Multiple distribution options.*** If a participant selects different distribution options with respect to two separate portions of the participant's accrued benefit that were determined in accordance with paragraph (d)(7)(ii) of this section, then the two different distribution options are treated as two separate optional forms of benefit for purposes of applying the requirements of section 417(e)(3) and this paragraph (d), even if the distribution options have the same annuity starting date. Thus, if the exception from the requirements of section 417(e)(3) and this paragraph (d) that is contained in paragraph (d)(6) of this section applies to one of those optional forms of benefit, then this paragraph (d) applies only to the other optional form of benefit.

(B) ***Repeated application of rule.*** If a participant's accrued benefit has been bifurcated in accordance with paragraph (d)(7)(ii) of this section, then the provisions of paragraph (d)(7)(ii) of this section may be applied again to bifurcate the remaining accrued benefit.

(C) ***Requirement to use explicit plan-specified bifurcation in certain cases*** —(*1*) *Section 411(d)(6)—protected optional form.* If the amount of a distribution in an optional form of benefit to which this paragraph (d) applies is determined by reference to the portion of a participant's accrued benefit as of the applicable amendment date for an amendment that eliminates that optional form of benefit (but, in accordance with section 411(d)(6), retains the optional form of benefit with respect to benefits accrued as of the applicable amendment date), then the plan must provide for explicit bifurcation of the accrued benefit as described in paragraph (d)(7)(ii)(A) of this section.

(*2*) *Single-sum available with respect to entire accrued benefit.* If a plan provides that a single-sum distribution is available to settle a participant's entire accrued benefit, then, in order to also provide for a distribution in the form of a single-sum payment that settles only a portion of a participant's accrued benefit, the plan must provide for explicit bifurcation of the accrued benefit as described in paragraph (d)(7)(ii)(A) of this section.

(D) ***Application of different factors to different portions of the accrued benefit.*** If a plan provides for an early retirement benefit, a retirement-type subsidy, an optional form of benefit, or an ancillary benefit, that applies only to a portion of a participant's accrued benefit, and the plan provides for a distribution that settles some, but not all, of the participant's accrued benefit, then the plan must specify which portion of the participant's total accrued benefit is settled by that distribution. For example, if a plan had one set of early retirement factors that applied to the accrued benefit as of December 31, 2005, but a different set of early retirement factors that applied to benefit accruals earned after that date, and the plan provides for a single-sum distribution that settles only a portion of a participant's accrued benefit, then the plan must specify which portion of the accrued benefit is settled by that distribution (in order to determine which early retirement factors apply to the remaining portion of the accrued benefit).

(iv) ***Limited section 411(d)(6) anti-cutback relief.*** This paragraph (d)(7)(iv) applies in the case of a plan that, for plan years beginning before January 1, 2017, uses the section 417(e)(3) applicable interest rate and applicable mortality table to calculate the amount of a distribution that is made to settle a portion of the accrued benefit if, pursuant to this paragraph (d)(7), the requirements of section 417(e)(3) and this paragraph (d) need not apply to the distribution. In such a case, section 411(d)(6) is not violated merely because, in accordance with this paragraph (d)(7), the plan is amended on or before December 31, 2017, to provide that the amount of a distribution described in the preceding sentence is determined for an annuity starting date on or after the applicable amendment date (within the meaning of § 1.411(d)-3(g)(4)) using the same actuarial assumptions that apply to calculate the amount of a distribution in the same form of benefit that is made to settle the participant's entire accrued benefit.

(v) ***Examples.*** The following examples illustrate the rules of this paragraph (d)(7). Unless otherwise indicated, these examples are based on the following assumptions: The taxpayers elect to apply the rules of this paragraph (d)(7) in 2016; each plan is a noncontributory defined benefit plan with a calendar-year plan year and a normal retirement age of age 65; a one-year stability period coinciding with the calendar year and a two-month lookback are used for determining the applicable interest rate; and all participant elections are made with proper spousal consent. The November 2015 segment rates are 1.76%, 4.15% and 5.13%.

(A) (*1*) Plan A offers a number of optional forms of payment, including a qualified joint and survivor annuity and a single-sum payment. The single-sum payment is equal to the present value of the participant's immediate benefit (but not less than the present value of the participant's accrued benefit payable at normal retirement age) using the applicable interest and mortality rates under section 417(e)(3). The amount of the joint and survivor annuity is determined using plan factors that are not based on the applicable interest and mortality rates under section 417(e)(3). Plan A permits a participant to elect to receive a percentage of the accrued benefit as a single sum and the remainder in any annuity form provided under the plan, with the amount of the single-sum payment determined by multiplying the amount that would be payable if the entire benefit were paid as a single sum by the percentage of the accrued benefit settled by the single-sum payment.

(*2*) Participant S retires at age 62 in 2016, with an accrued benefit of $1,000 per month payable as a straight life annuity at normal retirement age. Participant S is eligible for an unreduced early retirement benefit and can therefore collect a straight life annuity benefit of $1,000 per month beginning immediately. Alternatively, Participant S can elect to receive the benefit in other forms, including a single-sum payment of $168,516 (based on the applicable interest and mortality rates under section 417(e), which are the November 2015 segment rates and the 2016 applicable mortality table), or a 100% joint and survivor annuity of $850 per month (based on the plan's actuarial equivalence factors). Participant S elects to receive 25% of the accrued benefit in the form of a single-sum payment and the remaining 75% of the accrued benefit as a 100% joint and survivor annuity.

(*3*) Participant S receives a single-sum payment with respect to 25% of the accrued benefit. Accordingly, this single-sum payment is equal to 25% of the full single-sum amount, or $42,129. The remaining portion of the accrued benefit is 75% of the total accrued benefit, or $750 per month payable as a straight life annuity at normal retirement age.

(*4*) To settle the remaining portion of the accrued benefit, in addition to the single-sum payment of $42,129, Participant S receives a 100% joint and survivor annuity in the amount of $637.50 per month, which is determined by applying the plan's unreduced early retirement and actuarial equivalence factors to the remaining portion of the accrued benefit of $750 per month payable as a straight life annuity at normal retirement age. The joint and survivor annuity benefit is not subject to the minimum present value requirements of section 417(e)(3) because it is treated as a separate optional form of benefit under paragraph (d)(7)(iii)(A) of this section.

(B)

(*1*) Plan B is a contributory defined benefit plan that permits a participant to elect a single sum distribution equal to the participant's employee contributions, accumulated with interest, with the remainder payable as an annuity. Plan B provides that the probability of death before normal retirement age is not taken into account for purposes of determining actuarial equivalence between the single-sum payment and an annuity at normal retirement age. Based on the applicable mortality table for 2016 and the November 2015 segment rates, the deferred annuity factor at age 60 for lifetime payments commencing at age 65 (determined without taking mortality before age 65 into account) is 10.209.

(*2*) Participant T retires at age 60 in 2016 with an accrued benefit of $1,500 per month payable as a straight life annuity commencing at normal retirement age. For benefits commencing at age 60, Plan B provides for an early retirement reduction factor of 75% and an actuarial equivalence factor of 98% for adjusting a straight life annuity to a 10-year certain and life annuity, neither of which is based on the applicable interest and mortality rates under section 417(e)(3). Participant T's benefit commencing at age 60 in the form of a 10-year certain and life annuity would be $1,500 × 75% × 98% = $1,102.50 per month. Participant T elects to receive a single sum payment of $32,000 equal to T's accumulated contributions with interest, and the remainder as a 10-year certain and life annuity.

(*3*) The single-sum payment elected by Participant T is a distribution that is determined by reference to Participant T's contributions and interest, and not by reference to a specified portion of the participant's accrued benefit. Therefore, the single-sum payment is not described in paragraph (d)(7)(ii)(A) of this section. In order to satisfy paragraph (d)(7)(ii)(B) of this section, the portion of the participant's accrued benefit that is not settled by the single-sum payment must be no less than the excess of (A) the participant's total accrued benefit over (B) the annuity that is actuarially equivalent to the single-sum payment, (determined using the applicable interest and mortality rates under section 417(e)(3) as applicable), both expressed in the normal form of benefit commencing at normal retirement age. The amount of that actuarially equivalent annuity is determined by dividing Participant T's single-sum payment of $32,000 by the deferred annuity factor for lifetime payments commencing at age 65 under the terms of Plan B (10.209, not considering mortality for the deferral period) and dividing by 12 for an actuarially equivalent monthly benefit commencing at age 65 of $261.21. Thus, in order to satisfy paragraph (d)(7)(ii)(B) of this section, the remaining portion of T's accrued benefit must be at least $1,238.79 per month ($1,500.00−$261.21) payable as a straight life annuity at normal retirement age.

(*4*) Based on Plan B's early retirement and optional form factors applied to the remaining portion, the annuity benefit payable to Participant T in the form of a 10-year certain and life annuity beginning at age 60 cannot be less than $910.51 per month ($1,238.79 × 75% × 98%). Participant T receives this in addition to the single-sum payment of $32,000. The 10-year certain and life benefit is not subject to the minimum present value requirements of section 417(e)(3) because it is treated as a separate optional form of benefit under paragraph (d)(7)(iii)(A) of this section.

(*5*) If, instead, Plan B's terms had provided for a single-sum payment equal to the present value of the participant's employee-provided accrued benefit as determined under section 411(c)(3), then the plan is determining the single-sum payment as the present value of a specified portion of the accrued benefit. In such a case, the plan is using explicit bifurcation as described in paragraph (d)(7)(ii)(A) of this section and the single-sum payment would have to be set equal to the present value, determined under Plan B's terms, of T's employee-provided accrued benefit (which may or may not be equal to T's accumulated contributions and interest, depending on the plan's terms). The remaining annuity benefit payable to Participant T would have been based on an accrued benefit equal to $1,500 per month minus the amount of T's employee-provided accrued benefit.

(C)(*1*) The facts are the same as in paragraph (d)(7)(v)(B)(*1*) of this section (*Example 2*), except that Plan B also offers a single-sum payment option with respect to a participant's entire benefit. The single-sum payment is determined as the present value of the participant's early retirement benefit (but no less than the present value of the participant's accrued benefit) using the applicable interest and mortality rates under section 417(e)(3). Based on the applicable mortality table for 2016 and the November 2015 segment rates, the immediate annuity factor for lifetime payments commencing at age 60 is 14.632. Under the terms of the plan, the early retirement benefit payable as a straight life annuity to Participant T at age 60 with respect to T's full accrued benefit is $1,125 ($1,500 × 75%), and the corresponding single-sum amount payable to T is $1,125 × 14.632 × 12 = $197,532. (Note that this amount is larger than the age-60 present value of T's accrued benefit without taking mortality before age 65 into account, $1,500 × 10.209 × 12 = $183,762.) Participant T elects to receive a partial single-sum payment of $32,000, equal to T's accumulated contributions with interest and to take the remaining accrued benefit in the form of a 10-year certain and life annuity commencing at age 60.

(*2*) Because the plan also provides for a single-sum payment option with respect to a participant's entire benefit, pursuant to paragraph (d)(7)(iii)(C)(*2*) of this section the partial single-sum payment must be determined pursuant to the explicit bifurcation rules of paragraph (d)(7)(ii)(A) of this section.

(*3*) The portion of the participant's accrued benefit that is settled by the single-sum payment of $32,000 is determined as the amount that bears the same ratio to the total accrued benefit as that single-sum payment bears to the single-sum payment with respect to the entire accrued benefit (($32,000 ÷ $197,532) × $1,500), which is $243 per month payable as a straight life annuity at normal retirement age. Thus, the remaining portion of the accrued benefit is $1,257.00 per month payable as a straight life annuity at normal retirement age.

(*4*) Based on Plan B's early retirement and optional form factors applied to the remaining portion, the annuity benefit payable to Participant T in the form of a 10-year certain and life annuity beginning at age 60 is $923.90 per month ($1,257 × 75% × 98%). Participant T receives this benefit in addition to the single sum payment of $32,000. The 10-year certain and life benefit is not subject to the minimum present value requirements of section 417(e)(3) because it is treated as a separate optional form of benefit under paragraph (d)(7)(iii)(A) of this section.

(D)

(*1*) Plan C was amended to freeze benefits under a traditional defined benefit formula as of December 31, 2016, and to provide benefits under a cash balance formula beginning January 1, 2017. The plan provides that participants may elect separate distribution options for the portion of the benefit accrued under the traditional formula as of December 31, 2016, and the portion of the benefit earned under the cash balance formula. Furthermore, the plan provides that a participant may elect to receive a single-sum payment only with respect to the portion of the benefit earned under the cash balance formula.

(*2*) In accordance with paragraph (d)(7)(ii)(A) of this section, Plan C provides for an explicitly bifurcated accrued benefit because the portion of the accrued benefit settled by a distribution is determined separately for the portion under the traditional formula and the portion under the cash balance formula. As provided under paragraph (d)(7)(iii)(A) of this section, a single-sum payment under the cash balance formula and a distribution option under the traditional formula are treated as two separate optional forms of benefit for purposes of applying the provisions of the plan implementing the requirements of section 417(e)(3) and this paragraph (d). Therefore, whether a participant elects to receive a single-sum payment of the portion of the benefit earned under the cash balance formula does not affect whether the distribution elected with respect to the portion of the benefit earned as of December 31, 2016, is subject to the minimum present value requirements of section 417(e)(3).

(E)(*1*) The facts are the same as in paragraph (d)(7)(v)(D)(*1*) of this section (*Example 4*), except that Plan C also permits a participant to elect, with respect to the cash balance portion of the benefit, to receive a percentage of that portion as a single sum and the remainder in any annuity form provided under the plan, with the amount of the single-sum payment determined by multiplying the amount that would be payable if the entire cash balance portion were paid as a single sum by the percentage of the cash balance portion settled by the single-sum payment. Participant W retires at age 65, with an accrued benefit under the traditional defined benefit formula (earned as of December 31, 2016) of $500 per month payable as a straight life annuity at normal retirement age and a cash balance hypothetical account balance of $45,000. Based on Plan C's actuarial equivalence factors, Participant W's accrued benefit derived from the cash balance hypothetical account is $320 per month, payable as a straight life annuity at normal retirement age. Participant W elects to receive $^{1}/_{3}$ or $15,000 of the current hypothetical account balance in the form of a single sum and to receive the remainder of the total accrued benefit as a straight life annuity.

(*2*) Under the analysis set forth in paragraph (d)(7)(v)(D)(*1*) of this section (*Example 4*), Plan C provides for an explicitly bifurcated accrued benefit with respect to the traditional defined benefit portion and the cash balance portion because the portion of the accrued benefit settled by a distribution is determined separately for the portion under the traditional formula and the portion under the cash balance formula. As provided under paragraph (d)(7)(iii)(A) of this section, a single-sum payment under the cash balance formula and a distribution option under the traditional formula are treated as two separate optional forms of benefit for purposes of applying the provisions of the plan implementing the requirements of section 417(e)(3) and this paragraph (d). Thus, a separate distribution option may be chosen for each of these two portions, and section 417(e)(3) applies separately to each portion.

(*3*) In accordance with paragraph (d)(7)(ii)(A) of this section, Plan C also provides for an explicitly bifurcated accrued benefit with respect to the cash balance benefit because the plan provides that a distribution in the form of a single-sum payment is made to settle a specified percentage of the cash balance benefit. As provided under paragraph (d)(7)(iii)(A) of this section, the single-sum payment and the annuity selected by Participant W with respect to the cash balance benefit are treated as two separate optional forms of benefit for purposes of applying the provisions of the plan implementing the requirements of section 417(e)(3) and this paragraph (d). Thus, in accordance with paragraph (d)(7)(ii)(A) of this section, $^{1}/_{3}$ of the cash balance hypothetical account is settled by the distribution paid out as a single sum (that is, $15,000 ÷ $45,000). After the single-sum payment, the remaining portion of the accrued benefit derived from the cash balance account is $^{2}/_{3}$ of the initial accrued benefit derived from the cash balance account, or a straight life annuity at normal retirement age of $213.33 per month ($^{2}/_{3}$ × $320).

(*4*) To settle the remaining portion of the entire accrued benefit (the portion of the benefit attributable to service as of December 31, 2016 plus the remaining portion of the cash balance benefit), Participant W receives a monthly life annuity of $713.33 per month payable as a straight life annuity at normal retirement age (equal to the $500 straight life annuity at normal retirement age earned as of December 31, 2016 plus the remaining benefit derived from the cash balance portion of a straight life annuity payable at normal retirement age of $213.33 per month). Participant W's election to receive a single-sum payment of part of the benefit earned under the cash balance formula does not affect whether the remainder of Participant W's distribution is subject to the minimum present value requirements of section 417(e)(3).

(F)

(*1*) Plan D permits participants to elect a single-sum payment of up to $10,000 with the remaining benefit payable in the form of an annuity. Participant X retires in 2016 at age 55 with an accrued benefit of $1,000 per month payable as a straight life annuity at normal retirement age. Participant X is eligible for an unreduced early retirement benefit of $1,000 per month payable as a straight life annuity. Alternatively, based on Plan D's definition of actuarial equivalence (which is not based on the applicable interest and mortality rates under section 417(e)(3)), Participant X can receive an immediate benefit in the form of a 100% joint and survivor annuity of $800 per

month. Participant X elects to receive a single-sum payment of $10,000, with the balance of the benefit payable as a 100% joint and survivor annuity beginning at age 55. Based on the applicable mortality table for 2016 and the November 2015 segment rates, the deferred annuity factor at age 55 for lifetime payments commencing at age 65 is 7.602.

(*2*) Plan D provides for a single-sum distribution of a portion of the participant's accrued benefit but, because the plan initially specifies the amount of the single-sum distribution (rather than the portion of the accrued benefit that is being settled by that distribution), Plan D is described in paragraph (d)(7)(ii)(B) of this section. As provided under paragraph (d)(7)(iii)(A) of this section, the single-sum payment and the joint-and-survivor annuity selected by Participant X are treated as two separate optional forms of benefit for purposes of applying the provisions of the plan implementing the requirements of section 417(e)(3) and this paragraph (d).

(*3*) A straight life annuity of $109.62 per month payable at normal retirement age is actuarially equivalent to the $10,000 single-sum payment, determined using the applicable mortality table for 2016 and the November 2015 segment rates ($10,000 ÷ 12 ÷ 7.602). Therefore, pursuant to paragraph (d)(7)(ii)(B) of this section, in order to satisfy this paragraph (d) the remaining portion of the accrued benefit after the single-sum payment of $10,000 must be no less than $890.38 per month payable as a straight life annuity at normal retirement age ($1,000.00−$109.62).

(*4*) Based on Plan D's early retirement and optional form factors, in order to satisfy this paragraph (d), the annuity benefit payable to Participant X in the form of a 100% joint-and-survivor annuity beginning at age 55 must be no less than $712.30 per month ($890.38 × .8). Participant X receives this benefit in addition to the single sum payment of $10,000. The joint and survivor annuity benefit is not subject to the minimum present value requirements of section 417(e)(3) because it is treated as a separate optional form of benefit under paragraph (d)(7)(iii)(A) of this section.

(G)(*1*) Plan E provides for an unreduced early retirement benefit for participants who have met certain age and service requirements. Prior to amendment, Plan E permitted participants to elect a single-sum payment equal to the present value of the participant's unreduced early retirement benefit, determined using the applicable interest rate and applicable mortality table under section 417(e)(3). Plan E did not permit participants to elect a single-sum payment with respect to only a portion of their benefits. Effective December 31, 2012, Plan E was amended to eliminate the single-sum payment with respect to benefits accrued after that date.

(*2*) Participant Y retires on December 31, 2016, at age 60, after meeting Plan E's age and service requirements for an unreduced early retirement benefit. Participant Y's accrued benefit is $1,000 per month payable as a straight life annuity commencing at normal retirement age, of which $800 per month was accrued as of December 31, 2012. Participant Y elects to take a single-sum payment based on the benefit accrued as of December 31, 2012, with the remainder paid as a lifetime annuity commencing at age 60. Based on the applicable mortality table for 2016 and the November 2015 segment rates, the immediate annuity factor for lifetime payments commencing at age 60 is 14.632, so Y's single-sum payment is $800 × 12 × 14.632 = $140,467.20.

(*3*) In accordance with paragraph (d)(7)(iii)(C)(*1*) of this section, Plan E provides for explicit bifurcation of the accrued benefit as described in paragraph (d)(7)(ii)(A) of this section. Therefore, Participant Y must receive an annuity of $200 earned after December 31, 2012 in addition to the single-sum payment of $140,467. Plan E is not permitted to use the approach described in paragraph (d)(7)(ii)(B) of this section to reduce or eliminate the $200 annuity earned after December 31, 2012.

(H) ***Example of bifurcation of Social Security level income option*** —

(*1*) ***Facts.*** The facts are the same as in paragraph (d)(6)(ii)(A) of this section (*Example of Social Security level income option*), except that Plan A is amended to provide for implicit bifurcation of a distribution paid in the form of a Social Security level income option, as described in paragraph (d)(7)(ii)(C) of this section. Thus, under the plan amendment, a distribution in the form of a Social Security level income option is bifurcated into a temporary annuity portion that ceases at the participant's assumed Social Security commencement age and a life annuity portion.

(*2*) ***Analysis of bifurcation requirements.*** If the requirements of paragraph (d)(7)(ii)(C) of this section are satisfied, then the temporary annuity portion of the Social Security level income option satisfies the minimum present value rules of section 417(e)(3) and this paragraph (d). In order to satisfy paragraph (d)(7)(ii)(C) of this section, there are two requirements that must be satisfied. First, the portion of the participant's accrued benefit that is not paid in the form of the temporary annuity must be no less than the excess of the participant's total accrued benefit over the annuity that is actuarially equivalent to the temporary annuity (determined using the applicable interest and mortality rates under section 417(e)(3)), both expressed in the normal form of benefit commencing at normal retirement age (or at the current date, if later). Second, the portion of the participant's immediate annuity that is not paid in the form of the temporary annuity must be no less than the excess of the participant's total immediate annuity over the immediate annuity that is actuarially equivalent to the temporary annuity (determined using the applicable interest and mortality rates under section 417(e)(3)), both expressed in the form of benefit in which the accrued benefit is expressed but commencing at the current age.

(*3*) ***Analysis of minimum portion of accrued benefit payable as lifetime annuity.*** A temporary annuity that is payable from age 60 to 65 in the amount of $1,000 per month is actuarially equivalent, determined using the applicable interest rate and applicable mortality table under section 417(e)(3), to a straight life annuity of $441.33 per month payable at normal retirement age. Therefore, under the amendment, the portion of Participant R's accrued benefit that is not paid in the form of that temporary annuity must be no less than $1,558.67 per month payable as a straight life annuity at normal retirement age ($2,000−$441.33). Because the portion of the accrued benefit that is not being paid in the form of the temporary annuity determined without regard to the amendment is $1,455.08 (the lifetime annuity of $945.80, divided by the early retirement factor of .65), the amendment increases that portion of the accrued benefit to $1,558.67, and the associated early retirement benefit commencing at age 60 is $1,013.14 ($1,558.67 × 0.65).

(4) ***Analysis of minimum portion of immediate benefit payable as lifetime annuity.*** A temporary annuity that is payable from age 60 to 65 in the amount of $1,000 per month is actuarially equivalent, determined using the applicable interest rate and applicable mortality table under section 417(e)(3), to a straight life annuity of $306.20 per month commencing at age 60. Therefore, under the amendment, the portion of the participant's immediate benefit that is not paid in the form of that temporary annuity must be no less than $993.80 ($1,300−$306.20). Because this minimum amount of immediate annuity is less than the otherwise calculated early retirement benefit at age 60 of $1,013.14, the amendment does not increase the immediate annuity above that amount.

(5) ***Conclusion.*** Because the portion of the benefit under the Social Security level income option that is not paid in the form of a temporary annuity satisfies the requirements of paragraph (d)(7)(ii)(C) of this section, the plan is permitted under paragraph (d)(7)(iii)(A) of this section to treat the temporary annuity and the remaining portion of the benefit as separate distribution options for purposes of this paragraph (d). Under paragraph (d)(7)(ii)(C) of this section, the temporary annuity portion of the Social Security level income option is treated as satisfying the minimum present value requirements of section 417(e) and this paragraph (d). Because the lifetime annuity portion of the Social Security level income option is non-decreasing during the lifetime of the participant, that portion is described in paragraph (d)(6) of this section and is therefore excepted from the requirements of section 417(e)(3). Thus, under the amendment, the combined payments payable to Participant R under the Social Security level income option of $2,013.14 per month until age 65 and $1,013.14 per month thereafter satisfy the requirements of section 417(e)(3) and this paragraph (d).

(8) ***Effective/applicability date*** —

(i) ***In general.*** Except as otherwise provided in this paragraph (d)(8), this paragraph (d) applies to distributions with annuity starting dates in plan years beginning on or after January 1, 1995.

(ii) ***Optional delayed effective date of Retirement Protection Act of 1994 (RPA '94)(108 Stat. 5012) rules for plans adopted and in effect before December 8, 1994.*** For a plan adopted and in effect before December 8, 1994, the application of the rules relating to the applicable mortality table and applicable interest rate under paragraphs (d)(2) through (4) of this section is delayed to the extent provided in this paragraph (d)(8)(ii), if the plan provisions in effect on December 7, 1994, met the requirements of section 417(e)(3) and § 1.417(e)-1(d) as in effect on December 7, 1994 (as contained in 26 CFR part 1 revised April 1, 1995). In the case of a distribution from such a plan with an annuity starting date that precedes the optional delayed effective date described in paragraph (d)(8)(iv) of this section, and that precedes the first day of the first plan year beginning after December 31, 1999, the rules of paragraph (d)(9) of this section (which generally apply to distributions with annuity starting dates in plan years beginning before January 1, 1995) apply in lieu of the rules of paragraphs (d)(2) through (4) of this section. The interest rate under the rules of paragraph (d)(9) of this section is determined under the provisions of the plan as in effect on December 7, 1994, reflecting the interest rate or rates published by the Pension Benefit Guaranty Corporation (PBGC) and the provisions of the plan for determining the date on which the interest rate is fixed. The above described interest rate or rates published by the PBGC are those determined by the PBGC (for the date determined under those plan provisions) pursuant to the methodology under the regulations of the PBGC for

determining the present value of a lump sum distribution on plan termination under 29 CFR part 2619 that were in effect on September 1, 1993 (as contained in 29 CFR part 2619 revised July 1, 1994).

(iii) ***Optional accelerated effective date of RPA '94 rules.*** This paragraph (d) is also effective for a distribution with an annuity starting date after December 7, 1994, during a plan year beginning before January 1, 1995, if the employer elects, on or before the annuity starting date, to make the rules of this paragraph (d) effective with respect to the plan as of the optional accelerated effective date described in paragraph (d)(8)(iv) of this section. An employer is treated as making this election by making the plan amendments described in paragraph (d)(8)(iv) of this section.

(iv) ***Determination of delayed or accelerated effective date by plan amendment adopting RPA '94 rules.*** The optional delayed effective date of paragraph (d)(8)(ii) of this section, or the optional accelerated effective date of paragraph (d)(8)(iii) of this section, whichever is applicable, is the date plan amendments applying both the applicable mortality table of paragraph (d)(2) of this section and the applicable interest rate of paragraph (d)(3) of this section are adopted or, if later, are made effective.

(v) ***Effective date for special rules applicable to the payment of a portion of a participant's benefit.*** Paragraph (d)(7) of this section applies to distributions with annuity starting dates in plan years beginning on or after January 1, 2017. However, taxpayers may elect to apply the rules of paragraph (d)(7) of this section to earlier periods.

(vi) ***Applicability date for provisions reflecting PPA '06 updates and other rules.*** Paragraphs (d)(1) through (4) of this section apply to distributions with annuity starting dates occurring on or after October 1, 2024. For earlier distributions, the rules of § 1.417(e)-1(d) as set forth in 26 CFR part 1, revised as of April 1, 2023, apply, except that taxpayers may instead apply the rules of paragraphs (d)(1) through (4) of this section.

(9) ***Relationship with section 411(d)(6).*** A plan amendment that changes the interest rate or the mortality assumptions used for the purposes described in paragraph (d)(1) of this section (including a plan amendment that changes the time for determining those assumptions) is generally subject to section 411(d)(6). However, for certain exceptions to the rule in the preceding sentence, see paragraph (d)(7)(iv) of this section (with respect to a plan amendment providing for bifurcation that was adopted before December 31, 2017), § 1.411(d)-3(a)(4) (regarding changes in lookback months and stability periods for mortality table and interest rate), § 1.411(d)-4, Q&A-2(b)(2)(v) (with respect to plan amendments relating to involuntary distributions), and section 1107(a)(2) of the Pension Protection Act of 2006, Public Law 109-280, 120 Stat. 780 (PPA '06) (with respect to certain plan amendments that were made pursuant to a change to the Internal Revenue Code made by PPA '06 or pursuant to regulations issued thereunder).

(e) ***Special rules for annuity contracts*** —

(1) ***General rule.*** Any annuity contract purchased by a plan subject to section 401(a)(11) and distributed to or owned by a participant must provide that benefits under the contract are provided in accordance with the applicable consent, present value, and other requirements of sections 401(a)(11) and 417 applicable to the plan.

(2) [Reserved]

(f) ***Effective dates*** —

(1) *Annuity contracts.*

(i) Paragraph (e) of this section does not apply to contracts distributed to or owned by a participant prior to September 17, 1985, unless additional contributions are made under the plan by the employer with respect to such contracts.

(ii) In the case of a contract owned by the employer or distributed to or owned by a participant prior to the first plan year beginning after December 31, 1988, paragraph (e) of this section shall be satisfied if the annuity contracts described therein satisfy the requirements in §§ 1.401(a)-11T and 1.417(e)-1T. The preceding sentence shall not apply if additional contributions are made under the plan by the employer with respect to such contracts on or after the beginning of the first plan year beginning after December 31, 1988.

(2) *Interest rates.*

(i) A plan that uses the PBGC immediate interest rate as required by § 1.417(e)-1T(e) for distributions commencing in plan years beginning before January 1, 1987, shall be deemed to satisfy paragraph (d) of this section for such years.

(ii) For a special exception to the requirements of section 411(d)(6) for certain plan amendments that incorporate applicable interest rates, see section 1139(d)(2) of the Tax Reform Act of 1986.

(3) *Other effective dates and transitional rules.*

(i) Except as otherwise provided, a plan will be treated as satisfying sections 401(a)(11) and 417 for plan years beginning before the first plan year that the requirements of section 410(b) as amended by TRA 86 apply to such plan, if the plan satisfied the requirements in §§ 1.401(a)-11T and 1.417(e)-1T.

(ii) See § 1.401(a)-20 for other effective dates and transitional rules that apply to plans subject to sections 401(a)(11) and 417.

[T.D. 8219, 53 FR 31854, Aug. 22, 1988; 53 FR 48534, Dec. 1, 1988, as amended by T.D. 8591, 60 FR 17219, Apr. 5, 1995; T.D. 8620, 60 FR 49221, Sept. 22, 1995; T.D. 8768, 63 FR 16898, Apr. 7, 1998; T.D. 8796, 63 FR 70011, Dec. 18, 1998; T.D. 8794, 63 FR 70338, Dec. 21, 1998; T.D. 8891, 65 FR 44681, 44682, July 19, 2000; T.D. 9076, 68 FR 41909, July 16, 2003; T.D. 9099, 68 FR 70149, Dec. 17, 2003; T.D. 9783, 81 FR 62361, Sept. 9, 2016; T.D. 9987, 89 FR 3558, Jan. 19, 2024]

§ 1.417(e)-1T Restrictions and valuations of distributions from plans subject to sections 401(a)(11) and 417. (Temporary)

(a) [Reserved]

(b) *Consent, etc. requirements* —

(1) *General rule.* [Reserved]

(2) *Consent.* [Reserved]

(c) [Reserved]

(d) For rules regarding the present value of a participant's accrued benefit and related matters, see § 1.417(e)-1(d).

[T.D. 8591, 60 FR 17219, Apr. 5, 1995, as amended by T.D. 8620, 60 FR 49221, Sept. 22, 1995; T.D. 8768, 63 FR 16902, Apr. 7, 1998; T.D. 8796, 63 FR 70012, Dec. 18, 1998]

§ 1.419-1T Treatment of welfare benefit funds. (Temporary)

Q-1: What does section 419 of the Internal Revenue Code provide?

A-1: Section 419 prescribes limitations upon deductions for contributions paid or accrued with respect to a welfare benefit fund. Under section 419 (a) and (b), an employer's contributions to a welfare benefit fund are not deductible under section 162 (relating to trade or business expenses) or section 212 (relating to expenses for production of income) but, if the requirements of section 162 or 212 are otherwise met, are deductible under section 419 for the taxable year of the employer in which paid to the extent of the welfare benefit fund's qualified cost (within the meaning of section 419(c)(1)) for the taxable year of the fund that relates to such taxable year of the employer. Under section 419(g), section 419 and this section shall also apply to the deduction by a taxpayer of contributions with respect to a fund that would be a welfare benefit fund but for the fact that there is no employer-employee relationship between the person providing the services and the person for whom the services are provided. Contributions paid to a welfare benefit fund after section 419 becomes effective with respect to such contributions are deemed to relate, first, to amounts accrued and deducted (but not paid) by the employer with respect to such fund before section 419 becomes effective with respect to such contributions and thus shall not be treated as satisfying the payment requirement of section 419. See paragraph (b) of Q&A-5 for special deduction limits applicable to employer contributions to welfare benefit funds with excess reserves.

Q-2: When do the deduction rules of section 419, as enacted by the Tax Reform Act of 1984, become effective?

A-2:

(a) Section 419 generally applies to contributions paid or accrued with respect to a welfare benefit fund after December 31, 1985, in taxable years of employers ending after that date. See Q&A-9 of this regulation for special rules relating to the deduction limit for the first taxable year of a fiscal year employer ending after December 31, 1985.

(b) In the case of a welfare benefit fund which is part of a plan maintained pursuant to one or more collective bargaining agreements

(1) between employee representatives and one or more employers, and

(2) that are in effect on July 1, 1985 (or ratified on or before such date), sections 419 shall not apply to contributions paid or accrued in taxable years beginning before the termination of the last of the collective bargaining agreements pursuant to which the plan is maintained (determined without regard to any extension thereof agreed to after July 1, 1985). For purposes of the preceding sentence, any plan amendment made pursuant to a collective bargaining agreement relating to the plan which amends the plan solely to conform to any requirement added under section 511 of the Tax Reform Act of 1984 (i.e., requirements under sections 419, 419A, 512(a)(3)(E), and 4976) shall not be treated as a termination of such collective bargaining agreement. See § 1.419A-2T for special rules relating to the application of section 419 to collectively bargained welfare benefit funds.

(c) Notwithstanding paragraphs (a) and (b), section 419 applies to any contribution of a facility to a welfare benefit fund (or other contribution, such as cash, which is used to acquire, construct, or improve such a facility) after June 22, 1984, unless such facility is placed in service by the fund before January 1, 1987, and either

(1) is acquired or improved by the fund (or contributed to the fund) pursuant to a binding contract in effect on June 22, 1984, and at all times thereafter, or

(2) the construction of which was begun by or for the welfare benefit fund before June 22, 1984. See Q&A-11 of this regulation for special rules relating to the application of section 419 to the contribution of a facility to a welfare benefit fund (and to the contribution of other amounts, such as cash, used to acquire, construct, or improve such a facility) before section 419 generally becomes effective with respect to contributions to the fund.

Q-3. What is a “welfare benefit fund” under section 419?

A-3.

(a) A “welfare benefit fund” is any fund which is part of a plan, or method or arrangement, of an employer and through which the employer provides welfare benefits to employees or their beneficiaries. For purposes of this section, the term “welfare benefit” includes any benefit other than a benefit with respect to which the employer's deduction is governed by section 83(h), section 404 (determined without regard to section 404(b)(2)), section 404A, or section 463.

(b) Under section 419(e)(3) (A) and (B), the term “fund” includes any organization described in section 501(c) (7), (9), (17) or (20), and any trust, corporation, or other organization not exempt from tax imposed by chapter 1, subtitle A, of the Internal Revenue Code. Thus, a taxable trust or taxable corporation that is maintained for the purpose of providing welfare benefits to an employer's employees is a “welfare benefit fund.”

(c) Section 419(e)(3)(C) also provides that the term “fund” includes, to the extent provided in regulations, any account held for an employer by any person. Pending the issuance of further guidance, only the following accounts, and arrangements that effectively constitute accounts, as described below, are “funds” within section 419(e)(3)(C).

A retired lives reserve or a premium stabilization reserve maintained by an insurance company is a “fund,” or part of a “fund,” if it is maintained for a particular employer and the employer has the right to have any amount in the reserve applied against its future years' benefit costs or insurance premiums. Also, if an employer makes a payment to an insurance company under an “administrative services only” arrangement with respect to which the life insurance company maintains a separate account to provide benefits, then the arrangement would be considered to be a “fund.” Finally, an insurance or premium arrangement between an employer and an insurance company is a “fund” if, under the arrangement, the employer has a right to a refund, credit, or additional benefits (including upon termination of the arrangement) based on the benefit or claims experience, administrative cost experience, or investment experience attributable to such employer. However, an arrangement with an insurance company is not a “fund” under the previous sentence merely because the employer's premium for a renewal year reflects the employer's own experience for an earlier year if the arrangement is both cancellable by the insurance company and cancellable by the employer as of the end of any policy year and, upon cancellation by either of the parties, neither of the parties can receive a refund or additional amounts or benefits and neither of the parties can incur a residual liability beyond the end of the policy year (other than, in the case of the insurer, to provide benefits with respect to claims incurred before cancellation). The determination whether either of the parties can receive a refund or additional amounts or benefits or can incur a residual liability upon cancellation of an arrangement will be made by examining both the contractual rights and obligations of the parties under the arrangement and the actual practice of the insurance company (and other insurance companies) with respect to other employers upon cancellation of similar

arrangements. Similarly, a disability income policy does not constitute a “fund” under the preceding provisions merely because, under the policy, an employer pays an annual premium so that employees who became disabled in such year may receive benefit payments for the duration of the disability.

Q-4: For purposes of determining the section 419 limit on the employer's deduction for contributions to the fund for a taxable year of the employer, which taxable year of the welfare benefit fund is related to the taxable year of the employer?

A-4: The amount of an employer's deduction for contributions to a welfare benefit fund for a taxable year of the employer is limited to the “qualified cost” of the welfare benefit fund for the taxable year of the fund that is related to such taxable year of the employer. The taxable year of the welfare benefit fund that ends with or within the taxable year of the employer is the taxable year of the fund that is related to the taxable year of the employer. Thus, for example, if an employer has a calendar taxable year and it makes contributions to a fund having a taxable year ending June 30, the “qualified cost” of the fund for the taxable year of the fund ending on June 30, 1986, applies to limit the employer's deduction for contributions to the fund in the employer's 1986 taxable year. In the case of employer contributions paid directly to an account or arrangement with an insurance company that is treated as a welfare benefit fund for the purposes of section 419, the policy year will be treated as the taxable year of the fund. See Q&A-7 of this regulation for special section 419 rules relating to the coordination of taxable years for the taxable year of the employer in which a welfare benefit fund is established and for the next following taxable year of the employer.

Q-5: What is the “qualified cost” of a welfare benefit fund for a taxable year under section 419?

A-5:

(a) Under section 419(c), the “qualified cost” of a welfare benefit fund for a taxable year of the fund is the sum of:

(1) The “qualified direct cost” of such fund for such taxable year of the fund, and

(2) the amount that may be added to the qualified asset account for such taxable year of the fund to the extent that such addition does not result in a total amount of such account as of the end of such taxable year of the fund that exceeds the applicable account limit under section 419A(c). However, in calculating the qualified cost of a welfare benefit fund for a taxable year of the fund, this sum is reduced by the fund's “after-tax income” (as defined in section 419(c)(4)) for such taxable year of the fund. Also, the qualified cost of a welfare benefit fund is reduced further under the provisions of paragraph (b) of this Q&A.

(b)

(1) Pursuant to section 419A(i), notwithstanding section 419 and § 1.419-1T, contributions to a welfare benefit fund during any taxable year of the employer beginning after December 31, 1985, shall not be deductible for such taxable year to the extent that such contributions result in the total amount in the fund as of the end of the last taxable year of the fund ending with or within such taxable year of the employer exceeding the account limit applicable to such taxable year of the fund (as adjusted under section 419A(f)(7)). Solely for purposes of this subparagraph,

(i) contributions paid to a welfare benefit fund during the taxable year of the employer but after the end of the last taxable year of the fund that relates to such taxable year of the employer, and

(ii) contributions accrued with respect to a welfare benefit fund during the taxable year of the employer or during any prior taxable year of the employer (but not actually paid to such fund on or before the end of a taxable year of the employer) and deducted by the employer for such or any prior taxable year of the employer, shall be treated as an amount in the fund as of the end of the last taxable year of the fund that relates to the taxable year of the employer. Contributions that are not deductible under this subparagraph are in excess of the qualified cost of the welfare benefit fund for the taxable year of the fund that relates to the taxable year of the employer and thus are treated as contributed to the fund on the first day of the employer's next taxable year.

(2) Paragraph (b)(1) of this section shall not apply to contributions with respect to a collectively bargained welfare benefit fund within the meaning of § 1.419A-2T. In addition, paragraph (b)(1) of this section shall not apply to any taxable year of an employer beginning after the end of the earlier of the following taxable years:

(i) the first taxable year of the employer beginning after December 31, 1985, for which the employer's deduction limit under section 419 (after the application of paragraph (b)(1) of this section) is at least equal to the qualified direct cost of the fund for the taxable year (or years) of the fund that relates to such first taxable year of the employer, or

(ii) the first taxable year of the employer beginning after December 31, 1985, with or within which ends the first taxable year of the fund with respect to which the total amount in the fund as of the end of such taxable year of the fund does not exceed the account limit for such taxable year of the fund (as adjusted under section 419A(f)(7)).

(3) For example, assume an employer with a taxable year ending June 30 and a welfare benefit fund with a taxable year ending January 31. During its taxable year ending June 30, 1987, and on or before January 31, 1987, the employer contributes $250,000 to the fund, and during the remaining portion of its taxable year ending June 30, 1987, the employer contributes $200,000. The qualified direct cost of the fund for its taxable year ending January 31, 1987, is $500,000, the account limit applicable to such taxable year (after the adjustment under section 419A(f)(7)) is $750,000, and the total amount in the fund as of January 31, 1987, is $800,000. Before the application of this paragraph, the employer may deduct the entire $450,000 contribution for its taxable year ending June 30, 1987. However, under this paragraph, the excess of

(i) the sum of the total amount in the fund as of January 31, 1987 ($800,000), and employer contributions to the fund after January 31, 1987, and on or before June 30, 1987 ($200,000), over

(ii) the account limit applicable to the fund for its taxable year ending January 31, 1987 ($750,000), is $250,000. Thus, under this paragraph, only $200,000 of the $450,000 contribution the employer made during its taxable year ending June 30, 1987, is deductible for such taxable year. If the excess were $450,000 or greater, no portion of the $450,000 contribution would be deductible by the employer for its taxable year ending June 30, 1987. Such nondeductible contributions are in excess of the fund's qualified cost for the taxable year related to the employer's taxable year and thus are deemed to be contributed on the first day of the employer's next taxable year.

(c) See Q&A-7 of this regulation for special rules relating to the calculation of the qualified cost of a welfare benefit fund for an Initial Fund Year and an Overlap Fund Year (as defined in Q&A-7). See Q&A-11 of this regulation for special rules relating to the application of section 419 to the contribution to a welfare benefit fund of a facility (and to the contribution of other amounts, such as cash, used to acquire, construct, or improve a facility) before section 419 generally becomes effective with respect to contributions to the fund. See § 1.419A-2T for special rules relating to certain collectively bargained welfare benefit funds.

Q-6: What is the "qualified direct cost" of a welfare benefit fund under section 419(c)(3)?

A-6:

(a) Under section 419(c)(3), the "qualified direct cost" of a welfare benefit fund for any taxable year of the fund is the aggregate amount which would have been allowable as a deduction to the employer for benefits provided by such fund during such year (including insurance coverage for such year) if

(1) such benefits were provided directly by the employer and

(2) the employer used the cash receipts and disbursements method of accounting and had the same taxable year as the fund. In this regard, a benefit is treated as provided when such benefit would be includible in the gross income of the employee if provided directly by the employer (or would be so includible but for a provision of chapter 1, subtitle A, of the Internal Revenue Code excluding it from gross income). Thus, for example, if a calendar year welfare benefit fund pays an insurance company in July 1986 the full premium for coverage of its current employees under a term health insurance policy for the twelve month period ending June 30, 1987, the insurance coverage will be treated as provided by the fund over such twelve month period. Accordingly, only the portion of the premium for coverage during 1986 will be treated as a "qualified direct cost" of the fund for 1986; the remaining portion of the premium will be treated as a "qualified direct cost" of the fund for 1987. The "qualified direct cost" for a taxable year of the fund includes the administrative expenses incurred by the welfare benefit fund in delivering the benefits for such year.

(b) If, in a taxable year of a welfare benefit fund, the fund holds an asset with a useful life extending substantially beyond the end of the taxable year (e.g., buildings, vehicles, tangible assets, and licenses) and, for such taxable year of the fund, the asset is used in the provision of welfare benefits to employees, the "qualified direct cost" of the fund for such taxable year of the fund includes the amount that would have been allowable to the employer as a deduction under the applicable Code provisions (e.g., sections 168 and 179) with respect to the portion of the asset used in the provision of welfare benefits for such year if the employer had acquired and placed in service the asset at the same time the fund received and placed in service the asset, and the employer had the same taxable year as the fund. This rule applies regardless of whether the fund received the asset through a contribution of the asset by the employer or through an acquisition or the construction by the fund of the asset. For example, assume that in 1986 a calendar year employer contributes recovery property under section 168(c) to a welfare benefit fund with a calendar taxable year to be used in the provision of welfare benefits. The employer will be treated as having sold the property in such year and thus will recognize gain to the extent that the fair market value of the property exceeds the employer's adjusted basis in the property. In this regard, see section 1239(d). Also, the employer will be treated as having made a contribution to the fund in such year equal to the fair market value of the property. Finally, the qualified direct cost of the welfare benefit fund for 1986 will include the amount that the employer could have deducted in 1986 with respect to the portion of the property used in the provision of welfare benefits if the employer had acquired the property in 1986 and had

placed the property in service when the fund actually placed the property in service. Similarly, for example, assume that in 1986 a welfare bendfit fund purchases and places in service a facility to be used in the provision of welfare benefits. The qualified direct cost of the fund for 1986 will include the amount that the employer could have deducted with respect to such facility if the employer had purchased and placed in service the facility at the same time that the fund purchased and placed in service the facility.

(c) The qualified direct cost of a welfare benefit fund does not include expenditures by the fund that would not have been deductible if they had been made directly by the employer. For example, a fund's purchase of land in a year for an employee recreational facility will not be treated as a qualified direct cost because, if made directly by the employer, the purchase would not have been deductible under section 263. See also sections 264 and 274.

(d) Notwithstanding the preceding paragraphs, the qualified direct cost of a welfare benefit fund with respect to that portion of a child care facility used in the provision of welfare benefits for a year will include the amount that would have been allowable to the employer as a deduction for the year under a straight-line depreciation schedule for a period of 60 months beginning with the month in which the facility is placed in service under rules similar to those provided for section 188 property under § 1.188-1(a). For purposes of this section, a “child care facility” is tangible property of a character subject to depreciation that is located in the United States and specifically used as an integral part of a “qualified child care center facility” within the meaning of § 1.188-1(d)(4).

(e) See Q&A-7 of this regulation for special section 419 rules relating to the calculation of the qualified direct cost of a welfare benefit fund for an Initial Fund Year and an Overlap Fund Year (as defined in Q&A-7). See Q&A-11 of this regulation for special rules relating to the contribution to a welfare benefit fund of a facility (and to the contribution of other amounts, such as cash, used to acquire, construct, or improve a facility) before section 419 generally becomes effective with respect to contributions to the fund.

Q-7: What special rules apply for purposes of determining the section 419 limit on the employer's deduction for contributions to a welfare benefit fund for the taxable year of the employer in which the fund is established and for the next following taxable year of the employer?

A-7:

(a) If the taxable year of a welfare benefit fund is the same as the taxable year of the employer, there are no special rules that apply for purposes of determining the section 419 limit on an employer's deduction for contributions to the fund for either the taxable year of the employer in which the fund is established or the next following taxable year of the employer. However, if the taxable year of a welfare benefit fund is different from the taxable year of the employer, the general section 419 rules are modified by the special rules set forth below for purposes of determining the section 419 deduction limit for the taxable year of the employer in which a fund is established and for the next following taxable year of the employer.

(b) If a welfare benefit fund is established after December 31, 1985, during a taxable year of an employer and either

(i) the first taxable year of the fund ends after the close of such taxable year of the employer, or

(ii) the first taxable year of the fund is six months or less and ends before the close of such taxable year of the employer and the second taxable year of the fund begins before and ends after the close of such taxable year of the employer, the taxable year of the fund that contains the

closing day of such taxable year of the employer will be treated as an "Overlap Fund Year." For purposes of determining the limit on the employer's deduction for contributions to a welfare benefit fund for the taxable year of the employer in which the fund was established, the period between the beginning of the fund's Overlap Fund Year and the end of the employer's taxable year in which the Overlap Fund Year began will be treated as a taxable year of the fund ("Initial Fund Year").

(c) The qualified cost of a welfare benefit fund for its Initial Fund Year will be equal to the qualified direct cost of the fund for such Initial Fund Year. The qualified cost of a fund for its Overlap Fund Year will be determined under the general rules of Q&A-5 of this regulation and section 419(c), with the exception that such qualfied cost will be reduced by the employer contributions made during the Initial Fund Year and deductible by the employer for the taxable year of the employer in which the Overlap Fund Year of the fund begins.

(d) Assume that an employer with a calendar taxable year establishes on July 1, 1986, a welfare benefit fund with a taxable year ending on June 30. The fund's first taxable year from July 1, 1986, to June 30, 1987, is an Overlap Fund Year. The employer contributes $1,000 to the fund during its taxable year ending December 31, 1986 (i.e., during the period between July 1, 1986, and December 31, 1986, which is also the Initial Fund Year) and another $1,500 to the fund during its taxable year ending December 31, 1987. Assume further that the qualified direct cost of the fund for the Initial Fund Year is $900 and that the qualified cost for the Overlap Fund Year is $2,500 (prior to the reduction required by paragraph (c) of this Q&A). Under the special rules of paragraphs (b) and (c), the employer may deduct $900 for its taxable year ending on December 31, 1986, and $1,600 for its taxable year ending on December 31, 1987. If the qualified direct cost of the fund for the Initial Fund Year had been $1,050 and the qualified cost for the Overlap Fund Year had been $2,500 (prior to the reduction required by paragraph (c) of this Q&A), the employer's deduction for its taxable year ending December 31, 1986, would have been $1,000 and its deduction for its taxable year ending December 31, 1987, would have been $1,500.

(e) Assume that an employer with a calendar taxable year establishes on March 1, 1986, a welfare benefit fund with a taxable year ending June 30. Thus, the fund has a short first taxable year ending June 30, 1986, an Overlap Fund Year from July 1, 1986, until June 30, 1987, and an ongoing June 30 taxable year. The employer contributes $1,750 to the fund during the employer's taxable year ending December 31, 1986—$750 during the short first taxable year of the fund and $1,000 during the Initial Fund Year (i.e., the period between July 1, 1986, and December 31, 1986)—and $1,500 to the fund during its taxable year ending December 31, 1987. Assume that the qualified cost of the fund for the short first taxable year of the fund is $800, the qualified direct cost for the Initial Fund Year is $900, and the qualified cost for the Overlap Fund Year is $2,500 (prior to the reduction required by paragraph (c) of this Q&A). Under the special rules of paragraphs (b) and (c), the employer may deduct $1,700 for its taxable year ending December 31, 1986, and $1,550 for its taxable year ending December 31, 1987.

Q-8: How does section 419 treat an employer's contribution with respect to a welfare benefit fund in excess of the applicable deduction limit for a taxable year of the employer?

A-8:

(a) If an employer makes contributions to a welfare benefit fund in a taxable year of the employer and such contributions (when combined with prior contributions that are deemed under the rule of this Q&A and section 419(d) to have been made in such taxable year) exceed the section 419 deduction limit for such taxable year of the employer, the excess amounts are deemed to be contributed to the

fund on the first day of the next taxable year of the employer. Such deemed contributions are combined with amounts actually contributed by the employer to the fund during the next taxable year and may be deductible for such year, subject to the otherwise applicable section 419 deduction limit for such year.

(b) Contributions to a welfare benefit fund on or before December 31, 1985, that were not deductible by the employer for any taxable year of the employer ending on or before December 31, 1985, or for the first taxable year of the employer ending after December 31, 1985, as pre-1986 contributions (see Q&A-9 of this regulation) are deemed to be contributed to the fund on January 1, 1986, However, see Q&A-11 of this regulation for special rules relating to the contribution to a welfare benefit fund of amounts (such as cash) used to acquire, construct, or improve a facility before section 419 generally becomes effective with respect to contributions to the fund. Generally, such contributions (to the extent that they were made after June 22, 1984 and on or before December 31, 1985) are treated as nondeductible pre-1986 contributions and are deemed to be contributed in the form of a facility at the same time as when the facility is placed in service by the fund.

Q-9: How does an employer with a fiscal taxable year calculate its deduction limit for contributions with respect to a welfare benefit fund for the first taxable year of the employer ending after December 31, 1985?

A-9:

(a) If the first taxable year of an employer ending after December 31, 1985 (or, if applicable under paragraph (b) of Q&A-2 of this section, the first taxable year of an employer beginning after termination of the last of the collective bargaining agreements pursuant to which the fund is maintained) is a fiscal year, the employer's deduction for such taxable year for contributions to a welfare benefit fund that is not a collectively bargained welfare benefit fund under § 1.419A-2T is limited to the greater of the following two amounts:

(1) The contributions paid to the fund during such first taxable year up to the qualified cost of the welfare benefit fund for the taxable year of the fund that relates to such taxable year of the employer, and

(2) the contributions paid to the fund during the 1985 portion of such first taxable year of the employer (“the pre-1986 contributions”) to the extent that such pre-1986 contributions are deductible under the rules governing the deduction of such contributions before section 419 generally becomes effective (including the rules set forth in Q&A-10 of this regulation, modified for purposes of this Q&A-9 by substituting “December 31, 1986” for “December 31, 1985” in paragraph (c)). See Q&A-11 of this regulation for special rules relating to the contribution to a welfare benefit fund of a facility (and to the contribution of other amounts, such as cash, used to acquire, construct, or improve such a facility) before section 419 generally becomes effective with respect to contributions to such fund.

(b) For example, assume that an employer with a taxable year ending June 30, contributes to a welfare benefit fund with a taxable year ending January 31. This employer contributes $1,000 to the fund between July 1, 1985, and December 31, 1985, and an additional $500 to the fund between January 1, 1986, and June 30, 1986. Assume further that the qualified direct cost of the fund for the taxable year of the fund ending January 31, 1986, is $500 and that the qualified cost for such taxable year is $800. Under the deduction rule set forth above, the employer's deduction for its taxable year ending June 30, 1986, is the greater of two amounts:

(1) The contributions made during such full taxable year ($1,500) up to the qualifed cost of the fund with respect to such taxable year ($800), and

(2) the pre-1986 contributions ($1,000) to the extent that such pre-1986 contributions are deductible under the pre-section 419 rules. In determining the extent to which the pre-1986 contributions are deductible under the pre-section 419 rules, the rules contained in Q&A-10 apply as though December 31, 1985, in paragraph (c) were December 31, 1986. Assuming that only $875 is deductible under the pre-section 419 rules, because $875 is greater than $800, this employer may deduct $875 for its first taxable year ending after December 31, 1985. This full $875 deduction for 1985 is deemed to consist entirely of pre-1986 contributions.

Q-10: How do the rules of sections 263, 446(b), 461(a), and 461(h) apply in determining whether contributions with respect to a welfare benefit fund are deductible for a taxable year?

A-10:

(a) Both before and after the effective date of section 419 (see Q&A-2 of this regulation), an employer is allowed a deduction for taxable year for contributions paid or accrued with respect to a “welfare benefit fund” (as defined in Q&A-3 of this regulation and section 419(e)) only to the extent that such contributions satisfy the requirements of section 162 or 212. These requirements must be satisfied after the effective date of section 419 because 419 requires that (among other requirements) contributions to a welfare benefit fund satisfy the requirements of section 162 or 212.

(b) Except as provided in paragraphs (c) and (d), in determinig the extent to which contributions paid or accrued with respect to welfare benefit fund satisfy the requirements of section 162 or 212 for a taxable year (both before and after section 419 generally becomes effective with respect to such contributions), the rules of sections 263, 446(b), 461(a) (including the rules that relate to the creation of an asset with a useful life extending substantially beyond the close of the taxable year), and 461(h) (to the extent that such section is effective with respect to such contributions) are are generally applicable.

(c) Notwithstanding paragraph (b), under the authority of section 7805(b), the rules of sections 263, 446(b), and 461(a) shall not be applied in determining the extent to which an employer's contribution with respect to a welfare benefit fund is deductible under section 162 or 212 with respect to any taxable year of the employer ending on or before December 31, 1985, to the extent that, for such taxable year,

(1) the contribution was made pursuant to a bona fide collective bargaining agreement requiring fixed and determinable contributions to a collectively bargained welfare benefit fund (as defined in § 1.419A-2T), or

(2) the contribution was not in excess of the amount deductible under the principles of Revenue Rulings 69-382, 1969-2 C.B. 28; 69-478, 1969-2 C.B. 29; and 73-599, 1973-2 C.B. 40, modified as appropriate for benefits for active employees.

(d) Notwithstanding paragraph (b), in determining the extent to which contributions paid or accrued with respect to a welfare benefit fund are deductible under section 419, the rules of sections 263, 446(b), and 461(a) will be treated as having been satisfied to the extent that such contributions satisfy the otherwise applicable rules of section 419. Thus, for example, contributions to a welfare benefit fund will not fail to be deductible under section 419 merely because they create an asset with a useful life extending substantially beyoud the close of the taxable year if such contributions satisfy the otherwise applicable requirements of section 419.

(e) In determining the extent to which contributions with respect to a welfare benefit fund satisfy the requirements of section 461(h) for any taxable year for which section 461(h) is effective, pursuant to the authority under section 461(h)(2), economic performance occurs as contributions to the welfare benefit fund are made. Solely for purposes of section 461(h), in the case of an employer's taxable year ending on or after July 18, 1984, and on or before March 21, 1986, contributions made to the welfare benefit fund after the end of such taxable year and on or before March 21, 1986 shall be deemed to have been made on the last day of such taxable year.

Q-11: What special section 419 rules apply to the payment or accrual with respect to a welfare benefit fund of a facility (and the payment or accrual of other amounts, such as cash, used to acquire, construct, or improve such a facility)?

A-11:

(a)

(1) In the case of an employer's payment or accrual with respect to a welfare benefit fund after June 22, 1984, and on or before December 31, 1985 (or, if applicable under paragraph (b) of Q&A-2 of this regulation, before section 419 generally becomes effective with respect to contributions to such fund), of a facility, the rules of section 419, § 1.419-1T, and § 1.419A-2T generally apply to determine the extent to which such contribution is deductible by the employer for its taxable year of contribution. For this purpose, however, the facility is to be treated as the only contribution made to the fund and the qualified cost of the fund for the taxable year of the fund in which the facility was contributed is to be equal to the qualified direct cost directly attributable to the facility (as determined under Q&A-6 of this regulation). Also, for this purpose, the welfare benefit fund to which the facility was contributed may not be aggregated with any other fund. For purposes of this Q&A, “facility” means any tangible asset with a useful life extending substantially beyond the end of the taxable year (e.g., vehicles, buildings) and any intangible asset (e.g., licenses) related to a tangible asset, whether or not such asset is used in the provision of welfare benefits. See, however, paragraph (c) of Q&A-2 of this regulation for a binding contract exception.

(2) For example, assume that an employer and a welfare benefit fund each has a calendar taxable year and that, during 1985, the employer contributes to the fund $200,000 in cash and a facility with a fair market value of $100,000. Such facility is used in the provision of welfare benefits under the fund. The employer is treated as having sold the facility in such year and thus will recognize gain to the extent that the fair market value of the facility exceeds the employer's adjusted basis in the facility. In this regard, see section 1239(d). The extent to which the facility contribution is deductible by the employer for its 1985 taxable year is determined as though it were the only contribution made by the employer to the fund during such year and the qualified cost of the fund for the taxable year of the fund in which the contribution was made (i.e., the 1985 taxable year) were equal to the amount that would have been allowable to the employer as a deduction for such year under the applicable Code provisions with respect to the portion of the facility used in the provision of welfare benefits for such year if the employer had placed in service the facility at the time the fund placed in service the facility and if the employer had the same taxable year as the fund. If, under these assumptions, the employer would have been allowed a $10,000 deduction with respect to the facility for the 1985 taxable year, the fund's qualified cost for its 1985 taxable year would be only $10,000. Thus, only $10,000 of the $100,000 facility contribution would be deductible by the employer for its 1985 taxable year (i.e., the taxable year of the employer with or within which the applicable taxable year of the

fund ends). However, in determining the extent to which the $200,000 in cash is deductible by the employer for its 1985 taxable year, the $100,000 facility is not to be disregarded. Thus, if under the applicable pre-section 419 rules the employer is allowed for 1985 a total deduction of only $175,000, the employer would be permitted a deduction for 1985 of $175,000 ($10,000 with respect to the facility and $165,000 of the cash contribution). The nondeductible portion of the cash contribution is to be treated as contributed to the fund on the first day of the next taxable year of the employer. If under the applicable pre-section 419 rules the employer were allowed a total deduction of $300,000 for 1985, the employer would be permitted a deduction for 1985 of only $210,000 ($10,000 with respect to the facility and the full $200,000 cash contribution).

(3) For example, assume that an employer has a June 30 taxable year and maintains a welfare benefit fund with a taxable year ending January 31. During the 1985 portion of its taxable year ending June 30, 1986, the employer contributes $50,000 in cash and a facility with a fair market value of $100,000; and during the 1986 portion of such taxable year, the employer contributes another $75,000 in cash to the fund. The facility is used in the provision of welfare benefits under the fund. Under the rules of Q&A-9 of this regulation, the employer's deduction for its June 30, 1986, taxable year is limited to the greater of the following two amounts:

(i) The contributions paid to the fund during such taxable year ($225,000) up to the qualified cost of the fund for the taxable year of the fund ending January 31, 1986, and

(ii) the contributions paid to the fund during the 1985 portion of the employer's taxable year ending June 30, 1986 (“the pre-1986 contributions”) ($150,000) to the extent that such pre-1986 contributions are deductible under the rules governing the deduction of such contributions before section 419 is generally effective with respect to the fund. For purposes of this rule, the contribution of the facility on or before December 31, 1985, is to be treated as a pre-1986 contribution and the rules of section 419 and this Q&A are to be treated as rules governing the deduction of such contribution before section 419 generally becomes effective with respect to the fund. Thus, in determining the extent to which the facility is deductible as a pre-1986 contribution under the rules before section 419 generally becomes effective, the facility is treated as the only contribution to the welfare benefit fund and the qualified cost of such fund for the taxable year of the fund in which the facility was contributed is the amount that would have been allowable to the employer as a deduction with respect to the portion of the facility used in the provision of welfare benefits if the employer had placed in service the facility at the same time that the fund placed in service the facility and the employer's taxable year ended on January 31, 1986.

(b)

(1) The preceding rules shall also apply for purposes of determining when and the extent to which an employer may deduct contributions or other items and amounts after June 22, 1984 and on or before December 31, 1985 (or, if applicable under paragraph (b) of Q&A-2 of this regulation, before section 419 generally becomes effective with respect to contributions to the fund) that are not facilities (e.g., cash contributions) to a welfare benefit fund that are used by the fund to acquire, construct, or improve a facility. The most recent non-facility contributions made to a welfare benefit fund before the facility in question is placed in service by the fund (up to the fair market value of the facility at such time) are to be treated as used by the fund for the acquisition, construction, or improvement (as the case may be) of such facility. To the extent that contributions before such a facility is placed in service are not at least equal to the value of

the facility at such time, contributions after such date (up to the value of the facility at the time it is placed in service) are treated as used for acquisition, construction, or improvement of the facility. Such non-facility contributions, to the extent that they were made after June 22, 1984, and on or before December 31, 1985 (or, if applicable under paragraph (b) of Q&A-2 of this regulation, before section 419 generally becomes effective with respect to contributions to the fund), are not deductible by the employer as non-facility contributions for any year. Instead, the employer is permitted a deduction with respect to such contributions only under the rules of this Q&A as though the employer had contributed a facility to the fund at the same time that the fund placed in service the facility in question and, at such time, the facility had a fair market value equal to the total of such non-facility contributions.

(2) For example, assume that an employer and a welfare benefit fund each has a calendar taxable year and during 1985 the fund acquired and placed in service a facility with a fair market value of $100,000 to be used in the provision of welfare benefits. Further, during July 1984 the employer contributed $150,000 in cash to the fund and, during the portion of 1985, before the facility was placed in service by the fund, the employer contributed another $75,000 in cash to the fund; during the remaining portion of 1985, the employer contributed $125,000 in cash. The facility is used in the provision of welfare benefits under the fund. Because $25,000 of the employer's 1984 contribution is treated under this rule as used for the acquisition of a facility, such $25,000 is not deductible by the employer for 1984. For purposes of determining the employer's deduction for 1985, the employer will be treated as having contributed $125,000 in cash and a facility with a fair market value of $100,000. The employer's deduction for its 1985 taxable year will be determined under the rules relating to the contribution of a facility after June 22, 1984, and on or before December 31, 1985.

(3) For example, assume that an employer and a welfare benefit fund each has a calendar taxable year and during 1986 the fund placed in service a facility with a fair market value of $100,000 to be used in the provision of welfare benefits. During 1985, the employer contributed $125,000 in cash to the fund. During the portion of 1986 before the facility was placed in service, the employer contributed $60,000 in cash, and during the remaining portion of 1986, the employer contributed another $75,000 in cash. The facility is used in the provision of welfare benefits under the fund. Because $40,000 of its 1985 cash contribution is treated under this rule as used for the acquisition of the facility, such $40,000 is not deductible by the employer for 1985. For purposes of determining the employer's deduction for 1986, the employer will be treated as though it had contributed a $40,000 facility to the fund at the time the fund placed the facility in service.

(c) For purposes of calculating the “existing excess reserve amount” under Q&A-1 of § 1.419A-1T and the “existing reserves for post-retirement medical or life insurance benefits” under Q&A-4 of § 1.512(a)-5T (but not the exempt function income under Q&A-3 of § 1.512(a)-5T), the amount set aside as of any applicable date is to be reduced to the extent that contributions originally included in such amount are subsequently treated under this Q&A as used for the acquisition, construction, or improvement of an asset excluded from the calculation of the total amount set aside under paragraph (b) of § 1.512(a)-5T (or would be so treated under this Q&A if it applied to such asset). The reduction required under this paragraph applies for purposes of calculating the “existing excess reserve amount” and the “existing reserves for post-retirement medical or life insurance benefits” for all taxable years of the welfare benefit fund.

[T.D. 8073, 51 FR 4323, Feb. 4, 1986; 51 FR 7262, Mar. 3, 1986; 51 FR 11303, Apr. 2, 1986]

§ 1.419A-1T Qualified asset account limitation of additions to account. (Temporary)

Q-1: What does the transition rule under section 419A(f)(7) provide?

A-1: Section 419A(f)(7) provides that, in the case of a welfare benefit fund that was in existence on July 18, 1984, the account limit (as determined under section 419A(c)) for each of the first four taxable years of the fund that relate to taxable years of the employer ending after December 31, 1985 (or, if applicable under paragraph (b) of Q&A-2 of § 1.419-1T, taxable years of the employer beginning after the termination of the last of the collective bargaining agreements pursuant to which the plan is maintained) shall be increased by the following percentages of the "existing excess reserve amount":

	Percent
First taxable year	80
Second taxable year	60
Third taxable year	40
Fourth taxable year	20

For purposes of this section, the "existing excess reserve amount" for any taxable year of a fund is the excess of (a) the assets actually set aside for purposes described in section 419A(a) at the close of the first taxable year of the fund ending after July 18, 1984 (calculated in the manner set forth in Q&A-3 of § 1.512(a)-3T, and adjusted under paragraph (c) of Q&A-11 of § 1.419-1T), reduced by employer contributions to the fund before the close of such first taxable year to the extent that such contributions are not deductible for the taxable year of the employer with or within which such taxable year of the fund ends and for any prior taxable year of the employer, over (b) the account limit which would have applied to the taxable year of the fund for which the excess is being computed (without regard to this transition rule). A welfare benefit fund is treated as in existence on July 18, 1984, for purposes of this transition rule only if amounts were actually set aside in such fund on such date to provide welfare benefits enumerated under section 419A.

[T.D. 8073, 51 FR 4329, Feb. 4, 1986, as amended at 51 FR 11303, Apr. 2, 1986]

§ 1.419A-2T Qualified asset account limitation for collectively bargained funds. (Temporary)

Q-1: What account limits apply to welfare benefit funds that are maintained pursuant to a collective bargaining agreement?

A-1: Contributions to a welfare benefit fund maintained pursuant to one or more collective bargaining agreements and the reserves of such a fund generally are subject to the rules of sections 419, 419A, and 512. However, neither contributions to nor reserves of such a collectively bargained welfare benefit fund shall be treated as exceeding the otherwise applicable limits of section 419(b), 419A(b), or 512(a)(3)(E) until the earlier of:

(i) The date on which the last of the collective bargaining agreements relating to the fund in effect on, or ratified on or before, the date of issuance of final regulations concerning such limits for collectively bargained welfare benefit funds terminates (determined without regard to any extension thereof agreed to after the date of issuance of such final regulations), or

(ii) the date 3 years after the issuance of such final regulations.

Q-2: What is a welfare benefit fund maintained pursuant to a collective bargaining agreement for purposes of Q&

A-1 ?

A-2:

(1) For purposes of Q&A-1, a collectively bargained welfare benefit fund is a welfare benefit fund that is maintained pursuant to an agreement which the Secretary of Labor determines to be a collective bargaining agreement and which meets the requirements of the Secretary of the Treasury as set forth in paragraph 2 below.

(2) Notwithstanding a determination by the Secretary of Labor that an agreement is a collective bargaining agreement, a welfare benefit fund is considered to be maintained pursuant to a collective bargaining agreement only if the benefits provided through the fund were the subject of arms-length negotiations between employee representatives and one or more employers, and if such agreement between employee representatives and one or more employers satisfies section 7701(a)(46) of the Code. Moreover, the circumstances surrounding a collective bargaining agreement must evidence good faith bargaining between adverse parties over the welfare benefits to be provided through the fund. Finally, a welfare benefit fund is not considered to be maintained pursuant to a collective bargaining agreement unless at least 50 percent of the employees eligible to receive benefits under the fund are covered by the collective bargaining agreement.

(3) In the case of a collectively bargained welfare benefit fund, only the portion of the fund (as determined under allocation rules to be provided by the Commissioner) attributable to employees covered by a collective bargaining agreement, and from which benefits for such employees are provided, is considered to be maintained pursuant to a collective bargaining agreement.

(4) Notwithstanding the preceding paragraphs and pending the issuance of regulations setting account limits for collectively bargained welfare benefit funds, a welfare benefit fund will not be treated as a collectively bargained welfare benefit fund for purposes of Q&A-1 if and when, after July 1, 1985, the number of employees who are not covered by a collective bargaining agreement and are eligible to receive benefits under the fund increases by reason of an amendment, merger, or other action of the employer or the fund. In addition, pending the issuance of such regulations, for purposes of applying the 50 percent test of paragraph (2) to a welfare benefit fund that is not in existence on July 1, 1985, “90 percent” shall be substituted for “50 percent”.

[T.D. 8034, 50 FR 27428, July 3, 1985]

§ 1.419A(f)(6)-1 Exception for 10 or more employer plan.

(a) ***Requirements*** —

(1) ***In general.*** Sections 419 and 419A do not apply in the case of a welfare benefit fund that is part of a 10 or more employer plan described in section 419A(f)(6). A plan is a 10 or more employer plan described in section 419A(f)(6) only if it is a single plan—

(i) To which more than one employer contributes;

(ii) To which no employer normally contributes more than 10 percent of the total contributions contributed under the plan by all employers;

(iii) That does not maintain an experience-rating arrangement with respect to any individual employer; and

(iv) That satisfies the requirements of paragraph (a)(2) of this section.

(2) ***Compliance information.*** A plan satisfies the requirements of this paragraph (a)(2) if the plan is maintained pursuant to a written document that requires the plan administrator to maintain records sufficient for the Commissioner or any participating employer to readily verify that the plan satisfies the requirements of section 419A(f)(6) and this section and that provides the Commissioner and each participating employer (or a person acting on the participating employer's behalf) with the right, upon written request to the plan administrator, to inspect and copy all such records. See § 1.414(g)-1 for the definition of plan administrator.

(3) ***Application of rules*** —

(i) ***In general.*** The requirements described in paragraph (a)(1) and (2) of this section must be satisfied both in form and in operation.

(ii) ***Arrangement is considered in its entirety.*** The determination of whether a plan is a 10 or more employer plan described in section 419A(f)(6) is based on the totality of the arrangement and all related facts and circumstances, including any related insurance contracts. Accordingly, all agreements and understandings (including promotional materials and policy illustrations) and the terms of any insurance contract will be taken into account in determining whether the requirements are satisfied in form and in operation.

(b) ***Experience-rating arrangements*** —

(1) ***General rule.*** A plan maintains an experience-rating arrangement with respect to an individual employer and thus does not satisfy the requirement of paragraph (a)(1)(iii) of this section if, with respect to that employer, there is any period for which the relationship of contributions under the plan to the benefits or other amounts payable under the plan (the *cost of coverage*) is or can be expected to be based, in whole or in part, on the benefits experience or overall experience (or a proxy for either type of experience) of that employer or one or more employees of that employer. For purposes of this paragraph (b)(1), an employer's contributions include all contributions made by or on behalf of the employer or the employer's employees. *See* paragraph (d) of this section for the definitions of *benefits experience, overall experience, and benefits or other amounts payable.* The rules of this paragraph (b) apply under all circumstances, including employer withdrawals and plan terminations.

(2) ***Adjustment of contributions.*** An example of a plan that maintains an experience-rating arrangement with respect to an individual employer is a plan that entitles an employer to (or for which the employer can expect) a reduction in future contributions if that employer's overall experience is positive. Similarly, a plan maintains an experience-rating arrangement with respect to an individual employer where an employer can expect its future contributions to be increased if the employer's overall experience is negative. A plan also maintains an experience-rating arrangement with respect to an individual employer where an employer is entitled to receive (or can expect to receive) a rebate of all or a portion of its contributions if that employer's overall experience is positive or, conversely, where an employer is liable to make additional contributions if its overall experience is negative.

(3) ***Adjustment of benefits.*** An example of a plan that maintains an experience-rating arrangement with respect to an individual employer is a plan under which benefits for an employer's employees are (or can be expected to be) increased if that employer's overall experience is positive or, conversely,

under which benefits are (or can be expected to be) decreased if that employer's overall experience is negative. A plan also maintains an experience-rating arrangement with respect to an individual employer if benefits for an employer's employees are limited by reference, directly or indirectly, to the overall experience of the employer (rather than having all the plan assets available to provide the benefits).

(4) *Special rules* —

(i) *Treatment of insurance contracts* —

(A) ***In general.*** For purposes of this section, insurance contracts under the arrangement will be treated as assets of the fund. Accordingly, the value of the insurance contracts (including non-guaranteed elements) is included in the value of the fund, and amounts paid between the fund and the insurance company are disregarded, except to the extent they generate gains or losses as described in paragraph (b)(4)(i)(C) of this section.

(B) ***Payments to and from an insurance company.*** Payments from a participating employer or its employees to an insurance company pursuant to insurance contracts under the arrangement will be treated as contributions made to the fund, and amounts paid under the arrangement from an insurance company will be treated as payments from the fund.

(C) ***Gains and losses from insurance contracts.*** As of any date, if the sum of the benefits paid by the insurer and the value of the insurance contract (including non-guaranteed elements) is greater than the cumulative premiums paid to the insurer, the excess is treated as a gain to the fund. As of any date, if the cumulative premiums paid to the insurer are greater than the sum of the benefits paid by the insurer and the value of the insurance contract (including non-guaranteed elements), the excess is treated as a loss to the fund.

(ii) ***Treatment of flexible contribution arrangements.*** Solely for purposes of determining the cost of coverage under a plan, if contributions for any period can vary with respect to a benefit package, the Commissioner may treat the employer as contributing the minimum amount that would maintain the coverage for that period.

(iii) ***Experience rating by group of employers or group of employees.*** A plan will not be treated as maintaining an experience-rating arrangement with respect to an individual employer merely because the cost of coverage under the plan with respect to the employer is based, in whole or in part, on the benefits experience or the overall experience (or a proxy for either type of experience) of a rating group, provided that no employer normally contributes more than 10 percent of all contributions with respect to that rating group. For this purpose, a rating group means a group of participating employers that includes the employer or a group of employees covered under the plan that includes one or more employees of the employer.

(iv) ***Family members, etc.*** For purposes of this section, contributions with respect to an employee include contributions with respect to any other person (e.g., a family member) who may be covered by reason of the employee's coverage under the plan and amounts provided with respect to an employee include amounts provided with respect to such a person.

(v) ***Leased employees.*** In the case of an employer that is the recipient of services performed by a leased employee described in section 414(n)(2) who participates in the plan, the leased employee is treated as an employee of the recipient and contributions made by the leasing organization attributable to service performed with the recipient are treated as made by the recipient.

(c) ***Characteristics indicating a plan is not a 10 or more employer plan*** —

(1) ***In general.*** The presence of any of the characteristics described in paragraphs (c)(2) through (c)(6) of this section generally indicates that the plan is not a 10 or more employer plan described in section 419A(f)(6). Accordingly, unless established to the satisfaction of the Commissioner that the plan satisfies the requirements of section 419A(f)(6) and this section, a plan having any of the following characteristics is not a 10 or more employer plan described in section 419A(f)(6). A plan's lack of all the following characteristics does not create any inference that the plan is a 10 or more employer plan described in section 419A(f)(6).

(2) ***Allocation of plan assets.*** Assets of the plan or fund are allocated to a specific employer or employers through separate accounting of contributions and expenditures for individual employers, or otherwise.

(3) ***Differential pricing.*** The amount charged under the plan is not the same for all the participating employers, and those differences are not merely reflective of differences in current risk or rating factors that are commonly taken into account in manual rates used by insurers (such as current age, gender, geographic locale, number of covered dependents, and benefit terms) for the particular benefit or benefits being provided.

(4) ***No fixed welfare benefit package.*** The plan does not provide for fixed welfare benefits for a fixed coverage period for a fixed cost, within the meaning of paragraph (d)(5) of this section.

(5) ***Unreasonably high cost.*** The plan provides for fixed welfare benefits for a fixed coverage period for a fixed cost, but that cost is unreasonably high for the covered risk for the plan as a whole.

(6) ***Nonstandard benefit triggers.*** Benefits or other amounts payable can be paid, distributed, transferred, or otherwise provided from a fund that is part of the plan by reason of any event other than the illness, personal injury, or death of an employee or family member, or the employee's involuntary separation from employment. Thus, for example, a plan exhibits this characteristic if the plan provides for the payment of benefits or the distribution of an insurance contract to an employer's employees on the occasion of the employer's withdrawal from the plan. A plan will not be treated as having the characteristic described in this paragraph merely because, upon cessation of participation in the plan, an employee is provided with the right to convert coverage under a group life insurance contract to coverage under an individual life insurance contract without demonstrating evidence of insurability, but only if there is no additional economic value associated with the conversion right.

(d) ***Definitions.*** For purposes of this section:

(1) ***Benefits or other amounts payable.*** The term *benefits or other amounts payable* includes all amounts that are payable or distributable (or that will be otherwise provided) directly or indirectly to employers, to employees or their beneficiaries, or to another fund as a result of a spinoff or transfer, and without regard to whether payable or distributable as welfare benefits, cash, dividends, rebates of contributions, property, promises to pay, or otherwise.

(2) ***Benefits experience.*** The *benefits experience* of an employer (or of an employee or a group of employers or employees) means the benefits and other amounts incurred, paid, or distributed (or otherwise provided) directly or indirectly, including to another fund as a result of a spinoff or transfer, with respect to the employer (or employee or group of employers or employees), and without regard to whether provided as welfare benefits, cash, dividends, credits, rebates of contributions, property, promises to pay, or otherwise.

(3) ***Overall experience*** —

(i) ***Employer's overall experience.*** The term *overall experience* means, with respect to an employer (or group of employers), the balance that would have accumulated in a welfare benefit fund if that employer (or those employers) were the only employer (or employers) providing welfare benefits under the plan. Thus, the overall experience is credited with the sum of the contributions under the plan with respect to that employer (or group of employers), less the benefits and other amounts paid or distributed (or otherwise provided) with respect to that employer (or group of employers) or the employees of that employer (or group of employers), and adjusted for gain or loss from insurance contracts (as described in paragraph (b)(4)(i) of this section), investment return, and expenses. Overall experience as of any date may be either a positive or a negative number.

(ii) ***Employee's overall experience.*** The term *overall experience* means, with respect to an employee (or group of employees, whether or not employed by the same employer), the balance that would have accumulated in a welfare benefit fund if the employee (or group of employees) were the only employee (or employees) being provided welfare benefits under the plan. Thus, the overall experience is credited with the sum of the contributions under the plan with respect to that employee (or group of employees), less the benefits and other amounts paid or distributed (or otherwise provided) with respect to that employee (or group of employees), and adjusted for gain or loss from insurance contracts (as described in paragraph (b)(4)(i) of this section), investment return, and expenses. Overall experience as of any date may be either a positive or a negative number.

(4) ***Employer.*** The term *employer* means the employer whose employees are participating in the plan and those employers required to be aggregated with the employer under section 414(b), (c), or (m).

(5) ***Fixed welfare benefit package*** —

(i) ***In general.*** A plan provides for fixed welfare benefits for a fixed coverage period for a fixed cost, if it—

(A) Defines one or more welfare benefits, each of which has a fixed amount that does not depend on the amount or type of assets held by the fund;

(B) Specifies fixed contributions to provide for those welfare benefits; and

(C) Specifies a coverage period during which the plan agrees to provide specified welfare benefits, subject to the payment of the specified contributions by the employer.

(ii) ***Treatment of actuarial gains or losses.*** A plan will not be treated as failing to provide for fixed welfare benefits for a fixed coverage period for a fixed cost merely because the plan does not pay the promised benefits (or requires all participating employers to make proportionate additional contributions based on the fund's shortfall) when there are insufficient assets under the plan to pay the promised benefits. Similarly, a plan will not be treated as failing to provide

for fixed welfare benefits for a fixed coverage period for a fixed cost merely because the plan provides a period of extended coverage after the end of the coverage period with respect to employees of all participating employers at no cost to the employers (or provides a proportionate refund of contributions to all participating employers) because of the plan-wide favorable actuarial experience during the coverage period.

(e) ***Maintenance of records.*** The plan administrator of a plan that is intended to be a 10 or more employer plan described in section 419A(f)(6) shall maintain permanent records and other documentary evidence sufficient to substantiate that the plan satisfies the requirements of section 419A(f)(6) and this section. (*See* § 1.414(g)-1 for the definition of plan administrator.)

(f) ***Examples.*** The provisions of paragraph (c) of this section and the provisions of section 419A(f)(6) and this section relating to experience-rating arrangements may be illustrated by the following examples. Unless stated otherwise, it should be assumed that any life insurance contract described in an example is non-participating and has no value other than the value of the policy's current life insurance protection plus its cash value, and that no employer normally contributes more than 10 percent of the total contributions contributed under the plan by all employers. Paragraph (ii) of each example applies the characteristics listed in paragraph (c) of this section to the facts described in that example. Paragraphs (iii) and (iv) of each example analyze the facts described in the example to determine whether the plan maintains experience-rating arrangements with respect to individual employers. Paragraphs (iii) and (iv) of each example illustrate only the meaning of *experience-rating arrangements.* No inference should be drawn from these examples about whether these plans are otherwise described in section 419A(f)(6) or about the applicability or nonapplicability of any other Internal Revenue Code provision that may limit or deny the deduction of contributions to the arrangements. Further, no inference should be drawn from the examples concerning the tax treatment of employees as a result of the employer contributions or the provision of the benefits. The examples are as follows:

Example 1. (i) An arrangement provides welfare benefits to employees of participating employers. Each year a participating employer is required to contribute an amount equal to the claims and other expenses expected with respect to that employer for the year (based on current age, gender, geographic locale, number of participating employees, benefit terms, and other risk or rating factors commonly taken into account in manual rates used by insurers for the benefits being provided), multiplied by the ratio of actual claims with respect to that employer for the previous year over the expected claims with respect to that employer for the previous year.
(ii) This arrangement exhibits at least one of the characteristics listed in paragraph (c) of this section generally indicating that an arrangement is not a 10 or more employer plan described in section 419A(f)(6). Differential pricing exists under this arrangement because the amount charged under the plan is not the same for all the participating employers, and those differences are not merely reflective of differences in current risk or rating factors that are commonly taken into account in manual rates used by insurers for the particular benefit or benefits being provided.

(iii) This arrangement does not satisfy the requirements of section 419A(f)(6) and this section because, at a minimum, the requirement of paragraph (a)(1)(iii) of this section is not satisfied. Under the arrangement, an employer's cost of coverage for each year is based, in part, on that employer's benefits experience (*i.e.,* the benefits and other amounts provided in the past with

respect to one or more employees of that employer). Accordingly, pursuant to paragraph (b)(1) of this section, the arrangement maintains experience-rating arrangements with respect to individual employers.

Example 2. (i) The facts are the same as in *Example* 1, except that the amount charged to an employer each year is equal to claims and other expenses expected with respect to that employer for the year (determined the same as in *Example 1*), multiplied by the ratio of actual claims for the previous year (determined on a plan-wide basis) over the expected claims for the previous year (determined on a plan-wide basis).
(ii) Based on the limited facts described above, this arrangement exhibits none of the characteristics listed in paragraph (c) of this section generally indicating that an arrangement is not a 10 or more employer plan described in section 419A(f)(6). Unlike the arrangement discussed in *Example 1,* there is no differential pricing under the arrangement because the only differences in the amounts charged to the employers are solely reflective of differences in current risk or rating factors that are commonly taken into account in manual rates used by insurers for the particular benefit or benefits being provided.

(iii) Nothing in the facts described in this *Example 2* indicates that the arrangement maintains experience-rating arrangements prohibited under section 419A(f)(6) and this section. An employer's cost of coverage under the arrangement is based, in part, on the benefits experience of that employer (as well as of all the other participating employers). However, pursuant to paragraph (b)(4)(iii) of this section, the arrangement will not be treated as maintaining experience-rating arrangements with respect to the individual employers merely because the employers' cost of coverage is based on the benefits experience of a group of employees eligible under the plan, provided no employer normally contributes more than 10 percent of all contributions with respect to the rating group that includes the employees of an individual employer. Under the arrangement described in this *Example 2,* the rating group includes all the participating employers (or all of their employees), and no employer normally contributes more than 10 percent of the contributions made under the arrangement by all the employers. Accordingly, absent other facts, the arrangement will not be treated as maintaining experience-rating arrangements with respect to individual employers.

Example 3. (i) Arrangement A provides welfare benefits to employees of participating employers. Each year an employer is required to contribute an amount equal to the claims and other expenses expected with respect to that employer for the year (based on current risk or rating factors commonly taken into account in manual rates used by insurers for the benefits being provided), adjusted based on the employer's notional account. An employer's notional account is determined as follows. The account is credited with the sum of the employer's contributions previously paid under the plan less the benefit claims for that employer's employees. The notional account is further increased by a fixed five percent investment return (regardless of the actual investment return earned on the funds). If an employer's notional account is positive, the employer's

contributions are reduced by a specified percentage of the notional account. If an employer's notional account is negative, the employer's contributions are increased by a specified percentage of the notional account.
(ii) Arrangement A exhibits at least two of the characteristics listed in paragraph (c) of this section generally indicating that an arrangement is not a 10 or more employer plan described in section 419A(f)(6). First, assets under the plan are allocated to specific employers. Second, differential pricing exists because the amount charged under the plan is not the same for all the participating employers, and those differences are not merely reflective of differences in current risk or rating factors that are commonly taken into account in manual rates used by insurers for the particular benefit or benefits being provided.

(iii) Arrangement A does not satisfy the requirements of section 419A(f)(6) and this section because, at a minimum, the requirement of paragraph (a)(1)(iii) of this section is not satisfied. Under the arrangement, a participating employer's cost of coverage for each year is based on a proxy for that employer's overall experience. An employer's *overall experience,* as that term is defined in paragraph (d)(3) of this section, includes the balance that would have accumulated in the fund if that employer's employees were the only employees being provided benefits under the plan. Under that definition, the overall experience is credited with the sum of the contributions paid under the plan by or on behalf of that employer less the benefits or other amounts provided to with respect to that employer's employees, and adjusted for gain or loss from insurance contracts, expenses, and investment return. Under the formula used by the arrangement in this example to determine employer contributions, expenses are disregarded and a fixed investment return of five percent is used instead of actual investment return. The disregard of expenses and substitution of the fixed investment return for the actual investment return merely results in an employer's notional account that is a proxy for the overall experience of that employer. Accordingly, the arrangement maintains experience-rating arrangements with respect to individual employers.

Example 4. (i) Under Arrangement B, death benefits are provided for eligible employees of each participating employer. Individual level premium whole life insurance policies are purchased to provide the death benefits. Each policy has a face amount equal to the death benefit payable with respect to the individual employee. Each year, a participating employer is charged an amount equal to the level premiums payable with respect to the employees of that employer. One participating employer, F, has an employee, P, whose coverage under the arrangement commenced at the beginning of 2000, when P was age 50. P is covered under the arrangement for $1 million of death benefits, and a life insurance policy with a face amount of $1 million has been purchased on P's life. The level annual premium on the policy is $23,000. At the beginning of 2005, when P is age 55, the $23,000 premium amount has been paid for five years and the policy, which continues to have a face amount of $1 million, has a cash value of $92,000. Another employer, G, has an employee, R, who is also 55 years old at the beginning of 2005 and is covered under Arrangement B for $1 million, for which a level premium life insurance policy with a face amount of $1 million

has been purchased. However, R did not become covered under Arrangement B until the beginning of 2005. Because R's coverage began at age 55, the level annual premium charged for the policy on R's life is $30,000, or $7,000 more than the premiums payable on the policy in effect on P's life. Employer F is charged $23,000 and employer G is charged $30,000 for the death benefit for employees P and R, respectively. Assume that employees P and R are the only covered employees of their respective employers and that they are identical with respect to current risk and rating factors that are commonly taken into account in manual rates used by insurers for death benefits.
(ii) Arrangement B exhibits at least three of the characteristics listed in paragraph (c) of this section generally indicating that an arrangement is not a 10 or more employer plan described in section 419A(f)(6). First, assets of the plan are effectively allocated to specific employers. Second, there is differential pricing under the arrangement. That is, the amount charged under the plan during the year for a specific amount of death benefit coverage is not the same for all the employers (employer F is charged $23,000 each year for $1 million of death benefit coverage while employer G is charged $30,000 each year for the same coverage), and the difference is not merely reflective of differences in current risk or rating factors that are commonly taken into account in manual rates used by insurers for the death benefit being provided. (The differences in amounts charged are attributable to differences in issue age and not to differences in current risk or rating factors, as employees P and R are the same age). Third, during the early years of the arrangement, the amounts charged are unreasonably high for the covered risk for the plan as a whole.

(iii) Arrangement B does not satisfy the requirements of section 419A(f)(6) and this section because, at a minimum, the requirement of paragraph (a)(1)(iii) of this section is not satisfied. Arrangement B maintains experience-rating arrangements with respect to individual employers because the cost of coverage for each year for any employer participating in the arrangement is based on a proxy for the overall experience of that employer. Under Arrangement B, employer F's cost of coverage for 2005 is $23,000 for $1 million of coverage. The $92,000 cash value at the beginning of 2005 in the policy insuring P's life is a proxy for employer F's overall experience. (The $92,000 is essentially the balance that would have accumulated in the fund if employer F were the only employer providing welfare benefits under Arrangement B.) Further, the $23,000 charged to F for the $1 million of coverage in 2005 is based on the $92,000 since, in the absence of the $92,000, employer F would have been charged $30,000 for P's $1 million death benefit coverage. (Note that the conclusion that the $92,000 balance is the basis for the lower premium charged to employer F is consistent with the fact that a $92,000 balance, if converted to a life annuity using the same actuarial assumptions as were used to calculate the cash value amount, would be sufficient to provide for annual annuity payments of $7,000 for the life of P—an amount equal to the $7,000 difference from the premium charged in 2005 to employer G for the $1 million of coverage on employee R's life.) Thus, F's cost of coverage for 2005 is based on a proxy for F's overall experience. Accordingly, Arrangement B maintains an experience-rating arrangement with respect to employer F.

(iv) Arrangement B also maintains an experience-rating arrangement with respect to employer G because it can be expected that each year G will be charged $30,000 for the $1 million of coverage on R's life. Each year, G's cost of coverage will reflect G's prior contributions and allocable earnings, so that G's cost of coverage will be based on a proxy for G's overall experience. Accordingly, Arrangement B maintains an experience-rating arrangement with respect to employer G. Similarly, Arrangement B maintains an experience-rating arrangement with respect to each other participating employer. Accordingly, Arrangement B maintains experience-rating arrangements with respect to individual employers. This would also be the result if Arrangement B maintained an experience-rating arrangement with respect to only one individual employer.

Example 5. (i) The facts are the same as in *Example 4* except that the death benefits are provided under 10-year level term life insurance policies. One participating employer, H, has an employee, M, whose coverage under the arrangement commenced at the beginning of 2000, when M was age 35. M is covered under the arrangement for $1 million of death benefits, and a 10-year level term life insurance policy with a face amount of $1 million has been purchased on M's life. The level annual premium on the policy for the first 10 years is $700. At the beginning of 2007, when M is age 42, the $700 premium amount has been paid for seven years. Another employer, J, has an employee, N, who is also 42 years old at the beginning of 2007 and is covered under the arrangement for $1 million, for which a 10-year level term life insurance policy with a face amount of $1 million has been purchased. However, N did not become covered under the arrangement until the beginning of 2007. Because N's coverage began at age 42, the 10-year level term premium charged for the policy on N's life is $1,100, or $400 more than the premiums then payable on the policy in effect on M's life. Neither the policy on employee M nor the policy on employee N has any cash value at any point during its term. Assume that employees M and N are the only covered employees of their respective employers and that they are identical with respect to any current risk and rating factors that are commonly taken into account in manual rates used by insurers for the death benefit being provided.
(ii) Based on the facts described in this *Example 5,* this arrangement exhibits at least two of the characteristics listed in paragraph (c) of this section generally indicating that an arrangement is not a 10 or more employer plan described in section 419A(f)(6). First, for the same reasons as described in paragraph (ii) of *Example 4,* there is differential pricing under the arrangement. Second, assets of the plan are effectively allocated to specific employers. This is the case even though the insurance policies used by employers H and J have no accessible cash value.

(iii) The facts described in this *Example 5* indicate that the arrangement does not satisfy the requirements of section 419A(f)(6) and this section because, at a minimum, the requirement of paragraph (a)(1)(iii) of this section is not satisfied. This arrangement maintains experience-rating arrangements with respect to individual employers because the cost of coverage for each year for any employer participating in the arrangement is based on a proxy for the overall experience of that employer. Under this arrangement employer H's cost of coverage in 2007 is $700 for $1

million of coverage. Although the policy insuring M's life has no cash value accessible to employer H, the accumulation of the excesses of the amounts paid by employer H on behalf of employee M over each year's underlying mortality and expense charges for providing life insurance coverage to employee M provide economic value to employer H (*i.e.,* the ability to purchase future coverage on M's life at a premium that is less than the underlying mortality and expense charges as those underlying charges increase with M's increasing age). Thus, H's cost of coverage for 2007 is based on a proxy for H's overall experience. Accordingly, this arrangement maintains an experience-rating arrangement with respect to employer H.

(iv) This arrangement also maintains an experience-rating arrangement with respect to employer J because it can be expected that for each of the next nine years J will be charged $1,100 for the $1 million of coverage on N's life. Each year, J's cost of coverage will reflect J's prior contributions, so that J's cost of coverage will be based on a proxy for J's overall experience. Accordingly, this arrangement maintains an experience-rating arrangement with respect to employer J. Similarly, this arrangement maintains an experiencing-rating arrangement with respect to each other participating employer. Accordingly, this arrangement maintains experience-rating arrangements with respect to individual employers. This would also be the result if this arrangement maintained an experience-rating arrangement with respect to only one individual employer.

Example 6. (i) Under Arrangement C, death benefits are provided for eligible employees of each participating employer. Flexible premium universal life insurance policies are purchased to provide the death benefits. Each policy has a face amount equal to the death benefit payable with respect to the individual employee. Each participating employer can make any contributions to the arrangement provided that the amount paid for each employee is at least the amount needed to prevent the lapse of the policy. The amount needed to prevent the lapse of the universal life insurance policy is the excess, if any, of the mortality and expense charges for the year over the policy balance. All contributions made by an employer are paid as premiums to the universal life insurance policies purchased on the lives of the covered employees of that employer. Participating employers S and V each have a 50-year-old employee covered under Arrangement C for death benefits of $1 million, which is the face amount of the respective universal life insurance policies on the lives of the employees. In the first year of coverage employer S makes a contribution of $23,000 (the amount of a level premium) while employer V contributes only $6,000, which is the amount of the mortality and expense charges for the first year. At the beginning of year two, the balance in employer S's policy (including earnings) is $18,000, but the balance in V's policy is zero. Although S is not required to contribute anything in the second year of coverage, S contributes an additional $15,000 in the second year. Employer V contributes $7,000 in the second year.

(ii) Arrangement C exhibits at least two of the characteristics listed in paragraph (c) of this section generally indicating that an arrangement is not a 10 or more employer plan described in section 419A(f)(6). First, assets of the plan are effectively allocated to specific employers. Second, the arrangement does not provide for fixed welfare benefits for a fixed coverage period for a fixed cost.

(iii) Arrangement C does not satisfy the requirements of section 419A(f)(6) and this section because, at a minimum, the requirement of paragraph (a)(1)(iii) of this section is not satisfied. Arrangement C maintains experience-rating arrangements with respect to individual employers because the cost of coverage of an employer participating in the arrangement is based on a proxy for the overall experience of that employer. Pursuant to paragraph (b)(4)(ii) of this section (concerning treatment of flexible contribution arrangements), solely for purposes of determining an employer's cost of coverage, the Commissioner may treat an employer as contributing the minimum amount needed to maintain the coverage. Applying this treatment, H's cost of coverage for the first year of coverage under Arrangement C is $6,000 for $1 million of death benefit coverage, but for the second year it is zero for the same amount of coverage because that is the minimum amount needed to keep the insurance policy from lapsing. Employer H's overall experience at the beginning of the second year of coverage is $18,000, because that is the balance that would have accumulated in the fund if H were the only employer providing benefits under Arrangement C. (The special rule of paragraph (b)(4)(ii) of this section only applies to determine cost of coverage; it does not apply in determining overall experience.) The $18,000 balance in the policy insuring the life of employer H's employee is a proxy for H's overall experience. Employer H can choose not to make any contributions in the second year of coverage due to the $18,000 policy balance. Thus, H's cost of coverage for the second year is based on a proxy for H's overall experience. Accordingly, Arrangement C maintains an experience-rating arrangement with respect to employer H.

(iv) Arrangement C also maintains an experience-rating arrangement with respect to employer J because in each year J can contribute more than the amount needed to prevent a lapse of the policy on the life of its employee and can expect that its cost of coverage for subsequent years will reflect its prior contributions and allocable earnings. Accordingly, Arrangement C maintains an experience-rating arrangement with respect to employer J.

Example 7. (i) Arrangement D provides death benefits for eligible employees of each participating employer. Each employer can choose to provide a death benefit of either one, two, or three times the annual compensation of the covered employees. Under Arrangement D, the death benefit is payable only if the employee dies while employed by the employer. If an employee terminates employment with the employer or if the employer withdraws from the arrangement, the death benefit is no longer payable, no refund or other credit is payable to the employer or to the employees, and no policy or other property is transferrable to the employer or the employees. Furthermore, the employees are not provided with any right under Arrangement D to coverage

under any other arrangement, nor with any right to purchase or to convert to an individual insurance policy, other than any conversion rights the employees may have in accordance with state law (and which provide no additional economic benefit). Arrangement D determines the amount required to be contributed by each employer for each month of coverage by aggregating the amount required to be contributed for each covered employee of the employer. The amount required to be contributed for each covered employee is determined by multiplying the amount of the death benefit coverage (in thousands) for the employee by five-year age bracket rates in a table specified by the plan, which is used uniformly for all covered employees of all participating employers. The rates in the specified table do not exceed the rates set forth in Table I of § 1.79-3(d)(2), and differences in the rates in the table are merely reflective of differences in mortality risk for the various age brackets. The rates in the table are not based in whole or in part on the experience of the employers participating in Arrangement D. Arrangement D uses the amount contributed by each employer to purchase one-year term insurance coverage on the lives of the covered employees with a face amount equal to the death benefit provided by the plan. No employer is entitled to any rebates or refunds provided under the insurance contract.
(ii) Arrangement D does not exhibit any of the characteristics listed in paragraph (c) of this section generally indicating that an arrangement is not a 10 or more employer plan described in section 419A(f)(6). Under Arrangement D, assets are not allocated to a specific employer or employers. Differences in the amounts charged to the employers are solely reflective of differences in risk or rating factors that are commonly taken into account in manual rates used by insurers for the particular benefit or benefits being provided. The arrangement provides for fixed welfare benefits for a fixed coverage period for a fixed cost, within the meaning of paragraph (d)(5) of this section. The cost charged under the arrangement is not unreasonably high for the covered risk of the plan as a whole. Finally, benefits and other amounts payable can be paid, distributed, transferred, or otherwise made available only by reason of the death of the employee, so that there is no nonstandard benefit trigger under the arrangement.

(iii) Nothing in the facts of this *Example 7* indicates that Arrangement D fails to satisfy the requirements of section 419A(f)(6) or this section by reason of maintaining experience-rating arrangements with respect to individual employers. Based solely on the facts described above, Arrangement D does not maintain an experience rating-arrangement with respect to any individual employer because for each participating employer there is no period for which the employer's cost of coverage under the arrangement is based, in whole or in part, on either the benefits experience or the overall experience (or a proxy for either type of experience) of that employer or its employees.

Example 8. (i) The facts are the same as in *Example 7,* except that under the arrangement, any refund or rebate provided under that year's insurance contract is allocated among all the employers participating in the arrangement in proportion to their contributions, and is used to reduce the employers' contributions for the next year.

(ii) This arrangement exhibits at least one of the characteristics listed in paragraph (c) of this section generally indicating that an arrangement is not a 10 or more employer plan described in section 419A(f)(6). The arrangement includes nonstandard benefit triggers because amounts are made available to an employer by reason of the insurer providing a refund or rebate to the plan, an event that is other than the illness, personal injury, or death of an employee or family member, or an employee's involuntary separation from employment.

(iii) Based on the limited and specific facts described in this *Example 8,* an employer participating in this arrangement should be able to establish to the satisfaction of the Commissioner that the plan does not maintain experience-rating arrangements with respect to individual employers. A participating employer's cost of coverage is the relationship of its contributions to the death benefit coverage or other amounts payable with respect to that employer, including the employer's portion of the insurance company rebate and refund amounts. The rebate and refund amounts are allocated to an employer based on that employer's contribution for the prior year. However, even though an employer's overall experience includes its past contributions, contributions alone are not a proxy for an employer's overall experience under the particular facts described in this Example 8. As a result, a participating employer's cost of coverage under the arrangement for each year (or any other period) is not based on that employer's benefits experience or its overall experience (or a proxy for either type of experience), except as follows: If the total of the insurance company refund or rebate amounts is a proxy for the overall experience of all participating employers, a participating employer's cost of coverage will be based in part on that employer's overall experience (or a proxy therefor) by reason of that employer's overall experience being a portion of the overall experience of all participating employers. Under the special rule of paragraph (b)(2)(iii) of this section, however, that fact alone will not cause the arrangement to be treated as maintaining an experience-rating arrangement with respect to an individual employer because no employer normally contributes more than 10 percent of the total contributions under the plan by all employers (the rating group). Accordingly, the arrangement will not be treated as maintaining experience-rating arrangements with respect to individual employers.

Example 9. (i) Arrangement E provides medical benefits for covered employees of 90 participating employers. The level of medical benefits is determined by a schedule set forth in the trust document and does not vary by employer. Other than any rights an employee may have to COBRA continuation coverage, the medical benefits cease when an employee terminates employment with the employer. If an employer withdraws from the arrangement, there is no refund of any contributions and there is no transfer of anything of value to employees of the withdrawing employer, to the withdrawing employer, or to another plan or arrangement maintained by the withdrawing employer. Arrangement E determines the amount required to be contributed by each employer for each year of coverage, and the aggregate amounts charged are not unreasonably high for the covered risk for the plan as a whole. To determine the amount to be contributed for each employer, Arrangement E classifies an employer based on the employer's location. These geographic areas are not changed once established under the arrangement. The amount charged

for the coverage under the arrangement to the employers in a geographic area is determined from a rate-setting manual based on the benefit package and geographic area, and differences in the rates in the manual are merely reflective of current differences in those risk or rating factors. The rates in the rate-setting manual are not based in whole or in part on the experience of the employers participating in Arrangement E.
(ii) Arrangement E does not exhibit any of the characteristics listed in paragraph (c) of this section generally indicating that an arrangement is not a 10 or more employer plan described in section 419A(f)(6). Although the amounts charged under the arrangement to an employer in one geographic area can be expected to differ from those charged to an employer in another geographic area, the differences are merely reflective of differences in current risk or rating factors that are commonly taken into account in manual rates used by insurers for medical benefits.

(iii) Nothing in the facts of this *Example 9* indicates that Arrangement E fails to satisfy the requirements of section 419A(f)(6) or this section by reason of maintaining experience-rating arrangements with respect to individual employers. Based solely on the facts described above, Arrangement E does not maintain an experience rating-arrangement with respect to any individual employer because for each participating employer there is no period for which the employer's cost of coverage under the arrangement is based, in whole or in part, on either the benefits experience or the overall experience (or a proxy for either type of experience) of that employer or its employees.

Example 10. (i) The facts are the same as in *Example 9,* except that the amount charged for the coverage under the arrangement to the employers in a geographic area is initially determined from a rate-setting manual based on the benefit package and then adjusted to reflect the claims experience of the employers in that classification as a whole. The arrangement does not have any geographic area classification for which one of the employers in the classification normally contributes more than 10 percent of the contributions made by all the employers in that classification.
(ii) This arrangement exhibits at least one of the characteristics listed in paragraph (c) of this section generally indicating that an arrangement is not a 10 or more employer plan described in section 419A(f)(6). There is differential pricing under the arrangement because the amounts charged to an employer in one geographic area can be expected to differ from those charged to an employer in another geographic area, and the differences are not merely reflective of current risk or rating factors that are commonly taken into account in manual rates used by insurers for medical benefits.

(iii) Based on the facts described in this *Example 10,* an employer participating in this arrangement should be able to establish to the satisfaction of the Commissioner that the plan does not maintain experience-rating arrangements with respect to individual employers even though there is differential pricing. Although an employer's cost of coverage for each year is based, in part, on its benefits experience (as well as the benefits experience of the other employers in its geographic area), that does not result in experience-rating

arrangements with respect to any individual employer because the employers in each geographic area are a rating group and no employer normally contributes more than 10 percent of the contributions made by all the employers in its rating group. (See paragraph (b)(4)(iii) of this section.)

Example 11. (i) The facts of Arrangement F are the same as those described in *Example 10,* except that K, an employer in one of Arrangement F's geographic areas, normally contributes more than 10 percent of the contributions made by the employers in that geographic area.
(ii) For the same reasons as described in *Example 10,* Arrangement F results in differential pricing.

(iii) Arrangement F does not satisfy the requirements of section 419A(f)(6) and this section because, at a minimum, the requirement of paragraph (a)(1)(iii) of this section is not satisfied. An employer's cost of coverage for each year is based, in part, on its benefits experience (as well as the benefits experience of the other employers in its geographic area) and the special rule for experience-rating by a rating group does not apply to Arrangement F because employer K normally contributes more than 10 percent of the contributions made by the employers in its rating group. Accordingly, Arrangement F maintains experience-rating arrangements with respect to individual employers.

Example 12. (i) The facts of Arrangement G are the same as those described in Example 10, except for the way that the arrangement classifies the employers. Under Arrangement G, the experience of each employer for the prior year is reviewed and then the employer is assigned to one of three classifications (low cost, intermediate cost, or high cost) based on the ratio of actual claims with respect to that employer to expected claims with respect to that employer. No employer in any classification normally contributes more than 10 percent of the contributions of all employers in that classification.
(ii) For the same reasons as described in *Example 10,* Arrangement G results in differential pricing.

(iii) Arrangement G does not satisfy the requirements of section 419A(f)(6) and this section because, at a minimum, the requirement of paragraph (a)(1)(iii) of this section is not satisfied. The special rule in paragraph (b)(4)(iii) of this section for rating groups can prevent a plan from being treated as maintaining experience-rating arrangements with respect to individual employers if the mere use of a rating group is the only reason a plan would be so treated. Under Arrangement G, however, an employer's cost of coverage for each year is based on the employer's benefits experience in two ways: the employer's benefits experience is part of the benefits experience of a rating group that is otherwise permitted under the special rule of paragraph (b)(4)(iii) of this section, and the employer's benefits experience is considered annually in redetermining the rating group to which the employer is assigned. Accordingly, Arrangement G maintains experience-rating arrangements with respect to individual employers.

Example 13. (i) Arrangement H provides a death benefit equal to a multiple of one, two, or three times compensation as elected by the participating employer for all of its covered employees. Universal life insurance contracts are purchased on the lives of the covered employees. The face amount of each contract is the amount of the death benefit payable upon the death of the covered employee. Under the arrangement, each employer is charged annually an amount equal to 200 percent of the mortality and

expense charges under the contracts for that year covering the lives of the covered employees of that employer. Arrangement H pays the amount charged each employer to the insurance company. Thus, the insurance company receives an amount equal to 200 percent of the mortality and expense charges under the policies. The excess amounts charged and paid to the insurance company increase the policy value of the universal life insurance contracts. When an employer ceases to participate in Arrangement H, the insurance policies are distributed to each of the covered employees of the withdrawing employer.
(ii) Arrangement H exhibits at least three of the characteristics listed in paragraph (c) of this section generally indicating that an arrangement is not a 10 or more employer plan described in section 419A(f)(6). First, assets are effectively allocated to specific employers. Second, because the amount of the withdrawal benefit (*i.e.,* the value of the life insurance policies to be distributed) is unknown, the arrangement does not provide for fixed welfare benefits for a fixed coverage period for a fixed cost. Finally, Arrangement H includes nonstandard benefit triggers because amounts can be distributed under the arrangement for a reason other than the illness, personal injury, or death of an employee or family member, or an employee's involuntary separation from employment.

(iii) Arrangement H does not satisfy the requirements of section 419A(f)(6) and this section because, at a minimum, the requirement of paragraph (a)(1)(iii) of this section is not satisfied. Pursuant to paragraph (b)(1) of this section, the prohibition against maintaining experience-rating arrangements applies under all circumstances, including employer withdrawals. Arrangement H maintains experience-rating arrangements with respect to individual employers because the cost of coverage for a participating employer is based on a proxy for the overall experience of that employer. Under Arrangement H, the contributions of a participating employer are fixed. The benefits or other amounts payable with respect to an employer include the value of the life insurance policies that are distributable to the employees of that employer upon the withdrawal of that employer from the plan. Thus, the cost of coverage for any period of an employer's participation in Arrangement H is the relationship between the fixed contributions for that period and the variable benefits payable under the arrangement. The value of those variable benefits depends on the value of the policies that would be distributed if the employer were to withdraw at the end of the period. (Each year the insurance policies to be distributed to the employees in the event of the employer's withdrawal will increase in value due to the premium amounts paid on the policy in excess of current mortality and expense charges.) For reasons similar to those discussed above in Example 6, the aggregate value of the life insurance policies on the lives of an employer's employees is a proxy for that employer's overall experience. Thus, a participating's employer's cost of coverage for any period is based on a proxy for the overall experience of that employer. Accordingly, Arrangement H maintains experience-rating arrangements with respect to individual employers.

(iv) The result would be the same if, rather than distributing the policies, Arrangement H distributed cash amounts equal to the cash values of the policies. The result would also be the same if the distribution of policies or cash values is triggered by employees terminating their employment rather than by employers ceasing to participate in the arrangement.

Example 14. (i)(1) The facts of Arrangement J are the same as those described in *Example 13* for

Arrangement H, except that—
(A) Arrangement J purchases a special term insurance policy on the life of each covered employee with a face amount equal to the death benefit payable upon the death of the covered employee; and

(B) there is no benefit distributable upon an employer's withdrawal.

(2) The special term policy includes a rider that extends the term protection for a period of time beyond the term provided on the policy's face. The length of the extended term is not guaranteed, but is based on the excess of premiums over mortality and expense charges during the period of original term protection, increased by any investment return credited to the policies.

(ii) Arrangement J exhibits two of the characteristics listed in paragraph (c) of this section generally indicating that an arrangement is not a 10 or more employer plan described in section 419A(f)(6). First, assets of the plan are effectively allocated to specific employers. Second, the plan does not provide for fixed welfare benefits for a fixed coverage period for a fixed cost because the coverage period is not fixed.

(iii) Arrangement J does not satisfy the requirements of section 419A(f)(6) and this section because, at a minimum, the requirement of paragraph (a)(1)(iii) of this section is not satisfied. Arrangement J maintains experience-rating arrangements with respect to individual employers because the cost of coverage for a participating employer is based on a proxy for the overall experience of that employer. Under Arrangement J, the contributions of a participating employer are fixed. The benefits or other amounts payable with respect to an employer are the one-, two-, or three-times-compensation death benefit for each employee of the employer for the current year, plus the extended term protection coverage for future years. Thus, for any period extending to or beyond the end of the original term of one or more of the policies on the lives of an employer's employees, the employer's cost of coverage is the relationship between the fixed contributions for that period and the variable benefits payable under the arrangement. The value of those variable benefits depends on the aggregate value of the policies insuring the employer's employees (*i.e.*, the total of the premiums paid on the policies by Arrangement J to the insurance company, reduced by the mortality and expense charges that were needed to provide the original term protection, and increased by any investment return credited to the policies). The aggregate value of the policies insuring an employer's employees is, at any time, a proxy for the employer's overall experience. Thus, a participating employer's cost of coverage for any period described above is based on a proxy for the overall experience of that employer. Accordingly, Arrangement J maintains experience-rating arrangements with respect to individual employers.

Example 15. (i) Arrangement K provides a death benefit to employees of participating employers equal to a specified multiple of compensation. Under the arrangement, a flexible-premium universal life insurance policy is purchased on the life of each covered employee in the amount of that employee's death benefit. Each policy has a face amount equal to the employee's death benefit under the arrangement. Each participating employer is charged annually with the aggregate amount (if any) needed to maintain the policies covering the lives of its employees. However, each employer is permitted to make additional

contributions to the arrangement and, upon doing so, the additional contributions are paid to the insurance company and allocated to one or more contracts covering the lives of the employer's employees. In the event that any policy covering the life of an employee would lapse in the absence of new contributions from that employee's employer, and if at the same time there are policies covering the lives of other employees of the employer that have cash values in excess of the amounts needed to prevent their lapse, the employer has the option of reducing its otherwise-required contribution by amounts withdrawn from those other policies.

(ii) Arrangement K exhibits at least two of the characteristics listed in paragraph (c) of this section generally indicating that an arrangement is not a 10 or more employer plan described in section 419A(f)(6). First, assets of the plan are allocated to specific employers. Second, because the plan allows an employer to choose to contribute an amount that is different than that contributed by another employer for the same benefit, the amount charged under the plan is not the same for all participating employers (and the differences in the amounts are not merely reflective of differences in current risk or rating factors that are commonly taken into account in manual rates used by insurers for the particular benefit or benefits being provided), resulting in differential pricing.

(iii) Arrangement K does not satisfy the requirements of section 419A(f)(6) and this section because, at a minimum, the requirement of paragraph (a)(1)(iii) of this section is not satisfied. Arrangement K maintains experience-rating arrangements with respect to individual employers because the cost of coverage for any employer participating in the arrangement is based on a proxy for the overall experience of that employer. Under Arrangement K the benefits with respect to an employer for any year are a fixed amount. For purposes of determining the employer's cost of coverage for that year, the Commissioner may treat the employer's contribution under the special rule of paragraph (b)(4)(ii) of this section (concerning treatment of flexible contribution/arrangements) as being the minimum contribution amount needed to maintain the universal life policies with respect to that employer for the death benefit coverage for that year. Because the employer has the option to prevent the lapse of one policy by having amounts withdrawn from other policies, that minimum contribution amount will be based in part on the aggregate value of the policies on the lives of that employer's employees. That aggregate value is a proxy for the employer's overall experience. Accordingly, Arrangement K maintains experience-rating arrangements with respect to individual employers.

(g) ***Effective date*** —

(1) ***In general.*** Except as set forth in paragraph (g)(2) of this section, this section applies to contributions paid or incurred in taxable years of an employer beginning on or after July 11, 2002.

(2) ***Compliance information and recordkeeping.*** Paragraphs (a)(1)(iv), (a)(2), and (e) of this section apply for taxable years of a welfare benefit fund beginning after July 17, 2003.

[T.D. 9079, 68 FR 42259, July 17, 2003]

§ 1.420-1 Significant reduction in retiree health coverage during the cost maintenance period.

(a) In *general.* Notwithstanding section 420(c)(3)(A), the minimum cost requirements of section 420(c)(3) are not met if the employer significantly reduces retiree health coverage during the cost maintenance period.

(b) ***Significant reduction*** —

(1) ***In general.*** An employer significantly reduces retiree health coverage during the cost maintenance period if, for any taxable year beginning on or after January 1, 2002, that is included in the cost maintenance period, either—

(i) The employer-initiated reduction percentage for that taxable year exceeds 10 percent; or

(ii) The sum of the employer-initiated reduction percentages for that taxable year and all prior taxable years during the cost maintenance period exceeds 20 percent.

(2) ***Employer-initiated reduction percentage.*** The employer-initiated reduction percentage for any taxable year is the fraction B/A, expressed as a percentage, where:

A = The total number of individuals (retired employees plus their spouses plus their dependents) receiving coverage for applicable health benefits as of the day before the first day of the taxable year.

B = The total number of individuals included in A whose coverage for applicable health benefits ended during the taxable year by reason of employer action.

(3) ***Special rules for taxable years beginning before January 1, 2002.*** The following rules apply for purposes of computing the amount in paragraph (b)(1)(ii) of this section if any portion of the cost maintenance period precedes the first day of the first taxable year beginning on or after January 1, 2002—

(i) ***Aggregation of taxable years.*** The portion of the cost maintenance period that precedes the first day of the first taxable year beginning on or after January 1, 2002 (the initial period) is treated as a single taxable year and the employer-initiated reduction percentage for the initial period is computed as set forth in paragraph (b)(2) of this section, except that the words “initial period” apply instead of “taxable year.”

(ii) ***Loss of coverage.*** If coverage for applicable health benefits for an individual ends by reason of employer action at any time during the initial period, an employer may treat that coverage as not having ended if the employer restores coverage for applicable health benefits to that individual by the end of the initial period.

(4) ***Employer action*** —

(i) ***General rule.*** For purposes of paragraph (b)(2) of this section, an individual's coverage for applicable health benefits ends during a taxable year by reason of employer action, if on any day within the taxable year, the individual's eligibility for applicable health benefits ends as a result of a plan amendment or any other action of the employer (e.g., the sale of all or part of the employer's business) that, in conjunction with the plan terms, has the effect of ending the individual's eligibility. An employer action is taken into account for this purpose regardless of when the employer action actually occurs (e.g., the date the plan amendment is executed), except that employer actions occurring before the later of December 18, 1999, and the date that is 5 years before the start of the cost maintenance period are disregarded.

(ii) ***Special rule.*** Notwithstanding paragraph (b)(4)(i) of this section, coverage for an individual will not be treated as having ended by reason of employer action merely because such coverage ends under the terms of the plan if those terms were adopted contemporaneously with the provision under which the individual became eligible for retiree health coverage. This paragraph (b)(4)(ii) does not apply with respect to plan terms adopted contemporaneously with a plan amendment that restores coverage for applicable health benefits before the end of the initial period in accordance with paragraph (b)(3)(ii) of this section.

(iii) ***Sale transactions.*** If a purchaser provides coverage for retiree health benefits to one or more individuals whose coverage ends by reason of a sale of all or part of the employer's business, the employer may treat the coverage of those individuals as not having ended by reason of employer action. In such a case, for the remainder of the year of the sale and future taxable years of the cost maintenance period—

(A) For purposes of computing the applicable employer cost under section 420(c)(3), those individuals are treated as individuals to whom coverage for applicable health benefits was provided (for as long as the purchaser provides retiree health coverage to them), and any amounts expended by the purchaser of the business to provide for health benefits for those individuals are treated as paid by the employer;

(B) For purposes of determining whether a subsequent termination of coverage is by reason of employer action under this paragraph (b)(4), the purchaser is treated as the employer. However, the special rule in paragraph (b)(4)(ii) of this section applies only to the extent that any terms of the plan maintained by the purchaser that have the effect of ending retiree health coverage for an individual are the same as terms of the plan maintained by the employer that were adopted contemporaneously with the provision under which the individual became eligible for retiree health coverage under the plan maintained by the employer.

(c) ***Definitions.*** The following definitions apply for purposes of this section:

(1) ***Applicable health benefits.*** Applicable health benefits means applicable health benefits as defined in section 420(e)(1)(C).

(2) ***Cost maintenance period.*** Cost maintenance period means the cost maintenance period as defined in section 420(c)(3)(D).

(3) ***Sale.*** A sale of all or part of an employer's business means a sale or other transfer in connection with which the employees of a trade or business of the employer become employees of another person. In the case of such a transfer, the term *purchaser* means a transferee of the trade or business.

(d) ***Examples.*** The following examples illustrate the application of this section:

> *Example 1.* (i) Employer W maintains a defined benefit pension plan that includes a 401(h) account and permits qualified transfers that satisfy section 420. The number of individuals receiving coverage for applicable health benefits as of the day before the first day of Year 1 is 100. In Year 1, Employer W makes a qualified transfer under section 420. There is no change in the number of individuals receiving health benefits during Year 1. As of the last day of Year 2, applicable health benefits are provided to 99 individuals, because 2 individuals became eligible for coverage due to retirement and 3 individuals died in Year 2. During Year 3, Employer W amends its

health plan to eliminate coverage for 5 individuals, 1 new retiree becomes eligible for coverage and an additional 3 individuals are no longer covered due to their own decision to drop coverage. Thus, as of the last day of Year 3, applicable health benefits are provided to 92 individuals. During Year 4, Employer W amends its health plan to eliminate coverage under its health plan for 8 more individuals, so that as of the last day of Year 4, applicable health benefits are provided to 84 individuals. During Year 5, Employer W amends its health plan to eliminate coverage for 8 more individuals.
(ii) There is no significant reduction in retiree health coverage in either Year 1 or Year 2, because there is no reduction in health coverage as a result of employer action in those years.

(iii) There is no significant reduction in Year 3. The number of individuals whose health coverage ended during Year 3 by reason of employer action (amendment of the plan) is 5. Since the number of individuals receiving coverage for applicable health benefits as of the last day of Year 2 is 99, the employer-initiated reduction percentage for Year 3 is 5.05 percent (5/99), which is less than the 10 percent annual limit.

(iv) There is no significant reduction in Year 4. The number of individuals whose health coverage ended during Year 4 by reason of employer action is 8. Since the number of individuals receiving coverage for applicable health benefits as of the last day of Year 3 is 92, the employer-initiated reduction percentage for Year 4 is 8.70 percent (8/92), which is less than the 10 percent annual limit. The sum of the employer-initiated reduction percentages for Year 3 and Year 4 is 13.75 percent, which is less than the 20 percent cumulative limit.

(v) In Year 5, there is a significant reduction under paragraph (b)(1)(ii) of this section. The number of individuals whose health coverage ended during Year 5 by reason of employer action (amendment of the plan) is 8. Since the number of individuals receiving coverage for applicable health benefits as of the last day of Year 4 is 84, the employer-initiated reduction percentage for Year 5 is 9.52 percent (8/84), which is less than the 10 percent annual limit. However, the sum of the employer-initiated reduction percentages for Year 3, Year 4, and Year 5 is 5.05 percent + 8.70 percent + 9.52 percent = 23.27 percent, which exceeds the 20 percent cumulative limit.

Example 2. (i) Employer X, a calendar year taxpayer, maintains a defined benefit pension plan that includes a 401(h) account and permits qualified transfers that satisfy section 420. X also provides lifetime health benefits to employees who retire from Division A as a result of a plant shutdown, no health benefits to employees who retire from Division B, and lifetime health benefits to all employees who retire from Division C. In 2000, X amends its health plan to provide coverage for employees who retire from Division B as a result of a plant shutdown, but only for the 2-year period coinciding with their severance pay. Also in 2000, X amends the health plan to provide that employees who retire from Division A as a result of a plant shutdown receive health coverage only for the 2-year period coinciding with their severance pay. A plant shutdown that affects Division A and Division B employees occurs in 2000. The number of individuals receiving coverage for

applicable health benefits as of the last day of 2001 is 200. In 2002, Employer X makes a qualified transfer under section 420. As of the last day of 2002, applicable health benefits are provided to 170 individuals, because the 2-year period of benefits ends for 10 employees who retired from Division A and 20 employees who retired from Division B as a result of the plant shutdown that occurred in 2000.

(ii) There is no significant reduction in retiree health coverage in 2002. Coverage for the 10 retirees from Division A who lose coverage as a result of the end of the 2-year period is treated as having ended by reason of employer action, because coverage for those Division A retirees ended by reason of a plan amendment made after December 17, 1999. However, the terms of the health plan that limit coverage for employees who retired from Division B as a result of the 2000 plant shutdown (to the 2-year period) were adopted contemporaneously with the provision under which those employees became eligible for retiree coverage under the health plan. Accordingly, under the rule provided in paragraph (b)(4)(ii) of this section, coverage for those 20 retirees from Division B is not treated as having ended by reason of employer action. Thus, the number of individuals whose health benefits ended by reason of employer action in 2002 is 10. Since the number of individuals receiving coverage for applicable health benefits as of the last day of 2001 is 200, the employer-initiated reduction percentage for 2002 is 5 percent (10/200), which is less than the 10 percent annual limit.

(e) ***Regulatory effective date.*** This section is applicable to transfers of excess pension assets occurring on or after December 18, 1999.

[T.D. 8948, 66 FR 32900, June 19, 2001]

CERTAIN STOCK OPTIONS

§ 1.421-1 Meaning and use of certain terms.

(a) ***Option.***

(1) For purposes of this section and §§ 1.421-2 through 1.424-1, the term “option” means the right or privilege of an individual to purchase stock from a corporation by virtue of an offer of the corporation continuing for a stated period of time, whether or not irrevocable, to sell such stock at a price determined under paragraph (e) of this section, such individual being under no obligation to purchase. The individual who has such right or privilege is referred to as the optionee and the corporation offering to sell stock under such an arrangement is referred to as the optionor. While no particular form of words is necessary, the option must express, among other things, an offer to sell at the option price, the maximum number of shares purchasable under the option, and the period of time during which the offer remains open. The term *option* includes a warrant that meets the requirements of this paragraph (a)(1).

(2) An option may be granted as part of or in conjunction with an employee stock purchase plan or subscription contract. See section 423.

(3) An option must be in writing (in paper or electronic form), provided that such writing is adequate to establish an option right or privilege that is enforceable under applicable law.

(b) *Statutory options.*

(1) The term *statutory option,* for purposes of this section and §§ 1.421-2 through 1.424-1, means an *incentive stock option,* as defined in § 1.422-2(a), or an option granted under an *employee stock purchase plan,* as defined in § 1.423-2.

(2) An option qualifies as a statutory option only if the option is not transferable (other than by will or by the laws of descent and distribution) by the individual to whom the option was granted, and is exercisable, during the lifetime of such individual, only by such individual. See §§ 1.422-2(a)(2)(v) and 1.423-2(j). Accordingly, an option which is transferable or transferred by the individual to whom the option is granted during such individual's lifetime, or is exercisable during such individual's lifetime by another person, is not a statutory option. However, if the option or the plan under which the option was granted contains a provision permitting the individual to designate the person who may exercise the option after such individual's death, neither such provision, nor a designation pursuant to such provision, disqualifies the option as a statutory option. A pledge of the stock purchasable under an option as security for a loan that is used to pay the option price does not cause the option to violate the nontransferability requirements of this paragraph (b). Also, the transfer of an option to a trust does not disqualify the option as a statutory option if, under section 671 and applicable State law, the individual is considered the sole beneficial owner of the option while it is held in the trust. If an option is transferred incident to divorce (within the meaning of section 1041) or pursuant to a domestic relations order, the option does not qualify as a statutory option as of the day of such transfer. For the treatment of nonstatutory options, see § 1.83-7.

(3)

(i) The determination of whether an option is a statutory option is made as of the date such option is granted. An option which is a statutory option when granted does not lose its character as such an option by reason of subsequent events, and an option which is not a statutory option when granted does not become such an option by reason of subsequent events. See, however, paragraph (e) of § 1.424-1, relating to modification, extension, or renewal of an option. For rules concerning options that are not statutory options, see § 1.83-7.

(ii) The application of this subparagraph may be illustrated by the following examples:

Example 1. X Corporation is a subsidiary of S Corporation which, in turn, is a subsidiary of P Corporation. On June 1, 2004, P grants to an employee of P a statutory option to purchase a share of stock of X. On January 1, 2005, S sells a portion of the X stock which it owns to an unrelated corporation and, as of that date, X ceases to be a subsidiary of S. Because X was a subsidiary of P on the date of the grant of the statutory option, the option does not fail to be a statutory option even though X ceases to be a subsidiary of P.

Example 2. Assume P grants an option to an employee under the same facts as in example (1) above, except that on June 1, 2004, X is not a subsidiary of either S or P. Such option is not a statutory option on June 1, 2004. On January 1, 2005, S purchases from an unrelated corporation a sufficient number of shares of X stock to make X, as of that date, a subsidiary of S. Because X was not a subsidiary of S or P on the date of the grant of the option, the option is not a statutory option even though X later becomes a subsidiary of P. See §§ 1.422-2(a)(2) and 1.423-2(b).

(c) *Time and date of granting option.*

(1) For purposes of this section and §§ 1.421-2 through 1.424-1, the language "the date of the granting of the option" and "the time such option is granted," and similar phrases refer to the date or time when the granting corporation completes the corporate action constituting an offer of stock for sale to an individual under the terms and conditions of a statutory option. Except as set forth in § 1.423-2(h)(2), a corporate action constituting an offer of stock for sale is not considered complete until the date on which the maximum number of shares that can be purchased under the option and the minimum option price are fixed or determinable.

(2) If the corporation imposes conditions on the granting of an option (as distinguished from conditions governing the exercise of the option), such conditions shall be given effect in accordance with the intent of the corporation. However, under section 424(i), if the grant of an option is subject to approval by stockholders, the date of grant of the option shall be determined as if the option had not been subject to such approval. A condition which does not require corporate action, such as the approval of, or registration with, some regulatory or governmental agency, for example, a stock exchange or the Securities and Exchange Commission, is ordinarily considered a condition upon the exercise of the option unless the corporate action clearly indicates that the option is not to be granted until such condition is satisfied. If an option is granted to an individual upon the condition that such individual will become an employee of the corporation granting the option or of a related corporation, such option is not granted prior to the date the individual becomes such an employee.

(3) In general, conditions imposed upon the exercise of an option will not operate to make ineffective the granting of the option. For example, on June 1, 2004, the A Corporation grants to X, an employee, an option to purchase 5,000 shares of the corporation's stock, exercisable by X on or after June 1, 2005, provided he is employed by the corporation on June 1, 2005, and provided that A's profits during the fiscal year preceding the year of exercise exceed $200,000. Such an option is granted to X on June 1, 2004, and will be treated as outstanding as of such date.

(d) ***Stock and voting stock.***

(1) For purposes of this section and §§ 1.421-2 through 1.424-1, the term *stock* means capital stock of any class, including voting or nonvoting common or preferred stock. Except as otherwise provided, the term includes both treasury stock and stock of original issue. Special classes of stock authorized to be issued to and held by employees are within the scope of the term *stock* as used in such sections, provided such stock otherwise possesses the rights and characteristics of capital stock.

(2) For purposes of determining what constitutes voting stock in ascertaining whether a plan has been approved by stockholders under § 1.422-2(b) or 1.423-2(c) or whether the limitations pertaining to voting power contained in §§ 1.422-2(f) and 1.423-2(d) have been met, stock which does not have voting rights until the happening of an event, such as the default in the payment of dividends on preferred stock, is not voting stock until the happening of the specified event. Generally, stock which does not possess a general voting power, and may vote only on particular questions, is not voting stock. However, if such stock is entitled to vote on whether a stock option plan may be adopted, it is voting stock.

(3) In general, for purposes of this section and §§ 1.421-2 through 1.424-1, ownership interests other than capital stock are considered stock.

(e) ***Option price.***

(1) For purposes of this section and §§ 1.421-2 through 1.424-1, the term *option price*, *price paid under the option*, or *exercise price* means the consideration in cash or property which, pursuant to the terms of the option, is the price at which the stock subject to the option is purchased. The term *option price* does not include any amounts paid as interest under a deferred payment arrangement or treated as interest.

(2) Any reasonable valuation method may be used to determine whether, at the time the option is granted, the option price satisfies the pricing requirements of sections 422(b)(4), 422(c)(5), 422(c)(7), and 423(b)(6) with respect to the stock subject to the option. Such methods include, for example, the valuation method described in § 20.2031-2 of this chapter (Estate Tax Regulations).

(f) ***Exercise.*** For purposes of this section and §§ 1.421-2 through 1,424-1, the term "exercise", when used in reference to an option, means the act of acceptance by the optionee of the offer to sell contained in the option. In general, the time of exercise is the time when there is a sale or a contract to sell between the corporation and the individual. A promise to pay the option price does not constitute an exercise of the option unless the optionee is subject to personal liability on such promise. An agreement or undertaking by the employee to make payments under a stock purchase plan does not constitute the exercise of an option to the extent the payments made remain subject to withdrawal by or refund to the employee.

(g) ***Transfer.*** For purposes of this section and §§ 1.421-2 through 1.424-1, the term "transfer", when used in reference to the transfer to an individual of a share of stock pursuant to his exercise of a statutory option, means the transfer of ownership of such share, or the transfer of substantially all the rights of ownership. Such transfer must, within a reasonable time, be evidenced on the books of the corporation. For purposes of section 422, a transfer may occur even if a share of stock is subject to a substantial risk of forfeiture or is not otherwise transferable immediately after the date of exercise. See § 1.422-1(b)(3) *Example 2.* A transfer does not fail to occur merely because, under the terms of the arrangement, the individual may not dispose of the share for a specified period of time, or the share is subject to a right of first refusal or a right to reacquire the share at the share's fair market value at the time of sale.

(h) ***Employment relationship.***

(1) An option is a statutory option only if, at the time the option is granted, the optionee is an employee of the corporation granting the option, or a related corporation of such corporation. If the option has been assumed or a new option has been substituted in its place under § 1.424-1(a), the optionee must, at the time of such substitution or assumption, be an employee (or a former employee within the 3-month period following termination of the employment relationship) of the corporation so substituting or assuming the option, or a related corporation of such corporation. The determination of whether the optionee is an employee at the time the option is granted (or at the time of the substitution or assumption under § 1.424-1(a)) is made in accordance with section 3401(c) and the regulations thereunder. As to the granting of an option conditioned upon employment, see paragraph (c)(2) of this section. A statutory option must be granted for a reason connected with the individual's employment by the corporation or by its related corporation.

(2) In addition, § 1.421-2(a) is applicable to the transfer of a share pursuant to the exercise of the statutory option only if the optionee is, at all times during the period beginning with the date of the granting of such option and ending on the day 3 months before the date of such exercise, an employee of either the corporation granting such option, a related corporation of such corporation, or a corporation (or a related corporation of such corporation) substituting or assuming a stock option in a transaction to which § 1.424-1(a) applies. For purposes of the preceding sentence, the employment relationship is treated as continuing intact while the individual is on military leave, sick leave, or other bona fide leave of absence (such as temporary employment by the Government) if the

period of such leave does not exceed 3 months, or if longer, so long as the individual's right to reemployment with the corporation granting the option (or a related corporation of such corporation) or a corporation (or a related corporation of such corporation) substituting or assuming a stock option in a transaction to which § 1.424-1(a) applies, is provided either by statute or by contract. If the period of leave exceeds 3 months and the individual's right to reemployment is not provided either by statute or by contract, the employment relationship is deemed to terminate on the first day immediately following such three-month period. Thus, if the option is not exercised before such deemed termination of employment, § 1.421-2(a) applies to the transfer of a share pursuant to an exercise of the option only if the exercise occurs within 3 months from the date the employment relationship is deemed terminated.

(3) For purposes of determining whether an individual meets the requirements of this paragraph, the term “employer corporation”, as used in section 424 (e) and (f), shall be read as “grantor corporation” or “corporation issuing or assuming a stock option in a transaction to which section 424(a) is applicable”, as the case may be. For purposes of the employment requirement, a corporation employing an optionee is considered a related corporation if it was a parent or subsidiary of the corporation granting the option or substituting or assuming the option during the entire portion of the requisite period of employment during which it was the employer of such optionee.

(4) The application of this paragraph may be illustrated by the following examples:

Example 1. On June 1, 2004, X Corporation granted a statutory option to A, an employee of X Corporation, to purchase a share of X stock. On February 1, 2005, X sold the plant where A was employed to M Corporation, an unrelated corporation, and A was employed by M. If A exercises his statutory option on June 1, 2005, section 421 is not applicable to such exercise, because on June 1, 2005, A is not employed by the corporation which granted the option or by a related corporation of such corporation, nor was he employed by any of such corporations within 3 months before June 1, 2005.

Example 2. Assume the facts to be the same as in example (1), except that when A was employed by M Corporation, the option to purchase X stock was terminated and was replaced by an option to buy M stock in such circumstances that M Corporation is treated as a corporation substituting an option under section 424(a). If A exercises the option to purchase the share of M stock on June 1, 2005, section 421 is applicable to the transfer of the M stock because, at all times during the period beginning with the date of grant of the X option and ending with the date of exercise of the M option, A was an employee of the corporation granting the option or substituting or assuming the option under § 1.424-1(a).

Example 3. E is an employee of P Corporation. On June 1, 2004, P grants E a statutory option to purchase a share of P stock. On June 1, 2005, P acquires 100 percent of the stock of S Corporation; on such date S becomes a subsidiary of P. On July 1, 2005, E ceases to be employed by P and becomes employed by S. On October 10, 2005, while still employed by S, E exercises his option to buy P stock. Since E was at all times during the requisite period of employment an employee of either P, the corporation granting the option, or S, a subsidiary of the grantor during the period in which such corporation was E's employer, section 421 is applicable to the exercise of the option.

Example 4. Assume the same facts as in example (3) except assume that at the time E became an employee of S Corporation, S assumed E's option to purchase P stock under section 424(a). Section 421 is applicable to E's exercise of his option to buy P stock.

Example 5. M Corporation grants a statutory option to E, an employee of such corporation. E is an officer in a reserve Air Force unit. E goes on military leave with his unit for 3 weeks. Regardless of whether E is an employee of M within the meaning of section 3401(c) and the regulations thereunder during such 3-week period, E's employment relationship with M is treated as uninterrupted during the period of E's military leave.

Example 6. Assume the same facts as in example (5) and assume further that E's active duty status is extended indefinitely, but that E has a right to reemployment with M or a related corporation on the termination of any military duty E may be required to serve. E exercises his M option while on active military duty. Irrespective of whether E is an employee of M or a related corporation within the meaning of section 3401(c) and the regulations thereunder at the time of such exercise or within 3 months before such exercise, section 421 applies to such exercise.

Example 7. X Corporation grants an incentive option to A, an employee of X Corporation, whose employment contract provides that in the event of illness, A's right to reemployment with X, or a related corporation of X, will continue for 1 year after the time A becomes unable to perform his duties for X. A falls ill for 90 days. For purposes of section 422(a)(2), A's employment relationship with X will be treated as uninterrupted during the 90-day period. If A's incapacity extends beyond 90 days, then, for purposes of section 422(a)(2), A's employment relationship with X will be treated as continuing uninterrupted until A's reemployment rights terminate. Under section 422(a)(2), A has 3 months in which to exercise an incentive option after his employment relationship with X (and related corporations) is deemed terminated.

(i) ***Additional definitions.***

(1) ***Corporation.*** For purposes of this section and §§ 1.421-2 through 1.424-1, the term *corporation* has the meaning prescribed by section 7701(a)(3) and § 301.7701-2(b) of this chapter. For example, a *corporation* for purposes of the preceding sentence includes an S corporation (as defined in section 1361), a foreign corporation (as defined in section 7701(a)(5)), and a limited liability company that is treated as a corporation for all Federal tax purposes.

(2) ***Parent corporation and subsidiary corporation.*** For the definition of the terms *parent corporation* (and *parent*) and *subsidiary corporation* (and *subsidiary*), for purposes of this section and §§ 1.421-2 through 1.424-1, see § 1.424-1(f)(i) and (ii), respectively. *Related corporation* as used in this section and in §§ 1.421-2 through 1.424-1 means either a parent corporation or subsidiary corporation.

(j) ***Effective/applicability date*** —

(1) ***In general.*** Except for paragraph (c)(1) of this section, the regulations under this section are effective on August 3, 2004. Paragraph (c)(1) of this section is effective on November 17, 2009. Paragraph (c)(1) of this section applies to statutory options granted on or after January 1, 2010.

(2) ***Reliance and transition period.*** For statutory options granted on or before June 9, 2003, taxpayers may rely on the 1984 proposed regulations LR-279-81 (49 FR 4504), the 2003 proposed regulations REG-122917-02 (68 FR 34344), or this section until the earlier of January 1, 2006, or the first regularly scheduled stockholders meeting of the granting corporation occurring 6 months after August 3, 2004. For statutory options granted after June 9, 2003, and before the earlier of January 1, 2006, or the first regularly scheduled stockholders meeting of the granting corporation occurring at least 6 months after August 3, 2004, taxpayers may rely on either REG-122917-02 or this section. Taxpayers may not rely on LR-279-81 or REG-122917-02 after December 31, 2005. Reliance on LR-279-81, REG-122917-02, or this section must be in its entirety, and all statutory options granted during the reliance period must be treated consistently.

[T.D. 6887, 31 FR 8787, June 24, 1966, as amended by T.D. 6975, 33 FR 14779, Oct. 3, 1968; T.D. 7554, 43 FR 31927, July 24, 1978. Redesignated and amended by T.D. 9144, 69 FR 46406, Aug. 3, 2004; 69 FR 61310, Oct. 18, 2004; 69 FR 70551, Dec. 7, 2004; T.D. 9471, 74 FR 59077, Nov. 17, 2009]

§ 1.421-2 General rules.

(a) ***Effect of qualifying transfer.***

(1) If a share of stock is transferred to an individual pursuant to the individual's exercise of a statutory option, and if the requirements of § 1.422-1(a) (relating to incentive stock options) or § 1.423-1(a) (relating to employee stock purchase plans) whichever is applicable, are met, then—

(i) No income results under section 83 at the time of the transfer of such share to the individual upon the exercise of the option with respect to such share;

(ii) No deduction under sections 83(h) or 162 or the regulations thereunder (relating to trade or business expenses) is allowable at any time with respect to the share so transferred; and

(iii) No amount other than the price paid under the option is considered as received by the employer corporation, a related corporation of such corporation, or a corporation substituting or assuming a stock option in a transaction to which § 1.424-1(a) (relating to corporate reorganizations, liquidations, etc.) applies, for the share so transferred.

(2) For the purpose of this paragraph, each share of stock transferred pursuant to a statutory option is treated separately. For example, if an individual, while employed by a corporation granting him a statutory option, exercises the option with respect to part of the stock covered by the option, and if such individual exercises the balance of the option more than three months after leaving such employment, the application of section 421 to the stock obtained upon the earlier exercise of the option is not affected by the fact that the income taxes of the employer and the individual with respect to the stock obtained upon the later exercise of the option are not determined under section 421.

(b) ***Effect of disqualifying disposition.***

(1)

(i) The disposition (as defined in § 1.424-1(c)) of a share of stock acquired by the exercise of a statutory option before the expiration of the applicable holding periods as determined under § 1.422-1(a) or 1.423-1(a) is a disqualifying disposition and makes paragraph (a) of this section inapplicable to the transfer of such share. See section 83(a) to determine the amount includible on a disqualifying disposition. The income attributable to such transfer (determined without reduction for any brokerage fees or other costs paid in connection with the disposition) is treated by the individual as compensation income received in the taxable year in which such disqualifying disposition occurs. A deduction attributable to such transfer is allowable, to the extent otherwise allowable under section 162, for the taxable year in which such disqualifying disposition occurs to the employer corporation, or a related corporation of such corporation, or a corporation substituting or assuming an option in a transaction to which § 1.424-1(a) applies. Additionally, the amount allowed as a deduction must be determined as if the requirements of section 83(h) and § 1.83-6(a) apply. No amount is treated as income, and no amount is allowed as a deduction, for any taxable year other than the taxable year in which the disqualifying disposition occurs. If the amount realized on the disposition exceeds (or is less than) the sum

of the amount paid for the share and the amount of compensation income recognized as a result of such disposition, the extent to which the difference is treated as gain (or loss) is determined under the rules of section 302 or 1001, as applicable.

(ii) The following examples illustrate the principles of this paragraph (b):

Example 1. On June 1, 2006, X Corporation grants an incentive stock option to A, an employee of X, entitling A to purchase 100 shares of X stock at $10 per share. On August 1, 2006, A exercises the option when the fair market value of X stock is $20 per share, and 100 shares of X stock are transferred to A on that date. On December 15, 2007, A sells the stock for $20 per share. Because A disposed of the stock before June 2, 2008, A did not satisfy the holding period requirements of § 1.422-1(a). Under paragraph (b)(1)(i) of this section, A therefore made a disqualifying disposition of the stock. Thus, paragraph (a) of this section is inapplicable to the transfer of the shares, and A must include the compensation income attributable to the transfer of the shares in gross income in the year of the disqualifying disposition. The amount of compensation income A must include in income is $1,000 ($2,000, the fair market value of X stock on transfer less $1,000, the exercise price per share). If the requirements of § 83(h) and § 1.83-6(a) are satisfied and otherwise allowable under section162, X is allowed a deduction of $1,000 for its taxable year in which the disqualifying disposition occurs.

Example 2. Y Corporation grants an incentive stock option for 100 shares of its stock to E, an employee of Y. The option has an exercise price of $10 per share. E exercises the option and is transferred the shares when the fair market value of a share of Y stock is $30. Before the applicable holding periods are met, Y redeems the shares for $70 per share. Because the holding period requirements of § 1.422-1(a) are not met, the redemption of the shares is a disqualifying disposition of the shares. Under paragraph (b)(1)(i) of this section, A made a disqualifying disposition of the stock. Thus, paragraph (a) of this section is inapplicable to the transfer of the shares, and E must include the compensation income attributable to the transfer of the shares in gross income in the year of the disqualifying disposition. The amount of compensation income that E must include in income is $2,000 ($3,000, the fair market value of Y stock on transfer, less $1,000, the exercise price paid by E). The character of the additional gain that is includible in E's income as a result of the redemption is determined under the rules of section 302. If the requirements of § 83(h) and § 1.83-6(a) are satisfied and otherwise allowable under section 162, Y is allowed a deduction for the taxable year in which the disqualifying disposition occurs for the compensation income of $2,000. Y is not allowed a deduction for the additional gain includible in E's income as a result of the redemption.

(2) If an optionee transfers stock acquired through the optionee's exercise of a statutory option prior to the expiration of the applicable holding periods, paragraph (a) of this section continues to apply to the transfer of the stock pursuant to the exercise of the option if such transfer is not a disposition of the stock as defined in § 1.424-1(c) (for example, a transfer from a decedent to the decedent's estate or a transfer by bequest or inheritance). Similarly, a subsequent transfer by the executor, administrator, heir, or legatee is not a disqualifying disposition by the decedent. If a statutory option is exercised by the estate of the optionee or by a person who acquired the option by bequest or inheritance or by reason of the death of such optionee, see paragraph (c) of this section. If a statutory option is exercised by the individual to whom the option was granted and the individual dies before the expiration of the holding periods, see paragraph (d) of this section.

(3) For special rules relating to the disqualifying disposition of a share of stock acquired by exercise of an incentive stock option, see §§ 1.422-5(b)(2) and 1.424-1(c)(3).

(c) *Exercise by estate.*

(1) If a statutory option is exercised by the estate of the individual to whom the option was granted (or by any person who acquired such option by bequest or inheritance or by reason of the death of such individual), paragraph (a) of this section applies to the transfer of stock pursuant to such exercise in the same manner as if the option had been exercised by the deceased optionee. Consequently, neither the estate nor such person is required to include any amount in gross income as a result of a transfer of stock pursuant to the exercise of the option. Paragraph (a) of this section applies even if the executor, administrator, or such person disposes of the stock so acquired before the expiration of the applicable holding periods as determined under § 1.422-1(a) or 1.423-1(a). This special rule does not affect the applicability of section 423(c), relating to the estate's or other qualifying person's recognition of compensation income, or section 1222, relating to what constitutes a short-term and long-term capital gain or loss. Paragraph (a) of this section also applies even if the executor, administrator, or such person does not exercise the option within three months after the death of the individual or is not employed as described in § 1.421-1(h), either when the option is exercised or at any time. However, paragraph (a) of this section does not apply to a transfer of shares pursuant to an exercise of the option by the estate or by such person unless the individual met the employment requirements described in § 1.421-1(h) either at the time of the individual's death or within three months before such time (or, if applicable, within the period described in § 1.422-1(a)(3)). Additionally, paragraph (a) of this section does not apply if the option is exercised by a person other than the executor or administrator, or other than a person who acquired the option by bequest or inheritance or by reason of the death of such deceased individual. For example, if the option is sold by the estate, paragraph (a) of this section does not apply to the transfer of stock pursuant to an exercise of the option by the buyer, but if the option is distributed by the administrator to an heir as part of the estate, paragraph (a) of this section applies to the transfer of stock pursuant to an exercise of the option by such heir.

(2) Any transfer by the estate, whether a sale, a distribution of assets, or otherwise, of the stock acquired by its exercise of the option under this paragraph is a disposition of the stock for purposes of section 423(c). Therefore, if section 423(c) is applicable, the estate must include an amount as compensation in its gross income. Similarly, if section 423(c) is applicable in case of an exercise of the option under this paragraph by a person who acquired the option by bequest or inheritance or by reason of the death of the individual to whom the option was granted, there must be included in the gross income of such person an amount as compensation, either when such person disposes of the stock, or when he dies owning the stock.

(3)

(i) If, under section 423(c) an amount is required to be included in the gross income of the estate or of such person, the estate or such person shall be allowed a deduction as a result of the inclusion of the value of the option in the estate of the individual to whom the option was granted. Such deduction shall be computed under section 691(c) by treating the option as an item of gross income in respect of a decedent under section 691 and by treating the amount required to be included in gross income under section 423(c) as an amount included in gross income under section 691 in respect of such item of gross income. No such deduction shall be allowable with respect to any amount other than an amount includible under section 423(c). For the rules relating to the computation of a deduction under section 691(c), see § 1.691(c)-1.

(ii) The application of subdivision (i) may be illustrated by the following example:

Example. On June 1, 2004, E was granted an option under an employee stock purchase plan to purchase for $85 one share of the stock of his employer. On such day, the fair market value of such stock was $100 per share. E died on February 1, 2006, without having exercised such option. The option was, however, exercisable by his estate, and for purposes of the estate tax was valued at $30. On March 1, 2006, the estate exercised the option, and on March 15, 2006, sold for $150 the share of stock so acquired. For its taxable year including March 15, 2006, the estate is required by sections 421(c)(1)(B) and 423(c) to include in its gross income as compensation the amount of $15. During such taxable year, no amounts of income were properly paid, credited, or distributable to the beneficiaries of the estate. However, under section 421(c)(2), the estate is entitled to a deduction determined in the following manner. E's estate includes no other items of income in respect of a decedent referred to in section 691(a), and no deductions referred to in section 691(b), so that the value for estate tax purposes of the option, $30, is also the net value of all items of income in respect of the decedent. The estate tax attributable to the inclusion of the option in the estate of E is $10. Since $15, the amount includible in gross income by reason of sections 421(c)(1)(B) and 423(c), is less than the value for estate tax purposes of the option, only $^{15}/_{30}$ of the estate tax attributable to the inclusion of the option in the estate is deductible; that is, $^{15}/_{30}$ of $10, or $5. No deduction under section 421(c)(2) is allowable with respect to any capital gain.

(4)

(i)

(*a*) In the case of the death of an optionee, the basis of any share of stock acquired by the exercise of an option under this paragraph (c), determined under section 1011, shall be increased by an amount equal to the portion of the basis of the option attributable to such share. For example, if a statutory option to acquire 10 shares of stock has a basis of $100, the basis of one share acquired by a partial exercise of the option, determined under section 1011, would be increased by 1/10th of $100, or $10. The option acquires a basis, determined under section 1014(a) or under section 1022, if applicable, only if the transfer of the share pursuant to the exercise of such option qualifies for the special tax treatment provided by section 421(a). To the extent the option is so exercised, in whole or in part, it will acquire a basis equal to its fair market value (or the basis as determined under section 1022, if applicable) at the date of the employee's death or, if an election is made under section 2032, its value at its applicable valuation date. In certain cases, the basis of the share is subject to the adjustments provided by paragraphs (c)(4)(i)(*b*) and (*c*) of this section, but such adjustments are only applicable in the case of an option that is subject to section 423(c).

(*b*) If the amount which would have been includible in gross income under section 423(c) had the employee exercised the option on the date of his death and held the share at the time of his death exceeds the amount which is includible in gross income under such section, the basis of the share, determined under (*a*) of this subdivision, shall be reduced by such excess. For example, if $15 would have been includible in the gross income of the employee had he exercised the option and held such share at the time of his death, and only $10 is includible under section 423(c), the basis of the share, determined under (*a*) of this subdivision, would be reduced by $5. For purposes of determining the amount which would have been includible in gross income under section 423(c), if the employee had

exercised the option and held such share at the time of his death, the amount which would have been paid for the share shall be computed as if the option had been exercised on the date the employee died.

(*c*) If the amount includible in gross income under section 423(c) exceeds the portion of the basis of the option attributable to the share, the basis of the share, determined under (*a*) of this subdivision, shall be increased by such excess. Thus, if $15 is includible in gross income under such section, and the basis of the option with respect to the share is $10, the basis of the share, determined under (*a*) of this subdivision, will be increased by $5.

(ii) If a statutory option is not exercised by the estate of the individual to whom the option was granted, or by the person who acquired such option by bequest or inheritance or by reason of the death of such individual, the option shall be considered to be property that constitutes a right to receive an item of income in respect of a decedent to which the rules of sections 691 and 1014(c) (or section 1022(f), if applicable) apply.

(iii) The application of this subparagraph may be illustrated by the following examples:

Example 1. On June 1, 2005, the X Corporation granted to E, an employee, an option under its employee stock purchase plan to purchase a share of X Corporation stock for $85. The fair market value of X Corporation stock on such date was $100 per share. On June 1, 2006, E died. The fair market value of X Corporation stock on such date exceeded $100 per share and the fair market value of the option on the applicable valuation date was $35. On August 1, 2006, the estate of E exercised the option and sold the share of X Corporation stock at a time when the fair market value of the share was $120. The basis of the share is $120 (the $85 paid for the stock plus the $35 basis of the option). When the share is sold for $120, the estate is required to include $15 in its gross income as compensation. Since $15 would have been includible in E's gross income if he had exercised the option and held such share at the time of his death, paragraph (c)(4)(i)(*b*) of this section does not apply. Moreover, since the $15 includible in the gross income of the estate does not exceed the basis of the option ($35), paragraph (c)(4)(i)(*c*) of this section does not apply. Since the basis of the stock and the sale price are the same, no gain or loss is realized by the estate on the disposition of the share.

Example 2. Assume the same facts as in Example 1, except that the fair market value of the share of stock at the time of its sale was $90. The basis of the share, determined under paragraph (c)(4)(i)(*a*) of this section, is $120 (the $85 paid for the stock plus the $35 basis of the option). When the share is sold for $90, the estate is required to include $5 in its gross income as compensation. If the employee had exercised the option and held the share at the time of his death, $15 would have been includible in gross income as compensation for the taxable year ending with his death. Since such amount exceeds by $10 the amount which the estate is required to include in its gross income, paragraph (c)(4)(i)(*b*) of this section applies, and the basis of the share ($120), determined under paragraph (c)(4)(i)(*a*) of this section is reduced by $10. Accordingly, the basis is $110, and a capital loss of $20 is realized on the disposition of the share.

Example 3. Assume the same facts as in Example 1, except that the fair market value of the option on the applicable valuation date was $5, and that the fair market value of X Corporation stock on the date the employee died did not exceed $100. The basis of the share, determined under paragraph (c)(4)(i)(*a*) of this section, is $90 (the $85 paid for the stock plus the $5 basis of the option). When the share is sold for $120, the estate is required to include $15 in its gross income as compensation. Since such amount exceeds by $10 the basis of the option, paragraph (c)(4)(i)(*c*) of this section

applies, and the basis of the share ($90), determined under paragraph (c)(4)(i)(*b*) of this section, is increased by $10. Accordingly, the basis is $100 and a capital gain of $20 is realized on the disposition of the share.

Example 4. Assume the same facts as in Example 1, except that on June 1, 2006, the date the employee died, the fair market value of X Corporation stock was $98, and that on June 1, 2007, the alternate valuation date, the fair market value of the stock had declined substantially, and the fair market value of the option was $5. On August 1, 2007, the estate of E exercised the option and sold the share when its fair market value was $92. The basis of the share, determined under paragraph (c)(4)(i)(*a*) of this section, is $90 (the $85 paid for the stock plus the $5 basis of the option). When the share is sold for $92, the estate is required to include $7 in its gross income as compensation. Since $13 would have been includible in E's gross income if he had exercised the option and held such share at the time of his death, paragraph (c)(4)(i)(*b*) of this section applies, and the basis of the share ($90), determined under paragraph (c)(4)(i)(*a*) of this section, is reduced by $6 to $84. Furthermore, since the $7 that the estate is required to include in its gross income when the share is sold for $92 exceeds by $2 the basis of the option, paragraph (c)(4)(i)(*c*) of this section applies, and the basis of the share ($84), determined under paragraph (c)(4)(i)(*a*) of this section and paragraph (c)(4)(i)(*b*) of this section, is increased by $2. Accordingly, the basis is $86 and a capital gain of $6 is realized on the disposition of the share.

(d) ***Option exercised by the individual to whom the option was granted if the individual dies before expiration of the applicable holding periods.*** If a statutory option is exercised by the individual to whom the option was granted and such individual dies before the expiration of the applicable holding periods as determined under § 1.422-1(a) or 1.423-1(a), paragraph (a) of this section does not become inapplicable if the executor or administrator of the estate of such individual, or any person who acquired such stock by bequest or inheritance or by reason of the death of such individual, disposes of such stock before the expiration of such applicable holding periods. This rule does not affect the applicability of section 423(c), relating to the individual's recognition of compensation income, or section 1222, relating to what constitutes a short-term and long-term capital gain or loss.

(e) ***Incorporation by reference.*** Any requirement that an option expressly contain or state a prescribed limitation or term will be considered met if such limitation or term is set forth in a statutory option plan and is incorporated by reference by the option. Thus, if a statutory option plan expressly provides that no option granted thereunder shall be exercisable after five years from the date of grant, and if an option granted thereunder expressly provides that the option is granted subject to the terms and limitations of such plan, the option will be regarded as being, by its terms, not exercisable after the expiration of 5 years from the date such option is granted.

(f) ***Effective/applicability date.*** —

(1) ***In general.*** These regulations are effective on August 3, 2004.

(2) ***Reliance and transition period.*** For statutory options granted on or before June 9, 2003, taxpayers may rely on the 1984 proposed regulations LR-279-81 (49 FR 4504), the 2003 proposed regulations REG-122917-02 (68 FR 34344), or this section until the earlier of January 1, 2006, or the first regularly scheduled stockholders meeting of the granting corporation occurring 6 months after August 3, 2004. For statutory options granted after June 9, 2003, and before the earlier of January 1, 2006, or the first regularly scheduled stockholders meeting of the granting corporation occurring at least 6 months after August 3, 2004, taxpayers may rely on either REG-122917-02 or this section.

Taxpayers may not rely on LR-279-81 or REG-122917-02 after December 31, 2005. Reliance on LR-279-81, REG-122917-02, or this section must be in its entirety, and all statutory options granted during the reliance period must be treated consistently.

(3) ***Application of section 1022.*** The provisions of paragraph (c) of this section relating to section 1022 are effective on and after January 19, 2017.

[T.D. 6887, 31 FR 8789, June 24, 1966. Redesignated and amended by T.D. 9144, 69 FR 46406, Aug. 3, 2004; 69 FR 61310, Oct. 18, 2004; 69 FR 70551, Dec. 7, 2004; T.D. 9811, 82 FR 6238, Jan. 19, 2017]

§ 1.422-1 Incentive stock options; general rules.

(a) ***Applicability of section 421(a).***

(1)

(i) Section 1.421-2(a) applies to the transfer of a share of stock to an individual pursuant to the individual's exercise of an incentive stock option if the following conditions are satisfied—

(A) The individual makes no disposition of such share before the later of the expiration of the 2-year period from the date of grant of the option pursuant to which such share was transferred, or the expiration of the 1-year period from the date of transfer of such share to the individual; and

(B) At all times during the period beginning on the date of grant of the option and ending on the day 3 months before the date of exercise, the individual was an employee of either the corporation granting the option, a related corporation of such corporation, or a corporation (or a related corporation of such corporation) substituting or assuming a stock option in a transaction to which § 1.424-1(a) applies.

(ii) For rules relating to the disposition of shares of stock acquired pursuant to the exercise of a statutory option, see § 1.424-1(c). For rules relating to the requisite employment relationship, see § 1.421-1(h).

(2)

(i) The holding period requirement of section 422(a)(1), described in paragraph (a)(1)(i)(A) of this section, does not apply to the transfer of shares by an insolvent individual described in this paragraph (a)(2). If an insolvent individual holds a share of stock acquired pursuant to the individual's exercise of an incentive stock option, and if such share is transferred to a trustee, receiver, or other similar fiduciary in any proceeding under the Bankruptcy Act or any other similar insolvency proceeding, neither such transfer, nor any other transfer of such share for the benefit of the individual's creditors in such proceeding is a disposition of such share for purposes of this paragraph (a). For purposes of this paragraph (a)(2), an individual is insolvent only if the individual's liabilities exceed the individual's assets or the individual is unable to satisfy the individual's liabilities as they become due. See section 422(c)(3).

(ii) A transfer by the trustee or other fiduciary that is not treated as a disposition for purposes of this paragraph (a) may be a sale or exchange for purposes of recognizing capital gain or loss with respect to the share transferred. For example, if the trustee transfers the share to a

creditor in an insolvency proceeding, capital gain or loss must be recognized by the insolvent individual to the extent of the difference between the amount realized from such transfer and the adjusted basis of such share.

(iii) If any transfer by the trustee or other fiduciary (other than a transfer back to the insolvent individual) is not for the exclusive benefit of the creditors in an insolvency proceeding, then whether such transfer is a disposition of the share by the individual for purposes of this paragraph (a) is determined under § 1.424-1(c). Similarly, if the trustee or other fiduciary transfers the share back to the insolvent individual, any subsequent transfer of the share by such individual which is not made in respect of the insolvency proceeding may be a disposition of the share for purposes of this paragraph (a).

(3) If the employee exercising an option ceased employment because of permanent and total disability, within the meaning of section 22(e)(3), 1 year is used instead of 3 months in the employment period requirement of paragraph (a)(1)(i)(B) of this section.

(b) ***Failure to satisfy holding period requirements*** —

(1) ***General rule.*** For general rules concerning a disqualifying disposition of a share of stock acquired pursuant to the exercise of an incentive stock option, see § 1.421-2(b)(1).

(2)

(i) ***Special rule.*** If an individual makes a disqualifying disposition of a share of stock acquired by the exercise of an incentive stock option, and if such disposition is a sale or exchange with respect to which a loss (if sustained) would be recognized to the individual, then, under this paragraph (b)(2)(i), the amount includible (determined without reduction for brokerage fees or other costs paid in connection with the disposition) in the gross income of such individual, and deductible from the income of the employer corporation (or a related corporation of such corporation, or of a corporation substituting or assuming the option in a transaction to which § 1.424-1(a) applies) as compensation attributable to the exercise of such option, shall not exceed the excess (if any) of the amount realized on such sale or exchange over the adjusted basis of such share. Subject to the special rule provided by this paragraph (b)(2)(i), the amount of compensation attributable to the exercise of the option is determined under section 83(a); see § 1.421-2(b)(1)(i).

(ii) ***Limitation to special rule.*** The special rule described in paragraph (b)(2)(i) of this section does not apply if the disposition is a sale or exchange with respect to which a loss (if sustained) would not be recognized by the individual. Thus, for example, if a disqualifying disposition is a sale described in section 1091 (relating to loss from wash sales of stock or securities), a gift (or any other transaction which is not at arm's length), or a sale described in section 267(a)(1) (relating to sales between related persons), the special rule described in paragraph (b)(2)(i) of this section does not apply because a loss sustained in any such transaction would not be recognized.

(3) ***Examples.*** The following examples illustrate the principles of this paragraph (b):

Example 1. Disqualifying disposition of vested stock. On June 1, 2006, X Corporation grants an incentive stock option to A, an employee of X Corporation, entitling A to purchase one share of X Corporation stock. On August 1, 2006, A exercises the option, and the share of X Corporation stock is transferred to A on that date. The option price is $100 (the fair market value of a share of X Corporation stock on June 1, 2006), and the fair market value of a share of X Corporation

stock on August 1, 2006 (the date of transfer) is $200. The share transferred to A is transferable and not subject to a substantial risk of forfeiture. A makes a disqualifying disposition by selling the share on June 1, 2007, for $250. The amount of compensation attributable to A's exercise is $100 (the difference between the fair market value of the share at the date of transfer, $200, and the amount paid for the share, $100). Because the amount realized ($250) is greater than the value of the share at transfer ($200), paragraph (b)(2)(i) of this section does not apply and thus does not affect the amount includible as compensation in A's gross income and deductible by X. A must include in gross income for the taxable year in which the sale occurred $100 as compensation and $50 as capital gain ($250, the amount realized from the sale, less A's basis of $200 (the $100 paid for the share plus the $100 increase in basis resulting from the inclusion of that amount in A's gross income as compensation attributable to the exercise of the option)). If the requirements of section 83(h) and § 1.83-6(a) are satisfied and the deduction is otherwise allowable under section 162, for its taxable year in which the disqualifying disposition occurs, X Corporation is allowed a deduction of $100 for compensation attributable to A's exercise of the incentive stock option.

Example 2.@Disqualifying disposition of unvested stock. Assume the same facts as in *Example 1*, except that the share of X Corporation stock received by A is subject to a substantial risk of forfeiture and not transferable for a period of six months after such exercise. Assume further that the fair market value of X Corporation stock is $225 on February 1, 2007, the date on which the six-month restriction lapses. Because section 83 does not apply for ordinary income tax purposes on the date of exercise, A cannot make an effective section 83(b) election at that time (although such an election is permissible for alternative minimum tax purposes). Additionally, at the time of the disposition, section 422 and § 1.422-1(a) no longer apply, and thus, section 83(a) is used to measure the consequences of the disposition, and the holding period for capital gain purposes begins on the vesting date, six months after exercise. The amount of compensation attributable to A's exercise of the option and disqualifying disposition of the share is $125 (the difference between the fair market value of the share on the date that the restriction lapsed, $225, and the amount paid for the share, $100). Because the amount realized ($225) is greater than the value of the share at transfer ($200), paragraph (b)(2)(i) of this section does not apply and thus does not affect the amount includible as compensation in A's gross income and deductible by X. A must include $125 of compensation income and $25 of capital gain in gross income for the taxable year in which the disposition occurs ($250, the amount realized from the sale, less A's basis of $225 (the $100 paid for the share plus the $125 increase in basis resulting from the inclusion of that amount of compensation in A's gross income)). If the requirements of section 83(h) and § 1.83-6(a) are satisfied and the deduction is otherwise allowable under section 162, for its taxable year in which the disqualifying disposition occurs, X Corporation is allowed a deduction of $125 for the compensation attributable to A's exercise of the option.

Example 3. (i) *Disqualifying disposition and application of special rule.* Assume the same facts as in *Example 1*, except that A sells the share for $150 to M.
(ii) If the sale to M is a disposition that meets the requirements of paragraph (b)(2)(i) of this section, instead of $100 which otherwise would have been includible as compensation under § 1.83-7, under paragraph (b)(2)(i) of this section, A must include only $50 (the excess of the amount realized on such sale, $150, over the adjusted basis of the share, $100) in gross income as compensation attributable to the exercise of the

incentive stock option. Because A's basis for the share is $150 (the $100 which A paid for the share, plus the $50 increase in basis resulting from the inclusion of that amount in A's gross income as compensation attributable to the exercise of the option), A realizes no capital gain or loss as a result of the sale. If the requirements of section 83(h) and § 1.83-6(a) are satisfied and the deduction is otherwise allowable under section 162, for its taxable year in which the disqualifying disposition occurs, X Corporation is allowed a deduction of $50 for the compensation attributable to A's exercise of the option and disqualifying disposition of the share.

(iii) Assume the same facts as in paragraph (i) of this *Example 3*, except that 10 days after the sale to M, A purchases substantially identical stock. Because under section 1091(a) a loss (if it were sustained on the sale) would not be recognized on the sale, under paragraph (b)(2)(ii) of this section, the special rule described in paragraph (b)(2)(i) of this section does not apply. A must include $100 (the difference between the fair market value of the share on the date of transfer, $200, and the amount paid for the share, $100) in gross income as compensation attributable to the exercise of the option for the taxable year in which the disqualifying disposition occurred. A recognizes no capital gain or loss on the transaction. If the requirements of section 83(h) and § 1.83-6(a) are satisfied and the deduction is otherwise allowable under section 162, for its taxable year in which the disqualifying disposition occurs X Corporation is allowed a $100 deduction for compensation attributable to A's exercise of the option and disqualifying disposition of the share.

(iv) Assume the same facts as in paragraph (ii) of this *Example 3*, except that A sells the share for $50. Under paragraph (b)(2)(i) of this section, A is not required to include any amount in gross income as compensation attributable to the exercise of the option. A is allowed a capital loss of $50 (the difference between the amount realized on the sale, $50, and the adjusted basis of the share, $100). X Corporation is not allowed any deduction attributable to A's exercise of the option and disqualifying disposition of the share.

(c) ***Failure to satisfy employment requirement.*** Section 1.421-2(a) does not apply to the transfer of a share of stock pursuant to the exercise of an incentive stock option if the employment requirement, as determined under paragraph (a)(1)(i)(B) of this section, is not met at the time of the exercise of such option. Consequently, the effects of such a transfer are determined under the rules of § 1.83-7. For rules relating to the employment relationship, see § 1.421-1(h).

[T.D. 9144, 69 FR 46411, Aug. 3, 2004; 69 FR 61310, Oct. 18, 2004; 69 FR 70551, Dec. 7, 2004]

§ 1.422-2 Incentive stock options defined.

(a) ***Incentive stock option defined —***

(1) ***In general.*** The term *incentive stock option* means an option that meets the requirements of paragraph (a)(2) of this section on the date of grant. An incentive stock option is also subject to the $100,000 limitation described in § 1.422-4. An incentive stock option may contain a number of permissible provisions that do not affect the status of the option as an incentive stock option. See § 1.422-5 for rules relating to permissible provisions of an incentive stock option.

(2) ***Option requirements.*** To qualify as an incentive stock option under this section, an option must be granted to an individual in connection with the individual's employment by the corporation granting such option (or by a related corporation as defined in § 1.421-1(i)(2)), and granted only for stock of any of such corporations. In addition, the option must meet all of the following requirements—

(i) It must be granted pursuant to a plan that meets the requirements described in paragraph (b) of this section;

(ii) It must be granted within 10 years from the date of the adoption of the plan or the date such plan is approved by the stockholders, whichever is earlier (see paragraph (c) of this section);

(iii) It must not be exercisable after the expiration of 10 years from the date of grant (see paragraph (d) of this section);

(iv) It must provide that the option price per share is not less than the fair market value of the share on the date of grant (see paragraph (e) of this section);

(v) By its terms, it must not be transferrable by the individual to whom the option is granted other than by will or the laws of descent and distribution, and must be exercisable, during such individual's lifetime, only by such individual (see §§ 1.421-1(b)(2) and 1.421-2(c)); and

(vi) Except as provided in paragraph (f) of this section, it must be granted to an individual who, at the time the option is granted, does not own stock possessing more than 10 percent of the total combined voting power of all classes of stock of the corporation employing such individual or of any related corporation of such corporation.

(3) ***Amendment of option terms.*** Except as otherwise provided in § 1.424-1, the amendment of the terms of an incentive stock option may cause it to cease to be an option described in this section. If the terms of an option that has lost its status as an incentive stock option are subsequently changed with the intent to re-qualify the option as an incentive stock option, such change results in the grant of a new option on the date of the change. See § 1.424-1(e).

(4) ***Terms provide option not an incentive stock option.*** If the terms of an option, when granted, provide that it will not be treated as an incentive stock option, such option is not treated as an incentive stock option.

(b) ***Option plan*** —

(1) ***In general.*** An incentive stock option must be granted pursuant to a plan that meets the requirements of this paragraph (b). The authority to grant other stock options or other stock-based awards pursuant to the plan, where the exercise of such other options or awards does not affect the exercise of incentive stock options granted pursuant to the plan, does not disqualify such incentive stock options. The plan must be in writing or electronic form, provided that such writing or electronic form is adequate to establish the terms of the plan. See § 1.422-5 for rules relating to permissible provisions of an incentive stock option.

(2) ***Stockholder approval.***

(i) The plan required by this paragraph (b) must be approved by the stockholders of the corporation granting the incentive stock option within 12 months before or after the date such plan is adopted. Ordinarily, a plan is adopted when it is approved by the granting corporation's board of directors, and the date of the board's action is the reference point for determining whether stockholder approval occurs within the applicable 24-month period. However, if the board's action is subject to a condition (such as stockholder approval) or the happening of a particular event, the plan is adopted on the date the condition is met or the event occurs, unless the board's resolution fixes the date of approval as the date of the board's action.

(ii) For purposes of paragraph (b)(2)(i) of this section, the stockholder approval must comply with the rules described in § 1.422-3.

(iii) The provisions relating to the maximum aggregate number of shares to be issued under the plan (described in paragraph (b)(3) of this section) and the employees (or class or classes of employees) eligible to receive options under the plan (described in paragraph (b)(4) of this section) are the only provisions of a stock option plan that, if changed, must be re-approved by stockholders for purposes of section 422(b)(1). Any increase in the maximum aggregate number of shares that may be issued under the plan (other than an increase merely reflecting a change in the number of outstanding shares, such as a stock dividend or stock split), or change in the designation of the employees (or class or classes of employees) eligible to receive options under the plan is considered the adoption of a new plan requiring stockholder approval within the prescribed 24-month period. In addition, a change in the granting corporation or the stock available for purchase or award under the plan is considered the adoption of a new plan requiring new stockholder approval within the prescribed 24-month period. Any other changes in the terms of an incentive stock option plan are not considered the adoption of a new plan and, thus, do not require stockholder approval.

(3) *Maximum aggregate number of shares.*

(i) The plan required by this paragraph (b) must designate the maximum aggregate number of shares that may be issued under the plan through incentive stock options. If nonstatutory options or other stock-based awards may be granted, the plan may separately designate terms for each type of option or other stock-based awards and designate the maximum number of shares that may be issued under such option or other stock-based awards. Unless otherwise specified, all terms of the plan apply to all options and other stock-based awards that may be granted under the plan.

(ii) A plan that merely provides that the number of shares that may be issued as incentive stock options under such plan may not exceed a stated percentage of the shares outstanding at the time of each offering or grant under such plan does not satisfy the requirement that the plan state the maximum aggregate number of shares that may be issued under the plan. However, the maximum aggregate number of shares that may be issued under the plan may be stated in terms of a percentage of the authorized, issued, or outstanding shares at the date of the adoption of the plan. The plan may specify that the maximum aggregate number of shares available for grants under the plan may increase annually by a specified percentage of the authorized, issued, or outstanding shares at the date of the adoption of the plan. A plan which provides that the maximum aggregate number of shares that may be issued as incentive stock

options under the plan may change based on any other specified circumstances satisfies the requirements of this paragraph (b)(3) only if the stockholders approve an immediately determinable maximum aggregate number of shares that may be issued under the plan in any event.

(iii) It is permissible for the plan to provide that, shares purchasable under the plan may be supplied to the plan through acquisitions of stock on the open market; shares purchased under the plan and forfeited back to the plan; shares surrendered in payment of the exercise price of an option; shares withheld for payment of applicable employment taxes and/or withholding obligations resulting from the exercise of an option.

(iv) If there is more than one plan under which incentive stock options may be granted and stockholders of the granting corporation merely approve a maximum aggregate number of shares that are available for issuance under such plans, the stockholder approval requirements described in paragraph (b)(2) of this section are not satisfied. A separate maximum aggregate number of shares available for issuance pursuant to incentive stock options must be approved for each plan.

(4) ***Designation of employees.*** The plan described in this paragraph (b), as adopted and approved, must indicate the employees (or class or classes of employees) eligible to receive the options or other stock-based awards to be granted under the plan. This requirement is satisfied by a general designation of the employees (or the class or classes of employees) eligible to receive options or other stock-based awards under the plan. Designations such as “key employees of the grantor corporation”; “all salaried employees of the grantor corporation and its subsidiaries, including subsidiaries which become such after adoption of the plan;” or “all employees of the corporation” meet this requirement. This requirement is considered satisfied even though the board of directors, another group, or an individual is given the authority to select the particular employees who are to receive options or other stock-based awards from a described class and to determine the number of shares to be optioned or granted to each such employee. If individuals other than employees may be granted options or other stock-based awards under the plan, the plan must separately designate the employees or classes of employees eligible to receive incentive stock options.

(5) ***Conflicting option terms.*** An option on stock available for purchase or grant under the plan is treated as having been granted pursuant to a plan even if the terms of the option conflict with the terms of the plan, unless such option is granted to an employee who is ineligible to receive options under the plan, options have been granted on stock in excess of the aggregate number of shares which may be issued under the plan, or the option provides otherwise.

(6) The following examples illustrate the principles of this paragraph (b):

> *Example 1. Stockholder approval.* (i) S Corporation is a subsidiary of P Corporation, a publicly traded corporation. On January 1, 2006, S adopts a plan under which incentive stock options for S stock are granted to S employees.
> (ii) To meet the requirements of paragraph (b)(2) of this section, the plan must be approved by the stockholders of S (in this case, P) within 12 months before or after January 1, 2006.
>
> (iii) Assume the same facts as in paragraph (i) of this *Example 1,* except that the plan was adopted on January 1, 2010. Assume further that the plan was approved by the stockholders of S (in this case, P) on March 1, 2010. On January 1, 2012, S changes the plan to provide that

incentive stock options for P stock will be granted to S employees under the plan. Because there is a change in the stock available for grant under the plan, the change is considered the adoption of a new plan that must be approved by the stockholder of S (in this case, P) within 12 months before or after January 1, 2012.

Example 2. Stockholder approval. (i) Assume the same facts as in paragraph (i) of *Example 1*, except that on March 15, 2007, P completely disposes of its interest in S. Thereafter, S continues to grant options for S stock to S employees under the plan.
(ii) The new S options are granted under a plan that meets the stockholder approval requirements of paragraph (b)(2) of this section without regard to whether S seeks approval of the plan from the stockholders of S after P disposes of its interest in S.

(iii) Assume the same facts as in paragraph (i) of this *Example 2*, except that under the plan as adopted on January 1, 2006, only options for P stock are granted to S employees. Assume further that after P disposes of its interest in S, S changes the plan to provide for the grant of options for S stock to S employees. Because there is a change in the stock available for purchase or grant under the plan, under paragraph (b)(2)(iii) of this section, the stockholders of S must approve the plan within 12 months before or after the change to the plan to meet the stockholder approval requirements of paragraph (b) of this section.

Example 3. Stockholder approval. (i) Corporation X maintains a plan under which incentive stock options may be granted to all eligible employees. Corporation Y does not maintain an incentive stock option plan. On May 15, 2006, Corporation X and Corporation Y consolidate under state law to form one corporation. The new corporation will be named Corporation Y. The consolidation agreement describes the Corporation X plan, including the maximum aggregate number of shares available for issuance pursuant to incentive stock options after the consolidation and the employees eligible to receive options under the plan. Additionally, the consolidation agreement states that the plan will be continued by Corporation Y after the consolidation and incentive stock options will be issued by Corporation Y. The consolidation agreement is unanimously approved by the shareholders of Corporations X and Y on May 1, 2006. Corporation Y assumes the plan formerly maintained by Corporation X and continues to grant options under the plan to all eligible employees.
(ii) Because there is a change in the granting corporation (from Corporation X to Corporation Y), under paragraph (b)(2)(iii) of this section, Corporation Y is considered to have adopted a new plan. Because the plan is fully described in the consolidation agreement, including the maximum aggregate number of shares available for issuance pursuant to incentive stock options and employees eligible to receive options under the plan, the approval of the consolidation agreement by the shareholders constitutes approval of the plan. Thus, the shareholder approval of the consolidation agreement satisfies the shareholder approval requirements of paragraph (b)(2) of this section, and the plan is considered to be adopted by Corporation Y and approved by its shareholders on May 1, 2006.

Example 4. Maximum aggregate number of shares. X Corporation maintains a plan under which statutory options and nonstatutory options may be granted. The plan designates the number of shares that may be used for incentive stock options. Because the maximum aggregate number of shares that will be used for incentive stock options is designated in the plan, the requirements of paragraph (b)(3) of this section are satisfied.

Example 5. Maximum aggregate number of shares. Y Corporation adopts an incentive stock option plan on November 1, 2006. On that date, there are two million outstanding shares of Y Corporation stock. The plan provides that the maximum aggregate number of shares that may be issued under the plan may not exceed 15% of the outstanding number of shares of Y Corporation on November 1, 2006. Because the maximum aggregate number of shares that may be issued under the plan is designated in the plan, the requirements of paragraph (b)(3) of this section are met.

Example 6. Maximum aggregate number of shares. (i) B Corporation adopts an incentive stock option plan on March 15, 2005. The plan provides that the maximum aggregate number of shares available for issuance under the plan is 50,000, increased on each anniversary date of the adoption of the plan by 5 percent of the then-outstanding shares.
(ii) Because the maximum aggregate number of shares is not designated under the plan, the requirements of paragraph (b)(3) of this section are not met.

(iii) Assume the same facts as in paragraph (i) of this *Example 6,* except that the plan provides that the maximum aggregate number of shares available under the plan is the lesser of (a) 50,000 shares, increased each anniversary date of the adoption of the plan by 5 percent of the then-outstanding shares, or (b) 200,000 shares. Because the maximum aggregate number of shares that may be issued under the plan is designated as the lesser of one of two numbers, one of which provides an immediately determinable maximum aggregate number of shares that may be issued under the plan in any event, the requirements of paragraph (b)(3) of this section are met.

(c) ***Duration of option grants under the plan.*** An incentive stock option must be granted within 10 years from the date that the plan under which it is granted is adopted or the date such plan is approved by the stockholders, whichever is earlier. To grant incentive stock options after the expiration of the 10-year period, a new plan must be adopted and approved.

(d) ***Period for exercising options.*** An incentive stock option, by its terms, must not be exercisable after the expiration of 10 years from the date such option is granted, or 5 years from the date such option is granted to an employee described in paragraph (f) of this section. An option that does not contain such a provision when granted is not an incentive stock option.

(e) ***Option price.***

(1) Except as provided by paragraph (e)(2) of this section, the option price of an incentive stock option must not be less than the fair market value of the stock subject to the option at the time the option is granted. The option price may be determined in any reasonable manner, including the valuation methods permitted under § 20.2031-2 of this chapter, so long as the minimum price possible under

the terms of the option is not less than the fair market value of the stock on the date of grant. For general rules relating to the option price, see § 1.421-1(e). For rules relating to the determination of when an option is granted, see § 1.421-1(c).

(2)

(i) If a share of stock is transferred to an individual pursuant to the exercise of an option which fails to qualify as an incentive stock option merely because there was a failure of an attempt, made in good faith, to meet the option price requirements of paragraph (e)(1) of this section, the requirements of such paragraph are considered to have been met. Whether there was a good-faith attempt to set the option price at not less than the fair market value of the stock subject to the option at the time the option was granted depends on the relevant facts and circumstances.

(ii) For publicly held stock that is actively traded on an established market at the time the option is granted, determining the fair market value of such stock by the appropriate method described in § 20.2031-2 of this chapter establishes that a good-faith attempt to meet the option price requirements of this paragraph (e) was made.

(iii) For non-publicly traded stock, if it is demonstrated, for example, that the fair market value of the stock at the date of grant was based upon an average of the fair market values as of such date set forth in the opinions of completely independent and well-qualified experts, such a demonstration generally establishes that there was a good-faith attempt to meet the option price requirements of this paragraph (e). The optionee's status as a majority or minority stockholder may be taken into consideration.

(iv) Regardless of whether the stock offered under an option is publicly traded, a good-faith attempt to meet the option price requirements of this paragraph (e) is not demonstrated unless the fair market value of the stock on the date of grant is determined with regard to *nonlapse restrictions* (as defined in § 1.83-3(h)) and without regard to *lapse restrictions* (as defined in § 1.83-3(i)).

(v) Amounts treated as interest and amounts paid as interest under a deferred payment arrangement are not includible as part of the option price. See § 1.421-1(e)(1). An attempt to set the option price at not less than fair market value is not regarded as made in good faith where an adjustment of the option price to reflect amounts treated as interest results in the option price being lower than the fair market value on which the option price was based.

(3) Notwithstanding that the option price requirements of paragraphs (e)(1) and (2) of this section are satisfied by an option granted to an employee whose stock ownership exceeds the limitation provided by paragraph (f) of this section, such option is not an incentive stock option when granted unless it also complies with paragraph (f) of this section. If the option, when granted, does not comply with the requirements described in paragraph (f) of this section, such option can never become an incentive stock option, even if the employee's stock ownership does not exceed the limitation of paragraph (f) of this section when such option is exercised.

(f) ***Options granted to certain stockholders.***

(1) If, immediately before an option is granted, an individual owns (or is treated as owning) stock possessing more than 10 percent of the total combined voting power of all classes of stock of the corporation employing the optionee or of any related corporation of such corporation, then an option granted to such individual cannot qualify as an incentive stock option unless the option price is at least 110 percent of the stock's fair market value on the date of grant and such option by its terms is

not exercisable after the expiration of 5 years from the date of grant. For purposes of determining the minimum option price for purposes of this paragraph (f), the rules described in paragraph (e)(2) of this section, relating to the good-faith determination of the option price, do not apply.

(2) For purposes of determining the stock ownership of the optionee, the stock attribution rules of § 1.424-1(d) apply. Stock that the optionee may purchase under outstanding options is not treated as stock owned by the individual. The determination of the percentage of the total combined voting power of all classes of stock of the employer corporation (or of its related corporations) that is owned by the optionee is made with respect to each such corporation in the related group by comparing the voting power of the shares owned (or treated as owned) by the optionee to the aggregate voting power of all shares of each such corporation actually issued and outstanding immediately before the grant of the option to the optionee. The aggregate voting power of all shares actually issued and outstanding immediately before the grant of the option does not include the voting power of treasury shares or shares authorized for issue under outstanding options held by the individual or any other person.

(3) ***Examples.*** The rules of this paragraph (f) are illustrated by the following examples:

Example 1. (i) E, an employee of M Corporation, owns 15,000 shares of M Corporation common stock, which is the only class of stock outstanding. M has 100,000 shares of its common stock outstanding. On January 1, 2005, when the fair market value of M stock is $100, E is granted an option with an option price of $100 and an exercise period of 10 years from the date of grant.
(ii) Because E owns stock possessing more than 10 percent of the total combined voting power of all classes of M Corporation stock, M cannot grant an incentive stock option to E unless the option is granted at an option price of at least 110 percent of the fair market value of the stock subject to the option and the option, by its terms, expires no later than 5 years from its date of grant. The option granted to E fails to meet the option-price and term requirements described in paragraph (f)(1) of this section and, thus, the option is not an incentive stock option.

(iii) Assume the same facts as in paragraph (i) of this *Example 1*, except that E's father and brother each owns 7,500 shares of M Corporation stock, and E owns no M stock in E's own name. Because under the attribution rules of § 1.424-1(d), E is treated as owning stock held by E's parents and siblings, M cannot grant an incentive stock option to E unless the option price is at least 110 percent of the fair market value of the stock subject to the option, and the option, by its terms, expires no later than 5 years from the date of grant.

Example 2. Assume the same facts as in paragraph (i) of this *Example 1.* Assume further that M is a subsidiary of P Corporation. Regardless of whether E owns any P stock and the number of P shares outstanding, if P Corporation grants an option to E which purports to be an incentive stock option, but which fails to meet the 110-percent-option-price and 5-year-term requirements, the option is not an incentive stock option because E owns more than 10 percent of the total combined voting power of all classes of stock of a related corporation of P Corporation (*i.e.*, M Corporation). An individual who owns (or is treated as owning) stock in

excess of the ownership specified in paragraph (f)(1) of this section, in any corporation in a group of corporations consisting of the employer corporation and its related corporations, cannot be granted an incentive stock option by any corporation in the group unless such option meets the 110-percent-option-price and 5-year-term requirements of paragraph (f)(1) of this section.

Example 3. (i) F is an employee of R Corporation. R has only one class of stock, of which 100,000 shares are issued and outstanding. F owns no stock in R Corporation or any related corporation of R Corporation. On January 1, 2005, R grants a 10-year incentive stock option to F to purchase 50,000 shares of R stock at $3 per share, the fair market value of R stock on the date of grant of the option. On April 1, 2005, F exercises half of the January option and receives 25,000 shares of R stock that previously were not outstanding. On July 1, 2005, R grants a second 50,000 share option to F which purports to be an incentive stock option. The terms of the July option are identical to the terms of the January option, except that the option price is $3.25 per share, which is the fair market value of R stock on the date of grant of the July option.
(ii) Because F does not own more than 10% of the total combined voting power of all classes of stock of R Corporation or any related corporation on the date of the grant of the January option and the pricing requirements of paragraph (e) of this section are satisfied on the date of grant of such option, the unexercised portion of the January option remains an incentive stock option regardless of the changes in F's percentage of stock ownership in R after the date of grant. However, the July option is not an incentive stock option because, on the date that it is granted, F owns 20 percent (25,000 shares owned by F divided by 125,000 shares of R stock issued and outstanding) of the total combined voting power of all classes of R Corporation stock and, thus the pricing requirements of paragraph (f)(1) of this section are not met.

(iii) Assume the same facts as in paragraph (i) of this *Example 3* except that the partial exercise of the January incentive stock option on April 1, 2003, is for only 10,000 shares. Under these circumstances, the July option is an incentive stock option, because, on the date of grant of the July option, F does not own more than 10 percent of the total combined voting power (10,000 shares owned by F divided by 110,000 shares of R issued and outstanding) of all classes of R Corporation stock.

[T.D. 9144, 69 FR 46412, Aug. 3, 2004; T.D. 9471, 74 FR 59077, Nov. 17, 2009]

§ 1.422-3 Stockholder approval of incentive stock option plans.

This section addresses the stockholder approval of incentive stock option plans required by section 422(b)(1) of the Internal Revenue Code. (Section 422 was added to the Code as section 422A by section 251 of the Economic Recovery Tax Act of 1981, and was redesignated as section 422 by section 11801 of the Omnibus Budget Reconciliation Act of 1990.) The approval of stockholders must comply with all applicable provisions of the corporate charter, bylaws, and applicable State law prescribing the method and degree of stockholder approval required for the issuance of corporate stock or options. If the applicable State law does not prescribe a method and degree of stockholder approval in such cases an incentive stock option plan must be approved:

(a) By a majority of the votes cast at a duly held stockholders' meeting at which a quorum representing a majority of all outstanding voting stock is, either in person or by proxy, present and voting on the plan; or

(b) By a method and in a degree that would be treated as adequate under applicable State law in the case of an action requiring stockholder approval (i.e., an action on which stockholders would be entitled to vote if the action were taken at a duly held stockholders' meeting).

[T.D. 8374, 56 FR 61160, Dec. 2, 1991. Redesignated by T.D. 9144, 69 FR 46415, Aug. 3, 2004]

§ 1.422-4 $100,000 limitation for incentive stock options.

(a) ***$100,000 per year limitation*** —

(1) ***General rule.*** An option that otherwise qualifies as an incentive stock option nevertheless fails to be an incentive stock option to the extent that the $100,000 limitation described in paragraph (a)(2) of this section is exceeded.

(2) ***$100,000 per year limitation.*** To the extent that the aggregate fair market value of stock with respect to which an incentive stock option (determined without regard to this section) is exercisable for the first time by any individual during any calendar year (under all plans of the employer corporation and related corporations) exceeds $100,000, such option is treated as a nonstatutory option. See § 1.83-7 for rules applicable to nonstatutory options.

(b) ***Application.*** To determine whether the limitation described in paragraph (a)(2) of this section has been exceeded, the following rules apply:

(1) An option that does not meet the requirements of § 1.422-2 when granted (including an option which, when granted, contains terms providing that it will not be treated as an incentive stock option) is disregarded. See § 1.422-2(a)(4).

(2) The fair market value of stock is determined as of the date of grant of the option for such stock.

(3) Except as otherwise provided in paragraph (b)(4) of this section, options are taken into account in the order in which they are granted.

(4) For purposes of this section, an option is considered to be first exercisable during a calendar year if the option will become exercisable at any time during the year assuming that any condition on the optionee's ability to exercise the option related to the performance of services is satisfied. If the optionee's ability to exercise the option in the year is subject to an acceleration provision, then the option is considered first exercisable in the calendar year in which the acceleration provision is triggered. After an acceleration provision is triggered, the options subject to such provision are then taken into account in accordance with paragraph (b)(3) of this section for purposes of applying the limitation described in paragraph (a)(2) of this section to all options first exercisable during a calendar year. However, because an acceleration provision is not taken into account prior to its triggering, an incentive stock option that becomes exercisable for the first time during a calendar year by operation of such a provision does not affect the application of the $100,000 limitation with respect to any option (or portion thereof) exercised prior to such acceleration. For purposes of this paragraph (b)(4), an acceleration provision includes, for example, a provision that accelerates the exercisability of an option on a change in ownership or control or a provision that conditions exercisability on the attainment of a performance goal. See paragraph (d), *Example 4* of this section.

(5)

(i) An option (or portion thereof) is disregarded if, prior to the calendar year during which it would otherwise have become exercisable for the first time, the option (or portion thereof) is modified and thereafter ceases to be an incentive stock option described in § 1.422-2, is canceled, or is transferred in violation of § 1.421-1(b)(2).

(ii) If an option (or portion thereof) is modified, canceled, or transferred at any other time, such option (or portion thereof) is treated as outstanding according to its original terms until the end of the calendar year during which it would otherwise have become exercisable for the first time.

(6) A disqualifying disposition has no effect on the determination of whether an option exceeds the $100,000 limitation.

(c) ***Bifurcation*** —

(1) ***Options.*** The application of the rules described in paragraph (b) of this section may result in an option being treated, in part, as an incentive stock option and, in part, as a nonstatutory option. *See* § 1.83-7 for the treatment of nonstatutory options.

(2) ***Stock.*** A corporation may issue a separate certificate for incentive option stock or designate such stock as incentive stock option stock in the corporation's transfer records or plan records. In such a case, the issuance of separate certificates or designation in the corporation's transfer records or plan records is not a modification under § 1.424-1(e). In the absence of such an issuance or designation, shares are treated as first purchased under an incentive stock option to the extent of the $100,000 limitation, and the excess shares are treated as purchased under a nonstatutory option. *See* § 1.83-7 for the treatment of nonstatutory options.

(d) ***Examples.*** The following examples illustrate the principles of this section. In each of the following examples E is an employee of X Corporation. The examples are as follows:

Example 1. General rule. Effective January 1, 2004, X Corporation adopts a plan under which incentive stock options may be granted to its employees. On January 1, 2004, and each succeeding January 1 through January 1, 2013, E is granted immediately exercisable options for X Corporation stock with a fair market value of $100,000 determined on the date of grant. The options qualify as incentive stock options (determined without regard to this section). On January 1, 2014, E exercises all of the options. Because the $100,000 limitation has not been exceeded during any calendar year, all of the options are treated as incentive stock options.

Example 2. Order of grant. X Corporation is a parent corporation of Y Corporation, which is a parent corporation of Z Corporation. Each corporation has adopted its own separate plan, under which an employee of any member of the corporate group may be granted options for stock of any member of the group. On January 1, 2004, X Corporation grants E an incentive stock option (determined without regard to this section) for stock of Y Corporation with a fair market value of $100,000 on the date of grant. On December 31, 2004, Y Corporation grants E an incentive stock option (determined without regard to this section) for stock of Z Corporation with a fair market value of $75,000 as of the date of grant. Both of the options are immediately exercisable. For purposes of this section, options are taken into account in the order in which granted using the fair market value of stock as of the date on the option is granted. During calendar year 2004, the aggregate fair market value of stock with respect to which E's options are exercisable for the first time exceeds $100,000. Therefore, the option for Y Corporation stock is treated as an incentive stock option, and the option for Z Corporation stock is treated as a nonstatutory option.

Example 3. Acceleration provision. (i) In 2004, X Corporation grants E three incentive stock options (determined without regard to this section) to acquire stock with an aggregate fair market value of $150,000 on the date of grant. The dates of grant, the fair market value of the stock (as of the applicable date of grant) with respect to which the options are exercisable, and the years in which the options are first exercisable (without regard to acceleration provisions) are as follows:

	Date of grant	Fair market value of stock	First exercisable
Option 1	April 1, 2004	$60,000	2004
Option 2	May 1, 2004	50,000	2006
Option 3	June 1, 2004	40,000	2004

(ii) In July of 2004, a change in control of X Corporation occurs, and, under the terms of its option plan, all outstanding options become immediately exercisable. Under the rules of this section, Option 1 is treated as an incentive stock option in its entirety; Option 2 exceeds the $100,000 aggregate fair market value limitation for calendar year 2004 by $10,000 (Option 1's $60,000 + Option 2's $50,000 = $110,000) and is, therefore, bifurcated into an incentive stock option for stock with a fair market value of $40,000 as of the date of grant and a nonstatutory option for stock with a fair market value of $10,000 as of the date of grant. Option 3 is treated as a nonstatutory option in its entirety.

Example 4. Exercise of option and acceleration provision. (i) In 2004, X Corporation grants E three incentive stock options (determined without regard to this section) to acquire stock with an aggregate fair market value of $120,000 on the date of grant. The dates of grant, the fair market value of the stock (as of the applicable date of grant) with respect to which the options are exercisable, and the years in which the options are first exercisable (without regard to acceleration provisions) are as follows:

	Date of grant	Fair market value of stock	First exercisable
Option 1	April 1, 2004	$60,000	2005
Option 2	May 1, 2004	40,000	2006
Option 3	June 1, 2004	20,000	2005

(ii) On June 1, 2005, E exercises Option 3. At the time of exercise of Option 3, the fair market

value of X stock (at the time of grant) with respect to which options held by E are first exercisable in 2005 does not exceed $100,000. On September 1, 2005, a change of control of X Corporation occurs, and, under the terms of its option plan, Option 2 becomes immediately exercisable. Under the rules of this section, because E's exercise of Option 3 occurs before the change of control and the effects of an acceleration provision are not taken into account until it is triggered, Option 3 is treated as an incentive stock option in its entirety. Option 1 is treated as an incentive stock option in its entirety. Option 2 is bifurcated into an incentive stock option for stock with a fair market value of $20,000 on the date of grant and a nonstatutory option for stock with a fair market value of $20,000 on the date of grant because it exceeds the $100,000 limitation for 2003 by $20,000 (Option 1 for $60,000 + Option 3 for $20,000 + Option 2 for $40,000 = $120,000).
(iii) Assume the same facts as in paragraph (ii) of this *Example 4*, except that the change of control occurs on May 1, 2005. Because options are taken into account in the order in which they are granted, Option 1 and Option 2 are treated as incentive stock options in their entirety. Because the exercise of Option 3 (on June 1, 2005) takes place after the acceleration provision is triggered, Option 3 is treated as a nonstatutory option in its entirety.

Example 5. Cancellation of option. (i) In 2004, X Corporation grants E three incentive stock options (determined without regard to this section) to acquire stock with an aggregate fair market value of $140,000 as of the date of grant. The dates of grant, the fair market value of the stock (as of the applicable date of grant) with respect to which the options are exercisable, and the years in which the options are first exercisable (without regard to acceleration provisions) are as follows:

	Date of grant	Fair market value of stock	First exercisable
Option 1	April 1, 2004	$60,000	2005
Option 2	May 1, 2004	40,000	2005
Option 3	June 1, 2004	40,000	2005

(ii) On December 31, 2004, Option 2 is canceled. Because Option 2 is canceled before the calendar year during which it would have become exercisable for the first time, it is disregarded. As a result, Option 1 and Option 3 are treated as incentive stock options in their entirety.
(iii) Assume the same facts as in paragraph (ii) of this *Example 5*, except that Option 2 is canceled on January 1, 2005. Because Option 2 is not canceled prior to the calendar year during which it would have become exercisable for the first time (2005), it is treated as an outstanding option for purposes of determining whether the $100,000 limitation for 2005 has

been exceeded. Because options are taken into account in the order in which granted, Option 1 is treated as an incentive stock option in its entirety. Because Option 3 exceeds the $100,000 limitation by $40,000 (Option 1 for $60,000 + Option 2 for $40,000 + Option 3 for $40,000 = $140,000), it is treated as a nonstatutory option in its entirety.

(iv) Assume the same facts as in paragraph (i) of this *Example 5*, except that on January 1, 2005, E exercises Option 2 and immediately sells the stock in a disqualifying disposition. A disqualifying disposition has no effect on the determination of whether the underlying option is considered outstanding during the calendar year during which it is first exercisable. Because options are taken into account in the order in which granted, Option 1 is treated as an incentive stock option in its entirety. Because Option 3 exceeds the $100,000 limitation by $40,000 (Option 1 for $60,000 + Option 2 for $40,000 + Option 3 for $40,000 = $140,000), it is treated as a nonstatutory option in its entirety.

Example 6. Designation of stock. On January 1, 2004, X grants E an immediately exercisable incentive stock option (determined without regard to this section) to acquire X stock with a fair market value of $150,000 on that date. Under the rules of this section, the option is bifurcated and treated as an incentive stock option for X stock with a fair market value of $100,000 and a nonstatutory option for X stock with a fair market value of $50,000. In these circumstances, X may designate the stock that is treated as stock acquired pursuant to the exercise of an incentive stock option by issuing a separate certificate (or certificates) for $100,000 of stock and identifying such certificates as Incentive Stock Option Stock in its transfer records. In the absence of such a designation (or a designation in the corporation's transfer records or the plan records) shares with a fair market value of $100,000 are deemed purchased first under an incentive stock option, and shares with a fair market value of $50,000 are deemed purchased under a nonstatutory option.

[T.D. 9144, 69 FR 46415, Aug. 3, 2004; 69 FR 70551, Dec. 7, 2004]

§ 1.422-5 Permissible provisions.

(a) ***General rule.*** An option that otherwise qualifies as an incentive stock option does not fail to be an incentive stock option merely because such option contains one or more of the provisions described in paragraphs (b), (c), and (d) of this section.

(b) ***Cashless exercise.***

(1) An option does not fail to be an incentive stock option merely because the optionee may exercise the option with previously acquired stock of the corporation that granted the option or stock of the corporation whose stock is being offered for purchase under the option. For special rules relating to the use of statutory option stock to pay the option price of an incentive stock option, see § 1.424-1(c)(3).

(2) All shares acquired through the exercise of an incentive stock option are individually subject to the holding period requirements described in § 1.422-1(a) and the disqualifying disposition rules of § 1.422-1(b), regardless of whether the option is exercised with previously acquired stock of the corporation that granted the option or stock of the corporation whose stock is being offered for purchase under the option. If an incentive stock option is exercised with such shares, and the

exercise results in the basis allocation described in paragraph (b)(3) of this section, the optionee's disqualifying disposition of any of the stock acquired through such exercise is treated as a disqualifying disposition of the shares with the lowest basis.

(3) If the exercise of an incentive stock option with previously acquired shares is comprised in part of an exchange to which section 1036 (and so much of section 1031 as relates to section 1036) applies, then:

(i) The optionee's basis in the incentive stock option shares received in the section 1036 exchange is the same as the optionee's basis in the shares surrendered in the exchange, increased, if applicable, by any amount included in gross income as compensation pursuant to sections 421 through 424 or section 83. Except for purposes of § 1.422-1(a), the holding period of the shares is determined under section 1223. For purposes of § 1.422-1 and sections 421(b) and 83 and the regulations thereunder, the amount paid for the shares purchased under the option is the fair market value of the shares surrendered on the date of the exchange.

(ii) The optionee's basis in the incentive stock option shares not received pursuant to the section 1036 exchange is zero. For all purposes, the holding period of such shares begins as of the date that such shares are transferred to the optionee. For purposes of § 1.422-1(b) and sections 421(b) and 83 and the regulations thereunder, the amount paid for the shares is considered to be zero.

(c) ***Additional compensation.*** An option does not fail to be an incentive stock option merely because the optionee has the right to receive additional compensation, in cash or property, when the option is exercised, provided such additional compensation is includible in income under section 61 or section 83. The amount of such additional compensation may be determined in any manner, including by reference to the fair market value of the stock at the time of exercise or to the option price.

(d) ***Option subject to a condition.***

(1) An option does not fail to be an incentive stock option merely because the option is subject to a condition, or grants a right, that is not inconsistent with the requirements of §§ 1.422-2 and 1.422-4.

(2) An option that includes an alternative right is not an incentive stock option if the requirements of § 1.422-2 are effectively avoided by the exercise of the alternative right. For example, an alternative right extending the option term beyond ten years, setting an option price below fair market value, or permitting transferability prevents an option from qualifying as an incentive stock option. If either of two options can be exercised, but not both, each such option is a disqualifying alternative right with respect to the other, even though one or both options would individually satisfy the requirements of §§ 1.422-2, 1.422-4, and this section.

(3) An alternative right to receive a taxable payment of cash and/or property in exchange for the cancellation or surrender of the option does not disqualify the option as an incentive stock option if the right is exercisable only when the then fair market value of the stock exceeds the exercise price of the option and the option is otherwise exercisable, the right is transferable only when the option is otherwise transferable, and the exercise of the right has economic and tax consequences no more favorable than the exercise of the option followed by an immediate sale of the stock. For this purpose, the exercise of the alternative right does not have the same economic and tax consequences if the payment exceeds the difference between the then fair market value of the stock and the exercise price of the option.

(e) ***Examples.*** The principles of this section are illustrated by the following examples:

Example 1. On June 1, 2004, X Corporation grants an incentive stock option to A, an employee of X Corporation, entitling A to purchase 100 shares of X Corporation common stock at $10 per share. The option provides that A may exercise the option with previously acquired shares of X Corporation common stock. X Corporation has only one class of common stock outstanding. Under the rules of section 83, the shares transferable to A through the exercise of the option are transferable and not subject to a substantial risk of forfeiture. On June 1, 2005, when the fair market value of an X Corporation share is $25, A uses 40 shares of X Corporation common stock, which A had purchased on the open market on June 1, 2002, for $5 per share, to pay the full option price. After exercising the option, A owns 100 shares of incentive stock option stock. Under section 1036 (and so much of section 1031 as relates to section 1036), 40 of the shares have a $200 aggregate carryover basis (the $5 purchase price × 40 shares) and a three-year holding period for purposes of determining capital gain, and 60 of the shares have a zero basis and a holding period beginning on June 1, 2005, for purposes of determining capital gain. All 100 shares have a holding period beginning on June 1, 2005, for purposes of determining whether the holding period requirements of § 1.422-1(a) are met.

Example 2. Assume the same facts as in *Example 1.* Assume further that, on September 1, 2005, A sells 75 of the shares that A acquired through exercise of the incentive stock option for $30 per share. Because the holding period requirements were not satisfied, A made a disqualifying disposition of the 75 shares on September 1, 2005. Under the rules of paragraphs (b)(2) and (b)(3) of this section, A has sold all 60 of the non-section-1036 shares and 15 of the 40 section-1036 shares. Therefore, under paragraph (b)(3) of this section and section 83(a), the amount of compensation attributable to A's exercise of the option and subsequent disqualifying disposition of 75 shares is $1,500 (the difference between the fair market value of the stock on the date of transfer, $1,875 (75 shares at $25 per share), and the amount paid for the stock, $375 (60 shares at $0 per share plus 15 shares at $25 per share)). In addition, A must recognize a capital gain of $675, which consists of $375 ($450, the amount realized from the sale of 15 shares, less A's basis of $75) plus $300 ($1,800, the amount realized from the sale of 60 shares, less A's basis of $1,500 resulting from the inclusion of that amount in income as compensation). Accordingly, A must include in gross income for the taxable year in which the sale occurs $1,500 as compensation and $675 as capital gain. For its taxable year in which the disqualifying disposition occurs, if otherwise allowable under section 162 and if the requirements of § 1.83-6(a) are met, X Corporation is allowed a deduction of $1,500 for the compensation paid to A.

Example 3. Assume the same facts as in *Example 2*, except that, instead of selling the 75 shares of incentive stock option stock on September 1, 2005, A uses those shares to exercise a second incentive stock option. The second option was granted to A by X Corporation on January 1, 2005, entitling A to purchase 100 shares of X Corporation common stock at $22.50 per share. As in *Example 2*, A has made a disqualifying disposition of the 75 shares of stock pursuant to § 1.424-1(c). Under paragraph (b) of this section, A has disposed of all 60 of the non-section-1036 shares and 15 of the 40 section-1036 shares. Therefore, pursuant to paragraph (b)(3) of this section and section 83(a), the amount of compensation attributable to A's exercise of the first option and subsequent disqualifying disposition of 75 shares is $1,500 (the difference between the fair market value of the stock on the date of transfer, $1,875 (75 shares at $25 per share), and the amount paid for the stock, $375 (60 shares at $0 per share plus 15 shares at $25 per share)). Unlike *Example 2*, A does not recognize any capital gain as a result of exercising the second option because, for all purposes other than the determination of whether the exercise is a disposition pursuant to section 424(c), the exercise is considered an exchange to which section 1036 applies. Accordingly, A must include in gross income for the taxable year in which the disqualifying disposition occurs $1,500 as compensation. If the requirements of § 83(h) and § 1.83-6(a) are satisfied and the deduction is

otherwise allowable under section 162, for its taxable year in which the disqualifying disposition occurs, X Corporation is allowed a deduction of $1,500 for the compensation paid to A. After exercising the second option, A owns a total of 125 shares of incentive stock option stock. Under section 1036 (and so much of section 1031 as relates to section 1036), the 100 "new" shares of incentive stock option stock have the following bases and holding periods: 15 shares have a $75 carryover basis and a three-year-and-three-month holding period for purposes of determining capital gain, 60 shares have a $1,500 basis resulting from the inclusion of that amount in income as compensation and a three-month holding period for purposes of determining capital gain, and 25 shares have a zero basis and a holding period beginning on September 1, 2005, for purposes of determining capital gain. All 100 shares have a holding period beginning on September 1, 2005, for purposes of determining whether the holding period requirements of § 1.422-1(a) are met.

Example 4. Assume the same facts as in *Example 2*, except that, instead of selling the 75 shares of incentive stock option stock on September 1, 2005, A uses those shares to exercise a nonstatutory option. The nonstatutory option was granted to A by X Corporation on January 1, 2005, entitling A to purchase 100 shares of X Corporation common stock at $22.50 per share. Unlike *Example 3*, A has not made a disqualifying disposition of the 75 shares of stock. After exercising the nonstatutory option, A owns a total of 100 shares of incentive stock option stock and 25 shares of nonstatutory stock option stock. Under section 1036 (and so much of section 1031 as relates to section 1036), the 75 new shares of incentive stock option stock have the same basis and holding period as the 75 old shares used to exercise the nonstatutory option. The additional 25 shares of stock received upon exercise of the nonstatutory option are taxed under the rules of section 83(a). Accordingly, A must include in gross income for the taxable year in which the transfer of such shares occurs $750 (25 shares at $30 per share) as compensation. A's basis in such shares is the same as the amount included in gross income. For its taxable year in which the transfer occurs, X Corporation is allowed a deduction of $750 for the compensation paid to A to the extent the requirements of section 83(h) and § 1.83-6(a) are satisfied and the deduction is otherwise allowable under section 162.

Example 5. Assume the same facts in *Example 1*, except that the shares transferred pursuant to the exercise of the incentive stock option are subject to a substantial risk of forfeiture and not transferable (substantially nonvested) for a period of six months after such transfer. Assume further that the shares that A uses to exercise the incentive stock option are similarly restricted. Such shares were transferred to A on January 1, 2005, through A's exercise of a nonstatutory stock option which was granted to A on January 1, 2004. A paid $5 per share for the stock when its fair market value was $22.50 per share. A did not file a section 83(b) election to include the $700 spread (the difference between the option price and the fair market value of the stock on date of exercise of the nonstatutory option) in gross income as compensation. After exercising the incentive stock option with the 40 substantially-nonvested shares, A owns 100 shares of substantially-nonvested incentive stock option stock. Section 1036 (and so much of section 1031 as relates to section 1036) applies to the 40 shares exchanged in exercise of the incentive stock option. However, pursuant to section 83(g), the stock received in such exchange, because it is incentive stock option stock, is not subject to restrictions and conditions substantially similar to those to which the stock given in such exchange was subject. For purposes of section 83(a) and § 1.83-1(b)(1), therefore, A has disposed of the 40 shares of substantially-nonvested stock on June 1, 2005, and must include in gross income as compensation $800 (the difference between the amount realized upon such disposition, $1,000, and the amount paid for the stock, $200). Accordingly, 40 shares of the incentive stock option stock have a $1,000 basis (the $200 original basis plus the $800 included in income as compensation) and 60 shares of the incentive stock option stock have a zero basis. For its taxable year in which the

disposition of the substantially-nonvested stock occurs, X Corporation is allowed a deduction of $800 for the compensation paid to A, provided the requirements of section 83(h) and § 1.83-6(a) are satisfied and the deduction is otherwise allowable under section 162.

(f) ***Effective/applicability date*** —

(1) ***In general.*** Except for § 1.422-2(b)(6) *Example 1* (iii), the regulations under this section are effective on August 3, 2004. Section 1.422-2(b)(6) *Example 1* (iii) is effective on November 17, 2009. Section 1.422-2(b)(6) *Example 1* (iii) applies to statutory options granted on or after January 1, 2010.

(2) ***Reliance and transition period.*** For statutory options granted on or before June 9, 2003, taxpayers may rely on the 1984 proposed regulations LR-279-81 (49 FR 4504), the 2003 proposed regulations REG-122917-02 (68 FR 34344), or this section until the earlier of January 1, 2006, or the first regularly scheduled stockholders meeting of the granting corporation occurring 6 months after August 3, 2004. For statutory options granted after June 9, 2003, and before the earlier of January 1, 2006, or the first regularly scheduled stockholders meeting of the granting corporation occurring at least 6 months after August 3, 2004, taxpayers may rely on either REG-122917-02 or this section. Taxpayers may not rely on LR-279-81 or REG-122917-02 after December 31, 2005. Reliance on LR-279-81, REG-122917-02, or this section must be in its entirety, and all statutory options granted during the reliance period must be treated consistently.

[T.D. 9144, 69 FR 46417, Aug. 3, 2004; 69 FR 61310, Oct. 18, 2004; 69 FR 70551, Dec. 7, 2004; T.D. 9471, 74 FR 59078, Nov. 17, 2009]

§ 1.423-1 Applicability of section 421(a).

(a) ***General rule.*** Subject to the provisions of section 423(c) and § 1.423-2(k), the special rules of income tax treatment provided in section 421(a) apply with respect to the transfer of a share of stock to an individual pursuant to the individual's exercise of an option granted under an employee stock purchase plan, as defined in § 1.423-2, if the following conditions are satisfied—

(1) The individual makes no disposition of such share before the later of the expiration of the two-year period from the date of the grant of the option pursuant to which such share was transferred or the expiration of the one-year period from the date of transfer of such share to the individual; and

(2) At all times during the period beginning on the date of the grant of the option and ending on the day three months before the date of exercise, the individual was an employee of the corporation granting the option, a related corporation, or a corporation (or a related corporation) substituting or assuming the stock option in a transaction to which section 424(a) applies.

(b) ***Cross-references.*** For rules relating to the requisite employment relationship, see § 1.421-1(h). For rules relating to the effect of a disqualifying disposition, see section 421(b) and § 1.421-2(b). For the definition of the term “disposition,” see section 424(c) and § 1.424-1(c). For the definition of the term “related corporation,” see § 1.421-1(i).

(c) ***Effective/applicability date.*** The regulations under this section are effective on November 17, 2009. The regulations under this section apply to options granted under an employee stock purchase plan on or after January 1, 2010.

[T.D. 9471, 74 FR 59078, Nov. 17, 2009]

§ 1.423-2 Employee stock purchase plan defined.

(a) *In general* —

(1) The term "employee stock purchase plan" means a plan that meets the requirements of paragraphs (a)(2) and (a)(3) of this section. If the terms of the plan do not satisfy the requirements of paragraph (a)(3) of this section, then such requirements may be satisfied by the terms of an offering made under the plan. However, where the requirements of paragraph (a)(3) of this section are satisfied by the terms of an offering, such requirements will be treated as satisfied only with respect to options exercised under that offering. One or more offerings may be made under an employee stock purchase plan. Offerings may be consecutive or overlapping, and the terms of each offering need not be identical provided the terms of the plan and the offering together satisfy the requirements of paragraphs (a)(2) and (a)(3) of this section. The plan and the terms of an offering must be in writing or electronic form, provided that such writing or electronic form is adequate to establish the terms of the plan or offering, as applicable.

(2) To satisfy the requirements of this paragraph (a)(2) and § 1.423-1, the plan must meet both of the following requirements—

(i) The plan must provide that options can be granted only to employees of the employer corporation or of a related corporation (as defined in paragraph (i) of § 1.421-1) to purchase stock in any such corporation (see paragraph (b) of this section); and

(ii) The plan must be approved by the stockholders of the granting corporation within 12 months before or after the date the plan is adopted (see paragraph (c) of this section).

(3) To satisfy the requirements of this paragraph (a)(3) and § 1.423-1, the terms of the plan or offering must meet all of the following requirements—

(i) An employee cannot be granted an option if, immediately after the option is granted, the employee owns stock possessing 5 percent or more of the total combined voting power or value of all classes of stock of the employer corporation or of a related corporation (see paragraph (d) of this section);

(ii) Options must be granted to all employees of any corporation whose employees are granted any options by reason of their employment by the corporation (see paragraph (e) of this section);

(iii) All employees granted options must have the same rights and privileges (see paragraph (f) of this section);

(iv) The option price cannot be less than the lesser of—

(A) An amount equal to 85 percent of the fair market value of the stock at the time the option is granted, or

(B) An amount not less than 85 percent of the fair market value of the stock at the time the option is exercised (see paragraph (g) of this section).

(v) Options cannot be exercised after the expiration of—

(A) Five years from the date the option is granted if, under the terms of such plan, the option price cannot be less than 85 percent of the fair market value of the stock at the time the option is exercised, or

(B) Twenty-seven months from the date the option is granted, if the option price is not determined in the manner described in paragraph (a)(3)(v)(A) of this section (see paragraph (h) of this section).

(vi) No employee may be granted an option that permits the employee's rights to purchase stock under all employee stock purchase plans of the employer corporation and its related corporations to accrue at a rate that exceeds $25,000 of fair market value of the stock (determined at the time the option is granted) for each calendar year in which the option is outstanding at any time (see paragraph (i) of this section); and

(vii) Options are not transferable by the optionee other than by will or the laws of descent and distribution, and are exercisable, during the lifetime of the optionee, only by the optionee (see paragraph (j) of this section).

(4) The determination of whether a particular option is an option granted under an employee stock purchase plan is made at the time the option is granted. If the terms of an option are inconsistent with the terms of the employee stock purchase plan or the offering under the plan pursuant to which the option is granted, the option will not be treated as granted under an employee stock purchase plan. If an option with terms that are inconsistent with the terms of the plan or an offering under the plan is granted to an employee who is entitled to the grant of an option under the terms of the plan or offering, and the employee is not granted an option under the offering that qualifies as an option granted under an employee stock purchase plan, the offering will not meet the requirements of paragraph (e) of this section. Accordingly, none of the options granted under the offering will be eligible for the special tax treatment of section 421. However, if an option with terms that are inconsistent with the terms of the plan or an offering under the plan is granted to an individual who is not entitled to the grant of an option under the terms of the plan or offering, the option will not be treated as an option granted under an employee stock purchase plan but the grant of the option will not disqualify the options granted under the plan or offering. If, at the time of grant, an option qualifies as an option granted under an employee stock purchase plan, but after the time of grant one or more of the requirements of paragraph (a)(3) of this section is not satisfied with respect to the option, the option will not be treated as granted under an employee stock purchase plan but this failure to comply with the terms of the option will not disqualify the other options granted under the plan or offering.

(5) ***Examples.*** The following examples illustrate the principles of paragraph (a):

Example 1. Corporation A operates an employee stock purchase plan under which options for A stock are granted to employees of A. The terms of an offering provide that the option price will be 90 percent of the fair market value of A stock on the date of exercise. A grants an option under the offering to Employee Z, an employee of A. The terms of the option provide that the option price will be 85 percent of the fair market value of A stock on the date of exercise. Because the terms of Z's option are inconsistent with the terms of the offering, the option granted to Z will not be treated as an option granted under the employee stock purchase plan. Further, unless Z is granted an option under the offering that qualifies as an option granted under the employee stock purchase plan, the offering will not meet the requirements of paragraph (e) of this section and none of the options granted under the offering will be eligible for the special tax treatment of section 421.

Example 2. Corporation B operates an employee stock purchase plan that provides that options for B stock may only be granted to employees of B. Under the terms of the plan, options may not be granted to consultants and other non-employees. B grants an option to Consultant Y, a

consultant of B. Because Y is ineligible to receive an option under the plan because Y is not an employee, the grant of the option to Y is inconsistent with the terms of the plan and the option granted to Y will not be treated as an option granted under the employee stock purchase plan. However, the grant of the option to Y will not disqualify the options granted under the plan or any offering because Y was not entitled to the grant of an option under the plan.

Example 3. Corporation C operates an employee stock purchase plan under which options for C stock are granted to employees of C. C grants an option pursuant to an offering under the plan to Employee X, an employee of C who is a highly compensated employee. The terms of the employee stock purchase plan exclude highly compensated employees from participation in the plan. Because X is ineligible to receive an option under the plan by reason of X's exclusion from participation in the plan, the option granted to X will not be treated as an option granted under the employee stock purchase plan. However, the grant of the option to X will not disqualify the options granted under the plan or offering because X was not entitled to the grant of an option under the plan.

Example 4. Corporation D operates an employee stock purchase plan under which options for D stock are granted to employees of D. D grants an option pursuant to an offering under the plan to Employee W, an employee of D. The terms of the option provide that the option price will be 90 percent of the fair market value of D stock on the date of exercise. On the date of exercise, W pays only 85 percent of the fair market value of D stock. Because the terms of W's option are not satisfied, the option granted to W will not be treated as an option granted under the employee stock purchase plan. However, the failure to comply with the terms of the option granted to W will not disqualify the options granted under the plan or offering.

(b) ***Options restricted to employees.*** An employee stock purchase plan must provide that options can be granted only to employees of the employer corporation (or employees of its related corporations) to purchase stock in the employer corporation (or one of its related corporations). If such a provision is not included in the terms of the plan, the plan will not be an employee stock purchase plan and options granted under the plan will not qualify for the special tax treatment of section 421. For rules relating to the employment requirement, see § 1.421-1(h).

(c) ***Stockholder approval*** —

(1) An employee stock purchase plan must be approved by the stockholders of the granting corporation within 12 months before or after the date such plan is adopted. The approval of the stockholders must comply with all applicable provisions of the corporate charter and bylaws and of applicable State law prescribing the method and degree of stockholder approval required for the issuance of corporate stock or options. If the applicable State law does not prescribe a method and degree of stockholder approval, then an employee stock purchase plan must be approved—

(i) By a majority of the votes cast at a duly held stockholder's meeting at which a quorum representing a majority of all outstanding voting stock is, either in person or by proxy, present and voting on the plan; or

(ii) By a method and in a degree that would be treated as adequate under applicable State law in the case of an action requiring stockholder approval (such as, an action on which stockholders would be entitled to vote if the action were taken at a duly held stockholders' meeting).

(2) For purposes of the stockholder approval required by this paragraph (c), ordinarily, a plan is adopted when it is approved by the granting corporation's board of directors, and the date of the board's action is the reference point for determining whether stockholder approval occurs within the

applicable 24-month period. However, if the board's action is subject to a condition (such as stockholder approval) or the happening of a particular event, the plan is adopted on the date the condition is met or the event occurs, unless the board's resolution fixes the date of adoption as the date of the board's action.

(3) An employee stock purchase plan, as adopted and approved, must designate the maximum aggregate number of shares that may be issued under the plan, and the corporations or class of corporations whose employees may be offered options under the plan. A plan that merely provides that the number of shares that may be issued under the plan may not exceed a stated percentage of the shares outstanding at the time of each offering or grant under the plan does not satisfy the requirements of this paragraph (c)(3). However, the maximum aggregate number of shares that may be issued under the plan may be stated in terms of a percentage of the authorized, issued, or outstanding shares on the date of the adoption of the plan. The plan may specify that the maximum aggregate number of shares available for grants under the plan may increase annually by a specified percentage of the authorized, issued, or outstanding shares on the date of the adoption of the plan. A plan that provides that the maximum aggregate number of shares that may be issued as options under the plan may change based on any other specific circumstances satisfies the requirements of this paragraph only if the stockholders approve an immediately determinable maximum number of shares that may be issued under the plan in any event. If there is more than one employee stock purchase plan under which options may be granted and stockholders of the granting corporation merely approve a maximum aggregate number of shares that are available for issuance under the plans, the stockholder approval requirements described in paragraph (c)(1) of this section are not satisfied. A separate maximum aggregate number of shares available for issuance pursuant to options must be specified and approved for each plan.

(4) Once an employee stock purchase plan is approved by the stockholders of the granting corporation, the plan need not be reapproved by the stockholders of the granting corporation unless the plan is amended or changed in a manner that is considered the adoption of a new plan, in which case the plan must be reapproved within the prescribed 24-month period. Any increase in the aggregate number of shares that may be issued under the plan (other than an increase merely reflecting a change in the number of outstanding shares, such as a stock dividend or stock split) will be considered the adoption of a new plan requiring stockholder approval within the prescribed 24-month period. Similarly, a change in the designation of corporations whose employees may be offered options under the plan will be considered the adoption of a new plan requiring stockholder approval within the prescribed 24-month period unless the plan provides that designations of participating corporations may be made from time to time from among a group consisting of the granting corporation and its related corporations. The group from among which such changes and designations are permitted without additional stockholder approval may include corporations having become parents or subsidiaries of the granting corporation after the adoption and approval of the plan. In addition, a change in the granting corporation or the stock available for purchase under the plan will be considered the adoption of a new plan requiring stockholder approval within the prescribed 24-month period. Any other changes in the terms of an employee stock purchase plan are not considered the adoption of a new plan and, thus, do not require stockholder approval.

(5) ***Examples.*** The following examples illustrate the principles of this paragraph (c):

> *Example 1.* (i) Corporation E is a subsidiary of Corporation F, a publicly traded corporation. On January 1, 2010, E adopts an employee stock purchase plan under which options for E

stock are granted to E employees.
(ii) To meet the requirements of paragraph (c)(1) of this section, the plan must be approved by the stockholders of E (in this case, F) within 12 months before or after January 1, 2010.

(iii) Assume the same facts as in paragraph (i) of this *Example 1,* except that the plan was approved by the stockholders of E (in this case, F) on March 1, 2010. On January 1, 2012, E changes the plan to provide that options for F stock will be granted to E employees under the plan. Because there is a change in the stock available for grant under the plan, under paragraph (c)(4) of this section, the change is considered the adoption of a new plan that must be approved by the stockholders of E (in this case, F) within 12 months before or after January 1, 2012.

Example 2. (i) Assume the same facts as in paragraph (i) of *Example 1,* except that on March 15, 2011, F completely disposes of its interest in E. Thereafter, E continues to grant options for E stock to E employees under the plan.
(ii) The new E options are granted under a plan that meets the stockholder approval requirements of paragraph (c)(1) of this section without regard to whether E seeks approval of the plan from the stockholders of E after F disposes of its interest in E.

(iii) Assume the same facts as in paragraph (i) of this *Example 2,* except that under the plan as adopted on January 1, 2010, only options for F stock are granted to E employees. Assume further that, after F disposes of its interest in E, E changes the plan to provide for the grant of options for E stock to E employees. Because there is a change in the stock available for purchase or grant under the plan, under paragraph (c)(4) of this section, the stockholders of E must approve the plan within 12 months before or after the change to the plan to meet the stockholder approval requirements of paragraph (c) of this section.

Example 3. (i) Corporation G maintains an employee stock purchase plan providing options for G stock. Corporation H does not maintain an employee stock purchase plan. On May 15, 2010, G and H consolidate under State law to form one corporation. The new corporation is named Corporation H. The consolidation agreement describes the G plan, including the maximum aggregate number of shares available for issuance under the plan after the consolidation. Additionally, the consolidation agreement states that the plan will be continued by H after the consolidation. The consolidation agreement is approved by the stockholders of G and H on May 1, 2010. H assumes the plan formerly maintained by G and continues to grant options under the plan to all eligible employees, but the options are for H stock.
(ii) Because there is a change in the granting corporation (from G to H) and the stock available for purchase, under paragraph (c)(4) of this section, H is considered to have adopted a new plan. Because the plan is fully described in the consolidation agreement, including the maximum aggregate number of shares available for issuance under the plan, the approval of the consolidation agreement by the stockholders constitutes approval of the

plan. Thus, the stockholder approval of the consolidation agreement satisfies the stockholder approval requirements of paragraph (c)(1) of this section, and the plan is considered to be adopted by H and approved by its stockholders on May 1, 2010.

Example 4. Corporation I adopts an employee stock purchase plan on November 1, 2010. On that date, there are two million shares of I stock outstanding. The plan provides that the maximum aggregate number of shares that may be issued under the plan may not exceed 15 percent of the number of shares of I stock outstanding on November 1, 2010. Because the maximum aggregate number of shares that may be issued under the plan is designated in the plan, the requirements of paragraph (c)(3) of this section are met.

Example 5. (i) Corporation J adopts an employee stock purchase plan on March 15, 2010. The plan provides that the maximum aggregate number of shares of J stock available for issuance under the plan is 50,000, increased on each anniversary date of the adoption of the plan by 5 percent of the then outstanding shares. Because the maximum aggregate number of shares is not designated under the plan, the requirements of paragraph (c)(3) of this section are not met.
(ii) Assume the same facts as in paragraph (i) of this *Example 5,* except that the plan provides that the maximum aggregate number of shares available under the plan is the lesser of (a) 50,000 shares, increased each anniversary date of the adoption of the plan by 5 percent of the then-outstanding shares, or (b) 200,000 shares. Because the maximum aggregate number of shares that may be issued under the plan is designated as the lesser of two numbers, one of which provides an immediately determinable maximum aggregate number of shares that may be issued under the plan in any event, the requirements of paragraph (c)(3) of this section are met.

(d) ***Options granted to certain shareholders*** —

(1) An employee stock purchase plan or offering must, by its terms, provide that an employee cannot be granted an option if the employee, immediately after the option is granted, owns stock possessing 5 percent or more of the total combined voting power or value of all classes of stock of the employer corporation or a related corporation. In determining whether the stock ownership of an employee equals or exceeds this 5 percent limit, the rules of section 424(d) (relating to attribution of stock ownership) shall apply, and stock that the employee may purchase under outstanding options (whether or not the options qualify for the special tax treatment afforded by section 421(a)) shall be treated as stock owned by the employee. An option is outstanding for purposes of this paragraph (d) although under its terms it may be exercised only in installments or after the expiration of a fixed period of time. If an option is granted to an employee whose stock ownership (as determined under this paragraph (d)) exceeds the limitation set forth in this paragraph (d), no portion of the option will be treated as having been granted under an employee stock purchase plan.

(2) The determination of the percentage of the total combined voting power or value of all classes of stock of the employer corporation (or a related corporation) that is owned by the employee is made by comparing the voting power or value of the shares owned (or treated as owned) by the employee to the aggregate voting power or value of all shares actually issued and outstanding immediately

after the grant of the option to the employee. The aggregate voting power or value of all shares actually issued and outstanding immediately after the grant of the option does not include the voting power or value of treasury shares or shares authorized for issue under outstanding options held by the employee or any other person.

(3) ***Examples.*** The following examples illustrate the principles of this paragraph (d):

Example 1. Employee V, an employee of Corporation K, owns 6,000 shares of K common stock, the only class of K stock outstanding. K has 100,000 shares of its common stock outstanding. Because V owns 6 percent of the combined voting power or value of all classes of K stock, K cannot grant an option to V under K's employee stock purchase plan. If V's father and brother each owned 3,000 shares of K stock and V did not own any K stock, then the result would be the same because, under section 424(d), an individual is treated as owning stock held by the person's father and brother. Similarly, the result would be the same if, instead of actually owning 6,000 shares, V merely held an option on 6,000 shares of K stock, irrespective of whether the transfer of stock under the option could qualify for the special tax treatment of section 421, because this paragraph (d) provides that stock the employee may purchase under outstanding options is treated as stock owned by such employee.

Example 2. Assume the same facts as in *Example 1,* except that K is a 50 percent subsidiary corporation of Corporation L. Irrespective of whether V owns any L stock, V cannot receive an option from L under L's employee stock purchase plan because he owns 5 percent of the total combined voting power of all classes of stock of a subsidiary of L, in this example, K. An employee who owns (or is treated as owning) stock in excess of the limitation of this paragraph (d), in any corporation in a group of related corporations, consisting of a parent and its subsidiary corporations, cannot receive an option under an employee stock purchase plan from any corporation in the group.

Example 3. Employee U is an employee of Corporation M. M has only one class of stock, of which 100,000 shares are issued and outstanding. Assuming U does not own (and is not treated as owning) any stock in M or in any related corporation of M, M may grant an option to U under its employee stock purchase plan for 4,999 shares, because immediately after the grant of the option, U would not own 5 percent or more of the combined voting power or value of all classes of M stock actually issued and outstanding at such time. The 4,999 shares that U would be treated as owning under this paragraph (d) would not be added to the 100,000 shares actually issued and outstanding immediately after the grant for purposes of determining whether U's stock ownership exceeds the limitation of this paragraph (d).

Example 4. Assume the same facts as in *Example 3* but instead of an option for 4,999 shares, M grants U an option, purportedly under its employee stock purchase plan, for 5,000 shares. No portion of this option will be treated as granted under an employee stock purchase plan because U's stock ownership exceeds the limitation of this paragraph (d).

(e) ***Employees covered by plan*** —

(1) Subject to the provisions of this paragraph (e) and the limitations of paragraphs (d), (f) and (i) of this section, an employee stock purchase plan or offering must, by its terms, provide that options are to be granted to all employees of any corporation whose employees are granted any of such options by reason of their employment by that corporation, except that one or more of the following categories of employees may be excluded from the coverage of the plan or offering—

(i) Employees who have been employed less than two years;

(ii) Employees whose customary employment is 20 hours or less per week;

(iii) Employees whose customary employment is for not more than five months in any calendar year; and

(iv) Highly compensated employees (within the meaning of section 414(q)).

(2) A plan or offering does not fail to satisfy the coverage provision of paragraph (e)(1) of this section in the following circumstances—

(i) The plan or offering excludes employees who have completed a shorter period of service or whose customary employment is for fewer hours per week or fewer months in a calendar year than is specified in paragraphs (e)(1)(i), (ii) and (iii) of this section, provided the exclusion is applied in an identical manner to all employees of every corporation whose employees are granted options under the plan or offering.

(ii) The plan or offering excludes highly compensated employees (within the meaning of section 414(q)) with compensation above a certain level or who are officers or subject to the disclosure requirements of section 16(a) of the Securities Exchange Act of 1934, provided the exclusion is applied in an identical manner to all highly compensated employees of every corporation whose employees are granted options under the plan or offering.

(3) Notwithstanding paragraph (e)(1) of this section, employees who are citizens or residents of a foreign jurisdiction (without regard to whether they are also citizens of the United States or resident aliens (within the meaning of section 7701(b)(1)(A))) may be excluded from the coverage of an employee stock purchase plan or offering under the following circumstances—

(i) The grant of an option under the plan or offering to a citizen or resident of the foreign jurisdiction is prohibited under the laws of such jurisdiction; or

(ii) Compliance with the laws of the foreign jurisdiction would cause the plan or offering to violate the requirements of section 423.

(4) No option granted under a plan or offering that excludes from participation any employees, other than those who may be excluded under this paragraph (e), and those barred from participation by reason of paragraphs (d), (f) and (i) of this section, can be regarded as having been granted under an employee stock purchase plan. If an option is not granted to any employee who is entitled to the grant of an option under the terms of the plan or offering, none of the options granted under such offering will be treated as having been granted under an employee stock purchase plan. However, a plan that, by its terms, permits all eligible employees to elect to participate in an offering will not violate the requirements of this paragraph solely because eligible employees who elect not to participate in the offering are not granted options pursuant to such offering.

(5) For purposes of this paragraph (e), the existence of the employment relationship between an individual and the corporation participating under the plan will be determined under § 1.421-1(h).

(6) ***Examples.*** The following examples illustrate the principles of this paragraph (e):

Example 1. Corporation N has a stock purchase plan that meets all the requirements of paragraphs (a)(2) and (a)(3) of this section except that options are not required to be granted to employees whose weekly rate of pay is less than $1,000. As a matter of corporate practice, however, N grants options under its plan to all employees, irrespective of their weekly rate of pay. Even

though N's plan is operated in compliance with the requirements of this paragraph (e), N's plan is not an employee stock purchase plan because the terms of the plan exclude a category of employees that is not permitted under this paragraph (e).

Example 2. Assume the same facts as in *Example 1,* except that the first offering under N's plan provides that options will be granted to all employees of N. The terms of the first offering will be treated as part of the terms of N's plan, but only for purposes of the first offering. Because the terms of the first offering satisfy the requirements of this paragraph (e), stock transferred pursuant to options exercised under the first offering will be treated as stock transferred pursuant to the exercise of options granted under an employee stock purchase plan for purposes of section 421.

Example 3. Corporation O has a stock purchase plan that excludes from participation all employees who have been employed less than one year. Assuming all other requirements of paragraphs (a)(2) and (a)(3) of this section are satisfied, O's plan qualifies as an employee stock purchase plan under section 423.

Example 4. Corporation P has a stock purchase plan that excludes from participation clerical employees who have been employed less than two years. However, non-clerical employees with less than two years of service are permitted to participate in the plan. P's plan is not an employee stock purchase plan because the exclusion of employees who have been employed less than two years applies only to certain employees of P and is not applied in an identical manner to all employees of P. If, instead, P's plan excludes from participation all employees (both clerical and non-clerical) who have been employed less than two years, then P's plan would qualify as an employee stock purchase plan under section 423 assuming all other requirements of paragraphs (a)(2) and (a)(3) of this section are satisfied.

Example 5. Corporation Q has a stock purchase plan that excludes from participation all officers who are highly compensated employees (within the meaning of section 414(q)). Assuming all other requirements of paragraphs (a)(2) and (a)(3) of this section are satisfied, Q's plan qualifies as an employee stock purchase plan under section 423.

Example 6. Corporation R maintains an employee stock purchase plan that excludes from participation all highly compensated employees (within the meaning of section 414(q)), except highly compensated employees who are officers of R. R's plan is not an employee stock purchase plan because the exclusion of all highly compensated employees except highly compensated employees who are officers of R is not a permissible exclusion under paragraph (e)(2)(ii) of this section.

Example 7. Corporation S is the parent corporation of Subsidiary YY and Subsidiary ZZ. S maintains an employee stock purchase plan with both YY and ZZ participating in the same offering under the plan. Under the terms of the offering under the plan, all employees of YY and ZZ are permitted to participate in the plan with the exception of ZZ's highly compensated employees with annual compensation greater than $300,000. None of the options granted under the offering will be considered granted under an employee stock purchase plan because the exclusion of highly compensated employees with annual compensation greater than $300,000 is not applied in an identical manner to all employees of YY and ZZ granted options in the same offering.

Example 8. Assume the same facts as in *Example 7,* except that Corporation S establishes separate offerings under the plan for YY and ZZ. Under the terms of the separate offering for YY, all employees of YY are permitted to participate in the plan. Under the terms of the separate offering established for ZZ, all employees of ZZ are permitted to participate in the plan with the exception of ZZ's highly compensated employees with annual compensation greater than $300,000. The options granted under the separate offering for YY will be considered granted under an employee stock purchase plan. Further, the options granted under the separate offering for ZZ will be considered granted under an employee stock purchase plan because the exclusion of highly compensated employees with annual compensation greater than $300,000 is applied in an identical manner to all employees of ZZ granted options in the same offering.

Example 9. The laws of Country A require that options granted to residents of Country A be transferable during the lifetime of the option recipient. Corporation T has a stock purchase plan that excludes residents of Country A from participation in the plan. Because compliance with the laws of Country A would cause options granted to residents of Country A to violate paragraph (j) of this section, T may exclude residents of Country A from participation in the plan. Assuming all other requirements of paragraph (a)(2) of this section are satisfied, T's plan qualifies as an employee stock purchase plan under section 423.

(f) ***Equal rights and privileges*** —

(1) Except as otherwise provided in paragraphs (f)(2) through (f)(6) of this section, an employee stock purchase plan or offering must, by its terms, provide that all employees granted options under the plan or offering shall have the same rights and privileges. Thus, the provisions applying to one option under an offering (such as the provisions relating to the method of payment for the stock and the determination of the purchase price per share) must apply to all other options under the offering in the same manner. If all the options granted under a plan or offering do not, by their terms, give the respective optionees the same rights and privileges, none of the options will be treated as having been granted under an employee stock purchase plan for purposes of section 421.

(2) The requirements of this paragraph (f) do not prevent the maximum amount of stock that an employee may purchase from being determined on the basis of a uniform relationship to the total compensation, or the basic or regular rate of compensation, of all employees.

(3) A plan or offering will not fail to satisfy the requirements of this paragraph (f) because the plan or offering provides that no employee may purchase more than a maximum amount of stock fixed under the plan or offering.

(4) A plan or offering will not fail to satisfy the requirements of this paragraph (f) if, in order to comply with the laws of a foreign jurisdiction, the terms of an option granted under a plan or offering to citizens or residents of such foreign jurisdiction (without regard to whether they are also citizens of the United States or resident aliens (within the meaning of section 7701(b)(1)(A))) are less favorable than the terms of options granted under the same plan or offering to employees resident in the United States.

(5)

(i) Except as provided in this paragraph and paragraph (f)(5)(ii) of this section, a plan or offering permitting one or more employees to carry forward amounts that were withheld but not applied toward the purchase of stock under an earlier plan or offering and apply the amounts towards the purchase of additional stock under a subsequent plan or offering will be a violation of the equal rights and privileges under paragraph (f)(1) of this section. However, the carry forward of

amounts withheld but not applied toward the purchase of stock under an earlier plan or offering will not violate the equal rights and privileges requirement of paragraph (f)(1) of this section, if all other employees participating in the current plan or offering are permitted to make direct payments toward the purchase of shares under a subsequent plan or offering in an amount equal to the excess of the greatest amount which any employee is allowed to carry forward from an earlier plan or offering over the amount, if any, the employee will carry forward from an earlier plan or offering.

(ii) A plan or offering will not fail to satisfy the requirements of this section merely because employees are permitted to carry forward amounts representing a fractional share, that were withheld but not applied toward the purchase of stock under an earlier plan or offering and apply the amounts toward the purchase of additional stock under a subsequent plan or offering.

(6) Paragraph (f) does not prohibit the delaying of the grant of an option to any employee who is barred from being granted an option solely by reason of the employee's failing to meet a minimum service requirement set forth in paragraph (e)(1) of this section until the employee meets such requirement.

(7) ***Examples.*** The following examples illustrate the principles of this paragraph (f):

Example 1. Corporation U has an employee stock purchase plan that provides that the maximum amount of stock that each employee may purchase under the offering is one share for each $100 of annual gross pay. The plan meets the requirements of this paragraph (f).

Example 2. Corporation V has an employee stock purchase plan that provides that the maximum amount of stock that each employee may purchase under the offering is one share for each $100 of annual gross pay up to and including $10,000, and two shares for each $100 of annual gross pay in excess of $10,000. The plan will not meet the requirements of this paragraph (f) because the amount of stock that may be purchased under the plan is not based on a uniform relationship to the total compensation of all employees.

Example 3. Corporation W has an employee stock purchase plan that provides that options to purchase stock in an amount equal to ten percent of an employee's annual salary at a price equal to 85 percent of the fair market value on the first day of the offering will be granted to all employees other than those who have been employed less than 18 months. In addition, the plan provides that employees who have not yet met the minimum service requirements on the first day of the offering will be granted similar options on the date the 18 month service requirement has been attained. The plan meets the requirements of this paragraph (f).

Example 4. Corporation X is the parent corporation of Subsidiary AA, Subsidiary BB and Subsidiary CC. X maintains an employee stock purchase plan with AA, BB and CC participating in the same offering under the plan. Under the terms of the offering under the plan, options to purchase stock at a price equal to 90 percent of the fair market value at the time the option is exercised will be granted to all employees. Certain employees of AA are residents of Country B. The laws of Country B provide that options granted to employees who are residents of Country B must have a purchase price not less than 95 percent of the fair market value at the time the option is exercised. The plan will not fail to satisfy the requirements of this paragraph (f) merely because the residents of Country B are granted options under the plan to purchase stock at a price equal to 95 percent of the fair market value at the time the option is exercised.

Example 5. Assume the same facts as in *Example 4,* except that Corporation X establishes two separate offerings under the plan: A separate offering for the employees of AA and a separate offering for the employees of BB and CC. Under the separate offering for the employees of BB and CC, options are granted to all employees with an exercise price equal to 90 percent of the fair market value at the time the option is exercised. Under the separate offering for the employees of AA, options are granted to all employees with an exercise price equal to 95 percent of the fair market value at the time the option is exercised. The plan does not violate the equal rights and privileges requirement of this paragraph (f) merely because the exercise price of options granted under one offering is less than the exercise price of options granted under a separate offering.

Example 6. Corporation Y maintains an employee stock purchase plan. Employee T is employed by Y. T is granted an option under the current offering to purchase a maximum of 100 shares of Y stock at an option price equal to 85 percent of the fair market value of the stock at exercise. The plan permits the carry forward of withheld but unused amounts from an earlier offering. Prior to the exercise date, $2000 of T's salary has been withheld and is available to be applied toward the purchase of Y stock. On the exercise date, the fair market value of Y stock is $20 per share. T is able to purchase 100 shares of Y stock at $17 per share for an aggregate purchase price of $1700. T can carry forward $300 to the subsequent offering. Each employee in the subsequent offering other than T will be permitted to make direct payments toward the purchase of shares under the subsequent offering in a maximum amount of $300 less any amount the employee has carried forward from an earlier offering. The plan does not violate the equal rights and privileges requirement of this paragraph (f).

(g) ***Option price*** —

(1) An employee stock purchase plan or offering must, by its terms, provide that the option price will not be less than the lesser of—

(i) An amount equal to 85 percent of the fair market value of the stock at the time the option is granted, or

(ii) An amount that under the terms of the option may not be less than 85 percent of the fair market value of the stock at the time the option is exercised.

(2) For purposes of determining the option price, the fair market value of the stock may be determined in any reasonable manner, including the valuation methods permitted under § 20.2031-2. However, the option price must meet the minimum pricing requirements of this paragraph (g). For general rules relating to the option price, see § 1.421-1(e). For rules relating to the determination of when an option is granted, *see* §§ 1.421-1(c) and 1.423-2(h)(2). Any option that does not meet the minimum pricing requirements of this paragraph (g) will not be treated as an option granted under an employee stock purchase plan irrespective of whether the plan or offering satisfies those requirements. If an option that does not meet the minimum pricing requirements is granted to an employee who is entitled to the grant of an option under the terms of the plan or offering, and the employee is not granted an option under such offering that qualifies as an option granted under an employee stock purchase plan, the offering will not meet the requirements of paragraph (e) of this section. Accordingly, none of the options granted under the offering will be eligible for the special tax treatment of section 421.

(3) The option price may be stated either as a percentage or as a dollar amount. If the option price is stated as a dollar amount, then the requirement of this paragraph (g) can only be met by a plan or offering in which the price is fixed at not less than 85 percent of the fair market value of the stock at the time the option is granted. If the fixed price is less than 85 percent of the fair market value of the stock at grant, then the option cannot meet the requirement of this paragraph (g) even if a decline in the fair market value of the stock results in such fixed price being not less than 85 percent of the fair market value of the stock at the time the option is exercised, because that result was not certain to occur under the terms of the option.

(4) ***Examples.*** The following examples illustrate the principles of this paragraph (g):

Example 1. Corporation Z has an employee stock purchase plan that provides that the option price will be 85 percent of the fair market value of the stock on the first day of the offering (which is the date of grant in this case), or 85 percent of the fair market value of the stock at exercise, whichever amount is the lesser. Upon the exercise of an option issued under Z's plan, Z agrees to accept an option price that is less than the minimum amount allowable under the terms of such plan. Notwithstanding that the option was issued under an employee stock purchase plan, the transfer of stock pursuant to the exercise of such option does not satisfy the requirement of this paragraph (g) and cannot qualify for the special tax treatment of section 421.

Example 2. Corporation AA has an employee stock purchase plan that provides that the option price is set at 85 percent of the fair market value of AA stock at exercise, but not less than $80 per share. On the first day of the offering (which is the date of grant in this case), the fair market value of AA stock is $100 per share. The option satisfies the requirement of this paragraph (g), and can qualify for the special tax treatment of section 421.

Example 3. Assume the same facts as in *Example 2,* except that the option price is set at 85 percent of the fair market value of AA stock at exercise, but not more than $80 per share. This option cannot satisfy the requirement of this paragraph (g) irrespective of whether, at the time the option is exercised, 85 percent of the fair market value of AA stock is $80 or less.

(h) ***Option period*** —

(1) An employee stock purchase plan or offering must, by its terms, provide that options granted under the plan cannot be exercised after the expiration of 27 months from the date of grant unless, under the terms of the plan or offering, the option price is not less than 85 percent of the fair market value of the stock at the time of the exercise of the option. If the option price is not less than 85 percent of the fair market value of the stock at the time the option is exercised, then the option period provided under the plan must not exceed five years from the date of grant. If the requirements of this paragraph (h) are not met by the terms of the plan or offering, then options issued under such plan or offering will not be treated as options granted under an employee stock purchase plan irrespective of whether the options, by their terms, are exercisable beyond the period allowable under this paragraph (h). An option that provides that the option price is not less than 85 percent of the fair market value of the stock at exercise may have an option period of 5 years irrespective of whether the fair market value of the stock at exercise is more or less than the fair market value of the stock at grant. However, if the option provides that the option price is 85 percent of the fair market value of the stock at exercise, but not more than some other fixed amount determined in accordance with the provisions of paragraph (g) of this section, then irrespective of the price paid on exercise, the option period must not be more than 27 months.

(2) Section 1.421-1(c) provides that, for purposes of §§ 1.421-1 through 1.424-1, the language "the date of the granting of the option" and the "time such option is granted," and similar phrases refer to the date or time when the granting corporation completes the corporate action constituting an offer of stock for sale to an individual under the terms and conditions of a statutory option. With respect to options granted under an employee stock purchase plan, the principles of § 1.421-1(c) shall be applied without regard to the requirement that the minimum option price must be fixed or determinable in order for the corporate action constituting an offer of stock to be considered complete.

(3) The date of grant will be the first day of an offering if the terms of an employee stock purchase plan or offering designate a maximum number of shares that may be purchased by each employee during the offering. Similarly, the date of grant will be the first day of an offering if the terms of the plan or offering require the application of a formula to establish, on the first day of the offering, the maximum number of shares that may be purchased by each employee during the offering. It is not required that an employee stock purchase plan or offering designate a maximum number of shares that may be purchased by each employee during the offering or incorporate a formula to establish a maximum number of shares that may be purchased by each employee during the offering. If the maximum number of shares that can be purchased under an option is not fixed or determinable until the date the option is exercised, then the date of exercise will be the date of grant of the option.

(4) ***Examples.*** The following examples illustrate the principles of this paragraph (h):

Example 1. (i) Corporation BB has an employee stock purchase plan that provides that the option price will be the lesser of 85 percent of the fair market value of the stock on the first day of an offering or 85 percent of the fair market value of the stock on the last day of the offering. Options are exercised on the last day of the offering. One million shares of BB stock are reserved for issuance under the plan. The plan provides that no employee may be permitted to purchase stock under the plan at a rate that exceeds $25,000 in fair market value of the BB stock (determined on the date of grant) for each calendar year during which an option granted to the employee is outstanding. The terms of each option granted under an offering provide that a maximum of 500 shares may be purchased by the option recipient during the offering. Because the maximum number of shares that can be purchased under the option is fixed and determinable on the first day of the offering, the date of grant for the option is the first day of the offering.
(ii) Assume the same facts as in paragraph (i) of *Example 1,* except that BB's plan excludes all employees who have been employed less than 18 months. The plan provides that employees who have not yet met the minimum service requirements on the first day of an offering will be granted an option on the date the 18-month service requirement has been attained. With respect to those employees who have been employed less than 18 months on the first day of an offering, the date of grant for the option is the date the 18-month service requirement has been attained.

Example 2. Assume the same facts as in paragraph (i) of *Example 1,* except that the terms of each option granted do not provide that a maximum of 500 shares may be purchased by the option recipient during the offering. Notwithstanding the fixed number of shares reserved for issuance

under the plan and the $25,000 limitation set forth in the plan, the maximum number of shares that can be purchased under the option is not fixed or determinable until the last day of the offering when the option is exercised. Therefore the date of grant for the option is the last day of the offering when the option is exercised.

Example 3. Corporation CC has an employee stock purchase plan that provides that the option price will be 85 percent of the fair market value of the stock on the last day of the offering. Options are exercised on the last day of the offering. Each offering under the plan begins on January 1 and ends on December 31 of the same calendar year. The terms of each option granted under an offering provide that the maximum number of shares that may be purchased by any employee during the offering equals $25,000 divided by the fair market value of the stock on the first day of the offering. The maximum number of shares that can be purchased under the option is fixed and determinable on the first day of the offering and therefore the date of grant for the option is the first day of the offering.

Example 4. Assume the same facts as in *Example 3* except that the terms of each option granted under an offering provide that the maximum number of shares that may be purchased by any employee during the offering equals 10 percent of the employee's annual salary (determined as of January 1 of the year in which the offering commences) divided by the fair market value of the stock on the first day of the offering. The maximum number of shares that can be purchased under the option is fixed and determinable on the first day of the offering and therefore the date of grant for the option is the first day of the offering.

(i) ***Annual $25,000 limitation*** —

(1) An employee stock purchase plan or offering must, by its terms, provide that no employee may be permitted to purchase stock under all the employee stock purchase plans of the employer corporation and its related corporations at a rate that exceeds $25,000 in fair market value of the stock (determined at the time the option is granted) for each calendar year in which any option granted to the employee is outstanding at any time. In applying the foregoing limitation—

(i) The right to purchase stock under an option accrues when the option (or any portion thereof) first becomes exercisable during the calendar year;

(ii) The right to purchase stock under an option accrues at the rate provided in the option, but in no case may such rate exceed $25,000 of fair market value of such stock (determined at the time such option is granted) for any one calendar year; and

(iii) A right to purchase stock that has accrued under one option granted pursuant to the plan may not be carried over to any other option.

(2) If an option is granted under an employee stock purchase plan that satisfies the requirement of this paragraph (i), but the option gives the optionee the right to buy stock in excess of the maximum rate allowable under this paragraph (i), then no portion of the option will be treated as having been granted under an employee stock purchase plan. Furthermore, if the option was granted to an employee entitled to the grant of an option under the terms of the plan or offering, and the employee is not granted an option under the offering that qualifies as an option granted under an employee stock purchase plan, then the offering will not meet the requirements of paragraph (e) of this section. Accordingly, none of the options granted under the offering will be eligible for the special tax treatment of section 421.

(3) The limitation of this paragraph (i) applies only to options granted under employee stock purchase plans and does not limit the amount of stock that an employee may purchase under incentive stock options (as defined in section 422(b)) or any other stock options except those to which section 423 applies. Stock purchased under options to which section 423 does not apply will not limit the amount that an employee may purchase under an employee stock purchase plan, except for purposes of the 5-percent stock ownership provision of paragraph (d) of this section.

(4) Under the limitation of this paragraph (i), an employee may purchase up to $25,000 of stock (based on the fair market value of the stock at the time the option was granted) in each calendar year during which an option granted to the employee under an employee stock purchase plan is outstanding. Alternatively, an employee may purchase more than $25,000 of stock (based on the fair market value of such stock at the time the option was granted) in a calendar year, so long as the total amount of stock that the employee purchases does not exceed $25,000 in fair market value of the stock (determined at the time the option was granted) for each calendar year in which any option was outstanding. If, in any calendar year, the employee holds two or more outstanding options granted under employee stock purchase plans of the employer corporation, or a related corporation, then the employee's purchases of stock attributable to that year under all options granted under employee stock purchase plans must not exceed $25,000 in fair market value of the stock (determined at the time the options were granted). Under an employee stock purchase plan, an employee may not purchase stock in anticipation that the option will be outstanding in some future year. Thus, the employee may purchase only the amount of stock that does not exceed the limitation of this paragraph (i) for the year of the purchase and for preceding years during which the option was outstanding. Thus, the amount of stock that may be purchased under an option depends on the number of years in which the option is actually outstanding. The amount of stock that may be purchased under an employee stock purchase plan may not be increased by reason of the failure to grant an option in an earlier year under such plan, or by reason of the failure to exercise an earlier option. For example, if an option is granted to an individual and expires without having been exercised at all, then the failure to exercise the option does not increase the amount of stock which such individual may be permitted to purchase under an option granted in a year following the year of such expiration. If an option granted under an employee stock purchase plan is outstanding in more than one calendar year, then stock purchased pursuant to the exercise of such an option will be applied first, to the extent allowable under this paragraph (i), against the $25,000 limitation for the earliest year in which the option was outstanding, then, against the $25,000 limitation for each succeeding year, in order.

(5) ***Examples.*** The following examples illustrate the principles of this paragraph (i):

Example 1. Assume that Corporation DD maintains an employee stock purchase plan and that Employee S is employed by DD. On June 1, 2010, DD grants S an option under the plan to purchase a total of 750 shares of DD stock at $85 per share. On that date, the fair market value of DD stock is $100 per share. The option provides that it may be exercised at any time but cannot be exercised after May 31, 2012. Under this paragraph (i), the option must not permit S to purchase more than 250 shares of DD stock during the calendar year 2010, because 250 shares are equal to $25,000 in fair market value of DD stock determined at the time of grant. During the calendar year 2011, S may purchase under the option an amount of DD stock equal to the difference between $50,000 in fair market value of DD stock (determined at the time the option was granted) and the fair market value of DD stock (determined at the time of grant of the option) purchased during the year 2010. During the calendar year 2012, S may purchase an amount of DD stock equal to the difference between $75,000 in fair market value of the stock

(determined at the time of grant of the option) and the total amount of the fair market value of the stock (determined at the time of grant of the option) purchased under the option during the calendar years 2010 and 2011. S may purchase $25,000 of stock for the year 2010, and $25,000 of stock for the year 2012, although the option was outstanding for only a part of each of such years. However, S may not be granted another option under an employee stock purchase plan of DD or a related corporation to purchase stock of DD or a related corporation during the calendar years 2010, 2011, and 2012, so long as the option granted June 1, 2010, is outstanding.

Example 2. Assume the same facts as in *Example 1,* except that the option granted to S in 2010 is terminated in 2011 without any part of the option having been exercised, and that subsequent to the termination and during 2011, S is granted another option under DD's employee stock purchase plan. Under that option, S may be permitted to purchase $25,000 of stock for 2011. The failure of S to exercise the option granted to S in 2010, does not increase the amount of stock that S may be permitted to purchase under the option granted to S in 2011.

Example 3. Assume the same facts as in *Example 1,* except that, on May 31, 2012, S exercised the option granted to S in 2010, and purchased 600 shares of DD stock. Five hundred shares, the maximum amount of stock that could have been purchased in 2011, under the option, are treated as having been purchased for the years 2010 and 2011. Only 100 shares of the stock are treated as having been purchased for 2012. After S's exercise of the option on May 31, 2012, S is granted another option under DD's employee stock purchase plan. S may be permitted under the new option to purchase for 2012 stock having a fair market value of no more than $15,000 at the time the new option is granted.

Example 4. Corporation EE maintains an employee stock purchase plan and Employee R is employed by EE. On August 1, 2010, EE grants R an option under the plan to purchase 150 shares of EE stock at $85 per share during each of the calendar years 2010, 2011, and 2012. On that date, the fair market value of EE stock is $100 per share. The option provides that it may be exercised at any time during years 2010, 2011, and 2012. Because this option permits R to purchase only $15,000 of EE's stock for each year the option is outstanding, R could be granted another option by EE, or by a related corporation, in year 2010, permitting R to purchase an additional $10,000 of stock during each of the calendar years 2010, 2011, and 2012.

Example 5. Corporation FF maintains an employee stock purchase plan and Employee Q is employed by FF. On September 1, 2010, FF grants Q an option under the plan that will be automatically exercised on August 31, 2011, and August 31, 2012. The terms of the option provide that no more than 150 shares may be purchased on each date that the option is automatically exercised. On August 31, 2011, Q may purchase under the option an amount of FF stock equal to $50,000 in fair market value of FF stock (determined at the time the option was granted). On August 31, 2012, Q may purchase under the option an amount of FF stock equal to the difference between $75,000 in fair market value of FF stock (determined at the time the option was granted) and the fair market value of FF stock (determined at the time of grant of the option) purchased during year 2011.

(j) ***Restriction on transferability.*** An employee stock purchase plan or offering must, by its terms, provide that options granted under the plan are not transferable by the optionee other than by will or the laws of descent and distribution, and must be exercisable, during the optionee's lifetime, only by the optionee. For general rules relating to the restriction on transferability required by this paragraph (j), *see* § 1.421-1(b)(2). For a limited exception to the requirement of this paragraph (j), see section 424(h)(3).

(k) *Special rule where option price is between 85 percent and 100 percent of value of stock* —

(1)

(i) If all the conditions necessary for the application of section 421(a) exist, this paragraph (k) provides additional rules that are applicable in cases where, at the time the option is granted, the option price per share is less than 100 percent (but not less than 85 percent) of the fair market value of the share. In that case, upon the disposition of the share by the employee after the expiration of the two-year and the one-year holding periods, or upon the employee's death while owning the share (whether occurring before or after the expiration of such periods), there shall be included in the employee's gross income as compensation (and not as gain upon the sale or exchange of a capital asset) the lesser of—

(A) The amount, if any, by which the price paid under the option was exceeded by the fair market value of the share at the time the option was granted, or

(B) The amount, if any, by which the price paid under the option was exceeded by the fair market value of the share at the time of such disposition or death.

(ii) For purposes of applying the rules of this paragraph (k), if the option price is not fixed or determinable at the time the option is granted, the option price will be computed as if the option had been exercised at such time. The amount of compensation resulting from the application of this paragraph (k) shall be included in the employee's gross income for the taxable year in which the disposition occurs, or for the taxable year closing with the employee's death, whichever event results in the application of this paragraph (k).

(iii) The application of the special rules provided in this paragraph (k) shall not affect the rules provided in section 421(a) with respect to the employee exercising the option, the employer corporation, or a related corporation. Thus, notwithstanding the inclusion of an amount as compensation in the gross income of an employee, as provided in this paragraph (k), no income results to the employee at the time the stock is transferred to the employee, and no deduction under section 162 is allowable at any time to the employer corporation or a related corporation with respect to such amount.

(iv) If, during the employee's lifetime, the employee exercises an option granted under an employee stock purchase plan, but the employee dies before the stock is transferred to the employee pursuant to the exercise of the option, then for the purpose of sections 421 and 423, on the employee's death, the stock is deemed to be transferred immediately to the employee, and immediately thereafter, the employee is deemed to have transferred the stock to the employee's executor, administrator, trustee, beneficiary by operation of law, heir, or legatee, as the case may be.

(2) **If the special rules provided in this paragraph (k) are applicable to the disposition of a share of stock by an employee, then the basis of the share in the employee's hands at the time of the disposition, determined under section 1011, shall be increased by an amount equal to the amount includible as compensation in the employee's gross income under this paragraph (k). However, the basis of a share of stock acquired after the death of an employee by the exercise of an option granted to the employee under an employee stock purchase plan shall be determined in accordance with the rules of section 421(c) and § 1.421-2(c). If the special rules provided in this paragraph (k) are applicable to a share of stock upon the death of an employee, then the basis of the share in the hands of the estate or the person receiving the stock by bequest or inheritance shall be determined under section 1014 or under section 1022, if applicable, and shall not be increased by reason of the**

inclusion upon the decedent's death of any amount in the decedent's gross income under this paragraph (k). See *Example (9)* of this paragraph (k) with respect to the determination of basis of the share in the hands of a surviving joint owner.

(3) ***Examples.*** The following examples illustrate the principles of this paragraph (k):

Example 1. On June 1, 2010, Corporation GG grants to Employee P, an employee of GG, an option under GG's employee stock purchase plan to purchase a share of GG stock for $85. The fair market value of GG stock on such date is $100 per share. On June 1, 2011, P exercises the option and on that date GG transfers the share of stock to P. On January 1, 2013, P sells the share for $150, its fair market value on that date. P's income tax return is filed on the basis of the calendar year. The income tax consequences to P and GG are as follows—

(i) Compensation in the amount of $15 is includible in P's gross income for the year 2013, the year of the disposition of the share. The $15 represents the difference between the option price ($85) and the fair market value of the share on the date the option was granted ($100), because the value is less than the fair market value of the share on the date of disposition ($150). For the purpose of computing P's gain or loss on the sale of the share, P's cost basis of $85 is increased by $15, the amount includible in P's gross income as compensation. Thus, P's basis for the share is $100. Because the share was sold for $150, P realizes a gain of $50, which is treated as long-term capital gain; and

(ii) GG is not entitled to any deduction under section 162 at any time with respect to the share transferred to P.

Example 2. Assume the same facts as in *Example 1,* except that P sells the share of GG stock on January 1, 2014, for $75, its fair market value on that date. Because $75 is less than the option price ($85), no amount in respect of the sale is includible as compensation in P's gross income for the year 2014. P's basis for determining gain or loss on the sale is $85. Because P sold the share for $75, P realized a loss of $10 on the sale that is treated as a long-term capital loss.

Example 3. Assume the same facts as in *Example 1,* except that the option provides that the option price shall be 90 percent of the fair market value of the stock on the day the option is exercised. On June 1, 2011, when the option is exercised, the fair market value of the stock is $120 per share so that P pays $108 for the share of the stock. Compensation in the amount of $10 is includible in P's gross income for the year 2013, the year of the disposition of the share. This is determined in the following manner: The excess of the fair market value of the stock at the time of the disposition ($150) over the price paid for the share ($108) is $42; and the excess of the fair market value of the stock at the time the option was granted ($100) over the option price, computed as if the option had been exercised at such time ($90), is $10. Accordingly, $10, the lesser, is includible in gross income. In this situation, P's cost basis of $108 is increased by $10, the amount includible in P's gross income as compensation. Thus, P's basis for the share is $118. Because the share was sold for $150, P realizes a gain of $32 that is treated as long-term capital gain.

Example 4. Assume the same facts as in *Example 1,* except that the option provides that the option price shall be the lesser of 95 percent of the fair market value of the stock on the first day of the offering period and 95 percent of the fair market value of the stock on the day the option is exercised. On June 1, 2011, when the option is exercised, the fair market value of the stock is $120 per share. P pays $95 for the share of the stock. Compensation in the amount of $5 is includible in P's gross income for the year 2013, the year of the disposition of the share. This is determined in the following manner: The excess of the fair market value of the stock at the time of the disposition ($150) over the price paid for the share ($95) is $55; and the excess of the fair market value of the stock at the time the option was granted ($100) over the option price, computed as if the option had been exercised at such time ($95), is $5. Accordingly, $5, the lesser, is includible in gross income. In this situation, P's cost basis of $95 is increased by $5, the amount includible in P's gross income as compensation. Thus, P's basis for the share is $100. Because the share was sold for $150, P realizes a gain of $50 that is treated as long-term capital gain.

Example 5. Assume the same facts as in *Example 1,* except that instead of selling the share on January 1, 2013, P makes a gift of the share on that day. In that case $15 is includible as compensation in P's gross income for 2013. P's cost basis of $85 is increased by $15, the amount includible in P's gross income as compensation. Thus, P's basis for the share is $100, which becomes the donee's basis, as of the time of the gift, for determining gain or loss.

Example 6. Assume the same facts as in *Example 2,* except that instead of selling the share on January 1, 2014, P makes a gift of the share on that date. Because the fair market value of the share on that day ($75) is less than the option price ($85), no amount in respect of the disposition by way of gift is includible as compensation in P's gross income for 2014. P's basis for the share is $85, which becomes the donee's basis, as of the time of the gift, for the purpose of determining gain. The donee's basis for the purpose of determining loss, determined under section 1015(a), is $75 (fair market value of the share at the date of gift).

Example 7. Assume the same facts as in *Example 1,* except that after acquiring the share of stock on June 1, 2011, P dies on August 1, 2012, at which time the share has a fair market value of $150. Compensation in the amount of $15 is includible in P's gross income for the taxable year closing with P's death, $15 being the difference between the option price ($85) and the fair market value of the share when the option was granted ($100), because such value is less than the fair market value at date of death ($150). The basis of the share in the hands of P's estate is determined under section 1014 without regard to the $15 includible in the decedent's gross income.

Example 8. Assume the same facts as in *Example 7,* except that P dies on August 1, 2011, at which time the share has a fair market value of $150. Although P's death occurred within one year after the transfer of the share to P, the income tax consequences are the same as in *Example 7.*

Example 9. Assume the same facts as in *Example 1,* except that the share of stock was issued in the names of P and P's spouse jointly with right of survivorship, and that P and P's spouse sold the share on June 15, 2012, for $150, its fair market value on that date. Compensation in the amount of $15 is includible in P's gross income for the year 2012, the year of the disposition of the share. The basis of the share in the hands of P and P's spouse for the purpose of determining gain or loss on the sale is $100, that is, the cost of $85 increased by the amount of $15 includible as compensation in P's gross income. The gain of $50 on the sale is treated as long-term capital gain, and is divided equally between P and P's spouse.

Example 10. Assume the same facts as in *Example 1,* except that the share of stock was issued in the names of P and P's spouse jointly with right of survivorship, and that P predeceased P's spouse on August 1, 2012, at which time the share had a fair market value of $150. Compensation in the amount of $15 is includible in P's gross income for the taxable year closing with his death. See *Example 7.* The basis of the share in the hands of P's spouse as survivor is determined under section 1014 without regard to the $15 includible in the decedent's gross income.

Example 11. Assume the same facts as in *Example 10,* except that P's spouse predeceased P on July 1, 2012. Section 423(c) does not apply in respect of the death of P's spouse. Upon the subsequent death of P on August 1, 2012, the income tax consequences in respect of P's taxable year closing with the date of P's death, and in respect of the basis of the share in the hands of P's estate, are the same as in *Example 7.* If P had sold the share on July 15, 2012 (after the death of P's spouse), for $150, its fair market value at that time, the income tax consequences would be the same as in *Example 1.*

(l) ***Effective/applicability date.*** The regulations under this section are effective on November 17, 2009. The regulations under this section apply to options granted under an employee stock purchase plan on or after January 1, 2010. The provisions of this section relating to section 1022 are effective on and after January 19, 2017.

[T.D. 9471, 74 FR 59078, Nov. 17, 2009; 74 FR 67973, Dec. 22, 2009; T.D. 9811, 82 FR 6238, Jan. 19, 2017]

§ 1.424-1 Definitions and special rules applicable to statutory options.

(a) ***Substitutions and assumptions of options*** —

(1) ***In general.***

(i) This paragraph (a) provides rules under which an *eligible corporation* (as defined in paragraph (a)(2) of this section) may, by reason of a *corporate transaction* (as defined in paragraph (a)(3) of this section), substitute a new statutory option (new option) for an outstanding statutory option (old option) or assume an old option without such substitution or assumption being considered a modification of the old option. For the definition of *modification,* see paragraph (e) of this section.

(ii) For purposes of §§ 1.421-1 through 1.424-1, the phrase "substituting or assuming a stock option in a transaction to which section 424 applies," "substituting or assuming a stock option in a transaction to which § 1.424-1(a) applies," and similar phrases means a substitution of a new option for an old option or an assumption of an old option that meets the requirements of this paragraph (a). For a substitution or assumption to qualify under this paragraph (a), the substitution or assumption must meet all of the requirements described in paragraphs (a)(4) and (a)(5) of this section.

(2) ***Eligible corporation.*** For purposes of this paragraph (a), the term *eligible corporation* means a corporation that is the employer of the optionee or a related corporation of such corporation. For purposes of this paragraph (a), the determination of whether a corporation is the employer of the optionee or a related corporation of such corporation is based upon all of the relevant facts and circumstances existing immediately after the corporate transaction. See § 1.421-1(h) for rules concerning the employment relationship.

(3) ***Corporate transaction.*** For purposes of this paragraph (a), the term *corporate transaction* includes—

(i) A corporate merger, consolidation, acquisition of property or stock, separation, reorganization, or liquidation;

(ii) A distribution (excluding an ordinary dividend or a stock split or stock dividend described in § 1.424-1(e)(4)(v)) or change in the terms or number of outstanding shares of such corporation; and

(iii) Such other corporate events prescribed by the Commissioner in published guidance.

(4) ***By reason of.***

(i) For a change in an option or issuance of a new option to qualify as a substitution or assumption under this paragraph (a), the change must be made by an *eligible corporation* (as defined in paragraph (a)(2) of this section) and occur by reason of a *corporate transaction* (as defined in paragraph (a)(3) of this section).

(ii) Generally, a change in an option or issuance of a new option is considered to be by reason of a corporate transaction, unless the relevant facts and circumstances demonstrate that such change or issuance is made for reasons unrelated to such corporate transaction. For example, a change in an option or issuance of a new option will be considered to be made for reasons unrelated to a corporate transaction if there is an unreasonable delay between the corporate transaction and such change in the option or issuance of a new option, or if the corporate transaction serves no substantial corporate business purpose independent of the change in options. Similarly, a change in the number or price of shares purchasable under an option merely to reflect market fluctuations in the price of the stock purchasable under an option is not by reason of a corporate transaction.

(iii) A change in an option or issuance of a new option is by reason of a distribution or change in the terms or number of the outstanding shares of a corporation (as described in paragraph (a)(3)(ii) of this section) only if the option as changed, or the new option issued, is an option on the same stock as under the old option (or if such class of stock is eliminated in the change in capital structure, on other stock of the same corporation).

(5) ***Other requirements.*** For a change in an option or issuance of a new option to qualify as a substitution or assumption under this paragraph (a), all of the requirements described in this paragraph (a)(5) must be met.

(i) In the case of an issuance of a new option (or a portion thereof) in exchange for an old option (or portion thereof), the optionee's rights under the old option (or portion thereof) must be canceled, and the optionee must lose all rights under the old option (or portion thereof). There cannot be a substitution of a new option for an old option within the meaning of this paragraph (a) if the optionee may exercise both the old option and the new option. It is not necessary to have a complete substitution of a new option for the old option. However, any portion of such option which is not substituted or assumed in a transaction to which this paragraph (a) applies is an outstanding option to purchase stock or, to the extent paragraph (e) of this section applies, a modified option.

(ii) The excess of the aggregate fair market value of the shares subject to the new or assumed option immediately after the change in the option or issuance of a new option over the aggregate option price of such shares must not exceed the excess of the aggregate fair market value of all shares subject to the old option (or portion thereof) immediately before the change in the option or issuance of a new option over the aggregate option price of such shares.

(iii) On a share by share comparison, the ratio of the option price to the fair market value of the shares subject to the option immediately after the change in the option or issuance of a new option must not be more favorable to the optionee than the ratio of the option price to the fair market value of the stock subject to the old option (or portion thereof) immediately before the change in the option or issuance of a new option. The number of shares subject to the new or assumed option may be adjusted to compensate for any change in the aggregate spread between the aggregate option price and the aggregate fair market value of the shares subject to the option immediately after the change in the option or issuance of the new option as compared to the aggregate spread between the option price and the aggregate fair market value of the shares subject to the option immediately before the change in the option or issuance of the new option.

(iv) The new or assumed option must contain all terms of the old option, except to the extent such terms are rendered inoperative by reason of the corporate transaction.

(v) The new option or assumed option must not give the optionee additional benefits that the optionee did not have under the old option.

(6) ***Obligation to substitute or assume not necessary.*** For a change in the option or issuance of a new option to meet the requirements of this paragraph (a), it is not necessary to show that the corporation changing an option or issuing a new option is under any obligation to do so. In fact, this paragraph (a) may apply even when the option that is being replaced or assumed expressly provides that it will terminate upon the occurrence of certain corporate transactions. However, this paragraph (a) cannot be applied to revive a statutory option which, for reasons not related to the corporate transaction, expires before it can properly be replaced or assumed under this paragraph (a).

(7) ***Issuance of stock without meeting the requirements of this paragraph (a).*** A change in the terms of an option resulting in a modification of such option occurs if an optionee's new employer (or a related corporation of the new employer) issues its stock (or stock of a related corporation) upon exercise of such option without satisfying all of the requirements described in paragraphs (a)(4) and (5) of this section.

(8) ***Date of grant.*** For purposes of applying the rules of this paragraph (a), a substitution or assumption is considered to occur on the date that the optionee would, but for this paragraph (a), be considered to have been granted the option that the eligible corporation is substituting or assuming. A substitution or an assumption that occurs by reason of a corporate transaction may occur before or after the corporate transaction.

(9) Any reasonable methods may be used to determine the fair market value of the stock subject to the option immediately before the assumption or substitution and the fair market value of the stock subject to the option immediately after the assumption or substitution. Such methods include the valuation methods described in § 20.2031-2 of this chapter (the Estate Tax Regulations). In the case of stock listed on a stock exchange, the fair market value may be based on the last sale before and the first sale after the assumption or substitution if such sales clearly reflect the fair market value of the stock, or may be based upon an average selling price during a longer period, such as the day or week before, and the day or week after, the assumption or substitution. If the stocks are not listed, or if they are newly issued, it will be reasonable to base the determination on experience over even longer periods. In the case of a merger, consolidation, or other reorganization which is arrived at by arm's-length negotiations, the fair market value of the stocks subject to the option before and after the assumption or substitution may be based upon the values assigned to the stock for purposes of the reorganization. For example, if in the case of a merger the parties treat each share of the merged

company as being equal in value to a share of the surviving company, it will be reasonable to assume that the stocks are of equal value so that the substituted option may permit the employee to purchase at the same price one share of the surviving company for each share he could have purchased of the merged company.

(10) ***Examples.*** The principles of this paragraph (a) are illustrated by the following examples:

Example 1. Eligible corporation. X Corporation acquires a new subsidiary, Y Corporation, and transfers some of its employees to Y. Y Corporation wishes to grant to its new employees and to the employees of X Corporation new options for Y shares in exchange for old options for X shares that were previously granted by X Corporation. Because Y Corporation is an employer with respect to its own employees and a related corporation of X Corporation, Y Corporation is an eligible corporation under paragraph (a)(2) of this section with respect to both the employees of X and Y Corporations.

Example 2. Corporate transaction. (i) On January 1, 2004, Z Corporation grants E, an employee of Z, an option to acquire 100 shares of Z common stock. At the time of grant, the fair market value of Z common stock is $200 per share. E's option price is $200 per share. On July 1, 2005, when the fair market value of Z common stock is $400, Z declares a stock dividend of preferred stock distributed on common stock that causes the fair market value of Z common stock to decrease to $200 per share. On the same day, Z grants to E a new option to acquire 200 shares of Z common stock in exchange for E's old option. The new option has an exercise price of $100 per share.
(ii) A stock dividend other than that described in § 1.424-1(e)(4)(v) is a corporate transaction under paragraph (a)(3)(ii) of this section. Generally, the issuance of a new option is considered to be by reason of a corporate transaction. None of the facts in this *Example 2* indicate that the new option is not issued by reason of the stock dividend. In addition, the new option is issued on the same stock as the old option. Thus, the substitution occurs by reason of the corporate transaction. Assuming the other requirements of this section are met, the issuance of the new option is a substitution that meets the requirements of this paragraph (a) and is not a modification of the option.

(iii) Assume the same facts as in paragraph (i) of this *Example 2.* Assume further that on December 1, 2005, Z declares an ordinary cash dividend. On the same day, Z grants E a new option to acquire Z stock in substitution for E's old option. Under paragraph (a)(3)(ii) of this section, an ordinary cash dividend is not a corporate transaction. Thus, the exchange of the new option for the old option does not meet the requirements of this paragraph (a) and is a modification of the option.

Example 3. Corporate transaction. On March 15, 2004, A Corporation grants E, an employee of A, an option to acquire 100 shares of A stock at $50 per share, the fair market value of A stock on the date of grant. On May 2, 2005, A Corporation transfers several employees, including E, to B Corporation, a related corporation. B Corporation arranges to purchase some assets from A on the same day as E's transfer to B. Such purchase is without a substantial business purpose

independent of making the exchange of E's old options for the new options appear to be by reason of a corporate transaction. The following day, B Corporation grants to E, one of its new employees, an option to acquire shares of B stock in exchange for the old option held by E to acquire A stock. Under paragraph (a)(3)(i) of this section, the purchase of assets is a corporate transaction. Generally, the substitution of an option is considered to occur by reason of a corporate transaction. However, in this case, the relevant facts and circumstances demonstrate that the issuance of the new option in exchange for the old option occurred by reason of the change in E's employer rather than a corporate transaction and that the sale of assets is without a substantial corporate business purpose independent of the change in the options. Thus, the exchange of the new option for the old option is not by reason of a corporate transaction that meets the requirements of this paragraph (a) and is a modification of the old option.

Example 4. Corporate transaction. (i) E, an employee of Corporation A, holds an option to acquire 100 shares of Corporation A stock. On September 1, 2006, Corporation A has one class of stock outstanding and declares a stock dividend of one share of common stock for each outstanding share of common stock. The rights associated with the common stock issued as a dividend are the same as the rights under existing shares of stock. In connection with the stock dividend, E's option is exchanged for an option to acquire 200 shares of Corporation A stock. The per-share exercise price is equal to one half of the per-share exercise price of the original option. The stock dividend merely changes the number of shares of Corporation A outstanding and effects no other change to the stock of Corporation A. The option is proportionally adjusted and the aggregate exercise price remains the same and therefore satisfies the requirements described in § 1.424-1(e)(4)(v).
(ii) The stock dividend is not a corporate transaction under paragraph (a)(3) of this section, and the declaration of the stock dividend is not a modification of the old option under paragraph (a) of this section. Pursuant to § 1.424-1(e)(4)(v), the exercise price of the old option may be adjusted proportionally with the change in the number of outstanding shares of Corporation A such that the ratio of the aggregate exercise price of the option to the number of shares covered by the option is the same both before and after the stock dividend. The adjustment of E's option is not treated as a modification of the option.

Example 5. Additional benefit. On June 1, 2004, P Corporation acquires 100 percent of the shares of S Corporation and issues a new option to purchase P shares in exchange for an old option to purchase S shares that is held by E, an employee of S. On the date of the exchange, E's old option is exercisable for 3 more years, and, after the exchange, E's new option is exercisable for 5 years. Because the new option is exercisable for an additional period of time beyond the time allowed under the old option, the effect of the exchange of the new option for the old option is to give E an additional benefit that E did not enjoy under the old option. Thus, the requirements of paragraph (a)(5) of this section are not met, and this paragraph (a) does not apply to the exchange of the new option for the old option. Therefore, the exchange is a modification of the old options.

Example 6. Spread and ratio tests. E is an employee of S Corporation. E holds an old option that was granted to E by S to purchase 60 shares of S at $12 per share. On June 1, 2005, S Corporation is merged into P Corporation, and on such date P issues a new option to purchase P shares in exchange for E's old option to purchase S shares. Immediately before the exchange, the fair market value of an S share is $32; immediately after the exchange, the fair market value of a P share is $24. The new option entitles E to buy P shares at $9 per share. Because, on a share-by-share comparison, the ratio of the new option price ($9 per share) to the fair market value of a P share immediately after the exchange ($24 per share) is not more favorable to E than the ratio of the old option price ($12 per share) to the fair market value of an S share immediately before the exchange ($32 per share) ($^{9}/_{24} = {}^{12}/_{32}$), the requirements of paragraph (a)(5)(iii) of this section are met. The number of shares subject to E's option to purchase P stock is set at 80. Because the excess of the aggregate fair market value over the aggregate option price of the shares subject to E's new option to purchase P stock, $1,200 (80 × $24 minus 80 × $9), is not greater than the excess of the aggregate fair market value over the aggregate option price of the shares subject to E's old option to purchase S stock, $1,200 (60 × $32 minus 60 × $12), the requirements of paragraph (a)(5)(ii) of this section are met.

Example 7. Ratio test and partial substitution. Assume the same facts as in *Example 6*, except that the fair market value of an S share immediately before the exchange of the new option for the old option is $8, that the option price is $10 per share, and that the fair market value of a P share immediately after the exchange is $12. P sets the new option price at $15 per share. Because, on a share-by-share comparison, the ratio of the new option price ($15 per share) to the fair market value of a P share immediately after the exchange ($12) is not more favorable to E than the ratio of the old option price ($10 per share) to the fair market value of an S share immediately before the substitution ($8 per share) ($^{15}/_{12} = {}^{10}/_{8}$), the requirements of paragraph (a)(5)(iii) of this section are met. Assume further that the number of shares subject to E's P option is set at 20, as compared to 60 shares under E's old option to buy S stock. Immediately after the exchange, 2 shares of P are worth $24, which is what 3 shares of S were worth immediately before the exchange (2 × $12 = 3 × $8). Thus, to achieve a complete substitution of a new option for E's old option, E would need to receive a new option to purchase 40 shares of P (*i.e.*, 2 shares of P for each 3 shares of S that E could have purchased under the old option ($^{2}/_{3} = {}^{40}/_{60}$)). Because E's new option is for only 20 shares of P, P has replaced only $^{1}/_{2}$ of E's old option, and the other $^{1}/_{2}$ is still outstanding.

Example 8. Partial substitution. X Corporation forms a new corporation, Y Corporation, by a transfer of certain assets and, in a spin-off, distributes the shares of Y Corporation to the stockholders of X Corporation. E, an employee of X Corporation, is thereafter an employee of Y. Y wishes to substitute a new option to purchase some of its stock for E's old option to purchase 100 shares of X. E's old option to purchase shares of X, at $50 a share, was granted when the fair market value of an X share was $50, and an X share was worth $100 just before the distribution of the Y shares to X's stockholders. Immediately after the spin-off, which is also the time of the substitution, each share of X and each share of Y is worth $50. Based on these facts, a new option to purchase 200 shares of Y at an option price of $25 per share could be granted to E in complete substitution of E's old option. In the alternative, it would also be permissible in connection with the spin off, to grant E a new option to purchase 100 shares of Y, at an option price of $25 per share, and for E to retain an option to purchase 100 shares of X under the old option, with the option price adjusted to $25. However, because X is no longer a related corporation with respect to Y, E must exercise the option for 100 shares of X within three months from the date of the spin off for the option to be treated as a statutory option. See §

1.421-1(h). It would also be permissible to grant E a new option to purchase 100 shares of Y, at an option price of $25 per share, in substitution for E's right to purchase 50 of the shares under the old option.

Example 9. Stockholder approval requirements. (i) X Corporation, a publicly traded corporation, adopts an incentive stock option plan that meets the requirements of § 1.422-2. Under the plan, options to acquire X stock are granted to X employees. X Corporation is acquired by Y Corporation and becomes a subsidiary corporation of Y Corporation. After the acquisition, X employees remain employees of X. In connection with the acquisition, Y Corporation substitutes new options to acquire Y stock for the old options to acquire X stock previously granted to the employees of X. As a result of this substitution, on exercise of the new options, X employees receive Y Corporation stock. (ii) Because the requirements of § 1.422-2 were met on the date of grant, the substitution of the new Y options for the old X options does not require new stockholder approval. If the other requirements of paragraphs (a)(4) and (5) of this section are met, the issuance of new options for Y stock in exchange for the old options for X stock meets the requirements of this paragraph (a) and is not a modification of the old options.

(iii) Assume the same facts as in paragraphs (i) and (ii) of this *Example 9.* Assume further that as part of the acquisition, X amends its plan to allow future grants under the plan to be grants to acquire Y stock. Because the amendment of the plan to allow options on a different stock is considered the adoption of a new plan under § 1.422-2(b)(2)(iii), the stockholders of X (in this case, Y) must approve the plan within 12 months before or after the date of the amendment of the plan. If the stockholders of X (in this case, Y) timely approve the plan, the future grants to acquire Y stock will be incentive stock options (assuming the other requirements of § 1.422-2 have been met).

Example 10. Modification. X Corporation merges into Y Corporation. Y Corporation retains employees of X who hold old options to acquire X Corporation stock. When the former employees of X exercise the old options, Y Corporation issues Y stock to the former employees of X. Under paragraph (a)(7) of this section, because Y issues its stock on exercise of the old options for X stock, there is a change in the terms of the old options for X stock. Thus, the issuance of Y stock on exercise of the old options is a modification of the old options.

Example 11. Eligible corporation. (i) D Corporation grants an option to acquire 100 shares of D Corporation stock to E, an employee of D Corporation. S Corporation is a subsidiary of D Corporation. On March 1, 2005, D Corporation spins off S Corporation. E remains an employee of D Corporation. In connection with the spin off, D Corporation substitutes a new option to acquire D Corporation stock and a new option to acquire S Corporation stock for the old option in a manner that meets the requirements of paragraph (a) of this section.

(ii) The substitution of the new option to acquire S and D stock for the old option to acquire D stock is not a modification of the old option. However, because S is no longer a related corporation with respect to D Corporation, E must exercise the option for S stock within three months from March 1, 2005, for the option to be treated as a statutory option. See § 1.421-1(h).

(iii) Assume the same facts as in paragraph (i) of this *Example 11* except that E's employment with D Corporation is terminated on February 20, 2005. The substitution of the new option to acquire S and D stock for the old option to acquire D stock is not a modification of the old option. However, because the employment relationship between E and D Corporation terminated on February 20, 2005, E must exercise the option for the D and S stock within three months from February 20, 2005, for the option to be treated as a statutory option. See § 1.421-1(h).

(b) ***Acquisition of new stock.***

(1) Section 424(b) provides that the rules provided by sections 421 through 424 which are applicable with respect to stock transferred to an individual upon his exercise of an option, shall likewise be applicable with respect to stock acquired by a distribution or an exchange to which section 305, 354, 355, 356, or 1036 (or so much of section 1031 as relates to section 1036) applies. Stock so acquired shall, for purposes of sections 421 through 424, be considered as having been transferred to the individual upon his exercise of the option. A similar rule shall be applied in the case of a series of such acquisitions. With respect to such acquisitions, section 424(b) does not make inapplicable any of the provisions of section 305, 354, 355, 356, or 1036 (or so much of section 1031 as relates to section 1036).

(2) The application of this paragraph may be illustrated by the following example:

Example. If, with respect to stock transferred pursuant to the timely exercise of a statutory option, there is a distribution of new stock to which section 305(a) is applicable, and if there is a disposition of such new stock before the expiration of the applicable holding period required with respect to the stock originally acquired pursuant to the exercise of such option, such disposition makes section 421 inapplicable to the transfer of the original stock pursuant to the exercise of the option to the extent that the disposition effects a reduction of the individual's total interest in the old and new stock. However, if the new stock, as well as the old stock, is not disposed of before the expiration of the holding period required with respect to the original stock acquired pursuant to the exercise of the option, the special tax treatment provided by section 421 is applicable to both the original shares and the shares acquired by virtue of the distribution to which section 305(a) applies.

(c) ***Disposition of stock.***

(1) For purposes of sections 421 through 424, the term “disposition of stock” includes a sale, exchange, gift, or any transfer of legal title, but does not include—

(i) A transfer from a decedent to his estate or a transfer by bequest or inheritance; or

(ii) An exchange to which is applicable section 354, 355, 356, or 1036 (or so much of section 1031 as relates to section 1036); or

(iii) A mere pledge or hypothecation. However, a disposition of the stock pursuant to a pledge or hypothecation is a disposition by the individual, even though the making of the pledge or hypothecation is not such a disposition.

(iv) A transfer between spouses or incident to divorce (described in section 1041(a)). The special tax treatment of § 1.421-2(a) with respect to the transferred stock applies to the transferee. However, see § 1.421-1(b)(2) for the treatment of the transfer of a statutory option incident to divorce.

(2) A share of stock acquired by an individual pursuant to the exercise of a statutory option is not considered disposed of by the individual if such share is taken in the name of the individual and another person jointly with right of survivorship, or is subsequently transferred into such joint ownership, or is retransferred from such joint ownership to the sole ownership of the individual. However, any termination of such joint ownership (other than a termination effected by the death of a joint owner) is a disposition of such share, except to the extent the individual reacquires ownership of the share. For example, if such individual and his joint owner transfer such share to another person, the individual has made a disposition of such share. Likewise, if a share of stock held in the joint names of such individual and another person is transferred to the name of such other person, there is a disposition of such share by the individual. If an individual exercises a statutory option and a share of stock is transferred to another or is transferred to such individual in his name as trustee for another, the individual has made a disposition of such share. However, a termination of joint ownership resulting from the death of one of the owners is not a disposition of such share. For determination of basis in the hands of the survivor where joint ownership is terminated by the death of one of the owners, see section 1014 or section 1022, if applicable.

(3) If an optionee exercises an incentive stock option with statutory option stock and the applicable holding period requirements (under § 1.422-1(a) or § 1.423-1(a)) with respect to such statutory option stock are not met before such transfer, then sections 354, 355, 356, or 1036 (or so much of 1031 as relates to 1036) do not apply to determine whether there is a disposition of those shares. Therefore, there is a disposition of the statutory option stock, and the special tax treatment of § 1.421-2(a) does not apply to such stock.

(4) The application of this paragraph may be illustrated by the following examples:

Example 1. On June 1, 2004, the X Corporation grants to E, an employee, a statutory option to purchase 100 shares of X Corporation stock at $100 per share, the fair market value of X Corporation stock on that date. On June 1, 2005, while employed by X Corporation, E exercises the option in full and pays X Corporation $10,000, and on that day X Corporation transfers to E 100 shares of its stock having a fair market value of $12,000. Before June 1, 2006, E makes no disposition of the 100 shares so purchased. E realizes no income on June 1, 2005, with respect to the transfer to him of the 100 shares of X Corporation stock. X Corporation is not entitled to any deduction at any time with respect to its transfer to E of the stock. E's basis for such 100 shares is $10,000.

Example 2. Assume the same facts as in example (1), except assume that on August 1, 2006, three years and two months after the transfer of the shares to him, E sells the 100 shares of X Corporation stock for $13,000 which is the fair market value of the stock on that date. For the taxable year in which the sale occurs, E realizes a gain of $3,000 ($13,000 minus E's basis of $10,000), which is treated as capital gain.

Example 3. Assume the same facts as in example (2), except assume that on August 1, 2006, E makes a gift of the 100 shares of Y Corporation stock to his son. Such disposition results in no realization of gain to E either for the taxable year in which the option is exercised or the taxable year in which the gift is made. E's basis of $10,000 becomes the donee's basis for determining gain or loss.

Example 4. Assume the same facts as in example (1), except assume that on May 1, 2006, E sells the 100 shares of X Corporation stock for $13,000. The special rules of section 421(a) are not applicable to the transfer of the stock by X Corporation to E, because disposition of the stock was made by E within two years from the date the options were granted and within one year of the date that the shares were transferred to him.

Example 5. Assume the same facts as in example (1), except assume that E dies on September 1, 2005, owning the 100 shares of X Corporation stock acquired by him pursuant to his exercise on June 1, 2005, of the statutory option. On the date of death, the fair market value of the stock is $12,500. No income is realized by E by reason of the transfer of the 100 shares to his estate. If the stock is valued as of the date of E's death for estate tax purposes, the basis of the 100 shares in the hands of the executor is $12,500.

Example 6. Assume the same facts as in example (1), except assume that on June 1, 2005, when the option is exercised by E the 100 shares are transferred by X to E and his wife W, as joint owners with right of survivorship, and that E dies on July 1, 2005. Neither the transfer into joint ownership nor the termination of such joint ownership by E's death is a disposition. Because E has made no disqualifying disposition of the shares, section 421(a) is applicable and E realizes no compensation income at death with respect to the shares even though he held the stock less than 2 years after the transfer of the shares to him pursuant to his exercise of the option. See § 1.421-2(b)(2).

Example 7. On January 1, 2004, X Corporation grants to E, an employee of X Corporation, an incentive stock option to purchase 100 shares of X Corporation stock at $100 per share (the fair market value of an X Corporation share on that date). On January 1, 2005, when the fair market value of a share of X Corporation stock is $200, E exercises half of the option, pays X Corporation $5,000 in cash, and is transferred 50 shares of X Corporation stock with an aggregate fair market value of $10,000. E makes no disposition of the shares before January 2, 2006. Under § 1.421-2(a), no income is recognized by E on the transfer of shares pursuant to the exercise of the incentive stock option, and X Corporation is not entitled to any deduction at any time with respect to its transfer of the shares to E. E's basis in the shares is $5,000.

Example 8. Assume the same facts as in *Example 7*, except that on December 1, 2005, one year and 11 months after the grant of the option and 11 months after the transfer of the 50 shares to E, E uses 25 of those shares, with a fair market value of $5,000, to pay for the remaining 50 shares purchasable under the option. On that day, X Corporation transfers 50 of its shares, with an aggregate fair market value of $10,000, to E. Because E disposed of the 25 shares before the expiration of the applicable holding periods, § 1.421-2(a) does not apply to the January 1, 2005, transfer of the 25 shares used by E to exercise the remainder of the option. As a result of the disqualifying disposition of the 25 shares, E recognizes compensation income under the rules of § 1.421-2(b).

Example 9. On January 1, 2005, X Corporation grants an incentive stock option to E, an employee of X Corporation. The exercise price of the option is $10 per share. On June 1, 2005, when the fair market value of an X Corporation share is $20, E exercises the option and purchases 5 shares with an aggregate fair market value of $100. On January 1, 2006, when the fair market value of an X Corporation share is $50, X Corporation is acquired by Y Corporation in a section 368(a)(1)(A)

reorganization. As part of the acquisition, all X Corporation shares are converted into Y Corporation shares. After the conversion, if an optionee holds a fractional share of Y Corporation stock, Y Corporation will purchase the fractional share for cash equal to its fair market value. After applying the conversion formula to the shares held by E, E has $10^1/_2$ Y Corporation shares. Y Corporation purchases E's one-half share for $25, the fair market value of one-half of a Y Corporation share on the conversion date. Because E sells the one-half share prior to expiration of the holding periods described in § 1.422-1(a), the sale is a disqualifying disposition of the one-half share. Thus, in 2006, E must recognize compensation income of $5 (one-half of the fair market value of an X Corporation share on the date of exercise of the option, or $10, less one-half of the exercise price per share, or $5). For purposes of computing any additional gain, E's basis in the one-half share increases to $10 (reflecting the $5 included in income as compensation). E recognizes an additional gain of $15 ($25, the fair market value of the one-half share, less $10, the basis in such share). The extent to which the additional $15 of gain is treated as a redemption of Y Corporation stock is determined under section 302.

(d) ***Attribution of stock ownership.*** To determine the amount of stock owned by an individual for purposes of applying the percentage limitations relating to certain stockholders described in §§ 1.422-2(f) and 1.423-2(d), shares of the employer corporation or of a related corporation that are owned (directly or indirectly) by or for the individual's brothers and sisters (whether by the whole or half blood), spouse, ancestors, and lineal descendants, are considered to be owned by the individual. Also, for such purposes, if a domestic or foreign corporation, partnership, estate, or trust owns (directly or indirectly) shares of the employer corporation or of a related corporation, the shares are considered to be owned proportionately by or for the stockholders, partners, or beneficiaries of the corporation, partnership, estate, or trust. The extent to which stock held by the optionee as a trustee of a voting trust is considered owned by the optionee is determined under all of the facts and circumstances.

(e) ***Modification, extension, or renewal of option.***

(1) This paragraph (e) provides rules for determining whether a share of stock transferred to an individual upon the individual's exercise of an option after the terms of the option have been changed is transferred pursuant to the exercise of a statutory option.

(2) Any modification, extension, or renewal of the terms of an option to purchase shares is considered the granting of a new option. The new option may or may not be a statutory option. To determine the date of grant of the new option for purposes of section 422 or 423, see § 1.421-1(c).

(3) If section 423(c) applies to an option then, in case of a modification, extension, or renewal of an option, the highest of the following values shall be considered to be the fair market value of the stock at the time of the granting of such option for purposes of applying the rules of sections 423(b)(6)—

(i) The fair market value on the date of the original granting of the option,

(ii) The fair market value on the date of the making of such modification, extension, or renewal, or

(iii) The fair market value at the time of the making of any intervening modification, extension, or renewal.

(4)

(i) For purposes of §§ 1.421-1 through 1.424-1 the term *modification* means any change in the terms of the option (or change in the terms of the plan pursuant to which the option was granted or in the terms of any other agreement governing the arrangement) that gives the optionee additional benefits under the option regardless of whether the optionee in fact benefits from the change in terms. In contrast, for example, a change in the terms of the option shortening the period during which the option is exercisable is not a modification. However, a change providing an extension of the period during which an option may be exercised (such as after termination of employment) or a change providing an alternative to the exercise of the option (such as a stock appreciation right) is a modification regardless of whether the optionee in fact benefits from such extension or alternative right. Similarly, a change providing an additional benefit upon exercise of the option (such as the payment of a cash bonus) or a change providing more favorable terms for payment for the stock purchased under the option (such as the right to tender previously acquired stock) is a modification.

(ii) If an option is not immediately exercisable in full, a change in the terms of the option to accelerate the time at which the option (or any portion thereof) may be exercised is not a modification for purposes of this section. Additionally, no modification occurs if a provision accelerating the time when an option may first be exercised is removed prior to the year in which it would otherwise be triggered. For example, if an acceleration provision is timely removed to avoid exceeding the $100,000 limitation described in § 1.422-4, a modification of the option does not occur.

(iii) A change to an option which provides, either by its terms or in substance, that the optionee may receive an additional benefit under the option at the future discretion of the grantor, is a modification at the time that the option is changed to provide such discretion. In addition, the exercise of discretion to provide an additional benefit is a modification of the option. However, it is not a modification for the grantor to exercise discretion specifically reserved under an option with respect to the payment of a cash bonus at the time of exercise, the availability of a loan at exercise, the right to tender previously acquired stock for the stock purchasable under the option, or the payment of employment taxes and/or required withholding taxes resulting from the exercise of a statutory option. An option is not modified merely because an optionee is offered a change in the terms of an option if the change to the option is not made. An offer to change the terms of an option that remains open less than 30 days is not a modification of the option. However, if an offer to change the terms of an option remains outstanding for 30 days or more, there is a modification of the option as of the date the offer to change the option is made.

(iv) A change in the terms of the stock purchasable under the option that increases the value of the stock is a modification of such option, except to the extent that a new option is substituted for such option by reason of the change in the terms of the stock in accordance with paragraph (a) of this section.

(v) If an option is amended solely to increase the number of shares subject to the option, the increase is not considered a modification of the option but is treated as the grant of a new option for the additional shares. Notwithstanding the previous sentence, if the exercise price and number of shares subject to an option are proportionally adjusted to reflect a stock split (including a reverse stock split) or stock dividend, and the only effect of the stock split or stock dividend is to increase (or decrease) on a pro rata basis the number of shares owned by each

shareholder of the class of stock subject to the option, then the option is not modified if it is proportionally adjusted to reflect the stock split or stock dividend and the aggregate exercise price of the option is not less than the aggregate exercise price before the stock split or stock dividend.

(vi) Any change in the terms of an option made in an attempt to qualify the option as a statutory option grants additional benefits to the optionee and is, therefore, a modification. However, if the terms of an option are changed to provide that the optionee cannot transfer the option except by will or by the laws of descent and distribution in order to meet the requirements of section 422(b)(5) or 423(b)(9) such change is not a modicication.

(vii) An extension of an option refers to the granting by the corporation to the optionee of an additional period of time within which to exercise the option beyond the time originally prescribed. A renewal of an option is the granting by the corporation of the same rights or privileges contained in the original option on the same terms and conditions. The rules of this paragraph apply as well to successive modifications, extensions, and renewals.

(viii) Any inadvertent change to the terms of an option (or change in the terms of the plan pursuant to which the option was granted or in the terms of any other agreement governing the arrangement) that is treated as a modification under this paragraph (e) is not considered a modification of the option to the extent the change in the terms of the option is removed by the earlier of the date the option is exercised or the last day of the calendar year during which such change occurred. Thus, for example, if the terms of an option are inadvertently changed on March 1 to extend the exercise period and the change is removed on November, then if the option is not exercised prior to November 1, the option is not considered modified under this paragraph (e).

(5) A statutory option may, as a result of a modification, extension, or renewal, thereafter cease to be a statutory option, or any option may, by modification, extension, or renewal, thereafter become a statutory option.

(6) [Reserved]

(7) The application of this paragraph may be illustrated by the following examples:

Example 1. On June 1, 2004, the X Corporation grants to an employee an option under X's employee stock purchase plan to purchase 100 shares of the stock of X Corporation at $90 per share, such option to be exercised on or before June 1, 2006. At the time the option is granted, the fair market value of the X Corporation stock is $100 per share. On February 1, 2005, before the employee exercises the option, X Corporation modifies the option to provide that the price at which the employee may purchase the stock shall be $80 per share. On February 1, 2005, the fair market value of the X Corporation stock is $90 per share. Under section 424(h), the X Corporation is deemed to have granted an option to the employee on February 1, 2005. Such option shall be treated as an option to purchase at $80 per share 100 shares of stock having a fair market value of $100 per share, that is, the higher of the fair market value of the stock on June 1, 2004, or on February 1, 1965. Because the requirements of § 1.424-1(e)(3) and § 1.423-2(g) have not been met, the exercise of such option by the employee after February 1, 2005, is not the exercise of a statutory option.

Example 2. On June 1, 2004, the X Corporation grants to an employee an option under X's employee stock purchase plan to purchase 100 shares of X Corporation stock at $90 per share, exercisable after December 31, 2005, and on or before June 1, 2006. On June 1, 2004, the fair market value of X Corporation's stock is $100 per share. On February 1, 2005, X Corporation modifies the option to

provide that the option shall be exercisable on or before September 1, 2006. On February 1, 2005, the fair market value of X Corporation stock is $110 per share. Under section 424(h), X Corporation is deemed to have granted an option to the employee on February 1, 2005, to purchase at $90 per share 100 shares of stock having a fair market value of $110 per share, that is, the higher of the fair market value of the stock on June 1, 2004, or on February 1, 2005. Because the requirements of § 1.424-1(e)(3) and § 1.423-2(g) have not been met, the exercise of such option by the employee is not the exercise of a statutory option.

Example 3. The facts are the same as in example (1), except that the employee exercised the option to the extent of 50 shares on January 15, 2005, before the date of the modification of the option. Any exercise of the option after February 1, 2005, the date of the modification, is not the exercise of a statutory option. See example (1) in this subparagraph. The exercise of the option on January 15, 2005, pursuant to which 50 shares were acquired, is the exercise of a statutory option.

(f) ***Definitions.*** The following definitions apply for purposes of §§ 1.421-1 through 1.424-1:

(1) ***Parent corporation.*** The term *parent corporation*, or *parent*, means any corporation (other than the employer corporation) in an unbroken chain of corporations ending with the employer corporation if, at the time of the granting of the option, each of the corporations other than the employer corporation owns stock possessing 50 percent or more of the total combined voting power of all classes of stock in one of the other corporations in such chain.

(2) ***Subsidiary corporation.*** The term *subsidiary corporation*, or *subsidiary*, means any corporation (other than the employer corporation) in an unbroken chain of corporations beginning with the employer corporation if, at the time of the granting of the option, each of the corporations other than the last corporation in an unbroken chain owns stock possessing 50 percent or more of the total combined voting power of all classes of stock in one of the other corporations in such chain.

(g) ***Effective/applicability date*** —

(1) ***In general.*** Except for § 1.424-1(a)(10) *Example 9* (iii), the regulations under this section are effective on August 3, 2004. Section 1.424-1(a)(10) *Example 9* (iii) is effective on November 17, 2009. Section 1.424-1(a)(10) *Example 9* (iii) applies to statutory options granted on or after January 1, 2010.

(2) ***Reliance and transition period.*** For statutory options granted on or before June 9, 2003, taxpayers may rely on the 1984 proposed regulations LR-279-81 (49 FR 4504), the 2003 proposed regulations REG-122917-02 (68 FR 34344), or this section until the earlier of January 1, 2006, or the first regularly scheduled stockholders meeting of the granting corporation occurring 6 months after August 3, 2004. For statutory options granted after June 9, 2003, and before the earlier of January 1, 2006, or the first regularly scheduled stockholders meeting of the granting corporation occurring at least 6 months after August 3, 2004, taxpayers may rely on either REG-122917-02 or this section. Taxpayers may not rely on LR-279-81 or REG-122917-02 after December 31, 2005. Reliance on LR-279-81, REG-122917-02, or this section must be in its entirety, and all statutory options granted during the reliance period must be treated consistently.

(3) ***Application of section 1022.*** The provisions of paragraph (c)(2) of this section relating to section 1022 are effective on and after January 19, 2017.

[T.D. 6887, 31 FR 8808, June 24, 1966, as amended by T.D. 9144, 69 FR 46419, Aug. 3, 2004; 69 FR 61310, 61311, Oct. 18, 2004; 69 FR 70551, Dec. 7, 2004; T.D. 9471, 74 FR 59087, Nov. 17, 2009; T.D. 9811, 82 FR 6238, Jan. 19, 2017]

§§ 1.425-1.429 [Reserved]

§ 1.430(a)-1 Determination of minimum required contribution.

(a) *In general* —

(1) *Overview.* This section sets forth rules for determining a plan's minimum required contribution for a plan year under section 430(a). Section 430 and this section apply to single-employer defined benefit plans (including multiple employer plans as defined in section 413(c)) that are subject to section 412 but do not apply to multiemployer plans (as defined in section 414(f)). Paragraph (b) of this section defines a plan's minimum required contribution for a plan year. Paragraph (c) of this section provides rules for determining shortfall amortization installments. Paragraph (d) of this section provides rules for determining waiver amortization installments. Paragraph (e) of this section provides for early deemed amortization of shortfall and waiver amortization bases for fully funded plans. Paragraph (f) of this section provides definitions that apply for purposes of this section. Paragraph (g) of this section provides examples that illustrate the application of this section. Paragraph (h) of this section provides effective/applicability dates and transition rules.

(2) *Special rules for multiple employer plans* —

(i) *In general.* In the case of a multiple employer plan to which section 413(c)(4)(A) applies, the rules of section 430 and this section are applied separately for each employer under the plan, as if each employer maintained a separate plan. Thus, the minimum required contribution is computed separately for each employer under such a multiple employer plan. In the case of a multiple employer plan to which section 413(c)(4)(A) does not apply (that is, a plan described in section 413(c)(4)(B) that has not made the election for section 413(c)(4)(A) to apply), the rules of section 430 and this section are applied as if all participants in the plan were employed by a single employer.

(ii) *CSEC plans.* A CSEC plan (that is, a plan that fits within the definition of a CSEC plan in section 414(y) for plan years beginning on or after January 1, 2014 and for which the election under section 414(y)(3)(A) has not been made) is not subject to the rules of section 430. See section 433 for the minimum funding rules that apply to CSEC plans.

(b) *Definition of minimum required contribution* —

(1) *In general.* In the case of a defined benefit plan that is subject to section 430, except as offset under section 430(f) and § 1.430(f) 1, the minimum required contribution for a plan year is determined as the applicable amount determined under paragraph (b)(2) of this section or paragraph (b)(3) of this section, reduced by the amount of any funding waiver under section 412(c) that is granted for the plan year. See paragraph (b)(4) of this section for special rules for a plan maintained by a commercial passenger airline (or other eligible employer) for which an election under section 402 of the Pension Protection Act of 2006, Public Law 109-280 (120 Stat. 780), as amended (PPA '06), has been made, and see section 430(j) and § 1.430(j) 1(b) for rules regarding the required interest adjustment for a contribution that is paid on a date other than the valuation date for the plan year. See also § 1.430(j)-1(d)(3)(iv)(B) for rules regarding an increase to the minimum required contribution in certain circumstances for a plan with an unpaid liquidity amount.

(2) *Plan assets less than funding target* —

(i) ***General rule.*** For any plan year in which the value of plan assets (as reduced to reflect the subtraction of certain funding balances as provided under § 1.430(f)-1(c), but not below zero) is less than the funding target for the plan year, the minimum required contribution for that plan year is equal to the sum of—

(A) The target normal cost for the plan year;

(B) The total (not less than zero) of the shortfall amortization installments as described in paragraph (c) of this section determined with respect to any shortfall amortization base for the plan year and for each preceding plan year for which the shortfall amortization base has not been fully taken into account (generally, the 6 preceding plan years); and

(C) The total of the waiver amortization installments as described in paragraph (d) of this section determined with respect to any waiver amortization base for all preceding plan years for which the waiver amortization base has not been fully taken into account (generally, the 5 preceding plan years).

(ii) ***Special rule for short plan years*** —

(A) ***Proration of amortization installments.*** In determining the minimum required contribution in the case of a plan year that is shorter than 12 months (and is not a 52-week plan year of a plan that uses a 52-53 week plan year), the shortfall amortization installments and waiver amortization installments that are taken into account under paragraphs (b)(2)(i)(B) and (C) of this section are determined by multiplying the amount of those installments that would be taken into account for a 12-month plan year by a fraction, the numerator of which is the duration of the short plan year and the denominator of which is 1 year.

(B) ***Effect on subsequent years.*** In plan years after the short plan year, installments with respect to a shortfall amortization base or waiver amortization base continue to be taken into account under paragraphs (b)(2)(i)(B) and (C) of this section until the total amount of those installments, as originally determined when the base was established, has been taken into account. Thus, in the case of a plan that has a short plan year, an additional partial installment will be taken into account under paragraphs (b)(2)(i)(B) and (C) of this section for the plan year that ends after the end of the original amortization period (generally 7 years for shortfall amortization bases and 5 years for waiver amortization bases) in an amount determined so that the total of the amortization installments (including the prorated installment payable for the short plan year and the additional partial installment) is equal to the total of the amortization installments as originally determined.

(3) ***Plan assets equal or exceed funding target.*** For any plan year in which the value of plan assets (as reduced to reflect the subtraction of certain funding balances as provided under § 1.430(f)-1(c), but not below zero) equals or exceeds the funding target for the plan year, the minimum required contribution for that plan year is equal to the target normal cost for the plan year reduced (but not below zero) by that excess.

(4) ***Special rules for commercial passenger airlines*** —

(i) ***In general.*** This paragraph (b)(4) provides special rules for a plan maintained by a commercial passenger airline (or an employer whose principal business is providing catering services to a commercial passenger airline) for which an election under section 402(a)(1) of PPA '06 has been made. See paragraph (c)(4) of this section for special rules for a plan maintained by a

commercial passenger airline (or an employer whose principal business is providing catering services to a commercial passenger airline) for which an election under section 402(a)(2) of PPA '06 has been made.

(ii) ***Determinations during 17-year amortization period.*** If an election described in section 402(a)(1) of PPA '06 applies for the plan year with respect to an eligible plan described in section 402(c)(1) of PPA '06, then the plan's minimum required contribution for purposes of section 430 of the Internal Revenue Code (Code) for the plan year is equal to the amount necessary to amortize (at an interest rate of 8.85 percent) the unfunded liability of the plan in equal installments over the remaining amortization period. For this purpose, the unfunded liability means the excess of the accrued liability under the plan determined using the unit credit funding method and an interest rate of 8.85 percent over the value of assets (as determined under section 430(g)(3) and § 1.430(g)-1(c)), and the remaining amortization period is the 17-plan-year period beginning with the first plan year for which the election was made, reduced by 1 year for each plan year after the first plan year for which the election was made. In addition, the section 430(f)(3) election to apply funding balances against the minimum required contribution does not apply to a plan to which the election described in section 402(a)(1) of PPA '06 applies for the plan year.

(iii) ***Determinations following the election period.*** If an election described in section 402(a)(1) of PPA '06 applied to the plan for any preceding plan year but does not apply for the current plan year, then the plan's minimum required contribution for purposes of section 430 of the Code for the plan year is determined without regard to that election. For the first plan year for which that election no longer applies to the plan, any prefunding balance or funding standard carryover balance is reduced to zero.

(5) ***Terminated plans*** —

(i) ***Short plan year.*** If a plan's termination date occurs during a plan year but before the last day of a plan year, then, for purposes of section 430, the plan is treated as having a short plan year that ends on the termination date.

(ii) ***Valuation date.*** If a plan's termination date is before the date that would otherwise have been the valuation date for a plan year, then the valuation date for the plan year must be changed so that it falls within the short plan year pursuant to § 1.430(g)-1(b)(2)(i). See § 1.430(g)-1(b)(2)(iv) for a rule providing automatic approval of changes in the valuation date that are required by section 430.

(c) ***Shortfall amortization installments*** —

(1) ***In general.*** Except as otherwise provided in paragraphs (c)(3) and (4) of this section, the shortfall amortization installments with respect to a shortfall amortization base established for a plan year are the annual amounts necessary to amortize that shortfall amortization base in level annual installments over the 7-year period beginning with that plan year. See § 1.430(h)(2)-1(e) and (f) for rules regarding interest rates used for determining shortfall amortization installments and the date within each plan year on which the installments are assumed to be paid. The shortfall amortization installments are determined using the interest rates that apply for the plan year for which the shortfall amortization base is established and are not redetermined in subsequent plan years to reflect any changes in the valuation date or changes in interest rates under section 430(h)(2) for those subsequent plan years.

(2) ***Shortfall amortization base*** —

(i) ***In general.*** Unless the value of plan assets (as reduced to reflect the subtraction of certain funding balances as provided under § 1.430(f)-1(c)(2), but not below zero) is equal to or greater than the funding target for the plan year, a shortfall amortization base is established for the plan year equal to—

(A) The funding shortfall for the plan year; minus

(B) The amount attributable to future installments determined under paragraph (c)(2)(ii) of this section.

(ii) ***Amount attributable to future installments.*** The amount attributable to future installments is equal to the sum of the present values (determined in accordance with § 1.430(h)(2)-1(e) and (f) using the interest rates that apply for the current plan year) of—

(A) The shortfall amortization installments that have been determined for the plan year and any succeeding plan year with respect to the shortfall amortization bases for any plan year preceding the plan year; and

(B) The waiver amortization installments that have been determined for the plan year and any succeeding plan year with respect to the waiver amortization bases for any plan year preceding the plan year.

(iii) ***Timing assumption for installments after change in valuation date.*** For purposes of determining the present value in paragraph (c)(2)(ii) of this section, the shortfall amortization installments and waiver amortization installments are assumed to be paid on the valuation date for the current plan year and anniversaries thereof even if the valuation date for a subsequent plan year is not the same as the valuation date for the plan year for which a shortfall amortization base or waiver amortization base was established. For example, assume that a plan has a July 1 to June 30 plan year and a valuation date that is the first day of the plan year, and that the plan year for the plan is changed to the calendar year, so that the plan has a short plan year beginning July 1, 2017 and ending December 31, 2017 and a calendar plan year thereafter. In this case—

(A) For the July 1, 2017 actuarial valuation, the shortfall amortization payments with respect to shortfall amortization bases established for all prior plan years are assumed to be paid on July 1, 2017 and anniversaries thereof; and

(B) For the January 1, 2018 actuarial valuation, the shortfall amortization payments with respect to shortfall amortization bases established for all prior plan years are assumed to be paid on January 1, 2018 and anniversaries thereof.

(iv) ***Transition rule.*** See paragraph (h)(4) of this section for a transition rule under which only a portion of the funding target is taken into account in determining whether a shortfall amortization base is established under this paragraph (c)(2).

(3) ***Election of funding relief for certain plans*** —

(i) ***Funding relief under the Preservation of Access to Care for Medicare Beneficiaries and Pension Relief Act of 2010.*** See section 430(c)(2)(D) and section 430(c)(7) for special rules that apply to determine the amount of shortfall amortization installments with respect to shortfall amortization bases established for plan years ending on or after October 10, 2009 and beginning before January 1, 2012, for which the relief under section 430(c)(2)(D) is elected.

(ii) ***Funding relief related to eligible charity plans.*** See section 104(d)(3)(B) through (F) of PPA '06, which reflects amendments made by section 103(b)(2) of the Cooperative and Small Employer Charity Pension Flexibility Act of 2014, Public Law 113-97 (128 Stat. 1137), for special rules that apply to determine the amount of shortfall amortization installments with respect to plan years beginning on or after January 1, 2014, in the case of an eligible charity plan for which the relief under section 104(d)(3)(A) of PPA '06 is elected.

(iii) ***Election by commercial passenger airline under section 402(a)(2) of PPA '06.*** If an election described in section 402(a)(2) of PPA '06 has been made for an eligible plan described in section 402(c)(1) of PPA '06, then the minimum required contribution for purposes of section 430 is determined under generally applicable rules, except that the shortfall amortization base for the first plan year for which section 430 applies to the plan is amortized over 10 years (rather than over 7 years as provided in paragraph (c)(1) of this section) in accordance with § 1.430(h)(2)-1(e) and (f) using the interest rates that apply for purposes of determining the target normal cost for the first plan year for which section 430 applies to the plan. In such a case, the shortfall amortization installments with respect to the shortfall amortization base for that plan year will continue to be included in determining the minimum required contribution for 10 years rather than 7 years. See also § 1.430(h)(2)-1(b)(6) for a special rule for determining the funding target in the case of a plan for which an election under section 402(a)(2) of PPA '06 has been made.

(d) ***Waiver amortization installments*** —

(1) ***In general.*** For purposes of this section, the waiver amortization installments with respect to a waiver amortization base established for a plan year are the annual amounts necessary to amortize that waiver amortization base in level annual installments over the 5-year period beginning with the following plan year. See § 1.430(h)(2)-1(e) and (f) for rules regarding interest rates used for determining waiver amortization installments and the date within each plan year on which the installments are assumed to be paid. The waiver amortization installments established with respect to a waiver amortization base are determined using the interest rates that apply for the plan year for which the waiver is granted (even though the first installment with respect to the waiver amortization base is not due until the subsequent plan year) and are not redetermined in subsequent plan years to reflect any changes in the valuation date or changes in interest rates under section 430(h)(2) for those subsequent plan years.

(2) ***Waiver amortization base*** —

(i) ***In general.*** For purposes of this section, a waiver amortization base is established for each plan year for which a waiver of the minimum funding standard has been granted in accordance with section 412(c). The amount of the waiver amortization base is equal to the waived funding deficiency under section 412(c)(3) for the plan year.

(ii) ***Transition rule.*** See paragraph (h)(3) of this section for the treatment of funding waivers granted for plan years beginning before 2008.

(e) ***Early deemed amortization upon attainment of funding target.*** In any case in which the funding shortfall for a plan year is zero, for purposes of determining the minimum required contribution for that plan year and subsequent plan years—

(1) The shortfall amortization bases for all preceding plan years (and all shortfall amortization installments determined with respect to those bases) are reduced to zero; and

(2) The waiver amortization bases for all preceding plan years (and all waiver amortization installments determined with respect to those bases) are reduced to zero.

(f) *Definitions* —

(1) ***In general.*** The definitions set forth in this paragraph (f) apply for purposes of this section.

(2) ***Funding shortfall.*** The term *funding shortfall* means the excess (if any) of—

(i) The funding target for a plan year; over

(ii) The value of plan assets for the plan year (as reduced to reflect the subtraction of the funding standard carryover balance and prefunding balance to the extent provided under § 1.430(f)-1(c), but not below zero).

(3) ***Funding target.*** The term *funding target* means the plan's funding target for a plan year determined under § 1.430(d)-1(b)(2), § 1.430(i)-1(c), or § 1.430(i)-1(e)(1), whichever applies to the plan for the plan year.

(4) ***Target normal cost.*** The term *target normal cost* means the plan's target normal cost for a plan year determined under § 1.430(d)-1(b)(1), § 1.430(i)-1(d), or § 1.430(i)-1(e)(2), whichever applies to the plan for the plan year.

(5) *Termination date* —

(i) ***Plans subject to Title IV of ERISA.*** In the case of a plan subject to Title IV of the Employee Retirement Income Security Act of 1974, as amended (ERISA), the termination date means the plan's termination date established under section 4048(a) of ERISA.

(ii) *Other plans* —

(A) ***In general.*** In the case of a plan not subject to Title IV of ERISA, the termination date means the plan's termination date established by the plan administrator, provided that the termination date may be no earlier than the date on which all actions necessary to effect the plan termination (other than the distribution of plan assets) are taken.

(B) ***Requirement for prompt distribution.*** A plan is not treated as terminated on the applicable date described in paragraph (f)(5)(ii)(A) of this section if the assets are not distributed as soon as administratively feasible after that date. Whether distribution of plan assets is made as soon as administratively feasible is to be determined under all the relevant facts and circumstances. In general, distribution of plan assets is deemed to have been made as soon as administratively feasible to the extent that any delay in distribution was because of circumstances outside the control of the plan administrator. However, distribution of plan assets that was delayed merely for the purpose of obtaining a higher value than current market value is generally not deemed to have been made as soon as administratively feasible.

(C) ***Presumption applicable to prompt distribution requirement.*** Except as provided in paragraph (f)(5)(ii)(D) of this section, distribution of plan assets which is not completed within one year following the applicable date described in paragraph (f)(5)(ii)(A) of this section is presumed not to have been made as soon as administratively feasible.

(D) ***Exception to prompt distribution presumption for obtaining determination letter from Commissioner.*** A plan is not treated as failing to meet the requirement to distribute plan assets as soon as administratively feasible after the proposed termination date if the delay is attributable to the period of time necessary to obtain a determination letter from the Commissioner on the plan's qualified status upon its termination, provided that the request for a determination letter is timely and the distribution of plan assets is made as soon as administratively feasible after the letter is obtained.

(6) ***Transition funding shortfall*** —

(i) ***In general.*** The term *transition funding shortfall* means the excess, if any, of—

(A) The applicable percentage of the funding target for a plan year; over

(B) The value of plan assets for the plan year (as reduced to reflect the subtraction of the funding standard carryover balance and prefunding balance to the extent provided under § 1.430(f)-1(c), but not below zero).

(ii) ***Applicable percentage.*** For purposes of this paragraph (f)(6), the applicable percentage is determined in accordance with the following table:

Calendar year in which the plan year begins	Applicable percentage
2008	92
2009	94
2010	96

(g) ***Examples.*** The following examples illustrate the rules of this section. Unless otherwise indicated, these examples are based on the following assumptions: Section 430 applies to determine the minimum required contribution for plan years beginning on or after January 1, 2008; the plan year is the calendar year; the valuation date is January 1; the plan's prefunding balance and funding standard carryover balance are equal to $0; the plan sponsor did not elect any funding relief under section 430(c)(2)(D) for any plan year; and the plan has not received any funding waivers for any relevant time periods.

Example 1. (i) Plan A has a funding target of $2,500,000 and assets totaling $1,800,000 as of January 1, 2016. For purposes of this example, the segment interest rates used for the January 1, 2016 valuation are assumed to be 5.26% for the first segment interest rate and 5.82% for the second segment interest rate. No shortfall or waiver amortization bases have been established for prior plan years.
(ii) A $700,000 shortfall amortization base is established for 2016, which is equal to the $2,500,000 funding target less $1,800,000 of assets.

(iii) With respect to the new shortfall amortization base of $700,000, there is a shortfall amortization installment of $116,852 (which is the amount necessary to amortize the $700,000 shortfall amortization base over 7 years) for each year from 2016 through 2022. The amount of

this shortfall amortization installment is determined by discounting the first five installments using the first segment interest rate of 5.26%, and by discounting the sixth and seventh installments using the second segment rate of 5.82%.

Example 2. (i) The facts are the same as in *Example 1*, except that the plan was granted a funding waiver for 2014, resulting in five annual waiver amortization installments of $70,000 each, beginning with the 2015 plan year.
(ii) As of January 1, 2016, the present value of the remaining waiver amortization installments is $259,702, which is determined by discounting the remaining four waiver amortization installments of $70,000 each to January 1, 2016, using the first segment rate of 5.26%. See paragraph (c)(2)(ii) of this section.

(iii) A $440,298 shortfall amortization base is established for 2016, which is equal to the $2,500,000 funding target, less $1,800,000 of assets, less $259,702 (which is the present value of the remaining four waiver amortization installments).

(iv) With respect to this shortfall amortization base of $440,298, there is a shortfall amortization installment of $73,500 (which is equal to the $440,298 shortfall amortization base amortized over 7 years) for each year from 2016 through 2022.

Example 3. (i) The facts are the same as in *Example 2*. Plan A has a $100,000 target normal cost for the 2016 plan year and was granted a funding waiver for 2016 to the largest extent permitted under section 412(c).
(ii) If the funding waiver for 2016 had not been granted, the minimum required contribution for 2016 would have been $243,500. This is equal to the $100,000 target normal cost, plus the $70,000 waiver amortization installment from the 2014 waiver, plus the $73,500 January 1, 2016 shortfall amortization installment.

(iii) In accordance with section 412(c)(1)(C), the portion of the minimum required contribution attributable to the amortization of the 2014 funding waiver cannot be waived. Therefore, the maximum amount of the January 1, 2016 minimum required contribution that can be waived is $173,500.

(iv) In accordance with paragraph (d) of this section, a waiver amortization base of $173,500 is established as of January 1, 2016 to be amortized over 5 years beginning with the 2017 plan year. Although the waiver amortization installments for the 2016 funding waiver are not included in the minimum required contribution until 2017, the amount of those installments is determined based on the interest rates used for the 2016 plan year.

(v) The waiver amortization installments with respect to the 2016 funding waiver are calculated using the first segment interest rate of 5.26% for the first four installments (calculated as of January 1, 2017 through January 1, 2020) and the second segment interest rate of 5.82% for the final installment payable as of January 1, 2021. Accordingly, the waiver amortization installments with respect to the 2016 funding waiver are $40,554 each, payable beginning January 1, 2017.

Example 4. (i) The facts are the same as in *Example 3*. As of January 1, 2017, Plan A has a funding target of $2,750,000 and assets totaling $1,900,000. For purposes of this example, the first segment rate used for the 2017 valuation is assumed to be 5.50%, the second segment rate is assumed to be 6.00%, and the third segment rate is assumed to be 6.50%.
(ii) As of January 1, 2017, the present value of the remaining three waiver amortization installments with respect to the 2014 waiver is $199,242, which is determined using the first segment rate of 5.50%.

(iii) As of January 1, 2017, the present value of the remaining five waiver amortization installments with respect to the 2016 waiver is $182,701, which is determined using the first segment rate of 5.50%.

(iv) As of January 1, 2017, the present value of the remaining six shortfall amortization installments with respect to the 2016 shortfall amortization base is $386,052, which is determined using the first segment rate of 5.50% for the first five installments and the second segment rate of 6.00% for the sixth installment.

(v) A shortfall amortization base of $82,005 is established for 2017, which is equal to the $2,750,000 funding target, reduced by the sum of $1,900,000 of assets, $199,242 (the present value of the remaining waiver amortization installments with respect to the 2014 waiver), $182,701 (the present value of the remaining waiver amortization installments with respect to the 2016 waiver), and $386,052 (the present value of the remaining installments with respect to the 2016 shortfall amortization base).

(vi) With respect to this shortfall amortization base of $82,005, there is a shortfall amortization installment of $13,766 (which is the amount necessary to amortize the $82,005 shortfall amortization base over 7 years) for each year from 2017 through 2023.

Example 5. (i) As of January 1, 2016, a plan has a funding target of $2,500,000, a target normal cost of $175,000, and assets totaling $2,450,000. As of January 1, 2016, there are six remaining installments of $60,000 each with respect to the only shortfall amortization base for the plan, which was established for the 2015 plan year. Also as of January 1, 2016, there are five remaining installments of $25,000 each with respect to the only waiver amortization base for the plan, which was established for the 2015 plan year. For purposes of this example, the segment interest rates used for the January 1, 2016, valuation are assumed to be 5.26% for the first segment interest rate

and 5.82% for the second segment interest rate.
(ii) A shortfall amortization base of −$379,812 is established for 2016, which is equal to the $2,500,000 funding target, reduced by the sum of $2,450,000 of assets, $316,696 (the present value of the remaining installments with respect to the 2015 shortfall amortization base) and $113,116 (the present value of the remaining installments with respect to the 2015 funding waiver).

(iii) The shortfall amortization installment for the 2016 shortfall amortization base is −$63,403, which is the amount necessary to amortize the −$379,812 shortfall amortization base over seven years. The first five shortfall amortization installments are discounted using the first segment rate of 5.26% and the sixth and seventh shortfall amortization installments are discounted using the second segment rate of 5.82%.

(iv) The sum of the shortfall amortization installments is equal to −$3,403 ($60,000 plus −$63,403). However, in accordance with paragraph (b)(2)(i)(B) of this section, for purposes of determining the minimum required contribution for a plan year, the total of the shortfall amortization installments for a plan year is limited so that it is not less than zero.

(v) The minimum required contribution as of January 1, 2016 is $200,000. This is equal to the sum of the target normal cost of $175,000, the total of the shortfall amortization installments (as limited) of $0, and the waiver amortization installment of $25,000.

(vi) The shortfall amortization bases are not set to zero as of January 1, 2016, even though the sum of the shortfall amortization installments was set to zero for the 2016 plan year. Therefore, as of January 1, 2017 (unless the plan has a funding shortfall of zero as of that date), the shortfall amortization base established as of January 1, 2015 will have five remaining installments of $60,000 each and the shortfall amortization base established as of January 1, 2016 will have six remaining installments of −$ 63,403 each. Similarly, the waiver amortization base will have four remaining installments of $25,000 each.

Example 6. (i) The facts are the same as in *Example 5*, except that Plan A has assets totaling $2,550,000 as of January 1, 2016.
(ii) Because the assets of $2,550,000 exceed the funding target of $2,500,000, no new shortfall amortization base is established under paragraph (c)(2) of this section.

(iii) Furthermore, under paragraph (e) of this section, all shortfall amortization bases and waiver amortization bases (and all shortfall amortization installments and waiver amortization installments associated with those bases) are reduced to zero as of January 1, 2016.

(iv) The minimum required contribution for the 2016 plan year is $125,000, which is equal to the $175,000 target normal cost less the excess of the assets over the funding target ($2,550,000 minus $2,500,000).

Example 7. (i) The actuarial valuation for Plan B as of January 1, 2016, based on a 12-month plan year, results in a target normal cost of $110,000 and a shortfall amortization installment for 2016 of $185,000, attributable to a shortfall amortization base established January 1, 2016. There are no other shortfall or waiver amortization bases for Plan B as of January 1, 2016. The plan year for Plan B is changed to April 1 through March 31, effective April 1, 2016, resulting in a short plan year beginning January 1, 2016 and ending March 31, 2016.
(ii) The target normal cost for the short plan year is redetermined in order to reflect the fact that there is a short plan year. An actuarial valuation shows that the target normal cost is $25,000 for the short plan year based on the accruals for that short plan year (determined in accordance with 29 CFR 2530.204-2(e)).

(iii) In accordance with paragraph (b)(2)(ii)(A) of this section, the shortfall amortization base is prorated to reflect the three months covered by the short plan year. Accordingly, the shortfall amortization installment for the short plan year is $46,250 (that is, $185,000 multiplied by 3/12).

(iv) The total minimum required contribution for the short plan year is $71,250 (that is, the sum of the target normal cost of $25,000 plus the shortfall amortization installment of $46,250).

Example 8. (i) The facts are the same as in *Example 7*. For purposes of this example, assume that the first segment rate for the plan year beginning April 1, 2016 is 5.30%, and the second segment rate is 5.80%.
(ii) The present value of the remaining shortfall amortization installments with respect to the January 1, 2016 shortfall amortization base is equal to $1,074,937. This is determined by discounting the remaining installments (6 full-year installments of $185,000 each due April 1, 2016 through April 1, 2021, and a final 9-month installment of $138,750 due April 1, 2022) using the first segment rate of 5.30% for the first five installments and the second segment rate of 5.80% for the remaining installments.

Example 9. (i) As of January 1, 2016, Plan C has a funding target of $1,100,000, a target normal cost of $20,000, and an actuarial value of assets of $1,150,000. Prior to establishing any shortfall amortization base for 2016, the total of the shortfall amortization installments for 2016 is $30,000 and the present value of the remaining shortfall amortization installments (including installments for the 2016 plan year) is $150,000. Based on the segment rates used for the 2016 plan year, the 7-year amortization factor for any shortfall amortization base established for 2016 is 5.9887. The funding standard carryover balance as of January 1, 2016 is $40,000 and the prefunding balance is $60,000. The plan sponsor intends to use both balances to offset the minimum required contribution for 2016.

(ii) In accordance with sections 430(c) and 430(f)(4)(A), the test to determine whether Plan C is exempt from establishing a new shortfall amortization base for 2016 is initially applied based on assets reduced by the prefunding balance, because the plan sponsor intends to use the prefunding balance to offset the minimum required contribution. Therefore, the actuarial value of assets used for this purpose is $1,150,000 minus $60,000, or $1,090,000. This is less than the funding target of $1,100,000, so a new shortfall amortization base is established for 2016.

(iii) The funding shortfall as of January 1, 2016 is the difference between the funding target and the actuarial value of assets, where the actuarial value of assets is reduced by both the funding standard carryover balance and the prefunding balance. Accordingly, the value of assets used for this calculation is $1,050,000 (that is, $1,150,000 − $40,000 − $60,000), and the funding shortfall is $50,000 (that is, $1,100,000 − $1,050,000).

(iv) The shortfall amortization base established as of January 1, 2016 is the difference between the funding shortfall of $50,000 and the $150,000 present value of remaining shortfall amortization installments for bases established in prior years (that is, −$100,000). The shortfall amortization installment attributable to this base is −$100,000 ÷ 5.9887, or −$16,698.

(v) The preliminary minimum required contribution is the sum of the target normal cost, the shortfall amortization installments for bases established prior to 2016, and the shortfall amortization installment for the new base established for 2016, or $33,302 (that is, $20,000 + $30,000−$16,698). However, this amount is less than the funding standard carryover balance. Because section 430(f)(3)(B) and § 1.430(f)-1(d)(2) require that the funding standard carryover balance be used before using the prefunding balance, this means that the full minimum required contribution will be offset without using the prefunding balance. Accordingly, the plan sponsor will not be electing to use any portion of the prefunding balance to offset the minimum required contribution for 2016.

(vi) Because the plan sponsor is not using the prefunding balance to offset the minimum required contribution, the test to determine whether Plan C is exempt from establishing a new shortfall amortization base for 2016 must be applied without subtracting the prefunding balance from the actuarial value of plan assets. Because the full actuarial value of assets of $1,150,000 is higher than the funding target of $1,100,000, the plan is exempt from establishing a new shortfall amortization base for 2016. However, the actuarial value of plan assets is reduced by both balances when determining the funding shortfall, which is used to determine whether the shortfall amortization bases established prior to 2016 are reduced to zero. Because the funding shortfall is greater than zero as of January 1, 2016 (as calculated in paragraph (iii) of this *Example 9*), the shortfall amortization bases established before the 2016 plan year are retained.

(vii) The minimum required contribution for 2016 is the sum of the target normal cost and the shortfall amortization installments, or $50,000 ($20,000 + $30,000). Because this is larger than the funding standard account carryover balance of $40,000, the plan sponsor can only offset $40,000 of the minimum required contribution and must contribute $10,000 to meet the minimum funding requirements. The prefunding balance cannot be used to offset the remaining $10,000 minimum funding requirement because doing so would require recalculating the minimum required contribution as illustrated in paragraphs (ii) through (v) of this *Example 9* and the minimum required contribution would be too small to use the prefunding balance.

Example 10. (i) The facts are the same as in *Example 9*, except that, in lieu of making the cash contribution required in *Example 9*, the plan sponsor elects to reduce the funding standard carryover balance by $9,000.
(ii) Because the plan sponsor intends to use the prefunding balance to offset the minimum required contribution, the test to determine whether Plan C is exempt from establishing a shortfall amortization base for 2016 is based on the actuarial value of assets reduced by the prefunding balance. The actuarial value of assets reduced for the prefunding balance ($1,090,000) is less than the funding target ($1,100,000), so a new shortfall amortization base is established for 2016.

(iii) The remaining funding standard carryover balance is $31,000 (that is, $40,000 minus the elected reduction of $9,000). The funding shortfall as of January 1, 2016 is the difference between the funding target and the actuarial value of assets, where the actuarial value of assets is reduced by both the remaining funding standard carryover balance and the prefunding balance. Accordingly, the value of assets used for this calculation is $1,059,000 (that is, $1,150,000−$31,000−$60,000), and the funding shortfall is $41,000 (that is, $1,100,000−$1,059,000).

(iv) The shortfall amortization base established as of January 1, 2016 is the difference between the funding shortfall of $41,000 and the $150,000 present value of remaining shortfall amortization installments for bases established in prior years (that is, −$109,000). The shortfall amortization installment attributable to this base is −$109,000 ÷ 5.9887, or −$18,201.

(v) The minimum required contribution is the sum of the target normal cost, the shortfall amortization installments for bases established prior to 2016, and the shortfall amortization installment for the new base established for 2016, or $31,799 (that is, $20,000 + $30,000−$18,201). This amount is larger than the remaining funding standard carryover balance of $31,000. Therefore, the plan sponsor can offset the full minimum required contribution using the remaining $31,000 of the funding standard carryover balance and $799 of the prefunding balance. Because a portion of the prefunding balance is used to offset the minimum required contribution, the test under section 430(c)(5) is applied by subtracting the prefunding balance from the actuarial value of assets as illustrated in paragraph (ii) of this *Example 10*, and no further adjustments are required to the minimum required contribution.

Example 11. (i) An amendment to Plan D was adopted during 2015, scheduled to be effective February 1,

2016. The actuary determines that, as of January 1, 2016, the amendment would increase Plan D's funding target by $300,000, if the amendment is permitted to take effect. As of February 1, 2016, prior to taking into account the amendment, the presumed adjusted funding target attainment percentage (AFTAP) for Plan D is less than 80% but not less than 60%. Plan D's sponsor makes a section 436 contribution (under section 436(c)(2)(A)) of $300,000, adjusted for interest as required under § 1.436-1(f)(2)(i)(A)(2), to allow the amendment to take effect.
(ii) Because the plan amendment was adopted prior to the valuation date for 2016 and becomes effective during the 2016 plan year, under § 1.430(d)-1(d)(1)(i), the plan amendment must be taken into account in the funding target as of January 1, 2016. However, because the section 436 contribution is made for the 2016 plan year, it is not included in Plan D's actuarial value of assets as of January 1, 2016.

(iii) The funding shortfall as of January 1, 2016 is calculated as the amount of the funding target (taking into account the plan amendment) minus the actuarial value of assets, where the value of assets is reduced by any funding standard carryover balance and prefunding balance as of that date. Because the funding target takes into account the increase of $300,000 attributable to the plan amendment but the actuarial value of assets does not include the section 436 contribution, the funding shortfall is $300,000 higher than it would have been had the plan amendment not been allowed to take effect.

(iv) The funding shortfall as of January 1, 2017 will reflect both the cost of the plan amendment and the value of the section 436 contribution made during 2016. Therefore, in the absence of any other factors affecting the shortfall amortization base, it is expected that a negative shortfall amortization base will be established as of January 1, 2017 as a result of the section 436 contribution made during 2016.

Example 12. (i) Plan E has a calendar year plan year and in 2015 had 97 participants. Plan E has a valuation date of July 1. A shortfall amortization base of $300,000 was established with the July 1, 2016 valuation. The plan had no other shortfall or waiver amortization bases. For purposes of this example, assume that the first segment rate for the 2016 plan year is 5.50% and the second segment rate is 6.00%. Accordingly, the shortfall amortization installments are determined as seven annual installments of $50,358 each, payable as of each July 1 beginning July 1, 2016.
(ii) Sometime after January 1, 2016, the number of participants in Plan E increased to over 100 during 2016, and therefore the valuation date was changed to January 1 effective with the 2017 plan year. As of January 1, 2017, Plan E has a funding target of $2,000,000, plan assets of $1,600,000, and a zero funding standard carryover balance and prefunding balance. For purposes of this example, assume that as of January 1, 2017, the first segment rate is 5.75% and the second segment rate is 6.25%.

(iii) In accordance with paragraph (c)(1) of this section, the amount of the shortfall amortization installments for the base established July 1, 2016 is not adjusted for the change in valuation date. As of January 1, 2017, the outstanding balance of the shortfall amortization base established as of July 1, 2016 is $263,047, determined as the present value of the remaining shortfall amortization installments, calculated as if the shortfall amortization installments of $50,358 are payable annually on January 1 instead of July 1.

(iv) A new shortfall amortization base of $136,953 is established effective January 1, 2017 equal to the difference between the funding shortfall of $400,000 and the outstanding balance of the shortfall amortization base established as of July 1, 2016 ($263,047). The shortfall amortization installment for this base is calculated as $23,139.

(v) The total shortfall amortization installment for the 2017 plan year is $73,497, equal to the sum of the installments for the shortfall amortization base established July 1, 2016 ($50,358) and the base established January 1, 2017 ($23,139). The total amortization installment is determined as an amount payable as of January 1 regardless of the fact that the installment for the first base was initially calculated as an amount payable on July 1.

Example 13. (i) A funding waiver of $300,000 was granted for Plan F for the 2006 plan year. The valuation interest rate for the January 1, 2007 actuarial valuation is 8.50% (which exceeds 150% of the applicable federal mid-term rate). The first segment rate for the January 1, 2008 valuation of Plan F is 5.26%.
(ii) The waiver amortization charge for the plan year beginning January 1, 2007 is $70,166, which is equal to the $300,000 funding waiver base amortized over 5 years at the valuation interest rate of 8.50%.

(iii) The annual waiver amortization installment for 2008 and later years is equal to the amortization charge for the 2007 plan year, or $70,166. As of January 1, 2008, the present value of the remaining waiver amortization installments is $260,318, which is determined by discounting the remaining four waiver amortization installments of $70,166 to January 1, 2008, using the first segment rate of 5.26%.

Example 14. (i) As of January 1, 2008, Plan G has a funding target of $2,500,000, plan assets of $1,800,000 and a funding standard carryover balance of $100,000. Plan G has not received a funding waiver for any past plan year. Plan G was in existence during 2007, and in the 2007 plan year was not subject to the deficit reduction contribution in section 412(l) of the Code as it existed prior to PPA '06.
(ii) Plan G qualifies for the transition rule in section 430(c)(5) of the Code (as in effect prior to amendments made by the Tax Increase Prevention Act of 2014, Public Law 113-295, 128 Stat. 4010) and paragraph (h)(4) of this section. Because Plan G's assets are less than 92% of its funding target, a shortfall amortization base must be established as of January 1, 2008.

(iii) Under the transition rule in paragraph (h)(4) of this section, the shortfall amortization base for 2008 is determined using only 92% of Plan G's funding target, or $2,300,000. For purposes of this calculation, the value of assets is reduced by the funding standard carryover balance for a net asset figure of $1,700,000 (that is, $1,800,000 minus $100,000). Accordingly, the shortfall amortization base as of January 1, 2008 is equal to $600,000.

(h) ***Effective/applicability dates and transition rules*** —

(1) ***Statutory effective date/applicability date.*** Section 430 generally applies to plan years beginning on or after January 1, 2008. The applicability of section 430 for purposes of determining the minimum required contribution is delayed for certain plans in accordance with sections 104 through 106 of PPA '06.

(2) ***Effective date/applicability date of regulations.*** This section applies to plan years beginning on or after January 1, 2016. For plan years beginning before January 1, 2016, plans are permitted to rely on the provisions set forth in this section for purposes of satisfying the requirements of section 430(a).

(3) ***Treatment of pre-PPA '06 funding waivers.*** In the case of a plan that has received a funding waiver under section 412 for a plan year for which section 430 was not yet effective with respect to the plan for purposes of determining the minimum required contribution, the waiver is treated as giving rise to a waiver amortization base and the amortization charges with respect to that funding waiver are treated as waiver amortization installments as described in paragraph (d) of this section. With respect to such a pre-existing funding waiver, the amount of the waiver amortization installment is equal to the amortization charge with respect to that waiver determined using the interest rate or rates that applied for the pre-effective plan year.

(4) ***Transition rule for determining shortfall amortization base*** —

(i) ***In general.*** Except as provided in paragraph (h)(4)(ii) of this section, in the case of plan years beginning after December 31, 2007 and before January 1, 2011, for purposes of applying the rules of paragraph (c)(2) of this section—

(A) The applicable percentage (as described in paragraph (f)(6)(ii) of this section) of the funding target is substituted for the funding target; and

(B) The transition funding shortfall is substituted for the funding shortfall.

(ii) ***Transition rule not available for new plans or deficit reduction plans.*** The transition rule of paragraph (h)(4)(i) of this section does not apply to a plan—

(A) That was not in effect for a plan year beginning in 2007; or

(B) That was subject to section 412(l) for the last plan year beginning during 2007, determined after the application of sections 412(l)(6) and (9) (regardless of whether the deficit reduction contribution for that plan year was equal to zero).

(5) ***Pre-effective plan year*** —

(i) ***In general.*** For purposes of this section, the pre-effective plan year for a plan is the last plan year beginning before section 430 applies to the plan to determine the minimum required contribution. Thus, except for plans with a delayed effective date as described in paragraph (h)(1) of this section, the pre-effective plan year for a plan is the last plan year beginning before January 1, 2008.

(ii) ***Eligible charity plans.*** An eligible charity plan (as described in section 104(d) of PPA '06, which reflects amendments made by section 202(b)(2) of PRA 2010, Public Law 111-192, 124 Stat. 1280 (June 25, 2010)) that applies section 430 to the first plan year beginning on or after January 1, 2008 has a pre-effective plan year that is the last plan year beginning before January 1, 2008 and a second pre-effective plan year that is the last plan year that precedes the plan year for which section 430 again applies to the plan. (Section 430 does not apply to such a plan

for plan years beginning on or after January 1, 2009 and before January 1, 2017, unless the plan ceases to be an eligible charity plan, or an election under section 104(d)(2) or 104(d)(4) of PPA '06 is made for the plan not to be treated as an eligible charity plan, as of an earlier date.)

[T.D. 9732, 80 FR 54383, Sept. 9, 2015]

§ 1.430(d)-1 Determination of target normal cost and funding target.

(a) ***In general*** —

(1) ***Overview.*** This section sets forth rules for determining a plan's target normal cost and funding target under sections 430(b) and 430(d), including guidance relating to the rules regarding actuarial assumptions under sections 430(h)(1), 430(h)(4), and 430(h)(5). Section 430 and this section apply to single employer defined benefit plans (including multiple employer plans as defined in section 413(c)) that are subject to section 412, but do not apply to multiemployer plans (as defined in section 414(f)). For further guidance on actuarial assumptions, *see* § 1.430(h)(2)-1 (relating to interest rates) and §§ 1.430(h)(3)-1 and 1.430(h)(3)-2 (relating to mortality tables). *See* also § 1.430(i)-1 for the determination of the funding target and the target normal cost for a plan that is in at-risk status.

(2) ***Organization of regulation.*** Paragraph (b) of this section sets forth certain definitions that apply for purposes of section 430. Paragraph (c) of this section provides rules regarding which benefits are taken into account in determining a plan's target normal cost and funding target. Paragraph (d) of this section sets forth the rules regarding the plan provisions that are taken into account in making these determinations, and paragraph (e) of this section provides rules on the plan population that is taken into account for this purpose. Paragraph (f) of this section provides rules relating to the actuarial assumptions and the plan's funding method that are used to determine present values. Paragraph (g) of this section contains effective/applicability dates and transition rules.

(3) ***Special rules for multiple employer plans.*** In the case of a multiple employer plan to which section 413(c)(4)(A) applies, the rules of section 430 and this section are applied separately for each employer under the plan, as if each employer maintained a separate plan. Thus, the plan's funding target and target normal cost are computed separately for each employer under such a multiple employer plan. In the case of a multiple employer plan to which section 413(c)(4)(A) does not apply (that is, a plan described in section 413(c)(4)(B) that has not made the election for section 413(c)(4)(A) to apply), the rules of section 430 and this section are applied as if all participants in the plan were employed by a single employer.

(b) ***Definitions*** —

(1) ***Target normal cost*** —

(i) ***In general.*** For a plan that is not in at-risk status under section 430(i) for a plan year, subject to the adjustments described in paragraph (b)(1)(iii) of this section, the *target normal cost* of the plan for the plan year is the present value (determined as of the valuation date) of all benefits under the plan that accrue during, are earned during, or are otherwise allocated to service for the plan year under the applicable rules of this section, including paragraph (c)(1)(ii)(B), (C), or (D) of this section. *See* § 1.430(i)-1(d) and (e)(2) for the determination of the target normal cost for a plan that is in at-risk status.

(ii) ***Benefits allocated to a plan year.*** The benefits that accrue, are earned, or are otherwise allocated to service for the plan year are based on the actual benefits accrued, earned, or otherwise allocated to service for the plan year through the valuation date and benefits expected to accrue, be earned, or be otherwise allocated to service for the plan year for the period from the valuation date through the end of the plan year. The benefits that are allocated to the plan year under the rules of paragraph (c) of this section include any increase in benefits during the plan year that is attributable to increases in compensation for the current plan year even if that increase in benefits is with respect to benefits attributable to service performed in a preceding plan year. In addition, the benefits that are allocated to the plan year under the rules of paragraph (c) of this section include any increase in benefits during the plan year that arises on account of mandatory employee contributions (within the meaning of § 1.411(c)-1(c)(4)) that are made during the plan year.

(iii) ***Special adjustments*** —

(A) ***In general.*** The target normal cost of the plan for the plan year (determined under paragraph (b)(1)(i) of this section) is adjusted (not below zero) by adding the amount of plan-related expenses expected to be paid from plan assets during the plan year and subtracting the amount of mandatory employee contributions (within the meaning of § 1.411(c)-1(c)(4)) that are expected to be made during the plan year.

(B) ***Plan-related expenses.*** [Reserved]

(2) ***Funding target.*** For a plan that is not in at-risk status under section 430(i) for a plan year, the funding target of the plan for the plan year is the present value (determined as of the valuation date) of all benefits under the plan that have been accrued, earned, or otherwise allocated to years of service prior to the first day of the plan year under the applicable rules of this section, including paragraph (c)(1)(ii)(B), (C), or (D) of this section. *See* § 1.430(i)-1(c) and (e)(1) for the determination of the funding target for a plan that is in at-risk status.

(3) ***Funding target attainment percentage*** —

(i) ***In general.*** Except as otherwise provided in this paragraph (b)(3), the funding target attainment percentage of a plan for a plan year is a fraction (expressed as a percentage)—

(A) The numerator of which is the value of plan assets for the plan year (determined under the rules of § 1.430(g)-1) after subtraction of the prefunding balance and the funding standard carryover balance under section 430(f)(4)(B) and § 1.430(f)-1(c); and

(B) The denominator of which is the funding target of the plan for the plan year (determined without regard to the at-risk rules of section 430(i) and § 1.430(i)-1).

(ii) ***Determination of funding target attainment percentage for plans with delayed effective dates.*** If section 430 does not apply for purposes of determining the plan's minimum required contribution for a plan year that begins on or after January 1, 2008 (as is the case for a plan described in section 104, 105, or 106 of the Pension Protection Act of 2006 (PPA '06), Public Law 109-280 (120 Stat. 780)), then the funding target attainment percentage is determined for that plan year in accordance with the rules of paragraph (b)(3)(i) of this section in the same manner as for a plan to which section 430 applies to determine the plan's minimum required contribution, except that the value of plan assets that forms the numerator under paragraph (b)(3)(i)(A) of this section is determined without subtraction of the funding standard carryover balance or the credit balance under the funding standard account.

(iii) ***Special rule for plans with zero funding target.*** If the funding target of the plan is equal to zero for a plan year, then the funding target attainment percentage under this paragraph (b)(3) is equal to 100 percent for the plan year.

(4) ***Present value.*** The present value of a benefit (including a portion of a benefit) with respect to a participant that is taken into account under the rules of paragraph (c) of this section is determined as of the valuation date by multiplying the amount of that benefit by the probability that the benefit will be paid at a future date and then discounting the resulting product using the appropriate interest rate under § 1.430(h)(2)-1. The probability that the benefit will be paid with respect to the participant at such future date is determined using the actuarial assumptions that satisfy the standards of paragraph (f) of this section as to the probability of future service, advancement in age, and other events (such as death, disability, termination of employment, and selection of optional form of benefit) that affect whether the participant or beneficiary will be eligible for the benefit and whether the benefit will be paid at that future date.

(c) ***Benefits taken into account*** —

(1) ***In general*** —

(i) ***Benefits earned or accrued.*** The benefits taken into account in determining the target normal cost and the funding target under paragraph (b) of this section are all benefits earned or accrued under the plan that have not yet been paid as of the valuation date, including retirement-type and ancillary benefits (within the meaning of § 1.411(d)-3(g)). The benefits taken into account are based on the participant's or beneficiary's status (such as active employee, vested or partially vested terminated employee, or disabled participant) as of the valuation date, and those benefits are allocated to the funding target or the target normal cost under paragraph (c)(1)(ii) of this section.

(ii) ***Allocation of benefits*** —

(A) ***In general.*** To the extent that the amount of a participant's benefit that is expected to be paid is a function of the accrued benefit, the allocation of the benefit for purposes of determining the funding target and the target normal cost is made using the rules of paragraph (c)(1)(ii)(B) of this section. To the extent that the amount of a participant's benefit that is expected to be paid is not a function of the accrued benefit, but is a function of the participant's years of service (or is the excess of a function of the participant's years of service over a function of the participant's accrued benefit), the allocation of the benefit for purposes of determining the funding target and the target normal cost is made using the rules of paragraph (c)(1)(ii)(C) of this section. To the extent that the amount of a participant's benefit that is expected to be paid is not allocated under the rules of paragraph (c)(1)(ii)(B) or (C) of this section, the allocation of the benefit for purposes of determining the funding target and the target normal cost is made using the rules of paragraph (c)(1)(ii)(D) of this section.

(B) ***Benefits that are based on accrued benefits.*** If the allocation of the benefit for purposes of determining the funding target and the target normal cost is made under this paragraph (c)(1)(ii)(B), then the portion of a participant's benefit that is taken into account in the funding target for a plan year is determined by applying the function to the accrued benefit as of the first day of the plan year, and the portion of the benefit that is taken into account in determining the target normal cost for the plan year is determined by applying that function to the increase in the accrued benefit during the plan year. For example, a benefit

that is assumed to be payable at a particular early retirement age in the amount of 90 percent of the accrued benefit is taken into account in the funding target in the amount of 90 percent of the accrued benefit as of the beginning of the plan year, and that benefit is taken into account in the target normal cost in the amount of 90 percent of the increase in the accrued benefit during the plan year.

(C) ***Benefits that are based on service.*** If the allocation of the benefit for purposes of determining the funding target and the target normal cost is made under this paragraph (c)(1)(ii)(C), then the portion of a participant's benefit that is taken into account in determining the funding target for a plan year is determined by applying the function to the participant's years of service as of the first day of the plan year, and the portion of the benefit that is taken into account in determining the target normal cost for the plan year is determined by applying that function to the increase in the participant's years of service during the plan year. For example, if a plan provides a post-retirement death benefit of $500 per year of service, then the funding target is determined based on a death benefit of $500 multiplied by a participant's years of service at the beginning of the year, and if the participant earns or is expected to earn a full year of service during the plan year, the target normal cost is based on the additional $500 in death benefits attributable to that additional year of service.

(D) ***Other benefits.*** If the allocation of the benefit for purposes of determining the funding target and the target normal cost is made under this paragraph (c)(1)(ii)(D), then the portion of a participant's benefit that is taken into account in determining the funding target for a plan year is equal to the total benefit multiplied by the ratio of the participant's years of service as of the first day of the plan year to the years of service the participant will have at the time of the event that causes the benefit to be payable (whether the benefit is expected to be paid at the time of that decrement or at a future time), and the portion of the benefit that is taken into account in determining the target normal cost for the plan year is the increase in the proportionate benefit attributable to the increase in the participant's years of service during the plan year. For example, if a plan provides a Social Security supplement for a participant who retires after 30 years of service that is equal to a participant's Social Security benefit, the funding target with respect to the benefit payable beginning at a particular age (which reflects the probability of retirement at that age) is determined based on the projected Social Security benefit payable at the particular age multiplied by a fraction, the numerator of which is the participant's years of service as of the first day of the plan year and the denominator of which is the participant's projected years of service at the particular age. In such a case, if the participant earns or is expected to earn a full year of service during the plan year, the target normal cost is determined based on the projected Social Security benefit payable at the particular age multiplied by a fraction, the numerator of which is one and the denominator of which is the participant's projected years of service at the particular age.

(iii) ***Application of section 436 limitations to funding target and target normal cost determination*** —

(A) ***Effect of limitation on unpredictable contingent event benefits.*** The determination of the funding target and the target normal cost of a plan for a plan year must take into account any limitation on unpredictable contingent event benefits under section 436(b) with respect to unpredictable contingent events which occurred before the valuation date, but

must not take into account anticipated funding-based limitations on unpredictable contingent event benefits under section 436(b) with respect to unpredictable contingent events which are expected to occur on or after the valuation date.

(B) ***Effect of limitation on applicability of plan amendments.*** See paragraph (d) of this section for rules regarding the treatment of plan amendments that take effect during the plan year taking into account the restrictions under section 436(c).

(C) ***Effect of limitation on prohibited payments.*** The determination of the funding target and the target normal cost of a plan for a plan year must take into account any limitation on prohibited payments under section 436(d) with respect to any annuity starting date that was before the valuation date, but must not take into account any limitation on prohibited payments under section 436(d) for any annuity starting date on or after the valuation date (however, the determination must take into account benefit distributions under plan provisions that allow new annuity starting dates with respect to distributions that were limited under section 436(d)).

(D) ***Effect of limitation on benefit accruals.*** Except as otherwise provided in this paragraph (c)(1)(iii)(D), the determination of the funding target of a plan for a plan year must take into account any limitation on benefit accruals under section 436(e) applicable before the valuation date. However, if the plan terms provide for the automatic restoration of benefit accruals as permitted under § 1.436-1(a)(4)(ii)(B), and the restoration of benefits as of the valuation date will not be treated as resulting from a plan amendment under the rules of § 1.436-1(c)(3) (because the period of limitation as of the valuation date does not exceed 12 months and the adjusted funding target attainment percentage for the plan would not be less than 60 percent taking into account the restored benefit accruals), then the determination of the funding target of a plan for a plan year must not take into account the limitation on benefit accruals under section 436(e) for that period. The determination of the target normal cost of a plan for a plan year must not take into account any limitation on benefit accruals under section 436(e). Thus, if an employer wishes to take a plan freeze into account in determining the target normal cost, the plan must be specifically amended to cease accruals.

(iv) ***Effect of other limitations of benefits*** —

(A) ***Liquidity shortfalls.*** The determination of the funding target and the target normal cost of a plan for a plan year must take into account any restrictions on payments under section 401(a)(32) on account of a liquidity shortfall (as defined in section 430(j)(4)) for periods preceding the valuation date. The determination of the funding target and the target normal cost must not take into account any restrictions on payments under section 401(a)(32) on account of a liquidity shortfall or possible liquidity shortfall for any period on or after the valuation date.

(B) ***High 25 limitation.*** The determination of the funding target and the target normal cost of a plan for a plan year must take into account any restrictions on payments under § 1.401(a)(4)-5(b) to highly compensated employees to the extent that benefits were not paid or will not be paid because of a limitation that applied prior to the valuation date. If a benefit that was otherwise restricted was paid prior to the valuation date but with suitable security (such as an escrow account) provided to the plan in the event of a plan termination, the benefit is treated as distributed for purposes of section 430 and this section. Accordingly, the funding target does not include any liability for the benefit and

the plan assets do not include the security. The determination of the funding target and the target normal cost of a plan for a plan year must not take into account any restrictions on payments under § 1.401(a)(4)-5(b) to highly compensated employees that are anticipated with respect to annuity starting dates on or after the valuation date on account of the funded status of the plan.

(2) ***Benefits provided by insurance*** —

(i) ***General rule.*** A plan generally is required to reflect in the plan's funding target and target normal cost the liability for benefits that are funded through insurance contracts held by the plan, and to include the corresponding insurance contracts in plan assets. Paragraph (c)(2)(ii) of this section sets forth an alternative to this general approach. A plan's treatment of benefits funded through insurance contracts pursuant to this paragraph (c)(2) is part of the plan's funding method. Accordingly, that treatment can be changed only with the consent of the Commissioner.

(ii) ***Separate funding of insured benefits.*** As an alternative to the treatment described in paragraph (c)(2)(i) of this section, in the case of benefits that are funded through insurance contracts, the liability for benefits provided under such contracts is permitted to be excluded from the plan's funding target and target normal cost, provided that the corresponding insurance contracts are excluded from plan assets. This treatment is only available with respect to insurance purchased from an insurance company licensed under the laws of a State and only to the extent that a participant's or beneficiary's right to receive those benefits is an irrevocable contractual right under the insurance contracts, based on premiums paid to the insurance company prior to the valuation date. For example, in the case of a retired participant receiving benefits from an annuity contract in pay status under which no premiums are required on or after the valuation date, the liability for benefits provided by the contract is permitted to be excluded from the plan's funding target provided that the value of the contract is also excluded from the value of plan assets. Similarly, in the case of an active or deferred vested participant whose benefits are funded by a life insurance or annuity contract under which further premiums are required on or after the valuation date, the liability for benefits, if any, that would be paid from the contract if no further premiums were to be paid (for example, if the contract were to go on reduced paid-up status) is permitted to be excluded from the plan's funding target and target normal cost, provided that the value of the contract is excluded from the value of plan assets. By contrast, if the plan trustee can surrender a contract to the insurer for its cash value, then the participant's or beneficiary's right to receive those benefits is not an irrevocable contractual right and, therefore, the liability for benefits provided under the contract must be taken into account in determining the plan's funding target and target normal cost and the contracts cannot be excluded from plan assets.

(d) ***Plan provisions taken into account*** —

(1) ***General rule*** —

(i) ***Plan provisions adopted by valuation date.*** Except as otherwise provided in this paragraph (d), a plan's funding target and target normal cost for a plan year are determined based on plan provisions that are adopted no later than the valuation date for the plan year and that take effect on or before the last day of the plan year. For example, in the case of a plan amendment adopted on or before the valuation date for the plan year that has an effective date occurring in the current plan year, the plan amendment is taken into account in determining the funding

target and the target normal cost for the current plan year if it is permitted to take effect under the rules of section 436(c) for the current plan year, but the amendment is not taken into account for the current plan year if it does not take effect until a future plan year.

(ii) ***Plan provisions adopted after valuation date.*** If a plan administrator makes the election described in section 412(d)(2) with respect to a plan amendment, then the plan amendment is treated as having been adopted on the first day of the plan year for purposes of this paragraph (d). Section 412(d)(2) applies to any plan amendment adopted no later than $2^1/_2$ months after the close of the plan year, including an amendment adopted during the plan year. Thus, if an amendment is adopted after the valuation date for a plan year (and no later than $2^1/_2$ months after the close of the plan year), but takes effect by the last day of the plan year, the amendment is taken into account in determining the plan's funding target and target normal cost for the plan year if the plan administrator makes the election described in section 412(d)(2) with respect to such amendment.

(iii) ***Determination of when an amendment takes effect.*** For purposes of this paragraph (d)(1), the determination of whether an amendment that increases benefits takes effect and when it takes effect is determined in accordance with the rules of section 436(c) and § 1.436-1(c)(5). For purposes of this paragraph (d)(1), in the case of an amendment that decreases benefits, the amendment takes effect under a plan on the first date on which the benefits of any individual who is or could be a participant or beneficiary under the plan would be less than those benefits would be under the pre-amendment plan provisions if the individual were on that date to satisfy the applicable conditions for the benefits. In either case, the determination of when an amendment takes effect is unaffected by an election under section 412(d)(2).

(2) ***Special rule for certain amendments increasing liabilities.*** In the case of a plan amendment that is not required to be taken into account under the rules of paragraph (d)(1) of this section because it is adopted after the valuation date for the plan year, the plan amendment must be taken into account in determining a plan's funding target and target normal cost for the plan year if the plan amendment—

(i) Takes effect by the last day of the plan year;

(ii) Increases the liabilities of the plan by reason of increases in benefits, establishment of new benefits, changing the rate of benefit accrual, or changing the rate at which benefits become nonforfeitable; and

(iii) Would not be permitted to take effect under the rules of section 436(c) if those rules were applied—

(A) By treating the increase in the target normal cost for the plan year attributable to the amendment (and all other amendments that must be taken into account solely because of the application of the rules in this paragraph (d)(2)) as if the increase were an increase in the funding target for the plan year; and

(B) By taking into account all unpredictable contingent event benefits permitted to be paid for unpredictable contingent events that occurred during the current plan year and all plan amendments that took effect in the current plan year (including all amendments to which this paragraph (d)(2) applies for the plan year).

(3) ***Allocation of benefits attributable to plan amendments.*** If a plan amendment is taken into account for a plan year under the rules of this paragraph (d), then the allocation of benefits that is used to determine the funding target and the target normal cost for that plan year is based on the plan as

amended. Thus, if an amendment that is taken into account for a plan year increases a participant's accrued benefit for service prior to the beginning of the plan year, then the present value of that increase is included in the funding target for the plan year.

(e) ***Plan population taken into account*** —

(1) ***In general.*** In making any determination of the funding target or target normal cost under paragraph (b) of this section, the plan population is determined as of the valuation date. The plan population must include three classes of individuals—

(i) Participants currently employed in the service of the employer;

(ii) Participants who are retired under the plan or who are otherwise no longer employed in the service of the employer; and

(iii) All other individuals currently entitled to benefits under the plan.

(2) ***Assumption regarding rehiring of former employees*** —

(i) ***Special exclusion for "rule of parity" cases.*** Certain individuals may be excluded from the class of individuals described in paragraph (e)(1)(ii) of this section. The excludable individuals are those former employees who, prior to the valuation date for the plan year, have terminated service with the employer without vested benefits and whose service might be taken into account in future years because the "rule of parity" of section 411(a)(6)(D) does not permit that service to be disregarded. However, if the plan's experience as to separated employees returning to service has been such that the exclusion described in this paragraph (e)(2) would be unreasonable, then no such exclusion is permitted.

(ii) ***Application to partially vested participants.*** Whether former employees who are terminated with partially vested benefits are assumed to return to service is determined under the same rules that apply to former employees without vested benefits under paragraph (e)(2)(i) of this section.

(3) ***Anticipated future participants.*** In making any determination of the funding target or target normal cost under paragraph (b) of this section, the actuarial assumptions and funding method used for the plan must not anticipate the affiliation with the plan of future participants not employed in the service of the employer on the plan's valuation date. However, any such determination may anticipate the affiliation with the plan of current employees who have not yet satisfied the participation (age and service) requirements of the plan as of the valuation date.

(f) ***Actuarial assumptions and funding method used in determination of present value*** —

(1) ***Selection of actuarial assumptions and funding method*** —

(i) ***General rules.*** The determination of any present value or other computation under section 430 and this section must be made on the basis of actuarial assumptions and a funding method. Except as otherwise specifically provided (for example, in § 1.430(h)(2)-1(b)(6) or section 4006(a)(3)(E)(iv) of the Employee Retirement Income Security Act of 1974, as amended (ERISA)), the same actuarial assumptions and funding method must be used for all computations under sections 430 and 436. For example, the actuarial assumptions and the funding method used in making a certification of the adjusted funding target attainment

percentage for a plan year must be the same as those disclosed on the actuarial report under section 6059 (Schedule SB, "Single-Employer Defined Benefit Plan Actuarial Information" of Form 5500, "Annual Return/Report of Employee Benefit Plan").

(ii) ***Changes in actuarial assumptions and funding method.*** Actuarial assumptions established for a plan year cannot subsequently be changed for that plan year unless the Commissioner determines that the assumptions that were used are unreasonable. Similarly, a funding method established for a plan year cannot subsequently be changed for that plan year unless the Commissioner determines that the use of that funding method for that plan year is impermissible.

(iii) ***Procedures for establishing actuarial assumptions and funding method.*** For purposes of this paragraph (f)(1), in the case of a plan for which an actuarial report under section 6059 (Schedule SB of Form 5500) is required to be filed for a plan year, actuarial assumptions and the funding method are established by the filing of the actuarial report if it is filed no later than the due date (with extensions) for the report. In the case of a plan for which an actuarial report for a plan year is not required to be filed, actuarial assumptions and the funding method are established by the delivery of the completed report to the employer if it is delivered no later than what would be the due date (with extensions) for filing the actuarial report were such a filing required. If the actuarial report is not filed or delivered by the applicable date described in the two preceding sentences, then the same actuarial assumptions (such as the same interest rate and mortality table elections) and funding method as were used for the preceding plan year apply for all computations under sections 430 and 436 for the current plan year, unless the Commissioner permits or requires other actuarial assumptions or another funding method permitted under section 430 to be used for the current plan year.

(iv) ***Scope of funding method.*** A plan's funding method includes not only the overall funding method used by the plan but also each specific method of computation used in applying the overall method. However, the choice of which actuarial assumptions are appropriate to the overall method or to the specific method of computation is not a part of the funding method. The assumed earnings rate used for purposes of determining the actuarial value of assets under section 430(g)(3)(B) is treated as an actuarial assumption, rather than as part of the funding method.

(2) ***Interest and mortality rates.*** Section 430(h)(2) and § 1.430(h)(2)-1 set forth the interest rates, and section 430(h)(3) and §§ 1.430(h)(3)-1 and 1.430(h)(3)-2 set forth the mortality tables, that must be used for purposes of determining any present value under this section. However, notwithstanding the requirement to use the mortality tables, in the case of a plan which has fewer than 100 participants and beneficiaries who are not in pay status, the actuarial assumptions may assume no pre-retirement mortality, but only if that assumption would be a reasonable assumption.

(3) ***Other assumptions.*** In the case of actuarial assumptions other than those specified in sections 430(h)(2), 430(h)(3), and 430(i), each of those actuarial assumptions must be reasonable (taking into account the experience of the plan and reasonable expectations). In addition, the actuarial assumptions (other than those specified in sections 430(h)(2), 430(h)(3), and 430(i)) must, in combination, offer the plan's enrolled actuary's best estimate of anticipated experience under the plan based on information determined as of the valuation date. *See* paragraph (f)(4)(iii) of this section for special rules for determining the present value of a single-sum and similar distributions.

(4) ***Probability of benefit payments in single sum or other optional forms —***

(i) ***In general.*** This paragraph (f)(4) provides rules relating to the probability that benefit payments will be paid as single sums or other optional forms under a plan and the impact of that probability on the determination of the present value of those benefit payments under section 430.

(ii) ***General rules of application.*** Any determination of present value or any other computation under this section must take into account—

(A) The probability that future benefit payments under the plan will be made in the form of any optional form of benefit provided under the plan (including single-sum distributions), determined on the basis of the plan's experience and other related assumptions, in accordance with paragraph (f)(3) of this section; and

(B) Any difference in the present value of future benefit payments that results from the use of actuarial assumptions in determining the amount of benefit payments in any such optional form of benefit that are different from those prescribed by section 430(h).

(iii) ***Single-sum and similar distributions*** —

(A) ***Distributions using section 417(e) assumptions.*** In the case of a distribution that is subject to section 417(e)(3) and that is determined using the applicable interest rates and applicable mortality table under section 417(e)(3), for purposes of applying paragraph (f)(4)(ii) of this section, the computation of the present value of that distribution is treated as having taken into account any difference in present value that results from the use of actuarial assumptions that are different from those prescribed by section 430(h) (as required under paragraph (f)(4)(ii)(B) of this section) if and only if the present value of the distribution is determined in accordance with this paragraph (f)(4)(iii).

(B) ***Substitution of annuity form.*** Except as otherwise provided in this paragraph (f)(4)(iii), the present value of a distribution is determined in accordance with this paragraph (f)(4)(iii) if that present value is determined as the present value, using special actuarial assumptions, of the annuity (either the deferred or immediate annuity) which is used under the plan to determine the amount of the distribution. Under these special assumptions, for the period beginning with the expected annuity starting date for the distribution, the current applicable mortality table under section 417(e)(3) that would apply to a distribution with an annuity starting date occurring on the valuation date is substituted for the mortality table under section 430(h)(3) that would otherwise be used. In addition, under these special assumptions, the valuation interest rates under section 430(h)(2) are used for purposes of discounting the projected annuity payments from their expected payment dates to the valuation date (as opposed to the interest rates under section 417(e)(3) which the plan uses to determine the amount of the benefit).

(C) ***Optional application of generational mortality and phase-in of interest rates.*** In determining the present value of a distribution under this paragraph (f)(4)(iii), if a plan uses the generational mortality tables under § 1.430(h)(3)-1(a)(4) or § 1.430(h)(3)-2, the plan is permitted to use a 50-50 male-female blend of the annuitant mortality rates under the § 1.430(h)(3)-1(a)(4) generational mortality tables in lieu of the applicable mortality table under section 417(e)(3) that would apply to a distribution with an annuity starting date occurring on the valuation date. Similarly, a plan is permitted to make adjustments to the

interest rates in order to reflect differences between the phase-in of the section 430(h)(2) segment rates under section 430(h)(2)(G) and the adjustments to the segment rates under section 417(e)(3)(D)(iii).

(D) ***Distributions subject to section 417(e)(3) using other assumptions.*** In the case of a distribution that is subject to section 417(e)(3) but that is determined on a basis other than using the applicable interest rates and the applicable mortality table under section 417(e)(3), for purposes of applying paragraph (f)(4)(ii)(B) of this section, the computation of present value must take into account the extent to which the present value of the distribution is different from the present value determined using the rules of paragraph (f)(4)(iii)(B) of this section, based on actuarial assumptions that satisfy the requirements of paragraph (f)(3) of this section. If the plan provides that the amount of the benefit is based on a comparison of the section 417(e)(3) benefit (that is, the benefit determined using the applicable interest rates and the applicable mortality table under section 417(e)(3)) with another benefit determined using some other basis, then paragraph (f)(4)(ii)(B) of this section is applied as of the valuation date by comparing the present value of the section 417(e)(3) benefit determined under the rules of paragraph (f)(4)(iii)(B) of this section with the present value of the other benefit. The rule of this paragraph (f)(4)(iii)(D) applies, for example, where a distribution that is subject to section 417(e)(3) is determined as the greater of the benefit determined using the applicable interest rates and the applicable mortality table under section 417(e)(3) and the benefit determined using some other basis, or where the amount of a distribution that is subject to section 417(e)(3) is determined using an interest rate other than the applicable interest rates as required under section 415(b)(2)(E)(ii) (*see* § 1.417(e)-1(d)(1)).

(5) ***Distributions from applicable defined benefit plans under section 411(a)(13)(C)*** —

(i) ***In general.*** In the case of an applicable defined benefit plan described in section 411(a)(13)(C), if the amount of a future distribution is based on an interest adjustment applied to the current accumulated benefit, then the amount of that distribution is determined by projecting the future interest credits or equivalent amount under the plan's interest crediting rules using actuarial assumptions that satisfy the requirements of paragraph (f)(3) of this section. Thus, if a plan provides for a single-sum distribution equal to the balance of a participant's hypothetical account under a cash balance plan, then the amount of that future distribution is equal to the projected account balance at the expected date of payment determined using actuarial assumptions that satisfy the requirements of paragraph (f)(3) of this section.

(ii) ***Annuity distributions*** —

(A) ***General rule.*** In the case of an applicable defined benefit plan described in section 411(a)(13)(C), if the amount of an annuity distribution is based on either the balance of a hypothetical account maintained for a participant or the accumulated percentage of a participant's final average compensation, then the amount of that annuity distribution is calculated by converting the projected account balance (or accumulated percentage of final average compensation), in accordance with paragraph (f)(5)(i) of this section, to an annuity by applying the plan's annuity conversion provisions using the rules of this paragraph (f)(5)(ii).

(B) ***Use of current annuity factors.*** Except as otherwise provided in paragraph (f)(5)(ii)(C) of this section, if the plan bases the conversion of the projected account balance (or accumulated percentage of final average compensation) to an annuity using the

applicable interest rates and applicable mortality table under section 417(e)(3), then the amount of the annuity distribution is determined by dividing the projected account balance (or accumulated percentage of final average compensation) by an annuity factor corresponding to the assumed form of payment using, for the period beginning with the annuity starting date, the current applicable mortality table under section 417(e)(3) that would apply to a distribution with an annuity starting date occurring on the valuation date (in lieu of the mortality table under section 430(h)(3) that would otherwise be used) and the valuation interest rates under section 430(h)(2) (as opposed to the interest rates under section 417(e)(3) which the plan uses to determine the amount of the annuity).

(C) ***Optional application of generational mortality and phase-in of segment rates.*** In determining the amount of an annuity distribution under paragraph (f)(5)(ii)(B) of this section, a plan is permitted to apply the options described in paragraph (f)(4)(iii)(C) of this section.

(D) ***Distributions using assumptions other than assumptions under section 417(e)(3).*** In applying this paragraph (f)(5)(ii), in the case of a plan that determines an annuity using a basis other than the applicable interest rates and applicable mortality table under section 417(e)(3), the amount of the annuity distribution must be based on actuarial assumptions that satisfy the requirements of paragraph (f)(3) of this section.

(6) ***Unpredictable contingent event benefits.*** Any determination of present value or any other computation under this section must take into account, based on information as of the valuation date, the probability that future benefits (or increased benefits) will become payable under the plan due to the occurrence of an unpredictable contingent event (as described in § 1.436-1(j)(9)). For this purpose, this probability with respect to an unpredictable contingent event may be assumed to be zero if there is not more than a de minimis likelihood that the unpredictable contingent event will occur.

(7) ***Reasonable techniques permitted*** —

(i) ***Determination of benefits to be paid during the plan year.*** Any reasonable technique can be used to determine the present value of the benefits expected to be paid during a plan year, based on the interest rates and mortality assumptions applicable for the plan year. For example, the present value of a monthly retirement annuity payable at the beginning of each month can be determined—

(A) Using the standard actuarial approximation that reflects 13/24ths of the discounted expected payments for the year as of the beginning of the year and 11/24ths of the discounted expected payments for the year as of the end of the year;

(B) By assuming a uniform distribution of death during the year; or

(C) By assuming that the payment is made in the middle of the year.

(ii) ***Determination of target normal cost.*** In the case of a participant for whom there is a less than 100 percent probability that the participant will terminate employment during the plan year, for purposes of determining the benefits expected to accrue, be earned, or otherwise allocated to service during the plan year which are used to determine the target normal cost, it is permissible to assume the participant will not terminate during the plan year, unless using this method of calculation would be unreasonable.

(8) ***Approval of significant changes in actuarial assumptions for large plans*** —

(i) ***In general.*** Except as otherwise provided in paragraph (f)(8)(iii) of this section, any actuarial assumptions used to determine the funding target of a plan for a plan year during which the plan is described in paragraph (f)(8)(ii) of this section cannot be changed from the actuarial assumptions that were used for the preceding plan year without the approval of the Commissioner if the changes in assumptions result in a decrease in the plan's funding shortfall (within the meaning of section 430(c)(4)) for the current plan year (disregarding the effect on the plan's funding shortfall resulting from changes in interest and mortality assumptions under sections 430(h)(2) and (h)(3)) that either exceeds $50,000,000, or exceeds $5,000,000 and is 5 percent or more of the funding target of the plan before such change.

(ii) ***Affected plans.*** A plan is described in this paragraph (f)(8)(ii) for a plan year if—

(A) The plan is a defined benefit plan (other than a multiemployer plan) to which title IV of ERISA applies; and

(B) The aggregate unfunded vested benefits used to determine variable-rate premiums for the plan year (as determined under section 4006(a)(3)(E)(iii) of ERISA) of the plan and all other plans maintained by the contributing sponsors (as defined in section 4001(a)(13) of ERISA) and members of such sponsors' controlled groups (as defined in section 4001(a)(14) of ERISA) which are covered by title IV of ERISA (disregarding multiemployer plans and disregarding plans with no unfunded vested benefits) exceed $50,000,000.

(iii) ***Automatic approval to resume use of previously used assumptions upon exiting at-risk status during phase-in.*** A plan that is not in at-risk status for the current plan year and that was in at-risk status for the prior plan year (but not for a period of 5 or more consecutive plan years) is granted automatic approval to use the actuarial assumptions that were applied before the plan entered at-risk status and that were used in combination with the required at-risk assumptions during the period the plan was in at-risk status.

(9) ***Examples.*** The following examples illustrate the rules of this section. Unless otherwise indicated, these examples are based on the following assumptions: The normal retirement age is 65, the minimum required contribution for the plan is determined under the rules of section 430 starting in 2008, the plan year is the calendar year, the valuation date is January 1, no plan-related expenses are paid or expected to be paid from plan assets, and the plan does not provide for mandatory employee contributions. The examples are as follows:

> *Example 1.* (i) Plan P provides an accrued benefit equal to 1.0% of a participant's highest 3-year average compensation for each year of service. Plan P provides that an early retirement benefit can be received at age 60 equal to the participant's accrued benefit reduced by 0.5% per month for early commencement. On January 1, 2010, Participant A is age 60 and has 12 years of past service. Participant A's compensation for the years 2007 through 2009 was $47,000, $50,000, and $52,000, respectively. Participant A's rate of compensation at December 31, 2009, is $54,000 and A's rate of compensation for 2010 is assumed not to increase at any point during 2010. Decrements are applied at the beginning of the plan year.

(ii) Participant A's annual accrued benefit as of January 1, 2010, is $5,960 [0.01 × 12 × ($47,000 + $50,000 + $52,000) ÷ 3]. Participant A's expected benefit accrual for 2010 is $800 [0.01 × 13 × ($50,000 + $52,000 + $54,000) ÷ 3 − $5,960], to the extent that Participant A is expected to continue in employment for the full 2010 plan year.

(iii) Because the early retirement benefit is a function of the participant's accrued benefit, the allocation of the benefit for purposes of determining the target normal cost and funding target is made under paragraph (c)(1)(ii)(B) of this section. Accordingly, for Participant A, the early retirement benefit that is taken into account with respect to the decrement at age 60 when determining the 2010 funding target is $4,172 [$5,960 accrued benefit × (1 − 0.005 × 60 months)]. The expected accrual of the early retirement benefit during 2010 that is taken into account for Participant A with respect to the decrement at age 60 when determining the 2010 target normal cost is zero, because in this example the age-60 decrement would be applied as of January 1, 2010, before Participant A would earn any additional benefits. (But see paragraph (f)(7)(ii) of this section for an alternative approach for determining the expected accrual with respect to the decrement at age 60.)

(iv) The early retirement benefit for Participant A with respect to the decrement at age 61 that is taken into account in determining the funding target for the 2010 plan year is $4,529.60 [$5,960 accrued benefit × (1 − 0.005 × 48 months)]. The portion of the early retirement benefit that is taken into account for Participant A with respect to the decrement at age 61 that is taken into account in determining the target normal cost for the 2010 plan year is $608 [$800 expected annual accrual × (1 − 0.005 × 48 months)].

Example 2. (i) The facts are the same as in *Example 1*. In addition, the plan offers a $500 temporary monthly supplement to participants who complete 15 years of service and retire from active employment after attaining age 60. The temporary supplement is payable until the participant turns age 62. In addition, the supplement is limited so that it does not exceed the participant's Social Security benefit payable at age 62. On January 1, 2010, Participant B is age 55 and has 20 years of past service, and Participant C is age 60 and has 14 years of past service. For Participants B and C, the projected Social Security benefit is greater than $500 per month.
(ii) Because the temporary supplement is not a function of the participant's accrued benefit or service, the allocation of the benefit for purposes of determining the target normal cost and funding target is made under paragraph (c)(1)(ii)(D) of this section. The portion of the annual temporary supplement for Participant B with respect to the early retirement decrement occurring at age 60 that is taken into account in determining the funding target for the 2010 plan year is $4,800 [($500 × 12 months) × 20 years of past service ÷ 25 years of service at assumed early retirement age]. The portion of the annual temporary supplement for Participant B with respect to the early retirement decrement occurring at age 61 that is taken into account in determining the funding target for the 2010 plan year is $4,615 [($500 × 12

months) × 20 years of past service ÷ 26 years of service at assumed early retirement age]. In each case, the allocable portion of the benefit is assumed to be payable until age 62 (or the participant's death, if earlier).

(iii) For Participant B, the portion of the annual temporary supplement with respect to the early retirement decrement occurring at age 60 that is taken into account in determining the target normal cost for the 2010 plan year is $240 [($500 × 12 months) × 1 year of service expected to be earned during the plan year ÷ 25 years of service at assumed early retirement age]. The portion of the annual temporary supplement with respect to the early retirement decrement occurring at age 61 that is taken into account in determining the target normal cost for the 2010 plan year is $230.77 [($500 × 12 months) × 1 year of service expected to be earned during the plan year ÷ 26 years of service at assumed early retirement age]. The present value of these amounts reflects a payment period beginning with the decrement at age 60 or 61, as applicable, until age 62 (or assumed death, if earlier).

(iv) For Participant C, the portion of the annual temporary supplement with respect to the early retirement decrement occurring at age 61 (when the participant is first eligible for the benefit) that is taken into account in determining the funding target for the 2010 plan year is $5,600 [($500 × 12 months) × 14 years of past service ÷ 15 years of service at assumed early retirement age]. The present value of this amount reflects a payment period beginning with the decrement at age 61 until age 62 (or death if earlier).

Example 3. (i) The facts are the same as in *Example 1*. The plan also provides a single-sum death benefit (in addition to the qualified pre-retirement spouse's benefit) equal to the greater of the participant's annual accrued benefit at the time of death, or $10,000. The benefit is limited as necessary to ensure that the plan meets the incidental death benefit requirements of section 401(a).
(ii) The determination of the portion of the death benefit that is taken into account in determining the target normal cost and funding target is made under paragraph (c)(1)(ii)(B) of this section to the extent that it is a function of the participant's accrued benefit and under paragraph (c)(1)(ii)(D) of this section to the extent that it relates to the part of the death benefit that is not a function of the participant's accrued benefit.

(iii) The portion of the single-sum death benefit corresponding to the accrued benefit, or $5,960, is taken into account when determining the 2010 funding target for Participant A.

(iv) The excess of the death benefit over Participant A's accrued benefit is $4,040 (that is, $10,000 − $5,960). Because this part of the death benefit is not a function of the participant's accrued benefit nor is it a function of service, the determination of the corresponding portion of the death benefit taken into account in determining the target normal cost and funding target for 2010 is made under paragraph (c)(1)(ii)(D) of this section. For example, for

Participant A, the portion of this benefit with respect to the death decrement occurring at age 64 that is taken into account for purposes of determining the funding target for the 2010 plan year is $3,030 ($4,040 × 12 years of past service ÷ 16 years of service at assumed age of death).

(v) The total single-sum death benefit for Participant A with respect to the death decrement at age 64 that is taken into account in determining the funding target for the 2010 plan year is $8,990 ($5,960 + $3,030).

(vi) Similarly, the portion of the single-sum death benefit for Participant A that is taken into account in determining the target normal cost for the 2010 plan year is equal to the sum of the expected increase in the accrued benefit during 2010, and the expected change in the allocable portion of the excess death benefit attributable to service during 2010 as determined in accordance with paragraph (c)(1)(ii)(D) of this section. As described in *Example 1,* the expected increase in Participant A's accrued benefit during 2010 is $800, to the extent that Participant A is expected to continue in employment for the full 2010 plan year.

(vii) At the end of 2010, Participant A's accrued benefit is expected to be $6,760 ($5,960 + $800). The excess portion of the single-sum death benefit to be allocated in accordance with paragraph (c)(1)(ii)(D) of this section is $3,240 ($10,000 − $6,760), and the allocable portion of the excess benefit for Participant A as of December 31, 2010, with respect to the death decrement at age 64, is $2,632.50 ($3,240 × 13 years of service as of December 31, 2010 ÷ 16 years of service at assumed age of death). The change in the allocable portion of Participant A's excess death benefit due to an additional year of service, with respect to the death decrement at age 64, is a decrease of $397.50. Therefore, the target normal cost for the 2010 plan year attributable to Participant A, with respect to the death decrement at age 64, will reflect a single-sum death benefit of $402.50 ($800 expected increase in Participant A's accrued benefit minus a $397.50 expected decrease in the allocable portion of the death benefit in excess of the accrued benefit).

Example 4. (i) The facts are the same as in *Example 3,* except that the plan provides a single-sum death benefit equal to the greater of the present value of the qualified pre-retirement survivor annuity or 100 times the amount of the participant's monthly retirement benefit with service projected to normal retirement age. The valuation is based on the assumption that all surviving spouses choose to receive their benefit in the form of a single sum. For Participant A, the value of the qualified pre-retirement survivor annuity is less than 100 times Participant A's projected monthly retirement benefit.
(ii) The allocation of the death benefit that is a function of Participant A's accrued benefit is based on service and compensation to the first day of the plan year for purposes of determining the funding target, and the allocation of the death benefit that is a function of the

increase in Participant A's accrued benefit during the plan year for purposes of determining the target normal cost is made in accordance with paragraph (c)(1)(ii)(B) of this section. As described in *Example 1,* Participant A's accrued benefit based on service and compensation as of January 1, 2010, is $5,960, or $496.67 per month. Accordingly, the portion of the single-sum death benefit corresponding to the accrued benefit, or $49,667 (100 times $496.67), is taken into account when determining the 2010 funding target for Participant A.

(iii) In addition, the funding target and the target normal cost reflect a portion of Participant A's death benefit in excess of the amount based on Participant A's accrued benefit. Based on Participant A's average compensation as of the first day of the plan year, Participant A's accrued benefit with service projected to normal retirement is $8,443 [.01 × 17 years of service at age 65 × ($47,000 + $50,000 + $52,000) ÷ 3], or $703.61 per month. The corresponding death benefit is $70,361.

(iv) The excess of the death benefit over Participant A's accrued benefit as of January 1, 2010, is $20,694 (that is, $70,361 − $49,667). Because this part of the death benefit is not a function of Participant A's accrued benefit or service, the portion that is taken into account in determining the funding target is determined under paragraph (c)(1)(ii)(D) of this section. For Participant A, the portion of this benefit with respect to the death decrement occurring at age 64 that is taken into account when determining the funding target for the 2010 plan year is $15,521 ($20,694 × 12 years of past service ÷ 16 years of service at assumed age of death). The total single-sum death benefit for Participant A with respect to the death decrement at age 64 reflected in the funding target for the 2010 plan year is $65,188 ($49,667 + $15,521).

(v) Similarly, the portion of the single-sum death benefit for Participant A that is taken into account when determining the target normal cost for 2010 is equal to the sum of the death benefit based on the expected increase in the accrued benefit during 2010 and the expected change in the allocable portion of the excess death benefit attributable to service during 2010 as determined in accordance with paragraph (c)(1)(ii)(D) of this section.

(vi) At the end of 2010, Participant A's accrued benefit is expected to be $6,760 ($5,960 + $800), or $563.33 per month, and the associated death benefit is $56,333. The expected increase in the amount of the death benefit attributable to the increase in Participant A's accrued benefit is therefore $6,666 ($56,333 − $49,667).

(vii) Participant A's projected accrued benefit at normal retirement based on average compensation as of the end of 2010 is $8,840 [.01 × 17 years of service at age 65 × ($50,000 + $52,000 + $54,000) ÷ 3], or $736.67 per month. The corresponding death benefit is $73,667. The excess portion of the single-sum death benefit to be allocated in accordance with paragraph (c)(1)(ii)(D) of this section is $17,334 ($73,667 − $56,333), and the allocable

portion of the excess benefit for Participant A as of December 31, 2010, with respect to the death decrement at age 64, is $14,084 ($17,334 × 13 years of service as of December 31, 2010 ÷ 16 years of service at assumed age of death).

(viii) The change in the allocable portion of Participant A's excess death benefit during 2010, with respect to the death decrement at age 64, is a decrease of $1,437 ($14,084 − $15,521). Therefore, the target normal cost for the 2010 plan year attributable to Participant A, with respect to the death decrement at age 64, will reflect a single-sum death benefit of $5,229 ($6,666 expected increase in Participant A's death benefit based on the expected increase in the accrued benefit, minus an expected decrease of $1,437 in the amount of the death benefit in excess of the amount attributable to the accrued benefit).

Example 5. (i) The facts are the same as in *Example 1.* In addition, the plan provides a disability benefit to participants who become disabled after completing 15 years of service. The disability benefit is payable at normal retirement age or an earlier date if elected by a participant. For purposes of calculating the disability benefit, service continues to accrue until normal retirement age (unless recovery or commencement of retirement benefits occurs earlier). Further, compensation is deemed to continue at the same rate as when the disability began.
(ii) Participant A will be eligible for the disability benefit at age 63 after completion of 15 years of service. Participant A's annual disability benefit at normal retirement age is $9,180 (that is, 1% of highest 3-year average compensation of $54,000 multiplied by 17 years of deemed service at normal retirement age).

(iii) The portion of the disability benefit based on the participant's accrued benefit as of the valuation date that is taken into account in determining the target normal cost and funding target is determined in accordance with paragraph (c)(1)(ii)(B) of this section. Accordingly, the portion of the disability benefit corresponding to Participant A's accrued benefit as of January 1, 2010, or $5,960, is taken into account when determining the 2010 funding target.

(iv) The excess of Participant A's disability benefit over the accrued benefit as of January 1, 2010, is $3,220 ($9,180 − $5,960). Because this portion of the disability benefit is not based on Participant A's accrued benefit or service, the portion that is taken into account in determining the funding target is determined under paragraph (c)(1)(ii)(D) of this section. The portion of Participant A's excess disability benefit with respect to the disability decrement occurring at age 63 that is taken into account when determining the 2010 funding target is $2,576 [$3,220 × (12 years of past service ÷ 15 years of service at assumed date of disability)]. The total disability benefit for Participant A, with respect to the disability decrement occurring at age 63, that is taken into account in determining the funding target for the 2010 plan year is $8,536 ($5,960 + $2,576).

(v) The portion of Participant A's disability benefit with respect to the disability decrement occurring at age 64 that is taken into account when determining the 2010 funding target is $8,375 [$5,960 + $3,220 × (12 years of past service ÷ 16 years of service at assumed date of disability)].

(vi) If in fact Participant A becomes disabled at age 63, the funding target will reflect the full disability benefit to which Participant A will be entitled at normal retirement age, based on service projected to normal retirement age (17 years) and final average compensation reflecting compensation projected to normal retirement age at the rate Participant A was earning at the time of disablement.

Example 6. (i) The facts are the same as in *Example 5,* except that the disability benefit is based on the accrued benefit calculated using service and compensation earned to the date of disability.
(ii) Because the disability benefit is a function of the participant's accrued benefit, the portion of Participant A's disability benefit that is taken into account when determining the funding target for the 2010 plan year is Participant A's annual accrued benefit as of January 1, 2010, or $5,960, as determined in *Example 1.* This amount is taken into account for both the disability decrement occurring at age 63 and the disability decrement occurring at age 64.

(iii) Similarly, the benefit accrual for Participant A with respect to the disability decrements occurring at age 63 and age 64 that is taken into account when determining the target normal cost for the 2010 plan year is equal to Participant A's expected benefit accrual for 2010 determined in *Example 1,* or $800.

Example 7. (i) Retiree D, a participant in Plan P, is a male age 72 and is receiving a $100 monthly straight life annuity. The 2009 actuarial valuation is performed using the segment rates applicable for September 2008 (determined without regard to the transition rule of section 430(h)(2)(G)), and the 2009 annuitant and nonannuitant (male and female) mortality tables (published in Notice 2008-85). See § 601.601(d)(2) relating to objectives and standards for publishing regulations, revenue rulings and revenue procedures in the Internal Revenue Bulletin.
(ii) The present value of Retiree D's straight life annuity on the valuation date is $10,535.79. This is equal to the sum of: $5,029.99, which is the present value of payments expected to be made during the first 5 years, using the first segment interest rate of 5.07%; $5,322.26, which is the present value of payments expected to be made during the next 15 years, using the second segment interest rate of 6.09%; and $183.54, which is the present value of payments expected to be made after 20 years, using the third segment interest rate of 6.56%.

Example 8. (i) The facts are the same as in *Example 7.* Plan P does not provide for early retirement benefits or single-sum distributions. The actuary assumes that no participants

terminate employment prior to age 50 (other than by death), there is a 5% probability of withdrawal at age 50, and that those participants who withdraw receive a deferred annuity starting at age 65. Participant E is a male age 46 on January 1, 2009, and has an annual accrued benefit of $23,000 beginning at age 65.
(ii) Before taking into account the 5% probability of withdrawal, the funding target associated with Participant E's assumed age 50 withdrawal benefit in the 2009 actuarial valuation is $68,396.75. This is equal to the sum of: $6,925.29, which is the present value of payments expected to be made during the year the participant turns age 65 (the 20th year after the valuation date), using the second segment interest rate of 6.09%; and $61,471.46, which is the present value of payments expected to be made after the 20th year, using the third segment interest rate of 6.56%.

(iii) Taking the 5% probability of withdrawal into account, the funding target for the 2009 plan year associated with Participant E's assumed age 50 withdrawal benefit is $3,419.84 ($68,396.75 × 5%).

Example 9. (i) The facts are the same as in *Example 8,* except the plan offers a single-sum distribution payable at normal retirement age (age 65) determined based on the applicable interest rates and the applicable mortality table under section 417(e)(3). The actuary assumes that 70% of the participants will elect a single sum upon retirement and the remaining 30% will elect a straight life annuity.
(ii) Before taking into account the 5% probability of withdrawal or the 70% probability of electing a single-sum payment, the portion of the 2009 funding target that is attributable to Participant E's assumed single-sum payment, deferred to age 65, is $70,052.30. This is calculated in the same manner as the present value of annuity payments, except that, for the period after the annuity starting date, the 2009 applicable mortality rates are substituted for the 2009 male annuitant mortality rates. This portion of the funding target for the 2009 plan year is equal to the sum of: $6,929.00, which is the present value of annuity payments expected to be made between age 65 and 66 (during the 20th year after the valuation date), using the second segment interest rate of 6.09%; and $63,123.30, which is the present value of annuity payments expected to be made after the 20th year following the valuation date, using the third segment interest rate of 6.56%. These present value amounts reflect the 2009 male nonannuitant mortality rates prior to the assumed commencement of benefits at age 65 and the 100% probability of retiring at age 65.

(iii) Taking the 5% probability of withdrawal and the 70% probability of electing a single-sum payment into account, the portion of the 2009 funding target attributable to Participant E's assumed single-sum payment based on withdrawal at age 50 is $2,451.83 ($70,052.30 × 5% × 70%). After taking into account the 5% probability of withdrawal and the 30% probability of

electing a straight life annuity, the portion of the 2009 funding target that is attributable to Participant E's assumed straight life annuity (based on assumed withdrawal at age 50), deferred to age 65, is equal to 30% of the result obtained in *Example 8*.

Example 10. (i) The facts are the same as in *Example 9,* except the plan offers an immediate single sum upon withdrawal at age 50 determined based on the applicable interest rates and the applicable mortality table under section 417(e)(3). The actuary assumes that 70% of the participants will elect to receive a single-sum distribution upon withdrawal.
(ii) Before taking into account the 5% probability of withdrawal and the 70% probability of electing a single-sum payment, the portion of the funding target for the 2009 plan year that is attributable to Participant E's assumed single-sum payment based on withdrawal at age 50 is $68,908.39. This is calculated in the same manner as the present value of annuity payments, except that the 2009 applicable mortality rates are substituted for the 2009 male annuitant and nonannuitant mortality rates after the annuity starting date. This portion of the 2009 funding target is equal to the sum of $6,815.85, which is the present value of annuity payments expected to be made between age 65 and 66 (during the 20th year after the valuation date), using the second segment interest rate of 6.09%, and $62,092.54, which is the present value of annuity payments expected to be made after the 20th year following the valuation date, using the third segment interest rate of 6.56%. These present value amounts reflect the 2009 male nonannuitant mortality rates prior to the assumed single-sum distribution age of 50.

(iii) Applying the 5% probability of withdrawal at age 50 and the 70% probability of electing a single-sum payment, the portion of the funding target for the 2009 plan year that is attributable to Participant E's assumed single-sum payment (based on withdrawal at age 50) is $2,411.79 ($68,908.39 × 5% × 70%).

Example 11. (i) The facts are the same as in *Example 8,* except that the plan sponsor elects under section 430(h)(2)(D)(ii) to use the monthly corporate bond yield curve instead of segment rates. The enrolled actuary assumes payments are made monthly throughout the year and uses the interest rate from the middle of the monthly corporate bond yield curve because this mid-year yield rate most closely matches the average timing of benefits paid. In accordance with § 1.430(h)(2)-1(e)(4), the applicable monthly corporate bond yield curve is the yield curve derived from December 2008 rates.
(ii) Before taking into account the 5% probability of withdrawal, the funding target associated with Participant E's assumed age 50 withdrawal benefit in the 2009 actuarial valuation is $67,394.12. This reflects the sum of each year's expected payments, discounted at the yield rates described in paragraph (i) of this *Example 11,* as shown below:

Age	Maturity	Yield rate	Present value
65	19.5	6.97%	$5,897.88
66	20.5	6.90%	5,524.69

Age	Maturity	Yield rate	Present value
67	21.5	6.84%	5,164.63
68 and over	Varies	Varies	50,806.92
Total			67,394.12

(iii) Applying the 5% probability of withdrawal, the portion of the funding target for the 2009 plan year attributable to Participant E's assumed withdrawal at age 50 is $3,369.71 ($67,394.12 × 5%).

Example 12. (i) The facts are the same as in *Example 10,* except that the plan determines the amount of the immediate single-sum distribution upon withdrawal at age 50 based on the applicable interest rates under section 417(e)(3) or an interest rate of 6.25%, whichever produces the higher amount. The applicable mortality table under section 417(e)(3) is used for both calculations.
(ii) Before taking into account the 5% probability of withdrawal and the 70% probability of electing a single-sum payment, the present value of Participant E's single-sum distribution as of January 1, 2009, using an interest rate of 6.25%, based on withdrawal at age 50, is $77,391.88. This amount is determined by calculating the projected single-sum distribution at age 50 using the applicable mortality rate under section 417(e)(3) and an interest rate of 6.25%, or $94,789.10, and discounting the result to the January 1, 2009, valuation date using the first segment rate of 5.07% (because the single-sum distribution is assumed to be paid 4 years after the valuation date) and the male non-annuitant mortality rates for 2009.

(iii) Before taking into account the 5% probability of withdrawal and the 70% probability of electing a single-sum payment, the present value as of January 1, 2009, of Participant E's age-50 single-sum distribution using the applicable interest rates and applicable mortality table under section 417(e)(3) is $68,908.39, as developed in *Example 10.* Corresponding to plan provisions, the present value reflected in the funding target is the larger of this amount or the present value of the amount based on a 6.25% interest rate, or $77,391.88.

(iv) Applying the 5% probability of withdrawal at age 50 and the 70% probability of electing a single-sum payment, the portion of the funding target for the 2009 plan year that is attributable to Participant E's assumed single-sum payment (based on withdrawal at age 50) is $2,708.72 ($77,391.88 × 5% × 70%).

Example 13. (i) Plan Q is a cash balance plan that permits an immediate payment of a single sum equal to the participant's hypothetical account balance upon termination of employment. Plan Q's terms provide that the hypothetical account is credited with interest at a market-related rate, based on a specified index. The January 1, 2009, actuarial valuation is performed using the 24-month average segment rates applicable for September 2008 (determined without regard to the transition rule of section 430(h)(2)(G)). Participant F is a male age 61 on January 1, 2009, and has a hypothetical account balance equal to $150,000 on that date. In the 2009 actuarial valuation, the enrolled actuary assumes that the hypothetical

account balances will increase with annual interest credits of 7% until the participant commences receiving his or her benefit, corresponding to the actuary's best estimate of future interest rates credited under the terms of the plan. The actuary also assumes that all participants will retire on the first day of the plan year in which they attain age 65 (that is, no participant will terminate employment prior to age 65 other than by death), and that 100% of participants will elect a single sum upon retirement.
(ii) Participant F's hypothetical account balance projected to January 1, 2013 (the plan year in which F attains age 65) is $196,619.40 based on the assumed annual interest crediting rate of 7%. The funding target for the 2009 plan year attributable to Participant F's benefit at age 65 is $158,525.81, which is calculated by discounting the projected hypothetical account balance of $196,619.40 using the first segment rate of 5.07% and the male non-annuitant mortality rates.

Example 14. (i) The facts are the same as in *Example 13,* except that the actuary assumes that 10% of the participants will choose to collect their benefits in the form of a straight life annuity. The plan provides that the participant's account balance at retirement is converted to an annuity using the applicable interest rates and applicable mortality table under section 417(e)(3).
(ii) Participant F's hypothetical account balance projected to January 1, 2013 (the plan year in which F attains age 65) is $196,619.40, as outlined in *Example 13.* This amount is converted to an annuity payable commencing at age 65 by dividing the projected account balance by an annuity factor based on the applicable mortality table for 2009 under section 417(e)(3) (corresponding to the valuation date) and the interest rates used for the valuation. The resulting annuity factor is 10.8321, reflecting one year of interest at the first segment rate (5.07%) corresponding to the first year of the expected annuity payments (the fifth year after the valuation date), 15 years of interest at the second segment rate (6.09%) and all remaining years at the third segment rate (6.56%). The projected future annuity is therefore $196,619.40 divided by 10.8321, or $18,151.55 per year.

(iii) Before taking into account the 10% probability that the participant will elect to take the distribution in the form of a lifetime annuity, the funding target associated with the future annuity payout for Participant F is $149,120.41. This is equal to the sum of $14,242.79, which is the present value of the annuity payment expected to made during the year the participant turns age 65 (the 5th year after the valuation date), using the first segment interest rate of 5.07%; $116,321.72, which is the present value of payments expected to be made during the 6th through the 20th years following the valuation date, using the second segment interest rate of 6.09%; and $18,555.90, which is the present value of payments expected to be made after the 20th year following the valuation date, using the third segment interest rate of 6.56%.

(iv) Applying the 10% probability of electing a lifetime annuity, the portion of the 2009 funding target attributable to Participant F's assumed lifetime annuity payable at age 65 is $14,912.04. The portion of the 2009 funding target attributable to Participant F's assumed single-sum payment is 90% of the result obtained in *Example 13.*

Example 15. (i) Plan H provides a monthly benefit of $50 times service for all participants. Plan H has a funding target of $1,000,000 and an actuarial value of assets of $810,000 as of January 1, 2010. No

annuity contracts have been purchased, and Plan H has no funding standard carryover balance or prefunding balance as of January 1, 2010. The enrolled actuary certifies that the January 1, 2010, AFTAP is 81%. Effective July 1, 2010, Plan H is amended on June 14, 2010, to increase the plan's monthly benefit to $55 for years of service earned on or after July 1, 2010. The present value of the increase in plan benefits during 2010 (reflecting benefit accruals attributable to the six months between July 1, 2010, and December 31, 2010) is $25,000.
(ii) The amendment increases benefits for future service only, and so the funding target is unaffected. Since section 436(c) only restricts plan amendments that increase plan liabilities, the plan amendment can take effect.

(iii) If the $25,000 present value of the increase in plan benefits during 2010 were included in Plan H's funding target of $1,000,000, the total would be $1,025,000, and the AFTAP would be 79.02% (that is, $810,000/$1,025,000). Since this is less than 80%, the amendment would not have been permitted to take effect if the 2010 increase were included in the funding target instead of target normal cost.

(iv) Because the amendment was adopted after the January 1, 2010, valuation date, the plan sponsor would generally have the option of deciding whether to reflect this amendment in the January 1, 2010, valuation or defer recognition of the amendment to the January 1, 2011, valuation. However, under paragraph (d)(2) of this section, because the plan amendment would not have been permitted to take effect under the provisions of section 436 if the increase in the target normal cost for the plan year had been taken into account in the funding target, the actuary must take into account the amendment in the January 1, 2010, valuation for purposes of section 430. Thus, the target normal cost for the plan year includes the $25,000 that results from the plan amendment.

(g) ***Effective/applicability dates and transition rules*** —

(1) ***Statutory effective date/applicability date*** —

(i) ***In general.*** Section 430 generally applies to plan years beginning on or after January 1, 2008. The applicability of section 430 for purposes of determining the minimum required contribution is delayed for certain plans in accordance with sections 104 through 106 of PPA '06.

(ii) ***Applicability of special adjustments.*** The special adjustments of paragraph (b)(1)(iii) of this section (relating to adjustments to the target normal cost for plan-related expenses and mandatory employee contributions) apply to plan years beginning after December 31, 2008. In addition, a plan sponsor may elect to make the special adjustments of paragraph (b)(1)(iii) of this section for a plan year beginning in 2008. This election must take into account both adjustments described in paragraph (b)(1)(iii) of this section. This election is subject to the same rules that apply to an election to add an amount to the plan's prefunding balance pursuant to § 1.430(f)-1(f), and it must be made in the same manner as the election made under § 1.430(f)-1(f). Thus, the election can be made no later than the last day for making the minimum required contribution for the plan year to which the election relates.

(2) ***Effective date/applicability date of regulations.*** This section applies to plan years beginning on or after January 1, 2010, regardless of whether section 430 applies to determine the minimum required contribution for the plan year. For plan years beginning before January 1, 2010, plans are permitted to rely on the provisions set forth in this section for purposes of satisfying the requirements of section 430.

(3) ***Approval for changes in funding method*** —

(i) ***2008 plan year.*** Any changes in a plan's funding method that are made for the first plan year beginning in 2008 that are not inconsistent with the requirements of section 430 are treated as having been approved by the Commissioner and do not require the Commissioner's specific prior approval.

(ii) ***Application of this section*** —

(A) ***First plan year for which regulations are effective.*** Except as otherwise provided in paragraph (g)(3)(ii)(B) of this section, any change in a plan's funding method for the first plan year that begins on or after January 1, 2010, is treated as having been approved by the Commissioner and does not require the Commissioner's specific prior approval.

(B) ***Optional earlier application of regulations.*** For the first plan year that a plan applies all the provisions of this section, §§ 1.430(f)-1, 1.430(g)-1, 1.430(i)-1, and 1.436-1, any change in a plan's funding method for that plan year is treated as having been approved by the Commissioner and does not require the Commissioner's specific prior approval. For example, if the change in funding method includes a change in the valuation software, the change in the valuation software is treated as having been approved by the Commissioner and does not require the Commissioner's specific prior approval. If that plan year begins before January 1, 2010, the automatic approval for a change in funding method under paragraph (g)(3)(ii)(A) of this section does not apply to the plan.

(C) ***Special rule for changes in allocation.*** Any change in a plan's funding method for a plan year earlier than the first plan year beginning on or after January 1, 2010, that is necessary to apply the rules of paragraph (c)(1)(ii) of this section is treated as having been approved by the Commissioner and does not require the Commissioner's specific prior approval.

(iii) ***First plan year for which section 430 applies to determine minimum funding.*** For a plan for which the minimum required contribution is not determined under section 430 for the first plan year that begins on or after January 1, 2008, pursuant to sections 104 through 106 of PPA '06, any change in a plan's funding method for the first plan year to which section 430 applies to determine the plan's minimum required contribution is treated as having been approved by the Commissioner and does not require the Commissioner's specific prior approval.

(4) ***Approval for changes in actuarial assumptions.*** The Commissioner's specific prior approval is not required with respect to any actuarial assumptions that are adopted for the first plan year for which section 430 applies to determine the minimum required contribution for the plan and that are not inconsistent with the requirements of section 430.

(5) ***Transition rule for determining funding target attainment percentage for the 2007 plan year*** —

(i) ***In general.*** For purposes of the first plan year beginning on or after January 1, 2008, the funding target attainment percentage for the plan's prior plan year (the 2007 plan year) is determined as the fraction (expressed as a percentage), the numerator of which is the value of plan assets

determined under paragraph (g)(5)(ii) of this section, and the denominator of which is the plan's current liability determined pursuant to section 412(l)(7) (as in effect prior to amendment by PPA '06) as of the valuation date for the 2007 plan year.

(ii) *Determination of value of plan assets* —

(A) ***In general.*** The value of plan assets for the 2007 plan year under this paragraph (g)(5)(ii)(A) is determined as the value of plan assets as described in paragraph (g)(5)(ii)(B) of this section, reduced by the plan's funding standard account credit balance for the 2007 plan year as described in paragraph (g)(5)(iii)(A) of this section except to the extent provided in paragraph (g)(5)(iii)(B) of this section.

(B) ***Value of plan assets.*** The value of plan assets for the 2007 plan year under this paragraph (g)(5)(ii)(B) is determined under section 412(c)(2) as in effect for the 2007 plan year, except that the value of plan assets prior to subtracting the plan's funding standard account credit balance described in paragraph (g)(5)(iii)(A) of this section must be adjusted so that it is neither less than 90 percent of the fair market value of plan assets nor greater than 110 percent of the fair market value of plan assets on the valuation date for that plan year. If the value of plan assets prior to adjustment under this paragraph (g)(5)(ii)(B) is less than 90 percent of the fair market value of plan assets on the valuation date, then the value of plan assets under this paragraph (g)(5)(ii)(B) is equal to 90 percent of the fair market value of plan assets. If the value of plan assets determined under this paragraph (g)(5)(ii)(B) is greater than 110 percent of the fair market value of plan assets on the valuation date, then the value of plan assets under this paragraph (g)(5)(ii)(B) is equal to 110 percent of the fair market value of plan assets.

(iii) *Subtraction of credit balance* —

(A) ***In general.*** If a plan has a funding standard account credit balance as of the valuation date for the 2007 plan year, then, except as described in paragraph (g)(5)(iii)(B) of this section, that balance is subtracted from the value of plan assets described in paragraph (g)(5)(ii)(B) of this section as of that valuation date to determine the value of plan assets for the 2007 plan year. However, the value of plan assets is not reduced below zero.

(B) ***Effect of funding standard carryover balance reduction for the 2008 plan year.*** Notwithstanding the rules of paragraph (g)(5)(iii)(A) of this section, for the first plan year beginning in 2008, if the employer has made an election to reduce some or all of the funding standard carryover balance as of the first day of that year in accordance with § 1.430(f)-1(e), then the present value (determined as of the valuation date for the 2007 plan year using the valuation interest rate for that 2007 plan year) of the amount so reduced is not treated as part of the funding standard account credit balance when that balance is subtracted from the value of plan assets pursuant to paragraph (g)(5)(iii)(A) of this section.

[T.D. 9467, 74 FR 53035, Oct. 15, 2009]

§ 1.430(f)-1 Effect of prefunding balance and funding standard carryover balance.

(a) *In general* —

(1) ***Overview.*** This section provides rules relating to the application of prefunding and funding standard carryover balances under section 430(f). Section 430 and this section apply to single employer defined benefit plans (including multiple employer plans) that are subject to section 412, but do not apply to multiemployer plans (as defined in section 414(f)). Paragraph (b) of this section sets forth rules regarding a plan's prefunding balance and a plan sponsor's election to maintain a funding standard carryover balance. Paragraph (c) of this section provides rules under which those balances must be subtracted from plan assets. Paragraph (d) of this section describes a plan sponsor's election to use those balances to offset the minimum required contribution. Paragraph (e) of this section describes a plan sponsor's election to reduce those balances (which will affect the determination of the value of plan assets for purposes of sections 430 and 436). Paragraph (f) of this section sets forth rules regarding elections under this section. Paragraph (g) of this section contains examples. Paragraph (h) of this section contains effective/applicability dates and transition rules.

(2) ***Special rules for multiple employer plans.*** In the case of a multiple employer plan to which section 413(c)(4)(A) applies, the rules of this section are applied separately for each employer under the plan, as if each employer maintained a separate plan. Thus, each employer under such a multiple employer plan may have a separate funding standard carryover balance and a prefunding balance for the plan. In the case of a multiple employer plan to which section 413(c)(4)(A) does not apply (that is, a plan described in section 413(c)(4)(B) that has not made the election for section 413(c)(4)(A) to apply), the rules of this section are applied as if all participants in the plan were employed by a single employer.

(b) ***Maintenance of balances*** —

(1) ***Prefunding balance*** —

(i) ***In general.*** A plan sponsor is permitted to elect to maintain a prefunding balance for a plan. A prefunding balance maintained for a plan consists of a beginning balance of zero, increased by the amount of excess contributions to the extent the employer elects to do so as described in paragraph (b)(1)(ii) of this section, and decreased to the extent provided in paragraph (b)(1)(iii) of this section. The plan sponsor's initial election to add to the prefunding balance under paragraph (b)(1)(ii) of this section constitutes an election to maintain a prefunding balance. The prefunding balance is adjusted further for investment return and interest as provided in paragraphs (b)(3) and (b)(4) of this section.

(ii) ***Increases*** —

(A) ***In general.*** If the plan sponsor of a plan elects to add to the plan's prefunding balance, as of the first day of a plan year following the first effective plan year for the plan, the prefunding balance is increased by the amount so elected by the plan sponsor for the plan year. The amount added to the prefunding balance cannot exceed the present value of the excess contributions for the preceding plan year determined under paragraph (b)(1)(ii)(B) of this section, increased for interest in accordance with paragraph (b)(1)(iv)(A) of this section.

(B) ***Present value of excess contribution.*** The present value of the excess contribution for the preceding plan year is the excess, if any, of—

(*1*) The present value (determined under the rules of paragraph (b)(1)(iv)(B) of this section) of the employer contributions (other than contributions to avoid or terminate benefit limitations described in § 1.436-1(f)(2)) to the plan for such preceding plan year; over

(*2*) The minimum required contribution for such preceding plan year.

(C) ***Treatment of unpaid minimum required contributions.*** For purposes of this paragraph (b)(1)(ii), a contribution made during a plan year to correct an unpaid minimum required contribution (within the meaning of section 4971(c)(4)) for a prior plan year is not treated as a contribution for the current plan year.

(iii) ***Decreases.*** As of the first day of each plan year, the prefunding balance of a plan is decreased (but not below zero) by the sum of—

(A) Any amount of the prefunding balance that was used under paragraph (d) of this section to offset the minimum required contribution of the plan for the preceding plan year; and

(B) Any reduction in the prefunding balance under paragraph (e) of this section for the plan year.

(iv) ***Adjustments for interest*** —

(A) ***Adjustment of excess contribution.*** The present value of the excess contribution for the preceding year (as determined under paragraph (b)(1)(ii)(B) of this section) is increased for interest accruing for the period between the valuation date for the preceding plan year and the first day of the current plan year. For this purpose, interest is determined by using the plan's effective interest rate under section 430(h)(2)(A) for the preceding plan year, except to the extent provided in paragraph (b)(3)(iii) of this section.

(B) ***Determination of present value.*** The present value of the contributions described in paragraph (b)(1)(ii)(B)(*1*) of this section is determined as of the valuation date for the preceding plan year, using the plan's effective interest rate under section 430(h)(2)(A) for the preceding plan year.

(2) ***Funding standard carryover balance*** —

(i) ***In general.*** A funding standard carryover balance is automatically established for a plan that had a positive balance in the funding standard account under section 412(b) (as in effect prior to amendment by the Pension Protection Act of 2006 (PPA '06), Public Law 109-280 (120 Stat. 780)) as of the end of the pre-effective plan year for the plan. The funding standard carryover balance as of the beginning of the first effective plan year for the plan is the positive balance in the funding standard account under section 412(b) (as in effect prior to amendment by PPA '06) as of the end of the pre-effective plan year for the plan. After that date, the funding standard carryover balance is decreased to the extent provided in paragraph (b)(2)(ii) of this section and adjusted further for investment return and interest as provided in paragraphs (b)(3) and (b)(4) of this section.

(ii) ***Decreases.*** As of the first day of each plan year, the funding standard carryover balance of a plan is decreased (but not below zero) by the sum of—

(A) Any amount of the funding standard carryover balance that was used under paragraph (d) of this section to offset the minimum required contribution of the plan for the preceding plan year; and

(B) Any reduction in the funding standard carryover balance under paragraph (e) of this section for the plan year.

(3) *Adjustments for investment experience* —

(i) ***In general.*** A plan's prefunding balance under paragraph (b)(1) of this section and a plan's funding standard carryover balance under paragraph (b)(2) of this section as of the first day of a plan year must be adjusted to reflect the actual rate of return on plan assets for the preceding plan year. For this purpose, the actual rate of return on plan assets for the preceding plan year is determined on the basis of fair market value and must take into account the amount and timing of all contributions, distributions, and other plan payments made during that period.

(ii) ***Ordering rules for adjustments.*** In general, the adjustment for actual rate of return on plan assets is applied to the balance after any reduction of prefunding and funding standard carryover balances for that preceding plan year under paragraph (e) of this section and after subtracting amounts used to offset the minimum required contribution for the preceding plan year pursuant to paragraph (d) of this section. However, see paragraph (d)(1)(ii)(D) of this section for a special ordering rule when adjusting for investment experience.

(iii) ***Special rule for excess contributions attributable to use of funding balances.*** Notwithstanding paragraph (b)(1)(iv)(A) of this section, to the extent that a contribution is included in the present value of excess contributions solely because the minimum required contribution has been offset under paragraph (d) of this section, the contribution is adjusted for investment experience under the rules of this paragraph (b)(3).

(4) *Valuation date other than the first day of the plan year* —

(i) ***In general.*** If a plan's valuation date is not the first day of the plan year, then, solely for purposes of applying paragraphs (c), (d), and (e) of this section, the plan's prefunding and funding standard carryover balances (if any) determined under this paragraph (b) are increased from the first day of the plan year to the valuation date using the plan's effective interest rate under section 430(h)(2)(A) for the plan year.

(ii) ***Special rule for adjustments for investment experience.*** In the case of a plan with a valuation date that is not the first day of the plan year, for purposes of applying the subtraction under paragraph (b)(3)(ii) of this section for amounts used to offset the minimum required contribution for the preceding plan year and the decreases under paragraphs (b)(1)(iii) and (b)(2)(ii) of this section, the amount of the prefunding balance or funding standard carryover balance that is used to offset the minimum required contribution under paragraph (d) of this section or reduced under paragraph (e) of this section is discounted from the valuation date to the first day of the plan year using the effective interest rate under section 430(h)(2)(A) for the plan year.

(5) ***Special rule for quarterly contributions.*** For purposes of applying a prefunding balance or funding standard carryover balance to required installments described in section 430(j)(3), the respective balances are increased from the beginning of the year to the date of the election (using the plan's effective interest rate for the plan year) to determine the amount available to offset the required quarterly installment. The amounts used to offset required quarterly installments are then

discounted from that date to the first day of the plan year for purposes of the subtraction under paragraph (b)(3)(ii) of this section and the decreases under paragraphs (b)(1)(iii) and (b)(2)(ii) of this section, using the effective interest rate for the plan year. However, see paragraph (d)(1)(i)(B) of this section for a special rule regarding late quarterly installments when determining the amount that is used to offset the minimum required contribution for the plan year.

(c) *Effect of balances on the value of plan assets* —

(1) *In general.* In the case of any plan with a prefunding balance or a funding standard carryover balance, the amount of those balances is subtracted from the value of plan assets for purposes of sections 430 and 436, except as otherwise provided in paragraphs (c)(2), (c)(3), and (d)(3) of this section and § 1.436-1(j)(1)(ii)(B).

(2) *Subtraction of balances in determining new shortfall amortization base* —

(i) *Prefunding balance.* For purposes of determining whether a plan is exempt from the requirement to establish a new shortfall amortization base under section 430(c)(5), the amount of the prefunding balance is subtracted from the value of plan assets only if an election under paragraph (d) of this section to use the prefunding balance to offset the minimum required contribution is made for the plan year.

(ii) *Funding standard carryover balance.* For purposes of determining whether a plan is exempt from the requirement to establish a new shortfall amortization base under section 430(c)(5), the funding standard carryover balance is not subtracted from the value of plan assets regardless of whether any portion of either the funding standard carryover balance or the prefunding balance is used to offset the minimum required contribution for the plan year under paragraph (d) of this section.

(3) *Special rule for certain binding agreements with PBGC.* If there is in effect for a plan year a binding written agreement with the Pension Benefit Guaranty Corporation (PBGC) which provides that all or a portion of the prefunding balance or funding standard carryover balance (or both balances) is not available to offset the minimum required contribution for a plan year, that specified amount is not subtracted from the value of plan assets for purposes of determining the funding shortfall under section 430(c)(4). For example, if a plan has no prefunding balance and a $20 million funding standard carryover balance, a PBGC agreement provides that $5 million of a plan's funding standard carryover balance is unavailable to offset the minimum required contribution for a plan year, and the plan's assets are $100 million, then the value of plan assets for purposes of determining the funding shortfall under section 430(c)(4) is reduced by $15 million ($20 million less $5 million) to $85 million. For purposes of this paragraph (c)(3), an agreement with the PBGC is taken into account with respect to a plan year only if the agreement was executed prior to the valuation date for the plan year.

(d) *Election to apply balances against minimum required contribution* —

(1) *In general* —

(i) *Amount of offset to minimum required contribution* —

(A) *Effect of use of balances.* Subject to the limitations provided in this paragraph (d), in the case of any plan year with respect to which the plan sponsor elects to use all or a portion of the prefunding balance or the funding standard carryover balance to offset the

minimum required contribution for the plan year, the minimum required contribution for the plan year (determined after taking into account any waiver under section 412(c)) is offset as of the valuation date for the plan year by the amount so used.

(B) ***Special rule for late election with respect to quarterly contributions.*** Notwithstanding paragraph (d)(1)(i)(A) of this section, if the plan sponsor elects to use all or a portion of the prefunding balance or the funding standard carryover balance to satisfy a required installment under section 430(j)(3), the amount used to offset the minimum required contribution for the plan year is the portion of the balance so used, adjusted in accordance with the rules of paragraph (b)(5) of this section, unless the date of the election is after the due date of the required installment. If the election to use all or a portion of the prefunding balance or the funding standard carryover balance to satisfy the required installments under section 430(j)(3) is made after the due date for the required installment, then the amount used to offset the minimum required contribution for the plan year is the portion of the balance so used, discounted from the date of the election to the due date of the required installment at the effective interest rate plus 5 percentage points, and then further adjusted from the installment due date to the valuation date at the effective interest rate. For example, if a quarterly installment of $20,250 is due on April 15 for a calendar year plan with a valuation date on January 1 and an effective interest rate of 6 percent, and the installment is satisfied by an election to apply the funding standard carryover balance that is made on July 1 ($2^{1}/_{2}$; months after the April 15 due date), then the amount used to offset the minimum required contribution under this paragraph (d)(1)(i) is $19,481 (that is, $20,250 ÷ $1.11^{(2.5/12)}$ ÷ $1.06^{(3.5/12)}$). However, the amount by which the funding standard carryover balance is reduced under paragraph (b)(2)(ii) of this section is $19,669 (that is, $20,250 ÷ $1.06^{(6/12)}$).

(ii) ***Maximum amount of available balances and coordination of elections*** —

(A) ***General requirement to follow chronology.*** In general, the amount of prefunding and funding standard carryover balances that may be used to offset the minimum required contribution for a plan year must take into account any decrease in those balances which results from a prior election either to use the prefunding balance or funding standard carryover balance under section 430(f)(3) and this paragraph (d) or to reduce those balances under section 430(f)(5) and paragraph (e) of this section (including deemed elections under section 436(f)(3) and § 1.436-1(a)(5)). For example, for a calendar plan year with a January 1 valuation date, a deemed election under section 436(f)(3) and § 1.436-1(a)(5) on April 1, 2010 (the first day of the 4th month of the plan year) will reduce the available prefunding balance or funding standard carryover balance that can be used with respect to an election made after April 1, 2010.

(B) ***Exception to chronological rule.*** Notwithstanding the general rule of paragraph (d)(1)(ii)(A) of this section, all elections under section 430(f)(5) and paragraph (e) of this section to reduce the prefunding balance or funding standard carryover balance for the current plan year (including deemed elections under section 436(f)(3) and § 1.436-1(a)(5)) are deemed to occur on the valuation date for the plan year and before any election under section 430(f)(3) and this paragraph (d) to offset the minimum required contribution for the current plan year. Accordingly, if an election to use the prefunding balance or funding standard carryover balance to offset the minimum required contribution for the plan year (including an election to satisfy the quarterly contribution requirement) has been made prior to the election to reduce the prefunding balance or funding standard carryover

balance, then the amount available for use to offset the otherwise applicable minimum required contribution for the plan year under this paragraph (d) will be retroactively reduced. However, an election to reduce a prefunding balance or funding standard carryover balance for a plan year does not affect a prior election to use a prefunding balance or funding standard carryover balance to offset a minimum required contribution for a prior plan year.

(C) ***Investment experience.*** In addition to reflecting any decrease in the prefunding balance or the funding standard carryover balance which results from a prior election for the previous year either to use the prefunding balance or funding standard carryover balance under section 430(f)(3) and this paragraph (d) to offset the minimum required contribution for such prior plan year or to reduce those balances under section 430(f)(5) and paragraph (e) of this section (including deemed elections under section 436(f)(3) and § 1.436-1(a)(5)), the prior plan year's prefunding and funding standard carryover balances must be adjusted under the rules of paragraph (b)(3) of this section for investment experience for that prior plan year before determining the amount of those balances available for such an election for the current plan year.

(D) ***Special rule for current year elections that are made before prior year elections.*** This paragraph (d)(1)(ii)(D) sets forth a special rule that applies if, for the current plan year, a plan sponsor makes an election under this paragraph (d) or paragraph (e) of this section (including a deemed election under section 436(f)(3) and § 1.436-1(a)(5)), and then subsequently makes an election under this paragraph (d) to offset the minimum required contribution for the prior plan year. This special rule applies solely for purposes of determining the amount of prefunding and funding standard carryover balances available for that subsequent election. Under this special rule, in lieu of decreasing the funding standard carryover balance or prefunding balance as of the valuation date for the current year to take into account the current year election, the funding standard carryover balance or prefunding balance as of the valuation date for the prior plan year is decreased by the amount of the prior year equivalent of the current year election. The prior year equivalent of the current year election is determined by dividing the amount of the current year election (as of the first day of the current plan year) by a number equal to 1 plus the rate of investment return for the prior plan year determined under paragraph (b)(3) of this section. If this paragraph (d)(1)(ii)(D) applies for a plan year, then the funding standard carryover balance and prefunding balance are nonetheless adjusted in accordance with the rules of paragraph (b) of this section, after the application of the rules of this paragraph (d)(1)(ii)(D). Thus, the amount used to offset the minimum required contribution for the earlier plan year is subtracted from the prefunding balance or funding standard carryover balance as of the valuation date for that year prior to the adjustment for investment return under paragraph (b)(3) of this section for that plan year, and the amount by which the prefunding balance or funding standard carryover balance is decreased for the second year is based on the elections made for the second year.

(2) ***Requirement to use funding standard carryover balance before prefunding balance.*** To the extent that a plan has a funding standard carryover balance greater than zero, no amount of the plan's prefunding balance may be used to offset the minimum required contribution. Thus, a plan's funding standard carryover balance must be exhausted before the plan's prefunding balance may be applied under paragraph (d)(1) of this section to offset the minimum required contribution.

(3) ***Limitation for underfunded plans —***

(i) ***In general.*** An election to use the prefunding balance or funding standard carryover balance to offset the minimum required contribution under this paragraph (d) is not available for a plan year if the plan's prior plan year funding ratio is less than 80 percent. For purposes of this paragraph (d)(3), except as otherwise provided in this paragraph (d)(3) or paragraph (h)(3) of this section, the plan's prior plan year funding ratio is the fraction (expressed as a percentage)—

(A) The numerator of which is the value of plan assets on the valuation date for the preceding plan year, reduced by the amount of any prefunding balance (but not the amount of any funding standard carryover balance); and

(B) The denominator of which is the funding target of the plan for the preceding plan year (determined without regard to the at-risk rules of section 430(i)(1)).

(ii) ***Special rule for second year of a new plan with no past service.*** In the case of a new plan that was neither the result of a merger nor involved in a spinoff, if the prior plan year was the first year of the plan and the funding target for the prior plan year was zero, then the plan's prior plan year funding ratio is deemed to be 80 percent for purposes of this paragraph (d)(3).

(iii) ***Special rule for plans that are the result of a merger.*** [Reserved]

(iv) ***Special rules for plans that are involved in a spinoff.*** [Reserved]

(e) ***Election to reduce balances*** —

(1) ***In general.*** A plan sponsor may make an election for a plan year to reduce any portion of a plan's prefunding and funding standard carryover balances under this paragraph (e). If such an election is made, the amount of those balances that must be subtracted from the value of plan assets pursuant to paragraph (c)(1) of this section will be smaller and, accordingly, the value of plan assets taken into account for purposes of sections 430 and 436 will be larger. Thus, this election to reduce a plan's prefunding and funding standard carryover balances is taken into account in the determination of the value of plan assets for the plan year and applies for all purposes under sections 430 and 436, including for purposes of determining the plan's prior plan year funding ratio under paragraph (d)(3) of this section for the following plan year. *See also* section 436(f)(3) and § 1.436-1(a)(5) for a rule under which the plan sponsor is deemed to make the election described in this paragraph (e). The rules of paragraph (d)(1)(ii) of this section also apply for purposes of determining the maximum amount of prefunding balance or funding standard carryover balance that is available for an election under this paragraph (e).

(2) ***Requirement to reduce funding standard carryover balance before prefunding balance.*** To the extent that a plan has a funding standard carryover balance greater than zero, no election under paragraph (e)(1) of this section is permitted to be made that reduces the plan's prefunding balance. Thus, a plan must exhaust its funding standard carryover balance before it is permitted to make an election under paragraph (e)(1) of this section with respect to its prefunding balance.

(f) ***Elections*** —

(1) ***Method of making elections*** —

(i) ***In general.*** Any election under this section by the plan sponsor must be made by providing written notification of the election to the plan's enrolled actuary and the plan administrator. The written notification must set forth the relevant details of the election, including the specific

dollar amount involved in the election (except as provided in this paragraph (f)(1). Thus, except as provided in this paragraph (f)(1), a conditional or formula-based election generally does not satisfy the requirements of this paragraph (f).

(ii) ***Standing elections to increase or use balances.*** A plan sponsor may provide a standing election in writing to the plan's enrolled actuary to use the funding standard carryover balance and the prefunding balance to offset the minimum required contribution for the plan year to the extent needed to avoid an unpaid minimum required contribution under section 4971(c)(4) taking into account any contributions that are or are not made. In addition, a plan sponsor may provide a standing election in writing to the plan's enrolled actuary to add the maximum amount possible each year to the prefunding balance. Any election made pursuant to a standing election under this paragraph (f)(1)(ii) is deemed to occur on the last day available to make the election for the plan year as provided under paragraph (f)(2)(i) of this section. Any standing election under this paragraph (f)(1)(ii) remains in effect for the plan with respect to the enrolled actuary named in the election, unless—

(A) The standing election is revoked under the rules of paragraph (f)(3) of this section; or

(B) The enrolled actuary who signs the actuarial report under section 6059 (Schedule SB, “Single-Employer Defined Benefit Plan Actuarial Information” of Form 5500, “Annual Return/Report of Employee Benefit Plan”) for the plan for the plan year is not the enrolled actuary named in the standing election.

(iii) ***Standing election to satisfy installments through use of funding balances*** —

(A) ***In general.*** A plan sponsor may provide a standing election in writing to the plan's enrolled actuary to use (to the extent available) the funding standard carryover balance and the prefunding balance to satisfy any otherwise unpaid portion of a required installment under section 430(j)(3). Any use pursuant to a standing election under this paragraph (f)(1)(iii) is deemed to occur on the later of the last date for making the required installment and the date the standing election is provided to the enrolled actuary.

(B) ***Otherwise unpaid portion of a required installment.*** For purposes of paragraph (f)(1)(iii)(A) of this section, the otherwise unpaid portion of a required installment equals the amount necessary to satisfy the required installment rules under section 430(j) based on the installment amounts determined as if the required annual payment were the amount described in § 1.430(j)-1(c)(5)(ii)(B). Thus, the amount of the prefunding and funding standard carryover balances used under a standing election is the amount that is needed to satisfy an installment in the amount of 25 percent of the minimum required contribution for the prior plan year, plus installments in that amount with respect to all earlier required installment due dates for the plan year, taking into account prior contributions for the plan year and prior elections to use the funding standard carryover balance and prefunding balance for the plan year.

(C) ***Duration of standing election.*** Generally, any standing election under this paragraph (f)(1)(iii) remains in effect for the plan with respect to the enrolled actuary named in the election, unless either of the events described in paragraph (f)(1)(ii)(A) or (B) of this section occurs with respect to the standing election. However, a plan sponsor may suspend application of a standing election for the remaining installments with respect to a plan year by providing, in writing to the plan's enrolled actuary, notice that the standing election is not to apply for the remainder of the plan year. In addition, once the current

year's minimum required contribution has been determined, a plan sponsor may modify application of a standing election for the remaining installments with respect to a plan year by providing, in writing to the plan's enrolled actuary, a replacement formula election to use the funding standard carryover balance and prefunding balance (to the extent available) so that the otherwise unpaid portions of the remaining required installments satisfy the required installment rules under section 430(j), taking into account the determination of the current year's minimum required contribution pursuant to § 1.430(j)-1(c)(5)(ii)(A), prior contributions for the plan year and prior elections to use the prefunding and funding standard carryover balances.

(2) *Timing of elections* —

(i) ***General rule.*** Except as otherwise provided in paragraph (f)(2)(ii) or (iii) of this section, any election under this section with respect to a plan year must be made no later than the last date for making the minimum required contribution for the plan year as described in section 430(j)(1), or such later date as prescribed in guidance published in the Internal Revenue Bulletin. For this purpose, an election to add to the prefunding balance relates to the plan year for which excess contributions were made. For example, an election to add to the prefunding balance as of the first day of the plan year that begins on January 1, 2010 (in an amount not in excess of the present value of the excess contribution as of the valuation date in 2009, adjusted for interest under the rules of paragraph (b)(1)(ii) of this section), must be made no later than September 15, 2010, even though the election is reported on the 2010 Schedule SB of Form 5500, which is not due until 2011. Except for the standing elections covered by paragraph (f)(1)(ii) of this section, an election under this section may not be made prior to the first day of the plan year to which the election relates.

(ii) ***Special rule for standing election revoked by a change in enrolled actuary.*** If there is a change in enrolled actuary for the plan year which would result in a revocation of the standing election under the rule of paragraph (f)(1)(ii)(B) of this section, then the plan sponsor may reinstate the revoked standing election by providing a replacement to the new enrolled actuary by the due date of the Schedule SB of Form 5500.

(iii) ***Election to reduce balances.*** Any election under paragraph (e) of this section to reduce the prefunding balance or funding standard carryover balance for a plan year (for example, in order to avoid or terminate a benefit restriction under section 436) must be made by the end of the plan year to which the election relates.

(iv) ***Earlier elections.*** This paragraph (f)(2) sets forth the latest date that an election can be made. A plan sponsor is permitted to make an earlier election, and in certain circumstances may need to make such an election in order to timely satisfy a quarterly contribution requirement under section 430(j)(3).

(3) *Irrevocability of elections* —

(i) ***In general.*** Except as otherwise provided in this paragraph (f)(3) or in guidance published in the Internal Revenue Bulletin, a plan sponsor's election under this section with respect to the plan's prefunding balance or funding standard carryover balance is irrevocable (and must be unconditional). A standing election by the plan sponsor may be revoked by providing written notification of the revocation to the plan's enrolled actuary and the plan administrator on or before the date the corresponding election is deemed to occur pursuant to paragraph (f)(1)(ii) of this section.

(ii) ***Exception for certain elections.*** An election to use the prefunding balance or funding standard carryover balance to offset the minimum required contribution for a plan year (including an election to satisfy the quarterly contribution requirements for a plan year) is permitted to be revoked to the extent the amount the plan sponsor elected to use to offset the minimum contribution requirements (including an election used to satisfy the quarterly contribution requirements) exceeds the minimum required contribution for a plan year (determined without regard to the election under paragraph (d) of this section) if and only if the election is revoked by providing written notification of the revocation to the plan's enrolled actuary and the plan administrator by the deadline set forth in paragraph (f)(3)(iii) of this section. If no such revocation is made, then, under paragraph (b) of this section, the funding standard carryover balance or prefunding balance is decreased by the entire amount that the plan sponsor elected to use to offset the minimum required contribution for a plan year (including an election to satisfy the quarterly contribution requirements for a plan year).

(iii) ***Deadline for revoking election.*** The deadline for revoking the election described in paragraph (f)(3)(ii) of this section is generally the end of the plan year. However, for plans with a valuation date other than the first day of the plan year, the deadline for the revocation is the deadline for contributions for the plan year as described in section 430(j)(1). In addition, for the first plan year beginning in 2008, the deadline for the revocation for all plans is deferred to the due date (including extensions) of the Schedule SB, “Single-Employer Defined Benefit Plan Actuarial Information” of Form 5500, “Annual Return/Report of Employee Benefit Plan”.

(4) ***Plan sponsor —***

(i) ***In general.*** For purposes of the elections described in this section, except as otherwise provided in paragraph (f)(4)(ii) of this section, any reference to the plan sponsor means the employer or employers responsible for making contributions to or under the plan.

(ii) ***Certain multiple employer plans.*** For purposes of the elections described in this section, in the case of plans that are multiple employer plans to which section 413(c)(4)(A) does not apply, any reference to the plan sponsor means the plan administrator within the meaning of section 414(g).

(g) ***Examples.*** The following examples illustrate the rules of this section:

> *Example 1.* (i) Plan P is a defined benefit plan with a plan year that is the calendar year and a valuation date of January 1. The funding standard carryover balance of Plan P is $25,000 and the prefunding balance is zero as of the beginning of the 2010 plan year. The sponsor of Plan P, Sponsor S, does not elect to use any portion of the balance to offset the minimum required contribution for 2010 pursuant to paragraph (d)(1) of this section, or to reduce any portion of the funding standard carryover balance prior to the determination of the value of plan assets for 2010, pursuant to paragraph (e)(1) of this section. The actual rate of return on Plan P's assets for 2010 is 2%. Plan P's effective interest rate for 2010 is 6%. The minimum required contribution for Plan P under section 430 for 2010 is $100,000, and no quarterly installments are required for Plan P for the 2010 plan year. As of January 1, 2010, the value of plan assets is $1,100,000 and the funding target is $1,000,000. Therefore, the prior plan year funding ratio for Plan P for 2010, as determined under paragraph (d)(3) of this section, is 110%.

(ii) Sponsor S makes a contribution to Plan P of $150,000 on December 1, 2010, for the 2010 plan year and makes no other contributions for the 2010 plan year. Because this contribution was made on a date other than the valuation date for the 2010 plan year, the contribution must be adjusted to reflect interest that would otherwise have accrued between the valuation date and the date of the contribution, at the effective interest rate for the 2010 plan year. The amount of the contribution after adjustment is $142,198, determined as $150,000 discounted for 11 months of compound interest at an effective annual interest rate of 6%.

(iii) The excess of employer contributions for 2010 over the minimum required contribution for 2010, as of the valuation date, is $42,198 ($142,198 less $100,000). Accordingly, the increase in Plan P's prefunding balance as of January 1, 2011, cannot exceed $44,730 (which is the present value of the excess contribution of $42,198 adjusted for 12 months of interest at an effective interest rate of 6%).

(iv) Plan P's funding standard carryover balance as of January 1, 2011, is $25,500 (which is the funding standard carryover balance as of January 1, 2010, adjusted for investment experience during 2010 at a rate of 2%).

Example 2. (i) The facts are the same as in *Example 1,* except that the contribution of $150,000 is made on February 1, 2011, for the 2010 plan year.
(ii) The amount of the contribution after adjustment is $140,824, which is determined as $150,000 discounted for 13 months of interest at an effective interest rate of 6%. Accordingly, the increase in Plan P's prefunding balance as of January 1, 2011, cannot exceed $43,273 (which is the present value of the excess contribution of $40,824 adjusted for 12 months of interest at an effective interest rate of 6%).

(iii) Plan P's funding standard carryover balance as of January 1, 2011, is $25,500, as developed in *Example 1* of this section. If Sponsor S elects to increase the prefunding balance as of January 1, 2011, by the present value of the excess contribution adjusted for interest, or $43,273, the total of the funding standard carryover balance and prefunding balance as of January 1, 2011, is $68,773.

Example 3. (i) The facts are the same as in *Example 1,* except that Sponsor S contributes $90,539 to Plan P on February 1, 2011, for the 2010 plan year and makes no other contributions to Plan P for the 2010 plan year. In addition, on February 1, 2011, Sponsor S elects to use $15,000 of the funding standard carryover balance to offset P's minimum required contribution for 2010, pursuant to paragraph (d)(1) of this section. This is permitted because Plan P's prior-year funding ratio determined under paragraph (d)(3) of this section is 110%, and is therefore not less than 80%.
(ii) Because the contribution was made on a date other than the valuation date for the 2010 plan year, the contribution must be adjusted to reflect interest that would otherwise have accrued between the valuation date and the date of the contribution, at the effective interest rate for the 2010 plan year. The amount of the contribution after adjustment is $85,000, determined as

$90,539 discounted for 13 months of compound interest at an effective interest rate of 6%. The adjusted contribution of $85,000 plus the $15,000 of the funding standard carryover balance used to offset the minimum required contribution equals the minimum required contribution for the 2010 plan year of $100,000. Therefore, no excess contributions are available to increase the prefunding balance, and the prefunding balance as of January 1, 2011, remains zero.

(iii) The funding standard carryover balance as of January 1, 2011, is adjusted for investment experience during the 2010 plan year, in accordance with paragraph (b)(3) of this section. The amount of the adjustment is $200, determined as the actual rate of return on plan assets for 2010 as applied to the 2010 funding standard carryover balance after reduction for the amount of that balance used under paragraph (d)(1) of this section (that is, $25,000 less $15,000, multiplied by the actual rate of return of 2%).

(iv) The funding standard carryover balance, as of January 1, 2011, is $10,200, determined as the 2010 funding standard carryover balance less the amount used to offset the 2010 minimum required contribution, adjusted for investment experience during the 2010 year ($25,000 less $15,000 plus $200).

Example 4. (i) The facts are the same as in *Example 3,* except that Sponsor S contributes $150,000 (instead of $90,539) to Plan P on February 1, 2011, for the 2010 plan year.
(ii) Because the contribution was made on a date other than the valuation date for the 2010 plan year, the contribution must be adjusted to reflect interest that would otherwise have accrued between the valuation date and the date of the contribution, at the effective interest rate for the 2010 plan year. The amount of the contribution after adjustment is $140,824, determined as $150,000 discounted for 13 months of interest at an effective interest rate of 6%.

(iii) Because Sponsor S elected to use $15,000 of the funding standard carryover balance to offset the minimum required contribution for 2010 of $100,000, the cash contribution requirement for 2010, adjusted with interest to January 1, 2010, is $85,000. The adjusted contribution of $140,824 exceeds this amount by $55,824. Of this amount, $15,000 exceeds the minimum required contribution only because of Sponsor S's election to use the funding standard carryover balance to offset the minimum required contribution as provided in paragraph (d)(1) of this section. The remaining $40,824 ($140,824 minus $100,000) results from cash contributions made in excess of the minimum required contribution before offset by the funding standard carryover balance.

(iv) The portion of the excess contribution resulting solely because the minimum required contribution was offset by a portion of the funding standard carryover balance is adjusted for investment experience during 2009, pursuant to paragraph (b)(3)(iii) of this section. Accordingly, this portion of the present value of the excess contribution adjusted for interest as of January 1, 2011, is $15,300 ($15,000 adjusted for investment experience during 2010 at a rate of 2%).

(v) The excess contribution resulting from cash contributions in excess of the minimum required contribution before offset by the funding standard carryover balance is adjusted for interest at the effective interest rate for 2010, pursuant to paragraph (b)(1)(iv)(A) of this section. Accordingly, this portion of the present value of the excess contribution adjusted for interest as of January 1, 2011, is $43,273 ($40,824 increased by the effective interest rate of 6%). The increase in Plan P's prefunding balance as of January 1, 2011, cannot exceed the total present value of the excess contribution adjusted for interest of $58, 573 ($15,300 plus $43,273).

(vi) The funding standard carryover balance as of January 1, 2011, is $10,200, determined as the 2010 funding standard carryover balance less the $15,000 used to offset the 2010 minimum required contribution, adjusted for investment experience during the 2010 plan year as developed in *Example 3* ($25,000 less $15,000 plus $200).

(vii) Sponsor S elects to increase the prefunding balance by the maximum amount of the present value of the excess contribution adjusted for interest of $58,573, resulting in a total of the funding standard carryover balance and the prefunding balance as of January 1, 2011, of $68,773, the same amount as that developed in *Example 2.*

Example 5. (i) Plan Q is a defined benefit plan with a plan year that is the calendar year and a valuation date of July 1. The funding standard carryover balance of Plan Q is $50,000 as of January 1, 2010, the beginning of the 2010 plan year. The prefunding balance of Plan Q as of the beginning of the 2010 plan year is $0. The actual rate of return on Plan Q's assets for 2010 is 10%. Plan Q's effective interest rate for 2010 is 6.25%. The funding ratio for Plan Q for 2009 (the prior plan year funding ratio with respect to 2010, as determined under paragraph (d)(3) of this section) is 85%, which is not less than 80%. The minimum required contribution for Plan Q for 2010 is $200,000. Sponsor T makes a contribution to Plan Q of $190,000 on July 1, 2010, for the 2010 plan year, and makes no other contributions for the 2010 plan year. Sponsor T elects to use $10,000 of the funding standard carryover balance to offset Plan Q's minimum required contribution in 2010.
(ii) Pursuant to paragraph (b)(4) of this section, the funding standard carryover balance is increased to $51,539 as of July 1, 2010 (that is, an increase to reflect 6 months of interest at an effective interest rate of 6.25%) for the purpose of adjusting plan assets under paragraph (c) of this section, and for applying any election to use or reduce Plan Q's funding standard carryover balance under paragraph (d) or (e) of this section. However, Sponsor T does not elect in 2010 to reduce any portion of the funding standard carryover balance pursuant to paragraph (e) of this section. The funding standard carryover balance ($51,539) is subtracted from the value of plan assets, as of July 1, 2010, prior to the determination of the minimum funding contribution, and $51,539 is the maximum amount that may applied against the minimum required contribution.

(iii) The value of the funding standard carryover balance as of January 1, 2011, is determined by first discounting the amount used to offset the minimum required contribution for 2010 from July 1, 2010, to January 1, 2010, using the effective interest rate of 6.25%, and subtracting the

discounted amount from the January 1, 2010, funding standard carryover balance. The resulting amount is adjusted for investment experience to January 1, 2011, using a rate equal to the actual rate of return on plan assets of 10% during 2010. Thus, the $10,000 used to offset Plan Q's minimum required contribution as of July 1, 2010, is discounted for 6 months of interest, at an effective interest rate of 6.25%, to obtain an amount of $9,701 as of January 1, 2010. The remaining funding standard carryover balance as of January 1, 2010, solely for purposes of determining the adjustment for investment experience during 2010, is $40,299 ($50,000—$9,701), and the adjustment for investment experience is $4,030 ($40,299 × 10%). The value of the funding standard carryover balance as of January 1, 2011, is $44,329 (that is, $50,000 − $9,701 + $4,030).

Example 6. (i) The facts are the same as in *Example 5,* except that Sponsor T contributes $200,000 on July 1, 2010, for the 2010 plan year.
(ii) The cash contribution required for 2010, after offsetting the minimum required contribution by $10,000 of the funding standard carryover balance in accordance with T's election, is $190,000. The difference, or $10,000, must be adjusted to January 1, 2011, to determine the maximum amount that can be added to the prefunding balance as of that date.

(iii) The excess contribution is first adjusted to January 1, 2010, by discounting for 6 months of interest using the effective interest rate for 2010 of 6.25%. This results in an excess contribution of $9,701 ($10,000 ÷ $1.0625^{0.5}$). Because this amount is an excess contribution solely because of Sponsor T's election to offset the minimum required contribution for 2010 by a portion of the funding standard carryover balance, the amount is then adjusted for investment experience during 2010 at a rate of 10%, in accordance with paragraph (b)(3)(iii) of this section, for a present value of the excess contribution adjusted for interest of $10,671 ($9,701 × 1.10) as of January 1, 2011.

Example 7. (i) The facts are the same as in *Example 4.* Plan P's effective interest rate for 2011 is 6.5%, and the rate of return on investments during 2011 is 7%. All required quarterly installments for the 2011 plan year were made by the applicable due dates. On February 1, 2012, Sponsor S elects to use $50,000 of Plan P's prefunding and funding standard carryover balances to offset the minimum required contribution for the 2011 plan year. On April 15, 2012, Sponsor S elects to use Plan P's prefunding and funding standard carryover balances to offset the 2012 minimum required contribution by $20,000, in accordance with paragraph (d) of this section, in order to offset the required quarterly installment then due.
(ii) When adjusting Plan P's prefunding and funding standard carryover balances to reflect Sponsor S's election to use them to offset the 2011 minimum required contribution, the remaining $10,200 in the funding standard carryover balance as of January 1, 2011, must be used before any portion of the prefunding balance. The prefunding balance is reduced by the remaining $39,800 ($50,000 total election minus $10,200 from the funding standard carryover balance).

(iii) The amount available for Sponsor S's election to use Plan P's prefunding and funding standard carryover balances to offset the 2012 minimum required contribution is determined by reducing the January 1, 2011, prefunding and funding standard carryover balances to reflect the election to use the prefunding and funding standard carryover balances to offset the 2011 minimum required contribution, and by adjusting the resulting amount to January 1, 2012, using the rate of investment return for Plan P during 2011. Accordingly, the available amount in Plan P's funding standard carryover balance as of January 1, 2012, is zero. The available amount in Plan P's prefunding balance as of January 1, 2012, is $20,087 ($58,573 minus $39,800, increased by 7%). Therefore, Sponsor S has $20,087 available to offset the minimum required contribution for the 2012 plan year.

Example 8. (i) The facts are the same as in *Example 7,* except that based on the enrolled actuary's certification of the AFTAP on July 1, 2012, Sponsor S is deemed to elect to reduce the January 1, 2012, prefunding balance by $15,000 under section 436(f)(3).
(ii) In accordance with paragraph (d)(1)(ii)(B) of this section, the deemed election to reduce the prefunding balance is deemed to occur on the first day of the plan year, and before the date of any election to offset the minimum required contribution for the 2012 plan year. The deemed election does not affect Sponsor S's election to offset the 2011 minimum contribution because that election was made on February 1, 2012, before the date of the deemed election, July 1, 2012.

(iii) As shown in *Example 7,* the available prefunding balance as of January 1, 2012, after reflecting the February 1, 2012, election to offset the 2011 minimum required contribution but before reflecting the April 15, 2012, election to offset the 2012 minimum required contribution, is $20,087. Adjusting this amount to reflect the deemed election to reduce the prefunding balance by $15,000 leaves a balance of $5,087 available to offset the minimum required contribution for 2012.

(iv) The portion of the quarterly installment due April 15, 2012 that was not covered by the remaining $5,087 prefunding balance is considered unpaid retroactive to April 15, 2012.

Example 9. (i) The facts are the same as in *Example 8,* except that Sponsor S does not make the election to offset the 2011 minimum required contribution until August 1, 2012, and the deemed election as of July 1, 2012, reduces Plan P's prefunding and funding standard carryover balances as of January 1, 2012, by $68,500. Sponsor S does not elect to use Plan P's prefunding and funding standard carryover balances to offset the 2012 minimum contribution.
(ii) In accordance with paragraph (d)(1)(ii)(A) of this section, the July 1, 2012, deemed election to reduce Plan P's prefunding and funding standard carryover balances must be taken into account before determining the amount available to offset the 2011 minimum required contribution because the election to offset the 2011 minimum required contribution was made after the date of the deemed election, July 1, 2012.

(iii) Pursuant to paragraph (d)(1)(ii)(C) of this section, the January 1, 2011, prefunding and funding standard carryover balances are adjusted to January 1, 2012, using Plan P's rate of investment return for 2011 of 7%. This results in an available funding standard carryover balance of $10,914 ($10,200 × 1.07) and an available prefunding balance of $62,673 (58,573 × 1.07) as of January 1, 2012.

(iv) Paragraph (d)(2) of this section requires that the funding standard carryover balance must be used before reducing Plan P's prefunding balance. Accordingly, the funding standard carryover balance is eliminated, and the prefunding balance is reduced by the remaining $57,586 ($68,500 − $10,914), resulting in an available prefunding balance of $5,087 ($62,673 − $57,586) as of January 1, 2012.

(v) In accordance with paragraph (d)(1)(ii)(D) of this section, the remaining balance is adjusted to January 1, 2011, to determine the amount available to offset the 2011 minimum required contribution. This adjustment is done by dividing the remaining balance by 1 plus the rate of investment return for 2011. Accordingly, the amount available to offset the 2011 minimum required contribution is $4,754 ($5,087 ÷ 1.07).

(vi) If the plan sponsor elects to use the $4,754 available balance to offset the 2011 minimum required contribution, the funding standard carryover balance as of January 1, 2012 (prior to the deemed reduction under section 436(f)(3)) is $5,827 ($10,200 less $4,754, plus $381 for investment experience at a rate of 7%). The prefunding balance as of January 1, 2012 (prior to the deemed reduction under section 436(f)(3)) is $62,673 (that is, $58,573 × 1.07). The deemed election to reduce Plan P's balance is first applied to eliminate the funding standard carryover balance, and the remaining $62,673 ($68,500 less $5,827) reduces the January 1, 2012, prefunding balance to zero.

Example 10. (i) Plan V is a defined benefit plan with a plan year that is the calendar year and a valuation date of December 31. The valuation is based on the fair market value of plan assets, which amounts to $1,000,000 as of December 31, 2010, before any adjustments. As of January 1, 2010, Plan V's funding standard carryover balance is $0 and its prefunding balance is $125,000. Plan V's effective interest rate for 2010 is 5.5%. The enrolled actuary's certification of AFTAP for 2010 on March 31, 2010, results in a deemed reduction of $15,000 in the plan's prefunding balance as of January 1, 2010. Plan V's sponsor elected to use the prefunding balance to offset any portion of the minimum required contribution for 2010 not covered by cash contributions.
(ii) In accordance with paragraph (b)(4)(i) of this section, the amount of the prefunding balance subtracted from plan assets is increased from the first day of the plan year to the valuation date using the effective interest rate of 5.5% for 2009. Accordingly, the prefunding balance used for this purpose is $116,050 [($125,000 − $15,000 deemed reduction) × 1.055].

(iii) The fair market value of plan assets used for the December 31, 2010, valuation is $883,950 ($1,000,000 − $116,050).

Example 11. (i) The facts are the same as in *Example 10.* The minimum contribution for Plan V for the 2010 plan year is $45,000; no quarterly installments are required for Plan V for 2010. Plan V's sponsor makes a contribution of $20,000 for the 2010 plan year on July 1, 2011. The actual rate of return on assets for Plan V during 2010 is 10%.
(ii) The contribution of $20,000 is discounted to December 31, 2010, using the effective interest rate of 5.5% to determine the remaining balance of the 2010 minimum required contribution. Accordingly, the contribution is adjusted to $19,472 ($20,000 ÷ $1.055^{0.5}$) as of December 31, 2010, and the balance of the minimum required contribution is $25,528 ($45,000 − $19,472). This balance will be covered by the plan sponsor's election to use the prefunding balance to offset any portion of the minimum required contribution not covered by cash contributions.

(iii) Under section (b)(4)(ii) of this section, the amount used to offset the 2010 minimum required contribution for the purpose of adjusting the prefunding balance is discounted to January 1, 2010, using the effective interest rate for 2010. This amount is calculated as $24,197 ($25,528 ÷ 1.055).

(iv) The prefunding balance as of January 1, 2011, is reduced by the deemed election of $15,000 and the discounted amount used to offset the 2010 minimum required contribution ($24,197), and adjusted for investment experience for 2010 using the actual rate of return of 10%. Accordingly, the prefunding balance as of January 1, 2011 is $94,383 [($125,000 − $15,000 − $24,197) × 1.10].

Example 12. (i) The facts are the same as in *Example 11,* except that the enrolled actuary's certification of the AFTAP as of March 31, 2011, results in a deemed reduction of the prefunding balance as of January 1, 2011, of $75,000.
(ii) Under paragraph (d)(1)(ii) of this section, the deemed reduction of the prefunding balance is applied before the election to use the prefunding balance to offset the balance of the minimum required contribution for 2010. To determine the amount of the prefunding balance available to cover the remaining minimum required contribution for 2010, the deemed reduction is adjusted for investment experience to January 1, 2010, using the actual rate of return of 10% for 2010. Accordingly, the adjusted deemed reduction is $68,182 ($75,000 ÷ 1.10) and the available prefunding balance as of January 1, 2010, is $41,818 ($125,000 − $15,000 adjusted deemed reduction for 2010 − $68,182 adjusted deemed reduction for 2011).

(iii) This amount is then adjusted to December 31, 2010, using the effective interest rate of 5.5%. The amount of the prefunding balance available to offset the 2009 minimum required contribution as of December 31, 2010, is $44,118 ($41,818 × 1.055). This amount is larger than the election made by Plan V's sponsor to offset the minimum required contribution for 2010 ($25,528) and so the election remains valid.

(h) ***Effective/applicability date and transition rules*** —

(1) ***Statutory effective date/applicability date.*** Section 430 generally applies to plan years beginning on or after January 1, 2008. The applicability of section 430 for purposes of determining the minimum required contribution is delayed for certain plans in accordance with sections 104 through 106 of PPA '06.

(2) ***Effective date/applicability date of regulations.*** This section applies to plan years beginning on or after January 1, 2010. For plan years beginning before January 1, 2010, plans are permitted to rely on the provisions set forth in this section for purposes of satisfying the requirements of section 430.

(3) ***Special lookback rule for 2007 plan year's funding ratio*** —

(i) ***Plan assets.*** For purposes of determining a plan's prior plan year funding ratio under paragraph (d)(3) of this section with respect to the first plan year beginning on or after January 1, 2008, the value of plan assets on the valuation date of the preceding plan year (the "2007 plan year") is determined under section 412(c)(2) as in effect for the 2007 plan year, except that, for this purpose—

(A) If the value of plan assets is less than 90 percent of the fair market value of plan assets for the 2007 plan year on that date, such value is considered to be 90 percent of the fair market value; and

(B) If the value of plan assets is greater than 110 percent of the fair market value of plan assets for the 2007 plan year on that date, such value is considered to be 110 percent of the fair market value.

(ii) ***Funding target.*** For purposes of determining a plan's prior plan year funding ratio under paragraph (d)(3) of this section with respect to the first plan year beginning on or after January 1, 2008, the funding target of the plan for the preceding plan year is equal to the plan's current liability under section 412(l)(7) (as in effect prior to amendment by PPA '06) on the valuation date for the 2007 plan year.

(iii) ***Special rules for new plans, mergers, and spinoffs.*** In the case of a plan described in paragraph (d)(3)(ii), (d)(3)(iii), or (d)(3)(iv) of this section, the plan's prior plan year funding ratio with respect to the first plan year beginning on or after January 1, 2008 is determined using rules similar to the rules of paragraphs (d)(3)(ii), (d)(3)(iii), and (d)(3)(iv) of this section.

(4) ***First effective plan year.*** For purposes of this section, the term *first effective plan year* means the first plan year beginning on or after the date section 430 applies for purposes of determining the minimum required contribution for the plan.

(5) ***Pre-effective plan year.*** For purposes of this section, the term *pre-effective plan year* means the plan year immediately preceding the first effective plan year.

[T.D. 9467, 74 FR 54046, Oct. 15, 2009, as amended by T.D. 9732, 80 FR 54389, Sept. 9, 2015]

§ 1.430(g)-1 Valuation date and valuation of plan assets.

(a) ***In general*** —

(1) ***Overview.*** This section provides rules relating to a plan's valuation date and the valuation of a plan's assets for a plan year under section 430(g). Section 430 and this section apply to single employer defined benefit plans (including multiple employer plans as defined in section 413(c)) that are subject to the rules of section 412, but do not apply to multiemployer plans (as defined in section

414(f)). Paragraph (b) of this section describes valuation date rules. Paragraph (c) of this section describes rules regarding the determination of the asset value for purposes of a plan's actuarial valuation. Paragraph (d) of this section contains rules for taking employer contributions into account in the determination of the value of plan assets. Paragraph (e) of this section contains examples. Paragraph (f) of this section sets forth effective/applicability dates and transition rules.

(2) ***Special rules for multiple employer plans.*** In the case of a multiple employer plan to which section 413(c)(4)(A) applies, the rules of section 430 and this section are applied separately for each employer under the plan as if each employer maintained a separate plan. Thus, in such a case, the value of plan assets is determined separately for each employer under the plan. In the case of a multiple employer plan to which section 413(c)(4)(A) does not apply (that is, a plan described in section 413(c)(4)(B) that has not made the election for section 413(c)(4)(A) to apply), the rules of section 430 and this section are applied as if all participants in the plan were employed by a single employer.

(b) ***Valuation date*** —

(1) ***In general.*** The determination of the funding target, target normal cost, and value of plan assets for a plan year is made as of the valuation date for that plan year. Except as otherwise provided in paragraph (b)(2) of this section, the valuation date for any plan year is the first day of the plan year.

(2) ***Exception for small plans*** —

(i) ***In general.*** If, on each day during the preceding plan year, a plan had 100 or fewer participants determined by applying the rules of § 1.430(d)-1(e)(1) and (2) (including active and inactive participants and all other individuals entitled to future benefits), then the plan may designate any day during the plan year as its valuation date for that plan year and succeeding plan years. For purposes of this paragraph (b)(2)(i), all defined benefit plans (other than multiemployer plans as defined in section 414(f)) maintained by an employer are treated as one plan, but only participants with respect to that employer are taken into account.

(ii) ***Employer determination.*** For purposes of this paragraph (b)(2), the employer includes all members of the employer's controlled group determined pursuant to section 414(b), (c), (m), and (o) and includes any predecessor of the employer that, during the prior year, employed any employees of the employer who are covered by the plan.

(iii) ***Application of exception in first plan year.*** In the case of the first plan year of any plan, the exception for small plans under paragraph (b)(2)(i) of this section is applied by taking into account the number of participants that the plan is reasonably expected to have on each day during the first plan year.

(iv) ***Valuation date is part of funding method.*** The selection of a plan's valuation date is part of the plan's funding method and, accordingly, may only be changed with the consent of the Commissioner. A change of a plan's valuation date that is required by section 430 is treated as having been approved by the Commissioner and does not require the Commissioner's prior specific approval. Thus, if a plan that ceases to be eligible for the small plan exception under this paragraph (b)(2) for a plan year because the number of participants exceeded 100 in the prior plan year, then the resulting change in the valuation date to the first day of the plan year is automatically approved by the Commissioner.

(c) ***Determination of asset value*** —

(1) *In general* —

(i) ***General use of fair market value.*** Except as otherwise provided in this paragraph (c), the value of plan assets for purposes of section 430 is equal to the fair market value of plan assets on the valuation date. Prior year contributions made after the valuation date and current year contributions made before the valuation date are taken into account to the extent provided in paragraph (d) of this section.

(ii) ***Fair market value.*** The fair market value of an asset is determined as the price at which the asset would change hands between a willing buyer and a willing seller, neither being under any compulsion to buy or sell and both having reasonable knowledge of relevant facts. Except as otherwise provided by the Commissioner, any guidance on the valuation of insurance contracts under Subchapter D of Chapter 1 the Internal Revenue Code applies for purposes of this paragraph (c)(1)(ii).

(2) *Averaging of fair market values* —

(i) ***In general.*** Subject to the plan asset corridor rules of paragraph (c)(2)(iii) of this section, a plan is permitted to determine the value of plan assets on the valuation date as the average of the fair market value of assets on the valuation date and the adjusted fair market value of assets determined for one or more earlier determination dates (adjusted using the method described in paragraph (c)(2)(ii) of this section). The method of determining the value of assets is part of the plan's funding method and, accordingly, may only be changed with the consent of the Commissioner.

(ii) *Adjusted fair market value* —

(A) ***Determination dates.*** The period of time between each determination date (treating the valuation date as a determination date) must be equal and that period of time cannot exceed 12 months. In addition, the earliest determination date with respect to a plan year cannot be earlier than the last day of the 25th month before the valuation date of the plan year (or a similar period in the case of a valuation date that is not the first day of a month). In a typical situation, the earlier determination dates will be the two immediately preceding valuation dates. However, these rules also permit the use of more frequent determination dates. For example, monthly or quarterly determination dates may be used.

(B) ***Adjustments for contributions and distributions.*** The adjusted fair market value of plan assets for a prior determination date is the fair market value of plan assets on that date, increased for contributions included in the plan's asset balance on the valuation date that were not included in the plan's asset balance on the earlier determination date, reduced for benefits and all other amounts paid from plan assets during the period beginning with the prior determination date and ending immediately before the valuation date, and adjusted for expected earnings as described in paragraph (c)(2)(ii)(D) of this section. For this purpose, the fair market value of assets as of a determination date includes any contribution for a plan year that ends with or prior to the determination date that is receivable as of the determination date (but only if the contribution is actually made within $8^{1}/_{2}$ months after the end of the applicable plan year). If the contribution that is receivable as of the determination date is for a plan year beginning on or after January 1, 2008, then only the present value as of the determination date (determined using the effective interest rate under section 430(h)(2)(A) for the plan year for which the contribution is made) is included in the fair market value of assets.

(C) ***Treatment of spin-offs and plan-to-plan transfers.*** For purposes of determining the adjusted fair market value of plan assets, assets spun-off from a plan as a result of a spin-off described in § 1.414(l)-1(b)(4) are treated as an amount paid from plan assets. Except as otherwise provided by the Commissioner, for purposes of determining the adjusted fair market value of plan assets, assets that are added to a plan as a result of a plan-to-plan transfer described in § 1.414(l)-1(b)(3) are treated in the same manner as contributions.

(D) ***Adjustments for expected earnings.*** [Reserved]

(E) ***Assumed rate of return.*** [Reserved]

(F) ***Limitation on the assumed rate of return for periods within plan years for which the three segment rates were used.*** [Reserved]

(G) ***Limitation on the assumed rate of return for periods within plan years for which the full yield curve was used.*** [Reserved]

(iii) ***Restriction to 90-110 percent corridor*** —

(A) ***In general.*** This paragraph (c)(2)(iii) provides rules for applying the 90 to 110 percent corridor set forth in section 430(g)(3)(B)(iii). The rules for accounting for contribution receipts under paragraphs (d)(1) and (d)(2) of this section are applied prior to the application of the 90 to 110 percent corridor under this paragraph (c)(2)(iii).

(B) ***Asset value less than 90 percent of fair market value.*** If the value of plan assets determined under paragraph (c)(2)(i) of this section is less than 90 percent of the fair market value of plan assets, then the value of plan assets under this paragraph (c)(2) is equal to 90 percent of the fair market value of plan assets.

(C) ***Asset value greater than 110 percent of fair market value.*** If the value of plan assets determined under paragraph (c)(2)(i) of this section is greater than 110 percent of the fair market value of plan assets, then the value of plan assets under this paragraph (c)(2) is equal to 110 percent of the fair market value of plan assets.

(3) ***Qualified transfers to health benefit accounts.*** In the case of a qualified transfer (as defined in section 420), any assets so transferred are not treated as plan assets for purposes of section 430 and this section.

(d) ***Accounting for contribution receipts*** —

(1) ***Prior year contributions*** —

(i) ***In general.*** For purposes of determining the value of plan assets under paragraph (c) of this section, if an employer makes a contribution to the plan after the valuation date for the current plan year and the contribution is for an earlier plan year, then the present value of the contribution determined as of that valuation date is taken into account as an asset of the plan as of the valuation date, but only if the contribution is made before the deadline for contributions as described in section 430(j)(1) for the plan year immediately preceding the current plan year. For this purpose, the present value is determined using the effective interest rate under section 430(h)(2)(A) for the plan year for which the contribution is made.

(ii) ***Special rule for contributions for the 2007 plan year*** —

(A) ***Timely contributions.*** Notwithstanding paragraph (d)(1)(i) of this section, if the employer makes a contribution to the plan after the valuation date for the first plan year that begins on or after January 1, 2008, and the contribution is for the immediately preceding plan year and is made by the deadline for contributions for that preceding plan year under section 412(c)(10) (as in effect before amendment by the Pension Protection Act of 2006 (PPA '06), Public Law 109-280 (120 Stat. 780)), then the contribution is taken into account as a plan asset under paragraph (d)(1)(i) of this section without applying any present value discount.

(B) ***Late contributions.*** If a contribution is for the plan year that immediately precedes the first plan year that begins on or after January 1, 2008, and is not described in paragraph (d)(1)(ii)(A) of this section, then the rules of paragraph (d)(1)(i) apply to the contribution except that the present value is determined using the valuation interest rate under section 412(c)(2) for that plan year.

(iii) ***Ordering rules.*** For purposes of this paragraph (d)(1), the ordering rules of section 4971(c)(4)(B) apply for purposes of determining the plan year for which a contribution is made.

(2) ***Current year contributions made before valuation date.*** In the case of a plan with a valuation date that is not the first day of the plan year, for purposes of determining the value of plan assets under paragraph (c) of this section, if an employer makes a contribution for a plan year before that year's valuation date, that contribution (and any interest on the contribution for the period between the contribution date and the valuation date, determined using the effective interest rate under section 430(h)(2)(A) for the plan year) must be subtracted from plan assets in determining the value of plan assets as of the valuation date. If the result of this subtraction is a number less than zero, the value of plan assets as of the valuation date is equal to zero.

(e) ***Examples.*** [Reserved]

(f) ***Effective/applicability dates and transition rules*** —

(1) ***Statutory effective date/applicability date.*** Section 430 generally applies to plan years beginning on or after January 1, 2008. The applicability of section 430 for purposes of determining the minimum required contribution is delayed for certain plans in accordance with sections 104 through 106 of PPA '06.

(2) ***Effective date/applicability date of regulations*** —

(i) ***In general.*** This section applies to plan years beginning on or after January 1, 2010, regardless of whether section 430 applies to determine the minimum required contribution for the plan year. For plan years beginning before January 1, 2010, plans are permitted to rely on the provisions set forth in this section for purposes of satisfying the requirements of section 430.

(ii) ***Permission to use averaging for 2008.*** For purposes of determining the actuarial value of assets for a plan year beginning during 2008 using the averaging rules of paragraph (c)(2) of this section, a plan is permitted to apply an assumed earnings rate of zero under paragraph (c)(2)(ii)(E) of this section (even if zero is not the actuary's best estimate of the anticipated annual rate of return on plan assets).

(3) ***Approval for changes in the valuation date and valuation method.*** Any change in a plan's valuation date or asset valuation method that satisfies the rules of this section and is made for either the first plan year beginning in 2008, the first plan year beginning in 2009, or the first plan year beginning in

2010 is treated as having been approved by the Commissioner and does not require the Commissioner's specific prior approval. In addition, a change in a plan's valuation date or asset valuation method for the first plan year to which section 430 applies to determine the plan's minimum required contribution (even if that plan year begins after December 31, 2010) that satisfies the rules of this section is treated as having been approved by the Commissioner and does not require the Commissioner's specific prior approval.

[T.D. 9467, 74 FR 53053, Oct. 15, 2009]

§ 1.430(h)(2)-1 Interest rates used to determine present value.

(a) ***In general*** —

(1) ***Overview.*** This section provides rules relating to the interest rates to be applied for a plan year under section 430(h)(2). Section 430(h)(2) and this section apply to single employer defined benefit plans (including multiple employer plans as defined in section 413(c)) that are subject to section 412 but do not apply to multiemployer plans (as defined in section 414(f)). Paragraph (b) of this section describes how the segment interest rates are used for a plan year. Paragraph (c) of this section describes those segment rates. Paragraph (d) of this section describes the monthly corporate bond yield curve that is used to develop the segment rates. Paragraph (e) of this section describes certain elections that are permitted to be made under this section. Paragraph (f) of this section describes other rules related to interest rates. Paragraph (g) of this section contains examples. Paragraph (h) of this section contains effective/applicability dates.

(2) ***Special rules for multiple employer plans.*** In the case of a multiple employer plan to which section 413(c)(4)(A) applies, the rules of section 430 and this section are applied separately for each employer under the plan as if each employer maintained a separate plan. Thus, each employer under such a multiple employer plan may make elections with respect to the interest rate rules under this section that are independent of the elections of other employers under the plan. In the case of a multiple employer plan to which section 413(c)(4)(A) does not apply (that is, a plan described in section 413(c)(4)(B) that has not made the election for section 413(c)(4)(A) to apply), the rules of section 430 and this section are applied as if all participants in the plan were employed by a single employer.

(b) ***Interest rates for determining plan liabilities*** —

(1) ***In general.*** The interest rates used in determining the present value of the benefits that are included in the target normal cost and the funding target for the plan for a plan year are determined as set forth in this paragraph (b).

(2) ***Benefits payable within 5 years.*** In the case of benefits expected to be payable during the 5-year period beginning on the valuation date for the plan year, the interest rate used in determining the present value of the benefits that are included in the target normal cost and the funding target for the plan is the first segment rate with respect to the applicable month, as described in paragraph (c)(2)(i) of this section.

(3) ***Benefits payable after 5 years and within 20 years.*** In the case of benefits expected to be payable during the 15-year period beginning after the end of the period described in paragraph (b)(2) of this section, the interest rate used in determining the present value of the benefits that are included in the target normal cost and the funding target for the plan is the second segment rate with respect to the applicable month, as described in paragraph (c)(2)(ii) of this section.

(4) ***Benefits payable after 20 years.*** In the case of benefits expected to be payable after the period described in paragraph (b)(3) of this section, the interest rate used in determining the present value of the benefits that are included in the target normal cost and the funding target for the plan is the third segment rate with respect to the applicable month, as described in paragraph (c)(2)(iii) of this section.

(5) ***Applicable month.*** Except as otherwise provided in paragraph (e) of this section, the term *applicable month* for purposes of this paragraph (b) means the month that includes the valuation date of the plan for the plan year.

(6) ***Special rule for certain airlines*** —

(i) ***In general.*** Pursuant to section 6615 of the U.S. Troop Readiness, Veterans' Care, Katrina Recovery, and Iraq Accountability Appropriations Act, 2007, Public Law 110-28 (121 Stat. 112), for a plan sponsor that makes the election described in section 402(a)(2) of the Pension Protection Act of 2006 (PPA '06), Public Law 109-280 (120 Stat. 780), the interest rate required to be used to determine the plan's funding target for each of the 10 years under that election is 8.25 percent (rather than the segment rates otherwise described in this paragraph (b) or the full yield curve as permitted under paragraph (e)(4) of this section).

(ii) ***Special interest rate not applicable for other purposes.*** The special interest rate described in paragraph (b)(6)(i) of this section does not apply for other purposes such as the determination of the plan's target normal cost.

(c) ***Segment rates*** —

(1) ***Overview.*** This paragraph (c) sets forth rules for determining the first, second, and third segment rates for purposes of paragraph (b) of this section. The first, second, and third segment rates are set forth in revenue rulings, notices, or other guidance published in the Internal Revenue Bulletin. *See* § 601.601(d)(2) relating to objectives and standards for publishing regulations, revenue rulings and revenue procedures in the Internal Revenue Bulletin.

(2) ***Definition of segment rates*** —

(i) ***First segment rate.*** For purposes of this section, except as otherwise provided under the interest rate stabilization rules in section 430(h)(2)(C)(iv), the *first segment rate* is, with respect to any month, the single rate of interest determined by the Commissioner on the basis of the average of the monthly corporate bond yield curves (described in paragraph (d) of this section) for the 24-month period ending with the month preceding that month, taking into account only the first 5 years of each of those yield curves.

(ii) ***Second segment rate.*** For purposes of this section, except as otherwise provided under the interest rate stabilization rules in section 430(h)(2)(C)(iv), the *second segment rate* is, with respect to any month, the single rate of interest determined by the Commissioner on the basis of the average of the monthly corporate bond yield curves (described in paragraph (d) of this section) for the 24-month period ending with the month preceding that month, taking into account only the portion of each of those yield curves corresponding to the 15-year period that follows the end of the 5-year period described in paragraph (c)(2)(i) of this section.

(iii) ***Third segment rate.*** For purposes of this section, except as otherwise provided under the interest rate stabilization rules in section 430(h)(2)(C)(iv), the *third segment rate* is, with respect to any month, the single rate of interest determined by the Commissioner on the basis of the

average of the monthly corporate bond yield curves (described in paragraph (d) of this section) for the 24-month period ending with the month preceding that month, taking into account only the portion of each of those yield curves corresponding to the 40-year period that follows the end of the 15-year period described in paragraph (c)(2)(ii) of this section.

(d) *Monthly corporate bond yield curve* —

(1) *In general* —

(i) ***Construction of monthly corporate bond yield curve.*** For purposes of this section, the monthly corporate bond yield curve for a month is defined as the set of spot rates at specified durations. The specified durations are at 6-month intervals ranging from 6 months through 100 years and the spot rate at a duration is the yield (when compounded semiannually) for a bond that matures at that duration with a single payment at maturity. The monthly corporate bond yield curve is constructed as the average of the spot rates from the set of daily corporate bond yield curves as specified in paragraph (d)(1)(ii) of this section. Each daily corporate bond yield curve is constructed using the methodology set forth in paragraph (d)(2) of this section based on the data described in paragraph (d)(3) of this section. The yield curve for each month will be published in the Internal Revenue Bulletin. See § 601.601(d) of this chapter.

(ii) ***Monthly corporate bond yield curve constructed through averaging.*** Each spot rate at a specified duration on the monthly corporate bond yield curve for a month is equal to the arithmetic average, for each business day of that month, of the spot rates at that duration on the daily corporate bond yield curves.

(2) *Construction of the daily corporate bond yield curve* —

(i) *In general* —

(A) ***Calculation of spot rates.*** The spot rate at duration of $^1/_2$ year on the daily corporate bond yield curve is set equal to the yield at maturity of $^1/_2$ year from the daily par yield curve described in paragraph (d)(2)(i)(B) of this section. The spot rate for any later duration on the daily corporate bond yield curve is determined by applying an iterative process based on the spot rates at earlier durations and the daily par yield curve.

(B) ***Calculation of par yield curve.*** The daily par yield curve (that is, the curve in which the rate at maturity *t* on the curve is equal to the yield for a bond with maturity of *t* for which the price is the same as the principal amount) is calculated from the discount function described in paragraph (d)(2)(i)(C) of this section and the hump adjustment variable described in paragraph (d)(2)(iii)(D) of this section.

(C) ***Derivation of discount function.*** The discount function for a day at duration *t* (denoted d(t)) is derived from the forward interest rate function as described in paragraph (d)(2)(ii) of this section (denoted *f(z)*) using the following equation:

$$d(t) = exp\left(-\int_0^t f(z)dz\right)$$

(ii) *Determination of forward interest rates* —

(A) ***In general.*** The forward interest rate function used to derive the discount function is determined as a series of cubic polynomials (referred to as a cubic spline) that have a smooth junction at specified knot points (maturities of 0, 1.5, 3, 7, 15, and 30 years). The requirement that the polynomials have a smooth junction at a knot point is satisfied if the two polynomials that are meeting at the knot have the same value, the same derivative, and the same second derivative at that knot point.

(B) ***Constraints on the forward interest function.*** The following three constraints are placed on the forward interest rate function—

(*1*) The second derivative of the function is set to 0 at maturity 0.

(*2*) The value of the forward interest rate function at and after 30 years is constrained to equal its average value from 15 to 30 years.

(*3*) The derivative of the forward interest rate function is set to 0 at maturity 30 years.

(iii) ***Parameters for daily bond price model*** —

(A) ***B-spline coefficients.*** The assumed cubic spline for the forward interest rate function can be described as a linear combination of B-splines, with five parameters, which are determined taking into account the two coefficients for the bond-quality adjustment variables described in paragraphs (d)(2)(iii)(B) and (C) of this section and the coefficient for the hump adjustment variable described in paragraph (d)(2)(iii)(D) of this section. The five parameters and three coefficients are determined using the bond data weighted as described in paragraph (d)(2)(iv) of this section. After this weighting of the bond data, the five parameters and three coefficients are chosen to minimize the sum of the squared differences between the bid price for each of the bonds (or ask price for commercial paper) and the price estimated for each of those bonds determined using the specified parameters and coefficients, and taking into account the bond's coupon rate, number of years until maturity, and rating.

(B) ***Adjustment factor for share of bonds that are AA-rated.*** The first adjustment variable is based on the proportion of bonds that are rated AA within the universe of bonds in the data set that are rated AA or AAA, weighted by par value. In the case of an AAA-rated bond the adjustment variable described in this paragraph (d)(2)(iii)(B) is equal to the product of the proportion described in the preceding sentence and the number of years until maturity for the bond. In the case of an AA-rated bond the adjustment variable described in this paragraph (d)(2)(iii)(B) is equal to the product of (1- that proportion) and the number of years until maturity for the bond. In the case of an A-rated bond, the adjustment variable described in this paragraph (d)(2)(iii)(B) is 0.

(C) ***Adjustment factor for share of bonds that are A-rated.*** The second adjustment variable is based on the proportion of bonds rated A within the universe of bonds in the data set, weighted by par value. In the case of an AAA-rated bond or an AA-rated bond, the adjustment variable described in this paragraph (d)(2)(iii)(C) is equal to the product of the proportion described in the preceding sentence and the number of years until maturity for the bond. In the case of an A-rated bond, the adjustment variable described in this paragraph (d)(2)(iii)(C) is equal to the product of (1- that proportion) and the number of years until maturity for the bond.

(D) ***Hump adjustment variable.*** The hump adjustment variable is a mathematical function that is a cubic spline in the interval from 10 years maturity through 30 years maturity made up of two polynomials with a smooth junction (as described in paragraph (d)(2)(ii)(A) of this section) at 20 years maturity. The spline rises from 0 at 10 years maturity to 1.0 at 20 years maturity, then falls back down to 0 at 30 years maturity. The hump adjustment variable is 0 for maturities less than 10 years and maturities greater than 30 years.

(iv) ***Weighting of bond data.*** The bond data are weighted in three steps. In the first step, equal weights are assigned to the commercial paper rates at the short end of the curve, and the par amounts outstanding of all the bonds are rescaled so that their sum equals the sum of the weights for commercial paper. In the second step, the squared price difference for each commercial paper rate is multiplied by the commercial paper weight, and the squared price difference for each bond is multiplied by the bond's rescaled par amount outstanding. In the third step, applicable for bonds with duration greater than 1, the weighted squared price difference for each bond from the second step is divided by the bond's duration.

(3) ***Data used*** —

(i) ***In general.*** Except as otherwise provided in this paragraph (d)(3), the bonds that are used to construct the daily corporate bond yield curve for a business day are bonds with maturities longer than $^1/_2$ year, with at least two payment dates, and that:

(A) Are designated as corporate;

(B) Have high quality ratings (AAA, AA, or A) as of that business day from the nationally recognized statistical rating organizations;

(C) Have at least $250 million in par amount outstanding on at least one day during the month;

(D) Pay fixed nominal semiannual coupons and the principal amount at maturity; and

(E) Mature not later than 30 years after that business day.

(ii) ***Excluded bonds.*** The following types of bonds are not used to construct the daily corporate bond yield curve for a date:

(A) Bonds not denominated in U.S. dollars;

(B) Bonds not issued by U.S. corporations;

(C) Bonds that are capital securities (sometimes referred to as hybrid preferred stock);

(D) Bonds with variable coupon rates;

(E) Convertible bonds;

(F) Bonds issued by a government-sponsored enterprise (such as the Federal National Mortgage Association);

(G) Asset-backed bonds;

(H) Callable bonds, unless the call feature is make-whole or the call feature is exercisable only during the last year before maturity;

(I) Putable bonds;

(J) Bonds with sinking funds; and

(K) Bonds with an outstanding par amount below $250 million for the day for which the daily yield curve is constructed.

(iii) ***Durations equal to or below 1/2 year.*** The data for durations equal to or below 1/2 year that is used to construct the daily corporate bond yield curve consists of AA financial and AA nonfinancial commercial paper rates, as reported by the Federal Reserve Board.

(e) ***Elections*** —

(1) ***In general.*** This paragraph (e) describes elections for a plan year that a plan sponsor can make to use alternative interest rates under this section. Any election under this paragraph (e) must be made by providing written notification of the election to the plan's enrolled actuary. Any election in this paragraph (e) may be adopted for a plan year without obtaining the consent of the Commissioner, but, once adopted, that election will apply for that plan year and all future plan years and may be changed only with the consent of the Commissioner.

(2) ***Election for alternative applicable month.*** As an alternative to defining the applicable month as the month that includes the valuation date for the plan year, a plan sponsor that is using segment rates as provided under paragraph (b) of this section may elect to use one of the 4 months preceding that month as the applicable month.

(3) ***Election to use full yield curve*** —

(i) ***In general.*** For purposes of determining the plan's funding target and target normal cost, and for all other purposes under section 430 (including the determination of shortfall amortization installments, waiver installments, and the present values of those installments as described in paragraph (f)(2) of this section), the plan sponsor may elect to use interest rates under the monthly corporate bond yield curve described in paragraph (d) of this section for the month preceding the month that includes the valuation date in lieu of the segment rates determined under paragraph (c) of this section. In order to address the timing of benefit payments during a year, reasonable approximations are permitted to be used to value benefit payments that are expected to be made during a plan year.

(ii) ***Reasonable techniques permitted.*** In the case of a plan sponsor using the monthly corporate bond yield curve under this paragraph (e)(3), if with respect to a decrement the benefit is only expected to be paid for one-half of a year (because the decrement was assumed to occur in the middle of the year), the interest rate for that year can be determined as if the benefit were being paid for the entire year. See § 1.430(d)-1(f)(7) for additional reasonable techniques that can be used in determining present value.

(4) ***Plan sponsor.*** For purposes of the elections described in this section, any reference to the plan sponsor generally means the employer or employers responsible for making contributions to or under the plan. In the case of plans that are multiple employer plans to which section 413(c)(4)(A) does not apply, any reference to the plan sponsor means the plan administrator within the meaning of section 414(g).

(f) ***Interest rates used for other purposes*** —

(1) ***Effective interest rate*** —

(i) ***In general.*** Except as otherwise provided in paragraph (f)(2) of this section, the effective interest rate determined under section 430(h)(2)(A) for the plan year is the single interest rate that, if used to determine the present value of the benefits that are taken into account in determining the plan's funding target for the plan year, would result in an amount equal to the plan's funding target determined for the plan year under section 430(d) as described in § 1.430(d)-1(b)(2) (without regard to calculations for plans in at-risk status under section 430(i)).

(ii) ***Zero funding target.*** If, for the plan year, the plan's funding target is equal to zero, then the effective interest rate determined under section 430(h)(2)(A) for the plan year is the single interest rate that, if used to determine the present value of the benefits that are taken into account in determining the plan's target normal cost for the plan year, would result in an amount equal to the plan's target normal cost determined for the plan year under section 430(b) as described in § 1.430(d)-1(b)(1) (without regard to calculations for plans in at-risk status under section 430(i)).

(2) ***Interest rates used for determining shortfall amortization installments and waiver amortization installments.*** The interest rates used to determine the amount of shortfall amortization installments and waiver amortization installments and the present value of those installments are determined based on the dates those installments are assumed to be paid, using the same timing rules that apply in determining target normal cost as described in paragraph (b) of this section. Thus, for a plan that uses the segment rates described in paragraph (c) of this section, the first segment rate applies to the installments assumed to be paid during the first 5-year period beginning on the valuation date for the plan year, and the second segment rate applies to the installments assumed to be paid during the subsequent 15-year period. For purposes of this paragraph (f)(2), the shortfall amortization installments for a plan year are assumed to be paid on the valuation date for that plan year. For example, for a plan that uses the segment rates described in paragraph (c) of this section, the shortfall amortization installment for the fifth plan year following the current plan year (the sixth installment) is assumed to be paid on the valuation date for that year so that such shortfall amortization installment will be determined using the second segment rate.

(g) ***Examples.*** The following examples illustrate the rules of this section:

> *Example 1.* (i) The January 1, 2009, valuation of Plan P is performed using the segment rates applicable for September 2008 (determined without regard to the transition rule of section 430(h)(2)(G)), and the 2009 annuitant and nonannuitant (male and female) mortality tables as published in Notice 2008-85. See § 601.601(d)(2) relating to objectives and standards for publishing regulations, revenue rulings and revenue procedures in the Internal Revenue Bulletin. Plan P provides for early retirement benefits as early as age 50, and offers a single-sum distribution payable immediately at retirement. The single-sum payment is equal to the present value of the participant's accrued benefit, based on the applicable interest rates and the applicable mortality table under section 417(e)(3). Participant E is the only participant in the plan, and is a male age 46 as of January 1, 2009, with an annual accrued benefit of $23,000 payable beginning at age 65. The actuary assumes a 100% probability that Participant E will terminate at age 50 and will elect to receive his benefit in the form of a single-sum payment.

(ii) Plan P's funding target is $68,908 as of January 1, 2009. This figure is based on the male nonannuitant rates for ages prior to age 50, the applicable mortality rates under section 417(e)(3) for ages 50 and later, and segment interest rates of 5.07% for the first 5 years after the valuation date, 6.09% for the next 15 years, and 6.56% for periods more than 20 years after the valuation date. (See § 1.430(d)-1(f)(9), *Example 10,* for additional details.)

(iii) The present value of Participant E's benefits as of January 1, 2009, is $68,908 if a single interest rate of 6.52805% is substituted for the segment interest rates but all other assumptions remain the same. Thus (rounded), the effective interest rate for Plan P is 6.53% for 2009.

Example 2. (i) The facts are the same as for *Example 1,* except that Plan P offers a single-sum distribution equal to the present value of the accrued benefit based on the applicable interest rates under section 417(e)(3) or an interest rate of 6.25%, whichever produces the higher amount. The applicable mortality table under section 417(e)(3) is used for both calculations.
(ii) The present value of Participant E's age-50 single-sum distribution as of January 1, 2009 (when Participant E is age 46) is $77,392. This amount is determined by calculating the projected single-sum distribution at age 50 using the applicable mortality table under section 417(e)(3) and an interest rate of 6.25%, and discounting the result to January 1, 2009, using the first segment rate of 5.07% and male nonannuitant mortality rates for 2009. Because this amount is larger than the present value of Participant E's single-sum payment based on the applicable interest rates under section 417(e)(3) (that is, $68,908), the funding target for Plan P is $77,392 as of January 1, 2009. (See § 1.430(d)-1(f)(9), *Example 12* for additional details.)

(iii) The effective interest rate is the single interest rate that will produce the same funding target if substituted for the segment interest rates keeping all other assumptions the same, including the fixed interest rate used by the plan to determine single-sum payments. The only segment interest rate used to develop the funding target of $77,392 was the first segment rate of 5.07%. Therefore, considering only this calculation, the single interest rate that would produce the same funding target would be 5.07%.

(iv) However, the effective interest rate must also reflect the fact that the single-sum payment under Plan P is equal to the greater of the present value of Participant E's accrued benefit based on the fixed rate of 6.25% or the applicable interest rates under section 417(e)(3). If the single rate of 5.07% is substituted for the segment rates used to calculate the present value of the single-sum payment based on the applicable interest rates, the resulting funding target would be higher than $77,392.

(v) Using a single interest rate of 6.0771%, the January 1, 2009, present value of Participant E's single-sum payment based on the applicable interest rates is $77,392, and the present value of Participant E's single sum payment based on the plan's interest rate of 6.25% is $74,494. Plan P's

> funding target is the larger of the two, or $77,392, which is the same as the funding target based on the segment interest rates used for the 2009 valuation. Therefore, Plan P's effective interest rate for 2009 (rounded) is 6.08%.

(h) ***Applicability date.*** This section applies for months that begin on or after February 1, 2024. For rules that apply for earlier periods, see 26 CFR 1.430(h)(2)-1 revised as of April 1, 2023.

[T.D. 9467, 74 FR 53055, Oct. 15, 2009; T.D. 9732, 80 FR 54390, Sept. 9, 2015; T.D. 9986, 89 FR 2130, Jan. 12, 2024]

§ 1.430(h)(3)-1 Mortality tables used to determine present value.

(a) ***Overview*** —

(1) ***Standard mortality tables.*** This section sets forth rules for the mortality tables to be used in determining present value or making any computation under section 430. These mortality tables include—

(i) Generational mortality tables described in paragraph (b) of this section; and

(ii) Static mortality tables for small plans described in paragraph (c) of this section.

(2) ***Alternative tables*** —

(i) ***Plan-specific mortality tables.*** In lieu of using the mortality tables provided under this section, plan-specific substitute mortality tables are permitted to be used for purposes of section 430 pursuant to section 430(h)(3)(C), provided that the requirements of § 1.430(h)(3)-2 are satisfied.

(ii) ***Disabled individuals.*** In lieu of using the mortality tables provided under this section, mortality tables for disabled individuals are permitted to be used pursuant to section 430(h)(3)(D). These tables are provided in guidance published in the Internal Revenue Bulletin. See § 601.601(d) of this chapter.

(3) ***Individuals not identified as either male or female.*** The mortality tables in this section are applied for an individual based on the individual's gender. With respect to the portion of a plan's population for which male or female gender is not identified (for example, because an individual identifies as nonbinary or because the gender information for an individual is not available), the plan's actuary must use a reasonable approach for determining liability. Some reasonable approaches for these individuals include—

(i) Determining the liability for an individual for whom male or female gender is not identified as the weighted average of the liability calculated as if the individual were male and the liability calculated as if the individual were female, with an appropriate weighting that takes into account the distribution of gender for individuals in the plan's population for whom gender is identified; and

(ii) Assigning either male or female status randomly to an individual for whom male or female gender is not identified in a manner that is expected to result in an appropriate proportion of males and females for the plan's population that takes into account the distribution of gender for individuals in the plan's population for whom gender is identified.

(b) ***Generational mortality tables*** —

(1) *In general* —

(i) ***Construction of generational mortality tables.*** The generational mortality tables that are permitted to be used under section 430(h)(3)(A) and paragraph (a)(1)(i) of this section are constructed from the base mortality tables described in paragraph (b)(1)(ii) of this section and the mortality improvement rates described in paragraph (b)(1)(iii) of this section, as adjusted in accordance with paragraph (b)(1)(v) of this section.

(ii) ***Base mortality tables.*** The base mortality tables are set forth in paragraph (d) of this section.

(iii) *Mortality improvement rates* —

(A) ***Mortality improvement rates for valuation dates occurring on or after January 1, 2024.*** Except as otherwise provided in this paragraph (b)(1)(iii), the mortality improvement rates for valuation dates occurring on or after January 1, 2024, are the 2024 Adjusted Scale MP-2021 Rates as incorporated by reference pursuant to paragraph (b)(1)(iv)(A) of this section.

(B) [Reserved.]

(iv) ***Incorporation by reference.*** The material listed in this paragraph (b)(1)(iv) is incorporated by reference into this section with the approval of the Director of the Federal Register under 5 U.S.C. 552(a) and 1 CFR part 51. This material is available for inspection at the IRS and at the National Archives and Records Administration (NARA). Contact IRS at: IRS Office of Chief Counsel, Qualified Plans Branch 1, CC:EEE:EB:QP1, 1111 Constitution Avenue NW, Washington, DC 20224; (202) 317-6700; *www.irs.gov/retirement-plans/pension-plan-mortality-tables*. For information on the availability of this material at NARA, visit *www.archives.gov/federal-register/cfr/ibr-locations* or email *fr.inspection@nara.gov*. The material may be obtained from IRS: *www.irs.gov/retirement-plans/pension-plan-mortality-tables*.

(A) 2024 Adjusted Scale MP-2021 Rates, dated August 11, 2023.

(B) [Reserved]

(2) *Application of mortality improvement rates* —

(i) ***In general.*** Under the generational mortality tables described in this paragraph (b), the probability of an individual's death at a particular age in the future is determined as the individual's base mortality rate that applies at that age (that is, the applicable mortality rate from the tables set forth in paragraph (d) of this section for that age, gender, and status as an annuitant or a non-annuitant) multiplied by the cumulative mortality improvement factor for the individual's gender and for that age for the period from the base year for those mortality tables through the calendar year in which the individual is projected to reach the particular age. Paragraph (b)(3) of this section provides an example that shows how the base mortality tables in paragraph (d) of this section and the mortality improvement rates for valuation dates occurring during 2024 are combined to determine projected mortality rates.

(ii) ***Cumulative mortality improvement factor.*** The cumulative mortality improvement factor for an age and gender for a period is the product of the annual mortality improvement factors for that age and gender for each year within that period.

(iii) ***Annual mortality improvement factor.*** The annual mortality improvement factor for an age and gender for a year is 1 minus the mortality improvement rate that applies for that age and gender for that year. If that annual mortality improvement rate is greater than 1 (corresponding to a negative mortality improvement rate), then the projected mortality rate for that age and gender for that year is greater than the projected mortality rate for the same age and gender for the preceding year.

(3) ***Example of calculation*** —

(i) ***Calculation of mortality rate.*** The mortality rate for 2024 that is applied to a male annuitant who is age 68 in 2024 is equal to the product of the mortality rate under paragraph (d) of this section for a male annuitant who was age 68 in 2012 (0.01418) and the cumulative mortality improvement factor calculated from the 2024 Adjusted Scale MP-2021 Rates for an age 68 male from 2012 to 2024. The cumulative mortality improvement factor for age 68 males for the period from 2012 to 2024 is 0.9827, and the mortality rate for 2024 for male annuitants who are age 68 in that year is 0.01393, as shown in the following table.

TABLE 1 TO PARAGRAPH (b)(3)(i)

Calendar year	Rate of mortality improvement from prior year to current year	Annual mortality improvement factor (1 − mortality improvement rate)	Cumulative mortality improvement factor	Mortality rate
2012	n/a	n/a	n/a	0.01418
2013	0.0071	0.9929	0.9929	
2014	0.0047	0.9953	0.9882	
2015	0.0029	0.9971	0.9854	
2016	0.0017	0.9983	0.9837	
2017	0.0009	0.9991	0.9828	
2018	0.0001	0.9999	0.9827	
2019	(0.0001)	1.0001	0.9828	
2020	0.0001	0.9999	0.9827	
2021	0.0000	1.0000	0.9827	
2022	0.0000	1.0000	0.9827	
2023	0.0000	1.0000	0.9827	
2024	0.0000	1.0000	0.9827	0.01393

(ii) ***Probability of survival for an individual.*** After the projected mortality rates are derived for each age for each year, the rates are used to calculate the present value of a benefit stream that depends on the probability of survival year-by-year. For example, for purposes of calculating the present value (for a 2024 valuation date) of future payments in a benefit stream payable for a male annuitant who is age 68 in 2024, the probability of survival for the annuitant is based on

the mortality rate for a male annuitant who is age 68 in 2024 (0.01393), and the projected mortality rate for a male annuitant who will be age 69 in 2025 (0.01507), age 70 in 2026 (0.01635), and so on.

(4) *Use of the tables* —

(i) ***Separate tables for annuitants and non-annuitants.*** Separate mortality tables are provided for use with respect to annuitants and non-annuitants. The non-annuitant mortality tables are applied to determine the probability of survival for a non-annuitant for the period before the non-annuitant is projected to commence receiving benefits. The annuitant mortality tables are applied to determine the present value of benefits for each annuitant. In addition, the annuitant mortality tables are applied for each non-annuitant with respect to each assumed commencement of benefits for the period beginning with that assumed commencement. For purposes of this section, an annuitant means a plan participant who has commenced receiving benefits and a non-annuitant means a plan participant who has not yet commenced receiving benefits (for example, an active employee or a terminated vested participant). A participant whose benefit has partially commenced is treated as an annuitant with respect to the portion of the benefit that has commenced and treated as a non-annuitant with respect to the balance of the benefit. In addition, with respect to a beneficiary of a participant, the annuitant mortality tables apply for the period beginning with each assumed commencement of benefits for the participant. If the participant has died (or to the extent the participant is assumed to die before commencing benefits), the annuitant mortality tables apply with respect to the beneficiary for the period beginning with each assumed commencement of benefits for the beneficiary.

(ii) ***Examples of calculation using separate non-annuitant and annuitant tables.*** With respect to a 45-year-old active participant who is projected to commence receiving an annuity at age 55, the funding target is determined using the non-annuitant mortality tables for the period before the participant attains age 55 and using the annuitant mortality tables for the period ages 55 and above. Similarly, for a 45-year-old terminated vested participant who is projected to commence an annuity at age 65, the funding target is determined using the non-annuitant mortality tables for the period before the participant attains age 65 and using the annuitant mortality tables for ages 65 and above.

(c) *Static mortality tables* —

(1) *Availability of alternative tables for small plans* —

(i) ***In general.*** As an alternative to the generational mortality tables defined in paragraph (b) of this section, static mortality tables may be used for a small plan. The static mortality tables described in this paragraph (c) are constructed from the separate non-annuitant and annuitant static mortality tables described in paragraph (c)(2)(i) of this section, combined using the procedure described in paragraph (c)(2)(ii) of this section.

(ii) ***Definition of small plan.*** For purposes of this paragraph (c), a small plan is defined as a plan with 500 or fewer total participants (including both active and inactive participants and beneficiaries of deceased participants) on the valuation date.

(iii) ***Use of static mortality tables.*** The static mortality tables that are used for a valuation date are the static mortality tables for the calendar year that includes the valuation date.

(iv) ***Publication of mortality tables.*** The static mortality tables for the 2024 calendar year are set forth in paragraph (e) of this section.

Note 1 to paragraph (c)(1)(iv): The static mortality tables for valuation dates occurring in later calendar years will be published in the Internal Revenue Bulletin. *See* § 601.601(d) of this chapter.

(2) ***Development of static mortality tables*** —

(i) ***Non-annuitant and annuitant mortality tables.*** The non-annuitant and annuitant static mortality tables are determined using the base mortality tables described in paragraph (b)(1)(ii) of this section. The rates in those base mortality tables are adjusted using the mortality improvement rates described in paragraph (b)(1)(iii) of this section, in accordance with the rules set forth in paragraph (c)(3) of this section.

(ii) ***Combined static mortality tables.*** The static mortality tables described in this paragraph (c) are constructed from the separate non-annuitant and annuitant static mortality tables pursuant to paragraph (c)(2)(i) of this section, blended using the weighting factors in paragraph (d) of this section. The weighting factors are applied to develop these combined static tables using the following equation: Combined mortality rate = [non-annuitant rate * (1 − weighting factor)] + [annuitant rate * weighting factor].

(3) ***Projection of mortality improvements*** —

(i) ***General rule.*** Except as provided in paragraph (c)(3)(iii) of this section, the static mortality tables for a calendar year are determined by multiplying the applicable mortality rate for each age from the base mortality tables by both—

(A) The cumulative mortality improvement factor (determined under paragraph (b)(2)(ii) of this section) for the period from 2012 through that calendar year; and

(B) The cumulative mortality improvement factor (determined under paragraph (b)(2)(ii) of this section) for the period beginning in that calendar year and continuing beyond that calendar year for the number of years in the projection period described in paragraph (c)(3)(ii) of this section.

(ii) ***Projection period for static mortality tables*** —

(A) ***In general.*** The projection period is 8 years for males and 9 years for females, as adjusted based on age as provided in paragraph (c)(3)(ii)(B) of this section.

(B) ***Age adjustment.*** For ages below 80, the projection period is increased by 1 year for each year below age 80. For ages above 80, the projection period is reduced (but not below zero) by $^{1}/_{3}$ year for each year above 80.

(iii) ***Fractional projection periods.*** If for an age the number of years in the projection period determined under paragraph (c)(3)(ii) of this section is not a whole number, then the mortality rate for that age is determined by using linear interpolation between—

(A) The mortality rate for that age that would be determined under paragraph (c)(3)(i) of this section if the number of years in the projection period were the next lower whole number; and

(B) The mortality rate for that age that would be determined under paragraph (c)(3)(i) of this section if the number of years in the projection period were the next higher whole number.

(iv) ***Example.*** For example, at age 85 the projection period for a male is $6^{1}/_{3}$ years (8 years minus $^{1}/_{3}$ year for each of the 5 years above age 80). For a valuation date in 2024, the mortality rate in the static mortality table for an 85-year-old male is based on a projection of mortality improvement for $6^{1}/_{3}$ years beyond 2024. Under paragraph (c)(3)(iii) of this section, the mortality rate for an 85-year-old male annuitant in the static mortality table for 2024 is $^{2}/_{3}$ times the projected mortality rate for a male annuitant that age in 2030 plus $^{1}/_{3}$ times the projected mortality rate for a male annuitant that age in 2031. Accordingly, the mortality rate for an 85-year-old male annuitant in the static mortality table for 2024 is 0.08126 ($^{2}/_{3}$ times the projected mortality rate for an 85-year-old male annuitant in 2030 (0.08146) plus $^{1}/_{3}$ times the projected mortality rate for an 85-year-old male annuitant in 2031 (0.08086)).

(d) ***Base mortality tables.*** The following are the base mortality tables. The base year for these tables is 2012.

TABLE 2 TO PARAGRAPH (d)

Age	Males			Females		
	Non-annuitant	Annuitant	Weighting factor for small plan	Non-annuitant	Annuitant	Weighting factor for small plans
0	0.00650	0.00650	0.0000	0.00544	0.00544	0.0000
1	0.00045	0.00045	0.0000	0.00038	0.00038	0.0000
2	0.00030	0.00030	0.0000	0.00023	0.00023	0.0000
3	0.00022	0.00022	0.0000	0.00018	0.00018	0.0000
4	0.00019	0.00019	0.0000	0.00013	0.00013	0.0000
5	0.00016	0.00016	0.0000	0.00012	0.00012	0.0000
6	0.00014	0.00014	0.0000	0.00011	0.00011	0.0000
7	0.00013	0.00013	0.0000	0.00010	0.00010	0.0000
8	0.00011	0.00011	0.0000	0.00009	0.00009	0.0000
9	0.00009	0.00009	0.0000	0.00009	0.00009	0.0000
10	0.00008	0.00008	0.0000	0.00009	0.00009	0.0000
11	0.00009	0.00009	0.0000	0.00009	0.00009	0.0000
12	0.00013	0.00013	0.0000	0.00010	0.00010	0.0000
13	0.00017	0.00017	0.0000	0.00012	0.00012	0.0000
14	0.00022	0.00022	0.0000	0.00013	0.00013	0.0000
15	0.00028	0.00028	0.0000	0.00013	0.00013	0.0000
16	0.00034	0.00034	0.0000	0.00014	0.00014	0.0000
17	0.00040	0.00040	0.0000	0.00015	0.00015	0.0000
18	0.00046	0.00046	0.0000	0.00015	0.00015	0.0000
19	0.00053	0.00053	0.0000	0.00015	0.00015	0.0000
20	0.00056	0.00056	0.0000	0.00015	0.00015	0.0000
21	0.00056	0.00056	0.0000	0.00015	0.00015	0.0000

Age	Males			Females		
	Non-annuitant	Annuitant	Weighting factor for small plan	Non-annuitant	Annuitant	Weighting factor for small plans
22	0.00056	0.00056	0.0000	0.00016	0.00016	0.0000
23	0.00055	0.00055	0.0000	0.00018	0.00018	0.0000
24	0.00055	0.00055	0.0000	0.00019	0.00019	0.0000
25	0.00054	0.00054	0.0000	0.00019	0.00019	0.0000
26	0.00054	0.00054	0.0000	0.00019	0.00019	0.0000
27	0.00054	0.00054	0.0000	0.00020	0.00020	0.0000
28	0.00054	0.00054	0.0000	0.00020	0.00020	0.0000
29	0.00054	0.00054	0.0000	0.00020	0.00020	0.0000
30	0.00055	0.00055	0.0000	0.00021	0.00021	0.0000
31	0.00055	0.00055	0.0000	0.00022	0.00022	0.0000
32	0.00056	0.00056	0.0000	0.00023	0.00023	0.0000
33	0.00058	0.00058	0.0000	0.00025	0.00025	0.0000
34	0.00059	0.00059	0.0000	0.00026	0.00026	0.0000
35	0.00061	0.00061	0.0000	0.00028	0.00028	0.0000
36	0.00063	0.00063	0.0000	0.00031	0.00031	0.0000
37	0.00065	0.00065	0.0000	0.00034	0.00034	0.0000
38	0.00068	0.00068	0.0000	0.00036	0.00036	0.0000
39	0.00071	0.00071	0.0000	0.00040	0.00040	0.0000
40	0.00074	0.00074	0.0000	0.00043	0.00043	0.0000
41	0.00077	0.00082	0.0008	0.00047	0.00049	0.0010
42	0.00081	0.00099	0.0016	0.00051	0.00061	0.0020
43	0.00086	0.00124	0.0024	0.00055	0.00078	0.0030
44	0.00091	0.00158	0.0032	0.00060	0.00101	0.0040
45	0.00097	0.00200	0.0040	0.00065	0.00130	0.0051
46	0.00105	0.00251	0.0047	0.00071	0.00165	0.0061
47	0.00113	0.00310	0.0055	0.00077	0.00206	0.0071
48	0.00123	0.00378	0.0063	0.00083	0.00252	0.0081
49	0.00134	0.00454	0.0071	0.00090	0.00304	0.0091
50	0.00147	0.00539	0.0079	0.00098	0.00362	0.0101
51	0.00161	0.00544	0.0140	0.00107	0.00426	0.0185
52	0.00177	0.00565	0.0209	0.00116	0.00495	0.0262
53	0.00194	0.00588	0.0302	0.00126	0.00500	0.0349
54	0.00213	0.00616	0.0430	0.00137	0.00512	0.0449
55	0.00234	0.00647	0.0898	0.00148	0.00517	0.0853
56	0.00257	0.00686	0.1676	0.00161	0.00522	0.1535
57	0.00281	0.00728	0.2153	0.00175	0.00528	0.1923

Age	Males			Females		
	Non-annuitant	Annuitant	Weighting factor for small plan	Non-annuitant	Annuitant	Weighting factor for small plans
58	0.00308	0.00770	0.2635	0.00190	0.00561	0.2291
59	0.00338	0.00811	0.3144	0.00206	0.00601	0.2680
60	0.00369	0.00848	0.3821	0.00224	0.00643	0.3192
61	0.00403	0.00882	0.4579	0.00243	0.00690	0.3731
62	0.00441	0.00918	0.5935	0.00264	0.00743	0.4705
63	0.00481	0.00960	0.7153	0.00287	0.00796	0.5668
64	0.00525	0.01014	0.7764	0.00312	0.00859	0.6230
65	0.00573	0.01087	0.8454	0.00339	0.00928	0.7172
66	0.00636	0.01178	0.9002	0.00380	0.01003	0.8006
67	0.00706	0.01288	0.9275	0.00427	0.01089	0.8414
68	0.00784	0.01418	0.9431	0.00480	0.01192	0.8658
69	0.00870	0.01564	0.9547	0.00540	0.01309	0.8857
70	0.00967	0.01729	0.9642	0.00606	0.01444	0.9046
71	0.01073	0.01914	0.9732	0.00681	0.01597	0.9240
72	0.01192	0.02121	0.9791	0.00765	0.01770	0.9365
73	0.01323	0.02354	0.9823	0.00860	0.01967	0.9437
74	0.01469	0.02613	0.9847	0.00966	0.02192	0.9512
75	0.01632	0.02905	0.9868	0.01085	0.02445	0.9568
76	0.01812	0.03233	0.9889	0.01219	0.02727	0.9637
77	0.02012	0.03604	0.9906	0.01370	0.03042	0.9682
78	0.02234	0.04026	0.9920	0.01539	0.03391	0.9727
79	0.02480	0.04504	0.9935	0.01729	0.03775	0.9765
80	0.02754	0.05046	1.0000	0.01943	0.04198	1.0000
81	0.02989	0.05657	1.0000	0.02134	0.04663	1.0000
82	0.03460	0.06343	1.0000	0.02516	0.05178	1.0000
83	0.04166	0.07114	1.0000	0.03089	0.05754	1.0000
84	0.05108	0.07977	1.0000	0.03853	0.06401	1.0000
85	0.06285	0.08946	1.0000	0.04808	0.07132	1.0000
86	0.07698	0.10032	1.0000	0.05955	0.07954	1.0000
87	0.09346	0.11248	1.0000	0.07293	0.08879	1.0000
88	0.11229	0.12600	1.0000	0.08822	0.09936	1.0000
89	0.13348	0.14088	1.0000	0.10542	0.11124	1.0000
90	0.15703	0.15703	1.0000	0.12453	0.12453	1.0000
91	0.17401	0.17401	1.0000	0.13818	0.13818	1.0000
92	0.19151	0.19151	1.0000	0.15250	0.15250	1.0000
93	0.20936	0.20936	1.0000	0.16737	0.16737	1.0000

Age	Males			Females		
	Non-annuitant	Annuitant	Weighting factor for small plan	Non-annuitant	Annuitant	Weighting factor for small plans
94	0.22742	0.22742	1.0000	0.18274	0.18274	1.0000
95	0.24569	0.24569	1.0000	0.19863	0.19863	1.0000
96	0.26415	0.26415	1.0000	0.21509	0.21509	1.0000
97	0.28281	0.28281	1.0000	0.23214	0.23214	1.0000
98	0.30169	0.30169	1.0000	0.24983	0.24983	1.0000
99	0.32077	0.32077	1.0000	0.26814	0.26814	1.0000
100	0.33996	0.33996	1.0000	0.28698	0.28698	1.0000
101	0.35910	0.35910	1.0000	0.30619	0.30619	1.0000
102	0.37794	0.37794	1.0000	0.32549	0.32549	1.0000
103	0.39633	0.39633	1.0000	0.34472	0.34472	1.0000
104	0.41415	0.41415	1.0000	0.36375	0.36375	1.0000
105	0.43131	0.43131	1.0000	0.38243	0.38243	1.0000
106	0.44771	0.44771	1.0000	0.40065	0.40065	1.0000
107	0.46329	0.46329	1.0000	0.41828	0.41828	1.0000
108	0.47800	0.47800	1.0000	0.43522	0.43522	1.0000
109	0.49181	0.49181	1.0000	0.45139	0.45139	1.0000
110	0.50000	0.50000	1.0000	0.46673	0.46673	1.0000
111	0.50000	0.50000	1.0000	0.48120	0.48120	1.0000
112	0.50000	0.50000	1.0000	0.49477	0.49477	1.0000
113	0.50000	0.50000	1.0000	0.50000	0.50000	1.0000
114	0.50000	0.50000	1.0000	0.50000	0.50000	1.0000
115	0.50000	0.50000	1.0000	0.50000	0.50000	1.0000
116	0.50000	0.50000	1.0000	0.50000	0.50000	1.0000
117	0.50000	0.50000	1.0000	0.50000	0.50000	1.0000
118	0.50000	0.50000	1.0000	0.50000	0.50000	1.0000
119	0.50000	0.50000	1.0000	0.50000	0.50000	1.0000

Age	Males			Females		
	Non-annuitant	Annuitant	Weighting factor for small plan	Non-annuitant	Annuitant	Weighting factor for small plans
120	1.00000	1.00000	1.0000	1.00000	1.00000	1.0000

(e) *Static tables for 2024.* The following static mortality tables are used pursuant to paragraph (a)(1)(ii) of this section for determining present value or making any computation under section 430 with respect to valuation dates occurring during 2024.

TABLE 3 TO PARAGRAPH (e)

Age	Male	Female
0	0.00356	0.00306
1	0.00025	0.00022
2	0.00017	0.00013
3	0.00012	0.00010
4	0.00011	0.00008
5	0.00009	0.00007
6	0.00008	0.00007
7	0.00008	0.00006
8	0.00006	0.00005
9	0.00005	0.00005
10	0.00005	0.00006
11	0.00005	0.00006
12	0.00008	0.00006
13	0.00010	0.00008
14	0.00013	0.00008
15	0.00017	0.00008
16	0.00021	0.00009
17	0.00025	0.00010
18	0.00029	0.00010
19	0.00034	0.00010
20	0.00036	0.00010
21	0.00037	0.00010
22	0.00037	0.00011
23	0.00038	0.00013

Age	Male	Female
24	0.00039	0.00014
25	0.00040	0.00014
26	0.00041	0.00015
27	0.00043	0.00016
28	0.00044	0.00016
29	0.00046	0.00017
30	0.00049	0.00018
31	0.00050	0.00019
32	0.00053	0.00021
33	0.00056	0.00023
34	0.00059	0.00024
35	0.00062	0.00026
36	0.00065	0.00029
37	0.00067	0.00031
38	0.00070	0.00032
39	0.00072	0.00035
40	0.00074	0.00037
41	0.00075	0.00039
42	0.00077	0.00041
43	0.00079	0.00043
44	0.00081	0.00045
45	0.00084	0.00048
46	0.00088	0.00051
47	0.00092	0.00055
48	0.00098	0.00059
49	0.00104	0.00064
50	0.00113	0.00070
51	0.00124	0.00080
52	0.00137	0.00090
53	0.00153	0.00101
54	0.00173	0.00115
55	0.00206	0.00138
56	0.00253	0.00170
57	0.00296	0.00195
58	0.00344	0.00225
59	0.00397	0.00258
60	0.00458	0.00299
61	0.00523	0.00343
62	0.00615	0.00409

Age	Male	Female
63	0.00703	0.00478
64	0.00774	0.00537
65	0.00861	0.00619
66	0.00957	0.00707
67	0.01054	0.00786
68	0.01163	0.00871
69	0.01283	0.00968
70	0.01419	0.01082
71	0.01575	0.01217
72	0.01750	0.01368
73	0.01949	0.01540
74	0.02175	0.01742
75	0.02433	0.01975
76	0.02729	0.02240
77	0.03069	0.02540
78	0.03460	0.02878
79	0.03912	0.03254
80	0.04442	0.03715
81	0.05008	0.04158
82	0.05649	0.04650
83	0.06372	0.05202
84	0.07192	0.05823
85	0.08126	0.06527
86	0.09180	0.07337
87	0.10364	0.08255
88	0.11688	0.09305
89	0.13148	0.10480
90	0.14733	0.11790
91	0.16404	0.13141
92	0.18111	0.14547
93	0.19847	0.16007
94	0.21588	0.17495
95	0.23319	0.19020
96	0.25152	0.20655
97	0.27010	0.22354
98	0.28899	0.24127
99	0.30836	0.25965
100	0.32788	0.27862
101	0.34742	0.29799

Age	Male	Female
102	0.36672	0.31750
103	0.38574	0.33705
104	0.40436	0.35650
105	0.42191	0.37576
106	0.43897	0.39452
107	0.45520	0.41279
108	0.47064	0.43024
109	0.48536	0.44694
110	0.49448	0.46282
111	0.49552	0.47794
112	0.49656	0.49215
113	0.49756	0.49820
114	0.49870	0.49900
115	0.49975	0.49980
116	0.49990	0.49990
117	0.49995	0.50000
118	0.50000	0.50000
119	0.50000	0.50000
120	1.00000	1.00000

(f) ***Applicability date.*** This section applies for valuation dates occurring on or after January 1, 2024.

[T.D. 9983, 88 FR 72361, Oct. 20, 2023]

§ 1.430(h)(3)-2 Plan-specific substitute mortality tables used to determine present value.

(a) ***In general.*** This section provides rules for the use of substitute mortality tables under section 430(h)(3)(C) in determining any present value or making any computation under section 430 in accordance with § 1.430(h)(3)-1(a)(1). To use substitute mortality tables for a plan, a plan sponsor must first obtain approval to use the tables in accordance with the procedures described in paragraph (b) of this section. Paragraph (c) of this section provides rules for the development of substitute mortality tables, including guidelines providing that a plan must have either fully or partially credible mortality information in order to use substitute mortality tables. Paragraph (d) of this section describes the requirements for full credibility. Paragraph (e) of this section describes the requirements for partial credibility. Paragraph (f) of this section provides special rules for newly-affiliated plans. Paragraph (g) of this section specifies the effective date and applicability date of this section. The Commissioner may, in revenue rulings and procedures, notices, or other guidance published in the Internal Revenue Bulletin (see § 601.601(d)(2) of this chapter), provide additional guidance regarding approval and use of substitute mortality tables under section 430(h)(3)(C) and related matters.

(b) ***Procedures for obtaining approval to use substitute mortality tables —***

(1) ***Written request for approval to use substitute mortality tables —***

(i) ***General requirements.*** To use substitute mortality tables, a plan sponsor must first submit a written request to the Commissioner demonstrating that those substitute mortality tables meet the requirements of section 430(h)(3)(C) and this section. This request must specify the first plan year, and the term of years (not more than 10), for which the tables are to apply.

(ii) ***Time for written request.*** Substitute mortality tables may not be used for a plan year unless the plan sponsor submits the written request described in paragraph (b)(1)(i) of this section at least 7 months before the first day of the first plan year for which the substitute mortality tables are to apply.

(2) ***Commissioner's review of request*** —

(i) ***In general.*** During the 180-day period that begins on the date the plan sponsor submits a request for approval to use substitute mortality tables for a plan pursuant to this section, the Commissioner will determine whether the request for approval to use substitute mortality tables satisfies the requirements of this section (including any published guidance issued pursuant to paragraph (a) of this section), and will either approve or deny the request. The Commissioner will deny a request if the request fails to meet the requirements of this section or if the Commissioner determines that a substitute mortality table does not reflect the actual mortality experience of the applicable population.

(ii) ***Request for additional information.*** The Commissioner may request additional information with respect to the submission and deny a request to use substitute mortality tables if the additional information is not provided in a timely manner.

(iii) ***Deemed approval.*** Except as provided in paragraph (b)(2)(iv) of this section, if the Commissioner does not issue a denial within the 180-day review period, the request is deemed to have been approved.

(iv) ***Extension of time permitted.*** The Commissioner and a plan sponsor may, before the expiration of the 180-day review period, agree in writing to extend that period.

(c) ***Development of substitute mortality tables*** —

(1) ***Substitute mortality tables must be used for all plans in controlled group*** —

(i) ***General rule.*** Except as otherwise provided in this paragraph (c), substitute mortality tables are permitted to be used for a plan for a plan year only if, for that plan year (or any portion of that plan year), substitute mortality tables are also approved and used for each other pension plan subject to the requirements of section 430 that is maintained by the plan sponsor and by each member of the plan sponsor's controlled group. For purposes of this section, the term controlled group means any group that is treated as a single employer under paragraph (b), (c), (m), or (o) of section 414. See paragraph (c)(7) of this section for special rules applicable to multiple-employer plans.

(ii) ***Treatment of plans without credible mortality information.*** The rule of paragraph (c)(1)(i) of this section does not prohibit use of substitute mortality tables for one plan for a plan year if the only other plan or plans maintained by the plan sponsor (or by a member of the plan sponsor's controlled group) for which substitute mortality tables are not used are too small to have fully or partially credible mortality information for the plan year. For this purpose, the demonstration that neither males nor females under a plan have credible mortality information for a plan year

must be made by analyzing the actual number of deaths over a period that is the same length as the longest experience study period used for any plan within the controlled group and that ends less than three years before the first day of the plan year.

(2) *Mortality experience requirements* —

(i) ***In general.*** Substitute mortality tables must reflect the actual mortality experience of the pension plan for which the tables will be used, and that mortality experience must consist of credible mortality information as described in paragraph (c)(2)(ii) of this section. Separate substitute mortality tables must be established for each gender and, except as provided in paragraph (d)(6) of this section, a substitute mortality table is permitted to be established for a gender only if the plan has credible mortality information for that gender. See paragraph (d)(5) of this section for rules permitting the use of substitute mortality tables for separate populations within a gender in certain circumstances.

(ii) *Credible mortality information* —

(A) ***In general.*** A plan has credible mortality information for a gender if and only if the mortality experience with respect to that gender satisfies the requirement for either full credibility (as described in paragraph (d) of this section) or partial credibility (as described in paragraph (e) of this section).

(B) ***Simplified rule.*** Whether there is credible mortality information for a gender may be determined by only taking into account people who are at least age 50 and less than age 100. If there is credible mortality information for a gender using this simplified rule, the entire gender (not just those who are at least age 50 and less than age 100) has credible mortality information.

(iii) *Gender without credible mortality information* —

(A) ***In general.*** If, for the first plan year substitute mortality tables will be used for a plan, one gender has credible mortality information but the other gender does not have credible mortality information, then substitute mortality tables are established for the gender that has credible mortality information, and the mortality tables under § 1.430(h)(3)-1 are used for the gender that does not have credible mortality information. For a subsequent plan year, the plan sponsor may continue to use substitute mortality tables for the gender with credible mortality information without using substitute mortality tables for the other gender only if the other gender continues to lack credible mortality information for that subsequent plan year.

(B) ***Demonstration of lack of credible mortality information for a gender.*** The demonstration that a gender does not have credible mortality information (that is, the individuals of that gender had fewer than the minimum number of actual deaths to have partial credibility, as described in paragraph (e)(1) of this section) for a plan year must be made by analyzing the actual number of deaths over a period that is the same length as the period for the experience study on which the substitute mortality tables are based and that ends less than three years before the first day of the plan year.

(3) *Determination of substitute mortality tables* —

(i) ***Requirement to use generational mortality table.*** A plan's substitute mortality tables must be generational mortality tables. A plan's substitute mortality tables are determined using the plan's base substitute mortality tables developed pursuant to paragraph (d) or (e) of this section and the mortality improvement factors described in paragraph (c)(3)(ii) of this section.

(ii) ***Determination of mortality improvement factors.*** The mortality improvement factor for an age and gender is the cumulative mortality improvement factor determined under § 1.430(h)(3)-1(b)(2)(ii) for that age and gender for the applicable period. The applicable period is the period beginning with the base year for the base substitute mortality table determined under paragraph (d) or (e) of this section and ending in the calendar year in which the individual attains the age for which the probability of death is being determined. The base year for the base substitute mortality table is the calendar year that contains the day before the midpoint of the experience study period.

(4) ***Disabled individuals.*** Under section 430(h)(3)(D), separate mortality tables are permitted to be used for certain disabled individuals. If the separate mortality tables issued under section 430(h)(3)(D) for certain disabled individuals are used, then those disabled individuals are disregarded for all purposes under this section. Thus, if the mortality tables under section 430(h)(3)(D) are used for disabled individuals under a plan, mortality experience with respect to those individuals must be excluded in developing mortality rates for substitute mortality tables under this section.

(5) ***Aggregation*** —

(i) ***Permissive aggregation of plans.*** A plan sponsor may use the same substitute mortality tables for two or more of its plans provided that the rules of this section are applied by treating those plans as a single plan. In such a case, the substitute mortality tables must be based on data collected with respect to those aggregated plans.

(ii) ***Required aggregation of plans.*** In general, plans are not required to be aggregated for purposes of applying the rules of this section. However, for purposes of this section, a plan is required to be aggregated with any plan that was previously spun off from that plan if a purpose of the spinoff is to avoid the use of substitute mortality tables for any of the plans that were involved in the spinoff.

(iii) ***Special rule regarding experience study if aggregated plans have different plan years.*** If two or more plans are aggregated pursuant to this paragraph (c)(5) and not all of the plans have the same plan year, then the experience study period may be a period that is not a multiple of 12 months, provided that—

(A) The period over which mortality experience is collected for each plan (the data study period) is a multiple of 12 months and is based on the plan year for that plan;

(B) The data study periods for all of the plans consist of the same number of years;

(C) The data study periods for all of the plans satisfy the experience study period requirements of paragraph (d)(2)(ii) of this section; and

(D) The data study periods for all of the plans have been selected to minimize the total period of time covered by the experience study period by overlapping (to the greatest extent possible) those data study periods.

(6) ***Duration of use of tables*** —

(i) ***General rule.*** Except as provided in this paragraph (c)(6), substitute mortality tables are used for a plan for the term of consecutive plan years specified in the plan sponsor's written request for approval to use such tables under paragraph (b)(1) of this section and approved by the Commissioner, or a shorter period prescribed by the Commissioner in the approval to use substitute mortality tables. Following the end of the approved term of use, or following any early termination of use described in this paragraph (c)(6), the mortality tables specified in § 1.430(h)(3)-1 must be used for the plan unless approval under paragraph (b)(1) of this section has been received by the plan sponsor to use substitute mortality tables based on an updated experience study for a further term.

(ii) ***Early termination of use of tables.*** A plan's substitute mortality tables must not be used beginning with the earliest of—

(A) For a plan using a substitute mortality table for only one gender because of a lack of credible mortality information with respect to the other gender, the first plan year for which there is credible mortality information with respect to the gender that had lacked credible mortality information (unless an approved substitute mortality table is used for that gender);

(B) The first plan year for which the plan fails to satisfy the requirements of paragraph (c)(1) of this section (regarding use of substitute mortality tables for all plans in the controlled group), taking into account the rules of paragraph (f)(3) of this section (regarding the transition period for newly-affiliated plans);

(C) The second plan year following the plan year for which there is a significant change in individuals covered by the plan as described in paragraph (c)(6)(iii) of this section;

(D) The first plan year following the plan year for which a substitute mortality table used for a population is no longer accurately predictive of future mortality of that population, as determined by the Commissioner or as certified by the plan's actuary to the satisfaction of the Commissioner; or

(E) The date specified in guidance published in the Internal Revenue Bulletin (see § 601.601(d) of this chapter) in conjunction with a replacement of mortality tables specified under section 430(h)(3)(A) and § 1.430(h)(3)-1 (other than changes to the mortality improvement rates under § 1.430(h)(3)-1(b)(1)(iii) or annual updates to the static mortality tables issued as noted in § 1.430(h)(3)-1(c)(1)(iv)).

(iii) ***Significant change in coverage*** —

(A) ***Change in coverage from time of experience study.*** For purposes of applying the rules of paragraph (c)(6)(ii)(C) of this section, a significant change in the individuals covered by a substitute mortality table for a plan year occurs if the number of individuals covered by the substitute mortality table for the plan year is less than 80 percent or more than 120 percent of the average number of individuals in that population over the years covered by the experience study on which the substitute mortality tables are based. However, a change in coverage is not treated as significant if the plan's actuary certifies in writing to the satisfaction of the Commissioner that the substitute mortality tables used for the population continue to be accurately predictive of future mortality of that population (taking into account the effect of the change in the population).

(B) ***Change in coverage from time of certification.*** For purposes of applying the rules of paragraph (c)(6)(ii)(C) of this section, a significant change in the individuals covered by a substitute mortality table for a plan year occurs if the number of individuals covered by the substitute mortality table for the plan year is less than 80 percent or more than 120 percent of the number of individuals covered by the substitute mortality table in a plan year for which a certification described in paragraph (c)(6)(iii)(A) of this section was made on account of a prior change in coverage. However, a change in coverage is not treated as significant if the plan's actuary certifies in writing to the satisfaction of the Commissioner that the substitute mortality tables used by the plan with respect to the covered population continue to be accurately predictive of future mortality of that population (taking into account the effect of the change in the population).

(7) ***Multiple-employer plans*** —

(i) ***General rule.*** In the case of a multiple-employer plan described in section 413(c), the plan administrator (as described in section 414(g)) is treated as the plan sponsor for purposes of this section. If approval is received to use substitute mortality tables by a plan, those tables must apply on a plan-wide basis (even if the plan is subject to the rules of section 413(c)(4)(A)).

(ii) ***Application of controlled group consistency rules.*** In the case of an employer that participates in a multiple-employer plan, if the proportion of the plan's funding target attributable to the employees and former employees of the employer and members of its controlled group represents more than 50 percent of the plan's funding target, then the employer is treated as maintaining the plan for purposes of paragraph (c)(1) of this section. Thus, for a multiple-employer plan with credible mortality information that is treated as maintained by an employer under this paragraph (c)(7), unless substitute mortality tables are used for that plan, substitute mortality tables may not be used for any plan maintained by that employer or a member of its controlled group (and if substitute mortality tables are used for any other plan maintained by any member of the employer's controlled group, they must be used for the multiple-employer plan). By contrast, if the proportion of the plan's funding target attributable to the employees and former employees of the employer and members of its controlled group represents 50 percent or less of the funding target for a multiple-employer plan in which it participates, then the employer is not treated as maintaining the plan for purposes of paragraph (c)(1) of this section. Accordingly, whether substitute mortality tables may be used for other plans in such an employer's controlled group is independent of whether substitute mortality tables are used for the multiple-employer plan.

(d) ***Full credibility*** —

(1) ***In general.*** The mortality experience with respect to a gender or other population within a plan has full credibility if the actual number of deaths for that population during the experience study period described in paragraph (d)(2) of this section is at least the full credibility threshold described in paragraph (d)(3) of this section. Paragraph (d)(4) of this section provides rules for the creation of a base substitute mortality table from the experience study, which apply if the mortality experience for the population has full credibility. Paragraph (d)(5) of this section provides rules regarding the use of separate substitute mortality tables for plan populations within a gender. Paragraph (d)(6) of this section provides an option to use the combined mortality experience of both genders to determine the existence and extent of credible mortality information and to develop a single mortality ratio for use in constructing substitute mortality tables.

(2) ***Experience study period requirements*** —

(i) ***General rule.*** The base substitute mortality table for a gender or other population must be developed from an experience study of the mortality experience of that population that is collected over an experience study period. The experience study period must consist of 2, 3, 4, or 5 consecutive 12-month periods, and must be the same period for all populations except as provided in paragraph (c)(5)(iii) of this section.

(ii) ***Requirement to use recent experience data*** —

(A) ***General rule.*** Except as provided in paragraph (d)(2)(ii)(B) of this section, the last day of the experience study period must be less than 3 years before the first day of the first plan year for which the substitute mortality tables are to apply. For example, if January 1, 2019, is the first day of the first plan year for which the substitute mortality tables will be used, then an experience study using calendar year data generally must include data collected for a period that ends no earlier than December 31, 2016.

(B) ***Exception for submission between 1 and 2 years before effective date of table.*** If the plan sponsor submits a request for approval to use of substitute mortality tables more than 1 year (and less than 2 years) before the first day of the first plan year for which the substitute mortality tables are to apply, then the experience study is not treated as failing to satisfy the rule in paragraph (d)(2)(ii)(A) of this section if the last day of the final year reflected in the experience data is less than 2 years before the date of submission. For example, if an application for approval to use of substitute mortality tables that would apply for plan years beginning on or after January 1, 2019 is submitted in 2017, then an experience study using calendar year data may be based on data collected for a period that ends as early as December 31, 2015.

(iii) ***Experience study based on benefit amount.*** As provided in paragraph (d)(4)(i) of this section, the mortality rates under the base substitute mortality tables are amounts-weighted mortality rates that are derived from the experience study. An individual's benefit amount (which is used to determine amounts-weighted mortality rates and for other purposes under this paragraph (d)) is the individual's accrued benefit expressed in the form of an annual benefit commencing at normal retirement age (or at the current age, if later) if an individual has not commenced benefits and the individual's annual payment if the individual has commenced benefits. Because amounts-weighted mortality rates for a plan are determined using benefit amounts, the experience study used to develop a base substitute mortality table may not include periods before the plan was established.

(3) ***Full credibility threshold*** —

(i) ***Threshold number of deaths.*** The full credibility threshold for a gender or other population is the product of 1,082 and the population's benefit dispersion factor. In calculating the population's benefit dispersion factor, for purposes of paragraphs (d)(3)(iii), (iv), and (v) of this section, the population is adjusted, as appropriate, for individuals who leave the population on account of a reason other than death.

(ii) ***Population's benefit dispersion factor.*** The population's benefit dispersion factor is equal to—

(A) The number of expected deaths for the population during the experience study period (as defined in paragraph (d)(3)(iii) of this section); multiplied by

(B) The sum of the mortality-weighted squares of the benefits (as defined in paragraph (d)(3)(iv) of this section); divided by

(C) The square of the sum of the mortality-weighted benefits (as defined in paragraph (d)(3)(v) of this section).

(iii) ***Number of expected deaths.*** For a population, the number of expected deaths during the experience study period is equal to the sum, for all years in the experience study period, of the expected number of deaths in the population during the year using the mortality rates from the standard mortality tables determined under paragraph (d)(4)(iii) of this section. This amount is equal to:

$$\sum_{t=1}^{E} \sum_{x=1}^{N_t} q_{xt}$$

Where E is equal to the number of years in the experience study period, t represents each year during the experience study period, x represents an individual in the population during year t, q_{xt} is the mortality rate for that individual's age and gender for the calendar year in which year t begins under the applicable standard mortality table determined under paragraph (d)(4)(iii) of this section, and N_t is equal to the number of individuals in the population in year t.

(iv) ***Sum of the mortality-weighted squares of the benefits*** —

(A) ***Determination.*** For a population, the sum of the mortality-weighted squares of the benefits is the sum, for all years in the experience study period, for all individuals in the population at the beginning of the year, of the product of—

(*1*) The probability of death for the individual using the mortality rate for the individual's age and gender from the standard mortality table determined under paragraph (d)(4)(iii) of this section; and

(*2*) The square of the benefit amount for the individual.

(B) ***Expression as formula.*** The sum of the mortality-weighted squares of the benefits for a population determined pursuant to paragraph (d)(3)(iv)(A) of this section is equal to:

$$\sum_{t=1}^{E} \sum_{x=1}^{N_t} q_{xt} b_{xt}^2$$

Where E is equal to the number of years in the experience study period, t represents each year during the experience study period, x represents an individual in the population during year t, q_{xt} is the mortality rate for that individual's age and gender for the calendar year in which year t begins under the applicable standard mortality table determined under paragraph (d)(4)(iii) of this section, b_{xt} is equal to the benefit amount for that individual for year t, and N_t is equal to the number of individuals in the population in year t.

(v) ***Square of the sum of the mortality-weighted benefits*** —

(A) ***Determination.*** For a population, the square of the sum of the mortality-weighted benefits is equal to the square of the sum, for all years in the experience study period, for all individuals in the population at the beginning of the year, of the product of—

(*1*) The probability of death of the individual using the mortality rate for the individual's age and gender from the standard mortality table determined under paragraph (d)(4)(iii) of this section; and

(*2*) The benefit amount for the individual.

(B) ***Expression as formula.*** The square of the sum of the mortality-weighted benefits for a population determined pursuant to paragraph (d)(3)(v)(A) of this section is equal to:

$$\left(\sum_{t=1}^{E} \sum_{x=1}^{N_t} q_{xt} b_{xt}\right)^2$$

Where E is equal to the number of years in the experience study period, t represents each year during the experience study period, x represents an individual in the population during year t, q_{xt} is the mortality rate for that individual's age and gender for the calendar year in which t begins under the applicable standard mortality table determined under paragraph (d)(4)(iii) of this section, b_{xt} is equal to the benefit amount for that individual for year t, and N_t is equal to the number of individuals in the population in year t.

(4) ***Development of mortality rates*** —

(i) ***In general.*** The mortality rates under the base substitute mortality tables must be amounts-weighted mortality rates that are derived from the experience study. Except as provided in paragraph (d)(4)(iv) of this section, the mortality rate for an age and gender is determined by multiplying the mortality rate for that age and gender from the standard mortality table determined under paragraph (d)(4)(iii) of this section by the mortality ratio determined under paragraph (d)(4)(ii) of this section. If the simplified rule of paragraph (c)(2)(ii)(B) of this section is used for the population, then the mortality ratio is determined only taking into account people who are at least 50 years old and less than 100 years old, but the mortality ratio is applied to all ages.

(ii) ***Mortality ratio*** —

(A) ***In general.*** Except as provided in paragraph (d)(6) of this section, a mortality ratio is determined for a gender or other population within a gender, and is equal to the quotient determined by dividing—

(*1*) The sum, for all years in the experience study period, of the benefit amount for all individuals in the population at the beginning of the year who died during the year, by

(*2*) The sum, for all years in the experience study period, for all individuals in the population at the beginning of the year (adjusted, as appropriate, for individuals who leave on account of reason other than death), of the product of—

(*i*) The probability of death of the individual using the mortality rate for the individual's age and gender from the standard mortality table determined under paragraph (d)(4)(iii) of this section; and

(*ii*) The benefit amount for the individual.

(B) ***Expression as formula.*** For purposes of determining a mortality ratio as described in paragraph (d)(4)(ii)(A) of this section, the amount described in paragraph (d)(4)(ii)(A)(*2*) of this section is equal to:

$$\sum_{t=1}^{E} \sum_{x=1}^{N_t} q_{xt} b_{xt}$$

Where E is equal to the number of years in the experience study period, t represents each year during the experience study period, x represents an individual in the population during year t, q_{xt} is the mortality rate for that individual's age and gender for the calendar year in which t begins under the applicable standard mortality table determined under paragraph (d)(4)(iii) of this section, b_{xt} is equal to the benefit amount for that individual for year t, and N_t is equal to the number of individuals in the population in year t.

(iii) ***Standard mortality table*** —

(A) ***Projection of base table.*** Except as otherwise provided in this paragraph (d)(4)(iii), the standard mortality table for a year is the mortality table determined by applying cumulative mortality improvement factors determined under § 1.430(h)(3)-1(b)(2)(ii) to the base mortality table under § 1.430(h)(3)-1(d) for the period beginning with the base year for that mortality table and ending in the base year for the base substitute mortality table determined under paragraph (c)(3)(ii) of this section. For purposes of the preceding sentence, the cumulative mortality improvement factors are determined using the mortality improvement rates described in § 1.430(h)(3)-1(b)(1)(iii) that apply for the calendar year during which the plan sponsor submits the request for approval to use substitute mortality tables.

(B) ***Adjustments to standard mortality table for 2020, 2021, and 2022.*** If a 12-month period in the experience study period begins after December 31, 2019, and before January 1, 2023, the probability of death for an individual under paragraph (d)(4)(ii)(A)(*2*)(*i*) of this section is determined as the mortality rate for the individual's age (at the beginning of the year) and gender from the standard mortality table determined under paragraph (d)(4)(iii)(A) of this section multiplied by the adjustment factor in Table 1 for the calendar year that includes the first day of the 12-month period. For example, for an experience study period that begins April 1, 2019, and ends March 31, 2023, the probability of death for the year beginning April 1, 2022, for a male annuitant who is age 65 as of that date is the

probability of death from the base mortality table (0.01087), multiplied by the cumulative mortality improvement factor for the period from 2012 to 2021 (1.02292) and by the adjustment factor for the 2022 calendar year of 1.075, resulting in a probability of death of 0.01195.

TABLE 1 TO PARAGRAPH (d)(4)(iii)(B)

Calendar year	*Adjustment factor*
2020	1.15
2021	1.15
2022	1.075

(C) ***Selection of base table.*** If the population consists solely of annuitants, the annuitant base mortality table set forth in § 1.430(h)(3)-1(d) must be used for purposes of paragraph (d)(4)(iii)(A) of this section. If the population consists solely of nonannuitants, the nonannuitant base mortality table set forth in § 1.430(h)(3)-1(d) must be used for that purpose. If the population includes both annuitants and nonannuitants, a combination of the annuitant and nonannuitant base tables set forth in § 1.430(h)(3)-1(d) must be used for that purpose. The combined table is constructed using the weighting factors for small plans that are set forth in § 1.430(h)(3)-1(d). The weighting factors are applied to develop the combined table using the following equation:

> Combined mortality rate = [nonannuitant rate * (1−weighting factor)] + [annuitant rate * weighting factor].

(iv) ***Modification for ages 96 and older.*** Mortality rates for ages 96 and older under the base substitute mortality table are determined using the rules of paragraph (d)(4)(i) of this section but substituting a modified mortality ratio for the mortality ratio determined under paragraph (d)(4)(ii) of this section. The modified mortality ratio is determined as follows—

(A) For ages 96 through 109, if the mortality ratio is greater than 1.0, the modified mortality ratio is equal to the mortality ratio for the population reduced by 1/15th of the excess of the mortality ratio over 1.0 for each year that the age exceeds 95.

(B) For ages 96 through 109, if the mortality ratio is less than 1.0, the modified mortality ratio is equal to the mortality ratio for the population increased by 1/15th of the excess of 1.0 over the mortality ratio for each year that the age exceeds 95.

(C) For ages 110 and older, the modified mortality ratio is equal to 1.0.

(v) ***Change in number of individuals covered by table.*** Experience data may not be used to develop a base table if the number of individuals in the population covered by the table (for example, the male annuitant population) as of the last day of the plan year before the year the request for approval to use the substitute mortality table is made is less than 80 percent or more than 120 percent of the average number of individuals in that population over the years covered by the

experience study on which the substitute mortality tables are based, unless it is demonstrated to the satisfaction of the Commissioner that the experience data is accurately predictive of future mortality of that population (taking into account the effect of the change in individuals) after appropriate adjustments to the data are made (for example, excluding data from individuals with respect to a spun-off portion of the plan). For this purpose, a reasonable estimate of the number of individuals in the population covered by the table may be used.

(5) ***Separate tables for specified populations*** —

(i) ***In general.*** Except as provided in this paragraph (d)(5), separate substitute mortality tables are permitted to be used for separate populations within a gender only if—

(A) All individuals of that gender are divided into separate populations;

(B) Each separate population has mortality experience that has full credibility as determined under the rules of paragraph (d)(5)(iii) of this section; and

(C) The separate base substitute mortality table for each separate population is developed applying the rules of paragraphs (d)(1) through (4) of this section using an experience study that takes into account solely members of that population.

(ii) ***Annuitant and nonannuitant separate populations.*** Notwithstanding paragraph (d)(5)(i)(B) of this section, a gender may be separated into separate populations of annuitants and nonannuitants for the purpose of developing and using substitute mortality tables, even if only one of those separate populations has credible mortality information. Similarly, if separate populations that satisfy paragraph (d)(5)(i)(B) of this section are established, then any of those populations may be further subdivided into separate annuitant and nonannuitant subpopulations, provided that at least one of the two resulting subpopulations has credible mortality information. The standard mortality tables under § 1.430(h)(3)-1 are used for a resulting subpopulation that does not have credible mortality information. For example, if the male hourly and salaried populations under a plan each have mortality experience with full credibility and the male salaried annuitant population has credible mortality information, then substitute mortality tables may be used for the plan with respect to the male salaried annuitant population even if the standard mortality tables under § 1.430(h)(3)-1 are used with respect to the male salaried nonannuitant population (because that nonannuitant population does not have credible mortality information).

(iii) ***Credible mortality information for separate populations.*** In determining whether the mortality experience for a separate population within a gender has full credibility, the rules of paragraph (d)(1) of this section must be applied to that separate population. In demonstrating that an annuitant (or nonannuitant) population within a gender or within a separate population does not have credible mortality information, the rules of paragraph (c)(2)(iii)(B) of this section are applied by substituting the annuitant (or nonannuitant) population for the gender.

(6) ***Option to determine a single mortality ratio for both genders.*** Base substitute mortality tables for a plan may be constructed by developing and applying a single mortality ratio for both genders, but only if the substitute mortality tables used for all plans maintained by members of the plan sponsor's controlled group (except for plans for which both the male and female populations, considered separately, have mortality experience with full credibility) are constructed in this manner. If the option under this paragraph (d)(6) is applied for a plan then, for all plans maintained by members of the plan sponsor's controlled group, whether both the male and female populations within the plan

have credible mortality information (and, if that combined population's mortality experience does not have full credibility, the partial credibility weighting factor for the plan) is determined using the combined mortality experience for both genders.

(e) ***Partial credibility*** —

(1) ***In general.*** The mortality experience with respect to a population has partial credibility if the actual number of deaths for that population during the experience study period described in paragraph (d)(2) of this section is at least equal to 100 and is less than the full credibility threshold described for the population in paragraph (d)(3) of this section. If the mortality experience for the population has partial credibility, then in lieu of creating a base substitute mortality table as described in paragraph (d) of this section, the base substitute mortality table is created as the sum of—

(i) The product of—

(A) The partial credibility weighting factor determined under paragraph (e)(2) of this section; and

(B) The mortality rates that are derived from the experience study determined under paragraph (d)(4)(i) of this section, and

(ii) The product of—

(A) One minus the partial credibility weighting factor described in paragraph (e)(2) of this section; and

(B) The mortality rate from the standard mortality tables described in paragraph (d)(4)(iii) of this section.

(2) ***Partial credibility weighting factor.*** The partial credibility weighting factor is equal to the square root of the fraction—

(i) The numerator of which is the actual number of deaths for the population during the experience study period, and

(ii) The denominator of which is the full credibility threshold for the population described in paragraph (d)(3) of this section.

(f) ***Special rules for newly-affiliated plans*** —

(1) ***In general.*** This paragraph (f) provides special rules that provide temporary relief from certain rules in this section in the case of a controlled group that includes a newly-affiliated plan (as defined in paragraph (f)(2) of this section). Paragraph (f)(3) of this section provides a transition period during which the requirement in paragraph (c)(1) of this section (that is, the requirement that all plans within the controlled group that have credible mortality information must use substitute mortality tables) is not applicable. Paragraph (f)(4) of this section provides special rules that permit the use of a shorter experience study period in the case of a newly-affiliated plan that excludes the mortality experience data for the period before the date the plan becomes a newly-affiliated plan.

(2) ***Definition of newly-affiliated plan.*** For purposes of this paragraph (f), a plan is a newly-affiliated plan if the plan sponsor becomes a member of the new controlled group in connection with a merger, acquisition, or similar transaction described in § 1.410(b)-2(f). A plan also is treated as a newly-

affiliated plan for purposes of this section if the plan is established in connection with a transfer of assets and liabilities from another employer's plan in connection with a merger, acquisition, or similar transaction described in § 1.410(b)-2(f).

(3) ***Transition period for newly-affiliated plans.*** The use of substitute mortality tables for a plan within a controlled group is not prohibited merely because, during the transition period, substitute mortality tables are not used for a newly-affiliated plan that fails to demonstrate a lack of credible mortality information during that period. Similarly, during the transition period, the use of substitute mortality tables for a newly-affiliated plan is not prohibited merely because substitute mortality tables are not used for another plan within the controlled group that fails to demonstrate a lack of credible mortality information during that period. The transition period begins on the date of the transaction that results in the plan becoming a newly-affiliated plan and ends on the last day of the plan year that immediately follows the latest ending period described in section 410(b)(6)(C)(ii) with respect to that transaction for any of the plans in the controlled group.

(4) ***Experience study period for newly-affiliated plan*** —

(i) ***In general.*** The mortality experience data for a newly-affiliated plan may either include or exclude mortality experience data for the period before the date the plan becomes a newly-affiliated plan. If a plan sponsor excludes mortality experience data for the period before the date the plan becomes a newly-affiliated plan, the exclusion must apply for all populations within the plan.

(ii) ***Demonstration relating to lack of credible mortality information.*** If the experience study for a newly-affiliated plan excludes mortality experience data for the period prior to the date the plan becomes a newly-affiliated plan, then the demonstration that the plan does not have credible mortality information for a plan year that begins after the transition period can be made using a shorter experience study period than would otherwise be permitted under paragraph (c)(2)(iii)(B) of this section, provided that the experience study period begins with the date the plan becomes a newly-affiliated plan and ends not more than one year and one day before the first day of the plan year.

(iii) ***Demonstration relating to credible mortality information.*** If the experience study for a newly-affiliated plan excludes mortality experience data for the period before the date the plan becomes a newly-affiliated plan and the plan fails to demonstrate that it does not have credible mortality information for the plan year under the rules of paragraph (f)(4)(ii) of this section, then other plans within the controlled group may continue to use substitute mortality tables only if substitute mortality tables are used for the newly-affiliated plan for the plan year. In such a case, the experience study period for the newly-affiliated plan may consist of a 12-month period.

(g) ***Applicability date*** —

(1) ***General rule.*** This section applies for plan years beginning on or after January 1, 2025. Except as provided in paragraph (g)(2) or (3) of this section, the substitute mortality table used for a plan for such a plan year must comply with the rules of paragraphs (a) through (f) of this section.

(2) ***Transition rule for previously approved substitute mortality tables.*** If a plan sponsor has received approval from the Commissioner to use substitute mortality tables for a plan year beginning in 2025, then the plan's base substitute mortality tables that were approved are treated as satisfying the requirements of paragraph (d) or (e) of this section, as applicable, for that plan year.

(3) ***Transition rule for requests for approval to use substitute mortality tables.*** A written request described in paragraph (b)(1)(i) of this section to use substitute mortality tables for a plan year that begins during 2025 does not fail to satisfy the timing requirement of paragraph (b)(1)(ii) of this section if it is submitted no later than October 31, 2024, provided that the plan sponsor agrees to a 90-day extension of the 180-day review period in accordance with paragraph (b)(2)(iv) of this section.

[T.D. 9826, 82 FR 46404, Oct. 5, 2017, as amended by T.D. 9983, 88 FR 72366, Oct. 20, 2023; T.D. 10005, 89 FR 61345, July 31, 2024]

§ 1.430(i)-1 Special rules for plans in at-risk status.

(a) ***In general*** —

(1) ***Overview.*** This section provides special rules related to determining the funding target and making other computations for certain defined benefit plans that are in at-risk status for the plan year. Section 430(i) and this section apply to single employer defined benefit plans (including multiple employer plans) but do not apply to multiemployer plans (as defined in section 414(f)). Paragraph (b) of this section describes rules for determining whether a plan is in at-risk status for a plan year, including the determination of a plan's funding target attainment percentage and at-risk funding target attainment percentage. Paragraph (c) of this section describes the funding target for a plan in at-risk status. Paragraph (d) of this section describes the target normal cost for a plan in at-risk status. Paragraph (e) of this section describes rules regarding how the funding target and the target normal cost are determined for a plan that has been in at-risk status for fewer than 5 consecutive plan years. Paragraph (f) of this section sets forth effective/applicability dates and transition rules.

(2) ***Special rules for multiple employer plans.*** In the case of a multiple employer plan to which section 413(c)(4)(A) applies, the rules of section 430 and this section are applied separately for each employer under the plan, as if each employer maintained a separate plan. For example, at-risk status is determined separately for each employer under such a multiple employer plan. In the case of a multiple employer plan to which section 413(c)(4)(A) does not apply (that is, a plan described in section 413(c)(4)(B) that has not made the election for section 413(c)(4)(A) to apply), the rules of section 430 and this section are applied as if all participants in the plan were employed by a single employer.

(b) ***Determination of at-risk status of a plan*** —

(1) ***General rule.*** Except as otherwise provided in this section, a plan is in at-risk status for a plan year if—

(i) The funding target attainment percentage for the preceding plan year (determined under paragraph (b)(3) of this section) is less than 80 percent; and

(ii) The at-risk funding target attainment percentage for the preceding plan year (determined under paragraph (b)(4) of this section) is less than 70 percent.

(2) ***Small plan exception.*** If, on each day during the preceding plan year, a plan had 500 or fewer participants (including both active and inactive participants), determined in accordance with the same rules that apply for purposes of § 1.430(g)-1(b)(2)(ii), then the plan is not treated as being in at-risk status for the plan year.

(3) ***Funding target attainment percentage.*** For purposes of this section, except as otherwise provided in paragraph (b)(5) of this section, the funding target attainment percentage of a plan for a plan year is the funding target attainment percentage as defined in § 1.430(d)-1(b)(3).

(4) ***At-risk funding target attainment percentage.*** Except as otherwise provided in paragraph (b)(5) of this section, the at-risk funding target attainment percentage of a plan for a plan year is a fraction (expressed as a percentage)—

(i) The numerator of which is the value of plan assets for the plan year after subtraction of the prefunding balance and the funding standard carryover balance under section 430(f)(4)(B); and

(ii) The denominator of which is the at-risk funding target of the plan for the plan year (determined under paragraph (c) of this section, but without regard to the loading factor imposed under paragraph (c)(2)(ii) of this section).

(5) ***Special rules*** —

(i) ***Special rule for new plans.*** Except as otherwise provided in paragraph (b)(5)(iii) of this section, in the case of a new plan that was neither the result of a merger nor involved in a spinoff, the funding target attainment percentage under paragraph (b)(3) of this section and the at-risk funding target attainment percentage under paragraph (b)(4) of this section are equal to 100 percent for years before the plan exists.

(ii) ***Special rule for plans with zero funding target.*** Except as otherwise provided in paragraph (b)(5)(iii) of this section, if the funding target of the plan is equal to zero for a plan year, then the funding target attainment percentage under paragraph (b)(3) of this section and the at-risk funding target attainment percentage under paragraph (b)(4) of this section are equal to 100 percent for that plan year.

(iii) ***Exception when plan has predecessor plan that was in at-risk status.*** [Reserved]

(iv) ***Special rules for plans that are the result of a merger.*** [Reserved]

(v) ***Special rules for plans that are involved in a spinoff.*** [Reserved]

(6) ***Special rule for determining at-risk status of plans of specified automobile manufacturers.*** See section 430(i)(4)(C) for special rules for determining the at-risk status of plans of specified automobile and automobile parts manufacturers.

(c) ***Funding target for plans in at-risk status*** —

(1) ***In general.*** If the plan has been in at-risk status for 5 consecutive years, including the current plan year, then the funding target for the plan is the at-risk funding target determined under paragraph (c)(2) of this section. See paragraph (e) of this section for the determination of the funding target where the plan is in at-risk status for the plan year but was not in at-risk status for one or more of the 4 preceding plan years.

(2) ***At-risk funding target*** —

(i) ***Use of modified actuarial assumptions.*** Except as otherwise provided in this paragraph (c)(2), the at-risk funding target of the plan under this paragraph (c)(2) for the plan year is equal to the present value of all benefits accrued or earned under the plan as of the beginning of the plan year, as determined in accordance with § 1.430(d)-1 but using the additional actuarial assumptions described in paragraph (c)(3) of this section.

(ii) ***Funding target includes load.*** The at-risk funding target is increased by the sum of—

(A) $700 multiplied by the number of participants in the plan (including active participants, inactive participants, and beneficiaries); plus

(B) Four percent of the funding target (determined under § 1.430(d)-1(b)(2) as if the plan was not in at-risk status) of the plan for the plan year.

(iii) ***Minimum amount.*** Notwithstanding any otherwise applicable provisions of this section, the at-risk funding target of a plan for a plan year is not less than the plan's funding target for the plan year determined without regard to this section.

(3) ***Additional actuarial assumptions*** —

(i) ***In general.*** The actuarial assumptions used to determine a plan's at-risk funding target for a plan year are the actuarial assumptions that are applied under section 430, with the modifications described in this paragraph (c)(3).

(ii) ***Special retirement age assumption*** —

(A) ***Participants eligible to retire and collect benefits within 11 years.*** Subject to paragraph (c)(3)(ii)(B) of this section, if a participant would be eligible to commence an immediate distribution by the end of the 10th plan year after the current plan year (that is, the end of the 11th plan year beginning with the current plan year), that participant is assumed to commence an immediate distribution at the earliest retirement age under the plan, or, if later, at the end of the current plan year. The rule of this paragraph (c)(3)(ii)(A) does not affect the application of plan assumptions regarding an employee's termination of employment prior to the employee's earliest retirement age.

(B) ***Participants otherwise assumed to retire immediately.*** The special retirement age assumption of paragraph (c)(3)(ii)(A) of this section does not apply to a participant to the extent the participant is otherwise assumed to commence benefits during the current plan year under the actuarial assumptions for the plan. For example, if generally applicable retirement assumptions would provide for a 25 percent probability that a participant will commence benefits during the current plan year, the special retirement age assumption of paragraph (c)(3)(ii)(A) of this section requires the plan's enrolled actuary to assume a 75 percent probability that the participant will commence benefits at the end of the plan year.

(C) ***Definition of earliest retirement date.*** For purposes of this paragraph (c)(3)(ii), a plan's earliest retirement date for an employee is the earliest date on which the employee can commence receiving an immediate distribution of a fully vested benefit under the plan. *See* § 1.401(a)-20, Q&A-17(b).

(iii) ***Requirement to assume most valuable benefit.*** All participants and beneficiaries who are assumed to retire on a particular date are assumed to elect the optional form of benefit available under the plan that would result in the highest present value of benefits commencing at that date.

(iv) ***Reasonable techniques permitted.*** The plan's actuary is permitted to use reasonable techniques in determining the actuarial assumptions that are required to be used pursuant to this paragraph (c)(3). For example, the plan's actuary is permitted to use reasonable assumptions in determining the optional form of benefit under the plan that would result in the highest present value of benefits for this purpose.

(d) ***Target normal cost of plans in at-risk status*** —

(1) ***General rule.*** If the plan has been in at-risk status for 5 consecutive years, including the current plan year, then the target normal cost for the plan is the at-risk target normal cost determined under paragraph (d)(2) of this section. *See* paragraph (e) of this section for the determination of the target normal cost where the plan is in at-risk status for the plan year but was not in at-risk status for one or more of the 4 preceding plan years.

(2) ***At-risk target normal cost*** —

(i) ***Use of modified actuarial assumptions*** —

(A) ***In general.*** Except as otherwise provided in this paragraph (d)(2), the at-risk target normal cost of a plan for the plan year is equal to the present value (determined as of the valuation date) of all benefits that accrue during, are earned during, or are otherwise allocated to service in the plan year, as determined in accordance with § 1.430(d)-1 but using the additional actuarial assumptions described in paragraph (c)(3) of this section.

(B) ***Special adjustments.*** The target normal cost of the plan for the plan year (determined under paragraph (d)(2)(i)(A) of this section) is adjusted (not below zero) by adding the amount of plan-related expenses expected to be paid from plan assets during the plan year and subtracting the amount of any mandatory employee contributions expected to be made during the plan year.

(C) ***Plan-related expenses.*** For purposes of this paragraph (d)(2), plan-related expenses are determined using the rules of § 1.430(d)-1(b)(1)(iii)(B).

(ii) ***Loading factor.*** The at-risk target normal cost is increased by a loading factor equal to 4 percent of the present value (determined as of the valuation date) of all benefits under the plan that accrue, are earned, or are otherwise allocated to service for the plan year under the applicable rules of § 1.430(d)-1(c)(1)(ii)(B), (C), or (D), determined as if the plan were not in at-risk status.

(iii) ***Minimum amount.*** The at-risk target normal cost of a plan for a plan year is not less than the plan's target normal cost determined without regard to section 430(i) and this section.

(e) ***Transition between applicable funding targets and applicable target normal costs*** —

(1) ***Funding target.*** If a plan that is in at-risk status for the plan year has not been in at-risk status for one or more of the preceding 4 plan years, the plan's funding target for the plan year is determined as the sum of—

(i) The funding target determined without regard to section 430(i) and this section; plus

(ii) The phase-in percentage for the plan year multiplied by the excess of—

(A) The at-risk funding target determined under paragraph (c)(2) of this section (determined taking into account paragraph (e)(4) of this section); over

(B) The funding target determined without regard to section 430(i) and this section.

(2) ***Target normal cost.*** If a plan that is in at-risk status for the plan year has not been in at-risk status for one or more of the preceding 4 plan years, the plan's target normal cost for the plan year is determined as the sum of—

(i) The target normal cost determined without regard to section 430(i) and this section; plus

(ii) The phase-in percentage for the plan year multiplied by the excess of—

(A) The at-risk target normal cost determined under paragraph (d)(2) of this section (determined taking into account paragraph (e)(4) of this section); over

(B) The target normal cost determined without regard to section 430(i) and this section.

(3) ***Phase-in percentage.*** For purposes of this paragraph (e), the phase-in percentage is 20 percent multiplied by the number of consecutive plan years that the plan has been in at-risk status (including the current plan year) and not taking into account years before the first effective plan year for a plan.

(4) ***Transition funding target and target normal cost determined without load.*** Notwithstanding paragraph (c)(2)(ii) of this section, if a plan has not been in at-risk status for 2 or more of the preceding 4 plan years (not taking into account years before the first effective plan year for a plan), then the plan's at-risk funding target that is used for purposes of paragraph (e)(1)(ii)(A) of this section (to calculate the plan's funding target where the plan has been in at-risk status for fewer than 5 plan years) is determined without regard to the loading factor set forth in paragraph (c)(2)(ii) of this section. Similarly, if a plan has not been in at-risk status for 2 or more of the preceding 4 plan years (not taking into account years before the first effective plan year for a plan), then the plan's at-risk target normal cost that is used for purposes of paragraph (e)(2)(ii)(A) of this section (to calculate the plan's target normal cost where the plan has been in at-risk status for fewer than 5 plan years) is determined without regard to the loading factor set forth in paragraph (d)(2)(ii) of this section.

(f) ***Effective/applicability dates and transition rules*** —

(1) ***Statutory effective date/applicability date*** —

(i) ***General rule.*** Section 430 generally applies to plan years beginning on or after January 1, 2008. The applicability of section 430 for purposes of determining the minimum required contribution is delayed for certain plans in accordance with sections 104 through 106 of the Pension Protection Act of 2006 (PPA '06), Public Law 109-280 (120 Stat. 780).

(ii) ***Applicability of special adjustments to target normal cost.*** The special adjustments of paragraph (d)(2)(i)(B) of this section (relating to adjustments to the target normal cost for plan-related expenses and mandatory employee contributions) apply to plan years beginning after December 31, 2008. In addition, a plan sponsor may elect to make the special adjustments of paragraph (d)(2)(i)(B) of this section for plan years beginning in 2008. This election is made in the same manner and is subject to the same rules as an election to add an amount to the plan's prefunding balance pursuant to § 1.430(f)-1(f). Thus, the election can be made no later than the last day for making the minimum required contribution for the plan year to which the election relates.

(2) ***Effective date/applicability date of regulations.*** This section applies to plan years beginning on or after January 1, 2010. For plan years beginning before January 1, 2010, plans are permitted to rely on the provisions set forth in this section for purposes of satisfying the requirements of section 430.

(3) ***First effective plan year.*** For purposes of this section, the first effective plan year for a plan is the first plan year to which section 430 applies to the plan for purposes of determining the minimum required contribution.

(4) ***Transition rule for determining at-risk status.*** In the case of plan years beginning in 2008, 2009, and 2010, paragraph (b)(1)(i) of this section is applied by substituting the following percentages for “80 percent”—

(i) 65 percent in the case of 2008;

(ii) 70 percent in the case of 2009; and

(iii) 75 percent in the case of 2010.

[T.D. 9467, 74 FR 53058, Oct. 15, 2009]

§ 1.430(j)-1 Payment of minimum required contributions.

(a) ***In general*** —

(1) ***Overview.*** This section provides rules related to the payment of minimum required contributions, including the payment of required installments. Section 430(j) and this section apply to single-employer defined benefit plans (including multiple employer plans as defined in section 413(c)) but do not apply to multiemployer plans (as defined in section 414(f)). Paragraph (b) of this section describes the general timing requirement for minimum required contributions. Paragraph (c) of this section describes the accelerated required installment schedule for plans with a funding shortfall in the preceding plan year. Paragraph (d) of this section provides rules regarding liquidity requirements. Paragraph (e) of this section provides definitions. Paragraph (f) of this section provides examples that illustrate the rules of this section. Paragraph (g) of this section sets forth effective/applicability dates and transition rules.

(2) ***Special rules for multiple employer plans*** —

(i) ***In general.*** In the case of a multiple employer plan to which section 413(c)(4)(A) applies, the rules of section 430 and this section are applied separately for each employer under the plan, as if each employer maintained a separate plan. Thus, for example, required installments are determined separately for each employer under such a multiple employer plan. In the case of a multiple employer plan to which section 413(c)(4)(A) does not apply (that is, a plan described in section 413(c)(4)(B) that has not made the election for section 413(c)(4)(A) to apply), the rules of section 430 and this section are applied as if all participants in the plan were employed by a single employer.

(ii) ***CSEC plans.*** A CSEC plan (that is, a plan that fits within the definition of a CSEC plan in section 414(y) for plan years beginning on or after January 1, 2014 and for which the election under section 414(y)(3)(A) has not been made) is not subject to the rules of section 430. See section 433 for the minimum funding rules that apply to CSEC plans.

(3) ***Applicability of section 430(j) to plans of commercial passenger airlines*** —

(i) ***In general.*** Except as otherwise provided in this section, the rules of section 430(j) and this section apply to a plan for which an election described in section 402 of the Pension Protection Act of 2006, Public Law 109-280 (120 Stat. 780 (2006)), as amended (PPA '06), has been made in the same manner as those rules apply to any other plan subject to section 430.

(ii) ***Special rules for plans for which election was made pursuant to section 402(a)(1) of PPA '06.*** For purposes of applying the rules of section 430(j) and this section to a plan with respect to which the election under section 402(a)(1) of PPA '06 has been made, the effective interest rate for the plan is deemed to be 8.85 percent during the period for which the election applies. In addition, see paragraph (e)(4)(ii) of this section for a special determination of the funding shortfall for a plan for which the election in section 402(a)(1) of PPA '06 has been made.

(b) ***General timing requirement for minimum required contributions*** —

(1) ***Earliest date for contributions.*** A payment made before the first day of the plan year cannot be applied toward the minimum required contribution under section 430 for that plan year.

(2) ***Deadline for contributions.*** The deadline for any payment of any minimum required contribution for a plan year is $8^{1}/_{2}$ months after the close of the plan year. See section 4971 and the regulations thereunder regarding an excise tax that applies with respect to minimum required contributions not paid by this deadline. For additional rules that may apply in the case of a failure to pay minimum required contributions by this deadline, see also section 430(k) of the Code and sections 101(d) and 4043 of the Employee Retirement Income Security Act of 1974, as amended (ERISA).

(3) ***Allocation of contribution to a plan year*** —

(i) ***Plans with unpaid minimum required contributions that have not been corrected.*** If a plan has unpaid minimum required contributions within the meaning of § 54.4971(c)-1(c) of this chapter that have not yet been corrected within the meaning of § 54.4971(c)-1(d)(2) of this chapter at the time a contribution is made, then the contribution is treated as a late contribution for the earliest plan year for which there is an unpaid minimum required contribution (to the extent necessary to correct that unpaid minimum required contribution). To the extent the contribution exceeds the amount necessary to correct the earlier unpaid minimum required contribution, the excess is treated as a late contribution for the next earliest plan year for which there is an unpaid minimum required contribution (to the extent necessary to correct that next earliest unpaid minimum required contribution). The allocation of the contribution under the preceding sentence is repeated until all unpaid minimum required contributions have been corrected, or until the entire contribution is allocated, whichever comes first.

(ii) ***Plans without unpaid minimum required contributions.*** If a contribution is made during the current plan year but before the deadline under paragraph (b)(2) of this section for contributions for a prior plan year, and the plan has no unpaid minimum required contribution for any plan year at the time the contribution is made, then the contribution may be designated as a contribution for either that prior plan year or the current plan year. Similarly, if a contribution made during the current plan year but before the deadline under paragraph (b)(2) of this section for contributions for a prior plan year is more than enough to correct a plan's unpaid minimum required contributions for all plan years, the portion of a contribution that was not used to correct unpaid minimum required contributions may be designated as a contribution for either that prior plan year or the current plan year.

(iii) ***Method of allocating contributions*** —

(A) ***Reporting for contributions to correct unpaid minimum required contributions.*** The allocation of a contribution under the rules of paragraph (b)(3)(i) of this section to correct unpaid minimum required contributions is automatic and must be shown on the actuarial report (Schedule SB, “Single-Employer Defined Benefit Plan Actuarial Information” of Form 5500, “Annual Return/Report of Employee Benefit Plan”) for the earliest plan year with respect to which, as of the date of the contribution, the deadline for making contributions under paragraph (b)(2) of this section has not passed. See § 1.430(g)-1(d)(1) for the rules for determining the plan year for which these contributions are taken into account in determining the value of plan assets.

(B) ***Designation of plan year if no unpaid minimum contribution.*** In the case of a contribution described in paragraph (b)(3)(ii) of this section, the designation is established by the completion (and filing, if required) of the actuarial report (Schedule SB, “Single-Employer

Defined Benefit Plan Actuarial Information" of Form 5500, "Annual Return/Report of Employee Benefit Plan") for the plan year for which the contribution is designated and cannot be changed after the actuarial report that reflects the contribution is completed (and filed, if required) except as provided in guidance published in the Internal Revenue Bulletin. Thus, a contribution that has been designated for a plan year on an actuarial report pursuant to this paragraph (b)(3)(iii)(B) generally cannot be redesignated as a contribution for either an earlier or later plan year.

(4) *Adjustment for interest* —

(i) ***In general.*** Except as provided in this paragraph (b)(4), any payment toward the minimum required contribution under section 430 for a plan year that is paid on a date other than the valuation date for that plan year is adjusted for interest for the period between the valuation date and the payment date, at the plan's effective interest rate for that plan year determined pursuant to § 1.430(h)(2)-1(f)(1). The direction of the adjustment depends on whether the contribution is paid before or after the valuation date for the plan year. If the contribution is paid after the valuation date for the plan year, the contribution is discounted to the valuation date using the plan's effective interest rate. By contrast, if the contribution is paid before the valuation date for the plan year (which could only occur in the case of a small plan described in section 430(g)(2)(B)), the contribution is increased for interest using the plan's effective interest rate.

(ii) ***Interest adjustment for late quarterly installments.*** In the case of a plan that must make required installments under the rules of paragraph (c) of this section, to the extent a contribution for a plan year constitutes a late required installment, the adjustment for interest for the period between the valuation date and the payment date is made in two steps. In the first step, the portion of the contribution that constitutes a late required installment is adjusted for interest from the date of the contribution to the due date for the installment by discounting it using the plan's effective interest rate for that plan year determined pursuant to § 1.430(h)(2)-1(f)(1) plus 5 percentage points. In the second step, this discounted amount is treated as if it were contributed on the installment due date for purposes of the interest adjustment under paragraph (b)(4)(i) of this section. However, a contribution made toward the unpaid liquidity amount (as defined in paragraph (d)(3) of this section) that is made before the close of the quarter in which it is due is adjusted under paragraph (b)(4)(iii) of this section.

(iii) ***Interest adjustment for unpaid liquidity amounts.*** In the case of a plan that is subject to the liquidity requirement rules of paragraph (d) of this section, to the extent a contribution made during a quarter constitutes a payment of the unpaid liquidity amount for that quarter as described in paragraph (d)(3) of this section, the adjustment for interest for the period between the valuation date and the payment date is made in two steps. In the first step, the portion of the contribution that constitutes a payment of the unpaid liquidity amount is increased for interest from the date of the contribution to the last day of the quarter, at the plan's effective interest rate for that plan year determined pursuant to § 1.430(h)(2)-1(f)(1). In the second step, this adjusted amount is treated as if it were contributed on the last day of that quarter for purposes of the interest adjustment for late required installments under the rules of paragraph (b)(4)(ii) of this section. See paragraph (d)(3)(iv)(B) of this section for an increase to the minimum required contribution that gives effect to this interest adjustment for unpaid liquidity amounts in the event a portion of the required installment is no longer treated as unpaid after the close of the quarter under paragraph (d)(3)(iv)(A) of this section.

(c) *Accelerated quarterly installments required for underfunded plans* —

(1) ***Plans subject to quarterly installment requirement.*** The plan sponsor of a plan that has a funding shortfall for the preceding plan year is required to pay the installments described in paragraph (c)(5) of this section by the due dates described in paragraph (c)(6) of this section. See paragraph (b)(4)(ii) of this section, section 430(k) of the Internal Revenue Code (Code) (regarding the imposition of a lien), and sections 101(d) and 4043 of ERISA (regarding notice to participants and beneficiaries and to the Pension Benefit Guaranty Corporation) for examples of consequences that generally apply following a failure to make required installments.

(2) ***Satisfaction of quarterly installment requirement.*** A plan sponsor may satisfy the requirement to pay an installment under paragraph (c)(1) of this section by one or a combination of the following—

(i) Making a contribution for the plan year which is allocated among the required installments under the rules of paragraph (c)(3) of this section; and

(ii) Making an election to use some or all of the plan's prefunding balance or funding standard carryover balance in accordance with the rules of paragraph (c)(4) of this section.

(3) *Satisfaction of quarterly installment requirement with contributions* —

(i) ***Contributions allocated to earliest quarterly installments.*** For purposes of this section, a contribution for a plan year is allocated among the required installments for the plan year under the rules of paragraph (c)(3)(ii) or (iii) of this section, whichever is applicable. Which rule applies depends on whether, at the time the contribution is made, the plan sponsor has unpaid required installments (that is, the plan sponsor has not fully satisfied all required installments for which the due date has passed, taking into account the special rule with respect to the unpaid liquidity amounts in paragraph (d)(3)(iv)(A) of this section).

(ii) ***Early contributions increased with interest.*** If a plan has no unpaid required installments for a plan year at the time a contribution for the plan year is made, then the contribution is allocated to the required installments (if any) for the plan year due on or after the date of the contribution under the rules of this paragraph (c)(3)(ii). The contribution is allocated in the order in which those installments occur, and the amount allocated to each required installment is limited to the amount necessary to satisfy the required installment (including satisfaction of the liquidity requirement under paragraph (d)(1) of this section, taking into account the special rule with respect to the unpaid liquidity amounts in paragraph (d)(3)(iv)(A) of this section) taking into account any interest as described in the next sentence. If the contribution is made before the due date of the installment to which it is allocated, then the amount credited toward the installment includes interest on the contribution from the date of the contribution to the due date of the required installment (except as provided in paragraph (d)(2) of this section). This interest adjustment is made using an interest rate equal to the plan's effective interest rate under § 1.430(h)(2)-1(f)(1) for the plan year.

(iii) *Allocation of contributions to late required installments without interest* —

(A) ***In general.*** If a plan has any unpaid required installments for a plan year at the time a contribution for the plan year is made, then the contribution is allocated to those unpaid required installments under the rules of this paragraph (c)(3)(iii). The contribution is allocated in the order in which those unpaid required installments occur, and the amount allocated to each required installment is limited to the amount that satisfies the required installment without any adjustment for interest. If a contribution is allocated to an unpaid

required installment under this paragraph (c)(3)(iii), then that contribution is adjusted for interest under the rules of paragraph (b)(4) of this section (regarding interest adjustments for late quarterly installments) for purposes of determining the extent to which that contribution satisfies the minimum required contribution for the plan year.

(B) ***Bifurcation of contributions that exceed unpaid required installments.*** Any amount of a contribution described in paragraph (c)(3)(iii)(A) of this section that is not used to satisfy the unpaid required installments for the plan year is allocated toward any remaining required installments for the plan year under the rules of paragraph (c)(3)(ii) of this section.

(4) ***Satisfaction of quarterly installment requirements through use of funding balances.*** A plan sponsor may satisfy the requirement to pay an installment under paragraph (c)(1) of this section by making an election to use some or all of the plan's prefunding balance or funding standard carryover balance under section 430(f). Such an election is subject to the rules of § 1.430(f)-1 and cannot exceed the available amount of the plan's prefunding balance and funding standard carryover balance determined under § 1.430(f)-1(d)(1)(ii) as of the date of the election. The amount elected is allocated toward satisfaction of the required installments in the same manner as a contribution made on the date of the election. Thus, the amount of an election to use the plan's prefunding balance or funding standard carryover balance is increased with interest under the rules of paragraph (c)(3)(ii) of this section or is credited against the earliest unpaid required installment under the rules of paragraph (c)(3)(iii) of this section. See § 1.430(f)-1(f)(1)(iii) for rules permitting the use of a standing election for purposes of satisfying required installments through use of funding balances. See § 1.430(f)-1(d)(1)(i)(B) for rules relating to late elections to use the funding standard carryover balance or prefunding balance to satisfy the required installment rules.

(5) ***Amount of required installment*** —

(i) ***In general.*** For purposes of this section, the amount of any required installment due for a plan year is equal to 25 percent of the required annual payment for the plan year as described in paragraph (c)(5)(ii) of this section.

(ii) ***Required annual payment.*** The required annual payment for a plan year is equal to the lesser of—

(A) 90 percent of the minimum required contribution under section 430 for the plan year; or

(B) 100 percent of the minimum required contribution under section 430 (determined without regard to any funding waiver under section 412) for the preceding plan year.

(iii) ***Treatment of funding balances.*** For purposes of paragraph (c)(5)(ii) of this section, the minimum required contribution for a plan year is determined without regard to the use of the prefunding balance or funding standard carryover balance for the current year or the prior year. However, see paragraph (c)(4) of this section regarding a plan sponsor's election to use the plan's prefunding balance or funding standard carryover balance for the current year in order to satisfy the requirement to pay an installment.

(iv) ***Disregard of certain amounts.*** For purposes of paragraph (c)(5)(ii) of this section, the minimum required contribution for a plan year is determined without regard to the installment acceleration amount for the plan year determined under section 430(c)(7) or any increase to the minimum required contribution under paragraph (d)(3)(iv)(B) of this section (relating to an unpaid liquidity amount).

(6) ***Due dates for installments.*** For purposes of this section, there is a required installment for each quarter of the plan year, and the due dates for the required installments with respect to a full plan year are set forth in the following table:

Installment	Due date
First required installment	15th day of 4th plan month.
Second required installment	15th day of 7th plan month.
Third required installment	15th day of 10th plan month.
Fourth required installment	15th day after the end of the plan year.

(7) ***Special rules for short plan years*** —

(i) ***In general.*** In the case of a short plan year, the rules of this paragraph (c) are modified as provided in this paragraph (c)(7).

(ii) ***Current plan year is short plan year*** —

(A) ***Amount of required annual payment.*** In determining the required annual payment pursuant to paragraph (c)(5)(ii) of this section for a short plan year, the amount otherwise determined under paragraph (c)(5)(ii)(B) of this section (based on the prior year's minimum required contribution) is multiplied by a fraction, the numerator of which is the duration of the short plan year and the denominator of which is 1 year. This rule applies to the year that contains the plan's termination date if that date is before the date that would otherwise be the end of the plan year (because the plan is treated as having a short plan year for purposes of section 430 pursuant to § 1.430(a)-1(b)(5)).

(B) ***Number and due dates of installments.*** If the plan has a short plan year, then an installment is due 15 days after the end of that short plan year. In addition, an installment is required for each due date determined under paragraph (c)(6) of this section that falls within the short plan year. Thus, for example, if the short plan year ends before the 15th day of the 4th plan month of the plan year, there will be only one installment for that short plan year, and that installment will be due on the 15th day after the end of the short plan year.

(C) ***Amount of installments.*** The amount of each installment required to be paid for the short plan year is equal to the required annual payment determined pursuant to paragraph (c)(5)(ii) of this section (as modified by paragraph (c)(7)(ii)(A) of this section) divided by the number of installments determined pursuant to paragraph (c)(7)(ii)(B) of this section.

(D) ***No increase in prior required installments.*** If a plan is amended to have a short plan year (including as a result of plan termination) and the required installments determined under paragraph (c)(7)(ii)(C) of this section are greater than the required installments determined without regard to the amendment, then—

(*1*) The required installments for which the due dates occur before the end of the short plan year are determined without regard to the amendment, and

(2) The required installment due on the 15th day after the end of the short plan year is increased to the extent necessary so that the total of the required installments for the year is the required annual payment determined under paragraph (c)(5)(ii) of this section, determined taking into account the rules of paragraph (c)(7)(ii)(A) of this section.

(iii) ***Prior plan year is short plan year.*** If the prior plan year is a short plan year, the amount otherwise determined under paragraph (c)(5)(ii)(B) of this section (based on the prior year's minimum required contribution) is multiplied by a fraction, the numerator of which is 1 year and the denominator of which is the duration of the short plan year.

(d) ***Liquidity requirement in connection with quarterly installments*** —

(1) ***In general*** —

(i) ***Additional requirement with respect to quarterly installments.*** Except as provided in this paragraph (d)(1), if a plan sponsor is required to pay the installments described in paragraph (c) of this section, then the plan sponsor is treated as failing to pay the full amount of the required installment for a quarter to the extent that the value of the liquid assets paid in the required installment after the end of that quarter and on or before the due date for the installment is less than the liquidity shortfall for that quarter. If the amount of any required installment is increased by reason of this paragraph (d)(1)(i), in no event shall this increase exceed the amount which, when added to the current required installment (determined without regard to the increase) and prior required installments for the plan year (not including any portion of a required installment that is no longer treated as unpaid under paragraph (d)(3)(iv)(A) of this section), is necessary to increase the funding target attainment percentage for the plan year to 100 percent (taking into account the expected increase in the funding target due to benefits accruing or earned during the plan year).

(ii) ***Small plan exception.*** The liquidity requirement of this paragraph (d) does not apply to a plan for any plan year for which the plan is a small plan described in § 1.430(g)-1(b)(2).

(2) ***Satisfaction of liquidity requirement.*** The additional requirement with respect to a required installment under paragraph (d)(1) of this section can be satisfied only with an actual contribution of liquid assets that, after application of paragraph (c)(3) of this section, is allocated to satisfy the required installment for the quarter. The liquidity requirement cannot be satisfied through the use of funding balances, and satisfaction of this requirement is determined without taking into account the increase for interest for early contributions set forth in paragraph (c)(3)(ii) of this section. Any contribution of liquid assets that is allocated to satisfy the required installment for a quarter applies for purposes of determining whether the requirements of paragraph (d)(1) of this section are satisfied, even if the contribution is less than the total amount needed to satisfy the requirements of paragraph (c) of this section for the quarter (taking into account any increase in the required installment under this paragraph (d)).

(3) ***Failure to satisfy liquidity requirement*** —

(i) ***Treatment as failure to satisfy quarterly installment.*** If an employer fails to satisfy the additional requirement with respect to a required installment for a quarter under paragraph (d)(1) of this section, the portion of that required installment that is treated as not paid by reason of paragraph (d)(1) of this section (the unpaid liquidity amount for that quarter) is treated as an underpayment of the required installment. See paragraph (c)(1) of this section for examples of consequences of underpayment of a required installment.

(ii) ***Late satisfaction of liquidity requirement.*** The rules of paragraph (d)(2) of this section apply to determine whether a contribution made after the deadline for a required installment satisfies the liquidity requirement of paragraph (d)(1) of this section. However, pursuant to section 430(j)(4)(C), the unpaid liquidity amount is treated as unpaid until the end of the quarter in which the due date for that installment occurs, even if liquid assets in that amount are contributed during that quarter (but after the due date for the installment). See paragraph (b)(4)(iii) of this section for the application of this rule for purposes of applying the additional interest for late required installments.

(iii) ***Additional consequences of failure to pay liquidity shortfall.*** See section 206(e) of ERISA and section 401(a)(32) of the Code (regarding suspension of accelerated distributions for a plan with an unpaid liquidity amount). See also section 4971(f) regarding an excise tax imposed in the event of a failure to pay a liquidity shortfall.

(iv) ***Treatment in subsequent quarter*** —

(A) ***Adjustment to required installment.*** After the close of the quarter in which the due date of a required installment occurs, any portion of the installment that was treated as unpaid solely by reason of paragraph (d)(1) of this section, and that was not satisfied with a contribution of liquid assets during that quarter, is no longer treated as unpaid (but any portion of the installment that would be treated as unpaid without regard to paragraph (d)(1) of this section must be satisfied in accordance with the rules of paragraph (c) of this section).

(B) ***Increase to minimum required contribution for additional interest.*** If a portion of the required installment is no longer treated as unpaid by reason of paragraph (d)(3)(iv)(A) of this section, then the minimum required contribution for the plan year for which the installment was due is increased by an amount equal to—

(*1*) The portion of the required installment that is no longer treated as unpaid by reason of paragraph (d)(3)(iv)(A) of this section, discounted for interest for the period from the last day of the quarter that includes the due date of the required installment to the valuation date, using the plan's effective interest rate for the plan year (determined pursuant to § 1.430(h)(2)-1(f)(1)); minus

(*2*) The portion of the required installment that is no longer treated as unpaid by reason of paragraph (d)(3)(iv)(A) of this section, discounted for interest for the period from the last day of the quarter that includes the due date of the required installment to the due date of the installment, using the plan's effective interest rate for the plan year plus 5 percentage points, and further discounted for interest for the period from the due date of the required installment to the valuation date using the plan's effective interest rate for the plan year.

(e) ***Definitions*** —

(1) ***In general.*** The definitions set forth in this paragraph (e) apply for purposes of this section.

(2) ***Adjusted disbursements*** —

(i) ***In general.*** The term *adjusted disbursements* means, with respect to a time period, the amount described in paragraph (e)(2)(ii) of this section if the time period is within a single plan year, or the amount described in paragraph (e)(2)(iii) of this section if the time period spans more than one plan year.

(ii) ***Period within a single plan year.*** With respect to a period within a plan year, the adjusted disbursements are the disbursements from the plan during that period reduced by the product of—

(A) The plan's funding target attainment percentage determined under section 430(d)(2) for the plan year that contains that period; and

(B) The sum of the purchases of annuities and payments of single sums for that period.

(iii) ***Period spanning more than one plan year.*** With respect to a period of time that spans more than one plan year, the adjusted disbursements are the sum of the adjusted disbursements determined separately under paragraph (e)(2)(ii) of this section for each portion of a plan year that is included in the time period for which adjusted disbursements are determined.

(3) ***Disbursements from the plan.*** The term *disbursements from the plan* means all disbursements from the plan's trust, including purchases of annuities, payments of single sums and other benefits, and payments of administrative expenses.

(4) ***Funding shortfall*** —

(i) ***In general.*** Except as otherwise provided in this paragraph (e)(4), the term *funding shortfall* has the same meaning as under § 1.430(a)-1(f)(2).

(ii) ***Special rule for plans of commercial passenger airlines.*** In the case of a plan year for which an election described in section 402(a)(1) of PPA '06 is in effect, the term *funding shortfall* means the unfunded liability for that plan year determined under § 1.430(a)-1(b)(4)(ii).

(iii) ***Special rule for first effective plan year.*** See paragraph (g)(5)(ii) of this section for a calculation of the funding shortfall for the plan's pre-effective plan year.

(iv) ***Special rule for plan spinoffs and mergers.*** [Reserved]

(5) ***Liquid assets*** —

(i) ***In general.*** The term *liquid assets* means cash, marketable securities, and other assets described in this paragraph (e)(5)(i). For this purpose, marketable securities include financial instruments such as stocks and other equity interests, evidences of indebtedness (including certificates of deposit), options, futures contracts, and other derivatives, for which there is a liquid financial market, and other interests in entities (such as partnerships, trusts, or regulated investment companies) for which there is a liquid financial market. For purposes of the preceding sentence, a liquid financial market is an established financial market described in § 1.1092(d)-1(b) (other than an interbank market or an interdealer market described in § 1.1092(d)-1(b)(1)(v) and (vi), respectively). Any security that is issued or guaranteed by the government of the United States or an agency or instrumentality thereof for which there is an established financial market described in § 1.1092(d)-1(b) is a marketable security. Finally, any financial instrument or other interest in an entity that, under its terms, contains a right by which

the instrument or other interest may immediately be redeemed, exchanged, or converted into cash or a marketable security, is a marketable security, provided there are no restrictions on the exercise of that right.

(ii) ***Insurance and annuity contracts.*** Other assets that are treated as liquid assets of a plan are insurance, annuity, or other contracts issued by an insurance company that is licensed to do business under the laws of any State, but only if the insurance, annuity, or other contract—

(A) Contains an unrestricted right by which the insurance, annuity or other contract may immediately be redeemed, exchanged, or converted into cash or a marketable security;

(B) Provides for substantially equal monthly disbursements to the extent provided in paragraph (e)(5)(iii) of this section; or

(C) Is benefit responsive within the meaning of paragraph (e)(5)(iv) of this section.

(iii) ***Insurance and annuity contracts providing for substantially equal periodic payments.*** If the contract provides for substantially equal monthly disbursements (for example, an annuity contract in pay status), the only portion of the contract that may be treated as liquid assets for a quarter is the amount equal to 36 times the monthly disbursement (in the month containing the last day of the quarter) which is available under the terms of the contract, provided there are no restrictions on the right to disbursements.

(iv) ***Benefit responsive insurance and annuity contracts.*** A contract is considered benefit responsive if, under applicable law and contractual provisions, the plan has the right to receive disbursements from the contract in order to pay plan benefits for any participant in the plan, without restrictions on that right.

(v) ***Restrictions.*** For purposes of this paragraph (e)(5), a restriction on a redemption, exchange, or conversion right, or a restriction on a right to receive a disbursement, may result not only from applicable law or contractual provisions, but also from rehabilitation, conservatorship, receivership, insolvency, bankruptcy, or similar proceedings.

(6) ***Liquidity shortfall*** —

(i) ***In general.*** Except as modified in paragraph (e)(6)(iii) of this section with respect to multiple employer plans, the term *liquidity shortfall* means, with respect to any required installment, an amount equal to the excess (as of the last day of the quarter for which that installment is due) of—

(A) The base amount with respect to the quarter, over

(B) The value (as of the last day of the quarter) of the plan's liquid assets.

(ii) ***Base amount*** —

(A) ***In general.*** For purposes of this paragraph (e)(6), the term *base amount* means, with respect to any quarter, an amount equal to 3 times the sum of the adjusted disbursements from the plan for the 12 months ending on the last day of that quarter.

(B) ***Special rule.*** If the generally applicable base amount for a quarter (as determined under paragraph (e)(6)(ii)(A) of this section) exceeds an amount equal to 2 times the sum of the adjusted disbursements from the plan for the 36 months ending on the last day of the quarter and the enrolled actuary for the plan certifies to the satisfaction of the

Commissioner that such excess is the result of nonrecurring circumstances, then the base amount with respect to that quarter is determined without regard to amounts related to those nonrecurring circumstances.

(iii) ***Multiple employer plans*** —

(A) ***Satisfaction of liquidity requirement as if plan were not a multiple employer plan.*** For a multiple employer plan to which section 413(c)(4)(A) applies, the liquidity requirement of paragraph (d)(1)(i) of this section is satisfied if the liquidity requirement would be satisfied if the plan were a single-employer plan that is not a multiple employer plan to which section 413(c)(4)(A) applies.

(B) ***Failure to satisfy the liquidity requirement on a plan-wide basis.*** For a multiple employer plan to which section 413(c)(4)(A) applies, if the plan does not satisfy the liquidity requirement in accordance with paragraph (e)(6)(iii)(A) of this section, then the liquidity requirement must be applied separately for each employer under the plan, as if each employer maintained a separate plan. Thus, the value of plan assets as of the end of each quarter under such a multiple employer plan must be allocated among the employers sponsoring the plan, and the liquidity shortfall must be determined for each employer based on that allocation. See section 413(c)(7)(B) and paragraph (a)(2) of this section.

(7) ***Plan month*** —

(i) ***Plan year begins on the first day of a calendar month.*** For a plan year that begins with the first day of a calendar month, the term *plan month* means any calendar month that begins during the plan year.

(ii) ***Plan year begins on a date other than the first day of a calendar month.*** For a plan year that begins on a date other than the first day of a calendar month, the first day of each plan month is the day of the calendar month that corresponds to the day of the calendar month that is the first day of the plan year. Thus, for example, if the first day of a plan year is January 15, then a plan month starts on the 15th of each calendar month. However, if a calendar month does not contain a day that corresponds to the day of the calendar month that is the first day of the plan year (for example, if a calendar month has only 30 days and the first day of the plan year is the 31st day of a calendar month), then the first day of the plan month that begins during that calendar month is the last day of that calendar month.

(8) ***Quarter.*** The term *quarter* means, with respect to any required installment, the 3-plan-month period preceding the plan month in which the due date for that installment occurs.

(9) ***Short plan year.*** The term *short plan year* means a plan year that is shorter than 12 months (and is not a 52-week plan year of a plan that uses a 52-53 week plan year).

(f) ***Examples.*** The following examples illustrate the rules of this section. Unless otherwise indicated, these examples are based on the following assumptions: section 430 applies to determine the minimum required contribution for plan years beginning on or after January 1, 2008; the plan year is the calendar year; the valuation date is January 1; the plan sponsor is required to pay the installments described in paragraph (c) of this section; the plan does not have a liquidity shortfall; and the plan sponsor has not elected any funding relief under section 430(c)(2)(D) for any plan year. In addition, these examples assume that, under the funding method used for the plan, interest adjustments are calculated to the nearest half month (rather than days) for transactions that occur on the 1st and 15th of a calendar month.

Example 1. (i) Plan A has a funding standard carryover balance of $15,000 and a prefunding balance of zero as of January 1, 2016, and the plan's funding ratio for 2015 (determined under § 1.430(f)-1(d)(3)) was over 80%. The minimum required contribution for Plan A (determined prior to any offset for the funding standard carryover balance) is $100,000 for 2016 and is $125,000 for 2017. The effective interest rate for the 2017 plan year is 5.90%.
(ii) The required annual payment for 2017 is equal to the lesser of (a) 100% of the 2016 minimum required contribution ($100,000) or (b) 90% of the 2017 minimum required contribution (90% of $125,000, or $112,500). Therefore, each required installment for 2017 is 25% of $100,000, or $25,000.

(iii) Installments of $25,000 each are due by April 15, 2017, July 15, 2017, October 15, 2017, and January 15, 2018. The final contribution for the 2017 plan year is due by September 15, 2018. The amount of this final contribution is equal to $125,000, less the contributions made prior to that date, with all contributions adjusted to the valuation date using the effective interest rate for the 2017 plan year. If the plan sponsor makes each required installment on the date due, the remaining amount due is determined as follows:

(A) The contribution paid April 15, 2017 is adjusted by discounting the contribution amount for $3^{1}/_{2}$ months at the effective interest rate ($\$25{,}000 \div 1.0590^{(3.5/12)} = \$24{,}585$).

(B) The contribution paid July 15, 2017 is discounted for $6^{1}/_{2}$ months at the effective interest rate ($\$25{,}000 \div 1.0590^{(6.5/12)} = \$24{,}236$).

(C) The contribution paid October 15, 2017 is discounted for $9^{1}/_{2}$ months at the effective interest rate ($\$25{,}000 \div 1.0590^{(9.5/12)} = \$23{,}891$).

(D) The contribution paid January 15, 2018 is discounted for $12^{1}/_{2}$ months at the effective interest rate ($\$25{,}000 \div 1.0590^{(12.5/12)} = \$23{,}551$).

(E) The sum of the above contributions for the 2017 plan year paid through January 15, 2018, adjusted for interest to the valuation date, is $96,263. The remaining amount due for the 2017 plan year is $125,000 minus $96,263, or $28,737, as of January 1, 2017.

(iv) If the final contribution is made on September 15, 2018, the remaining amount due must be increased for interest at the plan's effective interest rate for the $20^{1}/_{2}$ months between January 1, 2017 and September 15, 2018 (so that, when it is discounted with interest for those $20^{1}/_{2}$ months, the resulting amount will equal $28,737). Therefore, the remaining contribution due on September 15, 2018 is $\$28{,}737 \times 1.0590^{(20.5/12)} = \$31{,}694$.

Example 2. (i) The facts are the same as in *Example 1,* except that the plan sponsor elects to use

the $15,000 funding standard carryover balance as of January 1, 2016, to offset the minimum required contribution for the 2016 plan year. The plan sponsor makes a contribution on January 1, 2016 of $85,000, which satisfies the minimum contribution requirement for 2016.
(ii) The required installments for 2017 are unaffected by the plan sponsor's election to offset the minimum required contribution by the funding standard carryover balance for 2016. Therefore, the required annual payment for 2017 is $100,000 (determined as the lesser of (a) 100% of $100,000 or (b) 90% of $125,000) and the amount of each required installment for the 2017 plan year is 25% of the required annual payment, or $25,000.

Example 3. (i) The facts are the same as in *Example 1.* Plan A's funding standard carryover balance has increased to $17,000 as of January 1, 2017, based on the actual rate of return of plan assets during the 2016 plan year. Plan A's funding ratio for 2016 (determined under § 1.430(f)-1(d)(3)) is over 80%. On March 15, 2017, the plan sponsor elects to use the entire amount of the funding standard carryover balance to offset the minimum required contribution for 2017.
(ii) The plan sponsor's election to use the funding standard carryover balance to offset the minimum required contribution is treated as satisfying the requirement to make a required installment to the extent of the amount elected, adjusted with interest for the period from the beginning of the plan year to the due date of the installment using the plan's effective interest rate for the 2017 plan year. This adjustment is made for the 2.5-month period from the beginning of the plan year to the date of the election as provided in § 1.430(f)-1(b)(5), and for the one-month period from the date of the election to the due date for the installment, as provided in paragraphs (c)(3)(ii) and (c)(4) of this section. Therefore, the $17,000 funding standard carryover balance as of January 1, 2017 offsets $17,000 × $1.0590^{(2.5/12)}$ × $1.0590^{(1/12)}$ or $17,287 of the $25,000 required installment due April 15, 2017, and the remaining contribution due on April 15, 2017 is $25,000 minus $17,287, or $7,713.

(iii) The interest adjustments in paragraph (ii) of this *Example 3* are based on the effective interest rate even if that rate is not determined by the time that the required installment is due. If the plan's effective interest rate for the plan year has not been determined at the time that the required installment is due, the actual amount of the required installment satisfied by the use of the funding standard carryover balance is determined after the effective interest rate is determined. If the extent to which the funding standard carryover balance satisfies the required installment is overestimated and the result is that the full amount of the required installment is not paid by the due date, the plan is subject to the consequences for late or unpaid required installments as described in paragraph (c)(1) of this section.

Example 4. (i) The facts are the same as in *Example 3.* The plan sponsor makes a contribution of $7,713 (which is equal to the remaining portion of the first required installment) on April 15, 2017. For the 2017 plan year, the plan sponsor makes another contribution of $200,000 on June 30, 2017. No further contributions are made for the 2017 plan year.

(ii) The contributions made for the 2017 plan year are adjusted to the valuation date using the plan's effective interest rate for the 2017 plan year. The contribution paid April 15, 2017 is discounted for the $3^{1}/_{2}$ months between January 1, 2017 and the date of payment, using the effective interest rate of 5.90% ($7,713 ÷ $1.0590^{(3.5/12)}$ = $7,585). The contribution paid June 30, 2017 is discounted for 6 months using the effective interest rate ($200,000 ÷ $1.0590^{(6/12)}$ = $194,349), for a total interest-adjusted contribution of $201,934.

(iii) The present value of the excess contribution for 2017 is based on the net contribution required for that year, which is the minimum required contribution minus the offset for the funding standard carryover balance, or $108,000 (that is, $125,000 minus $17,000). Accordingly, the present value of the excess contribution for 2017 is $201,934 minus $108,000, or $93,934. All or a portion of this amount may be credited to the prefunding balance at the election of the plan sponsor.

Example 5. (i) The facts are the same as in *Example 3.* The plan sponsor pays the required installment of $7,713 on April 15, 2017 and installments of $25,000 each on July 15, 2017 and October 15, 2017. However, only $10,000 of the installment due on January 15, 2018 is paid. No additional contributions are made until the final contribution for the plan year of $55,000 is paid on September 15, 2018.
(ii) The 2017 Schedule SB shows that the contributions for the plan year exceed the minimum required contribution. This is determined by comparing the net contribution requirement of $108,000 (equal to the minimum required contribution of $125,000 offset by $17,000 for the amount of funding standard carryover balance used) and the interest-adjusted contributions made for the 2017 plan year, developed as shown:

(A) The contribution paid April 15, 2017 is adjusted by discounting the contribution amount for $3^{1}/_{2}$ months at the effective interest rate ($7,713 ÷ $1.0590^{(3.5/12)}$ = $7,585).

(B) The contribution paid July 15, 2017 is discounted for $6^{1}/_{2}$ months at the effective interest rate ($25,000 ÷ $1.0590^{(6.5/12)}$ = $24,236).

(C) The contribution paid October 15, 2017 is discounted for $9^{1}/_{2}$ months at the effective interest rate ($25,000 ÷ $1.0590^{(9.5/12)}$ = $23,891).

(D) The contribution paid January 15, 2018 is discounted for $12^{1}/_{2}$ months at the effective interest rate ($10,000 ÷ $1.0590^{(12.5/12)}$ = $9,420).

(E) Pursuant to paragraph (b)(4)(ii) of this section, the interest rate used to adjust the $15,000 underpayment of the required installment due January 15, 2018 is increased by 5 percentage points for the 8-month period of underpayment (January 15, 2018 through September 15, 2018). Accordingly, $15,000 of the contribution paid on September 15, 2018 is discounted using a rate of

10.90% for 8 months to the due date of January 15, 2018, and is then further adjusted using the 5.90% effective interest rate for the $12^{1}/_{2}$ months between the required installment due date of January 15, 2018 and the valuation date of January 1, 2017. This portion of the September 15, 2018 contribution results in an adjusted amount of $13,189 as of January 1, 2017 ($15,000 ÷ $1.1090^{(8/12)}$ ÷ $1.0590^{(12.5/12)}$).

(F) The remaining $40,000 of the contribution paid on September 15, 2018 is discounted using the effective interest rate of 5.90% for the $20^{1}/_{2}$-month period between the date of payment and the valuation date. This portion of the payment is therefore adjusted to $36,268 as of the valuation date (that is, $40,000 ÷ $1.0590^{(20.5/12)}$).

(G) The sum of the contributions (as calculated in paragraphs (ii)(A) through (F) of this *Example 5*) for the 2017 plan year paid through September 15, 2018, adjusted for interest to the valuation date, is $114,589. This is greater than the net contribution required for the 2017 plan year of $108,000.

Example 6. (i) The facts are the same as in *Example 5,* except that the plan sponsor does not make the contribution on September 15, 2018.
(ii) The 2017 Schedule SB shows an unpaid minimum required contribution of $42,868 as of January 1, 2017. This is equal to the difference between the net contribution required for 2017 of $108,000 (the minimum required contribution of $125,000, offset by $17,000 for the amount of the funding standard carryover balance used) and $65,132 (the interest-adjusted contributions made for the 2017 plan year before the $8^{1}/_{2}$ month deadline, as illustrated in paragraphs (ii)(A) through (ii)(D) of *Example 5*).

Example 7. (i) The facts are the same as in *Example 1,* except that the plan year is changed to an August 1-July 31 plan year effective August 1, 2017. This results in a short plan year beginning January 1, 2017 and ending July 31, 2017. The minimum required contribution for the 7-month period covered by the plan year is calculated as $72,917 in accordance with § 1.430(a)-1(b)(2)(ii).
(ii) As provided in paragraph (c)(7) of this section, a required installment is due 15 days after the end of the short plan year (August 15, 2017), and required installments are also due on the regularly scheduled due dates for required installments that occur within the short plan year (April 15, 2017 and July 15, 2017).

(iii) The required installments are determined based on the lesser of (a) 90% of the minimum required contribution for the short plan year ending July 31, 2017 (90% of $72,917, or $65,625) or (b) 7/12 of 100% of the 2016 minimum required contribution ($100,000 × 7/12, or $58,333). The required installments are thus based on $58,333 because that is the smaller amount.

(iv) The amount of each required installment is determined by dividing the amount determined in paragraph (iii) of this *Example 7* by the number of required installments for the short plan year. This calculation results in required installments of $19,444 each (that is, $58,333 divided by 3 installments).

(v) The deadline for the remaining payment is $8^{1}/_{2}$ months after the end of the short plan year, or April 15, 2018. If the plan sponsor pays the minimum required amount at each installment date, does not elect to offset any amounts by any funding standard carryover or prefunding balance, and makes a final payment on April 15, 2018, then the remaining payment is $17,429, determined as follows:

(A) The contribution paid April 15, 2017 is adjusted by discounting the contribution amount for $3^{1}/_{2}$ months at the effective interest rate ($19,444 ÷ $1.0590^{(3.5/12)}$ = $19,122).

(B) The contribution paid July 15, 2017 is discounted for $6^{1}/_{2}$ months at the effective interest rate ($19,444 ÷ $1.0590^{(6.5/12)}$ = $18,850).

(C) The contribution paid August 15, 2017 is discounted for $7^{1}/_{2}$ months at the effective interest rate ($19,444 ÷ $1.0590^{(7.5/12)}$ = $18,760).

(D) The sum of the contributions for the 2017 plan year paid through August 15, 2017, adjusted for interest to the valuation date, is $56,732. The remaining amount paid April 15, 2018 for the 2017 plan year is ($72,917−$56,732) × $1.059^{(15.5/12)}$ = $17,429.

Example 8. (i) Plan B has an August 10 to August 9 plan year.
(ii) For the plan year that begins on August 10, 2017, a plan month begins on the 10th day of each calendar month. Accordingly, the due dates for the required installments for that plan year are November 24, 2017, February 24, 2018, May 24, 2018 and August 24, 2018. The deadline for the final contribution for the plan year is April 24, 2019.

Example 9. (i) Plan C has a funding standard carryover balance of $0 and a prefunding balance of $65,000 as of January 1, 2017. Plan C's funding ratio for 2016 (determined under § 1.430(f)-1(d)(3)) was over 80%. The minimum required contribution for Plan C (determined prior to any offset for the funding standard carryover balance) is $120,000 for 2016. Required installments for the 2016 plan year were made timely, and the final installment of the minimum required contribution for the 2016 plan year is due on September 15, 2017 in the amount of $40,000.
(ii) Prior to April 15, 2017, the plan sponsor makes a standing election to use Plan C's funding balances to offset any otherwise unpaid required installments and any otherwise unpaid minimum required contribution. On June 1, 2017, the actuary completes the 2017 valuation and notifies the

plan sponsor that the minimum required contribution for the 2017 plan year is $100,000. The effective interest rate for the 2017 plan year is 5.90%. No contributions are made for the 2017 plan year until September 15, 2018.

(iii) The first required installment for the 2017 plan year is due on April 15, 2017. Under § 1.430(f)-1(f)(1)(iii)(B), the amount of the prefunding balance used as of April 15, 2017 pursuant to the standing election is 25% of the $120,000 required annual payment for the 2016 plan year ($30,000). The prefunding balance is reduced by this amount, adjusted for the $3^{1}/_{2}$-month period between the January 1, 2017 valuation date and the April 15, 2017 due date, using the effective rate for Plan C for 2017 ($30,000 ÷ $1.0590^{(3.5/12)}$, or $29,503). The prefunding balance is available to offset the April 15, 2017 required installment even though the minimum required contribution for the 2016 plan year has not yet been made, because the standing election to use Plan C's balances to offset the minimum required contribution for the 2016 plan year does not take effect until the due date for that contribution, or September 15, 2017. Therefore, as of April 15, 2017, the prefunding balance still exists and may be used to offset the required installment due as of that date.

(iv) The second required installment for the 2017 plan year is due on July 15, 2017, after the actuary determined the minimum required contribution for the 2017 plan year. The required annual payment for 2017 is equal to the lesser of (a) 100% of the 2017 minimum required contribution ($120,000) or (b) 90% of the 2017 minimum required contribution (90% of $100,000, or $90,000). Therefore, each required installment for 2017 is 25% of $90,000, or $22,500.

(v) Although the amount of the required installments for 2017 ($22,500) is smaller than the amount based on the 2016 minimum required contribution ($30,000), under § 1.430(f)-1(f)(1)(iii)(B), the amount of the prefunding balance used under the standing election continues to be the $30,000 based on the minimum required contribution for the 2016 plan year. Alternatively, the plan sponsor can make a replacement formula election to use the prefunding balance to cover the remaining required installments for the 2017 plan year as described in § 1.430(f)-1(f)(1)(iii)(C), based on required installments of $22,500 each.

(vi) The use of $30,000 of the prefunding balance as of April 15, 2017 pursuant to the standing election is irrevocable, and therefore the prefunding balance is not adjusted to reflect the fact that the first required installment for the 2017 plan year (based on the actual 2017 minimum required contribution) is lower than $30,000.

(vii) However, the excess of the $30,000 of prefunding balance used on April 15, 2017 over the first required installment is allocated toward the second required installment. In addition, if the plan sponsor makes a replacement formula election in accordance with § 1.430(f)-1(f)(1)(iii)(C), the amount of prefunding balance used pursuant to that election takes into account the actual required installment. In this case, the amount of the prefunding balance used to satisfy the July

15, 2017 required installment is $14,437. This amount is determined by (1) calculating the excess of the amount of the prefunding balance used on April 15, 2017 over the amount of the required installment due on that date ($30,000 − $22,500 = $7,500), and adjusting it for the 3 months from April 15, 2017 to July 15, 2017, using the effective interest rate ($7,500 × $1.0590^{(3/12)}$ = $7,608), (2) deducting that amount from the required installment due July 15, 2017, to determine the net amount due as of that date ($22,500 − $7,608 = $14,892), and (3) adjusting the net amount to the valuation date of January 1, 2017 for the $6^1/_2$-month period between the valuation date and the due date for the required installment, using the effective interest rate for Plan C for 2017 ($14,892 ÷ $1.0590^{(6.5/12)}$ = $14,437).

Example 10. (i) The facts are the same as in *Example 9,* except that Plan C's prefunding balance as of January 1, 2017 is only $20,000, and Plan C's sponsor makes a contribution larger than the minimum required contribution for the 2016 plan year on March 1, 2017.
(ii) The amount of the April 15, 2017 required installment that is satisfied by the plan sponsor's election to offset the prefunding balance is calculated by increasing the January 1, 2017 prefunding balance with interest for $3^1/_2$ months to April 15, 2017, using the effective interest rate for Plan C for 2017. This results in an offset of $20,337 ($20,000 × $1.0590^{(3.5/12)}$). A cash contribution of $2,163 ($22,500 − $20,337) is needed to satisfy the required installment on that date.

(iii) The excess contribution made for the 2016 plan year cannot be used to offset the remainder of the April 15, 2017 required installment even though it was contributed prior to the date the installment is due, because the sponsor had not yet elected to credit the excess contribution to the prefunding balance. If the plan sponsor elects at a later date to credit the excess contribution to the prefunding balance, the amount can be used to offset required installments due on or after the date of that election. However, note that if Plan C's actuary reflected the excess contribution for 2016 in certifying the 2017 adjusted funding target attainment percentage (AFTAP) used to apply benefit restrictions under section 436, a later election to credit the excess contribution to the prefunding balance would reduce the AFTAP and could cause Plan C to violate section 436.

Example 11. (i) Plan D is not a small plan described in § 1.430(g)-1(b)(2). The valuation date for Plan D is January 1, and Plan D's funding target attainment percentage (FTAP) was 82% as of January 1, 2016 and is 90% as of January 1, 2017. The amount needed to increase the plan's FTAP for the 2017 plan year to 100% (including the expected increase in the funding target due to benefits accruing or earned during the plan year) is $500,000. Before taking the liquidity requirement of paragraph (d) of this section into account, the plan sponsor of Plan D is required to pay installments for the 2017 plan year in the amount of $50,000 each. During the 12-month period ending March 31, 2017, periodic annuity payments of $425,000 and single sum payments of $200,000 were made by Plan D. Of the single sum payments, $125,000 were made during the 2016 plan year and $75,000 were made during the 2017 plan year. None of these payments were due to nonrecurring circumstances. In addition, administrative expenses of $25,000 were paid from the plan trust during the 12-month period ending March 31, 2017. As of March 31, 2017, the reported value

of Plan D's assets is $1,500,000, and the fair market value of Plan D's liquid assets is $1,300,000.
(ii) The amount of the adjusted disbursements from Plan D for the 12-month period ending March 31, 2017 is calculated as the sum of the annuity benefits, single sum payments, and administrative expenses paid during the 12-month period, reduced by the product of the plan's FTAP and the sum of the single sum payments and any payments for annuities purchased during the plan year. This results in adjusted disbursements for the period of $480,000 (that is, $425,000 plus $200,000 plus $25,000, reduced by 82% of $125,000 in single sum payments during 2016 and 90% of $75,000 in single sum payments during 2017).

(iii) The base amount is calculated in accordance with paragraph (e)(6)(ii) of this section as three times the adjusted disbursements determined in paragraph (ii) of this *Example 11,* or $1,440,000.

(iv) The liquidity shortfall is the difference between the base amount of $1,440,000 determined in paragraph (iii) of this *Example 11* and the $1,300,000 in liquid assets as of March 31, 2017, or $140,000. The required installment due on April 15, 2017 is therefore $140,000, since this amount is larger than the $50,000 installment otherwise required, but less than the $500,000 needed to increase the plan's FTAP (including the expected increase in the funding target due to benefits accruing or earned during the plan year) to 100%.

(v) Note that any contributions of liquid assets made through March 31, 2017 are reflected for purposes of determining the fair market value of Plan D's liquid assets as of March 31, 2017 and are not applied toward satisfying the liquidity requirement as of April 15, 2017. Similarly, any funding standard carryover balance or prefunding balance as of January 1, 2017 cannot be applied to offset the liquidity requirement. Only contributions made in cash or other liquid assets made after March 31, 2017 and by April 15, 2017 can be used to timely satisfy this requirement.

Example 12. (i) The facts are the same as in *Example 11.* The plan sponsor makes a cash contribution for the 2017 plan year of $30,000 on April 15, 2017, and makes an additional cash contribution for the 2017 plan year of $110,000 on April 30, 2017. The effective interest rate for Plan D for the 2017 plan year is 5.90%.
(ii) Under paragraph (d)(3)(i) of this section, the underpayment of the required installment due April 15, 2017 is $110,000 (that is, $140,000 minus $30,000).

(iii) Because the $110,000 contribution was made after the due date for the required installment (which reflects an unpaid liquidity amount) but during the quarter in which the installment was due, and because that contribution does not exceed the unpaid liquidity amount for the quarter, the special interest adjustment under paragraph (b)(4)(iii) of this section applies to the entire amount of the contribution. Accordingly, the contribution is adjusted for interest in two steps for the purpose of determining the portion of the minimum required contribution that is satisfied by the contribution. In the first step, the contribution is adjusted using the effective interest rate for the 2-month period from the payment date of April 30, 2017 to June 30, 2017, the last day of the quarter during which the liquidity requirement was due

($110,000 × $1.0590^{(2/12)}$ = $111,056). In the second step, this amount is adjusted as if that amount had been paid on June 30, 2017. Accordingly, this amount ($111,056) is discounted for interest at a rate of 10.90% (the effective interest rate for the 2017 plan year of 5.90%, increased by 5 percentage points) for the $2^{1}/_{2}$-month period from June 30, 2017 to the April 15, 2017 due date for the installment, and is further discounted using the effective interest rate of 5.90% for the $3^{1}/_{2}$-month period between April 15, 2017 and the valuation date of January 1, 2017. Therefore, the April 30, 2017 contribution is adjusted to $106,886 as of January 1, 2017 ($111,056 ÷ $1.1090^{(2.5/12)}$ ÷ $1.0590^{(3.5/12)}$).

(iv) The $140,000 contributed during April 2017 is needed to satisfy the required installment due April 15, 2017 (determined taking into account the liquidity shortfall as of March 31, 2017), and so the full amount is applied to satisfy that installment. No portion of those contributions is applied to the required installments for subsequent quarters, and no additional payments are needed to satisfy the required installment due April 15, 2017 (because the $110,000 payment satisfies both the unpaid liquidity amount and the remaining amount of the required installment described under paragraph (c)(5) of this section).

Example 13. (i) The facts are the same as in *Example 12,* except that the plan sponsor does not make the second cash contribution of $110,000 on April 30, 2017, but instead makes a second cash contribution of $75,000 for the 2017 plan year on July 15, 2017. The base amount as of June 30, 2017 calculated in accordance with paragraph (e)(6)(ii) of this section is $1,500,000, and the fair market value of liquid assets as of that date is $1,400,000.
(ii) Under paragraph (d)(3)(i) of this section, the underpayment of the required installment due April 15, 2017 is $110,000 (that is, $140,000 minus $30,000).

(iii) As of June 30, 2017, no portion of the $110,000 underpayment of the required installment due April 15, 2017 has been satisfied. Under paragraph (d)(3)(iv)(A) of this section, to the extent that the amount due April 15, 2017 solely because of the liquidity requirement under paragraph (d)(1) of this section is not satisfied with a contribution of liquid assets during the quarter, this amount is no longer considered unpaid. Of the $110,000 underpayment of the required installment that was due on April 15, 2017, $20,000 would have been due without regard to the liquidity requirement under paragraph (d)(1) of this section and $90,000 was due solely because of that liquidity requirement. Accordingly, as of July 1, 2017, $90,000 of the required installment due on April 15, 2017 is no longer treated as unpaid and $20,000 of that required installment continues to be treated as unpaid.

(iv) Under paragraph (d)(3)(iv)(B) of this section, the interest adjustment in paragraph (b)(4)(iii) of this section for the $90,000 portion of the installment due April 15, 2017 that is no longer treated as unpaid is given effect through an increase in the minimum required contribution. This increase to the minimum required contribution is $837, which is determined as the difference between:

(A) The $90,000 portion of the required installment that is no longer treated as unpaid by reason of paragraph (d)(3)(iv)(A) of this section, discounted for the 6-month period between June 30, 2017 (the last day of the quarter in which the liquidity amount was due) to January 1, 2017 (the valuation date) using the plan's effective interest rate for 2017 (5.90%), resulting in $87,457 (that is, $90,000 ÷ $1.0590^{(6/12)}$), and

(B) The $90,000 portion of the required installment that is no longer treated as unpaid by reason of paragraph (d)(3)(iv)(A) of this section, discounted for the $2^{1}/_{2}$-month period between June 30, 2017 and the April 15, 2017 due date using the plan's effective interest rate increased by 5 percentage points (10.90%), and further discounted for the $3^{1}/_{2}$-month period between April 15, 2017 and January 1, 2017 valuation date using the plan's effective interest rate, for a result of $86,620 (that is, $90,000 ÷ $1.1090^{(2.5/12)}$ ÷ $1.0590^{(3.5/12)}$).

(v) The remainder of the required installment that was due on April 15, 2017 without regard to the liquidity requirement ($20,000) remains unpaid until the July 15, 2017 contribution is made. Under paragraph (c) of this section, $20,000 of the July 15, 2017 contribution must be allocated to the required installment due on April 15, 2017. The interest adjustment under paragraph (b)(4)(ii) of this section applies to that $20,000 portion of the contribution because it is a late payment of a required installment. Accordingly, $20,000 of the July 15, 2017 contribution is adjusted to April 15, 2017, using an interest rate of 10.90% for the 3-month period between July 15, 2017 and the April 15, 2017 due date, and further adjusted using the effective interest rate of 5.90% for $3^{1}/_{2}$ months between April 15, 2017 and the January 1, 2017 valuation date. Therefore, the portion of the July 15, 2017 contribution attributable to the April 15, 2017 required installment is adjusted to $19,166 as of January 1, 2017 ($20,000 ÷ $1.1090^{(3/12)}$ ÷ $1.0590^{(3.5/12)}$).

(vi) The liquidity shortfall is recalculated as of June 30, 2017 as $100,000 (that is, the base amount of $1,500,000 minus the value of liquid assets of $1,400,000). This amount is larger than the $50,000 required installment otherwise applicable, and so the amount of the required installment due on July 15, 2017 is $100,000. Of the $75,000 contribution made on July 15, 2017, $20,000 is applied to satisfy the remainder of the required installment due April 15, 2017, and the remaining $55,000 is applied toward the required installment due July 15, 2017. An additional contribution of $45,000 in liquid assets is needed to satisfy the required installment due July 15, 2017.

(vii) If instead there were no liquidity shortfall as of June 30, 2017, the required installment due July 15, 2017 would be $50,000. Of the $75,000 contribution made on July 15, 2017, $20,000 would be applied to satisfy the remainder of the required installment due April 15, 2017, $50,000 would be applied to satisfy the required installment due on July 15, 2017, and the remaining $5,000 would be applied toward the next required installment.

Example 14. (i) Plan E, which is a small plan described in section 430(g)(2)(B), has a calendar year plan year and a valuation date of December 31. The required installments for the 2017 plan year are $30,000 each and each of the required installments is paid on the due date. The effective interest rate for Plan E for

the 2017 plan year is 5.90%.
(ii) The total contributions made for the plan year and before the valuation date, adjusted with interest to the valuation date, equal $92,402. This is developed as shown below:

(A) The contribution paid April 15, 2017 is adjusted by increasing the contribution amount for $8^1/_2$ months at the effective interest rate ($30,000 × $1.0590^{(8.5/12)}$ = $31,243).

(B) The contribution paid July 15, 2017 is increased for $5^1/_2$ months at the effective interest rate ($30,000 × $1.0590^{(5.5/12)}$ = $30,799).

(C) The contribution paid October 15, 2017 is increased for $2^1/_2$ months at the effective interest rate ($30,000 × $1.0590^{(2.5/12)}$ = $30,360).

(iii) Pursuant to § 1.430(g)-1(d)(2), the interest-adjusted value of the contributions for the 2017 plan year that are made before the valuation date is subtracted from the December 31, 2017 plan assets in determining the value of plan assets for the December 31, 2017 actuarial valuation.

Example 15. (i) The facts are the same as in *Example 14,* except that the first contribution for the 2017 plan year is made on May 15, 2017 in the amount of $40,000. The remaining amount of each required installment is paid on the date it is due.
(ii) In accordance with paragraph (c)(3)(iii) of this section, the amount of the required installment due on April 15, 2017 remains at $30,000, even though the associated contribution was not paid until May 15, 2017. Therefore, $30,000 of the payment is allocated to the April 15, 2017 required installment and the remaining $10,000 is allocated to the installment due on July 15, 2017.

(iii) Under paragraph (c)(3)(ii) of this section, the portion of the May 15, 2017 contribution allocated to the July 15, 2017 required installment is increased for interest for the 2 months between the date of the contribution and the due date, using the effective interest rate for 2017. Therefore, the amount allocated to the July 15, 2017 installment is $10,096 (that is, $10,000 × $1.0590^{(2/12)}$). The remaining installment due July 15, 2017 is $30,000 minus $10,096, or $19,904.

(iv) The total amount credited against the minimum required contribution is $122,062 as of December 31, 2017. This amount is calculated as shown below:

(A) The portion of the May 15, 2017 contribution allocated to the April 15, 2017 required installment is first adjusted for the 1 month between the due date and the payment date using the effective interest rate plus 5% ($30,000 ÷ $1.1090^{(1/12)}$ = $29,742). This amount is then adjusted using the effective interest rate, for the $8^1/_2$ months between the due date of April 15, 2017 and the valuation date of December 31, 2017 ($29,742 × $1.0590^{(8.5/12)}$ = $30,975).

(B) The remaining portion of the May 15, 2017 contribution ($10,000) is increased for the $7^{1}/_{2}$ months between the date of the contribution and the valuation date at the effective interest rate ($10,000 × $1.0590^{(7.5/12)}$ = $10,365).

(C) The contribution paid July 15, 2017 is increased for $5^{1}/_{2}$ months at the effective interest rate ($19,904 × $1.0590^{(5.5/12)}$ = $20,434).

(D) The contribution paid October 15, 2017 is increased for $2^{1}/_{2}$ months at the effective interest rate ($30,000 × $1.0590^{(2.5/12)}$ = $30,360).

(E) The contribution paid January 15, 2018 is discounted for $^{1}/_{2}$ month at the effective interest rate ($30,000 ÷ $1.0590^{(0.5/12)}$ = $29,928).

(v) The amount deducted from valuation assets as of December 31, 2017 for contributions made before the valuation date is determined without regard to the special interest adjustment for late payment of the required installment due April 15, 2017 (and without regard to the contribution paid on January 15, 2018).

Example 16. (i) Plan F has a required installment of $10,000 per quarter for the 2016 plan year. The plan sponsor makes a contribution of $9,993 on April 10, 2016. The effective interest rate for Plan F for the 2016 plan year is 5.90%.
(ii) In accordance with paragraph (c)(3)(ii) of this section, the contribution is increased for interest at the effective interest rate, for the 5 days between the contribution date and the due date for the required installment. Therefore, the amount credited against the required installment due April 15, 2016 is $10,001 ($9,993 × $1.0590^{(5/365)}$), and the required installment is satisfied.

Example 17. (i) The facts are the same as in *Example 16,* except that a contribution of $8,000 is made on April 20, 2016.
(ii) In accordance with paragraph (c)(3)(iii) of this section, the amount of the required installment due on April 15, 2016 remains at $10,000, even though the associated contribution was not paid until after the due date, and so $2,000 ($10,000 − $8,000) of the required installment remains unpaid as of April 20, 2016.

(iii) The amount of the April 20, 2016 contribution credited against the minimum required contribution for 2016 is $7,858. This amount is determined by first adjusting the contribution for the 5 days between the due date for the required installment and the date of the contribution using the effective interest rate for Plan F for the 2016 plan year, plus 5% ($8,000 ÷ $1.1090^{(5/365)}$ = $7,989). The result is further adjusted for the 105 days from the due date for the required installment to the valuation date of January 1, 2016 using the effective interest rate of 5.90% ($7,989 ÷ $1.0590^{(105/365)}$ = $7,858).

(iv) Alternatively, the amount of the April 20, 2016 contribution credited against the minimum required contribution for 2016 could be determined using $3^{1}/_{2}$ months between the due date for the required installment and the January 1, 2016 valuation date, as long as the calculation is done consistently for each contribution and for each plan year. Using this approach, the amount adjusted to the April 15, 2016 due date (using the effective interest rate for Plan F for the 2016 plan year plus 5%) is adjusted to January 1, 2016 for $3^{1}/_{2}$ months at the effective interest rate for Plan F for the 2016 plan year. Under this approach, the amount credited against the minimum required contribution is $7,856 ($8,000 ÷ $1.1090^{(5/365)}$ ÷ $1.0590^{(3.5/12)}$).

Example 18. (i) Plan G has a funding standard carryover balance of $15,000 and a prefunding balance of $50,000 as of January 1, 2016. Plan G's required installments are $25,000 each for the 2017 plan year, and the final installment of the minimum required contribution for the 2016 plan year is due on September 15, 2017, in the amount of $40,000. Plan G's funding ratios for both 2015 and 2016 (determined under § 1.430(f)-1(d)(3)) were over 80%. No elections were made to reduce or use Plan G's funding balances during 2016. The effective interest rate for Plan G for the 2016 and 2017 plan years are 5.40% and 5.90%, respectively.
(ii) On April 15, 2017, Plan G's sponsor elected to use the balances to offset the required installment due on that date. The amount of the required installment is adjusted to January 1, 2017, using the effective interest rate for 2017 to determine the amount by which the balances are reduced. Accordingly, this election results in a reduction of $24,585 ($25,000 ÷ $1.0590^{(3.5/12)}$ in the funding balances as of January 1, 2017.

(iii) On September 15, 2017, Plan G's sponsor elected to use the balances to offset the remaining minimum required contribution for the 2016 plan year due on that date. This amount is adjusted to January 1, 2016, using the effective interest rate for 2016 to determine the amount by which the balances are reduced. Accordingly, this election results in a reduction of $36,563 ($40,000 ÷ $1.0540^{(20.5/12)}$ in Plan G's funding balances as of January 1, 2016.

(iv) Section 430(f)(3)(B) and § 1.430(f)-1(d)(2) require that the funding standard carryover balance be exhausted before the prefunding balance is used to offset required contribution amounts. Although the due date for the April 15, 2017 required installment occurs earlier than the due date for the 2016 minimum required contribution, for this purpose contributions for the 2016 plan year are deemed to occur before those for the 2017 plan year. Therefore, the election to offset the 2016 minimum required contribution will eliminate Plan G's funding standard carryover balance, and the 2017 required installment due April 15, 2017 will be offset by the prefunding balance.

(g) ***Effective/applicability dates and transition rules*** —

(1) ***Statutory effective date/applicability date.*** Section 430 generally applies to plan years beginning on or after January 1, 2008. The applicability of section 430 for purposes of determining the minimum required contribution is delayed for certain plans in accordance with sections 104 through 106 of PPA '06.

(2) ***Effective date/applicability date of regulations.*** This section applies to plan years beginning on or after January 1, 2016. For plan years beginning before January 1, 2016, plans are permitted to rely on the provisions set forth in this section for purposes of satisfying the requirements of section 430(j).

(3) ***First effective plan year.*** For purposes of this section, the *first effective plan year* for a plan is the first plan year after the pre-effective plan year.

(4) ***Pre-effective plan year.*** For purposes of this section, the *pre-effective plan year* is the plan year described in § 1.430(a)-1(h)(5).

(5) ***Special rules relating to first effective plan year*** —

(i) ***Determination of minimum required contribution for pre-effective plan year.*** In the case of the plan's first effective plan year, the minimum required contribution for the preceding plan year for purposes of paragraph (c)(5)(ii)(B) of this section is equal to the minimum required contribution under section 412 for the pre-effective plan year (determined without regard to any funding waiver under section 412), determined as of the last day of the pre-effective plan year and without regard to the plan's credit balance.

(ii) ***Determination of funding shortfall for pre-effective plan year*** —

(A) ***First effective plan year that begins during 2008.*** In general, in the case of a plan with a first effective plan year that begins during 2008, the funding shortfall for the pre-effective plan year that precedes it is determined pursuant to paragraph (e)(4) of this section. However, for this purpose, the plan's current liability for the pre-effective plan year under section 412(l)(7) (as in effect for the pre-effective plan year) is permitted to be used in place of the plan's funding target for the pre-effective plan year. In addition, for this purpose, the value of plan assets that was used for the pre-effective plan year is permitted to be used in place of the value of plan assets computed pursuant to § 1.430(g)-1(c) for the pre-effective plan year, provided that the value of plan assets that was used for the pre-effective plan year was not less than 90 percent nor more than 110 percent of the value of plan assets computed pursuant to § 1.430(g)-1(c). If the value of plan assets that was used for the pre-effective plan year was less than 90 percent of the value of plan assets computed pursuant to § 1.430(g)-1(c), then 90 percent of the value of plan assets computed pursuant to § 1.430(g)-1(c) is permitted to be used as the value of plan assets for the pre-effective plan year. If the value of plan assets that was used for the pre-effective plan year was more than 110 percent of the value of plan assets computed pursuant to § 1.430(g)-1(c), then 110 percent of the value of plan assets computed pursuant to § 1.430(g)-1(c) is permitted to be used as the value of plan assets for the pre-effective plan year. Finally, for this purpose, the value of plan assets is permitted to be determined without subtraction for the plan's credit balance for the pre-effective plan year.

(B) ***First effective plan year begins after 2008.*** In the case of a plan with a first effective plan year that begins after December 31, 2008, the determination of the funding shortfall for the pre-effective plan year that immediately precedes it is made in accordance with paragraph (e)(4)(i) of this section. Thus, the funding shortfall for the pre-effective plan year is based on the funding target for the pre-effective plan year and the value of plan assets is determined under § 1.430(g)-1(c) for the pre-effective plan year, even though section 430(g) did not apply to the plan for purposes of determining the minimum required contribution for the pre-effective plan year.

[T.D. 9732, 80 FR 54390, Sept. 9, 2015]

§ 1.431(c)(6)-1 Mortality tables used to determine current liability.

(a) ***Mortality tables used to determine current liability.*** In accordance with section 431(c)(6)(D), the mortality assumptions that apply to a single-employer defined benefit plan for the plan year pursuant to section 430(h)(3)(A) and (D) and §§ 1.430(h)(3)-1(a)(1) and (a)(2)(ii) are used to determine a multiemployer plan's current liability for purposes of applying the rules of section 431(c)(6). For purposes of this paragraph (a), either the generational mortality tables used pursuant to § 1.430(h)(3)-1(b) or the static mortality tables used pursuant to § 1.430(h)(3)-1(c) are permitted to be used without regard to whether the plan is a small plan. However, substitute mortality tables under §§ 1.430(h)(3)-1(a)(2)(i) and 1.430(h)(3)-2 are not permitted to be used for purposes of this paragraph (a).

(b) ***Applicability date.*** This section applies for valuation dates occurring on or after January 1, 2024.

[T.D. 9983, 88 FR 72366, Oct. 20, 2023]

§ 1.432 [Reserved]

§ 1.432(e)(9)-1 Benefit suspensions for multiemployer plans in critical and declining status.

(a) ***General rules on suspension of benefits*** —

(1) ***General rule.*** Subject to section 432(e)(9)(B) through (I) and this section, the plan sponsor of a multiemployer plan that is in critical and declining status (within the meaning of section 432(b)(6)) for a plan year may, by plan amendment adopted in the plan year, implement a suspension of benefits that the plan sponsor deems appropriate. Such an amendment is permitted notwithstanding the anti-cutback provisions of section 411(d)(6). As amended, the terms of the plan must satisfy the requirements of section 401(a).

(2) ***Adoption of plan terms inconsistent with suspension requirements*** —

(i) ***General rule.*** A plan may implement (or continue to implement) a reduction of benefits pursuant to a suspension of benefits only if the terms of the plan are consistent with the requirements of section 432(e)(9) and this section.

(ii) ***Changes in level of suspension*** —

(A) ***Phased-in suspension.*** A plan's terms are consistent with the requirements of section 432(e)(9) even if the plan provides that, instead of a suspension of benefits occurring in full on a specified effective date, the amount of a suspension will phase in or otherwise change in a definite, pre-determined manner as of a specified future effective date or dates.

(B) ***Level of suspension contingent on future events.*** Except as otherwise provided in this paragraph (a)(2)(ii), a plan's terms are inconsistent with the requirements of section 432(e)(9) if they provide that the amount of a suspension will change contingent upon the occurrence of any other specified future event, condition, or development. For example, a plan is not permitted to provide that an additional or larger suspension of benefits is triggered if the plan's funded status deteriorates. Similarly, a plan is not permitted to

provide that a suspension of benefits is decreased if the plan's funded status improves (except upon a failure to satisfy the annual plan sponsor determinations requirement of paragraph (c)(4) of this section).

(C) ***Level of suspension contingent on future status of individual.*** A plan's terms are not inconsistent with the requirements of section 432(e)(9) merely because they provide that, for a participant who has not commenced benefits before the effective date of the suspension, the amount of the suspension will change upon the occurrence of a specified future event, condition or development (such as retirement, death, or disability) with respect to the participant.

(3) ***Organization of the regulation.*** This paragraph (a) contains definitions and general rules relating to a suspension of benefits by a multiemployer plan under section 432(e)(9). Paragraph (b) of this section defines a suspension of benefits and describes the length of a suspension, the treatment of beneficiaries and alternate payees under this section, and the requirement to select a retiree representative. Paragraph (c) of this section prescribes certain rules for the actuarial certification and plan sponsor determinations that must be made in order for a plan to suspend benefits. Paragraph (d) of this section describes certain limitations on suspensions of benefits. Paragraph (e) of this section prescribes rules relating to benefit improvements. Paragraph (f) of this section describes the requirement to provide notice in connection with an application to suspend benefits. Paragraph (g) of this section describes certain requirements with respect to the approval or denial of an application for a suspension of benefits. Paragraph (h) of this section contains certain rules relating to the vote on an approved suspension, systemically important plans, and the issuance of a final authorization to suspend benefits. Paragraph (j) of this section provides the effective/applicability date of this section.

(4) ***Definitions.*** The following definitions apply for purposes of this section—

(i) ***Pay status.*** A person is in pay status under a multiemployer plan if, as described in section 432(j)(6), at any time during the current plan year, the person is a participant, beneficiary, or alternate payee under the plan and is paid an early, late, normal, or disability retirement benefit under the plan (or a death benefit under the plan related to a retirement benefit).

(ii) ***Plan sponsor.*** The term plan sponsor means the association, committee, joint board of trustees, or other similar group of representatives of the parties that establishes or maintains the multiemployer plan. However, in the case of a plan described in section 404(c), or a continuation of such a plan, the term plan sponsor means the association of employers that is the employer settlor of the plan.

(iii) ***Effective date of suspension of benefits*** —

(A) ***Individuals who are receiving benefits.*** In the case of a suspension affecting an individual who is receiving benefits when the suspension is implemented, the effective date of a suspension of benefits is the first date as of which any portion of the individual's benefits are not paid as a result of the suspension.

(B) ***Individuals who are not receiving benefits.*** In the case of a suspension affecting individuals other than individuals described in paragraph (a)(4)(iii)(A) of this section, the effective date of the suspension is the first date as of which the individual's entitlement to benefits is reduced as a result of the implementation of the suspension, regardless of whether the individual is eligible to commence benefits at that date.

(C) ***Phased-in suspension.*** If a suspension of benefits provides for more than one reduction in benefits over time, such that benefits are scheduled to be reduced by an additional amount after benefits are first reduced pursuant to the suspension, then each date as of which benefits are reduced is treated as a separate effective date of the suspension. However, if the effective date of the final scheduled reduction in benefits in a series of reductions pursuant to a suspension is less than three years later than the effective date of the first reduction, then the effective date of the first reduction will be treated as the effective date of all subsequent reductions pursuant to that suspension.

(D) ***Effective date may not be retroactive.*** The effective date of a suspension may not precede the date on which a final authorization to suspend benefits is issued pursuant to paragraph (h)(6) of this section.

(b) ***Definition of suspension of benefits and related rules*** —

(1) ***In general*** —

(i) ***Definition.*** For purposes of this section, the term suspension of benefits means the temporary or permanent reduction, pursuant to the terms of the plan, of any current or future payment obligation of the plan with respect to any plan participant. A suspension of benefits may apply with respect to a plan participant regardless of whether the participant, beneficiary, or alternate payee commenced receiving benefits before the effective date of the suspension of benefits.

(ii) ***Plan not liable for suspended benefits.*** If a plan pays a reduced level of benefits pursuant to a suspension of benefits that complies with the requirements of section 432(e)(9) and this section, then the plan is not liable for any benefits not paid as a result of the suspension.

(2) ***Length of suspension*** —

(i) ***In general.*** A suspension of benefits may be of indefinite duration or may expire as of a date that is specified in the plan amendment implementing the suspension.

(ii) ***Effect of a benefit improvement.*** A plan sponsor may amend the plan to eliminate some or all of a suspension of benefits, provided that the amendment satisfies the requirements that apply to a benefit improvement under section 432(e)(9)(E), in accordance with the rules of paragraph (e) of this section.

(3) ***Treatment of beneficiaries and alternate payees.*** Except as otherwise specified in this section, all references to suspensions of benefits, increases in benefits, or resumptions of suspended benefits with respect to participants also apply with respect to benefits of beneficiaries or alternate payees (as defined in section 414(p)(8)) of participants.

(4) ***Retiree representative*** —

(i) ***In general*** —

(A) ***Requirement to select retiree representative.*** The plan sponsor of a plan that intends to submit an application for a suspension of benefits and that has reported a total of 10,000 or more participants as of the end of the plan year for the most recently filed Form 5500, Annual Return/Report of Employee Benefit Plan, must select a retiree representative. The plan sponsor must select the retiree representative at least 60 days before the date the

plan sponsor submits an application to suspend benefits. The retiree representative must be a plan participant who is in pay status. The retiree representative may or may not be a plan trustee.

(B) ***Role of retiree representative.*** The role of the retiree representative is to advocate for the interests of the retired and deferred vested participants and beneficiaries of the plan, beginning when the retiree representative is selected and continuing throughout the suspension approval process. In the discretion of the plan sponsor, the retiree representative may continue in this role throughout the period of the benefit suspension.

(ii) ***Reasonable expenses from plan.*** The plan must pay reasonable expenses incurred by the retiree representative, including reasonable expenses for legal and actuarial support and communication with retired and deferred vested participants and beneficiaries, commensurate with the plan's size and funded status.

(iii) ***Disclosure of information.*** Upon request, the plan sponsor must promptly provide the retiree representative with relevant information, such as plan documents and data, that is reasonably necessary to enable the retiree representative to perform the role described in paragraph (b)(4)(i)(B) of this section.

(iv) ***Special rules relating to fiduciary status.*** See section 432(e)(9)(B)(v)(III) for rules relating to the fiduciary status of a retiree representative.

(v) ***Retiree representative for other plans.*** The plan sponsor of a plan that has reported fewer than 10,000 participants as of the end of the plan year for the most recently filed Form 5500, Annual Return/Report of Employee Benefit Plan is permitted to select a retiree representative. The rules in this paragraph (b)(4) (other than the rules in the first two sentences of paragraph (b)(4)(i)(A) of this section concerning the size of the plan and the timing of the appointment of the retiree representative) apply to such a representative.

(c) ***Conditions for suspension*** —

(1) ***In general*** —

(i) ***Actuarial certification and initial plan sponsor determinations.*** The plan sponsor of a plan in critical and declining status for a plan year may suspend benefits only if the actuarial certification requirement in paragraph (c)(2) of this section and the initial plan sponsor determinations requirement in paragraph (c)(3) of this section are met.

(ii) ***Annual requirement to make plan sponsor determinations.*** As provided in paragraph (c)(5) of this section, the suspension will continue only if the plan sponsor continues to make the annual plan sponsor determinations described in paragraph (c)(4) of this section.

(2) ***Actuarial certification.*** A plan satisfies the actuarial certification requirement of this paragraph (c)(2) if, taking into account the proposed suspension of benefits (and, if applicable, a proposed partition of the plan under section 4233 of the Employee Retirement Income Security Act of 1974, Public Law 93-406 (88 Stat. 829 (1974)), as amended (ERISA)), the plan's actuary certifies that the plan is projected to avoid insolvency within the meaning of section 418E, assuming the suspension of benefits continues until it expires by its own terms or if no such expiration date is set, indefinitely.

(3) ***Initial plan sponsor determinations*** —

(i) ***General rule.*** A plan satisfies the initial plan sponsor determinations requirement of this paragraph (c)(3) only if the plan sponsor determines that—

(A) All reasonable measures to avoid insolvency, within the meaning of section 418E, have been taken; and

(B) The plan would not be projected to avoid insolvency (determined using the standards described in paragraphs (d)(5)(ii), (iv), and (v) of this section) if no suspension of benefits were applied under the plan.

(ii) ***Factors.*** In making its determination that all reasonable measures to avoid insolvency, within the meaning of section 418E, have been taken, the plan sponsor may take into account the following non-exclusive list of factors—

(A) Current and past contribution levels;

(B) Levels of benefit accruals (including any prior reductions in the rate of benefit accruals);

(C) Prior reductions (if any) of adjustable benefits;

(D) Prior suspensions (if any) of benefits under this section;

(E) The impact on plan solvency of the subsidies and ancillary benefits available to active participants;

(F) Compensation levels of active participants relative to employees in the participants' industry generally;

(G) Competitive and other economic factors facing contributing employers;

(H) The impact of benefit and contribution levels on retaining active participants and bargaining groups under the plan;

(I) The impact of past and anticipated contribution increases under the plan on employer attrition and retention levels; and

(J) Measures undertaken by the plan sponsor to retain or attract contributing employers.

(iii) ***Reliance on certification of critical and declining status.*** For purposes of the insolvency projection under paragraph (c)(3)(i)(B) of this section, a plan sponsor may rely on the actuarial certification made pursuant to section 432(b)(3)(A)(i) that the plan is in critical and declining status for the plan year in making the determination that the plan is projected to become insolvent unless benefits are suspended.

(4) ***Annual plan sponsor determinations*** —

(i) ***General rule.*** A plan satisfies the annual plan sponsor determinations requirement of this paragraph (c)(4) for a plan year only if the plan sponsor determines, no later than the last day of the plan year, that—

(A) All reasonable measures to avoid insolvency have been and continue to be taken; and

(B) The plan would not be projected to avoid insolvency (determined using the standards described in paragraphs (d)(5)(ii), (iv), and (v) of this section, substituting the current plan year for the plan year that includes the effective date of the suspension) if no suspension of benefits were applied under the plan.

(ii) ***Factors.*** In making its determination that all reasonable measures to avoid insolvency have been and continue to be taken, the plan sponsor may take into account the non-exclusive list of factors in paragraph (c)(3)(ii) of this section.

(iii) ***Requirement to maintain written record.*** The plan sponsor must maintain a written record of the annual plan sponsor determinations made under this paragraph (c)(4). The written record must be included in an update to the rehabilitation plan, whether or not there is otherwise an update for that year (or, if the plan is no longer in critical status, must be included in the documents under which the plain is maintained). The written record of the determinations must describe the plan sponsor's consideration of factors, as described in paragraph (c)(4)(ii) of this section.

(5) ***Failure to make annual plan sponsor determinations.*** If a plan sponsor fails to satisfy the annual plan sponsor determinations requirement of paragraph (c)(4) of this section for a plan year (including maintaining the written record described in paragraph (c)(4)(iii) of this section), then the suspension of benefits will cease to be in effect beginning as of the first day of the next plan year.

(d) ***Limitations on suspension*** —

(1) ***In general.*** Any suspension of benefits with respect to a participant made by a plan sponsor pursuant to this section is subject to the individual limitations of sections 432(e)(9)(D)(i) through (iii) and paragraphs (d)(2) through (d)(4) of this section. After applying those provisions, the overall size and distribution of the suspension is subject to the aggregate limitations of sections 432(e)(9)(D)(iv) and (vi) and paragraphs (d)(5) and (d)(6) of this section. See section 432(e)(9)(D)(vii) and paragraph (d)(8) of this section for additional rules applicable to certain plans.

(2) ***Guarantee-based limitation*** —

(i) ***General rule.*** The reduction with respect to a participant under a suspension of benefits must be limited so that, on and after the effective date of the suspension, the monthly benefit is not less than the guarantee-based limitation. The guarantee-based limitation is 110 percent of the monthly benefit payable to a participant, beneficiary, or alternate payee that would be guaranteed by the Pension Benefit Guaranty Corporation (PBGC) under section 4022A of ERISA if the plan were to become insolvent as of the effective date of the suspension.

(ii) ***PBGC guarantee.*** Under section 4022A of ERISA, the monthly benefit of a participant or beneficiary that would be guaranteed by PBGC with respect to a plan if the plan were to become insolvent as of the effective date of the suspension is generally based on section 4022A(c)(1) of ERISA. Under that section, the monthly benefit that would be guaranteed if the plan were to become insolvent as of the date as of which the guarantee is determined is the product of—

(A) 100 percent of the accrual rate up to $11, plus 75 percent of the lesser of—

(*1*) $33; or

(*2*) The accrual rate, if any, in excess of $11; and

(B) The number of the participant's years and months of credited service as of that date.

(iii) ***Calculation of accrual rate.*** The accrual rate, as defined in section 4022A(c)(2) of ERISA, is calculated by dividing—

(A) The participant's or beneficiary's monthly benefit, described in section 4022A(c)(2)(A) of ERISA; by

(B) The participant's years of credited service, described in section 4022A(c)(3) of ERISA, as of the effective date of the suspension.

(iv) ***Special rule for non-vested participants.*** For purposes of this paragraph (d)(2), a participant's nonforfeitable benefits under section 4022A(a) of ERISA include benefits that are forfeitable as of the effective date of the suspension, provided that the participant would have a nonforfeitable right to those benefits if the participant continued to earn vesting service following that date.

(v) ***Examples.*** The following examples illustrate the limitation on a suspension of benefits under this paragraph (d)(2). Unless otherwise stated, the amount of guarantee payable by PBGC in these examples is based on section 4022A(c) of ERISA, and the rules under section 4022A(d) of ERISA (guarantee for benefits reduced under section 411(a)(3)(E)), section 4022A(e) of ERISA (benefits ineligible for guarantee), and section 4022A(h) of ERISA (guarantee for benefits accrued as of July 30, 1980) do not apply. In these examples, unless otherwise stated, the monthly benefits are nonforfeitable, are based on benefits that have been in effect for at least 60 months as of the effective date of the suspension, and are no greater than the monthly benefit that would be payable at normal retirement age in the form of a single life annuity.

Example 1. (i) *Facts.* A participant is receiving a benefit of $1,500 per month immediately prior to the effective date of the suspension. The participant has 30 years of credited service under the plan.
(ii) *Calculation of accrual rate.* The participant's accrual rate is $50, calculated by dividing the participant's monthly benefit payment ($1,500) by the participant's years of credited service (30).

(iii) *Calculation of monthly PBGC-guaranteed benefit.* The first $11 of the accrual rate is fully guaranteed, and the next $33 of the accrual rate is 75% guaranteed ($33 × .75 = $24.75). The participant's monthly guaranteed benefit per year of credited service is $35.75 ($11 + $24.75 = $35.75). The PBGC guarantee formula is then applied to produce the amount of guarantee payable by PBGC, which is $1,072.50 ($35.75 × 30 years = $1,072.50).

(iv) *Calculation of guarantee-based limitation.* A suspension of benefits may not reduce the participant's benefits, determined on and after the effective date of the suspension, below the guarantee-based limitation, which is equal to 110% of the amount of guarantee payable by PBGC. That monthly amount is $1,179.75 ($1,072.50 × 1.1 = $1,179.75).

Example 2. (i) *Facts.* The facts are the same as in *Example 1,* except that the participant is deceased and, immediately prior to the effective date of the suspension, the participant's beneficiary is receiving a monthly benefit of $750 under a 50% joint and survivor annuity.

(ii) *Calculation of accrual rate.* The beneficiary's accrual rate is $25, calculated by dividing the beneficiary's monthly benefit payment ($750) by the participant's years of credited service (30).

(iii) *Calculation of monthly PBGC-guaranteed benefit.* The first $11 of the accrual rate is fully guaranteed, and the next $14 ($25−$11 = $14) of the accrual rate is 75% guaranteed ($14 × .75 = $10.50). The beneficiary's monthly guaranteed benefit is $21.50 per year of credited service ($11 + $10.50 = $21.50). The PBGC guarantee formula is then applied to produce the amount of guarantee payable by PBGC, which is $645 ($21.50 × 30 years = $645).

(iv) *Calculation of guarantee-based limitation.* A suspension of benefits may not reduce the beneficiary's benefits, determined on and after the effective date of the suspension, below the guarantee-based limitation, which is equal to 110% of the monthly amount of guarantee payable by PBGC. That monthly guarantee-based limitation amount is $709.50 ($645 × 1.1 = $709.50).

Example 3. (i) *Facts.* A participant would be eligible for a monthly benefit of $1,000 payable as a single life annuity at normal retirement age, based on the participant's 25 years of credited service. The plan also permits a participant to receive a benefit on an unreduced basis as a single life annuity at a particular early retirement age and permits participants to receive an early retirement benefit beginning at that age in the form of a social security level income option. The participant has elected the social security level income option under which the participant receives a monthly benefit of $1,600 prior to normal retirement age (which is the plan's assumed social security retirement age) and $900 after normal retirement age.
(ii) *Calculation of accrual rate.* For purposes of calculating the accrual rate, the monthly benefit that is used to calculate the PBGC guarantee does not exceed the monthly benefit of $1,000 that would be payable at normal retirement age. In calculating the accrual rate, the amount of guarantee payable by PBGC would be based on a monthly benefit of $1,000 prior to normal retirement age and $900 after normal retirement age. Before normal retirement age, the participant's accrual rate is $40, determined by dividing the participant's monthly benefit payment ($1,000) by years of credited service (25). After normal retirement age, the participant's accrual rate is $36, calculated by dividing the participant's monthly benefit payment ($900) by the participant's years of credited service (25).

(iii) *Calculation of monthly PBGC-guaranteed benefit.* Before normal retirement age, the first $11 of the accrual rate is fully guaranteed, and the next $29 of the accrual rate is 75% guaranteed ($29 × .75 = $21.75). The participant's monthly guaranteed benefit per year of credited service is $32.75 ($11 + $21.75 = $32.75). The PBGC guarantee formula

is then applied to produce the amount of guarantee payable by PBGC, which is $818.75 ($32.75 × 25 years = $818.75). After normal retirement age, the first $11 of the accrual rate is fully guaranteed, and the next $25 of the accrual rate is 75% guaranteed ($25 × .75 = $18.75). The participant's monthly guaranteed benefit per year of credited service is $29.75 ($11 + $18.75 = $29.75). The PBGC guarantee formula is then applied to produce the amount of guarantee payable by PBGC, which is $743.75 after normal retirement age ($29.75 × 25 years = $743.75).

(iv) *Calculation of guarantee-based limitation.* A suspension of benefits may not reduce the participant's benefits, determined on and after the effective date of the suspension, below the guarantee-based limitation, which is equal to 110% of the monthly amount of guarantee payable by PBGC. That monthly guarantee-based limitation amount is $900.63 ($818.75 × 1.1 = $900.63) before normal retirement age and $818.13 ($743.75 × 1.1 = $818.13) after normal retirement age.

Example 4. (i) *Facts.* A participant would be eligible for a monthly benefit of $1,000 payable as a single life annuity at normal retirement age, based on the participant's 20 years of credited service. The plan provides an actuarial increase for delaying benefits until after normal retirement age. The participant delays commencement of benefits until after normal retirement age and the monthly benefit the participant is receiving immediately before the effective date of the suspension is $1,200 instead of $1,000.
(ii) *Calculation of accrual rate.* For purposes of calculating the accrual rate, the monthly benefit that is used to calculate the PBGC guarantee does not exceed the monthly benefit of $1,000 that would be payable at normal retirement age. Thus, in determining the accrual rate, the PBGC guarantee would be based on a monthly benefit of $1,000, whether benefits are paid at or after normal retirement age. The participant's accrual rate is $50, calculated by dividing the participant's monthly benefit payment ($1,000) by the participant's years of credited service (20).

(iii) *Calculation of monthly PBGC-guaranteed benefit.* The first $11 of the accrual rate is fully guaranteed, and the next $33 of the accrual rate is 75% guaranteed ($33 × .75 = $24.75). The participant's monthly guaranteed benefit per year of credited service is $35.75 ($11 + $24.75 = $35.75). The PBGC guarantee formula is then applied to produce the amount of guarantee payable by PBGC, which is $715 ($35.75 × 20 years = $715).

(iv) *Calculation of guarantee-based limitation.* A suspension of benefits may not reduce the participant's benefits, determined on and after the effective date of the suspension, below the guarantee-based limitation, which is equal to 110% of the monthly amount of guarantee payable by PBGC. That monthly guarantee-based limitation amount is $786.50 ($715 × 1.1 = $786.50).

> *Example 5.* (i) *Facts.* A plan provides that a participant who has completed at least five years of service will have a nonforfeitable right to 100% of an accrued benefit (and will not have a nonforfeitable right to any portion of the accrued benefit prior to completing five years of service). The plan implements a suspension of benefits on January 1, 2017. As of that date, a participant has three years of vesting service, and none of the participant's benefits are nonforfeitable under the terms of the plan.
> (ii) *Calculation of nonforfeitable benefits.* For purposes of applying the guarantee-based limitation, the participant is considered to have a nonforfeitable right to 100% of the accrued benefit under the plan as of January 1, 2017.

(3) ***Age-based limitation*** —

(i) ***No suspension for participants or beneficiaries who are age 80 and older.*** Pursuant to the age-based limitation of this paragraph (d)(3), no suspension of benefits is permitted to apply to a participant or beneficiary who—

(A) Has commenced benefits as of the effective date of the suspension; and

(B) Has attained 80 years of age no later than the end of the month that includes the effective date of the suspension.

(ii) ***Limited suspension for participants and beneficiaries between ages 75 and 80.*** Pursuant to the age-based limitation of this paragraph (d)(3), no more than the applicable percentage of the maximum suspendable benefit may be suspended for a participant or beneficiary who—

(A) Has commenced benefits as of the effective date of the suspension; and

(B) Has attained 75 years of age no later than the end of the month that includes the effective date of the suspension.

(iii) ***Maximum suspendable benefit*** —

(A) ***In general.*** For purposes of this paragraph (d)(3), the maximum suspendable benefit with respect to a participant, beneficiary, or alternate payee is the portion of the individual's benefits that would otherwise be suspended pursuant to this section (that is, the amount that would be suspended without regard to the limitation of this paragraph (d)(3)).

(B) ***Coordination of limitations.*** An individual's maximum suspendable benefit is calculated after the application of the guarantee-based limitation under paragraph (d)(2) of this section and the disability-based limitation under paragraph (d)(4) of this section.

(iv) ***Applicable percentage.*** For purposes of this paragraph (d)(3), the applicable percentage is the percentage obtained by dividing—

(A) The number of months during the period beginning with the month after the month in which the suspension of benefits is effective and ending with the month during which the participant or beneficiary attains the age of 80, by

(B) 60.

(v) ***Applicability of age-based limitation to benefits paid to beneficiaries.*** If the age-based limitation of this paragraph (d)(3) applies to a participant on the effective date of the suspension, then the age-based limitation also applies to the beneficiary of the participant, based on the age of the participant as of the end of the month that includes the effective date of the suspension.

(vi) ***Rule for benefits that have not commenced at the time of the suspension.*** If benefits have not commenced to either a participant or beneficiary as of the effective date of the suspension, then in applying this paragraph (d)(3)—

(A) If the participant is alive on the effective date of the suspension, the participant is treated as having commenced benefits on that date; and

(B) If the participant dies before the effective date of the suspension, the beneficiary is treated as having commenced benefits on that date.

(vii) ***Rules for alternate payees.*** The age-based limitation of this paragraph (d)(3) applies to a suspension of benefits in which an alternate payee has an interest, whether or not the alternate payee has commenced benefits as of the effective date of the suspension. For purposes of this paragraph (d)(3), the applicable percentage for an alternate payee is calculated by—

(A) Using the participant's age as of the end of the month that includes the effective date of the suspension, if the alternate payee's right to the suspended benefits derives from a qualified domestic relations order within the meaning of section 414(p)(1)(A) (QDRO) under which the alternate payee shares in each benefit payment but the participant retains the right to choose the time and form of payment with respect to the benefit to which the suspension applies (shared payment QDRO); or

(B) Substituting the alternate payee's age as of the end of the month that includes the effective date of the suspension for the participant's age, if the alternate payee's right to the suspended benefits derives from a QDRO under which the alternate payee has a separate right to receive a portion of the participant's retirement benefit to be paid at a time and in a form different from that chosen by the participant (separate interest QDRO).

(viii) ***Examples.*** The following examples illustrate the rules of this paragraph (d)(3):

> *Example 1.* (i) *Facts.* The plan sponsor of a plan in critical and declining status is implementing a suspension of benefits, effective December 1, 2017, that generally would reduce all benefit payments under the plan by 30%. On that date, a retiree is receiving a monthly benefit of $1,500 (which is not a benefit based on disability) and has 28 years of credited service under the plan. If none of the limitations in section 432(e)(9)(D)(i), (ii), and (iii) were to apply, a 30% suspension would reduce the retiree's monthly benefit by $450, to $1,050. Under the guarantee-based limitation in section 432(e)(9)(D)(i), the retiree's monthly benefit could not be reduced by more than $398.90, to $1,101.10 (1.1 × (28 × ($11 + (.75 × $33)))). The retiree is 77 years old on the effective date of the suspension, turns 78 on December 10, 2017, and turns 80 on December 10, 2019.

(ii) *Maximum suspendable benefit.* Because the retiree is not receiving a benefit based on disability under section 432(e)(9)(D)(iii), the retiree's maximum suspendable benefit is $398.90 (which is equal to the lesser of the amount of reduction that would apply pursuant to the 30% suspension ($450) or the amount of reduction that would be permitted under the guarantee-based limitation ($398.90)).

(iii) *Applicable percentage.* Because the retiree is between ages 75 and 80 on the effective date of the suspension, the reduction is not permitted to exceed the applicable percentage of the retiree's maximum suspendable benefit. The number of months during the period beginning with January 2018 (the month after the month that includes the effective date of the suspension) and ending with December 2019 (the month in which the retiree turns 80) is 24. The applicable percentage is equal to 40% (24 months divided by 60).

(iv) *Age-based limitation.* The retiree's maximum suspendable benefit is $398.90 and the applicable percentage is 40%. Thus, under the age-based limitation, the retiree's benefit may not be reduced by more than $159.56 ($398.90 × .40 = $159.56). Because the retiree was receiving a monthly benefit of $1,500, the suspension of benefits may not reduce the retiree's monthly benefit below $1,340.44 ($1,500−$159.56 = $1,340.44).

Example 2. (i) *Facts.* The facts are the same as *Example 1,* except that the retiree is 79 years old on December 1, 2017, and turns 80 on December 20, 2017.
(ii) *Age-based limitation.* The suspension is not permitted to apply to the retiree because the retiree will turn 80 by the end of the month (December 2017) in which the suspension is effective.

Example 3. (i) *Facts.* The facts are the same as *Example 1,* but on the effective date of the suspension, the retiree is receiving a benefit in the form of a 50% joint and survivor annuity for himself and a contingent beneficiary who is age 71. The retiree dies in October 2018.
(ii) *Application of age-based limitation to contingent beneficiary.* Because the retiree had attained age 78 in the month that included the effective date of the suspension, the age-based limitation on the suspension of benefits for a 78-year-old individual applies to the retiree. The age-based limitation also applies to the contingent beneficiary, even though the contingent beneficiary had not commenced benefits under the plan as of the effective date of the suspension and had not attained age 75 by the end of the month containing the effective date of the suspension.

(iii) *Maximum suspendable benefit.* The contingent beneficiary's amount of guarantee payable by PBGC is based on the benefit the beneficiary would have received from the plan before the suspension ($750). The beneficiary's accrual rate is $26.7857

(calculated by dividing the monthly benefit payment ($750) by years of credited service (28)) and the beneficiary's amount of guarantee payable by PBGC is $639.50 (28 × ($11 + (.75 × $15.7857))). The beneficiary's maximum suspendable benefit is $46.55 (which is equal to the lesser of the amount of reduction that would apply pursuant to the 30% suspension ($225) or the amount of reduction that would be permitted under the guarantee-based limitation ($46.55, which is equal to ($750−1.1 × $639.50)).

(iv) *Applicable percentage.* The applicable percentage for the beneficiary is based on the retiree's age of 78 as of the end of the month that includes the effective date of the suspension. Accordingly, the applicable percentage for the beneficiary is 40%.

(v) *Age-based limitation.* The beneficiary's maximum suspendable benefit is $46.55 and the applicable percentage is 40%. Thus, under the age-based limitation, the beneficiary's benefit may not be reduced by more than $18.62 ($46.55 × .40 = $18.62). Therefore, as a result of the retiree's age-based limitation, the suspension of benefits may not reduce the beneficiary's monthly benefit below $731.38 ($750−$18.62 = $731.38).

Example 4. (i) *Facts.* The facts are the same as *Example 3,* except that on the effective date of the suspension the retiree is age 71 and the retiree's contingent beneficiary is age 77.
(ii) *Application of age-based limitation to contingent beneficiary.* Because the retiree had not reached age 75 as of the end of the month that includes the effective date of the suspension, the age-based limitation on the suspension of benefits does not apply to the retiree. The age-based limitation also does not apply to the retiree's contingent beneficiary, even though the contingent beneficiary had attained age 77 as of the end of the month that includes the effective date of the suspension, because the contingent beneficiary had not yet commenced benefits on that date. The beneficiary's post-suspension benefit may not be less than the minimum benefit payable pursuant to the guarantee-based limitation, which is $703.45 ($639.50 × 1.1 = $703.45).

Example 5. (i) *Facts.* The facts are the same as in *Example 4,* except that the retiree died in October 2017, prior to the December 1, 2017 effective date of the suspension of benefits. The retiree's beneficiary commenced benefits on November 1, 2017.
(ii) *Application of age-based limitation to contingent beneficiary.* Because the retiree's beneficiary had commenced benefits before the effective date of the suspension and had reached age 75 as of the end of the month that includes the effective date of the suspension, the age-based limitation applies to the beneficiary based on the beneficiary's age as of the end of the month that includes the effective date of the suspension.

(4) ***Disability-based limitation*** —

(i) ***General rule.*** Pursuant to the disability-based limitation of this paragraph (d)(4), benefits based on disability (as defined under the plan) may not be suspended.

(ii) ***Benefits based on disability*** —

(A) ***In general.*** For purposes of this section, benefits based on disability means the entire amount paid to a participant pursuant to the participant becoming disabled, without regard to whether a portion of that amount would have been paid if the participant had not become disabled.

(B) ***Rule for auxiliary or other temporary disability benefits.*** If a participant begins receiving an auxiliary or other temporary disability benefit and the sole reason the participant ceases receiving that benefit is commencement of retirement benefits, then the benefit based on disability after commencement of retirement benefits is the lesser of—

(*1*) The periodic payment the participant was receiving immediately before the participant's retirement benefits commenced; or

(*2*) The periodic payment to the participant of retirement benefits under the plan.

(C) ***Examples.*** The following examples illustrate the disability-based limitation on a suspension of benefits under this paragraph (d)(4):

> *Example 1.* (i) *Facts.* A participant with a vested accrued benefit of $1,000 per month, payable at age 65, becomes disabled at age 55. The plan applies a reduction to the monthly benefit for early commencement if the participant commences benefits before age 65. For a participant who commences receiving benefits at age 55, the actuarially adjusted early retirement benefit is 60% of the accrued benefit. However, the plan also provides that if a participant becomes entitled to an early retirement benefit on account of disability, as defined in the plan, the benefit is not reduced. On account of a disability, the participant commences an unreduced early retirement benefit of $1,000 per month at age 55 (instead of the $600 monthly benefit the participant would receive if the participant were not disabled). The participant continues to receive $1,000 per month after reaching age 65.
> (ii) *Conclusion.* The participant's disability benefit payment of $1,000 per month commencing at age 55 is a benefit based on disability, even though the participant would have received a portion of these benefits at retirement regardless of the disability. Thus, both before and after attaining age 65, the participant's entire monthly payment amount ($1,000) is a benefit based on disability. A suspension of benefits is not permitted to apply to any portion of the participant's benefit at any time.

> *Example 2.* (i) *Facts.* The facts are the same as *Example 1,* except that the terms of the plan provide that when a disabled participant reaches age 65, the disability pension is discontinued by reason of reaching age 65, and the retirement benefits

commence. In this case, the amount of the participant's retirement benefits is the same as the amount that the participant was receiving immediately before commencing retirement benefits, or $1,000.
(ii) *Conclusion.* Before age 65, the participant's disability benefit payment of $1,000 per month commencing at age 55 is a benefit based on disability. After age 65, the periodic retirement benefit of $1,000 per month is a benefit based on disability because it does not exceed the benefit based on disability that the participant was receiving immediately before commencing retirement benefits. Thus, both before and after attaining age 65, the participant's entire monthly payment amount ($1,000) is a benefit based on disability. A suspension of benefits is not permitted to apply to any portion of the participant's benefit at any time.

Example 3. (i) *Facts.* The facts are the same as *Example 2,* except that upon reaching age 65, the participant elects to commence payment of retirement benefits not in the form of a single life annuity payable in the amount of $1,000 per month but instead in the form of an actuarially equivalent joint and survivor annuity payable in the amount of $850 per month.
(ii) *Conclusion.* Before age 65, the participant's benefit based on disability is $1,000 per month. After age 65, the participant's entire retirement benefit of $850 per month is a benefit based on disability because it does not exceed the benefit based on disability that the participant was receiving immediately before commencing retirement benefits. Thus, a suspension of benefits is not permitted to apply to any portion of those benefits at any time.

Example 4. (i) *Facts.* A participant's disability pension is a specified amount unrelated to the participant's accrued benefit. The participant's disability benefit commencing at age 55 is $750 per month. Upon reaching age 65, the participant's disability pension is discontinued by reason of reaching age 65 and the participant elects to receive an accrued benefit payable in the amount of $1,000 per month.
(ii) *Conclusion.* Before age 65, the participant's benefit based on disability is $750 per month. After age 65, the participant's benefit based on disability continues to be $750 per month (even though the participant's payment is $1,000 per month), because the benefit based on disability is the lesser of the periodic disability pension the participant was receiving immediately before retirement benefits commenced ($750) and the periodic payment of retirement benefits to the participant under the plan determined without regard to the suspension ($1,000). Thus, a suspension of benefits is not permitted to reduce the participant's benefit based on disability ($750 per month) at any time.

Example 5. (i) *Facts.* The facts are the same as *Example 2,* except that when the participant attains age 65, the participant's monthly benefit payment increases from

$1,000 to $1,300 as a result of the plan providing additional accruals during the period of disability, as if the participant were not disabled.
(ii) *Conclusion.* As in *Example 2,* before age 65, the participant's benefit payment of $1,000 per month commencing at age 55 is a benefit based on disability. After age 65, the participant's benefit payment of $1,300 per month is a benefit based on disability because the $1,300 is payable based on additional accruals earned pursuant to the participant becoming disabled. Thus, both before and after attaining age 65, the participant's entire monthly payment amount is a benefit based on disability. A suspension of benefits is not permitted to apply to any portion of the participant's benefit at any time.

Example 6. (i) *Facts.* The facts are the same as *Example 3* of paragraph (d)(2)(v) of this section, except that the social security level income option is only available to a participant who incurs a disability as defined in the plan.
(ii) *Conclusion.* Before normal retirement age, the participant's benefit payment of $1,600 per month is a benefit based on disability. After normal retirement age, the participant's benefit based on disability is $900, which is the lesser of the $1,600 periodic payment that the participant was receiving immediately before the participant's normal retirement benefit commenced and the participant's $900 periodic payment of retirement benefits determined without regard to the suspension. Thus, a suspension of benefits is not permitted to apply to any portion of those benefits ($1,600 per month before and $900 per month after normal retirement age) at any time.

Example 7. (i) *Facts.* A plan applies a reduction to the monthly benefit for early commencement if a participant commences benefits before age 65. The plan also provides that if a participant becomes disabled, as defined in the plan, the benefit that is paid before normal retirement age is not reduced for early retirement. Under the plan, when a disabled participant reaches age 65, the disability pension is discontinued by reason of reaching age 65 and the retirement benefits commence. A participant with a vested accrued benefit of $1,000 per month, payable at age 65, becomes disabled at age 55. On account of the disability, the participant commences benefits at age 55 in the amount of $1,000 per month (instead of the $600 monthly benefit the participant could have received at that age if the participant were not disabled). The participant recovers from the disability at age 60, and the participant's disability benefits cease. At age 60, the participant immediately elects to begin an early retirement benefit of $800.
(ii) *Conclusion.* The participant's disability benefit payment of $1,000 per month commencing at age 55 is a benefit based on disability, even though the participant would have received a portion of these benefits at retirement regardless of the

> disability. Because the participant ceased receiving disability benefits on account of the participant no longer being disabled (and not solely on account of commencing retirement benefits), the participant's early retirement benefit of $800 per month that began after the disability benefit ended is not a benefit based on disability.

(5) ***Limitation on aggregate size of suspension*** —

(i) ***General rule.*** Any suspension of benefits (considered, if applicable, in combination with a partition of the plan under section 4233 of ERISA (partition)) must be at a level that is reasonably estimated to—

(A) Enable the plan to avoid insolvency; and

(B) Not materially exceed the level that is necessary to enable the plan to avoid insolvency.

(ii) ***Suspension sufficient to avoid insolvency*** —

(A) ***General rule.*** A suspension of benefits (considered, if applicable, in combination with a partition of the plan) will satisfy the requirement that it is at a level that is reasonably estimated to enable the plan to avoid insolvency if—

(*1*) For each plan year throughout an extended period (as described in paragraph (d)(5)(ii)(C) of this section) beginning on the first day of the plan year that includes the effective date of the suspension, the plan's solvency ratio is projected on a deterministic basis to be at least 1.0;

(*2*) Based on stochastic projections reflecting variance in investment return, the probability that the plan will avoid insolvency throughout the extended period is more than 50 percent; and

(*3*) Unless the plan's projected funded percentage (within the meaning of section 432(j)(2)) at the end of the extended period using the deterministic projection described in paragraph (d)(5)(ii)(A)(*1*) of this section exceeds 100 percent, that projection shows that, during each of the last five plan years of that period, neither the plan's solvency ratio nor its available resources (as defined in section 418E(b)(3)) is projected to decrease.

(B) ***Solvency ratio.*** For purposes of this section, a plan's solvency ratio for a plan year means the ratio of—

(*1*) The plan's available resources (as defined in section 418E(b)(3)) for the plan year; to

(*2*) The scheduled benefit payments under the plan for the plan year.

(C) ***Extended period.*** For purposes of this section, an extended period means a period of at least 30 plan years. However, in the case of a temporary suspension of benefits that is scheduled to cease as of a date that is more than 25 years after the effective date, the extended period must be lengthened so that it ends no earlier than five plan years after the cessation of the suspension.

(iii) ***Suspension not materially in excess of level necessary to avoid insolvency*** —

(A) ***General rule.*** A suspension of benefits will satisfy the requirement under paragraph (d)(5)(i)(B) of this section that the suspension be at a level that is reasonably estimated to not materially exceed the level necessary for the plan to avoid insolvency only if an alternative, similar but smaller suspension of benefits would not be sufficient to enable the plan to satisfy the requirement to avoid insolvency under paragraph (d)(5)(i)(A) of this section (determined using an extended period that is no shorter than the extended period used to satisfy the requirements of paragraph (d)(5)(i)(A) of this section). The alternative suspension of benefits that is used for this purpose is a suspension of benefits under which, for each participant or beneficiary, the amount of the reduction in the periodic payment (determined after application of the individual limitations) is equal to the amount of the reduction proposed for that participant or beneficiary in the application submitted pursuant to paragraph (g) of this section, decreased (but not below zero) by the greater of—

(*1*) Five percent of the amount of the reduction in the periodic payment proposed for that participant or beneficiary; or

(*2*) Two percent of the amount of the participant's or beneficiary's periodic payment determined without regard to the reduction proposed in the application.

(B) ***Special rule for partitions.*** If PBGC issues an order partitioning the plan, then a suspension of benefits with respect to the plan will be deemed to satisfy the requirement under paragraph (d)(5)(i)(B) of this section that the suspension be at a level that is reasonably estimated to not materially exceed the level necessary for the plan to avoid insolvency.

(iv) ***Actuarial basis for projections*** —

(A) ***In general.*** This paragraph (d)(5)(iv) sets forth rules for the actuarial projections that are required under this paragraph (d)(5). The projections must reflect the assumption that the suspension of benefits continues indefinitely (or, if the suspension expires on a specified date by its own terms, until that date).

(B) ***Reasonable actuarial assumptions and methods.*** Each of the actuarial assumptions and methods used for the actuarial projections that are required under this paragraph (d)(5), and the combination of those actuarial assumptions and methods, must be reasonable, taking into account the experience of the plan and reasonable expectations. To be reasonable, the actuarial assumptions and methods must also be appropriate for the purpose of the measurement (this means that factors specific to the measurements must be taken into account). The actuary's selection of assumptions about future covered employment and contribution levels (including contribution base units and average contribution rate) may be based on information provided by the plan sponsor, which must act in good faith in providing the information. In addition, to the extent that an actuarial assumption used for the deterministic projection in paragraph (d)(5)(ii)(A)(*1*) of this section differs from that used to certify whether the plan is in critical and declining status pursuant to section 432(b)(3)(B)(iv), an explanation of the information and analysis that led to the selection of that different assumption must be provided. Similarly, to the extent that an actuarial assumption used for the stochastic projection in paragraph (d)(5)(ii)(A)(*2*) of this section differs from that used for the deterministic projection, an explanation of the information and analysis that led to the selection of that different assumption must be provided.

(C) ***Initial value of plan assets and cash flow projections.*** Except as provided in paragraph (d)(5)(iv)(D) of this section, the cash flow projections must be based on—

(*1*) The fair market value of plan assets as of the end of the calendar quarter immediately preceding the date the application is submitted;

(*2*) Projected benefit payments that are consistent with the projected benefit payments under the most recent actuarial valuation; and

(*3*) Appropriate adjustments to projected benefit payments to include benefits for new hires who are reflected in the projected contribution amounts.

(D) ***Requirement to reflect significant events.*** The projected cash flows relating to contributions, withdrawal liability payments, and benefit payments must also be adjusted to reflect significant events that occurred after the most recent actuarial valuation. Significant events include—

(*1*) A plan merger or transfer;

(*2*) The withdrawal or the addition of employers that changed projected cash flows relating to contributions, withdrawal liability payments, or benefit payments by more than five percent;

(*3*) A plan amendment, a change in a collective bargaining agreement, or a change in a rehabilitation plan that changed projected cash flows relating to contributions, withdrawal liability payments, or benefit payments by more than five percent; or

(*4*) Any other event or trend that resulted in a material change in those projected cash flows.

(v) ***Simplified determination for smaller plans.*** In the case of a plan that is not large enough to be required to select a retiree representative under paragraph (b)(4) of this section, the determination of whether the benefit suspension (or a benefit suspension in combination with a partition of the plan) will satisfy the requirement that it is at a level that is reasonably estimated to enable the plan to avoid insolvency is permitted to be made without regard to paragraph (d)(5)(ii)(A)(*2*) of this section.

(vi) ***Additional disclosure*** —

(A) ***Disclosure of past experience for critical assumptions.*** The application for suspension must include a disclosure of the total contributions, total contribution base units and average contribution rate, withdrawal liability payments, and the rate of return on plan assets for each of the 10 plan years preceding the plan year in which the application is submitted.

(B) ***Sensitivity of results to investment return assumptions.*** The application must include deterministic projections of the plan's solvency ratio over the extended period using two alternative assumptions for the plan's rate of return. These alternatives are that the plan's future rate of return will be lower than the assumed rate of return used under paragraph (d)(5)(iv)(B) of this section by—

(*1*) One percentage point; and

(*2*) Two percentage points.

(C) ***Sensitivity of results to industry level assumptions.*** The application must include deterministic projections of the plan's solvency ratio over the extended period using two alternative assumptions for future contribution base units. These alternatives are that future contribution base units—

(*1*) Continue under the same trend as the plan experienced over the past 10 years; and

(*2*) Continue under the trend identified in paragraph (d)(5)(vi)(C)(*1*) of this section reduced by one percentage point.

(D) ***Projection of funded percentage.*** The application must include an illustration, prepared on a deterministic basis, of the projected value of plan assets, the accrued liability of the plan (calculated using the unit credit funding method), and the funded percentage for each year in the extended period.

(E) ***Permitted simplification of certain projections.*** It is permissible for the projections described in paragraph (d)(5)(vi)(C) of this section to be made without reflecting any adjustments to the projected benefit payments that result from the alternative assumptions regarding future contribution base units.

(6) ***Equitable distribution*** —

(i) ***In general.*** Any suspension of benefits must be equitably distributed across the participant and beneficiary population, taking into account factors, with respect to participants and beneficiaries and their benefits, that may include one or more of the factors described in paragraph (d)(6)(ii) of this section. If a suspension of benefits provides for different treatment for different participants and beneficiaries (other than as a result of application of the individual limitations), then the suspension of benefits is equitably distributed across the participant and beneficiary population only if—

(A) Under the suspension, the participants and beneficiaries are divided into separate categories or groups that are defined by the consistent treatment of individuals within each separate category or group;

(B) Any difference in treatment under the suspension of benefits among the different categories or groups is based on relevant factors reasonably selected by the plan sponsor, such as the factors described in paragraph (d)(6)(ii) of this section; and

(C) Any such difference in treatment is based on a reasonable application of those relevant factors.

(ii) ***Factors that may be considered*** —

(A) ***In general.*** In accordance with paragraph (d)(6)(i)(B) and (C) of this section, if, under the suspension, there is any difference between the treatment of one category or group of participants and beneficiaries and another category or group of participants and beneficiaries, that difference must be based on a reasonable application of relevant statutory factors described in paragraph (d)(6)(ii)(B) of this section and any other factors reasonably selected by the plan sponsor. For example, it would be reasonable for a plan sponsor to conclude that the statutory factor described in paragraph (d)(6)(ii)(B)(*3*) of this section (amount of benefit) is a factor that should be taken into account as justifying a lesser benefit reduction for participants or beneficiaries whose benefits are closer to the level of the PBGC guarantee than for others. In addition, it would be reasonable for a plan

sponsor to conclude that the presumed financial vulnerability of certain participants or beneficiaries who are reasonably deemed to be in greater need of protection than other participants or beneficiaries is a factor that should be taken into account as justifying a lesser benefit reduction (as a percentage or otherwise) for those participants or beneficiaries than for others.

(B) ***Statutory factors.*** Factors that may be selected as a basis for differences in treatment under a suspension of benefits include, when reasonable under the circumstances, the following statutory factors:

(*1*) The age and life expectancy of the participant or beneficiary;

(*2*) The length of time that benefits have been in pay status;

(*3*) The amount of benefits;

(*4*) The type of benefit, such as survivor benefit, normal retirement benefit, or early retirement benefit;

(*5*) The extent to which a participant or beneficiary is receiving a subsidized benefit;

(*6*) The extent to which a participant or beneficiary has received post-retirement benefit increases;

(*7*) The history of benefit increases and reductions for participants and beneficiaries;

(*8*) The number of years to retirement for active employees;

(*9*) Any differences between active and retiree benefits;

(*10*) The extent to which active participants are reasonably likely to withdraw support for the plan, accelerating employer withdrawals from the plan and increasing the risk of additional benefit reductions for participants in and out of pay status; and

(*11*) The extent to which a participant's or beneficiary's benefits are attributable to service with an employer that failed to pay its full withdrawal liability.

(iii) ***Reasonable application of factors.*** An application of a factor referred to in paragraph (d)(6)(ii) of this section is unreasonable if it is inconsistent with the protections provided by the individual limitations described in paragraphs (d)(2) through (d)(4) of this section. For example, it would constitute an unreasonable application of the factor described in paragraph (d)(6)(ii)(B)(*3*) of this section (amount of benefit) if that factor were used to justify a larger suspension for participants whose benefits are closer to the guarantee-based limitation. Similarly, it would constitute an unreasonable application of the factors described in paragraph (d)(6)(ii)(B)(*1*) of this section (age and life expectancy of the participant or beneficiary) if those factors were used to justify a greater suspension for older participants.

(iv) ***Special rule for identification of categories or groups*** —

(A) ***New post-suspension benefit formula.*** This paragraph (d)(6)(iv) applies in the case of a proposed suspension of benefits under which an individual's benefits after suspension are calculated under a new benefit formula (rather than by reference to the individual's benefits before suspension). In this case, the evaluation of whether the proposed suspension is equitably distributed across the participant and beneficiary population is based on a comparison of an individual's pre-suspension benefit to the individual's post-

suspension benefit (determined without regard to the application of the individual limitations). Accordingly, all individuals whose pre-suspension benefits are determined under a uniform pre-suspension benefit formula and whose post-suspension benefits are determined under a different uniform post-suspension benefit formula are treated as a single group.

(B) ***Blended pre-suspension benefit formula.*** If a plan applies different pre-suspension benefit formulas with respect to different plan years, then all individuals to whom more than one such formula applied may be treated as having a uniform pre-suspension benefit formula for purposes of paragraph (d)(6)(iv)(A) of this section (even though those individuals have different proportions of their pre-suspension benefits calculated under the different benefit formulas).

(C) ***Changes in early retirement factors.*** For purposes of paragraph (d)(6)(iv)(A) of this section, two individuals are not treated as having different pre-suspension or post-suspension benefit formulas merely because, as a result of the application of a uniform set of early retirement factors, their benefits differ because of retirement at different ages.

(v) ***Examples.*** The following examples illustrate the rules on equitable distribution of a suspension of benefits of this paragraph (d)(6). As a simplifying assumption for purposes of these examples, it is assumed that the facts of each example describe all of the factors that are included in the application discussed in the example (provided, however, that, in the case of a plan described in section 432(e)(9)(D)(vii), the examples are not intended to illustrate the application of section 432(e)(9)(D)(vii) or its effect on the analysis or conclusions in the examples).

Example 1. (i) *Facts.* The plan sponsor applies for approval of a suspension of benefits on March 15, 2017. Under the plan terms applicable prior to the suspension, one group of participants benefitted only under Benefit Formula A and the remaining participants benefitted only under Benefit Formula B. Each of these benefit formulas is uniform. Under the suspension of benefits, subject to the individual limitations on benefit suspensions, benefits for all participants are reduced so that a uniform post-suspension benefit formula (Benefit Formula C) applies to all participants.
(ii) *Conclusion.* Because the reduction in benefits under the suspension formula is different for participants who benefitted only under Benefit Formula A than for participants who benefitted only under Benefit Formula B, the suspension of benefits provides for different treatment for different participants and beneficiaries (other than as a result of application of the individual limitations). In addition, the suspension of benefits provides for consistent treatment of participants within the following two categories: (1) Participants who benefitted only under Benefit Formula A; and (2) participants who benefitted only under Benefit Formula B. Therefore, pursuant to paragraph (d)(6)(iv)(A) of this section, these two categories of participants are each treated as a single group for purposes of evaluating whether the proposed suspension is equitably distributed across the participant and beneficiary population. In order to

demonstrate that the distribution of the suspension satisfies the equitable distribution requirement, the plan sponsor must reasonably select and apply factors that are the basis for the different treatment of these two groups of participants.

Example 2. (i) *Facts.* The facts are the same as in *Example 1,* except that the plan terms applicable prior to the suspension did not provide for different benefit formulas for different groups of participants at any given time. Instead, the plan terms provided that different uniform benefit formulas applied for service prior to January 1, 2000, and for service on or after January 1, 2000.
(ii) *Conclusion.* The reduction in benefits under the suspension formula is different for participants who had service only prior to January 1, 2000, participants who had service only after January 1, 2000, and participants who had service during both of those periods. The suspension of benefits provides for different treatment for different participants and beneficiaries (other than as a result of application of the individual limitations). In addition, the suspension of benefits provides for consistent treatment of participants within the following three categories of participants: (1) Participants whose entire service was prior to January 1, 2000, (2) participants whose entire service was on or after January 1, 2000, and (3) participants who have some service before January 1, 2000 and some service on or after January 1, 2000. Therefore, pursuant to paragraph (d)(6)(iv)(A) of this section, the two categories of participants whose entire service was either before or on or after January 1, 2000 are each treated as a single group for purposes of evaluating whether the proposed suspension is equitably distributed across the participant and beneficiary population. In addition, pursuant to paragraph (d)(6)(iv)(B) of this section, the category of participants with some service before January 1, 2000 and some service on or after January 1, 2000 is treated as a single group for purposes of this evaluation. In order to demonstrate that the distribution of the suspension satisfies the equitable distribution requirement, the plan sponsor must reasonably select and apply factors that are the basis for the different treatment of these three categories of participants.

Example 3. (i) *Facts.* The plan sponsor applies for approval of a suspension of benefits. Under the suspension of benefits, subject to the individual limitations on benefit suspensions, benefits for all participants and beneficiaries are reduced by the same percentage, and the suspension application indicates the rationale for this reduction.
(ii) *Conclusion.* The suspension of benefits is equitably distributed across the participant and beneficiary populations.

Example 4. (i) *Facts.* The plan sponsor applies for approval of a suspension of benefits. Under the suspension of benefits, subject to the age-based and disability-based limitations of section 432(e)(9)(D)(ii) and (iii), the portion of each participant's and beneficiary's benefit that exceeds the guarantee-based limitation of section

432(e)(9)(D)(i) is reduced by the same percentage, and the suspension application indicates the rationale for this reduction.
(ii) *Conclusion.* The suspension of benefits is equitably distributed across the participant and beneficiary populations. The result would be the same if, instead, the suspension of benefits applies only to benefits that exceed a multiple (in excess of 100%) of the guarantee-based limitation.

Example 5. (i) *Facts.* A plan was previously amended to provide an ad hoc 15% increase to the benefits of all participants and beneficiaries (including participants who, at the time, were no longer earning service under the plan, which therefore included retirees and deferred vested participants). The plan sponsor applies for approval of a suspension of benefits. Under the suspension of benefits, subject to the individual limitations on benefit suspensions, benefits for all participants and beneficiaries who were no longer earning service under the plan at the time of the ad hoc amendment are reduced by eliminating the amendment for those individuals. The suspension application indicates why the benefit reduction is based on the statutory factors in paragraph (d)(6)(ii)(B)(*6*) of this section (the extent to which a participant or beneficiary has received post-retirement benefit increases), including application of the reduction to those who, at the time of the previous benefit increase, were either retired participants or deferred vested participants, and in paragraph (d)(6)(ii)(B)(*7*) of this section (the history of benefit increases and reductions), and why it is reasonable to apply the factors in this manner.
(ii) *Conclusion.* The suspension of benefits is equitably distributed across the participant and beneficiary populations. This is because the difference in treatment between the two groups of participants is based on whether a participant has received post-retirement benefit increases (in this case, whether a participant was earning service under the plan at the time of the benefit increase amendment), which under these facts is a relevant factor that may be reasonably selected by the plan sponsor, and the difference in treatment between the two groups of participants (eliminating the amendment only for benefits with respect to participants who were no longer earning service at the time of the amendment) is based on a reasonable application of that factor.

Example 6. (i) *Facts.* A plan contains a provision that provides a “thirteenth check” in plan years for which the investment return is greater than 7% (which was the assumed rate of return under the plan's actuarial valuation). The plan sponsor applies for approval of a suspension of benefits. Under the suspension of benefits, subject to the individual limitations on benefit suspensions, benefits for all participants and beneficiaries are reduced by eliminating the “thirteenth check” for all of those individuals. The suspension application indicates why the benefit reduction is based on the statutory factors in

paragraph (d)(6)(ii)(B)(*6*) of this section (the extent to which a participant or beneficiary has received post-retirement benefit increases) and in paragraph (d)(6)(ii)(B)(*7*) of this section (the history of benefit increases and reductions), and why it is reasonable to apply the factors in this manner.
(ii) *Conclusion.* The suspension of benefits is equitably distributed across the participant and beneficiary populations.

Example 7. (i) *Facts.* A plan was previously amended to reduce future accruals from $60 per year of service to $50 per year of service. The plan sponsor applies for approval of a suspension of benefits. Under the suspension of benefits, subject to the individual limitations on benefit suspensions, the accrued benefits for all participants and beneficiaries are reduced to $50 per year of service (and the plan's generally applicable adjustments for early retirement and form of benefit apply). The suspension application indicates why the benefit reduction is based on the statutory factor in paragraph (d)(6)(ii)(B)(*7*) of this section (the history of benefit increases and reductions), and why it is reasonable to apply the factors in this manner.
(ii) *Conclusion.* The suspension of benefits is equitably distributed across the participant and beneficiary populations. This is because the difference in treatment among the different groups of participants is based on the history of benefit reductions and a discrepancy between active and retiree benefits, which under these facts are relevant factors that may be reasonably selected by the plan sponsor, and the difference in treatment between the three groups of participants (reducing the $60 benefit multiplier to $50 per year of service for two groups of participants—those who had accrued all of their benefits under the $60 multiplier and those who had accrued some of their benefits under the $60 multiplier—and not reducing benefits for the group of participants who had accrued all of their benefits under the $50 multiplier) is based on a reasonable application of those factors.

Example 8. (i) *Facts.* The facts are the same as in *Example 7,* except that no plan amendments have previously reduced future accruals or other benefits for active participants. Under the suspension of benefits, subject to the individual limitations on benefit suspensions, benefits for deferred vested participants, retirees, and beneficiaries who have commenced benefits are reduced, but no reduction applies to active participants. The suspension of benefits is not accompanied by any reductions in future accruals or other benefits for active participants.
(ii) *Conclusion.* The suspension of benefits is not equitably distributed across the participant and beneficiary populations. This is because, under these facts, no relevant factor (such as a previous reduction in benefits applicable only to active participants) has been reasonably selected by the plan sponsor to justify the proposed difference in treatment among the categories.

Example 9. (i) *Facts.* The facts are the same as in *Example 8,* except that the suspension of benefits provides for a reduction that applies to both active and inactive participants. However, the reduction that applies to active participants is smaller than the reduction that applies to inactive participants because the plan sponsor concludes, as explained and supported in the application for suspension, that active participants are reasonably likely to withdraw support for the plan if any larger reduction is applied.
(ii) *Conclusion.* The suspension of benefits is equitably distributed across the participant and beneficiary populations. This is because the difference in treatment between the different groups of participants is based on the extent to which active participants are reasonably likely to withdraw support for the plan, which under these facts is a relevant factor that may reasonably be selected by the plan sponsor, and the difference in treatment between the two groups of participants (applying a greater suspension to inactive than to active participants) is based on a reasonable application of that factor.

Example 10. (i) *Facts.* The plan sponsor applies for approval of a suspension of benefits. Under the suspension of benefits, subject to the individual limitations on benefit suspensions, the benefits for participants and beneficiaries attributable to service with an employer that failed to pay its full withdrawal liability are reduced by 50%. As indicated in the suspension application, the present value of the benefit reduction with respect to the former employees of one such employer is significantly greater than the unpaid withdrawal liability for that employer. Benefits for participants and beneficiaries attributable to service with all other employers are reduced by 10%.
(ii) *Conclusion.* The suspension of benefits is not equitably distributed across the participant and beneficiary populations. This is because, although the difference in treatment between the different groups of participants is based on a relevant factor that may reasonably be selected by the plan sponsor, the difference in treatment between the groups of participants is not based on a reasonable application of that factor.

Example 11. (i) *Facts.* The plan sponsor applies for approval of a suspension of benefits. Under the suspension of benefits, subject to the individual limitations on benefit suspensions, the benefits for all participants and beneficiaries are reduced by the same percentage, except that the fbenefits for employees and former employees of a particular employer that is actively represented on the plan's Board of Trustees are reduced by a specified lesser percentage.
(ii) *Conclusion.* The suspension of benefits is not equitably distributed across the participant and beneficiary populations. This is because, under these facts, no relevant factor has been reasonably selected by the plan sponsor to justify the difference in treatment between the two groups of participants.

Example 12. (i) *Facts.* The facts are the same as in *Example 11,* except that the particular employer whose employees and former employees are subject to the lesser benefit reduction is the union that also participates in the plan.

(ii) *Conclusion.* The suspension of benefits is not equitably distributed across the participant and beneficiary populations. This is because, under these facts, no relevant factor has been reasonably selected by the plan sponsor to justify the difference in treatment between the two groups of participants.

Example 13. (i) *Facts.* The plan sponsor applies for approval of a suspension of benefits. Under the suspension of benefits, subject to the individual limitations on benefit suspensions, the monthly benefit of all participants and beneficiaries is reduced to 110% of the monthly benefit that is guaranteed by PBGC under section 4022A of ERISA. As indicated in the suspension application, this is because the plan sponsor is applying to PBGC for a partition of the plan, which requires the plan sponsor to have implemented the maximum benefit suspensions under section 432(e)(9).
(ii) *Conclusion.* The suspension of benefits is equitably distributed across the participant and beneficiary populations.

Example 14. (i) *Facts.* The plan sponsor applies for approval of a suspension of benefits. Under the suspension of benefits, subject to the individual limitations on benefit suspensions, benefits for all participants and beneficiaries are reduced by the same percentage, except that the protection for benefits based on disability goes beyond the required disability-based limitations and also includes payments to a beneficiary of a participant who had been receiving benefits based on disability at the time of death. The suspension application indicates the rationale for this protection from reduction.
(ii) *Conclusion.* The suspension of benefits is equitably distributed across the participant and beneficiary populations because this suspension design is a reasonable application of the statutory factor in paragraph (d)(6)(ii)(B)(*4*) of this section (type of benefit).

Example 15. (i) *Facts.* The facts are the same as in *Example 3,* except that the plan does not provide for benefits based on disability. Under the suspension of benefits, less of a reduction is applied to a participant who has become disabled within the meaning of title II of the Social Security Act than to otherwise similarly situated participants and the suspension application indicates the rationale for this reduction.
(ii) *Conclusion.* The suspension of benefits is equitably distributed across the participant and beneficiary populations because a participant's disability within the meaning of title II of the Social Security Act is a factor that can reasonably be taken into account in designing a suspension of benefits and applying less of a reduction to an individual in this group is a reasonable application of that factor.

(7) ***Effective date of suspension made in combination with partition.*** In any case in which a suspension of benefits with respect to a plan is made in combination with a partition of the plan, the suspension of benefits may not take effect prior to the effective date of the partition. This requirement will not be satisfied if the partition order under section 4233 of ERISA has not been provided to the Secretary of the Treasury by the last day of the 225-day period described in paragraph (g)(3)(i) of this section. For purposes of the preceding sentence, a conditional approval by PBGC (within the meaning of 29 CFR 4233.12(c)) of a partition application that is conditioned only on the Secretary's issuing a final authorization to suspend is treated as a partition order.

(8) *Additional rules for plans described in section 432(e)(9)(D)(vii)* —

(i) ***In general.*** In the case of a plan that includes the benefits described in paragraph (d)(8)(i)(C) of this section, any suspension of benefits under this section shall—

(A) First, be applied to the maximum extent permissible to benefits attributable to a participant's service for an employer that withdrew from the plan and failed to pay (or is delinquent with respect to paying) the full amount of its withdrawal liability under section 4201(b)(1) of ERISA or an agreement with the plan;

(B) Second, except as provided by paragraph (d)(8)(i)(C) of this section, be applied to all other benefits that may be suspended under this section; and

(C) Third, be applied to benefits under a plan that are directly attributable to a participant's service with any employer that has, prior to December 16, 2014—

(*1*) Withdrawn from the plan in a complete withdrawal under section 4203 of ERISA and paid the full amount of the employer's withdrawal liability under section 4201(b)(1) of ERISA or an agreement with the plan; and

(*2*) Pursuant to a collective bargaining agreement, assumed liability for providing benefits to participants and beneficiaries of the plan under a separate, single-employer plan sponsored by the employer, in an amount equal to any amount of benefits for such participants and beneficiaries reduced as a result of the financial status of the plan.

(ii) *Application of suspensions to benefits that are directly attributable to a participant's service with certain employers* —

(A) ***Greater reduction in certain benefits not permitted.*** A suspension of benefits under this section must not be applied to provide for a greater reduction in benefits described in paragraph (d)(8)(i)(C) of this section than the reduction that is applied to benefits described in paragraph (d)(8)(i)(B) of this section. The requirement in the preceding sentence is satisfied if no individual's benefits that are directly attributable to service with an employer described in paragraph (d)(8)(i)(C) of this section are reduced more than that individual's benefits would have been reduced if, holding the benefit formula, work history, and all other relevant factors used to compute benefits constant, those benefits were attributable to service with an employer that is not described in paragraph (d)(8)(i)(C) of this section.

(B) ***Application of limitation to benefits of participants with respect to which the employer has not assumed liability.*** Benefits described in paragraph (d)(8)(i)(C) of this section include all benefits of a participant or beneficiary that are directly attributable to service with an employer described in paragraph (d)(8)(i)(C) of this section without regard to whether the employer has assumed liability for providing benefits to that participant or beneficiary that are reduced as a result of the financial status of the plan as described in paragraph (d)(8)(i)(C)(*2*) of this section. Thus, the rule of paragraph (d)(8)(ii)(A) of this section limits the amount by which a suspension of benefits is permitted to reduce benefits under a plan that are directly attributable to a participant's service with such an employer, even if the employer has not, pursuant to a collective bargaining agreement that satisfies the requirements of paragraph (d)(8)(i)(C)(*2*) of this section, assumed liability with respect to that participant's benefits.

(e) *Benefit improvements* —

(1) ***Limitations on benefit improvements.*** This paragraph (e) sets forth rules for the application of section 432(e)(9)(E). A plan satisfies the criteria in section 432(e)(9)(E) only if, during the period that any suspension of benefits remains in effect, the plan sponsor does not implement any benefit improvement with respect to the plan except as provided in this paragraph (e). Paragraph (e)(2) of this section describes limitations on a benefit improvement for participants and beneficiaries who are not yet in pay status. Paragraph (e)(3) of this section describes limitations on a benefit improvement for participants and beneficiaries who are in pay status. Paragraph (e)(4) of this section provides that the limitations of this paragraph (e) generally apply in addition to other limitations on benefit increases that apply to a plan. Paragraph (e)(5) of this section defines benefit improvement.

(2) *Limitations on benefit improvements for those not in pay status* —

(i) ***Equitable distribution for those in pay status and solvency projection.*** During the period that any suspension of benefits under a plan remains in effect, the plan sponsor may not increase the liabilities of the plan by reason of any benefit improvement for any participant or beneficiary who was not in pay status by the first day of the plan year for which the benefit improvement takes effect, unless—

(A) The present value of the total liabilities for a benefit improvement for participants and beneficiaries whose benefit commencement dates were before the first day of the plan year for which the benefit improvement takes effect is not less than the present value of the total liabilities for a benefit improvement for participants and beneficiaries who were not in pay status by that date;

(B) The plan sponsor equitably distributes the benefit improvement among the participants and beneficiaries whose benefit commencement dates were before the first day of the plan year in which the benefit improvement is proposed to take effect; and

(C) The plan actuary certifies that after taking into account the benefit improvement, the plan is projected to avoid insolvency indefinitely.

(ii) *Rules of application* —

(A) *Present value determination* —

(*1*) ***Actuarial assumptions and methods.*** For purposes of paragraph (e)(2)(i)(A) of this section, the present value of the total liabilities for a benefit improvement is the present value as of the first day of the plan year in which the benefit improvement is proposed to take effect. The actuarial assumptions and methods used for the calculation for present values and the actuarial projections that are required under this paragraph (e)(2) must each be reasonable, and the combination of the actuarial assumptions and methods must be reasonable, taking into account the experience of the plan and reasonable expectations.

(*2*) ***Increase in future accrual rate.*** In the case of a benefit improvement that is an increase in the rate of future accrual, the present value determined under paragraph (e)(2)(i)(A) of this section must take into account the increase in accruals for participants and beneficiaries not yet in pay status for all future years.

(B) ***Factors relevant to equitable distribution.*** The evaluation of whether a benefit improvement is equitably distributed for purposes of paragraph (e)(2)(i)(B) of this section must take into account the relevant factors described in paragraph (d)(6)(ii)(B) of this section and the extent to which the benefits of the participants and beneficiaries were suspended.

(C) ***Actuarial certification.*** The certification in paragraph (e)(2)(i)(C) of this section must be made using the standards described in paragraphs (d)(5)(ii), (iv), and (v) of this section, substituting the plan year that includes the effective date of the benefit improvement for the plan year that includes the effective date of the suspension.

(iii) ***Special rule for certain benefit increases.*** The limitations of this paragraph (e) do not apply to a resumption of suspended benefits or plan amendment that increases liabilities with respect to participants and beneficiaries not in pay status by the first day of the plan year in which the benefit improvement took effect that—

(A) The Secretary of the Treasury, in consultation with PBGC and the Secretary of Labor, determines to be reasonable and which provides for only *de minimis* increases in the liabilities of the plan; or

(B) Is required as a condition of qualification under section 401 or to comply with other applicable law, as determined by the Secretary of the Treasury.

(3) ***Limitation on resumption of suspended benefits only for those in pay status.*** The plan sponsor may increase liabilities of the plan by eliminating some or all of the suspension that applies solely to participants and beneficiaries in pay status at the time of the resumption, provided that the plan sponsor equitably distributes the value of those resumed benefits among participants and beneficiaries in pay status, taking into account the relevant factors described in paragraph (d)(6)(ii)(B) of this section. A resumption of benefits that is described in this paragraph (e)(3) is not subject to the limitations on a benefit improvement under section 432(f) (relating to restrictions on benefit increases for plans in critical status).

(4) ***Additional limitations.*** Except as provided in paragraph (e)(3) of this section, the limitations on a benefit improvement under this paragraph (e) are in addition to the limitations in section 432(f) and any other applicable limitations on increases in benefits imposed on a plan.

(5) ***Definition of benefit improvement*** —

(i) ***In general.*** For purposes of this paragraph (e), the term benefit improvement means, with respect to a plan, a resumption of suspended benefits, an increase in benefits, an increase in the rate at which benefits accrue, or an increase in the rate at which benefits become nonforfeitable, under the plan.

(ii) ***Effect of expiration of suspension.*** In the case of a suspension of benefits that expires as of a date that is specified in the plan amendment implementing the suspension, the resumption of benefits solely from the expiration of that period is not treated as a benefit improvement.

(f) ***Notice requirements*** —

(1) ***In general.*** No suspension of benefits may be made pursuant to this section unless notice of the proposed suspension has been given by the plan sponsor to—

(i) All participants, beneficiaries of deceased participants, and alternate payees under the plan (regardless of whether their benefits are proposed to be suspended), except those who cannot be contacted by reasonable efforts;

(ii) Each employer who has an obligation to contribute (within the meaning of section 4212(a) of ERISA) under the plan; and

(iii) Each employee organization which, for purposes of collective bargaining, represents plan participants employed by an employer described in paragraph (f)(1)(ii) of this section.

(2) *Content of notice* —

(i) ***In general.*** The notice described under paragraph (f)(1) of this section must contain—

(A) Sufficient information to enable a participant or beneficiary to understand the effect of any suspension of benefits, including an individualized estimate (on an annual or monthly basis) of the effect on that participant or beneficiary;

(B) A description of the factors considered by the plan sponsor in designing the benefit suspension;

(C) A statement that the application for approval of any suspension of benefits will be available on the Web site of the Department of the Treasury and that comments on the application will be accepted;

(D) Information as to the rights and remedies of plan participants and beneficiaries;

(E) If applicable, a statement describing the appointment of a retiree representative, the date of appointment of the representative, the role and responsibilities of the retiree representative, identifying information about the retiree representative (including whether the representative is a plan trustee), and how to contact the retiree representative; and

(F) Information on how to contact the Department of the Treasury for further information and assistance where appropriate.

(ii) ***Description of suspension of benefits.*** The notice described under paragraph (f)(1) of this section will not satisfy the requirements of paragraph (f)(2)(i) of this section unless it includes the following—

(A) To the extent that it is not possible to provide an individualized estimate on an annual or monthly basis of the quantitative effect of the suspension on a participant or beneficiary, such as in the case of a suspension that affects the payment of any future cost-of-living adjustment, that effect may be reflected in a narrative description;

(B) A statement that the plan sponsor has determined that the plan will become insolvent unless the proposed suspension takes effect, and the year in which insolvency is projected to occur without a suspension of benefits;

(C) A statement that insolvency of the plan could result in benefits lower than benefits paid under the proposed suspension and a description of the projected benefit payments upon insolvency;

(D) A description of the proposed suspension and its effect, including a description of the different categories or groups affected by the suspension, how those categories or groups are defined, and the formula that is used to calculate the amount of the proposed suspension for individuals in each category or group;

(E) A description of the effect of the proposed suspension on the plan's projected insolvency;

(F) A description of whether the suspension will remain in effect indefinitely, or the date the suspension expires if it expires by its own terms; and

(G) A statement describing the right to vote on the suspension application.

(iii) ***Readability requirement.*** A notice given under paragraph (f)(1) of this section must be written in a manner so as to be understood by the average plan participant.

(iv) ***Model notice.*** The Secretary of the Treasury will provide a model notice. The use of the model notice will satisfy the content and readability requirements of this paragraph (f)(2) with respect to the language provided in the model.

(3) ***Form and manner*** —

(i) ***Timing*** —

(A) ***In general.*** A notice under paragraph (f)(1) of this section must be given no earlier than four business days before the date on which an application is submitted and no later than two business days after the Secretary of the Treasury notifies the plan sponsor that it has submitted a complete application, as described in paragraph (g)(1)(ii) of this section.

(B) ***Timing for lost participants.*** If additional individuals who are entitled to notice are located after the time period in paragraph (f)(3)(i)(A) of this section has elapsed, then the plan sponsor must give notice to these individuals as soon as practicable thereafter.

(ii) ***Method of delivery of notice*** —

(A) ***Written or electronic delivery.*** A notice given under paragraph (f)(1) of this section may be provided in writing. It may also be provided in electronic form to the extent that the form is reasonably accessible to persons to whom the notice is required to be provided. Permissible electronic methods include those permitted under regulations of the Department of Labor at 29 CFR 2520.104b-1(c) and those described at § 54.4980F-1, Q&A-13(c) of the Excise Tax Regulations.

(B) ***No alternative method of delivery.*** A notice under this paragraph (f) must be provided in written or electronic form.

(iii) ***Additional information in notice.*** A notice given under paragraph (f)(1) of this section is permitted to include information in addition to the information that is required under paragraph (f)(2) of this section, including, if applicable, information relating to an application for partition under section 4233 of ERISA (such as the model notice at Appendix A of 29 CFR part 4233), provided that the requirements of paragraph (f)(3)(iv) of this section are satisfied.

(iv) ***No false or misleading information.*** A notice given under paragraph (f)(1) of this section may not include false or misleading information (or omit information in a manner that causes the information provided to be misleading).

(4) ***Other notice requirement.*** Any notice given under paragraph (f)(1) of this section satisfies the requirement for notice of a significant reduction in benefits described in section 4980F that would otherwise be required as a result of that suspension of benefits. To the extent that there are other reductions that accompany a suspension of benefits, such as a reduction in the future accrual rate described in section 4980F for active participants or a reduction in adjustable benefits under section 432(e)(8), notice that satisfies the requirements (including the applicable timing requirements) of section 4980F or section 432(e)(8), as applicable, must be provided.

(5) ***Examples.*** The following examples illustrate the requirement in paragraph (f)(1)(i) of this section to give notice to all participants, beneficiaries of deceased participants, and alternate payees, except those who cannot be contacted by reasonable efforts.

> *Example 1.* (i) *Facts.* A plan sponsor distributes notice of a proposed suspension of benefits to plan participants, beneficiaries of deceased participants, and alternate payees by mailing the notice to their last known mailing addresses, using the same information that it used to send the most recent annual funding notice. Of 5,000 such notices, 300 were returned as undeliverable. The plan sponsor takes no additional steps to contact the individuals for whom the notice was returned as undeliverable.
> (ii) *Conclusion.* The plan sponsor did not make any effort beyond the initial mailing to locate the 300 individuals for whom the notice was returned as undeliverable. Therefore, the plan sponsor did not satisfy the requirement to provide notice to all participants, beneficiaries of deceased participants, and alternate payees under the plan (regardless of whether their benefits are proposed to be suspended), except those who cannot be contacted by reasonable efforts.

> *Example 2.—* (i) *Facts.* The facts are the same as *Example 1,* but the plan sponsor contacts the bargaining parties for the plan and the plan administrators of any other employee benefit plans that the plan sponsor reasonably believes may have information useful for locating the missing individuals, and the plan sponsor requests contact information for the missing individuals. The plan sponsor then uses an Internet search tool, a credit reporting agency, and a commercial locator service to search for individuals for whom it was not able to obtain updated information from bargaining parties. Through these efforts, the plan sponsor locates the updated addresses of 250 of the 300 individuals whom it previously failed to contact. The plan sponsor mails notices to those individuals within one week of locating them.
> (ii) *Conclusion.* By using effective search methods to find the previously missing individuals and promptly mailing the notice of suspension to them, the plan sponsor has satisfied the requirement to provide notice to all participants, beneficiaries of deceased participants, and alternate payees under the plan (regardless of whether their benefits are proposed to be suspended), except those who cannot be contacted by reasonable efforts.

(g) ***Approval or denial of an application for suspension of benefits —***

(1) ***Application —***

(i) ***In general.*** The plan sponsor of a plan in critical and declining status for a plan year that seeks to suspend benefits must submit an application for approval of the proposed suspension of benefits to the Secretary of the Treasury. The Secretary of the Treasury, in consultation with PBGC and the Secretary of Labor, will approve a complete application described in paragraph (g)(1)(ii) of this section upon finding that—

(A) The plan is eligible for the proposed suspension described in the application;

(B) The plan actuary and plan sponsor satisfy the requirements of section 432(e)(9)(C) in accordance with the rules of paragraph (c) of this section;

(C) The design of the proposed suspension described in the application satisfies the criteria of section 432(e)(9)(D) in accordance with the rules of paragraphs (d) of this section; and

(D) The plan sponsor satisfies the requirements of section 432(e)(9)(E) and (F) in accordance with the rules of paragraphs (e) and (f) of this section.

(ii) ***Complete application.*** After receiving a submission, the plan sponsor will be notified within two business days whether the submission constitutes a complete application. A complete application will be treated as submitted on the date that it was originally submitted to the Secretary of the Treasury. If a submission is incomplete, the notification will inform the plan sponsor of the information that is needed to complete the submission and give the plan sponsor a reasonable opportunity to submit a complete application. In such a case, the complete application will be treated as submitted on the date on which the additional information needed to complete the application is submitted to the Secretary of the Treasury.

(iii) ***Submission of application.*** An application described in this paragraph (g)(1) must be submitted electronically in a searchable format.

(iv) ***Requirements for application.*** Additional guidance that may be necessary or appropriate with respect to applications described in this paragraph (g)(1), including procedures for submitting applications and the information required to be included in a complete application, may be published in the form of revenue procedures, notices, or other guidance in the Internal Revenue Bulletin.

(v) ***Requirement to provide adequate time to process application*** —

(A) ***General rule.*** An application for suspension that is not submitted in combination with an application to PBGC for a plan partition under section 4233 of ERISA generally will not be accepted unless the proposed effective date of the suspension is at least nine months from the date on which the application is submitted.

(B) ***Earlier effective date in appropriate circumstances.*** Nothwithstanding paragraph (g)(1)(v)(A) of this section, in appropriate circumstances the Secretary of the Treasury, in consultation with PBGC and the Secretary of Labor, may permit a proposed suspension to have an earlier effective date.

(vi) ***Plan sponsors that also apply for partition.*** See part 4233 of the PBGC regulations for a coordinated application process that applies in the case of a plan sponsor that is submitting an application for suspension in combination with an application to PBGC for a plan partition under section 4233 of ERISA.

(2) ***Solicitation of comments*** —

(i) ***In general.*** Not later than 30 days after receipt of a complete application described in paragraph (g)(1) of this section—

(A) The application for approval of the suspension of benefits will be published on the Web site of the Department of the Treasury; and

(B) The Secretary of the Treasury will publish a notice in the FEDERAL REGISTER soliciting comments from contributing employers, employee organizations, and participants and beneficiaries of the plan for which an application was made, and other interested parties.

(ii) ***Public comments.*** The notice described in paragraph (g)(2)(i)(B) of this section will generally request that comments be submitted no later than 45 days after publication of that notice in the FEDERAL REGISTER, but the notice may specify a different deadline for comments in appropriate circumstances. Comments received in response to this notice will be made publicly available.

(3) ***Special rules in the case of revision to proposed suspension*** —

(i) ***Resubmission review available in certain circumstances.*** The Secretary of the Treasury (in consultation with PBGC and the Secretary of Labor) has the discretion, in appropriate circumstances, to permit the plan sponsor to submit a revision of a proposed suspension that had been withdrawn for resubmission review. With respect to an application that is accepted for resubmission review—

(A) The rules of paragraph (g)(1)(v)(B) of this section will apply;

(B) The limitations of paragraph (d) of this section with respect to the revised proposed suspension may be applied using the same actuarial data (including the same fair market value of the plan assets) as was used in the initial application;

(C) The revision to the proposed suspension will be published, and comments solicited, in accordance with paragraph (g)(2) of this section; and

(D) The plan sponsor must provide notice of the revised proposed suspension in accordance with the requirements of paragraph (g)(3)(ii) of this section.

(ii) ***Requirement to provide updated notice to affected participants*** —

(A) ***General rule.*** Except as provided in paragraph (g)(3)(ii)(B) of this section, a plan sponsor that revises a proposed suspension in accordance with this paragraph (g)(3) must provide notice of the suspension in accordance with the rules of paragraph (f) of this section.

(B) ***Treatment of participants who are not affected by the revision.*** If the revision to the proposed suspension changes neither the amount of the suspension as initially proposed nor the effective date of the proposed suspension for an affected individual, then the Secretary of the Treasury (in consultation with PBGC and the Secretary of Labor) may permit the plan sponsor to provide a simplified version of the notice of the suspension to that individual. For this purpose, the effective date of a suspension is determined without taking into account the second sentence of paragraph (a)(4)(iii)(C) of this section.

(4) ***Approval or denial*** —

(i) ***Deemed approval.*** A complete application described in paragraph (g)(1)(ii) of this section will be deemed approved unless, within 225 days following the date that the complete application is submitted, the Secretary of the Treasury notifies the plan sponsor that its application does not satisfy one or more of the requirements described in this paragraph (g).

(ii) ***Notice of denial.*** If the Secretary of the Treasury denies a plan sponsor's application, the notification of the denial will detail the specific reasons for the denial, including reference to the specific requirement not satisfied.

(iii) ***Special rules for systemically important plans.*** If the Secretary of the Treasury approves a plan sponsor's application and the Secretary expects that the plan is or may be a systemically important plan (as defined in paragraph (h)(5)(iv) of this section), the Secretary will so notify the plan sponsor. In that case, and in the event of a vote to reject the suspension (as described in paragraph (h)(4) of this section), the plan sponsor may be required to supply individual participant data and any actuarial analyses that the Secretary may request, in order to assist the Secretary in determining whether to permit the implementation of the suspension that was approved by the Secretary but rejected by a majority of the eligible voters or the implementation of a modification of that suspension.

(iv) ***Agreement to stay 225-day period.*** The Secretary of the Treasury and the plan sponsor may mutually agree in writing to stay the 225-day period described in paragraph (g)(3)(i) of this section.

(5) ***Consideration of certain factors.*** In evaluating whether the plan sponsor has satisfied the requirement of paragraph (c)(3)(i)(A) of this section, the Secretary of the Treasury, in consultation with PBGC and the Secretary of Labor, will review the plan sponsor's consideration of each of the factors under paragraph (c)(3)(ii) of this section (and any other factor that the plan sponsor considered).

(6) ***Standard for accepting plan sponsor determinations.*** In evaluating the plan sponsor's application, the Secretary of the Treasury will accept the plan sponsor's determinations in paragraph (c)(3) of this section unless the Secretary concludes, in consultation with PBGC and the Secretary of Labor, that the determinations were clearly erroneous.

(7) ***Plan sponsor certifications with respect to plan amendments.*** The plan sponsor will not satisfy the requirements of paragraph (g)(1)(i)(B) and (D) of this section unless the plan sponsor certifies that if the plan sponsor receives final authorization to suspend as described in paragraph (h)(6) of this section with respect to the proposed benefit suspension (or, in the case of a systemically important plan, a proposed or modified benefit suspension), the plan sponsor chooses to implement the suspension, and the plan sponsor adopts the amendment described in paragraph (a)(1) of this section, then it will timely amend the plan to provide that—

(i) If the plan sponsor fails to make the annual determinations under section 432(e)(9)(C)(ii), then the suspension of benefits will cease as of the first day of the first plan year following the plan year in which the plan sponsor fails to make the annual plan sponsor determinations in paragraph (c)(4) of this section; and

(ii) Any future benefit improvement must satisfy the requirements of section 432(e)(9)(E).

(8) ***Special Master.*** The Secretary of the Treasury may appoint a Special Master for purposes of this section. If a Special Master is appointed, the Special Master will coordinate the implementation of this section and the review of applications for the suspension of benefits and other appropriate documents, and will provide recommendations to the Secretary of the Treasury with respect to decisions required under this section.

(h) ***Participant vote on proposed benefit reduction*** —

(1) ***Requirement for vote*** —

(i) ***In general.*** If an application for suspension is approved under paragraph (g) of this section, then the Secretary of the Treasury, in consultation with PBGC and the Secretary of Labor, will administer a vote as described in section 432(e)(9)(H) and this paragraph (h). A suspension of benefits may not take effect before the vote and may only take effect after a final authorization to suspend benefits under paragraph (h)(6) of this section.

(ii) ***Communication by plan sponsor.*** The plan sponsor must take reasonable steps to inform eligible voters about the proposed suspension. This includes all eligible voters who may be contacted by reasonable efforts in accordance with paragraph (f)(1) of this section. Any eligible voter whom the plan sponsor has been able to locate through these means (or who has otherwise been located by the plan sponsor) must be—

(A) Included on the voting roster described in paragraph (h)(3)(iii)(B) of this section; and

(B) Sent a ballot described in paragraph (h)(3) of this section.

(iii) ***Eligible voters*** —

(A) ***General definition.*** For purpose of this paragraph (h), the term “eligible voters” means all plan participants (that is, active plan participants, deferred vested participants, and retirees) and beneficiaries of deceased participants.

(B) ***Voting roster.*** The voting roster includes those eligible voters to whom the notices described in paragraph (f) of this section were sent. If there is a plan participant or beneficiary who did not receive a notice but who is subsequently located by the plan sponsor, that individual must be included on the roster. Similarly, if an individual becomes a plan participant after the date the notices were sent, then the individual must be included on the roster. If a plan sponsor learns after the date the notices described in paragraph (f) of this section were sent that an eligible voter has died, then that deceased individual must not be included on the roster (but if that participant has a beneficiary entitled to benefits under the plan, the beneficiary must be added to the roster).

(2) ***Participant vote*** —

(i) ***In general.*** The participant vote described in paragraph (h)(1)(i) of this section requires completion of the following steps—

(A) Distribution of the ballot package described in paragraph (h)(2)(iii) of this section to the eligible voters;

(B) Voting by eligible voters and collection and tabulation of the votes, as described in paragraph (h)(2)(iv) of this section; and

(C) Determination of whether a majority of the eligible voters has voted to reject the suspension, as described in paragraph (h)(2)(v) of this section.

(ii) ***Designation of service provider for limited functions.*** The Secretary of the Treasury is permitted to designate one or more service providers to perform, under the supervision of the Secretary, any of the functions of the Secretary described in paragraphs (h)(2)(i)(A) and (B) of this section. If the Secretary designates a service provider to perform these functions then the service provider will provide the Secretary with a written report of the results of the vote, including (as applicable)—

(A) The number of ballot packages distributed to eligible voters;

(B) The number of eligible voters to whom ballot packages have not been provided (because the individuals could not be located);

(C) The number of eligible voters who voted (specifying the number of affirmative votes and the number of negative votes cast); and

(D) Any other information that the Secretary requires.

(iii) ***Distribution of the ballot package to the eligible voters*** —

(A) ***Ballot package.*** The ballot package distributed to each eligible voter consists of—

(*1*) A ballot, approved under paragraph (h)(3)(iii) of this section, which contains the items described in section 432(e)(9)(H)(iii) and paragraph (h)(3)(i) of this section; and

(*2*) A voter identification code assigned to the eligible voter for use in voting.

(B) ***Plan sponsor responsibilities*** —

(*1*) ***In general.*** This paragraph (h)(2)(iii)(B) sets forth the responsibilities of the plan sponsor with respect to the distribution of the ballot package to the eligible voters.

(*2*) ***Furnish information regarding eligible voters.*** No later than 7 days following the date the Secretary of the Treasury has approved an application for a suspension of benefits under paragraph (g) of this section, the plan sponsor must furnish the following—

(*i*) The voting roster described in paragraph (h)(1)(iii)(B) of this section;

(*ii*) Plan information (such as participant identification codes used by the plan) to enable the Secretary of the Treasury to verify the identity of each eligible voter;

(*iii*) For each eligible voter on the voting roster, the last known mailing address (or, if the plan sponsor has been unable to locate that individual using the standards that apply for purposes of paragraph (f)(1)(i) of this section, an indication that the individual could not be located through reasonable efforts);

(*iv*) Current electronic mailing addresses for those eligible voters identified in paragraph (h)(2)(iii)(B)(*4*) of this section; and

(*v*) The individualized estimates described in paragraph (f)(2)(i)(A) of this section (or, if an individualized estimate is no longer accurate for an eligible voter, a corrected version of that estimate).

(*3*) ***Communication with eligible voters.*** In accordance with section 432(e)(9)(H)(iv) and paragraph (h)(1)(ii) of this section, the plan sponsor is responsible for communicating with eligible voters, which includes—

(*i*) Notifying the eligible voters described in paragraph (h)(2)(iii)(B)(*4*) of this section that a ballot package will be mailed to them by first-class U.S. mail; and

(*ii*) Making reasonable efforts (using the standards that apply for purposes of paragraph (f)(1)(i) of this section) as necessary to locate eligible voters for whom the plan sponsor has received notification that the mailed ballot packages are returned as undeliverable (so that ballot packages can be sent to those eligible voters).

(*4*) ***Eligible voters to receive electronic notification.*** Those eligible voters whom the plan sponsor must notify electronically are—

(*i*) Eligible voters who previously received the notice described in paragraph (f) of this section in electronic form (as permitted under paragraph (f)(3)(ii) of this section), and

(*ii*) Any other eligible voters who regularly receive plan-related communications from the plan sponsor in electronic form.

(*5*) ***Method of notifying certain eligible voters.*** The notification described in paragraph (h)(2)(iii)(B)(*3*)(*i*) of this section for an eligible voter must be made using the electronic form normally used to send plan-related communications to that voter (or the form used to provide the notice in paragraph (f) of this section, if different). The plan sponsor must send this notification promptly after being informed of the ballot distribution date (within the meaning of paragraph (h)(2)(iii)(D) of this section) and the notification must include the ballot distribution date.

(*6*) ***Pay costs associated with distribution.*** The plan sponsor is responsible for paying all costs associated with printing, assembling, and distributing the ballot package, including postage.

(C) ***Required method of distributing ballot package.*** Ballot packages must be distributed to eligible voters by first-class U.S. mail. A supplemental copy of the mailed ballot package may also be sent by an electronic communication to an eligible voter who has consented to receive electronic communications.

(D) ***Timing.*** Ballot packages will be distributed to eligible voters no later than 30 days after the Secretary of the Treasury has approved an application for a suspension of benefits under paragraph (g) of this section. The date on which the ballot packages are mailed to the eligible voters is referred to as the ballot distribution date.

(iv) ***Collection and tabulation of votes cast by eligible voters*** —

(A) ***Voting period.*** The voting period is the period during which a vote received from an eligible voter will be counted. The voting period begins on the ballot distribution date. The voting period generally remains open until the 30th day following the date the Secretary of the Treasury has approved an application for a suspension of benefits under paragraph (g) of

this section. However, the voting period will not close earlier than 21 days after the ballot distribution date. In addition, the Secretary (in consultation with PBGC and the Secretary of Labor) may specify a later date to end the voting period in appropriate circumstances.

(B) ***Automated voting system must be provided.*** An automated voting system that meets the requirements of paragraph (h)(2)(iv)(C) of this section must be made available to voters for casting their votes. In appropriate circumstances, the Secretary may, in consultation with PBGC and the Secretary of Labor, allow voters to cast votes by mail in lieu of using the automated voting system.

(C) ***Automated voting system.*** An automated voting system meets the requirements of this paragraph (h)(2)(iv)(C) only if the system—

(*1*) Collects votes cast by eligible voters both electronically (through a Web site) and telephonically (through a toll-free number allowing voters to cast their votes using both a touch-tone voting system and an interactive voice response system); and

(2) Accepts only votes cast during the voting period by an eligible voter who provides the eligible voter's identification code described in paragraph (h)(2)(iii)(A)(*2*) of this section.

(D) ***Policies and procedures.*** The Secretary of the Treasury (in consultation with PBGC and the Secretary of Labor) may establish such policies and procedures as may be necessary to facilitate the administration of the vote under this paragraph (h)(2). These policies and procedures may include, but are not limited to, establishing a process for an eligible voter to challenge the vote.

(v) ***Determination of whether a majority of the eligible voters has voted to reject the suspension.*** Within 7 calendar days after the end of the voting period, the Secretary of the Treasury (in consultation with PBGC and the Secretary of Labor) will—

(A) Certify that a majority of all eligible voters has voted to reject the suspension that was approved under paragraph (g) of this section, or

(B) Issue a final authorization to suspend as described in paragraph (h)(6) of this section.

(3) ***Ballots*** —

(i) ***In general.*** The plan sponsor must provide a ballot for the vote that includes the following—

(A) A description of the proposed suspension and its effect, including the effect of the suspension on each category or group of individuals affected by the suspension and the extent to which they are affected;

(B) A description of the factors considered by the plan sponsor in designing the benefit suspension, including but not limited to the factors in paragraph (d)(6)(ii) of this section;

(C) A description of whether the suspension will remain in effect indefinitely or will expire by its own terms (and, if it will expire by its own terms, when that will occur);

(D) A statement from the plan sponsor in support of the proposed suspension;

(E) A statement in opposition to the proposed suspension compiled from comments received pursuant to the solicitation of comments pursuant to paragraph (g)(2) of this section;

(F) A statement that the proposed suspension has been approved by the Secretary of the Treasury, in consultation with PBGC and the Secretary of Labor;

(G) A statement that the plan sponsor has determined that the plan will become insolvent unless the proposed suspension takes effect (including the year in which insolvency is projected to occur without a suspension of benefits), and an accompanying statement that this determination is subject to uncertainty;

(H) A statement that insolvency of the plan could result in benefits lower than benefits paid under the proposed suspension and a description of the projected benefit payments in the event of plan insolvency;

(I) A statement that insolvency of PBGC would result in benefits lower than benefits otherwise paid in the case of plan insolvency;

(J) A statement that the plan's actuary has certified that the plan is projected to avoid insolvency, taking into account the proposed suspension of benefits (and, if applicable, a proposed partition of the plan), and an accompanying statement that the actuary's projection is subject to uncertainty;

(K) A statement that the suspension will go into effect unless a majority of all eligible voters vote to reject the suspension and that, therefore, a failure to vote has the same effect on the outcome of the vote as a vote in favor of the suspension;

(L) A copy of the individualized estimate described in paragraph (f)(2)(i)(A) of this section (or, if that individualized estimate is no longer accurate, a corrected version of that estimate); and

(M) A description of the voting procedures, including the deadline for voting.

(ii) ***Additional rules*** —

(A) ***Readability requirement.*** A ballot provided under section 432(e)(9)(H)(iii), in accordance with the rules of paragraph (h)(3)(i) of this section, must be written in a manner that is readily understandable by the average plan participant.

(B) ***No false or misleading information.*** A ballot provided under section 432(e)(9)(H)(iii), in accordance with the rules of paragraph (h)(3)(i) of this section, may not include false or misleading information (or omit information in a manner that causes the information provided to be misleading).

(iii) ***Ballot must be approved.*** Any ballot provided under section 432(e)(9)(H)(iii), in accordance with the rules of paragraph (h)(3)(i) of this section, must be approved by the Secretary of the Treasury, in consultation with PBGC and the Secretary of Labor, before it is provided.

(iv) ***Statement in opposition to the proposed suspension.*** The statement in opposition to the proposed suspension that is prepared from comments received on the application, as required under section 432(e)(9)(H)(iii)(II), will be compiled by the Secretary of Labor and will be written in accordance with the rules of paragraph (h)(3)(ii) of this section. If no comments in opposition are received, the statement in opposition to the proposed suspension will include a statement indicating that there were no such comments.

(v) ***Model ballot.*** Model language for use in the ballot may be published in the Internal Revenue Bulletin.

(4) *Implementing suspension following vote* —

(i) ***In general.*** Unless a majority of all eligible voters vote to reject the suspension that was approved under paragraph (g) of this section, the suspension will be permitted to take effect. If a majority of all eligible voters vote to reject the suspension that was approved under paragraph (g) of this section, a suspension of benefits will not be permitted to take effect except as provided under paragraph (h)(5)(iii) of this section relating to the implementation of a suspension for a systemically important plan (as defined in paragraph (h)(5)(iv) of this section).

(ii) ***Effect of not sending ballot.*** Any eligible voters to whom ballots have not been provided (because the individuals could not be located) will be treated as voting to reject the suspension at the same rate (in other words, in the same percentage) as those to whom ballots have been provided.

(5) *Systemically important plans* —

(i) ***In general.*** If a majority of all eligible voters vote to reject the suspension that was approved under paragraph (g) of this section, the Secretary of the Treasury will consult with PBGC and the Secretary of Labor to determine if the plan is a systemically important plan. This determination will be made no later than 14 days after the results of the vote are certified.

(ii) ***Recommendations from Participant and Plan Sponsor Advocate.*** If the plan is determined to be a systemically important plan, then, no later than 44 days after the results of the vote are certified, the Participant and Plan Sponsor Advocate selected under section 4004 of ERISA may submit recommendations to the Secretary of the Treasury with respect to the suspension that was approved under paragraph (g) of this section or any modifications to the suspension.

(iii) ***Implementation of original or modified suspension by systemically important plans.*** If a plan is a systemically important plan for which a majority of all eligible voters vote to reject the suspension that was approved under paragraph (g) of this section, then the Secretary of the Treasury must determine whether to permit the implementation of the suspension that was approved under paragraph (g) of this section or whether to permit the implementation of a modification of that suspension. Under any such modification, the plan must be projected to avoid insolvency in accordance with section 432(e)(9)(D)(iv). No later than 60 days after the results of a vote to reject a suspension are certified, the Secretary of the Treasury will notify the plan sponsor that the suspension or modified suspension is permitted to be implemented.

(iv) *Systemically important plan defined* —

(A) ***In general.*** For purposes of this paragraph (h)(5), a systemically important plan is a plan with respect to which PBGC projects that the present value of its financial assistance payments will exceed $1.0 billion (adjusted in accordance with paragraph (h)(5)(iv)(B) of this section to the calendar year in which the application is submitted) if the suspension is not implemented.

(B) ***Indexing.*** For calendar years beginning after 2015, the dollar amount specified in paragraph (h)(5)(iv)(A) of this section will be replaced with an amount equal to the product of the dollar amount and a fraction, the numerator of which is the contribution and benefit base (determined under section 230 of the Social Security Act) for the preceding calendar

year and the denominator of which is the contribution and benefit base for calendar year 2014. If the amount otherwise determined under this paragraph (h)(5)(iv)(B) is not a multiple of $1.0 million, the amount will be rounded to the next lowest multiple of $1.0 million.

(6) ***Final authorization to suspend*** —

(i) ***In general.*** In any case in which a suspension is permitted to take effect following a vote pursuant to section 432(e)(9)(H)(ii) and paragraph (h)(4) of this section, the Secretary of the Treasury, in consultation with PBGC and the Secretary of Labor, will issue a final authorization to suspend with respect to the suspension not later than seven days after the vote.

(ii) ***Systemically important plans.*** In any case in which a suspension is permitted to take effect following a determination under paragraph (h)(5) of this section that the plan is a systemically important plan, the Secretary of the Treasury, in consultation with PBGC and the Secretary of Labor, will issue a final authorization to suspend, at a time sufficient to allow the implementation of the suspension prior to the end of the 90-day period beginning on the date the results of the vote are certified.

(iii) ***Plan partitions.*** Notwithstanding any other provision of this section, in any case in which a suspension of benefits with respect to a plan is made in combination with a partition of the plan, the suspension of benefits is not permitted to take effect prior to the effective date of the partition.

(i) [Reserved].

(j) ***Effective/applicability date.*** This section applies with respect to suspensions for which the approval or denial is issued on or after April 26, 2016 and, in the case of a systemically important plan, any modification described in paragraph (h)(5)(iii) of this section that is implemented on or after April 26, 2016.

[T.D. 9765, 81 FR 25557, Apr. 28, 2016, as amended by T.D. 9767, 81 FR 27015, May 5, 2016]

§ 1.433(h)(3)-1 Mortality tables used to determine current liability.

(a) ***Mortality tables used to determine current liability.*** In accordance with section 433(h)(3)(B), the mortality assumptions that apply to a single-employer defined benefit plan for the plan year pursuant to section 430(h)(3)(A) and (D) and §§ 1.430(h)(3)-1(a)(1) and (a)(2)(ii) are used to determine a cooperative and small employer charity (CSEC) plan's current liability under section 433(h). For purposes of this paragraph (a), either the generational mortality tables used pursuant to § 1.430(h)(3)-1(b) or the static mortality tables used pursuant to § 1.430(h)(3)-1(c) are permitted to be used without regard to whether the plan is a small plan as defined in § 1.430(h)(3)-1(c)(1)(ii). However, substitute mortality tables under §§ 1.430(h)(3)-1(a)(2)(i) and 1.430(h)(3)-2 are not permitted to be used for purposes of this paragraph (a).

(b) ***Applicability date.*** This section applies for valuation dates occurring on or after January 1, 2024.

[T.D. 9983, 88 FR 72366, Oct. 20, 2023]

§§ 1.434-1.435 [Reserved]

§ 1.436-0 Table of contents.

This section contains a listing of the major headings of § 1.436-1.

§ 1.436-1 Limits on benefits and benefit accruals under single employer defined benefit plans.

(a) General rules.

(1) Qualification requirement.

(2) Organization of the regulation.

(3) Special rules for certain plans.

(4) Treatment of plan as of close of prohibited or cessation period.

(5) Deemed election to reduce funding balances.

(b) Limitation on shutdown benefits and other unpredictable contingent event benefits.

(1) In general.

(2) Exemption if section 436 contribution is made.

(3) Rules of application.

(4) Prior unpredictable contingent event.

(c) Limitations on plan amendments increasing liability for benefits.

(1) In general.

(2) Exemption if section 436 contribution is made.

(3) Rules of application regarding pre-existing plan provisions.

(4) Exceptions.

(5) Rule for determining when an amendment takes effect.

(6) Treatment of mergers, consolidations, and transfers of plan assets into a plan. [Reserved]

(d) Limitations on prohibited payments.

(1) AFTAP less than 60 percent.

(2) Bankruptcy.

(3) Limited payment if AFTAP at least 60 percent but less than 80 percent.

(4) Exception for cessation of benefit accruals.

(5) Right to delay commencement.

(6) Plan alternative for special optional forms.

(7) Exception for distributions permitted without consent of the participant under section 411(a)(11).

(e) Limitation on benefit accruals for plans with severe funding shortfalls.

(1) In general.

(2) Exemption if section 436 contribution is made.

(3) Special rule under section 203 of the Worker, Retiree, and Employer Recovery Act of 2008. [Reserved]

(f) Methods to avoid or terminate benefit limitations.

(1) In general.

(2) Current year contributions to avoid or terminate benefit limitations.

(3) Security to increase adjusted funding target attainment percentage.

(4) Examples.

(g) Rules of operation for periods prior to and after certification.

(1) In general.

(2) Periods prior to certification during which a presumption applies.

(3) Periods prior to certification during which no presumption applies.

(4) Modification of the presumed AFTAP.

(5) Periods after certification of AFTAP.

(6) Examples.

(h) Presumed underfunding for purposes of benefit limitations.

(1) Presumption of continued underfunding.

(2) Presumption of underfunding beginning on first day of 4th month for certain underfunded plans.

(3) Presumption of underfunding beginning on first day of 10th month.

(4) Certification of AFTAP.

(5) Examples of rules of paragraphs (h)(1), (h)(2), and (h)(3) of this section.

(6) Examples of application of paragraph (h)(4) of this section.

(i) [Reserved]

(j) Definitions.

(1) Adjusted funding target attainment percentage.

(2) Annuity starting date.

(3) First effective plan year.

(4) Funding target.

(5) Prior year adjusted funding target attainment percentage.

(6) Prohibited payment.

(7) Section 436 contributions.

(8) Section 436 measurement date.

(9) Unpredictable contingent event.

(10) Examples.

(k) Effective/applicability dates.

(1) Statutory effective date.

(2) Collectively bargained plan exception.

(3) Effective date/applicability date of regulations.

[T.D. 9467, 74 FR 53060, Oct. 15, 2009]

§ 1.436-1 Limits on benefits and benefit accruals under single employer defined benefit plans.

(a) *General rules* —

(1) ***Qualification requirement.*** Section 401(a)(29) provides that a defined benefit pension plan that is subject to section 412 and that is not a multiemployer plan (within the meaning of section 414(f)) is a qualified plan only if it satisfies the requirements of section 436. This section provides rules relating to funding-based limitations on certain benefits under section 436, and the requirements of section 436 are satisfied only if the plan meets the requirements of this section beginning with the plan's first effective plan year. This section applies to single employer defined benefit plans (including multiple employer plans), but does not apply to multiemployer plans.

(2) ***Organization of the regulation.*** Paragraph (b) of this section describes limitations on shutdown benefits and other unpredictable contingent event benefits. Paragraph (c) of this section describes limitations on plan amendments increasing liabilities. Paragraph (d) of this section describes limitations on prohibited payments. Paragraph (e) of this section describes limitations on benefit accruals. Paragraph (f) of this section provides rules relating to methods to avoid or terminate benefit limitations. Paragraph (g) of this section provides rules for the operation of the plan in relation to benefit limitations under section 436. Paragraph (h) of this section describes related presumptions regarding underfunding that apply for purposes of the benefit limitations under section 436 and requirements relating to certifications. Paragraph (j) of this section contains definitions. Paragraph (k) of this section contains effective/applicability date provisions.

(3) *Special rules for certain plans* —

(i) ***New plans.*** The limitations described in paragraphs (b), (c), and (e) of this section do not apply to a plan for the first 5 plan years of the plan. Except as otherwise provided by the Commissioner in guidance of general applicability, plan years of the plan include the following (in addition to plan years during which the plan was maintained by the employer or plan sponsor):

(A) Plan years when the plan was maintained by a predecessor employer within the meaning of § 1.415(f)-1(c)(1).

(B) Plan years of another defined benefit plan maintained by a predecessor employer within the meaning of § 1.415(f)-1(c)(2) within the preceding five years if any participants in the plan participated in that other defined benefit plan (even if the plan maintained by the employer is not the plan that was maintained by the predecessor employer).

(C) Plan years of another defined benefit plan maintained by the employer within the preceding five years if any participants in the plan participated in that other defined benefit plan.

(ii) *Application of section 436 after termination of a plan* —

(A) ***In general.*** Except as otherwise provided in paragraph (a)(3)(ii)(B) of this section, any section 436 limitations in effect immediately before the termination of a plan do not cease to apply thereafter.

(B) ***Exception for payments pursuant to plan termination.*** The limitations under section 436(d) and paragraph (d) of this section do not apply to prohibited payments (within the meaning of paragraph (j)(6) of this section) that are made to carry out the termination of a plan in accordance with applicable law. For example, a plan sponsor's purchase of an irrevocable

commitment from an insurer to pay benefit liabilities in connection with the standard termination of a plan in accordance with section 4041(b)(3) of the Employee Retirement Income Security Act of 1974, as amended (ERISA), and in accordance with 29 CFR 4041.28, does not violate section 436(d) or this section.

(iii) ***Multiple employer plans.*** In the case of a multiple employer plan to which section 413(c)(4)(A) applies, this section applies separately with respect to each employer under the plan, as if each employer maintained a separate plan. Thus, the benefit limitations under section 436 and this section could apply differently to participants who are employees of different employers under such a multiple employer plan. In the case of a multiple employer plan to which section 413(c)(4)(A) does not apply (that is, a plan described in section 413(c)(4)(B) that has not made the election for section 413(c)(4)(A) to apply), this section applies as if all participants in the plan were employed by a single employer.

(4) ***Treatment of plan as of close of prohibited or cessation period*** —

(i) ***Application to prohibited payments and accruals*** —

(A) ***Resumption of prohibited payments.*** If a limitation on prohibited payments under paragraph (d) of this section applied to a plan as of a section 436 measurement date (as defined in paragraph (j)(8) of this section), but that limit no longer applies to the plan as of a later section 436 measurement date, then the limitation on prohibited payments under the plan does not apply to benefits with annuity starting dates (as defined in paragraph (j)(2) of this section) that are on or after that later section 436 measurement date. Any amendment to eliminate an optional form of benefit that contains a prohibited payment with respect to an annuity starting date during a period in which the limitations of section 436(d) and paragraph (d) of this section do not apply to the plan is subject to the rules of section 411(d)(6).

(B) ***Resumption of benefit accruals.*** If a limitation on benefit accruals under paragraph (e) of this section applied to a plan as of a section 436 measurement date, but that limit no longer applies to the plan as of a later section 436 measurement date, then that limitation does not apply to benefit accruals that are based on service on or after that later section 436 measurement date, except to the extent that the plan provides that benefit accruals will not resume when the limitation ceases to apply. The plan must comply with the rules relating to partial years of participation and the prohibition on double proration under Department of Labor regulation 29 CFR 2530.204-2(c) and (d).

(ii) ***Restoration of options and missed benefit accruals*** —

(A) ***Option to amend plan.*** A plan is permitted to be amended to provide participants who had an annuity starting date within a period during which a limitation under paragraph (d) of this section applied to the plan with the opportunity to make a new election under which the form of benefit previously elected is modified, subject to applicable qualification requirements. A participant who makes such a new election is treated as having a new annuity starting date under sections 415 and 417. Similarly, a plan is permitted to be amended to provide that any benefit accruals which were limited under the rules of paragraph (e) of this section are credited under the plan when the limitation no longer applies, subject to applicable qualification requirements. Any such plan amendment with respect to a new annuity starting date or crediting of benefit accruals is subject to the requirements of section 436(c) and paragraph (c) of this section.

(B) ***Automatic plan provisions.*** A plan is permitted to provide that participants who had an annuity starting date within a period during which a limitation under paragraph (d) of this section applied to the plan will be provided with the opportunity to have a new annuity starting date (which would constitute a new annuity starting date under sections 415 and 417) under which the form of benefit previously elected may be modified, subject to applicable qualification requirements, once the limitations of paragraph (d) of this section cease to apply. In addition, subject to the rules of paragraph (c)(3) of this section, a plan is permitted to provide for the automatic restoration of benefit accruals that had been limited under section 436(e) as of the section 436 measurement date that the limitation ceases to apply.

(iii) ***Shutdown and other unpredictable contingent event benefits.*** If unpredictable contingent event benefits with respect to an unpredictable contingent event that occurs during the plan year are not permitted to be paid after the occurrence of the event because of the limitations of section 436(b) and paragraph (b) of this section, but are permitted to be paid later in the plan year as a result of additional contributions under paragraph (f)(2) of this section or pursuant to the enrolled actuary's certification of the adjusted funding target attainment percentage for the plan year that meets the requirements of paragraph (g)(5)(ii)(B) of this section, then those unpredictable contingent event benefits must automatically become payable, retroactive to the period those benefits would have been payable under the terms of the plan (other than plan terms implementing the requirements of section 436(b)). If the benefits do not become payable during the plan year in accordance with the preceding sentence, then the plan is treated as if it does not provide for those benefits. However, all or any portion of those benefits can be restored pursuant to a plan amendment that meets the requirements of section 436(c) and paragraph (c) of this section and other applicable qualification requirements.

(iv) ***Treatment of plan amendments that do not take effect.*** If a plan amendment does not take effect as of the effective date of the amendment because of the limitations of section 436(c) and paragraph (c) of this section, but is permitted to take effect later in the plan year as a result of additional contributions under paragraph (f)(2) of this section or pursuant to the enrolled actuary's certification of the adjusted funding target attainment percentage for the plan year that meets the requirements of paragraph (g)(5)(ii)(C) of this section, then the plan amendment must automatically take effect as of the first day of the plan year (or, if later, the original effective date of the amendment). If the plan amendment cannot take effect during the plan year, then it must be treated as if it were never adopted, unless the plan amendment provides otherwise.

(v) ***Example.*** The following example illustrates the rules of this paragraph (a)(4):

> *Example.* (i) Plan T is a non-collectively bargained defined benefit plan with a plan year that is the calendar year and a valuation date of January 1. As of January 1, 2011, Plan T does not have a funding standard carryover balance or a prefunding balance. Plan T's sponsor is not in bankruptcy. Beginning January 1, 2011, Plan T is subject to the restriction on prohibited payments under paragraph (d)(3) of this section based on a presumed adjusted funding target attainment percentage (AFTAP) of 75%.

(ii) U is a participant in Plan T. Participant U retires on February 1, 2011, and elects to receive benefits in the form of a single sum. Plan T may pay only a portion (generally, 50%) of the prohibited payment. Accordingly, U elects in accordance with paragraph (d)(3)(ii) of this section to receive 50% of U's benefit in a single sum (up to the 2011 PBGC maximum benefit guarantee amount described in paragraph (d)(3)(iii)(C) of this section) and the remainder as an immediately commencing straight life annuity.

(iii) On March 1, 2011, the enrolled actuary for the Plan certifies that the AFTAP for 2011 is 80%. Accordingly, beginning March 1, 2011, Plan T is no longer subject to the restriction under paragraph (d)(3) of this section.

(iv) Effective March 1, 2011, Plan T is amended to provide that a participant whose benefits were restricted under paragraph (d)(3) of this section with respect to an annuity starting date between January 1, 2011, and February 28, 2011, may elect, within a specified period on or after March 1, 2011, a new annuity starting date and receive the remainder of his or her pension benefits in an accelerated form of payment. Plan T's enrolled actuary determines that the AFTAP, taking into account the amendment, would still be 80%. The amendment is permitted to take effect because Plan T would have an AFTAP of 80% taking into account the amendment and is therefore neither subject to the restriction on plan amendments in paragraph (c) of this section nor the restrictions on prohibited payments under paragraphs (d)(1) and (d)(3) of this section. Accordingly, Participant U may elect, within the specified period and subject to otherwise applicable qualification rules, including spousal consent, to receive the remainder of U's benefits in the form of a single sum on or after March 1, 2011.

(5) ***Deemed election to reduce funding balances*** —

(i) ***Limitations on accelerated benefit payments.*** If a benefit limitation under paragraph (d)(1) or (d)(3) of this section would (but for this paragraph (a)(5)) apply to a plan, the employer is treated as having made an election under section 430(f) to reduce the prefunding balance or funding standard carryover balance by such amount as is necessary for the adjusted funding target attainment percentage to be at the applicable threshold (60 or 80 percent, as the case may be) in order for the benefit limitation not to apply to the plan. The determination of whether a benefit limitation under paragraph (d) of this section would apply to a plan is based on whether the plan provides for an optional form of benefit that would be limited under section 436(d) and is not based on whether any participant elects payment of benefits in such a form.

(ii) ***Other limitations for collectively bargained plans*** —

(A) ***General rule.*** In the case of a collectively bargained plan to which a benefit limitation under paragraph (b), (c), or (e) of this section would (but for this paragraph (a)(5)) apply, the employer is treated as having made an election under section 430(f) to reduce the prefunding balance or funding standard carryover balance by such amount as is necessary for the adjusted funding target attainment percentage to be at the applicable

threshold (60 or 80 percent, as the case may be) in order for the benefit limitation not to apply to the plan, taking into account the adjustments described in paragraph (g)(2)(iii)(A), (g)(3)(ii)(A), or (g)(5)(i)(B) of this section, whichever applies.

(B) ***Collectively bargained plans.*** A plan is considered a collectively bargained plan for purposes of this paragraph (a)(5)(ii) if—

(*1*) At least 50 percent of the employees benefiting under the plan (within the meaning of § 1.410(b)-3(a)) are members of collective bargaining units for which the benefit levels under the plan are specified under a collective bargaining agreement; or

(*2*) At least 25 percent of the participants in the plan are members of collective bargaining units for which the benefit levels under the plan are specified under a collective bargaining agreement.

(iii) ***Exception for insufficient funding balances*** —

(A) ***In general.*** Paragraphs (a)(5)(i) and (a)(5)(ii) of this section apply with respect to a benefit limitation for any plan year only if the application of those paragraphs would result in the corresponding benefit limitation not applying for such plan year. Thus, if the plan's prefunding and funding standard carryover balances were reduced to zero and the resulting increase in plan assets taken into account would still not increase the plan's adjusted funding target attainment percentage enough to reach the threshold percentage applicable to the benefit limitation, the deemed election to reduce those balances pursuant to paragraph (a)(5)(i) or (a)(5)(ii) of this section does not apply.

(B) ***Presumed adjusted funding target attainment percentage less than 60 percent.*** During any period when a plan is presumed to have an adjusted funding target attainment percentage of less than 60 percent as a result of paragraph (h)(3) of this section, the plan is treated as if the prefunding balance and the funding standard carryover balance are insufficient to increase the adjusted funding target attainment percentage to the threshold percentage of 60 percent. Accordingly, the deemed election to reduce those balances pursuant to paragraphs (a)(5)(i) and (a)(5)(ii) of this section does not apply to the plan.

(iv) ***Other rules*** —

(A) ***Date of deemed election.*** If an election is deemed to be made pursuant to this paragraph (a)(5), then the plan sponsor is treated as having made that election on the date as of which the applicable benefit limitation would otherwise apply.

(B) ***Coordination with section 436 contributions.*** The determination of whether one of the benefit limitations described in paragraph (a)(5)(ii)(A) of this section would otherwise apply is made without regard to any contribution described in paragraph (f)(2) of this section. Thus, the requirement to reduce the prefunding balance or funding standard carryover balance under paragraph (a)(5)(ii) of this section cannot be avoided through the use of a section 436 contribution.

(C) ***Coordination with elections to offset minimum required contribution. See*** § 1.430(f)-1(d)(1)(ii) for rules on the coordination of elections to offset the minimum required contribution and the deemed election to reduce the prefunding and funding standard carryover balances under this paragraph (a)(5).

(v) ***Example.*** The following example illustrates the rules of this paragraph (a)(5):

Example. (i) Plan W is a collectively bargained, single employer defined benefit plan sponsored by Sponsor X, with a plan year that is the calendar year and a valuation date of January 1.
(ii) The enrolled actuary for Plan W issues a certification on March 1, 2010, that the 2010 AFTAP is 81%. Sponsor X adopts an amendment on March 25, 2010, to increase benefits under a formula based on participant compensation, with an effective date of May 1, 2010. (Because the formula is based on compensation, the exception in paragraph (c)(4)(i) of this section does not apply.) The plan's enrolled actuary determines that the plan's AFTAP for 2010 would be 75% if the benefits attributable to the plan amendment were taken into account in determining the funding target.

(iii) Because the AFTAP would be below the 80% threshold if the benefits attributable to the plan amendment were taken into account in determining the funding target, Sponsor X is deemed pursuant to paragraph (a)(5)(ii) of this section to have made an election to reduce Plan W's prefunding and funding standard carryover balances by the amount necessary for the AFTAP to reach the 80% threshold (reflecting the increase in funding target attributable to the plan amendment), provided that the amount of those balances is sufficient for this purpose.

(iv) If the deemed election described in paragraph (iii) of this example occurs, the plan amendment takes effect on its effective date (May 1, 2010). See paragraph (f) of this section for other methods to avoid or terminate benefit limitations (where, for example, the amount necessary for a benefit limitation not to apply for a plan year exceeds the sum of the prefunding balance and the funding standard carryover balance).

(6) ***Notice requirements.*** See section 101(j) of ERISA for rules requiring the plan administrator of a single employer plan to provide a written notice to participants and beneficiaries within 30 days after certain specified dates, which depend on whether the plan has become subject to a restriction described in the ERISA provisions that are parallel to Internal Revenue Code sections 436(b), 436(d), and 436(e) (ERISA sections 206(g)(1), 206(g)(3), and 206(g)(4), respectively).

(b) ***Limitation on shutdown benefits and other unpredictable contingent event benefits*** —

(1) ***In general.*** Except as otherwise provided in this paragraph (b), a plan satisfies section 436(b) and this paragraph (b) only if it provides that unpredictable contingent event benefits with respect to any unpredictable contingent events occurring during a plan year will not be paid if the adjusted funding target attainment percentage for the plan year is—

(i) Less than 60 percent; or

(ii) 60 percent or more, but would be less than 60 percent if the adjusted funding target attainment percentage were redetermined applying an actuarial assumption that the likelihood of occurrence of the unpredictable contingent event during the plan year is 100 percent.

(2) ***Exemption if section 436 contribution is made.*** The prohibition on payment of unpredictable contingent event benefits under paragraph (b)(1) of this section ceases to apply with respect to benefits attributable to an unpredictable contingent event occurring during the plan year upon payment by the plan sponsor of the contribution described in paragraph (f)(2)(iii) of this section with respect to that event. If the prior sentence applies with respect to an unpredictable contingent event, then all benefits with respect to the unpredictable contingent event must be paid, including benefits for periods prior to the contribution. *See* paragraph (f) of this section for additional rules.

(3) ***Rules of application*** —

(i) ***Participant-by-participant application.*** The limitations of section 436(b) and this paragraph (b) apply on a participant-by-participant basis. Thus, whether payment or commencement of an unpredictable contingent event benefit under a plan is restricted with respect to a participant is determined based on whether the participant satisfies the plan's eligibility requirements (other than the attainment of any age, performance of any service, receipt or derivation of any compensation, or the occurrence of death or disability) for such a benefit in a plan year in which the limitations of section 436(b) and this paragraph (b) apply.

(ii) ***Multiple contingencies.*** In the case of a plan that provides for a benefit that depends upon the occurrence of more than one unpredictable contingent event with respect to a participant, the unpredictable contingent event for purposes of section 436(b) and this paragraph (b) occurs upon the last to occur of those unpredictable contingent events.

(iii) ***Cessation of benefits.*** Cessation of a benefit under a plan upon the occurrence of a specified event is not an unpredictable contingent event for purposes of section 436(b) and this paragraph (b). Thus, section 436(b) and this paragraph (b) do not prohibit provisions of a plan that provide for cessation, suspension, or reduction of any benefits upon occurrence of any event. However, upon any subsequent recommencement of benefits (including any restoration of benefits), the rules of section 436 and this section will apply.

(4) ***Prior unpredictable contingent event.*** Unpredictable contingent event benefits attributable to an unpredictable contingent event that occurred within a period during which no limitation under this paragraph (b) applied to the plan are not affected by the limitation described in this paragraph (b) as it applies in a subsequent period. For example, if a plant shutdown occurs in 2010 and the plan's funded status is such that benefits contingent upon that plant shutdown are not subject to the limitation described in this paragraph (b) for that calendar plan year, this paragraph (b) does not apply to restrict payment of those benefits even if another plant shutdown occurs in 2012 that results in the restriction of benefits that are contingent upon that later plant shutdown under this paragraph (b) (where the plan's adjusted funding target attainment percentage for 2012 would be less than 60 percent taking into account the liability attributable to those shutdown benefits).

(c) ***Limitations on plan amendments increasing liability for benefits*** —

(1) ***In general.*** Except as otherwise provided in this paragraph (c), a plan satisfies section 436(c) and this paragraph (c) only if the plan provides that no amendment to the plan that has the effect of increasing liabilities of the plan by reason of increases in benefits, establishment of new benefits, changing the rate of benefit accrual, or changing the rate at which benefits become nonforfeitable will take effect in a plan year if the adjusted funding target attainment percentage for the plan year is—

(i) Less than 80 percent; or

(ii) 80 percent or more, but would be less than 80 percent if the benefits attributable to the amendment were taken into account in determining the adjusted funding target attainment percentage.

(2) ***Exemption if section 436 contribution is made*** —

(i) ***General rule.*** The limitations on plan amendments in paragraph (c)(1) of this section cease to apply with respect to an amendment upon payment by the plan sponsor of the contribution described in paragraph (f)(2)(iv) of this section, so that the amendment is permitted to take effect as of the later of the first day of the plan year or the effective date of the amendment. *See* paragraph (f) of this section for additional rules.

(ii) ***Amendments that do not increase funding target.*** If the amount of the contribution described in paragraph (f)(2)(iv) of this section is $0 (because the amendment increases benefits solely for future periods), the amendment is permitted to take effect without regard to this paragraph (c). However, *see* § 1.430(d)-1(d)(2) for a rule that requires such an amendment to be taken into account in determining the funding target and the target normal cost in certain situations.

(3) ***Rules of application regarding pre-existing plan provisions.*** If a plan contains a provision that provides for the automatic restoration of benefit accruals that were not permitted to accrue because of the application of section 436(e) and paragraph (e) of this section, the restoration of those accruals is generally treated as a plan amendment that is subject to section 436(c). However, such a provision is permitted to take effect without regard to the limits of section 436(c) and this paragraph (c) if—

(i) The continuous period of the limitation is 12 months or less; and

(ii) The plan's enrolled actuary certifies that the adjusted funding target attainment percentage for the plan would not be less than 60 percent taking into account the restored benefit accruals for the prior plan year.

(4) ***Exceptions*** —

(i) ***Benefit increases based on compensation*** —

(A) ***In general.*** In accordance with section 436(c)(3), section 436(c) and this paragraph (c) do not apply to any amendment that provides for an increase in benefits under a formula that is not based on a participant's compensation, but only if the rate of increase in benefits does not exceed the contemporaneous rate of increase in average wages of participants covered by the amendment. The determination of the rate of increase in average wages is made by taking into consideration the net increase in average wages from the period of time beginning with the effective date of the most recent benefit increase applicable to all of those participants who are covered by the current amendment and ending on the effective date of the current amendment.

(B) ***Application to participants who are not currently employed.*** If an amendment applies to both currently employed participants and other participants, all participants to whom the amendment applies are included in determining the increase in average wages of the participants covered by the amendment for purposes of this paragraph (c)(4)(i). For this purpose, participants who are not employees at any time during the period from the effective date of the most recent earlier benefit increase applicable to all of the

participants who are covered by the current amendment and ending on the effective date of the current amendment are treated as having no increase or decrease in wages for the period after severance from employment.

(C) ***Separate amendments for different plan populations.*** In lieu of a single amendment that applies to both currently employed participants and other participants as described in paragraph (c)(4)(i)(B) of this section, the employer can adopt multiple amendments—such as one that increases benefits for participants currently employed on the effective date of the current amendment and another one that increases benefits for other participants. In that case, the two amendments are considered separately in determining the increase in average wages, and the exception in this paragraph (c)(4)(i) applies separately to each amendment. Thus, the increase in benefits for currently employed participants takes effect if it satisfies the exception under this paragraph (c)(4), but the amendment increasing benefits for other participants who received no increase in wages from the employer during the period over which the increase in average wages is separately subject to the rules of this paragraph (c) without regard to the rules of this paragraph (c)(4).

(ii) ***Plan provisions providing for accelerated vesting.*** To the extent that any amendment provides for (or any pre-existing plan provision results in) a mandatory increase in the vesting of benefits under the Code or ERISA (such as vesting rate increases pursuant to statute, plan termination amendments or partial terminations under section 411(d)(3), and vesting increases required by the rules for top-heavy plans under section 416), that amendment (or pre-existing plan provision) does not constitute an amendment that changes the rate at which benefits become nonforfeitable for purposes of section 436(c) and this paragraph (c). However, this paragraph (c)(4)(ii) applies only to the extent the increase in vesting is necessary to enable the plan to continue to satisfy the requirements for qualified plans.

(iii) ***Authority for additional exceptions.*** The Commissioner may, in guidance of general applicability, issue additional rules under which other amendments to a plan are not treated as amendments to which section 436(c) and this paragraph (c) apply. See § 601.601(d)(2) relating to objectives and standards for publishing regulations, revenue rulings and revenue procedures in the Internal Revenue Bulletin.

(5) ***Rule for determining when an amendment takes effect.*** For purposes of section 436(c) and this paragraph (c), in the case of an amendment that increases benefits, the amendment takes effect under a plan on the first date on which any individual who is or could be a participant or beneficiary under the plan would obtain a legal right to the increased benefit if the individual were on that date to satisfy the applicable requirements for entitlement to the benefit (such as the attainment of any age, performance of any service, receipt or derivation of any compensation, or the occurrence of death, disability, or severance from employment).

(6) ***Treatment of mergers, consolidations, and transfers of plan assets into a plan.*** [Reserved]

(d) ***Limitations on prohibited payments*** —

(1) ***AFTAP less than 60 percent.*** A plan satisfies the requirements of section 436(d)(1) and this paragraph (d)(1) only if the plan provides that, if the plan's adjusted funding target attainment percentage for a plan year is less than 60 percent, a participant or beneficiary is not permitted to elect an optional form of benefit that includes a prohibited payment, and the plan will not pay any prohibited payment, with an annuity starting date on or after the applicable section 436 measurement date.

(2) ***Bankruptcy.*** A plan satisfies the requirements of section 436(d)(2) and this paragraph (d)(2) only if the plan provides that a participant or beneficiary is not permitted to elect an optional form of benefit that includes a prohibited payment, and the plan will not pay any prohibited payment, with an annuity starting date that occurs during any period in which the plan sponsor is a debtor in a case under title 11, United States Code, or similar Federal or State law, except for payments made within a plan year with an annuity starting date that occurs on or after the date on which the enrolled actuary of the plan certifies that the plan's adjusted funding target attainment percentage for that plan year is not less than 100 percent.

(3) ***Limited payment if AFTAP at least 60 percent but less than 80 percent*** —

(i) ***In general.*** A plan satisfies the requirements of section 436(d)(3) and this paragraph (d)(3) only if the plan provides that, in any case in which the plan's adjusted funding target attainment percentage for a plan year is 60 percent or more but is less than 80 percent, a participant or beneficiary is not permitted to elect the payment of an optional form of benefit that includes a prohibited payment, and the plan will not pay any prohibited payment, with an annuity starting date on or after the applicable section 436 measurement date, unless the present value, determined in accordance with section 417(e)(3), of the portion of the benefit that is being paid in a prohibited payment (which portion is determined under paragraph (d)(3)(iii)(B) of this section) does not exceed the lesser of—

(A) 50 percent of the present value (determined in accordance with section 417(e)(3)) of the benefit payable in the optional form of benefit that includes the prohibited payment; or

(B) 100 percent of the PBGC maximum benefit guarantee amount described in paragraph (d)(3)(iii)(C) of this section.

(ii) ***Bifurcation if optional form unavailable*** —

(A) ***Requirement to offer bifurcation.*** If an optional form of benefit that is otherwise available under the terms of the plan is not available as of the annuity starting date because of the application of paragraph (d)(3)(i) of this section, then the plan must permit the participant or beneficiary to elect to—

(*1*) Receive the unrestricted portion of that optional form of benefit (determined under the rules of paragraph (d)(3)(iii)(D) of this section) at that annuity starting date, determined by treating the unrestricted portion of the benefit as if it were the participant's or beneficiary's entire benefit under the plan;

(*2*) Commence benefits with respect to the participant's or beneficiary's entire benefit under the plan in any other optional form of benefit available under the plan at the same annuity starting date that satisfies paragraph (d)(3)(i) of this section; or

(*3*) Defer commencement of the payments to the extent described in paragraph (d)(5) of this section.

(B) ***Rules relating to bifurcation.*** If the participant or beneficiary elects payment of the unrestricted portion of the benefit as described in paragraph (d)(3)(ii)(A)(*1*) of this section, then the plan must permit the participant or beneficiary to elect payment of the remainder of the participant's or beneficiary's benefits under the plan in any optional form of benefit at that annuity starting date otherwise available under the plan that would not have included a prohibited payment if that optional form applied to the entire benefit of the

participant or beneficiary. The rules of § 1.417(e)-1 are applied separately to the separate optional forms for the unrestricted portion of the benefit and the remainder of the benefit (the restricted portion).

(C) ***Plan alternative that anticipates election of payment that includes a prohibited payment.*** With respect to an optional form of benefit that includes a prohibited payment and that is not permitted to be paid under paragraph (d)(3)(i) of this section, for which no additional information from the participant or beneficiary (such as information regarding a social security leveling optional form of benefit) is needed to make that determination, rather than wait for the participant or beneficiary to elect such optional form of benefit, a plan is permitted to provide for separate elections with respect to the restricted and unrestricted portions of that optional form of benefit. However, the rule in the preceding sentence applies only if—

(*1*) The plan applies the rule to all such optional forms; and

(*2*) The plan identifies the option that the bifurcation election replaces.

(iii) ***Definitions applicable to limited payment option*** —

(A) ***In general.*** The definitions in this paragraph (d)(3)(iii) apply for purposes of this paragraph (d)(3).

(B) ***Portion of benefit being paid in a prohibited payment.*** If a benefit is being paid in an optional form for which any of the payments is greater than the amount payable under a straight life annuity to the participant or beneficiary (plus any social security supplements described in the last sentence of section 411(a)(9) payable to the participant or beneficiary) with the same annuity starting date, then the portion of the benefit that is being paid in a prohibited payment is the excess of each payment over the smallest payment during the participant's lifetime under the optional form of benefit (treating a period after the annuity starting date and during the participant's lifetime in which no payments are made as a payment of zero).

(C) ***PBGC maximum benefit guarantee amount.*** The PBGC maximum benefit guarantee amount described in this paragraph (d)(3)(iii)(C) is the present value (determined under guidance prescribed by the Pension Benefit Guaranty Corporation, using the interest and mortality assumptions under section 417(e)) of the maximum benefit guarantee with respect to a participant (based on the participant's age or the beneficiary's age at the annuity starting date) under section 4022 of ERISA for the year in which the annuity starting date occurs.

(D) ***Unrestricted portion of the benefit*** —

(*1*) ***General rule.*** Except as otherwise provided in this paragraph (d)(3)(iii)(D), the unrestricted portion of the benefit with respect to any optional form of benefit is 50 percent of the amount payable under the optional form of benefit.

(*2*) ***Special rule for forms which include social security leveling or a refund of employee contributions.*** For an optional form of benefit that is a prohibited payment on account of a social security leveling feature (as defined in § 1.411(d)-3(g)(16)) or a refund of employee contributions feature (as defined in § 1.411(d)-3(g)(11)), the unrestricted portion of the benefit is the optional form of benefit that would apply if the participant's or beneficiary's accrued benefit were 50 percent smaller.

(3) ***Limited to PBGC maximum benefit guarantee amount.*** After the application of the preceding rules of this paragraph (d)(3)(iii)(D), the unrestricted portion of the benefit with respect to the optional form of benefit is reduced, to the extent necessary, so that the present value (determined in accordance with section 417(e)) of the unrestricted portion of that optional form of benefit does not exceed the PBGC maximum benefit guarantee amount (described in paragraph (d)(3)(iii)(C) of this section).

(iv) ***Other rules*** —

(A) ***One time application.*** A plan satisfies the requirements of this paragraph (d)(3) only if the plan provides that, in the case of a participant with respect to whom a prohibited payment (or series of prohibited payments under a single optional form of benefit) is made pursuant to paragraph (d)(3)(i) or (ii) of this section, no additional prohibited payment may be made with respect to that participant during any period of consecutive plan years for which prohibited payments are limited under this paragraph (d).

(B) ***Treatment of beneficiaries.*** For purposes of this paragraph (d)(3), benefits provided with respect to a participant and any beneficiary of the participant (including an alternate payee, as defined in section 414(p)(8)) are aggregated. If the only benefits paid under the plan with respect to the participant are death benefits payable to the beneficiary, then paragraph (d)(3)(iii)(B) of this section is applied by substituting the lifetime of the beneficiary for the lifetime of the participant. If the accrued benefit of a participant is allocated to such an alternate payee and one or more other persons, then the unrestricted amount under paragraph (d)(3)(iii)(D) of this section is allocated among such persons in the same manner as the accrued benefit is allocated, unless a qualified domestic relations order (as defined in section 414(p)(1)(A)) with respect to the participant or the alternate payee provides otherwise. See paragraphs (j)(2)(ii) and (j)(6)(ii) of this section for other special rules relating to beneficiaries.

(C) ***Treatment of annuity purchases and plan transfers.*** This paragraph (d)(3)(iv)(C) applies for purposes of applying paragraphs (d)(3)(i) and (iii)(D) of this section. In the case of a prohibited payment described in paragraph (j)(6)(i)(B) of this section (relating to purchase from an insurer), the present value of the portion of the benefit that is being paid in a prohibited payment is the cost to the plan of the irrevocable commitment and, in the case of a prohibited payment described in paragraph (j)(6)(i)(C) of this section (relating to certain plan transfers), the present value of the portion of the benefit that is being paid in a prohibited payment is the present value of the liabilities transferred (determined in accordance with section 414(l)). In addition, the present value of the accrued benefit is substituted for the present value of the benefit payable in the optional form of benefit that includes the prohibited payment in paragraph (d)(3)(i)(A) of this section. (Further, *see* § 1.411(d)-4, A-2(a)(3)(ii), for a rule under section 411(d)(6) that applies to an optional form of benefit that includes a prohibited payment described in paragraph (j)(6)(i)(B) of this section.)

(v) ***Examples.*** The following examples illustrate the rules of this paragraph (d)(3):

> *Example 1.* (i) Plan A has a plan year that is the calendar year, and is subject to the restriction on prohibited payments under paragraph (d)(3) of this section for the 2010

plan year. Participant P is not married, and retires at age 65 during 2010, while the restriction under paragraph (d)(3) of this section applies to Plan A. P's accrued benefit is $10,000 per month, payable commencing at age 65 as a straight life annuity. Plan A provides for an optional single-sum payment (subject to the restrictions under section 436) equal to the present value of the participant's accrued benefit using actuarial assumptions under section 417(e). P's single-sum payment, determined without regard to this paragraph (d), is calculated to be $1,416,000, payable at age 65.
(ii) The PBGC guaranteed monthly benefit for a straight life annuity payable at age 65 in 2010 (for purposes of this example) is assumed to be $4,500. The PBGC maximum benefit guarantee amount at age 65 is assumed to be $637,200 for 2010.

(iii) Because Participant P retires during a period when the restriction in paragraph (d)(3) of this section applies to Plan A, only a portion of the benefit can be paid in the form of a single sum. P elects a single-sum payment. Because a single-sum payment is a prohibited payment, a determination must be made whether the payment can be paid under paragraph (d)(3)(i) of this section. In this case, because the present value of the portion of Participant P's benefit that is being paid in a prohibited payment exceeds the lesser of 50% of the benefit or the PBGC maximum benefit guarantee amount, it cannot be paid under paragraph (d)(3)(i) of this section. Accordingly, the maximum single sum that P can receive is $637,200 (that is, the lesser of 50% of $1,416,000 or $637,200).

(iv) Pursuant to paragraph (d)(3)(ii) of this section, Plan A must offer P the option to bifurcate the benefit into unrestricted and restricted portions. The unrestricted portion is a monthly straight life annuity of $4,500, which can be paid in a single sum of $637,200. If P elects to receive the unrestricted portion of the benefit in the form of a single sum, then, with respect to the $5,500 restricted portion, Plan A must permit P to elect any form of benefit that would otherwise be permitted with respect to the full $10,000 and that is not a prohibited payment. Alternatively, Plan A may provide that P is permitted to elect to defer commencement of the restricted portion, subject to applicable qualification rules.

Example 2. (i) The facts are the same as in *Example 1.* In addition, Plan A provides an optional form of payment (subject to any benefit restrictions under section 436) that consists of a partial payment equal to the total return of employee contributions to the plan accumulated with interest, with an annuity payment for the remainder of the participant's benefit.
(ii) Participant Q is not married, and retires at age 65 during 2010, while Plan A is subject to the restriction under paragraph (d)(3) of this section. Participant Q has an accrued benefit equal to a straight life annuity of $3,000 per month. Under the optional form described in paragraph (i) of this *Example 2,* Q may elect a partial payment of $99,120

(representing the return of employee contributions accumulated with interest), plus a straight life annuity of $2,300 per month. The present value of Participant Q's accrued benefit, using actuarial assumptions under section 417(e), is $424,800.

(iii) Because the present value of the portion of Q's benefit that is being paid in a prohibited payment ($99,120) does not exceed the lesser of 50% of the present value of benefits (50% of $424,800) or 100% of the PBGC maximum benefit guarantee amount ($637,200 at age 65 for 2010), the optional form described in paragraph (i) of this *Example 2* is permitted to be paid under paragraph (d)(3)(i) of this section.

Example 3. (i) The facts are the same as in *Example 1.* In addition, Plan A provides an optional form of payment under a social security leveling option (subject to any benefit restrictions under section 436) that consists of an increased temporary benefit payable until age 62, with reduced payments beginning at age 62. The benefit is structured so that the combination of the participant's pension benefit and Social Security benefit provides an approximately level income for the participant's lifetime. The PBGC maximum benefit guarantee amount at age 55 is assumed to be $362,776 for 2010.
(ii) Participant R retires at age 55 in 2010 and is eligible to receive a level lifetime annuity of $1,200 per month beginning immediately. Instead, Participant R elects to receive a benefit under the social security leveling optional form of payment. Participant R's Social Security benefit payable at age 62 is projected, under the terms specified in Plan A, to be $1,500 per month. The Plan A adjustment factor for the social security leveling option using the minimum present value requirements of section 417(e)(3) is .590 at age 55. Therefore, Participant R's benefit payable from age 55 to age 62 is $2,085 per month ($1,200 + .590 × $1,500), and the benefit payable for Participant's lifetime, beginning after age 62, is $585 per month ($2,085−$1,500).

(iii) Because the optional form provides some payments which are greater than payments described in paragraph (j)(6)(i)(A) of this section ($1,200), the portion of the benefit that is being paid in a prohibited payment is $1,500 per month which is payable from age 55 to age 62. Using the applicable interest and mortality rates under section 417(e) as in effect for Plan A at the time the benefit commences, the present value of a temporary benefit of $1,500 per month ($2,085−$585) payable from age 55 to age 62 is $106,417, and the present value of the entire benefit (a temporary benefit of $2,085 per month payable from age 55 to age 62 plus a deferred lifetime benefit of $585 commencing at age 62) is $207,468.

(iv) Because $106,417 is more than 50% of $207,468 (and because 50% of Participant R's benefit is less than $362,776, which is the PBGC maximum guaranteed benefit amount at age 55 for 2010), Participant R can only receive 50% of the benefit in the form of the social security leveling option. Pursuant to paragraph (d)(3)(ii) of this section, Plan

A must offer Participant R the option to bifurcate the benefit into unrestricted and restricted portions. Participant R elects to receive the restricted portion of the early retirement benefit as a level lifetime annuity of $600 commencing at age 55.

(v) Participant R elects to receive the unrestricted portion of the early retirement benefit in the social security leveling form of payment. This portion of the benefit is determined under the social security leveling form of payment as if Participant R's benefit was one-half of the early retirement benefit, or $600. However, using a monthly level lifetime benefit of $600 and a monthly social security benefit of $1,500, Participant R would have a negative benefit after age 62 ($600 + .590 × $1,500 is only $1,485; offsetting $1,500 at age 62 would produce a negative amount). Plan A provides that in this situation, the benefit under the social security leveling option is an actuarially equivalent monthly annuity payable until age 62, with zero payable thereafter. Using the actuarial equivalence factor of .590 at age 55, the plan administrator determines that the unrestricted portion of Participant R's benefit is $1,463 per month, payable from age 55 to age 62 ($600 + .590 × $1,463 = $1,463 payable until age 62; $1,463−$1,463 = zero payable after age 62).

(vi) Combining the unrestricted and restricted portions of the benefit, Participant R will receive a total of $2,063 per month from age 55 to age 62 ($1,463 from the unrestricted portion of the benefit plus $600 from the restricted portion of the benefit), and $600 per month beginning at age 62 (zero from the unrestricted portion of the benefit plus $600 from the restricted portion of the benefit).

(4) ***Exception for cessation of benefit accruals.*** This paragraph (d) does not apply to a plan for a plan year if the terms of the plan, as in effect for the period beginning on September 1, 2005, provided for no benefit accruals with respect to any participants. If a plan that is described in this paragraph (d)(4) provides for benefit accruals during any time on or after September 1, 2005 (treating benefit increases pursuant to a plan amendment as benefit accruals), this paragraph (d)(4) ceases to apply for the plan as of the date any benefits accrue under the plan (or the date the amendment takes effect). For example, the exception in this paragraph (d)(4) does not apply to a plan after the plan increases benefits to take into account increases in the limitations under section 415(b) on or after September 1, 2005.

(5) ***Right to delay commencement.*** If a participant or beneficiary requests a distribution in an optional form of benefit that includes a prohibited payment that is not permitted to be paid under paragraph (d)(1), (d)(2), or (d)(3) of this section, the participant retains the right to delay commencement of benefits in accordance with the terms of the plan and applicable qualification requirements (such as sections 411(a)(11) and 401(a)(9)).

(6) ***Plan alternative for special optional forms.*** A plan is permitted to offer optional forms of benefit that are solely available during the period in which paragraph (d)(1), (d)(2), or (d)(3) of this section applies to limit prohibited payments under the plan. For example, a plan may permit participants or beneficiaries who commence benefits during the period in which paragraph (d)(1) of this section (or paragraph (d)(2) of this section) applies to limit prohibited payments under the plan to elect, within a

specified period after the date on which that paragraph ceases to apply to limit prohibited payments under the plan, to receive the remaining benefit in the form of a single-sum payment equal to the present value of the remaining benefit, but only to the extent then permitted under this paragraph (d). As another example, during a period when paragraph (d)(3) of this section applies to a plan, the plan may permit participants and beneficiaries to elect payment in an optional form of benefit that provides for the current payment of the unrestricted portion of the benefit, with a delayed commencement for the restricted portion of the benefit (subject to other applicable qualification requirements, such as sections 411(a)(11) and 401(a)(9)), or may satisfy paragraph (d)(3)(i) of this section by permitting participants and beneficiaries to elect an optional form of benefit that combines an unsubsidized single-sum payment for over 50 percent of the accrued benefit with a subsidized early retirement life annuity for the remainder of the accrued benefit. Any such optional forms must satisfy this paragraph (d) and applicable qualification requirements, including satisfaction of section 417(e) and section 415 (at each annuity starting date).

(7) ***Exception for distributions permitted without consent of the participant under section 411(a)(11).*** [Reserved]

(e) ***Limitation on benefit accruals for plans with severe funding shortfalls*** —

(1) ***In general.*** Except as otherwise provided in this paragraph (e), a plan satisfies the requirements of section 436(e) and this paragraph (e) only if it provides that, in any case in which the plan's adjusted funding target attainment percentage for a plan year is less than 60 percent, benefit accruals under the plan will cease as of the applicable section 436 measurement date. If a plan is required to cease benefit accruals under this paragraph (e), then the plan is not permitted to be amended in a manner that would increase the liabilities of the plan by reason of an increase in benefits or establishment of new benefits. The preceding sentence applies regardless of whether an amendment would otherwise be permissible under paragraph (c)(2) or (c)(3) of this section.

(2) ***Exemption if section 436 contribution is made.*** The prohibition on additional benefit accruals under a plan described in paragraph (e)(1) of this section ceases to apply with respect to a plan year, effective as of the first day of the plan year, upon payment by the plan sponsor of the contribution described in paragraph (f)(2)(v) of this section. See paragraph (f) of this section for additional rules.

(3) ***Special rule under section 203 of the Worker, Retiree, and Employer Recovery Act of 2008.*** [Reserved]

(f) ***Methods to avoid or terminate benefit limitations*** —

(1) ***In general.*** This paragraph (f) sets forth rules relating to employer contributions and other methods to avoid or terminate the application of section 436 limitations under a plan for a plan year. In general, there are four methods a plan sponsor may utilize to avoid or terminate one or more of the benefit limitations under this section for a plan year. Two of these methods (where the plan sponsor elects to reduce the prefunding balance or funding standard carryover balance and where the plan sponsor makes additional contributions under section 430 for the prior plan year within the time period provided by section 430(j)(1) that are not added to the prefunding balance) involve increasing the amount of plan assets which are taken into account in determining the adjusted funding target attainment percentage. The other two methods (making a contribution that is specifically designated as a current year contribution to avoid or terminate application of a benefit limitation under paragraph (b), (c), or (e) of this section, and providing security under section 436(f)(1)) are described in paragraphs (f)(2) and (f)(3) of this section, respectively.

(2) ***Current year contributions to avoid or terminate benefit limitations*** —

(i) *General rules* —

(A) *Amount of contribution* —

(1) ***In general.*** This paragraph (f)(2) sets forth rules regarding contributions to avoid or terminate the application of section 436 limitations under a plan for a plan year that apply to unpredictable contingent event benefits, plan amendments that increase liabilities for benefits, and benefit accruals.

(2) ***Interest adjustment.*** Any contribution made by a plan sponsor pursuant to this paragraph (f)(2) on a date other than the valuation date for the plan year must be adjusted with interest at the plan's effective interest rate under section 430(h)(2)(A) for the plan year. If the plan's effective interest rate for the plan year has not been determined at the time of the contribution, then this interest adjustment must be made using the highest of the three segment rates as applicable for the plan year under section 430(h)(2)(C). In such a case, if the effective interest rate for the plan year under section 430(h)(2)(A) is subsequently determined to be less than that highest rate, the excess is recharacterized as an employer contribution taken into account under section 430 for the current plan year.

(B) ***Timing requirement for section 436 contributions.*** Any contribution described in this paragraph (f)(2) must be paid before the unpredictable contingent event benefits are permitted to be paid, the plan amendment is permitted to take effect, or the benefit accruals are permitted to resume. In addition, any contribution described in this paragraph (f)(2) must be paid during the plan year.

(C) ***Prefunding balance or funding standard carryover balance may not be used.*** No prefunding balance or funding standard carryover balance under section 430(f) may be used as a contribution described in this paragraph (f)(2). However, a plan sponsor is permitted to elect to reduce the funding standard carryover balance or the prefunding balance in order to increase the adjusted funding target attainment percentage for a plan year. See paragraph (a)(5) of this section for a rule mandating such a reduction in certain situations.

(ii) *Section 436 contributions separate from minimum required contributions* —

(A) ***In general.*** The contributions described in this paragraph (f)(2) are contributions described in sections 436(b)(2), 436(c)(2), and 436(e)(2), and are separate from any minimum required contributions under section 430. Thus, if a plan sponsor makes a contribution described in this paragraph (f)(2) for a plan year but does not make the minimum required contribution for the plan year, the plan fails to satisfy the minimum funding requirements under section 430 for the plan year. In addition, a contribution described in this paragraph (f)(2) is disregarded in determining the maximum addition to the prefunding balance under section 430(f)(6) and § 1.430(f)-1(b)(1)(ii).

(B) ***Designation requirement.*** Any contribution made by a plan sponsor pursuant to this paragraph (f)(2) must be designated as such at the time the contribution is used to avoid or terminate the limitations under this paragraph (f)(2), including designation of the benefits or amendments to which the limits do not apply because of the contribution. Except as specifically provided in paragraph (f)(2)(i)(A)(2), (g) or (h) of this section, such a contribution cannot be subsequently recharacterized with respect to any plan year as a contribution to satisfy a minimum required contribution obligation, or otherwise. The

designation must be made in accordance with the rules and procedures that otherwise apply to elections under § 1.430(f)-1(f) with respect to the prefunding and funding standard carryover balances.

(C) ***Requirement to recertify AFTAP.*** If the plan's enrolled actuary has already certified the adjusted funding target attainment percentage for the plan year, a plan sponsor is treated as making the contribution described in paragraph (f)(2)(iii)(B), (f)(2)(iv)(B), or (f)(2)(v) of this section for the plan year only after the plan's enrolled actuary certifies an updated adjusted funding target attainment percentage for the plan year that takes into account the increased liability for the unpredictable contingent event benefits, the plan amendments, or restored accruals, and the associated section 436 contribution, under the rules of paragraph (h)(4)(v) of this section. See also paragraph (g)(4)(i) of this section for a requirement to modify the presumed adjusted funding target attainment percentage to take the liability for the unpredictable contingent event benefits or plan amendments, and the associated section 436 contribution, into account (if the contribution described in paragraph (f)(2)(iii)(B), (f)(2)(iv)(B), or (f)(2)(v) of this section is made before the plan's enrolled actuary certifies the adjusted funding target attainment percentage for the plan year).

(iii) ***Contribution for unpredictable contingent event benefits.*** In the case of a contribution to avoid or terminate the application of the limitation on benefits attributable to an unpredictable contingent event under section 436(b)—

(A) In the event that the adjusted funding target attainment percentage for the plan year determined without taking into account the liability attributable to the unpredictable contingent event benefits is less than 60 percent, the amount of the contribution under section 436(b)(2) is equal to the amount of the increase in the funding target of the plan for the plan year if the benefits attributable to the unpredictable contingent event were included in the determination of the funding target.

(B) In the event that the adjusted funding target attainment percentage for the plan year determined without taking into account the liability attributable to the unpredictable contingent event benefits is 60 percent or more, the amount of the contribution under section 436(b)(2) is the amount that would be sufficient to result in an adjusted funding target attainment percentage for the plan year of 60 percent if the contribution (and any prior section 436 contributions made for the plan year) were included as part of the plan assets and the funding target were to take into account the adjustments described in paragraph (g)(2)(iii)(A), (g)(3)(ii)(A), or (g)(5)(i)(B) of this section, whichever applies.

(iv) ***Contribution for plan amendments increasing liability for benefits.*** In the case of a contribution to avoid or terminate the application of the limitation on benefits attributable to a plan amendment under section 436(c)—

(A) In the event that the adjusted funding target attainment percentage for the plan year determined without taking into account the liability attributable to the plan amendment is less than 80 percent, the amount of the contribution under section 436(c)(2) is equal to the amount of the increase in the funding target of the plan for the plan year if the liabilities attributable to the amendment were included in the determination of the funding target.

(B) In the event that the adjusted funding target attainment percentage for the plan year determined without taking into account the liability attributable to the plan amendment is 80 percent or more, the amount of the contribution under section 436(c)(2) is the amount that would be sufficient to result in an adjusted funding target attainment percentage for the plan year of 80 percent if the contribution (and any prior section 436 contributions made for the plan year) were included as part of the plan assets and the funding target were to take into account the adjustments described in paragraph (g)(2)(iii)(A), (g)(3)(ii)(A), or (g)(5)(i)(B) of this section, whichever applies.

(v) ***Contribution required for continued benefit accruals.*** In the case of a contribution to avoid or terminate the application of the limitation on accruals under section 436(e), the amount of the contribution under section 436(e)(2) is equal to the amount sufficient to result in an adjusted funding target attainment percentage for the plan year of 60 percent if the contribution (and any prior section 436 contributions made for the plan year) were included as part of the plan assets and the funding target were to take into account the adjustments described in paragraph (g)(2)(iii)(A) or (g)(5)(i)(B) of this section, whichever applies.

(3) ***Security to increase adjusted funding target attainment percentage*** —

(i) ***In general.*** For purposes of avoiding benefit limitations under section 436, a plan sponsor may provide security in the form described in paragraph (f)(3)(ii) of this section. In such a case, the adjusted funding target attainment percentage for the plan year is determined by treating as an asset of the plan any security provided by a plan sponsor by the valuation date for the plan year in a form meeting the requirements of paragraph (f)(3)(ii) of this section. However, this security is not taken into account as a plan asset for any other purpose, including section 430.

(ii) ***Form of security.*** The forms of security permitted under paragraph (f)(3)(i) of this section are limited to—

(A) A bond issued by a corporate surety company that is an acceptable surety for purposes of section 412 of ERISA; or

(B) Cash, or United States obligations which mature in 3 years or less, held in escrow by a bank or an insurance company.

(iii) ***Enforcement.*** Any form of security provided under paragraph (f)(3)(i) of this section must provide—

(A) That it will be paid to the plan upon the earliest of—

(*1*) The plan termination date as defined in section 4048 of ERISA;

(*2*) If there is a failure to make a payment of the minimum required contribution for any plan year beginning after the security is provided, the due date for the payment under section 430(j)(1) or 430(j)(3); or

(*3*) If the plan's adjusted funding target attainment percentage is less than 60 percent (without regard to any security provided under this paragraph (f)(3)) for a consecutive period of 7 plan years, the valuation date for the last plan year in the 7-year period; and

(B) That the plan administrator must notify the surety, bank, or insurance company that issued or holds the security of any event described in paragraph (f)(3)(iii)(A) of this section within 10 days of its occurrence.

(iv) ***Release of security.*** The form of security is permitted to provide that it will be released (and any amounts thereunder will be refunded to the plan sponsor together with any interest accrued thereon) as provided in the agreement governing the security, but such release is not permitted until the plan's enrolled actuary has certified that the plan's adjusted funding target attainment percentage for a plan year is at least 90 percent (without regard to any security provided under this paragraph (f)(3)) or until replacement security has been provided in accordance with paragraph (f)(3)(vi) of this section.

(v) ***Contribution of security to plan.*** Any security provided under this paragraph (f)(3) that is subsequently turned over to the plan (whether pursuant to the enforcement mechanism of paragraph (f)(3)(iii) of this section or after its release under paragraph (f)(3)(iv) of this section) is treated as a contribution by the plan sponsor taken into account under section 430 when contributed and, if turned over pursuant to paragraph (f)(3)(iii) of this section, is not a contribution under paragraph (f)(2) of this section.

(vi) ***Replacement security.*** If security has been provided to a plan pursuant to this paragraph (f)(3), the plan sponsor may provide new security to the plan and subsequently or simultaneously have the original security released, but only if—

(A) The new security is in a form that satisfies the requirements of paragraph (f)(3)(ii) of this section;

(B) The amount of the new security is no less than the amount of the original security, determined at the time the original security is released; and

(C) The period described in paragraph (f)(3)(iii)(A)(*3*) of this section with respect to the new security is the same as the period that applied under that paragraph to the original security.

(4) ***Examples.*** The following examples illustrate the rules of this paragraph (f):

> *Example 1.* (i) Plan Z is a non-collectively bargained defined benefit plan with a plan year that is the calendar year and a valuation date of January 1. Plan Z's sponsor is not in bankruptcy, and Plan Z did not purchase any annuities in 2009 or 2010. As of January 1, 2011, Plan Z does not have a funding standard carryover balance or a prefunding balance, and is not in at-risk status. As of that date, Plan Z has plan assets (and adjusted plan assets) of $2,000,000 and a funding target (and an adjusted funding target) of $2,550,000. On March 1, 2011, the enrolled actuary for the plan certifies that the AFTAP as of January 1, 2011, is 78.43%. The effective interest rate for Plan Z for the 2011 plan year is 5.5%.
> (ii) On May 1, 2011, the plan sponsor amends Plan Z to increase benefits. The enrolled actuary for the plan determines that the present value, as of January 1, 2011, of the increase in the funding target due to the amendment is $400,000. Because the AFTAP prior to the plan amendment is less than 80%, Plan Z is subject to the restriction on plan amendments in

paragraph (c) of this section, and the amendment cannot take effect unless the employer utilizes one of the methods described in paragraph (f) of this section to avoid benefit limitations.

(iii) In order for the amendment to be permitted to take effect, the plan sponsor makes a contribution described in paragraph (f)(2) of this section. Because the AFTAP prior to the amendment was less than 80%, the provisions of paragraph (f)(2)(iv)(A) of this section apply. The amount of the contribution as of January 1, 2011, needed to avoid the restriction on plan amendments under paragraph (c) of this section is equal to the amount of the increase in funding target attributable to the amendment, or $400,000. Under the provisions of paragraph (f)(2)(iv)(A) of this section, this contribution is required even though, if the contribution were included as part of the plan assets and the liabilities attributable to the plan amendment were included in the funding target, the AFTAP would be 81.36% (that is, adjusted plan assets of $2,000,000 plus the contribution of $400,000 as of January 1, 2011; divided by the adjusted funding target of $2,550,000 increased to reflect the additional $400,000 in the funding target attributable to the plan amendment).

(iv) However, because the contribution is not paid until May 1, 2011, the necessary contribution amount must be adjusted to reflect interest from the valuation date to the date of the contribution, at Plan Z's effective interest rate for the 2011 plan year. The amount of the required contribution after adjustment is $407,203, determined as $400,000 increased for 4 months of compound interest at an effective annual interest rate of 5.5%.

(v) A contribution of $407,203 is made on May 1, 2011, and is designated as a contribution under paragraph (f)(2) of this section with respect to the May 1, 2011, plan amendment. Accordingly, the contribution is not applied toward minimum funding requirements under section 430, and is not eligible for inclusion in the prefunding balance under § 1.430(f)-1(b)(1). Since this contribution meets the requirements of paragraph (f)(2) of this section, the plan amendment takes effect in accordance with its terms.

Example 2. (i) The facts are the same as in *Example 1,* except that the plan is in at-risk status under section 430(i). The funding target determined under section 430(i) is $2,600,000, and the funding target determined without regard to section 430(i) is $2,550,000.
(ii) On May 1, 2011, the plan sponsor amends Plan Z to increase benefits. The plan's enrolled actuary determines that the present value as of January 1, 2011 of the increase in the funding target due to the amendment (taking into account the at-risk status of the plan) is $440,000. Because the AFTAP prior to the plan amendment is 78.43% (determined taking into account the at-risk status of Plan Z), Plan Z is subject to the restriction on plan amendments in paragraph (c) of this section, and the amendment cannot take effect unless the employer utilizes one of the methods described in this paragraph (f) to avoid benefit limitations.

(iii) In order for this amendment to be permitted to take effect, the plan sponsor makes a contribution described in paragraph (f)(2) of this section. Because the AFTAP prior to the amendment was less than 80%, the provisions of paragraph (f)(2)(iv)(A) of this section apply. The amount of the contribution as of January 1, 2011, needed to avoid the restriction on plan amendments under paragraph (c) of this section is equal to the amount of the increase in funding target attributable to the amendment, or $440,000. Under the provisions of paragraph (f)(2)(iv)(A) of this section, this contribution is required even though, if the contribution were included as part of the plan assets and the liability attributable to the plan amendment were included in the funding target, the AFTAP would exceed 80%.

(iv) However, because the contribution is not paid until May 1, 2011, the necessary contribution amount must be adjusted to reflect interest from the valuation date to the date of the contribution, at Plan Z's effective interest rate for the 2011 plan year. The amount of the required contribution after adjustment is $447,923, determined as $440,000 increased for 4 months of compound interest at an effective annual interest rate of 5.5%.

(v) A contribution of $447,923 is made on May 1, 2011, and is designated as a contribution under paragraph (f)(2) of this section with respect to the May 1, 2011, plan amendment. Accordingly, the contribution is not applied toward minimum funding requirements under section 430, and is not eligible for inclusion in the prefunding balance under § 1.430(f)-1(b)(1). Since this contribution meets the requirements of paragraph (f)(2) of this section, the plan amendment takes effect in accordance with its terms.

Example 3. (i) The facts are the same as in *Example 1,* except that the enrolled actuary for the plan does not issue the certification of the 2011 AFTAP until September 1, 2011. Prior to October 1, 2010, the enrolled actuary had certified the 2010 AFTAP to be 82%. Other than this amendment, no other amendment or unpredictable contingent event has occurred that requires a recertification. As of May 1, 2011, the plan's effective interest rate for the 2011 plan year has not yet been determined. The highest of the three segment rates applicable to the 2011 plan year under section 430(h)(2)(C) is 6%.
(ii) Because the enrolled actuary has not certified the actual AFTAP as of January 1, 2011, and the amendment is scheduled to take effect after April 1, 2011, the rules of paragraph (h)(2)(iii) of this section apply. Accordingly, the AFTAP for 2011 (prior to reflecting the effect of the amendment) is presumed to be 10 percentage points lower than the 2010 AFTAP, or 72%. Because this presumed AFTAP is less than 80%, the restriction on plan amendments in paragraph (c) of this section applies, and the plan amendment cannot take effect.

(iii) In order to allow the plan amendment to take effect, the plan sponsor decides to make a contribution under paragraph (f)(2) of this section on May 1, 2011. Because the presumed AFTAP was less than 80% prior to reflecting the plan amendment, the rules of paragraph (f)(2)(iv)(A) of this section apply, and the amount of the contribution under section 436(c)(2)

is the amount of the increase in the funding target for the year if the plan amendment were included in the determination of the funding target. Accordingly, an additional contribution of $400,000 is required as of January 1, 2011, to avoid the restriction on plan amendments under paragraph (c) of this section.

(iv) However, since the contribution is not made until May 1, 2011, the amount of the required contribution must be adjusted to reflect interest from the valuation date to the date of the contribution. Since the effective interest rate has not yet been determined, the interest adjustment is based on the highest of the three segment rates applicable for the 2011 plan year under section 430(h)(2)(C), or 6%. The amount of the required contribution after adjustment is $407,845, determined as $400,000 increased for 4 months of compound interest at the highest segment interest rate for 2011, or 6%.

(v) A contribution of $407,845 is made on May 1, 2011, and is designated as a contribution under paragraph (f)(2) of this section with respect to the May 1, 2011, plan amendment. Accordingly, the contribution is not applied toward minimum funding requirements under section 430, and is not eligible for inclusion in the prefunding balance under § 1.430(f)-1(b)(1). Since this contribution meets the requirements of paragraph (f)(2) of this section, the plan amendment takes effect in accordance with its terms.

(vi) After the plan's effective interest rate for 2011 has been determined to be 5.5%, the amount of excess interest previously contributed is recharacterized as an employer contribution taken into account under section 430 for 2011 (because that rate for the year is less than 6%).

(g) ***Rules of operation for periods prior to and after certification*** —

(1) ***In general.*** Section 436(h) and paragraph (h) of this section set forth a series of presumptions that apply before the enrolled actuary for a plan issues a certification of the plan's adjusted funding target attainment percentage for the plan year. This paragraph (g) sets forth rules for the application of limitations under sections 436(b), 436(c), 436(d), and 436(e) prior to and during the period those presumptions apply to the plan, and describes the interaction of those presumptions with plan operations after the plan's enrolled actuary has issued a certification of the plan's adjusted funding target attainment percentage for the plan year. Paragraph (g)(2) of this section sets forth rules that apply to periods during which a presumption under section 436(h) and paragraph (h) of this section applies. Paragraph (g)(3) of this section sets forth rules that apply to periods during which no presumptions under section 436(h) and paragraph (h) of this section apply but which are prior to the enrolled actuary's certification of the plan's adjusted funding target attainment percentage for the plan year. Paragraph (g)(4) of this section sets forth rules for modifying the plan's presumed adjusted funding target attainment percentage in certain situations. Paragraph (g)(5) of this section sets forth rules that apply after the enrolled actuary's certification of the plan's adjusted funding target attainment percentage for a plan year. Paragraph (g)(6) of this section sets forth examples illustrating the rules in this paragraph (g).

(2) ***Periods prior to certification during which a presumption applies*** —

(i) ***Plan must follow presumptions.*** A plan must provide that, for any period during which a presumption under section 436(h) and paragraph (h)(1), (2), or (3) of this section applies to the plan, the limitations applicable under section 436 and paragraphs (b), (c), (d), and (e) of this section are applied to the plan as if the adjusted funding target attainment percentage for the year were the presumed adjusted funding target attainment percentage determined under the rules of section 436(h) and paragraph (h)(1), (2), or (3) of this section, as applicable, updated to take into account certain unpredictable contingent event benefits and plan amendments in accordance with section 436 and the rules of this paragraph (g).

(ii) ***Determination of amount of reduction in balances*** —

(A) ***In general.*** During the period described in this paragraph (g)(2), the rules of paragraph (a)(5) of this section (relating to the deemed election to reduce the funding standard carryover balance and the prefunding balance) must be applied based on the presumed adjusted funding target attainment percentage. This paragraph (g)(2)(ii) provides rules for the determination of the reduction that applies as of the first day of the plan year, and, in certain circumstances, that applies later in the plan year. Paragraph (g)(2)(iii) of this section provides additional rules that apply with respect to unpredictable contingent event benefits or plan amendments, which rules must be applied prior to the application of paragraph (g)(2)(iv) of this section relating to section 436 contributions. The reapplication of the rules under this paragraph (g)(2) regarding the deemed election in paragraph (a)(5) of this section may require an additional reduction in the prefunding and funding standard carryover balances if the amount of the reduction in those balances that is necessary to reach the applicable threshold to avoid the application of a section 436 limitation exceeds the amount that was initially reduced. Prior reductions of the prefunding and funding standard carryover balances continue to apply.

(B) ***Reduction in balances at the first day of plan year*** —

(1) ***Plans with a certified AFTAP for the prior plan year.*** If section 436(h)(1) and paragraph (h)(1) of this section apply to determine the presumed adjusted funding target attainment percentage as of the first day of the current plan year based on the plan's enrolled actuary certification of the adjusted funding target attainment percentage for the prior plan year made during that prior plan year, then, in order to determine the amount of the reduction (if any) in the funding standard carryover balance and prefunding balance under this paragraph (g)(2)(ii), a presumed adjusted funding target must be established as of the first day of the plan year, and that amount is then compared to the interim value of adjusted plan assets as of that date. For this purpose, the interim value of adjusted plan assets is equal to the value of adjusted plan assets (within the meaning of paragraph (j)(1)(ii) of this section) as of the first day of the plan year, determined without regard to future contributions and future elections with respect to the plan's prefunding and funding standard carryover balances under section 430(f) (for example, elections to add to the prefunding balance for the prior plan year, elections to use the prefunding and funding standard carryover balances to offset the minimum required contribution for a year, and elections (including deemed elections under paragraph (a)(5) of this section) to reduce the prefunding and funding standard carryover balances for the current plan year), and the presumed adjusted funding target is equal to the interim value of adjusted plan assets for the plan year divided by the presumed adjusted funding

target attainment percentage. As provided in § 1.430(f)-1(e)(1), the rules of § 1.430(f)-1(d)(1)(ii) apply for purposes of determining the amount of the prefunding balance or the funding standard carryover balance that is available for reduction.

(*2*) ***Plans with presumed AFTAP deemed under 60 percent.*** If paragraph (g)(2)(ii)(B)(*1*) of this section does not apply to the plan for a plan year and the last day of the plan year is on or after the first day of the 10th month of the plan year, such that the presumed adjusted funding target attainment percentage for the prior plan year is conclusively presumed to be less than 60 percent under section 436(h)(2) and paragraph (h)(3) of this section, then no reduction in the funding standard carryover balance and prefunding balance is required under this paragraph (g)(2)(ii)(B). However, see paragraph (g)(2)(iv)(A) of this section for rules for determining the amount of a section 436 contribution that would permit unpredictable contingent event benefits to be paid in such a case.

(*3*) ***Treatment of short plan years.*** If paragraph (g)(2)(ii)(B)(*1*) of this section does not apply to the plan for a plan year but the last day of the plan year is before the first day of the 10th month of the plan year, such that section 436(h)(2) and paragraph (h)(3) of this section did not apply for that plan year, then paragraph (g)(2)(ii)(B)(*1*) of this section must be applied as of the first day of the next plan year based on the presumed adjusted funding target attainment percentage as of that last day of the prior short plan year.

(C) ***Change in presumed AFTAP later in the plan year.*** If the presumed adjusted funding target attainment percentage for the plan year changes during the year, the rules regarding the deemed election to reduce the prefunding and funding standard carryover balances described in paragraph (a)(5) of this section must be reapplied based on the new presumed adjusted funding target attainment percentage. This will typically occur on the first day of the 4th month of a plan year, but could happen at a different date if the enrolled actuary certifies the adjusted funding target attainment percentage for the prior plan year during the current plan year. In order to determine the amount of any reduction in the prefunding and funding standard carryover balances that would apply in such a situation, a new presumed adjusted funding target must be established, which is then compared to the updated interim value of adjusted plan assets. For this purpose, the updated interim value of adjusted plan assets for the plan year is determined as the interim value of adjusted plan assets as of the first day of the plan year updated to take into account contributions for the prior plan year and section 430(f) elections with respect to the plan's prefunding and funding standard carryover balances made before the date of the change in the presumed adjusted funding target attainment percentage, and the new presumed adjusted funding target is equal to the updated interim value of adjusted plan assets divided by the new presumed adjusted funding target attainment percentage.

(D) ***Plans funded below the threshold.*** If, after application of paragraph (g)(2)(ii)(B) and (C) of this section, the presumed adjusted funding target attainment percentage under this paragraph (g)(2)(ii) is less than the 60 percent threshold under section 436(e), then no benefit accruals are permitted under the plan unless the plan sponsor makes a section 436 contribution as provided in paragraph (g)(2)(iv)(A) of this section. *See* paragraph (g)(5)(ii) of this section for rules that apply on and after the date the enrolled actuary for the plan issues a certification of the adjusted funding target attainment percentage of the plan for the current plan year.

(iii) *Calculation of inclusive presumed AFTAP for application to unpredictable contingent event benefits and plan amendments* —

(A) ***Requirement to calculate inclusive presumed AFTAP.*** For purposes of applying the limitations under paragraphs (b) and (c) of this section during the period described in this paragraph (g)(2), an inclusive presumed adjusted funding target attainment percentage must be calculated. The inclusive presumed adjusted funding target attainment percentage is the ratio (expressed as a percentage) of the interim value of adjusted plan assets (updated to take into account contributions for the prior plan year, any prior section 436 contributions made for the plan year to the extent not previously taken into account in the interim value of adjusted plan assets for the plan year, and section 430(f) elections with respect to the plan's prefunding and funding standard carryover balances made before the date of the unpredictable contingent event or the date the plan amendment would take effect) to the inclusive presumed adjusted funding target. The inclusive presumed adjusted funding target is calculated as the presumed adjusted funding target determined under paragraph (g)(2)(ii)(B) or (C) of this section, increased to take into account—

(*1*) The unpredictable contingent event benefits or plan amendment;

(*2*) Any unpredictable contingent event benefits that are permitted to be paid as a result of any unpredictable contingent event that occurred, or plan amendment that has taken effect, in the prior plan year to the extent not taken into account in the prior plan year adjusted funding target attainment percentage; and

(*3*) Any other unpredictable contingent event benefits that are permitted to be paid as a result of any unpredictable contingent event that occurred, or plan amendment that has taken effect, in the current plan year to the extent not previously taken into account in the presumed adjusted funding target for the plan year.

(B) ***Mandatory reduction for collectively bargained plans.*** During the period described in this paragraph (g)(2), the rules of paragraph (a)(5)(ii) of this section (relating to the deemed election to reduce the funding standard carryover balance and the prefunding balance) must be applied by treating the inclusive presumed adjusted funding target attainment percentage determined under this paragraph (g)(2)(iii) as if it were the adjusted funding target attainment percentage.

(C) ***Optional reduction for plans that are not collectively bargained plans.*** A plan sponsor of a plan that is not a collectively bargained plan (and, thus, is not required to reduce the funding standard carryover balance and the prefunding balance under the rules of paragraph (a)(5)(ii) of this section) is permitted to elect to reduce those balances in order to increase the updated interim value of adjusted plan assets that is used to determine the inclusive presumed adjusted funding target attainment percentage under this paragraph (g)(2)(iii).

(D) ***Plans funded below the threshold.*** If, after application of paragraph (g)(2)(iii)(B) and (C) of this section, the inclusive presumed adjusted funding target attainment percentage determined under this paragraph (g)(2)(iii) is less than the applicable threshold under section 436(b) or 436(c), then the plan is not permitted to provide any benefits attributable to the unpredictable contingent event, nor is the plan amendment permitted to take effect, unless the plan sponsor makes a section 436 contribution as provided in paragraph

(g)(2)(iv) of this section. *See* paragraph (g)(5)(ii) of this section for rules that apply on and after the date the enrolled actuary for the plan issues a certification of the adjusted funding target attainment percentage of the plan for the current plan year.

(E) ***Plans funded at or above the threshold.*** If, after application of paragraph (g)(2)(iii)(B) or (C) of this section, the inclusive presumed adjusted funding target attainment percentage is greater than or equal to the applicable threshold under section 436(b) or 436(c), then the plan is not permitted to limit the payment of unpredictable contingent event benefits described in paragraph (b) of this section, nor is the plan permitted to restrict a plan amendment increasing benefit liabilities described in paragraph (c) of this section from taking effect, based on an expectation that the limitations under paragraph (b) or (c) of this section will apply following the enrolled actuary's certification of the adjusted funding target attainment percentage for the plan year.

(iv) ***Section 436 contributions —***

(A) ***Plans with presumed AFTAP below 60 percent —***

(*1*) ***Unpredictable contingent event benefits.*** If the presumed adjusted funding target attainment percentage for a plan is less than 60 percent, then unpredictable contingent event benefits are permitted to be paid as a result of an unpredictable contingent event occurring during the period described in this paragraph (g)(2) if the plan sponsor makes the section 436 contribution described in paragraph (f)(2)(iii)(A) of this section.

(*2*) ***Plan amendments.*** If the presumed adjusted funding target attainment percentage for a plan is less than 60 percent, then no plan amendment increasing plan liabilities is permitted to take effect during the period described in this paragraph (g)(2). See paragraph (e)(1) of this section.

(*3*) ***Benefit accruals.*** If the presumed adjusted funding target attainment percentage for a plan year of less than 60 percent is determined based on the plan's enrolled actuary certification of the adjusted funding target attainment percentage for the prior plan year made during that prior plan year (as opposed to being presumed to be less than 60 percent under the rules of section 436(h)(2) and paragraph (h)(3) of this section because the actuary has not certified the adjusted funding target attainment percentage for the prior plan year before the first day of the 10th month of the prior plan year), then benefits are permitted to accrue if the plan sponsor makes a section 436 contribution in the amount necessary to bring the ratio of the updated interim value of adjusted plan assets to the presumed adjusted funding target up to 60 percent, as described in paragraph (f)(2)(v) of this section.

(B) ***Plan amendments for plans with presumed AFTAP below 80 percent.*** If the presumed adjusted funding target attainment percentage for a plan is less than 80 percent, but is not less than 60 percent, then a plan amendment increasing plan liabilities is permitted to take effect during the period described in this paragraph (g)(2) if the plan sponsor makes a section 436 contribution described in paragraph (f)(2)(iv)(A) of this section.

(C) ***Contributions required to reach threshold.*** If a plan is described in paragraph (g)(2)(iii)(D) of this section and neither paragraph (g)(2)(iv)(A) nor (B) of this section apply to the plan, then unpredictable contingent event benefits are permitted to be paid or the plan amendment is permitted to become effective during the period this paragraph (g)(2)

applies to the plan only if the plan sponsor makes a section 436 contribution in the amount necessary to bring the ratio of the updated interim value of adjusted plan assets to the inclusive presumed adjusted funding target up to the applicable threshold under section 436(b) or (c), as described in paragraph (f)(2)(iii)(B) or (f)(2)(iv)(B) of this section. This paragraph (g)(2)(iv)(C) applies, for example, if an unpredictable contingent event occurs in the case of a plan with a presumed adjusted funding target attainment percentage of more than 60 percent where taking into account the unpredictable contingent event benefit in the inclusive presumed adjusted funding target would cause the ratio of the interim value of adjusted plan assets to the inclusive presumed adjusted funding target to be less than 60 percent.

(v) ***Bankruptcy of plan sponsor.*** Pursuant to section 436(d)(2), during any period in which the plan sponsor of a plan is a debtor in a case under title 11, United States Code, or any similar Federal or State law (as described in paragraph (d)(2) of this section), no prohibited payment within the meaning of paragraph (j)(6) of this section may be paid if the plan's enrolled actuary has not yet certified the plan's adjusted funding target attainment percentage for the plan year to be at least 100 percent. Thus, the presumption rules of paragraph (h) of this section do not apply for purposes of section 436(d)(2) and this paragraph (g)(2)(v).

(3) ***Periods prior to certification during which no presumption applies*** —

(i) ***Prohibited payments and benefit accruals.*** If no presumptions under section 436(h) apply to a plan during a period and the plan's enrolled actuary has not yet issued the certification of the plan's actual adjusted funding target attainment percentage for the plan year, the plan is not permitted to limit prohibited payments under paragraph (d) of this section or the accrual of benefits under paragraph (e) of this section based on an expectation that those paragraphs will apply to the plan once an actuarial certification is issued. However, see paragraph (g)(2)(v) of this section for a restriction on prohibited payments during any period in which the plan sponsor of a plan is a debtor in a case under title 11, United States Code, or any similar Federal or State law.

(ii) ***Unpredictable contingent event benefits and plan amendments increasing benefit liability*** —

(A) ***In general.*** If no presumptions under section 436(h) apply to a plan during a period and the plan's enrolled actuary has not yet issued a certification of the plan's adjusted funding target attainment percentage for the plan year, the limitations on unpredictable contingent event benefits under paragraph (b) of this section and plan amendments increasing benefit liabilities under paragraph (c) of this section must be applied during that period by following the rules of paragraphs (g)(2)(iii) of this section, based on the inclusive presumed adjusted funding target determined using the prior plan year adjusted funding target attainment percentage. Thus, whether unpredictable contingent event benefits are permitted to be paid or a plan amendment is permitted to take effect during a plan year is determined by calculating the ratio of the interim value of adjusted plan assets to the inclusive presumed adjusted funding target, where the inclusive presumed adjusted funding target is determined by dividing the interim value of adjusted plan assets by the prior plan year adjusted funding target attainment percentage and then adding the adjustments described in paragraphs (g)(2)(iii)(A)(*1*), (*2*) and (*3*) of this section. If, after application of paragraphs (g)(2)(iii)(B) and (C) of this section, that ratio is less than the applicable threshold under section 436(b) or 436(c), then the plan is not permitted to

provide any benefits attributable to the unpredictable contingent event, nor is the plan amendment permitted to take effect, unless the plan sponsor makes the contribution described in paragraph (g)(2)(iv)(C) of this section.

(B) ***Recharacterization of contributions made to avoid benefit limitations.*** In any case where, pursuant to paragraph (g)(3)(ii)(A) of this section, the plan sponsor makes section 436 contributions to avoid the application of the applicable benefit limitation, to the extent those contributions would not be needed to permit the payment of the unpredictable contingent event benefits or for the plan amendment to go into effect based on a subsequent certification of the adjusted funding target attainment percentage for the current plan year that takes into account the increase in the liability attributable to the unpredictable contingent event benefits or plan amendment, the excess section 436 contributions are recharacterized as employer contributions taken into account under section 430 for the current plan year.

(4) ***Modification of the presumed AFTAP —***

(i) ***Section 436 contributions.*** If, in accordance with the rules of paragraph (g)(2)(iv) of this section, unpredictable contingent event benefits are permitted to be paid, or a plan amendment takes effect, during the plan year because the plan sponsor makes a contribution described in paragraph (f)(2)(iii)(B) or (f)(2)(iv)(B) of this section, then the presumed adjusted funding target must be adjusted to reflect any increase in the funding target attributable to the unpredictable contingent event benefits or the plan amendment and the interim value of plan assets must be increased by the present value of the contribution. Similarly, if benefit accruals are permitted to resume in a plan year because the plan sponsor makes the contribution described in paragraph (f)(2)(v) of this section, then the presumed adjusted funding target must be adjusted to reflect any increase in the funding target attributable to the benefit accruals for the prior plan year and the interim value of adjusted plan assets must be increased by the present value of the contribution. The adjustment to the presumed adjusted funding target is made as of the date of the contribution, and that date is a section 436 measurement date.

(ii) ***Modification of the presumed AFTAP for reduction in balances.*** If a plan's funding standard carryover balance or prefunding balance is reduced under the rules of paragraph (g)(2) or (g)(3) of this section, then the presumed adjusted funding target attainment percentage for the plan year is increased to reflect the higher interim value of adjusted plan assets resulting from the reduction in the funding standard carryover balance or prefunding balance. The date of the event that causes the reduction is a section 436 measurement date.

(5) ***Periods after certification of AFTAP —***

(i) ***Plan must follow certified AFTAP —***

(A) ***In general.*** The rules of paragraphs (g)(2) and (g)(3) of this section no longer apply for a plan year on and after the date the enrolled actuary for the plan issues a certification of the adjusted funding target attainment percentage of the plan for the current plan year, provided that the certification is issued before the first day of the 10th month of the plan year. For example, the plan must provide that the limitations on prohibited payments apply for distributions with annuity starting dates on and after the date of that certification using the certified adjusted funding target attainment percentage of the plan for the plan year. Similarly, the plan must provide that any prohibition on accruals under paragraph (e) of this section as a result of the enrolled actuary's certification that the adjusted funding

target attainment percentage of the plan for the plan year is less than 60 percent is effective as of the date of the certification and that any prohibition on accruals ceases to be effective on the date the enrolled actuary issues a certification that the adjusted funding target attainment percentage of the plan for the plan year is at least 60 percent.

(B) ***Unpredictable contingent events and plan amendments.*** In the case of a plan that has been issued a certification of the plan's adjusted funding target attainment percentage for a plan year by the plan's enrolled actuary, the plan sponsor must comply with the requirements of paragraphs (b) and (c) of this section for an unpredictable contingent event that occurs or a plan amendment that takes effect on or after the date of the enrolled actuary's certification. Thus, the plan administrator must determine if the adjusted funding target attainment percentage would be at or above the applicable threshold if it were modified to take into account—

(*1*) The unpredictable contingent event or plan amendment;

(*2*) Any other unpredictable contingent event benefits that were permitted to be paid as a result of any unpredictable contingent event that occurred, and any other plan amendment that took effect, earlier during the plan year to the extent not taken into account in the certified adjusted funding target attainment percentage for the plan year; and

(*3*) Any earlier section 436 contributions made for the plan year to the extent those contributions were not taken into account in the certified adjusted funding target attainment percentage.

(C) ***Application of rule for deemed election to reduce funding balances.*** After the adjusted funding target attainment percentage for a plan year is certified by the plan's enrolled actuary, the deemed election to reduce the prefunding and funding standard carryover balances under paragraph (a)(5) of this section must be reapplied based on the actual funding target for the year (provided the certification is issued before the first day of the 10th month of the plan year). The reapplication of the rules under this paragraph (g)(5) regarding the deemed election in paragraph (a)(5) of this section may require an additional reduction in the prefunding and funding standard carryover balances if the amount of the reduction in the prefunding and funding standard carryover balances that is necessary to reach the applicable threshold to avoid the application of a section 436 limitation exceeds the amount that was initially reduced. Prior reductions of the prefunding and funding standard carryover balances continue to apply.

(ii) ***Applicability to prior periods*** —

(A) ***In general.*** Except as otherwise provided in this paragraph (g)(5)(ii), the enrolled actuary's certification of the adjusted funding target attainment percentage for the plan for the plan year does not affect prior periods. For example, the certification does not affect the application of the limitation under paragraph (d) of this section for distributions with annuity starting dates before the certification or the application of the limitation under paragraph (e) of this section prior to the date of that certification. *See* paragraph (a)(4) of this section for rules relating to the period of time after benefits cease to be limited. Except as otherwise provided in this paragraph (g)(5)(ii), the enrolled actuary's certification of the adjusted funding target attainment percentage for the plan for the plan year does not affect the application of the limitation under paragraph (b) or (c) of this

section to unpredictable contingent event benefits, or a plan amendment that increases the liability for benefits, where the unpredictable contingent event occurs or the amendment takes effect during the periods to which paragraphs (g)(2) and (g)(3) of this section apply.

(B) ***Special rule for unpredictable contingent event benefits.*** If a plan does not pay benefits attributable to an unpredictable contingent event because of the application of paragraph (g)(2)(iii)(D) or (g)(3)(ii)(A) of this section, then the plan must pay the benefits attributable to that event that were not previously paid if such benefits would be permitted under the rules of section 436 based on a certified adjusted funding target attainment percentage for the plan year that takes into account the increase in the funding target that would be attributable to those unpredictable contingent event benefits.

(C) ***Special rule for plan amendments that increase liability.*** If a plan amendment does not take effect because of the application of paragraph (g)(2)(iii)(D) or (g)(3)(ii)(A) of this section, the plan amendment must go into effect if it would be permitted under the rules of section 436 based on a certified actual adjusted funding target attainment percentage for the plan year that takes into account the increase in the funding target attributable to the plan amendment, unless the plan amendment provides otherwise.

(D) ***Ordering rule for multiple unpredictable contingent events or plan amendments.*** [Reserved]

(6) ***Examples.*** The following examples illustrate the rules of this paragraph (g). Unless otherwise indicated, these examples are based on the following facts: each plan has a plan year that is the calendar year and a valuation date of January 1; section 436 applies to the plan beginning in 2008; the plan has no funding standard carryover balance; the plan sponsor is not in bankruptcy; no annuity purchases have been made from the plan; and the plan offers a lump sum form of payment. No plan is in at-risk status for the years discussed in the examples. The examples read as follows:

> *Example 1.* (i) The plan's certified AFTAP as of January 1, 2010, is 75%. As of January 1, 2011, Plan A has assets of $3,300,000 and a prefunding balance of $300,000. Beginning on January 1, 2011, Plan A's AFTAP for 2011 is presumed to be 75%, under the rules of paragraph (h) of this section and based on the certified AFTAP for 2010.
> (ii) Based on Plan A's presumed AFTAP of 75%, Plan A would continue to be subject to the restriction on prohibited payments in paragraph (d)(3) of this section as of January 1, 2011. However, under the provisions of paragraph (a)(5) of this section, if the prefunding balance is large enough, Plan A's sponsor is deemed to elect to reduce the prefunding balance to the extent needed to avoid this restriction.
>
> (iii) The amount needed to avoid the restriction in paragraph (d)(3) of this section is determined by comparing the presumed adjusted funding target for Plan A with the interim value of adjusted plan assets as of the valuation date. The interim value of adjusted plan assets for Plan A is $3,000,000 (that is, the asset value of $3,300,000 reduced by the prefunding balance of $300,000). The presumed adjusted funding target for Plan A is the interim value of the adjusted plan assets divided by the presumed AFTAP, or $4,000,000 (that is, $3,000,000 divided by 75%).

(iv) In order to avoid the restriction on prohibited payments in paragraph (d)(3) of this section, Plan A's presumed AFTAP must be increased to 80%. This requires an increase in Plan A's adjusted plan assets of $200,000 (that is, 80% of the presumed adjusted funding target of $4,000,000, minus the interim value of the adjusted plan assets of $3,000,000). Plan A's prefunding balance as of January 1, 2011, is reduced by $200,000 under the deemed election provisions of paragraph (a)(5) of this section. Accordingly, Plan A's prefunding balance is $100,000 (that is, $300,000 minus $200,000) and the interim value of adjusted plan assets is increased to $3,200,000 (that is, $3,300,000 minus the reduced prefunding balance of $100,000). Pursuant to paragraph (g)(4)(ii) of this section, the presumed adjusted funding target attainment percentage for Plan A is redetermined as 80% and Plan A must pay the full amount of the accelerated benefit distributions elected by participants with an annuity starting date of January 1, 2011, or later.

Example 2. (i) The facts are the same as in *Example 1.* As of April 1, 2011, the enrolled actuary for Plan A has not certified the 2011 AFTAP. Therefore, beginning April 1, 2011, Plan A's AFTAP is presumed to be reduced by 10 percentage points to 70%, in accordance with paragraph (h)(2) of this section. Under the provisions of paragraph (g)(2)(ii)(B) of this section, the deemed election to reduce the prefunding and funding standard carryover balances described in paragraph (a)(5) of this section must be reapplied based on the new presumed AFTAP.
(ii) In accordance with paragraph (g)(2)(ii)(C) of this section, a new presumed adjusted funding target must be determined based on the new presumed AFTAP and must be compared to an updated interim value of adjusted plan assets. The new presumed adjusted funding target is $3,200,000 divided by the new presumed AFTAP of 70%, or $4,571,429.

(iii) In order to avoid the restriction on prohibited payments in paragraph (d)(3) of this section, Plan A's presumed AFTAP must be increased to 80%. This requires an additional increase in Plan A's adjusted plan assets of $457,143 (that is, 80% of the new presumed adjusted funding target of $4,571,429, minus the updated interim value of the adjusted plan assets of $3,200,000 reflecting the deemed reduction in Plan A's prefunding balance).

(iv) Plan A's remaining prefunding balance as of January 1, 2011, is only $100,000, which is not enough to avoid the restriction on prohibited payments under paragraph (d)(3) of this section. Accordingly, unless Plan A's sponsor utilizes one of the methods described in paragraph (f) of this section to avoid the restriction, Plan A is subject to the restriction on prohibited payments in paragraph (d)(3) of this section and cannot pay accelerated benefit distributions elected by participants with an annuity starting date of April 1, 2011, or later.

(v) Plan A's prefunding balance remains at $100,000 because, under paragraph (a)(5)(iii) of this section, the deemed reduction rules do not apply if the prefunding balance is not large enough to increase the adjusted value of plan assets enough to avoid the restriction.

However, the earlier deemed reduction of $200,000 continues to apply because all elections (including deemed elections) to reduce a plan's funding standard carryover balance or prefunding balance are irrevocable and must be unconditional in accordance with paragraph (g)(2)(ii)(A) of this section.

Example 3. (i) The facts are the same as in *Example 1.* On July 1, 2011, the enrolled actuary for Plan A calculates the actual adjusted funding target as $3,700,000 as of January 1, 2011. Therefore, the 2011 AFTAP would have been 81.08% without reducing the prefunding balance (that is, plan assets of $3,300,000 minus the prefunding balance of $300,000, divided by the adjusted funding target of $3,700,000), and Plan A would not have been subject to the restrictions under paragraph (d)(3) of this section.
(ii) However, paragraph (g)(5)(i)(C) of this section requires that any prior reductions in the prefunding or funding standard carryover balances continue to apply, and so Plan A's prefunding balance remains at the reduced amount of $100,000 as of January 1, 2011. The enrolled actuary certifies that the 2011 AFTAP is 86.49% (that is, plan assets of $3,300,000 reduced by the prefunding balance of $100,000, divided by the adjusted funding target of $3,700,000).

Example 4. (i) Plan B is a collectively bargained plan with assets of $2,500,000 and a prefunding balance of $150,000 as of January 1, 2011. On August 14, 2010, the enrolled actuary for Plan B certified the AFTAP for 2010 to be 83%. No unpredictable contingent events giving rise to unpredictable contingent event benefits occurred during 2010 and no plan amendments took effect in 2010 that were not taken into account in the certified AFTAP.
(ii) On January 10, 2011, Plan B's sponsor amends the plan to increase benefits effective on February 1, 2011. The amendment would increase Plan B's funding target by $350,000. Under the rules of paragraph (g)(3) of this section, the determination of whether the amendment is permitted to take effect is based on a comparison of the inclusive presumed adjusted funding target with the updated interim value of adjusted plan assets.

(iii) Plan B's interim value of adjusted plan assets as of the valuation date is $2,350,000 (that is, $2,500,000 minus the prefunding balance of $150,000). Prior to reflecting the amendment, Plan B's presumed adjusted funding target as of January 1, 2011, is $2,831,325, which is equal to the interim value of adjusted plan assets as of the valuation date of $2,350,000, divided by the presumed AFTAP of 83%. Increasing Plan B's presumed adjusted funding target by $350,000 to reflect the amendment results in an inclusive presumed adjusted funding target of $3,181,325 and would result in a presumed AFTAP of 73.87% (that is, the interim value of adjusted plan assets as of the valuation date of $2,350,000 divided by the inclusive presumed adjusted funding target of $3,181,325).

(iv) Because Plan B's presumed AFTAP was over 80% prior to taking the amendment into account but would be less than 80% if the amendment were taken into account, section 436(c) and paragraph (c) of this section prohibit the plan amendment from taking effect unless the adjusted plan assets are increased so that the inclusive presumed AFTAP would be increased to 80%. This would require an additional amount of $195,060 (that is, 80% of the inclusive presumed adjusted funding target of $3,181,325 less the interim value of adjusted plan assets of $2,350,000).

(v) Plan B's prefunding balance of $150,000 is not large enough for Plan B to avoid the restriction on plan amendments, and therefore the deemed election to reduce the prefunding balance under paragraph (a)(5) of this section does not apply, and the amendment cannot take effect unless the plan sponsor makes a contribution described in paragraph (f)(2) of this section.

Example 5. (i) The facts are the same as in *Example 4,* except that Plan B's sponsor decides to make a contribution on February 1, 2011, to avoid the benefit limitation as provided in paragraph (f)(2) of this section. As of February 1, 2011, Plan B's effective interest rate for the 2011 plan year has not yet been determined. Pursuant to paragraph (f)(2)(i)(A)(2) of this section, Plan B's effective interest rate for 2011 is treated as 6.25%, which is the largest of the three segment interest rates applicable to the 2011 plan year, as provided in paragraph (f)(2)(i)(A)(2) of this section.
(ii) The amount of the contribution as of January 1, 2011, needed to avoid the restriction on plan amendments under paragraph (c) of this section is $195,060. However, because the contribution is not paid until February 1, 2011, the necessary contribution amount must be adjusted to reflect interest that would otherwise have accrued between the valuation date and the date of the contribution, at Plan B's effective interest rate for the 2011 plan year. The amount of the required contribution after adjustment is $196,048, determined as $195,060 increased for one month of compound interest at an effective annual interest rate of 6.25%.

(iii) In accordance with paragraph (g)(4)(i) of this section, the inclusive presumed AFTAP as of February 1, 2011, is 80 percent.

Example 6. (i) The facts are the same as in *Example 5.* As of April 1, 2011, the enrolled actuary for the plan has not certified the 2011 AFTAP. Beginning April 1, 2011, Plan A's presumed AFTAP is equal to be 70%, 10 percentage points lower than the inclusive presumed AFTAP as of February 1, 2011, in accordance with paragraphs (g)(2)(iii)(A) and (h)(2) of this section. On July 1, 2011, the enrolled actuary for the plan calculates the actual adjusted funding target, prior to taking the plan amendment into account, as $2,700,000, and determines the actual effective interest rate for 2011 to be 5.25%. On this basis, the actual AFTAP for 2011 (prior to taking the amendment into account) as 87.04% (that is, adjusted assets of $2,350,000 divided by the adjusted funding target of $2,700,000). Reflecting the

$350,000 increase in funding target due to the plan amendment would increase the adjusted funding target to $3,050,000 and would decrease Plan B's AFTAP to 77.05%.
(ii) Based on the calculated adjusted funding target, the amount that was necessary to avoid the benefit restriction under paragraph (c) of this section was $90,000 (that is, 80% of the adjusted funding target reflecting the plan amendment (or $3,050,000), minus the adjusted value of plan assets of $2,350,000). This amount must be adjusted for interest between the valuation date and the date the contribution was made using the effective interest rate for Plan B. Therefore, the amount required on the payment date of February 1, 2011, was $90,385 (that is, $90,000 adjusted for compound interest for one month at Plan B's effective interest rate of 5.25% per year).

(iii) Under paragraph (g)(3)(ii)(B) of this section, the contribution made on February 1, 2011, is recharacterized as an employer contribution under section 430 to the extent that it exceeded the amount necessary to avoid application of the restriction on plan amendments under paragraph (c) of this section. Therefore, $105,663 (that is, the $196,048 actual contribution paid on February 1, 2011, minus the $90,385 required contribution based on the actual AFTAP) is recharacterized as an employer contribution under section 430 for the 2011 plan year. As such, it may be applied toward the minimum required contribution for 2011, or the plan sponsor can elect to credit the contribution to Plan B's prefunding balance to the extent that the contributions for the 2011 plan year exceed the minimum required contribution.

(iv) This recharacterization applied only because the 436 contribution was made during a period prior to the certification of Plan B's actual AFTAP for 2011 and during which no presumption applied (that is, when section 436 is applied based on the 2010 AFTAP, which was high enough that no restrictions applied for 2010). If the contribution had been made during a time when the presumptions applied (for instance, after April 1, 2011, when the presumed AFTAP was under 80%) then the only portion of the 436 contribution that would be recharacterized as an employer contribution under section 430 would be the portion of the interest adjustment attributable to the difference between the highest segment rate (6.25%) and the plan's actual effective interest rate (5.25%), in accordance with paragraph (f)(2)(i)(A)(2) of this section.

(v) After reflecting the plan amendment and the present value of the portion of the section 436 contribution that is not recharacterized as an employer contribution under section 430, the adjusted assets as of January 1, 2011, for purposes of section 436 are $2,440,000 ($2,350,000 plus $90,000) and the inclusive adjusted funding target is $3,050,000. Accordingly, the enrolled actuary certifies the inclusive AFTAP for 2011 as 80% ($2,440,00 ÷ $3,050,000). Note that assets for section 430 purposes are not increased to reflect the section 436 contribution as of January 1, 2011.

Example 7. (i) The facts are the same as in *Example 6,* except that on July 1, 2011, the

enrolled actuary for Plan B calculates the actual adjusted funding target (before reflecting the plan amendment) as $3,000,000 and certifies the actual AFTAP as 78.33% prior to reflecting the plan amendment (that is, adjusted plan assets of $2,350,000 divided by the actual adjusted funding target of $3,000,000). Based on the provisions of paragraph (c) of this section, because the AFTAP prior to reflecting the amendment is less than 80%, the contribution required to avoid the restriction on plan amendments would have been the amount equal to the increase in funding target due to the plan amendment, or $350,000.
(ii) However, according to paragraph (g)(5)(ii)(A) of this section, the enrolled actuary's certification of the 2011 AFTAP does not affect the application of the limitation under paragraph (c) of this section to the amendment, because the amendment to Plan B took effect prior to the date of the certification. Therefore, it is not necessary for Plan B's sponsor to contribute an additional amount in order for the plan amendment to remain in effect regardless of the extent to which the certified AFTAP for the plan year is less than the presumed inclusive AFTAP.

(h) ***Presumed underfunding for purposes of benefit limitations*** —

(1) ***Presumption of continued underfunding*** —

(i) ***In general.*** This paragraph (h)(1) applies to a plan for a plan year if a limitation under paragraph (b), (c), (d), or (e) of this section applied to the plan on the last day of the preceding plan year. If this paragraph (h)(1) applies to a plan, the first day of the plan year is a section 436 measurement date and the presumed adjusted funding target attainment percentage for the plan is the percentage under paragraph (h)(1)(ii) or (iii) of this section, whichever applies to the plan, beginning on that first day of the plan year and ending on the date specified in paragraph (h)(1)(iv) of this section.

(ii) ***Rule where preceding year certification issued during preceding year*** —

(A) ***General rule.*** In any case in which the plan's enrolled actuary has issued a certification under paragraph (h)(4) of this section of the adjusted funding target attainment percentage for the plan year preceding the current plan year before the first day of the current plan year, the presumed adjusted funding target attainment percentage of the plan for the current plan year is equal to the prior plan year adjusted funding target attainment percentage until it is changed under paragraph (h)(1)(iv) of this section.

(B) ***Special rule for late certifications.*** If the certification of the adjusted funding target attainment percentage for the prior plan year occurred after the first day of the 10th month of that prior plan year, the plan is treated as if no such certification was made, unless the certification took into account the effect of any unpredictable contingent event benefits that are permitted to be paid based on unpredictable contingent events that occurred, and any plan amendments that became effective, during the prior plan year but before the certification (and any associated section 436 contributions).

(iii) ***No certification for preceding year issued during preceding year*** —

(A) ***Deemed percentage continues.*** In any case in which the plan's enrolled actuary has not issued a certification under paragraph (h)(4) of this section of the adjusted funding target attainment percentage of the plan for the plan year preceding the current plan year during that prior plan year, the presumed adjusted funding target attainment percentage of the plan for the current plan year is equal to the presumed adjusted funding target attainment percentage that applied on the last day of the preceding plan year until the presumed adjusted funding target attainment percentage is changed under paragraph (h)(1)(iii)(B) or (h)(1)(iv) of this section. Thus, if the prior plan year was a 12-month plan year (so that the last day of the plan year was after the first day of the 10th month of the plan year and the rules of section 436(h)(2) and paragraph (h)(3) of this section applied to the plan for that plan year), then the presumed adjusted funding target attainment percentage for the current plan year is presumed to be less than 60 percent. By contrast, if the prior plan year was less than 9 months, the presumed adjusted funding target attainment percentage for the current plan year is the presumed adjusted funding target attainment percentage at the last day of the preceding plan year.

(B) ***Enrolled actuary's certification in following year.*** In any case in which the plan's enrolled actuary has issued the certification under paragraph (h)(4) of this section of the adjusted funding target attainment percentage of the plan for the plan year preceding the current plan year on or after the first day of the current plan year, the date of that prior plan year certification is a new section 436 measurement date for the current plan year. In such a case, the presumed adjusted funding target attainment percentage for the current plan year is equal to the prior plan year adjusted funding target attainment percentage (reduced by 10 percentage points if paragraph (h)(2)(iv) of this section applies to the plan) until it is changed under paragraph (h)(1)(iv) of this section. The rules of paragraph (h)(1)(ii)(B) of this section apply for purposes of determining whether the enrolled actuary has issued a certification of the adjusted funding target attainment percentage for the prior plan year during the current plan year.

(iv) ***Duration of use of presumed adjusted funding target attainment percentage.*** If this paragraph (h)(1) applies to a plan for a plan year, the presumed adjusted funding target attainment percentage determined under this paragraph (h)(1) applies until the earliest of—

(A) The first day of the 4th month of the plan year if paragraph (h)(2) of this section applies;

(B) The first day of the 10th month of the plan year if paragraph (h)(3) of this section applies;

(C) The date of a change in the presumed adjusted funding target attainment percentage under paragraph (g)(4) of this section; or

(D) The date the enrolled actuary issues a certification under paragraph (h)(4) of this section of the adjusted funding target attainment percentage for the plan year.

(2) ***Presumption of underfunding beginning on first day of 4th month for certain underfunded plans*** —

(i) ***In general.*** This paragraph (h)(2) applies to a plan for a plan year if—

(A) The enrolled actuary for the plan has not issued a certification of the adjusted funding target attainment percentage for the plan year before the first day of the 4th month of the plan year; and

(B) The plan's adjusted funding target attainment percentage for the preceding plan year was either—

(1) At least 60 percent but less than 70 percent; or

(2) At least 80 percent but less than 90 percent.

(ii) ***Special rule for first plan year a plan is subject to section 436.*** This paragraph (h)(2) also applies to a plan for the first effective plan year if—

(A) The enrolled actuary for the plan has not issued a certification of the adjusted funding target attainment percentage for the plan year before the first day of the 4th month of the plan year; and

(B) The prior plan year adjusted funding target attainment percentage is at least 70 percent but less than 80 percent.

(iii) ***Presumed adjusted funding target attainment percentage.*** If this paragraph (h)(2) applies to a plan for a plan year and the date of the enrolled actuary's certification of the adjusted funding target attainment percentage under paragraph (h)(4) of this section for the prior plan year (taking into account the special rules for late certifications under paragraph (h)(1)(ii)(B) of this section) occurred before the first day of the 4th month of the current plan year, then, commencing on the first day of the 4th month of the current plan year—

(A) The presumed adjusted funding target attainment percentage of the plan for the plan year is reduced by 10 percentage points; and

(B) The first day of the 4th month of the plan year is a section 436 measurement date.

(iv) ***Certification for prior plan year.*** If this paragraph (h)(2) applies to a plan and the date of the enrolled actuary's certification of the adjusted funding target attainment percentage under paragraph (h)(4) of this section for the prior plan year (taking into account the rules for late certifications under paragraph (h)(1)(ii)(B) of this section) occurs on or after the first day of the 4th month of the current plan year, then, commencing on the date of that prior plan year certification—

(A) The presumed adjusted funding target attainment percentage of the plan for the current plan year is equal to 10 percentage points less than the prior plan year adjusted funding target attainment percentage; and

(B) The date of the prior plan year certification is a section 436 measurement date.

(v) ***Duration of use of presumed adjusted funding target attainment percentage.*** If this paragraph (h)(2) applies to a plan for a plan year, the presumed adjusted funding target attainment percentage determined under this paragraph (h)(2) applies until the earliest of—

(A) The first day of the 10th month of the plan year if paragraph (h)(3) of this section applies;

(B) The date of a change in the presumed adjusted funding target attainment percentage under paragraph (g)(4) of this section; or

(C) The date the enrolled actuary issues a certification under paragraph (h)(4) of this section of the adjusted funding target attainment percentage for the plan year.

(3) ***Presumption of underfunding beginning on first day of 10th month.*** In any case in which no certification of the specific adjusted funding target attainment percentage for the current plan year under paragraph (h)(4) of this section is made with respect to the plan before the first day of the 10th month of the plan year, then, commencing on the first day of the 10th month of the current plan year—

(i) The presumed adjusted funding target attainment percentage of the plan for the plan year is presumed to be less than 60 percent; and

(ii) The first day of the 10th month of the plan year is a section 436 measurement date.

(4) ***Certification of AFTAP*** —

(i) ***Rules generally applicable to certifications*** —

(A) ***In general.*** The enrolled actuary's certification referred to in this section must be made in writing, must be signed and dated to show the date of the signature, must be provided to the plan administrator, and, except as otherwise provided in paragraph (h)(4)(ii) of this section, must certify the plan's adjusted funding target attainment percentage for the plan year. Except in the case of a range certification described in paragraph (h)(4)(ii) of this section, the certification must set forth the value of plan assets, the prefunding balance, the funding standard carryover balance, the value of the funding target used in the determination, the aggregate amount of annuity purchases included in the adjusted value of plan assets and the adjusted funding target, the unpredictable contingent event benefits permitted to be paid for unpredictable contingent events that occurred during the current plan year that were taken into account for the current plan year (including any associated section 436 contributions), the plan amendments that took effect in the current plan year that were taken into account for the current plan year (including any associated section 436 contributions), any benefit accruals that were restored for the plan year (including any section 436 contributions), and any other relevant factors. The actuarial assumptions and funding methods used in the calculation for the certification must be the actuarial assumptions and funding methods used for the plan for purposes of determining the minimum required contributions under section 430 for the plan year.

(B) ***Determination of plan assets.*** For purposes of making any determination of the adjusted funding target attainment percentage under this section, the determination is not permitted to include in plan assets contributions that have not been made to the plan by the certification date. Thus, the enrolled actuary's certification of the adjusted funding target attainment percentage for a plan year cannot take into account contributions that are expected to be made after the certification date. Notwithstanding the foregoing, for plan years beginning before January 1, 2009, the enrolled actuary's certification of the adjusted funding target attainment percentage is permitted to take into account employer contributions for the prior plan year that are reasonably expected to be made for that prior plan year but have not been contributed by the date of the enrolled actuary's certification. See paragraphs (h)(4)(iii) and (v) of this section for rules relating to changes in the certified percentage.

(ii) ***Special rules for certification within range*** —

(A) ***In general.*** Under this paragraph (h)(4)(ii), the plan's enrolled actuary is permitted to certify during a plan year that the plan's adjusted funding target attainment percentage for that plan year either is less than 60 percent, is 60 percent or higher (but is less than 80

percent), is 80 percent or higher, or is 100 percent or higher. If the enrolled actuary has issued such a range certification for a plan year and the enrolled actuary subsequently issues a certification of the specific adjusted funding target attainment percentage for the plan before the end of that plan year, then the certification of the specific adjusted funding target attainment percentage is treated as a change in the applicable percentage to which paragraph (h)(4)(iii) of this section applies.

(B) ***Effect of range certification before certification of specific percentage.*** If a plan's enrolled actuary issues a range certification pursuant to this paragraph (h)(4)(ii), then, for purposes of this section (including application of the limitations of sections 436(b) and (c), contributions described in sections 436(b)(2), 436(c)(2), and 436(e)(2), and the mandatory reduction of the prefunding and funding standard carryover balances under paragraph (a)(5) of this section), the plan is treated as having a certified percentage at the smallest value within the applicable range until a certification of the plan's specific adjusted funding target attainment percentage for the plan year has been issued under paragraph (h)(4)(i) of this section. However, if the plan's enrolled actuary has issued a range certification for the plan year but does not issue a certification of the specific adjusted funding target attainment percentage for the plan by the last day of that plan year, the adjusted funding target attainment percentage for the plan is retroactively deemed to be less than 60 percent as of the first day of the 10th month of the plan year.

(C) ***Effect of range certification on and after certification of specific percentage.*** Once the certification of the specific adjusted funding target attainment percentage is issued by the plan's enrolled actuary, the certified percentage applies for all purposes of this section on and after the date of that certification. If the plan sponsor made section 436 contributions to avoid application of a benefit limitation during the period a range certification was in effect, those section 436 contributions are recharacterized as employer contributions under section 430 to the extent the contributions exceed the amount necessary to avoid application of a limitation based on the specific adjusted funding target attainment percentage as certified by the plan's enrolled actuary on or before the last day of the plan year.

(iii) ***Change of certified percentage*** —

(A) ***Application of new percentage.*** If the enrolled actuary for the plan provides a certification of the adjusted funding target attainment percentage of the plan for the plan year under this paragraph (h)(4) (including a range certification) and that certified percentage is superseded by a subsequent determination of the adjusted funding target attainment percentage for that plan year, then, except to the extent provided in paragraph (h)(4)(iv)(B) of this section, that later percentage must be applied for the portion of the plan year beginning on the date of the earlier certification. The subsequent determination could be the correction of a prior incorrect certification or it could be an update of a prior correct certification to take into account subsequent facts under the rules of paragraph (h)(4)(v) of this section. The implications of such a change depend on whether the change is a material change or an immaterial change. *See* paragraph (h)(4)(iv) of this section.

(B) ***Material change.*** A change in a plan's certified adjusted funding target attainment percentage constitutes a material change for a plan year if plan operations with respect to benefits that are addressed by section 436, taking into account any actual contributions and elections under section 430(f) made by the plan sponsor based on the prior certified

percentage, would have been different based on the subsequent determination of the plan's adjusted funding target attainment percentage for the plan year. A change in a plan's adjusted funding target attainment percentage for a plan year can be a material change even if the only impact of the change occurs in the following plan year under the rules for determining the presumed adjusted funding target attainment percentage in that following year.

(C) ***Immaterial change.*** In general, an immaterial change is any change in an adjusted funding target attainment percentage for a plan year that is not a material change. In addition, subject to the requirement to recertify the adjusted funding target attainment percentage in paragraph (h)(4)(v)(B) of this section, a change in adjusted funding target attainment percentage is deemed to be an immaterial change if it merely reflects a change in the funding target for the plan year or the value of the adjusted plan assets after the date of the enrolled actuary's certification resulting from—

(*1*) Additional contributions for the preceding year that are made by the plan sponsor;

(*2*) The plan sponsor's election to reduce the prefunding balance or funding standard carryover balance;

(*3*) The plan sponsor's election to apply the prefunding balance or funding standard carryover balance to offset the prior plan year's minimum required contribution;

(*4*) A change in funding method or actuarial assumptions, where such change required actual approval of the Commissioner (rather than deemed approval);

(*5*) Unpredictable contingent event benefits which are permitted to be paid because the employer makes the section 436 contribution described in paragraph (f)(2)(iii)(A) of this section;

(*6*) Unpredictable contingent event benefits which are permitted to be paid because the plan's enrolled actuary determines that the increase in the funding target attributable to the occurrence of the unpredictable contingent event would not cause the plan's adjusted funding target attainment percentage to fall below 60 percent;

(*7*) A plan amendment which takes effect because the employer makes the section 436 contribution described in paragraph (f)(2)(iv)(A) of this section, the liability for which was not taken into account in the certification of the adjusted funding target attainment percentage;

(*8*) A plan amendment which takes effect because the plan's enrolled actuary determines that the increase in the funding target attributable to the plan amendment would not cause the plan's adjusted funding target attainment percentage to fall below 80 percent, the liability for which was not taken into account in the certification of the adjusted funding target attainment percentage; or

(*9*) Any other event prescribed in guidance published in the Internal Revenue Bulletin.

(iv) ***Effect of change in percentage*** —

(A) ***Material change.*** In the case of a material change, if the plan's prior operations were in accordance with the prior certification of the adjusted funding target attainment percentage for the plan year (rather than the actual adjusted funding target attainment

percentage for the plan year), then the plan will not have satisfied the requirements of section 401(a)(29) and section 436. Even if the plan's prior operations were in accordance with the subsequent certification of the adjusted funding target attainment percentage, the plan will not have satisfied the qualification requirements of section 401(a) because the plan will not have been operated in accordance with its terms during the period of time the prior certification applied. In addition, in the case of a material change, the rules requiring application of a presumed adjusted funding target attainment percentage under paragraphs (h)(1) through (h)(3) of this section continue to apply from and after the date of the prior certification until the date of the subsequent certification.

(B) ***Immaterial change.*** An immaterial change in the adjusted funding target attainment percentage applies prospectively only and does not change the inapplicability of the presumptions under paragraphs (h)(1), (2), and (3) of this section prior to the date of the later certification.

(v) ***Rules relating to updated certification*** —

(A) ***In general.*** This paragraph (h)(4)(v) sets forth rules relating to updates of an actuary's certification of the plan's adjusted funding target attainment percentage for a plan year. Paragraphs (h)(4)(v)(B) and (D) of this section require that an updated adjusted funding target attainment percentage be certified in certain situations. Even if the updated adjusted funding target attainment percentage is not required to be certified, plan administrators may request that the actuary prepare an updated certification of the adjusted funding target attainment percentage, as described in paragraphs (h)(4)(v)(C) and (E) of this section. Any updated adjusted funding target attainment percentage determined under this paragraph (h)(4)(v) will apply beginning as of the date of the event that gave rise to the need for the update which is a section 436 measurement date. Thus, pursuant to this paragraph (h)(4)(v), the updated funding target attainment percentage applies thereafter for all purposes of section 436, including application with respect to unpredictable contingent events occurring on or after the measurement date (but not for unpredictable contingent events that occurred before such measurement date or for benefits with annuity starting dates before that measurement date). The updated adjusted funding target attainment percentage will continue to apply for the remainder of the plan year and will be used for the presumed adjusted funding target attainment percentage for the next plan year, unless there is a later updated certification of adjusted funding target attainment percentage for the plan year.

(B) ***Requirement to recertify AFTAP if plan sponsor contributes to threshold.*** If, during the plan year, unpredictable contingent event benefits are permitted to be paid, a plan amendment takes effect, or benefits are permitted to accrue because the plan sponsor makes a contribution described in paragraph (f)(2)(iii)(B), (f)(2)(iv)(B), or (f)(2)(v) of this section, then, in accordance with paragraph (f)(2)(ii)(C) of this section, the plan's enrolled actuary must issue an updated certification of the adjusted funding target attainment percentage that takes into account such contribution as well as the liability for unpredictable contingent event benefits that are permitted to be paid, plan amendments that take effect during the plan year, and restored benefits.

(C) ***Optional recertification of AFTAP after other unpredictable contingent event or plan amendment.*** Except as provided in paragraph (h)(4)(v)(D) of this section, if, during a plan year, unpredictable contingent event benefits are permitted to be paid, or a plan

amendment takes effect, because either the plan sponsor makes a contribution described in paragraph (f)(2)(iii)(A) or (f)(2)(iv)(A) of this section, or the plan's enrolled actuary determines that the increase in the funding target attributable to the occurrence of the unpredictable contingent event or the plan amendment would not cause the plan's adjusted funding target attainment percentage to fall below the applicable 60 percent or 80 percent threshold (taking into account the occurrence of all previous unpredictable contingent event benefits and plan amendments to the extent not already reflected in the certified adjusted funding target attainment percentage for the plan year (or update)), then the plan administrator may request that the plan actuary issue an updated certification of the adjusted funding target attainment percentage that takes into account the unpredictable contingent event benefits or plan amendments and any associated section 436 contribution.

(D) ***Requirement to recertify AFTAP after deemed immaterial change.*** If a change in the adjusted funding target attainment percentage as a result of one of the items listed in paragraph (h)(4)(iii)(C) of this section would be a material change, then the change is treated as an immaterial change only if the plan's enrolled actuary recertifies the adjusted funding target attainment percentage for the plan year as soon as practicable after the event that gives rise to the change.

(E) ***Optional recertification after other immaterial change.*** If a change in the adjusted funding target attainment percentage is immaterial, then the plan administrator may request that the plan actuary issue an updated certification of the adjusted funding target attainment percentage that takes into account the unpredictable contingent event benefits or plan amendments and any associated section 436 contribution.

(5) ***Examples of rules of paragraphs (h)(1), (h)(2), and (h)(3) of this section.*** The following examples illustrate the rules of paragraphs (h)(1), (h)(2), and (h)(3) of this section. Unless otherwise indicated, the examples in this section are based on the information in this paragraph (h)(5). Each plan is a non-collectively bargained defined benefit plan with a plan year that is the calendar year and a valuation date of January 1. The plan year is subject to section 436 in 2008. The plan does not have a funding standard carryover balance or a prefunding balance as of any of the dates mentioned, and the plan sponsor does not elect to utilize any of the methods in paragraph (f) of this section to avoid applicable benefit restrictions. No range certification under paragraph (h)(4) of this section has been issued. The plan sponsor is not in bankruptcy. The examples read as follows:

> *Example 1.* (i) On July 15, 2010, the adjusted funding target attainment percentage ("AFTAP") for Plan T for 2010 is certified to be 65%. Based on this AFTAP, Plan T is subject to the restriction on prohibited payments in paragraph (d)(3) of this section for the remainder of 2010.
> (ii) Beginning January 1, 2011, Plan T's AFTAP for 2011 is presumed to be equal to the AFTAP for 2010, or 65%, under the provisions of paragraph (h)(1)(ii) of this section. Accordingly, the restriction on prohibited payments in paragraph (d)(3) of this section continues to apply.

(iii) On March 1, 2011, the enrolled actuary for the plan certifies that the actual AFTAP for 2011 is 80%. Therefore, beginning March 1, 2011, Plan T is no longer subject to the restriction under paragraph (d)(3) of this section, and so Plan T resumes paying the full amount of any prohibited payments elected by participants with an annuity starting date of March 1, 2011, or later.

Example 2. (i) The facts are the same as in *Example 1,* except that the enrolled actuary for the plan does not certify the AFTAP for 2011 until June 1, 2011, when it is certified to be 66%. (ii) Beginning January 1, 2011, Plan T's AFTAP for 2011 is presumed to be equal to the AFTAP for 2010, or 65%, under the provisions of paragraph (h)(1)(ii) of this section. Accordingly, the restriction on prohibited payments in paragraph (d)(3) of this section continues to apply.

(iii) Pursuant to paragraph (h)(2)(iv) of this section, beginning April 1, 2011, the AFTAP for 2011 is presumed to be 55% (10 percentage points less than the AFTAP for 2010). Plan T is subject to the restriction on prohibited payments under paragraph (d)(1) of this section for annuity starting dates on or after April 1, 2011. In addition, Plan T is subject to the restriction on unpredictable contingent event benefits under paragraph (b) of this section for unpredictable contingent events occurring on or after April 1, 2011 and benefits are required to be frozen on and after April 1, 2011 under paragraph (e) of this section.

(iv) Once the enrolled actuary for the plan certifies that the AFTAP for 2011 for Plan T is 66%, Plan T is no longer subject to the restriction under paragraph (d)(1) of this section, but it is subject to the restriction under paragraph (d)(3) of this section. Plan T must resume paying prohibited payments, as restricted under paragraph (d)(3) of this section, for participants who elect benefits in accelerated forms of payment and who have an annuity starting date of June 1, 2011, or later. In addition, Plan T must provide benefits for any unpredictable contingent event occurring on or after January 1, 2011, to the extent permitted under paragraph (b) of this section. Similarly, Plan T is no longer subject to the restriction on benefit accruals under paragraph (e) of this section, and benefit accruals resume under Plan T beginning June 1, 2011, unless Plan T provides otherwise.

Example 3. (i) The facts are the same as in *Example 1,* except that the enrolled actuary for the plan does not certify the 2011 AFTAP until November 15, 2011. Beginning October 1, 2011, Plan T is conclusively presumed to have an AFTAP of less than 60%, in accordance with the provisions of paragraph (h)(3) of this section. Accordingly, Plan T is subject to the restrictions in paragraphs (b), (d)(1), and (e) of this section commencing on October 1, 2011. (ii) On November 15, 2011, the enrolled actuary for the plan certifies that the AFTAP for 2011 is 72%. However, because the certification occurred after September 30, 2011, the certification does not constitute a new section 436 measurement date, and Plan T continues to be subject to the restrictions on unpredictable contingent event benefits, prohibited payments, and benefit accruals under paragraphs (b), (d)(1), and (e) of this section.

(iii) Beginning January 1, 2012, the 2012 AFTAP for Plan T is presumed to be equal to the 2011 AFTAP of 72%. Because the presumed 2012 AFTAP is between 70% and 80% and, therefore, paragraph (h)(2) of this section (which provides for a 10 percentage point reduction in a plan's AFTAP in certain cases) will not apply, the presumed AFTAP will remain at 72% until the plan's enrolled actuary certifies the AFTAP for 2012 or until paragraph (h)(3) of this section applies on the first day of the 10th month of the plan year. Because the presumed AFTAP is 72%, Plan T is no longer subject to the restrictions on prohibited payments under paragraph (d)(1) of this section, and Plan T must provide benefits for any unpredictable contingent event occurring on or after January 1, 2012, to the extent permitted under paragraph (b) of this section and must resume paying prohibited payments, as restricted under paragraph (d)(3) of this section, that are elected by participants with annuity starting dates on or after January 1, 2012. Similarly, Plan T is no longer subject to the restriction on benefit accruals under paragraph (e) of this section, and benefit accruals resume under Plan T beginning January 1, 2012, unless Plan T provides otherwise.

Example 4. (i) The facts are the same as in *Example 3,* except that the enrolled actuary for the plan does not issue a certification of the AFTAP for 2011 for Plan T until February 1, 2012. (ii) Beginning on January 1, 2012, the presumptions in paragraph (h)(1)(iii) of this section apply for the 2012 plan year. Because the enrolled actuary for the plan has not certified the AFTAP for 2011, the presumed AFTAP as of October 1, 2011, continues to apply for the period beginning January 1, 2012. Therefore, the AFTAP as of January 1, 2012, is presumed to be less than 60%, and Plan T continues to be subject to the restrictions on unpredictable contingent event benefits under paragraph (b) of this section, prohibited payments under paragraph (d)(1) of this section, and benefit accruals under paragraph (e) of this section.

(iii) On February 1, 2012, the enrolled actuary for the plan certifies that the AFTAP for 2011 for Plan T is 65%. Because the enrolled actuary for the plan has not issued a certification of the AFTAP for 2012, the provisions of paragraph (h)(1)(iii)(B) of this section apply. Accordingly, the certification date for the 2011 AFTAP (February 1, 2012) is a section 436 measurement date and 65% is the presumed AFTAP for 2012 beginning on that date.

(iv) Because the presumed AFTAP is over 60% but less than 80%, the full restriction on prohibited payments under paragraph (d)(1) of this section no longer applies; however, the partial restriction on prohibited payments under paragraph (d)(3) of this section applies beginning on February 1, 2012. Therefore, Plan T must pay a portion of the prohibited payments elected by participants with annuity starting dates on or after February 1, 2012. Furthermore, based on the presumed AFTAP of 65%, the restriction on unpredictable contingent event benefits under paragraph (b) of this section ceases to apply for events occurring on or after February 1, 2012, to the extent permitted under paragraph (b) of this

section and the restriction on benefit accruals under paragraph (e) of this section no longer applies so that, unless Plan T provides otherwise, benefit accruals will resume as of February 1, 2012.

Example 5. (i) The facts are the same as in *Example 3,* except that the enrolled actuary for the plan does not issue a certification of the actual AFTAP for Plan T as of January 1, 2011, until May 1, 2012.
(ii) Beginning on January 1, 2012, the presumptions in paragraph (h)(1)(iii) of this section apply for the 2012 plan year. Because the enrolled actuary for the plan has not certified the actual AFTAP as of January 1, 2011, the presumed AFTAP as of October 1, 2011, continues to apply for the period beginning January 1, 2012. Therefore, the AFTAP as of January 1, 2012, is presumed to be less than 60%, and Plan T continues to be subject to the restrictions on unpredictable contingent event benefits under paragraph (b) of this section, on prohibited payments under paragraph (d)(1) of this section, and on benefit accruals under paragraph (e) of this section.

(iii) Since the enrolled actuary for the plan has not issued a certification of the actual AFTAP as of January 1, 2011, the rules of paragraph (h)(1)(iii) of this section apply beginning April 1, 2012, and the AFTAP is presumed to remain less than 60%. Plan T continues to be subject to the restrictions on unpredictable contingent event benefits under paragraph (b) of this section, on prohibited payments under paragraph (d)(1) of this section, and on benefit accruals under paragraph (e) of this section.

(iv) On May 1, 2012, the enrolled actuary for the plan certifies that the actual AFTAP for 2011 for Plan T is 65%. Because the enrolled actuary for the plan has not issued a certification of the actual AFTAP as of January 1, 2012, the provisions of paragraph (h)(2)(iv) of this section apply. Accordingly, on May 1, 2012, the 2012 AFTAP is presumed to be 10 percentage points less than the 2011 AFTAP, or 55%, so that the restrictions under paragraphs (b), (d), and (e) of this section continue to apply.

Example 6. (i) The enrolled actuary for Plan V certifies the plan's AFTAP for 2010 to be 69%. Based on this AFTAP, Plan V is subject to the restriction in paragraph (d)(3) of this section, and can only pay a portion (generally 50%) of the prohibited payments otherwise due to plan participants who commence benefits while the restriction is in effect. The enrolled actuary for the plan does not issue a certification of the AFTAP for 2011 until June 1, 2011.
(ii) Beginning January 1, 2011, Plan V's 2011 AFTAP is presumed to be equal to the 2010 AFTAP, or 69%, under the provisions of paragraph (h)(1)(ii) of this section. Accordingly, the restriction on prohibited payments in paragraph (d)(3) of this section continues to apply from January 1, 2011, through March 31, 2011, and Plan T may only pay a portion of the prohibited payments otherwise due to participants who commence benefit payments during this period.

(iii) Beginning April 1, 2011, the provisions of paragraph (h)(2)(ii) of this section apply. Under those provisions, the AFTAP beginning April 1, 2011, is presumed to be 10 percentage points lower than the presumed 2011 AFTAP, or 59%. Because Plan V's presumed AFTAP for 2011 is less than 60%, the restrictions on unpredictable contingent event benefits under paragraph (b) of this section, on the payment of accelerated benefit distributions under paragraph (d)(1) of this section, and on benefit accruals under paragraph (e) of this section apply. Accordingly, Plan V cannot pay any unpredictable contingent event benefits for events occurring on or after April 1, 2011, or prohibited payments to participants with an annuity starting date on or after April 1, 2011, and benefit accruals cease as of April 1, 2011.

(iv) On June 1, 2011, Plan V's enrolled actuary certifies that the plan's AFTAP for 2011 is 71%. Therefore, the restrictions on unpredictable contingent event benefits, prohibited payments, and benefit accruals in paragraphs (b), (d)(1), and (e) of this section no longer apply, but the partial restriction on benefit payments in paragraph (d)(3) of this section does apply. Accordingly, Plan V begins paying unpredictable contingent event benefits for events occurring on or after January 1, 2011, to the extent permitted under paragraph (b) of this section and a portion of the prohibited payments elected by participants with an annuity starting date on or after June 1, 2011. Benefit accruals previously restricted under paragraph (e) of this section resume effective June 1, 2011, unless Plan V provides otherwise.

(v) Participants who were not able to elect an accelerated form of payment during the period from April 1, 2011, through May 31, 2011, would be able to elect a new annuity starting date with a partial distribution of accelerated benefits effective June 1, 2011, if Plan V contained a preexisting provision permitting such an election after the restriction in paragraph (d)(1) of this section no longer applies. This is permitted because, under paragraph (a)(4)(ii)(B) of this section, a preexisting provision of this type is not considered a plan amendment and is therefore not subject to the plan amendment restriction in paragraph (c) of this section even though Plan V's AFTAP for 2011 is less than 80%.

(vi) Benefit accruals for the period beginning April 1, 2011, through May 31, 2011, would be automatically restored if Plan V contained a preexisting provision to retroactively restore benefit accruals restricted under paragraph (e) of this section after the restriction no longer applies. This is permitted because under paragraph (a)(4)(ii)(B) of this section, a preexisting provision of this type is not considered to be a plan amendment and is therefore not subject to the plan amendment restriction in paragraph (c) of this section even though Plan V's AFTAP for 2011 is less than 80%, because the period of the restriction did not exceed 12 months.

(6) ***Examples of rules of paragraph (h)(4) of this section.*** The following examples illustrate the rules of paragraph (h)(4) of this section:

Example 1. (i) Plan Y is a non-collectively bargained defined benefit plan with a plan year

that is the calendar year and a valuation date of January 1. Plan Y does not have a funding standard carryover balance or a prefunding balance. Plan Y's sponsor is not in bankruptcy. In June of 2010, the actual AFTAP for 2010 for Plan Y is certified as 65%. On the last day of the 2010 plan year, Plan Y is subject to the restrictions in paragraph (d)(3) of this section.
(ii) The enrolled actuary for the plan issues a range certification on March 21, 2011, certifying that the AFTAP for 2011 is at least 60% and less than 80%. Because the certification was issued before the first day of the 4th month of the plan year, the 10 percentage point reduction in the presumed AFTAP under paragraph (h)(2) of this section does not apply. In addition, because the enrolled actuary for the plan has certified that the AFTAP is within this range, Plan Y is not subject to the full restriction on accelerated benefit payments in paragraph (d)(1) of this section or the restriction on benefit accruals under paragraph (e) of this section.

(iii) On August 1, 2011, the enrolled actuary for the plan certifies that the actual AFTAP as of January 1, 2011, is 75.86%. This AFTAP falls within the previously certified range. Thus, the change is immaterial under paragraph (h)(4)(iii) of this section and the new certification does not change the applicability or inapplicability of the restrictions in this section.

Example 2. (i) The facts are the same as in *Example 1,* except that the plan sponsor makes an additional contribution for the 2010 plan year on September 1, 2011, that is not added to the prefunding balance. Reflecting this contribution, the enrolled actuary for the plan issues a revised certification stating that the AFTAP for 2011 is 81%, and Plan Y is no longer subject to the restriction on accelerated benefit payments under paragraph (d)(3) of this section on that date.
(ii) Although the revised certification changes the applicability of the restriction under paragraph (d)(3) of this section, the change is not a material change under paragraph (h)(4)(iii)(C)(*1*) of this section because the AFTAP changed only because of additional contributions for the preceding year made by the plan sponsor after the date of the enrolled actuary's initial certification.

(i) [Reserved]

(j) ***Definitions.*** For purposes of this section—

(1) ***Adjusted funding target attainment percentage*** —

(i) ***In general.*** Except as otherwise provided in this paragraph (j)(1), the *adjusted funding target attainment percentage* for a plan year is the fraction (expressed as a percentage)—

(A) The numerator of which is the adjusted plan assets for the plan year described in paragraph (j)(1)(ii) of this section; and

(B) The denominator of which is the adjusted funding target for the plan year described in paragraph (j)(1)(iii) of this section.

(ii) *Adjusted plan assets* —

(A) ***General rule.*** The adjusted plan assets for a plan year is generally determined by—

(*1*) Subtracting the plan's funding standard carryover balance and prefunding balance as of the valuation date from the value of plan assets for the plan year under section 430(g) (but treating the resulting value as zero if it is below zero); and

(*2*) Increasing the resulting value by the aggregate amount of purchases of annuities for participants and beneficiaries (other than participants who, at the time of the purchase, were highly compensated employees as defined in section 414(q), which definition includes highly compensated former employees under § 1.414(q)-1T, Q&A-4) which were made by the plan during the preceding 2 plan years, to the extent not included in plan assets for purposes of section 430.

(B) ***Special rule for plans that are fully funded without regard to subtraction of funding balances from plan assets.*** If for a plan year the value of plan assets determined without subtracting the funding standard carryover balance and the prefunding balance is not less than 100 percent of the plan's funding target determined under section 430 without regard to section 430(i), then the adjusted value of plan assets used in the calculation of the adjusted funding target attainment percentage for the plan year is determined without subtracting the plan's funding standard carryover balance and prefunding balance from the value of plan assets for the plan year.

(C) ***Special rule for plans with section 436 contributions.*** If an employer makes a contribution described in paragraph (f)(2) of this section after the valuation date in order to avoid or terminate limitations under section 436, then the present value of that contribution (determined using the effective interest rate under section 430(h)(2)(A) for the plan year) is permitted to be added to the plan assets as of the valuation date for purposes of determining or redetermining the adjusted funding target attainment percentage for a plan year, but only if the liability for the benefits, amendment, or accruals that would have been limited (but for the contribution) is included in determining the adjusted funding target for the plan year.

(D) ***Transition rule.*** Paragraph (j)(1)(ii)(B) of this section is applied to plan years beginning after 2007 and before 2011 by substituting for “100 percent” the applicable percentage determined in accordance with the following table:

In the case of a plan year beginning in calendar year:	The applicable percentage is:
2008	92
2009	94

In the case of a plan year beginning in calendar year:	The applicable percentage is:
2010	96

(E) ***Limitation on transition rule.*** Paragraph (j)(1)(ii)(D) of this section does not apply with respect to the current plan year unless, for each plan year beginning after December 31, 2007, and before the current plan year, the value of plan assets determined without subtracting the funding standard carryover balance and the prefunding balance is not less than the product of—

(*1*) The applicable percentage determined under paragraph (j)(1)(ii)(D) of this section for that plan year; and

(*2*) The funding target (determined without regard to the at-risk rules of section 430(i)) for that plan year.

(iii) ***Adjusted funding target*** —

(A) ***In general.*** Except as otherwise provided in this paragraph (j)(1)(iii), the adjusted funding target equals the funding target for the plan year, determined in accordance with the rules set forth in § 1.430(d)-1, but without regard to the at-risk rules under section 430(i), increased by the aggregate amount of purchases of annuities that were added to assets for purposes of determining the plan's adjusted plan assets under paragraph (j)(1)(ii)(A)(*2*) of this section. The definition of adjusted funding target for a plan maintained by a commercial airline for which the plan sponsor has made the election described in section 402(a)(1) of Pension Protection Act of 2006 (PPA '06), Public Law 109-280 (120 Stat. 780), is the same as if it did not make such an election.

(B) ***Adjusted funding target after updated certification.*** After the plan's enrolled actuary prepares an updated certification of the adjusted funding target attainment percentage under paragraph (h)(4)(v) of this section, the adjusted funding target will also be updated to reflect unpredictable contingent event benefits and plan amendments not already taken into account.

(iv) ***Plans with zero adjusted funding target.*** If the adjusted funding target for the plan year is zero, then the adjusted funding target attainment percentage for the plan year is 100 percent.

(v) ***Plans with end of year valuation dates.*** [Reserved]

(vi) ***Special rule for plans that are the result of a merger.*** [Reserved]

(vii) ***Special rule for plans that are involved in a spinoff.*** [Reserved]

(2) ***Annuity starting date*** —

(i) ***General rule.*** The term *annuity starting date* means, as applicable—

(A) The first day of the first period for which an amount is payable as an annuity as described in section 417(f)(2)(A)(i);

(B) In the case of a benefit not payable in the form of an annuity, the annuity starting date is the annuity starting date for the qualified joint and survivor annuity that is payable under the plan at the same time as the benefit that is not payable as an annuity;

(C) In the case of an amount payable under a retroactive annuity starting date, the benefit commencement date (instead of the date determined under paragraphs (j)(2)(i)(A) and (B) of this section);

(D) The date of the purchase of an irrevocable commitment from an insurer to pay benefits under the plan; and

(E) The date of any transfer to another plan described in paragraph (j)(6)(i)(C) of this section.

(ii) ***Special rule for beneficiaries.*** If a participant commences benefits at an annuity starting date (as defined in paragraph (j)(2)(i) of this section) and, after the death of the participant, payments continue to a beneficiary, the annuity starting date for the payments to the participant constitutes the annuity starting date for payments to the beneficiary, except that a new annuity starting date occurs (determined by applying paragraph (j)(2)(i)(A), (B), and (C) of this section to the payments to the beneficiary) if the amounts payable to all beneficiaries of the participant in the aggregate at any future date can exceed the monthly amount that would have been paid to the participant had he or she not died.

(3) ***First effective plan year.*** The *first effective plan year* for a plan is the first plan year to which section 436 applies to the plan under paragraph (k)(1) or (k)(2) of this section.

(4) ***Funding target.*** In general, the *funding target* means the funding target under § 1.430(d)-1, without regard to the at-risk rules under section 430(i) and § 1.430(i)-1. However, solely for purposes of sections 436(b)(2)(A) and (c)(2)(A), the funding target means the funding target under § 1.430(i)-1 if the plan is in at-risk status for the plan year.

(5) ***Prior plan year adjusted funding target attainment percentage*** —

(i) ***In general.*** Except as otherwise provided in this paragraph (j)(5), the *prior plan year adjusted funding target attainment percentage* is the adjusted funding target attainment percentage determined under paragraph (j)(1) of this section for the immediately preceding plan year.

(ii) ***Special rules*** —

(A) ***Special rule for new plans.*** In the case of a plan established during the plan year that was not the result of a merger or spinoff, the adjusted funding target attainment percentage is equal to 100 percent for plan years before the plan was established. Except as otherwise provided in paragraph (j)(5)(ii)(B) of this section, a plan that has a predecessor plan in accordance with § 1.415(f)-1(c) is not a plan established during the plan year under this paragraph (j)(5)(ii)(A). Instead, if the plan has a predecessor plan, the adjusted funding target attainment percentage for the prior plan year is the adjusted funding target attainment percentage for the prior plan year for the predecessor plan (and that predecessor plan's adjusted funding target attainment percentage is treated as equal to 100 percent on any date on which it is terminated, other than in a distress termination).

(B) ***Special rules for plans that are the result of a merger.*** [Reserved]

(C) ***Special rules for plans that are involved in a spinoff.*** [Reserved]

(iii) ***Special rules for 2007 plan year*** —

(A) ***General determination of 2007 adjusted funding target attainment percentage.*** In the case of the first plan year beginning in 2008, except as otherwise provided in this paragraph (j)(5), the adjusted funding target attainment percentage for the immediately preceding plan year (the 2007 plan year) is determined as the fraction (expressed as a percentage)—

(*1*) The numerator of which is the value of plan assets determined under paragraph (j)(5)(iii)(B) of this section increased by the aggregate amount of purchases of annuities for participants and beneficiaries (other than participants who, at the time of the purchase, were highly compensated employees as defined in section 414(q), which definition includes highly compensated former employees under § 1.414(q)-1T, Q&A-4 which were made by the plan during the preceding 2 plan years, to the extent not included in plan assets under section 412(c)(2) (as in effect prior to amendment by PPA '06); and

(*2*) The denominator of which is the plan's current liability determined pursuant to section 412(l)(7) (as in effect prior to amendment by PPA '06) on the valuation date for the 2007 plan year increased by the aggregate amount of purchases of annuities that were added to the plan assets under the rules of paragraph (j)(5)(iii)(A)(*1*) of this section.

(B) ***General determination of value of plan assets*** —

(*1*) ***In general.*** The value of plan assets for purposes of this paragraph (j)(5)(iii) is determined under section 412(c)(2) as in effect for the 2007 plan year, except that the value of plan assets prior to subtracting the plan's funding standard account credit balance described in paragraph (j)(5)(iii)(B)(*2*) of this section must be adjusted so that the value of plan assets is neither less than 90 percent of the fair market value of plan assets nor greater than 110 percent of the fair market value of plan assets on the valuation date for that plan year.

(*2*) ***Subtraction of credit balance.*** If a plan has a funding standard account credit balance as of the valuation date for the 2007 plan year, that balance is subtracted from the value of plan assets described in paragraph (j)(5)(iii)(B)(*1*) of this section as of that valuation date. However, the subtraction does not apply if the value of plan assets prior to adjustment under paragraph (j)(5)(iii)(B)(*1*) of this section is greater than or equal to 90 percent of the plan's current liability as of the valuation date for the 2007 plan year.

(*3*) ***Effect of funding standard carryover balance reduction for 2007 plan year.*** Notwithstanding paragraph (j)(5)(iii)(B)(*2*) of this section, if, for the first plan year beginning in 2008, the employer has made an election to reduce some or all of the funding standard carryover balance as of the first day of that year in accordance with § 1.430(f)-1(e), then the present value (determined as of the valuation date for the 2007 plan year using the valuation interest rate for that plan year) of the amount so reduced is not treated as part of the funding standard account credit balance when that balance is subtracted from the asset value under paragraph (j)(5)(iii)(B)(*2*) of this section.

(C) ***Plan with end-of-year valuation date.*** With respect to the first plan year beginning in 2008, if the plan had a valuation date under section 412 that was the last day of the plan year for each of the plan years beginning in 2006 and 2007, the adjusted funding target attainment percentage for the 2007 plan year may be determined as the fraction (expressed as a percentage)—

(*1*) The numerator of which is the value of plan assets determined under paragraph (j)(5)(iii)(D) of this section increased by the aggregate amount of purchases of annuities for participants and beneficiaries (other than participants who, at the time of the purchase, were highly compensated employees as defined in section 414(q), which definition includes highly compensated former employees under § 1.414(q)-1T, Q&A-4 which were made by the plan during the preceding 2 plan years, to the extent not included in plan assets under section 412(c)(2) (as in effect prior to amendment by PPA '06); and

(*2*) The denominator of which is the plan's current liability determined pursuant to section 412(l)(7) (as in effect prior to amendment by PPA '06) on the valuation date for the second plan year that begins before 2008 (the 2006 plan year), including the increase in current liability for the 2006 plan year, increased by the aggregate amount of purchases of annuities that were added to the plan assets under the rules of paragraph (j)(5)(iii)(C)(*1*) of this section.

(D) ***Special asset determinations for 2006 adjusted funding target attainment percentage*** —

(*1*) ***General rule.*** If the adjusted funding target attainment percentage for the 2007 plan year is determined under the rules of paragraph (j)(5)(iii)(C) of this section, then the value of plan assets is determined as the value of plan assets under section 412(c)(2) as in effect for the 2006 plan year, adjusted as provided in this paragraph (j)(5)(iii)(D).

(*2*) ***Inclusion of contributions for 2006.*** Contributions made for the 2006 plan year are taken into account in determining the value of plan assets, regardless of whether those contributions are made during the plan year or after the end of the plan year and within the period specified under section 412(c)(10) (as in effect prior to amendment by PPA '06).

(*3*) ***Restriction to 90-110 percent corridor.*** The value of plan assets taking into account the amount of contributions made for the 2006 plan year is increased or decreased, as necessary, so that it is neither less than 90 percent of the fair market value of plan assets nor greater than 110 percent of the fair market value of plan assets on the valuation date for the 2006 plan year (taking into account assets attributable to contributions for the 2006 plan year).

(*4*) ***Subtraction of credit balance.*** The plan's funding standard account credit balance as of the end of the 2006 plan year is generally subtracted from the value of plan assets determined after application of paragraph (j)(5)(iii)(D)(*3*) of this section. However, this subtraction does not apply if the value of plan assets is greater than or equal to 90 percent of the plan's current liability determined under section 412(l)(7) (as in effect prior to amendment by PPA '06) on the valuation date for the 2006 plan year.

(E) ***Special rules for mergers and spinoffs.*** Rules similar to the rules of paragraph (j)(5)(ii) of this section apply for purposes of determining the adjusted funding target attainment percentage for the 2007 plan year in the case of a newly established plan, a plan that is the result of a merger of two plans, or a plan that is in involved in a spinoff.

(6) ***Prohibited payment*** —

(i) ***General rule.*** The term *prohibited payment* means—

(A) Any payment for a month that is in excess of the monthly amount paid under a straight life annuity (plus any social security supplements described in the last sentence of section 411(a)(9)) to a participant or beneficiary whose annuity starting date occurs during any period that a limitation under paragraph (d) of this section is in effect;

(B) Any payment for the purchase of an irrevocable commitment from an insurer to pay benefits;

(C) Any transfer of assets and liabilities to another plan maintained by the same employer (or by any member of the employer's controlled group) that is made in order to avoid or terminate the application of section 436 benefit limitations; and

(D) Any other amount that is identified as a prohibited payment by the Commissioner in revenue rulings and procedures, notices, and other guidance published in the Internal Revenue Bulletin (*see* § 601.601(d)(2) relating to objectives and standards for publishing regulations, revenue rulings and revenue procedures in the Internal Revenue Bulletin).

(ii) ***Special rule for beneficiaries.*** In the case of a beneficiary that is not an individual, the amount that is a prohibited payment is determined by substituting for the amount in paragraph (j)(1)(i)(A) of this section the monthly amount payable in installments over 240 months that is actuarially equivalent to the benefit payable to the beneficiary.

(7) ***Section 436 contributions. Section 436 contributions*** are the contributions described in paragraph (f)(2) of this section that are made in order to avoid the application of section 436 limitations under a plan for a plan year.

(8) ***Section 436 measurement date.*** A *section 436 measurement date* is the date that is used to determine when the limitations of sections 436(d) and 436(e) apply or cease to apply, and is also used for calculations with respect to applying the limitations of paragraphs (b) and (c) of this section. *See* paragraphs (h)(1)(i), (h)(2)(iii)(B), (h)(2)(iv)(B), and (h)(3)(i) of this section regarding section 436 measurement dates that result from application of the presumptions under paragraph (h) of this section.

(9) ***Unpredictable contingent event.*** An *unpredictable contingent event benefit* means any benefit or increase in benefits to the extent the benefit or increase would not be payable but for the occurrence of an unpredictable contingent event. For this purpose, an *unpredictable contingent event* means a plant shutdown (whether full or partial) or similar event, or an event (including the absence of an event) other than the attainment of any age, performance of any service, receipt or derivation of any compensation, or the occurrence of death or disability. For example, if a plan provides for an unreduced early retirement benefit upon the occurrence of an event other than the attainment of any age, performance of any service, receipt or derivation of any compensation, or the occurrence of death or disability, then that unreduced early retirement benefit is an unpredictable contingent event benefit to the extent of any portion of the benefit that would not be payable but for the occurrence of

the event, even if the remainder of the benefit is payable without regard to the occurrence of the event. Similarly, if a plan includes a benefit payable upon the presence (including the absence) of circumstances specified in the plan (other than the attainment of any age, performance of any service, receipt or derivation of any compensation, or the occurrence of death or disability), but not upon a severance from employment that does not include those circumstances, that benefit is an unpredictable contingent event benefit.

(10) ***Examples.*** The following examples illustrate the rules of this paragraph (j):

Example 1. (i) Plan S is a non-collectively bargained defined benefit plan with a plan year that is the calendar year and a valuation date of January 1. The first effective plan year is 2008. Plan S is not in at-risk status for 2008.
(ii) As of January 1, 2008, Plan S has a value of plan assets (equal to the market value of assets) of $2,100,000 and a funding standard carryover balance of $200,000. During 2006, assets from Plan S were used to purchase a total of $100,000 in annuities for employees other than highly compensated employees. No annuities were purchased during 2007. On May 1, 2008, the enrolled actuary for the plan determines that the funding target as of January 1, 2008, is $2,500,000.

(iii) The adjusted value of assets for Plan S as of January 1, 2008, is $2,000,000 (that is, plan assets of $2,100,000, plus annuity purchases of $100,000, and minus the funding standard carryover balance of $200,000). The adjusted funding target is $2,600,000 (that is, the funding target of $2,500,000, increased by the annuity purchases of $100,000).

(iv) Based on the above adjusted plan assets and adjusted funding target, the adjusted funding target attainment percentage (AFTAP) as of January 1, 2008, would be 76.92%. Since the AFTAP is less than 80% but is at least 60%, Plan S is subject to the restrictions in paragraph (d)(3) of this section.

Example 2. (i) The facts are the same as in *Example 1*, except that it is reasonable to expect that the plan sponsor will make a contribution of $80,000 to Plan S for the 2007 plan year by September 15, 2008. This amount is in excess of the minimum required contribution for 2007. The plan sponsor elects to reduce the funding standard carryover balance by $80,000.
(ii) Because it is reasonable to expect that the $80,000 will be contributed by the plan sponsor, that amount is taken into account when the enrolled actuary certifies the 2008 AFTAP under the special rule in paragraph (h)(4)(i)(B) of this section for plan years beginning before 2009. Accordingly, the enrolled actuary for the plan certifies the 2008 AFTAP as 80% (that is, adjusted plan assets of $2,080,000, reflecting the $80,000 in contributions receivable, divided by the adjusted funding target of $2,600,000).

(iii) The ability to take contributions into account before they are actually paid to the plan is available only for plan years beginning before 2009. Furthermore, if the employer does not actually make the contribution and the difference between the incorrect certification and the corrected AFTAP constitutes a material change, the plan will have violated section 401(a)(29) or will not have been operated in accordance with its terms.

Example 3. (i) Plan R is a defined benefit plan with a plan year that is the calendar year and a valuation date of January 1. Section 436 applies to Plan R for 2008. The valuation interest rate for the 2007 plan year for Plan R is 7%. The fair market value of assets of Plan R as of January 1, 2007, is $1,000,000. The actuarial value of assets of Plan R as of January 1, 2007, is $1,200,000. The current liability of Plan R as of January 1, 2007, is $1,500,000. The funding standard account credit balance as of January 1, 2007, is $80,000. The funding standard carryover balance of Plan R is $50,000 as of the beginning of the 2008 plan year. The sponsor of Plan R, Sponsor T, elects in 2008 to reduce the funding standard carryover balance in accordance with § 1.430(f)-1 by $45,000. No annuities were purchased using plan assets during 2005 or 2006.
(ii) Pursuant to paragraph (j)(5)(iii)(B)(*1*) of this section, the asset value used to determine the AFTAP for the 2007 plan year is limited to 110% of the fair market value of assets on January 1, 2007, or $1,100,000 (110% of $1,000,000).

(iii) Pursuant to paragraph (j)(5)(iii)(B)(*2*) of this section, the funding standard account credit balance as of January 1, 2007, is subtracted from the asset value used to determine the AFTAP for the 2007 plan year. However, pursuant to paragraph (j)(5)(iii)(B)(*3*) of this section, the present value of the amount by which Sponsor T elected to reduce the funding standard carryover balance in 2008 is not subtracted.

(iv) The present value, determined at an interest rate of 7%, of the $45,000 reduction in the funding standard carryover balance elected by Sponsor T in 2008 is $42,056. Thus, $42,056 is not subtracted from the 2007 plan year asset value. Accordingly, the funding standard account credit balance that is subtracted from the 2007 plan year asset value is $37,944 (that is, $80,000 less $42,056).

(v) Thus, the asset value that is used to determine the FTAP for the 2007 plan year is $1,100,000 less $37,944, or $1,062,056. Accordingly, for purposes of this section, the FTAP for the 2007 plan year for Plan R is 70.8% (that is, $1,062,056 divided by $1,500,000).

Example 4. (i) Plan T is a non-collectively bargained defined benefit plan that was established prior to 2007. Plan T has a plan year that is the calendar year and a valuation date of January 1. The first effective plan year is 2008; the plan met the conditions of paragraph (j)(1)(ii)(E) of this section for 2008. As of January 1, 2009, Plan T has a value of plan assets (equal to the market value of assets) of $3,000,000, a funding standard carryover balance of

$150,000, and a prefunding balance of $50,000. During 2007 and 2008, assets from Plan T were used to purchase a total of $400,000 in annuities for employees other than highly compensated employees. The funding target for Plan T (without regard to the at-risk rules of section 430(i)) is $3,200,000 as of January 1, 2009.
(ii) The plan's funding status is calculated in accordance with paragraph (j)(1)(ii)(B) of this section to determine whether the special rule for fully-funded plans applies to Plan T. Accordingly, the value of plan assets determined without subtracting the funding standard carryover balance and the prefunding balance is 93.75% of the plan's funding target ($3,000,000 ÷ $3,200,000). The applicable transitional percentage in paragraph (j)(1)(ii)(D) of this section is 94% for 2009. Because the percentage calculated above is less than 94%, the transition rule does not apply to Plan T.

(iii) Accordingly, the January 1, 2009, AFTAP for Plan T is calculated without reflecting the special rule in paragraph (j)(1)(ii)(B) of this section. The AFTAP as of January 1, 2009, is calculated by dividing the adjusted assets by the adjusted funding target. For this purpose, the value of assets is increased by the annuities purchased for nonhighly compensated employees during 2007 and 2008, and decreased by the funding standard carryover balance and the prefunding balance as of January 1, 2009, resulting in an adjusted asset value of $3,200,000 (that is, $3,000,000 + $400,000−$150,000−$50,000). The funding target is increased by the annuities purchased for nonhighly compensated employees during 2007 and 2008, resulting in an adjusted funding target of $3,600,000 (that is, $3,200,000 + $400,000). The AFTAP for Plan T for 2009 is therefore $3,200,000 ÷ $3,600,000, or 88.89%.

(k) ***Effective/applicability dates*** —

(1) ***Statutory effective date.*** Section 436 generally applies to plan years beginning on or after January 1, 2008. The applicability of section 436 for purposes of determining the minimum required contribution is delayed for certain plans in accordance with sections 104 through 106 of PPA '06.

(2) ***Collectively bargained plan exception*** —

(i) ***In general.*** In the case of a collectively bargained plan that is maintained pursuant to one or more collective bargaining agreements between employee representatives and one or more employers ratified before January 1, 2008, section 436 does not apply to plan years beginning before the earlier of—

(A) January 1, 2010; or

(B) The later of—

(*1*) The date on which the last such collective bargaining agreement relating to the plan terminates (determined without regard to any extension thereof agreed to after August 17, 2006); or

(*2*) The first day of the first plan year to which section 436 would (but for this paragraph (k)(2)) apply.

(ii) ***Treatment of certain plan amendments.*** For purposes of this paragraph (k)(2), any plan amendment made pursuant to a collective bargaining agreement relating to the plan which amends the plan solely to conform to any requirement added by section 436 is not treated as a termination of the collective bargaining agreement.

(iii) ***Treatment of plans with both collectively bargained and non-collectively bargained employees.*** In the case of a plan with respect to which a collective bargaining agreement applies to some, but not all, of the plan participants, the plan is considered a collectively bargained plan for purposes of this paragraph (k)(2) if it is considered a collectively bargained plan under the rules of paragraph (a)(5)(ii)(B) of this section.

(3) ***Effective date/applicability date of regulations.*** This section applies to plan years beginning on or after January 1, 2010. For plan years beginning before January 1, 2010, plans are permitted to rely on the provisions set forth in this section for purposes of satisfying the requirements of section 436.

[T.D. 9467, 74 FR 53061, Oct. 15, 2009, as amended by T.D. 9732, 80 FR 54400, Sept. 9, 2015]

§§ 1.437-1.440 [Reserved]

DEFERRED COMPENSATION, ETC. (CONTINUED)

ACCOUNTING PERIODS AND METHODS OF ACCOUNTING

ACCOUNTING PERIODS

§ 1.441-0 Table of contents.

This section lists the captions contained in §§ 1.441-1 through 1.441-4 as follows:

§ 1.441-1 Period for computation of taxable income.

(a) Computation of taxable income.

(1) In general.

(2) Length of taxable year.

(b) General rules and definitions.

(1) Taxable year.

(1) Required taxable year.

(i) In general.

(ii) Exceptions.

(A) 52-53-week taxable years.

(B) Partnerships, S corporations, and PSCs.

(C) Specified foreign corporations.

(3) Annual accounting period.

(4) Calendar year.

(5) Fiscal year.

(i) Definition.

(ii) Recognition.

(6) Grandfathered fiscal year.

(7) Books.

(8) Taxpayer.

(c) Adoption of taxable year.

(1) In general.

(2) Approval required.

(i) Taxpayers with required taxable years.

(ii) Taxpayers without books.

(d) Retention of taxable year.

(e) Change of taxable year.

(f) Obtaining approval of the Commissioner or making a section 444 election.

§ 1.441-2 Election of taxable year consisting of 52-53 weeks

(a) In general.

(1) Election.

(2) Effect.

(3) Eligible taxpayer.

(4) Example.

(b) Procedures to elect a 52-53-week taxable year.

(1) Adoption of a 52-53-week taxable year.

(i) In general.

(ii) Filing requirement.

(2) Change to (or from) a 52-53-week taxable year.

(i) In general.

(ii) Special rules for short period required to effect the change.

(3) Examples.

(c) Application of effective dates.

(1) In general.

(2) Examples.

(3) Changes in tax rates.

(4) Examples.

(d) Computation of taxable income.

(e) Treatment of taxable years ending with reference to the same calendar month.

(1) Pass-through entities.

(2) Personal service corporations and employee-owners.

(3) Definitions.

(i) Pass-through entity.

(ii) Owner of a pass-through entity.

(4) Examples.

(5) Transition rule.

§ 1.441-3 Taxable year of a personal service corporation

(a) Taxable year.

(1) Required taxable year.

(2) Exceptions.

(b) Adoption, change, or retention of taxable year.

(1) Adoption of taxable year.

(2) Change in taxable year.

(3) Retention of taxable year.

(4) Procedures for obtaining approval or making a section 444 election.

(5) Examples.

(c) Personal service corporation defined.

(1) In general.

(2) Testing period.

(i) In general.

(ii) New corporations.

(3) Examples.

(d) Performance of personal services.

(1) Activities described in section 448(d)(2)(A).

(2) Activities not described in section 448(d)(2)(A).

(e) Principal activity.

(1) General rule.

(2) Compensation cost.

(i) Amounts included.

(ii) Amounts excluded.

(3) Attribution of compensation cost to personal service activity.

(i) Employees involved only in the performance of personal services.

(ii) Employees involved only in activities that are not treated as the performance of personal services.

(iii) Other employees.

(A) Compensation cost attributable to personal service activity.

(B) Compensation cost not attributable to personal service activity.

(f) Services substantially performed by employee-owners.

(1) General rule.

(2) Compensation cost attributable to personal services.

(3) Examples.

(g) Employee-owner defined.

(1) General rule.

(2) Special rule for independent contractors who are owners.

(h) Special rules for affiliated groups filing consolidated returns.

(1) In general.

(2) Examples.

§ 1.441-4 Effective date

[T.D. 8996, 67 FR 35012, May 17, 2002]

§ 1.441-1 Period for computation of taxable income.

(a) ***Computation of taxable income*** —

(1) ***In general.*** Taxable income must be computed and a return must be made for a period known as the taxable year. For rules relating to methods of accounting, the taxable year for which items of gross income are included and deductions are taken, inventories, and adjustments, see parts II and III (section 446 and following), subchapter E, chapter 1 of the Internal Revenue Code, and the regulations thereunder.

(2) ***Length of taxable year.*** Except as otherwise provided in the Internal Revenue Code and the regulations thereunder (e.g., § 1.441-2 regarding 52-53-week taxable years), a taxable year may not cover a period of more than 12 calendar months.

(b) ***General rules and definitions.*** The general rules and definitions in this paragraph (b) apply for purposes of sections 441 and 442 and the regulations thereunder.

(1) ***Taxable year. Taxable year*** means—

(i) The period for which a return is made, if a return is made for a period of less than 12 months (short period). See section 443 and the regulations thereunder;

(ii) Except as provided in paragraph (b)(1)(i) of this section, the taxpayer's required taxable year (as defined in paragraph (b)(2) of this section), if applicable;

(iii) Except as provided in paragraphs (b)(1)(i) and (ii) of this section, the taxpayer's annual accounting period (as defined in paragraph (b)(3) of this section), if it is a calendar year or a fiscal year; or

(iv) Except as provided in paragraphs (b)(1)(i) and (ii) of this section, the calendar year, if the taxpayer keeps no books, does not have an annual accounting period, or has an annual accounting period that does not qualify as a fiscal year.

(2) ***Required taxable year*** —

(i) ***In general.*** Certain taxpayers must use the particular taxable year that is required under the Internal Revenue Code and the regulations thereunder (the required taxable year). For example, the required taxable year is—

(A) [Reserved]

(B) In the case of a personal service corporation (PSC), the taxable year determined under section 441(i) and § 1.441-3;

(C) In the case of a nuclear decommissioning fund, the taxable year determined under § 1.468A-4(c)(1);

(D) In the case of a designated settlement fund or a qualified settlement fund, the taxable year determined under § 1.468B-2(j);

(E) In the case of a common trust fund, the taxable year determined under section 584(i);

(F) In the case of certain trusts, the taxable year determined under section 644;

(G) In the case of a partnership, the taxable year determined under section 706 and § 1.706-1;

(H) In the case of an insurance company, the taxable year determined under section 843 and § 1.1502-76(a)(2);

(I) In the case of a real estate investment trust, the taxable year determined under section 859;

(J) In the case of a real estate mortgage investment conduit, the taxable year determined under section 860D(a)(5) and § 1.860D-1(b)(6);

(K) In the case of a specified foreign corporation, the taxable year determined under section 898(c)(1)(A);

(L) In the case of an S corporation, the taxable year determined under section 1378 and § 1.1378-1; or

(M) In the case of a member of an affiliated group that makes a consolidated return, the taxable year determined under § 1.1502-76.

(ii) ***Exceptions.*** Notwithstanding paragraph (b)(2)(i) of this section, the following taxpayers may have a taxable year other than their required taxable year:

(A) ***52-53-week taxable years.*** Certain taxpayers may elect to use a 52-53-week taxable year that ends with reference to their required taxable year. See, for example, §§ 1.441-3 (PSCs), 1.706-1 (partnerships), 1.1378-1 (S corporations), and 1.1502-76(a)(1) (members of a consolidated group).

(B) ***Partnerships, S corporations, and PSCs.*** A partnership, S corporation, or PSC may use a taxable year other than its required taxable year if the taxpayer elects to use a taxable year other than its required taxable year under section 444, elects a 52-53-week taxable year that ends with reference to its required taxable year as provided in paragraph (b)(2)(ii)(A) of this section or to a taxable year elected under section 444, or establishes a business purpose to the satisfaction of the Commissioner under section 442 (such as a grandfathered fiscal year).

(C) ***Specified foreign corporations.*** A specified foreign corporation (as defined in section 898(b)) may use a taxable year other than its required taxable year if it elects a 52-53-week taxable year that ends with reference to its required taxable year as provided in paragraph (b)(2)(ii)(A) of this section or makes a one-month deferral election under section 898(c)(1)(B).

(3) ***Annual accounting period. Annual accounting period*** means the annual period (calendar year or fiscal year) on the basis of which the taxpayer regularly computes its income in keeping its books.

(4) ***Calendar year. Calendar year*** means a period of 12 consecutive months ending on December 31. A taxpayer who has not established a fiscal year must make its return on the basis of a calendar year.

(5) ***Fiscal year*** —

(i) ***Definition. Fiscal year*** means—

(A) A period of 12 consecutive months ending on the last day of any month other than December; or

(B) A 52-53-week taxable year, if such period has been elected by the taxpayer. See § 1.441-2.

(ii) ***Recognition.*** A fiscal year will be recognized only if the books of the taxpayer are kept in accordance with such fiscal year.

(6) ***Grandfathered fiscal year. Grandfathered fiscal year*** means a fiscal year (other than a year that resulted in a three month or less deferral of income) that a partnership or an S corporation received permission to use on or after July 1, 1974, by a letter ruling (i.e., not by automatic approval).

(7) ***Books. Books*** include the taxpayer's regular books of account and such other records and data as may be necessary to support the entries on the taxpayer's books and on the taxpayer's return, as for example, a reconciliation of any difference between such books and the taxpayer's return. Records that are sufficient to reflect income adequately and clearly on the basis of an annual accounting period will be regarded as the keeping of books. See section 6001 and the regulations thereunder for rules relating to the keeping of books and records.

(8) ***Taxpayer. Taxpayer*** has the same meaning as the term *person* as defined in section 7701(a)(1) (*e.g.,* an individual, trust, estate, partnership, association, or corporation) rather than the meaning of the term taxpayer as defined in section 7701(a)(14) (any person subject to tax).

(c) ***Adoption of taxable year*** —

(1) ***In general.*** Except as provided in paragraph (c)(2) of this section, a new taxpayer may adopt any taxable year that satisfies the requirements of section 441 and the regulations thereunder without the approval of the Commissioner. A taxable year of a new taxpayer is adopted by filing its first Federal income tax return using that taxable year. The filing of an application for automatic extension of time to file a Federal income tax return (*e.g.,* Form 7004, "Application for Automatic Extension of Time to File Corporation Income Tax Return"), the filing of an application for an employer identification number (*i.e.,* Form SS-4, "Application for Employer Identification Number"), or the payment of estimated taxes, for a particular taxable year do not constitute an adoption of that taxable year.

(2) ***Approval required*** —

(i) ***Taxpayers with required taxable years.*** A newly-formed partnership, S corporation, or PSC that wants to adopt a taxable year other than its required taxable year, a taxable year elected under section 444, or a 52-53-week taxable year that ends with reference to its required taxable year or a taxable year elected under section 444 must establish a business purpose and obtain the approval of the Commissioner under section 442.

(ii) ***Taxpayers without books.*** A taxpayer that must use a calendar year under section 441(g) and paragraph (f) of this section may not adopt a fiscal year without obtaining the approval of the Commissioner.

(d) ***Retention of taxable year.*** In certain cases, a partnership, S corporation, electing S corporation, or PSC will be required to change its taxable year unless it obtains the approval of the Commissioner under section 442, or makes an election under section 444, to retain its current taxable year. For example, a corporation using a June 30 fiscal year that either becomes a PSC or elects to be an S corporation and, as a result, is required to use the calendar year under section 441(i) or 1378, respectively, must obtain the approval of the Commissioner to retain its current fiscal year. Similarly, a partnership using a taxable year that corresponds to its required taxable year must obtain the approval of the Commissioner to retain such taxable year if its required taxable year changes as a result of a change in ownership. However, a partnership that previously established a business purpose to the satisfaction of the Commissioner to use a taxable year is not required to obtain the approval of the Commissioner if its required taxable year changes as a result of a change in ownership.

(e) ***Change of taxable year.*** Once a taxpayer has adopted a taxable year, such taxable year must be used in computing taxable income and making returns for all subsequent years unless the taxpayer obtains approval from the Commissioner to make a change or the taxpayer is otherwise authorized to change without the approval of the Commissioner under the Internal Revenue Code (e.g., section 444 or 859) or the regulations thereunder.

(f) ***Obtaining approval of the Commissioner or making a section 444 election.*** See § 1.442-1(b) for procedures for obtaining approval of the Commissioner (automatically or otherwise) to adopt, change, or retain an annual accounting period. See §§ 1.444-1T and 1.444-2T for qualifications, and 1.444-3T for procedures, for making an election under section 444.

[T.D. 8996, 67 FR 35012, May 17, 2002, as amended at by T.D. 9849, 84 FR 9234, Mar. 14, 2019]

§ 1.441-2 Election of taxable year consisting of 52-53 weeks.

(a) *In general* —

(1) ***Election.*** An eligible taxpayer may elect to compute its taxable income on the basis of a fiscal year that—

(i) Varies from 52 to 53 weeks;

(ii) Ends always on the same day of the week; and

(iii) Ends always on—

(A) Whatever date this same day of the week last occurs in a calendar month; or

(B) Whatever date this same day of the week falls that is the nearest to the last day of the calendar month.

(2) ***Effect.*** In the case of a taxable year described in paragraph (a)(1)(iii)(A) of this section, the year will always end within the month and may end on the last day of the month, or as many as six days before the end of the month. In the case of a taxable year described in paragraph (a)(1)(iii)(B) of this section, the year may end on the last day of the month, or as many as three days before or three days after the last day of the month.

(3) ***Eligible taxpayer.*** A taxpayer is eligible to elect a 52-53-week taxable year if such fiscal year would otherwise satisfy the requirements of section 441 and the regulations thereunder. For example, a taxpayer that is required to use a calendar year under § 1.441-1(b)(2)(i)(D) is not an eligible taxpayer.

(4) ***Example.*** The provisions of this paragraph (a) are illustrated by the following example:

Example. If the taxpayer elects a taxable year ending always on the last Saturday in November, then for the year 2001, the taxable year would end on November 24, 2001. On the other hand, if the taxpayer had elected a taxable year ending always on the Saturday nearest to the end of November, then for the year 2001, the taxable year would end on December 1, 2001.

(b) *Procedures to elect a 52-53-week taxable year* —

(1) *Adoption of a 52-53-week taxable year* —

(i) ***In general.*** A new eligible taxpayer elects a 52-53-week taxable year by adopting such year in accordance with § 1.441-1(c). A newly-formed partnership, S corporation or personal service corporation (PSC) may adopt a 52-53-week taxable year without the approval of the Commissioner if such year ends with reference to either the taxpayer's required taxable year (as defined in § 1.441-1(b)(2)) or the taxable year elected under section 444. See §§ 1.441-3, 1.706-1, and 1.1378-1. Similarly, a newly-formed specified foreign corporation (as defined in section 898(b)) may adopt a 52-53-week taxable year if such year ends with reference to the taxpayer's required taxable year, or, if the one-month deferral election under section 898(c)(1)(B) is made, with reference to the month immediately preceding the required taxable year. See § 1.1502-76(a)(1) for special rules regarding subsidiaries adopting 52-53-week taxable years.

(ii) ***Filing requirement.*** A taxpayer adopting a 52-53-week taxable year must file with its Federal income tax return for its first taxable year a statement containing the following information—

(A) The calendar month with reference to which the 52-53-week taxable year ends;

(B) The day of the week on which the 52-53-week taxable year always will end; and

(C) Whether the 52-53-week taxable year will always end on the date on which that day of the week last occurs in the calendar month, or on the date on which that day of the week falls that is nearest to the last day of that calendar month.

(2) ***Change to (or from) a 52-53-week taxable year*** —

(i) ***In general.*** An election of a 52-53-week taxable year by an existing eligible taxpayer with an established taxable year is treated as a change in annual accounting period that requires the approval of the Commissioner in accordance with § 1.442-1. Thus, a taxpayer must obtain approval to change from its current taxable year to a 52-53-week taxable year, even if such 52-53-week taxable year ends with reference to the same calendar month. Similarly, a taxpayer must obtain approval to change from a 52-53-week taxable year, or to change from one 52-53-week taxable year to another 52-53-week taxable year. However, a taxpayer may obtain approval for 52-53-week taxable year changes automatically to the extent provided in administrative procedures published by the Commissioner. See § 1.442-1(b) for procedures for obtaining such approval.

(ii) ***Special rules for the short period required to effect the change.*** If a change to or from a 52-53-week taxable year results in a short period (within the meaning of § 1.443-1(a)) of 359 days or more, or six days or less, the tax computation under § 1.443-1(b) does not apply. If the short period is 359 days or more, it is treated as a full taxable year. If the short period is six days or less, such short period is not a separate taxable year but instead is added to and deemed a part of the following taxable year. (In the case of a change to or from a 52-53-week taxable year not involving a change of the month with reference to which the taxable year ends, the tax computation under § 1.443-1(b) does not apply because the short period will always be 359 days or more, or six days or less.) In the case of a short period which is more than six days and less than 359 days, taxable income for the short period is placed on an annual basis for purposes of § 1.443-1(b) by multiplying such income by 365 and dividing the result by the number of days in the short period. In such case, the tax for the short period is the same part of the tax computed on such income placed on an annual basis as the number of days in the short period is of 365 days (unless § 1.443-1(b)(2), relating to the alternative tax computation, applies). For an adjustment in deduction for personal exemption, see § 1.443-1(b)(1)(v).

(3) ***Examples.*** The following examples illustrate paragraph (b)(2)(ii) of this section:

Example 1. A taxpayer having a fiscal year ending April 30, obtains approval to change to a 52-53-week taxable year ending the last Saturday in April for taxable years beginning after April 30, 2001. This change involves a short period of 362 days, from May 1, 2001, to April 27, 2002, inclusive. Because the change results in a short period of 359 days or more, it is not placed on an annual basis and is treated as a full taxable year.

Example 2. Assume the same conditions as *Example 1,* except that the taxpayer changes for taxable years beginning after April 30, 2002, to a taxable year ending on the Thursday nearest to April 30. This change results in a short period of two days, May 1 to May 2, 2002. Because the short period is less than seven days, tax is not separately computed. This short period is added to and deemed part of the following 52-53-week taxable year, which would otherwise begin on May 3, 2002, and end on May 1, 2003.

(c) ***Application of effective dates*** —

(1) ***In general.*** Except as provided in paragraph (c)(3) of this section, for purposes of determining the effective date (*e.g.,* of legislative, regulatory, or administrative changes) or the applicability of any provision of the internal revenue laws that is expressed in terms of taxable years beginning, including, or ending with reference to the first or last day of a specified calendar month, a 52-53-week taxable year is deemed to begin on the first day of the calendar month nearest to the first day of the 52-53-week taxable year, and is deemed to end or close on the last day of the calendar month nearest to the last day of the 52-53-week taxable year, as the case may be. Examples of provisions of this title, the applicability of which is expressed in terms referred to in the preceding sentence, include the provisions relating to the time for filing returns and other documents, paying tax, or performing other acts, and the provisions of part II, subchapter B, chapter 6 (section 1561 and following) relating to surtax exemptions of certain controlled corporations.

(2) ***Examples.*** The provisions of paragraph (c)(1) of this section may be illustrated by the following examples:

Example 1. Assume that an income tax provision is applicable to taxable years beginning on or after January 1, 2001. For that purpose, a 52-53-week taxable year beginning on any day within the period December 26, 2000, to January 4, 2001, inclusive, is treated as beginning on January 1, 2001.

Example 2. Assume that an income tax provision requires that a return must be filed on or before the 15th day of the third month following the close of the taxable year. For that purpose, a 52-53-week taxable year ending on any day during the period May 25 to June 3, inclusive, is treated as ending on May 31, the last day of the month ending nearest to the last day of the taxable year, and the return, therefore, must be made on or before August 15.

Example 3. Assume that a revenue procedure requires the performance of an act by the taxpayer within "the first 90 days of the taxable year," by "the 75th day of the taxable year," or, alternately, by "the last day of the taxable year." The taxpayer employs a 52-53-week taxable year that ends always on the Saturday closest to the last day of December. These requirements are not expressed in terms of taxable years beginning, including, or ending with reference to the first or last day of a specified calendar month, and are accordingly outside the scope of the rule stated in § 1.441-2(c)(1). Accordingly, the taxpayer must perform the required act by the 90th, 75th, or last day, respectively, of its taxable year.

Example 4. X, a corporation created on January 1, 2001, elects a 52-53-week taxable year ending on the Friday nearest the end of December. Thus, X's first taxable year begins on Monday, January 1, 2001, and ends on Friday, December 28, 2001; its next taxable year begins on Saturday, December 29, 2001, and ends on Friday, January 3, 2003; and its next taxable year begins on Saturday, January 4, 2003, and ends on Friday, January 2, 2004. For purposes of applying the provisions of part II, subchapter B, chapter 6 of the Internal Revenue Code, X's first taxable year is deemed to end on December 31, 2001; its next taxable year is deemed to begin on January 1, 2002, and end on December 31, 2002, and its next taxable year is deemed to begin on January 1, 2003, and end on December 31, 2003. Accordingly, each such taxable year is treated as including one and only one December 31st.

(3) ***Changes in tax rates.*** If a change in the rate of tax is effective during a 52-53-week taxable year (other than on the first day of such year as determined under paragraph (c)(1) of this section), the tax for the 52-53-week taxable year must be computed in accordance with section 15, relating to effect of

changes, and the regulations thereunder. For the purpose of the computation under section 15, the determination of the number of days in the period before the change, and in the period on and after the change, is to be made without regard to the provisions of paragraph (b)(1) of this paragraph.

(4) ***Examples.*** The provisions of paragraph (c)(3) of this section may be illustrated by the following examples:

Example 1. Assume a change in the rate of tax is effective for taxable years beginning after June 30, 2002. For a 52-53-week taxable year beginning on Friday, November 2, 2001, the tax must be computed on the basis of the old rates for the actual number of days from November 2, 2001, to June 30, 2002, inclusive, and on the basis of the new rates for the actual number of days from July 1, 2002, to Thursday, October 31, 2002, inclusive.

Example 2. Assume a change in the rate of tax is effective for taxable years beginning after June 30, 2001. For this purpose, a 52-53-week taxable year beginning on any of the days from June 25 to July 4, inclusive, is treated as beginning on July 1. Therefore, no computation under section 15 will be required for such year because of the change in rate.

(d) ***Computation of taxable income.*** The principles of section 451, relating to the taxable year for inclusion of items of gross income, and section 461, relating to the taxable year for taking deductions, generally are applicable to 52-53-week taxable years. Thus, except as otherwise provided, all items of income and deduction must be determined on the basis of a 52-53-week taxable year. However, a taxpayer may determine particular items as though the 52-53-week taxable year were a taxable year consisting of 12 calendar months, provided that practice is consistently followed by the taxpayer and clearly reflects income. For example, an allowance for depreciation or amortization may be determined on the basis of a 52-53-week taxable year, or as though the 52-53-week taxable year is a taxable year consisting of 12 calendar months, provided the taxpayer consistently follows that practice with respect to all depreciable or amortizable items.

(e) ***Treatment of taxable years ending with reference to the same calendar month*** —

(1) ***Pass-through entities.*** If a pass-through entity (as defined in paragraph (e)(3)(i) of this section) or an owner of a pass-through entity (as defined in paragraph (e)(3)(ii) of this section), or both, use a 52-53-week taxable year and the taxable year of the pass-through entity and the owner end with reference to the same calendar month, then, for purposes of determining the taxable year in which items of income, gain, loss, deductions, or credits from the pass-through entity are taken into account by the owner of the pass-through, the owner's taxable year will be deemed to end on the last day of the pass-through's taxable year. Thus, if the taxable year of a partnership and a partner end with reference to the same calendar month, then for purposes of determining the taxable year in which that partner takes into account items described in section 702 and items that are deductible by the partnership (including items described in section 707(c)) and includible in the income of that partner, that partner's taxable year will be deemed to end on the last day of the partnership's taxable year. Similarly, if the taxable year of an S corporation and a shareholder end with reference to the same calendar month, then for purposes of determining the taxable year in which that shareholder takes into account items described in section 1366(a) and items that are deductible by the S corporation and includible in the income of that shareholder, that shareholder's taxable year will be deemed to end on the last day of the S corporation's taxable year.

(2) ***Personal service corporations and employee-owners.*** If the taxable year of a PSC (within the meaning of § 1.441-3(c)) and an employee-owner (within the meaning of § 1.441-3(g)) end with reference to the same calendar month, then for purposes of determining the taxable year in which an employee-

owner takes into account items that are deductible by the PSC and includible in the income of the employee-owner, the employee-owner's taxable year will be deemed to end on the last day of the PSC's taxable year.

(3) ***Definitions*** —

(i) ***Pass-through entity.*** For purposes of this section, a pass-through entity means a partnership, S corporation, trust, estate, closely-held real estate investment trust (within the meaning of section 6655(e)(5)(B)), common trust fund (within the meaning of section 584(i)), controlled foreign corporation (within the meaning of section 957), foreign personal holding company (within the meaning of section 552), or passive foreign investment company that is a qualified electing fund (within the meaning of section 1295).

(ii) ***Owner of a pass-through entity.*** For purposes of this section, an owner of a pass-through entity generally means a taxpayer that owns an interest in, or stock of, a pass-through entity. For example, an owner of a pass-through entity includes a partner in a partnership, a shareholder of an S corporation, a beneficiary of a trust or an estate, an owner of a closely-held real estate investment trust (within the meaning of section 6655(e)(5)(A)), a participant in a common trust fund, a U.S. shareholder (as defined in section 951(b)) of a controlled foreign corporation, a U.S. shareholder (as defined in section 551(a)) of a foreign personal holding company, or a U.S. person that holds stock in a passive foreign investment company that is a qualified electing fund with respect to that shareholder.

(4) ***Examples.*** The provisions of paragraph (e)(2) of this section may be illustrated by the following examples:

Example 1. ABC Partnership uses a 52-53-week taxable year that ends on the Wednesday nearest to December 31, and its partners, A, B, and C, are individual calendar year taxpayers. Assume that, for ABC's taxable year ending January 3, 2001, each partner's distributive share of ABC's taxable income is $10,000. Under section 706(a) and paragraph (e)(1) of this section, for the taxable year ending December 31, 2000, A, B, and C each must include $10,000 in income with respect to the ABC year ending January 3, 2001. Similarly, if ABC makes a guaranteed payment to A on January 2, 2001, A must include the payment in income for A's taxable year ending December 31, 2000.

Example 2. X, a PSC, uses a 52-53-week taxable year that ends on the Wednesday nearest to December 31, and all of the employee-owners of X are individual calendar year taxpayers. Assume that, for its taxable year ending January 3, 2001, X pays a bonus of $10,000 to each employee-owner on January 2, 2001. Under paragraph (e)(2) of this section, each employee-owner must include its bonus in income for the taxable year ending December 31, 2000.

(5) ***Transition rule.*** In the case of an owner of a pass-through entity (other than the owner of a partnership or S corporation) that is required by this paragraph (e) to include in income for its first taxable year ending on or after May 17, 2002 amounts attributable to two taxable years of a pass-through entity, the amount that otherwise would be required to be included in income for such first taxable year by reason of this paragraph (e) should be included in income ratably over the four-taxable-year period beginning with such first taxable year under principles similar to § 1.702-3T, unless the owner of the pass-through entity elects to include all such income in its first taxable year ending on or after May 17, 2002.

[T.D. 8996, 67 FR 35012, May 17, 2002]

§ 1.441-3 Taxable year of a personal service corporation.

(a) *Taxable year* —

(1) ***Required taxable year.*** Except as provided in paragraph (a)(2) of this section, the taxable year of a personal service corporation (PSC) (as defined in paragraph (c) of this section) must be the calendar year.

(2) ***Exceptions.*** A PSC may have a taxable year other than its required taxable year (i.e., a fiscal year) if it makes an election under section 444, elects to use a 52-53-week taxable year that ends with reference to the calendar year or a taxable year elected under section 444, or establishes a business purpose for such fiscal year and obtains the approval of the Commissioner under section 442.

(b) *Adoption, change, or retention of taxable year* —

(1) ***Adoption of taxable year.*** A PSC may adopt, in accordance with § 1.441-1(c), the calendar year, a taxable year elected under section 444, or a 52-53-week taxable year ending with reference to the calendar year or a taxable year elected under section 444 without the approval of the Commissioner. *See* § 1.441-1. A PSC that wants to adopt any other taxable year must establish a business purpose and obtain the approval of the Commissioner under section 442.

(2) ***Change in taxable year.*** A PSC that wants to change its taxable year must obtain the approval of the Commissioner under section 442 or make an election under section 444. However, a PSC may obtain automatic approval for certain changes, including a change to the calendar year or to a 52-53-week taxable year ending with reference to the calendar year, pursuant to administrative procedures published by the Commissioner.

(3) ***Retention of taxable year.*** In certain cases, a PSC will be required to change its taxable year unless it obtains the approval of the Commissioner under section 442, or makes an election under section 444, to retain its current taxable year. For example, a corporation using a June 30 fiscal year that becomes a PSC and, as a result, is required to use the calendar year must obtain the approval of the Commissioner to retain its current fiscal year.

(4) ***Procedures for obtaining approval or making a section 444 election.*** See § 1.442-1(b) for procedures to obtain the approval of the Commissioner (automatically or otherwise) to adopt, change, or retain a taxable year. See §§ 1.444-1T and 1.444-2T for qualifications, and 1.444-3T for procedures, for making an election under section 444.

(5) ***Examples.*** The provisions of paragraph (b)(4) of this section may be illustrated by the following examples:

Example 1. X, whose taxable year ends on January 31, 2001, becomes a PSC for its taxable year beginning February 1, 2001, and does not obtain the approval of the Commissioner for using a fiscal year. Thus, for taxable years ending before February 1, 2001, this section does not apply with respect to X. For its taxable year beginning on February 1, 2001, however, X will be required to comply with paragraph (a) of this section. Thus, unless X obtains approval of the Commissioner to use a January 31 taxable year, or makes a section 444 election, X will be required to change its taxable year to the calendar year under paragraph (b) of this section by using a short taxable year that begins on February 1, 2001, and ends on December 31, 2001. Under paragraph (b)(1) of this section, X may obtain automatic approval to change its taxable year to a calendar year. See § 1.442-1(b).

Example 2. Assume the same facts as in *Example 1,* except that X desires to change to a 52-53-week taxable year ending with reference to the month of December. Under paragraph (b)(1) of this section X may obtain automatic approval to make the change. See § 1.442-1(b).

(c) ***Personal service corporation defined*** —

(1) ***In general.*** For purposes of this section and section 442, a taxpayer is a PSC for a taxable year only if—

(i) The taxpayer is a C corporation (as defined in section 1361(a)(2)) for the taxable year;

(ii) The principal activity of the taxpayer during the testing period is the performance of personal services;

(iii) During the testing period, those services are substantially performed by employee-owners (as defined in paragraph (g) of this section); and

(iv) Employee-owners own (as determined under the attribution rules of section 318, except that the language "any" applies instead of "50 percent" in section 318(a)(2)(C)) more than 10 percent of the fair market value of the outstanding stock in the taxpayer on the last day of the testing period.

(2) ***Testing period*** —

(i) ***In general.*** Except as otherwise provided in paragraph (c)(2)(ii) of this section, the testing period for any taxable year is the immediately preceding taxable year.

(ii) ***New corporations.*** The testing period for a taxpayer's first taxable year is the period beginning on the first day of that taxable year and ending on the earlier of—

(A) The last day of that taxable year; or

(B) The last day of the calendar year in which that taxable year begins.

(3) ***Examples.*** The provisions of paragraph (c)(2)(ii) of this section may be illustrated by the following examples:

Example 1. Corporation A's first taxable year begins on June 1, 2001, and A desires to use a September 30 taxable year. However, if A is a personal service corporation, it must obtain the Commissioner's approval to use a September 30 taxable year. Pursuant to paragraph (c)(2)(ii) of this section, A's testing period for its first taxable year beginning June 1, 2001, is the period June 1, 2001 through September 30, 2001. Thus, if, based upon such testing period, A is a personal service corporation, A must obtain the Commissioner's permission to use a September 30 taxable year.

Example 2. The facts are the same as in *Example 1,* except that A desires to use a March 31 taxable year. Pursuant to paragraph (c)(2)(ii) of this section, A's testing period for its first taxable year beginning June 1, 2001, is the period June 1, 2001, through December 31, 2001. Thus, if, based upon such testing period, A is a personal service corporation, A must obtain the Commissioner's permission to use a March 31 taxable year.

(d) ***Performance of personal services*** —

(1) ***Activities described in section 448(d)(2)(A).*** For purposes of this section, any activity of the taxpayer described in section 448(d)(2)(A) or the regulations thereunder will be treated as the performance of personal services. Therefore, any activity of the taxpayer that involves the performance of services in the fields of health, law, engineering, architecture, accounting, actuarial science, performing arts, or consulting (as such fields are defined in § 1.448-1T) will be treated as the performance of personal services for purposes of this section.

(2) ***Activities not described in section 448(d)(2)(A).*** For purposes of this section, any activity of the taxpayer not described in section 448(d)(2)(A) or the regulations thereunder will not be treated as the performance of personal services.

(e) ***Principal activity*** —

(1) ***General rule.*** For purposes of this section, the principal activity of a corporation for any testing period will be the performance of personal services if the cost of the corporation's compensation (the compensation cost) for such testing period that is attributable to its activities that are treated as the performance of personal services within the meaning of paragraph (d) of this section (i.e., the total compensation for personal service activities) exceeds 50 percent of the corporation's total compensation cost for such testing period.

(2) ***Compensation cost*** —

(i) ***Amounts included.*** For purposes of this section, the compensation cost of a corporation for a taxable year is equal to the sum of the following amounts allowable as a deduction, allocated to a long-term contract, or otherwise chargeable to a capital account by the corporation during such taxable year—

(A) Wages and salaries; and

(B) Any other amounts, attributable to services performed for or on behalf of the corporation by a person who is an employee of the corporation (including an owner of the corporation who is treated as an employee under paragraph (g)(2) of this section) during the testing period. Such amounts include, but are not limited to, amounts attributable to deferred compensation, commissions, bonuses, compensation includible in income under section 83, compensation for services based on a percentage of profits, and the cost of providing fringe benefits that are includible in income.

(ii) ***Amounts excluded.*** Notwithstanding paragraph (e)(2)(i) of this section, compensation cost does not include amounts attributable to a plan qualified under section 401(a) or 403(a), or to a simplified employee pension plan defined in section 408(k).

(3) ***Attribution of compensation cost to personal service activity*** —

(i) ***Employees involved only in the performance of personal services.*** The compensation cost for employees involved only in the performance of activities that are treated as personal services under paragraph (d) of this section, or employees involved only in supporting the work of such employees, are considered to be attributable to the corporation's personal service activity.

(ii) ***Employees involved only in activities that are not treated as the performance of personal services.*** The compensation cost for employees involved only in the performance of activities that are not treated as personal services under paragraph (d) of this section, or for employees involved only in supporting the work of such employees, are not considered to be attributable to the corporation's personal service activity.

(iii) ***Other employees.*** The compensation cost for any employee who is not described in either paragraph (e)(3)(i) or (ii) of this section (a mixed-activity employee) is allocated as follows—

(A) ***Compensation cost attributable to personal service activity.*** That portion of the compensation cost for a mixed activity employee that is attributable to the corporation's personal service activity equals the compensation cost for that employee multiplied by the percentage of the total time worked for the corporation by that employee during the year that is attributable to activities of the corporation that are treated as the performance of personal services under paragraph (d) of this section. That percentage is to be determined by the taxpayer in any reasonable and consistent manner. Time logs are not required unless maintained for other purposes;

(B) ***Compensation cost not attributable to personal service activity.*** That portion of the compensation cost for a mixed activity employee that is not considered to be attributable to the corporation's personal service activity is the compensation cost for that employee less the amount determined in paragraph (e)(3)(iii)(A) of this section.

(f) ***Services substantially performed by employee-owners*** —

(1) ***General rule.*** Personal services are substantially performed during the testing period by employee-owners of the corporation if more than 20 percent of the corporation's compensation cost for that period attributable to its activities that are treated as the performance of personal services within the meaning of paragraph (d) of this section (*i.e.*, the total compensation for personal service activities) is attributable to personal services performed by employee-owners.

(2) ***Compensation cost attributable to personal services.*** For purposes of paragraph (f)(1) of this section—

(i) The corporation's compensation cost attributable to its activities that are treated as the performance of personal services is determined under paragraph (e)(3) of this section; and

(ii) The portion of the amount determined under paragraph (f)(2)(i) of this section that is attributable to personal services performed by employee-owners is to be determined by the taxpayer in any reasonable and consistent manner.

(3) ***Examples.*** The provisions of this paragraph (f) may be illustrated by the following examples:

Example 1. For its taxable year beginning February 1, 2001, Corp A's testing period is the taxable year ending January 31, 2000. During that testing period, A's only activity was the performance of personal services. The total compensation cost of A (including compensation cost attributable to employee-owners) for the testing period was $1,000,000. The total compensation cost attributable to employee-owners of A for the testing period was $210,000. Pursuant to paragraph (f)(1) of this section, the employee-owners of A substantially performed the personal services of A during the testing period because the compensation cost of A's employee-owners was more than 20 percent of the total compensation cost for all of A's employees (including employee-owners).

Example 2. Corp B has the same facts as corporation A in *Example 1,* except that during the taxable year ending January 31, 2001, B also participated in an activity that would not be characterized as the performance of personal services under this section. The total compensation cost of B (including compensation cost attributable to employee-owners) for the testing period was $1,500,000 ($1,000,000 attributable to B's personal service activity and $500,000 attributable to

B's other activity). The total compensation cost attributable to employee-owners of B for the testing period was $250,000 ($210,000 attributable to B's personal service activity and $40,000 attributable to B's other activity). Pursuant to paragraph (f)(1) of this section, the employee-owners of B substantially performed the personal services of B during the testing period because more than 20 percent of B's compensation cost during the testing period attributable to its personal service activities was attributable to personal services performed by employee-owners ($210,000).

(g) ***Employee-owner defined*** —

(1) ***General rule.*** For purposes of this section, a person is an employee-owner of a corporation for a testing period if—

(i) The person is an employee of the corporation on any day of the testing period; and

(ii) The person owns any outstanding stock of the corporation on any day of the testing period.

(2) ***Special rule for independent contractors who are owners.*** Any person who is an owner of the corporation within the meaning of paragraph (g)(1)(ii) of this section and who performs personal services for, or on behalf of, the corporation is treated as an employee for purposes of this section, even if the legal form of that person's relationship to the corporation is such that the person would be considered an independent contractor for other purposes.

(h) ***Special rules for affiliated groups filing consolidated returns*** —

(1) ***In general.*** For purposes of applying this section to the members of an affiliated group of corporations filing a consolidated return for the taxable year—

(i) The members of the affiliated group are treated as a single corporation;

(ii) The employees of the members of the affiliated group are treated as employees of such single corporation; and

(iii) All of the stock of the members of the affiliated group that is not owned by any other member of the affiliated group is treated as the outstanding stock of that corporation.

(2) ***Examples.*** The provisions of this paragraph (h) may be illustrated by the following examples:

Example 1. The affiliated group AB, consisting of corporation A and its wholly owned subsidiary B, filed a consolidated Federal income tax return for the taxable year ending January 31, 2001, and AB is attempting to determine whether it is affected by this section for its taxable year beginning February 1, 2001. During the testing period (i.e., the taxable year ending January 31, 2001), A did not perform personal services. However, B's only activity was the performance of personal services. On the last day of the testing period, employees of A did not own any stock in A. However, some of B's employees own stock in A. In the aggregate, B's employees own 9 percent of A's stock on the last day of the testing period. Pursuant to paragraph (h)(1) of this section, this section is effectively applied on a consolidated basis to members of an affiliated group filing a consolidated Federal income tax return. Because the only employee-owners of AB are the employees of B, and because B's employees do not own more than 10 percent of AB on the last day of the testing period, AB is not a PSC subject to the provisions of this section. Thus, AB is not required to determine on a consolidated basis whether, during the testing period, its principal activity is the providing of personal services, or the personal services are substantially performed by employee-owners.

Example 2. The facts are the same as in Example 1, except that on the last day of the testing period A owns only 80 percent of B. The remaining 20 percent of B is owned by employees of B. The fair market value of A, including its 80 percent interest in B, as of the last day of the testing period, is $1,000,000. In addition, the fair market value of the 20 percent interest in B owned by B's employees is $50,000 as of the last day of the testing period. Pursuant to paragraphs (c)(1)(iv) and (h)(1) of this section, AB must determine whether the employee-owners of A and B (i.e., B's employees) own more than 10 percent of the fair market value of A and B as of the last day of the testing period. Because the $140,000 [($1,000,000 × .09) + $50,000] fair market value of the stock held by B's employees is greater than 10 percent of the aggregate fair market value of A and B as of the last day of the testing period, or $105,000 [$1,000,000 + $50,000 × .10], AB may be subject to this section if, on a consolidated basis during the testing period, the principal activity of AB is the performance of personal services and the personal services are substantially performed by employee-owners.

[T.D. 8996, 67 FR 35012, May 17, 2002]

§ 1.441-4 Effective date.

Sections 1.441-0 through 1.441-3 are applicable for taxable years ending on or after May 17, 2002.

[T.D. 8996, 67 FR 35012, May 17, 2002]

§ 1.442-1 Change of annual accounting period.

(a) ***Approval of the Commissioner.*** A taxpayer that has adopted an annual accounting period (as defined in § 1.441-1(b)(3)) as its taxable year generally must continue to use that annual accounting period in computing its taxable income and for making its Federal income tax returns. If the taxpayer wants to change its annual accounting period and use a new taxable year, it must obtain the approval of the Commissioner, unless it is otherwise authorized to change without the approval of the Commissioner under either the Internal Revenue Code (*e.g.,* section 444 and section 859) or the regulations thereunder (*e.g.,* paragraph (c) of this section). In addition, as described in § 1.441-1(c) and (d), a partnership, S corporation, electing S corporation, or personal service corporation (PSC) generally is required to secure the approval of the Commissioner to adopt or retain an annual accounting period other than its required taxable year. The manner of obtaining approval from the Commissioner to adopt, change, or retain an annual accounting period is provided in paragraph (b) of this section. However, special rules for obtaining approval may be provided in other sections.

(b) ***Obtaining approval*** —

(1) ***Time and manner for requesting approval.*** In order to secure the approval of the Commissioner to adopt, change, or retain an annual accounting period, a taxpayer must file an application, generally on Form 1128, "Application To Adopt, Change, or Retain a Tax Year," with the Commissioner within such time and in such manner as is provided in administrative procedures published by the Commissioner.

(2) ***General requirements for approval.*** An adoption, change, or retention in annual accounting period will be approved where the taxpayer establishes a business purpose for the requested annual accounting period and agrees to the Commissioner's prescribed terms, conditions, and adjustments for effecting the adoption, change, or retention. In determining whether a taxpayer has established a business purpose and which terms, conditions, and adjustments will be required, consideration will

be given to all the facts and circumstances relating to the adoption, change, or retention, including the tax consequences resulting therefrom. Generally, the requirement of a business purpose will be satisfied, and adjustments to neutralize any tax consequences will not be required, if the requested annual accounting period coincides with the taxpayer's required taxable year (as defined in § 1.441-1(b)(2)), ownership taxable year, or natural business year. In the case of a partnership, S corporation, electing S corporation, or PSC, deferral of income to partners, shareholders, or employee-owners will not be treated as a business purpose.

(3) ***Administrative procedures.*** The Commissioner will prescribe administrative procedures under which a taxpayer may be permitted to adopt, change, or retain an annual accounting period. These administrative procedures will describe the business purpose requirements (including an ownership taxable year and a natural business year) and the terms, conditions, and adjustments necessary to obtain approval. Such terms, conditions, and adjustments may include adjustments necessary to neutralize the tax effects of a substantial distortion of income that would otherwise result from the requested annual accounting period including: a deferral of a substantial portion of the taxpayer's income, or shifting of a substantial portion of deductions, from one taxable year to another; a similar deferral or shifting in the case of any other person, such as a beneficiary in an estate; the creation of a short period in which there is a substantial net operating loss, capital loss, or credit (including a general business credit); or the creation of a short period in which there is a substantial amount of income to offset an expiring net operating loss, capital loss, or credit. See, for example, Rev. Proc. 2002-39, 2002-22 I.R.B., procedures for obtaining the Commissioner's prior approval of an adoption, change, or retention in annual accounting period through application to the national office; Rev. Proc. 2002-37, 2002-22 I.R.B., automatic approval procedures for certain corporations; Rev. Proc. 2002-38, 2002-22 I.R.B., automatic approval procedures for partnerships, S corporations, electing S corporations, and PSCs; and Rev. Proc. 66-50, 1966-2 C.B. 1260, automatic approval procedures for individuals. For availability of Revenue Procedures and Notices, see § 601.601(d)(2) of this chapter.

(4) ***Taxpayers to whom section 441(g) applies.*** If section 441(g) and § 1.441-1(b)(1)(iv) apply to a taxpayer, the adoption of a fiscal year is treated as a change in the taxpayer's annual accounting period under section 442. Therefore, that fiscal year can become the taxpayer's taxable year only with the approval of the Commissioner. In addition to any other terms and conditions that may apply to such a change, the taxpayer must establish and maintain books that adequately and clearly reflect income for the short period involved in the change and for the fiscal year proposed.

(c) ***Special rule for change of annual accounting period by subsidiary corporation.*** A subsidiary corporation that is required to change its annual accounting period under § 1.1502-76, relating to the taxable year of members of an affiliated group that file a consolidated return, does not need to obtain the approval of the Commissioner or file an application on Form 1128 with respect to that change.

(d) ***Special rule for newly married couples.***

(1) A newly married husband or wife may obtain automatic approval under this paragraph (d) to change his or her annual accounting period in order to use the annual accounting period of the other spouse so that a joint return may be filed for the first or second taxable year of that spouse ending after the date of marriage. Such automatic approval will be granted only if the newly married husband or wife adopting the annual accounting period of the other spouse files a Federal income tax return for the short period required by that change on or before the 15th day of the 4th month following the close of the short period. See section 443 and the regulations thereunder. If the due date for any such short-period return occurs before the date of marriage, the first taxable year of the other spouse ending after the date of marriage cannot be adopted under this paragraph (d). The short-period

return must contain a statement at the top of page one of the return that it is filed under the authority of this paragraph (d). The newly married husband or wife need not file Form 1128 with respect to a change described in this paragraph (d). For a change of annual accounting period by a husband or wife that does not qualify under this paragraph (d), see paragraph (b) of this section.

(2) The provisions of this paragraph (d) may be illustrated by the following example:

Example. H & W marry on September 25, 2001. H is on a fiscal year ending June 30, and W is on a calendar year. H wishes to change to a calendar year in order to file joint returns with W. W's first taxable year after marriage ends on December 31, 2001. H may not change to a calendar year for 2001 since, under this paragraph (d), he would have had to file a return for the short period from July 1 to December 31, 2000, by April 16, 2001. Since the date of marriage occurred subsequent to this due date, the return could not be filed under this paragraph (d). Therefore, H cannot change to a calendar year for 2001. However, H may change to a calendar year for 2002 by filing a return under this paragraph (d) by April 15, 2002, for the short period from July 1 to December 31, 2001. If H files such a return, H and W may file a joint return for calendar year 2002 (which is W's second taxable year ending after the date of marriage).

(e) ***Effective date.*** The rules of this section are applicable for taxable years ending on or after May 17, 2002.

[T.D. 8996, 67 FR 35019, May 17, 2002]

§ 1.443-1 Returns for periods of less than 12 months.

(a) ***Returns for short period.*** A return for a short period, that is, for a taxable year consisting of a period of less than 12 months, shall be made under any of the following circumstances:

(1) ***Change of annual accounting period.*** In the case of a change in the annual accounting period of a taxpayer, a separate return must be filed for the short period of less than 12 months beginning with the day following the close of the old taxable year and ending with the day preceding the first day of the new taxable year. However, such a return is not required for a short period of six days or less, or 359 days or more, resulting from a change from or to a 52-53-week taxable year. See section 441(f) and § 1.441-2. The computation of the tax for a short period required to effect a change of annual accounting period is described in paragraph (b) of this section. In general, a return for a short period resulting from a change of annual accounting period shall be filed and the tax paid within the time prescribed for filing a return for a taxday of the short period. For rules applicable to a subsidiary corporation which becomes a member of an affiliated group which files a consolidated return, see § 1.1502-76.

(2) ***Taxpayer not in existence for entire taxable year.*** If a taxpayer is not in existence for the entire taxable year, a return is required for the short period during which the taxpayer was in existence. For example, a corporation organized on August 1 and adopting the calendar year as its annual accounting period is required to file a return for the short period from August 1 to December 31, and returns for each calendar year thereafter. Similarly, a dissolving corporation which files its returns for the calendar year is required to file a return for the short period from January 1 to the date it goes out of existence. Income for the short period is not required to be annualized if the taxpayer is not in existence for the entire taxable year, and, in the case of a taxpayer other than a corporation, the deduction under section 151 for personal exemptions (or deductions in lieu thereof) need not be reduced under section 443(c). In general, the requirements with respect to the filing of returns and the payment of tax for a short period where the taxpayer has not been in existence for the entire

taxable year are the same as for the filing of a return and the payment of tax for a taxable year of 12 months ending on the last day of the short period. Although the return of a decedent is a return for the short period beginning with the first day of his last taxable year and ending with the date of his death, the filing of a return and the payment of tax for a decedent may be made as though the decedent had lived throughout his last taxable year.

(b) ***Computation of tax for short period on change of annual accounting period*** —

(1) ***General rule.***

(i) If a return is made for a short period resulting from a change of annual accounting period, the taxable income for the short period shall be placed on an annual basis by multiplying such income by 12 and dividing the result by the number of months in the short period. Unless section 443(b)(2) and subparagraph (2) of this paragraph apply, the tax for the short period shall be the same part of the tax computed on the annual basis as the number of months in the short period is of 12 months.

(ii) If a return is made for a short period of more than 6 days, but less than 359 days, resulting from a change from or to a 52-53-week taxable year, the taxable income for the short period shall be annualized and the tax computed on a daily basis, as provided in section 441(f)(2)(B)(iii) and § 1.441-2(b)(2)(ii).

(iii) For method of computation of income for a short period in the case of a subsidiary corporation required to change its annual accounting period to conform to that of its parent, see § 1.1502-76(b).

(iv) An individual taxpayer making a return for a short period resulting from a change of annual accounting period is not allowed to take the standard deduction provided in section 141 in computing his taxable income for the short period. See section 142(b)(3).

(v) In computing the taxable income of a taxpayer other than a corporation for a short period (which income is to be annualized in order to determine the tax under section 443(b)(1)) the personal exemptions allowed individuals under section 151 (and any deductions allowed other taxpayers in lieu thereof, such as the deduction under section 642(b)) shall be reduced to an amount which bears the same ratio to the full amount of the exemptions as the number of months in the short period bears to 12. In the case of the taxable income for a short period resulting from a change from or to a 52-53-week taxable year to which section 441(f)(2)(B)(iii) applies, the computation required by the preceding sentence shall be made on a daily basis, that is, the deduction for personal exemptions (or any deduction in lieu thereof) shall be reduced to an amount which bears the same ratio to the full deduction as the number of days in the short period bears to 365.

(vi) If the amount of a credit against the tax (for example, the credits allowable under section 34 (for dividends received on or before December 31, 1964), and 35 (for partially tax-exempt interest)) is dependent upon the amount of any item of income or deduction, such credit shall be computed upon the amount of the item annualized separately in accordance with the foregoing rules. The credit so computed shall be treated as a credit against the tax computed on the basis of the annualized taxable income. In any case in which a limitation on the amount of a credit is based upon taxable income, taxable income shall mean the taxable income computed on the annualized basis.

(vii) The provisions of this subparagraph may be illustrated by the following examples:

Example 1. A taxpayer with one dependent who has been granted permission under section 442 to change his annual accounting period files a return for the short period of 10 months ending October 31, 1956. He has income and deductions as follows:

Income			
Interest income			$10,000.00
Partially tax-exempt interest with respect to which a credit is allowable under section 35			500.00
Dividends to which sections 34 and 116 are applicable			750.00
			11,250.00
Deductions			
Real estate taxes			200.00
2 personal exemptions at $600 on an annual basis			1,200.00
The tax for the 10-month period is computed as follows:			
Total income as above			11,250.00
Less:			
Exclusion for dividends received		$50.00	
2 personal exemptions ($1,200 × 10/12)		1,000.00	
Real estate taxes		200.00	
		————	1,250.00
Taxable income for 10-month period before annualizing			10,000.00
Taxable income annualized (10,000 × 12/10)			12,000.00
Tax on $12,000 before credits			3,400.00
Deduct credits:			
Dividends received for 10-month period	$750.00		
Less: Excluded portion	50.00		
Included in gross income	700.00		
Dividend income annualized ($700 × 12/10)	840.00		
Credit (4 percent of $840)		33.60	
Partially tax-exempt interest included in gross income for 10-month period	500.00		
Partially tax-exempt interest (annualized) ($500 × 12/10)	600.00		
Credit (3 percent of $600)		18.00	
		————	51.60
Tax on $12,000 (after credits)			3,348.40

Tax for 10-month period ($3,348.40 × 10/12)	2,790.33

Example 2. The X Corporation makes a return for the one-month period ending September 30, 1956, because of a change in annual accounting period permitted under section 442. Income and expenses for the short period are as follows:

Gross operating income		$126,000
Business expenses		130,000
Net loss from operations		(4,000)
Dividends received from taxable domestic corporations		30,000
Gross income for short period before annualizing		26,000
Dividends received deduction (85 percent of $30,000, but not in excess of 85 percent of $26,000)		22,100
Taxable income for short period before annualizing		3,900
Taxable income annualized ($8,900 × 12)		46,800
Tax on annual basis:		
$46,800 at 52 percent	$24,336	
Less surtax exemption	5,500	
	————	$18,836
Tax for 1-month period ($18,836 × 1/12)		1,570

Example 3. The Y Corporation makes a re- turn for the six-month period ending June 30, 1957, because of a change in annual accounting period permitted under section 442. Income for the short period is as follows:

Taxable income exclusive of net long-term capital gain		$40,000
Net long-term capital gain		10,000
Taxable income for short period before annualizing		50,000
Taxable income annualized ($50,000 × 12/6)		100,000
Regular tax computation		
Taxable income annualized		100,000
Tax on annual basis:		
$100,000 at 52 percent	$52,000	
Less surtax exemption	5,500	

	46,500	
Tax for 6-month period ($46,500 × 6/12)		23,250
Alternative tax computation		
Taxable income annualized		100,000
Less annualized capital gain ($10,000 × 12/6)		20,000
Annualized taxable income subject to partial tax		80,000
Partial tax on annual basis		
$60,000 at 52 percent	$41,600	
Less surtax exemption	5,500	
	————	36,100
25 percent of annualized capital gain ($20,000)		5,000
Alternative tax on annual basis		41,100
Alternative tax for 6-month period ($41,100 × 6/12)		20,550

Since the alternative tax of $20,550 is less than the tax computed in the regular manner ($23,250), the corporation's tax for the 6-month short period is $20,550.

(2) ***Exception: computation based on 12-month period.***

(i) A taxpayer whose tax would otherwise be computed under section 443(b)(1) (or section 441(f)(2)(B)(iii) in the case of certain changes from or to a 52-53-week taxable year) for the short period resulting from a change of annual accounting period may apply to the district director to have his tax computed under the provisions of section 443(b)(2) and this subparagraph. If such application is made, as provided in subdivision (v) of this subparagraph, and if the taxpayer establishes the amount of his taxable income for the 12-month period described in subdivision (ii) of this subparagraph, then the tax for the short period shall be the greater of the following—

(*a*) An amount which bears the same ratio to the tax computed on the taxable income which the taxpayer has established for the 12-month period as the taxable income computed on the basis of the short period bears to the taxable income for such 12-month period; or

(*b*) The tax computed on the taxable income for the short period without placing the taxable income on an annual basis.

However, if the tax computed under section 443(b)(2) and this subparagraph is not less than the tax for the short period computed under section 443(b)(1) (or section 441(f)(2)(B)(iii) in the case of certain changes from or to a 52-53-week taxable year), then section 443(b)(2) and this subparagraph do not apply.

(ii) The term “12-month period” referred to in subdivision (i) of this subparagraph means the 12-month period beginning on the first day of the short period. However, if the taxpayer is not in existence at the end of such 12-month period, or if the taxpayer is a corporation which has disposed of substantially all of its assets before the end of such 12-month period, the term “12-month period” means the 12-month period ending at the close of the last day of the short

period. For the purposes of the preceding sentence, a corporation which has ceased business and distributed so much of the assets used in its business that it cannot resume its customary operations with the remaining assets, will be considered to have disposed of substantially all of its assets. In the case of a change from a 52-53-week taxable year, the term "12-month period" means the period of 52 or 53 weeks (depending on the taxpayer's 52-53-week taxable year) beginning on the first day of the short period.

(iii)

(*a*) The taxable income for the 12-month period is computed under the same provisions of law as are applicable to the short period and is computed as if the 12-month period were an actual annual accounting period of the taxpayer. All items which fall in such 12-month period must be included even if they are extraordinary in amount or of an unusual nature. If the taxpayer is a member of a partnership, his taxable income for the 12-month period shall include his distributive share of partnership income for any taxable year of the partnership ending within or with such 12-month period, but no amount shall be included with respect to a taxable year of the partnership ending before or after such 12-month period. If any other item partially applicable to such 12-month period can be determined only at the end of a taxable year which includes only part of the 12-month period, the taxpayer, subject to review by the Commissioner, shall apportion such item to the 12-month period in such manner as will most clearly reflect income for the 12-month period.

(*b*) In the case of a taxpayer permitted or required to use inventories, the cost of goods sold during a part of the 12-month period included in a taxable year shall be considered, unless a more exact determination is available, as such part of the cost of goods sold during the entire taxable year as the gross receipts from sales for such part of the 12-month period is of the gross receipts from sales for the entire taxable year. For example, the 12-month period of a corporation engaged in the sale of merchandise, which has a short period from January 1, 1956, to September 30, 1956, is the calendar year 1956. The three-month period, October 1, 1956, to December 31, 1956, is part of the taxpayer's taxable year ending September 30, 1957. The cost of goods sold during the three-month period, October 1, 1956, to December 31, 1956, is such part of the cost of goods sold during the entire fiscal year ending September 30, 1957, as the gross receipts from sales for such three-month period are of the gross receipts from sales for the entire fiscal year.

(*c*) The Commissioner may, in granting permission to a taxpayer to change his annual accounting period, require, as a condition to permitting the change, that the taxpayer must take a closing inventory upon the last day of the 12-month period if he wishes to obtain the benefits of section 443(b)(2). Such closing inventory will be used only for the purposes of section 443(b)(2), and the taxpayer will not be required to use such inventory in computing the taxable income for the taxable year in which such inventory is taken.

(iv) The provisions of this subparagraph may be illustrated by the following examples:

> *Example 1.* The taxpayer in Example 1 under paragraph (b)(1)(vii) of this section establishes his taxable income for the 12-month period from January 1, 1956, to December 31, 1956. The taxpayer has a short period of 10 months, from January 1, 1956, to October 31, 1956. The taxpayer files an application in accordance with

subdivision (v) of this subparagraph to compute his tax under section 443(b)(2). The taxpayer's income and deductions for the 12-month period, as so established, follow:

Income		
Interest income		$11,000
Partially tax-exempt interest with respect to which a credit is allowable under section 35		600
Dividends to which sections 34 and 116 are applicable		850
		12,450
Deductions		
Real estate taxes		200
2 personal exemptions at $600		1,200
Tax computation for short period under section 443(b)(2)(A)(i)		
Total income as above		$12,450
Less:		
Exclusion for dividends received	$50	
Personal exemptions	1,200	
Deduction for taxes	200	
		1,450
Taxable income for 12-month period		11,000
Tax before credits		3,020
Credit for partially tax-exempt interest (3 percent of $600)	18	
Credit for dividends received (4 percent of ($850−50))	32	
		50
Tax under section 443(b)(2)(A)(i) for 12-month period		2,970
Taxable income for 10-month short period from Example 1 of paragraph (b)(1)(vii) of this section before annualizing		10,000
Tax for short period under section 443(b)(2)(A)(i) ($2,970 × $10,000 (taxable income for short period)/$11,000 (taxable income for 12-month period))		2,700
Tax computation for short period under section 443(b)(2)(A)(ii)		
Total income for 10-month short period		11,250
Less:		
Exclusion for dividends received	50	
2 personal exemptions	1,200	
Real estate taxes	200	
		1,450
Taxable income for short period without annualizing and without proration of personal exemptions		9,800
Tax before credits		2,572
Less credits:		

Partially tax-exempt interest (3 percent of $500)	15	
Dividends received (4 percent of ($750−50))	28	
		43
Tax for short period under section 443(b)(2)(A)(ii)		2,529

The tax of $2,700 computed under section 443(b)(2)(A)(i) is greater than the tax of $2,529, computed under section 443(b)(2)(A)(ii), and is, therefore, the tax under section 443(b)(2). Since the tax of $2,700 (computed under section 443(b)(2)) is less than the tax of $2,790.33 (computed under section 443(b)(1)) on the annualized income of the short period (see Example 1 of paragraph (b)(1)(vii) of this section), the taxpayer's tax for the 10-month short period is $2,700.

Example 2. Assume the same facts as in Example 1 of this subdivision, except that, during the month of November 1956, the taxpayer suffered a casualty loss of $5,000. The tax computation for the short period under section 443(b)(2) would be as follows:

Tax computation for short period under section 443(b)(2)(A)(i)		
Taxable income for 12-month period from Example 1		$11,000
Less: Casualty loss		5,000
Taxable income for 12-month period		6,000
Tax before credits	$1,360	
Credits from Example 1	50	
Tax under section 443(b)(2)(A)(i) for 12-month period	1,310	
Tax for short period ($1,310 × $10,000/$6,000) under section 443(b)(2)(A)(i)	2,183	
Tax computation for short period under section 443(b)(2)(A)(ii)		
Total income for the short period	11,250	
Less:		
Exclusion for dividends received	50	
2 personal exemptions	1,200	
Real estate taxes	200	
		1,450
Taxable income for short period without annualizing and without proration of personal exemptions		9,800
Tax before credits		2,572
Less credits:		
Partially tax-exempt interest (3 percent of $500)	15	

Dividends received (4 percent of $750−50))	28	
		43
Tax for short period under section 443(b)(2)(A)(ii)		2,529

The tax of $2,529, computed under section 443(b)(2)(A)(ii) is greater than the tax of $2,183 computed under section 443(b)(2)- (A)(i) and is, therefore, the tax under section 443(b)(2). Since this tax is less than the tax of $2,790.33, computed under section 443(b)(1) (see Example 1 of paragraph (b)(1)(vii) of this section), the taxpayer's tax for the 10-month short period is $2,529.

(v)

(*a*) A taxpayer who wishes to compute his tax for a short period resulting from a change of annual accounting period under section 443(b)(2) must make an application therefor. Except as provided in (*b*) of this subdivision, the taxpayer shall first file his return for the short period and compute his tax under section 443(b)(1). The application for the benefits of section 443(b)(2) shall subsequently be made in the form of a claim for credit or refund. The claim shall set forth the computation of the taxable income and the tax thereon for the 12-month period and must be filed not later than the time (including extensions) prescribed for filing the return for the taxpayer's first taxable year which ends on or after the day which is 12 months after the beginning of the short period. For example, assume that a taxpayer changes his annual accounting period from the calendar year to a fiscal year ending September 30, and files a return for the short period from January 1, 1956, to September 30, 1956. His application for the benefits of section 443(b)(2) must be filed not later than the time prescribed for filing his return for his first taxable year which ends on or after the last day of December 1956, the twelfth month after the beginning of the short period. Thus, the taxpayer must file his application not later than the time prescribed for filing the return for his fiscal year ending September 30, 1957. If he obtains an extension of time for filing the return for such fiscal year, he may file his application during the period of such extension. If the district director determines that the taxpayer has established the amount of his taxable income for the 12-month period, any excess of the tax paid for the short period over the tax computed under section 443(b)(2) will be credited or refunded to the taxpayer in the same manner as in the case of an overpayment.

(*b*) If at the time the return for the short period is filed, the taxpayer is able to determine that the 12-month period ending with the close of the short period (see section 443(b)(2)-(B)(ii) and subparagraph (2)(ii) of this paragraph) will be used in the computations under section 443(b)(2), then the tax on the return for the short period may be determined under the provisions of section 443(b)(2). In such case, a return covering the 12-month period shall be attached to the return for the short period as a part thereof, and the return and attachment will then be considered as an application for the benefits of section 443(b)(2).

(c) ***Adjustment in deduction for personal exemption.*** For adjustment in the deduction for personal exemptions in computing the tax for a short period resulting from a change of annual accounting period under section 443(b)(1) (or under section 441(f)(2)(B)(iii) in the case of certain changes from or to a 52-53-week taxable year), see paragraph (b)(1)(v) of this section.

(d) ***Adjustments in exclusion of computing minimum tax for tax preferences.***

(1) If a return is made for a short period on account of any of the reasons specified in subsection (a) of section 443, the $30,000 amount specified in section 56 (relating to minimum tax for tax preferences), modified as provided by section 58 and the regulations thereunder, shall be reduced to the amount which bears the same ratio to such specified amount as the number of days in the short period bears to 365.

(2) ***Example.*** The provisions of this paragraph may be illustrated by the following example:

Example. A taxpayer who is an unmarried individual has been granted permission under section 442 to change his annual accounting period files a return for the short period of 4 months ending April 30, 1970. The $30,000 amount specified in section 56 is reduced as follows:

(120/365) × $30,000 = $9,835.89.

(e) ***Cross references.*** For inapplicability of section 443(b) and paragraph (b) of this section in computing—

(1) Accumulated earnings tax, see section 536 and the regulations thereunder;

(2) Personal holding company tax, see section 546 and the regulations thereunder;

(3) Undistributed foreign personal holding company income, see section 557 and the regulations thereunder;

(4) The taxable income of a regulated investment company, see section 852(b)(2)(E) and the regulations thereunder; and

(5) The taxable income of a real estate investment trust, see section 857(b)(2)(C) and the regulations thereunder.

[T.D. 6500, 25 FR 11705, Nov. 26, 1960, as amended by T.D. 6598, 27 FR 4093, Apr. 28, 1962; T.D. 6777, 29 FR 17808, Dec. 16, 1964; T.D. 7244, 37 FR 28897, Dec. 30, 1972, T.D. 7564, 43 FR 40494, Sept. 12, 1978; T.D. 7575, 43 FR 58816, Dec. 18, 1978; T.D. 7767, 465 FR 11265, Feb. 6, 1981; T.D. 8996, 67 FR 35012, May 17, 2002]

§ 1.444-0T Table of contents (temporary).

This section lists the captions that appear in the temporary regulations under section 444.

§ 1.444-1T Election to use a taxable year other than the required taxable year (temporary).

(a) General rules.

(1) Year other than required year.

(2) Effect of section 444 election.

(i) In general.

(ii) Duration of section 444 election.

(3) Section 444 election not required for certain years.

(4) Required taxable year.

(5) Termination of section 444 election.

(i) In general.

(ii) Effective date of termination.

(iii) Example.

(iv) Special rule for entity that liquidates or is sold prior to making a section 444 election, required return, or required payment.

(6) Re-activating certain S elections.

(i) Certain corporations electing S status that did not make a back-up calendar year request.

(ii) Certain corporations that revoked their S status.

(iii) Procedures for re-activating an S election.

(iv) Examples.

(b) Limitation on taxable years that may be elected.

(1) General rule.

(2) Changes in taxable year.

(i) In general.

(ii) Special rule for certain existing corporations electing S status.

(iii) Deferral period of the taxable year that is being changed.

(iv) Examples.

(3) Special rule for entities retaining 1986 taxable year.

(4) Deferral period.

(i) Retentions of taxable year.

(ii) Adoptions of and changes in taxable year.

(A) In general.

(B) Special rule.

(C) Examples.

(5) Miscellaneous rules.

(i) Special rule for determining the taxable year of a corporation electing S status.

(ii) Special procedure for cases where an income tax return is superseded.

(A) In general.

(B) Procedure for superseding return.

(iii) Anti-abuse rule.

(iv) Special rules for partial months and 52-53-week taxable years.

(c) Effective date.

(d) Examples.

(1) Changes in taxable year.

(2) Special rule for entities retaining their 1986 taxable year.

§ 1.444-2T Tiered structure (temporary).

(a) General rule.

(b) Definition of a member of a tiered structure.

(1) In general.

(2) Deferral entity.

(i) In general.

(ii) Grantor trusts.

(3) Anti-abuse rule.

(c) De minimis rules.

(1) In general.

(2) Downstream de minimis rule.

(i) General rule.

(ii) Definition of testing period.

(iii) Definition of adjusted taxable income.

(A) Partnership.

(B) S corporation.

(C) Personal service corporation.

(iv) Special rules.

(A) Pro-forma rule.

(B) Reasonable estimates allowed.

(C) Newly formed entities.

(*1*) Newly formed deferral entities.

(*2*) Newly formed partnership, S corporation, or personal service corporation desiring to make a section 444 election.

(3) Upstream de minimis rule.

(d) Date for determining the existence of a tiered structure.

(1) General rule.

(2) Special rule for taxable years beginning in 1987.

(e) Same taxable year exception.

(1) In general.

(2) Definition of tiered structure.

(i) General rule.

(ii) Special flow-through rule for downstream controlled partnerships.

(3) Determining the taxable year of a partnership or S corporation.

(4) Special rule for 52-53-week taxable years.

(5) Interaction with de minimis rules.

(i) Downstream de minimis rule.

(A) In general.

(B) Special rule for members of a tiered structure directly owned by a downstream controlled partnership.

(ii) Upstream de minimis rule.

(f) Examples.

(g) Effective date.

§ 1.444-3T Manner and time of making section 444 election (temporary).

(a) In general.

(b) Manner and time of making election.

(1) General rule.

(2) Special extension of time for making an election.

(3) Corporation electing to be an S corporation.

(i) In general.

(ii) Examples.

(4) Back-up section 444 election.

(i) General rule.

(ii) Procedures for making a back-up section 444 election.

(iii) Procedures for activating a back-up section 444 election.

(A) Partnership and S corporations.

(*1*) In general.

(2) Special rule if Form 720 used to satisfy return requirement.

(B) Personal service corporations.

(iv) Examples.

(c) Administrative relief.

(1) Extension of time to file income tax returns.

(i) Automatic extension.

(ii) Additional extensions.

(iii) Examples.

(2) No penalty for certain late payments.

(i) In general.

(ii) Example.

(d) Effective date.

[T.D. 8205, 53 FR 19693, May 27, 1988]

§ 1.444-1T Election to use a taxable year other than the required taxable year (temporary).

(a) ***General rules*** —

(1) ***Year other than required year.*** Except as otherwise provided in this section and § 1.444-2T, a partnership, S corporation, or personal service corporation (as defined in § 1.441-3(c)) may make or continue an election (a "section 444 election") to have a taxable year other than its required taxable year. See paragraph (b) of this section for limitations on the taxable year that may be elected. See § 1.444-2T for rules that generally prohibit a partnership, S corporation, or personal service corporation that is a member of a tiered structure from making or continuing a section 444 election. See § 1.444-3T for rules explaining how and when to make a section 444 election.

(2) ***Effect of section 444 election*** —

(i) ***In general.*** A partnership or S corporation that makes or continues a section 444 election shall file returns and make payments as required by §§ 1.7519-1T and 1.7519-2T. A personal service corporation that makes or continues a section 444 election is subject to the deduction limitation of § 1.280H-1T.

(ii) ***Duration of section 444 election.*** A section 444 election shall remain in effect until the election is terminated pursuant to paragraph (a)(5) of this section.

(3) ***Section 444 election not required for certain years.*** A partnership, S corporation, or personal service corporation is not required to make a section 444 election to use—

(i) A taxable year for which such entity establishes a business purpose to the satisfaction of the Commissioner (*i.e.,* approved under section 4 or 6 of Rev. Proc. 87-32, 1987-28 I.R.B. 14, or any successor revenue ruling or revenue procedure), or

(ii) A taxable year that is a "grandfathered fiscal year," within the meaning of section 5.01(2) of Rev. Proc. 87-32 or any successor revenue ruling or revenue procedure.

Although a partnership, S corporation or personal service corporation qualifies to use a taxable year described in paragraph (a)(3) (i) or (ii) of this section, such entity may, if otherwise qualified, make a section 444 election to use a different taxable year. Thus, for example, assume that a personal service corporation that historically used a January 31 taxable year established to the satisfaction of the Commissioner, under section 6 of Rev. Proc. 87-32, a business purpose to use a September 30 taxable year for its taxable year beginning February 1, 1987. Pursuant to this paragraph (a)(3), such personal service corporation may use a September 30 taxable year without making a section 444 election. However, the corporation may, if otherwise qualified, make a section 444 election to use a year ending other than September 30 for its taxable year beginning February 1, 1987.

(4) ***Required taxable year.*** For purposes of this section, the term "required taxable year" means the taxable year determined under section 706(b), 1378, or 441(i) without taking into account any taxable year which is allowable either—

(i) By reason of business purpose (*i.e.,* approved under section 4 or 6 of Rev. Proc. 87-32 or any successor revenue ruling or procedure), or

(ii) As a "grandfathered fiscal year" within the meaning of section 5.01(2) of Rev. Proc. 87-32, or any successor revenue ruling or procedure.

(5) ***Termination of section 444 election*** —

(i) ***In general.*** A section 444 election is terminated when—

(A) A partnership, S corporation, or personal service corporation changes to its required taxable year; or

(B) A partnership, S corporation, or personal service corporation liquidates (including a deemed liquidation of a partnership under § 1.708-1 (b)(1)(iv)); or

(C) A partnership, S corporation, or personal service corporation willfully fails to comply with the requirements of section 7519 or 280H, whichever is applicable; or

(D) A partnership, S corporation, or personal service corporation becomes a member of a tiered structure (within the meaning of § 1.444-2T), unless it is a partnership or S corporation that meets the same taxable year exception under § 1.444-2T (e); or

(E) An S corporation's S election is terminated; or

(F) A personal service corporation ceases to be a personal service corporation.

However, if a personal service corporation, that has a section 444 election in effect, elects to be an S corporation, the S corporation may continue the section 444 election of the personal service corporation. Similarly, if an S corporation that has a section 444 election in effect terminates its S election and immediately becomes a personal service corporation, the

personal service corporation may continue the section 444 election of the S corporation. If a section 444 election is terminated under this paragraph (a)(5), the partnership, S corporation, or personal service corporation may not make another section 444 election for any taxable year.

(ii) ***Effective date of termination.*** A termination of a section 444 election shall be effective—

(A) In the case of a change to the required year, on the first day of the short year caused by the change;

(B) In the case of a liquidating entity, on the date the liquidation is completed for tax purposes;

(C) In the case of willful failure to comply, on the first day of the taxable year (determined as if a section 444 election had never been made) determined in the discretion of the District Director;

(D) In the case of membership in a tiered structure, on the first day of the taxable year in which the entity is considered to be a member of a tiered structure, or such other taxable year determined in the discretion of the District Director;

(E) In the case of termination of S status, on the first day of the taxable year for which S status no longer exists;

(F) In the case of a personal service corporation that changes status, on the first day of the taxable year, for which the entity is no longer a personal service corporation.

In the case of a termination under this paragraph (a)(5) that results in a short taxable year, an income tax return is required for the short period. In order to allow the Service to process the affected income tax return in an efficient manner, a partnership, S corporation, or personal service corporation that files such a short period return should type or legibly print at the top of the first page of the income tax return for the short taxable year—"SECTION 444 ELECTION TERMINATED." In addition, a personal service corporation that changes its taxable year to the required taxable year is required to annualize its income for the short period.

(iii) ***Example.*** The provisions of paragraph (a)(5)(ii) of this section may be illustrated by the following example.

Example. Assume a partnership that is 100 percent owned, at all times, by calendar year individuals has historically used a June 30 taxable year. Also assume the partnership makes a valid section 444 election to retain a year ending June 30 for its taxable year beginning July 1, 1987. However, for its taxable year beginning July 1, 1988, the partnership changes to a calendar year, its required year. Based on these facts, the partnership's section 444 election is terminated on July 1, 1988, and the partnership must file a short period return for the period July 1, 1988-December 31, 1988. Furthermore, pursuant to § 1.702-3T(a)(1), the partners in such partnership are not entitled to a 4-year spread with respect to partnership items of income and expense for the taxable year beginning July 1, 1988 and ending December 31, 1988.

(iv) ***Special rule for entity that liquidates or is sold prior to making a section 444 election, required return, or required payment.*** A partnership, S corporation, or personal service corporation that is liquidated or sold for tax purposes before a section 444 election, required return, or required payment is made for a particular year may, nevertheless, make or continue a section 444 election, if otherwise qualified. (See §§ 1.7519-2T (a)(2) and 1.7519-1T (a)(3), respectively, for a description of the required return and a definition of the term "required payment.") However, the

partnership, S corporation, or personal service corporation (or a trustee or agent thereof) must comply with the requirements for making or continuing a section 444 election. Thus, if applicable, required payments must be made and a subsequent claim for refund must be made in accordance with § 1.7519-2T(a)(6). The following examples illustrate the application of this paragraph (a)(5)(iv).

Example 1. Assume an existing S corporation historically used a June 30 taxable year and desires to make a section 444 election for its taxable year beginning July 1, 1987. Assume further that the S corporation is liquidated for tax purposes on February 15, 1988. If otherwise qualified, the S corporation (or a trustee or agent thereof) may make a section 444 election to have a taxable year beginning July 1, 1987, and ending February 15, 1988. However, if the S corporation makes a section 444 election, it must comply with the requirements for making a section 444 election, including making required payments.

Example 2. The facts are the same as in Example 1, except that instead of liquidating on February 15, 1988, the shareholders of the S corporation sell their stock to a corporation on February 15, 1988. Thus, the corporation's S election is terminated on February 15, 1988. If otherwise qualified, the corporation may make a section 444 election to have a taxable year beginning July 1, 1987, and ending February 14, 1988.

Example 3. The facts are the same as in Example 2, except that the new shareholders are individuals. Furthermore, the corporation's S election is not terminated. Based on these facts, the S corporation, if otherwise qualified, may make a section 444 election to retain a year ending June 30 for its taxable year beginning July 1, 1987. Furthermore, the S corporation may, if otherwise qualified, continue its section 444 election for subsequent taxable years.

(6) ***Re-activating certain S elections*** —

(i) ***Certain corporations electing S status that did not make a back-up calendar year request.*** If a corporation that timely filed Form 2553, Election by a Small Business Corporation, effective for its first taxable year beginning in 1987—

(A) Requested a fiscal year based on business purpose,

(B) Did not agree to use a calendar year in the event its business purpose request was denied, and

(C) Such business purpose request is denied or withdrawn,

such corporation may retroactively re-activate its S election by making a valid section 444 election for its first taxable year beginning in 1987 and complying with the procedures in paragraph (a)(6)(iii) of this section.

(ii) ***Certain corporations that revoked their S status.*** If a corporation that used a fiscal year revoked its S election (pursuant to section 1362(d)(1)) for its first taxable year beginning in 1987, such corporation may retroactively re-activate its S election (*i.e.* rescind its revocation) by making a valid section 444 election for its first taxable year beginning in 1987 and complying with the procedures in paragraph (a)(6)(iii) of this section.

(iii) ***Procedures for re-activating an S election.*** A corporation re-activating its S election pursuant to paragraph (a)(6) (i) or (ii) of this section must—

(A) Obtain the consents of all shareholders who have owned stock in the corporation since the first day of the first taxable year of the corporation beginning after December 31, 1986,

(B) Include the following statement at the top of the first page of the corporation's Form 1120S for its first taxable year beginning in 1987—"SECTION 444 ELECTION—RE-ACTIVATES S STATUS," and

(C) Include the following statement with Form 1120S—"RE-ACTIVATION CONSENTED TO BY ALL SHAREHOLDERS WHO HAVE OWNED STOCK AT ANY TIME SINCE THE FIRST DAY OF THE FIRST TAXABLE YEAR OF THIS CORPORATION BEGINNING AFTER DECEMBER 31, 1986."

(iv) ***Examples.*** The provisions of this paragraph (a)(6) may be illustrated by the following examples.

Example 1. Assume a corporation historically used a June 30 taxable year and such corporation timely filed Form 2553, Election by a Small Business Corporation, to be effective for its taxable year beginning July 1, 1987. On its Form 2553, the corporation requested permission to retain its June 30 taxable year based on business purpose. However, the corporation did not agree to use a calendar year in the event its business purpose request was denied. On April 1, 1988, the Internal Revenue Service notified the corporation that its business purpose request was denied and therefore the corporation's S election was not effective. Pursuant to paragraph (a)(6)(i) of this section, the corporation may re-activate its S election by making a valid section 444 election and complying with the procedures in paragraph (a)(6)(iii) of this section.

Example 2. The facts are the same as in Example 1, except that as of July 26, 1988, the Internal Revenue Service has not yet determined whether the corporation has a valid business purpose to retain a June 30 taxable year. Based on these facts, the corporation may, if otherwise qualified, make a back-up section 444 election as provided in § 1.444-3T(b)(4). If the corporation's business purpose request is subsequently denied, the corporation should follow the procedures in § 1.444-3T(b)(4)(iii) for activating a back-up section 444 election rather than the procedures provided in this paragraph (a)(6 for re-activating an S election.

Example 3. Assume a corporation has historically been an S corporation with a March 31 taxable year. However, for its taxable year beginning April 1, 1987, the corporation revoked its S election pursuant to section 1362 (d)(1). Pursuant to paragraph (a)(6)(ii) of this section, such corporation may retroactively rescind its S election revocation by making a valid section 444 election for its taxable year beginning April 1, 1987, and complying with the procedures provided in paragraph (a)(6)(iii) of this section. If the corporation retroactively rescinds its S revocation, the corporation shall file a Form 1120S for its taxable year beginning April 1, 1987.

(b) ***Limitation on taxable years that may be elected*** —

(1) ***General rule.*** Except as provided in paragraphs (b)(2) and (3) of this section, a section 444 election may be made only if the deferral period (as defined in paragraph (b)(4) of this section) of the taxable year to be elected is not longer than three months.

(2) ***Changes in taxable year*** —

(i) ***In general.*** In the case of a partnership, S corporation, or personal service corporation changing its taxable year, such entity may make a section 444 election only if the deferral period of the taxable year to be elected is not longer than the shorter of—

(A) Three months, or

(B) The deferral period of the taxable year that is being changed, as defined in paragraph (b)(2)(iii) of this section.

(ii) ***Special rule for certain existing corporations electing S status.*** If a corporation with a taxable year other than the calendar year—

(A) Elected after September 18, 1986, and before January 1, 1988, under section 1362 of the Code to be an S corporation, and

(B) Elected to have the calendar year as the taxable year of the S corporation,

then, for taxable years beginning before 1989, paragraph (b)(2)(i) of this section shall be applied by taking into account the deferral period of the last taxable year of the corporation prior to electing to be an S corporation, rather than the deferral period of the taxable year that is being changed. Thus, the provisions of the preceding sentence do not apply to a corporation that elected to be an S corporation for its first taxable year.

(iii) ***Deferral period of the taxable year that is being changed.*** For purposes of paragraph (b)(2)(i)(B) of this section, the phrase "deferral period of the taxable year that is being changed" means the deferral period of the taxable year immediately preceding the taxable year for which the taxpayer desires to make a section 444 election. Furthermore, the deferral period of such year will be determined by using the required taxable year of the taxable year for which the taxpayer desires to make a section 444 election. For example, assume P, a partnership that has historically used a March 31 taxable year, desires to change to a September 30 taxable year by making a section 444 election for its taxable year beginning April 1, 1987. Furthermore, assume that pursuant to paragraph (a)(4) of this section, P's required taxable year for the taxable year beginning April 1, 1987 is a year ending December 31. Based on these facts the deferral period of the taxable year being changed is nine months (the period from March 31 to December 31).

(iv) ***Examples.*** See paragraph (d)(1) of this section for examples that illustrate the provisions of this paragraph (b)(2).

(3) ***Special rule for entities retaining 1986 taxable year.*** Notwithstanding paragraph (b)(2) of this section, a partnership, S corporation, or personal service corporation may, for its first taxable year beginning after December 31, 1986, if otherwise qualified, make a section 444 election to have a taxable year that is the same as the entity's last taxable year beginning in 1986. See paragraph (d)(2) of this section for examples that illustrate the provisions of this paragraph (b)(3).

(4) ***Deferral period*** —

(i) ***Retentions of taxable year.*** For a partnership, S corporation, or personal service corporation that desires to retain its taxable year by making a section 444 election, the term "deferral period" means the months between the beginning of such year and the close of the first required taxable year (as defined in paragraph (a)(4) of this section). The following example illustrates the application of this paragraph (b)(4)(i).

Example. AB partnership has historically used a taxable year ending July 31. AB desires to retain its July 31 taxable year by making a section 444 election for its taxable year beginning August 1, 1987. Calendar year individuals, A and B, each own 50 percent of the profits and capital of AB; thus, under paragraph (a)(4) of this section AB's required taxable year is the year ending December 31. Pursuant to this paragraph (b)(4)(i), if AB desires to retain its year ending July 31, the deferral period is five months (the months between July 31 and December 31).

(ii) ***Adoptions of and changes in taxable year*** —

(A) ***In general.*** For a partnership, S corporation, or personal service corporation that desires to adopt or change its taxable year by making a section 444 election, the term "deferral period" means the months that occur after the end of the taxable year desired under section 444 and before the close of the required taxable year.

(B) ***Special rule.*** If a partnership, S corporation or personal service corporation is using the required taxable year as its taxable year, the deferral period is deemed to be zero.

(C) ***Examples.*** The provisions of this paragraph (b)(4)(ii) may be illustrated by the following examples.

Example 1. Assume that CD partnership has historically used the calendar year and that CD's required taxable year is the calendar year. Under the special rule provided in paragraph (b)(4)(ii)(B) of this section, CD's deferral period is zero. See paragraph (b)(2)(i) of this section for rules that preclude CD from making a section 444 election to change its taxable year.

Example 2. E, a newly formed partnership, began operations on December 1, 1987, and is owned by calendar year individuals. E desires to make a section 444 election to adopt a September 30 taxable year. E's required taxable year is December 31. Pursuant to paragraph (b)(4)(ii)(A) of this section E's deferral period for the taxable year beginning December 1, 1987, is three months (the number of months between September 30 and December 31).

Example 3. Assume that F, a personal service corporation, has historically used a June 30 taxable year. F desires to make a section 444 election to change to an August 31 taxable year, effective for its taxable year beginning July 1, 1987. For purposes of determining the availability of a section 444 election for changing to the taxable year ending August 31, the deferral period of an August 31 taxable year is four months (the number of months between August 31 and December 31). The deferral period for F's existing June 30 taxable year is six months (the number of months between June 30 and December 31). Pursuant to § 1.444-1T(b)(2)(i), F may not make a section 444 election to change to an August 31 taxable year.

(5) ***Miscellaneous rules*** —

(i) ***Special rule for determining the taxable year of a corporation electing S status.*** For purposes of this section, and only for purposes of this section, a corporation that elected to be an S corporation for a taxable year beginning in 1987 or 1988 and which elected to be an S corporation prior to September 26, 1988, will not be considered to have adopted or changed its taxable year by virtue of information included on Form 2553, Election by a Small Business Corporation. See Example 8 in paragraph (d) of this section.

(ii) ***Special procedure for cases where an income tax return is superseded*** —

(A) ***In general.*** In the case of a partnership, S corporation, or personal service corporation that filed an income tax return for its first taxable year beginning after December 31, 1986, but subsequently makes a section 444 election that would result in a different year end for such taxable year, the income tax return filed pursuant to the section 444 election will supersede the original return. However, any payments of income tax made with respect to such superseded return will be credited to the taxpayer's superseding return and the taxpayer may file a claim for refund for such payments. See examples (5) and (7) in paragraph (d)(2) of this section.

(B) ***Procedure for superseding return.*** In order to allow the Service to process the affected income tax returns in an efficient manner, a partnership, S corporation, or personal service corporation that desires to supersede an income tax return in accordance with paragraph (b)(5)(ii)(A) of this section, should type or legibly print at the top of the first page of the income tax return for the taxable year elected—"SECTION 444 ELECTION—SUPERSEDES PRIOR RETURN."

(iii) ***Anti-abuse rule*** —If an existing partnership, S corporation or personal service corporation ("predecessor entities"), or the owners thereof, transfer assets to a related party and the principal purpose of such transfer is to—

(A) Create a deferral period greater than the deferral period of the predecessor entity's taxable year, or

(B) Make a section 444 election following the termination of the predecessor entity's section 444 election,

then such transfer will be disregarded for purposes of section 444 and this section, even if the deferral created by such change is effectively eliminated by a required payment (within the meaning of section 7519) or deferral of a deduction (to a personal service corporation under section 280H). The following example illustrates the application of this paragraph (b)(5)(iii).

Example. Assume that P1 is a partnership that historically used the calendar year and is owned by calendar year partners. Assume that P1 desires to make a section 444 election to change to a September year for the taxable year beginning January 1, 1988. P1 may not make a section 444 election to change taxable years under section 444(b)(2) because its current deferral period is zero. Assume further that P1 transfers a substantial portion of its assets to a newly-formed partnership (P2), which is owned by the partners of P1. Absent paragraph (b)(5)(iii) of this section, P2 could, if otherwise qualified, make a section 444 election under paragraph (b)(1) of this section to use a taxable year with a three month or less deferral period (*i.e.,* a September 30, October 31, or November 30 taxable year). However, if the principal purpose of the asset transfer was to create a one-, two-, or three-month deferral period by P2 making a section 444 election, the section 444 election shall not be given effect, even if the deferral would be effectively eliminated by P2 making a required payment under section 7519.

(iv) ***Special rules for partial months and 52-53-week taxable years.*** Except as otherwise provided in § 1.280H-1T(c)(2)(i)(A), for purposes of this section and §§ 1.7519-1T, 1.7519-2T and 1.280H-1T—

(A) A month of less than 16 days is disregarded, and a month of more than 15 days is treated as a full month; and

(B) A 52-53-week taxable year with reference to the end of a particular month will be considered to be the same as a taxable year ending with reference to the last day of such month.

(c) ***Effective date.*** This section is effective for taxable years beginning after December 31, 1986.

(d) ***Examples*** —

(1) ***Changes in taxable year.*** The following examples illustrate the provisions of paragraph (b)(2) of this section.

Example 1. A is a personal service corporation that historically used a June 30 taxable year. A desires to make a section 444 election to change to an August 31 taxable year, effective with its taxable year beginning July 1, 1987. Under paragraph (b)(4)(ii) of this section, the deferred period of the taxable year to be elected is four months (the number of months between August 31 and December 31). Furthermore, the deferral period of the taxable year that is being changed is six months (the number of months between June 30 and December 31). Pursuant to paragraph (b)(2)(i) of this section, a taxpayer may, if otherwise qualified, make a section 444 election to change to a taxable year only if the deferral period of the taxable year to be elected is not longer than the shorter of three months or the deferred period of the taxable year being changed. Since the deferral period of the taxable year to be elected (August 31) is greater than three months, A may not make a section 444 election to change to the taxable year ending August 31, However, since the deferral period of the taxable year that is being changed is three months or more, A may, if otherwise qualified, make a section 444 election to change to a year ending September 30, 1987 (three-month deferral period), a year ending October 31, 1987 (two-month deferral period), or a year ending November 30, 1987 (one-month deferral period). In addition, instead of making a section 444 election to change its taxable year, A could, if otherwise qualified, make a section 444 election to retain its June end, pursuant to paragraph (b)(3) of this section.

Example 2. B, a corporation that historically used an August 31 taxable year, elected on November 1, 1986 to be an S corporation for its taxable year beginning September 1, 1986. As a condition to having the S election accepted, B agreed on Form 2553 to use calendar year. Pursuant to the general effective date provided in paragraph (c) of this section, B may not make a section 444 election for its taxable year beginning in 1986. Thus, B must file a short period income tax return for the period September 1 to December 31, 1986.

Example 3. The facts are the same as in Example 2, except that B desires to make a section 444 election for its taxable year beginning January 1, 1987. Absent paragraph (b)(2)(ii) of this section, B would not be allowed to change its taxable year because the deferral period of the taxable year being changed (*i.e.,* the calendar year) is zero. However, pursuant to the special rule provided in paragraph (b)(2)(ii) of this section, B shall apply paragraph (b)(2)(i) of this section by taking into account the deferral period of the last taxable year of B prior to B's election to be an S corporation (four months), rather than the deferral period of B's taxable year that is being changed (zero months). Thus, if otherwise qualified, B may make a section 444 election to change to a taxable year ending September 30, October 31, or November 30, for its taxable year beginning January 1, 1987.

Example 4. The facts are the same as in Example 3, except that B files a calendar year income tax return for 1987 rather than making a section 444 election. However, for its taxable year beginning January 1, 1988, B desires to change its taxable year by making a section 444 election. Given that the special rule provided in paragraph (b)(2)(ii) of this section applies to section 444 elections made in taxable years beginning before 1989, B may, if otherwise qualified, make a section 444 election to change to a taxable year ending September 30, October 31, or November 30 for its taxable year beginning January 1, 1988.

Example 5. C, a corporation that historically used a June 30 taxable year, elected on December 15, 1986 to be an S corporation for its taxable year beginning July 1, 1987. As a condition to having the S election accepted, C agreed on Form 2553 to use a calendar year. Although pursuant to paragraph (b)(3) of this section, C would, if otherwise qualified, be allowed to retain its June 30 taxable year, C desires to change to a September 30 taxable year by making a section 444 election. Pursuant to paragraph (b)(2) of this section, a taxpayer may, if otherwise qualified, make a section 444 election to change to a taxable year only if the deferral period of the taxable year to be elected is not longer than the shorter of three months or the deferral period of the taxable year being changed. Given these facts, the deferral period of the taxable year to be elected is 3 months (September 30 to December 31) while the deferral period of the taxable year being changed is 6 months (June 30 to December 31). Thus, C may, if otherwise qualified, change to a September 30 taxable year for its taxable year beginning July 1, 1987, by making a section 444 election. The fact that C agreed on Form 2553 to use a calendar year is not relevant.

Example 6. D, a corporation that historically used a March 31 taxable year, elects on June 1, 1988 to be an S corporation for its taxable year beginning April 1, 1988. D desires to change to a June 30 taxable year by making a section 444 election for its taxable year beginning April 1, 1988. Pursuant to paragraph (b)(2)(i) of this section, D may not change to a June 30 taxable year because such year would have a deferral period greater than 3 months. However, if otherwise qualified, D may make a section 444 election to change to a taxable year ending September 30, October 31, or November 30 for its taxable year beginning April 1, 1988.

Example 7. E, a corporation that began operations on November 1, 1986, elected to be an S corporation on December 15, 1986, for its taxable year beginning November 1, 1986. E filed a short period income tax return for the period November 1 to December 31, 1986. E desires to change to a September 30 taxable year by making a section 444 election for its taxable year beginning January 1, 1987. Although E elected to be an S corporation after September 18, 1986, and before January 1, 1988, paragraph (b)(2)(ii) of this section does not apply to E since E was not a C corporation prior to electing S status. Thus, E may not change its taxable year for the taxable year beginning January 1, 1987, by making a section 444 election.

Example 8. The facts are the same as in Example 7, except that E began operations on April 15, 1987, and elected to be an S corporation on June 1, 1987, for its taxable year beginning April 15, 1987. As a condition to being an S corporation, E agreed on Form 2553 to use a calendar year. E desires to make a section 444 election to use a year ending September 30 for its taxable year beginning April 15, 1987. Pursuant to paragraph (b)(5)(i) of this section, E's agreement to use a calendar year on Form 2553 does not mean that E has adopted a calendar year. Thus, E's desire to make a section 444 election to use a September 30 taxable year will not be considered a change in taxable year and thus paragraph (b)(2) of this section will not apply. Instead, E will be subject to paragraph (b)(1) of this section. Since a September 30 taxable year would result in

only a three-month deferral period (September 30 to December 31), E may, if otherwise qualified, make a section 444 election to use a year ending September 30 for its taxable year beginning April 15, 1987.

(2) ***Special rule for entities retaining their 1986 taxable year.*** The following examples illustrate the provisions of paragraph (b)(3) of this section.

Example 1. F, an S corporation that elected to be an S corporation several years ago, has historically used a June 30 taxable year. F desires to retain its June 30 taxable year by making a section 444 election for its taxable year beginning July 1, 1987. Pursuant to paragraph (b)(4)(i) of this section, the deferral period of the taxable year being retained is 6 months (June 30 to December 31, F's required taxable year). Absent the special rule provided in paragraph (b)(3) of this section, F would be subject to the general rule provided in paragraph (b)(1) of this section which limits the deferral period of the taxable year elected to three months or less. However, pursuant to paragraph (b)(3) of this section, F may, if otherwise qualified, make a section 444 election to retain its year ending June 30 for its taxable year beginning July 1, 1987.

Example 2. The facts are the same as in Example 1, except that F received permission from the Commissioner to change its taxable year to the calendar year, and filed a short period income tax return for the period July 1 to December 31, 1986. F desires to make a section 444 election to use a year ending June 30 for its taxable year beginning January 1, 1987. Given that F had a December 31 taxable year for its last taxable year beginning in 1986, the special rule provided in paragraph (b)(3) of this section does not allow F to use a June 30 taxable year for its taxable year beginning January 1, 1987. Furthermore, pursuant to paragraph (b)(2)(i) of this section, F is not allowed to change its taxable year from December 31 to June 30 because the deferral period of the taxable year being changed is zero months.

Example 3. G, a corporation that historically used an August 31 taxable year, elected be an S corporation on November 15, 1986, for its taxable year beginning September 1, 1986. As a condition to obtaining S status, G agreed to use a calendar year. Thus, G filed its first S corporation return for the period September 1 to December 31, 1986. G desires to make a section 444 election to use a year ending August 31 for its taxable year beginning January 1, 1987. Since G's last taxable year beginning in 1986 was a calendar year, G cannot use paragraph (b)(3) of this section, relating to retentions of taxable years, to elect an August 31 taxable year. Thus, G is subject to paragraph (b)(2)(i) of this section, relating to changes in taxable year. Although G, if otherwise qualified, may use the special rule provided in paragraph (b)(2)(ii) of this section, G may only change from its current taxable year (*i.e.,* the calendar year) to a taxable year that has no more than a three-month deferral period (*i.e.,* September 30, October 31, or November 30).

Example 4. The facts are the same as in Example 3, except that G elected to be an S corporation for its taxable year beginning September 1, 1987, rather than its taxable year beginning September 1, 1986. As a condition to making its S election, G agreed, on Form 2553, to use the calendar year. However, G has not yet filed a short period income tax return for the period September 1 to December 31, 1987. Given these facts, paragraph (b)(3) of this section would allow G, if otherwise qualified, to make a section 444 election to retain an August 31 taxable year for its taxable year beginning September 1, 1987.

Example 5. The facts are the same as in Example 4, except that G has already filed a short period income tax return for the period September 1 to December 31, 1987. Pursuant to paragraph (b)(5)(ii)(A) of this section, G may supersede the return it filed for the period September 1 to December 31, 1987. Thus, pursuant to paragraph (b)(3) of this section, G may, if otherwise qualified, make a section 444 election to retain an August 31 taxable year for the taxable year beginning September 1, 1987. In addition, G should follow the special procedures set forth in paragraph (b)(5)(ii)(B) of this section.

Example 6. H, a corporation that historically used a May 31 taxable year, elects to be an S corporation on June 15, 1988 for its taxable year beginning June 1, 1988. H desires to make a section 444 election to use a taxable year other than the calendar year. Since the taxable year in issue is not H's first taxable year beginning after December 31, 1986, H may not use the special rule provided in paragraph (b)(3)(i) and thus may not retain its May 31 year. However, H may, if otherwise qualified, make a section 444 election under paragraph (b)(2)(i) of this section, to change to a taxable year that has no more than a three-month deferral period (*i.e.,* September 30, October 31, or November 30) for its taxable year beginning June 1, 1988.

Example 7. I is a partnership that has historically used a calendar year. Sixty percent of the profits and capital of I are owned by Q, a corporation (that is neither an S corporation nor a personal service corporation) that has a June 30 taxable year, and 40 percent of the profits and capital are owned by R, a calendar year individual. Since the partner that has more than a fifty percent interest in I has a June 30 taxable year, I's required taxable year is June 30. Accordingly, I filed an income tax return for the period January 1 to June 30, 1987. Based on these facts, I may, pursuant to paragraph (b)(5)(ii)(A) of this section, disregard the income tax return filed for the period January 1 to June 30, 1987. Thus, if otherwise qualified, I may make a section 444 election under paragraph (b)(2)(i) of this section to use a calendar year for its taxable year beginning January 1, 1987. If I makes such a section 444 election, I should follow the special procedures set forth in paragraph (b)(5)(ii)(B) of this section.

[T.D. 8205, 53 FR 19694, May 27, 1988, as amended by T.D. 8996, 67 FR 35012, May 17, 2002]

§ 1.444-2T Tiered structure (temporary).

(a) ***General rule.*** Except as provided in paragraph (e) of this section, no section 444 election shall be made or continued with respect to a partnership, S corporation, or personal service corporation that is a member of a tiered structure on the date specified in paragraph (d) of this section. For purposes of this section, the term "personal service corporation" means a personal service corporation as defined in § 1.441-3(c).

(b) ***Definition of a member of a tiered structure*** —

(1) ***In general.*** A partnership, S corporation, or personal service corporation is considered a member of a tiered structure if—

(i) The partnership, S corporation, or personal service corporation directly owns any portion of a deferral entity, or

(ii) A deferral entity directly owns any portion of the partnership, S corporation, or personal service corporation.

However, see paragraph (c) of this section for certain de minimis rules, and see paragraph (b)(3) of this section for an anti-abuse rule. In addition, for purposes of this section, a beneficiary of a trust shall be considered to own an interest in the trust.

(2) ***Deferral entity*** —

(i) ***In general.*** For purposes of this section, the term "deferral entity" means an entity that is a partnership, S corporation, personal service corporation, or trust. In the case of an affiliated group of corporations filing a consolidated income tax return that is treated as a personal service corporation pursuant to § 1.441-4T (i), such affiliated group is considered to be a single deferral entity.

(ii) ***Grantor trusts.*** The term "deferral entity" does not include a trust (or a portion of a trust) which is treated as owned by the grantor or beneficiary under Subpart E, part I, subchapter J, chapter 1, of the Code (relating to grantor trusts), including a trust that is treated as a grantor trust pursuant to section 1361(d)(1)(A) of the Code (relating to qualified subchapter S trusts). Thus, any taxpayer treated under subpart E as owning a portion of a trust shall be treated as owning the assets of the trust attributable to that ownership. The following examples illustrate the provisions of this paragraph (b)(2)(ii).

Example 1. A, an individual, is the sole beneficiary of T. T is a trust that owns 50 percent of the profits and capital of X, a partnership that desires to make a section 444 election. Furthermore, pursuant to Subpart E, Part I, subchapter J, chapter 1 of the Code, A is treated as an owner of X. Based upon these facts, T is not a deferral entity and 50 percent of X is considered to be directly owned by A.

Example 2. The facts are the same as in Example 1, except that A is a personal service corporation rather than an individual. Given these facts, 50 percent of X is considered to be directly owned by A, a deferral entity. Thus, X is considered to be a member of a tiered structure.

(3) ***Anti-abuse rule.*** Notwithstanding paragraph (b)(1) of this section, a partnership, S corporation, or personal service corporation is considered a member of a tiered structure if the partnership, S corporation, personal service corporation, or related taxpayers have organized or reorganized their ownership structure or operations for the principal purpose of obtaining a significant unintended tax benefit from making or continuing a section 444 election. For purposes of the preceding sentence, a significant unintended tax benefit results when a partnership, S corporation, or personal service corporation makes a section 444 election and, as a result, a taxpayer (not limited to the entity making the election) obtains a significant deferral of income substantially all of which is not eliminated by a required payment under section 7519. See examples (15) through (19) in paragraph (f) of this section.

(c) ***De minimis rules*** —

(1) ***In general.*** For rules relating to a de minimis exception to paragraph (b)(1)(i) of this section (the "downstream de minimis rule"), see paragraph (c)(2) of this section. For rules relating to a de minimis exception to paragraph (b)(1)(ii) of this section (the "upstream de minimis rule"), see paragraph (c)(3) of this section. For rules relating to the interaction of the de minimis rules provided in this paragraph (c) and the "same taxable year exception" provided in paragraph (e) of this section, see paragraph (e)(5) of this section.

(2) ***Downstream de minimis rule*** —

(i) ***General rule.*** If a partnership, S corporation, or personal service corporation directly owns any portion of one or more deferral entities as of the date specified in paragraph (d) of this section, such ownership is disregarded for purposes of paragraph (b)(1)(i) of this section if, in the aggregate, all such deferral entities accounted for—

(A) Not more than 5 percent of the partnership's, S corporation's, or personal service corporation's adjusted taxable income for the testing period ("5 percent adjusted taxable income test"), or

(B) Not more than 2 percent of the partnership's, S corporation's, or personal service corporation's gross income for the testing period ("2 percent gross income test"). See section 702 (c) for rules relating to the determination of gross income of a partner in a partnership.

See examples (3) through (5) in paragraph (f) of this section.

(ii) ***Definition of testing period.*** For purposes of this paragraph (c)(2), the term "testing period" means the taxable year that ends immediately prior to the taxable year for which the partnership, S corporation, or personal service corporation desires to make or continue a section 444 election. However, see the special rules provided in paragraph (c)(2)(iv) of this section for certain special cases (*e.g.,* the partnership, S corporation, personal service corporation or deferral entity was not in existence during the entire testing period). The following example illustrates the application of this paragraph (c)(2)(ii).

Example. A partnership desires to make a section 444 election for its taxable year beginning November 1, 1987. The testing period for purposes of determining whether deferral entities owned by such partnership are de minimis under paragraph (c)(2) of this section is the taxable year ending October 31, 1987. If either the partnership or the deferral entities were not in existence for the entire taxable year ending October 1, 1987, see the special rules provided in paragraph (c)(2)(iv) of this section.

(iii) ***Definition of adjusted taxable income*** —

(A) ***Partnership.*** In the case of a partnership, adjusted taxable income for purposes of paragraph (c)(2) of this section is an amount equal to the sum of the—

(*1*) Aggregate amount of the partnership items described in section 702(a) (other than credits and tax-exempt income),

(*2*) Applicable payments defined in section 7519(d)(3) that are deducted in determining the amount described in paragraph (c)(2)(iii)(A)(*1*) of this section, and

(*3*) Guaranteed payments defined in section 707(c) that are deducted in determining the amount described in paragraph (c)(2)(iii)(A)(*1*) of this section and are not otherwise included in paragraph (c)(2)(iii)(A)(*2*) of this section. For purposes of determining the aggregate amount of partnership items under paragraph (c)(2)(iii)(A)(*1*) of this section, deductions and losses are treated as negative income. Thus, for example, if under section 702(a) a partnership has $1,000 of ordinary taxable income, $500 of specially allocated deductions, and $300 of capital loss, the partnership's aggregate amount of partnership items under paragraph (c)(2)(iii)(A)(*1*) of this section is $200 ($1,000-$500-$300).

(B) *S corporation.* In the case of an S corporation, adjusted taxable income for purposes of paragraph (c)(2) of this section is an amount equal to the sum of the—

(*1*) Aggregate amount of the S corporation items described in section 1366(a) (other than credits and tax-exempt income), and

(*2*) Applicable payments defined in section 7519(d)(3) that are deducted in determining the amount described in paragraph (c)(2)(iii)(B)(*1*) of this section.

For purposes of determining the aggregate amount of S corporation items under paragraph (c)(2)(iii)(B)(*1*) of this section, deductions and losses are treated as negative income. Thus, for example, if under section 1366(a) an S corporation has $2,000 of ordinary taxable income, $1,000 of deductions described in section 1366(a)(1)(A) of the Code, and $500 of capital loss, the S corporation's aggregate amount of S corporation items under paragraph (c)(2)(iii)(B)(*1*) of this section is $500 ($2,000-$1,000-$500).

(C) ***Personal service corporation.*** In the case of a personal service corporation, adjusted taxable income for purposes of paragraph (c)(2) of this section is an amount equal to the sum of the—

(*1*) Taxable income of the personal service corporation, and

(*2*) Applicable amounts defined in section 280H(f)(1) that are deducted in determining the amount described in paragraph (c)(2)(iii)(C)(*1*) of this section.

(iv) ***Special rules*** —

(A) ***Pro-forma rule.*** Except as provided in paragraph (c)(iv)(C)(*2*) of this section, if a partnership, S corporation, or personal service corporation directly owns any interest in a deferral entity as of the date specified in paragraph (d) of this section and such ownership interest is different in amount from the partnership's, S corporation's, or personal service corporation's interest on any day during the testing period, the 5 percent adjusted taxable income test and the 2 percent gross income test must be applied on a pro-forma basis (*i.e.,* adjusted taxable income and gross income must be calculated for the testing period assuming that the partnership, S corporation, or personal service corporation owned the same interest in the deferral entity that it owned as of the date specified in paragraph (d) of this section). The following example illustrates the application of this paragraph (c)(2)(iv)(A).

Example. A personal service corporation desiring to make a section 444 election for its taxable year beginning October 1, 1987, acquires a 25 percent ownership interest in a partnership on or after October 1, 1987. Furthermore, the partnership has been in existence for several years. The personal service corporation must modify its calculations of the 5 percent adjusted taxable income test and the 2 percent gross income test for the testing period ended September 30, 1987, by assuming that the personal service corporation owned 25 percent of the partnership during such testing period and the personal service corporation's adjusted taxable income and gross income were correspondingly adjusted.

(B) ***Reasonable estimates allowed.*** If the information necessary to complete the pro-forma calculation described in paragraph (c)(2)(iv)(A) of this section is not readily available, the partnership, S corporation, or personal service corporation may make a reasonable estimate of such information.

(C) ***Newly formed entities*** —(*1*) *Newly formed deferral entities.* If a partnership, S corporation, or personal service corporation owns any portion of a deferral entity on the date specified in paragraph (d) of this section and such deferral entity was not in existence during the entire testing period (hereinafter referred to as a “newly formed deferral entity”), both the 5 percent adjusted taxable income test and the 2 percent gross income test are modified as follows. First, the partnership, S corporation, or personal service corporation shall calculate the percentage of its adjusted taxable income or gross income that is

attributable to deferral entities, excluding newly formed deferral entities. Second, the partnership, S corporation, or personal service corporation shall calculate (on the date specified in paragraph (d) of this section) the percentage of the tax basis of its assets that are attributable to its tax basis with respect to its ownership interests in all newly formed deferral entities. If the sum of the two percentages is 5 percent or less, the deferral entities are considered de minimis and are disregarded for purposes of paragraph (b)(1)(i) of this section. If the sum of the two percentages is greater than 5 percent, the deferral entities do not qualify for the de minimis rule provided in paragraph (c)(2) of this section and thus the partnership, S corporation, or personal service corporation is considered to be a member of a tiered structure for purposes of this section.

(*2*) *Newly formed partnership, S corporation, or personal service corporation desiring to make a section 444 election.* If a partnership, S corporation, or personal service corporation desires to make a section 444 election for the first taxable year of its existence, the 5 percent adjusted taxable income test and the 2 percent gross income test are replaced by a 5 percent of assets test. Thus, if on the date specified in paragraph (d) of this section, 5 percent or less of the assets (measured by reference to the tax basis of the assets) of the newly formed partnership, S corporation, or personal service corporation are attributable to the tax basis with respect to its ownership interests in the deferral entities, the deferral entities will be considered de minimis and will be disregarded for purposes of paragraph (b)(1)(i) of this section.

(*3*) ***Upstream de minimis rule.*** If a partnership, S corporation, or personal service corporation is directly owned by one or more deferral entities as of the date specified in paragraph (d) of this section, such ownership is disregarded for purposes of paragraph (b)(1)(ii) of this section if on the date specified in paragraph (d) of this section the deferral entities directly own, in the aggregate, 5 percent or less of—

(*i*) An interest in the current profits of the partnership, or

(*ii*) The stock (measured by value) of the S corporation or personal service corporation.

See examples (6) and (7) in paragraph (f) of this section.

(d) ***Date for determining the existence of a tiered structure*** —

(1) ***General rule.*** For purposes of paragraph (a) of this section, a partnership, S corporation, or personal service corporation will be considered a member of a tiered structure for a particular taxable year if the partnership, S corporation, or personal service corporation is a member of a tiered structure on the last day of the required taxable year (as defined in section 444 (e) of the Code) ending within such year. If a particular taxable year does not include the last day of the required taxable year for such year, the partnership, S corporation, or personal service corporation will not be considered a member of a tiered structure for such year. The following examples illustrate the application of this paragraph (d)(1).

Example 1. Assume that a newly formed partnership whose first taxable year begins November 1, 1988, desires to adopt a September 30 taxable year by making a section 444 election. Furthermore, assume that for its taxable year beginning November 1, 1988, the partnership's required taxable year is December 31. If the partnership is a member of a tiered structure on December 31, 1988, it will not be eligible to make a section 444 election for a taxable year beginning November 1, 1988, and ending September 30, 1989.

Example 2. Assume an S corporation that historically used a June 30 taxable year desires to make a section 444 election to change to a year ending September 30 for its taxable year beginning July 1, 1987. If the S corporation can make the section 444 election, it will have a short taxable year beginning July 1, 1987, and ending September 30, 1987. Given these facts, the short taxable year beginning July 1, 1987, does not include the last day of the S corporation's required taxable year for such year (*i.e.,* December 31, 1987). Thus, pursuant to paragraph (d)(1) of this section, the S corporation will not be considered a member of a tiered structure for its taxable year beginning July 1, 1987, and ending September 30, 1987.

(2) ***Special rule for taxable years beginning in 1987.*** For purposes of paragraph (a) of this section, a partnership, S corporation, or personal service corporation will not be considered a member of a tiered structure for a taxable year beginning in 1987 if the partnership, S corporation, or personal service corporation is not a member of a tiered structure on the day the partnership, S corporation, or personal service corporation timely files its section 444 election for such year. The following examples illustrate the application of this paragraph (d)(2).

Example 1. Assume that a partnership desires to retain a June 30 taxable year by making a section 444 election for its taxable year beginning July 1, 1987. Furthermore, assume that the partnership's required taxable year for such year is December 31 and that the partnership was a member of a tiered structure on such date. Also assume that the partnership was not a member of a tiered structure as of the date it timely filed its section 444 election for its taxable year beginning July 1, 1987. Based upon the special rule provided in this paragraph (d)(2), the partnership will not be considered a member of a tiered structure for its taxable year beginning July 1, 1987.

Example 2. Assume the same facts as in Example 1, except that the partnership was a member of a tiered structure on the date it filed its section 444 election for its taxable year beginning July 1, 1987, but was not a member of a tiered structure on December 31, 1987. Paragraph (d)(1) of this section would still apply and thus the partnership would not be considered part of a tiered structure for its taxable year beginning July 1, 1987. However, the partnership would be considered a member of a tiered structure for its taxable year beginning July 1, 1988, if the partnership was a member of a tiered structure on December 31, 1988.

(e) ***Same taxable year exception*** —

(1) ***In general.*** Although a partnership or S corporation is a member of a tiered structure as of the date specified in paragraph (d) of this section, the partnership, S corporation may make or continue a section 444 election if the tiered structure (as defined in paragraph (e)(2) of this section) consists entirely of partnerships or S corporations (or both), all of which have the same taxable year as determined under paragraph (e)(3) of this section. However, see paragraph (e)(5) of this section for the interaction of the de minimis rules provided in paragraph (c) of this section with the same taxable year exception. For purposes of this paragraph (e), two or more entities are considered to have the same taxable year if their taxable years end on the same day, even though they begin on different days. See examples (8) through (14) in paragraph (f) of this section.

(2) ***Definition of tiered structure*** —

(i) ***General rule.*** For purposes of the same taxable year exception, the members of a tiered structure are defined to include the following entities—

(A) The partnership or S corporation that desires to qualify for the same taxable year exception,

(B) A deferral entity (or entities) directly owned (in whole or in part) by the partnership or S corporation that desires to qualify for the same taxable year exception,

(C) A deferral entity (or entities) directly owning any portion of the partnership or S corporation that desires to qualify for the same taxable year exception, and

(D) A deferral entity (or entities) directly owned (in whole or in part) by a "downstream controlled partnership," as defined in paragraph (e)(2)(ii) of this section.

(ii) ***Special flow-through rule for downstream controlled partnerships.*** If more than 50 percent of a partnership's profits and capital are owned by a partnership or S corporation that desires to qualify for the same taxable year exception, such owned partnership is considered a downstream controlled partnership for purposes of paragraph (e)(2)(i) of this section. Furthermore, if more than 50 percent of a partnership's profits and capital are owned by a downstream controlled partnership, such owned partnership is considered a downstream controlled partnership for purposes of paragraph (e)(2)(i) of this section.

(3) ***Determining the taxable year of a partnership or S corporation.*** The taxable year of a partnership or S corporation to be taken into account for purposes of paragraph (e)(1) of this section is the taxable year ending with or prior to the date specified in paragraph (d) of this section. Furthermore, the determination of such taxable year will take into consideration any section 444 elections made by the partnership or S corporation. See examples (10) and (11) in paragraph (f) of this section.

(4) ***Special rule for 52-53-week taxable years.*** For purposes of this paragraph (e), a 52-53-week taxable year with reference to the end of a particular month will be considered to be the same as a taxable year ending with reference to the last day of such month.

(5) ***Interaction with de minimis rules*** —

(i) ***Downstream de minimis rule*** —

(A) ***In general.*** If a partnership or S corporation that desires to make or continue a section 444 election is a member of a tiered structure (as defined in paragraph (e)(2) of this section) and directly owns any member (or members) of the tiered structure with a taxable year different from the taxable year of the partnership or S corporation, such ownership is disregarded for purposes of the same taxable year exception of paragraph (e)(1) of this section provided that, in the aggregate, the de minimis rule of paragraph (c)(2) of this section is satisfied with respect to such owned member (or members). The following example illustrates the application of this paragraph (e)(5)(i)(A).

Example. P, a partnership with a June 30 taxable year, owns 60 percent of P1, another partnership with a June 30 taxable year. P also owns 1 percent of P2 and P3, calendar year partnerships. If, in the aggregate, P's ownership interests in P2 and P3 are considered de minimis under paragraph (c)(2) of this section, P meets the same taxable year exception and may make a section 444 election to retain its June 30 taxable year.

(B) ***Special rule for members of a tiered structure directly owned by a downstream controlled partnership.*** For purposes of paragraph (e)(5)(i)(A) of this section, a partnership or S corporation desiring to make or continue a section 444 election is considered to directly own any member of the tiered structure (as defined in paragraph (e)(2) of this section) directly owned by a downstream controlled partnership (as defined in paragraph (e)(2)(ii)

of this section). The adjusted taxable income or gross income of the partnership or S corporation that is attributable to a member of a tiered structure directly owned by a downstream controlled partnership equals the adjusted taxable income or gross income of such member multiplied by the partnership's or S corporation's indirect ownership percentage of such member. The following example illustrates the application of this paragraph (e)(5)(i)(B).

Example. P, a partnership, desires to retain its June 30 taxable year by making a section 444 election. However, as of the date specified in paragraph (d) of this section, P owns 75 percent of P1, a June 30 partnership, and P1 owns 40 percent of P2, a calendar year partnership. P also owns 25 percent of P3, a calendar year partnership. Pursuant to paragraphs (e)(5)(i) (A) and (B) of this section, P may only qualify to use the same taxable year exception if, in the aggregate, P2 and P3 are de minimis with respect to P. Pursuant to paragraph (e)(5)(i)(B) of this section, P's adjusted taxable income or gross income attributable to P2 equals 30 percent (75 percent times 40 percent) of P2's adjusted taxable income or gross income.

(ii) ***Upstream de minimis rule.*** If a partnership or S corporation that desires to make or continue a section 444 election is a member of a tiered structure (as defined in paragraph (e)(2) of this section) and is owned directly by a member (or members) of the tiered structure with taxable years different from the taxable year of the partnership or S corporation, such ownership is disregarded for purposes of the same taxable year exception of paragraph (e)(1) of this section provided that, in the aggregate, the de minimis rule of paragraph (c)(3) of this section is satisfied with respect to such owning member (or members). See Example 12 of paragraph (f) of this section.

(f) ***Examples.*** The provisions of this section may be illustrated by the following examples.

Example 1. A, a partnership, desires to make or continue a section 444 election. However, on the date specified in paragraph (d) of this section, A is owned by a combination of individuals and S corporations. The S corporations are deferral entities, as defined in paragraph (b)(2) of this section. Thus, pursuant to paragraph (b)(1)(ii) of this section, A will be a member of a tiered structure unless under paragraph (c)(3) of this section, the S corporations, in the aggregate, own a de minimis portion of A. If the S corporations' ownership in A is not considered de minimis under paragraph (c)(3) of this section, A is a member of a tiered structure and will be allowed to make or continue a section 444 election only if it meets the same taxable year exception provided in paragraph (e) of this section.

Example 2. B, a partnership, desires to make or continue a section 444 election. However, on the date specified in paragraph (d) of this section, B is a partner in two partnerships, B1 and B2. B1 and B2 are deferral entities, as defined in paragraph (b)(2) of this section. Thus, under paragraph (b)(1)(i) of this section, B will be a member of a tiered structure unless B's aggregate ownership interests in B1 and B2 are considered de minimis under paragraph (c)(2) of this section. If B is a member of a tiered structure on the date specified in paragraph (d) of this section, B will be allowed to make or continue a section 444 election only if it meets the same taxable year exception provided in paragraph (e) of this section.

Example 3. C, a partnership with a September 30 taxable year, is 100 percent owned by calendar year individuals. C desires to make a section 444 election for its taxable year beginning October 1, 1987. However, on the date specified in paragraph (d) of this section, C owns a 1 percent interest in C1, a partnership. C does not own any other interest in a deferral entity. For the taxable year ended

September 30, 1987, 10 percent of C's adjusted taxable income (as defined in paragraph (c)(2)(iii) of this section) was attributable to C's partnership interest in C1. Furthermore, 4 percent of C's gross income for the taxable year ended September 30, 1987, was attributable to C's partnership interest in C1. Under paragraph (c)(2) of this section, C's partnership interest in C1 is not de minimis because during the testing period more than 5 percent of C's adjusted taxable income is attributable to C1 and more than 2 percent of C's gross income is attributable to C1. Thus, C is a member of a tiered structure for its taxable year beginning October 1, 1987.

Example 4. The facts are the same as Example 3, except that for the taxable year ended September 30, 1987, only 2 percent of C's adjusted taxable income was attributable to C1. Under paragraph (c)(2) of this section, C's partnership interest in C1 is considered de minimis for purposes of determining whether C is a member of a tiered structure because not more than 5 percent of C's adjusted taxable income during the testing period is attributable to C1. Thus, C is not a member of a tiered structure for its taxable year beginning October 1, 1987.

Example 5. The facts are the same as Example 4, except that in addition to owning C1, C also owns 15 percent of C2, another partnership. For the taxable year ended September 30, 1987, 2 percent of C's adjusted taxable income is attributable to C1 and an additional 4 percent is attributable to C2. Furthermore, for the taxable year ended September 30, 1987, 4 percent of C's gross income is attributable to C1 while 3 percent is attributable to C2. Under paragraph (c)(2) of this section, C1 and C2 must be aggregated for purposes of determining whether C meets either the 5 percent adjusted taxable income test or the 2 percent gross income test. Since C's adjusted taxable income attributable to C1 and C2 is 6 percent (2 percent + 4 percent) and C's gross income attributable to C1 and C2 is 7 percent (4 percent + 3 percent), C does not meet the downstream de minimis rule provided in paragraph (c)(2) of this section. Thus, C is a member of a tiered structure for its taxable year beginning October 1, 1987.

Example 6. The facts are the same as Example 3, except that instead of determining whether C is part of a tiered structure, the issue is whether C1 is part of a tiered structure. In addition, assume that on the date specified in paragraph (d) of this section, the remaining 99 percent of C1 is owned by calendar year individuals and C1 does not own an interest in any deferral entity. Although C in Example 3 was considered to be a part of a tiered structure by virtue of its ownership interest in C1, C1 must be tested separately to determine whether it is part of a tiered structure. Since C's interest in C1 is 5 percent or less, C's interest in C1 is de minimis with respect to C1. See paragraph (c)(3) of this section. Thus, based upon these facts, C1 is not part of a tiered structure.

Example 7. The facts are the same as Example 6, except that the remaining 99 percent of C1 is owned 94 percent by calendar year individuals and 5 percent by C3, another partnership. Thus, deferral entities own 6 percent of C1 (1 percent owned by C and 5 percent owned by C3). Under paragraph (c)(3) of this section, deferral entities own more than a de minimis interest (*i.e.*, 5 percent) of C1, and thus C1 is part of a tiered structure.

Example 8. D, a partnership with a September 30 taxable year, desires to make a section 444 election for its taxable year beginning October 1, 1987. On December 31, 1987, and the date D plans to file its section 444 election, D is 10 percent owned by D1, a personal service corporation with a September 30 taxable year, and 90 percent owned by calendar year individuals. Furthermore, D1 will retain its September 30 taxable year because it previously established a business purpose for such year. Since D is owned in part by D1, a personal service corporation, and the ownership interest is not de minimis under paragraph (c)(3) of this section, D is considered a member of a tiered structure for its taxable year beginning October 1, 1987. Furthermore, although D and D1 have the same taxable year,

D does not qualify for the same taxable year exception provided in paragraph (e) of this section because D1 is a personal service corporation rather than a partnership or S corporation. Thus, pursuant to paragraph (a) of this section, D may not make a section 444 election for its taxable year beginning October 1, 1987.

Example 9. The facts are the same as Example 8, except that D1 is a partnership rather than a personal service corporation. Based upon these facts, D qualifies for the same taxable year exception provided in paragraph (e) of this section. Thus, D may make a section 444 election for its taxable year beginning October 1, 1987.

Example 10. The facts are the same as Example 9, except that D1 has not established a business purpose for a September 30 taxable year. In addition, D1 does not desire to make a section 444 election and, under section 706(b), D1 will be required to change to a calendar year for its taxable year beginning October 1, 1987. Pursuant to paragraph (e)(3) of this section, D and D1 do not have the same taxable year for purposes of the same taxable year exception provided in paragraph (e) of this section. Thus, D may not make a section 444 election for its taxable year beginning October 1, 1987.

Example 11. The facts are the same as Example 8, except that D1 is a partnership with a March 31 taxable year. Furthermore, for its taxable year beginning April 1, 1987, D1 will change to a September 30 taxable year by making a section 444 election. Pursuant to paragraph (e)(3) of this section, D1 is considered to have a September 30 taxable year for purposes of determining whether D qualifies for the same taxable year exception provided in paragraph (e) of this section. Since both D and D1 will have the same taxable year as of the date specified in paragraph (d) of this section, D may make a section 444 election for its taxable year beginning October 1, 1987.

Example 12. The facts are the same as Example 11, except that instead of the remaining 90 percent of D being owned by calendar year individuals, it is owned 86 percent by individuals and 4 percent by D2, a calendar year partnership. Thus, D, a September 30 partnership, is 10 percent owned by D1, a September 30 partnership, 86 percent owned by calendar year individuals, and 4 percent owned by D2, a calendar year partnership. Under paragraph (e)(5)(ii) of this section, D2's ownership interest in D is considered de minimis for purposes of the same taxable year exception. Since D2's ownership interest in D is considered de minimis, it is disregarded for purposes of determining whether D qualifies for the same taxable year exception provided in paragraph (e) of this section. Thus, since both D and D1 will have the same taxable year as of the date specified in paragraph (d) of this section, D may make a section 444 election for its taxable year beginning October 1, 1987.

Example 13. E, a partnership with a June 30 taxable year, desires to make a section 444 election for its taxable year beginning July 1, 1987. On the date specified in paragraph (d) of this section, E is 100 percent owned by calendar year individuals; E owns 99 percent of the profits and capital of E1, a partnership with a June 30 taxable year; and E1 owns 30 percent of the profits and capital of E2, a partnership with a September 30 taxable year. E owns no other deferral entities. Pursuant to paragraph (b)(1)(i) of this section, E is considered to be a member of a tiered structure. Furthermore, pursuant to paragraph (e) of this section, E does not qualify for the same taxable year exception because E2 does not have the same taxable year as E and E1.

Example 14. The facts are the same as Example 13, except that E owns only 49 percent (rather than 99 percent) of the profits and capital of E1. Pursuant to paragraph (e) of this section, E qualifies for the same taxable year exception because E and E1 have the same taxable year. Pursuant to paragraph (e) of this section, E1's ownership interest in E2 is disregarded since E does not own more than 50 percent of E1's profits and capital.

Example 15. Prior to consideration of the anti-abuse rule provided in paragraph (b)(3) of this section, H, a partnership that commenced operations on October 1, 1987, is eligible to make a section 444 election for its taxable year beginning October 1, 1987. Although H may obtain a significant deferral of income substantially all of which is not eliminated by a required payment under section 7519 (since there will be no required payment for H's first taxable year), the anti-abuse rule of paragraph (b)(3) will not apply unless the principal purpose of organizing H was the attainment of a significant deferral of income that would result from making a section 444 election.

Example 16. F, a partnership with a January 31 taxable year, desires to make a section 444 election to retain its January 31 taxable year for the taxable year beginning February 1, 1987. F is 100 percent owned by calendar year individuals. Prior to the date specified in paragraph (d) of this section, F contributes substantially all of its assets to F1, a partnership, in exchange for a 51 percent interest in F1. The remaining 49 percent of F1 is owned by the calendar year individuals owning 100 percent of F. If F is allowed to make a section 444 election to retain its January 31 taxable year, F1's required taxable year will be January 31 since a majority of F1's partners use a January 31 taxable year (see § 1.706-3T). F's principal purpose for creating F1 and contributing its assets to F1 is to obtain an 11-month deferral on 49 percent of the income previously earned by F and now earned by F1. Pursuant to paragraph (b)(3) of this section, F is not allowed to make a section 444 election for its taxable year beginning February 1, 1987.

Example 17. The facts are the same as in Example 16, except that F does not create F1 and contribute its assets to F1 until immediately after F makes its section 444 election for the taxable year beginning February 1, 1987. Thus, F is allowed to make a section 444 election for its taxable year beginning February 1, 1987. However, pursuant to paragraph (b)(3) of this section, F will have its section 444 election terminated for subsequent years unless the tax deferral inherent in the structure is eliminated (*e.g.,* F1 is liquidated or the individual owners of F contribute their interests in F1 to F) prior to the date specified in paragraph (d) of this section for subsequent taxable years beginning on or after February 1, 1988.

Example 18. The facts are the same as in Example 16, except that F1 is 99 percent owned by F and none of the individual owners of F own any portion of F1. Furthermore, F obtained no tax benefit from creating and contributing assets to F1. Given these facts paragraph (b)(3) of this section does not apply and thus, F may make a section 444 election for its taxable year beginning February 1, 1987.

Example 19. G, a partnership with an October 31 taxable year, desires to retain its October 31 taxable year for its taxable year beginning November 1, 1987. However, as of December 31, 1987, G owns a 30 percent interest in G1, a calendar year partnership. G owns no other deferral entity, and G is 100 percent owned by calendar year individuals. Furthermore, G's interest in G1 does not meet the de minimis rule provided in paragraph (c)(3) of this section. Thus, in order to avoid being a tiered structure, G sells its interest in G1 to an unrelated third party prior to the date G timely makes it section 444 election for its taxable year beginning November 1, 1987. Although the sale of G1 allows G to qualify to make a section 444 election, and therefore to obtain a significant tax benefit, such benefit is not unintended. Thus, paragraph (b)(3) of this section does not apply, and G may make a section 444 election for its taxable year beginning November 1, 1987.

(g) ***Effective date.*** This section is effective for taxable years beginning after December 31, 1986.

[T.D. 8205, 53 FR 19698, May 27, 1988, as amended by T.D. 8996, 67 FR 35012, May 17, 2002]

§ 1.444-3T Manner and time of making section 444 election (temporary).

(a) ***In general.*** A section 444 election shall be made in the manner and at the time provided in this section.

(b) ***Manner and time of making election*** —

(1) ***General rule.*** A section 444 election shall be made by filing a properly prepared Form 8716, "Election to Have a Tax Year Other Than a Required Tax Year," with the Service Center indicated by the instructions to Form 8716. Except as provided in paragraphs (b) (2) and (4) of this section, Form 8716 must be filed by the earlier of—

(i) The 15th day of the fifth month following the month that includes the first day of the taxable year for which the election will first be effective, or

(ii) The due date (without regard to extensions) of the income tax return resulting from the section 444 election.

In addition, a copy of Form 8716 must be attached to Form 1065 or Form 1120 series form, whichever is applicable, for the first taxable year for which the section 444 election is made. Form 8716 shall be signed by any person who is authorized to sign Form 1065 or Form 1120 series form, whichever is applicable. (See sections 6062 and 6063, relating to the signing of returns.) The provisions of this paragraph (b)(1) may be illustrated by the following examples.

Example 1. A, a partnership that began operations on September 10, 1988, is qualified to make a section 444 election to use a September 30 taxable year for its taxable year beginning September 10, 1988. Pursuant to paragraph (b)(1) of this section, A must file Form 8716 by the earlier of the 15th day of the fifth month following the month that includes the first day of the taxable year for which the election will first be effective (*i.e.,* February 15, 1989) or the due date (without regard to extensions) of the partnership's tax return for the period September 10, 1988 to September 30, 1988 (*i.e.,* January 15, 1989). Thus, A must file Form 8716 by January 15, 1989.

Example 2. The facts are the same as in Example 1, except that A began operations on October 20, 1988. Based upon these facts, A must file Form 8716 by March 15, 1989, the 15th day of the fifth month following the month that includes the first day of the taxable year for which the election will first be effective.

Example 3. B is a corporation that first becomes a personal service corporation for its taxable year beginning September 1, 1988. B qualifies to make a section 444 election to use a September 30 taxable year for its taxable year beginning September 1, 1988. Pursuant to this paragraph (b)(1), B must file Form 8716 by December 15, 1988, the due date of the income tax return for the short period September 1 to September 30, 1988.

(2) ***Special extension of time for making an election.*** If, pursuant to paragraph (b)(1) of this section, the due date for filing Form 8716 is prior to July 26, 1988, such date is extended to July 26, 1988. The provisions of this paragraph (b)(2) may be illustrated by the following examples.

Example 1. B, a partnership that historically used a June 30 taxable year, is qualified to make a section 444 election to retain a June 30 taxable year for its taxable year beginning July 1, 1987. Absent paragraph (b)(2) of this section, B would be required to file Form 8716 by December 15, 1987. However, pursuant to paragraph (b)(2) of this section, B's due date for filing Form 8716 is extended to July 26, 1988.

Example 2. C, a partnership that began operations on January 20, 1988, is qualified to make a section 444 election to use a year ending September 30 for its taxable year beginning January 20, 1988. Absent paragraph (b)(2) of this section, C is required to file Form 8716 by June 15, 1988 (the 15th day of the fifth month following the month that includes the first day of the taxable year for which the election will first be effective). However, pursuant to paragraph (b)(2) of this section, the due date for filing Form 8716 is July 26, 1988.

(3) ***Corporation electing to be an S corporation*** —

(i) ***In general.*** A corporation electing to be an S corporation is subject to the same time and manner rules for filing Form 8716 as any other taxpayer making a section 444 election. Thus, a corporation electing to be an S corporation that desires to make a section 444 election is not required to file Form 8716 with its Form 2553, "Election by a Small Business Corporation." However, a corporation electing to be an S corporation after September 26, 1988, is required to state on Form 2553 its intention to—

(A) Make a section 444 election, if qualified, or

(B) Make a "back-up section 444 election" as described in paragraph (b)(4) of this section.

If a corporation electing to be an S corporation fails to state either of the above intentions, the District Director may, at his discretion, disregard any section 444 election for such taxpayer.

(ii) ***Examples.*** The provisions of this paragraph (b)(3) may be illustrated by the following examples.

Example 1. D is a corporation that commences operations on October 1, 1988, and elects to be an S corporation for its taxable year beginning October 1, 1988. All of D's shareholders use the calendar year as their taxable year. D desires to adopt a September 30 taxable year. D does not believe it has a business purpose for a September 30 taxable year and thus it must make a section 444 election to use such year. Based on these facts, D must, pursuant to the instructions to Form 2553, state on Form 2553 that, if qualified, it will make a section 444 election to adopt a year ending September 30 for its taxable year beginning October 1, 1988. If D is qualified (*i.e.,* D is not a member of a tiered structure on December 31, 1988) to make a section 444 election for its taxable year beginning October 1, 1988, D must file Form 8716 by March 15, 1989. If D ultimately is not qualified to make a section 444 election for its taxable year beginning October 1, 1988, D's election to be an S corporation will not be effective unless, pursuant to the instructions to Form 2553, D made a back-up calendar year election (*i.e.,* an election to adopt the calendar year in the event D ultimately is not qualified to make a section 444 election for such year).

Example 2. The facts are the same as in Example 1, except that D believes it can establish, to the satisfaction of the Commissioner, a business purpose for adopting a September 30 taxable year. However, D desires to make a "back-up section 444 election" (see paragraph (b)(4) of this section) in the event that the Commissioner does not grant permission to adopt a September 30 taxable year based upon business purpose. Based on these facts, D must, pursuant to the instructions to Form 2553, state on Form 2553 its intention, if qualified, to make a back-up section 444 election to adopt a September 30 taxable year. If, by March 15, 1989, D has not received permission to adopt a September 30 taxable year and D is qualified to make a section 444 election, D must make a back-up election in accordance with paragraph (b)(4) of this section.

(4) ***Back-up section 444 election*** —

(i) ***General rule.*** A taxpayer that has requested (or is planning to request) permission to use a particular taxable year based upon business purpose, may, if otherwise qualified, file a section 444 election (referred to as a "back-up section 444 election"). If the Commissioner subsequently denies the business purpose request, the taxpayer will, if otherwise qualified, be required to activate the back-up section 444 election. See examples (1) and (2) in paragraph (b)(4)(iv) of this section.

(ii) ***Procedures for making a back-up section 444 election.*** In addition to following the general rules provided in this section, a taxpayer making a back-up section 444 election should, in order to allow the Service to process the affected returns in an efficient manner, type or legibly print the words "BACK-UP ELECTION" at the top of Form 8716, "Election to Have a Tax Year Other Than a Required Tax Year." However, if such Form 8716 is filed on or after the date a Form 1128, Application for Change in Accounting Period, is filed with respect to a period that begins on the same date, the words "FORM 1128 BACK-UP ELECTION" should be typed or legibly printed at the top of Form 8716.

(iii) ***Procedures for activating a back-up section 444 election*** —

(A) ***Partnerships and S corporations*** —(*1*) *In general.* A back-up section 444 election made by a partnership or S corporation is activated by filing the return required in § 1.7519-2T (a)(2)(i) and making the payment required in § 1.7519-1T. The due date for filing such return and payment will be the later of—

(*i*) The due dates provided in § 1.7519-2T, or

(*ii*) 60 days from the date the Commissioner denies the business purpose request.

However, interest will be assessed (at the rate provided in section 6621 (a)(2)) on any required payment made after the due date (without regard to any extension for a back-up election) provided in § 1.7519-2T (a)(4)(i) or (a)(4)(ii), whichever is applicable, for such payment. Interest will be calculated from such due date to the date such amount is actually paid. Interest assessed under this paragraph will be separate from any required payments. Thus, interest will not be subject to refund under § 1.7519-2T.

(*2*) *Special rule if Form 720 used to satisfy return requirement.* If, pursuant to § 1.7519-2T (a)(3), a partnership or S corporation must use Form 720, "Quarterly Federal Excise Tax Return," to satisfy the return requirement of § 1.7519-2T (a)(2), then in addition to following the general rules provided in § 1.7519-2T, the partnership or S corporation must type or legibly print the words "ACTIVATING BACK-UP ELECTION" on the top of Form 720. A partnership or S corporation that would otherwise file a Form 720 on or before the date specified in paragraph (b)(4)(iii)(A)(*1*) of this section may satisfy the return requirement by including the necessary information on such Form 720. Alternatively, such partnership or S corporation may file an additional Form 720 (*i.e.,* a Form 720 separate from the Form 720 it would otherwise file). Thus, for example, if the due date for activating an S corporation's back-up election is November 15, 1988, and the S corporation must file a Form 720 by October 31, 1988, to report manufacturers excise tax for the third quarter of 1988, the S corporation may use that Form 720 to activate its back-up election. Alternatively, the S corporation may file its regular Form 720 that is due October 31, 1988, and file an additional Form 720 by November 15, 1988, activating its back-up election.

(B) ***Personal service corporations.*** A back-up section 444 election made by a personal service corporation is activated by filing Form 8716 with the personal service corporation's original or amended income tax return for the taxable year in which the election is first effective, and typing or legibly printing the words—"ACTIVATING BACK-UP ELECTION" on the top of such income tax return.

(iv) ***Examples.*** The provisions of this paragraph (b)(4) may be illustrated by the following examples. Also see Example 2 in paragraph (b)(3) of this section.

Example 1. E, a partnership that historically used a June 30 taxable year, requested (pursuant to section 6 of Rev. Proc. 87-32, 1987-28 I.R.B. 14) permission from the Commissioner to retain a June 30 taxable year for its taxable year beginning July 1, 1987. Furthermore, E is qualified to make a section 444 election to retain a June 30 taxable year for its taxable year beginning July 1, 1987. However, as of the date specified in paragraph (b)(2) of this section, the Commissioner has not determined whether E has a valid business purpose for retaining its June 30 taxable year. Based on these facts, E may, by the date specified in paragraph (b)(2) of this section, make a back-up section 444 election to retain its June 30 taxable year.

Example 2. The facts are the same as in Example 1. In addition, on August 12, 1988, the Internal Revenue Service notifies E that its business purpose request is denied. E asks for reconsideration of the Service's decision, and the Service sustains the original denial on September 30, 1988. Based on these facts, E must activate its back-up section 444 election within 60 days after September 30, 1988.

Example 3. The facts are the same as in Example 1, except that E desires to make a section 444 election to use a year ending September 30 for its taxable year beginning July 1, 1987. Although E qualifies to make a section 444 election to retain its June 30 taxable year, E may make a back-up section 444 election for a September 30 taxable year.

(c) ***Administrative relief*** —

(1) ***Extension of time to file income tax returns*** —

(i) ***Automatic extension.*** If a partnership, S corporation, or personal service corporation makes a section 444 election (or does not make a section 444 election, either because it is ineligible or because it decides not to make the election, and therefore changes to its required taxable year) for its first taxable year beginning after December 31, 1986, the due date for filing its income tax return for such year shall be the later of—

(A) The due date established under—

(*1*) Section 6072, in the case of Form 1065,

(*2*) § 1.6037-1 (b), in the case of Form 1120S,

(*3*) Section 6072 (b), in the case of other Form 1120 series form; or

(B) August 15, 1988.

The words "SECTION 444 RETURN" should, in order to allow the Service to process the affected returns in an efficient manner, be typed or legibly printed at the top of the Form 1065 or Form 1120 series form, whichever is applicable, filed under this paragraph (c)(1)(i).

(ii) ***Additional extensions.*** If the due date of the income tax return for the first taxable year beginning after December 31, 1986, extended as provided in paragraph (c)(1)(i)(B) of this section, occurs before the date that is 6 months after the date specified in paragraph (c)(1)(i)(A) of this section, the partnership, S corporation, or personal service corporation may request an additional extension or extensions of time (up to 6 months after the date specified in paragraph (c)(1)(i)(A) of this section) to file its income tax return for such first taxable year. The request must be made by the later of the date specified in paragraph (c)(1)(i)(A) or (c)(1)(i)(B) of this section and must be made on Form 7004, "Application for Automatic Extension of Time To File Corporation Income Tax Return", or Form 2758, "Application for Extension of Time to File U.S. Partnership, Fiduciary, and Certain Other Returns," whichever is applicable, in accordance with the form and its instructions. In addition, the following words should be typed or legibly printed at the top of the form—"SECTION 444 REQUEST FOR ADDITIONAL EXTENSION."

(iii) ***Examples.*** The provisions of paragraph (c)(1) of this section may be illustrated by the following examples.

Example 1. G, a partnership that historically used a January 31 taxable year, makes a section 444 election to retain such year for its taxable year beginning February 1, 1987. Absent paragraph (c)(1)(i) of this section, G's Form 1065 for the taxable year ending January 31, 1988, is due on or before May 15, 1988. However, if G types or legibly prints "SECTION 444 RETURN" at the top of Form 1065 for such year, paragraph (c)(1)(i) of this section automatically extends the due date of such return to August 15, 1988.

Example 2. The facts are the same as in Example 1, except that G desires to extend the due date of its income tax return for the year ending January 31, 1988, to a date beyond August 15, 1988. Pursuant to paragraph (c)(1)(ii) of this section, G may extend such return to November 15, 1988 (*i.e.,* the date that is up to 6 months after May 15, 1988, the normal due date of the return). However, in order to obtain this additional extension, G must file Form 2758 pursuant to paragraph (c)(1)(i) of this section on or before August 15, 1988.

Example 3. H, a partnership that historically used a May 31 taxable year, makes a section 444 election to use a year ending September 30 for its taxable year beginning on June 1, 1987. Absent paragraph (c)(1)(i) of this section, H's Form 1065 for the taxable year beginning June 1, 1987, and ending September 30, 1987, is due on or before January 15, 1988. However, if H types or legibly prints "SECTION 444 RETURN" at the top of Form 1065 for such year, paragraph (c)(1)(i) of this section automatically extends the due date of such return to August 15, 1988.

Example 4. The facts are the same as in Example 3, except H desires to further extend (*i.e.,* extend beyond August 15, 1988) the due date of its income tax return for its taxable year beginning June 1, 1987, and ending September 30, 1987. Since August 15, 1988, is 6 months or more after the due date (without extensions) of such return, paragraph (c)(1)(ii) of this section prevents H from further extending the time for filing such return.

Example 5. I, a partnership that historically used a June 30 taxable year, considered making a section 44 election to retain such taxable year, but eventually decided to change to a December 31, taxable year (I's required taxable year). Absent paragraph (c)(1)(i) of this section, I's Form 1065 for the taxable year beginning July 1, 1987, and ending December 31, 1987, is due on or before April 15, 1988. Pursuant to paragraph (c)(1)(i) of this section, if I types or legibly prints "SECTION 444 RETURN" at the top of Form 1065 for such year,

paragraph (c)(1)(i) of this section automatically extends the due date of such return to August 15, 1988. In addition, I may further extend such return pursuant to paragraph (c)(1)(ii) of this section.

(2) ***No penalty for certain late payments*** —

(i) ***In general.*** In the case of a personal service corporation or S corporation described in paragraph (c)(1)(i) of this section, no penalty under section 6651 (a)(2) will be imposed for failure to pay income tax (if any) for the first taxable year beginning after December 31, 1986, but only for the period beginning with the last date for payment and ending with the later of the date specified in paragraph (c)(1)(i) or paragraph (c)(1)(ii) of this section.

(ii) ***Example.*** The provisions of paragraph (c)(2)(i) of this section may be illustrated by the following example.

Example. J, a personal service corporation that historically used a January 31 taxable year, makes a section 444 election to retain such year for its taxable year beginning February 1, 1987. The last date (without extension) for payment of J's income tax (if any) for its taxable year beginning February 1, 1987, is April 15, 1988. However, under paragraph (c)(2)(i) of this section, no penalty under section 6651(a)(2) will be imposed on any underpayment of income tax for the period beginning April 15, 1988 and ending August 15, 1988.

(d) ***Effective date.*** This section is effective for taxable years beginning after December 31, 1986.

[T.D. 8205, 53 FR 19703, May 27, 1988]

§ 1.444-4 Tiered structure.

(a) ***Electing small business trusts.*** For purposes of § 1.444-2T, solely with respect to an S corporation shareholder, the term *deferral entity* does not include a trust that is treated as an electing small business trust under section 1361(e). An S corporation with an electing small business trust as a shareholder may make an election under section 444. This paragraph is applicable to taxable years beginning on and after December 29, 2000; however, taxpayers may voluntarily apply it to taxable years of S corporations beginning after December 31, 1996.

(b) ***Certain tax-exempt trusts.*** For purposes of § 1.444-2T, solely with respect to an S corporation shareholder, the term *deferral entity* does not include a trust that is described in section 401(a) or 501(c)(3), and is exempt from taxation under section 501(a). An S corporation with a trust as a shareholder that is described in section 401(a) or section 501(c)(3), and is exempt from taxation under section 501(a) may make an election under section 444. This paragraph is applicable to taxable years beginning on and after December 29, 2000; however taxpayers may voluntarily apply it to taxable years of S corporations beginning after December 31, 1997.

(c) ***Certain terminations disregarded*** —

(1) ***In general.*** An S corporation that is described in this paragraph (c)(1) may request that a termination of its election under section 444 be disregarded, and that the S corporation be permitted to resume use of the year it previously elected under section 444, by following the procedures of paragraph (c)(2) of this section. An S corporation is described in this paragraph if the S corporation is otherwise qualified to make a section 444 election, and its previous election was terminated under § 1.444-2T(a) solely because—

(i) In the case of a taxable year beginning after December 31, 1996, a trust that is treated as an electing small business trust became a shareholder of such S corporation; or

(ii) In the case of a taxable year beginning after December 31, 1997, a trust that is described in section 401(a) or 501(c)(3), and is exempt from taxation under section 501(a) became a shareholder of such S corporation.

(2) *Procedure* —

(i) ***In general.*** An S corporation described in paragraph (c)(1) of this section that wishes to make the request described in paragraph (c)(1) of this section must do so by filing Form 8716, "Election To Have a Tax Year Other Than a Required Tax Year," and typing or printing legibly at the top of such form—"CONTINUATION OF SECTION 444 ELECTION UNDER § 1.444-4." In order to assist the Internal Revenue Service in updating the S corporation's account, on Line 5 the Box "Changing to" should be checked. Additionally, the election month indicated must be the last month of the S corporation's previously elected section 444 election year, and the effective year indicated must end in 2002.

(ii) ***Time and place for filing Form 8716.*** Such form must be filed on or before October 15, 2002, with the service center where the S corporation's returns of tax (Forms 1120S) are filed. In addition, a copy of the Form 8716 should be attached to the S corporation's short period Federal income tax return for the first election year beginning on or after January 1, 2002.

(3) *Effect of request* —

(i) ***Taxable years beginning on or after January 1, 2002.*** An S corporation described in paragraph (c)(1) of this section that requests, in accordance with this paragraph, that a termination of its election under section 444 be disregarded will be permitted to resume use of the year it previously elected under section 444, commencing with its first taxable year beginning on or after January 1, 2002. Such S corporation will be required to file a return under § 1.7519-2T for each taxable year beginning on or after January 1, 2002. No payment under section 7519 will be due with respect to the first taxable year beginning on or after January 1, 2002. However, a required payment will be due on or before May 15, 2003, with respect to such S corporation's second continued section 444 election year that begins in calendar year 2002.

(ii) ***Taxable years beginning prior to January 1, 2002.*** An S corporation described in paragraph (c)(1) of this section that requests, in accordance with this paragraph, that a termination of its election under section 444 be disregarded will not be required to amend any prior Federal income tax returns, make any required payments under section 7519, or file any returns under § 1.7519-2T, with respect to taxable years beginning on or after the date the termination of its section 444 election was effective and prior to January 1, 2002.

(iii) ***Section 7519: required payments and returns.*** The Internal Revenue Service waives any requirement for an S corporation described in paragraph (c)(1) of this section to file the federal tax returns and make any required payments under section 7519 for years prior to the taxable year of continuation as described in paragraph (c)(3)(i) of this section, if for such years the S corporation filed its federal income tax returns on the basis of its required taxable year.

[T.D. 8994, 67 FR 34394, May 14, 2002]

Methods of Accounting

METHODS OF ACCOUNTING IN GENERAL

§ 1.446-1 General rule for methods of accounting.

(a) *General rule.*

(1) Section 446(a) provides that taxable income shall be computed under the method of accounting on the basis of which a taxpayer regularly computes his income in keeping his books. The term "method of accounting" includes not only the overall method of accounting of the taxpayer but also the accounting treatment of any item. Examples of such over-all methods are the cash receipts and disbursements method, an accrual method, combinations of such methods, and combinations of the foregoing with various methods provided for the accounting treatment of special items. These methods of accounting for special items include the accounting treatment prescribed for research and experimental expenditures, soil and water conservation expenditures, depreciation, net operating losses, etc. Except for deviations permitted or required by such special accounting treatment, taxable income shall be computed under the method of accounting on the basis of which the taxpayer regularly computes his income in keeping his books. For requirement respecting the adoption or change of accounting method, see section 446(e) and paragraph (e) of this section.

(2) It is recognized that no uniform method of accounting can be prescribed for all taxpayers. Each taxpayer shall adopt such forms and systems as are, in his judgment, best suited to his needs. However, no method of accounting is acceptable unless, in the opinion of the Commissioner, it clearly reflects income. A method of accounting which reflects the consistent application of generally accepted accounting principles in a particular trade or business in accordance with accepted conditions or practices in that trade or business will ordinarily be regarded as clearly reflecting income, provided all items of gross income and expense are treated consistently from year to year.

(3) Items of gross income and expenditures which are elements in the computation of taxable income need not be in the form of cash. It is sufficient that such items can be valued in terms of money. For general rules relating to the taxable year for inclusion of income and for taking deductions, see sections 451 and 461, and the regulations thereunder.

(4) Each taxpayer is required to make a return of his taxable income for each taxable year and must maintain such accounting records as will enable him to file a correct return. See section 6001 and the regulations thereunder. Accounting records include the taxpayer's regular books of account and such other records and data as may be necessary to support the entries on his books of account and on his return, as for example, a reconciliation of any differences between such books and his return. The following are among the essential features that must be considered in maintaining such records:

(i) Except in the case of a taxpayer qualifying as a small business taxpayer for the taxable year under section 471(c), in all cases in which the production, purchase or sale of merchandise of any kind is an income-producing factor, merchandise on hand (including finished goods, work in progress, raw materials, and supplies) at the beginning and end of the year shall be taken into account in computing the taxable income of the year. (For rules relating to computation of inventories, see section 263A, 471, and 472 and the regulations thereunder.)

(ii) Expenditures made during the year shall be properly classified as between capital and expense. For example, expenditures for such items as plant and equipment, which have a useful life extending substantially beyond the taxable year, shall be charged to a capital account and not to an expense account.

(iii) In any case in which there is allowable with respect to an asset a deduction for depreciation, amortization, or depletion, any expenditures (other than ordinary repairs) made to restore the asset or prolong its useful life shall be added to the asset account or charged against the appropriate reserve.

(b) ***Exceptions.***

(1) If the taxpayer does not regularly employ a method of accounting which clearly reflects his income, the computation of taxable income shall be made in a manner which, in the opinion of the Commissioner, does clearly reflect income.

(2) A taxpayer whose sole source of income is wages need not keep formal books in order to have an accounting method. Tax returns, copies thereof, or other records may be sufficient to establish the use of the method of accounting used in the preparation of the taxpayer's income tax returns.

(c) ***Permissible methods*** —

(1) In general. Subject to the provisions of paragraphs (a) and (b) of this section, a taxpayer may compute his taxable income under any of the following methods of accounting:

(i) ***Cash receipts and disbursements method.*** Generally, under the cash receipts and disbursements method in the computation of taxable income, all items which constitute gross income (whether in the form of cash, property, or services) are to be included for the taxable year in which actually or constructively received. Expenditures are to be deducted for the taxable year in which actually made. For rules relating to constructive receipt, see § 1.451-2. For treatment of an expenditure attributable to more than one taxable year, see section 461(a) and paragraph (a)(1) of § 1.461-1.

(ii) ***Accrual method.*** (A) Generally, under an accrual method, income is to be included for the taxable year when all the events have occurred that fix the right to receive the income and the amount of the income can be determined with reasonable accuracy. (See § 1.451-1 for rules relating to the taxable year of inclusion.) Under such a method, a liability is incurred, and generally is taken into account for Federal income tax purposes, in the taxable year in which all the events have occurred that establish the fact of the liability, the amount of the liability can be determined with reasonable accuracy, and economic performance has occurred with respect to the liability. (See paragraph (a)(2)(iii)(A) of § 1.461-1 for examples of liabilities that may not be taken into account until after the taxable year incurred, and see §§ 1.461-4 through 1.461-6 for rules relating to economic performance.) Applicable provisions of the Code, the Income Tax Regulations, and other guidance published by the Secretary prescribe the manner in which a liability that has been incurred is taken into account. For example, section 162 provides that a deductible liability generally is taken into account in the taxable year incurred through a deduction from gross income. As a further example, under section 263 or 263A, a liability that relates to the creation of an asset having a useful life extending substantially beyond the close of the taxable year is taken into account in the taxable year incurred through capitalization (within the meaning of § 1.263A-1(c)(3)) and may later affect the computation of taxable income through depreciation or otherwise over a period including subsequent taxable years, in accordance with applicable Internal Revenue Code sections and related guidance.

(B) The term "liability" includes any item allowable as a deduction, cost, or expense for Federal income tax purposes. In addition to allowable deductions, the term includes any amount otherwise allowable as a capitalized cost, as a cost taken into account in computing cost of goods sold, as a cost allocable to a long-term contract, or as any other cost or expense. Thus, for example, an amount that a taxpayer expends or will expend for capital improvements to property must be incurred before the taxpayer may take the amount into account in computing its basis in the property. The term "liability" is not limited to items for which a legal obligation to pay exists at the time of payment. Thus, for example, amounts prepaid for goods or services and amounts paid without a legal obligation to do so may not be taken into account by an accrual basis taxpayer any earlier than the taxable year in which those amounts are incurred.

(C) No method of accounting is acceptable unless, in the opinion of the Commissioner, it clearly reflects income. The method used by the taxpayer in determining when income is to be accounted for will generally be acceptable if it accords with generally accepted accounting principles, is consistently used by the taxpayer from year to year, and is consistent with the Income Tax Regulations. For example, a taxpayer engaged in a manufacturing business may account for sales of the taxpayer's product when the goods are shipped, when the product is delivered or accepted, or when title to the goods passes to the customers, whether or not billed, depending on the method regularly employed in keeping the taxpayer's books.

(iii) ***Other permissible methods.*** Special methods of accounting are described elsewhere in chapter 1 of the Code and the regulations thereunder. For example, see the following sections and the regulations thereunder: Sections 61 and 162, relating to the crop method of accounting; section 453, relating to the installment method; section 460, relating to the long-term contract methods. In addition, special methods of accounting for particular items of income and expense are provided under other sections of chapter 1. For example, see section 174, relating to research and experimental expenditures, and section 175, relating to soil and water conservation expenditures.

(iv) ***Combinations of the foregoing methods.***

(*a*) In accordance with the following rules, any combination of the foregoing methods of accounting will be permitted in connection with a trade or business if such combination clearly reflects income and is consistently used. Where a combination of methods of accounting includes any special methods, such as those referred to in subdivision (iii) of this subparagraph, the taxpayer must comply with the requirements relating to such special methods. A taxpayer using an accrual method of accounting with respect to purchases and sales may use the cash method in computing all other items of income and expense. However, a taxpayer who uses the cash method of accounting in computing gross income from his trade or business shall use the cash method in computing expenses of such trade or business. Similarly, a taxpayer who uses an accrual method of accounting in computing business expenses shall use an accrual method in computing items affecting gross income from his trade or business.

(*b*) A taxpayer using one method of accounting in computing items of income and deductions of his trade or business may compute other items of income and deductions not connected with his trade or business under a different method of accounting.

(2) ***Special rules.***

(i) In any case in which it is necessary to use an inventory, the accrual method of accounting must be used with regard to purchases and sales unless:

(A) The taxpayer qualifies as a small business taxpayer for the taxable year under section 471(c), or

(B) Otherwise authorized under paragraph (c)(2)(ii) of this section.

(ii) No method of accounting will be regarded as clearly reflecting income unless all items of gross profit and deductions are treated with consistency from year to year. The Commissioner may authorize a taxpayer to adopt or change to a method of accounting permitted by this chapter although the method is not specifically described in the regulations in this part if, in the opinion of the Commissioner, income is clearly reflected by the use of such method. Further, the Commissioner may authorize a taxpayer to continue the use of a method of accounting consistently used by the taxpayer, even though not specifically authorized by the regulations in this part, if, in the opinion of the Commissioner, income is clearly reflected by the use of such method. See section 446(a) and paragraph (a) of this section, which require that taxable income shall be computed under the method of accounting on the basis of which the taxpayer regularly computes his income in keeping his books, and section 446(e) and paragraph (e) of this section, which require the prior approval of the Commissioner in the case of changes in accounting method.

(iii) The timing rules of § 1.1502-13 are a method of accounting for intercompany transactions (as defined in § 1.1502-13(b)(1)(i)), to be applied by each member of a consolidated group in addition to the member's other methods of accounting. *See* § 1.1502-13(a)(3)(i). This paragraph (c)(2)(iii) is applicable to consolidated return years beginning on or after November 7, 2001.

(3) ***Applicability date.*** The first sentence of paragraph (a)(4)(i) of this section and paragraph (c)(2)(i) of this section apply to taxable years beginning on or after January 5, 2021. However, for a taxable year beginning after December 31, 2017, and before January 5, 2021, a taxpayer may apply the rules provided in the first sentence of this paragraph (c)(3), provided that the taxpayer follows all the applicable rules contained in the regulations under section 446 for such taxable year and all subsequent taxable years.

(d) ***Taxpayer engaged in more than one business.***

(1) Where a taxpayer has two or more separate and distinct trades or businesses, a different method of accounting may be used for each trade or business, provided the method used for each trade or business clearly reflects the income of that particular trade or business. For example, a taxpayer may account for the operations of a personal service business on the cash receipts and disbursements method and of a manufacturing business on an accrual method, provided such businesses are separate and distinct and the methods used for each clearly reflect income. The method first used in accounting for business income and deductions in connection with each trade or business, as evidenced in the taxpayer's income tax return in which such income or deductions are first reported, must be consistently followed thereafter.

(2) No trade or business will be considered separate and distinct for purposes of this paragraph unless a complete and separable set of books and records is kept for such trade or business.

(3) If, by reason of maintaining different methods of accounting, there is a creation or shifting of profits or losses between the trades or businesses of the taxpayer (for example, through inventory adjustments, sales, purchases, or expenses) so that income of the taxpayer is not clearly reflected, the trades or businesses of the taxpayer will not be considered to be separate and distinct.

(e) ***Requirement respecting the adoption or change of accounting method.***

(1) A taxpayer filing his first return may adopt any permissible method of accounting in computing taxable income for the taxable year covered by such return. See section 446(c) and paragraph (c) of this section for permissible methods. Moreover, a taxpayer may adopt any permissible method of accounting in connection with each separate and distinct trade or business, the income from which is reported for the first time. See section 446(d) and paragraph (d) of this section. See also section 446(a) and paragraph (a) of this section.

(2)

(i) Except as otherwise expressly provided in chapter 1 of the Code and the regulations thereunder, a taxpayer who changes the method of accounting employed in keeping his books shall, before computing his income upon such new method for purposes of taxation, secure the consent of the Commissioner. Consent must be secured whether or not such method is proper or is permitted under the Internal Revenue Code or the regulations thereunder.

(ii)

(*a*) A change in the method of accounting includes a change in the overall plan of accounting for gross income or deductions or a change in the treatment of any material item used in such overall plan. Although a method of accounting may exist under this definition without the necessity of a pattern of consistent treatment of an item, in most instances a method of accounting is not established for an item without such consistent treatment. A material item is any item that involves the proper time for the inclusion of the item in income or the taking of a deduction. Changes in method of accounting include a change from the cash receipts and disbursement method to an accrual method, or vice versa, a change involving the method or basis used in the valuation of inventories (see sections 471 and 472 and the regulations under sections 471 and 472), a change from the cash or accrual method to a long-term contract method, or vice versa (see § 1.460-4), certain changes in computing depreciation or amortization (see paragraph (e)(2)(ii)(*d*) of this section), a change involving the adoption, use or discontinuance of any other specialized method of computing taxable income, such as the crop method, and a change where the Internal Revenue Code and regulations under the Internal Revenue Code specifically require that the consent of the Commissioner must be obtained before adopting such a change.

(*b*) A change in method of accounting does not include correction of mathematical or posting errors, or errors in the computation of tax liability (such as errors in computation of the foreign tax credit, net operating loss, percentage depletion, or investment credit). Also, a change in method of accounting does not include adjustment of any item of income or deduction that does not involve the proper time for the inclusion of the item of income or the taking of a deduction. For example, corrections of items that are deducted as interest or salary, but that are in fact payments of dividends, and of items that are deducted as business expenses, but that are in fact personal expenses, are not changes in method of accounting. In addition, a change in the method of accounting does not include an adjustment with respect to the addition to a reserve for bad debts. Although such

adjustment may involve the question of the proper time for the taking of a deduction, such items are traditionally corrected by adjustment in the current and future years. For the treatment of the adjustment of the addition to a bad debt reserve (for example, for banks under section 585 of the Internal Revenue Code), see the regulations under section 166 of the Internal Revenue Code. A change in the method of accounting also does not include a change in treatment resulting from a change in underlying facts. For further guidance on changes involving depreciable or amortizable assets, see paragraph (e)(2)(ii)(*d*) of this section and § 1.1016-3(h).

(*c*) A change in an overall plan or system of identifying or valuing items in inventory is a change in method of accounting. Also a change in the treatment of any material item used in the overall plan for identifying or valuing items in inventory is a change in method of accounting.

(*d*) ***Changes involving depreciable or amortizable assets*** —

(*1*) ***Scope.*** This paragraph (e)(2)(ii)(*d*) applies to property subject to section 167, 168, 197, 1400I, 1400L(c), to section 168 prior to its amendment by the Tax Reform Act of 1986 (100 Stat. 2121) (former section 168), or to an additional first year depreciation deduction provision of the Internal Revenue Code (for example, section 168(k), 1400L(b), or 1400N(d)).

(*2*) ***Changes in depreciation or amortization that are a change in method of accounting.*** Except as provided in paragraph (e)(2)(ii)(*d*)(*3*) of this section, a change in the treatment of an asset from nondepreciable or nonamortizable to depreciable or amortizable, or vice versa, is a change in method of accounting. Additionally, a correction to require depreciation or amortization in lieu of a deduction for the cost of depreciable or amortizable assets that had been consistently treated as an expense in the year of purchase, or vice versa, is a change in method of accounting. Further, except as provided in paragraph (e)(2)(ii)(*d*)(*3*) of this section, the following changes in computing depreciation or amortization are a change in method of accounting:

(*i*) A change in the depreciation or amortization method, period of recovery, or convention of a depreciable or amortizable asset.

(*ii*) A change from not claiming to claiming the additional first year depreciation deduction provided by, for example, section 168(k), 1400L(b), or 1400N(d), for, and the resulting change to the amount otherwise allowable as a depreciation deduction for the remaining adjusted depreciable basis (or similar basis) of, depreciable property that qualifies for the additional first year depreciation deduction (for example, qualified property, 50-percent bonus depreciation property, qualified New York Liberty Zone property, or qualified Gulf Opportunity Zone property), provided the taxpayer did not make the election out of the additional first year depreciation deduction (or did not make a deemed election out of the additional first year depreciation deduction; for further guidance, for example, see Rev. Proc. 2002-33 (2002-1 C.B. 963), Rev. Proc. 2003-50 (2003-2 C.B. 119), Notice 2006-77 (2006-40 I.R.B. 590), and § 601.601(d)(2)(ii)(*b*) of this chapter) for the class of property in which the depreciable property that

qualifies for the additional first year depreciation deduction (for example, qualified property, 50-percent bonus depreciation property, qualified New York Liberty Zone property, or qualified Gulf Opportunity Zone property) is included.

(*iii*) A change from claiming the 30-percent additional first year depreciation deduction to claiming the 50-percent additional first year depreciation deduction for depreciable property that qualifies for the 50-percent additional first year depreciation deduction, provided the property is not included in any class of property for which the taxpayer elected the 30-percent, instead of the 50-percent, additional first year depreciation deduction (for example, 50-percent bonus depreciation property or qualified Gulf Opportunity Zone property), or a change from claiming the 50-percent additional first year depreciation deduction to claiming the 30-percent additional first year depreciation deduction for depreciable property that qualifies for the 30-percent additional first year depreciation deduction, including property that is included in a class of property for which the taxpayer elected the 30-percent, instead of the 50-percent, additional first year depreciation deduction (for example, qualified property or qualified New York Liberty Zone property), and the resulting change to the amount otherwise allowable as a depreciation deduction for the property's remaining adjusted depreciable basis (or similar basis). This paragraph (e)(2)(ii)(*d*)(*2*)(*iii*) does not apply if a taxpayer is making a late election or revoking a timely valid election under the applicable additional first year depreciation deduction provision of the Internal Revenue Code (for example, section 168(k), 1400L(b), or 1400N(d)) (see paragraph (e)(2)(ii)(*d*)(*3*)(*iii*) of this section).

(*iv*) A change from claiming to not claiming the additional first year depreciation deduction for an asset that does not qualify for the additional first year depreciation deduction, including an asset that is included in a class of property for which the taxpayer elected not to claim any additional first year depreciation deduction (for example, an asset that is not qualified property, 50-percent bonus depreciation property, qualified New York Liberty Zone property, or qualified Gulf Opportunity Zone property), and the resulting change to the amount otherwise allowable as a depreciation deduction for the property's depreciable basis.

(*v*) A change in salvage value to zero for a depreciable or amortizable asset for which the salvage value is expressly treated as zero by the Internal Revenue Code (for example, section 168(b)(4)), the regulations under the Internal Revenue Code (for example, § 1.197-2(f)(1)(ii)), or other guidance published in the Internal Revenue Bulletin.

(*vi*) A change in the accounting for depreciable or amortizable assets from a single asset account to a multiple asset account (pooling), or vice versa, or from one type of multiple asset account (pooling) to a different type of multiple asset account (pooling).

(*vii*) For depreciable or amortizable assets that are mass assets accounted for in multiple asset accounts or pools, a change in the method of identifying which assets have been disposed. For purposes of this paragraph (e)(2)(ii)(*d*)(*2*)(*vii*), the term *mass assets* means a mass or group of individual items of depreciable

or amortizable assets that are not necessarily homogeneous, each of which is minor in value relative to the total value of the mass or group, numerous in quantity, usually accounted for only on a total dollar or quantity basis, with respect to which separate identification is impracticable, and placed in service in the same taxable year.

(*viii*) Any other change in depreciation or amortization as the Secretary may designate by publication in the FEDERAL REGISTER or in the Internal Revenue Bulletin (see § 601.601(d)(2) of this chapter).

(*3*) ***Changes in depreciation or amortization that are not a change in method of accounting.*** Section 1.446-1(e)(2)(ii)(*b*) applies to determine whether a change in depreciation or amortization is not a change in method of accounting. Further, the following changes in depreciation or amortization are not a change in method of accounting:

(*i*) ***Useful life.*** An adjustment in the useful life of a depreciable or amortizable asset for which depreciation is determined under section 167 (other than under section 168, section 1400I, section 1400L(c), former section 168, or an additional first year depreciation deduction provision of the Internal Revenue Code (for example, section 168(k), 1400L(b), or 1400N(d))) is not a change in method of accounting. This paragraph (e)(2)(ii)(*d*)(*3*)(*i*) does not apply if a taxpayer is changing to or from a useful life (or recovery period or amortization period) that is specifically assigned by the Internal Revenue Code (for example, section 167(f)(1), section 168(c), section 168(g)(2) or (3), section 197), the regulations under the Internal Revenue Code, or other guidance published in the Internal Revenue Bulletin and, therefore, such change is a change in method of accounting (unless paragraph (e)(2)(ii)(*d*)(*3*)(*v*) of this section applies). See paragraph (e)(2)(ii)(*d*)(*5*)(*iv*) of this section for determining the taxable year in which to correct an adjustment in useful life that is not a change in method of accounting.

(*ii*) ***Change in use.*** A change in computing depreciation or amortization allowances in the taxable year in which the use of an asset changes in the hands of the same taxpayer is not a change in method of accounting.

(*iii*) ***Elections.*** Generally, the making of a late depreciation or amortization election or the revocation of a timely valid depreciation or amortization election is not a change in method of accounting, except as otherwise expressly provided by the Internal Revenue Code, the regulations under the Internal Revenue Code, or other guidance published in the Internal Revenue Bulletin. This paragraph (e)(2)(ii)(*d*)(*3*)(*iii*) also applies to making a late election or revoking a timely valid election made under section 13261(g)(2) or (3) of the Revenue Reconciliation Act of 1993 (107 Stat. 312, 540) (relating to amortizable section 197 intangibles). A taxpayer may request consent to make a late election or revoke a timely valid election by submitting a request for a private letter ruling. For making or revoking an election under section 179 of the Internal Revenue Code, see section 179(c) and § 1.179-5.

(*iv*) ***Salvage value.*** Except as provided under paragraph (e)(2)(ii)(*d*)(*2*)(*v*) of this section, a change in salvage value of a depreciable or amortizable asset is not treated as a change in method of accounting.

(*v*) ***Placed-in-service date.*** Except as otherwise expressly provided by the Internal Revenue Code, the regulations under the Internal Revenue Code, or other guidance published in the Internal Revenue Bulletin, any change in the placed-in-service date of a depreciable or amortizable asset is not treated as a change in method of accounting. For example, if a taxpayer changes the placed-in-service date of a depreciable or amortizable asset because the taxpayer incorrectly determined the date on which the asset was placed in service, such a change is a change in the placed-in-service date of the asset and, therefore, is not a change in method of accounting. However, if a taxpayer incorrectly determines that a depreciable or amortizable asset is nondepreciable property and later changes the treatment of the asset to depreciable property, such a change is not a change in the placed-in-service date of the asset and, therefore, is a change in method of accounting under paragraph (e)(2)(ii)(*d*)(*2*) of this section. Further, a change in the convention of a depreciable or amortizable asset is not a change in the placed-in-service date of the asset and, therefore, is a change in method of accounting under paragraph (e)(2)(ii)(*d*)(*2*)(*i*) of this section. See paragraph (e)(2)(ii)(*d*)(*5*)(*v*) of this section for determining the taxable year in which to make a change in the placed-in-service date of a depreciable or amortizable asset that is not a change in method of accounting.

(*vi*) Any other change in depreciation or amortization as the Secretary may designate by publication in the FEDERAL REGISTER or in the Internal Revenue Bulletin (see § 601.601(d)(2) of this chapter).

(*4*) ***Item being changed.*** For purposes of a change in depreciation or amortization to which this paragraph (e)(2)(ii)(*d*) applies, the item being changed generally is the depreciation treatment of each individual depreciable or amortizable asset. However, the item is the depreciation treatment of each vintage account with respect to a depreciable asset for which depreciation is determined under § 1.167(a)-11 (class life asset depreciation range (CLADR) property). Similarly, the item is the depreciable treatment of each general asset account with respect to a depreciable asset for which general asset account treatment has been elected under section 168(i)(4) or the item is the depreciation treatment of each mass asset account with respect to a depreciable asset for which mass asset account treatment has been elected under former section 168(d)(2)(A). Further, a change in computing depreciation or amortization under section 167 (other than under section 168, section 1400I, section 1400L(c), former section 168, or an additional first year depreciation deduction provision of the Internal Revenue Code (for example, section 168(k), 1400L(b), or 1400N(d))) is permitted only with respect to all assets in a particular account (as defined in § 1.167(a)-7) or vintage account.

(*5*) ***Special rules.*** For purposes of a change in depreciation or amortization to which this paragraph (e)(2)(ii)(*d*) applies—

(*i*) ***Declining balance method to the straight line method for MACRS property.*** For tangible, depreciable property subject to section 168 (MACRS property) that is depreciated using the 200-percent or 150-percent declining balance method of depreciation under section 168(b)(1) or (2), a taxpayer may change without the consent of the Commissioner from the declining balance method of depreciation to the straight line method of depreciation in the first taxable year in which the use of the straight line method with respect to the adjusted depreciable basis of the MACRS property as of the beginning of that year will yield a depreciation allowance that is greater than the depreciation allowance yielded by the use of the declining balance method. When the change is made, the adjusted depreciable basis of the MACRS property as of the beginning of the taxable year is recovered through annual depreciation allowances over the remaining recovery period (for further guidance, see section 6.06 of Rev. Proc. 87-57 (1987-2 C.B. 687) and § 601.601(d)(2)(ii)(*b*) of this chapter).

(*ii*) ***Depreciation method changes for section 167 property.*** For a depreciable or amortizable asset for which depreciation is determined under section 167 (other than under section 168, section 1400I, section 1400L(c), former section 168, or an additional first year depreciation deduction provision of the Internal Revenue Code (for example, section 168(k), 1400L(b), or 1400N(d))), see § 1.167(e)-1(b), (c), and (d) for the changes in depreciation method that are permitted to be made without the consent of the Commissioner. For CLADR property, see § 1.167(a)-11(c)(1)(iii) for the changes in depreciation method for CLADR property that are permitted to be made without the consent of the Commissioner. Further, see § 1.167(a)-11(b)(4)(iii)(*c*) for how to correct an incorrect classification or characterization of CLADR property.

(*iii*) ***Section 481 adjustment.*** Except as otherwise expressly provided by the Internal Revenue Code, the regulations under the Internal Revenue Code, or other guidance published in the Internal Revenue Bulletin, no section 481 adjustment is required or permitted for a change from one permissible method of computing depreciation or amortization to another permissible method of computing depreciation or amortization for an asset because this change is implemented by either a cut-off method (for further guidance, for example, see section 2.06 of Rev. Proc. 97-27 (1997-1 C.B. 680), section 2.06 of Rev. Proc. 2002-9 (2002-1 C.B. 327), and § 601.601(d)(2)(ii)(*b*) of this chapter) or a modified cut-off method (under which the adjusted depreciable basis of the asset as of the beginning of the year of change is recovered using the new permissible method of accounting), as appropriate. However, a change from an impermissible method of computing depreciation or amortization to a permissible method of computing depreciation or amortization for an asset results in a section 481 adjustment. Similarly, a change in the treatment of an asset from nondepreciable or nonamortizable to depreciable or amortizable (or vice versa) or a change in the treatment of an asset from expensing to depreciating (or vice versa) results in a section 481 adjustment.

(*iv*) ***Change in useful life.*** This paragraph (e)(2)(ii)(*d*)(*5*)(*iv*) applies to an adjustment in the useful life of a depreciable or amortizable asset for which depreciation is determined under section 167 (other than under section 168, section 1400I,

section 1400L(c), former section 168, or an additional first year depreciation deduction provision of the Internal Revenue Code (for example, section 168(k), 1400L(b), or 1400N(d))) and that is not a change in method of accounting under paragraph (e)(2)(ii)(*d*) of this section. For this adjustment in useful life, no section 481 adjustment is required or permitted. The adjustment in useful life, whether initiated by the Internal Revenue Service (IRS) or a taxpayer, is corrected by adjustments in the taxable year in which the conditions known to exist at the end of that taxable year changed thereby resulting in a redetermination of the useful life under § 1.167(a)-1(b) (or if the period of limitation for assessment under section 6501(a) has expired for that taxable year, in the first succeeding taxable year open under the period of limitation for assessment), and in subsequent taxable years. In other situations (for example, the useful life is incorrectly determined in the placed-in-service year), the adjustment in the useful life, whether initiated by the IRS or a taxpayer, may be corrected by adjustments in the earliest taxable year open under the period of limitation for assessment under section 6501(a) or the earliest taxable year under examination by the IRS but in no event earlier than the placed-in-service year of the asset, and in subsequent taxable years. However, if a taxpayer initiates the correction in useful life, in lieu of filing amended Federal tax returns (for example, because the conditions known to exist at the end of a prior taxable year changed thereby resulting in a redetermination of the useful life under § 1.167(a)-1(b)), the taxpayer may correct the adjustment in useful life by adjustments in the current and subsequent taxable years.

(*v*) ***Change in placed-in-service date.*** This paragraph (e)(2)(ii)(*d*)(*5*)(*v*) applies to a change in the placed-in-service date of a depreciable or amortizable asset that is not a change in method of accounting under paragraph (e)(2)(ii)(*d*) of this section. For this change in placed-in-service date, no section 481 adjustment is required or permitted. The change in placed-in-service date, whether initiated by the IRS or a taxpayer, may be corrected by adjustments in the earliest taxable year open under the period of limitation for assessment under section 6501(a) or the earliest taxable year under examination by the IRS but in no event earlier than the placed-in-service year of the asset, and in subsequent taxable years. However, if a taxpayer initiates the change in placed-in-service date, in lieu of filing amended Federal tax returns, the taxpayer may correct the placed-in-service date by adjustments in the current and subsequent taxable years.

(iii) ***Examples.*** The rules of this paragraph (e) are illustrated by the following examples:

Example 1. Although the sale of merchandise is an income producing factor, and therefore inventories are required, a taxpayer in the retail jewelry business reports his income on the cash receipts and disbursements method of accounting. A change from the cash receipts and disbursements method of accounting to the accrual method of accounting is a change in the overall plan of accounting and thus is a change in method of accounting.

Example 2. A taxpayer in the wholesale dry goods business computes its income and expenses on the accrual method of accounting and files its Federal income tax returns on such basis except for real estate taxes which have been reported on the cash receipts and disbursements method of accounting. A change in the treatment of real estate taxes from

the cash receipts and disbursements method to the accrual method is a change in method of accounting because such change is a change in the treatment of a material item within his overall accounting practice.

Example 3. A taxpayer in the wholesale dry goods business computes its income and expenses on the accrual method of accounting and files its Federal income tax returns on such basis. Vacation pay has been deducted in the year in which paid because the taxpayer did not have a completely vested vacation pay plan, and, therefore, the liability for payment did not accrue until that year. Subsequently, the taxpayer adopts a completely vested vacation pay plan that changes its year for accruing the deduction from the year in which payment is made to the year in which the liability to make the payment now arises. The change for the year of deduction of the vacation pay plan is not a change in method of accounting but results, instead, because the underlying facts (that is, the type of vacation pay plan) have changed.

Example 4. From 1968 through 1970, a taxpayer has fairly allocated indirect overhead costs to the value of inventories on a fixed percentage of direct costs. If the ratio of indirect overhead costs to direct costs increases in 1971, a change in the underlying facts has occurred. Accordingly, an increase in the percentage in 1971 to fairly reflect the increase in the relative level of indirect overhead costs is not a change in method of accounting but is a change in treatment resulting from a change in the underlying facts.

Example 5. A taxpayer values inventories at cost. A change in the basis for valuation of inventories from cost to the lower of cost or market is a change in an overall practice of valuing items in inventory. The change, therefore, is a change in method of accounting for inventories.

Example 6. A taxpayer in the manufacturing business has for many taxable years valued its inventories at cost. However, cost has been improperly computed since no overhead costs have been included in valuing the inventories at cost. The failure to allocate an appropriate portion of overhead to the value of inventories is contrary to the requirement of the Internal Revenue Code and the regulations under the Internal Revenue Code. A change requiring appropriate allocation of overhead is a change in method of accounting because it involves a change in the treatment of a material item used in the overall practice of identifying or valuing items in inventory.

Example 7. A taxpayer has for many taxable years valued certain inventories by a method which provides for deducting 20 percent of the cost of the inventory items in determining the final inventory valuation. The 20 percent adjustment is taken as a "reserve for price changes." Although this method is not a proper method of valuing inventories under the Internal Revenue Code or the regulations under the Internal Revenue Code, it involves the treatment of a material item used in the overall practice of valuing inventory. A change in such practice or procedure is a change of method of accounting for inventories.

Example 8. A taxpayer has always used a base stock system of accounting for inventories. Under this system a constant price is applied to an assumed constant normal quantity of goods in stock. The base stock system is an overall plan of accounting for inventories which is not recognized as a proper method of accounting for inventories under the regulations. A change in this practice is, nevertheless, a change of method of accounting for inventories.

Example 9. In 2003, A1, a calendar year taxpayer engaged in the trade or business of manufacturing knitted goods, purchased and placed in service a building and its components at a total cost of $10,000,000 for use in its manufacturing operations. A1 classified the $10,000,000 as nonresidential real property under section 168(e). A1 elected not to deduct the additional first year depreciation provided by section 168(k) on its 2003 Federal tax return. As a result, on its 2003, 2004, and 2005 Federal tax returns, A1 depreciated the $10,000,000 under the general depreciation system of section 168(a), using the straight line method of depreciation, a 39-year recovery period, and the mid-month convention. In 2006, A1 completes a cost segregation study on the building and its components and identifies items that cost a total of $1,500,000 as section 1245 property. As a result, the $1,500,000 should have been classified in 2003 as 5-year property under section 168(e) and depreciated on A1's 2003, 2004, and 2005 Federal tax returns under the general depreciation system, using the 200-percent declining balance method of depreciation, a 5-year recovery period, and the half-year convention. Pursuant to paragraph (e)(2)(ii)(*d*)(*2*)(*i*) of this section, A1's change to this depreciation method, recovery period, and convention is a change in method of accounting. This method change results in a section 481 adjustment. The useful life exception under paragraph (e)(2)(ii)(*d*)(*3*)(*i*) of this section does not apply because the assets are depreciated under section 168.

Example 10. In 2003, B, a calendar year taxpayer, purchased and placed in service new equipment at a total cost of $1,000,000 for use in its plant located outside the United States. The equipment is 15-year property under section 168(e) with a class life of 20 years. The equipment is required to be depreciated under the alternative depreciation system of section 168(g). However, B incorrectly depreciated the equipment under the general depreciation system of section 168(a), using the 150-percent declining balance method, a 15-year recovery period, and the half-year convention. In 2010, the IRS examines B's 2007 Federal income tax return and changes the depreciation of the equipment to the alternative depreciation system, using the straight line method of depreciation, a 20-year recovery period, and the half-year convention. Pursuant to paragraph (e)(2)(ii)(*d*)(*2*)(*i*) of this section, this change in depreciation method and recovery period made by the IRS is a change in method of accounting. This method change results in a section 481 adjustment. The useful life exception under paragraph (e)(2)(ii)(*d*)(*3*)(*i*) of this section does not apply because the assets are depreciated under section 168.

Example 11. In May 2003, C, a calendar year taxpayer, purchased and placed in service equipment for use in its trade or business. C never held this equipment for sale. However, C incorrectly treated the equipment as inventory on its 2003 and 2004 Federal tax returns. In 2005, C realizes that the equipment should have been treated as a depreciable asset. Pursuant to paragraph (e)(2)(ii)(*d*)(*2*) of this section, C's change in the treatment of the equipment from inventory to a depreciable asset is a change in method of accounting. This method change results in a section 481 adjustment.

Example 12. Since 2003, D, a calendar year taxpayer, has used the distribution fee period method to amortize distributor commissions and, under that method, established pools to account for the distributor commissions (for further guidance, see Rev. Proc. 2000-38 (2000-2 C.B. 310) and § 601.601(d)(2)(ii)(*b*) of this chapter). A change in the accounting of distributor commissions under the distribution fee period method from pooling to single asset

accounting is a change in method of accounting pursuant to paragraph (e)(2)(ii)(*d*)(*2*)(*vi*) of this section. This method change results in no section 481 adjustment because the change is from one permissible method to another permissible method.

Example 13. Since 2003, E, a calendar year taxpayer, has accounted for items of MACRS property that are mass assets in pools. Each pool includes only the mass assets that are placed in service by E in the same taxable year. E is able to identify the cost basis of each asset in each pool. None of the pools are general asset accounts under section 168(i)(4) and the regulations under section 168(i)(4). E identified any dispositions of these mass assets by specific identification. Because of changes in E's recordkeeping in 2006, it is impracticable for E to continue to identify disposed mass assets using specific identification. As a result, E wants to change to a first-in, first-out method under which the mass assets disposed of in a taxable year are deemed to be from the pool with the earliest placed-in-service year in existence as of the beginning of the taxable year of each disposition. Pursuant to paragraph (e)(2)(ii)(*d*)(*2*)(*vii*) of this section, this change is a change in method of accounting. This method change results in no section 481 adjustment because the change is from one permissible method to another permissible method.

Example 14. In August 2003, F, a calendar year taxpayer, purchased and placed in service a copier for use in its trade or business. F incorrectly classified the copier as 7-year property under section 168(e). F elected not to deduct the additional first year depreciation provided by section 168(k) on its 2003 Federal tax return. As a result, on its 2003 and 2004 Federal tax returns, F depreciated the copier under the general depreciation system of section 168(a), using the 200-percent declining balance method of depreciation, a 7-year recovery period, and the half-year convention. In 2005, F realizes that the copier is 5-year property and should have been depreciated on its 2003 and 2004 Federal tax returns under the general depreciation system using a 5-year recovery period rather than a 7-year recovery period. Pursuant to paragraph (e)(2)(ii)(*d*)(*2*)(*i*) of this section, F's change in recovery period from 7 to 5 years is a change in method of accounting. This method change results in a section 481 adjustment. The useful life exception under paragraph (e)(2)(ii)(*d*)(*3*)(*i*) of this section does not apply because the copier is depreciated under section 168.

Example 15. In 2004, G, a calendar year taxpayer, purchased and placed in service an intangible asset that is not an amortizable section 197 intangible and that is not described in section 167(f). G amortized the cost of the intangible asset under section 167(a) using the straight line method of depreciation and a determinable useful life of 13 years. The safe harbor useful life of 15 or 25 years under § 1.167(a)-3(b) does not apply to the intangible asset. In 2008, because of changing conditions, G changes the remaining useful life of the intangible asset to 2 years. Pursuant to paragraph (e)(2)(ii)(*d*)(*3*)(*i*) of this section, G's change in useful life is not a change in method of accounting because the intangible asset is depreciated under section 167 and G is not changing to or from a useful life that is specifically assigned by the Internal Revenue Code, the regulations under the Internal Revenue Code, or other guidance published in the Internal Revenue Bulletin.

Example 16. In July 2003, H, a calendar year taxpayer, purchased and placed in service "off-the-shelf" computer software and a new computer. The cost of the new computer and computer software are separately stated. H incorrectly included the cost of this software as part of the cost of the computer, which is 5-year property under section 168(e). On its 2003 Federal tax return, H elected to depreciate its 5-year property placed in service in

2003 under the alternative depreciation system of section 168(g) and H elected not to deduct the additional first year depreciation provided by section 168(k). The class life for a computer is 5 years. As a result, because H included the cost of the computer software as part of the cost of the computer hardware, H depreciated the cost of the software under the alternative depreciation system, using the straight line method of depreciation, a 5-year recovery period, and the half-year convention. In 2005, H realizes that the cost of the software should have been amortized under section 167(f)(1), using the straight line method of depreciation, a 36-month useful life, and a monthly convention. H's change from 5-years to 36-months is a change in method of accounting because H is changing to a useful life that is specifically assigned by section 167(f)(1). The change in convention from the half-year to the monthly convention also is a change in method of accounting. Both changes result in a section 481 adjustment.

Example 17. On May 1, 2003, I2, a calendar year taxpayer, purchased and placed in service new equipment at a total cost of $500,000 for use in its business. The equipment is 5-year property under section 168(e) with a class life of 9 years and is qualified property under section 168(k)(2). I2 did not place in service any other depreciable property in 2003. Section 168(g)(1)(A) through (D) do not apply to the equipment. I2 intended to elect the alternative depreciation system under section 168(g) for 5-year property placed in service in 2003. However, I2 did not make the election. Instead, I2 deducted on its 2003 Federal tax return the 30-percent additional first year depreciation attributable to the equipment and, on its 2003 and 2004 Federal tax returns, depreciated the remaining adjusted depreciable basis of the equipment under the general depreciation system under 168(a), using the 200-percent declining balance method, a 5-year recovery period, and the half-year convention. In 2005, I2 realizes its failure to make the alternative depreciation system election in 2003 and files a Form 3115, "Application for Change in Accounting Method," to change its method of depreciating the remaining adjusted depreciable basis of the 2003 equipment to the alternative depreciation system. Because this equipment is not required to be depreciated under the alternative depreciation system, I2 is attempting to make an election under section 168(g)(7). However, this election must be made in the taxable year in which the equipment is placed in service (2003) and, consequently, I2 is attempting to make a late election under section 168(g)(7). Accordingly, I2's change to the alternative depreciation system is not a change in accounting method pursuant to paragraph (e)(2)(ii)(*d*)(*3*)(*iii*) of this section. Instead, I2 must submit a request for a private letter ruling under § 301.9100-3 of this chapter, requesting an extension of time to make the alternative depreciation system election on its 2003 Federal tax return.

Example 18. On December 1, 2004, J, a calendar year taxpayer, purchased and placed in service 20 previously-owned adding machines. For the 2004 taxable year, J incorrectly classified the adding machines as items in its "suspense" account for financial and tax accounting purposes. Assets in this suspense account are not depreciated until reclassified to a depreciable fixed asset account. In January 2006, J realizes that the cost of the adding machines is still in the suspense account and reclassifies such cost to the appropriate depreciable fixed asset account. As a result, on its 2004 and 2005 Federal tax returns, J did not depreciate the cost of the adding machines. Pursuant to paragraph (e)(2)(ii)(*d*)(*2*) of this section, J's change in the treatment of the adding machines from nondepreciable assets to depreciable assets is a change in method of accounting. The placed-in-service

date exception under paragraph (e)(2)(ii)(*d*)(*3*)(*v*) of this section does not apply because the adding machines were incorrectly classified in a nondepreciable suspense account. This method change results in a section 481 adjustment.

Example 19. In December 2003, K, a calendar year taxpayer, purchased and placed in service equipment for use in its trade or business. However, K did not receive the invoice for this equipment until January 2004. As a result, K classified the equipment on its fixed asset records as being placed in service in January 2004. On its 2004 and 2005 Federal tax returns, K depreciated the cost of the equipment. In 2006, K realizes that the equipment was actually placed in service during the 2003 taxable year and, therefore, depreciation should have began in the 2003 taxable year instead of the 2004 taxable year. Pursuant to paragraph (e)(2)(ii)(*d*)(*3*)(*v*) of this section, K's change in the placed-in-service date of the equipment is not a change in method of accounting.

(3)

(i) Except as otherwise provided under the authority of paragraph (e)(3)(ii) of this section, to secure the Commissioner's consent to a taxpayer's change in method of accounting the taxpayer generally must file an application on Form 3115, "Application for Change in Accounting Method," with the Commissioner during the taxable year in which the taxpayer desires to make the change in method of accounting. See §§ 1.381(c)(4)-1(d)(2) and 1.381(c)(5)-1(d)(2) for rules allowing additional time, in some circumstances, for the filing of an application on Form 3115 with respect to a transaction to which section 381(a) applies. To the extent applicable, the taxpayer must furnish all information requested on the Form 3115. This information includes all classes of items that will be treated differently under the new method of accounting, any amounts that will be duplicated or omitted as a result of the proposed change, and the taxpayer's computation of any adjustments necessary to prevent such duplications or omissions. The Commissioner may require such other information as may be necessary to determine whether the proposed change will be permitted. Permission to change a taxpayer's method of accounting will not be granted unless the taxpayer agrees to the Commissioner's prescribed terms and conditions for effecting the change, including the taxable year or years in which any adjustment necessary to prevent amounts from being duplicated or omitted is to be taken into account. See section 481 and the regulations thereunder, relating to certain adjustments resulting from accounting method changes, and section 472 and the regulations thereunder, relating to adjustments for changes to and from the last-in, first-out inventory method. For any Form 3115 filed on or after May 15, 1997, see § 1.446-1T(e)(3)(i)(B).

(ii) Notwithstanding the provisions of paragraph (e)(3)(i) of this section, the Commissioner may prescribe administrative procedures under which taxpayers will be permitted to change their method of accounting. The administrative procedures shall prescribe those terms and conditions necessary to obtain the Commissioner's consent to effect the change and to prevent amounts from being duplicated or omitted. The terms and conditions that may be prescribed by the Commissioner may include terms and conditions that require the change in method of accounting to be effected on a cut-off basis or by an adjustment under section 481(a) to be taken into account in the taxable year or years prescribed by the Commissioner.

(iii) This paragraph (e)(3) applies to Forms 3115 filed on or after December 31, 1997. For other Forms 3115, see § 1.446-1(e)(3) in effect prior to December 31, 1997 (§ 1.446-1(e)(3) as contained in the 26 CFR part 1 edition revised as of April 1, 1997).

(4) ***Effective date*** —

(i) ***In general.*** Except as provided in paragraphs (e)(3)(iii), (e)(4)(ii), and (e)(4)(iii) of this section, paragraph (e) of this section applies on or after December 30, 2003. For the applicability of regulations before December 30, 2003, see § 1.446-1(e) in effect prior to December 30, 2003 (§ 1.446-1(e) as contained in 26 CFR part 1 edition revised as of April 1, 2003).

(ii) ***Changes involving depreciable or amortizable assets.*** With respect to paragraph (e)(2)(ii)(*d*) of this section, paragraph (e)(2)(iii) *Examples 9* through *19* of this section, and the language "certain changes in computing depreciation or amortization (see paragraph (e)(2)(ii)(*d*) of this section)" in the last sentence of paragraph (e)(2)(ii)(*a*) of this section—

(A) For any change in depreciation or amortization that is a change in method of accounting, this section applies to such a change in method of accounting made by a taxpayer for a depreciable or amortizable asset placed in service by the taxpayer in a taxable year ending on or after December 30, 2003; and

(B) For any change in depreciation or amortization that is not a change in method of accounting, this section applies to such a change made by a taxpayer for a depreciable or amortizable asset placed in service by the taxpayer in a taxable year ending on or after December 30, 2003.

(iii) ***Effective/applicability date for paragraph (e)(3)(i).*** The rules of paragraph (e)(3)(i) of this section apply to corporate reorganizations and tax-free liquidations described in section 381(a) that occur on or after August 31, 2011.

[T.D. 6500, 25 FR 11708, Nov. 26, 1960]

Editorial Note: For FEDERAL REGISTER citations affecting § 1.446-1, see the List of CFR Sections Affected, which appears in the Finding Aids section of the printed volume and at *www.govinfo.gov*.

§ 1.446-2 Method of accounting for interest.

(a) ***Applicability*** —

(1) ***In general.*** This section provides rules for determining the amount of interest that accrues during an accrual period (other than interest described in paragraph (a)(2) of this section) and for determining the portion of a payment that consists of accrued interest. For purposes of this section, interest includes original issue discount and amounts treated as interest (whether stated or unstated) in any lending or deferred payment transaction. Accrued interest determined under this section is taken into account by a taxpayer under the taxpayer's regular method of accounting (e.g., an accrual method or the cash receipts and disbursements method). Application of an exception described in paragraph (a)(2) of this section to one party to a transaction does not affect the application of this section to any other party to the transaction.

(2) ***Exceptions*** —

(i) ***Interest included or deducted under certain other provisions.*** This section does not apply to interest that is taken into account under—

(A) Sections 1272(a), 1275, and 163(e) (income and deductions relating to original issue discount);

(B) Section 467(a)(2) (certain payments for the use of property or services);

(C) Sections 1276 through 1278 (market discount);

(D) Sections 1281 through 1283 (discount on certain short-term obligations);

(E) Section 7872(a) (certain loans with below-market interest rates);

(F) Section 1.1272-3 (an election by a holder to treat all interest on a debt instrument as original issue discount); or

(G) Section 1.451-3(j) (special ordering rule for specified fees).

(ii) ***De minimis original issue discount.*** This section does not apply to de minimis original issue discount (other than de minimis original issue discount treated as qualified stated interest) as determined under § 1.1273-1(d). See § 1.163-7 for the treatment of de minimis original issue discount by the issuer and §§ 1.1273-1(d) and 1.1272-3 for the treatment of de minimis original issue discount by the holder.

(b) ***Accrual of qualified stated interest.*** Qualified stated interest (as defined in § 1.1273-1(c)) accrues ratably over the accrual period (or periods) to which it is attributable and accrues at the stated rate for the period (or periods).

(c) ***Accrual of interest other than qualified stated interest.*** Subject to the modifications in paragraph (d) of this section, the amount of interest (other than qualified stated interest) that accrues for any accrual period is determined under rules similar to those in the regulations under sections 1272 and 1275 for the accrual of original issue discount. The preceding sentence applies regardless of any contrary formula agreed to by the parties.

(d) ***Modifications*** —

(1) ***Issue price.*** The issue price of the loan or contract is equal to—

(i) In the case of a contract for the sale or exchange of property to which section 483 applies, the amount described in § 1.483-2(a)(1)(i) or (ii), whichever is applicable;

(ii) In the case of a contract for the sale or exchange of property to which section 483 does not apply, the stated principal amount; or

(iii) In any other case, the amount loaned.

(2) ***Principal payments that are not deferred payments.*** In the case of a contract to which section 483 applies, principal payments that are not deferred payments are ignored for purposes of determining yield and adjusted issue price.

(e) ***Allocation of interest to payments*** —

(1) ***In general.*** Except as provided in paragraphs (e)(2), (e)(3), and (e)(4) of this section, each payment under a loan (other than payments of additional interest or similar charges provided with respect to amounts that are not paid when due) is treated as a payment of interest to the extent of the accrued and unpaid interest determined under paragraphs (b) and (c) of this section as of the date the payment becomes due.

(2) ***Special rule for points deductible under section 461(g)(2).*** If a payment of points is deductible by the borrower under section 461(g)(2), the payment is treated by the borrower as a payment of interest.

(3) ***Allocation respected in certain small transactions.*** [Reserved]

(4) ***Pro rata prepayments.*** Accrued but unpaid interest is allocated to a pro rata prepayment under rules similar to those for allocating accrued but unpaid original issue discount to a pro rata prepayment under § 1.1275-2(f). For purposes of the preceding sentence, a pro rata prepayment is a payment that is made prior to maturity that—

(i) Is not made pursuant to the contract's payment schedule; and

(ii) Results in a substantially pro rata reduction of each payment remaining to be paid on the contract.

(f) ***Aggregation rule.*** For purposes of this section, all contracts calling for deferred payments arising from the same transaction (or a series of related transactions) are treated as a single contract. This rule, however, generally only applies to contracts involving a single borrower and a single lender.

(g) ***Debt instruments denominated in a currency other than the U.S. dollar.*** This section applies to a debt instrument that provides for all payments denominated in, or determined by reference to, the functional currency of the taxpayer or qualified business unit of the taxpayer (even if that currency is other than the U.S. dollar). See § 1.988-2(b) to determine interest income or expense for debt instruments that provide for payments denominated in, or determined by reference to, a nonfunctional currency.

(h) ***Example.*** The following example illustrates the rules of this section.

> *Example. Allocation of unstated interest to deferred payments.* (i) *Facts.* On July 1, 1996, A sells his personal residence to B for a stated purchase price of $1,297,143.66. The property is not personal use property (within the meaning of section 1275(b)(3)) in the hands of B. Under the loan agreement, B is required to make two installment payments of $648,571.83 each, the first due on June 30, 1998, and the second due on June 30, 2000. Both A and B use the cash receipts and disbursements method of accounting and use a calendar year for their taxable year.
> (ii) *Amount of unstated interest.* Under section 483, the agreement does not provide for adequate stated interest. Thus, the loan's yield is the test rate of interest determined under § 1.483-3. Assume that both A and B use annual accrual periods and that the test rate of interest is 9.2 percent, compounded annually. Under § 1.483-2, the present value of the deferred payments is $1,000,000. Thus, the agreement has unstated interest of $297,143.66.
>
> (iii) *First two accrual periods.* Under paragraph (d)(1) of this section, the issue price at the beginning of the first accrual period is $1,000,000 (the amount described in § 1.483-2(a)(1)(i)). Under paragraph (c) of this section, the amount of interest that accrues for the first accrual period is $92,000 ($1,000,000 × .092) and the amount of interest that accrues for the second accrual period is $100,464 ($1,092,000 × .092). Thus, $192,464 of interest has accrued as of the end of the second accrual period. Under paragraph (e)(1) of this section, the $648,571.83 payment made on June 30, 1998, is treated first as a payment of interest to the extent of $192,464. The remainder of the payment ($456,107.83) is treated as a payment of principal. Both A and B take the payment of interest ($192,464) into account in 1998.

(iv) *Second two accrual periods.* The adjusted issue price at the beginning of the third accrual period is $543,892.17 ($1,092,000 + $100,464-$648,571.83). The amount of interest that accrues for the third accrual period is $50,038.08 ($543,892.17 × .092) and the amount of interest that accrues for the final accrual period is $54,641.58, the excess of the amount payable at maturity ($648,571.83), over the adjusted issue price at the beginning of the accrual period ($593,930.25). As of the date the second payment becomes due, $104,679.66 of interest has accrued. Thus, of the $648,571.83 payment made on June 30, 2000, $104,679.66 is treated as interest and $543,892.17 is treated as principal. Both A and B take the payment of interest ($104,679.66) into account in 2000.

(i) [Reserved]

(j) ***Effective date.*** This section applies to debt instruments issued on or after April 4, 1994, and to lending transactions, sales, and exchanges that occur on or after April 4, 1994. Taxpayers, however, may rely on this section for debt instruments issued after December 21, 1992, and before April 4, 1994, and for lending transactions, sales, and exchanges that occur after December 21, 1992, and before April 4, 1994.

[T.D. 8517, 59 FR 4804, Feb. 2, 1994, T.D. 9941, 86 FR 836, Jan. 6, 2021; 86 FR 1256, Jan. 8, 2021]

§ 1.446-3 Notional principal contracts.

(a) ***Table of contents.*** This paragraph (a) lists captioned paragraphs contained in § 1.446-3.

§ 1.446-3 Notional principal contracts.

(a) Table of contents.

(b) Purpose.

(c) Definitions and scope.

(1) Notional principal contract.

(i) In general.

(ii) Excluded contracts.

(iii) Transactions within section 475.

(iv) Transactions within section 988.

(2) Specified index.

(3) Notional principal amount.

(4) Special definitions.

(i) Related person and party to the contract.

(ii) Objective financial information.

(iii) Dealer in notional principal contracts.

(d) Taxable year of inclusion and deduction.

(e) Periodic payments.

(1) Definition.

(2) Recognition rules.

(i) In general.

(ii) Rate set in arrears.

(iii) Notional principal amount set in arrears.

(3) Examples.

(f) Nonperiodic payments.

(1) Definition.

(2) Recognition rules.

(i) In general.

(ii) General rule for swaps.

(iii) Alternative methods for swaps.

(A) Prepaid swaps.

(B) Other nonperiodic swap payments.

(iv) General rule for caps and floors.

(v) Alternative methods for caps and floors that hedge debt instruments.

(A) Prepaid caps and floors.

(B) Other caps and floors.

(C) Special method for collars.

(vi) Additional methods.

(3) Term of extendible or terminable contracts.

(4) Examples.

(g) Special rules.

(1) Disguised notional principal contracts.

(2) Hedged notional principal contracts.

(3) Options and forwards to enter into notional principal contracts.

(4) Swaps with significant nonperiodic payments.

(5) Caps and floors that are significantly in-the-money. [Reserved]

(6) Examples.

(h) Termination payments.

(1) Definition.

(2) Taxable year of inclusion and deduction by original parties.

(3) Taxable year of inclusion and deduction by assignees.

(4) Special rules.

(i) Assignment of one leg of a contract.

(ii) Substance over form.

(5) Examples.

(i) Anti-abuse rule.

(j) Effective date.

(b) ***Purpose.*** The purpose of this section is to enable the clear reflection of the income and deductions from notional principal contracts by prescribing accounting methods that reflect the economic substance of such contracts.

(c) ***Definitions and scope*** —

(1) *Notional principal contract* —

(i) ***In general.*** A notional principal contract is a financial instrument that provides for the payment of amounts by one party to another at specified intervals calculated by reference to a specified index upon a notional principal amount in exchange for specified consideration or a promise to pay similar amounts. An agreement between a taxpayer and a qualified business unit (as defined in section 989(a)) of the taxpayer, or among qualified business units of the same taxpayer, is not a notional principal contract because a taxpayer cannot enter into a contract with itself. Notional principal contracts governed by this section include interest rate swaps, currency swaps, basis swaps, interest rate caps, interest rate floors, commodity swaps, equity swaps, equity index swaps, and similar agreements. A collar is not itself a notional principal contract, but certain caps and floors that comprise a collar may be treated as a single notional principal contract under paragraph (f)(2)(v)(C) of this section. A contract may be a notional principal contract governed by this section even though the term of the contract is subject to termination or extension. Each confirmation under a master agreement to enter into agreements governed by this section is treated as a separate notional principal contract.

(ii) ***Excluded contracts.*** A contract described in section 1256(b), a futures contract, a forward contract, and an option are not notional principal contracts. An instrument or contract that constitutes indebtedness under general principles of Federal income tax law is not a notional principal contract. An option or forward contract that entitles or obligates a person to enter into a notional principal contract is not a notional principal contract, but payments made under such an option or forward contract may be governed by paragraph (g)(3) of this section.

(iii) ***Transactions within section 475.*** To the extent that the rules provided in paragraphs (e) and (f) of this section are inconsistent with the rules that apply to any notional principal contract that is governed by section 475 and regulations thereunder, the rules of section 475 and the regulations thereunder govern.

(iv) ***Transactions within section 988.*** To the extent that the rules provided in this section are inconsistent with the rules that apply to any notional principal contract that is also a section 988 transaction or that is integrated with other property or debt pursuant to section 988(d), the rules of section 988 and the regulations thereunder govern.

(2) ***Specified index.*** A specified index is—

(i) A fixed rate, price, or amount;

(ii) A fixed rate, price, or amount applicable in one or more specified periods followed by one or more different fixed rates, prices, or amounts applicable in other periods;

(iii) An index that is based on objective financial information (as defined in paragraph (c)(4)(ii) of this section); and

(iv) An interest rate index that is regularly used in normal lending transactions between a party to the contract and unrelated persons.

(3) ***Notional principal amount.*** For purposes of this section, a notional principal amount is any specified amount of money or property that, when multiplied by a specified index, measures a party's rights and obligations under the contract, but is not borrowed or loaned between the parties as part of the

contract. The notional principal amount may vary over the term of the contract, provided that it is set in advance or varies based on objective financial information (as defined in paragraph (c)(4)(ii) of this section).

(4) *Special definitions* —

(i) ***Related person and party to the contract.*** A related person is a person related (within the meaning of section 267(b) or 707(b)(1)) to one of the parties to the notional principal contract or a member of the same consolidated group (as defined in § 1.1502-1(h)) as one of the parties to the contract. For purposes of this paragraph (c), a related person is considered to be a party to the contract.

(ii) ***Objective financial information.*** For purposes of this paragraph (c), objective financial information is any current, objectively determinable financial or economic information that is not within the control of any of the parties to the contract and is not unique to one of the parties' circumstances (such as one party's dividends, profits, or the value of its stock). Thus, for example, a notional principal amount may be based on a broadly-based equity index or the outstanding balance of a pool of mortgages, but not on the value of a party's stock.

(iii) ***Dealer in notional principal contracts.*** A dealer in notional principal contracts is a person who regularly offers to enter into, assume, offset, assign, or otherwise terminate positions in notional principal contracts with customers in the ordinary course of a trade or business.

(d) ***Taxable year of inclusion and deduction.*** For all purposes of the Code, the net income or net deduction from a notional principal contract for a taxable year is included in or deducted from gross income for that taxable year. The net income or net deduction from a notional principal contract for a taxable year equals the total of all of the periodic payments that are recognized from that contract for the taxable year under paragraph (e) of this section and all of the nonperiodic payments that are recognized from that contract for the taxable year under paragraph (f) of this section.

(e) *Periodic payments* —

(1) ***Definition.*** Periodic payments are payments made or received pursuant to a notional principal contract that are payable at intervals of one year or less during the entire term of the contract (including any extension periods provided for in the contract), that are based on a specified index described in paragraph (c)(2)(i), (iii), or (iv) of this section (appropriately adjusted for the length of the interval), and that are based on either a single notional principal amount or a notional principal amount that varies over the term of the contract in the same proportion as the notional principal amount that measures the other party's payments. Payments to purchase or sell a cap or a floor, however, are not periodic payments.

(2) *Recognition rules* —

(i) ***In general.*** All taxpayers, regardless of their method of accounting, must recognize the ratable daily portion of a periodic payment for the taxable year to which that portion relates.

(ii) ***Rate set in arrears.*** If the amount of a periodic payment is not determinable at the end of a taxable year because the value of the specified index is not fixed until a date that occurs after the end of the taxable year, the ratable daily portion of a periodic payment that relates to that taxable year is generally based on the specified index that would have applied if the specified index were fixed as of the last day of the taxable year. If a taxpayer determines that the value of the specified index as of the last day of the taxable year does not provide a reasonable

estimate of the specified index that will apply when the payment is fixed, the taxpayer may use a reasonable estimate of the specified index each year, provided that the taxpayer (and any related person that is a party to the contract) uses the same method to make the estimate consistently from year to year and uses the same estimate for purposes of all financial reports to equity holders and creditors. The taxpayer's treatment of notional principal contracts with substantially similar specified indices will be considered in determining whether the taxpayer's estimate of the specified index is reasonable. Any difference between the amount that is recognized under this paragraph (e)(2)(ii) and the corresponding portion of the actual payment that becomes fixed under the contract is taken into account as an adjustment to the net income or net deduction from the notional principal contract for the taxable year during which the payment becomes fixed.

(iii) ***Notional principal amount set in arrears.*** Rules similar to the rules of paragraph (e)(2)(ii) of this section apply if the amount of a periodic payment is not determinable at the end of a taxable year because the notional principal amount is not fixed until a date that occurs after the end of the taxable year.

(3) ***Examples.*** The following examples illustrate the application of paragraph (e) of this section.

> *Example 1.* Accrual of periodic swap payments. (a) On April 1, 1995, *A* enters into a contract with unrelated counterparty *B* under which, for a term of five years, *A* is obligated to make a payment to *B* each April 1, beginning April 1, 1996, in an amount equal to the London Interbank Offered Rate (LIBOR), as determined on the immediately preceding April 1, multiplied by a notional principal amount of $100 million. Under the contract, *B* is obligated to make a payment to *A* each April 1, beginning April 1, 1996, in an amount equal to 8% multiplied by the same notional principal amount. *A* and *B* are calendar year taxpayers that use the accrual method of accounting. On April 1, 1995, LIBOR is 7.80%.
> (b) This contract is a notional principal contract as defined by paragraph (c)(1) of this section, and both LIBOR and a fixed interest rate of 8% are specified indices under paragraph (c)(2) of this section. All of the payments to be made by *A* and *B* are periodic payments under paragraph (e)(1) of this section because each party's payments are based on a specified index described in paragraphs (c)(2)(iii) and (c)(2)(i) of this section, respectively, are payable at periodic intervals of one year or less throughout the term of the contract, and are based on a single notional principal amount.
>
> (c) Under the terms of the swap agreement, on April 1, 1996, *B* is obligated to make a payment to *A* of $8,000,000 (8% × $100,000,000) and *A* is obligated to make a payment to *B* of $7,800,000 (7.80% × $100,000,000). Under paragraph (e)(2)(i) of this section, the ratable daily portions for 1995 are the amounts of these periodic payments that are attributable to *A*'s and *B*'s taxable year ending December 31, 1995. The ratable daily portion of the 8% fixed leg is $6,010,929 (275 days/366 days × $8,000,000), and the ratable daily portion of the floating leg is $5,860,656 (275 days/366 days × $7,800,000). The net amount for the taxable

year is the difference between the ratable daily portions of the two periodic payments, or $150,273 ($6,010,929—$5,860,656). Accordingly, *A* has net income of $150,273 from this swap for 1995, and *B* has a corresponding net deduction of $150,273.

(d) The $49,727 unrecognized balance of the $200,000 net periodic payment that is made on April 1, 1996, is included in *A*'s and *B*'s net income or net deduction from the contract for 1996.

(e) If the parties had entered into the contract on February 1, 1995, the result would not change because no portion of either party's obligation to make a payment under the swap relates to the period prior to April 1, 1995. Consequently, under paragraph (e)(2) of this section, neither party would accrue any income or deduction from the swap for the period from February 1, 1995, through March 31, 1995.

Example 2. Accrual of periodic swap payments by cash method taxpayer. (a) On April 1, 1995, *C* enters into a contract with unrelated counterparty *D* under which, for a period of five years, *C* is obligated to make a fixed payment to *D* each April 1, beginning April 1, 1996, in an amount equal to 8% multiplied by a notional principal amount of $100 million. *D* is obligated to make semi-annual payments to *C* each April 1 and October 1, beginning October 1, 1995, in an amount equal to one-half of the LIBOR amount as of the first day of the preceding 6-month period multiplied by the notional principal amount. The payments are to be calculated using a 30/360 day convention. *C* is a calendar year taxpayer that uses the accrual method of accounting. *D* is a calendar year taxpayer that uses the cash receipts and disbursements method of accounting. LIBOR is 7.80% on April 1, 1995, and 7.46% on October 1, 1995.
(b) This contract is a notional principal contract as defined by paragraph (c)(1) of this section, and LIBOR and the fixed interest rate of 8% are each specified indices under paragraph (c)(2) of this section. All of the payments to be made by *C* and *D* are periodic payments under paragraph (e)(1) of this section because they are each based on appropriate specified indices, are payable at periodic intervals of one year or less throughout the term of the contract, and are based on a single notional principal amount.

(c) Under the terms of the swap agreement, *D* pays *C* $3,900,000 (0.5 × 7.8% × $100,000,000) on October 1, 1995. In addition, *D* is obligated to pay *C* $3,730,000 (0.5 × 7.46% × $100,000,000) on April 1, 1996. *C* is obligated to pay *D* $8,000,000 on April 1, 1996. Under paragraph (e)(2)(i) of this section, *C*'s and *D*'s ratable daily portions for 1995 are the amounts of the periodic payments that are attributable to their taxable year ending December 31, 1995. The ratable daily portion of the 8% fixed leg is $6,000,000 (270 days/360 days × $8,000,000), and the ratable daily portion of the floating leg is $5,765,000 ($3,900,000 + (90 days/180 days × $3,730,000)). Thus, *C*'s net deduction from the contract for 1995 is $235,000 ($6,000,000—$5,765,000) and *D* reports $235,000 of net income from the contract for 1995.

(d) The net unrecognized balance of $135,000 ($2,000,000 balance of the fixed leg—$1,865,000 balance of the floating leg) is included in *C*'s and *D*'s net income or net deduction from the contract for 1996.

Example 3. Accrual of swap payments on index set in arrears. (a) The facts are the same as in *Example 1,* except that *A*'s obligation to make payments based upon LIBOR is determined by reference to LIBOR on the day each payment is due. LIBOR is 8.25% on December 31, 1995, and 8.16% on April 1, 1996.
(b) On December 31, 1995, the amount that *A* is obligated to pay *B* is not known because it will not become fixed until April 1, 1996. Under paragraph (e)(2)(ii) of this section, the ratable daily portion of the periodic payment from *A* to *B* for 1995 is based on the value of LIBOR on December 31, 1995 (unless *A* or *B* determines that the value of LIBOR on that day does not reasonably estimate the value of the specified index). Thus, the ratable daily portion of the floating leg is $6,198,770 (275 days/366 days × 8.25% × $100,000,000), while the ratable daily portion of the fixed leg is $6,010,929 (275 days/366 days × $8,000,000). The net amount for 1995 on this swap is $187,841 ($6,198,770—$6,010,929). Accordingly, *B* has $187,841 of net income from the swap in 1995, and *A* has a net deduction of $187,841.

(c) On April 1, 1996, *A* makes a net payment to *B* of $160,000 ($8,160,000 payment on the floating leg—$8,000,000 payment on the fixed leg). For purposes of determining their net income or net deduction from this contract for the year ended December 31, 1996, *B* and *A* must adjust the net income and net deduction they recognized in 1995 by $67,623 (275 days/366 days × ($8,250,000 presumed payment on the floating leg—$8,160,000 actual payment on the floating leg)).

(f) ***Nonperiodic payments*** —

(1) ***Definition.*** A nonperiodic payment is any payment made or received with respect to a notional principal contract that is not a periodic payment (as defined in paragraph (e)(1) of this section) or a termination payment (as defined in paragraph (h) of this section). Examples of nonperiodic payments are the premium for a cap or floor agreement (even if it is paid in installments), the payment for an off-market swap agreement, the prepayment of part or all of one leg of a swap, and the premium for an option to enter into a swap if and when the option is exercised.

(2) ***Recognition rules*** —

(i) ***In general.*** All taxpayers, regardless of their method of accounting, must recognize the ratable daily portion of a nonperiodic payment for the taxable year to which that portion relates. Generally, a nonperiodic payment must be recognized over the term of a notional principal contract in a manner that reflects the economic substance of the contract.

(ii) ***General rule for swaps.*** A nonperiodic payment that relates to a swap must be recognized over the term of the contract by allocating it in accordance with the forward rates (or, in the case of a commodity, the forward prices) of a series of cash-settled forward contracts that reflect the

specified index and the notional principal amount. For purposes of this allocation, the forward rates or prices used to determine the amount of the nonperiodic payment will be respected, if reasonable. See paragraph (f)(4) *Example 7* of this section.

(iii) ***Alternative methods for swaps.*** Solely for purposes of determining the timing of income and deductions, a nonperiodic payment made or received with respect to a swap may be allocated to each period of the swap contract using one of the methods described in this paragraph (f)(2)(iii). The alternative methods may not be used by a dealer in notional principal contracts (as defined in paragraph (c)(4)(iii) of this section) for swaps entered into or acquired in its capacity as a dealer.

(A) ***Prepaid swaps.*** An upfront payment on a swap may be amortized by assuming that the nonperiodic payment represents the present value of a series of equal payments made throughout the term of the swap contract (the level payment method), adjusted as appropriate to take account of increases or decreases in the notional principal amount. The discount rate used in this calculation must be the rate (or rates) used by the parties to determine the amount of the nonperiodic payment. If that rate is not readily ascertainable, the discount rate used must be a rate that is reasonable under the circumstances. Under this method, an upfront payment is allocated by dividing each equal payment into its principal recovery and time value components. The principal recovery components of the equal payments are treated as periodic payments that are deemed to be made on each of the dates that the swap contract provides for periodic payments by the payor of the nonperiodic payment or, if none, on each of the dates that the swap contract provides for periodic payments by the recipient of the nonperiodic payment. The time value component is needed to compute the amortization of the nonperiodic payment, but is otherwise disregarded. See paragraph (f)(4) *Example 5* of this section.

(B) ***Other nonperiodic swap payments.*** Nonperiodic payments on a swap other than an upfront payment may be amortized by treating the contract as if it provided for a single upfront payment (equal to the present value of the nonperiodic payments) and a loan between the parties. The discount rate (or rates) used in determining the deemed upfront payment and the time value component of the deemed loan is the same as the rate (or rates) used in the level payment method. The single upfront payment is then amortized under the level payment method described in paragraph (f)(2)(iii)(A) of this section. The time value component of the loan is not treated as interest, but, together with the amortized amount of the deemed upfront payment, is recognized as a periodic payment. See paragraph (f)(4) *Example 6* of this section. If both parties make nonperiodic payments, this calculation is done separately for the nonperiodic payments made by each party.

(iv) ***General rule for caps and floors.*** A payment to purchase or sell a cap or floor must be recognized over the term of the agreement by allocating it in accordance with the prices of a series of cash-settled option contracts that reflect the specified index and the notional principal amount. For purposes of this allocation, the option pricing used by the parties to determine the total amount paid for the cap or floor will be respected, if reasonable. Only the portion of the purchase price that is allocable to the option contract or contracts that expire during a particular period is recognized for that period. Thus, under this paragraph (f)(2)(iv), straight-line or accelerated amortization of a cap premium is generally not permitted. See paragraph (f)(4) *Examples 1* and *2* of this section.

(v) ***Alternative methods for caps and floors that hedge debt instruments.*** Solely for purposes of determining the timing of income and deductions, if a cap or floor is entered into primarily to reduce risk with respect to a specific debt instrument or group of debt instruments held or issued by the taxpayer, the taxpayer may amortize a payment to purchase or sell the cap or floor using the methods described in this paragraph (f)(2)(v), adjusted as appropriate to take account of increases or decreases in the notional principal amount. The alternative methods may not be used by a dealer in notional principal contracts (as defined in paragraph (c)(4)(iii) of this section) for caps or floors entered into or acquired in its capacity as a dealer.

(A) ***Prepaid caps and floors.*** A premium paid upfront for a cap or a floor may be amortized using the "level payment method" described in paragraph (f)(2)(iii)(A) of this section. See paragraph (f)(4) *Example 3* of this section.

(B) ***Other caps and floors.*** Nonperiodic payments on a cap or floor other than an upfront payment are amortized by treating the contract as if it provided for a single upfront payment (equal to the present value of the nonperiodic payments) and a loan between the parties as described in paragraph (f)(2)(iii)(B) of this section. Under the level payment method, a cap or floor premium paid in level annual installments over the term of the contract is effectively included or deducted from income ratably, in accordance with the level payments. See paragraph (f)(4) *Example 4* of this section.

(C) ***Special method for collars.*** A taxpayer may also treat a cap and a floor that comprise a collar as a single notional principal contract and may amortize the net nonperiodic payment to enter into the cap and floor over the term of the collar in accordance with the methods prescribed in this paragraph (f)(2)(v).

(vi) ***Additional methods.*** The Commissioner may, by a revenue ruling or a revenue procedure published in the Internal Revenue Bulletin, provide alternative methods for allocating nonperiodic payments that relate to a notional principal contract to each year of the contract. See § 601.601(d)(2)(ii)(*b*) of this chapter.

(3) ***Term of extendible or terminable contracts.*** For purposes of this paragraph (f), the term of a notional principal contract that is subject to extension or termination is the reasonably expected term of the contract.

(4) ***Examples.*** The following examples illustrate the application of paragraph (f) of this section.

> *Example 1.Cap premium amortized using general rule.* (a) On January 1, 1995, when LIBOR is 8%, *F* pays unrelated party *E* $600,000 for a contract that obligates *E* to make a payment to *F* each quarter equal to one-quarter of the excess, if any, of three-month LIBOR over 9% with respect to a notional principal amount of $25 million. Both *E* and *F* are calendar year taxpayers. *E* provides *F* with a schedule of allocable premium amounts indicating that the cap was priced according to a reasonable variation of the Black-Scholes option pricing formula

and that the total premium is allocable to the following periods:

	Pricing allocation
1995	$55,000
1996	225,000
1997	320,000
	$600,000

(b) This contract is a notional principal contract as defined by paragraph (c)(1) of this section, and LIBOR is a specified index under paragraph (c)(2)(iii) of this section. Any payments made by *E* to *F* are periodic payments under paragraph (e)(1) of this section because they are payable at periodic intervals of one year or less throughout the term of the contract, are based on an appropriate specified index, and are based on a single notional principal amount. The $600,000 cap premium paid by *F* to *E* is a nonperiodic payment as defined in paragraph (f)(1) of this section.
(c) The Black-Scholes model is recognized in the financial industry as a standard technique for pricing interest rate cap agreements. Therefore, because *E* has used a reasonable option pricing model, the schedule generated by *E* is consistent with the economic substance of the cap, and may be used by both *E* and *F* for calculating their ratable daily portions of the cap premium. Under paragraph (f)(2)(iv) of this section, *E* recognizes the ratable daily portion of the cap premium as income, and *F* recognizes the ratable daily portion of the cap premium as a deduction based on the pricing schedule. Thus, *E* and *F* account for the contract as follows:

	Ratable daily portion
1995	$55,000
1996	225,000
1997	320,000
	$600,000

(d) Any periodic payments under the cap agreement (that is, payments that *E* makes to *F* because LIBOR exceeds 9%) are included in the parties' net income or net deduction from the contract in accordance with paragraph (e)(2) of this section.

Example 2. Cap premium allocated to proper period. (a) The facts are the same as in *Example 1*, except that the cap is purchased by *F* on November 1, 1994. The first determination date under the cap agreement is January 31, 1995 (the last day of the first

quarter to which the contract relates). LIBOR is 9.1% on December 31, 1994, and is 9.15% on January 31, 1995.
(b) *E* and *F* recognize $9,192 (61 days/365 days × $55,000) as the ratable daily portion of the nonperiodic payment for 1994, and include that amount in their net income or net deduction from the contract for 1994. If *E*'s pricing model allocated the cap premium to each quarter covered by the contract, the ratable daily portion would be 61 days/92 days times the premium allocated to the first quarter.

(c) Under paragraph (e)(2)(ii) of this section, *E* and *F* calculate the payments using LIBOR as of December 31, 1994. *F* recognizes as income the ratable daily portion of the presumed payment, or $4,144 (61 days/92 days × .25 × .001 × $25,000,000). Thus, *E* reports $5,048 of net income from the contract for 1994 ($9,192-$4,144), and *F* reports a net deduction from the contract of $5,048.

(d) On January 31, 1995, *E* pays *F* $9,375 (.25 × .0015 × $25,000,000) under the terms of the cap agreement. For purposes of determining their net income or net deduction from this contract for the year ended December 31, 1995, *E* and *F* must adjust their respective net income and net deduction from the cap by $2,072 (61 days/92 days × ($9,375 actual payment under the cap on January 31, 1995—$6,250 presumed payment under the cap on December 31, 1994)).

Example 3. Cap premium amortized using alternative method. (a) The facts are the same as in *Example 1,* except that the cap provides for annual payments by *E* and is entered into by F primarily to reduce risk with respect to a debt instrument issued by *F. F* elects to amortize the cap premium using the alternative level payment method provided under paragraph (f)(2)(v)(A) of this section. Under that method, *F* amortizes the cap premium by assuming that the $600,000 is repaid in 3 equal annual payments of $241,269, assuming a discount rate of 10%. Each payment is divided into a time value component and a principal component, which are set out below.

	Level payment	Time value component	Principal component
1995	$241,269	$60,000	$181,269
1996	241,269	41,873	199,396
1997	241,269	21,934	219,335
	$723,807	$123,807	$600,000

(b) The net of the ratable daily portions of the principal component and the payments, if any, received from *E* comprise *F*'s annual net income or net deduction from the cap. The time

value components are needed only to compute the ratable daily portions of the cap premium, and are otherwise disregarded.

Example 4. Cap premium paid in level installments and amortized using alternative method. (a) The facts are the same as in *Example 3,* except that *F* agrees to pay for the cap in three level installments of $241,269 (a total of $723,807) on December 31, 1995, 1996, and 1997. The present value of three payments of $241,269, discounted at 10%, is $600,000. For purposes of amortizing the cap premium under the alternative method provided in paragraph (f)(2)(v)(B) of this section, *F* is treated as paying $600,000 for the cap on January 1, 1995, and borrowing $600,000 from *E* that will be repaid in three annual installments of $241,269. The time value component of the loan is computed as follows:

	Loan balance	Time value component	Principal component
1995	$600,000	$60,000	$181,269
1996	418,731	41,873	199,396
1997	219,335	21,934	219,335
		$123,807	$600,000

(b) *F* is treated as making periodic payments equal to the amortized principal components from a $600,000 cap paid in advance (as described in *Example 3*), increased by the time value components of the $600,000 loan, which totals $241,269 each year. The time value components of the $600,000 loan are included in the periodic payments made by *F,* but are not characterized as interest income or expense. The effect of the alternative method in this situation is to allow *F* to amortize the cap premium in level installments, the same way it is paid. The net of the ratable daily portions of *F*'s deemed periodic payments and the payments, if any, received from *E* comprise *F*'s annual net income or net deduction from the cap.

Example 5. Upfront interest rate swap payment amortized using alternative method. (a) On January 1, 1995, *G* enters into an interest rate swap agreement with unrelated counterparty *H* under which, for a term of five years, *G* is obligated to make annual payments at 11% and H is obligated to make annual payments at LIBOR on a notional principal amount of $100 million. At the time *G* and *H* enter into this swap agreement, the rate for similar on-market swaps is LIBOR to 10%. To compensate for this difference, on January 1, 1995, *H* pays *G* a yield adjustment fee of $3,790,786. *G* provides *H* with information that indicates that the amount of the yield adjustment fee was determined as the present value, at 10% compounded annually, of five annual payments of $1,000,000 (1% × $100,000,000). *G* and *H* are calendar

year taxpayers.
(b) This contract is a notional principal contract as defined by paragraph (c)(1) of this section. The yield adjustment fee is a nonperiodic payment as defined in paragraph (f)(1) of this section.

(c) Under the alternative method described in paragraph (f)(2)(iii)(A) of this section, the yield adjustment fee is recognized over the life of the agreement by assuming that the $3,790,786 is repaid in five level payments. Assuming a constant yield to maturity and annual compounding at 10%, the ratable daily portions are computed as follows:

	Level payment	Time value component	Principal component
1995	$1,000,000	$379,079	$620,921
1996	1,000,000	316,987	683,013
1997	1,000,000	248,685	751,315
1998	1,000,000	173,554	826,446
1999	1,000,000	90,909	909,091
	$5,000,000	$1,209,214	$3,790,786

(d) *G* also makes swap payments to *H* at 11%, while *H* makes swap payments to *G* based on LIBOR. The net of the ratable daily portions of the 11% payments by *G,* the LIBOR payments by *H,* and the principal component of the yield adjustment fee paid by *H* determines the annual net income or net deduction from the contract for both *G* and *H.* The time value components are needed only to compute the ratable daily portions of the yield adjustment fee paid by *H,* and are otherwise disregarded.

Example 6. Backloaded interest rate swap payment amortized using alternative method.
(a) The facts are the same as in *Example 5,* but *H* agrees to pay *G* a yield adjustment fee of $6,105,100 on December 31, 1999. Under the alternative method in paragraph (f)(2)(iii)(B) of this section, *H* is treated as paying a yield adjustment fee of $3,790,786 (the present value of $6,105,100, discounted at a 10% rate with annual compounding) on January 1, 1995. Solely for timing purposes, *H* is treated as borrowing $3,790,786 from *G.* Assuming annual compounding at 10%, the time value component is computed as follows:

	Loan balance	Time value component	Principal component
1995	$3,790,786	$379,079	0
1996	4,169,865	416,987	0

	Loan balance	Time value component	Principal component
1997	4,586,852	458,685	0
1998	5,045,537	504,554	0
1999	5,550,091	555,009	6,105,100

(b) The amortization of *H*'s yield adjustment fee is equal to the amortization of a yield adjustment fee of $3,790,786 paid in advance (as described in *Example 5*), increased by the time value component of the $3,790,786 deemed loan from *G* to *H*. Thus, the amount of *H*'s yield adjustment fee that is allocated to 1995 is $1,000,000 ($620,921 + $379,079). The time value components of the $3,790,786 loan are included in the periodic payments paid by *H,* but are not characterized as interest income or expense. The net of the ratable daily portions of the 11% swap payments by *G,* and the LIBOR payments by H, added to the principal components from *Example 5* and the time value components from this *Example 6,* determines the annual net income or net deduction from the contract for both *G* and *H*.

Example 7. Nonperiodic payment on a commodity swap amortized under general rule. (a) On January 1, 1995, *I* enters into a commodity swap agreement with unrelated counterparty *J* under which, for a term of three years, *I* is obligated to make annual payments based on a fixed price of $2.35 per bushel times a notional amount of 100,000 bushels of corn and *J* is obligated to make annual payments equal to the spot price times the same notional amount. Assume that on January 1, 1995, the price of a one year forward for corn is $2.40 per bushel, of a two year forward $2.55 per bushel, and of a 3 year forward $2.75 per bushel. To compensate for the below-market fixed price provided in the swap agreement, *I* pays *J* $53,530 for entering into the swap. *I* and *J* are calendar year taxpayers.
(b) This contract is a notional principal contract as defined by paragraph (c)(1) of this section, and $2.35 and the spot price of corn are specified indices under paragraphs (c)(2)(i) and (iii) of this section, respectively. The $53,530 payment is a nonperiodic payment as defined by paragraph (f)(1) of this section.

(c) Assuming that *I* does not use the alternative methods provided under paragraph (f)(2)(iii) of this section, paragraph (f)(2)(ii) of this section requires that *I* recognize the nonperiodic payment over the term of the agreement by allocating the payment to each forward contract in accordance with the forward price of corn. Solely for timing purposes, *I* treats the $53,530

nonperiodic payment as a loan that *J* will repay in three installments of $5,000, $20,000, and $40,000, the expected payouts on the in-the-money forward contracts. With annual compounding at 8%, the ratable daily portions are computed as follows:

	Expected forward payment	Time value component	Principal component
1995	$5,000	$4,282	$718
1996	20,000	4,225	15,775
1997	40,000	2,963	37,037
	$65,000	$11,470	$53,530

(d) The ratable daily portion of the principal component is added to *I*'s periodic payments in computing its net income or net deduction from the notional principal contract for each taxable year. The time value components are needed only to compute the principal components, and are otherwise disregarded.

(g) *Special rules* —

(1) ***Disguised notional principal contracts.*** The Commissioner may recharacterize all or part of a transaction (or series of transactions) if the effect of the transaction (or series of transactions) is to avoid the application of this section.

(2) ***Hedged notional principal contracts.*** If a taxpayer, either directly or through a related person (as defined in paragraph (c)(4)(i) of this section), reduces risk with respect to a notional principal contract by purchasing, selling, or otherwise entering into other notional principal contracts, futures, forwards, options, or other financial contracts (other than debt instruments), the taxpayer may not use the alternative methods provided in paragraphs (f)(2)(iii) and (v) of this section. Moreover, where such positions are entered into to avoid the appropriate timing or character of income from the contracts taken together, the Commissioner may require that amounts paid to or received by the taxpayer under the notional principal contract be treated in a manner that is consistent with the economic substance of the transaction as a whole.

(3) ***Options and forwards to enter into notional principal contracts.*** An option or forward contract that entitles or obligates a person to enter into a notional principal contract is subject to the general rules of taxation for options or forward contracts. Any payment with respect to the option or forward contract is treated as a nonperiodic payment for the underlying notional principal contract under the rules of paragraphs (f) and (g)(4) or (g)(5) of this section if and when the underlying notional principal contract is entered into.

(4) *Swaps with significant nonperiodic payments* —

(i) ***General rule.*** Except as provided in paragraph (g)(4)(ii) of this section, a swap with significant nonperiodic payments is treated as two separate transactions consisting of an on-market, level payment swap and a loan. The loan must be accounted for by the parties to the contract

independently of the swap. The time value component associated with the loan, determined in accordance with paragraph (f)(2)(iii)(A) of this section, is recognized as interest expense to the payor and interest income to the recipient.

(ii) ***Exception for cleared swaps and non-cleared swaps subject to margin or collateral requirements.*** Paragraph (g)(4)(i) of this section does not apply to a swap if the contract is described in paragraph (g)(4)(ii)(A) or (B) of this section.

(A) The swap is cleared by a derivatives clearing organization, as such term is defined in section 1a of the Commodity Exchange Act (7 U.S.C. 1a), or by a clearing agency, as such term is defined in section 3 of the Securities Exchange Act of 1934 (15 U.S.C. 78c), that is registered as a derivatives clearing organization under the Commodity Exchange Act or as a clearing agency under the Securities Exchange Act of 1934, respectively, and the derivatives clearing organization or clearing agency requires the parties to the swap to post and collect margin or collateral.

(B) The swap is a non-cleared swap that requires the parties to meet the margin or collateral requirements of a federal regulator or that provides for margin or collateral requirements that are substantially similar to a cleared swap or a non-cleared swap subject to the margin or collateral requirements of a federal regulator. For purposes of this paragraph (g)(4)(ii)(B), the term *federal regulator* means the Securities and Exchange Commission (SEC), the Commodity Futures Trading Commission (CFTC), or a prudential regulator, as defined in section 1a(39) of the Commodity Exchange Act (7 U.S.C. 1a), as amended by section 721 of the Dodd-Frank Wall Street Reform and Consumer Protection Act of 2010, Public Law 111-203, 124 Stat. 1376, Title VII.

(iii) ***Coordination with section 163(j).*** For the treatment of swaps with significant nonperiodic payments under section 163(j), see § 1.163(j)-1(b)(22)(ii).

(5) ***Caps and floors that are significantly in-the-money.*** [Reserved]

(6) ***Examples.*** The following examples illustrate the application of paragraph (g) of this section.

> *Example 1. Cap hedged with options.* (a) On January 1, 1995, *K* sells to unrelated counterparty *L* three cash settlement European-style put options on Eurodollar time deposits with a strike rate of 9%. The options have exercise dates of January 1, 1996, January 1, 1997, and January 1, 1998, respectively. If LIBOR exceeds 9% on any of the exercise dates, *L* will be entitled, by exercising the relevant option, to receive from *K* an amount that corresponds to the excess of LIBOR over 9% times $25 million. *L* pays *K* $650,000 for the three options. Furthermore, *K* is related to *F*, the cap purchaser in paragraph (f)(4) *Example 1* of this section. (b) *K*'s option agreements with *L* reduce risk with respect to *F*'s cap agreement with *E*. Accordingly, under paragraph (g)(2) of this section, *F* cannot use the alternative methods provided in paragraph (f)(2)(v) of this section to amortize the premium paid under the cap agreement. *F* must amortize the cap premium it paid in accordance with paragraph (f)(2)(iv) of this section.
>
> (c) The method that *E* may use to account for its agreement with *F* is not affected by the application of paragraph (g)(2) of this section to *F*.

Example 2. [Reserved]. For further guidance, see § 1.446-3T(g)(6), *Example 2.*

Example 3. [Reserved]. For further guidance, see § 1.446-3T(g)(6), *Example 3.*

Example 4. [Reserved]. For further guidance, see § 1.446-3T(g)(6), *Example 4.*

(h) ***Termination payments*** —

(1) ***Definition.*** A payment made or received to extinguish or assign all or a proportionate part of the remaining rights and obligations of any party under a notional principal contract is a termination payment to the party making the termination payment and the party receiving the payment. A termination payment includes a payment made between the original parties to the contract (an extinguishment), a payment made between one party to the contract and a third party (an assignment), and any gain or loss realized on the exchange of one notional principal contract for another. Where one party assigns its remaining rights and obligations to a third party, the original nonassigning counterparty realizes gain or loss if the assignment results in a deemed exchange of contracts and a realization event under section 1001.

(2) ***Taxable year of inclusion and deduction by original parties.*** Except as otherwise provided (for example, in section 453, section 1092, or § 1.446-4), a party to a notional principal contract recognizes a termination payment in the year the contract is extinguished, assigned, or exchanged. When the termination payment is recognized, the party also recognizes any other payments that have been made or received pursuant to the notional principal contract, but that have not been recognized under paragraph (d) of this section. If only a proportionate part of a party's rights and obligations is extinguished, assigned, or exchanged, then only that proportion of the unrecognized payments is recognized under the previous sentence.

(3) ***Taxable year of inclusion and deduction by assignees.*** A termination payment made or received by an assignee pursuant to an assignment of a notional principal contract is recognized by the assignee under the rules of paragraphs (f) and (g)(4) or (g)(5) of this section as a nonperiodic payment for the notional principal contract that is in effect after the assignment.

(4) ***Special rules*** —

(i) ***Assignment of one leg of a contract.*** A payment is not a termination payment if it is made or received by a party in exchange for assigning all or a portion of one leg of a notional principal contract at a time when a substantially proportionate amount of the other leg remains unperformed and unassigned. The payment is either an amount loaned, an amount borrowed, or a nonperiodic payment, depending on the economic substance of the transaction to each party. This paragraph (h)(4)(i) applies whether or not the original notional principal contract is terminated as a result of the assignment.

(ii) ***Substance over form.*** Any economic benefit that is given or received by a taxpayer in lieu of a termination payment is a termination payment.

(5) ***Examples.*** The following examples illustrate the application of this paragraph (h). The contracts in the examples are not hedging transactions as defined in § 1.1221-2(b), and all of the examples assume that no loss-deferral rules apply.

> *Example 1. Termination by extinguishment.* (a) On January 1, 1995, *P* enters into an interest rate swap agreement with unrelated counterparty *Q* under which, for a term of seven years, *P* is obligated to make annual payments based on 10% and *Q* is obligated to make semi-annual

payments based on LIBOR and a notional principal amount of $100 million. *P* and *Q* are both calendar year taxpayers. On January 1, 1997, when the fixed rate on a comparable LIBOR swap has fallen to 9.5%, *P* pays *Q* $1,895,393 to terminate the swap.
(b) The payment from *P* to *Q* extinguishes the swap contract and is a termination payment, as defined in paragraph (h)(1) of this section, for both parties. Accordingly, under paragraph (h)(2) of this section, *P* recognizes a loss of $1,895,393 in 1997 and *Q* recognizes $1,895,393 of gain in 1997.

Example 2. Termination by assignment. (a) The facts are the same as in *Example 1,* except that on January 1, 1997, *P* pays unrelated party *R* $1,895,393 to assume all of *P*'s rights and obligations under the swap with *Q.* In return for this payment, *R* agrees to pay 10% of $100 million annually to *Q* and to receive LIBOR payments from *Q* for the remaining five years of the swap.
(b) The payment from *P* to *R* terminates *P*'s interest in the swap contract with *Q* and is a termination payment, as defined in paragraph (h)(1) of this section, for *P.* Under paragraph (h)(2) of this section, *P* recognizes a loss of $1,895,393 in 1997. Whether *Q* also has a termination payment with respect to the payment from *P* to *R* is determined under section 1001.

(c) Under paragraph (h)(3) of this section, the assignment payment that *R* receives from *P* is a nonperiodic payment for an interest rate swap. Because the assignment payment is not a significant nonperiodic payment within the meaning of paragraph (g)(1) of this section, *R* amortizes the $1,895,393 over the five year term of the swap agreement under paragraph (f)(2) of this section.

Example 3. Assignment of swap with yield adjustment fee. (a) The facts are the same as in *Example 2,* except that on January 1, 1995, *Q* paid *P* a yield adjustment fee to enter into the seven year interest rate swap. In accordance with paragraph (f)(2) of this section, *P* and *Q* included the ratable daily portions of that nonperiodic payment in their net income or net deduction from the contract for 1995 and 1996. On January 1, 1997, $300,000 of the nonperiodic payment has not yet been recognized by *P* and *Q.*
(b) Under paragraph (h)(2) of this section, *P* recognizes a loss of $1,595,393 ($1,895,393-$300,000) in 1997. *R* accounts for the termination payment in the same way it did in *Example 2*; the existence of an unamortized payment with respect to the original swap has no effect on *R.*

Example 4. Assignment of one leg of a swap. (a) On January 1, 1995, *S* enters into an interest rate swap agreement with unrelated counterparty *T* under which, for a term of five years, *S* will make annual payments at 10% and *T* will make annual payments at LIBOR on a notional principal amount of $50 million. On January 1, 1996, unrelated party U pays *T*

> $15,849,327 for the right to receive the four remaining $5,000,000 payments from *S*. Under the terms of the agreement between *S* and *T*, *S* is notified of this assignment, and *S* is contractually bound thereafter to make its payments to *U* on the appropriate payment dates. *S*'s obligation to pay *U* is conditioned on *T* making its LIBOR payment to *S* on the appropriate payment dates.
> (b) Because *T* has assigned to *U* its rights to the fixed rate payments, but not its floating rate obligations under the notional principal contract, *U*'s payment to *T* is not a termination payment as defined in paragraph (h)(1) of this section, but is covered by paragraph (h)(4)(i) of this section. The economic substance of the transaction between *T* and *U* is a loan that does not affect the way that *S* and *T* account for the notional principal contract under this section.

(i) ***Anti-abuse rule.*** If a taxpayer enters into a transaction with a principal purpose of applying the rules of this section to produce a material distortion of income, the Commissioner may depart from the rules of this section as necessary to reflect the appropriate timing of income and deductions from the transaction.

(j)

(1) ***Effective/applicability date.*** These regulations are effective for notional principal contracts entered into on or after December 13, 1993.

(2) The rules provided in paragraph (g)(4) of this section apply to notional principal contracts entered into on or after September 14, 2021. Taxpayers may choose to apply the rules provided in paragraph (g)(4) of this section to notional principal contracts entered into before September 14, 2021.

[T.D. 8491, 58 FR 53128, Oct. 14, 1993; 59 FR 9411, Feb. 28, 1994, as amended by T.D. 8554, 59 FR 36358, July 18, 1994; T.D. 9719, 80 FR 26440, May 8, 2015; 80 FR 34051, June 15, 2015; T.D. 9905, 85 FR 56839, Sept. 14, 2020]

§ 1.446-3T Notional principal contracts (temporary).

(a) through (g) (3) [Reserved]. For further guidance, see § 1.446-3(a) through (g)(3).

(4) ***Notional principal contracts with nonperiodic payments*** —

(i) ***General rule.*** Except as provided in paragraph (g)(4)(ii) of this section, a notional principal contract with one or more nonperiodic payments is treated as two separate transactions consisting of an on-market, level payment swap and one or more loans. The loan(s) must be accounted for by the parties to the contract independently of the swap. The time value component associated with the loan(s) is not included in the net income or net deduction from the swap under § 1.446-3(d), but it is recognized as interest for all purposes of the Internal Revenue Code. See paragraph (g)(6) *Example 2* of this section.

(ii) ***Exceptions*** —

(A) ***Notional principal contract with a term of one year or less*** —

(*1*) ***General rule.*** Except for purposes of sections 514 and 956, paragraph (g)(4)(i) of this section does not apply to a notional principal contract if the term of the contract is one year or less. For purposes of this paragraph (g)(4)(ii)(A), the term of a notional principal contract is the stated term of the contract, inclusive of any extensions

(optional or otherwise) provided for in the terms of the contract, without regard to whether any extension is unilateral, is subject to approval by one or both parties to the contract, or is based on the occurrence or non-occurrence of a specified event.

(*2*) ***Anti-abuse rule.*** For purposes of determining the term of a contract under paragraph (g)(4)(ii)(A)(*1*) of this section, the Commissioner may treat two or more contracts as a single contract if a principal purpose of entering into separate contracts is to qualify for the exception set forth in paragraph (g)(4)(ii)(A)(*1*) of this section. A purpose may be a principal purpose even though it is outweighed by other purposes (taken together or separately).

(B) ***Notional principal contract subject to margin or collateral requirements.*** Subject to the requirements in paragraph (g)(4)(ii)(C) of this section, paragraph (g)(4)(i) of this section does not apply to a notional principal contract if the contract is described in paragraph (g)(4)(ii)(B)(*1*) or (*2*) of this section. See § 1.956-2T(b)(1)(xi) for a related exception under section 956.

(*1*) The contract is cleared by a derivatives clearing organization (as such term is defined in section 1a of the Commodity Exchange Act (7 U.S.C. 1a)) or by a clearing agency (as such term in defined in section 3 of the Securities Exchange Act of 1934 (15 U.S.C. 78c)) that is registered as a derivatives clearing organization under the Commodity Exchange Act or as a clearing agency under the Securities Exchange Act of 1934, respectively, and the derivatives clearing organization or clearing agency requires the parties to the contract to post and collect margin or collateral to fully collateralize the mark-to-market exposure on the contract (including the exposure on the nonperiodic payment) on a daily basis for the entire term of the contract. The mark-to-market exposure on a contract will be fully collateralized only if the contract is subject to both initial variation margin in an amount equal to the nonperiodic payment (except for variances permitted by intraday price changes) and daily variation margin in an amount equal to the daily change in the fair market value of the contract. See paragraph (g)(6) *Example 3* of this section.

(*2*) The parties to the contract are required, pursuant to the terms of the contract or the requirements of a federal regulator, to post and collect margin or collateral to fully collateralize the mark-to-market exposure on the contract (including the exposure on the nonperiodic payment) on a daily basis for the entire term of the contract. The mark-to-market exposure on a contract will be fully collateralized only if the contract is subject to both initial variation margin or collateral in an amount equal to the nonperiodic payment (except for variances permitted by intraday price changes) and daily variation margin or collateral in an amount equal to the daily change in the fair market value of the contract. For purposes of this paragraph (g)(4)(ii)(B)(*2*), the term “federal regulator” means the Securities and Exchange Commission (SEC), Commodity Futures Trading Commission (CFTC), or a prudential regulator, as defined in section 1a(39) of the Commodity Exchange Act (7 U.S.C. 1a), as amended by section 721 of the Dodd-Frank Act. See paragraph (g)(6) *Example 4* of this section.

(C) ***Limitations and special rules*** —

(*1*) ***Cash requirement.*** A notional principal contract is described in paragraph (g)(4)(ii)(B) of this section only to the extent the parties post and collect margin or collateral to fully collateralize the mark-to-market exposure on the contract (including the

exposure on the nonperiodic payment) by paying and receiving the required margin or collateral in cash. The term "cash" includes U.S. dollars or cash in any currency in which payment obligations under the notional principal contract are denominated.

(2) ***Excess margin or collateral.*** For purposes of paragraph (g)(4)(ii)(B)(2) of this section, if the amount of cash margin or collateral posted and collected is in excess of the amount necessary to fully collateralize the mark-to-market exposure on the contract (including the exposure on the nonperiodic payment) on a daily basis for the entire term of the contract, any excess is subject to the rule in paragraph (g)(4)(i) of this section.

(3) ***Margin or collateral paid and received in cash and other property.*** If the parties to the contract post and collect both cash and other property to satisfy margin or collateral requirements to collateralize the mark-to-market exposure on the contract (including the exposure on the nonperiodic payment), any excess of the nonperiodic payment over the cash margin or collateral posted and collected is subject to the rule in paragraph (g)(4)(i) of this section.

(5) [Reserved]. For further guidance, see § 1.446-3(g)(5).

(6) ***Examples*** through *Example 1.* [Reserved]. For further guidance, see § 1.446-3(g)(6), *Examples* through *Example 1*.

> *Example 2.* *Nonperiodic payment.* (i) On January 1, 2016, unrelated parties M and N enter into an interest rate swap contract. Under the terms of the contract, N agrees to make five annual payments to M equal to LIBOR times a notional principal amount of $100 million. In return, M agrees to pay N 6% of $100 million annually, plus an upfront payment of $15,163,147 on January 1, 2016. At the time M and N enter into the contract, the rate for similar on-market swaps is LIBOR to 10%, and N provides M with information that the amount of the upfront payment was determined as the present value, at 10% compounded annually, of five annual payments from M to N of $4,000,000 (4% of $100,000,000). The contract does not require the parties to post and collect margin or collateral to collateralize the mark-to-market exposure on the contract on a daily basis for the entire term of the contract.
> (ii) The exceptions in paragraphs (g)(4)(ii)(A) and (B) of this section do not apply. Under paragraph (g)(4)(i) of this section, the transaction is recharacterized as consisting of both a $15,163,147 loan from M to N that N repays in installments over the term of the contract and an interest rate swap between M and N in which M immediately pays the installment payments on the loan back to N as part of its fixed payments on the swap in exchange for the LIBOR payments by N.

(iii) The upfront payment is recognized over the life of the contract by treating the $15,163,147 as a loan that will be repaid with level payments over five years. Assuming a constant yield to maturity and annual compounding at 10%, M and N account for the principal and interest on the loan as follows:

	Level payment	Interest component	Principal component
2016	$4,000,000	$1,516,315	$2,483,685
2017	4,000,000	1,267,946	2,732,054
2018	4,000,000	994,741	3,005,259
2019	4,000,000	694,215	3,305,785
2020	4,000,000	363,636	3,636,364
	20,000,000	4,836,853	15,163,147

(iv) M recognizes interest income, and N claims an interest deduction, each taxable year equal to the interest component of the deemed installment payments on the loan. These interest amounts are not included in the parties' net income or net deduction from the swap contract under § 1.446-3(d). The principal components are needed only to compute the interest component of the level payment for the following period and do not otherwise affect the parties' net income or net deduction from this contract.
(v) N also makes swap payments to M based on LIBOR and receives swap payments from M at a fixed rate that is equal to the sum of the stated fixed rate and the rate calculated by dividing the deemed level annual payments on the loan by the notional principal amount. Thus, the fixed rate on this swap is 10%, which is the sum of the stated rate of 6% and the rate calculated by dividing the annual loan payment of $4,000,000 by the notional principal amount of $100,000,000, or 4%. Using the methods provided in § 1.446-3(e)(2), the fixed swap payments from M to N of $10,000,000 (10% of $100,000,000) and the LIBOR swap payments from N to M are included in the parties' net income or net deduction from the contract for each taxable year.

Example 3. Full margin—cleared contract. (i) A, a domestic corporation enters into an interest rate swap contract with unrelated counterparty B. The contract is required to be cleared and is accepted for clearing by a U.S.-registered derivatives clearing organization (DCO). The standardized terms of the contract provide that A, for a term of X years, will pay B a fixed coupon of 1% per year and receive a floating coupon on a notional principal amount of $Y. When A and B enter into the interest rate swap, the market coupon for similar interest rate swaps is 2% per year. The DCO requires A to make an upfront payment to compensate B for the below-market annual coupon payments that B will receive, and A makes the upfront

payment in cash. The DCO also requires B to post initial variation margin in an amount equal to the upfront payment and requires each party to post and collect daily variation margin in an amount equal to the change in the fair market value of the contract on a daily basis for the entire term of the contract. B posts the initial variation margin in U.S. dollars, and the parties post and collect daily variation margin in U.S. dollars.
(ii) Because the contract is subject to initial variation margin in an amount equal to the upfront payment and daily variation margin in an amount equal to the change in the fair market value of the contract on a daily basis for the entire term of the contract, the contract is described in paragraph (g)(4)(ii)(B)(*1*) of this section and paragraph (g)(4)(i) of this section does not apply to the contract.

Example 4. *Full margin—uncleared contract.* (i) On June 1, 2016, P, a domestic corporation, enters into an interest rate swap contract with an unrelated domestic counterparty, CP. Under the terms of the contract, CP agrees to make five annual payments to P equal to a specified contract rate of 3% times the notional amount of $10,000,000 plus an upfront payment of $1,878,030. In exchange, P agrees to make five annual payments to CP equal to the same notional amount times LIBOR. At the time the parties enter into the contract, the fixed rate for an on-market swap is 7.52%. The contract is not required to be cleared and is not accepted for clearing by a U.S.-registered derivatives clearing organization. However, pursuant to the terms of the contract, P is obligated to post $1,878,030 as collateral with CP, and P and CP are obligated to post and collect collateral each business day in an amount equal to the daily change in the fair market value of the contract for the entire term of the contract. All collateral on the contract is required to be in U.S. dollars.
(ii) Because the contract is required to be collateralized in an amount equal to the upfront payment and changes in the fair market value of the contract on a daily basis for the entire term of the contract, the contract is described in paragraph (g)(4)(ii)(B)(*2*) of this section and paragraph (g)(4)(i) of this section does not apply to the contract.

(h) through (j)

(1) [Reserved]. For further guidance, see § 1.446-3(h) through (j)(1).

(2) ***Application of § 1.446-3T(g)(4).*** Paragraph (g)(4)(i) of this section and paragraph (g)(6) *Example 2* of this section apply to notional principal contracts entered into on or after the later of January 1, 2017, or 180 days after the date of publication of the Treasury decision adopting these rules as final regulations in the FEDERAL REGISTER. Paragraph (g)(4)(ii) of this section applies to notional principal contracts entered into on or after May 8, 2015. However, before the later of January 1, 2017, or 180 days after the date of publication of the Treasury decision adopting paragraph (g)(4)(i) of this section as final regulations in the FEDERAL REGISTER, taxpayers may rely on the provision in § 1.446-3(g)(4), as contained in 26 CFR part 1, revised April 1, 2015, which (except for purposes of section 956) limits the application of the embedded loan rule to nonperiodic payments that are

significant, even if the requirements for the exceptions in paragraph (g)(4)(ii) of this section are not met. Taxpayers may apply paragraph (g)(4)(i) of this section, paragraph (g)(4)(ii) of this section, or both to notional principal contracts entered into before the dates set forth in this paragraph (j)(2).

(k) ***Expiration date.*** The applicability of paragraph (g)(4) of this section and paragraph (g)(6) *Examples 2, 3* and *4* of this section expires May 7, 2018.

[T.D. 9719, 80 FR 26440, May 8, 2015, as amended by 80 FR 61308, Oct. 13, 2015]

§ 1.446-4 Hedging transactions.

(a) ***In general.*** Except as provided in this paragraph (a), a hedging transaction as defined in § 1.1221-2(b) (whether or not the character of gain or loss from the transaction is determined under § 1.1221-2) must be accounted for under the rules of this section. To the extent that provisions of any other regulations governing the timing of income, deductions, gain, or loss are inconsistent with the rules of this section, the rules of this section control.

(1) ***Trades or businesses excepted.*** A taxpayer is not required to account for hedging transactions under the rules of this section for any trade or business in which the cash receipts and disbursements method of accounting is used or in which § 1.471-6 is used for inventory valuations if, for all prior taxable years ending on or after September 30, 1993, the taxpayer met the $5,000,000 gross receipts test of section 448(c) (or would have met that test if the taxpayer were a corporation or partnership). A taxpayer not required to use the rules of this section may nonetheless use a method of accounting that is consistent with these rules.

(2) ***Coordination with other sections.*** This section does not apply to—

(i) Any position to which section 475(a) applies;

(ii) An integrated transaction subject to § 1.1275-6;

(iii) Any section 988 hedging transaction if the transaction is integrated under § 1.988-5 or if other regulations issued under section 988(d) (or an advance ruling described in 1.988-5(e)) govern when gain or loss from the transaction is taken into account; or

(iv) The determination of the issuer's yield on an issue of tax-exempt bonds for purposes of the arbitrage restrictions to which § 1.148-4(h) applies.

(b) ***Clear reflection of income.*** The method of accounting used by a taxpayer for a hedging transaction must clearly reflect income. To clearly reflect income, the method used must reasonably match the timing of income, deduction, gain, or loss from the hedging transaction with the timing of income, deduction, gain, or loss from the item or items being hedged. Taking gains and losses into account in the period in which they are realized may clearly reflect income in the case of certain hedging transactions. For example, where a hedge and the item being hedged are disposed of in the same taxable year, taking realized gain or loss into account on both items in that taxable year may clearly reflect income. In the case of many hedging transactions, however, taking gains and losses into account as they are realized does not result in the matching required by this section.

(c) ***Choice of method and consistency.*** For any given type of hedging transaction, there may be more than one method of accounting that satisfies the clear reflection requirement of paragraph (b) of this section. A taxpayer is generally permitted to adopt a method of accounting for a particular type of hedging transaction that clearly reflects the taxpayer's income from that type of transaction. See paragraph (e) of

this section for requirements and limitations on the taxpayer's choice of method. Different methods of accounting may be used for different types of hedging transactions and for transactions that hedge different types of items. Once a taxpayer adopts a method of accounting, however, that method must be applied consistently and can only be changed with the consent of the Commissioner, as provided by section 446(e) and the regulations and procedures thereunder.

(d) ***Recordkeeping requirements*** —

(1) ***In general.*** The books and records maintained by a taxpayer must contain a description of the accounting method used for each type of hedging transaction. The description of the method or methods used must be sufficient to show how the clear reflection requirement of paragraph (b) of this section is satisfied.

(2) ***Additional identification.*** In addition to the identification required by § 1.1221-2(f), the books and records maintained by a taxpayer must contain whatever more specific identification with respect to a transaction is necessary to verify the application of the method of accounting used by the taxpayer for the transaction. This additional identification may relate to the hedging transaction or to the item, items, or aggregate risk being hedged. The additional identification must be made at the time specified in § 1.1221-2(f)(2) and must be made on, and retained as part of, the taxpayer's books and records.

(3) ***Transactions in which character of gain or loss is not determined under § 1.1221-2.*** A section 988 transaction, as defined in section 988(c)(1), or a qualified fund, as defined in section 988(c)(1)(E)(iii), is subject to the identification and recordkeeping requirements of § 1.1221-2(f). See § 1.1221-2(a)(4).

(e) ***Requirements and limitations with respect to hedges of certain assets and liabilities.*** In the case of certain hedging transactions, this paragraph (e) provides guidance in determining whether a taxpayer's method of accounting satisfies the clear reflection requirement of paragraph (b) of this section. Even if these rules are satisfied, however, the taxpayer's method, as actually applied to the taxpayer's hedging transactions, must clearly reflect income by meeting the matching requirement of paragraph (b) of this section.

(1) ***Hedges of aggregate risk*** —

(i) ***In general.*** The method of accounting used for hedges of aggregate risk must comply with the matching requirements of paragraph (b) of this section. Even though a taxpayer may not be able to associate the hedging transaction with any particular item being hedged, the timing of income, deduction, gain, or loss from the hedging transaction must be matched with the timing of the aggregate income, deduction, gain, or loss from the items being hedged. For example, if a notional principal contract hedges a taxpayer's aggregate risk, taking into account income, deduction, gain, or loss under the provisions of § 1.446-3 may clearly reflect income. See paragraph (e)(5) of this section.

(ii) ***Mark-and-spread method.*** The following method may be appropriate for taking into account income, deduction, gain, or loss from hedges of aggregate risk:

(A) The hedging transactions are marked to market at regular intervals for which the taxpayer has the necessary data, but no less frequently than quarterly; and

(B) The income, deduction, gain, or loss attributable to the realization or periodic marking to market of hedging transactions is taken into account over the period for which the hedging transactions are intended to reduce risk. Although the period over which the hedging transactions are intended to reduce risk may change, the period must be reasonable and consistent with the taxpayer's hedging policies and strategies.

(2) ***Hedges of items marked to market.*** In the case of a transaction that hedges an item that is marked to market under the taxpayer's method of accounting, marking the hedge to market clearly reflects income.

(3) ***Hedges of inventory*** —

(i) ***In general.*** If a hedging transaction hedges purchases of inventory, gain or loss on the hedging transaction may be taken into account in the same period that it would be taken into account if the gain or loss were treated as an element of the cost of inventory. Similarly, if a hedging transaction hedges sales of inventory, gain or loss on the hedging transaction may be taken into account in the same period that it would be taken into account if the gain or loss were treated as an element of sales proceeds. If a hedge is associated with a particular purchase or sales transaction, the gain or loss on the hedge may be taken into account when it would be taken into account if it were an element of cost incurred in, or sales proceeds from, that transaction. As with hedges of aggregate risk, however, a taxpayer may not be able to associate hedges of inventory purchases or sales with particular purchase or sales transactions. In order to match the timing of income, deduction, gain, or loss from the hedge with the timing of aggregate income, deduction, gain, or loss from the hedged purchases or sales, it may be appropriate for a taxpayer to account for its hedging transactions in the manner described in paragraph (e)(1)(ii) of this section, except that the gain or loss that is spread to each period is taken into account when it would be if it were an element of cost incurred (purchase hedges), or an element of proceeds from sales made (sales hedges), during that period.

(ii) ***Alternative methods for certain inventory hedges.*** In lieu of the method described in paragraph (e)(3)(i) of this section, other simpler, less precise methods may be used in appropriate cases where the clear reflection requirement of paragraph (b) of this section is satisfied. For example:

(A) Taking into account realized gains and losses on both hedges of inventory purchases and hedges of inventory sales when they would be taken into account if the gains and losses were elements of inventory cost in the period realized may clearly reflect income in some situations, but does not clearly reflect income for a taxpayer that uses the last-in, first-out method of accounting for the inventory; and

(B) Marking hedging transactions to market with resulting gain or loss taken into account immediately may clearly reflect income even though the inventory that is being hedged is not marked to market, but only if the inventory is not accounted for under either the last-in, first-out method or the lower-of-cost-or-market method and only if items are held in inventory for short periods of time.

(4) ***Hedges of debt instruments.*** Gain or loss from a transaction that hedges a debt instrument issued or to be issued by a taxpayer, or a debt instrument held or to be held by a taxpayer, must be accounted for by reference to the terms of the debt instrument and the period or periods to which the hedge relates. A hedge of an instrument that provides for interest to be paid at a fixed rate or a qualified floating rate, for example, generally is accounted for using constant yield principles. Thus, assuming that a fixed rate or qualified floating rate instrument remains outstanding, hedging gain or loss is

taken into account in the same periods in which it would be taken into account if it adjusted the yield of the instrument over the term to which the hedge relates. For example, gain or loss realized on a transaction that hedged an anticipated fixed rate borrowing for its entire term is accounted for, solely for purposes of this section, as if it decreased or increased the issue price of the debt instrument. Similarly, gain or loss realized on a transaction that hedges a contingent payment on a debt instrument subject to § 1.1275-4(c) (a contingent payment debt instrument issued for nonpublicly traded property) is taken into account when the contingent payment is taken into account under § 1.1275-4(c).

(5) ***Notional principal contracts.*** The rules of § 1.446-3 govern the timing of income and deductions with respect to a notional principal contract unless, because the notional principal contract is part of a hedging transaction, the application of those rules would not result in the matching that is needed to satisfy the clear reflection requirement of paragraph (b) and, as applicable, (e)(4) of this section. For example, if a notional principal contract hedges a debt instrument, the method of accounting for periodic payments described in § 1.446-3(e) and the methods of accounting for nonperiodic payments described in § 1.446-3(f)(2)(iii) and (v) generally clearly reflect the taxpayer's income. The methods described in § 1.446-3(f)(2)(ii) and (iv), however, generally do not clearly reflect the taxpayer's income in that situation.

(6) ***Disposition of hedged asset or liability.*** If a taxpayer hedges an item and disposes of, or terminates its interest in, the item but does not dispose of or terminate the hedging transaction, the taxpayer must appropriately match the built-in gain or loss on the hedging transaction to the gain or loss on the disposed item. To meet this requirement, the taxpayer may mark the hedge to market on the date it disposes of the hedged item. If the taxpayer intends to dispose of the hedging transaction within a reasonable period, however, it may be appropriate to match the realized gain or loss on the hedging transaction with the gain or loss on the disposed item. If the taxpayer intends to dispose of the hedging transaction within a reasonable period and the hedging transaction is not actually disposed of within that period, the taxpayer must match the gain or loss on the hedge at the end of the reasonable period with the gain or loss on the disposed item. For purposes of this paragraph (e)(6), a reasonable period is generally 7 days.

(7) ***Recycled hedges.*** If a taxpayer enters into a hedging transaction by recycling a hedge of a particular hedged item to serve as a hedge of a different item, as described in § 1.1221-2(d)(4), the taxpayer must match the built-in gain or loss at the time of the recycling to the gain or loss on the original hedged item, items, or aggregate risk. Income, deduction, gain, or loss attributable to the period after the recycling must be matched to the new hedged item, items, or aggregate risk under the principles of paragraph (b) of this section.

(8) ***Unfulfilled anticipatory transactions*** —

(i) ***In general.*** If a taxpayer enters into a hedging transaction to reduce risk with respect to an anticipated asset acquisition, debt issuance, or obligation, and the anticipated transaction is not consummated, any income, deduction, gain, or loss from the hedging transaction is taken into account when realized.

(ii) ***Consummation of anticipated transaction.*** A taxpayer consummates a transaction for purposes of paragraph (e)(8)(i) of this section upon the occurrence (within a reasonable interval around the expected time of the anticipated transaction) of either the anticipated transaction or a different but similar transaction for which the hedge serves to reasonably reduce risk.

(9) ***Hedging by members of a consolidated group*** —

(i) ***General rule: single-entity approach.*** In general, a member of a consolidated group must account for its hedging transactions as if all of the members were separate divisions of a single corporation. Thus, the timing of the income, deduction, gain, or loss on a hedging transaction must match the timing of income, deduction, gain, or loss from the item or items being hedged. Because all of the members are treated as if they were divisions of a single corporation, intercompany transactions are neither hedging transactions nor hedged items for these purposes.

(ii) ***Separate-entity election.*** If a consolidated group makes an election under § 1.1221-2(e)(2), then paragraph (e)(9)(i) of this section does not apply. Thus, in that case, each member of the consolidated group must account for its hedging transactions in a manner that meets the requirements of paragraph (b) of this section. For example, the income, deduction, gain, or loss from intercompany hedging transactions (as defined in § 1.1221-2(e)(2)(ii)) is taken into account under the timing rules of § 1.446-4 rather than under the timing rules of § 1.1502-13.

(iii) ***Definitions.*** For definitions of consolidated group, divisions of a single corporation, intercompany transaction, and member, see section 1502 and the regulations thereunder.

(iv) ***Effective date.*** This paragraph (e)(9) applies to transactions entered into on or after March 8, 1996.

(f) ***Type or character of income and deduction.*** The rules of this section govern the timing of income, deduction, gain, or loss on hedging transactions but do not affect the type or character of income, deduction, gain, or loss produced by the transaction. Thus, for example, the rules of paragraph (e)(3) of this section do not affect the computation of cost of goods sold or sales proceeds for a taxpayer that hedges inventory purchases or sales. Similarly, the rules of paragraph (e)(4) of this section do not increase or decrease the interest income or expense of a taxpayer that hedges a debt instrument or a liability.

(g) ***Effective date.*** This section applies to hedging transactions entered into on or after October 1, 1994.

(h) ***Consent to change methods of accounting.*** The Commissioner grants consent for a taxpayer to change its methods of accounting for transactions that are entered into on or after October 1, 1994, and that are described in paragraph (a) of this section. This consent is granted only for changes for the taxable year containing October 1, 1994. The taxpayer must describe its new methods of accounting in a statement that is included in its Federal income tax return for that taxable year.

[T.D. 8554, 59 FR 36358, July 18, 1994, as amended by T.D. 8653, 61 FR 519, Jan. 8, 1996; T.D. 8674, 61 FR 30138, June 14, 1996; T.D. 8985, 67 FR 12865, Mar. 20, 2002; 67 FR 31955, May 13, 2002]

§ 1.446-5 Debt issuance costs.

(a) ***In general.*** This section provides rules for allocating debt issuance costs over the term of the debt. For purposes of this section, the term *debt issuance costs* means those transaction costs incurred by an issuer of debt (that is, a borrower) that are required to be capitalized under § 1.263(a)-5. If these costs are otherwise deductible, they are deductible by the issuer over the term of the debt as determined under paragraph (b) of this section.

(b) ***Method of allocating debt issuance costs —***

(1) ***In general.*** Solely for purposes of determining the amount of debt issuance costs that may be deducted in any period, these costs are treated as if they adjusted the yield on the debt. To effect this, the issuer treats the costs as if they decreased the issue price of the debt. See § 1.1273-2 to determine issue price. Thus, debt issuance costs increase or create original issue discount and decrease or eliminate bond issuance premium.

(2) ***Original issue discount.*** Any resulting original issue discount is taken into account by the issuer under the rules in § 1.163-7, which generally require the use of a constant yield method (as described in § 1.1272-1) to compute how much original issue discount is deductible for a period. However, see § 1.163-7(b) for special rules that apply if the total original issue discount on the debt is *de minimis*.

(3) ***Bond issuance premium.*** Any remaining bond issuance premium is taken into account by the issuer under the rules of § 1.163-13, which generally require the use of a constant yield method for purposes of allocating bond issuance premium to accrual periods.

(c) ***Examples.*** The following examples illustrate the rules of this section:

Example 1. (i) On January 1, 2004, X borrows $10,000,000. The principal amount of the loan ($10,000,000) is repayable on December 31, 2008, and payments of interest in the amount of $500,000 are due on December 31 of each year the loan is outstanding. X incurs debt issuance costs of $130,000 to facilitate the borrowing.
(ii) Under § 1.1273-2, the issue price of the loan is $10,000,000. However, under paragraph (b) of this section, X reduces the issue price of the loan by the debt issuance costs of $130,000, resulting in an issue price of $9,870,000. As a result, X treats the loan as having original issue discount in the amount of $130,000 (stated redemption price at maturity of $10,000,000 minus the issue price of $9,870,000). Because this amount of original issue discount is more than the *de minimis* amount of original issue discount for the loan determined under § 1.1273-1(d) ($125,000 ($10,000,000 × .0025 × 5)), X must allocate the original issue discount to each year based on the constant yield method described in § 1.1272-1(b). See § 1.163-7(a). Based on this method and a yield of 5.30%, compounded annually, the original issue discount is allocable to each year as follows: $23,385 for 2004, $24,625 for 2005, $25,931 for 2006, $27,306 for 2007, and $28,753 for 2008.

Example 2. (i) Assume the same facts as in *Example 1,* except that X incurs debt issuance costs of $120,000 rather than $130,000.
(ii) Under § 1.1273-2, the issue price of the loan is $10,000,000. However, under paragraph (b) of this section, X reduces the issue price of the loan by the debt issuance costs of $120,000, resulting in an issue price of $9,880,000. As a result, X treats the loan as having original issue discount in the amount of $120,000 (stated redemption price at maturity of $10,000,000 minus the issue price of $9,880,000). Because this amount of original issue discount is less than the *de minimis* amount of original issue discount for the loan determined under § 1.1273-1(d) ($125,000), X does not have to use the constant yield method described in § 1.1272-1(b) to allocate the original issue discount to each year. Instead, under § 1.163-7(b)(2), X can choose to allocate the original issue discount to each year on a straight-line basis over the term of the loan or in

> proportion to the stated interest payments ($24,000 each year). X also could choose to deduct the original issue discount at maturity of the loan. X makes its choice by reporting the original issue discount in a manner consistent with the method chosen on X's timely filed federal income tax return for 2004. If X wanted to use the constant yield method, based on a yield of 5.279%, compounded annually, the original issue discount is allocable to each year as follows: $21,596 for 2004, $22,736 for 2005, $23,937 for 2006, $25,200 for 2007, and $26,531 for 2008.

(d) ***Effective date.*** This section applies to debt issuance costs paid or incurred for debt instruments issued on or after December 31, 2003.

(e) ***Accounting method changes*** —

(1) ***Consent to change.*** An issuer required to change its method of accounting for debt issuance costs to comply with this section must secure the consent of the Commissioner in accordance with the requirements of § 1.446-1(e). Paragraph (e)(2) of this section provides the Commissioner's automatic consent for certain changes.

(2) ***Automatic consent.*** The Commissioner grants consent for an issuer to change its method of accounting for debt issuance costs incurred for debt instruments issued on or after December 31, 2003. Because this change is made on a cut-off basis, no items of income or deduction are omitted or duplicated and, therefore, no adjustment under section 481 is allowed. The consent granted by this paragraph (e)(2) applies provided—

(i) The change is made to comply with this section;

(ii) The change is made for the first taxable year for which the issuer must account for debt issuance costs under this section; and

(iii) The issuer attaches to its federal income tax return for the taxable year containing the change a statement that it has changed its method of accounting under this section.

[T.D. 9107, 69 FR 464, Jan. 5, 2004]

§ 1.446-6 REMIC inducement fees.

(a) ***Purpose.*** This section provides specific timing rules for the clear reflection of income from an inducement fee received in connection with becoming the holder of a noneconomic REMIC residual interest. An inducement fee must be included in income over a period reasonably related to the period during which the applicable REMIC is expected to generate taxable income or net loss allocable to the holder of the noneconomic residual interest.

(b) ***Definitions.*** For purposes of this section:

(1) ***Applicable REMIC.*** The applicable REMIC is the REMIC that issued the noneconomic residual interest with respect to which the inducement fee is paid.

(2) ***Inducement fee.*** An inducement fee is the amount paid to induce a person to become the holder of a noneconomic residual interest in an applicable REMIC.

(3) ***Noneconomic residual interest.*** A REMIC residual interest is a noneconomic residual interest if it is a noneconomic residual interest within the meaning of § 1.860E-1(c)(2).

(4) ***Remaining anticipated weighted average life.*** The remaining anticipated weighted average life is the anticipated weighted average life determined using the methodology set forth in § 1.860E-1(a)(3)(iv) applied as of the date of acquisition of the noneconomic residual interest.

(5) ***REMIC.*** The term REMIC has the same meaning in this section as given in § 1.860D-1.

(c) ***General rule.*** All taxpayers, regardless of their overall method of accounting, must recognize an inducement fee over the remaining expected life of the applicable REMIC in a manner that reasonably reflects, without regard to this paragraph, the after-tax costs and benefits of holding that noneconomic residual interest.

(d) ***Special rule on disposition of a residual interest.*** If any portion of an inducement fee received with respect to becoming the holder of a noneconomic residual interest in an applicable REMIC has not been recognized in full by the holder as of the time the holder transfers, or otherwise ceases to be the holder for Federal tax purposes of, that residual interest in the applicable REMIC, then the holder must include the unrecognized portion of the inducement fee in income at that time. This rule does not apply to a transaction to which section 381(c)(4) applies.

(e) ***Safe harbors.*** If inducement fees are recognized in accordance with a method described in this paragraph (e), that method complies with the requirements of paragraph (c) of this section.

(1) ***The book method.*** Under the book method, an inducement fee is recognized in accordance with the method of accounting, and over the same period, used by the taxpayer for financial reporting purposes (including consolidated financial statements to shareholders, partners, beneficiaries, and other proprietors and for credit purposes), provided that the inducement fee is included in income for financial reporting purposes over a period that is not shorter than the period during which the applicable REMIC is expected to generate taxable income.

(2) ***The modified REMIC regulatory method.*** Under the modified REMIC regulatory method, the inducement fee is recognized ratably over the remaining anticipated weighted average life of the applicable REMIC as if the inducement fee were unrecognized gain being included in gross income under § 1.860F-2(b)(4)(iii).

(3) ***Additional safe harbor methods.*** The Commissioner, by revenue ruling or revenue procedure (*see* § 1.601(d)(2) of this chapter), may provide additional safe harbor methods for recognizing inducement fees relating to noneconomic REMIC residual interests.

(f) ***Method of accounting.*** The treatment of inducement fees is a method of accounting to which the provisions of sections 446 and 481 and the regulations thereunder apply. A taxpayer is generally permitted to adopt a method of accounting for inducement fees that satisfies the requirements of paragraph (c) of this section. Once a taxpayer adopts a method of accounting for inducement fees, that method must be applied consistently to all inducement fees received in connection with noneconomic REMIC residual interests and may be changed only with the consent of the Commissioner, as provided by section 446(e) and the regulations and procedures thereunder.

(g) ***Effective date.*** This section is applicable for taxable years ending on or after May 11, 2004.

[T.D. 9128, 69 FR 26041, May 11, 2004]

§ 1.446-7 Net asset value method for certain money market fund shares.

(a) ***In general.*** This section provides a permissible method of accounting (the net asset value method, or NAV method) for gain or loss on shares in a money market fund (or MMF).

(b) ***Definitions.*** For purposes of this section—

(1) ***Computation period.*** Computation periods are the periods (of either equal or varying length) that a taxpayer selects for computing gain and loss under the NAV method for shares in an MMF. Computation periods must possess all of the following attributes:

(i) Every day during the taxable year falls within one, and only one, computation period;

(ii) Each computation period contains days from only one taxable year; and

(iii) If the taxpayer is a regulated investment company (RIC) that is not described in section 4982(f)—

(A) The same computation periods are used for purposes of both income tax accounting under chapter 1 and excise tax computations under section 4982; and

(B) The requirements in paragraphs (b)(1)(i) and (ii) of this section are also satisfied if applied by substituting the RIC's section 4982 period for the RIC's taxable year.

(2) ***Ending value.*** The *ending value* of a taxpayer's shares in an MMF for a computation period is the aggregate fair market value of the taxpayer's shares at the end of that computation period.

(3) ***Fair market value.*** The fair market value of a share in an MMF is determined as follows:

(i) ***Presumption based on applicable published redemption amount.*** For purposes of this section, the fair market value of a share in an MMF is presumed to be the applicable published redemption amount for the share.

(ii) ***Published redemption amount.*** The published redemption amount for a share in an MMF is the published amount for which the MMF would redeem the share (usually, the net asset value per share (NAV)), taking into account any corrections and not taking into account any liquidity fee described in Rule 2a-7(c)(2) under the Investment Company Act of 1940 (17 CFR 270.2a-7(c)(2)).

(iii) ***Applicable published redemption amount.*** The applicable published redemption amount is—

(A) For purposes of determining the ending value of a taxpayer's shares in an MMF for a computation period under paragraph (b)(2) of this section, the last published redemption amount on the last day of that computation period;

(B) For purposes of determining the value of MMF shares received in a redemption or exchange described in paragraph (b)(5)(ii)(A) of this section, the published redemption amount for such MMF shares used to determine the consideration received in the redemption or exchange, or if the consideration received is not based on a published redemption amount, the first published redemption amount for such MMF shares after the redemption or exchange;

(C) For purposes of determining the amount received in a redemption or exchange described in paragraph (b)(5)(ii)(B) of this section in which the consideration received is based on a published redemption amount for the redeemed shares, that published redemption amount; and

(D) For purposes of determining the amount received in an exchange described in paragraph (b)(5)(ii)(B) of this section that is not described in paragraph (b)(3)(iii)(C) of this section, or the amount of any adjustment resulting from a disposition transaction described in paragraph (b)(5)(iii) of this section, the first published redemption amount for the exchanged or disposed of MMF shares after the exchange or other transaction.

(iv) ***Facts and circumstances determination.*** If there is no applicable published redemption amount or if circumstances indicate that the amount does not represent the fair market value of a share in the MMF, the fair market value is determined on the basis of all of the facts and circumstances.

(4) ***Money market fund (or MMF).*** An MMF is a regulated investment company that is permitted to hold itself out to investors as a money market fund under Rule 2a-7 under the Investment Company Act of 1940 (17 CFR 270.2a-7). See paragraph (c)(5) of this section for the treatment of shares in a single MMF held in more than one account.

(5) ***Net investment*** —

(i) ***In general.*** The net investment in an MMF for a computation period may be a positive amount, a negative amount, or zero. Except as provided in paragraph (b)(5)(iii) of this section, the net investment is equal to—

(A) The aggregate cost of shares in the MMF purchased during the computation period (including purchases through reinvestment of dividends); minus

(B) The aggregate amount received during the computation period in redemption of (or otherwise in exchange for) shares in the MMF in transactions in which gain or loss would be recognized if the taxpayer did not apply the NAV method to the shares.

(ii) ***Aggregate amount received.*** For purposes of paragraph (b)(5)(i)(B) of this section, the amount received in a redemption or exchange of an MMF share is—

(A) If no property other than cash and shares in one or more other MMFs is received, the amount of any cash plus the fair market value of any MMF shares received; or

(B) If any property other than cash or shares in one or more other MMFs is received, the fair market value of the redeemed MMF share.

(iii) ***Adjustments*** —

(A) ***Dispositions in which gain or loss is not recognized.*** If, during the computation period, any shares in an MMF are disposed of in transactions in which gain or loss would not be recognized if the taxpayer did not apply the NAV method to the shares, the net investment in the MMF for the computation period is decreased by the fair market value of each such share at the time of its disposition.

(B) ***Acquisitions other than by purchase.*** If, during the computation period, any shares in an MMF are acquired other than by purchase, the net investment in the MMF for the computation period is increased by the adjusted basis (for purposes of determining loss)

of each such share immediately after its acquisition. If the adjusted basis of an acquired share would be determined by reference to the basis of a share or shares in an MMF that are being disposed of by the taxpayer in a transaction that is governed by paragraph (b)(5)(iii)(A) of this section, then the adjusted basis of each such disposed share is treated for purposes of this section as being the fair market value of that share at the time of its disposition. If the adjusted basis of an acquired share would be determined by reference to the basis of that share in the hands of the person from whom the share is acquired and that person was applying the NAV method to the share at the time of the transaction, then the adjusted basis of the share in the hands of the person from whom the share is acquired is treated for purposes of this section as being the fair market value of that share at the time of the transaction.

(6) ***Section 4982 period.*** If a taxpayer using the NAV method is a RIC to which section 4982 applies, the section 4982 period is the one-year period with respect to which gain or loss is determined for purposes of section 4982(e)(2) and (e)(6). The preceding sentence is applied taking into account the application of section 4982(e)(4). See paragraph (c)(8) of this section regarding the application of section 4982(e)(6).

(7) ***Starting basis.*** The starting basis of a taxpayer's shares in an MMF for a computation period is—

(i) Except as provided in paragraph (b)(7)(ii) of this section, the ending value of the taxpayer's shares in the MMF for the immediately preceding computation period; or

(ii) For the first computation period in a taxable year, if the taxpayer did not use the NAV method for shares in the MMF for the immediately preceding taxable year, the aggregate adjusted basis of the taxpayer's shares in the MMF at the end of the immediately preceding taxable year.

(c) ***NAV method*** —

(1) ***Scope.*** A taxpayer may use the NAV method described in this section to determine the gain or loss for a taxable year on the taxpayer's shares in an MMF. A taxpayer may have different methods of accounting, different computation periods, and gains or losses of differing character, for its shares in different MMFs. See paragraph (c)(5) of this section for the treatment of shares in a single MMF held in more than one account. See paragraph (c)(6) of this section for rules applicable to RICs to which section 4982 applies. See paragraph (c)(8) of this section for rules applicable to accounting method changes.

(2) ***Net gain or loss for a taxable year*** —

(i) ***Determination for each computation period.*** Subject to any adjustment under paragraph (c)(2)(ii) of this section, the net gain or loss for each computation period with respect to the shares in an MMF to which the NAV method applies equals the ending value, minus the starting basis, minus the net investment in the MMF for the computation period. If the computation produces a result that is greater than zero, the taxpayer has a gain for the computation period with respect to the shares in the MMF; if the computation produces a result that is less than zero, the taxpayer has a loss for the computation period with respect to the shares in the MMF; and if the computation produces a result that is equal to zero, the taxpayer has no gain or loss for the computation period with respect to the shares in the MMF.

(ii) ***Adjustment of gain or loss to reflect any basis adjustments.*** If, during a computation period, there is any downward (or upward) adjustment to the taxpayer's basis in the shares in the MMF under any provision of internal revenue law, then the net gain or loss for the computation period on shares in the MMF determined under paragraph (c)(2)(i) of this section is increased (or decreased) by the amount of the adjustment.

(iii) ***Timing of gains and losses.*** Gain or loss determined under the NAV method with respect to a taxpayer's shares in an MMF during a computation period is treated as arising on the last day of the computation period.

(iv) ***Determination of net gain or loss for each taxable year.*** The taxpayer's net gain or loss for a taxable year on shares in an MMF is the sum of the net gains or losses on shares in the MMF for the computation period (or computation periods) that comprise the taxable year.

(3) ***Character*** —

(i) In the case of a taxpayer that applies the NAV method to shares in an MMF, the gain or loss with respect to those shares for a computation period is treated as gain or loss from a sale or exchange of a capital asset provided the sale or exchange of one or more of those shares during the computation period would give rise to capital gain or loss if the taxpayer did not apply the NAV method to the shares.

(ii) In the case of a taxpayer that applies the NAV method to shares in an MMF, the gain or loss with respect to those shares for a computation period is treated as ordinary gain or loss provided the sale or exchange of every one of those shares during the computation period would give rise to ordinary gain or loss if the taxpayer did not apply the NAV method to the shares.

(iii) See paragraph (c)(5) of this section for the treatment of shares in a single MMF held in more than one account.

(4) ***Holding period.*** Capital gains and losses determined under the NAV method are treated as short-term capital gains and losses.

(5) ***More than one account.*** If a taxpayer holds shares in an MMF through more than one account, the taxpayer must treat its holdings in each account as a separate MMF for purposes of this section. A taxpayer therefore may have different methods of accounting, different computation periods, and gains or losses of differing character, for its shares of a single MMF held in different accounts.

(6) ***Consistency requirement for MMF shareholders that are RICs.*** If the taxpayer is a RIC that is not described in section 4982(f) (and therefore is subject to the section 4982 excise tax), then, for each MMF, the taxpayer must use the NAV method for both income tax and excise tax computations or for neither computation. See paragraph (c)(5) of this section for the treatment of shares in a single MMF held in more than one account. See paragraph (c)(8)(ii) of this section for changes to or from the NAV method by a RIC.

(7) ***Treatment of ordinary gains and losses under section 4982(e)(6).*** Under section 4982(e)(6)(B), this section is a specified mark to market provision, and therefore any ordinary gains and losses determined under the NAV method are governed by section 4982(e)(6)(A).

(8) ***Accounting method changes*** —

(i) ***In general.*** A change to or from the NAV method is a change in method of accounting to which the provisions of section 446 and the accompanying regulations apply. A taxpayer seeking to change to or from the NAV method must secure the consent of the Commissioner in accordance with § 1.446-1(e) and follow the administrative procedures issued under § 1.446-1(e)(3)(ii) for obtaining the Commissioner's consent to change the taxpayer's accounting method. Any such change will be made on a cut-off basis. Because there will be no duplication or omission of amounts as a result of such a change to or from the NAV method, no adjustment under section 481(a) will be required or permitted.

(ii) ***RICs*** —

(A) ***In general.*** A RIC that is subject to the excise tax under section 4982 and that changes to or from the NAV method for its shares in an MMF for income tax purposes must apply the new method for excise tax purposes starting with the first day of the RIC's income tax year of change. If that first day is not the first day of the RIC's section 4982 period that ends in or with the RIC's income tax year, then solely for purposes of applying the NAV method to compute the RIC's required distribution for the calendar year that ends with or within the RIC's income tax year of change, the section 4982 period is bifurcated into two portions, each of which is treated as a separate taxable year. The first portion begins on the first day of the section 4982 period and ends on the last day of the RIC's income tax year that precedes the year of change. The second portion begins on the first day of the income tax year of change and ends on the last day of the section 4982 period.

(B) ***Example.*** If a RIC that holds MMF shares as capital assets changes from a realization method to the NAV method for its income tax year ending January 31, 2019, the section 4982 period is bifurcated into two portions that are treated as separate taxable years solely for purposes of applying this section. For the portion starting on November 1, 2017, and ending on January 31, 2018, the RIC applies its realization method for excise tax purposes. For the portion starting on February 1, 2018, and ending on October 31, 2018, the RIC applies the NAV method for excise tax purposes, treating February 1, 2018, as the first day of the RIC's tax year for purposes of paragraphs (b)(1) and (6) of this section. The RIC's net gain or loss for this later portion is determined under paragraph (c)(2)(iii) of this section. This net gain or loss and any gains and losses for the earlier portion determined under the realization method are taken into account in determining the RIC's capital gain net income for the full one-year period described in section 4982(b)(1)(B).

(d) ***Example.*** The provisions of this section may be illustrated by the following example:

> *Example.* (i) Fund is an MMF. Shareholder is a person whose taxable year is the calendar year. On January 1 of Year 1, Shareholder owns 5,000,000 shares in Fund with an adjusted basis of $5,000,000.00. The price of Fund shares has not varied from $1.00 from the date Shareholder acquired the shares through January 1 of Year 1. During that period, Shareholder has engaged in multiple purchases and redemptions of Fund shares, but Shareholder has reported no gains or losses with respect to the shares because Shareholder realized an amount in each redemption equal to Shareholder's basis in the redeemed shares. During Year 1, the price of Fund shares begins to float. During Year 1, Shareholder receives $32,158.23 in taxable dividends from Fund and makes 120 purchases of additional shares in Fund (including purchases through the reinvestment

of those dividends) totaling $1,253,256.37 and 28 redemptions totaling $1,124,591.71. The fair market value of Shareholder's shares in Fund at the end of Year 1 is $5,129,750.00. All of Shareholder's shares in Fund are held in a single account and as capital assets. There is no adjustment to the basis in Shareholder's shares in Fund under any provision of internal revenue law during Year 1.

(ii) Prior to Year 1, Shareholder has had no gains or losses to report with respect to the Fund shares under a realization method and no changes in fair market value that would have been reported under the NAV method. Therefore, Shareholder may use the NAV method for the shares in Fund for Year 1. Shareholder uses the NAV method for the shares with its taxable year as the computation period. Shareholder's net investment in Fund for Year 1 equals $128,664.66 (the $1,253,256.37 in purchases, minus the $1,124,591.71 in redemptions). Shareholder's Year 1 gain therefore is $1,085.34, which is the ending value of Shareholder's shares ($5,129,750.00), minus the starting basis of Shareholder's shares ($5,000,000.00), minus Shareholder's net investment in the fund for the taxable year ($128,664.66). The gain of $1,085.34 is treated as short-term capital gain. Shareholder's starting basis for Year 2 is $5,129,750.00. Shareholder also must include the $32,158.23 in dividends in its income for Year 1 in the same manner as if Shareholder did not use the NAV method.

(iii) If Shareholder had instead adopted the calendar month as its computation period, it would have used the NAV method for every month of Year 1, even though prices of Fund shares may have been fixed for some months.

(e) ***Effective/applicability date.*** Except as provided in the following sentence, this section applies to taxable years ending on or after July 8, 2016. For taxable years ending on or after July 28, 2014, and beginning before July 8, 2016, however, shareholders of MMFs may rely either on this section or on § 1.446-7 of the 2014 proposed regulations REG-107012-14 (79 FR 43694).

[T.D. 9774, 81 FR 44512, July 8, 2016]

§ 1.448-1 Limitation on the use of the cash receipts and disbursements method of accounting.

(a)-(f) [Reserved]

(g) ***Treatment of accounting method change and timing rules for section 481(a) adjustment*** —

(1) ***Treatment of change in accounting method.*** The rules provided in paragraph (g) of this section apply to taxable years beginning before January 1, 2018. See § 1.448-2 for rules relating to taxable years beginning after December 31, 2017. Notwithstanding any other procedure published prior to January 7, 1991, concerning changes from the cash method, any taxpayer to whom section 448 applies must change its method of accounting in accordance with the provisions of this paragraph (g) and paragraph (h) of this section. In the case of any taxpayer required by this section to change its method of accounting for any taxable year, the change shall be treated as a change initiated by the taxpayer. The adjustments required under section 481(a) with respect to the change in method of accounting of such a taxpayer shall not be reduced by amounts attributable to taxable years preceding the Internal Revenue Code of 1954. Paragraph (h)(2) of this section provides procedures

under which a taxpayer may change to an overall accrual method of accounting for the first taxable year the taxpayer is subject to this section ("first section 448 year"). If the taxpayer complies with the provisions of paragraph (h)(2) of this section for its first section 448 year, the change shall be treated as made with the consent of the Commissioner. Paragraph (h)(3) of this section provides procedures under which a taxpayer may change to other than an overall accrual method of accounting for its first section 448 year. Unless the taxpayer complies with the provisions of paragraph (h)(2) or (h)(3) of this section for its first section 448 year, the taxpayer must comply with the provisions of paragraph (h)(4) of this section. See paragraph (h) of this section for rules to effect a change in method of accounting.

(2) ***Timing rules for section 481(a) adjustment*** —

(i) ***In general.*** Except as otherwise provided in paragraphs (g)(2)(ii) and (g)(3) of this section, a taxpayer required by this section to change from the cash method must take the net section 481(a) adjustment into account over the section 481(a) adjustment period as determined under the applicable administrative procedures issued under § 1.446-1(e)(3)(ii) for obtaining the Commissioner's consent to a change in accounting method (for example, see Rev. Proc. 2002-9 (2002-1 C.B. 327) and Rev. Proc. 97-27 (1997-1 C.B. 680) (also see § 601.601(d)(2) of this chapter)), provided the taxpayer complies with the provisions of paragraph (h)(2) or (3) of this section for its first section 448 year.

(ii) ***Hospital timing rules*** —

(A) ***In general.*** In the case of a hospital that is required by this section to change from the cash method, the section 481(a) adjustment shall be taken into account ratably (beginning with the year of change) over 10 years, provided the taxpayer complies with the provisions of paragraph (h)(2) or (h)(3) of this section for its first section 448 year.

(B) ***Definition of hospital.*** For purposes of paragraph (g) of this section, a hospital is an institution—

(*1*) Accredited by the Joint Commission on Accreditation of Healthcare Organizations or its predecessor (the JCAHO) (or accredited or approved by a program of the qualified governmental unit in which such institution is located if the Secretary of Health and Human Services has found that the accreditation or comparable approval standards of such qualified governmental unit are essentially equivalent to those of the JCAHO);

(*2*) Used primarily to provide, by or under the supervision of physicians, to inpatients diagnostic services and therapeutic services for medical diagnosis, treatment, and care of injured, disabled, or sick persons;

(*3*) Requiring every patient to be under the care and supervision of a physician; and

(*4*) Providing 24-hour nursing services rendered or supervised by a registered professional nurse and having a licensed practical nurse or registered nurse on duty at all times.

For purposes of this section, an entity need not be owned by or on behalf of a governmental unit or by a section 501(c)(3) organization, or operated by a section 501(c)(3) organization, in order to be considered a hospital. In addition, for purposes of this section, a hospital does not include a rest or nursing home, continuing care facility, daycare center, medical school facility, research laboratory, or ambulatory care facility.

(C) ***Dual function facilities.*** With respect to any taxpayer whose operations consist both of a hospital, and other facilities not qualifying as a hospital, the portion of the adjustment required by section 481(a) that is attributable to the hospital shall be taken into account in accordance with the rules of paragraph (g)(2) of this section relating to hospitals. The portion of the adjustment required by section 481(a) that is not attributable to the hospital shall be taken into account in accordance with the rules of paragraph (g)(2) of this section not relating to hospitals.

(iii) ***Untimely change in method of accounting to comply with this section.*** Unless a taxpayer (including a hospital and a cooperative) required by this section to change from the cash method complies with the provisions of paragraph (h)(2) or (h)(3) of this section for its first section 448 year within the time prescribed by those paragraphs, the taxpayer must take the section 481 (a) adjustment into account under the provisions of any applicable administrative procedure that is prescribed by the Commissioner after January 7, 1991, specifically for purposes of complying with this section. Absent such an administrative procedure, a taxpayer must request a change under § 1.446-1(e)(3) and shall be subject to any terms and conditions (including the year of change) as may be imposed by the Commissioner.

(3) ***Special timing rules for section 481(a) adjustment*** —

(i) ***Cessation of trade or business.*** If the taxpayer ceases to engage in the trade or business to which the section 481(a) adjustment relates, or if the taxpayer operating the trade or business terminates existence, and such cessation or termination occurs prior to the expiration of the adjustment period described in paragraph (g)(2)(i) or (ii) of this section, the taxpayer must take into account, in the taxable year of such cessation or termination, the balance of the adjustment not previously taken into account in computing taxable income. For purposes of this paragraph (g)(3)(i), the determination as to whether a taxpayer has ceased to engage in the trade or business to which the section 481(a) adjustment relates, or has terminated its existence, is to be made under the principles of § 1.446-1(e)(3)(ii) and its underlying administrative procedures.

(ii) ***De minimis rule for a taxpayer other than a cooperative.*** Notwithstanding paragraph (g)(2)(i) and (ii) of this section, a taxpayer other than a cooperative (within the meaning of section 1381(a)) that is required to change from the cash method by this section may elect to use, in lieu of the adjustment period described in paragraph (g)(2)(i) and (ii) of this section, the adjustment period for *de minimis* section 481(a) adjustments provided in the applicable administrative procedure issued under § 1.446-1(e)(3)(ii) for obtaining the Commissioner's consent to a change in accounting method. A taxpayer may make an election under this paragraph (g)(3)(ii) only if—

(A) The taxpayer's entire net section 481(a) adjustment (whether positive or negative) is a de minimis amount as determined under the applicable administrative procedure issued under § 1.446-1(e)(3)(ii) for obtaining the Commissioner's consent to a change in accounting method,

(B) The taxpayer complies with the provisions of paragraph (h)(2) or (3) of this section for its first section 448 year,

(C) The return for such year is due (determined with regard to extensions) after December 27, 1993, and

(D) The taxpayer complies with any applicable instructions to Form 3115 that specify the manner of electing the adjustment period for de minimis section 481(a) adjustments.

(4) ***Additional rules relating to section 481(a) adjustment.*** In addition to the rules set forth in paragraph (g) (2) and (3) of this section, the following rules shall apply in taking the section 481(a) adjustment into account—

(i) Any net operating loss and tax credit carryforwards will be allowed to offset any positive section 481(a) adjustment,

(ii) Any net operating loss arising in the year of change or in any subsequent year that is attributable to a negative section 481(a) adjustment may be carried back to earlier taxable years in accordance with section 172, and

(iii) For purposes of determining estimated income tax payments under sections 6654 and 6655, the section 481(a) adjustment will be recognized in taxable income ratably throughout a taxable year.

(5) ***Outstanding section 481(a) adjustment from previous change in method of accounting.*** If a taxpayer changed its method of accounting to the cash method for a taxable year prior to the year the taxpayer was required by this section to change from the cash method (the section 448 year), any section 481(a) adjustment from such prior change in method of accounting that is outstanding as of the section 448 year shall be taken into account in accordance with the provisions of this paragraph (g)(5). A taxpayer shall account for any remaining portion of the prior section 481(a) adjustment outstanding as of the section 448 year by continuing to take such remaining portion into account under the provisions and conditions of the prior change in method of accounting, or, at the taxpayer's option, combining or netting the remaining portion of the prior section 481(a) adjustment with the section 481(a) adjustment required under this section, and taking into account under the provisions of this section the resulting net amount of the adjustment. Any taxpayer choosing to combine or net the section 481(a) adjustments as described in the preceding sentence shall indicate such choice on the Form 3115 required to be filed by such taxpayer under the provisions of paragraph (h) of this section.

(h) ***Procedures for change in method of accounting*** —

(1) ***Applicability.*** The rules provided in paragraph (h) of this section apply to taxable years beginning before January 1, 2018. See § 1.448-2 for rules relating to taxable years beginning after December 31, 2017. Paragraph (h) of this section applies to taxpayers who change from the cash method as required by this section. Paragraph (h) of this section does not apply to a change in accounting method required by any Code section (or regulations thereunder) other than this section.

(2) ***Automatic rule for changes to an overall accrual method*** —

(i) ***Timely changes in method of accounting.*** Notwithstanding any other available procedures to change to the accrual method of accounting, a taxpayer to whom paragraph (h) of this section applies who desires to make a change to an overall accrual method for its first section 448 year must make that change under the provisions of this paragraph (h)(2). A taxpayer changing to

an overall accrual method under this paragraph (h)(2) must file a current Form 3115 by the time prescribed in paragraph (h)(2)(ii). In addition, the taxpayer must set forth on a statement accompanying the Form 3115 the period over which the section 481(a) adjustment will be taken into account and the basis for such conclusion. Moreover, the taxpayer must type or legibly print the following statement at the top of page 1 of the Form 3115: "Automatic Change to Accrual Method—Section 448." The consent of the Commissioner to the change in method of accounting is granted to taxpayers who change to an overall accrual method under this paragraph (h)(2). See paragraph (g)(2)(i), (g)(2)(ii), or (g)(3) of this section, whichever is applicable, for rules to account for the section 481(a) adjustment.

(ii) *Time and manner for filing Form 3115* —

(A) ***In general.*** Except as provided in paragraph (h)(2)(ii)(B) of this section, the Form 3115 required by paragraph (h)(2)(i) must be filed no later than the due date (determined with regard to extensions) of the taxpayer's federal income tax return for the first section 448 year and must be attached to that return.

(B) ***Extension of filing deadline.*** Notwithstanding paragraph (h)(2)(ii)(A) of this section, the filing of the Form 3115 required by paragraph (h)(2)(i) shall not be considered late if such Form 3115 is attached to a timely filed amended income tax return for the first section 448 year, provided that—

(*1*) The taxpayer's first section 448 year is a taxable year that begins (or, pursuant to § 1.441-2(c), is deemed to begin) in 1987, 1988, 1989, or 1990,

(*2*) The taxpayer has not been contacted for examination, is not before appeals, and is not before a federal court with respect to an income tax issue (each as defined in applicable administrative pronouncements), unless the taxpayer also complies with any requirements for approval in those applicable administrative pronouncements, and

(*3*) Any amended return required by this paragraph (h)(2)(ii)(B) is filed on or before July 8, 1991.

Filing an amended return under this paragraph (h)(2)(ii)(B) does not extend the time for making any other election. Thus, for example, taxpayers that comply with this section by filing an amended return pursuant to this paragraph (h)(2)(ii)(B) may not elect out of section 448 pursuant to paragraph (i)(2) of this section.

(3) *Changes to a method other than overall accrual method* —

(i) ***In general.*** A taxpayer to whom paragraph (h) of this section applies who desires to change to a special method of accounting must make that change under the provisions of this paragraph (h)(3), except to the extent other special procedures have been promulgated regarding the special method of accounting. Such a taxpayer includes taxpayers who change to both an accrual method of accounting and a special method of accounting such as a long-term contract method. In order to change an accounting method under this paragraph (h)(3), a taxpayer must submit an application for change in accounting method under the applicable administrative procedures in effect at the time of change, including the applicable procedures regarding the time and place of filing the application for change in method. Moreover, a taxpayer who changes an accounting method under this paragraph (h)(3) must type or legibly print the following statement on the top of page 1 of Form 3115: "Change to a Special Method

of Accounting—Section 448." The filing of a Form 3115 by any taxpayer requesting a change of method of accounting under this paragraph (h)(3) for its taxable year beginning in 1987 will not be considered late if the form is filed with the appropriate office of the Internal Revenue Service on or before the later of: the date that is the 180th day of the taxable year of change; or September 14, 1987. If the Commissioner approves the taxpayer's application for change in method of accounting, the timing of the adjustment required under section 481 (a), if applicable, will be determined under the provisions of paragraph (g)(2)(i), (g)(2)(ii), or (g)(3) of this section, whichever is applicable. If the Commissioner denies the taxpayer's application for change in accounting method, or if the taxpayer's application is untimely, the taxpayer must change to an overall accrual method of accounting under the provisions of either paragraph (h)(2) or (h)(4) of this section, whichever is applicable.

(ii) ***Extension of filing deadline.*** Notwithstanding paragraph (h)(3)(i) of this section, if the events or circumstances which under section 448 disqualify a taxpayer from using the cash method occur after the time prescribed under applicable procedures for filing the Form 3115, the filing of such form shall not be considered late if such form is filed on or before 30 days after the close of the taxable year.

(4) ***Untimely change in method of accounting to comply with this section.*** Unless a taxpayer to whom paragraph (h) of this section applies complies with the provisions of paragraph (h)(2) or (h)(3) of this section for its first section 448 year, the taxpayer must comply with the requirements of § 1.446-1 (e)(3) (including any applicable administrative procedure that is prescribed thereunder after January 7, 1991 specifically for purposes of complying with this section) in order to secure the consent of the Commissioner to change to a method of accounting that is in compliance with the provisions of this section. The taxpayer shall be subject to any terms and conditions (including the year of change) as may be imposed by the Commissioner.

(i) ***Effective date*** —

(1) ***In general.*** Except as provided in paragraph (i)(2), (3), (4), and (5) of this section, this section applies to any taxable year beginning after December 31, 1986.

(2) ***Election out of section 448*** —

(i) ***In general.*** A taxpayer may elect not to have this section apply to any

(A) transaction with a related party (within the meaning of section 267(b) of the Internal Revenue Code of 1954, as in effect on October 21, 1986),

(B) loan, or

(C) lease, if such transaction, loan, or lease was entered into on or before September 25, 1985. Any such election described in the preceding sentence may be made separately with respect to each transaction, loan, or lease. For rules relating to the making of such election, see § 301.9100-7T (temporary regulations relating to elections under the Tax Reform Act of 1986). Notwithstanding the provisions of this paragraph (i)(2), the gross receipts attributable to a transaction, loan, or lease described in this paragraph (i)(2) shall be taken into account for purposes of the $5,000,000 gross receipts test described in paragraph (f) of this section.

(ii) ***Special rules for loans.*** If the taxpayer makes an election under paragraph (i)(2)(i) of this section with respect to a loan entered into on or before September 25, 1985, the election shall apply only with respect to amounts that are attributable to the loan balance outstanding on September 25, 1985. The election shall not apply to any amounts advanced or lent after September 25, 1985, regardless of whether the loan agreement was entered into on or before such date. Moreover, any payments made on outstanding loan balances after September 25, 1985, shall be deemed to first extinguish loan balances outstanding on September 25, 1985, regardless of any contrary treatment of such loan payments by the borrower and lender.

(3) ***Certain contracts entered into before September 25, 1985.*** This section does not apply to a contract for the acquisition or transfer of real property or a contract for services related to the acquisition or development of real property if—

(i) The contract was entered into before September 25, 1985; and

(ii) The sole element of the contract which was not performed as of September 25, 1985, was payment for such property or services.

(4) ***Transitional rule for paragraphs (g) and (h) of this section.*** To the extent the provisions of paragraphs (g) and (h) of this section were not reflected in paragraphs (g) and (h) of § 1.448-1T (as set forth in 26 CFR part 1 as revised on April 1, 1993), paragraphs (g) and (h) of this section will not be adversely applied to a taxpayer with respect to transactions entered into before December 27, 1993.

(5) ***Effective date of paragraph (g)(2)(i).*** Paragraph (g)(2)(i) of this section applies to taxable years ending on or after June 16, 2004.

[T.D. 8514, 58 FR 68299, Dec. 27, 1993, as amended by T.D. 8996, 67 FR 35012, May 17, 2002; T.D. 9131, 69 FR 33572, June 16, 2004; T.D. 9942, 86 FR 268, Jan. 5, 2021]

§ 1.448-1T Limitation on the use of the cash receipts and disbursements method of accounting (temporary).

(a) ***Limitation on accounting method*** —

(1) ***In general.*** This section prescribes regulations under section 448 relating to the limitation on the use of the cash receipts and disbursements method of accounting (the cash method) by certain taxpayers.

(2) ***Limitation rule.*** Except as otherwise provided in this section, the computation of taxable income using the cash method is prohibited in the case of a—

(i) C corporation,

(ii) Partnership with a C corporation as a partner, or

(iii) Tax shelter.

A partnership is described in paragraph (a)(2)(ii) of this section, if the partnership has a C corporation as a partner at any time during the partnership's taxable year beginning after December 31, 1986.

(3) ***Meaning of C corporation.*** For purposes of this section, the term “C corporation” includes any corporation that is not an S corporation. For example, a regulated investment company (as defined in section 851) or a real estate investment trust (as defined in section 856) is a C corporation for

purposes of this section. In addition, a trust subject to tax under section 511 (b) shall be treated, for purposes of this section, as a C corporation, but only with respect to the portion of its activities that constitute an unrelated trade or business. Similarly, for purposes of this section, a corporation that is exempt from federal income taxes under section 501 (a) shall be treated as a C corporation only with respect to the portion of its activities that constitute an unrelated trade or business. Moreover, for purposes of determining whether a partnership has a C corporation as a partner, any partnership described in paragraph (a)(2)(ii) of this section is treated as a C corporation. Thus, if partnership ABC has a partner that is a partnership with a C corporation, then, for purposes of this section, partnership ABC is treated as a partnership with a C corporation partner.

(4) ***Treatment of a combination of methods.*** For purposes of this section, the use of a method of accounting that records some, but not all, items on the cash method shall be considered the use of the cash method. Thus, a C corporation that uses a combination of accounting methods including the use of the cash method is subject to this section.

(b) ***Tax shelter defined*** —

(1) ***In general.*** For purposes of this section, the term "tax shelter" means any—

(i) Enterprise (other than a C corporation) if at any time (including taxable years beginning before January 1, 1987) interests in such enterprise have been offered for sale in any offering required to be registered with any federal or state agency having the authority to regulate the offering of securities for sale,

(ii) Syndicate (within the meaning of paragraph (b)(3) of this section), or

(iii) Tax shelter within the meaning of section 6662(d)(2)(C).

(2) ***Requirement of registration.*** For purposes of paragraph (b)(1)(i) of this section, an offering is required to be registered with a federal or state agency if, under the applicable federal or state law, failure to register the offering would result in a violation of the applicable federal or state law (regardless of whether the offering is in fact registered). In addition, an offering is required to be registered with a federal or state agency if, under the applicable federal or state law, failure to file a notice of exemption from registration would result in a violation of the applicable federal or state law (regardless of whether the notice is in fact filed).

(3) ***Meaning of syndicate.*** For purposes of paragraph (b)(1)(ii) of this section, the term "syndicate" means a partnership or other entity (other than a C corporation) if more than 35 percent of the losses of such entity during the taxable year (for taxable years beginning after December 31, 1986) are allocated to limited partners or limited entrepreneurs. For purposes of this paragraph (b)(3), the term "limited entrepreneur" has the same meaning given such term in section 464 (e)(2). In addition, in determining whether an interest in a partnership is held by a limited partner, or an interest in an entity or enterprise is held by a limited entrepreneur, section 464 (c)(2) shall apply in the case of the trade or business of farming (as defined in paragraph (d)(2) of this section), and section 1256 (e)(3)(C) shall apply in any other case. Moreover, for purposes of this paragraph (b)(3), the losses of a partnership, entity, or enterprise (the enterprise) means the excess of the deductions allowable to the enterprise over the amount of income recognized by such enterprise under the enterprise's method of accounting used for federal income tax purposes (determined without regard to this section). For this purpose, gains or losses from the sale of capital assets or section 1221 (2) assets are not taken into account.

(4) ***Presumed tax avoidance.*** For purposes of paragraph (b)(1)(iii) of this section, marketed arrangements in which persons carrying on farming activities using the services of a common managerial or administrative service will be presumed to have the principal purpose of tax avoidance if such persons use borrowed funds to prepay a substantial portion of their farming expenses (*e.g.,* payment for farm supplies that will not be used or consumed until a taxable year subsequent to the taxable year of payment).

(5) ***Taxable year tax shelter must change accounting method.*** A partnership, entity, or enterprise that is a tax shelter must change from the cash method for the later of

(i) the first taxable year beginning after December 31, 1986, or

(ii) the taxable year that such partnership, entity, or enterprise becomes a tax shelter.

(c) ***Effect of section 448 on other provisions.*** Nothing in section 448 shall have any effect on the application of any other provision of law that would otherwise limit the use of the cash method, and no inference shall be drawn from section 448 with respect to the application of any such provision. For example, nothing in section 448 affects the requirement of section 447 that certain corporations must use an accrual method of accounting in computing taxable income from farming, or the requirement of § 1.446-1(c)(2) that an accrual method be used with regard to purchases and sales of inventory. Similarly, nothing in section 448 affects the authority of the Commissioner under section 446(b) to require the use of an accounting method that clearly reflects income, or the requirement under section 446(e) that a taxpayer secure the consent of the Commissioner before changing its method of accounting. For example, a taxpayer using the cash method may be required to change to an accrual method of accounting under section 446(b) because such method clearly reflects that taxpayer's income, even though the taxpayer is not prohibited by section 448 from using the cash method. Similarly, a taxpayer using an accrual method of accounting that is not prohibited by section 448 from using the cash method may not change to the cash method unless the taxpayer secures the consent of the Commissioner under section 446(e), and, in the opinion of the Commissioner, the use of the cash method clearly reflects that taxpayer's income under section 446(b).

(d) ***Exception for farming business*** —

(1) ***In general.*** Except in the case of a tax shelter, this section shall not apply to any farming business. A taxpayer engaged in a farming business and a separate nonfarming business is not prohibited by this section from using the cash method with respect to the farming business, even though the taxpayer may be prohibited by this section from using the cash method with respect to the nonfarming business.

(2) ***Meaning of farming business.*** For purposes of paragraph (d) of this section, the term “farming business” means—

(i) The trade or business of farming as defined in section 263A(e)(4) (including the operation of a nursery or sod farm, or the raising or harvesting of trees bearing fruit, nuts, or other crops, or ornamental trees), or

(ii) The raising, harvesting , or growing of trees described in section 263A(c)(5) (relating to trees raised, harvested, or grown by the taxpayer other than trees described in paragraph (d)(2)(i) of this section).

Thus, for purposes of this section, the term “farming business” includes the raising of timber. For purposes of this section, the term “farming business” does not include the processing of commodities or products beyond those activities normally incident to the growing, raising or harvesting of such products. For example, assume that a C corporation taxpayer is in the business of growing and harvesting wheat and other grains. The taxpayer processes the harvested grains to produce breads, cereals, and similar food products which it sells to customers in the course of its business. Although the taxpayer is in the farming business with respect to the growing and harvesting of grain, the taxpayer is not in the farming business with respect to the processing of such grains to produce food products which the taxpayer sells to customers. Similarly, assume that a taxpayer is in the business of raising poultry or other livestock. The taxpayer uses the livestock in a meat processing operation in which the livestock are slaughtered, processed, and packaged or canned for sale to customers. Although the taxpayer is in the farming business with respect to the raising of livestock, the taxpayer is not in the farming business with respect to the meat processing operation. However, under this section the term “farming business” does include processing activities which are normally incident to the growing, raising or harvesting of agricultural products. For example, assume a taxpayer is in the business of growing fruits and vegetables. When the fruits and vegetables are ready to be harvested, the taxpayer picks, washes, inspects, and packages the fruits and vegetables for sale. Such activities are normally incident to the raising of these crops by farmers. The taxpayer will be considered to be in the business of farming with respect to the growing of fruits and vegetables, and the processing activities incident to the harvest.

(e) ***Exception for qualified personal service corporation*** —

(1) ***In general.*** Except in the case of a tax shelter, this section does not apply to a qualified personal service corporation.

(2) ***Certain treatment for qualified personal service corporation.*** For purposes of paragraph (a)(2)(ii) of this section (relating to whether a partnership has a C corporation as a partner), a qualified personal service corporation shall be treated as an individual.

(3) ***Meaning of qualified personal service corporation.*** For purposes of this section, the term “qualified personal service corporation” means any corporation that meets—

(i) The function test paragraph (e)(4) of this section, and

(ii) The ownership test of paragraph (e)(5) of this section.

(4) ***Function test*** —

(i) ***In general.*** A corporation meets the function test if substantially all the corporation's activities for a taxable year involve the performance of services in one or more of the following fields—

(A) Health,

(B) Law,

(C) Engineering (including surveying and mapping),

(D) Architecture,

(E) Accounting,

(F) Actuarial science,

(G) Performing arts, or

(H) Consulting.

Substantially all of the activities of a corporation are involved in the performance of services in any field described in the preceding sentence (a qualifying field), only if 95 percent or more of the time spent by employees of the corporation, serving in their capacity as such, is devoted to the performance of services in a qualifying field. For purposes of determining whether this 95 percent test is satisfied, the performance of any activity incident to the actual performance of services in a qualifying field is considered the performance of services in that field. Activities incident to the performance of services in a qualifying field include the supervision of employees engaged in directly providing services to clients, and the performance of administrative and support services incident to such activities.

(ii) ***Meaning of services performed in the field of health.*** For purposes of paragraph (e)(4)(i)(A) of this section, the performance of services in the field of health means the provision of medical services by physicians, nurses, dentists, and other similar healthcare professionals. The performance of services in the field of health does not include the provision of services not directly related to a medical field, even though the services may purportedly relate to the health of the service recipient. For example, the performance of services in the field of health does not include the operation of health clubs or health spas that provide physical exercise or conditioning to their customers.

(iii) ***Meaning of services performed in the field of performing arts.*** For purposes of paragraph (e)(4)(i)(G) of this section, the performance of services in the field of the performing arts means the provision of services by actors, actresses, singers, musicians, entertainers, and similar artists in their capacity as such. The performance of services in the field of the performing arts does not include the provision of services by persons who themselves are not performing artists (*e.g.,* persons who may manage or promote such artists, and other persons in a trade or business that relates to the performing arts). Similarly, the performance of services in the field of the performing arts does not include the provision of services by persons who broadcast or otherwise disseminate the performances of such artists to members of the public (*e.g.,* employees of a radio station that broadcasts the performances of musicians and singers). Finally, the performance of services in the field of the performing arts does not include the provision of services by athletes.

(iv) ***Meaning of services performed in the field of consulting*** —

(A) ***In general.*** For purposes of paragraph (e)(4)(i)(H) of this section, the performance of services in the field of consulting means the provision of advice and counsel. The performance of services in the field of consulting does not include the performance of services other than advice and counsel, such as sales or brokerage services, or economically similar services. For purposes of the preceding sentence, the determination of whether a person's services are sales or brokerage services, or economically similar services, shall be based on all the facts and circumstances of that person's business. Such facts and circumstances include, for example, the manner in which the taxpayer is compensated for the services provided (*e.g.,* whether the compensation for the services is contingent upon the consummation of the transaction that the services were intended to effect).

(B) ***Examples.*** The following examples illustrate the provisions of paragraph (e)(4)(iv)(A) of this section. The examples do not address all types of services that may or may not qualify as consulting. The determination of whether activities not specifically addressed in

the examples qualify as consulting shall be made by comparing the service activities in question to the types of service activities discussed in the examples. With respect to a corporation which performs services which qualify as consulting under this section, and other services which do not qualify as consulting, see paragraph (e)(4)(i) of this section which requires that substantially all of the corporation's activities involve the performance of services in a qualifying field.

Example 1. A taxpayer is in the business of providing economic analyses and forecasts of business prospects for its clients. Based on these analyses and forecasts, the taxpayer advises its clients on their business activities. For example, the taxpayer may analyze the economic conditions and outlook for a particular industry which a client is considering entering. The taxpayer will then make recommendations and advise the client on the prospects of entering the industry, as well as on other matters regarding the client's activities in such industry. The taxpayer provides similar services to other clients, involving, for example, economic analyses and evaluations of business prospects in different areas of the United States or in other countries, or economic analyses of overall economic trends and the provision of advice based on these analyses and evaluations. The taxpayer is considered to be engaged in the performance of services in the field of consulting.

Example 2. A taxpayer is in the business of providing services that consist of determining a client's electronic data processing needs. The taxpayer will study and examine the client's business, focusing on the types of data and information relevant to the client and the needs of the client's employees for access to this information. The taxpayer will then make recommendations regarding the design and implementation of data processing systems intended to meet the needs of the client. The taxpayer does not, however, provide the client with additional computer programming services distinct from the recommendations made by the taxpayer with respect to the design and implementation of the client's data processing systems. The taxpayer is considered to be engaged in the performance of services in the field of consulting.

Example 3. A taxpayer is in the business of providing services that consist of determining a client's management and business structure needs. The taxpayer will study the client's organization, including, for example, the departments assigned to perform specific functions, lines of authority in the managerial hierarchy, personnel hiring, job responsibility, and personnel evaluations and compensation. Based on the study, the taxpayer will then advise the client on changes in the client's management and business structure, including, for example, the restructuring of the client's departmental systems or its lines of managerial authority. The taxpayer is considered to be engaged in the performance of services in the field of consulting.

Example 4. A taxpayer is in the business of providing financial planning services. The taxpayer will study a particular client's financial situation, including, for example, the client's present income, savings and investments, and anticipated future economic and financial needs. Based on this study, the taxpayer will then assist the client in making decisions and plans regarding the client's financial activities. Such financial planning includes the design of a personal budget to assist the client in monitoring the client's financial situation, the adoption of investment strategies tailored to the client's needs, and other similar services. The taxpayer is considered to be engaged in the performance of services in the field of consulting.

Example 5. A taxpayer is in the business of executing transactions for customers involving various types of securities or commodities generally traded through organized exchanges or other similar networks. The taxpayer provides its clients with economic analyses and forecasts of conditions in various industries and businesses. Based on these analyses, the taxpayer makes recommendations regarding transactions in securities and commodities. Clients place orders with the taxpayer to trade securities or commodities based on the taxpayer's recommendations. The taxpayer's compensation for its services is typically based on the trade orders. The taxpayer is not considered to be engaged in the performance of services in the field of consulting. The taxpayer is engaged in brokerage services. Relevant to this determination is the fact that the compensation of the taxpayer for its services is contingent upon the consummation of the transaction the services were intended to effect (i.e., the execution of trade orders for its clients).

Example 6. A taxpayer is in the business of studying a client's needs regarding its data processing facilities and making recommendations to the client regarding the design and implementation of data processing systems. The client will then order computers and other data processing equipment through the taxpayer based on the taxpayer's recommendations. The taxpayer's compensation for its services is typically based on the equipment orders made by the clients. The taxpayer is not considered to be engaged in the performance of services in the field of consulting. The taxpayer is engaged in the performance of sales services. Relevant to this determination is the fact that the compensation of the taxpayer for its services it contingent upon the consummation of the transaction the services were intended to effect (i.e., the execution of equipment orders for its clients).

Example 7. A taxpayer is in the business of assisting businesses in meeting their personnel requirements by referring job applicants to employers with hiring needs in a particular area. The taxpayer may be informed by potential employers of their need for job applicants, or, alternatively, the taxpayer may become aware of the client's personnel requirements after the taxpayer studies and examines the client's management and business structure. The taxpayer's compensation for its services is typically based on the job applicants, referred by the taxpayer to the clients, who accept employment positions with the clients. The taxpayer is not considered to be engaged in the performance of services in the field of consulting. The taxpayer is involved in the performance of services economically similar to brokerage services. Relevant to this determination is the fact that the compensation of the taxpayer for its services is contingent upon the consummation of the transaction the services were intended to effect (i.e., the hiring of a job applicant by the client).

Example 8. The facts are the same as in Example 7, except that the taxpayer's clients are individuals who use the services of the taxpayer to obtain employment positions. The taxpayer is typically compensated by its clients who obtain employment as a result of the taxpayer's services. For the reasons set forth in Example 7, the taxpayer is not considered to be engaged in the performance of services in the field of consulting.

Example 9. A taxpayer is in the business of assisting clients in placing advertisements for their goods and services. The taxpayer analyzes the conditions and trends in the client's particular industry, and then makes recommendations to the client regarding the types of advertisements which should be placed by the client and the various

types of advertising media (e.g., radio, television, magazines, etc.) which should be used by the client. The client will then purchase, through the taxpayer, advertisements in various media based on the taxpayer's recommendations. The taxpayer's compensation for its services is typically based on the particular orders for advertisements which the client makes. The taxpayer is not considered to be engaged in the performance of services in the field of consulting. The taxpayer is engaged in the performance of services economically similar to brokerage services. Relevant to this determination is the fact that the compensation of the taxpayer for its services is contingent upon the consummation of the transaction the services were intended to effect (i.e., the placing of advertisements by clients).

Example 10. A taxpayer is in the business of selling insurance (including life and casualty insurance), annuities, and other similar insurance products to various individual and business clients. The taxpayer will study the particular client's financial situation, including, for example, the client's present income, savings and investments, business and personal insurance risks, and anticipated future economic and financial needs. Based on this study, the taxpayer will then make recommendations to the client regarding the desirability of various insurance products. The client will then purchase these various insurance products through the taxpayer. The taxpayer's compensation for its services is typically based on the purchases made by the clients. The taxpayer is not considered to be engaged in the performance of services in the field of consulting. The taxpayer is engaged in the performance of brokerage or sales services. Relevant to this determination is the fact that the compensation of the taxpayer for its services is contingent upon the consummation of the transaction the services were intended to effect (i.e., the purchase of insurance products by its clients).

(5) ***Ownership test*** —

(i) ***In general.*** A corporation meets the ownership test, if at all times during the taxable year, substantially all the corporation's stock, by value, is held, directly or indirectly, by—

(A) Employees performing services for such corporation in connection with activities involving a field referred to in paragraph (e)(4) of this section,

(B) Retired employees who had performed such services for such corporation,

(C) The estate of any individual described in paragraph (e)(5)(i) (A) or (B) of this section, or

(D) Any other person who acquired such stock by reason of the death of an individual described in paragraph (e)(5)(i) (A) or (B) of this section, but only for the 2-year period beginning on the date of the death of such individual.

For purposes of this paragraph (e)(5) of this section, the term "substantially all" means an amount equal to or greater than 95 percent.

(ii) ***Definition of employee.*** For purposes of the ownership test of this paragraph (e)(5) of this section, a person shall not be considered an employee of a corporation unless the services performed by that person for such corporation, based on the facts and circumstances, are more than de minimis. In addition, a person who is an employee of a corporation shall not be treated as an employee of another corporation merely by reason of the employer corporation and the other corporation being members of the same affiliated group or otherwise related.

(iii) ***Attribution rules.*** For purposes of this paragraph (e)(5) of this section, a corporation's stock is considered held indirectly by a person if, and to the extent, such person owns a proportionate interest in a partnership, S corporation, or qualified personal service corporation that owns such stock. No other arrangement or type of ownership shall constitute indirect ownership of a corporation's stock for purposes of this paragraph (e)(5) of this section. Moreover, stock of a corporation held by a trust is considered held by a person if, and to the extent, such person is treated under subpart E, part I, subchapter J, chapter 1 of the Code as the owner of the portion of the trust that consists of such stock.

(iv) ***Disregard of community property laws.*** For purposes of this paragraph (e)(5) of this section, community property laws shall be disregarded. Thus, in determining the stock ownership of a corporation, stock owned by a spouse solely by reason of community property laws shall be treated as owned by the other spouse.

(v) ***Treatment of certain stock plans.*** For purposes of this paragraph (e)(5) of this section, stock held by a plan described in section 401 (a) that is exempt from tax under section 501 (a) shall be treated as held by an employee described in paragraph (e)(5)(i)(A) of this section.

(vi) ***Special election for certain affiliated groups.*** For purposes of determining whether the stock ownership test of this paragraph (e)(5) of this section has been met, at the election of the common parent of an affiliated group (within the meaning of section 1504 (a)), all members of such group shall be treated as one taxpayer if substantially all (within the meaning of paragraph (e)(4)(i) of this section) the activities of all such members (in the aggregate) are in the same field described in paragraph (e)(4)(i)(A)-(H) of this section. For rules relating to the making of the election, see 26 CFR 5h.5 (temporary regulations relating to elections under the Tax Reform Act of 1986).

(vii) ***Examples.*** The following examples illustrate the provisions of paragraph (e) of this section:

> *Example 1.* (i) X, a Corporation, is engaged in the business of providing accounting services to its clients. These services consist of the preparation of audit and financial statements and the preparation of tax returns. For purposes of section 448, such services consist of the performance of services in the field of accounting. In addition, for purposes of section 448, the supervision of employees directly preparing the statements and returns, and the performance of all administrative and support services incident to such activities (including secretarial, janitorial, purchasing, personnel, security, and payroll services) are the performance of services in the field of accounting.
> (ii) In addition, X owns and leases a portion of an office building. For purposes of this section, the following types of activities undertaken by the employees of X shall be considered as the performance of services in a field other than the field of accounting: (A) services directly relating to the leasing activities, e.g., time spent in leasing and maintaining the leased portion of the building; (B) supervision of employees engaged in directly providing services in the leasing activity; and (C) all administrative and support services incurred incident to services described in (A) and (B). The leasing activities of X are considered the performance of services in a field other than the field of accounting, regardless of whether such leasing activities constitute a trade or business under the

> Code. If the employees of X spend 95% or more of their time in the performance of services in the field of accounting, X satisfies the function test of paragraph (e)(4) of this section.

Example 2. Assume that Y, a C corporation, meets the function test of paragraph (e)(4) of this section. Assume further that all the employees of Y are performing services for Y in a qualifying field as defined in paragraph (e)(4) of this section. P, a partnership, owns 40%, by value, of the stock of Y. The remaining 60% of the stock of Y is owned directly by employees of Y. Employees of Y have an aggregate interest of 90% in the capital and profits of P. This, 96% of the stock of Y is held directly, or indirectly, by employees of Y performing services in a qualifying field. Accordingly, Y meets the ownership test of paragraph (e)(5) of this section and is a qualified personal service corporation.

Example 3. The facts are the same as in Example 2, except that 40% of the stock of Y is owned by Z, a C corporation. The remaining 60% of the stock is owned directly by the employees of Y. Employees of Y own 90% of the stock, by value, of Z. Assume that Z independently qualifies as a personal service corporation. The result is the same as in Example 2, i.e., 96% of the stock of Y is held, directly or indirectly, by employees of Y performing services in a qualifying field. Thus, Y is a qualified personal service corporation.

Example 4. The facts are the same as in Example 3, except that Z does not independently qualify as a personal service corporation. Because Z is not a qualified personal service corporation, the Y stock owned by Z is not treated as being held indirectly by the Z shareholders. Consequently, only 60% of the stock of Y is held, directly or indirectly, by employees of Y. Thus, Y does not meet the ownership test of paragraph (e)(5) of this section, and is not a qualified personal service corporation.

Example 5. Assume that W, a C corporation, meets the function test of paragraph (e)(4) of this section. In addition, assume that all the employees of W are performing services for W in a qualifying field. Nominal legal title to 100% of the stock of W is held by employees of W. However, due solely to the operation of community property laws, 20% of the stock of W is held by spouses of such employees who themselves are not employees of W. In determining the ownership of the stock, community property laws are disregarded. Thus, Y meets the ownership test of paragraph (e)(5) of this section, and is a qualified personal service corporation.

Example 6. Assume that 90% of the stock of T, a C corporation, is directly owned by the employees of T. Spouses of T's employees directly own 5% of the stock of T. The spouses are not employees of T, and their ownership does not occur solely by operation of community property laws. In addition, 5% of the stock of T is held by trusts (other than a trust described in section 401(a) that is exempt from tax under section 501(a)), the sole beneficiaries of which are employees of T. The employees are not treated as owners of the trusts under subpart E, part I, subchapter J, chapter 1 of the Code. Since a person is not treated as owning the stock of a corporation owned by that person's spouse, or by any portion of a trust that is not treated as owned by such person under subpart E, only 90% of the stock of T is treated as held, directly or indirectly, by employees of T. Thus, T does not meet the ownership test of paragraph (e)(5) of this section, and is not a qualified personal service corporation.

Example 7. Assume that Y, a C corporation, directly owns all the stock of three subsidiaries, F, G, and H. Y is a common parent of an affiliated group within the meaning of section 1504(a) consisting of Y, F, G, and H. Y is not engaged in the performance of services in a qualifying field. Instead, Y is a holding company whose activities consist of its ownership and investment in its operating subsidiaries. Substantially all the activities of F involve the performance of services in the field of engineering. In addition, a majority of (but not substantially all) the activities of G involve the performance of services in the field of engineering; the remainder of G's services involve the performance of services in a nonqualifying field. Moreover, a majority of (but not substantially all) the activities of H involve the performance of services in the field of engineering; the remainder of H's activities involve the performance of services in the field of architecture. Nevertheless, substantially all the activities of the group consisting of Y, F, G, and H, in the aggregate, involve the performance of services in the field of engineering. Accordingly, Y elects under paragraph (e)(5)(vi) of this section to be treated as one taxpayer for determining the ownership test of paragraph (e)(5) of this section. Assume that substantially all the stock of Y (by value) is held by employees of F, G, or H who perform services in connection with a qualifying field (engineering or architecture). Thus, for purposes of determining whether any member corporation is a qualified personal service corporation, the ownership test of paragraph (e)(5) of this section has been satisfied. Since F and H satisfy the function test of paragraph (e)(4) of this section, F and H are qualified personal service corporations. However, since Y and G each fail the function test of paragraph (e)(4) of this section, neither corporation is a qualified personal service corporation.

Example 8. The facts are the same as in Example 7, except that less than substantially all the activities of the group consisting of Y, F, G, and H, in the aggregate, are performed in the field of engineering. Substantially all the activities of the group consisting of Y, F, G, and H, are, in the aggregate, performed in two fields, the fields of engineering and architecture. Y may not elect to have the affiliated group treated as one taxpayer for purposes of determining whether group members meet the ownership test of paragraph (e)(5) of this section. The election is available only if substantially all the activities of the group, in the aggregate, involve the performance of services in only one qualifying field. Moreover, none of the group members are qualified personal service corporations. Y fails the function test of paragraph (e)(4) of this section because less than substantially all the activities of Y are performed in a qualifying field. In addition, F, G, and H fail the ownershp test of paragraph (e)(5) of this section because substantially all their stock is owned by Y and not by their employees. The owners of Y are not deemed to indirectly own the stock owned by Y because Y is not a qualified personal service corporation.

> *Example 9.* (i) The facts are the same as in Example 8, except Y itself satisfies the function tests of paragraph (e)(4) of this section because substantially all the activities of Y involve the performance of services in the field of engineering. In addition, assume that all employees of Y are involved in the performance of services in the field of engineering, and that all such employees own 100% of Y's stock. Moreover, assume that one-third of all the employees of Y are separately employed by F. Similarly, another one-third of the employees of Y are separately employed by G and H, respectively. None of the employees of Y are employed by

more than one of Y's subsidiaries. Also, no other persons except the employees of Y are employed by any of the subsidiaries.
(ii) Y is a personal service corporation under section 448 because Y satisfies both the function and the ownership test of paragraphs (e) (4) and (5) of this section. As in Example 8, Y is unable to make the election to have the affiliated group treated as one taxpayer for purposes of determining whether group members meet the ownership test of paragraph (e)(5) of this section because less than substantially all the activities, in the aggregate, of the group members are performed in one of the qualifying fields. However, because Y is a personal service corporation, the stock owned by Y is treated as indirectly owned, proportionately, by the owners of Y. Thus, the employees of F are collectively treated as owning one-third of the stock of F, G, and H. The employees of G and H are similarly treated as owning one-third of each subsidiary's stock.

(iii) F, G, and H each fail the ownership test of paragraph (e)(5) of this section because less than substantially all of each corporation's stock is owned by the employees of the respective corporation. Only one-third of each corporation's stock is owned by employees of that corporation. Thus, F, G, and H are not qualified personal service corporations.

Example 10. (i) Assume that Y, a C corporation, directly owns all the stock of three subsidiaries, F, G, and Z. Y is a common parent of an affiliated group within the meaning of section 1504(a) consisting of Y, F, and G. Z is a foreign corporation and is excluded from the affiliated group under section 1504. Assume that Y is a holding company whose activities consist of its ownership and investment in its operating subsidiaries. Substantially all the activities of F, G, and Z involve the performance of services in the field of engineering. Assume that employees of Z own one-third of the stock of Y and that none of these employees are also employees of Y, F, or G. In addition, assume that Y elects to be treated as one taxpayer for determining whether group members meet the ownership tests of paragraph (e)(5) of this section. Thus, Y, F, and G are treated as one taxpayer for purposes of the ownership test.
(ii) None of the members of the group are qualified personal service corporations. Y, F, and G fail the ownership test of paragraph (e)(5) of this section because less than substantially all the stock of Y is owned by employees of either Y, F, or G. Moreover, Z fails the ownership test of paragraph (e)(5) of this section because substantially all its stock is owned by Y and not by its employees.

(6) ***Application of function and ownership tests.*** A corporation that fails the function test of paragraph (e)(4) of this section for any taxable year, or that fails the ownership test of paragraph (e)(5) of this section at any time during any taxable year, shall change from the cash method effective for the year

in which the corporation fails to meet the function test or the ownership test. For example, if a personal service corporation fails the function test for taxable year 1987, such corporation must change from the cash method effective for taxable year 1987. A corporation that fails the function or ownership test for a taxable year shall not be treated as a qualified personal service corporation for any part of that taxable year.

(f) ***Exception for entities with gross receipts of not more than $5 million*** —

(1) ***In general.*** Except in the case of a tax shelter, this section shall not apply to any C corporation or partnership with a C corporation as a partner for any taxable year if, for all prior taxable years beginning after December 31, 1985, such corporation or partnership (or any predecessor thereof) meets the $5,000,000 gross receipts test of paragraph (f)(2) of this section.

(2) ***The $5,000,000 gross receipts test*** —

(i) ***In general.*** A corporation meets the $5,000,000 gross receipts test of this paragraph (f)(2) for any prior taxable year if the average annual gross receipts of such corporation for the 3 taxable years (or, if shorter, the taxable years during which such corporation was in existence) ending with such prior taxable year does not exceed $5,000,000. In the case of a C corporation exempt from federal income taxes under section 501(a), or a trust subject to tax under section 511(b) that is treated as a C corporation under paragraph (a)(3) of this section, only gross receipts from the activities of such corporation or trust that constitute unrelated trades or businesses are taken into account in determining whether the $5,000,000 gross receipts test is satisfied. A partnership with a C corporation as a partner meets the $5,000,000 gross receipts test of this paragraph (f)(2) for any prior taxable year if the average annual gross receipts of such partnership for the 3 taxable years (or, if shorter, the taxable years during which such partnership was in existence) ending with such prior year does not exceed $5,000,000. The gross receipts of the corporate partner are not taken into account in determining whether the partnership meets the $5,000,000 gross receipts test.

(ii) ***Aggregation of gross receipts.*** For purposes of determining whether the $5,000,000 gross receipts test has been satisfied, all persons treated as a single employer under section 52 (a) or (b), or section 414 (m) or (o) (or who would be treated as a single employer under such sections if they had employees) shall be treated as one person. Gross receipts attributable to transactions between persons who are treated as a common employer under this paragraph shall not be taken into account in determining whether the $5,000,000 gross receipts test is satisified.

(iii) ***Treatment of short taxable year.*** In the case of any taxable year of less than 12 months (a short taxable year), the gross receipts shall be annualized by

(A) multiplying the gross receipts for the short period by 12 and

(B) dividing the result by the number of months in the short period.

(iv) ***Determination of gross receipts*** —(A) *In general.* The term “gross receipts” means gross receipts of the taxable year in which such receipts are properly recognized under the taxpayer's accounting method used in that taxable year (determined without regard to this section) for federal income tax purposes. For this purpose, gross receipts include total sales (net of returns and allowances) and all amounts received for services. In addition, gross receipts include any income from investments, and from incidental or outside sources. For example, gross receipts include interest (including original issue discount and tax-exempt interest within the meaning of

section 103), dividends, rents, royalties, and annuities, regardless of whether such amounts are derived in the ordinary course of the taxpayer's trade of business. Gross receipts are not reduced by cost of goods sold or by the cost of property sold if such property is described in section 1221 (1), (3), (4) or (5). With respect to sales of capital assets as defined in section 1221, or sales of property described in 1221 (2) (relating to property used in a trade or business), gross receipts shall be reduced by the taxpayer's adjusted basis in such property. Gross receipts do not include the repayment of a loan or similar instrument (*e.g.,* a repayment of the principal amount of a loan held by a commercial lender). Finally, gross receipts do not include amounts received by the taxpayer with respect to sales tax or other similar state and local taxes if, under the applicable state or local law, the tax is legally imposed on the purchaser of the good or service, and the taxpayer merely collects and remits the tax to the taxing authority. If, in contrast, the tax is imposed on the taxpayer under the applicable law, then gross receipts shall include the amounts received that are allocable to the payment of such tax.

(3) ***Examples.*** The following examples illustrate the provisions of paragraph (f) of this section:

Example 1. X, a calendar year C corporation, was formed on January 1, 1986. Assume that in 1986 X has gross receipts of $15 million. For taxable year 1987, this section applies to X because in 1986, the period during which X was in existence, X has average annual gross receipts of more than $5 million.

Example 2. Y, a calendar year C corporation that is not a qualified personal service corporation, has gross receipts of $10 million, $9 million, and $4 million for taxable years 1984, 1985, and 1986, respectively. In taxable year 1986, X has average annual gross receipts for the 3-taxable-year period ending with 1986 of $7.67 million ($10 million + 9 million + 4 million ÷ 3). Thus, for taxable year 1987, this section applies and Y must change from the cash method for such year.

Example 3. Z, a C corporation which is not a qualified personal service corporation, has a 5% partnership interest in ZAB partnership, a calendar year cash method taxpayer. All other partners of ZAB partnership are individuals. Z corporation has average annual gross receipts of $100,000 for the 3-taxable-year period ending with 1986 (*i.e.,* 1984, 1985 and 1986). The ZAB partnership has average annual gross receipts of $6 million for the same 3-taxable-year period. Since ZAB fails to meet the $5,000,000 gross receipts test for 1986, this section applies to ZAB for its taxable year beginning January 1, 1987. Accordingly, ZAB must change from the cash method for its 1987 taxable year. The gross receipts of Z corporation are not relevant in determining whether ZAB is subject to this section.

Example 4. The facts are the same as in Example 3, except that during the 1987 taxable year of ZAB, the Z corporation transfers its partnership interest in ZAB to an individual. Under paragraph (a)(1) of this section, ZAB is treated as a partnership with a C corporation as a partner. Thus, this section requires ZAB to change from the cash method effective for its taxable year 1987. If ZAB later desires to change its method of accounting to the cash method for its taxable year beginning January 1, 1988 (or later), ZAB must comply with all requirements of law, including sections 446(b), 446(e), and 481, to effect the change.

Example 5. X, a C corporation that is not a qualified personal service corporation, was formed on January 1, 1986, in a transaction described in section 351. In the transaction, A, an individual, contributed all of the assets and liabilities of B, a trade or business, to X, in return for the receipt of all the outstanding stock of X. Assume that in 1986 X has gross receipts of $4 million. In 1984 and 1985, the gross receipts of B, the trade or business, were $10 million and $7 million respectively. The gross receipts test is applied for the period during which X and its

predecessor trade or business were in existence. X has average annual gross receipts for the 3-taxable-year period ending with 1986 of $7 million ($10 million + $7 million + $4 million ÷ 3). Thus, for taxable year 1987, this section applies and X must change from the cash method for such year.

[T.D. 8143, 52 FR 22766, June 16, 1987, as amended by T.D. 8329, 56 FR 485, Jan. 7, 1991; T.D. 8514, 58 FR 68299, Dec. 27, 1993; T.D. 9174, 70 FR 704, Jan. 5, 2005]

§ 1.448-2 Limitation on the use of the cash receipts and disbursements method of accounting for taxable years beginning after December 31, 2017.

(a) ***Limitation on method of accounting*** —

(1) ***In general.*** The rules of this section relate to the limitation on the use of the cash receipts and disbursements method of accounting (cash method) by certain taxpayers applicable for taxable years beginning after December 31, 2017. For rules applicable to taxable years beginning before January 1, 2018, see §§ 1.448-1 and 1.448-1T.

(2) ***Limitation rule.*** Except as otherwise provided in this section, the computation of taxable income using the cash method is prohibited in the case of a:

(i) C corporation;

(ii) Partnership with a C corporation as a partner, or a partnership that had a C corporation as a partner at any time during the partnership's taxable year beginning after December 31, 1986; or

(iii) Tax shelter.

(3) ***Treatment of combination methods*** —

(i) ***In general.*** For purposes of this section, the use of a method of accounting that records some, but not all, items on the cash method is considered the use of the cash method. Thus, a C corporation that uses a combination of accounting methods including the use of the cash method is subject to this section.

(ii) ***Example.*** The following example illustrates the operation of this paragraph (a)(3). In 2020, A is a C corporation with average annual gross receipts for the prior three taxable years of greater than $30 million, is not a tax shelter under section 448(a)(3) and does not qualify as a qualified personal service corporation, as defined in paragraph (e) of this section. For the last 20 years, A used an accrual method for items of income and expenses related to purchases and sales of inventory, and the cash method for items related to its provision of services. A is using a combination of accounting methods that include the cash method. Thus, A is subject to section 448. A is prohibited from using the cash method for any item for 2020 and is required to change to a permissible method.

(b) ***Definitions.*** For purposes of this section—

(1) ***C corporation*** —

(i) ***In general.*** The term *C corporation* means any corporation that is not an S corporation (as defined in section 1361(a)(1)). For example, a regulated investment company (as defined in section 851) or a real estate investment trust (as defined in section 856) is a C corporation for purposes of this section. In addition, a trust subject to tax under section 511(b) is treated, for

purposes of this section, as a C corporation, but only with respect to the portion of its activities that constitute an unrelated trade or business. Similarly, for purposes of this section, a corporation that is exempt from Federal income taxes under section 501(a) is treated as a C corporation only with respect to the portion of its activities that constitute an unrelated trade or business. Moreover, for purposes of determining whether a partnership has a C corporation as a partner, any partnership described in paragraph (a)(2)(ii) of this section is treated as a C corporation. Thus, if partnership ABC has a partner that is a partnership with a C corporation, then, for purposes of this section, partnership ABC is treated as a partnership with a C corporation partner.

(ii) [Reserved]

(2) ***Tax shelter*** —

(i) ***In general.*** The term *tax shelter* means any—

(A) Enterprise, other than a C corporation, if at any time, including taxable years beginning before January 1, 1987, interests in such enterprise have been offered for sale in any offering required to be registered with any Federal or state agency having the authority to regulate the offering of securities for sale;

(B) Syndicate, within the meaning of paragraph (b)(2)(iii) of this section; or

(C) Tax shelter, within the meaning of section 6662(d)(2)(C).

(ii) ***Requirement of registration.*** For purposes of paragraph (b)(2)(i)(A) of this section, an offering is required to be registered with a Federal or state agency if, under the applicable Federal or state law, failure to register the offering would result in a violation of the applicable Federal or state law. This rule applies regardless of whether the offering is in fact registered. In addition, an offering is required to be registered with a Federal or state agency if, under the applicable Federal or state law, failure to file a notice of exemption from registration would result in a violation of the applicable Federal or state law, regardless of whether the notice is in fact filed. However, an S corporation is not treated as a tax shelter for purposes of section 448(d)(3) or this section merely by reason of being required to file a notice of exemption from registration with a state agency described in section 461(i)(3)(A), but only if all corporations offering securities for sale in the state must file such a notice in order to be exempt from such registration.

(iii) ***Syndicate*** —

(A) ***In general.*** For purposes of paragraph (b)(2)(i)(B) of this section, the term *syndicate* means a partnership or other entity (other than a C corporation) if more than 35 percent of the losses of such entity during the taxable year (for taxable years beginning after December 31, 1986) are allocated to limited partners or limited entrepreneurs. For purposes of this paragraph (b)(2)(iii), the term *limited entrepreneur* has the same meaning given such term in section 461(k)(4). In addition, in determining whether an interest in a partnership is held by a limited partner, or an interest in an entity or enterprise is held by a limited entrepreneur, section 461(k)(2) applies in the case of the trade or business of farming (as defined in paragraph (d)(2) of this section), and section 1256(e)(3)(C) applies in all other cases. Moreover, for purposes of paragraph (b)(2) of this section, the losses of a partnership, entity, or enterprise (entities) means the excess of the deductions allowable to the entities over the amount of income recognized by such entities under the entities'

method of accounting used for Federal income tax purposes (determined without regard to this section). For this purpose, gains or losses from the sale of capital assets or assets described in section 1221(a)(2) are not taken into account.

(B) ***Irrevocable annual election to test the allocation of losses from prior taxable year*** —

(*1*) ***In general.*** For purposes of paragraph (b)(2)(iii)(A) of this section, to determine if more than 35 percent of the losses of a venture are allocated to limited partners or limited entrepreneurs, entities may elect to use the allocations made in the immediately preceding taxable year instead of using the current taxable year's allocation. An election under this paragraph (b)(2)(iii)(B) applies only to the taxable year for which the election is made. Except as otherwise provided in guidance published in the Internal Revenue Bulletin (see § 601.601(d)(2) of this chapter), a taxpayer that makes an election under this paragraph (b)(2)(iii)(B) must apply this election for other provisions of the Code that specifically apply the definition of tax shelter in section 448(a)(3).

(*2*) ***Time and manner of making election.*** A taxpayer makes this election for the taxable year by attaching a statement to its timely filed original Federal income tax return (including extensions) for such taxable year. The statement must state that the taxpayer is making the election under § 1.448-2(b)(2)(iii)(B). In the case of an S corporation or partnership, the election is made by the S corporation or the partnership and not by the shareholders or partners. An election under this paragraph (b)(2)(iii)(B) may not be made by the taxpayer in any other manner. For example, the election cannot be made through a request under section 446(e) to change the taxpayer's method of accounting. A taxpayer may not revoke an election under this paragraph (b)(2)(iii)(B).

(*3*) ***Administrative guidance.*** The IRS may publish procedural guidance in the Internal Revenue Bulletin (see § 601.601(d)(2) of this chapter) that provides alternative procedures for complying with paragraph (b)(2)(iii)(B)(*2*) of this section.

(C) ***Examples.*** The following examples illustrate the rules of paragraph (b)(2)(iii) of this section. For purposes of the examples, the term “losses” has the meaning stated in paragraph (b)(2)(iii)(A) of this section.

(*1*) ***Example 1.*** Taxpayer B is a calendar year limited partnership, with no active management from its limited partner. For 2019, B is profitable and has no losses to allocate to its limited partner. For 2020, B is not profitable and allocates 60 percent of its losses to its general partner and 40 percent of its losses to its limited partner. For 2021, B is not profitable and allocates 50 percent of its losses to its general partner and 50 percent of its losses to its limited partner. For taxable year 2020, B makes an election under paragraph (b)(2)(iii)(B) of this section to use its prior year allocated amounts. Accordingly, for 2020, B is not a syndicate because B was profitable for 2019 and did not allocate any losses to its limited partner in 2019. For 2021, B is a syndicate because B allocated 50 percent of its 2021 losses to its limited partner under paragraph (b)(2)(ii)(3)(A) of this section. Even if B made an election under paragraph (b)(2)(iii)(B) of this section to use prior year allocated amounts, B is a syndicate for 2021 because B allocated 40 percent of its 2020 losses to its limited

partner in 2020. Because B is a syndicate under paragraph (b)(2)(iii)(A) of this section for 2021, B is a tax shelter prohibited from using the cash method for taxable year 2021 under paragraph (b)(2)(i)(B) of this section.

(2) ***Example (2).*** Same facts as Example (1) in paragraph (b)(2)(iii)(C)(1) of this section, except for 2021, B is profitable and has no losses to allocate to its limited partner. For 2020, B makes an election under paragraph (b)(2)(iii)(B) of this section to use its prior year allocated amounts. Accordingly, for 2020, B is not a syndicate because it did not any allocate any losses to its limited partner in 2019. For 2021, B chooses not to make the election under paragraph (b)(2)(iii)(B) of this section. For 2021, B is not a syndicate because it does not have any 2021 losses to allocate to a limited partner. For taxable years 2019, 2020 and 2021, B is not a syndicate under paragraph (b)(2)(iii)(A) of this section and is not prohibited from using the cash method for taxable years 2019, 2020 or 2021 under paragraph (b)(2)(i)(B) of this section.

(iv) ***Presumed tax avoidance.*** For purposes of (b)(2)(i)(C) of this section, marketed arrangements in which persons carrying on farming activities using the services of a common managerial or administrative service will be presumed to have the principal purpose of tax avoidance if such persons use borrowed funds to prepay a substantial portion of their farming expenses. Payments for farm supplies that will not be used or consumed until a taxable year subsequent to the taxable year of payment are an example of one type of such prepayment.

(v) ***Taxable year tax shelter must change accounting method.*** A tax shelter must change from the cash method for the taxable year that it becomes a tax shelter, as determined under paragraph (b)(2) of this section.

(vi) ***Determination of loss amount.*** For purposes of section 448(d)(3), the amount of losses to be allocated under section 1256(e)(3)(B) is calculated without regard to section 163(j).

(c) ***Exception for entities with gross receipts not in excess of the amount provided in section 448(c)*** —

(1) ***In general.*** Except in the case of a tax shelter, this section does not apply to any C corporation or partnership with a C corporation as a partner for any taxable year if such corporation or partnership (or any predecessor thereof) meets the gross receipts test of paragraph (c)(2) of this section.

(2) ***Gross receipts test*** —

(i) ***In general.*** A corporation meets the gross receipts test of this paragraph (c)(2) if the average annual gross receipts of such corporation for the 3 taxable years (or, if shorter, the taxable years during which such corporation was in existence, annualized as required) ending with such prior taxable year does not exceed the gross receipts test amount provided in paragraph (c)(2)(v) of this section (section 448(c) gross receipts test). In the case of a C corporation exempt from Federal income taxes under section 501(a), or a trust subject to tax under section 511(b) that is treated as a C corporation under paragraph (b)(1) of this section, only gross receipts from the activities of such corporation or trust that constitute unrelated trades or businesses are taken into account in determining whether the gross receipts test is satisfied. A partnership with a C corporation as a partner meets the gross receipts test of paragraph (c)(2) of this section if the average annual gross receipts of such partnership for the 3 taxable years (or, if shorter, the taxable years during which such partnership was in existence annualized as required) ending with such prior year does not exceed the gross receipts test amount of

paragraph (c)(2)(v) of this section. Except as provided in paragraph (c)(2)(ii) of this section, the gross receipts of the corporate partner are not taken into account in determining whether a partnership meets the gross receipts test of paragraph (c)(2) of this section.

(ii) ***Aggregation of gross receipts.*** The aggregation rules in § 1.448-1T(f)(2)(ii) apply for purposes of aggregating gross receipts for purposes of this section.

(iii) ***Treatment of short taxable year.*** The short taxable year rules in § 1.448-1T(f)(2)(iii) apply for purposes of this section.

(iv) ***Determination of gross receipts.*** The determination of gross receipts rules in § 1.448-1T(f)(2)(iv) apply for purposes of this section.

(v) ***Gross receipts test amount*** —

(A) ***In general.*** For purposes of paragraph (c) of this section, the term *gross receipts test amount* means $25,000,000, adjusted annually for inflation in the manner provided in section 448(c)(4). The inflation adjusted gross receipts test amount is published annually in guidance published in the Internal Revenue Bulletin (see § 601.601(d)(2)(ii) of this chapter).

(B) ***Example.*** Taxpayer A, a C corporation, is a plumbing contractor that installs plumbing fixtures in customers' homes or businesses. A's gross receipts for the 2017-2019 taxable years are $20 million, $16 million, and $30 million, respectively. A's average annual gross receipts for the three taxable-year period preceding the 2020 taxable year is $22 million (($20 million + $16 million + $30 million)/3) = $22 million. A may use the cash method for its trade or business for the 2020 taxable year because its average annual gross receipts for the preceding three taxable years is not more than the gross receipts test amount of paragraph (c)(2)(vi) of this section, which is $26 million for 2020.

(d) ***Exception for farming businesses*** —

(1) ***In general.*** Except in the case of a tax shelter, this section does not apply to any farming business. A taxpayer engaged in a farming business and a separate non-farming business is not prohibited by this section from using the cash method with respect to the farming business, even though the taxpayer may be prohibited by this section from using the cash method with respect to the non-farming business.

(2) ***Farming business*** —

(i) ***In general.*** For purposes of paragraph (d) of this section, the term *farming business* means—

(A) The trade or business of farming as defined in section 263A(e)(4) (including the operation of a nursery or sod farm, or the raising or harvesting of trees bearing fruit, nuts or other crops, or ornamental trees),

(B) The raising, harvesting, or growing of trees described in section 263A(c)(5) (relating to trees raised, harvested, or grown by the taxpayer other than trees described in paragraph (d)(2)(i)(A) of this section),

(C) The raising of timber, or

(D) Processing activities which are normally incident to the growing, raising, or harvesting of agricultural products.

(ii) ***Example.*** Assume a taxpayer is in the business of growing fruits and vegetables. When the fruits and vegetables are ready to be harvested, the taxpayer picks, washes, inspects, and packages the fruits and vegetables for sale. Such activities are normally incident to the raising of these crops by farmers. The taxpayer will be considered to be in the business of farming with respect to the growing of fruits and vegetables, and the processing activities incident to the harvest.

(iii) ***Processing activities excluded from farming businesses*** —

(A) ***In general.*** For purposes of this section, a farming business does not include the processing of commodities or products beyond those activities normally incident to the growing, raising, or harvesting of such products.

(B) ***Examples.***

(*1*) ***Example 1.*** Assume that a C corporation taxpayer is in the business of growing and harvesting wheat and other grains. The taxpayer processes the harvested grains to produce breads, cereals, and similar food products which it sells to customers in the course of its business. Although the taxpayer is in the farming business with respect to the growing and harvesting of grain, the taxpayer is not in the farming business with respect to the processing of such grains to produce breads, cereals, and similar food products which the taxpayer sells to customers.

(*2*) ***Example 2.*** Assume that a taxpayer is in the business of raising livestock. The taxpayer uses the livestock in a meat processing operation in which the livestock are slaughtered, processed, and packaged or canned for sale to customers. Although the taxpayer is in the farming business with respect to the raising of livestock, the taxpayer is not in the farming business with respect to the meat processing operation.

(e) ***Exception for qualified personal service corporation.*** The rules in § 1.448-1T(e) relating to the exception for qualified personal service corporations apply for taxable years beginning after December 31, 2017.

(f) ***Effect of section 448 on other provisions.*** Except as provided in paragraph (b)(2)(iii)(B) of this section, nothing in section 448 shall have any effect on the application of any other provision of law that would otherwise limit the use of the cash method, and no inference shall be drawn from section 448 with respect to the application of any such provision. For example, nothing in section 448 affects the requirement of section 447 that certain corporations must use an accrual method of accounting in computing taxable income from farming, or the requirement of § 1.446-1(c)(2) that, in general, an accrual method be used with regard to purchases and sales of inventory. Similarly, nothing in section 448 affects the authority of the Commissioner under section 446(b) to require the use of an accounting method that clearly reflects income, or the requirement under section 446(e) that a taxpayer secure the consent of the Commissioner before changing its method of accounting. For example, a taxpayer using the cash method may be required to change to an accrual method of accounting under section 446(b) because such method clearly reflects the taxpayer's income, even though the taxpayer is not prohibited by section 448 from using the cash method. Similarly, a taxpayer using an accrual method of accounting that is not prohibited by section 448 from using the cash method may not change to the cash method unless the taxpayer secures the consent of the Commissioner under section 446(e).

(g) ***Treatment of accounting method change and rules for section 481(a) adjustment*** —

(1) ***In general.*** Any taxpayer to whom section 448 applies must change its method of accounting in accordance with the provisions of this paragraph (g). In the case of any taxpayer required by this section to change its method of accounting, the change shall be treated as a change initiated by the taxpayer to compute the adjustment required under section 481. A taxpayer must change to an overall accrual method of accounting for the first taxable year the taxpayer is subject to this section or a subsequent taxable year in which the taxpayer is newly subject to this section after previously making a change in method of accounting that complies with section 448 (mandatory section 448 year). A taxpayer may have more than one mandatory section 448 year. For example, a taxpayer may exceed the gross receipts test of section 448(c) in non-consecutive taxable years. If the taxpayer complies with the provisions of paragraph (g) of this section for its mandatory section 448 year, the change shall be treated as made with the consent of the Commissioner. The change shall be implemented pursuant to the applicable administrative procedures to obtain the automatic consent of the Commissioner to change a method of accounting under section 446(e) as published in the Internal Revenue Bulletin (see Revenue Procedure 2015-13 (2015-5 IRB 419) (or successor) (see also § 601.601(d)(2) of this chapter)). This paragraph (g) applies only to a taxpayer who changes from the cash method as required by this section. This paragraph (g) does not apply to a change in method of accounting required by any Code section (or applicable regulation) other than this section.

(2) ***Section 481(a) adjustment.*** The amount of the net section 481(a) adjustment and the adjustment period necessary to implement a change in method of accounting required under this section are determined under § 1.446-1(e) and the applicable administrative procedures to obtain the Commissioner's consent to change a method of accounting as published in the Internal Revenue Bulletin (see Revenue Procedure 2015-13 (2015-5 IRB 419) (or successor) (see also § 601.601(d)(2) of this chapter).

(h) ***Applicability dates.*** The rules of this section apply for taxable years beginning on or after January 5, 2021. However, for a taxable year beginning after December 31, 2017, and before January 5, 2021, a taxpayer may apply the rules provided in this section provided that the taxpayer follows all the applicable rules contained in the regulations under section 448 for such taxable year and all subsequent taxable years.

[T.D. 9942, 86 FR 269, Jan. 5, 2021, as amended by 86 FR 32186, June 17, 2021]

§ 1.448-3 Nonaccrual of certain amounts by service providers.

(a) ***In general.*** This section applies to taxpayers qualified to use a nonaccrual-experience method of accounting provided for in section 448(d)(5) with respect to amounts to be received for the performance of services. A taxpayer that satisfies the requirements of this section is not required to accrue any portion of amounts to be received from the performance of services that, on the basis of the taxpayer's experience, and to the extent determined under the computation or formula used by the taxpayer and allowed under this section, will not be collected. Except as otherwise provided in this section, a taxpayer is qualified to use a nonaccrual-experience method of accounting if the taxpayer uses an accrual method of accounting with respect to amounts to be received for the performance of services by the taxpayer and either—

(1) The services are in fields referred to in section 448(d)(2)(A) and described in § 1.448-1T(e)(4) (health, law, engineering, architecture, accounting, actuarial science, performing arts, or consulting); or

(2) The taxpayer meets the gross receipts test of section 448(c) and § 1.448-1T(f)(2) (in the case of taxable years beginning before January 1, 2018), or § 1.448-2(c) (in the case of taxable years beginning after December 31, 2017) for all prior taxable years.

(b) ***Application of method and treatment as method of accounting.*** The rules of section 448(d)(5) and the regulations are applied separately to each taxpayer. For purposes of section 448(d)(5), the term *taxpayer* has the same meaning as the term *person* defined in section 7701(a)(1) (rather than the meaning of the term defined in section 7701(a)(14)). The nonaccrual of amounts to be received for the performance of services is a method of accounting (a nonaccrual-experience method). A change to a nonaccrual-experience method, from one nonaccrual-experience method to another nonaccrual-experience method, or to a periodic system (for example, *see* Notice 88-51 (1988-1 C.B. 535) and § 601.601(d)(2)(ii)(*b*) of this chapter), is a change in method of accounting to which the provisions of sections 446 and 481 and the regulations apply. *See* also paragraphs (c)(2)(i), (c)(5), (d)(4), and (e)(3)(i) of this section. Except as provided in other published guidance, a taxpayer who wishes to adopt or change to any nonaccrual-experience method other than one of the safe harbor methods described in paragraph (f) of this section must request and receive advance consent from the Commissioner in accordance with the applicable administrative procedures issued under § 1.446-1(e)(3)(ii) for obtaining the Commissioner's consent.

(c) ***Definitions and special rules*** —

(1) ***Accounts receivable*** —

(i) ***In general.*** Accounts receivable include only amounts that are earned by a taxpayer and otherwise recognized in income through the performance of services by the taxpayer. For purposes of determining a taxpayer's nonaccrual-experience under any method provided in this section, amounts described in paragraph (c)(1)(ii) of this section are not taken into account. Except as otherwise provided, for purposes of this section, accounts receivable do not include amounts that are not billed (such as for charitable or pro bono services) or amounts contractually not collectible (such as amounts in excess of a fee schedule agreed to by contract). *See* paragraph (g) *Examples 1* and *2* of this section for examples of this rule.

(ii) ***Method not available for certain receivables*** —

(A) ***Amounts not earned and recognized through the performance of services.*** A nonaccrual-experience method of accounting may not be used with respect to amounts that are not earned by a taxpayer and otherwise recognized in income through the performance of services by the taxpayer. For example, a nonaccrual-experience method may not be used with respect to amounts owed to the taxpayer by reason of the taxpayer's activities with respect to lending money, selling goods, or acquiring accounts receivable or other rights to receive payment from other persons (including persons related to the taxpayer) regardless of whether those persons earned the amounts through the provision of services. However, *see* paragraph (d)(3) of this section for special rules regarding acquisitions of a trade or business or a unit of a trade or business.

(B) ***If interest or penalty charged on amounts due.*** A nonaccrual-experience method of accounting may not be used with respect to amounts due for which interest is required to be paid or for which there is any penalty for failure to timely pay any amounts due. For this purpose, a taxpayer will be treated as charging interest or penalties for late payment if the contract or agreement expressly provides for the charging of interest or penalties for late payment, regardless of the practice of the parties. If the contract or agreement does not expressly provide for the charging of interest or penalties for late payment, the

determination of whether the taxpayer charges interest or penalties for late payment will be made based on all of the facts and circumstances of the transaction, and not merely on the characterization by the parties or the treatment of the transaction under state or local law. However, the offering of a discount for early payment of an amount due will not be regarded as the charging of interest or penalties for late payment under this section, if—

(*1*) The full amount due is otherwise accrued as gross income by the taxpayer at the time the services are provided; and

(*2*) The discount for early payment is treated as an adjustment to gross income in the year of payment, if payment is received within the time required for allowance of the discount. *See* paragraph (g) *Example 3* of this section for an example of this rule.

(2) ***Applicable period*** —

(i) ***In general.*** The applicable period is the number of taxable years on which the taxpayer bases its nonaccrual-experience method. A change in the number of taxable years included in the applicable period is a change in method of accounting to which the procedures of section 446 apply. A change in the inclusion or exclusion of the current taxable year in the applicable period is a change in method of accounting to which the procedures of section 446 apply. A change in the number of taxable years included in the applicable period or the inclusion or exclusion of the current taxable year in the applicable period is made on a cut-off basis.

(ii) ***Applicable period for safe harbors.*** For purposes of the safe harbors under paragraph (f) of this section the applicable period may consist of at least three but not more than six of the immediately preceding consecutive taxable years. Alternatively, the applicable period may consist of the current taxable year and at least two but not more than five of the immediately preceding consecutive taxable years. A period shorter than six taxable years is permissible only if the period contains the most recent preceding taxable years and all of the taxable years in the applicable period are consecutive.

(3) ***Bad debts.*** Bad debts are accounts receivable determined to be uncollectible and charged off.

(4) ***Charge-offs.*** Amounts charged off include only those amounts that would otherwise be allowable under section 166(a).

(5) ***Determination date.*** The determination date in safe harbor 2 provided in paragraph (f)(2) of this section is used as a cut-off date for determining all known data to be taken into account in the computation of the taxable year's uncollectible amount. The determination date may not be later than the earlier of the due date, including extensions, for filing the taxpayer's Federal income tax return for that taxable year or the date on which the taxpayer timely files the return for that taxable year. The determination date may be different in each taxable year. However, once a determination date is selected and used for a particular taxable year, it may not be changed for that taxable year. The choice of a determination date is not a method of accounting.

(6) ***Recoveries.*** Recoveries are amounts previously excluded from income under a nonaccrual-experience method or charged off that the taxpayer recovers.

(7) ***Uncollectible amount.*** The uncollectible amount is the portion of any account receivable amount due that, under the taxpayer's nonaccrual-experience method, will be not collected.

(d) ***Use of experience to estimate uncollectible amounts*** —

(1) ***In general.*** In determining the portion of any amount due that, on the basis of experience, will not be collected, a taxpayer may use any nonaccrual-experience method that clearly reflects the taxpayer's nonaccrual-experience. The determination of whether a nonaccrual-experience method clearly reflects the taxpayer's nonaccrual-experience is made in accordance with the rules under paragraph (e) of this section. Alternatively, the taxpayer may use any one of the five safe harbor nonaccrual-experience methods of accounting provided in paragraphs (f)(1) through (f)(5) of this section, which are presumed to clearly reflect a taxpayer's nonaccrual-experience.

(2) ***Application to specific accounts receivable.*** The nonaccrual-experience method is applied with respect to each account receivable of the taxpayer that is eligible for this method. With respect to a particular account receivable, the taxpayer determines, in the manner prescribed in paragraphs (d)(1) or (f)(1) through (f)(5) of this section (whichever applies), the uncollectible amount. The determination is required to be made only once with respect to each account receivable, regardless of the term of the receivable. The uncollectible amount is not recognized as gross income. Thus, the amount recognized as gross income is the amount that would otherwise be recognized as gross income with respect to the account receivable, less the uncollectible amount. A taxpayer that excludes an amount from income during a taxable year as a result of the taxpayer's use of a nonaccrual-experience method may not deduct in any subsequent taxable year the amount excluded from income. Thus, the taxpayer may not deduct the excluded amount in a subsequent taxable year in which the taxpayer actually determines that the amount is uncollectible and charges it off. If a taxpayer using a nonaccrual-experience method determines that an amount that was not excluded from income is uncollectible and should be charged off (for example, a calendar-year taxpayer determines on November 1st that an account receivable that was originated on May 1st of the same taxable year is uncollectible and should be charged off), the taxpayer may deduct the amount charged off when it is charged off, but must include any subsequent recoveries in income. The reasonableness of a taxpayer's determination that amounts are uncollectible and should be charged off may be considered on examination. *See* paragraph (g) *Example 12* of this section for an example of this rule.

(3) ***Acquisitions and dispositions*** —

(i) ***Acquisitions.*** If a taxpayer acquires the major portion of a trade or business of another person (predecessor) or the major portion of a separate unit of a trade or business of a predecessor, then, for purposes of applying this section for any taxable year ending on or after the acquisition, the experience from preceding taxable years of the predecessor attributable to the portion of the trade or business acquired, if available, must be used in determining the taxpayer's experience.

(ii) ***Dispositions.*** If a taxpayer disposes of a major portion of a trade or business or the major portion of a separate unit of a trade or business, and the taxpayer furnished the acquiring person the information necessary for the computations required by this section, then, for purposes of applying this section for any taxable year ending on or after the disposition, the experience from preceding taxable years attributable to the portion of the trade or business disposed may not be used in determining the taxpayer's experience.

(iii) ***Meaning of terms.*** For the meaning of the terms *acquisition, separate unit,* and *major portion, see* paragraph (b) of § 1.52-2. The term *acquisition* includes an incorporation or a liquidation.

(4) ***New taxpayers.*** The rules of this paragraph (d)(4) apply to any newly formed taxpayer to which the rules of paragraph (d)(3)(i) of this section do not apply. Any newly formed taxpayer that wants to use a safe harbor nonaccrual-experience method of accounting described in paragraph (f)(1), (f)(2),

(f)(3), (f)(4), or (f)(5) of this section applies the methods by using the experience of the actual number of taxable years available in the applicable period. A newly formed taxpayer that wants to use one of the safe harbor nonaccrual-experience methods of accounting described in paragraph (f)(2), (f)(4), or (f)(5) of this section in its first taxable year and does not have any accounts receivable upon formation may not exclude any portion of its year-end accounts receivable from income for its first taxable year. The taxpayer must begin creating its moving average in its second taxable year by tracking the accounts receivable as of the first day of its second taxable year. The use of one of the safe harbor nonaccrual-experience methods of accounting described in paragraph (f)(2), (f)(4), or (f)(5) of this section in a taxpayer's second taxable year in this situation is not a change in method of accounting. Although the taxpayer must maintain the books and records necessary to perform the computations under the adopted safe harbor nonaccrual-experience method, the taxpayer is not required to affirmatively elect the method on its Federal income tax return for its first taxable year.

(5) ***Recoveries.*** Regardless of the nonaccrual-experience method of accounting used by a taxpayer under this section, the taxpayer must take recoveries into account. If, in a subsequent taxable year, a taxpayer recovers an amount previously excluded from income under a nonaccrual-experience method or charged off, the taxpayer must include the recovered amount in income in that subsequent taxable year. *See* paragraph (g) *Example 13* of this section for an example of this rule.

(6) ***Request to exclude taxable years from applicable period.*** A period shorter than the applicable period generally is permissible only if the period consists of consecutive taxable years and there is a change in the type of a substantial portion of the outstanding accounts receivable such that the risk of loss is substantially increased. A decline in the general economic conditions in the area, which substantially increases the risk of loss, is a relevant factor in determining whether a shorter period is appropriate. However, approval to use a shorter period will not be granted unless the taxpayer supplies evidence that the accounts receivable outstanding at the close of the taxable years for the shorter period requested are more comparable in nature and risk to accounts receivable outstanding at the close of the current taxable year. A substantial increase in a taxpayer's bad debt experience is not, by itself, sufficient to justify the use of a shorter period. If approval is granted to use a shorter period, the experience for the excluded taxable years may not be used for any subsequent taxable year. A request for approval to exclude the experience of a prior taxable year must be made in accordance with the applicable procedures for requesting a letter ruling and must include a statement of the reasons the experience should be excluded. A request will not be considered unless it is sent to the Commissioner at least 30 days before the close of the first taxable year for which the approval is requested.

(7) ***Short taxable years.*** A taxpayer with a short taxable year that uses a nonaccrual-experience method that compares accounts receivable balance to total bad debts during the taxable year should make appropriate adjustments.

(8) ***Recordkeeping requirements*** —

(i) A taxpayer using a nonaccrual-experience method of accounting must keep sufficient books and records to establish the amount of any exclusion from gross income under section 448(d)(5) for the taxable year, including books and records demonstrating—

(A) The nature of the taxpayer's nonaccrual-experience method;

(B) Whether, for any particular taxable year, the taxpayer qualifies to use its nonaccrual-experience method (including the self-testing requirements of paragraph (e) of this section (if applicable));

(C) The taxpayer's determination that amounts are uncollectible;

(D) The proper amount that is excludable under the taxpayer's nonaccrual-experience method; and

(E) The taxpayer's determination date under paragraph (c)(5) of this section (if applicable).

(ii) If a taxpayer does not maintain records of the data that are sufficient to establish the amount of any exclusion from gross income under section 448(d)(5) for the taxable year, the Internal Revenue Service may change the taxpayer's method of accounting on examination. *See* § 1.6001-1 for rules regarding records.

(e) ***Requirements for nonaccrual method to clearly reflect experience*** —

(1) ***In general.*** A nonaccrual-experience method clearly reflects the taxpayer's experience if the taxpayer's nonaccrual-experience method meets the self-test requirements described in this paragraph (e). If a taxpayer is using one of the safe harbor nonaccrual-experience methods described in paragraphs (f)(1) through (f)(4) of this section, its method is deemed to clearly reflect its experience and is not subject to the self-testing requirements in paragraphs (e)(2) and (e)(3) of this section.

(2) ***Requirement to self-test*** —

(i) ***In general.*** A taxpayer using, or desiring to use, a nonaccrual-experience method must self-test its nonaccrual-experience method for its first taxable year for which the taxpayer uses, or desires to use, that nonaccrual-experience method (first-year self-test) and every three taxable years thereafter (three-year self-test). Each self-test must be performed by comparing the uncollectible amount (under the taxpayer's nonaccrual-experience method) with the taxpayer's actual experience. A taxpayer using the safe harbor under paragraph (f)(5) of this section must self-test using the safe harbor comparison method in paragraph (e)(3) of this section.

(ii) ***First-year self-test.*** The first-year self-test must be performed by comparing the uncollectible amount with the taxpayer's actual experience for its first taxable year for which the taxpayer uses, or desires to use, that nonaccrual-experience method. If the uncollectible amount for the first-year self-test is less than or equal to the taxpayer's actual experience for its first taxable year for which the taxpayer uses, or desires to use, that nonaccrual-experience method, the taxpayer's nonaccrual-experience method is treated as clearly reflecting its experience for the first taxable year. If, as a result of the first-year self-test, the uncollectible amount for the test period is greater than the taxpayer's actual experience, then—

(A) The taxpayer's nonaccrual-experience method is treated as not clearly reflecting its experience;

(B) The taxpayer is not permitted to use that nonaccrual-experience method in that taxable year; and

(C) The taxpayer must change to (or adopt) for that taxable year either—

(*1*) Another nonaccrual-experience method that clearly reflects experience, that is, a nonaccrual-experience method that meets the first-year self-test requirement; or

(2) A safe harbor nonaccrual-experience method described in paragraphs (f)(1) through (f)(5) of this section.

(iii) *Three-year self-test* —

(A) *In general.* The three-year self-test must be performed by comparing the sum of the uncollectible amounts for the current taxable year and prior two taxable years (cumulative uncollectible amount) with the sum of the taxpayer's actual experience for the current taxable year and prior two taxable years (cumulative actual experience amount).

(B) *Recapture.* If the cumulative uncollectible amount for the test period is greater than the cumulative actual experience amount for the test period, the taxpayer's uncollectible amount is limited to the cumulative actual experience amount for the test period. Any excess of the taxpayer's cumulative uncollectible amount over the taxpayer's cumulative actual nonaccrual-experience amount excluded from income during the test period must be recaptured into income in the third taxable year of the three-year self-test period.

(C) *Determination of whether method is permissible or impermissible.* If the cumulative uncollectible amount is less than 110 percent of the cumulative actual experience amount, the taxpayer's nonaccrual-experience method is treated as a permissible method and the taxpayer may continue to use its alternative nonaccrual-experience method, subject to the three-year self-test requirement of this paragraph (e)(2)(iii). If the cumulative uncollectible amount is greater than or equal to 110 percent of the cumulative actual experience amount, the taxpayer's nonaccrual-experience method is treated as impermissible in the taxable year subsequent to the three-year self-test year and does not clearly reflect its experience. The taxpayer must change to another nonaccrual-experience method that clearly reflects experience, including, for example, one of the safe harbor nonaccrual-experience methods described in paragraphs (f)(1) through (f)(5) of this section, for the subsequent taxable year. A change in method of accounting from an impermissible method under this paragraph (e)(2)(iii)(C) to a permissible method in the taxable year subsequent to the three-year self-test year is made on a cut-off basis.

(iv) *Determination of taxpayer's actual experience.* [Reserved]

(3) *Safe harbor comparison method* —

(i) *In general.* A taxpayer using, or desiring to use, a nonaccrual-experience method under the safe harbor in paragraph (f)(5) of this section must self-test its nonaccrual-experience method for its first taxable year for which the taxpayer uses, or desires to use, that nonaccrual-experience method (first-year self-test) and every three taxable years thereafter (three-year self-test). A nonaccrual-experience method under the safe harbor in paragraph (f)(5) of this section is deemed to clearly reflect experience provided all the requirements of the safe harbor comparison method of this paragraph (e)(3) are met. Each self-test must be performed by comparing the uncollectible amount (under the taxpayer's nonaccrual-experience method) with the uncollectible amount that would have resulted from use of one of the safe harbor methods described in paragraph (f)(1), (f)(2), (f)(3), or (f)(4) of this section. A change from a nonaccrual-experience method that uses the safe harbor comparison method for self-testing to a nonaccrual-experience method that does not use the safe harbor comparison method for self-testing, and vice versa, is a change in method of accounting to which the provisions of sections

446 and 481 and the regulations apply. A change solely to use or discontinue use of the safe harbor comparison method for purposes of determining whether the nonaccrual-experience method clearly reflects experience must be made on a cut-off basis and without audit protection.

(ii) ***Requirements to use safe harbor comparison method*** —

(A) ***First-year self-test.*** The first-year self-test must be performed by comparing the uncollectible amount with the uncollectible amount determined under any of the safe harbor methods described in paragraph (f)(1), (f)(2), (f)(3), or (f)(4) of this section (safe harbor uncollectible amount) for its first taxable year for which the taxpayer uses, or desires to use, that nonaccrual-experience method. If the uncollectible amount for the first-year self-test is less than or equal to the safe harbor uncollectible amount, then the taxpayer's nonaccrual-experience method is treated as clearly reflecting its experience for the first taxable year. If, as a result of the first-year self-test, the uncollectible amount for the test period is greater than the safe harbor uncollectible amount, then—

(*1*) The taxpayer's nonaccrual-experience method is treated as not clearly reflecting its experience;

(*2*) The taxpayer is not permitted to use that nonaccrual-experience method in that taxable year; and

(*3*) The taxpayer must change to (or adopt) for that taxable year either—

(*i*) Another nonaccrual-experience method that clearly reflects experience, that is, a nonaccrual-experience method that meets the first-year self-test requirement; or

(*ii*) A safe harbor nonaccrual-experience method described in paragraphs (f)(1) through (f)(5) of this section.

(B) ***Three-year self-test.*** The three-year self-test must be performed by comparing the sum of the uncollectible amounts for the current taxable year and prior two taxable years (cumulative uncollectible amount) with the sum of the uncollectible amount determined under any of the safe harbor methods described in paragraph (f)(1), (f)(2), (f)(3), or (f)(4) of this section for the current taxable year and prior two taxable years (cumulative safe harbor uncollectible amounts). If the cumulative uncollectible amount for the three-year self-test is less than or equal to the cumulative safe harbor uncollectible amount for the test period, then the taxpayer's nonaccrual-experience method is treated as clearly reflecting its experience for the test period and the taxpayer may continue to use that nonaccrual-experience method, subject to a requirement to self-test again after three taxable years. If the cumulative uncollectible amount for the test period is greater than the cumulative safe harbor uncollectible amount for the test period, the taxpayer's uncollectible amount is limited to the cumulative safe harbor uncollectible amount for the test period. Any excess of the taxpayer's cumulative uncollectible amount over the taxpayer's cumulative safe harbor uncollectible amount excluded from income during the test period must be recaptured into income in the third taxable year of the three-year self-test period. If the cumulative uncollectible amount is less than 110 percent of the cumulative safe harbor uncollectible amount, the taxpayer's nonaccrual-experience method is treated as a permissible method and the taxpayer may continue to use its alternative nonaccrual-experience method, subject to the three-year self-test requirement of this paragraph (e)(3)(ii)(B). If the cumulative uncollectible amount is greater than or

equal to 110 percent of the cumulative safe harbor uncollectible amount, the taxpayer's nonaccrual-experience method is treated as impermissible in the taxable year subsequent to the three-year self-test year and does not clearly reflect its experience. The taxpayer must change to another nonaccrual-experience method that clearly reflects experience, including, for example, one of the safe harbor nonaccrual-experience methods described in paragraphs (f)(1) through (f)(5) of this section, for the subsequent taxable year. A change in method of accounting from an impermissible method under this paragraph (e)(3)(ii)(B) to a permissible method in the taxable year subsequent to the three-year self-test year is made on a cut-off basis.

(4) ***Methods that do not clearly reflect experience.*** [Reserved]

(5) ***Contemporaneous documentation.*** For purposes of this paragraph (e), including the safe harbor comparison method of paragraph (e)(3) of this section, a taxpayer must document in its books and records, in the taxable year any first-year or three-year self-test is performed, the method used to conduct the self-test, including appropriate documentation and computations that resulted in the determination that the taxpayer's nonaccrual-experience method clearly reflected the taxpayer's nonaccrual-experience for the applicable test period.

(f) ***Safe harbors*** —

(1) ***Safe harbor 1: revenue-based moving average method.*** A taxpayer may use a nonaccrual-experience method under which the taxpayer determines the uncollectible amount by multiplying its accounts receivable balance at the end of the current taxable year by a percentage (revenue-based moving average percentage). The revenue-based moving average percentage is computed by dividing the total bad debts sustained, adjusted by recoveries received, throughout the applicable period by the total revenue resulting in accounts receivable earned throughout the applicable period. *See* paragraph (g) *Example 4* of this section for an example of this method. Thus, the uncollectible amount under the revenue-based moving average method is computed:

$$\frac{\text{Bad debts sustained, adjusted by recoveries received, during the applicable period}}{\text{Total revenue resulting in accounts receivable during the applicable period}} \times \text{Accounts receivable at end of current taxable year}$$

(2) ***Safe harbor 2: actual experience method***—

(i) ***Option A: single determination date.*** A taxpayer may use a nonaccrual-experience method under which the taxpayer determines the uncollectible amount by multiplying its accounts receivable balance at the end of the current taxable year by a percentage (moving average nonaccrual-experience percentage) and then increasing the resulting amount by 5 percent. *See* paragraph (g) *Example 5* of this section for an example of safe harbor 2 in general, and paragraph (g) *Example 6* of this section for an example of the single determination date option of safe harbor 2. The taxpayer's moving average nonaccrual-experience percentage is computed by dividing the total bad debts sustained, adjusted by recoveries that are allocable to the bad debts, by the determination date of the current taxable year related to the taxpayer's accounts receivable balance at the beginning of each taxable year during the applicable period by the sum of the accounts receivable at the beginning of each taxable year during the applicable period. Thus, the uncollectible amount under Option A of the actual experience method is computed:

$$\frac{\text{Bad debts sustained, adjusted by recoveries received that are allocable to the bad debts, by the determination date of the current taxable year related to the taxpayer's accounts receivable balance at the beginning of each taxable year during the applicable period}}{\text{Sum of accounts receivable at the beginning of each taxable year during the applicable period}} \times \text{Accounts receivable at end of current taxable year} \times 1.05$$

(ii) ***Option B: multiple determination dates.*** Alternatively, in computing its bad debts related to the taxpayer's accounts receivable balance at the beginning of each taxable year during the applicable period, a taxpayer may use the original determination date for each taxable year during the applicable period. That is, the taxpayer may use bad debts sustained, adjusted by recoveries received that are allocable to the bad debts, by the determination date of each taxable year during the applicable period rather than the determination date of the current taxable year. *See* paragraph (g) *Example 7* of this section for an example of the multiple determination date option of safe harbor 2. Thus, the uncollectible amount under Option B of the actual experience method is computed:

$$\frac{\text{Sum of, for each taxable year during the applicable period, bad debts sustained, adjusted by recoveries received that are allocable to the bad debts, by that taxable year's determination date and related to the taxpayer's accounts receivable balance at the beginning of the taxable year}}{\text{Sum of accounts receivable at the beginning of each taxable year during the applicable period}} \times \text{Accounts receivable at end of current taxable year} \times 1.05$$

(iii) ***Tracing of recoveries*** —

(A) ***In general.*** Bad debts related to the taxpayer's accounts receivable balance at the beginning of each taxable year during the applicable period must be adjusted by the portion, if any, of recoveries received that are properly allocable to the bad debts.

(B) ***Specific tracing.*** If a taxpayer, without undue burden, can trace all recoveries to their corresponding charge-offs, the taxpayer must specifically trace all recoveries.

(C) ***Recoveries cannot be traced without undue burden.*** If a taxpayer has any recoveries that cannot, without undue burden, be traced to corresponding charge-offs, the taxpayer may allocate those or all recoveries between charge-offs of amounts in the relevant beginning accounts receivable balances and other charge-offs using an allocation method that is reasonable under all of the facts and circumstances.

(1) ***Reasonable allocations.*** An allocation method is reasonable if there is a cause and effect relationship between the allocation base or ratio and the recoveries. A taxpayer may elect to trace recoveries that are traceable and allocate all untraceable recoveries to charge-offs of amounts in the relevant beginning accounts receivable balances. Such an allocation method will be deemed to be reasonable under all the facts and circumstances.

(2) ***Allocations that are not reasonable.*** Allocation methods that generally will not be considered reasonable include, for example, methods in which there is not a cause and effect relationship between the allocation base or ratio and methods in which receivables for which the nonaccrual-experience method is not allowed to be used are included in the allocation. *See* paragraph (c)(1)(ii) of this section for examples of receivables for which the nonaccrual-experience method is not allowed.

(3) ***Safe harbor 3: modified Black Motor method.*** A taxpayer may use a nonaccrual-experience method under which the taxpayer determines the uncollectible amount by multiplying its accounts receivable balance at the end of the current taxable year by a percentage (modified Black Motor moving average percentage) and then reducing the resulting amount by the bad debts written off during the current taxable year relating to accounts receivable generated during the current taxable year. The modified Black Motor moving average percentage is computed by dividing the total bad debts sustained, adjusted by recoveries received, during the applicable period by the sum of accounts receivable at the end of each taxable year during the applicable period. *See* paragraph (g) *Example 8* of this section for an example of this method. Thus, the uncollectible amount under the modified Black Motor method is computed:

$$\frac{\text{Bad debts sustained, adjusted by recoveries received, during the applicable period}}{\text{Sum of accounts receivable at the end of each taxable year during the applicable period}} \times \text{Accounts receivable at end of current taxable year} - \text{Bad debts written off during the current taxable year relating to accounts receivable generated during the current taxable year}$$

(4) ***Safe harbor 4: modified moving average method.*** A taxpayer may use a nonaccrual-experience method under which the taxpayer determines the uncollectible amount by multiplying its accounts receivable balance at the end of the current taxable year by a percentage (modified moving average percentage). The modified moving average percentage is computed by dividing the total bad debts sustained, adjusted by recoveries received, during the applicable period other than bad debts that were written off in the same taxable year the related accounts receivable were generated by the sum of accounts receivable at the beginning of each taxable year during the applicable period. *See* paragraph (g) *Example 9* of this section for an example of this method. Thus, the uncollectible amount under the modified moving average method is computed:

$$\frac{(\text{Bad debts sustained, adjusted by recoveries received, during the applicable period} - \text{Bad debts written off in same taxable year accounts receivable generated})}{\text{Sum of accounts receivable at the beginning of each taxable year during the applicable period}} \times \text{Accounts receivable at end of current taxable year}$$

(5) ***Safe harbor 5: alternative nonaccrual-experience method.*** A taxpayer may use an alternative nonaccrual-experience method that clearly reflects the taxpayer's actual nonaccrual-experience, provided the taxpayer's alternative nonaccrual-experience method meets the self-test requirements described in paragraph (e)(3) of this section.

(g) ***Examples.*** The following examples illustrate the provisions of this section. In each example, the taxpayer uses a calendar year for Federal income tax purposes and an accrual method of accounting, does not require the payment of interest or penalties with respect to past due accounts receivable (except in the case of *Example 3*) and, in the case of *Examples 5* through *7*, selects an appropriate determination date for each taxable year. The examples are as follows:

Example 1. Contractual allowance or adjustment. B, a healthcare provider, performs a medical procedure on individual C, who has health insurance coverage with IC, an insurance company. B bills IC and C for $5,000, B's standard charge for this medical procedure. However, B has a contract with IC that obligates B to accept $3,500 as full payment for the medical procedure if the procedure is provided to a patient insured by IC. Under the contract, only $3,500 of the $5,000 billed by B is legally collectible from IC and C. The remaining $1,500 represents a contractual allowance or contractual adjustment. Under paragraph (c)(1)(i) of this section, the remaining $1,500 is not a contractually collectible amount for purposes of this section and B may not use a nonaccrual-experience method with respect to this portion of the receivable.

Example 2. Charitable or pro bono services. D, a law firm, agrees to represent individual E in a legal matter and to provide services to E on a pro bono basis. D normally charges $500 for these services. Because D provides its services to E pro bono, D's services are never billed or intended to result in revenue. Thus, under paragraph (c)(1)(i) of this section, the $500 is not a collectible amount for purposes of this section and D may not use a nonaccrual-experience method with respect to this portion of the receivable.

Example 3. Charging interest and/or penalties. Z has two billing methods for the amounts to be received from Z's provision of services described in paragraph (a)(1) of this section. Under one method, for amounts that are more than 90 days past due, Z charges interest at a market rate until the amounts (together with interest) are paid. Under the other billing method, Z charges no interest for amounts past due. Under paragraph (c)(1)(ii) of this section, A may not use a nonaccrual-experience method of accounting with respect to any of the amounts billed under the method that charges interest on amounts that are more than 90 days past due. Z may, however, use the nonaccrual-experience method with respect to the amounts billed under the method that does not charge interest for amounts past due.

Example 4. Safe harbor 1: Revenue-based moving average method. (i) F uses the revenue-based moving average method described in paragraph (f)(1) of this section with an applicable period of six taxable years. F's total accounts receivable and bad debt experience for the 2006 taxable year and the five immediately preceding consecutive taxable years are as follows:

Taxable year	Total accounts receivable earned during the taxable year	Bad debts adjusted for recoveries
2001	$40,000	$5,700
2002	40,000	7,200
2003	40,000	11,000
2004	60,000	10,200
2005	70,000	14,000
2006	80,000	16,800

Taxable year	Total accounts receivable earned during the taxable year	Bad debts adjusted for recoveries
Total	330,000	64,900

(ii) F's revenue-based moving average percentage is 19.67% ($64,900/$330,000). If $49,300 of accounts receivable remains outstanding as of the close of that taxable year (2006), F's uncollectible amount using the revenue-based moving average safe harbor method is computed by multiplying $49,300 by the revenue-based moving average percentage of 19.67%, or $9,697. Thus, F may exclude $9,697 from gross income for 2006.

Example 5. Safe harbor 2: Actual experience method . (i) G is eligible to use a nonaccrual-experience method and wishes to adopt the actual experience method of paragraph (f)(2) of this section. G elects to use a three-year applicable period consisting of the current and two immediately preceding consecutive taxable years. G determines that its actual accounts receivable collection experience is as follows:

Taxable year	Total A/R balance at beginning of taxable year	Bad debts, adjusted for recoveries, related to A/R balance at beginning of taxable year
2006	$1,000,000	$35,000
2007	760,000	75,000
2008	1,975,000	65,000
Total	3,735,000	175,000

(ii) G's ending A/R Balance on December 31, 2008, is $880,000. In 2008, G computes its uncollectible amount by using a three-year moving average under paragraph (f)(2) of this section. G's moving average nonaccrual-experience percentage is 4.7%, determined by dividing the sum of the amount of G's accounts receivable outstanding on January 1 of 2006, 2007, and 2008, that were determined to be bad debts (adjusted for recoveries allocable to the bad debts) on or before the corresponding determination date(s), by the sum of the amount of G's accounts receivable outstanding on January 1 of 2006, 2007, and 2008 ($175,000/$3,735,000 or 4.7%). G's uncollectible amount for 2008 is determined by multiplying this percentage by the balance of G's accounts receivable on December 31, 2008 ($880,000 × 4.7% = $41,360), and increasing this amount by 105% ($41,360 × 105% = $43,428). G may exclude $43,428 from gross income for 2008.

Example 6. Safe harbor 2: Single determination date (Option A). H is eligible to use a nonaccrual-experience method and wishes to adopt the actual experience method of paragraph (f)(2) of this section. H elects to use a six-year applicable period consisting of the current and five immediately preceding taxable years. H also elects to use a single determination date in accordance with paragraph (f)(2)(i) of this section. H selects December 31, its taxable year-end, as its determination date. Since H is using a single determination date from the current taxable year, its determination date for the 2001-2006 applicable period is December 31, 2006. H has a $800 charge-off in 2003 of an account receivable in the 2003 beginning accounts receivable balance. In 2005, H has a recovery of $100 which is traceable, without undue burden, to the $800 charge-off in 2003. Since the $100 recovery occurred prior to H's December 31, 2006, determination date, it reduces the amount of H's bad debts in the numerator of the formula for purposes of determining H's moving average nonaccrual-experience percentage. In addition, H must include the $100 recovery in income in 2005 (*see* paragraph (d)(5) of this section regarding recoveries).

Example 7. Safe harbor 2: Multiple determination dates (Option B). The facts are the same as in *Example 6,* except H elects to use multiple determination dates in accordance with paragraph (f)(2)(ii) of this section. Consequently, H's determination date is December 31, 2001, for its calculations of the portion of the numerator relating to the 2001 taxable year, December 31, 2002, for its calculations of the portion of the numerator relating to the 2002 taxable year, and so on through the final taxable year (2006), which has a determination date of December 31, 2006. Since the $100 recovery did not occur until after December 31, 2003 (the determination date for the 2003 taxable year), it does not reduce the amount of H's bad debts in the numerator of the formula for purposes of determining H's moving average nonaccrual-experience percentage. However, H still must include the $100 recovery in income in 2005 (*see* paragraph (d)(5) of this section regarding recoveries).

Example 8. Safe harbor 3: Modified Black Motor method. (i) J uses the modified Black Motor method described in paragraph (f)(3) of this section and a six-year applicable period. J's total accounts receivable and bad debt experience for the 2006 taxable year and the five immediately preceding consecutive taxable years are as follows:

Taxable year	Accounts receivable at end of taxable year	Bad debts (adjusted for recoveries)
2001	$130,000	$9,100
2002	140,000	7,000
2003	140,000	14,000
2004	160,000	14,400
2005	170,000	20,400
2006	180,000	10,800
Total	920,000	75,700

(ii) J's modified Black Motor moving average percentage is 8.228% ($75,700/$920,000). If the accounts receivable generated and written off during the current taxable year are $3,600,

J's uncollectible amount is $11,210, computed by multiplying J's accounts receivable on December 31, 2006 ($180,000) by the modified Black Motor moving average percentage of 8.228% and reducing the resulting amount by $3,600 (J's accounts receivable generated and written off during the 2006 taxable year). J may exclude $11,210 from gross income for 2006.

Example 9. Safe harbor 4: Modified moving average method. (i) The facts are the same as in *Example 8,* except that the balances represent accounts receivable at the beginning of the taxable year, and J uses the modified moving average method described in paragraph (f)(4) of this section and a six-year applicable period. Furthermore, the accounts receivable that were written off in the same taxable year they were generated, adjusted for recoveries of bad debts during the period are as follows:

Taxable year	Accounts receivable written off in same taxable year as generated (adjusted for recoveries)
2001	$3,033
2002	2,333
2003	4,667
2004	4,800
2005	6,800
2006	3,600
Total	25,233

(ii) J's modified moving average percentage is 5.486% (($75,700−$25,233)/$920,000). J's uncollectible amount is $9,875, computed by multiplying J's accounts receivable on December 31, 2006 ($180,000) by the modified moving average percentage of 5.486%. J may exclude $9,875 from gross income for 2006.

Example 10. First-year self-test. Beginning in 2006, K is eligible to use a nonaccrual-experience method and wants to adopt an alternative nonaccrual-experience method under paragraph (f)(5) of this section, and consequently is subject to the safe harbor comparison method of self-testing under paragraph (e)(3) of this section. K elects to self-test against safe harbor 1 for purposes of conducting its first-year self-test. K's uncollectible amount for 2006 is $22,000. K's safe harbor uncollectible amount under safe harbor 1 is $21,000. Because K's uncollectible amount for 2006 ($22,000) is greater than the safe harbor uncollectible amount ($21,000), K's alternative nonaccrual-experience method is treated as not clearly reflecting its nonaccrual experience for 2006. Accordingly, K must adopt either another nonaccrual-experience method that clearly reflects experience (subject to the self-testing requirements of paragraph (e)(2)(ii) of this section, or a safe harbor nonaccrual-experience method described in paragraph (f)(1) (revenue-based moving average), (f)(2) (actual experience method),

(f)(3) (modified Black Motor method), (f)(4) (modified moving average method) of this section, or another alternative nonaccrual-experience method under paragraph (f)(5) of this section that meets the self-testing requirements of paragraph (e)(3) of this section.

Example 11. Three-year self-test. The facts are the same as in Example 10, except that K's safe harbor uncollectible amount under safe harbor 1 for 2006 is also $22,000. Consequently, K meets the first-year self-test requirement and may use its alternative nonaccrual-experience method. Subsequently, K's cumulative uncollectible amount for 2007 through 2009 is $300,000. K's safe harbor uncollectible amount for 2007 through 2009 under its chosen safe harbor method for self-testing (safe harbor 1) is $295,000. Because K's cumulative uncollectible amount for the three-year test period (taxable years 2007 through 2009) is greater than its safe harbor uncollectible amount for the three-year test period ($295,000), under paragraph (e)(3)(ii)(B) of this section, the $5,000 excess of K's cumulative uncollectible amount over K's safe harbor uncollectible amount for the three-year test period must be recaptured into income in 2009 in accordance with paragraph (e)(3)(ii)(B) of this section. Since K's cumulative uncollectible amount for the three-year test period ($300,000) is less than 110% of its safe harbor uncollectible amount ($295,000 × 110% = $324,500), under paragraph (e)(3)(ii)(B) of this section, K may continue to use its alternative nonaccrual-experience method, subject to the three-year self-test requirement.

Example 12. Subsequent worthlessness of year-end receivable. The facts are the same as in *Example 4,* except that one of the accounts receivable outstanding at the end of 2002 was for $8,000, and in 2003, under section 166, the entire amount of this receivable becomes wholly worthless. Because F does not accrue as income $1,573 of this account receivable ($8,000 × .1967) under the nonaccrual-experience method in 2002, under paragraph (d)(2) of this section F may not deduct this portion of the account receivable as a bad debt deduction under section 166 in 2003. F may deduct the remaining balance of the receivable in 2003 as a bad debt deduction under section 166 ($8,000−$1,574 = $6,426).

Example 13. Subsequent collection of year-end receivable. The facts are the same as in *Example 4.* In 2007, F collects in full an account receivable of $1,700 that was outstanding at the end of 2006. Under paragraph (d)(5) of this section, F must recognize additional gross income in 2007 equal to the portion of this receivable that F excluded from gross income in the prior taxable year ($1,700 × .1967 = $334). That amount ($334) is a recovery under paragraph (d)(5) of this section.

(h) ***Applicability dates.***

(1) Except as provided in paragraph (h)(2) of this section, this section is applicable for taxable years ending on or after August 31, 2006.

(2) The rules of paragraph (a)(2) of this section apply for taxable years beginning on or after January 5, 2021. However, for a taxable year beginning after December 31, 2017, and before January 5, 2021, a taxpayer may apply the paragraph described in the first sentence of this paragraph (h)(2), provided that the taxpayer follows all the applicable rules contained in the regulations under section 448 for such taxable year and all subsequent taxable years.

[T.D. 9285, 71 FR 52437, Sept. 6, 2006. Redesignated and amended at T.D. 9942, 86 FR 272, Jan. 5, 2021]

TAXABLE YEAR FOR WHICH ITEMS OF GROSS INCOME INCLUDED

§ 1.451-1 General rule for taxable year of inclusion.

(a) ***General rule.*** Gains, profits, and income are to be included in gross income for the taxable year in which they are actually or constructively received by the taxpayer unless includible for a different year in accordance with the taxpayer's method of accounting. Under an accrual method of accounting, income is includible in gross income when all the events have occurred which fix the right to receive such income and the amount thereof can be determined with reasonable accuracy (all events test). Therefore, under such a method of accounting if, in the case of compensation for services, no determination can be made as to the right to such compensation or the amount thereof until the services are completed, the amount of compensation is ordinarily income for the taxable year in which the determination can be made. Under the cash receipts and disbursements method of accounting, such an amount is includible in gross income when actually or constructively received. Where an amount of income is properly accrued on the basis of a reasonable estimate and the exact amount is subsequently determined, the difference, if any, shall be taken into account for the taxable year in which such determination is made. To the extent that income is attributable to the recovery of bad debts for accounts charged off in prior years, it is includible in the year of recovery in accordance with the taxpayer's method of accounting, regardless of the date when the amounts were charged off. For treatment of bad debts and bad debt recoveries, see sections 166 and 111 and the regulations thereunder. For rules relating to the treatment of amounts received in crop shares, see section 61 and the regulations thereunder. For the year in which a partner must include his distributive share of partnership income, see section 706(a) and paragraph (a) of § 1.706-1. If a taxpayer ascertains that an item should have been included in gross income in a prior taxable year, he should, if within the period of limitation, file an amended return and pay any additional tax due. Similarly, if a taxpayer ascertains that an item was improperly included in gross income in a prior taxable year, he should, if within the period of limitation, file claim for credit or refund of any overpayment of tax arising therefrom.

(b) ***Timing of income inclusion for accrual method taxpayers with an applicable financial statement.*** For the timing of income inclusion for taxpayers that have an applicable financial statement, as defined in § 1.451-3(b)(1), and that use an accrual method of accounting, see section 451(b) and § 1.451-3.

(c) ***Special rule for timing of income inclusion from advance payments.*** For the timing of income inclusion for taxpayers that receive advance payments, as defined in § 1.451-8(a)(1), and that use an accrual method of accounting, see section 451(c) and § 1.451-8.

(d) ***Special rule in case of death.***

(1) A taxpayer's taxable year ends on the date of his death. See section 443(a)(2) and paragraph (a)(2) of § 1.443-1. In computing taxable income for such year, there shall be included only amounts properly includible under the method of accounting used by the taxpayer. However, if the taxpayer used an accrual method of accounting, amounts accrued only by reason of his death shall not be included in computing taxable income for such year. If the taxpayer uses no regular accounting method, only amounts actually or constructively received during such year shall be included. (For rules relating to the inclusion of partnership income in the return of a decedent partner, see subchapter K, chapter 1 of the Code, and the regulations thereunder.)

(2) If the decedent owned an installment obligation the income from which was taxable to him under section 453, no income is required to be reported in the return of the decedent by reason of the transmission at death of such obligation. See section 453(d)(3). For the treatment of installment obligations acquired by the decedent's estate or by any person by bequest, devise, or inheritance from the decedent, see section 691(a)(4) and the regulations thereunder.

(e) ***Special rule for employee tips.*** Tips reported by an employee to his employer in a written statement furnished to the employer pursuant to section 6053(a) shall be included in gross income of the employee for the taxable year in which the written statement is furnished the employer. For provisions relating to the reporting of tips by an employee to his employer, see section 6053 and § 31.6053-1 of this chapter (Employment Tax Regulations).

(f) ***Special rule for ratable inclusion of original issue discount.*** For ratable inclusion of original issue discount in respect of certain corporate obligations issued after May 27, 1969, see section 1232(a)(3).

(g) ***Special rule for inclusion of qualified tax refund effected by allocation.*** For rules relating to the inclusion in income of an amount paid by a taxpayer in respect of his liability for a qualified State individual income tax and allocated or reallocated in such a manner as to apply it toward the taxpayer's liability for the Federal income tax, see paragraph (f)(1) of § 301.6361-1 of this chapter (Regulations on Procedure and Administration).

(h) ***Timing of income from notional principal contracts.*** For the timing of income with respect to notional principal contracts, see § 1.446-3.

(i) ***Timing of income from section 467 rental agreements.*** For the timing of income with respect to section 467 rental agreements, see section 467 and the regulations thereunder.

[T.D. 6500, 25 FR 11709, Nov. 26, 1960, as amended by T.D. 7001, 34 FR 997, Jan. 23, 1969; T.D. 7154, 36 FR 24996, Dec. 28, 1971; 43 FR 59357, Dec. 20, 1978; T.D. 8491, 58 FR 53135, Oct. 14, 1993; T.D. 8820, 64 FR 26851, May 18, 1999; T.D. 9941, Jan. 6, 2021, 86 FR 1256, Jan. 8, 2021]

§ 1.451-2 Constructive receipt of income.

(a) ***General rule.*** Income although not actually reduced to a taxpayer's possession is constructively received by him in the taxable year during which it is credited to his account, set apart for him, or otherwise made available so that he may draw upon it at any time, or so that he could have drawn upon it during the taxable year if notice of intention to withdraw had been given. However, income is not constructively received if the taxpayer's control of its receipt is subject to substantial limitations or restrictions. Thus, if a corporation credits its employees with bonus stock, but the stock is not available to such employees until some future date, the mere crediting on the books of the corporation does not constitute receipt. In the case of interest, dividends, or other earnings (whether or not credited) payable in respect of any deposit or account in a bank, building and loan association, savings and loan association, or similar institution, the following are not substantial limitations or restrictions on the taxpayer's control over the receipt of such earnings:

(1) A requirement that the deposit or account, and the earnings thereon, must be withdrawn in multiples of even amounts;

(2) The fact that the taxpayer would, by withdrawing the earnings during the taxable year, receive earnings that are not substantially less in comparison with the earnings for the corresponding period to which the taxpayer would be entitled had he left the account on deposit until a later date (for example, if an amount equal to three months' interest must be forfeited upon withdrawal or redemption before maturity of a one year or less certificate of deposit, time deposit, bonus plan, or other deposit arrangement then the earnings payable on premature withdrawal or redemption would be substantially less when compared with the earnings available at maturity);

(3) A requirement that the earnings may be withdrawn only upon a withdrawal of all or part of the deposit or account. However, the mere fact that such institutions may pay earnings on withdrawals, total or partial, made during the last three business days of any calendar month ending a regular quarterly or semiannual earnings period at the applicable rate calculated to the end of such calendar month shall not constitute constructive receipt of income by any depositor or account holder in any such institution who has not made a withdrawal during such period;

(4) A requirement that a notice of intention to withdraw must be given in advance of the withdrawal. In any case when the rate of earnings payable in respect of such a deposit or account depends on the amount of notice of intention to withdraw that is given, earnings at the maximum rate are constructively received during the taxable year regardless of how long the deposit or account was held during the year or whether, in fact, any notice of intention to withdraw is given during the year. However, if in the taxable year of withdrawal the depositor or account holder receives a lower rate of earnings because he failed to give the required notice of intention to withdraw, he shall be allowed an ordinary loss in such taxable year in an amount equal to the difference between the amount of earnings previously included in gross income and the amount of earnings actually received. See section 165 and the regulations thereunder.

(b) ***Examples of constructive receipt.*** Amounts payable with respect to interest coupons which have matured and are payable but which have not been cashed are constructively received in the taxable year during which the coupons mature, unless it can be shown that there are no funds available for payment of the interest during such year. Dividends on corporate stock are constructively received when unqualifiedly made subject to the demand of the shareholder. However, if a dividend is declared payable on December 31 and the corporation followed its usual practice of paying the dividends by checks mailed so that the shareholders would not receive them until January of the following year, such dividends are not considered to have been constructively received in December. Generally, the amount of dividends or interest credited on savings bank deposits or to shareholders of organizations such as building and loan associations or cooperative banks is income to the depositors or shareholders for the taxable year when credited. However, if any portion of such dividends or interest is not subject to withdrawal at the time credited, such portion is not constructively received and does not constitute income to the depositor or shareholder until the taxable year in which the portion first may be withdrawn. Accordingly, if, under a bonus or forfeiture plan, a portion of the dividends or interest is accumulated and may not be withdrawn until the maturity of the plan, the crediting of such portion to the account of the shareholder or depositor does not constitute constructive receipt. In this case, such credited portion is income to the depositor or shareholder in the year in which the plan matures. However, in the case of certain deposits made after December 31, 1970, in banks, domestic building and loan associations, and similar financial institutions, the ratable inclusion rules of section 1232(a)(3) apply. See § 1.1232-3A. Accrued interest on unwithdrawn insurance policy dividends is gross income to the taxpayer for the first taxable year during which such interest may be withdrawn by him.

[T.D. 6723, 29 FR 5342, Apr. 21, 1964, as amended by T.D. 7154, 36 FR 24997, Dec. 28, 1971; T.D. 7663, 44 FR 76782, Dec. 28, 1979]

§ 1.451-3 Timing of income inclusion for taxpayers with an applicable financial statement using an accrual method of accounting.

(a) ***Definitions.*** The following definitions apply for this section:

(1) ***AFS income inclusion amount.*** The term *AFS income inclusion amount means the amount* of an item of gross income that is required to be included in gross income under the AFS income inclusion rule in paragraph (b)(1) of this section.

(2) ***AFS income inclusion rule.*** The term *AFS income inclusion rule* has the meaning provided in paragraph (b)(1) of this section.

(3) ***AFS inventory inclusion amount.*** The term *AFS inventory inclusion amount* has the meaning provided in paragraph (c)(2)(i)(A) of this section.

(4) ***AFS revenue.*** The term *AFS revenue* means revenue reported in the taxpayer's AFS. The characterization of an amount in the AFS is not determinative of whether the amount is AFS revenue. For example, AFS revenue can include amounts reported as other comprehensive income or adjustments to retained earnings in an AFS. See paragraph (b) of this section for adjustments to AFS revenue that may need to be made to apply the rules of this section.

(5) ***Applicable financial statement (AFS).*** Subject to the rules in paragraph (a)(5)(iv) of this section, the terms *applicable financial statement* and *AFS* are synonymous and mean the taxpayer's financial statement listed in paragraph (a)(5)(i) through (iii) of this section that has the highest priority, including priority within paragraphs (a)(5)(i)(B) and (a)(5)(ii)(B) of this section. The financial statements are, in order of descending priority:

(i) ***GAAP statements.*** A financial statement that is certified as being prepared in accordance with United States generally accepted accounting principles (GAAP) and is:

(A) A Form 10-K (or successor form), or annual statement to shareholders, filed with the United States Securities and Exchange Commission (SEC);

(B) An audited financial statement of the taxpayer that is used for:

(*1*) Credit purposes;

(*2*) Reporting to shareholders, partners, or other proprietors, or to beneficiaries; or

(*3*) Any other substantial non-tax purpose; or

(C) A financial statement, other than a tax return, filed with the Federal Government or any Federal agency, other than the SEC or the Internal Revenue Service (IRS);

(ii) ***IFRS statements.*** A financial statement that is certified as being prepared in accordance with international financial reporting standards (IFRS) and is:

(A) Filed by the taxpayer with an agency of a foreign government that is equivalent to the SEC, and has financial reporting standards not less stringent than the standards required by the SEC;

(B) An audited financial statement of the taxpayer that is used for:

(*1*) Credit purposes;

(*2*) Reporting to shareholders, partners, or other proprietors, or to beneficiaries; or

(*3*) Any other substantial non-tax purpose; or

(C) A financial statement, other than a tax return, filed with the Federal Government, Federal agency, a foreign government, or agency of a foreign government, other than the SEC, IRS, or an agency that is equivalent to the SEC or the IRS; or

(iii) ***Other statements.*** A financial statement, other than a tax return, filed with the Federal Government or any Federal agency, a state government or state agency, or a self-regulatory organization including, for example, a financial statement filed with a state agency that regulates insurance companies or the Financial Industry Regulatory Authority. Additional financial statements beyond those included in this paragraph (a)(5)(iii) may be provided in guidance published in the Internal Revenue Bulletin (see § 601.601(d) of this chapter).

(iv) ***Additional rules for determining priority.*** If a taxpayer restates AFS revenue for a taxable year prior to the date that the taxpayer files its Federal income tax return for such taxable year, the restated AFS must be used instead of the original AFS. If using the restated AFS revenue results in a change in method of accounting, the preceding sentence applies only if the taxpayer receives permission to change its method of accounting to use the restated AFS revenue. In addition, if a taxpayer with different financial accounting and taxable years is required to file both annual financial statements and periodic financial statements covering less than a year with a government or government agency, the taxpayer must prioritize the annual financial statement in accordance with this paragraph (a)(5).

(6) ***Cost of goods.*** The term *cost of goods* means the costs that are properly capitalized and included in inventory under sections 471 and 263A or any other applicable provision of the Internal Revenue Code (Code) and that are allocable to an item of inventory for which an AFS inventory inclusion amount is calculated. See paragraph (c)(5)(iii) of this section for specific rules for taxpayers using simplified methods under section 263A.

(7) ***Cost of goods in progress offset.*** The term *cost of goods in progress offset* has the meaning provided in paragraph (c)(3) of this section.

(8) ***Cumulative cost of goods in progress offset.*** The term *cumulative cost of goods in progress offset* means the cumulative cost of goods in progress offset amounts under paragraph (c) of this section for a specific item of inventory that have reduced an AFS inventory inclusion amount attributable to such item of inventory in prior taxable years.

(9) ***Enforceable right.*** The term *enforceable right* means any right that a taxpayer has under the terms of a contract or under applicable Federal, state, or international law, including rights to amounts recoverable in equity and liquidated damages. A contract can include, but is not limited to, a statement of work, purchase order, or invoice.

(10) ***Equity method.*** The term *equity method* means a method of accounting for financial accounting purposes under which an investment is initially recorded at cost and subsequently increased or decreased in carrying value by the investor's proportionate share of income and losses and such income or losses are reported as separate items on the investor's statement of income.

(11) ***Performance obligation.*** The term *performance obligation* means a promise in a contract with a customer to transfer to the customer a distinct good, service, or right; or a series of distinct goods, services, or rights, or a combination thereof, that are substantially the same and that have the same pattern of transfer to the customer. A performance obligation includes a promise to grant or transfer a right to use or access intangible property. Performance obligations in a contract are identified by applying the accounting standards the taxpayer uses to prepare its AFS. Additionally, to the extent the contract with the customer provides the taxpayer with an enforceable right to payment, the

revenue from which is not allocated to a performance obligation described in the first two sentences of this paragraph (a)(11) in the taxpayer's AFS but is accounted for as a separate source of revenue in the taxpayer's AFS, such right shall be treated as a separate performance obligation under this section. A fee described in paragraph (j)(2) of this section is an example of an enforceable right that is treated as a separate performance obligation.

(12) ***Prior income inclusion amounts.*** The term *prior income inclusion amounts* means amounts of an item of gross income that were required to be included in the taxpayer's gross income under this section or § 1.451-8 in prior taxable years.

(13) ***Special method of accounting.*** The term *special method of accounting* means a method of accounting expressly permitted or required under any provision of the Code, the regulations in this part, or other guidance published in the Internal Revenue Bulletin (see § 601.601(d) of this chapter) under which the time for taking an item of gross income into account in a taxable year is not determined under the all events test in § 1.451-1(a). See, however, paragraph (j) of this section relating to certain items of income for debt instruments. The term special method of accounting does not include any method of accounting expressly permitted or required under this section. The following are examples of special methods of accounting to which the AFS income inclusion rule does not apply:

(i) The crop method of accounting under sections 61 and 162;

(ii) Methods of accounting provided in sections 453 through 460;

(iii) Methods of accounting for notional principal contracts under § 1.446-3;

(iv) Methods of accounting for hedging transactions under § 1.446-4;

(v) Methods of accounting for REMIC inducement fees under § 1.446-6;

(vi) Methods of accounting for gain on shares in a money market fund under § 1.446-7;

(vii) Methods of accounting for certain rental payments under section 467;

(viii) The mark-to-market method of accounting under section 475;

(ix) Timing rules for income and gain associated with a transaction that is integrated under § 1.988-5, and income and gain under the nonfunctional currency contingent payment debt instrument rules in § 1.988-6;

(x) Except as otherwise provided in paragraph (j) of this section, timing rules for original issue discount (OID) under section 811(b)(3) or 1272 (and the regulations in this part under section 1272 of the Code), income under the contingent payment debt instrument rules in § 1.1275-4, income under the variable rate debt instrument rules in § 1.1275-5, income and gain associated with a transaction that is integrated under § 1.1275-6, and income under the inflation-indexed debt instrument rules in § 1.1275-7;

(xi) Timing rules for de minimis OID under § 1.1273-1(d) and for de minimis market discount (as defined in section 1278(a)(2)(C));

(xii) Timing rules for accrued market discount under sections 1276 and 1278(b);

(xiii) Timing rules for short-term obligations under sections 1281 through 1283;

(xiv) Timing rules for stripped bonds under section 1286; and

(xv) Methods of accounting provided in sections 1502 and 1503 and the regulations thereunder, including the method of accounting relating to intercompany transactions under § 1.1502-13.

(14) ***Transaction price amount.*** The term *transaction price amount* means the total amount of consideration to which a taxpayer is, or expects to be, entitled from all performance obligations under a contract. The transaction price amount is determined under the standards the taxpayer uses to prepare its AFS.

(b) ***AFS income inclusion rule*** —

(1) ***In general.*** Except as otherwise provided in this section, if a taxpayer uses an accrual method of accounting for Federal income tax purposes and has an AFS, the all events test under § 1.451-1(a) for any item of gross income, or portion thereof, is met no later than when that item, or portion thereof, is taken into account as AFS revenue (AFS income inclusion rule). See paragraph (b)(2) of this section for rules regarding when an item of gross income, or portion thereof, is treated as *taken into account as AFS revenue* under the AFS income inclusion rule. See paragraph (c) of this section for optional rules to determine the AFS income inclusion amount for an item of gross income from the sale of inventory. See paragraph (d) of this section for rules regarding the allocation of the transaction price amount to multiple items of gross income. See paragraph (e) of this section for rules to determine the AFS income inclusion amount for an item of gross income from a multi-year contract. See paragraphs (f) and (g) of this section for limitations of the AFS income inclusion rule. See paragraph (h) of this section for special rules that may affect the determination of AFS revenue under the AFS income inclusion rule. See paragraph (j) of this section for special ordering rules for certain items of income with respect to debt instruments.

(2) ***Amounts taken into account as AFS revenue*** —

(i) ***General rule.*** Unless the taxpayer uses the alternative AFS revenue method described in paragraph (b)(2)(ii) of this section, the amount of the item of gross income that is treated as *taken into account as AFS revenue* under paragraph (b)(1) of this section is determined by making adjustments to AFS revenue for the amounts described in paragraphs (b)(2)(i)(A) through (D) of this section.

(A) If AFS revenue reflects a reduction for amounts described in paragraph (b)(2)(i)(A)(*1*) or (*2*) of this section, AFS revenue is increased by the amount of the reduction.

(*1*) Cost of goods sold and liabilities that are required to be accounted for under other provisions of the Code such as section 461, including liabilities for allowances, rebates, chargebacks, rewards issued in credit card transactions and other reward programs, and refunds, regardless of when any amount described in this paragraph (b)(2)(i)(A)(*1*) is incurred.

(*2*) Amounts anticipated to be in dispute or anticipated to be uncollectable.

(B) If AFS revenue includes an amount the taxpayer does not have an enforceable right to recover if the customer were to terminate the contract on the last day of the taxable year (regardless of whether the customer actually terminates the contract), AFS revenue is reduced by such amount.

(C) If the transaction price was increased because a significant financing component is deemed to exist under the standards the taxpayer uses to prepare its AFS, then any AFS revenue attributable to such increase is disregarded.

(D) AFS revenue may be increased or reduced by additional amounts as provided in guidance published in the Internal Revenue Bulletin (see § 601.601(d) of this chapter).

(ii) ***Alternative AFS revenue method.*** A taxpayer that chooses to apply the AFS income inclusion rule by using the alternative AFS revenue method described in this paragraph (b)(2)(ii) in lieu of the rules in paragraph (b)(2)(i) of this section, determines the amount of the item of gross income that is treated as *taken into account as AFS revenue* under paragraph (b)(1) of this section by making adjustments to AFS revenue for only the amounts described in paragraphs (b)(2)(i)(A), (C), and (D) of this section. A taxpayer that uses the alternative AFS revenue method for a trade or business must apply the method to all items of gross income in the trade or business that are subject to the AFS income inclusion rule.

(3) ***Exceptions.*** The AFS income inclusion rule in paragraph (b)(1) of this section does not apply to:

(i) Any item of gross income, or portion thereof, if the timing of income inclusion for that item, or portion thereof, is determined using a special method of accounting;

(ii) Any item of gross income, or portion thereof, in connection with a mortgage servicing contract; or

(iii) Any taxable year that is not covered for the entire year by one or more AFS.

(4) ***Examples.*** The following examples illustrate the provisions of paragraph (b) of this section. Unless the facts specifically state otherwise, the taxpayer has an AFS, is on a calendar year for Federal income tax purposes and AFS purposes, and uses an accrual method of accounting for Federal income tax purposes. Further, the taxpayer does not use the alternative AFS revenue method under paragraph (b)(2)(ii) of this section or the AFS cost offset method under paragraph (d) of this section, and does not use a special method of accounting:

(i) ***Example 1: Provision of installation services*** —

(A) ***Facts.*** In 2021, B enters into a 2-year service contract with a customer to install the customer's manufacturing equipment for $100,000. Throughout the term of the contract, the customer retains control of the equipment. B begins providing the installation services in 2021 and completes the installation services in 2022. Under the contract, B bills the customer $55,000 in 2021 when installation begins, but does not have a fixed right to receive the remaining $45,000 until installation is complete and approved by the customer. However, if the customer were to terminate the contract prior to completion, B would have an enforceable right to payment for all services performed prior to the termination date. For its AFS, B reports $60,000 of AFS revenue for 2021 and $40,000 of AFS revenue for 2022, in accordance with the services performed in each respective year.

(B) ***Analysis.*** Under the all events test in § 1.451-1(a), B is required to include $55,000 in gross income in 2021 as B has a fixed right to receive $55,000 as of the end of 2021. However, under the AFS income inclusion rule, because B has an enforceable right to recover the entire $60,000 that was reported in AFS revenue for 2021 had the customer terminated the contract on the last day of 2021, the entire $60,000 is treated as taken into account as AFS revenue in 2021. Accordingly, the all events test is met for the $60,000 of gross income no later than the end of 2021 and B is required to include $60,000 in gross income in 2021.

(ii) ***Example 2: Provision of goods included in AFS with enforceable right*** —

(A) ***Facts.*** In November 2021, C enters into a contract with a customer to provide 50 customized computers for $80,000. Under the contract, C can bill $80,000 after the customer accepts delivery of the computers. However, the contract provides that C has an enforceable right to be paid for work performed to date if the customer were to terminate the contract prior to delivery. C produces and ships all of the computers in 2021. In 2022, the customer accepts delivery of the computers and C bills the customer. For its AFS, C reports $80,000 of AFS revenue for 2021.

(B) ***Analysis.*** Under the all events test in § 1.451-1(a), C does not have a fixed right to receive the $80,000 until the customer accepts delivery of the computers in 2022. However, under the AFS income inclusion rule, because C has an enforceable right to recover the entire $80,000 of AFS revenue that was reported for 2021 had the customer terminated the contract on the last day of 2021, the entire $80,000 is treated as "taken into account as AFS revenue" in 2021. Accordingly, the all events test is met for the $80,000 no later than in 2021 and C is required to include $80,000 in gross income in 2021.

(iii) ***Example 3: Provision of services included in AFS with enforceable right*** —

(A) ***Facts.*** In 2021, D, an engineering services provider, enters into a 4-year contract with a customer to provide services for a total of $100x. Under the contract, D bills and receives $25x for each year of the contract. If the customer were to terminate the contract prior to completion, D has an enforceable right to only the billed amounts. For its AFS, D reports $60x, $0, $20x, and $20x of AFS revenue from the contract for 2021, 2022, 2023, and 2024, respectively.

(B) ***Analysis.*** Under the all events test in § 1.451-1(a), D is required to include $25x in gross income in 2021 as D has a fixed right to receive $25x as of the end of 2021. Although D reports $60x of AFS revenue from the provision of services for 2021, D has an enforceable right to recover only $25x if the customer were to terminate the contract on the last day of 2021. Accordingly, pursuant to paragraph (b)(2)(i)(B) of this section, of the $60x of AFS revenue reported for 2021, only $25x is treated as "taken into account as AFS revenue" under the AFS income inclusion rule. As a result, D is required to include only $25x in gross income in 2021. Similarly, in 2022, 2023 and 2024, D includes in gross income only the yearly $25x contract payments under the all events test as only the billed amounts are treated as "taken into account as AFS revenue" under the AFS income inclusion rule.

(iv) ***Example 4: Sale of good under cost-plus contract*** —

(A) ***Facts.*** In 2021, E, a manufacturer, enters into a contract with Fire Department for the manufacture and delivery of a fire truck. The fire truck takes 10 months to manufacture at an estimated cost of $60,000. The contract provides E with an enforceable right to recover costs incurred in manufacturing the fire truck regardless of whether the Fire Department accepts delivery of the fire truck or terminates the contract, and an enforceable right to an additional $20,000 if the fire truck is accepted by the Fire Department. E does not have an enforceable right to recover any portion of the additional $20,000 if the Fire Department were to terminate the contract before it accepts the fire truck. E has an obligation to cure any defects if the customer rejects the fire truck. In August 2021, E begins manufacturing the fire truck ordered by Fire Department and incurs $30,000 of costs for materials and labor for the contract. For its AFS, E reports $40,000 of AFS revenue for 2021 ($30,000 costs plus $10,000 expected profit on the sale of the fire truck).

(B) ***Analysis for 2021 taxable year.*** Under the all events test in § 1.451-1(a), E is required to include $30,000 in gross income in 2021 as E has a fixed right to receive $30,000 as of the end of 2021. Although E reports $40,000 of AFS revenue for 2021, E has an enforceable right to recover only $30,000 if the Fire Department were to terminate the contract on the last day of 2021. Accordingly, pursuant to paragraph (b)(2)(i)(B) of this section, of the $40,000 of AFS revenue reported for 2021, only $30,000 is treated as "taken into account as AFS revenue" under the AFS income inclusion rule. As a result, E is required to include only $30,000 in gross income in 2021.

(v) ***Example 5: Sale of goods with AFS revenue adjustments*** —

(A) ***Facts.*** In July 2021, F, a manufacturer of automobile parts, enters into a contract to sell 1,000 parts to a customer for $10 per part, for a total of $10,000 (1,000 × $10). The contract also provides that F will receive a $200 bonus if it delivers all the parts to the customer by February 1, 2022. F delivers 500 non-defective parts to the customer on December 31, 2021 and schedules the remaining 500 parts for delivery to the customer on January 1, 2022. F does not have an enforceable right to recover any portion of the $200 bonus if the customer were to terminate the contract before all 1,000 parts are delivered. F expects to earn the $200 bonus and have 5% of the non-defective parts returned. For its AFS, F reports $4,850 ($5,000 + $100−$250) of AFS revenue for 2021, which includes a $100 (50% × $200) adjustment to increase AFS revenue for the expected bonus and a $250 (5% × $5,000) adjustment to decrease AFS revenue for anticipated returns.

(B) ***Analysis.*** Under the all events test in § 1.451-1(a), F is required to include $5,000, less the corresponding cost of goods sold under sections 263A and 471 as applicable, in gross income in 2021 as F has a fixed right to receive $5,000 from the delivery of 500 parts to the customer in 2021. However, F does not have a fixed right to receive any portion of the $200 delivery bonus as of the end of 2021 as the remaining 500 parts had yet to be delivered. Under the AFS income inclusion rule and, specifically, paragraphs (b)(2)(i)(A)(*1*) and (b)(2)(i)(B) of this section, the amount treated as "taken into account as AFS revenue" for 2021 is also $5,000, calculated as $4,850 of AFS revenue that was reported for 2021, decreased by $100 for the expected delivery bonus that F does not have an enforceable right to recover if the customer were to terminate the contract as of the end of 2021 and increased by $250 for anticipated return liabilities that are accounted for under section 461 ($4,850−$100 + $250 = $5,000). Accordingly, F is required to include $5,000, less the corresponding cost of goods sold determined under sections 263A and 471 as applicable, in gross income in 2021.

(vi) ***Example 6: Chargebacks*** —

(A) ***Facts.*** In November 2021, G, a pharmaceutical manufacturer, enters into a contract to sell 1,000 units to W, a wholesaler, for $10 per unit, totaling $10,000 (1,000 × $10). The contract also provides that G will credit or pay W $4 per unit (a 40% "chargeback") for sales W makes to certain qualifying customers. G delivers 600 units to W on December 31, 2021, and bills W $6,000 under the contract. W does not make any sales to qualifying customers in 2021. For its AFS, G reports $3,600 ($6,000−$2,400) of AFS revenue for 2021, which includes a reduction of the $6,000 of sales revenue by $2,400 (40% × $6,000) for anticipated chargebacks.

(B) ***Analysis.*** Under the all events test in § 1.451-1(a), G is required to include $6,000, less the corresponding cost of goods sold under sections 263A and 471 as applicable, in gross income in 2021 as G has a fixed right to receive $6,000 from the delivery of 600 units to W in 2021. The anticipated chargebacks are liabilities that are accounted for under section 461. Under the AFS income inclusion rule and, specifically, paragraph (b)(2)(i)(A)(*1*) of this section, the amount treated as "taken into account as AFS revenue" for 2021 is also $6,000, calculated as $3,600 of AFS revenue reported for 2021, increased by $2,400 of anticipated chargeback liabilities that are accounted for under section 461 ($3,600 + $2,400 = $6,000). Accordingly, G is required to include $6,000, less the corresponding cost of goods sold under sections 263A and 471 as applicable, in gross income in 2021.

(vii) ***Example 7: Sale of property using a special method of accounting.*** In 2021, H, a financial services provider, sells a building for $100,000, payable in five annual payments of $20,000 together with adequate stated interest, starting in 2021. For its AFS, H reports $100,000 of AFS revenue for 2021 from the sale of the building. For Federal income tax purposes, H uses the installment method under section 453 for the sale of the building. Because the installment method under section 453 is a special method of accounting under paragraphs (a)(13)(ii) and (b)(3)(i) of this section, the AFS income inclusion rule does not apply to H's sale of the building. Accordingly, the gain from the sale is included in income as prescribed in section 453.

(viii) ***Example 8: Insurance contract renewals*** —

(A) ***Facts.*** J, an insurance agent, is engaged by an insurance carrier to sell insurance. Pursuant to the contract between J and the insurance carrier, J is entitled to receive a $50 commission from the insurance carrier at the time a policy is sold to a customer. The contract also provides that J is entitled to receive an additional $25 commission each time a policy is renewed. J does not have an enforceable right to a renewal commission if the insurance carrier terminates the contract before a policy is renewed. J sells 1,000 one-year policies in 2021, of which 800 are expected to be renewed in 2022 and 700 are expected to be renewed in 2023. J does not have any ongoing obligation to provide additional services to the insurance carrier or the customers after the initial sale of the policy. For its AFS, J reports $87,500 of AFS revenue for 2021, which includes $50,000 ($50 × 1,000) of commission income for policies sold in 2021 and an estimate of $37,500 ($25 × 1,500) of commission income for the policies expected to be renewed in 2022 and 2023.

(B) ***Analysis.*** Under the all events test in § 1.451-1(a), J is required to include $50,000 in gross income in 2021 as J has a fixed right to receive $50,000 of commission income for the policies it sold during 2021. However, as of the end of 2021, J does not have a fixed right to receive any commission income from anticipated policy renewals. Under the AFS income inclusion rule, although J reports $87,500 of AFS revenue for 2021, J does not have an enforceable right to recover the $37,500 of anticipated commission income from future policy renewals if the insurance carrier were to terminate the contract on the last day of 2021. Accordingly, pursuant to paragraph (b)(2)(i)(B) of this section, of the $87,500 of AFS revenue reported for 2021, only $50,000 is treated as "taken into account as AFS revenue" under the AFS income inclusion rule. As a result, J is required to include $50,000 in gross income in 2021. Alternatively, if J uses the alternative AFS revenue method in paragraph (b)(2)(ii) of this section, all $87,500 of AFS revenue reported for 2021 would be treated as "taken into account as AFS revenue" under the AFS income inclusion rule and J would be required to include $87,500 of commission income in gross income in 2021.

(ix) *Example 9: Escalating rents* —

(A) *Facts.*

(1) K is a landlord in the business of leasing office space. On January 1, 2021, K enters into a 5-year lease with a tenant that provides for annual rent of $30,000 for 2021 and increases by 5% each year over the lease term. The annual rents are due at the end of each year. Accordingly, the rent for each year (rounded to the nearest dollar) is as follows:

TABLE 1 TO PARAGRAPH (b)(4)(ix)(A)

Year	Calculation	Total rent
2021	$30,000	$30,000
2022	30,000 * 1.05	31,500
2023	31,500 * 1.05	33,075
2024	33,075 * 1.05	34,729
2025	34,729 * 1.05	36,465
Total Rent for Five Years		165,769

(2) The lease is not a section 467 rental agreement as defined under section 467(d). If the tenant terminates the lease early, the tenant must pay K the balance of the rent due for the remainder of the termination year. On its AFS, K reports AFS revenue from rents on a straight-line basis over the term of the lease, or approximately $33,154 per year ($165,769 total rent/5 years). Accordingly, for its AFS, K reports $33,154 of AFS revenue for 2021.

(B) *Analysis.* Under the all events test in § 1.451-1(a), K is required to include $30,000 in gross income in 2021 as K has a fixed right to receive $30,000 for the 2021 rental period under the terms of the lease agreement. Under the AFS income inclusion rule, although K reports $33,154 of AFS revenue for 2021, K has an enforceable right to recover only $30,000 if the tenant were to cancel the lease on the last day of 2021. Accordingly, pursuant to paragraph (b)(2)(i)(B) of this section, of the $33,154 of AFS revenue reported for 2021, only $30,000 is treated as "taken into account in AFS revenue" under the AFS income inclusion rule. As a result, K is required to include $30,000 in gross income in 2021.

(x) *Example 10: Licensing income from digital services* —

(A) *Facts.* M is engaged in the business of licensing media entertainment content packages. M licenses content packages to customers by entering into subscription plans with customers. In January 2021, M enters into a two-year subscription plan with Customer. M charges Customer $40 per month billed monthly in arrears. If Customer terminates the plan prior to the two-year term, it must pay the balance of the subscription fee for the remaining term of the contract. For its AFS, M reports $960 ($40 × 24 months) of AFS revenue for 2021.

(B) *Analysis.* Under the all events test in § 1.451-1(a), M is required to include $480 in gross income in 2021 as M has a fixed right to receive $480 ($40 × 12) for the 12 months of media content licensed to Customer in 2021. M does not have a fixed right to receive any portion of the 2022 subscription fee as of the end of 2021 as such fee is not due under the terms of the subscription agreement until 2022 and M has yet to provide the media content for the 2022 subscription period. However, under the AFS income inclusion rule, because M has an enforceable right to recover all $960 of AFS revenue reported for 2021 if Customer were to terminate the contract at the end of 2021, all $960 is treated as "taken into account as AFS revenue" in 2021. Accordingly, M is required to include $960 in gross income in 2021.

(c) *Cost offsets* —

(1) *In general.* This paragraph (c) provides an optional method of accounting that may be used to determine the AFS income inclusion amount for an item of gross income from the sale of inventory (AFS cost offset method). A taxpayer that uses the AFS cost offset method for a trade or business must apply this method to all items of gross income in the trade or business that meet the criteria in this paragraph (c). Additionally, a taxpayer that uses this method for a trade or business must also use the advance payment cost offset method described in § 1.451-8(e) to account for all advance payments received by such trade or business that meet the criteria in § 1.451-8(e), if applicable. A taxpayer that uses the AFS cost offset method to account for gross income from the sale of an item of inventory, but not the advance payment cost offset method because it does not receive any advance payments for such item, determines the corresponding AFS income inclusion amount for a taxable year by following the rules in paragraph (c)(2) of this section. A taxpayer that uses the AFS cost offset method and the advance payment cost offset method to account for gross income, including advance payments, from the sale of an item of inventory, determines the corresponding AFS income inclusion amount and the advance payment income inclusion amount, as defined in § 1.451-8(a)(2), for a taxable year by following the rules in paragraph (c)(2) of this section rather than the rules under § 1.451-8(e). However, if all payments received for the sale of an item of inventory meet the definition of an advance payment under § 1.451-8(a)(1), a taxpayer that uses the advance payment cost offset method determines the corresponding advance payment income inclusion amount for a taxable year by following the rules in § 1.451-8(e).

(2) *AFS cost offset method.* A taxpayer that uses the AFS cost offset method and, if applicable, the advance payment cost offset method, to account for gross income from the sale of an item of inventory determines the AFS income inclusion amount, or, if applicable, the advance payment income inclusion amount, for a taxable year prior to the taxable year in which ownership of the item of inventory is transferred to the customer by following the rules in paragraph (c)(2)(i) of this section, subject to the additional rules and limitations in paragraphs (c)(4) through (6) of this section. Such taxpayer determines the AFS income inclusion amount or, if applicable, the advance payment income inclusion amount, for the taxable year in which ownership of the item of inventory is transferred to the customer by following the rules in paragraph (c)(2)(ii) of this section. A taxpayer described in this paragraph (c)(2) that receives advance payments for the sale of the item of inventory may be required to include in gross income for a taxable year an amount that is comprised of both an AFS income inclusion amount and an advance payment income inclusion amount. In such case, it is not necessary to determine the portion of the total inclusion that is comprised of the AFS income inclusion amount and the portion of the total inclusion that is comprised of the advance payment income inclusion amount.

(i) ***Determining gross income for a year prior to the year of sale.*** To determine the amount required to be included in gross income from the sale of an item of inventory for a taxable year prior to the taxable year in which ownership of the item of inventory is transferred to the customer, a taxpayer must first determine the AFS inventory inclusion amount for such item for such year by applying the steps in paragraph (c)(2)(i)(A) of this section. This AFS inventory inclusion amount is then reduced by the cost of goods in progress offset for the taxable year, as determined under paragraphs (c)(3) through (5) of this section. This net amount is required to be included in gross income for the taxable year.

(A) ***AFS inventory inclusion amount for a taxable year.*** To determine the AFS inventory inclusion amount for an item of inventory for a taxable year:

(*1*) The taxpayer first takes the greater of the amount described in paragraph (c)(2)(i)(A)(*1*)(*i*) of this section, or the amount described in paragraph (c)(2)(i)(A)(*1*)(*ii*) of this section (or if the two amounts are equal, the equal amount).

(*i*) The cumulative amount of revenue from the item of inventory that satisfies the all events test under § 1.451-1(a) through the last day of the taxable year, less any advance payment inventory inclusion amount, as defined in § 1.451-8(a)(3), with respect to a subsequent taxable year.

(*ii*) The cumulative amount of revenue from the item of inventory that is treated as "taken into account as AFS revenue" under paragraph (b)(2) of this section through the last day of the taxable year.

(*2*) The taxpayer then reduces the amount determined under paragraph (c)(2)(i)(A)(*1*) of this section by the amount computed under paragraph (c)(2)(i)(A)(*1*) of this section for that item of inventory for the immediately preceding taxable year.

(B) [Reserved]

(ii) ***Determining the gross income for the year of sale.*** To determine the amount required to be included in gross income from the sale of an item of inventory for the taxable year in which ownership of the item of inventory is transferred to the customer:

(A) The taxpayer first takes the greater of the amount described in paragraph (c)(2)(ii)(A)(*1*) of this section, or the amount described in paragraph (c)(2)(ii)(A)(*2*) of this section (or if the two amounts are equal, the equal amount).

(*1*) The cumulative amount of revenue from the item of inventory that satisfies the all events test under § 1.451-1(a) through the last day of the taxable year, including the full amount of any advance payment received for the item of inventory.

(*2*) The cumulative amount of revenue from the item of inventory that is treated as "taken into account as AFS revenue" under paragraph (b)(2) of this section through the last day of the taxable year.

(B) The taxpayer then reduces such amount by any prior income inclusion amounts with respect to such item of inventory. This net amount is required to be included in gross income for the taxable year. The taxpayer does not further reduce such amount by a cost of goods in progress offset under paragraph (c)(3) of this section. However, the taxpayer

is entitled to recover the costs capitalized to the item of inventory as cost of goods sold in accordance with sections 471 and 263A or any other applicable provision of the Internal Revenue Code. See § 1.61-3.

(3) ***Cost of goods in progress offset for a taxable year.*** The cost of goods in progress offset for the taxable year is calculated as:

(i) The cost of goods allocable to the item of inventory through the last day of the taxable year; reduced by

(ii) The cumulative cost of goods in progress offset attributable to the item of inventory, if any.

(4) ***Limitations to the cost of goods in progress offset.*** The cost of goods in progress offset is determined separately for each item of inventory. Further, the cost of goods in progress offset attributable to one item of inventory cannot reduce the AFS inventory inclusion amount attributable to a separate item of inventory. The cost of goods in progress offset cannot reduce the AFS inventory inclusion amount for the taxable year below zero.

(5) ***Inventory methods*** —

(i) ***Inventory costs not affected by cost of goods in progress offset.*** The cost of goods comprising the cost of goods in progress offset does not reduce the costs that are capitalized to the items of inventory produced or items of inventory acquired for resale by the taxpayer. While the cost of goods in progress offset reduces the AFS inventory inclusion amount, the cost of goods in progress offset does not affect how and when costs are capitalized to inventory under sections 471 and 263A or any other applicable provision of the Internal Revenue Code or when those capitalized costs will be recovered.

(ii) ***Consistency between inventory methods and AFS cost offset method.*** The costs of goods comprising the cost of goods in progress offset must be determined by applying the taxpayer's method of accounting for inventory for Federal income tax purposes. A taxpayer using the AFS cost offset method and, if applicable, the advance payment cost offset method must calculate its cost of goods in progress offset by reference to all costs that the taxpayer has permissibly capitalized and allocated to items of inventory under its method of accounting for inventory for Federal income tax purposes, but including no more costs than what the taxpayer has permissibly capitalized and allocated to items of inventory.

(iii) ***Allocation of "additional section 263A costs" for taxpayers using simplified methods.*** If a taxpayer uses the simplified production method as defined under § 1.263A-2(b), the modified simplified production method as defined under § 1.263A-2(c), or the simplified resale method as defined under § 1.263A-3(d) to determine the amount of its *additional section 263A costs,* as defined under § 1.263A-1(d)(3), to be included in ending inventory, then solely to compute the cost of goods in progress offset, the taxpayer must determine the portion of additional section 263A costs allocable to an item of inventory by multiplying its total additional section 263A costs accounted for under the simplified method for all items of inventory subject to the simplified method by the following ratio:

Section 471 costs allocable to the specific item of inventory

Total section 471 costs for all items of inventory subject to the simplified method

(6) ***Acceleration of gross income.*** A taxpayer that uses the AFS cost offset method or the advance payment cost offset method must include in gross income for a taxable year prior to the taxable year in which an item of inventory is transferred to the customer, all payments received for the item of inventory that were not previously included in gross income:

(i) If, in that taxable year, the taxpayer either dies or ceases to exist in a transaction other than a transaction to which section 381(a) applies; or

(ii) If, and to the extent that, in that taxable year, the taxpayer's obligation to the customer with respect to the item of inventory ends other than in:

(A) A transaction to which section 381(a) applies; or

(B) A section 351(a) transfer that is part of a section 351 transaction in which:

(*1*) Substantially all assets of the trade or business, including the item of inventory, are transferred;

(*2*) The transferee adopts or uses, in the year of the transfer, the same methods of accounting for the item of inventory under this section and § 1.451-8 as those used by the transferor; and

(*3*) The transferee and the transferor are members of the same consolidated group, as defined in § 1.1502-1(h).

(7) ***Additional procedural guidance.*** The IRS may publish procedural guidance in the Internal Revenue Bulletin (see § 601.601(d) of this chapter) that provides alternative procedures for complying with the rules under this paragraph (c), including alternative methods of accounting for cost offsets.

(8) ***Examples.*** The following examples illustrate the AFS cost offset method. Unless the facts specifically state otherwise, the taxpayer has an AFS, is on a calendar year for both Federal income tax purposes and AFS purposes, uses an accrual method of accounting for Federal income tax purposes, and does not use a special method of accounting. Further, the taxpayer properly applies its inventory accounting method, uses the AFS cost offset method under paragraph (c) of this section, and, except as otherwise provided, does not receive advance payments. Lastly, the taxpayer does not produce unique items, as described in § 1.460-2(a)(1) and (b), or any item that normally requires more than 12 calendar months to complete, as determined under § 1.460-2(a)(2) and (c). Any production period that exceeds 12 calendar months is due to unforeseen production delays.

(i) ***Example 1*** —

(A) ***Facts.*** During 2021, A enters into a contract with Customer to manufacture and deliver a good with a total contract price of $100x. The costs to produce the good are required to be capitalized under sections 471 and 263A as the good is inventory in the hands of A. Ownership of the good is transferred from A to Customer upon its delivery in 2022. A determines, under paragraph (c)(2)(i)(A) of this section, that its AFS inventory inclusion amount for 2021 is $20x. A incurs $12x of costs in 2021, and $48x of costs in 2022 ($60x in total) that are permissibly capitalized and allocated to the produced good under sections 471 and 263A. A has a fixed right to receive the $100x contract price when it delivers the good in 2022. A does not receive any payments from Customer prior to delivery. Further, all $100x is treated as “taken into account as AFS revenue” as of the last day of 2022.

(B) ***Analysis for 2021.*** For 2021, A's AFS income inclusion amount, as determined under paragraph (c)(2)(i) of this section, is $8x ($20x AFS inventory inclusion amount less $12x cost of goods in progress offset, which is the cost of goods incurred through December 31, 2021).

(C) ***Analysis for 2022.*** During 2022, ownership of the good is transferred to Customer. Accordingly, pursuant to paragraph (c)(2)(ii) of this section, A determines the AFS income inclusion amount for 2022 by:

(*1*) First taking the greater of:

(*i*) The cumulative amount of revenue that satisfies the all events test under § 1.451-1(a) through the last day of 2022 ($100x); or

(ii) The cumulative amount of revenue that is treated as "taken into account as AFS revenue" through the last day of 2022 ($100x) (or if the two amounts are equal, the equal amount).

(*2*) Then subtracting from such amount ($100x) the prior income inclusion amounts attributable to the transferred good ($8x). This net amount of $92x is the AFS income inclusion amount for 2022. Although A does not reduce such amount by a cost of goods in progress offset under this paragraph (c), A is entitled to recover the $60x of costs capitalized to the good as cost of goods sold in 2022 in accordance with sections 471 and 263A. See § 1.61-3. Accordingly, A's gross income for 2022 is $32x.

(ii) ***Example 2*** —

(A) ***Facts.*** In December of 2021, A enters into a contract with Customer to manufacture and deliver 10 items of inventory at a price of $10x per item by the end of 2023. A determines, under paragraph (c)(2)(i)(A) of this section, that the AFS inventory inclusion amount attributable to each item of inventory under the contract is $3x for 2021. A also incurs $10x of inventory costs during 2021. Such costs are permissibly capitalized and allocated under sections 471 and 263A and are allocated equally to each item of inventory under the contract ($1x per item). During 2022, the taxpayer incurs $18x of costs to finish manufacturing 6 of the 10 items and delivers such items to Customer in October of 2022. Such costs are permissibly capitalized and allocated under sections 471 and 263A and are allocated equally to each of the 6 items delivered in October of 2022 ($3x per item). Upon delivering the 6 items, ownership of the delivered items transfers to Customer, A has a fixed right to receive $60x of the total contract price, and all $60x is treated as "taken into account as AFS revenue." A does not incur any inventory costs during 2022 that are allocable to the 4 remaining undelivered items, nor does the taxpayer have an AFS inventory inclusion amount attributable to such items for 2022. During 2023, A incurs $12x of costs to finish manufacturing the 4 remaining items and delivers such items to Customer. Such costs are permissibly capitalized and allocated under sections 471 and 263A and are allocated equally to each of the 4 items delivered in 2023 ($3x per item). Upon delivering the 4 remaining items, ownership of the items transfers to Customer, A has a fixed right to receive the remaining $40x contract price, and all $40x is treated as "taken into account as AFS revenue."

(B) ***Analysis for 2021*** A's AFS income inclusion amount for 2021 is $2x per item ($3x AFS inventory inclusion amount per item less $1x cost of goods in progress offset per item, which is the cost of goods as of December 31, 2021). Accordingly, A's total gross income inclusion for 2021 is $20x.

(C) ***Analysis for 2022.*** During 2022, ownership of 6 of the 10 items is transferred to Customer. Accordingly, pursuant to paragraph (c)(2)(ii) of this section, A determines the AFS income inclusion amount for 2022 by:

(*1*) First taking the greater of:

(*i*) The cumulative amount of revenue that satisfies the all events test under § 1.451-1(a) through the last day of 2022 ($10x per item); or

(*ii*) The cumulative amount of revenue that is treated as taken into account as AFS revenue through the last day of 2022 ($10x per item) (or if the two amounts are equal, the equal amount).

(*2*) Then subtracting from such amount ($10x per item) the prior income inclusion amounts attributable to each transferred item ($2x per item). This net amount of $8x per item is the AFS income inclusion amount for each transferred item for 2022. Although A does not reduce such amount by a cost of goods in progress offset under this paragraph (c), A is entitled to recover the $4x of costs capitalized to each item delivered as cost of goods sold in 2022 in accordance with sections 471 and 263A. Accordingly, on an aggregate basis, A's gross income for 2022 is $24x (aggregate AFS income inclusion amount for the 6 items delivered in 2022 of $ 48x less aggregate cost of goods sold of $24x). A does not include any amounts in gross income for 2022 with respect to the 4 items of inventory that were not delivered to Customer until 2023 as A does not have an AFS inventory inclusion amount attributable to such items for 2022.

(D) ***Analysis for 2023.*** During 2023, ownership of the 4 remaining items are transferred to Customer. Based on the facts, A did not have an AFS inventory inclusion amount attributable to the 4 remaining items for 2022, nor did it incur any cost for such items in 2022 so the analysis for the 4 remaining items for 2023 is similar to the analysis for the 6 items transferred to the customer in 2022 on a per item basis. Pursuant to paragraph (c)(2)(ii) of this section, A determines the AFS income inclusion amount for 2023 by:

(*1*) First taking the greater of:

(*i*) The cumulative amount of revenue that satisfies the all events test under § 1.451-1(a) through the last day of 2023 ($10x per item); or

(ii) The cumulative amount of revenue that is treated as taken into account as AFS revenue through the last day of 2023 ($10x per item) (or if the two amounts are equal, the equal amount).

(*2*) Then subtracting from such amount ($10x per item) the prior income inclusion amounts attributable to each transferred item ($2x per item). This net amount of $8x per item is the AFS income inclusion amount for each transferred item for 2023. Although A does not reduce such amount by a cost of goods in progress offset under this paragraph (c), A is entitled to recover the $4x of costs capitalized to each item

delivered as cost of goods sold in 2023 in accordance with sections 471 and 263A. On an aggregate basis, A's gross income for 2023 is $16x (aggregate AFS income inclusion amount for the 4 items delivered in 2023 of $32x less aggregate cost of goods sold of $16x).

(iii) *Example 3* —

(A) ***Facts.*** In December of 2021, A enters into a contract with Customer to manufacture and deliver a good with a total contract price of $100x. The costs to produce the good are required to be capitalized under sections 471 and 263A as the good is inventory in the hands of the taxpayer. Ownership of the good is transferred from A to Customer upon its delivery in January of 2023. A determines, under paragraph (c)(2)(i)(A) of this section, that its AFS inventory inclusion amount for 2021 and 2022 is $40x per year. A incurs $25x of costs each year ($75x in total) that are permissibly capitalized and allocated to the manufactured good under sections 471 and 263A. A has a fixed right to receive the $100x contract price when it delivers the good in January of 2023. A does not receive any payments from Customer prior to delivery. Further, all $100x is treated as "taken into account as AFS revenue" as of the last day of 2023.

(B) ***Analysis for 2021 and 2022.*** For 2021, A's AFS income inclusion amount, as determined under paragraph (c)(2)(i) of this section, is $15x ($40x AFS inventory inclusion amount for 2021 less the $25x cost of goods in progress offset for 2021, which is equal to the cost of goods as of December 31, 2021). For 2022, A's AFS income inclusion amount is $15x ($40x AFS inventory inclusion amount for 2022 less the $25x cost of goods in progress offset for 2022, which is the $50x cost of goods as of December 31, 2022 less the 25x cumulative cost of goods in progress offset amount taken into account in 2021).

(C) ***Analysis for 2023.*** During 2023, ownership of the good is transferred to Customer. Accordingly, pursuant to paragraph (c)(2)(ii) of this section, A determines the AFS income inclusion amount for 2023 by:

(*1*) First taking the greater of:

(*i*) The cumulative amount of revenue that satisfies the all events test under § 1.451-1(a) through the last day of 2023 ($100x); or

(*ii*) The cumulative amount of revenue that is treated as "taken into account as AFS revenue" through the last day of 2023 ($100x) (or if the two amounts are equal, the equal amount).

(*2*) Then subtracting from such amount ($100x) the prior income inclusion amounts attributable to the transferred good of $30x ($15x for 2021 and $15x for 2022). This net amount of $70x is the AFS income inclusion amount for 2023. Although A does not reduce such amount by a cost of goods in progress offset under this paragraph (c), A is entitled to recover the $75x of costs capitalized to the good as cost of goods sold in 2023 in accordance with sections 471 and 263A. See § 1.61-3. Accordingly, A's gross income for 2025 is −$5x.

(iv) *Example 4* —

(A) ***Facts.*** In December 2021, A enters into a contract with Customer to manufacture and deliver a good with a total contract price of $100x. A reports $5x of AFS revenue for 2021, $90x of cumulative AFS revenue through the end of 2022, and $100x of cumulative AFS revenue through the end of 2023. A has an enforceable right to recover all AFS revenue reported through the end of each contract year if Customer were to terminate the contract on the last day of each year. Under the terms of the contract, A is entitled to and receives a payment of $40x in 2021 and a payment of $60x when Customer accepts delivery of the good in 2023, which is also when ownership of the good transfers to Customer. The costs to produce the good are required to be capitalized under sections 471 and 263A as the good is inventory in the hands of A. A incurs $10x of costs in 2021, $55x of costs in 2022, and $5x of costs in 2023 ($70x in total). Such costs are permissibly capitalized and allocated to the produced good under sections 471 and 263A. A uses the AFS cost offset method under paragraph (c) of this section and accounts for advance payments, as defined in § 1.451-8(a)(1), under the deferral method and advance payment cost offset method under § 1.451-8(c) and (e), respectively.

(B) ***Analysis for 2021.*** The $40x payment A receives in 2021 meets the definition of an advance payment under § 1.451-8(a)(1) as the full inclusion of $40x in gross income in the year of receipt is a permissible method of accounting, a portion of the payment ($35x) is "taken into account as AFS revenue" in a subsequent year, and the payment is for a good. Pursuant to § 1.451-8(a)(3), A's advance payment inventory inclusion amount for 2022 is $35x (the portion of the payment deferred for AFS purposes). Pursuant to paragraph (c)(2)(i) of this section, A must first determine the AFS inventory inclusion amount for 2021 by applying the rules in paragraph (c)(2)(i)(A) of this section. A then reduces such amount by the cost of goods in progress offset for 2021, as determined under paragraphs (c)(3) through (5) of this section.

(*1*) Pursuant to paragraph (c)(2)(i)(A)(*1*) of this section, A first takes the greater of:

(*i*) The cumulative amount of revenue that satisfies the all events test under § 1.451-1(a) through the last day of 2021, less any advance payment inventory inclusion amount attributable to a subsequent year ($5x, determined as the $40x under the all events test, less the $35x of advance payment inventory inclusion amount attributable to 2022); or

(*ii*) The cumulative amount of revenue that is treated as "taken into account as AFS revenue" through the last day of 2021 ($5x) (or if the two amounts are equal, the equal amount).

(*2*) Pursuant to paragraph (c)(2)(i)(A)(*2*) of this section, A then subtracts from such amount ($5x) the amount determined under paragraph (c)(2)(i)(A)(*1*) of this section for the item of inventory for the immediately preceding year ($0). This net amount of $5x is the AFS inventory inclusion amount for 2021.

(*3*) Pursuant to paragraph (c)(2)(i) of this section, A reduces this $5x AFS inventory inclusion amount by the cost of goods in progress offset for 2021 of $5x, determined as the cost of goods as of December 31, 2021 of $10x, less the cumulative cost of goods in progress offset taken into account in prior years of $0, less 5x for the AFS inventory inclusion amount limitation under paragraph (c)(4) of this section. Accordingly, A is required to include $0 in gross income for 2021.

(C) ***Analysis for 2022.*** Pursuant to paragraph (c)(2)(i) of this section, A must first determine the AFS inventory inclusion amount for 2022 by applying the rules in paragraph (c)(2)(i)(A) of this section. A then reduces such amount by the cost of goods in progress offset for 2022, as determined under paragraphs (c)(3) through (5) of this section.

(*1*) Pursuant to paragraph (c)(2)(i)(A)(*1*) of this section, A first takes the greater of:

(*i*) The cumulative amount of revenue that satisfies the all events test under § 1.451-1(a) through the last day of 2022 ($40x); or

(*ii*) The cumulative amount of revenue that is treated as "taken into account as AFS revenue" through the last day of 2022 ($90x).

(*2*) Pursuant to (c)(2)(i)(A)(*2*) of this section, A then subtracts from such amount ($90x) the amount determined under paragraph (c)(2)(i)(A)(*1*) of this section for the item of inventory for 2021 ($5x). This net amount of $85x is the AFS inventory inclusion amount for 2022.

(*3*) Pursuant to paragraph (c)(2)(i) of this section, A reduces this $85x AFS inventory inclusion amount by the cost of goods in progress offset for 2022 of $60x, determined as the cost of goods as of December 31, 2022 of $65x, less the cumulative cost of goods in progress offset taken into account in prior years of $5x. Accordingly, A is required to include $25x in gross income for 2022.

(D) ***Analysis for 2023.*** During 2023, ownership of the good is transferred to Customer. Accordingly, pursuant to paragraph (c)(2)(ii) of this section, A determines its gross income inclusion for 2023 by:

(*1*) First taking the greater of:

(*i*) The cumulative amount of revenue that satisfies the all events test under § 1.451-1(a) through the last day of 2023 ($100x); or

(*ii*) The cumulative amount of revenue that is treated as "taken into account as AFS revenue" through the last day of 2023 ($100x) (or if the two amounts are equal, the equal amount).

(*2*) Then subtracting from such amount ($100x) the prior income inclusion amounts attributable to the transferred good of $25x ($0 for 2021 plus $25x for 2022). A is required to include this net amount of $75x in gross income for 2023. Although A does not reduce such amount by a cost of goods in progress offset under this paragraph (c), A is entitled to recover the $70x of costs capitalized to the good as cost of goods sold in 2023 in accordance with sections 471 and 263A. See § 1.61-3. Accordingly, A's gross income for 2023 is $5x.

(v) ***Example 5*** *—(A) Facts.* The same facts as in paragraph (c)(8)(iv) of this section (*Example 4*) apply, except that in 2022, A's obligation to Customer with respect to the good ends other than in a transaction to which section 381(a) applies, or a section 351 transaction described in paragraph (c)(6)(ii)(B) of this section. A does not receive any additional payments in 2022.

(B) ***Analysis for 2021.*** The analysis for 2021 is the same as in paragraph (c)(8)(iv) of this section (*Example 4*).

(C) ***Analysis for 2022.*** Because, in 2022, A's obligation to Customer with respect to the good ends in a transaction other than a transaction described in paragraph (c)(6)(ii)(A) or (B) of this section, A is required to apply the acceleration rules in paragraph (c)(6) of this section. Accordingly, because A received $40x of payments as of the date of the transaction, but did not include any portion of such payments in gross income in prior years, A is required to include the remaining $40x of the payments received in gross income in 2022 pursuant to paragraph (c)(6) of this section. A is not permitted to further reduce the $40x income inclusion by a cost of goods in progress offset under this paragraph (c).

(vi) ***Example 6*** —

(A) ***Facts.*** In 2021, A enters into a contract with Customer to produce and deliver a good. The contract provides that A will receive payments equal to AFS costs plus a 100% mark-up, however, A can only bill the customer on December 31, 2022 and, if the good is not delivered by December 31, 2022, A can also bill Customer upon delivery of the good, for the AFS costs (plus markup) incurred to date, less any amounts previously billed. A recognizes AFS revenue based on a percentage of completion (cost to cost) method. A recognizes AFS revenue of $100 through the last day of 2021, $150 through the last day of 2022, and $300 through the last day of 2023, and has an enforceable right to all AFS revenue reported as of the end of each year if the customer were to terminate the contract on the last day of the year. A bills the customer $150 on December 31 of 2022 and $150 in 2023 when A delivers the good and ownership transfers to Customer. The costs to produce the good are required to be capitalized under sections 471 and 263A as the good is inventory in the hands of the taxpayer. A incurs the following costs each year that are permissibly capitalized and allocated to the produced good under sections 471 and 263A: $125 in 2021; $0 in 2022; and $25 in year 2023.

(B) ***Analysis for taxable year 2021.*** Pursuant to paragraph (c)(2)(i) of this section, A must first determine the AFS inventory inclusion amount for 2021 by applying the rules in paragraph (c)(2)(i)(A) of this section. A then reduces such amount by the cost of goods in progress offset for 2021, as determined under paragraphs (c)(3) through (5) of this section.

(*1*) Pursuant to paragraph (c)(2)(i)(A)(*1*) of this section, A first takes the greater of:

(*i*) The cumulative amount of revenue that satisfies the all events test under § 1.451-1(a) through the last day of 2021 ($0); or

(*ii*) The cumulative amount of revenue that is treated as “taken into account as AFS revenue” through the last day of 2021 ($100).

(*2*) Pursuant to paragraph (c)(2)(i)(A)(*2*) of this section, A then subtracts from such amount ($100) the amount determined under paragraph (c)(2)(i)(A)(*1*) of this section for the item of inventory for the immediately preceding year ($0). This net amount of $100 is the AFS inventory inclusion amount for 2021.

(*3*) Pursuant to paragraph (c)(2)(i) of this section, A reduces this $100 AFS inventory inclusion amount by the cost of goods in progress offset for 2021 of $100. Although A's cost of goods in progress as of the end of 2021 is $125, the cost of goods in progress offset is limited to $100, the amount of A's AFS inventory inclusion amount for 2021. Accordingly, A is required to include $0 in gross income in 2021.

(C) ***Analysis for taxable year 2022.*** Pursuant to paragraph (c)(2)(i) of this section, A must first determine the AFS inventory inclusion amount for 2022 by applying the rules in paragraph (c)(2)(i)(A) of this section. A then reduces such amount by the cost of goods in progress offset for 2022, as determined under paragraphs (c)(3) through (5) of this section.

(*1*) Pursuant to paragraph (c)(2)(i)(A)(*1*) of this section, A first takes the greater of:

(*i*) The cumulative amount of revenue that satisfies the all events test under § 1.451-1(a) through the last day of 2022 ($150 due under the terms of the contract); or

(*ii*) The cumulative amount of revenue that is treated as "taken into account as AFS revenue" through the last day of 2022 ($150) (or if the two amounts are equal, the equal amount).

(*2*) Pursuant to paragraph (c)(2)(i)(A)(*2*) of this section, A then subtracts from such amount ($150) the amount determined under paragraph (c)(2)(i)(A)(*1*) of this section for the item of inventory for the immediately preceding year ($100). This net amount of $50 is the AFS inventory inclusion amount for 2022.

(*3*) Pursuant to paragraph (c)(2)(i) of this section, A reduces this $50 AFS inventory inclusion amount by the cost of goods in progress offset for 2022 of $25, determined as $125 cost of goods as of December 31, 2022 minus $100 cumulative cost of goods in progress offset amount taken into account in 2021. Accordingly, A is required to include $25 in gross income for 2022.

(D) ***Analysis for taxable year 2023.*** During 2023, ownership of the good is transferred to the customer. Accordingly, pursuant to paragraph (c)(2)(ii) of this section, A determines its gross income inclusion for 2023 by:

(*1*) First taking the greater of:

(*i*) The cumulative amount of revenue that satisfies the all events test under § 1.451-1(a) through the last day of 2023 ($300x); or

(*ii*) The cumulative amount of revenue that is treated as "taken into account as AFS revenue" through the last day of 2025 ($300x) (or if the two amounts are equal, the equal amount).

(*2*) Then subtracting from such amount ($300x) the prior income inclusion amounts attributable to the transferred good of $25 ($0 for 2021 plus $25 for 2022). This net amount of $275 is the AFS income inclusion amount for 2023. Although A does not reduce such amount by a cost of goods in progress offset under this paragraph (c), A is entitled to recover the $150 of costs capitalized to the good as cost of goods sold in 2023 in accordance with sections 471 and 263A. See § 1.61-3. Accordingly, A's gross income for 2023 is $125 ($275 AFS income inclusion amount less $150 cost of goods sold).

(d) ***Contracts with multiple performance obligations*** —

(1) ***In general.*** Each performance obligation generally yields a corresponding item of gross income that must be accounted for separately under the AFS income inclusion rule in paragraph (b)(1) of this section. Except as provided in paragraph (d)(5) of this section, if a contract contains more than one

performance obligation, and thus yields more than one corresponding item of gross income, the transaction price amount shall be allocated to each corresponding item of gross income in accordance with the transaction price amount allocated to each performance obligation for AFS purposes, subject to the adjustments to the transaction price amount and special allocation rules in paragraph (d)(3) of this section.

(2) ***Single performance obligation with more than one item of gross income.*** If a single performance obligation yields more than one corresponding item of gross income, the transaction price amount allocated to the single performance obligation for AFS purposes must be further allocated among the corresponding items of gross income using any reasonable method.

(3) ***Adjustments to transaction price amount and special allocation rules*** —

(i) ***Increases to transaction price amount.*** If the transaction price amount includes a reduction for amounts described in paragraph (b)(2)(i)(A)(*1*) or (*2*) of this section, or has been reduced because a significant financing component is deemed to exist under the standards the taxpayer uses to prepare its AFS, the taxpayer must determine the specific performance obligation to which such reduction relates and increase the transaction price amount allocable to the corresponding item of gross income by the amount of such reduction (specific identification approach). If it is impracticable from the taxpayer's records to use the specific identification approach, the taxpayer may use any reasonable method to allocate the reduction amount to the items of gross income in the contract. A pro-rata allocation of the reduction amount across all items of gross income under the contract based on the relative transaction price amounts allocated to such items under paragraph (d)(1) of this section is a reasonable method.

(ii) ***Decrease to transaction price amount.*** If the transaction price amount has been increased because a significant financing component is deemed to exist under the standards the taxpayer uses to prepare its AFS, the taxpayer must determine the specific performance obligation to which such amount relates and decrease the transaction price amount allocable to the corresponding item of gross income by such amount (specific identification approach). If it is impracticable from the taxpayer's records to use the specific identification approach, the taxpayer may use any reasonable method to allocate such amount to the items of gross income in the contract. A pro-rata allocation of such amount across all items of gross income under the contract based on the relative transaction price amounts allocated to such items under paragraph (d)(1) of this section is a reasonable method.

(4) ***Examples.*** The following examples illustrate the rules of paragraph (d)(1) through (3) of this section. Unless the facts specifically state otherwise, the taxpayer has an AFS, is on a calendar year for Federal income tax purposes and AFS purposes, and uses an accrual method of accounting for Federal income tax purposes.

(i) ***Example 1*** —

(A) ***Facts.*** On November 1, 2021, A, a software developer, enters into a contract with a customer to transfer a software license, perform software installation services, and provide technical support for a two-year period for $100x. The installation service does not significantly modify the software and the software remains functional without the technical support. A receives an additional $10x bonus if the installation service is performed before February 1, 2022, which A expects to receive. Further, the customer is

entitled to a refund of $2x if technical support does not meet performance standards set forth in the contract, which A expects it will pay to the customer. For its AFS, A identifies three performance obligations in the contract:

(*1*)

(*i*) The software license;

(*ii*) The installation service; and

(*iii*) Technical support.

(*2*) Also, for its AFS, A determines that the transaction price amount is $108x, determined as $100x contract price plus $10x bonus for installation services minus $2x customer refund. Finally, for its AFS, A allocates the $108x transaction price amount to the three performance obligations as follows: $60x to the software license; $40x to the installation service ($30x + $10x bonus); and $8x to technical support ($10x−$2x refund).

(B) ***Analysis.*** Pursuant to paragraph (d)(1) of this section, A's contract with the customer has three performance obligations, and each performance obligation yields a corresponding item of gross income that is accounted for separately. Pursuant to paragraph (d)(1) of this section, A is required to allocate the $108x transaction price amount to each corresponding item of gross income in accordance with the transaction price amount allocated to each respective performance obligation for AFS purposes. Accordingly, A initially allocates $60x to the software license item, $40x to the installation service item, and $8 to the technical support item. However, because the transaction price amount was reduced by the anticipated refund of $2x, which relates specifically to the technical support item, A must increase the transaction price allocable to that item of gross income pursuant to the specific identification approach in paragraph (d)(3) of this section. Accordingly, the amount allocated to the item of gross income related to technical support is $10x.

(ii) *Example 2* —

(A) ***Facts.*** In 2021, B, a manufacturer and servicer of airplane parts, enters into a contract with a customer to sell airplane parts in 2021 and to service those parts, as necessary, in 2021, 2022, and 2023 for $100x. B regularly sells the airline parts and the services separately. For its AFS, B identifies two performance obligations in the contract:

(*1*)

(*i*) The sale of airplane parts; and

(*ii*) The services for those parts.

(*2*) The customer receives a refund of $5x if it does not require a specified level of service for the parts, which B expects it will pay to the customer. Also, for its AFS, B determines that the transaction price amount is $95x, determined as the $100x contract price minus the $5x refund that it expects to pay the customer. Finally, for its AFS, B allocates the $95x transaction price amount to the two performance obligations as follows: $40x to the sale of parts and $55x to the provision of services ($60x−$5x refund).

(B) ***Analysis.*** Pursuant to paragraph (d)(1) of this section, B's contract with the customer has two performance obligations, and each performance obligation yields a corresponding item of gross income that is accounted for separately. Pursuant to paragraph (d)(1) of this section, B is required to allocate the $95x transaction price amount to each corresponding item of gross income in accordance with the transaction price amount allocated to each respective performance obligation for AFS purposes. Accordingly, B initially allocates $40x to the sale of parts item and $55x to the provision of services item. However, because the transaction price amount was reduced by the anticipated refund of $5x, which relates specifically to provision of services item, B must increase the transaction price allocable to that item of gross income pursuant to the specific identification approach in paragraph (d)(3) of this section. Accordingly, the amount allocated to the item of gross income related to servicing the parts is $60x.

(iii) ***Example 3: Reward points*** —

(A) ***Facts.*** On December 31, 2021, U, in the business of selling consumer electronics, sells a new TV for $1,000 and gives the customer 50 reward points. Each reward point is redeemable for a $1 discount on any future purchase of U's products. For its AFS, U identifies two performance obligations from the transaction:

(*1*)

(*i*) The sale of the TV; and

(*ii*) The provision of rewards points.

(*2*) Also, for its AFS, U allocates $950 of transaction price amount to the sale of the TV and the remaining $50 of the transaction price amount to the reward points.

(B) ***Analysis.*** Pursuant to paragraph (d)(1) of this section, U's contract with the customer has two performance obligations, and each performance obligation yields a corresponding item of gross income that is accounted for separately. Pursuant to paragraph (d)(1) of this section, U is required to allocate the $1,000 transaction price amount to each corresponding item of gross income in accordance with the transaction price amount allocated to each respective performance obligation for AFS purposes. Accordingly, U allocates the transaction price amount as follows: $950 to the TV sale item and $50 to the reward points item. If U reports any portion of the $50 payment allocated to the reward points as AFS revenue for 2022, or later, the payment is an advance payment, as defined in § 1.451-8(a)(1), and may be accounted for under the deferral method if U satisfies the criteria in § 1.451-8(c).

(iv) ***Example 4: Airline reward miles*** —

(A) ***Facts.*** On January 1, 2021, W, a passenger airline company, sells a customer a $700 airline ticket to fly roundtrip in 2021. As part of the purchase, the customer receives 7,000 points (air miles) from W to be redeemed for future air travel. For its AFS, W identifies two performance obligations in the contract:

(*1*)

(*i*) The sale of the airline ticket; and

(*ii*) The provision of air miles.

(2) W also anticipates that it will issue a rebate to the customer for $10. Also, for its AFS, W determines that the transaction price amount is $690, determined as the $700 ticket price minus the anticipated $10 rebate. Finally, for its AFS, W allocates the $690 transaction price amount to the separate performance obligations as follows: $660 to the ticket ($670−$10 rebate = $660) and $30 to the air miles.

(B) ***Analysis.*** Pursuant to paragraph (d)(1) of this section, W's contract with the customer has two performance obligations, and each performance obligation yields a corresponding item of gross income that is accounted for separately. Pursuant to paragraph (d)(1) of this section, W must allocate the $690 transaction price amount to each corresponding item of gross income in accordance with the transaction price amount allocated to each respective performance obligation for AFS purposes. Accordingly, W initially allocates $660 to the ticket sale item and $30 to the air miles item. However, because the transaction price amount was reduced by the anticipated rebate of $10x, which relates to the ticket sale item, W must increase the transaction price allocable to that item of gross income pursuant to paragraph (d)(3) of this section. Accordingly, the amount allocated to the item of gross income related to the ticket sale is $670. If W reports any portion of the $30 payment allocated to the air miles item as AFS revenue for 2022, or later, the payment is an advance payment, as defined in § 1.451-8(a)(1), and may be accounted for under the deferral method if W satisfies the criteria in § 1.451-8(c).

(v) ***Example 5: Contract with significant financing component amounts*** —

(A) ***Facts.*** On January 1, 2021, C, a manufacturer and servicer of airline parts, enters into a contract with a customer to sell airline parts in December 2022, and to service those parts, as necessary, through 2024. The contract contains two alternative payment options: payment of $5,000 in December 2022 when the customer obtains control of the parts or payment of $4,000 when the contract is signed. The customer pays $4,000 when the contract is signed, which reflects an implicit interest rate of 11.8% and is C's incremental borrowing rate. C regularly sells the airline parts and the services separately. For its AFS, C identifies two performance obligations in the contract:

(*1*)

(*i*) The sale of airplane parts; and

(*ii*) The services for those parts.

(*2*) Also, for its AFS, although the contract only requires the customer to pay $4,000, the transaction price is increased by $1,000 to $5,000 because the customer is deemed to provide financing to C under the standards C uses to prepare its AFS. The $1,000 increase is attributable to a significant financing component. Finally, for its AFS, C allocates the $5,000 transaction price amount to the separate performance obligations as follows: $3,750 to the sale of parts ($3,000 upfront payment plus $750 financing component) and $1,250 ($1,000 upfront payment plus $250 financing component) to the provision of services.

(B) ***Analysis.*** Pursuant to paragraph (d)(1) of this section, C's contract with the customer has two performance obligations, and each performance obligation yields a corresponding item of gross income that is accounted for separately. Pursuant to paragraph (d)(1) of this section, C must allocate the $5,000 transaction price amount to each corresponding item of gross income in accordance with the transaction price amount allocated to each

respective performance obligation for AFS purposes. Accordingly, C initially allocates $3,750 to the sale of the parts item and $1,250 to the provision of services item. However, because the transaction price was increased by a significant financing component of $1,000, $750 of which was allocated to sale of the parts item and $250 of which was allocated to the provision of services item, pursuant to paragraph (d)(3) of this section, C must decrease the transaction price amount allocable to the sale of parts item from $3,750 to $3,000 and must decrease the transaction price allocable to the provision of services from $1,250 to $1,000.

(5) ***Contracts accounted for in part under this section and in part under a special method of accounting*** —

(i) ***In general.*** If a taxpayer has a contract with a customer that includes one or more items of gross income that are subject to a special method of accounting and one or more items of gross income that are subject to this section (*special method/451 contract*), the transaction price allocation rule in paragraph (d)(1) of this section does not apply to determine the amount of each item of gross income that is subject to a special method of accounting. For purposes of this paragraph (d)(5)(i), a special method of accounting has the meaning set forth in paragraph (a)(13) of this section, except as otherwise provided in guidance published in the Internal Revenue Bulletin (see § 601.601(d) of this chapter). For special method/451 contracts, paragraphs (d)(5)(ii) and (iii) of this section apply to determine the transaction price amount and the portion of such amount that is allocated to each item of gross income that is subject to this section.

(ii) ***Transaction price adjustments.*** If the transaction price amount for the special method/451 contract includes a reduction for amounts described in paragraph (b)(2)(i)(A)(*1*) or (*2*) of this section, or has been reduced because a significant financing component is deemed to exist under the standards the taxpayer uses to prepare its AFS, the taxpayer must increase the transaction price amount by the amount of such reduction. If the transaction price amount for the special method/451 contract has been increased because a significant financing component is deemed to exist under the standards the taxpayer uses to prepare its AFS, the taxpayer must decrease the transaction price amount by the amount of such increase.

(iii) ***Transaction price allocation.*** After the taxpayer determines the adjusted transaction price amount for the special method/451 contract under paragraph (d)(5)(ii) of this section, the taxpayer first allocates such amount to the item(s) of gross income subject to a special method of accounting and then allocates the remainder (residual amount) to the item(s) of gross income that are subject to this section. If the contract contains more than one item of gross income that is subject to this section, the taxpayer allocates the residual amount to such items in proportion to the amounts allocated to the corresponding performance obligations for AFS purposes or as otherwise provided in guidance published in the Internal Revenue Bulletin (see § 601.601(d) of this chapter).

(iv) ***Example*** —(1) *Facts.* B is a calendar-year accrual method taxpayer with an AFS. In 2020, B enters into a $100x contract to design, build, operate and maintain a toll road. The contract meets the definition of a long-term contract under § 1.460-1(b)(1). B determines that the obligations to design and build the toll road are long-term contract activities under § 1.460-1(d)(1) and accounts for the gross income from these activities under section 460 and the regulations in this part under section 460 of the Code. In addition, B determines that the obligations to operate and maintain the toll road are non-long-term contract activities under § 1.460-1(d)(2) and that the gross income attributable to these activities is required to be

accounted for under this section. B determines that of the $100x transaction price amount, $60x is properly allocable to the items of gross income that are subject to section 460 and the regulations in this part under section 460 of the Code. However, for its AFS, B allocates $55x of the transaction price amount to performance obligations that are long-term contract activities, $30x to the toll road operation performance obligation and $15x to the toll road maintenance performance obligation.

(2) *Analysis.* A method of accounting under section 460 is a special method of accounting that is within the scope of paragraph (d)(5) of this section. Pursuant to paragraph (d)(5) of this section, B first allocates $60x of the transaction price amount to the items of gross income that are subject to section 460 and the regulations in this part under section 460 of the Code and then allocates the residual amount of $40x to the two items of gross income that are required to be accounted for under this section in proportion to the amounts allocated to the corresponding performance obligations for AFS purposes. Accordingly, B allocates $26.7 × ($30x/$45x × $40x residual amount) to the toll road operations item of gross income and $13.3x ($15x/$45x × $40x residual amount) to the toll road maintenance item of gross income.

(e) ***Cumulative rule for multi-year contracts*** —

(1) ***In general.*** In the case of an item of gross income from a multi-year contract, a taxpayer determines the AFS income inclusion amount for a taxable year by applying the steps in paragraph (e)(1)(i) or (ii) of this section. For this paragraph (e), the term *multi-year contract* means a contract that spans more than one taxable year.

(i) ***Inventory items.*** If the item of gross income is from the sale of an item of inventory and the taxpayer uses the cost offset method under paragraph (c) of this section, see paragraph (c) of this section.

(ii) ***Other items of gross income.*** For all other items of gross income, the taxpayer first compares the cumulative amount of the item of gross income that satisfies the all events test under § 1.451-1(a) through the last day of the taxable year, including the full amount of any advance payment received for such item in a prior taxable year, with the cumulative amount of the item of gross income that is treated as "taken into account as AFS revenue" under paragraph (b)(2) of this section through the last day of the taxable year and identifies the larger of the two amounts (or, if the two amounts are equal, the equal amount). The taxpayer then reduces such amount by all prior year inclusion amounts attributable to the item of gross income, if any, to determine the AFS income inclusion amount for the current taxable year. If, however, the taxpayer receives an advance payment, as defined in § 1.451-8(a)(1), that is allocable to an item of gross income from a multi-year contract, the taxpayer applies the applicable rules in § 1.451-8, rather than the rules in this paragraph (e)(1)(ii), to determine the amount of the item of gross income that is required to be included in gross income in the taxable year in which such advance payment is received, or, if applicable, in a short taxable year described in § 1.451-8(c)(6).

(2) ***Examples.*** The following examples illustrate the rules of paragraph (e)(1) of this section. Unless the facts specifically state otherwise, the taxpayer has an AFS, is on a calendar year for both Federal income tax purposes and AFS purposes and uses an accrual method of accounting for Federal income tax purposes. Further, the taxpayer does not use a special method of accounting.

(i) ***Example 1: Provision of services included in AFS revenue with full inclusion method for advance payments*** —

(A) ***Facts.*** In 2021, D, an engineering services provider, enters into a nonseverable contract with a customer to provide engineering services through 2024 for a total of $100x. Under the contract, D receives payments of $25x in each calendar year of the contract. For its AFS, D reports $50x, $0, $20x, and $30x of AFS revenue from the contract for 2021, 2022, 2023, and 2024, respectively. D has an enforceable right to recover all amounts reported as AFS revenue through the end of a given contract year if the customer were to terminate the contract on the last day of such year. The $25x payment received in 2023 is an advance payment, as defined in § 1.451-8(a)(1), because $5x of the $25x payment is reported as AFS revenue for 2024. D uses the full inclusion method for advance payments.

(B) ***Taxable year 2021.*** Under the all events test in § 1.451-1(a), D is required to include $25x in gross income in 2021 as $25x is due under the terms of the contract and received by D during 2021. D does not have a fixed right to receive any portion of the remaining $75 as such amount is not due under the terms of the contract until future years and is also contingent on D's completion of the nonseverable services. Under the AFS income inclusion rule, because D has an enforceable right to recover all $50x reported as AFS revenue for 2021 if the customer were to terminate the contract on the last day of such year, all $50x is treated as "taken into account as AFS revenue" in 2021. Accordingly, D is required to include $50x in gross income in 2021.

(C) ***Taxable year 2022.*** Under the all events test in § 1.451-1(a), D is required to include $50x in gross income through the end of 2022 as $50x is due under the terms of the contract and received by D as of the end of 2022. D does not have a fixed right to receive any portion of the remaining $50 as such amount is not due under the terms of the contract until future years and is also contingent on D's completion of the nonseverable services. Under the AFS income inclusion rule, because D has an enforceable right to recover all $50x reported as AFS revenue through the end of 2022 if the customer were to terminate the contract on the last day of such year, all $50x is treated as "taken into account as AFS revenue" as of the last day of 2022. Under the cumulative rule in paragraph (e)(1)(ii) of this section, D compares the cumulative all events test amount of $50x with the cumulative AFS revenue amount of $50x and selects the larger of the two amounts (or if the two amounts are equal, the equal amount). From this equal amount of $50x, D subtracts the prior income inclusion amount of $50x. Accordingly, under the cumulative rule D is not required to include any amount in gross income in 2022.

(D) ***Taxable year 2023.*** The payment received during 2023 meets the definition of an advance payment under § 1.451-8(a)(1). Accordingly, pursuant to paragraph (e)(1)(ii) of this section, D must determine the amount that is required to be included in gross income in 2023 under the rules in § 1.451-8. Because D uses the full inclusion method under § 1.451-8(b), D is required to include the $25x that was due and received during 2023 in gross income in 2023.

(E) ***Taxable year 2024.*** Under the all events test in § 1.451-1(a), D is required to include $100x in gross income through the end of 2024 as $100x is due under the terms of the contract and received by D as of the end of 2024. Under the AFS income inclusion rule, because D has an enforceable right to recover all $100x reported as AFS revenue through the end of 2024 if the customer were to terminate the contract on the last day of such year, all $100x is treated as "taken into account as AFS revenue" through the last day of 2024. Under the cumulative rule in paragraph (e)(1)(ii) of this section, D compares the cumulative all events test amount of $100x with the cumulative AFS revenue amount of $100x and

selects the larger of the two amounts (or, if the two amounts are equal, the equal amount). From this equal amount of $100x, D subtracts the prior income inclusion amount of $75x ($50x from 2021 plus $0x from 2022 plus $25x from 2023). Accordingly, under the cumulative rule D is required to include $25 in gross income in 2024. The example in this paragraph (e)(2)(i)(E) is summarized in the following table:

TABLE 2 TO PARAGRAPH (e)(2)(i)(E)

	2021	2022	2023	2024	Total
All Events/Full Inclusion Income	$25x	$25x	$25x	$25x	$100x
AFS Revenue	50x	0	20x	30x	100x
Cumulative rule income	50x	0	25x	25x	100x

(ii) ***Example 2: Provision of services included in AFS revenue with deferral method for advance payments —***

(A) ***Facts.*** The facts are the same as in paragraph (e)(2)(i) of this section (*Example 1*), except D elects to use the deferral method under § 1.451-8(c) to account for advance payments.

(B) ***Taxable years 2021 and 2022.*** The analysis for tax years 2021 and 2022 is the same as in paragraph (e)(2)(i) of this section (*Example 1*).

(C) ***Taxable year 2023.*** The payment received during 2023 meets the definition of an advance payment under § 1.451-8(a)(1). Accordingly, pursuant to paragraph (e)(1)(ii) of this section, D must determine the amount that is required to be included in gross income in 2023 under the rules in § 1.451-8. Because D uses the deferral method under § 1.451-8(b), D is required to include $20x of the $25x payment in gross income in 2023 as $20x of such payment was treated as "taken into account as AFS revenue" as of the end of 2023.

(D) ***Taxable year 2024.*** Under the all events test in § 1.451-1(a), D is required to include $100x in gross income through the end of 2024. Under the AFS income inclusion rule, because D has an enforceable right to recover all $100x reported as AFS revenue through the end of 2024 if the customer were to terminate the contract on the last day of such year, all $100x is treated as "taken into account as AFS revenue" through the last day of 2024. Under the cumulative rule in paragraph (e)(1)(ii) of this section, D compares the cumulative all events test amount of $100x, which includes the full amount of the $25 advance payment received in 2023, with the cumulative AFS revenue amount of $100x and selects the larger of the two amounts (or, if the two amounts are equal, the equal amount). From this equal amount of $100x, D subtracts the prior income inclusion amount of $70x ($50x from 2021

plus $0x from 2022 plus $20x from 2023). Accordingly, under the cumulative rule D is required to include $30x in gross income in 2024. The example in this paragraph (e)(2)(ii)(D) is summarized in the following table:

TABLE 3 TO PARAGRAPH (e)(2)(ii)(D)

	2021	2022	2023	2024	Total
All Events Test/Deferral Method Income	$25x	$25x	[1] $20x	$30x	$100x
AFS Revenue amount	50x	0	20x	30x	100x
Cumulative rule income	50x	0	20x	30x	100x

[1] *$5x of the advance payment in 2023 is deferred and taken into income in 2024.*

(f) ***No change in the treatment of a transaction.*** Except as provided in paragraph (j) of this section and § 1.1275-2(l), the AFS income inclusion rule does not change the treatment of a transaction or the character of an item for Federal income tax purposes. The following are examples of transactions where the treatment or character for AFS purposes does not change the treatment of the transaction or character of the item for Federal income tax purposes:

(1) A transaction treated as a lease, license, or similar transaction for Federal income tax purposes that is treated as a sale or financing for AFS purposes, and vice versa;

(2) A transaction or instrument that is not required to be marked-to-market for Federal income tax purposes but that is marked-to-market for AFS purposes;

(3) Asset sale and liquidation treatment under section 336(e) or 338(h)(10);

(4) A distribution of a corporation or the allocable share of partnership items or an income inclusion under section 951, 951A, or 1293(a) for Federal income tax purposes that is accounted for under the equity method for AFS purposes;

(5) A distribution of previously taxed earnings and profits of a foreign corporation; and

(6) A deposit, return of capital, or conduit payment that is not gross income for Federal income tax purposes that is treated as AFS revenue.

(g) ***No change to exclusion provisions and the treatment of non-recognition transactions*** —

(1) ***In general.*** The AFS income inclusion rule accelerates the time at which the all events test under § 1.451-1(a) is treated as satisfied, and therefore does not change the applicability of any exclusion provision, or the treatment of non-recognition transactions, in the Code, the regulations in this part, or other guidance published in the Internal Revenue Bulletin (see § 601.601(d) of this chapter). The following are examples of exclusion provisions and non-recognition transactions that are not affected by the AFS income inclusion rule:

(i) Any non-recognition transaction, within the meaning of section 7701(a)(45), including, for example, a liquidation described in sections 332 and 337, an exchange described in section 351, a distribution described in section 355, a reorganization described in section 368, a contribution described in section 721, or transactions described in sections 1031 through 1045; and

(ii) Items specifically excluded from income under sections 101 through 140.

(2) ***Example: Non-recognition provisions not changed for Federal income tax purposes*** —

(i) ***Facts.*** Taxpayer (Distributing) is a calendar-year accrual method C corporation with an AFS. On December 31, 2021, Distributing:

(A)

(*1*) Contributes assets to a wholly owned subsidiary (Controlled) in exchange for Controlled stock and $100x; and

(*2*) Distributes all the Controlled stock pro rata to its shareholders.

(B) The transaction qualifies as a reorganization under section 368(a)(1)(D) and a distribution to which section 355 applies (D reorganization). Distributing's realized gain on the transferred assets for book and tax purposes is $150x. On January 15, 2022, in pursuance of the plan of reorganization, Distributing distributes the $100x to its shareholders. Consequently, no gain to Distributing is recognized under section 361(b)(1)(A). On Distributing's 2021 AFS, Distributing recognizes revenue of $150x related to the D reorganization.

(ii) ***Analysis.*** For Federal income tax purposes, under section 361, Distributing does not recognize gain on Distributing's:

(A)

(*1*) Contribution of assets to Controlled;

(*2*) Receipt of Controlled stock and cash; and

(*3*) Distribution of Controlled stock and cash to Distributing's shareholders.

(B) Pursuant to paragraph (g) of this section, the AFS income inclusion rule does not change the result of this paragraph (g)(2).

(h) ***Additional AFS issues*** —

(1) ***AFS covering groups of entities*** —

(i) ***In general.*** If a taxpayer's financial results are reported on the AFS for a group of entities (consolidated AFS), the taxpayer's AFS is the consolidated AFS. However, if the taxpayer's financial results are also reported on a separate AFS that is of equal or higher priority to the consolidated AFS under paragraph (a)(5) of this section, then the taxpayer's AFS is the separate AFS.

(ii) ***Example.*** Taxpayer B, a reseller of computers and electronics, is a calendar-year accrual method taxpayer. In 2021, B's financial results are included in P's consolidated financial statement, which is certified as being prepared in accordance with GAAP, and is a Form 10-K filed with the

SEC. B also has a separate audited financial statement prepared in accordance with GAAP that is used for credit purposes. B must use its parent corporation's consolidated Form 10-K as its AFS.

(2) ***Separately listed items.*** If a consolidated AFS is treated as the taxpayer's AFS, the taxpayer must include the amount of any items listed separately in the consolidated AFS, including any notes or other supplementary data that is considered part of the consolidated AFS, in determining the amount of AFS revenue allocated to the taxpayer.

(3) ***Non-separately listed items.*** If a consolidated AFS does not separately list items for the taxpayer, the portion of the AFS revenue allocable to the taxpayer is determined by relying on the taxpayer's separate source documents that were used to create the consolidated AFS and includes amounts subsequently eliminated in the consolidated AFS. Whether a taxpayer that changes the source documents it uses for this purpose from one taxable year to another taxable year has changed its method of accounting is determined under the rules of section 446.

(4) ***Computation of AFS revenue for the taxable year when the AFS covers mismatched reportable periods —***

(i) ***In general.*** If a taxpayer's AFS is prepared on the basis of a financial accounting year that differs from the taxpayer's taxable year, the taxpayer must use one of the following permissible methods of accounting described in paragraph (h)(4)(i)(A) through (C) of this section to determine the AFS income inclusion amount for the taxable year:

(A) The taxpayer computes AFS revenue as if its financial reporting period is the same as its taxable year by conducting an interim closing of its books using the accounting principles it uses to prepare its AFS.

(B) The taxpayer computes AFS revenue by including a pro rata portion of AFS revenue for each financial accounting year that includes any part of the taxpayer's taxable year. If the taxpayer's AFS for part of the taxable year is not available by the due date of the return (with extension), the taxpayer must make a reasonable estimate of AFS revenue for the pro rata portion of the taxable year for which an AFS is not yet available. See § 1.451-1(a) for adjustments after actual amounts are determined.

(C) If a taxpayer's financial accounting year ends five or more months after the end of its taxable year, the taxpayer computes AFS revenue for the taxable year based on the AFS revenue reported on the AFS prepared for the financial accounting year ending within the taxpayer's taxable year. For this paragraph (h)(4)(i)(C), if a taxpayer uses a 52-53 week year for financial accounting or Federal income tax purposes, the last day of such year shall be deemed to occur on the last day of the calendar month ending closest to the end of such year.

(ii) ***Examples.*** The following examples illustrate the principles of paragraph (j)(4) of this section.

(A) ***Example 1: Interim closing of the books.*** A is a calendar year taxpayer. For its AFS, A's financial results are reported on a June 30 fiscal year. Using the method described in paragraph (h)(4)(i)(A) of this section, for the taxable year 2021, A uses the financial results reported on its June 30, 2021 AFS to determine whether an item of gross income is treated as “taken into account as AFS revenue” from January 1, 2021, through June 30, 2021, and uses financial data and accounting procedures from its June 30, 2022 AFS to

prepare an interim closing of the books as of December 31, 2021 to determine whether an item of gross income is treated as "taken into account as AFS revenue" from July 1, 2021, through December 31, 2021.

(B) ***Example 2: Pro rata approach.*** A is a calendar year taxpayer. For its AFS, A's financial results are reported on a June 30 fiscal year. Using the method described in paragraph (h)(4)(i)(B) of this section, for the taxable year 2021, A computes AFS revenue for the 2021 tax year by taking the AFS revenue for the financial accounting year ending June 30, 2021 and multiplying it by a ratio equal to the number of days in the financial accounting year that are part of the 2021 tax year/365 and then adding to that amount the AFS revenue for the financial accounting year ending June 30, 2022 multiplied by the number of days in the financial accounting year that are part of the 2021 tax year/365.

(C) ***Example 3: AFS revenue for the taxable year based on AFS ending in taxpayer's taxable year.*** The same facts as in paragraph (h)(4)(ii)(B) of this section (*Example 2*) apply, except that A uses the method described in paragraph (h)(4)(i)(C) of this section. For the taxable year 2021, A uses the financial results reported on its June 30, 2021 AFS to determine whether an item of gross income is treated as "taken into account as AFS revenue" as of the end of its 2021 taxable year. Accordingly, any AFS revenue reported on the taxpayer's June 30, 2022 AFS is disregarded when determining whether an item of gross income is treated as "taken into account as AFS revenue" as of the end of the 2021 taxable year.

(i) [Reserved]

(j) ***Special ordering rule for certain items of income for debt instruments*** —

(1) ***In general.*** If an item of income, or portion thereof, with respect to a debt instrument is described in paragraph (j)(2) of this section, the rules of this section apply before the rules in sections 1271 through 1275 and §§ 1.1271-1 through 1.1275-7 (OID rules). Therefore, an item of income, or portion thereof, described in paragraph (j)(2) of this section may not be included in income later than when that item, or portion thereof, is treated as *taken into account as AFS revenue,* as determined under paragraph (b)(2) of this section, regardless of whether the timing of income inclusion for that item is normally determined using a special method of accounting. See also § 1.1275-2(l) for the treatment of the items described in paragraph (j)(2) of this section under the OID rules.

(2) ***Specified fees.*** Paragraph (j)(1) of this section applies to fees (specified fees) that are not spread over a period of time as discount or as an adjustment to the yield of a debt instrument (such as points) in the taxpayer's AFS and, but for paragraph (j) of this section and § 1.1275-2(l), would be treated as creating or increasing OID for Federal income tax purposes. For example, the following specified fees (specified credit card fees) are described in this paragraph (j)(2):

(i) A payment of additional interest or a similar charge provided with respect to amounts that are not paid when due on a credit card account (for example, credit card late fees);

(ii) Amounts charged under a credit card agreement when the cardholder uses the credit card to conduct a cash advance transaction (for example, credit card cash advance fees); and

(iii) Amounts a credit or debit card issuer is entitled to upon a purchase of goods or services by one of its cardholders (for example, interchange fees, which are sometimes labeled merchant discount in certain private label credit card transactions).

(3) ***Example.*** C, a credit card issuer, is a calendar-year accrual method taxpayer with a calendar year AFS. In 2021, a cardholder uses C's credit card to purchase $100 of merchandise from a merchant and the cardholder earns a reward of 1% of the purchase price of $100 ($1) as part of C's cardholder loyalty program. Upon purchase, C becomes entitled to an interchange fee equal to 2% of the purchase price of $100 ($2). For its AFS, C reports the $2 of interchange fees as AFS revenue for 2021. C's $2 of interchange fees is described in paragraph (j)(2)(iii) of this section. Under paragraph (j)(1) of this section, C must apply the rules in this section before applying the OID rules. See also § 1.1275-2(l). Therefore, C's $2 of interchange fees is included in gross income in 2021, the year it is treated as "taken into account as AFS revenue." Under paragraph (b)(2)(i)(A) of this section, the $2 of interchange revenue is not reduced by the $1 reward. Even if C reports interchange fees net of rewards in its AFS for 2021 ($2 of interchange fee minus $1 reward liability), under paragraph (b)(2)(i)(A) of this section, C includes $2 of interchange revenue in gross income in 2021. See sections 162 and 461(h) for the treatment of the reward by C.

(k) ***Treatment of adjustments to deferred revenue in an AFS*** —

(1) ***In general.*** If a taxpayer treats an item of gross income as deferred revenue in its AFS and writes down or adjusts that item, or portion thereof, to an equity account (for example, retained earnings) or otherwise writes down or adjusts that item of deferred revenue in a subsequent taxable year, AFS revenue for that subsequent taxable year is increased or decreased, as applicable by the amount of that item, or portion thereof, that is written down or adjusted. See § 1.451-8(c)(5).

(2) ***Example*** —

(i) ***Facts.*** D, a remanufacturer of industrial equipment, is a calendar-year, accrual method taxpayer with a calendar year AFS. On January 1, 2021, D enters into a contract with a customer and receives a payment of $100x to remanufacture equipment in 2021 and 2022. The contract is not a long-term contract under section 460. For its AFS 2021, D performs remanufacturing services and reports $40x of the $100x payment as AFS revenue for 2021, and treats $60x of the $100x payment as deferred revenue.

(ii) ***Facts for taxable year 2022.*** On January 1, 2022, all of the stock of D is acquired by an unrelated third party and D adjusts deferred AFS revenue to $50x (the expected cost to provide the services) by charging $10x ($60x−$50× = $10x) to retained earnings. In addition, for 2022, D performs remanufacturing services and reports $50x of the deferred revenue as AFS revenue.

(iii) ***Analysis for taxable year 2022.*** Under paragraph (k)(1) of this section, D's $10x write down to deferred revenue for 2022 is treated as "taken into account as AFS revenue" for 2022.

(l) ***Methods of accounting*** —

(1) ***In general.*** Except as otherwise provided in this section, a change to comply with this section is a change in method of accounting to which the provisions of sections 446 and 481 and the regulations in this part under sections 446 and 481 of the Code apply. A taxpayer seeking to change to a method of accounting permitted in this section must secure the consent of the Commissioner in accordance with § 1.446-1(e) and follow the administrative procedures issued under § 1.446-1(e)(3)(ii) for obtaining the Commissioner's consent to change its accounting method. For example, the use of the AFS income inclusion rule under paragraph (b)(1) of this section under which the taxpayer determines the amount of the item of gross income that is treated as "taken into account as AFS revenue" by making the adjustments provided in paragraph (b)(2)(i) of this section, the use of the AFS income inclusion rule under paragraph (b)(1) of this section under which the taxpayer determines the amount of the item of gross income that is treated as "taken into account

as AFS revenue" by making only the adjustments provided in paragraph (b)(2)(ii) of this section (the alternative AFS revenue method), the AFS cost offset method under paragraph (c) of this section, the use of a method of determining AFS revenue under paragraph (i)(4) of this section, are methods of accounting under section 446 and the regulations in this part under section 446 of the Code. In addition, a change in the manner of recognizing revenue in an AFS that changes or could change the timing of the inclusion of income for Federal income tax purposes is generally a change in method of accounting under section 446 and the regulations in this part under section 446 of the Code. However, a change resulting from the restatement of AFS revenue may not always constitute a change in method of accounting under section 446 and the regulations in this part under section 446 of the Code. For example, a restatement of AFS revenue to correct an error described in § 1.446-1(e)(2)(ii)(b) does not constitute a change in method of accounting under section 446.

(2) ***Transition rule for changes in method of accounting*** —

(i) ***In general.*** Except as provided in paragraph (l)(2)(ii) of this section, a taxpayer that makes a qualified change in method of accounting for the taxpayer's first taxable year beginning after December 31, 2017, is treated as making a change in method of accounting initiated by the taxpayer under section 481(a)(2). A taxpayer obtains the consent of the Commissioner to make the change in method of accounting by using the applicable administrative procedures that govern changes in method of accounting under section 446(e). See § 1.446-1(e)(3).

(ii) ***Special rules for OID and specified credit card fees.*** The rules of paragraph (l)(2)(i) of this section apply to a qualified change in method of accounting for the taxpayer's first taxable year beginning after December 31, 2018, if the change relates to a specified credit card fee as defined in paragraph (j)(2) of this section. For paragraph (l) of this section, the section 481(a) adjustment period for any adjustment under section 481(a) for a change in method of accounting described in the preceding sentence is six taxable years.

(iii) ***Qualified change in method of accounting.*** For paragraph (l)(2) of this section, a qualified change in method of accounting means any change in method of accounting that is required by section 13221 of Public Law 115-97, 131 Stat. 2054 (2017) (TCJA), or was prohibited under the Internal Revenue Code of 1986 prior to TCJA section 13221 and is now permitted as a result of TCJA section 13221.

(m) ***Applicability date*** —

(1) ***In general.*** Except as provided in paragraph (m)(2) of this section, this section applies for taxable years beginning on or after January 1, 2021.

(2) ***Delayed application with respect to certain fees.*** Notwithstanding paragraph (m)(1) of this section, paragraph (j) of this section applies to specified fees (as defined in paragraph (j)(2) of this section) that are not specified credit card fees (as defined in paragraph (j)(2) of this section) for taxable years beginning on or after January 6, 2022.

(3) ***Early application of this section*** —

(i) ***In general.*** Except as provided in paragraph (m)(3)(ii) of this section, taxpayers and their related parties, within the meaning of sections 267(b) and 707(b), may apply both the rules in this section and, to the extent relevant, the rules in § 1.451-8, in their entirety and in a consistent manner, to a taxable year beginning after December 31, 2017, and before January 1, 2021,

provided that, once applied to a taxable year, the rules in this section and, to the extent relevant, the rules in § 1.451-8, are applied in their entirety and in a consistent manner to all subsequent taxable years. See section 7508(b)(7) and § 1.451-8(h).

(ii) *Certain fees* —

(A) ***Specified credit card fees.*** In the case of specified credit card fees, a taxpayer and its related parties, within the meaning of sections 267(b) and 707(b), may apply both the rules in this section and the rules in § 1.1275-2(l), in their entirety and in a consistent manner, to a taxable year beginning after December 31, 2018, and before January 1, 2021, provided that, once applied to a taxable year, the rules in this section and § 1.1275-2(l) that apply to specified credit card fees are applied in their entirety and in a consistent manner to all subsequent taxable years (other than the rules applicable to specified fees that are not specified credit card fees). See section 7508(b)(7) and § 1.1275-2(l)(2).

(B) ***Specified fees.*** Paragraphs (m)(3)(i) and (m)(3)(ii)(A) of this section do not apply to specified fees that are not specified credit card fees.

[T.D. 9941, 86 FR 836, Jan. 6, 2021, as amended by 86 FR 1256, Jan. 8, 2021]

§ 1.451-4 Accounting for redemption of trading stamps and coupons.

(a) *In general* —

(1) ***Subtraction from receipts.*** If an accrual method taxpayer issues trading stamps or premium coupons with sales, or an accrual method taxpayer is engaged in the business of selling trading stamps or premium coupons, and such stamps or coupons are redeemable by such taxpayer in merchandise, cash, or other property, the taxpayer should, in computing the income from such sales, subtract from gross receipts with respect to sales of such stamps or coupons (or from gross receipts with respect to sales with which trading stamps or coupons are issued) an amount equal to—

(i) The cost to the taxpayer of merchandise, cash, and other property used for redemptions in the taxable year,

(ii) Plus the net addition to the provision for future redemptions during the taxable year (or less the net subtraction from the provision for future redemptions during the taxable year).

(2) ***Trading stamp companies.*** For purposes of this section, a taxpayer will be considered as being in the business of selling trading stamps or premium coupons if—

(i) The trading stamps or premium coupons sold by him are issued by purchasers to promote the sale of their merchandise or services,

(ii) The principal activity of the trade or business is the sale of such stamps or coupons,

(iii) Such stamps or coupons are redeemable by the taxpayer for a period of at least 1 year from the date of sale, and

(iv) Based on his overall experience, it is estimated that not more than two-thirds of the stamps or coupons sold which it is estimated, pursuant to paragraph (c) of this section, will be ultimately redeemed, will be redeemed within 6 months of the date of sale.

(b) *Computation of the net addition to or subtraction from the provision for future redemptions* —

(1) ***Determination of the provision for future redemptions.***

(i) The provision for future redemptions as of the end of a taxable year is computed by multiplying "estimated future redemptions" (as defined in subdivision (ii) of this subparagraph) by the estimated average cost of redeeming each trading stamp or coupon (computed in accordance with subdivision (iii) of this subparagraph).

(ii) For purposes of this section, the term "estimated future redemptions" as of the end of a taxable year means the number of trading stamps or coupons outstanding as of the end of such year that it is reasonably estimated will ultimately be presented for redemption. Such estimate shall be determined in accordance with the rules contained in paragraph (c) of this section.

(iii) For purposes of this section, the estimated average cost of redeeming each trading stamp or coupon shall be computed by including only the costs to the taxpayer of acquiring the merchandise, cash, or other property needed to redeem such stamps or coupons. The term "the costs to the taxpayer of acquiring the merchandise, cash, or other property needed to redeem such stamps or coupons" includes only the price charged by the seller (less trade or other discounts, except strictly cash discounts approximating a fair interest rate, which may be deducted or not at the option of the taxpayer provided a consistent course is followed) plus transportation or other necessary charges in acquiring possession of the goods. Items such as the costs of advertising, catalogs, operating redemption centers, transporting merchandise or other property from a central warehouse to a branch warehouse (or from a warehouse to a redemption center), and storing the merchandise or other property used to redeem stamps or coupons should not be included in costs of redeeming stamps or premium coupons, but rather should be accounted for in accordance with the provisions of sections 162 and 263.

(2) ***Changes in provision for future redemptions.*** For purposes of this section, a "net addition to" or "net subtraction from" the provision for future redemptions for a taxable year is computed as follows:

(i) Carry over the provision for future redemptions (if any) as of the end of the preceding taxable year,

(ii) Compute the provision for future redemptions as of the end of the taxable year in accordance with subparagraph (1) of this paragraph, and

(iii) If the amount referred to in subdivision (ii) of this subparagraph exceeds the amount referred to in subdivision (i) of this subparagraph, such excess is the net addition to the provision for future redemptions for the taxable year. On the other hand, if the amount referred to in such subdivision (i) exceeds the amount referred to in such subdivision (ii), such excess is the net subtraction from the provision for future redemptions for the taxable year.

(3) ***Example.*** The provisions of this paragraph and paragraph (a)(1) of this section may be illustrated by the following example:

> *Example.* (a) X Company, a calendar year accrual method taxpayer, is engaged in the business of selling trading stamps to merchants. In 1971, its first year of operation, X sells 10 million stamps at $5 per 1,000; it redeems 3 million stamps for merchandise and cash of an average value of $3 per 1,000 stamps. At the end of 1971 it is estimated (pursuant to paragraph (c) of this section) that a total of 9 million stamps of the 10 million stamps issued in 1971 will eventually be presented for redemption. At this time it is estimated that the

average cost of redeeming stamps (as described in subparagraph (1)(iii) of this paragraph) would continue to be $3 per 1,000 stamps. Under these circumstances, X computes its gross income from sales of trading stamps as follows:

Gross receipts from sales (10 million stamps at $5 per 1,000)		$50,000
Less:		
Cost of actual redemptions (3 million stamps at $3 per 1,000)	$9,000	
Provision for future redemptions on December 31, 1971 (9 million stamps − 3 million stamps × $3 per 1,000)	18,000	
		27,000
1971 gross income from sales of stamps		23,000

(b) In 1972, X also sells 10 million stamps at $5 per 1,000 stamps. During 1972 X redeems 7 million stamps at an average cost of $3.01 per 1,000 stamps. At the end of 1972 it is determined that the estimated future redemptions (within the meaning of subparagraph (1)(ii) of this paragraph) is 8 million. It is further determined that the estimated average cost of redeeming stamps would continue to be $3.01 per 1,000 stamps. X thus computes its gross income from sales of trading stamps for 1972 as follows:

Gross receipts from sales (10 million stamps at $5 per 1,000)		$50,000
Less:		
Cost of actual redemptions (7 million stamps at $3.01 per 1,000)	$21,070	
Plus:		
Provision for future redemptions on Dec. 31, 1972 (8 million stamps at $3.01 per 1,000)	24,080	
Minus provision for future redemptions on Dec. 31, 1971	18,000	
Addition to provision for future redemptions	6,080	
Total cost of redemptions		27,150
1972 Gross income from sales of stamps		22,850

(c) ***Estimated future redemptions*** —

(1) ***In general.*** A taxpayer may use any method of determining the estimated future redemptions as of the end of a year so long as—

(i) Such method results in a reasonably accurate estimate of the stamps or coupons outstanding at the end of such year that will ultimately be presented for redemption,

(ii) Such method is used consistently, and

(iii) Such taxpayer complies with the requirements of this paragraph and paragraphs (d) and (e) of this section.

(2) ***Utilization of prior redemption experience.*** Normally, the estimated future redemptions of a taxpayer shall be determined on the basis of such taxpayer's prior redemption experience. However, if the taxpayer does not have sufficient redemption experience to make a reasonable determination of his "estimated future redemptions," or if because of a change in his mode of operation or other relevant factors the determination cannot reasonably be made completely on the basis of the taxpayer's own experience, the experiences of similarly situated taxpayers may be used to establish an experience factor.

(3) ***One method of determining estimated future redemptions.*** One permissible method of determining the estimated future redemptions as of the end of the current taxable year is as follows:

(i) Estimate for each preceding taxable year and the current taxable year the number of trading stamps or coupons issued for each such year which will ultimately be presented for redemption.

(ii) Determine the sum of the estimates under subdivision (i) of this subparagraph for each taxable year prior to and including the current taxable year.

(iii) The difference between the sum determined under subdivision (ii) of this subparagraph and the total number of trading stamps or coupons which have already been presented for redemption is the estimated future redemptions as of the end of the current taxable year.

(4) ***Determination of an "estimated redemption percentage."*** For purposes of applying subparagraph (3)(i) of this paragraph, one permissible method of estimating the number of trading stamps or coupons issued for a taxable year that will ultimately be presented for redemption is to multiply such number of stamps issued for such year by an "estimated redemption percentage." For purposes of this section the term "estimated redemption percentage" for a taxable year means a fraction, the numerator of which is the number of trading stamps or coupons issued during a taxable year that it is reasonably estimated will ultimately be redeemed, and the denominator of which is the number of trading stamps or coupons issued during such year. Consequently, the product of such percentage and the number of stamps issued for such year equals the number of trading stamps or coupons issued for such year that it is estimated will ultimately be redeemed.

(5) ***Five-year rule.***

(i) One permissible method of determining the "estimated redemption percentage" for a taxable year is to—

(*a*) Determine the percentage which the total number of stamps or coupons redeemed in the taxable year and the 4 preceding taxable years is of the total number of stamps or coupons issued or sold in such 5 years; and

(*b*) Multiply such percentage by an appropriate growth factor as determined pursuant to guidelines published by the Commissioner.

(ii) If a taxpayer uses the method described in subdivision (i) of this subparagraph for a taxable year, it will normally be presumed that such taxpayer's "estimated redemption percentage" is reasonably accurate.

(6) ***Other methods of determining estimated future redemptions.***

(i) If a taxpayer uses a method of determining his "estimated future redemptions" (other than a method which applies the 5-year rule as described in subparagraph (5)(i) of this paragraph) such as a probability sampling technique, the appropriateness of the method (including the appropriateness of the sampling technique, if any) and the accuracy and reliability of the results obtained must, if requested, be demonstrated to the satisfaction of the district director.

(ii) No inference shall be drawn from subdivision (i) of this subparagraph that the use of any method to which such subdivision applies is less acceptable than the method described in subparagraph (5)(i) of this paragraph. Therefore, certain probability sampling techniques used in determining estimated future redemptions may result in reasonably accurate and reliable estimates. Such a sampling technique will be considered appropriate if the sample is—

(*a*) Taken in accordance with sound statistical sampling principles,

(*b*) In accordance with such principles, sufficiently broad to produce a reasonably accurate result, and

(*c*) Taken with sufficient frequency as to produce a reasonably accurate result.

In addition, if the sampling technique is appropriate, the results obtained therefrom in determining estimated future redemptions will be considered accurate and reliable if the evaluation of such results is consistent with sound statistical principles. Ordinarily, samplings and recomputations of the estimated future redemptions will be required annually. However, the facts and circumstances in a particular case may justify such a recomputation being taken less frequently than annually. In addition, the Commissioner may prescribe procedures indicating that samples made to update the results of a sample of stamps redeemed in a prior year need not be the same size as the sample of such prior year.

(d) ***Consistency with financial reporting*** —

(1) ***Estimated future redemptions.*** For taxable years beginning after August 22, 1972, the estimated future redemptions must be no greater than the estimate that the taxpayer uses for purposes of all reports (including consolidated financial statements) to shareholders, partners, beneficiaries, other proprietors, and for credit purposes.

(2) ***Average cost of redeeming stamps.*** For taxable years beginning after August 22, 1972, the estimated average cost of redeeming each stamp or coupon must be no greater than the average cost of redeeming each stamp or coupon (computed in accordance with paragraph (b)(1)(iii) of this section) that the taxpayer uses for purposes of all reports (including consolidated financial statements) to shareholders, partners, beneficiaries, other proprietors, and for credit purposes.

(e) ***Information to be furnished with return*** —

(1) ***In general.*** For taxable years beginning after August 22, 1972, a taxpayer described in paragraph (a) of this section who uses a method of determining the "estimated future redemptions" other than that described in paragraph (c)(5)(i) of this section shall file a statement with his return showing such information as is necessary to establish the correctness of the amount subtracted from gross receipts in the taxable year.

(2) ***Taxpayers using the 5-year rule.*** If a taxpayer uses the method of determining estimated future redemptions described in paragraph (c)(5)(i) of this section, he shall file a statement with his return showing, with respect to the taxable year and the 4 preceding taxable years—

(i) The total number of stamps or coupons issued or sold during each year, and

(ii) The total number of stamps or coupons redeemed in each such year.

(3) ***Trading stamp companies.*** In addition to the information required by subparagraph (1) or (2) of this paragraph, a taxpayer engaged in the trade or business of selling trading stamps or premium coupons shall include with the statement described in subparagraph (1) or (2) of this paragraph such information as may be necessary to satisfy the requirements of paragraph (a)(2)(iv) of this section.

[T.D. 7201, 37 FR 16911, Aug. 23, 1972, as amended by T.D. 7201, 37 FR 18617, Sept. 14, 1972]

§ 1.451-6 Election to include crop insurance proceeds in gross income in the taxable year following the taxable year of destruction or damage.

(a) ***In general.***

(1) For taxable years ending after December 30, 1969, a taxpayer reporting gross income on the cash receipts and disbursements method of accounting may elect to include insurance proceeds received as a result of the destruction of, or damage to, crops in gross income for the taxable year following the taxable year of the destruction or damage, if the taxpayer establishes that, under the taxpayer's normal business practice, the income from those crops would have been included in gross income for any taxable year following the taxable year of the destruction or damage. However, if the taxpayer receives the insurance proceeds in the taxable year following the taxable year of the destruction or damage, the taxpayer shall include the proceeds in gross income for the taxable year of receipt without having to make an election under section 451(d) and this section. For the purposes of this section only, federal payments received as a result of destruction or damage to crops caused by drought, flood, or any other natural disaster, or the inability to plant crops because of such a natural disaster, shall be treated as insurance proceeds received as a result of destruction or damage to crops. The preceding sentence shall apply to payments that are received by the taxpayer after December 31, 1973.

(2) In the case of a taxpayer who receives insurance proceeds as a result of the destruction of, or damage to, two or more specific crops, if such proceeds may, under section 451(d) and this section, be included in gross income for the taxable year following the taxable year of such destruction or damage, and if such taxpayer makes an election under section 451(d) and this section with respect to any portion of such proceeds, then such election will be deemed to cover all of such proceeds which are attributable to crops representing a single trade or business under section 446(d). A separate election must be made with respect to insurance proceeds attributable to each crop which represents a separate trade or business under section 446(d).

(b)

(1) ***Time and manner of making election.*** The election to include in gross income insurance proceeds received as a result of destruction of, or damage to, the taxpayer's crops in the taxable year following the taxable year of such destruction or damage shall be made by means of a statement attached to the taxpayer's return (or an amended return) for the taxable year of destruction or damage. The statement shall include the name and address of the taxpayer (or his duly authorized representative), and shall set forth the following information:

(i) A declaration that the taxpayer is making an election under section 451(d) and this section;

(ii) Identification of the specific crop or crops destroyed or damaged;

(iii) A declaration that under the taxpayer's normal business practice the income derived from the crops which were destroyed or damaged would have been included in this gross income for a taxable year following the taxable year of such destruction or damage;

(iv) The cause of destruction or damage of crops and the date or dates on which such destruction or damage occurred;

(v) The total amount of payments received from insurance carriers, itemized with respect to each specific crop and with respect to the date each payment was received;

(vi) The name(s) of the insurance carrier or carriers from whom payments were received.

(2) ***Scope of election.*** Once made, an election under section 451(d) is binding for the taxable year for which made unless the district director consents to a revocation of such election. Requests for consent to revoke an election under section 451(d) shall be made by means of a letter to the district director for the district in which the taxpayer is required to file his return, setting forth the taxpayer's name, address, and identification number, the year for which it is desired to revoke the election, and the reasons therefor.

[T.D. 7097, 36 FR 5215, Mar. 18, 1971, as amended by T.D. 7526, 42 FR 64624, Dec. 27, 1977; T.D. 8429, 57 FR 38595, Aug. 26, 1992]

§ 1.451-7 Election relating to livestock sold on account of drought.

(a) ***In general.*** Section 451(e) provides that for taxable years beginning after December 31, 1975, a taxpayer whose principal trade or business is farming (within the meaning of § 6420 (c)(3)) and who reports taxable income on the cash receipts and disbursements method of accounting may elect to defer for one year a certain portion of income. The income which may be deferred is the amount of gain realized during the taxable year from the sale or exchange of that number of livestock sold or exchanged solely on account of a drought which caused an area to be designated as eligible for assistance by the Federal Government (regardless of whether the designation is made by the President or by an agency or department of the Federal Government). That number is equal to the excess of the number of livestock sold or exchanged over the number which would have been sold or exchanged had the taxpayer followed its usual business practices in the absence of such drought. For example, if in the past it has been a taxpayer's practice to sell or exchange annually 400 head of beef cattle but due to qualifying drought conditions 550 head were sold in a given taxable year, only income from the sale of 150 head may qualify for deferral under this section. The election is not available with respect to livestock described in section 1231(b)(3) (relating to cattle, horses (and other livestock) held by the taxpayer for 24 months (12 months) and used for draft, breeding, dairy, or sporting purposes).

(b) ***Usual business.*** The determination of the number of animals which a taxpayer would have sold if it had followed its usual business practice in the absence of drought will be made in light of all facts and circumstances. In the case of taxpayers who have not established a usual business practice, reliance will be placed upon the usual business practice of similarly situated taxpayers in the same general region as the taxpayer.

(c) ***Special rules —***

(1) ***Connection with drought area.*** To qualify under section 451(e) and this section, the livestock need not be raised, and the sale or exchange need not take place, in a drought area. However, the sale or exchange of the livestock must occur solely on account of drought conditions, the existence of which affected the water, grazing, or other requirements of the livestock so as to necessitate their sale or exchange.

(2) ***Sale prior to designation of area as eligible for Federal assistance.*** The provisions of this section will apply regardless of whether all or a portion of the excess number of animals were sold or exchanged before an area becomes eligible for Federal assistance, so long as the drought which caused such dispositions also caused the area to be designated as eligible for Federal assistance.

(d) ***Classifications of livestock with respect to which the election may be made.*** The election to have the provisions of section 451(e) apply must be made separately for each broad generic classification of animals (e.g., hogs, sheep, cattle) for which the taxpayer wishes the provisions to apply. Separate elections shall not be made solely by reason of the animals' age, sex, or breed.

(e) ***Computation*** —

(1) ***Determination of amount deferred.*** The amount of income which may be deferred for a classification of livestock pursuant to this section shall be determined in the following manner. The total amount of income realized from the sale or exchange of all livestock in the classification during the taxable year shall be divided by the total number of all such livestock sold. The resulting quotient shall then be multiplied by the excess number of such livestock sold on account of drought.

(2) ***Example.*** The provisions of this paragraph may be illustrated by the following example:

Example. A, a calendar year taxpayer, normally sells 100 head of beef cattle a year. As the result of drought conditions existing during 1976, A sells 135 head during that year. A realizes $35,100 of income from the sale of the 135 head. On August 9, 1976, as a result of the drought, the affected area was declared a disaster area thereby eligible for Federal assistance. The amount of income which A may defer until 1977, presuming the other provisions of this section are met, is determined as follows: $35,100 (total income from sales of beef cattle)/135 (total number of beef cattle sold) × 35 (excess number of beef cattle sold, i.e. 135 − 100) = $9,100 (amount which A may defer until 1977)

(f) ***Successive elections.*** If a taxpayer makes an election under section 451(e) for successive years, the amount deferred from one year to the next year shall not be deemed to have been received from the sale or exchange of livestock during the later year. In addition, in determining the taxpayer's normal business practice for the later year, earlier years for which an election under section 451(e) was made shall not be considered.

(g) ***Time and manner of making election.*** The election provided for in this section must be made by the later of (1) the due date for filing the income tax return (determined with regard to any extensions of time granted the taxpayer for filing such return) for the taxable year in which the early sale of livestock occurs, or (2) (the 90th day after the date these regulations are published as a Treasury decision in the FEDERAL REGISTER). The election must be made separately for each taxable year to which it is to apply. It must be made by attaching a statement to the return or an amended return for such taxable year. The statement shall include the name and address of the taxpayer and shall set forth the following information for each classification of livestock for which the election is made:

(1) A declaration that the taxpayer is making an election under section 451(e);

(2) Evidence of the existence of the drought conditions which forced the early sale or exchange of the livestock and the date, if known, on which an area was designated as eligible for assistance by the Federal Government as a result of the drought conditions.

(3) A statement explaining the relationship of the drought area to the taxpayer's early sale or exchange of the livestock;

(4) The total number of animals sold in each of the three preceding years;

(5) The number of animals which would have been sold in the taxable year had the taxpayer followed its normal business practice in the absence of drought;

(6) The total number of animals sold, and the number sold on account of drought, during the taxable year; and

(7) A computation, pursuant to paragraph (e) of this section, of the amount of income to be deferred for each such classification.

(h) ***Revocation of election.*** Once an election under this section is made for a taxable year, it may be revoked only with the approval of the Commissioner.

(i) ***Cross reference.*** For provisions relating to the involuntary conversion of livestock sold on account of drought see section 1033(e) and the regulations thereunder.

[T.D. 7526, 42 FR 64624, Dec. 27, 1977]

§ 1.451-8 Advance payments for goods, services, and certain other items.

(a) ***Definitions.*** Except as otherwise provided in this section, the following definitions apply for this section:

(1) ***Advance payment*** —

(i) ***In general.*** An *advance payment* is a payment received by a taxpayer if:

(A) The full inclusion of the payment in the gross income of the taxpayer for the taxable year of receipt is a permissible method of accounting, without regard to this section;

(B) Any portion of the payment is taken into account as AFS revenue for a subsequent taxable year, or, if the taxpayer does not have an applicable financial statement any portion of the payment is earned by the taxpayer in a subsequent taxable year. To determine the amount of the payment that is treated as "taken into account as AFS revenue," the taxpayer must adjust AFS revenue for any amounts described in § 1.451-3(b)(2)(i)(A), (C), and (D);

(C) The payment is for:

(*1*) Services;

(*2*) The sale of goods;

(*3*) The use, including by license or lease, of intellectual property, including copyrights, patents, trademarks, service marks, trade names, and similar intangible property rights, such as franchise rights and arena naming rights;

(*4*) The occupancy or use of property if the occupancy or use is ancillary to the provision of services, for example, advance payments for the use of rooms or other quarters in a hotel, booth space at a trade show, campsite space at a mobile home park, and recreational or banquet facilities, or other uses of property, so long as the use is ancillary to the provision of services to the property user;

(*5*) The sale, lease, or license of computer software;

(*6*) Guaranty or warranty contracts ancillary to an item or items described in paragraph (a)(1)(i)(C)(*1*), (*2*), (*3*), (*4*), or (*5*) of this section;

(*7*) Subscriptions in tangible or intangible format. Subscriptions for which an election under section 455 is in effect is not included in this paragraph (a)(1)(i)(C)(*7*);

(*8*) Memberships in an organization. Memberships for which an election under section 456 is in effect are not included in this paragraph (a)(1)(i)(C)(*8*);

(*9*) An eligible gift card sale;

(*10*) Any other payment identified by the Secretary of the Treasury or his delegate (Secretary) under section 451(c)(4)(A)(iii), including in guidance published in the Internal Revenue Bulletin (see § 601.601(d)(2) of this chapter); or

(*11*) Any combination of items described in paragraphs (a)(1)(i)(C)(*1*) through (*10*) of this section.

(ii) ***Exclusions from the definition of advance payment.*** An advance payment does not include:

(A) Rent, except for amounts paid for an item or items described in paragraph (a)(1)(i)(C)(*3*), (*4*), or (*5*) of this section;

(B) Insurance premiums, to the extent the inclusion of those premiums is governed by Subchapter L of the Internal Revenue Code;

(C) Payments with respect to financial instruments (for example, debt instruments, deposits, letters of credit, notional principal contracts, options, forward contracts, futures contracts, foreign currency contracts, credit card agreements (including rewards or loyalty points under such agreements), financial derivatives, or similar items), including purported prepayments of interest;

(D) Payments with respect to service warranty contracts for which the taxpayer uses the accounting method provided in Revenue Procedure 97-38, 1997-2 C.B. 479 (see § 601.601(d)(2) of this chapter);

(E) Payments with respect to warranty and guaranty contracts under which a third party is the primary obligor;

(F) Payments subject to section 871(a), 881, 1441, or 1442;

(G) Payments in property to which section 83 applies;

(H) Payments received in a taxable year earlier than the taxable year immediately preceding the taxable year of the contractual delivery date for a specified good (specified good exception) unless the taxpayer uses the method under paragraph (f) of this section;

(I) Any other payment identified by the Secretary under section 451(c)(4)(B)(vii), including in guidance published in the Internal Revenue Bulletin (see § 601.601(d)(2) of this chapter); and

(J) Any combination of items described in paragraphs (a)(1)(ii)(A) through (I) of this section.

(2) ***Advance payment income inclusion amount.*** The term *advance payment income inclusion amount* means the amount of the advance payment that is required to be included in gross income for the taxable year under the applicable rules in this section.

(3) ***Advance payment inventory inclusion amount.*** The term *advance payment inventory inclusion amount* means the amount of the advance payment from the sale of an item of inventory that, but for the cost of goods in progress offset, would be includable in gross income under paragraph (b), (c), or (d) of this section, as applicable, for the taxable year.

(4) ***AFS revenue.*** The term *AFS revenue* has the same meaning as provided in § 1.451-3(a)(4).

(5) ***Applicable financial statement.*** The term *applicable financial statement* (AFS) has the same meaning as provided in § 1.451-3(a)(5).

(6) ***Contractual delivery date.*** The term *contractual delivery date* means the month and year of delivery listed in the original written contract to the transaction entered into between the parties prior to initial receipt of any payments.

(7) ***Cost of goods.*** The term *cost of goods* means the costs that are properly capitalized and included in inventory under sections 471 and 263A or any other applicable provision of the Internal Revenue Code and that are allocable to an item of inventory for which an advance payment inventory inclusion amount is calculated. See paragraph (e)(6) of this section for specific rules for a taxpayer using the simplified methods under section 263A.

(8) ***Cost of goods in progress offset.*** The term *cost of goods in progress offset* has the meaning provided in paragraph (e)(4) of this section.

(9) ***Cumulative cost of goods in progress offset.*** The term *cumulative cost of goods in progress offset* means the cumulative cost of goods in progress offset amounts under paragraph (e) of this section for a specific item of inventory that have reduced an advance payment inventory inclusion amount attributable to such item of inventory in prior taxable years.

(10) ***Eligible gift card sale.*** The term *eligible gift card sale* means the sale of a gift card or gift certificate if:

(i) The taxpayer is primarily liable to the customer, or holder of the gift card, for the value of the card until redemption or expiration; and

(ii) The gift card is redeemable by the taxpayer or by any other entity that is legally obligated to the taxpayer to accept the gift card from a customer as payment for items listed in paragraphs (a)(1)(i)(C)(*1*) through (*11*) of this section.

(11) ***Enforceable right.*** The term *enforceable right* has the same meaning as provided in § 1.451-3(a)(9).

(12) ***Performance obligation.*** The term *performance obligation* has the same meaning as provided in § 1.451-3(a)(11).

(13) ***Prior income inclusion amounts.*** The term *prior income inclusion amounts* means the amount of an item of gross income that was included in the taxpayer's gross income under this section or § 1.451-3 in a prior taxable year.

(14) ***Received.*** An item of gross income is *received* by the taxpayer if it is actually or constructively received, or if it is due and payable to the taxpayer.

(15) ***Specified good.*** The term *specified good* means a good for which:

(i) During the taxable year a payment is received, the taxpayer does not have on hand, or available to it in such year through its normal source of supply, goods of a substantially similar kind and in a sufficient quantity to satisfy the contract to transfer the good to the customer; and

(ii) All the revenue from the sale of the good is recognized in the taxpayer's AFS in the year of delivery.

(16) ***Transaction price.*** The term *transaction price* has the same meaning as provided in § 1.451-3(a)(14).

(b) ***In general.*** Except as provided in paragraph (c) or (d) of this section, an accrual method taxpayer shall include an advance payment in gross income no later than in the taxable year in which the taxpayer receives the advance payment.

(c) ***Deferral method for taxpayers with an applicable financial statement (AFS)*** —

(1) ***In general.*** An accrual method taxpayer with an AFS that receives an advance payment may elect the deferral method described in this paragraph (c) if the taxpayer can determine the extent to which the advance payment is taken into account as AFS revenue as of the end of the taxable year of receipt and, if applicable, a short taxable year described in paragraph (c)(6) of this section. Except as otherwise provided in this section, a taxpayer that uses the deferral method described in this paragraph (c) must:

(i) Include the advance payment, or any portion thereof, in gross income in the taxable year of receipt to the extent *taken into account as AFS revenue* as of the end of such taxable year, as determined under paragraph (c)(2) of this section; and

(ii) Include the remaining portion of such advance payment in gross income in the taxable year following the taxable year in which such payment is received (next succeeding year).

(2) ***Adjustments to AFS revenue.*** The amount of an advance payment that is treated as "taken into account as AFS revenue" as of the end of the taxable year of receipt under paragraph (c)(1)(i) of this section is determined by adjusting AFS revenue by amounts described in § 1.451-3(b)(2)(i)(A), (C), and (D), as applicable.

(3) ***Examples.*** The following examples demonstrate the rules in paragraphs (c)(1) and (2) of this section.

(i) ***Example 1: Gift cards not eligible for deferral method.*** E, a hair styling salon, receives advance payments for gift cards that may later be redeemed at the salon for hair styling services or hair care products at the face value of the gift card. The gift cards may not be redeemed for cash and have no expiration date. E does not track the sale date of the gift cards and includes advance payments for gift cards in AFS revenue when redeemed. Because E is unable to determine the extent to which advance payments are taken into account as AFS revenue for the taxable year of receipt, E cannot use the deferral method for these advance payments.

(ii) ***Example 2: Gift cards eligible for deferral method.*** The same facts as in paragraph (c)(3)(i) of this section (*Example 1*) apply, except that the gift cards have an expiration date 12 months from the date of sale, E does not accept expired gift cards, and E includes unredeemed gift cards in AFS revenue for the taxable year in which the cards expire. Because E tracks the sale date and the expiration date of the gift cards for its AFS, E can determine the extent to which

advance payments are taken into account as AFS revenue for the taxable year of receipt. Therefore, E meets the requirement of paragraph (c)(1) of this section and may elect the deferral method for these advance payments.

(4) ***Acceleration of advance payments*** —

(i) ***In general.*** A taxpayer that uses the deferral method described in this paragraph (c) must include in gross income for the taxable year, all advance payments not previously included in gross income:

(A) If, in that taxable year, the taxpayer either dies or ceases to exist in a transaction other than a transaction to which section 381(a) applies; or

(B) If, and to the extent that, in that taxable year, the taxpayer's obligation for the advance payments is satisfied or otherwise ends other than in:

(*1*) A transaction to which section 381(a) applies; or

(*2*) A section 351(a) transfer that is part of a section 351 transaction in which:

(*i*) Substantially all assets of the trade or business, including advance payments, are transferred;

(*ii*) The transferee adopts or uses the deferral method in the year of transfer; and

(*iii*) The transferee and the transferor are members of the same consolidated group, as defined in § 1.1502-1(h).

(ii) ***Examples.*** The following examples illustrate the rules in paragraph (c)(4) of this section. In each of the following examples, the taxpayer is a C corporation, uses an accrual method of accounting for Federal income tax purposes and files its returns on a calendar year basis. In addition, the taxpayer has an AFS and uses the deferral method in paragraph (c) of this section.

(A) ***Example 1: Ceasing to exist.*** A is in the business of selling and licensing off the shelf, fully customized, and semi-customized computer software and providing customer support. On July 1, 2021, A enters into a 2-year software maintenance contract and receives an advance payment. Under the contract, A will provide software updates if it develops an update within the contract period, as well as online and telephone customer support. A ceases to exist on December 1, 2021, in a transaction that does not involve a section 351(a) transfer described in paragraph (c)(4)(i)(B)(*2*) of this section and is not a transaction to which section 381(a) applies. For Federal income tax purposes, A must include the entire advance payment in gross income in its 2021 taxable year.

(B) ***Example 2: Satisfaction of obligation*** —

(*1*) ***Facts.*** On November 1, 2021, J, a travel agent, receives payment from a customer for an airline flight that will take place in April 2022. J purchases and delivers the airline ticket to the customer on November 14, 2021. J retains the excess of the customer's payment over the cost of the airline ticket as its commission. The customer may cancel the flight and receive a refund from J only to the extent the airline itself provides refunds. In its AFS, J includes its commission in revenue for 2022.

(2) ***Analysis.*** The payment for commission income is an advance payment. Because J is not required to provide any services after the ticket is delivered to the customer on November 14, 2021, J satisfies its obligation to the customer for its commission when the airline ticket is delivered. Thus, for Federal income tax purposes, J must include the commission in gross income for 2021.

(5) ***Financial statement adjustments*** —

(i) ***In general.*** If a taxpayer treats an advance payment as an item of deferred revenue in its AFS and writes-down or adjusts that item, or portion thereof, to an equity account such as retained earnings, or otherwise writes-down or adjusts that item of deferred revenue in a subsequent taxable year, AFS revenue for that subsequent taxable year is increased or decreased, as applicable, by the amount that is written down or adjusted. See § 1.451-3(k).

(ii) ***Examples.*** The following examples illustrate the rules in paragraph (c)(5) of this section. In each of the following examples, the taxpayer is a C corporation, uses an accrual method of accounting for Federal income tax purposes and files its returns on a calendar year basis. In addition, the taxpayer has an AFS and uses the deferral method in paragraph (c) of this section.

(A) ***Example 1*** —

(1) ***Facts.*** On May 1, 2021, A received $100 as an advance payment for a 2-year contract to provide services. For financial accounting purposes, A recorded $100 as a deferred revenue liability in its AFS, expecting to report $^1/_4$ ($25) of the advance payment in AFS revenue for 2021, $^1/_2$ ($50) for 2022, and $^1/_4$ ($25) for 2023. On August 31, 2021, C, an unrelated corporation that files its Federal income tax return on a calendar year basis and that is a member of a consolidated group, acquired all of the stock of A, and A joined C's consolidated group. A's short taxable year ended on August 31, 2021, and, as of that date, A had included $^1/_4$ ($25) of the advance payment in AFS revenue. On September 1, 2021, after the stock acquisition, and in accordance with purchase accounting rules, C wrote down A's deferred revenue liability to its fair value of $10 as of the date of the acquisition. The $10 is included in revenue on A's AFS in accordance with the method of accounting A uses for financial accounting purposes.

(2) ***Analysis.*** For Federal income tax purposes, A must take $^1/_4$ ($25) of the advance payment into income for its short taxable year ending August 31, 2021 and must include the remainder of the advance payment ($75) ($65 write down + $10 future financial statement revenue) in income for its next succeeding taxable year.

(B) ***Example 2*** —

(1) ***Facts.*** On May 1, 2021, B received $100 as an advance payment for a contract to be performed in 2021, 2022, and 2023. On August 31, 2021, D, a corporation that is not a member of a consolidated group for Federal income tax purposes, acquired all of the stock of B. Before the stock acquisition, for 2021, B included $40 of the advance payment in AFS revenue, and $60 as a deferred revenue liability. On September 1, 2021, after the stock acquisition and in accordance with purchase accounting rules, B, at D's direction, wrote down its $60 deferred revenue liability to $10 (its fair value)

as of the date of the acquisition. After the acquisition, B does not take into account as AFS revenue any of the $10 deferred revenue liability in its 2021 AFS. B does include $5 in revenue in 2022, and $5 in revenue in 2023.

(2) ***Analysis.*** For Federal income tax purposes, B must include $40 of the advance payment into income in 2021 and must include the remainder of the advance payment ($60) ($50 write down plus $10 future financial statement revenue) in income for the 2022 taxable year.

(6) ***Short taxable year rule*** —

(i) ***In general.*** If the taxpayer's next succeeding taxable year is a short taxable year, other than a taxable year in which the taxpayer dies or ceases to exist in a transaction other than a transaction to which section 381(a) applies, and the short taxable year consists of 92 days or less, a taxpayer using the deferral method must include the portion of the advance payment not included in the taxable year of receipt in gross income for the short taxable year to the extent taken into account as AFS revenue as of the end of such taxable year, as determined under paragraph (c)(2) of this section. Any amount of the advance payment not included in gross income in the taxable year of receipt or the short taxable year, must be included in gross income for the taxable year immediately following the short taxable year.

(ii) ***Example 1*** —

(A) ***Facts.*** A is a calendar year taxpayer and is in the business of selling and licensing off the shelf, fully customized, and semi-customized computer software and providing customer support. On July 1, 2021, A enters into a 2-year software maintenance contract and receives an advance payment of $240 under the contract. Under the contract, A will provide software updates if it develops an update within the contract period, as well as provides online and telephone customer support. A changes its taxable period to a fiscal year ending March 31. As a result, A has a short taxable year beginning January 1, 2022, and ending March 31, 2022. In its AFS, A includes 6/24 ($60) of the payment in revenue for the taxable year ending December 31, 2021 to account for the six-month period July 1 through December 31, 2021; 3/24 ($30) in revenue for the short taxable year ending March 31, 2022 to account for the three-month period January 1 through March 31, 2022; 12/24 ($120) in revenue for the taxable year ending March 31, 2023; and 3/24 ($30) in revenue for the taxable year ending March 31, 2024.

(B) ***Analysis.*** Because the taxable year ending March 31, 2021, is 92 days or less, A must include 6/24 ($60) of the payment in gross income for the taxable year ending December 31, 2021, 3/24 ($30) in gross income for the short taxable year ending March 31, 2022, and 15/24 ($150), the remaining amount, in gross income for the taxable year ending March 31, 2023.

(iii) ***Example 2*** —

(A) ***Facts.*** On May 1, 2021, B received $100 as an advance payment for a contract to be performed in 2021, 2022, and 2023. On October 31, 2021, C, an unrelated corporation that files its federal income tax return on a calendar year basis and that is a member of a consolidated group, acquired all the stock of B and B joined C's consolidated group. Before the stock acquisition, for 2021, B included $40 of the advance payment in AFS revenue, and $60 as a deferred revenue liability. On November 1, 2021, after the stock acquisition and in accordance with purchase accounting rules, C wrote down B's $60

deferred revenue liability to $10 (its fair value) as of the date of the acquisition. After the acquisition, B does not include in revenue any of the $10 deferred revenue liability in its 2021 AFS. B includes $5 in revenue in 2022, and $5 in revenue in 2023.

(B) ***Analysis.*** For Federal income tax purposes, B must take $40 of the advance payment into income in its short tax year ending October 31, 2021. B's subsequent tax year, the short tax year ending December 31, 2021, is a tax year that is 92 days or less. Therefore, under paragraph (c)(6)(i) of this section, B generally will include the portion of the advance payment not included in the taxable year of receipt in gross income for this short taxable year to the extent taken into account as AFS revenue. Although for AFS purposes, no amount is recognized in revenue for the short period beginning November 1, 2021 and ending on December 31, 2021, under paragraph (c)(5)(i) of this section, B must treat the amount of the write-down as AFS revenue in the taxable year in which the write-down occurs. Therefore, B must include $50 of the advance payment into income in the short tax year ending December 31, 2021 (equal to the $50 write down plus $0 recognized in B's AFS for the period beginning on November 1, 2021 and ending December 31, 2021), and must include the remainder of the advance payment ($10) in income for the 2022 taxable year.

(7) ***Financial statement conformity requirement.*** A taxpayer that uses an AFS to apply the rules under § 1.451-3 must use the same AFS and, if applicable, the same method of accounting under § 1.451-3(h)(4), to apply the deferral method in paragraph (c) of this section. Additionally, the AFS rules under § 1.451-3(h) also apply for purposes of this section.

(8) ***Contracts with multiple performance obligations*** —

(i) ***General rule.*** If a taxpayer is using the deferral method under this paragraph (c) and the taxpayer's contract with a customer has more than one performance obligation, then any payments received under the contract are allocated to the corresponding item of gross income in the same manner as such payments are allocated to the performance obligations in the taxpayer's AFS.

(ii) ***Example: Computer software subscription with multiple performance obligations*** —

(A) ***Facts.*** P is in the business of licensing off the shelf, fully customized, and semi-customized computer software and providing customer support. P uses an accrual method of accounting for Federal income tax purposes, files its returns on a calendar year basis, and has an AFS. On July 1, 2021, P receives an advance payment of $100 for a 2-year software subscription comprised of:

(*1*)

(*i*) A 1-year “software maintenance contract” under which P will provide software updates within the contract period; and

(*ii*) A “customer support agreement” for online and telephone customer support.

(*2*) P reflects the software maintenance contract and the customer support agreement as two separate performance obligations in its AFS and allocates $80 of the payment to the software maintenance contract and $20 to the customer support agreement. P includes the $80 allocable to the software maintenance payment in AFS revenue as follows: 1/4 ($20) in AFS revenue for 2021; 1/2 ($40) in AFS revenue for 2022; and the

remaining 1/4 ($20) in AFS revenue for 2023. Regarding the $20 allocable to the customer support payment, P includes 1/2 ($10) in AFS revenue for 2021, and the remaining 1/2 ($10) in AFS revenue for 2022 regardless of when P provides the customer support.

(B) ***Analysis.*** Since the software maintenance contract and the customer support agreement are two separate performance obligations, each yielding a separate item of gross income, paragraph (c)(8) of this section requires P to allocate the $100 payment to each item of gross income in the same manner as the payment is allocated to each performance obligation in P's AFS. For Federal income tax purposes, P must include $30 in gross income for 2021 ($20 allocable to the software maintenance contract and $10 allocable to the customer support agreement) and the remaining $70 is included in gross income for 2022.

(iii) ***Contracts with advance payments that include items subject to a special method of accounting*** —

(A) ***In general.*** The portion of the payment allocable to the items of gross income described in paragraph (a)(1)(i)(C) of this section from a contract that includes one or more items of gross income subject to a special method of accounting and one or more items of gross income described in paragraph (a)(1)(i)(C) of this section must be determined based on objective criteria.

(B) ***Allocation deemed to be based on objective criteria.*** A taxpayer's allocation method is based on objective criteria if an allocation of the payment to each item of gross income is in proportion to the amounts determined in § 1.451-3(d)(5) or as otherwise provided in guidance published in the Internal Revenue Bulletin (see § 601.601(d) of this chapter).

(iv) ***Example*** —

(A) ***Facts.*** B is a calendar-year accrual method taxpayer with an AFS. In 2020, B enters into a $100x contract to design, build, operate and maintain a toll road and receives an up-front payment of $100x. The contract meets the definition of a long-term contract under § 1.460-1(b)(1). B properly determines that the obligations to design and build the toll road are long-term contract activities under § 1.460-1(d)(1) and accounts for the gross income from these activities under section 460. In addition, B properly determines that the obligations to operate and maintain the toll road are non-long-term contract activities under § 1.460-1(d)(2) and that the gross income attributable to these activities is accounted for under section 451(b). B allocates $60x of the transaction price amount to the long-term contract activities and the remaining $40x to the non-long-term contract activity pursuant to § 1.451-3(d)(5). For AFS purposes, B allocates $55x of the transaction price amount to the performance obligations that are long-term contract activities and $45x to the non-long-term contract activities. B uses the deferral method of accounting.

(B) ***Analysis.*** For Federal income tax purposes, a method of accounting under section 460 is a special method of accounting under paragraph (c)(8)(iv) of this section. Pursuant to paragraph (c)(8)(iv) of this section, B must allocate the payment among the item(s) of gross income that are subject to section 460 and the item(s) of gross income described in paragraph (a)(1)(i)(C) of this section based on objective criteria. B's allocation is deemed to be based on objective criteria if it allocates the payment in proportion to the amounts

determined under § 1.451-3(d)(5). That is, $60x to the items of gross income subject to section 460 and $40x to the items of gross income described in paragraph (a)(1)(i)(C) of this section.

(9) ***Special rule relating to eligible gift card sales.*** For paragraphs (a)(1)(i)(B) and (c)(1) of this section, if an eligible gift card is redeemable by an entity described in paragraph (a)(10)(ii) of this section whose financial results are not included in the taxpayer's AFS, a payment will be treated as included by the taxpayer in its AFS revenue to the extent the gift card is redeemed by such entity during the taxable year.

(10) ***Examples.*** The following examples illustrate the rules of paragraph (c) of this section. In each of the following examples, the taxpayer uses an accrual method of accounting for Federal income tax purposes and files its returns on a calendar year basis. In addition, the taxpayer in each example has an AFS and uses the deferral method under paragraph (c) of this section. Further, the taxpayer does not use the advance payment cost offset method in paragraph (e) of this section.

(i) ***Example 1: Services.*** On November 1, 2021, A, in the business of giving dancing lessons, receives an advance payment of $480 for a 1-year contract commencing on that date and providing for up to 48 individual, 1-hour lessons. A provides eight lessons in 2021 and another 35 lessons in 2022. A takes into account $^{1}/_{6}$ ($80) of the payment as AFS revenue for 2021, and $^{5}/_{6}$ ($400) of the payment as AFS revenue for 2022. For Federal income tax purposes, under the deferral method in paragraph (c) of this section, A must include $^{1}/_{6}$ ($80) of the payment in gross income for 2021, and the remaining $^{5}/_{6}$ ($400) of the payment in gross income for 2022.

(ii) ***Example 2: Services.*** The same facts as in paragraph (c)(10)(i) of this section (*Example 1*) apply. A receives an advance payment of $960 for a 3-year contract under which A provides up to 96 lessons. A provides eight lessons in 2021, 48 lessons in 2022, and 40 lessons in 2023. A takes into account 1/12 ($80) of the payment as AFS revenue for 2021, $^{1}/_{2}$ ($480) of the payment as AFS revenue for 2022, and 5/12 ($400) of the payment as AFS revenue for 2023. For Federal income tax purposes, under the deferral method in paragraph (c) of this section, A must include 1/12 ($80) of the payment in gross income for 2021, and the remaining 11/12 ($880) of the payment in gross income for 2022.

(iii) ***Example 3: Services.*** On June 1, 2021, B, a landscape architecture firm, receives an advance payment of $100 for landscape services that, under the terms of the agreement, must be provided by December 2022. On December 31, 2021, B estimates that $^{3}/_{4}$ of the work under the agreement has been completed. B takes into account $^{3}/_{4}$ ($75) of the payment as AFS revenue for 2021, and $^{1}/_{4}$ ($25) of the payment as AFS revenue for 2022. For Federal income tax purposes, under the deferral method in paragraph (c) of this section, B must include $^{3}/_{4}$ ($75) of the payment in gross income for 2021, and the remaining $^{1}/_{4}$ ($25) of the payment in gross income for 2022, regardless of whether B completes the job in 2022.

(iv) ***Example 4: Repair contracts.*** On July 1, 2021, C, in the business of selling and repairing television sets, receives an advance payment of $100 for a 2-year contract under which C agrees to repair the customer's television set. C takes into account $^{1}/_{4}$ ($25) of the payment as AFS revenue for 2021, $^{1}/_{2}$ ($50) of the payment as AFS revenue for 2022, and $^{1}/_{4}$ ($25) of the payment as AFS revenue for 2023. For Federal income tax purposes, under the deferral method in paragraph (c) of this section, C must include $^{1}/_{4}$ ($25) of the payment in gross income for 2021 and the remaining $^{3}/_{4}$ ($75) of the payment in gross income for 2022.

(v) ***Example 5: Online website design.*** On July 20, 2021, D, a website designer, receives an online payment of $75 to design a website for Customer to be completed on February 1, 2023. D designs and completes Customer's website on February 1, 2023. D takes into account the $75 payment for Customer's website as AFS revenue for 2023. The $75 payment D receives for Customer's website is an advance payment. For Federal income tax purposes, under the deferral method in paragraph (c) of this section, D must include the $75 payment for the website in gross income for 2022.

(vi) ***Example 6: Online subscriptions.*** G is in the business of compiling and providing business information for a particular industry in an online format accessible over the internet. On September 1, 2021, G receives an advance payment from a subscriber for 1 year of access to its online database, beginning on that date. G takes into account $^{1}/_{3}$ of the payment as AFS revenue for 2021 and the remaining $^{2}/_{3}$ as AFS revenue for 2022. For Federal income tax purposes, under the deferral method in paragraph (c) of this section, G must include $^{1}/_{3}$ of the payment in gross income for 2021 and the remaining $^{2}/_{3}$ of the payment in gross income for 2022.

(vii) ***Example 7: Membership fees.*** On December 1, 2021, H, in the business of operating a chain of "shopping club" retail stores, receives advance payments for membership fees. The membership fees are not prepaid dues income subject to section 456. Upon payment of the fee, a member is allowed access for a 1-year period to H's stores, which offer discounted merchandise and services. H takes into account 1/12 of the payment as AFS revenue for 2021 and 11/12 of the payment as AFS revenue for 2022. For Federal income tax purposes, under the deferral method in paragraph (c) of this section, H must include 1/12 of the payment in gross income for 2021, and the remaining 11/12 of the payment in gross income for 2022.

(viii) ***Example 8: Cruise.*** In 2021, I, in the business of operating tours, receives $20x payments from customers for a 10-day cruise that will take place in April 2022. Under the agreement, I charters a cruise ship, hires a crew and a tour guide, and arranges for entertainment and shore trips for the customers. I takes into account the $20x payments as AFS revenue for 2022. For Federal income tax purposes, I must include the $20x payments in gross income for 2022.

(ix) ***Example 9: Broadcasting rights*** —

(A) ***Facts.*** K, a professional sports franchise, is a member of a sports league that enters into contracts with television networks for the right to broadcast games to be played between teams in the league. The league entered into a 2-year broadcasting contract beginning October 1, 2021. K receives two payments of $100x on October 1 of each contract year, beginning in 2021. K estimates that for each contract year, 25% of the broadcasting rights are transferred by December 31 of the year of payment, and the remaining 75% of the broadcasting rights are transferred in the following year. K takes into account $^{1}/_{4}$ ($25x) of the first installment payment as AFS revenue for 2021 and $^{3}/_{4}$ ($75x) as AFS revenue for 2022. K takes into account $^{1}/_{4}$ ($25x) of the second payment as AFS revenue for 2022 and $^{3}/_{4}$ ($75x) as AFS revenue for 2023.

(B) ***Analysis.*** Each installment payment is an advance payment under paragraph (a)(1) of this section because a portion of each payment is included in AFS revenue for a subsequent taxable year and the payment relates to the use of intellectual property. For Federal income tax purposes, under the deferral method in paragraph (c) of this section, K must include $^{1}/_{4}$ ($25x) of the first $100x installment payment in gross income for 2021 and $^{3}/_{4}$

($75x) of the first installment payment in gross income for 2022. In addition, K must include 1/4 ($25x) of the second $100x payment in gross income for 2022 and 3/4 ($75x) of the second installment payment in gross income for 2023.

(x) *Example 10: Insurance claims administration* —

(A) ***Facts.*** L is in the business of negotiating, placing, and servicing insurance coverage and administering claims for insurance companies. On December 1, 2021, L enters into a contract with an insurance company to provide property and casualty claims administration services for a 4-year period beginning January 1, 2022. Pursuant to the contract, the insurance company makes four equal annual payments to L; each payment relates to a year of service and is made during the month prior to the service year. Since L does not perform any services related to the payment prior to the service year, L does not meet the requirements of § 1.451-1(a) for the payment prior to the service year. For example, L is paid on December 1, 2021, for the service year beginning January 1, 2022. L takes into account the first payment as AFS revenue for 2022; the second payment as AFS revenue for 2023; the third payment as AFS revenue for 2024; and the fourth payment as AFS revenue for 2025.

(B) ***Analysis.*** Each annual payment is an advance payment under paragraph (a)(1) of this section because each payment is taken into account as AFS revenue for a subsequent taxable year and the payment relates to services. For Federal income tax purposes, under the deferral method in paragraph (c) of this section, L must include: The first payment in gross income for 2022; the second payment in gross income for 2023; the third payment in gross income for 2024; and the fourth payment in gross income for 2025.

(xi) *Example 11: internet services* —

(A) ***Facts.*** M is a cable internet service provider that enters into contracts with subscribers to provide internet services for a monthly fee that is paid prior to the service month. For those subscribers who do not own a compatible modem, M provides a rental cable modem for an additional monthly charge, that is also paid prior to the service month. Pursuant to the contract, M will replace or repair the cable modem if it proves defective during the contract period. In December 2021, M receives $100x payments from subscribers for January 2022 internet service and cable modem use. M takes into account the entire $100x payments as AFS revenue for 2022.

(B) ***Analysis.*** For Federal income tax purposes, the $100x payments are advance payments. Because M uses the deferral method in paragraph (c) of this section, M must include $100x in gross income for 2022.

(xii) *Example 12: License agreement* —

(A) ***Facts.*** On January 1, 2021, N receives a payment of $250 for entering into a 3-year license agreement for the use of N's trademark throughout the term of the agreement. The $250 payment reflects the first year (2021) license fee of $100 and the third year (2023) license fee of $150. The fee of $125 for the second year is payable on January 1, 2022. N takes into account $100 of the $250 upfront payment as AFS revenue for 2021, $125 as AFS revenue for 2022, and $150 of the $250 payment as AFS revenue for 2023.

(B) ***Analysis.*** For Federal income tax purposes, N received an advance payment of $150, the 2023 license fee, in 2021. Because N uses the deferral method in paragraph (c) of this section, N must defer the $150 payment and include it in gross income for 2022.

(xiii) ***Example 13: Computer software subscription with one performance obligation*** —

(A) ***Facts.*** On July 1, 2021, O, in the business of licensing off the shelf, fully customized, and semi-customized computer software and providing customer support, receives a payment of $100 for a 2-year "software subscription contract" under which O will provide software updates if it develops an update within the contract period, as well as online and telephone customer support. O determines that its obligations under the software subscription contract are one performance obligation for financial accounting purposes, which yields one item of gross income. O takes into account $^{1}/_{4}$ ($25) of the payment as AFS revenue for 2021, $^{1}/_{2}$ ($50) as AFS revenue for 2022, and the remaining $^{1}/_{4}$ ($25) as AFS revenue for 2023, regardless of when O provides updates or customer support.

(B) ***Analysis.*** For Federal income tax purposes, the $100 payment is an advance payment. Because O uses the deferral method in paragraph (c) of this section, O must include $^{1}/_{4}$ ($25) of the payment in gross income for 2021 and $^{3}/_{4}$ ($75) in gross income for 2022.

(xiv) ***Example 14: Gift cards administered by another*** —

(A) ***General facts.*** Q is a corporation that operates department stores and is the common parent of a consolidated group (the Q group). U, V, and W are domestic corporations wholly owned by Q and members of the Q group. X is a foreign corporation wholly owned by Q and not a member of the Q group. U sells Brand A goods, V sells Brand B goods, X sells Brand C goods, and Z is an unrelated entity that sells Brand D goods. W administers a gift card program for the members of the Q group, X, and Z. Pursuant to the underlying agreements, W issues gift cards that are redeemable for goods or services offered by U, V, X, and Z. In addition, U, V, X, and Z sell gift cards to customers on behalf of W and remit amounts received to W. The agreements provide that W is primarily liable to the customer for the value of the gift card until redemption, and U, V, X, and Z are obligated to accept the gift card as payment for goods or services. When a customer purchases goods or services with a gift card at U, V, X, or Z, W reimburses that entity for the sales price of the goods or services purchased with the gift card, up to the total gift card value.

(B) ***Facts for taxable year 2021.*** In 2021, W sells gift cards with a total value of $900, and, at the end of 2021, the unredeemed balance of the gift cards is $100. In Q group's AFS, the group includes revenue from the sale of a gift card when the gift card is redeemed. Accordingly, of the $900 of gift cards sold in 2021, $800 were redeemed and taken into account as AFS revenue for 2021. W tracks sales and redemptions of gift cards electronically, determines the extent to which advance payments are taken into account as AFS revenue in Q group's AFS for the taxable year of receipt and meets the requirements of paragraph (c)(1) of this section.

(C) ***Analysis.*** The payments W receives from the sale of gift cards are advance payments because they are payments for eligible gift cards. Under the deferral method, W must include $800 of the payments from gift card sales in gross income in 2021 and the remaining $100 of the payments in gross income in 2022.

(xv) ***Example 15: Gift cards of affiliates*** —

(A) *Facts.* R is a Subchapter S corporation that operates an affiliated restaurant corporation and manages other affiliated restaurants. These other restaurants are owned by other Subchapter S corporations, partnerships, and limited liability companies. R has a partnership interest or an equity interest in some of the restaurants. R administers a gift card program for participating restaurants. Each participating restaurant operates under a different trade name. Under the gift card program, R and each of the participating restaurants sell gift cards, which are issued with R's brand name and are redeemable at all participating restaurants. Participating restaurants sell the gift cards to customers and remit the proceeds to R, R is primarily liable to the customer for the value of the gift card until redemption, and the participating restaurants are obligated under an agreement with R to accept the gift card as payment for food, beverages, taxes, and gratuities. When a customer uses a gift card to make a purchase at a participating restaurant, R is obligated to reimburse that restaurant for the amount of the purchase, up to the total gift card value. In R's AFS, R includes revenue from the sale of a gift card when a gift card is redeemed at a participating restaurant. R tracks sales and redemptions of gift cards electronically, is able to determine the extent to which advance payments are taken into account as AFS revenue for the taxable year of receipt and meet the requirements of paragraph (c)(1) of this section.

(B) *Analysis.* The payments R receives from the sale of gift cards are advance payments because they are payments for eligible gift card sales. For Federal income tax purposes, R is eligible to use the deferral method. Using the deferral method, in the taxable year of receipt, R must include the advance payment in income to the extent taken into account as AFS revenue and must include any remaining amount in income in the taxable year following the taxable year of receipt. Under paragraph (c)(9) of this section, R is treated as taking into account revenue from the sale of a gift card as AFS revenue when a gift card is redeemed at a participating restaurant.

(xvi) *Example 16: Gift cards for domestic and international hotels* —

(A) *Facts.* S is a corporation that operates for the benefit of its franchisee members, who own and operate domestic and international individual member hotels. S administers a gift card program for its members by selling gift cards that may be redeemed for hotel rooms and food or beverages provided by any member hotel. The agreements underlying the gift card program provide that S is entitled to the proceeds from the sale of the gift cards, must reimburse the member hotel for the value of a gift card redeemed, and until redemption remains primarily liable to the customer for the value of the card. In S's AFS, S includes payments from the sale of a gift card when the card is redeemed. S tracks sales and redemptions of gift cards electronically, determines the extent to which advance payments are included in AFS revenue for the taxable year of receipt and meets the requirements of paragraph (c)(1) of this section.

(B) *Analysis.* The payments S receives from the sale of gift cards are advance payments because they are payments for eligible gift card sales. Thus, for Federal income tax purposes, S is eligible to use the deferral method. Under the deferral method, in the taxable year of receipt, S must include in income the advance payment to the extent taken into account as AFS revenue and must include any remaining amount in income in the taxable year following the taxable year of receipt.

(xvii) *Example 17: Discount voucher* —

(A) ***Facts.*** On December 10, 2021, T, in the business of selling home appliances, sells a washing machine for $500. As part of the sale, T gives the customer a 40% discount voucher for any future purchases of T's goods up to $100 in the next 60 days. In its AFS, T treats the discount voucher as a separate performance obligation and allocates $30 of the $500 sales price to the discount voucher. T takes into account $12 of the amount allocated to the discount voucher as AFS revenue for 2021 and includes $18 of the discount voucher as AFS revenue for 2022.

(B) ***Analysis.*** For Federal income tax purposes, the $30 payment allocated to the discount voucher is an advance payment. Using the deferral method, T must include the $12 allocable to the discount voucher in gross income in 2021 and the remaining $18 allocated to the discount voucher in gross income in 2022.

(xviii) ***Example 18: Rewards*** —

(A) ***Facts.*** On December 31, 2021, U, in the business of selling consumer electronics, sells a new TV for $1,000 and gives the customer 50 reward points. Each reward point is redeemable for a $1 discount on any future purchase of U's products. The reward points are not redeemable for cash and have a 2-year expiration date. U tracks the issue date, redemption date, and expiration date of each customer's reward points. Under the terms of U's reward program, when the customer redeems reward points they are deemed to use the earliest issued points first. In its AFS, U treats the rewards points as a separate performance obligation and allocates $50 of the $1,000 sales price to the rewards points. U is able to determine the extent to which a payment that is allocated to a reward point is taken into account in AFS revenue in the year of receipt. U does not take any of the amount allocated to the reward points into account as AFS revenue for 2021. U takes into account $25 of the reward points as AFS revenue for 2022 and $25 of the reward points as AFS revenue for 2023.

(B) ***Analysis.*** For Federal income tax purposes, U's treatment of the reward points as a separate performance obligation for AFS purposes yields an item of gross income that must be accounted for separately. The $50 payment allocated to the reward points item is an advance payment as the full inclusion of the payment in gross income in the year of receipt is a permissible method of accounting without regard to this section, a portion of the payment is taken into account as AFS revenue in a subsequent taxable year, and the reward points are redeemable for an item described in paragraph (a)(1)(i)(C) of this section (goods). Because the entire amount of the $50 advance payment is taken into account as AFS revenue in tax years following the year of receipt, U defers the payment and includes the $50 payment in gross income in 2022.

(xix) ***Example 19: Credit card rewards*** —

(A) ***Facts.*** V issues credit cards and has a loyalty program under which cardholders earn reward points when they use V's credit card to make purchases. Each reward point is redeemable for $1 on any future purchases.

(B) ***Analysis.*** Payments under credit card agreements, including rewards for credit card purchases, are excluded from the definition of an advance payment under paragraph (a)(1)(ii)(C) of this section. Accordingly, V cannot use the deferral method for these amounts.

(xx) ***Example 20: Airline reward miles*** —

(A) ***Facts.*** On January 1, 2021, W, a passenger airline company, sells a customer a $700 airline ticket to fly roundtrip in 2021. As part of the purchase, the customer receives 7,000 reward points (air miles) from W to be used for future air travel. The reward points are not redeemable for cash and have a 2-year expiration date. W tracks the issue date, redemption date, and expiration date of each customer's reward points. Under the terms of U's reward program, when the customer redeems reward points they are deemed to use the earliest issued points first. In its AFS, W treats the rewards points as a separate performance obligation and allocates $35 of the $700 ticket price to the reward points. W is able to determine the extent to which a payment that is allocated to a reward point is taken into account in AFS revenue in the year of receipt. W takes into account all $35 as AFS revenue in 2023 when the customer redeems the air miles.

(B) ***Analysis.*** For Federal income tax purposes, W's treatment of the reward points as a separate performance obligation for AFS purposes yields an item of gross income that must be accounted for separately. The $35 allocated to the reward points item is an advance payment as the full inclusion of the payment in gross income in the taxable year of receipt is a permissible method of accounting without regard to this section, a portion of the payment is taken into account as AFS revenue in a subsequent taxable year, and the reward points are redeemable for an item described in paragraph (a)(1)(i)(C) of this section (services). Because the entire amount of the $35 advance payment is taken into account as AFS revenue in a tax year following the year of receipt, W defers the payment and includes the $35 payment in gross income in 2022.

(xxi) ***Example 21: Chargebacks*** —

(A) ***Facts.*** In 2021, X, a manufacturer of pharmaceuticals, enters into a contract to sell 1,000 units to W, a wholesaler, for $10 per unit, totaling $10,000 (1,000 × $10 = $10,000). The contract also provides that X will credit W $4 per unit (chargeback) for sales W makes to qualifying customers. X delivers 600 units to W on December 31, 2021, and bills W $6,000 under the contract. X anticipates that all of W's sales will be to qualifying customers and subject to chargeback. For AFS purposes, X adjusts its 2021 AFS revenue of $6,000 by $2,400, the anticipated chargebacks, and reports $3,600 of AFS revenue.

(B) ***Analysis.*** For Federal income tax purposes, under paragraph (a)(1)(i)(B) of this section, for a payment to qualify as an advance payment, a portion of the payment must be taken into account as AFS revenue for a subsequent taxable year. Under paragraph (a)(1)(i)(B) of this section, the amount of the payment included in AFS revenue for a subsequent taxable year is $0, calculated as the $6,000 payment reduced by $6,000 that is treated as taken into account as AFS revenue for 2021 ($3,600 of AFS revenue for 2021 + $2,400 of anticipated chargebacks (section 461 liabilities) which had reduced AFS revenue for 2021). Because no portion of the $6,000 is taken into account as AFS revenue in a subsequent taxable year (that is, on an AFS after 2021), the $6,000 payment received in 2021 is not an advance payment under paragraph (a)(1)(i) of this section.

(d) ***Deferral method for taxpayers without an AFS (non-AFS deferral method)*** —

(1) ***In general.*** Only a taxpayer described in paragraph (d)(2) of this section may elect to use the non-AFS deferral method of accounting described in paragraph (d)(4) of this section.

(2) ***Taxpayers eligible to use the non-AFS deferral method.*** A taxpayer is eligible to use the non-AFS deferral method if the taxpayer does not have an applicable financial statement and can determine the extent to which advance payments are earned in the taxable year of receipt and, if applicable, a short taxable year described in paragraph (d)(6) of this section. The determination whether the advance payment is earned in the taxable year of receipt, or a short taxable year described in paragraph (d)(6) of this section, if applicable, is determined on an item by item basis.

(3) ***Deferral of advance payments based on when payment is earned*** —

(i) ***In general.*** Except as otherwise provided in this section, a taxpayer that uses the non-AFS deferral method of accounting includes the advance payment in gross income for the taxable year of receipt to the extent that it is earned in that taxable year and includes the remaining portion of the advance payment in gross income in the next succeeding taxable year.

(ii) ***When payment is earned.*** Under the non-AFS deferral method, a payment is earned when the all events test described in § 1.451-1(a) is met, without regard to when the amount is received, as defined under paragraph (a)(14) of this section, by the taxpayer. If a taxpayer is unable to determine the extent to which a payment is earned in the taxable year of receipt, or a short taxable year described in paragraph (d)(6) of this section, if applicable, the taxpayer may calculate the amount:

(A) On a statistical basis if adequate data are available to the taxpayer;

(B) On a straight-line basis over the term of the agreement if the taxpayer receives the advance payment under a fixed term agreement and if it is reasonable to anticipate at the end of the taxable year of receipt that the advance payment will be earned ratably over the term of the agreement; or

(C) Using any other method that may be provided in guidance published in the Internal Revenue Bulletin (see § 601.601(d) of this chapter).

(4) ***Contracts with multiple items of gross income*** —

(i) ***In general.*** If a taxpayer receives a payment that is attributable to one or more items described in paragraph (a)(1)(i)(C) of this section, the taxpayer must determine the portion of the payment that is allocable to such item(s) by using an allocation method that is based on objective criteria.

(ii) ***Objective criteria.*** A taxpayer's allocation method for a payment described in paragraph (d)(4)(i) of this section is deemed to be based on objective criteria if the allocation method is based on payments the taxpayer receives for an item or items it regularly sells or provides separately or any method that may be provided in guidance published in the Internal Revenue Bulletin (see § 601.601(d) of this chapter).

(5) ***Acceleration of advance payments.*** The acceleration rules in paragraph (c)(4) of this section also apply to a taxpayer that uses the non-AFS deferral method under paragraph (d) of this section.

(6) ***Short taxable year rule.*** If the taxpayer's next succeeding taxable year is a short taxable year, other than a taxable year in which the taxpayer dies or ceases to exist in a transaction other than a transaction to which section 381(a) applies, and the short taxable year consists of 92 days or less, a taxpayer using the non-AFS deferral method must include the portion of the advance payment not included in the taxable year of receipt in gross income for the short taxable year to the extent earned

in such taxable year. Any amount of the advance payment not included in gross income in the taxable year of receipt, or the short taxable year, must be included in gross income for the taxable year immediately following the short taxable year.

(7) ***Eligible gift card sale.*** For paragraphs (a)(1)(i)(B) and (d)(3) of this section, if an eligible gift card is redeemable by an entity described in paragraph (a)(10)(ii) of this section, including an entity whose financial results are not included in the taxpayer's financial statement, a payment will be treated as earned by the taxpayer to the extent the gift card is redeemed by such entity during the taxable year.

(8) ***Examples.*** The following examples illustrate the rules of paragraph (d) of this section. In the examples in this paragraph (d)(8), the taxpayer is a calendar year taxpayer that uses the non-AFS deferral method described in paragraph (d) of this section. None of the taxable years are short taxable years.

(i) ***Example 1*** —

(A) ***Facts.*** A, a video arcade operator, receives payments in 2021 for tokens that customers use to play A's arcade games. The tokens cannot be redeemed for cash, are imprinted with the name of the arcade, but are not individually marked for identification. A completed a study on a statistical basis, based on adequate data available to A, and concluded that for payments received in 2021, 70% of tokens are expected to be used in 2021, 20% of tokens are expected to be used in 2022, and 10% of tokens are expected to never be used. Based on the study, under paragraph (d)(3)(ii)(A) of this section, A determines that 80% of the advance payments are earned for 2021 (70% for tokens expected to be used in 2021 plus 10% for tokens that are expected to never be used).

(B) ***Analysis.*** For Federal income tax purposes, A must include 80% of the advance payments in gross income for 2021 and 20% of the advance payments in gross income for 2022.

(ii) ***Example 2*** —

(A) ***Facts.*** B is in the business of providing internet services. On September 1, 2021, B receives an advance payment from a customer for a 2-year term for access to its internet services, beginning on that date. B does not have an AFS. B is unable to determine the extent to which the payment is earned in the taxable year of receipt. However, at the close of the 2021 taxable year, it is reasonable for B to anticipate that the advance payment will be earned ratably over the term of the agreement.

(B) ***Analysis.*** For Federal income tax purposes, pursuant to paragraph (d)(3)(ii)(B) of this section, B determines the extent to which the payment is earned in tax year 2021 on a straight-line basis over the term of the agreement and takes that amount into income in 2021. The remaining amount of the advance payment is taken into gross income in the 2022 taxable year.

(e) ***Advance payment cost offset method*** —

(1) ***In general.*** This paragraph (e) provides an optional method of accounting for advance payments from the sale of inventory (advance payment cost offset method). A taxpayer that chooses to use the advance payment cost offset method for a trade or business must use the method of accounting for all advance payments received by that trade or business that meet the criteria in this paragraph (e). Additionally, a taxpayer that chooses to use this method for a trade or business and that has an AFS must also use the AFS cost offset method described in § 1.451-3(c). A taxpayer that uses the

AFS cost offset method and the advance payment cost offset method to account for gross income, including advance payments, from the sale of an item of inventory, determines the corresponding AFS income inclusion amount, as defined in § 1.451-3(a)(1), and the advance payment income inclusion amount for a taxable year by following the rules in § 1.451-3(c)(2) rather than the rules under this paragraph (e). However, if all payments received for the sale of item of inventory meet the definition of an advance payment under paragraph (a)(1) of this section, a taxpayer that uses the advance payment cost offset method determines the corresponding advance payment income inclusion amount for a taxable year by:

(i) Following the rules in paragraph (e)(2) of this section, subject to the additional rules and limitations in paragraphs (e)(5) through (8) of this section, if the taxable year is a taxable year prior to the taxable year in which ownership of the item of inventory is transferred to the customer; and

(ii) Following the rules in paragraph (e)(3) of this section, subject to the additional rules and limitations in paragraphs (e)(5) through (8) of this section, if the taxable year is the taxable year in which ownership of the item of inventory is transferred to the customer.

(2) ***Determining the advance payment income inclusion amount in a year prior to the year of sale.*** To determine the advance payment income inclusion amount for a taxable year prior to the year in which ownership of the item of inventory is transferred to the customer, the taxpayer must first determine the advance payment inventory inclusion amount for such item for such year. This advance payment inventory inclusion amount is then reduced by the cost of goods in progress offset for the taxable year, as determined under paragraphs (e)(4), (5), and (8) of this section. This net amount is the advance payment income inclusion amount for the taxable year.

(3) ***Determining the advance payment income inclusion amount in the year of sale.*** The advance payment income inclusion amount for the taxable year in which ownership of the item of inventory is transferred to the customer is equal to the portion of any advance payment for such item that was not required to be included in gross income in a prior taxable year. This amount is not reduced by a cost of goods in progress offset under paragraph (e)(4) of this section. However, the taxpayer is entitled to recover the costs capitalized to the item of inventory as cost of goods sold in accordance with sections 471 and 263A or any other applicable provision of the Internal Revenue Code. See § 1.61-3.

(4) ***Cost of goods in progress offset.*** The cost of goods in progress offset for the taxable year is calculated as:

(i) The cost of goods allocable to the item of inventory through the last day of the taxable year; reduced by

(ii) The cumulative cost of goods in progress offset attributable to the item of inventory, if any.

(5) ***Limitations to the cost of goods in progress offset.*** The cost of goods in progress offset is determined separately for each item of inventory. The cost of goods in progress offset attributable to one item of inventory cannot reduce the advance payment inventory inclusion amount attributable to a different item of inventory. Further, the cost of goods in progress offset cannot reduce the advance payment inventory inclusion amount for the taxable year below zero.

(6) ***Exception for gift cards.*** The cost of goods in progress offset in this paragraph (e) does not apply to eligible gift card sales or payments received for customer reward points.

(7) ***Acceleration of advance payments.*** The acceleration rules in paragraph (c)(4) of this section also apply to a taxpayer that uses the advance payment cost offset method under this paragraph (e), regardless of whether the taxpayer uses such method in connection with the full inclusion method under paragraph (b) of this section, or the deferral method under paragraph (c) or (d) of this section. If an advance payment is subject to the acceleration rules, paragraph (e)(2) of this section does not apply to determine the advance payment income inclusion amount for the taxable year described in paragraph (c)(4) of this section. Further, a taxpayer that uses the advance payment cost offset method under this paragraph (e) applies paragraph (c)(4)(i)(B)(*2*)(*ii*) of this section by substituting "same advance payment method as the transferor" for "deferral method."

(8) ***Inventory costs for the advance payment cost offset method*** —

(i) ***Inventory costs not affected by cost of goods in progress offset.*** The cost of goods comprising the cost of goods in progress offset does not reduce the costs that are capitalized to the items of inventory produced or items of inventory acquired for resale by the taxpayer. While the cost of goods in progress offset reduces the amount of the advance payment inventory inclusion amount, the cost of goods in progress offset does not affect how and when costs are capitalized to inventory under sections 471 and 263A or any other applicable provision of the Internal Revenue Code or when those capitalized costs will be recovered.

(ii) ***Consistency between inventory methods and advance payment cost offset method.*** The costs of goods comprising the cost of goods in progress offset must be determined by applying the taxpayer's methods of accounting for inventory for Federal income tax purposes. A taxpayer using the advance payment cost offset method must calculate its cost of goods in progress offset by reference to all costs that the taxpayer has permissibly capitalized and allocated to items of inventory under its methods of accounting for inventory for Federal income tax purposes, but including no more costs than what the taxpayer has permissibly capitalized and allocated to items of inventory.

(iii) ***Allocation of "additional section 263A costs" for taxpayers using simplified methods.*** If a taxpayer uses the simplified production method as defined under § 1.263A-2(b), the modified simplified production method as defined under § 1.263A-2(c), or the simplified resale method as defined under § 1.263A-3(d) to determine the amount of its "additional section 263A costs," as defined under § 1.263A-1(d)(3), to be included in ending inventory, then solely for computing the cost of goods in progress offset, the taxpayer must determine the portion of additional section 263A costs allocable to an item of inventory by multiplying its total additional section 263A costs accounted for under the simplified method for all items of inventory subject to the simplified method by the following ratio:

$$\frac{\text{Section 471 costs allocable to the specific item of inventory}}{\text{Total section 471 costs for all items of inventory subject to the simplified method}}$$

(9) ***Additional procedural guidance.*** The IRS may publish procedural guidance in the Internal Revenue Bulletin (see § 601.601(d) of this chapter) that provides alternative procedures for complying with the rules under this paragraph (e), including alternative methods of accounting for cost offsets.

(10) *Examples.* The following examples illustrate the rules of paragraph (e) of this section. In each of the following examples, the taxpayer is a C corporation, has an AFS, uses an accrual method of accounting for Federal income tax purposes, and uses a calendar year for Federal income tax purposes and AFS purposes. In addition, in each example, the taxpayer uses the deferral method and the advance payment cost offset method under paragraph (e) of this section. Lastly, the taxpayer does not produce unique items, as described in § 1.460-2(a)(1) and (b), or any item that normally requires more than 12 calendar months to complete, as determined under § 1.460-2(a)(2) and (c). Any production period that exceeds 12 calendar months is due to unforeseen production delays.

(i) *Example 1* —

(A) *Facts.* In December 2021, A enters into a contract with Customer to manufacture and deliver a good in 2024, with a total contract price of $100x. The costs to produce the good are required to be capitalized under sections 471 and 263A as the good is inventory in the hands of A. On the same day, A receives a payment of $40x from the customer. For its AFS, A reports all of the revenue from the sale of the good as AFS revenue in the year of delivery, which is also the year in which ownership of the good transfers from A to Customer. As of December 31, 2021, A has not incurred any cost to manufacture the good. The payment of $40x does not satisfy the specified good exception in paragraph (a)(1)(ii)(H) of this section, and thus qualifies as an advance payment. During 2022, A does not receive any additional payments on the contract and incurs $10x of costs to manufacture the good. A properly capitalizes and allocates such costs to the manufactured good under sections 471 and 263A.

(B) *Analysis.* Because no portion of the $40x advance payment is taken into account as AFS revenue as of the end of 2021, A is not required to include any portion of the advance payment in gross income for 2021. For 2022, A's advance payment inventory inclusion amount is $40x, which is the amount of the advance payment that, but for the cost of goods in progress offset, would be includable in gross income in 2022 under the deferral method. Pursuant to paragraph (e)(2) of this section, A reduces such amount by the $10x cost of goods in progress offset, determined as the costs of goods through the end of 2022 ($0 costs incurred in 2021 plus 10x of costs incurred in 2022 = $10x). A is required to include this net amount of $30x in gross income in 2022. The remaining portion of the payment ($10x) is deferred and included in gross income in 2024, the taxable year in which ownership of the good is transferred to Customer.

(ii) *Example 2* —

(A) *Facts.* The same facts as in paragraph (e)(10)(i) of this section (*Example 1*) apply. In addition, in 2023, A incurs costs of $20x to manufacture the good but does not receive any additional payments from Customer.

(B) *Analysis.* A includes $0 in gross income in 2023. A's cost of goods in progress offset for 2023 is $20x under paragraph (e)(4) of this section ($30x costs of goods through the last day of 2023 ($10x for 2022 plus $20x for 2023 = $30x) less $10x cumulative cost of goods in progress offset amounts taken in prior taxable years). However, because A's advance payment inventory inclusion amount for 2023 is $0, which is the amount of the advance payment that, but for the cost of goods in progress offset, would be includable in gross income in 2023 under the deferral method, paragraph (e)(5) of this section limits the cost offset to $0.

(iii) *Example 3* —

(A) ***Facts.*** The same facts as in paragraph (e)(10)(i) of this section (*Example 1*) apply, except that in taxable year 2022, A incurs additional costs of $25x to manufacture the good, resulting in total costs of $35x to manufacture the good in taxable year 2022.

(B) ***Analysis.*** For 2022, A's advance payment inventory inclusion amount is $40x, which is the amount of the advance payment that, but for the cost of goods in progress offset, would be includable in gross income in 2022 under the deferral method. Pursuant to paragraph (e)(2) of this section A reduces such amount by the $35x cost of goods in progress offset, determined as the costs of goods through the end of 2022 ($0 costs incurred in 2021 plus $35x costs incurred in 2022 = $35x). A is required to include this net amount of $5x in gross income in 2022. The remaining portion of the payment ($35x) is deferred and included in gross income in 2024, the taxable year in which ownership of the good is transferred to the customer.

(iv) *Example 4* —

(A) ***Facts.*** The same facts as in paragraph (e)(10)(iii) of this section (*Example 3*) apply, except that for tax year 2023, A receives an additional advance payment of $60x, and does not incur any costs to manufacture the good in 2023. In 2024, A incurs the remaining $10x to manufacture the good, and delivers the good to Customer.

(B) ***Analysis for 2023.*** Because no portion of the $60x advance payment is taken into account as AFS revenue as of the end of 2023, A is not required to include any portion of the $60x advance payment in gross income for 2023.

(C) ***Analysis for 2024.*** In 2024, the ownership of the good is transferred to Customer. Accordingly, pursuant to paragraph (e)(3) of this section, A is required to include $95x, the remaining portion of all advance payments that were not required to be included in gross income in a prior taxable year ($100x of total advance payments received less $5x that was required to be included in gross income in 2022). Although A does not reduce such amount by a cost offset, it reduces gross income in 2024 by recovering the $45x of costs capitalized to inventory as cost of goods sold ($35x costs incurred in 2022 plus $10x costs incurred in 2024) in accordance with sections 471 and 263A. Accordingly, A's gross income for 2024 is $50x.

(f) ***Method treating payments qualifying for the specified goods exception as advance payments*** —

(1) ***In general.*** A taxpayer may choose to use the *specified good section 451(c) method* to treat all payments that qualify for the specified goods exception in paragraph (a)(1)(ii)(H) of this section as advance payments that are eligible to be accounted for under this section. Under the specified good section 451(c) method, an advance payment is a payment received by the taxpayer in a taxable year earlier than the taxable year immediately preceding the taxable year of the contractual delivery date for a specified good. A taxpayer that chooses to use the specified good section 451(c) method for a trade or business must apply this method of accounting for all advance payments that meet the criteria described in paragraph (a)(1)(ii)(H) of this section.

(2) ***Example: Method for the specified goods exception to not apply.*** On May 1, 2021, A, a corporation that files its Federal income tax return on the calendar year basis, receives a prepayment for $100x, for a contract to manufacture and deliver a good in September of 2023. All of the revenue from the sale of the good is recognized in A's AFS in the year of delivery. During 2021, A does not have on hand, or

available to it in such year through its normal source of supply, goods of a substantially similar kind and in a sufficient quantity to satisfy the contract to transfer the good to the customer. The payment of $100x satisfies the specified good exception. A uses the method under paragraph (f) of this section to treat all payments that otherwise satisfy the specified good exception as advance payments under this section. For Federal income tax purposes, A must treat the payment of $100x as an advance payment and account for such payment under the full inclusion method in paragraph (b) of this section, or the deferral method in paragraph (c) of this section, as applicable. Additionally, the taxpayer may choose to apply the advance payment cost offset method in paragraph (e) of this section.

(g) *Election and methods of accounting* —

(1) ***Procedures for making election under section 451(c)(1)(B).*** An election to apply the deferral method under section 451(c)(1)(B) is made by the taxpayer filing a Federal income tax return reflecting the deferral method in computing its taxable income. If the application of the deferral method under section 451(c)(1)(B) results in the taxpayer changing its method of accounting, the election may only be made by the taxpayer complying with the method change procedures under this paragraph (g).

(2) ***Methods of accounting.*** A change to comply with this section is a change in method of accounting to which the provisions of sections 446 and 481 and the regulations in this part under sections 446 and 481 of the Code apply. A taxpayer seeking to change to a method of accounting permitted in this section must secure the consent of the Commissioner in accordance with § 1.446-1(e) and follow the administrative procedures issued under § 1.446-1(e)(3)(ii) for obtaining the Commissioner's consent to change its accounting method. For example, use of the full inclusion method under paragraph (b) of this section, the AFS deferral method under paragraph (c) of this section, the non-AFS deferral method under paragraph (d) of this section, the advance payment cost offset method under paragraph (e) of this section, and the specified good section 451(c) method under paragraph (f) of this section are adoptions of, or changes in, a method of accounting under section 446 of the Internal Revenue Code or the regulations in this part under section 446 of the Code. In addition, a change in the manner of recognizing advance payments in revenue in an AFS that changes or could change the timing of the inclusion of income for Federal income tax purposes is a change in method of accounting under section 446 and the regulations in this part under section 446 of the Code.

(h) *Applicability date* —

(1) ***In general.*** The rules of this section apply to taxable years beginning on or after January 1, 2021.

(2) ***Early application.*** Taxpayers and their related parties, within the meaning of sections 267(b) and 707(b), may apply both the rules in this section and, to the extent relevant, the rules in § 1.451-3, in their entirety and in a consistent manner, to a taxable year beginning after December 31, 2017, and before January 1, 2021, provided that, once applied to a taxable year, the rules in this section and, to the extent relevant, the rules in § 1.451-3, are applied in their entirety and in a consistent manner to all subsequent taxable years. See section 7805(b)(7) and § 1.451-3(m).

[T.D. 9941, Jan. 6, 2021, as amended by 86 FR 1256, Jan. 8, 2021]

§§ 1.453-1-1.453-2 [Reserved]

§ 1.453-3 Purchaser evidences of indebtedness payable on demand or readily tradable.

(a) ***In general.*** A bond or other evidence of indebtedness (hereinafter in this section referred to as an obligation) issued by any person and payable on demand shall not be treated as an evidence of indebtedness of the purchaser in applying section 453(b) to a sale or other disposition of real property or to a casual sale or other casual disposition of personal property. In addition, an obligation issued by a corporation or a government or political subdivision thereof—

(1) With interest coupons attached (whether or not the obligation is readily tradable in an established securities market),

(2) In registered form (other than an obligation issued in registered form which the taxpayer establishes will not be readily tradable in an established securities market), or

(3) In any other form designed to render such obligation readily tradable in an established securities market shall not be treated as an evidence of indebtedness of the purchaser in applying section 453(b) to a sale or other disposition of real property or to a casual sale or other casual disposition of personal property. For purposes of this section, an obligation is to be considered in registered form if it is registered as to principal, interest, or both and if its transfer must be effected by the surrender of the old instrument and either the reissuance by the corporation of the old instrument to the new holder or the issuance by the corporation of a new instrument to the new holder.

(b) ***Treatment as payment.*** If under section 453(b)(3) an obligation is not treated as an evidence of indebtedness of the purchaser, then—

(1) For purposes of determining whether the payments received in the taxable year of the sale or disposition exceed 30 percent of the selling price, and

(2) For purposes of returning income on the installment method during the taxable year of the sale or disposition or in a subsequent taxable year, the receipt by the seller of such obligation shall be treated as a payment. The rules stated in this paragraph may be illustrated by the following examples:

$$\frac{\text{\$250,000 payment (i.e., 250 of corporation Y's registered bonds each with a principal amount and fair market value of \$1,000)}}{\text{\$1 million selling price (i.e., \$250,000 of corporation Y's registered bonds plus promissory note of \$750,000)}} = 25 \text{ percent}$$

Example 1. On July 1, 1970, A, an individual on the cash method of accounting reporting on a calendar year basis, transferred all of his stock in corporation X (traded on an established securities market and having a fair market value of $1 million) to corporation Y in exchange for 250 of corporation Y's registered bonds (which are traded in an over-the-counter bond market) each with a principal amount and fair market value of $1,000 (with interest payable at the rate of 8 percent per year), and Y's unsecured promissory note, with a principal amount of $750,000. At the time of such exchange A's basis in the corporation X stock is $900,000. The promissory note is payable at the rate of $75,000 annually, due on July 1, of each year following 1970, until the principal balance is paid. The

note provides for the payment of interest at the rate of 10 percent per year also payable on July 1 of each year. Under the rule stated in subparagraph (1) of this paragraph, the 250 registered bonds of corporation Y are treated as a payment for purposes of the 30 percent test described in section 453(b)(2)(A)(ii). The payment on account of the bonds equals 25 percent of the selling price determined as follows: Since the payments received in the taxable year of the sale do not exceed 30 percent of the selling price and the sales price exceeds $1,000, A may report the income received on the sale of his corporation X stock on the installment method. A elects to report the income on the installment method. The gross profit to be realized when the corporation X stock is fully paid for is 10 percent of the total contract price, computed as follows: $100,000 gross profit (i.e., $1 million contract price less $900,000 basis in corporation X stock) over $1 million contract price. However, since subparagraph (2) of this paragraph also treats the 250 corporation Y registered bonds as a payment for purposes of reporting income, A must include $25,000 (i.e., 10 percent times $250,000) in his gross income for calendar year 1970, the taxable year of sale.

Example 2. Assume the same facts as in Example 1. Assume further that on July 1, 1971, corporation Y makes its first installment payment to A under the terms of the unsecured promissory note with 75 more of its $1,000 registered bonds. A must include $7,500 (i.e., 10 percent gross profit percentage times $75,000) in his gross income for calendar year 1971. In addition, A includes the interest payment made by corporation Y on July 1, in his gross income for 1971.

(c) ***Payable on demand.*** Under section 453(b)(3), an obligation shall be treated as payable on demand only if the obligation is treated as payable on demand under applicable state or local law.

(d) ***Designed to be readily tradable in an established securities market*** —

(1) ***In general.*** Obligations issued by a corporation or government or political subdivision thereof will be deemed to be in a form designed to render such obligations readily tradable in an established securities market if—

(i) Steps necessary to create a market for them are taken at the time of issuance (or later, if taken pursuant to an expressed or implied agreement or understanding which existed at the time of issuance),

(ii) If they are treated as readily tradable in an established securities market under subparagraph (2) of this paragraph, or

(iii) If they are convertible obligations to which paragraph (e) of this section applies.

(2) ***Readily tradable in an established securities market.*** An obligation will be treated as readily tradable in an established securities market if—

(i) The obligation is part of an issue or series of issues which are readily tradable in an established securities market, or

(ii) The corporation issuing the obligation has other obligations of a comparable character which are described in subdivision (i) of this subparagraph.

For purposes of subdivision (ii) of this subparagraph, the determination as to whether there exist obligations of a comparable character depends upon the particular facts and circumstances. Factors to be considered in making such determination include, but are not limited to, substantial similarity with respect to the presence and nature of security for the obligation, the number of obligations issued (or to be issued), the number of holders of such obligation, the principal amount of the obligation, and other relevant factors.

(3) ***Readily tradable.*** For purposes of subparagraph (2)(i) of this paragraph, an obligation shall be treated as readily tradable if it is regularly quoted by brokers or dealers making a market in such obligation or is part of an issue a portion of which is in fact traded in an established securities market.

(4) ***Established securities market.*** For purposes of this paragraph, the term established securities market includes

(i) a national securities exchange which is registered under section 6 of the Securities and Exchange Act of 1934 (15 U.S.C. 78f),

(ii) an exchange which is exempted from registration under section 5 of the Securities Exchange Act of 1935 (15 U.S.C. 78e) because of its limited volume of transactions, and

(iii) any over-the-counter market. For purposes of this subparagraph, an over-the-counter market is reflected by the existence of an interdealer quotation system. An interdealer quotation system is any system of general circulation to brokers and dealers which regularly disseminates quotations of obligations by identified brokers or dealers, other than a quotation sheet prepared and distributed by a broker or dealer in the regular course of his business and containing only quotations of such broker or dealer.

(5) ***Examples.*** The rules stated in this paragraph may be illustrated by the following examples:

Example 1. On June 1, 1971, 25 individuals owning equal interests in a tract of land with a fair market value of $1 million sell the land to corporation Y. The $1 million sales price is represented by 25 bonds issued by corporation Y each having a face value of $40,000. The bonds are not in registered form and do not have interest coupons attached, and, in addition, are payable in 120 equal installments each due on the first business day of each month. In addition, the bonds are negotiable and may be assigned by the holder to any other person. However, the bonds are not quoted by any brokers or dealers who deal in corporate bonds, and, furthermore, there are no comparable obligations of corporation Y (determined with reference to the characteristics set forth in subparagraph (2) of this paragraph) which are so quoted. Therefore, the bonds are not treated as readily tradable in an established securities market. In addition, under the particular facts and circumstances stated, the bonds will not be considered to be in a form designed to render them readily tradeable in an established securities market. Since the bonds are not in registered form, do not have coupons attached, are not in a form designed to render them readily tradable in an established securities market, the receipt of such bonds by the holder is not treated as a payment for purposes of section 453(b), notwithstanding that they are freely assignable.

Example 2. On April 1, 1972, corporation M purchases in a casual sale of personal property a fleet of trucks from corporation N in exchange for corporation M's negotiable notes, not in registered form and without coupons attached. The corporation M notes are comparable to earlier notes issued by corporation M, which notes are quoted in the Eastern Bond section of the National daily quotation sheet, which is an interdealer quotation system. Both issues of notes are unsecured, held by more than 100 holders, have a maturity date of more than 5 years, and were issued for a comparable principal amount. On the basis of these similar characteristics it appears that the latest notes will also be readily tradable. Since an interdealer system reflects an over-the-counter market, the earlier notes are treated as readily tradable in an established securities market. Since the later notes are obligations comparable to the earlier ones, which

are treated as readily tradable in an established securities market, the later notes are also treated as readily tradable in an established securities market (whether or not such notes are actually traded).

(e) *Special rule for convertible securities* —

(1) *General rule.* For purposes of paragraph (d)(1) of this section, if an obligation contains a right whereby the holder of such obligation may convert it directly or indirectly into another obligation which would be treated as a payment under paragraph (b) of this section or may convert it directly or indirectly into stock which would be treated as readily tradable or designed to be readily tradable in an established securities market under paragraph (d) of this section, the convertible obligation shall be considered to be in a form designed to render such obligation readily tradable in an established securities market unless such obligation is convertible only at a substantial discount. In determining whether the stock or obligation, into which an obligation is convertible, is readily tradable or designed to be readily tradable in an established securities market, the rules stated in paragraph (d) of this section shall apply, and for purposes of such paragraph (d) if such obligation is convertible into stock then the term "stock" shall be substituted for the term "obligation" wherever it appears in such paragraph (d).

(2) *Substantial discount rule.* Whether an obligation is convertible at a substantial discount depends upon the particular facts and circumstances. A substantial discount shall be considered to exist if at the time the convertible obligation is issued, the fair market value of the stock or obligation into which the obligation is convertible is less than 80 percent of the fair market value of the obligation (determined by taking into account all relevant factors, including proper discount to reflect the fact that the convertible obligation is not readily tradable in an established securities market and any additional consideration required to be paid by the taxpayer). Also, if a privilege to convert an obligation into stock or an obligation which is readily tradable in an established securities market may not be exercised within a period of 1 year from the date the obligation is issued, a substantial discount shall be considered to exist.

(f) *Effective date.* The provisions of this section shall apply to sales or other dispositions occurring after May 27, 1969, which are not made pursuant to a binding written contract entered into on or before such date. No inference shall be drawn from this section as to any question of law concerning the application of section 453 to sales or other dispositions occurring on or before May 27, 1969.

[T.D. 7197, 37 FR 13532, July 11, 1972]

§§ 1.453-4-1.453-8 [Reserved]

§ 1.453-9 Gain or loss on disposition of installment obligations.

(a) *In general.* Subject to the exceptions contained in section 453(d)(4) and paragraph (c) of this section, the entire amount of gain or loss resulting from any disposition or satisfaction of installment obligations, computed in accordance with section 453(d), is recognized in the taxable year of such disposition or satisfaction and shall be considered as resulting from the sale or exchange of the property in respect of which the installment obligation was received by the taxpayer.

(b) *Computation of gain or loss.*

(1) The amount of gain or loss resulting under paragraph (a) of this section is the difference between the basis of the obligation and

(i) the amount realized, in the case of satisfaction at other than face value or in the case of a sale or exchange, or

(ii) the fair market value of the obligation at the time of disposition, if such disposition is other than by sale or exchange.

(2) The basis of an installment obligation shall be the excess of the face value of the obligation over an amount equal to the income which would be returnable were the obligation satisfied in full.

(3) The application of subparagraphs (1) and (2) of this paragraph may be illustrated by the following examples:

Example 1. In 1960 the M Corporation sold a piece of unimproved real estate to B for $20,000. The company acquired the property in 1948 at a cost of $10,000. During 1960 the company received $5,000 cash and vendee's notes for the remainder of the selling price, or $15,000, payable in subsequent years. In 1962, before the vendee made any further payments, the company sold the notes for $13,000 in cash. The corporation makes its returns on the calendar year basis. The income to be reported for 1962 is $5,500, computed as follows:

Proceeds of sale of notes		$13,000
Selling price of property	$20,000	
Cost of property	10,000	
Total profit	10,000	
Total contract price	20,000	
Percent of profit, or proportion of each payment returnable as income, $10,000 divided by $20,000, 50 percent.		
Face value of notes	15,000	
Amount of income returnable were the notes satisfied in full, 50 percent of $15,000	7,500	
Basis of obligation—excess of face value of notes over amount of income returnable were the notes satisfied in full	7,500	
Taxable income to be reported for 1962		5,500

Example 2. Suppose in Example 1 the M Corporation, instead of selling the notes, distributed them in 1962 to its shareholders as a dividend, and at the time of such distribution, the fair market value of the notes was $14,000. The income to be reported for

1962 is $6,500, computed as follows:

Fair market value of notes	$14,000
Basis of obligation—excess of face value of notes over amount of income returnable were the notes satisfied in full (computed as in Example 1)	7,500
Taxable income to be reported for 1962	6,500

(c) ***Disposition from which no gain or loss is recognized.***

(1)

(i) Under section 453(d)(4)(A), no gain or loss shall be recognized to a distributing corporation with respect to the distribution made after November 13, 1966, of installment obligations if (*a*) the distribution is made pursuant to a plan for the complete liquidation of a subsidiary under section 332, and (*b*) the basis of the such obligations in the hands of the distributee is determined under section 334(b)(1).

(ii) Under section 453(d)(4)(B), no gain or loss shall be recognized to a distributing corporation with respect to the distribution of installment obligations if the distribution is made, pursuant to a plan for the complete liquidation of a corporation which meets the requirements of section 337, under conditions whereby no gain or loss would have been recognized to the corporation had such installment obligations been sold or exchanged on the day of the distribution. The preceding sentence shall not apply to the extent that under section 453(d)(1) gain to the distributing corporation would be considered as gain to which section 341(f)(2), 617(d)(1), 1245(a)(1), 1250(a)(1), 1251(c)(1), 1252(a)(1), or 1254(a)(1) applies, computed under the principles of the regulations under such provisions. See paragraph (d) of § 1.1245-6, paragraph (c)(6) of § 1.1250-1, paragraph (e)(6) of § 1.1251-1, paragraph (d)(3) of § 1.1252-1, and paragraph (d) of § 1.1254-1.

(2) Where the Code provides for exceptions to the recognition of gain or loss in the case of certain dispositions, no gain or loss shall result under section 453(d) in the case of a disposition of an installment obligation. Such exceptions include: Certain transfers to corporations under sections 351 and 361; contributions of property to a partnership by a partner under section 721; and distributions by a partnership to a partner under section 731 (except as provided by section 736 and section 751).

(3) Any amount received by a person in payment or settlement of an installment obligation acquired in a transaction described in subparagraphs (1) or (2) of this paragraph (other than an amount received by a stockholder with respect to an installment obligation distributed to him pursuant to section 337) shall be considered to have the character it would have had in the hands of the person from whom such installment obligation was acquired.

(d) ***Carryover of installment method.*** For the treatment of income derived from installment obligations received in transactions to which section 381 (a) is applicable, see section 381(c)(8) and the regulations thereunder.

(e) ***Installment obligations transmitted at death.*** Where installment obligations are transmitted at death, see section 691(a)(4) and the regulations thereunder for the treatment of amounts considered income in respect of a decedent.

(f) ***Losses.*** See subchapter P (section 1201 and following), chapter 1 of the Code, as to the limitation on capital losses sustained by corporations and the limitation as to both capital gains and capital losses of individuals.

(g) ***Disposition of installment obligations to life insurance companies.***

(1) Notwithstanding the provisions of section 453(d)(4) and paragraph (c) of this section or any provision of subtitle A relating to the nonrecognition of gain, the entire amount of any gain realized on the disposition of an installment obligation by any person, other than a life insurance company (as defined in section 801(a) and paragraph (b) of § 1.801-3), to a life insurance company or to a partnership of which a life insurance company is a partner shall be recognized and treated in accordance with section 453(d)(1) and paragraphs (a) and (b) of this section. If a corporation which is a life insurance company for the taxable year was a corporation which was not a life insurance company for the preceding taxable year, such corporation shall be treated, for purposes of section 453(d)(1) and this paragraph, as having transferred to a life insurance company, on the last day of the preceding taxable year, all installment obligations which it held on such last day. The gain, if any, realized by reason of the installment obligations being so transferred shall be recognized and treated in accordance with section 453(d)(1) and paragraphs (a) and (b) of this section. Similarly, a partnership of which a life insurance company becomes a partner shall be treated, for purposes of section 453(d)(1) and this paragraph, as having transferred to a life insurance company, on the last day of the preceding taxable year of such partnership, all installment obligations which it holds at the time such life insurance company becomes a partner. The gain, if any, realized by reason of the installment obligations being so transferred shall be recognized and treated in accordance with section 453(d)(1) and paragraphs (a) and (b) of this section.

(2) The provisions of section 453(d)(5) and subparagraph (1) of this paragraph shall not apply to losses sustained in connection with the disposition of installment obligations to a life insurance company.

(3) For the effective date of the provisions of section 453(d)(5) and this paragraph, see paragraph (f) of § 1.453-10.

(4) Application of the provisions of this paragraph may be illustrated by the following examples:

Example 1. A, an individual, in a transaction to which section 351 applies, transfers in 1961 certain assets, including installment obligations, to a new corporation, X, which qualifies as a life insurance company (as defined in section 801(a)) for the year 1961. A makes his return on the calendar year basis. Section 453(d)(5) provides that the nonrecognition provisions of section 351 will not apply to the installment obligations transferred by A to X Corporation. Therefore, the entire amount of any gain realized by A on the transfer of the installment obligations shall be recognized in 1961, with the amount of any such gain computed in accordance with the provisions of section 453(d)(1) and paragraph (b) of this section.

Example 2. The M Corporation did not qualify as a life insurance company (as defined in section 801(a)) for the taxable year 1958. On December 31, 1958, it held $60,000 of installment obligations. The M Corporation qualified as a life insurance company for the taxable year 1959. Accordingly, the M Corporation is treated as having transferred to a life insurance company, on December 31, 1958, the $60,000 of installment obligations it held on such date. The gain, if any, realized by M by reason of such installment obligations being so transferred shall be recognized in the taxable year 1958, with the amount of any such gain computed in accordance with the provisions of section 453(d)(1) and paragraph (b) of this section.

Example 3. During its taxable year 1958, none of the partners of the N partnership qualified as a life insurance company (as defined in section 801(a)). The N partnership held $30,000 of installment obligations on December 31, 1958. On July 30, 1959, the O Corporation, a life insurance company (as defined in section 801(a)), became a partner in the partnership. The N partnership held $50,000 of installment obligations on July 30, 1959. Pursuant to section 453(d)(5), the N partnership is treated as having transferred to a life insurance company, on December 31, 1958, the $50,000 of installment obligations it held on July 30, 1959. The gain, if any, realized by the N partnership by reason of such installment obligations being so transferred shall be recognized in the taxable year 1958, with the amount of any such gain computed in accordance with the provisions of section 453(d)(1) and paragraph (b) of this section.

Example 4. In 1960, the P Corporation, in a reorganization qualifying under section 368(a), transferred certain assets (including installment obligations) to the R Corporation, a life insurance company as defined in section 801(a). P realized a loss upon the transfer of the installment obligations, which was not recognized under section 361. Pursuant to subparagraph (2) of paragraph (c) of this section, no loss with respect to the transfer of these obligations will be recognized to P under section 453(d)(1).

[T.D. 6500, 25 FR 11718, Nov. 26, 1960, as amended by T.D. 6590, 27 FR 1319, Feb. 13, 1962; T.D. 7084, 36 FR 267, Jan. 8, 1971; T.D. 7418, 41 FR 18812, May 7, 1976; T.D. 8586, 60 FR 2500, Jan. 10, 1995]

§ 1.453-10 [Reserved]

§ 1.453-11 Installment obligations received from a liquidating corporation.

(a) ***In general*** —

(1) ***Overview.*** Except as provided in section 453(h)(1)(C) (relating to installment sales of depreciable property to certain closely related persons), a qualifying shareholder (as defined in paragraph (b) of this section) who receives a qualifying installment obligation (as defined in paragraph (c) of this section) in a liquidation that satisfies section 453(h)(1)(A) treats the receipt of payments in respect of the obligation, rather than the receipt of the obligation itself, as a receipt of payment for the shareholder's stock. The shareholder reports the payments received on the installment method unless the shareholder elects otherwise in accordance with § 15a.453-1(d) of this chapter.

(2) ***Coordination with other provisions*** —

(i) ***Deemed sale of stock for installment obligation.*** Except as specifically provided in section 453(h)(1)(C), a qualifying shareholder treats a qualifying installment obligation, for all purposes of the Internal Revenue Code, as if the obligation is received by the shareholder from the person issuing the obligation in exchange for the shareholder's stock in the liquidating corporation. For example, if the stock of a corporation that is liquidating is traded on an established securities market, an installment obligation distributed to a shareholder of the corporation in exchange for the shareholder's stock does not qualify for installment reporting pursuant to section 453(k)(2).

(ii) ***Special rules to account for the qualifying installment obligation*** —

(A) ***Issue price.*** A qualifying installment obligation is treated by a qualifying shareholder as newly issued on the date of the distribution. The issue price of the qualifying installment obligation on that date is equal to the sum of the adjusted issue price of the obligation on the date of the distribution (as determined under § 1.1275-1(b)) and the amount of any qualified stated interest (as defined in § 1.1273-1(c)) that has accrued prior to the distribution but that is not payable until after the distribution. For purposes of the

preceding sentence, if the qualifying installment obligation is subject to § 1.446-2 (e.g., a debt instrument that has unstated interest under section 483), the adjusted issue price of the obligation is determined under § 1.446-2(c) and (d).

(B) ***Variable rate debt instrument.*** If the qualifying installment obligation is a variable rate debt instrument (as defined in § 1.1275-5), the shareholder uses the equivalent fixed rate debt instrument (within the meaning of § 1.1275-5(e)(3)(ii)) constructed for the qualifying installment obligation as of the date the obligation was issued to the liquidating corporation to determine the accruals of original issue discount, if any, and interest on the obligation.

(3) ***Liquidating distributions treated as selling price.*** All amounts distributed or treated as distributed to a qualifying shareholder incident to the liquidation, including cash, the issue price of qualifying installment obligations as determined under paragraph (a)(2)(ii)(A) of this section, and the fair market value of other property (including obligations that are not qualifying installment obligations) are considered as having been received by the shareholder as the selling price (as defined in § 15a.453-1(b)(2)(ii) of this chapter) for the shareholder's stock in the liquidating corporation. For the proper method of reporting liquidating distributions received in more than one taxable year of a shareholder, see paragraph (d) of this section. An election not to report on the installment method an installment obligation received in the liquidation applies to all distributions received in the liquidation.

(4) ***Assumption of corporate liability by shareholders.*** For purposes of this section, if in the course of a liquidation a shareholder assumes secured or unsecured liabilities of the liquidating corporation, or receives property from the corporation subject to such liabilities (including any tax liabilities incurred by the corporation on the distribution), the amount of the liabilities is added to the shareholder's basis in the stock of the liquidating corporation. These additions to basis do not affect the shareholder's holding period for the stock. These liabilities do not reduce the amounts received in computing the selling price.

(5) ***Examples.*** The provisions of this paragraph (a) are illustrated by the following examples. Except as otherwise provided, assume in each example that A, an individual who is a calendar-year taxpayer, owns all of the stock of T corporation. A's adjusted tax basis in that stock is $100,000. On February 1, 1998, T, an accrual method taxpayer, adopts a plan of complete liquidation that satisfies section 453(h)(1)(A) and immediately sells all of its assets to unrelated B corporation in a single transaction. The examples are as follows:

> *Example 1.* (i) The stated purchase price for T's assets is $3,500,000. In consideration for the sale, B makes a down payment of $500,000 and issues a 10-year installment obligation with a stated principal amount of $3,000,000. The obligation provides for interest payments of $150,000 on January 31 of each year, with the total principal amount due at maturity.
> (ii) Assume that for purposes of section 1274, the test rate on February 1, 1998, is 8 percent, compounded semi-annually. Also assume that a semi-annual accrual period is used. Under § 1.1274-2, the issue price of the obligation on February 1, 1998, is $2,368,450. Accordingly, the obligation has $631,550 of original issue discount ($3,000,000-$2,368,450). Between February 1 and July 31, $19,738 of original issue discount and $75,000 of qualified stated interest accrue with respect to the obligation and are taken into account by T.

(iii) On July 31, 1998, T distributes the installment obligation to A in exchange for A's stock. No other property is ever distributed to A. On January 31, 1999, A receives the first annual payment of $150,000 from B.

(iv) When the obligation is distributed to A on July 31, 1998, it is treated as if the obligation is received by A in an installment sale of shares directly to B on that date. Under § 1.1275-1(b), the adjusted issue price of the obligation on that date is $2,388,188 (original issue price of $2,368,450 plus accrued original issue discount of $19,738). Accordingly, the issue price of the obligation under paragraph (a)(2)(ii)(A) of this section is $2,463,188, the sum of the adjusted issue price of the obligation on that date ($2,388,188) and the amount of accrued but unpaid qualified stated interest ($75,000).

(v) The selling price and contract price of A's stock in T is $2,463,188, and the gross profit is $2,363,188 ($2,463,188 selling price less A's adjusted tax basis of $100,000). A's gross profit ratio is thus 96 percent (gross profit of $2,363,188 divided by total contract price of $2,463,188).

(vi) Under §§ 1.446-2(e)(1) and 1.1275-2(a), $98,527 of the $150,000 payment is treated as a payment of the interest and original issue discount that accrued on the obligation from July 31, 1998, to January 31, 1999 ($75,000 of qualified stated interest and $23,527 of original issue discount). The balance of the payment ($51,473) is treated as a payment of principal. A's gain recognized in 1999 is $49,414 (96 percent of $51,473).

Example 2. (i) T owns Blackacre, unimproved real property, with an adjusted tax basis of $700,000. Blackacre is subject to a mortgage (underlying mortgage) of $1,100,000. A is not personally liable on the underlying mortgage and the T shares held by A are not encumbered by the underlying mortgage. The other assets of T consist of $400,000 of cash and $600,000 of accounts receivable attributable to sales of inventory in the ordinary course of business. The unsecured liabilities of T total $900,000.
(ii) On February 1, 1998, T adopts a plan of complete liquidation complying with section 453(h)(1)(A), and promptly sells Blackacre to B for a 4-year mortgage note (bearing adequate stated interest and otherwise meeting all of the requirements of section 453) in the face amount of $4 million. Under the agreement between T and B, T (or its successor) is to continue to make principal and interest payments on the underlying mortgage. Immediately thereafter, T completes its liquidation by distributing to A its remaining cash of $400,000 (after payment of T's tax liabilities), accounts receivable of $600,000, and the $4 million B note. A assumes T's $900,000 of unsecured liabilities and receives the distributed property subject to the obligation to make payments on the $1,100,000 underlying mortgage. A receives no payments from B on the B note during 1998.

(iii) Unless A elects otherwise, the transaction is reported by A on the installment method. The selling price is $5 million (cash of $400,000, accounts receivable of $600,000, and the B note of $4 million). The total contract price also is $5 million. A's adjusted tax basis in the T shares, initially $100,000, is increased by the $900,000 of unsecured T liabilities assumed by A and by the obligation (subject to which A takes the distributed property) to make payments on the $1,100,000 underlying mortgage on Blackacre, for an aggregate adjusted tax basis of $2,100,000. Accordingly, the gross profit is $2,900,000 (selling price of $5 million less aggregate adjusted tax basis of $2,100,000). The gross profit ratio is 58 percent (gross profit of $2,900,000 divided by the total contract price of $5 million). The 1998 payments to A are $1 million ($400,000 cash plus $600,000 receivables) and A recognizes gain in 1998 of $580,000 (58 percent of $1 million).

(iv) In 1999, A receives payment from B on the B note of $1 million (exclusive of interest). A's gain recognized in 1999 is $580,000 (58 percent of $1 million).

(b) ***Qualifying shareholder.*** For purposes of this section, *qualifying shareholder* means a shareholder to which, with respect to the liquidating distribution, section 331 applies. For example, a creditor that receives a distribution from a liquidating corporation, in exchange for the creditor's claim, is not a qualifying shareholder as a result of that distribution regardless of whether the liquidation satisfies section 453(h)(1)(A).

(c) ***Qualifying installment obligation*** —

(1) ***In general.*** For purposes of this section, *qualifying installment obligation* means an installment obligation (other than an evidence of indebtedness described in § 15a.453-1(e) of this chapter, relating to obligations that are payable on demand or are readily tradable) acquired in a sale or exchange of corporate assets by a liquidating corporation during the 12-month period beginning on the date the plan of liquidation is adopted. See paragraph (c)(4) of this section for an exception for installment obligations acquired in respect of certain sales of inventory. Also see paragraph (c)(5) of this section for an exception for installment obligations attributable to sales of certain property that do not generally qualify for installment method treatment.

(2) ***Corporate assets.*** Except as provided in section 453(h)(1)(C), in paragraph (c)(4) of this section (relating to certain sales of inventory), and in paragraph (c)(5) of this section (relating to certain tax avoidance transactions), the nature of the assets sold by, and the tax consequences to, the selling corporation do not affect whether an installment obligation is a qualifying installment obligation. Thus, for example, the fact that the fair market value of an asset is less than the adjusted basis of that asset in the hands of the corporation; or that the sale of an asset will subject the corporation to depreciation recapture (e.g., under section 1245 or section 1250); or that the assets of a trade or business sold by the corporation for an installment obligation include depreciable property, certain marketable securities, accounts receivable, installment obligations, or cash; or that the distribution of assets to the shareholder is or is not taxable to the corporation under sections 336 and 453B, does not affect whether installment obligations received in exchange for those assets are treated as qualifying installment obligations by the shareholder. However, an obligation received by the corporation in exchange for cash, in a transaction unrelated to a sale or exchange of noncash assets by the corporation, is not treated as a qualifying installment obligation.

(3) ***Installment obligations distributed in liquidations described in section 453(h)(1)(E)*** —

(i) ***In general.*** In the case of a liquidation to which section 453(h)(1)(E) (relating to certain liquidating subsidiary corporations) applies, a qualifying installment obligation acquired in respect of a sale or exchange by the liquidating subsidiary corporation will be treated as a qualifying installment obligation if distributed by a controlling corporate shareholder (within the meaning of section 368(c)) to a qualifying shareholder. The preceding sentence is applied successively to each controlling corporate shareholder, if any, above the first controlling corporate shareholder.

(ii) ***Examples.*** The provisions of this paragraph (c)(3) are illustrated by the following examples:

> *Example 1.* (i) A, an individual, owns all of the stock of T corporation, a C corporation. T has an operating division and three wholly-owned subsidiaries, X, Y, and Z. On February 1, 1998, T, Y, and Z all adopt plans of complete liquidation.
> (ii) On March 1, 1998, the following sales are made to unrelated purchasers: T sells the assets of its operating division to B for cash and an installment obligation. T sells the stock of X to C for an installment obligation. Y sells all of its assets to D for an installment obligation. Z sells all of its assets to E for cash. The B, C, and D installment obligations bear adequate stated interest and meet the requirements of section 453.
>
> (iii) In June 1998, Y and Z completely liquidate, distributing their respective assets (the D installment obligation and cash) to T. In July 1998, T completely liquidates, distributing to A cash and the installment obligations respectively issued by B, C, and D. The liquidation of T is a liquidation to which section 453(h) applies and the liquidations of Y and Z into T are liquidations to which section 332 applies.
>
> (iv) Because T is in control of Y (within the meaning of section 368(c)), the D obligation acquired by Y is treated as acquired by T pursuant to section 453(h)(1)(E). A is a qualifying shareholder and the installment obligations issued by B, C, and D are qualifying installment obligations. Unless A elects otherwise, A reports the transaction on the installment method as if the cash and installment obligations had been received in an installment sale of the stock of T corporation. Under section 453B(d), no gain or loss is recognized by Y on the distribution of the D installment obligation to T. Under sections 453B(a) and 336, T recognizes gain or loss on the distribution of the B, C, and D installment obligations to A in exchange for A's stock.

> *Example 2.* (i) A, a cash-method individual taxpayer, owns all of the stock of P corporation, a C corporation. P owns 30 percent of the stock of Q corporation. The balance of the Q stock is owned by unrelated individuals. On February 1, 1998, P adopts a plan of complete liquidation and sells all of its property, other than its Q stock, to B, an unrelated purchaser for cash and an installment obligation bearing adequate stated interest. On March 1, 1998, Q adopts a plan of complete liquidation and sells all of its

property to an unrelated purchaser, C, for cash and installment obligations. Q immediately distributes the cash and installment obligations to its shareholders in completion of its liquidation. Promptly thereafter, P liquidates, distributing to A cash, the B installment obligation, and a C installment obligation that P received in the liquidation of Q.

(ii) In the hands of A, the B installment obligation is a qualifying installment obligation. In the hands of P, the C installment obligation was a qualifying installment obligation. However, in the hands of A, the C installment obligation is not treated as a qualifying installment obligation because P owned only 30 percent of the stock of Q. Because P did not own the requisite 80 percent stock interest in Q, P was not a controlling corporate shareholder of Q (within the meaning of section 368(c)) immediately before the liquidation. Therefore, section 453(h)(1)(E) does not apply. Thus, in the hands of A, the C obligation is considered to be a third-party note (not a purchaser's evidence of indebtedness) and is treated as a payment to A in the year of distribution. Accordingly, for 1998, A reports as payment the cash and the fair market value of the C obligation distributed to A in the liquidation of P.

(iii) Because P held 30 percent of the stock of Q, section 453B(d) is inapplicable to P. Under sections 453B(a) and 336, accordingly, Q recognizes gain or loss on the distribution of the C obligation. P also recognizes gain or loss on the distribution of the B and C installment obligations to A in exchange for A's stock. See sections 453B and 336.

(4) ***Installment obligations attributable to certain sales of inventory*** —

(i) ***In general.*** An installment obligation acquired by a corporation in a liquidation that satisfies section 453(h)(1)(A) in respect of a broken lot of inventory is not a qualifying installment obligation. If an installment obligation is acquired in respect of a broken lot of inventory and other assets, only the portion of the installment obligation acquired in respect of the broken lot of inventory is not a qualifying installment obligation. The portion of the installment obligation attributable to other assets is a qualifying installment obligation. For purposes of this section, the term *broken lot of inventory* means inventory property that is sold or exchanged other than in bulk to one person in one transaction involving substantially all of the inventory property attributable to a trade or business of the corporation. See paragraph (c)(4)(ii) of this section for rules for determining what portion of an installment obligation is not a qualifying installment obligation and paragraph (c)(4)(iii) of this section for rules determining the application of payments on an installment obligation only a portion of which is a qualifying installment obligation.

(ii) ***Rules for determining nonqualifying portion of an installment obligation.*** If a broken lot of inventory is sold to a purchaser together with other corporate assets for consideration consisting of an installment obligation and either cash, other property, the assumption of (or taking property subject to) corporate liabilities by the purchaser, or some combination thereof, the installment obligation is treated as having been acquired in respect of a broken lot of inventory only to the extent that the fair market value of the broken lot of inventory exceeds the sum of unsecured liabilities assumed by the purchaser, secured liabilities which encumber the

broken lot of inventory and are assumed by the purchaser or to which the broken lot of inventory is subject, and the sum of the cash and fair market value of other property received. This rule applies solely for the purpose of determining the portion of the installment obligation (if any) that is attributable to the broken lot of inventory.

(iii) ***Application of payments.*** If, by reason of the application of paragraph (c)(4)(ii) of this section, a portion of an installment obligation is not a qualifying installment obligation, then for purposes of determining the amount of gain to be reported by the shareholder under section 453, payments on the obligation (other than payments of qualified stated interest) shall be applied first to the portion of the obligation that is not a qualifying installment obligation.

(iv) ***Example.*** The following example illustrates the provisions of this paragraph (c)(4). In this example, assume that all obligations bear adequate stated interest within the meaning of section 1274(c)(2) and that the fair market value of each nonqualifying installment obligation equals its face amount. The example is as follows:

> *Example.* (i) P corporation has three operating divisions, X, Y, and Z, each engaged in a separate trade or business, and a minor amount of investment assets. On July 1, 1998, P adopts a plan of complete liquidation that meets the criteria of section 453(h)(1)(A). The following sales are promptly made to purchasers unrelated to P: P sells all of the assets of the X division (including all of the inventory property) to B for $30,000 cash and installment obligations totalling $200,000. P sells substantially all of the inventory property of the Y division to C for a $100,000 installment obligation, and sells all of the other assets of the Y division (excluding cash but including installment receivables previously acquired in the ordinary course of the business of the Y division) to D for a $170,000 installment obligation. P sells $^1/_3$ of the inventory property of the Z division to E for $100,000 cash, $^1/_3$ of the inventory property of the Z division to F for a $100,000 installment obligation, and all of the other assets of the Z division (including the remaining $^1/_3$ of the inventory property worth $100,000) to G for $60,000 cash, a $240,000 installment obligation, and the assumption by G of the liabilities of the Z division. The liabilities assumed by G, which are unsecured liabilities and liabilities encumbering the inventory property acquired by G, aggregate $30,000. Thus, the total purchase price G pays is $330,000.
> (ii) P immediately completes its liquidation, distributing the cash and installment obligations, which otherwise meet the requirements of section 453, to A, an individual cash-method taxpayer who is its sole shareholder. In 1999, G makes a payment to A of $100,000 (exclusive of interest) on the $240,000 installment obligation.
>
> (iii) In the hands of A, the installment obligations issued by B, C, and D are qualifying installment obligations because they were timely acquired by P in a sale or exchange of its assets. In addition, the installment obligation issued by C is a qualifying installment obligation because it arose from a sale to one person in one transaction of substantially all of the inventory property of the trade or business engaged in by the Y division.

(iv) The installment obligation issued by F is not a qualifying installment obligation because it is in respect of a broken lot of inventory. A portion of the installment obligation issued by G is a qualifying installment obligation and a portion is not a qualifying installment obligation, determined as follows: G purchased part of the inventory property (with a fair market value of $100,000) and all of the other assets of the Z division by paying cash ($60,000), issuing an installment obligation ($240,000), and assuming liabilities of the Z division ($30,000). The assumed liabilities ($30,000) and cash ($60,000) are attributed first to the inventory property. Therefore, only $10,000 of the $240,000 installment obligation is attributed to inventory property. Accordingly, in the hands of A, the G installment obligation is a qualifying installment obligation to the extent of $230,000, but is not a qualifying installment obligation to the extent of the $10,000 attributable to the inventory property.

(v) In the 1998 liquidation of P, A receives a liquidating distribution as follows:

Item	Qualifying installment obligations	Cash and other property
Cash		$190,000
B note	$200,000	
C note	$100,000	
D note	$170,000	
F note		$100,000
G note [1]	$230,000	$ 10,000
Total	$700,000	$300,000

[1] *Face amount $240,000.*

(vi) Assume that A's adjusted tax basis in the stock of P is $100,000. Under the installment method, A's selling price and the contract price are both $1 million, the gross profit is $900,000 (selling price of $1 million less adjusted tax basis of $100,000), and the gross profit ratio is 90 percent (gross profit of $900,000 divided by the contract price of $1 million). Accordingly, in 1998, A reports gain of $270,000 (90 percent of $300,000 payment in cash and other property). A's adjusted tax basis in each of the qualifying installment obligations is an amount equal to 10 percent of the obligation's respective face amount. A's adjusted tax basis in the F note, a nonqualifying installment obligation, is $100,000, i.e., the fair market value of the note when received by A. A's adjusted tax basis in the G note, a mixed obligation, is $33,000 (10 percent of the $230,000 qualifying installment obligation portion of the note, plus the $10,000 nonqualifying portion of the note).

(vii) With respect to the $100,000 payment received from G in 1999, $10,000 is treated as the recovery of the adjusted tax basis of the nonqualifying portion of the G installment obligation and $9,000 (10 percent of $90,000) is treated as the recovery of the adjusted tax basis of the portion of the note that is a qualifying installment obligation. The remaining $81,000 (90 percent of $90,000) is reported as gain from the sale of A's stock. See paragraph (c)(4)(iii) of this section.

(5) ***Installment obligations attributable to sales of certain property*** —

(i) ***In general.*** An installment obligation acquired by a liquidating corporation, to the extent attributable to the sale of property described in paragraph (c)(5)(ii) of this section, is not a qualifying obligation if the corporation is formed or availed of for a principal purpose of avoiding section 453(b)(2) (relating to dealer dispositions and certain other dispositions of personal property), section 453(i) (relating to sales of property subject to recapture), or section 453(k) (relating to dispositions under a revolving credit plan and sales of stock or securities traded on an established securities market) through the use of a party bearing a relationship, either directly or indirectly, described in section 267(b) to any shareholder of the corporation.

(ii) ***Covered property.*** Property is described in this paragraph (c)(5)(ii) if, within 12 months before or after the adoption of the plan of liquidation, the property was owned by any shareholder and—

(A) The shareholder regularly sold or otherwise disposed of personal property of the same type on the installment plan or the property is real property that the shareholder held for sale to customers in the ordinary course of a trade or business (provided the property is not described in section 453(l)(2) (relating to certain exceptions to the definition of dealer dispositions));

(B) The sale of the property by the shareholder would result in recapture income (within the meaning of section 453(i)(2)), but only if the amount of the recapture income is equal to or greater than 50 percent of the property's fair market value on the date of the sale by the corporation;

(C) The property is stock or securities that are traded on an established securities market; or

(D) The sale of the property by the shareholder would have been under a revolving credit plan.

(iii) ***Safe harbor.*** Paragraph (c)(5)(i) of this section will not apply to the liquidation of a corporation if, on the date the plan of complete liquidation is adopted and thereafter, less than 15 percent of the fair market value of the corporation's assets is attributable to property described in paragraph (c)(5)(ii) of this section.

(iv) ***Example.*** The provisions of this paragraph (c)(5) are illustrated by the following example:

Example. Ten percent of the fair market value of the assets of T is attributable to stock and securities traded on an established securities market. T owns no other assets described in paragraph (c)(5)(ii) of this section. T, after adopting a plan of complete liquidation, sells all of its stock and securities holdings to C corporation in exchange for an installment obligation bearing adequate stated interest, sells all of its other assets to B corporation for cash, and distributes the cash and installment obligation to its sole shareholder, A, in a complete liquidation that satisfies section 453(h)(1)(A). Because the C installment obligation arose from a sale of publicly traded stock and securities, T cannot report the

gain on the sale under the installment method pursuant to section 453(k)(2). In the hands of A, however, the C installment obligation is treated as having arisen out of a sale of the stock of T corporation. In addition, the general rule of paragraph (c)(5)(i) of this section does not apply, even if a principal purpose of the liquidation was the avoidance of section 453(k)(2), because the fair market value of the publicly traded stock and securities is less than 15 percent of the total fair market value of T's assets. Accordingly, section 453(k)(2) does not apply to A, and A may use the installment method to report the gain recognized on the payments it receives in respect of the obligation.

(d) ***Liquidating distributions received in more than one taxable year.*** If a qualifying shareholder receives liquidating distributions to which this section applies in more than one taxable year, the shareholder must reasonably estimate the gain attributable to distributions received in each taxable year. In allocating basis to calculate the gain for a taxable year, the shareholder must reasonably estimate the anticipated aggregate distributions. For this purpose, the shareholder must take into account distributions and other relevant events or information that the shareholder knows or reasonably could know up to the date on which the federal income tax return for that year is filed. If the gain for a taxable year is properly taken into account on the basis of a reasonable estimate and the exact amount is subsequently determined the difference, if any, must be taken into account for the taxable year in which the subsequent determination is made. However, the shareholder may file an amended return for the earlier year in lieu of taking the difference into account for the subsequent taxable year.

(e) ***Effective date.*** This section is applicable to distributions of qualifying installment obligations made on or after January 28, 1998.

[T.D. 8762, 63 FR 4170, Jan. 28, 1998]

§ 1.453-12 Allocation of unrecaptured section 1250 gain reported on the installment method.

(a) ***General rule.*** Unrecaptured section 1250 gain, as defined in section 1(h)(7), is reported on the installment method if that method otherwise applies under section 453 or 453A and the corresponding regulations. If gain from an installment sale includes unrecaptured section 1250 gain and adjusted net capital gain (as defined in section 1(h)(4)), the unrecaptured section 1250 gain is taken into account before the adjusted net capital gain.

(b) ***Installment payments from sales before May 7, 1997.*** The amount of unrecaptured section 1250 gain in an installment payment that is properly taken into account after May 6, 1997, from a sale before May 7, 1997, is determined as if, for all payments properly taken into account after the date of sale but before May 7, 1997, unrecaptured section 1250 gain had been taken into account before adjusted net capital gain.

(c) ***Installment payments received after May 6, 1997, and on or before August 23, 1999.*** If the amount of unrecaptured section 1250 gain in an installment payment that is properly taken into account after May 6, 1997, and on or before August 23, 1999, is less than the amount that would have been taken into account under this section, the lesser amount is used to determine the amount of unrecaptured section 1250 gain that remains to be taken into account.

(d) ***Examples.*** In each example, the taxpayer, an individual whose taxable year is the calendar year, does not elect out of the installment method. The installment obligation bears adequate stated interest, and the property sold is real property held in a trade or business that qualifies as both section 1231 property and section 1250 property. In all taxable years, the taxpayer's marginal tax rate on ordinary income is 28 percent. The following examples illustrate the rules of this section:

Example 1. General rule. This example illustrates the rule of paragraph (a) of this section as follows:
(i) In 1999, A sells property for $10,000, to be paid in ten equal annual installments beginning on December 1, 1999. A originally purchased the property for $5000, held the property for several years, and took straight-line depreciation deductions in the amount of $3000. In each of the years 1999-2008, A has no other capital or section 1231 gains or losses.

(ii) A's adjusted basis at the time of the sale is $2000. Of A's $8000 of section 1231 gain on the sale of the property, $3000 is attributable to prior straight-line depreciation deductions and is unrecaptured section 1250 gain. The gain on each installment payment is $800.

(iii) As illustrated in the table in this paragraph (iii) of this *Example 1.,* A takes into account the unrecaptured section 1250 gain first. Therefore, the gain on A's first three payments, received in 1999, 2000, and 2001, is taxed at 25 percent. Of the $800 of gain on the fourth payment, received in 2002, $600 is taxed at 25 percent and the remaining $200 is taxed at 20 percent. The gain on A's remaining six installment payments is taxed at 20 percent. The table is as follows:

	1999	2000	2001	2002	2003	2004-2008	Total gain
Installment gain	800	800	800	800	800	4000	8000
Taxed at 25%	800	800	800	600			3000
Taxed at 20%				200	800	4000	5000
Remaining to be taxed at 25%	2200	1400	600				

Example 2. Installment payments from sales prior to May 7, 1997. This example illustrates the rule of paragraph (b) of this section as follows:
(i) The facts are the same as in *Example 1* except that A sold the property in 1994, received the first of the ten annual installment payments on December 1, 1994, and had no other capital or section 1231 gains or losses in the years 1994-2003.

(ii) As in *Example 1,* of A's $8000 of gain on the sale of the property, $3000 was attributable to prior straight-line depreciation deductions and is unrecaptured section 1250 gain.

(iii) As illustrated in the following table, A's first three payments, in 1994, 1995, and 1996, were received before May 7, 1997, and taxed at 28 percent. Under the rule described in paragraph (b) of this section, A determines the allocation of unrecaptured section 1250 gain for each installment payment after May 6, 1997, by taking unrecaptured section 1250 gain into account first, treating the general rule of paragraph (a) of this section as having applied since the time the property was sold, in 1994. Consequently, of the $800 of gain on the fourth payment, received in 1997, $600 is taxed at 25 percent and the remaining $200 is taxed at 20 percent. The gain on A's remaining six installment payments is taxed at 20 percent. The table is as follows:

	1994	1995	1996	1997	1998	1999-2003	Total gain
Installment gain	800	800	800	800	800	4000	8000
Taxed at 28%	800	800	800				2400
Taxed at 25%				600			600
Taxed at 20%				200	800	4000	5000
Remaining to be taxed at 25%	2200	1400	600				

Example 3. Effect of section 1231(c) recapture. This example illustrates the rule of paragraph (a) of this section when there are non-recaptured net section 1231 losses, as defined in section 1231(c)(2), from prior years as follows:
(i) The facts are the same as in *Example 1,* except that in 1999 A has non-recaptured net section 1231 losses from the previous four years of $1000.

(ii) As illustrated in the table in paragraph (iv) of this *Example 3,* in 1999, all of A's $800 installment gain is recaptured as ordinary income under section 1231(c). Under the rule described in paragraph (a) of this section, for purposes of determining the amount of unrecaptured section 1250 gain remaining to be taken into account, the $800 recaptured as ordinary income under section 1231(c) is treated as reducing unrecaptured section 1250 gain, rather than adjusted net capital gain. Therefore, A has $2200 of unrecaptured section 1250 gain remaining to be taken into account.

(iii) In the year 2000, A's installment gain is taxed at two rates. First, $200 is recaptured as ordinary income under section 1231(c). Second, the remaining $600 of gain on A's year 2000 installment payment is taxed at 25 percent. Because the full $800 of gain reduces unrecaptured section 1250 gain, A has $1400 of unrecaptured section 1250 gain remaining to be taken into account.

(iv) The gain on A's installment payment received in 2001 is taxed at 25 percent. Of the $800 of gain on the fourth payment, received in 2002, $600 is taxed at 25 percent and the remaining $200 is taxed at 20 percent. The gain on A's remaining six installment payments is taxed at 20 percent. The table is as follows:

	1999	2000	2001	2002	2003	2004-2008	Total gain
Installment gain	800	800	800	800	800	4000	8000
Taxed at ordinary rates under section 1231(c)	800	200					1000
Taxed at 25%		600	800	600			2000
Taxed at 20%				200	800	4000	5000
Remaining non-recaptured net section 1231 losses	200						
Remaining to be taxed at 25%	2200	1400	600				

Example 4. Effect of a net section 1231 loss. This example illustrates the application of paragraph (a) of this section when there is a net section 1231 loss as follows:
(i) The facts are the same as in *Example 1* except that A has section 1231 losses of $1000 in 1999.

(ii) In 1999, A's section 1231 installment gain of $800 does not exceed A's section 1231 losses of $1000. Therefore, A has a net section 1231 loss of $200. As a result, under section 1231(a) all of A's section 1231 gains and losses are treated as ordinary gains and losses. As illustrated in the following table, A's entire $800 of installment gain is ordinary gain. Under the rule described in paragraph (a) of this section, for purposes of determining the amount of unrecaptured section 1250 gain remaining to be taken into account, A's $800 of ordinary section 1231 installment gain in 1999 is treated as reducing unrecaptured section 1250 gain. Therefore, A has $2200 of unrecaptured section 1250 gain remaining to be taken into account.

(iii) In the year 2000, A has $800 of section 1231 installment gain, resulting in a net section 1231 gain of $800. A also has $200 of non-recaptured net section 1231 losses. The $800 gain is taxed at two rates. First, $200 is taxed at ordinary rates under section 1231(c), recapturing the $200 net section 1231 loss sustained in 1999. Second, the remaining $600 of gain on A's year 2000 installment payment is taxed at 25 percent. As in *Example 3,* the $200 of section 1231(c) gain is treated as reducing unrecaptured section 1250 gain, rather than adjusted net capital gain. Therefore, A has $1400 of unrecaptured section 1250 gain remaining to be taken into account.

(iv) The gain on A's installment payment received in 2001 is taxed at 25 percent, reducing the remaining unrecaptured section 1250 gain to $600. Of the $800 of gain on the fourth payment, received in 2002, $600 is taxed at 25 percent and the remaining $200 is taxed at 20 percent. The gain on A's remaining six installment payments is taxed at 20 percent. The table is as follows:

	1999	2000	2001	2002	2003	2004-2008	Total gain
Installment gain	800	800	800	800	800	4000	8000
Ordinary gain under section 1231(a)	800						800
Taxed at ordinary rates under section 1231(c)		200					200
Taxed at 25%		600	800	600			2000
Taxed at 20%				200	800	4000	5000
Net section 1231 loss	200						
Remaining to be taxed at 25%	2200	1400	600				

(e) ***Effective date.*** This section applies to installment payments properly taken into account after August 23, 1999.

[T.D. 8836, 64 FR 45875, Aug. 23, 1999]

§ 1.453A-0 Table of contents.

This section lists the paragraphs and subparagraphs contained in §§ 1.453A-1 through 1.453A-3.

§ 1.453A-1 Installment method of reporting income by dealers in personal property.

(a) In general.

(b) Effect of security.

(c) Definition of dealer, sale, and sale on the installment plan.

(d) Installment plans.

(1) Traditional installment plans.

(2) Revolving credit plans.

(e) Installment income of dealers in personal property.

(1) In general.

(2) Gross profit and total contract price.

(3) Carrying changes not included in total contract price.

(f) Other accounting methods.

(g) Records.

(h) Effective date.

§ 1.453A-3 Requirements for adoption of or change to installment method by dealers in personal property.

(a) In general.

(b) Time and manner of electing installment method reporting.

(1) Time for election.

(2) Adoption of installation method.

(3) Change to installment method.

(4) Deemed elections.

(c) Consent.

(d) Cut-off method for amounts previously accrued.

(e) Effective date.

[T.D. 8270, 54 FR 46376, Nov. 3, 1989, as amended by T.D. 9849, 84 FR 9235, Mar. 14, 2019]

§ 1.453A-1 Installment method of reporting income by dealers on personal property.

(a) ***In general.*** A dealer (as defined in paragraph (c)(1) of this section) may elect to return the income from the sale of personal property on the installment method if such sale is a sale on the installment plan (as defined in paragraphs (c)(3) and (d) of this section). Under the installment method of accounting, a taxpayer may return as income from installment sales in any taxable year that proportion of the installment payments actually received in that year which the gross profit realized or to be realized when the property is paid for bears to the total contract price. For this purpose, gross profit means sales less cost of goods sold. See paragraph (d) of this section for additional rules relating to the computation of income under the installment method of accounting.

(b) ***Effect of security.*** A dealer may adopt (but is not required to do so) one of the following four ways of protecting against loss in case of default by the purchaser:

(1) An agreement that title is to remain in the vendor until performance of the purchaser's part of the transaction is completed;

(2) A form of contract in which title is conveyed to the purchaser immediately, but subject to a lien for the unpaid portion of the selling price;

(3) A present transfer of title to the purchaser, who at the same time executes a reconveyance in the form of a chattel mortgage to the vendor; or

(4) A conveyance to a trustee pending performance of the contract and subject to its provisions.

(c) ***Definitions of dealer, sale, and sale on the installment plan.*** For purposes of the regulations under section 453A—

(1) The term “dealer” means a person who regularly sells or otherwise disposes of personal property on the installment plan;

(2) The term “sale” includes sales and other dispositions; and

(3) Except as provided in paragraph (d)(2) of this section, the term “sale on the installment plan” means—

(i) A sale of personal property by the taxpayer under any plan for the sale of personal property, which plan, by its terms and conditions, contemplates that each sale under the plan will be paid for in two or more payments; or

(ii) A sale of personal property by the taxpayer under any plan for the sale of personal property—

(A) Which plan, by its terms and conditions, contemplates that such sale will be paid for in two or more payments; and

(B) Which sale is in fact paid for in two or more payments.

(d) ***Installment plans*** —

(1) ***Traditional installment plans.*** A traditional installment plan usually has the following characteristics:

(i) The execution of a separate installment contract for each sale or disposition of personal property; and

(ii) The retention by the dealer of some type of security interest in such property.

Normally, a sale under a traditional installment plan meets the requirements of paragraph (c)(3)(i) of this section.

(2) ***Revolving credit plans.*** Sales under a revolving credit plan (within the meaning of § 1.453A-2(c)(1))—

(i) Are treated, for taxable years beginning on or before December 31, 1986, as sales on the installment plan to the extent provided in § 1.453A-2, which provides for the application of the requirements of paragraph (c)(3)(ii) of this section to sales under revolving credit plans; and

(ii) Are not treated as sales on the installment plan for taxable years beginning after December 31, 1986.

(e) ***Installment income of dealers in personal property*** —

(1) ***In general.*** The income from sales on the installment plan of a dealer may be ascertained by treating as income that proportion of the total payments received in the taxable year from sales on the installment plan (such payments being allocated to the year against the sales of which they apply) which the gross profit realized or to be realized on the total sales on the installment plan made during each year bears to the total contract price of all such sales made during that respective year. However, if the dealer demonstrates to the satisfaction of the district director that income from sales on the installment plan is clearly reflected, the income from such sales may be ascertained by treating as income that proportion of the total payments received in the taxable year from sales on the installment plan (such payments being allocated to the year against the sales of which they apply) which either:

(i) The gross profit realized or to be realized on the total credit sales made during each year bears to the total contract price of all credit sales during that respective year, or

(ii) The gross profit realized or to be realized on all sales made during each year bears to the total contract price of all sales made during that respective year.

A dealer who desires to compute income by the installment method shall maintain accounting records in such a manner as to enable an accurate computation to be made by such method in accordance with the provisions of this section, section 446, and § 1.446-1.

(2) ***Gross profit and total contract price.*** For purposes of paragraph (e)(1) of this section, in computing the gross profit realized or to be realized on the total sales on the installment plan, there shall be included in the total selling price and, thus, in the total contract price of all such sales.

(i) The amount of carrying charges or interest which is determined at the time of each sale and is added to the established cash selling price of such property and is treated as part of the selling price for customer billing purposes, and

(ii) In the case of sales made in taxable years beginning on or after January 1, 1960, the amount of carrying charges or interest determined with respect to such sales which are added contemporaneously with the sale on the books of account of the seller but are treated as periodic service charges for customer billing purposes.

Any change in the amount of the carrying charges or interest in a year subsequent to the sale will not affect the computation of the gross profit for the year of sale but will be taken into account at the time the carrying charges or interest are adjusted. The application of this paragraph (e)(2) to carrying charges or interest described in paragraph (e)(2)(ii) of this section may be illustrated by the following example:

Example. X Corporation makes sales on the traditional installment plan. The customer's order specifies that the total price consists of a cash price plus a “time price differential” of $1^1/_2$ percent per month on the outstanding balance in the customer's account, and the customer is billed in this manner. On its books and for purposes of reporting to stockholders, X Corporation consistently makes the following entries each month when it records its sales. A debit entry is make to accounts receivable (for the total price) and balancing credit entries are made to sales (for the established selling price) and to a reserve account for collection expense (for the amount of the time price differential). In computing the gross profit realized or to be realized on the total sales on the installment plan, the total selling price and, thus, the total contract price for purposes of this paragraph (e) would, with respect to sales made in taxable years beginning on or after January 1, 1960, include the time price differential.

(3) ***Carrying charges not included in total contract price.*** In the case of sales by dealers in personal property made during taxable years beginning after December 31, 1963, the income from which is returned on the installment method, if the carrying charges or interest with respect to such sales is not included in the total contract price, payments received with respect to such sales shall be treated as applying first against such carrying charges or interest.

(f) Other accounting methods. If the vendor chooses as a matter of consistent practice to return the income from installment sales on an accrual method (,) such a course is permissible.

(g) Records. In adopting the installment method of accounting the seller must maintain such records as are necessary to clearly reflect income in accordance with this section, section 446 and § 1.446-1.

(h) ***Effective date.*** This section applies for taxable years beginning after December 31, 1953, and ending after August 16, 1954, but generally does not apply to sales made after December 31, 1987, in taxable years ending after such date. For sales made after December 31, 1987, sales made by a dealer in personal or real property shall not be treated as sales on the installment plan. (However, see section 453(l)(2) for exceptions to this rule.)

[T.D. 8270, 54 FR 46377, Nov. 3, 1989, as amended by T.D. 9849, 84 FR 9235, Mar. 14, 2019]

§ 1.453A-2 [Reserved]

§ 1.453A-3 Requirements for adoption of or change to installment method by dealers in personal property.

(a) ***In general.*** A dealer (within the meaning of § 1.453A-1(c)(1)) may adopt or change to the installment method for a type or types of sales on the installment plan (within the meaning of § 1.453A-1(c)(3) and (d)) in the manner prescribed in this section. This section applies only to dealers and only with respect to their sales on the installment plan.

(b) ***Time and manner of electing installment method reporting*** —

(1) ***Time for election.*** An election to adopt or change to the installment method for a type or types of sales must be made on an income tax return for the taxable year of the election, filed on or before the time specified (including extensions thereof) for filing such return.

(2) ***Adoption of installment method.*** A taxpayer who adopts the installment method for the first taxable year in which sales are made on an installment plan of any kind must indicate in the income tax return for that taxable year that the installment method of accounting is being adopted and specify the type or types of sales included within the election. If a taxpayer in the year of the initial election made only one type of sale on the installment plan, but during a subsequent taxable year makes another type of sale on the installment plan and adopts the installment method for that other type of sale, the taxpayer must indicate in the income tax return for the subsequent year that an election is being made to adopt the installment method of accounting for the additional type of sale.

(3) ***Change to installment method.*** A taxpayer who changes to the installment method for a particular type or types of sales on the installment plan in acordance with this section must, for each type of sale on the installment plan for which the installment method is to be used, attach a separate statement to the income tax return for the taxable year with respect to which the change is made. Each statement must show the method of accounting used in computing taxable income before the change and the type of sale on the installment plan for which the installment method is being elected.

(4) ***Deemed elections.*** A dealer (including a person who is a dealer as a result of the recharacterization of transactions as sales) is deemed to have elected the installment method if the dealer treats a sale on the installment plan as a transaction other than a sale and fails to report the full amount of gain in the year of the sale. For example, if a transaction treated by a dealer as a lease is recharacterized by the Internal Revenue Service as a sale on the installment plan, the dealer will be deemed to have elected the installment method assuming the dealer failed to report the full amount of gain in the year of the transaction.

(c) ***Consent.*** A dealer may adopt or change to the installment method for sales on the installment plan without the consent of the Commissioner. However, a dealer may not change from the installment method to the accrual method of accounting or to any other method of accounting without the consent of the Commissioner.

(d) ***Cut-off method for amounts previously accrued.*** An election to change to the installment method for a type of sale applies only with respect to sales made on or after the first day of the taxable year of change. Thus, payments received in the taxable year of the change, or in subsequent years, in respect of an installment obligation which arose in a taxable year prior to the taxable year of change are not taken into account on the installment method, but rather must be accounted for under the taxpayer's method of accounting in use in the prior year.

(e) ***Effective date.*** This section applies to sales by dealers in taxable years ending after October 19, 1980, but generally does not apply to sales made after December 31, 1987. For sales made after December 31, 1987, sales by a dealer in personal or real property shall not be treated as sales on the installment plan. (However, see section 453(l)(2) for certain exceptions to this rule.) For rules relating to sales by dealers in taxable years ending before October 20, 1980, see 26 CFR 1.453-7 and 1.453-8 (rev. as of April 1, 1987).

[T.D. 8269, 54 FR 46375, Nov. 3, 1989]

§ 1.454-1 Obligations issued at discount.

(a) ***Certain non-interest-bearing obligations issued at discount*** —

(1) ***Election to include increase in income currently.*** If a taxpayer owns—

(i) A non-interest-bearing obligation issued at a discount and redeemable for fixed amounts increasing at stated intervals (other than an obligation issued by a corporation after May 27, 1969, as to which ratable inclusion of original issue discount is required under section 1232(a)(3)), or

(ii) An obligation of the United States, other than a current income obligation, in which he retains his investment in a matured series E U.S. savings bond, or

(iii) A nontransferable obligation (whether or not a current income obligation) of the United States for which a series E U.S. savings bond was exchanged (whether or not at final maturity) in an exchange upon which gain is not recognized because of section 1037(a) (or so much of section 1031(b) as relates to section 1037),

and if the increase, if any, in redemption price of such obligation described in subdivision (i), (ii), or (iii) of this subparagraph during the taxable year (as described in subparagraph (2) of this paragraph) does not constitute income for such year under the method of accounting used in computing his taxable income, then the taxpayer may, at his election, treat the increase as constituting income for the year in which such increase occurs. If the election is not made and section 1037 (or so much of section 1031 as relates to section 1037) does not apply, the taxpayer shall treat the increase as constituting income for the year in which the obligation is redeemed or disposed of, or finally matures, whichever is earlier. Any such election must be made in the taxpayer's return and may be made for any taxable year. If an election is made with respect to any such obligation described in subdivision (i), (ii), or (iii) of this subparagraph, it shall apply also to all other obligations of the type described in such subdivisions owned by the taxpayer at the beginning of the first taxable year to which the election applies, and to those thereafter acquired by him, and shall be binding for the taxable year for which the return is filed and for all subsequent taxable years, unless the Commissioner permits the taxpayer to change to a different method of reporting income from such obligations. See section 446(e) and paragraph (e) of § 1.446-1, relating to requirement respecting a change of accounting method. Although the election once made is binding upon the taxpayer, it does not apply to a transferee of the taxpayer.

(2) ***Amount of increase in case of non-interest-bearing obligations.*** In any case in which an election is made under section 454, the amount which accrues in any taxable year to which the election applies is measured by the actual increase in the redemption price occurring in that year. This amount does not accrue ratably between the dates on which the redemption price changes. For example, if two dates on which the redemption price increases (February 1 and August 1) fall within a taxable year and if the redemption price increases in the amount of 50 cents on each such date, the amount

accruing in that year would be $1 ($0.50 on February 1 and $0.50 on August 1). If the taxpayer owns a non-interest-bearing obligation of the character described in subdivision (i), (ii), or (iii) of subparagraph (1) of this paragraph acquired prior to the first taxable year to which his election applies, he must also include in gross income for such first taxable year (i) the increase in the redemption price of such obligation occurring between the date of acquisition of the obligation and the first day of such first taxable year and (ii), in a case where a series E bond was exchanged for such obligation, the increase in the redemption price of such series E bond occurring between the date of acquisition of such series E bond and the date of the exchange.

(3) ***Amount of increase in case of current income obligations.*** If an election is made under section 454 and the taxpayer owns, at the beginning of the first taxable year to which the election applies, a current income obligation of the character described in subparagraph (1)(iii) of this paragraph acquired prior to such taxable year, he must also include in gross income for such first taxable year the increase in the redemption price of the series E bond which was surrendered to the United States in exchange for such current income obligation; the amount of the increase is that occurring between the date of acquisition of the series E bond and the date of the exchange.

(4) ***Illustrations.*** The application of this paragraph may be illustrated by the following examples:

Example 1. Throughout the calendar year 1954, a taxpayer who uses the cash receipts and disbursements method of accounting holds series E U.S. savings bonds having a maturity value of $5,000 and a redemption value at the beginning of the year 1954 of $4,050 and at the end of the year 1954 of $4,150. He purchased the bonds on January 1, 1949, for $3,750, and holds no other obligation of the type described in this section. If the taxpayer exercises the election in his return for the calendar year 1954, he is required to include $400 in taxable income with respect to such bonds. Of this amount, $300 represents the increase in the redemption price before 1954 and $100 represents the increase in the redemption price in 1954. The increases in redemption value occurring in subsequent taxable years are includible in gross income for such taxable years.

Example 2. In 1958 B, a taxpayer who uses the cash receipts and disbursements method of accounting and the calendar year as his taxable year, purchased for $7,500 a series E United States savings bond with a face value of $10,000. In 1965, when the stated redemption value of the series E bond is $9,760, B surrenders it to the United States in exchange solely for a $10,000 series H U.S. current income savings bond in an exchange qualifying under section 1037(a), after paying $240 additional consideration. On the exchange of the series E bond for the series H bond in 1965, B realizes a gain of $2,260 ($9,760 less $7,500), none of which is recognized for that year by reason of section 1037(a). B retains the series H bond and redeems it at maturity in 1975 for $10,000, but in 1966 he exercises the election under section 454(a) in his return for that year with respect to five series E bonds he purchased in 1960. B is required to include in gross income for 1966 the increase in redemption price occurring before 1966 and in 1966 with respect to the series E bonds purchased in 1960; he is also required to include in gross income for 1966 the $2,260 increase in redemption price of the series E bond which was exchanged in 1965 for the series H bond.

(b) ***Short-term obligations issued on a discount basis.*** In the case of obligations of the United States or any of its possessions, or of a State, or Territory, or any political subdivision thereof, or of the District of Columbia, issued on a discount basis and payable without interest at a fixed maturity date not exceeding one year from the date of issue, the amount of discount at which such obligation originally sold does not accrue until the date on which such obligation is redeemed, sold, or otherwise disposed of. This rule

applies regardless of the method of accounting used by the taxpayer. For examples illustrating rules for computation of income from sale or other disposition of certain obligations of the type described in this paragraph, see section 1221 and the regulations thereunder.

(c) ***Matured U.S. savings bonds*** —

(1) ***Inclusion of increase in income upon redemption or final maturity.*** If a taxpayer (other than a corporation) holds—

(i) A matured series E U.S. savings bond,

(ii) An obligation of the United States, other than a current income obligation, in which he retains his investment in a matured series E U.S. savings bond, or

(iii) A nontransferable obligation (whether or not a current income obligation) of the United States for which a series E U.S. savings bond was exchanged (whether or not at final maturity) in an exchange upon which gain is not recognized because of section 1037(a) (or so much of section 1031(b) as relates to section 1037(a)),

the increase in redemption price of the series E bond in excess of the amount paid for such series E bond shall be included in the gross income of such taxpayer for the taxable year in which the obligation described in subdivision (i), (ii), or (iii) of this subparagraph is redeemed or disposed of, or finally matures, whichever is earlier, but only to the extent such increase has not previously been includible in the gross income of such taxpayer or any other taxpayer. If such obligation is partially redeemed before final maturity, or partially disposed of by being partially reissued to another owner, such increase in redemption price shall be included in the gross income of such taxpayer for such taxable year on a basis proportional to the total denomination of obligations redeemed or disposed of. The provisions of section 454 (c) and of this subparagraph shall not apply in the case of any taxable year for which the taxpayer's taxable income is computed under an accrual method of accounting or for a taxable year for which an election made by the taxpayer under section 454(a) and paragraph (a) of this section applies. For rules respecting the character of the gain realized upon the disposition or redemption of an obligation described in subdivision (iii) of this subparagraph, see paragraph (b) of § 1.1037-1.

(2) ***Illustrations.*** The application of this paragraph may be illustrated by the following examples, in which it is assumed that the taxpayer uses the cash receipts and disbursements method of accounting and the calendar year as his taxable year:

Example 1. On June 1, 1941, A purchased for $375 a series E U.S. savings bond which was redeemable at maturity (10 years from issue date) for $500. At maturity of the bond, A exercised the option of retaining the matured series E bond for the 10-year extended maturity period. On June 2, 1961, A redeemed the series E bond, at which time the stated redemption value was $674.60. A never elected under section 454(a) to include the annual increase in redemption price in gross income currently. Under section 454(c), A is required to include $299.60 ($674.60 less $375) in gross income for 1961 by reason of his redemption of the bond.

Example 2. The facts are the same as in Example 2 in paragraph (a)(4) of this section. On redemption of the series H bond received in the exchange qualifying under section 1037(a), B realizes a gain of $2,260, determined as provided in Example 5 in paragraph (b)(4) of § 1.1037-1. None of this amount is includible in B's gross income for 1975, such amount having already been includible in his gross income for 1966 because of his election under section 454(a).

Example 3. C, who had elected under section 454(a) to include the annual increase in the redemption price of his non-interest-bearing obligations in gross income currently, owned a $1,000 series E U.S. savings bond, which was purchased on October 1, 1949, for $750, C died on February 1, 1955, when the redemption value of the bond was $820. The bond was immediately reissued to D, his only heir, who has not made an election under section 454(a). On January 15, 1960, when the redemption value of the bond is $1,000, D surrenders it to the United States in exchange solely for a $1,000 series H U.S. savings bond in an exchange qualifying under the provisions of section 1037(a). For 1960 D properly does not return any income from the exchange of bonds, although he returns the interest payments on the series H bond for the taxable years in which they are received. On September 1, 1964, prior to maturity of the series H bond, D redeems it for $1,000. For 1964, D must include $180 in gross income under section 454(c) from the redemption of the series H bond, that is, the amount of the increase in the redemption price of the series E bond ($1,000 less $820) occurring between February 1, 1955, and January 15, 1960, the period during which he owned the series E bond.

[T.D. 6500, 25 FR 11719, Nov. 26, 1960, as amended by T.D. 6935, 32 FR 15820, Nov. 17, 1967; T.D. 7154, 36 FR 24997, Dec. 28, 1971]

§ 1.455-1 Treatment of prepaid subscription income.

Effective with respect to taxable years beginning after December 31, 1957, section 455 permits certain taxpayers to elect with respect to a trade or business in connection with which prepaid subscription income is received, to include such income in gross income for the taxable years during which a liability exists to furnish or deliver a newspaper, magazine, or other periodical. If a taxpayer does not elect to treat prepaid subscription income under the provisions of section 455, such income is includible in gross income for the taxable year in which received by the taxpayer, unless under the method or practice of accounting used in computing taxable income such amount is to be properly accounted for as of a different period.

[T.D. 6591, 27 FR 1798, Feb. 27, 1962]

§ 1.455-2 Scope of election under section 455.

(a) If a taxpayer makes an election under section 455 and § 1.455-6 with respect to a trade or business, all prepaid subscription income from such trade or business shall be included in gross income for the taxable years during which the liability exists to furnish or deliver a newspaper, magazine, or other periodical. Such election shall be applicable to all prepaid subscription income received in connection with the trade or business for which the election is made; except that the taxpayer may further elect to include in gross income for the taxable year of receipt (as described in section 455(d)(3) and paragraph (c) of § 1.455-5) the entire amount of any prepaid subscription income if the liability from which it arose is to end within 12 months after the date of receipt, hereinafter sometimes referred to as "within 12 months" election.

(b) If the taxpayer is engaged in more than one trade or business in which a liability is incurred to furnish or deliver a newspaper, magazine, or other periodical, a separate election 455 with respect to each such trade or business. In addition, a taxpayer may make a separate "within 12 months" election for each separate trade or business for which it has made an election under section 455.

(c) An election made under section 455 shall be binding for the first taxable year for which the election is made and for all subsequent taxable years, unless the taxpayer secures the consent of the Commissioner to the revocation of such election. Thus, in any case where the taxpayer has elected a method prescribed

by section 455 for the inclusion of prepaid subscription income in gross income, such method of reporting income may not be changed without the prior approval of the Commissioner. In order to secure the Commissioner's consent to the revocation of such election, an application must be filed with the Commissioner in accordance with section 446(e) and the regulations thereunder. For purposes of subtitle A of the Code, the computation of taxable income under an election made under section 455 shall be treated as a method of accounting. For adjustments required by changes in method of accounting, see section 481 and the regulations thereunder.

(d) An election made under section 455 shall not apply to any prepaid subscription income received before the first taxable year to which the election applies. For example, Corporation M, which computes its taxable income under an accrual method of accounting and files its income tax returns on the calendar year basis, publishes a monthly magazine and customarily sells subscriptions on a 3-year basis. In 1958 it received $135,000 of 3-year prepaid subscription income for subscriptions beginning during 1958, and in 1959 it received $142,000 of prepaid subscription income for subscriptions beginning after December 31, 1958. In February 1959 it elected, with the consent of the Commissioner, to report its prepaid subscription income under the provisions of section 455 for the year 1959 and subsequent taxable years. The $135,000 received in 1958 from prepaid subscriptions must be included in gross income in full in that year, and no part of such 1958 income shall be allocated to the years 1959, 1960, and 1961 during which M was under a liability to deliver its magazine. The $142,000 received in 1959 from prepaid subscriptions shall be allocated to the years 1959, 1960, 1961, and 1962.

(e) No election may be made under section 455 with respect to a trade or business if, in computing taxable income, the cash receipts and disbursements method of accounting is used with respect to such trade or business. However, if the taxpayer is on a “combination” method of accounting under section 446(c)(4) and the regulations thereunder, it may elect the benefits of section 455 if it uses an accrual method of accounting for subscription income

[T.D. 6591, 27 FR 1798, Feb. 27, 1962]

§ 1.455-3 Method of allocation.

(a) Prepaid subscription income to which section 455 applies shall be included in gross income for the taxable years during which the liability to which the income relates is discharged or is deemed to be discharged on the basis of the taxpayer's experience.

(b) For purposes of determining the period or periods over which the liability of the taxpayer extends, and for purposes of allocating prepaid subscription income to such periods, the taxpayer may aggregate similar transactions during the taxable year in any reasonable manner, provided the method of aggregation and allocation is consistently followed.

[T.D. 6591, 27 FR 1798, Feb. 27, 1962]

§ 1.455-4 Cessation of taxpayer's liability.

(a) If a taxpayer has elected to apply the provisions of section 455 to a trade or business in connection with which prepaid subscription income is received, and if its liability to furnish or deliver a newspaper, magazine, or other periodical ends for any reason, then so much of the prepaid subscription income attributable to such liability as was not includible in its gross income under section 455 for preceding taxable years shall be included in its gross income for the taxable year in which such liability ends. A

taxpayer's liability may end, for example, because of the cancellation of a subscription. See section 381(c)(4) and the regulations thereunder for the treatment of prepaid subscription income in a transaction to which section 381(a) applies.

(b) If a taxpayer who has elected to apply the provisions of section 455 to a trade or business dies or ceases to exist, then so much of the prepaid subscription income attributable to such trade or business which was not includible in its gross income under section 455 for preceding taxable years shall be included in its gross income for the taxable year in which such death or cessation of existence occurs. See section 381(c)(4) and the regulations thereunder for the treatment of prepaid subscription income in a transaction to which section 381(a) applies.

[T.D. 6591, 27 FR 1799, Feb. 27, 1962]

§ 1.455-5 Definitions and other rules.

(a) ***Prepaid subscription income.***

(1) The term "prepaid subscription income" means any amount includible in gross income which is received in connection with, and is directly attributable to, a liability of the taxpayer which extends beyond the close of the taxable year in which such amount is received and which is income from a newspaper, magazine, or other periodical. For example where Corporation X, a publisher of newspapers, magazines, and other periodicals makes sales on a subscription basis and the purchaser pays the subscription price in advance, prepaid subscription income would include the amounts actually received by X in connection with its liability to furnish or deliver the newspaper, magazine, or other periodical.

(2) For purposes of section 455, prepaid subscription income does not include amounts received by a taxpayer in connection with sales of subscriptions on a prepaid basis where such taxpayer does not have the liability to furnish or deliver a newspaper, magazine, or other periodical. The provisions of this subparagraph may be illustrated by the following example. Corporation D has a contract with each of several large publishers which grants it the right to sell subscriptions to their periodicals. Corporation D collects the subscription price from the subscribers, retains a portion thereof as its commission and remits the balance to the publishers. The amount retained by Corporation D represents commissions on the sale of subscriptions, and is not prepaid subscription income for purposes of section 455 since the commissions represent compensation for services rendered and are not directly attributable to a liability of Corporation D to furnish or deliver a newspaper, magazine, or other periodical.

(b) ***Liability.*** The term "liability" means a liability of the taxpayer to furnish or deliver a newspaper, magazine, or other periodical.

(c) ***Receipt of prepaid subscription income.*** For purposes of section 455, prepaid subscription income shall be treated as received during the taxable year for which it is includible in gross income under section 451, relating to general rule for taxable year of inclusion, without regard to section 455.

(d) ***Treatment of prepaid subscription income under an established accounting method.*** Notwithstanding the provisions of section 455 and § 1.455-1, any taxpayer who, for taxable years beginning before January 1, 1958, has reported prepaid subscription income for income tax purposes under an established and consistent method or practice of deferring such income may continue to report such income in accordance with such method or practice for all subsequent taxable years to which section 455 applies without making an election under section 455.

[T.D. 6591, 27 FR 1799, Feb. 27, 1962]

§ 1.455-6 Time and manner of making election.

(a) ***Election without consent.***

(1) A taxpayer may, without consent, elect to treat prepaid subscription income of a trade or business under section 455 for the first taxable year—

(i) Which begins after December 31, 1957, and

(ii) In which there is received prepaid subscription income from the trade or business for which the election is made. Such an election shall be made not later than the time prescribed by law for filing the income tax return for such year (including extensions thereof), and shall be made by means of a statement attached to such return.

(2) The statement shall indicate that the taxpayer is electing to apply the provisions of section 455 to his trade or business, and shall contain the following information:

(i) The name and a description of the taxpayer's trade or business to which the election is to apply;

(ii) The method of accounting used in such trade or business;

(iii) The total amount of prepaid subscription income from such trade or business for the taxable year;

(iv) The period or periods over which the liability of the taxpayer to furnish or deliver a newspaper, magazine, or other periodical extends;

(v) The amount of prepaid subscription income applicable to each such period; and

(vi) A description of the method used in allocating the prepaid subscription income to each such period.

In any case in which prepaid subscription income is received from more than one trade or business, the statement shall set forth the required information with respect to each trade or business subject to the election.

(3) See paragraph (c) of this section for additional information required to be submitted with the statement if the taxpayer also elects to include in gross income for the taxable year of receipt the entire amount of prepaid subscription income attributable to a liability which is to end within 12 months after the date of receipt.

(b) ***Election with consent.*** A taxpayer may, with the consent of the Commissioner, elect at any time to apply the provisions of section 455 to any trade or business in which it receives prepaid subscription income. The request for such consent shall be in writing, signed by the taxpayer or its authorized representative, and shall be addressed to the Commissioner of Internal Revenue, Attention: T:R:C, Washington, D.C. 20224. The request must be filed on or before the later of the following dates:

(1) 90 days after the beginning of the first taxable year to which the election is to apply or

(2) May 28, 1962, and must contain the information described in paragraph (a)(2) of this section.

See paragraph (c) of this section for additional information required to be submitted with the request if the taxpayer also elects to include in gross income for the taxable year of receipt the entire amount of prepaid subscription income attributable to a liability which is to end within 12 months after the date of receipt.

(c) ***"Within 12 months" election.***

(1) A taxpayer who elects to apply the provisions of section 455 to any trade or business may also elect to include in gross income for the taxable year of receipt (as described in section 455(d)(3) and paragraph (c) of § 1.455-5) the entire amount of any prepaid subscription income from such trade or business if the liability from which it arose is to end within 12 months after the date of receipt. Any such election is binding for the first taxable year for which it is effective and for all subsequent taxable years, unless the taxpayer secures permission from the Commissioner to treat such income differently. Application to revoke or change a "within 12 months" election shall be made in accordance with the provisions of section 446(e) and the regulations thereunder.

(2) The "within 12 months" election shall be made by including in the statement required by paragraph (a) of this section or the request described in paragraph (b) of this section, whichever is applicable, a declaration that the taxpayer elects to include such income in gross income in the taxable year of receipt, and the amount of such income. If the taxpayer is engaged in more than one trade or business for which the election under section 455 is made, it must include, in such statement or request, a declaration for each trade or business for which it makes the "within 12 months" election. See also paragraph (e) of § 1.455-2.

(3) If the taxpayer does not make the "within 12 months" election for its trade or business at the time prescribed for making the election to include prepaid subscription income in gross income for the taxable years during which its liability to furnish or deliver a newspaper, magazine, or other periodical exists for such trade or business, but later wishes to make such election, it must apply for permission from the Commissioner. Such application shall be made in accordance with the provisions of section 446(e) and the regulations thereunder.

[T.D. 6591, 27 FR 1799, Feb. 27, 1962]

§ 1.456-1 Treatment of prepaid dues income.

Effective for taxable years beginning after December 31, 1960, a taxpayer which is a membership organization (as described in paragraph (c) of § 1.456-5) and which receives prepaid dues income as described in paragraph (a) of § 1.456-5 in connection with its trade or business of rendering services or making available membership privileges may elect under section 456 to include such income in gross income ratably over the taxable years during which its liability (as described in paragraph (b) of § 1.456-5) to render such services or extend such privileges exists, if such liability does not extend over a period of time in excess of 36 months. If the taxpayer does not elect to treat prepaid dues income under section 456, or if such income may not be reported under section 456, as for example, where the income relates to a liability to render services or make available membership privileges which extends beyond 36 months, then such income is includible in gross income for the taxable year in which it is received (as described in paragraph (d) of § 1.456-5).

[T.D. 6937, 32 FR 16394, Nov. 30, 1967]

§ 1.456-2 Scope of election under section 456.

(a) An election made under section 456 and § 1.456-6, shall be applicable to all prepaid dues income received in connection with the trade or business for which the election is made. However, the taxpayer may further elect to include in gross income for the taxable year of receipt the entire amount of any prepaid dues income attributable to a liability extending beyond the close of the taxable year but ending within 12 months after the date of receipt, hereinafter referred to as the “within 12 months” election.

(b) If the taxpayer is engaged in more than one trade or business in connection with which prepaid dues income is received, a separate election may be made under section 456 with respect to each such trade or business. In addition, a taxpayer may make a separate “within 12 months” election for each separate trade or business for which it has made an election under section 456.

(c) A section 456 election and a “within 12 months” election shall be binding for the first taxable year for which the election is made and for all subsequent taxable years, unless the taxpayer secures the consent of the Commissioner to the revocation of either election. In order to secure the Commissioner's consent to the revocation of the section 456 election or the “within 12 months” election, an application must be filed with the Commissioner in accordance with section 446(e) and the regulations thereunder. However, an application for consent to revoke the section 456 election or the “within 12 months” election in the case of all taxable years which end before November 30, 1967 must be filed on or before February 28, 1968. For purposes of Subtitle A of the Code, the computation of taxable income under an election made under section 456 or under the “within 12 months” election shall be treated as a method of accounting. For adjustments required by changes in method of accounting, see section 481 and the regulations thereunder.

(d) Except as provided in section 456(d) and § 1.456-7, an election made under section 456 shall not apply to any prepaid dues income received before the first taxable year to which the election applies. For example, Corporation X, a membership organization which files its income tax returns on a calendar year basis, customarily sells 3-year memberships, payable in advance. In 1961 it received $160,000 of prepaid dues income for 3-year memberships beginning during 1961, and in 1962 it received $185,000 of prepaid dues income for 3-year memberships beginning on January 1, 1962. In March 1962 it elected, with the consent of the Commissioner, to report its prepaid dues income under the provisions of section 456 for the year 1962 and subsequent taxable years. The $160,000 received in 1961 from prepaid dues must be included in gross income in full in that year, and except as provided in section 456(d) and § 1.456-7, no part of such income shall be allocated to the taxable years 1962, 1963, and 1964 during which X was under a liability to make available its membership privileges. The $185,000 received in 1962 from prepaid dues income shall be allocated to the years 1962, 1963, and 1964.

(e) No election may be made under section 456 with respect to a trade or business if, in computing taxable income, the cash receipts and disbursements method (or a hybrid thereof) of accounting is used with respect to such trade or business, unless the combination of the section 456 election and the taxpayer's hybrid method of accounting does not result in a material distortion of income.

[T.D. 6937, 32 FR 16394, Nov. 30, 1967; 32 FR 17479, Dec. 6, 1967]

§ 1.456-3 Method of allocation.

(a) Prepaid dues income for which an election has been made under section 456 shall be included in gross income over the period of time during which the liability to render services or make available membership privileges exists. The liability to render the services or make available the membership privileges shall be

deemed to exist ratably over the period of time such services are required to be rendered, or such membership privileges are required to be made available. Thus, the prepaid dues income shall be included in gross income ratably over the period of the membership contract. For example, Corporation X, a membership organization, which files its income tax returns on a calendar year basis, elects, for its taxable year beginning January 1, 1961, to report its prepaid dues income in accordance with the provisions of section 456. On March 31, 1961, it sells a 2-year membership for $48 payable in advance, the membership to extend from May 1, 1961, to April 30, 1963. X shall include in its gross income for the taxable year 1961 $^{8}/_{24}$ of the $48, or $16, and for the taxable year 1962 $^{12}/_{24}$ of the $48, or $24, and for the taxable year 1963 $^{4}/_{24}$ of the $48, or $8.

(b) For purposes of determining the period or periods over which the liability of the taxpayer exists, and for purposes of allocating prepaid dues income to such periods, the taxpayer may aggregate similar transactions during the taxable year in any reasonable manner, provided the method of aggregation and allocation is consistently followed.

[T.D. 6937, 32 FR 16395, Nov. 30, 1967]

§ 1.456-4 Cessation of liability or existence.

(a) If a taxpayer has elected to apply the provisions of section 456 to a trade or business in connection with which prepaid dues income is received, and if the taxpayer's liability to render services or make available membership privileges ends for any reason, as for example, because of the cancellation of a membership then so much of the prepaid dues income attributable to such liability as was not includible in the taxpayer's gross income under section 456 for preceding taxable years shall be included in gross income for the taxable year in which such liability ends. This paragraph shall not apply to amounts includible in gross income under § 1.456-7.

(b) If a taxpayer which has elected to apply the provisions of section 456 ceases to exist, then the prepaid dues income which was not includible in gross income under section 456 for preceding taxable years shall be included in the taxpayer's gross income for the taxable year in which such cessation of existence occurs. This paragraph shall not apply to amounts includible in gross income under § 1.456-7.

(c) If a taxpayer is a party to a transaction to which section 381(a) applies and the taxpayer's method of accounting with respect to prepaid dues income is used by the acquiring corporation under the provisions of section 381(c)(4), then neither the liability nor the existence of the taxpayer shall be deemed to have ended or ceased. In such cases see section 381(c)(4) and the regulations thereunder for the treatment of the portion of prepaid dues income which was not included in gross income under section 456 for preceding taxable years.

[T.D. 6937, 32 FR 16395, Nov. 30, 1967]

§ 1.456-5 Definitions and other rules.

(a) ***Prepaid dues income.***

(1) The term “prepaid dues income” means any amount for membership dues includible in gross income which is received by a membership organization in connection with, and is directly attributable to, a liability of the taxpayer to render services or make available membership privileges over a period of time which extends beyond the close of the taxable year in which such amount is received.

(2) For purposes of section 456, prepaid dues income does not include amounts received by a taxpayer in connection with sales of memberships on a prepaid basis where the taxpayer does not have the liability to furnish the services or make available the membership privileges. For example, where a taxpayer has a contract with several membership organizations to sell memberships in such organizations and retains a portion of the amounts received from the sale of such memberships and remits the balance to the membership organizations, the amounts retained by such taxpayer represent commissions and do not constitute prepaid dues income for purposes of section 456.

(b) ***Liability.*** The term "liability" means a liability of the taxpayer to render services or make available membership privileges over a period of time which does not exceed 36 months. Thus, if during the taxable year a taxpayer sells memberships for more than 36 months and also memberships for 36 months or less, section 456 does not apply to the income from the sale of memberships for more than 36 months. For the purpose of determining the duration of a liability, a bona fide renewal of a membership shall not be considered to be a part of the existing membership.

(c) ***Membership organization.***

(1) The term "membership organization" means a corporation, association, federation, or other similar organization meeting the following requirements:

(i) It is organized without capital stock of any kind.

(ii) Its charter, bylaws, or other written agreement or contract expressly prohibits the distribution of any part of the net earnings directly or indirectly, in money, property, or services, to any member, and

(iii) No part of the net earnings of which is in fact distributed to any member either directly or indirectly, in money, property, or services.

(2) For purposes of this paragraph an increase in services or reduction in dues to all members shall generally not be considered distributions of net earnings.

(3) If a corporation, association, federation, or other similar organization subsequent to the time it elects to report its prepaid dues income in accordance with the provisions of section 456,

(i) issues any kind of capital stock either to any member or nonmember,

(ii) amends its charter, bylaws, or other written agreement or contract to permit distributions of its net earnings to any member or,

(iii) in fact, distributes any part of its net earnings either in money, property, or services to any member, then immediately after such event the organization shall not be considered a membership organization within the meaning of section 456(e)(3).

(d) ***Receipt of prepaid dues income.*** For purposes of section 456, prepaid dues income shall be treated as received during the taxable year for which it is includible in gross income under section 451, relating to the general rule for taxable year of inclusion, without regard to section 456.

[T.D. 6937, 32 FR 16395, Nov. 30, 1967]

§ 1.456-6 Time and manner of making election.

(a) ***Election without consent.*** A taxpayer may make an election under section 456 without the consent of the Commissioner for the first taxable year beginning after December 31, 1960, in which it receives prepaid dues income in the trade or business for which such election is made. The election must be made not later than the time prescribed by law for filing the income tax return for such year (including extensions thereof). The election must be made by means of a statement attached to such return. In addition, there should be attached a copy of a typical membership contract used by the organization and a copy of its charter, bylaws, or other written agreement or contract of organization or association. The statement shall indicate that the taxpayer is electing to apply the provisions of section 456 to the trade or business, and shall contain the following information:

(1) The taxpayer's name and a description of the trade or business to which the election is to apply.

(2) The method of accounting used for prepaid dues income in the trade or business during the first taxable year for which the election is to be effective and during each of 3 preceding taxable years, and if there was a change in the method of accounting for prepaid dues income during such 3-year period, a detailed explanation of such change including the adjustments necessary to prevent duplications or omissions of income.

(3) Whether any type of deferral method for prepaid dues income has been used during any of the 3 taxable years preceding the first taxable year for which the election is effective. Where any type of such deferral method has been used during this period, an explanation of the method and a schedule showing the amounts received in each such year and the amounts deferred to each succeeding year.

(4) A schedule with appropriate explanations showing:

(i) The total amount of prepaid dues income received in the trade or business in the first taxable year for which the election is effective and the amount of such income to be included in each taxable year in accordance with the election,

(ii) The total amount, if any, of prepayments of dues received in the first taxable year for which the election is effective which are directly attributable to a liability of the taxpayer to render services or make available membership privileges over a period of time in excess of 36 months, and

(iii) The total amount, if any, of prepaid dues income received in the trade or business in—

(*a*) The taxable year preceding the first taxable year for which the election is effective if all memberships sold by the taxpayer are for periods of 1 year or less,

(*b*) Each of the 2 taxable years preceding the first taxable year for which the election is effective if any memberships are sold for periods in excess of 1 year but none are sold for periods in excess of 2 years, or

(*c*) Each of the 3 taxable years preceding the first taxable year for which the election is effective if any memberships are sold for periods in excess of 2 years.

In each case there shall be set forth the amount of such income which would have been includible in each taxable year had the election been effective for the years for which the information is required.

In any case in which prepaid dues income is received from more than one trade or business, the statement shall set forth separately the required information with respect to each trade or business for which the election is made. See paragraph (c) of this section for additional information required to be submitted with the statement if the taxpayer also elects to include in gross income for the taxable year of receipt the entire amount of prepaid dues income attributable to a liability which is to end within 12 months after the date of receipt.

(b) ***Election with consent.*** A taxpayer may elect with the consent of the Commissioner, to apply the provisions of section 456 to any trade or business in which it receives prepaid dues income. The request for such consent shall be in writing, signed by the taxpayer or its authorized representative, and shall be addressed to the Commissioner of Internal Revenue, Washington, D.C. 20224. The request must be filed on or before the later of the following dates:

(1) 90 days after the beginning of the first taxable year to which the election is to apply, or

(2) February 28, 1968 and should contain the information described in paragraph (a) of this section.

See paragraph (c) of this section for additional information required to be submitted with the request if the taxpayer also elects to include in gross income for the taxable year of receipt the entire amount of prepaid dues income attributable to a liability which is to end within 12 months after the date of receipt.

(c) ***"Within 12 months" election.***

(1) The "within 12 months" election shall be made by including in the statement required by paragraph (a) of this section or the request described in paragraph (b) of this section, whichever is applicable, a declaration that the taxpayer elects to include such income in gross income in the taxable year of receipt, and the amount of such income for each taxable year to which the election is to apply which has ended prior to the time such statement or request is filed. If the taxpayer is engaged in more than one trade or business for which the election under section 456 is made, it must include, in such statement or request, a declaration for each trade or business for which it wishes to make the "within 12 months" election.

(2) If the taxpayer does not make the "within 12 months" election for a trade or business at the time it makes the election under paragraph (a) or (b) of this section, but later wishes to make such election, it must apply for permission from the Commissioner. Such application shall be made in accordance with the provisions of section 446(e).

[T.D. 6937, 32 FR 16395, Nov. 30, 1967; 32 FR 17479, Dec. 6, 1967]

§ 1.456-7 Transitional rule.

(a) Under section 456(d)(1), a taxpayer making an election under section 456 shall include in its gross income for the first taxable year to which the election applies and for each of the 2 succeeding taxable years not only that portion of prepaid dues income which is includible in gross income for each such taxable year under section 456(a), but also an additional amount equal to that portion of the total prepaid dues income received in each of the 3 taxable years preceding the first taxable year to which the election applies which would have been includible in gross income for such first taxable year and such 2 succeeding taxable years had the election under section 456 been effective during such 3 preceding taxable years. In computing such additional amounts—

(1) In the case of taxpayers who did not include in gross income for the taxable year preceding the first taxable year for which the election is effective, that portion of the prepaid dues income received in such year attributable to a liability which is to end within 12 months after the date of receipt, no effect shall be given to a “within 12 months” election made under paragraph (c) of § 1.456-6, and

(2) There shall be taken into account only prepaid dues income arising from a trade or business with respect to which an election is made under section 456 and § 1.456-6.

Section 481 and the regulations thereunder shall have no application to the additional amounts includible in gross income under section 456(d) and this section, but section 481 and the regulations thereunder shall apply to prevent other amounts from being duplicated or omitted.

(b) A taxpayer who makes an election with respect to prepaid dues income, and who includes in gross income for any taxable year to which the election applies an additional amount computed under section 456(d)(1) and paragraph (a) of this section, shall be permitted under section 456(d)(2) to deduct for such taxable year and for each of the 4 succeeding taxable years an amount equal to one-fifth of such additional amount, but only to the extent that such additional amount was also included in the taxpayer's gross income for any of the 3 taxable years preceding the first taxable year to which such election applies. The taxpayer shall maintain books and records in sufficient detail to enable the district director to determine upon audit that the additional amounts were included in the taxpayer's gross income for any of the 3 taxable years preceding such first taxable year. If, however, the taxpayer ceases to exist, as described in paragraph (b) of § 1.456-4, and there is included in gross income, under such paragraph, of the year of cessation the entire portion of prepaid dues income not previously includible in gross income under section 456 for preceding taxable years (other than for amounts received prior to the first year for which an election was made), all the amounts not previously deducted under this paragraph shall be permitted as a deduction in the year of cessation of existence.

(c) The provisions of this section may be illustrated by the following example:

Example. (1) Assume that X Corporation, a membership organization qualified to make the election under section 456, elects to report its prepaid dues income in accordance with the provisions of section 456 for its taxable year ending December 31, 1961. Assume further that X Corporation receives in the middle of each taxable year $3,000 of prepaid dues income in connection with a liability to render services over a 3-year period beginning with the date of receipt. Under section 456(a), X Corporation will report income received in 1961 and subsequent years as follows:

Year of receipt	Total receipts	1961	1962	1963	1964	1965	1966	1967	1968
1961	$3,000	$500	$1,000	$1,000	$500				
1962	3,000		500	1,000	1,000	$500			
1963	3,000			500	1,000	1,000	$500		
1964	3,000				500	1,000	1,000	$500	
1965	3,000					500	1,000	1,000	$500
1966	3,000						500	1,000	1,000
1967	3,000							500	1,000
1968	3,000								500
Total reportable under section 456(a)		500	1,500	2,500	3,000	3,000	3,000	3,000	3,000

(2) Under section 456(d) (1), X Corporation must include in its gross income for the first taxable year to which the election applies and for each of the 2 succeeding taxable years, the amounts which would have been included in those years had the election been effective 3 years earlier. If the election had been effective in 1958, the following amounts received in 1958, 1959, and 1960 would have been reported in 1961 and subsequent years:

Year of receipt	Amount received	Years of including additional amounts		
		1961	1962	1963
1958	$3,000	$500		
1959	3,000	1,000	$500	
1960	3,000	1,000	1,000	$500
Total additional amounts to be included under section 456(d)(1)	2,500	1,500	500	

(3) Having included the additional amounts as required by section 456(d)(1), and assuming such amounts were actually included in gross income in the 3 taxable years preceding the first taxable year for which the election is effective, X Corporation is entitled to deduct under section 456(d)(2) in the year of inclusion and in each of the succeeding 4 years an amount equal to one-fifth of the amounts included, as follows:

Year of inclusion	Amount	Years of deduction						
		1961	1962	1963	1964	1965	1966	1967
1961	$2,500	$500	$500	$500	$500	$500		
1962	1,500		300	300	300	300	$300	
1963	500			100	100	100	100	$10
Total amount deductible under section 456(d)(2)	500	800	900	900	900	400	100	

(4) The net result of the inclusions under section 456(d)(1) and the deductions under section 456(d)(2) may be summarized as follows:

	1961	1962	1963	1964	1965	1966	1967	1968
Amount includible under section 456(a)	$500	$1,500	$2,500	$3,000	$3,000	$3,000	$3,000	$3,000
Amount includible under section 456(d)(1)	2,500	1,500	500					
Total	3,000	3,000	3,000	3,000	3,000	3,000	3,000	3,000
Amount deductible under section 456(d)(2)	500	800	900	900	900	400	100	
Net amount reportable under section 456	2,500	2,200	2,100	2,100	2,100	2,600	2,900	3,000

[T.D. 6937, 32 FR 16396, Nov. 30, 1967]

§ 1.457-1 General overviews of section 457.

Section 457 provides rules for nonqualified deferred compensation plans established by eligible employers as defined under § 1.457-2(d). Eligible employers can establish either deferred compensation plans that are eligible plans and that meet the requirements of section 457(b) and §§ 1.457-3 through 1.457-10, or deferred compensation plans or arrangements that do not meet the requirements of section 457(b) and §§ 1.457-3 through 1.457-10 and that are subject to tax treatment under section 457(f) and § 1.457-11.

[T.D. 9075, 68 FR 41234, July 11, 2003]

§ 1.457-2 Definitions.

This section sets forth the definitions that are used under §§ 1.457-1 through 1.457-11.

(a) ***Amount(s) deferred. Amount(s) deferred*** means the total annual deferrals under an eligible plan in the current and prior years, adjusted for gain or loss. Except as provided at §§ 1.457-4(c)(1)(iii) and 1.457-6(a), amount(s) deferred includes any rollover amount held by an eligible plan as provided under § 1.457-10(e).

(b) ***Annual deferral(s)*** —

(1) ***Annual deferral(s)*** means, with respect to a taxable year, the amount of compensation deferred under an eligible plan, whether by salary reduction or by nonelective employer contribution. The amount of compensation deferred under an eligible plan is taken into account as an annual deferral in the taxable year of the participant in which deferred, or, if later, the year in which the amount of compensation deferred is no longer subject to a substantial risk of forfeiture.

(2) If the amount of compensation deferred under the plan during a taxable year is not subject to a substantial risk of forfeiture, the amount taken into account as an annual deferral is not adjusted to reflect gain or loss allocable to the compensation deferred. If, however, the amount of compensation deferred under the plan during the taxable year is subject to a substantial risk of forfeiture, the amount of compensation deferred that is taken into account as an annual deferral in the taxable year in which the substantial risk of forfeiture lapses must be adjusted to reflect gain or loss allocable to the compensation deferred until the substantial risk of forfeiture lapses.

(3) If the eligible plan is a defined benefit plan within the meaning of section 414(j), the annual deferral for a taxable year is the present value of the increase during the taxable year of the participant's accrued benefit that is not subject to a substantial risk of forfeiture (disregarding any such increase attributable to prior annual deferrals). For this purpose, present value must be determined using actuarial assumptions and methods that are reasonable (both individually and in the aggregate), as determined by the Commissioner.

(4) For purposes solely of applying § 1.457-4 to determine the maximum amount of the annual deferral for a participant for a taxable year under an eligible plan, the maximum amount is reduced by the amount of any deferral for the participant under a plan described at paragraph (k)(4)(i) of this section (relating to certain plans in existence before January 1, 1987) as if that deferral were an annual deferral under another eligible plan of the employer.

(c) ***Beneficiary. Beneficiary*** means a person who is entitled to benefits in respect of a participant following the participant's death or an alternate payee as described in § 1.457-10(c).

(d) ***Catch-up. Catch-up*** amount or *catch-up* limitation for a participant for a taxable year means the annual deferral permitted under section 414(v) (as described in § 1.457-4(c)(2)) or section 457(b)(3) (as described in § 1.457-4(c)(3)) to the extent the amount of the annual deferral for the participant for the taxable year is permitted to exceed the plan ceiling applicable under section 457(b)(2) (as described in § 1.457-4(c)(1)).

(e) ***Eligible employer. Eligible employer*** means an entity that is a State that establishes a plan or a tax-exempt entity that establishes a plan. The performance of services as an independent contractor for a State or local government or a tax-exempt entity is treated as the performance of services for an eligible employer. The term *eligible employer* does not include a church as defined in section 3121(w)(3)(A), a qualified church-controlled organization as defined in section 3121(w)(3)(B), or the Federal government or any agency or instrumentality thereof. Thus, for example, a nursing home which is associated with a church, but which is not itself a church (as defined in section 3121(w)(3)(A)) or a qualified church-controlled organization as defined in section 3121(w)(3)(B)), would be an eligible employer if it is a tax-exempt entity as defined in paragraph (m) of this section.

(f) ***Eligible plan.*** An *eligible plan* is a plan that meets the requirements of §§ 1.457-3 through 1.457-10 that is established and maintained by an eligible employer. An *eligible governmental plan* is an eligible plan that is established and maintained by an eligible employer as defined in paragraph (l) of this section. An arrangement does not fail to constitute a single eligible governmental plan merely because the arrangement is funded through more than one trustee, custodian, or insurance carrier. An *eligible plan of a tax-exempt entity* is an eligible plan that is established and maintained by an eligible employer as defined in paragraph (m) of this section.

(g) ***Includible compensation. Includible compensation*** of a participant means, with respect to a taxable year, the participant's compensation, as defined in section 415(c)(3), for services performed for the eligible employer. The amount of includible compensation is determined without regard to any community property laws.

(h) ***Ineligible plan. Ineligible plan*** means a plan established and maintained by an eligible employer that is not maintained in accordance with §§ 1.457-3 through 1.457-10. A plan that is not established by an eligible employer as defined in paragraph (e) of this section is neither an eligible nor an ineligible plan.

(i) ***Nonelective employer contribution.*** A *nonelective employer contribution* is a contribution made by an eligible employer for the participant with respect to which the participant does not have the choice to receive the contribution in cash or property. Solely for purposes of section 457 and §§ 1.457-2 through 1.457-11, the term *nonelective employer contribution* includes employer contributions that would be described in section 401(m) if they were contributions to a qualified plan.

(j) ***Participant. Participant*** in an eligible plan means an individual who is currently deferring compensation, or who has previously deferred compensation under the plan by salary reduction or by nonelective employer contribution and who has not received a distribution of his or her entire benefit under the eligible plan. Only individuals who perform services for the eligible employer, either as an employee or as an independent contractor, may defer compensation under the eligible plan.

(k) ***Plan. Plan*** includes any agreement or arrangement between an eligible employer and a participant or participants (including an individual employment agreement) under which the payment of compensation is deferred (whether by salary reduction or by nonelective employer contribution). The following types of plans are not treated as agreements or arrangements under which compensation is deferred: a bona fide

vacation leave, sick leave, compensatory time, severance pay, disability pay, or death benefit plan described in section 457(e)(11)(A)(i) and any plan paying length of service awards to bona fide volunteers (and their beneficiaries) on account of qualified services performed by such volunteers as described in section 457(e)(11)(A)(ii). Further, the term *plan* does not include any of the following (and section 457 and §§ 1.457-2 through 1.457-11 do not apply to any of the following)—

(1) Any nonelective deferred compensation under which all individuals (other than those who have not satisfied any applicable initial service requirement) with the same relationship with the eligible employer are covered under the same plan with no individual variations or options under the plan as described in section 457(e)(12), but only to the extent the compensation is attributable to services performed as an independent contractor;

(2) An agreement or arrangement described in § 1.457-11(b);

(3) Any plan satisfying the conditions in section 1107(c)(4) of the Tax Reform Act of 1986 (100 Stat. 2494) (TRA '86) (relating to certain plans for State judges); and

(4) Any of the following plans or arrangements (to which specific transitional statutory exclusions apply)—

(i) A plan or arrangement of a tax-exempt entity in existence prior to January 1, 1987, if the conditions of section 1107(c)(3)(B) of the TRA '86, as amended by section 1011(e)(6) of the Technical and Miscellaneous Revenue Act of 1988 (102 Stat. 3700) (TAMRA), are satisfied (see § 1.457-2(b)(4) for a special rule regarding such plan);

(ii) A collectively bargained nonelective deferred compensation plan in effect on December 31, 1987, if the conditions of section 6064(d)(2) of TAMRA are satisfied;

(iii) Amounts described in section 6064(d)(3) of TAMRA (relating to certain nonelective deferred compensation arrangements in effect before 1989); and

(iv) Any plan satisfying the conditions in section 1107(c)(4) or (5) of TRA '86 (relating to certain plans for certain individuals with respect to which the Service issued guidance before 1977).

(l) ***State. State*** means a State (treating the District of Columbia as a State as provided under section 7701(a)(10)), a political subdivision of a State, and any agency or instrumentality of a State.

(m) ***Tax-exempt entity. Tax-exempt entity*** includes any organization exempt from tax under subtitle A of the Internal Revenue Code, except that a governmental unit (including an international governmental organization) is not a tax-exempt entity.

(n) ***Trust. Trust*** means a trust described under section 457(g) and § 1.457-8. Custodial accounts and contracts described in section 401(f) are treated as trusts under the rules described in § 1.457-8(a)(2).

[T.D. 9075, 68 FR 41234, July 11, 2003; 68 FR 51446, Aug. 27, 2003]

§ 1.457-3 General introduction to eligible plans.

(a) ***Compliance in form and operation.*** An eligible plan is a written plan established and maintained by an eligible employer that is maintained, in both form and operation, in accordance with the requirements of §§ 1.457-4 through 1.457-10. An eligible plan must contain all the material terms and conditions for benefits under the plan. An eligible plan may contain certain optional features not required for plan eligibility under section 457(b), such as distributions for unforeseeable emergencies, loans, plan-to-plan

transfers, additional deferral elections, acceptance of rollovers to the plan, and distributions of smaller accounts to eligible participants. However, except as otherwise specifically provided in §§ 1.457-4 through 1.457-10, if an eligible plan contains any optional provisions, the optional provisions must meet, in both form and operation, the relevant requirements under section 457 and §§ 1.457-2 through 1.457-10.

(b) ***Treatment as single plan.*** In any case in which multiple plans are used to avoid or evade the requirements of §§ 1.457-4 through 1.457-10, the Commissioner may apply the rules under §§ 1.457-4 through 1.457-10 as if the plans were a single plan. See also § 1.457-4(c)(3)(v) (requiring an eligible employer to have no more than one normal retirement age for each participant under all of the eligible plans it sponsors), the second sentence of § 1.457-4(e)(2) (treating deferrals under all eligible plans under which an individual participates by virtue of his or her relationship with a single employer as a single plan for purposes of determining excess deferrals), and § 1.457-5 (combining annual deferrals under all eligible plans).

[T.D. 9075, 68 FR 41234, July 11, 2003]

§ 1.457-4 Annual deferrals, deferral limitations, and deferral agreements under eligible plans.

(a) ***Taxation of annual deferrals.*** Annual deferrals that satisfy the requirements of paragraphs (b) and (c) of this section are excluded from the gross income of a participant in the year deferred or contributed and are not includible in gross income until paid to the participant in the case of an eligible governmental plan, or until paid or otherwise made available to the participant in the case of an eligible plan of a tax-exempt entity. See § 1.457-7.

(b) ***Agreement for deferral.*** In order to be an eligible plan, the plan must provide that compensation may be deferred for any calendar month by salary reduction only if an agreement providing for the deferral has been entered into before the first day of the month in which the compensation is paid or made available. A new employee may defer compensation payable in the calendar month during which the participant first becomes an employee if an agreement providing for the deferral is entered into on or before the first day on which the participant performs services for the eligible employer. An eligible plan may provide that if a participant enters into an agreement providing for deferral by salary reduction under the plan, the agreement will remain in effect until the participant revokes or alters the terms of the agreement. Nonelective employer contributions are treated as being made under an agreement entered into before the first day of the calendar month.

(c) ***Maximum deferral limitations*** —

(1) ***Basic annual limitation.***

(i) Except as described in paragraphs (c)(2) and (3) of this section, in order to be an eligible plan, the plan must provide that the annual deferral amount for a taxable year (the plan ceiling) may not exceed the lesser of—

(A) The applicable annual dollar amount specified in section 457(e)(15): $11,000 for 2002; $12,000 for 2003; $13,000 for 2004; $14,000 for 2005; and $15,000 for 2006 and thereafter. After 2006, the $15,000 amount is adjusted for cost-of-living in the manner described in paragraph (c)(4) of this section; or

(B) 100 percent of the participant's includible compensation for the taxable year.

(ii) The amount of annual deferrals permitted by the 100 percent of includible compensation limitation under paragraph (c)(1)(i)(B) of this section is determined under section 457(e)(5) and § 1.457-2(g).

(iii) For purposes of determining the plan ceiling under this paragraph (c), the annual deferral amount does not include any rollover amounts received by the eligible plan under § 1.457-10(e).

(iv) The provisions of this paragraph (c)(1) are illustrated by the following examples:

> *Example 1.* (i) *Facts.* Participant A, who earns $14,000 a year, enters into a salary reduction agreement in 2006 with A's eligible employer and elects to defer $13,000 of A's compensation for that year. A is not eligible for the catch-up described in paragraph (c)(2) or (3) of this section, participates in no other retirement plan, and has no other income exclusions taken into account in computing includible compensation.
> (ii) *Conclusion.* The annual deferral limit for A in 2006 is the lesser of $15,000 or 100 percent of includible compensation, $14,000. A's annual deferral of $13,000 is permitted under the plan because it is not in excess of $14,000 and thus does not exceed 100 percent of A's includible compensation.

> *Example 2.* (i) *Facts.* Assume the same facts as in *Example 1,* except that A's eligible employer provides an immediately vested, matching employer contribution under the plan for participants who make salary reduction deferrals under A's eligible plan. The matching contribution is equal to 100 percent of elective contributions, but not in excess of 10 percent of compensation (in A's case, $1,400).
> (ii) *Conclusion.* Participant A's annual deferral exceeds the limitations of this paragraph (c)(1). A's maximum deferral limitation in 2006 is $14,000. A's salary reduction deferral of $13,000 combined with A's eligible employer's nonelective employer contribution of $1,400 exceeds the basic annual limitation of this paragraph (c)(1) because A's annual deferrals total $14,400. A has an excess deferral for the taxable year of $400, the amount exceeding A's permitted annual deferral limitation. The $400 excess deferral is treated as described in paragraph (e) of this section.

> *Example 3.* (i) *Facts.* Beginning in year 2002, Eligible Employer X contributes $3,000 per year for five years to B's eligible plan account. B's interest in the account vests in 2006. B has annual compensation of $50,000 in each of the five years 2002 through 2006. B is 41 years old. B is not eligible for the catch-up described in paragraph (c)(2) or (3) of this section, participates in no other retirement plan, and has no other income exclusions taken into account in computing includible compensation. Adjusted for gain or loss, the value of B's benefit when B's interest in the account vests in 2006 is $17,000.

(ii) *Conclusion.* Under this vesting schedule, $17,000 is taken into account as an annual deferral in 2006. B's annual deferrals under the plan are limited to a maximum of $15,000 in 2006. Thus, the aggregate of the amounts deferred, $17,000, is in excess of B's maximum deferral limitation by $2,000. The $2,000 is treated as an excess deferral described in paragraph (e) of this section.

(2) ***Age 50 catch-up*** —

(i) ***In general.*** In accordance with section 414(v) and the regulations thereunder, an eligible governmental plan may provide for catch-up contributions for a participant who is age 50 by the end of the year, provided that such age 50 catch-up contributions do not exceed the catch-up limit under section 414(v)(2) for the taxable year. The maximum amount of age 50 catch-up contributions for a taxable year under section 414(v) is as follows: $1,000 for 2002; $2,000 for 2003; $3,000 for 2004; $4,000 for 2005; and $5,000 for 2006 and thereafter. After 2006, the $5,000 amount is adjusted for cost-of-living. For additional guidance, see regulations under section 414(v).

(ii) ***Coordination with special section 457 catch-up.*** In accordance with sections 414(v)(6)(C) and 457(e)(18), the age 50 catch-up described in this paragraph (c)(2) does not apply for any taxable year for which a higher limitation applies under the special section 457 catch-up under paragraph (c)(3) of this section. Thus, for purposes of this paragraph (c)(2)(ii) and paragraph (c)(3) of this section, the special section 457 catch-up under paragraph (c)(3) of this section applies for any taxable year if and only if the plan ceiling taking into account paragraph (c)(1) of this section and the special section 457 catch-up described in paragraph (c)(3) of this section (and disregarding the age 50 catch-up described in this paragraph (c)(2)) is larger than the plan ceiling taking into account paragraph (c)(1) of this section and the age 50 catch-up described in this paragraph (c)(2) (and disregarding the special section 457 catch-up described in paragraph (c)(3) of this section). Thus, if a plan so provides, a participant who is eligible for the age 50 catch-up for a year and for whom the year is also one of the participant's last three taxable years ending before the participant attains normal retirement age is eligible for the larger of—

(A) The plan ceiling under paragraph (c)(1) of this section and the age 50 catch-up described in this paragraph (c)(2) (and disregarding the special section 457 catch-up described in paragraph (c)(3) of this section) or

(B) The plan ceiling under paragraph (c)(1) of this section and the special section 457 catch-up described in paragraph (c)(3) of this section (and disregarding the age 50 catch-up described in this paragraph (c)(2)).

(iii) ***Examples.*** The provisions of this paragraph (c)(2) are illustrated by the following examples:

Example 1. (i) *Facts.* Participant C, who is 55, is eligible to participate in an eligible governmental plan in 2006. The plan provides a normal retirement age of 65. The plan provides limitations on annual deferrals up to the maximum permitted under paragraphs (c)(1) and (3) of this section and the age 50 catch-up described in this paragraph (c)(2). For 2006, C will receive compensation of $40,000 from the eligible employer. C desires to defer the maximum amount possible in 2006. The applicable basic dollar limit of paragraph (c)(1)(i)(A) of this section is $15,000 for 2006 and the additional dollar

amount permitted under the age 50 catch-up is $5,000 for 2006.
(ii) *Conclusion.* C is eligible for the age 50 catch-up in 2006 because C is 55 in 2006. However, C is not eligible for the special section 457 catch-up under paragraph (c)(3) of this section in 2006 because 2006 is not one of the last three taxable years ending before C attains normal retirement age. Accordingly, the maximum that C may defer for 2006 is $20,000.

Example 2. (i) *Facts.* The facts are the same as in *Example 1,* except that, in 2006, C will attain age 62. The maximum amount that C can elect under the special section 457 catch-up under paragraph (c)(3) of this section is $2,000 for 2006.
(ii) *Conclusion.* The maximum that C may defer for 2006 is $20,000. This is the sum of the basic plan ceiling under paragraph (c)(1) of this section equal to $15,000 and the age 50 catch-up equal to $5,000. The special section 457 catch-up under paragraph (c)(3) of this section is not applicable since it provides a smaller plan ceiling.

Example 3. (i) *Facts.* The facts are the same as in *Example 2,* except that the maximum additional amount that C can elect under the special section 457 catch-up under paragraph (c)(3) of this section is $7,000 for 2006.
(ii) *Conclusion.* The maximum that C may defer for 2006 is $22,000. This is the sum of the basic plan ceiling under paragraph (c)(1) of this section equal to $15,000, plus the additional special section 457 catch-up under paragraph (c)(3) of this section equal to $7,000. The additional dollar amount permitted under the age 50 catch-up is not applicable to C for 2006 because it provides a smaller plan ceiling.

(3) ***Special section 457 catch-up*** —

(i) ***In general.*** Except as provided in paragraph (c)(2)(ii) of this section, an eligible plan may provide that, for one or more of the participant's last three taxable years ending before the participant attains normal retirement age, the plan ceiling is an amount not in excess of the lesser of—

(A) Twice the dollar amount in effect under paragraph (c)(1)(i)(A) of this section; or

(B) The underutilized limitation determined under paragraph (c)(3)(ii) of this section.

(ii) ***Underutilized limitation.*** The underutilized amount determined under this paragraph (c)(3)(ii) is the sum of—

(A) The plan ceiling established under paragraph (c)(1) of this section for the taxable year; plus

(B) The plan ceiling established under paragraph (c)(1) of this section (or under section 457(b)(2) for any year before the applicability date of this section) for any prior taxable year or years, less the amount of annual deferrals under the plan for such prior taxable year or years (disregarding any annual deferrals under the plan permitted under the age 50 catch-up under paragraph (c)(2) of this section).

(iii) ***Determining underutilized limitation under paragraph (c)(3)(ii)(B) of this section.*** A prior taxable year is taken into account under paragraph (c)(3)(ii)(B) of this section only if it is a year beginning after December 31, 1978, in which the participant was eligible to participate in the plan, and in which compensation deferred (if any) under the plan during the year was subject to a plan ceiling established under paragraph (c)(1) of this section. This paragraph (c)(3)(iii) is subject to the special rules in paragraph (c)(3)(iv) of this section.

(iv) ***Special rules concerning application of the coordination limit for years prior to 2002 for purposes of determining the underutilized limitation*** —

(A) ***General rule.*** For purposes of determining the underutilized limitation for years prior to 2002, participants remain subject to the rules in effect prior to the repeal of the coordination limitation under section 457(c)(2). Thus, the applicable basic annual limitation under paragraph (c)(1) of this section and the special section 457 catch-up under this paragraph (c)(3) for years in effect prior to 2002 are reduced, for purposes of determining a participant's underutilized amount under a plan, by amounts excluded from the participant's income for any prior taxable year by reason of a nonelective employer contribution, salary reduction or elective contribution under any other eligible section 457(b) plan, or a salary reduction or elective contribution under any 401(k) qualified cash or deferred arrangement, section 402(h)(1)(B) simplified employee pension (SARSEP), section 403(b) annuity contract, and section 408(p) simple retirement account, or under any plan for which a deduction is allowed because of a contribution to an organization described in section 501(c)(18) (pre-2002 coordination plans). Similarly, in applying the section 457(b)(2)(B) limitation for includible compensation for years prior to 2002, the limitation is $33^{1}/_{3}$ percent of the participant's compensation includible in gross income.

(B) ***Coordination limitation applied to participant.*** For purposes of determining the underutilized limitation for years prior to 2002, the coordination limitation applies to pre-2002 coordination plans of all employers for whom a participant has performed services, whether or not those are plans of the participant's current eligible employer. Thus, for purposes of determining the amount excluded from a participant's gross income in any prior taxable year under paragraph (c)(3)(ii)(B) of this section, the participant's annual deferrals under an eligible plan, and salary reduction or elective deferrals under all other pre-2002 coordination plans, must be determined on an aggregate basis. To the extent that the combined deferrals for years prior to 2002 exceeded the maximum deferral limitations, the amount is treated as an excess deferral under paragraph (e) of this section for those prior years.

(C) ***Special rule where no annual deferrals under the eligible plan.*** A participant who, although eligible, did not defer any compensation under the eligible plan in any year before 2002 is not subject to the coordinated deferral limit, even though the participant may have deferred compensation under one of the other pre-2002 coordination plans. An individual is treated as not having deferred compensation under an eligible plan for a prior taxable year if all annual deferrals under the plan are distributed in accordance with paragraph (e) of this section. Thus, to the extent that a participant participated solely in one or more of the other pre-2002 coordination plans during a prior taxable year (and not the eligible plan), the participant is not subject to the coordinated limitation for that prior taxable year. However, the participant is treated as having deferred an amount in a prior taxable year, for purposes of determining the underutilized limitation for that prior taxable year under this paragraph (c)(3)(iv)(C), to the extent of the participant's aggregate salary reduction

contributions and elective deferrals under all pre-2002 coordination plans up to the maximum deferral limitations in effect under section 457(b) for that prior taxable year. To the extent an employer did not offer an eligible plan to an individual in a prior given year, no underutilized limitation is available to the individual for that prior year, even if the employee subsequently becomes eligible to participate in an eligible plan of the employer.

(D) ***Examples.*** The provisions of this paragraph (c)(3)(iv) are illustrated by the following examples:

Example 1. (i) *Facts.* In 2001 and in years prior to 2001, Participant D earned $50,000 a year and was eligible to participate in both an eligible plan and a section 401(k) plan. However, D had always participated only in the section 401(k) plan and had always deferred the maximum amount possible. For each year before 2002, the maximum amount permitted under section 401(k) exceeded the limitation of paragraph (c)(3)(i) of this section. In 2002, D is in the 3-year period prior to D's attainment of the eligible plan's normal retirement age of 65, and D now wants to participate in the eligible plan and make annual deferrals of up to $30,000 under the plan's special section 457 catch-up provisions.
(ii) *Conclusion.* Participant D is treated as having no underutilized amount under paragraph (c)(3)(ii)(B) of this section for 2002 for purposes of the catch-up limitation under section 457(b)(3) and paragraph (c)(3) of this section because, in each of the years before 2002, D has deferred an amount equal to or in excess of the limitation of paragraph (c)(3)(i) of this section under all of D's coordinated plans.

Example 2. (i) *Facts.* Assume the same facts as in *Example 1,* except that D only deferred $2,500 per year under the section 401(k) plan for one year before 2002.
(ii) *Conclusion.* D is treated as having an underutilized amount under paragraph (c)(3)(ii)(B) of this section for 2002 for purposes of the special section 457 catch-up limitation. This is because D has deferred an amount for prior years that is less than the limitation of paragraph (c)(1)(i) of this section under all of D's coordinated plans.

Example 3. (i) *Facts.* Participant E, who earned $15,000 for 2000, entered into a salary reduction agreement in 2000 with E's eligible employer and elected to defer $3,000 for that year under E's eligible plan. For 2000, E's eligible employer provided an immediately vested, matching employer contribution under the plan for participants who make salary reduction deferrals under E's eligible plan. The matching contribution was equal to 67 percent of elective contributions, but not in excess of 10 percent of compensation before salary reduction deferrals (in E's case, $1,000). For 2000, E was not eligible for any catch-up contribution, participated in no other retirement plan, and had no other income exclusions taken into account in

computing taxable compensation.
(ii) *Conclusion.* Participant E's annual deferral equaled the maximum limitation of section 457(b) for 2000. E's maximum deferral limitation in 2000 was $4,000 because E's includible compensation was $12,000 ($15,000 minus the deferral of $3,000) and the applicable limitation for 2000 was one third of the individual's includible compensation (one-third of $12,000 equals $4,000). E's salary reduction deferral of $3,000 combined with E's eligible employer's matching contribution of $1,000 equals the limitation of section 457(b) for 2000 because E's annual deferrals totaled $4,000. E's underutilized amount for 2000 is zero.

(v) ***Normal retirement age*** —

(A) ***General rule.*** For purposes of the special section 457 catch-up in this paragraph (c)(3), a plan must specify the normal retirement age under the plan. A plan may define normal retirement age as any age that is on or after the earlier of age 65 or the age at which participants have the right to retire and receive, under the basic defined benefit pension plan of the State or tax-exempt entity (or a money purchase pension plan in which the participant also participates if the participant is not eligible to participate in a defined benefit plan), immediate retirement benefits without actuarial or similar reduction because of retirement before some later specified age, and that is not later than age $70^{1}/_{2}$. Alternatively, a plan may provide that a participant is allowed to designate a normal retirement age within these ages. For purposes of the special section 457 catch-up in this paragraph (c)(3), an entity sponsoring more than one eligible plan may not permit a participant to have more than one normal retirement age under the eligible plans it sponsors.

(B) ***Special rule for eligible plans of qualified police or firefighters.*** An eligible plan with participants that include qualified police or firefighters as defined under section 415(b)(2)(H)(ii)(I) may designate a normal retirement age for such qualified police or firefighters that is earlier than the earliest normal retirement age designated under the general rule of paragraph (c)(3)(i)(A) of this section, but in no event may the normal retirement age be earlier than age 40. Alternatively, a plan may allow a qualified police or firefighter participant to designate a normal retirement age that is between age 40 and age $70^{1}/_{2}$.

(vi) ***Examples.*** The provisions of this paragraph (c)(3) are illustrated by the following examples:

Example 1. (i) *Facts.* Participant F, who will turn 61 on April 1, 2006, becomes eligible to participate in an eligible plan on January 1, 2006. The plan provides a normal retirement age of 65. The plan provides limitations on annual deferrals up to the maximum permitted under paragraphs (c)(1) through (3) of this section. For 2006, F will receive compensation of $40,000 from the eligible employer. F desires to defer the maximum amount possible in 2006. The applicable basic dollar limit of paragraph (c)(1)(i)(A) of this section is $15,000 for 2006 and the additional dollar amount permitted under the age 50 catch-up in paragraph (c)(2) of this section for an individual who is at least age 50 is $5,000 for 2006.

(ii) *Conclusion.* F is not eligible for the special section 457 catch-up under paragraph (c)(3) of this section in 2006 because 2006 is not one of the last three taxable years ending before F attains normal retirement age. Accordingly, the maximum that F may defer for 2006 is $20,000. See also paragraph (c)(2)(iii) *Example 1* of this section.

Example 2. (i) *Facts.* The facts are the same as in *Example 1* except that, in 2006, F elects to defer only $2,000 under the plan (rather than the maximum permitted amount of $20,000). In addition, assume that the applicable basic dollar limit of paragraph (c)(1)(i)(A) of this section continues to be $15,000 for 2007 and the additional dollar amount permitted under the age 50 catch-up in paragraph (c)(2) of this section for an individual who is at least age 50 continues to be $5,000 for 2007. In F's taxable year 2007, which is one of the last three taxable years ending before F attains the plan's normal retirement age of 65, F again receives a salary of $40,000 and elects to defer the maximum amount permissible under the plan's catch-up provisions prescribed under paragraph (c) of this section.
(ii) *Conclusion.* For 2007, which is one of the last three taxable years ending before F attains the plan's normal retirement age of 65, the applicable limit on deferrals for F is the larger of the amount under the special section 457 catch-up or $20,000, which is the basic annual limitation ($15,000) and the age 50 catch-up limit of section 414(v) ($5,000). For 2007, F's special section 457 catch-up amount is the lesser of two times the basic annual limitation ($30,000) or the sum of the basic annual limitation ($15,000) plus the $13,000 underutilized limitation under paragraph (c)(3)(ii) of this section (the $15,000 plan ceiling in 2006, minus the $2,000 contributed for F in 2006), or $28,000. Thus, the maximum amount that F may defer in 2007 is $28,000.

Example 3. (i) *Facts.* The facts are the same as in *Examples 1* and *2,* except that F does not make any contributions to the plan before 2010. In addition, assume that the applicable basic dollar limitation of paragraph (c)(1)(i)(A) of this section continues to be $15,000 for 2010 and the additional dollar amount permitted under the age 50 catch-up in paragraph (c)(2) of this section for an individual who is at least age 50 continues to be $5,000 for 2010. In F's taxable year 2010, the year in which F attains age 65 (which is the normal retirement age under the plan), F desires to defer the maximum amount possible under the plan. F's compensation for 2010 is again $40,000.
(ii) *Conclusion.* For 2010, the maximum amount that F may defer is $20,000. The special section 457 catch-up provisions under paragraph (c)(3) of this section are not applicable because 2010 is not a taxable year ending before the year in which F attains normal retirement age.

(4) ***Cost-of-living adjustment.*** For years beginning after December 31, 2006, the $15,000 dollar limitation in paragraph (c)(1)(i)(A) of this section will be adjusted to take into account increases in the cost-of-living. The adjustment in the dollar limitation is made at the same time and in the same manner as

under section 415(d) (relating to qualified plans under section 401(a)), except that the base period is the calendar quarter beginning July 1, 2005 and any increase which is not a multiple of $500 will be rounded to the next lowest multiple of $500.

(d) ***Deferrals after severance from employment, including sick, vacation, and back pay under an eligible plan*** —

(1) ***In general.*** An eligible plan may provide that a participant who has not had a severance from employment may elect to defer accumulated sick pay, accumulated vacation pay, and back pay under an eligible plan if the requirements of section 457(b) are satisfied. For example, the plan must provide, in accordance with paragraph (b) of this section, that these amounts may be deferred for any calendar month only if an agreement providing for the deferral is entered into before the beginning of the month in which the amounts would otherwise be paid or made available and the participant is an employee on the date the amounts would otherwise be paid or made available. For purposes of section 457, compensation that would otherwise be paid for a payroll period that begins before severance from employment is treated as an amount that would otherwise be paid or made available before an employee has a severance from employment. In addition, deferrals may be made for former employees with respect to compensation described in § 1.415(c)-2(e)(3)(i) (relating to certain compensation paid by the later of $2^1/_2$ months after severance from employment or the end of the limitation year that includes the date of severance from employment). For this purpose, the calendar year is substituted for the limitation year. In addition, compensation described in § 1.415(c)-2(e)(4), (g)(4), or (g)(7) (relating to compensation paid to participants who are permanently and totally disabled or compensation relating to qualified military service under section 414(u)), provided those amounts represent compensation described in § 1.415(c)-2(e)(3)(i).

(2) ***Examples.*** The provisions of this paragraph (d) are illustrated by the following examples:

> *Example 1.* (i) *Facts.* Participant G, who is age 62 in year 2007, is an employee who participates in an eligible plan providing a normal retirement age of 65 and a bona fide sick leave and vacation pay program of the eligible employer. Under the terms of G's employer's eligible plan and the sick leave and vacation pay program, G is permitted to make a one-time election to contribute amounts representing accumulated sick pay to the eligible plan. G has a severance from employment on January 12, 2008, at which time G's accumulated sick and vacation pay that is payable on March 15, 2008, totals $12,000. G elects, on February 4, 2008, to have the $12,000 of accumulated sick and vacation pay contributed to the eligible plan.
> (ii) *Conclusion.* Under the terms of the eligible plan and the sick and vacation pay program, G may elect before March 1, 2008, to defer the accumulated sick and vacation pay because the agreement providing for the deferral is entered into before the beginning of the month in which the amount is currently available and the amount is bona fide accumulated sick and vacation pay, as described in § 1.415(c)-2(e)(3)(ii), and that is payable by the later of $2^1/_2$ months after severance from employment or the end of the calendar year that includes the date of severance from employment by G. Thus, under this section and § 1.415(c)-2(e)(3)(ii), the $12,000 is included in G's includible compensation for purposes of determining G's includible compensation in year 2008.

> *Example 2.* (i) *Facts.* Same facts as in *Example 1*, except that G's severance from

employment is on May 31, 2008, G's $12,000 of accumulated sick and vacation pay is payable on September 15, 2008 (which is by the later of $2^1/_2$ months after severance from employment or the end of the calendar year that includes the date of severance from employment by G), and G's election to defer the accumulated sick and vacation pay is made before May 1, 2008.
(ii) *Conclusion.* Under this section and § 1.415(c)-2(e)(3)(ii), the $12,000 is included in G's includible compensation for purposes of determining G's includible compensation in year 2008.

Example 3. (i) *Facts.* Employer X maintains an eligible plan and a vacation leave plan. Under the terms of the vacation leave plan, employees generally accrue three weeks of vacation per year. Up to one week's unused vacation may be carried over from one year to the next, so that in any single year an employee may have a maximum of four weeks' vacation time. At the beginning of each calendar year, under the terms of the eligible plan (which constitutes an agreement providing for the deferral), the value of any unused vacation time from the prior year in excess of one week is automatically contributed to the eligible plan, to the extent of the employee's maximum deferral limitations. Amounts in excess of the maximum deferral limitations are forfeited.
(ii) *Conclusion.* The value of the unused vacation pay contributed to X's eligible plan pursuant to the terms of the plan and the terms of the vacation leave plan is treated as an annual deferral to the eligible plan for January of the calendar year. No amounts contributed to the eligible plan will be considered made available to a participant in X's eligible plan.

(e) ***Excess deferrals under an eligible plan*** —

(1) ***In general.*** Any amount deferred under an eligible plan for the taxable year of a participant that exceeds the maximum deferral limitations set forth in paragraphs (c)(1) through (3) of this section, and any amount that exceeds the individual limitation under § 1.457-5, constitutes an excess deferral that is taxable in accordance with § 1.457-11 for that taxable year. Thus, an excess deferral is includible in gross income in the taxable year deferred or, if later, the first taxable year in which there is no substantial risk of forfeiture.

(2) ***Excess deferrals under an eligible governmental plan other than as a result of the individual limitation.*** In order to be an eligible governmental plan, the plan must provide that any excess deferral resulting from a failure of a plan to apply the limitations of paragraphs (c)(1) through (3) of this section to amounts deferred under the eligible plan (computed without regard to the individual limitation under § 1.457-5) will be distributed to the participant, with allocable net income, as soon as administratively practicable after the plan determines that the amount is an excess deferral. For purposes of determining whether there is an excess deferral resulting from a failure of a plan to apply the limitations of paragraphs (c)(1) through (3) of this section, all plans under which an individual participates by virtue of his or her relationship with a single employer are treated as a single plan (without regard to any differences in funding). An eligible governmental plan does not fail to satisfy the requirements of paragraphs (a) through (d) of this section or §§ 1.457-6 through 1.457-10 (including the distribution rules under § 1.457-6 and the funding rules under § 1.457-8)

solely by reason of a distribution made under this paragraph (e)(2). If such excess deferrals are not corrected by distribution under this paragraph (e)(2), the plan will be an ineligible plan under which benefits are taxable in accordance with § 1.457-11.

(3) ***Excess deferrals under an eligible plan of a tax-exempt employer other than as a result of the individual limitation.*** If a plan of a tax-exempt employer fails to comply with the limitations of paragraphs (c)(1) through (3) of this section, the plan will be an ineligible plan under which benefits are taxable in accordance with § 1.457-11. However, a plan may distribute to a participant any excess deferrals (and any income allocable to such amount) not later than the first April 15 following the close of the taxable year of the excess deferrals. In such a case, the plan will continue to be treated as an eligible plan. However, any excess deferral is included in the gross income of a participant for the taxable year of the excess deferral. If the excess deferrals are not corrected by distribution under this paragraph (e)(3), the plan is an ineligible plan under which benefits are taxable in accordance with § 1.457-11. For purposes of determining whether there is an excess deferral resulting from a failure of a plan to apply the limitations of paragraphs (c)(1) through (3) of this section, all eligible plans under which an individual participates by virtue of his or her relationship with a single employer are treated as a single plan.

(4) ***Excess deferrals arising from application of the individual limitation.*** An eligible plan may provide that an excess deferral that is a result solely of a failure to comply with the individual limitation under § 1.457-5 for a taxable year may be distributed to the participant, with allocable net income, as soon as administratively practicable after the plan determines that the amount is an excess deferral. An eligible plan does not fail to satisfy the requirements of paragraphs (a) through (d) of this section or §§ 1.457-6 through 1.457-10 (including the distribution rules under § 1.457-6 and the funding rules under § 1.457-8) solely by reason of a distribution made under this paragraph (e)(4). Although a plan will still maintain eligible status if excess deferrals are not distributed under this paragraph (e)(4), a participant must include the excess amounts in income as provided in paragraph (e)(1) of this section.

(5) ***Examples.*** The provisions of this paragraph (e) are illustrated by the following examples:

> *Example 1.* (i) *Facts.* In 2006, the eligible plan of State Employer X in which Participant H participates permits a maximum deferral of the lesser of $15,000 or 100 percent of includible compensation. In 2006, H, who has compensation of $28,000, nevertheless defers $16,000 under the eligible plan. Participant H is age 45 and normal retirement age under the plan is age 65. For 2006, the applicable dollar limit under paragraph (c)(1)(i)(A) of this section is $15,000. Employer X discovers the error in January of 2007 when it completes H's 2006 Form W-2 and promptly distributes $1,022 to H (which is the sum of the $1,000 excess and $22 of allocable net income).
> (ii) *Conclusion.* Participant H has deferred $1,000 in excess of the $15,000 limitation provided for under the plan for 2006. The $1,000 excess must be included by H in H's income for 2006. In order to correct the failure and still be an eligible plan, the plan must distribute the excess deferral, with allocable net income, as soon as administratively practicable after determining that the amount exceeds the plan deferral limitations. In this case, $22 of the distribution of $1,022 is included in H's gross income for 2007 (and is not an eligible rollover distribution). If the excess deferral were not distributed, the plan would be an ineligible plan with respect to which benefits are taxable in accordance with § 1.457-11.

Example 2. (i) *Facts.* The facts are the same as in *Example 1,* except that X uses a number of separate arrangements with different trustees and annuity insurers to permit employees to defer and H elects deferrals under several of the funding arrangements none of which exceeds $15,000 for any individual funding arrangement, but which total $16,000.
(ii) *Conclusion.* The conclusion is the same as in *Example 1.*

Example 3. (i) *Facts.* The facts are the same as in *Example 1,* except that H's deferral under the eligible plan is limited to $11,000 and H also makes a salary reduction contribution of $5,000 to an annuity contract under section 403(b) with the same Employer X.
(ii) *Conclusion.* H's deferrals are within the plan deferral limitations of Employer X. Because of the repeal of the application of the coordination limitation under former paragraph (2) of section 457(c), H's salary reduction deferrals under the annuity contract are no longer considered in determining H's applicable deferral limits under paragraphs (c)(1) through (3) of this section.

Example 4. (i) *Facts.* The facts are the same as in *Example 1,* except that H's deferral under the eligible governmental plan is limited to $14,000 and H also makes a deferral of $4,000 to an eligible governmental plan of a different employer. Participant H is age 45 and normal retirement age under both eligible plans is age 65.
(ii) *Conclusion.* Because of the application of the individual limitation under § 1.457-5, H has an excess deferral of $3,000 (the sum of $14,000 plus $4,000 equals $18,000, which is $3,000 in excess of the dollar limitation of $15,000). The $3,000 excess deferral, with allocable net income, may be distributed from either plan as soon as administratively practicable after determining that the combined amount exceeds the deferral limitations. If the $3,000 excess deferral is not distributed to H, each plan will continue to be an eligible plan, but the $3,000 must be included by H in H's income for 2006.

Example 5. (i) *Facts.* Assume the same facts as in *Example 3,* except that H's deferral under the eligible governmental plan is limited to $14,000 and H also makes a deferral of $4,000 to an eligible plan of Employer Y, a tax-exempt entity.
(ii) *Conclusion.* The results are the same as in *Example 3,* namely, because of the application of the individual limitation under § 1.457-5, H has an excess deferral of $3,000. If the $3,000 excess deferral is not distributed to H, each plan will continue to be an eligible plan, but the $3,000 must be included by H in H's income for 2006.

Example 6. (i) *Facts.* Assume the same facts as in *Example 5,* except that X is a tax-exempt entity and thus its plan is an eligible plan of a tax-exempt entity.
(ii) *Conclusion.* The results are the same as in Example 5, namely, because of the application of the individual limitation under § 1.457-5, H has an excess deferral of $3,000. If the $3,000 excess deferral is not distributed to H, each plan will continue to be an eligible plan, but the $3,000 must be included by H into H's income for 2006.

[T.D. 9075, 68 FR 41234, July 11, 2003; 68 FR 51446, Aug. 27, 2003; T.D. 9319, 72 FR 16930, Apr. 5, 2007]

§ 1.457-5 Individual limitation for combined annual deferrals under multiple eligible plans

(a) ***General rule.*** The individual limitation under section 457(c) and this section equals the basic annual deferral limitation under § 1.457-4(c)(1)(i)(A), plus either the age 50 catch-up amount under § 1.457-4(c)(2), or the special section 457 catch-up amount under § 1.457-4(c)(3), applied by taking into account the combined annual deferral for the participant for any taxable year under all eligible plans. While an eligible plan may include provisions under which it will limit deferrals to meet the individual limitation under section 457(c) and this section, annual deferrals by a participant that exceed the individual limit under section 457(c) and this section (but do not exceed the limits under § 1.457-4(c)) will not cause a plan to lose its eligible status. However, to the extent the combined annual deferrals for a participant for any taxable year exceed the individual limitation under section 457(c) and this section for that year, the amounts are treated as excess deferrals as described in § 1.457-4(e).

(b) ***Limitation applied to participant.*** The individual limitation in this section applies to eligible plans of all employers for whom a participant has performed services, including both eligible governmental plans and eligible plans of a tax-exempt entity and both eligible plans of the employer and eligible plans of other employers. Thus, for purposes of determining the amount excluded from a participant's gross income in any taxable year (including the underutilized limitation under § 1.457-4 (c)(3)(ii)(B)), the participant's annual deferral under an eligible plan, and the participant's annual deferrals under all other eligible plans, must be determined on an aggregate basis. To the extent that the combined annual deferral amount exceeds the maximum deferral limitation applicable under § 1.457-4 (c)(1)(i)(A), (c)(2), or (c)(3), the amount is treated as an excess deferral under § 1.457-4(e).

(c) ***Special rules for catch-up amounts under multiple eligible plans.*** For purposes of applying section 457(c) and this section, the special section 457 catch-up under § 1.457-4 (c)(3) is taken into account only to the extent that an annual deferral is made for a participant under an eligible plan as a result of plan provisions permitted under § 1.457-4 (c)(3). In addition, if a participant has annual deferrals under more than one eligible plan and the applicable catch-up amount under § 1.457-4 (c)(2) or (3) is not the same for each such eligible plan for the taxable year, section 457(c) and this section are applied using the catch-up amount under whichever plan has the largest catch-up amount applicable to the participant.

(d) ***Examples.*** The provisions of this section are illustrated by the following examples:

> *Example 1.* (i) *Facts.* Participant F is age 62 in 2006 and participates in two eligible plans during 2006, Plans J and K, which are each eligible plans of two different governmental entities. Each plan includes provisions allowing the maximum annual deferral permitted under § 1.457-4(c)(1) through (3). For 2006, the underutilized amount under § 1.457-4 (c)(3)(ii)(B) is $20,000 under Plan J and is $40,000 under Plan K. Normal retirement age is age 65 under both plans. Participant F defers $15,000 under each plan. Participant F's includible compensation is in each case in excess of the deferral. Neither plan designates the $15,000 contribution as a catch-up permitted under each plan's special section 457 catch-up provisions.
> (ii) *Conclusion.* For purposes of applying this section to Participant F for 2006, the maximum exclusion is $20,000. This is equal to the sum of $15,000 plus $5,000, which is the age 50 catch-up amount. Thus, F has an excess amount of $10,000 which is treated as an excess deferral for Participant F for 2006 under § 1.457-4(e).

> *Example 2.* (i) *Facts.* Participant E, who will turn 63 on April 1, 2006, participates in four eligible plans

during year 2006: Plan W which is an eligible governmental plan; and Plans X, Y, and Z which are each eligible plans of three different tax-exempt entities. For year 2006, the limitation that applies to Participant E under all four plans under § 1.457-4(c)(1)(i)(A) is $15,000. For year 2006, the additional age 50 catch-up limitation that applies to Participant E under all four plans under § 1.457-4(c)(2) is $5,000. Further, for year 2006, different limitations under § 1.457-4(c)(3) and (c)(3)(ii)(B) apply to Participant E under each of these plans, as follows: under Plan W, the underutilized limitation under § 1.457-4(c)(3)(ii)(B) is $7,000; under Plan X, the underutilized limitation under § 1.457-4(c)(3)(ii)(B) is $2,000; under Plan Y, the underutilized limitation under § 1.457-4(c)(3)(ii)(B) is $8,000; and under Plan Z, § 1.457-4(c)(3) is not applicable since normal retirement age is 62 under Plan Z. Participant E's includible compensation is in each case in excess of any applicable deferral.
(ii) *Conclusion.* For purposes of applying this section to Participant E for year 2006, Participant E could elect to defer $23,000 under Plan Y, which is the maximum deferral limitation under § 1.457-4(c)(1) through (3), and to defer no amount under Plans W, X, and Z. The $23,000 maximum amount is equal to the sum of $15,000 plus $8,000, which is the catch-up amount applicable to Participant E under Plan Y and which is the largest catch-up amount applicable to Participant E under any of the four plans for year 2006. Alternatively, Participant E could instead elect to defer the following combination of amounts: An aggregate total of $15,000 to Plans X, Y, and Z, if no contribution is made to Plan W; an aggregate total of $20,000 to any of the four plans, assuming at least $5,000 is contributed to Plan W; or $22,000 to Plan W and none to any of the other three plans.

(iii) If the underutilized amount under Plans W, X, and Y for year 2006 were in each case zero (because E had always contributed the maximum amount or E was a new participant) or an amount not in excess of $5,000, the maximum exclusion under this section would be $20,000 for Participant E for year 2006 ($15,000 plus the $5,000 age 50 catch-up amount), which Participant E could contribute to any of the plans assuming at least $5,000 is contributed to Plan W.

[T.D. 9075, 68 FR 41240, July 11, 2003; 68 FR 51446, Aug. 26, 2003; T.D. 9319, 72 FR 16930, Apr. 5, 2007; 72 FR 28854, May 23, 2007]

§ 1.457-6 Timing of distributions under eligible plans.

(a) ***In general.*** Except as provided in paragraph (c) of this section (relating to distributions on account of an unforeseeable emergency), paragraph (e) of this section (relating to distributions of small accounts), § 1.457-10(a) (relating to plan terminations), or § 1.457-10(c) (relating to domestic relations orders), amounts deferred under an eligible plan may not be paid to a participant or beneficiary before the participant has a severance from employment with the eligible employer or when the participant attains age 70½, if earlier. For rules relating to loans, see paragraph (f) of this section. This section does not apply to distributions of excess amounts under § 1.457-4(e). However, except to the extent set forth by the Commissioner in revenue rulings, notices, and other guidance published in the Internal Revenue Bulletin (see § 601.601(d) of this chapter), this section applies to amounts held in a separate account for eligible rollover distributions maintained by an eligible governmental plan as described in § 1.457-10(e)(2).

(b) ***Severance from employment —***

(1) ***Employees.*** An employee has a severance from employment with the eligible employer if the employee dies, retires, or otherwise has a severance from employment with the eligible employer. See regulations under section 401(k) for additional guidance concerning severance from employment.

(2) ***Independent contractors*** —

(i) ***In general.*** An independent contractor is considered to have a severance from employment with the eligible employer upon the expiration of the contract (or in the case of more than one contract, all contracts) under which services are performed for the eligible employer if the expiration constitutes a good-faith and complete termination of the contractual relationship. An expiration does not constitute a good faith and complete termination of the contractual relationship if the eligible employer anticipates a renewal of a contractual relationship or the independent contractor becoming an employee. For this purpose, an eligible employer is considered to anticipate the renewal of the contractual relationship with an independent contractor if it intends to contract again for the services provided under the expired contract, and neither the eligible employer nor the independent contractor has eliminated the independent contractor as a possible provider of services under any such new contract. Further, an eligible employer is considered to intend to contract again for the services provided under an expired contract if the eligible employer's doing so is conditioned only upon incurring a need for the services, the availability of funds, or both.

(ii) ***Special rule.*** Notwithstanding paragraph (b)(2)(i) of this section, the plan is considered to satisfy the requirement described in paragraph (a) of this section that no amounts deferred under the plan be paid or made available to the participant before the participant has a severance from employment with the eligible employer if, with respect to amounts payable to a participant who is an independent contractor, an eligible plan provides that—

(A) No amount will be paid to the participant before a date at least 12 months after the day on which the contract expires under which services are performed for the eligible employer (or, in the case of more than one contract, all such contracts expire); and

(B) No amount payable to the participant on that date will be paid to the participant if, after the expiration of the contract (or contracts) and before that date, the participant performs services for the eligible employer as an independent contractor or an employee.

(c) ***Rules applicable to distributions for unforeseeable emergencies*** —

(1) ***In general.*** An eligible plan may permit a distribution to a participant or beneficiary for an unforeseeable emergency. The distribution must satisfy the requirements of paragraph (c)(2) of this section.

(2) ***Requirements*** —

(i) ***Unforeseeable emergency defined.*** An unforeseeable emergency must be defined in the plan as a severe financial hardship of the participant or beneficiary resulting from an illness or accident of the participant or beneficiary, the participant's or beneficiary's spouse, or the participant's or beneficiary's dependent (as defined in section 152, and, for taxable years beginning on or after January 1, 2005, without regard to section 152(b)(1), (b)(2), and (d)(1)(B)); loss of the participant's or beneficiary's property due to casualty (including the need to rebuild a home following damage to a home not otherwise covered by homeowner's insurance, such as damage that is the result of a natural disaster); or other similar extraordinary and unforeseeable

circumstances arising as a result of events beyond the control of the participant or the beneficiary. For example, the imminent foreclosure of or eviction from the participant's or beneficiary's primary residence may constitute an unforeseeable emergency. In addition, the need to pay for medical expenses, including non-refundable deductibles, as well as for the cost of prescription drug medication, may constitute an unforeseeable emergency. Finally, the need to pay for the funeral expenses of a spouse or a dependent (as defined in section 152, and, for taxable years beginning on or after January 1, 2005, without regard to section 152(b)(1), (b)(2), and (d)(1)(B)) of a participant or beneficiary may also constitute an unforeseeable emergency. Except as otherwise specifically provided in this paragraph (c)(2)(i), the purchase of a home and the payment of college tuition are not unforeseeable emergencies under this paragraph (c)(2)(i).

(ii) ***Unforeseeable emergency distribution standard.*** Whether a participant or beneficiary is faced with an unforeseeable emergency permitting a distribution under this paragraph (c) is to be determined based on the relevant facts and circumstances of each case, but, in any case, a distribution on account of unforeseeable emergency may not be made to the extent that such emergency is or may be relieved through reimbursement or compensation from insurance or otherwise, by liquidation of the participant's assets, to the extent the liquidation of such assets would not itself cause severe financial hardship, or by cessation of deferrals under the plan.

(iii) ***Distribution necessary to satisfy emergency need.*** Distributions because of an unforeseeable emergency must be limited to the amount reasonably necessary to satisfy the emergency need (which may include any amounts necessary to pay for any federal, state, or local income taxes or penalties reasonably anticipated to result from the distribution).

(d) ***Minimum required distributions for eligible plans.*** In order to be an eligible plan, a plan must meet the distribution requirements of section 457(d)(1) and (2). Under section 457(d)(2), a plan must meet the minimum distribution requirements of section 401(a)(9). See section 401(a)(9) and the regulations thereunder for these requirements. For taxable years beginning on or after January 1, 2025, if an eligible plan is subject to the rules of § 1.401(a)(9)-5, then the plan must meet the requirements of section 401(a)(9)(H). The preceding sentence applies to an eligible plan maintained by any eligible employer (including an eligible plan of a tax-exempt entity).

(e) ***Distributions of smaller accounts*** —

(1) ***In general.*** An eligible plan may provide for a distribution of all or a portion of a participant's benefit if this paragraph (e)(1) is satisfied. This paragraph (e)(1) is satisfied if the participant's total amount deferred (the participant's total account balance) which is not attributable to rollover contributions (as defined in section 411(a)(11)(D)) is not in excess of the dollar limit under section 411(a)(11)(A), no amount has been deferred under the plan by or for the participant during the two-year period ending on the date of the distribution, and there has been no prior distribution under the plan to the participant under this paragraph (e). An eligible plan is not required to permit distributions under this paragraph (e).

(2) ***Alternative provisions possible.*** Consistent with the provisions of paragraph (e)(1) of this section, a plan may provide that the total amount deferred for a participant or beneficiary will be distributed automatically to the participant or beneficiary if the requirements of paragraph (e)(1) of this section are met. Alternatively, if the requirements of paragraph (e)(1) of this section are met, the plan may provide for the total amount deferred for a participant or beneficiary to be distributed to the participant or beneficiary only if the participant or beneficiary so elects. The plan is permitted to substitute a specified dollar amount that is less than the total amount deferred. In addition, these

two alternatives can be combined; for example, a plan could provide for automatic distributions for up to $500, but allow a participant or beneficiary to elect a distribution if the total account balance is above $500.

(f) ***Loans from eligible plans*** —

(1) ***Eligible plans of tax-exempt entities.*** If a participant or beneficiary receives (directly or indirectly) any amount deferred as a loan from an eligible plan of a tax-exempt entity, that amount will be treated as having been paid or made available to the individual as a distribution under the plan, in violation of the distribution requirements of section 457(d).

(2) ***Eligible governmental plans.*** The determination of whether the availability of a loan, the making of a loan, or a failure to repay a loan made from a trustee (or a person treated as a trustee under section 457(g)) of an eligible governmental plan to a participant or beneficiary is treated as a distribution (directly or indirectly) for purposes of this section, and the determination of whether the availability of the loan, the making of the loan, or a failure to repay the loan is in any other respect a violation of the requirements of section 457(b) and the regulations, depends on the facts and circumstances. Among the facts and circumstances are whether the loan has a fixed repayment schedule and bears a reasonable rate of interest, and whether there are repayment safeguards to which a prudent lender would adhere. Thus, for example, a loan must bear a reasonable rate of interest in order to satisfy the exclusive benefit requirement of section 457(g)(1) and § 1.457-8(a)(1). See also § 1.457-7(b)(3) relating to the application of section 72(p) with respect to the taxation of a loan made under an eligible governmental plan, and § 1.72(p)-1 relating to section 72(p)(2).

(3) ***Example.*** The provisions of paragraph (f)(2) of this section are illustrated by the following example:

Example. (i) *Facts.* Eligible Plan X of State Y is funded through Trust Z. Plan X permits an employee's account balance under Plan X to be paid in a single sum at severance from employment with State Y. Plan X includes a loan program under which any active employee with a vested account balance may receive a loan from Trust Z. Loans are made pursuant to plan provisions regarding loans that are set forth in the plan under which loans bear a reasonable rate of interest and are secured by the employee's account balance. In order to avoid taxation under § 1.457-7(b)(3) and section 72(p)(1), the plan provisions limit the amount of loans and require loans to be repaid in level installments as required under section 72(p)(2). Participant J's vested account balance under Plan X is $50,000. J receives a loan from Trust Z in the amount of $5,000 on December 1, 2003, to be repaid in level installments made quarterly over the 5-year period ending on November 30, 2008. Participant J makes the required repayments until J has a severance from employment from State Y in 2005 and subsequently fails to repay the outstanding loan balance of $2,250. The $2,250 loan balance is offset against J's $80,000 account balance benefit under Plan X, and J elects to be paid the remaining $77,750 in 2005.
(ii) *Conclusion.* The making of the loan to J will not be treated as a violation of the requirements of section 457(b) or the regulations. The cancellation of the loan at severance from employment does not cause Plan X to fail to satisfy the requirements for plan eligibility under section 457. In addition, because the loan satisfies the maximum amount and repayment requirements of section 72(p)(2), J is not required to include any amount in income as a result of the loan until 2005, when J has income of $2,250 as a result of the offset (which is a permissible distribution under this section) and income of $77,750 as a result of the distribution made in 2005.

[T.D. 9075, 68 FR 41240, July 11, 2003; 68 FR 51446, Aug. 27, 2003; T.D. 9319, 72 FR 16930, Apr. 5, 2007; T.D. 10001, 89 FR 58951, July 19, 2024]

§ 1.457-7 Taxation of Distributions Under Eligible Plans.

(a) ***General rules for when amounts are included in gross income.*** The rules for determining when an amount deferred under an eligible plan is includible in the gross income of a participant or beneficiary depend on whether the plan is an eligible governmental plan or an eligible plan of a tax-exempt entity. Paragraph (b) of this section sets forth the rules for an eligible governmental plan. Paragraph (c) of this section sets forth the rules for an eligible plan of a tax-exempt entity.

(b) ***Amounts included in gross income under an eligible governmental plan*** —

(1) ***Amounts included in gross income in year paid under an eligible governmental plan.*** Except as provided in paragraphs (b)(2) and (3) of this section (or in § 1.457-10(c) relating to payments to a spouse or former spouse pursuant to a qualified domestic relations order), amounts deferred under an eligible governmental plan are includible in the gross income of a participant or beneficiary for the taxable year in which paid to the participant or beneficiary under the plan.

(2) ***Rollovers to individual retirement arrangements and other eligible retirement plans.*** A trustee-to-trustee transfer in accordance with section 401(a)(31) (generally referred to as a direct rollover) from an eligible government plan is not includible in gross income of a participant or beneficiary in the year transferred. In addition, any payment made from an eligible government plan in the form of an eligible rollover distribution (as defined in section 402(c)(4)) is not includible in gross income in the year paid to the extent the payment is transferred to an eligible retirement plan (as defined in section 402(c)(8)(B)) within 60 days, including the transfer to the eligible retirement plan of any property distributed from the eligible governmental plan. For this purpose, the rules of section 402(c)(2) through (7) and (9) apply. Any trustee-to-trustee transfer under this paragraph (b)(2) from an eligible government plan is a distribution that is subject to the distribution requirements of § 1.457-6.

(3) ***Amounts taxable under section 72(p)(1).*** In accordance with section 72(p), the amount of any loan from an eligible governmental plan to a participant or beneficiary (including any pledge or assignment treated as a loan under section 72(p)(1)(B)) is treated as having been received as a distribution from the plan under section 72(p)(1), except to the extent set forth in section 72(p)(2) (relating to loans that do not exceed a maximum amount and that are repayable in accordance with certain terms) and § 1.72(p)-1. Thus, except to the extent a loan satisfies section 72(p)(2), any amount loaned from an eligible governmental plan to a participant or beneficiary (including any pledge or assignment treated as a loan under section 72(p)(1)(B)) is includible in the gross income of the participant or beneficiary for the taxable year in which the loan is made. See generally § 1.72(p)-1.

(4) ***Examples.*** The provisions of this paragraph (b) are illustrated by the following examples:

> *Example 1.* (i) *Facts.* Eligible Plan G of a governmental entity permits distribution of benefits in a single sum or in installments of up to 20 years, with such benefits to commence at any date that is after severance from employment (up to the later of severance from employment or the plan's normal retirement age of 65). Effective for participants who have a severance from employment after December 31, 2001, Plan X allows an election—as to both the date on which payments are to begin and the form in which payments are to be made—to be made by

the participant at any time that is before the commencement date selected. However, Plan X chooses to require elections to be filed at least 30 days before the commencement date selected in order for Plan X to have enough time to be able to effectuate the election.
(ii) *Conclusion.* No amounts are included in gross income before actual payments begin. If installment payments begin (and the installment payments are payable over at least 10 years so as not to be eligible rollover distributions), the amount included in gross income for any year is equal to the amount of the installment payment paid during the year.

Example 2. (i) *Facts.* Same facts as in *Example 1,* except that the same rules are extended to participants who had a severance from employment before January 1, 2002.
(ii) *Conclusion.* For all participants (that is, both those who have a severance from employment after December 31, 2001, and those who have a severance from employment before January 1, 2002, including those whose benefit payments have commenced before January 1, 2002), no amounts are included in gross income before actual payments begin. If installment payments begin (and the installment payments are payable over at least 10 years so as not to be eligible rollover distributions), the amount included in gross income for any year is equal to the amount of the installment payment paid during the year.

(c) ***Amounts included in gross income under an eligible plan of a tax-exempt entity —***

(1) ***Amounts included in gross income in year paid or made available under an eligible plan of a tax-exempt entity.*** Amounts deferred under an eligible plan of a tax-exempt entity are includible in the gross income of a participant or beneficiary for the taxable year in which paid or otherwise made available to the participant or beneficiary under the plan. Thus, amounts deferred under an eligible plan of a tax-exempt entity are includible in the gross income of the participant or beneficiary in the year the amounts are first made available under the terms of the plan, even if the plan has not distributed the amounts deferred. Amounts deferred under an eligible plan of a tax-exempt entity are not considered made available to the participant or beneficiary solely because the participant or beneficiary is permitted to choose among various investments under the plan.

(2) ***When amounts deferred are considered to be made available under an eligible plan of a tax-exempt entity —***

(i) ***General rule.*** Except as provided in paragraphs (c)(2)(ii) through (iv) of this section, amounts deferred under an eligible plan of a tax-exempt entity are considered made available (and, thus, are includible in the gross income of the participant or beneficiary under this paragraph (c)) at the earliest date, on or after severance from employment, on which the plan allows distributions to commence, but in no event later than the date on which distributions must commence pursuant to section 401(a)(9). For example, in the case of a plan that permits distribution to commence on the date that is 60 days after the close of the plan year in which the participant has a severance from employment with the eligible employer, amounts deferred are considered to be made available on that date. However, distributions deferred in accordance with paragraphs (c)(2)(ii) through (iv) of this section are not considered made available prior to the applicable date under paragraphs (c)(2)(ii) through (iv) of this section. In addition, no portion of

a participant or beneficiary's account is treated as made available (and thus currently includible in income) under an eligible plan of a tax-exempt entity merely because the participant or beneficiary under the plan may elect to receive a distribution in any of the following circumstances:

(A) A distribution in the event of an unforeseeable emergency to the extent the distribution is permitted under § 1.457-6(c).

(B) A distribution from an account for which the total amount deferred is not in excess of the dollar limit under section 411(a)(11)(A) to the extent the distribution is permitted under § 1.457-6(e).

(ii) ***Initial election to defer commencement of distributions*** —

(A) ***In general.*** An eligible plan of a tax-exempt entity may provide a period for making an initial election during which the participant or beneficiary may elect, in accordance with the terms of the plan, to defer the payment of some or all of the amounts deferred to a fixed or determinable future time. The period for making this initial election must expire prior to the first time that any such amounts would be considered made available under the plan under paragraph (c)(2)(i) of this section.

(B) ***Failure to make initial election to defer commencement of distributions.*** Generally, if no initial election is made by a participant or beneficiary under this paragraph (c)(2)(ii), then the amounts deferred under an eligible plan of a tax-exempt entity are considered made available and taxable to the participant or beneficiary in accordance with paragraph (c)(2)(i) of this section at the earliest time, on or after severance from employment (but in no event later than the date on which distributions must commence pursuant to section 401(a)(9)), that distribution is permitted to commence under the terms of the plan. However, the plan may provide for a default payment schedule that applies if no election is made. If the plan provides for a default payment schedule, the amounts deferred are includible in the gross income of the participant or beneficiary in the year the amounts deferred are first made available under the terms of the default payment schedule.

(iii) ***Additional election to defer commencement of distribution.*** An eligible plan of a tax-exempt entity is permitted to provide that a participant or beneficiary who has made an initial election under paragraph (c)(2)(ii)(A) of this section may make one additional election to defer (but not accelerate) commencement of distributions under the plan before distributions have commenced in accordance with the initial deferral election under paragraph (c)(2)(ii)(A) of this section. Amounts payable to a participant or beneficiary under an eligible plan of a tax-exempt entity are not treated as made available merely because the plan allows the participant to make an additional election under this paragraph (c)(2)(iii). A participant or beneficiary is not precluded from making an additional election to defer commencement of distributions merely because the participant or beneficiary has previously received a distribution under § 1.457-6(c) because of an unforeseeable emergency, has received a distribution of smaller amounts under § 1.457-6(e), has made (and revoked) other deferral or method of payment elections within the initial election period, or is subject to a default payment schedule under which the commencement of benefits is deferred (for example, until a participant is age 65).

(iv) ***Election as to method of payment.*** An eligible plan of a tax-exempt entity may provide that an election as to the method of payment under the plan may be made at any time prior to the time the amounts are distributed in accordance with the participant or beneficiary's initial or

additional election to defer commencement of distributions under paragraph (c)(2)(ii) or (iii) of this section. Where no method of payment is elected, the entire amount deferred will be includible in the gross income of the participant or beneficiary when the amounts first become made available in accordance with a participant's initial or additional elections to defer under paragraphs (c)(2)(ii) and (iii) of this section, unless the eligible plan provides for a default method of payment (in which case amounts are considered made available and taxable when paid under the terms of the default payment schedule). A method of payment means a distribution or a series of periodic distributions commencing on a date determined in accordance with paragraph (c)(2)(ii) or (iii) of this section.

(3) ***Examples.*** The provisions of this paragraph (c) are illustrated by the following examples:

Example 1. (i) *Facts.* Eligible Plan X of a tax-exempt entity provides that a participant's total account balance, representing all amounts deferred under the plan, is payable to a participant in a single sum 60 days after severance from employment throughout these examples, unless, during a 30-day period immediately following the severance, the participant elects to receive the single sum payment at a later date (that is not later than the plan's normal retirement age of 65) or elects to receive distribution in 10 annual installments to begin 60 days after severance from employment (or at a later date, if so elected, that is not later than the plan's normal retirement age of 65). On November 13, 2004, K, a calendar year taxpayer, has a severance from employment with the eligible employer. K does not, within the 30-day window period, elect to postpone distributions to a later date or to receive payment in 10 fixed annual installments.
(ii) *Conclusion.* The single sum payment is payable to K 60 days after the date K has a severance from employment (January 12, 2005), and is includible in the gross income of K in 2005 under section 457(a).

Example 2. (i) *Facts.* The terms of eligible Plan X are the same as described in *Example 1.* Participant L participates in eligible Plan X. On November 11, 2003, L has a severance from the employment of the eligible employer. On November 24, 2003, L makes an initial deferral election not to receive the single-sum payment payable 60 days after the severance, and instead elects to receive the amounts in 10 annual installments to begin 60 days after severance from employment.
(ii) *Conclusion.* No portion of L's account is considered made available in 2003 or 2004 before a payment is made and no amount is includible in the gross income of L until distributions commence. The annual installment payable in 2004 will be includible in L's gross income in 2004.

Example 3. (i) *Facts.* The facts are the same as in *Example 1,* except that eligible Plan X also provides that those participants who are receiving distributions in 10 annual installments may, at any time and without restriction, elect to receive a cash out of all remaining installments. Participant M elects to receive a distribution in 10 annual installments commencing in 2004.
(ii) *Conclusion.* M's total account balance, representing the total of the amounts deferred under the plan, is considered made available and is includible in M's gross income in 2004.

Example 4. (i) *Facts.* The facts are the same as in *Example 3,* except that, instead of providing for an

unrestricted cashout of remaining payments, the plan provides that participants or beneficiaries who are receiving distributions in 10 annual installments may accelerate the payment of the amount remaining payable to the participant upon the occurrence of an unforeseeable emergency as described in § 1.457-6(c)(1) in an amount not exceeding that described in § 1.457-6(c)(2).
(ii) *Conclusion.* No amount is considered made available to participant M on account of M's right to accelerate payments upon the occurrence of an unforeseeable emergency.

Example 5. (i) *Facts.* Eligible Plan Y of a tax-exempt entity provides that distributions will commence 60 days after a participant's severance from employment unless the participant elects, within a 30-day window period following severance from employment, to defer distributions to a later date (but no later than the year following the calendar year the participant attains age 70½). The plan provides that a participant who has elected to defer distributions to a later date may make an election as to form of distribution at any time prior to the 30th day before distributions are to commence.
(ii) *Conclusion.* No amount is considered made available prior to the date distributions are to commence by reason of a participant's right to defer or make an election as to the form of distribution.

Example 6. (i) *Facts.* The facts are the same as in *Example 1,* except that the plan also permits participants who have made an initial election to defer distribution to make one additional deferral election at any time prior to the date distributions are scheduled to commence. Participant N has a severance from employment at age 50. The next day, during the 30-day period provided in the plan, N elects to receive distribution in the form of 10 annual installment payments beginning at age 55. Two weeks later, within the 30-day window period, N makes a new election permitted under the plan to receive 10 annual installment payments beginning at age 60 (instead of age 55). When N is age 59, N elects under the additional deferral election provisions, to defer distributions until age 65.
(ii) *Conclusion.* In this example, N's election to defer distributions until age 65 is a valid election. The two elections N makes during the 30-day window period are not additional deferral elections described in paragraph (c)(2)(iii) of this section because they are made before the first permissible payout date under the plan. Therefore, the plan is not precluded from allowing N to make the additional deferral election. However, N can make no further election to defer distributions beyond age 65 (or accelerate distribution before age 65) because this additional deferral election can only be made once.

[T.D. 9075, 68 FR 41240, July 11, 2003; 68 FR 51447, Aug. 27, 2003]

§ 1.457-8 Funding rules for eligible plans.

(a) ***Eligible governmental plans*** —

(1) ***In general.*** In order to be an eligible governmental plan, all amounts deferred under the plan, all property and rights purchased with such amounts, and all income attributable to such amounts, property, or rights, must be held in trust for the exclusive benefit of participants and their beneficiaries. A trust described in this paragraph (a) that also meets the requirements of §§ 1.457-3 through 1.457-10 is treated as an organization exempt from tax under section 501(a), and a

participant's or beneficiary's interest in amounts in the trust is includible in the gross income of the participants and beneficiaries only to the extent, and at the time, provided for in section 457(a) and §§ 1.457-4 through 1.457-10.

(2) *Trust requirement.*

(i) A trust described in this paragraph (a) must be established pursuant to a written agreement that constitutes a valid trust under State law. The terms of the trust must make it impossible, prior to the satisfaction of all liabilities with respect to participants and their beneficiaries, for any part of the assets and income of the trust to be used for, or diverted to, purposes other than for the exclusive benefit of participants and their beneficiaries.

(ii) Amounts deferred under an eligible governmental plan must be transferred to a trust within a period that is not longer than is reasonable for the proper administration of the participant accounts (if any). For purposes of this requirement, the plan may provide for amounts deferred for a participant under the plan to be transferred to the trust within a specified period after the date the amounts would otherwise have been paid to the participant. For example, the plan could provide for amounts deferred under the plan at the election of the participant to be contributed to the trust within 15 business days following the month in which these amounts would otherwise have been paid to the participant.

(3) *Custodial accounts and annuity contracts treated as trusts* —

(i) ***In general.*** For purposes of the trust requirement of this paragraph (a), custodial accounts and annuity contracts described in section 401(f) that satisfy the requirements of this paragraph (a)(3) are treated as trusts under rules similar to the rules of section 401(f). Therefore, the provisions of § 1.401(f)-1(b) will generally apply to determine whether a custodial account or an annuity contract is treated as a trust. The use of a custodial account or annuity contract as part of an eligible governmental plan does not preclude the use of a trust or another custodial account or annuity contract as part of the same plan, provided that all such vehicles satisfy the requirements of section 457(g)(1) and (3) and paragraphs (a)(1) and (2) of this section and that all assets and income of the plan are held in such vehicles.

(ii) *Custodial accounts* —

(A) ***In general.*** A custodial account is treated as a trust, for purposes of section 457(g)(1) and paragraphs (a)(1) and (2) of this section, if the custodian is a bank, as described in section 408(n), or a person who meets the nonbank trustee requirements of paragraph (a)(3)(ii)(B) of this section, and the account meets the requirements of paragraphs (a)(1) and (2) of this section, other than the requirement that it be a trust.

(B) ***Nonbank trustee status.*** The custodian of a custodial account may be a person other than a bank only if the person demonstrates to the satisfaction of the Commissioner that the manner in which the person will administer the custodial account will be consistent with the requirements of section 457(g)(1) and (3). To do so, the person must demonstrate that the requirements of § 1.408-2(e)(2) through (6) (relating to nonbank trustees) are met. The written application must be sent to the address prescribed by the Commissioner in the same manner as prescribed under § 1.408-2(e). To the extent that a person has already demonstrated to the satisfaction of the Commissioner that the person satisfies the requirements of § 1.408-2(e) in connection with a qualified trust (or custodial account or annuity contract) under section 401(a), that person is deemed to satisfy the requirements of this paragraph (a)(3)(ii)(B).

(iii) ***Annuity contracts.*** An annuity contract is treated as a trust for purposes of section 457(g)(1) and paragraph (a)(1) of this section if the contract is an annuity contract, as defined in section 401(g), that has been issued by an insurance company qualified to do business in the State, and the contract meets the requirements of paragraphs (a)(1) and (2) of this section, other than the requirement that it be a trust. An annuity contract does not include a life, health or accident, property, casualty, or liability insurance contract.

(4) ***Combining assets.*** [Reserved]

(b) ***Eligible plans maintained by tax-exempt entity*** —

(1) ***General rule.*** In order to be an eligible plan of a tax-exempt entity, the plan must be unfunded and plan assets must not be set aside for participants or their beneficiaries. Under section 457(b)(6) and this paragraph (b), an eligible plan of a tax-exempt entity must provide that all amounts deferred under the plan, all property and rights to property (including rights as a beneficiary of a contract providing life insurance protection) purchased with such amounts, and all income attributable to such amounts, property, or rights, must remain (until paid or made available to the participant or beneficiary) solely the property and rights of the eligible employer (without being restricted to the provision of benefits under the plan), subject only to the claims of the eligible employer's general creditors.

(2) ***Additional requirements.*** For purposes of paragraph (b)(1) of this section, the plan must be unfunded regardless of whether or not the amounts were deferred pursuant to a salary reduction agreement between the eligible employer and the participant. Any funding arrangement under an eligible plan of a tax-exempt entity that sets aside assets for the exclusive benefit of participants violates this requirement, and amounts deferred are generally immediately includible in the gross income of plan participants and beneficiaries. Nothing in this paragraph (b) prohibits an eligible plan from permitting participants and their beneficiaries to make an election among different investment options available under the plan, such as an election affecting the investment of the amounts described in paragraph (b)(1) of this section.

[T.D. 9075, 68 FR 41240, July 11, 2003; 68 FR 51447, Aug. 27, 2003]

§ 1.457-9 Effect on eligible plans when not administered in accordance with eligibility requirements.

(a) ***Eligible governmental plans.*** A plan of a State ceases to be an eligible governmental plan on the first day of the first plan year beginning more than 180 days after the date on which the Commissioner notifies the State in writing that the plan is being administered in a manner that is inconsistent with one or more of the requirements of §§ 1.457-3 through 1.457-8 or 1.447-10. However, the plan may correct the plan inconsistencies specified in the written notification before the first day of that plan year and continue to maintain plan eligibility. If a plan ceases to be an eligible governmental plan, amounts subsequently deferred by participants will be includible in income when deferred, or, if later, when the amounts deferred cease to be subject to a substantial risk of forfeiture, as provided at § 1.457-11. Amounts deferred before the date on which the plan ceases to be an eligible governmental plan, and any earnings thereon, will be treated as if the plan continues to be an eligible governmental plan and will not be includible in participant's or beneficiary's gross income until paid to the participant or beneficiary.

(b) ***Eligible plans of tax-exempt entities.*** A plan of a tax-exempt entity ceases to be an eligible plan on the first day that the plan fails to satisfy one or more of the requirements of §§ 1.457-3 through 1.457-8, or § 1.457-10. *See* § 1.457-11 for rules regarding the treatment of an ineligible plan.

[T.D. 9075, 68 FR 41240, July 11, 2003; 68 FR 51447, Aug. 27, 2003]

§ 1.457-10 Miscellaneous provisions.

(a) ***Plan terminations and frozen plans*** —

(1) ***In general.*** An eligible employer may amend its plan to eliminate future deferrals for existing participants or to limit participation to existing participants and employees. An eligible plan may also contain provisions that permit plan termination and permit amounts deferred to be distributed on termination. In order for a plan to be considered terminated, amounts deferred under an eligible plan must be distributed to all plan participants and beneficiaries as soon as administratively practicable after termination of the eligible plan. The mere provision for, and making of, distributions to participants or beneficiaries upon a plan termination will not cause an eligible plan to cease to satisfy the requirements of section 457(b) or the regulations.

(2) ***Employers that cease to be eligible employers*** —

(i) ***Plan not terminated.*** An eligible employer that ceases to be an eligible employer may no longer maintain an eligible plan. If the employer was a tax-exempt entity and the plan is not terminated as permitted under paragraph (a)(2)(ii) of this section, the tax consequences to participants and beneficiaries in the previously eligible (unfunded) plan of an ineligible employer are determined in accordance with either section 451 if the employer becomes an entity other than a State or § 1.457-11 if the employer becomes a State. If the employer was a State and the plan is neither terminated as permitted under paragraph (a)(2)(ii) of this section nor transferred to another eligible plan of that State as permitted under paragraph (b) of this section, the tax consequences to participants in the previously eligible governmental plan of an ineligible employer, the assets of which are held in trust pursuant to § 1.457-8(a), are determined in accordance with section 402(b) (section 403(c) in the case of an annuity contract) and the trust is no longer to be treated as a trust that is exempt from tax under section 501(a).

(ii) ***Plan termination.*** As an alternative to determining the tax consequences to the plan and participants under paragraph (a)(2)(i) of this section, the employer may terminate the plan and distribute the amounts deferred (and all plan assets) to all plan participants as soon as administratively practicable in accordance with paragraph (a)(1) of this section. Such distribution may include eligible rollover distributions in the case of a plan that was an eligible governmental plan. In addition, if the employer is a State, another alternative to determining the tax consequences under paragraph (a)(2)(i) of this section is to transfer the assets of the eligible governmental plan to an eligible governmental plan of another eligible employer within the same State under the plan-to-plan transfer rules of paragraph (b) of this section.

(3) ***Examples.*** The provisions of this paragraph (a) are illustrated by the following examples:

> *Example 1.* (i) *Facts.* Employer Y, a corporation that owns a State hospital, sponsors an eligible governmental plan funded through a trust. Employer Y is acquired by a for-profit hospital and Employer Y ceases to be an eligible employer under section 457(e)(1) or §

1.457-2(e). Employer Y terminates the plan and, during the next 6 months, distributes to participants and beneficiaries all amounts deferred that were under the plan.
(ii) *Conclusion.* The termination and distribution does not cause the plan to fail to be an eligible governmental plan. Amounts that are distributed as eligible rollover distributions may be rolled over to an eligible retirement plan described in section 402(c)(8)(B).

Example 2. (i) *Facts.* The facts are the same as in *Example 1,* except that Employer Y decides to continue to maintain the plan.
(ii) *Conclusion.* If Employer Y continues to maintain the plan, the tax consequences to participants and beneficiaries will be determined in accordance with either section 402(b) if the compensation deferred is funded through a trust, section 403(c) if the compensation deferred is funded through annuity contracts, or § 1.457-11 if the compensation deferred is not funded through a trust or annuity contract. In addition, if Employer Y continues to maintain the plan, the trust will no longer be treated as exempt from tax under section 501(a).

Example 3. (i) *Facts.* Employer Z, a corporation that owns a tax-exempt hospital, sponsors an unfunded eligible plan. Employer Z is acquired by a for-profit hospital and is no longer an eligible employer under section 457(e)(1) or § 1.457-2(e). Employer Z terminates the plan and distributes all amounts deferred under the eligible plan to participants and beneficiaries within a one-year period.
(ii) *Conclusion.* Distributions under the plan are treated as made under an eligible plan of a tax-exempt entity and the distributions of the amounts deferred are includible in the gross income of the participant or beneficiary in the year distributed.

Example 4. (i) *Facts.* The facts are the same as in *Example 3,* except that Employer Z decides to maintain instead of terminate the plan.
(ii) *Conclusion.* If Employer Z maintains the plan, the tax consequences to participants and beneficiaries in the plan will thereafter be determined in accordance with section 451.

(b) ***Plan-to-plan transfers*** —

(1) ***General rule.*** An eligible governmental plan may provide for the transfer of amounts deferred by a participant or beneficiary to another eligible governmental plan if the conditions in paragraphs (b)(2), (3), or (4) of this section are met. An eligible plan of a tax-exempt entity may provide for transfers of amounts deferred by a participant to another eligible plan of a tax-exempt entity if the conditions in paragraph (b)(5) of this section are met. In addition, an eligible governmental plan may accept transfers from another eligible governmental plan as described in the first sentence of this paragraph (b)(1), and an eligible plan of a tax-exempt entity may accept transfers from another eligible plan of a tax-exempt entity as described in the preceding sentence. However, a State may not transfer the assets of its eligible governmental plan to a tax-exempt entity's eligible plan and the plan of a tax-exempt entity may not accept such a transfer. Similarly, a tax-exempt entity may not transfer the assets of its eligible plan to an eligible governmental plan and an eligible governmental plan may not accept such a transfer. In addition, if the conditions in paragraph (b)(4) of this section (relating to

permissive past service credit and repayments under section 415) are met, an eligible governmental plan of a State may provide for the transfer of amounts deferred by a participant or beneficiary to a qualified plan (under section 401(a)) maintained by a State. However, a qualified plan may not transfer assets to an eligible governmental plan or to an eligible plan of a tax-exempt entity, and an eligible governmental plan or the plan of a tax-exempt entity may not accept such a transfer.

(2) ***Requirements for post-severance plan-to-plan transfers among eligible governmental plans.*** A transfer under paragraph (b)(1) of this section from an eligible governmental plan to another eligible governmental plan is permitted if the following conditions are met—

(i) The transferor plan provides for transfers;

(ii) The receiving plan provides for the receipt of transfers;

(iii) The participant or beneficiary whose amounts deferred are being transferred will have an amount deferred immediately after the transfer at least equal to the amount deferred with respect to that participant or beneficiary immediately before the transfer; and

(iv) In the case of a transfer for a participant, the participant has had a severance from employment with the transferring employer and is performing services for the entity maintaining the receiving plan.

(3) ***Requirements for plan-to-plan transfers of all plan assets of eligible governmental plan.*** A transfer under paragraph (b)(1) of this section from an eligible governmental plan to another eligible governmental plan is permitted if the following conditions are met—

(i) The transfer is from an eligible governmental plan to another eligible governmental plan within the same State;

(ii) All of the assets held by the transferor plan are transferred;

(iii) The transferor plan provides for transfers;

(iv) The receiving plan provides for the receipt of transfers;

(v) The participant or beneficiary whose amounts deferred are being transferred will have an amount deferred immediately after the transfer at least equal to the amount deferred with respect to that participant or beneficiary immediately before the transfer; and

(vi) The participants or beneficiaries whose deferred amounts are being transferred are not eligible for additional annual deferrals in the receiving plan unless they are performing services for the entity maintaining the receiving plan.

(4) ***Requirements for plan-to-plan transfers among eligible governmental plans of the same employer.*** A transfer under paragraph (b)(1) of this section from an eligible governmental plan to another eligible governmental plan is permitted if the following conditions are met—

(i) The transfer is from an eligible governmental plan to another eligible governmental plan of the same employer (and, for this purpose, the employer is not treated as the same employer if the participant's compensation is paid by a different entity);

(ii) The transferor plan provides for transfers;

(iii) The receiving plan provides for the receipt of transfers;

(iv) The participant or beneficiary whose amounts deferred are being transferred will have an amount deferred immediately after the transfer at least equal to the amount deferred with respect to that participant or beneficiary immediately before the transfer; and

(v) The participant or beneficiary whose deferred amounts are being transferred is not eligible for additional annual deferrals in the receiving plan unless the participant or beneficiary is performing services for the entity maintaining the receiving plan.

(5) ***Requirements for post-severance plan-to-plan transfers among eligible plans of tax-exempt entities.*** A transfer under paragraph (b)(1) of this section from an eligible plan of a tax-exempt employer to another eligible plan of a tax-exempt employer is permitted if the following conditions are met—

(i) The transferor plan provides for transfers;

(ii) The receiving plan provides for the receipt of transfers;

(iii) The participant or beneficiary whose amounts deferred are being transferred will have an amount deferred immediately after the transfer at least equal to the amount deferred with respect to that participant or beneficiary immediately before the transfer; and

(iv) In the case of a transfer for a participant, the participant has had a severance from employment with the transferring employer and is performing services for the entity maintaining the receiving plan.

(6) ***Treatment of amount transferred following a plan-to-plan transfer between eligible plans.*** Following a transfer of any amount between eligible plans under paragraphs (b)(1) through (b)(5) of this section—

(i) The transferred amount is subject to the restrictions of § 1.457-6 (relating to when distributions are permitted to be made to a participant under an eligible plan) in the receiving plan in the same manner as if the transferred amount had been originally been deferred under the receiving plan if the participant is performing services for the entity maintaining the receiving plan, and

(ii) In the case of a transfer between eligible plans of tax-exempt entities, except as otherwise determined by the Commissioner, the transferred amount is subject to § 1.457-7(c)(2) (relating to when amounts are considered to be made available under an eligible plan of a tax-exempt entity) in the same manner as if the elections made by the participant or beneficiary under the transferor plan had been made under the receiving plan.

(7) ***Examples.*** The provisions of paragraphs (b)(1) through (6) of this section are illustrated by the following examples:

> *Example 1.* (i) *Facts.* Participant A, the president of City X's hospital, has accepted a position with another hospital which is a tax-exempt entity. A participates in the eligible governmental plan of City X. A would like to transfer the amounts deferred under City X's eligible governmental plan to the eligible plan of the tax-exempt hospital.
> (ii) *Conclusion.* City X's plan may not transfer A's amounts deferred to the tax-exempt employer's eligible plan. In addition, because the amounts deferred would no longer be held in trust for the exclusive benefit of participants and their beneficiaries, the transfer would violate the exclusive benefit rule of section 457(g) and § 1.457-8(a).

Example 2. (i) *Facts.* County M, located in State S, operates several health clinics and maintains an eligible governmental plan for employees of those clinics. One of the clinics operated by County M is being acquired by a hospital operated by State S, and employees of that clinic will become employees of State S. County M permits those employees to transfer their balances under County M's eligible governmental plan to the eligible governmental plan of State S.
(ii) *Conclusion.* If the eligible governmental plans of County M and State S provide for the transfer and acceptance of the transfer (and the other requirements of paragraph (b)(1) of this section are satisfied), then the requirements of paragraph (b)(2) of this section are satisfied and, thus, the transfer will not cause either plan to violate the requirements of section 457 or these regulations.

Example 3. (i) *Facts.* City Employer Z, a hospital, sponsors an eligible governmental plan. City Employer Z is located in State B. All of the assets of City Employer Z are being acquired by a tax-exempt hospital. City Employer Z, in accordance with the plan-to-plan transfer rules of paragraph (b) of this section, would like to transfer the total amount of assets deferred under City Employer Z's eligible governmental plan to the acquiring tax-exempt entity's eligible plan.
(ii) *Conclusion.* City Employer Z may not permit participants to transfer the amounts to the eligible plan of the tax-exempt entity. In addition, because the amounts deferred would no longer be held in trust for the exclusive benefit of participants and their beneficiaries, the transfer would violate the exclusive benefit rule of section 457(g) and § 1.457-8(a).

Example 4. (i) *Facts.* The facts are the same as in *Example 3,* except that City Employer Z, instead of transferring all of its assets to the eligible plan of the tax-exempt entity, decides to transfer all of the amounts deferred under City Z's eligible governmental plan to the eligible governmental plan of County B in which City Z is located. County B's eligible plan does not cover employees of City Z, but is willing to allow the assets of City Z's plan to be transferred to County B's plan, a related state government entity, also located in State B.
(ii) *Conclusion.* If City Employer Z's (transferor) eligible governmental plan provides for such transfer and the eligible governmental plan of County B permits the acceptance of such a transfer (and the other requirements of paragraph (b)(1) of this section are satisfied), then the requirements of paragraph (b)(3) of this section are satisfied and, thus, City Employer Z may transfer the total amounts deferred under its eligible governmental plan, prior to termination of that plan, to the eligible governmental plan maintained by County B. However, the participants of City Employer Z whose deferred amounts are being transferred are not eligible to participate in the eligible governmental plan of County B, the receiving plan, unless they are performing services for County B.

Example 5. (i) *Facts.* State C has an eligible governmental plan. Employees of City U in State

C are among the eligible employees for State C's plan and City U decides to adopt another eligible governmental plan only for its employees. State C decides to allow employees to elect to transfer all of the amounts deferred for an employee under State C's eligible governmental plan to City U's eligible governmental plan.
(ii) Conclusion. If State C's (transferor) eligible governmental plan provides for such transfer and the eligible governmental plan of City U permits the acceptance of such a transfer (and the other requirements of paragraph (b)(1) of this section are satisfied), then the requirements of paragraph (b)(4) of this section are satisfied and, thus, State C may transfer the total amounts deferred under its eligible governmental plan to the eligible governmental plan maintained by City U.

(8) ***Purchase of permissive service credit by plan-to-plan transfers from an eligible governmental plan to a qualified plan*** —

(i) ***General rule.*** An eligible governmental plan of a State may provide for the transfer of amounts deferred by a participant or beneficiary to a defined benefit governmental plan (as defined in section 414(d)), and no amount shall be includible in gross income by reason of the transfer, if the conditions in paragraph (b)(8)(ii) of this section are met. A transfer under this paragraph (b)(8) is not treated as a distribution for purposes of § 1.457-6. Therefore, such a transfer may be made before severance from employment.

(ii) ***Conditions for plan-to-plan transfers from an eligible governmental plan to a qualified plan.*** A transfer may be made under this paragraph (b)(8) only if the transfer is either—

(A) For the purchase of permissive service credit (as defined in section 415(n)(3)(A)) under the receiving defined benefit governmental plan; or

(B) A repayment to which section 415 does not apply by reason of section 415(k)(3).

(iii) ***Example.*** The provisions of this paragraph (b)(8) are illustrated by the following example:

Example. (i) *Facts.* Plan X is an eligible governmental plan maintained by County Y for its employees. Plan X provides for distributions only in the event of death, an unforeseeable emergency, or severance from employment with County Y (including retirement from County Y). Plan S is a qualified defined benefit plan maintained by State T for its employees. County Y is within State T. Employee A is an employee of County Y and is a participant in Plan X. Employee A previously was an employee of State T and is still entitled to benefits under Plan S. Plan S includes provisions allowing participants in certain plans, including Plan X, to transfer assets to Plan S for the purchase of service credit under Plan S and does not permit the amount transferred to exceed the amount necessary to fund the benefit resulting from the service credit. Although not required to do so, Plan X allows Employee A to transfer assets to Plan S to provide a service benefit under Plan S.
(ii) *Conclusion.* The transfer is permitted under this paragraph (b)(8).

(c) ***Qualified domestic relations orders under eligible plans*** —

(1) ***General rule.*** An eligible plan does not become an ineligible plan described in section 457(f) solely because its administrator or sponsor complies with a qualified domestic relations order as defined in section 414(p), including an order requiring the distribution of the benefits of a participant to an alternate payee in advance of the general rules for eligible plan distributions under § 1.457-6. If a distribution or payment is made from an eligible plan to an alternate payee pursuant to a qualified domestic relations order, rules similar to the rules of section 402(e)(1)(A) shall apply to the distribution or payment.

(2) ***Examples.*** The provisions of this paragraph (c) are illustrated by the following examples:

> *Example 1.* (i) *Facts.* Participant C and C's spouse D are divorcing. C is employed by State S and is a participant in an eligible plan maintained by State S. C has an account valued at $100,000 under the plan. Pursuant to the divorce, a court issues a qualified domestic relations order on September 1, 2003 that allocates 50 percent of C's $100,000 plan account to D and specifically provides for an immediate distribution to D of D's share within 6 months of the order. Payment is made to D in January of 2004.
> (ii) *Conclusion.* State S's eligible plan does not become an ineligible plan described in section 457(f) and § 1.457-11 solely because its administrator or sponsor complies with the qualified domestic relations order requiring the immediate distribution to D in advance of the general rules for eligible plan distributions under § 1.457-6. In accordance with section 402(e)(1)(A), D (not C) must include the distribution in gross income. The distribution is includible in D's gross income in 2004. If the qualified domestic relations order were to provide for distribution to D at a future date, amounts deferred attributable to D's share will be includible in D's gross income when paid to D.

> *Example 2.* (i) *Facts.* The facts are the same as in *Example 1,* except that S is a tax-exempt entity, instead of a State.
> (ii) *Conclusion.* State S's eligible plan does not become an ineligible plan described in section 457(f) and § 1.457-11 solely because its administrator or sponsor complies with the qualified domestic relations order requiring the immediate distribution to D in advance of the general rules for eligible plan distributions under § 1.457-6. In accordance with section 402(e)(1)(A), D (not C) must include the distribution in gross income. The distribution is includible in D's gross income in 2004, assuming that the plan did not make the distribution available to D in 2003. If the qualified domestic relations order were to provide for distribution to D at a future date, amounts deferred attributable to D's share would be includible in D's gross income when paid or made available to D.

(d) ***Death benefits and life insurance proceeds.*** A death benefit plan under section 457(e)(11) is not an eligible plan. In addition, no amount paid or made available under an eligible plan as death benefits or life insurance proceeds is excludable from gross income under section 101.

(e) ***Rollovers to eligible governmental plans*** —

(1) ***General rule.*** An eligible governmental plan may accept contributions that are eligible rollover distributions (as defined in section 402(c)(4)) made from another eligible retirement plan (as defined in section 402(c)(8)(B)) if the conditions in paragraph (e)(2) of this section are met. Amounts contributed to an eligible governmental plan as eligible rollover distributions are not taken into account for purposes of the annual limit on annual deferrals by a participant in § 1.457-4(c) or § 1.457-5, but are otherwise treated in the same manner as amounts deferred under section 457 for purposes of §§ 1.457-3 through 1.457-9 and this section.

(2) ***Conditions for rollovers to an eligible governmental plan.*** An eligible governmental plan that permits eligible rollover distributions made from another eligible retirement plan to be paid into the eligible governmental plan is required under this paragraph (e)(2) to provide that it will separately account for any eligible rollover distributions it receives. A plan does not fail to satisfy this requirement if it separately accounts for particular types of eligible rollover distributions (for example, if it maintains a separate account for eligible rollover distributions attributable to annual deferrals that were made under other eligible governmental plans and a separate account for amounts attributable to other eligible rollover distributions), but this requirement is not satisfied if any such separate account includes any amount that is not attributable to an eligible rollover distribution.

(3) ***Example.*** The provisions of this paragraph (e) are illustrated by the following example:

> *Example.* (i) *Facts.* Plan T is an eligible governmental plan that provides that employees who are eligible to participate in Plan T may make rollover contributions to Plan T from amounts distributed to an employee from an eligible retirement plan. An eligible retirement plan is defined in Plan T as another eligible governmental plan, a qualified section 401(a) or 403(a) plan, or a section 403(b) contract, or an individual retirement arrangement (IRA) that holds such amounts. Plan T requires rollover contributions to be paid by the eligible retirement plan directly to Plan T (a direct rollover) or to be paid by the participant within 60 days after the date on which the participant received the amount from the other eligible retirement plan. Plan T does not take rollover contributions into account for purposes of the plan's limits on amounts deferred that conform to § 1.457-4(c). Rollover contributions paid to Plan T are invested in the trust in the same manner as amounts deferred under Plan T and rollover contributions (and earnings thereon) are available for distribution to the participant at the same time and in the same manner as amounts deferred under Plan T. In addition, Plan T provides that, for each participant who makes a rollover contribution to Plan T, the Plan T record-keeper is to establish a separate account for the participant's rollover contributions. The record-keeper calculates earnings and losses for investments held in the rollover account separately from earnings and losses on other amounts held under the plan and calculates disbursements from and payments made to the rollover account separately from disbursements from and payments made to other amounts held under the plan.
> (ii) *Conclusion.* Plan T does not lose its status as an eligible governmental plan as a result of the receipt of rollover contributions. The conclusion would not be different if the Plan T record-keeper were to establish two separate accounts, one of which is for the participant's rollover contributions attributable to annual deferrals that were made under an eligible governmental plan and the other of which is for other rollover contributions.

(f) ***Deemed IRAs under eligible governmental plans.*** See regulations under section 408(q) for guidance regarding the treatment of separate accounts or annuities as individual retirement plans (IRAs).

[T.D. 9075, 68 FR 41240, July 11, 2003; 68 FR 51447, Aug. 27, 2003; T.D. 9319, 72 FR 16931, Apr. 5, 2007]

§ 1.457-11 Tax treatment of participants if plan is not an eligible plan.

(a) ***In general.*** Under section 457(f), if an eligible employer provides for a deferral of compensation under any agreement or arrangement that is an ineligible plan—

(1) Compensation deferred under the agreement or arrangement is includible in the gross income of the participant or beneficiary for the first taxable year in which there is no substantial risk of forfeiture (within the meaning of section 457(f)(3)(B)) of the rights to such compensation;

(2) If the compensation deferred is subject to a substantial risk of forfeiture, the amount includible in gross income for the first taxable year in which there is no substantial risk of forfeiture includes earnings thereon to the date on which there is no substantial risk of forfeiture;

(3) Earnings credited on the compensation deferred under the agreement or arrangement that are not includible in gross income under paragraph (a)(2) of this section are includible in the gross income of the participant or beneficiary only when paid or made available to the participant or beneficiary, provided that the interest of the participant or beneficiary in any assets (including amounts deferred under the plan) of the entity sponsoring the agreement or arrangement is not senior to the entity's general creditors; and

(4) Amounts paid or made available to a participant or beneficiary under the agreement or arrangement are includible in the gross income of the participant or beneficiary under section 72, relating to annuities.

(b) ***Exceptions.*** Paragraph (a) of this section does not apply with respect to—

(1) A plan described in section 401(a) which includes a trust exempt from tax under section 501(a);

(2) An annuity plan or contract described in section 403;

(3) That portion of any plan which consists of a transfer of property described in section 83;

(4) That portion of any plan which consists of a trust to which section 402(b) applies; or

(5) A qualified governmental excess benefit arrangement described in section 415(m).

(c) ***Amount included in income.*** The amount included in gross income on the applicable date under paragraphs (a)(1) and (a)(2) of this section is equal to the present value of the compensation (including earnings to the extent provided in paragraph (a)(2) of this section) on that date. For purposes of applying section 72 on the applicable date under paragraphs (a)(3) and (4) of this section, the participant is treated as having paid investment in the contract (or basis) to the extent that the deferred compensation has been taken into account by the participant in accordance with paragraphs (a)(1) and (a)(2) of this section.

(d) ***Coordination of section 457(f) with section 83*** —

(1) ***General rules.*** Under paragraph (b)(3) of this section, section 457(f) and paragraph (a) of this section do not apply to that portion of any plan which consists of a transfer of property described in section 83. For this purpose, a transfer of property described in section 83 means a transfer of property to which section 83 applies. Section 457(f) and paragraph (a) of this section do not apply if the date on

which there is no substantial risk of forfeiture with respect to compensation deferred under an agreement or arrangement that is not an eligible plan is on or after the date on which there is a transfer of property to which section 83 applies. However, section 457(f) and paragraph (a) of this section apply if the date on which there is no substantial risk of forfeiture with respect to compensation deferred under an agreement or arrangement that is not an eligible plan precedes the date on which there is a transfer of property to which section 83 applies. If deferred compensation payable in property is includible in gross income under section 457(f), then, as provided in section 72, the amount includible in gross income when that property is later transferred or made available to the service provider is the excess of the value of the property at that time over the amount previously included in gross income under section 457(f).

(2) ***Examples.*** The provisions of this paragraph (d) are illustrated in the following examples:

Example 1. (i) *Facts.* As part of an arrangement for the deferral of compensation, an eligible employer agrees on December 1, 2002 to pay an individual rendering services for the eligible employer a specified dollar amount on January 15, 2005. The arrangement provides for the payment to be made in the form of property having a fair market value equal to the specified dollar amount. The individual's rights to the payment are not subject to a substantial risk of forfeiture (within the meaning of section 457(f)(3)(B)).
(ii) *Conclusion.* In this *Example 1,* because there is no substantial risk of forfeiture with respect to the agreement to transfer property in 2005, the present value (as of December 1, 2002) of the payment is includible in the individual's gross income for 2002. Under paragraph (a)(4) of this section, when the payment is made on January 15, 2005, the amount includible in the individual's gross income is equal to the excess of the fair market value of the property when paid, over the amount that was includible in gross income for 2002 (which is the basis allocable to that payment).

Example 2. (i) *Facts.* As part of an arrangement for the deferral of compensation, individuals A and B rendering services for a tax-exempt entity each receive in 2010 property that is subject to a substantial risk of forfeiture (within the meaning of section 457(f)(3)(B) and within the meaning of section 83(c)(1)). Individual A makes an election to include the fair market value of the property in gross income under section 83(b) and individual B does not make this election. The substantial risk of forfeiture for the property transferred to individual A lapses in 2012 and the substantial risk of forfeiture for the property transferred to individual B also lapses in 2012. Thus, the property transferred to individual A is included in A's gross income for 2010 when A makes a section 83(b) election and the property transferred to individual B is included in B's gross income for 2012 when the substantial risk of forfeiture for the property lapses.
(ii) *Conclusion.* In this *Example 2,* in each case, the compensation deferred is not subject to section 457(f) or this section because section 83 applies to the transfer of property on or before the date on which there is no substantial risk of forfeiture with respect to compensation deferred under the arrangement.

Example 3. (i) *Facts.* In 2004, Z, a tax-exempt entity, grants an option to acquire property to employee C. The option lacks a readily ascertainable fair market value, within the meaning of section 83(e)(3), has a value on the date of grant equal to $100,000, and is not subject to a substantial risk of forfeiture (within the meaning of section 457(f)(3)(B) and within the meaning of section 83(c)(1)). Z exercises the option in 2012 by paying an exercise price of $75,000 and receives property that has a fair market value (for

purposes of section 83) equal to $300,000.
(ii) *Conclusion.* In this *Example 3,* under section 83(e)(3), section 83 does not apply to the grant of the option. Accordingly, C has income of $100,000 in 2004 under section 457(f). In 2012, C has income of $125,000, which is the value of the property transferred in 2012, minus the allocable portion of the basis that results from the $100,000 of income in 2004 and the $75,000 exercise price.

Example 4. (i) *Facts.* In 2010, X, a tax-exempt entity, agrees to pay deferred compensation to employee D. The amount payable is $100,000 to be paid 10 years later in 2020. The commitment to make the $100,000 payment is not subject to a substantial risk of forfeiture. In 2010, the present value of the $100,000 is $50,000. In 2018, X transfers to D property having a fair market value (for purposes of section 83) equal to $70,000. The transfer is in partial settlement of the commitment made in 2010 and, at the time of the transfer in 2018, the present value of the commitment is $80,000. In 2020, X pays D the $12,500 that remains due.
(ii) *Conclusion.* In this *Example 4,* D has income of $50,000 in 2010. In 2018, D has income of $30,000, which is the amount transferred in 2018, minus the allocable portion of the basis that results from the $50,000 of income in 2010. (Under section 72(e)(2)(B), income is allocated first. The income is equal to $30,000 ($80,000 minus the $50,000 basis), with the result that the allocable portion of the basis is equal to $40,000 ($70,000 minus the $30,000 of income).) In 2020, D has income of $2,500 ($12,500 minus $10,000, which is the excess of the original $50,000 basis over the $40,000 basis allocated to the transfer made in 2018).

[T.D. 9075, 68 FR 41240, July 11, 2003]

§ 1.457-12 Effective dates.

(a) ***General effective date.*** Except as otherwise provided in this section, §§ 1.457-1 through 1.457-11 apply for taxable years beginning after December 31, 2001.

(b) ***Transition period for eligible plans to comply with EGTRRA.*** For taxable years beginning after December 31, 2001, and before January 1, 2004, a plan does not fail to be an eligible plan as a result of requirements imposed by the Economic Growth and Tax Relief Reconciliation Act of 2001 (115 Stat. 385) (EGTRRA) (Public Law 107-16) June 7, 2001, if it is operated in accordance with a reasonable, good faith interpretation of EGTRRA.

(c) ***Special rule for distributions from rollover accounts.*** The last sentence of § 1.457-6(a) (relating to distributions of amounts held in a separate account for eligible rollover distributions) applies for taxable years beginning after December 31, 2003.

(d) ***Special rule for options.*** Section 1.457-11(d) does not apply with respect to an option without a readily ascertainable fair market value (within the meaning of section 83(e)(3)) that was granted on or before May 8, 2002.

(e) ***Special rule for qualified domestic relations orders.*** Section 1.457-10(c) (relating to qualified domestic relations orders) applies for transfers, distributions, and payments made after December 31, 2001.

[T.D. 9075, 68 FR 41240, July 11, 2003]

§ 1.458-1 Exclusion for certain returned magazines, paperbacks, or records.

(a) *In general* —

(1) ***Introduction.*** For taxable years beginning after September 30, 1979, section 458 allows accrual basis taxpayers to elect to use a method of accounting that excludes from gross income some or all of the income attributable to qualified sales during the taxable year of magazines, paperbacks, or records, that are returned before the close of the applicable merchandise return period for that taxable year. Any amount so excluded cannot be excluded or deducted from gross income for the taxable year in which the merchandise is returned to the taxpayer. For the taxable year in which the taxpayer first uses this method of accounting, the taxpayer is not allowed to exclude from gross income amounts attributable to merchandise returns received during the taxable year that would have been excluded from gross income for the prior taxable year had the taxpayer used this method of accounting for that prior year. (See paragraph (e) of this section for rules describing how this amount should be taken into account.) The election to use this method of accounting shall be made in accordance with the rules contained in section 458(c) and in § 1.458-2 and this section. A taxpayer that does not elect to use this method of accounting can reduce income for returned merchandise only for the taxable year in which the merchandise is actually returned unsold by the purchaser.

(2) ***Effective date.*** While this section is generally effective only for taxable years beginning after August 31, 1984, taxpayers may rely on the provisions of paragraphs (a) through (f) of this section in taxable years beginning after September 30, 1979.

(b) *Definitions* —

(1) ***Magazine.*** "Magazine" means a publication, usually paper-backed and sometimes illustrated, that is issued at regular intervals and contains stories, poems, articles, features, etc. This term includes periodicals, but does not include newspapers or volumes of a single publication issued at various intervals. However, volumes of a single publication that are issued at least annually, are related by title or subject matter to a magazine, and would otherwise qualify as a magazine, will be treated as a magazine.

(2) ***Paperback.*** "Paperback" means a paperback book other than a magazine. Unlike a hardback book, which usually has stiff front and back covers that enclose pages bound to a separate spine, a paperback book is characterized by a flexible outer cover to which the pages of the book are directly affixed.

(3) ***Record.*** "Record" means a disc, tape, or similar item on which music, spoken or other sounds are recorded. However, the term does not include blank records, tapes, etc., on which it is expected the ultimate purchaser will record. The following items, provided they carry pre-recorded sound, are examples of "records": audio and video cassettes, eight-track tapes, reel-to-reel tapes, cylinders, and flat, compact, and laser discs.

(4) ***Qualified sale.*** In order for a sale to be considered a qualified sale, both of the following conditions must be met:

(i) The taxpayer must be under a legal obligation (as determined by applicable State law), at the time of sale, to adjust the sales price of the magazine, paperback, or record on account of the purchaser's failure to resell it; and

(ii) The taxpayer must actually adjust the sales price of the magazine, paperback, or record to reflect the purchaser's failure to resell the merchandise. The following are examples of adjustments to the sales price of unsold merchandise: Cash refunds, credits to the account of the purchaser, and repurchases of the merchandise. The adjustment need not be equal to the full amount of the sales price of the item. However, a markdown of the sales price under an agreement whereby the purchaser continues to hold the merchandise for sale or other disposition (other than solely for scrap) does not constitute an adjustment resulting from a failure to resell.

(5) ***Merchandise return period*** —

(i) ***In general.*** Unless the taxpayer elects a shorter period, the "merchandise return period" is the period that ends 2 months and 15 days after the close of the taxable year for sales of magazines and 4 months and 15 days after the close of the taxable year for sales of paperbacks and records.

(ii) ***Election to use shorter period.*** The taxpayer may select a shorter merchandise return period than the applicable period set forth in paragraph (b)(5)(i) of this section.

(iii) ***Change in merchandise return period.*** Any change in the merchandise return period after its initial establishment will be treated as a change in method of accounting.

(c) ***Amount of the exclusion*** —

(1) ***In general.*** Except as otherwise provided in paragraph (g) of this section, the amount of the gross income exclusion with respect to any qualified sale is equal to the lesser of—

(i) The amount covered by the legal obligation referred to in paragraph (b)(4)(i) of this section; or

(ii) The amount of the adjustment agreed to by the taxpayer before the close of the merchandise return period.

(2) ***Price adjustment in excess of legal obligation.*** The excess, if any, of the amount described in paragraph (c)(1)(ii) of this section over the amount described in paragraph (c)(1)(i) of this section should be excluded in the taxable year in which it is properly accruable under section 461.

(d) ***Return of the merchandise*** —

(1) ***In general.***

(i) The exclusion from gross income allowed by section 458 applies with respect to a qualified sale of merchandise only if the seller receives, before the close of the merchandise return period, either—

(A) The physical return of the merchandise; or

(B) Satisfactory evidence that the merchandise has not been and will not be resold (as defined in paragraph (d)(2) of this section).

(ii) For purposes of this paragraph (d), evidence of a return received by an agent of the seller (other than the purchaser who purchased the merchandise from the seller) will be considered to be received by the seller at the time the agent receives the merchandise or evidence.

(2) ***Satisfactory evidence.*** Evidence that merchandise has not been and will not be resold is satisfactory only if the seller receives—

(i) Physical return of some portion of the merchandise (e.g., covers) provided under either the agreement between the seller and the purchaser or industry practice (such return evidencing the fact that the purchaser has not and will not resell the merchandise); or

(ii) A written statement from the purchaser specifying the quantities of each title not resold, provided either—

(A) The statement contains a representation that the items specified will not be resold by the purchaser; or

(B) The past dealings, if any, between the parties and industry practice indicate that such statement constitutes a promise by the purchaser not to resell the items.

(3) ***Retention of evidence.*** In the case of a return of merchandise (described in paragraph (d)(1)(i)(A) of this section) or portion thereof (described in paragraph (d)(2)(i) of this section), the seller has no obligation to retain physical evidence of the returned merchandise or portion thereof, provided the seller maintains documentary evidence that describes the quantity of physical items returned to the seller and indicates that the items were returned before the close of the merchandise return period.

(e) *Transitional adjustment* —

(1) ***In general.*** An election to change from some other method of accounting for the return of magazines, paperbacks, or records to the method of accounting described in section 458 is a change in method of accounting that requires a transitional adjustment. Section 458 provides special rules for transitional adjustments that must be taken into account as a result of this change. See paragraph (e)(2) of this section for special rules applicable to magazines and paragraphs (e) (3) and (4) of this section for special rules applicable to paperbacks and records.

(2) ***Magazines: 5-year spread of decrease in taxable income.*** For taxpayers who have elected to use the method of accounting described in section 458 to account for returned magazines for a taxable year, section 458(d) and this paragraph (e)(2) provide a special rule for taking into account any decrease in taxable income resulting from the adjustment required by section 481(a)(2). Under these provisions, one-fifth of the transitional adjustment must be taken into account in the taxable year of the change and in each of the 4 succeeding taxable years. For example, if the application of section 481(a)(2) would produce a decrease in taxable income of $50 for 1980, the year of change, then $10 (one-fifth of $50) must be taken into account as a decrease in taxable income for 1980, 1981, 1982, 1983, and 1984.

(3) *Suspense account for paperbacks and records* —

(i) ***In general.*** For taxpayers who have elected to use the method of accounting described in section 458 to account for returned paperbacks and records for a taxable year, section 458(e) provides that, in lieu of applying section 481, an electing taxpayer must establish a separate suspense account for its paperback business and its record business. The initial opening balance of the suspense account is described in paragraph (e)(3)(ii)(A) of this section. An initial adjustment to gross income for the year of election is described in paragraph (e)(3)(ii)(B) of this section. Annual adjustments to the suspense account are described in paragraph (e)(3)(iii)(A) of this section. Gross income adjustments are described in paragraph (e)(3)(iii)(B) of this section. Examples are provided in paragraph (e)(4) of this section. The effect of the suspense account is to defer all, or some part, of the deduction of the transitional adjustment until the taxpayer is no longer engaged in the trade or business of selling paperbacks or records, whichever is applicable.

(ii) *Establishing a suspense account* —

(A) ***Initial opening balance.*** To compute the initial opening balance of the suspense account for the first taxable year for which an election is effective, the taxpayer must determine the section 458 amount (as defined in paragraph (e)(3)(ii)(C) of this section) for each of the three preceding taxable years. The initial opening balance of the account is the largest of the section 458 amounts.

(B) ***Initial year adjustment.*** If the initial opening balance in the suspense account exceeds the section 458 amount (as defined in paragraph (e)(3)(ii)(C) of this section) for the taxable year immediately preceding the year of election, the excess is included in the taxpayer's gross income for the first taxable year for which the election was made.

(C) ***Section 458 amount.*** For purposes of paragraph (e)(3)(ii) of this section, the section 458 amount for a taxable year is the dollar amount of merchandise returns that would have been excluded from gross income under section 458(a) for that taxable year if the section 458 election had been in effect for that taxable year.

(iii) *Annual adjustments* —

(A) ***Adjustment to the suspense account.*** Adjustments are made to the suspense account each year to account for fluctuations in merchandise returns. To compute the annual adjustment, the taxpayer must determine the amount to be excluded under the election from gross income under section 458(a) for the taxable year. If the amount is less than the opening balance in the suspense account for the taxable year, the balance in the suspense account is reduced by the difference. Conversely, if the amount is greater than the opening balance in the suspense account for the taxable year, the account is increased by the difference, but not to an amount in excess of the initial opening balance described in paragraph (e)(3)(ii)(A) of this section. Therefore, the balance in the suspense account will never be greater than the initial opening balance in the suspense account determined in paragraph (e)(3)(ii)(A) of this section. However, the balance in the suspense account after adjustments may be less than this initial opening balance in the suspense account.

(B) ***Gross income adjustments.*** Adjustments to the suspense account for years subsequent to the year of election also produce adjustments in the taxpayer's gross income. Adjustments which reduce the balance in the suspense account reduce gross income for the year in which the adjustment to the suspense account is made. Adjustments which increase the balance in the suspense account increase gross income for the year in which the adjustment to the suspense account is made.

(4) ***Example.*** The provisions of paragraph (e)(3) of this section may be illustrated by the following example:

> *Example:* (i) X corporation, a paperback distributor, makes a timely section 458 election for its taxable year ending December 31, 1980. If the election had been in effect for the taxable years ending on December 31, 1977, 1978, and 1979, the dollar amounts of the qualifying returns would have been $5, $8, and $6, respectively. The initial opening balance of X's suspense account on January 1, 1980, is $8, the largest of these amounts. Since the initial opening balance ($8), is larger than the qualifying returns for 1979 ($6), the initial adjustment to gross income for 1980 is $2 ($8-$6).

(ii) X has $5 in qualifying returns for its taxable year ending December 31, 1980. X must reduce its suspense account by $3, which is the excess of the opening balance ($8) over the amount of qualifying returns for the 1980 taxable year ($5). X also reduces its gross income for 1980 by $3. Thus, the net amount excludable from gross income for the 1980 taxable year after taking into account the qualifying returns, the gross income adjustment, and the initial year adjustment is $6 ($3 + $5−$2).

(iii) X has qualifying returns of $7 for its taxable year ending December 31, 1981. X must increase its suspense account balance by $2, which is the excess of the amount of qualifying returns for 1981 ($7) over X's opening balance in the suspense account ($5). X must also increase its gross income by $2. Thus, the net income excludable from gross income for the 1981 taxable year after taking into account the qualifying returns and the gross income adjustment is $5 ($7-$2).

(iv) X has qualifying returns of $10 for its taxable year ending December 31, 1982. The opening balance in X's suspense account of $7 will not be increased in excess of the initial opening balance ($8). X must also increase gross income by $1. Thus, the net amount excludable from gross income for the 1982 taxable year is $9 ($10-$1).

(v) This example is summarized by the following table:

	Years Ending December 31					
	1977	**1978**	**1979**	**1980** [1]	**1981**	**1982**
Facts:						
Qualifying returns during merchandise return period for the taxable year	$5	$8	$6	$5	$7	$10
Adjustment to suspense account:						
Opening balance				$8	$5	$7
Addition to account [2]					2	1
Reduction to account [3]				(3)		
Opening balance for next year				$5	$7	$8
Amount excludable from income:						
Initial year adjustment				$(2)		

[1] *Year of Change.*

[2] *Applies when qualifying returns during the merchandise return period exceed the opening balance; the addition is not to cause the suspense account to exceed the initial opening balance.*

[3] *Applies when qualifying returns during the merchandise return period are less than the opening balance.*

	Years Ending December 31					
	1977	1978	1979	1980 [1]	1981	1982
Amount excludable as qualifying returns in merchandise return period				5	$7	$10
Adjustment for increase in suspense account					(2)	(1)
Adjustment for decrease in suspense account				3		
Net amount excludable for the year				$6	$5	$9

[1] *Year of Change.*

[2] *Applies when qualifying returns during the merchandise return period exceed the opening balance; the addition is not to cause the suspense account to exceed the initial opening balance.*

[3] *Applies when qualifying returns during the merchandise return period are less than the opening balance.*

(f) ***Subchapter C transactions*** —

(1) ***General rule.*** If a transfer of substantially all the assets of a trade or business in which paperbacks or records are sold is made to an acquiring corporation, and if the acquiring corporation determines its basis in these assets, in whole or part, with reference to the basis of these assets in the hands of the transferor, then for the purposes of section 458(e) the principles of section 381 and § 1.381(c)(4)-1 will apply. The application of this rule is not limited to the transactions described in section 381(a). Thus, the rule also applies, for example, to transactions described in section 351.

(2) ***Special rules.*** If, in the case of a transaction described in paragraph (f)(1) of this section, an acquiring corporation acquires assets that were used in a trade or business that was not subject to a section 458 election from a transferor that is owned or controlled directly (or indirectly through a chain of corporations) by the same interests, and if the acquiring corporation uses the acquired assets in a trade or business for which the acquiring corporation later makes an election to use section 458, then the acquiring corporation must establish a suspense account by taking into account not only its own experience but also the transferor's experience when the transferor held the assets in its trade or business. Furthermore, the transferor is not allowed a deduction or exclusion for merchandise returned after the date of the transfer attributable to sales made by the transferor before the date of the transfer. Such returns shall be considered to be received by the acquiring corporation.

(3) ***Example.*** The provisions of paragraph (f)(2) of this section may be illustrated by the following example.

Example. Corporation S, a calendar year taxpayer, is a wholly owned subsidiary of Corporation P, a calendar year taxpayer. On December 31, 1982, S acquires from P substantially all of the assets used in a trade or business in which records are sold. P had not made an election under section 458 with respect to the qualified sale of records made in connection with that trade or business. S makes an election to use section 458 for its taxable year ending December 31, 1983, for the trade or business in which the acquired assets are used. P's qualified record returns within the 4 month and 15 day merchandise return period following the 1980 and 1981

taxable years were $150 and $170, respectively. S's qualified record returns during the merchandise return period following 1982 were $160. S must establish a suspense account by taking into account both P's and S's experience for the 3 immediately preceding taxable years. Thus, the initial opening balance of S's suspense account is $170. S must also make an initial year adjustment of $10 ($170—$160), which S must include in income for S's taxable year ending December 31, 1983. P is not entitled to a deduction or exclusion for merchandise received after the date of the transfer (December 31, 1982) attributable to sales made by the transferor before the date of transfer. Thus, P is not entitled to a deduction or exclusion for the $160 of merchandise received by S during the first 4 months and 15 days of 1983.

(g) ***Adjustment to inventory and cost of goods sold.***

(1) If a taxpayer makes adjustments to gross receipts for a taxable year under the method of accounting described in section 458, the taxpayer, in determining excludable gross income, is also required to make appropriate correlative adjustments to purchases or closing inventory and to cost of goods sold for the same taxable year. Adjustments are appropriate, for example, where the taxpayer holds the merchandise returned for resale or where the taxpayer is entitled to receive a price adjustment from the person or entity that sold the merchandise to the taxpayer. Cost of goods sold must be properly adjusted in accordance with the provisions of § 1.61-3 which provides, in pertinent part, that gross income derived from a manufacturing or merchandising business equals total sales less cost of goods sold.

(2) The provisions of this paragraph (g) may be illustrated by the following examples. These examples do not, however, reflect any required adjustments under paragraph (e)(3) of this section.

Example 1. (i) In 1986, P, a publisher, properly elects under section 458 of the Code not to include in its gross income in the year of sale, income attributable to qualified sales of paperback books returned within the specified statutory merchandise return period of 4 months and 15 days. P and D, a distributor, agree that P shall provide D with a full refund for paperback books that D purchases from P and is unable to resell, provided the merchandise is returned to P within four months following the original sale. The agreement constitutes a legal obligation. The agreement provides that D's return of the covers of paperback books within the first four months following their sale constitutes satisfactory evidence that D has not resold and will not resell the paperback books. During P's 1989 taxable year, pursuant to the agreement, P sells D 500 paperback books for $1 each. In 1990, during the merchandise return period, D returns covers from 100 unsold paperback books representing $100 of P's 1989 sales of paperback books. P's cost attributable to the returned books is $25. No adjustment to cost of goods sold is required under paragraph (g)(1) of this section because P is not holding returned merchandise for resale. P's proper amount excluded from its 1989 gross income under section 458 is $100.
(ii) If D returns the paperback books, rather than the covers, to P and these same books are then held by P for resale to other customers, paragraph (g)(1) of this section applies. Under paragraph (g)(1), P is required to decrease its cost of goods sold by $25, the amount of P's cost attributable to the returned merchandise. The proper amount excluded from P's 1989 gross income under section 458 is $75, resulting from adjustments to sales and cost of sales [(100 × $1)—$25].

Example 2. (i) In 1986, D, a distributor, properly elects under section 458 of the Code not to include in its

gross income in the year of sale, income attributable to qualified sales of paperback books returned within the specified statutory merchandise return period of four months and 15 days. D and R, a retailer, agree that D shall provide a full refund for paperback books that R purchases from it and is unable to resell. D and R also have agreed that the merchandise must be returned to D within four months following the original sale. The agreement constitutes a legal obligation. D is similarly entitled to a full refund from P, the publisher, for the same paperback books. In 1990, during the merchandise return period, R returns paperback books to D representing $100 of 1989 sales. D's cost relating to these sales is $50. Under paragraph (g)(1) of this section, D must decrease its costs of goods sold by $50. D's proper amount excluded from its 1989 gross income under section 458 is $50 resulting from adjustments to sales and costs of sales ($100—$50).

(ii) If D is instead only entitled to a 50 percent refund from P, D is required under paragraph (g)(1) of this section to decrease its costs of goods sold by $25, the amount of refund from P. D's proper amount excluded from its 1989 gross income under section 458 is $75, resulting from adjustments to sales and cost of sales ($100—$25).

[T.D. 8426, 57 FR 38596, Aug. 26, 1992; 57 FR 45879, Oct. 5, 1992]

§ 1.458-2 Manner of and time for making election.

(a) ***Scope.*** For taxable years beginning after September 30, 1979, section 458 provides a special method of accounting for taxpayers who account for sales of magazines, paperbacks, or records using an accrual method of accounting. In order to use the special method of accounting under section 458, a taxpayer must make an election in the manner prescribed in this section. The election does not require the prior consent of the Internal Revenue Service. The election is effective for the taxable year for which it is made and for all subsequent taxable years, unless the taxpayer secures the prior consent of the Internal Revenue Service to revoke such election.

(b) ***Separate election for each trade or business.*** An election is made with respect to each trade or business of a taxpayer in connection with which qualified sales (as defined in section 458(b)(5)) of a category of merchandise were made. Magazines, paperbacks, and records are each treated as a separate category of merchandise. If qualified sales of two or more categories of merchandise are made in connection with the same trade or business, then solely for purposes of section 458, each category is treated as a separate trade or business. For example, if a taxpayer makes qualified sales of both magazines and paperbacks in the same trade or business, then solely for purposes of section 458, the qualified sales relating to magazines are considered one trade or business and the qualified sales relating to paperbacks are considered a separate trade or business. Thus, if the taxpayer wishes to account under section 458 for the qualified sales of both magazines and paperbacks, such taxpayer must make a separate election for each category.

(c) ***Manner of, and time for, making election.*** An election is made under section 458 and this section by filing a statement of election containing the information described in paragraph (d) of this section with the taxpayer's income tax return for first taxable year for which the election is made. The election must be made no later than the time prescribed by law (including extensions) for filing the income tax return for the first taxable year for which the election is made. Thus, the election may not be filed with an amended income tax return after the prescribed date (including extensions) for filing the original return for such year.

(d) ***Required information.*** The statement of election required by paragraph (c) of this section must indicate that an election is being made under section 458(c) and must set forth the following information:

(1) The taxpayer's name, address, and identification number;

(2) A description of each trade or business for which an election is made;

(3) The first taxable year for which an election is made for each trade or business;

(4) The merchandise return period (as defined in section 458(b)(7)) for each trade or business for which an election is made;

(5) With respect to an election that applies to magazines, the amount of the adjustment computed under section 481(a) resulting from the change to the method of accounting described in section 458; and

(6) With respect to an election that applies to paperbacks or records, the initial opening balance (computed in accordance with section 458(e)) in the suspense account for each trade or business for which an election is made.

The statement of election should be made on a Form 3115 which need contain no information other than that required by this paragraph.

[T.D. 7628, 44 FR 33398, June 11, 1979. Redesignated by T.D. 8426, 57 FR 38599, Aug. 26, 1992]

§ 1.460-0 Outline of regulations under section 460.

This section lists the paragraphs contained in § 1.460-1 through § 1.460-6.

§ 1.460-1 Long-term contracts.

(a) Overview.

(1) In general.

(2) Exceptions to required use of PCM.

(i) Exempt construction contract.

(ii) Qualified ship or residential construction contract.

(b) Terms.

(1) Long-term contract.

(2) Contract for the manufacture, building, installation, or construction of property.

(i) In general.

(ii) De minimis construction activities.

(3) Allocable contract costs.

(4) Related party.

(5) Contracting year.

(6) Completion year.

(7) Contract commencement date.

(8) Incurred.

(9) Independent research and development expenses.

(10) Long-term contract methods of accounting.

(c) Entering into and completing long-term contracts.

(1) In general.

(2) Date contract entered into.

(i) In general.

(ii) Options and change orders.

(3) Date contract completed.

(i) In general.

(ii) Secondary items.

(iii) Subcontracts.

(iv) Final completion and acceptance.

(A) In general.

(B) Contingent compensation.

(C) Assembly or installation.

(D) Disputes.

(d) Allocation among activities.

(1) In general.

(2) Non-long-term contract activity.

(e) Severing and aggregating contracts.

(1) In general.

(2) Facts and circumstances.

(i) Pricing.

(ii) Separate delivery or acceptance.

(iii) Reasonable businessperson.

(3) Exceptions.

(i) Severance for PCM.

(ii) Options and change orders.

(4) Statement with return.

(f) Classifying contracts.

(1) In general.

(2) Hybrid contracts.

(i) In general.

(ii) Elections.

(3) Method of accounting.

(4) Use of estimates.

(i) Estimating length of contract.

(ii) Estimating allocable contract costs.

(g) Special rules for activities benefitting long-term contracts of a related party.

(1) Related party use of PCM.

(i) In general.

(ii) Exception for components and subassemblies.

(2) Total contract price.

(3) Completion factor.

(h) Effective date.

(1) In general.

(2) Change in method of accounting.

(3) Changes made by Tax Cuts and Jobs Act (Pub. L. 115-97).

(i) [Reserved]

(j) Examples.

§ 1.460-2 Long-term manufacturing contracts.

(a) In general.

(b) Unique.

(1) In general.

(2) Safe harbors.

(i) Short production period.

(ii) Customized item.

(iii) Inventoried item.

(c) Normal time to complete.

(1) In general.

(2) Production by related parties.

(d) Qualified ship contracts.

(e) Examples.

§ 1.460-3 Long-term construction contracts.

(a) In general.

(b) Exempt construction contracts.

(1) In general.

(2) Home construction contract.

(i) In general.

(ii) Townhouses and rowhouses.

(iii) Common improvements.

(iv) Mixed use costs.

(3) Gross receipts test.

(i) In general

(ii) Application of gross receipts test

(A) In general

(B) Gross receipts of individuals, etc.

(C) Partners and S corporation shareholders

(D) Examples

(*1*) Example 1.

(*2*) Example 2.

(iii) Method of accounting.

(c) Residential construction contracts.

(d) Applicability dates.

§ 1.460-4 Methods of accounting for long-term contracts.

(a) Overview.

(b) Percentage-of-completion method.

(1) In general.

(2) Computations.

(3) Post-completion-year income.

(4) Total contract price.

(i) In general.

(A) Definition.

(B) Contingent compensation.

(C) Non-long-term contract activities.

(ii) Estimating total contract price.

(5) Completion factor.

(i) Allocable contract costs.

(ii) Cumulative allocable contract costs.

(iii) Estimating total allocable contract costs.

(iv) Pre-contracting-year costs.

(v) Post-completion-year costs.

(6) 10-percent method.

(i) In general.

(ii) Election.

(7) Terminated contract.

(i) Reversal of income.

(ii) Adjusted basis.

(iii) Look-back method.

(c) Exempt contract methods.

(1) In general.

(2) Exempt-contract percentage-of-completion method.

(i) In general.

(ii) Determination of work performed.

(d) Completed-contract method.

(1) In general.

(2) Post-completion-year income and costs.

(3) Gross contract price.

(4) Contracts with disputed claims.

(i) In general.

(ii) Taxpayer assured of profit or loss.

(iii) Taxpayer unable to determine profit or loss.

(iv) Dispute resolved.

(e) Percentage-of-completion/capitalized-cost method.

(f) Alternative minimum taxable income.

(1) In general.

(2) Election to use regular completion factors.

(g) Method of accounting.

(h) Examples.

(i) Applicability date.

(j) Consolidated groups and controlled groups.

(1) Intercompany transactions.

(i) In general.

(ii) Definitions and nomenclature.

(2) Example.

(3) Effective dates.

(i) In general.

(ii) Prior law.

(4) Consent to change method of accounting.

(k) Mid-contract change in taxpayer.

(1) In general.

(2) Constructive completion transactions.

(i) Scope.

(ii) Old taxpayer.

(iii) New taxpayer.

(iv) Special rules relating to distributions of certain contracts by a partnership.

(A) In general.

(B) Old taxpayer.

(C) New taxpayer.

(D) Basis rules.

(E) Section 751.

(*1*) In general.

(*2*) Ordering rules.

(3) Step-in-the-shoes transactions.

(i) Scope.

(ii) Old taxpayer.

(A) In general.

(B) Gain realized on the transaction.

(iii) New taxpayer.

(A) Method of accounting.

(B) Contract price.

(C) Contract costs.

(iv) Special rules related to certain corporate and partnership transactions.

(A) Old taxpayer—basis adjustment.

(*1*) In general.

(*2*) Basis adjustment in excess of stock or partnership interest basis.

(*3*) Subsequent dispositions of certain contracts.

(B) New taxpayer.

(*1*) Contract price adjustment.

(*2*) Basis in contract.

(C) Definition of old taxpayer and new taxpayer for certain partnership transactions.

(D) Exceptions to step-in-the-shoes rules for S corporations.

(v) Special rules relating to certain partnership transactions.

(A) Section 704(c).

(*1*) Contributions of contracts.

(*2*) Revaluations of partnership property.

(*3*) Allocation methods.

(B) Basis adjustments under sections 743(b) and 734(b).

(C) Cross reference.

(D) Exceptions to step-in-the-shoes rules.

(4) Anti-abuse rule.

(5) Examples.

(6) Effective date.

§ 1.460-5 Cost allocation rules.

(a) Overview.

(b) Cost allocation method for contracts subject to PCM.

(1) In general.

(2) Special rules.

(i) Direct material costs.

(ii) Components and subassemblies.

(iii) Simplified production methods.

(iv) Costs identified under cost-plus long-term contracts and federal long-term contracts.

(v) Interest.

(A) In general.

(B) Production period.

(C) Application of section 263A(f).

(vi) Research and experimental expenses.

(vii) Service costs.

(A) Simplified service cost method.

(*1*) In general.

(*2*) Example.

(B) Jobsite costs.

(C) Limitation on other reasonable cost allocation methods.

(c) Simplified cost-to-cost method for contracts subject to the PCM.

(1) In general.

(2) Election.

(d) Cost allocation rules for exempt construction contracts reported using CCM.

(1) In general.

(2) Indirect costs.

(i) Indirect costs allocable to exempt construction contracts.

(ii) Indirect costs not allocable to exempt construction contracts.

(3) Large homebuilders.

(e) Cost allocation rules for contracts subject to the PCCM.

(f) Special rules applicable to costs allocated under this section.

(1) Nondeductible costs.

(2) Costs incurred for non-long-term contract activities.

(g) Method of accounting.

§ 1.460-6 Look-back method.

(a) In general.

(1) Introduction.

(2) Overview.

(b) Scope of look-back method.

(1) In general.

(2) Exceptions from section 460.

(3) De minimis exception.

(4) Alternative minimum tax.

(5) Effective date.

(c) Operation of the look-back method.

(1) Overview.

(i) In general.

(ii) Post-completion revenue and expenses.

(A) In general.

(B) Completion.

(C) Discounting of contract price and contract cost adjustments subsequent to completion; election not to discount.

(*1*) General rule.

(*2*) Election not to discount.

(*3*) Year-end discounting convention.

(D) Revenue acceleration rule.

(2) Look-back Step One.

(i) Hypothetical reallocation of income among prior tax years.

(ii) Treatment of estimated future costs in year of completion.

(iii) Interim reestimates not considered.

(iv) Tax years in which income is affected.

(v) Costs incurred prior to contract execution; 10-percent method.

(A) General rule.

(B) Example.

(vi) Amount treated as contract price.

(A) General rule.

(B) Contingencies.

(C) Change orders.

(3) Look-back Step Two: Computation of hypothetical overpayment or underpayment of tax.

(i) In general.

(ii) Redetermination of tax liability.

(iii) Hypothetical underpayment or overpayment.

(iv) Cumulative determination of tax liability.

(v) Years affected by look-back only.

(vi) Definition of tax liability.

(4) Look-back Step Three: Calculation of interest on underpayment or overpayment.

(i) In general.

(ii) Changes in the amount of a loss or credit carryback or carryover.

(iii) Changes in the amount of tax liability that generated a subsequent refund.

(d) Simplified marginal impact method.

(1) Introduction.

(2) Operation.

(i) In general.

(ii) Applicable tax rate.

(iii) Overpayment ceiling.

(iv) Example.

(3) Anti-abuse rule.

(4) Application.

(i) Required use by certain pass-through entities.

(A) General rule.

(B) Closely held.

(C) Examples.

(D) Domestic contracts.

(*1*) General rule.

(*2*) Portion of contract income sourced.

(E) Application to foreign contracts.

(F) Effective date.

(ii) Elective use.

(A) General rule.

(B) Election requirements.

(C) Consolidated group consistency rule.

(e) Delayed reapplication method.

(1) In general.

(2) Time and manner of making election.

(3) Examples.

(f) Look-back reporting.

(1) Procedure.

(2) Treatment of interest on return.

(i) General rule.

(ii) Timing of look-back interest.

(3) Statutes of limitations and compounding of interest on look-back interest.

(g) Mid-contract change in taxpayer.

(1) In general.

(2) Constructive completion transactions.

(3) Step-in-the-shoes transactions.

(i) General rules.

(ii) Application of look-back method to pre-transaction period.

(A) Contract price

(B) Method.

(C) Interest accrual period.

(D) Information old taxpayer must provide.

(*1*) In general.

(*2*) Special rules for certain pass-through entity transactions.

(iii) Application of look-back method to post-transaction years.

(iv) S corporation elections.

(4) Effective date.

(h) Examples.

(1) Overview.

(2) Step One.

(3) Step Two.

(4) Post-completion adjustments.

(5) Alternative minimum tax.

(6) Credit carryovers.

(7) Net operating losses.

(8) Alternative minimum tax credit.

(9) Period for interest.

(i) [Reserved]

(j) Election not to apply look-back method in de minimis cases.

(k) Applicability date.

[T.D. 9315, 55 FR 41670, Oct. 15, 1990, as amended by T.D. 8597, 60 FR 36683, July 18, 1995; T.D. 8756, 63 FR 1918, Jan. 13, 1998; T.D. 8775, 63 FR 36181, July 2, 1998; T.D. 8929, 66 FR 2224, Jan. 11, 2001; T.D. 8995, 67 FR 34605, May 15, 2002; T.D. 9137, 69 FR 42553, July 16, 2004; T.D. 9942, 86 FR 272, Jan. 5, 2021; 86 FR 32186, June 17, 2021]

§ 1.460-1 Long-term contracts.

(a) ***Overview*** —

(1) ***In general.*** This section provides rules for determining whether a contract for the manufacture, building, installation, or construction of property is a long-term contract under section 460 and what activities must be accounted for as a single long-term contract. Specific rules for long-term manufacturing and construction contracts are provided in §§ 1.460-2 and 1.460-3, respectively. A taxpayer generally must determine the income from a long-term contract using the percentage-of-completion method described in § 1.460-4(b) (PCM) and the cost allocation rules described in § 1.460-5(b) or (c). In addition, after a contract subject to the PCM is completed, a taxpayer generally must apply the look-back method described in § 1.460-6 to determine the amount of interest owed on any hypothetical underpayment of tax, or earned on any hypothetical overpayment of tax, attributable to accounting for the long-term contract under the PCM.

(2) ***Exceptions to required use of PCM*** —

(i) ***Exempt construction contract.*** The requirement to use the PCM does not apply to any exempt construction contract described in § 1.460-3(b). Thus, a taxpayer may determine the income from an exempt construction contract using any accounting method permitted by § 1.460-4(c) and, for contracts accounted for using the completed-contract method (CCM), any cost allocation method permitted by § 1.460-5(d). Exempt construction contracts that are not subject to the PCM or CCM are not subject to the cost allocation rules of § 1.460-5 except for the production-period interest rules of § 1.460-5(b)(2)(v). Exempt construction contractors that are large homebuilders described in § 1.460-5(d)(3) must capitalize costs under section 263A. All other exempt construction contractors must account for the cost of construction using the appropriate rules contained in other sections of the Internal Revenue Code or regulations.

(ii) ***Qualified ship or residential construction contract.*** The requirement to use the PCM applies only to a portion of a *qualified ship contract* described in § 1.460-2(d) or *residential construction contract* described in § 1.460-3(c). A taxpayer generally may determine the income from a qualified ship contract or residential construction contract using the percentage-of-completion/capitalized-cost method (PCCM) described in § 1.460-4(e), but must use a cost allocation method described in § 1.460-5(b) for the entire contract.

(b) ***Terms*** —

(1) ***Long-term contract. A long-term contract*** generally is any contract for the manufacture, building, installation, or construction of property if the contract is not completed within the contracting year, as defined in paragraph (b)(5) of this section. However, a contract for the manufacture of property is a long-term contract only if it also satisfies either the unique item or 12-month requirements described in § 1.460-2. A contract for the manufacture of personal property is a *manufacturing contract.* In contrast, a contract for the building, installation, or construction of real property is a *construction contract.*

(2) ***Contract for the manufacture, building, installation, or construction of property*** —

(i) ***In general.*** A contract is a *contract for the manufacture, building, installation, or construction of property* if the manufacture, building, installation, or construction of property is necessary for the taxpayer's contractual obligations to be fulfilled and if the manufacture, building, installation, or construction of that property has not been completed when the parties enter into the contract. If a taxpayer has to manufacture or construct an item to fulfill its obligations under the contract, the fact that the taxpayer is not required to deliver that item to the customer is not relevant. Whether the customer has title to, control over, or bears the risk of loss from, the property manufactured or constructed by the taxpayer also is not relevant. Furthermore, how the parties characterize their agreement (*e.g.,* as a contract for the sale of property) is not relevant.

(ii) ***De minimis construction activities.*** Notwithstanding paragraph (b)(2)(i) of this section, a contract is not a construction contract under section 460 if the contract includes the provision of land by the taxpayer and the estimated total allocable contract costs, as defined in paragraph (b)(3) of this section, attributable to the taxpayer's construction activities are less than 10 percent of the contract's total contract price, as defined in § 1.460-4(b)(4)(i). For the purposes of this paragraph (b)(2)(ii), the allocable contract costs attributable to the taxpayer's construction activities do not include the cost of the land provided to the customer. In addition, a contract's estimated total allocable contract costs include a proportionate share of the estimated cost of any common improvement that benefits the subject matter of the contract if the taxpayer is contractually obligated, or required by law, to construct the common improvement.

(3) ***Allocable contract costs. Allocable contract costs*** are costs that are allocable to a long-term contract under § 1.460-5.

(4) ***Related party.*** A *related party* is a person whose relationship to a taxpayer is described in section 707(b) or 267(b), determined without regard to section 267(f)(1)(A) and determined by replacing “at least 80 percent” with “more than 50 percent” for the purposes of determining the ownership of the stock of a corporation in sections 267(b)(2), (8), (10)(A), and (12).

(5) ***Contracting year.*** The *contracting year* is the taxable year in which a taxpayer enters into a contract as described in paragraph (c)(2) of this section.

(6) ***Completion year.*** The *completion year* is the taxable year in which a taxpayer completes a contract as described in paragraph (c)(3) of this section.

(7) ***Contract commencement date.*** The *contract commencement date* is the date that a taxpayer or related party first incurs any allocable contract costs, such as design and engineering costs, other than expenses attributable to bidding and negotiating activities. Generally, the contract commencement date is relevant in applying § 1.460-6(b)(3) (concerning the de minimis exception to the look-back method under section 460(b)(3)(B)); § 1.460-5(b)(2)(v)(B)(1)(*i*) (concerning the production period subject to interest allocation); § 1.460-2(d) (concerning qualified ship contracts); and § 1.460-3(b)(1)(ii) (concerning the construction period for exempt construction contracts).

(8) ***Incurred. Incurred*** has the meaning given in § 1.461-1(a)(2) (concerning the taxable year a liability is incurred under the accrual method of accounting), regardless of a taxpayer's overall method of accounting. See § 1.461-4(d)(2)(ii) for economic performance rules concerning the PCM.

(9) ***Independent research and development expenses. Independent research and development expenses*** are any expenses incurred in the performance of research or development, except that this term does not include any expenses that are directly attributable to a particular long-term contract in existence when the expenses are incurred and this term does not include any expenses under an agreement to perform research or development.

(10) ***Long-term contract methods of accounting. Long-term contract methods of accounting,*** which include the PCM, the CCM, the PCCM, and the exempt-contract percentage-of-completion method (EPCM), are methods of accounting that may be used only for long-term contracts.

(c) ***Entering into and completing long-term contracts*** —

(1) ***In general.*** To determine when a contract is entered into under paragraph (c)(2) of this section and completed under paragraph (c)(3) of this section, a taxpayer must consider all relevant allocable contract costs incurred and activities performed by itself, by related parties on its behalf, and by the customer, that are incident to or necessary for the long-term contract. In addition, to determine whether a contract is completed in the contracting year, the taxpayer may not consider when it expects to complete the contract.

(2) ***Date contract entered into*** —

(i) ***In general.*** A taxpayer enters into a contract on the date that the contract binds both the taxpayer and the customer under applicable law, even if the contract is subject to unsatisfied conditions not within the taxpayer's control (such as obtaining financing). If a taxpayer delays entering into a contract for a principal purpose of avoiding section 460, however, the taxpayer will be treated as having entered into a contract not later than the contract commencement date.

(ii) ***Options and change orders.*** A taxpayer enters into a new contract on the date that the customer exercises an option or similar provision in a contract if that option or similar provision must be severed from the contract under paragraph (e) of this section. Similarly, a taxpayer enters into a new contract on the date that it accepts a change order or other similar agreement if the change order or other similar agreement must be severed from the contract under paragraph (e) of this section.

(3) ***Date contract completed*** —

(i) ***In general.*** A taxpayer's contract is completed upon the earlier of—

(A) Use of the subject matter of the contract by the customer for its intended purpose (other than for testing) and at least 95 percent of the total allocable contract costs attributable to the subject matter have been incurred by the taxpayer; or

(B) Final completion and acceptance of the subject matter of the contract.

(ii) ***Secondary items.*** The date a contract accounted for using the CCM is completed is determined without regard to whether one or more secondary items have been used or finally completed and accepted. If any secondary items are incomplete at the end of the taxable year in which the primary subject matter of a contract is completed, the taxpayer must separate the portion of the gross contract price and the allocable contract costs attributable to the incomplete secondary item(s) from the completed contract and account for them using a permissible

method of accounting. A permissible method of accounting includes a long-term contract method of accounting only if a separate contract for the secondary item(s) would be a long-term contract, as defined in paragraph (b)(1) of this section.

(iii) ***Subcontracts.*** In the case of a subcontract, a subcontractor's customer is the general contractor. Thus, the subject matter of the subcontract is the relevant subject matter under paragraph (c)(3)(i) of this section.

(iv) ***Final completion and acceptance*** —

(A) ***In general.*** Except as otherwise provided in this paragraph (c)(3)(iv), to determine whether final completion and acceptance of the subject matter of a contract have occurred, a taxpayer must consider all relevant facts and circumstances. Nevertheless, a taxpayer may not delay the completion of a contract for the principal purpose of deferring federal income tax.

(B) ***Contingent compensation.*** Final completion and acceptance is determined without regard to any contractual term that provides for additional compensation that is contingent on the successful performance of the subject matter of the contract. A taxpayer must account for all contingent compensation that is not includible in total contract price under § 1.460-4(b)(4)(i), or in gross contract price under § 1.460-4(d)(3), using a permissible method of accounting. For application of the look-back method for contracts accounted for using the PCM, see § 1.460-6(c)(1)(ii) and (2)(vi).

(C) ***Assembly or installation.*** Final completion and acceptance is determined without regard to whether the taxpayer has an obligation to assist or supervise assembly or installation of the subject matter of the contract where the assembly or installation is not performed by the taxpayer or a related party. A taxpayer must account for the gross receipts and costs attributable to such an obligation using a permissible method of accounting, other than a long-term contract method.

(D) ***Disputes.*** Final completion and acceptance is determined without regard to whether a dispute exists at the time the taxpayer tenders the subject matter of the contract to the customer. For contracts accounted for using the CCM, see § 1.460-4(d)(4). For application of the look-back method for contracts accounted for using the PCM, see § 1.460-6(c)(1)(ii) and (2)(vi).

(d) ***Allocation among activities*** —

(1) ***In general.*** Long-term contract methods of accounting apply only to the gross receipts and costs attributable to long-term contract activities. Gross receipts and costs attributable to long-term contract activities means amounts included in total contract price or gross contract price, whichever is applicable, as determined under § 1.460-4, and costs allocable to the contract, as determined under § 1.460-5. Gross receipts and costs attributable to non-long-term contract activities (as defined in paragraph (d)(2) of this section) generally must be taken into account using a permissible method of accounting other than a long-term contract method. See section 446(c) and § 1.446-1(c). However, if the performance of a non-long-term contract activity is incident to or necessary for the manufacture, building, installation, or construction of the subject matter of one or more of the taxpayer's long-term contracts, the gross receipts and costs attributable to that activity must be allocated to the long-term contract(s) benefitted as provided in §§ 1.460-4(b)(4)(i) and 1.460-5(f)(2), respectively. Similarly, if a single long-term contract requires a taxpayer to perform a non-long-term contract activity that is not incident to or necessary for the manufacture, building, installation, or

construction of the subject matter of the long-term contract, the gross receipts and costs attributable to that non-long-term contract activity must be separated from the contract and accounted for using a permissible method of accounting other than a long-term contract method. But see paragraph (g) of this section for related party rules.

(2) ***Non-long-term contract activity. Non-long-term contract activity*** means the performance of an activity other than manufacturing, building, installation, or construction, such as the provision of architectural, design, engineering, and construction management services, and the development or implementation of computer software. In addition, performance under a guaranty, warranty, or maintenance agreement is a non-long-term contract activity that is never incident to or necessary for the manufacture or construction of property under a long-term contract.

(e) ***Severing and aggregating contracts*** —

(1) ***In general.*** After application of the allocation rules of paragraph (d) of this section, the severing and aggregating rules of this paragraph (e) may be applied by the Commissioner or the taxpayer as necessary to clearly reflect income (*e.g.,* to prevent the unreasonable deferral (or acceleration) of income or the premature recognition (or deferral) of loss). Under the severing and aggregating rules, one agreement may be treated as two or more contracts, and two or more agreements may be treated as one contract. Except as provided in paragraph (e)(3)(ii) of this section, a taxpayer must determine whether to sever an agreement or to aggregate two or more agreements based on the facts and circumstances known at the end of the contracting year.

(2) ***Facts and circumstances.*** Whether an agreement should be severed, or two or more agreements should be aggregated, depends on the following factors:

(i) ***Pricing.*** Independent pricing of items in an agreement is necessary for the agreement to be severed into two or more contracts. In the case of an agreement for similar items, if the price to be paid for the items is determined under different terms or formulas (e.g., if some items are priced under a cost-plus incentive fee arrangement and later items are to be priced under a fixed-price arrangement), then the difference in the pricing terms or formulas indicates that the items are independently priced. Similarly, interdependent pricing of items in separate agreements is necessary for two or more agreements to be aggregated into one contract. A single price negotiation for similar items ordered under one or more agreements indicates that the items are interdependently priced.

(ii) ***Separate delivery or acceptance.*** An agreement may not be severed into two or more contracts unless it provides for separate delivery or separate acceptance of items that are the subject matter of the agreement. However, the separate delivery or separate acceptance of items by itself does not necessarily require an agreement to be severed.

(iii) ***Reasonable businessperson.*** Two or more agreements to perform manufacturing or construction activities may not be aggregated into one contract unless a reasonable businessperson would not have entered into one of the agreements for the terms agreed upon without also entering into the other agreement(s). Similarly, an agreement to perform manufacturing or construction activities may not be severed into two or more contracts if a reasonable businessperson would not have entered into separate agreements containing terms allocable to each severed contract. Analyzing the reasonable businessperson standard requires an analysis of all the facts and circumstances of the business arrangement between the

taxpayer and the customer. For purposes of this paragraph (e)(2)(iii), a taxpayer's expectation that the parties would enter into another agreement, when agreeing to the terms contained in the first agreement, is not relevant.

(3) ***Exceptions*** —

(i) ***Severance for PCM.*** A taxpayer may not sever under this paragraph (e) a long-term contract that would be subject to the PCM without obtaining the Commissioner's prior written consent.

(ii) ***Options and change orders.*** Except as provided in paragraph (e)(3)(i) of this section, a taxpayer must sever an agreement that increases the number of units to be supplied to the customer, such as through the exercise of an option or the acceptance of a change order, if the agreement provides for separate delivery or separate acceptance of the additional units.

(4) ***Statement with return.*** If a taxpayer severs an agreement or aggregates two or more agreements under this paragraph (e) during the taxable year, the taxpayer must attach a statement to its original federal income tax return for that year. This statement must contain the following information—

(i) The legend NOTIFICATION OF SEVERANCE OR AGGREGATION UNDER SEC. 1.460-1(e);

(ii) The taxpayer's name; and

(iii) The taxpayer's employer identification number or social security number.

(f) ***Classifying contracts*** —

(1) ***In general.*** After applying the severing and aggregating rules of paragraph (e) of this section, a taxpayer must determine the classification of a contract (*e.g.,* as a long-term manufacturing contract, long-term construction contract, non-long-term contract) based on all the facts and circumstances known no later than the end of the contracting year. Classification is determined on a contract-by-contract basis. Consequently, a requirement to manufacture a single unique item under a long-term contract will subject all other items in that contract to section 460.

(2) ***Hybrid contracts*** —

(i) ***In general.*** A long-term contract that requires a taxpayer to perform both manufacturing and construction activities (hybrid contract) generally must be classified as two contracts, a manufacturing contract and a construction contract. A taxpayer may elect, on a contract-by-contract basis, to classify a hybrid contract as a long-term construction contract if at least 95 percent of the estimated total allocable contract costs are reasonably allocable to construction activities. In addition, a taxpayer may elect, on a contract-by-contract basis, to classify a hybrid contract as a long-term manufacturing contract subject to the PCM.

(ii) ***Elections.*** A taxpayer makes an election under this paragraph (f)(2) by using its method of accounting for similar construction contracts or for manufacturing contracts, whichever is applicable, to account for a hybrid contract entered into during the taxable year of the election on its original federal income tax return for the election year. If an electing taxpayer's method is the PCM, the taxpayer also must use the PCM to apply the look-back method under § 1.460-6 and to determine alternative minimum taxable income under § 1.460-4(f).

(3) ***Method of accounting.*** Except as provided in paragraph (f)(2)(ii) of this section, a taxpayer's method of classifying contracts is a method of accounting under section 446 and, thus, may not be changed without the Commissioner's consent. If a taxpayer's method of classifying contracts is unreasonable, that classification method is an impermissible accounting method. A taxpayer may

adopt any permissible method of accounting for each classification of contract. Such adoption is not a change in method of accounting under section 446 and the accompanying regulations. For example, a taxpayer that has had only contracts classified as nonexempt long-term contracts and has used the PCM for these contracts may adopt an exempt contract method in the taxable year it first enters into an exempt long-term contract.

(4) *Use of estimates* —

(i) ***Estimating length of contract.*** A taxpayer must use a reasonable estimate of the time required to complete a contract when necessary to classify the contract (e.g., to determine whether the five-year completion rule for qualified ship contracts under § 1.460-2(d), or the two-year completion rule for exempt construction contracts under § 1.460-3(b), is satisfied, but not to determine whether a contract is completed within the contracting year under paragraph (b)(1) of this section). To be considered reasonable, an estimate of the time required to complete the contract must include anticipated time for delay, rework, change orders, technology or design problems, or other problems that reasonably can be anticipated considering the nature of the contract and prior experience. A contract term that specifies an expected completion or delivery date may be considered evidence that the taxpayer reasonably expects to complete or deliver the subject matter of the contract on or about the date specified, especially if the contract provides bona fide penalties for failing to meet the specified date. If a taxpayer classifies a contract based on a reasonable estimate of completion time, the contract will not be reclassified based on the actual (or another reasonable estimate of) completion time. A taxpayer's estimate of completion time will not be considered unreasonable if a contract is not completed within the estimated time primarily because of unforeseeable factors not within the taxpayer's control, such as third-party litigation, extreme weather conditions, strikes, or delays in securing permits or licenses.

(ii) ***Estimating allocable contract costs.*** A taxpayer must use a reasonable estimate of total allocable contract costs when necessary to classify the contract (e.g., to determine whether a contract is a home construction contract under § 1.460-(3)(b)(2)). If a taxpayer classifies a contract based on a reasonable estimate of total allocable contract costs, the contract will not be reclassified based on the actual (or another reasonable estimate of) total allocable contract costs.

(g) *Special rules for activities benefitting long-term contracts of a related party* —

(1) *Related party use of PCM* —

(i) ***In general.*** Except as provided in paragraph (g)(1)(ii) of this section, if a related party and its customer enter into a long-term contract subject to the PCM, and a taxpayer performs any activity that is incident to or necessary for the related party's long-term contract, the taxpayer must account for the gross receipts and costs attributable to this activity using the PCM, even if this activity is not otherwise subject to section 460(a). This type of activity may include, for example, the performance of engineering and design services, and the production of components and subassemblies that are reasonably expected to be used in the production of the subject matter of the related party's contract.

(ii) ***Exception for components and subassemblies.*** A taxpayer is not required to use the PCM under this paragraph (g) to account for a component or subassembly that benefits a related party's long-term contract if more than 50 percent of the average annual gross receipts attributable to the sale of this item for the 3-taxable-year-period ending with the contracting year comes from unrelated parties.

(2) ***Total contract price.*** If a taxpayer is required to use the PCM under paragraph (g)(1)(i) of this section, the total contract price (as defined in § 1.460-4(b)(4)(i)) is the fair market value of the taxpayer's activity that is incident to or necessary for the performance of the related party's long-term contract. The related party also must use the fair market value of the taxpayer's activity as the cost it incurs for the activity. The fair market value of the taxpayer's activity may or may not be the same as the amount the related party pays the taxpayer for that activity.

(3) ***Completion factor.*** To compute a contract's completion factor (as described in § 1.460-4(b)(5)), the related party must take into account the fair market value of the taxpayer's activity that is incident to or necessary for the performance of the related party's long-term contract when the related party incurs the liability to the taxpayer for the activity, rather than when the taxpayer incurs the costs to perform the activity.

(h) ***Effective date*** —

(1) ***In general.*** Except as otherwise provided, this section and §§ 1.460-2 through 1.460-5 are applicable for contracts entered into on or after January 11, 2001.

(2) ***Change in method of accounting.*** Any change in a taxpayer's method of accounting necessary to comply with this section and §§ 1.460-2 through 1.460-5 is a change in method of accounting to which the provisions of section 446 and the regulations thereunder apply. For the first taxable year that includes January 11, 2001, a taxpayer is granted the consent of the Commissioner to change its method of accounting to comply with the provisions of this section and §§ 1.460-2 through 1.460-5 for long-term contracts entered into on or after January 11, 2001. A taxpayer that wants to change its method of accounting under this paragraph (h)(2) must follow the automatic consent procedures in Rev. Proc. 99-49 (1999-52 I.R.B. 725) (see § 601.601(d)(2) of this chapter), except that the scope limitations in section 4.02 of Rev. Proc. 99-49 do not apply. Because a change under this paragraph (h)(2) is made on a cut-off basis, a section 481(a) adjustment is not permitted or required. Moreover, the taxpayer does not receive audit protection under section 7 of Rev. Proc. 99-49 for a change in method of accounting under this paragraph (h)(2). A taxpayer that wants to change its exempt-contract method of accounting is not granted the consent of the Commissioner under this paragraph (h)(2) and must file a Form 3115, "Application for Change in Accounting Method," to obtain consent. See Rev. Proc. 97-27 (1997-1 C.B. 680) (see § 601.601(d)(2) of this chapter).

(3) ***Changes made by Tax Cuts and Jobs Act (Pub. L. 115-97).*** Paragraph (f)(3) of this section, and § 1.460-5(d)(1) and (d)(3), apply for contracts entered into in taxable years beginning on or after January 5, 2021. However, for contracts entered into after December 31, 2017, in a taxable year ending after December 31, 2017, and before January 5, 2021, a taxpayer may apply paragraph (f)(3) of this section, and § 1.460-5(d)(1) and (d)(3), provided that the taxpayer also applies the applicable rules contained in the regulations under section 460 for such taxable year and all subsequent taxable years.

(i) [Reserved]

(j) ***Examples.*** The following examples illustrate the rules of this section:

Example 1. Contract for manufacture of property. B notifies C, an aircraft manufacturer, that it wants to purchase an aircraft of a particular type. At the time C receives the order, C has on hand several partially completed aircraft of this type; however, C does not have any completed aircraft of this type on hand. C and B agree that B will purchase one of these aircraft after it has been completed. C retains title to and risk of loss with respect to the aircraft until the sale takes place. The agreement between C and B is a contract for the manufacture of property under paragraph (b)(2)(i) of this section, even if labeled as a contract for the sale of property, because the manufacture of the aircraft is necessary for C's obligations under the agreement to be fulfilled and the manufacturing was not complete when B and C entered into the agreement.

Example 2. De minimis construction activity. C, a master developer whose taxable year ends December 31, owns 5,000 acres of undeveloped land with a cost basis of $5,000,000 and a fair market value of $50,000,000. To obtain permission from the local county government to improve this land, a service road must be constructed on this land to benefit all 5,000 acres. In 2001, C enters into a contract to sell a 1,000-acre parcel of undeveloped land to B, a residential developer, for its fair market value, $10,000,000. In this contract, C agrees to construct a service road running through the land that C is selling to B and through the 4,000 adjacent acres of undeveloped land that C has sold or will sell to other residential developers for its fair market value, $40,000,000. C reasonably estimates that it will incur allocable contract costs of $50,000 (excluding the cost of the land) to construct this service road, which will be owned and maintained by the county. C must reasonably allocate the cost of the service road among the benefitted parcels. The portion of the estimated total allocable contract costs that C allocates to the 1,000-acre parcel being sold to B (based upon its fair market value) is $10,000 ($50,000 × ($10,000,000 ÷ $50,000,000)). Construction of the service road is finished in 2002. Because the estimated total allocable contract costs attributable to C's construction activities, $10,000, are less than 10 percent of the contract's total contract price, $10,000,000, C's contract with B is not a construction contract under paragraph (b)(2)(ii) of this section. Thus, C's contract with B is not a long-term contract under paragraph (b)(2)(i) of this section, notwithstanding that construction of the service road is not completed in 2001.

Example 3. Completion—customer use. In 2002, C, whose taxable year ends December 31, enters into a contract to construct a building for B. In November of 2003, the building is completed in every respect necessary for its intended use, and B occupies the building. In early December of 2003, B notifies C of some minor deficiencies that need to be corrected, and C agrees to correct them in January 2004. C reasonably estimates that the cost of correcting these deficiencies will be less than five percent of the total allocable contract costs. C's contract is complete under paragraph (c)(3)(i)(A) of this section in 2003 because in that year, B used the building and C had incurred at least 95 percent of the total allocable contract costs attributable to the building. C must use a permissible method of accounting for any deficiency-related costs incurred after 2003.

Example 4. Completion—customer use. In 2001, C, whose taxable year ends December 31, agrees to construct a shopping center, which includes an adjoining parking lot, for B. By October 2002, C has finished constructing the retail portion of the shopping center. By December 2002, C has graded the entire parking lot, but has paved only one-fourth of it because inclement weather conditions prevented C from laying asphalt on the remaining three-fourths. In December 2002, B opens the retail portion of the shopping center and the paved portion of the parking lot to the general public. C reasonably estimates that the cost of paving the remaining three-fourths of the parking lot when weather permits will exceed five percent of C's total allocable contract costs. Even though B is using

the subject matter of the contract, C's contract is not completed in December 2002 under paragraph (c)(3)(i)(A) of this section because C has not incurred at least 95 percent of the total allocable contract costs attributable to the subject matter.

Example 5. Completion—customer use. In 2001, C, whose taxable year ends December 31, agrees to manufacture 100 machines for B. By December 31, 2002, C has delivered 99 of the machines to B. C reasonably estimates that the cost of finishing the related work on the contract will be less than five percent of the total allocable contract costs. C's contract is not complete under paragraph (c)(3)(i)(A) of this section in 2002 because in that year, B is not using the subject matter of the contract (all 100 machines) for its intended purpose.

Example 6. Non-long-term contract activity. On January 1, 2001, C, whose taxable year ends December 31, enters into a single long-term contract to design and manufacture a satellite and to develop computer software enabling B to operate the satellite. At the end of 2001, C has not finished manufacturing the satellite. Designing the satellite and developing the computer software are non-long-term contract activities that are incident to and necessary for the taxpayer's manufacturing of the subject matter of a long-term contract because the satellite could not be manufactured without the design and would not operate without the software. Thus, under paragraph (d)(1) of this section, C must allocate these non-long-term contract activities to the long-term contract and account for the gross receipts and costs attributable to designing the satellite and developing computer software using the PCM.

Example 7. Non-long-term contract activity. C agrees to manufacture equipment for B under a long-term contract. In a separate contract, C agrees to design the equipment being manufactured for B under the long-term contract. Under paragraph (d)(1) of this section, C must allocate the gross receipts and costs related to the design to the long-term contract because designing the equipment is a non-long-term contract activity that is incident to and necessary for the manufacture of the subject matter of the long-term contract.

Example 8. Severance. On January 1, 2001, C, a construction contractor, and B, a real estate investor, enter into an agreement requiring C to build two office buildings in different areas of a large city. The agreement provides that the two office buildings will be completed by C and accepted by B in 2002 and 2003, respectively, and that C will be paid $1,000,000 and $1,500,000 for the two office buildings, respectively. The agreement will provide C with a reasonable profit from the construction of each building. Unless C is required to use the PCM to account for the contract, C is required to sever this contract under paragraph (e)(2) of this section because the buildings are independently priced, the agreement provides for separate delivery and acceptance of the buildings, and, as each building will generate a reasonable profit, a reasonable businessperson would have entered into separate agreements for the terms agreed upon for each building.

Example 9. Severance. C, a large construction contractor whose taxable year ends December 31, accounts for its construction contracts using the PCM and has elected to use the 10-percent method described in § 1.460-4(b)(6). In September 2001, C enters into an agreement to construct four buildings in four different cities. The buildings are independently priced and the contract provides a reasonable profit for each of the buildings. In addition, the agreement requires C to complete one building per year in 2002, 2003, 2004, and 2005. As of December 31, 2001, C has incurred 25 percent of the estimated total allocable contract costs attributable to one of the buildings, but only five percent of the estimated total allocable contract costs attributable to all four buildings included in the agreement. C does not request the Commissioner's consent to sever this contract. Using the 10-percent method, C does not take into account any portion of the total contract price or any

incurred allocable contract costs attributable to this agreement in 2001. Upon examination of C's 2001 tax return, the Commissioner determines that C entered into one agreement for four buildings rather than four separate agreements each for one building solely to take advantage of the deferral obtained under the 10-percent method. Consequently, to clearly reflect the taxpayer's income, the Commissioner may require C to sever the agreement into four separate contracts under paragraph (e)(2) of this section because the buildings are independently priced, the agreement provides for separate delivery and acceptance of the buildings, and a reasonable businessperson would have entered into separate agreements for these buildings.

Example 10. Aggregation. In 2001, C, a shipbuilder, enters into two agreements with the Department of the Navy as the result of a single negotiation. Each agreement obligates C to manufacture a submarine. Because the submarines are of the same class, their specifications are similar. Because C has never manufactured submarines of this class, however, C anticipates that it will incur substantially higher costs to manufacture the first submarine, to be delivered in 2007, than to manufacture the second submarine, to be delivered in 2010. If the agreements are treated as separate contracts, the first contract probably will produce a substantial loss, while the second contract probably will produce substantial profit. Based upon these facts, aggregation is required under paragraph (e)(2) of this section because the submarines are interdependently priced and a reasonable businessperson would not have entered the first agreement without also entering into the second.

Example 11. Aggregation. In 2001, C, a manufacturer of aircraft and related equipment, agrees to manufacture 10 military aircraft for foreign government B and to deliver the aircraft by the end of 2003. When entering into the agreement, C anticipates that it might receive production orders from B over the next 20 years for as many as 300 more of these aircraft. The negotiated contract price reflects C's and B's consideration of the expected total cost of manufacturing the 10 aircraft, the risks and opportunities associated with the agreement, and the additional factors the parties considered relevant. The negotiated price provides a profit on the sale of the 10 aircraft even if C does not receive any additional production orders from B. It is unlikely, however, that C actually would have wanted to manufacture the 10 aircraft but for the expectation that it would receive additional production orders from B. In 2003, B accepts delivery of the 10 aircraft. At that time, B orders an additional 20 aircraft of the same type for delivery in 2007. When negotiating the price for the additional 20 aircraft, C and B consider the fact that the expected unit cost for this production run of 20 aircraft will be lower than the unit cost of the 10 aircraft completed and accepted in 2003, but substantially higher than the expected unit cost of future production runs. Based upon these facts, aggregation is not permitted under paragraph (e)(2) of this section. Because the parties negotiated the prices of both agreements considering only the expected production costs and risks for each agreement standing alone, the terms and conditions agreed upon for the first agreement are independent of the terms and conditions agreed upon for the second agreement. The fact that the agreement to manufacture 10 aircraft provides a profit for C indicates that a reasonable businessperson would have entered into that agreement without entering into the agreement to manufacture the additional 20 aircraft.

Example 12. Classification and completion. In 2001, C, whose taxable year ends December 31, agrees to manufacture and install an industrial machine for B. C elects under paragraph (f) of this section to classify the agreement as a long-term manufacturing contract and to account for it using the PCM. The agreement requires C to deliver the machine in August 2003 and to install and test the machine in B's factory. In addition, the agreement requires B to accept the machine when the tests prove that the machine's performance will satisfy the environmental standards set by the Environmental Protection Agency (EPA), even if B has not obtained the required operating permit. Because of

technical difficulties, C cannot deliver the machine until December 2003, when B conditionally accepts delivery. C installs the machine in December 2003 and then tests it through February 2004. B accepts the machine in February 2004, but does not obtain the operating permit from the EPA until January 2005. Under paragraph (c)(3)(i)(B) of this section, C's contract is finally completed and accepted in February 2004, even though B does not obtain the operating permit until January 2005, because C completed all its obligations under the contract and B accepted the machine in February 2004.

[T.D. 8929, 66 FR 2225, Jan. 11, 2001; 66 FR 18357, Apr. 6, 2001; T.D. 9942, 86 FR 272, Jan. 5, 2021]

§ 1.460-2 Long-term manufacturing contracts.

(a) ***In general.*** Section 460 generally requires a taxpayer to determine the income from a long-term manufacturing contract using the percentage-of-completion method described in § 1.460-4(b) (PCM). A contract not completed in the contracting year is a long-term manufacturing contract if it involves the manufacture of personal property that is—

(1) A unique item of a type that is not normally carried in the finished goods inventory of the taxpayer; or

(2) An item that normally requires more than 12 calendar months to complete (regardless of the duration of the contract or the time to complete a deliverable quantity of the item).

(b) ***Unique*** —

(1) ***In general. Unique*** means designed for the needs of a specific customer. To determine whether an item is designed for the needs of a specific customer, a taxpayer must consider the extent to which research, development, design, engineering, retooling, and similar activities (customizing activities) are required to manufacture the item and whether the item could be sold to other customers with little or no modification. A contract may require the taxpayer to manufacture more than one unit of a unique item. If a contract requires a taxpayer to manufacture more than one unit of the same item, the taxpayer must determine whether that item is unique by considering the customizing activities that would be needed to produce only the first unit. For the purposes of this paragraph (b), a taxpayer must consider the activities performed on its behalf by a subcontractor.

(2) ***Safe harbors.*** Notwithstanding paragraph (b)(1) of this section, an item is not unique if it satisfies one or more of the safe harbors in this paragraph (b)(2). If an item does not satisfy one or more safe harbors, the determination of uniqueness will depend on the facts and circumstances. The safe harbors are:

(i) ***Short production period.*** An item is not unique if it normally requires 90 days or less to complete. In the case of a contract for multiple units of an item, the item is not unique only if it normally requires 90 days or less to complete each unit of the item in the contract.

(ii) ***Customized item.*** An item is not unique if the total allocable contract costs attributable to customizing activities that are incident to or necessary for the manufacture of the item do not exceed 10 percent of the estimated total allocable contract costs allocable to the item. In the case of a contract for multiple units of an item, this comparison must be performed on the first unit of the item, and the total allocable contract costs attributable to customizing activities that are incident to or necessary for the manufacture of the first unit of the item must be allocated to that first unit.

(iii) ***Inventoried item.*** A unique item ceases to be unique no later than when the taxpayer normally includes similar items in its finished goods inventory.

(c) ***Normal time to complete*** —

(1) ***In general.*** The amount of time normally required to complete an item is the item's reasonably expected *production period,* as described in § 1.263A-12, determined at the end of the contracting year. Thus, in general, the expected production period for an item begins when a taxpayer incurs at least five percent of the costs that would be allocable to the item under § 1.460-5 and ends when the item is ready to be held for sale and all reasonably expected production activities are complete. In the case of components that are assembled or reassembled into an item or unit at the customer's facility by the taxpayer's employees or agents, the production period ends when the components are assembled or reassembled into an operable item or unit. To the extent that several distinct activities related to the production of the item are expected to occur simultaneously, the period during which these distinct activities occur is not counted more than once. Furthermore, when determining the normal time to complete an item, a taxpayer is not required to consider activities performed or costs incurred that would not be allocable contract costs under section 460 (*e.g.,* independent research and development expenses (as defined in § 1.460-1(b)(9)) and marketing expenses). Moreover, the time normally required to design and manufacture the first unit of an item for which the taxpayer intends to produce multiple units generally does not indicate the normal time to complete the item.

(2) ***Production by related parties.*** To determine the time normally required to complete an item, a taxpayer must consider all relevant production activities performed and costs incurred by itself and by related parties, as defined in § 1.460-1(b)(4). For example, if a taxpayer's item requires a component or subassembly manufactured by a related party, the taxpayer must consider the time the related party takes to complete the component or subassembly and, for purposes of determining the beginning of an item's production period, the costs incurred by the related party that are allocable to the component or subassembly. However, if both requirements of the exception for components and subassemblies under § 1.460-1(g)(1)(ii) are satisfied, a taxpayer does not consider the activities performed or the costs incurred by a related party when determining the normal time to complete an item.

(d) ***Qualified ship contracts.*** A taxpayer may determine the income from a long-term manufacturing contract that is a qualified ship contract using either the PCM or the percentage-of-completion/capitalized-cost method (PCCM) of accounting described in § 1.460-4(e). A *qualified ship contract* is any contract entered into after February 28, 1986, to manufacture in the United States not more than 5 seagoing vessels if the vessels will not be manufactured directly or indirectly for the United States Government and if the taxpayer reasonably expects to complete the contract within 5 years of the contract commencement date. Under § 1.460-1(e)(3)(i), a contract to produce more than 5 vessels for which the PCM would be required cannot be severed in order to be classified as a qualified ship contract.

(e) ***Examples.*** The following examples illustrate the rules of this section:

Example 1. Unique item and classification. In December 2001, C enters into a contract with B to design and manufacture a new type of industrial equipment. C reasonably expects the normal production period for this type of equipment to be eight months. Because the new type of industrial equipment requires a substantial amount of research, design, and engineering to produce, C determines that the equipment is a unique item and its contract with B is a long-term contract. After delivering the equipment to B in September 2002, C contracts with B to produce five additional units of that industrial equipment with certain different specifications. These additional units, which also are expected to take eight months to produce, will be delivered to B in 2003. C determines that the

research, design, engineering, retooling, and similar customizing costs necessary to produce the five additional units of equipment does not exceed 10 percent of the first unit's share of estimated total allocable contract costs. Consequently, the additional units of equipment satisfy the safe harbor in paragraph (b)(2)(ii) of this section and are not unique items. Although C's contract with B to produce the five additional units is not completed within the contracting year, the contract is not a long-term contract since the additional units of equipment are not unique items and do not normally require more than 12 months to produce. C must classify its second contract with B as a non-long term contract, notwithstanding that it classified the previous contract with B for a similar item as a long-term contract, because the determination of whether a contract is a long-term contract is made on a contract-by-contract basis. A change in classification is not a change in method of accounting because the change in classification results from a change in underlying facts.

Example 2. 12-month rule—related party. C manufactures cranes. C purchases one of the crane's components from R, a related party under § 1.460-1(b)(4). Less than 50 percent of R's gross receipts attributable to the sale of this component comes from sales to unrelated parties; thus, the exception for components and subassemblies under § 1.460-1(g)(1)(ii) is not satisfied. Consequently, C must consider the activities of R as R incurs costs and performs the activities rather than as C incurs a liability to R. The normal time period between the time that both C and R incur five percent of the costs allocable to the crane and the time that R completes the component is five months. C normally requires an additional eight months to complete production of the crane after receiving the integral component from R. C's crane is an item of a type that normally requires more than 12 months to complete under paragraph (c) of this section because the production period from the time that both C and R incur five percent of the costs allocable to the crane until the time that production of the crane is complete is normally 13 months.

Example 3. 12-month rule—duration of contract. The facts are the same as in *Example 2,* except that C enters into a sales contract with B on December 31, 2001 (the last day of C's taxable year), and delivers a completed crane to B on February 1, 2002. C's contract with B is a long-term contract under paragraph (a)(2) of this section because the contract is not completed in the contracting year, 2001, and the crane is an item that normally requires more than 12 calendar months to complete (regardless of the duration of the contract).

Example 4. 12-month rule—normal time to complete. The facts are the same as in *Example 2,* except that C (and R) actually complete B's crane in only 10 calendar months. The contract is a long-term contract because the normal time to complete a crane, not the actual time to complete a crane, is the relevant criterion for determining whether an item is subject to paragraph (a)(2) of this section.

Example 5. Normal time to complete. C enters into a multi-unit contract to produce four units of an item. C does not anticipate producing any additional units of the item. C expects to perform the research, design, and development that are directly allocable to the particular item and to produce the first unit in the first 24 months. C reasonably expects the production period for each of the three remaining units will be 3 months. This contract is not a contract that involves the manufacture of an item that normally requires more than 12 months to complete because the normal time to complete the item is 3 months. However, the contract does not satisfy the 90-day safe harbor for unique items because the normal time to complete the first unit of this item exceeds 90 days. Thus, the contract might involve the manufacture of a unique item depending on the facts and circumstances.

[T.D. 8929, 66 FR 2230, Jan. 11, 2001; 66 FR 18191, Apr. 6, 2001]

§ 1.460-3 Long-term construction contracts.

(a) ***In general.*** Section 460 generally requires a taxpayer to determine the income from a long-term construction contract using the percentage-of-completion method described in § 1.460-4(b) (PCM). A contract not completed in the contracting year is a long-term construction contract if it involves the building, construction, reconstruction, or rehabilitation of real property; the installation of an integral component to real property; or the improvement of real property (collectively referred to as construction). *Real property* means land, buildings, and *inherently permanent structures,* as defined in § 1.263A-8(c)(3), such as roadways, dams, and bridges. Real property does not include vessels, offshore drilling platforms, or unsevered natural products of land. An *integral component to real property* includes property not produced at the site of the real property but intended to be permanently affixed to the real property, such as elevators and central heating and cooling systems. Thus, for example, a contract to install an elevator in a building is a construction contract because a building is real property, but a contract to install an elevator in a ship is not a construction contract because a ship is not real property.

(b) ***Exempt construction contracts*** —

(1) ***In general.*** The general requirement to use the PCM and the cost allocation rules described in § 1.460-5(b) or (c) does not apply to any long-term construction contract described in this paragraph (b) (exempt construction contract). *Exempt construction contract* means any—

(i) Home construction contract; and

(ii) Other construction contract, entered into after December 31, 2017, in a taxable year ending after December 31, 2017, by a taxpayer, other than a tax shelter prohibited from using the cash receipts and disbursements method of accounting (cash method) under section 448(a)(3), who estimates at the time such contract is entered into that such contract will be completed within the 2-year period beginning on the contract commencement date, and who meets the gross receipts test described in paragraph (b)(3) of this section for the taxable year in which such contract is entered into.

(2) ***Home construction contract*** —

(i) ***In general.*** A long-term construction contract is a *home construction contract* if a taxpayer (including a subcontractor working for a general contractor) reasonably expects to attribute 80 percent or more of the estimated total allocable contract costs (including the cost of land, materials, and services), determined as of the close of the contracting year, to the construction of—

(A) Dwelling units, as defined in section 168(e)(2)(A)(ii)(I), contained in buildings containing 4 or fewer dwelling units (including buildings with 4 or fewer dwelling units that also have commercial units); and

(B) Improvements to real property directly related to, and located at the site of, the dwelling units.

(ii) ***Townhouses and rowhouses.*** Each townhouse or rowhouse is a separate building.

(iii) ***Common improvements.*** A taxpayer includes in the cost of the dwelling units their allocable share of the cost that the taxpayer reasonably expects to incur for any common improvements (e.g., sewers, roads, clubhouses) that benefit the dwelling units and that the taxpayer is contractually obligated, or required by law, to construct within the tract or tracts of land that contain the dwelling units.

(iv) ***Mixed use costs.*** If a contract involves the construction of both commercial units and dwelling units within the same building, a taxpayer must allocate the costs among the commercial units and dwelling units using a reasonable method or combination of reasonable methods, such as specific identification, square footage, or fair market value.

(3) ***Gross receipts test*** —

(i) ***In general.*** A taxpayer, other than a tax shelter prohibited from using the cash method under section 448(a)(3), meets the gross receipts test of this paragraph (b)(3) if it meets the gross receipts test of section 448(c) and § 1.448-2(c)(2). This gross receipts test applies even if the taxpayer is not otherwise subject to section 448(a).

(ii) ***Application of gross receipts test*** —

(A) ***In general.*** In the case of any taxpayer that is not a corporation or a partnership, and except as provided in paragraphs (b)(3)(ii)(B) and (C) of this section, the gross receipts test of section 448(c) and the accompanying regulations are applied in the same manner as if each trade or business of such taxpayer were a corporation or partnership.

(B) ***Gross receipts of individuals, etc.*** Except when the aggregation rules of section 448(c)(2) apply, the gross receipts of a taxpayer other than a corporation or partnership are the amount derived from all trades or businesses of such taxpayer. Amounts not related to a trade or business are excluded from the gross receipts of the taxpayer. For example, an individual taxpayer's gross receipts do not include inherently personal amounts, such as personal injury awards or settlements with respect to an injury of the individual taxpayer, disability benefits, Social Security benefits received by the taxpayer during the taxable year, and wages received as an employee that are reported on Form W-2.

(C) ***Partners and S corporation shareholders.*** Except when the aggregation rules of section 448(c)(2) apply, each partner in a partnership includes a share of partnership gross receipts in proportion to such partner's distributive share (as determined under section 704) of items of gross income that were taken into account by the partnership under section 703. Similarly, a shareholder includes the pro rata share of S corporation gross receipts taken into account by the S corporation under section 1363(b).

(D) ***Examples.*** The operation of this paragraph (b)(3) is illustrated by the following examples:

(*1*) ***Example 1.*** Taxpayer A is an individual who operates two separate and distinct trades or business that are reported on Schedule C, *Profit or Loss from Business,* of A's Federal income tax return. For 2020, one trade or business has annual average gross receipts of $5 million, and the other trade or business has average annual gross receipts of $35 million. Under paragraph (b)(3)(ii)(B) of this section, for 2020, neither of A's trades or businesses meets the gross receipts test of paragraph (b)(3) of this section ($5 million + $35 million = $40 million, which is greater than the inflation-adjusted gross receipts test amount for 2020, which is $26 million).

(*2*) ***Example 2.*** Taxpayer B is an individual who operates three separate and distinct trades or business that are reported on Schedule C of B's Federal income tax return. For 2020, Business X is a retail store with average annual gross receipts of $15 million, Business Y is a dance studio with average annual gross receipts of $6 million, and Business Z is a car repair shop with average annual gross receipts of $12 million. Under paragraph (b)(3)(ii)(B) of this section, B's gross receipts are the

combined amount derived from all three of B's trades or businesses. Therefore, for 2020, X, Y and Z do not meet the gross receipts test of paragraph (b)(3)(i) of this section ($15 million + $6 million + $12 million = $33 million, which is greater than the inflation-adjusted gross receipts test amount for 2020, which is $26 million).

(iii) ***Method of accounting.*** A change in the method of accounting used for exempt construction contracts described in paragraph (b)(1)(ii) of this section is a change in method of accounting under section 446 and the accompanying regulations. For rules distinguishing a change in method from adoption of a method, see § 1.460-1(f)(3). A taxpayer changing its method of accounting must obtain the consent of the Commissioner in accordance with § 1.446-1(e)(3). For rules relating to the clear reflection of income and the pattern of consistent treatment of an item, see section 446 and § 1.446-1. A change in method of accounting shall be implemented pursuant to the applicable administrative procedures to obtain the consent of the Commissioner to change a method of accounting under section 446(e) as published in the Internal Revenue Bulletin (IRB) (see Revenue Procedure 2015-13 (2015-5 IRB 419) (or successor) (see § 601.601(d)(2) of this chapter)). A taxpayer that uses the percentage of completion method for exempt contracts described in paragraph (b)(1)(ii) of this section that wants to change to another exempt contract method is to use the applicable administrative procedures to obtain the automatic consent of the Commissioner to change such method under section 446(e) as published in the IRB. A taxpayer-initiated change in method of accounting will be permitted only on a cut-off basis, and thus, a section 481(a) adjustment will not be permitted or required. See § 1.460-4(g).

(c) ***Residential construction contracts.*** A taxpayer may determine the income from a long-term construction contract that is a residential construction contract using either the PCM or the percentage-of-completion/capitalized-cost method (PCCM) of accounting described in § 1.460-4(e). A *residential construction contract* is a home construction contract, as defined in paragraph (b)(2) of this section, except that the building or buildings being constructed contain more than 4 dwelling units.

(d) ***Applicability Dates.*** Paragraphs (b)(1)(ii) and (b)(3) of this section apply, for contracts entered into in taxable years beginning on or after January 5, 2021. However, for contracts entered into after December 31, 2017, in a taxable year ending after December 31, 2017, and before January 5, 2021, a taxpayer may apply the paragraphs described in the first sentence of this paragraph (d), provided that the taxpayer follows all the applicable rules contained in the regulations under section 460 for such taxable year and all subsequent taxable years.

[T.D. 8929, 66 FR 2231, Jan. 11, 2001, as amended by T.D. 9942, 86 FR 272, Jan. 5, 2021; 86 FR 32186, June 17, 2021]

§ 1.460-4 Methods of accounting for long-term contracts.

(a) ***Overview.*** This section prescribes permissible methods of accounting for long-term contracts. Paragraph (b) of this section describes the percentage-of-completion method under section 460(b) (PCM) that a taxpayer generally must use to determine the income from a long-term contract. Paragraph (c) of this section lists permissible methods of accounting for exempt construction contracts described in § 1.460-3(b)(1) and describes the exempt-contract percentage-of-completion method (EPCM). Paragraph (d) of this section describes the completed-contract method (CCM), which is one of the permissible methods of accounting for exempt construction contracts. Paragraph (e) of this section describes the percentage-of-completion/capitalized-cost method (PCCM), which is a permissible method of accounting for qualified ship contracts described in § 1.460-2(d) and residential construction contracts described in §

1.460-3(c). Paragraph (f) of this section provides rules for determining the alternative minimum taxable income (AMTI) from long-term contracts that are not exempted under section 56. Paragraph (g) of this section provides rules concerning consistency in methods of accounting for long-term contracts. Paragraph (h) of this section provides examples illustrating the principles of this section. Paragraph (j) of this section provides rules for taxpayers that file consolidated tax returns. Finally, paragraph (k) of this section provides rules relating to a mid-contract change in taxpayer of a contract accounted for using a long-term contract method of accounting.

(b) ***Percentage-of-completion method*** —

(1) ***In general.*** Under the PCM, a taxpayer generally must include in income the portion of the *total contract price,* as defined in paragraph (b)(4)(i) of this section, that corresponds to the percentage of the entire contract that the taxpayer has completed during the taxable year. The percentage of completion must be determined by comparing allocable contract costs incurred with estimated total allocable contract costs. Thus, the taxpayer includes a portion of the total contract price in gross income as the taxpayer incurs allocable contract costs.

(2) ***Computations.*** To determine the income from a long-term contract, a taxpayer—

(i) Computes the *completion factor* for the contract, which is the ratio of the cumulative allocable contract costs that the taxpayer has incurred through the end of the taxable year to the estimated total allocable contract costs that the taxpayer reasonably expects to incur under the contract;

(ii) Computes the amount of *cumulative gross receipts* from the contract by multiplying the completion factor by the total contract price;

(iii) Computes the amount of *current-year gross receipts,* which is the difference between the amount of cumulative gross receipts for the current taxable year and the amount of cumulative gross receipts for the immediately preceding taxable year (the difference can be a positive or negative number); and

(iv) Takes both the current-year gross receipts and the allocable contract costs incurred during the current year into account in computing taxable income.

(3) ***Post-completion-year income.*** If a taxpayer has not included the total contract price in gross income by the completion year, as defined in § 1.460-1(b)(6), the taxpayer must include the remaining portion of the total contract price in gross income for the taxable year following the completion year. For the treatment of post-completion-year costs, see paragraph (b)(5)(v) of this section. See § 1.460-6(c)(1)(ii) for application of the look-back method as a result of adjustments to total contract price.

(4) ***Total contract price*** —

(i) ***In general*** —

(A) ***Definition. Total contract price*** means the amount that a taxpayer reasonably expects to receive under a long-term contract, including holdbacks, retainages, and cost reimbursements. See § 1.460-6(c)(1)(ii) and (2)(vi) for application of the look-back method as a result of changes in total contract price.

(B) ***Contingent compensation.*** Any amount related to a contingent right under a contract, such as a bonus, award, incentive payment, and amount in dispute, is included in total contract price as soon as the taxpayer can reasonably predict that the amount will be earned, even if the all events test has not yet been met. For example, if a bonus is payable to a taxpayer for meeting an early completion date, the bonus is includible in total contract price at the time and to the extent that the taxpayer can reasonably predict the achievement of the corresponding objective. Similarly, a portion of the contract price that is in dispute is includible in total contract price at the time and to the extent that the taxpayer can reasonably predict that the dispute will be resolved in the taxpayer's favor (regardless of when the taxpayer actually receives payment or when the dispute is finally resolved). Total contract price does not include compensation that might be earned under any other agreement that the taxpayer expects to obtain from the same customer (*e.g.,* exercised option or follow-on contract) if that other agreement is not aggregated under § 1.460-1(e). For the purposes of this paragraph (b)(4)(i)(B), a taxpayer can reasonably predict that an amount of contingent income will be earned not later than when the taxpayer includes that amount in income for financial reporting purposes under generally accepted accounting principles. If a taxpayer has not included an amount of contingent compensation in total contract price under this paragraph (b)(4)(i) by the taxable year following the completion year, the taxpayer must account for that amount of contingent compensation using a permissible method of accounting. If it is determined after the taxable year following the completion year that an amount included in total contract price will not be earned, the taxpayer should deduct that amount in the year of the determination.

(C) ***Non-long-term contract activities.*** Total contract price includes an allocable share of the gross receipts attributable to a non-long-term contract activity, as defined in § 1.460-1(d)(2), if the activity is incident to or necessary for the manufacture, building, installation, or construction of the subject matter of the long-term contract. Total contract price also includes amounts reimbursed for independent research and development expenses (as defined in § 1.460-1(b)(9)), or for bidding and proposal costs, under a federal or cost-plus long-term contract (as defined in section 460(d)), regardless of whether the research and development, or bidding and proposal, activities are incident to or necessary for the performance of that long-term contract.

(ii) ***Estimating total contract price.*** A taxpayer must estimate the total contract price based upon all the facts and circumstances known as of the last day of the taxable year. For this purpose, an event that occurs after the end of the taxable year must be taken into account if its occurrence was reasonably predictable and its income was subject to reasonable estimation as of the last day of that taxable year.

(5) ***Completion factor*** —

(i) ***Allocable contract costs.*** A taxpayer must use a cost allocation method permitted under either § 1.460-5(b) or (c) to determine the amount of cumulative allocable contract costs and estimated total allocable contract costs that are used to determine a contract's completion factor. Allocable contract costs include a reimbursable cost that is allocable to the contract.

(ii) ***Cumulative allocable contract costs.*** To determine a contract's completion factor for a taxable year, a taxpayer must take into account the cumulative allocable contract costs that have been incurred, as defined in § 1.460-1(b)(8), through the end of the taxable year.

(iii) ***Estimating total allocable contract costs.*** A taxpayer must estimate total allocable contract costs for each long-term contract based upon all the facts and circumstances known as of the last day of the taxable year. For this purpose, an event that occurs after the end of the taxable year must be taken into account if its occurrence was reasonably predictable and its cost was subject to reasonable estimation as of the last day of that taxable year. To be considered reasonable, an estimate of total allocable contract costs must include costs attributable to delay, rework, change orders, technology or design problems, or other problems that reasonably can be predicted considering the nature of the contract and prior experience. However, estimated total allocable contract costs do not include any contingency allowance for costs that, as of the end of the taxable year, are not reasonably predicted to be incurred in the performance of the contract. For example, estimated total allocable contract costs do not include any costs attributable to factors not reasonably predictable at the end of the taxable year, such as third-party litigation, extreme weather conditions, strikes, and delays in securing required permits and licenses. In addition, the estimated costs of performing other agreements that are not aggregated with the contract under § 1.460-1(e) that the taxpayer expects to incur with the same customer (*e.g.,* follow-on contracts) are not included in estimated total allocable contract costs for the initial contract.

(iv) ***Pre-contracting-year costs.*** If a taxpayer reasonably expects to enter into a long-term contract in a future taxable year, the taxpayer must capitalize all costs incurred prior to entering into the contract that will be allocable to that contract (*e.g.,* bidding and proposal costs). A taxpayer is not required to compute a completion factor, or to include in gross income any amount, related to allocable contract costs for any taxable year ending before the contracting year or, if applicable, the 10-percent year defined in paragraph (b)(6)(i) of this section. In that year, the taxpayer is required to compute a completion factor that includes all allocable contract costs that have been incurred as of the end of that taxable year (whether previously capitalized or deducted) and to take into account in computing taxable income the related gross receipts and the previously capitalized allocable contract costs. If, however, a taxpayer determines in a subsequent year that it will not enter into the long-term contract, the taxpayer must account for these pre-contracting-year costs in that year (*e.g.,* as a deduction or an inventoriable cost) using the appropriate rules contained in other sections of the Code or regulations.

(v) ***Post-completion-year costs.*** If a taxpayer incurs an allocable contract cost after the completion year, the taxpayer must account for that cost using a permissible method of accounting. See § 1.460-6(c)(1)(ii) for application of the look-back method as a result of adjustments to allocable contract costs.

(6) ***10-percent method*** —

(i) ***In general.*** Instead of determining the income from a long-term contract beginning with the contracting year, a taxpayer may elect to use the 10-percent method under section 460(b)(5). Under the 10-percent method, a taxpayer does not include in gross income any amount related to allocable contract costs until the taxable year in which the taxpayer has incurred at least 10 percent of the estimated total allocable contract costs (10-percent year). A taxpayer must treat costs incurred before the 10-percent year as pre-contracting-year costs described in paragraph (b)(5)(iv) of this section.

(ii) ***Election.*** A taxpayer makes an election under this paragraph (b)(6) by using the 10-percent method for all long-term contracts entered into during the taxable year of the election on its original federal income tax return for the election year. This election is a method of accounting

and, thus, applies to all long-term contracts entered into during and after the taxable year of the election. An electing taxpayer must use the 10-percent method to apply the look-back method under § 1.460-6 and to determine alternative minimum taxable income under paragraph (f) of this section. This election is not available if a taxpayer uses the simplified cost-to-cost method described in § 1.460-5(c) to compute the completion factor of a long-term contract.

(7) ***Terminated contract*** —

(i) ***Reversal of income.*** If a long-term contract is terminated before completion and, as a result, the taxpayer retains ownership of the property that is the subject matter of that contract, the taxpayer must reverse the transaction in the taxable year of termination. To reverse the transaction, the taxpayer reports a loss (or gain) equal to the cumulative allocable contract costs reported under the contract in all prior taxable years less the cumulative gross receipts reported under the contract in all prior taxable years.

(ii) ***Adjusted basis.*** As a result of reversing the transaction under paragraph (b)(7)(i) of this section, a taxpayer will have an adjusted basis in the retained property equal to the cumulative allocable contract costs reported under the contract in all prior taxable years. However, if the taxpayer received and retains any consideration or compensation from the customer, the taxpayer must reduce the adjusted basis in the retained property (but not below zero) by the fair market value of that consideration or compensation. To the extent that the amount of the consideration or compensation described in the preceding sentence exceeds the adjusted basis in the retained property, the taxpayer must include the excess in gross income for the taxable year of termination.

(iii) ***Look-back method.*** The look-back method does not apply to a terminated contract that is subject to this paragraph (b)(7).

(c) ***Exempt contract methods*** —

(1) ***In general.*** An *exempt contract method* means the method of accounting that a taxpayer must use to account for all its long-term contracts (and any portion of a long-term contract) that are exempt from the requirements of section 460(a). Thus, an exempt contract method applies to exempt construction contracts, as defined in § 1.460-3(b); the non-PCM portion of a qualified ship contract, as defined in § 1.460-2(d); and the non-PCM portion of a residential construction contract, as defined in § 1.460-3(c). Permissible exempt contract methods include the PCM, the EPCM described in paragraph (c)(2) of this section, the CCM described in paragraph (d) of this section, or any other permissible method. See section 446.

(2) ***Exempt-contract percentage-of-completion method*** —

(i) ***In general.*** Similar to the PCM described in paragraph (b) of this section, a taxpayer using the EPCM generally must include in income the portion of the total contract price, as described in paragraph (b)(4) of this section, that corresponds to the percentage of the entire contract that the taxpayer has completed during the taxable year. However, under the EPCM, the percentage of completion may be determined as of the end of the taxable year by using any method of cost comparison (such as comparing direct labor costs incurred to date to estimated total direct labor costs) or by comparing the work performed on the contract with the estimated total work to be performed, rather than by using the cost-to-cost comparison required by paragraphs (b)(2)(i) and (5) of this section, provided such method is used consistently and clearly reflects

income. In addition, paragraph (b)(3) of this section (regarding post-completion-year income), paragraph (b)(6) of this section (regarding the 10-percent method) and § 1.460-6 (regarding the look-back method) do not apply to the EPCM.

(ii) ***Determination of work performed.*** For purposes of the EPCM, the criteria used to compare the work performed on a contract as of the end of the taxable year with the estimated total work to be performed must clearly reflect the earning of income with respect to the contract. For example, in the case of a roadbuilder, a standard of completion solely based on miles of roadway completed in a case where the terrain is substantially different may not clearly reflect the earning of income with respect to the contract.

(d) ***Completed-contract method*** —

(1) ***In general.*** Except as otherwise provided in paragraph (d)(4) of this section, a taxpayer using the CCM to account for a long-term contract must take into account in the contract's completion year, as defined in § 1.460-1(b)(6), the gross contract price and all allocable contract costs incurred by the completion year. A taxpayer may not treat the cost of any materials and supplies that are allocated to a contract, but actually remain on hand when the contract is completed, as an allocable contract cost.

(2) ***Post-completion-year income and costs.*** If a taxpayer has not included an item of contingent compensation (*i.e.,* amounts for which the all events test has not been satisfied) in gross contract price under paragraph (d)(3) of this section by the completion year, the taxpayer must account for this item of contingent compensation using a permissible method of accounting. If a taxpayer incurs an allocable contract cost after the completion year, the taxpayer must account for that cost using a permissible method of accounting.

(3) ***Gross contract price.*** Gross contract price includes all amounts (including holdbacks, retainages, and reimbursements) that a taxpayer is entitled by law or contract to receive, whether or not the amounts are due or have been paid. In addition, gross contract price includes all bonuses, awards, and incentive payments, such as a bonus for meeting an early completion date, to the extent the all events test is satisfied. If a taxpayer performs a non-long-term contract activity, as defined in § 1.460-1(d)(2), that is incident to or necessary for the manufacture, building, installation, or construction of the subject matter of one or more of the taxpayer's long-term contracts, the taxpayer must include an allocable share of the gross receipts attributable to that activity in the gross contract price of the contract(s) benefitted by that activity. Gross contract price also includes amounts reimbursed for independent research and development expenses (as defined in § 1.460-1(b)(9)), or bidding and proposal costs, under a federal or cost-plus long-term contract (as defined in section 460(d)), regardless of whether the research and development, or bidding and proposal, activities are incident to or necessary for the performance of that long-term contract.

(4) ***Contracts with disputed claims*** —

(i) ***In general.*** The special rules in this paragraph (d)(4) apply to a long-term contract accounted for using the CCM with a dispute caused by a customer's requesting a reduction of the gross contract price or the performance of additional work under the contract or by a taxpayer's requesting an increase in gross contract price, or both, on or after the date a taxpayer has tendered the subject matter of the contract to the customer.

(ii) ***Taxpayer assured of profit or loss.*** If the disputed amount relates to a customer's claim for either a reduction in price or additional work and the taxpayer is assured of either a profit or a loss on a long-term contract regardless of the outcome of the dispute, the gross contract price,

reduced (but not below zero) by the amount reasonably in dispute, must be taken into account in the completion year. If the disputed amount relates to a taxpayer's claim for an increase in price and the taxpayer is assured of either a profit or a loss on a long-term contract regardless of the outcome of the dispute, the gross contract price must be taken into account in the completion year. If the taxpayer is assured a profit on the contract, all allocable contract costs incurred by the end of the completion year are taken into account in that year. If the taxpayer is assured a loss on the contract, all allocable contract costs incurred by the end of the completion year, reduced by the amount reasonably in dispute, are taken into account in the completion year.

(iii) ***Taxpayer unable to determine profit or loss.*** If the amount reasonably in dispute affects so much of the gross contract price or allocable contract costs that a taxpayer cannot determine whether a profit or loss ultimately will be realized from a long-term contract, the taxpayer may not take any of the gross contract price or allocable contract costs into account in the completion year.

(iv) ***Dispute resolved.*** Any part of the gross contract price and any allocable contract costs that have not been taken into account because of the principles described in paragraph (d)(4)(i), (ii), or (iii) of this section must be taken into account in the taxable year in which the dispute is resolved. If a taxpayer performs additional work under the contract because of the dispute, the term *taxable year in which the dispute is resolved* means the taxable year the additional work is completed, rather than the taxable year in which the outcome of the dispute is determined by agreement, decision, or otherwise.

(e) ***Percentage-of-completion/capitalized-cost method.*** Under the PCCM, a taxpayer must determine the income from a long-term contract using the PCM for the applicable percentage of the contract and its exempt contract method, as defined in paragraph (c) of this section, for the remaining percentage of the contract. For residential construction contracts described in § 1.460-3(c), the applicable percentage is 70 percent, and the remaining percentage is 30 percent. For qualified ship contracts described in § 1.460-2(d), the applicable percentage is 40 percent, and the remaining percentage is 60 percent.

(f) ***Alternative minimum taxable income*** —

(1) ***In general.*** Under section 56(a)(3), a taxpayer subject to the AMT must use the PCM to determine its AMTI from any long-term contract entered into on or after March 1, 1986, that is not a home construction contract, as defined in § 1.460-3(b)(2). For AMTI purposes, the PCM must include any election under paragraph (b)(6) of this section (concerning the 10-percent method) or under § 1.460-5(c) (concerning the simplified cost-to-cost method) that the taxpayer has made for regular tax purposes. For exempt construction contracts described in § 1.460-3(b)(1)(ii), a taxpayer must use the simplified cost-to-cost method to determine the completion factor for AMTI purposes. Except as provided in paragraph (f)(2) of this section, a taxpayer must use AMTI costs and AMTI methods, such as the depreciation method described in section 56(a)(1), to determine the completion factor of a long-term contract (except a home construction contract) for AMTI purposes.

(2) ***Election to use regular completion factors.*** Under this paragraph (f)(2), a taxpayer may elect for AMTI purposes to determine the completion factors of all of its long-term contracts using the methods of accounting and allocable contract costs used for regular federal income tax purposes. A taxpayer makes this election by using regular methods and regular costs to compute the completion factors of all long-term contracts entered into during the taxable year of the election for AMTI purposes on its original federal income tax return for the election year. This election is a method of accounting and, thus, applies to all long-term contracts entered into during and after the taxable year of the

election. Although a taxpayer may elect to compute the completion factor of its long-term contracts using regular methods and regular costs, an election under this paragraph (f)(2) does not eliminate a taxpayer's obligation to comply with the requirements of section 55 when computing AMTI. For example, although a taxpayer may elect to use the depreciation methods used for regular tax purposes to compute the completion factor of its long-term contracts for AMTI purposes, the taxpayer must use the depreciation methods permitted by section 56 to compute AMTI.

(g) ***Method of accounting.*** A taxpayer that uses the PCM, EPCM, CCM, or PCCM, or elects the 10-percent method or special AMTI method (or changes to another method of accounting with the Commissioner's consent) must apply the method(s) consistently for all similarly classified long-term contracts, until the taxpayer obtains the Commissioner's consent under section 446(e) to change to another method of accounting. A taxpayer-initiated change in method of accounting will be permitted only on a cut-off basis (*i.e.,* for contracts entered into on or after the year of change), and thus, a section 481(a) adjustment will not be permitted or required.

(h) ***Examples.*** The following examples illustrate the rules of this section:

Example 1. PCM—estimating total contract price. C, whose taxable year ends December 31, determines the income from long-term contracts using the PCM. On January 1, 2001, C enters into a contract to design and manufacture a satellite (a unique item). The contract provides that C will be paid $10,000,000 for delivering the completed satellite by December 1, 2002. The contract also provides that C will receive a $3,000,000 bonus for delivering the satellite by July 1, 2002, and an additional $4,000,000 bonus if the satellite successfully performs its mission for five years. C is unable to reasonably predict if the satellite will successfully perform its mission for five years. If on December 31, 2001, C should reasonably expect to deliver the satellite by July 1, 2002, the estimated total contract price is $13,000,000 ($10,000,000 unit price + $3,000,000 production-related bonus). Otherwise, the estimated total contract price is $10,000,000. In either event, the $4,000,000 bonus is not includible in the estimated total contract price as of December 31, 2001, because C is unable to reasonably predict that the satellite will successfully perform its mission for five years.

Example 2. PCM—computing income. (i) C, whose taxable year ends December 31, determines the income from long-term contracts using the PCM. During 2001, C agrees to manufacture for the customer, B, a unique item for a total contract price of $1,000,000. Under C's contract, B is entitled to retain 10 percent of the total contract price until it accepts the item. By the end of 2001, C has incurred $200,000 of allocable contract costs and estimates that the total allocable contract costs will be $800,000. By the end of 2002, C has incurred $600,000 of allocable contract costs and estimates that the total allocable contract costs will be $900,000. In 2003, after completing the contract, C determines that the actual cost to manufacture the item was $750,000.

(ii) For each of the taxable years, C's income from the contract is computed as follows:

	Taxable Year		
	2001	2002	2003
(A) Cumulative incurred costs	$200,000	$600,000	$750,000
(B) Estimated total costs	800,000	900,000	750,000
(C) Completion factor: (A) ÷ (B)	25.00%	66.67%	100.00%
(D) Total contract price	1,000,000	1,000,000	1,000,000
(E) Cumulative gross receipts: (C) × (D)	250,000	666,667	1,000,000
(F) Cumulative gross receipts (prior year)	(0)	(250,000)	(666,667)
(G) Current-year gross receipts	250,000	416,667	333,333
(H) Cumulative incurred costs	200,000	600,000	750,000
(I) Cumulative incurred costs (prior year)	(0)	(200,000)	(600,000)
(J) Current-year costs	200,000	400,000	150,000
(K) Gross income: (G) − (J)	$50,000	$16,667	$183,333

Example 3. PCM—computing income with cost sharing. (i) C, whose taxable year ends December 31, determines the income from long-term contracts using the PCM. During 2001, C enters into a contract to manufacture a unique item. The contract specifies a target price of $1,000,000, a target cost of $600,000, and a target profit of $400,000. C and B will share the savings of any cost underrun (actual total incurred cost is less than target cost) and the additional cost of any cost overrun (actual total incurred cost is greater than target cost) as follows: 30 percent to C and 70 percent to B. By the end of 2001, C has incurred $200,000 of allocable contract costs and estimates that the total allocable contract costs will be $600,000. By the end of 2002, C has incurred $300,000 of allocable contract costs and estimates that the total allocable contract costs will be $400,000. In 2003, after completing the contract, C determines that the actual cost to manufacture the item was $700,000.
(ii) For each of the taxable years, C's income from the contract is computed as follows (note that the sharing of any cost underrun or cost overrun is reflected as an adjustment to C's target price under paragraph (b)(4)(i) of this section):

	Taxable Year		
	2001	2002	2003
(A) Cumulative incurred costs	$200,000	$300,000	$700,000
(B) Estimated total costs	600,000	400,000	700,000

	Taxable Year		
	2001	2002	2003
(C) Completion factor: (A) ÷ (B)	33.33%	75.00%	100.00%
(D) Target price	$1,000,000	$1,000,000	$1,000,000
(E) Estimated total costs	600,000	400,000	700,000
(F) Target costs	600,000	600,000	600,000
(G) Cost (underrun)/overrun: (E) − (F)	0	(200,000)	100,000
(H) Adjustment rate	70%	70%	70%
(I) Target price adjustment	0	(140,000)	70,000
(J) Total contract price: (D) + (I)	$1,000,000	$860,000	$1,070,000
(K) Cumulative gross receipts: (C) × (J)	$333,333	$645,000	$1,070,000
(L) Cumulative gross receipts (prior year):	(0)	(333,333)	(645,000)
(M) Current-year gross receipts	333,333	311,667	425,000
(N) Cumulative incurred costs	200,000	300,000	700,000
(O) Cumulative incurred costs (prior year):	(0)	(200,000)	(300,000)
(P) Current-year costs	200,000	100,000	400,000
(Q) Gross income: (M) − (P)	$133,333	$211,667	$25,000

Example 4. PCM—10 percent method. (i) C, whose taxable year ends December 31, determines the income from long-term contracts using the PCM. In November 2001, C agrees to manufacture a unique item for $1,000,000. C reasonably estimates that the total allocable contract costs will be $600,000. By December 31, 2001, C has received $50,000 in progress payments and incurred $40,000 of costs. C elects to use the 10 percent method effective for 2001 and all subsequent taxable years. During 2002, C receives $500,000 in progress payments and incurs $260,000 of costs. In 2003, C incurs an additional $300,000 of costs, C finishes manufacturing the item, and receives the final $450,000 payment.
(ii) For each of the taxable years, C's income from the contract is computed as follows:

	Taxable Year		
	2001	2002	2003
(A) Cumulative incurred costs	$40,000	$300,000	$600,000
(B) Estimated total costs	600,000	600,000	600,000
(C) Completion factor (A) ÷ (B)	6.67%	50.00%	100.00%
(D) Total contract price	1,000,000	1,000,000	1,000,000

**Unless (C) <10 percent.*

	Taxable Year		
	2001	2002	2003
(E) Cumulative gross receipts: (C) × (D)*	0	500,000	1,000,000
(F) Cumulative gross receipts (prior year):	(0)	(0)	(500,000)
(G) Current-year gross receipts	0	500,000	500,000
(H) Cumulative incurred costs	0	300,000	600,000
(I) Cumulative incurred costs (prior year):	(0)	(0)	(300,000)
(J) Current-year costs	0	300,000	300,000
(K) Gross income: (G) − (J)	$0	$200,000	$200,000

**Unless (C) <10 percent.*

Example 5. PCM—contract terminated. C, whose taxable year ends December 31, determines the income from long-term contracts using the PCM. During 2001, C buys land and begins constructing a building that will contain 50 condominium units on that land. C enters into a contract to sell one unit in this condominium to B for $240,000. B gives C a $5,000 deposit toward the purchase price. By the end of 2001, C has incurred $50,000 of allocable contract costs on B's unit and estimates that the total allocable contract costs on B's unit will be $150,000. Thus, for 2001, C reports gross receipts of $80,000 ($50,000 ÷ $150,000 × $240,000), current-year costs of $50,000, and gross income of $30,000 ($80,000 − $50,000). In 2002, after C has incurred an additional $25,000 of allocable contract costs on B's unit, B files for bankruptcy protection and defaults on the contract with C, who is permitted to keep B's $5,000 deposit as liquidated damages. In 2002, C reverses the transaction with B under paragraph (b)(7) of this section and reports a loss of $30,000 ($50,000−$80,000). In addition, C obtains an adjusted basis in the unit sold to B of $70,000 ($50,000 (current-year costs deducted in 2001)− $5,000 (B's forfeited deposit) + $25,000 (current-year costs incurred in 2002). C may not apply the look-back method to this contract in 2002.

Example 6. CCM—contracts with disputes from customer claims. In 2001, C, whose taxable year ends December 31, uses the CCM to account for exempt construction contracts. C enters into a contract to construct a bridge for B. The terms of the contract provide for a $1,000,000 gross contract price. C finishes the bridge in 2002 at a cost of $950,000. When B examines the bridge, B insists that C either repaint several girders or reduce the contract price. The amount reasonably in dispute is $10,000. In 2003, C and B resolve their dispute, C repaints the girders at a cost of $6,000, and C and B agree that the contract price is not to be reduced. Because C is assured a profit of $40,000 ($1,000,000 − $10,000 − $950,000) in 2002 even if the dispute is resolved in B's favor, C must take this $40,000 into account in 2002. In 2003, C will earn an additional $4,000 profit ($1,000,000 − $956,000 − $40,000) from the contract with B. Thus, C must take into account an additional $10,000 of gross contract price and $6,000 of additional contract costs in 2003.

Example 7. CCM—contracts with disputes from taxpayer claims. In 2003, C, whose taxable year ends December 31, uses the CCM to account for exempt construction contracts. C enters into a contract to construct a building for B. The terms of the contract provide for a $1,000,000 gross contract price. C finishes the building in 2004 at a cost of $1,005,000. B examines the building in 2004 and agrees that it meets the contract's specifications; however, at the end of 2004, C and B are unable to agree on the merits of C's claim for an additional $10,000 for items that C alleges are changes in contract

specifications and B alleges are within the scope of the contract's original specifications. In 2005, B agrees to pay C an additional $2,000 to satisfy C's claims under the contract. Because the amount in dispute affects so much of the gross contract price that C cannot determine in 2004 whether a profit or loss will ultimately be realized, C may not taken any of the gross contract price or allocable contract costs into account in 2004. C must take into account $1,002,000 of gross contract price and $1,005,000 of allocable contract costs in 2005.

Example 8. CCM—contracts with disputes from taxpayer and customer claims. C, whose taxable year ends December 31, uses the CCM to account for exempt construction contracts. C constructs a factory for B pursuant to a long-term contract. Under the terms of the contract, B agrees to pay C a total of $1,000,000 for construction of the factory. C finishes construction of the factory in 2002 at a cost of $1,020,000. When B takes possession of the factory and begins operations in December 2002, B is dissatisfied with the location and workmanship of certain heating ducts. As of the end of 2002, C contends that the heating ducts are constructed in accordance with contract specifications. The amount of the gross contract price reasonably in dispute with respect to the heating ducts is $6,000. As of this time, C is claiming $14,000 in addition to the original contract price for certain changes in contract specifications which C alleges have increased his costs. B denies that these changes have increased C's costs. In 2003, the disputes between C and B are resolved by performance of additional work by C at a cost of $1,000 and by an agreement that the contract price would be revised downward to $996,000. Under these circumstances, C must include in his gross income for 2002, $994,000 (the gross contract price less the amount reasonably in dispute because of B's claim, or $1,000,000 − $6,000). In 2002, C must also take into account $1,000,000 of allocable contract costs (costs incurred less the amounts in dispute attributable to both B's and C's claims, or $1,020,000 − $6,000 − $14,000). In 2003, C must take into account an additional $2,000 of gross contract price ($996,000 − $994,000) and $21,000 of allocable contract costs ($1,021,000 − $1,000,000).

(i) ***Applicability date.*** Paragraph (f)(1) of this section applies to taxable years beginning on or after January 5, 2021. However, for a taxable year beginning after December 31, 2017, and before January 5, 2021, a taxpayer may apply the paragraph described in the first sentence of this paragraph (i), provided that the taxpayer follows all the applicable rules contained in the regulations under section 460 for such taxable year and all subsequent taxable years.

(j) ***Consolidated groups and controlled groups*** —

(1) ***Intercompany transactions*** —

(i) ***In general.*** Section 1.1502-13 does not apply to the income, gain, deduction, or loss from an intercompany transaction between members of a consolidated group, and section 267(f) does not apply to these items from an intercompany sale between members of a controlled group, to the extent—

(A) The transaction or sale directly or indirectly benefits, or is intended to benefit, another member's long-term contract with a nonmember;

(B) The selling member is required under section 460 to determine any part of its gross income from the transaction or sale under the percentage-of-completion method (PCM); and

(C) The member with the long-term contract is required under section 460 to determine any part of its gross income from the long-term contract under the PCM.

(ii) ***Definitions and nomenclature.*** The definitions and nomenclature under § 1.1502-13 and § 1.267(f)-1 apply for purposes of this paragraph (j).

(2) ***Example.*** The following example illustrates the principles of paragraph (j)(1) of this section.

Example. Corporations P, S, and B file consolidated returns on a calendar-year basis. In 1996, B enters into a long-term contract with X, a nonmember, to manufacture 5 airplanes for $500 million, with delivery scheduled for 1999. Section 460 requires B to determine the gross income from its contract with X under the PCM. S enters into a contract with B to manufacture for $50 million the engines that B will install on X's airplanes. Section 460 requires S to determine the gross income from its contract with B under the PCM. S estimates that it will incur $40 million of total contract costs during 1997 and 1998 to manufacture the engines. S incurs $10 million of contract costs in 1997 and $30 million in 1998. Under paragraph (j) of this section, S determines its gross income from the long-term contract under the PCM rather than taking its income or loss into account under section 267(f) or § 1.1502-13. Thus, S includes $12.5 million of gross receipts and $10 million of contract costs in gross income in 1997 and includes $37.5 million of gross receipts and $30 million of contract costs in gross income in 1998.

(3) ***Effective dates*** —

(i) ***In general.*** This paragraph (j) applies with respect to transactions and sales occurring pursuant to contracts entered into in years beginning on or after July 12, 1995.

(ii) ***Prior law.*** For transactions and sales occurring pursuant to contracts entered into in years beginning before July 12, 1995, see the applicable regulations issued under sections 267(f) and 1502, including §§ 1.267(f)-1T, 1.267(f)-2T, and 1.1502-13(n) (as contained in the 26 CFR part 1 edition revised as of April 1, 1995).

(4) ***Consent to change method of accounting.*** For transactions and sales to which this paragraph (j) applies, the Commissioner's consent under section 446(e) is hereby granted to the extent any changes in method of accounting are necessary solely to comply with this section, provided the changes are made in the first taxable year of the taxpayer to which the rules of this paragraph (j) apply. Changes in method of accounting for these transactions are to be effected on a cut-off basis.

(k) ***Mid-contract change in taxpayer*** —

(1) ***In general.*** The rules in this paragraph (k) apply if prior to the completion of a long-term contract accounted for using a long-term contract method by a taxpayer (old taxpayer), there is a transaction that makes another taxpayer (new taxpayer) responsible for accounting for income from the same contract. For purposes of this paragraph (k) and § 1.460-6(g), an old taxpayer also includes any old taxpayer(s) (e.g., predecessors) of the old taxpayer. In addition, a change in status from taxable to tax exempt or from domestic to foreign, or vice versa, will be considered a change in taxpayer. Finally, a contract will be treated as the same contract if the terms of the contract are not substantially changed in connection with the transaction, whether or not the customer agrees to release the old taxpayer from any or all of its obligations under the contract. The rules governing constructive completion transactions are provided in paragraph (k)(2) of this section, while the rules governing step-in-the-shoes transactions are provided in paragraph (k)(3) of this section. Special rules relating to the treatment of certain partnership transactions are provided in paragraphs (k)(2)(iv) and (k)(3)(v) of this section. For application of the look-back method to mid-contract changes in taxpayers for contracts accounted for using the PCM, see § 1.460-6(g).

(2) ***Constructive completion transactions*** —

(i) ***Scope.*** The constructive completion rules in this paragraph (k)(2) apply to transactions (constructive completion transactions) that result in a change in the taxpayer responsible for reporting income from a contract and that are not described in paragraph (k)(3)(i) of this section. Constructive completion transactions generally include, for example, taxable sales under section 1001 and deemed asset sales under section 338.

(ii) ***Old taxpayer.*** The old taxpayer is treated as completing the contract on the date of the transaction. The total contract price (or, gross contract price in the case of a long-term contract accounted for under the CCM) for the old taxpayer is the sum of any amounts realized from the transaction that are allocable to the contract and any amounts the old taxpayer has received or reasonably expects to receive under the contract. Total contract price (or gross contract price) is reduced by any amount paid by the old taxpayer to the new taxpayer, and by any transaction costs, that are allocable to the contract. Thus, the old taxpayer's allocable contract costs determined under paragraph (b)(5) of this section do not include any consideration paid, or costs incurred, as a result of the transaction that are allocable to the contract. In the case of a transaction subject to section 338 or 1060, the amount realized from the transaction allocable to the contract is determined by using the residual method under §§ 1.338-6 and 1.338-7.

(iii) ***New taxpayer.*** The new taxpayer is treated as entering into a new contract on the date of the transaction. The new taxpayer must evaluate whether the new contract should be classified as a long-term contract within the meaning of § 1.460-1(b) and account for the contract under a permissible method of accounting. For a new taxpayer who accounts for a contract using the PCM, the total contract price is any amount the new taxpayer reasonably expects to receive under the contract consistent with paragraph (b)(4) of this section. Total contract price is reduced by the amount of any consideration paid by the new taxpayer as a result of the transaction, and by any transaction costs, that are allocable to the contract and is increased by the amount of any consideration received by the new taxpayer as a result of the transaction that is allocable to the contract. Similarly, the gross contract price for a contract accounted for using the CCM is all amounts the new taxpayer is entitled by law or contract to receive consistent with paragraph (d)(3) of this section, adjusted for any consideration paid (or received) by the new taxpayer as a result of the transaction, and for any transaction costs, that are allocable to the contract. Thus, the new taxpayer's allocable contract costs determined under paragraph (b)(5) of this section do not include any consideration paid, or costs incurred, as a result of the transaction that are allocable to the contract. In the case of a transaction subject to sections 338 or 1060, the amount of consideration paid that is allocable to the contract is determined by using the residual method under §§ 1.338-6 and 1.338-7.

(iv) ***Special rules relating to distributions of certain contracts by a partnership*** —

(A) ***In general.*** The constructive completion rules of paragraph (k)(2) of this section apply both to the distribution of a contract accounted for under a long-term contract method of accounting by a partnership to a partner and to the distribution of an interest in a partnership (lower-tier partnership) holding (either directly or through other partnerships) one or more contracts accounted for under a long-term contract method of accounting by another partnership (upper-tier partnership). Notwithstanding the previous sentence, the constructive completion rules of paragraph (k)(2) of this section do not apply to a transfer by a partnership (transferor partnership) of all of its assets and liabilities to a second partnership (transferee partnership) in an exchange described in section 721, followed by a distribution of the interest in the transferee partnership in liquidation of the transferor partnership, under § 1.708-1(b)(4) (relating to terminations under section 708(b)(1)(B)) or

§ 1.708-1(c)(3)(i) (relating to certain partnership mergers). If a partnership that holds a contract accounted for under a long-term contract method of accounting terminates under section 708(b)(1)(A) because the number of its owners is reduced to one, the entire contract will be treated as being distributed from the partnership for purposes of the constructive completion rules, and the partnership must apply paragraph (k)(2) of this section immediately prior to the transaction or transactions resulting in the termination of the partnership.

(B) ***Old taxpayer.*** The partnership that distributes the contract is treated as the old taxpayer for purposes of paragraph (k)(2)(ii) of this section. For purposes of determining the total contract price (or gross contract price) under paragraph (k)(2)(ii) of this section, the fair market value of the contract is treated as the amount realized from the transaction. For purposes of determining each partner's distributive share of partnership items, any income or loss resulting from the constructive completion must be allocated among the partners of the old taxpayer as though the partnership closed its books on the date of the distribution.

(C) ***New taxpayer.*** The partner receiving the distributed contract is treated as the new taxpayer for purposes of paragraph (k)(2)(iii) of this section. For purposes of determining the total contract price (or gross contract price) under paragraph (k)(2)(iii) of this section, the new taxpayer's basis in the contract (including the uncompleted property, if applicable) after the distribution (as determined under section 732) is treated as consideration paid by the new taxpayer that is allocable to the contract. Thus, the total contract price (or gross contract price) of the new contract is reduced by the partner's basis in the contract (including the uncompleted property, if applicable) immediately after the distribution.

(D) ***Basis rules.*** For purposes of determining the new taxpayer's basis in the contract (including the uncompleted property, if applicable) under section 732, and the amount of any basis adjustment under section 734(b), the partnership's basis in the contract (including the uncompleted property, if applicable) immediately prior to the distribution is equal to—

(*1*) The partnership's allocable contract costs (including transaction costs);

(*2*) Increased (or decreased) by the amount of cumulative taxable income (or loss) recognized by the partnership on the contract through the date of the distribution (including amounts recognized as a result of the constructive completion); and

(*3*) Decreased by the amounts that the partnership has received or reasonably expects to receive under the contract.

(E) ***Section 751*** —

(*1*) ***In general.*** Contracts accounted for under a long-term contract method of accounting are unrealized receivables within the meaning of section 751(c). For purposes of section 751, the amount of ordinary income or loss attributable to a contract accounted for under a long-term contract method of accounting is the amount of income or loss that the partnership would take into account under the constructive completion rules of paragraph (k)(2) of this section if the contract were disposed of for its fair market value in a constructive completion transaction, adjusted to account

for any income or loss from the contract that is allocated under section 706 to that portion of the taxable year of the partnership ending on the date of the distribution, sale, or exchange.

(2) ***Ordering rules.*** Because the distribution of a contract accounted for under a long-term contract method of accounting is the distribution of an unrealized receivable, section 751(b) may apply to the distribution. A partnership that distributes a contract accounted for under a long-term contract method of accounting must apply paragraph (k)(2)(ii) of this section before applying the rules of section 751(b) to the distribution.

(3) ***Step-in-the-shoes transactions*** —

(i) ***Scope.*** Except as otherwise provided in paragraph (k)(3)(v)(D) of this section, the step-in-the-shoes rules in this paragraph (k)(3) apply to the following transactions that result in a change in the taxpayer responsible for reporting income from a contract accounted for using a long-term contract method of accounting (step-in-the-shoes transactions)—

(A) Transfers to which section 361 applies if the transfer is in connection with a reorganization described in section 368(a)(1)(A), (C) or (F);

(B) Transfers to which section 361 applies if the transfer is in connection with a reorganization described in section 368(a)(1)(D) or (G), provided the requirements of section 354(b)(1)(A) and (B) are met;

(C) Distributions to which section 332 applies, provided the contract is transferred to an 80-percent distributee;

(D) Transfers described in section 351;

(E) Transfers to which section 361 applies if the transfer is in connection with a reorganization described in section 368(a)(1)(D) with respect to which the requirements of section 355 (or so much of section 356 as relates to section 355) are met;

(F) Transfers (e.g., sales) of S corporation stock;

(G) Conversion to or from an S corporation;

(H) Members joining or leaving a consolidated group;

(I) Contributions of contracts accounted for under a long-term contract method of accounting to which section 721(a) applies;

(J) Contributions of property (other than contracts accounted for under a long-term contract method of accounting) to a partnership that holds a contract accounted for under a long-term contract method of accounting;

(K) Transfers of partnership interests (other than transfers which cause the partnership to terminate under section 708(b)(1)(A));

(L) Distributions to which section 731 applies (other than the distribution of the contract); and

(M) Any other transaction designated in the Internal Revenue Bulletin by the Internal Revenue Service. See § 601.601(d)(2)(ii) of this chapter.

(ii) ***Old taxpayer*** —

(A) ***In general.*** The new taxpayer will "step into the shoes" of the old taxpayer with respect to the contract. Thus, the old taxpayer's obligation to account for the contract terminates on the date of the transaction and is assumed by the new taxpayer, as set forth in paragraph (k)(3)(iii) of this section. As a result, an old taxpayer using the PCM is required to recognize income from the contract based on the cumulative allocable contract costs incurred as of the date of the transaction. Similarly, an old taxpayer using the CCM is not required to recognize any revenue and may not deduct allocable contract costs incurred with respect to the contract.

(B) ***Gain realized on the transaction.*** The amount of gain the old taxpayer realizes on the transfer of a contract in a step-in-the-shoes transaction must be determined after application of paragraph (k)(3)(ii)(A) of this section using the rules of paragraph (k)(2) of this section that apply to constructive completion transactions. (The amount of gain realized on a transfer of a contract is relevant, for example, in determining the amount of gain recognized with respect to the contract in a section 351 transaction in which the old taxpayer receives from the new taxpayer money or property other than stock of the transferee.)

(iii) ***New taxpayer*** —

(A) ***Method of accounting.*** Beginning on the date of the transaction, the new taxpayer must account for the long-term contract by using the same method of accounting used by the old taxpayer prior to the transaction. The same method of accounting must be used for such contract regardless of whether the old taxpayer's method is the new taxpayer's principal method of accounting under § 1.381(c)(4)-1(b)(3) or whether the new taxpayer is otherwise eligible to use the old taxpayer's method. Thus, if the old taxpayer uses the PCM to account for the contract, the new taxpayer steps into the shoes of the old taxpayer with respect to its completion factor and percentage of completion methods (such as the 10-percent method), even if the new taxpayer has not elected such methods for similarly classified contracts. Similarly, if the old taxpayer uses the CCM, the new taxpayer steps into the shoes of the old taxpayer with respect to the CCM, even if the new taxpayer is not otherwise eligible to use the CCM. However, the new taxpayer is not necessarily bound by the old taxpayer's method for similarly classified contracts entered into by the new taxpayer subsequent to the transaction and must apply general tax principles, including section 381, to determine the appropriate method to account for these subsequent contracts. To the extent that general tax principles allow the taxpayer to account for similarly classified contracts using a method other than the old taxpayer's method, the taxpayer is not required to obtain the consent of the Commissioner to begin using such other method.

(B) ***Contract price.*** In the case of a long-term contract that has been accounted for under PCM, the total contract price for the new taxpayer is the sum of any amounts the old taxpayer or the new taxpayer has received or reasonably expects to receive under the contract consistent with paragraph (b)(4) of this section. Similarly, the gross contract price in the case of a long-term contract accounted for under the CCM includes all amounts the old taxpayer or the new taxpayer is entitled by law or by contract to receive consistent with paragraph (d)(3) of this section.

(C) ***Contract costs.*** Total allocable contract costs for the new taxpayer are the allocable contract costs as defined under paragraph (b)(5) of this section incurred by either the old taxpayer prior to, or the new taxpayer after, the transaction. Thus, any payments between the old taxpayer and the new taxpayer with respect to the contract in connection with the transaction are not treated as allocable contract costs.

(iv) ***Special rules related to certain corporate and partnership transactions*** —

(A) ***Old taxpayer*** —*basis adjustment*—

(*1*) ***In general.*** Except as provided in paragraph (k)(3)(iv)(A)(*2*) of this section, in the case of a transaction described in paragraph (k)(3)(i)(D), (E), or (I) of this section, the old taxpayer must adjust its basis in the stock or partnership interest of the new taxpayer by—

(*i*) Increasing such basis by the amount of gross receipts the old taxpayer has recognized under the contract; and

(*ii*) Reducing such basis by the amount of gross receipts the old taxpayer has received or reasonably expects to receive under the contract (except to the extent such gross receipts give rise to a liability other than a liability described in section 357(c)(3)).

(*2*) ***Basis adjustment in excess of stock or partnership interest basis.*** If the old and new taxpayer do not join in the filing of a consolidated Federal income tax return, the old taxpayer may not adjust its basis in the stock or partnership interest of the new taxpayer under paragraph (k)(3)(iv)(A)(*1*) of this section below zero and the old taxpayer must recognize ordinary income to the extent the basis in the stock or partnership interest of the new taxpayer otherwise would be adjusted below zero. If the old and new taxpayer join in the filing of a consolidated Federal income tax return, the old taxpayer must create an (or increase an existing) excess loss account to the extent the basis in the stock of the new taxpayer otherwise would be adjusted below zero under paragraph (k)(3)(iv)(A)(*1*) of this section. See § 1.1502-19 and 1.1502-32(a)(3)(ii).

(*3*) ***Subsequent dispositions of certain contracts.*** If the old taxpayer disposes of a contract in a transaction described in paragraph (k)(3)(i)(D), (E), or (I) of this section that the old taxpayer acquired in a transaction described in paragraph (k)(3)(i)(D), (E), or (I) of this section, the basis adjustment rule of this paragraph (k)(3)(iv)(A) is applied by treating the old taxpayer as having recognized the amount of gross receipts recognized by the previous old taxpayer under the contract and any amount recognized by the previous old taxpayer with respect to the contract in connection with the transaction in which the old taxpayer acquired the contract. In addition, the old taxpayer is treated as having received or as reasonably expecting to receive under the contract any amount the previous old taxpayer received or reasonably expects to receive under the contract. Similar principles will apply in the case of multiple successive transfers described in paragraph (k)(3)(i)(D), (E), or (I) of this section involving the contract.

(B) ***New taxpayer*** —

(1) ***Contract price adjustment.*** Generally, payments between the old taxpayer and the new taxpayer with respect to the contract in connection with the transaction do not affect the contract price. Notwithstanding the preceding sentence and paragraph (k)(3)(iii)(B) of this section, however, in the case of transactions described in paragraph (k)(3)(i)(B), (D), (E), or (I) of this section, the total contract price (or gross contract price) must be reduced to the extent of any amount recognized by the old taxpayer with respect to the contract in connection with the transaction (*e.g.,* any amount recognized under section 351(b) or section 357 that is attributable to the contract and any income recognized by the old taxpayer pursuant to the basis adjustment rule of paragraph (k)(3)(iv)(A) of this section).

(2) ***Basis in contract.*** The new taxpayer's basis in a contract (including the uncompleted property, if applicable) acquired in a transaction described in paragraphs (k)(3)(i)(A) through (E) or paragraph (k)(3)(i)(I) of this section will be computed under section 362, section 334, or section 723, as applicable. Upon a new taxpayer's completion (actual or constructive) of a CCM or a PCM contract acquired in a transaction described in paragraphs (k)(3)(i)(A) through (E) or paragraph (k)(3)(i)(I) of this section, the new taxpayer's basis in the contract (including the uncompleted property, if applicable) is reduced to zero. The new taxpayer is not entitled to a deduction or loss in connection with any basis reduction pursuant to this paragraph (k)(3)(iv)(B)(2).

(C) ***Definition of old taxpayer and new taxpayer for certain partnership transactions.*** For purposes of paragraphs (k)(3)(ii), (iii) and (iv) of this section, in the case of a transaction described in paragraph (k)(3)(i)(I) of this section, the partner contributing the contract to the partnership is treated as the old taxpayer, and the partnership receiving the contract from the partner is treated as the new taxpayer.

(D) ***Exceptions to step-in-the-shoes rules for S corporations.*** Upon a transfer described in paragraph (k)(3)(i)(F) of this section or a conversion described in paragraph (k)(3)(i)(G) of this section, paragraphs (k)(3)(ii) and (iii) of this section apply to a contract accounted for under a long-term contract method of accounting only if the S corporation's books are closed under section 1362(e)(3), section 1362(e)(6)(C), section 1362(e)(6)(D), section 1377(a)(2), or § 1.1502-76 on the date of the transfer or conversion. In these cases, the corporation is treated as both the old taxpayer and the new taxpayer for purposes of paragraphs (k)(3)(ii) and (iii) of this section. In all other cases involving these transfers, the corporation shall compute its income or loss from each contract accounted for under a long-term contract method of accounting for the period that includes the date of the transaction as though no change in taxpayer had occurred with respect to the contract, and must allocate the income or loss from the contract for that period in accordance with the rules generally applicable to transfers of S corporation stock and conversions to or from S corporation status. This paragraph (k)(3)(iv)(D) is applicable for transactions on or after July 16, 2004. In addition, this paragraph (k)(3)(iv)(D) may be relied upon for transactions on or after May 15, 2002.

(v) ***Special rules relating to certain partnership transactions*** —

(A) ***Section 704(c)*** —

(1) ***Contributions of contracts.*** The principles of section 704(c)(1)(A), section 737, and the regulations thereunder apply to income or loss with respect to a contract accounted for under a long-term contract method of accounting that is contributed to a partnership. The amount of built-in income or built-in loss attributable to a contributed contract that is subject to section 704(c)(1)(A) is determined as follows. First, the contributing partner must take into account any income or loss required under paragraph (k)(3)(ii)(A) of this section for the period ending on the date of the contribution. Second, the partnership must determine the amount of income or loss that the contributing partner would take into account if the contract were disposed of for its fair market value in a constructive completion transaction. This calculation is treated as occurring immediately after the partner has applied paragraph (k)(3)(ii)(A) of this section, but before the contribution to the partnership. Finally, this amount is reduced by the amount of income, if any, that the contributing partner is required to recognize as a result of the contribution.

(2) ***Revaluations of partnership property.*** The principles of section 704(c) and § 1.704-3 apply to allocations of income or loss with respect to a long-term contract that is revalued by a partnership under § 1.704-1(b)(2)(iv)(*f*). The amount of built-in income or built-in loss attributable to such a contract is equal to the amount of income or loss that would be taken into account if, at the time of the revaluation, the contract were disposed of for its fair market value in a constructive completion transaction.

(3) ***Allocation methods.*** In the case of a contract accounted for under the CCM, any built-in income or loss under section 704(c) is taken into account in the year the contract is completed. In the case of a contract accounted for under a long-term contract method of accounting other than the CCM, any built-in income or loss under section 704(c) must be taken into account in a manner that reasonably accounts for the section 704(c) income or loss over the remaining term of the contract.

(B) ***Basis adjustments under sections 743(b) and 734(b).*** For purposes of §§ 1.743-1(d), 1.755-1(b), and 1.755-1(c), the amount of ordinary income or loss attributable to a contract accounted for under a long-term contract method of accounting is the amount of income or loss that the partnership would take into account under the constructive completion rules of paragraph (k)(2) of this section if, at the time of the sale of a partnership interest or the distribution to a partner, the partnership disposed of the contract for its fair market value in a constructive completion transaction. If all or part of the transferee's basis adjustment under section 743(b) or the partnership's basis adjustment under section 734(b) is allocated to a contract accounted for under a long-term contract method of accounting, the basis adjustment shall reduce or increase, as the case may be, the affected party's income or loss from the contract. In the case of a contract accounted for under the CCM, the basis adjustment is taken into account in the year in which the contract is completed. In the case of a contract accounted for under a long-term contract method of accounting other than the CCM, the portion of that basis adjustment that is recovered in each taxable year of the partnership must be determined by the partnership in a manner that reasonably accounts for the adjustment over the remaining term of the contract.

(C) ***Cross reference.*** See paragraph (k)(2)(iv)(E) of this section for rules relating to the application of section 751 to the transfer of an interest in a partnership holding a contract accounted for under a long-term contract method of accounting.

(D) ***Exceptions to step-in-the-shoes rules.*** Upon a contribution described in paragraph (k)(3)(i)(J) of this section, a transfer described in paragraph (k)(3)(i)(K) of this section, or a distribution described in paragraph (k)(3)(i)(L) of this section, paragraphs (k)(3)(ii) and (iii) of this section apply to a contract accounted for under a long-term contract method of accounting only if the partnership's books are properly closed with respect to that contract under section 706. In these cases, the partnership is treated as both the old taxpayer and the new taxpayer for purposes of paragraphs (k)(3)(ii) and (iii) of this section. In all other cases involving these transactions, the partnership shall compute its income or loss from each contract accounted for under a long-term contract method of accounting for the period that includes the date of the transaction as though no change in taxpayer had occurred with respect to the contract, and must allocate the income or loss from the contract for that period under a reasonable method complying with section 706.

(4) ***Anti-abuse rule.*** Notwithstanding this paragraph (k), in the case of a transaction entered into with a principal purpose of shifting the tax consequences associated with a long-term contract in a manner that substantially reduces the aggregate U.S. Federal income tax liability of the parties with respect to that contract, the Commissioner may allocate to the old (or new) taxpayer the income from that contract properly allocable to the old (or new) taxpayer. For example, the Commissioner may reallocate income from a long-term contract in a transaction in which a contract accounted for using the CCM, or using the PCM where the old taxpayer has received advance payments in excess of its contribution to the contract, is transferred to a tax indifferent party (e.g., a foreign person not subject to U.S. Federal income tax).

(5) ***Examples.*** The following examples illustrate the rules of this paragraph (k). For purposes of these examples, it is assumed that the contract is a long-term construction contract accounted for using the PCM prior to the transaction unless stated otherwise and the contract is not transferred with a principal purpose of shifting the tax consequences associated with a long-term contract in a manner that substantially reduces the aggregate U.S. Federal income tax liability of the parties with respect to that contract. The examples are as follows:

> *Example 1. Constructive completion—PCM.* (i) *Facts.* In Year 1, X enters into a contract. The total contract price is $1,000,000 and the estimated total allocable contract costs are $800,000. In Year 1, X incurs costs of $200,000. In Year 2, X incurs additional costs of $400,000 before selling the contract as part of a taxable sale of its business in Year 2 to Y, an unrelated party. At the time of sale, X has received $650,000 in progress payments under the contract. The consideration allocable to the contract under section 1060 is $150,000. Pursuant to the sale, the new taxpayer Y immediately assumes X's contract obligations and rights. Y is required to account for the contract using the PCM. In Year 2, Y incurs additional allocable contract costs of $50,000. Y correctly estimates at the end of Year 2 that it will have to incur an additional $75,000 of allocable contract costs in Year 3 to complete the contract. (ii) *Old taxpayer.* For Year 1, X reports receipts of $250,000 (the completion factor multiplied by total contract price ($200,000/$800,000 × $1,000,000)) and costs of $200,000, for a profit of $50,000. X is treated as completing the contract in Year 2 because it sold the contract. For purposes of applying the PCM in Year 2, the total contract price is $800,000 (the sum of the amounts received under the contract and the amount realized in the sale ($650,000 + $150,000)) and the total allocable contract costs are $600,000 (the sum of the costs incurred

in Year 1 and Year 2 ($200,000 + $400,000)). Thus, in Year 2, X reports receipts of $550,000 (total contract price minus receipts already reported ($800,000 − $250,000)) and costs incurred in year 2 of $400,000, for a profit of $150,000.

(iii) *New taxpayer.* Y is treated as entering into a new contract in Year 2. The total contract price is $200,000 (the amount remaining to be paid under the terms of the contract less the consideration paid allocable to the contract ($1,000,000 − $650,000 − $150,000)). The estimated total allocable contract costs at the end of Year 2 are $125,000 (the allocable contract costs that Y reasonably expects to incur to complete the contract ($50,000 + $75,000)). In Year 2, Y reports receipts of $80,000 (the completion factor multiplied by the total contract price [($50,000/$125,000) × $200,000] and costs of $50,000 (the costs incurred after the purchase), for a profit of $30,000. For Year 3, Y reports receipts of $120,000 (total contract price minus receipts already reported ($200,000 − $80,000)) and costs of $75,000, for a profit of $45,000.

Example 2. Constructive completion—CCM. (i) *Facts.* The facts are the same as in Example 1, except that X and Y properly account for the contract under the CCM.
(ii) *Old taxpayer.* X does not report any income or costs from the contract in Year 1. In Year 2, the contract is deemed complete for X, and X reports its gross contract price of $800,000 (the sum of the amounts received under the contract and the amount realized in the sale ($650,000 + $150,000)) and its total allocable contract costs of $600,000 (the sum of the costs incurred in Year 1 and Year 2 ($200,000 + $400,000)) in that year, for a profit of $200,000.

(iii) *New taxpayer.* Y is treated as entering into a new contract in Year 2. Under the CCM, Y reports no gross receipts or costs in Year 2. Y reports its gross contract price of $200,000 (the amount remaining to be paid under the terms of the contract less the consideration paid allocable to the contract ($1,000,000 − $650,000 − $150,000)) and its total allocable contract costs of $125,000 (the allocable contract costs that Y incurred to complete the contract ($50,000 + $75,000)) in Year 3, the completion year, for a profit of $75,000.

Example 3. Step-in-the-shoes—PCM. (i) *Facts.* The facts are the same as in Example 1, except that X transfers the contract (including the uncompleted property) to Y in exchange for stock of Y in a transaction that qualifies as a statutory merger described in section 368(a)(1)(A) and does not result in gain or loss to X under section 361(a).
(ii) *Old taxpayer.* For Year 1, X reports receipts of $250,000 (the completion factor multiplied by total contract price ($200,000/$800,000 × $1,000,000)) and costs of $200,000, for a profit of $50,000. Because the mid-contract change in taxpayer results from a transaction described in paragraph (k)(3)(i) of this section, X is not treated as completing the contract in

Year 2. In Year 2, X reports receipts of $500,000 (the completion factor multiplied by the total contract price and minus the Year 1 gross receipts [($600,000/$800,000 × $1,000,000)-$250,000]) and costs of $400,000, for a profit of $100,000.

(iii) *New taxpayer.* Because the mid-contract change in taxpayer results from a step-in-the-shoes transaction, Y must account for the contract using the same methods of accounting used by X prior to the transaction. Total contract price is the sum of any amounts that X and Y have received or reasonably expect to receive under the contract, and total allocable contract costs are the allocable contract costs of X and Y. Thus, the estimated total allocable contract costs at the end of Year 2 are $725,000 (the cumulative allocable contract costs of X and the estimated total allocable contract costs of Y ($200,000 + $400,000 + $50,000 + $75,000)). In Year 2, Y reports receipts of $146,552 (the completion factor multiplied by the total contract price minus receipts reported by the old taxpayer ([($650,000/$725,000) × $1,000,000]-$750,000) and costs of $50,000, for a profit of $96,552. For Year 3, Y reports receipts of $103,448 (the total contract price minus prior year receipts ($1,000,000-$896,552)) and costs of $75,000, for a profit of $28,448.

Example 4. Step-in-the-shoes—CCM (i) *Facts.* The facts are the same as in *Example 3,* except that X properly accounts for the contract under the CCM.
(ii) *Old taxpayer.* X reports no income or costs from the contract in Years 1, 2 or 3.

(iii) *New taxpayer.* Because the mid-contract change in taxpayer results from a step-in-the-shoes transaction, Y must account for the contract using the same method of accounting used by X prior to the transaction. Thus, in Year 3, the completion year, Y reports receipts of $1,000,000 and total contract costs of $725,000, for a profit of $275,000.

Example 5. Step in the shoes—PCM—basis adjustment. The facts are the same as in Example 3, except that X transfers the contract (including the uncompleted property) with a basis of $0 and $125,000 of cash to a new corporation, Z, in exchange for all of the stock of Z in a section 351 transaction. Thus, under section 358(a), X's basis in the Z stock is $125,000. Pursuant to paragraph (k)(3)(iv)(A)(*1*) of this section, X must increase its basis in the Z stock by the amount of gross receipts X recognized under the contract, $750,000 ($250,000 receipts in Year 1 + $500,000 receipts in Year 2), and reduce its basis by the amount of gross receipts X received under the contract, the $650,000 in progress payments. Accordingly, X's basis in the Z stock is $225,000. All other results are the same.

Example 6. Step in the shoes—CCM—basis adjustment. (i) *Facts.* The facts are the same as in *Example 4,* except that X receives progress payments of $800,000 (rather than $650,000) and transfers the contract (including the uncompleted property) with a basis of $600,000 and $125,000 of cash to a new corporation, Z, in exchange for all of the stock of Z in a section 351 transaction. X and Z do not join in filing a consolidated Federal income tax return.

(ii) *Old taxpayer.* X reports no income or costs under the contract in Years 1, 2, or 3. Under section 358(a), X's basis in Z is $725,000. Pursuant to paragraph (k)(3)(iv)(A)(*1*), X must reduce its basis in the stock of Z by $800,000, the progress payments received by X. However, X may not reduce its basis in the Z stock below zero pursuant paragraph (k)(3)(iv)(A)(*2*) of this section. Accordingly, X's basis in the Z stock is reduced by $725,000 to zero and X must recognize ordinary income of $75,000.

(iii) *New taxpayer.* Upon completion of the contract in Year 3, Z reports gross receipts of $925,000 ($1,000,000 original contract price—$75,000 income recognized by the old taxpayer pursuant to the basis adjustment rule of paragraph (k)(3)(iv)(A)) and total contract costs of $725,000, for a profit of $200,000.

Example 7. Step in the shoes—PCM—gain recognized in transaction. (i) *Facts.* The facts are the same as in *Example 3,* except that X transfers the contract (including the uncompleted property) with a basis of $0 and an unrelated capital asset with a value of $100,000 and a basis of $0 to a new corporation, Z, in exchange for stock of Z with a value of $200,000 and $50,000 of cash in a section 351 transaction.
(ii) *Old taxpayer.* For year 1, X reports receipts of $250,000 ($200,000/$800,000 × $1,000,000) and costs of $200,000, for a profit of $50,000. X is not treated as completing the contract in Year 2. In Year 2, X reports receipts of $500,000 (($600,000/$800,000 × $1,000,000 = $750,000 cumulative gross receipts)—$250,000 prior year cumulative gross receipts) and costs of $400,000, for a profit of $100,000. Under paragraph (k)(3)(ii)(B) of this section, X determines that the gain realized on the transfer of the contract to Z under the constructive completion rules of paragraph (k)(2)(ii) of this section is $50,000 (total contract price of $800,000 ($150,000 value allocable to the contract + $650,000 progress payments)—$750,000 previously recognized cumulative gross receipts—$0 costs incurred but not recognized). The gain realized on the transfer of the unrelated capital asset to Z is $100,000. The amount of gain X must recognize due to the receipt of $50,000 cash in the exchange is $50,000, of which $30,000 is allocated to the contract ($150,000 value of contract/$250,000 total value of property transferred to Z × $50,000) and is treated as ordinary income, and $20,000 is allocated to the unrelated capital asset ($100,000 value of capital asset/$250,000 total value of property transferred to Z × $50,000). Under section 358(a), X's basis in the Z stock is $0. However, pursuant to paragraph (k)(3)(iv)(A)(*1*) of this section, X must increase its basis in the Z stock by $750,000, the amount of gross receipts recognized under the contract, and must reduce its basis in the Z stock by $650,000, the amount of gross receipts X received under the contract. Therefore, X's basis in the Z stock is $100,000.

(iii) *New taxpayer.* Z must account for the contract using the same PCM method used by X prior to the transaction. Pursuant to paragraph (k)(3)(iv)(B)(1) of this section, the total contract price is $970,000 ($1,000,000 amount X and Z have received or reasonably

expect to receive under the contract—$30,000 income recognized by X with respect to the contract as a result of the receipt of $50,000 cash in the transaction). In Year 2, Z reports gross receipts of $119,655 ($650,000/$725,000 × $970,000 = $869,655 current year cumulative gross receipts—$750,000 cumulative gross receipts reported by the old taxpayer) and costs of $50,000, for a profit of $69,655. In Year 3, Z reports gross receipts of $100,345 ($970,000-$869,655) and costs of $75,000, for a profit of $25,345.

Example 8. Step in the shoes—CCM—gain recognized in transaction. (i) *Facts.* The facts are the same as in *Example 4,* except that X transfers the contract (including the uncompleted property) with a basis of $600,000 and an unrelated capital asset with a value of $125,000 and a basis of $0 to a new corporation, Z, in exchange for all the stock of Z with a value of $175,000 and $100,000 of cash in a section 351 transaction. X and Z do not join in filing a consolidated Federal income tax return.
(ii) *Old taxpayer.* X reports no income or costs under the contract in Years 1, 2, or 3. Under paragraph (k)(3)(ii)(B), X determines that the gain realized on the transfer of the contract to Z under the constructive completion rules of paragraph (k)(2)(ii) of this section is $200,000 ($800,000 total contract price ($150,000 value allocable to the contract + $650,000 progress payments)—$600,000 costs incurred but not recognized). The gain realized on the transfer of the unrelated capital asset to Z is $125,000. The amount of gain X must recognize due to the receipt of $100,000 of cash in the exchange is $100,000, of which $54,545 is allocated to the contract ($150,000 value of the contract/$275,000 total value of property transferred to Z × $100,000) and is treated as ordinary income, and $45,455 is allocated to the unrelated capital asset ($125,000 value of capital asset/$275,000 total value of property transferred to Z × $100,000). Under section 358(a), X's basis in the Z stock is $600,000 ($600,000 basis in the contract and unrelated capital asset transferred—$100,000 cash received + $100,000 gain recognized). Pursuant to paragraph (k)(3)(iv)(A)(*1*) of this section, X must reduce its basis in the stock of Z by $650,000, the progress payments received under the contract. However, X may not reduce its basis in the Z stock below zero pursuant to paragraph (k)(3)(iv)(A)(*2*) of this section. Accordingly, X's basis in the Z stock is reduced by $600,000 to zero and X must recognize income of $50,000.

(iii) *New taxpayer.* Z must account for the contract using the same CCM used by X prior to the transaction. Pursuant to paragraph (k)(3)(iv)(B)(1) of this section, the total contract price is $895,455 ($1,000,000 original contract price—$54,545 income recognized by old taxpayer with respect to the contract as a result of the receipt of cash in the transaction—$50,000 income recognized by the old taxpayer pursuant to the basis adjustment rule of paragraph (k)(3)(iv)(A)). Accordingly, upon completion of the contract in Year 3, Z reports gross receipts of $895,455 and total contract costs of $725,000, for a profit of $170,455.

Example 9. Constructive completion—PCM—distribution of contract by partnership. (i) *Facts.* In Year 1, W, X, Y, and Z each contribute $100,000 to form equal partnership PRS. In Year 1, PRS enters into a contract. The total contract price is $1,000,000 and the estimated total allocable contract costs are $800,000. In Year 1, PRS incurs costs of $600,000 and receives $650,000 in progress payments under the contract. Under the contract, PRS performed all of the services required in order to be entitled to receive the progress payments, and there was no obligation to return the payments or perform any additional services in order to retain the payments. PRS properly accounts for the contract under the PCM. In Year 2, PRS distributes the contract to X in liquidation of X's interest. PRS incurs no costs and receives no progress payments in Year 2 prior to the distribution. At the time of the distribution, PRS's only asset other than the long-term contract and the partially constructed property is $450,000 cash ($400,000 initially contributed and $50,000 in excess progress payments). The fair market value of the contract is $150,000. Pursuant to the distribution, X assumes PRS's contract obligations and rights. In Year 2, X incurs additional allocable contract costs of $50,000. X correctly estimates at the end of Year 2 that X will have to incur an additional $75,000 of allocable contract costs in Year 3 to complete the contract (rather than $150,000 as originally estimated by PRS). Assume that X properly accounts for the contract under the PCM, that PRS has no income or loss other than income or loss from the contract, and that PRS has an election under section 754 in effect in Year 2.
(ii) *Tax consequences to PRS.* For Year 1, PRS reports receipts of $750,000 (the completion factor multiplied by total contract price ($600,000/$800,000 × $1,000,000)) and costs of $600,000, for a profit of $150,000, which is allocated equally among W, X, Y, and Z ($37,500 each). Immediately prior to the distribution of the contract to X in Year 2, the contract is deemed completed. Under paragraph (k)(2)(iv)(B) of this section, the fair market value of the contract ($150,000) is treated as the amount realized from the transaction. For purposes of applying the PCM in Year 2, the total contract price is $800,000 (the sum of the amounts received under the contract and the amount treated as realized from the transaction ($650,000 + $150,000)) and the total allocable contract costs are $600,000. Thus, in Year 2 PRS reports receipts of $50,000 (total contract price minus receipts already reported ($800,000 − $750,000)), and costs incurred in Year 2 of $0, for a profit of $50,000. Under paragraph (k)(2)(iv)(B) of this section, this profit must be allocated among W, X, Y, and Z as though the partnership closed its books on the date of the distribution. Accordingly, each partner's distributive share of this income is $12,500.

(iii) *Tax consequences to X.* X's basis in its interest in PRS immediately prior to the distribution is $150,000 (X's $100,000 initial contribution, increased by $37,500, X's distributive share of Year 1 income, and $12,500, X's distributive share of Year 2 income). Under paragraph (k)(2)(iv)(D) of this section, PRS's basis in the contract

(including the uncompleted property, if applicable) immediately prior to the distribution is equal to $150,000 (the partnership's allocable contract costs, $600,000, increased by the amount of income recognized by PRS on the contract through the date of the distribution (including amounts recognized as a result of the constructive completion), $200,000, decreased by the amounts that the partnership has received or reasonably expects to receive under the contract, $650,000). Under section 732, X's basis in the contract (including the uncompleted property) after the distribution is $150,000. Under paragraph (k)(2)(iv)(C) of this section, X's basis in the contract (including the uncompleted property) is treated as consideration paid by X that is allocable to the contract. X's total contract price is $200,000 (the amount remaining to be paid under the terms of the contract less the consideration allocable to the contract ($350,000-$150,000)). For Year 2, X reports receipts of $80,000 (the completion factor multiplied by the total contract price [($50,000/$125,000) × $200,000]) and costs of $50,000 (the costs incurred after the distribution of the contract), for a profit of $30,000. For Year 3, X reports receipts of $120,000 (the total contract price minus receipts already reported ($200,000 − $80,000)) and costs of $75,000, for a profit of $45,000.

(iv) *Section 734(b).* Because X's basis in the contract (including the uncompleted property) immediately after the distribution, $150,000, is equal to PRS's basis in the contract (including the uncompleted property) immediately prior to the distribution, there is no basis adjustment under section 734(b).

Example 10. Constructive completion—CCM—distribution of contract by partnership.
(i) *Facts.* The facts are the same as in *Example 9,* except that PRS and X properly account for the contract under the CCM.
(ii) *Tax consequences to PRS.* PRS reports no income or costs from the contract in Year 1. Immediately prior to the distribution of the contract to X in Year 2, the contract is deemed completed. Under paragraph (k)(2)(iv)(B) of this section, the fair market value of the contract ($150,000) is treated as the amount realized from the transaction. For purposes of applying the CCM in Year 2, the gross contract price is $800,000 (the sum of the amounts received under the contract and the amount treated as realized from the transaction ($650,000 + $150,000)) and the total allocable contract costs are $600,000. Thus, in Year 2 PRS reports profits of $200,000 ($800,000 − $600,000). This profit must be allocated among W, X, Y, and Z as though the partnership closed its books on the date of the distribution. Accordingly, each partner's distributive share of this income is $50,000.

(iii) *Tax consequences to X.* X's basis in its interest in PRS immediately prior to the distribution is $150,000 ($100,000 initial contribution, increased by $50,000, X's distributive share of Year 2 income). Under paragraph (k)(2)(iv)(D) of this section, PRS's basis in the contract (including the uncompleted property, if applicable) immediately

prior to the distribution is equal to $150,000 (the partnership's allocable contract costs, $600,000, increased by the amount of cumulative taxable income recognized by PRS on the contract through the date of the distribution (including amounts recognized as a result of the constructive completion), $200,000, decreased by the amounts that the partnership has received or reasonably expects to receive under the contract, $650,000). Under section 732, X's basis in the contract (including the uncompleted property) after the distribution is $150,000. Under paragraph (k)(2)(iv)(C) of this section, X's basis in the contract is treated as consideration paid by X that is allocable to the contract. Under the CCM, X reports no gross receipts or costs in Year 2. For Year 3, the completion year, X reports its gross contract price of $200,000 (the amount remaining to be paid under the terms of the contract less the consideration allocable to the contract ($350,000 − $150,000)) and its total allocable contract costs of $125,000 (the allocable contract costs that X incurred to complete the contract ($50,000 + $75,000)), for a profit of $75,000.

(iv) *Section 734(b).* The results under section 734(b) are the same as in Example 9.

Example 11. Step-in-the-shoes—PCM—contribution of contract to partnership. (i) *Facts.* In Year 1, X enters into a contract that X properly accounts for under the PCM. The total contract price is $1,000,000 and the estimated total allocable contract costs are $800,000. In Year 1, X incurs costs of $600,000 and receives $650,000 in progress payments under the contract. Under the contract, X performed all of the services required in order to be entitled to receive the progress payments, and there was no obligation to return the payments or perform any additional services in order to retain the payments. In Year 2, X contributes the contract (including the uncompleted property) with a basis of $0 and $125,000 of cash to partnership PRS in exchange for a one-fourth partnership interest. X incurs costs of $10,000, and receives no progress payments in Year 2 prior to the contribution of the contract. X and the other three partners of PRS share equally in its capital, profits, and losses. The parties determine that, at the time of the contribution, the fair market value of the contract is $160,000. Following the contribution in Year 2, PRS incurs additional allocable contract costs of $40,000. PRS correctly estimates at the end of Year 2 that it will have to incur an additional $75,000 of allocable contract costs in Year 3 to complete the contract (rather than $150,000 as originally estimated by PRS).
(ii) *Tax consequences to X.* For Year 1, X reports receipts of $750,000 (the completion factor multiplied by the total contract price ($600,000/$800,000 × $1,000,000)) and costs of $600,000, for a profit of $150,000. Because the mid-contract change in taxpayer results from a transaction described in paragraph (k)(3)(i)(I) of this section, X is not treated as completing the contract in Year 2. Under paragraph (k)(3)(ii)(A) of this section, for Year 2, X reports receipts of $12,500 (the completion factor multiplied by the total

contract price ($610,000/$800,000 × $1,000,000, or $762,500), decreased by receipts already reported, $750,000) and costs of $10,000, for a profit of $2,500. Under section 722, X's initial basis in its interest in PRS is $125,000. Pursuant to paragraph (k)(3)(iv)(A)(1) of this section, X must increase its basis in its interest in PRS by the amount of gross receipts X recognized under the contract, $762,500, and reduce its basis by the amount of gross receipts X received under the contract, the $650,000 in progress payments. Accordingly, X's basis in its interest in PRS is $237,500.

(iii) *Tax consequences to PRS.* Because the mid-contract change in taxpayer results from a step-in-the-shoes transaction, PRS must account for the contract using the same methods of accounting used by X prior to the transaction. The total contract price is the sum of any amounts that X and PRS have received or reasonably expect to receive under the contract, and total allocable contract costs are the allocable contract costs of X and PRS. For Year 2, PRS reports receipts of $134,052 (the completion factor multiplied by the total contract price [($650,000/$725,000) − $1,000,000], $896,552, decreased by receipts reported by X, $762,500) and costs of $40,000, for a profit of $94,052. For Year 3, PRS reports receipts of $103,448 (the total contract price minus prior year receipts ($1,000,000 × $896,552)) and costs of $75,000, for a profit of $28,448.

(iv) *Section 704(c).* The principles of section 704(c) and § 1.704-3 apply to allocations of income or loss with respect to the contract contributed by X. In this case, the amount of built-in income that is subject to section 704(c) is the amount of income or loss that the contributing partner would take into account if the contract were disposed of for its fair market value in a constructive completion transaction. This calculation is treated as occurring immediately after the partner has applied paragraph (k)(3)(ii)(A) of this section, but before the contribution to the partnership. In a constructive completion transaction, the total contract price would be $810,000 (the sum of the amounts received under the contract and the amount realized in the deemed sale ($650,000 + $160,000)). X would report receipts of $47,500 (total contract price minus receipts already reported ($810,000 − $762,500)) and costs of $0, for a profit of $47,500. Thus, the amount of built-in income that is subject to section 704(c) is $47,500. The partnership must apply section 704(c) to this income in a manner that reasonably accounts for the income over the remaining term of the contract. For example, in Year 2, PRS could allocate $26,810 to X under section 704(c) (the amount of built-in income, $47,500, multiplied by a fraction, the numerator of which is the completion factor for the year, $650,000/725,000, less the completion factor for the prior year, $610,000/$800,000, and the denominator of which is 100 percent reduced by the completion factor for the taxable year preceding the event creating the section 704(c) income or loss, $610,000/$800,000). The remaining $67,242 would be allocated equally among all of the partners. In Year 3, the completion year, PRS could allocate $20,690 to X under section

704(c) ($47,500 × [($725,000/$725,000 −$650,000/$725,000) / (100 percent − $610,000/$800,000)]). The remaining $7,758 would be allocated equally among all the partners.

Example 12. Step-in-the-shoes—CCM—contribution of contract to partnership. (i) *Facts.* The facts are the same as in *Example 11,* except that X and PRS properly account for the contract under the CCM, and X has a basis of $610,000 in the contract (including the uncompleted property).
(ii) *Tax consequences to X.* X reports no income or costs from the contract in Years 1 or 2. X is not treated as completing the contract in Year 2. Under section 722, X's initial basis in its interest in PRS is $735,000 (the sum of $125,000 cash and X's basis of $610,000 in the contract (including the uncompleted property)). Pursuant to paragraph (k)(3)(iv)(A)(*1*)(*ii*) of this section, X must reduce its basis in its interest in PRS by the amount of gross receipts X received under the contract, or $650,000. Accordingly, X's basis in its interest in PRS is $85,000.

(iii) *Tax consequences to PRS.* PRS must account for the contract using the same methods of accounting used by X prior to the transaction. Under the CCM, PRS reports no gross receipts or costs in Year 2. For Year 3, the completion year, PRS reports its gross contract price of $1,000,000 (the sum of any amounts that X and PRS have received or reasonably expect to receive under the contract), and total allocable contract costs of $725,000 (the allocable contract costs of X and PRS), for a profit of $275,000.

(iv) *Section 704(c).* In this case, the amount of built-in income that is subject to section 704(c) is the amount of income or loss that the contributing partner would take into account if the contract were disposed of for its fair market value in a constructive completion transaction. This calculation is treated as occurring immediately after the partner has applied paragraph (k)(3)(ii)(A) of this section, but before the contribution to the partnership. In a constructive completion transaction, X would report its gross contract price of $810,000 (the sum of the amounts received under the contract and the amount realized in the deemed sale ($650,000 + $160,000)) and its total allocable contract costs of $610,000, for a profit of $200,000. Thus, the amount of built-in income that is subject to section 704(c) is $200,000. Out of PRS's income of $275,000, in Year 3, $200,000 must be allocated to X under section 704(c), and the remaining $75,000 is allocated equally among all of the partners.

Example 13. Step-in-the-shoes—PCM—transfer of a partnership interest. (i) *Facts.* In Year 1, W, X, Y, and Z each contribute $100,000 to form equal partnership PRS. In Year 1, PRS enters into a contract. The total contract price is $1,000,000 and the estimated total allocable contract costs are $800,000. In Year 1, PRS incurs costs of $600,000 and receives $650,000 in progress payments under the contract. Under the contract, PRS

performed all of the services required in order to be entitled to receive the progress payments, and there was no obligation to return the payment or perform any additional services in order to retain the payments. PRS properly accounts for the contract under the PCM. In Year 2, W transfers W's interest in PRS to T for $150,000. Assume that $10,000 of PRS's Year 2 costs are incurred prior to the transfer, $40,000 are incurred after the transfer; and that PRS receives no progress payments in Year 2. Also assume that the fair market value of the contract on the date of the transfer is $160,000, that PRS closes its books with respect to the contract under section 706 on the date of the transfer, and that PRS correctly estimates at the end of Year 2 that it will have to incur an additional $75,000 of allocable contract costs in Year 3 to complete the contract (rather than $150,000 as originally estimated by PRS).
(ii) *Income reporting for period ending on date of transfer.* For Year 1, PRS reports receipts of $750,000 (the completion factor multiplied by total contract price ($600,000/$800,000 × $1,000,000)) and costs of $600,000, for a profit of $150,000. This profit is allocated equally among W, X, Y, and Z ($37,500 each). Under paragraph (k)(3)(ii)(A) of this section, for the part of Year 2 ending on the date of the transfer of W's interest, PRS reports receipts of $12,500 (the completion factor multiplied by the total contract price ($610,000/$800,000 × $1,000,000) minus receipts already reported ($750,000)) and costs of $10,000 for a profit of $2,500. This profit is allocated equally among W, X, Y, and Z ($625 each).

(iii) *Income reporting for period after transfer.* PRS must continue to use the PCM. For the part of Year 2 beginning on the day after the transfer, PRS reports receipts of $134,052 (the completion factor multiplied by the total contract price decreased by receipts reported by PRS for the period ending on the date of the transfer [($650,000/$725,000 × $1,000,000)—$762,500]) and costs of $40,000, for a profit of $94,052. This profit is shared equally among T, X, Y, and Z ($23,513 each). For Year 3, PRS reports receipts of $103,448 (the total contract price minus prior year receipts ($1,000,000 − $896,552)) and costs of $75,000, for a profit of $28,448. The profit for Year 3 is shared equally among T, X, Y, and Z ($7,112 each).

(iv) *Tax Consequences to W.* W's amount realized is $150,000. W's adjusted basis in its interest in PRS is $138,125 ($100,000 originally contributed, plus $37,500, W's distributive share of PRS's Year 1 income, and $625, W's distributive share of PRS's Year 2 income prior to the transfer). Accordingly, W's income from the sale of W's interest in PRS is $11,875. Under paragraph (k)(2)(iv)(E) of this section, for purposes of section 751(a), the amount of ordinary income attributable to the contract is determined as follows. First, the partnership must determine the amount of income or loss from the contract that is allocated under section 706 to the period ending on the date of the sale ($625). Second, the partnership must determine the amount of income or loss that the partnership would take into account under the constructive completion rules of

paragraph (k)(2) of this section if the contract were disposed of for its fair market value in a constructive completion transaction. Because PRS closed its books under section 706 with respect to the contract on the date of the sale, this calculation is treated as occurring immediately after the partnership has applied paragraph (k)(3)(ii)(A) of this section on the date of the sale. In a constructive completion transaction, the total contract price would be $810,000 (the sum of the amounts received under the contract and the amount realized in the deemed sale ($650,000 + $160,000)). PRS would report receipts of $47,500 (total contract price minus receipts already reported ($810,000 − $762,500)) and costs of $0, for a profit of $47,500. Thus, the amount of ordinary income attributable to the contract is $47,500, and W's share of that income is $11,875. Thus, under § 1.751-1(a), all of W's $11,875 of income from the sale of W's interest in PRS is ordinary income.

(v) *Tax Consequences to T.* T's adjusted basis for its interest in PRS is $150,000. Under § 1.743-1(d)(2), the amount of income that would be allocated to T if the contract were disposed of for its fair market value (adjusted to account for income from the contract for the portion of PRS's taxable year that ends on the date of the transfer) is $11,875. Under § 1.743-1(b), the amount of T's basis adjustment under section 743(b) is $11,875. Under paragraph (k)(3)(v)(B) of this section, the portion of T's basis adjustment that is recovered in Year 2 and Year 3 must be determined by PRS in a manner that reasonably accounts for the adjustment over the remaining term of the contract. For example, PRS could recover $6,703 of the adjustment in Year 2 (the amount of the basis adjustment, $11,875, multiplied by a fraction, the numerator of which is the excess of the completion factor for the year, $650,000/$725,000, less the completion factor for the prior year, $610,000/$800,000, and the denominator of which is 100 percent reduced by the completion factor for the taxable year preceding the transfer, $610,000/$800,000). T's distributive share of income in Year 2 from the contract would be adjusted from $23,513 to $16,810 as a result of the basis adjustment. In Year 3, the completion year, PRS could recover $5,172 of the adjustment ($11,875 × [($725,000/$725,000 −$650,000/$725,000) / (100 percent − $610,000/$800,000)]). T's distributive share of income in Year 2, the completion year, from the contract would be adjusted from $7,112 to $1,940 as a result of the basis adjustment.

(6) ***Effective date.*** Except as provided in paragraph (k)(3)(iv)(D) of this section, this paragraph (k) is applicable for transactions on or after May 15, 2002. Application of the rules of this paragraph (k) to a transaction that occurs on or after May 15, 2002 is not a change in method of accounting.

[T.D. 8597, 60 FR 36684, July 18, 1995, as amended by T.D. 8929, 66 FR 2232, Jan. 11, 2001; 66 FR 18191, Apr. 6, 2001; T.D. 8995, 67 FR 34605, May 15, 2002; T.D. 9137, 69 FR 42553, July 16, 2004; T.D. 9942, 86 FR 273, Jan. 5, 2021]

§ 1.460-5 Cost allocation rules.

(a) ***Overview.*** This section prescribes methods of allocating costs to long-term contracts accounted for using the percentage-of-completion method described in § 1.460-4(b) (PCM), the completed-contract method described in § 1.460-4(d) (CCM), or the percentage-of-completion/capitalized-cost method described in § 1.460-4(e) (PCCM). Exempt construction contracts described in § 1.460-3(b) accounted for using a method other than the PCM or CCM are not subject to the cost allocation rules of this section (other than the requirement to allocate production-period interest under paragraph (b)(2)(v) of this section). Paragraph (b) of this section describes the regular cost allocation methods for contracts subject to the PCM. Paragraph (c) of this section describes an elective simplified cost allocation method for contracts subject to the PCM. Paragraph (d) of this section describes the cost allocation methods for exempt construction contracts reported using the CCM. Paragraph (e) of this section describes the cost allocation rules for contracts subject to the PCCM. Paragraph (f) of this section describes additional rules applicable to the cost allocation methods described in this section. Paragraph (g) of this section provides rules concerning consistency in method of allocating costs to long-term contracts.

(b) ***Cost allocation method for contracts subject to PCM*** —

(1) ***In general.*** Except as otherwise provided in paragraph (b)(2) of this section, a taxpayer must allocate costs to each long-term contract subject to the PCM in the same manner that direct and indirect costs are capitalized to property produced by a taxpayer under § 1.263A-1(e) through (h). Thus, a taxpayer must allocate to each long-term contract subject to the PCM all direct costs and certain indirect costs properly allocable to the long-term contract (*i.e.,* all costs that directly benefit or are incurred by reason of the performance of the long-term contract). However, see paragraph (c) of this section concerning an election to allocate contract costs using the simplified cost-to-cost method. As in section 263A, the use of the practical capacity concept is not permitted. See § 1.263A-2(a)(4).

(2) ***Special rules*** —

(i) ***Direct material costs.*** The costs of direct materials must be allocated to a long-term contract when dedicated to the contract under principles similar to those in § 1.263A-11(b)(2). Thus, a taxpayer dedicates direct materials by associating them with a specific contract, including by purchase order, entry on books and records, or shipping instructions. A taxpayer maintaining inventories under § 1.471-1 must determine allocable contract costs attributable to direct materials using its method of accounting for those inventories (*e.g.,* FIFO, LIFO, specific identification).

(ii) ***Components and subassemblies.*** The costs of a component or subassembly (component) produced by the taxpayer must be allocated to a long-term contract as the taxpayer incurs costs to produce the component if the taxpayer reasonably expects to incorporate the component into the subject matter of the contract. Similarly, the cost of a purchased component (including a component purchased from a related party) must be allocated to a long-term contract as the taxpayer incurs the cost to purchase the component if the taxpayer reasonably expects to incorporate the component into the subject matter of the contract. In all other cases, the cost of a component must be allocated to a long-term contract when the component is dedicated, under principles similar to those in § 1.263A-11(b)(2). A taxpayer maintaining inventories under § 1.471-1 must determine allocable contract costs attributable to components using its method of accounting for those inventories (*e.g.,* FIFO, LIFO, specific identification).

(iii) ***Simplified production methods.*** A taxpayer may not determine allocable contract costs using the simplified production methods described in § 1.263A-2(b) and (c).

(iv) ***Costs identified under cost-plus long-term contracts and federal long-term contracts.*** To the extent not otherwise allocated to the contract under this paragraph (b), a taxpayer must allocate any identified costs to a cost-plus long-term contract or federal long-term contract (as defined in section 460(d)). *Identified cost* means any cost, including a charge representing the time-value of money, identified by the taxpayer or related person as being attributable to the taxpayer's cost-plus long-term contract or federal long-term contract under the terms of the contract itself or under federal, state, or local law or regulation.

(v) ***Interest*** —

(A) ***In general.*** If property produced under a long-term contract is *designated property,* as defined in § 1.263A-8(b) (without regard to the exclusion for long-term contracts under § 1.263A-8(d)(2)(v)), a taxpayer must allocate interest incurred during the production period to the long-term contract in the same manner as interest is allocated to property produced by a taxpayer under section 263A(f). See §§ 1.263A-8 to 1.263A-12 generally.

(B) ***Production period.*** Notwithstanding § 1.263A-12(c) and (d), for purposes of this paragraph (b)(2)(v), the production period of a long-term contract—

(*1*) Begins on the later of—

(*i*) The contract commencement date, as defined in § 1.460-1(b)(7); or

(*ii*) For a taxpayer using the accrual method of accounting for long-term contracts, the date by which 5 percent or more of the total estimated costs, including design and planning costs, under the contract have been incurred; and

(*2*) Ends on the date that the contract is completed, as defined in § 1.460-1(c)(3).

(C) ***Application of section 263A(f).*** For purposes of this paragraph (b)(2)(v), section 263A(f)(1)(B)(iii) (regarding an estimated production period exceeding 1 year and a cost exceeding $1,000,000) must be applied on a contract-by-contract basis; except that, in the case of a taxpayer using an accrual method of accounting, that section must be applied on a property-by-property basis.

(vi) ***Research and experimental expenses.*** Notwithstanding § 1.263A-1(e)(3)(ii)(P) and (iii)(B), a taxpayer must allocate research and experimental expenses, other than independent research and development expenses (as defined in § 1.460-1(b)(9)), to its long-term contracts.

(vii) ***Service costs*** —

(A) ***Simplified service cost method*** —

(1) ***In general.*** To use the simplified service cost method under § 1.263A-1(h), a taxpayer must allocate the otherwise capitalizable mixed service costs among its long-term contracts using a reasonable method. For example, otherwise capitalizable mixed service costs may be allocated to each long-term contract based on labor hours or contract costs allocable to the contract. To be considered reasonable, an allocation method must be applied consistently and must not disproportionately allocate service costs to contracts expected to be completed in the near future.

(2) ***Example.*** The following example illustrates the rule of this paragraph (b)(2)(vii)(A):

Example. Simplified service cost method. During 2001, C, whose taxable year ends December 31, produces electronic equipment for inventory and enters into long-term contracts to manufacture specialized electronic equipment. C's method of allocating mixed service costs to the property it produces is the labor-based, simplified service cost method described in § 1.263A-1(h)(4). For 2001, C's total mixed service costs are $100,000, C's section 263A labor costs are $500,000, C's section 460 labor costs (*i.e.,* labor costs allocable to C's long-term contracts) are $250,000, and C's total labor costs are $1,000,000. To determine the amount of mixed service costs capitalizable under section 263A for 2001, C multiplies its total mixed service costs by its section 263A allocation ratio (section 263A labor costs ÷ total labor costs). Thus, C's capitalizable mixed service costs for 2001 are $50,000 ($100,000 × $500,000 ÷ $1,000,000). Thereafter, C allocates its capitalizable mixed service costs to produced property remaining in ending inventory using its 263A allocation method (*e.g.,* burden rate, simplified production). Similarly, to determine the amount of mixed service costs that are allocable to C's long-term contracts for 2001, C multiplies its total mixed service costs by its section 460 allocation ratio (section 460 labor ÷ total labor costs). Thus, C's allocable mixed service contract costs for 2001 are $25,000 ($100,000 × $250,000 ÷ $1,000,000). Thereafter, C allocates its allocable mixed service costs to its long-term contracts proportionately based on its section 460 labor costs allocable to each long-term contract.

(B) ***Jobsite costs.*** If an administrative, service, or support function is performed solely at the jobsite for a specific long-term contract, the taxpayer may allocate all the direct and indirect costs of that administrative, service, or support function to that long-term contract. Similarly, if an administrative, service, or support function is performed at the jobsite solely for the taxpayer's long-term contract activities, the taxpayer may allocate all the direct and indirect costs of that administrative, service, or support function among all the long-term contracts performed at that jobsite. For this purpose, jobsite means a production plant or a construction site.

(C) ***Limitation on other reasonable cost allocation methods.*** A taxpayer may use any other reasonable method of allocating service costs, as provided in § 1.263A-1(f)(4), if, for the taxpayer's long-term contracts considered as a whole, the—

(*1*) Total amount of service costs allocated to the contracts does not differ significantly from the total amount of service costs that would have been allocated to the contracts under § 1.263A-1(f)(2) or (3);

(*2*) Service costs are not allocated disproportionately to contracts expected to be completed in the near future because of the taxpayer's cost allocation method; and

(*3*) Taxpayer's cost allocation method is applied consistently.

(c) ***Simplified cost-to-cost method for contracts subject to the PCM*** —

(1) ***In general.*** Instead of using the cost allocation method prescribed in paragraph (b) of this section, a taxpayer may elect to use the simplified cost-to-cost method, which is authorized under section 460(b)(3)(A), to allocate costs to a long-term contract subject to the PCM. Under the simplified cost-to-cost method, a taxpayer determines a contract's completion factor based upon only direct

material costs; direct labor costs; and depreciation, amortization, and cost recovery allowances on equipment and facilities directly used to manufacture or construct the subject matter of the contract. For this purpose, the costs associated with any manufacturing or construction activities performed by a subcontractor are considered either direct material or direct labor costs, as appropriate, and therefore must be allocated to the contract under the simplified cost-to-cost method. An electing taxpayer must use the simplified cost-to-cost method to apply the look-back method under § 1.460-6 and to determine alternative minimum taxable income under § 1.460-4(f).

(2) ***Election.*** A taxpayer makes an election under this paragraph (c) by using the simplified cost-to-cost method for all long-term contracts entered into during the taxable year of the election on its original federal income tax return for the election year. This election is a method of accounting and, thus, applies to all long-term contracts entered into during and after the taxable year of the election. This election is not available if a taxpayer does not use the PCM to account for all long-term contracts or if a taxpayer elects to use the 10-percent method described in § 1.460-4(b)(6).

(d) ***Cost allocation rules for exempt construction contracts reported using the CCM*** —

(1) ***In general.*** For exempt construction contracts reported using the CCM, other than contracts described in paragraph (d)(3) of this section, a taxpayer must annually allocate the cost of any activity that is incident to or necessary for the taxpayer's performance under a long-term contract. A taxpayer must allocate to each exempt construction contract all direct costs as defined in § 1.263A-1(e)(2)(i) and all indirect costs either as provided in § 1.263A-1(e)(3) or as provided in paragraph (d)(2) of this section.

(2) ***Indirect costs*** —

(i) ***Indirect costs allocable to exempt construction contracts.*** A taxpayer allocating costs under this paragraph (d)(2) must allocate the following costs to an exempt construction contract, other than a contract described in paragraph (d)(3) of this section, to the extent incurred in the performance of that contract—

(A) Repair of equipment or facilities;

(B) Maintenance of equipment or facilities;

(C) Utilities, such as heat, light, and power, allocable to equipment or facilities;

(D) Rent of equipment or facilities;

(E) Indirect labor and contract supervisory wages, including basic compensation, overtime pay, vacation and holiday pay, sick leave pay (other than payments pursuant to a wage continuation plan under section 105(d) as it existed prior to its repeal in 1983), shift differential, payroll taxes, and contributions to a supplemental unemployment benefits plan;

(F) Indirect materials and supplies;

(G) Noncapitalized tools and equipment;

(H) Quality control and inspection;

(I) Taxes otherwise allowable as a deduction under section 164, other than state, local, and foreign income taxes, to the extent attributable to labor, materials, supplies, equipment, or facilities;

(J) Depreciation, amortization, and cost-recovery allowances reported for the taxable year for financial purposes on equipment and facilities to the extent allowable as deductions under chapter 1 of the Internal Revenue Code;

(K) Cost depletion;

(L) Administrative costs other than the cost of selling or any return on capital;

(M) Compensation paid to officers other than for incidental or occasional services;

(N) Insurance, such as liability insurance on machinery and equipment; and

(O) Interest, as required under paragraph (b)(2)(v) of this section.

(ii) ***Indirect costs not allocable to exempt construction contracts.*** A taxpayer allocating costs under this paragraph (d)(2) is not required to allocate the following costs to an exempt construction contract reported using the CCM—

(A) Marketing and selling expenses, including bidding expenses;

(B) Advertising expenses;

(C) Other distribution expenses;

(D) General and administrative expenses attributable to the performance of services that benefit the taxpayer's activities as a whole (*e.g.,* payroll expenses, legal and accounting expenses);

(E) Research and experimental expenses (described in section 174 and the regulations thereunder);

(F) Losses under section 165 and the regulations thereunder;

(G) Percentage of depletion in excess of cost depletion;

(H) Depreciation, amortization, and cost recovery allowances on equipment and facilities that have been placed in service but are temporarily idle (for this purpose, an asset is not considered to be temporarily idle on non-working days, and an asset used in construction is considered to be idle when it is neither en route to nor located at a job-site), and depreciation, amortization and cost recovery allowances under chapter 1 of the Internal Revenue Code in excess of depreciation, amortization, and cost recovery allowances reported by the taxpayer in the taxpayer's financial reports;

(I) Income taxes attributable to income received from long-term contracts;

(J) Contributions paid to or under a stock bonus, pension, profit-sharing, or annuity plan or other plan deferring the receipt of compensation whether or not the plan qualifies under section 401(a), and other employee benefit expenses paid or accrued on behalf of labor, to the extent the contributions or expenses are otherwise allowable as deductions under chapter 1 of the Internal Revenue Code. Other employee benefit expenses include (but are not limited to): Worker's compensation; amounts deductible or for whose payment reduction in earnings and profits is allowed under section 404A and the regulations thereunder; payments pursuant to a wage continuation plan under section 105(d) as it existed prior to its repeal in 1983; amounts includible in the gross income of employees under a method or arrangement of employer contributions or compensation which has the

effect of a stock bonus, pension, profit-sharing, or annuity plan, or other plan deferring the receipt of compensation or providing deferred benefits; premiums on life and health insurance; and miscellaneous benefits provided for employees such as safety, medical treatment, recreational and eating facilities, membership dues, etc.;

(K) Cost attributable to strikes, rework labor, scrap and spoilage; and

(L) Compensation paid to officers attributable to the performance of services that benefit the taxpayer's activities as a whole.

(3) ***Large homebuilders.*** A taxpayer must capitalize the costs of home construction contracts under section 263A, unless the taxpayer estimates, when entering into the contract, that it will be completed within two years of the contract commencement date, and the taxpayer satisfies the gross receipts test of section 448(c) described in § 1.460-3(b)(3) for the taxable year in which the contract is entered into.

(e) ***Cost allocation rules for contracts subject to the PCCM.*** A taxpayer must use the cost allocation rules described in paragraph (b) of this section to determine the costs allocable to the entire qualified ship contract or residential construction contract accounted for using the PCCM and may not use the simplified cost-to-cost method described in paragraph (c) of this section.

(f) ***Special rules applicable to costs allocated under this section*** —

(1) ***Nondeductible costs.*** A taxpayer may not allocate any otherwise allocable contract cost to a long-term contract if any section of the Internal Revenue Code disallows a deduction for that type of payment or expenditure (*e.g.,* an illegal bribe described in section 162(c)).

(2) ***Costs incurred for non-long-term contract activities.*** If a taxpayer performs a non-long-term contract activity, as defined in § 1.460-1(d)(2), that is incident to or necessary for the manufacture, building, installation, or construction of the subject matter of one or more of the taxpayer's long-term contracts, the taxpayer must allocate the costs attributable to that activity to such contract(s).

(g) ***Method of accounting.*** A taxpayer that adopts or elects a cost allocation method of accounting (or changes to another cost allocation method of accounting with the Commissioner's consent) must apply that method consistently for all similarly classified contracts, until the taxpayer obtains the Commissioner's consent under section 446(e) to change to another cost allocation method. A taxpayer-initiated change in cost allocation method will be permitted only on a cut-off basis (*i.e.,* for contracts entered into on or after the year of change) and thus, a section 481(a) adjustment will not be permitted or required.

[T.D. 8929, 66 FR 2237, Jan. 11, 2001, as amended by T.D. 9942, 86 FR 273, Jan. 5, 2021]

§ 1.460-6 Look-back method.

(a) ***In general*** —

(1) ***Introduction.*** With respect to income from any long-term contract reported under the percentage of completion method, a taxpayer is required to pay or is entitled to receive interest under section 460(b) on the amount of tax liability that is deferred or accelerated as a result of overestimating or underestimating total contract price or contract costs. Under this look-back method, taxpayers are required to pay interest for any deferral of tax liability resulting from the underestimation of the total contract price or the overestimation of total contract costs. Conversely, if the total contract price is

overestimated or the total contract costs are underestimated, taxpayers are entitled to receive interest for any resulting acceleration of tax liability. The computation of the amount of deferred or accelerated tax liability under the look-back method is hypothetical; application of the look-back method does not result in an adjustment to the taxpayer's tax liability as originally reported, as reported on an amended return, or as adjusted on examination. Thus, the look-back method does not correct for differences in tax liability that result from over- or under-estimation of contract price and costs and that are permanent because, for example, tax rates change during the term of the contract.

(2) ***Overview.*** Paragraph (b) explains which situations require application of the look-back method to income from a long-term contract. Paragraph (c) explains the operation of the three computational steps for applying the look-back method. Paragraph (d) provides guidance concerning the simplified marginal impact method. Paragraph (e) provides an elective method to minimize the number of times the look-back method must be reapplied to a single long-term contract. Paragraph (f) describes the reporting requirements for the look-back method and the tax treatment of look-back interest. Paragraph (g) provides rules for applying the look-back method when there is a transaction that changes the taxpayer that reports income from a long-term contract prior to the completion of a contract. Paragraph (h) provides examples illustrating the three computational steps for applying the look-back method. Paragraph (j) of this section provides guidance concerning the election not to apply the look-back method in de minimis cases.

(b) ***Scope of look-back method*** —

(1) ***In general.*** The look-back method applies to any income from a long-term contract within the meaning of section 460(f) that is required to be reported under the percentage of completion method (as modified by section 460) for regular income tax purposes or for alternative minimum tax purposes. If a taxpayer uses the percentage of completion-capitalized cost method for long-term contracts, the look-back method applies for regular tax purposes only to the portion (40, 70, or 90 percent, whichever applies) of the income from the contract that is reported under the percentage of completion method. To the extent that the percentage-of-completion method is required to be used under § 1.460-1(g) with respect to income and expenses that are attributable to activities that benefit a related party's long-term contract, the look-back method also applies to these amounts, even if those activities are not performed under a contract entered into directly by the taxpayer.

(2) ***Exceptions from section 460.*** The look-back method generally does not apply to the regular taxable income from any long-term construction contract within the meaning of section 460(e)(3) that:

(i) Is a home construction contract within the meaning of section 460(e)(1)(A), or

(ii) Is not a home construction contract but is estimated to be completed within a 2-year period by a taxpayer, other than a tax shelter prohibited from using the cash receipts and disbursements method of accounting under section 448(a)(3), who meets the gross receipts test of section 448(c) and § 1.460-3(b)(3) for the taxable year in which such contract is entered into. These contracts are not subject to the look-back method for regular tax purposes, even if the taxpayer uses a version of the percentage of completion method permitted under § 1.451-3, unless the taxpayer has properly changed its method of accounting for these contracts to the percentage of completion method as modified by section 460(b). The look-back method, however, applies to the alternative minimum taxable income from a contract of this type, for those taxpayers subject to the AMT in taxable years prior to the filing taxable year in which the look-back method is required, unless the contract is exempt from required use of the percentage of completion method under section 56(a)(3).

(3) ***De minimis exception.*** Notwithstanding that the percentage of completion method is otherwise required to be used, the look-back method does not apply to any long-term contract that:

(i) Is completed within 2 years of the contract commencement date, and

(ii) Has a gross contract price (as of the completion of the contract) that does not exceed the lesser of $1,000,000 or 1 percent of the average annual gross receipts of the taxpayer for the 3 tax years preceding the tax year in which the contract is completed.

(iii) This de minimis exception is mandatory and, therefore, precludes application of the look-back method to any contract that meets the requirements of the exception. The de minimis exception applies for purposes of computing both regular taxable income and alternative minimum taxable income. Solely for this purpose, the determination of whether a long-term contract meets the gross receipts test for both alternative minimum tax and regular tax purposes is made based only on the taxpayer's regular taxable income. For contracts entered into after December 31, 2017, in a taxable year ending after December 31, 2017, a taxpayer's gross receipts are determined in the manner required by regulations under section 448(c).

(4) ***Alternative minimum tax.*** For purposes of computing alternative minimum taxable income, section 56(a)(3) generally requires long-term contracts within the meaning of section 460(f) (generally without regard to the exceptions in section 460(e)) to be accounted for using only the percentage of completion method as defined in section 460(b), including the look-back method of section 460(b), with respect to tax years beginning after December 31, 1986. However, section 56(a)(3) (and thus the look-back method) does not apply to any long-term contract entered into after June 20, 1988, and before the beginning of the first tax year that begins after September 30, 1990, that meets the conditions of both section 460(e)(1)(A) and clauses (i) and (ii) of section 460(e)(1)(B), and does not apply to any long-term contract entered into in a tax year that begins after September 30, 1990, that meets the conditions of section 460(e)(1)(A). A taxpayer that applies the percentage of completion method (and thus the look-back method) to income from a long-term contract only for purposes of determining alternative minimum taxable income, and not regular taxable income, must apply the look-back method to the alternative minimum taxable income in the year of contract completion and other filing years whether or not the taxpayer was liable for the alternative minimum tax for the filing year or for any prior year. Interest is computed under the look-back method to the extent that the taxpayer's total tax liability (including the alternative minimum tax liability) would have differed if the percentage of completion method had been applied using actual, rather than estimated, contract price and contract costs.

(5) ***Effective date.*** The look-back method, including the de minimis exception, applies to long-term contracts entered into after February 28, 1986. With respect to activities that are subject to section 460 solely because they benefit a long-term contract of a related party, the look-back method generally applies only if the related party's long-term contract was entered into after June 20, 1988, unless a principal purpose of the related-party arrangement is to avoid the requirements of section 460.

(c) ***Operation of the look-back method*** —

(1) ***Overview*** —

(i) ***In general.*** The amount of interest charged or credited to a taxpayer under the look-back method is computed in three steps. This paragraph (c) describes the three steps for applying the look-back method. These steps are illustrated by the examples in paragraph (h). The first step is to hypothetically reapply the percentage of completion method to all long-term

contracts that are completed or adjusted in the current year (the "filing year"), using the actual, rather than estimated, total contract price and contract costs. Based on this reapplication, the taxpayer determines the amount of taxable income (and, when applicable, alternative minimum taxable income and modified taxable income under section 59A(c)) that would have been reported for each year prior to the filing year that is affected by contracts completed or adjusted in the filing year if the actual, rather than estimated, total contract price and costs had been used in applying the percentage of completion method to these contracts, and to any other contracts completed or adjusted in a year preceding the filing year. If the percentage of completion method only applies to alternative minimum taxable income for contracts completed or adjusted in the filing year, only alternative minimum taxable income is recomputed in the first step. The second step is to compare what the tax liability would have been under the percentage of completion method (as reapplied in the first step) for each tax year for which the tax liability is affected by income from contracts completed or adjusted in the filing year (a "redetermination year") with the most recent determination of tax liability for that year to produce a hypothetical underpayments or overpayment of tax. The third step is to apply the rate of interest on overpayments designated under section 6621 of the Code, compounded daily, to the hypothetical underpayment or overpayment of tax for each redetermination year to compute interest that runs, generally, from the due date (determined without regard to extensions) of the return for the redetermination year to the due date (determined without regard to extensions) of the return for the filing year. The net amount of interest computed under the third step is paid by or credited to the taxpayer for the filing year. Paragraph (d) provides a simplified marginal impact method that simplifies the second step—the computation of hypothetical underpayments or overpayments of tax liability for redetermination years—and, in some cases, the third step—the determination of the time period for computing interest.

(ii) ***Post-completion revenue and expenses*** —

(A) ***In general.*** Except as otherwise provided in section 460(b)(6) (see § 1.460-6(j) for method of electing) or § 1.460-6(e), a taxpayer must apply the look-back method to a long-term contract in the completion year and in any post-completion year for which the taxpayer must adjust total contract price or total allocable contract costs, or both, under the PCM. Any year in which the look-back method must be reapplied is treated as a filing year. See Example 3 of paragraph (h)(4) for an illustration of how the look-back method is applied to post-completion adjustments.

(B) ***Completion.*** A contract is considered to be completed for purposes of the look-back method in the year in which final completion and acceptance within the meaning of § 1.460-1(c)(3) have occurred.

(C) ***Discounting of contract price and contract cost adjustments subsequent to completion; election not to discount*** —

(*1*) ***General rule.*** The amount of any post-completion adjustment to the total contract price or contract costs is discounted, solely for purposes of applying the look-back method, from its value at the time the amount is taken into account in computing taxable income to its value at the completion of the contract. The discount rate for this purpose is the Federal mid-term rate under section 1274(d) in effect at the time

the amount is properly taken into account. For purposes of applying the look-back method for the completion year, no amounts are discounted, even if they are received after the completion year.

(2) ***Election not to discount.*** Notwithstanding the general requirement to discount post-completion adjustments, a taxpayer may elect not to discount contract price and contract cost adjustments with respect to any contract. The election not to discount is to be made on a contract-by-contract basis and is binding with respect to all post-completion adjustments that arise with respect to a contract for which an election has been made. An election not to discount with respect to any contract is made by stating that an election is being made on the taxpayer's timely filed Federal income tax return (determined with regard to extensions) for the first tax year after completion in which the taxpayer takes into account (i.e., includes in income or deducts) any adjustment to the contract price or contract costs. See § 301.9100-8 of this chapter.

(3) ***Year-end discounting convention.*** In the absence of an election not to discount, any revisions to the contract price and contract costs must be discounted to their value as of the completion of the contract in reapplying the look-back method. For this purpose, the period of discounting is the period between the completion date of the contract and the date that any adjustment is taken into account in computing taxable income. Although taxpayers may use the period between the months in which these two events actually occur, in many cases, these dates may not be readily identifiable. Therefore, for administrative convenience, taxpayers are permitted to use the period between the end of the tax years in which these events occur as the period of discounting provided that the convention is used consistently with respect to all post-completion adjustments for all contracts of the taxpayer the adjustments to which are discounted. In that case, the taxpayer must use as the discount rate the Federal mid-term rate under section 1274(d) as of the end of the tax year in which any revision is taken into account in computing taxable income.

(D) ***Revenue acceleration rule.*** Section 460(b)(1) imposes a special rule that requires a taxpayer to include in gross income, for the tax year immediately following the year of completion, any previously unreported portion of the total contract price (including amounts that the taxpayer expects to receive in the future) determined as of that year, even if the percentage of completion ratio is less than 100 percent because the taxpayer expects to incur additional allocable contract costs in a later year. At the time any remaining portion of the contract price is includible in income under this rule, no offset against this income is permitted for estimated future contract costs. To achieve the requirement to report all remaining contract revenue without regard to additional estimated costs, a taxpayer must include only costs actually incurred through the end of the tax year in the denominator of the percentage of completion ratio in applying the percentage of completion method for any tax years after the year of completion. The look-back method also must be reapplied for the year immediately following the year of completion if any portion of the contract price is includible in income in that year by reason of section 460(b)(1). For purposes of reapplying the look-back method as a result of this inclusion in income, the taxpayer must only include in the denominator of the percentage of completion ratio the actual contract costs incurred as of the end of the year, even if the taxpayer reasonably expects to incur additional allocable contract costs. To the

extent that costs are incurred in a subsequent tax year, the look-back method is reapplied in that year (or a later year if the delayed reapplication method is used), and the taxpayer is entitled to receive interest for the post-completion adjustment to contract costs. Because this reapplication occurs subsequent to the completion year, only the cumulative costs incurred as of the end of the reapplication year are includible in the denominator of the percentage of completion ratio.

(2) *Look-back Step One* —

(i) ***Hypothetical reallocation of income among prior tax years.*** For each filing year, a taxpayer must allocate total contract income among prior tax years, by hypothetically applying the percentage of completion method to all contracts that are completed or adjusted in the filing year using the rules of this paragraph (c)(2). The taxpayer must reallocate income from those contracts among all years preceding the filing year that are affected by those contracts using the total contract price and contract costs, as determined as of the end of the filing year ("actual contract price and costs"), rather than the estimated contract price and contract costs. The taxpayer then must determine the amount of taxable income (and, when applicable, alternative minimum taxable income and modified taxable income under section 59A(c)) that would have been reported for each affected tax year preceding the filing year if the percentage of completion method had been applied on the basis of actual contract price and contract costs in reporting income from all contracts completed or adjusted in the filing year and in any preceding year. If the percentage of completion method only applies to alternative minimum taxable income from the contract, only alternative minimum taxable income is recomputed in the first step. For purposes of reallocating income (and costs if the 10-percent year changes for a taxpayer using the 10-percent method of section 460(b)(5)) under the look-back method, the method of computing the percentage of completion ratio is the same method used to report income from the contract on the taxpayer's return. (Thus, an election to use the 10-percent method or the simplified cost-to-cost method is taken into account). See Example 1 of paragraph (h)(2) for an illustration of Step One.

(ii) ***Treatment of estimated future costs in year of completion.*** If a taxpayer reasonably expects to incur additional allocable contract costs in a tax year subsequent to the year in which the contract is completed, the taxpayer includes the actual costs incurred as of the end of the completion year plus the additional allocable contract costs that are reasonably expected to be incurred (to the extent includible under the taxpayer's percentage of completion method) in the denominator of the percentage of completion ratio. The completion year is the only filing year for which the taxpayer may include additional estimated costs in the denominator of the percentage of completion ratio in applying the look-back method. If the look-back method is reapplied in any year after the completion year, only the cumulative costs incurred as of the end of the year of reapplication are includible in the denominator of the percentage of completion ratio in reapplying the look-back method.

(iii) ***Interim reestimates not considered.*** The look-back method cannot be applied to a contract before it is completed. Accordingly, for purposes of applying Step One, the actual total contract price and contract costs are substituted for the previous estimates of total contract price and contract costs only with respect to contracts that have been completed in the filing year and in a tax year preceding the filing year. No adjustments are made under Step One for contracts that have not been completed prior to the end of the current filing year, even if, as of the end of this year, the estimated total contract price or contract costs for these uncompleted contracts is

different from the estimated amount that was used during any tax year for which taxable income is recomputed with respect to completed contracts under the look-back method for the current filing year.

(iv) ***Tax years in which income is affected.*** In general, because income under the percentage of completion method is generally reported as costs are incurred, the taxable income and, when applicable, alternative minimum taxable income and modified taxable income under section 59A(c), are recomputed only for each year in which allocable contract costs were incurred. However, there will be exceptions to this general rule. For example, a taxpayer may be required to cumulatively adjust the income from a contract in a year in which no allocable contract costs are incurred if the estimated total contract price or contract costs was revised in that year. However, in applying the look-back method, no contract income is allocated to that year. Thus, there may be a difference between the amount of contract income originally reported for that year and the amount of contract income as reallocated. Similarly, because of the revenue acceleration rule of section 460(b)(1), income may be reported in the year immediately following the completion year even though no costs were incurred during that year and, in applying the look-back method in that year or another year, if additional costs are incurred or the contract price is adjusted in a later year, no income is allocated to the year immediately following the completion year.

(v) ***Costs incurred prior to contract execution; 10-percent method*** —

(A) ***General rule.*** The look-back method does not require allocation of contract income to tax years before the contract was entered into. Costs incurred prior to the year a contract is entered into are first taken into account in the numerator of the percentage of completion ratio in the year the contract is entered into. A taxpayer using the 10-percent method must also use the 10-percent method in applying the look-back method, using actual total contract costs to determine the 10-percent year. Thus, contract income is never reallocated to a year before the 10-percent year as determined on the basis of actual contract costs. If the 10-percent year is earlier as a result of applying Step One of the look-back method, contract costs incurred up to and including the new 10-percent year (as determined based on actual contract costs), are reallocated from the original 10-percent year to the new 10-percent, and costs incurred in later years but before the old 10-percent year are reallocated to those years. If the 10-percent year is later as a result of applying Step One of the look-back method, contract costs incurred up to and including the new 10-percent year are reallocated from all prior years to the new 10-percent year. This is the only case in which costs are reallocated under the look-back method.

(B) ***Example.*** The application of the look-back method by a taxpayer using the 10-percent method is illustrated by the following example:

Example. Z elected to use the 10-percent method of section 460(b)(5) for reporting income under the percentage of completion method. Z entered into a contract in 1990 for a fixed price of $1,000*x*. During 1990, Z incurred allocable contract costs of $80*x* and estimated that it would incur a total of $900*x* for the entire contract. Since $80*x* is less than 10 percent of total estimated contract costs, Z reported no revenue from the contract in 1990 and deferred the $80*x* of costs incurred. In 1991, Z incurred an additional $620*x* of contract costs, and completed the contract. Accordingly, in its 1991 return, Z reported the entire contract price of $l,000*x,* and deducted the $620*x* of costs incurred in 1991 and the $80*x* of costs incurred in 1990. Under section

460(b)(5), the 10-percent method applies both for reporting contract income and the look-back method. Under the look-back method, since the costs incurred in 1990 ($80*x*) exceed 10 percent of the actual total contract costs ($700*x*), Z is required to allocate $114*x* of contract revenue ($80*x*/$700*x* × $1,000*x*) and the $80*x* of costs incurred to 1990. Thus, application of the 1ook-back method results in a net increase in taxable income for 1990 of $34*x,* solely for purposes of the look-back method.

(vi) ***Amount treated as contract price*** —

(A) ***General rule.*** The amount that is treated as total contract price for purposes of applying the percentage of completion method and reapplying the percentage of completion method under the look-back method under Step One includes all amounts that the taxpayer expects to receive from the customer. Thus, amounts are treated as part of the contract price as soon as it is reasonably estimated that they will be received, even if the all-events test has not yet been met.

(B) ***Contingencies.*** Any amounts related to contingent rights or obligations, such as incentive fees or amounts in dispute, are not separated from the contract and accounted for under a non-long-term contract method of accounting, notwithstanding any provision in § 1.460-4(b)(4)(i), to the contrary. Instead, those amounts are treated as part of the total contract price in applying the look-back method. For example, if an incentive fee under a contract to manufacture a satellite is payable to the taxpayer after a specified period of successful performance, the incentive fee is includible in the total contract price at the time and to the extent that it can reasonably be predicted that the performance objectives will be met, . A portion of the contract price that is in dispute is included in the total contract price at the time and to the extent that the taxpayer can reasonably expect the dispute will be resolved in the taxpayer's favor (without regard to when the taxpayer receives payment for the amount in dispute or when the dispute is finally resolved).

(C) ***Change orders.*** In applying the look-back method, a change order with respect to a contract is not treated as a separate contract unless the change order would be treated as a separate contract under the rules for severing and aggregating contracts provided in § 1.460-1(e). Thus, if a change order is not treated as a separate contract, the contract price and contract costs attributable to the change order must be taken into account in allocating contract income to all tax years affected by the underlying contract.

(3) ***Look-back Step Two: Computation of hypothetical overpayment or underpayment of tax*** —

(i) ***In general.*** Step Two involves the computation of a hypothetical overpayment or underpayment of tax for each year in which the tax liability is affected by income from contracts that are completed or adjusted in the filing year (a “redetermination year”). The application of Step Two depends on whether the taxpayer uses the simplified marginal impact method contained in paragraph (d) or the actual method described in this paragraph (c)(3). The remainder of this paragraph (c)(3) does not apply if a taxpayer uses the simplified marginal impact method.

(ii) ***Redetermination of tax liability.*** Under the method described in this paragraph (c)(3) (actual method), a taxpayer first must determine what its regular and, when applicable, its alternative minimum tax and base erosion minimum tax liability would have been for each redetermination year if the amounts of contract income allocated in Step One for all contracts completed or adjusted in the filing year and in any prior year were substituted for the amounts of contract

income reported under the percentage of completion method on the taxpayer's original return (or as subsequently adjusted on examination, or by amended return). See Example 2 of paragraph (h)(3) for an illustration of Step Two.

(iii) ***Hypothetical underpayment or overpayment.*** After redetermining the income tax liability for each tax year affected by the reallocation of contract income, the taxpayer then determines the amount, if any, of the hypothetical underpayment or overpayment of tax for each of these redetermination years. The hypothetical underpayment or overpayment for each affected year is the difference between the tax liability as redetermined under the look-back method for that year and the amount of tax liability determined as of the latest of the following:

(A) The original return date;

(B) The date of a subsequently amended or adjusted return (if, however, the amended return is due to a carryback described in section 6611(f), see paragraph (c)(4)(iii)); or,

(C) The last previous application of the look-back method (in which case, the previous hypothetical tax liability is used).

(iv) ***Cumulative determination of tax liability.*** The redetermination of tax liability resulting from previous applications of the look-back method is cumulative. Thus, for example, in computing the amount of a hypothetical overpayment or underpayment of tax for a redetermination year, the current hypothetical tax liability is compared to the hypothetical tax liability for that year determined as of the last previous application of the look-back method.

(v) ***Years affected by look-back only.*** A redetermination of income tax liability under Step Two is required for every tax year for which the tax liability would have been affected by a change in the amount of income or loss for any other year for which a redetermination is required. For example, if the allocation of contract income under Step One changed the amount of a net operating loss that was carried back to a year preceding the year the taxpayer entered into the contract, the tax liability for the earlier year must be redetermined.

(vi) ***Definition of tax liability.*** For purposes of Step Two, the income tax liability must be redetermined by taking into account all applicable additions to tax, credits, and net operating loss carrybacks and carryovers. Thus, the taxes, if any, imposed under sections 55 and 59A (relating to alternative and base erosion minimum tax, respectively) must be taken into account. For example, if the taxpayer did not pay alternative minimum tax, but would have paid alternative minimum tax for that year if actual rather than estimated contract price and costs had been used in determining contract income for the year, the amount of any hypothetical overpayment or underpayment of tax must be determined by comparing the hypothetical total tax liability (including hypothetical alternative minimum tax liability) with the actual tax liability for that year. The effect of taking these items into account in applying the look-back method is illustrated in Examples (4) through (7) of paragraphs (h)(5) through (h)(8) below.

(4) ***Look-back Step Three: Calculation of interest on underpayment or overpayment*** —

(i) ***In general.*** After determining a hypothetical underpayment or overpayment of tax for each redetermination year, the taxpayer must determine the interest charged or credited on each of these amounts. Interest on the amount determined under Step Two is determined by applying the overpayment rate designated under section 6621, compounded daily. In general, the time period over which interest is charged on hypothetical underpayments or credited on

hypothetical overpayments begins at the due date (not including extensions) of the return for the redetermination year for which the hypothetical underpayment or overpayment determined in Step Two is computed. This time period generally ends on the earlier of:

(A) The due date (not including extensions) of the return for the filing year, and

(B) The date both

(*1*) The income tax return for the filing year is filed, and

(*2*) The tax for that year has been paid in full. If a taxpayer uses the simplified marginal impact method contained in paragraph (d), the remainder of this paragraph (c)(4) does not apply.

(ii) ***Changes in the amount of a loss or credit carryback or carryover.*** The time period for determining interest may be different in cases involving loss or credit carrybacks or carryovers in order to properly reflect the time period during which the taxpayer (in the case of an underpayment) or the Government (in the case of an overpayment) had the use of the amount determined to be a hypothetical underpayment or overpayment. Thus, if a reallocation of contract income under Step One results in an increase or decrease to a net operating loss carryback (but not a carryforward), the interest due or to be refunded must be computed on the increase or decrease in tax attributable to the change to the carryback only from the due date (not including extensions) of the return for the redetermination year that generated the carryback and not from the due date of the return for the redetermination year in which the carryback was absorbed. In the case of a change in the amount of a carryover as a result of applying the lookback method, interest is computed from the due date of the return for the year in which the carryover was absorbed. See Examples (8) and (9) of paragraph (h)(9) for an illustration of these rules.

(iii) ***Changes in the amount of tax liability that generated a subsequent refund.*** If the amount of tax liability for a redetermination year (as reported on the taxpayer's original return, as subsequently adjusted on examination, as adjusted by amended return, or as redetermined by the last previous application of the look-back method) is decreased by the application of the look-back method, and any portion of the redetermination year tax liability was absorbed by a loss or credit carryback arising in a year subsequent to the redetermination year, the look-back method applies as follows to properly reflect the time period of the use of the tax overpayment. To the extent the amount of tax absorbed because of the carryback exceeds the total hypothetical tax liability for the year (as redetermined under the look-back method) the taxpayer is entitled to receive interest only until the due date (not including extensions) of the return for the year in which the carryback arose.

> *Example.* Upon the completion of a long-term contract in 1990, the taxpayer redetermines its tax liability for 1988 under the look-back method. This redetermination results in a hypothetical reduction of tax liability from $1,500*x* (actual liability originally reported) to $1,200*x* (hypothetical liability). In addition, the taxpayer had already received a refund of some or all of the actual 1988 tax by carrying back a net operating loss (NOL) that arose in 1989. The time period over which interest would be computed on the hypothetical overpayment of $300*x* for 1988 would depend on the amount of the refund generated by the carryback, as illustrated by the following three alternative situations:

(A) If the amount refunded because of the NOL is $1,500*x:* interest is credited to the taxpayer on the entire hypothetical overpayment of $300*x* from the due date of the 1988 return, when the hypothetical overpayment occurred, until the due date of the 1989 return, when the taxpayer received a refund for the entire amount of the 1988 tax, including the hypothetical overpayment.

(B) If the amount refunded because of the NOL is $1,000*x:* interest is credited to the taxpayer on the entire amount of the hypothetical overpayment of $300*x* from the due date of the 1988 return, when the hypothetical overpayment occurred, until the due date of the 1990 return. In this situation interest is credited until the due date of the return for the completion year of the contract, rather than the due date of the return for the year in which the carryback arose, because the amount refunded was less than the redetermined tax liability. Therefore, no portion of the hypothetical overpayment is treated as having been refunded to the taxpayer before the filing year.

(C) If the amount refunded because of the NOL is $1,300*x*−*:* interest is credited to the taxpayer on $100*x* ($1,300*x*−$1,200*x*) from the due date of the 1988 return until the due date of the 1989 return because only this portion of the total hypothetical overpayment is treated as having been refunded to the taxpayer before the filing year. However, the taxpayer did not receive a refund for the remaining $200*x* of the overpayment at that time and, therefore, is credited with interest on $200*x* through the due date of the tax return for 1990, the filing year. See Examples (10) and (11) of paragraph (h)(9) for a further illustration of this rule.

(d) ***Simplified marginal impact method*** —

(1) ***Introduction.*** This paragraph (d) provides a simplified method for calculating look-back interest. Any taxpayer may elect this simplified marginal impact method, except that pass-through entities described in paragraph (d)(4) of this section are required to apply the simplified marginal impact method at the entity level with respect to domestic contracts and the owners of those entities do not apply the look-back method to those contracts. Under the simplified marginal impact method, a taxpayer calculates the hypothetical underpayments or overpayments of tax for a prior year based on an assumed marginal tax rate. A taxpayer electing to use the simplified marginal impact method must use the method for each long-term contract for which it reports income (except with respect to domestic contracts if the taxpayer is an owner in a widely held pass-through entity that is required to use the simplified marginal impact method at the entity level for those contracts).

(2) ***Operation*** —

(i) ***In general.*** Under the simplified marginal impact method, income from those contracts that are completed or adjusted in the filing year is first reallocated in accordance with the procedures of Step One contained in paragraph (c)(2) of this section. Step Two is modified in the following manner. The hypothetical underpayment or overpayment of tax for each year of the contract (a "redetermination year") is determined by multiplying the applicable regular tax rate (as defined in paragraph (d)(2)(iii)) by the increase or decrease in regular taxable income (or, if it produces

a greater amount, by multiplying the applicable alternative minimum tax rate by the increase or decrease in alternative minimum taxable income, for taxpayers subject to the alternative minimum tax without regard to whether tentative minimum tax exceeds regular tax for the redetermination year) that results from reallocating income to the tax year under Step One. Generally, the product of the alternative minimum tax rate and the increase or decrease in alternative minimum taxable income will be the greater of the two amounts described in the preceding sentence only with respect to contracts for which a taxpayer uses the full percentage of completion method only for alternative minimum tax purposes and uses the completed contract method, or the percentage of completion-capitalized cost method, for regular tax purposes. Step Three is then applied. Interest is credited to the taxpayer on the net overpayment and is charged to the taxpayer on the net underpayment for each redetermination year from the due date (determined without regard to extensions) of the return for the redetermination year until the earlier of

(A) The due date (determined without regard to extensions) of the return for the filing year, and

(B) The first date by which both the return is filed and the tax is fully paid.

(ii) ***Applicable tax rate.*** For purposes of determining hypothetical underpayments or overpayments of tax under the simplified marginal impact method, the applicable regular tax rate is the highest rate of tax in effect for the redetermination year under section 1 in the case of an individual and under section 11 in the case of a corporation. The applicable alternative minimum tax rate is the rate of tax in effect for the taxpayer under section 55(b)(1). The highest rate is determined without regard to the taxpayer's actual rate bracket and without regard to any additional surtax imposed for the purpose of phasing out multiple tax brackets or exemptions.

(iii) ***Overpayment ceiling.*** The net hypothetical overpayment of tax for any redetermination year is limited to the taxpayer's total federal income tax liability for the redetermination year reduced by the cumulative amount of net hypothetical overpayments of tax for that redetermination year resulting from earlier applications of the look-back method. If the reallocation of contract income results in a net overpayment of tax and this amount exceeds the actual tax liability (as of the filing year) for the redetermination year, as adjusted for past applications of the look-back method and taking into account net operating loss, capital loss, or credit carryovers and carrybacks to that year, the actual tax so adjusted is treated as the overpayment for the redetermination year. This overpayment ceiling does not apply when the simplified marginal impact method is applied at the entity level by a widely held pass-through entity in accordance with paragraph (d)(4) of this section.

(iv) ***Example.*** The application of the simplified marginal impact method is illustrated by the following example:

> *Example.* Corporation X, a calendar-year taxpayer, reports income from long-term contracts and elected the simplified marginal impact method when it filed its income tax return for 1989. X uses only the percentage of completion method for both regular taxable income and alternative minimum taxable income. X completed contracts A, B, and C in 1989 and, therefore, was required to apply the look-back method in 1989. Income was actually reported for these contracts in 1987, 1988, and 1989. X's applicable tax rate, as determined under section 11, for the redetermination years 1987 and 1988

was 40 percent and 34 percent, respectively. The amount of contract income originally reported and reallocated for contracts A, B, and C, and the net overpayments and underpayments for the redetermination years are as follows:

	1987	1988
Contract A:		
Originally reported	$5,000*x*	$4,000*x*
Reallocated	3,000*x*	5,000*x*
Increase/(Decrease)	(2,000*x*)	1,000*x*
Contract B:		
Originally reported	6,000*x*	2,000*x*
Reallocated	7,000*x*	1,500*x*
Increase/(Decrease)	1,000*x*	(500*x*)
Contract C:		
Originally reported	8,000*x*	5,000*x*
Reallocated	4,000*x*	7,000*x*
Increase/(Decrease)	(4,000*x*)	2,000*x*
Net Increase/(Decrease)	(5,000*x*)	2,500*x*
Tentative (Underpayment)/Overpayment:		
@ .40	2,000*x*	
@ .34		(850*x*)
Ceiling:		
Actual Tax Liability (After Carryovers and Carrybacks)	1,500*x*	500*x*
Final (Underpayment)/Overpayment	1,500*x*	(850*x*)

Under the simplified marginal impact method, X determined a tentative hypothetical net overpayment for 1987 and a net underpayment for 1988. X determined these amounts by first aggregating the difference for contracts A, B, and C between the amount of contract price originally reported and the amount of contract price as reallocated and, then, applying the highest regular tax rate to the aggregate decrease in income for 1987 and the aggregate increase in income for 1988.

However, X's overpayment for 1987 is subject to a ceiling based on X's total tax liability. Because the tentative net overpayment of tax for 1987 exceeds the actual tax liability for that year after taking into account carryovers and carrybacks to that year, the final overpayment under the simplified marginal impact method is the amount of tax liability paid instead of the tentative net overpayment. Since application of the look-back method for 1988 results in a tentative underpayment of tax, it is not subject to a ceiling. If the look-back method is applied in 1991, the ceiling amount for 1987 will be zero and the ceiling amount for 1988 will be $1,350.

> X is entitled to receive interest on the hypothetical overpayment from March 15, 1988, to March 15, 1990. X is required to pay interest on the underpayment from March 15, 1989, to March 15, 1990.

(3) ***Anti-abuse rule.*** If the simplified marginal impact method is used with respect to any long-term contract (including a contract of a widely held pass-through entity), the district director may recompute interest for the contract (including domestic contracts of widely held pass-through entities) under the look-back method using the actual method (and without regard to the simplified marginal impact method). The district director may make such a recomputation only if the amount of income originally reported with respect to the contract for any redetermination year exceeds the amount of income reallocated under the look-back method with respect to that contract for that year (using actual contract price and contract costs) by the lesser of $1,000,000 or 20 percent of the amount of income as reallocated (*i.e.,* based on actual contract price and contract costs) under the look-back method with respect to that contract for that year. In determining whether to exercise this authority upon examination of the Form 8697, the district director may take into account whether the taxpayer overreported income for a purpose of receiving interest under the look-back method on a hypothetical overpayment determined at the applicable tax rate. The district director also may take into account whether the taxpayer underreported income for the year in question with respect to other contracts. Notwithstanding the look-back method, the district director may require an adjustment to the tax liability for any open tax year if the taxpayer did not apply the percentage of completion method properly on its original return.

(4) ***Application*** —

(i) ***Required use by certain pass-through entities*** —

(A) ***General rule.*** The simplified marginal impact method is required to be used with respect to income reported from domestic contracts by a pass-through entity that is either a partnership, an S corporation, or a trust, and that is not closely held. With respect to contracts described in the preceding sentence, the simplified marginal impact method is applied by the pass-through entity at the entity level. The pass-through entity determines the amount of any hypothetical underpayment or overpayment for a redetermination year using the highest rate of tax in effect for corporations under section 11. However, for redetermination years beginning before January 1, 2018, the pass-through entity uses the highest rates of tax in effect for corporations under section 11 and section 55(b)(1). Further, the pass-through entity uses the highest rates of tax imposed on individuals under section 1 and section 55(b)(1) if, at all times during the redetermination year involved (that is, the year in which the hypothetical increase or decrease in income arises), more than 50 percent of the interests in the entity were held by individuals directly or through 1 or more pass-through entities.

(B) ***Closely held.*** A pass-through entity is closely held if, at any time during any redetermination year, 50 percent of more (by value) of the beneficial interests in that entity are held (directly or indirectly) by or for 5 or fewer persons. For this purpose, the term “person” has the same meaning as in section 7701(a)(1), except that a pass-through entity is not treated as a person. In addition, the constructive ownership rules of section 1563(e) apply by substituting the term “beneficial interest” for the term “stock” and by substituting

the term "pass-through entity" for the term, "corporation" used in that section, as appropriate, for purposes of determining whether a beneficial interest in a pass-through entity is indirectly owned by any person.

(C) ***Examples.*** The following examples illustrate the application of the rules of paragraph (d)(4)(i):

Example 1. P, a partnership, began a long-term contract on March 1, 1986, and completed this contract in its tax year ending December 31, 1989. P used the percentage of completion method for all contract income. Substantially all of the income from the contract arose from U.S. sources. At all times during all of the years for which income was required to be reported under the contract, exactly 25 percent of the value of P's interests was owned by Corporation M. The remaining 75 percent of the value of P's interests was owned in equal shares by 15 unrelated individuals, who are also unrelated to Corporation M. M's ownership of P represents less than 50 percent of the value of the beneficial interests in P, and, therefore, viewed alone, is insufficient to make P a closely held partnership. In addition, because no 4 of the individual owners together own 25 percent or more of the remaining value of P's beneficial interests, there is no group of 5 owners that together own, directly or indirectly, 50 percent or more by value of the beneficial interests in P. Therefore, P is not closely held pass-through entity. Because P is not a closely held pass-through entity, and because P completed the contract after the effective date of section 460(b)(4), P is required to use the simplified marginal impact method. Any interest computed under the look-back method will be paid to, or collected from, P, rather than its partners, and must be reported to each of the partners on Form 1065 as interest income or expense. Further, assume that, for the redetermination years, Corporation M is subject to alternative minimum tax at the rate of 20 percent and 3 of the individuals who own interests in P are subject to the highest marginal tax rate of 33 percent in 1988. Regardless of the actual marginal tax rates of its partners, P is required to determine the underpayment or overpayment of tax for each redetermination year at the entity level by applying a single rate to the increase or decrease in income resulting from the reallocation of contract income under the look-back method. Because more than 50 percent of the interests in P are held by individuals, P must use the highest rate specified in section 1 for each redetermination year. Thus, the rate applied by P is 50 percent for 1986, 38.5 percent for 1987, and 28 percent for 1988.

Example 2. Assume the same facts as in Example 1, except that one of the individuals, Individual I, who directly owns 5 percent of the value of the interests of P, also owns 100 percent of the stock of Corporation M. Section 1563(e)(4) of the Code provides that stock owned directly or indirectly by or for a corporation is considered to be owned by any person who owns 5 percent or more in value of its stock in that proportion which the value of the stock which that person so owns bears to the value of all the stock in that corporation. Because section 460(b)(4)(C)(iii) and this paragraph (d)(4) provide that rules similar to the constructive ownership rules of section 1563(e) apply in determining whether a pass-through entity is closely held, all of M's interest in P is attributed to I because I owns 100 percent of the value of the stock in M. Accordingly, because I's direct 5 percent and constructive 25 percent ownership of P, plus the interests owned by any 4 other individual partners, equals 50

percent or more of the value of the beneficial interests of P, P is a closely held pass-through entity within the meaning of section 460(b)(4)(C)(iii). Therefore, P cannot use the simplified marginal impact method at the entity level. Accordingly, each of the partners of P must separately apply the look-back method to their respective interests in the income and expenses attributable to the contract, but each partner may elect to use the simplified marginal impact method with respect to the partner's share of income from the contract.

(D) ***Domestic contracts*** —

(*1*) ***General rule.*** A domestic contract is any contract substantially all of the income of which is from sources in the United States. For this purpose, "substantially all" of the income from a long-term contract is considered to be from United States sources if 95 percent or more of the gross income from the contract is from sources within the United States as determined under the rules in sections 861 through 865.

(*2*) ***Portion of contract income sourced.*** In determining whether substantially all of the gross income from a long-term contract is from United States sources, taxpayers must apply the allocation and apportionment principles of sections 861 through 865 only to the portion of the contract accounted for under the percentage of completion method. Under the percentage of completion method, gross income from a long-term contract includes all payments to be received under the contract (*i.e.,* any amounts treated as contract price). Similarly, all costs taken into account in the computation of taxable income under the percentage of completion method are deducted from gross income rather than added to a cost of goods sold account that reduces gross income. Therefore, allocable contract costs are not considered in determining whether a long-term contract is a domestic contract or a foreign contract, even if, under the taxpayer's facts, the allocation of contract costs to any portion of a contract not accounted for under the percentage of completion method would affect the relative percentages of United States and foreign source gross income from the entire contract if this portion of the contract were taken into account in applying the 95-percent test.

(E) ***Application to foreign contracts.*** If a widely held pass-through entity has some foreign contracts and some domestic contracts, the owners of the pass-through entity each apply the look-back method (using, if they elect, the simplified marginal impact method) to their respective share of the income and expense from foreign contracts. Moreover, in applying the look-back method to foreign contracts at the owner level, the owners do not take into account their share of increases or decreases in contract income resulting from the application of the simplified marginal impact method with respect to domestic contracts at the entity level.

(F) ***Effective date.*** The simplified marginal impact method must be applied to pass-through entities described in paragraph (d)(4)(i) of this section with respect to domestic contracts completed or adjusted in tax years for which the due date of the return (determined with regard to extensions) of the pass-through entity is after November 9, 1988.

(ii) ***Elective use*** —

(A) ***General rule.*** As provided in paragraph (d)(4)(i) of this section, the simplified marginal impact method must be used by certain pass-through entities with respect to domestic contracts. C corporations, individuals, and owners of closely held pass-through entities may elect the simplified marginal impact method. Owners of other pass-through entities may also elect the simplified marginal impact method with respect to all contracts other than those for which the simplified marginal impact method is required to be applied at the entity level. This rule applies to foreign contracts of widely held pass-through entities. In the case of an electing owner in a pass-through entity, the simplified marginal impact method is applied at the owner level, instead of at the entity level, with respect to the owner's share of the long-term contract income and expense reported by the pass-through entity.

(B) ***Election requirements.*** A taxpayer elects the simplified marginal impact method by stating that the election is being made on a timely filed income tax return (determined with regard to extensions) for the first tax year the election is to apply. An election to use the simplified marginal impact method applies to all applications of the look-back method to all eligible long-term contracts for the tax year for which the election is made and for any subsequent tax year. The election may not be revoked without the consent of the Commissioner.

(C) ***Consolidated group consistency rule.*** In the case of a consolidated group of corporations as defined in § 1.1502-1(h), an election to use the simplified marginal impact method is made by the common parent of the group. The election is binding on all other affected members of the group (including members that join the group after the election is made with respect to all applications of the look-back method after joining). If a member subsequently leaves the group, the election remains binding as to that member unless the Commissioner consents to a revocation of the election. If a corporation using the simplified marginal impact method joins a group that does not use the method, the election is automatically revoked with respect to all applications of the look-back method after it joins the group.

(e) ***Delayed reapplication method*** —

(1) ***In general.*** For purposes of reapplying the look-back method after the year of contract completion, a taxpayer may elect the delayed reapplication method to minimize the number of required reapplications of the look-back method. Under this method, the look-back method is reapplied after the year of completion of a contract (or after a subsequent application of the look-back method) only when the first one of the following conditions is met with respect to the contract:

(i) The net undiscounted value of increases or decreases in the contract price occurring since the time of the last application of the look-back method exceeds the lesser of $1,000,000 or 10 percent of the total contract price as of that time,

(ii) The net undiscounted value of increases or decreases in the contract costs occurring since the time of the last application of the look-back method exceeds the lesser of $1,000,000 or 10 percent of the total contract price as of that time,

(iii) The taxpayer goes out of existence,

(iv) The taxpayer reasonably believes the contract is finally settled and closed, or

(v) Neither condition (e)(1) (i), (ii), (iii), nor (iv) above is met by the end of the fifth tax year that begins after the last previous application of the look-back method.

(2) ***Time and manner of making election.*** An election to use the delayed reapplication method may be made for any filing year for which the due date of the return (determined with regard to extensions) is after June 12, 1990. The election is made by a statement to that effect on the taxpayer's timely filed Federal income tax return (determined with regard to extensions) for the first tax year the election is to be effective. An election to use the delayed reapplication method is binding with respect to all long-term contracts for which the look-back method would be reapplied without regard to the election in the year of election and any subsequent year unless the Commissioner consents to a revocation of the election. In the case of a consolidated group of corporations as defined in § 1.1502-1(h), an election to use the delayed reapplication method is made by the common parent of the group. The election is binding on all other affected members of the group (including members that join the group after the election is made with respect to contracts adjusted after joining). If a member subsequently leaves the group, the election remains binding as to that member unless the Commissioner consents to a revocation of the election. If a corporation that has made the election joins a consolidated group that has not made the election, the election is treated as revoked with respect to contracts adjusted after joining.

(3) ***Examples.*** The operation of this delayed reapplication method is illustrated by the following examples:

Example 1. X completes a contract in 1987, and applies the look-back method when its return for 1987 is filed. X properly uses $600,000 as the actual contract price in applying the look-back method. In 1990, as a result of the settlement of a dispute with its customer, X redetermines total contract price to be $640,000, and includes $40,000 in gross income. On its return for 1990, X states it is electing the delayed reapplication method. X is not required to reapply the look-back method at that time, because $40,000 does not exceed the lesser of $1,000,000 or 10 percent of the unadjusted contract price of $600,000, and 5 years have not passed since the last application of the look-back method.

Example 2. Assume the same facts as in Example 1, except that at the end of 1992, the fifth year after completion of the contract, no other adjustments to contract price or contract costs have occurred. X is required to reapply the look-back method in 1992 and, accordingly, redetermine its tax liability for each redetermination year. After redetermining the underpayment of tax for those years, X must compute the amount of interest charged on the underpayments. Although 1992 is the filing year, interest is due on the amount of each underpayment resulting from the adjustment only from the due date of the return for each redetermination year to the due date of the return for 1990 because the tax liability for the adjustment was fully paid in 1990. However, from the due of the 1990 return until the due date of the 1992 return, when the look-back method is reapplied for the adjustment, interest is due on the amount of interest attributable to the underpayments.

(f) ***Look-back reporting*** —

(1) ***Procedure.*** The amount of any interest due from, or payable to, a taxpayer as a result of applying the look-back method is computed on Form 8697 for any filing year. In general, the look-back method is applied by the taxpayer that reports income from a long-term contract. See paragraph (g) of this section to determine who is responsible for applying the look-back method when, prior to the completion of a long-term contract, there is a transaction that changes the taxpayer that reports income from the contract.

(2) *Treatment of interest on return* —

(i) ***General rule.*** The amount of interest required to be paid by a taxpayer is treated as an income tax under subtitle A, but only for purposes of subtitle F of the Code (other than sections 6654 and 6655), which addresses tax procedures and administration. Thus, a taxpayer that fails to pay the amount of interest due is subject to any applicable penalties under subtitle F, including, for example, an underpayment penalty under section 6651, and the taxpayer also is liable for underpayment interest under section 6601. However, interest required to be paid under the look-back method is treated as interest expense for purposes of computing taxable income under subtitle A, even though it is treated as income tax liability for subtitle F purposes. Interest received under the look-back method is treated as taxable interest income for all purposes, and is not treated as a reduction in tax liability or a tax refund. The determination of whether or not interest computed under the look-back method is treated as tax is determined on a "net" basis for each filing year. Thus, if a taxpayer computes for the current filing year both hypothetical overpayments and hypothetical underpayments for prior years, the taxpayer has an increase in tax only if the interest computed on the underpayments for all those prior years exceeds the interest computed on the overpayments for all those prior years, for all contracts completed or adjusted for the year.

(ii) ***Timing of look-back interest.*** For purposes of determining taxable income under subtitle A of the Code, any amount of interest payable to the taxpayer under the look-back method is includible in gross income as interest income in the tax year it is properly taken into account under the taxpayer's method of accounting for interest income. Any amount of interest required to be paid is taken into account as interest expense arising from an underpayment of income tax in the tax year it is properly taken into account under the taxpayer's method of accounting for interest expense. Thus, look-back interest required to be paid by an individual, or by a pass-through entity on behalf of an individual owner (or beneficiary) under the simplified marginal impact method, is personal interest and, therefore, is disallowed in accordance with § 1.163-9T(b)(2). Interest determined at the entity level under the simplified marginal impact method is allocated among the owners (or beneficiaries) for reporting purposes in the same manner that interest income and interest expense are allocated to owners (or beneficiaries) and subject to the requirements of section 704 and any other applicable rules.

(3) ***Statute of limitations and compounding of interest on look-back interest.*** For guidance on the statute of limitations applicable to the assessment and collection of look-back interest owed by a taxpayer, see sections 6501 and 6502. A taxpayer's claim for credit or refund of look-back interest previously paid by or collected from a taxpayer is a claim for credit or refund of an overpayment of tax and is subject to the statute of limitations provided in section 6511. A taxpayer's claim for look-back interest (or interest payable on look-back interest) that is not attributable to an amount previously paid by or collected from a taxpayer is a general, non-tax claim against the federal government. For guidance on the statute of limitations that applies to general, non-tax claims against the federal government, see 28 U.S.C. sections 2401 and 2501. For guidance applicable to the compounding of interest when the look-back interest is not paid, see sections 6601 to 6622.

(g) *Mid-contract change in taxpayer* —

(1) ***In general.*** The rules in this paragraph (g) apply if, as described in § 1.460-4(k), prior to the completion of a long-term contract accounted for using the PCM or the PCCM by a taxpayer (old taxpayer), there is a transaction that makes another taxpayer (new taxpayer) responsible for accounting for income from the same contract. The rules governing constructive completion

transactions are provided in paragraph (g)(2) of this section, while the rules governing step-in-the-shoes transactions are provided in paragraph (g)(3) of this section. For purposes of this paragraph, pre-transaction years are all taxable years of the old taxpayer in which the old taxpayer accounted for (or should have accounted for) gross receipts from the contract, and post-transaction years are all taxable years of the new taxpayer in which the new taxpayer accounted for (or should have accounted for) gross receipts from the contract.

(2) ***Constructive completion transactions.*** In the case of a transaction described in § 1.460-4(k)(2)(i) (constructive completion transaction), the look-back method is applied by the old taxpayer with respect to pre-transaction years upon the date of the transaction and, if the new taxpayer uses the PCM or the PCCM to account for the contract, by the new taxpayer with respect to post-transaction years upon completion of the contract. The contract price and allocable contract costs to be taken into account by the old taxpayer or the new taxpayer in applying the look-back method are described in § 1.460-4(k)(2).

(3) ***Step-in-the-shoes transactions*** —

(i) ***General rules.*** In the case of a transaction described in § 1.460-4(k)(3)(i) (step-in-the-shoes transaction), the look-back method is not applied at the time of the transaction, but is instead applied for the first time when the contract is completed by the new taxpayer. Upon completion of the contract, the look-back method is applied by the new taxpayer with respect to both pre-transaction years and post-transaction years, taking into account all amounts reasonably expected to be received by either the old or new taxpayer and all allocable contract costs incurred during both periods as described in § 1.460-4(k)(3). The new taxpayer is liable for filing the Form 8697 and for interest computed on hypothetical underpayments of tax, and is entitled to receive interest with respect to hypothetical overpayments of tax, for both pre- and post-transaction years. The old taxpayer will be secondarily liable for any interest required to be paid with respect to pre-transaction years reduced by any interest on pre-transaction overpayments.

(ii) ***Application of look-back method to pre-transaction period*** —

(A) ***Contract price.*** The actual contract price for pre-transaction taxable years must be determined by the new taxpayer without regard to any contract price adjustment described in paragraph (k)(3)(iv)(B)(1) of this section.

(B) ***Method.*** The new taxpayer may apply the look-back method to each pre-transaction taxable year that is a redetermination year using the simplified marginal impact method described in paragraph (d) of this section (regardless of whether or not the old taxpayer would have actually used that method and without regard to the tax liability ceiling). But see paragraph (d)(4) of this section, which requires use of the simplified marginal impact method by certain pass-through entities.

(C) ***Interest accrual period.*** With respect to any hypothetical underpayment or overpayment of tax for a pre-transaction taxable year, interest accrues from the due date of the old taxpayer's tax return (not including extensions) for the taxable year of the underpayment or overpayment until the due date of the new taxpayer's return (not including extensions) for the completion year or the year of a post-completion adjustment, whichever is applicable.

(D) ***Information old taxpayer must provide*** —

(1) ***In general.*** Except as provided in paragraph (g)(3)(ii)(D)(*2*) of this section, in order to help the new taxpayer to apply the look-back method with respect to pre-transaction taxable years, any old taxpayer that accounted for income from a long-term contract under the PCM or PCCM for either regular or alternative minimum tax purposes is required to provide the information described in this paragraph to the new taxpayer by the due date (not including extensions) of the old taxpayer's income tax return for the first taxable year ending on or after a step-in-the-shoes transaction described in § 1.460-4(k)(3)(i). The required information is as follows—

(*i*) The portion of the contract reported by the old taxpayer under PCM for regular and alternative minimum tax purposes (*i.e.*, whether the old taxpayer used PCM, the 40/60 PCCM method, or the 70/30 PCCM method);

(*ii*) Any submethods used in the application of PCM (*e.g.*, the simplified cost-to-cost method or the 10-percent method);

(*iii*) The amount of total contract price reported by year;

(*iv*) The numerator and the denominator of the completion factor by year;

(*v*) The due date (not including extensions) of the old taxpayer's income tax returns for each taxable year in which income was required to be reported;

(*vi*) Whether the old taxpayer was a corporate or a noncorporate taxpayer by year; and

(*vii*) Any other information required by the Commissioner by administrative pronouncement.

(*2*) ***Special rules for certain pass-through entity transactions.*** For purposes of paragraph (g)(3)(ii)(D)(*1*) of this section, in the case of a transaction described in § 1.460-4(k)(3)(i)(I), the contributing partner is treated as the old taxpayer, and the partnership is treated as the new taxpayer. In the case of transactions described in § 1.460-4(k)(3)(i)(F), (G), (J), (K), or (L), the old taxpayer is not required to provide the information described in paragraph (g)(3)(ii)(D)(*1*) of this section, because information necessary for the new taxpayer to apply the look-back method is provided by the pass-through entity. This paragraph (g)(3)(ii)(D) is applicable for transactions on or after August 6, 2003.

(iii) ***Application of look-back method to post-transaction years.*** With respect to post-transaction taxable years, the new taxpayer must use the same look-back method it uses for other contacts (i.e., the simplified marginal impact method or the acutal method) to determine the amount of any hypothetical overpayment or underpayment of tax and the time period for computing interest on these amounts.

(iv) ***S corporation elections.*** Following the conversion of a C corporation into an S corporation, the look-back method is applied at the entity level with respect to contracts entered into prior to the conversion, notwithstanding section 460(b)(4)(B)(i).

(4) ***Effective date.*** Except as provided in paragraph (g)(3)(ii)(D) of this section, this paragraph (g) is applicable for transactions on or after May 15, 2002.

(h) ***Examples*** —

(1) ***Overview.*** This paragraph provides computational examples of the rules of this section. Except as otherwise noted, the examples involve calendar-year taxpayers and involve long-term contracts subject to section 460 that are accounted for using the percentage of completion method, rather than the percentage of completion-capitalized cost method. If the percentage of completion-capitalized cost method were used by a taxpayer described in the examples, the amounts of contract income and expenses shown in the examples would be reduced, for purposes of determining regular taxable income, to the appropriate fraction (40, 70, or 90 percent) of contract items accounted for under the percentage of completion method. Tens of thousands of dollars ($ 00,000's) are omitted from the figures in the examples. The contracts described in the examples are assumed to be the taxpayers' only contracts that are subject to the look-back method of section 460. Except as otherwise stated, the examples assume that the taxpayer has no adjustments and preferences for purposes of section 55, so that alternative minimum taxable income is the same as taxable income, and no alternative minimum tax is imposed for the years involved. The examples assume that the taxpayer does not elect the 10-percent method, the simplified marginal impact method, or the delayed reapplication method.

(2) ***Step One.*** The following example illustrates the application of paragraph (c)(2):

Example 1. In 1989, W completes three long-term contracts, A, B, and C, entered into on January 1 of 1986, 1987, and 1988, respectively. For Contract A, W used the completed contract method of accounting. For Contract B, W used the percentage of completion-capitalized cost method of accounting, taking into account 60 percent of contract income under W's normal method of accounting, which was the completed contract method. For Contract C, W used the percentage of completion method of accounting. The total price for each contract was $1,000. In computing alternative minimum taxable income, W is required to use the percentage of completion method for Contracts B and C. W used regular tax costs for purposes of determining the degree of contract completion under the alternative minimum tax.

Contract A is not taken into account for purposes of applying the look-back method, because it is subject to neither section 460 nor section 56(a)(3). Thus, even if W had used the percentage of completion method as permitted under § 1.451-3, instead of the completed contract method, the look-back method would not be applicable because the Contract A was entered into before the effective date of section 460.

The actual costs allocated to Contracts B and C under section 460(c) and incurred in each year of the contract were as follows:

Contract	1987	1988	1989	Total
B	$200	$400	$200	$800

Contract	1987	1988	1989	Total
C	100	300	400	800

In applying the look-back method, the first step is to allocate the contract price among tax years preceding and including the completion year. That allocation would produce the following amounts of gross income for purposes of the regular tax. Note that no income from Contract C is allocated to 1987, the year before the contract was entered into, even though contract costs were incurred in 1987:

Contract	1987	1988	1989
B	$100 (40%X$200/$800X$1000)	$200 ((40%X$600/$800X$1000)-$100)	$700
C	0	500 ($400/$800X$1000)	500

Because the percentage of completion-capitalized cost method may not be used for alternative minimum tax purposes, the allocation of contract income would produce the following amounts of gross income for purposes of computing alternative minimum taxable income:

Contract	1987	1988	1989
B	$250 ($200/$800X$1000)	$500 (($600/$800X$1000)-$250)	$250
C	0	500	500

(3) ***Step Two.*** The following example illustrates the application of paragraph (c)(3):

Example 2. (i) X enters into two long-term contracts (D and E) in 1988. X determines its tax liability for 1988 as follows:
e = estimate

a = amount originally reported (actual)

h = hypothetical

	1988		Total
	D	E	
1988 contract costs	$3,000a	$2,000a	
Total contract costs	8,000e	8,000e	
Total contract price	10,000e	10,000e	
1988 completion %	37.5e	25e	
1988 gross income	3,750a	2,500a	
Less, 1988 costs	(3,000a)	(2,000a)	
1988 net contract income	750a	500a	$1,250a
Other 1988 net income (loss)			(2,000a)
Taxable income (NOL)			(750a)
Tax			0a
Refund from NOL carryback fully absorbed in 1985, at 46%			345a

(ii) X completes Contract D during 1989. X determines its taxable income for 1989 as follows:

	1989		Total
	D	E	
1989 contract costs	$3,000a	0a	
Total contract costs	6,000a	$9,000e	
Total contract price	10,000a	10,000e	
1989 completion %	100a	22.2e	
1989 gross income/(loss)	6,250a	(278a)	
Less, 1989 costs	(3,000a)	0a	
1989 net contract income	3,250a	(278a)	$2,972a
Other 1989 net income (loss)			0a
Taxable income (NOL)			2,972a
Tax at 34%			1,011a

(iii) For purposes of the look-back method, X must reallocate the actual total contract D price between 1988 and 1989 based on the actual total contract D costs. This results in the following hypothetical underpayment of tax for 1988 for purposes of the look-back method. Note that X does not reallocate the contract E price in applying the look-back method in 1989

because contract E has not been completed, even though X's estimate of contract E costs has changed. The following computation is only for purposes of applying the look-back method, and does not result in the assessment of a tax deficiency.

	1988		Total
	D	E	
1988 contract costs	$3,000a	$2,000a	
Total contract costs	6,000a	8,000e	
Total contract price	10,000a	10,000e	
1988 completion %	50a	25e	
1988 gross income	5,000h	2,500a	
Less, 1988 costs	(3,000a)	(2,000a)	
1988 net contract income	2,000h	500a	$2,500h
Other 1988 net income (loss)			(2,000a)
Taxable income (NOL)			500h
Tax at 34%			170h
Less, previously computed tax			−0a
Underpayment of 1988 tax			170h
Underpayment of 1985 tax from NOL carryback refund in 1988			345h
Total underpayment of tax			515h

For purposes of any subsequent application of the look-back method for which 1989 is a redetermination year, because the reallocation of contract income and redetermination of tax liability are cumulative, X will use for 1989 the amount of contract D income and the amount of tax liability that would have been reported in 1989 if X had used actual contract costs instead of the amounts that were originally reported using the estimate of $8,000. Assuming no subsequent revisions (due to, for example, adjustments to contract D price and costs determined after the end of 1989), this amount would be determined as follows:

	1989		Total
	D	E	
1989 contract costs	$3,000a	0a	
Total contract costs	6,000a	$9,000e	
Total contract price	10,000a	10,000e	
1989 completion %	100a	22.2e	

	1989		Total
	D	E	
1989 gross income	5,000h	(278a)	
Less, 1989 costs	(3,000a)	0a	
1989 net contract income	2,000h	(278a)	$1,722h
Other 1989 net income (loss)			0a
Taxable income (NOL)			1,722h
Tax at 34%			585h

(iv) X completes contract E during 1990. X determines its taxable income for 1990 as follows:

	1990		Total
	D	E	
1990 contract costs		$7,000a	
Total contract costs		9,000a	
Total contract price		10,000a	
1990 completion %		100a	
1990 gross income		7,778a	
Less, 1990 costs		(7,000a)	
1990 net contract income		778a	$778a
Other 1990 net income (loss)			0a
Taxable income (NOL)			778a
Tax at 34%			265a

(v) For purposes of the look-back method, X must reallocate the actual total contract E price between the 1988, 1989, and 1990, based on the actual total contract E costs.
This results in the following hypothetical overpayment of tax for 1988. Note that X uses the amount of income for contract D determined in the last previous application of the look-back method, and not the amount of income actually reported:

	1988		Total
	D	E	
1988 contract costs	$3,000a	$2,000a	

	1988		Total
	D	E	
Total contract costs	$6,000a	$9,000a	
Total contract price	$10,000a	$10,000a	
1988 completion (%)	50a	22.2a	
1988 gross income	$5,000h	$2,222h	
Less, 1988 costs	($3,000a)	($2,000a)	
1988 net contract income	$2,000h	$222h	$2,222h
Other 1988 net income (loss)			($2,000a)
Taxable income (NOL)			$222h
Tax at 34%			$75h
Less, previously computed tax (based on most recent application of the look-back method)			$170h
Overpayment of 1988 tax			($95h)

In applying the look-back method to 1989, X again uses the amounts substituted as of the last previous application of the look-back method with respect to contract D. Thus, X computes its hypothetical underpayment for 1989 as follows:

	1989		Total
	D	E	
1989 contract costs	$3,000a	0a	
Total contract costs	$6,000a	$9,000a	
Total contract price	$10,000a	$10,000a	
1989 completion (%)	100a	22.2a	
1989 gross income	$5,000h	$0h	
Less, 1989 costs	($3,000a)	($0a)	
1989 net contract income	$2,000h	0a	$2,000h
Other 1989 net income (loss)			($0a)
Taxable income (NOL)			$2,000h
Tax at 34%			$680h
Less, previously computed tax			$585h
Underpayment of 1989 tax			$95h

For purposes of any subsequent application of the look-back method for which 1990 is a redetermination year, X will use for 1990 the amount of Contract E income, and the amount of tax liability, that was originally reported in 1990 because X's estimate of the total contract

costs from $8,000 to $9,000 did not change after 1989. Without regard to any subsequent revisions, these amounts are the same as in the table in paragraph (h)(3)(iv) above.

(4) ***Post-completion adjustments.*** The following example illustrates the application of paragraph (c)(1)(ii):

Example 3. The facts are the same as in Example 2. In 1991, X settles a lawsuit against its customer in Contract E. The customer pays X an additional $3,000, without interest, in 1991. Applying the Federal mid-term rate then in effect, this $3,000 has a discounted value at the time of contract completion in 1990 of $2,700. X is required to apply the look-back method for 1991 even though no contract was completed in 1991. X must include the full $3,000 adjustment (which was not previously includible in total contract price) in gross income for 1991. X does not elect not to discount adjustments to the contract price or costs. Thus, X adjusts the contract price by the discounted amount of the adjustment and, therefore, uses $12,700 (not $13,000) for total Contract E price, rather than $10,000, which was used when the look-back method was first applied with respect to Contract E.
For purposes of the look-back method, X must allocate the revised total Contract E price of $12,700 between 1988, 1989 and 1990 based on the actual total Contract E costs, and compare the resulting revised tax liability with the tax liability determined for the last previous application of the look-back method involving those years. This results in the following hypothetical underpayments of tax for purposes of the look-back method:

r = revised

	1988		Total
	D	E	
1988 contract costs	$3,000a	$2,000a	
Total contract costs	$6,000a	$9,000a	
Total contract price	$10,000a	$12,700r	
1988 completion (%)	50a	22.2a	
1988 gross income	$5,000h	$2,822rh	
Less, 1988 costs	($3,000a)	($2,000a)	
1988 net contract income	$2,000h	822rh	$2,222rh
Other 1988 net income (loss)			($2,000a)
Taxable income			$822rh
Tax at 34%			$279rh
Less, previously computed tax			$75h

	1988		Total
	D	E	
Underpayment of 1988 tax			$204rh

No Contract E costs were incurred in 1989, and there is no hypothetical underpayment for 1989.

	1990		
	D	E	Total
1990 contract costs		$7,000a	
Total contract costs		$9,000a	
Total contract price		$12,700r	
1990 completion (%)		100a	
1990 gross income		$9,878rh	
Less 1990 costs		(*$7,000a*)	
1990 net contract income		$2,878rh	$2,878rh
Other 1990 net income (loss)			0a
Taxable income (NOL)			$2,878rh
Tax at 34%			$978rh
Less, previously computed tax			$265h
Underpayment of 1990 tax			$713rh

In 1992, X incurs an additional cost of $1,000 allocable to the contract, which was not previously includible in total contract costs. Applying the Federal mid-term rate then in effect, the $1,000 has a discounted value at the time of contract completion of $800. X deducts this additional $1,000 in expenses in 1992. Based on this increase to contract costs, X reapplies the look-back method, and determines the following hypothetical underpayments for 1988, 1989 and 1990 for purposes of the look-back method:

	1988		Total
	D	E	
1988 contract costs	$3,000a	$2,000a	
Total contract costs	$6,000a	$9,800r	

	1988		Total
	D	E	
Total contract price	$10,000a	$12,700r	
1988 completion (%)	50a	20.4r	
1988 gross income	$5,000h	$2,592rh	
Less, 1988 costs	*($3,000a)*	*($2,000a)*	
1988 net contract income	$2,000h	592rh	$2,592rh
Other 1988 net income (loss)			*($2,000a)*
Taxable income (NOL)			$592rh
Tax at 34%			$201rh
Less, previously computed tax			$279rh
Overpayment of 1988 tax			($78rh)

No Contract E costs were incured in 1989, and there is no hypothetical underpayment for 1989.

	1990		Total
	D	E	
1990 contract costs			$7,000a
Total contract costs		9,800r	
Total contract price		12,700r	
1990 completion (%)		92a	
1990 gross income		9,071rh	
Less, 1990 costs		*(7,000a)*	
1990 Net contract income		2,071rh	$2,071rh
Other 1990 net income (loss)			*0a*
Taxable income (NOL)			2,071rh
Tax at 34%			704rh
Less, previously computed tax			978rh
Overpayment of 1990 tax			(274rh)

(5) ***Alternative minimum tax.*** The operation of the look-back method in the case of a taxpayer liable for the alternative minimum tax as provided in paragraph (c)(3)(vi) is illustrated by the following examples:

Example 4. Y enters into a long-term contract in 1988 that is completed in 1989. Y used regular tax costs for purposes of determining the degree of contract completion under the

alternative minimum tax.

(i) Y determines its tax liability for 1988 as follows:

1988 contract costs	$4,000a
Total contract costs	$8,000e
Total contract price	$20,000e
1988 completion (%)	50e
1988 gross income	$10,000a
Less, 1988 contract costs	*($4,000a*
1988 net contract income	$6,000a
Other 1988 net income/(loss)	($3,400a)
Taxable income	$2,600a
Regular tax at 34%	884a
Adjustments and preferences to produce alternative minimum taxable income	$600a
Alternative minimum taxable income	$3,200a
Tentative minimum tax at 20%	640a
Tax liability	$884a

In 1989, Y determines the following amounts:

1989 contract costs	$6,000a
Total contract costs	$10,000a
Total contract price	$20,000a

(ii) For purposes of applying the look-back method, Y redetermines its tax liability for 1988, which results in a hypothetical overpayment of tax. This hypothetical overpayment is determined by comparing Y's original regular tax liability for 1988 with the hypothetical total tax liability (including alternative minimum tax liability) for that year because Y would have paid the alternative minimum tax if Y had used its actual contract costs to report income:

1988 contract costs	$4,000a
Total contract costs	$10,000a
Total contract price	$20,000a

1988 completion(%)	40a
1988 gross income	$8,000h
less, 1988 contract costs	($4,000a)
1988 net contract income	$4,000h
Other 1988 net income/(loss)	($3,400a)
Taxable income	$600h
Regular tax at 34%	$204h
Adjustments and preferences to produce alternative minimum taxable income	$600a
Alternative minimum taxable income	$1,200h
Tentative minimum tax at 20%	240h
Alternative minimum tax	$36h
Total tax liability	$240h
less, previously computed tax	$884a
Underpayment/(overpayment)	($644h)

(6) ***Credit carryovers.*** The operation of the look-back method in the case of credit carryovers as provided in paragraph (c)(3)(v) is illustrated by the following example:

Example 5. Z enters into a contract in 1986 that is completed in 1987. Z determines its tax liability for 1986 as follows:

1986 contract costs	$400a
Total contract costs	$1,000e
Total contract price	$2,000e
1986 completion (%)	40e
1986 gross income	$800a
Less, 1986 costs	($400a)
1986 net contract income	$400a
Other 1986 net income	$0a
Taxable income	$400a
Tax at 46%	$184a
Unused tax credits carried forward from 1985 allowable in 1986	$350a

Net tax due	$0a

Z determines the following amounts for 1987:

1987 contract costs	$400a
Total contract price	$2,000a
Total contract costs	$800a

If Z had used actual rather than estimated contract costs in determining gross income for 1986, Z would have reported tax liability of $276 (46%x$600) rather than $184. However, Z would have paid no additional tax for 1986 because its unused tax credits carried forward from 1985 would have been sufficient to offset this increased tax liability. Therefore, there is no hypothetical underpayment for 1986 for purposes of the look-back method. However, this hypothetical earlier use of the credit may increase the hypothetical tax liability for 1987 (or another subsequent year) for purposes of subsequent applications of the look-back method.

(7) ***Net operating losses.*** The operation of the look-back method in the case of net operating loss ("NOL") carryovers as provided in paragraph (c)(3)(v) is illustrated by the following example:

Example 6. A entered into a long-term contract in 1986, which was completed in 1987. A determined its tax liability for 1986 as follows:

1986 contract costs	$400a
Total contract costs	$1,000e
Total contract price	$2,000e
1986 completion (%)	40e
1986 gross income	$800a
Less, 1986 costs	($400a)
1986 net contract income	$400a
Other 1986 net income/(loss)	($1,000a)
Taxable income/(NOL)	($600a)
Tax	$0a

A elected to carry this loss forward to 1987 pursuant to section 172(b)(3)(C).

For 1987, A determined the following amounts:

1987 contract costs	$400a
Total contract costs	$800a
Total contract price	$2,000a

If actual rather than estimated contract costs had been used in determining gross income for 1986, A would have reported $1,000 of gross income from the contract rather than $800, and thus would have reported a loss of $400 rather than $600. However, since A would have paid no tax for 1986 regardless of whether actual or estimated contract costs had been used, A does not have an underpayment for 1986 for purposes of the look-back method. If A had, instead, carried back the 1986 NOL, and this NOL had been absorbed in the tax years 1983 through 1985, it would have resulted in refunds of tax for those years in 1986. When A applies the look-back method, a hypothetical underpayment of tax would have resulted for those years due to a hypothetical reduction in the amount that would have been refunded if income had been reported on the basis of actual contract costs. See Example 2(iii).

(8) ***Alternative minimum tax credit.*** The following example illustrates the application of the look-back method if affected by the alternative minimum tax credit as provided in paragraph (c)(3)(vi):

(i) Example 4, above illustrates that the reallocation of contract income under the look-back method can result in a hypothetical underpayment or overpayment determined using the alternative minimum tax rate, even though the taxpayer actually paid only the regular tax for that year. However, application of the look-back method had no effect on the difference between the amount of alternative minimum taxable income and the amount of regular taxable income taken into account in that year because the taxpayer was required to use the percentage of completion method for both regular and alternative minimum tax purposes and used the same version of the percentage of completion method for both regular and alternative minimum tax purposes (*i.e.,* the taxpayer had made an election to use regular tax costs in determining the percentage of completion for purposes of computing alternative minimum taxable income).

(ii) The following example illustrates the application of the look-back method in the case of a taxpayer that does not use the percentage of completion method of accounting for long-term contracts in computing taxable income for regular tax purposes and thus must make an adjustment to taxable income to determine alternative minimum taxable income. The example also shows how interest is computed under the look-back method when the taxpayer is entitled to a credit under section 53 for minimum tax paid because of this adjustment.

(iii) ***Example 7.*** X, a calendar year C corporation, is engaged in the construction of real property under contracts that are completed within a 24-month period. Its average annual gross receipts for the prior 3-taxable-year period does not exceed $25,000,000. As permitted by section 460(e)(1)(B), X uses the completed contract method (CCM) for regular tax purposes. However,

X is engaged in the construction of commercial real property and, for years beginning before January 1, 2018, is required to use the percentage of completion method (PCM) for alternative minimum tax (AMT) purposes. Assume that for 2017, 2018, and 2019, X has only one long-term contract, which is entered into in 2017 and completed in 2019 and that in 2017 X's average annual gross receipts for the prior 3-taxable-years do not exceed $10,000,000. Assume further that X estimates gross income from the contract to be $2,000, total contract costs to be $1,000, and that the contract is 25 percent complete in 2017 and 70 percent complete in 2018, and 5 percent complete in 2019. In 2019, the year of completion, gross income from the contract is actually $3,000, instead of $2,000, and costs are actually $1,000. Because X was required to use the PCM for 2017 for AMT purposes, X must apply the look-back method to its AMT reporting for that year. X has elected to use the simplified marginal impact method. For 2017, X's income using estimated contract price and costs is as follows:

TABLE 1 TO PARAGRAPH (h)(8)(iii)

Estimates	2017
Gross Income	$500 = ($2,000 × 25%)
Deductions	$(250) = ($1,000 × 25%)
Contract Income—PCM	$250

(A) When X files its federal income tax return for 2019, the contract completion year, X applies the look-back method. For 2017, X's income using actual contract price and costs is as follows:

TABLE 2 TO PARAGRAPH (h)(8)(iii)(A)

Actual	2017
Gross Income	$750 = ($3,000 × 25%)
Deductions	$(250) = ($1,000 × 25%)
Contract Income—PCM	$500

(B) Accordingly, the reallocation of contract income under the look-back method results in an increase of income for AMT purposes for 2017 of $250 ($500-$250). Under the simplified marginal impact method, X applies the highest rate of tax under section 55(b)(1) to this increase, which produces a hypothetical underpayment for 2017 of $50 (.20 × $250). Interest is charged to X on this $50 underpayment from the due date of X's 2017 return until the due date of X's 2019 return. X, a C corporation, is not subject to the AMT in 2018. X does not compute alternative minimum taxable income or use the PCM in that year. Accordingly, look-back does not apply to 2018.

(9) ***Period for interest.*** The following Examples (8) through (11) illustrate how to determine the period for computing interest as provided in paragraph (c)(4):

Example 8. The facts are the same as in Example 6, except that the contract is completed in 1988, and A determined the following amounts for 1987 and 1988:

For 1987:	
1987 contract costs	0
Total contract costs	$1,000e
Total contract price	$2,000e
1987 completion (%)	$40e
1987 gross income	0a
Less, 1987 costs	0a
Other 1987 net income	$600a
Net operating loss carryforward from 1986	$(600a)
Taxable income	0a
Tax	0a
For 1988:	
1988 contract costs	$400a
Total contract costs	$800a
Total contract price	$2,000a

If actual rather than estimated contract costs had been used in determining gross income for 1986, A would have reported $1,000 of gross income from the contract for 1986 rather than $800, and would have reported a net operating loss carryforward to 1987 of $400 rather than $600. Therefore, A would have reported taxable income of $200, and would have paid tax of $80 (*i.e.,* $200 × 40%) for 1987. The due date for filing A's Federal income tax return for its 1988 taxable year is March 15. A obtains an extension and files its 1988 return on September 15, 1989. Under the look-back method, A is required to pay interest on the amount of this hypothetical underpayment ($80) computed from the due date (determined without regard to extensions) for A's return for 1987 (not 1986, even though 1986 was the year in which the net operating loss arose) until March 15 (not September 15), the due date (without regard to extensions) of A's return for 1988. A is required to pay additional interest from March 15 until September 15 on the amount of interest outstanding as of March 15 with respect to the hypothetical underpayment of $80.

Example 9. The facts are the same as in Example 6, except that A carries the net operating loss of $600 back to 1983 rather than forward to 1987, and receives a refund of $276 ($600 reduction in 1983 taxable income × 46% rate in effect in 1983). As in Example 6, if actual contract costs had been used, A would have reported a loss for 1986 of $400 rather than $600. Thus, A would have received a

refund of 1983 tax of $184 ($400 × 46%) rather than $276. Under the look-back method A is required to pay interest on the difference in these two amounts ($92) computed from the due date (determined without regard to extensions) of A's return for 1986 (the year in which the carryback arose rather than 1983, the year in which it was used) until the due date of A's return for 1988.

Example 10. B enters into a long-term contract in 1986 that is completed in 1988. B determines its 1986 tax liability as follows:

1986 contract costs	$400a
Total contract costs	$1,000e
Total contract price	$2,000e
1986 completion (%)	40e
1986 gross income	$800a
Less, 1986 costs	($400a)
1986 net contract income	$400a
Other 1986 net income	$2,000a
Taxable income	$2,400a
Tax at 46%	$1,104a

B determines its tax liability for 1987 as follows:

1987 contract costs	$400a
Total contract costs	$1,600e
Total contract price	$2,000e
1987 completion (%)	50e
1987 gross income	$200a
(= (50% × $2,000)−$800 previously reported) less, 1987 costs	($400a)
1987 net contract income	($200a)
Other 1987 net income/(loss)	($2,200a)
Taxable income (NOL)	($2,400a)
Tax	0a

Assume that B had no taxable income in either 1984 or 1985, so that the entire amount of the $2,400 net operating loss is carried back to 1986, and B receives a refund, with interest from the due date of B's 1987 return, of the entire $1,104 in tax that it paid for 1986.
In 1988, B determines the following amounts:

1988 contract costs	$800a
Total contract costs	$1,600a

Total contract price	$2,000a

If B had used actual contract costs rather than estimated costs in determining its gross income for 1986, B would have had gross income from the contract of $500 rather than $800, and thus would have had taxable income of $2,100 rather than $2,400, and would have paid tax of $966 rather than $1,104. B is entitled to receive interest on the difference between these two amounts, the hypothetical overpayment of tax of $138. Interest is computed from the due date (without regard to extensions) of B's return for 1986 until the due date for B's return for 1987. Interest stops running at this date, because B's hypothetical overpayment of tax ended when B filed its original 1987 return and received a refund for the carryback to 1986, and interest on this refund began to run only from the due date of B's 1987 return. See section 6611(f).

Example 11. C enters into a long-term contract in 1986, its first year in business, which is completed in 1988. C determines its tax liability for 1986 as follows:

1986 contract costs	$400a
Total contract costs	$1,000e
Total contract price	$2,000e
1986 completion (%)	40e
1986 gross income	$800a
less, 1986 costs	($400a)
1986 net contract income	$400a
Other 1986 net income	$2,000a
Taxable income (NOL)	$2,400a
Tax at 46%	$1,104a

C determines its tax liability for 1987 as follows:

1987 contract costs	$400a
Total contract costs	$1,066e
Total contract price	$2,000e
1987 completion (%)	75e
1987 gross income	$700a

Less, 1987 costs	($400a)
1987 net contract income	$300a
Other 1987 net income	($2,450a)
Taxable income (NOL)	($2,150a)
Tax	$10a

C carries back the net operating loss to 1986, and files an amended return for 1986, showing taxable income of $250, and receives a refund of $989 (46% × $2,150). Interest on this refund begins to run only as of the due date of C's 1987 return. See section 6611(f).
In 1988, when the contract is completed, C determines the following amounts:

1988 contract costs	$800a
Total contract costs	$1,600a
Total contract price	$2,000a

If C had used actual contract price and contract costs in determining gross income for 1986, it would have reported gross income from the contract of $500 rather than $800, taxable income of $2,100 rather than $2,400, and tax liability of $966 rather than $1,104.
If C had used actual contract price and contract costs in determining gross income for 1987, it would have reported gross income from the contract of $500 rather than $700, and would have reported a net operating loss of $2,350, rather than $2,150, which would have been carried back to 1986.

Under the look-back method, C receives interest with respect to a total 1986 hypothetical overpayment of $138 ($1,104 minus $966). C is credited with interest on $23 of this amount only from the due date of C's 1986 return until the due date of C's 1987 tax return, because this portion of C's total hypothetical overpayment for 1986 was refunded to C with interest computed from the due date of C's 1987 return and, therefore, was no longer held by the government. However, because the remainder of the total hypothetical overpayment of $115 was not refunded to C, C is credited with interest on this amount from the due date of C's 1986 return until the due date of C's 1988 tax return.

Under the look-back method, C receives no interest with respect to 1987, because C had no tax liability for 1987 using either estimated or actual contract price and costs.

(i) [Reserved]

(j) ***Election not to apply look-back method in de minimis cases.*** Section 460(b)(6) provides taxpayers with an election not to apply the look-back method to long-term contracts in de minimis cases, effective for contracts completed in taxable years ending after August 5, 1997. To make an election, a taxpayer must attach a statement to its timely filed original federal income tax return (including extensions) for the taxable year the election is to become effective or to an amended return for that year, provided the amended return is filed on or before March 31, 998. This statement must have the legend "NOTIFICATION OF ELECTION UNDER SECTION 460(b)(6)"; provide the taxpayer's name and identifying number and the effective date of the election; and identify the trades or businesses that involve long-term contracts. An election applies to all long-term contracts completed during and after the taxable year for which the election is effective. An election may not be revoked without the Commissioner's consent. For taxpayers who elected to use the delayed reapplication method under paragraph (e) of this section, an election under this paragraph (j) automatically revokes the election to use the delayed reapplication method for contracts subject to section 460(b)(6). A consolidated group of corporations, as defined in § 1.1502-1(h), is subject to consistency rules analogous to those in paragraph (e)(2) of this section and in paragraph (d)(4)(ii)(C) of this section (concerning election to use simplified marginal impact method).

(k) ***Applicability date.*** Paragraphs (b)(2), (b)(2)(ii), (b)(3)(iii), (c)(1)(i), (c)(2)(i), (c)(2)(iv), (c)(3)(ii), (c)(3)(vi), (d)(2)(i), (d)(4)(i)(A), and (h)(8)(iii) of this section apply to taxable years beginning on or after January 5, 2021. However, for a taxable year beginning after December 31, 2017, and before January 5, 2021, a taxpayer may apply the paragraphs described in the first sentence of this paragraph (k), provided that the taxpayer follows all the applicable rules contained in the regulations under section 460 for such taxable year and all subsequent taxable years. Further, a taxpayer may apply those portions of paragraphs (b)(2)(ii) and (b)(3)(iii) of this section that relate to section 460(e)(1)(B) for contracts entered into after December 31, 2017, in a taxable year ending after December 31, 2017, provided that the taxpayer follows all the applicable rules contained in the regulations under section 460 for such taxable year and all subsequent taxable years.

[T.D. 8315, 55 FR 41670, Oct. 15, 1990, as amended by T.D. 8775, 63 FR 36181, July 2, 1998; T.D. 8929, 66 FR 2240, Jan. 11, 2001; T.D. 8995, 67 FR 34609, May 15, 2002; T.D. 9137, 69 FR 42558, July 16, 2004; T.D. 9942, 86 FR 273, Jan. 5, 2021; 86 FR 32186, June 17, 2021]

TAXABLE YEAR FOR WHICH DEDUCTIONS TAKEN

§ 1.461-0 Table of contents.

This section lists the captions that appear in the regulations under section 461 of the Internal Revenue Code.

§ 1.461-1 General rule for taxable year of deduction.

(a) General rule.

(1) Taxpayer using cash receipts and disbursements method.

(2) Taxpayer using an accrual method.

(3) Effect in current taxable year of improperly accounting for a liability in a prior taxable year.

(4) Deductions attributable to certain foreign income.

(b) Special rule in case of death.

(c) Accrual of real property taxes.

(1) In general.

(2) Special rules.

(3) When election may be made.

(4) Binding effect of election.

(5) Apportionment of taxes on real property between seller and purchaser.

(6) Examples.

(d) Limitation on acceleration of accrual of taxes.

(e) Dividends or interest paid by certain savings institutions on certain deposits or withdrawable accounts.

(1) Deduction not allowable.

(2) Computation of amounts not allowed as a deduction.

(3) When amounts allowable.

§ 1.461-2 Contested liabilities.

(a) General rule.

(1) Taxable year of deduction.

(2) Exception.

(3) Refunds includible in gross income.

(4) Examples.

(5) Liabilities described in paragraph (g) of § 1.461-4. [Reserved]

(b) Contest of asserted liability.

(1) Asserted liability.

(2) Definition of the term “contest.”

(3) Example.

(c) Transfer to provide for the satisfaction of an asserted liability.

(1) In general.

(2) Examples.

(d) Contest exists after transfer.

(e) Deduction otherwise allowed.

(1) In general.

(2) Example.

(f) Treatment of money or property transferred to an escrowee, trustee, or court and treatment of any income attributable thereto. [Reserved]

(g) Effective dates.

§ 1.461-3 Prepaid interest. [Reserved]

§ 1.461-4 Economic performance.

(a) Introduction.

(1) In general.

(2) Overview.

(b) Exceptions to the economic performance requirement.

(c) Definitions.

(1) Liability.

(2) Payment.

(d) Liabilities arising out of the provision of services, property, or the use of property.

(1) In general.

(2) Services or property provided to the taxpayer.

(3) Use of property provided to the taxpayer.

(4) Services or property provided by the taxpayer.

(5) Liabilities that are assumed in connection with the sale of a trade or business.

(6) Rules relating to the provision of services or property to a taxpayer.

(7) Examples.

(e) Interest.

(f) Timing of deductions from notional principal contracts.

(g) Certain liabilities for which payment is economic performance.

(1) In general.

(2) Liabilities arising under a workers compensation act or out of any tort, breach of contract, or violation of law.

(3) Rebates and refunds.

(4) Awards, prizes, and jackpots.

(5) Insurance, warranty, and service contracts.

(6) Taxes.

(7) Other liabilities.

(8) Examples.

(h) Liabilities arising under the Nuclear Waste Policy Act of 1982.

(i) [Reserved]

(j) Contingent liabilities. [Reserved]

(k) Special effective dates.

(1) In general.

(2) Long-term contracts.

(3) Payment liabilities.

(l) [Reserved]

(m) Change in method of accounting required by this section.

(1) In general.

(2) Change in method of accounting for long-term contracts and payment liabilities.

§ 1.461-5 Recurring item exception.

(a) In general.

(b) Requirements for use of the exception.

(1) General rule.

(2) Amended returns.

(3) Liabilities that are recurring in nature.

(4) Materiality requirement.

(5) Matching requirement.

(c) Types of liabilities not eligible for treatment under the recurring item exception.

(d) Time and manner of adopting the recurring item exception.

(1) In general.

(2) Change to the recurring item exception method for the first taxable year beginning after December 31, 1991.

(3) Retroactive change to the recurring item exception method.

(e) Examples.

§ 1.461-6 Economic performance when certain liabilities are assigned or are extinguished by the establishment of a fund.

(a) Qualified assignments of certain personal injury liabilities under section 130.

(b) Section 468B.

(c) Payments to other funds or persons that constitute economic performance. [Reserved]

(d) Effective dates.

[T.D. 8408, 57 FR 12420, Apr. 10, 1992, as amended by T.D. 8593, 60 FR 18743, Apr. 13, 1995]

§ 1.461-1 General rule for taxable year of deduction.

(a) *General rule* —

(1) ***Taxpayer using cash receipts and disbursements method.*** Under the cash receipts and disbursements method of accounting, amounts representing allowable deductions shall, as a general rule, be taken into account for the taxable year in which paid. Further, a taxpayer using this method may also be entitled to certain deductions in the computation of taxable income which do not involve cash disbursements during the taxable year, such as the deductions for depreciation, depletion, and losses under sections 167, 611, and 165, respectively. If an expenditure results in the creation of an asset having a useful life which extends substantially beyond the close of the taxable year, such an expenditure may not be deductible, or may be deductible only in part, for the taxable year in which made. An example is an expenditure for the construction of improvements by the lessee on leased property where the estimated life of the improvements is in excess of the remaining period of the lease. In such a case, in lieu of the allowance for depreciation provided by section 167, the basis shall be amortized ratably over the remaining period of the lease. See section 178 and the regulations thereunder for rules governing the effect to be given renewal options in determining whether the useful life of the improvements exceeds the remaining term of the lease where a lessee begins improvements on leased property after July 28, 1958, other than improvements which on such date and at all times thereafter, the lessee was under a binding legal obligation to make. See section 263 and the regulations thereunder for rules relating to capital expenditures. See section 467 and the regulations thereunder for rules under which a liability arising out of the use of property pursuant to a section 467 rental agreement is taken into account.

(2) *Taxpayer using an accrual method* —

(i) ***In general.*** Under an accrual method of accounting, a liability (as defined in § 1.446-1(c)(1)(ii)(B)) is incurred, and generally is taken into account for Federal income tax purposes, in the taxable year in which all the events have occurred that establish the fact of the liability, the amount of the liability can be determined with reasonable accuracy, and economic performance has occurred with respect to the liability. (See paragraph (a)(2)(iii)(A) of this section for examples of liabilities that may not be taken into account until a taxable year subsequent to the taxable year incurred, and see §§ 1.461-4 through 1.461-6 for rules relating to economic performance.) Applicable provisions of the Code, the Income Tax Regulations, and other guidance published by the Secretary prescribe the manner in which a liability that has been incurred is taken into account. For example, section 162 provides that the deductible liability generally is taken into account in the taxable year incurred through a deduction from gross income. As a further example, under section 263 or 263A, a liability that relates to the creation of an asset having a useful life extending substantially beyond the close of the taxable year is taken into account in the taxable year incurred through capitalization (within the meaning of § 1.263A-1(c)(3)), and may later affect the computation of taxable income through depreciation or otherwise over a period including subsequent taxable years, in accordance with applicable Internal Revenue Code sections and guidance published by the Secretary. The principles of this paragraph (a)(2) also apply in the calculation of earnings and profits and accumulated earnings and profits.

(ii) ***Uncertainty as to the amount of a liability.*** While no liability shall be taken into account before economic performance and all of the events that fix the liability have occurred, the fact that the exact amount of the liability cannot be determined does not prevent a taxpayer from taking into account that portion of the amount of the liability which can be computed with reasonable

accuracy within the taxable year. For example, A renders services to B during the taxable year for which A charges $10,000. B admits a liability to A for $6,000 but contests the remainder. B may take into account only $6,000 as an expense for the taxable year in which the services were rendered.

(iii) ***Alternative timing rules.*** (A) If any provision of the Code requires a liability to be taken into account in a taxable year later than the taxable year provided in paragraph (a)(2)(i) of this section, the liability is taken into account as prescribed in that Code provision. See, for example, section 267 (transactions between related parties) and section 464 (farming syndicates).

(B) If the liability of a taxpayer is subject to section 170 (charitable contributions), section 192 (black lung benefit trusts), section 194A (employer liability trusts), section 468 (mining and solid waste disposal reclamation and closing costs), or section 468A (certain nuclear decommissioning costs), the liability is taken into account as determined under that section and not under section 461 or the regulations thereunder. For special rules relating to certain loss deductions, see sections 165(e), 165(i), and 165(l), relating to theft losses, disaster losses, and losses from certain deposits in qualified financial institutions.

(C) Section 461 and the regulations thereunder do not apply to any amount allowable under a provision of the Code as a deduction for a reserve for estimated expenses.

(D) Except as otherwise provided in any Internal Revenue regulations, revenue procedure, or revenue ruling, the economic performance requirement of section 461(h) and the regulations thereunder is satisfied to the extent that any amount is otherwise deductible under section 404 (employer contributions to a plan of deferred compensation), section 404A (certain foreign deferred compensation plans), or section 419 (welfare benefit funds). See § 1.461-4(d)(2)(iii).

(E) Except as otherwise provided by regulations or other published guidance issued by the Commissioner (See § 601.601(b)(2) of this chapter), in the case of a liability arising out of the use of property pursuant to a section 467 rental agreement, the all events test (including economic performance) is considered met in the taxable year in which the liability is to be taken into account under section 467 and the regulations thereunder.

(3) ***Effect in current taxable year of improperly accounting for a liability in a prior taxable year.*** Each year's return should be complete in itself, and taxpayers shall ascertain the facts necessary to make a correct return. The expenses, liabilities, or loss of one year generally cannot be used to reduce the income of a subsequent year. A taxpayer may not take into account in a return for a subsequent taxable year liabilities that, under the taxpayer's method of accounting, should have been taken into account in a prior taxable year. If a taxpayer ascertains that a liability should have been taken into account in a prior taxable year, the taxpayer should, if within the period of limitation, file a claim for credit or refund of any overpayment of tax arising therefrom. Similarly, if a taxpayer ascertains that a liability was improperly taken into account in a prior taxable year, the taxpayer should, if within the period of limitation, file an amended return and pay any additional tax due. However, except as provided in section 905(c) and the regulations thereunder, if a liability is properly taken into account in an amount based on a computation made with reasonable accuracy and the exact amount of the liability is subsequently determined in a later taxable year, the difference, if any, between such amounts shall be taken into account for the later taxable year.

(4) ***Deductions attributable to certain foreign income.*** In any case in which, owing to monetary, exchange, or other restrictions imposed by a foreign country, an amount otherwise constituting gross income for the taxable year from sources without the United States is not includible in gross income of the

taxpayer for that year, the deductions and credits properly chargeable against the amount so restricted shall not be deductible in such year but shall be deductible proportionately in any subsequent taxable year in which such amount or portion thereof is includible in gross income. See paragraph (g) of § 1.905-1 for rules relating to credit for foreign income taxes when foreign income is subject to exchange controls.

(b) ***Special rule in case of death.*** A taxpayer's taxable year ends on the date of his death. See section 443(a)(2) and paragraph (a)(2) of § 1.443-1. In computing taxable income for such year, there shall be deducted only amounts properly deductible under the method of accounting used by the taxpayer. However, if the taxpayer used an accrual method of accounting, no deduction shall be allowed for amounts accrued only by reason of his death. For rules relating to the inclusion of items of partnership deduction, loss, or credit in the return of a decedent partner, see subchapter K, chapter 1 of the Code, and the regulations thereunder.

(c) ***Accrual of real property taxes*** —

(1) ***In general.*** If the accrual of real property taxes is proper in connection with one of the methods of accounting described in section 446(c), any taxpayer using such a method of accounting may elect to accrue any real property tax, which is related to a definite period of time, ratably over that period in the manner described in this paragraph. For example, assume that such an election is made by a calendar-year taxpayer whose real property taxes, applicable to the period from July 1, 1955, to June 30, 1956, amount to $1,200. Under section 461(c), $600 of such taxes accrue in the calendar year 1955, and the balance accrues in 1956. For special rule in the case of certain contested real property taxes in respect of which the taxpayer transfers money or other property to provide for the satisfaction of the contested tax, see § 1.461-2. For general rules relating to deductions for taxes, see section 164 and the regulations thereunder.

(2) ***Special rules*** —

(i) ***Effective date.*** Section 461(c) and this paragraph do not apply to any real property tax allowable as a deduction under the Internal Revenue Code of 1939 for any taxable year beginning before January 1, 1954.

(ii) If real property taxes which relate to a period prior to the taxpayer's first taxable year beginning on or after January 1, 1954, would, but for section 461(c), be deductible in such first taxable year, the portion of such taxes which applies to the prior period is deductible in such first taxable year (in addition to the amount allowable under section 461(c)(1)).

(3) ***When election may be made*** —

(i) ***Without consent.*** A taxpayer may elect to accrue real property taxes ratably in accordance with section 461(c) and this paragraph without the consent of the Commissioner for his first taxable year beginning after December 31, 1953, and ending after August 16, 1954, in which the taxpayer incurs real property taxes. Such election must be made not later than the time prescribed by law for filing the return for such year (including extensions thereof). An election may be made by the taxpayer for each separate trade or business (and for nonbusiness activities, if accounted for separately). Such an election shall apply to all real property taxes of the trade, business, or nonbusiness activity for which the election is made. The election shall be made in a statement submitted with the taxpayer's return for the first taxable year to which the election is applicable. The statement should set forth:

(*a*) The trades or businesses, or nonbusiness activity, to which the election is to apply, and the method of accounting used therein;

(*b*) The period of time to which the taxes are related; and

(*c*) The computation of the deduction for real property taxes for the first year of the election (or a summary of such computation).

(ii) ***With consent.*** A taxpayer may elect with the consent of the Commissioner to accrue real property taxes ratably in accordance with section 461 (c) and this paragraph. A written request for permission to make such an election shall be submitted to the Commissioner of Internal Revenue, Washington, D.C. 20224, within 90 days after the beginning of the taxable year to which the election is first applicable, or before March 26, 1958, whichever date is later. The request for permission shall state:

(*a*) The name and address of the taxpayer;

(*b*) The trades or businesses, or nonbusiness activity, to which the election is to apply, and the method of accounting used therein;

(*c*) The taxable year to which the election first applies;

(*d*) The period to which the real property tax relate;

(*e*) The computation of the deduction for real property taxes for the first year of election (or a summary of such computation); and

(*f*) An adequate description of the manner in which all real property taxes were deducted in the year prior to the year of election.

(4) ***Binding effect of election.*** An election to accrue real property taxes ratably under section 461(c) is binding upon the taxpayer unless the consent of the Commissioner is obtained under section 446(e) and paragraph (e) of § 1.446-1 to change such method of deducting real property taxes. If the last day prescribed by law for filing a return for any taxable year (including extensions thereof) to which section 461(c) is applicable falls before March 25, 1958, consent is hereby given for the taxpayer to revoke an election previously made to accrue real property taxes in the manner prescribed by section 461(c). If the taxpayer revokes his election under the preceding sentence, he must, on or before March 25, 1958, notify the district director for the district in which the return was filed of such revocation. For any taxable year for which such revocation is applicable, an amended return reflecting such revocation shall be filed on or before March 25, 1958.

(5) ***Apportionment of taxes on real property between seller and purchaser.*** For apportionment of taxes on real property between seller and purchaser, see section 164(d) and the regulations thereunder.

(6) ***Examples.*** The provisions of this paragraph are illustrated by the following examples:

> *Example 1.* A taxpayer on an accrual method reports his taxable income for the taxable year ending June 30. He elects to accrue real property taxes ratably for the taxable year ending June 30, 1955 (which is his first taxable year beginning on or after January 1, 1954). In the absence of an election under section 461(c), such taxes would accrue on January 1 of the calendar year to which they are related. The real property taxes are $1,200 for 1954; $1,600 for 1955; and $1,800 for 1956. Deductions for such taxes for the fiscal years ending June 30,

1955, and June 30, 1956, are computed as follows:

Fiscal year ending June 30, 1955

July through December 1954	[1] None
January through June 1955 (6/12 of $1,600)	$800
Deduction for fiscal year ending June 30, 1955	800

[1] *The taxes for 1954 were deductible in the fiscal year ending June 30, 1954, since such taxes accrued on January 1, 1954.*

Fiscal year ending June 30, 1956

July through December 1955 (6/12 of $1,600)	$800
January through June 1956 (6/12 of $1,800)	900
Deduction for fiscal year ending June 30, 1956	1,700

Example 2. A calendar-year taxpayer on an accrual method elects to accrue real property taxes ratably for 1954. In the absence of an election under section 461(c), such taxes would accrue on July 1 and are assessed for the 12-month period beginning on that date. The real property taxes assessed for the year ending June 30, 1954, are $1,200; $1,600 for the year ending June 30, 1955; and $1,800 for the year ending June 30, 1956. Deductions for such taxes for the calendar years 1954 and 1955 are computed as follows:

Year ending December 31, 1954

January through June 1954	[1] None
July through December 1954 (6/12 of $1,600)	$800

[1] *The entire tax of $1,200 for the year ended June 30, 1954, was deductible in the return for 1953, since such tax accrued on July 1, 1953.*

Deduction for year ending December 31, 1954	800

[1] *The entire tax of $1,200 for the year ended June 30, 1954, was deductible in the return for 1953, since such tax accrued on July 1, 1953.*

YEAR ENDING DECEMBER 31, 1955

January through June 1955 (6/12 of $1,600)	$800
July through December 1955 (6/12 of $1,800)	900
Deduction for year ending December 31, 1955	1,700

Example 3. A calendar-year taxpayer on an accrual method elects to accrue real property taxes ratably for 1954. In the absence of an election under section 461(c), such taxes, which relate to the calendar year 1954, are accruable on December 1 of the preceding calendar year. No deduction for real property taxes is allowable for the taxable year 1954 since such taxes accrued in the taxable year 1953 under section 23(c) of the Internal Revenue Code of 1939.

Example 4. A taxpayer on an accrual method reports his taxable income for the taxable year ending March 31. He elects to accrue real property taxes ratably for the taxable year ending March 31, 1955. In the absence of an election under section 461(c), such taxes are accruable on June 1 of the calendar year to which they relate. The real property taxes are $1,200 for 1954; $1,600 for 1955; and $1,800 for 1956. Deductions for such taxes for the taxable years ending March 31, 1955, and March 31, 1956, are computed as follows:

FISCAL YEAR ENDING MARCH 31, 1955

April through December 1954 (9/12 of $1,200)	$900
January through March 1955 (3/12 of $1,600)	400
Taxes accrued ratably in fiscal year ending March 31, 1955	1,800
Tax relating to period January through March 1954, paid in June 1954, and not deductible in prior taxable year (9/12 of $1,200)	300

Deduction for fiscal year ending March 31, 1955	1,600

Fiscal year ending March 31, 1956

April through December 1955 (9/12 of $1,600)	$1,200
January through March 1956 (3/12 of $1,800)	450
Deduction for fiscal year ending March 31, 1956	1,650

Example 5. The facts are the same as in Example 4 except that in June 1955, when the taxpayer pays his $1,600 real property taxes for 1955, he pays $400 of such amount under protest. Deductions for taxes for the taxable years ending March 31, 1955, and March 31, 1956, are computed as follows:

Fiscal year ending March 31, 1955

April through December 1954 (9/12 of $1,200)	$900
January through March 1955 (3/12 of $1,200, that is, $1,600 minus $400 (the contested portion which is not properly accruable))	300
Taxes accrued ratably in fiscal year ending March 31, 1955	1,200
Tax relating to period January through March 1954, paid in June 1954, and not deductible in prior taxable years (3/12 of $1,200)	300
Deduction for fiscal year ending March 31, 1955	1,500

Fiscal year ending March 31, 1956

April through December 1955 (9/12 of $1,200)	$900
January through March 1956 (3/12 of $1,800)	450
Taxes accrued ratably in fiscal year ending March 31, 1956	1,350
Contested portion of tax relating to period January through December 1955, paid in June 1955, and deductible, under section 461(f), for taxpayer's fiscal	400

year ending March 31, 1956	
Deduction for fiscal year ending March 31, 1956	1,750

(d) ***Limitation on acceleration of accrual of taxes.***

(1) Section 461(d)(1) provides that, in the case of a taxpayer whose taxable income is computed under an accrual method of accounting, to the extent that the time for accruing taxes is earlier than it would be but for any action of any taxing jurisdiction taken after December 31, 1960, such taxes are to be treated as accruing at the time they would have accrued but for such action. Any such action which, but for the provisions of section 461(d) and this paragraph, would accelerate the time for accruing a tax is to be disregarded in determining the time for accruing such tax for purposes of the deduction allowed for such tax. Such action is to be disregarded not only with respect to a taxpayer (whose taxable income is computed under an accrual method of accounting) upon whom the tax is imposed at the time of the action, but also with respect to such a taxpayer upon whom the tax is imposed at any time subsequent to such action. Thus, in the case of a tax imposed on property, the acceleration of the time for accruing taxes is to be disregarded not only with respect to the taxpayer who owned the property at the time of such acceleration, but also with respect to any subsequent owner of the property whose taxable income is computed under an accrual method of accounting. Similarly, such action is to be disregarded with respect to all property subject to such tax, even if such property is acquired after the action. Whenever the time for accruing taxes is to be disregarded in accordance with the provisions of this paragraph, the taxpayer shall accrue the tax at the time (original accrual date) the tax would have accrued but for such action, and shall, in the absence of any action of the taxing jurisdiction placing the time for accruing such tax at a time subsequent to the original accrual date, continue to accrue the tax as of the original accrual date for all future taxable years.

(2) For purposes of this paragraph—

(i) The term “a taxpayer whose taxable income is computed under an accrual method of accounting” means a taxpayer who, for Federal income tax purposes, accounts for any tax which is the subject of “any action” (as defined in subdivision (iii) of this subparagraph) under an accrual method of accounting. See section 446 and the regulations thereunder. If a taxpayer uses an accrual method as his overall method of accounting, it shall be presumed that he is “a taxpayer whose taxable income is computed under an accrual method of accounting.” However, if the taxpayer establishes to the satisfaction of the district director that he has, for Federal income tax purposes, consistently accounted for such tax under the cash method of accounting, he shall be considered not to be “a taxpayer whose taxable income is computed under an accrual method of accounting.”

(ii) The time for accruing taxes shall be determined under section 461 and the regulations in this section.

(iii) The term “any action” includes the enactment or reenactment of legislation, the adoption of an ordinance, the exercise of any taxing or administrative authority, or the taking of any other step, the result of which is an acceleration of the accrual event of any tax. The term also applies to the substitution of a substantially similar tax by either the original taxing jurisdiction or a

substitute jurisdiction. However, the term does not include either a judicial interpretation, or an administrative determination by the Internal Revenue Service, as to the event which fixes the accrual date for the tax.

(iv) The term "any taxing jurisdiction" includes the District of Columbia, any State, possession of the United States, city, county, municipality, school district, or other political subdivision or authority, other than the United States, which imposes, assesses, or collects a tax.

(3) The provisions of this paragraph may be illustrated by the following examples:

Example 1. State X imposes a tax on intangible and tangible personal property used in a trade or business conducted in the State. The tax is assessed as of July 1, and becomes a lien as of that date. As a result of administrative and judicial decisions, July 1 is recognized as the proper date on which accrual method taxpayers may accrue their personal property tax for Federal income tax purposes. In 1961 State X, by legislative action, changes the assessment and lien dates from July 1, 1962, to December 31, 1961, for the property tax year 1962. The action taken by State X is considered to be "any action" of a taxing jurisdiction which results in the time for accruing taxes being earlier than it would have been but for that action. Therefore, for purposes of the deduction allowed for such tax, the personal property tax imposed by State X, for the property tax year 1962, shall be treated as though it accrued on July 1, 1962.

Example 2. Assume the same facts as in Example 1 except that State X repeals the personal property tax and in lieu thereof enacts a franchise tax which is imposed on the privilege of conducting a trade or business within State X, and is based on the value of intangible and tangible personal property used in the trade or business. The franchise tax is to be assessed and will become a lien as of December 31, 1961, for the franchise tax year 1962, and on December 31 for all subsequent franchise tax years. Since the franchise tax is substantially similar to the former personal property tax and since the enactment of the franchise tax has the effect of accelerating the accrual date of the personal property tax from July 1, 1962, to December 31, 1961, the action taken by State X is considered to be "any action" of a taxing jurisdiction which results in the time for accruing taxes being earlier than it would have been but for that action. Therefore, for purposes of the deduction allowed for such tax, the franchise tax imposed by State X shall be treated as though it accrued on July 1, 1962, for the franchise tax year 1962, and on July 1 for all subsequent franchise tax years.

Example 3. Assume the same facts as in Example 1 except that State X repealed the personal property tax and empowered the counties within the State to impose a personal property tax. Assuming the counties in State X subsequently imposed a personal property tax and chose December 31 of the preceding year as the assessment and lien date, the action of each of the counties would be considered to be "any action" of a taxing jurisdiction which results in the time for accruing taxes being earlier than it would have been but for that action since it is immaterial whether the original taxing jurisdiction or a substitute jurisdiction took the action.

(4) Section 461(d)(1) shall not be applicable to the extent that it would prevent the taxpayer and all other persons, including successors in interest, from ever taking into account, for Federal income tax purposes, any tax to which that section would otherwise apply. For example, assume that State Y imposes a personal property tax on tangible personal property used in a trade or business conducted in the State during a calendar year. The tax is assessed as of February 1 of the year following the personal property tax year, and becomes a lien as of that date. As a result of administrative and judicial decisions, February 1 of the following year is recognized as the proper date on which accrual method taxpayers may accrue the personal property tax for Federal income

tax purposes. In 1962 State Y, by legislative action, changes the assessment and lien dates for the personal property tax year 1962 from February 1, 1963, to December 1, 1962, and to December 1 of the personal property tax year for all subsequent years. Corporation A, an accrual method taxpayer which uses the calendar year as its taxable year, pays the tax for 1962 on December 10, 1962. On December 15, 1962, the property which was taxed is completely destroyed and, on December 20, 1962, corporation A transfers all of its remaining assets to its shareholders, and is dissolved. Since corporation A is not in existence in 1963, and therefore could not take the personal property tax into account in computing its 1963 Federal income tax if February 1, 1963, is considered to be the time for accruing the tax, and no other person could ever take such tax into account in computing his Federal income tax, such tax shall be treated as accruing as of December 1, 1962. To the extent that any person other than the taxpayer may at any time take such tax into account in computing his taxable income, the provisions of section 461(d)(1) shall apply. Thus, upon the dissolution of a corporation or the termination of a partnership between the time which, but for the provisions of section 461(d)(1) and this paragraph, would be the time for accruing any tax which was the subject of "any action" (as defined in subdivision (iii) of subparagraph (2)), and the original accrual date, the corporation or the partnership would be entitled to a deduction for only that portion, if any, of such tax with respect to which it can establish, to the satisfaction of the district director, that no other taxpayer can properly take into account in computing his taxable income. However, to the extent that the corporation or partnership cannot establish, at the time of its dissolution or termination, as the case may be, that no other taxpayer would be entitled to take such tax into account in computing his taxable income, and it is subsequently determined that no other taxpayer is entitled to take such tax into account in computing his taxable income, the corporation or partnership may file a claim for refund for the year of its dissolution or termination (subject to the limitations prescribed in section 6511) and claim as a deduction therein the portion of such tax determined to be not deductible by any other taxpayer.

(5) Section 461(d) and this paragraph shall apply to taxable years ending after December 31, 1960.

(e) ***Dividends or interest paid by certain savings institutions on certain deposits or withdrawable accounts*** —

(1) ***Deduction not allowable*** —

(i) ***In general.*** Except as otherwise provided in this paragraph, pursuant to section 461(e) amounts paid to, or credited to the accounts of, depositors or holders of accounts as dividends or interest on their deposits or withdrawable accounts (if such amounts paid or credited are withdrawable on demand subject only to customary notice to withdraw) by a mutual savings bank not having capital stock represented by shares, a domestic building and loan association, or a cooperative bank shall not be allowed as a deduction for the taxable year to the extent such amounts are paid or credited for periods representing more than 12 months. The provisions of section 461(e) are applicable with respect to taxable years ending after December 31, 1962. Whether amounts are paid or credited for periods representing more than 12 months depends upon all the facts and circumstances in each case. For example, payments or credits which under all the facts and circumstances are in the nature of bona fide bonus interest or dividends paid or credited because a shareholder or depositor maintained a certain balance for more than 12 months, will not be considered made for more than 12 months, providing the regular payments or credits represent a period of 12 months or less. The nonallowance of a deduction to the taxpayer under section 461(e) and this subparagraph has no effect either on the proper time for reporting dividends or interest by a depositor or holder of a withdrawable account, or on the obligation of the taxpayer to make a return setting forth, among other things, the aggregate amounts paid to a depositor or shareholder under section 6049 (relating to

returns regarding payments of interest) and the regulations thereunder. With respect to a short period (a taxable year consisting of a period of less than 12 months), amounts of dividends or interest paid or credited shall not be allowed as a deduction to the extent that such amounts are paid or credited for a period representing more than the number of months in such short period. In such a case, the rules contained in section 461(e) and this paragraph apply to the short period in a manner consistent with the application of such rules to a 12-month taxable year. Subparagraph (2) of this paragraph provides rules for computing amounts not allowed in the taxable year and subparagraph (3) provides rules for determining when such amounts are allowed. See section 7701(a) (19) and (32) and the regulations thereunder for the definitions of domestic building and loan association and cooperative bank.

(ii) ***Exceptions.*** The rule of nonallowance set forth in subdivision (i) of this subparagraph is not applicable to a taxpayer in the year in which it liquidates (other than following, or as part of, an acquisition of its assets in which the acquiring corporation, pursuant to section 381(a), takes into account certain items of the taxpayer, which for purposes of this paragraph shall be referred to as an acquisition described in section 381(a)). In addition, such rule of nonallowance is not applicable to a taxpayer which pays or credits grace interest or dividends to terminating depositors or shareholders, provided the total amount of the grace interest or dividends paid or credited during the payment or crediting period (for example, a quarterly or semiannual period) does not exceed 10 percent of the total amount of the interest or dividends paid or credited during such period, computed without regard to the grace interest or dividends. For example, providing the 10 percent limitation is met, the rule of nonallowance does not apply in a case in which a calendar year taxpayer, with regular interest payment dates of January 1, April 1, July 1, and October 1, pays grace interest for the period beginning October 1 to a depositor who terminates his account on December 10.

(2) ***Computation of amounts not allowed as a deduction*** —

(i) ***Method of computation.*** The amount of the dividends or interest to which subparagraph (1) of this paragraph applies, which is not allowed as a deduction, shall be computed under the rules of this subparagraph. The amount which is not allowed as a deduction is the difference between the total amount of dividends or interest paid or credited to that class of accounts with respect to which a deduction is not allowed under subparagraph (1) of this paragraph during the taxable year (or short period, if applicable) and an amount which bears the same ratio to such total as the number 12 (or number of months in the short period) bears to the number of months with respect to which such amounts of dividends or interest are paid or credited.

(ii) ***Examples.*** The provisions of subdivision (i) of this subparagraph may be illustrated by the following examples:

> *Example 1.* X Association, a domestic building and loan association filing its return on the basis of a calendar year, regularly credits dividends on its withdrawable accounts quarterly on the first day of the quarter following the quarter with respect to which they are earned. X changes the time of crediting dividends commencing with the credit for the fourth quarter of 1964. Such credit and all subsequent credits are made on the last day of the quarter with respect to which they are earned. As a result of this change X's

credits for the year 1964 are as follows:

Period with respect to which earned	Date credited in 1964	Amt.
4th quarter, 1963	Jan. 1	$250,000
1st quarter, 1964	Apr. 1	300,000
2d quarter, 1964	July 1	300,000
3d quarter, 1964	Oct. 1	300,000
4th quarter, 1964	Dec. 31	350,000
Total dividends credited		1,500,000

Since the change in the time of crediting dividends results in the crediting in 1964 of amounts of dividends representing periods totaling 15 months (October 1963 through December 1964), amounts shall not be allowed as a deduction in 1964 which are in excess of $1,200,000, which is the amount which bears the same ratio to the amounts of dividends credited during the year ($1,500,000) as the number 12 bears to the number of months (15) with respect to which such dividends are credited. Thus, $300,000 ($1,500,000 minus $1,200,000) is not allowed as a deduction in 1964.

Example 2. Y Association, a domestic building and loan association filing its return on the basis of a calendar year, regularly credits dividends on its withdrawable accounts on the basis of a semiannual period on March 31 and September 30 of each year. Y changes the period with respect to which credits are made from the semiannual period to the quarterly basis, commencing with the last quarter in 1964. The credit for this last quarter and all subsequent credits are made on the last day of the quarter with respect to which they are earned. As a result of this change, Y's credits for the year 1964 are as follows:

Period with respect to which earned	Date credited in 1964	Amt.
6-month period ending Mar. 31, 1964	Mar. 31	$300,000
6-month period ending Sept. 30, 1964	Sept. 30	400,000
4th quarter, 1964	Dec. 31	200,000
Total dividends credited		900,000

Since the change in the basis of crediting dividends results in a crediting in 1964 of dividends representing periods totaling 15 months (October 1963 through December 1964), amounts shall not be allowed as a deduction in 1964 which are in excess of

$720,000, which is the amount which bears the same ratio to the amounts of dividends credited during the year ($900,000) as the number 12 bears to the number of months (15) with respect to which such dividends are credited. Thus, $180,000 ($900,000 minus $720,000) is not allowed as a deduction in 1964.

Example 3. Z Association, a domestic building and loan association regularly files its return on the basis of a fiscal year ending on the last day of February and regularly credits dividends on its withdrawable accounts quarterly on the last day of the quarter with respect to which they are earned. Z receives approval from the Commissioner of Internal Revenue to change its accounting period to a calendar year and effects the change by filing a return for a short period ending on December 31, 1964. Dividend credits for the short period beginning on March 1 and ending on December 31, 1964, are as follows:

Period with respect to which earned	Date credited in 1964	Amt.
January-March 1964	Mar. 31	$250,000
April-June 1964	June 30	300,000
July-September 1964	Sept. 30	300,000
October-December 1964	Dec. 31	350,000
Total dividends credited		1,200,000

Since the change of accounting period results in amounts of dividends credited ($1,200,000) representing periods totaling 12 months (January through December 1964), and such periods represent more than the number of months (10) in the short period, an amount shall not be allowed as a deduction in such short period which is in excess of $1,000,000, which is the amount which bears the same ratio to the amount of dividends credited in the short period ($1,200,000) as the number of months (10) in the short period bears to the number of months (12) with respect to which such dividends are credited. Thus, $200,000 ($1,200,000 minus $1,000,000) is not allowed as a deduction in the short period.

(3) ***When amounts allowable.*** The amount of dividends or interest not allowed as a deduction under subparagraph (1) of this paragraph shall be allowed as follows (subject to the limitation that the total of the amounts so allowed shall not exceed the amount not allowed under subparagraph (1)):

(i) Such amount shall be allowed as a deduction in a later taxable year or years subject to the limitation that, when taken together with the deductions otherwise allowable in the later taxable year or years, it does not bring the deductions for any later taxable year to a total representing a period of more than 12 months (or number of months in the short period, if applicable). However, in any event, an amount otherwise allowable under subdivision (ii) of this

subparagraph shall be allowed notwithstanding the fact that it may bring the deductions allowable to a total representing a period of more than 12 months (or number of months in the short period, if applicable).

(ii) In any case in which it is established to the satisfaction of the Commissioner that the taxpayer does not intend to avoid taxes, one-tenth of such amount shall be allowed as a deduction in each of the 10 succeeding taxable years—

(*a*) Commencing with the taxable year for which such amount is not allowed as a deduction under subparagraph (1), or

(*b*) In the case of such amount not allowed for a taxable year ending before July 1, 1964, commencing with either the first or second taxable year after the taxable year for which such amount is not allowed as a deduction under subparagraph (1) if the taxpayer has not taken a deduction on his return, or filed a claim for credit or refund, in respect of such amount under (*a*).

Normally, if the deduction not allowed under subparagraph (1) is a result of a change, not requested by the taxpayer, in the taxpayer's annual accounting period or dividend or interest payment or crediting dates solely as a consequence of a requirement of a Federal or State regulatory authority, or if the deduction is not allowed solely as a result of the taxpayer being a party to an acquisition to which section 381(a) applies, the Commissioner will permit the allowance of the amount not allowed in the manner provided in this subdivision. Nothing set forth in this subdivision shall be construed as permitting the allowance of a credit or refund for any year which is barred by the limitations on credit or refund provided by section 6511.

(iii) If the total of the amounts, if any, allowed under subdivisions (i) and (ii) of this subparagraph before the taxable year in which the taxpayer liquidates or otherwise ceases to engage in trade or business is less than the amount not allowed under subparagraph (1), there shall be allowed a deduction in such taxable year for the difference between the amount not allowed under subparagraph (1) and the amounts allowed, if any, as deductions under subdivisions (i) and (ii) unless the circumstances under which the taxpayer ceased to do business constitute an acquisition described in section 381(a) (relating to carryovers in certain corporate acquisitions). If the circumstances under which the taxpayer ceased to do business constitute an acquisition described in section 381(a), the acquiring corporation shall succeed to and take into account the balance of the amounts not allowed on the same basis as the taxpayer, had it not ceased to engage in business.

[T.D. 6500, 25 FR 11720, Nov. 26, 1960]

Editorial Note: For FEDERAL REGISTER citations affecting § 1.461-1, see the List of CFR Sections Affected, which appears in the Finding Aids section of the printed volume and at *www.govinfo.gov*.

§ 1.461-2 Contested liabilities.

(a) ***General rule*** —

(1) ***Taxable year of deduction.*** If—

(i) The taxpayer contests an asserted liability,

(ii) The taxpayer transfers money or other property to provide for the satisfaction of the asserted liability,

(iii) The contest with respect to the asserted liability exists after the time of the transfer, and

(iv) But for the fact that the asserted liability is contested, a deduction would be allowed for the taxable year of the transfer (or, in the case of an accrual method taxpayer, for an earlier taxable year for which such amount would be accruable),

then the deduction with respect to the contested amount shall be allowed for the taxable year of the transfer.

(2) ***Exception.*** Subparagraph (1) of this paragraph shall not apply in respect of the deduction for income, war profits, and excess profits taxes imposed by the authority of any foreign country or possession of the United States, including a tax paid in lieu of a tax on income, war profits, or excess profits otherwise generally imposed by any foreign country or by any possession of the United States.

(3) ***Refunds includible in gross income.*** If any portion of the contested amount which is deducted under subparagraph (1) of this paragraph for the taxable year of transfer is refunded when the contest is settled, such portion is includible in gross income except as provided in § 1.111-1, relating to recovery of certain items previously deducted or credited. Such refunded amount is includible in gross income for the taxable year of receipt, or for an earlier taxable year if properly accruable for such earlier year.

(4) ***Examples.*** The provisions of this paragraph are illustrated by the following examples:

Example 1. X Corporation, which uses an accrual method of accounting, in 1964 contests $20 of a $100 asserted real property tax liability but pays the entire $100 to the taxing authority. In 1968, the contest is settled and X receives a refund of $5. X deducts $100 for the taxable year 1964, and includes $5 in gross income for the taxable year 1968 (assuming § 1.111-1 does not apply to such amount). If in 1964 X pays only $80 to the taxing authority, X deducts only $80 for 1964. The result would be the same if X Corporation used the cash method of accounting.

Example 2. Y Corporation makes its return on the basis of a calendar year and uses an accrual method of accounting. Y's real property taxes are assessed and become a lien on December 1, but are not payable until March 1 of the following year. On December 10, 1964, Y contests $20 of the $100 asserted real property tax which was assessed and became a lien on December 1, 1964. On March 1, 1965, Y pays the entire $100 to the taxing authority. In 1968, the contest is settled and Y receives a refund of $5. Y deducts $80 for the taxable year 1964, deducts $20 for the taxable year 1965, and includes $5 in gross income for the taxable year 1968 (assuming § 1.111-1 does not apply to such amount).

(b) ***Production costs*** —

(1) ***In general; asserted liability.*** For purposes of paragraph (a)(1) of this section, the term "asserted liability" means an item with respect to which, but for the existence of any contest in respect of such item, a deduction would be allowable under an accrual method of accounting. For example, a notice of a local real estate tax assessment and a bill received for services may represent asserted liabilities.

(2) ***Definition of the term "contest".*** Any contest which would prevent accrual of a liability under section 461(a) shall be considered to be a contest in determining whether the taxpayer satisfies paragraph (a)(1)(i) of this section. A contest arises when there is a bona fide dispute as to the proper

evaluation of the law or the facts necessary to determine the existence or correctness of the amount of an asserted liability. It is not necessary to institute suit in a court of law in order to contest an asserted liability. An affirmative act denying the validity or accuracy, or both, of an asserted liability to the person who is asserting such liability, such as including a written protest with payment of the asserted liability, is sufficient to commence a contest. Thus, lodging a protest in accordance with local law is sufficient to contest an asserted liability for taxes. It is not necessary that the affirmative act denying the validity or accuracy, or both, of an asserted liability be in writing if, upon examination of all the facts and circumstances, it can be established to the satisfaction of the Commissioner that a liability has been asserted and contested.

(3) ***Example.*** The provisions of this paragraph are illustrated by the following example:

Example: O Corporation makes its return on the basis of a calendar year and uses an accrual method of accounting. O receives a large shipment of typewriter ribbons from S Company on January 30, 1964, which O pays for in full on February 10, 1964. Subsequent to their receipt, several of the ribbons prove defective because of inferior materials used by the manufacturer. On August 9, 1964, O orally notifies S and demands refund of the full purchase price of the ribbons. After negotiations prove futile and a written demand is rejected by S, O institutes an action for the full purchase price. For purposes of paragraph (a)(1)(i) of this section, S has asserted a liability against O which O contests on August 9, 1964. O deducts the contested amount for 1964.

(c) ***Transfer to provide for the satisfaction of an asserted liability*** —

(1) ***In general.***

(i) A taxpayer may provide for the satisfaction of an asserted liability by transferring money or other property beyond his control to—

(A) The person who is asserting the liability;

(B) An escrowee or trustee pursuant to a written agreement (among the escrowee or trustee, the taxpayer, and the person who is asserting the liability) that the money or other property be delivered in accordance with the settlement of the contest;

(C) An escrowee or trustee pursuant to an order of the United States or of any State or political subdivision thereof or any agency or instrumentality of the foregoing, or of a court, that the money or other property be delivered in accordance with the settlement of the contest; or

(D) A court with jurisdiction over the contest.

(ii) In order for money or other property to be beyond the control of a taxpayer, the taxpayer must relinquish all authority over the money or other property.

(iii) The following are not transfers to provide for the satisfaction of an asserted liability—

(A) Purchasing a bond to guarantee payment of the asserted liability;

(B) An entry on the taxpayer's books of account;

(C) A transfer to an account that is within the control of the taxpayer;

(D) A transfer of any indebtedness of the taxpayer or of any promise by the taxpayer to provide services or property in the future; and

(E) A transfer to a person (other than the person asserting the liability) of any stock of the taxpayer or of any stock or indebtedness of a person related to the taxpayer (as defined in section 267(b)).

(2) ***Examples.*** The provisions of this paragraph are illustrated by the following examples:

Example 1. M Corporation contests a $5,000 liability asserted against it by L Company for services rendered. To provide for the contingency that it might have to pay the liability, M establishes a separate bank account in its own name. M then transfers $5,000 from its general account to such separate account. Such transfer does not qualify as a transfer to provide for the satisfaction of an asserted liability because M has not transferred the money beyond its control.

Example 2. M Corporation contests a $5,000 liability asserted against it by L Company for services rendered. To provide for the contingency that it might have to pay the liability, M transfers $5,000 to an irrevocable trust pursuant to a written agreement among the trustee, M (the taxpayer), and L (the person who is asserting the liability) that the money shall be held until the contest is settled and then disbursed in accordance with the settlement. Such transfer qualifies as a transfer to provide for the satisfaction of an asserted liability.

(d) ***Contest exists after transfer.*** In order for a contest with respect to an asserted liability to exist after the time of transfer, such contest must be pursued subsequent to such time. Thus, the contest must have been neither settled nor abandoned at the time of the transfer. A contest may be settled by a decision, judgment, decree, or other order of any court of competent jurisdiction which has become final, or by written or oral agreement between the parties. For example, Z Corporation, which uses an accrual method of accounting, in 1964 contests a $100 asserted liability. In 1967 the contested liability is settled as being $80 which Z accrues and deducts for such year. In 1968 Z pays the $80. Section 461(f) does not apply to Z with respect to the transfer because a contest did not exist after the time of such transfer.

(e) ***Deduction otherwise allowed*** —

(1) ***In general.*** The existence of the contest with respect to an asserted liability must prevent (without regard to section 461(f)) and be the only factor preventing a deduction for the taxable year of the transfer (or, in the case of an accrual method taxpayer, for an earlier taxable year for which such amount would be accruable) to provide for the satisfaction of such liability. Nothing in section 461(f) or this section shall be construed to give rise to a deduction since section 461(f) and this section relate only to the timing of deductions which are otherwise allowable under the Code.

(2) ***Application of economic performance rules to transfers under section 461(f).***

(i) A taxpayer using an accrual method of accounting is not allowed a deduction under section 461(f) in the taxable year of the transfer unless economic performance has occurred.

(ii) Economic performance occurs for liabilities requiring payment to another person arising out of any workers compensation act or any tort, or any other liability designated in § 1.461-4(g), as payments are made to the person to which the liability is owed. Except as provided in section 468B or the regulations thereunder, economic performance does not occur when a taxpayer transfers money or other property to a trust, an escrow account, or a court to provide for the satisfaction of an asserted workers compensation, tort, or other liability designated under § 1.461-4(g) that the taxpayer is contesting unless the trust, escrow account, or court is the person to which the liability is owed or the taxpayer's payment to the trust, escrow account, or court discharges the taxpayer's liability to the claimant. Rather, economic performance occurs

in the taxable year the taxpayer transfers money or other property to the person that is asserting the workers compensation, tort, or other liability designated under § 1.461-4(g) that the taxpayer is contesting or in the taxable year that payment is made from a trust, an escrow account, or a court registry funded by the taxpayer to the person to which the liability is owed.

(3) ***Examples.*** The provisions of this paragraph are illustrated by the following examples:

Example 1. A, an individual, makes a gift of certain property to B, an individual. A pays the entire amount of gift tax assessed against him but contests his liability for the tax. Section 275(a)(3) provides that gift taxes are not deductible. A does not satisfy the requirement of paragraph (a)(1)(iv) of this section because a deduction would not be allowed for the taxable year of the transfer even if A did not contest his liability to the tax.

Example 2. Corporation X is a defendant in a class action suit for tort liabilities. In 2002, X establishes a trust for the purpose of satisfying the asserted liability and transfers $10,000,000 to the trust. The trust does not satisfy the requirements of section 468B or the regulations thereunder. In 2004, the trustee pays $10,000,000 to the plaintiffs in settlement of the litigation. Under paragraph (e)(2) of this section, economic performance with respect to X's liability to the plaintiffs occurs in 2004. X may deduct the $10,000,000 payment to the plaintiffs in 2004.

(f) ***Treatment of money or property transferred to an escrowee, trustee, or court and treatment of any income attributable thereto.*** [Reserved]

(g) ***Effective dates.***

(1) Except as otherwise provided, this section applies to transfers of money or other property in taxable years beginning after December 31, 1953, and ending after August 16, 1954.

(2) Paragraph (c)(1)(iii)(E) of this section applies to transfers of any stock of the taxpayer or any stock or indebtedness of a person related to the taxpayer on or after November 19, 2003.

(3) Paragraph (e)(2)(i) of this section applies to transfers of money or other property after July 18, 1984.

(4) Paragraph (e)(2)(ii) and paragraph (e)(3) *Example 2* of this section apply to—

(i) Transfers after July 18, 1984, of money or other property to provide for the satisfaction of an asserted workers compensation or tort liability; and

(ii) Transfers in taxable years beginning after December 31, 1991, of money or other property to provide for the satisfaction of asserted liabilities designated in § 1.461-4(g) (other than liabilities for workers compensation or tort).

[T.D. 6772, 29 FR 15753, Nov. 24, 1964, as amended by T.D. 8408, 57 FR 12421, Apr. 10, 1992; T.D. 9095, 68 FR 65636, Nov. 21, 2003; T.D. 9140, 69 FR 43303, July 20, 2004]

§ 1.461-3 Prepaid interest. [Reserved]

§ 1.461-4 Economic performance.

(a) ***Introduction*** —

(1) ***In general.*** For purposes of determining whether an accrual basis taxpayer can treat the amount of any liability (as defined in § 1.446-1(c)(1)(ii)(B)) as incurred, the all events test is not treated as met any earlier than the taxable year in which economic performance occurs with respect to the liability.

(2) ***Overview.*** Paragraph (b) of this section lists exceptions to the economic performance requirement. Paragraph (c) of this section provides cross-references to the definitions of certain terms for purposes of section 461 (h) and the regulations thereunder. Paragraphs (d) through (m) of this section and § 1.461-6 provide rules for determining when economic performance occurs. Section 1.461-5 provides rules relating to an exception under which certain recurring items may be incurred for the taxable year before the year during which economic performance occurs.

(b) ***Exceptions to the economic performance requirement.*** Paragraph (a)(2)(iii)(B) of § 1.461-1 provides examples of liabilities that are taken into account under rules that operate without regard to the all events test (including economic performance).

(c) ***Definitions.*** The following cross-references identify certain terms defined for purposes of section 461(h) and the regulations thereunder:

(1) ***Liability.*** See paragraph (c)(1)(ii)(B)d of § 1.446-1 for the definition of "liability."

(2) ***Payment.*** See paragraph (g)(1)(ii) of this section for the definition of "payment."

(d) ***Liabilities arising out of the provision of services, property, or the use of property*** —

(1) ***In general.*** The principles of this paragraph (d) determine when economic performance occurs with respect to liabilities arising out of the performance of services, the transfer of property, or the use of property. This paragraph (d) does not apply to liabilities described in paragraph (e) (relating to interest expense) or paragraph (g) (relating to breach of contract, workers compensation, tort, etc.) of this section. In addition, except as otherwise provided in Internal Revenue regulations, revenue procedures, or revenue rulings this paragraph (d) does not apply to amounts paid pursuant to a notional principal contract. The Commissioner may provide additional rules in regulations, revenue procedures, or revenue rulings concerning the time at which economic performance occurs for items described in this paragraph (d).

(2) ***Services or property provided to the Taxpayer*** —

(i) ***In general.*** Except as otherwise provided in paragraph (d)(5) of this section, if the liability of a taxpayer arises out of the providing of services or property to the taxpayer by another person, economic performance occurs as the services or property is provided.

(ii) ***Long-term contracts.*** In the case of any liability of a taxpayer described in paragraph (d)(2)(i) of this section that is an expense attributable to a long-term contract with respect to which the taxpayer uses the percentage of completion method, economic performance occurs—

(A) As the services or property is provided; or, if earlier,

(B) As the taxpayer makes payment (as defined in paragraph (g)(1)(ii) of this section) in satisfaction of the liability to the person providing the services or property. See paragraph (k)(2) of this section for the effective date of this paragraph (d)(2)(ii).

(iii) ***Employee benefits*** —

(A) ***In general.*** Except as otherwise provided in any Internal Revenue regulation, revenue procedure, or revenue ruling, the economic performance requirement is satisfied to the extent that any amount is otherwise deductible under section 404 (employer contributions to a plan of deferred compensation), section 404A (certain foreign deferred compensation plans), and section 419 (welfare benefit funds). See § 1.461-1(a)(2)(iii)(D).

(B) ***Property transferred in connection with performance of services.*** [Reserved]

(iv) ***Cross-references.*** See *Examples 4* through *6* of paragraph (d)(7) of this section. See paragraph (d)(6) of this section for rules relating to when a taxpayer may treat services or property as provided to the taxpayer.

(3) ***Use of property provided to the taxpayer*** —

(i) ***In general.*** Except as otherwise provided in this paragraph (d)(3)d and paragraph (d)(5) of this section, if the liability of a taxpayer arises out of the use of property by the taxpayer, economic performance occurs ratably over the period of time the taxpayer is entitled to the use of the property (taking into account any reasonably expected renewal periods when necessary to carry out the purposes of section 461(h)). See *Examples 6* through *9* of paragraph (d)(7) of this section.

(ii) ***Exceptions*** —

(A) ***Volume, frequency of use, or income.*** If the liability of a taxpayer arises out of the use of property by the taxpayer and all or a portion of the liability is determined by reference to the frequency or volume of use of the property or the income from the property, economic performance occurs for the portion of the liability determined by reference to the frequency or volume of use of the property or the income from the property as the taxpayer uses the property or includes income from the property. See *Examples 8* and *9* of paragraph (d)(7) of this section. This paragraph (d)(3)(ii) shall not apply if the District Director determines, that based on the substance of the transaction, the liability of the taxpayer for use of the property is more appropriately measured ratably over the period of time the taxpayer is entitled to the use of the property.

(B) ***Section 467 rental agreements.*** In the case of a liability arising out of the use of property pursuant to a section 467 rental agreement, economic performance occurs as provided in § 1.461-1(a)(2)(iii)(E).

(4) ***Services or property provided by the taxpayer*** —

(i) ***In general.*** Except as otherwise provided in paragraph (d)(5) of this section, if the liability of a taxpayer requires the taxpayer to provide services or property to another person, economic performance occurs as the taxpayer incurs costs (within the meaning of § 1.446-1(c)(1)(ii)) in connection with the satisfaction of the liability. See *Examples 1* through *3* of paragraph (d)(7) of this section.

(ii) ***Barter transactions.*** If the liability of a taxpayer requires the taxpayer to provide services, property, or the use of property, and arises out of the use of property by the taxpayer, or out of the provision of services or property to the taxpayer by another person, economic performance occurs to the extent of the lesser of—

(A) The cumulative extent to which the taxpayer incurs costs (within the meaning of § 1.446-1(c)(1)(ii)) in connection with its liability to provide the services of property; or

(B) The cumulative extent to which the services or property is provided to the taxpayer.

(5) ***Liabilities that are assumed in connection with the sale of a trade or business*** —

(i) ***In general.*** If, in connection with the sale or exchange of a trade or business by a taxpayer, the purchaser expressly assumes a liability arising out of the trade or business that the taxpayer but for the economic performance requirement would have been entitled to incur as of the date of the sale, economic performance with respect to that liability occurs as the amount of the liability is properly included in the amount realized on the transaction by the taxpayer. See § 1.1001-2 for rules relating to the inclusion in amount realized from a discharge of liabilities resulting from a sale or exchange.

(ii) ***Trade or business.*** For purposes of this paragraph (d)(5), a trade or business is a specific group of activities carried on by the taxpayer for the purpose of earning income or profit if every operation that is necessary to the process of earning income or profit is included in the group. Thus, for example, the group of activities generally must include the collection of income and the payment of expenses.

(iii) ***Tax avoidance.*** This paragraph (d)(5) does not apply if the District Director determines that tax avoidance is one of the taxpayer's principal purposes for the sale or exchange.

(6) ***Rules relating to the provision of services or property to a taxpayer.*** The following rules apply for purposes of this paragraph (d):

(i) Services or property provided to a taxpayer include services or property provided to another person at the direction of the taxpayer.

(ii) A taxpayer is permitted to treat services or property as provided to the taxpayer as the taxpayer makes payment to the person providing the services or property (as defined in paragraph (g)(1)(ii) of this section), if the taxpayer can reasonably expect the person to provide the services or property within $3^1/_2$ months after the date of payment.

(iii) A taxpayer is permitted to treat property as provided to the taxpayer when the property is delivered or accepted, or when title to the property passes. The method used by the taxpayer to determine when property is provided is a method of accounting that must comply with the rules of § 1.446-1(e). Thus, the method of determining when property is provided must be used consistently from year to year, and cannot be changed without the consent of the Commissioner.

(iv) If different services or items of property are required to be provided to a taxpayer under a single contract or agreement, economic performance generally occurs over the time each service is provided and as each item of property is provided. However, if a service or item of property to be provided to the taxpayer is incidental to other services or property to be provided under a contract or agreement, the taxpayer is not required to allocate any portion of the total contract price to the incidental service or property. For purposes of this paragraph (d)(6)(iv), services or property is treated as incidental only if—

(A) The cost of the services or property is treated on the taxpayer's books and records as part of the cost of the other services or property provided under the contract; and

(B) The aggregate cost of the services or property does not exceed 10 percent of the total contract price.

(7) ***Examples.*** The following examples illustrate the principles of this paragraph (d). For purposes of these examples, it is assumed that the requirements of the all events test other than economic performance have been met, and that the recurring item exception is not used. Assume further that the examples do not involve section 467 rental agreements and, therefore, section 467 is not applicable. The examples are as follows:

> *Example 1. Services or property provided by the taxpayer.* (i) X corporation, a calendar year, accrual method taxpayer, is an oil company. During March 1990, X enters into an oil and gas lease with Y. In November 1990, X installs a platform and commences drilling. The lease obligates X to remove its offshore platform and well fixtures upon abandonment of the well or termination of the lease. During 1998, X removes the platform and well fixtures at a cost of $200,000.
> (ii) Under paragraph (d)(4)(i) of this section, economic performance with respect to X's liability to remove the offshore platform and well fixtures occurs as X incurs costs in connection with that liability. X incurs these costs in 1998 as, for example, X's employees provide X with removal services (see paragraph (d)(2) of this section). Consequently, X incurs $200,000 for the 1998 taxable year. Alternatively, assume that during 1990 X pays Z $130,000 to remove the platform and fixtures, and that Z performs these removal services in 1998. Under paragraph (d)(2) of this section, X does not incur this cost until Z performs the services. Thus, economic performance with respect to the $130,000 X pays Z occurs in 1998.

> *Example 2. Services or property provided by the taxpayer.* (i) W corporation, a calendar year, accrual method taxpayer, sells tractors under a three-year warranty that obligates W to make any reasonable repairs to each tractor it sells. During 1990, W sells ten tractors. In 1992 W repairs, at a cost of $5,000, two tractors sold during 1990.
> (ii) Under paragraph (d)(4)(i) of this section, economic performance with respect to W's liability to perform services under the warranty occurs as W incurs costs in connection with that liability. W incurs these costs in 1992 as, for example, replacement parts are provided to W (see paragraph (d)(2) of this section). Consequently, $5,000 is incurred by W for the 1992 taxable year.

> *Example 3. Services or property provided by the taxpayer; Long-term contracts.* (i) W corporation, a calendar year, accrual method taxpayer, manufactures machine tool equipment. In November 1992, W contracts to provide X corporation with certain equipment. The contract is not a long-term contract under section 460 or § 1.451-3. In 1992, W pays Z corporation $50,000 to lease from Z, for the one-year period beginning on January 1, 1993, testing equipment to perform quality control tests required by the agreement with X. In 1992, pursuant to the terms of a contract, W pays Y corporation $100,000 for certain parts necessary to manufacture the equipment. The parts are provided to W in 1993. W's employees provide W with services necessary to manufacture the equipment during 1993, for which W pays $150,000 in 1993.

(ii) Under paragraph (d)(4) of this section, economic performance with respect to W's liability to provide the equipment to X occurs as W incurs costs in connection with that liability. W incurs these costs during 1993, as services, property, and the use of property necessary to manufacture the equipment are provided to W (see paragraphs (d)(2) and (d)(3) of this section). Thus, $300,000 is incurred by W for the 1993 taxable year. See section 263A and the regulations thereunder for rules relating to the capitalization and inclusion in inventory of these incurred costs.

(iii) Alternatively, assume that the agreement with X is a long-term contract as defined in section 460(f), and that W takes into account all items with respect to such contracts under the percentage of completion method as described in section 460(b)(1). Under paragraph (d)(2)(ii) of this section, the $100,000 W pays in 1992 for parts is incurred for the 1992 taxable year, for purposes of determining the percentage of completion under section 460(b)(1)(A). W's other costs under the agreement are incurred for the 1993 taxable year for this purpose.

Example 4. Services or property provided to the taxpayers. (i) LP1, a calendar year, accrual method limited partnership, owns the working interest in a parcel of property containing oil and gas. During December 1990, LP1 enters into a turnkey contract with Z corporation pursuant to which LP1 pays Z $200,000 and Z is required to provide a completed well by the close of 1992. In May 1992, Z commences drilling the well, and, in December 1992, the well is completed.
(ii) Under paragraph (d)(2) of this section, economic performance with respect to LP1's liability for drilling and development services provided to LP1 by Z occurs as the services are provided. Consequently, $200,000 is incurred by LP1 for the 1992 taxable year.

Example 5. Services or property provided to the taxpayer. (i) X corporation, a calendar year, accrual method taxpayer, is an automobile dealer. On Jaunary 15, 1990, X agrees to pay an additional $10 to Y, the manufacturer of the automobiles, for each automobile purchased by X from Y. Y agrees to provide advertising and promotional activities to X.
(ii) During 1990, X purchases from Y 1,000 new automobiles and pays to Y an additional $10,000 as provided in the agreement. Y, in turn, uses this $10,000 to provide advertising and promotional activities during 1992.

(iii) Under paragraph (d)(2) of this section, economic performance with respect to X's liability for advertising and promotional services provided to X by Y occurs as the services are provided. Consequently, $10,000 is incurred by X for the 1992 taxable year.

Example 6. Use of property provided to the taxpayer; services or property provided to the taxpayer. (i) V corporation, a calendar year, accrual method taxpayer, charters aircrafts. On December 20, 1990, V leases a jet aircraft from L for the four-year period that begins on

January 1, 1991. The lease obligates V to pay L a base rental of $500,000 per year. In addition, the lease requires V to pay $25 to an escrow account for each hour that the aircraft is flown. The escrow account funds are held by V and are to be used by L to make necessary repairs to the aircraft. Any amount remaining in the escrow account upon termination of the lease is payable to V. During 1991, the aircraft is flown 1,000 hours and V pays $25,000 to the escrow account. The aircraft is repaired by L in 1993. In 1994, $20,000 is released from the escrow account to pay L for the repairs.
(ii) Under paragraph (d)(3)(i) of this section, economic performance with respect to V's base rental liability occurs ratably over the period of time V is entitled to use the jet aircraft. Consequently, the $500,000 rent is incurred by V for the 1991 taxable year and for each of the next three taxable years. Under paragraph (d)(2) of this section, economic performance with respect to the liability to place amounts in escrow occurs as the aircraft is repaired. Consequently, V incurs $20,00 for the 1993 taxable year.

Example 7. Use of property provided to the taxpayer. (i) X corporation, a calendar year, accrual method taxpayer, manufactures and sells electronic circuitry. On November 15, 1990, X enters into a contract with Y that entitles X to the exclusive use of a product owned by Y for the five-year period beginning on January 1, 1991. Pursuant to the contract, X pays Y $100,000 on December 30, 1990.
(ii) Under paragraph (d)(3)(i) of this section, economic performance with respect to X's liability for the use of property occurs ratably over the period of time X is entitled to use the product. Consequently, $20,000 is incurred by X for 1991 and for each of the succeeding four taxable years.

Example 8. Use of property provided to the taxpayer. (i) Y corporation, a calendar year, accrual method taxpayer, enters into a five-year lease with Z for the use of a copy machine on July 1, 1991. Y also receives elivery of the copy machine on July 1, 1991. The lease obligates Y to pay Z a base rental payment of $6,000 per year at the beginning of each lease year and an additional charge of 5 cents per copy 30 days after the end of each lease year. The machine is used to make 50,000 copies during the first lease year: 20,000 copies in 1991 and 30,000 copies from January 1, 1992, to July 1, 1992. Y pays the $6,000 base rental payment to Z on July 1, 1991, and the $2,500 variable use payment on July 30, 1992.
(ii) under paragraph (d)(3)(i) of this section, economic performance with respect to Y's base rental liability occurs ratably over the period of time Y is entitled to use the copy machine. Consequently, $3,000 rent is incurred by Y for the 1991 taxable year. Under paragraph (d)(3)(ii) of this section, economic performance with respect to Y's variable use portion of the liability occurs as Y uses the machine. Thus, the $1,000 of the $2,500 variable-use liability that relates to the 20,000 copies made in 1991 is incurred by Y for the 1991 taxable year.

Example 9. Use of property provided to the taxpayer. (i) X corporation, a calendar year,

accrual method taxpayer, enters into a five-year product distribution agreement with Y, on January 1, 1992. The agreement provides for a payment of $100,000 on January 1, 1992, plus 10 percent of the gross profits earned by X from distribution of the product. The variable income portion of X's liability is payable on April 1 of each subsequent year. On January 1, 1992, X pays Y $100,000. On April 1, 1993, X pays Y $3 million representing 10 percent of X's gross profits from January 1 through December 31, 1992.
(ii) Under paragraph (d)(3)(i) of this section, economic performance with respect to X's $100,000 payment occurs ratably over the period of time X is entitled to use the product. Consequently, $20,000 is incurred by X for each year of the agreement beginning with 1992. Under paragraph (d)(3)(ii) of this section, economic performance with respect to X's variable income portion of the liability occurs as the income is earned by X. Thus, the $3 million variable-income liability is incurred by X for the 1992 taxable year.

(e) ***Interest.*** In the case of interest, economic performance occurs as the interest cost economically accrues, in accordance with the principles of relevant provisions of the Code.

(f) ***Timing of deductions from notional principal contracts.*** Economic performance on a notional principal contract occurs as provided under § 1.446-3.

(g) ***Certain liabilities for which payment is economic performance*** —

(1) ***In general*** —

(i) ***Person to which payment must be made.*** In the case of liabilities described in paragraphs (g) (2) through (7) of this section, economic performance occurs when, and to the extent that, payment is made to the person to which the liability is owed. Thus, except as otherwise provided in paragraph (g)(1)(iv) of this section and § 1.461-6, economic performance does not occur as a taxpayer makes payments in connection with such a liability to any other person, including a trust, escrow account, court-administered fund, or any similar arrangement, unless the payments constitute payment to the person to which the liability is owed under paragraph (g)(1)(ii)(B) of this section. Instead, economic performance occurs as payments are made from that other person or fund to the person to which the liability is owed. The amount of economic performance that occurs as payment is made from the other person or fund to the person to which the liability is owed may not exceed the amount the taxpayer transferred to the other person or fund. For special rules relating to the taxation of amounts transferred to “qualified settlement funds,” see section 468B and the regulations thereunder. The Commissioner may provide additional rules in regulations, revenue procedures, and revenue rulings concerning the time at which economic performance occurs for items described in this paragraph (g).

(ii) ***Payment to person to which liability is owed.*** Paragraph (d)(6) of this section provides that for purposes of paragraph (d) of this section (relating to the provision of services or property to the taxpayer) in certain cases a taxpayer may treat services or property as provided to the taxpayer as the taxpayer makes payments to the person providing the services or property. In addition, this paragraph (g) provides that in the case of certain liabilities of a taxpayer, economic performance occurs as the taxpayer makes payment to persons specified therein. For these and all other purposes of section 461(h) and the regulations thereunder:

(A) ***Payment.*** The term *payment* has the same meaning as is used when determining whether a taxpayer using the cash receipts and disbursements method of accounting has made a payment. Thus, for example, payment includes the furnishing of cash or cash equivalents and the netting of offsetting accounts. Payment does not include the furnishing of a note or other evidence of indebtedness of the taxpayer, whether or not the evidence is guaranteed by any other instrument (including a standby letter of credit) or by any third party (including a government agency). As a further example, payment does not include a promise of the taxpayer to provide services or property in the future (whether or not the promise is evidenced by a contract or other witten agreement). In addition, payment does not include an amount transferred as a loan, refundable deposit, or contingent payment.

(B) ***Person to which payment is made.*** Payment to a particular person is accomplished if paragraph (g)(1)(ii)(A) of this section is satisfied and a cash basis taxpayer in the position of that person would be treated as having actually or constructively received the amount of the payment as gross income under the principles of section 451 (without regard to section 104(a) or any other provision that specifically excludes the amount from gross income). Thus, for example, the purchase of an annuity contract or any other asset generally does not constitute payment to the person to which a liability is owed unless the ownership of the contract or other asset is transferred to that person.

(C) ***Liabilities that are assumed in connection with the sale of a trade or business.*** Paragraph (d)(5) of this section provides rules that determine when economic performance occurs in the case of liabilities that are assumed in connection with the sale of a trade or business. The provisions of paragraph (d)(5) of this section also apply to any liability described in paragraph (g) (2) through (7) of this section that the purchaser expressly assumes in connection with the sale or exchange of a trade or business by a taxpayer, provided the taxpayer (but for the economic performance requirement) would have been entitled to incur the liability as of the date of the sale.

(iii) ***Person.*** For purposes of this paragraph (g), "person" has the same meaning as in section 7701(a)(1), except that it also includes any foreign state, the United States, any State or political subdivision thereof, any possession of the United States, and any agency or instrumentality of any of the foregoing.

(iv) ***Assignments.*** If a person that has a right to receive payment in satisfaction of a liability described in paragraphs (g) (2) through (7) of this section makes a valid assignment of that right to a second person, or if the right is assigned to the second person through operation of law, then payment to the second person in satisfaction of that liability constitutes payment to the person to which the liability is owed.

(2) ***Liabilities arising under a workers compensation act or out of any tort, breach of contract, or violation of law.*** If the liability of a taxpayer requires a payment or series of payments to another person and arises under any workers compensation act or out of any tort, breach of contract, or violation of law, economic performance occurs as payment is made to the person to which the liability is owed. See *Example 1* of paragraph (g)(8) of this section. For purposes of this paragraph (g)(2)—

(i) A liability to make payments for services, property, or other consideration provided under a contract is not a liability arising out of a breach of that contract unless the payments are in the nature of incidental, consequential, or liquidated damages; and

(ii) A liability arising out of a tort, breach of contract, or violation of law includes a liability arising out of the settlement of a dispute in which a tort, breach of contract, or violation of law, respectively, is alleged.

(3) ***Rebates and refunds.*** If the liability of a taxpayer is to pay a rebate, refund, or similar payment to another person (whether paid in property, money, or as a reduction in the price of goods or services to be provided in the future by the taxpayer), economic performance occurs as payment is made to the person to which the liability is owed. This paragraph (g)(3) applies to all rebates, refunds, and payments or transfers in the nature of a rebate or refund regardless of whether they are characterized as a deduction from gross income, an adjustment to gross receipts or total sales, or an adjustment or addition to cost of goods sold. In the case of a rebate or refund made as a reduction in the price of goods or services to be provided in the future by the taxpayer, "payment" is deemed to occur as the taxpayer would otherwise be required to recognize income resulting from a disposition at an unreduced price. See *Example 2* of paragraph (g)(8) of this section. For purposes of determining whether the recurring item exception of § 1.461-5 applies, a liability that arises out of a tort, breach of contract, or violation of law is not considered a rebate or refund.

(4) ***Awards, prizes, and jackpots.*** If the liability of a taxpayer is to provide an award, prize, jackpot, or other similar payment to another person, economic performance occurs as payment is made to the person to which the liability is owed. See *Examples 3* and *4* of paragraph (g)(8) of this section.

(5) ***Insurance, warranty, and service contracts.*** If the liability of a taxpayer arises out of the provision to the taxpayer of insurance, or a warranty or service contract, economic performance occurs as payment is made to the person to which the liability is owed. See *Examples 5* through *7* of paragraph (g)(8) of this section. For purposes of this paragraph (g)(5)—

(i) A warranty or service contract is a contract that a taxpayer enters into in connection with property bought or leased by the taxpayer, pursuant to which the other party to the contract promises to replace or repair the property under specified circumstances.

(ii) The term "insurance" has the same meaning as is used when determining the deductibility of amounts paid or incurred for insurance under section 162.

(6) ***Taxes*** —

(i) ***In general.*** Except as otherwise provided in this paragraph (g)(6), if the liability of a taxpayer is to pay a tax, economic performance occurs as the tax is paid to the governmental authority that imposed the tax. For purposes of this paragraph (g)(6), payment includes payments of estimated income tax and payments of tax where the taxpayer subsequently files a claim for credit or refund. In addition, for purposes of this paragraph (g)(6), a tax does not include a charge collected by a governmental authority for specific extraordinary services or property provided to a taxpayer by the governmental authority. Examples of such a charge include the purchase price of a parcel of land sold to a taxpayer by a governmental authority and a charge for labor engaged in by government employees to improve that parcel. In certain cases, a liability to pay a tax is permitted to be taken into account in the taxable year before the taxable year during which economic performance occurs under the recurring item exception of § 1.461-5. See *Example 8* of paragraph (g)(8) of this section.

(ii) ***Licensing fees.*** If the liability of a taxpayer is to pay a licensing or permit fee required by a governmental authority, economic performance occurs as the fee is paid to the governmental authority, or as payment is made to any other person at the direction of the governmental authority.

(iii) *Exceptions* —

(A) ***Real property taxes.*** If a taxpayer has made a valid election under section 461 (c), the taxpayer's accrual for real property taxes is determined under section 461 (c). Otherwise, economic performance with respect to a property tax liability occurs as the tax is paid, as specified in paragraph (g)(6)(i) of this section.

(B) ***Certain foreign taxes.*** If the liability of a taxpayer is to pay an income, war profits, or excess profits tax that is imposed by the authority of any foreign country or possession of the United States and is creditable under section 901 (including a creditable tax described in section 903 that is paid in lieu of such a tax), economic performance occurs when the requirements of the all events test (as described in § 1.446-1 (c)(1)(ii)) other than economic performance are met, whether or not the taxpayer elects to credit such taxes under section 901 (a).

(7) ***Other liabilities.*** In the case of a taxpayer's liability for which economic perfomance rules are not provided elsewhere in this section or in any other Internal Revenue regulation, revenue ruling or revenue procedure, economic performance occurs as the taxpayer makes payments in satisfaction of the liability to the person to which the liability is owed. This paragraph (g)(7) applies only if the liability cannot properly be characterized as a liability covered by rules provided elsewhere in this section. If a liability may properly be characterized as, for example, a liability arising from the provision of services or property to, or by, a taxpayer, the determination as to when economic performance occurs with respect to that liability is made under paragraph (d) of this section and not under this paragraph (g)(7).

(8) ***Examples.*** The following examples illustrate the principles of this paragraph (g). For purposes of these examples, it is assumed that the requirements of the all events test other than economic performance have been met and, except as otherwise provided, that the recurring item exception is not used.

> *Example 1. Liabilities arising out of a tort.* (i) During the period 1970 through 1975, Z corporation, a calendar year, accrual method taxpayer, manufactured and distributed industrial products that contained carcinogenic substances. In 1992, a number of lawsuits are filed against Z alleging damages due to exposure to these products. In settlement of a lawsuit maintained by A, Z agrees to purchase an annuity contract that will provide annual payments to A of $50,000 for a period of 25 years. On December 15, 1992, Z pays W, an unrelated life insurance company, $491,129 for such an annuity contract. Z retains ownership of the annuity contract.
> (ii) Under paragraph (g)(2) of this section, economic performance with respect to Z's liability to A occurs as each payment is made to A. Consequently, $50,000 is incurred by Z for each taxable year that a payment is made to A under the annuity contract. (Z must also include in income a portion of amounts paid under the annuity, pursuant to section 72.) The result is the same if in 1992 Z secures its obligation with a standby letter of credit.

(iii) If Z later transfers ownership of the annuity contract to A, an amount equal to the fair market value of the annuity on the date of transfer is incurred by Z in the taxable year of the transfer (see paragraph (g)(1)(ii)(B) of this section). In addition, the transfer constitutes a transaction to which section 1001 applies.

Example 2. Rebates and refunds. (i) X corporation, a calendar year, accrual method taxpayer, manufactures and sells hardware products. X enters into agreements that entitle each of its distributors to a rebate (or discount on future purchases) from X based on the amount of purchases made by the distributor from X during any calendar year. During the 1992 calendar year, X becomes liable to pay a $2,000 rebate to distributor A. X pays A $1,200 of the rebate on January 15, 1993, and the remaining $800 on October 15, 1993. Assume the rebate is deductible (or allowable as an adjustment to gross receipts or cost of goods sold) when incurred.
(ii) If X does not adopt the recurring item exception described in § 1.461-5 with respect to rebates and refunds, then under paragraph (g)(3) of this section, economic performance with respect to the $2,000 rebate liability occurs in 1993. However, if X has made a proper election under § 1.461-5, and as of December 31, 1992, all events have occurred that determine the fact of the rebate liability, X incurs $1,200 for the 1992 taxable year. Because economic performance (payment) with respect to the remaining $800 does not occur until October 15, 1993 (more than $8^1/_2$ months after the end of 1992), X cannot use the recurring item exception for this portion of the liability (see § 1.461-5). Thus, the $800 is not incurred by X until the 1993 taxable year. If, instead of making the cash payments to A during 1993, X adjusts the price of hardware purchased by A that is delivered to A during 1993, X's “payment” occurs as X would otherwise be required to recognize income resulting from a disposition at an unreduced price.

Example 3. Awards, prizes, and jackpots. (i) W corporation, a calendar year, accrual method taxpayer, produces and sells breakfast cereal. W conducts a contest pursuant to which the winner is entitled to $10,000 per year for a period of 20 years. On December 1, 1992, A is declared the winner of the contest and is paid $10,000 by W. In addition, on December 1 of each of the next nineteen years, W pays $10,000 to A.
(ii) Under paragraph (g)(4) of this section, economic performance with respect to the $200,000 contest liability occurs as each of the $10,000 payments is made by W to A. Consequently, $10,000 is incurred by W for the 1992 taxable year and for each of the succeeding nineteen taxable years.

Example 4. Awards, prizes, and jackpots. (i) Y corporation, a calendar year, accrual method taxpayer, owns a casino that contains progressive slot machines. A progressive slot machine provides a guaranteed jackpot amount that increases as money is gambled through the machine until the jackpot is won or until a maximum predetermined amount is reached. On

July 1, 1993, the guaranteed jackpot amount on one of Y's slot machines reaches the maximum predetermined amount of $50,000. On October 1, 1994, the $50,000 jackpot is paid to B.
(ii) Under paragraph (g)(4) of this section, economic performance with respect to the $50,000 jackpot liability occurs on the date the jackpot is paid to B. Consequently, $50,000 is incurred by Y for the 1994 taxable year.

Example 5. Insurance, warranty, and service contracts. (i) V corporation, a calendar year, accrual method taxpayer, manufactures toys. V enters into a contract with W, an unrelated insurance company, on December 15, 1992. The contract obligates V to pay W a premium of $500,000 before the end of 1995. The contract obligates W to satisfy any liability of V resulting from claims made during 1993 or 1994 against V by any third party for damages attributable to defects in toys manufactured by V. Pursuant to the contract, V pays W a premium of $500,000 on October 1, 1995.
(ii) Assuming the arrangement constitutes insurance, under paragraph (g)(5) of this section economic performance occurs as the premium is paid. Thus, $500,000 is incurred by V for the 1995 taxable year.

Example 6. Insurance, warranty, and service contracts. (i) Y corporation, a calendar year, accrual method taxpayer, is a common carrier. On December 15, 1992, Y enters into a contract with Z, an unrelated insurance company, under which Z must satisfy any liability of Y that arises during the succeeding 5 years for damages under a workers compensation act or out of any tort, provided the event that causes the damages occurs during 1993 or 1994. Under the contract, Y pays $360,000 to Z on December 31, 1993.
(ii) Assuming the arrangement constitutes insurance, under paragraph (g)(5) of this section economic performance occurs as the premium is paid. Consequently, $360,000 is incurred by Y for the 1993 taxable year. The period for which the $360,000 amount is permitted to be taken into account is determined under the capitalization rules because the insurance contract is an asset having a useful life extending substantially beyond the close of the taxable year.

Example 7. Insurance, warranty, and service contracts. Assume the same facts as in *Example 6,* except that Y is obligated to pay the first $5,000 of any damages covered by the arrangement with Z. Y is, in effect, self-insured to the extent of this $5,000 "deductible." Thus, under paragraph (g)(2) of this section, economic performance with respect to the $5,000 liability does not occur until the amount is paid to the person to which the tort or workers compensation liability is owed.

Example 8. Taxes. (i) The laws of State A provide that every person owning personal property located in State A on the first day of January shall be liable for tax thereon and that a lien for the tax shall attach as of that date. In addition, the laws of State A provide that 60% of the tax is due on the first day of December following the lien date and the

remaining 40% is due on the first day of July of the succeeding year. On January 1, 1992, X corporation, a calendar year, accrual method taxpayer, owns personal property located in State A. State A imposes a $10,000 tax on S with respect to that property on January 1, 1992. X pays State A $6,000 of the tax on December 1, 1992, and the remaining $4,000 on July 1, 1993.

(ii) Under paragraph (g)(6) of this section, economic performance with respect to $6,000 of the tax liability occurs on December 1, 1992. Consequently, $6,000 is incurred by X for the 1992 taxable year. Economic performance with respect to the remaining $4,000 of the tax liability occurs on July 1, 1993. If X has adopted the recurring item exception described in § 1.461-5 as a method of accounting for taxes, and as of December 31, 1992, all events have occurred that determine the liability of X for the remaining $4,000, X also incurs $4,000 for the 1992 taxable year. If X does not adopt the recurring item exception method, the $4,000 is not incurred by X until the 1993 taxable year.

(h) ***Liabilities arising under the Nuclear Waste Policy Act of 1982.*** Notwithstanding the principles of paragraph (d) of this section, economic performance with respect to the liability of an owner or generator of nuclear waste to make payments to the Department of Energy ("DOE") pursuant to a contract required by the Nuclear Waste Policy Act of 1982 (Pub. L. 97-425, 42 U.S.C. 10101-10226 (1982)) occurs as each payment under the contract is made to DOE and not when DOE satisfies its obligations under the contract. This rule applies to the continuing fee required by 42 U.S.C. 10222(a)(2) (1982), as well as the one-time fee required by 42 U.S.C. 10222 (a)(3) (1982). For rules relating to when economic performance occurs with respect to interest, see paragraph (e) of this section.

(i) [Reserved]

(j) ***Contingent liabilities.*** [Reserved]

(k) ***Special effective dates*** —

(1) ***In general.*** Except as otherwise provided in this paragraph (k), section 461(h) and this section apply to liabilities that would, under the law in effect before the enactment of section 461(h), be allowable as a deduction or otherwise incurred after July 18, 1984. For example, the economic performance requirement applies to all liabilities arising under a workers compensation act or out of any tort that would, under the law in effect before the enactment of section 461(h), be incurred after July 18, 1984. For taxable years ending before April 7, 1995, see Q&A-2 of § 1.461-7T (as it appears in 26 CFR part 1 revised April 1, 1995), which provides an election to make this change in method of accounting applicable to either the portion of the first taxable year that occurs after July 18, 1984 (part-year change method), or the entire first taxable year ending after July 18, 1984 (full-year change method). With respect to the effective date rules for interest, section 461(h) applies to interest accruing under any obligation (whether or not evidenced by a debt instrument) if the obligation is incurred in any transaction occurring after June 8, 1984, and is not incurred under a written contract which was binding on March 1, 1984, and at all times thereafter until the obligation is incurred. Interest accruing under an obligation described in the preceding sentence is subject to section 461(h) even if the interest accrues before July 19, 1984. Similarly, interest accruing under any obligation incurred in a transaction occurring before June 9, 1984, (or under a written contract which was binding on March 1, 1984, and at all times thereafter until the obligation is incurred) is not subject to section 461(h) even to the extent the interest accrues after July 18, 1984.

(2) ***Long-term contracts.*** Except as otherwise provided in paragraph (M)(2) of this section, in the case of liabilities described in paragraph (d)(2)(ii) of this section (relating to long-term contracts), paragraph (d)(2)(ii) of this section applies to liabilities that would, but for the enactment of section 461(h), be allowable as a deduction or otherwise incurred for taxable years beginning after December 31, 1991.

(3) ***Payment liabilities.*** Except as otherwise provided in paragraph (m)(2) of this section, in the case of liabilities described in paragraph (g) of this section (other than liabilities arising under a workers compensation act or out of any tort described in paragraph (g)(2) of this section), paragraph (g) of this section applies to liabilities that would, but for the enactment of section 461(h), be allowable as a deduction or otherwise incurred for taxable years beginning after December 31, 1991.

(l) [Reserved]

(m) ***Change in method of accounting required by this section*** —

(1) ***In general.*** For the first taxable year ending after July 18, 1984, a taxpayer is granted the consent of the Commissioner to change its method of accounting for liabilities to comply with the provisions of this section pursuant to any of the following procedures:

(i) For taxable years ending before April 7, 1995, the part-year change in method election described in Q&A-2 through Q&A-6 and Q&A-8 through Q&A-10 of § 1.461-7T (as it appears in 26 CFR part 1 revised April 1, 1995);

(ii) For taxable years ending before April 7, 1995, the full-year change in method election described in Q&A-2 through Q&A-6 and Q&A-8 through Q&A-10 of § 1.461-7T (as it appears in 26 CFR part 1 revised April 1, 1995); or

(iii) For taxable years ending before April 7, 1995, if no election is made, the cut-off method described in Q&A-1 and Q&A-11 of § 1.461-7T (as it appears in 26 CFR part 1 revised April 1, 1995).

(2) ***Change in method of accounting for long-term contracts and payment liabilities*** —

(i) ***First taxable year beginning after December 31, 1991.*** For the first taxable year beginning after December 31, 1991, a taxpayer is granted the consent of the Commissioner to change its method of accounting for long-term contract liabilities described in paragraph (D)(2)(ii) of this section and payment liabilities described in paragraph (g) of this section (other than liabilities arising under a workers compensation act or out of any tort described in paragraph (g)(2) of this section) to comply with the provisions of this section. The change must be made in accordance with paragraph (m)(1)(ii) or (m)(1)(iii) of this section, except the effective date is the first day of the first taxable year beginning December 31, 1991.

(ii) ***Retroactive change in method of accounting for long-term contracts and payment liabilities.*** For the first taxable year beginning after December 31, 1989, or the first taxable year beginning after December 31, 1990, a taxpayer is granted the consent of the Commissioner to change its method of accounting for long-term contract liabilities described in paragraph (d)(2)(ii) of this section and payment liabilities described in paragraph (g) of this section (other than liabilities arising under a workers compensation act or out of any tort described in paragraph (g)(2) of this section) to comply with the provisions of this section. The change must be made in accordance with paragraph (m)(1)(ii) or (m)(1)(iii) of this section, except the effective date is the first day of the first taxable year beginning after December 31, 1989, or the first day of the first taxable year beginning after December 31, 1990. For taxable years ending before April 7,

1995, the taxpayer may make the change in method of accounting, including a full-year change in method election under paragraph (m)(1)(ii) of this section and Q&A-5 of § 1.461-7T (as it appears in 26 CFR part 1 revised April 1, 1995), by filing an amended return for such year, provided the amended return is filed on or before October 7, 1992.

[T.D. 8408, 57 FR 12421, Apr. 10, 1992, as amended by T.D. 8491, 58 FR 53135, Oct. 14, 1993; T.D. 8593, 60 FR 18743, Apr. 13, 1995; T.D. 8820, 64 FR 26851, May 18, 1999; T.D. 8408, 69 FR 44597, July 27, 2004]

§ 1.461-5 Recurring item exception.

(a) ***In general.*** Except as otherwise provided in paragraph (c) of this section, a taxpayer using an accrual method of accounting may adopt the recurring item exception described in paragraph (b) of this section as method of accounting for one or more types of recurring items incurred by the taxpayer. In the case of the "other payment liabilities" described in § 1.461-4(g)(7), the Commissioner may provide for the application of the recurring item exception by regulation, revenue procedure or revenue ruling.

(b) ***Requirements for use of the exception*** —

(1) ***General rule.*** Under the recurring item exception, a liability is treated as incurred for a taxable year if—

(i) As of the end of that taxable year, all events have occurred that establish the fact of the liability and the amount of the liability can be determined with reasonable accuracy;

(ii) Economic performance with respect to the liability occurs on or before the earlier of—

(A) The date the taxpayer files a timely (including extensions) return for that taxable year; or

(B) The 15th day of the 9th calendar month after the close of that taxable year;

(iii) The liability is recurring in nature; and

(iv) Either—

(A) The amount of the liability is not material; or

(B) The accrual of the liability for that taxable year results in a better matching of the liability with the income to which it relates than would result from accruing the liability for the taxable year in which economic performance occurs.

(2) ***Amended returns.*** A taxpayer may file an amended return treating a liability as incurred under the recurring item exception for a taxable year if economic performance with respect to the liability occurs after the taxpayer files a return for that year, but within $8^{1}/_{2}$ months after the close of that year.

(3) ***Liabilities that are recurring in nature.*** A liability is recurring if it can generally be expected to be incurred from one taxable year to the next. However, a taxpayer may treat such a liability as recurring in nature even if it is not incurred by the taxpayer in each taxable year. In addition, a liability that has never previously been incurred by a taxpayer may be treated as recurring if it is reasonable to expect that the liability will be incurred on a recurring basis in the future.

(4) ***Materiality requirement.*** For purposes of this paragraph (b):

(i) In determining whether a liability is material, consideration shall be given to the amount of the liability in absolute terms and in relation to the amount of other items of income and expense attributable to the same activity.

(ii) A liability is material if it is material for financial statement purposes under generally acepted accounting principles.

(iii) A liability that is immaterial for financial statement purposes under generally accepted accounting principles may be material for purposes of this paragraph (b).

(5) ***Matching requirement.***

(i) In determining whether the matching requirement of paragraph (b)(1)(iv)(B) of this section is satisfied, generally accepted accounting principles are an important factor, but are not dispositive.

(ii) In the case of a liability described in paragraph (g)(3) (rebates and refunds), paragraph (g)(4) (awards, prizes, and jackpots), paragraph (g)(5) (insurance, warranty, and service contracts), paragraph (g)(6) (taxes), or paragraph (h) (continuing fees under the Nuclear Waste Policy Act of 1982) of § 1.461-4, the matching requirement of paragraph (b)(1)(iv)(B) of this section shall be deemed satisfied.

(c) ***Types of liabilities not eligible for treatment under the recurring item exception.*** The recurring item exception does not apply to any liability of a taxpayer described in paragraph (e) (interest), paragraph (g)(2) (workers compensation, tort, breach of contract, and violation of law), or paragraph (g)(7) (other liabilities) of § 1.461-4. Moreover, the recurring item exception does not apply to any liability incurred by a tax shelter, as defined in section 461(i) and § 1.448-1T(b).

(d) ***Time and manner of adopting the recurring item exception —***

(1) ***In general.*** The recurring item exception is a method of accounting that must be consistently applied with respect to a type of item, or for all items, from one taxable year to the next in order to clearly reflect income. A taxpayer is permitted to adopt the recurring item exception as part of its method of accounting for any type of item for the first taxable year in which that type of item is incurred. Except as otherwise provided, the rules of section 446(e) and § 1.446-1(e) apply to changes to or from the recurring item exception as a method of accounting. For taxable years ending before April 7, 1995, see Q&A-7 of § 1.461-7T (as it appears in 26 CFR part 1 revised April 1, 1995) for rules concerning the time and manner of adopting the recurring item exception for taxable years that include July 19, 1984. For purposes of this section, items are to be classified by type in a manner that results in classifications that are no less inclusive than the classifications of production costs provided in the full-absorption regulations of § 1.471-11(b) and(c), whether or not the taxpayer is required to maintain inventories.

(2) ***Change to the recurring item exception method for the first taxable year beginning after December 31, 1991 —***

(i) ***In general.*** For the first taxable year beginning after December 31, 1991, a taxpayer is granted the consent of the Commissioner to change to the recurring item exception method of accounting. A taxpayer is also granted the consent of the Commissioner to expand or modify its use of the recurring item exception method for the first taxable year beginning after December 31, 1991. For each trade or business for which a taxpayer elects to use the recurring item exception method, the taxpayer must use the same method of change (cut-off or full-year change) it is using for that trade or business under § 1.461-4(m). For taxable year sending before April 7, 1995, see Q&A-11 of § 1.461-7T (as it appears in 26 CFR part 1 revised April 1, 1995) for an explanation of how amounts are taken into account under the cut-off method (except that, for purposes of this paragraph (d)(2), the change applies to all amounts otherwise

incurred on or after the first day of the first taxable year beginning after December 31, 1991). For taxable years ending before April 7, 1995, see Q&A-6 of § 1.461-7T (as it appears in 26 CFR part 1 revised April 1, 1995) for an explanation of how amounts are taken into account under the full-year change method (except that the change in method occurs on the first day of the first taxable year beginning after December 31, 1991). For taxable years ending before April 7, 1995, the full-year change in method may result in a section 481(a) adjustment that must be taken into account in the manner described in Q&A-8 and Q&A-9 of § 1.461-7T (as it appears in 26 CFR part 1 revised April 1, 1995) (except that the taxable year of change is the first taxable year beginning after December 31, 1991).

(ii) ***Manner of changing to the recurring item exception method.*** For the first taxable year beginning after December 31, 1991, a taxpayer may change to the recurring item exception method by accounting for the item on its timely filed original return for such taxable year (including extensions). For taxable years ending before April 7, 1995, the automatic consent of the Commissioner is limited to those items accounted for under the recurring item exception method on the timely filed return, unless the taxpayer indicates a wider scope of change by filing the statement provided in Q&A-7(b)(2) of § 1.461-7T (as it appears in 26 CFR part 1 revised April 1, 1995).

(3) ***Retroactive change to the recurring item exception method.*** For the first taxable year beginning after December 31, 1989, or December 31, 1990, a taxpayer is granted consent of the Commissioner to change to the recurring item exception method of accounting, provided the taxpayer complies with paragraph (d)(2) of this section on either the original return for such year or on an amended return for such year filed on or before October 7, 1991. For this purpose the effective date is the first day of the first taxable year beginning after December 31, 1989, or the first day of the first taxable year beginning after December 31, 1990. A taxpayer is also granted the consent of the Commissioner to expand or modify its use of the recurring item exception method for the first taxable year beginning after December 31, 1989, December 31, 1990, or December 31, 1991.

(e) ***Examples.*** The following examples illustrate the principles of this section:

Example 1. Requirements for use of the recurring item exception. (i) Y corporation, a calendar year, accrual method taxpayer, manufactures and distributes video cassette recorders. Y timely files its federal income tax return for each taxable year on the extended due date for the return (September 15, of the following taxable year). Y offers to refund the price of a recorder to any purchaser not satisfied with the recorder. During 1992, 100 purchasers request a refund of the $500 purchase price. Y refunds $30,000 on or before September 15, 1993, and the remaining $20,000 after such date but before the end of 1993.
(ii) Under paragraph (g)(3) of § 1.461-4, economic performance with respect to $30,000 of the refund liability occurs on September 15, 1993. Assume the refund is deductible (or allowable as an adjustment to gross receipts or cost of goods sold) when incurred. If Y does not adopt the recurring item exception with respect to rebates and refunds, the $30,000 refund is incurred by Y for the 1993 taxable year. However, if Y has properly adopted the recurring item exception method of accounting under this section, and as of December 31, 1992, all events have occurred that determine the fact of the liability for the $30,000 refund, Y incurs that amount for the 1992 taxable year. Because economic performance (payment) with respect to the remaining $20,000 occurs

> after September 15, 1993 (more than 8½ months after the end of 1992), that amount is not eligible for recurring item treatment under this section. Thus, the $20,000 amount is not incurred by Y until the 1993 taxable year.

Example 2. Requirements for use of the recurring item exception; amended returns. The facts are the same as in *Example 2,* except that Y files its income tax return for 1992 on March 15, 1993, and Y does not refund the price of any recorder before that date. Under paragraph (b)(1) of this section, the refund liability is not eligible for the recurring item exception because economic performance with respect to the refund does not occur before Y files a return for the taxable year for which the item would have been incurred under the exception. However, since economic performance occurs within 8½ months after 1992, Y may file an amended return claiming the $30,000 as incurred for its 1992 taxable year (see paragraph (b)(2) of this section).

[T.D. 8408, 57 FR 12427, Apr. 10, 1992, as amended by T.D. 8593, 60 FR 18743, Apr. 13, 1995]

§ 1.461-6 Economic performance when certain liabilities are assigned or are extinguished by the establishment of a fund.

(a) ***Qualified assignments of certain personal injury liabilities under section 130.*** In the case of a qualified assignment (within the meaning of section 130(c)), economic performance occurs as a taxpayer-assignor makes payments that are excludible from the income of the assignee under section 130(a).

(b) ***Section 468B.*** Economic performance occurs as a taxpayer makes qualified payments to a designated settlement fund under section 468B, relating to special rules for designated settlement funds.

(c) ***Payments to other funds or persons that constitute economic performance.*** [Reserved]

(d) ***Effective dates.*** The rules in paragraph (a) of this section apply to payments after July 18, 1984.

[T.D. 8408, 57 FR 12428, Apr. 10, 1992]

§ 1.465-1T Aggregation of certain activities (temporary).

(a) ***General rule.*** A partner in a partnership or an S corporation shareholder may aggregate and treat as a single activity—

(1) The holding, production, or distribution of more than one motion picture film or video tape by the partnership or S corporation,

(2) The farming (as defined in section 464 (e)) of more than one farm by the partnership or S corporation,

(3) The exploration for, or exploitation of, oil and gas resources with respect to more than one oil and gas property by the partnership or S corporation, or

(4) The exploration for, or exploitation of, geothermal deposits (within the meaning of section 613(e)(3)) with respect to more than one geothermal property by the partnership or S corporation.

Thus, for example, if a partnership or S corporation is engaged in the activity of exploring for, or exploiting, oil and gas resources with respect to 10 oil and gas properties, a partner or S corporation shareholder may aggregate those properties and treat the aggregated oil and gas activities as a single activity. If that

partnership or S corporation also is engaged in the activity of farming with respect to two farms, the partner or shareholder may aggregate the farms and treat the aggregated farming activities as a single separate activity. Except as provided in section 465(c)(2)(B)(ii), the partner or shareholder cannot aggregate the farming activity with the oil and gas activity.

(b) ***Effective date.*** This section shall apply to taxable years beginning after December 31, 1983 and before January 1, 1985.

(Secs. 465(c)(2)(B) and 7805 of the Internal Revenue Code of 1954 (98 Stat. 814, 68A Stat. 917; 26 U.S.C. 465(c)(2)(B) and 7805))

[T.D. 8012, 50 FR 9614, Mar. 11, 1985]

§ 1.465-8 General rules; interest other than that of a creditor.

(a) ***In general*** —

(1) ***Amounts borrowed.*** This section applies to amounts borrowed for use in an activity described in section 465(c)(1) or (c)(3)(A). Amounts borrowed with respect to an activity will not increase the borrower's amount at risk in the activity if the lender has an interest in the activity other than that of a creditor or is related to a person (other than the borrower) who has an interest in the activity other than that of a creditor. This rule applies even if the borrower is personally liable for the repayment of the loan or the loan is secured by property not used in the activity. For additional rules relating to the treatment of amounts borrowed from these persons, *see* § 1.465-20.

(2) ***Certain borrowed amounts excepted.***

(i) For purposes of determining a corporation's amount at risk, an interest in the corporation as a shareholder is not an interest in any activity of the corporation. Thus, amounts borrowed by a corporation from a shareholder may increase the corporation's amount at risk.

(ii) For purposes of determining a taxpayer's amount at risk in an activity of holding real property, paragraph (a)(1) of this section does not apply to financing that is secured by real property used in the activity and is either—

(A) Qualified nonrecourse financing described in section 465(b)(6)(B); or

(B) Financing that, if it were nonrecourse, would be financing described in section 465(b)(6)(B).

(b) ***Loans for which the borrower is personally liable for repayment*** —

(1) ***General rule.*** If a borrower is personally liable for the repayment of a loan for use in an activity, a person shall be considered a person with an interest in the activity other than that of a creditor only if the person has either a capital interest in the activity or an interest in the net profits of the activity.

(2) ***Capital interest.*** For the purposes of this section a capital interest in an activity means an interest in the assets of the activity which is distributable to the owner of the capital interest upon the liquidation of the activity. The partners of a partnership and the shareholders of an S corporation are considered to have capital interests in the activities conducted by the partnership or S corporation.

(3) ***Interest in net profits.*** For the purposes of this section it is not necessary for a person to have any incidents of ownership in the activity in order to have an interest in the net profits of the activity. For example, an employee or independent contractor any part of whose compensation is determined with reference to the net profits of the activity will be considered to have an interest in the net profits of the activity.

(4) ***Examples.*** The provisions of this paragraph may be illustrated by the following examples:

Example 1. A, the owner of a herd of cattle sells the herd to partnership BCD. BCD pays A $10,000 in cash and executes a note for $30,000 payable to A. Each of the three partners, B, C, and D, assumes personal liability for repayment of the amount owed A. In addition, BCD enters into an agreement with A under which A is to take care of the cattle for BCD in return for compensation equal to 6 percent of BCD's net profits from the activity. Because A has an interest in the net profits of BCD's farming activity, A is considered to have an interest in the activity other than that of a creditor. Accordingly, amounts payable to A for use in that activity do not increase the partners' amount at risk even though the partners assume personal liability for repayment.

Example 2. Assume the same facts as in *Example 1* except that instead of receiving compensation equal to 6 percent of BCD's net profits from the activity, A instead receives compensation equal to 1 percent of the gross receipts from the activity. A does not have a capital interest in BCD. A's interest in the gross receipts is not considered an interest in the net profits. Because B, C, and D assumed personal liability for the amounts payable to A, and A has neither a capital interest nor an interest in the net profits of the activity, A is not considered to have an interest in the activity other than that of a creditor with respect to the $30,000 loan. Accordingly, B, C, and D are at risk for their share of the loan if the other provisions of section 465 are met.

Example 3. Assume the same facts as in Example 1 except that instead of receiving compensation equal to 6 percent of BCD's net profits from the activity, A instead receives compensation equal to 6 percent of the net profits from the activity or $15,000, whichever is greater. A is considered to have an interest in the net profits from the activity and accordingly will be treated as a person with an interest in the activity other than that of a creditor.

(c) ***Nonrecourse loans secured by assets with a readily ascertainable fair market value*** —

(1) ***General rule.*** This paragraph shall apply in the case of a nonrecourse loan for use in an activity where the loan is secured by property which has a readily ascertainable fair market value. In the case of such a loan a person shall be considered a person with an interest in the activity other than that of a creditor only if the person has either a capital interest in the activity or an interest in the net profits of the activity.

(2) ***Example.*** The provisions of this paragraph (c) may be illustrated by the following example:

Example. X is an investor in an activity described in section 465(c)(1). In order to raise money for the investment, X borrows money from A, the promoter (the person who brought X together with other taxpayers for the purpose of investing in the activity). The loan is secured by stock unrelated to the activity which is listed on a national securities exchange. X's stock has a readily ascertainable fair market value. A does not have a capital interest in the activity or an interest in its net profits. Accordingly, with respect to the loan secured by X's stock, A does not have an interest in the activity other than that of a creditor.

(d) ***Nonrecourse loans secured by assets without a readily ascertainable fair market value*** —

(1) ***General rule.*** This paragraph shall apply in the case of a nonrecourse loan for use in an activity where the loan is secured by property which does not have a readily ascertainable fair market value. In the case of such a loan a person shall be considered a person with an interest in the activity other than that of a creditor if the person stands to receive financial gain (other than interest) from the activity or from the sale of interests in the activity. For the purposes of this section persons who stand to receive financial gain from the activity include persons who receive compensation for services rendered in connection with the organization or operation of the activity or for the sale of interests in the activity. Such a person will generally include the promoter of the activity who organizes the activity or solicits potential investors in the activity.

(2) ***Example.*** The provisions of this paragraph (d) may be illustrated by the following example:

Example. A is the promoter of an activity described in section 465(c)(1). As the promoter, A organizes the activity and solicits potential investors. For these services A is paid a flat fee of $130x. This fee is paid out of the amounts contributed by the investors to the activity. X, one of the investors in the activity, borrows money from A for use in the activity. X is not personally liable for repayment to A of the amount borrowed. As security for the loan, X pledges an asset which does not have a readily ascertainable fair market value. A is considered a person with an interest in the activity other than that of a creditor with respect to this loan because the asset pledged as security does not have a readily ascertainable fair market value, X is not personally liable for repayment of the loan, and A received financial gain from the activity. Accordingly, X's amount at risk in the activity is not increased despite the fact that property was pledged as security.

(e) ***Effective date.*** This section applies to amounts borrowed after May 3, 2004.

[T.D. 9124, 69 FR 24079, May 3, 2004; 69 FR 26305, May 12, 2004]

§ 1.465-20 Treatment of amounts borrowed from certain persons and amounts protected against loss.

(a) ***General rule.*** The following amounts are treated in the same manner as borrowed amounts for which the taxpayer has no personal liability and for which no security is pledged—

(1) Amounts that do not increase the taxpayer's amount at risk because they are borrowed from a person who has an interest in the activity other than that of a creditor or from a person who is related to a person (other than the taxpayer) who has an interest in the activity other than that of a creditor; and

(2) Amounts (whether or not borrowed) that are protected against loss.

(b) ***Interest other than that of a creditor; cross reference. See*** § 1.465-8 for additional rules relating to amounts borrowed from a person who has an interest in the activity other than that of a creditor or is related to a person (other than the taxpayer) who has an interest in the activity other than that of a creditor.

(c) ***Amounts protected against loss; cross reference. See*** § 1.465-6 for rules relating to amounts protected against loss.

(d) ***Effective date.*** This section applies to amounts borrowed after May 3, 2004.

[T.D. 9124, 69 FR 24079, May 3, 2004]

§ 1.465-27 Qualified nonrecourse financing.

(a) ***In general.*** Notwithstanding any provision of section 465(b) or the regulations under section 465(b), for an activity of holding real property, a taxpayer is considered at risk for the taxpayer's share of any qualified nonrecourse financing which is secured by real property used in such activity.

(b) ***Qualified nonrecourse financing secured by real property*** —

(1) ***In general.*** For purposes of section 465(b)(6) and this section, the term *qualified nonrecourse financing* means any financing—

(i) Which is borrowed by the taxpayer with respect to the activity of holding real property;

(ii) Which is borrowed by the taxpayer from a qualified person or represents a loan from any federal, state, or local government or instrumentality thereof, or is guaranteed by any federal, state, or local government;

(iii) For which no person is personally liable for repayment, taking into account paragraphs (b)(3), (4), and (5) of this section; and

(iv) Which is not convertible debt.

(2) ***Security for qualified nonrecourse financing*** —

(i) ***Types of property.*** For a taxpayer to be considered at risk under section 465(b)(6), qualified nonrecourse financing must be secured only by real property used in the activity of holding real property. For this purpose, however, property that is incidental to the activity of holding real property will be disregarded. In addition, for this purpose, property that is neither real property used in the activity of holding real property nor incidental property will be disregarded if the aggregate gross fair market value of such property is less than 10 percent of the aggregate gross fair market value of all the property securing the financing.

(ii) ***Look-through rule for partnerships.*** For purposes of paragraph (b)(2)(i) of this section, a borrower shall be treated as owning directly its proportional share of the assets in a partnership in which the borrower owns (directly or indirectly through a chain of partnerships) an equity interest.

(3) ***Personal liability; partial liability.*** If one or more persons are personally liable for repayment of a portion of a financing, the portion of the financing for which no person is personally liable may qualify as qualified nonrecourse financing.

(4) ***Partnership liability.*** For purposes of section 465(b)(6) and this paragraph (b), the personal liability of any partnership for repayment of a financing is disregarded and, provided the requirements contained in paragraphs (b)(1)(i), (ii), and (iv) of this section are satisfied, the financing will be treated as qualified nonrecourse financing secured by real property if—

(i) The only persons personally liable to repay the financing are partnerships;

(ii) Each partnership with personal liability holds only property described in paragraph (b)(2)(i) of this section (applying the principles of paragraph (b)(2)(ii) of this section in determining the property held by each partnership); and

(iii) In exercising its remedies to collect on the financing in a default or default-like situation, the lender may proceed only against property that is described in paragraph (b)(2)(i) of this section and that is held by the partnership or partnerships (applying the principles of paragraph (b)(2)(ii) of this section in determining the property held by the partnership or partnerships).

(5) ***Disregarded entities.*** Principles similar to those described in paragraph (b)(4) of this section shall apply in determining whether a financing of an entity that is disregarded for federal tax purposes under § 301.7701-3 of this chapter is treated as qualified nonrecourse financing secured by real property.

(6) ***Examples.*** The following examples illustrate the rules of this section:

Example 1. Personal liability of a partnership; incidental property. (i) X is a limited liability company that is classified as a partnership for federal tax purposes. X engages only in the activity of holding real property. In addition to real property used in the activity of holding real property, X owns office equipment, a truck, and maintenance equipment that it uses to support the activity of holding real property. X borrows $500 to use in the activity. X is personally liable on the financing, but no member of X and no other person is liable for repayment of the financing under local law. The lender may proceed against all of X's assets if X defaults on the financing.
(ii) Under paragraph (b)(2)(i) of this section, the personal property is disregarded as incidental property used in the activity of holding real property. Under paragraph (b)(4) of this section, the personal liability of X for repayment of the financing is disregarded and, provided the requirements contained in paragraphs (b)(1)(i), (ii), and (iv) of this section are satisfied, the financing will be treated as qualified nonrecourse financing secured by real property.

Example 2. Bifurcation of a financing. The facts are the same as in *Example 1,* except that A, a member of X, is personally liable for repayment of $100 of the financing. If the requirements contained in paragraphs (b)(1)(i), (ii), and (iv) of this section are satisfied, then under paragraph (b)(3) of this section, the portion of the financing for which A is not personally liable for repayment ($400) will be treated as qualified nonrecourse financing secured by real property.

Example 3. Personal liability; tiered partnerships. (i) UTP1 and UTP2, both limited liability companies classified as partnerships, are the only general partners in Y, a limited partnership. Y borrows $500 with respect to the activity of holding real property. The financing is a general obligation of Y. UTP1 and UTP2, therefore, are personally liable to repay the financing. Under section 752, UTP1's share of the financing is $300, and UTP2's share is $200. No person other than Y, UTP1, and UTP2 is personally liable to repay the financing. Y, UTP1, and UTP2 each hold only real property.
(ii) Under paragraph (b)(4) of this section, the personal liability of Y, UTP1, and UTP2 to repay the financing is disregarded and, provided the requirements of paragraphs (b)(1)(i), (ii), and (iv) of this section are satisfied, UTP1's $300 share of the financing and UTP2's $200 share of the financing will be treated as qualified nonrecourse financing secured by real property.

Example 4. Personal liability; tiered partnerships. The facts are the same as in *Example 3,* except that Y's general partners are UTP1 and B, an individual. Because B, an individual, is also personally liable to repay the $500 financing, the entire financing fails to satisfy the requirement in paragraph (b)(1)(iii) of this section. Accordingly, UTP1's $300 share of the financing will not be treated as qualified nonrecourse financing secured by real property.

Example 5. Personal liability; tiered partnerships. The facts are the same as in *Example 3,* except that Y is a limited liability company and UTP1 and UTP2 are not personally liable for the debt. However, UTP1 and UTP2 each pledge property as security for the loan that is other than real property used in the activity of holding real property and other than property that is incidental to the activity of holding real property. The fair market value of the property pledged by UTP1 and UTP2 is greater than 10 percent of the sum of the aggregate gross fair market value of the property held by Y and the aggregate gross fair market value of the property pledged by UTP1 and UTP2. Accordingly, the financing fails to satisfy the requirement in paragraph (b)(1)(iii) of this section by virtue of its failure to satisfy paragraph (b)(4)(iii) of this section. Therefore, the financing is not qualified nonrecourse financing secured by real property.

> *Example 6. Personal liability; Disregarded entity.* (i) X is a single member limited liability company that is disregarded as an entity separate from its owner for federal tax purposes under § 301.7701-3 of this chapter. X owns certain real property and property that is incidental to the activity of holding the real property. X does not own any other property. For federal tax purposes, A, the sole member of X, is considered to own all of the property held by X and is engaged in the activity of holding real property through X. X borrows $500 and uses the proceeds to purchase additional real property that is used in the activity of holding real property. X is personally liable to repay the financing, but A is not personally liable for repayment of the financing under local law. The lender may proceed against all of X's assets if X defaults on the financing.
> (ii) X is disregarded so that the assets and liabilities of X are treated as the assets and liabilities of A. However, A is not personally liable for the $500 liability. Provided that the requirements contained in paragraphs (b)(1)(i), (ii), and (iv) of this section are satisfied, the financing will be treated as qualified nonrecourse financing secured by real property with respect to A.

(c) ***Effective date.*** This section is effective for any financing incurred on or after August 4, 1998. Taxpayers, however, may apply this section retroactively for financing incurred before August 4, 1998.

[T.D. 8777, 63 FR 41421, Aug. 4, 1998]

§ 1.466-1 Method of accounting for the redemption cost of qualified discount coupons.

(a) ***Introduction.*** Section 466 permits taxpayers who elect to use the method of accounting description in section 466 to deduct the redemption cost (as defined in paragraph (b) of this section) of qualified discount coupons (as defined in paragraph (c) of this section) outstanding at the end of the taxable year and redeemed during the redemption period (within the meaning of paragraph (d)(2) of this section) in addition to the redemption cost of qualified discount coupons redeemed during the taxable year which

were not deducted for a prior taxable year. For the taxable year in which the taxpayer first uses this method of accounting, the taxpayer is not allowed to deduct the redemption costs of qualified discount coupons redeemed during the taxable year that would have been deductible for the prior taxable year had the taxpayer used this method of accounting for such prior year. (See paragraph (e) of this section for rules describing how this amount should be taken into account.) A taxpayer must use the accrual method of accounting for any trade or business for which an election is made under section 466. Furthermore, the taxpayer must make an election in accordance with the rules in section 466(d) and § 1.466-3 for that trade or business. The method of accounting in section 466 is applicable only to the taxpayer's redemption of qualified discount coupons. Section 466 does not apply to trading stamps or premium coupons, which are subject to the method of accounting in § 1.451-4, or to discount coupons that are not qualified discount coupons.

(b) ***Redemption costs*** —

(1) ***Costs deductible under section 466.*** The deduction allowed by section 466 applies only to the redemption cost of qualified discount coupons. The term “redemption cost” means an amount equal to:

(i) The lesser of:

(A) The amount of the discount stated on the coupon, or

(B) The cost incurred by the taxpayer for paying the discount; plus

(ii) The amount payable to the retailer (or other person redeeming the coupon from the person receiving the price discount) for services in redeeming the coupon.

The amount payable to the retailer or other person for services in redeeming the coupon is allowed only if the amount payable is stated on the coupon.

(2) ***Costs not deductible under section 466.*** The term “redemption cost” includes only the amounts stated in paragraph (b)(1) of this section. Amounts other than those mentioned in paragraph (b)(1) of this section cannot be deducted under the method of accounting described in section 466 even though such amounts are incurred in relation to the redemption of qualified discount coupons. Therefore, those amounts must be taken into account as if section 466 did not apply. Examples of such amounts are fees paid to the redemption center or clearinghouse and amounts payable to the retailer in excess of the amount stated on the coupon.

(c) ***Qualified discount coupons*** —

(1) ***General rule.*** In order for a discount coupon (as defined in paragraph (c)(2)(i) of this section) to be considered a qualified discount coupon, all of the following requirements must be met:

(i) The coupon must have been issued by and must be redeemable by the taxpayer;

(ii) The coupon must allow a discount on the purchase price of merchandise or other tangible personal property;

(iii) The face amount of the coupon must not exceed five dollars;

(iv) The coupon, by its terms, may not be used with other coupons to bring about a price discount reimbursable by the issuer of more than five dollars with respect to any item; and

(v) There must exist a redemption chain (as defined in paragraph (c)(2)(ii) of this section) with respect to the coupon.

(2) *Definitions* —

(i) ***Discount coupon.*** A discount coupon is a sales promotion device used to encourage the purchase of a specific product by allowing a purchaser of that product to receive a discount on its purchase price. The term "discount coupon" does not include trading stamps or premium coupons, which are subject to the method of accounting in § 1.451-4. A discount coupon may or may not be issued as part of a prior purchase. A discount coupon normally entitles its holders to receive nothing more than a reduction in the sales price of one of the issuer's products. The discount may be stated in terms of a cash amount, a percentage or fraction of the purchase price, a "two for the price of one" deal, or any other similar provision. A discount coupon need not be printed on paper in the form usually associated with coupons; it may be a token or other object so long as it functions as a coupon.

(ii) ***Redemption chain.*** A redemption chain exists when the issuer redeems the coupon from some person other than the customer who used the coupon to receive the price discount. Thus, in order to be treated as a qualified discount coupon, the coupon must not be issued by the person that initially redeems the coupon from the customer. For purposes of determining whether a redemption chain exists, corporations that are members of the same controlled group of corporations (as defined in section 1563(a)) as the issuer of the coupon shall be treated as the issuer. Thus, if the issuer of the coupon and the retailer that initially redeems the coupon from the customer are members of the same controlled group of corporations, the coupon shall not be treated as a qualified discount coupon.

(d) *Deduction for coupons redeemed during the redemption period* —

(1) ***General rule.*** Two special conditions must be met before the cost of redeeming qualified discount coupons during the redemption period can be deducted from the taxpayer's gross income for the taxable year preceding the redemption period. First, the qualified discount coupons must have been outstanding at the close of such taxable year. Second, the qualified discount coupons must have been received by the taxpayer before the close of the redemption period for that taxable year.

(2) ***Redemption period.*** The taxpayer can select any redemption period so long as the period does not extend longer than 6 months after the close of the taxapayer's taxable year. A change in the redemption period so selected shall be treated as a change in method of accounting.

(3) ***Coupons received.*** The deduction provided for in section 466(a)(1) is limited to the redemption costs associated with coupons that are actually received by the taxpayer within the redemption period. For purposes of this paragraph, if the issuer uses a redemption agent or clearinghouse to group, count, and verify coupons after they have been redeemed by a retailer, the coupons received by the redemption agent or clearinghouse will be

considered to have been received by the issuer. Nothing in section 466, however, allows deductions to be made on the basis of estimated redemptions, whether such estimates are made by either the issuer or some other party.

(e) *Transitional adjustment* —

(1) ***In general.*** An election to change from some other method of accounting for the redemption of discount coupons to the method of accounting described in section 466 is a change in method of accounting that requires a transitional adjustment. Unless the taxpayer can qualify for a waiver of the suspense account requirement as provided for in section 373(c) of the Revenue Act of 1978 (92

Stat. 2865), the taxpayer should compute the transitional adjustment described in section 481(a)(2) according to the rules contained in this section. This adjustment should be taken into account according to the special rules in subsections (e) and (f) of section 466.

(2) ***Net increase in taxable income.*** In the case of a transitional adjustment that would result in a net increase in taxable income under section 481(a)(2) for the year of change, that increase should be taken into income over a ten-year period consisting of the year of change and the immediately succeeding nine taxable years. For example, assume that A, a calendar year taxpayer, makes an election to use the method of accounting described in section 466 for the year 1980 and for subsequent years. Assume further that the amount of the transitional adjustment computed under section 481(a)(2) would result in a net increase in taxable income of $100 for 1980. Under these facts, A should increase taxable income for 1980 and each of the next nine taxable years by $10.

(3) ***Suspense account*** —

(i) ***In general.*** In the case of a transitional adjustment that would result in a net decrease in taxable income under section 481(a)(2) for the year of change, in lieu of applying section 481, the taxpayer must establish a separate suspense account for each trade or business for which the taxpayer has made an election to use section 466. The computation of the initial opening balance in the suspense account is described in paragraph (e)(3)(ii)(A) of this section. An initial adjustment to gross income for the year of election is described in paragraph (e)(3)(ii)(B) of this section. Annual adjustments to the suspense account are described in paragraph (e)(3)(iii)(A) of this section, and gross income adjustments are described in paragraph (e)(3)(iii)(B) of this section. Examples are provided in paragraph (e)(4) of this section. The effect of the suspense account is to defer some part of, or all of, the deduction of the transitional adjustment until the taxpayer no longer redeems discount coupons in connection with the trade or business to which the suspense account relates.

(ii) ***Establishing a suspense account*** —

(A) ***Initial opening balance.*** To compute the initial opening balance of the suspense account for the first taxable year for which the election to use section 466 is effective, the taxpayer must determine the dollar amount of the deduction that would have been allowed for qualified discount coupon redemption costs during the redemption period for each of the three immediately preceding taxable years had the election to use section 466 been in effect for those years. The initial opening balance of the suspense account is the largest such dollar amount reduced by the sum of the adjustments attributable to the change in method of accounting that increase income for the year of change.

(B) ***Initial year adjustment.*** If, in computing the initial opening balance, the largest dollar amount of deduction that would have been allowed in any of the three prior years exceeds the actual cost of redeeming qualified discount coupons received during the redemption period following the close of the year immediately preceding the year of election, the excess is included in income in the year of election. Section 481(b) does not apply to this increase in gross income.

(iii) ***Annual adjustments*** —

(A) ***Adjustment to the suspense account.*** Adjustments are made to the suspense account each year to account for fluctuations in coupon redemptions. To compute the annual adjustment, the taxpayer must determine the amount to be deducted under section 466(a)(1) for the taxable year. If the amount is less than the opening balance in the

suspense account for the taxable year, the balance in the suspense account is reduced by the difference. Conversely, if such amount is greater than the opening balance in the suspense account for the taxable year, the account is increased by the difference (but not to an amount in excess of the initial opening balance described in paragraph (e)(3)(ii) of this section). Therefore, the balance in the suspense account will never be greater than the initial opening balance in the suspense account determined in paragraph (e)(3)(ii) of this section. However, the balance in the suspense account after adjustments may be less than this initial opening balance in the suspense account.

(B) ***Gross income adjustments.*** Adjustments to the suspense account for years subsequent to the year of the election also produce adjustments in the taxpayer's gross income. Adjustments which reduce the balance in the suspense account reduce gross income for the year in which the adjustment to the suspense account is made. Adjustments which increase the balance in the suspense account increase gross income for the year in which the adjustment to the suspense account is made.

(4) ***Examples.***

(i) The provisions of paragraph (e)(3) of this section may be illustrated by the following examples:

Example 1. Assume that the issuer of qualified discount coupons makes a timely election under section 466 for its taxable year ending December 31, 1979, and does not select a coupon redemption period shorter than the statutory period of 6 months. Assume further that the taxpayer's qualified discount coupon redemption costs in the first 6 months of 1977, 1978, and 1979 were $7, $13, and $8 respectively, and that the accounting change adjustments that increase income for 1979 are $10. Since the accounting change adjustment that increases income for 1979, ($10), is greater than the taxpayer's discount coupon redemptions during the first 6 months of 1979 ($8), the net section 481(a)(2) adjustment for the year of change results in a positive adjustment. Because of this, a suspense account is not required. The taxpayer should instead follow the rules in section 466(f) and in paragraph (e)(2) of this section in order to take this positive transitional adjustment into account.

Example 2. Assume the same facts as in Example 1, except that the sum of the accounting change adjustments that increase income for 1979 is equal to $2. Under these facts the initial opening balance in the suspense account on January 1, 1979 would be $11 (that is, the largest dollar amount of qualified coupon redemption costs in the pertinent years ($13), reduced by the sum of the accounting change adjustments that increase income in the year of change ($2)). Since the coupon redemption costs taken into account in determining the initial opening balance ($13 in 1979) exceed the actual redemption costs in the first 6 months of the taxable year for which the election is first effective ($8 in 1979), the excess of $5 is added to gross income for the year of election (1979).

Example 3. Assume, in addition to the facts of Example 2, that coupon redemption costs during the redemption period for the 1979 taxable year are $7. Since the qualifying redemption costs ($7) during the redemption period for the taxable year are less than the opening balance in the suspense account ($11) the taxpayer must reduce the suspense account balance by the difference ($4). The taxpayer is also allowed to take a deduction equal to the amount of this adjustment to the suspense account. Thus, the net amount deductible

for the 1979 taxable year after taking into account the coupon redemptions during the redemption period, the amount deductible because of the decrease in the suspense account, and the initial year adjustment determined in Example 2 is $6 ($7 + $4−$5).

Example 4. Assume, in addition to the facts of Example 3, that coupon redemption costs during the redemption period for the 1980 taxable year are $10. Since the qualifying redemption costs during the redemption period for the taxable year ($10) exceed the opening balance of the suspense account at the beginning of the taxable year ($7), the suspense account must be increased by the difference ($3). The taxpayer must also include $3 in gross income for the taxable year. Thus, the net amount deductible for the 1980 taxable year is $7 ($10−$3).

Example 5. Assume, in addition to the facts of Example 4, that coupon redemption costs during the redemption period for the 1981 taxable year are $12. Since the qualifying redemption costs for the 1961 taxable year ($12) exceed the opening balance of the suspense account at the beginning of the taxable year ($10), the suspense account must be increased by the difference ($2) but not above the initial opening balance ($11). Thus, the taxpayer will increase the balance by $1. The taxpayer must also include $1 in gross income for the taxable year. Thus, the net amount deductible for the 1981 taxable year is $11 ($12−$1).

(ii) The following table summarizes examples (2) through (5):

	Years ending Dec. 31—					
	1977	**1978**	**1979**	**1980**	**1981**	**1982**
Facts:						
Actual coupon redemption costs in first six months	$7	$13	$8	$7	$10	$12
Accounting change adjustments that increase income in year of change			2			
Net adjustment decreasing income in year of change under sec. 481(a)(2)			6			
Adjustment to suspense account:						
Opening balance			11	7	10	11
Addition to account				3	1	
Reduction to account			(4)			
Opening balance for next year			7	10	11	
Amount deductible:						
Initial year adjustment			(5)			
Amount of deductible as actual coupon redemptions during redemption period			7	10	12	
Adjustment for increase in suspense account				(3)	(1)	
Adjustment for decrease in suspense account			4			
Net amount deductible for the year for coupons redeemed			6	7	11	

	Years ending Dec. 31—					
	1977	1978	1979	1980	1981	1982
during the redemption period						

(f) *Subchapter C transactions* —

(1) ***General rule.*** If a transfer of substantially all the assets of a trade or business in which discount coupons are redeemed is made to an acquiring corporation, and if the acquiring corporation determines its bases in these assets, in whole or part, with reference to the basis of these assets in the hands of the transferor, then for the purposes of section 466(e) the principles of section 381 and § 1.381(c)(4)-1 will apply. The application of this rule is not limited to the transactions described in section 381(a). Thus, the rule also applies, for example, to transactions described in section 351.

(2) ***Special rules.*** If, in the case of a transaction described in paragraph (f)(1) of this section, an acquiring corporation acquires assets that were used in a trade or business that was not subject to a section 466 election from a transferor that is owned or controlled directly (or indirectly through a chain of corporations) by the same interests, and if the acquiring corporation uses the acquired assets in a trade or business for which the acquiring corporation later makes an election to use section 466, then the acquiring corporation must establish a suspense account by taking into account not only its own experience but also the transferor's experience when the transferor held the assets in its trade or business. Furthermore, the transferor is not allowed a deduction for qualified discount coupons redeemed after the date of the transfer attributable to discount coupons issued by the transferor before the date of the transfer. Such redemptions shall be considered to be made by the acquiring corporation.

(3) ***Example.*** The provisions of paragraph (f)(2) of this section may be illustrated by the following example:

Example. Corporation S, a calendar year taxpayer, is a wholly owned subsidiary of Corporation P, a calendar year taxpayer. On December 31, 1982, S acquires from P sustantially all of the assets used in a trade or business in which qualified disount coupons are redeemed. P had not made an election under section 466 with respect to the redemption costs of the qualified discount coupons issued in connection with that trade or business. S makes an election to use section 466 for its taxable year ending December 31, 1983, for the trade or business in which the acquired assets are used, and selects a redemption period of 6 months. Assume that P's qualified discount coupon redemption costs in the first 6 months of 1981 and 1982 were $120 and $140 respectively. Assume further that S's qualified discount coupon redemption costs in the first 6 months of 1983 were $130, and that there are no accounting change adjustments that increase income with respect to the election. S must establish a suspense account by taking into account the largest dollar amount of deductions that would have been allowed under section 466(a)(1) for the 3 immediately preceding taxable years of P, including both P's and S's experience with respect to costs actually incurred during the redemption periods relating to those years. Thus, the initial opening balance of S's suspense account is $140. S must also make an initial year adjustment of $10 ($140-$130), which S must include in income for S's taxable year ending December 31, 1983. P may not take a deduction for the qualified

coupon redemptions made after December 31, 1982, that are attributable to coupons issued by P before December 31, 1982. Thus, none of the $130 qualified discount coupon redemption costs incurred by S during the first six months of 1983 may be deducted by P.

[T.D. 8022, 50 FR 18474, May 1, 1985, as amended at 50 FR 21046, May 22, 1985]

§ 1.466-2 Special protective election for certain taxpayers.

(a) ***General rule.*** Section 373(c) of the Revenue Act of 1978 (92 Stat. 2865) allows certain taxpayers, who in prior years have accounted for discount coupons under a method of accounting reasonably similar to the method described in § 1.451-4, to elect to treat that method of accounting as a proper one for those prior years. There are several differences between this protective election and the section 466(d) election. First, the protective election applies only to a single continuous period of taxable years the last year of which ends before January 1, 1979. Second, an otherwise qualifying protective election may apply to coupons which are discount coupons but which would not be treated as qualified discount coupons under Code section 466. Third, certain expenses such as the cost of redemption center service fees, and amounts that are payable to the retailer (or other person redeeming the coupons from the person receiving the price discount) for services in redeeming the coupons but that are not stated on the coupon, can be subtracted from gross receipts for prior years covered by a protective election (if treated as deductible under the accounting method for such years), even though such expenses would not be deductible under Code section 466.

(b) ***Requirements.*** In order to qualify for this special protective election, the following conditions must be met:

(1) For a continuous period of one or more prior taxable years, (the last year of which ends before Jan. 1, 1979), the taxpayer must have used a method of accounting for discount coupons that is reasonably similar to the method provided in § 1.451-4 or its predecessors under the Internal Revenue Code of 1954;

(2) The taxpayer must make an election under section 466 of the Internal Revenue Code of 1954 according to the rules contained in § 1.466-3 for its first taxable year ending after December 31, 1978; and

(3) The taxpayer must make an election under section 373(c) of the Revenue Act of 1978 according to the rules contained in § 1.466-4 for its first taxable year ending after December 31, 1978.

(c) ***Amount to be subtracted from gross receipts.*** The amount the taxpayer may subtract under this section for the redemption costs of coupons shall include only:

(1) Costs of the type permitted by § 1.451-4 to be included in the estimated average cost of redeeming coupons, plus

(2) Any amount designated or referred to on the coupon payable by the taxpayer to the person who allowed the discount on a sale by such person to the user of the coupon.

Nothing in this paragraph shall allow an item to be deducted more than once.

(d) ***Right to amend prior tax returns.*** This paragraph applies only to those taxpayers who have agreed in a prior year to discontinue the use of the method of accounting described in § 1.451-4 for discount coupon redemptions. If the taxpayer used such method of accounting on the original return filed for the prior taxable year, and if any such year is not closed under the statute of limitations or by reason of a closing agreement with the Internal Revenue Service, a taxpayer who has made a protective election may file an

amended return and a claim for refund for such years. In this amended return, the taxpayer should account for its discount coupon redemptions, according to the method of accounting described in § 1.451-4. This is not to be construed, however, to abrogate in any way the rules regarding the close of taxable years due to the statute of limitations or a binding closing agreement between the Internal Revenue Service and the taxpayer.

(e) ***Suspense account not required.*** If the following three conditions are satisfied, the taxpayer need not establish the suspense account otherwise required by section 466(e). First, the taxpayer must make a timely election under these rules to protect prior years. Second, the method of accounting used in those years must have been used for all discount coupons issued by the taxpayer in those years in all the taxpayer's separate trades or

businesses in which coupons were issued. Third, either before or after an amendment to the taxpayer's tax returns as described in paragraph (d) of this section, a method of accounting reasonably similar to the method of accounting described in § 1.451-4 must have been used for the taxable year ending on or before December 31, 1978. If these conditions are met, the taxpayer will treat the election of the method under section 466 as a change in method of accounting to which the rules in section 481 and the regulations thereunder apply.

(f) ***Definition: reasonably similar.*** For purposes of paragraphs (b)(1) and (e) of this section, a taxpayer will be considered to have used a method of accounting for discount coupons that is “reasonably similar” to the method of accounting provided in § 1.451-4 if the taxpayer followed the method of accounting described in § 1.451-4 as if that method were a valid method of accounting for discount coupon redemptions.

[T.D. 8022, 50 FR 18476, May 1, 1985]

§ 1.466-3 Manner of and time for making election under section 466.

(a) ***In general.*** Section 466 provides a special method of accounting for accrual basis taxpayers who issue qualified discount coupons (as defined in section 466(b)). In order to use the special method under section 466, a taxpayer must make an election with respect to the trade or business in connection with which the qualified discount coupons are issued. If a taxpayer issues qualified discount coupons in connection with more than one trade or business, the taxpayer may use the special method of accounting under section 466 only with respect to the qualified discount coupons issued in connection with a trade or business for which an election is made. The election must be made in the manner prescribed in this section. The election does not require the prior consent of the Internal Revenue Service. An election under section 466 is effective for the taxable year for which it is made and for all subsequent taxable years, unless the taxpayer secures the prior consent of the Internal Revenue Service to revoke such election.

(b) ***Manner of and time for making election*** —

(1) ***General rule.*** Except as provided in paragraph (b)(2) of this section, an election is made under section 466 and this section by filing a statement of election containing the information described in paragraph (c) of this section with the taxpayer's income tax return for the taxpayer's first taxable year for which the election is made. The election must be made not later than the time prescribed by law (including extensions thereof) for filing the income tax return for the first taxable year for which the election is made. Thus, the election may not be made for a taxable year by filing an amended income tax return after the time prescribed (including extensions) for filing the original return for such year.

(2) ***Transitional rule.*** If the last day of the time prescribed by law (including extensions thereof) for filing a taxpayer's income tax return for the taxpayer's first taxable year ending after December 31, 1978, falls before December 3, 1979, and the taxpayer does not make an election under section 466 with respect to such taxable year in the manner prescribed by paragraph (b)(1) of this section, an election is made under section 466 and this section with respect to such taxable year if—

(i) Within the time prescribed by law (including extensions thereof) for filing the taxpayer's income tax return for such taxable year, the taxpayer has made a reasonable effort to notify the Commissioner of the taxpayer's intent to make an election under section 466 with respect to such taxable year, and

(ii) Before January 2, 1980, the taxpayer files a statement of election

containing the information described in paragraph (c) of this section to be associated with the taxpayer's income tax return for such taxable year.

For purposes of paragraph (b)(2)(i) of this section, a reasonable effort to notify the Commissioner of an intent to make an election under section 466 with respect to a taxable year includes the timely filing of an income tax return for such taxable year if the taxable income reported on the return reflects a deduction for the redemption costs of qualified discount coupons as determined under section 466(a).

(c) ***Required information.*** The statement of election required by paragraph (b) of this section must indicate that the taxpayer (identified by name, address, and taxpayer identification number) is making an election under section 466 and must set forth the following information:

(1) A description of each trade or business for which the election is made;

(2) The first taxable year for which the election is made;

(3) The redemption period (as defined in section 466(c)(2)) for each trade or business for which the election is made;

(4) If the taxpayer is required to establish a suspense account under section 466(e) for a trade or business for which the election is made, the initial opening balance of such account (as defined in section 466(e)(2)) for each such trade or business; and

(5) In the case of an election under section 466 that results in a net increase in taxable income under section 481(a)(2), the amount of such net increase.

The statement of election should be made on a Form 3115, which need contain no information other than that required by this paragraph or paragraph (c) of § 1.466-4.

[T.D. 8022, 50 FR 18477, May 1, 1985]

§ 1.466-4 Manner of and time for making election under section 373(c) of the Revenue Act of 1978.

(a) ***In general.*** Section 373(c)(2) of the Revenue Act of 1978 (92 Stat. 2865) provides an election for taxpayers who satisfy the requirements of section 373(c)(2)(A) (i) and (ii) of the Act. The election is made with respect to a method of accounting for the redemption costs of discount coupons used by the electing

taxpayer in a continuous period of one or more taxable years ending before January 1, 1979. The election must be made in the manner prescribed by this section. The election does not require the prior consent of the Internal Revenue Service.

(b) ***Manner of and time for making election*** —

(1) ***General rule.*** Except as provided in paragraph (b)(2) of this section, the election under section 373(c) of the Revenue Act of 1978 is made by filing a statement of election containing the information described in paragraph (c) of this section with the taxpayer's income tax return for the taxpayer's first taxable year ending after December 31, 1978. The election must be made not later than the time prescribed by law (including extensions thereof) for filing the income tax return for the taxpayer's first taxable year ending after December 31, 1978. Thus, the election may not be made with an amended income tax return for such year filed after the time prescribed (including extensions) for filing the original return.

(2) ***Transitional rule.*** If the last day of the time prescribed by law (including extensions thereof) for filing a taxpayer's income tax return for the taxpayer's first taxable year ending after December 31, 1978, falls before December 3, 1979, and the taxpayer does not make an election in the manner prescribed by paragraph (b)(1) of this section, an election is made under section 373(c) of the Act and this section with respect to a continuous period if—

(i) Within the time prescribed by law (including extensions thereof) for filing the taxpayer's income tax return for the taxpayer's first taxable year ending after December 31, 1978, the taxpayer has made a reasonable effort to notify the Commissioner of the taxpayer's intent to make election under section 373(c) of the Act with respect to the continuous period, and

(ii) Before January 2, 1980, the taxpayer files a statement of election containing the information described in paragraph (c) of this section to be associated with the taxpayer's income tax return for the taxpayer's first taxable year ending after December 31, 1978.

(c) ***Required information.*** The statement of election required by paragraph (b) of this section must indicate that the taxpayer (identified by name, address, and taxpayer identification number) is making an election under section 373(c) of the Revenue Act of 1978 and must set forth the taxable years in the continuous period for which the election is made. The statement of election should be made on the same form 3115 on which the taxpayer has made a statement of election under section 466. The Form 3115 need contain no information other than that required by this paragraph or paragraph (c) of § 1466-3.

[T.D. 8022, 50 FR 18478, May 1, 1985]

§ 1.467-0 Table of contents.

This section lists the captions that appear in §§ 1.467-1 through 1.467-9.

§ 1.467-1 Treatment of lessors and lessees generally.

(a) Overview.

(1) In general.

(2) Cases in which rules are inapplicable.

(3) Summary of rules.

(i) Basic rules.

(ii) Special rules.

(4) Scope of rules.

(5) Application of other authorities.

(b) Method of accounting for section 467 rental agreements.

(c) Section 467 rental agreements.

(1) In general.

(2) Increasing or decreasing rent.

(i) Fixed rent.

(A) In general.

(B) Certain rent holidays disregarded.

(ii) Fixed rent allocated to a rental period.

(A) Specific allocation.

(*1*) In general.

(*2*) Rental agreements specifically allocating fixed rent.

(B) No specific allocation.

(iii) Contingent rent.

(A) In general.

(B) Certain contingent rent disregarded.

(3) Deferred or prepaid rent.

(i) Deferred rent.

(ii) Prepaid rent.

(iii) Rent allocated to a calendar year.

(iv) Examples.

(4) Rental agreements involving total payments of $250,000 or less.

(i) In general.

(ii) Special rules in computing amount described in paragraph (c)(4)(i) of this section.

(d) Section 467 rent.

(1) In general.

(2) Fixed rent for a rental period.

(i) Constant rental accrual.

(ii) Proportional rental accrual.

(iii) Section 467 rental agreement accrual.

(e) Section 467 interest.

(1) In general.

(2) Interest on fixed rent for a rental period.

(i) In general.

(ii) Section 467 rental agreements with adequate interest.

(3) Treatment of interest.

(f) Substantial modification of a rental agreement.

(1) Treatment as new agreement.

(i) In general.

(ii) Limitation.

(2) Post-modification agreement; in general.

(3) Other effects of a modification.

(4) Special rules.

(i) Carryover of character; leasebacks.

(ii) Carryover of character; long-term agreements.

(iii) Carryover of character; disqualified agreements.

(iv) Allocation of rent.

(v) Difference between aggregate rent and interest and aggregate payments.

(A) In general.

(B) Constant rental accrual prior to the modification.

(C) Agreements described in this paragraph (f)(4)(v)(C).

(vi) Principal purpose of tax avoidance.

(5) Definitions.

(6) Safe harbors.

(7) Special rules for certain transfers.

(i) In general.

(ii) Exception.

(g) Treatment of amounts payable by lessor to lessee.

(1) Interest.

(2) Other amounts. [Reserved]

(h) Meaning of terms.

(i) [Reserved]

(j) Computational rules.

(1) Counting conventions.

(2) Conventions regarding timing of rent and payments.

(i) In general.

(ii) Time amount is payable.

(3) Annualized fixed rent.

(4) Allocation of fixed rent within a period.

(5) Rental period length.

§ 1.467-2 Rent accrual for section 467 rental agreements without adequate interest.

(a) Section 467 rental agreements for which proportional rental accrual is required.

(b) Adequate interest on fixed rent.

(1) In general.

(2) Section 467 rental agreements that provide for a variable rate of interest.

(3) Agreements with both deferred and prepaid rent.

(c) Computation of proportional rental amount.

(1) In general.

(2) Section 467 rental agreements that provide for a variable rate of interest.

(d) Present value.

(e) Applicable Federal rate.

(1) In general.

(2) Source of applicable Federal rates.

(3) 110 percent of applicable Federal rate.

(4) Term of the section 467 rental agreement.

(i) In general.

(ii) Section 467 rental agreements with variable interest.

(f) Examples.

§ 1.467-3 Disqualified leasebacks and long-term agreements.

(a) General rule.

(b) Disqualified leaseback or long-term agreement.

(1) In general.

(2) Leaseback.

(3) Long-term agreement.

(i) In general.

(ii) Statutory recovery period.

(A) In general.

(B) Special rule for rental agreements relating to properties having different statutory recovery periods.

(c) Tax avoidance as principal purpose for increasing or decreasing rent.

(1) In general.

(2) Tax avoidance.

(i) In general.

(ii) Significant difference in tax rates.

(iii) Special circumstances.

(3) Safe harbors.

(4) Uneven rent test.

(i) In general.

(ii) Special rule for real estate.

(iii) Operating rules.

(d) Calculating constant rental amount.

(1) In general.

(2) Initial or final short periods.

(3) Method to determine constant rental amount; no short periods.

(i) Step 1.

(ii) Step 2.

(iii) Step 3.

(e) Examples.

§ 1.467-4 Section 467 loan.

(a) In general.

(1) Overview.

(2) No section 467 loan in the case of certain section 467 rental agreements.

(3) Rental agreements subject to constant rental accrual.

(4) Special rule in applying the provisions of § 1.467-7 (e), (f), or (g).

(b) Principal balance.

(1) In general.

(2) Section 467 rental agreements that provide for prepaid fixed rent and adequate interest.

(3) Timing of payments.

(c) Yield.

(1) In general.

(i) Method of determining yield.

(ii) Method of stating yield.

(iii) Rounding adjustments.

(2) Yield of section 467 rental agreements for which constant rental amount or proportional rental amount is computed.

(3) Yield for purposes of applying paragraph (a)(4) of this section.

(4) Determination of present values.

(d) Contingent payments.

(e) Section 467 rental agreements that call for payments before or after the lease term.

(f) Examples.

§ 1.467-5 Section 467 rental agreements with variable interest.

(a) Variable interest on deferred or prepaid rent.

(1) In general.

(2) Exceptions.

(b) Variable rate treated as fixed.

(1) In general.

(2) Variable interest adjustment amount.

(i) In general.

(ii) Positive or negative adjustment.

(3) Section 467 loan balance.

(c) Examples.

§ 1.467-6 Section 467 rental agreements with contingent payments. [Reserved]

§ 1.467-7 Section 467 recapture and other rules relating to dispositions and modifications.

(a) Section 467 recapture.

(b) Recapture amount.

(1) In general.

(2) Prior understated inclusion.

(3) Section 467 gain.

(i) In general.

(ii) Certain dispositions.

(c) Special rules.

(1) Gifts.

(2) Dispositions at death.

(3) Certain tax-free exchanges.

(i) In general.

(ii) Dispositions covered.

(A) In general.

(B) Transfers to certain tax-exempt organizations.

(4) Dispositions by transferee.

(5) Like-kind exchanges and involuntary conversions.

(6) Installment sales.

(7) Dispositions covered by section 170(e), 341(e)(12), or 751(c).

(d) Examples.

(e) Other rules relating to dispositions.

(1) In general.

(2) Treatment of section 467 loan.

(3) [Reserved]

(4) Examples.

(f) Treatment of assignments by lessee and lessee-financed renewals.

(1) Substitute lessee use.

(2) Treatment of section 467 loan.

(3) Lessor use.

(4) Examples.

(g) Application of section 467 following a rental agreement modification.

(1) Substantial modifications.

(i) Treatment of pre-modification items.

(ii) Computations with respect to post-modification items.

(iii) Adjustments.

(A) Adjustment relating to certain prepayments.

(B) Adjustment relating to retroactive beginning of lease term.

(iv) Coordination with rules relating to dispositions and assignments.

(A) Dispositions.

(B) Assignments.

(2) Other modifications.

(i) Computation of section 467 loan for modified agreement.

(ii) Change in balance of section 467 loan.

(iii) Section 467 rent and interest after the modification.

(iv) Applicable Federal rate.

(v) Modification effective within a rental period.

(vi) Other adjustments.

(vii) Coordination with rules relating to dispositions and assignments.

(viii) Exception for agreements entered into prior to effective date of section 467.

(3) Adjustment by Commissioner.

(4) Effective date of modification.

(5) Examples.

(h) Omissions or duplications.

(1) In general.

(2) Example.

§ 1.467-8 Automatic consent to change to constant rental accrual for certain rental agreements.

(a) General rule.

(b) Agreements to which automatic consent applies.

§ 1.467-9 Effective dates and automatic method changes for certain agreements.

(a) In general.

(b) Automatic consent for certain rental agreements.

(c) Application of regulation project IA-292-84 to certain leasebacks and long-term agreements.

(d) Entered into.

(e) Change in method of accounting.

(1) In general.

(2) Application of regulation project IA-292-84.

(3) Automatic change procedures.

[T.D. 8820, 64 FR 26851, May 18, 1999, as amended by T.D. 8917, 66 FR 1039, Jan. 5, 2001]

§ 1.467-1 Treatment of lessors and lessees generally.

(a) ***Overview*** —

(1) ***In general.*** When applicable, section 467 requires a lessor and lessee of tangible property to treat rents consistently and to use the accrual method of accounting (and time value of money principles) regardless of their overall method of accounting. In addition, in certain cases involving tax avoidance, the lessor and lessee must take rent and stated or imputed interest into account under a constant rental accrual method, pursuant to which the rent is treated as accruing ratably over the entire lease term.

(2) ***Cases in which rules are inapplicable.*** Section 467 applies only to leases (or other similar arrangements) that constitute section 467 rental agreements as defined in paragraph (c) of this section. For example, a rental agreement is not a section 467 rental agreement, and, therefore, is not subject to the provisions of this section and §§ 1.467-2 through 1.467-9 (the section 467 regulations), if it specifies equal amounts of rent for each month throughout the lease term and all payments of rent are due in the calendar year to which the rent relates (or in the preceding or

succeeding calendar year). In addition, the section 467 regulations do not apply to a rental agreement that requires total rents of $250,000 or less. For purposes of determining whether the agreement has total rents of $250,000 or less, certain specified contingent rent is disregarded.

(3) *Summary of rules* —

(i) ***Basic rules.*** Paragraph (c) of this section provides rules for determining whether a rental agreement is a section 467 rental agreement. Paragraphs (d) and (e) of this section provide rules for determining the amount of rent and interest, respectively, required to be taken into account by a lessor and lessee under a section 467 rental agreement. Paragraphs (f) through (h) and (j) of this section provide various definitions and special rules relating to the application of the section 467 regulations. Paragraph (i) of this section is reserved.

(ii) ***Special rules.*** Section 1.467-2 provides rules for section 467 rental agreements that have deferred or prepaid rents without providing for adequate interest. Section 1.467-3 provides rules for application of the constant rental accrual method, including criteria for determining whether an agreement is subject to this method. Section 1.467-4 provides rules for establishing and adjusting a section 467 loan (the amount that a lessor is deemed to have loaned to the lessee, or vice versa, pursuant to the application of the section 467 regulations). Section 1.467-5 provides rules for applying the section 467 regulations where a rental agreement requires payments of interest at a variable rate. Section 1.467-6, relating to the treatment of certain section 467 rental agreements with contingent payments, is reserved. Section 1.467-7 provides rules for the treatment of dispositions by a lessor of property subject to a section 467 rental agreement and the treatment of assignments by lessees and certain lessee-financed renewals of a section 467 rental agreement. Section 1.467-7 also provides rules for the treatment of modified rental agreements. Section 1.467-8 provides special transitional rules relating to the method of accounting for certain rental agreements entered into on or before May 18, 1999. Finally, § 1.467-9 provides the effective date rules for the section 467 regulations.

(4) ***Scope of rules.*** No inference should be drawn from any provision of this section or §§ 1.467-2 through 1.467-9 concerning whether—

(i) For Federal tax purposes, an arrangement constitutes a lease; or

(ii) For Federal tax purposes, any obligation of the lessee under a rental agreement is treated as rent.

(5) ***Application of other authorities.*** Notwithstanding section 467 and the regulations thereunder, other authorities such as section 446(b) clear-reflection-of-income principles, section 482, and the substance-over-form doctrine, may be applied by the Commissioner to determine the income and expense from a rental agreement (including the proper allocation of fixed rent under a rental agreement).

(b) ***Method of accounting for section 467 rental agreements.*** If a rental agreement is a section 467 rental agreement, as described in paragraph (c) of this section, the lessor and lessee must each take into account for any taxable year the sum of—

(1) The section 467 rent for the taxable year (as defined in paragraph (d) of this section); and

(2) The section 467 interest for the taxable year (as defined in paragraph (e) of this section).

(c) *Section 467 rental agreements* —

(1) ***In general.*** Except as otherwise provided in paragraph (c)(4) of this section, the term *section 467 rental agreement* means a rental agreement, as defined in paragraph (h)(12) of this section, that has increasing or decreasing rents (as described in paragraph (c)(2) of this section), or deferred or prepaid rents (as described in paragraph (c)(3) of this section).

(2) ***Increasing or decreasing rent*** —

(i) ***Fixed rent*** —

(A) ***In general.*** A rental agreement has increasing or decreasing rent if the annualized fixed rent, as described in paragraph (j)(3) of this section, allocated to any rental period exceeds the annualized fixed rent allocated to any other rental period in the lease term.

(B) ***Certain rent holidays disregarded.*** Notwithstanding the provisions of paragraph (c)(2)(i)(A) of this section, a rental agreement does not have increasing or decreasing rent if the increasing or decreasing rent is solely attributable to a rent holiday provision allowing reduced rent (or no rent) for a period of three months or less at the beginning of the lease term.

(ii) ***Fixed rent allocated to a rental period*** —

(A) ***Specific allocation*** —

(*1*) ***In general.*** If a rental agreement provides a specific allocation of fixed rent, as described in paragraph (c)(2)(ii)(A)(*2*) of this section, the amount of fixed rent allocated to each rental period during the lease term is the amount of fixed rent allocated to that period by the rental agreement.

(*2*) ***Rental agreements specifically allocating fixed rent.*** A rental agreement specifically allocates fixed rent if the rental agreement unambiguously specifies, for periods no longer than a year, a fixed amount of rent for which the lessee becomes liable on account of the use of the property during that period, and the total amount of fixed rent specified is equal to the total amount of fixed rent payable under the lease. For example, a rental agreement providing that rent is $100,000 per calendar year, and providing for total payments of fixed rent equal to the total amount specified, specifically allocates rent. A rental agreement stating only when rent is payable does not specifically allocate rent.

(B) ***No specific allocation.*** If a rental agreement does not provide a specific allocation of fixed rent (for example, because the total amount of fixed rent specified is not equal to the total amount of fixed rent payable under the lease), the amount of fixed rent allocated to a rental period is the amount of fixed rent payable during that rental period. If an amount of fixed rent is payable before the beginning of the lease term, it is allocated to the first rental period in the lease term. If an amount of fixed rent is payable after the end of the lease term, it is allocated to the last rental period in the lease term.

(iii) ***Contingent rent*** —

(A) ***In general.*** A rental agreement has increasing or decreasing rent if it requires (or may require) the payment of contingent rent (as defined in paragraph (h)(2) of this section), other than contingent rent described in paragraph (c)(2)(iii)(B) of this section.

(B) ***Certain contingent rent disregarded.*** For purposes of this paragraph (c)(2)(iii), rent is disregarded to the extent it is contingent as the result of one or more of the following provisions—

(*1*) A qualified percentage rents provision, as defined in paragraph (h)(8) of this section;

(*2*) An adjustment based on a reasonable price index, as defined in paragraph (h)(10) of this section;

(*3*) A provision requiring the lessee to pay third-party costs, as defined in paragraph (h)(15) of this section;

(*4*) A provision requiring the payment of late payment charges, as defined in paragraph (h)(4) of this section;

(*5*) A loss payment provision, as defined in paragraph (h)(7) of this section;

(*6*) A qualified TRAC provision, as defined in paragraph (h)(9) of this section;

(*7*) A residual condition provision, as defined in paragraph (h)(13) of this section;

(*8*) A tax indemnity provision, as defined in paragraph (h)(14) of this section;

(*9*) A variable interest rate provision, as defined in paragraph (h)(16) of this section; or

(*10*) Any other provision provided in regulations or other published guidance issued by the Commissioner, but only if the provision is designated as contingent rent to be disregarded for purposes of this paragraph (c)(2)(iii).

(3) ***Deferred or prepaid rent*** —

(i) ***Deferred rent.*** A rental agreement has deferred rent under this paragraph (c)(3) if the cumulative amount of rent allocated as of the close of a calendar year (determined under paragraph (c)(3)(iii) of this section) exceeds the cumulative amount of rent payable as of the close of the succeeding calendar year.

(ii) ***Prepaid rent.*** A rental agreement has prepaid rent under this paragraph (c)(3) if the cumulative amount of rent payable as of the close of a calendar year exceeds the cumulative amount of rent allocated as of the close of the succeeding calendar year (determined under paragraph (c)(3)(iii) of this section).

(iii) ***Rent allocated to a calendar year.*** For purposes of this paragraph (c)(3), the rent allocated to a calendar year is the sum of—

(A) The fixed rent allocated to any rental period (determined under paragraph (c)(2)(ii) of this section) that begins and ends in the calendar year;

(B) A ratable portion of the fixed rent allocated to any other rental period that begins or ends in the calendar year; and

(C) Any contingent rent that accrues during the calendar year.

(iv) ***Examples.*** The following examples illustrate the application of this paragraph (c)(3):

> *Example 1.* (i) A and B enter into a rental agreement that provides for the lease of property to begin on January 1, 2000, and end on December 31, 2003. The rental

agreement provides that rent of $100,000 accrues during each year of the lease term. Under the rental agreement, no rent is payable during calendar year 2000, a payment of $100,000 is to be made on December 31, 2001, and December 31, 2002, and a payment of $200,000 is to be made on December 31, 2003. A and B both select the calendar year as their rental period. Thus, the amount of rent allocated to each rental period under paragraph (c)(2)(ii) of this section is $100,000. Therefore, the rental agreement does not have increasing or decreasing rent as described in paragraph (c)(2)(i) of this section.
(ii) Under paragraph (c)(3)(i) of this section, a rental agreement has deferred rent if, at the close of a calendar year, the cumulative amount of rent allocated under paragraph (c)(3)(iii) of this section exceeds the cumulative amount of rent payable as of the close of the succeeding year. In this example, there is no deferred rent: the rent allocated to 2000 ($100,000) does not exceed the cumulative rent payable as of December 31, 2001 ($100,000); the rent allocated to 2001 and preceding years ($200,000) does not exceed the cumulative rent payable as of December 31, 2002 ($200,000); the rent allocated to 2002 and preceding years ($300,000) does not exceed the cumulative rent payable as of December 31, 2003 ($400,000); and the rent allocated to 2003 and preceding years ($400,000) does not exceed the cumulative rent payable as of December 31, 2004 ($400,000). Therefore, because the rental agreement does not have increasing or decreasing rent and does not have deferred or prepaid rent, the rental agreement is not a section 467 rental agreement.

Example 2. (i) A and B enter into a rental agreement that provides for a 10-year lease of personal property, beginning on January 1, 2000, and ending on December 31, 2009. The rental agreement provides for accruals of rent of $10,000 during each month of the lease term. Under paragraph (c)(3)(iii) of this section, $120,000 is allocated to each calendar year. The rental agreement provides for a $1,200,000 payment on December 31, 2000.
(ii) The rental agreement does not have increasing or decreasing rent as described in paragraph (c)(2)(i) of this section. The rental agreement, however, provides prepaid rent under paragraph (c)(3)(ii) of this section because the cumulative amount of rent payable as of the close of a calendar year exceeds the cumulative amount of rent allocated as of the close of the succeeding calendar year. For example, the cumulative amount of rent payable as of the close of 2000 ($1,200,000 is payable on December 31, 2000) exceeds the cumulative amount of rent allocated as of the close of 2001, the succeeding calendar year ($240,000). Accordingly, the rental agreement is a section 467 rental agreement.

(4) ***Rental agreements involving total payments of $250,000 or less —***

(i) ***In general.*** A rental agreement is not a section 467 rental agreement if, as of the agreement date (as defined in paragraph (h)(1) of this section), it is not reasonably expected that the sum of the aggregate amount of rental payments under the rental agreement and the aggregate value of all other consideration to be received for the use of property (taking into account any payments of contingent rent, and any other contingent consideration) will exceed $250,000.

(ii) ***Special rules in computing amount described in paragraph (c)(4)(i) of this section of this section.*** The following rules apply in determining the amount described in paragraph (c)(4)(i) of this section:

(A) Stated interest on deferred rent is not taken into account. However, the Commissioner may recharacterize a portion of stated interest as additional rent if a rental agreement provides for interest on deferred rent at a rate that, in light of all of the facts and circumstances, is clearly greater than the arm's-length rate of interest that would have been charged in a lending transaction between the lessor and lessee.

(B) Consideration that does not involve a cash payment is taken into account at its fair market value. A liability that is either assumed or secured by property acquired subject to the liability is taken into account at the sum of its remaining principal amount and accrued interest (if any) thereon or, in the case of an obligation originally issued at a discount, at the sum of its adjusted issue price and accrued qualified stated interest (if any), within the meaning of § 1.1273-1(c)(1).

(C) All rental agreements that are part of the same transaction or a series of related transactions involving the same lessee (or any related person) and the same lessor (or any related person) are treated as a single rental agreement. Whether two or more rental agreements are part of the same transaction or a series of related transactions depends on all the facts and circumstances.

(D) If an agreement includes a provision increasing or decreasing rent payable solely as a result of an adjustment based on a reasonable price index, the amount described in paragraph (c)(4)(i) of this section must be determined as if the applicable price index did not change during the lease term.

(E) If an agreement includes a variable interest rate provision (as defined in paragraph (h)(16) of this section), the amount described in paragraph (c)(4)(i) of this section must be determined by using fixed rate substitutes (determined in the same manner as under § 1.1275-5(e), treating the agreement date as the issue date) for the variable rates of interest applicable to the lessor's indebtedness.

(F) Contingent rent described in paragraphs (c)(2)(iii)(B)(*3*) through (*8*) of this section is not taken into account.

(d) ***Section 467 rent*** —

(1) ***In general.*** The section 467 rent for a taxable year is the sum of—

(i) The fixed rent for any rental period (determined under paragraph (d)(2) of this section) that begins and ends in the taxable year;

(ii) A ratable portion of the fixed rent for any other rental period beginning or ending in the taxable year; and

(iii) In the case of a section 467 rental agreement that provides for contingent rent, the contingent rent that accrues during the taxable year.

(2) *Fixed rent for a rental period* —

(i) ***Constant rental accrual.*** In the case of a section 467 rental agreement that is a disqualified leaseback or long-term agreement (as described in § 1.467-3(b)), the fixed rent for a rental period is the constant rental amount (as determined under § 1.467-3(d)).

(ii) ***Proportional rental accrual.*** In the case of a section 467 rental agreement that is not described in paragraph (d)(2)(i) of this section, and does not provide adequate interest on fixed rent (as determined under § 1.467-2(b)), the fixed rent for a rental period is the proportional rental amount (as determined under § 1.467-2(c)).

(iii) ***Section 467 rental agreement accrual.*** In the case of a section 467 rental agreement that is not described in either paragraph (d)(2)(i) or (ii) of this section, the fixed rent for a rental period is the amount of fixed rent allocated to the rental period under the rental agreement, as determined under paragraph (c)(2)(ii) of this section.

(e) *Section 467 interest* —

(1) ***In general.*** The section 467 interest for a taxable year is the sum of—

(i) The interest on fixed rent for any rental period that begins and ends in the taxable year;

(ii) A ratable portion of the interest on fixed rent for any other rental period beginning or ending in the taxable year; and

(iii) In the case of a section 467 rental agreement that provides for contingent rent, any interest that accrues on the contingent rent during the taxable year.

(2) *Interest on fixed rent for a rental period* —

(i) ***In general.*** Except as provided in paragraph (e)(2)(ii) of this section and § 1.467-5(b)(1)(ii), the interest on fixed rent for a rental period is equal to the product of—

(A) The principal balance of the section 467 loan (as described in § 1.467-4(b)) at the beginning of the rental period; and

(B) The yield of the section 467 loan (as described in § 1.467-4(c)).

(ii) ***Section 467 rental agreements with adequate interest.*** Except in the case of a section 467 rental agreement that is a disqualified leaseback or long-term agreement, if a section 467 rental agreement provides adequate interest under § 1.467-2(b)(1)(i) (agreements with no deferred or prepaid rent) or § 1.467-2(b)(1)(ii) (agreements with adequate interest stated at a single fixed rate), the interest on fixed rent for a rental period is the amount of interest provided in the rental agreement for the period.

(3) ***Treatment of interest.*** If the section 467 interest for a rental period is a positive amount, the lessor has interest income and the lessee has an interest expense. If the section 467 interest for a rental period is a negative amount, the lessee has interest income and the lessor has an interest expense. Section 467 interest is treated as interest for all purposes of the Internal Revenue Code.

(f) *Substantial modification of a rental agreement* —

(1) *Treatment as new agreement* —

(i) ***In general.*** If a substantial modification of a rental agreement occurs after June 3, 1996, the post-modification agreement is treated as a new agreement and the date on which the modification occurs is treated as the agreement date in applying section 467 and the regulations thereunder to the post-modification agreement. Thus, for example, the post-modification agreement is treated as a new agreement entered into on the date the modification occurs for purposes of determining whether it is a section 467 rental agreement under this section, whether it is a disqualified leaseback or long-term agreement under § 1.467-3, and whether it is entered into after the applicable effective date in § 1.467-9.

(ii) ***Limitation.*** In the case of a substantial modification of a rental agreement occurring on or before May 18, 1999, this paragraph (f) applies only if—

(A) The rental agreement was a disqualified leaseback or long-term agreement before the modification and the agreement date, determined without regard to the modification, is after June 3, 1996; or

(B) The post-modification agreement would, after application of the rules in this paragraph (f) (other than the special rule for disqualified agreements in paragraph (f)(4)(iii) of this section), be a disqualified leaseback or long-term agreement.

(2) ***Post-modification agreement; in general.*** For purposes of determining whether a post-modification agreement is a section 467 rental agreement or a disqualified leaseback or long-term agreement under paragraph (f)(1) of this section, the terms of the post-modification agreement are, except as provided in paragraph (f)(4) of this section, only those terms that provide for rights and obligations relating to post-modification items (within the meaning of paragraph (f)(5)(iv) of this section).

(3) ***Other effects of a modification.*** For rules relating to amounts that must be taken into account following certain modifications, see § 1.467-7(g).

(4) ***Special rules*** —

(i) ***Carryover of character; leasebacks.*** If an agreement is a leaseback prior to its modification and the lessee prior to the modification (or a related person) is the lessee after the modification, the post-modification agreement is a leaseback even if the post-modification lessee did not have an interest in the property at any time during the two-year period ending on the date on which the modification occurs.

(ii) ***Carryover of character; long-term agreements.*** If an agreement is a long-term agreement prior to its modification and the entire agreement (as modified) would be a long-term agreement, the post-modification agreement is a long-term agreement.

(iii) ***Carryover of character; disqualified agreements.*** If an agreement (as in effect before its modification) is a disqualified leaseback or long-term agreement as the result of a determination (whether occurring before or after the modification) under § 1.467-3(b)(1)(ii) and the post-modification agreement is a section 467 rental agreement (or the entire agreement (as modified) would be a section 467 rental agreement), the post-modification agreement will, notwithstanding its treatment as a new agreement under paragraph (f)(1)(i) of this section, be subject to constant rental accrual unless the Commissioner determines that, because of the absence of tax avoidance potential, the post-modification agreement should not be treated as a disqualified leaseback or long-term agreement.

(iv) ***Allocation of rent.*** If the entire agreement (as modified) provides a specific allocation of fixed rent, as described in paragraph (c)(2)(ii)(A)(*2*) of this section, the post-modification agreement is treated as an agreement that provides a specific allocation of fixed rent. If the entire agreement (as modified) does not provide a specific allocation of fixed rent, the fixed rent allocated to rental periods during the lease term of the post-modification agreement is determined by applying the rules of paragraph (c)(2)(ii)(B) of this section to the entire agreement (as modified).

(v) ***Difference between aggregate rent and interest and aggregate payments*** —

(A) ***In general.*** Except as provided in paragraph (f)(4)(v)(B) of this section, a post-modification agreement described in paragraph (f)(4)(v)(C) of this section is treated as a section 467 rental agreement subject to proportional rental accrual (determined under § 1.467-2(c)).

(B) ***Constant rental accrual prior to the modification.*** A post-modification agreement described in paragraph (f)(4)(v)(C) of this section is treated as a section 467 rental agreement subject to constant rental accrual if—

(*1*) Constant rental accrual is required under paragraph (f)(4)(iii) of this section; or

(*2*) The post-modification agreement involves total payments of more than $250,000 (as described in paragraph (c)(4) of this section), and the Commissioner determines that the post-modification agreement is a disqualified leaseback or long-term agreement.

(C) ***Agreements described in this paragraph*** (f)(4)(v)(C). A post-modification agreement is described in this paragraph (f)(4)(v)(C) if the aggregate amount of fixed rent and stated interest treated as post-modification items does not equal the aggregate amount of payments treated as post-modification items.

(vi) ***Principal purpose of tax avoidance.*** If a principal purpose of a substantial modification is to avoid the purpose or intent of section 467 or the regulations thereunder, the Commissioner may treat the entire agreement (as modified) as a single agreement for purposes of section 467 and the regulations thereunder.

(5) ***Definitions.*** The following definitions apply for purposes of this paragraph (f) and § 1.467-7(g):

(i) A *modification* of a rental agreement is any alteration, including any deletion or addition, in whole or in part, of a legal right or obligation of the lessor or lessee thereunder, whether the alteration is evidenced by an express agreement (oral or written), conduct of the parties, or otherwise.

(ii) A modification is *substantial* only if, based on all of the facts and circumstances, the legal rights or obligations that are altered and the degree to which they are altered are economically substantial. A modification of a rental agreement will not be treated as substantial solely because it is not described in paragraph (f)(6) of this section.

(iii) A modification *occurs* on the earlier of the first date on which there is a binding contract that substantially sets forth the terms of the modification or the date on which agreement to such terms is otherwise evidenced.

(iv) ***Post-modification items*** with respect to any modification of a rental agreement are all items (other than pre-modification items) provided under the terms of the entire agreement (as modified).

(v) ***Pre-modification items*** with respect to any modification of a rental agreement are pre-modification rent, interest thereon, and payments allocable thereto (whether payable before or after the modification.) For this purpose—

(A) Pre-modification rent is rent allocable to periods before the effective date of the modification, but only to the extent such rent is payable under the entire agreement (as modified) at the time such rent was due under the agreement in effect before the modification; and

(B) Pre-modification items are identified by applying payments, in the order payable under the entire agreement (as modified) unless the agreement specifies otherwise, to rent and interest thereon in the order in which amounts accrue.

(vi) The *entire agreement (as modified)* with respect to any modification is the agreement consisting of pre-modification terms providing for rights and obligations that are not affected by the modification and post-modification terms providing for rights and obligations that differ from the rights and obligations under the agreement in effect before the modification. For example, if a 10-year rental agreement that provides for rent of $25,000 per year is modified at the end of the 5th year to provide for rent of $30,000 per year in subsequent years, the entire agreement (as modified) provides for a 10-year lease term and provides for rent of $25,000 per year in years 1 through 5 and rent of $30,000 per year in years 6 through 10. The result would be the same if the modification provided for both the increase in rent and the substitution of a new lessee.

(6) ***Safe harbors.*** Notwithstanding the provisions of paragraph (f)(5) of this section, a modification of a rental agreement is not a substantial modification if the modification occurs solely as the result of one or more of the following—

(i) The refinancing of any indebtedness incurred by the lessor to acquire the property subject to the rental agreement and secured by such property (or any refinancing thereof) but only if all of the following conditions are met—

(A) Neither the amount, nor the time for payment, of the principal amount of the new indebtedness differs from the amount and time for payment of the remaining principal amount of the refinanced indebtedness, except for de minimis changes;

(B) For each of the remaining rental periods, the rent allocation schedule, the payments of rent and interest, and the amount accrued under section 467 are changed only to the extent necessary to take into account the change in financing costs, and such changes are made pursuant to the terms of the rental agreement in effect before the modification;

(C) The lessor and the lessee are not related persons to each other or to any lender to the lessor with respect to the property (whether under the refinanced indebtedness or the new indebtedness); and

(D) With respect to the indebtedness being refinanced, the lessor was granted a unilateral option (within the meaning of § 1.1001-3(c)(3)) by the creditor to repay the refinanced indebtedness, exercisable with or without the lessee's consent;

(ii) A change in the obligation of the lessee to make any of the contingent payments described in paragraphs (c)(2)(iii)(B)(*3*) through (*8*) of this section; or

(iii) A change in the amount of fixed rent allocated to a rental period that, when combined with all previous changes in the amount of fixed rent allocated to the rental period, does not exceed one percent of the fixed rent allocated to that rental period prior to the modification.

(7) ***Special rules for certain transfers*** —

(i) ***In general.*** For purposes of this paragraph (f), a substitution of a new lessee or a sale, exchange, or other disposition by a lessor of property subject to a rental agreement will not, by itself, be treated as a substantial modification unless a principal purpose of the transaction giving rise to the modification is the avoidance of Federal income tax. In determining whether a principal purpose of the transaction giving rise to the modification is the avoidance of Federal income tax—

(A) The safe harbors and other principles of § 1.467-3(c) are taken into account; and

(B) The Commissioner may treat the post-modification agreement as a new agreement or treat the entire agreement (as modified) as a single agreement.

(ii) ***Exception.*** Notwithstanding the provisions of paragraph (f)(7)(i) of this section, the continuing lessor and the new lessee (in the case of a substitution of a new lessee) or the new lessor and the continuing lessee (in the case of a sale, exchange, or other disposition by a lessor of property subject to a rental agreement) may, in appropriate cases, request the Commissioner to treat the transaction as if it were a substantial modification in order to have the provisions of paragraph (f)(4)(iii) of this section and § 1.467-7(g)(1) apply to the transaction.

(g) ***Treatment of amounts payable by lessor to lessee*** —

(1) ***Interest.*** For purposes of determining present value, any amounts payable by the lessor to the lessee as interest on prepaid rent are treated as negative amounts.

(2) ***Other amounts.*** [Reserved]

(h) ***Meaning of terms.*** The following meanings apply for purposes of this section and §§ 1.467-2 through 1.467-9:

(1) ***Agreement date*** means the earlier of the lease date or the first date on which there is a binding written contract that substantially sets forth the terms under which the property will be leased.

(2) ***Contingent rent*** means any rent that is not fixed rent, including any amount reflecting an adjustment based on a reasonable price index (as defined in paragraph (h)(10) of this section) or a variable interest rate provision (as defined in paragraph (h)(16) of this section).

(3) ***Fixed rent*** means any rent to the extent its amount and the time at which it is required to be paid are fixed and determinable under the terms of the rental agreement as of the lease date. The following rules apply for the purpose of determining the extent to which rent is fixed rent:

(i) The possibility of a breach, default, or other early termination of the rental agreement and any adjustments based on a reasonable price index or a variable interest rate provision are disregarded.

(ii) Rent will not fail to be treated as fixed rent merely because of the possibility of impairment by insolvency, bankruptcy, or other similar circumstances.

(iii) If the lease term (as defined in paragraph (h)(6) of this section) includes one or more periods as to which either the lessor or the lessee has an option to renew or extend the term of the agreement, rent will not fail to be treated as fixed rent merely because the option has not been exercised.

(iv) If the lease term includes one or more periods during which a substitute lessee or lessor may have use of the property, rent will not fail to be treated as fixed rent merely because the contingencies relating to the obligation of the lessee (or a related person) to make payments in the nature of rent have not occurred.

(v) If either the lessor or the lessee has an unconditional option or options, exercisable on one or more dates during the lease term, that, if exercised, require payments of rent to be made under an alternative payment schedule or schedules, the amount of fixed rent and the dates on which such rent is required to be paid are determined on the basis of the payment schedule that, as of the agreement date, is most likely to occur. If payments of rent are made under an alternative payment schedule that differs from the payment schedule assumed in applying the preceding sentence, then, for purposes of paragraph (f) of this section, the rental agreement is treated as having been modified at the time the option to make payments on such alternative schedule is exercised.

(4) ***Late payment charge*** means any amount required to be paid by the lessee to the lessor as additional compensation for the lessee's failure to make any payment of rent under a rental agreement when due.

(5) ***Lease date*** means the date on which the lessee first has the right to use of the property that is the subject of the rental agreement.

(6) ***Lease term*** means the period during which the lessee has use of the property subject to the rental agreement, including any option of the lessor to renew or extend the term of the agreement. An option of the lessee to renew or extend the term of the agreement is included in the lease term only if it is expected, as of the agreement date, that the option will be exercised. For this purpose, a lessee is generally expected to exercise an option if, for example, as of the agreement date the rent for the option period is less than the expected fair market value rental for such period. The lessor's or lessee's determination that an option period is either included in or excluded from the lease term is not binding on the Commissioner. If the lessee (or a related person) agrees that one or both of them will or could be obligated to make payments in the nature of rent (within the meaning of § 1.168(i)-2(b)(2)) for a period when another lessee (the substitute lessee) or the lessor will have use of the property subject to the rental agreement, the Commissioner may, in appropriate cases, treat the period when the substitute lessee or lessor will have use of the property as part of the lease term. See § 1.467-7(f) for special rules applicable to the lessee, substitute lessee, and lessor. This paragraph (h)(6) applies to section 467 rental agreements entered into after March 6, 2001. However, taxpayers may choose to apply this paragraph (h)(6) to any rental agreement that is described in § 1.467-9(a) and is entered into on or before March 6, 2001.

(7) A *loss payment provision* means a provision that requires the lessee to pay the lessor a sum of money (which may be either a stipulated amount or an amount determined by reference to a formula or other objective measure) if the property subject to the rental agreement is lost, stolen, damaged or destroyed, or otherwise rendered unsuitable for any use (other than for scrap purposes).

(8) A *qualified percentage rents provision* means a provision pursuant to which the rent is equal to a fixed percentage of the lessee's receipts or sales (whether or not receipts or sales are adjusted for returned merchandise or Federal, state, or local sales taxes), but only if the percentage does not vary throughout the lease term. A provision will not fail to be treated as a qualified percentage rents provision solely by reason of one or more of the following additional terms:

(i) Differing percentages of receipts or sales apply to different departments or separate floors of a retail store, but only if the percentage applicable to a particular department or floor does not vary throughout the lease term.

(ii) The percentage is applied to receipts or sales in excess of determinable dollar amounts, but only if the determinable dollar amounts are fixed and do not vary throughout the lease term.

(9) A *qualified TRAC provision* means a terminal rental adjustment clause (as defined in section 7701(h)(3)) contained in a qualified motor vehicle operating agreement (as defined in section 7701(h)(2)), but only if the adjustment to the rental price is based on a reasonable estimate, determined as of any date between the agreement date and the lease date (or, in the event the agreement date is the same as or later than the lease date, determined as of the agreement date), of the fair market value of the motor vehicle (including any trailer) at the end of the lease term.

(10) An adjustment is *based on a reasonable price index* if the adjustment reflects inflation or deflation occurring over a period during the lease term and is determined consistently under a generally recognized index for measuring inflation or deflation (for example, the non-seasonally adjusted U.S. City Average All Items Consumer Price Index for All Urban Consumers (CPI-U), which is published by the Bureau of Labor Statistics of the Department of Labor). An adjustment will not fail to be treated as one that is based on a reasonable price index merely because the adjustment may be limited to a fixed percentage, but only if the parties reasonably expect, as of any date between the agreement date and the lease date (or, in the event the agreement date is the same as the lease date, as of such date), that the fixed percentage will actually limit the amount of the rent payable during less than 50 percent of the lease term.

(11) For purposes of determining whether a section 467 rental agreement is a leaseback within the meaning of § 1.467-3(b)(2), two persons are *related persons* if they are related persons within the meaning of section 465(b)(3)(C). In all other cases, two persons are *related persons* if they either have a relationship to each other that is specified in section 267(b) or section 707(b)(1) or are related entities within the meaning of sections 168(h)(4)(A), (B), or (C).

(12) ***Rental agreement*** includes any agreement, whether written or oral, that provides for the use of tangible property and is treated as a lease for Federal income tax purposes.

(13) A *residual condition provision* means a provision in a rental agreement that requires a payment to be made by either the lessor or the lessee to the other party based on the difference between the actual condition of the property subject to the agreement, determined as of the expiration of the lease term, and the expected condition of the property at the expiration of the lease term, as set forth in the rental agreement. The amount of any such payment may be determined by reference to any objective measure relating to the use or condition of the property, such as miles, hours or other duration of use, units of production, or similar measure. A provision will be treated as a residual condition provision only if the payment represents compensation for the use of, or wear and tear on, the property in excess of, or below, a standard set forth in the rental agreement, and the standard is

reasonably expected, as of any date between the agreement date and the lease date (or, in the event the agreement date is the same as or later than the lease date, as of the agreement date), to be met at the expiration of the lease term.

(14) A *tax indemnity provision* means a provision in a rental agreement that may require the lessee to make one or more payments to the lessor in the event that the Federal, foreign, state, or local income tax consequences actually realized by a lessor from owning the property subject to the rental agreement and leasing it to the lessee differ from the consequences reasonably expected by the lessor, but only if the differences in such consequences result from a misrepresentation, act, or failure to act on the part of the lessee, or any other factor not within the control of the lessor or any related person.

(15) ***Third-party costs*** include any real estate taxes, insurance premiums, maintenance costs, and any other costs (excluding a debt service cost) that relate to the leased property and are not within the control of the lessor or lessee or any person related to the lessor or lessee.

(16) A *variable interest rate provision* means a provision in a rental agreement that requires the rent payable by the lessee to the lessor to be adjusted by the dollar amount of changes in the amount of interest payable by the lessor on any indebtedness that was incurred to acquire the property subject to the rental agreement (or any refinancing thereof), but—

(i) Only to the extent the changes are attributable to changes in the interest rate; and

(ii) Only if the indebtedness provides for interest at one or more qualified floating rates (within the meaning of § 1.1275-5(b)), or the changes are attributable to a refinancing at a fixed rate or one or more qualified floating rates.

(i) [Reserved]

(j) ***Computational rules.*** For purposes of this section and §§ 1.467-2 through 1.467-9, the following rules apply—

(1) ***Counting conventions.*** Any reasonable counting convention may be used (for example, 30 days per month/360 days per year) to determine the length of a rental period or to perform any computation. Rental periods of the same descriptive length, for example annual, semiannual, quarterly, or monthly, may be treated as being of equal length.

(2) ***Conventions regarding timing of rent and payments*** —

(i) ***In general.*** For purposes of determining present values and yield only, except as otherwise provided in this section and §§ 1.467-2 through 1.467-8—

(A) The rent allocated to a rental period is taken into account on the last day of the rental period;

(B) Any amount payable during the first half of the first rental period is treated as payable on the first day of that rental period;

(C) Any amount payable during the first half of any other rental period is treated as payable on the last day of the preceding rental period;

(D) Any amount payable during the second half of a rental period is treated as payable on the last day of the rental period; and

(E) Any amount payable at the midpoint of a rental period is treated, in applying this paragraph (j)(2), as an amount payable during the first half of the rental period.

(ii) ***Time amount is payable.*** For purposes of this section and §§ 1.467-2 through 1.467-9, an amount is payable on the last day for timely payment (that is, the last day such amount may be paid without incurring interest, computed at an arm's-length rate, a substantial penalty, or other substantial detriment (such as giving the lessor the right to terminate the agreement, bring an action to enforce payment, or exercise other similar remedies under the terms of the agreement or applicable law)). This paragraph (j)(2)(ii) applies to section 467 rental agreements entered into after March 6, 2001. However, taxpayers may choose to apply this paragraph (j)(2)(ii) to any rental agreement that is described in § 1.467-9(a) and is entered into on or before March 6, 2001.

(3) ***Annualized fixed rent.*** Annualized fixed rent is determined by multiplying the fixed rent allocated to the rental period under paragraph (c)(2)(ii) of this section by the number of periods of the rental period's length in a calendar year. Thus, if the fixed rent allocated to a rental period is $10,000 and the rental period is one month, the annualized fixed rent for that rental period is $120,000 ($10,000 times 12).

(4) ***Allocation of fixed rent within a period.*** A rental agreement that allocates fixed rent to any period is treated as allocating fixed rent ratably within that period. Thus, if a rental agreement provides that $120,000 is allocated to each calendar year in the lease term, $10,000 of rent is allocated to each calendar month.

(5) ***Rental period length.*** Except as provided in § 1.467-3(d)(1) (relating to agreements for which constant rental accrual is required), rental periods may be of any length, may vary in length, and may be different as between the lessor and the lessee as long as—

(i) The rental periods are one year or less, cover the entire lease term, and do not overlap;

(ii) Each scheduled payment under the rental agreement (other than a payment scheduled to occur before or after the lease term) occurs within 30 days of the beginning or end of a rental period; and

(iii) In the case of a rental agreement that does not provide a specific allocation of fixed rent, the rental periods selected do not cause the agreement to be treated as a section 467 rental agreement unless all alternative rental period schedules would result in such treatment.

[T.D. 8820, 64 FR 26853, May 18, 1999, as amended by T.D. 8917, 66 FR 1039, Jan. 5, 2001]

§ 1.467-2 Rent accrual for section 467 rental agreements without adequate interest.

(a) ***Section 467 rental agreements for which proportional rental accrual is required.*** Under § 1.467-1(d)(2)(ii), the fixed rent for each rental period is the proportional rental amount, computed under paragraph (c) of this section, if—

(1) The section 467 rental agreement is not a disqualified leaseback or long-term agreement under § 1.467-3(b); and

(2) The section 467 rental agreement does not provide adequate interest on fixed rent under paragraph (b) of this section.

(b) ***Adequate interest on fixed rent*** —

(1) ***In general.*** A section 467 rental agreement provides adequate interest on fixed rent if, disregarding any contingent rent—

(i) The rental agreement has no deferred or prepaid rent as described in § 1.467-1(c)(3);

(ii) The rental agreement has deferred or prepaid rent, and—

(A) The rental agreement provides interest (the stated rate of interest) on deferred or prepaid fixed rent at a single fixed rate (as defined in § 1.1273-1(c)(1)(iii));

(B) The stated rate of interest on fixed rent is no lower than 110 percent of the applicable Federal rate (as defined in paragraph (e)(3) of this section);

(C) The amount of deferred or prepaid fixed rent on which interest is charged is adjusted at least annually to reflect the amount of deferred or prepaid fixed rent as of a date no earlier than the date of the preceding adjustment and no later than the date of the succeeding adjustment; and

(D) The rental agreement requires interest to be paid or compounded at least annually;

(iii) The rental agreement provides for deferred rent but no prepaid rent, and the sum of the present values (within the meaning of paragraph (d) of this section) of all amounts payable by the lessee as fixed rent (and interest, if any, thereon) is equal to or greater than the sum of the present values of the fixed rent allocated to each rental period; or

(iv) The rental agreement provides for prepaid rent but no deferred rent, and the sum of the present values of all amounts payable by the lessee as fixed rent, plus the sum of the negative present values of all amounts payable by the lessor as interest, if any, on prepaid fixed rent, is equal to or less than the sum of the present values of the fixed rent allocated to each rental period.

(2) ***Section 467 rental agreements that provide for a variable rate of interest.*** For purposes of the adequate interest test under paragraph (b)(1) of this section, if a section 467 rental agreement provides for variable interest, the rental agreement is treated as providing for fixed rates of interest on deferred or prepaid fixed rent equal to the fixed rate substitutes (determined in the same manner as under § 1.1275-5(e), treating the agreement date as the issue date) for the variable rates called for by the rental agreement. For purposes of this section, a rental agreement provides for variable interest if all stated interest provided by the agreement is paid or compounded at least annually at a rate or rates that meet the requirements of § 1.1275-5(a)(3)(i)(A) or (B) and (a)(4).

(3) ***Agreements with both deferred and prepaid rent.*** If an agreement has both deferred and prepaid rent, the agreement provides adequate interest under paragraph (b)(1) of this section if the conditions set forth in paragraph (b)(1)(ii)(A) through (D) of this section are met for both the prepaid and the deferred rent. For purposes of this paragraph (b)(3), an agreement will be considered to meet the condition set forth in paragraph (b)(1)(ii)(A) of this section if the agreement provides a single fixed rate of interest on the deferred rent and a single fixed rate of interest on the prepaid rent, even if those rates are not the same. This paragraph (b)(3) applies to section 467 rental agreements entered into after March 6, 2001. However, taxpayers may choose to apply this paragraph (b)(3) to any rental agreement that is described in § 1.467-9(a) and is entered into on or before March 6, 2001.

(c) ***Computation of proportional rental amount*** —

(1) ***In general.*** The proportional rental amount for a rental period is the amount of fixed rent allocated to the rental period under § 1.467-1(c)(2)(ii), multiplied by a fraction. The numerator of the fraction is the sum of the present values of the amounts payable under the terms of the section 467 rental agreement as fixed rent and interest thereon. The denominator of the fraction is the sum of the present values of the fixed rent allocated to each rental period under the rental agreement.

(2) ***Section 467 rental agreements that provide for a variable rate of interest.*** To calculate the proportional rental amount for a section 467 rental agreement that provides for a variable rate of interest, see § 1.467-5.

(d) ***Present value.*** For purposes of determining adequate interest under paragraph (b) of this section or the proportional rental amount under paragraph (c) of this section, the present value of any amount is determined using a discount rate equal to 110 percent of the applicable Federal rate. In general, present values are determined as of the first day of the first rental period in the lease term. However, if a section 467 rental agreement calls for payments of fixed rent prior to the lease term, present values are determined as of the first day a fixed rent payment is called for by the agreement. For purposes of the present value determination under paragraph (b)(1)(iv) of this section, the fixed rent allocated to a rental period must be discounted from the first day of the rental period. For other conventions and rules relating to the determination of present value, see § 1.467-1(g) and (j).

(e) ***Applicable Federal rate*** —

(1) ***In general.*** The applicable Federal rate for a section 467 rental agreement is the applicable Federal rate in effect on the agreement date. The *applicable Federal rate* for a rental agreement means—

(i) The Federal short-term rate if the term of the rental agreement is not over 3 years;

(ii) The Federal mid-term rate if the term of the rental agreement is over 3 years but not over 9 years; and

(iii) The Federal long-term rate if the term of the rental agreement is over 9 years.

(2) ***Source of applicable Federal rates.*** The Internal Revenue Service publishes the applicable Federal rates, based on annual, semiannual, quarterly, and monthly compounding, each month in the Internal Revenue Bulletin (see § 601.601(d) of this chapter). However, the applicable Federal rates may be based on any compounding assumption. To convert a rate based on one compounding assumption to an equivalent rate based on a different compounding assumption, see § 1.1272-1(j), *Example 1*.

(3) ***110 percent of applicable Federal rate.*** For purposes of § 1.467-1, this section and §§ 1.467-3 through 1.467-9, 110 percent of the applicable Federal rate means 110 percent of the applicable Federal rate based on semiannual compounding or any rate based on a different compounding assumption that is equivalent to 110 percent of the applicable Federal rate based on semiannual compounding. The Internal Revenue Service publishes 110 percent of the applicable Federal rates, based on annual, semiannual, quarterly, and monthly compounding, each month in the Internal Revenue Bulletin (see § 601.601(d)(2) of this chapter).

(4) ***Term of the section 467 rental agreement*** —

(i) ***In general.*** For purposes of determining the applicable Federal rate under this paragraph (e), the term of the section 467 rental agreement includes the lease term, any period before the lease term beginning with the first day an amount of fixed rent is payable under the terms of the rental agreement, and any period after the lease term ending with the last day an amount of fixed rent or interest thereon is payable under the rental agreement.

(ii) ***Section 467 rental agreements with variable interest.*** If a section 467 rental agreement provides variable interest on deferred or prepaid fixed rent, the term of the rental agreement for purposes of calculating the applicable Federal rate is the longest period between interest rate adjustment dates, or, if the rental agreement provides an initial fixed rate of interest on deferred or prepaid fixed rent, the period between the agreement date and the last day the fixed rate applies, if this period is longer. If, as described in § 1.1274-4(c)(2)(ii), the rental agreement provides for a qualified floating rate (as defined in § 1.1275-5(b)) that in substance resembles a fixed rate, the applicable Federal rate is determined by reference to the lease term.

(f) ***Examples.*** The following examples illustrate the application of this section. In each of these examples it is assumed that the rental agreement is not a disqualified leaseback or long-term agreement subject to constant rental accrual. The examples are as follows:

Example 1. (i) C agrees to lease property from D for five years beginning on January 1, 2000, and ending on December 31, 2004. The section 467 rental agreement provides that rent of $100,000 accrues in each calendar year in the lease term and that rent of $500,000 plus $120,000 of interest is payable on December 31, 2004. Assume that the parties select the calendar year as the rental period and that 110 percent of the applicable Federal rate is 10 percent, compounded annually.
(ii) The rental agreement has deferred rent under § 1.467-1(c)(3)(i) because the fixed rent allocated to calendar years 2000, 2001, and 2002 is not paid until 2004. In addition, because the rental agreement does not state an interest rate, the rental agreement does not satisfy the requirements of paragraph (b)(1)(ii) of this section.

(iii)(A) Because the rental agreement has deferred fixed rent and no prepaid rent, the agreement has adequate interest only if the present value test provided in paragraph (b)(1)(iii) of this section is met. The present value of all fixed rent and interest payable under the rental agreement is $384,971.22, determined as follows: $620,000/$(1.10)^5$ = $384,971.22. The present value of all fixed rent allocated under the rental agreement (discounting the amount of fixed rent allocated to a rental period from the last day of the rental period) is $379,078.68, determined as follows:

$$\$379{,}078.68 = \$100{,}000 \times \frac{1-(1.10)^{-5}}{.10}$$

(B) The rental agreement provides adequate interest on fixed rent because the present value of the single amount payable under the section 467 rental agreement exceeds the sum of the present values of fixed rent allocated.
(iv) For an example illustrating the computation of the yield on the rental agreement and the allocation of the interest and rent provided for under the rental agreement, see § 1.467-4(f), *Example 2.*

Example 2. (i) E and F enter into a section 467 rental agreement for the lease of equipment beginning on January 1, 2000, and ending on December 31, 2004. The rental agreement provides that rent of $100,000 accrues for each calendar month during the lease term. All rent is payable on December 31, 2004, together with interest on accrued rent at a qualified floating rate set at a current value (as defined in §

1.1275-5(a)(4)) that is compounded at the end of each calendar month and adjusted at the beginning of each calendar month throughout the lease term. Therefore, the rental agreement provides for variable interest within the meaning of paragraph (b)(2) of this section.
(ii) On the agreement date the qualified floating rate is 7.5 percent, and 110 percent of the applicable Federal rate, as defined in paragraph (e)(3) of this section, based on monthly compounding, is 7 percent. Under paragraph (b)(2) of this section, the fixed rate substitute for the qualified floating rate is 7.5 percent and the agreement is treated as providing for interest at this fixed rate for purposes of determining whether adequate interest is provided under paragraph (b) of this section. Accordingly, the requirements of paragraph (b)(1)(ii) of this section are satisfied, and the rental agreement has adequate interest.

Example 3. (i) X and Y enter into a section 467 rental agreement for the lease of real property beginning on January 1, 2000, and ending on December 31, 2002. The rental agreement provides that rent of $800,000 is allocable to 2000, $1,000,000 is allocable to 2001, and $1,200,000 is allocable to 2002. Under the rental agreement, Y must make a $3,000,000 payment on December 31, 2002. Assume that both X and Y choose the calendar year as the rental period, X and Y are calendar year taxpayers, and 110 percent of the applicable Federal rate is 8.5 percent compounded annually.
(ii) The rental agreement fails to provide adequate interest under paragraph (b)(1) of this section. Therefore, under § 1.467-1(d)(2)(ii), the fixed rent for each rental period is the proportional rental amount.

(iii)(A) The proportional rental amount is computed under paragraph (c) of this section. Because the rental agreement does not call for any fixed rent payments prior to the lease term, under paragraph (d) of this section, the present value is determined as of the first day of the first rental period in the lease term. The present value of the single amount payable by the lessee under the rental agreement is computed as follows:

$$\$2,348,724.30 = \frac{\$3,000,000}{(1+.085)^3}$$

(B) The sum of the present values of the fixed rent allocated to each rental period (discounting the fixed rent allocated to a rental period from the last day of such rental period) is computed as follows:

$$\$2,526,272.20 = \frac{\$800,000}{(1+.085)} + \frac{\$1,000,000}{(1+.085)^2} + \frac{\$1,200,000}{(1+.085)^3}$$

(C) Thus, the fraction for determining the proportional rental amount is .9297194 ($2,348,724.30/$2,526,272.20). The section 467 interest for each of the taxable years within the lease term is computed and taken into account as provided in § 1.467-4. The section 467 rent for each of the taxable

years within the lease term is as follows:

Taxable year	Section 467 rent
2000	$743,775.52 ($ 800,000 × .9297194).
2001	929,719.40 ($1,000,000 × .9297194).
2002	1,115,663.28 ($1,200,000 × .9297194).

[T.D. 8820, 64 FR 26859, May 18, 1999, as amended by T.D. 8917, 66 FR 1040, Jan. 5, 2001]

§ 1.467-3 Disqualified leasebacks and long-term agreements.

(a) ***General rule.*** Under § 1.467-1(d)(2)(i), constant rental accrual (as described under paragraph (d) of this section) must be used to determine the fixed rent for each rental period in the lease term if the section 467 rental agreement is a disqualified leaseback or long-term agreement within the meaning of paragraph (b) of this section. Constant rental accrual may not be used in the absence of a determination by the Commissioner, pursuant to paragraph (b)(1)(ii) of this section, that the rental agreement is disqualified. Such determination may be made either on a case-by-case basis or in regulations or other guidance published by the Commissioner (see § 601.601(d)(2) of this chapter) providing that a certain type or class of leaseback or long-term agreement will be treated as disqualified and subject to constant rental accrual.

(b) ***Disqualified leaseback or long-term agreement*** —

(1) ***In general.*** A leaseback (as defined in paragraph (b)(2) of this section) or a long-term agreement (as defined in paragraph (b)(3) of this section) is disqualified only if—

(i) A principal purpose for providing increasing or decreasing rent is the avoidance of Federal income tax (as described in paragraph (c) of this section);

(ii) The Commissioner determines that, because of the tax avoidance purpose, the agreement should be treated as a disqualified leaseback or long-term agreement; and

(iii) For section 467 rental agreements entered into before July 19, 1999, the amount determined with respect to the rental agreement under § 1.467-1(c)(4) (relating to the exception for rental agreements involving total payments of $250,000 or less) exceeds $2,000,000.

(2) ***Leaseback.*** A section 467 rental agreement is a leaseback if the lessee (or a related person) had any interest (other than a de minimis interest) in the property at any time during the two-year period ending on the agreement date. For this purpose, interests in property include options and agreements to purchase the property (whether or not the lessee or related person was considered the owner of the property for Federal income tax purposes) and, in the case of subleased property, any interest as a sublessor.

(3) ***Long-term agreement*** —

(i) ***In general.*** A section 467 rental agreement is a long-term agreement if the lease term exceeds 75 percent of the property's statutory recovery period.

(ii) ***Statutory recovery period*** —

(A) ***In general.*** The term statutory recovery period means—

(*1*) In the case of property depreciable under section 168, the applicable period determined under section 467(e)(3)(A);

(*2*) In the case of land, 19 years; and

(*3*) In the case of any other tangible property, the period that would apply under section 467(e)(3)(A) if the property were property to which section 168 applied.

(B) ***Special rule for rental agreements relating to properties having different statutory recovery periods.*** In the case of a rental agreement relating to two or more related properties that have different statutory recovery periods, the statutory recovery period for purposes of paragraph (b)(3)(ii)(A) of this section is the weighted average, based on the fair market values of the properties on the agreement date, of the statutory recovery periods of each of the properties.

(c) ***Tax avoidance as principal purpose for increasing or decreasing rent*** —

(1) ***In general.*** In determining whether a principal purpose for providing increasing or decreasing rent is the avoidance of Federal income tax, all relevant facts and circumstances are taken into account. However, an agreement will not be treated as a disqualified leaseback or long-term agreement if either of the safe harbors set forth in paragraph (c)(3) of this section is met. The mere failure of a leaseback or long-term agreement to meet one of these safe harbors will not, by itself, cause the agreement to be treated as one in which tax avoidance was a principal purpose for providing increasing or decreasing rent.

(2) ***Tax avoidance*** —

(i) ***In general.*** If, as of the agreement date, a significant difference between the marginal tax rates of the lessor and lessee can reasonably be expected at some time during the lease term, the agreement will be closely scrutinized and clear and convincing evidence will be required to establish that tax avoidance is not a principal purpose for providing increasing or decreasing rent. The term “marginal tax rate” means the percentage determined by dividing one dollar into the amount of the increase or decrease in the Federal income tax liability of the taxpayer that would result from an additional dollar of rental income or deduction.

(ii) ***Significant difference in tax rates.*** A significant difference between the marginal tax rates of the lessor and lessee is reasonably expected if—

(A) The rental agreement has increasing rents and the lessor's marginal tax rate is reasonably expected to exceed the lessee's marginal tax rate by more than 10 percentage points during any rental period to which the rental agreement allocates annualized fixed rent that is less than the average rent allocated to all calendar years (determined by taking into account the rules set forth in paragraph (c)(4)(iii) of this section); or

(B) The rental agreement has decreasing rents and the lessee's marginal tax rate is reasonably expected to exceed the lessor's marginal tax rate by more than 10 percentage points during any rental period to which the rental agreement allocates annualized fixed rent that is greater than the average rent allocated to all calendar years (determined by taking into account the rules set forth in paragraph (c)(4)(iii) of this section).

(iii) ***Special circumstances.*** In determining the expected marginal tax rates of the lessor and lessee, net operating loss and credit carryovers and any other attributes or special circumstances reasonably expected to affect the Federal income tax liability of the taxpayer (including the alternative minimum tax) are taken into account. For example, in the case of a partnership or S corporation, the amount of rental income or deduction that would be allocable to the partners or shareholders, respectively, is taken into account.

(3) ***Safe harbors.*** Tax avoidance will not be considered a principal purpose for providing increasing or decreasing rent if—

(i) The uneven rent test (as defined in paragraph (c)(4) of this section) is met; or

(ii) The increase or decrease in rent is wholly attributable to one or more of the following provisions—

(A) A contingent rent provision set forth in § 1.467-1(c)(2)(iii)(B); or

(B) A single rent holiday provision allowing reduced rent (or no rent) for one consecutive period during the lease term, but only if—

(*1*) The rent holiday is for a period of three months or less at the beginning of the lease term and for no other period; or

(*2*) The duration of the rent holiday is reasonable, determined by reference to commercial practice (as of the agreement date) in the locality where the use of the property occurs, and does not exceed the lesser of 24 months or 10 percent of the lease term.

(4) ***Uneven rent test*** —

(i) ***In general.*** The uneven rent test is met if the rent allocated to each calendar year does not vary from the average rent allocated to all calendar years (determined in accordance with the rules set forth in paragraph (c)(4)(iii) of this section) by more than 10 percent.

(ii) ***Special rule for real estate.*** Paragraph (c)(4)(i) of this section is applied by substituting “15 percent” for “10 percent” if the rental agreement is a long-term agreement and at least 90 percent of the property subject to the agreement (determined on the basis of fair market value as of the agreement date) consists of real property (as defined in § 1.856-3(d)).

(iii) ***Operating rules.*** In determining whether the uneven rent test has been met, the following rules apply:

(A) Any contingent rent attributable to a provision set forth in § 1.467-1(c)(2)(iii)(B)(*3*) through (*9*) is disregarded.

(B) If the lease term includes one or more partial calendar years (a period less than a complete calendar year), the average rent allocated to each calendar year is the total rent allocated under the rental agreement, divided by the actual length (in years) of the lease

term. The rent allocated to a partial calendar year is annualized by multiplying the allocated rent by the number of periods of the partial calendar year's length in a full calendar year and the annualized rent is treated as the amount of rent allocated to that year in determining whether the uneven rent test is met.

(C) In the case of a rental agreement not described in paragraph (c)(4)(ii) of this section, an initial rent holiday period and any rent allocated to such period are disregarded for purposes of this paragraph (c)(4) if taking such period and rent into account would cause the agreement to fail to meet the uneven rent test. For purposes of this paragraph (c)(4), an initial rent holiday period is any period of three months or less at the beginning of the lease term during which annualized fixed rent (determined by treating such period as a rental period for purposes of § 1.467-1(j)(3)) is less than the average rent allocated to all calendar years (determined before the application of this paragraph (c)(4)(iii)(C)).

(D) In the case of a rental agreement described in paragraph (c)(4)(ii) of this section, one qualified rent holiday period and any rent allocated to such period are disregarded for purposes of this paragraph (c)(4) if taking such period and rent into account would cause the agreement to fail the uneven rent test. For this purpose, a qualified rent holiday period is a consecutive period that is an initial rent holiday period or that meets the following conditions:

(*1*) The period does not exceed the lesser of 24 months or 10 percent of the lease term (determined before the application of this paragraph (c)(4)(iii)(D)).

(*2*) Annualized fixed rent during the period (determined by treating the period as a rental period for purposes of § 1.467-1(j)(3)) is less than the average rent allocated to all calendar years (determined before the application of this paragraph (c)(4)(iii)(D)).

(*3*) Providing less than average rent for the period is reasonable, determined by reference to commercial practice (as of the agreement date) in the locality where the use of the property occurs.

(E) If the rental agreement contains a variable interest rate provision, the uneven rent test is applied by treating the rent as having been fixed under the terms of the rental agreement for the entire lease term using fixed rate substitutes (determined in the same manner as § 1.1275-5(e), treating the agreement date as the issue date) for the variable rates of interest provided under the terms of the lessor's indebtedness.

(d) ***Calculating constant rental amount*** —

(1) ***In general.*** Except as provided in paragraph (d)(2) of this section, the constant rental amount is the amount that, if paid at the end of each rental period, would result in a present value equal to the present value of all amounts payable under the disqualified leaseback or long-term agreement as rent and interest. In computing the constant rental amount, the rules for determining present value are the same as those provided in § 1.467-2(d) for computing the proportional rental amount. If constant rental accrual is required, all rental periods (other than an initial or final short period of not more than one month) must be equal in length and satisfy the requirements of § 1.467-1(j)(5).

(2) ***Initial or final short periods.*** If a disqualified leaseback or long-term agreement has an initial or final short rental period, the constant rental amount for the initial or final short period may be determined under any reasonable method. However, the sum of the present values of all the constant rental amounts must equal the present values of all amounts payable under the disqualified leaseback or

long-term agreement as rent and interest. Any adjustment necessary to eliminate the section 467 loan balance because of the method used to determine the constant rental amount for short periods must be taken into account as section 467 rent for the final rental period.

(3) ***Method to determine constant rental amount; no short periods*** —

(i) ***Step 1.*** Determine the present value of amounts payable under the disqualified leaseback or long-term agreement as rent or interest.

(ii) ***Step 2.*** Determine the present value of $1 to be received at the end of each rental period during the lease term as of the first day of the first rental period during the lease term (or, if earlier, the first day a rent payment is required under the rental agreement).

(iii) ***Step 3.*** Divide the amount determined in paragraph (d)(3)(i) of this section (Step 1) by the number of dollars determined in paragraph (d)(3)(ii) of this section (Step 2).

(e) ***Examples.*** The following examples illustrate the application of this section:

Example 1. (i) K, lessor, and L, lessee, enter into a long-term agreement for a 10-year lease of personal property beginning on January 1, 2000. K and L are C corporations that use the calendar year as their taxable year. K does not have any unused losses or credits from taxable years preceding 2000. In addition, as of the agreement date, K expects that it will be subject to the maximum rate of tax imposed by section 11 in 2000 and that it will not be limited in its ability to use any losses or credits. As of the agreement date, L expects that it will be subject to the alternative minimum tax imposed by section 55 in 2000. The rental agreement provides for rent allocations in each year of the lease term, as follows:

Year	Amount
2000	$427,500
2001	442,500
2002	457,500
2003	472,500
2004	487,500
2005	502,500
2006	517,500
2007	532,500
2008	547,500
2009	562,500

(ii) As described in paragraph (c)(2) of this section, as of the agreement date, a significant difference between the marginal tax rates of the lessor and lessee can reasonably be expected at some time during the lease term. First, the rental agreement has increasing rents. Second, the lessor's marginal tax rate exceeds the lessee's marginal tax rate by more than 10 percentage points during a rental period to which the rental agreement allocates less than a ratable portion of the aggregate amount of rent payable under

the agreement. For example, for the year 2000, the lessor's expected marginal tax rate is 35 percent, the percentage determined by dividing the increase in the Federal income tax liability of K that would result from an additional dollar of rental income ($.35) by $1. Because the lessee is subject to the alternative minimum tax, the lessee's expected marginal tax rate for 2000 is 20 percent, the percentage determined by dividing the decrease in the Federal income tax liability (taking into account both the decrease in the lessee's regular tax and the increase in the lessee's alternative minimum tax) that would result from an additional dollar of rental deduction ($.20) by $1. Further, for the year 2000, the rent allocated in accordance with the rental agreement is $427,500, which is less than a ratable portion of the aggregate amount of rental payments, $495,000, determined by dividing the total rents payable under the agreement ($4,950,000) by the number of years in the lease term (10). Thus, because a significant difference between the marginal tax rates of the lessor and lessee can reasonably be expected during the lease term, the agreement will be closely scrutinized and clear and convincing evidence will be required to establish that tax avoidance is not a principal purpose for providing increasing rent.

Example 2. (i) A and B enter into a long-term agreement for a 5-year lease of personal property beginning on July 1, 2000, and ending on June 30, 2005. The rental agreement provides that the rent is allocated to the calendar years in the lease term in accordance with the following schedule and is paid at successive six-month intervals (on December 31 and June 30) during the lease term:

Year	Amount
2000	$450,000
2001	900,000
2002	900,000
2003	1,100,000
2004	1,100,000
2005	550,000

(ii) In determining whether the uneven rent test described in paragraph (c)(4)(i) of this section is met, the total amount of rent allocated under the rental agreement is $5,000,000, and the lease term is five years. The average rent for each year is $1,000,000 (see paragraph (c)(4)(iii)(B) of this section), and the uneven rent test is met if the rent for each year is not less than $900,000 and not more than $1,100,000. The test is met for 2000 because the annualized rent for that year is $900,000. The test is met for 2005 because the annualized rent for that year is $1,100,000. The test is met for each of the years 2001 through 2004 because the rent for each of these years is not less than $900,000 and not more than $1,100,000. Accordingly, because the uneven rent test of paragraph (c)(4)(i) of this section is met, the long-term agreement will not be treated as disqualified.

Example 3. (i) C and D enter into a long-term agreement for a lease of personal property beginning on

October 1, 1999, and ending on December 31, 2005. The rental agreement provides that the rent is allocated to the calendar years in the lease term in accordance with the following schedule and is paid at successive six-month intervals (on December 31 and June 30) during the lease term:

Year	Amount
1999	$0
2000	900,000
2001	900,000
2002	900,000
2003	1,100,000
2004	1,100,000
2005	1,100,000

(ii) The three-month rent holiday period at the beginning of the lease term is an initial rent holiday within the meaning of paragraph (c)(4)(iii)(C) of this section. Moreover, the agreement would fail the uneven rent test if the rent holiday period and the rent allocated to the period were taken into account. Thus, under paragraph (c)(4)(iii)(C) of this section, the period and the rent allocated to the period are disregarded for purposes of applying the uneven rent test. In that case, the lease term is six years, and the uneven rent test is met because the average rent for each year in the lease term is $1,000,000 and the rent for each calendar year in the lease term is not less than $900,000 nor more than $1,100,000. Accordingly, the long-term agreement will not be treated as disqualified.

Example 4. (i) E and F enter into a long-term agreement for a 6-year lease of personal property beginning on January 1, 2000, and ending on December 31, 2005. The rental agreement provides that the rent allocated to the calendar years in the lease term and paid at successive six-month intervals (on June 30 and December 31) during the lease term is the sum of the interest on the lessor's indebtedness, in the amount of $4,637,577, and an amount determined in accordance with the following schedule:

Year	Amount
2000	$539,574
2001	583,603
2002	631,225
2003	886,733
2004	959,090

Year	Amount
2005	1,037,352

(ii) Assume further that the lessor's indebtedness bears interest at the rate of 2 percent in excess of the 6-month London Interbank Offered Rate (LIBOR) in effect on the first day of the 6-month period for each rental period and that, on the agreement date, the interest rate under this formula would be 8 percent. If the interest rate remained fixed during the entire lease term, the formula for determining the rent payable by the lessee would result in payments of rent in the amount of $450,000 for each six-month period in 2000, 2001, and 2002, and $550,000 for each six-month period in 2003, 2004, and 2005.
(iii) Under paragraph (c)(4)(iii)(E) of this section, the fixed rate substitute for the variable interest rate provision produces a schedule of fixed rents that meets the uneven rent test of paragraph (c)(4)(i) of this section. Thus, even if the actual rents payable under the rental agreement do not meet the uneven rent test because of fluctuations in the 6-month LIBOR, the uneven rent test will be treated as having been met, and the long-term agreement will not be treated as disqualified.

Example 5. (i) G and H enter into a long-term agreement for a 5-year lease of personal property beginning on January 1, 2000, and ending on December 31, 2004. The rental agreement provides that the rent is payable to G at the rate of $40,000 per month in arrears, subject to an adjustment based on changes in prevailing interest rates during the lease term. Under this adjustment, the lessor is entitled to receive an amount equal to the sum of a specified dollar amount, which increases each month as payments of rent are made, and interest on a notional principal amount (as defined in § 1.446-3(c)(3)) at a qualified floating rate (as defined in § 1.1275-5(b)). The notional principal amount is initially established at 80 percent of the cost of the property. As each payment of rent is made, the notional principal amount is reduced (but not below zero) to an amount that would represent the outstanding principal balance of a loan the payments on which are equal to the monthly payments of rent. As of the agreement date, the value of the qualified floating rate is 9 percent. Although G did not incur indebtedness specifically for the purpose of acquiring the property, the parties agreed to the adjustment provisions in order to compensate G for its general costs of borrowing.
(ii) The adjustment provision produces a schedule of rent payments that is virtually identical to the schedule that would have resulted if G had actually borrowed money in an amount and on terms identical to the terms used in determining interest on the notional principal amount and the adjustment were based on that indebtedness. An adjustment based on actual indebtedness of the lessor would have been a variable interest rate provision eligible for a safe harbor under paragraph (c)(3)(ii)(A) of this section. Accordingly, based on all the facts and circumstances, the adjustment provision did not have as one of its principal purposes the avoidance of Federal income tax, and thus the long-term agreement will not be treated as disqualified.

Example 6. (i) X and Y enter into a leaseback for a 5-year lease of personal property beginning on

January 1, 1998, and ending on December 31, 2002. The rental agreement provides that $0 of rent is allocated to years 1998, 1999, and 2000, and that rent of $17,500,000 is allocated to years 2001 and 2002. The rental agreement provides that the rent allocated to each year is payable on December 31 of that year. Assume all rental periods are the calendar year. Assume also that 110 percent of the applicable Federal rate based on annual compounding is 12 percent.
(ii)(A) If the Commissioner determines that the leaseback is disqualified, the constant rental amount is computed as follows:

(B) Step 1 in calculating the constant rental amount is to determine the present value of the two payments due under the rental agreement as follows:

$$\$21{,}051{,}536 = \frac{\$17{,}500{,}000}{(1.12)^4} + \frac{\$17{,}500{,}000}{(1.12)^5}$$

(iii) Because no amounts of rent are payable before the lease term, Step 2 in calculating the constant rental amount is to determine the present value as of the first day of the lease term of $1 to be received at the end of each rental period during the lease term. This results in a present value of $3.6047762. In Step 3 the amount determined in Step 1 is divided by the number of dollars determined in Step 2. Thus, the constant rental amount is $5,839,901 for each calendar year during the lease term computed as follows:

$$\$5{,}839{,}901 = \frac{\$21{,}051{,}536}{3.6047762}$$

[T.D. 8820, 64 FR 26860, May 18, 1999, as amended by T.D. 8917, 66 FR 1040, Jan. 5, 2001]

§ 1.467-4 Section 467 loan.

(a) ***In general*** —

(1) ***Overview.*** Except as provided in paragraph (a)(2) of this section, the section 467 loan rules of this section apply to a section 467 rental agreement if, as of the first day of a rental period, there is a difference between the amount of fixed rent payable under the rental agreement on or before the first day and the amount of fixed rent required to be accrued in accordance with § 1.467-1(d)(2) before the first day. Paragraph (b) of this section provides rules for computing the principal balance of a section 467 loan at the beginning of any rental period. The principal balance of a section 467 loan may be positive or negative. For Federal tax purposes, if the principal balance is positive, the amount represents a loan from the lessor to the lessee, and if the principal balance is negative, the amount represents a loan from the lessee to the lessor.

(2) ***No section 467 loan in the case of certain section 467 rental agreements.*** Except as provided in paragraphs (a)(3) and (4) of this section, this section does not apply to section 467 rental agreements that provide adequate interest under § 1.467-2(b)(1)(i) (agreements with no deferred or prepaid rent) or § 1.467-2(b)(1)(ii) (agreements with deferred or prepaid rent that provide adequate stated interest at a single fixed rate).

(3) ***Rental agreements subject to constant rental accrual.*** Notwithstanding the provisions of paragraph (a)(2) of this section, this section applies to rental agreements subject to constant rental accrual under § 1.467-3 (relating to disqualified leasebacks or long-term agreements).

(4) ***Special rule in applying the provisions of § 1.467-7(e), (f), or (g).*** Notwithstanding the provisions of paragraph (a)(2) of this section, section 467 loan balances must be computed for section 467 rental agreements that are not subject to constant rental accrual under § 1.467-3 and that provide adequate interest under § 1.467-2(b)(1)(i) or (ii), but only for purposes of applying the provisions of § 1.467-7(e) (relating to dispositions of property subject to a section 467 rental agreement), § 1.467-7(f) (relating to assignments by lessees and lessee-financed renewals), and § 1.467-7(g) (relating to modifications of rental agreements).

(b) ***Principal balance*** —

(1) ***In general.*** Except as provided in paragraph (b)(2) of this section or in § 1.467-7(e), (f), or (g), the principal balance of the section 467 loan at the beginning of a rental period equals—

(i) The fixed rent accrued in preceding rental periods;

(ii) Increased by the sum of—

(A) The interest on fixed rent includible in the gross income of the lessor for preceding rental periods; and

(B) Any amount payable by the lessor on or before the first day of the rental period as interest on prepaid fixed rent; and

(iii) Decreased by the sum of—

(A) The interest on prepaid fixed rent includible in the gross income of the lessee for preceding rental periods; and

(B) Any amount payable by the lessee on or before the first day of the rental period as fixed rent or interest thereon.

(2) ***Section 467 rental agreements that provide for prepaid fixed rent and adequate interest.*** If a section 467 rental agreement calls for prepaid fixed rent and provides adequate interest under § 1.467-2(b)(1)(iv), the principal balance of the section 467 loan at the beginning of a rental period equals the principal balance determined under paragraph (b)(1) of this section, plus the fixed rent accrued for that rental period.

(3) ***Timing of payments.*** For purposes of this paragraph (b), the day on which an amount is payable is determined under the rules of § 1.467-1(j)(2)(i)(B) through (E) and § 1.467-1(j)(2)(ii).

(c) ***Yield*** —

(1) ***In general*** —

(i) ***Method of determining yield.*** Except as provided in paragraphs (c)(2) and (3) of this section, the yield of a section 467 loan is the discount rate at which the sum of the present values of all amounts payable by the lessee as fixed rent and interest on fixed rent, plus the sum of the present values of all amounts payable by the lessor as interest on prepaid fixed rent, equals the sum of the present values of the fixed rent that accrues in accordance with § 1.467-1(d)(2). The yield must be constant over the term of the section 467 rental agreement and, when expressed as a percentage, must be calculated to at least two decimal places.

(ii) ***Method of stating yield.*** In determining the section 467 interest for a rental period, the yield of the section 467 loan must be stated appropriately by taking into account the length of the rental period. Section 1.1272-1(j), *Example 1,* provides a formula for converting a yield based on a period of one length to an equivalent yield based on a period of a different length.

(iii) ***Rounding adjustments.*** Any adjustment necessary to eliminate the section 467 loan because of rounding the yield to two or more decimal places must be taken into account as an adjustment to the section 467 interest for the final rental period determined as provided in paragraph (e) of this section.

(2) ***Yield of section 467 rental agreements for which constant rental amount or proportional rental amount is computed.*** In the case of a section 467 rental agreement to which § 1.467-1(d)(2)(i) or (ii) applies, the yield of the section 467 loan equals 110 percent of the applicable Federal rate (based on a compounding period equal to the length of the rental period).

(3) ***Yield for purposes of applying paragraph (a)(4) of this section.*** For purposes of applying paragraph (a)(4) of this section, the yield of the section 467 loan balance of any party, or prior party, to a section 467 rental agreement for a period is the same for all parties and is the yield that results in the net accrual of positive or negative interest for that period equal to the amount of such interest that accrues under the terms of the rental agreement for that period. For example, if property subject to a section 467 rental agreement is sold (transferred) and the beginning section 467 loan balance of the transferor (as described in § 1.467-7(e)(2)(i)) is positive and the beginning section 467 loan balance of the transferee (as described in § 1.467-7(e)(2)(ii)) is negative, the yield on each of these loan balances for any period is the same for all parties and is the yield that results in the net accrual of positive or negative interest, taking into account the aggregate positive or negative interest on the section 467 loan balances of both the transferor and transferee, equal to the amount of such interest that accrues under the terms of the rental agreement for that period.

(4) ***Determination of present values.*** The rules for determining present value in computing the yield of a section 467 loan are the same as those provided in § 1.467-2(d) for computing the proportional rental amount.

(d) ***Contingent payments.*** Except as otherwise required, contingent payments are not taken into account in calculating either the yield or the principal balance of a section 467 loan.

(e) ***Section 467 rental agreements that call for payments before or after the lease term.*** If a section 467 rental agreement calls for the payment of fixed rent or interest thereon before the beginning of the lease term, this section is applied by treating the period beginning on the first day an amount is payable and ending on the day before the beginning of the first rental period of the lease term as one or more rental periods. If a rental agreement calls for the payment of fixed rent or interest thereon after the end of the lease term, this section is applied by treating the period beginning on the day after the end of the last rental period of the lease term and ending on the last day an amount of fixed rent or interest thereon is payable as one or more rental periods. Rental period length for the period before the lease term or after the lease term is determined in accordance with the rules of § 1.467-1(j)(5).

(f) ***Examples.*** The following examples illustrate the application of this section:

> *Example 1.* (i)(A) A leases property to B for a three-year period beginning on January 1, 2000, and ending on December 31, 2002. The section 467 rental agreement has the following rent allocation schedule and

payment schedule:

	Rent allocation	Payment
2000	$400,000	
2001	600,000	
2002	800,000	$1,800,000

(B) The rental agreement requires a $1.8 million payment to be made on December 31, 2002, but does not provide for interest on deferred rent. Assume A and B choose the calendar year as the rental period length and that 110 percent of the applicable Federal rate based on annual compounding is 10 percent. Assume also that the agreement is not a leaseback or long-term agreement and, therefore, is not subject to constant rental accrual.

(ii) Because the section 467 rental agreement does not provide adequate interest under § 1.467-2(b) and is not subject to constant rental accrual, the fixed rent that accrues during each rental period is the proportional rental amount as described in § 1.467-2(c). The proportional rental amounts for each rental period are as follows:

2000	$370,370.37
2001	555,555.56
2002	740,740.73

(iii) A section 467 loan arises at the beginning of the second rental period because the rent payable on or before that day (zero) is less than the fixed rent accrued under § 1.467-1(d)(2) in all preceding rental periods ($370,370.37). Under paragraph (c)(2) of this section, the yield of the loan is equal to 110 percent of the applicable Federal rate (10 percent compounded annually). Because no payments are treated as made on or before the first day of the second rental period, the principal balance of the loan at the beginning of the second rental period is $370,370.37. The interest for the second rental period on fixed rent is $37,037.04 (.10 × $370,370.37) and, under § 1.467-1(e)(3), is treated as interest income of the lessor and as an interest expense of the lessee.

(iv) Because no payments are made on or before the first day of the third rental period, the principal balance of the loan at the beginning of the third rental period is equal to the fixed rent accrued during the first and second rental periods plus the lessor's interest income on fixed rent for the second rental period ($962,962.97 = $370,370.37 + $555,555.56 + $37,037.04). The interest for the third rental period on fixed rent is $96,296.30 (.10 × $962,962.97). Thus, the sum of the fixed rent and interest on fixed rent for the three rental periods is equal to the total amount paid over the lease term (first year fixed rent accrual,

$370,370.37, plus second year fixed rent and interest accrual, $555,555.56 + $37,037.04, plus third year fixed rent and interest accrual, $740,740.73 + $96,296.30, equals $1,800,000). B takes the amounts of interest and rent into account as interest and rent expense, respectively, and A takes such amounts into account as interest and rent income, respectively, for the calendar years identified above, regardless of their respective overall methods of accounting.

Example 2. (i) The facts are the same as in *Example 1,* § 1.467-2(f). C agrees to lease property from D for five years beginning on January 1, 2000, and ending on December 31, 2004. The section 467 rental agreement provides that rent of $100,000 accrues in each calendar year in the lease term and that rent of $500,000 plus $120,000 of interest is payable on December 31, 2004. The parties select the calendar year as the rental period, and 110 percent of the applicable Federal rate is 10 percent, compounded annually. The rental agreement has deferred rent but provides adequate interest on fixed rent.
(ii)(A) Pursuant to paragraph (c)(1) of this section, the yield of the section 467 loan is 10.775078%, compounded annually. The following is a schedule of the rent allocable to each rental period during the lease term, the balance of the section 467 loan as of the end of each rental period (determined, in the case of the calendar year 2004, without regard to the single payment of rent and interest in the amount of $620,000 payable on the last day of the lease term), and the interest on the section 467 loan allocable to each rental period:

Calendar year	Section 467 interest	Section 467 rent	Section 467 loan balance
2000	$0	$100,000.00	$100,000.00
2001	10,775.08	100,000.00	210,775.08
2002	22,711.18	100,000.00	333,486.26
2003	35,933.41	100,000.00	469,419.67
2004	50,580.33	100,000.00	620,000.00

(B) C takes the amounts of interest and rent into account as expense and D takes such amounts into account as income for the calendar years identified above, regardless of their respective overall methods of accounting.

[T.D. 8820, 64 FR 26863, May 18, 1999]

§ 1.467-5 Section 467 rental agreements with variable interest.

(a) ***Variable interest on deferred or prepaid rent*** —

(1) ***In general.*** This section provides rules for computing section 467 rent and interest in the case of section 467 rental agreements providing variable interest. For purposes of this section, a rental agreement provides for variable interest if the rental agreement provides for stated interest that is

paid or compounded at least annually at a rate or rates that meet the requirements of § 1.1275-5(a)(3)(i)(A) or (B) and (a)(4). If a section 467 rental agreement provides for interest that is neither variable interest nor fixed interest, the agreement provides for contingent payments.

(2) ***Exceptions.*** This section is not applicable to section 467 rental agreements that provide adequate interest under § 1.467-2(b)(1)(i) (agreements with no deferred or prepaid rent) or (b)(1)(ii) (rental agreements with stated interest at a single fixed rate). The exceptions in this paragraph (a)(2) do not apply to rental agreements subject to constant rental accrual under § 1.467-3.

(b) ***Variable rate treated as fixed*** —

(1) ***In general.*** If a section 467 rental agreement provides variable interest—

(i) The fixed rate substitutes (determined in the same manner as under § 1.1275-5(e), treating the agreement date as the issue date) for the variable rates of interest on deferred or prepaid fixed rent provided by the rental agreement must be used in computing the proportional rental amount under § 1.467-2(c), the constant rental amount under § 1.467-3(d), the principal balance of a section 467 loan under § 1.467-4(b), and the yield of a section 467 loan under § 1.467-4(c); and

(ii) The interest on fixed rent for any rental period is equal to the amount that would be determined under § 1.467-1(e)(2) if the section 467 rental agreement did not provide variable interest, using the fixed rate substitutes determined under paragraph (b)(1)(i) of this section in place of the variable rates called for by the rental agreement, plus the variable interest adjustment amount provided in paragraph (b)(2) of this section.

(2) ***Variable interest adjustment amount*** —

(i) ***In general.*** The variable interest adjustment amount for a rental period equals the difference between—

(A) The amount of interest that, without regard to section 467, would have accrued during the rental period under the terms of the section 467 rental agreement; and

(B) The amount of interest that, without regard to section 467, would have accrued during the rental period under the terms of the section 467 rental agreement using the fixed rate substitutes determined under paragraph (b)(1)(i) of this section in place of the variable interest rates called for by the rental agreement.

(ii) ***Positive or negative adjustment.*** If the amount determined under paragraph (b)(2)(i)(A) of this section is greater than the amount determined under paragraph (b)(2)(i)(B) of this section, the variable interest adjustment amount is positive. If the amount determined under paragraph (b)(2)(i)(A) of this section is less than the amount determined under paragraph (b)(2)(i)(B) of this section, the variable interest adjustment amount is negative.

(3) ***Section 467 loan balance.*** The variable interest adjustment amount is not taken into account in determining the principal balance of a section 467 loan under § 1.467-4(b). Instead, the section 467 loan balance is computed as if all amounts payable under the section 467 rental agreement were based on the fixed rate substitutes determined under paragraph (b)(1)(i) of this section.

(c) ***Examples.*** The following examples illustrate the application of this section:

Example 1. (i) X and Y enter into a section 467 rental agreement for the lease of personal property

beginning on January 1, 2000, and ending on December 31, 2002. The rental agreement allocates $100,000 of rent to 2000, $200,000 to 2001, and $100,000 to 2002, and requires the lessee to pay all $400,000 of rent on December 31, 2002. The rental agreement requires the accrual of interest on unpaid accrued rent at two different qualified floating rates (as defined in § 1.1275-5(b)), one for 2001 and the other for 2002, such interest to be paid on December 31 of the year it accrues. The rental agreement provides that the qualified floating rate is set at a current value within the meaning of § 1.1275-5(a)(4). Assume that on the agreement date, 110 percent of the applicable Federal rate is 10 percent, compounded annually. Assume also that the agreement is not a leaseback or long-term agreement and, therefore, is not subject to constant rental accrual.
(ii) To determine if the section 467 rental agreement provides for adequate interest under § 1.467-2(b), § 1.467-2(b)(2) requires the use of fixed rate substitutes (in this example determined in the same manner as under § 1.1275-5(e)(3)(i) treating the agreement date as the issue date) in place of the variable rates called for by the rental agreement. Assume that on the agreement date the qualified floating rates, and therefore the fixed rate substitutes, relating to 2001 and 2002 are 10 and 15 percent compounded annually. Taking into account the fixed rate substitutes, the sum of the present values of all amounts payable by the lessee as fixed rent and interest thereon is greater than the sum of the present values of the fixed rent allocated to each rental period. Accordingly, the rental agreement provides adequate interest under § 1.467-2(b)(1)(iii) and the fixed rent accruing in each calendar year during the rental agreement is the fixed rent allocated under the rental agreement.

(iii) Because the section 467 rental agreement provides for variable interest on unpaid accrued fixed rent at qualified floating rates and the qualified floating rates are set at a current value, the requirements of § 1.1275-5(a)(3)(i)(A) and (4) are met and the rental agreement provides for variable interest within the meaning of paragraph (a)(1) of this section. Therefore, under paragraph (b)(1)(i) of this section, the yield of the section 467 loan is computed based on the fixed rate substitutes. Under § 1.467-4(c), the constant yield (rounded to two decimal places) equals 13.63 percent compounded annually. Based on the fixed rate substitutes, the fixed rent, interest on fixed rent, and the principal balance of the section 467 loan, for each calendar year during the lease term, are as follows:

	Accrued rent	Accrued interest	Projected payment	Cumulative loan
2000	$100,000	$0	$0	$100,000
2001	200,000	13,630	(10,000)	303,630
2002	100,000	41,370	(445,000)	0

(iv) To compute the actual reported interest on fixed rent for each calendar year, the variable interest adjustment amount, as described in paragraph (b)(2) of this section, must be added to the accrued interest determined in paragraph (iii) of this *Example 1.* Assume that the variable rates for 2001 and 2002 are

actually 11 and 14 percent, respectively. Without regard to section 467, the interest that would have accrued during each calendar year under the terms of the section 467 rental agreement, and the interest that would have accrued under the terms of the rental agreement using the fixed rate substitutes determined under paragraph (b)(1)(i) of this section are as follows:

	Accrued interest under rental agreement	Accrued interest using fixed rate substitutes
2000	$0	$0
2001	11,000	10,000
2002	42,000	45,000

(v) Under paragraph (b)(2) of this section, the variable interest adjustment amount is $1,000 ($11,000−$10,000) for 2001 and is −$3,000 ($42,000−$45,000) for 2002. Thus, under paragraph (b)(1)(ii) of this section, the actual interest on fixed rent for 2001 is $14,630 ($13,630 + $1,000) and for 2002 is $38,370 ($41,370−$3,000).

Example 2. (i) The facts are the same as in *Example 1* except that 110 percent of the applicable Federal rate is 15 percent compounded annually and the section 467 rental agreement does not provide adequate interest under § 1.467-2(b). Consequently, the fixed rent for each calendar year during the lease is the proportional rental amount.
(ii) The sum of the present values of the fixed rent provided for each calendar year during the lease term, discounted at 15 percent compounded annually, equals $303,936.87.

(iii)(A) Paragraph (b)(1)(i) of this section requires the proportional rental amount to be computed based on the assumption that interest will accrue and be paid based on the fixed rate substitutes. Thus, the sum of the present values of the projected payments under the section 467 rental agreement equals $300,156.16, computed as follows:

$$\begin{aligned} \$\ 10{,}000/(1.15)^2 &= \$\quad 7{,}561.44 \\ 445{,}000/(1.15)^3 &= \underline{\quad 292{,}594.72} \\ & \quad \underline{\underline{\$300{,}156.16}} \end{aligned}$$

(B) The fraction for computing the proportional rental amount equals .9875609 ($300,156.16/$303,936.87).

(iv) Based on the fixed rate substitutes, the fixed rent, interest on fixed rent, and the balance of the section 467 loan for each calendar year during the lease term are as follows:

	Proportional rent	Accrued interest	Projected payment	Cumulative loan
2000	$98,756.09	$0.00	$0	$98,756.09
2001	197,512.18	14,813.41	(10,000)	301,081.68
2002	98,756.09	45,162.23	(445,000)	0.00

(v) The variable interest adjustment amount in this example is the same as in *Example 1*. Under paragraph (b)(1)(ii) of this section, the actual interest on fixed rent for 2001 is $15,813.41 ($14,813.41 + $1,000) and for 2002 is $42,162.23 ($45,162.23−$3,000).

[T.D. 8820, 64 FR 26865, May 18, 1999]

§ 1.467-6 Section 467 rental agreements with contingent payments. [Reserved]

§ 1.467-7 Section 467 recapture and other rules relating to dispositions and modifications.

(a) ***Section 467 recapture.*** Notwithstanding any other provision of the Internal Revenue Code, except as provided in paragraph (c) of this section, a lessor disposing of property in a transaction to which this paragraph (a) applies must recognize the recapture amount (determined under paragraph (b) of this section) and treat that amount as ordinary income. This paragraph (a) applies to any disposition of property subject to a section 467 rental agreement that—

(1) Is a leaseback (as defined in § 1.467-3(b)(2)) or a long-term agreement (as defined in § 1.467-3(b)(3));

(2) Is not disqualified under § 1.467-3(b)(1); and

(3) Allocates to any rental period fixed rent that, when annualized, exceeds the annualized fixed rent allocated to any preceding rental period.

(b) ***Recapture amount*** —

(1) ***In general.*** The recapture amount for a disposition is the lesser of—

(i) The prior understated inclusion (determined under paragraph (b)(2) of this section); or

(ii) The section 467 gain (determined under paragraph (b)(3) of this section).

(2) ***Prior understated inclusion.*** The prior understated inclusion is the excess (if any) of—

(i) The aggregate amount of section 467 rent and section 467 interest for the period during which the lessor held the property, determined as if the section 467 rental agreement were a disqualified leaseback or long-term agreement subject to constant rental accrual under § 1.467-3; over

(ii) The aggregate amount of section 467 rent and section 467 interest accrued by the lessor during that period.

(3) *Section 467 gain* —

(i) ***In general.*** Except as otherwise provided in paragraph (b)(3)(ii) of this section, the section 467 gain is the excess (if any) of—

(A) The amount realized from the disposition; over

(B) The sum of the adjusted basis of the property and the amount of any gain from the disposition that is treated as ordinary income under any provision of subtitle A of the Internal Revenue Code other than section 467(c) (for example, section 1245 or 1250).

(ii) ***Certain dispositions.*** In the case of a disposition that is not a sale or exchange, the section 467 gain is the excess (if any) of the fair market value of the property on the date of disposition over the amount determined under paragraph (b)(3)(i)(B) of this section.

(c) *Special rules* —

(1) ***Gifts.*** Paragraph (a) of this section does not apply to a disposition by gift. However, see paragraph (c)(4) of this section for dispositions by transferees. If a disposition is in part a sale or exchange and in part a gift, paragraph (a) of this section applies to the disposition but the prior understated inclusion is determined by taking into account only section 467 rent and section 467 interest properly allocable to the portion of the property not disposed of by gift.

(2) ***Dispositions at death.*** Paragraph (a) of this section does not apply to a disposition if the basis of the property in the hands of the transferee is determined under section 1014(a) or section 1022. However, see paragraph (c)(4) of this section for dispositions of property subject to section 1022 by transferees. This paragraph (c)(2) does not apply to property that constitutes a right to receive an item of income in respect of a decedent. See sections 691, 1014(c), and 1022(f).

(3) *Certain tax-free exchanges* —

(i) ***In general.*** The recapture amount in the case of a disposition to which this paragraph (c)(3) applies is limited to the amount of gain recognized to the transferor (determined without regard to paragraph (a) of this section), reduced by the amount of any gain from the disposition that is treated as ordinary income under any provision of subtitle A of the Internal Revenue Code other than section 467(c). However, see paragraph (c)(4) of this section for dispositions by transferees.

(ii) *Dispositions covered* —

(A) ***In general.*** Except as provided in paragraph (c)(3)(ii)(B) of this section, this paragraph (c)(3) applies to a disposition of property if the basis of the property in the hands of the transferee is determined by reference to its basis in the hands of the transferor by reason of the application of section 332, 351, 361, 721, or 731.

(B) ***Transfers to certain tax-exempt organizations.*** This paragraph (c)(3) does not apply to a disposition to an organization (other than a cooperative described in section 521) which is exempt from tax imposed by chapter 1, subtitle A of the Internal Revenue Code (a tax-exempt entity) except to the extent the property is used in an activity the income from which is subject to tax under section 511(a) (a section 511(a) activity). However, if assets used to any extent in a section 511(a) activity are disposed of by the tax-exempt entity,

then, notwithstanding any other provision of law (except section 1031 or section 1033) the recapture amount with respect to such disposition, to the extent attributable under paragraph (c)(4) of this section to the period of the transferor's ownership of the property prior to the first disposition, shall be included in the tax-exempt entity's unrelated business taxable income. To the extent that the tax-exempt entity ceases to use the property in a section 511(a) activity, the entity will be treated for purposes of this paragraph (c)(3) and paragraph (c)(4) of this section as having disposed of the property to such extent on the date of the cessation.

(4) ***Dispositions by transferee.*** If the recapture amount with respect to a disposition of property (the first disposition) is limited under paragraph (c)(1) or (c)(3) of this section, or under paragraph (c)(2) of this section because the basis of the property in the hands of the transferee is determined under section 1022, and the transferee subsequently disposes of the property in a transaction to which paragraph (a) of this section applies, the prior understated inclusion determined under paragraph (b)(2) of this section is computed by taking into account the amounts attributable to the period of the transferor's ownership of the property prior to the first disposition. Thus, for example, the section 467 rent and section 467 interest that would have been taken into account by the transferee if the section 467 rental agreement were a disqualified leaseback or long-term agreement subject to constant rental accrual include the amounts that would have been taken into account by the transferor, and the aggregate amount of section 467 rent and section 467 interest accrued by the transferee includes the aggregate amount of section 467 rent and section 467 interest that was taken into account by the transferor. The prior understated inclusion determined under this paragraph (c)(4) must be reduced by any recapture amount taken into account under paragraph (a) of this section by the transferor.

(5) ***Like-kind exchanges and involuntary conversions.*** If property is disposed of or converted and, before the application of paragraph (a) of this section, gain is not recognized in whole or in part under section 1031 or 1033, then the amount of section 467 gain taken into account by the lessor is limited to the sum of—

(i) The amount of gain recognized on the disposition or conversion of the property (determined without regard to paragraph (a) of this section); and

(ii) The fair market value of property acquired that is not subject to the same section 467 rental agreement and that is not taken into account under paragraph (c)(5)(i) of this section.

(6) ***Installment sales.*** In the case of an installment sale of property to which paragraph (a) of this section applies—

(i) The recapture amount is recognized and treated as ordinary income in the year of the disposition; and

(ii) Any gain in excess of the recapture amount is reported under the installment method of accounting if and to the extent that method is otherwise available under section 453.

(7) ***Dispositions covered by section 170(e), 341(e)(12), or 751(c).*** For purposes of sections 170(e), 341(e)(12), and 751(c), amounts treated as ordinary income under paragraph (a) of this section must be treated in the same manner as amounts treated as ordinary income under section 1245 or 1250.

(d) ***Examples.*** The following examples illustrate the application of paragraphs (a), (b), and (c) of this section. In each of these examples the transferor of property subject to a section 467 rental agreement is entitled to the rent for the day of the disposition. The examples are as follows:

Example 1. (i)(A) X and Y enter into a section 467 rental agreement for a 5-year lease of personal property beginning on January 1, 2000, and ending on December 31, 2004. The rental agreement provides that the calendar year will be the rental period and that rents accrue and are paid in the following pattern:

	Allocation	Payment
2000	$0	$0
2001	87,500	0
2002	87,500	175,000
2003	87,500	175,000
2004	87,500	0

(B) Assume that both X and Y are calendar year taxpayers and that 110 percent of the applicable Federal rate is 11 percent, compounded annually. Assume also that the rental agreement is a long-term agreement (as defined in § 1.467-3(b)(3)), but it is not a disqualified leaseback or long-term agreement. Further, because the agreement does not provide prepaid or deferred rent, proportional rental accrual is not applicable. (See § 1.467-2(b)(1)(i)). Therefore, the rent taken into account under § 1.467-1(d)(2) is the fixed rent allocated to the rental periods under § 1.467-1(c)(2)(ii).
(ii) On December 31, 2000, X sells the property subject to the section 467 rental agreement to an unrelated person for $575,000. At the time of the sale, X's adjusted basis in the property is $175,000. Thus, X's gain on the sale of the property is $400,000. Assume that $175,000 of this gain would be treated as ordinary income under provisions of the Internal Revenue Code other than section 467(c). Under paragraph (a) of this section, X is required to take the recapture amount into account as ordinary income. Under paragraph (b) of this section, the recapture amount is the lesser of the prior understated inclusion or the section 467 gain.

(iii)(A) In computing the prior understated inclusion under paragraph (b)(2) of this section, assume that the section 467 rent and section 467 interest (based on constant rental accrual) would be taken into account as follows if the section 467 rental agreement were a disqualified long-term agreement:

	Section 467 rent	Section 467 interest
2000	$65,812.55	$0
2001	65,812.55	7,239.38
2002	65,812.55	15,275.09
2003	65,812.55	4,944.73
2004	65,812.55	(6,521.95)

(B) The total amount of section 467 rent and section 467 interest for 2000, based on constant rental accrual, is $65,812.55. Since X did not take any section 467 rent or section 467 interest into account in 2000, the prior understated inclusion is also $65,812.55. X's section 467 gain is $225,000, which is the excess of the gain realized ($400,000) over the amount of that gain treated as ordinary income under non-section 467 provisions ($175,000). Accordingly, the recapture amount (the lesser of the prior understated inclusion or the section 467 gain) treated as ordinary income is $65,812.55.

Example 2. (i) The facts are the same as in *Example 1*, except that the section 467 rental agreement specifies that rents accrue and are paid in the following pattern:

	Allocation	Payment
2000	$60,000	$0
2001	65,000	0
2002	70,000	175,000
2003	75,000	175,000
2004	80,000	0

(ii)(A) Assume the section 467 rental agreement does not provide for adequate interest under § 1.467-2(b), and, therefore, the fixed rent for a rental period is the proportional rental amount. See § 1.467-1(d)(2)(ii). Under § 1.467-2(c), the following amounts would be required to be taken into

account:

	Section 467 rent	Section 467 interest
2000	$57,260.43	$ 0
2001	62,032.13	6,298.65
2002	66,803.83	13,815.03
2003	71,575.53	3,433.11
2004	76,347.23	(7,565.94)

(B) The amount of section 467 rent and section 467 interest taken into account by X for 2000 is $57,260.43. Thus, the prior understated inclusion is $8,552.12 (the excess of the amount of section 467 rent and section 467 interest based on constant rental accrual for 2000, $65,812.55, over the amount of section 467 rent and section 467 interest actually taken into account, $57,260.43). Since the prior understated inclusion is less than the section 467 gain ($225,000, as determined in *Example 1*(iii)(B)), the recapture amount treated as ordinary income is also $8,552.12.

Example 3. (i) The facts are the same as in *Example 1,* except that, instead of selling the property, X transfers the property to S on December 31, 2002, in exchange for stock of S in a transaction that meets the requirements of section 351(a). Under paragraph (c)(3) of this section, because of the application of section 351, X is not required to take into account any section 467 recapture.
(ii) On December 31, 2003, S sells the property subject to the section 467 rental agreement to an unrelated person for $450,000. At the time of the sale, S's adjusted basis in the property is $105,000. Thus, S's gain on the sale of the property is $345,000. Assume that $245,000 of this gain would be treated as ordinary income under provisions of the Internal Revenue Code other than section 467(c). Under paragraph (a) of this section, S is required to take the recapture amount into account as ordinary income which, under paragraph (b) of this section, is the lesser of the prior understated inclusion or the section 467 gain.

(iii) S owned the property in 2003 and, under paragraph (c)(4) of this section, for purposes of determining S's prior understated inclusion, S is treated as if it had owned the property during the years 2000 through 2002. In computing S's prior understated inclusion under paragraph (b)(2) of this section, the section 467 rent and section 467 interest based on constant rental accrual are the same as the amounts set forth in the schedule in *Example 1*(iii)(A). Thus, the constant rental amount for 2000, 2001, 2002, and 2003 is $290,709.40 ((4 × $65,812.55) + $7,239.38 + $15,275.09 + $4,944.73). The section 467 rent and section 467 interest actually taken into account prior to the disposition is $262,500. Thus, S's prior understated inclusion is $28,209.40 ($290,709.40 minus $262,500 (3 × $87,500)). S's section 467 gain is $100,000, the difference between the gain realized

on the disposition ($345,000) and the amount of gain that is treated as ordinary income under non-section 467 Code provisions ($245,000). Accordingly, S's recapture amount, the lesser of the prior understated inclusion or the section 467 gain, is $28,209.40.

(e) *Other rules relating to dispositions* —

(1) ***In general.*** If there is a sale, exchange, or other disposition of property subject to a section 467 rental agreement (the transfer), the section 467 rent and, if applicable, section 467 interest for a period are taken into account by the owner of the property during the period. The following rules apply in determining the section 467 rent and section 467 interest for the portion of the rental period ending immediately prior to the transfer:

(i) The section 467 rent and section 467 interest for the portion of the rental period ending immediately prior to the transfer are a pro rata portion of the section 467 rent and the section 467 interest, respectively, for the rental period. Such amounts are also taken into account in determining the transferor's section 467 loan balance, prior to any adjustment thereof that may be required under paragraph (h) of this section, immediately before the transfer.

(ii) If the transferor of the property is entitled to the rent for the day of transfer, the transfer is treated as occurring at the end of the day of the transfer.

(iii) If the transferee of the property is entitled to the rent for the day of transfer, the transfer is treated as occurring at the beginning of the day of the transfer.

(2) ***Treatment of section 467 loan.*** If there is a transfer described in paragraph (e)(1) of this section, the following rules apply in determining the transferor's and the transferee's section 467 loans for the period after the transfer, the amount realized by the transferor, and the transferee's basis in the property:

(i) The beginning balance of the transferor's section 467 loan is equal to the net present value at the time of the transfer (but after giving effect to the transfer) of all subsequent amounts payable as fixed rent and interest on fixed rent to the transferor and all subsequent amounts payable as interest on prepaid fixed rent by the transferor. The transferor must continue to take into account interest on the transferor's section 467 loan balance after the date of the transfer.

(ii) The beginning balance of the transferee's section 467 loan is equal to the principal balance of the transferor's section 467 loan immediately before the transfer reduced (below zero, if appropriate) by the beginning balance of the transferor's section 467 loan. Amounts payable to the transferor are not taken into account in adjusting the transferee's section 467 loan balance.

(iii) If the beginning balance of the transferee's section 467 loan is negative, the transferor and transferee must treat the balance as a liability that is either assumed in connection with the transfer of the property or secured by the property acquired subject to the liability. If the beginning balance of the transferee's section 467 loan is positive, the transferor and transferee must treat the balance as an additional asset acquired in connection with the transfer of the property. In the case of a positive beginning balance of the transferee's section 467 loan, the transferee will have an initial cost basis in the section 467 loan equal to the lesser of the beginning balance of the loan or the aggregate consideration for the transfer of the property subject to the section 467 rental agreement and the transfer of the transferor's interest in the section 467 loan.

(3) [Reserved]

(4) ***Examples.*** The following examples illustrate the application of this paragraph (e). In each of these examples the transferor of property subject to a section 467 rental agreement is entitled to the rent for the day of the transfer. The examples are as follows:

Example 1. (i) Q and R enter into a section 467 rental agreement for a 5-year lease of personal property beginning on January 1, 2000, and ending on December 31, 2004. The rental agreement provides that $0 of rent is allocated to 2000, 2001, and 2002, and $1,750,000 is allocated to each of the years 2003 and 2004. The rental agreement provides that the calendar year will be the rental period and that the rent allocated to each calendar year is payable on the last day of that calendar year. Assume that both Q and R are calendar year taxpayers and that 110 percent of the applicable Federal rate is 11 percent, compounded annually. Assume further that the rental agreement is a disqualified long-term agreement (as defined in § 1.467-3(b)(3)) and that the section 467 rent, the section 467 interest, and the section 467 loan balance would be the following amounts:

Calendar year	Payment	Section 467 interest	Section 467 rent	Section 467 loan balance
2000	$0	$0	$592,905.87	$592,905.87
2001	0	65,219.65	592,905.87	1,251,031.39
2002	0	137,613.45	592,905.87	1,981,550.71
2003	1,750,000.00	217,970.58	592,905.87	1,042,427.16
2004	1,750,000.00	114,666.97	592,905.87	0

(ii) On December 31, 2002, Q sells the property subject to the section 467 rental agreement to P, an unrelated person, for $3,000,000. Q does not retain the right to receive any amounts payable by R under the rental agreement after the date of sale, but the agreement is not otherwise modified. At the time of the sale, Q's adjusted basis in the property is $975,000. Assume that, under § 1.467-1(f)(7), the disposition is not a substantial modification. Further, the Commissioner does not determine that the treatment of the agreement as a disqualified long-term agreement should be changed and, under § 1.467-1(f)(4)(iii), the agreement remains subject to constant rental accrual. Thus, under paragraph (g)(2)(iii) of this section, section 467 rent and section 467 interest for periods after the disposition will be taken into account on the basis of constant rental accrual applied to the terms of the entire agreement (as modified).

(iii) Under paragraph (e)(2)(ii) of this section, the beginning balance of P's section 467 loan is $1,981,550.71. P's section 467 loan balance is computed by reducing the balance of the section 467 loan immediately before the transfer ($1,981,550.71) by the beginning balance of the transferor's section 467 loan ($0 because Q does not retain the right to receive any amounts payable under the rental agreement subsequent to the transfer).

(iv) Q will be treated as if it had received $1,981,550.71 from the disposition of the section 467 loan and $1,018,449.29 from the sale of the property subject to the rental agreement. Thus, Q's gain on the sale of the property is $43,449.29 ($1,018,449.29 amount realized less $975,000 adjusted basis). Q's gain is not subject to the recapture provisions of section 467(c) and paragraph (a) of this section because the rental agreement was disqualified under § 1.467-3(b)(1) and, thus, the requirement of paragraph (a)(2) of this section is not met. Q recognizes no gain on the disposition of the section 467 loan because Q's basis in the loan equals the amount considered received for the loan. Further, Q does not take into account any of the section 467 rent or section 467 interest attributable to periods after the transfer of the property.

(v) P is treated as if it had acquired the property and the positive balance in the transferee's section 467 loan. P's cost basis in the property is $1,018,449.29, and its cost basis in the section 467 loan immediately following the transfer is $1,981,550.71. P takes section 467 rent and section 467 interest into account for the calendar years 2002 and 2003 under the constant rental accrual method and, accordingly, treats payments received under the rental agreement as recoveries of the principal balance of the section 467 loan (as adjusted from time to time).

Example 2. (i) The facts are the same as *Example 1,* except that on December 31, 2002, Q transfers the property to P in exchange for stock of P having a fair market value of $3,000,000 and the transaction meets the requirements of section 351(a).
(ii) Q is treated as having transferred two assets to P, the property subject to the rental agreement and the positive balance of the section 467 loan. Under section 351(a), because only stock of P is received by Q, Q does not recognize any of the gain realized on the transaction. Pursuant to section 358(a), the basis of Q in the P stock received in the exchange is the same as the aggregate basis of the property exchanged, or $2,956,550.71 (the sum of the balance of the section 467 loan, $1,981,550.71, and the adjusted basis of the property, $975,000). Q does not take into account any of the section 467 rent or section 467 interest attributable to periods after the transfer of the property.

(iii) P is treated as if it had acquired the property and the positive balance in the transferee's section 467 loan in the transaction. Pursuant to section 362(a), P's basis in each asset is the same as the basis of Q immediately preceding the transfer. Thus, the basis of P in the property subject to the rental agreement is $975,000, and the basis of P in the section 467

loan immediately following the transfer is $1,981,550.71. P takes section 467 rent and section 467 interest into account for the calendar years 2003 and 2004 under the constant rental accrual method and, accordingly, treats payments received under the rental agreement as recoveries of the principal balance of the section 467 loan (as adjusted from time to time).

(f) *Treatment of assignments by lessee and lessee-financed renewals* —

(1) ***Substitute lessee use.*** If a lessee assigns its interest in a section 467 rental agreement to a substitute lessee, or if a period when a substitute lessee has the use of property subject to a section 467 rental agreement is otherwise included in the lease term under § 1.467-1(h)(6), the section 467 rent for a period is taken into account by the person having the use of the property during the period. The following rules apply in determining the section 467 rent and section 467 interest for the portion of the rental period ending immediately prior to the assignment:

(i) The section 467 rent and section 467 interest for the portion of the rental period ending immediately prior to the assignment are a pro rata portion of the section 467 rent and the section 467 interest, respectively, for the rental period. Such amounts are also taken into account in determining the lessee's section 467 loan balance, prior to any adjustment thereof that may be required under paragraph (h) of this section, immediately before the substitute lessee first has use of the property.

(ii) If the lessee is liable for the rent for the day that the substitute lessee first has use of the property, the substitute lessee's use shall be treated as beginning at the end of that day.

(iii) If the substitute lessee is liable for the rent for the day that the substitute lessee first has use of the property, the substitute lessee's use shall be treated as beginning at the beginning of that day.

(2) ***Treatment of section 467 loan.*** If, as described in paragraph (f)(1) of this section, a lessee assigns its interest in a section 467 rental agreement to a substitute lessee or a period when a substitute lessee has the use of property subject to a section 467 rental agreement is otherwise included in the lease term under § 1.467-1(h)(6), the following rules apply in determining the amount of the lessee's and the substitute lessee's section 467 loans for the period when the substitute lessee has use of the property and in computing the taxable income of the lessee and substitute lessee:

(i) The beginning balance of the lessee's section 467 loan is equal to the net present value, as of the time the substitute lessee first has use of the property (but after giving effect to the transfer of the right to use the property), of all amounts subsequently payable by the lessee as fixed rent and interest on fixed rent and all amounts subsequently payable as interest on prepaid fixed rent to the lessee. For purposes of this paragraph (f), any amount otherwise payable by the lessee is not treated as an amount subsequently payable by the lessee to the extent that such payment, if made by the lessee, would give rise to a right of contribution or other similar claim against the substitute lessee or any other person. The lessee must continue to take into account interest on the lessee's section 467 loan balance after the substitute lessee first has use of the property.

(ii) The beginning balance of the substitute lessee's section 467 loan is equal to the principal balance of the lessee's section 467 loan immediately before the substitute lessee first has use of the property reduced (below zero, if appropriate) by the beginning balance of the lessee's section 467 loan. Amounts payable by the lessee to any person other than the substitute lessee

(or a related person) or payable to the lessee by any person other than the substitute lessee (or a related person) are not taken into account in adjusting the substitute lessee's section 467 loan balance.

(iii) If the beginning balance of the substitute lessee's section 467 loan is positive, the beginning balance is treated as—

(A) Gross receipts of the lessee for the taxable year in which the substitute lessee first has use of the property; and

(B) A liability that is either assumed in connection with the transfer of the leasehold interest to the substitute lessee or secured by property acquired subject to the liability.

(iv) If the beginning balance of the substitute lessee's section 467 loan is negative, the following rules apply:

(A) If the principal balance of the lessee's section 467 loan immediately before the substitute lessee first has use of the property was negative, any consideration paid by the substitute lessee to the lessee in conjunction with the transfer of the use of the property shall be treated as a nontaxable return of capital to the lessee to the extent that—

(*1*) The consideration does not exceed the amount owed to the lessee under the lessee's section 467 loan balance immediately before the substitute lessee first has use of the property; and

(2) The lessee has basis in the principal balance of the lessee's section 467 loan immediately before the substitute lessee first has use of the property.

(B) Except as provided in paragraph (f)(2)(iv)(D) of this section, the excess, if any, of the beginning balance of the amount owed to the substitute lessee under the section 467 loan, over any consideration paid by the substitute lessee to the lessee in conjunction with the transfer of the use of the property, is treated as an amount incurred by the lessee for the taxable year in which the substitute lessee first has use of the property.

(C) To the extent the beginning balance of the amount owed to the substitute lessee under the section 467 loan exceeds any consideration paid by the substitute lessee to the lessee in conjunction with the transfer of the use of the property, repayments of the beginning balance are items of gross income of the substitute lessee in the taxable year in which repayment occurs (determined by applying any repayment first to the beginning balance of the substitute lessee's section 467 loan).

(D) Any amount incurred by the lessee under paragraph (f)(2)(iv)(B) of this section with respect to a transfer of the use of property (the current transfer) shall be reduced (but not below zero) to the extent that the lessee, in its capacity, if any, as a substitute lessee with respect to an earlier transfer of the use of the property would have recognized additional gross income under paragraph (f)(2)(iv)(C) of this section if the current transfer had not occurred.

(v) For purposes of paragraph (f)(2)(iv)(C) of this section, repayments occur as the negative balance is amortized through the net accrual of rent and negative interest.

(3) ***Lessor use.*** If a period when the lessor has the use of property subject to a section 467 rental agreement is included in the lease term under § 1.467-1(h)(6), the section 467 rent for the period is not taken into account and the lessor is treated as a substitute lessee for purposes of this paragraph (f).

(4) ***Examples.*** The following examples illustrate the application of this paragraph (f). In each of these examples, the substitute lessee is liable for the rent for the day on which the substitute lessee first has use of the property subject to the section 467 rental agreement. Further, assume that in each example the lessee assignment is not a substantial modification under § 1.467-1(f). The examples are as follows:

Example 1. (i) The facts are the same as in *Example 1* of paragraph (e)(4) of this section, except that on December 31, 2001, R, the lessee, contracts to assign its entire remaining interest in the leasehold to S, a calendar year taxpayer. The assignment becomes effective at the beginning of January 1, 2002. Pursuant to the terms of the assignment, R agrees with S that R will make $1,400,000 of the $1,750,000 rental payment required on December 31, 2003. (ii) Under paragraph (f)(2)(i) of this section, R's section 467 loan balance as of the beginning of January 1, 2002, the time S first has use of the property, is $1,136,271.41 ($1,400,000/(1.11)2). Under paragraph (f)(2)(ii) of this section, S's section 467 loan balance as of the beginning of January 1, 2002, is $114,759.98 (the principal balance of R's section 467 loan immediately before S has use of the property ($1,251,031.39), less R's section 467 loan balance at the beginning of January 1, 2002 ($1,136,271.41)).

(iii) Because S's $114,759.98 section 467 loan balance is positive, under paragraph (f)(2)(iii)(A) of this section, such amount is treated as gross receipts of R for 2002, R's taxable year in which S first has use of the property. R will treat the $114,759.98 as an amount received in exchange for the transfer of the leasehold interest. Under paragraph (f)(2)(iii)(B) of this section, S will treat that amount as a liability assumed in acquiring the leasehold interest. Thus, S's cost basis in the leasehold interest is $114,759.98.

(iv) Under paragraph (f)(1) of this section, S takes the section 467 rent attributable to the property into account for the period beginning on January 1, 2002. For 2002, S takes section 467 interest into account based on S's section 467 loan balance at the beginning of 2002. S's amounts payable, section 467 rent, section 467 interest, and end-of-year section 467 loan balances for calendar years 2002 through 2004 are as follows:

Calendar year	Payment	Section 467 interest	Section 467 rent	Section 467 loan balance
Beginning				$114,759.98
2002	$0	$12,623.60	$592,905.87	720,289.45

Calendar year	Payment	Section 467 interest	Section 467 rent	Section 467 loan balance
2003	350,000.00	79,231.83	592,905.87	1,042,427.15
2004	1,750,000.00	114,666.98	592,905.87	0

(v) Under paragraph (f)(2)(i) of this section, R must continue to take into account section 467 interest on R's section 467 loan balance after S first has use of the property. R's section 467 loan balance beginning when S first has use of the property is $1,136,271.41. R's section 467 interest and end-of-year section 467 loan balances for calendar years 2002 through 2003 are as follows:

Calendar year	Payment	Section 467 interest	Section 467 loan balance
Beginning			$1,136,271.41
2002	$0	$124,989.85	1,261,261.26
2003	1,400,000.00	138,738.74	0

Example 2. (i) On January 1, 2000, B leases tangible personal property from C for a period of five years. The rental agreement provides that the rental period is the calendar year and that rent payments are due at the end of the calendar year. The rental agreement does not provide for interest on prepaid rent. Assume that B and C are both calendar year taxpayers and that 110 percent of the applicable Federal rate is 10 percent, compounded annually. The rental agreement allocates rents and provides for payments of rent as follows:

Calendar year	Rent	Payments
2000	$200,000	$400,000
2001	200,000	300,000
2002	200,000	200,000
2003	200,000	100,000
2004	200,000	0

(ii) The rental agreement has prepaid rent within the meaning of § 1.467-1(c)(3)(ii) because the cumulative amount of rent payable through the end of 2001 ($700,000) exceeds the cumulative amount of rent allocated to calendar years 2000 through 2002 ($600,000).

Because the rental agreement does not provide for adequate interest on prepaid fixed rent, the rent for each calendar year during the lease term is the proportional rental amount, as described in § 1.467-2(c). The amounts payable, section 467 rent, section 467 interest, and end-of-year section 467 loan balances for each calendar year are as follows:

Calendar year	Payment	Section 467 interest	Section 467 rent	Section 467 loan balance
2000	$400,000	$0	$218,987.40	($181,012.60)
2001	300,000	(18,101.26)	218,987.40	(280,126.46)
2002	200,000	(28,012.64)	218,987.40	(289,151.70)
2003	100,000	(28,915.17)	218,987.40	(199,079.47)
2004	0	(19,907.93)	218,987.40	0

(iii) On December 31, 2001, B contracts to assign its entire remaining interest in the leasehold to D, a calendar year taxpayer. The assignment becomes effective at the beginning of January 1, 2002. D pays B $278,000 on January 1, 2002, in conjunction with the assignment of the leasehold interest. Under the terms of the assignment, B is not obligated to make any rental payments due after the assignment.
(iv) Under paragraph (f)(2)(i) of this section, B's section 467 loan balance as of the beginning of January 1, 2002, the time D first has use of the property, is zero because D is obligated to make all rent payments due after the assignment of the leasehold interest. Under paragraph (f)(2)(ii) of this section, D's section 467 loan balance as of the beginning of January 1, 2002, is negative $280,126.46 (the principal balance of B's section 467 loan immediately before D has use of the property (negative $280,126.46), less B's section 467 loan balance when D first has use of the property (zero)). Because D's beginning section 467 loan balance is negative, paragraph (f)(2)(iv) of this section applies.

(v) Because B's $280,126.46 section 467 loan balance at the end of 2001 (that is, immediately before D has use of the property) is negative, paragraph (f)(2)(iv)(A) of this section applies. B's loan balance is the amount owed to B under the section 467 loan and consists of the excess of B's payments to C over the net amount of rent and negative interest B has taken into account through the end of 2001. Thus, B's basis in the negative section 467 loan balance at the end of 2001 is $280,126.46. Because the $278,000 paid by D to B in conjunction with the transfer of the leasehold interest does not exceed the amount owed to B under the section 467 loan at the end of 2001, and does not exceed B's basis in that loan balance, under paragraph (f)(2)(iv)(A) of this section B treats the $278,000 payment from D as a nontaxable return of capital.

(vi) The beginning balance of the amount owed to D under the section 467 loan ($280,126.46) exceeds by $2,126.46 the $278,000 paid by D to B in conjunction with the transfer of the leasehold interest. Paragraph (f)(2)(iv)(B) of this section treats the $2,126.46 as an amount incurred by B in 2002, B's taxable year in which D first has use of the property. Paragraph (f)(2)(iv)(D) of this section does not apply to reduce the amount incurred by B because B is the original lessee under the section 467 rental agreement.

(vii) Under paragraph (f)(1) of this section, D takes the section 467 rent into account for the period beginning when D first has use of the property. D takes section 467 interest into account based on a beginning section 467 loan balance of negative $280,126.46.

(viii) The beginning balance of the amount owed to D under the section 467 loan ($280,126.46) exceeds by $2,126.46 the $278,000 paid by D to B in conjunction with the transfer of the leasehold interest. Under paragraph (f)(2)(iv)(C) of this section, D must include this amount in gross income in 2002, the year in which this amount of D's beginning section 467 loan balance is paid through the net accrual of rent and negative interest. This inclusion in gross income ensures that the reductions in D's taxable income attributable to the section 467 rental agreement will not exceed the actual amount of D's expenditures.

(g) *Application of section 467 following a rental agreement modification* —

(1) *Substantial modifications.* The following rules apply to any substantial modification of a rental agreement occurring after May 18, 1999 unless the entire agreement (as modified) is treated as a single agreement under § 1.467-1(f)(4)(vi):

(i) *Treatment of pre-modification items.* The lessor and lessee must take pre-modification items (within the meaning of § 1.467-1(f)(5)(v)) into account under their method of accounting used before the modification to report income and expense attributable to the rental agreement.

(ii) *Computations with respect to post-modification items.* In computing section 467 rent, section 467 interest, and the amount of the section 467 loan with respect to post-modification items—

(A) Post-modification items are treated as provided under a rental agreement (the post-modification agreement) separate from the agreement under which pre-modification items are provided;

(B) The lease term of the post-modification agreement begins at the beginning of the first period for which rent other than pre-modification rent is provided; and

(C) The applicable Federal rate for the post-modification agreement is the applicable Federal rate in effect on the day on which the modification occurs.

(iii) *Adjustments* —

(A) *Adjustment relating to certain prepayments.* If any payments before the beginning of the lease term of the post-modification agreement are post-modification items, the lessor and lessee must take into account, in the taxable year in which the modification occurs, any adjustment necessary to prevent duplication with respect to such payments or the omission of interest thereon for periods before the beginning of the lease term.

(B) ***Adjustment relating to retroactive beginning of lease term.*** If the lease term of a post-modification agreement begins before the date on which the modification occurs, the lessor and lessee must take into account in the taxable year in which the modification occurs any amount necessary to prevent the duplication or omission of rent or interest for the period after the beginning of the lease term of the post-modification agreement and before the beginning of the taxable year in which the modification occurs. For this purpose, the amount necessary to prevent duplication or omission is determined after taking into account any adjustments required by the Commissioner for taxable years ending prior to the beginning of the taxable year in which the modification occurs. In determining any adjustments required by the Commissioner for taxable years ending prior to the beginning of the taxable year in which the modification occurs, the Commissioner will disregard the modification.

(iv) ***Coordination with rules relating to dispositions and assignments*** —

(A) ***Dispositions.*** If the modification involves a sale, exchange, or other disposition of the property subject to the rental agreement—

(*1*) Adjustments required under this paragraph (g) are taken into account before applying paragraphs (a), (b), (c), and (e) of this section;

(*2*) The prior understated inclusion for purposes of paragraph (b) of this section is the sum of the prior understated inclusion with respect to pre-modification items and the prior understated inclusion with respect to post-modification items; and

(*3*) Paragraph (e) of this section applies separately with respect to pre-modification items and post-modification items.

(B) ***Assignments.*** If the modification involves an assignment of the lessee's interest in the rental agreement to a substitute lessee or a substitute lessee having use of the property during a period otherwise included in the lease term—

(*1*) Adjustments required under this paragraph (g) are taken into account before applying paragraph (f) of this section; and

(*2*) Paragraph (f) of this section applies separately with respect to pre-modification items and post-modification items.

(2) ***Other modifications.*** The following rules apply to a modification (other than a substantial modification) of a rental agreement occurring after May 18, 1999:

(i) ***Computation of section 467 loan for modified agreement.*** The amount of the section 467 loan relating to the agreement is computed as of the effective date of the modification. The section 467 rent and section 467 interest for periods before the effective date of the modification are determined, solely for purposes of computing the amount of the section 467 loan, under the terms of the entire agreement (as modified).

(ii) ***Change in balance of section 467 loan.***

(A) If the balance of the section 467 loan determined under paragraph (g)(2)(i) of this section is greater than the balance of the section 467 loan immediately before the effective date of the modification, the difference is taken into account, in the taxable year in which the modification occurs, as additional rent.

(B) If the balance of the section 467 loan determined under paragraph (g)(2)(i) of this section is less than the balance of the section 467 loan immediately before the effective date of the modification, the difference is taken into account, in the taxable year in which the modification occurs, as a reduction of the rent previously taken into account by the lessor and lessee.

(C) For purposes of this paragraph (g)(2)(ii), a negative balance is less than a positive balance, a zero balance, or any other negative balance that is closer to a zero balance.

(iii) ***Section 467 rent and interest after the modification.*** The section 467 rent and section 467 interest for periods after the effective date of the modification are determined under the terms of the entire agreement (as modified).

(iv) ***Applicable Federal rate.*** The applicable Federal rate for the agreement does not change as a result of the modification.

(v) ***Modification effective within a rental period.*** If the effective date of a modification does not coincide with the beginning or end of a rental period under the agreement in effect before the modification, the section 467 rent and section 467 interest for the portion of the rental period ending immediately prior to the effective date of the modification are a pro rata portion of the section 467 rent and the section 467 interest, respectively, for the rental period. Such amounts are also taken into account in determining the section 467 loan balance, prior to any adjustment thereof that may be required under paragraph (h) of this section, immediately before the effective date of the modification. Similar rules apply with respect to the section 467 rent and section 467 interest determined under the terms of the entire agreement (as modified) for purposes of computing the amount of the section 467 loan under paragraph (g)(2)(i) of this section and the section 467 rent and section 467 interest for a partial rental period beginning on the effective date of the modification.

(vi) ***Other adjustments.*** The lessor and lessee must take into account, in the taxable year in which a retroactive modification occurs, any amount necessary to prevent the duplication or omission of rent or interest for the period before the beginning of the taxable year in which the modification occurs.

(vii) ***Coordination with rules relating to dispositions and assignments.*** If the modification involves a sale, exchange, or other disposition of the property subject to the rental agreement, an assignment of the lessee's interest in the rental agreement to a substitute lessee or a substitute lessee having use of the property during a period otherwise included in the lease term, adjustments required under this paragraph (g) are taken into account before applying paragraphs (a), (b), (c), (e), and (f) of this section.

(viii) ***Exception for agreements entered into prior to effective date of section 467.*** This paragraph (g)(2) does not apply to a modification of a rental agreement that is not subject to section 467 because of the effective date provisions of section 92(c) of the Tax Reform Act of 1984 (Public Law 98-369 (98 Stat. 612)).

(3) ***Adjustment by Commissioner.*** If the entire agreement (as modified) is treated as a single agreement under § 1.467-1(f)(4)(vi), the Commissioner may require adjustments to taxable income to reflect the effect of the modification, including adjustments that are similar to those required under paragraph (g)(2) of this section.

(4) ***Effective date of modification.*** The effective date of a modification of a rental agreement occurs at the earliest of—

(i) The date on which the modification occurs;

(ii) The beginning of the first period for which the amount of rent or interest provided under the entire agreement (as modified) differs from the amount of rent or interest provided under the agreement in effect before the modification;

(iii) The due date of the first payment, under either the entire agreement (as modified) or the agreement in effect before the modification, that is not identical, in due date and amount, under both such agreements;

(iv) The date, in the case of a modification involving the substitution of a new lessor, on which the property subject to the rental agreement is transferred; or

(v) The date, in the case of a modification involving the substitution of a new lessee, on which the substitute lessee first has use of the property subject to the rental agreement.

(5) ***Examples.*** The following examples illustrate the application of this paragraph (g):

Example 1. (i) F, a cash method lessor, and G, an accrual method lessee, agree to a 7-year lease of tangible personal property for the period beginning on January 1, 1998, and ending on December 31, 2004. The rental agreement allocates $100,000 of rent to each calendar year during the lease term, such rent to be paid December 31 following the close of the calendar year to which it is allocated. Because the rental agreement does not provide for increasing rent, or deferred rent within the meaning of section 467(d)(1)(A), section 467 does not apply to the rental agreement.
(ii) Prior to January 1, 2001, G timely makes the $100,000 rental payments required as of December 31, 1999, and December 31, 2000. On January 1, 2001, F and G modify the rental agreement payment schedule to provide for a single final payment of $500,000 on December 31, 2004. Assume that the change is a substantial modification within the meaning of § 1.467-1(f)(5)(ii). Because the modification occurs after May 18, 1999, the post-modification agreement is treated, under § 1.467-1(f)(1), as a new agreement for purposes of determining whether it is a section 467 rental agreement.

(iii) Under § 1.467-1(f)(5)(v), the $200,000 of rent allocated to calendar years 1998 and 1999 (periods prior to the modification) constitutes pre-modification rent, and the $100,000 rent payments made on December 31, 1999, and December 31, 2000, constitute pre-modification payments. Although calendar year 2000 is also prior to the modification, the rent allocated to calendar year 2000 is not pre-modification rent and the related payment is not a pre-modification payment because the modification changed the time at which that rent is payable. See § 1.467-1(f)(5)(v)(A).

(iv) Under paragraph (g)(1)(i) of this section, F and G take pre-modification rent and pre-modification payments into account under the method of accounting they used to report income and deductions attributable to the pre-modification agreement.

(v) Under § 1.467-1(f)(1)(i), the post-modification agreement providing rent for the period beginning on January 1, 2000, and ending on December 31, 2004, is treated as a new rental agreement. This rental agreement allocates $100,000 of rent to each of the calendar years 2000 through 2004 and provides for a single rental payment of $500,000 on December 31, 2004. Because the post-modification agreement provides for deferred rent under § 1.467-1(c)(3)(i), section 467 applies. Further, the post-modification agreement does not provide for adequate interest on fixed rent, and therefore F and G must account for fixed rent and interest on fixed rent using proportional rental accrual. Under paragraph (g)(1)(iii) of this section, for their taxable years which include January 1, 2001, F and G must adjust reported rent for the difference between the rent taken into account for the calendar year 2000 under the unmodified agreement and the proportional rental amount for that year under the post-modification agreement.

Example 2. (i) On January 1, 2000, X, lessee, and Y, lessor, enter into a rental agreement for a 6-year lease of tangible personal property beginning January 1, 2000, and endingDecember 31, 2005. The agreement provides that the calendar year is the rental period and all rent payments are due on July 15 of all years in which a payment is required. Assume the agreement is not a disqualified leaseback or long-term agreement within the meaning of § 1.467-3(b), and has the following allocation schedule and payment schedule:

Year	Allocation	Payment
2000	$800,000	$0
2001	900,000	0
2002	1,000,000	1,500,000
2003	1,000,000	1,500,000
2004	1,100,000	1,500,000
2005	1,200,000	1,500,000

(ii) The rental agreement has deferred rent within the meaning of § 1.467-1(c)(3)(i) because the rent allocated to 2000 is not payable until 2002 and some of the rent allocable to 2001 is not payable until 2003. Further, the rental agreement does not provide adequate interest on fixed rent within the meaning of § 1.467-2(b). Therefore, the rent amount to be accrued by X and Y for each rental period is the proportional rental amount, as described in § 1.467-2(c). Assuming 110 percent of the applicableFederal rate is 10 percent compounded annually, the

section 467 rent, interest, and loan balances are as follows:

Year	Rent	Interest	Loan balance
2000	$736,949.55	$0	$736,949.55
2001	829,068.24	73,694.96	1,639,712.75
2002	921,186.94	163,971.28	1,224,870.97
2003	921,186.94	122,487.10	768,545.01
2004	1,013,305.63	76,854.50	358,705.14
2005	1,105,424.33	35,870.53	0

(iii)(A) On January 1, 2004, X and Y agree that the $1,500,000 payment scheduled for July 15, 2005, will be made in three equal installments on June 15, 2005, July 15, 2005, and August 15, 2005. Under § 1.467-1(j)(2)(i)(C) (relating to timing conventions), the payment to be made on June 15, 2005, is treated as if it were payable on December 31, 2004, for purposes of determining present values and yield of the section 467 loan. Assume that this change, which results in the following allocation schedule and payment schedule, is not a substantial modification within the meaning of § 1.467-1(f)(5)(ii):

Year	Allocation	Payment
2000	$800,000	$0
2001	900,000	0
2002	1,000,000	1,500,000
2003	1,000,000	1,500,000
2004	1,100,000	2,000,000
2005	1,200,000	1,000,000

(B) The agreement remains subject to proportional rental accrual after the modification because it has deferred rent and does not provide adequate interest on fixed rent within the meaning of § 1.467-2(b).

(iv) Because the modification occurs after May 18, 1999, and is not substantial within the meaning of § 1.467-1(f)(5)(ii), paragraph (g)(2) of this section applies. Under paragraph (g)(2)(i) of this section, the amount of the section 467 loan relating to the modified agreement is computed as of the effective date of the modification, and, solely for purposes of recomputing the amount of the section 467 loan, the section 467 rent and section 467 interest for periods before the modification are determined under the terms of the entire

agreement (as modified). In addition, the applicable Federal rate does not change as a result of the modification. Thus, the recomputed section 467 rent, interest, and loan balances are as follows:

Year	Rent	Interest	Loan balance
2000	$ 742,242.59	$ 0	$ 742,242.59
2001	835,022.91	74,224.26	1,651,489.76
2002	927,803.24	165,148.98	1,244,441.98
2003	927,803.24	124,444.20	796,689.42
2004	1,020,583.56	79,668.94	(103,058.08)
2005	1,113,363.88	(10,305.80)	0

(v) Under paragraph (g)(2)(ii) of this section, the difference between the section 467 loan balance immediately before the effective date of the modification and the recomputed section 467 loan balance as of the effective date of the modification is taken into account. In this example, the loan balance immediately before the effective date of the modification is $768,545.01 and the recomputed loan balance as of the effective date of the modification is $796,689.42. Thus, because the recomputed loan balance exceeds the original loan balance, the difference ($28,144.41) is taken into account, in the taxable year in which the modification occurs, as additional rent. Beginning on January 1, 2004, section 467 rent and interest are taken into account by X and Y in accordance with the recomputed rent schedule set forth in paragraph (iv) of this example.

(h) *Omissions or duplications* —

(1) ***In general.*** In applying the rules of this section in conjunction with the rules of §§ 1.467-1 through 1.467-5, adjustments must be made to the extent necessary to prevent the omission or duplication of items of income, deduction, gain, or loss. For example, if a transferee lessor acquires property subject to a section 467 rental agreement at other than the beginning or end of a rental period, and the transferee lessor's beginning section 467 loan balance differs from the transferor lessor's section 467 loan balance immediately prior to the transfer, it will be necessary to treat the rental period that includes the day of transfer as consisting of two rental periods, one beginning at the beginning of the rental period that includes the day of transfer and ending with or immediately prior to the transfer and one beginning with or immediately after the transfer and ending immediately prior to the beginning of the succeeding rental period. Because the substitution of two rental periods for one rental period may change the proportional rental amount or constant rental amount, the change in rental periods should be treated as a modification of the rental agreement that occurs immediately prior to the transfer. The change in rental periods, by itself, is not treated as a substantial modification of the rental agreement although the substitution of a new lessor may constitute a substantial modification of the rental agreement. Likewise, § 1.467-1(j)(2), which provides rules regarding when amounts are treated as payable, is designed to simplify calculations

of present values, section 467 loan balances, and proportional and constant rental amounts. These simplifying conventions assume that there will be no change in the lessor or lessee under a section 467 rental agreement and that the terms of the section 467 rental agreement will not be modified. Therefore, as illustrated in the example in paragraph (h)(2) of this section, when actual events do not reflect these assumptions, it may be necessary to alter the application of these rules to properly reflect taxable income.

(2) ***Example.*** The following example illustrates an application of this paragraph (h):

Example. (i) J leases tangible personal property from K for five years beginning on January 1, 2000, and ending on December 31, 2004. Under the rental agreement, rent is payable on July 15 of the calendar year to which it is allocated. Both J and K treat the calendar year as the rental period. The allocation of rent and payments of rent required under the rental agreement are as follows:

Calendar year	Rent	Payments
2000	$200,000	$450,000
2001	200,000	250,000
2002	200,000	200,000
2003	200,000	100,000
2004	200,000	0

(ii) The rental agreement does not provide for interest on prepaid rent. The rental agreement has prepaid rent under § 1.467-1(c)(3)(ii) because the rent payable at the end of 2000 exceeds the cumulative amount of rent allocated to 2000 and 2001. Therefore, J and K must take section 467 rent into account under the proportional rental method of § 1.467-2(c). Assume that 110 percent of the applicable Federal rate is 10 percent, compounded annually. The section 467 rent, section 467 interest, amounts payable, and section 467 loan balances for each of the calendar years under the terms of the rental agreement are as follows:

Calendar Year	Section 467 rent	Section 467 interest	Payments	Section 467 loan balance
2000	$220,077.48	$0	$450,000	$(229,922.52)
2001	220,077.48	(22,992.25)	250,000	(282,837.29)
2002	220,077.48	(28,283.73)	200,000	(291,043.54)
2003	220,077.48	(29,104.35)	100,000	(200,070.41)
2004	220,077.48	(20,007.07)	0	0

(iii) On January 1, 2002, J and K amend the terms of the rental agreement to advance the due date of the $200,000 payment originally due on July 15, 2002, to June 15, 2002. This change in the payment schedule

constitutes a modification of the terms of the rental agreement within the meaning of § 1.467-1(f)(5)(i). Assume, however, that the change is not a substantial modification within the meaning of § 1.467-1(f)(5)(ii). Because the modification occurs after May 18, 1999, and is not substantial, paragraph (g)(2) of this section applies. Thus, the section 467 loan balance at the beginning of 2002 must be recomputed as if the June 15, 2002, payment date had been included in the terms of the pre-modification rental agreement. If this had been the case, the section 467 rent, section 467 interest, amounts payable, and section 467 loan balances for each of the calendar years under the terms of the rental agreement would have been as follows:

Calendar	Section 467 rent	Section 467 interest	Payments	Section 467 loan balance
2000	$224,041.38	$0	$450,000	$(225,958.62)
2001	224,041.38	(22,595.86)	450,000	(474,513.10)
2002	224,041.38	(47,451.31)	0	(297,923.03)
2003	224,041.38	(29,792.30)	100,000	(203,673.95)
2004	224,041.38	(20,367.43)	0	0

(iv) Section 1.467-4(b)(3) incorporates the conventions of § 1.467-1(j)(2) in determining when amounts are treated as payable for purposes of determining the section 467 loan balance. Section 1.467-1(j)(2)(i)(C) treats amounts payable during the first half of any rental period except the first rental period as payable on the last day of the preceding rental period. Therefore, because June 15, 2002, occurs in the first half of 2002, in determining the section 467 loan balance at the beginning of 2002 under the amended terms of the rental agreement, the $200,000 payment due on June 15, 2002, is treated as payable on December 31, 2001.

(v) Under paragraph (g)(2)(ii)(B) of this section, if the recomputed section 467 loan balance is less than the section 467 loan balance immediately before the modification, the difference is taken into account as a reduction of the rent previously taken into account by the lessor and the lessee. In this example, the recomputed section 467 loan balance immediately after the modification is negative $474,513.10 and the section 467 loan balance immediately before the modification is negative $282,837.29. However, the section 467 loan balance immediately before the modification does not take into account the $200,000 payment originally payable on July 15, 2002, whereas, under the conventions of § 1.467-1(j)(2)(i)(C), the recomputed section 467 loan balance immediately after the modification takes into account that $200,000 payment because it is now payable in the first half of the rental period (June 15). Under these circumstances, if the recomputed section 467 loan balance immediately after the modification is treated as negative $474,513.10 for purposes of applying paragraph (g)(2)(ii)(B) of this section, K's gross income and J's deductions attributable to the section 467 rental agreement will be understated by $200,000. Therefore, under paragraph (h)(1) of this section, only for purposes of applying paragraph (g)(2)(ii)(B) of this section, the $200,000 payment due on June 15, 2002, should not be taken into account in determining the recomputed section 467 loan balance immediately after the modification.

[T.D. 8820, 64 FR 26867, May 18, 1999, as amended by T.D. 9811, 82 FR 6238, Jan. 19, 2017]

§ 1.467-8 Automatic consent to change to constant rental accrual for certain rental agreements.

(a) ***General rule.*** For the first taxable year ending after May 18, 1999, a taxpayer may change to the constant rental accrual method, as described in § 1.467-3, for all of its section 467 rental agreements described in paragraph (b) of this section. A change to the constant rental accrual method is a change in method of accounting to which the provisions of sections 446 and 481 and the regulations thereunder apply. A taxpayer changing its method of accounting in accordance with this section must follow the automatic change in accounting method provisions of Rev. Proc. 98-60 (see § 601.601(d)(2) of this chapter) except, for purposes of this paragraph (a), the scope limitations in section 4.02 of Rev. Proc. 98-60 are not applicable. Taxpayers changing their method of accounting in accordance with this section must do so for all of their section 467 rental agreements described in paragraph (b) of this section.

(b) ***Agreements to which automatic consent applies.*** A section 467 rental agreement is described in this paragraph (b) if—

(1) The property subject to the section 467 rental agreement is financed with an “exempt facility bond” within the meaning of section 142;

(2) The facility subject to the section 467 rental agreement is described in section 142(a)(1), (2), (3), or (12);

(3) The section 467 rental agreement does not include a specific allocation of fixed rent within the meaning of § 1.467-1(c)(2)(ii)(A)(2); and

(4) The section 467 rental agreement was entered into on or before May 18, 1999.

[T.D. 8820, 64 FR 26875, May 18, 1999]

§ 1.467-9 Effective/applicability dates and automatic method changes for certain agreements.

(a) ***In general.*** Sections 1.467-1 through 1.467-7 are applicable for—

(1) Disqualified leasebacks and long-term agreements entered into after June 3, 1996; and

(2) Rental agreements not described in paragraph (a)(1) of this section that are entered into after May 18, 1999.

(b) ***Automatic consent for certain rental agreements.*** Section 1.467-8 applies only to rental agreements described in § 1.467-8.

(c) ***Application of regulation project IA-292-84 to certain leasebacks and long-term agreements.*** In the case of any leaseback or long-term agreement (other than a disqualified leaseback or long-term agreement) entered into after June 3, 1996, and on or before May 18, 1999, a taxpayer may choose to apply the provisions of regulation project IA-292-84 (1996-2 C.B. 462)(see § 601.601(d)(2) of this chapter).

(d) ***Entered into.*** For purposes of this section and § 1.467-8, a rental agreement is entered into on its agreement date (within the meaning of § 1.467-1(h)(1) and, if applicable, § 1.467-1(f)(1)(i)).

(e) ***Change in method of accounting*** —

(1) ***In general.*** For the first taxable year ending after May 18, 1999, a taxpayer is granted consent of the Commissioner to change its method of accounting for rental agreements described in paragraph (a)(2) of this section to comply with the provisions of §§ 1.467-1 through 1.467-7.

(2) ***Application of regulation project IA-292-84.*** For the first taxable year ending after May 18, 1999, a taxpayer is granted consent of the Commissioner to change its method of accounting for any rental agreement described in paragraph (c) of this section to comply with the provisions of regulation project IA-292-84 (1996-2 C.B. 462) (see § 601.601(d)(2) of this chapter).

(3) ***Automatic change procedures.*** A taxpayer changing its method of accounting in accordance with this paragraph (e) must follow the automatic change in accounting method provisions of Rev. Proc. 98-60 (see § 601.601(d)(2) of this chapter) except, for purposes of this paragraph (e), the scope limitations in section 4.02 of Rev. Proc. 98-60 are not applicable. A method change in accordance with paragraph (e)(1) of this section is made on a cut-off basis so no adjustment under section 481(a) is required.

(f) ***Application of section 1022.*** The provisions of § 1.467-7(c)(2) and (4) relating to section 1022 are effective on and after January 19, 2017.

[T.D. 8820, 64 FR 26875, May 18, 1999, as amended by T.D. 9811, 82 FR 6238, Jan. 19, 2017]

§ 1.468A-0 Nuclear decommissioning costs; table of contents.

This section lists the paragraphs contained in §§ 1.468A-1 through 1.468A-9.

§ 1.468A-1 Nuclear decommissioning costs; general rules.

(a) Introduction.

(b) Definitions.

(c) Special rules applicable to certain experimental nuclear facilities.

§ 1.468A-2 Treatment of electing taxpayer.

(a) In general.

(b) Limitation on payments to a nuclear decommissioning fund.

(1) In general.

(2) Excess contributions not deductible.

(c) Deemed payment rules.

(1) In general.

(2) Cash payment by customer.

(d) Treatment of distributions.

(1) In general.

(2) Exceptions to inclusion in gross income.

(i) Payment of administrative costs and incidental expenses.

(ii) Withdrawals of excess contributions.

(iii) Actual distributions of amounts included in gross income as deemed distributions.

(e) Deduction when economic performance occurs.

§ 1.468A-3 Ruling amount.

(a) In general.

(b) Level funding limitation.

(c) Funding period.

(d) Decommissioning costs allocable to a fund.

(1) General rule.

(2) Total estimated cost of decommissioning.

(3) Taxpayer's share.

(e) Manner of requesting schedule of ruling amounts.

(1) In general.

(2) Information required.

(3) Administrative procedures.

(f) Review and revision of schedule of ruling amounts.

(1) Mandatory review.

(2) Elective review.

(3) Determination of revised schedule of ruling amounts.

(g) Special rule permitting payments to a nuclear decommissioning fund before receipt of an initial or revised ruling amount applicable to a taxable year.

§ 1.468A-4 Treatment of nuclear decommissioning fund.

(a) In general.

(b) Modified gross income.

(c) Special rules.

(1) Period for computation of modified gross income.

(2) Gain or loss upon distribution of property by a fund.

(3) Denial of credits against tax.

(4) Other corporate taxes inapplicable.

(d) Treatment as corporation for purposes of subtitle F.

§ 1.468A-5 Nuclear decommissioning fund—miscellaneous provisions.

(a) Qualification requirements.

(1) In general.

(2) Limitation on contributions.

(3) Limitation on use of fund.

(i) In general.

(ii) Definition of administrative costs and expenses.

(4) Trust provisions.

(b) Prohibitions against self-dealing.

(1) In general.

(2) Self-dealing defined.

(3) Disqualified person defined.

(c) Disqualification of nuclear decommissioning fund.

(1) In general.

(2) Exception to disqualification.

(i) In general.

(ii) Excess contribution defined.

(iii) Taxation of income attributable to an excess contribution.

(3) Effect of disqualification.

(4) Further effects of disqualification.

(d) Termination of nuclear decommissioning fund upon substantial completion of decommissioning.

(1) In general.

(2) Additional rules.

(3) Substantial completion of decommissioning defined.

§ 1.468A-6 Disposition of an interest in a nuclear power plant.

(a) In general.

(b) Requirements.

(c) Tax consequences.

(1) The transferor and its Fund.

(2) The transferee and its Fund.

(3) Basis.

(d) Determination of proportionate amount.

(e) Calculation of schedule of ruling amounts and schedule of deduction amounts for dispositions described in this section.

(1) Transferor.

(i) Taxable year of disposition.

(ii) Taxable years after the disposition.

(2) Transferee.

(i) Taxable year of disposition.

(ii) Taxable years after the disposition.

(3) Examples.

(f) Anti-abuse provision.

§ 1.468A-7 Manner of and time for making election.

(a) In general.

(b) Required information.

§ 1.468A-8 Special transfers to qualified funds pursuant to section 468A(f).

(a) General rule.

(1) In general.

(2) Pre-2005 nonqualifying amount.

(i) In general.

(ii) Pre-2005 nonqualifying amount of transferee.

(3) Transfers in multiple years.

(4) Deemed payment rules.

(i) In general.

(ii) Special rule for certain transfers.

(b) Deduction for amounts transferred.

(1) In general.

(2) Amount of deduction.

(i) General Rule.

(ii) Election.

(A) In general.

(B) Manner of making election.

(C) Election allowed for property transferred prior to December 23, 2010.

(3) Denial of deduction for previously deducted amounts.

(4) Transfers of qualified nuclear decommissioning funds.

(5) Special rules.

(i) Gain or loss not recognized on transfers to fund.

(ii) Taxpayer basis in fund.

(iii) Fund basis in transferred property.

(A) In general.

(B) Basis in case of election.

(c) Schedule of deductions required.

(1) In general.

(2) Transfers in multiple taxable years.

(3) Transfer of partial interest in fund.

(4) Special transfer permitted before receipt of schedule.

(d) Manner of requesting schedule of deduction amounts.

(1) In general.

(2) Information required.

(3) Statement required.

(4) Administrative procedures.

§ 1.468A-9 Effective/applicability date.

[T.D. 9512, 75 FR 80701, Dec. 23, 2010]

§ 1.468A-1 Nuclear decommissioning costs; general rules.

(a) ***Introduction.*** Section 468A provides an elective method for taking into account nuclear decommissioning costs for Federal income tax purposes. In general, an eligible taxpayer that elects the application of section 468A pursuant to the rules contained in § 1.468A-7 is allowed a deduction (as determined under § 1.468A-2) for the taxable year in which the taxpayer makes a cash payment to a nuclear decommissioning fund. Taxpayers using an accrual method of accounting that do not elect the application of section 468A are not allowed a deduction for nuclear decommissioning costs prior to the taxable year in which economic performance occurs with respect to such costs (*see* section 461(h)).

(b) ***Definitions.*** The following terms are defined for purposes of section 468A and §§ 1.468A-1 through 1.468A-9:

(1) The term *eligible taxpayer* means any taxpayer that possesses a qualifying interest in a nuclear power plant (including a nuclear power plant that is under construction).

(2) The term *qualifying interest* means—

(i) A direct ownership interest; and

(ii) A leasehold interest in any portion of a nuclear power plant if—

(A) The holder of the leasehold interest is primarily liable under Federal or State law for decommissioning such portion of the nuclear power plant; and

(B) No other person establishes a nuclear decommissioning fund with respect to such portion of the nuclear power plant.

(3) The term *direct ownership interest* includes an interest held as a tenant in common or joint tenant, but does not include stock in a corporation that owns a nuclear power plant or an interest in a partnership that owns a nuclear power plant. Thus, in the case of a partnership that owns a nuclear power plant, the election under section 468A must be made by the partnership and not by the partners. In the case of an unincorporated organization described in § 1.761-2(a)(3) that elects under section 761(a) to be excluded from the application of subchapter K, each taxpayer that is a co-owner of the nuclear power plant is eligible to make a separate election under section 468A.

(4) The terms *nuclear decommissioning fund* and *qualified nuclear decommissioning fund* mean a fund that satisfies the requirements of § 1.468A-5. The term *nonqualified fund* means a fund that does not satisfy those requirements.

(5) The term *nuclear power plant* means any nuclear power reactor that is used predominantly in the trade or business of the furnishing or sale of electric energy. Each unit (that is, nuclear reactor) located on a multi-unit site is a separate nuclear power plant. The term *nuclear power plant* also includes the portion of the common facilities of a multi-unit site allocable to a unit on that site.

(6) The term *nuclear decommissioning costs* or *decommissioning costs* includes all otherwise deductible expenses to be incurred in connection with the entombment, decontamination, dismantlement, removal and disposal of the structures, systems and components of a nuclear power plant, whether that nuclear power plant will continue to produce electric energy or has permanently ceased to produce electric energy. Such term includes all otherwise deductible expenses to be incurred in connection with the preparation for decommissioning, such as engineering and other planning expenses, and all otherwise deductible expenses to be incurred with respect to the plant after the actual decommissioning occurs, such as physical security and radiation monitoring expenses. Such

term also includes costs incurred in connection with the construction, operation, and ultimate decommissioning of a facility used solely to store, pending acceptance by the government for permanent storage or disposal, spent nuclear fuel generated by the nuclear power plant or plants located on the same site as the storage facility. Such term does not include otherwise deductible expenses to be incurred in connection with the disposal of spent nuclear fuel under the Nuclear Waste Policy Act of 1982 (Pub. L. 97-425). An expense is otherwise deductible for purposes of this paragraph (b)(6) if it would be deductible under chapter 1 of the Internal Revenue Code without regard to section 280B.

(i) For the purpose of this title, the term *nuclear decommissioning costs* or *decommissioning costs* includes all expenses related to land improvements and otherwise deductible expenses to be incurred in connection with the entombment, decontamination, dismantlement, removal and disposal of the structures, systems and components of a nuclear power plant, whether that nuclear power plant will continue to produce electric energy or has permanently ceased to produce electric energy. Such term includes all expenses related to land improvements and otherwise deductible expenses to be incurred in connection with the preparation for decommissioning, such as engineering and other planning expenses, and all otherwise deductible expenses to be incurred with respect to the plant after the actual decommissioning occurs, such as physical security and radiation monitoring expenses. An expense is otherwise deductible for purposes of this paragraph (b)(6) if it would be deductible or recoverable through depreciation or amortization under chapter 1 of the Internal Revenue Code without regard to section 280B.

(ii) The term nuclear decommissioning costs or decommissioning costs, as applicable to this title, also includes expenses incurred in connection with the construction, operation, and ultimate decommissioning of a facility used solely to store, pending delivery to a permanent repository or disposal, spent nuclear fuel generated by one or more nuclear power plants (for example, an Independent Spent Fuel Storage Installation). Such term does not include otherwise deductible expenses to be incurred in connection with the disposal of spent nuclear fuel under the Nuclear Waste Policy Act of 1982 (Pub. L. 97-425).

(7) The term *public utility commission* means any State or political subdivision thereof, any agency, instrumentality or judicial body of the United States, or any judicial body, commission or other similar body of the District of Columbia or of any State or any political subdivision thereof that establishes or approves rates for the furnishing or sale of electric energy.

(8) The term *ratemaking proceeding* means any proceeding before a public utility commission in which rates for the furnishing or sale of electric energy are established or approved. Such term includes a generic proceeding that applies to two or more taxpayers that are subject to the jurisdiction of a single public utility commission.

(9) The term *special transfer* means any transfer of funds to a qualified nuclear decommissioning fund pursuant to § 1.468A-8.

(c) ***Special rules applicable to certain experimental nuclear facilities.***

(1) The owner of a qualifying interest in an experimental nuclear facility possesses a qualifying interest in a nuclear power plant for purposes of paragraph (b) of this section if such person is engaged in the trade or business of the furnishing or sale of electric energy.

(2) An owner of stock in a corporation that owns an experimental nuclear facility possesses a qualifying interest in a nuclear power plant for purposes of paragraph (b)(1) of this section if—

(i) Such stockholder satisfies the conditions of paragraph (c)(1) of this section; and

(ii) The corporation that directly owns the facility is not engaged in the trade or business of the furnishing or sale of electric energy.

(3) For purposes of this paragraph (c), an experimental nuclear facility is a nuclear power reactor that is used predominantly for the purpose of conducting experimentation and research.

[T.D. 9512, 75 FR 80701, Dec. 23, 2010, as amended by T.D. 9906, 85 FR 55190, Sept. 4, 2020]

§ 1.468A-2 Treatment of electing taxpayer.

(a) ***In general.*** An eligible taxpayer that elects the application of section 468A pursuant to the rules contained in § 1.468A-7 (an electing taxpayer) is allowed a deduction for the taxable year in which the taxpayer makes a cash payment (or is deemed to make a cash payment as provided in paragraph (c) of this section) to a nuclear decommissioning fund and for any taxable year in which a deduction is allowed for a special transfer described in § 1.468A-8. The amount of the deduction for any taxable year equals the total amount of cash payments made (or deemed made) by the electing taxpayer to a nuclear decommissioning fund (or nuclear decommissioning funds) during such taxable year under this section, plus any amount allowable as a deduction in that taxable year for a special transfer described in § 1.468A-8. The amount of a special transfer permitted under § 1.468A-8 is not treated as a cash payment for purposes of this paragraph (a), and a taxpayer making a special transfer is allowed a ratable deduction in each taxable year during the remaining useful life of the nuclear power plant for the special transfer. A payment may not be made (or deemed made) to a nuclear decommissioning fund before the first taxable year in which all of the following conditions are satisfied:

(1) The construction of the nuclear power plant to which the nuclear decommissioning fund relates has commenced.

(2) A ruling amount is applicable to the nuclear decommissioning fund (*see* § 1.468A-3).

(b) ***Limitation on payments to a nuclear decommissioning fund*** —

(1) ***In general.*** For purposes of paragraph (a) of this section, the maximum amount of cash payments made (or deemed made) to a nuclear decommissioning fund under paragraph (a) of this section during any taxable year shall not exceed the ruling amount applicable to the nuclear decommissioning fund for such taxable year (as determined under § 1.468A-3).

(2) ***Excess contributions not deductible.*** If the amount of cash payments made (or deemed made) to a nuclear decommissioning fund during any taxable year exceeds the limitation of paragraph (b)(1) of this section, the excess is not deductible by the electing taxpayer. In addition, *see* paragraph (c) of § 1.468A-5 for rules which provide that the Internal Revenue Service may disqualify a nuclear decommissioning fund if the amount of cash payments made (or deemed made) to a nuclear decommissioning fund during any taxable year exceeds the limitation of paragraph (b)(1) of this section.

(3) ***Special transfer disregarded.*** The amount of a special transfer permitted under § 1.468A-8 is not treated as a cash payment for purposes of this paragraph (b).

(c) ***Deemed payment rules*** —

(1) ***In general.*** The amount of any cash payment made by an electing taxpayer to a nuclear decommissioning fund on or before the 15th day of the third calendar month after the close of any taxable year (the deemed payment deadline date) shall be deemed made during such taxable year if the electing taxpayer irrevocably designates the amount as relating to such taxable year on its timely filed Federal income tax return for such taxable year (*see* § 1.468A-7(b)(4)(iii) and (iv) for rules relating to such designation).

(2) ***Cash payment by customer.*** The amount of any cash payment made by a customer of an electing taxpayer to a nuclear decommissioning fund of such electing taxpayer shall be deemed made by the electing taxpayer if the amount is included in the gross income of the electing taxpayer in the manner prescribed by section 88 and § 1.88-1.

(d) ***Treatment of distributions*** —

(1) ***In general.*** Except as otherwise provided in paragraph (d)(2) of this section, the amount of any actual or deemed distribution from a nuclear decommissioning fund shall be included in the gross income of the electing taxpayer for the taxable year in which the distribution occurs. The amount of any distribution of property equals the fair market value of the property on the date of the distribution. *See* § 1.468A-5(c) and (d) for rules relating to the deemed distribution of the assets of a nuclear decommissioning fund in the case of a disqualification or termination of the fund. A distribution from a nuclear decommissioning fund shall include an expenditure from the fund or the use of the fund's assets—

(i) To satisfy, in whole or in part, the liability of the electing taxpayer for decommissioning costs of the nuclear power plant to which the fund relates; and

(ii) To pay administrative costs and other incidental expenses of the fund.

(2) ***Exceptions to inclusion in gross income*** —

(i) ***Payment of administrative costs and incidental expenses.*** The amount of any payment by a nuclear decommissioning fund for administrative costs or other incidental expenses of such fund (as defined in § 1.468A-5(a)(3)(ii)) shall not be included in the gross income of the electing taxpayer unless such amount is paid to the electing taxpayer (in which case the amount of the payment is included in the gross income of the electing taxpayer under section 61).

(ii) ***Withdrawals of excess contributions.*** The amount of a withdrawal of an excess contribution (as defined in § 1.468A-5(c)(2)(ii)) by an electing taxpayer pursuant to the rules of § 1.468A-5(c)(2) shall not be included in the gross income of the electing taxpayer. *See* paragraph (b)(2) of this section, which provides that the payment of such amount to the nuclear decommissioning fund is not deductible by the electing taxpayer.

(iii) ***Actual distributions of amounts included in gross income as deemed distributions.*** If the amount of a deemed distribution is included in the gross income of the electing taxpayer for the taxable year in which the deemed distribution occurs, no further amount is required to be included in gross income when the amount of the deemed distribution is actually distributed by the nuclear decommissioning fund. The amount of a deemed distribution is actually distributed by a nuclear decommissioning fund as the first actual distributions are made by the nuclear decommissioning fund on or after the date of the deemed distribution.

(e) ***Deduction when economic performance occurs.*** An electing taxpayer using an accrual method of accounting is allowed a deduction for nuclear decommissioning costs no earlier than the taxable year in which economic performance occurs with respect to such costs (*see* section 461(h)(2)). The amount of nuclear decommissioning costs that is deductible under this paragraph (e) is determined without regard to section 280B (*see* § 1.468A-1(b)(6)). A deduction is allowed under this paragraph (e) whether or not a deduction was allowed with respect to such costs under section 468A(a) and paragraph (a) of this section for an earlier taxable year.

[T.D. 9512, 75 FR 80701, Dec. 23, 2010]

§ 1.468A-3 Ruling amount.

(a) ***In general.***

(1) Except as otherwise provided in paragraph (g) of this section or in § 1.468A-8 (relating to deductions for special transfers into a nuclear decommissioning fund), an electing taxpayer is allowed a deduction under section 468A(a) for the taxable year in which the taxpayer makes a cash payment (or is deemed to make a cash payment) to a nuclear decommissioning fund only if the taxpayer has received a schedule of ruling amounts for the nuclear decommissioning fund that includes a ruling amount for such taxable year. Except as provided in paragraph (a)(4) or (5) of this section, a schedule of ruling amounts for a nuclear decommissioning fund (*schedule of ruling amounts*) is a ruling (within the meaning of § 601.201(a)(2) of this chapter) specifying the annual payments (ruling amounts) that, over the taxable years remaining in the funding period as of the date the schedule first applies, will result in a projected balance of the nuclear decommissioning fund as of the last day of the funding period equal to (and in no event greater than) the amount of decommissioning costs allocable to the fund. The projected balance of a nuclear decommissioning fund as of the last day of the funding period shall be calculated by taking into account the fair market value of the assets of the fund as of the first day of the first taxable year to which the schedule of ruling amounts applies and the estimated rate of return to be earned by the assets of the fund after payment of the estimated administrative costs and incidental expenses to be incurred by the fund (as defined in § 1.468A-5(a)(3)(ii)), including all Federal, State and local income taxes to be incurred by the fund (the after-tax rate of return). *See* paragraph (c) of this section for a definition of funding period and paragraph (d) of this section for guidance with respect to the amount of decommissioning costs allocable to a fund.

(2) Each schedule of ruling amounts must be consistent with the principles and provisions of this section and must be based on reasonable assumptions concerning—

(i) The after-tax rate of return to be earned by the assets of the qualified nuclear decommissioning fund;

(ii) The total estimated cost of decommissioning the nuclear power plant (*see* paragraph (d)(2) of this section); and

(iii) The frequency of contributions to a nuclear decommissioning fund for a taxable year (for example, monthly, quarterly, semi-annual or annual contributions).

(3) The Internal Revenue Service (IRS) shall provide a schedule of ruling amounts that is identical to the schedule of ruling amounts proposed by the taxpayer in connection with the taxpayer's request for a schedule of ruling amounts (*see* paragraph (e)(2)(viii) of this section), but no schedule of ruling amounts shall be provided unless the taxpayer's proposed schedule of ruling amounts is consistent

with the principles and provisions of this section and is based on reasonable assumptions. If a proposed schedule of ruling amounts is not consistent with the principles and provisions of this section or is not based on reasonable assumptions, the taxpayer may propose an amended schedule of ruling amounts that is consistent with such principles and provisions and is based on reasonable assumptions.

(4) The taxpayer bears the burden of demonstrating that the proposed schedule of ruling amounts is consistent with the principles and provisions of this section and is based on reasonable assumptions. If a public utility commission established or approved the currently applicable rates for the furnishing or sale by the taxpayer of electricity from the plant, the taxpayer can generally satisfy this burden of proof by demonstrating that the schedule of ruling amounts is calculated using the assumptions used by the public utility commission in its most recent order. In addition, a taxpayer that owns an interest in a deregulated nuclear plant may submit assumptions used by a public utility commission that formerly had regulatory jurisdiction over the plant as support for the assumptions used in calculating the taxpayer's proposed schedule of ruling amounts, with the understanding that the assumptions used by the public utility commission may be given less weight if they are out of date or were developed in a proceeding for a different taxpayer. The use of other industry standards, such as the assumptions underlying the taxpayer's most recent financial assurance filing with the NRC, are an alternative means of demonstrating that the taxpayer has calculated its proposed schedule of ruling amounts on a reasonable basis. Consistency with financial accounting statements is not sufficient, in the absence of other supporting evidence, to meet the taxpayer's burden of proof under this paragraph (a)(4).

(5) The IRS will approve, at the request of the taxpayer, a formula or method for determining a schedule of ruling amounts (rather than providing a schedule specifying a dollar amount for each taxable year) if the formula or method is consistent with the principles and provisions of this section and is based on reasonable assumptions. *See* paragraph (f)(1)(ii) of this section for a special rule relating to the mandatory review of ruling amounts that are determined pursuant to a formula or method.

(6) The IRS may, in its discretion, provide a schedule of ruling amounts that is determined on a basis other than the rules of paragraphs (a) through (d) of this section if—

(i) In connection with its request for a schedule of ruling amounts, the taxpayer explains the need for special treatment and sets forth an alternative basis for determining the schedule of ruling amounts; and

(ii) The IRS determines that special treatment is consistent with the purpose of section 468A.

(b) ***Level funding limitation.***

(1) Except as otherwise provided in paragraph (b)(3) of this section, the ruling amount specified in a schedule of ruling amounts for any taxable year in the funding period (as defined in paragraph (c) of this section) shall not be less than the ruling amount specified in such schedule for any earlier taxable year.

(2) The ruling amount specified in a schedule of ruling amounts for a taxable year after the end of the funding period may be less than the ruling amount specified in such schedule for an earlier taxable year.

(3) The ruling amount specified in a schedule of ruling amounts for the last taxable year in the funding period may be less than the ruling amount specified in such schedule for an earlier taxable year if, when annualized, the amount specified for the last taxable year is not less than the amount specified for such earlier taxable year. The amount specified for the last taxable year is annualized by—

(i) Determining the number of days between the beginning of the taxable year and the end of the plant's estimated useful life;

(ii) Dividing the amount specified for the last taxable year by such number of days; and

(iii) Multiplying the result by the number of days in the last taxable year (generally 365).

(c) *Funding period* —

(1) ***In general.*** For purposes of this section, the funding period for a nuclear decommissioning fund is the period that—

(i) Begins on the first day of the first taxable year for which a deductible payment is made (or deemed made) to such nuclear decommissioning fund (*see* § 1.468A-2(a) for rules relating to the first taxable year for which a payment may be made (or deemed made) to a nuclear decommissioning fund); and

(ii) Ends on the last day of the taxable year that includes the last day of the estimated useful life of the nuclear power plant to which the nuclear decommissioning fund relates.

(2) ***Estimated useful life.*** The last day of the estimated useful life of a nuclear power plant is determined under the following rules:

(i) Except as provided in paragraph (c)(2)(ii) of this section—

(A) The last day of the estimated useful life of a nuclear power plant that has been included in rate base for ratemaking purposes in any ratemaking proceeding that established rates for a period before January 1, 2006, is the date used in the first such ratemaking proceeding as the estimated date on which the nuclear power plant will no longer be included in the taxpayer's rate base for ratemaking purposes;

(B) The last day of the estimated useful life of a nuclear power plant that is not described in paragraph (c)(2)(i)(A) of this section is the last day of the estimated useful life of the plant determined as of the date it is placed in service;

(C) A taxpayer with an interest in a plant that is not described in paragraph (c)(2)(i)(A) of this section may use any reasonable method for determining the last day of such estimated useful life; and

(D) A reasonable method for purposes of paragraph (c)(2)(i)(C) of this section may include use of the period for which a public utility commission has included a comparable nuclear power plant in rate base for ratemaking purposes.

(ii) If it can be established that the estimated useful life of the nuclear power plant will end on a date other than the date determined under paragraph (c)(2)(i) of this section, the taxpayer may use such other date as the last day of the estimated useful life but is not required to do so. If the last day of the estimated useful life was determined under paragraph (c)(2)(i)(A) of this section and the most recent ratemaking proceeding used an alternative date as the estimated

date on which the nuclear power plant will no longer be included rate base, the most recent ratemaking proceeding will generally be treated as establishing such alternative date as the last day of the estimated useful life.

(iii) The estimated useful life of a nuclear power plant determined for purposes of paragraph (c)(1) of this section may end on a different date from the estimated useful life of a nuclear power plant determined for purposes of § 1.468A-8(b)(1) and (c)(1).

(d) ***Decommissioning costs allocable to a fund.*** The amount of decommissioning costs allocable to a nuclear decommissioning fund is determined for purposes of this section by applying the following rules and definitions:

(1) ***General rule.*** The amount of decommissioning costs allocable to a nuclear decommissioning fund is the taxpayer's share of the total estimated cost of decommissioning the nuclear power plant to which the fund relates.

(2) ***Total estimated cost of decommissioning.*** Under paragraph (a)(2) of this section, the taxpayer must demonstrate the reasonableness of the assumptions concerning the total estimated cost of decommissioning the nuclear power plant.

(3) ***Taxpayer's share.*** The taxpayer's share of the total estimated cost of decommissioning a nuclear power plant equals the total estimated cost of decommissioning such nuclear power plant multiplied by the percentage of such nuclear power plant that the qualifying interest of the taxpayer represents. (*See* § 1.468A-1(b)(2) for circumstances in which a taxpayer possesses a qualifying interest in a nuclear power plant).

(e) ***Manner of requesting schedule of ruling amounts —***

(1) ***In general.***

(i) In order to receive a ruling amount for any taxable year, a taxpayer must file a request for a schedule of ruling amounts that complies with the requirements of this paragraph (e), the applicable procedural rules set forth in § 601.201(e) of this chapter (Statement of Procedural Rules), and the requirements of any applicable revenue procedure that is in effect on the date the request is filed.

(ii) A separate request for a schedule of ruling amounts is required for each nuclear decommissioning fund established by a taxpayer. (*See* paragraph (a) of § 1.468A-5 for rules relating to the number of nuclear decommissioning funds that a taxpayer can establish.)

(iii) Except as provided by §§ 1.468A-5(a)(1)(iv) (relating to certain unincorporated organizations that may be taxable as corporations) and 1.468A-8 (relating to a special transfer under section 468A(f)(1)), a request for a schedule of ruling amounts must not contain a request for a ruling on any other issue, whether the issue involves section 468A or another section of the Internal Revenue Code.

(iv) In the case of an affiliated group of corporations that join in the filing of a consolidated return, the common parent of the group may request a schedule of ruling amounts for each member of the group that possesses a qualifying interest in the same nuclear power plant by filing a single submission with the IRS.

(v) The IRS will not provide or revise a ruling amount applicable to a taxable year in response to a request for a schedule of ruling amounts that is filed after the deemed payment deadline date (as defined in § 1.468A-2(c)(1)) for such taxable year. In determining the date when a request is filed, the principles of sections 7502 and 7503 shall apply.

(vi) Except as provided in paragraph (e)(1)(vii) of this section, a request for a schedule of ruling amounts shall be considered filed only if such request complies substantially with the requirements of this paragraph (e).

(vii) If a request does not comply substantially with the requirements of this paragraph (e), the IRS will notify the taxpayer of that fact. If the information or materials necessary to comply substantially with the requirements of this paragraph (e) are provided to the IRS within 30 days after this notification, the request will be considered filed on the date of the original submission. In addition, the request will be considered filed on the date of the original submission in a case in which the information and materials are provided more than 30 days after the notification if the IRS determines that the electing taxpayer made a good faith effort to provide the applicable information or materials within 30 days after notification and also determines that treating the request as filed on the date of the original submission is consistent with the purposes of section 468A. In any other case in which the information or materials necessary to comply substantially with the requirements of this paragraph (e) are not provided within 30 days after the notification, the request will be considered filed on the date that all information or materials necessary to comply with the requirements of this paragraph (e) are provided.

(2) ***Information required.*** A request for a schedule of ruling amounts must contain the following information:

(i) The taxpayer's name, address, and taxpayer identification number.

(ii) Whether the request is for an initial schedule of ruling amounts, a mandatory review of the schedule of ruling amounts (*see* paragraph (f)(1) of this section), or an elective review of the schedule of ruling amounts (*see* paragraph (f)(2) of this section).

(iii) The name and location of the nuclear power plant with respect to which a schedule of ruling amounts is requested.

(iv) A description of the taxpayer's qualifying interest in the nuclear power plant and the percentage of such nuclear power plant that the qualifying interest of the taxpayer represents.

(v) Where applicable, an identification of each public utility commission that establishes or approves rates for the furnishing or sale by the taxpayer of electric energy generated by the nuclear power plant, and, for each public utility commission identified—

(A) Whether the public utility commission has determined the amount of decommissioning costs to be included in the taxpayer's cost of service for ratemaking purposes;

(B) The amount of decommissioning costs that are to be included in the taxpayer's cost of service for each taxable year under the current determination and amounts that otherwise are required to be included in the taxpayer's income under section 88 and the regulations thereunder;

(C) A description of the assumptions, estimates and other factors used by the public utility commission to determine the amount of decommissioning costs;

(D) A copy of such portions of any order or opinion of the public utility commission as pertain to the public utility commission's most recent determination of the amount of decommissioning costs to be included in cost of service; and

(E) A copy of each engineering or cost study that was relied on or used by the public utility commission in determining the amount of decommissioning costs to be included in the taxpayer's cost of service under the current determination.

(vi) A description of the assumptions, estimates and other factors that were used by the taxpayer to determine the amount of decommissioning costs, including each of the following if applicable:

(A) A description of the proposed method of decommissioning the nuclear power plant (for example, prompt removal/dismantlement, safe storage entombment with delayed dismantlement, or safe storage mothballing with delayed dismantlement).

(B) The estimated year in which substantial decommissioning costs will first be incurred.

(C) The estimated year in which the decommissioning of the nuclear power plant will be substantially complete (*see* § 1.468A-5(d)(3) for a definition of substantial completion of decommissioning).

(D) The total estimated cost of decommissioning expressed in current dollars (that is, based on price levels in effect at the time of the current determination).

(E) The total estimated cost of decommissioning expressed in future dollars (that is, based on anticipated price levels when expenses are expected to be paid).

(F) For each taxable year in the period that begins with the year specified in paragraph (e)(2)(vi)(B) of this section (the estimated year in which substantial decommissioning costs will first be incurred) and ends with the year specified in paragraph (e)(2)(vi)(C) of this section (the estimated year in which the decommissioning of the nuclear power plant will be substantially complete), the estimated cost of decommissioning expressed in future dollars.

(G) A description of the methodology used in converting the estimated cost of decommissioning expressed in current dollars to the estimated cost of decommissioning expressed in future dollars.

(H) The assumed after-tax rate of return to be earned by the assets of the qualified nuclear decommissioning fund.

(I) A copy of each engineering or cost study that was relied on or used by the taxpayer in determining the amount of decommissioning costs.

(vii) A proposed schedule of ruling amounts for each taxable year remaining in the funding period as of the date the schedule of ruling amounts will first apply.

(viii) A description of the assumptions, estimates and other factors that were used in determining the proposed schedule of ruling amounts, including, if applicable—

(A) The funding period (as such term is defined in paragraph (c) of this section);

(B) The assumed after-tax rate of return to be earned by the assets of the nuclear decommissioning fund;

(C) The fair market value of the assets (if any) of the nuclear decommissioning fund as of the first day of the first taxable year to which the schedule of ruling amounts will apply;

(D) The amount expected to be earned by the assets of the nuclear decommissioning fund (based on the after-tax rate of return applicable to the fund) over the period that begins on the first day of the first taxable year to which the schedule of ruling amounts will apply and ends on the last day of the funding period;

(E) The amount of decommissioning costs allocable to the nuclear decommissioning fund (as determined under paragraph (d) of this section);

(F) The total estimated cost of decommissioning (as determined under paragraph (d)(2) of this section); and

(G) The taxpayer's share of the total estimated cost of decommissioning (as such term is defined in paragraph (d)(3) of this section).

(ix) If the request is for a revised schedule of ruling amounts, the after-tax rate of return earned by the assets of the nuclear decommissioning fund for each taxable year in the period that begins with the date of the initial contribution to the fund and ends with the first day of the first taxable year to which the revised schedule of ruling amounts applies.

(x) If applicable, an explanation of the need for a schedule of ruling amounts determined on a basis other than the rules of paragraphs (a) through (d) of this section and a description of an alternative basis for determining a schedule of ruling amounts (*see* paragraph (a)(5) of this section).

(xi) A chart or table, based upon the assumed after-tax rate of return to be earned by the assets of the nuclear decommissioning fund, setting forth the years the fund will be in existence, the annual contribution to the fund, the estimated annual earnings of the fund and the cumulative total balance in the fund.

(xii) If the request is for a revised schedule of ruling amounts, a copy of the schedule of ruling amounts that the revised schedule would replace.

(xiii) If the request for a schedule of ruling amounts contains a request, pursuant to § 1.468A-5(a)(1)(iv), that the IRS rule whether an unincorporated organization through which the assets of the fund are invested is an association taxable as a corporation for Federal tax purposes, a copy of the legal documents establishing or otherwise governing the organization.

(xiv) Any other information required by the IRS that may be necessary or useful in determining the schedule of ruling amounts.

(3) ***Administrative procedures.*** The IRS may prescribe administrative procedures that supplement the provisions of paragraph (e)(1) and (2) of this section. In addition, the IRS may, in its discretion, waive the requirements of paragraph (e)(1) and (2) of this section under appropriate circumstances.

(f) ***Review and revision of schedule of ruling amounts*** —

(1) ***Mandatory review.***

(i) Any taxpayer that has obtained a schedule of ruling amounts pursuant to paragraph (e) of this section must file a request for a revised schedule of ruling amounts on or before the deemed payment deadline date for the 10th taxable year that begins after the taxable year in which the

most recent schedule of ruling amounts was received. If the taxpayer calculated its most recent schedule of ruling amounts on any basis other than an order issued by a public utility commission, the taxpayer must file a request for a revised schedule of ruling amounts on or before the deemed payment deadline date for the 5th taxable year that begins after the taxable year in which the most recent schedule of ruling amounts was received.

(ii)

(A) Any taxpayer that has obtained a formula or method for determining a schedule of ruling amounts for any taxable year under paragraph (a)(5) of this section must file a request for a revised schedule on or before the earlier of the deemed payment deadline for the 5th taxable year that begins after its taxable year in which the most recent formula or method was approved or the deemed payment deadline for the first taxable year that begins after a taxable year in which there is a substantial variation in the ruling amount determined under the most recent formula or method. There is a substantial variation in the ruling amount determined under the formula or method in effect for a taxable year if the ruling amount for the year and the ruling amount for any earlier year since the most recent formula or method was approved differ by more than 50 percent of the smaller amount.

(B) Any taxpayer that has determined its ruling amount for any taxable year under a formula prescribed by § 1.468A-6 (which prescribes ruling amounts for the taxable year in which there is a disposition of a qualifying interest in a nuclear power plant) must file a request for a revised schedule of ruling amounts on or before the deemed payment deadline for its first taxable year that begins after the disposition.

(iii) A taxpayer requesting a schedule of deduction amounts for a nuclear decommissioning fund under § 1.468A-8 must also request a revised schedule of ruling amounts for the fund. The revised schedule of ruling amounts must apply beginning with the first taxable year following the first year in which a deduction is allowed under the schedule of deduction amounts.

(iv) If the operating license of the nuclear power plant to which a nuclear decommissioning fund relates is renewed, the taxpayer maintaining the fund must request a revised schedule of ruling amounts. The request for the revised schedule must be submitted on or before the deemed payment deadline for the taxable year that includes the date on which the operating license is renewed.

(v) A request for a schedule of ruling amounts required by this paragraph (f)(1) must be made in accordance with the rules of paragraph (e) of this section. If a taxpayer does not properly file a request for a revised schedule of ruling amounts by the date provided in paragraph (f)(1)(i), (ii) or (iv) of this section (whichever is applicable), the taxpayer's ruling amount for the first taxable year to which the revised schedule of ruling amounts would have applied and for all succeeding taxable years until a new schedule is obtained shall be zero dollars, unless, in its discretion, the IRS provides otherwise in such new schedule of ruling amounts. Thus, if a taxpayer is required to request a revised schedule of ruling amounts under any provision of this section, and each ruling amount in the revised schedule would equal zero dollars, the taxpayer may, instead of requesting a new schedule of ruling amounts, begin treating the ruling amounts under its most recent schedule as equal to zero dollars.

(2) ***Elective review.*** Any taxpayer that has obtained a schedule of ruling amounts pursuant to paragraph (e) of this section can request a revised schedule of ruling amounts. Such a request must be made in accordance with the rules of paragraph (e) of this section; thus, the IRS will not provide a revised

ruling amount applicable to a taxable year in response to a request for a schedule of ruling amounts that is filed after the deemed payment deadline date for such taxable year (*see* paragraph (e)(1)(vi) of this section).

(3) ***Determination of revised schedule of ruling amounts.*** A revised schedule of ruling amounts for a nuclear decommissioning fund shall be determined under this section without regard to any schedule of ruling amounts for such nuclear decommissioning fund that was issued prior to such revised schedule. Thus, a ruling amount specified in a revised schedule of ruling amounts for any taxable year in the funding period can be less than one or more ruling amounts specified in a prior schedule of ruling amounts for a prior taxable year.

(g) ***Special rule permitting payments to a nuclear decommissioning fund before receipt of an initial or revised ruling amount applicable to a taxable year.***

(1) If an electing taxpayer has filed a timely request for an initial or revised ruling amount for a taxable year beginning on or after January 1, 2006, and does not receive the ruling amount on or before the deemed payment deadline date for such taxable year, the taxpayer may make a payment to a nuclear decommissioning fund on the basis of the ruling amount proposed in the taxpayer's request. Thus, under the preceding sentence, an electing taxpayer may make a payment to a nuclear decommissioning fund for such taxable year that does not exceed the ruling amount proposed by the taxpayer for such taxable year in a timely filed request for a schedule of ruling amounts.

(2) If an electing taxpayer makes a payment to a nuclear decommissioning fund for any taxable year pursuant to paragraph (g)(1) of this section and the ruling amount that is provided by the IRS is greater than the ruling amount proposed by the taxpayer for such taxable year, the taxpayer is not allowed to make an additional payment to the fund for such taxable year after the deemed payment deadline date for such taxable year.

(3) If the payment or transfer that an electing taxpayer makes to a nuclear decommissioning fund for any taxable year pursuant to paragraph (g)(1) of this section exceeds the ruling amount that is provided by the IRS for such taxable year, the following rules apply:

(i) The amount of the excess is an excess contribution (as defined in § 1.468A-5(c)(2)(ii)) for such taxable year.

(ii) The amount of the excess contribution is not deductible (*see* § 1.468A-2(b)(2)) and must be withdrawn by the taxpayer pursuant to the rules of § 1.468A-5(c)(2)(i).

(iii) The taxpayer must withdraw the after-tax earnings on the excess contribution.

(iv) If the taxpayer claimed a deduction for the excess contribution, the taxpayer should file an amended return for the taxable year.

[T.D. 9512, 75 FR 80701, Dec. 23, 2010]

§ 1.468A-4 Treatment of nuclear decommissioning fund.

(a) ***In general.*** A nuclear decommissioning fund is subject to tax on all of its modified gross income (as defined in paragraph (b) of this section). The rate of tax is 20 percent for taxable years beginning after December 31, 1995. This tax is in lieu of any other tax that may be imposed under subtitle A of the Internal Revenue Code (Code) on the income earned by the assets of the nuclear decommissioning fund.

(b) ***Modified gross income.*** For purposes of this section, the term *modified gross income* means gross income as defined under section 61 computed with the following modifications:

(1) The amount of any payment or special transfer to the nuclear decommissioning fund with respect to which a deduction is allowed under section 468A(a) or section 468A(f) is excluded from gross income.

(2) A deduction is allowed for the amount of administrative costs and other incidental expenses of the nuclear decommissioning fund (including taxes, legal expenses, accounting expenses, actuarial expenses and trustee expenses, but not including decommissioning costs) that are otherwise deductible and that are paid by the nuclear decommissioning fund to any person other than the electing taxpayer. An expense is otherwise deductible for purposes of this paragraph (b)(2) if it would be deductible under chapter 1 of the Code in determining the taxable income of a corporation. For example, because Federal income taxes are not deductible under chapter 1 of the Code in determining the taxable income of a corporation, the tax imposed by section 468A(e)(2) and paragraph (a) of this section is not deductible in determining the modified gross income of a nuclear decommissioning fund. Similarly, because certain expenses allocable to tax-exempt interest income are not deductible under section 265 in determining the taxable income of a corporation, such expenses are not deductible in determining the modified gross income of a nuclear decommissioning fund.

(3) A deduction is allowed for the amount of an otherwise deductible loss that is sustained by the nuclear decommissioning fund in connection with the sale, exchange or worthlessness of any investment. A loss is otherwise deductible for purposes of this paragraph (b)(3) if such loss would be deductible by a corporation under section 165(f) or (g) and sections 1211(a) and 1212(a).

(4) A deduction is allowed for the amount of an otherwise deductible net operating loss of the nuclear decommissioning fund. For purposes of this paragraph (b), the net operating loss of a nuclear decommissioning fund for a taxable year is the amount by which the deductions allowable under paragraphs (b)(2) and (3) of this section exceed the gross income of the nuclear decommissioning fund computed with the modification described in paragraph (b)(1) of this section. A net operating loss is otherwise deductible for purposes of this paragraph (b)(4) if such a net operating loss would be deductible by a corporation under section 172(a).

(c) ***Special rules*** —

(1) ***Period for computation of modified gross income.*** The modified gross income of a nuclear decommissioning fund must be computed on the basis of the taxable year of the electing taxpayer. If an electing taxpayer changes its taxable year, each nuclear decommissioning fund of the electing taxpayer must change to the new taxable year. *See* section 442 and § 1.442-1 for rules relating to the change to a new taxable year.

(2) ***Gain or loss upon distribution of property by a fund.*** A distribution of property by a nuclear decommissioning fund (whether an actual distribution or a deemed distribution) shall be considered a disposition of property by the nuclear decommissioning fund for purposes of section 1001. In determining the amount of gain or loss from such disposition, the amount realized by the nuclear decommissioning fund shall be the fair market value of the property on the date of disposition.

(3) ***Denial of credits against tax.*** The tax imposed on the modified gross income of a nuclear decommissioning fund under paragraph (a) of this section is not to be reduced or offset by any credits against tax provided by part IV of subchapter A of chapter 1 of the Code other than the credit provided by section 31(c) for amounts withheld under section 3406 (back-up withholding).

(4) ***Other corporate taxes inapplicable.*** Although the modified gross income of a nuclear decommissioning fund is subject to tax at the rate specified by section 468A(e)(2) and paragraph (a) of this section, a nuclear decommissioning fund is not subject to the other taxes imposed on corporations under subtitle A of the Code. For example, a nuclear decommissioning fund is not subject to the alternative minimum tax imposed by section 55, the accumulated earnings tax imposed by section 531, the personal holding company tax imposed by section 541, and the alternative tax imposed on a corporation under section 1201(a).

(d) ***Treatment as corporation for purposes of subtitle F.*** For purposes of subtitle F of the Code and §§ 1.468A-1 through 1.468A-9, a nuclear decommissioning fund is to be treated as if it were a corporation and the tax imposed by section 468A(e)(2) and paragraph (a) of this section is to be treated as a tax imposed by section 11. Thus, for example, the following rules apply:

(1) A nuclear decommissioning fund must file a return with respect to the tax imposed by section 468A(e)(2) and paragraph (a) of this section for each taxable year (or portion thereof) that the fund is in existence even though no amount is included in the gross income of the fund for such taxable year. The return is to be made on Form 1120-ND in accordance with the instructions relating to such form. For purposes of this paragraph (d)(1), a nuclear decommissioning fund is in existence for the period that—

(i) Begins on the date that the first deductible payment is actually made to such nuclear decommissioning fund; and

(ii) Ends on the date of termination (*see* § 1.468A-5(d)), the date that the entire fund is disqualified (*see* § 1.468A-5(c)), or the date that the electing taxpayer disposes of its entire qualifying interest in the nuclear power plant to which the nuclear decommissioning fund relates (other than in connection with the transfer of the entire fund to the person acquiring such interest), whichever is applicable.

(2) For each taxable year of the nuclear decommissioning fund, the return described in paragraph (d)(1) of this section must be filed on or before the 15th day of the third month following the close of such taxable year unless the nuclear decommissioning fund is granted an extension of time for filing under section 6081. If such an extension is granted for any taxable year, the return for such taxable year must be filed on or before the extended due date for such taxable year.

(3) A nuclear decommissioning fund must provide its employer identification number on returns, statements and other documents as required by the forms and instructions relating thereto. The employer identification number is obtained by filing a Form SS-4, Application for Employer Identification Number, in accordance with the instructions relating thereto.

(4) A nuclear decommissioning fund must deposit all payments of tax imposed by section 468A(e)(2) and paragraph (a) of this section (including any payments of estimated tax) with an authorized government depositary in accordance with § 1.6302-1.

(5) A nuclear decommissioning fund is subject to the addition to tax imposed by section 6655 in case of a failure to pay estimated income tax. For purposes of section 6655 and this section—

(i) The tax with respect to which the amount of the underpayment is computed in the case of a nuclear decommissioning fund is the tax imposed by section 468A(e)(2) and paragraph (a) of this section; and

(ii) The taxable income with respect to which the nuclear decommissioning fund's status as a large corporation is measured is modified gross income (as defined by paragraph (b) of this section).

[T.D. 9512, 75 FR 80701, Dec. 23, 2010]

§ 1.468A-5 Nuclear decommissioning fund—miscellaneous provisions.

(a) ***Qualification requirements*** —

(1) ***In general.***

(i) A nuclear decommissioning fund must be established and maintained at all times in the United States pursuant to an arrangement that qualifies as a trust under State law. Such trust must be established for the exclusive purpose of providing funds for the decommissioning of one or more nuclear power plants, but a single trust agreement may establish multiple funds for such purpose. Thus, for example—

(A) Two or more nuclear decommissioning funds can be established and maintained pursuant to a single trust agreement; and

(B) One or more funds that are to be used for the decommissioning of a nuclear power plant and that do not qualify as nuclear decommissioning funds under this paragraph (a) can be established and maintained pursuant to a trust agreement that governs one or more nuclear decommissioning funds.

(ii) A separate nuclear decommissioning fund is required for each electing taxpayer and for each nuclear power plant with respect to which an electing taxpayer possesses a qualifying interest. The Internal Revenue Service (IRS) will issue a separate schedule of ruling amounts with respect to each nuclear decommissioning fund, and each nuclear decommissioning fund must file a separate income tax return even if other nuclear decommissioning funds or nonqualified funds are established and maintained pursuant to the trust agreement governing such fund or the assets of other nuclear decommissioning funds or nonqualified funds are pooled with the assets of such fund.

(iii) An electing taxpayer can maintain only one nuclear decommissioning fund for each nuclear power plant with respect to which the taxpayer elects the application of section 468A. If a nuclear power plant is subject to the ratemaking jurisdiction of two or more public utility commissions and any such public utility commission requires a separate fund to be maintained for the benefit of ratepayers whose rates are established or approved by the public utility commission, the separate funds maintained for such plant (whether or not established and maintained pursuant to a single trust agreement) shall be considered a single nuclear decommissioning fund for purposes of section 468A and §§ 1.468A-1 through 1.468A-4, this section and §§ 1.468A-7 through 1.468A-9. Thus, for example, the IRS will issue one schedule of ruling amounts with respect to such nuclear power plant, the nuclear decommissioning fund must file a single income tax return (*see* § 1.468A-4(d)(1)), and, if the IRS disqualifies the nuclear decommissioning fund, the assets of each separate fund are treated as distributed on the date of disqualification (*see* paragraph (c)(3) of this section).

(iv) If assets of a nuclear decommissioning fund are (or will be) invested through an unincorporated organization, within the meaning of § 301.7701-2 of this chapter, the IRS will rule, if requested, whether the organization is an association taxable as a corporation for Federal tax purposes. A request for this ruling may be made by the electing taxpayer as part of its request for a schedule of ruling amounts or as part of a request under § 1.468A-8 for a schedule of deduction amounts.

(2) ***Limitation on contributions.*** Except as otherwise provided in § 1.468A-8 (relating to special transfers under section 468A(f)), a nuclear decommissioning fund is not permitted to accept any contributions in cash or property other than cash payments with respect to which a deduction is allowed under section 468A(a) and § 1.468A-2(a). Thus, for example, except in the case of a special transfer pursuant to § 1.468A-8, securities may not be contributed to a nuclear decommissioning fund even if the taxpayer or a fund established by the taxpayer previously held such securities for the purpose of providing funds for the decommissioning of a nuclear power plant.

(3) ***Limitation on use of fund*** —

(i) ***In general.*** The assets of a nuclear decommissioning fund are to be used exclusively—

(A) To satisfy, in whole or in part, the liability of the electing taxpayer for decommissioning costs of the nuclear power plant to which the nuclear decommissioning fund relates;

(B) To pay administrative costs and other incidental expenses of the nuclear decommissioning fund; and

(C) To the extent that the assets of the nuclear decommissioning fund are not currently required for the purposes described in paragraph (a)(3)(i)(A) or (B) of this section, to make investments.

(ii) ***Definition of administrative costs and expenses.*** For purposes of paragraph (a)(3)(i) of this section, the term *administrative costs and other incidental expenses of a nuclear decommissioning fund* means all ordinary and necessary expenses incurred in connection with the operation of the nuclear decommissioning fund. Such term includes the tax imposed by section 468A(e)(2) and § 1.468A-4(a), any State or local tax imposed on the income or the assets of the fund, legal expenses, accounting expenses, actuarial expenses and trustee expenses. Such term does not include decommissioning costs or the payment of insurance premiums on a policy to pay for the nuclear decommissioning costs of a nuclear power plant. Such term also does not include the excise tax imposed on the trustee or other disqualified person under section 4951 or the reimbursement of any expenses incurred in connection with the assertion of such tax unless such expenses are considered reasonable and necessary under section 4951(d)(2)(C) and it is determined that the trustee or other disqualified person is not liable for the excise tax.

(4) ***Trust provisions.*** Each qualified nuclear decommissioning fund trust agreement must provide that assets in the fund must be used as authorized by section 468A and §§ 1.468A-1 through 1.468A-9 and that the agreement may not be amended so as to violate section 468A or §§ 1.468A-1 through 1.468A-9.

(b) ***Prohibitions against self-dealing*** —

(1) ***In general.*** Except as otherwise provided in this paragraph (b), the excise taxes imposed by section 4951 shall apply to each act of self-dealing between a disqualified person and a nuclear decommissioning fund.

(2) ***Self-dealing defined.*** For purposes of this paragraph (b), the term *self-dealing* means any act described in section 4951(d), except—

(i) A payment by a nuclear decommissioning fund for the purpose of satisfying, in whole or in part, the liability of the electing taxpayer for decommissioning costs of the nuclear power plant to which the nuclear decommissioning fund relates, whether such payment is made to an unrelated party in satisfaction of the decommissioning liability or to the plant operator or other otherwise disqualified person as reimbursement solely for actual expenses paid by such person in satisfaction of the decommissioning liability;

(ii) A withdrawal of an excess contribution by the electing taxpayer pursuant to the rules of paragraph (c)(2) of this section;

(iii) A withdrawal by the electing taxpayer of amounts that have been treated as distributed under paragraph (c)(3) of this section;

(iv) A payment of amounts remaining in a nuclear decommissioning fund to the electing taxpayer after the termination of such fund (as determined under paragraph (d) of this section);

(v) Any act described in section 4951(d)(2)(B) or (C). Whether payments under section 4951(c)(2)(C) are not excessive is determined under § 1.162-7. See § 53.4941(d)-3(c)(1). The fact that the amount of such payments that are not excessive are also more than the disqualified person's actual expenses for such personal services does not cause the payments to constitute acts of self-dealing, even if the difference is properly characterized as profit, or direct or indirect overhead;

(vi) Any act that is described in § 53.4951-1(c) of this chapter and is undertaken to facilitate the temporary investment of assets or the payment of reasonable administrative expenses of the nuclear decommissioning fund; or

(vii) A payment by a nuclear decommissioning fund for the performance of trust functions and certain general banking services by a bank or trust company that is a disqualified person if the banking services are reasonable and necessary to carry out the purposes of the fund and the compensation paid to the bank or trust company for such services, taking into account the fair interest rate for the use of the funds by the bank or trust company, is not excessive.

(3) ***Disqualified person defined.*** For purposes of this paragraph (b), the term *disqualified person* includes each person described in section 4951(e)(4) and § 53.4951-1(d).

(4) ***General banking services.*** The general banking services allowed by paragraph (b)(2)(vii) of this section are—

(i) Checking accounts, as long as the bank does not charge interest on any overwithdrawals;

(ii) Savings accounts, as long as the fund may withdraw its funds on no more than 30 days' notice without subjecting itself to a loss of interest on its money for the time during which the money was on deposit; and

(iii) Safekeeping activities (*see* § 53.4941(d)-3(c)(2), *Example 3,* of this chapter).

(c) *Disqualification of nuclear decommissioning fund* —

(1) *In general* —

(i) ***Disqualification events.*** Except as otherwise provided in paragraph (c)(2) of this section, the IRS may, in its discretion, disqualify all or any portion of a nuclear decommissioning fund if at any time during a taxable year of the fund—

(A) The fund does not satisfy the requirements of paragraph (a) of this section; or

(B) The fund and a disqualified person engage in an act of self-dealing (as defined in paragraph (b)(2) of this section).

(ii) ***Date of disqualification.***

(A) Except as otherwise provided in this paragraph (c)(1)(ii), the date on which a disqualification under this paragraph (c) will take effect (date of disqualification) is the date that the fund does not satisfy the requirements of paragraph (a) of this section or the date on which the act of self-dealing occurs, whichever is applicable.

(B) If the IRS determines, in its discretion, that the disqualification should take effect on a date subsequent to the date specified in paragraph (c)(1)(ii)(A) of this section, the date of disqualification is such subsequent date.

(iii) ***Notice of disqualification.*** The IRS will notify the electing taxpayer of the disqualification of a nuclear decommissioning fund and the date of disqualification by registered or certified mail to the last known address of the electing taxpayer (the notice of disqualification). For further guidance regarding the definition of last known address, *see* § 301.6212-2 of this chapter.

(2) *Exception to disqualification* —

(i) ***In general.*** A nuclear decommissioning fund will not be disqualified under paragraph (c)(1) of this section by reason of an excess contribution or the withdrawal of such excess contribution by an electing taxpayer if the amount of the excess contribution is withdrawn by the electing taxpayer on or before the date prescribed by law (including extensions) for filing the return of the nuclear decommissioning fund for the taxable year to which the excess contribution relates. In the case of an excess contribution that is the result of a payment made pursuant to § 1.468A-3(g)(1), a nuclear decommissioning fund will not be disqualified under paragraph (c)(1) of this section if the amount of the excess contribution is withdrawn by the electing taxpayer on or before the later of—

(A) The date prescribed by law (including extensions) for filing the return of the nuclear decommissioning fund for the taxable year to which the excess contribution relates; or

(B) The date that is 30 days after the date that the taxpayer receives the ruling amount for such taxable year.

(ii) ***Excess contribution defined.*** For purposes of this section, an excess contribution is the amount by which cash payments made (or deemed made) to a nuclear decommissioning fund during any taxable year exceed the payment limitation contained in section 468A(b) and § 1.468A-2(b). The amount of a special transfer permitted under § 1.468A-8 is not treated as a cash payment for this purpose.

(iii) ***Taxation of income attributable to an excess contribution.*** The income of a nuclear decommissioning fund attributable to an excess contribution is required to be included in the gross income of the nuclear decommissioning fund under § 1.468A-4(b).

(3) ***Disqualification treated as distribution.*** If all or any portion of a nuclear decommissioning fund is disqualified under paragraph (c)(1) of this section, the portion of the nuclear decommissioning fund that is disqualified is treated as distributed to the electing taxpayer on the date of disqualification. Such a distribution shall be treated for purposes of section 1001 as a disposition of property held by the nuclear decommissioning fund (*see* § 1.468A-4(c)(2)). In addition, the electing taxpayer must include in gross income for the taxable year that includes the date of disqualification an amount equal to the fair market value of the distributable assets of the nuclear decommissioning fund multiplied by the fraction of the nuclear decommissioning fund that was disqualified under paragraph (c)(1) of this section. For this purpose, the fair market value of the distributable assets of the nuclear decommissioning fund is equal to the fair market value of the assets of the fund determined as of the date of disqualification, reduced by—

(i) The amount of any excess contribution that was not withdrawn before the date of disqualification if no deduction was allowed with respect to such excess contribution;

(ii) The amount of any deemed distribution that was not actually distributed before the date of disqualification (as determined under § 1.468A-2(d)(2)(iii)) if the amount of the deemed distribution was included in the gross income of the electing taxpayer for the taxable year in which the deemed distribution occurred; and

(iii) The amount of any tax that—

(A) Is imposed on the income of the fund;

(B) Is attributable to income taken into account before the date of disqualification or as a result of the disqualification; and

(C) Has not been paid as of the date of disqualification.

(4) ***Further effects of disqualification.*** Contributions made to a disqualified fund after the date of disqualification are not deductible under section 468A(a) and § 1.468A-2(a), or, if the fund is disqualified only in part, are deductible only to the extent provided in the notice of disqualification. In addition, if any assets of the fund that are deemed distributed under paragraph (c)(3) of this section are held by the fund after the date of disqualification (or if additional assets are acquired with nondeductible contributions made to the fund after the date of disqualification), the income earned by such assets after the date of disqualification must be included in the gross income of the electing taxpayer (*see* section 671) to the extent that such income is otherwise includible under chapter 1 of the Internal Revenue Code (Code). An electing taxpayer can establish a nuclear decommissioning fund to replace a fund that has been disqualified in its entirety only if the IRS specifically consents to the establishment of a replacement fund in connection with the issuance of an initial schedule of ruling amounts for such replacement fund.

(d) ***Termination of nuclear decommissioning fund upon substantial completion of decommissioning*** —

(1) ***In general.*** Upon substantial completion of the decommissioning of a nuclear power plant to which a nuclear decommissioning fund relates, such nuclear decommissioning fund shall be considered terminated and treated as having distributed all of its assets on the date the termination occurs (the termination date). Such a distribution shall be treated for purposes of section 1001 as a disposition

of property held by the nuclear decommissioning fund (*see* § 1.468A-4(c)(2)). In addition, the electing taxpayer shall include in gross income for the taxable year in which the termination occurs an amount equal to the fair market value of the assets of the fund determined as of the termination date, reduced by—

(i) The amount of any deemed distribution that was not actually distributed before the termination date if the amount of the deemed distribution was included in the gross income of the electing taxpayer for the taxable year in which the deemed distribution occurred; and

(ii) The amount of any tax that—

(A) Is imposed on the income of the fund;

(B) Is attributable to income taken into account before the termination date or as a result of the termination; and

(C) Has not been paid as of the termination date.

(2) ***Additional rules.*** Contributions made to a nuclear decommissioning fund after the termination date are not deductible under section 468A(a) and § 1.468A-2(a). In addition, if any assets are held by the fund after the termination date, the income earned by such assets after the termination date must be included in the gross income of the electing taxpayer (*see* section 671) to the extent that such income is otherwise includible under chapter 1 of the Code. Finally, under § 1.468A-2(e), an electing taxpayer using an accrual method of accounting is allowed a deduction for nuclear decommissioning costs that are incurred during any taxable year even if such costs are incurred after substantial completion of decommissioning (for example, expenses incurred to monitor or safeguard the plant site).

(3) ***Substantial completion of decommissioning and termination date.***

(i) The substantial completion of the decommissioning of a nuclear power plant occurs on the date on which all Federal, state, local, and contractual decommissioning requirements are fully satisfied (the substantial completion date). Except as otherwise provided in paragraph (d)(3)(ii) of this section, the substantial completion date is also the termination date.

(ii) If a significant portion of the total estimated decommissioning costs with respect to a nuclear power plant are not incurred on or before the substantial completion date, an electing taxpayer may request, and the IRS will issue, a ruling that designates a date subsequent to the substantial completion date as the termination date. The termination date designated in the ruling will not be later than the last day of the third taxable year after the taxable year that includes the substantial completion date. The request for a ruling under this paragraph (d)(3)(ii) must be filed during the taxable year that includes the substantial completion date and must comply with the procedural rules in effect at the time of the request.

[T.D. 9512, 75 FR 80701, Dec. 23, 2010, as amended by T.D. 9906, 85 FR 55190, Sept. 4, 2020]

§ 1.468A-6 Disposition of an interest in a nuclear power plant.

(a) ***In general.*** This section describes the Federal income tax consequences of a transfer of the assets of a nuclear decommissioning fund (Fund) within the meaning of § 1.468A-1(b)(4) in connection with a sale, exchange, or other disposition by a taxpayer (transferor) of all or a portion of its qualifying interest in a nuclear power plant to another taxpayer (transferee). This section also explains how a schedule of ruling

amounts will be determined for the transferor and transferee. For purposes of this section, a nuclear power plant includes a plant that previously qualified as a nuclear power plant and that has permanently ceased to produce electricity.

(b) ***Requirements.*** This section applies if—

(1) Immediately before the disposition, the transferor maintained a Fund with respect to the interest disposed of;

(2) Immediately after the disposition—

(i) The transferee maintains a Fund with respect to the interest acquired;

(ii) The interest acquired is a qualifying interest of the transferee in the nuclear power plant;

(3) In connection with the disposition, either—

(i) The transferee acquires part or all of the transferor's qualifying interest in the plant and a proportionate amount of the assets of the transferor's Fund (all such assets if the transferee acquires the transferor's entire qualifying interest in the plant) is transferred to a Fund of the transferee; or

(ii) The transferee acquires the transferor's entire qualifying interest in the plant and the transferor's entire Fund is transferred to the transferee; and

(4) The transferee continues to satisfy the requirements of § 1.468A-5(a)(1)(iii), which permits an electing taxpayer to maintain only one Fund for each plant.

(c) ***Tax consequences.*** A disposition that satisfies the requirements of paragraph (b) of this section will have the following tax consequences at the time it occurs:

(1) ***The transferor and its Fund.***

(i) Except as provided in paragraph (c)(1)(ii) of this section, neither the transferor nor the transferor's Fund will recognize gain or loss or otherwise take any income or deduction into account by reason of the transfer of a proportionate amount of the assets of the transferor's Fund to the transferee's Fund (or by reason of the transfer of the transferor's entire Fund to the transferee). For purposes of §§ 1.468A-1 through 1.468A-9, this transfer (or the transfer of the transferor's Fund) will not be considered a distribution of assets by the transferor's Fund.

(ii) Notwithstanding paragraph (c)(1)(i) of this section, if the transferor has made a special transfer under § 1.468A-8 prior to the transfer of the Fund or Fund assets, any deduction with respect to that special transfer allowable under section 468A(f)(2) for a taxable year ending after the date of the transfer of the Fund or Fund assets (the unamortized special transfer deduction) is allowed under section 468A(f)(2)(C) for the taxable year that includes the date of the transfer of the Fund or Fund assets. If the taxpayer transfers only a portion of its interest in a nuclear power plant, only the corresponding portion of the unamortized special transfer deduction qualifies for the acceleration under section 468A(f)(2)(C).

(2) ***The transferee and its Fund.*** Neither the transferee nor the transferee's Fund will recognize gain or loss or otherwise take any income or deduction into account by reason of the transfer of a proportionate amount of the assets of the transferor's Fund to the transferee's Fund (or by reason of

the transfer of the transferor's Fund to the transferee). For purposes of §§ 1.468A-1 through 1.468A-9, this transfer (or the transfer of the transferor's Fund) will not constitute a payment or a contribution of assets by the transferee to its Fund.

(3) ***Basis.*** Transfers of assets of a Fund to which this section applies do not affect basis. Thus, the transferee's Fund will have a basis in the assets received from the transferor's Fund that is the same as the basis of those assets in the transferor's Fund immediately before the disposition.

(d) ***Determination of proportionate amount.*** For purposes of this section, a transferor of a qualifying interest in a nuclear power plant is considered to transfer a proportionate amount of the assets of its Fund to a Fund of a transferee of the interest if, on the date of the transfer of the interest, the percentage of the fair market value of the Fund's assets attributable to the assets transferred equals the percentage of the transferor's qualifying interest that is transferred.

(e) ***Calculation of schedule of ruling amounts and schedule of deduction amounts for dispositions described in this section*** —

(1) ***Transferor.*** If a transferor disposes of all or a portion of its qualifying interest in a nuclear power plant in a transaction to which this section applies, the transferor's schedule of ruling amounts with respect to the interests disposed of and retained (if any) and, if applicable, the amount allowable as a deduction for a special transfer under § 1.468A-8 will be determined under the following rules:

(i) ***Taxable year of disposition; ruling amount.*** If the transferor does not file a request for a revised schedule of ruling amounts on or before the deemed payment deadline for the taxable year of the transferor in which the disposition of its interest in the nuclear power plant occurs (that is, the date that is two and one-half months after the close of that year), the transferor's ruling amount with respect to that plant for that year will equal the sum of—

(A) The ruling amount contained in the transferor's current schedule of ruling amounts with respect to that plant for that taxable year multiplied by the portion of the qualifying interest that is retained (if any); and

(B) The ruling amount contained in the transferor's current schedule of ruling amounts with respect to that plant for that taxable year multiplied by the product of—

(*1*) The portion of the transferor's qualifying interest that is disposed of; and

(*2*) A fraction, the numerator of which is the number of days in that taxable year that precede the date of disposition, and the denominator of which is the number of days in that taxable year.

(ii) ***Taxable year of disposition; deduction under § 1.468A-8.*** If the transferor has elected to make a special transfer under section 468A(f), the amount allowable as a deduction under § 1.468A-8 for the taxable year in which it transfers a portion of its interest in the nuclear plant is equal to the deduction amount for that taxable year from its existing schedule of deduction amounts multiplied by the percentage of its interest that it retains. This deduction is in addition to the deduction described in paragraph (c)(1)(ii) of this section.

(iii) ***Taxable years after the year of disposition.*** A transferor that retains a qualifying interest in a nuclear power plant must file a request for a revised schedule of ruling amounts (and, if applicable, a revised schedule of deduction amounts) with respect to that interest on or before the deemed payment deadline for the first taxable year of the transferor beginning after the disposition. *See* §§ 1.468A-3(f)(1)(ii)(B) and 1.468A-8(c)(3). If the transferor does not timely file

such a request, the transferor's ruling amount and the transferor's deduction amount under § 1.468A-8 with respect to that interest for the affected year or years will be zero, unless the Internal Revenue Service (IRS) waives the application of this paragraph (e)(1)(iii) upon a showing of good cause for the delay.

(2) ***Transferee.*** If a transferee acquires all or a portion of a transferor's qualifying interest in a nuclear power plant in a transaction to which this section applies, the transferee's schedule of ruling amounts with respect to the interest acquired will be determined under the following rules:

(i) ***Taxable year of disposition.*** If the transferee does not file a request for a schedule of ruling amounts on or before the deemed payment deadline for the taxable year of the transferee in which the disposition occurs (that is, the date that is two and one-half months after the close of that year), the transferee's ruling amount with respect to the interest acquired in the nuclear power plant for that year is equal to the amount contained in the transferor's current schedule of ruling amounts for that plant for the taxable year of the transferor in which the disposition occurred, multiplied by the product of—

(A) The portion of the transferor's qualifying interest that is transferred; and

(B) A fraction, the numerator of which is the number of days in the taxable year of the transferor including and following the date of disposition, and the denominator of which is the number of days in that taxable year.

(ii) ***Taxable years after the year of disposition.*** A transferee of a qualifying interest in a nuclear power plant must file a request for a revised schedule of ruling amounts with respect to that interest on or before the deemed payment deadline for the first taxable year of the transferee beginning after the disposition. *See* § 1.468A-3(f)(1)(ii)(B). If the transferee does not timely file such a request, the transferee's ruling amount with respect to that interest for the affected year or years will be zero, unless the IRS waives the application of this paragraph (e)(2)(ii) upon a showing of good cause for the delay.

(3) ***Examples.*** The following examples illustrate the provisions of this paragraph (e):

> *Example 1.* (i) X Corporation is a calendar year taxpayer engaged in the sale of electric energy generated by a nuclear power plant. The plant is owned entirely by X. On May 27, 2010, X transfers a 60-percent qualifying interest in the plant to Y Corporation, a calendar year taxpayer. Before the transfer, X had received a schedule of ruling amounts containing an annual ruling amount of $10 million for the taxable years 2005 through 2025. For 2010, neither X nor Y files a request for a revised schedule of ruling amounts.
> (ii) Under paragraph (e)(1)(i) of this section, X's ruling amount for 2010 is calculated as follows: ($10,000,000 × .40) + ($10,000,000 × .60 × 146/365) = $6,400,000. Under paragraph (e)(2)(i) of this section, Y's ruling amount for 2010 is calculated as follows: $10,000,000 × .60 × 219/365 = $3,600,000. Under paragraphs (e)(1)(iii) and (e)(2)(ii) of this section, X and Y must file requests for revised schedules of ruling amounts by March 15, 2012.

Example 2. Y Corporation, the sole owner of a nuclear power plant, is a calendar year taxpayer. In year 1, Y elects to make a special transfer under section 468A(f)(1) to the nuclear decommissioning fund Y maintains with respect to the plant. The amount of the special transfer is $100 × , and

the remaining useful life of the plant is 20 years. Y obtains a schedule of deduction amounts under § 1.468A-8T(c) permitting a $5 × deduction each year over the 20-year remaining useful life, and deducts $5 × of the special transfer amount in year 1, year 2, year 3, and year 4. On the first day of year 5, Y transfers a 25% interest in the plant to an unrelated party. Under paragraph (c)(1)(ii) of this section, Y may deduct in Year 5 the unamortized special transfer deduction corresponding to the portion of the plant transferred (25 percent of $80 × or $20 ×). In addition, under paragraph (e)(1)(ii) of this section, Y may deduct the portion of the deduction amount for year 5 from the schedule of deduction amounts corresponding to its retained interest in the plant (75 percent of $5 × or $3.75 ×). Pursuant to paragraph (e)(1)(iii) of this section, Y must file a request for a revised schedule of ruling amounts by March 15 of year 7.

(f) ***Anti-abuse provision.*** The IRS may treat a disposition as satisfying the requirements of this section if the IRS determines that this treatment is necessary or appropriate to carry out the purposes of section 468A and §§ 1.468A-1 through 1.468A-9.

[T.D. 9512, 75 FR 80701, Dec. 23, 2010, as amended by 76 FR 3837, Jan. 21, 2011]

§ 1.468A-7 Manner of and time for making election.

(a) ***In general.*** An eligible taxpayer is allowed a deduction for the taxable year in which the taxpayer makes a cash payment (or is deemed to make a cash payment) to a nuclear decommissioning fund or for a special transfer under § 1.468A-8 only if the taxpayer elects the application of section 468A. A separate election is required for each nuclear decommissioning fund and for each taxable year with respect to which payments are to be deducted under section 468A or a special transfer is made under § 1.468A-8. In the case of an affiliated group of corporations that join in the filing of a consolidated return for a taxable year, the common parent must make a separate election on behalf of each member whose payments to a nuclear decommissioning fund during such taxable year are to be deducted under section 468A and each member that makes a special transfer under § 1.468A-8 with respect to such year. The election under section 468A for any taxable year is irrevocable and must be made by attaching a statement (Election Statement) and a copy of the schedule of ruling amounts provided pursuant to the rules of § 1.468A-3 to the taxpayer's Federal income tax return (or, in the case of an affiliated group of corporations that join in the filing of a consolidated return, the consolidated return) for such taxable year. The return to which the Election Statement and a copy of the schedule of ruling amounts is attached must be filed on or before the time prescribed by law (including extensions) for filing the return for the taxable year with respect to which payments are to be deducted under section 468A.

(b) ***Required information.*** The Election Statement must include the following information:

(1) The legend “Election Under Section 468A” typed or legibly printed at the top of the first page.

(2) The electing taxpayer's name, address and taxpayer identification number (or, in the case of an affiliated group of corporations that join in the filing of a consolidated return, the name, address and taxpayer identification number of each electing taxpayer).

(3) The taxable year for which the election is made.

(4) For each nuclear decommissioning fund for which an election is made—

(i) The name and location of the nuclear power plant to which the fund relates;

(ii) The name and employer identification number of the nuclear decommissioning fund;

(iii) The total amount of actual cash payments made to the nuclear decommissioning fund during the taxable year that were not treated as deemed cash payments under § 1.468A-2(c)(1) for a prior taxable year;

(iv) The total amount of cash payments deemed made to the nuclear decommissioning fund under § 1.468A-2(c)(1) for the taxable year;

(v) The total amount of any special transfers (whether in cash or property) made to the nuclear decommissioning fund under § 1.468A-8 during the taxable year that were not treated as deemed transfers under § 1.468A-8(a)(4) for a prior taxable year;

(vi) The total amount of any special transfers (whether in cash or property) deemed made to the nuclear decommissioning fund under § 1.468A-8(a)(4) for the taxable year; and

(vii) For each item of property included in the amounts described in paragraph (b)(4)((v) or (vi) of this section, the amount of the item of property and whether the basis of the item of property is determined under § 1.468A-8(b)(5)(iii)(A) or § 1.468A-8(b)(5)(iii)(B).

[T.D. 9512, 75 FR 80701, Dec. 23, 2010]

§ 1.468A-8 Special transfers to qualified funds pursuant to section 468A(f).

(a) ***General rule*** —

(1) ***In general.*** Under section 468A(f), a taxpayer maintaining a qualified nuclear decommissioning fund with respect to a nuclear power plant may transfer cash or property into the fund (a special transfer). The special transfer is not subject to the ruling amount limitation in section 468A(b) and is not treated as a cash payment for purposes of that limitation. Thus, a taxpayer may, in the same taxable year, pay the ruling amount and make a special transfer into the fund. A special transfer may be made in cash, property, or both cash and property. The amount of a special transfer (that is, the amount of cash and the fair market value of property transferred) may not exceed the present value of the pre-2005 nonqualifying amount of nuclear decommissioning costs with respect to the nuclear power plant. The taxpayer is entitled to a deduction against income for a special transfer, as described in paragraph (b) of this section. A special transfer may not be made to a nuclear decommissioning fund before the first taxable year in which a deduction amount is applicable to the nuclear decommissioning fund (*see* paragraph (c) of this section).

(2) ***Pre-2005 nonqualifying amount*** —

(i) ***In general.*** The present value of the pre-2005 nonqualifying amount of nuclear decommissioning costs with respect to a nuclear power plant is the amount equal to the pre-2005 nonqualifying percentage of the present value of the estimated future decommissioning costs (as defined in § 1.468A-1(b)(6)) with respect to the nuclear power plant as of the first day of the taxable year of the taxpayer in which the special transfer is made or deemed made (or a later date that is on or before the date on which the special transfer is expected to be made if the taxpayer establishes to the satisfaction of the IRS that the determination of present value as of such date is reasonable and consistent with the principles and provisions of this section). For this purpose, the pre-2005 nonqualifying percentage for the plant is 100 percent reduced by the sum of—

(A) The qualifying percentage (within the meaning of § 1.468A-3(d)(4) as in effect on December 31, 2005) used in determining the taxpayer's last schedule of ruling amounts for the nuclear decommissioning fund under the law in effect before the enactment of the Energy Policy Act of 2005 (that is, the percentage of the plant's total nuclear decommissioning costs that were permitted to be funded through the fund under the law in effect before the enactment of the Energy Policy Act of 2005); and

(B) The percentage of decommissioning costs transferred in any previous special transfer (that is, the amount transferred as a percentage of the present value of the estimated future costs of decommissioning as of the first day of the taxable year in which such previous transfer was made).

(ii) ***Pre-2005 nonqualifying amount of transferee.*** If there is a transfer of a nuclear decommissioning fund or part or all of its assets and § 1.468A-6 applies to the transfer, the pre-2005 nonqualifying amount determined with respect to the transferee is equal to the pre-2005 nonqualifying amount (or a proportionate part of the pre-2005 nonqualifying amount) that would have been determined with respect to the transferor but for such transfer.

(3) ***Transfers in multiple years.*** A taxpayer making a special transfer is not required to transfer the entire eligible amount in a single year. The requirements of paragraph (c) of this section apply separately to each year in which a special transfer is made. In calculating the amount of any subsequent transfer, the taxpayer must reduce the pre-2005 nonqualifying percentage under paragraph (a)(2) of this section to take into account all previous transfers. For example, if a taxpayer has a pre-2005 nonqualifying percentage of 40 percent, and transfers half of the eligible amount in a special transfer, any subsequent transfer must be calculated on the basis of a pre-2005 nonqualifying percentage of 20 percent.

(4) ***Deemed payment rules*** —

(i) ***In general.*** The amount of any special transfer (whether in cash or property) described in § 1.468A-8 and made by an electing taxpayer to a nuclear decommissioning fund on or before the 15th day of the third calendar month after the close of any taxable year (the deemed payment deadline date) shall be deemed made during such taxable year if the electing taxpayer irrevocably designates the amount as relating to such taxable year on its timely filed Federal income tax return for such taxable year or, in the case of special transfers described in paragraph (a)(4)(ii) of this section, on an amended return for such taxable year (*see* § 1.468A-7(b)(4)(v) and (vi) for rules relating to such designation).

(ii) ***Special rule for certain special transfers.*** Special transfers that the electing taxpayer designates as relating to a taxable year beginning after December 31, 2005, and ending before January 1, 2010, which are actually made within 90 days after the electing taxpayer receives a ruling from the Secretary relating to the special transfer are deemed made during the taxable year designated as the year to which the special transfer relates.

(b) ***Deduction for amounts transferred*** —

(1) ***In general.***

(i) Except as provided in this paragraph (b), the deduction for any special transfer is allowed ratably over the remaining useful life of the nuclear power plant. The amount of the deduction for any taxable year is the deduction amount for such year specified in the schedule of deduction amounts required under paragraph (c) of this section.

(ii) For purposes of this paragraph (b), the remaining useful life of the nuclear power plant is the period beginning on the first day of the taxable year during which the transfer is made and ending on the last day of the taxable year that includes the last day of the estimated useful life of the nuclear power plant. The last day of the estimated useful life of the nuclear power plant is determined for this purpose under the rules of § 1.468A-3(c)(2).

(2) *Amount of deduction* —

(i) ***General rule.*** Except as provided in this paragraph (b)(2), the deduction for property contributed in a special transfer is limited to the lesser of the fair market value of the property contributed or the taxpayer's basis in that property.

(ii) *Election* —

(*A*) ***In general.*** If the fair market value of the property contributed is less than the taxpayer's adjusted basis in such property as of the date the property is contributed and the fund elects to treat the fair market value of the property as its adjusted basis in the property, the taxpayer may deduct an amount equal to the adjusted basis of the contributed property.

(B) ***Manner of making election.*** The election described in paragraph (b)(2)(ii)(A) of this section is made for property contributed in a special transfer by attaching a description of the property and a statement that the fund is making an election under § 1.468A-8(b)(2)(ii) with respect to the property to the return of the fund for the taxable year in which the property is contributed to the fund.

(*C*) ***Election allowed for property transferred prior to December 23, 2010.*** The election described in paragraph (b)(2)(ii)(A) of this section may be made and a deduction equal to adjusted basis will be allowed for property contributed in a special transfer prior to December 23, 2010. The election in such a case may be made on an amended return of the fund for the taxable year in which the property is contributed to the fund and the transferor may amend previously filed returns to claim a deduction calculated by reference to the adjusted basis of the property.

(3) ***Denial of deduction for previously deducted amounts.*** If a deduction (other than a deduction under section 468A) has been allowed to the taxpayer (or a predecessor) on account of expected decommissioning costs for a nuclear power plant (a nonconforming deduction) or an amount otherwise includible in income has been excluded from the gross income of the taxpayer (or a predecessor) on account of such expected decommissioning costs (a nonconforming exclusion), the deduction allowed for a special transfer to the nuclear decommissioning fund maintained with respect to the plant is reduced. In the case of a single special transfer of the full eligible amount, the reduction is equal to the aggregate amount of all nonconforming deductions and nonconforming exclusions. In the case of a transfer of less than the full eligible amount, the reduction is a ratable portion of such aggregate amount.

(4) ***Transfers of qualified nuclear decommissioning funds.***

(i) If a special transfer is made to any qualified nuclear decommissioning fund, there is a subsequent transfer of the fund or the assets of the fund (a fund transfer), and § 1.468-6 applies to the fund transfer, any amount of the deduction under paragraph (b) of this section allocable to taxable years ending after the date of the fund transfer will be allowed as a current deduction to the transferor for the taxable year that includes the date of the fund transfer. *See* §

468A-6(c) for additional rules concerning transfers of decommissioning funds, including the transfer of a portion of the taxpayer's interest in a nuclear power plant. If a taxpayer transfers only part of the fund or the fund's assets, the rules in this paragraph (b)(4) apply only to the corresponding portion of the deduction under paragraph (b) of this section.

(ii) If a deduction is allowed to the transferor under paragraph (b)(4)(i) of this section and the transferee is related to the transferor, the Internal Revenue Service (IRS) will not approve the transferee's schedule of ruling amounts for taxable years beginning after the date of the transfer unless the ruling amounts are deferred in a manner that results in recapture of the acceleration amount. For this purpose—

(A) The acceleration amount is the difference between the deduction allowed under this paragraph (b)(4) and the present value as of the beginning of the acceleration period of the deductions that, but for the transfer, would have been allowed under this paragraph (b) for taxable years during the acceleration period;

(B) The acceleration amount is recaptured if the aggregate present value of the ruling amounts at the beginning of the acceleration period is equal to the amount by which the aggregate present value of the ruling amounts that would have been approved but for this paragraph (b)(4)(ii) exceeds the acceleration amount;

(C) The acceleration period is the period from the first day of the transferor's first taxable year beginning after the date of the transfer until the end of the plant's remaining useful life;

(D) Present values will be determined using the assumptions that are used in determining the transferee's first schedule of ruling amounts; and

(E) A transferor and a transferee are related if their relationship is specified in section 267(b) or section 707(b)(1) or they are treated as a single taxpayer under section 41(f)(1)(A) or (B).

(5) *Special rules* —

(i) ***Gain or loss not recognized on transfers to fund.*** No gain or loss will be recognized on any special transfer.

(ii) ***Taxpayer basis in fund.*** Notwithstanding any other provision of the Internal Revenue Code (Code) and regulations, the taxpayer's basis in the fund is not increased by reason of the special transfer.

(iii) *Fund basis in transferred property* —

(*A*) ***In general.*** Except as provided in paragraph (b)(5)(iii)(B) of this section, the fund's basis in any property transferred in a special transfer is the same as the transferor's basis in the property immediately before the transfer.

(*B*) ***Basis in case of election.*** If a fund makes the election described in paragraph (b)(2)(ii) of this section, the fund's basis in the property transferred is the fair market value of the property on the date of transfer.

(c) *Schedule of deductions required* —

(1) ***In general.*** A taxpayer may not make a special transfer to a qualified nuclear decommissioning fund unless the taxpayer requests from the IRS a schedule of deduction amounts in connection with such transfer. A schedule of deduction amounts for a nuclear decommissioning fund (schedule of deduction amounts) is a ruling (within the meaning of § 601.201(a)(2) of this chapter) specifying the annual deductions (deduction amounts) that, over the taxable years in the remaining useful life of the nuclear power plant, will result in the deduction of the entire amount of the special transfer. Such a request may be combined with a request for a schedule of ruling amounts under § 1.468A-3(a). In the case of a combined request, the schedule of deduction amounts requested under this paragraph (c)(1) must be stated separately from the schedule of ruling amounts requested under § 1.468A-3(a) and approval of the schedule of deduction amounts under this section will constitute a separate ruling. A request for a schedule of deduction amounts must comply with all provisions of paragraph (d) of this section.

(2) ***Transfers in multiple taxable years.*** A taxpayer making a special transfer in more than one taxable year pursuant to paragraph (a)(3) of this section must request a separate schedule of deduction amounts in connection with each special transfer. More than one schedule of deduction amounts can be requested in a single ruling request to the Secretary and the Secretary will provide, in a single ruling, separate schedules of deduction amounts for each of a series of special transfers provided that each request for a separate schedule of deduction amounts complies with all requirements of this paragraph.

(3) ***Transfer of partial interest in fund.*** If a taxpayer transfers part of a fund or a fund's assets and is allowed a deduction under paragraph (b)(3) of this section, the taxpayer must request a new schedule of deduction amounts in connection with the transfer.

(4) ***Special transfer permitted before receipt of schedule.*** If an electing taxpayer has filed a timely request for a schedule of deduction amounts in connection with a special transfer for a taxable year and does not receive the schedule of deduction amounts before the deemed payment deadline for such taxable year, the taxpayer may make a special transfer to the nuclear decommissioning fund on the basis of the special transfer amount proposed in the taxpayer's request. If the schedule of deduction amounts provided by the Secretary is based on a special transfer amount that differs from the special transfer amount proposed in the taxpayer's request, rules similar to the rules of § 1.468A-3(g)(2) and (3) shall apply.

(d) ***Manner of requesting schedule of deduction amounts*** —

(1) ***In general.***

(i) In order to receive a deduction amount for any taxable year, a taxpayer must file a request for a schedule of deduction amounts that complies with the requirements of this paragraph (d), the applicable procedural rules set forth in § 601.201(e) of this chapter (Statement of Procedural Rules) and the requirements of any applicable revenue procedure that is in effect on the date the request is filed.

(ii) A separate request for a schedule of deduction amounts is required for each nuclear decommissioning fund established by a taxpayer (*see* § 1.468A-5(a) for rules relating to the number of nuclear decommissioning funds that a taxpayer can establish).

(iii) Except as provided by § 1.468A-5(a)(1)(iv) (relating to certain unincorporated organizations that may be taxable as corporations) and § 1.468A-3 (relating to a request for a schedule of ruling amounts), a request for a schedule of deduction amounts must not contain a request for a ruling on any other issue, whether the issue involves section 468A or another section of the Code.

(iv) In the case of an affiliated group of corporations that join in the filing of a consolidated return, the common parent of the group may request a schedule of deduction amounts for each member of the group that possesses a qualifying interest in the same nuclear power plant by filing a single submission with the IRS.

(v) Except as provided in paragraph (d)(1)(vi) of this section, the IRS will not provide or revise a deduction amount applicable to a taxable year in response to a request for a schedule of deduction amounts that is filed after the deemed payment deadline date (as defined in paragraph (a)(4) of this section) for such taxable year.

(vi) For special transfers relating to taxable years beginning after December 31, 2005, and before January 1, 2010, the IRS will not provide a deduction amount in response to a request for a schedule of deduction amounts that is filed after February 22, 2011.

(vii) Except as provided in paragraph (d)(1)(viii) of this section, a request for a schedule of deduction amounts shall be considered filed only if such request complies substantially with the requirements of this paragraph (d). In determining the date when a request is filed, the principles of sections 7502 and 7503 shall apply.

(viii) If a request does not comply substantially with the requirements of this paragraph (d), the IRS will notify the taxpayer of that fact. If the information or materials necessary to comply substantially with the requirements of this paragraph (d) are provided to the IRS within 30 days after this notification, the request will be considered filed on the date of the original submission. In addition, the request will be considered filed on the date of the original submission in a case in which the information and materials are provided more than 30 days after the notification if the IRS determines that the electing taxpayer made a good faith effort to provide the applicable information or materials within 30 days after notification and also determines that treating the request as filed on the date of the original submission is consistent with the purposes of section 468A. In any other case in which the information or materials necessary to comply substantially with the requirements of this paragraph (d) are not provided within 30 days after the notification, the request will be considered filed on the date that all information or materials necessary to comply with the requirements of this paragraph (d) are provided.

(2) ***Information required.*** A request for a schedule of deduction amounts must contain the following information:

(i) The taxpayer's name, address and taxpayer identification number.

(ii) Whether the request is for an initial schedule of deduction amounts or a schedule of deduction amounts for a subsequent special transfer.

(iii) The name and location of the nuclear power plant with respect to which a schedule of deduction amounts is requested.

(iv) A description of the taxpayer's qualifying interest in the nuclear power plant and the percentage of such nuclear power plant that the qualifying interest of the taxpayer represents.

(v) The present value of the estimated future decommissioning costs (as defined in § 1.468A-1(b)(6)) with respect to the taxpayer's qualifying interest in the nuclear power plant as of the first day of the taxable year of the taxpayer in which a transfer is made under this section.

(vi) A description of the assumptions, estimates and other factors that were used by the taxpayer to determine the amount of decommissioning costs, including each of the following if applicable:

(A) A description of the proposed method of decommissioning the nuclear power plant (for example, prompt removal/dismantlement, safe storage entombment with delayed dismantlement, or safe storage mothballing with delayed dismantlement).

(B) The estimated year in which substantial decommissioning costs will first be incurred.

(C) The estimated year in which the decommissioning of the nuclear power plant will be substantially complete (*see* § 1.468A-5(d)(3) for a definition of substantial completion of decommissioning).

(D) The total estimated cost of decommissioning expressed in current dollars (that is, based on price levels in effect at the time of the current determination).

(E) The total estimated cost of decommissioning expressed in future dollars (that is, based on anticipated price levels when expenses are expected to be paid).

(F) For each taxable year in the period that begins with the year specified in paragraph (d)(2)(vi)(B) of this section (the estimated year in which substantial decommissioning costs will first be incurred) and ends with the year specified in paragraph (d)(2)(vi)(C) of this section (the estimated year in which the decommissioning of the nuclear power plant will be substantially complete), the estimated cost of decommissioning expressed in future dollars.

(G) A description of the methodology used in converting the estimated cost of decommissioning expressed in current dollars to the estimated cost of decommissioning expressed in future dollars.

(H) The assumed after-tax rate of return to be earned by the amounts collected for decommissioning.

(I) A copy of each engineering or cost study that was relied on or used by the taxpayer in determining the amount of decommissioning costs.

(vii) The taxpayer's pre-2005 nonqualifying percentage (as defined in paragraph (a)(2) of this section).

(viii) The estimated useful life of the nuclear power plant (as such term is defined in paragraph (b)(1)(ii) or (iii) of this section).

(ix) If the request is for a subsequent schedule of deduction amounts, the amount of the previous special transfer and the present value of the estimated future decommissioning costs (as defined in § 1.468A-1(b)(6)) with respect to the taxpayer's qualifying interest in the nuclear power plant as of the first day of the taxable year of the taxpayer in which the previous special transfer was made.

(x) If the request is for a subsequent schedule of deduction amounts, a copy of all schedules of deduction amounts that relate to the nuclear power plant to which the request relates and that were previously issued to the taxpayer making the request.

(xi) If the request for a schedule of deduction amounts contains a request, pursuant to § 1.468A-5(a)(1)(iv), that the IRS rule whether an unincorporated organization through which the assets of the fund are invested is an association taxable as a corporation for Federal tax purposes, a copy of the legal documents establishing or otherwise governing the organization.

(xii) Any other information required by the IRS that may be necessary or useful in determining the schedule of deduction amounts.

(3) ***Statement required.*** A taxpayer requesting a schedule of deduction amounts under this paragraph (d) must submit a statement that any nonconforming deductions and nonconforming exclusions have reduced the deduction allowed for the special transfer in accordance with paragraph (b)(2) of this section.

(4) ***Administrative procedures.*** The IRS may prescribe administrative procedures that supplement the provisions of paragraphs (d)(1) and (2) of this section. In addition, the IRS may, in its discretion, waive the requirements of paragraphs (d)(1) and (2) of this section under appropriate circumstances.

[T.D. 9512, 75 FR 80701, Dec. 23, 2010]

§ 1.468A-9 Applicability dates.

(a) ***In general.*** Except as provided in paragraph (b) of this section, §§ 1.468A-1 through 1.468A-8 are effective on December 23, 2010, and apply with respect to taxable years ending after such date.

(b) ***Special rules*** —

(1) ***Taxable years ending before December 23, 2010.*** Special rules that are provided for taxable years ending on or before December 23, 2010, such as the special rule for certain special transfers contained in § 1.468A-8(a)(4)(ii), apply with respect to such taxable years. In addition, except as provided in paragraph (2) of this section, a taxpayer may apply the provisions of §§ 1.468A-1 through 1.468A-8 with respect to a taxable year ending on or before December 23, 2010, if all such provisions are consistently applied.

(2) ***Applicability of § 1.468A-1(b)(6) and § 1.468A-5(b)(2)(i), (b)(2)(v), and (d)(3)(i).*** The rules in §§ 1.468A-1(b)(6) and 1.468A-5(b)(2)(i), (b)(2)(v), and (d)(3)(i) apply to taxable years ending on or after September 4, 2020. Taxpayers may also choose to apply the rules in § 1.468A-1(b)(6) and § 1.468A-5(b)(2)(i), (b)(2)(v), and (d)(3)(i) to prior taxable years for which a taxpayer's deemed payment deadline (as defined in § 1.468A-2(c)(1)) has not passed prior to September 4, 2020.

[T.D. 9906, 85 FR 55190, Sept. 4, 2020]

§ 1.468B Designated settlement funds.

A designated settlement fund, as defined in section 468B(d)(2), is taxed in the manner described in § 1.468B-2. The rules for transferors to a qualified settlement fund described in § 1.468B-3 apply to transferors to a designated settlement fund. Similarly, the rules for claimants of a qualified settlement fund described in § 1.468B-4 apply to claimants of a designated settlement fund. A fund, account, or trust that does not qualify as a designated settlement fund is, however, a qualified settlement fund if it meets the requirements of a qualified settlement fund described in § 1.468B-1.

[T.D. 8459, 57 FR 60988, Dec. 23, 1992]

§ 1.468B-0 Table of contents.

This section lists the table of contents for §§ 1.468B-1 through 1.468B-9.

§ 1.468B-1 Qualified settlement funds.

(a) In general.

(b) Coordination with other entity classifications.

(c) Requirements.

(d) Definitions.

(1) Transferor.

(2) Related person.

(e) Governmental order or approval requirement.

(1) In general.

(2) Arbitration panels.

(f) Resolve or satisfy requirement.

(1) Liabilities to provide property or services.

(2) CERCLA liabilities.

(g) Excluded liabilities.

(h) Segregation requirement.

(1) In general.

(2) Classification of fund established to resolve or satisfy allowable and non-allowable claims.

(i) [Reserved]

(j) Classification of fund prior to satisfaction of requirements in paragraph (c) of this section.

(1) In general.

(2) Relation-back rule.

(i) In general.

(ii) Relation-back election.

(k) Election to treat a qualified settlement fund as a subpart E trust.

(1) In general.

(2) Manner of making grantor trust election.

(i) In general.

(ii) Requirements for election statement.

(3) Effect of making the election.

(l) Examples.

§ 1.468B-2 Taxation of qualified settlement funds and related administrative requirements.

(a) In general.

(b) Modified gross income.

(c) Partnership interests held by a qualified settlement fund on February 14, 1992.

(1) In general.

(2) Limitation on changes in partnership agreements and capital contributions.

(d) Distributions to transferors and claimants.

(e) Basis of property transferred to a qualified settlement fund.

(f) Distribution of property.

(g) Other taxes.

(h) Denial of credits against tax.

(i) [Reserved]

(j) Taxable year and accounting method.

(k) Treatment as corporation for purposes of subtitle F.

(l) Information reporting withholding requirements.

(1) Payments to a qualified settlement fund.

(2) Payments and distributions by a qualified settlement fund.

(i) In general.

(ii) Special rules.

(m) Request for prompt assessment.

(n) Examples.

§ 1.468B-3 Rules applicable to the transferor.

(a) Transfer of property.

(1) In general.

(2) Anti-abuse rule.

(b) Qualified appraisal requirement for transfers of certain property.

(1) In general.

(2) Provision of copies.

(3) Qualified appraisal.

(4) Information included in a qualified appraisal.

(5) Effect of signature of the qualified appraiser.

(c) Economic performance.

(1) In general.

(2) Right to a refund or reversion.

(i) In general.

(ii) Right extinguished.

(3) Obligations of a transferor.

(d) Payment of insurance amounts.

(e) Statement to the qualified settlement fund and the Internal Revenue Service.

(1) In general.

(2) Required statement.

(i) In general.

(ii) Combined statements.

(f) Distributions to transferors.

(1) In general.

(2) Deemed distributions.

(i) Other liabilities.

(ii) Constructive receipt.

(3) Tax benefit rule.

(g) Example.

§ 1.468B-4 Taxability of distributions to claimants.

§ 1.468B-5 Effective dates and transition rules applicable to qualified settlement funds.

(a) In general.

(b) Taxation of certain pre-1996 fund income.

(1) Reasonable method.

(i) In general.

(ii) Qualified settlement funds established after February 14, 1992, but before January 1, 1993.

(iii) Use of cash method of accounting.

(iv) Unreasonable position.

(v) Waiver of penalties.

(2) Election to apply qualified settlement fund rules.

(i) In general.

(ii) Election statement.

(iii) Due date of returns and amended returns.

(iv) Computation of interest and waiver of penalties.

(c) Grantor trust elections under § 1.468B-1(k).

(1) In general.

(2) Transition rules.

(3) Qualified settlement funds established by the U.S. government on or before February 3, 2006.

§ 1.468B-6 Escrow accounts, trusts, and other funds used during deferred exchanges of like-kind property under section 1031(a)(3).

(a) Scope.

(b) Definitions.

(1) In general.

(2) Exchange funds.

(3) Exchange facilitator.

(4) Transactional expenses.

(i) In general.

(ii) Special rule for certain fees for exchange facilitator services.

(c) Taxation of exchange funds.

(1) Exchange funds generally treated as loaned to an exchange facilitator.

(2) Exchange funds not treated as loaned to an exchange facilitator.

(i) Scope.

(ii) Earnings attributable to the taxpayer's exchange funds.

(A) Separately identified account.

(B) Allocation of earnings in commingled accounts.

(C) Transactional expenses.

(iii) Treatment of the taxpayer.

(d) Information reporting requirements.

(e) Examples.

(f) Effective/applicability dates.

(1) In general.

(2) Transition rule.

§ 1.468B-7 Pre-closing escrows.

(a) Scope.

(b) Definitions.

(c) Taxation of pre-closing escrows.

(d) Reporting obligations of the administrator.

(e) Examples.

(f) Effective dates.

(1) In general.

(2) Transition rule.

§ 1.468B-8 Contingent-at-closing escrows. [Reserved]

§ 1.468B-9 Disputed ownership funds.

(a) Scope.

(b) Definitions.

(c) Taxation of a disputed ownership fund.

(1) In general.

(2) Exceptions.

(3) Property received by the disputed ownership fund.

(i) Generally excluded from income.

(ii) Basis and holding period.

(4) Property distributed by the disputed ownership fund.

(i) Computing gain or loss.

(ii) Denial of deduction.

(5) Taxable year and accounting method.

(6) Unused carryovers.

(d) Rules applicable to transferors that are not transferor-claimants.

(1) Transfer of property.

(2) Economic performance.

(i) In general.

(ii) Obligations of the transferor.

(3) Distributions to transferors.

(i) In general.

(ii) Exception.

(iii) Deemed distributions.

(e) Rules applicable to transferor-claimants.

(1) Transfer of property.

(2) Economic performance.

(i) In general.

(ii) Obligations of the transferor-claimant.

(3) Distributions to transferor-claimants.

(i) In general.

(ii) Deemed distributions.

(f) Distributions to claimants other than transferor-claimants.

(g) Statement to the disputed ownership fund and the Internal Revenue Service with respect to transfers of property other than cash.

(1) In general.

(2) Combined statements.

(3) Information required on the statement.

(h) Examples.

(i) [Reserved]

(j) Effective dates.

(1) In general.

(2) Transition rule.

[T.D. 8459, 57 FR 60988, Dec. 23, 1992, as amended by T.D. 8495, 58 FR 58787, Nov. 4, 1993; T.D. 9249, 71 FR 6200, Feb. 7, 2006; T.D. 9413, 73 FR 39619, July 10, 2008]

§ 1.468B-1 Qualified settlement funds.

(a) ***In general.*** A qualified settlement fund is a fund, account, or trust that satisfies the requirements of paragraph (c) of this section.

(b) ***Coordination with other entity classifications.*** If a fund, account, or trust that is a qualified settlement fund could be classified as a trust within the meaning of § 301.7701-4 of this chapter, it is classified as a qualified settlement fund for all purposes of the Internal Revenue Code (Code). If a fund, account, or trust, organized as a trust under applicable state law, is a qualified settlement fund, and could be classified as either an association (within the meaning of § 301.7701-2 of this chapter) or a partnership (within the

meaning of § 301.7701-3 of this chapter), it is classified as a qualified settlement fund for all purposes of the Code. If a fund, account, or trust, established for contested liabilities pursuant to § 1.461-2(c)(1) is a qualified settlement fund, it is classified as a qualified settlement fund for all purposes of the Code.

(c) ***Requirements.*** A fund, account, or trust satisfies the requirements of this paragraph (c) if—

(1) It is established pursuant to an order of, or is approved by, the United States, any state (including the District of Columbia), territory, possession, or political subdivision thereof, or any agency or instrumentality (including a court of law) of any of the foregoing and is subject to the continuing jurisdiction of that governmental authority;

(2) It is established to resolve or satisfy one or more contested or uncontested claims that have resulted or may result from an event (or related series of events) that has occurred and that has given rise to at least one claim asserting liability—

(i) Under the Comprehensive Environmental Response, Compensation and Liability Act of 1980 (hereinafter referred to as CERCLA), as amended, 42 U.S.C. 9601 *et seq.*; or

(ii) Arising out of a tort, breach of contract, or violation of law; or

(iii) Designated by the Commissioner in a revenue ruling or revenue procedure; and

(3) The fund, account, or trust is a trust under applicable state law, or its assets are otherwise segregated from other assets of the transferor (and related persons).

(d) ***Definitions.*** For purposes of this section—

(1) ***Transferor.*** A “transferor” is a person that transfers (or on behalf of whom an insurer or other person transfers) money or property to a qualified settlement fund to resolve or satisfy claims described in paragraph (c)(2) of this section against that person.

(2) ***Related person.*** A “related person” is any person who is related to the transferor within the meaning of sections 267(b) or 707(b)(1).

(e) ***Governmental order or approval requirement*** —

(1) ***In general.*** A fund, account, or trust is “ordered by” or “approved by” a governmental authority described in paragraph (c)(1) of this section when the authority issues its initial or preliminary order to establish, or grants its initial or preliminary approval of, the fund, account, or trust, even if that order or approval may be subject to review or revision. Except as otherwise provided in paragraph (j)(2) of this section, the governmental authority's order or approval has no retroactive effect and does not permit a fund, account, or trust to be a qualified settlement fund prior to the date the order is issued or the approval is granted.

(2) ***Arbitration panels.*** An arbitration award that orders the establishment of, or approves, a fund, account, or trust is an order or approval of a governmental authority described in paragraph (c)(1) of this section if—

(i) The arbitration award is judicially enforceable;

(ii) The arbitration award is issued pursuant to a bona fide arbitration proceeding in accordance with rules that are approved by a governmental authority described in paragraph (c)(1) of this section (such as self-regulatory organization-administered arbitration proceedings in the securities industry); and

(iii) The fund, account, or trust is subject to the continuing jurisdiction of the arbitration panel, the court of law that has jurisdiction to enforce the arbitration award, or the governmental authority that approved the rules of the arbitration proceeding.

(f) ***Resolve or satisfy requirement*** —

(1) ***Liabilities to provide services or property.*** Except as otherwise provided in paragraph (f)(2) of this section, a liability is not described in paragraph (c)(2) of this section if it is a liability for the provision of services or property, unless the transferor's obligation to provide services or property is extinguished by a transfer or transfers to the fund, account, or trust.

(2) ***CERCLA liabilities.*** A transferor's liability under CERCLA to provide services or property is described in paragraph (c)(2) of this section if following its transfer to a fund, account, or trust the transferor's only remaining liability to the Environmental Protection Agency (if any) is a remote, future obligation to provide services or property.

(g) ***Excluded liabilities.*** A liability is not described in paragraph (c)(2) of this section if it—

(1) Arises under a workers compensation act or a self-insured health plan;

(2) Is an obligation to refund the purchase price of, or to repair or replace, products regularly sold in the ordinary course of the transferor's trade or business;

(3) Is an obligation of the transferor to make payments to its general trade creditors or debtholders that relates to a title 11 or similar case (as defined in section 368(a)(3)(A)), or a workout; or

(4) Is designated by the Commissioner in a revenue ruling or a revenue procedure (see § 601.601(d)(2)(ii)(*b*) of this chapter).

(h) ***Segregation requirement*** —

(1) ***In general.*** If it is not a trust under applicable state law, a fund, account, or trust satisfies the requirements of paragraph (c)(3) of this section if its assets are physically segregated from other assets of the transferor (and related persons). For example, cash held by a transferor in a separate bank account satisfies the segregation requirement of paragraph (c)(3) of this section.

(2) ***Classification of fund established to resolve or satisfy allowable and non-allowable claims.*** If a fund, account, or trust is established to resolve or satisfy claims described in paragraph (c)(2) of this section as well as other types of claims (*i.e.,* non-allowable claims) arising from the same event or related series of events, the fund is a qualified settlement fund. However, under § 1.468B-3(c), economic performance does not occur with respect to transfers to the qualified settlement fund for non-allowable claims.

(i) [Reserved]

(j) ***Classification of fund prior to satisfaction of requirements in paragraph (c) of this section*** —

(1) ***In general.*** If a fund, account, or trust is established to resolve or satisfy claims described in paragraph (c)(2) of this section, the assets of the fund, account, or trust are treated as owned by the transferor of those assets until the fund, account, or trust also meets the requirements of paragraphs (c) (1) and (3) of this section. On the date the fund, account, or trust satisfies all the requirements of paragraph (c) of this section, the transferor is treated as transferring the assets to a qualified settlement fund.

(2) ***Relation-back rule*** —

(i) ***In general.*** If a fund, account, or trust meets the requirements of paragraphs (c)(2) and (c)(3) of this section prior to the time it meets the requirements of paragraph (c)(1) of this section, the transferor and administrator (as defined in § 1.468B-2(k)(3)) may jointly elect (a relation-back election) to treat the fund, account, or trust as coming into existence as a qualified settlement fund on the later of the date the fund, account, or trust meets the requirements of paragraphs (c)(2) and (c)(3) of this section or January 1 of the calendar year in which all the requirements of paragraph (c) of this section are met. If a relation-back election is made, the assets held by the fund, account, or trust on the date the qualified settlement fund is treated as coming into existence are treated as transferred to the qualified settlement fund on that date.

(ii) ***Relation-back election.*** A relation-back election is made by attaching a copy of the election statement, signed by each transferor and the administrator, to (and as part of) the timely filed income tax return (including extensions) of the qualified settlement fund for the taxable year in which the fund is treated as coming into existence. A copy of the election statement must also be attached to (and as part of) the timely filed income tax return (including extensions), or an amended return that is consistent with the requirements of §§ 1.468B-1 through 1.468B-4, of each transferor for the taxable year of the transferor that includes the date on which the qualified settlement fund is treated as coming into existence. The election statement must contain—

(A) A legend, "§ 1.468B-1 Relation-Back Election", at the top of the first page;

(B) Each transferor's name, address, and taxpayer identification number;

(C) The qualified settlement fund's name, address, and employer identification number;

(D) The date as of which the qualified settlement fund is treated as coming into existence; and

(E) A schedule describing each asset treated as transferred to the qualified settlement fund on the date the fund is treated as coming into existence. The schedule of assets does not have to identify the amount of cash or the property treated as transferred by a particular transferor. If the schedule does not identify the transferor of each asset, however, each transferor must include with the copy of the election statement that is attached to its income tax return (or amended return) a schedule describing each asset the transferor is treated as transferring to the qualified settlement fund.

(k) ***Election to treat a qualified settlement fund as a subpart E trust*** —

(1) ***In general.*** If a qualified settlement fund has only one transferor (as defined in paragraph (d)(1) of this section), the transferor may make an election (grantor trust election) to treat the qualified settlement fund as a trust all of which is owned by the transferor under section 671 and the regulations thereunder. A grantor trust election may be made whether or not the qualified settlement fund would be classified, in the absence of paragraph (b) of this section, as a trust all of which is treated as owned by the transferor under section 671 and the regulations thereunder. A grantor trust election may be revoked only for compelling circumstances upon consent of the Commissioner by private letter ruling.

(2) ***Manner of making grantor trust election*** —

(i) ***In general.*** To make a grantor trust election, a transferor must attach an election statement satisfying the requirements of paragraph (k)(2)(ii) of this section to a timely filed (including extensions) Form 1041, "U.S. Income Tax Return for Estates and Trusts," that the administrator

files on behalf of the qualified settlement fund for the taxable year in which the qualified settlement fund is established. However, if a Form 1041 is not otherwise required to be filed (for example, because the provisions of § 1.671-4(b) apply), then the transferor makes a grantor trust election by attaching an election statement satisfying the requirements of paragraph (k)(2)(ii) of this section to a timely filed (including extensions) income tax return of the transferor for the taxable year in which the qualified settlement fund is established. See § 1.468B-5(c)(2) for transition rules.

(ii) ***Requirements for election statement.*** The election statement must include a statement by the transferor that the transferor will treat the qualified settlement fund as a grantor trust. The election statement must include the transferor's name, address, taxpayer identification number, and the legend, "§ 1.468B-1(k) Election." The election statement and the statement described in § 1.671-4(a) may be combined into a single statement.

(3) ***Effect of making the election.*** If a grantor trust election is made—

(i) Paragraph (b) of this section, and §§ 1.468B-2, 1.468B-3, and 1.468B-5(a) and (b) do not apply to the qualified settlement fund. However, this section (except for paragraph (b) of this section) and § 1.468B-4 apply to the qualified settlement fund;

(ii) The qualified settlement fund is treated, for Federal income tax purposes, as a trust all of which is treated as owned by the transferor under section 671 and the regulations thereunder;

(iii) The transferor must take into account in computing the transferor's income tax liability all items of income, deduction, and credit (including capital gains and losses) of the qualified settlement fund in accordance with § 1.671-3(a)(1); and

(iv) The reporting obligations imposed by § 1.671-4 on the trustee of a trust apply to the administrator.

(l) ***Examples.*** The following examples illustrate the rules of this section:

Example 1. In a class action brought in a United States federal district court, the court holds that the defendant, Corporation X, violated certain securities laws and must pay damages in the amount of $150 million. Pursuant to an order of the court, Corporation X transfers $50 million in cash and transfers property with a fair market value of $75 million to a state law trust. The trust will liquidate the property and distribute the cash proceeds to the plaintiffs in the class action. The trust is a qualified settlement fund because it was established pursuant to the order of a federal district court to resolve or satisfy claims against Corporation X for securities law violations that have occurred.

> *Example 2.* (i) Assume the same facts as in *Example 1,* except that Corporation X and the class of plaintiffs reach an out-of-court settlement that requires Corporation X to establish and fund a state law trust before the settlement agreement is submitted to the court for approval.
> (ii) The trust is not a qualified settlement fund because it neither is established pursuant to an order of, nor has it been approved by, a governmental authority described in paragraph (c)(1) of this section.

Example 3. On June 1, 1994, Corporation Y establishes a fund to resolve or satisfy claims against it arising from the violation of certain securities laws. On that date, Corporation Y transfers $10 million to a segregated account. On December 1, 1994, a federal district court approves the fund. Assuming Corporation Y and the administrator of the qualified settlement fund do not make a relation-back election, Corporation Y is treated as the owner of the $10 million, and is taxable on any income earned on that money, from June 1 through November 30, 1994. The fund is a qualified settlement fund beginning on December 1, 1994.

Example 4. (i) On September 1, 1993, Corporation X, which has a taxable year ending on October 31, enters into a settlement agreement with a plaintiff class for asserted tort liabilities. Under the settlement agreement, Corporation X makes two $50 million payments into a segregated fund, one on September 1, 1993, and one on October 1, 1993, to resolve or satisfy the tort liabilities. A federal district court approves the settlement agreement on November 1, 1993.
(ii) The administrator of the fund and Corporation X elect to treat the fund as a qualified settlement fund prior to governmental approval under the relation-back rule of paragraph (j)(2) of this section. The administrator must attach the relation-back election statement to the fund's income tax return for calendar year 1993, and Corporation X must attach the election to its original or amended income tax return for its taxable year ending October 31, 1993.

(iii) Pursuant to the relation-back election, the fund begins its existence as a qualified settlement fund on September 1, 1993, and Corporation X is treated as transferring $50 million to the qualified settlement fund on September 1, 1993, and $50 million on October 1, 1993.

(iv) With respect to these transfers, Corporation X must provide the statement described in § 1.468B-3(e) to the administrator of the qualified settlement fund by February 15, 1994, and must attach a copy of this statement to its original or amended income tax return for its taxable year ending October 31, 1993.

Example 5. Assume the same facts as in *Example 4,* except that the court approves the settlement on May 1, 1994. The administrator must attach the relation-back election statement to the fund's income tax return for calendar year 1994, and Corporation X must attach the election statement to its original or amended income tax return for its taxable year ending October 31, 1994. Pursuant to this election, the fund begins its existence as a qualified settlement fund on January 1, 1994. In addition, Corporation X is treated as transferring to the qualified settlement fund all amounts held in the fund on January 1, 1994. With respect to the transfer, Corporation X must provide the statement described in § 1.468B-3(e) to the administrator of the qualified settlement fund by February 15, 1995, and must attach a copy of this statement to its income tax return for its taxable year ending October 31, 1994.

Example 6. Corporation Z establishes a fund that meets all the requirements of section 468B(d)(2) for a designated settlement fund, except that Corporation Z does not make the election under section 468B(d)(2)(F). Although the fund does not qualify as a designated settlement fund, it is a qualified settlement fund because the fund meets the requirements of paragraph (c) of this section.

Example 7. Corporation X owns and operates a landfill in State A. State A requires Corporation X to transfer money to a trust annually based on the total tonnage of material placed in the landfill during the year. Under the laws of State A, Corporation X will be required to perform (either itself or through contractors) specified closure activities when the landfill is full, and the trust assets will be used to reimburse Corporation X for those closure costs. The trust is not a qualified settlement fund because it is established to secure the liability of Corporation X to perform the closure activities.

[T.D. 8459, 57 FR 60989, Dec. 23, 1992; 58 FR 7865, Feb. 10, 1993, as amended by T.D. 9249, 71 FR 6201, Feb. 7, 2006]

§ 1.468B-2 Taxation of qualified settlement funds and related administrative requirements.

(a) ***In general.*** A qualified settlement fund is a United States person and is subject to tax on its modified gross income for any taxable year at a rate equal to the maximum rate in effect for that taxable year under section 1(e).

(b) ***Modified gross income.*** The "modified gross income" of a qualified settlement fund is its gross income, as defined in section 61, computed with the following modifications—

(1) In general, amounts transferred to the qualified settlement fund by, or on behalf of, a transferor to resolve or satisfy a liability for which the fund is established are excluded from gross income. However, dividends on stock of a transferor (or a related person), interest on debt of a transferor (or a related person), and payments in compensation for late or delayed transfers, are not excluded from gross income.

(2) A deduction is allowed for administrative costs and other incidental expenses incurred in connection with the operation of the qualified settlement fund that would be deductible under chapter 1 of the Internal Revenue Code in determining the taxable income of a corporation. Administrative costs and other incidental expenses include state and local taxes, legal, accounting, and actuarial fees relating to the operation of the qualified settlement fund, and expenses arising from the notification of claimants and the processing of their claims. Administrative costs and other incidental expenses do not include legal fees incurred by, or on behalf of, claimants.

(3) A deduction is allowed for losses sustained by the qualified settlement fund in connection with the sale, exchange, or worthlessness of property held by the fund to the extent the losses would be deductible in determining the taxable income of a corporation under section 165 (f) or (g), and sections 1211(a) and 1212(a).

(4) A deduction is allowed for the amount of a net operating loss of the qualified settlement fund to the extent the loss would be deductible in determining the taxable income of a corporation under section 172(a). For purposes of this paragraph (b)(4), the net operating loss of a qualified settlement fund for a taxable year is the amount by which the deductions allowed under paragraphs (b)(2) and (b)(3) of this section exceed the gross income of the fund computed with the modification described in paragraph (b)(1) of this section.

(c) ***Partnership interests held by a qualified settlement fund on February 14, 1992*** —

(1) ***In general.*** For taxable years ending prior to January 1, 2003, a qualified settlement fund that holds a partnership interest it acquired prior to February 15, 1992, is allowed a deduction for its distributive share of that partnership's items of loss, deduction, or credit described in section 702(a) that would be deductible in determining the taxable income (or in the case of a credit, the income tax liability) of a corporation to the extent of the fund's distributive share of that partnership's items of income and gain described in section 702(a) for the same taxable year. For purposes of this paragraph (c)(1), a distributive share of a partnership credit is treated as a deduction in an amount equal to the amount of the credit divided by the rate described in paragraph (a) of this section.

(2) ***Limitation on changes in partnership agreements and capital contributions.*** For purposes of paragraph (c)(1) of this section, changes in a qualified settlement fund's distributive share of items of income, gain, loss, deduction, or credit are disregarded if—

(i) They result from a change in the terms of the partnership agreement on or after December 18, 1992, or a capital contribution to the partnership on or after December 18, 1992, unless the partnership agreement as in effect prior to December 18, 1992, requires the contribution; and

(ii) A principal purpose of the change in the terms of the partnership agreement or the capital contribution is to circumvent the limitation described in paragraph (c)(1) of this section.

(d) ***Distributions to transferors and claimants.*** Amounts that are distributed by a qualified settlement fund to, or on behalf of, a transferor or a claimant are not deductible by the fund.

(e) ***Basis of property transferred to a qualified settlement fund.*** A qualified settlement fund's initial basis in property it receives from a transferor (or from an insurer or other person on behalf of a transferor) is the fair market value of that property on the date of transfer to the fund.

(f) ***Distribution of property.*** A qualified settlement fund must treat a distribution of property as a sale or exchange of that property for purposes of section 1001(a). In computing gain or loss, the amount realized by the qualified settlement fund is the fair market value of the property on the date of distribution.

(g) ***Other taxes.*** The tax imposed under paragraph (a) of this section is in lieu of any other taxation of the income of a qualified settlement fund under subtitle A of the Internal Revenue Code. Thus, a qualified settlement fund is not subject to the alternative minimum tax of section 55, the accumulated earnings tax of section 531, the personal holding company tax of section 541, or the maximum capital gains rate of section 1(h). A qualified settlement fund is, however, subject to taxes that are not imposed on the income of a taxpayer, such as the tax on transfers of property to foreign entities under section 1491.

(h) ***Denial of credits against tax.*** The tax imposed on the modified gross income of a qualified settlement fund under paragraph (a) of this section may not be reduced or offset by any credits against tax provided by part IV of subchapter A of chapter 1 of the Internal Revenue Code.

(i) [Reserved]

(j) ***Taxable year and accounting method.*** The taxable year of a qualified settlement fund is the calendar year. A qualified settlement fund must use an accrual method of accounting within the meaning of section 446(c).

(k) ***Treatment as corporation for purposes of subtitle F.*** Except as otherwise provided in § 1.468B-5(b), for purposes of subtitle F of the Internal Revenue Code, a qualified settlement fund is treated as a corporation and any tax imposed under paragraph (a) of this section is treated as a tax imposed by section 11. Subtitle F rules that apply to qualified settlement funds include, but are not limited to—

(1) A qualified settlement fund must file an income tax return with respect to the tax imposed under paragraph (a) of this section for each taxable year that the fund is in existence, whether or not the fund has gross income for that taxable year.

(2) A qualified settlement fund is in existence for the period that—

(i) Begins on the first date on which the fund is treated as a qualified settlement fund under § 1.468B-1; and

(ii) Ends on the earlier of the date the fund—

(A) No longer satisfies the requirements of § 1.468B-1; or

(B) No longer has any assets and will not receive any more transfers. (See paragraph (m) of this section for procedures for the prompt assessment of tax.)

(3) The income tax return of the qualified settlement fund must be filed on or before March 15 of the year following the close of the taxable year of the qualified settlement fund unless the fund is granted an extension of time for filing under section 6081. The return must be made by the administrator of the qualified settlement fund. The "administrator" (which may include a trustee if the qualified settlement fund is a trust) of a qualified settlement fund is, in order of priority—

(i) The person designated, or approved, by the governmental authority that ordered or approved the fund for purposes of § 1.468B-1(c)(1);

(ii) The person designated in the escrow agreement, settlement agreement, or other similar agreement governing the fund;

(iii) The escrow agent, custodian, or other person in possession or control of the fund's assets; or

(iv) The transferor or, if there are multiple transferors, all the transferors, unless an agreement signed by all the transferors designates a single transferor as the administrator.

(4) The administrator of a qualified settlement fund must obtain an employer identification number for the fund.

(5) A qualified settlement fund must deposit all payments of tax imposed under paragraph (a) of this section (including any payments of estimated tax) with an authorized government depositary in accordance with § 1.6302-1.

(6) A qualified settlement fund is subject to the addition to tax imposed by section 6655 in the case of an underpayment of estimated tax computed with respect to the tax imposed under paragraph (a) of this section. For purposes of section 6655(g)(2), a qualified settlement fund's taxable income is its modified gross income and a transferor is not considered a predecessor of a qualified settlement fund.

(l) *Information reporting and withholding requirements* —

(1) ***Payments to a qualified settlement fund.*** Payments to a qualified settlement fund are treated as payments to a corporation for purposes of the information reporting requirements of part III of subchapter A of chapter 61 of the Internal Revenue Code.

(2) ***Payments and distributions by a qualified settlement fund*** —

(i) ***In general.*** Payments and distributions by a qualified settlement fund are subject to the information reporting requirements of part III of subchapter A of chapter 61 of the Internal Revenue Code (Code), and the withholding requirements of subchapter A of chapter 3 of subtitle A and subtitle C of the Code.

(ii) ***Special rules.*** The following rules apply with respect to payments and distributions by a qualified settlement fund—

(A) A qualified settlement fund must make a return for, or must withhold tax on, a distribution to a claimant if one or more transferors would have been required to make a return or withhold tax had that transferor made the distribution directly to the claimant;

(B) For purposes of sections 6041(a) and 6041A, if a qualified settlement fund makes a payment or distribution to a transferor, the fund is deemed to make the payment or distribution to the transferor in the course of a trade or business;

(C) For purposes of sections 6041(a) and 6041A, if a qualified settlement fund makes a payment or distribution on behalf of a transferor or a claimant, the fund is deemed to make the payment or distribution to the recipient of that payment or distribution in the course of a trade or business;

(D) With respect to a distribution or payment described in paragraph (1)(2)(ii)(C) of this section and the information reporting requirements of part III of subchapter A of chapter 61 of the Internal Revenue Code, the qualified settlement fund is also deemed to have made the distribution or payment to the transferor or claimant.

(m) ***Request for prompt assessment.*** A qualified settlement fund is eligible to request the prompt assessment of tax under section 6501(d). For purposes of section 6501(d), a qualified settlement fund is treated as dissolving on the date the fund no longer has any assets (other than a reasonable reserve for potential tax liabilities and related professional fees) and will not receive any more transfers.

(n) ***Examples.*** The following examples illustrate the rules of this section:

Example 1. On June 30, 1993, a United States federal district court approves the settlement of a lawsuit under which Corporation X must transfer $10,833,000 to a qualified settlement fund on August 1, 1993. The $10,833,000 includes $10 million of damages incurred by plaintiffs on October 1, 1992, and $833,000 of interest calculated at 10 percent annually from October 1, 1992, to August 1, 1993. The $833,000 of interest is not a payment to the qualified settlement fund in compensation for a late or delayed transfer to the fund within the meaning of paragraph (b)(1) of this section because the payment of $10,833,000 to the fund is not due until August 1, 1993.

Example 2. Assume the same facts as in *Example 1* except that the settlement agreement also provides for interest to accrue at a rate of 12 percent annually on any amount not transferred to the qualified settlement fund on August 1, 1993, and the only transfer Corporation X makes to the fund is $11,374,650 on January 1, 1994. The additional payment of $541,650 ($11,374,650 paid on January 1, 1994, less $10,833,000 due on August 1, 1993) is a payment to the qualified settlement fund in compensation for a late or delayed transfer to the fund within the meaning of paragraph (b)(1) of this section.

[T.D. 8459, 57 FR 60991, Dec. 23, 1992; 58 FR 7865, Feb. 10, 1993]

§ 1.468B-3 Rules applicable to the transferor.

(a) *Transfer of property* —

(1) ***In general.*** A transferor must treat a transfer of property to a qualified settlement fund as a sale or exchange of that property for purposes of section 1001(a). In computing the gain or loss, the amount realized by the transferor is the fair market value of the property on the date the transfer is made (or is treated as made under § 1.468B-1(g)) to the qualified settlement fund. Because the issuance of a transferor's debt, obligation to provide services or property in the future, or obligation to make a payment described in § 1.461-4(g), is generally not a transfer of property by the transferor, it generally does not result in gain or loss to the transferor under this paragraph (a)(1). If a person other than the transferor transfers property to a qualified settlement fund, there may be other tax consequences as determined under general federal income tax principles.

(2) ***Anti-abuse rule.*** The Commissioner may disallow a loss resulting from the transfer of property to a qualified settlement fund if the Commissioner determines that a principal purpose for the transfer was to claim the loss and—

(i) The transferor places significant restrictions on the fund's ability to use or dispose of the property; or

(ii) The property (or substantially similar property) is distributed to the transferor (or a related person).

(b) *Qualified appraisal requirement for transfers of certain property* —

(1) ***In general.*** A transferor must obtain a qualified appraisal to support a loss or deduction it claims with respect to a transfer to a qualified settlement fund of the following types of property—

(i) Nonpublicly traded securities (as defined in § 1.170A-13(c)(7)(ix)) issued by the transferor (or a related person); and

(ii) Interests in the transferor (if the transferor is a partnership) and in a partnership in which the transferor (or a related person) is a direct or indirect partner.

(2) ***Provision of copies.*** The transferor must provide a copy of the qualified appraisal to the administrator of the qualified settlement fund no later than February 15 of the year following the calendar year in which the property is transferred. The transferor also must attach a copy of the qualified appraisal to (and as part of) its timely filed income tax return (including extensions) for the taxable year of the transferor in which the transfer is made.

(3) ***Qualified appraisal.*** A “qualified appraisal” is a written appraisal that—

(i) Is made within 60 days before or after the date the property is transferred to the qualified settlement fund;

(ii) Is prepared, signed, and dated by an individual who is a qualified appraiser within the meaning of § 1.170A-13(c)(5);

(iii) Includes the information required by paragraph (b)(4) of this section; and

(iv) Does not involve an appraisal fee of the type prohibited by § 1.170A-13(c)(6).

(4) ***Information included in a qualified appraisal.*** A qualified appraisal must include the following information—

(i) A description of the appraised property;

(ii) The date (or expected date) of the property's transfer to the qualified settlement fund;

(iii) The appraised fair market value of the property on the date (or expected date) of transfer;

(iv) The method of valuing the property, such as the comparable sales approach;

(v) The specific basis for the valuation, such as specific comparable sales or statistical sampling, including a justification for using comparable sales or statistical sampling and an explanation of the procedure employed;

(vi) The terms of any agreement or understanding entered into (or expected to be entered into) by or on behalf of the transferor (or a related person) or the qualified settlement fund that relates to the use, sale, or other disposition of the transferred property, including, for example, the terms of any agreement or understanding that temporarily or permanently—

(A) Restricts the qualified settlement fund's right to use or dispose of the property; or

(B) Reserves to, or confers upon, any person other than the qualified settlement fund any right (including designating another person as having the right) to income from the property, to possess the property (including the right to purchase or otherwise acquire the property), or to exercise any voting rights with respect to the property;

(vii) The name, address, and taxpayer identification number of the qualified appraiser; and if the qualified appraiser is acting in his or her capacity as a partner in a partnership, an employee of any person, or an independent contractor engaged by a person other than the transferor, the name, address, and taxpayer identification number of the partnership or the person who employs or engages the qualified appraiser;

(viii) The qualifications of the qualified appraiser, including the appraiser's background, experience, education, and membership, if any, in professional appraisal associations; and

(ix) A statement that the appraisal was prepared for income tax purposes.

(5) ***Effect of signature of the qualified appraiser.*** Any appraiser who falsely or fraudulently overstates the value of the transferred property referred to in a qualified appraisal may be subject to a civil penalty under section 6701 for aiding and abetting an understatement of tax liability and may have appraisals disregarded pursuant to 31 U.S.C. 330(c).

(c) ***Economic performance*** —

(1) ***In general.*** Except as otherwise provided in this paragraph (c), for purposes of section 461(h), economic performance occurs with respect to a liability described in § 1.468B-1(c)(2) (determined with regard to § 1.468B-1(f) and (g)) to the extent the transferor makes a transfer to a qualified settlement fund to resolve or satisfy the liability.

(2) ***Right to a refund or reversion*** —

(i) ***In general.*** Economic performance does not occur to the extent—

(A) The transferor (or a related person) has a right to a refund or reversion of a transfer if that right is exercisable currently and without the agreement of an unrelated person that is independent or has an adverse interest (e.g., the court or agency that approved the fund, or the fund claimants); or

(B) Money or property is transferred under conditions that allow its refund or reversion by reason of the occurrence of an event that is certain to occur, such as the passage of time, or if restrictions on its refund or reversion are illusory.

(ii) ***Right extinguished.*** With respect to a transfer described in paragraph (c)(2)(i) of this section, economic performance is deemed to occur on the date, and to the extent, the transferor's right to a refund or reversion is extinguished.

(3) ***Obligations of a transferor.*** Economic performance does not occur when a transferor transfers to a qualified settlement fund its debt (or the debt of a related person). Instead, economic performance occurs as the transferor (or related person) makes principal payments on the debt. Similarly, economic performance does not occur when a transferor transfers to a qualified settlement fund its obligation (or the obligation of a related person) to provide services or property in the future, or to make a payment described in § 1.461-4(g). Instead, economic performance with respect to such an obligation occurs as services, property or payments are provided or made to the qualified settlement fund or a claimant.

(d) ***Payment of insurance amounts.*** No deduction is allowed to a transferor for a transfer to a qualified settlement fund to the extent the transferred amounts represent amounts received from the settlement of an insurance claim and are excludable from gross income. If the settlement of an insurance claim occurs after a transferor makes a transfer to a qualified settlement fund for which a deduction has been taken, the transferor must include in income the amounts received from the settlement of the insurance claim to the extent of the deduction.

(e) ***Statement to the qualified settlement fund and the Internal Revenue Service*** —

(1) ***In general.*** A transferor must provide the statement described in paragraph (e)(2) of this section to the administrator of a qualified settlement fund no later than February 15 of the year following each calendar year in which the transferor (or an insurer or other person on behalf of the transferor) makes a transfer to the fund. The transferor must attach a copy of the statement to (and as part of) its timely filed income tax return (including extensions) for the taxable year of the transferor in which the transfer is made.

(2) ***Required statement*** —

(i) ***In general.*** The statement required by this paragraph (e) must provide the following information—

(A) A legend, "§ 1.468B-3 Statement", at the top of the first page;

(B) The transferor's name, address, and taxpayer identification number;

(C) The qualified settlement fund's name, address, and employer identification number;

(D) The date of each transfer;

(E) The amount of cash transferred; and

(F) A description of property transferred and its fair market value on the date of transfer.

(ii) ***Combined statements.*** If a qualified settlement fund has more than one transferor, any two or more of the transferors may provide a combined statement to the administrator that does not identify the amount of cash or the property transferred by a particular transferor. If a combined

statement is used, however, each transferor must include with its copy of the statement that is attached to its income tax return a schedule describing each asset that the transferor transferred to the qualified settlement fund.

(f) ***Distributions to transferors*** —

(1) ***In general.*** A transferor must include in gross income any distribution (including a deemed distribution described in paragraph (f)(2) of this section) it receives from a qualified settlement fund. If property is distributed, the amount includible in gross income and the basis in that property, is the fair market value of the property on the date of the distribution.

(2) ***Deemed distributions*** —

(i) ***Other liabilities.*** If a qualified settlement fund makes a distribution on behalf of a transferor to a person that is not a claimant, or to a claimant to resolve or satisfy a liability of the transferor (or a related person) other than a liability described in § 1.468B-1(c)(2) for which the fund was established, the distribution is deemed made by the fund to the transferor. The transferor, in turn, is deemed to have made a payment to the actual recipient.

(ii) ***Constructive receipt.*** To the extent a transferor acquires a right to a refund or reversion described in paragraph (c)(2) of this section of all or a portion of the assets of a qualified settlement fund subsequent to the transfer of those assets to the fund, the fund is deemed to distribute those assets to the transferor on the date the right is acquired.

(3) ***Tax benefit rule.*** A distribution described in paragraph (f)(1) or (f)(2) of this section is excluded from the gross income of a transferor to the extent provided by section 111(a).

(g) ***Example.*** The following example illustrates the rules of this section:

Example. On March 1, 1993, Individual A transfers $1 million to a qualified settlement fund to resolve or satisfy claims against him resulting from certain violations of securities laws. Individual A uses the cash receipts and disbursements method of accounting. Since Individual A does not use the accrual method of accounting, the economic performance rules of paragraph (c) of this section are not applicable. Therefore, whether, when, and to what extent Individual A can deduct the transfer is determined under applicable provisions of the Internal Revenue Code, such as sections 162 and 461.

[T.D. 8459, 57 FR 60992, Dec. 23, 1992]

§ 1.468B-4 Taxability of distributions to claimants.

Whether a distribution to a claimant is includible in the claimant's gross income is generally determined by reference to the claim in respect of which the distribution is made and as if the distribution were made directly by the transferor. For example, to the extent a distribution is in satisfaction of damages on account of personal injury or sickness, the distribution may be excludable from gross income under section 104(a)(2). Similarly, to the extent a distribution is in satisfaction of a claim for foregone taxable interest, the distribution is includible in the claimant's gross income under section 61(a)(4).

[T.D. 8459, 57 FR 60994, Dec. 23, 1992]

§ 1.468B-5 Effective dates and transition rules applicable to qualified settlement funds.

(a) ***In general.*** Section 468B, including section 468B(g), is effective as provided in the Tax Reform Act of 1986 and the Technical and Miscellaneous Revenue Act of 1988. Except as otherwise provided in this section, §§ 1.468B-1 through 1.468-4 are effective on January 1, 1993. Thus, the regulations apply to income of a qualified settlement fund earned after December 31, 1992, transfers to a fund after December 31, 1992, and distributions from a fund after December 31, 1992. For purposes of § 1.468B-3(c) (relating to economic performance), previously transferred assets held by a qualified settlement fund on the date these regulations first apply to the fund (i.e., January 1, 1993, or the earlier date provided under paragraph (b)(2) of this section) are treated as transferred to the fund on that date, to the extent no taxpayer has previously claimed a deduction for the transfer.

(b) ***Taxation of certain pre-1996 fund income*** —

(1) ***Reasonable method*** —

(i) ***In general.*** With respect to a fund, account, or trust established after August 16, 1986, but prior to February 15, 1992, that satisfies (or, if it no longer exists, would have satisfied) the requirements of § 1.468B-1(c), the Internal Revenue Service will not challenge a reasonable, consistently applied method of taxation for transfers to the fund, income earned by the fund, and distributions made by the fund after August 16, 1986, but prior to January 1, 1996. A method is generally considered reasonable if, depending on the facts and circumstances, all transferors and the administrator of the fund have consistently treated transfers to the fund, income earned by the fund, and distributions made by the fund after August 16, 1986, as if the fund were—

(A) A grantor trust and the transferors are the grantors;

(B) A complex trust and the transferors are the grantors; or

(C) A designated settlement fund.

(ii) ***Qualified settlement funds established after February 14, 1992, but before January 1, 1993.*** With respect to a fund, account, or trust established after February 14, 1992, but prior to January 1, 1993, that satisfies the requirements of § 1.468B-1(c), the Internal Revenue Service will not challenge a reasonable, consistently applied method of taxation as described in paragraph (b)(1)(i) of this section for transfers to, income earned by, and distributions made by the fund prior to January 1, 1993. However, pursuant to paragraph (a) of this section, sections 1.468B-1 through 1.468B-4 apply to transfers to, income earned by, and distributions made by the qualified settlement fund after 1992.

(iii) ***Use of cash method of accounting.*** For purposes of paragraphs (b)(i) and (b)(ii) of this section, for taxable years beginning prior to January 1, 1996, the Internal Revenue Service will not challenge the use of the cash receipts and disbursement method of accounting by a fund, account, or trust.

(iv) ***Unreasonable position.*** In no event is it a reasonable position to assert, pursuant to Rev. Rul. 71-119 (see § 601.601(d)(2)(ii)(*b*) of this chapter), that there is no current taxation of the income of a fund established after August 16, 1986.

(v) ***Waiver of penalties.*** For taxable years beginning prior to January 1, 1993, if a fund, account or trust is subject to section 468B(g) and the Internal Revenue Service does not challenge the method of taxation for transfers to, income earned by, and distributions made by, the fund

pursuant to paragraph (b)(1)(i) or (b)(1)(ii) of this section, penalties will not be imposed in connection with the use of such method. For example, the penalties under section 6655 for failure to pay estimated tax, section 6651(a)(1) for failure to file a return, section 6651(a)(2) for failure to pay tax, section 6656 for failure to make deposit of taxes, and section 6662 for accuracy-related underpayments will generally not be imposed.

(2) ***Election to apply qualified settlement fund rules*** —

(i) ***In general.*** The person that will be the administrator of a qualified settlement fund may elect to apply §§ 1.468B-1 through 1.468B-4 to transfers to, income earned by, and distributions made by, the fund in taxable years ending after August 16, 1986. The election is effective beginning on the first day of the earliest open taxable year of the qualified settlement fund. For purposes of this paragraph (b)(2), a taxable year is considered open if the period for assessment and collection of tax has not expired pursuant to the rules of section 6501. The election statement must provide the information described in paragraph (b)(2)(ii) of this section and must be signed by the person that will be the administrator. Such person must also provide each transferor of the qualified settlement fund with a copy of the election statement on or before March 15, 1993.

(ii) ***Election statement.*** The election statement must provide the following information—

(A) A legend, "§ 1.468B-5(b)(2) Election", at the top of the first page;

(B) Each transferor's name, address, and taxpayer identification number;

(C) The qualified settlement fund's name, address, and employer identification number; and

(D) The date the qualified settlement fund was established within the meaning of § 1.468B-1(j).

(iii) ***Due date of returns and amended returns.*** The election statement described in paragraph (b)(2)(ii) of this section must be filed with, and as part of, the qualified settlement fund's timely filed tax return for the taxable year ended December 31, 1992. In addition, the qualified settlement fund must file an amended return that is consistent with the requirements of §§ 1.468B-1 through 1.468B-4 for any taxable year to which the election applies in which the fund took a position inconsistent with those requirements. Any such amended return must be filed no later than March 15, 1993, and must include a copy of the election statement described in paragraph (b)(2)(ii) of this section.

(iv) ***Computation of interest and waiver of penalties.*** For purposes of section 6601 and section 6611, the income tax return for each taxable year of the qualified settlement fund to which the election applies is due on March 15 of the year following the taxable year of the fund. For taxable years of a qualified settlement fund ending prior to January 1, 1993, the income earned by the fund is deemed to have been earned on December 31 of each taxable year for purposes of section 6655. Thus, the addition to tax for failure to pay estimated tax under section 6655 will not be imposed. The penalty for failure to file a return under section 6651(a)(1), the penalty for failure to pay tax under section 6651(a)(2), the penalty for failure to make deposit of taxes under section 6656, and the accuracy-related penalty under section 6662 will not be imposed on a qualified settlement fund if the fund files its tax returns for taxable years ending prior to January 1, 1993, and pays any tax due for those taxable years, on or before March 15, 1993.

(c) ***Grantor trust elections under § 1.468B-1(k)*** —

(1) ***In general.*** A transferor may make a grantor trust election under § 1.468B-1(k) if the qualified settlement fund is established after February 3, 2006.

(2) ***Transition rules.*** A transferor may make a grantor trust election under § 1.468B-1(k) for a qualified settlement fund that was established on or before February 3, 2006, if the applicable period of limitation on filing an amended return has not expired for both the qualified settlement fund's first taxable year and all subsequent taxable years and the transferor's corresponding taxable year or years. A grantor trust election under this paragraph (c)(2) requires that the returns of the qualified settlement fund and the transferor for all affected taxable years are consistent with the grantor trust election. This requirement may be satisfied by timely filed original returns or amended returns filed before the applicable period of limitation expires.

(3) ***Qualified settlement funds established by the U.S. government on or before*** February 3, 2006. If the U.S. government, or any agency or instrumentality thereof, established a qualified settlement fund on or before February 3, 2006, and the fund would have been classified as a trust all of which is treated as owned by the U.S. government under section 671 and the regulations thereunder without regard to the regulations under section 468B, then the U.S. government is deemed to have made a grantor trust election under § 1.468B-1(k), and the election is applicable for all taxable years of the fund.

[T.D. 8459, 57 FR 60994, Dec. 23, 1992, as amended by T.D. 9249, 71 FR 6201, Feb. 7, 2006]

§ 1.468B-6 Escrow accounts, trusts, and other funds used during deferred exchanges of like-kind property under section 1031(a)(3).

(a) ***Scope.*** This section provides rules under section 468B(g) relating to the current taxation of escrow accounts, trusts, and other funds used during deferred exchanges.

(b) ***Definitions.*** The definitions in this paragraph (b) apply for purposes of this section.

(1) ***In general. Deferred exchange, escrow agreement, escrow holder, exchange agreement, qualified escrow account, qualified intermediary, qualified trust, relinquished property, replacement property, taxpayer, trust agreement*** , and *trustee* have the same meanings as in § 1.1031(k)-1; deferred exchange also includes any exchange intended to qualify as a deferred exchange, and qualified intermediary also includes any person or entity intended by a taxpayer to be a qualified intermediary within the meaning of § 1.1031(k)-1(g)(4).

(2) ***Exchange funds. Exchange funds*** means relinquished property, cash, or cash equivalent that secures an obligation of a transferee to transfer replacement property, or proceeds from a transfer of relinquished property, held in a qualified escrow account, qualified trust, or other escrow account, trust, or fund in a deferred exchange.

(3) ***Exchange facilitator. Exchange facilitator*** means a qualified intermediary, transferee, escrow holder, trustee, or other party that holds exchange funds for a taxpayer in a deferred exchange pursuant to an escrow agreement, trust agreement, or exchange agreement.

(4) ***Transactional expenses*** —

(i) ***In general.*** Except as provided in paragraph (b)(4)(ii) of this section, *transactional expenses* means transactional items within the meaning of § 1.1031(k)-1(g)(7)(ii).

(ii) ***Special rule for certain fees for exchange facilitator services.*** The fee for the services of an exchange facilitator is not a transactional expense unless the escrow agreement, trust agreement, or exchange agreement, as applicable, provides that—

(A) The amount of the fee payable to the exchange facilitator is fixed on or before the date of the transfer of the relinquished property by the taxpayer (either by stating the fee as a fixed dollar amount in the agreement or determining the fee by a formula, the result of which is known on or before the transfer of the relinquished property by the taxpayer); and

(B) The amount of the fee is payable by the taxpayer regardless of whether the earnings attributable to the exchange funds are sufficient to pay the fee.

(c) ***Taxation of exchange funds*** —

(1) ***Exchange funds generally treated as loaned to an exchange facilitator.*** Except as provided in paragraph (c)(2) of this section, exchange funds are treated as loaned from a taxpayer to an exchange facilitator (exchange facilitator loan). If a transaction is treated as an exchange facilitator loan under this paragraph (c)(1), the exchange facilitator must take into account all items of income, deduction, and credit (including capital gains and losses) attributable to the exchange funds. See § 1.7872-16 to determine if an exchange facilitator loan is a below-market loan for purposes of section 7872 and § 1.7872-5(b)(16) to determine if an exchange facilitator loan is exempt from section 7872.

(2) ***Exchange funds not treated as loaned to an exchange facilitator*** —

(i) ***Scope.*** This paragraph (c)(2) applies if, in accordance with an escrow agreement, trust agreement, or exchange agreement, as applicable, all the earnings attributable to a taxpayer's exchange funds are paid to the taxpayer.

(ii) ***Earnings attributable to the taxpayer's exchange funds*** —

(A) ***Separately identified account.*** If an exchange facilitator holds all of the taxpayer's exchange funds in a separately identified account, the earnings credited to that account are deemed to be all the earnings attributable to the taxpayer's exchange funds for purposes of paragraph (c)(2)(i) of this section. In general, a separately identified account is an account established under the taxpayer's name and taxpayer identification number with a depository institution. For purposes of paragraph (c)(2)(i) of this section, a sub-account will be treated as a separately identified account if the master account under which the sub-account is created is established with a depository institution, the depository institution identifies the sub-account by the taxpayer's name and taxpayer identification number, and the depository institution specifically credits earnings to the sub-account.

(B) ***Allocation of earnings in commingled accounts.*** If an exchange facilitator commingles (for investment or otherwise) the taxpayer's exchange funds with other funds or assets, all the earnings attributable to the taxpayer's exchange funds are paid to the taxpayer if all of the earnings attributable to the commingled funds or assets that are allocable on a pro-rata basis (using a reasonable method that takes into account the time that the exchange funds are in the commingled account, actual rate or rates of return, and the respective account balances) to the taxpayer's exchange funds either are paid to the taxpayer or are treated as paid to the taxpayer under paragraph (c)(2)(ii)(C) of this section.

(C) ***Transactional expenses.*** Any payment from the taxpayer's exchange funds, or from the earnings attributable to the taxpayer's exchange funds, for a transactional expense of the taxpayer (as defined in paragraph (b)(4) of this section) is treated as first paid to the taxpayer and then paid by the taxpayer to the recipient.

(iii) ***Treatment of the taxpayer.*** If this paragraph (c)(2) applies, exchange funds are not treated as loaned from a taxpayer to an exchange facilitator. The taxpayer must take into account all items of income, deduction, and credit (including capital gains and losses) attributable to the exchange funds.

(d) ***Information reporting requirements.*** A payor (as defined in § 1.6041-1) must report the income attributable to exchange funds to the extent required by the information reporting provisions of subpart B, Part III, subchapter A, chapter 61, Subtitle F of the Internal Revenue Code, and the regulations under those provisions. See § 1.6041-1(f) for rules relating to the amount to be reported when fees, expenses or commissions owed by a payee to a third party are deducted from a payment.

(e) ***Examples.*** The provisions of this section are illustrated by the following examples in which T is a taxpayer that uses a calendar taxable year and the cash receipts and disbursements method of accounting. The examples are as follows:

Example 1. All earnings attributable to exchange funds paid to taxpayer. (i) T enters into a deferred exchange with R. The sales agreement provides that T will transfer property (the relinquished property) to R and R will transfer replacement property to T. R's obligation to transfer replacement property to T is secured by cash equal to the fair market value of the relinquished property, which R will deposit into a qualified escrow account that T establishes with B, a depository institution. T enters into an escrow agreement with B that provides that all the earnings attributable to the exchange funds will be paid to T.
(ii) On November 1, 2008, T transfers property to R and R deposits $2,100,000 in T's qualified escrow account with B. Between November 1 and December 31, 2008, B credits T's account with $14,000 of interest. During January 2009, B credits T's account with $7000 of interest. On February 1, 2009, R transfers replacement property worth $2,100,000 to T and B pays $2,100,000 from the qualified escrow account to R. Additionally, on February 1, 2009, B pays the $21,000 of interest to T.

(iii) Under paragraph (b) of this section, the $2,100,000 deposited with B constitutes exchange funds and B is an exchange facilitator. Because all the earnings attributable to the exchange funds are paid to T in accordance with the escrow agreement, paragraph (c)(2) of this section applies. The exchange funds are not treated as loaned from T to B. T must take into account in computing T's income tax liability for 2008 the $14,000 of earnings credited to the qualified escrow account in 2008 and for 2009 the $7,000 of earnings credited to the qualified escrow account in 2009.

Example 2. Payment of transactional expenses from earnings. (i) The facts are the same as in *Example 1*, except that the escrow agreement provides that, prior to paying the earnings to T, B may deduct any amounts B has paid to third parties for T's transactional expenses. B pays a third party $350 on behalf of T for a survey of the replacement property. After deducting $350 from the

earnings attributable to T's qualified escrow account, B pays T the remainder ($20,650) of the earnings.
(ii) Under paragraph (b)(4) of this section, the cost of the survey is a transactional expense. Under paragraph (c)(2)(ii)(C) of this section, the $350 that B pays for the survey is treated as first paid to T and then from T to the third party. Therefore, all the earnings attributable to T's exchange funds are paid or treated as paid to T in accordance with the escrow agreement, and paragraph (c)(2) of this section applies. The exchange funds are not treated as loaned from T to B, and T must take into account in computing T's income tax liability the $21,000 of earnings credited to the qualified escrow account.

Example 3. Earnings retained by exchange facilitator as compensation for services. (i) The facts are the same as in *Example 1*, except that the escrow agreement provides that B also may deduct any outstanding fees owed by T for B's services in facilitating the deferred exchange. In accordance with paragraph (b)(4)(ii) of this section, the escrow agreement provides for a fixed fee of $1,200 for B's services, which is payable by T regardless of the amount of earnings attributable to the exchange funds. Because the earnings on the exchange funds in this case exceed $1,200, B retains $1,200 as the unpaid portion of its fee and pays T the remainder ($19,800) of the earnings.
(ii) Under paragraph (b)(4) of this section, B's fee is treated as a transactional expense. Under paragraph (c)(2)(ii)(C) of this section, the $1200 that B retains for its fee is treated as first paid to T and then from T to B. Therefore, all the earnings attributable to T's exchange funds are paid or treated as paid to T in accordance with the escrow agreement, and paragraph (c)(2) of this section applies. The exchange funds are not treated as loaned from T to B, and T must take into account in computing T's income tax liability the $21,000 of earnings credited to the qualified escrow account.

Example 4. Exchange funds deposited by exchange facilitator with related depository institution in account in taxpayer's name. (i) The facts are the same as in *Example 1* except that, instead of entering into an escrow agreement, T enters into an exchange agreement with QI, a qualified intermediary. The exchange agreement provides that R will pay $2,100,000 to QI, QI will deposit $2,100,000 into an account with a depository institution under T's name and taxpayer identification number (TIN), and all the earnings attributable to the account will be paid to T.
(ii) On May 1, 2008, T transfers property to QI, QI transfers the property to R, R delivers $2,100,000 to QI, and QI deposits $2,100,000 into a money market account with depository institution B under T's name and TIN. B and QI are members of the same consolidated group of corporations within the meaning of section 1501. Between May 1 and September 1, 2008, the account earns $28,000 of interest at the stated rate established by B. During the period May 1 to September 1, 2008, B invests T's exchange funds and earns $40,000. On September 1, 2008, QI uses $2,100,000 of the funds in the account to purchase replacement property identified by T and transfers the replacement property to T. B pays to T the $28,000 of interest earned on the money market account at the stated rate.

(iii) Under paragraph (b) of this section, the $2,100,000 QI receives from R for the relinquished property is exchange funds and QI is an exchange facilitator. B is not an exchange facilitator. T has not entered into an escrow agreement, trust agreement, or exchange agreement with B, and QI, not B, holds the exchange funds on behalf of T. Under paragraph (c)(2)(ii)(A) of this section, the $40,000 B earns from investing T's exchange funds are not treated as earnings attributable to T's exchange funds. Because all the earnings attributable to T's exchange funds are paid to T in accordance with the exchange agreement, paragraph (c)(2) of this section applies. The exchange funds are not treated as loaned from T to QI, and T must take into account in computing T's income tax liability for 2008 the $28,000 of interest earned on the money market account.

Example 5. Earnings of related depository institution credited to exchange facilitator. (i) The facts are the same as in *Example 4*, except that at the end of each taxable year, B credits a portion of its earnings on deposits to QI. The amount credited is based on the total amount of exchange funds QI has deposited with B during the year. At the end of the 2008 taxable year, B credits $152,500 of B's earnings to QI.
(ii) Under paragraph (c)(2)(ii)(A) of this section, no part of the $152,500 credited by B to QI is earnings attributable to T's exchange funds. Therefore, all of the earnings attributable to the exchange funds are paid to T in accordance with the exchange agreement, and paragraph (c)(2) of this section applies. The exchange funds are not treated as loaned from T to QI, and T must take into account in computing T's income tax liability for 2008 the $28,000 of interest earned on T's account.

Example 6. Exchange funds deposited by exchange facilitator with unrelated depository institution in sub-account in taxpayer's name. (i) The facts are the same as in *Example 4*, except that QI and B are unrelated and the money market account in which QI deposits the $2,100,000 received from T is a sub-account within a master account QI maintains with B in QI's name and TIN. The master account includes other sub-accounts, each in the name and TIN of a taxpayer that has entered into an exchange agreement with QI, into which QI deposits each taxpayer's exchange funds. Each month, B transfers to QI's master account an additional amount of interest based upon the average daily balance of all exchange funds within the master account during the month. At the end of the 2008 taxable year, B has credited $152,500 of additional interest to QI.
(ii) Under paragraph (c)(2)(ii)(A) of this section, no part of the $152,500 credited by B to QI is earnings attributable to T's exchange funds. Therefore, all of the earnings attributable to the exchange funds are paid to T in accordance with the exchange agreement, and paragraph (c)(2) of this section applies. The exchange funds are not treated as loaned from T to QI, and T must take into account in computing T's income tax liability for 2008 the $28,000 of interest earned on T's account.

Example 7. Marketing fee paid to exchange facilitator. (i) The facts are the same as in *Example 4*, except that at the end of each taxable year, B pays a marketing fee to QI for using B as its

depository institution for exchange funds. The amount of the fee is based on the total amount of exchange funds QI has deposited with B during the year.
(ii) Under paragraph (c)(2)(ii)(A) of this section, no part of the marketing fee that B pays to QI is earnings attributable to T's exchange funds. Therefore, all of the earnings attributable to the exchange funds are paid to T in accordance with the exchange agreement, and paragraph (c)(2) of this section applies. The exchange funds are not treated as loaned from T to QI, and T must take into account in computing T's income tax liability for 2008 the $28,000 of interest earned on T's account.

Example 8. Stated rate of interest on account less than earnings attributable to exchange funds. (i) The facts are the same as in *Example 4*, except that the exchange agreement provides only that QI will pay T a stated rate of interest. QI invests the exchange funds and earns $40,000. The exchange funds earn $28,000 at the stated rate of interest, and QI pays the $28,000 to T.
(ii) Paragraph (c)(1) of this section applies and the exchange funds are treated as loaned from T to QI. QI must take into account in computing QI's income tax liability all items of income, deduction, and credit (including capital gains and losses) attributable to the exchange funds. Paragraph (c)(2) of this section does not apply because QI does not pay all the earnings attributable to the exchange funds to T. See §§ 1.7872-5 and 1.7872-16 for rules relating to exchange facilitator loans.

Example 9. All earnings attributable to commingled exchange funds paid to taxpayer. (i) The facts are the same as in *Example 4*, except that the exchange agreement does not specify how the $2,100,000 QI receives from R must be invested.
(ii) On May 1, 2008, QI deposits the $2,100,000 with B in a pre-existing interest-bearing account under QI's name and TIN. The account has a total balance of $5,275,000 immediately thereafter. On the last day of each month between May and September, 2008, the account earns interest as follows: $17,583 in May, $17,642 in June, $18,756 in July, and $17,472 in August. On July 11, 2008, QI deposits $500,000 in the account. On August 15, 2008, QI withdraws $1,175,000 from the account.

(iii) QI calculates T's pro-rata share of the earnings allocable to the $2,100,000 based on the actual return, the average daily principal balances, and a 30-day month convention, as follows:

Month	Account's avg. daily bal.	T's avg. daily bal.	T's share* (percent)	Monthly interest	T's end. bal.**
May	$5,275,000	$2,100,000	39.8	$17,583	$2,106,998

** T's Average Daily Balance ÷ Account's Average Daily Balance.*

*** T's beginning balance + [(T's share) (Monthly Interest)].*

Month	Account's avg. daily bal.	T's avg. daily bal.	T's share* (percent)	Monthly interest	T's end. bal.**
June	5,292,583	2,106,998	39.8	17,642	2,114,020
July	5,643,558	2,114,020	37.5	18,756	2,121,054
August	5,035,647	2,121,054	42.1	17,472	2,128,410

** T's Average Daily Balance ÷ Account's Average Daily Balance.*

*** T's beginning balance + [(T's share) (Monthly Interest)].*

(iv) On September 1, 2008, QI uses $2,100,000 of the funds to purchase replacement property identified by T and transfers the property to T. QI pays $28,410, the earnings of the account allocated to T's exchange funds, to T.

(v) Because QI uses a reasonable method to calculate the pro-rata share of account earnings allocable to T's exchange funds in accordance with paragraph (c)(2)(ii)(B) of this section, and pays all those earnings to T, paragraph (c)(2) of this section applies. The exchange funds are not treated as loaned from T to QI. T must take into account in computing T's income tax liability for 2008 the $28,410 of earnings attributable to T's exchange funds.

(f) ***Effective/applicability dates*** —

(1) ***In general.*** This section applies to transfers of relinquished property made by taxpayers on or after October 8, 2008.

(2) ***Transition rule.*** With respect to transfers of relinquished property made by taxpayers after August 16, 1986, but before October 8, 2008, the Internal Revenue Service will not challenge a reasonable, consistently applied method of taxation for income attributable to exchange funds.

[T.D. 9413, 73 FR 39620, July 10, 2008]

§ 1.468B-7 Pre-closing escrows.

(a) ***Scope.*** This section provides rules under section 468B(g) for the current taxation of income of a pre-closing escrow.

(b) ***Definitions.*** For purposes of this section—

(1) A *pre-closing escrow* is an escrow account, trust, or fund—

(i) Established in connection with the sale or exchange of real or personal property;

(ii) Funded with a down payment, earnest money, or similar payment that is deposited into the escrow prior to the sale or exchange of the property;

(iii) Used to secure the obligation of the purchaser to pay the purchase price for the property;

(iv) The assets of which, including any income earned thereon, will be paid to the purchaser or otherwise distributed for the purchaser's benefit when the property is sold or exchanged (for example, by being distributed to the seller as a credit against the purchase price); and

(v) Which is not an escrow account or trust established in connection with a deferred exchange under section 1031(a)(3).

(2) ***Purchaser*** means, in the case of an exchange, the intended transferee of the property whose obligation to pay the purchase price is secured by the pre-closing escrow;

(3) ***Purchase price*** means, in the case of an exchange, the required consideration for the property; and

(4) ***Administrator*** means the escrow agent, escrow holder, trustee, or other person responsible for administering the pre-closing escrow.

(c) ***Taxation of pre-closing escrows.*** The purchaser must take into account in computing the purchaser's income tax liability all items of income, deduction, and credit (including capital gains and losses) of the pre-closing escrow. In the case of an exchange with a single pre-closing escrow funded by two or more purchasers, each purchaser must take into account in computing the purchaser's income tax liability all items of income, deduction, and credit (including capital gains and losses) earned by the pre-closing escrow with respect to the money or property deposited in the pre-closing escrow by or on behalf of that purchaser.

(d) ***Reporting obligations of the administrator.*** For each calendar year (or portion thereof) that a pre-closing escrow is in existence, the administrator must report the income of the pre-closing escrow on Form 1099 to the extent required by the information reporting provisions of subpart B, Part III, subchapter A, chapter 61, Subtitle F of the Internal Revenue Code and the regulations thereunder. See § 1.6041-1(f) for rules relating to the amount to be reported when fees, expenses, or commissions owed by a payee to a third party are deducted from a payment.

(e) ***Examples.*** The provisions of this section may be illustrated by the following examples:

Example 1. P enters into a contract with S for the purchase of residential property owned by S for the price of $200,000. P is required to deposit $10,000 of earnest money into an escrow. At closing, the $10,000 and the interest earned thereon will be credited against the purchase price of the property. The escrow is a pre-closing escrow. P is taxable on the interest earned on the pre-closing escrow prior to closing.

Example 2. X and Y enter into a contract in which X agrees to exchange certain construction equipment for residential property owned by Y. The contract requires X and Y to each deposit $10,000 of earnest money into an escrow. At closing, $10,000 and the interest earned thereon will be paid to X and $10,000 and the interest earned thereon will be paid to Y. The escrow is a pre-closing escrow. X is taxable on the interest earned prior to closing on the $10,000 of funds X deposited in the pre-closing escrow. Similarly, Y is taxable on the interest earned prior to closing on the $10,000 of funds Y deposited in the pre-closing escrow.

(f) ***Effective dates*** —

(1) ***In general.*** This section applies to pre-closing escrows established after February 3, 2006.

(2) ***Transition rule.*** With respect to a pre-closing escrow established after August 16, 1986, but on or before February 3, 2006, the Internal Revenue Service will not challenge a reasonable, consistently applied method of taxation for income earned by the escrow or a reasonable, consistently applied method for reporting the income.

[T.D. 9249, 71 FR 6202, Feb. 7, 2006]

§ 1.468B-8 Contingent-at-closing escrows. [Reserved]

§ 1.468B-9 Disputed ownership funds.

(a) ***Scope.*** This section provides rules under section 468B(g) relating to the current taxation of income of a disputed ownership fund.

(b) ***Definitions.*** For purposes of this section—

(1) ***Disputed ownership fund*** means an escrow account, trust, or fund that—

(i) Is established to hold money or property subject to conflicting claims of ownership;

(ii) Is subject to the continuing jurisdiction of a court;

(iii) Requires the approval of the court to pay or distribute money or property to, or on behalf of, a claimant, transferor, or transferor-claimant; and

(iv) Is not a qualified settlement fund under § 1.468B-1, a bankruptcy estate (or part thereof) resulting from the commencement of a case under title 11 of the United States Code, or a liquidating trust under § 301.7701-4(d) of this chapter (except as provided in paragraph (c)(2)(ii) of this section);

(2) ***Administrator*** means a person designated as such by a court having jurisdiction over a disputed ownership fund, however, if no person is designated, the administrator is the escrow agent, escrow holder, trustee, receiver, or other person responsible for administering the fund;

(3) ***Claimant*** means a person who claims ownership of, in whole or in part, or a legal or equitable interest in, money or property immediately before and immediately after that property is transferred to a disputed ownership fund;

(4) ***Court*** means a court of law or equity of the United States or of any state (including the District of Columbia), territory, possession, or political subdivision thereof;

(5) ***Disputed property*** means money or property held in a disputed ownership fund subject to the claimants' conflicting claims of ownership;

(6) ***Related person*** means any person that is related to a transferor within the meaning of section 267(b) or 707(b)(1);

(7) ***Transferor*** means, in general, a person that transfers disputed property to a disputed ownership fund, except that—

(i) If disputed property is transferred by an agent, fiduciary, or other person acting in a similar capacity, the transferor is the person on whose behalf the agent, fiduciary, or other person acts; and

(ii) A payor of interest or other income earned by a disputed ownership fund is not a transferor within the meaning of this section (unless the payor is also a claimant);

(8) ***Transferor-claimant*** means a transferor that claims ownership of, in whole or in part, or a legal or equitable interest in, the disputed property immediately before and immediately after that property is transferred to the disputed ownership fund. Because a transferor-claimant is both a transferor and a claimant, generally the terms *transferor* and *claimant* also include a transferor-claimant. See paragraph (d) of this section for rules applicable only to transferors that are not transferor-claimants and paragraph (e) of this section for rules applicable only to transferors that are also transferor-claimants.

(c) ***Taxation of a disputed ownership fund*** —

(1) ***In general.*** For Federal income tax purposes, a disputed ownership fund is treated as the owner of all assets that it holds. A disputed ownership fund is treated as a C corporation for purposes of subtitle F of the Internal Revenue Code, and the administrator of the fund must obtain an employer identification number for the fund, make all required income tax and information returns, and deposit all tax payments. Except as otherwise provided in this section, a disputed ownership fund is taxable as—

(i) A C corporation, unless all the assets transferred to the fund by or on behalf of transferors are passive investment assets. For purposes of this section, passive investment assets are assets of the type that generate portfolio income within the meaning of § 1.469-2T(c)(3)(i); or

(ii) A qualified settlement fund, if all the assets transferred to the fund by or on behalf of transferors are passive investment assets. A disputed ownership fund taxable as a qualified settlement fund under this section is subject to all the provisions contained in § 1.468B-2, except that the rules contained in paragraphs (c)(3), (4), and (c)(5)(i) of this section apply in lieu of the rules in § 1.468B-2(b)(1), (d), (e), (f) and (j).

(2) ***Exceptions.***

(i) The claimants to a disputed ownership fund may submit a private letter ruling request proposing a method of taxation different than the method provided in paragraph (c)(1) of this section.

(ii) The trustee of a liquidating trust established pursuant to a plan confirmed by the court in a case under title 11 of the United States Code may, in the liquidating trust's first taxable year, elect to treat an escrow account, trust, or fund that holds assets of the liquidating trust that are subject to disputed claims as a disputed ownership fund. Pursuant to this election, creditors holding disputed claims are not treated as transferors of the money or property transferred to the disputed ownership fund. A trustee makes the election by attaching a statement to the timely filed Federal income tax return of the disputed ownership fund for the taxable year for which the election becomes effective. The election statement must include a statement that the trustee will treat the escrow account, trust, or fund as a disputed ownership fund and must include a legend, "§ 1.468B-9(c) Election," at the top of the page. The election may be revoked only upon consent of the Commissioner by private letter ruling.

(3) ***Property received by the disputed ownership fund*** —

(i) ***Generally excluded from income.*** In general, a disputed ownership fund does not include an amount in income on account of a transfer of disputed property to the disputed ownership fund. However, the accrual or receipt of income from the disputed property in a disputed ownership fund is not a transfer of disputed property to the fund. Therefore, a disputed ownership fund must include in income all income received or accrued from the disputed property, including items such as—

(A) Payments to a disputed ownership fund made in compensation for late or delayed transfers of money or property;

(B) Dividends on stock of a transferor (or a related person) held by the fund; and

(C) Interest on debt of a transferor (or a related person) held by the fund.

(ii) ***Basis and holding period.*** In general, the initial basis of property transferred by, or on behalf of, a transferor to a disputed ownership fund is the fair market value of the property on the date of transfer to the fund, and the fund's holding period begins on the date of the transfer. However, if the transferor is a transferor-claimant, the fund's initial basis in the property is the same as the basis of the transferor-claimant immediately before the transfer to the fund, and the fund = s holding period for the property is determined under section 1223(2).

(4) ***Property distributed by the disputed ownership fund*** —

(i) ***Computing gain or loss.*** Except in the case of a distribution or deemed distribution described in paragraph (e)(3) of this section, a disputed ownership fund must treat a distribution of disputed property as a sale or exchange of that property for purposes of section 1001(a). In computing gain or loss, the amount realized by the disputed ownership fund is the fair market value of that property on the date of distribution.

(ii) ***Denial of deduction.*** A disputed ownership fund is not allowed a deduction for a distribution of disputed property or of the net after-tax income earned by the disputed ownership fund made to or on behalf of a transferor or claimant.

(5) ***Taxable year and accounting method.***

(i) A disputed ownership fund taxable as a C corporation under paragraph (c)(1)(i) of this section may compute taxable income under any accounting method allowable under section 446 and is not subject to the limitations contained in section 448. A disputed ownership fund taxable as a C corporation may use any taxable year allowable under section 441.

(ii) A disputed ownership fund taxable as a qualified settlement fund under paragraph (c)(1)(ii) of this section may compute taxable income under any accounting method allowable under section 446 and may use any taxable year allowable under section 441.

(iii) Appropriate adjustments must be made by a disputed ownership fund or transferors to the fund to prevent the fund and the transferors from taking into account the same item of income, deduction, gain, loss, or credit (including capital gains and losses) more than once or from omitting such items. For example, if a transferor that is not a transferor-claimant uses the cash receipts and disbursements method of accounting and transfers an account receivable to a disputed ownership fund that uses an accrual method of accounting, at the time of the transfer of the account receivable to the disputed ownership fund, the transferor must include in its gross income the value of the account receivable because, under paragraph (c)(3)(ii) of this section, the disputed ownership fund will take a fair market value basis in the receivable and

will not include the fair market value in its income when received from the transferor or when paid by the customer. If the account receivable were transferred to the disputed ownership fund by a transferor-claimant using the cash receipts and disbursements method, however, the disputed ownership fund would take a basis in the receivable equal to the transferor's basis, or $0, and would be required to report the income upon collection of the account.

(6) ***Unused carryovers.*** Upon the termination of a disputed ownership fund, if the fund has an unused net operating loss carryover under section 172, an unused capital loss carryover under section 1212, or an unused tax credit carryover, or if the fund has, for its last taxable year, deductions in excess of gross income, the claimant to which the fund's net assets are distributable will succeed to and take into account the fund's unused net operating loss carryover, unused capital loss carryover, unused tax credit carryover, or excess of deductions over gross income for the last taxable year of the fund. If the fund's net assets are distributable to more than one claimant, the unused net operating loss carryover, unused capital loss carryover, unused tax credit carryover, or excess of deductions over gross income for the last taxable year must be allocated among the claimants in proportion to the value of the assets distributable to each claimant from the fund. Unused carryovers described in this paragraph (c)(6) are not money or other property for purposes of paragraph (e)(3)(ii) of this section and thus are not deemed transferred to a transferor-claimant before being transferred to the claimants described in this paragraph (c)(6).

(d) ***Rules applicable to transferors that are not transferor-claimants.*** The rules in this paragraph (d) apply to transferors (as defined in paragraph (b)(7) of this section) that are not transferor-claimants (as defined in paragraph (b)(8) of this section).

(1) ***Transfer of property.*** A transferor must treat a transfer of property to a disputed ownership fund as a sale or other disposition of that property for purposes of section 1001(a). In computing the gain or loss on the disposition, the amount realized by the transferor is the fair market value of the property on the date the transfer is made to the disputed ownership fund.

(2) ***Economic performance*** —

(i) ***In general.*** For purposes of section 461(h), if a transferor using an accrual method of accounting has a liability for which economic performance would otherwise occur under § 1.461-4(g) when the transferor makes payment to the claimant or claimants, economic performance occurs with respect to the liability when and to the extent that the transferor makes a transfer to a disputed ownership fund to resolve or satisfy that liability.

(ii) ***Obligations of the transferor.*** Economic performance does not occur when a transferor using an accrual method of accounting issues to a disputed ownership fund its debt (or provides the debt of a related person). Instead, economic performance occurs as the transferor (or related person) makes principal payments on the debt. Economic performance does not occur when the transferor provides to a disputed ownership fund its obligation (or the obligation of a related person) to provide property or services in the future or to make a payment described in § 1.461-4(g)(1)(ii)(A). Instead, economic performance occurs with respect to such an obligation as property or services are provided or payments are made to the disputed ownership fund or a claimant. With regard to interest on a debt issued or provided to a disputed ownership fund, economic performance occurs as determined under § 1.461-4(e).

(3) ***Distributions to transferors*** —

(i) ***In general.*** Except as provided in section 111(a) and paragraph (d)(3)(ii) of this section, the transferor must include in gross income any distribution to the transferor (including a deemed distribution described in paragraph (d)(3)(iii) of this section) from the disputed ownership fund. If property is distributed, the amount includible in gross income and the basis in that property are generally the fair market value of the property on the date of distribution.

(ii) ***Exception.*** A transferor is not required to include in gross income a distribution of money or property that it previously transferred to the disputed ownership fund if the transferor did not take into account, for example, by deduction or capitalization, an amount with respect to the transfer either at the time of the transfer to, or while the money or property was held by, the disputed ownership fund. The transferor's gross income does not include a distribution of money from the disputed ownership fund equal to the net after-tax income earned on money or property transferred to the disputed ownership fund by the transferor while that money or property was held by the fund. Money distributed to a transferor by a disputed ownership fund will be deemed to be distributed first from the money or property transferred to the disputed ownership fund by that transferor, then from the net after-tax income of any money or property transferred to the disputed ownership fund by that transferor, and then from other sources.

(iii) ***Deemed distributions.*** If a disputed ownership fund makes a distribution of money or property on behalf of a transferor to a person that is not a claimant, the distribution is deemed made by the fund to the transferor. The transferor, in turn, is deemed to make a payment to the actual recipient.

(e) ***Rules applicable to transferor-claimants.*** The rules in this paragraph (e) apply to transferor-claimants (as defined in paragraph (b)(8) of this section).

(1) ***Transfer of property.*** A transfer of property by a transferor-claimant to a disputed ownership fund is not a sale or other disposition of the property for purposes of section 1001(a).

(2) ***Economic performance*** —

(i) ***In general.*** For purposes of section 461(h), if a transferor-claimant using an accrual method of accounting has a liability for which economic performance would otherwise occur under § 1.461-4(g) when the transferor-claimant makes payment to another claimant, economic performance occurs with respect to the liability when and to the extent that the disputed ownership fund transfers money or property to the other claimant to resolve or satisfy that liability.

(ii) ***Obligations of the transferor-claimant.*** Economic performance does not occur when a disputed ownership fund transfers the debt of a transferor-claimant (or of a person related to the transferor-claimant) to another claimant. Instead, economic performance occurs as principal payments on the debt are made to the other claimant. Economic performance does not occur when a disputed ownership fund transfers to another claimant the obligation of a transferor-claimant (or of a person related to the transferor-claimant) to provide property or services in the future or to make a payment described in § 1.461-4(g)(1)(ii)(A). Instead, economic performance occurs with respect to such an obligation as property or services are provided or payments are made to the other claimant. With regard to interest on a debt issued or provided to a disputed ownership fund, economic performance occurs as determined under § 1.461-4(e).

(3) ***Distributions to transferor-claimants*** —

(i) ***In general.*** The gross income of a transferor-claimant does not include a distribution to the transferor-claimant (including a deemed distribution described in paragraph (e)(3)(ii) of this section) of money or property from a disputed ownership fund that the transferor-claimant previously transferred to the fund, or the net after-tax income earned on that money or property while it was held by the fund. If such property is distributed to the transferor-claimant by the disputed ownership fund, then the transferor-claimant's basis in the property is the same as the disputed ownership fund's basis in the property immediately before the distribution.

(ii) ***Deemed distributions.*** If a disputed ownership fund makes a distribution of money or property to a claimant or makes a distribution of money or property on behalf of a transferor-claimant to a person that is not a claimant, the distribution is deemed made by the fund to the transferor-claimant. The transferor-claimant, in turn, is deemed to make a payment to the actual recipient.

(f) ***Distributions to claimants other than transferor-claimants.*** Whether a claimant other than a transferor-claimant must include in gross income a distribution of money or property from a disputed ownership fund generally is determined by reference to the claim in respect of which the distribution is made.

(g) ***Statement to the disputed ownership fund and the Internal Revenue Service with respect to transfers of property other than cash*** —

(1) ***In general.*** By February 15 of the year following each calendar year in which a transferor (or other person acting on behalf of a transferor) makes a transfer of property other than cash to a disputed ownership fund, the transferor must provide a statement to the administrator of the fund setting forth the information described in paragraph (g)(3) of this section. The transferor must attach a copy of this statement to its return for the taxable year of transfer.

(2) ***Combined statements.*** If a disputed ownership fund has more than one transferor, any two or more transferors may provide a combined statement to the administrator. If a combined statement is used, each transferor must attach a copy of the combined statement to its return and maintain with its books and records a schedule describing each asset that the transferor transferred to the disputed ownership fund.

(3) ***Information required on the statement.*** The statement required by paragraph (g)(1) of this section must include the following information—

(i) A legend, "§ 1.468B-9 Statement," at the top of the first page;

(ii) The transferor's name, address, and taxpayer identification number;

(iii) The disputed ownership fund's name, address, and employer identification number;

(iv) A statement declaring whether the transferor is a transferor-claimant;

(v) The date of each transfer;

(vi) A description of the property (other than cash) transferred; and

(vii) The disputed ownership fund's basis in the property and holding period on the date of transfer as determined under paragraph (c)(3)(ii) of this section.

(h) ***Examples.*** The following examples illustrate the rules of this section:

> *Example 1.* (i) X Corporation petitions the United States Tax Court in 2006 for a redetermination of its tax liability for the 2003 taxable year. In 2006, the Tax Court determines that X Corporation is

liable for an income tax deficiency for the 2003 taxable year. X Corporation files an appellate bond in accordance with section 7485(a) and files a notice of appeal with the appropriate United States Court of Appeals. In 2006, the Court of Appeals affirms the decision of the Tax Court and the United States Supreme Court denies X Corporation's petition for a writ of certiorari.
(ii) The appellate bond that X Corporation files with the court for the purpose of staying assessment and collection of deficiencies pending appeal is not an escrow account, trust or fund established to hold property subject to conflicting claims of ownership. Although X Corporation was found liable for an income tax deficiency, ownership of the appellate bond is not disputed. Rather, the bond serves as security for a disputed liability. Therefore, the bond is not a disputed ownership fund.

Example 2. (i) The facts are the same as *Example 1*, except that X Corporation deposits United States Treasury bonds with the Tax Court in accordance with section 7845(c)(2) and 31 U.S.C. 9303.
(ii) The deposit of United States Treasury bonds with the court for the purpose of staying assessment and collection of deficiencies while X Corporation prosecutes an appeal does not create a disputed ownership fund because ownership of the bonds is not disputed.

Example 3. (i) Prior to A's death, A was the insured under a life insurance policy issued by X, an insurance company. X uses an accrual method of accounting. Both A's current spouse and A's former spouse claim to be the beneficiary under the policy and entitled to the policy proceeds ($1 million). In 2005, X files an interpleader action and deposits $1 million into the registry of the court. On June 1, 2006, a final determination is made that A's current spouse is the beneficiary under the policy and entitled to the money held in the registry of the court. The interest earned on the registry account is $12,000. The money in the registry account is distributed to A's current spouse.
(ii) The money held in the registry of the court consisting of the policy proceeds and the earnings thereon are a disputed ownership fund taxable as if it were a qualified settlement fund. See paragraphs (b)(1) and (c)(1)(ii) of this section. The fund's gross income does not include the $1 million transferred to the fund by X, however, the $12,000 interest is included in the fund's gross income in accordance with its method of accounting. See paragraph (c)(3)(i) of this section. Under paragraph (c)(4)(ii) of this section, the fund is not allowed a deduction for a distribution to A's current spouse of the $1 million or the interest income earned by the fund.

(iii) X is a transferor that is not a transferor-claimant. See paragraphs (b)(7) and (b)(8) of this section.

(iv) Whether A's current spouse must include in income the $1 million insurance proceeds and the interest received from the fund is determined under other provisions of the Internal Revenue Code. See paragraph (f) of this section.

Example 4. (i) Corporation B and unrelated individual C claim ownership of certain rental property. B uses an accrual method of accounting. The rental property is property used in a trade or business. B claims to have purchased the property from C's father. However, C asserts that the purported sale to B was ineffective and that C acquired ownership of the property through intestate succession upon the death of C's father. For several years, B has maintained and received the rent from the property.
(ii) Pending the resolution of the title dispute between B and C, the title to the rental property is transferred to a court-supervised registry account on February 1, 2005. On that date the court appoints R as receiver for the property. R collects the rent earned on the property and hires employees necessary for the maintenance of the property. The rents paid to R cannot be distributed to B or C without the court's approval.

(iii) On June 1, 2006, the court makes a final determination that the rental property is owned by C. The court orders C to refund to B the purchase price paid by B to C's father plus interest on that amount from February 1, 2005. The court also orders that a distribution be made to C of all funds held in the court registry consisting of the rent collected by R and the income earned thereon. C takes title to the rental property.

(iv) The rental property and the funds held by the court registry are a disputed ownership fund under paragraph (b)(1) of this section. The fund is taxable as if it were a C corporation because the rental property is not a passive investment asset within the meaning of paragraph (c)(1)(i) of this section.

(v) The fund's gross income does not include the value of the rental property transferred to the fund by B. See paragraph (c)(3)(i) of this section. Under paragraph (c)(3)(ii) of this section, the fund's initial basis in the property is the same as B's adjusted basis immediately before the transfer to the fund and the fund's holding period is determined under section 1223(2). The fund's gross income includes the rents collected by R and any income earned thereon. For the period between February 1, 2005, and June 1, 2006, the fund may be allowed deductions for depreciation and for the costs of maintenance of the property because the fund is treated as owning the property during this period. See sections 162, 167, and 168. Under paragraph (c)(4)(ii) of this section, the fund may not deduct the distribution to C of the property, or the rents (or any income earned thereon) collected from the property while the fund holds the property. No gain or loss is recognized by the fund from this distribution or from the fund's transfer of the rental property to C pursuant to the court's determination that C owns the property. See paragraphs (c)(4)(i) and (e)(3) of this section.

(vi) B is the transferor to the fund. Under paragraphs (b)(8) and (e)(1) of this section, B is a transferor-claimant and does not recognize gain or loss under section 1001(a) on transfer of the property to the disputed ownership fund. The money and property distributed from the fund to C is deemed to be distributed first to B and then transferred from B to C. See paragraph (e)(3)(ii) of this

> section. Under paragraph (e)(2)(i) of this section, economic performance occurs when the disputed ownership fund transfers the property and any earnings thereon to C. The income tax consequences of the deemed transfer from B to C as well as the income tax consequences of C's refund to B of the purchase price paid to C's father and interest thereon are determined under other provisions of the Internal Revenue Code.

(i) [Reserved]

(j) ***Effective dates*** —

(1) ***In general.*** This section applies to disputed ownership funds established after February 3, 2006.

(2) ***Transition rule.*** With respect to a disputed ownership fund established after August 16, 1986, but on or before February 3, 2006, the Internal Revenue Service will not challenge a reasonable, consistently applied method of taxation for income earned by the fund, transfers to the fund, and distributions made by the fund.

[T.D. 9249, 71 FR 6202, Feb. 7, 2006]

§ 1.469-0 Table of contents.

This section lists the captions that appear in the regulations under section 469.

§ 1.469-1 General rules.

(a)-(c)(7) [Reserved]

(c)(8) Consolidated groups.

(c)(9)-(d)(1) [Reserved]

(2) Coordination with sections 613A(d) and 1211.

(d)(3)-(e)(1) [Reserved]

(2) Trade or business activity.

(e)(3)(i)-(e)(3)(ii) [Reserved]

(iii) Average period of customer use.

(A) In general.

(B) Average use factor.

(C) Average period of customer use for class of property.

(D) Period of customer use.

(E) Class of property.

(F) Gross rental income and daily rent.

(e)(3)(iv)-(e)(3)(vi)(C) [Reserved]

(D) Lodging rented for convenience of employer.

(E) Unadjusted basis.

(e)(3)(vii)-(e)(4)(iii) [Reserved]

(iv) Definition of “working interest.”

(e)(4)(v)-(vi) [Reserved]

(5) Rental of dwelling unit.

(e)(6)-(f)(3)(iii) [Reserved]

(4) Carryover of disallowed deductions and credits.

(i) In general.

(ii) Operations continued through C corporations or similar entities.

(iii) Examples.

(g)(1)-(g)(4)(ii)(B) [Reserved]

(4)(ii)(C) (no paragraph heading)

(5) [Reserved]

(h)(1) In general.

(2) Definitions.

(3) [Reserved]

(4) Status and participation of members.

(i) Determination by reference to status and participation of group.

(ii) Determination of status and participation of consolidated group.

(5) [Reserved]

(6) Intercompany transactions.

(i) In general.

(ii) Example.

(iii) Effective dates.

(h)(7)-(k) [Reserved]

§ 1.469-1T General rules (temporary).

(a) Passive activity loss and credit disallowed.

(1) In general.

(2) Exceptions.

(b) Taxpayers to whom these rules apply.

(c) Cross references.

(1) Definition of passive activity.

(2) Passive activity loss.

(3) Passive activity credit.

(4) Effect of rules for other purposes.

(5) Special rule for oil and gas working interests.

(6) Treatment of disallowed losses and credits.

(7) Corporations subject to section 469.

(8) [Reserved]

(9) Joint returns.

(10) Material participation.

(11) Effective date and transition rules.

(12) Future regulations.

(d) Effect of section 469 and the regulations thereunder for other purposes.

(1) Treatment of items of passive activity income and gain.

(2) Coordination with sections 613A(d) and 1211. [Reserved]

(3) Treatment of passive activity losses.

(e) Definition of “passive activity.”

(1) In general.

(2) Trade or business activity. [Reserved]

(3) Rental Activity.

(i) In general.

(ii) Exceptions.

(iii) Average period of customer use. [Reserved]

(A) In general. [Reserved]

(B) Average use factor. [Reserved]

(C) Average period of customer use for class of property. [Reserved]

(D) Period of Customer use. [Reserved]

(E) Class of property. [Reserved]

(F) Gross rental income and daily rent. [Reserved]

(iv) Significant personal services.

(A) In general.

(B) Excluded services.

(v) Extraordinary personal services.

(vi) Rental of property incidental to a nonrental activity of the taxpayer.

(A) In general.

(B) Property held for investment.

(C) Property used in a trade or business.

(D) Lodging rented for convenience of employer. [Reserved]

(E) Unadjusted basis. [Reserved]

(vii) Property made available for use in a nonrental activity conducted by a partnership, S corporation or joint venture in which the taxpayer owns an interest.

(viii) Examples.

(4) Special rules for oil and gas working interests.

(i) In general.

(ii) Exception for deductions attributable to a period during which liability is limited.

(A) In general.

(B) Coordination with rules governing the identification of disallowed passive activity deductions.

(C) Meaning of certain terms.

(*1*) Allocable deductions.

(*2*) Disqualified deductions.

(*3*) Net loss.

(*4*) Ratable portion.

(iii) Examples.

(iv) Definition of “working interest.” [Reserved]

(v) Entities that limit liability.

(A) General rule.

(B) Other limitations disregarded.

(C) Examples.

(vi) Cross reference to special rule for income from certain oil or gas properties.

(5) Rental of dwelling unit. [Reserved]

(6) Activity of trading personal property.

(i) In general.

(ii) Personal property.

(iii) Example.

(f) Treatment of disallowed passive activity losses and credits.

(1) Scope of this paragraph.

(2) Identification of disallowed passive activity deductions.

(i) Allocation of disallowed passive activity deductions.

(A) General rule.

(B) Loss from an activity.

(C) Significant participation passive activities.

(D) Examples.

(ii) Allocation with loss activities.

(A) In general.

(B) Excluded deductions.

(iii) Separately identified deductions.

(3) Identification of disallowed credits from passive activities.

(i) General rule.

(ii) Coordination rule.

(iii) Separately identified credits.

(4) Carryover of disallowed deductions and credits. [Reserved]

(i) In general.

(ii) Operations continued through C corporations or similar entities.

(iii) Examples.

(g) Application of these rules to C corporations.

(1) In general.

(2) Definitions.

(3) Participation of corporations.

(i) Material participation.

(ii) Significant participation.

(iii) Participation of individual.

(4) Modified computation of passive activity loss in the case of closely held corporations.

(i) In general.

(ii) Net active income.

(iii) Examples.

(5) Allowance of passive activity credit of closely held corporations to extent of net active income tax liability.

(i) In general.

(ii) Net active income tax liability.

(h) Special rules for affiliated group filing consolidated return.

(1)-(2) [Reserved]

(3) Disallowance of consolidated group's passive activity loss or credit.

(4) Status and participation of members. [Reserved]

(i) Determination by reference to status and participation of group. [Reserved]

(ii) Determination of status and participation of consolidated group. [Reserved]

(5) Modification of rules for identifying disallowed passive activity deductions and credits.

(i) Identification of disallowed deductions.

(ii) Ratable portion of disallowed passive activity losses.

(iii) Identification of disallowed credits.

(6) [Reserved]

(7) Disposition of stock of a member of an affiliated group.

(8) Dispositions of property used in multiple activities.

(i) [Reserved]

(j) Spouses filing joint returns.

(1) In general.

(2) Exceptions of treatment as one taxpayer.

(i) Identification of disallowed deductions and credits.

(ii) Treatment of deductions disallowed under sections 704(d), 1366(d) and 465.

(iii) Treatment of losses from working interests.

(3) Joint return no longer filed.

(4) Participation of spouses.

(k) Former passive activities and changes in status of corporations. [Reserved]

§ 1.469-2 Passive activity loss.

(a)-(c)(2)(ii) [Reserved]

(iii) Disposition of substantially appreciated property formerly used in a nonpassive activity.

(A) In general.

(B) Date of disposition.

(C) Substantially appreciated property.

(D) Investment property.

(E) Coordination with § l.469-2T(c)(2)(ii).

(F) Coordination with section 163(d).

(G) Examples.

(iv) Taxable acquisitions.

(v) Property held for sale to customers.

(A) Sale incidental to another activity.

(*1*) Applicability.

(*i*) In general.

(*ii*) Principal purpose.

(*2*) Dealing activity not taken into account.

(B) Use in a nondealing activity incidental to sale.

(C) Examples.

(c)(3)-(c)(5) [Reserved]

(6) Gross income from certain oil or gas properties.

(i) In general.

(ii) Gross and net passive income from the property.

(iii) Property.

(iv) Examples 1 and 2.

(c)(6)(iv) Example 3-(c)(7)(iii) [Reserved]

(c)(7)(iv) through (vi) (no paragraph headings)

(d)(1)-(d)(2)(viii) [Reserved]

(d)(2)(ix) through (d)(2)(xii) (no paragraph headings)

(d)(3)-(d)(5)(ii) [Reserved]

(d)(5)(iii)(A) Applicability of rules in § 1.469-2T(c)(2).

(d)(5)(iii)(B)-(d)(6)(v)(D) [Reserved]

(d)(6)(v)(E) (no paragraph heading)

(d)(6)(v)(F)-(d)(7) [Reserved]

(8) Taxable year in which item arises.

(e)(1)-(e)(2)(i) [Reserved]

(ii) Section 707(c).

(iii) Payments in liquidation of a partner's interest in partnership property.

(A) In general.

(B) Payments in liquidation of a partner's interest in unrealized receivables and goodwill under section 736(a).

(e)(3)(i)-(iii)(A) [Reserved]

(e)(3)(iii)(B) (no paragraph heading)

(e)(3)(iii)(C)-(f)(4) [Reserved]

(5) Net income from certain property rented incidental to development activity.

(i) In general.

(ii) Commencement of use.

(iii) Services performed for the purpose of enhancing the value of property.

(iv) Examples.

(6) Property rented to a nonpassive activity.

(f)(7)-(f)(9)(ii) [Reserved]

(f)(9)(iii) through (f)(9)(iv) (no paragraph heading).

(10) Coordination with section 163(d).

(f)(11) [Reserved]

§ 1.469-2T Passive activity loss (temporary).

(a) Scope of this section.

(b) Definition of passive activity loss.

(1) In general.

(2) Cross reference.

(c) Passive activity group income.

(1) In general.

(2) Treatment of gain from disposition of an interest in an activity or an interest in property used in an activity.

(i) In general.

(A) Treatment of gain.

(B) Dispositions of partnership interest and S corporation stock.

(C) Interest in property.

(D) Examples.

(ii) Disposition of property used in more than one activity in 12-month period preceding disposition.

(iii) Disposition of substantially appreciated property used in nonpassive activity. [Reserved]

(A) In general. [Reserved]

(B) Date of disposition. [Reserved]

(C) Substantially appreciated property. [Reserved]

(D) Investment property. [Reserved]

(E) Coordination with paragraph (c)(2)(ii) of this section. [Reserved]

(F) Coordination with section 163(d). [Reserved]

(G) Examples. [Reserved]

(iv) Taxable acquisitions. [Reserved]

(v) Property held for sale to customers. [Reserved]

(A) Sale incidental to another activity. [Reserved]

(*1*) Applicability. [Reserved]

(*i*) In general. [Reserved]

(*ii*) Principal purpose. [Reserved]

(*2*) Dealing activity not taken into account. [Reserved]

(B) Use in a nondealing activity incidental to sale. [Reserved]

(C) Examples. [Reserved]

(3) Items of portfolio income specifically excluded.

(i) In general.

(ii) Gross income derived in the ordinary course of a trade or business.

(iii) Special rules.

(A) Income from property held for investment by dealer.

(B) Royalties derived in the ordinary course of the trade or business of licensing intangible property.

(*1*) In general.

(*2*) Substantial services or costs.

(*i*) In general.

(*ii*) Exception.

(*iii*) Expenditures taken into account.

(*3*) Passthrough entities.

(*4*) Cross reference.

(C) Mineral production payments.

(iv) Examples.

(4) Items of personal service income specifically excluded.

(i) In general.

(ii) Example.

(5) Income from section 481 adjustments.

(i) In general.

(ii) Positive section 481 adjustments.

(iii) Ratable portion.

(6) Gross income from certain oil or gas properties. [Reserved]

(i) In general. [Reserved]

(ii) Gross and net passive income from the properties. [Reserved]

(iii) Property. [Reserved]

(iv) Examples.

(7) Other items specifically excluded.

(d) Passive activity deductions.

(1) In general.

(2) Exceptions.

(3) Interest expense.

(4) Clearly and directly allocable expenses.

(5) Treatment of loss from disposition.

(i) In general.

(ii) Disposition of property used in more than one activity in 12-month period preceding disposition.

(iii) Other applicable rules.

(A) Applicability or rules in paragraph (c)(2).

(B) Dispositions of partnership interest and S corporation stock.

(6) Coordination with other limitations on deductions that apply before section 469.

(i) In general.

(ii) Proration of deductions disallowed under basis limitations.

(A) Deductions disallowed under section 704(d).

(B) Deductions disallowed under section 1366(d).

(iii) Proration of deductions disallowed under at-risk limitations.

(iv) Coordination of basis and at-risk limitations.

(v) Separately identified items of deduction and loss.

(7) Deductions from section 481 adjustment.

(i) In general.

(ii) Negative section 481 adjustment.

(iii) Ratable portion.

(8) Taxable year in which item arises.

(e) Special rules for partners and S corporation shareholders.

(1) In general.

(2) Payments under sections 707(a), 707(c), and 736(b).

(i) Section 707(a).

(ii) Section 707(c).

(iii) Payments in liquidation of a partner's interest in partnership property.

(A) In general.

(B) Payments in liquidation of a partner's interest of a partnership property.

(3) Sale or exchange of interest in passthrough entity.

(i) Application of this paragraph (e)(3).

(ii) General rule.

(A) Allocation among activities.

(B) Ratable portions.

(1) Disposition on which gain is recognized.

(2) Disposition on which loss is recognized.

(C) Default rule.

(D) Special rules.

(*1*) Applicable valuation date.

(*i*) In general.

(*ii*) Exception.

(*2*) Basis adjustment.

(*3*) Tiered passthrough entities.

(E) Meaning of certain terms.

(iii) Treatment of gain allocated to certain passive activities as not from a passive activity.

(iv) Dispositions occurring in taxable years beginning before February 19, 1988.

(A) In general.

(B) Exceptions.

(v) Treatment of portfolio assets.

(vi) Definitions.

(vii) Examples.

(f) Recharacterization of passive income in certain situations.

(1) In general.

(2) Special rule for significant participation.

(i) In general.

(ii) Significant participation passive activity.

(iii) Example.

(3) Rental of nondepreciable property.

(4) Net interest income from passive equity-financed lending activity.

(i) In general.

(ii) Equity-financed lending activity.

(A) In general.

(B) Certain liabilities not taken into account.

(iii) Equity-financed interest income.

(iv) Net interest income.

(v) Interest-bearing assets.

(vi) Liabilities incurred in the activity.

(vii) Average outstanding balance.

(viii) Example.

(5) Net income from certain property rented incidental to development activity.

(i) In general. [Reserved]

(ii) Commencement of use. [Reserved]

(iii) Services performed for the purpose of enhancing the value of property. [Reserved]

(iv) Examples. [Reserved]

(6) Property rented to a nonpassive activity.

(7) Special rules applicable to the acquisition of an interest of a passthrough entity engaged in the trade or business of licensing intangible property.

(i) In general.

(ii) Royalty income from property.

(iii) Exceptions.

(iv) Capital expenditures.

(v) Example.

(8) Limitation on recharacterized income.

(9) Meaning of certain terms.

(10) Coordination with section 163(d).

(11) Effective date.

§ 1.469-3 Passive activity credit.

(a)-(d) [Reserved]

(e) Coordination with section 38(b).

(f) Coordination with section 50.

(g) [Reserved]

§ 1.469-3T Passive activity credit (temporary).

(a) Computation of passive activity credit.

(b) Credits subject to section 469.

(1) In general.

(2) Treatment of credits attributed to qualified progress expenditures.

(3) Special rule for partners and S corporations shareholders.

(4) Exception for pre-1987 credits.

(c) Taxable year to which credit is attributable.

(d) Regular tax liability allocable to passive activities.

(1) In general.

(2) Regular tax liability.

(e) Coordination with section 38(b). [Reserved]

(f) Coordination with section 47. [Reserved]

(g) Examples.

§ 1.469-4 Definition of activity.

(a) Scope and purpose.

(b) Definitions.

(1) Trade or business activities.

(2) Rental activities.

(c) General rules for grouping activities.

(1) Appropriate economic unit.

(2) Facts and circumstances test.

(3) Examples.

(d) Limitation on grouping certain activities.

(1) Grouping rental activities with other trade or business activities.

(i) Rule.

(ii) Examples.

(2) Grouping real property rentals and personal property rentals prohibited.

(3) Certain activities of limited partners and limited entrepreneurs.

(i) In general.

(ii) Example.

(4) Other activities identified by the Commissioner.

(5) Activities conducted through section 469 entities.

(i) In general.

(ii) Cross reference.

(e) Disclosure and consistency requirements.

(1) Original groupings.

(2) Regroupings.

(f) Grouping by Commissioner to prevent tax avoidance.

(1) Rule.

(2) Example.

(g) Treatment of partial dispositions.

(h) Rules for grouping rental real estate activities for taxpayers qualifying under section 469(c)(7).

§ 1.469-5 Material participation.

(a)-(e) [Reserved]

(f) Participation.

(1) In general.

(f)(2)-(h)(2) [Reserved]

(3) Coordination with rules governing the treatment of passthroughs entities.

(i) [Reserved]

(j) Material participation for preceding taxable years.

(1) In general.

(2) Material participation test for taxable years beginning before January 1, 1987

(k) Examples (1)-(4). [Reserved]

(k) Example 5.

(k) Examples (6)-(8). [Reserved]

§ 1.469-5T Material participation (temporary).

(a) In general.

(b) Facts and circumstances.

(1) In general. [Reserved]

(2) Certain participation insufficient to constitute material participation under this paragraph (b).

(i) Participation satisfying standards not contained in section 469.

(ii) Certain management activities.

(iii) Participation less than 100 hours.

(c) Significant participation activity.

(1) In general.

(2) Significant participation.

(d) Personal service activity.

(e) Treatment of limited partners.

(1) General rule.

(2) Exceptions.

(3) Limited partnership interest.

(i) In general.

(ii) Limited partner holding general partner interest.

(f) Participation. [Reserved]

(1) In general. [Reserved]

(2) Exceptions.

(i) Certain work not customarily done by owners.

(ii) participation as an investor.

(A) In general.

(B) Work done in individual's capacity as an investor.

(3) Participation of spouses.

(4) Methods of proof.

(g) Material participation of trust and estates. [Reserved]

(h) Miscellaneous rules.

(1) Participation of corporations.

(2) Treatment of certain retired farmers and surviving spouses of retired or disabled farmers.

(3) Coordination with rules governing the treatment of passthroughs entities. [Reserved]

(i) [Reserved]

(j) Material participation for preceding taxable years. [Reserved]

(1) In general. [Reserved]

(2) Material participation for taxable years beginning before January 1, 1987. [Reserved]

(k) Examples.

§ 1.469-6 Treatment of losses upon certain dispositions. [Reserved]

§ 1.469-7 Treatment of self-charged items of interest income and deduction.

(a) In general.

(1) Applicability and effect of rules.

(2) Priority of rules in this section.

(b) Definitions.

(1) Passthrough entity.

(2) Taxpayer's share.

(3) Taxpayer's indirect interest.

(4) Entity taxable year.

(5) Deductions for a taxable year.

(c) Taxpayer loans to passthrough entity.

(1) Applicability.

(2) General rule.

(3) Applicable percentage.

(d) Passthrough entity loans to taxpayer.

(1) Applicability.

(2) General rule.

(3) Applicable percentage.

(e) Identically-owned passthrough entities.

(1) Applicability.

(2) General rule.

(1) Example.

(f) Identification of properly allocable deductions.

(g) Election to avoid application of the rules of this section.

(1) In general.

(2) Form of election.

(3) Period for which election applies.

(4) Revocation.

(h) Examples.

§ 1.469-8 Application of section 469 to trust, estates, and their beneficiaries. [Reserved]

§ 1.469-9 Rules for certain rental real estate activities.

(a) Scope and purpose.

(b) Definitions.

(1) Trade or business.

(2) Real property trade or business.

(3) Rental real estate.

(4) Personal services.

(5) Material participation.

(6) Qualifying taxpayer.

(c) Requirements for qualifying taxpayers.

(1) In general.

(2) Closely held C corporations.

(3) Requirement of material participation in the real property trades or businesses.

(4) Treatment of spouses.

(5) Employees in real property trades or businesses.

(d) General rule for determining real property trades or businesses.

(1) Facts and circumstances.

(2) Consistency requirement.

(e) Treatment of rental real estate activities of a qualifying taxpayer.

(1) In general.

(2) Treatment as a former passive activity.

(3) Grouping rental real estate activities with other activities.

(i) In general.

(ii) Special rule for certain management activities.

(4) Example.

(f) Limited partnership interests in rental real estate activities.

(1) In general.

(2) De minimis exception.

(g) Election to treat all interests in rental real estate as a single rental real estate activity.

(1) In general.

(2) Certain changes not material.

(3) Filing a statement to make or revoke the election.

(h) Interests in rental real estate held by certain passthrough entities.

(1) General rule.

(2) Special rule if a qualifying taxpayer holds a fifty-percent or greater interest in a passthrough entity.

(3) Special rule for interests held in tiered passthrough entities.

(i) [Reserved]

(j) $25,000 offset for rental real estate activities of qualifying taxpayers.

(1) In general.

(2) Example.

§ 1.469-10 Application of section 469 to publicly traded partnerships. [Reserved]

§ 1.469-11 Effective date and transition rules.

(a) Generally applicable effective dates.

(b) Additional effective dates.

(1) Application of 1992 amendments for taxable years beginning before October 4, 1994.

(2) Additional transition rule for 1992 amendments.

(3) Fresh starts under consistency rules.

(i) Regrouping when tax liability is first determined under Project PS-1-89.

(ii) Regrouping when tax liability is first determined under § 1.469-4.

(iii) Regrouping when taxpayer is first subject to section 469(c)(7).

(iv) Regrouping for taxpayers subject to section 1411.

(A) In general.

(B) Eligibility criteria.

(C) Consequences of amended returns and examination adjustments.

(*1*) Taxpayers first subject to section 1411.

(*2*) Taxpayers ceasing to be subject to section 1411.

(*3*) Examples.

(D) Effective/applicability date.

(4) Certain investment credit property.

(c) Special rules.

(1) Application of certain income recharacterization rules and self-charged rules.

(i) Certain recharacterization rules inapplicable in 1987.

(ii) Property rented to a nonpassive activity.

(iii) Self-charged rules.

(2) Qualified low-income housing projects.

(3) Effect of events occurring in years prior to 1987.

(d) Examples.

[T.D. 8417, 57 FR 20748, May 15, 1992, as amended by T.D. 8477, 58 FR 11538, Feb. 26, 1993; T.D. 8495, 58 FR 58787, Nov. 4, 1993; T.D. 8565, 59 FR 50487, Oct. 4, 1994; T.D. 8597, 60 FR 36684, July 18, 1995; T.D. 8645, 60 FR 66498, Dec. 22, 1995; T.D. 9013, 67 FR 54089, Aug. 21, 2002; T.D. 9644, 78 FR 72421, Dec. 2, 2013]

§ 1.469-1 General rules.

(a)-(c) (7) [Reserved]

(c) (8) *Consolidated groups.* Rules relating to the application of section 469 to consolidated groups are contained in paragraph (h) of this section.

(c) (9) -

(d) (1) [Reserved]

(d) (2) *Coordination with sections 613A (d) and 1211.* A passive activity deduction that is not disallowed for the taxable year under section 469 and the regulations thereunder may nonetheless be disallowed for the taxable year under section 613A(d) or 1211. The following example illustrates the application of this paragraph (d)(2):

Example. In 1993, an individual derives $10,000 of ordinary income from passive activity X, no gains from the sale or exchange of capital assets or assets used in a trade or business, $12,000 of capital loss from passive activity Y, and no income, gain, deductions, or losses from any other passive activity. The capital loss from activity Y is a passive activity deduction (within the meaning of § 1.469-2T(d)). Under section 469 and the regulations thereunder, the taxpayer is allowed $10,000 of the $12,000 passive activity deduction and has a $2,000 passive activity loss for the taxable year. Since the $10,000 passive activity deduction allowed under section 469 is a capital loss, such deduction is allowable for the taxable year only to the extent provided under section 1211. Therefore, the taxpayer is allowed $3,000 of the $10,000 capital loss under section 1211 and has a $7,000 capital loss carryover (within the meaning of section 1212(b)) to the succeeding taxable year.

(d) (3) -

(e) (1) [Reserved]

(e) (2) *Trade or business activities. Trade or business activities* are activities that constitute trade or business activities within the meaning of § 1.469-4(b)(1).

(e) (3)(i)-(e)(3)(ii) [Reserved]

(e) (3)(iii) *Average period of customer use*—(A) *In general.* For purposes of this paragraph (e)(3), the average period of customer use for property held in connection with an activity (the *activity's average period of customer use*) is the sum of the average use factors for each class of property held in connection with the activity.

(B) *Average use factor.* The average use factor for a class of property held in connection with an activity is the average period of customer use for that class of property multiplied by the fraction obtained by dividing—

(*1*) The activity's gross rental income attributable to that class of property; by

(*2*) The activity's gross rental income.

(C) *Average period of customer use for class of property.* In determining an activity's average period of customer use for a taxable year, the average period of customer use for a class of property held in connection with an activity is determined by dividing—

(*1*) The aggregate number of days in all periods of customer use for property in the class (taking into account only periods that end during the taxable year or that include the last day of the taxable year); by

(*2*) The number of those periods of customer use.

(D) *Period of customer use.* Each period during which a customer has a continuous or recurring right to use an item of property held in connection with the activity (without regard to whether the customer uses the property for the entire period or whether the right to use the property is pursuant to a single agreement or to renewals thereof) is treated for purposes of this paragraph (e)(3)(iii) as a separate period of customer use. The duration of a period of customer use that includes the last day of a taxable year may be determined on the basis of reasonable estimates.

(E) *Class of property.* Taxpayers may organize property into classes for purposes of this paragraph (e)(3)(iii) using any method under which items of property for which the amount of the daily rent differs significantly are not included in the same class.

(F) *Gross rental income and daily rent.* In determining an activity's average period of customer use for a taxable year—

(*1*) The activity's gross rental income is the gross income from the activity for the taxable year taking into account only income that is attributable to amounts paid for the use of property;

(*2*) The activity's gross rental income attributable to a class of property is the gross income from the activity for the taxable year taking into account only income that is attributable to amounts paid for the use of property in that class; and

(*3*) The daily rent for items of property may be determined on any basis that reasonably reflects differences during the taxable year in the amounts ordinarily paid for one day's use of those items of property.

(e) (3)(iv)-(e)(3)(vi)(C) [Reserved]

(e) (3)(vi)(D) *Lodging rented for convenience of employer.* The provision of lodging to an employee or to an employee's spouse or dependents is treated as incidental to the activity (or activities) of the taxpayer in which the employee performs services if the lodging is furnished for the taxpayer's convenience (within the meaning of section 119).

(E) *Unadjusted basis.* For purposes of this paragraph (e)(3)(vi), the term *unadjusted basis* means adjusted basis determined without regard to any adjustment described in section 1016 that decreases basis.

(e) (3)(vii)-(e)(4)(iii) [Reserved]

(e) (4)(iv) *Definition of "working interest."* For purposes of section 469 and the regulations thereunder, the term *working interest* means a working or operating mineral interest in any tract or parcel of land (within the meaning of § 1.612-4(a)).

(e) (4)(v)-(f)(3) [Reserved]

(f) (4) *Carryover of disallowed deductions and credits*—

(i) ***In general.*** In the case of an activity of a taxpayer with respect to which any deductions or credits are disallowed for a taxable year under § 1.469-1T (f)(2) or (f)(3) (the loss activity)—

(A) The disallowed deductions or credits is allocated among the taxpayer's activities for the succeeding taxable year in a manner that reasonably reflects the extent to which each activity continues the loss activity; and

(B) The disallowed deductions or credits allocated to an activity under paragraph (f)(4)(i)(A) of this section shall be treated as deductions or credits from the activity for the succeeding taxable year.

(ii) ***Business continued through C corporations or similar entities.*** If a taxpayer continues part or all of a loss activity through a C corporation or similar entity (C corporation entity), the taxpayer's interest in the C corporation entity shall be treated for purposes of this paragraph (f)(4) as an interest in a passive activity that continues that loss activity in whole or part. An entity is similar to a C corporation for this purpose if the owners of interests in the entity derive only portfolio income (within the meaning of § 1.469-2T(c)(3)(i)) from the interests.

(iii) ***Examples.*** The following examples illustrate the application of this paragraph (f)(4). In each example, the taxpayer is an individual whose taxable year is the calendar year.

Example 1. (i) The taxpayer owns interests in a convenience store and an apartment building. In each taxable year, the taxpayer's interests in the convenience store and the apartment building are treated under § 1.469-4 as interests in two separate passive activities of the taxpayer. A $5,000 loss from the convenience-store activity and a $3,000 loss from the apartment-building activity are disallowed under § 1.469-1T(f)(2) for 1993. Under § 1.469-1T(f)(2), the $5,000 loss from the convenience-store activity is allocated among the passive activity deductions from that activity for 1993, and the $3,000 loss from the apartment-building activity is treated similarly.
(ii) In 1994, the convenience store is continued in a single activity, and the section 469 activities that constituted the apartment building is similarly continued in a separate activity. Thus, the disallowed deductions from the convenience-store activity for 1993 must be allocated under paragraph (f)(4)(i)(A) of this section to the taxpayer's convenience-store activity in 1994. Similarly, the disallowed deductions from the apartment-building activity for 1993 must be allocated to the taxpayer's apartment-building activity in 1994. Under paragraph (f)(4)(i)(B) of this section, the disallowed deductions allocated to the convenience-store activity in 1994 are treated as deductions from that activity for 1994, and the disallowed deductions allocated to the apartment-building activity for 1994 are treated as deductions from the apartment-building activity for 1994.

Example 2. (i) In 1993, the taxpayer acquires a restaurant and a catering business. Assume that in 1993 and 1994 the restaurant and the catering business are treated under § 1.469-4 as an interest in a single passive activity of the taxpayer (the restaurant and catering activity). A $10,000 loss from the activity is disallowed under § 1.469-1T(f)(2) for 1994. Assume that in 1995, the taxpayer's interests in the restaurant and the catering business are treated under § 1.469-4 as interests in two separate passive activities of the taxpayer.
(ii) Under § 1.469-1T(f)(2), the $10,000 loss from the restaurant and catering activity is allocated among the passive activity deductions from that activity for 1994. In 1995, the businesses that constituted the restaurant and catering activity are continued, but are treated as two separate activities under § 1.469-4. Thus, the disallowed deductions from the restaurant and catering activity for 1994 must be allocated under paragraph (f)(4)(i)(A) of this section between the restaurant activity and the catering activity in 1995 in a manner that reasonably reflects the extent to which each of the activities continues the single restaurant and catering activity. Under paragraph (f)(4)(i)(B) of this section, the disallowed deductions allocated to the restaurant activity in 1995 are treated as deductions from the restaurant activity for 1995, and the disallowed deductions allocated to the catering activity in 1995 are treated as deductions from the catering activity for 1995.

Example 3. (i) In 1993, the taxpayer acquires a restaurant and a catering business. Assume

that in 1993 and 1994 the restaurant and the catering business are treated under § 1.469-4 as an interest in a single passive activity of the taxpayer (the restaurant and catering activity). A $10,000 loss from the activity is disallowed under § 1.469-1T(f)(2) for 1994. Assume that in 1995, the taxpayer's interests in the restaurant and the catering business are treated under § 1.469-4 as interestes in two separate passive activities of the taxpayer. In addition, a $20,000 loss from the activity was disallowed under § 1.469-1T(f)(2) for 1993, and the gross income and deductions (including deductions that were disallowed for 1993 under § 1.469-1T(f)(2)) from the restaurant and catering business for 1993 and 1994 are as follows:

	Restaurant	Catering business
1993:		
Gross income	$20,000	$60,000
Deductions	40,000	60,000
Net income (loss)	(20,000)	
1994:		
Gross income	40,000	50,000
Deductions	[1] 30,000	[2] 70,000
Net income (loss)	10,000	(20,000)

[1] Includes $8,000 of deductions that were disallowed for 1993 ($20,000 × $40,000/$100,000).

[2] Includes $12,000 of deductions that were disallowed for 1993 ($20,000 × $60,000/$100,000).

(ii) Under paragraph (f)(4)(i)(A) of this section, the disallowed deductions from the restaurant and catering activity must be allocated among the taxpayer's activities for the succeeding year in a manner that reasonably reflects the extent to which those activities continue the restaurant and catering activity. The remainder of this example describes a number of allocation methods that will ordinarily satisfy the requirement of paragraph (f)(4)(i)(A) of this section. The description of specific allocation methods in this example does not preclude the use of other reasonable allocation methods for purposes of paragraph (f)(4)(i)(A) of this section.

(iii) Ordinarily, an allocation of disallowed deductions from the restaurant to the restaurant activity and disallowed deductions from the catering business to the catering activity would satisfy the requirement of paragraph (f)(4)(i)(A) of this section. Under § 1.469-1T (f)(2)(ii), a ratable portion of each deduction from the restaurant and catering activity is disallowed for 1994. Thus, $3,000 of the 1994 deductions from the restaurant are disallowed ($10,000 × $30,000/$100,000), and $7,000 of the 1994 deductions from the catering business are

disallowed ($10,000 × $70,000/$100,000). Thus, the taxpayer can ordinarily treat $3,000 of the disallowed deductions as deductions from the restaurant activity for 1995, and $7,000 of the disallowed deductions as deductions from the catering activity for 1995.

(iv) Ordinarily, an allocation of disallowed deductions between the restaurant activity and catering activity in proportion to the losses from the restaurant and from the catering business for 1994 would also satisfy the requirement of paragraph (f)(4)(i)(A) of this section. If the restaurant and the catering business had been treated as separate activities in 1994, the restaurant activity would have had net income of $10,000 and the catering activity would have had a $20,000 loss. Thus, the taxpayer can ordinarily treat all $10,000 of disallowed deductions as deductions from the catering activity for 1995.

(v) Ordinarily, an allocation of disallowed deductions between the restaurant activity and catering activity in proportion to the losses from the restaurant and from the catering business for 1994 (determined as if the restaurant and the catering business had been separate activities for all taxable years) would also satisfy the requirement of paragraph (f)(4)(i)(A) of this section. If the restaurant and the catering business had been treated as separate activities for all taxable years, the entire $20,000 loss from the restaurant in 1993 would have been allocated to the restaurant activity in 1994, and the gross income and deductions from the separate activities for 1994 would be as follows:

	Restaurant	Catering business
Gross income	$40,000	$50,000
Deductions	42,000	58,000
Net income (loss)	(2,000)	(8,000)

Thus, the taxpayer can ordinarily treat $2,000 of the disallowed deductions as deductions from the restaurant activity for 1995, and $8,000 of the disallowed deductions as deductions from the catering activity for 1995.

Example 4. (i) The taxpayer is a partner in a law partnership that acquires a building in December 1993 for use in the partnership's law practice. In taxable year 1993, four floors that are not needed in the law practice are leased to tenants; in taxable year 1994, two floors are leased to tenants; in taxable years after 1994, only one floor is leased to tenants and the rental operations are insubstantial. Assume that under § 1.469-4, the law practice and the rental property are treated as a trade or business activity and a separate rental activity for taxable years 1993 and 1994. Assume further that the law practice and the rental operations are a single trade or business activity for taxable years after 1994 under § 1.469-4. The trade

or business activity is not a passive activity of the taxpayer. The rental activity, however, is a passive activity. Under § 1.469-T(f)(2), a $12,000 loss from the rental activity is disallowed for 1993 and a $9,000 loss from the rental activity is disallowed for 1994.
(ii) Under § 1.469-1T(f)(2), the $12,000 loss from the rental activity for 1993 is allocated among the passive activity deductions from that activity for 1993. In 1994, the business of the rental activity is continued in two separate activities. Only two floors of the building remain in the rental activity, and the other two floors (*i.e.,* the floors that were leased to tenants in 1993, but not in 1994) are used in the taxpayer's law-practice activity. Thus, the disallowed deductions from the rental activity for 1993 must be allocated under paragraph (f)(4)(i)(A) of this section between the rental activity and the law-practice activity in a manner that reasonably reflects the extent to which each of the activities continues business on the four floors that were leased to tenants in 1993. In these circumstances, the requirement of paragraph (f)(4)(i)(A) of this section would ordinarily be satisfied by any of the allocation methods illustrated in Example 3 or by an allocation of 50 percent of the disallowed deductions to each activity. Under paragraph (f)(4)(i)(B) of this section, the disallowed deductions allocated to the rental activity in 1994 are treated as deductions from the rental activity for 1994, and the disallowed deductions ($6,000) allocated to the law-practice activity in 1994 are treated as deductions from the law-practice activity for 1994.

(iii) Under § 1.469-1T(f)(2), the $9,000 loss from the rental activity for 1994 is allocated among the passive activity deductions from that activity for 1994. In 1995, the rental activity is continued in the taxpayer's law-practice activity. Thus, the disallowed deductions from the rental activity for 1994 must be allocated under paragraph (f)(4)(ii) of this section to the taxpayer's law-practice activity in 1995. Under paragraph (f)(4)(i)(B) of this section, the disallowed deductions allocated to the law-practice activity are treated as deductions from the law-practice activity for 1995.

(iv) Rules relating to former passive activities will be contained in paragraph (k) of this section. Under those rules, any disallowed deductions from the rental activity that are treated as deductions from the law-practice activity will be treated as unused deductions that are allocable to a former passive activity.

Example 5. (i) The taxpayer owns stock in a corporation that is an S corporation for the taxpayer's 1993 taxable year and a C coporation thereafter. The only activity of the corporation is a rental activity. For 1993, the taxpayer's pro rata share of the corporation's loss from the rental activity is $5,000, and the entire loss is disallowed under § 1.469-1T(f)(2) of this section.
(ii) Under § 1.469-1T(f)(2), the taxpayer's $5,000 loss from the rental activity is allocated among the taxpayer's deductions from that activity for 1993. In 1994, the rental activity is continued through a C corporation, and the taxpayer's interest in the C corporation is treated under paragraph (f)(4)(ii) of this section as a passive activity that continues the rental activity

(the C corporation activity) for purposes of allocating the previously disallowed loss. Thus, the disallowed deductions from the rental activity for 1993 must be allocated under paragraph (f)(4)(i)(A) of this section to the taxpayer's C corporation activity in 1994, and are treated under paragraph (f)(4)(i)(B) of this section as deductions from the C corporation activity for 1994.

(iii) Treating the taxpayer's interest in the C corporation as an interest in a passive activity that continues the business of the rental activity does not change the character of the taxpayer's dividend income from the C corporation. Thus, the taxpayer's dividend income is portfolio income (within the meaning of § 1.469-2T(c)(3)(i)) and is not included in passive activity gross income. Accordingly, the taxpayer's loss from the C corporation activity for 1994 is $5,000.

Example 6. (i) The taxpayer owns stock in a corporation that is an S corporation for the taxpayer's 1993 taxable year and a C corporation thereafter. The only activity of the corporation is a rental activity. For 1993, the taxpayer's pro rata share of the corporation's loss from the rental activity is $5,000, and the entire loss is disallowed under § 1.469-1T(f)(2). The taxpayer has $2,000 in income from other passive activities for 1994, and as a result, only 60% of the taxpayer's loss from the C corporation activity ($3,000) is disallowed for 1994 under § 1.469-1T(f)(2).
(ii) Under § 1.469-1T(f)(2), the $3,000 disallowed loss from the C corporation activity is allocated among the passive activity deductions from that activity for 1994. In effect, therefore, 60 percent of each disallowed deduction from the rental activity for 1993 is again disallowed for 1994.

(iii) Under paragraph (f)(4) of this section, the taxpayer's interest in the C corporation is treated as a loss activity and as an interest in a passive activity that continues the business of that loss activity for 1995. Thus, the disallowed deductions from the C corporation activity for 1994 must be allocated under paragraph (f)(4)(i)(A) of this section to the taxpayer's C corporation activity in 1995, and are treated under paragraph (f)(4)(i)(B) of this section as deductions from that activity for 1995.

(g)

(1) -(g)(4)(ii)(B) [Reserved]

(g)(4)(ii)(C) Portfolio income (within the meaning of § 1.469-2T(c)(3)(i)), including any gross income that is treated as portfolio income under any other provision of the regulations (See, e.g., § 1.469-2(c)(2)(iii)(F) (relating to gain from the disposition of substantially appreciated property formerly held for investment) and § 1.469-2(f)(10) (relating to certain recharacterized passive activity gross income))

(5) [Reserved]

(h)(1) *In general.* This paragraph (h) provides rules for applying section 469 in computing a consolidated group's consolidated taxable income and consolidated tax liability (and the separate taxable income and tax liability of each member).

(2) ***Definitions.*** The definitions and nomenclature in the regulations under section 1502 apply for purposes of this paragraph (h). See, e.g., §§ 1.1502-1 (definitions of group, consolidated group, member, subsidiary, and consolidated return year), 1.1502-2 (consolidated tax liability), 1.1502-11 (consolidated taxable income), 1.1502-12 (separate taxable income), 1.1502-13 (intercompany transactions), 1.1502-21 (net operating losses, and 1.1502-22 (consolidated net capital gain and loss).

(3) [Reserved]

(4) ***Status and participation of members*** —

(i) ***Determination by reference to status and participation of group.*** For purposes of section 469 and the regulations thereunder—

(A) Each member of a consolidated group shall be treated as a closely held corporation or personal service corporation, respectively, for the taxable year, if and only if the consolidated group is treated (under the rules of paragraph (h)(4)(ii) of this section) as a closely held corporation or personal service corporation for that year; and

(B) The determination of whether a trade or business activity (within the meaning of paragraph (e)(2) of this section) conducted by one or more members of a consolidated group is a passive activity of the members is made by reference to the consolidated group's participation in the activity.

(ii) ***Determination of status and participation of consolidated group.*** For purposes of determining under § 1.469-1T(g)(2) whether a consolidated group is treated as a closely held corporation or a personal service corporation, and determining under § 1.469-1T(g)(3) whether the consolidated group materially or significantly participates in any activity conducted by one or more members of the group—

(A) The members of the consolidated group shall be treated as one corporation;

(B) Only the outstanding stock of the common parent shall be treated as outstanding stock of the corporation;

(C) An employee of any member of the group shall be treated as an employee of the corporation; and

(D) An activity is treated as the principal activity of the corporation if and only if it is the principal activity (within the meaning of § 1.441-3(e)) of the consolidated group.

(5) [Reserved]

(6) ***Intercompany transactions*** —

(i) ***In general.*** Section 1.1502-13 applies to determine the treatment under section 469 of intercompany items and corresponding items from intercompany transactions between members of a consolidated group. For example, the matching rule of § 1.1502-13(c) treats the selling member (S) and the buying member (B) as divisions of a single corporation for purposes

of determining whether S's intercompany items and B's corresponding items are from a passive activity. Thus, for purposes of applying § 1.469-2(c)(2)(iii) and § 1.469-2T(d)(5)(ii) to property sold by S to B in an intercompany transaction—

(A) S and B are treated as divisions of a single corporation for determining the uses of the property during the 12-month period preceding its disposition to a nonmember, and generally have an aggregate holding period for the property; and

(B) § 1.469-2(c)(2)(iv) does not apply.

(ii) ***Example.*** The following example illustrates the application of this paragraph (h)(6).

> *Example.* (i) P, a closely held corporation, is the common parent of the P consolidated group. P owns all of the stock of S and B. X is a person unrelated to any member of the P group. S owns and operates equipment that is not used in a passive activity. On January 1 of Year 1, S sells the equipment to B at a gain. B uses the equipment in a passive activity and does not dispose of the equipment before it has been fully depreciated.
> (ii) Under the matching rule of § 1.1502-13(c), S's gain taken into account as a result of B's depreciation is treated as gain from a passive activity even though S used the equipment in a nonpassive activity.
>
> (iii) The facts are the same as in paragraph (a) of this Example, except that B sells the equipment to X on December 1 of Year 3 at a further gain. Assume that if S and B were divisions of a single corporation, gain from the sale to X would be passive income attributable to a passive activity. To the extent of B's depreciation before the sale, the results are the same as in paragraph (ii) of this Example. B's gain and S's remaining gain taken into account as a result of B's sale are treated as attributable to a passive activity.
>
> (iv) The facts are the same as in paragraph (iii) of this Example, except that B recognizes a loss on the sale to X. B's loss and S's gain taken into account as a result of B's sale are treated as attributable to a passive activity.

(iii) ***Effective dates.*** This paragraph (h)(6) applies with respect to transactions occurring in years beginning on or after July 12, 1995. For transactions occurring in years beginning before July 12, 1995, see § 1.469-1T(h)(6) (as contained in the 26 CFR part 1 edition revised as of April 1, 1995).

(h) (7) - (k) [Reserved]

[T.D. 8417, 57 FR 20750, May 15, 1992; 57 FR 28612, June 26, 1992, as amended by T.D. 8417, 59 FR 45623, Sept. 2, 1994; T.D. 8597, 60 FR 36684, July 18, 1995; T.D. 8677, 61 FR 33322, June 27, 1996; T.D. 8823, 64 FR 36099, July 2, 1999; T.D. 8996, 67 FR 35012, May 17, 2002]

§ 1.469-1T General rules (temporary).

(a) ***Passive activity loss and credit disallowed*** —

(1) ***In general.*** Except as otherwise provided in paragraph (a)(2) of this section—

(i) The passive activity loss for the taxable year shall not be allowed as a deduction; and

(ii) The passive activity credit for the taxable year shall not be allowed.

(2) ***Exceptions.*** Paragraph (a)(1) of this section shall not apply to the passive activity loss or the passive activity credit for the taxable year to the extent provided in—

(i) Section 469(i) and the rules to be contained in § 1.469-9T (relating to losses and credits attributable to certain rental real estate activities); and

(ii) Section 1.469-11T (relating to losses and credits attributable to certain pre-enactment interests in activities).

(b) ***Taxpayers to whom these rules apply.*** The rules of section 469 and the regulations thereunder generally apply to—

(1) Individuals;

(2) Trusts (other than trusts (or portions of trusts) described in section 671);

(3) Estates;

(4) Personal service corporations (within the meaning of paragraph (g)(2)(i) of this section); and

(5) Closely held corporations (within the meaning of paragraph (g)(2)(ii) of this section).

(c) ***Cross references*** —

(1) ***Definition of "passive activity."*** Rules relating to the definition of the term "passive activity" are contained in paragraph (e) of this section.

(2) ***Passive activity loss.*** Rules relating to the computation of the passive activity loss for the taxable year are contained in § 1.469-2T.

(3) ***Passive activity credit.*** Rules relating to the computation of the passive activity credit for the taxable year are contained in § 1.469-3T.

(4) ***Effect of rules for other purposes.*** Rules relating to the effect of section 469 and the regulations thereunder for other purposes under the Code are contained in paragraph (d) of this section.

(5) ***Special rule for oil and gas working interests.*** Rules relating to the treatment of losses and credits from certain interests in oil and gas wells are contained in paragraph (e)(4) of this section

(6) ***Treatment of disallowed losses and credits.*** Paragraph (f) of this section contains rules relating to—

(i) The treatment of deductions from passive activities in taxable years in which the passive activity loss is disallowed in whole or in part under paragraph (a)(1)(i) of this section; and

(ii) The treatment of credits from passive activities in taxable years in which the passive activity credit is disallowed in whole or in part under paragraph (a)(1)(ii) of this section.

(7) ***Corporation subject to section 469.*** Rules relating to the application of section 469 and regulations thereunder to C corporations are contained in paragraph (g) of this section.

(8) [Reserved]

(9) ***Joint returns.*** Rules relating to the application of section 469 and the regulations thereunder to spouses filing a joint return for the taxable year are contained in paragraph (j) of this section.

(10) ***Material participation.*** Rules defining the term "material participation" are contained in § 1.469-5T.

(11) ***Effective date and transition rules.*** Rules relating to the effective date of section 469 and the regulations thereunder and transition rules applicable to pre-enactment interests in activities are contained in § 1.469-11T.

(12) ***Future regulations.***

(i) Rules relating to former passive activities and changes in corporate status will be contained in paragraph (k) of this section.

(ii) Rules relating to the definition of "activity" will be contained in § 1.469-4T.

(iii) Rules relating to the treatment of deductions from activities that are disposed of in certain transactions will be contained in § 1.469-6T.

(iv) Rules relating to the treatment of self-charged items of income and expense will be contained in § 1.469-7T.

(v) Rules relating to the application of section 469 and the regulations thereunder to trusts, estates, and their beneficiaries will be contained in § 1.469-8T.

(vi) Rules relating to the treatment of income, deductions, and credits from certain rental real estate activities of individuals and certain estates will be contained in § 1.469-9T.

(vii) Rules relating to the application of section 469 to publicly traded partnerships will be contained in § 1.469-10T.

(d) ***Effect of section 469 and the regulations thereunder for other purposes*** —

(1) ***Treatment of items of passive activity income and gain.*** Neither the provisions of section 469 (a)(1) and paragraph (a)(1) of this section nor the characterization of items of income or deduction as passive activity gross income (within the meaning of § 1.469-2T (c)) or passive activity deductions (within the meaning of § 1.469-2T (d)) affects the treatment of any item of income or gain under any provision of the Internal Revenue Code other than section 469. The following example illustrates the application of this paragraph (d)(1):

> *Example.* (i) In 1991, an individual's only income and loss from passive activities are a $10,000 capital gain from passive activity X and a $12,000 ordinary loss from passive activity Y. The taxpayer also has a $10,000 capital loss that is not derived from a passive activity.
> (ii) Under § 1.469-2T (b), the taxpayer has a $2,000 passive activity loss for the taxable year. The only effect of section 469 and the regulations thereunder is to disallow a deduction for the taxpayer's $2,000 passive activity loss for the taxable year. Thus, the taxpayer's capital loss for the taxable year is allowed because the $10,000 capital gain from passive activity X is taken into account under section 1211 (b) in computing the taxpayer's allowable capital loss for the year.

(2) ***Coordination with sections 613A(d) and 1211.*** [Reserved]. See § 1.469-1(d)(2) for rules relating to this paragraph.

(3) ***Treatment of passive activity losses.*** Except as otherwise provided by regulations, a deduction that is disallowed for a taxable year under section 469 and the regulations thereunder is not taken into account as a deduction that is allowed for the taxable year in computing the amount subject to any tax imposed by subtitle A of the Internal Revenue Code. The following example illustrates the application of this paragraph (d)(3):

Example. An individual has a $5,000 passive activity loss for a taxable year, all of which is disallowed under paragraph (a)(1) of this section. All of the disallowed loss is allocated under paragraph (f) of this section to activities that are trades or businesses (within the meaning of section 1402(c)). Such loss is not taken into account for the taxable year in computing the taxpayer's taxable income subject to tax under section 1. In addition, under this paragraph (d)(3), such loss is not taken into account for the taxable year in computing the taxpayer's net earnings from self-employment subject to tax under section 1401.

(e) ***Definition of "passive activity"*** —

(1) ***In general.*** Except as otherwise provided in this paragraph (e), an activity is a passive activity of the taxpayer for a taxable year if and only if the activity—

(i) Is a trade or business activity (within the meaning of paragraph (e)(2) of this section) in which the taxpayer does not materially participate for such taxable year; or

(ii) Is a rental activity (within the meaning of paragraph (e)(3) of this section), without regard to whether or to what extent the taxpayer participates in such activity.

(2) ***Trade or business activity.*** [Reserved]. See § 1.469-1(e)(2) for rules relating to this paragraph.

(3) ***Rental activity*** —

(i) ***In general.*** Except as otherwise provided in this paragraph (e)(3), an activity is a rental activity for a taxable year if—

(A) During such taxable year, tangible property held in connection with the activity is used by customers or held for use by customers; and

(B) The gross income attributable to the conduct of the activity during such taxable year represents (or, in the case of an activity in which property is held for use by customers, the expected gross income from the conduct of the activity will represent) amounts paid or to be paid principally for the use of such tangible property (without regard to whether the use of the property by customers is pursuant to a lease or pursuant to a service contract or other arrangement that is not denominated a lease).

(ii) ***Exceptions.*** For purposes of this paragraph (e)(3), an activity involving the use of tangible property is not a rental activity for a taxable year if for such taxable year—

(A) The average period of customer use for such property is seven days or less;

(B) The average period of customer use for such property is 30 days or less, and significant personal services (within the meaning of paragraph (e)(3)(iv) of this section) are provided by or on behalf of the owner of the property in connection with making the property available for use by customers;

(C) Extraordinary personal services (within the meaning of paragraph (e)(3)(v) of this section) are provided by or on behalf of the owner of the property in connection with making such property available for use by customers (without regard to the average period of customer use);

(D) The rental of such property is treated as incidental to a nonrental activity of the taxpayer under paragraph (e)(3)(vi) of this section;

(E) The taxpayer customarily makes the property available during defined business hours for nonexclusive use by various customers; or

(F) The provision of the property for use in an activity conducted by a partnership, S corporation, or joint venture in which the taxpayer owns an interest is not a rental activity under paragraph (e)(3)(vii) of this section.

(iii) ***Average period of customer use.*** [Reserved]. See § 1.469-1(e)(3)(iii) for rules relating to this paragraph.

(iv) ***Significant personal services*** —

(A) ***In general.*** For purposes of paragraph (e)(3)(ii)(B) of this section, personal services include only services performed by individuals, and do not include excluded services (within the meaning of paragraph (e)(3)(iv)(B) of this section). In determining whether personal services provided in connection with making property available for use by customers are significant, all of the relevant facts and circumstances shall be taken into account. Relevant facts and circumstances include the frequency with which such services are provided, the type and amount of labor required to perform such services, and the value of such services relative to the amount charged for the use of the property.

(B) ***Excluded services.*** For purposes of paragraph (e)(3)(iv)(A) of this section, the term "excluded services" means, with respect to any property made available for use by customers—

(*1*) Services necessary to permit the lawful use of the property;

(*2*) Services performed in connection with the construction of improvements to the property, or in connection with the performance of repairs that extend the property's useful life for a period substantially longer than the average period for which such property is used by customers; and

(*3*) Services, provided in connection with the use of any improved real property, that are similar to those commonly provided in connection with long-term rentals of high-grade commercial or residential real property (e.g., cleaning and maintenance of common areas, routine repairs, trash collection, elevator service, and security at entrances or perimeters).

(v) ***Extraordinary personal services.*** For purposes of paragraph (e)(3)(ii)(C) of this section, extraordinary personal services are provided in connection with making property available for use by customers only if the services provided in connection with the use of the property are performed by individuals, and the use by customers of the property is incidental to their receipt of such services. For example, the use by patients of a hospital's boarding facilities generally is

incidental to their receipt of the personal services provided by the hospital's medical and nursing staff. Similarly, the use by students of a boarding school's dormitories generally is incidental to their receipt of the personal services provided by the school's teaching staff.

(vi) ***Rental of property incidental to a nonrental activity of the taxpayer*** —

(A) ***In general.*** For purposes of paragraph (e)(3)(ii)(D) of this section, the rental of property shall be treated as incidental to a nonrental activity of the taxpayer only to the extent provided in this paragraph (e)(3)(vi).

(B) ***Property held for investment.*** The rental of property during a taxable year shall be treated as incidental to an activity of holding such property for investment if and only if—

(*1*) The principal purpose for holding the property during such taxable year is to realize gain from the appreciation of the property (without regard to whether it is expected that such gain will be realized from the sale or exchange of the property in its current state of development); and

(*2*) The gross rental income from the property for such taxable year is less than two percent of the lesser of—

(*i*) The unadjusted basis of such property; and

(*ii*) The fair market value of such property.

(C) ***Property used in a trade or business.*** The rental of property during a taxable year shall be treated as incidental to a trade or business activity (within the meaning of paragraph (e)(2) of this section) if and only if—

(*1*) The taxpayer owns an interest in such trade or business activity during the taxable year;

(*2*) The property was predominantly used in such trade or business activity during the taxable year or during at least two of the five taxable years that immediately precede the taxable year; and

(*3*) The gross rental income from such property for the taxable year is less than two percent of the lesser of—

(*i*) The unadjusted basis of such property; and

(*ii*) The fair market value of such property.

(D) ***Lodging for convenience of employer.*** [Reserved]. See § 1.469-1(e)(3)(vi)(D) for rules relating to this paragraph.

(E) ***Unadjusted basis.*** [Reserved]. See § 1.469-1(e)(3)(vi)(E) for rules relating to this paragraph.

(vii) ***Property made available for use in a nonrental activity conducted by a partnership, S corporation, or joint venture in which the taxpayer owns an interest.*** If the taxpayer owns an interest in a partnership, S corporation, or joint venture conducting an activity other than a rental activity, and the taxpayer provides property for use in the activity in the taxpayer's capacity as an owner of an interest in such partnership, S corporation, or joint venture, the provision of such property is not a rental activity. Thus, if a partner contributes the use of property to a partnership, none of the partner's distributive share of partnership income is income from a rental activity unless

the partnership is engaged in a rental activity. In addition, a partner's gross income attributable to a payment described in section 707(c) is not income from a rental activity under any circumstances (see § 1.469-2T (e)(2)). The determination of whether property used in an activity is provided by the taxpayer in the taxpayer's capacity as an owner of an interest in a partnership, S corporation, or joint venture shall be made on the basis of all of the facts and circumstances.

(viii) ***Examples.*** The following examples illustrate the application of this paragraph (e)(3):

Example 1. The taxpayer is engaged in an activity of leasing photocopying equipment. The average period of customer use for the equipment exceeds 30 days. Pursuant to the lease agreements, skilled technicians employed by the taxpayer maintain the equipment and service malfunctioning equipment for no additional charge. Service calls occur frequently (three times per week on average) and require substantial labor. The value of the maintenance and repair services (measured by the cost to the taxpayer of employees performing these services) exceeds 50 percent of the amount charged for the use of the equipment. Under these facts, services performed by individuals are provided in connection with the use of the photocopying equipment, but the customers' use of the photocopying equipment is not incidental to their receipt of the services. Therefore, extraordinary personal services (within the meaning of paragraph (e)(3)(v) of this section) are not provided in connection with making the photocopying equipment available for use by customers, and the activity is a rental activity.

Example 2. The facts are the same as in Example 1, except that the average period of customer use for the photocopying equipment exceeds seven days but does not exceed 30 days. Under these facts, significant personal services (within the meaning of paragraph (e)(3)(iv) of this section) are provided in connection with making the photocopying equipment available for use by customers and, under paragraph (e)(3)(ii)(B) of this section, the activity is not a rental activity.

Example 3. The taxpayer is engaged in an activity of transporting goods for customers. In conducting the activity, the taxpayer provides tractor-trailers to transport goods for customers pursuant to arrangements under which the tractor-trailers are selected by the taxpayer, may be replaced at the sole option of the taxpayer, and are operated and maintained by drivers and mechanics employed by the taxpayer. The average period of customer use for the tractor-trailers exceeds 30 days. Under these facts, the use of tractor-trailers by the taxpayer's customers is incidental to their receipt of personal services provided by the taxpayer. Accordingly, the services performed in the activity are extraordinary personal services (within the meaning of paragraph (e)(3)(v) of this section) and, under paragraph (e)(3)(ii)(C) of this section, the activity is not a rental activity.

Example 4. The taxpayer is engaged in an activity of owning and operating a residential apartment hotel. For the taxable year, the average period of customer use for apartments exceeds seven days but does not exceed 30 days. In addition to cleaning public entrances, exists, stairways, and lobbies, and collecting and removing trash, the taxpayer provides a daily maid and linen service at no additional charge. All of the services other than maid and linen service are excluded services (within the meaning of paragraph (e)(3)(iv)(B) of this section), because such services are similar to those commonly provided in connection with long-term rentals of high-grade residential real property. The value of the maid and linen services (measured by the cost to the taxpayer of employees performing

such services) is less than 10 percent of the amount charged to tenants for occupancy of apartments. Under these facts, neither significant personal services (within the meaning of paragraph (e)(3)(iv) of this section) nor extraordinary personal services (within the meaning of paragraph (e)(3)(v) of this section) are provided in connection with making apartments available for use by customers. Accordingly, the activity is a rental activity.

Example 5. The taxpayer owns 1,000 acres of unimproved land with a fair market value of $350,000 and an unadjusted basis of $210,000. The taxpayer holds the land for the principal purpose of realizing gain from appreciation. In order to defray the cost of carrying the land, the taxpayer leases the land to a rancher, who uses the land to graze cattle and pays rent of $4,000 per year. Thus, the gross rental income from the land is less than two percent of the lesser of the fair market value and the unadjusted basis of the land (.02 × $210,000 = $4,200). Accordingly, under paragraph (e)(3)(ii)(D) of this section, the rental of the land is not a rental activity because the rental is treated under paragraph (e)(3)(vi)(B) of this section as incidental to an activity of holding the property for investment.

Example 6. (i) A calendar year taxpayer owns an interest in a farming activity which is a trade or business activity (within the meaning of paragraph (e)(2) of this section) and owns farmland which was used in the farming activity in 1985 and 1986. The fair market value of the farmland is $350,000 and its unadjusted basis is $210,000. In 1987, 1988, and 1989, the taxpayer continues to own an interest in the farming activity but does not use the land in the activity. In 1987, the taxpayer leases the land for $4,000 to a rancher, who uses the land to graze cattle. In 1988, the taxpayer leases the land for $10,000 to a film production company, which uses the land to film scenes for a movie. In 1989, the taxpayer again leases the land for $4,000 to the rancher.
(ii) For 1987 and 1989, the taxpayer owns an interest in a trade or business activity, and the farmland which the taxpayer leases to the rancher was used in such activity for two out of the five immediately preceding taxable years. In addition, the gross rental income from the land ($4,000) is less than two percent of the lesser of the fair market value and the unadjusted basis of the land (.02 × $210,000 = $4,200). Accordingly, the taxpayer's rental of the land is treated under paragraph (e)(3)(vi)(C) of this section as incidental to the taxpayer's farming activity, and is not a rental activity.

(iii) Because the taxpayer's gross rental income from the land for 1988 ($10,000) is not less than two percent of the lesser of the fair market value and the unadjusted basis of the land, the requirement of paragraph (e)(3)(vi)(C)(*3*) of this section is not met. Therefore, the taxpayer's rental of the land in 1988 is not treated as incidental to the taxpayer's farming activity and is a rental activity.

Example 7. (i) In 1988, the taxpayer acquires vacant land for the purpose of

constructing a shopping mall. Before commencing construction, the taxpayer leases the land under a one-year lease to an automobile dealer, who uses the land to park cars held in its inventory. The taxpayer commences construction of the shopping mall in 1989.
(ii) The taxpayer acquired the land for the principal purpose of constructing the shopping mall, not for the principal purpose of realizing gain from the appreciation of the property. Therefore, the rental of the property in 1988 is not treated under paragraph (e)(3)(vi)(B) of this section as incidental to an activity of holding the property for investment.

(iii) The land has not been used in any taxable year in any trade or business of the taxpayer. Therefore, the rental of the property in 1988 is not treated under paragraph (e)(3)(vi)(C) of this section as incidental to a trade or business activity.

(iv) Since the rental of the land in 1988 is not treated under paragraph (e)(3)(vi) of this section as incidental to a nonrental activity of the taxpayer, the rental of the land in 1988 is a rental activity. See § 1.469-2T(f)(3) for a special rule relating to the treatment of gross income from the rental of nondepreciable property.

Example 8. The taxpayer makes farmland available to a tenant farmer pursuant to an arrangement designated a "crop-share lease." Under the arrangement, the tenant is required to use the tenant's best efforts to farm the land and produce marketable crops. The taxpayer is obligated to pay 50 percent of the costs incurred in the activity (without regard to whether any crops are successfully produced or marketed), and is entitled to 50 percent of the crops produced (or 50 percent of the proceeds from marketing the crops). For purposes of paragraph (e)(3)(vii) of this section, the taxpayer is treated as providing the farmland for use in a farming activity conducted by a joint venture in the taxpayer's capacity as an owner of an interest in the joint venture. Accordingly, under paragraph (e)(3)(ii)(F) of this section, the taxpayer is not engaged in a rental activity, without regard to whether the taxpayer performs any services in the farming activity.

Example 9. The taxpayer owns a taxicab which the taxpayer operates during the day and leases to another driver for use at night under a one-year lease. Under the terms of the lease, the other driver is charged a fixed rental for use of the taxicab. Assume that, under the rules to be contained in § 1.469-4T, the taxpayer is engaged in two separate activities, an activity of operating the taxicab and an activity of making the taxicab available for use by the other driver. Under these facts, the period for which the other driver uses the taxicab exceeds 30 days, and the taxpayer does not provide extraordinary personal services in connection with making the taxicab available to the other driver. Accordingly, the lease of the taxicab is a rental activity.

Example 10. The taxpayer operates a golf course. Some customers of the golf course pay green fees upon each use of the golf course, while other customers purchase weekly, monthly, or annual passes. The golf course is open to all customers from sunrise to sunset every day of the year except certain holidays and days on which the taxpayer determines that the course is too wet for play. The taxpayer thus makes the golf course available during

prescribed hours for nonexclusive use by various customers. Accordingly, under paragraph (e)(3)(ii)(E) of this section, the taxpayer is not engaged in a rental activity, without regard to the average period of customer use for the golf course.

(4) ***Special rule for oil and gas working interests*** —

(i) ***In general.*** Except as otherwise provided in paragraph (e)(4)(ii) of this section, an interest in an oil or gas well drilled or operated pursuant to a working interest (within the meaning of paragraph (e)(4)(iv) of this section) of a taxpayer is not an interest in a passive activity for the taxpayer's taxable year (without regard to whether the taxpayer materially participates in such activity) if at any time during such taxable year the taxpayer holds such working interest either—

(A) Directly; or

(B) Through an entity that does not limit the liability of the taxpayer with respect to the drilling or operation of such well pursuant to such working interest.

(ii) ***Exception for deductions attributable to a period during which liability is limited*** —

(A) ***In general.*** If paragraph (e)(4)(i) of this section applies for a taxable year to the taxpayer's interest in an oil or gas well that would, but for the application of paragraph (e)(4)(i) of this section, by an interest in a passive activity for the taxable year, and the taxpayer has a net loss (within the meaning of paragraph (e)(4)(ii)(C)(*3*) of this section) from the well for the taxable year—

(*1*) The taxpayer's disqualified deductions (within the meaning of paragraph (e)(4)(ii)(C)(*2*) of this section) from such oil or gas well for such year shall be treated as passive activity deductions for such year (within the meaning of § 1.469-2T(d)); and

(*2*) A ratable portion (within the meaning of paragraph (e)(4)(ii)(C)(*4*) of this section) of the taxpayer's gross income from such oil or gas well for such year shall be treated as passive activity gross income for such year (within the meaning of § 1.469-2T(c)).

(B) ***Coordination with rules governing the identification of disallowed passive activity deductions.*** If gross income and deductions from an activity for a taxable year are treated as passive activity gross income and passive activity deductions under paragraph (e)(4)(ii)(A) of this section, such activity shall be treated as a passive activity for such year for purposes of applying paragraph (f) (2) and (4) of this section.

(C) ***Meaning of certain terms.*** For purposes of this paragraph (e)(4)(ii), the following terms shall have the meanings set forth below:

(*1*) ***Allocable deductions.*** The deductions allocable to a taxable year are any deductions that arise in such year (within the meaning of § 1.469-2T (d)(8)) and any deductions that are treated as deductions for such year under paragraph (f)(4) of this section.

(*2*) *Disqualified deductions.* The taxpayer's “disqualified deductions” from an oil or gas well for a taxable year are the taxpayer's deductions—

(*i*) That are attributable to such well and allocable to the taxable year; and

(*ii*) With respect to which economic performance (within the meaning of section 461(h), without regard to section 461 (h)(3) or (i)(2)) occurs at a time during which the taxpayer's only interest in the working interest is held through an entity that limits the taxpayer's liability with respect to the drilling or operation of such well.

(*3*) *Net loss.* The "net loss" of a taxpayer from an oil or gas well for a taxable year equals the amount by which the taxpayer's deductions that are attributable to such oil or gas well and allocable to such year exceeds the gross income of the taxpayer from such well for such year.

(*4*) *Ratable portion.* The "ratable portion" of the taxpayer's gross income from an oil or gas well for a taxable year equals the total amount of such gross income multiplied by the fraction obtained by dividing—

(*i*) The disqualified deductions from such oil or gas well for the taxable year; by

(*ii*) The total amount of the deductions that are attributable to such oil or gas well and allocable to the taxable year.

(iii) ***Examples.*** The following examples illustrate the application of paragraphs (e)(4) (i) and (ii) of this section:

> *Example 1.* (i) A, a calendar year individual, acquires on January 1, 1987, a general partnership interest in P, a calendar year partnership that holds a working interest in an oil or gas property. Pursuant to the partnership agreement, A is entitled to convert the general partnership interest into a limited partnership interest at any time. On December 1, 1987, pursuant to a contract with D, an independent drilling contractor, P commences drilling a single well pursuant to the working interest. Under the drilling contract, P pays D for the drilling only as the work is performed. All drilling costs are deducted by P in the year in which they are paid. At the end of 1987, A converts the general partnership interest into a limited partnership interest, effective immediately. The drilling of the well is completed on February 28, 1988. A's interest in the well would but for this paragraph (e)(4) be an interest in a passive activity.
> (ii) Throughout 1987, A holds the working interest through an entity that does not limit A's liability with respect to the drilling of the well pursuant to the working interest. In 1988, however, A holds the working interest through an entity that limits A's liability with respect to the drilling and operation of the well throughout such year. Accordingly, under paragraph (e)(4)(i) of this section, A's interest in P's well is not an interest in a passive activity for 1987 but is an interest in a passive activity for 1988. Moreover, since economic performance occurs in 1987 with respect to all items of deduction for drilling costs that are allocable to 1987, A has no disqualified deductions for 1987.

Example 2. The facts are the same as in Example 1, except that all costs of drilling under the contract with D (including costs of drilling performed after 1987) are paid before the end of 1987 and A has a net loss for 1987. In addition, A has $15,000 of total deductions that

are attributable to the well and allocable to 1987, but economic performance (as that term is used in paragraph (e)(4)(ii)(C)(*2*)(*ii*) of this section) does not occur with respect to $5,000 of those deductions until 1988. Under paragraph (e)(4)(ii) of this section, the $5,000 of deductions with respect to which economic performance occurs in 1988 are disqualified deductions and are treated as passive activity deductions for 1987. In addition, one-third ($5,000/$15,000) of A's gross income from the well for 1987 is treated as passive activity gross income.

(iv) ***Definition of "working interest."*** [Reserved]. See § 1.469-1(e)(4)(iv) for rules relating to this paragraph.

(v) ***Entities that limit liability*** —

(A) ***General rule.*** For purposes of paragraph (e)(4)(i)(B) of this section, an entity limits the liability of the taxpayer with respect to the drilling or operation of a well pursuant to a working interest held through such entity if the taxpayer's interest in the entity is in the form of—

(*1*) A limited partnership interest in a partnership in which the taxpayer is not a general partner;

(*2*) Stock in a corporation; or

(*3*) An interest in any entity (other than a limited partnership or corporation) that, under applicable State law, limits the potential liability of a holder of such an interest for all obligations of the entity to a determinable fixed amount (for example, the sum of the taxpayer's capital contributions).

(B) ***Other limitations disregarded.*** For purposes of this paragraph (e)(4), protection against loss through any of the following is not taken into account in determining whether a taxpayer holds a working interest through an entity that limits the taxpayer's liability:

(*1*) An indemnification agreement;

(*2*) A stop loss arrangement;

(*3*) Insurance;

(*4*) Any similar arrangement; or

(*5*) Any combination of the foregoing.

(C) *Examples.* The following examples illustrate the application of this paragraph (e)(4)(v):

Example 1. A owns a 20 percent interest as a general partner in the capital and profits of P, a partnership which owns oil or gas working interests. The other partners of P agree to indemnify A against liability in excess of A's capital contribution for any of P's costs and expenses with respect to P's working interests. As a general partner, however, A is jointly and severally liable for all of P's liabilities and, under paragraph (e)(4)(v)(B)(*1*) of this section, the indemnification agreement is not taken into account in determining whether A holds the working interests through an entity that limits A's liability. Accordingly, the partnership does not limit A's liability with respect to the drilling or operation of wells pursuant to the working interests.

Example 2. B owns a 10 percent interest in X, an entity (other than a limited partnership or corporation) created under applicable State law to hold working interests in oil or gas properties. Under applicable State law, B is liable without limitation for 10 percent of X's costs and expenses with respect to X's working interests but is not liable for the remaining 90 percent of such costs and expenses. Since B's liability for the obligations of X is not limited to a determinable fixed amount (within the meaning of paragraph (e)(4)(v)(A)(*3*) of this section), the entity does not limit B's liability with respect to the drilling or operation of wells pursuant to the working interests.

Example 3. C is both a general partner and a limited partner in a partnership that owns a working interest in oil or gas property. Because C owns an interest as a general partner in each well drilled pursuant to the working interest, C's entire interest in each well drilled pursuant to the working interest is treated under paragraph (e)(4)(i) of this section as an interest in an activity that is not a passive activity (without regard to whether C materially participates in such activity).

(vi) *Cross reference to special rule for income from certain oil or gas properties.* A special rule relating to the treatment of income from certain interests in oil or gas properties is contained in § 1.469-2T(c)(6).

(5) ***Rental of dwelling unit.*** [Reserved]. See § 1.469-2(d)(2)(xii) for rules relating to this paragraph.

(6) ***Activity of trading personal property*** —

(i) ***In general.*** An activity of trading personal property for the account of owners of interests in the activity is not a passive activity (without regard to whether such activity is a trade or business activity (within the meaning of paragraph (e)(2) of this section)).

(ii) ***Personal property.*** For purposes of this paragraph (e)(6), the term "personal property" means personal property (within the meaning of section 1092(d), without regard to paragraph (3) thereof).

(iii) ***Example.*** The following example illustrates the application of this paragraph (e)(6):

Example. A partnership is a trader of stocks, bonds, and other securities (within the meaning of section 1236(c)). The capital employed by the partnership in the trading activity consists of amounts contributed by the partners in exchange for their partnership interests, and funds borrowed by the partnership. The partnership derives gross income from the activity in the form of interest, dividends, and capital gains. Under these facts, the partnership is treated as conducting an activity of trading personal property for the account of its partners. Accordingly, under this paragraph (e)(6), the activity is not a passive activity.

(f) ***Treatment of disallowed passive activity losses and credits*** —

(1) ***Scope of this paragraph.*** The rules in this paragraph (f)—

(i) Identify the passive activity deductions that are disallowed for any taxable year in which all or a portion of the taxpayer's passive activity loss is disallowed under paragraph (a)(1)(i) of this section;

(ii) Identify the credits from passive activities that are disallowed for any taxable year in which all or a portion of the taxpayer's passive activity credit is disallowed under paragraph (a)(1)(i) of this section; and

(iii) Provide for the carryover of disallowed deductions and credits.

(2) ***Identification of disallowed passive activity deductions*** —

(i) *Allocation of disallowed passive activity loss among activities* —

(A) ***General rule.*** If all or any portion of the taxpayer's passive activity loss is disallowed for the taxable year under paragraph (a)(1)(i) of this section, a ratable portion of the loss (if any) from each passive activity of the taxpayer is disallowed. For purposes of the preceding sentence, the ratable portion of a loss from an activity is computed by multiplying the passive activity loss that is disallowed for the taxable year by the fraction obtained by dividing—

(*1*) The loss from the activity for the taxable year; by

(*2*) The sum of the losses for the taxable year from all activities having losses for such year.

(B) ***Loss from an activity.*** For purposes of this paragraph (f)(2)(i), the term "loss from an activity" means—

(*1*) The amount by which the passive activity deductions from the activity for the taxable year (within the meaning of § 1.469-2T(d)) exceed the passive activity gross income from the activity for the taxable year (within the meaning of § 1.469-2T(c)); reduced by

(*2*) Any part of such amount that is allowed under section 469(i) and the rules to be contained in § 1.469-9T (relating to the $25,000 allowance for certain rental real estate activities).

(C) ***Significant participation passive activities.*** If the taxpayer's passive activity gross income from significant participation passive activities (within the meaning of § 1.469-2T(f)(2)(ii)) for the taxable year (determined without regard to § 1.469-2T(f)(2) through (4)) exceeds the taxpayer's passive activity deductions from such activities for the taxable year, such activities shall be treated, solely for purposes of applying this paragraph (f)(2)(i) for the taxable year, as a single activity that does not have a loss for such taxable year.

(D) ***Examples.*** The following examples illustrate the application of this paragraph (f)(2)(i):

Example 1. An individual holds interests in three passive activities, A, B, and C. The gross income and deductions from these activities for the taxable year are as follows:

	A	B	C	Total
Gross income	$7,000	$4,000	$12,000	$23,000
Deductions	(16,000)	(20,000)	(8,000)	(44,000)
Net income (loss)	($9,000)	($16,000)	$4,000	($21,000)

The taxpayer's $21,000 passive activity loss for the taxable year is disallowed under paragraph (a)(1)(i) of this section. Therefore, a ratable portion of the losses

from activities A and B is disallowed. The disallowed portion of each loss is determined as follows:

A: $21,000 × $9,000/$25,000	$7,560
B: $21,000 × $16,000/$25,000	$13,440
Total	$21,000

Example 2. An individual holds interests in four passive activities, A, B, C, and D. The results of operations of these activities for the taxable year are as follows:

	A	B	C	D	Total
Gross income	15,000	5,000	10,000	10,000	40,000
Deductions	(5,000)	(10,000)	(20,000)	(8,000)	(43,000)
Net income (loss)	10,000	(5,000)	(10,000)	2,000	(3,000)

Activities A and B are significant participation passive activities (within the meaning of § 1.469-2T(f)(2)(ii)). The gross income from these activities for the taxable year ($20,000) exceeds the passive activity deductions from those activities for the taxable year ($15,000) by $5,000 and, under § 1.469-2T(f)(2), $5,000 of gross income from those activities is treated as not from a passive activity. Therefore, solely for purposes of applying this paragraph (f)(2)(i) for the taxable year, activities A and B are treated as a single activity that does not have a loss for the taxable year. Under § 1.469-2T(b), the taxpayer's passive activity loss for the taxable year is $8,000 ($43,000 of passive activity deductions minus $35,000 of passive activity gross income). The results of treating activities A and B as a single activity that does not have a loss for the taxable year is that none of the $8,000 passive activity loss is allocated under this paragraph (f)(2)(i) to activity B for the taxable year, even though the taxpayer incurred a loss in that activity for the taxable year.

(ii) ***Allocation within loss activities*** —

(A) ***In general.*** If all or any portion of a taxpayer's loss from an activity is disallowed under paragraph (f)(2)(i) of this section for the taxable year, a ratable portion of each passive activity deduction (other than an excluded deduction (within the meaning of paragraph (f)(2)(ii)(B) of this section)) of the taxpayer from such activity is disallowed. For purposes of the preceding sentence, the ratable portion of a passive activity deduction of a taxpayer

is the amount of the disallowed portion of the taxpayer's loss from the activity (within the meaning of paragraph (f)(2)(i)(B) of this section) for the taxable year multiplied by the fraction obtained by dividing—

(1) The amount of such deduction; by

(2) The sum of all passive activity deductions (other than excluded deductions (within the meaning of paragraph (f)(2)(ii)(B) of this section)) of the taxpayer from such activity from the taxable year.

(B) ***Excluded deductions.*** The term "excluded deduction" means any passive activity deduction of a taxpayer that is taken into account in computing the taxpayer's net income from an item of property for a taxable year in which an amount of the taxpayer's gross income from such item of property is treated as not from a passive activity under § 1.469-2T(c)(6) or § 1.469-2T(f) (5), (6), or (7).

(iii) ***Separately identified deductions.*** In identifying the deductions from an activity that are disallowed under this paragraph (f)(2), the taxpayer need not account separately for a deduction unless such deduction may, if separately taken into account, result in an income tax liability for any taxable year different from that which would result were such deduction not taken into account separately. For related rules applicable to partnerships and S corporations, see § 1.702-1(a)(8)(ii) and section 1366(a)(1)(A), respectively. Deductions that must be accounted for separately include (but are not limited to) deductions that—

(A) Arise in a rental real estate activity (within the meaning of section 469(i) and the rules to be contained in § 1.469-9T) in taxable years in which the taxpayer actively participates (within the meaning of section 469(i) and the rules to be contained in § 1.469-9T) in such activity;

(B) Arise in a rental real estate activity (within the meaning of section 469(i) and the rules to be contained in § 1.469-9T) in taxable years in which the taxpayer does not actively participate (within the meaning of section 469(i) and the rules to be contained in § 1.469-9T) in such activity; or

(C) Are taken into account under section 1211 (relating to the limitation on capital losses) or section 1231 (relating to property used in a trade or business and involuntary conversions).

(3) ***Identification of disallowed credits from passive activities*** —

(i) ***General rule.*** If all or any portion of the taxpayer's passive activity credit is disallowed for the taxable year under paragraph (a)(1)(ii) of this section, a ratable portion of each credit from each passive activity of the taxpayer is disallowed. For purposes of the preceding sentence, the ratable portion of a credit of a taxpayer is computed by multiplying the portion of the taxpayer's passive activity credit that is disallowed for the taxable year by the fraction obtained by dividing—

(A) The amount of the credit; by

(B) The sum of all of the taxpayer's credits from passive activities for the taxable year.

(ii) ***Coordination rule.*** For purposes of paragraph (f)(3)(i) of this section, the credits from a passive activity do not include any credit or portion of a credit that—

(A) Is allowed for the taxable year under section 469(i) and the rules to be contained in § 1.469-9T (relating to the $25,000 allowance for certain rental real estate activities); or

(B) Increases the basis of property during the taxable year under section 469(j)(9) and the rules to be contained in § 1.469-6T (relating to the election to increase the basis of certain property by disallowed credits).

(iii) ***Separately identified credits.*** In identifying the credits from an activity that are disallowed under this paragraph (f)(3), the taxpayer need not account separately for any credit unless such credit may, if separately taken into account, result in an income tax liability for any taxable year different from that which would result were such credit not taken into account separately. For related rules applicable to partnerships and S corporations, see § 1.702-1(a)(8)(ii) and section 1366(a)(1)(A), respectively. Credits that must be accounted for separately include (but are not limited to)—

(A) Credits (other than the low-income housing and rehabilitation investment credits) from a rental real estate activity (within the meaning of section 469(i) and the rules to be contained in § 1.469-9T) that arise in a taxable year in which the taxpayer actively participates (within the meaning of section 469(i) and the rules to be contained in § 1.469-9T) in such activity;

(B) Credits (other than the low-income housing and rehabilitation investment credits) from a rental real estate activity (within the meaning of section 469(i) and the rules to be contained in § 1.469-9T) that arise in a taxable year in which the taxpayer does not actively participate (within the meaning of section 469(i) and the rules to be contained in § 1.469-9T) in such activity;

(C) Low-income housing and rehabilitation investment credits from a rental real estate activity (within the meaning of section 469(i) and the rules to be contained in § 1.469-9T); and

(D) Any credit that is subject to the limitations of sections 26(a), 28(d)(2), 29(b)(5), or 38(c) in a manner that differs from the manner in which any other credit is subject to such limitations.

(4) ***Carryover of disallowed deductions and credits.*** [Reserved]. See § 1.469-1(f)(4) for rules relating to this paragraph.

(g) ***Application of these rules to C corporations*** —

(1) ***In general.*** Except as otherwise provided in the rules to be contained in paragraph (k) of this section, section 469 and the regulations thereunder do not apply to any corporation that is not a personal service corporation or a closely held corporation for the taxable year. See paragraphs (g) (4) and (5) of this section for special rules for computing the passive activity loss and passive activity credit, respectively, of a closely held corporation.

(2) ***Definitions.*** For purposes of section 469 and the regulations thereunder—

(i) The term *personal service corporation* means a C corporation that is a personal service corporation for the taxable year (within the meaning of § 1.441-3(c)); and

(ii) The term *closely held corporation* means a C corporation that meets the stock ownership requirements of section 542(a)(2) (taking into account the modifications in section 465(a)(3)) for the taxable year and is not a personal service corporation for such year.

(3) *Participation of corporations* —

(i) ***Material participation.*** For purposes of section 469 and the regulations thereunder, a corporation described in paragraph (g)(2) of this section shall be treated as materially participating in an activity for a taxable year if and only if—

(A) One or more individuals, each of whom is treated under paragraph (g)(3)(iii) of this section as materially participating in such activity for the taxable year, directly or indirectly hold (in the aggregate) more than 50 percent (by value) of the outstanding stock of such corporation; or

(B) In the case of a closely held corporation (within the meaning of paragraph (g)(2)(ii) of this section), the requirements of section 465(c)(7)(C) (without regard to clause (iv) thereof and taking into account section 465(c)(7)(D)) are met with respect to such activity.

(ii) ***Significant participation.*** For purposes of § 1.469-2T(f)(2), an activity of a corporation described in paragraph (g)(2) of this section shall be treated as a significant participation passive activity for a taxable year if and only if—

(A) The corporation is not treated as materially participating in such activity for the taxable year; and

(B) One or more individuals, each of whom is treated under paragraph (g)(3)(iii) of this section as significantly participating in such activity, directly or indirectly hold (in the aggregate) more than 50 percent (by value) of the outstanding stock of such corporation.

(iii) ***Participation of individual.*** Whether an individual is treated for purposes of this paragraph (g)(3) as materially participating or significantly participating in an activity of a corporation shall be determined under the rules of § 1.469-5T, except that in applying such rules—

(A) All activities of the corporation shall be treated as activities in which the individual holds an interest in determining whether the individual participates (within the meaning of § 1.469-5T(f)) in an activity of the corporation; and

(B) The individual's participation in all activities other than activities of the corporation shall be disregarded in determining whether the individual's participation in an activity of the corporation is treated as material participation under § 1.469-5T(a)(4) (relating to material participation in significant participation activities).

(4) *Modified computation of passive activity loss in the case of closely held corporations* —

(i) ***In general.*** A closely held corporation's passive activity loss for the taxable year is the amount, if any, by which the corporation's passive activity deductions for the taxable year (within the meaning of § 1.469-2T(d)) exceed the sum of—

(A) The corporation's passive activity gross income for the taxable year (within the meaning of § 1.469-2T(c)); and

(B) The corporation's net active income for the taxable year.

(ii) ***Net active income.*** For purposes of this paragraph (g)(4), a corporation's net active income for the taxable year is such corporation's taxable income for the taxable year, determined without regard to the following items for the year:

(A) Passive activity gross income;

(B) Passive activity deductions;

(C) [Reserved]. See § 1.469-1(g)(4)(ii)(C) for rules relating to this paragraph.

(D) Gross income that is treated under § 1.469-2T(c)(6) (relating to gross income from certain oil or gas properties) as not from a passive activity;

(E) Gross income and deductions from any trade or business activity (within the meaning of paragraph (e)(2) of this section) that is described in paragraph (e)(6) of this section (relating to certain activities of trading personal property) but only if the corporation did not materially participate in such activity for the taxable year;

(F) Deductions described in § 1.469-2T(d)(2)(i), (ii), and (iv) (relating to certain deductions attributable to portfolio income); and

(G) Interest expense allocated under § 1.163-8T to a portfolio expenditure (within the meaning of § 1.163-8T(b)(6)).

(iii) ***Examples.*** The following examples illustrate the application of this paragraph (g)(4):

Example 1. (i) For 1987, X, a closely held corporation, is engaged in two activities, a trade or business activity in which X materially participates for 1987 and a rental activity. X also holds portfolio investments. For 1987, X has the following gross income and deductions:

Gross income:	
Rents	$60,000
Gross income from business	100,000
Portfolio income	35,000
Total	$195,000
Deductions:	
Rental deductions	($100,000)
Business deductions (80,000)	
Interest expense allocable to portfolio expenditures under § 1.163-8T	(10,000)
Deductions (other than interest expense) clearly and directly allocable to portfolio income	(5,000)
Total	($195,000)

(ii) The corporation's net active income for 1987 is $20,000, computed as follows:

Gross income	$195,000

Amounts not taken into account in computing net active income:			
Rents (see paragraph (g)(4)(ii)(A) of this section)	$60,000		
Portfolio income (see paragraph (g)(4)(ii)(C) of this section)	$35,000		
	$95,000	($95,000)	
Gross income taken into account in computing net active income		$100,000	$100,000
Deductions		($195,000)	
Amounts not taken into account in computing net active income:			
Rental deductions (see paragraph (g)(4)(ii)(B) of this section)	($100,000)		
Interest expense allocated to portfolio expenditures (see paragraph (g)(4)(ii)(G) of this section)	($10,000)		
Other deductions clearly and directly allocable to portfolio income (see paragraph (g)(4)(ii)(F) of this section)	($5,000)		
	($115,000)	$115,000	
Deductions taken into account in computing net active income		($80,000)	($80,000)
Net active income			$20,000

(iii) Under paragraph (g)(4)(i) of this section, X's passive activity loss for 1987 is $20,000, the amount by which the passive activity deductions for the taxable year ($100,000) exceed the sum of (a) the passive activity gross income for the taxable year ($60,000) and (b) the net active income for the taxable year ($20,000). Under paragraph (f)(4) of this section, the $20,000 of deductions from X's rental activity that are disallowed for 1987 are treated as deductions from the rental activity for 1988. If computed without regard to the net active income for the taxable year, X's passive activity loss would be $40,000 ($100,000 of rental deductions minus $60,000 of rental income). Thus, the effect of the rule in paragraph (g)(4)(i) of this section is to reduce the corporation's passive activity loss for the taxable year by the amount of the corporation's net active income for such year.

(iv) Under these facts, X's taxable income for 1987 is $20,000, computed as follows:

Gross income		$195,000
Deductions:		
Total deductions	($195,000)	
Passive activity loss	$20,000	
Allowable deductions	($175,000)	($175,000)
Taxable income		$20,000

Example 2. (i) The facts are the same as in Example 1, except that, in 1988, X has a loss from the trade or business activity, and a net operating loss ("NOL") of $15,000 that is carried back under section 172(b) to 1987. Since NOL carrybacks are taken into account in computing net active income, X's net active income for 1987 must be recomputed as follows:

Net active income before NOL carryback	$20,000
NOL carryback	($15,000)
Net active income	$5,000

(ii) Under these facts, X's disallowed passive activity loss for 1987 is $35,000, the amount by which the passive activity deductions for the taxable year ($100,000) exceed the sum of (a) the passive activity gross income for the taxable year ($60,000) and (b) the net active income for the taxable year ($5,000).
(iii) Under paragraph (f)(4) of this section, the $35,000 of deductions from X's rental activity that are disallowed for 1987 are treated as deductions from the rental activity for 1988. X's taxable income for 1987 is $20,000, computed as follows:

Gross income		$195,000
Deductions:		
Total deductions	($210,000)	
Passive activity loss	$35,000	
Allowable deductions	($175,000)	($175,000)

Taxable income	$20,000

Thus, taking the NOL carryback into account in computing net active income for 1987 does not affect X's taxable income for 1987, but increases the deductions treated under paragraph (f)(4) as deductions from X's rental activity for 1988 and decreases X's NOL carryover to years other than 1987.

(5) ***Allowance of passive activity credit of closely held corporations to extent of net active income tax liability*** —

(i) ***In general.*** Solely for purposes of determining the amount disallowed under paragraph (a)(1)(ii) of this section, a closely held corporation's passive activity credit for the taxable year shall be reduced by such corporation's net active income tax liability for such year.

(ii) ***Net active income tax liability.*** For purposes of paragraph (g)(5)(i) of this section, a corporation's net active income tax liability for a taxable year is the amount (if any) by which—

(A) The corporation's regular tax liability (within the meaning of section 26(b)) for the taxable year, determined by reducing the corporation's taxable income for such year by an amount equal to the excess (if any) of the corporation's passive activity gross income for such year over the corporation's passive activity deductions for such year; exceeds

(B) The sum of—

(*1*) The corporation's regular tax liability for the taxable year, determined by reducing the corporation's taxable income for such year by an amount equal to the excess (if any) of the sum of the corporation's net active income (within the meaning of paragraph (g)(4)(ii) of this section) and passive activity gross income for such year over the corporation's passive activity deductions for such year; and

(*2*) The corporation's credits (other than credits from passive activities) that are allowable for the taxable year (without regard to the limitations contained in sections 26(a), 28(d)(2), 29(b)(5), 38(c), and 469).

(h) ***Special rules for affiliated group filing consolidated return.***

(1)-(2) [Reserved]

(3) ***Disallowance of consolidated group's passive activity loss or credit.*** A consolidated group's passive activity loss or passive activity credit for the taxable year shall be disallowed to the extent provided in paragraph (a) of this section. For purposes of the preceding sentence, a consolidated group's passive activity loss and passive activity credit shall be determined by taking into account the following items of each member of such group:

(i) Passive activity gross income;

(ii) Passive activity deductions;

(iii) Net active income (in the case of a consolidated group treated as a closely held corporation under paragraph (h)(4)(ii) of this section); and

(iv) Credits from passive activities.

(4) [Reserved]. See § 1.469-1(h)(4) for rules relating to this paragraph.

(5) ***Modification of rules for identifying disallowed passive activity deductions and credits*** —

(i) ***Identification of disallowed deductions.*** In applying paragraphs (f) (2) and (4) of this section to a consolidated group for purposes of identifying the passive activity deductions of such consolidated group and of each member of such consolidated group that are disallowed for the taxable year and treated as deductions from activities for the succeeding taxable year, the following rules shall apply:

(A) A ratable portion (within the meaning of paragraph (h)(5)(ii) of this section) of the passive activity loss of the consolidated group that is disallowed for the taxable year shall be allocated to each member of the group;

(B) Pararaph (f)(2) of this section shall then be applied to each member of the group as if—

(*1*) Such member were a separate taxpayer; and

(*2*) The amount allocated to such member under paragraph (h)(5)(i)(A) of this section were the amount of such member's passive activity loss that is disallowed for the taxable year; and

(C) Paragraph (f)(4) of this section shall be applied to each member of the group as if it were a separate taxpayer.

(ii) ***Ratable portion of disallowed passive activity loss.*** For purposes of paragraph (h)(5)(i)(A) of this section, a member's ratable portion of the disallowed passive activity loss of the consolidated group is the amount of such disallowed loss multiplied by the fraction obtained by dividing—

(A) The amount of the passive activity loss of such member of the consolidated group that would be disallowed for the taxable year if the items of gross income and deduction of such member were the only items of the group for such year; by

(B) The sum of the amounts described in paragraph (h)(5)(ii)(A) of this section for all members of the group.

(iii) ***Identification of disallowed credits.*** In applying paragraph (f)(3) of this section to a consolidated group for purposes of identifying the credits from passive activities of members of such consolidated group that are disallowed for the taxable year, the consolidated group shall be treated as one taxpayer. Thus, a ratable portion of each of the group's credits from passive activities is disallowed.

(6) [Reserved]

(7) ***Disposition of stock of a member of an affiliated group.*** Any gain recognized by a member on the disposition of stock of a subsidiary (including income resulting from the recognition of an excess loss account under § 1.1502-19) shall be treated as portfolio income (within the meaning of § 1.469-2T (c)(3)(i)).

(8) ***Dispositions of property used in multiple activities.*** The determination of whether § 1.469-2T(c)(2)(ii) or (iii) or (d)(5)(ii) applies to a disposition (including a deemed disposition described in paragraph (h)(6)(iii)(C)(*1*) of this section) of property by a member of a consolidated group shall be made by treating such member as having held the property for the entire period that the group has owned such property and as having used the property in all of the activities in which the group has used such property

(i) [Reserved]

(j) ***Spouses filing joint return*** —

(1) ***In general.*** Except as otherwise provided in the regulations under section 469, spouses filing a joint return for a taxable year shall be treated for such year as one taxpayer for purposes of section 469 and the regulations thereunder Thus, for example, spouses filing a joint return are treated as one taxpayer for purposes of—

(i) Section 1.469-2T (relating generally to the computation of such taxpayer's passive activity loss); and

(ii) Paragraph (f) of this section (relating to the allocation of such taxpayer's disallowed passive activity loss and passive activity credit among activities and the identification of disallowed passive activity deductions and credits from passive activities).

(2) ***Exceptions to treatment as one taxpayer*** —

(i) ***Identification of disallowed deductions and credits.*** For purposes of paragraphs (f)(2)(iii) and (3)(iii) of this section, spouses filing a joint return for the taxable year must account separately for the deductions and credits attributable to the interests of each spouse in any activity.

(ii) ***Treatment of deductions disallowed under sections 704(d), 1366(d), and 465.*** Notwithstanding any other provision of this section or § 1.469-2T, this paragraph (j) shall not affect the application of section 704(d), section 1366(d), or section 465 to taxpayers filing a joint return for the taxable year.

(iii) ***Treatment of losses from working interests.*** Paragraph (e)(4) of this section (relating to losses and credits from certain interests in oil and gas wells) shall be applied by treating a husband and wife (whether or not filing a joint return) as separate taxpayers.

(3) ***Joint return no longer filed.*** If an individual—

(A) Does not file a joint return for the taxable years; and

(B) Filed a joint return for the immediately preceding taxable year;

then the passive activity deductions and credits allocable to such individual's activities for the taxable year under paragraph (f)(4) of this section shall be determined by taking into account the items of deduction and credit attributable to such individual's interests in passive activities for the immediately preceding taxable year. See paragraph (j)(2)(i) of this section.

(4) ***Participation of spouses.*** Rules treating an individual's participation in an activity as participation of such individual's spouse in such activity (without regard to whether the spouses file a joint return) are contained in § 1.469-5T(f)(3).

(k) ***Former passive activities and changes in status of corporations.*** [Reserved]

[T.D. 8175, 53 FR 5700, Feb. 25, 1988, as amended by T.D. 8253, 54 FR 20535, May 12, 1989; T.D. 8319, 55 FR 49038, Nov. 26, 1990; T.D. 8417, 57 FR 20753, May 15, 1992; 58 FR 29536, May 21, 1993; 58 FR 45059, Aug. 26, 1993; 59 FR 17478, Apr. 13, 1994; T.D. 8560, 59 FR 41674, Aug. 15, 1994; T.D. 8597, 60 FR 36685, July 18, 1995; T.D. 8996, 67 FR 35012, May 17, 2002]

§ 1.469-2 Passive activity loss.

(a)-(c) (2)(ii) [Reserved]

(c) (2)(iii) *Disposition of substantially appreciated property formerly used in nonpassive activity*—(A) *In general.* If an interest in property used in an activity is substantially appreciated at the time of its disposition, any gain from the disposition shall be treated as not from a passive activity unless the interest in property was used in a passive activity for either—

(*1*) 20 percent of the period during which the taxpayer held the interest in property; or

(*2*) The entire 24-month period ending on the date of the disposition.

(B) *Date of disposition.* For purposes of this paragraph (c)(2)(iii), a disposition of an interest in property is deemed to occur on the date that the interest in property becomes subject to an oral or written agreement that either requires the owner or gives the owner an option to transfer the interest in property for consideration that is fixed or otherwise determinable on that date.

(C) *Substantially appreciated property.* For purposes of this paragraph (c)(2)(iii), an interest in property is substantially appreciated if the fair market value of the interest in property exceeds 120 percent of the adjusted basis of the interest.

(D) *Investment property.* For purposes of this paragraph (c)(2)(iii), an interest in property is treated as an interest in property used in an activity other than a passive activity and as an interest in property held for investment for any period during which the interest is held through a C corporation or similar entity. An entity is similar to a C corporation for this purpose if the owners of interests in the entity derive only portfolio income (within the meaning of § 1.469-2T) from the interests.

(E) *Coordination with § 1.469-2T(c)(2)(ii).* If § 1.469-2T(c)(2)(ii) applies to the disposition of an interest in property, this paragraph (c)(2)(iii) applies only to that portion of the gain from the disposition of the interest in property that is characterized as gain from a passive activity after the application of § 1.469-2T(c)(2)(ii).

(F) *Coordination with section 163(d).* Gain that is treated as not from a passive activity under this paragraph (c)(2)(iii) is treated as income described in section 469(e)(1)(A) and § 1.469-2T(c)(3)(i) if and only if the gain is from the disposition of an interest in property that was held for investment for more than 50 percent of the period during which the taxpayer held that interest in property in activities other than passive activities.

(G) *Examples.* The following examples illustrate the application of this paragraph (c)(2)(iii):

Example 1. A acquires a building on January 1, 1993, and uses the building in a trade or business activity in which A materially participates until March 31, 2004. On April 1, 2004, A leases the building to B. On December 31, 2005, A sells the building. At the time of the sale, A's interest in the building is substantially appreciated (within the meaning of paragraph (c)(2)(iii)(C) of this section). Assuming A's lease of the building to B constitutes a rental activity (within the meaning of § 1.469-1T(e)(3)), the building is used in a passive activity for 21 months (April 1, 2004, through December 31, 2005). Thus, the building was not used in a passive activity for the entire 24-month period ending on the date of the sale. In addition, the

21-month period during which the building was used in a passive activity is less than 20 percent of A's holding period for the building (13 years). Therefore, the gain from the sale is treated under this paragraph (c)(2)(iii) as not from a passive activity.

Example 2. (i) A, an individual, is a stockholder of corporation X. X is a C corporation until December 31, 1993, and is an S corporation thereafter. X acquires a building on January 1, 1993, and sells the building on March 1, 1994. At the time of the sale, A's interest in the building held through X is substantially appreciated (within the meaning of paragraph (c)(2)(iii)(C) of this section). The building is leased to various tenants at all times during the period in which it is held by X. Assume that the lease of the building would constitute a rental activity (within the meaning of § 1.469-1T(e)(3)) with respect to a person that holds the building directly or through an S corporation.
(ii) Paragraph (c)(2)(iii)(D) of this section provides that an interest in property is treated for purposes of this paragraph (c)(2)(iii) as used in an activity other than a passive activity and as held for investment for any period during which the interest is held through a C corporation. Thus, for purposes of determining the character of A's gain from the sale of the building, A's interest in the building is treated as an interest in property held for investment for the period from January 1, 1993, to December 31, 1993, and as an interest in property used in a passive activity for the period from January 1, 1994, to February 28, 1994.

(iii) A's interest in the building was not used in a passive activity for the entire 24-month period ending on the date of the sale. In addition, the 2-month period during which A's interest in the building was used in a passive activity is less than 20 percent of the period during which A held an interest in the building (14 months). Therefore, the gain from the sale is treated under this paragraph (c)(2)(iii) as not from a passive activity.

(iv) Under paragraph (c)(2)(iii)(F) of this section, gain that is treated as nonpassive under this paragraph (c)(2)(iii) is treated as portfolio income (within the meaning of § 1.469-2T(c)(3)(i)) if the gain is from the disposition of an interest in property that was held for investment for more than 50 percent of the period during which the taxpayer held the interest in activities other than passive activities. In this case, A's interest in the building was treated as held for investment for the entire period during which it was used in activities other than passive activities (*i.e.,* the 12-month period from January 1, 1993, to December 31, 1993). Accordingly, A's gain from the sale is treated under this paragraph (c)(2)(iii) as portfolio income.

(iv) *Taxable acquisitions.* If a taxpayer acquires an interest in property in a transaction other than a nonrecognition transaction (within the meaning of section 7701(a)(45)), the ownership and use of the interest in property before the transaction is not taken into account for purposes of applying this paragraph (c)(2) to any subsequent disposition of the interest in property by the taxpayer.

(v) *Property held for sale to customers*—(A) *Sale incidental to another activity*—(*1*) *Applicability*—(*i*) *In general.* This paragraph (c)(2)(v)(A) applies to the disposition of a taxpayer's interest in property if and only if—

(*A*) At the time of the disposition, the taxpayer holds the interest in property in an activity that, for purposes of section 1221(1), involves holding the property or similar property primarily for sale to customers in the ordinary course of a trade or business (a dealing activity);

(*B*) One or more other activities of the taxpayer do not involve holding similar property for sale to customers in the ordinary course of a trade or business (nondealing activities) and the interest in property was used in the nondealing activity or activities for more than 80 percent of the period during which the taxpayer held the interest in property; and

(*C*) The interest in property was not acquired and held by the taxpayer for the principal purpose of selling the interest to customers in the ordinary course of a trade or business.

(*ii*) *Principal purpose.* For purposes of this paragraph (c)(2)(v)(A), a taxpayer is rebuttably presumed to have acquired and held an interest in property for the principal purpose of selling the interest to customers in the ordinary course of a trade or business if—

(*A*) The period during which the interest in property was used in nondealing activities of the taxpayer does not exceed the lesser of 24 months or 20 percent of the recovery period (within the meaning of section 168) applicable to the property; or

(*B*) The interest in property was simultaneously offered for sale to customers and used in a nondealing activity of the taxpayer for more than 25 percent of the period during which the interest in property was used in nondealing activities of the taxpayer.

For purposes of the preceding sentence, an interest in property is not considered to be offered for sale to customers solely because a lessee of the property has been granted an option to purchase the property.

(*2*) *Dealing activity not taken into account.* If paragraph (c)(2)(v)(A) applies to the disposition of a taxpayer's interest in property, holding the interest in the dealing activity is treated, for purposes of § 1.469-2T(c)(2), as the use of the interest in the last nondealing activity of the taxpayer in which the interest in property was used prior to its disposition.

(B) *Use in a nondealing activity incidental to sale.* If paragraph (c)(2)(v)(A) of this section does not apply to the disposition of a taxpayer's interest in property that is held in a dealing activity of the taxpayer at the time of disposition, the use of the interest in property in a nondealing activity of the taxpayer for any period during which the interest in property is also offered for sale to customers is treated, for purposes of § 1.469-2T(c)(2), as the use of the interest in property in the dealing activity of the taxpayer.

(C) *Examples.* The following examples illustrate the application of this paragraph (c)(2)(v):

> *Example 1.* (i) The taxpayer acquires a residential apartment building on January 1, 1993, and uses the building in a rental activity. In January 1996, the taxpayer converts the apartments into condominium units. After the conversion, the taxpayer holds the condominium units for sale to customers in the ordinary course of a trade or business of dealing in condominium units. (Assume that these are dealing operations treated as separate activities under § 1.469-4, and that the taxpayer materially participates in the activity.) In addition, the taxpayer continues to use the units in the rental activity until they are sold. The units are first held for sale on January 1, 1996, and the last unit is sold on December 31, 1996.

(ii) This paragraph (c)(2)(v) provides that holding an interest in property in a dealing activity (the marketing of the property) is treated for purposes of § 1.469-2T(c)(2) as the use of the interest in a nondealing activity if the marketing of the property is incidental to the nondealing use. Under paragraph (c)(2)(v)(A)(*2*) of this section, the interests in property are treated as used in the last nondealing activity in which they were used prior to their disposition. In addition, paragraph (c)(2)(v)(A)(*1*) of this section provides rules for determining whether the marketing of the property is incidental to the use of an interest in property in a nondealing activity. Under these rules, the marketing of the property is treated as incidental to the use in a nondealing activity if the interest in property was used in nondealing activities for more than 80 percent of the taxpayer's holding period in the property (the holding period requirement) and the taxpayer did not acquire and hold the interest in property for the principal purpose of selling it to customers in the ordinary course of a trade or business (a dealing purpose).

(iii) In this case, the apartments were used in a rental activity for the entire period during which they were held by the taxpayer. Thus, the apartments were used in a nondealing activity for more than 80 percent of the taxpayer's holding period in the property, and the marketing of the property satisfies the holding period requirement.

(iv) Paragraph (c)(2)(v)(A)(*1*)(*ii*) of this section provides that a taxpayer is rebuttably presumed to have a dealing purpose unless the interest in property was used in nondealing activities for more than 24 months or 20 percent of the property's recovery period (whichever is less). The same presumption applies if the interest in property was offered for sale to customers during more than 25 percent of the period in which the interest was held in nondealing activities. In this case, the taxpayer used each apartment in a nondealing activity (the rental activity) for a period of 36 to 48 months (*i.e.,* from January 1, 1993, to the date of sale in the period from January through December 1996). Thus, the apartments were used in nondealing activities for more than 24 months, and the first of the rebuttable presumptions described above does not apply. In addition, the apartments were offered for sale to customers for up to 12 months (depending on the month in which the apartment was sold) during the period in which the apartments were used in a nondealing activity. The percentage obtained by dividing the period during which an apartment was held for sale to customers by the period during which the apartment was used in nondealing activities ranges from zero in the case of apartments sold on January 1, 1996, to 25 percent (*i.e.,* 12 months/48 months) in the case of apartments sold on December 31, 1996. Thus, no apartment was offered for sale to customers during more than 25 percent of the period in which it was used in nondealing activities, and the second rebuttable presumption does not apply.

(v) Because neither of the rebuttable presumptions in paragraph (c)(2)(v)(A)(*1*)((*ii*) of this section applies in this case, the taxpayer will not be treated as having a dealing purpose unless other facts and circumstances establish that the taxpayer acquired and held the apartments for the principal

purpose of selling the apartments to customers in the ordinary course of a trade or business. Assume that none of the facts and circumstances suggest that the taxpayer had such a purpose. If that is the case, the taxpayer does not have a dealing purpose.

(vi) The marketing of the property satisfies the holding period requirement, and the taxpayer does not have a dealing purpose. Thus, holding the apartments in the taxpayer's dealing activity is treated for purposes of this paragraph (c)(2) as the use of the apartments in a nondealing activity. In this case, the rental activity is the only nondealing activity in which the apartments were used prior to their disposition. Thus, the apartments are treated under paragraph (c)(2)(v)(A)(2) of this section as interests in property that were used only in the rental activity for the entire period during which the taxpayer held the interests. Accordingly, the rules in § 1.469-2T(c)(2)(ii) and paragraph (c)(2)(iii) of this section do not apply, and all gain from the sale of the apartments is treated as passive activity gross income.

Example 2. (i) The taxpayer acquires a residential apartment building on January 1, 1993, and uses the building in a rental activity. The taxpayer converts the apartments into condominium units on July 1, 1993. After the conversion, the taxpayer holds the condominium units for sale to customers in the ordinary course of a trade or business of dealing in condominium units. (Assume that these are dealing operations treated as separate activities under § 1.469-4, and that the taxpayer materially participates in the activities.) In addition, the taxpayer continues to use the units in the rental activity until they are sold. The first unit is sold on January 1, 1994, and the last unit is sold on December 31, 1996.
(ii) In this case, all of the apartments were simultaneously offered for sale to customers and used in a nondealing activity of the taxpayer for more than 25 percent of the period during which the apartments were used in nondealing activities. Thus, the taxpayer is rebuttably presumed to have acquired the apartments (including apartments that are used in the rental activity for at least 24 months) for the principal purpose of selling them to customers in the ordinary course of a trade or business. Assume that the facts and circumstances do not rebut this presumption. If that is the case, the taxpayer has a dealing purpose, and paragraph (c)(2)(v)(A) of this section does not apply to the disposition of the apartments.

(iii) Paragraph (c)(2)(v)(B) of this section provides that if paragraph (c)(2)(v)(A) of this section does not apply to the disposition of a taxpayer's interest in property that is held in a dealing activity of the taxpayer at the time of the disposition, the use of the interest in property in any nondealing activity of the taxpayer for any period during which the interest is also offered for sale to customers is treated as incidental to the use of the interest in the dealing activity. Accordingly, for purposes of applying the rules of § 1.469-2T(c)(2) to the disposition of the apartments, the rental of the apartments after July 1, 1993, is treated as the use of the apartments in the taxpayer's dealing activity.

Example 3. (i) The taxpayer acquires a residential apartment building on January 1, 1993, and

uses the building in a rental activity. In January 1996, the taxpayer converts the apartments into condominium units. After the conversion, the taxpayer holds the condominium units for sale to customers in the ordinary course of a trade or business of dealing in condominium units. (Assume that these are dealing operations treated as separate activities under § 1.469-4, and that the taxpayer materially participates in the activities.) In addition, the taxpayer continues to use the units in the rental activity until they are sold. The units are first held for sale on January 1, 1996, and the last unit is sold in 1997.

(ii) The treatment of apartments sold in 1996 is the same as in Example 1. The apartments sold in 1997, however, were simultaneously offered for sale to customers and used in a nondealing activity for more than 25 percent of the period during which the apartments were used in nondealing activities. (For example, an apartment that is sold on January 31, 1997, has been offered for sale for 13 months or 26.1 percent of the 49-month period during which it was used in nondealing activities.) Thus, the taxpayer is rebuttably presumed to have acquired the apartments sold in 1997 for the principal purpose of selling them to customers in the ordinary course of a trade of business. Assume that the facts and circumstances do not rebut this presumption. In that case, the marketing of the apartments sold in 1997 does not satisfy the principal purpose requirement, and paragraph (c)(2)(v)(A) of this section does not apply to the disposition of those apartments. Accordingly, for purposes of applying the rules of § 1.469-2T(c)(2) to the disposition of the apartments sold in 1997, the rental of the apartments after January 1, 1996, is treated, under paragraph (c)(2)(v)(B) of this section, as the use of the apartments in the taxpayer's dealing activity.

(c) (3) - (c)(5) [Reserved]

(c) (6) *Gross income from certain oil or gas properties*—

(i) ***In general.*** Notwithstanding any other provision of the regulations under section 469, passive activity gross income for any taxable year does not include an amount of the taxpayer's gross passive income for the year from a property described in this paragraph (c)(6)(i) equal to the taxpayer's net passive income from the property for the year. Property is described in this paragraph (c)(6)(i) if the property is—

(A) An oil or gas property that includes an oil or gas well if, for any prior taxable year beginning after December 31, 1986, any of the taxpayer's loss from the well was treated, solely by reason of § 1.469-1T(e)(4) (relating to a special rule for losses from oil and gas working interests), and not by reason of the taxpayer's material participation in the activity, as a loss that is not from a passive activity; or

(B) Any property the basis of which is determined in whole or in part by reference to the basis of property described in paragraph (c)(6)(i)(A) of this section.

(ii) ***Gross and net passive income from the property.*** For purposes of this paragraph (c)(6)—

(A) The taxpayer's gross passive income for any taxable year from any property described in paragraph (c)(6)(i) of this section is any passive activity gross income for the year (determined without regard to this paragraph (c)(6) and § 1.469-2T(f)) from the property;

(B) The taxpayer's net passive income for any taxable year from any property described in paragraph (c)(6)(i) of this section is the excess, if any, of—

(1) The taxpayer's gross passive income for the taxable year from the property; over

(2) Any passive activity deductions for the taxable year (including any deduction treated as a deduction for the year under § 1.469-1T(f)(4)) that are reasonably allocable to the income; and

(C) if any oil or gas well or other item of property (the item) is included in two or more properties described in paragraph (c)(6)(i) of this section (the properties), the taxpayer must allocate the passive activity gross income (determined without regard to this paragraph (c)(6) and § 1.469-2T(f) from the item and the passive activity deductions reasonably allocable to the item among the properties.

(iii) ***Property.*** For purposes of paragraph (c)(6)(i)(A) of this section, the term "property" does not have the meaning given the term by section 614(a) or the regulations thereunder, and an oil or gas property that includes an oil or gas well is—

(A) The well; and

(B) Any other item of property (including any oil or gas well) the value of which is directly enhanced by any drilling, logging, seismic testing, or other activities the costs of which were taken into account in determining the amount of the taxpayer's income or loss from the well.

(iv) ***Examples.*** The following examples illustrate the application of this paragraph (c)(6):

Example 1. A is a general partner in partnership P and a limited partner in partnership R. P and R own oil and gas working interests in two separate tracts of land acquired from two separate landowners. In 1993, P drills a well on its tract, and A's distributive share of P's losses from drilling the well are treated under § 1.469-1T(e)(4) as not from a passive activity. In the course of selecting the drilling site and drilling the well, P develops information indicating that the reservior in which the well was drilled underlies R's tract as well as P's. Under these facts, P's and R's tracts are treated as one property for purposes of this paragraph (c)(6), even if A's interests in the mineral deposits in the tracts are treated as separate properties under section 614(a). Accordingly, in 1994 and subsequent years, A's distributive share of both P's and R's income and expenses from their respective tracts is taken into account in computing A's net passive income from the property for purposes of this paragraph (c)(6).

Example 2. B is a general partner in partnership S. S owns an oil and gas working interest in a single tract of land. In 1993, S drills a well, and B's distributive share of S's losses from drilling the well is treated under § 1.469-1T(e)(4) as not from a passive activity. In the course of drilling the well, S discovers two oil-bearing formations, one underlying the other. On December 1, 1993, S completes the well in the underlying formation. On January 1, 1994, B converts B's entire general partnership interest in S into a limited partnership interest. In 1994, S completes in, and commences production from, the shallow formation. Under these facts, the two mineral deposits in S's tract are treated as one property for purposes of this paragraph (c)(6), even if they are treated as separate properties under section 614(a). Accordingly, B's distributive share of S's income and expenses from both the underlying formation and from recompletion in and production from the shallow formation is taken into account in computing B's net passive income from the property for purposes of this paragraph (c)(6).

(c) (6)(iv) *Example 3*—(c)(7)(iii) [Reserved]

(c) (7)(iv) Gross income of an individual from a covenant by such individual not to compete;

(v) Gross income that is treated as not from a passive activity under any provision of the regulations under section 469, including but not limited to § 1.469-1T(h)(6) (relating to income from intercompany transactions of members of an affiliated group of corporations filing a consolidated return) and § 1.469-2T(f) and paragraph (f) of this section (relating to recharacterized passive income);

(vi) Gross income attributable to the reimbursement of a loss from fire, storm, shipwreck, or other casualty, or from theft (as such terms are used in section 165(c)(3)) if—

(A) The reimbursement is included in gross income under § 1.165-1(d)(2)(iii) (relating to reimbursements of losses that the taxpayer deducted in a prior taxable year); and

(B) The deduction for the loss was not a passive activity deduction; and

(c) (7)(vii) Gross income or gain allocable to business or rental use of a dwelling unit for any taxable year in which section 280A(c)(5) applies to such business or rental use.

(d)(1) - (d)(2)(viii) [Reserved]

(ix) An item of loss or deduction that is carried to the taxable year under section 172(a), section 613A(d), section 1212(a)(1) (in the case of corporations), or section 1212(b) (in the case of taxpayers other than corporations);

(x) An item of loss or deduction that would have been allowed for a taxable year beginning before January 1, 1987, but for section 704(d), 1366, or 465;

(xi) A deduction for a loss from fire, storm, shipwreck, or other casualty, or from theft (as such terms are used in section 165(c)(3)) if losses that are similar in cause and severity do not recur regularly in the conduct of the activity; and

(xii) A deduction or loss allocable to business or rental use of a dwelling unit for any taxable year in which section 280A(c)(5) applies to such business or rental use.

(d) (3) - (d)(5)(ii) [Reserved]

(d) (5)(iii) *Other applicable rules*—(A) *Applicability of rules in § 1.469-2T(c)(2).* For purposes of this paragraph (d)(5), a taxpayer's interests in property used in an activity and the amounts allocated to the interests shall be determined under § 1.469-2T(c)(2)(i)(C). In addition, the rules contained in paragraph (c)(2)(iv) and (v) of this section apply in determining for purposes of this paragraph (d)(5) the activity (or activities) in which an interest in property is used at the time of its disposition and during the 12-month period ending on the date of its disposition.

(d) (5)(iii)(B) - (d)(6)(v)(D) [Reserved]

(d) (6)(v)(E) Are taken into account under section 613A(d) (relating to limitations on certain depletion deductions), section 1211 (relating to the limitation on capital losses), or section 1231 (relating to property used in a trade or business and involuntary conversions); or

(d) (6)(v)(F) - (d)(7) [Reserved]

(d) (8) *Taxable year in which item arises.* For purposes of § 1.469-2T(d), an item of deduction arises in the taxable year in which the item would be allowable as a deduction under the taxpayer's method of accounting if taxable income for all taxable years were determined without regard to sections 469, 613A(d) and 1211.

(e)(1) - (e)(2)(i) [Reserved]

(e) (2)(ii) *Section 707(c).* Except as provided in paragraph (e)(2)(iii)(B) of this section, any payment to a partner for services or the use of capital that is described in section 707(c), including any payment described in section 736(a)(2) (relating to guaranteed payments made in liquidation of the interest of a retiring or deceased partner), is characterized as a payment for services or as the payment of interest, respectively, and not as a distributive share of partnership income.

(iii) ***Payments in liquidation of a partner's interest in partnership property*** —

(A) ***In general.*** If any gain or loss is taken into account by a retiring partner (or any other person that owns (directly or indirectly) an interest in the partner if the partner is a passthrough entity) or a deceased partner's successor in interest as a result of a payment to which section 736(b) (relating to payments made in exchange for a retired or deceased partner's interest in partnership property) applies, the gain or loss is treated as passive activity gross income or a passive activity deduction only to the extent that the gain or loss would have been passive activity gross income or a passive activity deduction of the retiring or deceased partner (or the other person) if it had been recognized at the time the liquidation of the partner's interest commenced.

(B) ***Payments in liquidation of a partner's interest in unrealized receivables and goodwill under section 736(a).***

(*1*) If a payment is made in liquidation of a retiring or deceased partner's interest, the payment is described in section 736(a), and any income—

(*i*) Is taken into account by the retiring partner (or any other person that owns (directly or indirectly) an interest in the partner if the partner is a passthrough entity) or the deceased partner's successor in interest as a result of the payment; and

(*ii*) Is attributable to the portion (if any) of the payment that is allocable to the unrealized receivables (within the meaning of section 751(c)) and goodwill of the partnership;

the percentage of the income that is treated as passive activity gross income shall not exceed the percentage of passive activity gross income that would be included in the gross income that the retiring or deceased partner (or the other person) would have recognized if the unrealized receivables and goodwill had been sold at the time that the liquidation of the partner's interest commenced.

(*2*) For purposes of this paragarph (e)(2)(iii)(B), the portion (if any) of a payment under section 736(a) that is allocable to unrealized receivables and goodwill of a partnership shall be determined in accordance with the principles employed under § 1.736-1(b) for determining the portion of a payment made under section 736 that is treated as a distribution under section 736(b).

(e) (3)

(i)-(iii) (A) [Reserved]

(B) An amount of gain that would have been treated as gain that is not from a passive activity under paragraph (c)(2)(iii) of this section (relating to substantially appreciated property formerly used in a nonpassive activity), paragraph (c)(6) of this section (relating to certain oil or gas properties), § 1.469-2T(f)(5) (relating to certain property rented incidental to development), paragraph (f)(6) of this section (relating to property rented to a nonpassive activity), or § 1.469-2T(f)(7) (relating to certain interests in a passthrough entity engaged in the trade or business of licensing intangible property) would have been allocated to the holder (or such other person) with respect to the interest if all of the property used in the passive activity had been sold immediately prior to the disposition for its fair market value on the applicable valuation date (within the meaning of § 1.469-2T(e)(3)(ii)(D)(*1*)); and

(e) (3)(iii)(C) - (f)(4) [Reserved]

(f) (5) *Net income from certain property rented incidental to development activity*—

(i) ***In general.*** An amount of the taxpayer's gross rental activity income for the taxable year from an item of property equal to the net rental activity income for the year from the item of property shall be treated as not from a passive activity if—

(A) Any gain from the sale, exchange, or other disposition of the item of property is included in the taxpayer's income for the taxable year;

(B) The taxpayer's use of the item of property in an activity involving the rental of the property commenced less than 12 months before the date of the disposition (within the meaning of paragraph (c)(2)(iii)(B) of this section) of such property; and

(C) The taxpayer materially participated (within the meaning of § 1.469-5T) or significantly participated (within the meaning of § 1.469-5T(c)(2)) for any taxable year in an activity that involved for such year the performance of services for the purpose of enhancing the value of such item of property (or any other item of property if the basis of the item of property that is sold, exchanged, or otherwise disposed of is determined in whole or in part by reference to the basis of such other item of property).

(ii) ***Commencement of use*** —

(A) ***In general.*** For purposes of paragraph (f)(5)(i)(B) of this section, a taxpayer's use of an item of property in an activity involving the rental of the property commences on the first date on which—

(*1*) The taxpayer owns an interest in the property;

(*2*) Substantially all of the property is rented (or is held out for rent and is in a state of readiness for rental); and

(*3*) No significant value-enhancing services (within the meaning of paragraph (f)(5)(ii)(B) of this section) remain to be performed.

(B) ***Value-enhancing services.*** For purposes of this paragraph (f)(5)(ii), the term value-enhancing services means the services described in paragraphs (f)(5) (i)(C) and (iii) of this section, except that the term does not include lease-up. Thus, in cases in which this paragraph (f)(5) applies solely because substantial lease-up remains to be performed (see paragraph (f)(5)(iii)(C) of this

section), the twelve month period described in paragraph (f)(5)(i)(B) of this section will begin when the taxpayer acquires an interest in the property if substantially all of the property is held out for rent and is in a state of readiness for rental on that date.

(iii) ***Services performed for the purpose of enhancing the value of property.*** For purposes of paragraph (f)(5)(i)(C) of this section, services that are treated as performed for the purpose of enhancing the value of an item of property include but are not limited to—

(A) Construction;

(B) Renovation; and

(C) Lease-up (unless more than 50 percent of the property is leased on the date that the taxpayer acquires an interest in the property).

(iv) ***Examples.*** The following examples illustrate the application of this paragraph (f)(5):

Example 1. (i) A, a calendar year individual, is a partner in P, a calendar year partnership, which develops real estate. In 1993, P acquires an interest in undeveloped land and arranges for the financing and construction of an office building on the land. Construction is completed in February 1995, and substantially all of the building is either rented or held out for rent and in a state of readiness for rental beginning on March 1, 1995. Twenty percent of the building is leased as of March 1, 1995.
(ii) P rents the building (or holds it out for rent) for the remainder of 1995 and all of 1996, and sells the building on February 1, 1997, pursuant to a contract entered into on January 15, 1996. P did not hold the building (or any other buildings) for sale to customers in the ordinary course of P's trade or business (see paragraph (c)(2)(v) of this section). A's distributive share of P's taxable losses from the rental of the building is $50,000 for 1995 and $30,000 for 1996. All of A's losses from the rental of the building are disallowed under 1.469-1(a)(1)(i) (relating to the disallowance of the passive activity loss for the taxable year). A's distributive share of P's gain from the sale of the building is $150,000. A has no other gross income or deductions from the activity of renting the building.

(iii) The real estate development activity that A holds through P in 1993, 1994, and 1995 involves the performance of services (e.g., construction) for the purpose of enhancing the value of the building. Accordingly, an amount equal to A's net rental activity income from the building may be treated as gross income that is not from a passive activity if A's use of the building in an activity involving the rental of the building commenced less that 12 months before the date of the disposition of the building. In this case, the date of the disposition of the building is January 15, 1996, the date of the binding contract for its sale.

(iv)(A) A taxpayer's use of an item of property in an activity involving the rental of the property commences on the first date on which—

(*1*) The taxpayer owns an interest in the item of property;

(*2*) Substantially all of the property is rented (or is held out for rent and is in a state of readiness for rental); and

(*3*) No significant value-enhancing services (within the meaning of paragraph (f)(5)(ii)(B) of this section) remain to be performed.

(B) In this case, A's use of the building in an activity involving the rental of the building commenced on March 1, 1995, less than 12 months before January 15, 1996, the date of disposition. Accordingly, if A materially (or significantly) participated in the real estate development activity in 1993, 1994, or 1995 (without regard to whether A materially participated in the activity in more than one of those years), an amount of A's gross rental activity income from the building for 1997 equal to A's net rental activity income from the building for 1997 is treated under this paragraph (f)(5) as gross income that is not from a passive activity. Under paragraph (f)(9)(iv) of this section, A's net rental activity income from the building for 1997 is $70,000 ($150,000 distributive share of gain from the disposition of the building minus $80,000 of reasonably allocable passive activity deductions).

Example 2. (i) X, a calendar year taxpayer subject to section 469, acquires a building on February 1, 1994, when the building is 25 percent leased. During 1994, X rents the building (or holds it out for rent) and materially participates in an activity that involves the lease-up of the building. X's activities do not otherwise involve the performance of construction or other services for the purpose of enhancing the value of the building, and X does not hold the building (or any other building) for sale to customers in the ordinary course of X's trade or business. X sells the building on December 1, 1994.
(ii)(A) Under paragraph (f)(5)(iii)(C) of this section, lease-up is considered a service performed for the purpose of enhancing the value of property unless more than 50 percent of the property is leased on the date the taxpayer acquires an interest in the property. Under paragraph (f)(5)(ii)(B) of this section, however, lease-up is not considered a value-enhancing service for purposes of determining when the taxpayer commences using an item of property in an activity involving the rental of the property. Accordingly, X's acquisition of the building constitutes a commencement of X's use of the building in a rental activity, because February 1, 1994, is the first date on which—

(*1*) The taxpayer owns an interest in the item of property;

(*2*) Substantially all of the property is held out for rent; and

(*3*) No significant value-enhancing services (within the meaning of paragraph (f)(5)(ii)(B) of this section) remain to be performed.

(B) In this case, X disposes of the property within 12 months of the date X commenced using the building in a rental activity. Accordingly, an amount of X's gross rental activity income for 1994 equal to X's net rental activity income from the building for 1994 is treated under this paragraph (f)(5) as gain that is not from a passive activity.

Example 3. The facts are the same as in Example 2, except that at the time X acquires the building it is 60 percent leased. Under paragraph (f)(5)(iii)(C) of this section, lease-up is not considered a service performed for the purpose of enhancing the value of property if more than 50 percent of the property is leased on the date the taxpayer acquires an interest in the property. Therefore, additional lease-up performed by X is not taken into account under this paragraph (f)(5). Since X's activities do not otherwise involve the performance of services for the purpose of enhancing the value of the building, none of X's gross rental activity income from the building will be treated as income that is not from a passive activity under this paragraph (f)(5).

(f) (6) *Property rented to a nonpassive activity.* An amount of the taxpayer's gross rental activity income for the taxable year from an item of property equal to the net rental activity income for the year from that item of property is treated as not from a passive activity if the property—

(i) Is rented for use in a trade or business activity (within the meaning of paragraph (e)(2) of this section) in which the taxpayer materially participates (within the meaning of § 1.469-5T) for the taxable year; and

(ii) Is not described in § 1.469-2T(f)(5).

(f) (7) - (f)(9)(ii) [Reserved]

(f) (9)(iii) The gross rental activity income for a taxable year from an item of property is any passive activity gross income (determined without regard to § 1.469-2T(f)(2) through (f)(6)) that—

(A) Is income for the year from the rental or disposition of such item of property; and

(B) In the case of income from the disposition of such item of property, is income from an activity that involved the rental of such item of property during the 12-month period ending on the date of the disposition (see § 1.469-2T(c)(2)(ii)); and

(iv) The net rental activity income from an item of property for the taxable year is the excess, if any, of—

(A) The gross rental activity income from the item of property for the taxable year; over

(B) Any passive activity deductions for the taxable year (including any deduction treated as a deduction for the year under § 1.469-1(f)(4)) that are reasonably allocable to the income.

(10) *Coordination with section 163(d).* Gross income that is treated as not from a passive activity under § 1.469-2T(f)(3), (4), or (7) is treated as income described in section 469(e)(1)(A) and § 1.469-2T(c)(3)(i) except in determining whether—

(i) Any property is treated for purposes of section 469(e)(1)(A)(ii)(I) and § 1.469-2T(c)(3)(i)(C) as property that produces income of a type described in § 1.469-2T(c)(3)(i)(A);

(ii) Any property is treated for purposes of section 469(e)(1)(A)(ii)(II) and § 1.469-2T(c)(3)(i)(D) as property held for investment;

(iii) An expense (other than interest expense) is treated for purposes of section 469(e)(1)(A)(i)(II) and § 1.469-2T(d)(4) as clearly and directly allocable to portfolio income (within the meaning of § 1.469-2T(c)(3)(i); and

(iv) Interest expense is allocated under § 1.163-8T to an investment expenditure (within the meaning of § 1.163-8T(b)(3)) or to a passive activity expenditure (within the meaning of § 1.163-8T(b)(4)).

(11) [Reserved]

[T.D. 8417, 57 FR 20754, May 15, 1992, as amended by T.D. 8477, 58 FR 11538, Feb. 26, 1993; 58 FR 13706, Mar. 15, 1993; 58 FR 29536, May 21, 1993; T.D. 8495, 58 FR 58787, Nov. 4, 1993; T.D. 8417, 59 FR 45623, Sept. 2, 1994]

§ 1.469-2T Passive activity loss (temporary).

(a) ***Scope of this section.*** This section contains rules for determining the amount of the taxpayer's passive activity loss for the taxable year for purposes of section 469 and the regulations thereunder. The rules contained in this section—

(1) Provide general guidance for identifying items of income and deduction that are taken into account in determining the amount of the passive activity loss for the taxable year;

(2) Specify particular items of income and deduction that are not taken into account in determining the amount of the passive activity loss for the taxable year; and

(3) Specify the manner in which provisions of the Internal Revenue Code and the regulations, other than section 469 and the regulations thereunder, are applied for purposes of determining the extent to which items of deduction are taken into account for a taxable year in computing the amount of the passive activity loss for such year.

(b) ***Definition of passive activity loss*** —

(1) ***In general.*** In the case of a taxpayer other than a closely held corporation (within the meaning of § 1.469-1T(g)(2)(ii)), the passive activity loss for the taxable year is the amount, if any, by which the passive activity deductions for the taxable year exceed the passive activity gross income for the taxable year.

(2) ***Cross references.*** See paragraph (c) of this section for the definition of “passive activity gross income,” paragraph (d) of this section for the definition of “passive activity deduction,” and § 1.469-1T(g)(4) for the computation of the passive activity loss of a closely held corporation.

(c) ***Passive activity gross income*** —

(1) ***In general.*** Except as otherwise provided in the regulations under section 469, passive activity gross income for a taxable year includes an item of gross income if and only if such income is from a passive activity.

(2) ***Treatment of gain from disposition of an interest in an activity or an interest in property used in an activity*** —

(i) ***In general*** —

(A) ***Treatment of gain.*** Except as otherwise provided in the regulations under section 469, any gain recognized upon the sale, exchange or other disposition (a "disposition") of an interest in property used in an activity at the time of the disposition or of an interest in an activity held through a partnership or S corporation is treated in the following manner:

(*1*) The gain is treated as gross income from such activity for the taxable year or years in which it is recognized;

(*2*) If the activity is a passive activity of the taxpayer for the taxable year of the disposition, the gain is treated as passive activity gross income for the taxable year or years in which it is recognized; and

(*3*) If the activity is not a passive activity of the taxpayer for the taxable year of the disposition, the gain is treated as not from a passive activity.

(B) ***Dispositions of partnership interests and S corporation stock.*** A partnership interest or S corporation stock is not property used in an activity for purposes of this paragraph (c)(2). See paragraph (e)(3) of this section for rules treating the gain recognized upon the disposition of a partnership interest or S corporation stock as gain from the disposition of interests in the activities in which the partnership or S corporation has an interest.

(C) ***Interest in property.*** For purposes of applying this paragraph (c)(2) to a disposition of property—

(*1*) Any material portion of the property that was used, at any time before the disposition, in any activity at a time when the remainder of the property was not used in such activity shall be treated as a separate interest in property; and

(*2*) The amount realized from the disposition and the adjusted basis of the property must be allocated among the separate interests in a reasonable manner.

(D) ***Examples.*** The following examples illustrate the application of this paragraph (c)(2)(i):

Example 1. A owns an interest in a trade or business activity in which A has never materially participated. In 1987, A sells equipment that was used exclusively in the activity and realizes a gain on the sale. Under paragraph (c)(2)(i)(A)(*2*) of this section, the gain is passive activity gross income.

Example 2. B owns an interest in a trade or business activity in which B materially participates for 1987. In 1987, B sells a building used in the activity in an installment sale and realizes a gain on the sale. B does not materially participate in the activity for 1988 or any subsequent year. Under paragraph (c)(2)(i)(A)(*3*) of this section, none of B's gain from the sale (including gain taken into account after 1987) is passive activity gross income.

Example 3. C enters into a contract to acquire property used by the seller in a rental activity. Before acquiring the property pursuant to the contract, C sells all rights under the contract and realizes a gain on the sale. Since C's rights under the contract are not property used in a rental activity, the gain is not income from a rental activity. The result would be the same if C owned an option to acquire the property and sold the option.

Example 4. D sells a ten-floor office building. D owned the building for three years preceding the sale and at all times during that period used seven floors of the building in a trade or business activity and three floors in a rental activity. The fair market value per square foot is substantially the same throughout the building, and D did not maintain a separate adjusted basis for any part of the building. Under paragraph (c)(2)(i)(C)(*1*) of this section, the seven floors used in the trade or business activity and the three floors used in the rental activity are treated as separate interests in property. Under paragraph (c)(2)(i)(C)(*2*) of this section, the amount realized and the adjusted basis of the building must be allocated between the separate interests in a reasonable manner. Under these facts, an allocation based on the square footage of the parts of the building used in each activity would be reasonable.

Example 5. The facts are the same as in Example 4, except that two of the seven floors used in the trade or business activity were used in the rental activity until five months before the sale. Under paragraph (c)(2)(i)(C)(*1*) of this section, the five floors used exclusively in the trade or business activity and the two floors used first in the rental activity and then in the trade or business activity are treated as separate interests in property. See paragraph (c)(2)(ii) of this section for rules for allocating amount realized and adjusted basis upon a disposition of an interest in property used in more than one activity during the 12-month period ending on the date of the disposition.

(ii) ***Disposition of property used in more than one activity in 12-month period preceding disposition.*** In the case of a disposition of an interest in property that is used in more than one activity during the 12-month period ending on the date of the disposition, the amount realized from the disposition and the adjusted basis of such interest must be allocated among such activities on a basis that reasonably reflects the use of such interest in property during such 12-month period. For purposes of this paragraph (c)(2)(ii), an allocation of the amount realized and adjusted basis solely to the activity in which an iterest in property is predominantly used during the 12-month period ending on the date of the disposition reasonably reflects the use of such interest in property if the fair market value of such interest does not exceed the lesser of—

(A) $10,000; and

(B) 10 percent of the sum of the fair market value of such interest and the fair market value of all other property used in such activity immediately before the disposition.

The following examples illustrate the application of this paragraph (c)(2)(ii):

Example 1. The facts are the same as in Example 5 of paragraph (c)(2)(i)(D) of this section. Under paragraph (c)(2)(i)(C)(*2*) of this section, D allocates the amount realized and adjusted basis of the building 30 percent to the three floors used exclusively in the rental activity, 50 percent to the five floors used exclusively in the trade or business activity, and 20 percent to the two floors used first in the rental activity and then in the trade or business activity. Under this paragraph (c)(2)(ii), the amount realized and adjusted basis allocated to the two floors that were used in both activities during the 12-month period ending on the date of the disposition must also be allocated between such activities. Under these facts, an allocation of $^{7}/_{12}$ of such amounts to the rental activity and $^{5}/_{12}$ of such amounts to the trade or business activity would reasonably reflect the use of the two floors during the 12-month period ending on the date of the disposition.

Example 2. B is a limited partner in a partnership that sells a tractor-trailer. During the 12-month period ending on the date of the sale, the tractor-trailer was used in several activities, and the partnership allocates the amount realized from the disposition and the adjusted basis of the tractor-trailer among the activities based on the number of days during the 12-month period that the partnership used the tractor-trailer in each activity. Under these facts, the partnership's allocation reasonably reflects the use of the tractor-trailer during the 12-month period ending on the date of the sale.

Example 3. C sells a personal computer for $8,000. During the 12-month period ending on the date of the sale, 70 percent of C's use of the computer was in a passive activity. Immediately before the sale, the fair market value of all property used in the passive activity (including the personal computer) was $200,000. Under these facts, the computer was predominatly used in the passive activity during the 12-month period ending on the date of the sale, and the value of the computer, as measured by its sale price ($8,000), does not exceed the lesser of (a) $10,000, and (b) 10 percent of the value of all property used in the activity immediately before the sale ($20,000). C allocates the amount realized and the adjusted basis solely to the passive activity. Under this paragraph (c)(2)(ii), C's allocation reasonably reflects the use of the computer during the 12-month period ending on the date of the sale.

(iii) ***Disposition of substantially appreciated property formerly used in nonpassive activity.*** [Reserved]. See § 1.469-4(c)(2)(iii) for rules relating to this paragraph.

(iv) ***Taxable acquisitions.*** [Reserved]. See § 1.469-2(c)(iv) for rules relating to this paragraph.

(v) ***Property held for sale to customers.*** [Reserved]. See § 1.469-2(c)(v) for rules relating to this paragraph.

(3) ***Items of portfolio income specifically excluded*** —

(i) ***In general.*** Passive activity gross income does not include portfolio income. For purposes of the preceding sentence, portfolio income includes all gross income, other than income derived in the ordinary course of a trade or business (within the meaning of paragraph (c)(3)(ii) of this section), that is attributable to—

(A) Interest (including amounts treated as interest under paragraph (e)(2)(ii) of this section, relating to certain payments to partners for the use of capital); annuities; royalties (including fees and other payments for the use of intangible property); dividends on C corporation stock; and income (including dividends) from a real estate investment trust (within the meaning of section 856), regulated investment company (within the meaning of section 851), real estate mortgage investment conduit (within the meaning of section 860D), common trust fund (within the meaning of section 584), controlled foreign corporation (within the meaning of section 957), qualified electing fund (within the meaning of section 1295(a)), or cooperative (within the meaning of section 1381(a));

(B) Dividends on S corporation stock (within the meaning of section 1368(c)(2);

(C) The disposition of property that produces income of a type described in paragraph (c)(3)(i)(A) of this section; and

(D) The disposition of property held for investment (within the meaning of section 163 (d)).

(ii) ***Gross income derived in the ordinary course of a trade or business.*** Solely for purposes of paragraph (c)(3)(i) of this section, gross income derived in the ordinary course of a trade or business includes only—

(A) Interest income on loans and investments made in the ordinary course of a trade or business of lending money;

(B) Interest on accounts receivable arising from the performance of services or the sale of property in the ordinary course of a trade or business of performing such services or selling such property, but only if credit is customarily offered to customers of the business;

(C) Income from investments made in the ordinary course of a trade or business of furnishing insurance or annuity contracts or reinsuring risks underwritten by insurance companies;

(D) Income or gain derived in the ordinary course of an activity of trading or dealing in any property if such activity constitutes a trade or business (but see paragraph (c)(3)(iii)(A) of this section);

(E) Royalties derived by the taxpayer in the ordinary course of a trade or business of licensing intangible property (within the meaning of paragraph (c)(3)(iii)(B) of this section);

(F) Amount included in the gross income of a patron of a cooperative (within the meaning of section 1381(a), without regard to paragraph (2)(A) or (C) thereof) by reason of any payment or allocation to the patron based on patronage occurring with respect to a trade or business of the patron; and

(G) Other income identified by the Commissioner as income derived by the taxpayer in the ordinary course of a trade or business.

(iii) ***Special rules*** —

(A) ***Income from property held for investment by dealer.*** For purposes of paragraph (c)(3)(i) of this section, a dealer's income or gain from an item of property is not dervied by the dealer in the ordinary course of a trade or business of dealing in such property if the dealer held the property for investment at any time before such income or gain is recognized.

(B) ***Royalties derived in the ordinary course of the trade or business of licensing intangible property*** —

(*1*) ***In general.*** Royalties received by any person with respect to a license or other transfer of any rights in intangible property shall be considered to be derived in the ordinary course of the trade or business of licensing such property only if such person—

(*i*) Created such property; or

(*ii*) Performed substantial services or incurred substantial costs with respect to the development or marketing of such property.

(*2*) ***Substantial services or costs*** —

(*i*) ***In general.*** Except as provided in paragraph (c)(3)(iii)(B)(*2*)(*ii*) of this section, the determination of whether a person has performed substantial services or incurred substantial costs with respect to the development or marketing of an item of intangible property shall be made on the basis of all the facts and circumstances.

(*ii*) ***Exception.*** A person has performed substantial services or incurred substantial costs for a taxable year with respect to the development or marketing of an item of intangible property if—

(*a*) The expenditures reasonably incurred by such person in such taxable year with respect to the development or marketing of the property exceed 50 percent of the gross royalties from licensing such property that are includible in such person's gross income for the taxable year; or

(*b*) The expenditures reasonably incurred by such person in such taxable year and all prior taxable years with respect to the development or marketing of the property exceed 25 percent of the aggregate capital expenditures (without any adjustment of amortization) made by such person with respect to the property in all such taxable years.

(*iii*) ***Expenditures taken into account.*** For purposes of paragraph (c)(3)(iii)(B)(*2*)(*ii*) of this section, expenditures in a taxable year include amounts chargeable to capital account for such year without regard to the year or years (if any) in which any deduction for such expenditure is allowed.

(*3*) ***Passthrough entities.*** For purposes of this paragraph (c)(3)(iii)(B), in the case of any intangible property held by a partnership, S corporation, estate, or trust, the determination of whether royalties from such property are derived in the ordinary course of a trade or business shall be made by applying the rules of this paragraph (c)(3)(iii)(B) to such entity and not to any holder of an interest in such entity.

(*4*) ***Cross reference.*** For special rules applicable to certain gross income from a trade or business of licensing intangible property, see paragraph (f)(7) of this section.

(C) ***Mineral production payments.*** For purposes of section 469 and the regulations thereunder—

(*1*) If a mineral production payment is treated as a loan under section 636, the portion of any payment in discharge of the production payment that is the equivalent of interest shall be treated as interest; and

(*2*) If a mineral production payment is not treated as a loan under section 636, payments in discharge of the production payment shall be treated as royalties.

(iv) ***Examples.*** The following examples illustrate the application of this paragraph (c)(3):

Example 1. A, an individual engaged in the trade or business of farming, disposes of farmland in an installment sale. A is not engaged in a trade or business of selling farmland. Therefore, A's interest income from the installment note is not gross income derived in the ordinary course of a trade or business.

Example 2. P, a partnership, operates a rental apartment building for low-income tenants in City Y. Under Y's laws relating to the operation of low-income housing, P is required to maintain a reserve fund to pay for the maintenance and repair of the building. P invests the reserve fund in short-term interest-bearing deposits. Because P's interest income from the investment of the reserve fund is not interest income described in paragraph (c)(3)(ii) of this section, such income is not treated as derived in the ordinary course of a trade or business. Accordingly, P's interest income from the deposits is portfolio income (within the meaning of paragraph (c)(3)(i) of this section).

Example 3. (i) B is a partner in a partnership that is engaged in an activity involving the conduct of a trade or business of dealing in securities. On February 1, the partnership acquires certain securities for investment (within the meaning of section 163(d)). On February 2, before recognizing any income with respect to the securities, the partnership determines that it would be advisable to hold the securities primarily for sale to customers and subsequently sells them to customers in the ordinary course of its business.
(ii) Under paragraph (c)(3)(iii)(A) of this section, income or gain from any security (including any security acquired pursuant to an investment of working capital) held by a dealer for investment at any time before such income or gain is recognized is not treated for purposes of paragraph (c)(3)(i) of this section as derived by the dealer in the ordinary course of its trade or business of dealing in securities. Accordingly, B's distributive share of the partnership's interest, dividends, or gains from the securities acquired by the partnership for investment on February 1 is portfolio income of B, notwithstanding that such securities were held by the partnership, subsequent to February 1, primarily for sale to customers in the ordinary course of the partnership's trade or business of dealing in securities.

Example 4. C is a partner in a partnership that is engaged in an activity of trading or dealing in royalty interests in mineral properties. The partnership derives royalty income from royalty interests held in the activity. If the activity is a trade or business activity, C's distributive share of the partnership's royalty income from such royalty interests is treated under paragraph (c)(3)(ii)(D) of this section as derived in the ordinary course of the partnership's trade or business.

Example 5. (i) D, a calendar year individual, is a partner in a calendar year partnership that is engaged in an activity of developing and marketing a design for a system that reduces air pollution in office buildings. D has a 10 percent distributive share of all items of partnership income, gain, loss, deduction, and credit. In 1987, the partnership acquired the rights to the design for $100,000. In 1987, 1988, and 1989, the partnership incurs expenditures with respect to the development and marketing of the design, and derives gross royalties from licensing the design, in the amounts set forth in the table below. The expenditures incurred in 1987 and 1988 are currently deductible expenses. The expenditures

incurred in 1989 are capitalized and may be deducted only in subsequent taxable years.

Year	Gross royalties	Expenditures	Cumulative capital expenditures
1987	$20,000	$8,000	$100,000
1988	20,000	12,000	100,000
1989	60,000	15,000	115,000
1990	120,000	0	115,000

(ii) Under paragraph (c)(3)(iii)(B)(*3*) of this section, the determination of whether royalties from intangible property are derived in the ordinary course of a trade or business of a partnership is made by applying the rules of paragraph (c)(3)(iii)(B) of this section to the partnership rather than the partners. The expenditures reasonably incurred by the partnership in 1987 with respect to the development or marketing of the design ($8,000) do not exceed 50 percent of the partnership's gross royalties for such year from licensing the design ($20,000). In addition, the sum of such expenditures incurred in 1987 and all prior taxable years ($8,000) does not exceed 25 percent of the aggregate capital expenditures made by the partnership in all such taxable years with respect to the design ($100,000). Accordingly, for 1987, the partnership is not treated under paragraph (c)(3)(iii)(B)(*2*)(*ii*) of this section as performing substantial services or incurring substantial costs with respect to the development or marketing of the design. Therefore, unless all of the facts and circumstances indicate that the partnership performed substantial services or incurred substantial costs with respect to the development or marketing of the design, D's distributive share of the partnership's royalty income for 1987 is portfolio income.
(iii) As of the end of 1988, the sum of the expenditures reasonably incurred by the partnership during such taxable year and all prior taxable years with respect to the development or marketing of the design ($20,000) does not exceed 25 percent of the aggregate capital expenditures made by the partnership in all such years with respect to the design ($100,000). However, the amount of such expenditures incurred by the partnership in 1988 ($12,000) exceeds 50 percent of the partnership's gross royalties for such year from licensing the design ($20,000). Accordingly, for 1988, under paragraph (c)(3)(iii)(B)(*2*)(*ii*)(*a*) of this section, the partnership is treated as performing substantial services or incurring substantial costs with respect to the development or marketing of the design, and D's

distributive share of the partnership's royalty income for 1988 is considered for purposes of paragraph (c)(3)(i) of this section to be derived in the ordinary course of a trade or business and therefore is not portfolio income.

(iv) The expenditures reasonably incurred by the partnership in 1989 with respect to the development or marketing of the design ($15,000) do not exceed 50 percent of the partnership's gross royalties for such year from licensing the design ($60,000). However, the sum of such expenditures incurred by the partnership in 1989 and all prior taxable years ($35,000) exceeds 25 percent of the partnership's aggregate capital expenditures made in all such years with respect to the design ($115,000). Accordingly, for 1989, under paragraph (c)(3)(iii)(B)(*2*)(*ii*)(*b*) of this section, the partnership is treated as performing substantial services or incurring substantial costs with respect to the development or marketing of the design, and D's distributive share of the partnership's royalty income in 1989 is considered for purposes of paragraph (c)(3)(i) of this section to be derived in the ordinary course of a trade or business and therefore is not portfolio income.

(v) The result for 1990 is the same as for 1989, notwithstanding that the partnership incurs no expenditures in 1990 with respect to the development or marketing of the design.

Example 6. The facts are the same as in Example 5, except that, for 1987, D's distributive share of the partnership's development and marketing costs is 15 percent, while D's distributive share of the partnership's gross royalties is 10 percent. Although D's distributive share of the expenditures reasonably incurred by the partnership during 1987 with respect to the development and marketing of the design ($1,200) is more than 50 percent of D's distributive share of the partnership's gross royalties from licensing the design ($2,000), D is not treated as performing substantial services or incurring substantial costs with respect to the development or marketing of the design for 1987 under paragraph (c)(3)(iii)(B)(*2*)(*ii*)(*a*) of this section. This is because, under paragraph (c)(3)(iii)(B)(*3*) of this section, the determination of whether the royalties are derived in the ordinary course of a trade or business is made by applying paragraph (c)(3)(iii)(B) of this section to the partnership, and not to D.

(4) ***Items of personal service income specifically excluded*** —

(i) ***In general.*** Passive activity gross income does not include compensation paid to or on behalf of an individual for personal services performed or to be performed by such individual at any time. For purposes of this paragraph (c)(4), compensation for personal services includes only—

(A) Earned income (within the meaning of section 911(d)(2)(A)), including gross income from a payment described in paragraph (e)(2) of this section that represents compensation for the performance of services by a partner;

(B) Amounts includible in gross income under section 83;

(C) Amounts includible in gross income under sections 402 and 403;

(D) Amounts (other than amounts described in paragraph (c)(4)(i)(C) of this section) paid pursuant to retirement, pension, and other arrangements for deferred compensation for services;

(E) Social security benefits (within the meaning of section 86(d)) includible in gross income under section 86; and

(F) Other income identified by the Commissioner as income derived by the taxpayer from personal services;

provided, however, that no portion of a partner's distributive share of partnership income (within the meaning of section 704(b)) or a shareholder's pro rata share of income from an S corporation (within the meaning of section 1377(a)) shall be treated as compensation for personal services.

(ii) ***Example.*** The following example illustrates the application of this paragraph (c)(4):

Example. C owns 50 percent of the stock of X, an S corporation. X owns rental real estate, which it manages. X pays C a salary for services performed by C on behalf of X in connection with the management of X's rental properties. Under this paragraph (c)(4), although C's pro rata share of X's gross rental income is passive activity gross income (even if the salary paid to C is less than the fair market value of C's services), the salary paid to C does not constitute passive activity gross income.

(5) ***Income from section 481 adjustment*** —

(i) ***In general.*** If a change in accounting method results in a positive section 481 adjustment with respect to an activity, a ratable portion (within the meaning of paragraph (c)(5)(iii) of this section) of the amount taken into account for a taxable year as a net positive section 481 adjustment by reason of such change shall be treated as gross income from the activity for such taxable year, and such gross income shall be treated as passive activity gross income if and only if such activity is a passive activity for the year of the change (within the meaning of section 481(a)).

(ii) ***Positive section 481 adjustments.*** For purposes of applying this paragraph (c)(5)—

(A) The term “net positive section 481 adjustment” means the increase (if any) in taxable income taken into account under section 481(a) to prevent amounts from being duplicated or omitted by reason of a change in accounting method; and

(B) The term “positive section 481 adjustment with respect to an activity” means the increase (if any) in taxable income that would be taken into account under section 481(a) to prevent only the duplication or omission of amounts from such activity by reason of the change in accounting method.

(iii) ***Ratable portion.*** The ratable portion of the amount taken into account as a net positive section 481 adjustment for a taxable year by reason of a change in accounting method is determined with respect to an activity by multiplying such amount by the fraction obtained by dividing—

(A) The positive section 481 adjustment with respect to the activity; by

(B) The sum of the positive section 481 adjustments with respect to all of the activities of the taxpayer.

(6) *Gross income from certain oil or gas properties* —

(i) ***In general.*** [Reserved]. See § 1.469-2(c)(6)(i) for rules relating to this paragraph.

(ii) ***Gross and net passive income from the property.*** [Reserved]. See § 1.469-2(c)(6)(ii) for rules relating to this paragraph.

(iii) ***Property.*** [Reserved]. See 1.469-2(c)(6)(iii) for rules relating to this paragraph.

(iv) ***Examples.*** The following examples illustrate the application of this (c)(6):

Example 1. [Reserved]. See § 1.469-2(c)(6)(iv) *Example 1.*

Example 2. [Reserved]. See § 1.469-2(c)(6)(iv) *Example 2.*

Example 3. C is a general partner in partnership T and a limited partner in partnership U. T and U both own oil and gas working interests in tracts of land in County X. In 1987, T drills a well, and C's distributive share of T's losses from drilling the well is treated under § 1.469-1T(e)(4) as not from a passive activity. In the course of selecting the drilling site and drilling the well, T develops information indicating a significant probability that substantial oil and gas reserves underlie most portions of County X. As a result, the value of all oil and gas properties in County X is enhanced. The information developed by T does not, however, indicate that the reservoir in which T's well is drilled underlies U's tract. Under these facts, T's and U's tracts are not treated as one property for purposes of this paragraph (c)(6), because the value of U's tract is not directly enhanced by T's activities.

(7) ***Other items specifically excluded.*** Notwithstanding any other provision of the regulations under section 469, passive activity gross income does not include the following:

(i) Gross income of an individual from intangible property, such as a patent, copyright, or literary, musical, or artistic composition, if the taxpayer's personal efforts significantly contributed to the creation of such property;

(ii) Gross income from a qualified low-income housing project (within the meaning of section 502 of the Tax Reform Act of 1986) for any taxable year in the relief period (within the meaning of section 502(b) of such Act;

(iii) Gross income attributable to a refund of any state, local, or foreign income, war profits, or excess profits tax;

(iv) [Reserved]. See § 1.469-2(c)(7)(iv) for rules relating to this paragraph (c)(7)(iv).

(v) [Reserved]. See § 1.469-2(c)(7)(v) for rules relating to this paragraph (c)(7)(v).

(vi) [Reserved]. See § 1.469-2(c)(7)(vi) for rules relating to this paragraph (c)(7)(vi).

(d) *Passive activity deductions* —

(1) ***In general.*** Except as otherwise provided in section 469 and the regulations thereunder, a deduction is a passive activity deduction for a taxable year if and only if such deduction—

(i) Arises (within the meaning of paragraph (d)(8) of this section) in connection with the conduct of an activity that is a passive activity for the taxable year; or

(ii) Is treated as a deduction from an activity under § 1.469-1T(f)(4) for the taxable year.

The following example illustrates the application of this paragraph (d)(1):

Example. (i) In 1987, A, a calendar year individual, acquires a partnership interest in R, a calendar year partnership. R's only activity is a trade or business activity in which A materially participates for 1987. R incurs a loss in 1987. A's distributive share of R's 1987 loss is $1,000. However, A's basis in the partnership interest at the end of 1987 (without regard to A's distributive share of partnership loss) is $600; accordingly, section 704(d) disallows any deduction in 1987 for $400 of A's distributive share of R's loss. The remainder of A's distributive share of R's loss would be allowed as a deduction for 1987 if taxable income for all taxable years were determined without regard to sections 469, 613A(d), and 1211. See paragraph (d)(8) of this section.
(ii) A does not materially participate in R's activity for 1988. In 1988, R again incurs a loss, and A's distributive share of the loss is again $1,000. At the end of 1988, A's basis in the partnership interest (without regard to A's distributive share of partnership loss) is $2,000; accordingly, in 1988 section 704(d) does not limit A's deduction for either A's $1,000 distributive share of R's 1988 loss or the $400 loss carried over from 1987 under the second sentence of section 704(d). These losses would be allowed as a deduction for 1988 if taxable income for all taxable years were determined without regard to sections 469, 613A(d) and 1211. See paragraph (d)(8) of this section.

(iii) Under these facts, only $400 of A's distributive share of R's deductions from the activity are disallowed under section 704(d) in 1987. A's remaining deductions from the activity are treated as deductions that arise in connection with the activity for 1987 under paragraph (d)(8) of this section. Because A materially participates in the activity for 1987, the activity is not a passive activity (within the meaning of § 1.469-1T(e)(1)) of A for such year. Accordingly, the deductions that are not disallowed in 1987 are not passive activity deductions.

(iv) A does not materially participate in R's activity for 1988. Accordingly, the activity is a passive activity of A for such year. No portion of A's distributive share of R's deductions from the activity is disallowed under section 704(d) in 1988. Accordingly, A's distributive share of R's deductions for 1988 and the $400 of deductions carried over from 1987 are both treated under paragraph (d)(8) of this section as deductions that arise in 1988. Since the activity is a passive activity for 1988, such deductions are passive activity deductions.

(2) ***Exceptions.*** Passive activity deductions do not include—

(i) A deduction for an item of expense (other than interest) that is clearly and directly allocable (within the meaning of paragraph (d)(4) of this section) to portfolio income (within the meaning of paragraph (c)(3)(i) of this section);

(ii) A deduction allowed under section 243, 244, or 245 with respect to any dividend that is not included in passive activity gross income;

(iii) Interest expense (other than interest expense described in paragraph (d)(3) of this section);

(iv) A deduction for a loss from the disposition of property of a type that produces portfolio income (within the meaning of paragraph (c)(3)(i) of this section);

(v) A deduction that, under section 469(g) and § 1.469-6T (relating to the allowance of passive activity losses upon certain dispositions of interests in passive activities), is treated as a deduction that is not a passive activity deduction;

(vi) A deduction for any state, local, or foreign income, war profits, or excess profits tax;

(vii) A miscellaneous itemized deduction (within the meaning of section 67(b)) that is subject to disallowance in whole or in part under section 67(a) (without regard to whether any amount of such deduction is disallowed under section 67);

(viii) A deduction allowed under section 170 for a charitable contribution;

(ix) [Reserved]. See § 1.469-2(d)(2)(ix) for rules relating to this paragraph.

(x) [Reserved]. See § 1.469-2(d)(2)(x) for rules relating to this paragraph (d)(2)(x).

(xi) [Reserved]. See § 1.469-2(d)(2)(xi) for rules relating to this paragraph (d)(2)(xi).

(xii) [Reserved]. See § 1.469-2(d)(2)(xii) for rules relating to this paragraph (d)(2)(xii).

(3) ***Interest expense.*** Except as otherwise provided in the regulations under section 469, interest expense is taken into account as a passive activity deduction if and only if such interest expense—

(i) Is allocated under § 1.163-8T to a passive activity expenditure (within the meaning of § 1.163-8T(b)(4)); and

(ii) Is not—

(A) Qualified residence interest (within the meaning of § 1.163-10T); or

(B) Capitalized pursuant to a capitalization provision (within the meaning of § 1.163-8T(m)(7)(i)).

(4) ***Clearly and directly allocable expenses.*** For purposes of section 469 and the regulations thereunder, an expense (other than interest expense) is clearly and directly allocable to portfolio income (within the meaning of paragraph (c)(3)(i) of this section) if and only if such expense is incurred as a result of, or incident to, an activity in which such gross income is derived or in connection with property from which such gross income is derived. For example, general and administrative expenses and compensation paid to officers attributable to the performance of services that do not directly benefit or are not incurred by reason of a particular activity or particular property are not clearly and directly allocable to portfolio income (within the meaning of paragraph (c)(3)(i) of this section).

(5) ***Treatment of loss from disposition*** —

(i) ***In general.*** Except as otherwise provided in the regulations under section 469—

(A) Any loss recognized in any year upon the sale, exchange, or other disposition (a "disposition") of an interest in property used in an activity at the time of the disposition or of an interest in an activity held through a partnership or S corporation and any deduction allowed on account of the abandonment or worthlessness of such an interest is treated as a deduction from such activity; and

(B) Any such deduction is a passive activity deduction if and only if the activity is a passive activity of the taxpayer for the taxable year of the disposition (or other event giving rise to the deduction).

(ii) ***Disposition of property used in more than one activity in 12-month period preceding disposition.*** In the case of a disposition of an interest in property that is used in more than one activity during the 12-month period ending on the date of the disposition, the amount realized from the disposition and the adjusted basis of such interest must be allocated among such activities in the manner described in paragraph (c)(2)(ii) of this section.

(iii) ***Other applicable rules*** —

(A) ***Applicability of rules in paragraph (c)(2).*** [Reserved]. See § 1.469-2(d)(5)(iii)(A) for rules relating to this paragraph.

(B) ***Dispositions of partnership interests and S corporation stock.*** A partnership interest or S corporation stock is not property used in an activity for purposes of this paragraph (d)(5). See paragraph (e)(3) of this section for rules treating the loss recognized upon the disposition of a partnership interest or S corporation stock as loss from the disposition of interests in the activities in which the partnership or S corporation has an interest.

(6) ***Coordination with other limitations on deductions that apply before section 469*** —

(i) ***In general.*** An item of deduction from a passive activity that is disallowed for a taxable year under section 704(d), 1366(d), or 465 is not a passive activity deduction for the taxable year. Paragraphs (d)(6) (ii) and (iii) of this section provide rules for determining the extent to which items of deduction from a passive activity are disallowed for a taxable year under sections 704(d), 1366(d), and 465.

(ii) ***Proration of deductions disallowed under basis limitations*** —

(A) ***Deductions disallowed under section 704(d).*** If any amount of a partner's distributive share of a partnership's loss for the taxable year is disallowed under section 704(d), a ratable portion of the partner's distributive share of each item of deduction or loss of the partnership is disallowed for the taxable year. For purposes of the preceding sentence, the ratable portion of an item of deduction or loss is the amount of such item multiplied by the fraction obtained by dividing—

(*1*) The amount of the partner's distributive share of partnership loss that is disallowed for the taxable year; by

(*2*) The sum of the partner's distributive shares of all items of deduction and loss of the partnership for the taxable year.

(B) ***Deductions disallowed under section 1366(d).*** If any amount of an S corporation shareholder's pro rata share of an S corporation's loss for the taxable year is disallowed under section 1366(d), a ratable portion of the taxpayer's pro rata share of each item of deduction or loss of the S corporation is disallowed for the taxable year. For purposes of the preceding sentence, the ratable portion of an item of deduction or loss is the amount of such item multiplied by the fraction obtained by dividing—

(*1*) The amount of the shareholder's pro rata share of S corporation loss that is disallowed for the taxable year; by

(2) The sum of the shareholder's pro rata shares of all items of deduction and loss of the corporation for the taxable year.

(iii) ***Proration of deductions disallowed under at-risk limitation.*** If any amount of the taxpayer's loss from an activity (within the meaning of section 465(c)) is disallowed under section 465 for the taxable year, a ratable portion of each item of deduction or loss from the activity is disallowed for the taxable year. For purposes of the preceding sentence, the ratable portion of an item of deduction or loss is the amount of such item multiplied by the fraction obtained by dividing—

(*1*) The amount of the loss from the activity that is disallowed for the taxable year; by

(*2*) The sum of all deductions from the activity for the taxable year.

(iv) ***Coordination of basis and at-risk limitations.*** The portion of any item of deduction or loss that is disallowed for the taxable year under section 704(d) or 1366(d) is not taken into account for the taxable year in determining the loss from an activity (within the meaning of section 465(c)) for purposes of applying section 465.

(v) ***Separately identified items of deduction and loss.*** In identifying the items of deduction and loss from an activity that are not disallowed under sections 704(d), 1366(d), and 465 (and that therefore may be treated as passive activity deductions), the taxpayer need not account separately for any item of deduction or loss unless such item may, if separately taken into account, result in an income tax liability different from that which would result were such item of deduction or loss taken into account separately. For related rules applicable to partnerships and S corporations, see § 1.702-1(a)(8)(ii) and section 1366(a)(1)(A), respectively. Items of deduction or loss that must be accounted for separately include (but are not limited to) items of deduction or loss that—

(A) Are attributable to separate activities (within the meaning of the rules to be contained in § 1.469-4T);

(B) Arise in a rental real estate activity (within the meaning of section 469(i) and the rules to be contained in § 1.469-9T) in taxable years in which the taxpayer activity participates (within the meaning of section 469(i) and the rules to be contained in § 1.469-9T) in such activity;

(C) Arise in a rental real estate activity (within the meaning of section 469(i) and the rules to be contained in § 1.469-9T) in taxable years in which the taxpayer does not actively participate (within the meaning of section 469(i) and the rules to be contained in § 1.469-9T) in such activity;

(D) Arose in a taxable year beginning before 1987 and were not allowed for such taxable year under section 704(d), 1366(d), or 465(a)(2);

(E) [Reserved]. See § 1.469-2(d)(6)(v)(E) for rules relating to this paragraph.

(F) Are attributable to pre-enactment interests in activities (within the meaning of § 1.469-11T(c)).

(7) ***Deductions from section 481 adjustment*** —

(i) ***In general.*** If a change in accounting method results in a negative section 481 adjustment with respect to an activity, a ratable portion (within the meaning of paragraph (d)(7)(iii) of this section) of the amount taken into account for a taxable year as a net negative section 481

adjustment by reason of such change shall be treated as a deduction from the activity for such taxable year, and such deduction shall be treated as a passive activity deduction if and only if such activity is a passive activity for the year of the change (within the meaning of section 481(a)). See the rules to be contained in § 1.469-1T(k) for the treatment of passive activity deductions from an activity in taxable years in which the activity is a former passive activity.

(ii) ***Negative section 481 adjustments.*** For purposes of applying this paragraph (d)(7)—

(A) The term "net negative section 481 adjustment" means the decrease (if any) in taxable income taken into account under section 481(a) to prevent amounts from being duplicated or omitted by reason of a change in accounting method; and

(B) The term "negative section 481 adjustment with respect to an activity" means the decrease (if any) in taxable income that would be taken into account under section 481(a) to prevent only the duplication or omission of amounts from such activity by reason of the change in accounting method.

(iii) ***Ratable portion.*** The ratable portion of the amount taken into account as a net negative section 481 adjustments for a taxable year by reason of a change in accounting method is determined with respect to an activity by multiplying such amount by the fraction obtained by dividing—

(A) The negative section 481 adjustment with respect to the activity; by

(B) The sum of the negative section 481 adjustments with respect to all of the activities of the taxpayer.

(8) ***Taxable year in which item arises.*** [Reserved]. See § 1.469-2(d)(8) for rules relating to this paragraph.

(e) ***Special rules for partners and S corporation shareholders*** —

(1) ***In general.*** For purposes of section 469 and the regulations thereunder, the character (as an item of passive activity gross income or passive activity deduction) of each item of gross income and deduction allocated to a taxpayer from a partnership or S corporation (a "passthrough entity") shall be determined, in any case in which participation is relevant, by reference to the participation of the taxpayer in the activity (or activities) that generated such item. Such participation is determined for the taxable year of the passthrough entity (and not the taxable year of the taxpayer). The following example illustrates the application of this paragraph (e)(1):

Example. A, a calendar year individual, is a partner in a partnership that has a taxable year ending January 31. During its taxable year ending on January 31, 1988, the partnership engages in a single trade or business activity. For the period from February 1, 1987, through January 31, 1988, A does not materially participate in this activity. In A's calendar year 1988 return, A's distributive share of the partnership's gross income and deductions from the activity must be treated as passive activity gross income and passive activity deductions, without regard to A's participation in the activity from February 1, 1988, through December 31, 1988. See also § 1.469-11T(a)(4) (relating to the effective date of, and transition rules under, section 469 and the regulations thereunder).

(2) ***Payments under sections 707(a), 707(c), and 736(b).*** Items of gross income and deduction attributable to a transaction described in section 707(a), 707(c), or 736(b) shall be characterized for purposes of section 469 and the regulations thereunder in accordance with the following rules:

(i) ***Section 707(a).*** Any item of gross income or deduction attributable to a transaction that is treated under section 707(a) as a transaction between a partnership and a partner acting in a capacity other than as a member of such partnership shall be characterized for purposes of section 469 and the regulations thereunder in a manner that is consistent with the treatment of such transaction under section 707(a).

(ii) ***Section 707(c).*** [Reserved]. See § 1.469-2(e)(ii) for rules relating to this paragraph.

(iii) ***Payments in liquidation of a partner's interest in partnership property.*** [Reserved]. See § 1.469-2(e)(iii) for rules relating to this paragraph.

(3) ***Sale or exchange of interest in passthrough entity*** —

(i) ***Application of this paragraph (e)(3).*** In the case of the sale, exchange, or other disposition (a "disposition") of an interest in a passthrough entity, the amount of the seller's gain or loss from each activity in which such entity has an interest is determined, for purposes of section 469 and the regulations thereunder, under this paragraph (e)(3). In the case of any such disposition, except as otherwise provided in paragraph (e)(3)(iii) or (iv) of this section, paragraph (e)(3)(ii) of this section shall apply. See paragraphs (c)(2) and (d)(5) of this section for rules for determining the character of gain or loss, respectively, recognized upon a disposition of an interest in an activity held through a passthrough entity.

(ii) ***General rule*** —

(A) ***Allocation among activities.*** Except as otherwise provided in this paragraph (e)(3)(ii) or in paragraph (e)(3) (iii) or (iv) of this section, if a holder of an interest in a passthrough entity disposes of such interest, a ratable portion (within the meaning of paragraph (e)(3)(ii)(B) of this section) of any gain or loss from such disposition shall be treated as gain or loss from the disposition of an interest in each trade or business, rental, or investment activity in which such passthrough entity owns an interest on the applicable valuation date.

(B) ***Ratable portion*** —

(*1*) ***Dispositions on which gain is recognized.*** The ratable portion of any gain from the disposition of an interest in a passthrough entity that is allocable to an activity described in paragraph (e)(3)(ii)(A) of this section is determined by multiplying the amount of such gain by the fraction obtained by dividing—

(*i*) The amount of net gain (within the meaning of paragraph (e)(3)(ii)(E)(*3*) of this section) that would have been allocated to the holder of such interest with respect thereto if the passthrough entity had sold its entire interest in such activity for its fair market value on the applicable valuation date; by

(*ii*) The sum of the amounts of net gain that would have been allocated to the holder of such interest with respect thereto if the passthrough entity had sold its entire interest in each appreciated activity (within the meaning of paragraph (e)(3)(ii)(E)(*1*) of this section) described in paragraph (e)(3)(ii)(A) of this section for the fair market value of each such activity on the applicable valuation date.

(*2*) ***Dispositions on which loss is recognized.*** The ratable portion of any loss from the disposition of an interest in a passthrough entity that is allocable to an activity described in paragraph (e)(3)(ii)(A) of this section is determined by multiplying the amount of such loss by the fraction obtained by dividing—

(*i*) The amount of net loss (within the meaning of paragraph (e)(3)(ii)(E)(*4*) of this section) that would have been allocated to the holder of such interest with respect thereto if the passthrough entity had sold its entire interest in such activity for its fair market value on the applicable valuation date; by

(*ii*) The sum of the amounts of net loss that would have been allocated to the holder of such interest with respect thereto if the passthrough entity had sold its entire interest in each depreciated activity (within the meaning of paragraph (e)(3)(ii)(E)(*2*) of this section) described in paragraph (e)(3)(ii)(A) of this section for the fair market value of each such activity on the applicable valuation date.

(C) ***Default rule.*** If the gain or loss recognized upon the disposition of an interest in a passthrough entity cannot be allocated under paragraph (e)(3)(ii)(A) of this section, such gain or loss shall be allocated among the activities described in paragraph (e)(3)(ii)(A) of this section in proportion to the respective fair market values of the passthrough entity's interests in such activities at the applicable valuation date, and the gain or loss allocated to each activity of the passthrough entity shall be treated as gain or loss from the disposition of an interest in such activity.

(D) ***Special rules.*** For purposes of this paragraph (e)(3)(ii), the following rules shall apply:

(*1*) ***Applicable valuation date*** —

(*i*) ***In general.*** Except as otherwise provided in paragraph (e)(3)(ii)(D)(*1*)(*ii*) of this section, the applicable valuation date with respect to any disposition of an interest in a passthrough entity is whichever one of the following dates is selected by the passthrough entity:

(*a*) The beginning of the taxable year of the passthrough entity in which such disposition occurs; or

(*b*) The date on which such disposition occurs.

(*ii*) ***Exception.*** If, after the beginning of a passthrough entity's taxable year in which a holder's disposition of an interest in such passthrough entity occurs and before the time of such disposition—

(*a*) The passthrough entity disposes of more than 10 percent of its interest (by value as of the beginning of such taxable year) in any activity;

(*b*) More than 10 percent of the property (by value as of the beginning of such taxable year) used in any activity of the passthrough entity is disposed of; or

(*c*) The holder of such interest contributes to the passthrough entity substantially appreciated property or substantially depreciated property with a total fair market value or adjusted basis, respectively, which exceeds 10 percent of the total fair market value of the holder's interest in the passthrough entity as of the beginning of such taxable year;

then the applicable valuation date shall be the date immediately preceding the date on which such disposition occurs.

(2) ***Basis adjustments.*** Any adjustment to the basis of partnership property under section 743(b) made with respect to the holder of an interest in a partnership shall be taken into account in computing the net gain or net loss that would have been allocated to the holder with respect to such interest if the partnership had sold its entire interest in an activity.

(3) ***Tiered passthrough entities.*** In the case of a disposition of an interest in a passthrough entity (the "subsidiary passthrough entity") by a holder that is also a passthrough entity, any gain or loss from such disposition that is taken into account by any person that owns (directly or indirectly) an interest in such holder shall be allocated among the activities of the subsidiary passthrough entity by applying the rules of this paragraph (e)(3)(ii) to the person taking such gain or loss into account as if such person has been the holder of an interest in such subsidiary passthrough entity and had recognized such gain or loss as a result of a disposition of such interest.

(E) ***Meaning of certain terms.*** For purposes of this paragraph (e)(3)(ii)—

(1) An activity is an appreciated activity with respect to a holder that has disposed of an interest in a passthrough entity if a net gain would have been allocated to the holder with respect to such interest if the passthrough entity has sold its entire interest in such activity for its fair market value on the applicable valuation date;

(2) An activity is a depreciated activity with respect to a holder that has disposed of an interest in a passthrough entity if a net loss would have been allocated to the holder with respect to such interest if the passthrough entity had sold its entire interest in such activity for its fair market value on the applicable valuation date;

(3) The term "net gain" means, with respect to the sale of a passthrough entity's entire interest in an activity, the amount by which the gains from the sale of all of the property used by (or representing the interest of) the passthrough entity in such activity exceed the losses (if any) from such sale;

(4) The term "net loss" means, with respect to the sale of a passthrough entity's entire interest in an activity, the amount by which the losses from the sale of all of the property used by (or representing the interest of) the passthrough entity in such activity exceed the gains (if any) from such sale.

(iii) ***Treatment of gain allocated to certain passive activities as not from a passive activity.*** If, in the case of a disposition of an interest in a passthrough entity—

(A) An amount of gain recognized on account of such disposition by the holder of such interest (or any other person that owns (directly or indirectly) an interest in such holder if such holder is a passthrough entity) is allocated to a passive activity of such holder (or such other person) under paragraph (e)(3)(ii) of this section;

(B) [Reserved]. See § 1.469-2(e)(3)(iii)(B) for rules relating to this paragraph.

(C) The amount of the gain of the holder (or such other person) described in paragraph (e)(3)(iii)(B) of this section exceeds 10 percent of the amount of the gain of the holder (or such other person) described in paragraph (e)(3)(iii)(A) of this section;

then the gain of the holder (or such other person) that is described in paragraph (e)(3)(iii)(A) of this section shall be treated as gain that is not from a passive activity to the extent that such gain does not exceed the amount of the gain of the holder (or such other person) described in paragraph (e)(3)(iii)(B) of this section. For purposes of applying the preceding sentence to the disposition of an interest in a partnership, the amount of gain that would have been allocated to the holder (or such other person) if all of the property used in an activity had been sold shall be determined by taking into account any adjustment to the basis of partnership property made with respect to such holder (or such other person) under section 743(b).

(iv) ***Dispositions occurring in taxable years beginning before February 19, 1988*** —

(A) ***In general.*** Except as otherwise provided in this paragraph (e)(3)(iv), if the holder of an interest in a passthrough entity sells, exchanges, or otherwise disposes of all or part of such interest during a taxable year of such entity beginning prior to February 19, 1988, any gain or loss recognized from such disposition shall be allocated among the activities of the passthrough entity under any reasonable method selected by the passthrough entity, and the gain or loss allocated to each activity of the passthrough entity shall be treated as gain or loss from the disposition of an interest in such activity. For purposes of the preceding sentence, a reasonable method shall include the method prescribed by paragraph (e)(3)(ii) of this section. In addition, a method that allocates gain or loss among the passthrough entity's activities on the basis of the fair market value, cost, or adjusted basis of the property used in such activities shall generally be considered a reasonable method for purposes of this paragraph (e)(3)(iv).

(B) ***Exceptions.*** This paragraph (e)(3)(iv) shall not apply to any disposition of an interest in a passthrough entity occurring after February 19, 1988, if after such date, but before the holder's disposition of such interest, the holder (or any other person that owns (directly or indirectly) an interest in such holder if such holder is a passthrough entity) contributes to the passthrough entity substantially appreciated portfolio assets or any other substantially appreciated property that was used in any trade or business activity (within the meaning of § 1.469-1T(e)) of the holder (or such other person) during—

(*1*) The taxable year of such person in which such contribution occurs; or

(*2*) The immediately preceding taxable year of such person;

but only if such person materially participated (within the meaning of § 1.469-5T) in the activity for such year.

(v) ***Treatment of portfolio assets.*** For purposes of the paragraph (e)(3), all portfolio assets owned by a passthrough entity shall be treated as held in a single investment activity.

(vi) ***Definitions.*** For purposes of this paragraph (e)(3)—

(A) The term “portfolio asset” means any property of a type that produces portfolio income (within the meaning of paragraph (c)(3)(i) of this section);

(B) The term “substantially appreciated property” means property with a fair market value that exceeds 120 percent of its adjusted basis; and

(C) The term “substantially depreciated property” means property with an adjusted basis that exceeds 120 percent of its fair market value.

(vii) ***Examples.*** The following examples illustrate the application of this paragraph (e)(3):

Example 1. (i) A owns a one-half interest in P, a calendar year partnership. In 1993, A sells 50 percent of such interest for $50,000. A's adjusted basis for the interest sold is $30,000. Thus, A recognizes $20,000 of gain from the sale. P is engaged in three trade or business activities, X, Y, and Z, and owns marketable securities that are portfolio assets. For 1993, A materially participates in activity Z, but does not participate in activities X and Y. Paragraph (c)(2)(iii) of this section would not have applied to any of the gain that A would have been allocated if, immediately before A's sale, P had disposed of all of the property used in its trade or business activities. During the portion of 1993 preceding A's sale, P did not sell any of the property used in its activities, and A did not contribute any property to P.
(ii) Under paragraph (e)(3)(ii) of this section, a ratable portion of A's $20,000 gain is allocated to each appreciated activity in which P owned an interest on the applicable valuation date (within the meaning of paragraph (e)(3)(ii)(D)(*1*) of this section). For this purpose, paragraph (e)(3)(v) of this section treats the marketable securities owned by P as a single investment activity.

(iii) P selects the beginning of 1993 as the applicable valuation date pursuant to paragraph (e)(3)(ii)(D)(*1*)(*i*) of this section. P is not required to use the date of A's sale as the applicable valuation date under paragraph (e)(3)(ii)(D)(*1*)(*ii*) of this section because during the portion of 1993 preceding A's sale, P did not sell any of its property and A did not contribute any property to P. At the beginning of 1993, the fair market value and adjusted basis of the property used in P's activities are as follows:

	Adjusted basis	Fair market value
X	$68,000	$48,000
Y	30,000	62,000
Z	20,000	80,000
Marketable securities	2,000	10,000
Total	120,000	200,000

(iv) Under paragraph (e)(3)(ii)(B) of this section, the portion of A's $20,000 gain that is allocated to an appreciated activity of P (i.e., activities Y and Z and the marketable securities) is the amount of such gain multiplied by the fraction obtained by dividing (a) the net gain that would have been allocated to A with respect to the interest sold by A if P had sold its entire interest in such activity at the beginning of 1993 by (b) the sum of the amounts of net gain that would have been allocated to A with respect to the interest

sold by A if P had sold its entire interest in each appreciated activity at the beginning of 1993.

(v) If P had sold its entire interest in activities Y and Z and the marketable securities at the beginning of 1993, A would have been allocated the following amounts of net gain with respect to the interest in P that A sold in 1993:

Activity	Net gain
Y	$8,000
Z	15,000
Marketable securities	2,000
Total	25,000

(vi) Accordingly, under paragraph (e)(3)(ii) of this section, $6,400 of A's $20,000 gain ($20,000 × $8,000/$25,000) is allocated to activity Y, $12,000 of A's $20,000 gain ($20,000 × $15,000/$25,000) is allocated to activity Z, and $1,600 of A's $20,000 gain ($20,000 × $2,000/$25,000) is allocated to the marketable securities. The gain allocated to activity Y is passive activity gross income. None of that gain is treated as gain that is not from a passive activity under paragraph (e)(3)(iii) of this section because paragraph (c)(2)(iii) of this section would not have applied to any of the gain that A would have been allocated if P had sold all of the property used in activity Y immediately prior to A's sale.

Example 2. (i) B and C, calendar year individuals, are equal partners in calendar year partnership R, which they formed on January 1, 2005, with contributions of property and money. The only item of property (other than money) contributed by B was a building that B had used for 12 years preceding the contribution in an activity that was not a passive activity during such period. At the time of its contribution, the building had an adjusted basis of $40,000 and a fair market value of $66,000. R is engaged in a single activity: the sale of equipment to customers in the ordinary course of the business of dealing in such property. R uses the building contributed by B in the dealership activity. B did not materially participate in the dealership activity during 2005. On July 1, 2005, D purchases one-half of B's interest in R for $37,500 in cash. At the time of the sale, the

balance sheet of R, which uses the accrual method of accounting, is as follows:

	Adjusted basis per books	Fair market value
Assets		
Cash	$30,000	$30,000
Accounts receivable:		
Dealership	20,000	18,000
Inventory:		
Dealership	52,000	66,000
Building	40,000	66,000
Total	142,000	180,000
Liabilities and Capital		
Liabilities	$30,000	$30,000
Capital:		
B	47,000	75,000
C	65,000	75,000
Total	142,000	180,000

Thus, B's gain from the sale is $14,000 ($45,000 amount realized from the sale (consisting of $37,500 of cash and $7,500 of liabilities assumed by the purchaser) minus B's $31,000 adjusted basis for the interest sold (one-half of B's total adjusted basis of $62,000)).

(ii) Under paragraph (e)(3)(ii) of this section, all $14,000 of B's gain from the sale is allocated to R's dealership activity, which is a passive activity of B for 2005. If, however, R had sold its interest in the building immediately prior to B's sale for its fair market value on the applicable valuation date (the valuation date selected by R is irrelevant since the building had a fair market value of $66,000 at the beginning of 2005 and at the time of the sale), B would have been allocated $13,000 of gain under section 704(c) with respect to the interest in R that B sold to D. This gain would have been treated as gain that is not from a passive activity under paragraph (c)(2)(iii) of this section and would have exceeded 10 percent of the total amount of B's gain that is allocated to the dealership activity under paragraph (e)(3)(ii) of this section. Accordingly, under paragraph (e)(3)(iii) of this section, B's gain from the sale ($14,000) is treated as gain that is not from a passive activity to the extent that such gain does not exceed the amount of gain subject to paragraph (c)(2)(iii) of this section that B would have been allocated with respect to the interest sold to D if R had sold all of the property used in the dealership activity immediately prior to B's sale ($13,000). Thus, $13,000 of B's gain from the sale is treated

as gain that is not from a passive activity.

(f) ***Recharacterization of passive income in certain situations*** —

(1) ***In general.*** This paragraph (f) sets forth rules that require income from certain passive activities to be treated as income that is not from a passive activity (regardless of whether such income is treated as passive activity gross income under section 469 or any other provision of the regulations thereunder). For definitions of certain terms used in this paragraph (f), see paragraph (f)(9) of this section.

(2) ***Special rule for significant participation*** —

(i) ***In general.*** An amount of the taxpayer's gross income from each significant participation passive activity for the taxable year equal to a ratable portion of the taxpayer's net passive income from such activity for the taxable year shall be treated as not from a passive activity if the taxpayer's passive activity gross income from all significant participation passive activities for the taxable year (determined without regard to paragraphs (f) (2) through (4) of this section) exceeds the taxpayer's passive activity deductions from all such activities for such year. For purposes of this paragraph (f)(2), the ratable portion of the net passive income from an activity is determined by multiplying the amount of such income by the fraction obtained by dividing—

(A) The amount of the excess described in the preceding sentence; by

(B) The amount of the excess described in the preceding sentence taking into account only significant participation passive activities from which the taxpayer has net passive income for the taxable year.

(ii) ***Significant participation passive activity.*** For purposes of this paragraph (f)(2), the term "significant participation passive activity" means any trade or business activity (within the meaning of § 1.469-1T(e)(2)) in which the taxpayer significantly participates (within the meaning of § 1.469-5T(c)(2)) for the taxable year but in which the taxpayer does not materially participate (within the meaning of § 1.469-5T) for such year.

(iii) ***Example.*** The following example illustrates the application of this paragraph (f)(2):

Example. (i) A owns interests in three trade or business activities, X, Y, and Z. A does not materially participate in any of these activities for the taxable year, but participates in activity X for 110 hours, in activity Y for 160 hours, and in activity Z for 125 hours. A owns no interest in any other trade or business activity in which A does not materially participate for the taxable year but in which A participates for more than 100 hours during the taxable year. A's net passive income (or loss) for the taxable year from activities X, Y, and Z is as follows:

	X	Y	Z
Passive activity gross income	$600	$700	$900
Passive activity deductions	(200)	(1,000)	(300)

	X	Y	Z
Net passive income	400	(300)	600

(ii) Under paragraph (f)(2)(ii) of this section, activities X, Y, and Z are A's only significant participation passive activities for the taxable year. A's passive activity gross income from significant participation passive activities ($2,200) exceeds A's passive activity deductions from significant participation passive activities ($1,500) by $700 for such year. Therefore, under paragraph (f)(2)(i) of this section, a ratable portion of A's gross income from activities X and Z (A's significant participation passive activities with net passive income for the taxable year) is treated as gross income that is not from a passive activity. The ratable portion is determined by dividing (a) the amount by which A's passive activity gross income from significant participation passive activities exceeds A's passive activity deductions from significant participation passive activities for the taxable year ($700) by (b) such excess taking into account only A's significant participation passive activities having net passive income for the taxable year ($1,000). Accordingly, $280 of gross income from activity X ($400 × 700/1000) and $420 of gross income from activity Z ($600 × 700/1000) is treated as gross income that is not from a passive activity.

(3) ***Rental of nondepreciable property.*** If less than 30 percent of the unadjusted basis of the property used or held for use by customers in a rental activity (within the meaning of § 1.469-1T(e)(3)) during the taxable year is subject to the allowance for depreciation under section 167, an amount of the taxpayer's gross income from the activity equal to the taxpayer's net passive income from the activity shall be treated as not from a passive activity. For purposes of this paragraph (f)(3), the term "unadjusted basis" means adjusted basis determined without regard to any adjustment described in section 1016 that decreases basis. The following example illustrates the application of this paragraph (f)(3):

Example. C is a limited partner in a partnership. The partnership acquires vacant land for $300,000, constructs improvements on the land at a cost of $100,000, and leases the land and improvements to a tenant. The partnership then sells the land and improvements for $600,000, thereby realizing a gain on the disposition. The unadjusted basis of the improvements ($100,000) equals 25 percent of the unadjusted basis of all property ($400,000) used in the rental activity. Therefore, under this paragraph (f)(3), an amount of C's gross income from the activity equal to the net passive income from the activity (which is computed by taking into account the gain from the disposition, including gain allocable to the improvements) is treated as not from a passive activity.

(4) ***Net interest income from passive equity-financed lending activity*** —

(i) ***In general.*** An amount of the taxpayer's gross income for the taxable year from any equity-financed lending activity equal to the lesser of—

(A) The taxpayer's equity-financed interest income from the activity for such year; and

(B) The taxpayer's net passive income from the activity for such year

shall be treated as not from a passive activity.

(ii) ***Equity-financed lending activity*** —

(A) ***In general.*** For purposes of this paragraph (f)(4), an activity is an equity-financed lending activity for a taxable year if—

(*1*) The activity involves a trade or business of lending money; and

(*2*) The average outstanding balance of the liabilities incurred in the activity for the taxable year does not exceed 80 percent of the average outstanding balance of the interest-bearing assets held in the activity for such year.

(B) ***Certain liabilities not taken into account.*** For purposes of paragraph (f)(4)(ii)(A)(*2*) of this section, liabilities incurred principally for the purpose of increasing the percentage described in paragraph (f)(4)(ii)(A)(*2*) of this section shall not be taken into account in computing such percentage.

(iii) ***Equity-financed interest income.*** For purposes of this paragraph (f)(4), the taxpayer's equity-financed interest income from an activity for a taxable year is the amount of the taxpayer's net interest income from the activity for such year multiplied by the fraction obtained by dividing—

(A) The excess of the average outstanding balance for such year of the interest-bearing assets held in the activity over the average outstanding balance for such year of the liabilities incurred in the activity; by

(B) The average outstanding balance for such year of the interest-bearing assets held in the activity.

(iv) ***Net interest income.*** For purposes of this paragraph (f)(4), the net interest income from an activity for a taxable year is—

(A) The gross interest income from the activity for such year; reduced by

(B) Expenses from the activity (other than interest on liabilities described in paragraph (f)(4)(vi) of this section) for such year that are reasonably allocable to such gross interest income.

(v) ***Interest-bearing assets.*** For purposes of this paragraph (f)(4), the interest-bearing assets held in an activity include all assets that produce interest income, including loans to customers.

(vi) ***Liabilities incurred in the activity.*** For purposes of this paragraph (f)(4), liabilities incurred in an activity include all fixed and determinable liabilities incurred in the activity that bear interest or are issued with original issue discount other than debts secured by tangible property used in the activity. In the case of an activity conducted by an entity in which the taxpayer owns an interest, liabilities incurred in an activity include only liabilities with respect to which the entity is the borrower.

(vii) ***Average outstanding balance.*** For purposes of this paragraph (f)(4), the average outstanding balance of liabilities incurred in an activity or of the interest-bearing assets held in an activity may be computed on a daily, monthly, or quarterly basis at the option of the taxpayer.

(viii) ***Example.*** The following example illustrates the application of this paragraph (f)(4):

Example: (i) A, a calendar year individual, acquires on January 1, 1988, a limited partnership interest in P, a calendar year partnership. Under the partnership agreement, A has a one percent share of each item of income, gain, loss, deduction, and credit of P. A acquires the partnership interest for $90,000, using $50,000 of unborrowed funds and $40,000 of proceeds of a loan bearing interest at an annual rate of 10 percent. A pays $4,000 of interest on the loan in 1988.
(ii) P's sole activity is a trade or business of lending money. A does not materially participate in the activity for 1988. During 1988, the average outstanding balance of P's interest-bearing assets (including loans to customers, temporary deposits with other lending institutions, and government and corporate securities) is $20 million. P incurs numerous interest-bearing liabilities in connection with its lending activity, including liabilities for deposits taken from customers, unsecured short-term and long-term loans from other lending institutions, and a mortgage loan secured by the building, owned by P, in which P conducts its business. For 1988, the average outstanding balance of all of these liabilities (other than the mortgage loan) is $11 million. None of these liabilities was incurred by P principally for the purpose of increasing the percentage described in paragraph (f)(4)(ii)(A)(2) of this section.

(iii) The interest income derived by P for 1988 from its interest-bearing assets is $2.2 million. The interest expense paid by P for 1988 with respect to the liabilities incurred in connection with its lending activity (other than the mortgage loan) is $990,000. P's other expenses for 1988 that are reasonably allocable to P's gross interest income (including expenses for advertising, loan processing and servicing, and insurance, and depreciation on P's building) total $250,000. P's interest expense for 1988 on the mortgage loan secured by the building used in P's lending activity is $50,000. All of the interest expense paid or incurred by P for 1988 is allocated under § 1.63-8T to expeditures in connection with P's lending activity.

(iv) Under paragraph (f)(4)(ii) of this section, P's activity is an equity-financed lending activity for 1988, since, for 1988, the activity involves a trade or business of lending money and the average outstanding balance of the liabilities incurred in the activity ($11 million) does not exceed 80 percent of the average outstanding balance of the interest-bearing assets held in the activity ($20 million). Accordingly, under paragraph (f)(4)(i) of this section, an amount of A's gross income from the activity equal to the lesser of (a) A's equity-financed interest income from the activity for 1988, or (b) A's net passive income from the activity for 1988, is treated as income that is not from a passive activity.

(v) Under paragraph (f)(4)(iii) of this section, A's equity-financed interest income from the activity for 1988 is determined by multiplying A's net interest income from the activity for 1988 by the fraction obtained by dividing $9 million (the excess of the average interest-bearing assets for 1988 over the average interest-bearing liabilities for 1988) by $20 million (the average interest-bearing assets for 1988). Under paragraph (f)(4)(iv) of this section, A's net interest income from the activity for 1988 is $19,000 (A's distributive share of $2.2 million of gross interest income less A's distributive share of $300,000 of expenses described in paragraph (f)(4)(iv)(B) of this section, including interest expense on the mortgage loan). A's distributive share of P's other interest expense ($990,000) is not taken into account in computing A's net interest income for 1988. Accordingly, A's equity-financed interest income from the activity for 1988 is $8,550 ($19,000 × $9 million/$20 million).

(vi) Under paragraph (f)(9)(i) of this section, A's net passive income from the activity for 1988 is determined by taking into account A's distributive share of P's gross income and deductions from the activity for 1988, as well as any interest expense incurred by A individually that is taken into account under § 1.163-8T in determining A's income or loss from the activity for 1988. Assuming that for 1988 all $4,000 of interest expense on the loan that A used to finance the acquisition of A's interest in P is allocated under § 1.163-8T to expenditures of A in connection with the lending activity for 1988, A's net passive income from the activity for 1988 is $5,100, computed as set forth in the following table:

Gross income:	
Interest income	$22,000
Deductions:	
Distributive share of P's expenses from the activity	(12,900)
Interest expense on A's acquisition debt	(4,000)
Net passive income	5,100

(vii) A's net passive income from the activity for 1988 ($5,100) is less than A's equity-financed income from the activity for 1988 ($8,550). Accordingly, under this paragraph (f)(4), $5,100 of A's gross income from the activity for 1988 is treated as not from a passive activity.

(5) ***Net income from certain property rented incidental to development activity*** —

(i) ***In general.*** [Reserved]. See § 1.469-2(f)(5)(i) for rules relating to this paragraph.

(ii) ***Commencement.*** [Reserved]. See § 1.469-2(f)(5)(ii) for rules relating to this paragraph (f)(5)(ii).

(iii) ***Services performed for the purpose of enhancing the value of property.*** [Reserved]. See § 1.469-2(f)(5)(iii) for rules relating to this paragraph (f)(5)(iii).

(iv) ***Examples.*** [Reserved]. See § 1.469-2(f)(5)(iv) for examples relating to this paragraph (f)(5)(iv).

(6) ***Property rented to a nonpassive activity.*** [Reserved]. See § 1.469-2(f)(6) for rules relating to this paragraph.

(7) ***Special rules applicable to the acquisition of an interest in a passthrough entity engaged in the trade or business of licensing intangible property*** —

(i) ***In general.*** If a taxpayer acquires an interest in an entity described in paragraph (c)(3)(iii)(B)(*3*) of this section (the "development entity") after the development entity has created an item of intangible property or performed substantial services or incurred substantial costs with respect to the development or marketing of an item of intangible property, an amount of the taxpayer's gross royalty income for the taxable year from such item of property equal to the taxpayer's net royalty income for the year from such item of property shall be treated as not from a passive activity.

(ii) ***Royalty income from property.*** For purposes of this paragraph (f)(7)—

(A) A taxpayer's gross royalty income for a taxable year from an item of property is the taxpayer's share of passive activity gross income for such year (determined without regard to paragraphs (f)(2) through (7) of this section) from the licensing or transfer of any right in such property; and

(B) A taxpayer's net royalty income for a taxable year from an item of property is the excess, if any, of—

(*1*) The taxpayer's gross royalty income for the taxable year from such item of property; over

(*2*) Any passive activity deductions for such taxable year (including any deduction treated as a deduction for such year under § 1.469-1T (f)(4)) that are reasonably allocable to such item of property.

(iii) ***Exceptions.*** Paragraph (f)(7)(i) of this section shall not apply to a taxpayer's gross royalty income for a taxable year from the licensing of an item of intangible property if—

(A) The expenditures reasonably incurred by the development entity for the taxable year of the entity ending with or within the taxpayer's taxable year with respect to the development or marketing of such property satisfy paragraph (c)(3)(iii)(B)(*2*)(*ii*) (*a*) of this section; or

(B) The taxpayer's share of the expenditures reasonably incurred by the development entity with respect to the development or marketing of such property for all taxable years of the entity beginning with the taxable year of the entity in which the taxpayer acquired the interest in the entity and ending with the taxable year of the entity ending with or within the taxpayer's current taxable year exceeds 25 percent of the fair market value of the taxpayer's interest in such property at the time the taxpayer acquired the interest in the entity.

(iv) ***Capital expenditures.*** For purposes of paragraph (f)(7)(iii)(B) of this section, a capital expenditure shall be taken into account for the taxable year of the entity in which such expenditure is chargeable to capital account, and the taxpayer's share of such expenditure shall be determined as though such expenditure were allowed as a deduction for such year.

(v) ***Example.*** The following example illustrates the application of this paragraph (f)(7):

> *Example.* (i) The facts are the same as in Example 5 in paragraph (c)(3)(iv) of this section, except that, in 1988, D's 10 percent partnership interest is sold to F for $13,000, all of which is attributable to the design licensed by the partnership.
> (ii) For 1988, the expenditures reasonably incurred by the partnership with respect to the development or marketing of the design satisfy paragraph (c)(3)(iii)(B)(*2*)(*ii*)(*a*) of this section. Accordingly, under paragraph (f)(7)(iii)(A) of this section, paragraph (f)(7)(i) of this section does not apply to F's distributive share of the partnership's gross income from licensing the design.
>
> (iii) For 1989, the expenditures reasonably incurred by the partnership with respect to the development or marketing of the design do not satisfy paragraph (c)(3)(iii)(B)(*2*)(*ii*)(*a*) of this section. Moreover, F's distributive share of such expenditures reasonably incurred by the partnership for 1988 and 1989 ($27,000 × .10 = $2,700) does not exceed 25 percent of the fair market value of F's interest in the design at the time F acquired the partnership interest ($13,000). Accordingly, neither of the exceptions provided in paragraph (f)(7)(iii) of this section applies for 1989 and, under paragraph (f)(7)(i) of this section, an amount of F's gross royalty income from the design equal to F's net royalty income from the design is treated as not from a passive activity.

(8) ***Limitation on recharacterized income.*** The amount of gross income from an activity that is treated as not from a passive activity for the taxable year under subparagraphs (f) (2) through (4) of this paragraph (f) shall not exceed the greatest amount of gross income treated as not from a passive activity under any one of such subparagraphs.

(9) ***Meaning of certain terms.*** For purposes of this paragraph (f), the terms set forth below shall have the following meanings:

(i) The net passive income from an activity for a taxable year is the amount by which the taxpayer's passive activity gross income from the activity for the taxable year (determined without regard to paragraphs (f) (2) through (4) of this section) exceeds the taxpayer's passive activity deductions from the activity for such year;

(ii) The net passive loss from an activity for a taxable year is the amount by which the taxpayer's passive activity deductions from the activity for the taxable year exceeds the taxpayer's passive activity gross income from the activity for such year (determined without regard to paragraphs (f) (2) through (4) of this section).

(iii) [Reserved]. See § 1.469-2(f)(9)(iii) for rules relating to this paragraph.

(iv) [Reserved]. See § 1.469-2(f)(9)(iv) for rules relating to this paragraph.

(10) ***Coordination with section 163(d).*** [Reserved]. See paragraph 1.469-2(f)(10) for rules relating to this paragraph.

(11) ***Effective date.*** For the effective date of the rules in this paragraph (f), see § 1.469-11T (relating to effective date and transition rules).

[T.D. 8175, 53 FR 5711, Feb. 25, 1988; 53 FR 15494, Apr. 29, 1988, as amended by T.D. 8253, 54 FR 20538, May 12, 1989; T.D. 8290, 55 FR 6981, Feb. 28, 1990; T.D. 8318, 55 FR 48108, Nov. 19, 1990; 55 FR 51688, Dec. 17, 1990; T.D. 8417, 57 FR 20758, May 15, 1992; T.D. 8477, 58 FR 11538, Feb. 26, 1993; T.D. 8495, 58 FR 58788, Nov. 4, 1993]

§ 1.469-3 Passive activity credit.

(a)-(d) [Reserved]

(e) ***Coordination with section 38(b).*** Any credit described in section 38(b)

(1) through (5) is taken into account in computing the current year business credit for the first taxable year in which the credit is subject to section 469 and is not disallowed by section 469 and the regulations thereunder.

(f) ***Coordination with section 50.*** In the case of any cessation described in section 50(a) (1) or (2), the credits allocable to the taxpayer's activities under § 1.469-1(f)(4) shall be adjusted by reason of the cessation.

(g) [Reserved]

[T.D. 8417, 57 FR 20758, May 15, 1992]

§ 1.469-3T Passive activity credit (temporary).

(a) ***Computation of passive activity credit.*** The taxpayer's passive activity credit for the taxable year is the amount (if any) by which—

(1) The sum of all of the taxpayer's credits that are subject to section 469 for such year; exceeds

(2) The taxpayer's regular tax liability allocable to all passive activities for such year.

(b) ***Credits subject to section 469*** —

(1) ***In general.*** Except as otherwise provided in this paragraph (b), a credit is subject to section 469 for a taxable year if and only if—

(i) Such credit—

(A) Is attributable to such taxable year and arises in connection with the conduct of an activity that is a passive activity for such taxable year; and

(B) Is described in—

(*1*) Section 38(b) (1) through (5) (relating to general business credits);

(*2*) Section 27(b) (relating to corporations described in section 936);

(*3*) Section 28 (relating to clinical testing of certain drugs); or

(*4*) Section 29 (relating to fuel from nonconventional sources); or

(ii) Such credit is allocable to an activity for such taxable year under § 1.469-1T(f)(4).

(2) ***Treatment of credits attributable to qualified progress expenditures.*** Any credit attributable to an increase in qualified investment under section 46(d)(1)(A) (relating to qualified progress expenditures) with respect to progress expenditure property (as defined in section 46(d)(2)) is subject to section 469 for a taxable year if—

(i) Such credit is attributable to such taxable year;

(ii) Such credit is described in paragraph (b)(1)(i)(B) of this section; and

(iii) It is reasonable to believe that such progress expenditure property will be used in a passive activity of the taxpayer when it is placed in service.

(3) ***Special rule for partners and S corporation shareholders.*** The character of a credit of a taxpayer arising in connection with an activity conducted by a partnership or S corporation (as a credit subject to section 469) shall be determined, in any case in which participation is relevant, by reference to the participation of the taxpayer in such activity. Such participation is determined for the taxable year of the partnership or S corporation (and not the taxable year of the taxpayer). See § 1.469-2T(e)(1).

(4) ***Exception for pre-1987 credits.*** A credit is not subject to section 469 if it is attributable to a taxable year of the taxpayer beginning prior to January 1, 1987.

(c) ***Taxable year to which credit is attributable.*** A credit is attributable to the taxable year in which such credit would be (or would have been) allowed if the credits regard to the limitations contained in sections 26(a), 28(d)(2), 29(b)(5), 38(c), and 469.

(d) ***Regular tax liability allocable to passive activities*** —

(1) ***In general.*** For purposes of paragraph (a)(2) of this section, the taxpayer's regular tax liability allocable to all passive activities for the taxable year is the excess (if any) of—

(i) The taxpayer's regular tax liability for such taxable year; over

(ii) The amount of such regular tax liability determined by reducing the taxpayer's taxable income for such year by the excess (if any) of the taxpayer's passive activity gross income for such year over the taxpayer's passive activity deductions for such year.

(2) ***Regular tax liability.*** For purposes of this section, the term “regularly tax liability” has the meaning given such term in section 26(b).

(e) ***Coordination with section 38(b).*** [Reserved]. See § 1.469-3(e) for rules relating to this paragraph.

(f) ***Coordination with section 50.*** [Reserved]. See § 1.469-3(f) for rules relating to this paragraph.

(g) ***Examples.*** The following examples illustrate the application of this section:

> *Example 1.* (i) A, a calendar year individual, is a general partner in calendar year partnership P. P purchases a building in 1987 and, in 1987, 1988, and 1989, incurs rehabilitation costs with respect to the building. The building is placed in service in the rental activity in 1989. P's rehabilitation costs are qualified rehabilitation expenditures (within the meaning of section 48(g)(2)) and are taken into account in determining the amount of the investment credit for rehabilitation expenditures. P's qualified rehabilitation expenditures are not qualified progress expenditures (within the meaning of section 46(d)).

(ii) Because, under section 46(c)(1), the credit is allowable for the taxable year in which the rehabilitated property is placed in service, the credit allowable for P's qualified rehabilitation expenditures arises in connection with the activity in which the property is placed in service. In addition, the credit is attributable to 1989, the year in which the property is placed in service, because it would be allowed for such year if A's credits allowed for all taxable years were determined without regard to the limitations contained in sections 26(a), 28(d)(2), 29(b)(5), 38(c), and 469. Accordingly, under paragraph (b)(1) of this section, A's distributive share of the credit is subject to section 469 for 1989 because the credit arises in connection with a rental activity for such year.

Example 2. The facts are the same as in Example 1, except that the rehabilitation costs are incurred in anticipation of placing the building in service in a rental activity, the qualified rehabilitation expenditures in 1987 and 1988 are qualified progress expenditures ("QPEs") (within the meaning of section 46(d)(3)), the improvements resulting from the expenditures are progress expenditure property (within the meaning of paragraph (d)(2) of this section), and it is reasonable to expect that such property will be transition property (within the meaning of section 49(e)) when the property is placed in service. Therefore, under section 46(d)(1)(A), the qualified investment for 1987 and 1988 is increased by an amount equal to the aggregate of the applicable percentage of the qualified rehabilitation expenditures incurred in such years. The credits that are based on these expenditures are attributable (under paragraph (c) of this section) to 1987 and 1988, respectively. It is reasonable to believe in 1987 and 1988 that the progress expenditure property will be used in a rental activity when it is placed in service. Accordingly, under paragraph (b)(2) of this section, A's distributive share of the credit for 1987 and 1988 is subject to section 469. Under paragraph (b)(1) of this section (as in Example 1), A's distributive share of the credit for 1989 is also subject to section 469.

Example 3. (i) B, a single individual, acquires an interest in a partnership that, in 1988, rehabilitates a building and places it in service in a trade or business activity in which B does not materially participate. For 1988, B has the following items of gross income, deduction, and credit:

Gross income:		
Income other than passive activity gross income	$110,000	
Passive activity gross income	20,000	$130,000
Deductions:		
Deductions other than passive activity deductions	23,950	
Passive activity deductions	18,000	(41,950)
Taxable income		88,050
Credits:		
Rehabilitation credit from the passive activity		8,000

(ii) For 1988, the amount by which B's passive activity gross income exceeds B's passive activity

deductions (B's net passive income) is $2,000. Under paragraph (d) of this section, B's regular tax liability allocable to passive activities for 1988 is determined as follows:

(A) Taxable income	$88,050	
(B) Regular tax liability		$24,578.50
(C) Taxable income minus net passive income	86,050	
(D) Regular tax liability for taxable income of $86,050.00		23,918.50
(E) Regular tax liability allocable to passive activities ((B) minus (D))		$660.00

(iii) Under paragraph (a) of this section, B's passive activity credit for 1988 is the amount by which B's credits that are subject to section 469 for 1988 ($8,000) exceed B's regular tax liability allocable to passive activities for 1988 ($660.00). Accordingly, B's passive activity credit for 1988 is $7,340.

Example 4. (i) The facts are the same as in Example 3 except that, in 1988, B also has additional deductions of $100,000 from a trade or business activity in which B materially participates for 1988. Thus, B has a taxable loss for 1988 of $11,950, determined as follows:

Gross income:		
Income other than passive activity gross income	$110,000	
Passive activity gross income	20,000	$130,000
Deductions:		
Deductions other than passive activity deductions	123,950	
Passive activity deductions	18,000	(141,950)
Taxable income		(11,950)

(ii) Under section 26(b) and paragraph (d)(2) of this section, the regular tax liability for a taxable year cannot exceed the tax imposed by chapter 1 of subtitle A of the Internal Revenue Code for the taxable year. Therefore, under paragraph (d)(1) of this section, B's regular tax liability allocable to passive activities for 1988 is zero. Although B's net operating loss for the taxable year is reduced by B's net passive income, and B's regular tax liability for other taxable years may increase as a result of the reduction, such an increase does not change B's regular tax liability allocable to passive activities for 1988. Accordingly, B's passive activity credit for 1988 is $8,000.

[T.D. 8175, 53 FR 5724, Feb. 25, 1988; 53 FR 15494, Apr. 29, 1988; T.D. 8253, 54 FR 20542, May 12, 1989; T.D. 8417, 57 FR 20758, May 15, 1992]

§ 1.469-4 Definition of activity.

(a) ***Scope and purpose.*** This section sets forth the rules for grouping a taxpayer's trade or business activities and rental activities for purposes of applying the passive activity loss and credit limitation rules of section 469. A taxpayer's activities include those conducted through C corporations that are subject to section 469, S corporations, and partnerships.

(b) ***Definitions.*** The following definitions apply for purposes of this section—

(1) ***Trade or business activities. Trade or business activities*** are activities, other than rental activities or activities that are treated under § 1.469-1T(e)(3)(vi)(B) as incidental to an activity of holding property for investment, that—

(i) Involve the conduct of a trade or business (within the meaning of section 162);

(ii) Are conducted in anticipation of the commencement of a trade or business; or

(iii) Involve research or experimental expenditures that are deductible under section 174 (or would be deductible if the taxpayer adopted the method described in section 174(a)).

(2) ***Rental activities. Rental activities*** are activities that constitute rental activities within the meaning of § 1.469-1T(e)(3).

(c) ***General rules for grouping activities*** —

(1) ***Appropriate economic unit.*** One or more trade or business activities or rental activities may be treated as a single activity if the activities constitute an appropriate economic unit for the measurement of gain or loss for purposes of section 469.

(2) ***Facts and circumstances test.*** Except as otherwise provided in this section, whether activities constitute an appropriate economic unit and, therefore, may be treated as a single activity depends upon all the relevant facts and circumstances. A taxpayer may use any reasonable method of applying the relevant facts and circumstances in grouping activities. The factors listed below, not all of which are necessary for a taxpayer to treat more than one activity as a single activity, are given the greatest weight in determining whether activities constitute an appropriate economic unit for the measurement of gain or loss for purposes of section 469—

(i) Similarities and differences in types of trades or businesses;

(ii) The extent of common control;

(iii) The extent of common ownership;

(iv) Geographical location; and

(v) Interdependencies between or among the activities (for example, the extent to which the activities purchase or sell goods between or among themselves, involve products or services that are normally provided together, have the same customers, have the same employees, or are accounted for with a single set of books and records).

(3) ***Examples.*** The following examples illustrate the application of this paragraph (c).

Example 1. Taxpayer *C* has a significant ownership interest in a bakery and a movie theater at a shopping mall in Baltimore and in a bakery and a movie theater in Philadelphia. In this case, after taking into account all the relevant facts and circumstances, there may be more than one reasonable method for grouping *C*'s activities. For instance, depending on the relevant facts

and circumstances, the following groupings may or may not be permissible: a single activity; a movie theater activity and a bakery activity; a Baltimore activity and a Philadelphia activity; or four separate activities. Moreover, once *C* groups these activities into appropriate economic units, paragraph (e) of this section requires *C* to continue using that grouping in subsequent taxable years unless a material change in the facts and circumstances makes it clearly inappropriate.

Example 2. Taxpayer *B,* an individual, is a partner in a business that sells non-food items to grocery stores (partnership *L*). *B* also is a partner in a partnership that owns and operates a trucking business (partnership *Q*). The two partnerships are under common control. The predominant portion of *Q*'s business is transporting goods for *L,* and *Q* is the only trucking business in which *B* is involved. Under this section, *B* appropriately treats *L*'s wholesale activity and *Q*'s trucking activity as a single activity.

(d) ***Limitation on grouping certain activities.*** The grouping of activities under this section is subject to the following limitations:

(1) ***Grouping rental activities with other trade or business activities*** —

(i) ***Rule.*** A rental activity may not be grouped with a trade or business activity unless the activities being grouped together constitute an appropriate economic unit under paragraph (c) of this section and—

(A) The rental activity is insubstantial in relation to the trade or business activity;

(B) The trade or business activity is insubstantial in relation to the rental activity; or

(C) Each owner of the trade or business activity has the same proportionate ownership interest in the rental activity, in which case the portion of the rental activity that involves the rental of items of property for use in the trade or business activity may be grouped with the trade or business activity.

(ii) ***Examples.*** The following examples illustrate the application of paragraph (d)(1)(i) of this section:

> *Example 1.* (i) *H* and *W* are married and file a joint return. *H* is the sole shareholder of an S corporation that conducts a grocery store trade or business activity. *W* is the sole shareholder of an S corporation that owns and rents out a building. Part of the building is rented to *H*'s grocery store trade or business activity (the grocery store rental). The grocery store rental and the grocery store trade or business are not insubstantial in relation to each other.
> (ii) Because they file a joint return, *H* and *W* are treated as one taxpayer for purposes of section 469. See § 1.469-1T(j). Therefore, the sole owner of the trade or business activity (taxpayer *H-W*) is also the sole owner of the rental activity. Consequently, each owner of the trade or business activity has the same proportionate ownership interest in the rental activity. Accordingly, the grocery store rental and the grocery store trade or business activity may be grouped together (under paragraph (d)(1)(i) of this section) into a single trade or business activity, if the grouping is appropriate under paragraph (c) of this section.

Example 2. Attorney *D* is a sole practitioner in town *X*. *D* also wholly owns residential real estate in town *X* that *D* rents to third parties. *D*'s law practice is a trade or business activity within the meaning of paragraph (b)(1) of this section. The residential real estate is a rental activity within the meaning of § 1.469-1T(e)(3) and is insubstantial in relation to *D*'s law practice. Under the facts and circumstances, the law practice and the residential real estate do not constitute an appropriate economic unit under paragraph (c) of this section. Therefore, *D* may not treat the law practice and the residential real estate as a single activity.

(2) ***Grouping real property rentals and personal property rentals prohibited.*** An activity involving the rental of real property and an activity involving the rental of personal property (other than personal property provided in connection with the real property or real property provided in connection with the personal property) may not be treated as a single activity.

(3) ***Certain activities of limited partners and limited entrepreneurs*** —

(i) ***In general.*** Except as provided in this paragraph, a taxpayer that owns an interest, as a limited partner or a limited entrepreneur (as defined in section 464(e)(2)), in an activity described in section 465(c)(1), may not group that activity with any other activity. A taxpayer that owns an interest as a limited partner or a limited entrepreneur in an activity described in the preceding sentence may group that activity with another activity in the same type of business if the grouping is appropriate under the provisions of paragraph (c) of this section.

(ii) ***Example.*** The following example illustrates the application of this paragraph (d)(3):

> *Example.* (i) Taxpayer *A,* an individual, owns and operates a farm. *A* is also a member of *M,* a limited liability company that conducts a cattle-feeding business. *A* does not actively participate in the management of *M* (within the meaning of section 464(e)(2)(B)). In addition, *A* is a limited partner in *N,* a limited partnership engaged in oil and gas production.
> (ii) Because *A* does not actively participate in the management of *M, A* is a limited entrepreneur in *M*'s activity. *M*'s cattle-feeding business is described in section 465(c)(1)(B) (relating to farming) and may not be grouped with any other activity that does not involve farming. Moreover, *A*'s farm may not be grouped with the cattle-feeding activity unless the grouping constitutes an appropriate economic unit for the measurement of gain or loss for purposes of section 469.
>
> (iii) Because *A* is a limited partner in *N* and *N*'s activity is described in section 465(c)(1)(D) (relating to exploring for, or exploiting, oil and gas resources), *A* may not group *N*'s oil and gas activity with any other activity that does not involve exploring for, or exploiting, oil and gas resources. Thus, *N*'s activity may not be grouped with *A*'s farm or with *M*'s cattle-feeding business.

(4) ***Other activities identified by the Commissioner.*** A taxpayer that owns an interest in an activity identified in guidance issued by the Commissioner as an activity covered by this paragraph (d)(4) may not group that activity with any other activity, except as provided in the guidance issued by the Commissioner.

(5) ***Activities conducted through section 469 entities*** —

(i) ***In general.*** A C corporation subject to section 469, an S corporation, or a partnership (a section 469 entity) must group its activities under the rules of this section. Once the section 469 entity groups its activities, a shareholder or partner may group those activities with each other, with activities conducted directly by the shareholder or partner, and with activities conducted through other section 469 entities, in accordance with the rules of this section. A shareholder or partner may not treat activities grouped together by a section 469 entity as separate activities.

(ii) ***Cross reference.*** An activity that a taxpayer conducts through a C corporation subject to section 469 may be grouped with another activity of the taxpayer, but only for purposes of determining whether the taxpayer materially or significantly participates in the other activity. See § 1.469-2T(c)(3)(i)(A) and (c)(4)(i) for the rules regarding dividends on C corporation stock and compensation paid for personal services.

(6) ***Activities described in section 163(d)(5)(A)(ii).*** With respect to any taxpayer that is an individual, trust, estate, closely held C corporation or personal service corporation, an activity described in § 1.469-1T(e)(6) and subject to section 163(d)(5)(A)(ii) that involves the conduct of a trade or business which is not a passive activity of the taxpayer and with respect to which the taxpayer does not materially participate may not be grouped with any other activity or activities of the taxpayer, including any other activity described in § 1.469-1T(e)(6) and subject to section 163(d)(5)(A)(ii).

(e) ***Disclosure and consistency requirements*** —

(1) ***Original groupings.*** Except as provided in paragraph (e)(2) of this section and § 1.469-11, once a taxpayer has grouped activities under this section, the taxpayer may not regroup those activities in subsequent taxable years. Taxpayers must comply with disclosure requirements that the Commissioner may prescribe with respect to both their original groupings and the addition and disposition of specific activities within those chosen groupings in subsequent taxable years.

(2) ***Regroupings.*** If it is determined that a taxpayer's original grouping was clearly inappropriate or a material change in the facts and circumstances has occurred that makes the original grouping clearly inappropriate, the taxpayer must regroup the activities and must comply with disclosure requirements that the Commissioner may prescribe.

(f) ***Grouping by Commissioner to prevent tax avoidance*** —

(1) ***Rule.*** The Commissioner may regroup a taxpayer's activities if any of the activities resulting from the taxpayer's grouping is not an appropriate economic unit and a principal purpose of the taxpayer's grouping (or failure to regroup under paragraph (e) of this section) is to circumvent the underlying purposes of section 469.

(2) ***Example.*** The following example illustrates the application of this paragraph (f):

> *Example.* (i) Taxpayers *D, E, F, G,* and *H* are doctors who operate separate medical practices. *D* invested in a tax shelter several years ago that generates passive losses and the other doctors intend to invest in real estate that will generate passive losses. The taxpayers form a partnership to engage in the trade or business of acquiring and operating X-ray equipment. In exchange for equipment contributed to the partnership, the taxpayers receive limited partnership interests. The partnership is managed by a general partner selected by the

taxpayers; the taxpayers do not materially participate in its operations. Substantially all of the partnership's services are provided to the taxpayers or their patients, roughly in proportion to the doctors' interests in the partnership. Fees for the partnership's services are set at a level equal to the amounts that would be charged if the partnership were dealing with the taxpayers at arm's length and are expected to assure the partnership a profit. The taxpayers treat the partnership's services as a separate activity from their medical practices and offset the income generated by the partnership against their passive losses.
(ii) For each of the taxpayers, the taxpayer's own medical practice and the services provided by the partnership constitute an appropriate economic unit, but the services provided by the partnership do not separately constitute an appropriate economic unit. Moreover, a principal purpose of treating the medical practices and the partnership's services as separate activities is to circumvent the underlying purposes of section 469. Accordingly, the Commissioner may require the taxpayers to treat their medical practices and their interests in the partnership as a single activity, regardless of whether the separate medical practices are conducted through C corporations subject to section 469, S corporations, partnerships, or sole proprietorships. The Commissioner may assert penalties under section 6662 against the taxpayers in appropriate circumstances.

(g) ***Treatment of partial dispositions.*** A taxpayer may, for the taxable year in which there is a disposition of substantially all of an activity, treat the part disposed of as a separate activity, but only if the taxpayer can establish with reasonable certainty—

(1) The amount of deductions and credits allocable to that part of the activity for the taxable year under § 1.469-1(f)(4) (relating to carryover of disallowed deductions and credits); and

(2) The amount of gross income and of any other deductions and credits allocable to that part of the activity for the taxable year.

(h) ***Rules for grouping rental real estate activities for taxpayers qualifying under section 469(c)(7).*** See § 1.469-9 for rules for certain rental real estate activities.

[T.D. 8565, 59 FR 50487, Oct. 4, 1994, as amended by T.D. 8645, 60 FR 66499, Dec. 22, 1995; T.D. 9943, 86 FR 5540, Jan. 19, 2021]

§ 1.469-4T Definition of activity (temporary).

(a) ***Overview*** —

(1) ***Purpose and effect of overview.*** This paragraph (a) contains a general description of the rules contained in this section and is intended solely as an aid to readers. The provisions of this paragraph (a) are not a substitute for the more detailed rules contained in the remainder of this section and cannot be relied upon in cases in which those rules qualify the general description contained in this paragraph (a).

(2) ***Scope and structure of § 1.469-4T.*** This section provides rules under which a taxpayer's business and rental operations are treated as one or more activities for purposes of section 469 and the regulations thereunder. (See paragraph (b)(2)(ii) of this section for the definition of business and rental operations.) In general, these rules are divided into three groups:

(i) Rules that identify the business and rental operations that constitute an undertaking (the undertaking rules).

(ii) Rules that identify the undertaking or undertakings that constitute an activity (the activity rules).

(iii) Rules that apply only under certain special circumstances (the special rules).

(3) *Undertaking rules* —

(i) ***In general.*** The undertaking is generally the smallest unit that can constitute an activity. (See paragraph (b)(1) of this section for the general rule and paragraph (k)(2)(iii) of this section for a special rule that permits taxpayers to treat a single rental real estate undertaking as multiple activities.) An undertaking may include diverse business and rental operations.

(ii) ***Basic undertaking rule.*** The basic undertaking rule identifies the business and rental operations that constitute an undertaking by reference to their location and ownership. Under this rule, business and rental operations that are conducted at the same location and are owned by the same person are generally treated as part of the same undertaking. Conversely, business and rental operations generally constitute separate undertakings to the extent that they are conducted at different locations or are not owned by the same person. (See paragraph (c)(2)(i) of this section.)

(iii) ***Circumstances in which location is disregarded.*** In some circumstances, the undertaking in which business and rental operations are included does not depend on the location at which the operations are conducted. Operations that are not conducted at any fixed place of business or that are conducted at the customer's place of business are treated as part of the undertaking with which the operations are most closely associated (see paragraph (c)(2)(iii)(C) of this section). In addition, operations that are conducted at a location but do not relate to the production of property at that location or to the transaction of business with customers at that location are treated, in effect, as part of the undertaking or undertakings that the operations support (see paragraph (c)(2)(ii) of this section).

(iv) ***Rental undertakings.*** The basic undertaking rule is also modified if the undertaking determined under that rule includes both rental and nonrental operations. In such cases, the rental operations and the nonrental operations generally must be treated as separate undertakings (see paragraph (d)(1) of this section). This rule does not apply if more than 80 percent of the income of the undertaking determined under the basic rule is attributable to one class of operations (*i.e.,* rental or nonrental) or if the rental operations would not be treated as part of a rental activity because of the exceptions contained in § 1.469-1T(e)(3)(ii) (see paragraph (d)(2) of this section). In applying the rental undertaking rules, short-term rentals of real property (*e.g.,* hotel-room rentals) are generally treated as nonrental operations (see paragraph (d)(3)(ii) of this section).

(v) ***Oil and gas wells.*** Another exception to the basic undertaking rule treats oil and gas wells that are subject to the working-interest exception in § 1.469-1T(e)(4) as separate undertakings (see paragraph (e) of this section).

(4) *Activity rules* —

(i) ***In general.*** The basic activity rule treats each undertaking in which a taxpayer owns an interest as a separate activity of the taxpayer (see paragraph (b)(1) of this section). In the case of trade or business undertakings, professional service undertakings, and rental real estate undertakings, additional rules may either require or permit the aggregation of two or more undertakings into a single activity.

(ii) ***Aggregation of trade or business undertakings*** —

(A) ***Trade or business undertakings.*** Trade or business undertakings include all nonrental undertakings other than oil and gas undertakings described in paragraph (a)(3)(v) of this section and professional service undertakings described in paragraph (a)(4)(iii) of this section (see paragraph (f)(1)(ii) of this section).

(B) ***Similar, commonly-controlled undertakings treated as a single activity.*** An aggregation rule treats trade or business undertakings that are both similar and controlled by the same interests as part of the same activity. This rule is, however, generally inapplicable to small interests held by passive investors in such undertakings, except to the extent such interests are held through the same passthrough entity. (See paragraph (f)(2) of this section.) Undertakings are similar for purposes of this rule if more than half (by value) of their operations are in the same line of business (as defined in a revenue procedure issued pursuant to paragraph (f)(4)(iv) of this section) or if the undertakings are vertically integrated (see paragraph (f)(4)(iii) of this section). All the facts and circumstances are taken into account in determining whether undertakings are controlled by the same interests for purposes of the aggregation rule (see paragraph (j)(1) of this section). If, however, each member of a group of five or fewer persons owns a substantial interest in each of the undertakings, the undertakings may be rebuttably presumed to be controlled by the same interests (see paragraph (j) (2) and (3) of this section).

(C) ***Integrated businesses treated as a single activity.*** Trade or business undertakings (including undertakings that have been aggregated because of their similarity and common control) are subject to a second aggregation rule. Under this rule undertakings that constitute an integrated business and are controlled by the same interests must be treated as part of the same activity. (See paragraph (g) of this section.)

(iii) ***Aggregation of professional service undertakings.*** Professional service undertakings are nonrental undertakings that predominantly involve the provision of services in the fields of health, law, engineering, architecture, accounting, actuarial science, performing arts, or consulting (see paragraph (h)(1)(ii) of this section). In general, professional service undertakings that are either similar, related, or controlled by the same interests must be treated as part of the same activity (see paragraph (h)(2) of this section). The rules for determining whether trade or business undertakings are controlled by the same interests also apply with respect to professional service undertakings. Professional service undertakings are similar, however, if more than 20 percent (by value) of their operations are in the same field, and two professional service undertakings are related if one of the undertakings derives more than 20 percent of its gross income from persons who are customers of the other undertaking (see paragraph (h)(3) of this section).

(iv) ***Rules for rental real estate*** —

(A) ***Taxpayers permitted to determine rental real estate activities.*** The rules for aggregating rental real estate undertakings are generally elective. They permit taxpayers to treat any combination of rental real estate undertakings as a single activity. Taxpayers may also divide their rental real estate undertakings and then treat portions of the undertakings as separate activities or recombine the portions into activities that include parts of different undertakings. (See paragraph (k)(2) (i) and (iii) of this section.)

(B) ***Limitations on fragmentation and aggregation of rental real estate.*** Taxpayers may not fragment their rental real estate in a manner that is inconsistent with their treatment of such property in prior taxable years or with the treatment of such property by the passthrough entity through which it is held (see paragraph (k) (2)(ii) and (3) of this section). There are no comparable limitations on the aggregation of rental real estate into a single activity. If however, the income or gain from a rental real estate undertaking is subject to recharacterization under § 1.469-2T(f)(3) (relating to the rental of nondepreciable property), a coordination rule provides that the undertaking must be treated as a separate activity (see paragraph (k)(6) of this section.)

(v) ***Election to treat nonrental undertakings as separate activities.*** Another elective rule permits taxpayers to treat a nonrental undertaking as a separate activity even if the undertaking would be treated as part of a larger activity under the aggregation rules applicable to the undertaking (see paragraph (o)(2) of this section). This elective rule is limited by consistency requirements similar to those that apply to rental real estate operations (see paragraph (o) (3) and (4) of this section). Moreover, in cases in which a taxpayer elects to treat a nonrental undertaking as a separate activity, the taxpayer's level of participation (*i.e.,* material, significant, or otherwise) in the separate activity is the same as the taxpayer's level of participation in the larger activity in which the undertaking would be included but for the election (see paragraph (o)(6) of this section).

(5) ***Special rules*** —

(i) ***Consolidated groups and publicly traded partnerships.*** Special rules apply to the business and rental operations of consolidated groups of corporations and publicly traded partnerships. Under these rules, a consolidated group is treated as one taxpayer in determining its activities and those of its members (see paragraph (m) of this section), and business and rental operations owned through a publicly traded partnership cannot be aggregated with operations that are not owned through the partnership (see paragraph (n) of this section).

(ii) ***Transitional rule.*** A special rule applies for taxable years ending before August 10, 1989. In those years, taxpayers may organize business and rental operations into activities under any reasonable method (see paragraph (p)(1) of this section). A taxpayer will also be permitted to use any reasonable method to allocate disallowed deductions and credits among activities for the first taxable year in which the taxpayer's activities are determined under the general rules of § 1.469-4T (see paragraph (p)(3) of this section).

(b) ***General rule and definitions of general application*** —

(1) ***General rule.*** Except as otherwise provided in this section, each undertaking in which a taxpayer owns an interest shall be treated as a separate activity of the taxpayer. See paragraphs (f), (g), and (h) of this section for rules requiring certain nonrental undertakings to be treated as part of the same activity and paragraph (k) of this section for rules identifying the rental real estate undertakings (or portions thereof) that are included in an activity.

(2) ***Definitions of general application.*** The following definitions set forth the meaning of certain terms for purposes of this section:

(i) ***Passthrough entity.*** The term "passthrough entity" means a partnership, S corporation, estate, or trust.

(ii) ***Business and rental operations*** —

(A) ***In general.*** Except as provided in paragraph (b)(2)(ii)(B) of this section, the term "business and rental operations" means all endeavors that are engaged in for profit or the production of income and satisfy one or more of the following conditions for the taxable year:

(*1*) Such endeavors involve the conduct of a trade or business (within the meaning of section 162) or are conducted in anticipation of such endeavors becoming a trade or business;

(*2*) Such endeavors involve making tangible property available for use by customers; or

(*3*) Research or experimental expenditures paid or incurred with respect to such endeavors are deductible under section 174 (or would be deductible if the taxpayer adopted the method described in section 174(a)).

(B) ***Operations conducted through nonpassthrough entities.*** For purposes of applying section 469 and the regulations thereunder, a taxpayer's activities do not include operations that a taxpayer conducts through one or more entities (other than passthrough entities). The following example illustrates the operation of this paragraph (b)(2)(ii)(B):

> *Example.* (i) A, an individual, owns stock of X, a closely held corporation (within the meaning of § 1.469-1T(g)(2)(ii) that is directly engaged in the conduct of a real estate development business. A participates in X's real estate development business, but does not own any interest in the business other than through ownership of the stock of X.
> (ii) X is subject to section 469 (see § 1.469-1T(b)(5)) and does not hold the real estate development business through another entity. Accordingly, for purposes of section 469 and the regulations thereunder, the operations of X's real estate development business are treated as part of X's activities.
>
> (iii) A is also subject to section 469 (see § 1.469-1T(b)(1)), but A's only interest in the real estate development business is held through X. X is a C corporation and therefore is not a passthrough entity. Thus, for purposes of section 469 and the regulations thereunder, A's activities do not include the operations of X's real estate development business. Accordingly, A's participation in X's busines is not participation in an activity of A, and is not taken into account in determining whether A materially participates (within the meaning of § 1.469-5T) or significantly participates (within the meaning of § 1.469-1T(c)(2)) in any activity. (See, however,

§ 1.469-1T(g)(3) for rules under which a shareholder's participation is taken into account for purposes of determining whether a corporation materially or significantly participates in an activity.

(c) *Undertaking* —

(1) ***In general.*** Except as otherwise provided in paragraphs (d), (e), and (k)(2)(iii) of this section, business and rental operations that constitute a separate source of income production shall be treated as a single undertaking that is separate from other undertakings.

(2) ***Operations treated as a separate source of income production*** —

(i) ***In general.*** Except as otherwise provided in this paragraph (c)(2), business and rental operations shall be treated for purposes of this paragraph (c) as a separate source of income production if and only if—

(A) Such operations are conducted at the same location (within the meaning of paragraph (c)(2)(iii) of this section) and are owned by the same person (within the meaning of paragraph (c)(2)(v) of this section); and

(B) Income-producing operations (within the meaning of paragraph (c)(2)(iv) of this section) owned by such person are conducted at such location.

(ii) ***Treatment of support operations*** —

(A) ***In general.*** For purposes of section 469 and the regulations thereunder—

(*1*) The support operations conducted at a location shall not be treated as part of an undertaking under paragraph (c)(2)(i) of this section; and

(*2*) The income and expenses that are attributable to such operations and are reasonably allocable to an undertaking conducted at a different location shall be taken into account in determining the income or loss from the activity or activities that include such undertaking.

(B) ***Support operations.*** For purposes of this paragraph (c)(2), the business and rental operations conducted at a location are treated as support operations to the extent that—

(*1*) Such operations and an undertaking that is conducted at a different location are owned by the same person (within the meaning of paragraph (c)(2)(v) of this section);

(*2*) Such operations involve the provision of property or services to such undertaking; and

(*3*) Such operations are not income-producing operations (within the meaning of paragraph (c)(2)(iv) of this section).

(iii) ***Location.*** For purposes of this paragraph (c)(2)—

(A) The term “location” means, with respect to any business and rental operations, a fixed place of business at which such operations are regularly conducted;

(B) Business and rental operations are conducted at the same location if they are conducted in the same physical structure or within close proximity of one another;

(C) Business and rental operations that are not conducted at a fixed place of business or that are conducted on the customer's premises shall be treated as operations that are conducted at the location (other than the customer's premises) with which they are most closely associated;

(D) All the facts and circumstances (including, in particular, the factors listed in paragraph (c)(3) of this section) are taken into account in determining the location with which business and rental operations are most closely associated; and

(E) Oil and gas operations that are conducted for the development of a common reservoir are conducted within close proximity of one another.

(iv) ***Income-producing operations.*** For purposes of this paragraph (c)(2), the term "income-producing operations" means business and rental operations that are conducted at a location and relate to (or are conducted in reasonable anticipation of)—

(A) The production of property at such location;

(B) The sale of property to customers at such location;

(C) The performance of services for customers at such location;

(D) Transactions in which customers take physical possession at such location of property that is made available for their use; or

(E) Any other transactions that involve the presence of customers at such location.

(v) ***Ownership by the same person.*** For purposes of this paragraph (c)(2), business and rental operations are owned by the same person if and only if one person (within the meaning of section 7701(a)(1)) is the direct owner of such operations.

(3) ***Facts and circumstances determinations.*** In determining whether a location is the location with which business and rental operations are most closely associated for purposes of paragraph (c)(2)(iii)(D) of this section, the following relationships between operations that are conducted at such location and other operations are generally the most significant:

(i) The extent to which other persons conduct similar operations at one location;

(ii) Whether such operations are treated as a unit in the primary accounting records reflecting the results of such operations;

(iii) The extent to which other persons treat similar operations as a unit in the primary accounting records reflecting the results of such similar operations;

(iv) The extent to which such operations involve products or services that are commonly provided together;

(v) The extent to which such operations serve the same customers;

(vi) The extent to which the same personnel, facilities, or equipment are used to conduct such operations;

(vii) The extent to which such operations are conducted in coordination with or reliance upon each other;

(viii) The extent to which the conduct of any such operations is incidental to the conduct of the remainder of such operations;

(ix) The extent to which such operations depend on each other for their economic success; and

(x) Whether such operations are conducted under the same trade name.

(4) ***Examples.*** The following examples illustrate the application of this paragraph (c). In each example that does not state otherwise, the taxpayer is an individual and the facts, analysis, and conclusion relate to a single taxable year.

Example 1. The taxpayer is the sole owner of a department store and a restaurant and conducts both businesses in the same building. Thus, the department store and restaurant operations are conducted at the same location (within the meaning of paragraph (c)(2)(iii) of this section) and are owned by the same person (*i.e.,* the taxpayer is the direct owner of the operations). In addition, the taxpayer conducts income-producing operations (within the meaning of paragraph (c)(2)(iv) of this section) at the location (*i.e.,* property is sold to customers and services are performed for customers on the premises of the department store). Accordingly, the department store and restaurant operations are treated as a separate source of income production (see paragraph (c)(2) of this section) and as a single undertaking that is separate from other undertakings (see paragraph (c)(1) of this section).

Example 2. (i) The facts are the same as in Example 1, except that the taxpayer is also the sole owner of an automotive center that services automobiles and sells tires, batteries, motor oil, and accessories. The taxpayer operates the automotive center in a separate structure in the shopping mall in which the department store is located. Although the automotive center operations and the department store and restaurant operations are not conducted in the same physical structure, they are conducted within close proximity (within the meaning of paragraph (c)(2)(iii)(B) of this section) of one another. Thus, the department store, restaurant, and automotive center operations are conducted at the same location (within the meaning of paragraph (c)(2)(iii) of this section).
(ii) As in Example 1, the operations conducted at the same location are owned by the same person, and the taxpayer conducts income-producing operations (within the meaning of paragraph (c)(2)(iv) of this section) at the location. Accordingly, the department store, restaurant, and automotive center operations are treated as a separate source of income production (see paragraph (c)(2) of this section) and as a single undertaking that is separate from other undertakings (see paragraph (c)(1) of this section).

Example 3. (i) The facts are the same as in Example 2, except that the automotive center is located several blocks from the shopping mall. As in Example 1, the department store and restaurant operations are treating as a single undertaking that is separate from other undertakings. Because, however, the automotive center operations are not conducted within close proximity (within the meaning of paragraph (c)(2)(iii)(B)

of this section) of the department store and restaurant operations, all of the taxpayer's operations are not conducted at the same location (within the meaning of paragraph (c)(2)(iii) of this section).
(ii) All of the automotive center operations are conducted at the same location (within the meaning of paragraph (c)(2)(iii) of this section) and are owned by the same person (*i.e.,* the taxpayer is the direct owner of the operations). In addition, the taxpayer conducts income producing operations (within the meaning of paragraph (c)(2)(iv) of this section) at the location (*i.e.,* property is sold to customers and services are performed for customers on the premises of the automotive center). Accordingly, the automotive center operations are also treated as a separate source of income production (see paragraph (c)(2) of this section) and as a single undertaking that is separate from other undertakings (see paragraph (c)(1) of this section). See, however, paragraph (g) of this section for rules under which certain trade or business activities are treated as a single activity.

Example 4. The taxpayer is the sole owner of a building and rents residential, office, and retail space in the building to various tenants. The taxpayer manages these rental operations from an office located in the building. The rental operations are conducted at the same location (within the meaning of paragraph (c)(2)(iii) of this section) and are owned by the same person (*i.e.,* the taxpayer is the direct owner of the operations). In addition, the taxpayer conducts income-producing operations (within the meaning of paragraph (c)(2)(iv) of this section) at the location (*i.e.,* customers take physical possession in the building of property made available for their use). Accordingly, the rental operations are treated as a separate source of income production (see paragraph (c)(2) of this section) and as a single undertaking that is separate from other undertakings (see paragraph (c)(1) of this section). See paragraph (d) of this section for rules for determining whether this undertaking is a rental undertaking and paragraph (k) of this section for rules for identifying rental real estate activities.

Example 5. (i) The facts are the same as in Example 4, except that the taxpayer also uses the rental office in the building ("Building #1") to manage rental operations in another building ("Building #2") that the taxpayer owns. The rental operations conducted in Building #2 are treated as a separate source of income production under paragraph (c)(2) of this section and as a single undertaking that is separate from other undertakings (the "Building #2 undertaking") under paragraph (c)(1) of this section.
(ii) The operations conducted at the rental office in Building #1 and the Building #2 undertaking are owned by the same person (*i.e.,* the taxpayer is the direct owner of the operations). In addition, the operations conducted at the rental office with respect to the Building #2 undertaking relate to transactions in which customers take physical possession at another location of property that is made available for their use (*i.e.,* the operations are not income-producing operations (within the meaning of paragraph (c)(2)(iv) of this section)). Thus, to the extent the operations conducted at the rental

office involve the management of the Building #2 undertaking, they are support operations (within the meaning of paragraph (c)(2)(ii)(B) of this section) with respect to the Building #2 undertaking.

(iii) Paragraph (c)(2)(ii)(A)(*1*) of this section provides that support operations are not treated as part of an undertaking under paragraph (c)(2)(i) of this section. Therefore, the support operations conducted at the rental office are not treated as part of the undertaking that consists of the rental operations conducted in Building #1 (the "Building #1 undertaking"). Paragraph (c)(2)(ii)(A)(*2*) of this section provides that the income and expenses that are attributable to support operations and are reasonably allocable to an undertaking conducted at a different location shall be taken into account in determining the income or loss from the activity that includes such undertaking. Accordingly, the income and expenses of the rental office that are reasonably allocable to the Building #2 undertaking are taken into account in determining the income or loss from the activity or activities that include the Building #2 undertaking. See paragraph (k) of this section for rules for identifying rental real estate activities.

(iv) Rental office operations that involve the management of rental operations conducted in Building #1 are not support operations (within the meaning of paragraph (c)(2)(ii)(B) of this section) because they relate to an undertaking that is conducted at the same location (the "Building #1 undertaking"). Thus, the rules for support operations in paragraph (c)(2)(ii)(A) of this section do not apply to such operations, and they are treated as part of the Building #1 undertaking.

Example 6. (i) The taxpayer conducts business and rental operations at eleven different locations (within the meaning of paragraph (c)(2)(iii) of this section). At ten of the locations the taxpayer owns grocery stores, and at the eleventh location the taxpayer owns a warehouse that receives goods and supplies them to the taxpayer's stores. The operations of each store are conducted at the same location (within the meaning of paragraph (c)(2)(iii) of this section) and are owned by the same person (*i.e.,* the taxpayer is the direct owner of the operations). In addition, the taxpayer conducts income-producing operations (within the meaning of paragraph (c)(2)(iv) of this section) at each location (*i.e.,* property is sold to customers on the store premises, and customers take physical possession on the store premises of property made available for their use). Accordingly, the operations of each of the ten grocery stores are treated as a separate source of income production (see paragraph (c)(2) of this section), and each store is treated as a single undertaking (a "grocery store undertaking") that is separate from other undertakings (see paragraph (c)(1) of this section). The operations conducted at the warehouse, however, do not include any income-producing operations (within the meaning of paragraph (c)(2)(iv) of this section). Accordingly, the warehouse operations

do not satisfy the requirements of paragraph (c)(2)(i) of this section and are not treated as a separate undertaking under paragraph (c)(1) of this section.
(ii) The warehouse operations and the grocery store undertakings are owned by the same person (*i.e.,* the taxpayer is the direct owner of the operations), the operations conducted at the warehouse involve the provision of property to the grocery store undertakings, and the warehouse operations are not income-producing operations (within the meaning of paragraph (c)(2)(iv) of this section). Thus, the warehouse operations are support operations (within the meaning of paragraph (c)(2)(ii)(B) of this section) with respect to the grocery store undertakings. Paragraph (c)(2)(ii)(A)(*2*) of this section provides that the income and expenses that are attributable to support operations and are reasonably allocable to an undertaking conducted at a different location shall be taken into account in determining the income or loss from the activity or activities that include such undertaking. Accordingly, the income and expenses of the warehouse operations that are reasonably allocable to a grocery store undertaking are taken into account in determining the income or loss from the activity or activities that include such undertaking. See paragraph (f) of this section for rules under which certain similar, commonly-controlled undertakings are treated as a single activity.

Example 7. (i) The facts are the same as in Example 6, except that the warehouse operations also include the sale of goods to grocery stores that the taxpayer does not own ("other grocery stores"). Because of these sales, the taxpayer conducts income-producing operations (within the meaning of paragraph (c)(2)(iv) of this section) at the warehouse. The warehouse operations are conducted at the same location (within the meaning of paragraph (c)(2)(iii) of this section) and are owned by the same person (*i.e.,* the taxpayer is the direct owner of the operations). Accordingly, prior to the application of the rules for support operations in paragraph (c)(2)(ii) of this section, the warehouse operations are treated as a separate source of income production (see paragraph (c)(2) of this section) and as a single undertaking (the "separate warehouse undertaking") that is separate from other undertakings (see paragraph (c)(1) of this section).
(ii) As in Example 6, the warehouse operations that involve supplying goods to the taxpayer's grocery store undertakings are support operations with respect to those undertakings. Therefore, those operations are not treated as part of the separate warehouse undertaking (see paragraph (c)(2)(ii)(A)(*1*) of this section), and the income and expenses of such operations are taken into account, as in Example 6, in determining the income or loss from the activity or activities that include the taxpayer's grocery store undertakings.

Example 8. (i) A partnership is formed to acquire real property and construct a building on the property. The partnership hires brokers to locate a suitable parcel of land, lawyers to negotiate zoning variances, easements, and building permits, and architects and

engineers to design the improvements. After the architects and engineers have designed the improvements and other preliminaries have been completed, the partnership hires a general contractor who hires subcontractors and oversees construction. During the construction process and after construction has been completed, the partnership leases out space in the building. The partnership then operates the building as a rental property. The operations of acquiring the real property, negotiating contracts, overseeing the designing and construction of the improvements, leasing up the building, and operating the building are conducted at an office (the "management office") that is not at the same location (within the meaning of paragraph (c)(2)(iii) of this section) as the building.
(ii) The operations conducted at the building site (*e.g.,* excavating the land, pouring the concrete for the foundation, erecting the frame of the building, completing the exterior of the building, and building out the interior of the building) are conducted at the same location (within the meaning of paragraph (c)(2)(iii) of this section) and are owned by the same person (*i.e.,* the partnership is the direct owner of the operations). In addition, the partnership conducts income-producing operations (within the meaning of paragraph (c)(2)(iv) of this section) at the location (*i.e.,* during the construction period property (the building) is produced at the building site, and during the rental period customers take physical possession in the building of property made available for their use). Accordingly, the operations conducted at the building site are treated as a separate source of income production (see paragraph (c)(2) of this section) and as a single undertaking that is separate from other undertakings (see paragraph (c)(1) of this section).

(iii) The operations conducted at the management office and the undertaking conducted at the building site are owned by the same person (*i.e.,* the partnership is the direct owner of the operations). In addition, the operations conducted at the management office relate to transactions in which customers take physical possession at another location of property that is made available for their use (*i.e.,* the operations are not income-producing operations (within the meaning of paragraph (c)(2)(iv) of this section)). Thus, to the extent the operations conducted at the management office involve the provision of services to the undertaking conducted at the building site, they are support operations (within the meaning of paragraph (c)(2)(ii)(B) of this section) with respect to such undertaking.

(iv) Paragraph (c)(2)(ii)(A)(*2*) of this section provides that the income and expenses of support operations that are reasonably allocable to an undertaking conducted at a different location shall be taken into account in determining the income or loss from the activity that includes such undertaking. Accordingly, the income and expenses of the management office that are reasonably allocable to the undertaking conducted at the building site are taken into account in determining the income or loss from the activity or activities that include such undertaking.

(v) Until the building is first held out for rent and is in a state of readiness for rental, the undertaking conducted at the building site is a trade or business undertaking (within the meaning of paragraph (f)(1)(ii) of this section). See paragraph (d) of this section for rules for determining whether the undertaking is a rental undertaking for periods after the building is first held out for rent and is in a state of readiness for rental and paragraph (k) of this section for rules for identifying rental real estate activities.

Example 9. The taxpayer owns 15 oil wells pursuant to a single working interest (within the meaning of § 1.469-1T (e)(4)(iv). All of the wells are drilled and operated for the development of a common reservoir. Thus, all of the wells are at the same location (see paragraph (c)(2)(iii)(E) of this section). All of the wells are owned by the same person (*i.e.,* the taxpayer is the direct owner of the operations), and the taxpayer conducts income-producing operations (within the meaning of paragraph (c)(2)(iv) of this section) at the location (*i.e.,* oil wells are drilled in reasonable anticipation of producing oil at the location). Accordingly, the operations of the wells are treated as a separate source of income production (see paragraph (c)(2) of this section) and as a single undertaking that is separate from other undertakings (see paragraph (c)(1) of this section). See paragraph (e) of this section for rules under which certain oil and gas operations are treated as multiple undertakings even if they would be part of the same undertaking under the rules of this paragraph (c).

Example 10. (i) Partnership X owns an automobile dealership and partnership Y owns an automobile repair shop. The dealership and repair shop operations are conducted in the same physical structure. Individuals A, B, and C are the only partners in partnerships X and Y, and each of the partners owns a one-third interest in both partnerships.
(ii) The dealership operations and the repair-shop operations are conducted at the same location (within the meaning of paragraph (c)(2)(iii) of this section), but are owned by different persons (*i.e.,* X is the direct owner of the dealership operations, and Y is the direct owner of the repair-shop operations). Moreover, indirect ownership of the operations is not taken into account under paragraph (c)(2)(v) of this section. Thus, it is irrelevant that the two partnerships are owned by the same persons in identical proportions. Accordingly, the dealership and repair-shop operations are not treated as part of the same source of income production (see paragraph (c)(2) of this section) or as a single undertaking that is separate from other undertakings (see paragraph (c)(1) of this section). See, however, paragraph (g) of this section for rules under which certain trade or business activities are treated as a single activity.

Example 11. (i) The taxpayer owns and operates a delivery service. The business consists of a central office, retail establishments, and messengers who transport packages from one place to another. Customers may bring their packages to a retail establishment for delivery elsewhere or, by calling the central office, may have packages picked up at their homes or offices. The central office dispatches messengers and coordinates all pickups and deliveries. Customers may pay for deliveries when they drop

off or pick up packages at a retail establishment, or the central office will bill the customer for services rendered. In addition, many packages are routed through the central office.
(ii) The operations conducted at the central office are conducted at the same location (within the meaning of paragraph (c)(2)(iii) of this section) and are owned by the same person (*i.e.,* the taxpayer is the direct owner of the operations). The operations actually conducted at the central office, however, do not include any income-producing operations (within the meaning of paragraph (c)(2)(iv) of this section).

(iii) Under paragraph (c)(2)(iii) (C) and (D) of this section, business and rental operations that are not conducted at a fixed place of business or that are conducted on the customer's premises are treated as operations that are conducted at the location (other than the customer's premises) with which they are most closely associated, and all the facts and circumstances are taken into account in determining the location with which business and rental operations are most closely associated. The facts and circumstances in this case (including the facts that the central office dispatches messengers, coordinates all pickups and deliveries, and is the transshipment point for many packages) establish that the operations of delivering packages from one location to another are most closely associated with the central office. Thus, the delivery operations are treated as operations that are conducted at the central office, and the deliveries are treated as income-producing operations (*i.e.,* the performance of services for customers) that the taxpayer conducts at the central office. Accordingly, the operations conducted at the central office are treated as a separate source of income production (see paragraph (c)(2) of this section) and as a single undertaking that is separate from other undertakings (see paragraph (c)(1) of this section).

(iv) The operations conducted at each retail establishment are conducted at the same location (within the meaning of paragraph (c)(2)(iii) of this section) and are owned by the same person (*i.e.,* the taxpayer is the direct owner of the operations). At each retail establishment, the taxpayer's operations include transactions that involve the presence of customers at the establishment. Thus, the taxpayer conducts income-producing operations (within the meaning of paragraph (c)(2)(iv)(E) of this section) at the retail establishments. Accordingly, the operations of each retail establishment are treated as a separate source of income production (see paragraph (c)(2) of this section) and as a single undertaking that is separate from other undertakings (see paragraph (c)(1) of this section). See, however, paragraph (f) of this section for rules under which certain similar, commonly-controlled undertakings are treated as a single activity.

Example 12. (i) The taxpayer is the sole owner of a saw mill and a lumber yard. The taxpayer's business operations consist of converting timber into lumber and other wood products and selling the resulting products. The timber is processed at the saw mill, and

the resulting products are transported to the lumber yard where they are sold. The saw mill and the lumber yard are at different locations (within the meaning of paragraph (c)(2)(iii) of this section). The transportation operations are managed at the saw mill.
(ii) The operations conducted at the saw mill are conducted at the same location (within the meaning of paragraph (c)(2)(iii) of this section) and are owned by the same person (*i.e.*, the taxpayer is the direct owner of the operations). In addition, the taxpayer conducts income-producing operations (within the meaning of paragraph (c)(2)(iv) of this section) at the location (*i.e.*, lumber is produced at the mill). Similarly, the selling operations at the lumber yard are conducted at the same location (within the meaning of paragraph (c)(2)(iii) of this section) and are owned by the same person (*i.e.*, the taxpayer is the direct owner of the operations). In addition, the taxpayer conducts income-producing operations (within the meaning of paragraph (c)(2)(iv) of this section) at the location (*i.e.*, lumber is sold to customers at the lumber yard). Thus, the milling operations and the selling operations are treated as separate sources of income production (see paragraph (c)(2) of this section) and as separate undertakings (see paragraph (c)(1) of this section).

(iii) The operations conducted at the mill involve the provision of property to the lumber-yard undertaking. Nonetheless, the milling operations are income-producing operations because they relate to the production of property at the mill, and an undertaking's income-producing operations are not treated as support operations (see paragraph (c)(2)(ii)(B)(*3*) of this section). Accordingly, the milling operations are not support operations with respect to the lumber-yard undertaking. See, however, paragraph (f) of this section for rules under which certain vertically-integrated undertakings are treated as part of the same activity.

(iv) The operations of transporting finished products from the saw mill to the lumber yard are not conducted at a fixed location. Under paragraphs (c)(2)(iii) (C) and (D) of this section, business and rental operations that are not conducted at a fixed place of business or that are conducted on the customer's premises are treated as operations that are conducted at the location (other than the customer's premises) with which they are most closely associated, and all the facts and circumstances are taken into account in determining the location with which business and rental operations are most closely associated. The facts and circumstances in this case (including the fact that the transportation operations are managed at the saw mill) establish that the transportation operations are most closely associated with the saw mill. Thus, the transportation operations are treated as operations that are conducted at the mill and as part of the undertaking that consists of the milling operations.

(d) *Rental undertaking* —

(1) ***In general.*** This paragraph (d) applies to operations that are treated, under paragraph (c) of this section and before the application of paragraph (d)(1)(i) of this section, as a single undertaking that is separate from other undertakings (a "paragraph (c) undertaking"). For purposes of this section—

(i) A paragraph (c) undertaking's rental operations and its operations other than rental operations shall be treated, except as otherwise provided in paragraph (d)(2) of this section, as two separate undertakings;

(ii) The income and expenses that are reasonably allocable to an undertaking (determined after the application of paragraph (d)(1)(i) of this section) shall be taken into account in determining the income or loss from the activity or activities that include such undertaking; and

(iii) An undertaking (determined after the application of paragraph (d)(1)(i) of this section) shall be treated as a rental undertaking if and only if such undertaking, considered as a separate activity, would constitute a rental activity (within the meaning of § 1.469-1T(e)(3)).

(2) ***Exceptions.*** Paragraph (d)(1)(i) of this section shall not apply to a paragraph (c) undertaking for any taxable year in which—

(i) The rental operations of the paragraph (c) undertaking, considered as a separate activity, would not constitute a rental activity (within the meaning of § 1.469-1T(e)(3));

(ii) Less than 20 percent of the gross income of the paragraph (c) undertaking is attributable to rental operations; or

(iii) Less than 20 percent of the gross income of the paragraph (c) undertaking is attributable to operations other than rental operations.

(3) ***Rental operations.*** For purposes of this paragraph (d), a paragraph (c) undertaking's rental operations are determined under the following rules:

(i) ***General rule.*** Except as otherwise provided in paragraph (d)(3) (ii) or (iii) of this section, a paragraph (c) undertaking's rental operations are all of the undertaking's business and rental operations that involve making tangible property available for use by customers and the provision of property and services in connection therewith.

(ii) ***Real property provided for short-term use.*** A paragraph (c) undertaking's operations that involve making short-term real property available for use by customers and the provision of property and services in connection therewith shall not be treated as rental operations if such operations, considered as a separate activity, would not constitute a rental activity. An item of property is treated as short-term real property for this purpose if and only if such item is real property that the paragraph (c) undertaking makes available for use by customers and the average period of customer use (within the meaning of § 1.469-1T(e)(3)(iii)) for all of the paragraph (c) undertaking's real property of the same type as such item is 30 days or less.

(iii) ***Property made available to licensees.*** A paragraph (c) undertaking's operations that involve making tangible property available during defined business hours for nonexclusive use by various customers shall not be treated as rental operations. (See § 1.469-1T(e)(3)(ii)(E).)

(4) ***Examples.*** The following examples illustrate the application of this paragraph (d). In each example that does not state otherwise, the taxpayer is an individual and the facts, analysis, and conclusions relate to a single taxable year.

Example 1. (i) The taxpayer owns a building in which the taxpayer rents office space to tenants and operates a parking garage that is used by tenants and other persons. (Assume that, under paragraph (c)(1) of this section, the operations conducted in the building are treated as a single paragraph (c) undertaking.) The taxpayer's tenants typically occupy an office for at least one year, and the services provided to tenants are those customarily provided in office buildings. Some persons (including tenants) rent spaces in the parking garage on a monthly or annual basis. In general, however, spaces are rented on an hourly or daily basis, and the average period for which all customers (including tenants) use the parking garage is less than 24 hours. The paragraph (c) undertaking derives 75 percent of its gross income from office-space rentals and 25 percent of its gross income from the parking garage. The operations conducted in the building are not incidental to any other activity of the taxpayer (within the meaning of § 1.469-1T(e)(3)(vi)).
(ii) The parking spaces are real property and the average period of customer use (within the meaning of § 1.469-1T(e)(3)(iii)) for the parking spaces is 30 days or less. Thus, the parking spaces are short-term real properties (within the meaning of paragraph (d)(3)(ii) of this section). (For this purpose, individual parking spaces that are rented on a monthly or annual basis are, nevertheless, short-term real properties because all the parking spaces are property of the same type, and the average rental period taking all parking spaces into account is 30 days or less.) In addition, the parking-garage operations involve making short-term real properties available for use by customers and the provision of property and services in connection therewith.

(iii) Paragraph (d)(3) (i) and (ii) of this section provides, in effect, that a paragraph (c) undertaking's operations that involve making short-term real properties available for use by customers and the provision of property and services in connection therewith are treated as rental operations if and only if the operations, considered as a separate activity, would constitute a rental activity (within the meaning of § 1.469-1T(e)(3)). In this case, the parking-garage operations, if considered as a separate activity, would not constitute a rental activity because the average period of customer use for the parking spaces is seven days or less (see § 1.469-1T(e)(3)(ii)(A)). Accordingly, the parking-garage operations are not treated as rental operations.

(iv) The paragraph (c) undertaking's remaining operations involve the provision of tangible property (the office spaces) for use by customers and the provision of property and services in connection therewith. The average period of customer use for the office spaces exceeds 30 days. Thus, the office spaces are not short-term real properties, and the undertaking's operations involving the rental of office spaces are rental operations.

(v) Paragraph (d)(1)(i) of this section provides, with certain exceptions, that a paragraph (c) undertaking's rental operations and its operations other than rental operations are treated as two separate undertakings. In this case, at least 20 percent of the paragraph (c) undertaking's

gross income is attributable to rental operations (the office-space operations) and at least 20 percent is attributable to operations other than rental operations (the parking-garage operations). Thus, the exceptions in paragraph (d)(2) (ii) and (iii) of this section do not apply. In addition, the average period of customer use for the office spaces exceeds 30 days, extraordinary personal services (within the meaning of § 1.469-1T(e)(3)(v)) are not provided, and the rental of the office spaces is not treated as incidental to a nonrental activity under § 1.469-1T(e)(3)(vi) (relating to incidental rentals that are not treated as a rental activity). Thus, the rental operations, if considered as a separate activity, would constitute a rental activity, and the exception in paragraph (d)(2)(i) of this section does not apply. Accordingly, the rental operations and the parking-garage operations are treated as two separate undertakings (the "office-space undertaking" and the "parking-garage undertaking").

(vi) Paragraph (d)(1)(iii) of this section provides that an undertaking (determined after the application of paragraph (d)(1)(i) of this section) is treated as a rental undertaking if and only if the undertaking, considered as a separate activity, would constitute a rental activity. In this case, the office-space undertaking, if considered as a separate activity, would constitute a rental activity (see (v) above), and the parking-garage undertaking, if considered as a separate activity, would not constitute a rental activity (see (iii) above). Accordingly, the office-space undertaking is treated as a rental undertaking, and the parking-garage undertaking is not.

Example 2. (i) The taxpayer owns a building in which the taxpayer rents apartments to tenants and operates a restaurant. (Assume that, under paragraph (c)(1) of this section, the operations conducted in the building are treated as a single paragraph (c) undertaking.) The taxpayer's tenants typically occupy an apartment for at least one year, and the services provided to tenants are those customarily provided in residential apartment buildings. The paragraph (c) undertaking derives 85 percent of its gross income from apartment rentals and 15 percent of its gross income from the restaurant. The operations conducted in the building are not incidental to any other activity of the taxpayer (within the meaning of § 1.469-1T(e)(3)(vi)).
(ii) The operations with respect to apartments (the "apartment operations") involve the provision of tangible property (the apartments) for use by customers and the provision of property and services in connection therewith. In addition, the apartments are not short-term real properties (within the meaning of paragraph (d)(3)(ii) of this section) because the average period of customer use (within the meaning of § 1.469-1T(e)(3)(iii)) for the apartments exceeds 30 days. Accordingly, the apartment operations are rental operations (within the meaning of paragraph (d)(3) of this section). The restaurant operations do not involve the provision of tangible property for use by customers or the provision of property or services in connection therewith. Thus, the restaurant operations are not rental operations.

(iii) Paragraph (d)(1)(i) of this section provides, with certain exceptions, that a paragraph (c) undertaking's rental operations and its operations other than rental operations are treated as two separate undertakings. In this case, however, the exception in paragraph (d)(2)(iii) of this section applies because less than 20 percent of the paragraph (c) undertaking's gross income is attributable to operations other than rental operations (the restaurant operations). Accordingly, the rental operations and the restaurant operations are not treated as two separate undertakings under paragraph (d)(1)(i) of this section.

(iv) Paragraph (d)(1)(iii) of this section provides that an undertaking (determined after the application of paragraph (d)(1)(i) of this section) is treated as a rental undertaking if and only if the undertaking, considered as a separate activity, would constitute a rental activity. In this case, the undertaking (determined after the application of paragraph (d)(1)(i) of this section) includes both the apartment operations and the restaurant operations, and the gross income of this undertaking represents amounts paid principally for the use of tangible property (the apartments). Moreover, the average period of customer use for the apartments exceeds 30 days, extraordinary personal services (within the meaning of § 1.469-1T(e)(3)(v)) are not provided, and the rental of the apartments is not treated as incidental to a nonrental activity under § 1.469-1T(e)(3)(vi) (relating to incidental rentals that are not treated as a rental activity). Thus, the undertaking, if considered as a separate activity, would constitute a rental activity. Accordingly, the undertaking is treated as a rental undertaking.

Example 3. (i) The taxpayer owns a building in which the taxpayer rents hotel rooms, meeting rooms, and parking spaces to customers, rents space to various retailers, and operates a restaurant and health club. (Assume that, under paragraph (c)(1) of this section, the operations conducted in the building are treated as a single paragraph (c) undertaking.) Although some customers occupy hotel rooms for extended periods (including some customers who reside in the hotel), customers use hotel rooms for an average period of two days and meeting rooms for an average period of one day. The services provided to persons using the hotel rooms and meeting rooms are those customarily provided in hotels (including wake-up calls, valet services, and delivery of food and beverages to rooms). Some customers rent spaces in the parking garage on a monthly or annual basis. In general, however, parking spaces are rented on an hourly or daily basis, and the average period for which customers use the parking garage is less than 24 hours. Retail tenants typically occupy their space for at least one year, and the services provided to retail tenants are those customarily provided in commercial buildings. The paragraph (c) undertaking derives 45 percent of its gross income from renting hotel rooms, meeting rooms, and parking spaces, 35 percent of its gross income from renting retail space, and 20 percent of its gross income from the restaurant and health club. The operations conducted in the building are not incidental to any other activity of the taxpayer (within the meaning of § 1.469-1T(e)(3)(vi)).

(ii) The parking spaces, hotel rooms, and meeting rooms are real property of three different types, but the average period of customer use (within the meaning of § 1.469-1T (e)(3)(iii)) for property of each type is 30 days or less. Thus, the parking spaces, hotel rooms, and meeting rooms are short-term real properties. (For this purpose, individual parking spaces or hotel rooms that are rented for extended periods are, nevertheless, short-term real properties if the average rental period for all parking spaces is 30 days or less and the average rental period for all hotel rooms is 30 days or less.) In addition, the parking garage operations, the operations with respect to hotel rooms (the "hotel-room operations"), and the operations with respect to meeting rooms (the "meeting-room operations") involve making short-term real properties available for use by customers and the provision of property and services in connection therewith.

(iii) Paragraph (d)(3) (i) and (ii) of this section provides, in effect, that a paragraph (c) undertaking's operations that involve making short-term real properties available for use by customers and the provision of property and services in connection therewith are treated as rental operations if and only if the operations, considered as a separate activity, would constitute a rental activity (within the meaning of § 1.469-1T (e)(3)). In this case the parking-garage, hotel-room and meeting-room operations, if considered as separate activities, would not constitute rental activities because the average period of customer use for parking spaces, hotel rooms, and meeting rooms does not exceed seven days (see § 1.469-1T (e)(3)(ii)(A)). Accordingly, the parking-garage, hotel-room, and meeting-room operations are not treated as rental operations.

(iv) The operations with respect to retail space in the building (the "retail-space operations") involve the provision of tangible property (the retail spaces) for use by customers and the provision of property and services in connection therewith. In addition, the retail spaces are not short-term real properties (within the meaning of paragraph (d)(3)(ii) of this section) because the average period of customer use (within the meaning of § 1.469-1T (e)(3)(iii)) for the retail spaces exceeds 30 days. Accordingly, the retail-space operations are rental operations.

(v) The health-club operations involve making tangible property available for use by customers, but the property is customarily made available during defined business hours for nonexclusive use by various customers. Accordingly, the health-club operations are not rental operations (see paragraph (d)(3)(iii) of this seciton). The restaurant operations do not involve the provision of tangible property for use by customers or the provision of property or services in connection therewith. Accordingly, the restaurant operations also are not rental operations.

(vi) Paragraph (d)(1)(i) of this section provides, with certain exceptions, that a paragraph (c) undertaking's rental operations and its operations other than rental operations are treated as two separate undertakings. In this case, at least 20 percent of the paragraph (c) undertaking's gross income is attributable to rental operations (35 percent of the paragraph (c) undertaking's gross income is from the retail-space operations) and at least 20 percent is attributable to operations other than rental operations (45 percent from the hotel-room, meeting-room and parking-garage operations and 20 percent from the restaurant and health-club operations). Thus, the exceptions in paragraph (d)(2) (ii) and (iii) of this section do not apply. In addition, the average period of customer use for the retail space exceeds 30 days, extraordinary personal services (within the meaning of § 1.469-1T (e)(3)(v)) are not provided, and the rental of the retail space is not treated as incidental to a nonrental activity under § 1.469-1T (e)(3)(vi) (relating to incidental rentals that are not treated as a rental activity). Thus, the retail-space operations, if considered as a separate activity, would constitute a rental activity, and the exception in paragraph (d)(2)(i) of this section does not apply. Accordingly, the retail-space operations are treated as an undertaking (the “retail-space undertaking”) and all the other operations conducted in the building (*i.e.,* renting hotel and meeting rooms and parking spaces and operating the restaurant and health club) are treated as a separate undertaking (the “hotel undertaking”).

(vii) Paragraph (d)(1)(iii) of this section provides that an undertaking (determined after the application of paragraph (d)(1)(i) of this section) is treated as a rental undertaking if and only if the undertaking, considered as a separate activity, would constitute a rental activity. In this case, the retail-space undertaking, if considered as a separate activity, would constitute a rental activity (see (iv) above). Accordingly, the retail-space undertaking is treated as a rental undertaking. The hotel undertaking, if considered as a separate activity, would not constitute a rental activity because all tangible property provided for the use of customers in the hotel undertaking is either property for which the average period of customer use is seven days or less (see § 1.469-1T (e)(3)(ii)(A)) or property customarily made available during defined business hours for nonexclusive use by various customers (see § 1.469-1T (e)(3)(ii)(E)). Accordingly, the hotel undertaking is not treated as a rental undertaking.

Example 4. (i) A law partnership owns a ten-story building. The partnership uses eight floors of the building in its law practice and leases two floors to one or more tenants. (Assume that, under paragraph (c)(1) of this section, the operations conducted in the building are treated as a single paragraph (c) undertaking.) Tenants typically occupy space on the two rented floors for at least one year, and the services provided to tenants are those customarily provided in office buildings. The paragraph (c) undertaking derives 90 percent of its gross income from rendering legal services and 10 percent of its gross income from renting space. The operations conducted in the building are not incidental to any other activity of the taxpayer (within the meaning of § 1.469-1T (e)(3)(vi)).

(ii) The operations with respect to the office space leased to tenants (the "office-space operations") involve the provision of tangible property (the office space) for use by customers and the provision of property and services in connection therewith. In addition, the office spaces are not short-term real properties (within the meaning of paragraph (d)(3)(ii) of this section) because the average period of customer use (within the meaning of § 1.469-1T(e)(3)(iii)) for the office space exceeds 30 days. Accordingly, the office-space operations are rental operations (within the meaning of paragraph (d)(3) of this section).

(iii) The operations that involve the performance of legal services (the "law-practice operations") do not involve the provision of tangible property for use by customers or the provision of property or services in connection therewith. Accordingly, the law-practice operations are not rental operations.

(iv) Paragraph (d)(1)(i) of this section provides, with certain exceptions, that a paragraph (c) undertaking's rental operations and its operations other than rental operations are treated as two separate undertakings. In this case, however, the exception in paragraph (d)(2)(ii) of this section applies because less than 20 percent of the paragraph (c) undertaking's gross income is attributable to rental operations (the office-space operations). Accordingly, the law-practice operations and the office-space operations are not treated as two separate undertakings under paragraph (d)(1)(i) of this section.

(v) Paragraph (d)(1)(iii) of this section provides that an undertaking (determined after the application of paragraph (d)(1)(i) of this section) is treated as a rental undertaking only if the undertaking, considered as a separate activity, would constitute a rental activity. In this case, the undertaking (determined after the application of paragraph (d)(1)(i) of this section) includes both the law-practice operations and the office-space operations, and the gross income of this undertaking does not represent amounts paid principally for the use of tangible property. Thus, the undertaking, if considered as a separate activity, would not constitute a rental activity. Accordingly, the undertaking is not treated as a rental undertaking.

Example 5. (i) The facts are the same as in Example 4, except that the building is owned by a separate partnership (the "real estate partnership"), which leases eight floors of the building to the law partnership for use in its law practice and two floors to one or more other tenants. The law partnership and real estate partnership are owned by the same individuals in identical proportions.
(ii) The operations conducted in the building are owned by two different persons (*i.e.,* the law partnership and the real estate partnership). (See paragraph (c)(2)(v) of this section.) Thus, the operations conducted in the building are not treated as a single undertaking under paragraph (c)(1) of this section. Instead, each partnership's share of such operations is treated as a separate paragraph (c) undertaking (the "law-practice undertaking" and the "office-space undertaking").

(iii) Paragraph (d)(1)(iii) of this section provides that an undertaking (determined after the application of paragraph (d)(1)(i) of this section) is treated as a rental undertaking if and only if the undertaking, considered as a separate activity, would constitute a rental activity. In this case, the office-space undertaking, if considered as a separate activity, would constitute a rental activity because all of the undertaking's gross income (including rents paid by the law partnership) represents amounts paid principally for the use of tangible property (the office space), the average period of customer use for the office space exceeds 30 days, extraordinary personal services (within the meaning of § 1.469-1T(e)(3)(v)) are not provided, and the rental of the office space is not treated as incidental to a nonrental activity under § 1.469-1T(e)(3)(vi) (relating to incidental rentals that are not treated as a rental activity). Accordingly, the office-space undertaking is treated as a rental undertaking. See, however, § 1.469-2T(f)(6) (relating to certain rentals of property to a trade or business activity in which the taxpayer materially participates).

(iv) The law-practice undertaking, if considered as a separate activity, would not constitute a rental activity because none of the undertaking's gross income represents amounts paid principally for the use of tangible property. Accordingly, the law-practice undertaking is not treated as a rental undertaking.

Example 6. (i) The taxpayer owns a building in which the taxpayer operates a nursing home and a medical clinic. (Assume that, under paragraph (c)(1) of this section, the operations conducted in the building are treated as a single paragraph (c) undertaking.) The nursing-home operations consist of renting apartments in the nursing home to elderly and handicapped persons and providing medical care, meals, and social activities. (Assume that these services are extraordinary personal services (within the meaning of § 1.469-1T(e)(3)(v)). The medical clinic provides medical care to nursing-home residents and other individuals. Nursing-home residents typically occupy an apartment for at least one year. The paragraph (c) undertaking derives 55 percent of its gross income from nursing-home operations (including the provision of medical services to nursing-home residents) and 45 percent of its gross income from medical-clinic operations. The operations conducted in the building are not incidental to any other activity of the taxpayer (within the meaning of § 1.469-1T(e)(3)(vi)).
(ii) The paragraph (c) undertaking's nursing-home operations involve the provision of tangible property (the apartments) for use by customers and the provision of property and services in connection therewith. In addition, the apartments are not short-term real properties (within the meaning of paragraph (d)(3)(ii) of this section) because the average period of customer use (within the meaning of § 1.469-1T(e)(3)(iii)) for the apartments exceeds 30 days. Accordingly, the nursing-home operations are rental operations (within the meaning of paragraph (d)(3) of this section). The medical-clinic operations do not involve the provision of tangible property for use by customers or the provision of property or services in connection therewith. Thus, the medical-clinic operations are not rental operations.

(iii) Paragraph (d)(1)(i) of this section provides, with certain exceptions, that a paragraph (c) undertaking's rental operations and its operations other than rental operations are treated as two separate undertakings. In this case, however, the nursing-home operations, if considered as a separate activity, would not constitute a rental activity because extraordinary personal services are provided in connection with making nursing-home apartments available for use by customers (see § 1.469-T(e)(3)(ii)(C)). Thus, the exception in paragraph (d)(2)(i) of this section applies, and the nursing-home operations and the medical-clinic operations are not treated as two separate undertakings under paragraph (d)(1)(i) of this section.

(iv) Paragraph (d)(1)(iii) of this section provides that an undertaking (determined after the application of paragraph (d)(1)(i) of this section) is treated as a rental undertaking only if the undertaking, considered as a separate activity, would constitute a rental activity. In this case, the nursing-home operations, if considered as a separate activity, would not constitute a rental activity (see (iii) above). Thus, an undertaking that includes no rental operations other than the nursing-home operations would not, if considered as a separate activity, constitute a rental activity. Accordingly, the undertaking is not treated as a rental undertaking.

Example 7. (i) The taxpayer rents and sells videocassettes. (Assumes that, under paragraph (c)(1) of this section, the videocassette operations are treated as a single paragraph (c) undertaking.) Renters of videocassettes typically keep the videocassettes for one or two days, and do not receive any other property or services in connection with videocassette rentals. The paragraph (c) undertaking derives 70 percent of its gross income from renting videocassettes and 30 percent of its gross income from selling videocassettes. The videocassette operations are not incidental to any other activity of the taxpayer (within the meaning of § 1.469-1T(e)(3)(vi)).
(ii) The rental of videocassettes involves the provision of tangible property (the videocassettes) for use by customers. In addition, the special rules for short-term real properties contained in paragraph (d)(3)(ii) of this section do not apply in this case because the videocassettes are not real property. Thus, the operations that involve videocassette rentals are rental operations (within the meaning of paragraph (d)(3) of this section). The sale of videocassettes does not involve the provision of tangible property for use by customers or the provision of property or services in connection therewith. Thus, the operations that involve videocassette sales are not rental operations.

(iii) Paragraph (d)(1)(i) of this section provides, with certain exceptions, that a paragraph (c) undertaking's rental operations and its operations other than rental operations are treated as two separate undertakings. In this case, however, the rental operations, if considered as a separate activity, would not constitute a rental activity because the average period of customer use for rented videocassettes does not exceed seven days (see §

1.469-1T(e)(3)(ii)(A)). Accordingly, the exception in paragraph (d)(2)(i) of this section applies, and the videocassette-rental operations and videocassette-sales operations are not treated as two separate undertakings under paragraph (d)(1)(i) of this section.

(iv) Paragraph (d)(1)(iii) of this section provides that an undertaking (determined after the application of paragraph (d)(1)(i) of this section) is treated as a rental undertaking only if the undertaking, considered as a separate activity, would constitute a rental activity. In this case, the videocassette-rental operations, if considered as a separate activity, would not constitute a rental activity (see (iii) above). Thus, an undertaking that includes no rental operations other than the videocassette-rental operations would not, if considered as a separate activity, constitute a rental activity. Accordingly, the undertaking is not treated as a rental undertaking.

Example 8. (i) The taxpayer owns a building in which the taxpayer sells, leases, and services automobiles. (Assume that, under paragraph (c)(1) of this section, the operations conducted in the building are treated as a single paragraph (c) undertaking.) The minimum lease term for any leased automobile is 31 days, and the services provided to lessees (including periodic oil changes, lubrication, and routine services and repairs) are those customarily provided in long-term automobile leases. The paragraph (c) undertaking derives 75 percent of its gross income from selling automobiles, 15 percent of its gross income from servicing automobiles other than leased automobiles, and 10 percent of its gross income from leasing automobiles. The taxpayer's automobile operations are not incidental to any other activity of the taxpayer (within the meaning of § 1.469-1T(e)(3)(vi)).
(ii) The paragraph (c) undertaking's automobile-leasing operations involve the provision of tangible property (the automobiles) for use by customers and the provision of services in connection therewith. In addition, the special rules for short-term real properties contained in paragraph (d)(3)(ii) of this section do not apply in this case because the automobiles are not real property. Accordingly, the automobile-leasing operations are rental operations (within the meaning of paragraph (d)(3) of this section). The paragraph (c) undertaking's automobile-sales operations and servicing operations for automobiles other than leased automobiles (the “selling-and-servicing operations”) do not involve the provision of tangible property for use by customers or the provision of property or services in connection therewith. Thus, the selling-and-servicing operations are not rental operations.

(iii) Paragraph (d)(1)(i) of this section provides, with certain exceptions, that a paragraph (c) undertaking's rental operations and its operations other than rental operations are treated as two separate undertakings. In this case, however, the exception in paragraph (d)(2)(ii) of this section applies because less than 20 percent of the paragraph (c) undertaking's gross income is attributable to rental operations (the “automobile-leasing operations”). Accordingly, the rental operations and the selling-and-servicing operations are not treated as two separate undertakings under paragraph (d)(1)(i) of this section.

(iv) Paragraph (d)(1)(iii) of this section provides that an undertaking (determined after the application of paragraph (d)(1)(i) of this section) is treated as a rental undertaking only if the undertaking, considered as a separate activity, would constitute a rental activity. In this case, the undertaking (determined after the application of paragraph (d)(1)(i) of this section) includes both the selling-and-servicing operations and the automobile-leasing operations, and the gross income of the undertaking does not represent amounts paid principally for the use of tangible property. Thus, the undertaking, if considered as a separate activity, would not constitute a rental activity. Accordingly, the undertaking is not treated as a rental undertaking.

Example 9. (i) The facts are the same as in Example 8, except that the paragraph (c) undertaking derives 60 percent of its gross income from selling automobiles, 15 percent of its gross income from servicing automobiles other than leased automobiles, and 25 percent of its gross income from leasing automobiles.
(ii) Paragraph (d)(1)(i) of this section provides, with certain exceptions, that a paragraph (c) undertaking's rental operations and its operations other than rental operations are treated as two separate undertakings. In this case, more than 20 percent of the paragraph (c) undertaking's gross income is attributable to rental operations (the automobile-leasing operations), and more than 20 percent is attributable to operations other than rental operations (the selling-and-servicing operations). Thus, the exceptions in paragraph (d)(2) (ii) and (iii) of this section do not apply. In addition, the average period of customer use for leased automobiles exceeds 30 days, extraordinary personal services (within the meaning of § 1.469-1T(e)(3)(v)) are not provided, and the leasing of the automobiles is not treated as incidental to a nonrental activity under § 1.469-1T(e)(3)(vi) (relating to incidental rentals that are not treated as a rental activity). Thus, the leasing operations, if considered as a separate activity, would constitute a rental activity, and the exception in paragraph (d)(2)(i) of this section does not apply. Accordingly, the rental operations and the selling-and-servicing operations are treated as two separate undertakings (the “automobile-leasing undertaking” and the “automobile selling-and-servicing undertaking”).

(iii) Paragraph (d)(1)(iii) of this section provides that an undertaking (determined after the application of paragraph (d)(1)(i) of this section) is treated as a rental undertaking if and only if the undertaking, considered as a separate activity, would constitute a rental activity. In this case, the automobile-leasing undertaking would, if considered as a separate activity, constitute a rental activity, and the automobile selling-and-servicing undertaking would not, if considered as a separate activity, constitute a rental activity (see Example 8 and (ii) above). Accordingly, the automobile-leasing undertaking is treated as a rental undertaking, and the automobile selling-and-servicing undertaking is not.

(e) ***Special rules for certain oil and gas operations*** —

(1) ***Wells treated as nonpassive under § 1.469-1T(e)(4)(i).*** An oil or gas well shall be treated as an undertaking that is separate from other undertakings in determining the activities of a taxpayer for a taxable year if the following conditions are satisfied:

(i) The well is drilled or operated pursuant to a working interest (within the meaning of § 1.469-1T(e)(4)(iv)) and at any time during such taxable year the taxpayer holds such working interest either—

(A) Directly; or

(B) Through an entity that does not limit the liability of the taxpayer with respect to the drilling or operation of such well pursuant to such working interest; and

(ii) The taxpayer would not be treated as materially participating (within the meaning of § 1.469-5T) for the taxable year in the activity in which such well would be included if the taxpayer's activities were determined without regard to this paragraph (e).

(2) ***Business and rental operations that constitute an undertaking.*** In any case in which an oil or gas well is treated under this paragraph (e) as an undertaking that is separate from other undertakings, the business and rental operations that constitute such undertaking are the business and rental operations that are attributable to such well.

(3) ***Examples.*** The following examples illustrate the application of this paragraph (e). In each example, the taxpayer is an individual whose taxable year is the calendar year.

Example 1. During 1989, A directly owns an undivided interest in a working interest (within the meaning of § 1.469-1T(e)(4)(iv)) in two oil wells. A does not participate in the activity in which the wells would be included if A's activities were determined without regard to this paragraph (e). Under paragraph (e)(1) of this section, each well is treated as a separate undertaking in determining A's activities for 1989 because A holds the working interest directly and would not be treated as materially participating for 1989 in the activity in which the wells would be included if A's activities were determined without regard to this paragraph (e). The aggregation rules in paragraph (f) of this section do not apply to these undertakings (see paragraph (f)(1)(ii)(B) of this section). Thus, each of the undertakings is treated as a separate activity under paragraph (b)(1) of this section. The result is the same even if A has net income from one or both wells for 1989 and even if the wells would otherwise be treated as part of the same undertaking under paragraph (c) of this section. The result would also be the same if A held the working interest through an entity, such as a general partnership, that does not limit A's liability with respect to the drilling or operation of the wells pursuant to the working interest.

Example 2. (i) During 1989, B is a general partner in a partnership that owns a working interest (within the meaning of § 1.469-1T(e)(4)(iv)) in an oil well. B does not own any interest in the well other than through the partnership. At the end of 1989, however, B's partnership interest is converted into a limited partnership interest, and during 1990 B holds the working interest only as a limited partner. B does not participate in the activity in which the well would be included if B's activities were determined without regard to this paragraph (e).

(ii) Under paragraph (e)(1) of this section, the well is treated as a separate undertaking in determining B's activities for 1989 because B holds the working interest during 1989 through an entity that does not limit B's liability with respect to the drilling or operation of the well pursuant to the working interest, and B would not be treated as materially participating for 1989 in the activity in which the well would be included if B's activities were determined without regard to this paragraph (e). Throughout 1990, however, B's liability with respect to the drilling and operation of the well is limited by the entity through which B holds the working interest (*i.e.,* the limited partnership). Accordingly, paragraph (e)(1) of this section does not apply to the well in 1990, and the well may be included under paragraph (c) of this section in an undertaking that includes other operations.

Example 3. The facts are the same as in Example 2, except that B's partnership interest is converted into a limited partnership interest at the end of November 1989. An oil or gas well may be treated as a separate undertaking under paragraph (e)(1) of this section if at any time during the taxable year the taxpayer holds a working interest in the well directly or through an entity that does not limit the taxpayer's liability with respect to the drilling or operation of the well pursuant to the working interest (see § 1.469-1T(e)(4)(i)). Thus, although B's liability with respect to the drilling and operation of the well is limited during December 1989, the result in both 1989 and 1990 is the same as in Example 2. In 1989, however, disqualified deductions and a ratable portion of the gross income from the well may be treated under § 1.469-1T(e)(4)(ii) as passive activity deductions and passive activity gross income, respectively.

(f) ***Certain trade or business undertakings treated as part of the same activity*** —

(1) ***Applicability*** —

(i) ***In general.*** This paragraph (f) applies to a taxpayer's interests in trade or business undertakings (within the meaning of paragraph (f)(1)(ii) of this section).

(ii) ***Trade or business undertaking.*** For purposes of this paragraph (f), the term "trade or business undertaking" means any undertaking in which a taxpayer has an interest, other than—

(A) A rental undertaking (within the meaning of paragraph (d) of this section);

(B) An oil or gas well treated as an undertaking that is separate from other undertakings under paragraph (e) of this section; or

(C) A professional service undertaking (within the meaning of paragraph (h) of this section).

(2) ***Treatment as part of the same activity.*** A taxpayer's interests in two or more trade or business undertakings that are similar (within the meaning of paragraph (f)(4) of this section) and controlled by the same interests (within the meaning of paragraph (j) of this section) shall be treated as part of the same activity of the taxpayer for any taxable year in which the taxpayer—

(i) Owns interests in each such undertaking through the same passthrough entity;

(ii) Owns a direct or substantial indirect interest (within the meaning of paragraph (f)(3) of this section) in each such undertaking; or

(iii) Materially or significantly participates (within the meaning of § 1.469-5T) in the activity that would result if such undertakings were treated as part of the same activity.

(3) ***Substantial indirect interest*** —

(i) ***In general.*** For purposes of this paragraph (f), a taxpayer owns a substantial indirect interest in an undertaking for a taxable year if at any time during such taxable year the taxpayer's ownership percentage (determined in accordance with paragraph (j)(3) of this section) in a passthrough entity that directly owns such undertaking exceeds ten percent.

(ii) ***Coordination rule.*** A taxpayer shall be treated for purposes of this paragraph (f) as owning a substantial indirect interest in each of two or more undertakings for any taxable year in which—

(A) Such undertakings are treated as part of the same activity of the taxpayer under paragraph (f)(2)(i) of this section; and

(B) The taxpayer owns a substantial indirect interest (within the meaning of paragraph (f)(3)(i) of this section) in any such undertaking.

(4) ***Similar undertakings*** —

(i) ***In general.*** Except as provided in paragraph (f)(4)(iii) of this section, two undertakings are similar for purposes of this paragraph (f) if and only if—

(A) There are predominant operations in each such undertaking; and

(B) The predominant operations of both undertakings are in the same line of business.

(ii) ***Predominant operations.*** For purposes of paragraph (f)(4)(i)(A) of this section, there are predominant operations in an undertaking if more than 50 percent of the undertaking's gross income is attributable to operations in a single line of business.

(iii) ***Vertically-integrated undertakings.*** If an undertaking (the “supplier undertaking”) provides property or services to other undertakings (the “recipient undertakings”), the following rules apply for purposes of this paragraph (f):

(A) ***Supplier undertaking similar to recipient undertaking.*** If the supplier undertaking predominantly involves the provision of property and services to a recipient undertaking that is controlled by the same interests (within the meaning of paragraph (j) of this section), the supplier undertaking shall be treated as similar to the recipient undertaking. For purposes of applying the preceding sentence—

(*1*) If a supplier undertaking and two or more recipient undertakings that are similar (within the meaning of paragraph (f)(4)(i) of this section) are controlled by the same interests, such recipient undertakings shall be treated as a single undertaking; and

(*2*) A supplier undertaking predominantly involves the provision of property and services to a recipient undertaking for any taxable year in which such recipient undertaking obtains more than 50 percent (by value) of all property and services provided by the supplier undertaking.

(B) ***Recipient undertaking similar to supplier undertaking.*** If the supplier undertaking is the predominant provider of property and services to a recipient undertaking that is controlled by the same interests (within the meaning of paragraph (j) of this section), the recipient undertaking shall be treated, except as otherwise provided in paragraph (f)(4)(iii)(C) of this

section, as similar to the supplier undertaking. For purposes of the preceding sentence, a supplier undertaking is the predominant provider of property and services to a recipient undertaking for any taxable year in which the supplier undertaking provides more than 50 percent (by value) of all property and services obtained by the recipient undertaking.

(C) ***Coordination rules.***

(*1*) Paragraph (f)(4)(iii)(B) of this section does not apply if, under paragraph (f)(4)(iii)(A) of this section—

(*i*) The supplier undertaking is treated as an undertaking that is similar to any recipient undertaking;

(*ii*) The recipient undertaking is treated as a supplier undertaking that is similar to another recipient undertaking; or

(*iii*) Another supplier undertaking is treated as an undertaking that is similar to the recipient undertaking.

(*2*) If paragraph (f)(4)(iii)(A) of this section applies to a supplier undertaking, the supplier undertaking shall be treated as similar to undertakings that are similar to the recipient undertaking and shall not otherwise be treated as similar to undertakings to which the supplier undertaking would be similar without regard to paragraph (f)(4)(iii) of this section.

(*3*) If paragraph (f)(4)(iii)(B) of this section applies to a recipient undertaking, the recipient undertaking shall be treated as similar to undertakings that are similar to the supplier undertaking and shall not otherwise be treated as similar to undertakings to which the recipient undertaking would be similar without regard to paragraph (f)(4)(iii) of this section.

(iv) ***Lines of business.*** The Commissioner shall establish, by revenue procedure, lines of business for purposes of this paragraph (f)(4). Business and rental operations that are not included in the lines of business established by the Commissioner shall nonetheless be included in a line of business for purposes of this paragraph (f)(4). Such operations shall be included in a single line of business or in multiple lines of business on a basis that reasonably reflects—

(A) Similarities and differences in the property or services provided pursuant to such operations and in the markets to which such property or services are offered; and

(B) The treatment within the lines of business established by the Commissioner of operations that are comparable in their similarities and differences.

(5) ***Examples.*** The following examples illustrate the application of this paragraph (f). In each example that does not state otherwise, the taxpayer is an individual and the facts, analysis, and conclusions relate to a single taxable year.

> *Example 1.* (i) The taxpayer is a partner in partnerships A, B, C, and D and owns a five-percent interest in each partnership. Each partnership owns a single undertaking (undertakings A, B, C, and D), and the undertakings are trade or business undertakings (within the meaning of paragraph (f)(1)(ii) of this section) that are controlled by the same interests (within the meaning of paragraph (j) of this section). In addition, undertakings A, B, and D are

similar (within the meaning of paragraph (f)(4) of this section). The taxpayer is not related to any of the other partners, and does not participate in any of the undertakings.
(ii) In general, each undertaking in which a taxpayer owns an interest is treated as a single activity that is separate from other activities of the taxpayer (see paragraph (b)(1) of this section). This paragraph (f) provides aggregation rules for trade or business undertakings that are similar and controlled by the same interests. These aggregation rules do not apply, however, unless the taxpayer owns interests in the undertakings through the same passthrough entity, owns direct or substantial indirect interests in the undertakings, or materially or significantly participates in the undertakings. In this case, the taxpayer does not satisfy any of these conditions, and the aggregation rules in this paragraph (f) do not apply. Accordingly, except as otherwise provided in paragraph (g) of this section (relating to an aggregation rule for integrated businesses), undertakings A, B, C, and D are treated as separate activities of the taxpayer under paragraph (b)(1) of this section.

Example 2. (i) The facts are the same as in Example 1, except that the taxpayer owns a 25-percent interest in partnership A, a 15-percent interest in partnership B, and a 40-percent interest in partnership C.
(ii) Paragraph (f)(2)(ii) of this section provides that trade or business undertakings that are similar and controlled by the same interests are treated as part of the same activity of the taxpayer if the taxpayer owns a direct or substantial indirect interest in each such undertaking. In this case, the taxpayer owns more than ten percent of partnerships A, B, and C, and these partnerships directly own undertakings A, B, and C. Thus, the taxpayer owns a substantial indirect interest in undertakings A, B, and C (see paragraph (f)(3)(i) of this section). Of these undertakings, only undertakings A and B are both similar and controlled by the same interests. Accordingly, the taxpayer's interests in undertakings A and B are treated as part of the same activity. As in Example 1, the aggregation rules in this paragraph (f) do not apply to undertakings C and D, and except as otherwise provided in paragraph (g) of this section, undertakings C and D are treated as separate activities.

Example 3. (i) The facts are the same as in Example 1, except that the taxpayer participates (within the meaning of § 1.469-5T(f)) for 60 hours in undertaking A and for 60 hours in undertaking B.
(ii) Paragraph (f)(2)(iii) of this section provides that trade or business undertakings that are similar and controlled by the same interests are treated as part of the same activity of the taxpayer if the taxpayer materially or significantly participates (within the meaning of § 1.469-5T) in the activity that would result from the treatment of similar, commonly-controlled undertakings as part of the same activity. In this case, the activity that would result from treating the similar, commonly-controlled undertakings as part of the same activity consists of undertakings A, B, and D, and the taxpayer participates for 120 hours in the activity that results from this treatment. Accordingly, undertakings A, B, and D are treated as part of the same activity because the taxpayer significantly participates (within the meaning of §

1.469-5T(c)(2)) in the activity that results from this treatment. The result is the same whether the taxpayer participates in one, two, or all three of the similar, commonly-controlled undertakings, so long as the taxpayer's aggregate participation in undertakings A, B, and D exceeds 100 hours. As in Example 1, the aggregation rules in this paragraph (f) do not apply to undertaking C, and except as otherwise provided in paragraph (g) of this section, undertaking C is treated as a separate activity.

Example 4. (i) The taxpayer owns a 5-percent interest in partnership A. Partnership A owns interests in partnerships B and C, each of which owns a single undertaking (undertakings B and C). In addition, the taxpayer is a partner in partnerships C and D and directly owns a 15-percent interest in each partnership. Partnership D also owns a single undertaking (undertaking D). Undertakings B, C, and D are trade or business undertakings (within the meaning of paragraph (f)(1)(ii) of this section) that are similar (within the meaning of paragraph (f)(4) of this section) and controlled by the same interests (within the meaning of paragraph (j) of this section). The taxpayer does not participate in undertaking B, C, or D.
(ii) Paragraph (f)(2)(i) of this section provides that trade or business undertakings that are similar and controlled by the same interests are treated as part of the same activity of the taxpayer if the taxpayer owns interests in the undertakings through the same passthrough entity. In this case, the taxpayer owns interests in undertakings B and C through partnership A. Thus, the taxpayer's interests in undertakings B and C are treated as part of the same activity.

(iii) Paragraph (f)(2)(ii) of this section provides that trade or business undertakings that are similar and controlled by the same interests are treated as part of the same activity of the taxpayer if the taxpayer owns a direct or substantial indirect interest in each such undertaking. In this case, the taxpayer owns more than ten percent of partnerships C and D, and these partnerships directly own undertakings C and D. Thus, the taxpayer owns a substantial indirect interest in undertakings C and D (see paragraph (f)(3)(i) of this section).

(iv) The coordination rule in paragraph (f)(3)(ii) of this section applies to undertakings B and C because they are treated as part of the same activity under paragraph (f)(2)(i) of this section, and the taxpayer owns a substantial indirect interest in undertaking C. Under the coordination rule, the taxpayer is treated as owning a substantial indirect interest in undertaking B as well as undertaking C. Accordingly, the taxpayer's interests in undertakings B, C, and D are treated as part of the same activity.

Example 5. (i) Undertakings A, B, C, and D are trade or business undertakings (within the meaning of paragraph (f)(1)(ii) of this section), each of which involves the operation of a department store, restaurants, and movie theaters. The following table shows, for each undertaking, the percentages of gross income attributable to the various operations of the

undertaking.

	Department store	Restaurants	Movie Theaters
Undertaking A	70%	20%	10%
Undertaking B	60%	20%	20%
Undertaking C	35%	35%	30%
Undertaking D	35%	10%	55%

(ii) Paragraph (f)(4)(i) of this section provides that two undertakings are similar for purposes of this paragraph (f) if and only if there are predominant operations in each undertaking and the predominant operations of the two undertakings are in the same line of business. (Assume that the applicable revenue procedure provides that "general merchandise stores," "eating and drinking places," and "motion picture services" are three separate lines of business.)
(iii) Undertaking A and undertaking B each derives more than 50 percent of its gross income from department-store operations, which are in the general-merchandise-store line of business. Thus, there are predominant operations in undertaking A and undertaking B, and the predominant operations of the two undertakings are in the same line of business. Accordingly, undertakings A and B are similar.

(iv) Undertaking C does not derive more than 50 percent of its gross income from operations in any single line of business. Thus, there are no predominant operations in undertaking C, and undertaking C is not similar to any of the other undertakings.

(v) Undertaking D derives more than 50 percent of its gross income from movie-theater operations, which are in the motion-picture-services line of business. Thus, there are predominant operations in undertaking D. The predominant operations of undertaking D, however, are not in the same line of business as those of undertakings A and B. Accordingly, undertaking D is not similar to undertakings A and B.

Example 6. (i) Undertakings A and B are trade or business undertakings (within the meaning of paragraph (f)(1)(ii) of this section) that derive all of their gross income from the sale of automobiles. Undertakings C and D derive all of their gross income from the rental of automobiles. Undertaking C is not a rental undertaking (within the meaning of paragraph (d)(1)(iii) of this section) because the average period of customer use (within the meaning of § 1.469-1T(e)(3)(iii)) for its automobiles does not exceed seven days (see § 1.469-1T(e)(3)(ii)(A)). Undertaking D, on the other hand, leases automobiles for periods of one year or more and is a rental undertaking.

(ii) Paragraph (f)(4)(i) of this section provides that two undertakings are similar for purposes of this paragraph (f) if and only if there are predominant operations in each undertaking and the predominant operations of the two undertakings are in the same line of business. (Assume that the applicable revenue procedure provides that (a) “automotive dealers and service stations” (automotive retail) and (b) “auto repair, services (including rentals), and parking” (automotive services) are two separate lines of business.)

(iii) Undertakings A and B both derive more than 50 percent of their gross income from operations in the automotive-retail line of business (the automobile-sales operations). Similarly, undertakings C and D both derive more than 50 percent of their gross income from operations in the automotive-services line of business (the automobile-rental operations). Thus, there are predominant operations in each undertaking, the predominant operations of undertakings A and B are in the same line of business, and the predominant operations of undertakings C and D are in the same line of business. Accordingly, undertakings A and B are similar, undertakings C and D are similar, and undertakings A and B are not similar to undertakings C and D.

(iv) Paragraph (f)(1) of this section provides that this paragraph (f) applies only to trade or business undertakings and that a rental undertaking is not a trade or business undertaking. Accordingly, this paragraph (f) does not apply to undertaking D, and undertakings C and D, although similar, are not treated, under this paragraph (f), as part of the same activity.

Example 7. (i) Undertakings A, B, and C are trade or business undertakings (within the meaning of paragraph (f)(1)(ii) of this section) that involve real estate operations. Undertaking A derives all of its gross income from the development of real property, undertaking B derives all of its gross income from the management of real property and the performance of services as a leasing agent with respect to real property, and undertaking C derives all of its gross income from buying, selling, or arranging purchases and sales of real property. Undertaking D derives all of its gross income from the rental of residential apartments and is a rental undertaking (within the meaning of paragraph (d)(1)(iii) of this section).
(ii) Paragraph (f)(4)(i) of this section provides that two undertakings are similar for purposes of this paragraph (f) if there are predominant operations in each undertaking and the predominant operations of the two undertakings are in the same line of business. (Assume that the applicable revenue procedure provides that real estate development and services (including the development and management of real property, dealing in real property, and the performance of services as a leasing agent with respect to real property) is a single line of business (the “real-estate” line of business).)

(iii) Undertakings A, B, and C all derive more than 50 percent of their gross income from operations in the real-estate line of business. Thus, there are predominant operations in undertakings A, B, and C, and the predominant operations of the three undertakings are in the same line of business. Accordingly, undertakings A, B, and C are similar.

(iv) Undertaking D also derives more than 50 percent of its gross income from operations in the real-estate line of business. Thus, there are predominant operations in undertaking D, and the predominant operations of undertaking D are in the same line of business as those of undertakings A, B, and C. Paragraph (f)(1) of this section provides, however, that this paragraph (f) applies only to trade or business undertakings and that a rental undertaking is not a trade or business undertaking. Accordingly, this paragraph (f) does not apply to undertaking D, and undertaking D, although similar to undertakings A, B, and C, is not treated, under this paragraph (f), as part an activity that includes undertaking A, B, or C.

Example 8. (i) Undertakings A and B are trade or business undertakings (within the meaning of paragraph (f)(1)(ii) of this section), both of which involve the provision of moving services. Undertaking A derives its gross income principally from local moves, and undertaking B derives its gross income principally from long-distance moves.
(ii) Paragraph (f)(4)(i) of this section provides that two undertakings are similar for purposes of this paragraph (f) if there are predominant operations in each undertaking and the predominant operations of the two undertakings are in the same line of business. Under paragraph (f)(4)(iv) of this section, operations that are not in the lines of business established by the applicable revenue procedure are nonetheless included in a line of business. In addition, such operations are included in a single line of business or in multiple lines of business on a basis that reasonably reflects (a) similarities and differences in the property or services provided pursuant to such operations and in the markets to which such property or services are offered, and (b) the treatment within the lines of business established by the Commissioner of operations that are comparable in their similarities and differences. (Assume that the provision of moving services is not in any line of business established by the Commissioner and that within the lines of business established by the Commissioner services that differ only in the distance over which they are performed (*e.g.,* local and long-distance telephone services) are generally treated as part of the same line of business.)

(iii) Undertakings A and B provide the same types of services to similar customers, and the only significant difference in the services provided is the distance over which they are performed. Thus, treating local and long-distance moving services as a single line of business (the “moving-services” line of business) reasonably reflects the treatment within the lines of business established by the Commissioner of operations that are comparable in their similarities and differences.

(iv) Each undertaking derives more than 50 percent of its gross income from operations in the moving-services line of business. Thus, there are predominant operations in each undertaking, and the predominant operations of the two undertakings are in the same line of business. Accordingly, undertakings A and B are similar.

Example 9. (i) Undertakings A, B, C, D, and E are trade or business undertakings (within the meaning of paragraph (f)(1)(ii) of this section) and are controlled by the same interests (within the meaning of paragraph (j) of this section). Undertakings A, B, and C derive all of their gross income from retail sales of dairy products, and undertakings D and E derive all of their gross income from the processing of dairy products. Undertakings D and E sell less than ten percent of their dairy products to undertakings A, B, and C, and sell the remainder to unrelated undertakings. Undertakings A, B, and C purchase less than ten percent of their inventory from undertakings D and E and purchase the remainder from unrelated undertakings.
(ii) Paragraph (f)(4)(i) of this section provides that, except as provided in paragraph (f)(4)(iii) of this section, undertakings are similar for purposes of this paragraph (f) if and only if there are predominant operations in each undertaking and the predominant operations of the undertakings are in the same line of business. (Assume that the applicable revenue procedure provides that (a) “food stores” and (b) “manufacturing—food and kindred products” are two separate lines of business.)

(iii) Undertakings A, B, and C all derive more than 50 percent of their gross income from operations in the food-store line of business (the dairy-sales operations). Thus, there are predominant operations in undertakings A, B, and C, and the predominant operations of the three undertakings are in the same line of business. Accordingly, undertakings A, B, and C are similar.

(iv) Undertakings D and E both derive more than 50 percent of their gross income from operations in the food-manufacturing line of business (the dairy-processing operations). Thus, there are predominant operations in undertakings D and E, and the predominant operations of the two undertakings are in the same line of business. Accordingly, undertakings D and E are similar. The predominant operations of undertakings D and E are not in the same line of business as those of undertakings A, B, and C. Accordingly, undertakings D and E are not similar to undertakings A, B, and C.

(v) Paragraph (f)(4)(iii) of this section provides rules under which certain undertakings whose operations are not in the same line of business nevertheless are similar to one another if one of the undertakings (the “supplier undertaking”) provides property or services to the other undertaking (the “recipient undertaking”), and the undertakings are controlled by the same interests. These rules apply, however, only if the supplier undertaking predominantly involves the provision of property and services to the recipient undertaking (see paragraph (f)(4)(iii)(A)

of this section), or the supplier undertaking is the predominant provider of property and services to the recipient undertaking (see paragraph (f)(4)(iii)(B) of this section). In this case, undertakings D and E are supplier undertakings, and undertakings A, B, and C are recipient undertakings. Undertakings D and E, however, sell less than ten percent of their dairy products to undertakings A, B, and C and thus do not predominantly involve the provision of property and services to recipient undertakings. Similarly, undertakings D and E are not the predominant providers of property and services to undertakings A, B, and C. Thus, the rules for vertically-integrated undertakings in paragraph (f)(4)(iii) of this section do not apply in this case.

Example 10. (i) The facts are the same as in Example 9, except that undertaking D sells 75 percent of its dairy products to undertakings A, B, and C.
(ii) Paragraph (f)(4)(iii)(A) of this section applies if a supplier undertaking predominantly involves the provision of property to a recipient undertaking that is controlled by the same interests. Paragraph (f)(4)(iii)(A)(*2*) of this section provides that a supplier undertaking predominantly involves the provision of property to a recipient undertaking if the supplier undertaking provides more than 50 percent of its property to such recipient undertaking. In addition, paragraph (f)(4)(iii)(A)(*1*) of this section provides that if a supplier undertaking and two or more similar recipient undertakings are controlled by the same interests, the recipient undertakings are treated as a single undertaking for purposes of applying paragraph (f)(4)(iii)(A) of this section. Undertakings D and E both provide dairy products to undertakings A, B, and C. Thus, for purposes of paragraph (f)(4)(iii) of this section, undertakings D and E are supplier undertakings and undertakings A, B, and C are recipient undertakings. Undertaking D predominantly involves the provision of property to undertakings A, B, and C. Moreover, undertakings A, B, and C are treated as a single undertaking under paragraph (f)(4)(iii)(A)(*1*) of this section because undertakings A, B, and C are similar to one another under paragraph (f)(4)(i) of this section, and undertakings A, B, C, and D are controlled by the same interests. Accordingly, paragraph (f)(4)(iii)(A) of this section applies to undertakings A, B, C, and D.

(iii) If paragraph (f)(4)(iii)(A) of this section applies to supplier and recipient undertakings, the supplier undertaking is treated under paragraph (f)(4)(iii) (A) and (C)(*2*) of this section as an undertaking that is similar to the recipient undertakings and to undertakings to which the recipient undertakings are similar. Accordingly, undertaking D is similar, for purposes of this paragraph (f), to undertakings A, B, and C.

(iv) Undertaking E does not predominantly involve the provision of property to undertakings A, B, and C, or to any other related undertakings. Thus, paragraph (f)(4)(iii)(A) of this section does not apply to undertaking E, and undertaking E is not similar to undertakings A, B, and C. Moreover, undertakings D and E are not similar because, under paragraph (f)(4)(iii)(C)(*2*) of this section, undertaking D is not similar to any undertaking that is not similar to undertakings A, B, and C.

Example 11. (i) The facts are the same as in Example 10, except that 75 percent of undertaking D's dairy products are sold to undertakings A and B, and none are sold to undertaking C.

(ii) In this case, undertaking D is a supplier undertaking only with respect to undertakings A and B. Accordingly, paragraph (f)(4)(iii)(A) applies only to undertakings A, B, and D. As in Example 10, undertaking D is similar to undertakings A and B, and is not similar to undertaking E. In addition, if paragraph (f)(4)(iii)(A) of this section applies to supplier and recipient undertakings, the supplier undertaking is treated under paragraph (f)(4)(iii)(C)(*2*) of this section as an undertaking that is similar to the recipient undertakings and undertakings to which the recipient undertakings are similar. Accordingly, even though undertaking D does not provide any property or services to undertaking C, undertaking D is similar to undertaking C because undertaking C is similar to undertakings A and B.

Example 12. (i) The facts are the same as in Example 9, except that undertakings A and B purchase 80 percent of their inventory from undertaking D.
(ii) Paragraph (f)(4)(iii)(B) of this section applies, except as provided in paragraph (f)(4)(iii)(C) of this section, if a supplier undertaking is the predominant provider of property to a recipient undertaking that is controlled by the same interests. Undertakings D and E both provide dairy products to undertakings A, B, and C. Thus, for purposes of paragraph (f)(4)(iii) of this section, undertakings D and E are supplier undertakings, and undertakings A, B, and C are recipient undertakings. In addition, undertaking D is the predominant provider of property and services to undertakings A and B, and undertakings A, B and D are controlled by the same interests. Thus, except as provided in paragraph (f)(4)(iii)(C) of this section, paragraph (f)(4)(iii)(B) of this section applies to undertakings A, B, and D.

(iii) The coordination rules in paragraph (f)(4)(iii)(C)(*1*) of this section provide that paragraph (f)(4)(iii)(B) of this section does not apply in certain cases to which paragraph (f)(4)(iii)(A) of this section applies. These coordination rules would apply if undertaking D or E (or any other undertaking that is controlled by the interests that control undertakings A, B, and C) predominantly involved the provision of property and services to undertakings A, B, and C. The coordination rules in paragraph (f)(4)(iii)(C)(*1*) of this section would also apply if undertaking A, B, or D predominantly involved the provision of property or services to a recipient undertaking that is controlled by the same interests. Assume that these coordination rules do not apply in this case.

(iv) If paragraph (f)(4)(iii)(B) of this section applies to supplier and recipient undertakings, the recipient undertakings are treated under paragraph (f)(4)(iii) (B) and (C)(*3*) of this section as undertakings that are similar to the supplier undertaking and to undertakings to which the supplier undertaking is similar. Accordingly, undertakings A and B are similar, for purposes of this paragraph (f), to undertaking D and, because undertakings D and E are similar, to undertaking E.

(v) The principal providers of property and services to undertaking C are unrelated undertakings. Thus, paragraph (f)(4)(iii)(B) of this section does not apply to undertaking C, and undertaking C is not similar to undertakings D and E. Moreover, undertaking C is not similar to undertakings A and B because, under paragraph (f)(4)(iii)(C)(*3*) of this section, undertakings A and B are not similar to any undertaking that is not similar to undertaking D.

Example 13. (i) Undertakings A through Z are trade or business undertakings (within the meaning of paragraph (f)(1)(ii) of this section) and are controlled by the same interests (within the meaning of paragraph (j) of this section). Undertaking A derives all of its gross income from the manufacture and sale of men's and women's clothing, undertaking B derives all of its gross income from sales of men's and women's clothing to retail stores, and undertakings C through Z derive all of their gross income from retail sales of men's and women's clothing. Undertaking A sells clothing exclusively to undertaking B. Undertaking B sells 75 percent of its clothing to undertakings C through Z, and sells the remainder to unrelated retail stores. Undertaking B purchases 80 percent of its inventory from undertaking A, and undertakings C through Z purchase 60 to 90 percent of their inventory from undertaking B.
(ii) Paragraph (f)(4)(iii)(A) of this section applies if a supplier undertaking predominantly involves the provision of property to a recipient undertaking that is controlled by the same interests. In addition, paragraph (f)(4)(iii)(A)(*1*) of this section provides that if a supplier undertaking and two or more similar recipient undertakings are controlled by the same interests, the recipient undertaking are treated as a single undertaking for this purpose. Undertaking B provides men's and women's clothing to undertaking C through Z. Thus, for purposes of paragraph (f)(4)(iii) of this section, undertaking B is a supplier undertaking and undertakings C through Z are recipient undertakings. In addition, undertaking B predominantly involves the provision of property to undertakings C through Z, and undertakings C through Z are treated as a single undertaking for purposes of paragraph (f)(4)(iii)(A) of this section. Accordingly, paragraph (f)(4)(iii)(A) of this section applies to undertakings B and C through Z.

(iii) If paragraph (f)(4)(iii)(A) of this section applies to supplier and recipient undertakings, the supplier undertaking is treated under paragraph (f)(4)(iii)(A) of this section as an undertaking that is similar to the recipient undertakings. Accordingly, undertaking B is similar, for purposes of this paragraph (f), to undertakings C through Z.

(iv) Undertaking A provides men's and women's clothing to undertaking B. Thus, for purposes of paragraph (f)(4)(iii) of this section, undertaking A is a supplier undertaking and undertaking B is a recipient undertaking. In addition, undertaking A predominantly involves the provision of property to undertaking B, and undertakings A and B are controlled by the same interests. Accordingly, paragraph (f)(4)(iii)(A) of this section applies to undertakings A and B, and undertaking A is similar to undertaking B.

(v) If paragraph (f)(4)(iii)(A) of this section applies to supplier and recipient undertakings, the supplier undertaking is treated under paragraph (f)(4)(iii)(C)(*2*) of this section as an undertaking that is similar to undertakings to which the recipient undertakings are similar. Accordingly, undertaking A is also similar, for purposes of this paragraph (f), to undertakings C through Z.

(vi) The coordination rule in paragraph (f)(4)(iii)(C)(*1*)(*i*) of this section provides that paragraph (f)(4)(iii)(B) of this section does not apply if, as described above, the supplier undertaking predominantly involves the provision of property to recipient undertakings and is treated under paragraph (f)(4)(iii)(A) of this section as an undertaking that is similar to such recipient undertakings. Accordingly, paragraph (f)(4)(iii)(B) of this section does not apply to undertakings B through Z, even though undertaking B is the predominant

provider of property and services to undertakings C through Z, and undertakings B through Z are controlled by the same interests. For the same reason, paragraph (f)(4)(iii)(B) of this section does not apply to undertaking A and B. (Paragraph (f)(4)(iii)(B) of this section is also inapplicable to undertakings A and B because the coordination rule in paragraph (f)(4)(iii)(C)(*1*)(*ii*) of this section applies if the recipient undertaking (undertaking B) is itself a supplier undertaking that is treated under paragraph (f)(4)(iii)(A) of this section as an undertaking that is similar to its recipient undertakings (undertakings C through Z).)

(g) ***Integrated businesses*** —

(1) ***Applicability*** —

(i) ***In general.*** This paragraph (g) applies to a taxpayer's interests in trade or business activities (within the meaning of paragraph (g)(1)(ii) of this section).

(ii) ***Trade or business activity.*** For purposes of this paragraph (g), the term “trade or business activity” means any activity (determined without regard to this paragraph (g)) that consists of interests in one or more trade or business undertakings (within the meaning of paragraph (f)(1)(ii) of this section).

(2) ***Treatment as a single activity.*** A taxpayer's interests in two or more trade or business activities shall be treated as a single activity if and only if—

(i) The operations of such trade or business activities constitute a single integrated business, activities constitute a single integrated business; and

(ii) Such activities are controlled by the same interests (within the meaning of paragraph (j) of this section).

(3) ***Facts and circumstances test.*** In determining whether the operations of two or more trade or business activities constitute a single integrated business for purposes of this paragraph (g), all the facts and circumstances are taken into account, and the following factors are generally the most significant:

(i) Whether such operations are conducted at the same location;

(ii) The extent to which other persons conduct similar operations at one location;

(iii) Whether such operations are treated as a unit in the primary accounting records reflecting the results of such operations;

(iv) The extent to which other persons treat similar operations as a unit in the primary accounting records reflecting the results of such similar operations;

(v) Whether such operations are owned by the same person (within the meaning of paragraph (c)(2)(v) of this section);

(vi) The extent to which such operations involve products or services that are commonly provided together;

(vii) The extent to which such operations serve the same customers;

(viii) The extent to which the same personnel, facilities, or equipment are used to conduct such operations;

(ix) The extent to which such operations are conducted in coordination with or reliance upon each other;

(x) The extent to which the conduct of any such operations is incidental to the conduct of the remainder of such operations;

(xi) The extent to which such operations depend on each other for their economic success; and

(xii) Whether such operations are conducted under the same trade name.

(4) ***Examples.*** The following examples illustrate the application of this paragraph (g). The facts, analysis, and conclusion in each example relate to a single taxable year, and the trade or business activities described in each example are controlled by the same interests (within the meaning of paragraph (j) of this section).

> *Example 1.* (i) The taxpayer owns a number of department stores and auto-supply stores. Some of the taxpayer's department stores include auto-supply departments. In other cases, the taxpayer operates a department store and an auto-supply store at the same location (within the meaning of paragraph (c)(2)(iii) of this section), or at different locations from which the same group of customers can be served. In cases in which a department store and an auto-supply store are operated at the same location, the department-store operations are the predominant operations (within the meaning of paragraph (f)(4)(ii) of this section), and the undertaking that includes the stores is treated as a department-store undertaking for purposes of paragraph (f) of this section. Under paragraph (f) of this section, the department-store undertakings are all treated as part of the same activity of the taxpayer (the "department-store activity"). Similarly, the auto-supply undertakings (*i.e.,* the auto-supply stores that are not operated at a department-store location) are all treated as part of the same activity (the "auto-supply activity"). (Assume that department-store undertakings and auto-supply undertakings are not similar and are not treated as part of the same activity under paragraph (f) of this section.)
> (ii) The department stores and auto-supply stores use a common trade name and coordinate their marketing activities (*e.g.,* the stores advertise in the same catalog and the same newspaper supplements, honor the same credit cards (including credit cards issued by the department stores), and jointly conduct sales and other promotional activities). Although sales personnel generally work only in a particular store or in a particular department within a store, other employees (*e.g.,* cashiers, janitorial and maintenance workers, and clerical staff) may work in or perform services for various stores, including both department and auto-supply stores. In addition, the management of store operations is organized on a geographical basis, and managers above the level of the individual store generally supervise operations in both types of store. A central office provides payroll, financial, and other support services to all stores and establishes pricing and other business policies. Most inventory for both types of stores is acquired through a central purchasing department and inventory for all stores in an area is stored in a common warehouse.

(iii) Based on the foregoing facts and circumstances, the operations of the department-store activity and the auto-supply activity constitute an integrated business. Paragraph (g)(3) of this section provides that the factors relevant to this determination include the conduct of department-store and auto-supply operations at the same location, the location of department and auto-supply stores at sites where the same group of customers can be served, the treatment of all such operations as a unit in the taxpayer's financial statements, the taxpayer's ownership and the common management of all such operations, the use of the same personnel, facilities, and equipment to conduct and support the operations, the use of a common trade name, and the coordination (as evidenced by the coordinated marketing activities) of department-store and auto-supply operations.

(iv) Paragraph (g)(2) of this section provides that a taxpayer's interests in two or more trade or business activities (within the meaning of paragraph (g)(1)(ii) of this section) are treated as a single activity of the taxpayer if the operations of such activities constitute an integrated business and the activities are controlled by the same interests. The department-store activity and the auto-supply activity consist of trade or business undertakings and, thus, are trade or business activities. In addition, the activities are controlled by the same interests (the taxpayer), and the operations of the activities constitute an integrated business. Accordingly, the department-store activity and the auto-supply activity are treated as a single activity of the taxpayer.

Example 2. (i) The taxpayer owns a number of stores that sell stereo equipment and a repair shop that services stereo equipment. Under paragraph (f) of this section, the stores are all treated as part of the same activity of the taxpayer (the “store activity”). The repair shop does not sell stereo equipment, does not predominantly involve the provision of services to the taxpayer's stores, and is treated as a separate activity (the “repair-shop activity”). (Assume that stereo-sales undertakings and stereo-repair undertakings are not similar and are not treated as part of the same activity under paragraph (f) of this section.)
(ii) The stores sell stereo equipment produced by manufacturers for which the stores are an authorized distributor. The repair shop's operations principally involve the servicing of stereo equipment produced by the same manufacturers. These operations include repairs on equipment under warranty for which reimbursement is received from the manufacturer and reconditioning of equipment taken as trade-ins by the taxpayer's stores. The majority of the operations, however, involve repairs that are performed for customers and are not covered by a warranty. The taxpayer's distribution agreements with manufacturers generally require the taxpayer to repair and service equipment produced by the manufacturer both during and after the warranty period. In some cases, the distribution agreements require that the taxpayer's repair facility meet the manufacturer's standards and provide for periodic inspections to ensure that these standards are met.

(iii) The stores and the repair shop use a common trade name. Sales personnel generally work only in a particular store and stereo technicians work only in the repair shop. The stores and the repair shop are, however, managed from a central office, which supervises both store and repair-shop operations, provides payroll, financial, and other support services to the stores and the repair shop, and establishes pricing and other business policies. In addition, inventory for the stores and supplies for the repair shop are acquired through a central purchasing department and are stored in a single warehouse.

(iv) Based on the foregoing facts and circumstances, the operations of the store activity and the repair-shop activity constitute an integrated business. Paragraph (g)(3) of this section provides that the factors relevant to this determination include the treatment of all such operations as a unit in the taxpayer's financial statements, the taxpayer's ownership and the common management of all such operations, the use of the same personnel and facilities to support the operations, the use of a common trade name, the extent to which the same customers patronize both the stores and the repair shop, the similarity of the products (*i.e.*, stereo equipment) involved in both store and repair-shop operations, and the extent to which the provision of repair services contributes to the taxpayer's ability to obtain the stereo equipment sold in store operations.

(v) Paragraph (g)(2) of this section provides that a taxpayer's interests in two or more trade or business activities (within the meaning of paragraph (g)(1)(ii) of this section) are treated as a single activity of the taxpayer if the operations of such activities constitute an integrated business and the activities are controlled by the same interests. The store activity and repair-shop activity consist of trade or business undertakings and thus are trade or business activities. In addition, the activities are controlled by the same interests (the taxpayer), and the operations of the activities constitute an integrated business. Accordingly, the store activity and the repair-shop activity are treated as a single activity of the taxpayer.

Example 3. (i) The taxpayer owns interests in three partnerships. One partnership owns a television station, the second owns a professional sports franchise, and the third owns a motion-picture production company. The operations of the partnerships are treated as three separate undertakings. Although other persons own interests in the partnerships, all three undertakings are controlled (within the meaning of paragraph (j) of this section) by the taxpayer. The operations of the partnerships are treated as three separate activities (the "television activity," the "sports activity," and the "motion-picture activity"). (Assume that the undertakings are not similar and are not treated as part of the same activity under paragraph (f) of this section.)
(ii) Each partnership prepares financial statements that reflect only the results of that partnership's operations, and each of the activities is conducted under its own trade name. The taxpayer participates extensively in the management of each partnership and makes the major business decisions for all three partnerships. Each partnership, however, employs

separate management and other personnel who conduct its operations on a day-to-day basis. The taxpayer generally arranges the partnerships' financing and often obtains loans for two, or all three, partnerships from the same source. Although the assets of one partnership are not used as security for loans to another partnership, the taxpayer's interest in a partnership may secure loans to the other partnerships. The television station broadcasts the sports franchise's games, and the motion-picture production company occasionally prepares programming for the television station. In addition, support staff of one partnership may, during periods of peak activity or in the case of emergency, be made available to another partnership on a temporary basis. There are no other significant transactions between the partnerships. Moreover, all transactions between the partnerships involve essentially the same terms as would be provided in transactions between unrelated persons.

(iii) Based on the foregoing facts and circumstances, the television activity, the sports activity, and the motion-picture activity constitute three separate businesses. Paragraph (g)(3) of this section provides that the factors relevant to this determination include the treatment of the activities as separate units in the partnerships' financial statements, the use of a different trade name for each activity, the separate day-to-day management of the activities, and the limited extent to which the activities contribute to or depend on each other (as evidenced by the small number of significant transactions between the partnerships and the arm's length nature of those transactions). The taxpayer's participation in management and financing are taken into account in this determination, as are the transactions between the partnerships, but these factors do not of themselves support a determination that the activities constitute an integrated business.

(iv) Paragraph (g)(2) of this section provides that a taxpayer's interests in two or more trade or business activities (within the meaning of paragraph (g)(1)(ii) of this section) are treated as a single activity of the taxpayer only if the operations of such activities constitute an integrated business and the activities are controlled by the same interests. In this case, the taxpayer's activities do not constitute an integrated business, and the aggregation rule in paragraph (g)(2) of this section does not apply. Accordingly, the television activity, the sports activity, and the motion-picture activity are treated as three separate activities of the taxpayer.

(h) ***Certain professional service undertakings treated as a single activity*** —

(1) ***Applicability*** —

(i) ***In general.*** This paragraph (h) applies to a taxpayer's interests in professional service undertakings (within the meaning of paragraph (h)(1)(ii) of this section).

(ii) ***Professional service undertaking.*** For purposes of this paragraph (h), an undertaking is treated as a professional service undertaking for any taxable year in which the undertaking derives more than 50 percent of its gross income from the provision of services that are treated, for

purposes of section 448 (d)(2)(A) and the regulations thereunder, as services performed in the fields of health, law, engineering, architecture, accounting, actuarial science, performing arts, or consulting.

(2) ***Treatment as a single activity*** —

(i) ***Undertakings controlled by the same interest.*** A taxpayer's interests in two or more professional service undertakings that are controlled by the same interests (within the meaning of paragraph (j) of this section) shall be treated as part of the same activity of the taxpayer.

(ii) ***Undertakings involving significant similar or significant related services.*** A taxpayer's interests in two or more professional service undertakings that involve the provision of significant similar services or significant related services shall be treated as part of the same activity of the taxpayer.

(iii) ***Coordination rule.***

(A) Except as provided in paragraph (h)(2)(iii)(B) of this section, a taxpayer's interests in two or more undertakings (the "original undertakings") that are treated as part of the same activity of the taxpayer under the provisions of paragraph (h)(2) (i) or (ii) of this section shall be treated as interests in a single professional service undertaking (the "aggregated undertaking") for purposes of reapplying such provisions.

(B) If any original undertaking included in an aggregated undertaking and any other undertaking that is not included in such aggregated undertaking involve the provision of significant similar or related services, the aggregated undertaking and such other undertaking shall be treated as undertakings that involve the provision of significant similar or related services for purposes of reapplying the provisions of paragraph (h)(2)(ii) of this section.

(3) ***Significant similar or significant related services.*** For purposes of this paragraph (h)—

(i) Services (other than consulting services) in any field described in paragraph (h)(1)(ii) of this section are similar to all other services in the same field;

(ii) All the facts and circumstances are taken into account in determining whether consulting services are similar;

(iii) Two professional service undertakings involve the provision of significant similar services if and only if—

(A) Each such undertaking provides significant professional services; and

(B) Significant professional services provided by one such undertaking are similar to significant professional services provided by the other such undertaking;

(iv) Services are significant professional services if and only if such services are in a field described in paragraph (h)(1)(ii) of this section and more than 20 percent of the undertaking's gross income is attributable to services in such field (or, in the case of consulting services, to similar services in such field); and

(v) Two professional service undertakings involve the provision of significant related services if and only if more than 20 percent of the gross income of one such undertaking is derived from customers that are also customers of the other such undertaking.

(4) ***Examples.*** The following examples illustrate the application of this paragraph (h). In each example that does not state otherwise, the taxpayer is an individual, and the facts, analysis, and conclusions relate to a single taxable year.

Example 1. (i) The taxpayer is a partner in a law partnership that has offices in various cities. Some of the partnership's offices provide a full range of legal services. Other offices, however, specialize in a particular area or areas of the law (*e.g.,* litigation, tax law, corporate law, etc.). In either case, substantially all of the office's gross income is derived from the provision of legal services. Under paragraph (c)(1) of this section, each of the law partnership's offices is treated as a single undertaking that is separate from other undertakings (a "law-office undertaking").
(ii) Each law-office undertaking derives more than 50 percent of its gross income from the provision of services in the field law. Thus, each such undertaking is treated as a professional service undertaking (within the meaning of paragraph (h)(1)(ii) of this section).

(iii) Each law-office undertaking derives more than 20 percent of its gross income from services in the field of law. Thus, each such undertaking involves significant professional services (within the meaning of paragraph (h)(3)(iv) of this section) in the field of law. In addition, all services in the field of law are treated as similar services under paragraph (h)(3)(i) of this section. Thus, the law-office undertakings involve the provision of significant similar services (within the meaning of paragraph (h)(3)(iii) of this section).

(iv) Paragraph (h)(2)(ii) of this section provides that a taxpayer's interest in professional service undertakings that involve the provision of significant similar services are treated as part of the same activity of the taxpayer. Accordingly, the taxpayer's interests in the law-office undertakings are treated as part of the same activity of the taxpayer under paragraph (h)(2)(ii) of this section even if the undertakings are not controlled by the same interests (within the meaning of paragraph (j) of this section).

Example 2. (i) The taxpayer is a partner in medical partnerships A and B. Both partnerships derive all of their gross income from the provision of medical services, but partnership A specializes in internal medicine and partnership B operates a radiology laboratory. Under paragraph (c)(1) of this section, the medical-service business of each partnership is treated as a single undertaking that is separate from other undertakings (a "medical-service undertaking"). Partnerships A and B are not controlled by the same interests (within the meaning of paragraph (j) of this section).
(ii) Each partnership's medical-service undertaking derives more than 50 percent of its gross income from the provision of services in the field of health. Thus, each partnership's medical-service undertaking is treated as a professional service undertaking (within the meaning of paragraph (h)(1)(ii) of this section).

(iii) Each partnership's medical-service undertaking derives more than 20 percent of its gross income from services in the field of health. Thus, each such undertaking involves significant professional services (within the meaning of paragraph (h)(3)(iv) of this section) in the field of health. In addition, all services in the field of health are treated as similar services under paragraph (h)(3)(i) of this section. Thus, the medical-services undertakings of partnerships A and B involve the provision of significant similar services (within the meaning of paragraph (h)(3)(iii) of this section).

(iv) Paragraph (h)(2)(ii) of this section provides that a taxpayer's interests in professional service undertakings that involve the provision of significant similar services are treated as part of the same activity of the taxpayer. Accordingly, the taxpayer's interests in the medical-service undertakings of partnerships A and B are treated as part of the same activity of the taxpayer under paragraph (h)(2)(ii) of this section even though the undertakings are not controlled by the same interests.

Example 3. (i) The facts are the same as in Example 2, except that the taxpayer withdraws from partnership A in 1989 and becomes a partner in partnership B in 1990. In addition, the taxpayer was a full-time participant in the operations of partnership A from 1970 through 1989, but does not participate in the operations of partnership B.
(ii) Paragraph (h)(2)(ii) of this section provides that a taxpayer's interests in professional service undertakings that involve the provision of significant similar services are treated as part of the same activity of the taxpayer. This rule is not limited to cases in which the taxpayer holds such interests simultaneously. Thus, as in Example 2, the taxpayer's interests in the medical-service undertakings of partnerships A and B are treated as part of the same activity of the taxpayer.

(iii) The activity that includes the taxpayer's interests in the medical-service undertakings of partnerships A and B is a personal service activity (within the meaning of § 1.469-5T(d)) because it involves the performance of personal services in the field of health. In addition, the taxpayer materially participated in the activity for three or more taxable years preceding 1990 (see § 1.469-5T(j)(1)). Thus, even if the taxpayer does not work in the activity after 1989, the taxpayer is treated, under § 1.469-5T(a)(6), as materially participating in the activity for 1990 and subsequent taxable years.

Example 4. (i) The taxpayer is a partner in an accounting partnership that has offices in various cities (partnership A) and in a management-consulting partnership that has a single office (partnership B). Each of partnership A's offices derives substantially all of its gross income from services in the field of accounting, and partnership B derives substantially all of its gross income from services in the field of consulting. Under paragraph (c)(1) of this section, partnership B's consulting business is treated as a single undertaking that is separate from other undertakings (the “consulting undertaking”) and each of partnership A's

offices is similarly treated (the “accounting undertakings”). The accounting undertakings are controlled by the same interests, but partnerships A and B are not controlled by the same interests (within the meaning of paragraph (j) of this section). Partnership B's consulting business derives 50 percent of its gross income from customers of partnership A's accounting undertakings, but does not derive more than 20 percent of its gross income from the customers of any single accounting undertaking.
(ii) Each accounting undertaking derives more than 50 percent of its gross income from the provision of services in the field of accounting, and the consulting undertaking derives more than 50 percent of its gross income from the provision of services in the field of consulting. Thus, each accounting undertaking is treated as a professional service undertaking (within the meaning of paragraph (h)(1)(ii) of this section), and the consulting undertaking is also treated as a professional service undertaking.

(iii) Each accounting undertaking derives more than 20 percent of its gross income from services in the field of accounting. Thus, each such undertaking involves significant professional services (within the meaning of paragraph (h)(3)(iv) of this section) in the field of accounting. In addition, all services in the field of accounting are treated as similar services under paragraph (h)(3)(i) of this section. Thus, the accounting undertakings involve the provision of significant similar services (within the meaning of paragraph (h)(3)(iii) of this section).

(iv) Paragraph (h)(2) (i) and (ii) of this section provides that a taxpayer's interests in professional service undertakings that are controlled by the same interests or that involve the provision of significant similar services are treated as part of the same activity of the taxpayer. The accounting undertakings are controlled by the same interests (see (i) above) and involve the provision of significant similar services (see (iii) above). Accordingly, the taxpayer's interests in the accounting undertakings are treated as part of the same activity under paragraph (h)(2) (i) and (ii) of this section.

(v) The consulting undertaking derives more than 20 percent of its gross income from services in the field of consulting. If, based on all the facts and circumstances, these services are determined to be similar consulting services under paragraph (h)(3)(ii) of this section, the consulting undertaking involves significant professional services (within the meaning of paragraph (h)(3)(iv) of this section). In this case, however, the consulting undertaking and the accounting undertakings do not involve the provision of significant similar services (within the meaning of paragraph (h)(3)(iii) of this section) because consulting services and accounting services are not treated as similar services under paragraph (h)(3)(i) of this section.

(vi) The consulting undertaking does not derive more than 20 percent of its gross income from the customers of any single accounting undertaking of partnership A. If, however, partnership A's accounting undertakings are aggregated, the consulting undertaking derives more than 20 percent of its gross income from customers of the aggregated undertakings. Paragraph (h)(3)(v) of this section provides that two professional service undertakings involve the provision of significant related services if more than 20 percent of the gross income of one undertaking is derived from customers of the other undertaking. For purposes of applying this rule, partnership A's accounting undertakings are treated as a single undertaking under paragraph (h)(2)(iii) of this section because the accounting undertakings are treated as part of the same activity under paragraph (h)(2)(i) and (ii) of this section. Thus, the consulting undertaking and the accounting undertakings involve the provision of significant related services.

(vii) Paragraph (h)(2)(ii) of this section provides that a taxpayer's interests in professional service undertakings that involve the provision of significant related services are treated as part of the same activity of the taxpayer. Accordingly, the taxpayer's interests in the consulting undertaking and the accounting undertakings are treated as part of the same activity of the taxpayer under paragraph (h)(2)(ii) of this section.

Example 5. (i) The facts are the same as in Example 4, except that partnership B's consulting business derives only 15 percent of its gross income from customers of partnership A's accounting undertakings.
(ii) As in Example 4, the taxpayer's interests in the accounting undertakings are treated as part of the same activity under paragraph (h)(2)(i) and (ii) of this section and are treated under paragraph (h)(2)(iii) of this section as a single undertaking for purposes of reapplying those provisions. In this case, however, the consulting undertaking does not derive more than 20 percent of its gross income from the customers of partnership A's accounting undertakings. Thus, the consulting undertaking and the accounting undertakings do not involve the provision of significant related services. Accordingly, the accounting undertakings and the consulting undertaking are not treated as part of the same activity under paragraph (h)(2)(i) or (ii) of this section because they are not controlled by the same interests and do not involve the provision of significant similar or related services.

Example 6. (i) The taxpayer is a partner in partnerships A, B, and C. Partnership A derives substantially all of its gross income from the provision of engineering services, partnership B derives substantially all of its gross income from the provision of architectural services, and partnership C derives 40 percent of its gross income from the provision of engineering services and the remainder from the provision of architectural services. Under paragraph (c)(1) of this section, each partnership's service business is treated as a single undertaking that is separate from other undertakings. Partnerships A, B, and C are not controlled by the same interests (within the meaning of paragraph (j) of this section).

(ii) Each partnership's undertaking derives more than 50 percent of its gross income from the provision of services in the fields of architecture and engineering. Thus, each such undertaking is treated as a professional service undertaking (within the meaning of paragraph (h)(1)(ii) of this section).

(iii) Partnership A's undertaking ("undertaking A") derives more than 20 percent of its gross income from services in the field of engineering, partnership B's undertaking ("undertaking B") derives more than 20 percent of its gross income from services in the field of architecture, and partnership C's undertaking ("undertaking C") derives more than 20 percent of its gross income from services in the field of engineering and more than 20 percent of its gross income from services in the field of architecture. Thus, undertaking A involves significant services in the field of engineering, undertaking B involves significant services in the field of architecture, and undertaking C involves significant services in both fields. Under paragraph (h)(3)(i) of this section, all services within each field are treated as similar services, but engineering services and architectural services are not treated as similar services. Thus, undertakings A and C, and undertakings B and C, involve the provision of significant similar services (within the meaning of paragraph (h)(3)(iii) of this section).

(iv) Paragraph (h)(2)(ii) of this section provides that a taxpayer's interests in professional service undertakings that involve the provision of significant similar services are treated as part of the same activity of the taxpayer. Accordingly, the taxpayer's interests in undertakings A and C are treated as part of the same activity of the taxpayer.

(v) Under paragraph (h)(2)(iii)(A) of this section, undertakings A and C are also treated as a single undertaking for purposes of determining whether undertaking B involves the provision of significant similar services. Paragraph (h)(2)(iii)(B) of this section in effect provides that treating undertakings A and C as a single undertaking does not affect the conclusion that the architectural services provided by undertakings B and C are significant similar services. Thus, undertaking B and the single undertaking in which undertakings A and C are included under paragraph (h)(3)(iii) of this section involve the provision of significant similar services, and the taxpayer's interests in undertakings A, B, and C are treated as part of the same activity of the taxpayer under paragraph (h)(2)(ii) of this section.

(i) [Reserved]

(j) ***Control by the same interests and ownership percentage*** —

(1) ***In general.*** Except as otherwise provided in paragraph (j)(2) of this section, all the facts and circumstances are taken into account in determining, for purposes of this section, whether undertakings are controlled by the same interests. For this purpose, control includes any kind of control, direct or indirect, whether legally enforceable, and however exercisable or exercised. It is the reality of control that is determinative, and not its form or mode of exercise.

(2) ***Presumption*** —

(i) ***In general.*** Undertakings are rebuttably presumed to be controlled by the same interests if such undertakings are part of the same common-ownership group.

(ii) ***Common-ownership group.*** Except as provided in paragraph (j)(2)(iii) of this section, two or more undertakings of a taxpayer are part of the same common-ownership group for purposes of this paragraph (j)(2) if and only if the sum of the common-ownership percentages of any five or fewer persons (within the meaning of section 7701(a)(1), but not including passthrough entities) with respect to such undertakings exceeds 50 percent. For this purpose, the common-ownership percentage of a person with respect to such undertakings is the person's smallest ownership percentage (determined in accordance with paragraph (j)(3) of this section) in any such undertaking.

(iii) ***Special aggregation rule.*** If, without regard to this paragraph (j)(2)(iii), an undertaking of a taxpayer is part of two or more common-ownership groups, any undertakings of the taxpayer that are part of any such common-ownership group shall be treated for purposes of this paragraph (j)(2) as part of a single common-ownership group in determining the activities of such taxpayer.

(3) ***Ownership percentage*** —

(i) ***In general.*** For purposes of this section, a person's ownership percentage in an undertaking or in a passthrough entity shall include any interest in such undertaking or passthrough entity that the person holds directly and the person's share of any interest in such undertaking or passthrough entity that is held through one or more passthrough entities.

(ii) ***Passthrough entities.*** The following rules apply for purposes of applying paragraph (j)(3)(i) of this section:

(A) A partner's interest in a partnership and share of any interest in a passthrough entity or undertaking held through a partnership shall be determined on the basis of the greater of such partner's percentage interest in the capital (by value) of such partnership or such partner's largest distributive share of any item of income or gain (disregarding guaranteed payments under section 707(c)) of such partnership.

(B) A shareholder's interest in an S corporation and share of any interest in a passthrough entity or undertaking held through an S corporation shall be determined on the basis of such shareholder's stock ownership.

(C) A beneficiary's interest in a trust or estate and share of any interest in a passthrough entity or undertaking held through a trust or estate shall not be taken into account.

(iii) ***Attribution rules*** —

(A) ***In general.*** Except as otherwise provided in paragraph (j)(3)(iii)(B) of this section, a person's ownership percentage in a passthrough entity or in an undertaking shall be determined by treating such person as the owner of any interest that a person related to such person owns (determined without regard to this paragraph (j)(3)(iii)) in such passthrough entity or in such undertaking.

(B) ***Determination of common-ownership percentage.*** The common-ownership percentage of five or fewer persons with respect to two or more undertakings shall be determined, in any case in which, after the application of paragraph (j)(3)(iii)(A) of this section, two or more such persons own the same interest in any such undertaking (the “related-party owners”)

by treating as the only owner of such interest (or portion thereof) the related-party owner whose ownership of such interest (or a portion thereof) would result in the highest common-ownership percentage.

(C) ***Related person.*** A person is related to another person for purposes of this paragraph (j)(3)(iii) if the relationship of such persons is described in section 267(b) or 707(b)(1).

(4) ***Special rule for trade or business activities.*** In determining whether two or more trade or business activities are controlled by the same interests for purposes of paragraph (g) of this section, each such activity shall be treated as a separate undertaking in applying this paragraph (j).

(5) ***Examples.*** The following examples illustrate the application of this paragraph (j):

Example 1. (i) Partnership X is the sole owner of an undertaking (undertaking X), and partnership Y is the sole owner of another undertaking (undertaking Y). Individuals A, B, C, D, and E are the only partners in partnerships X and Y, and the partnership agreements of both X and Y provide that no action may be taken or decision made on behalf of the partnership without the unanimous consent of the partners. Moreover, each partner actually participates in, and agrees to, all major decisions that affect the operations of either partnership. The ownership percentages (within the meaning of paragraph (j)(3) of this section) of A, B, C, D, and E in each partnership (and in the undertaking owned by the partnership) are as follows:

Partner	Partnership/Undertaking	
	X (percent)	Y (percent)
A	15	5
B	10	60
C	10	20
D	77	12
E	8	20
	120	117

The sum of the ownership percentages exceeds 100 percent for both X and Y because, under paragraph (j)(3)(ii)(A) of this section, each partner's ownership percentage is determined on the basis of the greater of the partner's percentage interest in the capital of the partnership or the partner's largest distributive share of any item of income or gain of the partnership.

(ii) Paragraph (j)(2)(ii) of this section provides that a person's common-ownership percentage with respect to any two or more undertakings is the person's smallest ownership percentage in any such undertaking. Thus, the common-ownership percentages of A, B, C, D, and E with respect to undertakings X and Y are as follows:

Partner	Common-ownership percentage
A	5
B	10
C	10
D	12
E	8
	45

(iii) Paragraph (j)(2)(i) of this section provides that undertakings are rebuttably presumed to be controlled by the same interests if the undertakings are part of the same common-ownership group. In general, undertakings are part of a common-ownership group only if the sum of the common-ownership percentages of any five or fewer persons with respect to such undertakings exceeds 50 percent. In this case, the sum of the partners' common-ownership percentages with respect to undertakings X and Y is only 45 percent. Thus, undertakings X and Y are not part of the same common-ownership group.
(iv) If the presumption in paragraph (j)(2)(i) of this section does not apply, all the facts and circumstances are taken into account in determining whether undertakings are controlled by the same interests (see paragraph (j)(1) of this section). In this case, all actions and decisions in both undertakings require the unanimous consent of the same persons and each of those persons actually participates in, and agrees to, all major decisions. Accordingly, undertakings X and Y are controlled by the same interests (*i.e.,* A, B, C, D, and E).

Example 2. (i) Partnerships W, X, Y, and Z are each the sole owner of an undertaking (undertakings W, X, Y, and Z). Individuals A, B, and C are partners in each of the four partnerships, and the remaining interests in each partnership are owned by a number of unrelated individuals, none of whom owns more than a one-percent interest in any of the partnerships. The ownership percentages (within the meaning of paragraph (j)(3) of this section) of A, B, and C in each partnership (and in the undertaking owned by the partnership)

are as follows:

Partnership/Undertaking	Partner		
	A	B	C
W	23%	21%	40%
X	19%	30%	22%
Y	25%	25%	20%
Z	8%	4%	2%

(ii) Paragraph (j)(2)(ii) of this section provides that a person's common-ownership percentage with respect to any two or more undertakings is the person's smallest ownership percentage in any such undertaking. Thus, the common-ownership percentages of A, B, and C in undertakings W, X, Y, and Z are as follows:

Partner	Common-ownership percentage
A	8
B	4
C	2
	14

(iii) The sum of the common-ownership percentages of A, B, and C with respect to undertakings W, X, Y, and Z is 14 percent, and no other person owns more than a one-percent interest in any of the undertakings. Thus, the sum of the common-ownership percentages of any five or fewer persons with respect to all four undertakings cannot exceed 50 percent. Accordingly, undertakings W, X, Y, and Z are not part of the same common-ownership group (see paragraph (j)(2)(ii) of this section) and are not rebuttably presumed to be controlled by the same interests (see paragraph (j)(2)(i) of this section).
(iv) The common-ownership percentages of A, B, and C in undertakings W, X, and Y are as follows:

Partner	Common ownership percentage
A	19
B	21

Partner	Common ownership percentage
C	20
	60

(v) The sum of the common-ownership percentages of A, B, and C, taking into account only undertakings W, X, and Y, is 60 percent. Because the sum of the common-ownership percentages exceeds 50 percent, undertakings W, X, and Y are part of the same common-ownership group (see paragraph (j)(2)(ii) of this section and are rebuttably presumed to be controlled by the same interests (see paragraph (j)(2)(i) of this section).

Example 3. (i) Corporation X, an S corporation, is the sole owner of an undertaking (undertaking X), and corporation Y, another S corporation, is the sole owner of another undertaking (undertaking Y). Individuals A, B, and C are shareholders in corporations X and Y. Both A and B are related (within the meaning of paragraph (j)(3)(iii)(C) of this section) to C, but not to each other. A, B, and C are not related to any other person that owns an interest in either corporation X or corporation Y. The ownership percentages (determined without regard to the attribution rules of paragraph (j)(3)(iii) of this section) of A, B, and C in each corporation (and in the undertaking owned by the corporation) are as follows:

CORPORATION/UNDERTAKING

Shareholder	X (percent)	Y (percent)
A	20	
B		20
C	5	5

(ii) In general, a person's ownership percentage is determined by treating the person as the owner of interests that are actually owned by related persons (see paragraph (j)(3)(iii)(A) of this section). If A, B, and C are treated as owning interests that are actually owned by related

persons, their ownership percentages are as follows:

CORPORATION/UNDERTAKING

Shareholder	X (percent)	Y (percent)
A	25	5
B	5	25
C	25	25

(iii) Paragraph (j)(3)(iii)(B) of this section provides that, in determining the sum of the common-ownership percentages of any five or fewer persons with respect to any undertakings, each interest in such undertakings is counted only once. If two or more persons are treated as owners of the same interest under paragraph (j)(3)(iii)(A) of this section, the person whose ownership would result in the highest sum is treated as the only owner of the interest. In this case, C's common-ownership percentage with respect to undertakings X and Y, determined by treating C as the owner of the interests actually owned by A and B, is 25 percent. If, however, A and B are treated as the owners of the interests actually owned by C, each has a common-ownership percentage of only five percent. Thus, in determining the sum of common-ownership percentages with respect to undertakings X and Y, C is treated as the owner of the interests actually owned by A and B because this treatment results in the highest sum of common-ownership percentages with respect to such undertakings.

Example 4. (i) The ownership percentages of individuals A, B, and C in undertakings X, Y, and Z are as follows:

UNDERTAKING

Individual	X	Y	Z
A	30%	30%	30%
B	30%	30%	30%
C		30%	30%

No other person owns an interest in more than one of the undertakings.

(ii) Paragraph (j)(2)(ii) of this section provides that a person's common ownership percentage with respect to any two or more undertakings is the person's smallest ownership percentage in any such undertaking. Thus, A's common-ownership percentage with respect to undertakings X, Y, and Z is 30 percent, and the common-ownership percentages of B and C (and all other persons owning interests in such undertakings) with respect to such undertakings is zero. Accordingly, the sum of the common ownership percentages with respect to undertakings X, Y, and Z is only 30 percent, and undertakings X, Y, and Z are not treated as part of the same common-ownership group under paragraph (j)(2)(ii) of this section.
(iii) B's common-ownership percentage with respect to undertakings X and Y is 30 percent, and the sum of A's and B's common-ownership percentages with respect to such undertakings is 60 percent. Thus, undertakings X and Y are treated as part of the same common-ownership group under paragraph (j)(2)(ii) of this section. Similarly, C's common-ownership percentage with respect to undertakings Y and Z is 30 percent, and the sum of A's and C's common-ownership percentages with respect to such undertakings is 60 percent. Thus, undertakings Y and Z are also treated as part of the same common-ownership group under paragraph (j)(2)(ii) of this section.

(iv) Paragraph (j)(2)(iii) of this section requires the aggregation of common-ownership groups that include the same undertaking. In this case, undertaking Y is treated as part of the common-ownership group XY and as part of the common-ownership group YZ. Accordingly, undertakings X, Y, and Z are treated as part of a single common-ownership group and are rebuttably presumed to be controlled by the same interests (see paragraph (j)(2)(i) of this section) even though B does not own an interest in undertaking Z and C does not own an interest in undertaking X. The fact that B and C are not common owners with respect to undertakings X and Z is taken into account, however, in determining whether this presumption is rebutted.

(k) ***Identification of rental real estate activities*** —

(1) ***Applicability*** —

(i) ***In general.*** Except as otherwise provided in paragraph (k)(6) of this section, this paragraph (k) applies to a taxpayer's interests in rental real estate undertakings (within the meaning of paragraph (k)(1)(ii) of this section).

(ii) ***Rental real estate undertaking.*** For purposes of this paragraph (k), a rental real estate undertaking is a rental undertaking (within the meaning of paragraph (d) of this section) in which at least 85 percent of the unadjusted basis (within the meaning of § 1.469-2T(f)(3)) of the property made available for use by customers is real property. For this purpose the term “real property” means any tangible property other than tangible personal property (within the meaning of § 1.48-1(c)).

(2) ***Identification of activities*** —

(i) ***Multiple undertakings treated as a single activity or multiple activities by taxpayer.*** Except as otherwise provided in this paragraph (k), a taxpayer may treat two or more rental real estate undertakings (determined after the application of paragraph (k)(2) (ii) and (iii) of this section) as a single activity or may treat such undertakings as separate activities.

(ii) ***Multiple undertakings treated as a single activity by passthrough entity.*** A taxpayer must treat two or more rental real estate undertakings as a single rental real estate undertaking for a taxable year if any passthrough entity through which the taxpayer holds such undertakings treats such undertakings as a single activity on the applicable return of the passthrough entity for the taxable year of the taxpayer.

(iii) ***Single undertaking treated as multiple undertakings.*** Notwithstanding that a taxpayer's interest in leased property would, but for the application of this paragraph (k)(2)(iii), be treated as used in a single rental real estate undertaking, the taxpayer may, except as otherwise provided in paragraph (k)(3) of this section, treat a portion of the leased property (including a ratable portion of any common areas or facilities) as a rental real estate undertaking that is separate from the undertaking or undertakings in which the remaining portion of the property is treated as used. This paragraph (k)(2)(iii) shall apply for a taxable year if and only if—

(A) Such portion of the leased property can be separately conveyed under applicable State and local law (taking into account the limitations, if any, imposed by any special rules or procedures, such as condominium conversion laws, restricting the separate conveyance of parts of the same structure); and

(B) The taxpayer holds such leased property directly or through one or more passthrough entities, each of which treats such portion of the leased property as a separate activity on the applicable return of the passthrough entity for the taxable year of the taxpayer.

(3) ***Treatment in succeeding taxable years.*** All rental real estate undertakings or portions of such undertakings that are treated, under this paragraph (k), as part of the same activity for a taxable year ending after August 9, 1989 must be treated as part of the same activity in each succeeding taxable year.

(4) ***Applicable return of passthrough entity.*** For purposes of this paragraph (k), the applicable return of a passthrough entity for a taxable year of a taxpayer is the return reporting the passthrough entity's income, gain, loss, deductions, and credits taken into account by the taxpayer for such taxable year.

(5) ***Evidence of treatment required.*** For purposes of this paragraph (k), a person (including a passthrough entity) does not treat a rental real estate undertaking as multiple undertakings for a taxable year or, except as otherwise provided in paragraph (k) (2)(ii) or (3) of this section, treat multiple rental real estate undertakings as a single undertaking for a taxable year unless such treatment is reflected on a schedule attached to the person's return for the taxable year.

(6) ***Coordination rule for rental of nondepreciable property.*** This paragraph (k) shall not apply to a rental real estate undertaking if less than 30 percent of the unadjusted basis (within the meaning of § 1.469-2T(f)(3)) of property used or held for use by customers in such undertaking during the taxable year is subject to the allowance for depreciation under section 167.

(7) ***Coordination rule for rental of dwelling unit.*** For any taxable year in which section 280A(c)(5) applies to a taxpayer's use of a dwelling unit—

(i) Paragraph (k) (2) and (3) of this section shall not apply to the taxpayer's interest in such dwelling unit; and

(ii) The taxpayer's interest in such dwelling unit shall be treated as a separate activity of the taxpayer.

(8) ***Examples.*** The following examples illustrate the application of this paragraph (k). In each example, the taxpayer is an individual whose taxable year is the calendar year.

Example 1. (i) In 1989, the taxpayer directly owns five condominium units (units A, B, C, D, and E) in three different buildings. Units A, B, and C are in one of the buildings and constitute a single rental real estate undertaking (within the meaning of paragraph (k)(1)(ii) of this section). Units D and E are in the other two buildings, and each of these units constitutes a separate rental real estate undertaking. Each of the units can be separately conveyed under applicable State and local law.
(ii) Paragraph (k)(2)(iii) of this section permits a taxpayer to treat a portion of the property included in a rental real estate undertaking as a separate rental real estate undertaking if the property can be separately conveyed under applicable State and local law and the taxpayer owns the property directly. Thus, the taxpayer can treat units A, B, and C as three separate undertakings. Alternatively, the taxpayer could treat two of those units (*e.g.,* units A and C) as an undertaking and the remaining unit as a separate undertaking, or could treat units A, B, and C as a single undertaking.

(iii) Paragraph (k)(2)(i) of this section permits a taxpayer to treat two or more rental real estate undertakings as a single activity, or to treat such undertakings as separate activities. Thus, the taxpayer, by combining undertakings, can treat all five units as a single activity. Alternatively, the taxpayer could treat each undertaking as a separate activity, or could combine some, but not all, undertakings. Thus, for example, the taxpayer could treat units A, B, C, and D as an activity and unit E as a separate activity.

(iv) For purposes of paragraph (k)(2)(i) of this section, a taxpayer's rental real estate undertakings are determined after the application of paragraph (k)(2)(iii) of this section. Thus, the taxpayer, by treating units as separate undertakings under paragraph (k)(2)(iii) of this section and combining them with other units under paragraph (k)(2)(i) of this section, can treat any combination of units as a single activity. For example, the taxpayer could treat units A and B as a separate rental real estate undertaking, and then treat units A, B, and D as a single activity. In that case, the taxpayer could treat units C and E either as a single activity or as two separate activities.

Example 2. (i) The facts are the same as in Example 1. In addition, the taxpayer treats all five units as a single activity for 1989 and sells unit E in 1990. (See paragraph (k)(5) of this section for a rule providing that the units are treated as a single activity only if such treatment is reflected on a schedule attached to the taxpayer's return.)

(ii) Under paragraph (k)(3) of this section, rental real estate undertakings that are treated as part of the same activity for a taxable year must be treated as part of the same activity in each succeeding year. In this case, all five units were treated as part of the same activity for 1989 and must therefore be treated as part of the same activity for 1990. Accordingly, the taxpayer's sale of unit E in 1990 cannot be treated as a disposition of the taxpayer's entire interest in an activity for purposes of section 469(g) and the rules to be contained in § 1.469-6T (relating to the treatment of losses upon certain dispositions of passive and former passive activities).

Example 3. (i) The facts are the same as in Example 1, except that the taxpayer is a partner in a partnership that is the direct owner of the five condominium units. In its return for its taxable year ending on November 30, 1989, the partnership treats the five units as a single activity. (See paragraph (k)(5) of this section for a rule providing that the units are treated as a single activity only if such treatment is reflected on a schedule attached to the partnership's return.) The partnership sells unit E on November 1, 1990.
(ii) Paragraph (k)(2)(ii) of this section provides that a taxpayer who holds rental real estate undertakings through a passthrough entity must treat those undertakings as a single rental real estate undertaking if they are treated as a single activity on the applicable return of the passthrough entity. Under paragraph (k)(4) of this section, the applicable return of the partnership for the taxpayer's 1989 taxable year is the partnership's return for its taxable year ending on November 30, 1989. Accordingly, the taxpayer must treat the five condominium units as a single rental real estate undertaking (and thus as part of the same activity) for 1989 because they are treated as a single activity on the partnership's return for its taxable year ending in 1989.

(iii) Under paragraph (k)(3) of this section, the taxpayer must continue treating the condominium units as part of the same activity for taxable years after 1989. Accordingly, as in Example 2, the five condominium units are treated as part of the same activity for 1990, and the sale of unit E in 1990 cannot be treated as a disposition of the taxpayer's interest in an activity for purposes of section 469(g) and the rules to be contained in § 1.469-6T.

Example 4. (i) The taxpayer owns a shopping center and a vacant lot that are separate rental real estate undertakings (within the meaning of paragraph (k)(1)(ii) of this section). The taxpayer rents space in the shopping center to various tenants and rents the vacant lot to a parking lot operator. Most of the unadjusted basis of the property used in the shopping-center undertaking (taking into account the land on which the shopping center is built) is subject to the allowance for depreciation, but no depreciable property is used in the parking-lot undertaking.
(ii) This paragraph (k) provides rules for identifying rental real estate activities (including the rule in paragraph (k)(2)(i) of this section that permits a taxpayer to treat two or more rental real estate undertakings as a single activity). Paragraph (k)(6) of this section provides,

however, that these rules do not apply to a rental real estate undertaking if less than 30 percent of the unadjusted basis of the property used in the undertaking is subject to the allowance for depreciation. Thus, the taxpayer may not combine the parking-lot undertaking, which includes no depreciable property, with the shopping-center undertaking or any other rental real estate undertaking under paragraph (k)(2)(i) of this section. Accordingly, the parking lot undertaking is treated as a separate activity under paragraph (b)(1) of this section.

Example 5. (i) The facts are the same as in Example 4, except that the shopping center and the vacant lot are at the same location (within the meaning of paragraph (c)(2)(iii) of this section) and are part of the same rental real estate undertaking (within the meaning of paragraph (k)(1)(ii) of this section). Taking into account the property used in the shopping center operations (including the land on which the shopping center is built) and the vacant lot, 50 percent of the unadjusted basis of the property used in the undertaking is subject to the allowance for depreciation.
(ii) In this case, the vacant lot is used in a rental real estate undertaking in which depreciable property is also used. Moreover, the exception in paragraph (k)(6) of this section does not apply to the undertaking consisting of the shopping center and the parking lot because at least 30 percent of unadjusted basis of the property used in the undertaking is subject to the allowance for depreciation. Accordingly, the taxpayer may combine the undertaking with other rental real estate undertakings and treat the combined undertakings as a single activity under paragraph (k)(2)(i) of this section.

(l) [Reserved]

(m) ***Consolidated groups*** —

(1) ***In general.*** The activities of a consolidated group (within the meaning of § 1.469-1T(h)(2)(ii)) and of each member of such group shall be determined under this section as if the consolidated group were one taxpayer.

(2) ***Examples.*** The following examples illustrate the application of this paragraph (m). In each example, the facts, analysis, and conclusions relate to a single taxable year.

Example 1. (i) Corporations M, N, and O are the members of a consolidated group (within the meaning of § 1.469-1T(h)(2)(ii)). Under § 1.469-1T(h)(4)(i)(A) and (ii), the consolidated group and its members are treated as closely held corporations (within the meaning of § 1.469-1T(g)(2)(ii)). Each member of the consolidated group owns a two-percent interest in partnership X and a two-percent interest in partnership Y, and owns interests in a number of trade or business undertakings (within the meaning of paragraph (f)(1)(ii) of this section) through the partnerships. Each of these undertakings is directly owned by partnership X or Y, and all the undertakings of partnerships X and Y are controlled by the same interests (within the meaning of paragraph (j) of this section) and are similar (within the meaning of paragraph (f)(4) of this section). The employees of the consolidated group and the shareholders of its

common parent do not participate in the undertakings that the member corporations own through the partnerships.
(ii) Paragraph (f)(2)(i) of this section provides that trade or business undertakings that are similar and controlled by the same interests are treated as part of the same activity of the taxpayer if the taxpayer owns interests in the undertakings through the same passthrough entity. In this case, the member corporations own interests in similar, commonly-controlled undertakings through both partnerships, and such interests are treated under this paragraph (m) as interests owned by one taxpayer (the consolidated group). Accordingly, the member corporations' interests in the undertakings owned through partnership X are treated as part of the same activity of the consolidated group, and their interests in the undertakings owned through partnership Y are treated similarly.

Example 2. (i) The facts are the same as in Example 1, except that each member of the consolidated group owns a five-percent interest in partnership X and a five-percent interest in partnership Y.
(ii) Paragraph (f)(2)(ii) of this section provides that trade or business undertakings that are similar and controlled by the same interests are treated as part of the same activity of the taxpayer if the taxpayer owns a direct or substantial indirect interest in each such undertaking. In this case, the member corporations own, in the aggregate, a 15-percent interest in partnership X and a 15-percent interest in partnership Y, and such interests are treated under this paragraph (m) as interests owned by one taxpayer (the consolidated group). Thus, the consolidated group owns a substantial indirect interest in the similar, commonly-controlled undertakings owned by partnerships X and Y (see paragraph (f)(3)(i) of this section). Accordingly, the member corporations' interests in the undertakings owned through partnerships X and Y are treated as part of the same activity of the consolidated group.

(n) ***Publicly traded partnerships.*** The rules of this section shall apply to a taxpayer's interest in business and rental operations held through a publicly traded partnership (within the meaning of section 469(k)(2)) as if the taxpayer had no interest in any other business and rental operations. The following example illustrates the application of this paragraph (n):

Example. (i) The taxpayer, an individual, owns a 20-percent interest in partnership X and a 15-percent interest in partnership Y. Partnership X directly owns a hotel (“hotel 1”) and a commercial office building (“building 1”). Partnership Y directly owns two hotels (“hotels 2 and 3”) and two commercial office buildings (“buildings 2 and 3”). Each of the three hotels is a separate trade or business undertaking (within the meaning of paragraph (f)(1)(ii) of this section), and each of the three office buildings is a separate rental real estate undertaking (within the meaning of paragraph (k)(1)(ii) of this section). The three hotel undertakings are similar (within the meaning of paragraph (f)(4) of this section) and are controlled by the same interests (within the meaning of paragraph (j) of this section). Partnership X is not a publicly traded partnership (within the

meaning of section 469(k)(2)). Partnership Y, however, is a publicly traded partnership and is not treated as a corporation under section 7704.
(ii) This paragraph (n) provides that the rules of this section apply to a taxpayer's interest in business and rental operations held through a publicly traded partnership as if the taxpayer had no interest in any other business and rental operations. Thus, undertakings owned through partnership Y may be treated as part of the same activity under the rules of this section, but an undertaking owned through partnership Y and an undertaking that is not owned through partnership Y may not be treated as part of the same activity.

(iii) Paragraph (f)(2)(i) of this section provides that a taxpayer's interests in two or more trade or business undertakings that are similar and controlled by the same interests are treated as part of the same activity if the taxpayer owns interests in each undertaking through the same passthrough entity. Partnership Y's hotel undertakings (*i.e.,* hotels 2 and 3) are similar and are controlled by the same interests. In addition, the taxpayer owns interests in both undertakings through the same partnership. Accordingly, the taxpayer's interests in partnership Y's hotel undertakings are treated as part of the same activity.

(iv) The hotel undertaking owned through partnership X (*i.e.,* hotel 1) and the hotel undertakings owned through partnership Y are similar and controlled by the same interests, and the taxpayer owns a substantial indirect interest in each of the undertakings (see paragraph (f)(3)(i) of this section). Thus, the three undertakings would ordinarily be treated as part of the same activity under paragraph (f)(2)(ii) of this section. Under this paragraph (n), however, undertakings that are owned through a publicly traded partnership cannot be treated as part of the same activity as any undertaking not owned through that partnership. Accordingly, the hotel undertaking that the taxpayer owns through partnership X and the hotel undertakings that the taxpayer owns through partnership Y are treated as two separate activities.

(v) Paragraph (k)(2)(i) of this section provides that, with certain exceptions, a taxpayer may treat two or more rental real estate undertakings as a single activity or as separate activities. Thus, the taxpayer's interests in the rental real estate undertakings owned through partnership Y (*i.e.,* buildings 2 and 3) may be treated as a single activity or as separate activities. Under this paragraph (n), however, undertakings that are owned through a publicly traded partnership cannot be treated as part of the same activity as any undertaking not owned through that partnership. Accordingly, the taxpayer's interest in the rental real estate undertaking owned through partnership X (building 1) cannot be treated as part of an activity that includes any rental real estate undertaking owned through partnership Y.

(o) ***Elective treatment of undertakings as separate activities*** —

(1) ***Applicability.*** This paragraph applies to a taxpayer's interest in any undertaking (other than a rental real estate undertaking (within the meaning of paragraph (k)(1)(ii) of this section)) that would otherwise be treated under this section as part of an activity that includes the taxpayer's interest in any other undertaking.

(2) ***Undertakings treated as separate activities.*** Except as otherwise provided in this paragraph (o), a person (including a passthrough entity) shall treat an undertaking to which this paragraph (o) applies as an activity separate from the remainder of the activity in which such undertaking would otherwise be included for a taxable year if and only if, for such taxable year or any preceding taxable year, such person made an election with respect to such undertaking under this paragraph (o).

(3) ***Multiple undertakings treated as a single activity by passthrough entity.*** A person (including a passthrough entity) must treat interests in two or more undertakings as part of the same activity for a taxable year if any passthrough entity through which the person holds such undertakings treats such undertakings as part of the same activity on the applicable return of the passthrough entity for the taxable year of such person.

(4) ***Multiple undertakings treated as a single activity for a preceding taxable year.*** If a person (including a passthrough entity) treats undertakings as part of the same activity on such person's return for a taxable year ending after August 9, 1989, such person may not treat such undertakings as part of different activities under this paragraph (o) for any subsequent taxable year.

(5) ***Applicable return of passthrough entity.*** For purposes of this paragraph (o), the applicable return of a passthrough entity for a taxable year of a taxpayer is the return reporting the passthrough entity's income, gain, loss, deductions, and credits taken into account by the taxpayer for such taxable year.

(6) ***Participation.*** The following rules apply to multiple activities (the “separate activities”) that would be treated as a single activity (the “original activity”) if the taxpayer's activities were determined without regard to this paragraph (o):

(i) The taxpayer shall be treated as materially participating (within the meaning of § 1.469-5T) for the taxable year in the separate activities if and only if the taxpayer would, but for the application of this paragraph (o), be treated as materially participating for the taxable year in the original activity.

(ii) The taxpayer shall be treated as significantly participating (within the meaning of § 1.469-5T(c)(2)) for the taxable year in the separate activities if and only if the taxpayer would, but for the application of this paragraph (o), be treated as significantly participating for the taxable year in the original activity.

(7) ***Election*** —

(i) ***In general.*** A person makes an election with respect to an undertaking under this paragraph (o) by attaching the written statement described in paragraph (o)(7)(ii) of this section to such person's return for the taxable year for which the election is made (see paragraph (o)(2) of this section).

(ii) ***Written statement.*** The written statement required by paragraph (o)(7)(i) of this section must—

(A) State the name, address, and taxpayer identification number of the person making the election;

(B) Contain a declaration that an election is being made under § 1.469-4T(o);

(C) Identify the undertaking with respect to which such election is being made; and

(D) Identify the remainder of the activity in which such undertaking would otherwise be included.

(8) ***Examples.*** The following examples illustrate the application of this paragraph (o):

Example 1. (i) During 1989, the taxpayer, an individual whose taxable year is the calendar year, acquires and is the direct owner of ten grocery stores. The operations of each grocery store are treated under paragraph (c)(1) of this section as a single undertaking that is separate from other undertakings (a "grocery-store undertaking"), and the taxpayer's interests in the grocery-store undertakings would be treated as part of the same activity of the taxpayer under paragraph (f)(2) of this section.
(ii) Paragraph (o)(2) of this section provides that, with certain exceptions, undertakings that would be treated as part of the same activity under other rules in this section may, at the election of the taxpayer, be treated as separate activities. Thus, the taxpayer may elect to treat each grocery-store undertaking as a separate activity for 1989. Alternatively, the taxpayer may combine grocery-store undertakings in any manner and treat each combination of undertakings (and each uncombined undertaking) as a separate activity for 1989. In either case, the election must be made by attaching the written statement described in paragraph (o)(7)(ii) of this section to the taxpayer's 1989 return.

Example 2. (i) The facts are the same as in Example 1. In addition, the taxpayer, in 1989, elects to treat each grocery-store undertaking as a separate activity and participates for 15 hours in each of the grocery-store undertakings.
(ii) The taxpayer's interest in each grocery-store undertaking is treated, under paragraph (o)(2) of this section, as a separate activity of the taxpayer for 1989 (a "grocery-store activity"). In 1989, however, the taxpayer participates for more than 100 hours in the activity in which the undertakings would be included (but for the election to treat the grocery-store undertakings as separate activities) and would be treated under § 1.469-5T(c)(2) as significantly participating in such activity. Accordingly, the taxpayer is treated under paragraph (o)(6)(ii) of this section as significantly participating in each of the grocery-store activities for 1989.

Example 3. (i) The facts are the same as in Example 1. In addition, the taxpayer, in 1989, elects to treat each grocery-store undertaking as a separate activity. The taxpayer does not participate in any of the grocery-store undertakings in 1989 or 1990, and sells one of the grocery stores in 1990.
(ii) As in Example 2, the taxpayer's interests in each grocery-store undertaking is treated, under paragraph (o)(2) of this section, as a separate activity of the taxpayer for 1989. Because the taxpayer elected to treat the undertakings as separate activities for a preceding taxable year (1989), each grocery-store undertaking is also treated, under paragraph (o)(2) of this section, as a separate activity of the taxpayer for 1990. In addition, each of the taxpayer's

grocery-store activities is a passive activity for 1989 and 1990 because the taxpayer does not participate in any of the grocery store undertakings for 1989 and 1990. Accordingly, the taxpayer's sale of the grocery store will generally be treated as a disposition of the taxpayer's entire interest in a passive activity for purposes of section 469(g) and the rules to be contained in § 1.469-6T (relating to the treatment of losses upon certain dispositions of passive and former passive activities).

Example 4. (i) The facts are the same as in Example 3, except that the taxpayer elects to treat the grocery-store undertakings as two separate activities. One of the activities includes three grocery-store undertakings, and the store sold in 1990 is part of this activity. The other activity includes the seven remaining grocery-store undertakings.
(ii) Paragraph (o)(4) of this section provides that a person who treats undertakings as part of the same activity for a taxable year ending after August 9, 1989, may not elect to treat those undertakings as separate activities for a subsequent taxable year. The grocery store sold in 1990 was treated for 1989 as part of an activity that includes two other grocery stores. Thus, those three stores must be treated as part of the same activity for 1990. Accordingly, the taxpayer's sale of the grocery store cannot be treated as a disposition of the taxpayer's entire interest in a passive activity for purposes of section 469(g) and the rules to be contained in § 1.469-6T.

Example 5. (i) The facts are the same as in Example 1, except that the taxpayer is a partner in a partnership that acquires and is the direct owner of the ten grocery stores. The taxable year of the partnership ends on November 30, and the partnership acquires the grocery stores in its taxable year ending on November 30, 1989. In its return for that taxable year, the partnership treats the grocery-store undertakings as a single activity.
(ii) Paragraph (o)(3) of this section provides that a person who holds undertakings through a passthrough entity may not elect to treat those undertakings as separate activities if they are treated as part of the same activity on the applicable return of the passthrough entity. Under paragraph (o)(5) of this section, the applicable return of the partnership for the taxpayer's 1989 taxable year is the partnership's return for its taxable year ending on November 30, 1989. Accordingly, the taxpayer must treat the grocery-store undertakings as a single activity for 1989 because those undertakings are treated as a single activity on the partnership's return for its taxable year ending in 1989.

(iii) Under paragraph (o)(4) of this section, the taxpayer must continue treating the grocery-store undertakings as part of the same activity for taxable years after 1989. This rule applies even if the partnership subsequently distributes its interest in the grocery stores to the taxpayer, and the taxpayer becomes the direct owner of the grocery-store undertakings.

(p) Special rule for taxable years ending before August 10, 1989—

(1) ***In general.*** For purposes of applying section 469 and the regulations thereunder for a taxable year ending before August 10, 1989, a taxpayer's business and rental operations may be organized into activities under the rules or paragraphs (b) through (n) of this section or under any other reasonable method. For example, for such taxable years a taxpayer may treat each of the taxpayer's undertakings as a separate activity, or a taxpayer may treat undertakings that involve the provision of similar goods or services as a single activity.

(2) ***Unreasonable methods.*** A method of organizing business and rental operations into activities is not reasonable if such method—

(i) Treats rental operations (within the meaning of paragraph (d)(3) of this section) that are not ancillary to a trade or business activity (within the meaning of § 1.469-1T(e)(2)) as part of a trade or business activity;

(ii) Treats operations that are not rental operations and are not ancillary to a rental activity (within the meaning of § 1.469-1T(e)(3)) as part of a rental activity;

(iii) Includes in a passive activity of a taxpayer any oil or gas well that would be treated, under paragraph (e)(1) of this section, as a separate undertaking in determining the taxpayer's activities;

(iv) Includes in a passive activity of a taxpayer any interest in a dwelling unit that would be treated, under paragraph (K)(7) of this section, as a separate activity of the taxpayer; or

(v) Is inconsistent with the taxpayer's method of organizing business and rental operations into activities for the taxpayer's first taxable year beginning after December 31, 1986.

(3) ***Allocation of dissallowed deductions in succeeding taxable year.*** If any of the taxpayer's passive activity deductions or the taxpayer's credits from passive activities are disallowed under § 1.469-1T for the last taxable year of the taxpayer ending before August 10, 1989, such disallowed deductions or credits shall be allocated among the taxpayer's activities for the first taxable year of the taxpayer ending after August 9, 1989, using any reasonable method. See § 1.469-1T(f)(4).

[T.D. 8253, 54 FR 20542, May 12, 1989]

§ 1.469-5 Material participation.

(a)-(e) [Reserved]

(f) ***Participation*** —(1) *In general.* Except as otherwise provided in this paragraph (f), any work done by an individual (without regard to the capacity in which the individual does the work) in connection with an activity in which the individual owns an interest at the time the work is done shall be treated for purposes of this section as participation of the individual in the activity.

(f) (2) - (h)(2) [Reserved]

(h) (3) *Coordination with rules governing the treatment of passthrough entities.* If a taxpayer takes into account for a taxable year of the taxpayer any item of gross income or deduction from a partnership or S corporation that is characterized as an item of gross income or deduction from an activity in which the taxpayer materially participated under § 1.469-2T(e)(1), the taxpayer is treated as materially participating in the activity for the taxable year for purposes of applying § 1.469-5T(a)(5) and (6) to any succeeding taxable year of the taxpayer.

(i) [Reserved]

(j) ***Material participation for preceding taxable years*** —

(1) ***In general.*** For purposes of § 1.469-5T(a)(5) and (6), a taxpayer has materially participated in an activity for a preceding taxable year if the activity includes significant section 469 activities that are substantially the same as significant section 469 activities that were included in an activity in which the taxpayer materially participated (determined without regard to § 1.469-5T(a)(5)) for the preceding taxable year.

(2) ***Material participation for taxable years beginning before January 1, 1987.*** In any case in which it is necessary to determine whether an individual materially participated in any activity for a taxable year beginning before January 1, 1987 (other than a taxable year of a partnership, S corporation, estate, or trust ending after December 31, 1986), the determination shall be made without regard to paragraphs (a)(2) through (7) of this section.

(k) ***Examples.*** Example 1—Example 4 [Reserved]

Example 5. In 1993, D, an individual, acquires stock in an S corporation engaged in a trade or business activity (within the meaning of § 1.469-1(e)(2)). For every taxable year from 1993 through 1997, D is treated as materially participating (without regard to § 1.469-5T(a)(5)) in the activity. D retires from the activity at the beginning of 1998, and would not be treated as materially participating in the activity for 1998 and subsequent taxable years if material participation of those years were determined without regard to § 1.469-5T(a)(5). Under § 1.469-5T(a)(5) of this section, however, D is treated as materially participating in the activity for taxable years 1998 through 2003 because D materially participated in the activity (determined without regard to § 1.469-5T(a)(5) for five taxable years during the ten taxable years that immediately precede each of those years. D is not treated under § 1.469-5T(a)(5) as materially participating in the activity for taxable years beginning after 2003 because for those years D has not materially participated in the activity (determined without regard to § 1.469-5T(a)(5) for five of the last ten immediately preceding taxable years.

[T.D. 8417, 57 FR 20758, May 15, 1992]

§ 1.469-5T Material participation (temporary).

(a) ***In general.*** Except as provided in paragraphs (e) and (h)(2) of this section, an individual shall be treated, for purposes of section 469 and the regulations thereunder, as materially participating in an activity for the taxable year if and only if—

(1) The individual participates in the activity for more than 500 hours during such year;

(2) The individual's participation in the activity for the taxable year constitutes substantially all of the participation in such activity of all individuals (including individuals who are not owners of interests in the activity) for such year;

(3) The individual participates in the activity for more than 100 hours during the taxable year, and such individual's participation in the activity for the taxable year is not less than the participation in the activity of any other individual (including individuals who are not owners of interests in the activity) for such year;

(4) The activity is a significant participation activity (within the meaning of paragraph (c) of this section) for the taxable year, and the individual's aggregate participation in all significant participation activities during such year exceeds 500 hours;

(5) The individual materially participated in the activity (determined without regard to this paragraph (a)(5)) for any five taxable years (whether or not consecutive) during the ten taxable years that immediately precede the taxable year;

(6) The activity is a personal service activity (within the meaning of paragraph (d) of this section), and the individual materially participated in the activity for any three taxable years (whether or not consecutive) preceding the taxable year; or

(7) Based on all of the facts and circumstances (taking into account the rules in paragraph (b) of this section), the individual participates in the activity on a regular, continuous, and substantial basis during such year.

(b) *Facts and circumstances* —

(1) *In general.* [Reserved]

(2) *Certain participation insufficient to constitute material participation under this paragraph (b)* —

(i) *Participation satisfying standards not contained in section 469.* Except as provided in section 469(h)(3) and paragraph (h)(2) of this section (relating to certain retired individuals and surviving spouses in the case of farming activities), the fact that an individual satisfies the requirements of any participation standard (whether or not referred to as “material participation”) under any provision (including sections 1402 and 2032A and the regulations thereunder) other than section 469 and the regulations thereunder shall not be taken into account in determining whether such individual materially participates in any activity for any taxable year for purposes of section 469 and the regulations thereunder.

(ii) *Certain management activities.* An individual's services performed in the management of an activity shall not be taken into account in determining whether such individual is treated as materially participating in such activity for the taxable year under paragraph (a)(7) of this section unless, for such taxable year—

(A) No person (other than such individual) who performs services in connection with the management of the activity receives compensation described in section 911(d)(2)(A) in consideration for such services; and

(B) No individual performs services in connection with the management of the activity that exceed (by hours) the amount of such services performed by such individual.

(iii) *Participation less than 100 hours.* If an individual participates in an activity for 100 hours or less during the taxable year, such individual shall not be treated as materially participating in such activity for the taxable year under paragraph (a)(7) of this section.

(c) *Significant participation activity* —

(1) *In general.* For purposes of paragraph (a)(4) of this section, an activity is a significant participation activity of an individual if and only if such activity—

(i) Is a trade or business activity (within the meaning of § 1.469-1T(e)(2)) in which the individual significantly participates for the taxable year; and

(ii) Would be an activity in which the individual does not materially participate for the taxable year if material participation for such year were determined without regard to paragraph (a)(4) of this section.

(2) ***Significant participation.*** An individual is treated as significantly participating in an activity for a taxable year if and only if the individual participates in the activity for more than 100 hours during such year.

(d) ***Personal service activity.*** An activity constitutes a personal service activity for purposes of paragraph (a)(6) of this section if such activity involves the performance of personal services in—

(1) The fields of health, law, engineering, architecture, accounting, actuarial science, performing arts, or consulting; or

(2) Any other trade or business in which capital is not a material income-producing factor.

(e) ***Treatment of limited partners*** —

(1) ***General rule.*** Except as otherwise provided in this paragraph (e), an individual shall not be treated as materially participating in any activity of a limited partnership for purposes of applying section 469 and the regulations thereunder to—

(i) The individual's share of any income, gain, loss, deduction, or credit from such activity that is attributable to a limited partnership interest in the partnership; and

(ii) Any gain or loss from such activity recognized upon a sale or exchange of such an interest.

(2) ***Exceptions.*** Paragraph (e)(1) of this section shall not apply to an individual's share of income, gain, loss, deduction, and credit for a taxable year from any activity in which the individual would be treated as materially participating for the taxable year under paragraph (a)(1), (5), or (6) of this section if the individual were not a limited partner for such taxable year.

(3) ***Limited partnership interest*** —

(i) ***In general.*** Except as provided in paragraph (e)(3)(ii) of this section, for purposes of section 469(h)(2) and this paragraph (e), a partnership interest shall be treated as a limited partnership interest if—

(A) Such interest is designated a limited partnership interest in the limited partnership agreement or the certificate of limited partnership, without regard to whether the liability of the holder of such interest for obligations of the partnership is limited under the applicable State law; or

(B) The liability of the holder of such interest for obligations of the partnership is limited, under the law of the State in which the partnership is organized, to a determinable fixed amount (for example, the sum of the holder's capital contributions to the partnership and contractural obligations to make additional capital contributions to the partnership).

(ii) ***Limited partner holding general partner interest.*** A partnership interest of an individual shall not be treated as a limited partnership interest for the individual's taxable year if the individual is a general partner in the partnership at all times during the partnership's taxable year ending with or within the individual's taxable year (or the portion of the partnership's taxable year during which the individual (directly or indirectly) owns such limited partnership interest).

(f) ***Participation*** —

(1) [Reserved]. See § 1.469-5(f)(1) for rules relating to this paragraph.

(2) *Exceptions* —

(i) ***Certain work not customarily done by owners.*** Work done in connection with an activity shall not be treated as participation in the activity for purposes of this section if—

(A) Such work is not of a type that is customarily done by an owner of such an activity; and

(B) One of the principal purposes for the performance of such work is to avoid the disallowance, under section 469 and the regulations thereunder, of any loss or credit from such activity.

(ii) *Participation as an investor* —

(A) ***In general.*** Work done by an individual in the individual's capacity as an investor in an activity shall not be treated as participation in the activity for purposes of this section unless the individual is directly involved in the day-to-day management or operations of the activity.

(B) ***Work done in individual's capacity as an investor.*** For purposes of this paragraph (f)(2)(ii), work done by an individual in the individual's capacity as an investor in an activity includes—

(*1*) Studying and reviewing financial statements or reports on operations of the activity;

(*2*) Preparing or compiling summaries or analyses of the finances or operations of the activity for the individual's own use; and

(*3*) Monitoring the finances or operations of the activity in a non-managerial capacity.

(3) ***Participation of spouse.*** In the case of any person who is a married individual (within the meaning of section 7703) for the taxable year, any participation by such person's spouse in the activity during the taxable year (without regard to whether the spouse owns an interest in the activity and without regard to whether the spouses file a joint return for the taxable year) shall be treated, for purposes of applying section 469 and the regulations thereunder to such person, as participation by such person in the activity during the taxable year.

(4) ***Methods of proof.*** The extent of an individual's participation in an activity may be established by any reasonable means. Contemporaneous daily time reports, logs, or similar documents are not required if the extent of such participation may be established by other reasonable means. Reasonable means for purposes of this paragraph may include but are not limited to the identification of services performed over a period of time and the approximate number of hours spent performing such services during such period, based on appointment books, calendars, or narrative summaries.

(g) ***Material participation of trusts and estates.*** [Reserved]

(h) *Miscellaneous rules* —

(1) ***Participation of corporations.*** For rules relating to the participation in an activity of a personal service corporation (within the meaning of § 1.468-1T(g)(2)(i)) or a closely held corporation (within the meaning of § 1.469-1T(g)(2)(ii)), see § 1.469-1T(g)(3).

(2) ***Treatment of certain retired farmers and surviving spouses of retired or disabled farmers.*** An individual shall be treated as materially participating for a taxable year in any trade or business activity of farming if paragraph (4) or (5) of section 2032A(b) would cause the requirements of section 2032A(b)(1)(C)(ii) to be met with respect to real property used in such activity had the individual died during such taxable year.

(3) ***Coordination with rules governing the treatment of passthrough entities.*** [Reserved]. See § 1.469-5(h)(3) for rules relating to this paragraph.

(i) [Reserved]

(j) ***Material participation for preceding taxable years.*** [Reserved]. See § 1.469-5(j) for rules relating to this paragraph.

(k) ***Examples.*** The following examples illustrate the application of this section:

Example 1. A, a calendar year individual, owns all of the stock of X, a C corporation. X is the general partner, and A is the limited partner, in P, a calendar year partnership. P has a single activity, a restaurant, which is a trade or business activity (within the meaning of § 1.469-1T(e)(2)). During the taxable year, A works for an average of 30 hours per week in connection with P's restaurant activity. Under paragraphs (a)(1) and (e)(2) of this section, A is treated as materially participating in the activity for the taxable year because A participates in the restaurant activity during such year for more than 500 hours. In addition, under § 1.469-1T(g)(3)(i), A's participation will cause X to be treated as materially participating in the restaurant activity.

Example 2. The facts are the same as in Example 1, except that the partnership agreement provides that P's restaurant activity is to be managed by X, and A's work in the activity is performed pursuant to an employment contract between A and X. Under paragraph (f)(1) of this section, work done by A in connection with the activity in any capacity is treated as participation in the activity by A. Accordingly, the conclusion is the same as in Example 1. The conclusion would be the same if A owned no stock in X at any time, although in that case A's participation would not be taken into account in determining whether X materially participates in the restaurant activity.

Example 3. B, an individual, is employed fulltime as a carpenter. B also owns an interest in a partnership which is engaged in a van conversion activity, which is a trade or business activity (within the meaning of § 1.469-1T(e)(2)). B and C, the other partner, are the only participants in the activity for the taxable year. The activity is conducted entirely on Saturdays. Each Saturday throughout the taxable year, B and C work for eight hours in the activity. Although B does not participate in the activity for more than 500 hours during the taxable year, under paragraph (a)(3) of this section, B is treated for such year as materially participating in the activity because B participates in the activity for more than 100 hours during the taxable year, and B's participation in the activity for such year is not less than the participation of any other person in the activity for such year.

Example 4. C, an individual, is employed full-time as an accountant. C also owns interests in a restaurant and a shoe store. The restaurant and shoe store are trade or business activities (within the meaning of § 1.469-1T(e)(2)) that are treated as separate activities under the rules to be contained in § 1.469-4T. Each activity has several full-time employees. During the taxable year, C works in the restaurant activity for 400 hours and in the shoe store activity for 150 hours. Under paragraph (c) of this section, both the restaurant and shoe store activities are significant participation activities of C for the taxable year. Accordingly, since C's aggregate participation in the restaurant and shoe store activities during the taxable year exceeds 500 hours, C is treated under paragraph (a)(4) of this section as materially participating in both activities.

Example 5. [Reserved]. See § 1.469-5(k) *Example 5* for this example.

Example 6. The facts are the same as in Example 5, except that D does not acquire any stock in the S corporation until 1994. Under paragraph (f)(1) of this section, D is not treated as participating in the activity for any taxable year prior to 1994 because D does not own as interest in the activity for any such taxable year. Accordingly, D materially participates in the activity for only one taxable year prior to 1995, and D is not treated under paragraph (a)(5) of this section as materially participating in the activity for 1995 or subsequent taxable years.

Example 7. (i) E, a married individual filing a separate return for the taxable year, is employed full-time as an attorney. E also owns an interest in a professional football team that is a trade or business activity (within the meaning of § 1.469-1T(e)(2)). E does no work in connection with this activity. E anticipates that, for the taxable year, E's deductions from the activity will exceed E's gross income from the activity and that, if E does not materially participate in the activity for the taxable year, part or all of F's passive activity loss for the taxable year will be disallowed under § 1.469-1T(a)(1)(i). Accordingly, E pays E's spouse to work as an office receptionist in connection with the activity for an average of 15 hours per week during the taxable year.
(ii) Under paragraph (f)(3) of this section any participation in the activity by E's spouse is treated as participation in the activity by E. However, under paragraph (f)(2)(i) of this section, the work done by E's spouse is not treated as participation in the activity because work as an office receptionist is not work of a type customarily done by an owner of a football team, and one of E's principal purposes for paying E's spouse to do this work is to avoid the disallowance under § 1.469-1T(a)(1)(i) of E's passive activity loss. Accordingly, E is not treated as participating in the activity for the taxable year.

Example 8. (i) F, an individual, owns an interest in a partnership that feeds and sells cattle. The general partner of the partnership periodically mails F a letter setting forth certain proposed actions and decisions with respect to the cattle-feeding operation. Such actions and decisions include, for example, what kind of feed to purchase, how much to purchase, and when to purchase it, how often to feed cattle, and when to sell cattle. The letters explain the proposed actions and decisions, emphasize that taking or not taking a particular action or decision is solely within the discretion of F and other partners, and ask F to indicate a decision with respect to each proposed action by answering certain questions. The general partner receives a fee that constitutes earned income (within the meaning of section 911 (d)(2)(A)) for managing the cattle-feeding operation. F is not treated as materially participating in the cattle-feeding operation under paragraph (a) (1) through (6) of this section.
(ii) F's only participation in the cattle-feeding operation is to make certain managerial decisions. Under paragraph (b)(2)(ii) of this section, such management services are not taken into account in determining whether the taxpayer is treated as materially participating in the activity for a taxable year under paragraph (a)(7) of this section, if any other person performs services in connection with the management of the activity and receives compensation described in section 911(d)(2)(A) for such services. Therefore, F is not treated as materially participating for the taxable year in the cattle-feeding operation.

[T.D. 8175, 53 FR 5725, Feb. 25, 1988; 53 FR 15494, Apr. 29, 1988, as amended by T.D. 8253, 54 FR 20565, May 12, 1989; T.D. 8417, 57 FR 20759, May 15, 1992; 61 FR 14247, Apr. 1, 1996]

§ 1.469-6 Treatment of losses upon certain dispositions. [Reserved]

§ 1.469-7 Treatment of self-charged items of interest income and deduction.

(a) ***In general*** —

(1) ***Applicability and effect of rules.*** This section sets forth rules that apply, for purposes of section 469 and the regulations thereunder, in the case of a lending transaction (including guaranteed payments for the use of capital under section 707(c)) between a taxpayer and a passthrough entity in which the taxpayer owns a direct or indirect interest, or between certain passthrough entities. The rules apply only to items of interest income and interest expense that are recognized in the same taxable year. The rules—

(i) Treat certain interest income resulting from these lending transactions as passive activity gross income;

(ii) Treat certain deductions for interest expense that is properly allocable to the interest income as passive activity deductions; and

(iii) Allocate the passive activity gross income and passive activity deductions resulting from this treatment among the taxpayer's activities.

(2) ***Priority of rules in this section.*** The character of amounts treated under the rules of this section as passive activity gross income and passive activity deductions and the activities to which these amounts are allocated are determined under the rules of this section and not under the rules of §§ 1.163-8T, 1.469-2(c) and (d), and 1.469-2T(c) and (d).

(b) ***Definitions.*** The following definitions set forth the meaning of certain terms for purposes of this section:

(1) ***Passthrough entity.*** The term *passthrough entity* means a partnership or an S corporation.

(2) ***Taxpayer's share.*** A *taxpayer's share* of an item of income or deduction of a passthrough entity is the amount treated as an item of income or deduction of the taxpayer for the taxable year under section 702 (relating to the treatment of distributive shares of partnership items as items of partners) or section 1366 (relating to the treatment of pro rata shares of S corporation items as items of shareholders).

(3) ***Taxpayer's indirect interest.*** The taxpayer has an indirect interest in an entity if the interest is held through one or more passthrough entities.

(4) ***Entity taxable year.*** In applying this section for a taxable year of a taxpayer, the term *entity taxable year* means the taxable year of the passthrough entity for which the entity reports items that are taken into account under section 702 or section 1366 for the taxpayer's taxable year.

(5) ***Deductions for a taxable year.*** The term *deductions for a taxable year* means deductions that would be allowable for the taxable year if the taxpayer's taxable income for all taxable years were determined without regard to sections 163(d), 170(b), 469, 613A(d), and 1211.

(c) ***Taxpayer loans to passthrough entity*** —

(1) ***Applicability.*** Except as provided in paragraph (g) of this section, this paragraph (c) applies with respect to a taxpayer's interest in a passthrough entity (borrowing entity) for a taxable year if—

(i) The borrowing entity has deductions for the entity taxable year for interest charged to the borrowing entity by persons that own direct or indirect interests in the borrowing entity at any time during the entity taxable year (the borrowing entity's self-charged interest deductions);

(ii) The taxpayer owns a direct or an indirect interest in the borrowing entity at any time during the entity taxable year and has gross income for the taxable year from interest charged to the borrowing entity by the taxpayer or a passthrough entity through which the taxpayer holds an interest in the borrowing entity (the taxpayer's income from interest charged to the borrowing entity); and

(iii) The taxpayer's share of the borrowing entity's self-charged interest deductions includes passive activity deductions.

(2) ***General rule.*** If any of the borrowing entity's self-charged interest deductions are allocable to an activity for a taxable year in which this paragraph (c) applies, the passive activity gross income and passive activity deductions from that activity are determined under the following rules—

(i) The applicable percentage of each item of the taxpayer's income for the taxable year from interest charged to the borrowing entity is treated as passive activity gross income from the activity; and

(ii) The applicable percentage of each deduction for the taxable year for interest expense that is properly allocable (within the meaning of paragraph (f) of this section) to the taxpayer's income from the interest charged to the borrowing entity is treated as a passive activity deduction from the activity.

(3) ***Applicable percentage.*** In applying this paragraph (c) with respect to a taxpayer's interest in a borrowing entity, the applicable percentage is separately determined for each of the taxpayer's activities. The percentage applicable to an activity for a taxable year is obtained by dividing—

(i) The taxpayer's share for the taxable year of the borrowing entity's self-charged interest deductions that are treated as passive activity deductions from the activity by

(ii) The greater of—

(A) The taxpayer's share for the taxable year of the borrowing entity's aggregate self-charged interest deductions for all activities (regardless of whether these deductions are treated as passive activity deductions); or

(B) The taxpayer's aggregate income for the taxable year from interest charged to the borrowing entity for all activities of the borrowing entity.

(d) ***Passthrough entity loans to taxpayer*** —

(1) ***Applicability.*** Except as provided in paragraph (g) of this section, this paragraph (d) applies with respect to a taxpayer's interest in a passthrough entity (lending entity) for a taxable year if—

(i) The lending entity has gross income for the entity taxable year from interest charged by the lending entity to persons that own direct or indirect interests in the lending entity at any time during the entity taxable year (the lending entity's self-charged interest income);

(ii) The taxpayer owns a direct or an indirect interest in the lending entity at any time during the entity taxable year and has deductions for the taxable year for interest charged by the lending entity to the taxpayer or a passthrough entity through which the taxpayer holds an interest in the lending entity (the taxpayer's deductions for interest charged by the lending entity); and

(iii) The taxpayer's deductions for interest charged by the lending entity include passive activity deductions.

(2) ***General rule.*** If any of the taxpayer's deductions for interest charged by the lending entity are allocable to an activity for a taxable year in which this paragraph (d) applies, the passive activity gross income and passive activity deductions from that activity are determined under the following rules—

(i) The applicable percentage of the taxpayer's share for the taxable year of each item of the lending entity's self-charged interest income is treated as passive activity gross income from the activity.

(ii) The applicable percentage of the taxpayer's share for the taxable year of each deduction for interest expense that is properly allocable (within the meaning of paragraph (f) of this section) to the lending entity's self-charged interest income is treated as a passive activity deduction from the activity.

(3) ***Applicable percentage.*** In applying this paragraph (d) with respect to a taxpayer's interest in a lending entity, the applicable percentage is separately determined for each of the taxpayer's activities. The percentage applicable to an activity for a taxable year is obtained by dividing—

(i) The taxpayer's deductions for the taxable year for interest charged by the lending entity, to the extent treated as passive activity deductions from the activity; by

(ii) The greater of—

(A) The taxpayer's aggregate deductions for all activities for the taxable year for interest charged by the lending entity (regardless of whether these deductions are treated as passive activity deductions); or

(B) The taxpayer's aggregate share for the taxable year of the lending entity's self-charged interest income for all activities of the lending entity.

(e) ***Identically-owned passthrough entities*** —

(1) ***Applicability.*** Except as provided in paragraph (g) of this section, this paragraph (e) applies with respect to lending transactions between passthrough entities if each owner of the borrowing entity has the same proportionate ownership interest in the lending entity.

(2) ***General rule.*** To the extent an owner shares in interest income from a loan between passthrough entities described in paragraph (e)(1) of this section, the owner is treated as having made the loan to the borrowing passthrough entity and paragraph (c) of this section applies to determine the applicable percentage of portfolio income of properly allocable interest expense that is recharacterized as passive.

(3) ***Example.*** The following example illustrates the application of this paragraph (e):

> *Example.* (i) A and B, both calendar year taxpayers, each own a 50-percent interest in the

capital and profits of partnerships RS and XY, both calendar year partnerships. Under the partnership agreements of RS and XY, A and B are each entitled to a 50-percent distributive share of each partnership's income, gain, loss, deduction, or credit. RS makes a $20,000 loan to XY and XY pays RS $2,000 of interest for the taxable year. A's distributive share of interest income attributable to this loan is $1,000 (50 percent × $2,000). XY uses all of the proceeds received from RS is a passive activity. A's distributive share of interest expense attributable to the loan is $1,000 (50 percent × $2,000).
(ii) This paragraph (e) applies in determining A's passive activity gross income because RS and XY are identically-owned passthrough entities as described in paragraph (e)(1) of this section. Under paragraph (e)(2) of this section, the RS-to-XY loan is treated as if A made the loan to XY. Therefore, A must apply paragraph (c) of this section to determine the applicable percentage of portfolio income that is recharacterized as passive income.

(iii) Paragraph (c) of this section applies in determining A's passive activity gross income because: XY has deductions for interest charged to XY by RS for the taxable year (XY's self-charged interest deductions); A owns an interest in XY during XY's taxable year and has gross income for the taxable year from interest charged to XY by RS; and A's share of XY's self-charged interest deductions includes passive activity deductions. See paragraph (c)(1) of this section.

(iv) Under paragraph (c)(2)(i) of this section, the applicable percentage of A's interest income is recharacterized as passive activity gross income from the activity. Paragraph (c)(3) of this section provides that the applicable percentage is obtained by dividing A's share for the taxable year of XY's self-charged interest deductions that are treated as passive activity deductions from the activity ($1,000) by the greater of A's share for the taxable year of XY's self-charged interest deductions ($1,000), or A's income for the year from interest charged to XY ($1,000). Thus, A's applicable percentage is 100 percent ($1,000/$1,000), and $1,000 (100 percent × $1,000) of A's income from interest charged to XY is treated as passive activity gross income from the passive activity.

(f) ***Identification of properly allocable deductions.*** For purposes of this section, interest expense is properly allocable to an item of interest income if the interest expense is allocated under § 1.163-8T to an expenditure that—

(1) Is properly chargeable to capital account with respect to the investment producing the item of interest income; or

(2) May reasonably be taken into account as a cost of producing the item of interest income.

(g) ***Election to avoid application of the rules of this section*** —

(1) ***In general.*** Paragraphs (c), (d) and (e) of this section shall not apply with respect to any taxpayer's interest in a passthrough entity for a taxable year if the passthrough entity has made, under this paragraph (g), an election that applies to the entity's taxable year.

(2) ***Form of election.*** A passthrough entity makes an election under this paragraph (g) by attaching to its return (or amended return) a written statement that includes the name, address, and taxpayer identification number of the passthrough entity and a declaration that an election is being made under this paragraph (g).

(3) ***Period for which election applies.*** An election under this paragraph (g) made with a return (or amended return) for a taxable year applies to that taxable year and all subsequent taxable years that end before the date on which the election is revoked.

(4) ***Revocation.*** An election under this paragraph (g) may be revoked only with the consent of the Commissioner.

(h) ***Examples.*** The following examples illustrate the principles of this section. The examples assume for purposes of simplifying the presentation, that the lending transactions described do not result in foregone interest (within the meaning of section 7872(e)(2)), original issue discount (within the meaning of section 1273), or total unstated interest (within the meaning of section 483(b)).

Example 1. (i) A and B, two calendar year individuals, each own 50-percent interests in the capital, profits and losses of AB, a calendar year partnership. AB is engaged in a single rental activity within the meaning of § 1.469-1T(e)(3). AB borrows $50,000 from A and uses the loan proceeds in the rental activity. AB pays $5,000 of interest to A for the taxable year. A and B each incur $2,500 of interest expense as their distributive share of AB's interest expense.
(ii) AB has self-charged interest deductions for the taxable year (*i.e.,* the deductions for interest charged to AB by A); A owns a direct interest in AB during AB's taxable year and has income for A's taxable year from interest charged to AB; and A's share of AB's self-charged interest deductions includes passive activity deductions. Accordingly, paragraph (c) of this section applies in determining A's passive activity gross income. See paragraph (c)(1) of this section.

(iii) Under paragraph (c)(2)(i) of this section, the applicable percentage of A's interest income is recharacterized as passive activity gross income from AB's rental activity. Paragraph (c)(3) of this section provides that the applicable percentage is obtained by dividing A's share for the taxable year of AB's self-charged interest deductions that are treated as passive activity deductions from the activity ($2,500) by the greater of A's share for the taxable year of AB's self-charged interest deductions ($2,500), or A's income for the taxable year from interest charged to AB ($5,000). Thus, A's applicable percentage is 50 percent ($2,500/$5,000), and $2,500 (50 percent × $5,000) of A's income from interest charged to AB is treated as passive activity gross income from the passive activity A conducts through AB.

(iv) Because B does not have any gross income for the year from interest charged to AB, this section does not apply to B. See paragraph (c)(1)(ii) of this section.

Example 2. (i) C and D, two calendar year taxpayers, each own 50-percent interests in the capital and profits of CD, a calendar year partnership. CD is engaged in a single rental activity, within the meaning of § 1.469-1T(e)(3). C obtains a $10,000 loan from a third-party lender, and pays the lender $900 in interest for the taxable year. C lends the $10,000 to CD, and receives $1,000 of interest income from CD for the taxable

year. D lends $20,000 to CD and receives $2,000 of interest income from CD for the taxable year. CD uses all of the proceeds in the rental activity. C and D are each allocated $1,500 (50 percent × $3,000) of interest expense as their distributive share of CD's interest expense for the taxable year.
(ii) CD has self-charged interest deductions for the taxable year (i.e., deductions for interest charged to CD by C and D); C and D each own direct interests in CD during CD's taxable year and have gross income for the taxable year from interest charged to CD; and both C's and D's shares of CD's self-charged interest deductions include passive activity deductions. Accordingly, paragraph (c) of this section applies in determining C's and D's passive activity gross income. See paragraph (c)(1) of this section.

(iii) Under paragraph (c)(2)(i) of this section, the applicable percentage of each partner's interest income is recharacterized as passive activity gross income from CD's rental activity. Paragraph (c)(3) of this section provides that C's applicable percentage is obtained by dividing C's share for the taxable year of CD's self-charged interest deductions that are treated as passive activity deductions from the activity ($1,500) by the greater of C's share for the taxable year of CD's self-charged interest deductions ($1,500), or C's income for the taxable year from interest charged to CD ($1,000). Thus, C's applicable percentage is 100 percent ($1,500/$1,500), and all of C's income from interest charged to CD ($1,000) is treated as passive activity gross income from the passive activity C conducts through CD. Similarly, D's applicable percentage is obtained by dividing D's share for the taxable year of CD's self-charged interest deductions that are treated as passive activity deductions from the activity ($1,500) by the greater of D's share for the taxable year of CD's self-charged interest deductions ($1,500), or D's income for the taxable year from interest charged to CD ($2,000). Thus, D's applicable percentage is 75 percent ($1,500/$2,000), and $1,500 (75 percent × $2,000) of D's income from interest charged to CD is treated as passive activity gross income from the rental activity.

(iv) The $900 of interest expense that C pays to the third-party lender is allocated under § 1.163-8T(c)(1) to an expenditure that is properly chargeable to capital account with respect to the loan to CD. Thus, the expense is properly allocable to the interest income C receives from CD (see paragraph (f) of this section). Under paragraph (c)(2)(ii) of this section, the applicable percentage of C's deductions for the taxable year for interest expense that is properly allocable to C's income from interest charged to CD is recharacterized as a passive activity deduction from CD's rental activity. Accordingly, all of C's $900 interest deduction is treated as a passive activity deduction from the rental activity.

Example 3. (i) E and F, calendar year taxpayers, each own 50 percent of the stock of X, a calendar year S corporation. E borrows $30,000 from X, and pays X $3,000 of interest for the taxable year. E uses $15,000 of the loan proceeds to make a personal expenditure (as defined in § 1.163-8T(b)(5)), and uses $15,000 of loan proceeds to purchase a trade or business activity in which E does not materially participate (within the meaning of § 1.469-5T) for the taxable year. E and F each receive $1,500 as their pro rata share of X's interest income from the loan for the taxable year.

(ii) X has gross income for X's taxable year from interest charged to E (X's self-charged interest income); E owns a direct interest in X during X's taxable year and has deductions for the taxable year for interest charged by X; and E's deductions for interest charged by X include passive activity deductions. Accordingly, paragraph (d) of this section applies in determining E's passive activity gross income. See paragraph (d)(1) of this section.

(iii) Under the rules in paragraph (d)(2)(i) of this section, the applicable percentage of E's share of X's self-charged interest income is recharacterized as passive activity gross income from the activity. Paragraph (d)(3) of this section provides that the applicable percentage is obtained by dividing E's deductions for the taxable year for interest charged by X, to the extent treated as passive activity deductions from the activity ($1,500), by the greater of E's deductions for the taxable year for interest charged by X, regardless of whether those deductions are treated as passive activity deductions ($3,000), or E's share for the taxable year of X's self-charged interest income ($1,500). Thus, E's applicable percentage is 50 percent ($1,500/$3,000), and $750 (50 percent × $1,500) of E's share of X's self-charged interest income is treated as passive activity gross income.

(iv) Because F does not have any deductions for the taxable year for interest charged by X, this section does not apply to F. See paragraph (d)(1)(ii) of this section.

Example 4. (i) This *Example 4* illustrates the application of this section to a partner that has a different taxable year from the partnership. The facts are the same as in *Example 1* except as follows: Partnership AB has properly adopted a fiscal year ending June 30 for federal tax purposes; AB borrows the $50,000 from A on October 1, 1990; and under the terms of the loan, AB must pay A $5,000 in interest annually, in quarterly installments, for a term of 2 years.
(ii) For A's taxable years from 1990 through 1993 and AB's corresponding entity taxable years (as defined in paragraph (b)(4) of this section) A's interest income and AB's interest deductions from the loan are as follows:

	A's interest income	AB's interest deductions
1990	$1,250	0
1991	5,000	$3,750
1992	3,750	5,000
1993	0	1,250

(iii) For A's taxable year ending December 31, 1990, the corresponding entity taxable year is AB's taxable year ending June 30, 1990. Because AB does not have any deductions for the entity taxable year for interest charged to AB by A, paragraph (c) of this section does not apply in determining A's passive activity gross income for 1990 (see paragraph (c)(1)(i) of this section). Accordingly, A reports $1,250 of portfolio

income on A's 1990 income tax return.
(iv) For A's taxable year ending December 31, 1991, the corresponding entity taxable year ends on June 30, 1991. AB has $3,750 of deductions for the entity taxable year for interest charged to AB by A (AB's self-charged interest deductions); A owns a direct interest in AB during the entity taxable year and has $5,000 of interest income for A's taxable year from interest charged to AB; and A's share of AB's self-charged interest deductions includes passive activity deductions. Accordingly, paragraph (c) of this section applies in determining A's passive activity gross income.

(v) Under paragraph (c)(2)(i) of this section, the applicable percentage of A's 1991 interest income is recharacterized as passive activity gross income from the activity. Paragraph (c)(3) of this section provides that the applicable percentage is obtained by dividing A's share for A's 1991 taxable year of AB's self-charged interest deductions that are treated as passive activity deductions from the activity (50 percent × $3,750 = $1,875) by the greater of A's share for A's taxable year of AB's self-charged interest deductions ($1,875), or A's income for A's taxable year from interest charged to AB ($5,000). Thus, A's applicable percentage is 37.5 percent ($1,875/$5,000), and $1,875 (37.5 percent × $5,000) of A's income from interest charged to AB is treated as passive activity gross income from the passive activity A conducts through AB.

(vi) For A's taxable year ending December 31, 1992, the corresponding entity taxable year ends on June 30, 1992. AB has $5,000 of deductions for the entity taxable year for interest charged to AB by A (AB's self-charged interest deductions); A owns a direct interest in AB during the entity taxable year and has $3,750 of gross income for A's taxable year from interest charged to AB; and A's share of AB's self-charged interest deductions includes passive activity deductions. Accordingly, paragraph (c) of this section applies in determining A's passive activity gross income.

(vii) The applicable percentage for 1992 is obtained by dividing A's share for A's 1992 taxable year of AB's self-charged interest deductions that are treated as passive activity deductions from the activity ($2,500) by the greater of A's share for A's taxable year of AB's self-charged interest deductions ($2,500), or A's income for A's taxable year from interest charged to AB ($3,750). Thus, A's applicable percentage is $66^{2}/_{3}$ percent ($2,500/$3,750), and $2,500 ($66^{2}/_{3}$ percent × $3,750) of A's income from interest charged to AB is treated as passive activity gross income from the passive activity A conducts through AB.

(viii) Paragraph (c) of this section does not apply in determining A's passive activity gross income for the taxable year ending December 31, 1993, because A has no gross income for the taxable year from interest charged to AB (see paragraph (c)(1)(ii) of this section). A's share of AB's self-charged interest deductions for the entity taxable year ending June 30, 1993 ($625) is taken into account as a passive activity deduction on A's 1993 income tax return.

(ix) Because B does not have any gross income from interest charged to AB for any of the taxable years, this section does not apply to B. See paragraph (c)(1)(ii) of this section.

Example 5. (i) This *Example 5* illustrates the application of the rules of this section in the case of a taxpayer who has an indirect interest in a partnership. G, a calendar year taxpayer, is an 80-percent partner in partnership UTP. UTP owns a 25-percent interest in the capital and profits of partnership LTP. UTP and LTP are both calendar year partnerships. The partners of LTP conduct a single passive activity through LTP. UTP obtains a $10,000 loan from a bank, and pays the bank $1,000 of interest per year. G's distributive share of the interest paid to the bank is $800 (80 percent × $1,000). UTP uses the $10,000 debt proceeds and another $10,000 of cash to make a loan to LTP, and LTP pays UTP $2,000 of interest for the taxable year. G's distributive share of interest income attributable to the UTP-to-LTP loan is $1,600 (80 percent × $2,000). LTP uses all of the proceeds received from UTP in the passive activity. UTP's distributive share of interest expense attributable to the UTP-to-LTP loan is $500 (25 percent × $2,000). G's distributive share of interest expense attributable to the UTP-to-LTP loan is $400 (80 percent × $500).
(ii) LTP has deductions for interest charged to LTP by UTP for the taxable year (LTP's self-charged interest deductions); G owns an indirect interest in LTP during LTP's taxable year and has gross income for the taxable year from interest charged to LTP by a passthrough entity (UTP) through which G owns an interest in LTP; and G's share of LTP's self-charged interest deductions includes passive activity deductions. Accordingly, paragraph (c) of this section applies in determining G's passive activity gross income. See paragraph (c)(1) of this section.

(iii) Under paragraph (c)(2)(i) of this section, the applicable percentage of G's interest income is recharacterized as passive activity gross income from the activity. Paragraph (c)(3) of this section provides that the applicable percentage is obtained by dividing G's share for the taxable year of LTP's self-charged interest deductions that are treated as passive activity deductions from the activity ($400) by the greater of G's share for the taxable year of LTP's self-charged interest deductions ($400), or G's income for the year from interest charged to LTP ($1,600). Thus, G's applicable percentage is 25 percent ($400/$1,600), and $400 (25 percent × $1,600) of G's income from interest charged to LTP is treated as passive activity gross income from the passive activity that G conducts through UTP and LTP.

(iv) G's $800 distributive share of the interest expense that UTP pays to the third-party lender is allocated under § 1.163-8T(c)(1) to an expenditure that is properly chargeable to capital account with respect to the loan to LTP. Thus, the expense is a deduction properly allocable to the interest income that G receives as a result of the UTP-to-LTP loan (see paragraph (f) of this section). Under paragraph (c)(2)(ii) of this section, the applicable percentage of G's deductions for the taxable year for interest expense that is properly allocable to G's income from interest charged by UTP to LTP is recharacterized as a passive activity deduction from LTP's passive activity. Accordingly, $200 (25 percent × $800) of G's interest deduction is treated as a passive activity deduction from LTP's activity.

Example 6. (i) This *Example 6* illustrates the application of the rules of this section in the case of a taxpayer who conducts two passive activities through a passthrough entity. J, a calendar year taxpayer, is the 100-percent shareholder of Y, a calendar year S corporation. J conducts two passive activities through Y: a rental activity and a trade or business activity in which J does not materially participate. Y borrows

$80,000 from J, and uses $60,000 of the loan proceeds in the rental activity and $20,000 of the loan proceeds in the passive trade or business activity. Y pays $8,000 of interest to J for the taxable year, and J incurs $8,000 of interest expense as J's distributive share of Y's interest expense.
(ii) Y has self-charged interest deductions for the taxable year (i.e., the deductions for interest charged to Y by J); J owns a direct interest in Y during Y's taxable year and has gross income for J's taxable year from interest charged to Y; and J's share of Y's self-charged interest deductions includes passive activity deductions. Accordingly, paragraph (c) of this section applies in determining J's passive activity gross income. See paragraph (c)(1) of this section.

(iii) Under paragraph (c)(2)(i) of this section, the applicable percentage of J's interest income is recharacterized as passive activity gross income attributable to the rental activity. Paragraph (c)(3) of this section provides that the applicable percentage is obtained by dividing J's share for the taxable year of Y's self-charged interest deductions that are treated as passive activity deductions from the rental activity ($6,000) by the greater of J's share for the taxable year of Y's self-charged interest deductions ($8,000), or J's income for the taxable year from interest charged to Y ($8,000). Thus, J's applicable percentage is 75 percent ($6,000/$8,000), and $6,000 (75 percent × $8,000) of J's income from interest charged to Y is treated as passive activity gross income from the rental activity J conducts through Y.

(iv) Under paragraph (c)(2)(i) of this section, the applicable percentage of J's interest income is recharacterized as passive activity gross income attributable to the passive trade or business activity. Paragraph (c)(3) of this section provides that the applicable percentage is obtained by dividing J's share for the taxable year of Y's self-charged interest deductions that are treated as passive activity deductions from the passive trade or business activity ($2,000) by the greater of J's share for the taxable year of Y's self-charged interest deductions ($8,000), or J's income for the taxable year from interest charged to Y ($8,000). Thus, J's applicable percentage is 25 percent ($2,000/$8,000), and $2,000 of J's income from interest charged to Y is treated as passive activity gross income from the passive trade or business activity J conducts through Y.

[T.D. 9013, 67 FR 54089, Aug. 21, 2002]

§ 1.469-8 Application of section 469 to trust, estates, and their beneficiaries. [Reserved]

§ 1.469-9 Rules for certain rental real estate activities.

(a) ***Scope and purpose.*** This section provides guidance to taxpayers engaged in certain real property trades or businesses on applying section 469(c)(7) to their rental real estate activities.

(b) ***Definitions.*** The following definitions apply for purposes of this section:

(1) ***Trade or business.*** A *trade or business* is any trade or business determined by treating the types of activities in § 1.469-4(b)(1) as if they involved the conduct of a trade or business, and any interest in rental real estate, including any interest in rental real estate that gives rise to deductions under section 212.

(2) ***Real property trade or business.*** The following terms have the following meanings in determining whether a trade or business is a real property trade or business for purposes of section 469(c)(7)(C) and this section.

(i) ***Real property*** —

(A) ***In general.*** The term *real property* includes land, buildings, and other inherently permanent structures that are permanently affixed to land. Any interest in real property, including fee ownership, co-ownership, a leasehold, an option, or a similar interest is real property under this section. Tenant improvements to land, buildings, or other structures that are inherently permanent or otherwise classified as real property under this section are real property for purposes of section 469(c)(7)(C). However, property manufactured or produced for sale that is not real property in the hands of the manufacturer or producer, but that may be incorporated into real property through installation or any similar process or technique by any person after the manufacture or production of such property (for example, bricks, nails, paint, and windowpanes), is not treated as real property in the hands of any person (including any person involved in the manufacture, production, sale, incorporation or installation of such property) prior to the completed incorporation or installation of such property into the real property for purposes of section 469(c)(7)(C) and this section.

(B) ***Land.*** The term *land* includes water and air space superjacent to land and natural products and deposits that are unsevered from the land. Natural products and deposits, such as plants, crops, trees, water, ores, and minerals, cease to be real property when they are harvested, severed, extracted, or removed from the land. Accordingly, any trade or business that involves the cultivation and harvesting of plants, crops, or certain types of trees in a farming operation as defined in section 464(e), or severing, extracting, or removing natural products or deposits from land is not a real property trade or business for purposes of section 469(c)(7)(C) and this section. The storage or maintenance of severed or extracted natural products or deposits, such as plants, crops, trees, water, ores, and minerals, in or upon real property does not cause the stored property to be recharacterized as real property, and any trade or business relating to or involving such storage or maintenance of severed or extracted natural products or deposits is not a real property trade or business, even though such storage or maintenance otherwise may occur upon or within real property.

(C) ***Inherently permanent structure.*** The term *inherently permanent structure* means any permanently affixed building or other permanently affixed structure. If the affixation is reasonably expected to last indefinitely, based on all the facts and circumstances, the affixation is considered permanent. However, an asset that serves an active function, such as an item of machinery or equipment (for example, HVAC system, elevator or escalator), is not a building or other inherently permanent structure, and therefore is not real property for purposes of section 469(c)(7)(C) and this section, even if such item of machinery or equipment is permanently affixed to or becomes incorporated within a building or other inherently permanent structure. Accordingly, a trade or business that involves the manufacture, installation, operation, maintenance, or repair of any asset that serves an active function will not be a real property trade or business, or a unit or component of another real property trade or business, for purposes of section 469(c)(7)(C) and this section.

(D) ***Building*** —

(*1*) ***In general.*** A *building* encloses a space within its walls and is generally covered by a roof or other external upper covering that protects the walls and inner space from the elements.

(*2*) ***Types of buildings.*** Buildings include the following assets if permanently affixed to land: Houses; townhouses; apartments; condominiums; hotels; motels; stadiums; arenas; shopping malls; factory and office buildings; warehouses; barns; enclosed garages; enclosed transportation stations and terminals; and stores.

(E) ***Other inherently permanent structures*** —

(*1*) ***In general.*** Other inherently permanent structures include the following assets if permanently affixed to land: Parking facilities; bridges; tunnels; roadbeds; railroad tracks; pipelines; storage structures such as silos and oil and gas storage tanks; and stationary wharves and docks.

(*2*) ***Facts and circumstances determination.*** The determination of whether an asset is an inherently permanent structure is based on all the facts and circumstances. In particular, the following factors must be taken into account:

(*i*) The manner in which the asset is affixed to land and whether such manner of affixation allows the asset to be easily removed from the land;

(*ii*) Whether the asset is designed to be removed or to remain in place indefinitely on the land;

(*iii*) The damage that removal of the asset would cause to the asset itself or to the land to which it is affixed;

(*iv*) Any circumstances that suggest the expected period of affixation is not indefinite (for example, a lease that requires or permits removal of the asset from the land upon the expiration of the lease); and

(*v*) The time and expense required to move the asset from the land.

(ii) ***Other definitions***

(A) ***Real property development.*** The term *real property development* means the maintenance and improvement of raw land to make the land suitable for subdivision, further development, or construction of residential or commercial buildings, or to establish, cultivate, maintain or improve timberlands (that is, land covered by timber-producing forest). Improvement of land may include any clearing (such as through the mechanical separation and removal of boulders, rocks, brush, brushwood, and underbrush from the land); excavation and gradation work; diversion or redirection of creeks, streams, rivers, or other sources or bodies of water; and the installation of roads (including highways, streets, roads, public sidewalks, and bridges), utility lines, sewer and drainage systems, and any other infrastructure that may be necessary for subdivision, further development, or construction of residential or commercial buildings, or for the establishment, cultivation, maintenance or improvement of timberlands.

(B) ***Real property redevelopment.*** The term *real property redevelopment* means the demolition, deconstruction, separation, and removal of existing buildings, landscaping, and infrastructure on a parcel of land to return the land to a raw condition or otherwise prepare the land for new development or construction, or for the establishment and cultivation of new timberlands.

(C) through (G) [Reserved]

(H) ***Real property operation.*** The term *real property operation* means handling, by a direct or indirect owner of the real property, the day-to-day operations of a trade or business, under paragraph (b)(1) of this section, relating to the maintenance and occupancy of the real property that affect the availability and functionality of that real property used, or held out for use, by customers where payments received from customers are principally for the customers' use of the real property. The principal purpose of such business operations must be the provision of the use of the real property, or physical space accorded by or within the real property, to one or more customers, and not the provision of other significant or extraordinary personal services, under § 1.469-1T(e)(3)(iv) and (v), to customers in conjunction with the customers' incidental use of the real property or physical space. If the real property or physical space is provided to a customer to be used to carry on the customer's trade or business, the principal purpose of the business operations must be to provide the customer with exclusive use of the real property or physical space in furtherance of the customer's trade or business, and not to provide other significant or extraordinary personal services to the customer in addition to or in conjunction with the use of the real property or physical space, regardless of whether the customer pays for the services separately. However, for purposes of and with respect to the preceding sentence, other incidental personal services may be provided to the customer in conjunction with the use of real property or physical space, as long as such services are insubstantial in relation to the customer's use of the real property or physical space.

(I) ***Real property management.*** The term *real property management* means handling, by a professional manager, the day-to-day operations of a trade or business, under paragraph (b)(1) of this section, relating to the maintenance and occupancy of real property that affect the availability and functionality of that property used, or held out for use, by customers where payments received from customers are principally for the customers' use of the real property. The principal purpose of such business operations must be the provision of the use of the real property, or physical space accorded by or within the real property, to one or more customers, and not the provision of other significant or extraordinary personal services, under § 1.469-1T(e)(3)(iv) and (v), to customers in conjunction with the customers' incidental use of the real property or physical space. If the real property or physical space is provided to a customer to be used to carry on the customer's trade or business, the principal purpose of the business operations must be to provide the customer with exclusive use of the real property or physical space in furtherance of the customer's trade or business, and not to provide other significant or extraordinary personal services to the customer in addition to or in conjunction with the use of the real property or physical space, regardless of whether the customer pays for the services separately. However, for purposes of and with respect to the preceding sentence, other incidental personal services may be provided to the customer in conjunction with the use of real property or physical space, as long as such services are insubstantial in

relation to the customer's use of the real property or physical space. A professional manager is a person responsible, on a full-time basis, for the overall management and oversight of the real property or properties and who is not a direct or indirect owner of the real property or properties.

(iii) ***Examples.*** The following examples illustrate the operation of this paragraph (b)(2):

(A) ***Example 1.*** A owns farmland and uses the land in A's farming business to grow and harvest crops of various kinds. As part of this farming business, A utilizes a greenhouse that is an inherently permanent structure to grow certain crops during the winter months. Under the rules of this section, any trade or business that involves the cultivation and harvesting of plants, crops, or trees is not a real property trade or business for purposes of section 469(c)(7)(C) and this section, even though the cultivation and harvesting of crops occurs upon or within real property. Accordingly, under these facts, A is not engaged in a real property trade or business for purposes of section 469(c)(7)(C) and this section.

(B) ***Example 2.*** B is a retired farmer and owns farmland that B rents exclusively to C to operate a farm. The arrangement between B and C is a trade or business (under paragraph (b)(1) of this section) where payments by C are principally for C's use of B's real property. B also provides certain farm equipment for C's use. However, C is solely responsible for the maintenance and repair of the farm equipment along with any costs associated with operating the equipment. B also occasionally provides oral advice to C regarding various aspects of the farm operation, based on B's prior experience as a farmer. Other than the provision of this occasional advice, B does not provide any significant or extraordinary personal services to C in connection with the rental of the farmland to C. Under these facts, B is engaged in a real property trade or business (which does not include the use or deemed rental of any farm equipment) for purposes of section 469(c)(7)(C) and this section, and B's oral advice is an incidental personal service that B provides in conjunction with C's use of the real property. Nevertheless, under these facts, C is not engaged in a real property trade or business for purposes of section 469(c)(7)(C) and this section because C is engaged in the business of farming.

(C) ***Example 3.*** D owns a building in which D operates a restaurant and bar. Even though D provides customers with use of the physical space inside the building, D is not engaged in a trade or business where payments by customers are principally for the use of real property or physical space. Instead, the payments by D's customers are principally for the receipt of significant or extraordinary personal services (under § 1.469-1T(e)(3)(iv) and (v)), mainly food and beverage preparation and presentation services, and the use of the physical space by customers is incidental to the receipt of these personal services. Under the rules of this section, any trade or business that involves the provision of significant or extraordinary personal services to customers in conjunction with the customers' incidental use of real property or physical space is not a real property trade or business, even though the business operations occur upon or within real property. Accordingly, under these facts, D is not engaged in a real property trade or business for purposes of section 469(c)(7)(C) and this section.

(D) ***Example 4.*** E owns a majority interest in an S corporation, X, that is engaged in the trade or business of manufacturing industrial cooling systems for installation in commercial buildings and for other uses. E also owns a majority interest in an S corporation, Y, that purchases the industrial cooling systems from X and that installs, maintains, and repairs

those systems in both existing commercial buildings and commercial buildings under construction. Under the rules of this section, any trade or business that involves the manufacture, installation, operation, maintenance, or repair of any machinery or equipment that serves an active function will not be a real property trade or business (or a unit or component of another real property trade or business) for purposes of section 469(c)(7)(C) and this section, even though the machinery or equipment will be permanently affixed to real property once it is installed. In this case, the industrial cooling systems are machinery or equipment that serves an active function. Accordingly, under these facts, E, X and Y will not be treated as engaged in one or more real property trades or businesses for purposes of section 469(c)(7)(C) and this section.

(E) ***Example 5.***

(*1*) F owns an interest in P, a limited partnership. P owns and operates a luxury hotel. In addition to providing rooms and suites for use by customers, the hotel offers many additional amenities such as in-room food and beverage service, maid and linen service, parking valet service, concierge service, front desk and bellhop service, dry cleaning and laundry service, and in-room barber and hairdresser service. P contracted with M to provide maid and janitorial services to P's hotel. M is an S corporation principally engaged in the trade or business of providing maid and janitorial services to various types of businesses, including hotels. G is a professional manager employed by M who handles the day-to-day business operations relating to M's provision of maid and janitorial services to M's various customers, including P.

(*2*) Even though the personal services that P provides to the customers of its hotel are significant personal services under § 1.469-1T(e)(3)(iv), the principal purpose of P's hotel business operations is the provision of use of the hotel's rooms and suites to customers, and not the provision of the significant personal services to P's customers in conjunction with the customers' incidental use of those rooms or suites. The provision of these significant personal services by P to P's customers is incidental to the customers' use of the hotel's real property. Accordingly, under these facts, F is treated as owning an interest in a real property trade or business conducted by or through P and P is treated as engaged in a real property trade or business for purposes of section 469(c)(7)(C) and this section.

(*3*) With respect to the maid and janitorial services provided by M, M's operations affect the availability and functionality of real property used, or held out for use, by customers in a trade or business where payments by customers are principally for the use of real property (in this case, P's hotel). However, M does not operate or manage real property. Instead, M is engaged in a trade or business of providing maid and janitorial services to customers, such as P, that are engaged in real property trades or businesses. Thus, M's business operations are merely ancillary to real property trades or businesses. Therefore, M is not engaged in real property operations or management as defined in this section. Accordingly, under these facts, M is not engaged in a real property trade or business under section 469(c)(7)(C) and this section.

(4) With respect to the day-to-day business operations that G handles as a professional manager of M, the business operations that G manages is not the provision of use of P's hotel rooms and suites to customers. G does not operate or manage real property. Instead, G manages the provision of maid and janitorial services to customers, including P's hotel. Therefore, G is not engaged in real property management as defined in this section. Accordingly, under these facts, G is not engaged in a real property trade or business under section 469(c)(7)(C) and this section.

(3) ***Rental real estate. Rental real estate*** is any real property used by customers or held for use by customers in a rental activity within the meaning of § 1.469-1T(e)(3). However, any rental real estate that the taxpayer grouped with a trade or business activity under § 1.469-4(d)(1)(i)(A) or (C) is not an interest in rental real estate for purposes of this section.

(4) ***Personal services. Personal services*** means any work performed by an individual in connection with a trade or business. However, personal services do not include any work performed by an individual in the individual's capacity as an investor as described in § 1.469-5T(f)(2)(ii).

(5) ***Material participation. Material participation*** has the same meaning as under § 1.469-5T. Paragraph (f) of this section contains rules applicable to limited partnership interests in rental real estate that a qualifying taxpayer elects to aggregate with other interests in rental real estate of that taxpayer.

(6) ***Qualifying taxpayer.*** A *qualifying taxpayer* is a taxpayer that owns at least one interest in rental real estate and meets the requirements of paragraph (c) of this section.

(c) ***Requirements for qualifying taxpayers*** —

(1) ***In general.*** A qualifying taxpayer must meet the requirements of section 469(c)(7)(B).

(2) ***Closely held C corporations.*** A closely held C corporation meets the requirements of paragraph (c)(1) of this section by satisfying the requirements of section 469(c)(7)(D)(i). For purposes of section 469(c)(7)(D)(i), gross receipts do not include items of portfolio income within the meaning of § 1.469-2T(c)(3).

(3) ***Requirement of material participation in the real property trades or businesses.*** A taxpayer must materially participate in a real property trade or business in order for the personal services provided by the taxpayer in that real property trade or business to count towards meeting the requirements of paragraph (c)(1) of this section.

(4) ***Treatment of spouses.*** Spouses filing a joint return are qualifying taxpayers only if one spouse separately satisfies both requirements of section 469(c)(7)(B). In determining the real property trades or businesses in which a married taxpayer materially participates (but not for any other purpose under this paragraph (c)), work performed by the taxpayer's spouse in a trade or business is treated as work performed by the taxpayer under § 1.469-5T(f)(3), regardless of whether the spouses file a joint return for the year.

(5) ***Employees in real property trades or businesses.*** For purposes of paragraph (c)(1) of this section, personal services performed during a taxable year as an employee generally will be treated as performed in a trade or business but will not be treated as performed in a real property trade or business, unless the taxpayer is a five-percent owner (within the meaning of section 416(i)(1)(B)) in

the employer. If an employee is not a five-percent owner in the employer at all times during the taxable year, only the personal services performed by the employee during the period the employee is a five-percent owner in the employer will be treated as performed in a real property trade or business.

(d) ***General rule for determining real property trades or businesses*** —

(1) ***Facts and circumstances.*** The determination of a taxpayer's real property trades or businesses for purposes of paragraph (c) of this section is based on all of the relevant facts and circumstances. A taxpayer may use any reasonable method of applying the facts and circumstances in determining the real property trades or businesses in which the taxpayer provides personal services. Depending on the facts and circumstances, a real property trade or business consists either of one or more than one trade or business specifically described in section 469(c)(7)(C). A taxpayer's grouping of activities under § 1.469-4 does not control the determination of the taxpayer's real property trades or businesses under this paragraph (d).

(2) ***Consistency requirement.*** Once a taxpayer determines the real property trades or businesses in which personal services are provided for purposes of paragraph (c) of this section, the taxpayer may not redetermine those real property trades or businesses in subsequent taxable years unless the original determination was clearly inappropriate or there has been a material change in the facts and circumstances that makes the original determination clearly inappropriate.

(e) ***Treatment of rental real estate activities of a qualifying taxpayer*** —

(1) ***In general.*** Section 469(c)(2) does not apply to any rental real estate activity of a taxpayer for a taxable year in which the taxpayer is a qualifying taxpayer under paragraph (c) of this section. Instead, a rental real estate activity of a qualifying taxpayer is a passive activity under section 469 for the taxable year unless the taxpayer materially participates in the activity. Each interest in rental real estate of a qualifying taxpayer will be treated as a separate rental real estate activity, unless the taxpayer makes an election under paragraph (g) of this section to treat all interests in rental real estate as a single rental real estate activity. Each separate rental real estate activity, or the single combined rental real estate activity if the taxpayer makes an election under paragraph (g), will be an activity of the taxpayer for all purposes of section 469, including the former passive activity rules under section 469(f) and the disposition rules under section 469(g). However, section 469 will continue to be applied separately with respect to each publicly traded partnership, as required under section 469(k), notwithstanding the rules of this section.

(2) ***Treatment as a former passive activity.*** For any taxable year in which a qualifying taxpayer materially participates in a rental real estate activity, that rental real estate activity will be treated as a former passive activity under section 469(f) if disallowed deductions or credits are allocated to the activity under § 1.469-1(f)(4).

(3) ***Grouping rental real estate activities with other activities*** —

(i) ***In general.*** For purposes of this section, a qualifying taxpayer may not group a rental real estate activity with any other activity of the taxpayer. For example, if a qualifying taxpayer develops real property, constructs buildings, and owns an interest in rental real estate, the taxpayer's interest in rental real estate may not be grouped with the taxpayer's development activity or construction activity. Thus, only the participation of the taxpayer with respect to the rental real estate may be used to determine if the taxpayer materially participates in the rental real estate activity under § 1.469-5T.

(ii) ***Special rule for certain management activities.*** A qualifying taxpayer may participate in a rental real estate activity through participation, within the meaning of §§ 1.469-5(f) and 5T(f), in an activity involving the management of rental real estate (even if this management activity is conducted through a separate entity). In determining whether the taxpayer materially participates in the rental real estate activity, however, work the taxpayer performs in the management activity is taken into account only to the extent it is performed in managing the taxpayer's own rental real estate interests.

(4) ***Example.*** The following example illustrates the application of this paragraph (e).

> *Example.* (i) Taxpayer *B* owns interests in three rental buildings, *U, V* and *W.* In 1995, *B* has $30,000 of disallowed passive losses allocable to Building *U* and $10,000 of disallowed passive losses allocable to Building *V* under § 1.469-1(f)(4). In 1996, *B* has $5,000 of net income from Building *U,* $5,000 of net losses from Building *V,* and $10,000 of net income from Building *W.* Also in 1996, *B* is a qualifying taxpayer within the meaning of paragraph (c) of this section. Each building is treated as a separate activity of *B* under paragraph (e)(1) of this section, unless *B* makes the election under paragraph (g) to treat the three buildings as a single rental real estate activity. If the buildings are treated as separate activities, material participation is determined separately with respect to each building. If *B* makes the election under paragraph (g) to treat the buildings as a single activity, all participation relating to the buildings is aggregated in determining whether *B* materially participates in the combined activity.
> (ii) Effective beginning in 1996, *B* makes the election under paragraph (g) to treat the three buildings as a single rental real estate activity. *B* works full-time managing the three buildings and thus materially participates in the combined activity in 1996 (even if *B* conducts this management function through a separate entity, including a closely held C corporation). Accordingly, the combined activity is not a passive activity of *B* in 1996. Moreover, as a result of the election under paragraph (g), disallowed passive losses of $40,000 ($30,000 + $10,000) are allocated to the combined activity. B's net income from the activity for 1996 is $10,000 ($5,000−$5,000 + $10,000). This net income is nonpassive income for purposes of section 469. However, under section 469(f), the net income from a former passive activity may be offset with the disallowed passive losses from the same activity. Because Buildings *U, V* and *W* are treated as one activity for all purposes of section 469 due to the election under paragraph (g), and this activity is a former passive activity under section 469(f), *B* may offset the $10,000 of net income from the buildings with an equal amount of disallowed passive losses allocable to the buildings, regardless of which buildings produced the income or losses. As a result, *B* has $30,000 ($40,000−$10,000) of disallowed passive losses remaining from the buildings after 1996.

(f) ***Limited partnership interests in rental real estate activities*** —

(1) ***In general.*** If a taxpayer elects under paragraph (g) of this section to treat all interests in rental real estate as a single rental real estate activity, and at least one interest in rental real estate is held by the taxpayer as a limited partnership interest (within the meaning of § 1.469-5T(e)(3)), the combined rental real estate activity will be treated as a limited partnership interest of the taxpayer for purposes of determining material participation. Accordingly, the taxpayer will not be treated under this section as materially participating in the combined rental real estate activity unless the taxpayer materially participates in the activity under the tests listed in § 1.469-5T(e)(2) (dealing with the tests for determining the material participation of a limited partner).

(2) ***De minimis exception.*** If a qualifying taxpayer elects under paragraph (g) of this section to treat all interests in rental real estate as a single rental real estate activity, and the taxpayer's share of gross rental income from all of the taxpayer's limited partnership interests in rental real estate is less than ten percent of the taxpayer's share of gross rental income from all of the taxpayer's interests in rental real estate for the taxable year, paragraph (f)(1) of this section does not apply. Thus the taxpayer may determine material participation under any of the tests listed in § 1.469-5T(a) that apply to rental real estate activities.

(g) ***Election to treat all interests in rental real estate as a single rental real estate activity*** —

(1) ***In general.*** A qualifying taxpayer may make an election to treat all of the taxpayer's interests in rental real estate as a single rental real estate activity. This election is binding for the taxable year in which it is made and for all future years in which the taxpayer is a qualifying taxpayer under paragraph (c) of this section, even if there are intervening years in which the taxpayer is not a qualifying taxpayer. The election may be made in any year in which the taxpayer is a qualifying taxpayer, and the failure to make the election in one year does not preclude the taxpayer from making the election in a subsequent year. In years in which the taxpayer is not a qualifying taxpayer, the election will not have effect and the taxpayer's activities will be those determined under § 1.469-4. If there is a material change in the taxpayer's facts and circumstances, the taxpayer may revoke the election using the procedure described in paragraph (g)(3) of this section.

(2) ***Certain changes not material.*** The fact that an election is less advantageous to the taxpayer in a particular taxable year is not, of itself, a material change in the taxpayer's facts and circumstances. Similarly, a break in the taxpayer's status as a qualifying taxpayer is not, of itself, a material change in the taxpayer's facts and circumstances.

(3) ***Filing a statement to make or revoke the election.*** A qualifying taxpayer makes the election to treat all interests in rental real estate as a single rental real estate activity by filing a statement with the taxpayer's original income tax return for the taxable year. This statement must contain a declaration that the taxpayer is a qualifying taxpayer for the taxable year and is making the election pursuant to section 469(c)(7)(A). The taxpayer may make this election for any taxable year in which section 469(c)(7) is applicable. A taxpayer may revoke the election only in the taxable year in which a material change in the taxpayer's facts and circumstances occurs or in a subsequent year in which the facts and circumstances remain materially changed from those in the taxable year for which the election was made. To revoke the election, the taxpayer must file a statement with the taxpayer's original income tax return for the year of revocation. This statement must contain a declaration that the taxpayer is revoking the election under section 469(c)(7)(A) and an explanation of the nature of the material change.

(h) ***Interests in rental real estate held by certain passthrough entities*** —

(1) ***General rule.*** Except as provided in paragraph (h)(2) of this section, a qualifying taxpayer's interest in rental real estate held by a partnership or an S corporation (passthrough entity) is treated as a single interest in rental real estate if the passthrough entity grouped its rental real estate as one rental activity under § 1.469-4(d)(5). If the passthrough entity grouped its rental real estate into separate rental activities under § 1.469-4(d)(5), each rental real estate activity of the passthrough entity will be treated as a separate interest in rental real estate of the qualifying taxpayer. However, the qualifying taxpayer may elect under paragraph (g) of this section to treat all interests in rental real estate, including the rental real estate interests held through passthrough entities, as a single rental real estate activity.

(2) ***Special rule if a qualifying taxpayer holds a fifty-percent or greater interest in a passthrough entity.*** If a qualifying taxpayer owns, directly or indirectly, a fifty-percent or greater interest in the capital, profits, or losses of a passthrough entity for a taxable year, each interest in rental real estate held by the passthrough entity will be treated as a separate interest in rental real estate of the qualifying taxpayer, regardless of the passthrough entity's grouping of activities under § 1.469-4(d)(5). However, the qualifying taxpayer may elect under paragraph (g) of this section to treat all interests in rental real estate, including the rental real estate interests held through passthrough entities, as a single rental real estate activity.

(3) ***Special rule for interests held in tiered passthrough entities.*** If a passthrough entity owns a fifty-percent or greater interest in the capital, profits, or losses of another passthrough entity for a taxable year, each interest in rental real estate held by the lower-tier entity will be treated as a separate interest in rental real estate of the upper-tier entity, regardless of the lower-tier entity's grouping of activities under § 1.469-4(d)(5).

(i) [Reserved]

(j) ***$25,000 offset for rental real estate activities of qualifying taxpayers*** —

(1) ***In general.*** A qualifying taxpayer's passive losses and credits from rental real estate activities (including prior-year disallowed passive activity losses and credits from rental real estate activities in which the taxpayer materially participates) are allowed to the extent permitted under section 469(i). The amount of losses or credits allowable under section 469(i) is determined after the rules of this section are applied. However, losses allowable by reason of this section are not taken into account in determining adjusted gross income for purposes of section 469(i)(3).

(2) ***Example.*** The following example illustrates the application of this paragraph (j).

> *Example.* (i) Taxpayer *A* owns building *X* and building *Y*, both interests in rental real estate. In 1995, *A* is a qualifying taxpayer within the meaning of paragraph (c) of this section. *A* does not elect to treat *X* and *Y* as one activity under section 469(c)(7)(A) and paragraph (g) of this section. As a result, *X* and *Y* are treated as separate activities pursuant to section 469(c)(7)(A)(ii). *A* materially participates in *X* which has $100,000 of passive losses disallowed from prior years and produces $20,000 of losses in 1995. *A* does not materially participate in *Y* which produces $40,000 of income in 1995. *A* also has $50,000 of income from other nonpassive sources in 1995. *A* otherwise meets the requirements of section 469(i).

(ii) Because *X* is not a passive activity in 1995, the $20,000 of losses produced by *X* in 1995 are nonpassive losses that may be used by *A* to offset part of the $50,000 of nonpassive income. Accordingly, *A* is left with $30,000 ($50,000-$20,000) of nonpassive income. In addition, A may use the prior year disallowed passive losses of *X* to offset any income from *X* and passive income from other sources. Therefore, *A* may offset the $40,000 of passive income from *Y* with $40,000 of passive losses from *X*.

(iii) Because *A* has $60,000 ($100,000-$40,000) of passive losses remaining from *X* and meets all of the requirements of section 469(i), *A* may offset up to $25,000 of nonpassive income with passive losses from *X* pursuant to section 469(i). As a result, *A* has $5,000 ($30,000-$25,000) of nonpassive income remaining and disallowed passive losses from *X* of $35,000 ($60,000-$25,000) in 1995.

[T.D. 8645, 60 FR 66499, Dec. 22, 1995, as amended by T.D. 9905, 85 FR 56840, Sept. 14, 2020; T.D. 9943, 86 FR 5540, Jan. 19, 2021]

§ 1.469-10 Application of section 469 to publicly traded partnerships.

(a) [Reserved]

(b) ***Publicly traded partnership*** —

(1) ***In general.*** For purposes of section 469(k), a partnership is a publicly traded partnership only if the partnership is a publicly traded partnership as defined in § 1.7704-1.

(2) ***Effective date.*** This section applies for taxable years of a partnership beginning on or after December 17, 1998.

[T.D. 8799, 63 FR 69553, Dec. 17, 1998]

§ 1.469-11 Applicability date and transition rules.

(a) ***Generally applicable effective dates.*** Except as otherwise provided in this section—

(1) The rules contained in §§ 1.469-1, 1.469-1T, 1.469-2, 1.469-2T, 1.469-3, 1.469-3T, 1.469-4, but not § 1.469-4(d)(6), 1.469-5 and 1.469-5T, apply for taxable years ending after May 10, 1992. The rules contained in § 1.469-4(d)(6) apply for taxable years beginning on or after March 22, 2021. However, taxpayers and their related parties, within the meaning of sections 267(b) (determined without regard to section 267(c)(3)) and 707(b)(1), may choose to apply the rules in § 1.469-4(d)(6) to a taxable year beginning after December 31, 2017, and before March 22, 2021, provided that those taxpayers and their related parties consistently apply all of the rules in the section 163(j) regulations as contained in T.D. 9905 (§§ 1.163(j)-0 through 1.163(j)-11, effective November 13, 2020) as modified by T.D. 9943 (effective January 13, 2021), and, if applicable, §§ 1.263A-9, 1.263A-15, 1.381(c)(20)-1, 1.382-1, 1.382-2, 1.382-5, 1.382-6, 1.383-0, 1.383-1, 1.469-9, 1.704-1, 1.882-5, 1.1362-3, 1.1368-1, 1.1377-1, 1.1502-13, 1.1502-21, 1.1502-79, 1.1502-91 through 1.1502-99 (to the extent they effectuate the rules of §§ 1.382-2, 1.382-5, 1.382-6, and 1.383-1), and 1.1504-4 contained in T.D. 9905 as modified by T.D. 9943, to that taxable year and each subsequent taxable year.

(2) The rules contained in 26 CFR 1.469-1T, 1.469-2T, 1.469-3T, 1.469-4T, 1.469-5T, 1.469-11T (b) and (c) (as contained in the CFR edition revised as of April 1, 1992) apply for taxable years beginning after December 31, 1986, and ending on or before May 10, 1992;

(3) The rules contained in § 1.469-9, other than paragraph (b)(2), apply for taxable years beginning on or after January 1, 1995, and to elections made under § 1.469-9(g) with returns filed on or after January 1, 1995;

(4) The rules contained in § 1.469-9(b)(2), other than paragraphs (b)(2)(ii)(A) and (B), apply to taxable years beginning on or after November 13, 2020. Section 1.469-9(b)(2)(ii)(A) and (B) applies to taxable years beginning on or after March 22, 2021. However, taxpayers and their related parties, within the meaning of sections 267(b) (determined without regard to section 267(c)(3)) and 707(b)(1), may choose to apply the rules in § 1.469-9(b)(2), other than paragraphs (b)(2)(ii)(A) and (B), to a taxable year beginning after December 31, 2017, and on or before November 13, 2020 and may choose to apply the rules in § 1.469-9(b)(2)(ii)(A) and (B) to taxable years beginning after December 31, 2017, and before March 22, 2021, provided that those taxpayers and their related parties consistently apply all of the rules in the section 163(j) regulations contained in T.D. 9905 (§§ 1.163(j)-0 through 1.163(j)-11, effective November 13, 2020) as modified by T.D. 9943 (effective January 13, 2021), and, if applicable, §§ 1.263A-9, 1.263A-15, 1.381(c)(20)-1, 1.382-1, 1.382-2, 1.382-5, 1.382-6, 1.383-0, 1.383-1, 1.469-9, 1.704-1, 1.882-5, 1.1362-3, 1.1368-1, 1.1377-1, 1.1502-13, 1.1502-21, 1.1502-79, 1.1502-91 through 1.1502-99 (to the extent they effectuate the rules of §§ 1.382-2, 1.382-5, 1.382-6, and 1.383-1), and 1.1504-4, contained in T.D. 9905 as modified by T.D. 9943, to that taxable year and each subsequent taxable year.

(5) The rules contained in § 1.469-7 apply for taxable years ending after December 31, 1986; and

(6) This section applies for taxable years beginning after December 31, 1986.

(b) ***Additional effective dates*** —

(1) ***Application of 1992 amendments for taxable years beginning before October 4, 1994.*** Except as provided in paragraph (b)(2) of this section, for taxable years that end after May 10, 1992, and begin before October 4, 1994, a taxpayer may determine tax liability in accordance with Project PS-1-89 published at 1992-1 C.B. 1219 (see § 601.601(d)(2)(ii)(b) of this chapter).

(2) ***Additional transition rule for 1992 amendments.*** If a taxpayer's first taxable year ending after May 10, 1992, begins on or before that date, the taxpayer may treat the taxable year, for purposes of paragraph (a) of this section, as a taxable year ending on or before May 10, 1992.

(3) ***Fresh starts under consistency rules*** —

(i) ***Regrouping when tax liability is first determined under Project PS-1-89.*** For the first taxable year in which a taxpayer determines its tax liability under Project PS-1-89, the taxpayer may regroup its activities without regard to the manner in which the activities were grouped in the preceding taxable year and must regroup its activities if the grouping in the preceding taxable year is inconsistent with the rules of Project PS-1-89.

(ii) ***Regrouping when tax liability is first determined under § 1.469-4.*** For the first taxable year in which a taxpayer determines its tax liability under § 1.469-4, rather than under the rules of Project PS-1-89, the taxpayer may regroup its activities without regard to the manner in which the activities were grouped in the preceding taxable year and must regroup its activities if the grouping in the preceding taxable year is inconsistent with the rules of § 1.469-4.

(iii) ***Regrouping when taxpayer is first subject to section 469(c)(7).*** For the first taxable year beginning after December 31, 1993, a taxpayer may regroup its activities to the extent necessary or appropriate to avail itself of the provisions of section 469(c)(7) and without regard to the manner in which the activities were grouped in the preceding taxable year.

(iv) ***Regrouping for taxpayers subject to section 1411*** —

(A) ***In general.*** If an individual, estate, or trust meets the Eligibility Criteria, as defined in paragraph (b)(3)(iv)(B) of this section, such individual, estate, or trust, in the first taxable year beginning after December 31, 2013, in which section 1411 would apply to such taxpayer, may regroup its activities without regard to the manner in which the activities were grouped in the preceding taxable year. For this purpose, the determination of whether a taxpayer meets the Eligibility Criteria is made without regard to the effect of regrouping. The regrouping must be made in the manner prescribed by forms, instructions, or in other guidance on an original return for the taxable year for which the regrouping is done. A taxpayer that is an individual, estate, or trust may regroup its activities for any taxable year that begins during 2013, if the individual, estate, or trust meets the Eligibility Criteria for such year. A taxpayer may regroup activities only once pursuant to this paragraph (b)(3)(iv), and a regrouping made pursuant to this paragraph (b)(3)(iv) will apply to the taxable year for which the regrouping is done and all subsequent years.

(B) ***Eligibility criteria.*** The term *Eligibility Criteria* means that an individual, estate, or trust has net investment income (as defined in § 1.1411-4) and such individual's (as defined in § 1.1411-2(a)) modified adjusted gross income (as defined in § 1.1411-2(c)) exceeds the applicable threshold in § 1.1411-2(d) or such estate's or trust's (as defined in § 1.1411-3(a)(1)(i)) adjusted gross income exceeds the amount described in § 1.1411-3(a)(1)(ii)(B)(*2*).

(C) ***Consequences of amended returns and examination adjustments*** —

(*1*) ***Taxpayers first subject to section 1411.*** An individual, estate, or trust also may regroup activities, in the manner described in paragraph (b)(3)(iv)(A) of this section, on an amended return only if the changes reported on such amended return cause the taxpayer to meet the Eligibility Criteria for the first time beginning in the taxable year for which the amended return is applicable and that the taxable year is not closed by the period of limitations on assessments under section 6501. If the amended return is for a tax year that precedes a tax year for which a taxpayer had regrouped its activities pursuant to paragraph (b)(3)(iv)(A) of this section, the regrouping on such amended return must be consistent with the taxpayer's subsequent year's regrouping. If a regrouping on an amended return is inconsistent with a subsequent year's grouping, the subsequent year's grouping is invalid under § 1.469-4(e)(1) unless a material change in facts and circumstances occurred in the subsequent year such that the subsequent year's grouping constitutes a permissible regrouping under § 1.469-4(e)(2). Similar rules also apply for any taxable year that begins during 2013.

(*2*) ***Taxpayers ceasing to be subject to section 1411.*** In the event a taxpayer regroups activities pursuant to paragraphs (b)(3)(iv)(A) or (C) of this section and it is subsequently determined that such taxpayer does not meet the Eligibility Criteria for the year of such regrouping, such regrouping will have no effect for that year and all future years. Appropriate adjustments should be made to reflect the voiding of the

ineffective regrouping. However, notwithstanding the previous sentence, if an individual, estate, or trust meets the Eligibility Criteria in a subsequent year, such taxpayer is deemed to treat such regrouping as being made in such subsequent year unless the taxpayer either regroups in a different manner (so long as such alternative regrouping is permissible under § 1.469-4) or properly reflects the ineffective regrouping in the previous year. The subsequent year's regrouping may be made on an original or on an amended return for that year. This paragraph (b)(3)(iv)(C)(*2*) shall not apply if a taxpayer does not meet the Eligibility Criteria for the year of such regrouping as a result of the carryback of a net operating loss pursuant to section 172. Similar rules also apply for any taxable year that begins during 2013.

(*3*) ***Examples.*** The following examples illustrate the principles of paragraph (b)(3)(iv)(C) of this section. In each example, unless otherwise indicated, the taxpayer uses a calendar taxable year, the taxpayer is a United States citizen, and Year 1 is a taxable year in which section 1411 is in effect:

> ***Example 1.*** In Year 1, X, a single individual, reports modified adjusted gross income (as defined in § 1.1411-2(c)) of $198,000 (including $12,000 of net investment income (as defined in § 1.1411-4)); thus is not subject to 1411. After X filed his original return, X receives a corrected Form 1099-DIV, which increases his modified adjusted gross income (as defined in § 1.1411-2(c)) and his net investment income by $2,500. X files an amended return for Year 1 in Year 2 reporting modified adjusted gross income of $200,500 and net investment income of $14,500. Pursuant to paragraph (b)(3)(iv)(C)(*1*) of this section, X may regroup his passive activities on an amended return, because X now has MAGI above the applicable threshold amount and net investment income.

> ***Example 2.*** Same facts as *Example 1,* except that the $2,500 increase to modified adjusted gross income and net investment income was a result of an examination of X's Year 1 return. Pursuant to paragraph (b)(3)(iv)(C)(*1*) of this section, X may regroup his passive activities on an amended return.

> ***Example 3.*** In Year 1, Y, a single individual reported modified adjusted gross income (as defined in § 1.1411-2(c)) of $205,000 and net investment income (as defined in § 1.1411-4) of $500. Pursuant to paragraph (b)(3)(iv)(A) of this section, Y regrouped his four passive activities, A, B, C, and D, into a single activity group. Prior to the Year 1 regrouping, Y had grouped A and B into one group, and treated each of C and D as separate activities. Y did not meet the Eligibly Criteria in any year prior to Year 1 or Year 2. In Year 3, Y's employer issued Y a corrected Year 1 Form W-2, which reduced Y's taxable wages by $6,000. As a result, Y no longer meets the Eligibility Criteria in Year 1 because Y's modified adjusted gross income is now $199,000. Therefore, Y's Year 1 regrouping is no longer effective and the prior groupings are in effect (that is, Activity A and B are one group and Activity C and Activity D separately). Appropriate adjustments should be made to reflect the ineffective regrouping. However, if Y had a material change in facts and circumstances such that Y could regroup in Year 1 or a subsequent year, as

applicable, by reason of § 1.469-4(e)(2), then the regrouping will be deemed to occur. Y could designate a different regrouping for the year of the material change in facts and circumstances.

Example 4. Same facts as *Example 3,* except that Y met the Eligibly Criteria in Year 2. In this case, Y's Year 1 regrouping is no longer effective and Y must report his income consistent with the pre-Year 1 groupings. In Year 2, Y has three options. First, without any action by Y, Y's activities are regrouped as originally reported in Year 1. In this case, the regrouping from the Year 1 return is deemed to occur on the Year 2 return. This option is the default option. Second, pursuant to paragraph (b)(3)(iv)(C)(*2*) of this section, Y may file an amended return to report his income consistent with groupings in effect prior to Year 1. Third, Y may file an original or an amended return to regroup in a manner different from groupings in effect prior to Year 1 and different from the Year 1 groupings (for example, Y could choose to group Activity C and D into a single activity, thus causing Y to have two groups; Group A-B and Group C-D).

(D) ***Effective/applicability date.*** This section applies to taxable years beginning after December 31, 2013. However, taxpayers may apply this section to taxable years beginning after December 31, 2012.

(4) ***Certain investment credit property.***

(i) The rules contained in § 1.469-3(f) apply with respect to property placed in service after December 31, 1990 (other than property described in section 11813 (c)(2) of the Omnibus Reconciliation Act of 1990 (P.L. 101-508)).

(ii) The rules contained in 26 CFR 1.469-3T(f) (as contained in the CFR edition revised as of April 1, 1992) apply with respect to property placed in service on or before December 31, 1990, and property described in section 11813(c)(2) of the Omnibus Reconcilation Act of 1990.

(c) ***Special rules —***

(1) ***Application of certain income recharacterization rules and self-charged rules —***

(i) ***Certain recharacterization rules inapplicable in 1987.*** No amount of gross income shall be treated under § 1.469-2T(f)(3) through (7) as income that is not from a passive activity for any taxable year of the taxpayer beginning before January 1, 1988.

(ii) ***Property rented to a nonpassive activity.*** In applying § 1.469-2(f)(6) or § 1.469-2T(f)(6) to a taxpayer's rental of an item of property, the taxpayer's net rental activity income (within the meaning of § 1.469-2(f)(9)(iv) or § 1.469-2T(f)(9)(iv)) from the property for any taxable year beginning after December 31, 1987, does not include the portion of the income (if any) that is attributable to the rental of that item of property pursuant to a written binding contract entered into before February 19, 1988.

(iii) ***Self-charged rules.*** For taxable years beginning before June 4, 1991—

(*1*) A taxpayer is not required to apply the rules in § 1.469-7 in computing the taxpayer's passive activity loss and passive activity credit; and

(2) A taxpayer that owns an interest in a passthrough entity may use any reasonable method of offsetting items of interest income and interest expense from lending transactions between the passthrough entity and its owners or between identically-owned passthrough entities (as defined in § 1.469-7(e)) to compute the taxpayer's passive activity loss and passive activity credit. Items from nonlending transactions cannot be offset under the self-charged rules.

(2) ***Qualified low-income housing projects.*** For a transitional rule concerning the application of section 469 to losses from qualified low-income housing projects, see section 502 of the Tax Reform Act of 1986.

(3) ***Effect of events occurring in years prior to 1987.*** The treatment for a taxable year beginning after December 31, 1986, of any item of income, gain, loss, deduction, or credit as an item of passive activity gross income, passive activity deduction, or credit from a passive activity, is determined as if section 469 and the regulations thereunder had been in effect for taxable years beginning before January 1, 1987, but without regard to any passive activity loss or passive activity credit that would have been disallowed for any taxable year beginning before January 1, 1987, if section 469 and the regulations thereunder had been in effect for that year. For example, in determining whether a taxpayer materially participates in an activity under § 1.469-5T(a)(5) (relating to taxpayers who have materially participated in an activity for five of the ten immediately preceding taxable years) for any taxable year beginning after December 31, 1986, the taxpayer's participation in the activity for all prior taxable years (including taxable years beginning before 1987) is taken into account. See § 1.469-5(j) (relating to the determination of material participation for taxable years beginning before January 1, 1987).

(d) ***Examples.*** The following examples illustrate the application of paragraph (c) of this section:

Example 1. A, a calendar year individual, is a partner in a partnership with a taxable year ending on January 31. During its taxable year ending January 31, 1987, the partnership was engaged in a single activity involving the conduct of a trade or business. In applying section 469 and the regulations thereunder to A for calendar year 1987, A's distributive share of partnership items for the partnership's taxable year ending January 31, 1987, is taken into account. Therefore, under § 1.469-2T(e)(1) and paragraph (c)(3) of this section, A's participation in the activity throughout the partnership's taxable year beginning February 1, 1986, and ending January 31, 1987, is taken into account for purposes of determining the character under section 469 of the items of gross income, deduction, and credit allocated to A for the partnership's taxable year ending January 31, 1987.

Example 2. B, a calendar year individual, is a beneficiary of a trust described in section 651 that has a taxable year ending January 31. The trust conducts a rental activity (within the meaning of § 1.469-1T(e)(3)). Because the trust's taxable year ending January 31, 1987, began before January 1, 1987, section 469 and the regulations thereunder do not applying to the trust for that year. Section 469 and the regulations thereunder do apply, however, to B for B's calendar year 1987. Therefore, income of the trust from the rental activity for the trust's taxable year ending January 31, 1987, that is included in B's gross income for 1987 is taken into account in apply section 469 to B for 1987.

[T.D. 8417, 57 FR 20759, May 15, 1992, as amended by T.D. 8417, 59 FR 45623, Sept. 2, 1994; T.D. 8565, 59 FR 50489, Oct. 4, 1994; T.D. 8645, 60 FR 66501, Dec. 22, 1995; T.D. 9013, 67 FR 54093, Aug. 21, 2002; T.D. 9644, 78 FR 72421, Dec. 2, 2013; 79 FR 18159, Apr. 1, 2014; T.D. 9905, 85 FR 56842, Sept. 14, 2020; T.D. 9943, 86 FR 5540, Jan. 19, 2021]

INVENTORIES

§ 1.471-1 Need for inventories.

(a) ***In general.*** Except as provided in paragraph (b) of this section, in order to reflect taxable income correctly, inventories at the beginning and end of each taxable year are necessary in every case in which the production, purchase, or sale of merchandise is an income-producing factor. The inventory should include all finished or partly finished goods and, in the case of raw materials and supplies, only those which have been acquired for sale or which will physically become a part of merchandise intended for sale, in which class fall containers, such as kegs, bottles, and cases, whether returnable or not, if title thereto will pass to the purchaser of the product to be sold therein. Merchandise should be included in the inventory only if title thereto is vested in the taxpayer. Accordingly, the seller should include in his inventory goods under contract for sale but not yet segregated and applied to the contract and goods out upon consignment, but should exclude from inventory goods sold (including containers), title to which has passed to the purchaser. A purchaser should include in inventory merchandise purchased (including containers), title to which has passed to him, although such merchandise is in transit or for other reasons has not been reduced to physical possession, but should not include goods ordered for future delivery, transfer of title to which has not yet been effected. (But see § 1.472-1.)

(b) ***Exemption for certain small business taxpayers*** —

(1) ***In general.*** Paragraph (a) of this section shall not apply to a taxpayer, other than a tax shelter prohibited from using the cash receipts and disbursements method of accounting (cash method) under section 448(a)(3), in any taxable year if the taxpayer meets the gross receipts test described in paragraph (b)(2) of this section, and uses as a method of accounting for its inventory a method that is described in paragraph (b)(3) of this section.

(2) ***Gross receipts test*** —

(i) ***In general.*** A taxpayer, other than a tax shelter prohibited from using the cash method under section 448(a)(3), meets the gross receipts test of this paragraph (b)(2) if it meets the gross receipts test of section 448(c) and § 1.448-2(c). This gross receipts test applies even if the taxpayer is not otherwise subject to section 448(a).

(ii) ***Application of the gross receipts test*** —

(A) ***In general.*** In the case of any taxpayer that is not a corporation or partnership, and except as otherwise provided in paragraphs (b)(2)(ii)(B) and (C) of this section, the gross receipts test of section 448(c) and the accompanying regulations are applied in the same manner as each trade or business of the taxpayer were a corporation or partnership.

(B) ***Gross receipts of individuals, etc.*** Except when the aggregation rules of section 448(c)(2) apply, the gross receipts of a taxpayer other than a corporation or partnership are the amount derived from all trades or businesses of such taxpayer. Amounts not related to a trade or businesses are excluded from the gross receipts of the taxpayer. For example, an individual taxpayer's gross receipts do not include inherently personal amounts, such as: personal injury awards or settlements with respect to an injury of the individual taxpayer, disability benefits, Social Security benefits received by the taxpayer during the taxable year, and wages received as an employee that are reported on Form W-2.

(C) ***Partners and S corporation shareholders*** —

(1) ***In general.*** Except when the aggregation rules of section 448(c)(2) apply, each partner in a partnership includes a share of the partnership's gross receipts in proportion to such partner's distributive share (as determined under section 704) of items of gross income that were taken into account by the partnership under section 703. Similarly, a shareholder includes the *pro rata* share of S corporation gross receipts taken into account by the S corporation under section 1363(b).

(2) [Reserved]

(D) ***Examples.*** The operation of this paragraph (b)(2) is illustrated by the following examples:

(1) ***Example 1.*** Taxpayer A, a calendar year S corporation, is a reseller and maintains inventories. In 2017, 2018, and 2019, A's gross receipts were $10 million, $11 million, and $13 million respectively. A is not prohibited from using the cash method under section 448(a)(3). For 2020, A meets the gross receipts test of paragraph (b)(2) of this section.

(2) ***Example 2.*** Taxpayer B operates two separate and distinct trades or businesses that are reported on Schedule C, *Profit or Loss from Business,* of B's Federal income tax return. For 2020, one trade or business has annual average gross receipts of $5 million, and the other trade or business has average annual gross receipts of $35 million. Under paragraph (b)(2)(ii)(B) of this section, for 2020, neither of B's trades or businesses meets the gross receipts test of paragraph (b)(2) of this section ($5 million + $35 million = $40 million, which is greater than the inflation-adjusted gross receipts test amount for 2020, which is $26 million).

(3) ***Example 3.*** Taxpayer C is an individual who operates three separate and distinct trades or business that are reported on Schedule C of C's Federal income tax return. For 2020, Business X is a retail store with average annual gross receipts of $15 million, Business Y is a dance studio with average annual gross receipts of $6 million, and Business Z is a car repair shop with average annual gross receipts of $12 million. Under paragraph (b)(2)(ii)(B) of this section, C's gross receipts are the combined amount derived from all three of C's trades or businesses. Therefore, for 2020, X, Y and Z do not meet the gross receipts test of paragraph (b)(2)(i) of this section ($15 million + $6 million + $12 million = $33 million, which is greater than the inflation-adjusted gross receipts test amount for 2020, which is $26 million).

(3) ***Methods of accounting under the small business taxpayer exemption.*** A taxpayer eligible to use, and that chooses to use, the exemption described in paragraph (b) of this section may account for its inventory by either:

(i) Using a method that treats its inventory as non-incidental materials and supplies (section 471(c) NIMS inventory method), as described in paragraph (b)(4) of this section; or

(ii) Using the method for each item that is reflected in the taxpayer's applicable financial statement (AFS) (AFS section 471(c) inventory method); or, if the taxpayer does not have an AFS for the taxable year, the books and records of the taxpayer prepared in accordance with the taxpayer's accounting procedures, as defined in paragraph (b)(6)(ii) of this section (non-AFS section 471(c) inventory method).

(4) ***Inventory treated as non-incidental materials and supplies*** —

(i) ***In general.*** The costs of inventory treated as non-incidental materials and supplies are recovered through cost of goods sold only in the taxable year in which the inventory is used or consumed in the taxpayer's business, or in the taxable year in which the taxpayer pays for or incurs the cost of the inventory, whichever is later. Inventory treated as non-incidental materials and supplies is used or consumed in the taxpayer's business in the taxable year in which the taxpayer provides the inventory to its customer. The costs of inventory are treated as non-incidental materials and supplies under this paragraph (b)(4) are not eligible for the *de minimis* safe harbor election under § 1.263(a)-1(f)(2).

(ii) ***Identification and valuation of inventory treated as non-incidental materials and supplies.*** A taxpayer may determine the amount of the costs of its inventory treated as non-incidental materials and supplies that are recoverable through costs of goods sold by using either a specific identification method, a first-in, first-out (FIFO) method, or an average cost method, provided that method is used consistently. See § 1.471-2(d). A taxpayer that uses the section 471(c) NIMS inventory method may not use any other method described in the regulations under section 471, or the last-in, first-out (LIFO) method described in section 472 and the accompanying regulations, to either identify inventory treated as non-incidental materials and supplies, or to value that inventory treated as non-incidental materials and supplies. The inventory costs includible in the section 471(c) NIMS inventory method are the direct material costs of the property produced or the costs of property acquired for resale. However, an inventory cost does not include a cost for which a deduction would be disallowed, or that is not otherwise recoverable but for paragraph (b)(4) of this section, in whole or in part, under a provision of the Internal Revenue Code.

(iii) ***Allocation methods.*** A taxpayer treating its inventory as non-incidental materials and supplies under this paragraph (b)(4) may allocate the costs of such inventory by using specific identification or any other reasonable method.

(iv) ***Example.*** Taxpayer D is a baker that reports its baking trade or business on Schedule C, *Profit or Loss From Business,* of the Form 1040, *Individual Tax Return,* and D's baking business has average annual gross receipts for the 3-taxable years prior to 2019 of less than $100,000. D meets the gross receipts test of section 448(c) and is not prohibited from using the cash method under section 448(a)(3) in 2019. Therefore, D qualifies as a small business taxpayer under paragraph (b)(2) of this section. D uses the overall cash method, and the section 471(c) NIMS inventory method. D purchases $50 of peanut butter in November 2019. In December 2019, D uses all of the peanut butter to bake cookies available for immediate sale. D sells those peanut butter cookies to customers in January 2020. The peanut butter cookies are used or consumed under paragraph (b)(4)(i) of this section in January 2020 when the cookies are sold to customers, and D may recover the cost of the peanut butter in 2020.

(5) ***AFS section 471(c) inventory method*** —

(i) ***In general.*** A taxpayer that meets the gross receipts test described in paragraph (b)(2) of this section and that has an AFS for such taxable year may use the AFS section 471(c) inventory method described in this paragraph to account for its inventory costs for the taxable year. For purposes of the AFS section 471(c) inventory method, an inventory cost is a cost of production or resale that a taxpayer capitalizes to inventory property produced or property acquired for resale in its AFS. For purposes of the AFS section 471(c) inventory method, costs that are generally required to be capitalized to inventory under section 471(a) but that the taxpayer does not capitalize to inventory on its AFS are not required to be capitalized to inventory. However, an

inventory cost does not include a cost that is neither deductible nor otherwise recoverable but for paragraph (b)(5) of this section, in whole or in part, under a provision of the Internal Revenue Code (for example, section 162(c), (e), (f), (g), or 274). In lieu of the inventory method described in section 471(a), a taxpayer using the AFS section 471(c) inventory method recovers its inventory costs in accordance with the inventory method used in its AFS.

(ii) ***Definition of Applicable Financial Statement (AFS).*** The term applicable financial statement (AFS) is defined in section 451(b)(3) and the accompanying regulations. See § 1.451-3(a)(5). The rules relating to additional AFS issues provided in § 1.451-3(h) apply to the AFS section 471(c) inventory method. In the case of a taxpayer with a financial accounting year that differs from the taxpayer's taxable year, the taxpayer must consistently use the same method of accounting described in § 1.451-3(h)(4)(i)(A) through (C) that is used for section 451(b) purposes to also determine its inventory for the taxable year under this paragraph (b)(5)(ii). A taxpayer has an AFS for the taxable year if all of the taxpayer's taxable year is covered by an AFS.

(iii) ***Timing of inventory costs.*** Notwithstanding the timing rules used in the taxpayer's AFS, the amount of any inventoriable cost may not be capitalized or otherwise taken into account for Federal income tax purposes any earlier than the taxable year during which the amount is paid or incurred under the taxpayer's overall method of accounting, as described in § 1.446-1(c)(1). For example, in the case of an accrual method taxpayer, inventoriable costs must satisfy the all events test, including economic performance, of section 461. See § 1.446-1(c)(1)(ii) and section 461 and the accompanying regulations.

(iv) ***Example.*** H is a calendar year C corporation that is engaged in the trade or business of selling office supplies and providing copier repair services. H meets the gross receipts test of section 448(c) and is not prohibited from using the cash method under section 448(a)(3) for 2019 or 2020. For Federal income tax purposes, H chooses to account for purchases and sales of inventory using an accrual method of accounting and for all other items using the cash method. For AFS purposes, H uses an overall accrual method of accounting. H uses the AFS section 471(c) inventory method of accounting. In H's 2019 AFS, H incurred $2 million in purchases of office supplies held for resale and recovered the $2 million as cost of goods sold. On January 5, 2020, H makes payment on $1.5 million of these office supplies. For purposes of the AFS section 471(c) inventory method of accounting, H can recover the $2 million of office supplies in 2019 because the amount has been included in cost of goods sold in its AFS inventory method and section 461 has been satisfied.

(6) ***Non-AFS section 471(c) inventory method*** —

(i) ***In general.*** A taxpayer that meets the gross receipts test described in paragraph (b)(2) of this section for a taxable year and that does not have an AFS, as defined in paragraph (b)(5)(ii) of this section, for such taxable year may use the non-AFS section 471(c) inventory method to account for its inventories for the taxable year in accordance with this paragraph (b)(6). The non-AFS section 471(c) inventory method is the method of accounting used for inventory in the taxpayer's books and records that properly reflect its business activities for non-tax purposes and are prepared in accordance with the taxpayer's accounting procedures. For purposes of the non-AFS section 471(c) inventory method, an inventory cost is a cost of production or resale that the taxpayer capitalizes to inventory property produced or property acquired for resale in its books and records, except as provided in paragraph (b)(6)(ii) of this section. Costs that are generally required to be capitalized to inventory under section 471(a), but that the taxpayer

does not capitalize in its books and records are not required to be capitalized to inventory. However, an inventory cost does not include a cost that is neither deductible nor otherwise recoverable but for paragraph (b)(5) of this section, in whole or in part, under a provision of the Internal Revenue Code (for example, section 162(c), (e), (f), (g), or 274). In lieu of the inventory method described in section 471(a), a taxpayer using the non-AFS section 471(c) inventory method recovers its applicable costs through its book inventory method of accounting. A taxpayer that has an AFS for such taxable year may not use the non-AFS section 471(c) inventory method.

(ii) ***Timing and amounts of costs.*** Notwithstanding the timing of costs reflected in the taxpayer's books and records, a taxpayer may not recover any costs that have not been paid or incurred under the taxpayer's overall method of accounting, as described in § 1.446-1(c)(1). For example, in the case of an accrual method taxpayer or a taxpayer using an accrual method for purchases and sales, inventory costs must satisfy the all events test, including economic performance, under section 461(h). See § 1.446-1(c)(1)(ii), and section 461 and the accompanying regulations.

(iii) ***Examples.*** The following examples illustrate the rules of paragraph (b)(6) of this section.

(A) ***Example 1.*** Taxpayer E is a C corporation that is engaged in the retail trade or business of selling beer, wine, and liquor. In 2019, E has average annual gross receipts for the prior 3-taxable-years of $15 million and is not otherwise prohibited from using the cash method under section 448(a)(3). E does not have an AFS for the 2019 taxable year. E is eligible to use the non-AFS section 471(c) inventory method of accounting. E uses the overall cash method, and the non-AFS section 471(c) inventory method of accounting for Federal income tax purposes. In E's electronic bookkeeping software, E treats all costs paid during the taxable year as presently deductible. As part of its regular business practice, E's employees take a physical count of inventory on E's selling floor and its warehouse on December 31, 2019, and E uses this physical count as part of its books and records for purposes of capitalizing and allocating costs to inventory. E also makes representations to its creditor of the cost of inventory on hand for specific categories of product it sells. E may not expense all of its costs paid during the 2019 taxable year because its books and records do not accurately reflect the inventory records used for non-tax purposes in its regular business activity. Instead, E must use the physical inventory count taken at the end of 2019 to determine how its capitalized costs are allocated and recovered.

(B) ***Example 2.*** Same facts as Example (1) in paragraph (b)(6)(iii)(A) of this section but E does not use the physical count to capitalize and allocate costs to inventory and does not make any representations about inventory on hand to any creditors. Although E pays or incurs costs that are generally required to be capitalized to inventory under section 471(a), because such costs are not capitalized to inventory in E's books and records, they are not required to be capitalized to inventory under paragraph (b)(6)(i) of this section.

(C) ***Example 3.*** Same facts as Example (1) in paragraph (b)(6)(iii)(A) of this section but E does not use the physical count to capitalize and allocate costs to inventory in its electronic bookkeeping software and does not make any representations about inventory on hand to any external parties. E does use the physical count to value inventory on hand for internal

reports to its shareholders. The internal reports to its shareholders are part of E's books and records and must be taken into account for E's non-AFS section 471(c) inventory method. E recovers its inventory costs consistent with its non-AFS section 471(c) inventory method.

(D) ***Example 4.*** Taxpayer F is a C corporation that is engaged in the manufacture of baseball bats. In 2019, F has average annual gross receipts for the prior 3-taxable-years of less than $25 million and is not otherwise prohibited from using the cash method under section 448(a)(3). F does not have an AFS for the 2019 taxable year. For Federal income tax purposes, F uses the overall cash method of accounting, and the non-AFS section 471(c) inventory method of accounting. For its books and records, F uses an overall accrual method and maintains inventories. In December 2019, F's financial statements show $500,000 of direct and indirect material costs. F pays its supplier in January 2020. Under paragraph (b)(6)(ii) of this section, F recovers its direct and indirect material costs in 2020.

(E) ***Example 5.*** Taxpayer G is a baker that reports its baking trade or business on Schedule C, Profit or Loss From Business, of the Form 1040, Individual Tax Return. In 2020, G's baking business has average annual gross receipts for the prior 3-taxable years of less than $100,000 and is not otherwise prohibited from using the cash method under section 448(a)(3). G does not have an AFS for the 2020 taxable year. For Federal income tax purposes, G uses the overall cash method of accounting and the non-AFS section 471(c) inventory method. In G's books and records for 2020 that properly reflects its business activities for non-tax purposes, G capitalizes the cost of its cookie ingredients to inventory but immediately expenses the cost of labor for G's employee who bakes the cookies. Under paragraphs (b)(6)(i) and (ii) of this section, G treats as an inventory cost the cost of its cookie ingredients and recovers such costs in accordance with the accounting procedures used to prepare its books and records, or, if later, when paid. Additionally, although the cost of direct labor is generally required to be capitalized to inventory under section 471(a), because such cost is not capitalized to inventory in G's books and records, it is not required to be capitalized to inventory under paragraph (b)(6)(i) of this section. Further, because such direct labor cost is generally deductible under section 162, and not otherwise required to be capitalized under section 263(a), G may deduct the cost of labor in the year G pays that expense.

(F) ***Example 6.*** Taxpayer H is a partnership engaged in the resale of beer, wine, and liquor. In 2020, H has average annual gross receipts for the prior 3-taxable-years of less than $25 million and is not otherwise prohibited from using the cash method under section 448(a)(3). H does not have an AFS for the 2020 taxable year. For Federal income tax purposes, H uses the overall cash method of accounting, and the non-AFS section 471(c) inventory method of accounting. For its books and records, H uses the overall cash method. As part of its regular business practice, H's employees take regular physical counts of the inventory on the shop floor and in the storeroom, however H's method of accounting for inventory for its books and records does not allocate costs between ending inventory and cost of goods sold, and instead expenses the cost of the inventory in the year it was paid for. Prior to December 2020, H acquires and pays for $500,000 of beer, wine, and liquor. In addition, on December 1, 2020, H acquires $50,000 in beer and wine, and pays for this beer and wine on December 20, 2020. H may recover as deductions in 2020 the $550,000 of inventory costs.

(G) *Example 7.* Taxpayer J is a partnership engaged in the resale of beer, wine, and liquor. In 2020, J has average annual gross receipts for the prior 3-taxable-years of less than $25 million and is not otherwise prohibited from using the cash method under section 448(a)(3). J does not have an AFS for the 2020 taxable year. For Federal income tax purposes, J uses the overall cash method of accounting, and the non-AFS section 471(c) inventory method of accounting. For its books and records, J uses the overall cash method. J maintains a point-of-sale computer system that tracks acquisition costs and inventory levels of the beer, wine, and liquor. The ledger is periodically reconciled with physical counts performed by J's employees. J must use the physical inventory count and ledger to determine its ending inventory. J includes in cost of goods sold for 2020 those inventory costs that are not properly allocated to ending inventory.

(7) ***Effect of section 471(c) on other provisions.*** Nothing in section 471(c) shall have any effect on the application of any other provision of law that would otherwise apply, and no inference shall be drawn from section 471(c) with respect to the application of any such provision. For example, an accrual method taxpayer that includes inventory costs in its AFS is required to satisfy section 461 before such cost can be included in cost of goods sold for the taxable year. Similarly, nothing in section 471(c) affects the requirement under section 446(e) that a taxpayer secure the consent of the Commissioner before changing its method of accounting. If an item of income or expense is not treated consistently from year to year, that treatment may not clearly reflect income, notwithstanding the application of this section. Finally, nothing in section 471(c) permits the deduction or recovery of any cost that a taxpayer is otherwise precluded from deducting or recovering under any other provision in the Code or Regulations.

(8) ***Method of accounting*** —

(i) ***In general.*** A change in the method of treating inventory under this paragraph (b) is a change in method of accounting under sections 446 and 481 and the accompanying regulations. A taxpayer changing its method of accounting under paragraph (b) of this section may do so only with the consent of the Commissioner as required under section 446(e) and § 1.446-1. For example, a taxpayer using the AFS section 471(c) inventory method or non-AFS section 471(c) inventory method that wants to change its method of accounting for inventory in its AFS, or its books and records, respectively, is required to secure the consent of the Commissioner before using this new method for Federal income tax purposes. However, a change from having an AFS to not having an AFS, or vice versa, without a change in the underlying method for inventory for financial reporting purposes that affects Federal income tax is not a change in method of accounting for such inventory under section 446(e). In the case of any taxpayer required by this section to change its method of accounting for any taxable year, the change shall be treated as a change initiated by the taxpayer. For rules relating to the clear reflection of income and the pattern of consistent treatment of an item, see section 446 and § 1.446-1. The amount of the net section 481(a) adjustment and the adjustment period necessary to implement a change in method of accounting required under this section are determined under § 1.446-1(e) and the applicable administrative procedures to obtain the Commissioner's consent to change a method of accounting as published in the Internal Revenue Bulletin (see Revenue Procedure 2015-13 (2015-5 IRB 419) (or successor) (see also § 601.601(d)(2) of this chapter).

(ii) ***Automatic consent for certain method changes.*** Certain changes in method of accounting made under paragraph (b) of this section may be made under the procedures to obtain the automatic consent of the Commissioner to change a method of accounting. See Revenue Procedure 2015-13 (2015-5 IRB 419) (or successor) (see § 601.601(d)(2) of this chapter)). In certain situations, special terms and conditions may apply.

(c) ***Applicability dates.*** This section applies for taxable years beginning on or after January 5, 2021. However, for a taxable year beginning after December 31, 2017, and before January 5, 2021, a taxpayer may apply this section provided that the taxpayer follows all the applicable rules contained in this section for such taxable year and all subsequent taxable years.

[T.D. 6500, 25 FR 11724, Nov. 26, 1960, as amended by T.D. 9942, 86 FR 275, Jan. 5, 2021]

§ 1.471-2 Valuation of inventories.

(a) Section 471 provides two tests to which each inventory must conform:

(1) It must conform as nearly as may be to the best accounting practice in the trade or business, and

(2) It must clearly reflect the income.

(b) It follows, therefore, that inventory rules cannot be uniform but must give effect to trade customs which come within the scope of the best accounting practice in the particular trade or business. In order to clearly reflect income, the inventory practice of a taxpayer should be consistent from year to year, and greater weight is to be given to consistency than to any particular method of inventorying or basis of valuation so long as the method or basis used is in accord with §§ 1.471-1 through 1.471-11.

(c) The bases of valuation most commonly used by business concerns and which meet the requirements of section 471 are

(1) cost and

(2) cost or market, whichever is lower. (For inventories by dealers in securities, see § 1.471-5.) Any goods in an inventory which are unsalable at normal prices or unusable in the normal way because of damage, imperfections, shop wear, changes of style, odd or broken lots, or other similar causes, including second-hand goods taken in exchange, should be valued at bona fide selling prices less direct cost of disposition, whether subparagraph (1) or (2) of this paragraph is used, or if such goods consist of raw materials or partly finished goods held for use or consumption, they shall be valued upon a reasonable basis, taking into consideration the usability and the condition of the goods, but in no case shall such value be less than the scrap value. Bona fide selling price means actual offering of goods during a period ending not later than 30 days after inventory date. The burden of proof will rest upon the taxpayer to show that such exceptional goods as are valued upon such selling basis come within the classifications indicated above, and he shall maintain such records of the disposition of the goods as will enable a verification of the inventory to be made.

(d) In respect of normal goods, whichever method is adopted must be applied with reasonable consistency to the entire inventory of the taxpayer's trade or business except as to those goods inventoried under the last-in, first-out method authorized by section 472 or to animals inventoried under the elective unit, livestock-price-method authorized by § 1.471-6. See paragraph (d) of § 1.446-1 for rules permitting the use of different methods of accounting if the taxpayer has more than one trade or business. Where the taxpayer is engaged in more than one trade or business the Commissioner may require that the method of valuing inventories with respect to goods in one trade or business also be used with respect to similar

goods in other trades or businesses if, in the opinion of the Commissioner, the use of such method with respect to such other goods is essential to a clear reflection of income. Taxpayers were given an option to adopt the basis of either

(1) cost or

(2) cost or market, whichever is lower, for their 1920 inventories. The basis properly adopted for that year or any subsequent year is controlling, and a change can now be made only after permission is secured from the Commissioner. Application for permission to change the basis of valuing inventories shall be made in writing and filed with the Commissioner as provided in paragraph (e) of § 1.446-1. Goods taken in the inventory which have been so intermingled that they cannot be identified with specific invoices will be deemed to be the goods most recently purchased or produced, and the cost thereof will be the actual cost of the goods purchased or produced during the period in which the quantity of goods in the inventory has been acquired. But see section 472 as to last-in, first-out inventories. Where the taxpayer maintains book inventories in accordance with a sound accounting system in which the respective inventory accounts are charged with the actual cost of the goods purchased or produced and credited with the value of goods used, transferred, or sold, calculated upon the basis of the actual cost of the goods acquired during the taxable year (including the inventory at the beginning of the year), the net value as shown by such inventory accounts will be deemed to be the cost of the goods on hand. The balances shown by such book inventories should be verified by physical inventories at reasonable intervals and adjusted to conform therewith.

(e) Inventories should be recorded in a legible manner, properly computed and summarized, and should be preserved as a part of the accounting records of the taxpayer. The inventories of taxpayers on whatever basis taken will be subject to investigation by the district director, and the taxpayer must satisfy the district director of the correctness of the prices adopted.

(f) The following methods, among others, are sometimes used in taking or valuing inventories, but are not in accord with the regulations in this part:

(1) Deducting from the inventory a reserve for price changes, or an estimated depreciation in the value thereof.

(2) Taking work in process, or other parts of the inventory, at a nominal price or at less than its proper value.

(3) Omitting portions of the stock on hand.

(4) Using a constant price or nominal value for so-called normal quantity of materials or goods in stock.

(5) Including stock in transit, shipped either to or from the taxpayer, the title to which is not vested in the taxpayer.

(6) Segregating indirect production costs into fixed and variable production cost classifications (as defined in § 1.471-11(b)(3)(ii)) and allocating only the variable costs to the cost of goods produced while treating fixed costs as period costs which are currently deductible. This method is commonly referred to as the “direct cost” method.

(7) Treating all or substantially all indirect production costs (whether classified as fixed or variable) as period costs which are currently deductible. This method is generally referred to as the “prime cost” method.

[T.D. 6500, 25 FR 11724, Nov. 26, 1960, as amended by T.D. 7285, 38 FR 26185, Sept. 19, 1973]

§ 1.471-3 Inventories at cost.

Cost means:

(a) In the case of merchandise on hand at the beginning of the taxable year, the inventory price of such goods.

(b) In the case of merchandise purchased since the beginning of the taxable year, the invoice price less trade or other discounts, except strictly cash discounts approximating a fair interest rate, which may be deducted or not at the option of the taxpayer, provided a consistent course is followed. To this net invoice price should be added transportation or other necessary charges incurred in acquiring possession of the goods. But see § 1.263A-1(d)(2)(iv)(C) for special rules for certain direct material costs that in certain cases are permitted to be capitalized as additional section 263A costs by taxpayers using a simplified method under § 1.263A-2(b) or (c) or § 1.263A-3(d). For taxpayers acquiring merchandise for resale that are subject to the provisions of section 263A, see §§ 1.263A-1 and 1.263A-3 for additional amounts that must be included in inventory costs.

(c) In the case of merchandise produced by the taxpayer since the beginning of the taxable year,

(1) the cost of raw materials and supplies entering into or consumed in connection with the product,

(2) expenditures for direct labor, and

(3) indirect production costs incident to and necessary for the production of the particular article, including in such indirect production costs an appropriate portion of management expenses, but not including any cost of selling or return on capital, whether by way of interest or profit. See §§ 1.263A-1 and 1.263A-2 for more specific rules regarding the treatment of production costs.

(d) In any industry in which the usual rules for computation of cost of production are inapplicable, costs may be approximated upon such basis as may be reasonable and in conformity with established trade practice in the particular industry. Among such cases are:

(1) Farmers and raisers of livestock (see § 1.471-6);

(2) Miners and manufacturers who by a single process or uniform series of processes derive a product of two or more kinds, sizes, or grades, the unit cost of which is substantially alike (see § 1.471-7); and

(3) Retail merchants who use what is known as the “retail method” in ascertaining approximate cost (see § 1.471-8).

(e) ***Sales-based vendor allowances*** —

(1) ***Treatment of sales-based vendor chargebacks*** —

(i) ***In general.*** A sales-based vendor chargeback is an allowance, discount, or price rebate that a taxpayer becomes unconditionally entitled to by selling a vendor's merchandise to specific customers identified by the vendor at a price determined by the vendor. A sales-based vendor chargeback decreases cost of goods sold and does not reduce the cost of goods on hand at the end of the taxable year.

(ii) ***Example.*** The following example illustrates the provisions of this paragraph (e)(1).

> *Example.* (i) W is a wholesaler of pharmaceuticals. W purchases Drug X from the manufacturer, M, for $10x per unit. M has agreements with specific customers that allow those customers to acquire Drug X from M's wholesalers for $6x per unit. Under an agreement between W and M, W is required to sell Drug X to specific customers at the prices M has negotiated with such customers ($6x per unit) and, in exchange, M agrees to provide a price rebate to W equal to the difference between W's cost for Drug X and the price W is required to charge specific customers under the agreement (a difference of $4x per unit). W sells Drug X to specific customer Y for $6x. Under the agreement between W and M, the price rebate can be paid to W, credited against M's invoice to W for W's purchase of Drug X, or it can be credited to W's future purchases of drugs from M.
> (ii) Under the terms of the agreement, W is unconditionally entitled to the price rebate of Drug X when it sells Drug X to specific customer Y, a specifically identified customer of M. The price rebate received by W for the sale of Drug X to Y is a sales-based vendor chargeback. Therefore, the amount of the sales-based vendor charge back, $4x per unit for Drug X, whether paid to W, credited against M's invoice to W for W's purchase of Drug X or credited against a future purchase, decreases cost of goods sold and does not reduce the cost of Drug X on hand at the end of the taxable year.

(2) ***Treatment of other sales-based vendor allowances.*** [Reserved]

(f) Notwithstanding the other rules of this section, cost shall not include an amount which is of a type for which a deduction would be disallowed under section 162 (c), (f), or (g) and the regulations thereunder in the case of a business expense.

(g) ***Effective/applicability date.*** Paragraph (f) of this section applies to taxable years ending on or after January 13, 2014.

[T.D. 6500, 25 FR 11725, Nov. 26, 1960, as amended by T.D. 7285, 38 FR 26185, Sept. 19, 1973; T.D. 7345, 40 FR 7439, Feb. 20, 1975; T.D. 8131, 52 FR 10084, Mar. 30, 1987; T.D. 8482, 58 FR 42233, Aug. 9, 1993; T.D. 9652, 79 FR 2098, Jan. 13, 2014; T.D. 9843, 83 FR 58498, Nov. 20, 2018]

§ 1.471-4 Inventories at cost or market, whichever is lower.

(a) ***In general*** —

(1) ***Market definition.*** Under ordinary circumstances and for normal goods in an inventory, *market* means the aggregate of the current bid prices prevailing at the date of the inventory of the basic elements of cost reflected in inventories of goods purchased and on hand, goods in process of manufacture, and finished manufactured goods on hand. The basic elements of cost include direct materials, direct labor, and indirect costs required to be included in inventories by the taxpayer (e.g., under section 263A and its underlying regulations for taxpayers subject to that section). For taxpayers to which section 263A applies, for example, the basic elements of cost must reflect all direct costs and all indirect costs properly allocable to goods on hand at the inventory date at the current bid price of those costs, including but not limited to the cost of purchasing, handling, and storage activities conducted by the taxpayer, both prior to and subsequent to acquisition or production of the goods.

The determination of the current bid price of the basic elements of costs reflected in goods on hand at the inventory date must be based on the usual volume of particular cost elements purchased (or incurred) by the taxpayer.

(2) ***Fixed price contracts.*** Paragraph (a)(1) of this section does not apply to any goods on hand or in process of manufacture for delivery upon firm sales contracts (i.e., those not legally subject to cancellation by either party) at fixed prices entered into before the date of the inventory, under which the taxpayer is protected against actual loss. Any such goods must be inventoried at cost.

(3) ***Examples.*** The valuation principles in paragraph (a)(1) of this section are illustrated by the following examples:

Example 1. (i) Taxpayer A manufactures tractors. A values its inventory using cost or market, whichever is lower, under paragraph (a)(1) of this section. At the end of 1994, the cost of one of A's tractors on hand is determined as follows:

Direct materials	$3,000
Direct labor	4,000
Indirect costs under section 263A	3,000
Total section 263A costs (cost)	$10,000

(ii) A determines that the aggregate of the current bid prices of the materials, labor, and overhead required to reproduce the tractor at the end of 1994 are as follows:

Direct materials	$3,100
Direct labor	4,100
Indirect costs under section 263A	3,100
Total section 263A costs (market)	$10,300

(iii) In determining the lower of cost or market value of the tractor, A compares the cost of the tractor, $10,000, with the market value of the tractor, $10,300, in accordance with paragraph (c) of this section. Thus, under this section, A values the tractor at $10,000.

Example 2. (i) Taxpayer B purchases and resells several lines of shoes and is subject to section 263A. B values its inventory using cost or market, whichever is lower, under paragraph (a)(1) of this section. At the end of 1994, the cost of one pair of shoes on hand is determined

as follows:

Acquisition cost	$200
Indirect costs under section 263A	10
Total section 263A costs (cost)	$210

(ii) B determines the aggregate current bid prices prevailing at the end of 1994 for the elements of cost (both direct costs and indirect costs incurred prior and subsequent to acquisition of the shoes) based on the volume of the elements usually purchased (or incurred) by B as follows:

Acquisition cost	$178
Indirect costs under section 263A	12
Total § 263A costs (market)	$190

(iii) In determining the lower of cost or market value of the shoes, B compares the cost of the pair of shoes, $210, with the market value of the shoes, $190, in accordance with paragraph (c) of this section. Thus, under this section, B values the shoes at $190.

(b) ***Inactive markets.*** Where no open market exists or where quotations are nominal, due to inactive market conditions, the taxpayer must use such evidence of a fair market price at the date or dates nearest the inventory as may be available, such as specific purchases or sales by the taxpayer or others in reasonable volume and made in good faith, or compensation paid for cancellation of contracts for purchase commitments. Where the taxpayer in the regular course of business has offered for sale such merchandise at prices lower than the current price as above defined, the inventory may be valued at such prices less direct cost of disposition, and the correctness of such prices will be determined by reference to the actual sales of the taxpayer for a reasonable period before and after the date of the inventory. Prices which vary materially from the actual prices so ascertained will not be accepted as reflecting the market.

(c) ***Comparison of cost and market.*** Where the inventory is valued upon the basis of cost or market, whichever is lower, the market value of each article on hand at the inventory date shall be compared with the cost of the article, and the lower of such values shall be taken as the inventory value of the article.

(d) ***Effective date.*** This section applies to inventory valuations for taxable years beginning after December 31, 1993. For taxable years beginning before January 1, 1994, taxpayers must take reasonable positions on their federal income tax returns with respect to the application of section 263A, and must have otherwise complied with § 1.471-4 (as contained in the 26 CFR part 1 edition revised April 1, 1993). For purposes of this paragraph (d), a reasonable position as to the application of section 263A is a position consistent

with the temporary regulations, revenue rulings, revenue procedures, notices, and announcements concerning section 263A applicable in taxable years beginning before January 1, 1994. (See § 601.601(d)(2)(ii)(*b*) of this chapter.)

[T.D. 6500, 25 FR 11725, Nov. 26, 1960, as amended by T.D. 8482, 58 FR 42233, Aug. 9, 1993]

§ 1.471-5 Inventories by dealers in securities.

A dealer in securities who in his books of account regularly inventories unsold securities on hand either—

(a) At cost,

(b) At cost or market, whichever is lower, or

(c) At market value,

may make his return upon the basis upon which his accounts are kept, provided that a description of the method employed is included in or attached to the return, that all the securities are inventoried by the same method, and that such method is adhered to in subsequent years, unless another method is authorized by the Commissioner pursuant to a written application therefor filed as provided in paragraph (e) of § 1.446-1. A dealer in securities in whose books of account separate computations of the gain or loss from the sale of the various lots of securities sold are made on the basis of the cost of each lot shall be regarded, for the purposes of this section, as regularly inventorying his securities at cost. For the purposes of this section, a dealer in securities is a merchant of securities, whether an individual, partnership, or corporation, with an established place of business, regularly engaged in the purchase of securities and their resale to customers; that is, one who as a merchant buys securities and sells them to customers with a view to the gains and profits that may be derived therefrom. If such business is simply a branch of the activities carried on by such person, the securities inventoried as provided in this section may include only those held for purposes of resale and not for investment. Taxpayers who buy and sell or hold securities for investment or speculation, irrespective of whether such buying or selling constitutes the carrying on of a trade or business, and officers of corporations and members of partnerships who in their individual capacities buy and sell securities, are not dealers in securities within the meaning of this section. See §§ 1.263A-1 and 1.263A-3 for rules regarding the treatment of costs with respect to property acquired for resale.

[T.D. 6500, 25 FR 11725, Nov. 26, 1960, as amended by T.D. 8131, 52 FR 10084, Mar. 30, 1987; T.D. 8482, 58 FR 42234, Aug. 9, 1993]

§ 1.471-6 Inventories of livestock raisers and other farmers.

(a) A farmer may make his return upon an inventory method instead of the cash receipts and disbursements method. It is optional with the taxpayer which of these methods of accounting is used but, having elected one method, the option so exercised will be binding upon the taxpayer for the year for which the option is exercised and for subsequent years unless another method is authorized by the Commissioner as provided in paragraph (e) of § 1.446-1.

(b) In any change of accounting method from the cash receipts and disbursements method to an inventory method, adjustments shall be made as provided in section 481 (relating to adjustments required by change in method of accounting) and the regulations thereunder.

(c) Because of the difficulty of ascertaining actual cost of livestock and other farm products, farmers who render their returns upon an inventory method may value their inventories according to the “farm-price method”, and farmers raising livestock may value their inventories of animals according to either the

"farm-price method" or the "unit-livestock-price method". In addition, these inventory methods may be used to account for the costs of property produced in a farming business that are required to be capitalized under section 263A regardless of whether the property being produced is otherwise treated as inventory by the taxpayer, and regardless of whether the taxpayer is otherwise using the cash or an accrual method of accounting.

(d) The "farm-price method" provides for the valuation of inventories at market price less direct cost of disposition. If this method of valuation is used, it generally must be applied to all property produced by the taxpayer in the trade or business of farming, except as to livestock accounted for, at the taxpayer's election, under the unit livestock method of accounting. However, see § 1.263A-4(c)(3) for an exception to this rule. If the use of the "farm-price method" of valuing inventories for any taxable year involves a change in method of valuing inventories from that employed in prior years, permission for such change shall first be secured from the Commissioner as provided in paragraph (e) of § 1.446-1.

(e) The "unit-livestock-price method" provides for the valuation of the different classes of animals in the inventory at a standard unit price for each animal within a class. A livestock raiser electing this method of valuing his animals must adopt a reasonable classification of the animals in his inventory with respect to the age and kind included so that the unit prices assigned to the several classes will reasonably account for the normal costs incurred in producing the animals within such classes. Thus, if a cattle raiser determines that it costs approximately $15 to produce a calf, and $7.50 each year to raise the calf to maturity, his classifications and unit prices would be as follows: Calves, $15; yearlings, $22.50; 2-year olds, $30; mature animals, $37.50. The classification selected by the livestock raiser, and the unit prices assigned to the several classes, are subject to approval by the district director upon examination of the taxpayer's return.

(f) A taxpayer that elects to use the "unit-livestock-price method" must apply it to all livestock raised, whether for sale or for draft, breeding, or dairy purposes. The inventoriable costs of animals raised for draft, breeding, or dairy purposes can, at the election of the livestock raiser, be included in inventory or treated as property used in a trade or business subject to depreciation after maturity. *See* § 1.263A-4 for rules regarding the computation of inventoriable costs for purposes of the unit-livestock-price method. Once established, the methods of accounting used by the taxpayer to determine unit prices and to classify animals must be consistently applied in all subsequent taxable years. A taxpayer that uses the unit-livestock-price method must annually reevaluate its unit prices and adjust the prices either upward to reflect increases, or downward to reflect decreases, in the costs of raising livestock. The consent of the Commissioner is not required to make such upward or downward adjustments. No other changes in the classification of animals or unit prices may be made without the consent of the Commissioner. *See* § 1.446-1(e) for procedures for obtaining the consent of the Commissioner. The provisions of this paragraph (f) apply to taxable years ending after October 28, 2002.

(g) A livestock raiser who uses the "unit-livestock-price method" must include in his inventory at cost any livestock purchased, except that animals purchased for draft, breeding, or dairy purposes can, at the election of the livestock raiser, be included in inventory or be treated as property used in a trade or business subject to depreciation after maturity. If the animals purchased are not mature at the time of purchase, the cost should be increased at the end of each taxable year in accordance with the established unit prices, except that no increase is to be made in the taxable year of purchase if the animal is acquired during the last six months of that year. If the records maintained permit identification of a purchased animal, the cost of such animal will be eliminated from the closing inventory in the event of its sale or loss. Otherwise, the first-in, first-out method of valuing inventories must be applied.

(h) If a taxpayer using the "farm-price method" desires to adopt the "unit-livestock-price method" in valuing his inventories of livestock, permission for the change shall first be secured from the Commissioner as provided in paragraph (e) of § 1.446-1. However, a taxpayer who has filed returns on the basis of inventories at cost, or cost or market whichever is lower, may adopt the "unit-livestock-price method" for valuing his inventories of livestock without formal application for permission, but the classifications and unit prices selected are subject to approval by the district director upon examination of the taxpayer's return. A livestock raiser who has adopted a constant unit-price method of valuing livestock inventories and filed returns on that basis will be considered as having elected the "unit-livestock-price method".

(i) If returns have been made in which the taxable income has been computed upon incomplete inventories, the abnormality should be corrected by submitting with the return for the current taxable year a statement for the preceding taxable year. In this statement such adjustments shall be made as are necessary to bring the closing inventory for the preceding taxable year into agreement with the opening complete inventory for the current taxable year. If necessary clearly to reflect income, similar adjustments may be made as at the beginning of the preceding year or years, and the tax, if any be due, shall be assessed and paid at the rate of tax in effect for such year or years.

[T.D. 6500, 25 FR 11726, Nov. 26, 1960, as amended by T.D. 8131, 52 FR 10084, Mar. 30, 1987; T.D. 8729, 62 FR 44551, Aug. 22, 1997; T.D. 8897, 65 FR 50650, Aug. 21, 2000; T.D. 9019, 67 FR 65698, Oct. 28, 2002]

§ 1.471-7 Inventories of miners and manufacturers.

A taxpayer engaged in mining or manufacturing who by a single process or uniform series of processes derives a product of two or more kinds, sizes, or grades, the unit cost of which is substantially alike, and who in conformity to a recognized trade practice allocates an amount of cost to each kind, size, or grade of product, which in the aggregate will absorb the total cost of production, may, with the consent of the Commissioner, use such allocated cost as a basis for pricing inventories, provided such allocation bears a reasonable relation to the respective selling values of the different kinds, sizes, or grades of product. See section 472 as to last-in, first-out inventories.

[T.D. 6500, 25 FR 11726, Nov. 26, 1960]

§ 1.471-8 Inventories of retail merchants.

(a) ***In general.*** A taxpayer that is a retail merchant may use the retail inventory method of accounting described in this section. The retail inventory method uses a formula to convert the retail selling price of ending inventory to an approximation of cost (retail cost method) or an approximation of lower of cost or market (retail LCM method). A taxpayer may use the retail inventory method instead of valuing inventory at cost under § 1.471-3 or lower of cost or market under § 1.471-4.

(b) ***Computation*** —

(1) ***In general.*** A taxpayer computes the value of ending inventory under the retail inventory method by multiplying a cost complement by the retail selling prices of the goods on hand at the end of the taxable year.

(2) ***Cost complement*** —

(i) ***In general.*** The cost complement is a ratio computed as follows:

(A) The numerator is the value of beginning inventory plus the cost (as determined under § 1.471-3, except as otherwise provided in this section) of goods purchased during the taxable year.

(B) The denominator is the retail selling prices of beginning inventory plus the retail selling prices of goods purchased during the year (that is, the bona fide retail selling prices of the items at the time acquired), adjusted for all permanent markups and markdowns, including markup and markdown cancellations and corrections. The denominator is not adjusted for temporary markups or markdowns.

(ii) ***Vendor allowances required to reduce only cost of goods sold.*** A taxpayer may not reduce the numerator of the cost complement by the amount of an allowance, discount, or price rebate that is required under § 1.471-3(e) to reduce only cost of goods sold.

(3) ***Additional rules for cost complement for retail LCM method*** —

(i) ***In general*** —

(A) ***Margin protection payments.*** A taxpayer using the retail LCM method may not reduce the numerator of the cost complement by the amount of an allowance, discount, or price rebate that is related to or intended to compensate for a permanent reduction in the taxpayer's retail selling price of inventory (a margin protection payment).

(B) ***Markdowns.*** A taxpayer using the retail LCM method does not adjust the denominator of the cost complement for markdowns (and markdown cancellations or corrections). Markups must be reduced by the markdowns made to cancel or correct them.

(ii) ***Alternative methods for computing cost complement*** —

(A) ***In general.*** In lieu of the method described in paragraph (b)(3)(i) of this section, a taxpayer using the retail LCM method may compute the cost complement using one of the alternative methods described in this paragraph (b)(3)(ii). A taxpayer using an alternative method under this paragraph (b)(3)(ii) must use that method for all cost complements.

(B) ***Adjust numerator and denominator.*** A taxpayer using the retail LCM method may reduce the numerator of the cost complement by the amount of all margin protection payments if the taxpayer also reduces the denominator of the cost complement by the amount of the permanent reduction in retail selling price to which the margin protection payments relate (related markdowns).

(C) ***Deemed adjustment to denominator.*** A taxpayer using the retail LCM method that is able to determine the amount of all margin protection payments but cannot determine the amount of the related markdowns may reduce the numerator of the cost complement by the amount of all margin protection payments if the taxpayer also reduces the denominator by the amount that, in conjunction with the reduction of the numerator for the margin protection payments, maintains what would have been the cost complement percentage before taking into account the margin protection payment and the related markdown. A taxpayer that can determine the amount of a related markdown but not the associated margin protection payments may not use this method to compute an adjustment to the numerator.

(iii) ***Statistical sampling.*** A taxpayer using the retail LCM method may use statistical sampling in accordance with Rev. Proc. 2011-42 or any successor (see § 601.601(d) of this chapter), in conjunction with any method of computing the cost complement described in this paragraph (b)(3), to determine the amount of margin protection payments and related markdowns. A taxpayer using statistical sampling must use it for all margin protection payments and related markdowns associated with the inventory items valued by a particular cost complement, but is not required to use it for every cost complement.

(4) ***Ending inventory retail selling prices.*** A taxpayer must include all permanent markups and markdowns but may not include temporary markups or markdowns in determining the retail selling prices of goods on hand at the end of the taxable year. A taxpayer may not include a markdown that is not an actual reduction of retail selling price.

(c) ***Special rules for LIFO taxpayers.*** A taxpayer using the last-in, first-out (LIFO) inventory method with the retail inventory method uses the retail cost method. See § 1.472-1(k) for additional adjustments for a taxpayer using the LIFO inventory method with the retail cost method.

(d) ***Scope of retail inventory method.*** A taxpayer may use the retail inventory method to value ending inventory for a department, a class of goods, or a stock-keeping unit. A taxpayer maintaining more than one department or dealing in classes of goods with different percentages of gross profit must compute cost complements separately for each department or class of goods.

(e) ***Examples.*** The following examples illustrate the rules of this section:

Example 1. (i) R, a retail merchant who uses the retail LCM method and uses a calendar taxable year, has no beginning inventory in 2012. R purchases 40 tables during 2012 for $60 each for a total of $2,400. R offers the tables for sale at $100 each for an aggregate retail selling price of $4,000. R does not sell any tables at a price of $100, so R permanently marks down the retail selling price of its tables to $90 each. As a result of the $10 markdown, R's supplier provides R a $6 per table margin protection payment. R sells 25 tables during 2012 and has 15 tables in ending inventory at the end of 2012.
(ii) Under paragraph (b)(2)(i)(A) of this section, the numerator of the cost complement is the aggregate cost of the tables, $2,400. Under paragraph (b)(3)(i)(A) of this section, R may not reduce the numerator of the cost complement by the amount of the margin protection payment. Under paragraph (b)(2)(i)(B) of this section, the denominator of the cost complement is the aggregate of the bona fide retail selling prices of all the tables at the time acquired, $4,000. Under paragraph (b)(3)(i)(B) of this section, R does not adjust the denominator of the cost complement for the markdown. Therefore, R's cost complement is $2,400/$4,000, or 60%.

(iii) Under paragraph (b)(4) of this section, R includes the permanent markdown in determining year-end retail selling prices. Therefore, the aggregate retail selling price of R's ending table inventory is $1,350 (15 * $90). Approximating LCM under the retail method, the value of R's ending table inventory is $810 (60% * $1,350).

Example 2. (i) The facts are the same as in *Example 1,* except that R permanently reduces the retail selling price of all 40 tables to $50 per unit and the 15 tables on hand at the end of the year

are marked for sale at that price. The additional $40 markdown is unrelated to a margin protection payment or other allowance.
(ii) Under paragraph (b)(3)(i)(B) of this section, R does not adjust the denominator of the cost complement for the markdown. Therefore, R's cost complement is $2,400/$4,000, or 60%.

(iii) Under paragraph (b)(4) of this section, R includes the permanent markdowns in determining year-end retail selling prices. Therefore, the aggregate retail selling price of R's ending inventory is $750 (15 * $50). Approximating LCM under the retail method, the value of R's ending inventory is $450 (60% * $750).

Example 3. (i) The facts are the same as in *Example 1,* except that R computes the cost complement using the alternative method under paragraph (b)(3)(ii)(B) of this section.
(ii) R reduces the numerator of the cost complement by the margin protection payments of $240 ($6 * 40) and reduces the denominator of the cost complement by the related markdowns of $400 ($10 * 40). Therefore, R's cost complement is $2,160/$3,600, or 60%.

(iii) Under paragraph (b)(4) of this section, R includes the permanent markdown in determining year-end retail selling prices. Therefore, the aggregate retail selling price of R's ending table inventory is $1,350 (15 * $90). Approximating LCM under the retail method, the value of R's ending table inventory is $810 (60% * $1,350).

Example 4. (i) The facts are the same as in *Example 1,* except that R cannot determine the amount of its related markdowns and computes the cost complement using the alternative method under paragraph (b)(3)(ii)(C) of this section.
(ii) R reduces the numerator of the cost complement by the margin protection payments of $240 ($6 * 40). R reduces the denominator of the cost complement by the amount that, in conjunction with the reduction in the numerator, maintains the cost complement percentage before taking into account the margin protection payments and the related markdowns. R's original cost complement was 60% ($2,400/$4,000). The numerator of R's new cost complement is $2,160 ($2,400−$240). Therefore, R reduces the denominator by $400, which maintains the cost complement of 60% ($2,160/$3,600).

(iii) Under paragraph (b)(4) of this section, R includes the permanent markdowns in determining year-end retail selling prices. Therefore, the aggregate retail selling price of R's ending table inventory is $1,350 (15 * $90). Approximating LCM under the retail method, the value of R's ending table inventory is $810 (60% * $1,350).

Example 5. (i) The facts are the same as in *Example 1,* except that R uses the LIFO inventory method. R must value inventories at cost and, under paragraph (c) of this section, uses the retail cost method.

(ii) Under paragraph (b)(2)(i)(A) of this section, R reduces the numerator of the cost complement by the amount of the margin protection payment. Under paragraph (b)(2)(i)(B) of this section, R includes the permanent markdown in the denominator of the cost complement. Therefore, R's cost complement is $2,160/$3,600, or 60%.

(iii) Under paragraph (b)(4) of this section, R includes the permanent markdown in determining year-end retail selling prices. Therefore, the aggregate retail selling price of R's ending inventory is $1,350 (15 * $90). Approximating cost under the retail method, the value of R's ending inventory is $810 (60% * $1,350).

(f) ***Effective/applicability date.*** This section applies to taxable years beginning after December 31, 2014. For taxable years beginning before January 1, 2015, see § 1.471-8 as contained in 26 CFR part 1, revised April 1, 2014.

[T.D. 9688, 79 FR 48036, Aug. 15, 2014]

§ 1.471-9 Inventories of acquiring corporations.

For additional rules in the case of certain corporate acquisitions specified in section 381(a), see section 381(c)(5) and the regulations thereunder.

[T.D. 6500, 25 FR 11727, Nov. 26, 1960]

§ 1.471-10 Applicability of long-term contract methods.

See § 1.460-2 for rules providing for the application of the long-term contract methods to certain manufacturing contracts.

[T.D. 8067, 51 FR 393, Jan. 6, 1986, as amended by T.D. 8929, 66 FR 2240, Jan. 11, 2001]

§ 1.471-11 Inventories of manufacturers.

(a) ***Use of full absorption method of inventory costing.*** In order to conform as nearly as may be possible to the best accounting practices and to clearly reflect income (as required by section 471 of the Code), both direct and indirect production costs must be taken into account in the computation of inventoriable costs in accordance with the “full absorption” method of inventory costing. Under the full absorption method of inventory costing production costs must be allocated to goods produced during the taxable year, whether sold during the taxable year or in inventory at the close of the taxable year determined in accordance with the taxpayer's method of identifying goods in inventory. Thus, the taxpayer must include as inventoriable costs all direct production costs and, to the extent provided by paragraphs (c) and (d) of this section, all indirect production costs. For purposes of this section, the term “financial reports” means financial reports (including consolidated financial statements) to shareholders, partners, beneficiaries or other proprietors and for credit purposes. See also § 1.263A-1T with respect to the treatment of production costs incurred in taxable years beginning after December 31, 1986, and before January 1, 1994. See also §§ 1.263A-1 and 1.263A-2 with respect to the treatment of production costs incurred in taxable years beginning after December 31, 1993.

(b) ***Production costs —***

(1) ***In general.*** Costs are considered to be production costs to the extent that they are incident to and necessary for production or manufacturing operations or processes. Production costs include direct production costs and fixed and variable indirect production costs.

(2) ***Direct production costs.***

(i) Costs classified as "direct production costs" are generally those costs which are incident to and necessary for production or manufacturing operations or processes and are components of the cost of either direct material or direct labor. Direct material costs include the cost of those materials which become an integral part of the specific product and those materials which are consumed in the ordinary course of manufacturing and can be identified or associated with particular units or groups of units of that product. See § 1.471-3 for the elements of direct material costs. Direct labor costs include the cost of labor which can be identified or associated with particular units or groups of units of a specific product. The elements of direct labor costs include such items as basic compensation, overtime pay, vacation and holiday pay, sick leave pay (other than payments pursuant to a wage continuation plan under section 105(d)), shift differential, payroll taxes and payments to a supplemental unemployment benefit plan paid or incurred on behalf of employees engaged in direct labor. For the treatment of rework labor, scrap, spoilage costs, and any other costs not specifically described as direct production costs see § 1.471-11(c)(2).

(ii) Under the full absorption method, a taxpayer must take into account all items of direct production cost in his inventoriable costs. Nevertheless, a taxpayer will not be treated as using an incorrect method of inventory costing if he treats any direct production costs as indirect production costs, provided such costs are allocated to the taxpayer's ending inventory to the extent provided by paragraph (d) of this section. Thus, for example, a taxpayer may treat direct labor costs as part of indirect production costs (for example, by use of the conversion cost method), provided all such costs are allocated to ending inventory to the extent provided by paragraph (d) of this section.

(3) ***Indirect production costs*** —

(i) ***In general.*** The term "indirect production costs" includes all costs which are incident to and necessary for production or manufacturing operations or processes other than direct production costs (as defined in subparagraph (2) of this paragraph). Indirect production costs may be classified as to kind or type in accordance with acceptable accounting principles so as to enable convenient identification with various production or manufacturing activities or functions and to facilitate reasonable groupings of such costs for purposes of determining unit product costs.

(ii) ***Fixed and variable classifications.*** For purposes of this section, fixed indirect production costs are generally those costs which do not vary significantly with changes in the amount of goods produced at any given level of production capacity. These fixed costs may include, among other costs, rent and property taxes on buildings and machinery incident to and necessary for manufacturing operations or processes. On the other hand, variable indirect production costs are generally those costs which do vary significantly with changes in the amount of goods produced at any given level of production capacity. These variable costs may include, among other costs, indirect materials, factory janitorial supplies, and utilities. Where a particular cost contains both fixed and variable elements, these elements should be segregated into fixed and

variable classifications to the extent necessary under the taxpayer's method of allocation, such as for the application of the practical capacity concept (as described in paragraph (d) (4) of this section).

(c) ***Certain indirect and production costs*** —

(1) ***General rule.*** Except as provided in paragraph (c)(3) of this section and in paragraph (d)(6)(v) of § 1.451-3, in order to determine whether indirect production costs referred to in paragraph (b) of this section must be included in a taxpayer's computation of the amount of inventoriable costs, three categories of costs have been provided in subparagraph (2) of this paragraph. Costs described in subparagraph (2)(i) of this paragraph must be included in the taxpayer's computation of the amount of inventoriable costs, regardless of their treatment by the taxpayer in his financial reports. Costs described in subparagraph (2)(ii) of this paragraph need not enter into the taxpayer's computation of the amount of inventoriable costs, regardless of their treatment by the taxpayer in his financial reports. Costs described in subparagraph (2)(iii) of this paragraph must be included in or excluded from the taxpayer's computation of the amount inventoriable costs in accordance with the treatment of such costs by the taxpayer in his financial reports and generally accepted accounting principles. For the treatment of indirect production costs described in subparagraph (2) of this paragraph in the case of a taxpayer who is not using comparable methods of accounting for such costs for tax and financial reporting see paragraph (c)(3) of this section. For contracts entered into after December 31, 1982, notwithstanding this section, taxpayers who use an inventory method of accounting for extended period long-term contracts (as defined in paragraph (b)(3) of § 1.451-3) for tax purposes may be required to use the cost allocation rules provided in paragraph (d)(6) of § 1.451-3 rather than the cost allocation rules provided in this section. See paragraph (d)(6)(v) of § 1.451-3. After a taxpayer has determined which costs must be treated as indirect production costs includible in the computation of the amount of inventoriable costs, such costs must be allocated to a taxpayer's ending inventory in a manner prescribed by paragraph (d) of this section.

(2) ***Includibility of certain indirect production costs*** —

(i) ***Indirect production*** costs included in inventoriable costs. Indirect production costs which must enter into the computation of the amount of inventoriable costs (regardless of their treatment by a taxpayer in his financial reports) include:

(*a*) Repair expenses,

(*b*) Maintenance,

(*c*) Utilities, such as heat, power and light,

(*d*) Rent,

(*e*) Indirect labor and production supervisory wages, including basic compensation, overtime pay, vacation and holiday pay, sick leave pay (other than payments pursuant to a wage continuation plan under section 105(d), shift differential, payroll taxes and contributions to a supplemental unemployment benefit plan,

(*f*) Indirect materials and supplies,

(*g*) Tools and equipment not capitalized, and

(*h*) Costs of quality control and inspection,

to the extent, and only to the extent, such costs are incident to and necessary for production or manufacturing operations or processes.

(ii) ***Costs not included in inventoriable costs.*** Costs which are not required to be included for tax purposes in the computation of the amount of inventoriable costs (regardless of their treatment by a taxpayer in his financial reports) include:

(*a*) Marketing expenses,

(*b*) Advertising expenses,

(*c*) Selling expenses,

(*d*) Other distribution expenses,

(*e*) Interest,

(*f*) Research and experimental expenses including engineering and product development expenses,

(*g*) Losses under section 165 and the regulations thereunder,

(*h*) Percentage depletion in excess of cost depletion,

(*i*) Depreciation and amortization reported for Federal income tax purposes in excess of depreciation reported by the taxpayer in his financial reports,

(*j*) Income taxes attributable to income received on the sale of inventory,

(*k*) Pension contributions to the extent that they represent past services cost,

(*l*) General and administrative expenses incident to and necessary for the taxpayer's activities as a whole rather than to production or manufacturing operations or processes, and

(*m*) Salaries paid to officers attributable to the performance of services which are incident to and necessary for the taxpayer's activities taken as a whole rather than to production or manufacturing operations or processes.

Notwithstanding the preceding sentence, if a taxpayer consistently includes in his computation of the amount of inventoriable costs any of the costs described in the preceding sentence, a change in such method of inclusion shall be considered a change in method of accounting within the meaning of sections 446, 481, and paragraph (e)(4) of this section.

(iii) ***Indirect production costs includible in inventoriable costs depending upon treatment in taxpayer's financial reports.*** In the case of costs listed in this subdivision, the inclusion or exclusion of such costs from the amount of inventoriable costs for purposes of a taxpayer's financial reports shall determine whether such costs must be included in or excluded from the computation of inventoriable costs for tax purposes, but only if such treatment is not inconsistent with generally accepted accounting principles. In the case of costs which are not included in subdivision (i) or (ii) of this subparagraph, nor listed in this subdivision, whether such costs must be included in or excluded from the computation of inventoriable costs for tax purposes depends upon the extent to which such costs are similar to costs included in subdivision (i) or (ii), and if such costs are dissimilar to costs in subdivision (i) or (ii), such costs shall be treated as included in or excludable from the amount of inventoriable costs in accordance with this subdivision. The costs listed in this subdivision are:

(a) ***Taxes.*** Taxes otherwise allowable as a deduction under section 164 (other than State and local and foreign income taxes) attributable to assets incident to and necessary for production or manufacturing operations or processes. Thus, for example, the cost of State and local property taxes imposed on a factory or other production facility and any State and local taxes imposed on inventory must be included in or excluded from the computation of the amount of inventoriable costs for tax purposes depending upon their treatment by a taxpayer in his financial reports.

(b) ***Depreciation and depletion.*** Depreciation reported in financial reports and cost depletion on assets incident to and necessary for production or manufacturing operations or processes. In computing cost depletion under this section, the adjusted basis of such assets shall be reduced by cost depletion and not by percentage depletion taken thereon.

(c) ***Employee benefits.*** Pension and profit-sharing contributions representing current service costs otherwise allowable as a deduction under section 404, and other employee benefits incurred on behalf of labor incident to and necessary for production or manufacturing operations or processes. These other benefits include workmen's compensation expenses, payments under a wage continuation plan described in section 105(d), amounts of a type which would be includible in the gross income of employees under non-qualified pension, profit-sharing and stock bonus plans, premiums on life and health insurance and miscellaneous benefits provided for employees such as safety, medical treatment, cafeteria, recreational facilities, membership dues, etc., which are otherwise allowable as deductions under chapter 1 of the Code.

(d) ***Costs attributable to strikes, rework labor, scrap and spoilage.*** Costs attributable to rework labor, scrap and spoilage which are incident to and necessary for production or manufacturing operations or processes and costs attributable to strikes incident to production or manufacturing operation or processes.

(e) ***Factory administrative expenses.*** Administrative costs of production (but not including any cost of selling or any return on capital) incident to and necessary for production or manufacturing operations or processes.

(f) ***Officers' salaries.*** Salaries paid to officers attributable to services performed incident to and necessary for production or manufacturing operations or processes.

(g) ***Insurance costs.*** Insurance costs incident to and necessary for production or manufacturing operations or processes such as insurance on production machinery and equipment. A change in the taxpayer's treatment in his financial reports of costs described in this subdivision which results in a change in treatment of such costs for tax purposes shall constitute a change in method of accounting within the meaning of sections 446 and 481 to which paragraph (e) applies.

(3) ***Exception.*** Except as provided in paragraph (d)(6) of § 1.451-3, in the case of a taxpayer whose method of accounting for production costs in his financial reports is not comparable to his method of accounting for such costs for tax purposes (such as a taxpayer using the prime cost method for purposes of financial reports), the following rules apply:

(i) ***Indirect production costs included in inventoriable costs.*** Indirect production costs which must enter into the computation of the amount of inventoriable costs (to the extent, and only to the extent, such costs are incident to and necessary for production or manufacturing operations or processes) include:

(*a*) Repair expenses,

(*b*) Maintenance,

(*c*) Utilities, such as heat, power and light,

(*d*) Rent,

(*e*) Indirect labor and production supervisory wages, including basic compensation, overtime pay, vacation and holiday pay, sick leave pay (other than payments pursuant to a wage continuation plan under section 105(d)), shift differential, payroll taxes and contributions to a supplemental unemployment benefit plan,

(*f*) Indirect materials and supplies,

(*g*) Tools and equipment not capitalized,

(*h*) Costs of quality control and inspection,

(*i*) Taxes otherwise allowable as a deduction under section 164 (other than State and local and foreign income taxes),

(*j*) Depreciation and amortization reported for financial purposes and cost depletion,

(*k*) Administrative costs of production (but not including any cost of selling or any return on capital) incident to and necessary for production or manufacturing operations or processes,

(*l*) Salaries paid to officers attributable to services performed incident to and necessary for production or manufacturing operations or processes, and

(*m*) Insurance costs incident to and necessary for production or manufacturing operations or processes such as insurance on production machinery and equipment.

(ii) ***Costs not included in inventoriable costs.*** Costs which are not required to be included in the computation of the amount of inventoriable costs include:

(*a*) Marketing expenses,

(*b*) Advertising expenses,

(*c*) Selling expenses,

(*d*) Other distribution expenses,

(*e*) Interest,

(*f*) Research and experimental expenses including engineering and product development expenses,

(*g*) Losses under section 165 and the regulations thereunder,

(*h*) Percentage depletion in excess of cost depletion,

(*i*) Depreciation reported for Federal income tax purposes in excess of depreciation reported by the taxpayer in his financial reports,

(*j*) Income taxes attributable to income received on the sale of inventory,

(*k*) Pension and profit-sharing contributions representing either past service costs or representing current service costs otherwise allowable as a deduction under section 404, and other employee benefits incurred on behalf of labor. These other benefits include workmen's compensation expenses, payments under a wage continuation plan described in section 105(d), amounts of a type which would be includible in the gross income of employees under nonqualified pension, profit-sharing and stock bonus plans, premiums on life and health insurance and miscellaneous benefits provided for employees such as safety, medical treatment, cafeteria, recreational facilities, membership dues, etc., which are otherwise allowable as deductions under chapter 1 of the Code,

(*l*) Cost attributable to strikes, rework labor, scrap and spoilage,

(*m*) General and administrative expenses incident to and necessary for the taxpayer's activities as a whole rather than to production or manufacturing operations or processes, and

(*n*) Salaries paid to officers attributable to the performance of services which are incident to and necessary for the taxpayer's activities as a whole rather than to production or manufacturing operations or processes.

(d) ***Allocation methods*** —

(1) ***In general.*** Indirect production costs required to be included in the computation of the amount of inventoriable costs pursuant to paragraphs (b) and (c) of this paragraph must be allocated to goods in a taxpayer's ending inventory (determined in accordance with the taxpayer's method of identification) by the use of a method of allocation which fairly apportions such costs among the various items produced. Acceptable methods for allocating indirect production costs to the cost of goods in the ending inventory include the manufacturing burden rate method and the standard cost method. In addition, the practical capacity concept can be used in conjunction with either the manufacturing burden rate or standard cost method.

(2) ***Manufacturing burden rate method*** —

(i) ***In general.*** Manufacturing burden rates may be developed in accordance with acceptable accounting principles and applied in a reasonable manner. In developing a manufacturing burden rate, the factors described in paragraph (d)(2)(ii) of this section may be taken into account. Furthermore, if the taxpayer chooses, he may allocate different indirect production costs on the basis of different manufacturing burden rates. Thus, for example, the taxpayer may use one burden rate for allocating rent and another burden rate for allocating utilities. The method used by the taxpayer in allocating such costs in his financial reports shall be given great weight in determining whether the taxpayer's method employed for tax purposes fairly allocates indirect production costs to the ending inventory. Any change in a manufacturing burden rate which is merely a periodic adjustment to reflect current operating conditions, such as increases in automation or changes in operation, does not constitute a change in method of accounting under section 446. However, a change in the concept upon which such rates are developed does constitute a change in method of accounting requiring the consent of the Commissioner. The taxpayer shall maintain adequate records and working papers to support all manufacturing burden rate calculations.

(ii) ***Development of manufacturing burden rate.*** The following factors, among others, may be taken into account in developing manufacturing burden rates:

(*a*) The selection of an appropriate level of activity and period of time upon which to base the calculation of rates which will reflect operating conditions for purposes of the unit costs being determined;

(*b*) The selection of an appropriate statistical base such as direct labor hours, direct labor dollars, or machine hours, or a combination thereof, upon which to apply the overhead rate to determine production costs; and

(*c*) The appropriate budgeting, classification and analysis of expenses (for example, the analysis of fixed and variable costs).

(iii) ***Operation of the manufacturing burden rate method.***

(*a*) The purpose of the manufacturing burden rate method used in conjunction with the full absorption method of inventory costing is to allocate an appropriate amount of indirect production costs to a taxpayer's goods in ending inventory by the use of predetermined rates intended to approximate the actual amount of indirect production costs incurred. Accordingly, the proper use of the manufacturing burden rate method under this section requires that any net negative or net positive difference between the total predetermined amount of indirect production costs allocated to the goods in ending inventory and the total amount of indirect production costs actually incurred and required to be allocated to such goods (i.e., the under or over-applied burden) must be treated as an adjustment to the taxpayer's ending inventory in the taxable year in which such difference arises. However, if such adjustment is not significant in amount in relation to the taxpayer's total actual indirect production costs for the year then such adjustment need not be allocated to the taxpayer's goods in ending inventory unless such allocation is made in the taxpayer's financial reports. The taxpayer must treat both positive and negative adjustments consistently.

(*b*) Notwithstanding subdivision (*a*), the practical capacity concept may be used to determine the total amount of fixed indirect production costs which must be allocated to goods in ending inventory. See subparagraph (4) of this paragraph.

(3) ***Standard cost method*** —

(i) ***In general.*** A taxpayer may use the so-called “standard cost” method of allocating inventoriable costs to the goods in ending inventory, provided he treats variances in accordance with the procedures prescribed in paragraph (d)(3)(ii) of this section. The method used by the taxpayer in allocating such costs in his financial reports shall be given great weight in determining whether the taxpayer's method employed for tax purposes fairly allocates indirect production costs to the ending inventory. For purposes of this subparagraph, a “net positive overhead variance” shall mean the excess of total standard (or estimated) indirect production costs over total actual indirect production costs and a “net negative overhead variance” shall mean the excess of total actual indirect production costs over total standard (or estimated) indirect production costs.

(ii) ***Treatment of variances.***

(*a*) The proper use of the standard cost method pursuant to this subparagraph requires that a taxpayer must reallocate to the goods in ending inventory a pro rata portion of any net negative or net positive overhead variances and any net negative or net positive direct production cost variances. The taxpayer must apportion such variances among his

various items in ending inventory. However, if such variances are not significant in amount in relation to the taxpayer's total actual indirect production costs for the year then such variances need not be allocated to the taxpayer's goods in ending inventory unless such allocation is made in the taxpayer's financial reports. The taxpayer must treat both positive and negative variances consistently.

(*b*) Notwithstanding subdivision (*a*), the practical capacity concept may be used to determine the total amount of fixed indirect production costs which must be allocated to goods in ending inventory. See subparagraph (4) of this paragraph.

(4) ***Practical capacity concept*** —

(i) ***In general.*** Under the practical capacity concept, the percentage of practical capacity represented by actual production (not greater than 100 percent), as calculated under subdivision (ii) of this subparagraph, is used to determine the total amount of fixed indirect production costs which must be included in the taxpayer's computation of the amount of inventoriable costs. The portion of such costs to be included in the taxpayer's computation of the amount of inventoriable costs is then combined with variable indirect production costs and both are allocated to the goods in ending inventory in accordance with this paragraph. See the example in subdivision (ii)(*d*) of this subparagraph. The difference (if any) between the amount of all fixed indirect production costs and the fixed indirect production costs which are included in the computation of the amount of inventoriable costs under the practical capacity concept is allowable as a deduction for the taxable year in which such difference occurs.

(ii) ***Calculation of practical capacity*** —

(*a*) ***In general.*** Practical capacity and theoretical capacity (as described in (*c*) of this subdivision) may be computed in terms of tons, pounds, yards, labor hours, machine hours, or any other unit of production appropriate to the cost accounting system used by a particular taxpayer. The determination of practical capacity and theoretical capacity should be modified from time to time to reflect a change in underlying facts and conditions such as increased output due to automation or other changes in plant operation. Such a change does not constitute a change in method of accounting under sections 446 and 481.

(*b*) ***Based upon taxpayer's experience.*** In selecting an appropriate level of production activity upon which to base the calculation of practical capacity, the taxpayer shall establish the production operating conditions expected during the period for which the costs are being determined, assuming that the utilization of production facilities during operations will be approximately at capacity. This level of production activity is frequently described as practical capacity for the period and is ordinarily based upon the historical experience of the taxpayer. For example, a taxpayer operating on a 5-day, 8-hour basis may have a “normal” production of 100,000 units a year based upon three years of experience.

(*c*) ***Based upon theoretical capacity.*** Practical capacity may also be established by the use of “theoretical” capacity, adjusted for allowances for estimated inability to achieve maximum production, such as machine breakdown, idle time, and other normal work stoppages. Theoretical capacity is the level of production the manufacturer could reach if all machines and departments were operated continously at peak efficiency.

(*d*) ***Example.*** The provisions of (*c*) of this subdivision may be illustrated by the following example:

Corporation X operates a stamping plant with a theoretical capacity of 50 units per hour. The plant actually operates 1960 hours per year based on an 8-hour day, 5 day week basis and 15 shutdown days for vacations and holidays. A reasonable allowance for down time (the time allowed for ordinary and necessary repairs and maintenance) is 5 percent of practical capacity before reduction for down time. Assuming no loss of production during starting up, closing down, or employee work breaks, under these facts and circumstances X may properly make a practical capacity computation as follows:

Practical capacity without allowance for down time based on theoretical capacity per hour is (1960 × 50)	98,000
Reduction for down time (98,000 × 5 percent)	4,900
Practical capacity	93,100

The 93,100 unit level of activity (*i.e.,* practical capacity) would, therefore, constitute an appropriate base for calculating the amount of fixed indirect production costs to be included in the computation of the amount of inventoriable costs for the period under review. On this basis if only 76,000 units were produced for the period, the effect would be that approximately 81.6 percent (76,000, the actual number of units produced, divided by 93,100, the maximum number of units producible at practical capacity) of the fixed indirect production costs would be included in the computation of the amount of inventoriable costs during the year. The portion of the fixed indirect production costs not so included in the computation of the amount of inventoriable costs would be deductible in the year in which paid or incurred. Assume further that 7,600 units were on hand at the end of the taxable year and the 7,600 units were in the same proportion to the total units produced. Thus, 10 percent (7,600 units in inventory at the end of the taxable year, divided by 76,000, the actual number of units produced) of the fixed indirect production costs included in the computation of the amount of inventoriable costs (the above-mentioned 81.6 percent) and 10 percent of the variable indirect production costs would be included in the cost of the goods in the ending inventory, in accordance with a method of allocation provided by this paragraph.

(e) ***Transition to full absorption method of inventory costing*** —

(1) ***In general*** —

(i) ***Mandatory requirement.*** A taxpayer not using the full absorption method of inventory costing, as prescribed by paragraph (a) of this section, must change to that method. Any change to the full absorption method must be made by the taxpayer with respect to all trades or businesses of

the taxpayer to which this section applies. A taxpayer not using the full absorption method of inventory costing, as prescribed by paragraph (a) of this section, who makes the special election provided in subdivision (ii) of this subparagraph during the transition period described in subdivision (ii) of this subparagraph need not change to the full absorption method of inventory costing for taxable years prior to the year for which such election is made. In determining whether the taxpayer is changing to a more or less inclusive method of inventory costing, all positive and negative adjustments for all items and all trades or businesses of the taxpayer shall be aggregated. If the net adjustment is positive, paragraph (e)(3) shall apply, and if the net adjustment is negative, paragraph (e)(4) shall apply to the change. The rules otherwise prescribed in sections 446 and 481 and the regulations thereunder shall apply to any taxpayer who fails to make the special election in subdivision (ii) of this subparagraph. The transition rules of this paragraph are available only to those taxpayers who change their method of inventory costing.

(ii) ***Special election during two-year-transition period.*** If a taxpayer elects to change to the full absorption method of inventory costing during the transition period provided herein, he may elect on Form 3115 to change to such full absorption method of inventory costing and, in so doing, employ the transition procedures and adopt any of the transition methods prescribed in subparagraph (3) of this paragraph. Such election shall be made during the first 180 days of any taxable year beginning on or after September 19, 1973 and before September 19, 1975 (i.e., the “transition period”) and the change in inventory costing method shall be made for the taxable year in which the election is made. Notwithstanding the preceding sentence if the taxpayer's prior returns have been examined by the Service prior to Sept. 19, 1973, and there is a pending issue involving the taxpayer's method of inventory costing, the taxpayer may request the application of this regulation by agreeing and filing a letter to that effect with the district director, within 90 days after September 19, 1973 to change to the full absorption method for the first taxable year of the taxpayer beginning after Sept. 19, 1973 and subsequently filing Form 3115 within the first 180 days of such taxable year of change.

(iii) ***Change initiated by the Commissioner.*** A taxpayer who properly makes an election under subdivision (ii) of this subparagraph shall be considered to have made a change in method of accounting not initiated by the taxpayer, notwithstanding the provisions of § 1.481-1(c)(5). Thus, any of the taxpayer's “pre-1954 inventory balances” with respect to such inventory shall not be taken into account as an adjustment under section 481. For purposes of this paragraph, a “pre-1954 inventory balance” is the net amount of the adjustments which would have been required if the taxpayer had made such change in his method of accounting with respect to his inventory in his first taxable year which began after December 31, 1953, and ended after August 16, 1954. See section 481(a)(2) and § 1.481-3.

(2) ***Procedural rules for change.*** If a taxpayer makes an election pursuant to subparagraph (1)(ii) of this paragraph, the Commissioner's consent will be evidenced by a letter of consent to the taxpayer, setting forth the values of inventory, as provided by the taxpayer, determined under the full absorption method of inventory costing, except to the extent that no determination of such values is necessary under subparagraph (3)(ii)(B) of this paragraph (the cut off method), the amount of the adjustments (if any) required to be taken into account by section 481, and the treatment to be accorded to any such adjustments. Such full absorption values shall be subject to verification on examination by the district director. The taxpayer shall preserve at his principal place of business all records, data, and other evidence relating to the full absorption values of inventory.

(3) ***Transition methods.*** In the case of a taxpayer who properly makes an election under subparagraph (1)(ii) of this paragraph during the transition period—

(i) ***10-year adjustment period.*** Such taxpayer may elect to take any adjustment required by section 481 with respect to any inventory being revalued under the full absorption method into account ratably over a period designated by the taxpayer at the time of such election, not to exceed the lesser of 10 taxable years commencing with the year of transition or the number of years the taxpayer has been on the inventory method from which he is changing. If the taxpayer dies or ceases to exist in a transaction other than one to which section 381(a) of the Code applies or if the taxpayer's inventory (determined under the full absorption method) on the last day of any taxable year is reduced (by other than a strike or involuntary conversion) by more than an amount equal to $33^{1}/_{3}$ percent of the taxpayer's inventory (determined under the full absorption method) as of the beginning of the year of change, the entire amount of the section 481 adjustment not previously taken into account in computing income shall be taken into account in computing income for the taxable year in which such taxpayer so ceases to exist or such taxpayer's inventory is so reduced.

(ii) ***Additional rules for LIFO taxpayers.*** A taxpayer who uses the LIFO method of inventory identification may either—

(*a*) Employ the special transition rules described in subdivision (i) of this subparagraph. Accordingly, all LIFO layers must be revalued under the full absorption method and the section 481 adjustment must be computed for all items in all layers in inventory, but no pre-1954 inventory balances shall be taken into account as adjustments under section 481; or

(*b*)

(*1*) Employ a cut-off method whereby the full absorption method is only applied in costing layers of inventory acquired during all taxable years beginning with the year for which an election is made under subparagraph (e)(1)(ii).

(*2*) In the case of a taxpayer using dollar value LIFO, employ a cut-off method whereby the taxpayer must use, for the year of change, the full absorption method in computing the base year cost and current cost of a dollar value inventory pool for the beginning of such year. The taxpayer shall not be required to recompute his LIFO inventories based on the full absorption method for a taxable year beginning prior to the year of change to the full absorption method. The base cost and layers of increment previously computed shall be retained and treated as if such base cost and layers of increment had been computed under the method authorized by this section. The taxpayer shall use the year of change as the base year in applying the double extension method or other method approved by the Commissioner, instead of the earliest year for which he adopted the LIFO method for any items in the pool.

(4) ***Transition to full absorption method of inventory costing from a method more*** inclusive of indirect production costs—

(i) ***Taxpayer has not previously changed to his present method pursuant to subparagraphs (1), (2), and (3) of this paragraph.*** If a taxpayer wishes to change to the full absorption method of inventory costing (as prescribed by paragraph (a) of this section) from a method of inventory costing which is more inclusive of indirect production costs and he has not previously changed to his present method by use of the special transition rules provided by subparagraphs (1), (2)

and (3) of this paragraph, he may elect on Form 3115 to change to the full absorption method of inventory costing and, in so doing, take into account any resulting section 481 adjustment generally over 10 taxable years commencing with the year of transition. The Commissioner's consent to such election will be evidenced by a letter of consent to the taxpayer setting forth the values of inventory, as provided by the taxpayer determined under the full absorption method of inventory costing, except to the extent that no determination of such values is necessary under subparagraph (3)(ii)(*b*) of this paragraph, the amount of the adjustments (if any) required to be taken into account by section 481, and the treatment to be accorded such adjustments, subject to terms and conditions specified by the Commissioner to prevent distortions of income. Such election must be made within the transition period described in subparagraph (1)(ii) of this paragraph. A change pursuant to this subparagraph shall be a change initiated by the taxpayer as provided by § 1.481-1(c)(5). Thus, any of the taxpayers "pre-1954 inventory balances" will be taken into account as an adjustment under section 481.

(ii) ***Taxpayer has previously changed to his present method pursuant to subparagraph (1), (2), and (3) of this paragraph or would satisfy all the requirements of subdivision (i) of this subparagraph but fails to elect within the transition period.*** If a taxpayer wishes to change to the full absorption method of inventory costing (as prescribed by paragraph (a) of this section) from a method of inventory costing which is more inclusive of indirect production costs and he has previously changed to his present method pursuant to subparagraphs (1), (2), and (3) of this paragraph or he would satisfy the requirements of subdivision (i) of this subparagraph but he fails to elect within the transition period, he must secure the consent of the Commissioner prior to making such change.

[T.D. 7285, 38 FR 26185, Sept. 19, 1973, as amended by T.D. 8067, 51 FR 393, Jan. 6, 1986; T.D. 8131, 52 FR 10084, Mar. 30, 1987; T.D. 8482, 58 FR 42234, Aug. 9, 1993]

§ 1.472-1 Last-in, first-out inventories.

(a) Any taxpayer permitted or required to take inventories pursuant to the provisions of section 471, and pursuant to the provisions of §§ 1.471-1 to 1.471-9, inclusive, may elect with respect to those goods specified in his application and properly subject to inventory to compute his opening and closing inventories in accordance with the method provided by section 472, this section, and § 1.472-2. Under this last-in, first-out (LIFO) inventory method, the taxpayer is permitted to treat those goods remaining on hand at the close of the taxable year as being:

(1) Those included in the opening inventory of the taxable year, in the order of acquisition and to the extent thereof, and

(2) Those acquired during the taxable year.

The LIFO inventory method is not dependent upon the character of the business in which the taxpayer is engaged, or upon the identity or want of identity through commingling of any of the goods on hand, and may be adopted by the taxpayer as of the close of any taxable year.

(b) If the LIFO inventory method is used by a taxpayer who regularly and consistently, in a manner similar to hedging on a futures market, matches purchases with sales, then firm purchases and sales contracts (i.e., those not legally subject to cancellation by either party) entered into at fixed prices on or before the date of the inventory may be included in purchases or sales, as the case may be, for the purpose of

determining the cost of goods sold and the resulting profit or loss, provided that this practice is regularly and consistently adhered to by the taxpayer and provided that, in the opinion of the Commissioner, income is clearly reflected thereby.

(c) A manufacturer or processor who has adopted the LIFO inventory method as to a class of goods may elect to have such method apply to the raw materials only (including those included in goods in process and in finished goods) expressed in terms of appropriate units. If such method is adopted, the adjustments are confined to costs of the raw material in the inventory and the cost of the raw material in goods in process and in finished goods produced by such manufacturer or processor and reflected in the inventory. The provisions of this paragraph may be illustrated by the following examples:

Example 1. Assume that the opening inventory had 10 units of raw material, 10 units of goods in process, and 10 units of finished goods, and that the raw material cost was 6 cents a unit, the processing cost 2 cents a unit, and overhead cost 1 cent a unit. For the purposes of this example, it is assumed that the entire amount of goods in process was 50 percent processed.

Opening Inventory

	Raw material	Goods in process	Finished goods
Raw material	$0.60	$0.60	$0.60
Processing cost		.10	.20
Overhead		.05	.10

In the closing inventory there are 20 units of raw material, 6 units of goods in process, and 8 units of finished goods and the costs were: Raw material 10 cents, processing cost 4 cents, and overhead 1 cent.

Closing Inventory
[Based on cost and prior to adjustment]

	Raw material	Goods in process	Finished goods
Raw material	$2.00	$0.60	$0.80
Processing costs		.12	.32
Overhead		.03	.08

	Raw material	Goods in process	Finished goods
Total	2.00	.75	1.20

There were 30 units of raw material in the opening inventory and 34 units in the closing inventory. The adjustment to the closing inventory would be as follows:

CLOSING INVENTORY AS ADJUSTED

	Raw material	Goods in process	Finished goods
Raw material:			
20 at 6 cents	$1.20		
6 at 6 cents		$0.36	
4 at 6 cents			$0.24
4 at 10 cents [1]			.40
Processing costs		.12	.32
Overhead		.03	.08
Total	1.20	.51	1.04

[1] *This excess is subject to determination of price under section 472(b)(1) and § 1.472-2. If the excess falls in goods in process, the same adjustment is applicable.*

The only adjustment to the closing inventory is the cost of the raw material; the processing costs and overhead cost are not changed.

Example 2. Assume that the opening inventory had 5 units of raw material, 10 units of goods in process, and 20 units of finished goods, with the same prices as in Example 1, and that the closing inventory had 20 units of raw material, 20 units of goods in process, and 10 units of finished goods, with raw material costs as in the closing inventory in Example 1. The adjusted closing inventory would be as follows in so far as the raw material is concerned:

Raw material, 20 at 6 cents	$1.20
Goods in process:	
15 at 6 cents	.90

[1] *This excess is subject to determination of price under section 472(b)(1) and § 1.472-2.*

5 at 10 cents [1]	.50
Finished goods:	
None at 6 cents	0.00
10 at 10 cents [1]	1.00

[1] *This excess is subject to determination of price under section 472(b)(1) and § 1.472-2.*

The 20 units of raw material in the raw state plus 15 units of raw material in goods in process make up the 35 units of raw material that were contained in the opening inventory.

(d) For the purposes of this section, raw material in the opening inventory must be compared with similar raw material in the closing inventory. There may be several types of raw materials, depending upon the character, quality, or price, and each type of raw material in the opening inventory must be compared with a similar type in the closing inventory.

(e) In the cotton textile industry there may be different raw materials depending upon marked differences in length of staple, in color or grade of the cotton. But where different staple lengths or grades of cotton are being used at different times in the same mill to produce the same class of goods, such differences would not necessarily require the classification into different raw materials.

(f) As to the pork packing industry a live hog is considered as being composed of various raw materials, different cuts of a hog varying markedly in price and use. Generally a hog is processed into approximately 10 primal cuts and several miscellaneous articles. However, due to similarity in price and use, these may be grouped into fewer classifications, each group being classed as one raw material.

(g) When the finished product contains two or more different raw materials as in the case of cotton and rayon mixtures, each raw material is treated separately and adjustments made accordingly.

(h) Upon written notice addressed to the Commissioner of Internal Revenue, Attention T:R, Washington, D.C. 20224 by the taxpayer, a taxpayer who has heretofore adopted the LIFO inventory method in respect of any goods may adopt the method authorized in this section and limit the election to the raw material including raw materials entering into goods in process and in finished goods. If this method is adopted as to any specific goods, it must be used exclusively for such goods for any prior taxable year (not closed by agreement) to which the prior election applies and for all subsequent taxable years, unless permission to change is granted by the Commissioner.

(i) The election may also be limited to that phase in the manufacturing process where a product is produced that is recognized generally as a salable product as, for example, in the textile industry where one phase of the process is the production of yarn. Since yarn is generally recognized as a salable product, the election may be limited to that portion of the process when yarn is produced. In the case of copper and brass processors, the election may be limited to the production of bars, plates, sheets, etc., although these may be further processed into other products.

(j) The election may also apply to any one raw material, when two or more raw materials enter into the composition of the finished product; for example, in the case of cotton and rayon yarn, the taxpayer may elect to inventory the cotton only. However, a taxpayer who has previously made an election to use the LIFO inventory method may not later elect to exclude any raw materials that were covered by such previous election.

(k) If a taxpayer using the retail method of pricing inventories, authorized by § 1.471-8, elects to use in connection therewith the LIFO inventory method authorized by section 472 and this section, the apparent cost of the goods on hand at the end of the year, determined pursuant to § 1.471-8, shall be adjusted to the extent of price changes therein taking place after the close of the preceding taxable year. The amount of any apparent inventory increase or decrease to be eliminated in this adjustment shall be determined by reference to acceptable price indexes established to the satisfaction of the Commissioner. Price indexes prepared by the United States Bureau of Labor Statistics which are applicable to the goods in question will be considered acceptable to the Commissioner. Price indexes which are based upon inadequate records, or which are not subject to complete and detailed audit within the Internal Revenue Service, will not be approved.

(l) If a taxpayer uses consistently the so-called “dollar-value” method of pricing inventories, or any other method of computation established to the satisfaction of the Commissioner as reasonably adaptable to the purpose and intent of section 472 and this section, and if such taxpayer elects under section 472 to use the LIFO inventory method authorized by such section, the taxpayer's opening and closing inventories shall be determined under section 472 by the use of the appropriate adaptation. See § 1.472-8 for rules relating to the use of the dollar-value method.

[T.D. 6500, 25 FR 11727, Nov. 26, 1960, as amended by T.D. 6539, 26 FR 518, Jan. 20, 1961]

§ 1.472-2 Requirements incident to adoption and use of LIFO inventory method.

Except as otherwise provided in § 1.472-1 with respect to raw material computations, with respect to retail inventory computations, and with respect to other methods of computation established to the satisfaction of the Commissioner as reasonably adapted to the purpose and intent of section 472, and in § 1.472-8 with respect to the “dollar-value” method, the adoption and use of the LIFO inventory method is subject to the following requirements:

(a) The taxpayer shall file an application to use such method specifying with particularity the goods to which it is to be applied.

(b) The inventory shall be taken at cost regardless of market value.

(c) Goods of the specified type included in the opening inventory of the taxable year for which the method is first used shall be considered as having been acquired at the same time and at a unit cost equal to the actual cost of the aggregate divided by the number of units on hand. The actual cost of the aggregate shall be determined pursuant to the inventory method employed by the taxpayer under the regulations applicable to the prior taxable year with the exception that restoration shall be made with respect to any writedown to market values resulting from the pricing of former inventories.

(d) Goods of the specified type on hand as of the close of the taxable year in excess of what were on hand as of the beginning of the taxable year shall be included in the closing inventory, regardless of identification with specific invoices and regardless of specific cost accounting records, at costs determined pursuant to the provisions of subparagraph (1) or (2) of this paragraph, dependent upon the character of the transactions in which the taxpayer is engaged:

(1)

(i) In the case of a taxpayer engaged in the purchase and sale of merchandise, such as a retail grocer or druggist, or engaged in the initial production of merchandise and its sale without processing, such as a miner selling his ore output without smelting or refining, such costs shall be determined—

(*a*) By reference to the actual cost of the goods most recently purchased or produced;

(*b*) By reference to the actual cost of the goods purchased or produced during the taxable year in the order of acquisition;

(*c*) By application of an average unit cost equal to the aggregate cost of all of the goods purchased or produced throughout the taxable year divided by the total number of units so purchased or produced, the goods reflected in such inventory increase being considered for the purposes of section 472 as having been acquired all at the same time; or

(*d*) Pursuant to any other proper method which, in the opinion of the Commissioner, clearly reflects income.

(ii) Whichever of the several methods of valuing the inventory increase is adopted by the taxpayer and approved by the Commissioner shall be consistently adhered to in all subsequent taxable years so long as the LIFO inventory method is used by the taxpayer.

(iii) The application of subdivisions (i) and (ii) of this subparagraph may be illustrated by the following examples:

Example 1. Suppose that the taxpayer adopts the LIFO inventory method for the taxable year 1957 with an opening inventory of 10 units at 10 cents per unit, that it makes 1957 purchases of 10 units as follows:

January	1 at	$0.11=	$0.11
April	2 at	.12=	.24
July	3 at	.13=	.39
October	4 at	.14=	.56
Totals	10		1.30

and that it has a 1957 closing inventory of 15 units. This closing inventory, depending upon the taxpayer's method of valuing inventory increases, will be computed as follows:

(*a*) Most recent purchases—

	10 at	$0.10	$1.00

October	4 at	.14	.56
July	1 at	.13	.13
Totals	15		1.69

(*b*) In order of acquisitions—

	10 at	$0.10	$1.00
January	1 at	.11	.11
April	2 at	.12	.24
July	2 at	.13	.26
Totals	15		1.61

or

(*c*) At an annual average—

	10 at	$0.10	$1.00
(130/10)	5 at	.13	.65
Totals	15		1.65

Example 2. Suppose that the taxpayer's closing inventory for 1958, the year following that involved in Example 1 of this subdivision, reflects an inventory decrease for the year, and not an increase; suppose that there is, accordingly, a 1958 closing inventory of 13 units. Inasmuch as the decreased closing inventory will be determined wholly by reference to the 15 units reflected in the opening inventory for the year, and will be taken “in the order of acquisition” pursuant to section 472 (b) (1), and inasmuch as the character of the taxpayer's opening inventory for 1958 will be dependent upon its method of valuing its 5-unit inventory increase for 1957, the closing inventory for 1958 will be computed as follows:

(*a*) In case the increase for 1957 was taken by reference to the most recent purchases—

From 1956	10 at	$0.10	$1.00
July 1957	1 at	.13	.13
October 1957	2 at	.14	.28
Totals	13		1.41

or

(*b*) In case the increase for 1957 was taken in the order of acquisition—

From 1956	10 at	$0.10	$1.00
January 1957	51 at	.11	.11
April 1957	2 at	.12	.24
Totals	13		1.35

or

(*c*) In case the increase for 1957 was taken on the basis of an average—

From 1956	10 at	$0.10	$1.00
From 1957	3 at	.13	.39
Totals	13		1.39

(2) In the case of a taxpayer engaged in manufacturing, fabricating, processing, or otherwise producing merchandise, such costs shall be determined:

(i) In the case of raw materials purchased or initially produced by the taxpayer, in the manner elected by the taxpayer under subparagraph (1) of this paragraph to the same extent as if the taxpayer were engaged in purchase and sale transactions; and

(ii) In the case of goods in process, regardless of the stage to which the manufacture, fabricating, or processing may have advanced, and in the case of finished goods, pursuant to any proper method which, in the opinion of the Commissioner, clearly reflects income.

(e) *LIFO conformity requirement* —

(1) ***In general.*** The taxpayer must establish to the satisfaction of the Commissioner that the taxpayer, in ascertaining the income, profit, or loss for the taxable year for which the LIFO inventory method is first used, or for any subsequent taxable year, for credit purposes or for purposes of reports to shareholders, partners, or other proprietors, or to beneficiaries, has not used any inventory method other than that referred to in § 1.472-1 or at variance with the requirement referred to in § 1.472-2(c). See paragraph (e)(2) of this section for rules relating to the meaning of the term "taxable year" as used in this paragraph. The following are not considered at variance with the requirement of this paragraph:

(i) The taxpayer's use of an inventory method other than LIFO for purposes of ascertaining information reported as a supplement to or explanation of the taxpayer's primary presentation of the taxpayer's income, profit, or loss for a taxable year in credit statements or financial reports (including preliminary and unaudited financial reports). See paragraph (e)(3) of this section for rules relating to the reporting of supplemental and explanatory information ascertained by the use of an inventory method other than LIFO.

(ii) The taxpayer's use of an inventory method other than LIFO to ascertain the value of the taxpayer's inventory of goods on hand for purposes of reporting the value of such inventories as assets. See paragraph (e)(4) of this section for rules relating to such disclosures.

(iii) The taxpayer's use of an inventory method other than LIFO for purposes of ascertaining information reported in internal management reports. See paragraph (e)(5) of this section for rules relating to such reports.

(iv) The taxpayer's use of an inventory method other than LIFO for purposes of issuing reports or credit statements covering a period of operations that is less than the whole of a taxable year for which the LIFO method is used for Federal income tax purposes. See paragraph (e)(6) of this section for rules relating to series of interim reports.

(v) The taxpayer's use of the lower of LIFO cost or market method to value LIFO inventories for purposes of financial reports and credit statements. However, except as provided in paragraph (e)(7) of this section, a taxpayer may not use market value in lieu of cost to value inventories for purposes of financial reports or credit statements.

(vi) The taxpayer's use of a costing method or accounting method to ascertain income, profit, or loss for credit purposes or for purposes of financial reports if such costing method or accounting method is neither inconsistent with the inventory method referred to in § 1.472-1 nor at variance with the requirement referred to in § 1.472-2(c), regardless of whether such costing method or accounting method is used by the taxpayer for Federal income tax purposes. See paragraph (e)(8) of this section for examples of such costing methods and accounting methods.

(vii) For credit purposes or for purposes of financial reports, the taxpayer's treatment of inventories, after such inventories have been acquired in a transaction to which section 351 applies from a transferor that used the LIFO method with respect to such inventories, as if such inventories had the same acquisition dates and costs as in the hands of the transferor.

(viii) For credit purposes or for purposes of financial reports relating to a taxable year, the taxpayer's determination of income, profit, or loss for the taxable year by valuing inventories in accordance with the procedures described in section 472(b) (1) and (3), notwithstanding that such valuation differs from the valuation of inventories for Federal income tax purposes because the taxpayer either—

(A) Adopted such procedures for credit or financial reporting purposes beginning with an accounting period other than the taxable year for which the LIFO method was first used by the taxpayer for Federal income tax purposes, or

(B) With respect to such inventories treated a business combination for credit or financial reporting purposes in a manner different from the treatment of the business combination for Federal income tax purposes.

(2) ***One-year periods other than a taxable year.*** The rules of this paragraph relating to the determination of income, profit, or loss for a taxable year and credit statements or financial reports that cover a taxable year also apply to the determination of income, profit, or loss for a one-year period other than a taxable year and credit statements or financial reports that cover a one-year period other than a taxable year, but only if the one-year period both begins and ends in a taxable year or years for which the taxpayer uses the LIFO method for Federal income tax purposes. For example, the requirements of paragraph (e)(1) of this section apply to a taxpayer's determination of income for purposes of a credit statement that covers a 52-week fiscal year beginning and ending in a taxable year for which the taxpayer uses the LIFO method for Federal income tax purposes. Similarly, in the case of a calendar year taxpayer, the requirements of paragraph (e)(1) of this section apply to the taxpayer's determination of income for purposes of a credit statement that covers the period October 1, 1981, through September 30, 1982, if the taxpayer uses the LIFO method for Federal income tax purposes in taxable years 1981 and 1982. However, the Commissioner will waive any violation of the requirements of this paragraph in the case of a credit statement or financial report that covers a one-year period other than a taxable year if the report was issued before January 22, 1981.

(3) ***Supplemental and explanatory information*** —

(i) ***Face of the income statement.*** Information reported on the face of a taxpayer's financial income statement for a taxable year is not considered a supplement to or explanation of the taxpayer's primary presentation of the taxpayer's income, profit, or loss for the taxable year in credit statements or financial reports. For purposes of paragraph (e)(3) of this section, the face of an income statement does not include notes to the income statement presented on the same page as the income statement, but only if all notes to the financial income statement are presented together.

(ii) ***Notes to the income statement.*** Information reported in notes to a taxpayer's financial income statement is considered a supplement to or explanation of the taxpayer's primary presentation of income, profit, or loss for the period covered by the income statement if all notes to the financial income statement are presented together and if they accompany the income statement in a single report. If notes to an income statement are issued in a report that does not include the income statement, the question of whether the information reported therein is supplemental or explanatory is determined under the rules in paragraph (e)(3)(iv) of this section.

(iii) ***Appendices and supplements to the income statement.*** Information reported in an appendix or supplement to a taxpayer's financial income statement is considered a supplement to or explanation of the taxpayer's primary presentation of income, profit, or loss for the period covered by the income statement if the appendix or supplement accompanies the income statement in a single report and the information reported in the appendix or supplement is clearly identified as a supplement to or explanation of the taxpayer's primary presentation of income, profit, or loss as reported on the face of the taxpayer's income statement. If an appendix or supplement to an income statement is issued in a report that does not include the

income statement, the question of whether the information reported therein is supplemental or explanatory is determined under the rules in paragraph (e)(3)(iv) of this section. For purposes of paragraph (e)(3)(iii) of this section, an appendix or supplement to an income statement includes written statements, schedules, and reports that are labelled supplements or appendices to the income statement. However, sections of an annual report such as those labelled “President's Letter”, “Management's Analysis”, “Statement of Changes in Financial Position”, “Summary of Key Figures”, and similar sections are reports described in paragraph (e)(3)(iv) of this section and are not considered “supplements or appendices to an income statement” within the meaning of paragraph (e)(3)(iii) of this section, regardless of whether such sections are also labelled as supplements or appendices. For purposes of paragraph (e)(3)(iii) of this section, information is considered to be clearly identified as a supplement to or explanation of the taxpayer's primary presentation of income, profit, or loss as reported on the face of the taxpayer's income statement if the information either—

(A) Is reported in an appendix or supplement that contains a general statement identifying all such supplemental or explanatory information;

(B) Is identified specifically as supplemental or explanatory by a statement immediately preceding or following the disclosure of the information;

(C) Is disclosed in the context of making a comparison to corresponding information disclosed both on the face of the taxpayer's income statement and in the supplement or appendix; or

(D) Is a disclosure of the effect on an item reported on the face of the taxpayer's income statement of having used the LIFO method.

For example, a restatement of cost of goods sold based on an inventory method other than LIFO is considered to be clearly identified as supplemental or explanatory information if the supplement or appendix containing the restatement contains a general statement that all information based on such inventory method is reported in the appendix or supplement as a supplement to or explanation of the taxpayer's primary presentation of income, profit, or loss as reported on the face of the taxpayer's income statement.

(iv) ***Other reports; in general.*** The rules of paragraph (e)(3) (iv), (v), and (vi) of this section apply to the following types of reports: news releases; letters to shareholders, partners, or other proprietors or beneficiaries; oral statements at press conferences, shareholders' meetings or securities analysts' meetings; sections of an annual report such as those labelled “President's Letter”, “Management's Analysis”, “Statement of Changes in Financial Position”, “Summary of Key Figures”, and similar sections; and reports other than a taxpayer's income statement or accompanying notes, appendices, or supplements. Information disclosed in such a report is considered a supplement to or explanation of the taxpayer's primary presentation of income, profit, or loss for the period covered by an income statement if the supplemental or explanatory information is clearly identified as a supplement to or explanation of the taxpayer's primary presentation of income, profit, or loss as reported on the face of the taxpayer's income statement and the specific item of information being explained or supplemented, such as the cost of goods sold, net income, or earnings per share ascertained using the LIFO method, is also reported in the other report.

(v) ***Other reports; disclosure of non-LIFO income.*** For purposes of paragraph (e)(3)(iv) of this section, supplemental or explanatory information is considered to have been clearly identified as such if it would be considered to have been clearly identified as such under the rules of paragraph (e)(3)(iii) of this section, relating to information reported in supplements or appendices to an income statement. For example, if at a securities analysts' meeting the following question is asked, "What would the reported earnings per share for the year have been if the FIFO method had been used to value inventories?", it would be permissible to respond "Reported earnings per share for the year were $6.00. If the company had used the FIFO method to value inventories this year and had computed earnings based upon the following assumptions, earnings per share would have been $8.20. FIFO earnings are based on the following assumptions:

"(A) The use of the same effective tax rate as used in computing LIFO earnings, and

"(B) All other conditions and assumptions remain the same, including—

"(*1*) The use of the LIFO method for Federal income tax purposes and

"(*2*) The investment of the tax savings resulting from such use of the LIFO method, the income from which is included in both LIFO and FIFO "earnings." "

(vi) ***Other reports; disclosure of effect on income.*** For purposes of paragraph (e)(3)(iv) of this section, if the only supplement to or explanation of a specific item is the effect on the item of having used LIFO instead of a method other than LIFO to value inventories, it is not necessary to also report the specific item. For example, if at a shareholders' meeting the question is asked, "What was the effect on reported earnings per share of not having used FIFO to value inventories?", it would be permissible to respond "If earnings would have been computed on the basis of the following assumptions, the use of LIFO instead of FIFO to value inventories would have decreased reported earnings per share by $2.20. FIFO earnings are based on the following assumptions:

"(A) The use of the same effective tax rate as used in computing LIFO earnings, and

"(B) All other conditions and assumptions remain the same, including—

"(*1*) The use of the LIFO method for Federal income tax purposes and

"(*2*) The investment of the tax savings resulting from such use of the LIFO method, the income from which is included in both LIFO and FIFO earnings."

(4) ***Inventory asset value disclosures.*** Under paragraph (e)(1)(ii) of this section, the use of an inventory method other than LIFO to ascertain the value of the taxpayer's inventories for purposes of reporting the value of the inventories as assets is not considered the ascertainment of income, profit, or loss and therefore is not considered at variance with the requirement of paragraph (e)(1) of this section. Therefore, a taxpayer may disclose the value of inventories on a balance sheet using a method other than LIFO to identify the inventories, and such a disclosure will not be considered at variance with the requirement of paragraph (e)(1) of this section. However, the disclosure of income, profit, or loss for a taxable year on a balance sheet issued to creditors, shareholders, partners, other proprietors, or beneficiaries is considered at variance with the requirement of paragraph (e)(1) of this section if such income information is ascertained using an inventory method other than LIFO and such income information is for a taxable year for which the LIFO method is used for Federal income tax purposes. Therefore, a balance sheet that discloses the net worth of a taxpayer, determined as if income had

been ascertained using an inventory method other than LIFO, may be at variance with the requirement of paragraph (e)(1) of this section if the disclosure of net worth is made in a manner that also discloses income, profit, or loss for a taxable year.

However, a disclosure of income, profit, or loss using an inventory method other than LIFO is not considered at variance with the requirement of paragraph (e)(1) of this section if the disclosure is made in the form of either a footnote to the balance sheet or a parenthetical disclosure on the face of the balance sheet. In addition, an income disclosure is not considered at variance with the requirement of paragraph (e)(1) of this section if the disclosure is made on the face of a supplemental balance sheet labelled as a supplement to the taxpayer's primary presentation of financial position, but only if, consistent with the rules of paragraph (e)(3) of this section, such a disclosure is clearly identified as a supplement to or explanation of the taxpayer's primary presentation of financial income as reported on the face of the taxpayer's income statement.

(5) ***Internal management reports.*** [Reserved]

(6) ***Series of interim reports.*** For purposes of paragraph (e)(1)(iv) of this section, a series of credit statements or financial reports is considered a single statement or report covering a period of operations if the statements or reports in the series are prepared using a single inventory method and can be combined to disclose the income, profit, or loss for the period. However, the Commissioner will waive any violation of the requirement of this paragraph in the case of a series of interim reports issued before February 6, 1978, that cover a taxable year, or a series of interim reports issued before January 22, 1981 that cover a one-year period other than a taxable year.

(7) ***Market value.*** The Commissioner will waive any violation of the requirement of this paragraph in the case of a taxpayer's use of market value in lieu of cost for a credit statement or financial report issued before January 22, 1981. However, the special rule of this (7) applies only to a taxpayer's use of market value in lieu of cost and does not apply to the use of a method of valuation such as market value in lieu of cost but not more than FIFO cost.

(8) ***Use of different methods.*** The following are examples of costing methods and accounting methods that are neither inconsistent with the inventory method referred to in § 1.472-1 nor at variance with the requirement of § 1.472-2(c) and which, under paragraph (e)(1)(vi) of this section, may be used to ascertain income, profit, or loss for credit purposes or for purposes of financial reports regardless of whether such method is also used by the taxpayer for Federal income tax purposes:

(i) Any method relating to the determination of which costs are includible in the computation of the cost of inventory under the full absorption inventory method.

(ii) Any method of establishing pools for inventory under the dollar-value LIFO inventory method.

(iii) Any method of determining the LIFO value of a dollar-value inventory pool, such as the double-extension method, the index method, and the link chain method.

(iv) Any method of determining or selecting a price index to be used with the index or link chain method of valuing inventory pools under the dollar-value LIFO inventory method.

(v) Any method permitted under § 1.472-8 for determining the current-year cost of closing inventory for purposes of using the dollar-value LIFO inventory method.

(vi) Any method permitted under § 1.472-2(d) for determining the cost of goods in excess of goods on hand at the beginning of the year for purposes of using a LIFO method other than the dollar-value LIFO method.

(vii) Any method relating to the classification of an item as inventory or a capital asset.

(viii) The use of an accounting period other than the period used for Federal income tax purposes.

(ix) The use of cost estimates.

(x) The use of actual cost of cut timber or the cost determined under section 631(a).

(xi) The use of inventory costs unreduced by any adjustment required by the application of section 108 and section 1017, relating to discharge of indebtedness.

(xii) The determination of the time when sales or purchases are accrued.

(xiii) The use of a method to allocate basis in the case of a business combination other than the method used for Federal income tax purposes.

(xiv) The treatment of transfers of inventory between affiliated corporations in a manner different from that required by § 1.1502-13.

(9) ***Reconciliation of LIFO inventory values.*** A taxpayer may be required to reconcile differences between the value of inventories maintained for credit or financial reporting purposes and for Federal income tax purposes in order to show that the taxpayer has satisfied the requirements of this paragraph.

(f) Goods of the specified type on hand as of the close of the taxable year preceding the taxable year for which this inventory method is first used shall be included in the taxpayer's closing inventory for such preceding taxable year at cost determined in the manner prescribed in paragraph (c) of this section.

(g) The LIFO inventory method, once adopted by the taxpayer with the approval of the Commissioner, shall be adhered to in all subsequent taxable years unless—

(1) A change to a different method is approved by the Commissioner; or

(2) The Commissioner determines that the taxpayer, in ascertaining income, profit, or loss for the whole of any taxable year subsequent to his adoption of the LIFO inventory method, for credit purposes or for the purpose of reports to shareholders, partners, or other proprietors, or to beneficiaries, has used any inventory method at variance with that referred to in § 1.472-1 and requires of the taxpayer a change to a different method for such subsequent taxable year or any taxable year thereafter.

(h) The records and accounts employed by the taxpayer in keeping his books shall be maintained in conformity with the inventory method referred to in § 1.472-1; and such supplemental and detailed inventory records shall be maintained as will enable the district director readily to verify the taxpayer's inventory computations as well as his compliance with the requirements of section 472 and §§ 1.472-1 through 1.472-7.

(i) Where the taxpayer is engaged in more than one trade or business, the Commissioner may require that if the LIFO method of valuing inventories is used with respect to goods in one trade or business the same method shall also be used with respect to similar goods in the other trades or businesses if, in the opinion of the Commissioner, the use of such method with respect to such other goods is essential to a clear reflection of income.

[T.D. 6500, 25 FR 11728, Nov. 26, 1960, as amended by T.D. 6539, 26 FR 518, Jan. 20, 1961; T.D. 7756, 46 FR 6920, Jan. 22, 1981; T.D. 7756, 46 FR 15685, Mar. 9, 1981]

§ 1.472-3 Time and manner of making election.

(a) The LIFO inventory method may be adopted and used only if the taxpayer files with his income tax return for the taxable year as of the close of which the method is first to be used a statement of his election to use such inventory method. The statement shall be made on Form 970 pursuant to the instructions printed with respect thereto and to the requirements of this section, or in such other manner as may be acceptable to the Commissioner. Such statement shall be accompanied by an analysis of all inventories of the taxpayer as of the beginning and as of the end of the taxable year for which the LIFO inventory method is proposed first to be used, and also as of the beginning of the prior taxable year. In the case of a manufacturer, this analysis shall show in detail the manner in which costs are computed with respect to raw materials, goods in process, and finished goods, segregating the products (whether in process or finished goods) into natural groups on the basis of either

(1) similarity in factory processes through which they pass, or

(2) similarity of raw materials used, or

(3) similarity in style, shape, or use of finished products. Each group of products shall be clearly described.

(b) The taxpayer shall submit for the consideration of the Commissioner in connection with the taxpayer's adoption or use of the LIFO inventory method such other detailed information with respect to his business or accounting system as may be at any time requested by the Commissioner.

(c) As a condition to the taxpayer's use of the LIFO inventory method, the Commissioner may require that the method be used with respect to goods other than those specified in the taxpayer's statement of election if, in the opinion of the Commissioner, the use of such method with respect to such other goods is essential to a clear reflection of income.

(d) Whether or not the taxpayer's application for the adoption and use of the LIFO inventory method should be approved, and whether or not such method, once adopted, may be continued, and the propriety of all computations incidental to the use of such method, will be determined by the Commissioner in connection with the examination of the taxpayer's income tax returns.

[T.D. 6500, 25 FR 11729, Nov. 26, 1960, as amended by T.D. 7295, 38 FR 34203, Dec. 12, 1973]

§ 1.472-4 Adjustments to be made by taxpayer.

A taxpayer may not change to the LIFO method of taking inventories unless, at the time he files his application for the adoption of such method, he agrees to such adjustments incident to the change to or from such method, or incident to the use of such method, in the inventories of prior taxable years or otherwise, as the district director upon the examination of the taxpayer's returns may deem necessary in order that the true income of the taxpayer will be clearly reflected for the years involved.

[T.D. 6500, 25 FR 11730, Nov. 26, 1960]

§ 1.472-5 Revocation of election.

An election made to adopt and use the LIFO inventory method is irrevocable, and the method once adopted shall be used in all subsequent taxable years, unless the use of another method is required by the Commissioner, or authorized by him pursuant to a written application therefor filed as provided in paragraph (e) of § 1.446-1.

[T.D. 6500, 25 FR 11730, Nov. 26, 1960]

§ 1.472-6 Change from LIFO inventory method.

If the taxpayer is granted permission by the Commissioner to discontinue the use of LIFO method of taking inventories, and thereafter to use some other method, or if the taxpayer is required by the Commissioner to discontinue the use of the LIFO method by reason of the taxpayer's failure to conform to the requirements detailed in § 1.472-2, the inventory of the specified goods for the first taxable year affected by the change and for each taxable year thereafter shall be taken—

(a) In conformity with the method used by the taxpayer under section 471 in inventorying goods not included in his LIFO inventory computations; or

(b) If the LIFO inventory method was used by the taxpayer with respect to all of his goods subject to inventory, then in conformity with the inventory method used by the taxpayer prior to his adoption of the LIFO inventory method; or

(c) If the taxpayer had not used inventories prior to his adoption of the LIFO inventory method and had no goods currently subject to inventory by a method other than the LIFO inventory method, then in conformity with such inventory method as may be selected by the taxpayer and approved by the Commissioner as resulting in a clear reflection of income; or

(d) In any event, in conformity with any inventory method to which the taxpayer may change pursuant to application approved by the Commissioner.

[T.D. 6500, 25 FR 11730, Nov. 26, 1960]

§ 1.472-7 Inventories of acquiring corporations.

For additional rules in the case of certain corporate acquisitions specified in section 381(a), see section 381(c)(5) and the regulations thereunder.

[T.D. 6500, 25 FR 11730, Nov. 26, 1960]

§ 1.472-8 Dollar-value method of pricing LIFO inventories.

(a) ***Election to use dollar-value method.*** Any taxpayer may elect to determine the cost of his LIFO inventories under the so-called “dollar-value” LIFO method, provided such method is used consistently and clearly reflects the income of the taxpayer in accordance with the rules of this section. The dollar-value method of valuing LIFO inventories is a method of determining cost by using “base-year” cost expressed in terms of total dollars rather than the quantity and price of specific goods as the unit of measurement. Under such method the goods contained in the inventory are grouped into a pool or pools as described in paragraphs (b) and (c) of this section. The term “base-year cost” is the aggregate of the cost (determined as of the beginning of the taxable year for which the LIFO method is first adopted, i.e., the base date) of all items in a pool. The taxable year for which the LIFO method is first adopted with respect to any item in the pool is the “base year” for that pool, except as provided in paragraph (g)(3) of this section. Liquidations and increments of items contained in the pool shall be reflected only in terms of a net liquidation or increment for the pool as a whole. Fluctuations may occur in quantities of various items within the pool, new items which properly fall within the pool may be added, and old items may disappear from the pool, all without necessarily effecting a change in the dollar value of the pool as a whole. An increment in the

LIFO inventory occurs when the end of the year inventory for any pool expressed in terms of base-year cost is in excess of the beginning of the year inventory for that pool expressed in terms of base-year cost. In determining the inventory value for a pool, the increment, if any, is adjusted for changing unit costs or values by reference to a percentage, relative to base-year-cost, determined for the pool as a whole. See paragraph (e) of this section. See also paragraph (f) of this section for rules relating to the change to the dollar-value LIFO method from another LIFO method.

(b) ***Principles for establishing pools of manufacturers and processors*** —

(1) ***Natural business unit pools.*** A pool shall consist of all items entering into the entire inventory investment for a natural business unit of a business enterprise, unless the taxpayer elects to use the multiple pooling method provided in subparagraph (3) of this paragraph. Thus, if a business enterprise is composed of only one natural business unit, one pool shall be used for all of its inventories, including raw materials, goods in process, and finished goods. If, however, a business enterprise is actually composed of more than one natural business unit, more than one pool is required. Where similar types of goods are inventoried in two or more natural business units of the taxpayer, the Commissioner may apportion or allocate such goods among the various natural business units, if he determines that such apportionment or allocation is necessary in order to clearly reflect the income of such taxpayer. Where a manufacturer or processor is also engaged in the wholesaling or retailing of goods purchased from others, any pooling of the LIFO inventory of such purchased goods for the wholesaling or retailing operations shall be determined in accordance with the rules of paragraph (c) of this section.

(2) ***Definition of natural business unit.***

(i) Whether an enterprise is composed of more than one natural business unit is a matter of fact to be determined from all the circumstances. The natural business divisions adopted by the taxpayer for internal management purposes, the existence of separate and distinct production facilities and processes, and the maintenance of separate profit and loss records with respect to separate operations are important considerations in determining what is a business unit, unless such divisions, facilities, or accounting records are set up merely because of differences in geographical location. In the case of a manufacturer or processor, a natural business unit ordinarily consists of the entire productive activity of the enterprise within one product line or within two or more related product lines including (to the extent engaged in by the enterprise) the obtaining of materials, the processing of materials, and the selling of manufactured or processed goods. Thus, in the case of a manufacturer or processor, the maintenance and operation of a raw material warehouse does not generally constitute, of itself, a natural business unit. If the taxpayer maintains and operates a supplier unit the production of which is both sold to others and transferred to a different unit of the taxpayer to be used as a component part of another product, the supplier unit will ordinarily constitute a separate and distinct natural business unit. Ordinarily, a processing plant would not in itself be considered a natural business unit if the production of the plant, although saleable at this stage, is not sold to others, but is transferred to another plant of the enterprise, not operated as a separate division, for further processing or incorporation into another product. On the other hand, if the production of a manufacturing or processing plant is transferred to a separate and distinct division of the taxpayer, which constitutes a natural business unit, the supplier unit itself will ordinarily be considered a natural business unit. However, the mere fact that a portion of the production of a manufacturing or processing plant may be sold to others at a certain stage of processing with the remainder of the production being further processed or incorporated into another product will not of itself be determinative that the activities devoted to the production

of the portion sold constitute a separate business unit. Where a manufacturer or processor is also engaged in the wholesaling or retailing of goods purchased from others, the wholesaling or retailing operations with respect to such purchased goods shall not be considered a part of any manufacturing or processing unit.

(ii) The rules of this subparagraph may be illustrated by the following examples:

Example 1. A corporation manufactures, in one division, automatic clothes washers and driers of both commercial and domestic grade as well as electric ranges, mangles, and dishwashers. The corporation manufactures, in another division, radios and television sets. The manufacturing facilities and processes used in manufacturing the radios and television sets are distinct from those used in manufacturing the automatic clothes washers, etc. Under these circumstances, the enterprise would consist of two business units and two pools would be appropriate, one consisting of all of the LIFO inventories entering into the manufacture of clothes washers and driers, electric ranges, mangles, and dishwashers and the other consisting of all of the LIFO inventories entering into the production of radio and television sets.

Example 2. A taxpayer produces plastics in one of its plants. Substantial amounts of the production are sold as plastics. The remainder of the production is shipped to a second plant of the taxpayer for the production of plastic toys which are sold to customers. The taxpayer operates his plastics plant and toy plant as separate divisions. Because of the different product lines and the separate divisions the taxpayer has two natural business units.

Example 3. A taxpayer is engaged in the manufacture of paper. At one stage of processing, uncoated paper is produced. Substantial amounts of uncoated paper are sold at this stage of processing. The remainder of the uncoated paper is transferred to the taxpayer's finishing mill where coated paper is produced and sold. This taxpayer has only one natural business unit since coated and uncoated paper are within the same product line.

(3) ***Multiple pools*** —(i) *Principles for establishing multiple pools.* (*a*) A taxpayer may elect to establish multiple pools for inventory items which are not within a natural business unit as to which the taxpayer has adopted the natural business unit method of pooling as provided in subparagraph (1) of this paragraph. Each such pool shall ordinarily consist of a group of inventory items which are substantially similar. In determining whether such similarity exists, consideration shall be given to all the facts and circumstances. The formulation of detailed rules for selection of pools applicable to all taxpayers is not feasible. Important considerations to be taken into account include, for example, whether there is substantial similarity in the types of raw materials used or in the processing operations applied; whether the raw materials used are readily interchangeable; whether there is similarity in the use of the products; whether the groupings are consistently followed for purposes of internal accounting and management; and whether the groupings follow customary business practice in the taxpayer's industry. The selection of pools in each case must also take into consideration such factors as the nature of the inventory items subject to the dollar-value LIFO method and the significance of such items to the taxpayer's business operations. Where similar types of goods are inventoried in natural business units and multiple pools of the taxpayer, the Commissioner may apportion or allocate such goods among the natural business units and the multiple pools, if he determines that such apportionment or allocation is necessary in order to clearly reflect the income of the taxpayer.

(*b*) Raw materials which are substantially similar shall be pooled together in accordance with the principles of this subparagraph. However, inventories of raw or unprocessed materials of an unlike nature may not be placed into one pool, even though such materials become part of otherwise identical finished products.

(*c*) Finished goods and goods-in-process in the inventory shall be placed into pools classified by major classes or types of goods. The same class or type of finished goods and goods-in-process shall ordinarily be included in the same pool. Where the material content of a class of finished goods and goods-in-process included in a pool has been changed, for example, to conform with current trends in an industry, a separate pool of finished goods and goods-in-process will not ordinarily be required unless the change in material content results in a substantial change in the finished goods.

(*d*) The requirement that pools be established by major types of materials or major classes of goods is not to be construed so as to preclude the establishment of a miscellaneous pool. Since a taxpayer may elect the dollar-value LIFO method with respect to all or any designated goods in his inventory, there may be a number of such inventory items covered in the election. A miscellaneous pool shall consist only of items which are relatively insignificant in dollar value by comparison with other inventory items in the particular trade or business and which are not properly includible as part of another pool.

(ii) *Raw materials content pools.* The dollar-value method of pricing LIFO inventories may be used in conjunction with the raw materials content method authorized in § 1.472-1. Raw materials (including the raw material content of finished goods and goods-in-process) which are substantially similar shall be pooled together in accordance with the principles of subdivision (i) of this subparagraph. However, inventories of materials of an unlike nature may not be placed into one pool, even though such materials become part of otherwise identical finished products.

(4) *IPIC method pools.* A manufacturer or processor that elects to use the inventory price index computation method described in paragraph (e)(3) of this section (IPIC method) for a trade or business may elect to establish dollar-value pools for those items accounted for using the IPIC method based on the 2-digit commodity codes (i.e., major commodity groups) in Table 6 (Producer price indexes and percent changes for commodity groupings and individual items, not seasonally adjusted) of the "PPI Detailed Report" published monthly by the United States Bureau of Labor Statistics (available from New Orders, Superintendent of Documents, PO Box 371954, Pittsburgh, PA 15250-7954). A taxpayer electing to establish dollar-value pools under this paragraph (b)(4) may combine IPIC pools that comprise less than 5 percent of the total current-year cost of all dollar-value pools to form a single miscellaneous IPIC pool. A taxpayer electing to establish dollar-value pools under this paragraph (b)(4) may combine a miscellaneous IPIC pool that comprises less than 5 percent of the total current-year cost of all dollar-value pools with the largest IPIC pool. Each of these 5 percent rules is a method of accounting. A taxpayer may not change to, or cease using, either 5 percent rule without obtaining the Commissioner's prior consent. Whether a specific IPIC pool or the miscellaneous IPIC pool satisfies the applicable 5 percent rule must be determined in the year of adoption or year of change (whichever is applicable) and redetermined every third taxable year. Any change in pooling required or permitted as a result of a 5 percent rule is a change in method of accounting. A taxpayer must secure the consent of the Commissioner pursuant to § 1.446-1(e) before combining or separating pools and must combine or separate its IPIC pools in accordance with paragraph (g)(2) of this section.

(c) *Principles for establishing pools for wholesalers, retailers, etc*—(1) *In general.* Items of inventory in the hands of wholesalers, retailers, jobbers, and distributors shall be placed into pools by major lines, types, or classes of goods. In determining such groupings, customary business classifications of the particular trade in which the taxpayer is engaged is an important consideration. An example of such customary

business classification is the department in the department store. In such case, practices are relatively uniform throughout the trade, and departmental grouping is peculiarly adapted to the customs and needs of the business. However, in appropriate cases, the principles set forth in paragraphs (b) (1) and (2) of this section, relating to pooling by natural business units, may be used, with permission of the Commissioner, by wholesalers, retailers, jobbers, or distributors. Where a wholesaler or retailer is also engaged in the manufacturing or processing of goods, the pooling of the LIFO inventory for the manufacturing or processing operations shall be determined in accordance with the rules of paragraph (b) of this section.

(2) ***IPIC method pools.*** A retailer that elects to use the inventory price index computation method described in paragraph (e)(3) of this section (IPIC method) for a trade or business may elect to establish dollar-value pools for those items accounted for using the IPIC method based on either the general expenditure categories (i.e., major groups) in Table 3 (Consumer Price Index for all Urban Consumers (CPI-U): U.S. city average, detailed expenditure categories) of the "CPI Detailed Report" or the 2-digit commodity codes (i.e., major commodity groups) in Table 6 (Producer price indexes and percent changes for commodity groupings and individual items, not seasonally adjusted) of the "PPI Detailed Report." A wholesaler, jobber, or distributor that elects to use the IPIC method for a trade or business may elect to establish dollar-value pools for any group of goods accounted for using the IPIC method and included within one of the 2-digit commodity codes (i.e., major commodity groups) in Table 6 (Producer price indexes and percent changes for commodity groupings and individual items, not seasonally adjusted) of the "PPI Detailed Report." The "CPI Detailed Report" and the "PPI Detailed Report" are published monthly by the United States Bureau of Labor Statistics (BLS) (available from New Orders, Superintendent of Documents, P.O. Box 371954, Pittsburgh, PA 15250-7954). A taxpayer electing to establish dollar-value pools under this paragraph (c)(2) may combine IPIC pools that comprise less than 5 percent of the total current-year cost of all dollar-value pools to form a single miscellaneous IPIC pool. A taxpayer electing to establish pools under this paragraph (c)(2) may combine a miscellaneous IPIC pool that comprises less than 5 percent of the total current-year cost of all dollar-value pools with the largest IPIC pool. Each of these 5 percent rules is a method of accounting. Thus, a taxpayer may not change to, or cease using, either 5 percent rule without obtaining the Commissioner's prior consent. Whether a specific IPIC pool or the miscellaneous IPIC pool satisfies the applicable 5 percent rule must be determined in the year of adoption or year of change (whichever is applicable) and redetermined every third taxable year. Any change in pooling required or permitted under a 5 percent rule is a change in method of accounting. A taxpayer must secure the consent of the Commissioner pursuant to section 1.446-1(e) before combining or separating pools and must combine or separate its IPIC pools in accordance with paragraph (g)(2) of this section.

(d) ***Determination of appropriateness of pools.*** Whether the number and the composition of the pools used by the taxpayer is appropriate, as well as the propriety of all computations incidental to the use of such pools, will be determined in connection with the examination of the taxpayer's income tax returns. Adequate records must be maintained to support the base-year unit cost as well as the current-year unit cost for all items priced on the dollar-value LIFO inventory method, regardless of the method authorized by paragraph (e) of this section which is used in computing the LIFO value of the dollar-value pool. The pool or pools selected must be used for the year of adoption and for all subsequent taxable years unless a change is required by the Commissioner in order to clearly reflect income, or unless permission to change is granted by the Commissioner as provided in paragraph (e) of § 1.446-1. However, see paragraph (h) of this section for authorization to change the method of pooling in certain specified cases.

(e) ***Methods of computation of the LIFO value of a dollar-value pool*** —

(1) ***Methods authorized.*** A taxpayer may ordinarily use only the so-called “double-extension” method for computing the base-year and current-year cost of a dollar-value inventory pool. Where the use of the double-extension method is impractical, because of technological changes, the extensive variety of items, or extreme fluctuations in the variety of the items, in a dollar-value pool, the taxpayer may use an index method for computing all or part of the LIFO value of the pool. An index may be computed by double-extending a representative portion of the inventory in a pool or by the use of other sound and consistent statistical methods. The index used must be appropriate to the inventory pool to which it is to be applied. The appropriateness of the method of computing the index and the accuracy, reliability, and suitability of the use of such index must be demonstrated to the satisfaction of the district director in connection with the examination of the taxpayer's income tax returns. The use of any so-called “link-chain” method will be approved for taxable years beginning after December 31, 1960, only in those cases where the taxpayer can demonstrate to the satisfaction of the district director that the use of either an index method or the double-extension method would be impractical or unsuitable in view of the nature of the pool. A taxpayer using either an index or link-chain method shall attach to his income tax return for the first taxable year beginning after December 31, 1960, for which the index or link-chain method is used, a statement describing the particular link-chain method or the method used in computing the index. The statement shall be in sufficient detail to facilitate the determination as to whether the method used meets the standards set forth in this subparagraph. In addition, a copy of the statement shall be filed with the Commissioner of Internal Revenue, Attention: T:R, Washington, D.C. 20224. The taxpayer shall submit such other information as may be requested with respect to such index or link-chain method. Adequate records must be maintained by the taxpayer to support the appropriateness, accuracy, and reliability of an index or link-chain method. A taxpayer may request the Commissioner to approve the appropriateness of an index or link-chain method for the first taxable year beginning after December 31, 1960, for which it is used. Such request must be submitted within 90 days after the beginning of the first taxable year beginning after December 31, 1960, in which the taxpayer desires to use the index or link-chain method, or on or before May 1, 1961, whichever is later. A taxpayer entitled to use the retail method of pricing LIFO inventories authorized by paragraph (k) of § 1.472-1 may use retail price indexes prepared by the United States Bureau of Labor Statistics. Any method of computing the LIFO value of a dollar-value pool must be used for the year of adoption and all subsequent taxable years, unless the taxpayer obtains the consent of the Commissioner in accordance with paragraph (e) of § 1.446-1 to use a different method.

(2) ***Double-extension method.***

(i) Under the double-extension method the quantity of each item in the inventory pool at the close of the taxable year is extended at both base-year unit cost and current-year unit cost. The respective extensions at the two costs are then each totaled. The first total gives the amount of the current inventory in terms of base-year cost and the second total gives the amount of such inventory in terms of current-year cost.

(ii) The total current-year cost of items making up a pool may be determined—

(*a*) By reference to the actual cost of the goods most recently purchased or produced;

(*b*) By reference to the actual cost of the goods purchased or produced during the taxable year in the order of acquisition;

(*c*) By application of an average unit cost equal to the aggregate cost of all of the goods purchased or produced throughout the taxable year divided by the total number of units so purchased or produced; or

(*d*) Pursuant to any other proper method which, in the opinion of the Commissioner, clearly reflects income.

(iii) Under the double-extension method a base-year unit cost must be ascertained for each item entering a pool for the first time subsequent to the beginning of the base year. In such a case, the base-year unit cost of the entering item shall be the current-year cost of that item unless the taxpayer is able to reconstruct or otherwise establish a different cost. If the entering item is a product or raw material not in existence on the base date, its cost may be reconstructed, that is, the taxpayer using reasonable means may determine what the cost of the item would have been had it been in existence in the base year. If the item was in existence on the base date but not stocked by the taxpayer, he may establish, by using available data or records, what the cost of the item would have been to the taxpayer had he stocked the item. If the base-year unit cost of the entering item is either reconstructed or otherwise established to the satisfaction of the Commissioner, such cost may be used as the base-year unit cost in applying the double-extension method. If the taxpayer does not reconstruct or establish to the satisfaction of the Commissioner a base-year unit cost, but does reconstruct or establish to the satisfaction of the Commissioner the cost of the item at some year subsequent to the base year, he may use the earliest cost which he does reconstruct or establish as the base-year unit cost.

(iv) To determine whether there is an increment or liquidation in a pool for a particular taxable year, the end of the year inventory of the pool expressed in terms of base-year cost is compared with the beginning of the year inventory of the pool expressed in terms of base-year cost. When the end of the year inventory of the pool is in excess of the beginning of the year inventory of the pool an increment occurs in the pool for that year. If there is an increment for the taxable year, the ratio of the total current-year cost of the pool to the total base-year cost of the pool must be computed. This ratio when multiplied by the amount of the increment measured in terms of base-year cost gives the LIFO value of such increment. The LIFO value of each such increment is hereinafter referred to in this section as the “layer of increment” and must be separately accounted for and a record thereof maintained as a separate layer of the pool, and may not be combined with a layer of increment occurring in a different year. On the other hand, when the end of the year inventory of the pool is less than the beginning of the year inventory of the pool, a liquidation occurs in the pool for that year. Such liquidation is to be reflected by reducing the most recent layer of increment by the excess of the beginning of the year inventory over the end of the year inventory of the pool. However, if the amount of the liquidation exceeds the amount of the most recent layer of increment, the preceding layers of increment in reverse chronological order are to be successively reduced by the amount of such excess until all the excess is absorbed. The base-year inventory is to be reduced by liquidation only to the extent that the aggregate of all liquidation exceeds the aggregate of all layers of increment.

(v) The following examples illustrate inventories under the double-extension the computation of the LIFO value of method.

> *Example 1.* (a) A taxpayer elects, beginning with the calendar year 1961, to compute his inventories by use of the LIFO inventory method under section 472 and further elects to use the dollar-value method in pricing such inventories as provided in paragraph (a) of this section. He creates Pool No. 1 for items A, B, and C. The composition of the

inventory for Pool No. 1 at the base date, January 1, 1961, is as follows:

Items	Units	Unit cost	Total cost
A	1,000	$5	$5,000
B	2,000	4	8,000
C	500	2	1,000
Total base-year cost at Jan. 1, 1961			14,000

(b) The closing inventory of Pool No. 1 at December 31, 1961, contains 3,000 units of A, 1,000 units of B, and 500 units of C. The taxpayer computes the current-year cost of the items making up the pool by reference to the actual cost of goods most recently purchased. The most recent purchases of items A, B, and C are as follows:

Item	Purchase date	Quantity purchased	Unit cost
A	Dec. 15, 1961	3,500	$6.00
B	Dec. 10, 1961	2,000	5.00
C	Nov. 1, 1961	500	2.50

(c) The inventory of Pool No. 1 at December 31, 1961, shown at base-year and current-year cost is as follows:

Item	Quantity	Dec. 31, 1961, inventory at Jan. 1, 1961, base-year cost		Dec. 31, 1961, inventory at current-year cost	
		Unit cost	Amount	Unit cost	Amount
A	3,000	$5.00	$15,000	$6.00	$18,000
B	1,000	4.00	4,000	5.00	5,000
C	500	2.00	1,000	2.50	1,250
Total			20,000		24,250

(d) If the amount of the December 31, 1961, inventory at base-year cost were equal to, or less than, the base-year cost of $14,000 at January 1, 1961, such amount would be the closing LIFO inventory at December 31, 1961. However, since the base-year cost of the closing LIFO inventory at December 31, 1961, amounts to $20,000, and is in excess

of the $14,000 base-year cost of the opening inventory for that year, there is a $6,000 increment in Pool No. 1 during the year. This increment must be valued at current-year cost, i.e., the ratio of 24,250/20,000, or 121.25 percent. The LIFO value of the inventory at December 31, 1961, is $21,275, computed as follows:

Pool No. 1

	Dec. 31, 1961, inventory at Jan. 1, 1961, base-year cost	Ratio of total current-year cost to total base-year cost (percent)	Dec. 31, 1961, inventory at LIFO value
Jan. 1, 1961, base cost	14,000	100.00	$14,000
Dec. 31, 1961, increment	6,000	121.25	7,275
Total	20,000		21,275

Example 2. (a) Assume the taxpayer in Example 1 during the year 1962 completely disposes of item C and purchases item D. Assume further that item D is properly includible in Pool No. 1 under the provisions of this section. The closing inventory on December 31, 1962, consists of quantities at current-year unit cost, as follows:

Items	Units	Current-year unit cost Dec. 31, 1962
A	2,000	$6.50
B	1,500	6.00
D	1,000	5.00

(b) The taxpayer establishes that the cost of item D, had he acquired it on January 1, 1961, would have been $2.00 per unit. Such cost shall be used as the base-year unit cost

for item D, and the LIFO computations at December 31, 1962, are made as follows:

Item	Quantity	Dec. 31, 1962, inventory at Jan. 1, 1961, base-year cost		Dec. 31, 1962, inventory at current-year cost	
		Unit cost	Amount	Unit cost	Amount
A	2,000	$5.00	$10,000	$6.50	$13,000
B	1,500	4.00	6,000	6.00	9,000
D	1,000	2.00	2,000	5.00	5,000
Total			18,000		27,000

(c) Since the closing inventory at base-year cost, $18,000, is less than the 1962 opening inventory at base-year cost, $20,000, a liquidation of $2,000 has occurred during 1962. This liquidation is to be reflected by reducing the most recent layer of increment. The LIFO value of the inventory at December 31, 1962, is $18,850, and is summarized as follows:

POOL NO. 1

	Dec. 31, 1962, inventory at Jan. 1, 1961, base-year cost	Ratio of total current-year cost to total base-year cost (percent)	Dec. 31, 1962, inventory at LIFO value
Jan. 1, 1961, base cost	14,000	100.00	$14,000
Dec. 31, 1961, increment	4,000	121.25	4,850
Total	18,000		18,850

(3) *Inventory price index computation (IPIC) method* —

(i) ***In general.*** The inventory price index computation method provided by this paragraph (e)(3) (IPIC method) is an elective method of determining the LIFO value of a dollar-value pool using consumer or producer price indexes published by the United States Bureau of Labor Statistics (BLS). A taxpayer using the IPIC method must compute a separate inventory price index (IPI) for each dollar-value pool. This IPI is used to convert the total current-year cost of the items in a dollar-value pool to base-year cost in order to determine whether there is an increment or liquidation in terms of base-year cost and, if there is an increment, to determine the LIFO

inventory value of the current year's layer of increment (layer). Using one IPI to compute the base-year cost of a dollar-value pool for the current taxable year and using a different IPI to compute the LIFO inventory value of the current taxable year's layer is not permitted under the IPIC method. The IPIC method will be accepted by the Commissioner as an appropriate method of computing an index, and the use of that index to compute the LIFO value of a dollar-value pool will be accepted as accurate, reliable, and suitable. The appropriateness of a taxpayer's computation of an IPI, which includes all the steps described in paragraph (e)(3)(iii) of this section, will be determined in connection with an examination of the taxpayer's federal income tax return. A taxpayer using the IPIC method may elect to establish dollar-value pools according to the special rules in paragraphs (b)(4) and (c)(2) of this section or the general rules in paragraphs (b) and (c) of this section. Taxpayers eligible to use the IPIC method are described in paragraph (e)(3)(ii) of this section. The manner in which an IPI is computed is described in paragraph (e)(3)(iii) of this section. Rules relating to the adoption of, or change to, the IPIC method are in paragraph (e)(3)(iv) of this section.

(ii) ***Eligibility.*** Any taxpayer electing to use the dollar-value LIFO method may elect to use the IPIC method. Except as provided in this paragraph (e)(3)(ii) or in other published guidance, a taxpayer that elects to use the IPIC method for a specific trade or business must use that method to account for all items of dollar-value LIFO inventory. A taxpayer that uses the retail price indexes computed by the BLS and published in “Department Store Inventory Price Indexes” (available from the BLS by calling (202) 606-6325 and entering document code 2415) may elect to use the IPIC method for items that do not fall within any of the major groups listed in “Department Store Inventory Price Indexes.”

(iii) ***Computation of an inventory price index*** —

(A) ***In general.*** The computation of an IPI for a dollar-value pool requires the following four steps, which are described in more detail in this paragraph (e)(3)(iii): First, selection of a BLS table and an appropriate month; second, assignment of items in a dollar-value pool to BLS categories (selected BLS categories); third, computation of category inflation indexes for selected BLS categories; and fourth, computation of the IPI. A taxpayer may compute the IPI for each dollar-value pool using either the double-extension method (double-extension IPIC method) or the link-chain method (link-chain IPIC method), without regard to whether the use of a double-extension method is impractical or unsuitable. The use of either the double-extension IPIC method or the link-chain IPIC method is a method of accounting, and the adopted method must be applied consistently to all dollar-value pools within a trade or business accounted for under the IPIC method. A taxpayer that wants to change from the double-extension IPIC method to the link-chain IPIC method, or vice versa, must secure the consent of the Commissioner under § 1.446-1(e). This change must be made with a new base year as described in paragraph (e)(3)(iv)(B)(1).

(B) ***Selection of BLS table and appropriate month*** —

(*1*) ***In general.*** Under the IPIC method, an IPI is computed using the consumer or producer price indexes for certain categories (BLS price indexes and BLS categories, respectively) listed in the selected BLS table of the “CPI Detailed Report” or the “PPI Detailed Report” for the appropriate month.

(*2*) ***BLS table selection.*** Manufacturers, processors, wholesalers, jobbers, and distributors must select BLS price indexes from Table 6 (Producer price indexes and percent changes for commodity groupings and individual items, not seasonally adjusted) of

the "PPI Detailed Report", unless the taxpayer can demonstrate that selecting BLS price indexes from another table of the "PPI Detailed Report" is more appropriate. Retailers may select BLS price indexes from either Table 3 (Consumer Price Index for all Urban Consumers (CPI-U): U.S. city average, detailed expenditure categories) of the "CPI Detailed Report" or from Table 6 (or another more appropriate table) of the "PPI Detailed Report." The selection of a BLS table is a method of accounting and must be used for the taxable year of adoption and all subsequent years, unless the taxpayer obtains the Commissioner's consent under § 1.446-1(e) to change its table selection. A taxpayer that changes its BLS table must establish a new base year in the year of change as described in paragraph (e)(3)(iv)(B) of this section.

(*3*) ***Appropriate month.*** In the case of a retailer using the retail method, the appropriate month is the last month of the retailer's taxable year. In the case of all other taxpayers, the appropriate month is the month most consistent with the method used to determine the current-year cost of the dollar-value pool under paragraph (e)(2)(ii) of this section and the taxpayer's history of inventory production or purchases during the taxable year. A taxpayer not using the retail method may annually select an appropriate month for each dollar-value pool or make an election on Form 970, "Application to Use LIFO Inventory Method," to use a representative appropriate month (representative month). An election to use a representative month is a method of accounting and the month elected must be used for the taxable year of the election and all subsequent taxable years, unless the taxpayer obtains the Commissioner's consent under § 1.446-1(e) to change or revoke its election.

(*4*) ***Examples.*** The following examples illustrate the rules of this paragraph (e)(3)(iii)(B)(*3*):

Example 1. Determining an appropriate month. A wholesaler of seasonal goods timely files a Form 970, "Application to Use LIFO Inventory Method," for the taxable year ending December 31, 2001. The taxpayer indicates elections to use the dollar-value LIFO method, to determine the current-year cost using the earliest acquisitions method in accordance with paragraph (e)(2)(ii)(*b*) of this section, and to use the IPIC method under paragraph (e)(3) of this section. Although the taxpayer purchases inventory items regularly throughout the year, the items purchased vary according to the seasons. The seasonal items on hand at December 31, 2001, are purchased between October and December. Thus, based on the taxpayer's use of the earliest acquisitions method of determining current-year cost and its experience with inventory purchases, the appropriate month for the items represented in the ending inventory at December 31, 2001, is October.

Example 2. Electing a representative month. A retailer not using the retail method timely files a Form 970, "Application to Use LIFO Inventory Method," for the taxable year ending December 31, 2001. The taxpayer indicates elections to use the dollar-value LIFO method, the most recent purchases method of determining current-year cost under paragraph (e)(2)(ii)(*a*) of this section, the IPIC method under paragraph (e)(3) of this section, and December as its representative month under paragraph (e)(3)(iii)(B)(*3*) of this section. The items in the taxpayer's ending inventory are purchased fairly uniformly throughout the year, with the first purchases normally occurring in January and the last

purchases normally occurring in December. The taxpayer's election to use December as its representative month is permissible because the taxpayer elected to use the most recent purchases method and the taxpayer's last purchases of the taxable year normally occur during December, the last month of the taxpayer's taxable year.

Example 3. Changing representative month. The facts are the same as in *Example 2,* except the taxpayer files a Form 3115, "Application for Change in Accounting Method," requesting permission to change to the earliest acquisitions method of determining current-year cost in accordance with paragraph (e)(2)(ii)(*b*) of this section and to change its representative month from December to January beginning with the taxable year ending December 31, 2003. If the Commissioner consents to the taxpayer's request to change to the earliest acquisitions method, December will no longer be a permissible representative month for this taxpayer because of the absence of a nexus between the earliest acquisitions method, the month of December (the last month of the taxpayer's taxable year), and the taxpayer's experience with inventory purchases during the year. Thus, the Commissioner will permit the taxpayer to change its representative month to January, the first month of the taxpayer's taxable year.

Example 4. Changing representative month. The facts are the same as in *Example 2.* In 2002, the taxpayer changes its annual accounting period to a taxable year ending June 30, which requires the taxpayer to file a return for the short taxable year beginning January 1, 2002, and ending June 30, 2002. As a result, December is no longer a permissible representative month because of the absence of a nexus between the most recent purchases method, the month of December, and the taxpayer's experience with inventory purchases during the year. The taxpayer should file a Form 3115 requesting permission to change its representative month from December to June beginning with the short taxable year ending June 30, 2002. Because the taxpayer's last purchases of the taxable year now will occur in June, the Commissioner will consent to the taxpayer's request to change its representative month to June.

Example 5. Changing representative month. The facts are the same as *in Example 2,* except that the taxpayer elects to use January as its representative month. The taxpayer timely files a Form 3115 requesting permission to change its representative month from January to December beginning with the taxable year ending December 31, 2003. January is not a permissible representative month because of the absence of a nexus between the most recent purchases method, the taxpayer's history of inventory purchases, and the month of January, the first month in the taxpayer's taxable year. Because December is a permissible representative month, the Commissioner will permit the taxpayer to change its representative month to December.

(C) ***Assignment of inventory items to BLS categories*** —

(*1*) ***In general.*** Except as provided in paragraph (e)(3)(iii)(C)(*2*) of this section, a taxpayer must assign each item in a dollar-value pool to the most-detailed BLS category of the selected BLS table that contains that item. For example, in Table 6 of the "PPI Detailed Report" for a given month, the commodity codes for the various BLS

categories run from 2 to 8 digits, with the least-detailed BLS categories having a 2-digit code and the most-detailed BLS categories usually (but not always) having an 8-digit code. For purposes of assigning items to the most-detailed BLS category, manufacturers and processors must assign each raw material item to the most-detailed PPI category that includes that raw material and must assign each finished good item to the most-detailed PPI category that includes that finished good. In addition, manufacturers and processors must assign each work-in-process (WIP) item to the most-detailed PPI category that includes the finished good into which the item will be manufactured or processed. For this purpose, *finished good* means a salable item that the taxpayer regularly sells. For example, a gasoline-engine manufacturer that also manufactures the pistons used in those engines and regularly sells some of the pistons (e.g., to retailers of replacement parts) must assign both finished pistons that have not been affixed to an engine block and piston WIP items to the most-detailed PPI category that includes pistons. Finished pistons that have been affixed to an engine block must be assigned to the most-detailed PPI category that includes gasoline engines. In contrast, if sales of these pistons occur infrequently, the taxpayer must assign both finished pistons and piston WIP items to the most-detailed PPI category that includes gasoline engines.

(*2*) ***10 percent method.*** Instead of assigning each item in a dollar-value pool to the most-detailed BLS categories, as described in paragraph (e)(3)(iii)(C)(*1*) of this section, a taxpayer may elect to use the 10 percent method described in this paragraph (e)(3)(iii)(C)(*2*). Under the 10 percent method, items are assigned to BLS categories using a three-step procedure. First, when the current-year cost of a specific item is 10 percent or more of the total current-year cost of the dollar-value pool, the taxpayer must assign that item to the most-detailed BLS category that includes that item (10 percent BLS category). Any other item that is includible in that 10 percent BLS category (other than an item that qualifies for its own 10 percent BLS category under the preceding sentence) must be assigned to that 10 percent BLS category. Second, if one or more items have not been assigned to BLS categories in the first step, the taxpayer must investigate successively less-detailed BLS categories and assign the unassigned item(s) to the first BLS category that contains unassigned items whose current-year cost, in the aggregate, is 10 percent or more of the total current-year cost of the dollar-value pool (also, 10 percent BLS categories). This step must be repeated until all the items in the dollar-value pool have been included in an appropriate 10 percent BLS category, the current-year cost of the unassigned items, in the aggregate, is less than 10 percent of the total current-year cost of the dollar-value pool, or the taxpayer determines that a single BLS category is not appropriate for the aggregate of the unassigned items. Third, if items in a dollar-value pool have not been assigned to a 10 percent BLS category because the current-year cost of those items, in the aggregate, is less than 10 percent of the total current-year cost of the dollar-value pool, the taxpayer must assign those items to the most-detailed BLS category that includes all those items (also, a 10 percent category). On the other hand, if items in a dollar-value pool have not been assigned to a 10 percent BLS category because the taxpayer determines that a single BLS category is not appropriate for the aggregate of those items, the taxpayer must assign each of those items to a single miscellaneous BLS category created by the taxpayer (also, a 10 percent category). In no event may a taxpayer assign items in a dollar-value pool to a

BLS category that is less detailed than either the major groups of consumer goods described in Table 3 of the monthly "CPI Detailed Report" or the major commodity groups of producer goods described in Table 6 of the monthly "PPI Detailed Report." Principles similar to those described in paragraph (e)(3)(iii)(C)(*1*) apply for purposes of assigning raw material, work-in-process, and finished good items to the most-detailed BLS category under the 10 percent method.

(*3*) ***Change in method of accounting.*** The 10 percent method of assigning items in a dollar-value pool to BLS categories is a method of accounting. In addition, a taxpayer's selection of a BLS category for a specific item is a method of accounting. However, the assignment of items to different BLS categories solely as a result of the application of the 10 percent method is a change in underlying facts and not a change in method of accounting. Likewise, the selection of a new BLS category for a specific item as a result of a revision to a BLS table is a change in underlying facts and not a change in method of accounting. A taxpayer that wants to change its method of selecting BLS categories (i.e., to or from the 10-percent method) or of selecting a BLS category for a specific item must secure the Commissioner's consent in accordance with § 1.446-1(e). A taxpayer that voluntarily changes its method of selecting BLS categories or of selecting a BLS category for a specific item must establish a new base year in the year of change as described in paragraph (e)(3)(iv)(B) of this section.

(D) ***Computation of a category inflation index*** —

(*1*) ***In general.*** As described in more detail in this paragraph (e)(3)(iii)(D), a category inflation index reflects the inflation that occurs in the BLS price indexes for a selected BLS category (or, if applicable, 10 percent BLS category) during the relevant measurement period.

(*2*) ***BLS price indexes.*** The BLS price indexes are the cumulative indexes published in the selected BLS table for the appropriate month. A taxpayer may elect to use either preliminary or final BLS price indexes for the appropriate month, provided that the selected BLS price indexes are used consistently. However, a taxpayer that elects to use final BLS price indexes for the appropriate month must use preliminary BLS price indexes for any taxable year for which the taxpayer files its original federal income tax return before the BLS publishes final BLS price indexes for the appropriate month. If a BLS price index for a most-detailed or 10 percent BLS category is not otherwise available for the appropriate or representative month (but not because the BLS categories in the BLS table have been revised), the taxpayer must use the BLS price index for the next most-detailed BLS category that includes the specific item(s) in the most-detailed or 10 percent BLS category. If a BLS price index is not otherwise available for the appropriate or representative month because the BLS categories in the BLS table have been revised, the rules of paragraph (e)(3)(iii)(D)(*4*) of this section apply.

(*3*) ***Category inflation index*** —

(*i*) ***In general.*** Except as provided in paragraph (e)(3)(iii)(D)(*4*) of this section (concerning compound category inflation indexes) or (e)(3)(iii)(D)(*5*) of this section (concerning category inflation indexes for certain 10 percent BLS

categories), a category inflation index for a selected BLS category (or, if applicable, 10 percent BLS category) is computed under the rules of this paragraph (e)(3)(iii)(D)(*3*).

(*ii*) ***Double-extension IPIC method.*** In the case of a taxpayer using the double-extension IPIC method, the category inflation index for a BLS category is the quotient of the BLS price index for the appropriate or representative month of the current year divided by the BLS price index for the appropriate month of the taxable year preceding the base year (base month). However, if the taxpayer did not have an opening inventory in the year that its election to use the dollar-value LIFO method and double-extension IPIC method became effective, the category inflation index for a BLS category is the quotient of the BLS price index for the appropriate or representative month of the current year divided by the BLS price index for the month immediately preceding the month of the taxpayer's first inventory production or purchase.

(*iii*) ***Link-chain IPIC method.*** In the case of a taxpayer using the link-chain IPIC method, the category inflation index for a BLS category is the quotient of the BLS price index for the appropriate or representative month of the current year divided by the BLS price index for the appropriate month used for the immediately preceding taxable year. However, if the taxpayer did not have an opening inventory in the year that its election to use the dollar-value LIFO method and link-chain IPIC method became effective, the category inflation index for a BLS category for the year of election is the quotient of the BLS price index for the appropriate or representative month of the current year divided by the BLS price index for the month immediately preceding the month of the taxpayer's first inventory production or purchase.

(*iv*) ***Special rules concerning representative months.*** A taxpayer electing to use a representative month under paragraph (e)(3)(iii)(B)(*3*) of this section must use an appropriate month, rather than the representative month, to determine category inflation indexes in the circumstances described in this paragraph (e)(3)(iii)(D)(*3*)(*iv*) and in other similar circumstances. For example, in the case of a short taxable year, the category inflation index should reflect the inflation that occurs from the base month (in the case of the double-extension IPIC method), or the appropriate or representative month used for the preceding taxable year (in the case of the link-chain IPIC method), and the appropriate month for the short taxable year. Similarly, if a taxpayer using the link-chain IPIC method is granted consent to change both its method of determining the current-year cost of a dollar-value pool and its representative month, the category inflation index for the year of change should reflect the inflation that occurs between the old representative month used for the preceding taxable year and the new representative month used for the year of change.

(*4*) ***Compound category inflation index for revised BLS categories or price indexes*** —

(*i*) ***In general.*** Periodically, the BLS revises a BLS table to add one or more new BLS categories, eliminate one or more previously reported BLS categories, or reset the base-year BLS price index of one or more BLS categories. If the BLS has revised the applicable BLS table for a taxable year, a taxpayer must compute the

category inflation index for each BLS category for which the taxpayer cannot compute a category inflation index in accordance with paragraph (e)(3)(iii)(D)(*3*) of this section (affected BLS category) using a reasonable method, provided the method is used consistently for all affected BLS categories within a particular taxable year. For example, if the BLS revised the CPI by adding new BLS categories as of January 2001 and eliminating some previously reported BLS categories as of December 2000, January 2002 would be the first month for which it would be possible to compute a category inflation index for a 12-month period using the BLS price indexes for any affected category. The compound category inflation index described in paragraph (e)(3)(iii)(D)(*4*)(*ii*) of this section is a reasonable method of computing the category inflation index for an affected BLS category.

(*ii*) ***Computation of compound category inflation index.*** When the applicable BLS table is revised as described in paragraph (e)(3)(iii)(D)(*4*)(*i*) of this section, a taxpayer may use the procedure described in this paragraph (e)(3)(iii)(D)(*4*)(*ii*) to compute a compound category inflation index for each affected BLS category represented in the taxpayer's ending inventory. For this purpose, a compound category inflation index is the product of the category inflation index for the “first portion” multiplied by the corresponding category inflation index for the “second portion.” The category inflation index for the first portion must reflect the inflation that occurs between the end of the base month (in the case of the double-extension IPIC method), or the preceding year's appropriate or representative month (in the case of the link-chain IPIC method), and the end of the last month covered by the unrevised BLS table based on the old BLS category. The corresponding category inflation index for the second portion must reflect the inflation that occurs between the beginning of the first month covered by the revised BLS table based on the new BLS category and the end of the current year's appropriate or representative month. First, using the revised BLS table for the current-year's appropriate or representative month, the taxpayer assigns items in the dollar-value pool using its method of assigning items to BLS categories as described in paragraph (e)(3)(iii)(C) of this section. Second, for each affected BLS category represented in the ending inventory, the taxpayer computes the category inflation index for the second portion using this formula: [A/B], where A equals the BLS price index for the current year's appropriate or representative month and B equals the BLS price index for the last month covered by the unrevised BLS table (as published for the first month of the revised BLS table). Third, using the unrevised BLS table for the base month (in the case of the double extension IPIC method) or the preceding year's appropriate or representative month (in the case of the link-chain IPIC method), the taxpayer assigns each of the items in the dollar-value pool using its method of assigning items to BLS categories. Fourth, for each affected BLS category represented in the ending inventory, the taxpayer computes the category inflation index for the first portion using this formula: [C/D], where C equals the BLS price index for the last month covered by the unrevised BLS table (as published for the last month of the unrevised BLS table) and D equals the BLS price index for the base month (in the case of the double-extension IPIC method) or the preceding year's appropriate or representative month (in the

case of the link-chain IPIC method). Fifth, for each affected BLS category represented in the ending inventory, the taxpayer computes the compound category inflation index using this formula: [X*Y], where X equals the category inflation index for the second portion, and Y equals the corresponding category inflation index for the first portion. For the purpose of computing the compound category inflation index for each affected BLS category, the corresponding category inflation index for the first portion is the category inflation index for the unrevised BLS category that includes the specific inventory item(s) included in the revised BLS category. If items included in a single revised BLS category had been included in separate BLS categories before the revision of the BLS table, the corresponding category inflation index for the first portion is the weighted harmonic mean of the category inflation indexes for these unrevised BLS categories. See paragraph (e)(3)(iii)(E)(*1*) of this section for a formula of the weighted harmonic mean. When computing this weighted-average category inflation index, a taxpayer must use the current-year costs (or in the case of a retailer using the retail method, the retail selling prices) in ending inventory as the weights.

(*iii*) ***New base year.*** A taxpayer may establish a new base year in the year following the taxable year for which the taxpayer computed a compound category inflation index under this paragraph (e)(3)(iii)(D)(*4*) for one or more affected BLS categories in a dollar-value pool. See paragraph (e)(3)(iv)(B) of this section for the procedures and computations incident to establishing a new base year.

(*iv*) ***Examples.*** The following examples illustrate the rules of this paragraph (e)(3)(iii)(D)(*4*):

> *Example 1. BLS categories eliminated.* (i) A retailer, whose taxable year ends January 31, elected to account for its inventories using the dollar-value LIFO method and double-extension IPIC method (based on the CPI), beginning with the taxable year ending January 31, 1997. The taxpayer does not use the retail method, but elected to use January as its representative month. On January 31, 1999, the taxpayer's only dollar-value pool contains only two items—lemons and peaches. The total current-year cost of these items is as follows: lemons, $40, and peaches, $30.
> (ii) The CPI was revised in October of 1998 to eliminate the “Citrus fruits” subcategory of “Other fresh fruits.” In addition, the base-year BLS price index for “Other fresh fruits” was reset to 100.00 as of October 1, 1998. In relevant part, the January 1999 CPI permits the assignment of both lemons and peaches to “Other fresh fruits.” The January 1999 BLS price indexes for “Citrus fruits” and “Other fresh fruits” are 96.6 and 105.6, respectively. In relevant part, the September 1998 CPI permits the assignment of lemons to “Citrus fruits” and peaches to “Other fresh fruits.” The September 1998 BLS price indexes for “Citrus fruits” and

"Other fresh fruits" are 194.9 and 294.9, respectively, and the January 1997 BLS price indexes for "Citrus fruits" and "Other fresh fruits" are 190.2 and 290.2, respectively.

(iii) Because the BLS eliminated the category, "Citrus fruits," as of October 1998, it did not publish a BLS price index for that category in the January 1999 CPI. Thus, the taxpayer cannot compute a category inflation index for "Citrus fruits" under the normal procedures, but may compute a compound category inflation index for that affected BLS category using the procedures described in paragraph (e)(3)(iii)(D)(*4*)(*ii*) of this section.

(iv) The taxpayer computes a compound category inflation index for the two BLS categories that formerly included lemons and peaches. The taxpayer first assigns lemons and peaches to "Other fresh fruits," the most-detailed index in the January 1999 CPI, and then computes the category inflation index for the second portion as follows:

Item	1999 category	Jan. 1999 index/Sept. 1998 index (as published in Oct. 1998)	Category inflation index
Lemons and Peaches	Other fresh fruits	105.6/100.0	1.0560

(v) The taxpayer assigns the lemons and peaches to the most-detailed BLS categories in the January 1998 CPI as follows: lemons to "Citrus fruits" and peaches to "Other fresh fruits." Then, the taxpayer computes the category inflation index for the first portion as follows:

Item	1998 category	Sept. 1998 index (as published in Sept. 1998)/Jan. 1997	Category inflation index
Lemons	Citrus fruits	194.9/190.2	1.0247
Peaches	Other fresh	294.9/290.2	1.0162

Item	1998 category	Sept. 1998 index (as published in Sept. 1998)/Jan. 1997	Category inflation index
	Fruits		

(vi) Because lemons and peaches, which are included together in the revised “Other fresh fruits” category, had been included in separate BLS categories before the BLS table was revised, the taxpayer must compute a single corresponding category inflation index for the affected BLS categories for the first portion. This corresponding category inflation index is the weighted harmonic mean of the separate corresponding category inflation indexes for the first portion using the cost of the items in ending inventory as the weights. The taxpayer computes the corresponding category inflation index for “Other fresh fruits” for the first portion as follows:

Item	(I) Weight (cost of item)	(II) Category inflation index	(III) Quotient: (I)/(II)
Lemons	$40.00	1.0247	$39.04
Peaches	30.00	1.0162	29.52
Total	70.00		68.56

(IV) Sum of weights	(V) Sum of (weight/ category inflation index)	(VI) Weighted harmonic mean of other fresh fruits: (IV)/(V)
$70.00	$68.56	1.0210

(vii) Finally, the taxpayer computes the compound category inflation

index for Other fresh fruits as follows:

Item	(I) Category inflation index (second portion)	(II) Category inflation index (first portion)	(III) Compound category inflation index: (I)*(II)
Other fresh fruits	1.0560	1.0210	1.0782

(viii) The taxpayer may establish a new base year for the taxable year ending January 31, 2000.

Example 2. BLS categories separated. (i) The facts are the same as in *Example 1*, except prior to October 1998, both lemons and peaches were assigned to “Other fresh fruits” and in the October 1998 CPI, the BLS created a new category, “Citrus fruits,” for citrus fruits, such as lemons. Moreover, the BLS reset the base-year BLS price index for “Other fresh fruits” to 100.0 as of October 1, 1998. As a result of these changes, the taxpayer may no longer assign lemons to “Other fresh fruits.”
(ii) Because “Citrus fruits” is new as of October 1998, the BLS did not publish a BLS price index for this BLS category in the January 1999 CPI. Thus, because the taxpayer cannot compute a category inflation index for “Citrus fruits” under the normal procedures, the taxpayer may compute a compound category inflation index for the affected BLS category using the procedures described in paragraph (e)(3)(iii)(D)(*4*)(*ii*) of this section.

(iii) Based on the January 1999 CPI, the taxpayer assigns lemons to “Citrus fruits” and peaches to “Other fresh fruits.” Then, the taxpayer computes a compound category inflation index for each of the two BLS categories. The computation of the category inflation index for the second portion is as follows:

Item	1999 category	Jan. 1999 index/Sept. 1998 index (as published in Oct. 1998)	Category inflation index
Lemons	Citrus	96.6/100	0.9660

Item	1999 category	Jan. 1999 index/Sept. 1998 index (as published in Oct. 1998)	Category inflation index
Peaches	fruits Other fresh fruits	105.6/100	1.0560

(iv) Then, the taxpayer computes the category inflation index for the first portion as follows:

Item	1998 category	Sept. 1998 index (as published in Sept. 1998)/Jan. 1997	Category inflation index
Lemons & Peaches	Other fresh fruits	294.9/290.2	1.0162

(v) Finally, the taxpayer computes the compound category inflation index for “Citrus fruits” and “Other fresh fruits”:

Item	(I) Category inflation index (second portion)	(II) Category inflation index (first portion)	(III) Compound category inflation index: (I)*(II)
Citrus fruits	0.9660	1.0162	0.9816
Other fresh fruits	1.0560	1.0162	1.0731

(vi) The taxpayer may establish a new base year for the taxable year ending January 31, 2000.

(5) *10 percent method.*

(i) ***Applicability.*** A taxpayer that elects to use the 10 percent method described in paragraph (e)(3)(iii)(C)(*2*) of this section must compute a category inflation index for a less-detailed 10 percent BLS category as provided in this paragraph (e)(3)(iii)(D)(*5*). A less-detailed 10 percent category is a BLS category that—

(*A*) subsumes two or more BLS categories;

(*B*) Does not have a single assigned item whose current-year cost is 10 percent or more of the current-year cost of all the items in the dollar-value pool;

(*C*) Has at least one item in at least one of the subsumed BLS categories; and

(*D*) Has at least one subsumed BLS category that either does not have any assigned items or is a separate 10 percent BLS category.

(*ii*) ***Determination of category inflation index.*** If the rules of this paragraph (e)(3)(iii)(D)(*5*) apply, the category inflation index for the less-detailed 10 percent BLS category is equal to the weighted arithmetic mean of the category inflation index (or, compound category inflation index, if applicable) for each of the subsumed BLS categories that have been assigned at least one item from the taxpayer's dollar-value pool (excluding any item that is properly assigned to a separate 10 percent BLS category). [Weighted Arithmetic Mean = Sum of (Weight × Category Inflation Index)]/Sum of Weights]. The appropriate weight for each of the most-detailed BLS categories referenced in the preceding sentence is the corresponding BLS weight. Currently, in January of each year, the BLS publishes the BLS weights determined for December of the preceding year. In the case of a taxpayer using the double-extension IPIC method, the BLS weights for December of the taxable year preceding the base year are to be used for all taxable years. In the case of a taxpayer using the link-chain IPIC method, the BLS weights for December of a given calendar year are to be used for taxable years that end during the 12-month period that begins on July 1 of the following calendar year. However, if the BLS weights are not published for all of the most-detailed BLS categories referenced above, the taxpayer may use the current-year cost (or in the case of a retailer using the retail method, the retail selling prices) of all items assigned to a specific most-detailed BLS category as the appropriate weight for that category, but must compute a weighted harmonic mean. See paragraph (e)(3)(iii)(E)(*1*) of this section for a formula of the weighted harmonic mean.

(E) ***Computation of Inventory Price Index (IPI) —***

(1) ***Double-extension IPIC method.*** Under the double-extension IPIC method, the IPI for a dollar-value pool is the weighted harmonic mean of the category inflation indexes (or, if applicable, compound category inflation indexes) determined under paragraph (e)(3)(iii)(D) of this section for each selected BLS category (or, if applicable 10 percent BLS category) represented in the taxpayer's dollar-value pool at the end of the taxable year. The formula for computing the weighted harmonic mean of the category inflation indexes is: [Sum of Weights/Sum of (Weight/Category Inflation Index)]. The weights to be used when computing this weighted harmonic mean are

the current-year costs (or, in the case of a retailer using the retail method, the retail selling prices) in each selected BLS category represented in the dollar-value pool at the end of the taxable year.

(2) ***Link-chain IPIC method.*** Under the link-chain IPIC method, the IPI for a dollar-value pool is the product of the weighted harmonic mean of the category inflation indexes (or, if applicable, the compound category inflation indexes) determined under paragraph (e)(3)(iii)(D) of this section for each selected BLS category (or, if applicable, 10 percent BLS category) represented in the taxpayer's dollar-value pool at the end of the taxable year multiplied by the IPI for the immediately preceding taxable year. The formula for computing the weighted harmonic mean of the category inflation indexes is: [Sum of Weights/Sum of (Weight/Category Inflation Index)]. The weights to be used when computing this weighted harmonic mean are the current-year costs (or, in the case of a retailer using the retail method, the retail selling prices) in each selected BLS category represented in the dollar-value pool at the end of the taxable year.

(3) ***Examples.*** The following examples illustrate the rules of this paragraph (e)(3)(iii)(E):

> *Example 1. Double-extension method.* (i) *Introduction.* R is a retail furniture merchant that does not use the retail method. For the taxable year ending December 31, 2000, R used the first-in, first-out method of identifying inventory and valued its inventory at cost. The total cost of R's inventory on December 31, 2000, was $850,000. R elected to use the dollar-value LIFO and double-extension IPIC methods for its taxable year ending December 31, 2001. R does not elect to use the 10 percent method described in paragraph (e)(3)(iii)(C)(*2*) of this section. R determines the current-year cost of the items using the actual cost of the most recently purchased goods. R elected to pool its inventory based on the major groups in Table 6 of the monthly “PPI Detailed Report” in accordance with the special IPIC pooling rules of paragraph (b)(4) of this section. All items in R's inventory fall within the 2-digit commodity code in Table 6 of the monthly “PPI Detailed Report” for “furniture and household durables.” Therefore, R will maintain a single dollar-value pool.
> (ii) *Select a BLS table and appropriate month for 2001.* R determines that the appropriate month for 2001 is October. R also determines that the appropriate month for 2000 would have been December if R had used the IPIC method for that year.

(iii) *Assign inventory items to BLS categories for 2001.* For 2001, R assigns all items in the dollar-value pool to the most-detailed BLS categories listed in Table 6 of the October 2001 "PPI Detailed Report" that contain those items. The BLS categories and the current-year cost of the items assigned to them are summarized as follows:

Commodity code	Category	Current-year cost
12120101	Living Room Table	$111,924.00
12120211	Dining Room Table	159,578.00
12120216	Dining Room Chairs	98,639.00
12130101	Upholstered Sofas	332,488.00
12130111	Upholstered Chairs	218,751.00
Total		921,380.00

(iv) *Compute category inflation indexes for 2001.* Because R elected to use the double-extension IPIC method and did not elect the 10 percent method, the category inflation indexes are computed in accordance with paragraph (e)(3)(iii)(D)(*3*)(*ii*) of this section (BLS price indexes for October 2001 divided by BLS price indexes for December 2000). R computes the category inflation indexes for 2001 as follows:

Category	(I) Oct. 2001 index	(II) Dec. 2000 index	(III) Category inflation index: (I)/(II)
Living Room Table	172.4	169.2	1.018913
Dining Room Table	171.9	168.1	1.022606
Dining Room Chairs	172.8	169.7	1.018268
Upholstered Sofas	142.2	140.9	1.009226
Upholstered Chairs	134.1	132.5	1.012075

(v) *Compute IPI for 2001.* R must compute the IPI for 2001, which is the weighted harmonic mean of the category inflation indexes for 2001. The

formula for the weighted harmonic mean provided in paragraph (e)(3)(iii)(E)(*1*) of this section is [Sum of Weights/Sum of (Weight/Category Inflation Index)]. The IPI for 2001 is computed as follows:

Category	(I) Weight	(II) Category inflation index	(III) Quotient: (I)/(II)
Living Room Table	$111,924.00	1.018913	$109,846.47
Dining Room Table	159,578.00	1.022606	156,050.33
Dining Room Chairs	98,639.00	1.018268	96,869.39
Upholstered Sofas	332,488.00	1.009226	329,448.51
Upholstered Chairs	218,751.00	1.012075	216,141.10
Total	$921,380.00		$908,355.80

(IV) Sum of weights	(V) Sum of (weight/category inflation index)	(VI) Inventory price index: (IV)/(V)
$921,380.00	$908,355.80	1.01433821

(vi) *Determine the LIFO value of the dollar-value pool for 2001.* For 2001, R determines the total base-year cost of its ending inventory by dividing the total current-year cost of the items in the dollar-value pool by the IPI for 2001. The total base-year cost of R's ending inventory is $908,355.80 ($921,380/ 1.01433821). Comparing the base-year cost of the ending inventory to the base-year cost of the beginning inventory, R determines that the base-year cost of the 2001 increment is $58,355.80 ($908,355.80 - $850,000.00). R multiplies the base-year cost of the 2001 increment by the IPI for 2001 and determines that the LIFO value of the 2001 layer is $59,192.52 ($58,355.80 * 1.01433821). Thus, the LIFO value of R's total inventory at the end of 2001 is $909,192.52 ($850,000.00 (opening inventory) + $59,192.52 (2001 layer)).

(vii) *Select a BLS table and appropriate month for 2002.* For 2002, R must compute a new IPI under the double-extension IPIC method to determine the LIFO value of its dollar-value pool. R determines that the appropriate month for 2002 is November.

(viii) *Assign inventory items to BLS categories for 2002.* For 2002, R assigns all items in the dollar-value pool to the most-detailed BLS categories listed in Table 6 of the November 2002 "PPI Detailed Report" that contain those items. The BLS categories and the current-year cost of the items assigned to them are summarized as follows:

Commodity code	Category	Current-year cost
12120103	Living Room Desks	$125,008.00
12120211	Dining Room Table	136,216.00
12120216	Dining Room Chairs	113,569.00
12130101	Upholstered Sofas	343,900.00
12130111	Upholstered Chairs	233,050.00
Total		$951,743.00

(ix) *Compute category inflation indexes for 2002.* Because R uses the double-extension IPIC method and did not elect the 10 percent method, the category inflation indexes are computed in accordance with paragraph (e)(3)(iii)(D)(*3*)(*ii*) of this section (BLS price indexes for November 2002 divided by BLS price indexes for December 2000). R computes the category inflation indexes for 2002 as follows:

Category	(I) Nov. 2002 index	(II) Dec. 2000 index	(III) Category inflation index (I)/(II)
Living Room Desks	172.6	160.3	1.076731
Dining Room Table	174.8	168.1	1.039857
Dining Room Chairs	177.0	169.7	1.043017
Upholstered Sofas	144.9	140.9	1.028389

Category	(I) Nov. 2002 index	(II) Dec. 2000 index	(III) Category inflation index (I)/(II)
Upholstered Chairs	136.6	132.5	1.030943

(x) *Compute IPI for 2002.* R must compute the IPI for 2002, which is the weighted harmonic mean [Sum of Weights/Sum of (Weight/Category Inflation Index)] of the category inflation indexes for 2002. The IPI for 2002 is computed as follows:

Category	(I) Weight	(II) Category inflation index	(III) Quotient: (I)/(II)
Living Room Desks	$125,008.00	1.076731	$116,099.56
Dining Room Table	136,216.00	1.039857	130,994.93
Dining Room Chairs	113,569.00	1.043017	108,885.09
Upholstered Sofas	343,900.00	1.028389	334,406.53
Upholstered Chairs	233,050.00	1.030943	226,055.17
Total	951,743.00		916,441.28

(IV) Sum of weights	(V) Category inflation index	(VI) Inventory price index: (IV)/(V)
$951,743.00	$916,441.28	1.03852044

(xi) *Determine the LIFO value of the pool for 2002.* For 2002, R determines the total base-year cost of its ending inventory by dividing the total current-year cost of the items in the dollar-value pool by the IPI for 2002. The total base-year cost of the ending inventory is $916,441.28 ($951,743.00/1.03852044).

Comparing the base-year cost of the ending inventory to the base-year cost of the beginning inventory, R determines that the base-year cost of the 2002 increment is $8,085.48 ($916,441.28−$908,355.80). R multiplies the base-year cost of the 2002 increment by the IPI for 2002 and determines that the LIFO value of the 2002 layer is $8,396.94 ($8,085.48 * 1.03852044). Thus, the LIFO value of R's total inventory at the end of 2002 is $917,589.46 ($850,000.00 (opening inventory) + $59,192.52 (2001 layer) + $8,396.94 (2002 layer)).

Example 2. Link-chain method. (i) *Introduction.* The facts are the same as *Example 1,* except that R uses the link-chain IPIC method. The double-extension IPIC method and the link-chain IPIC method yield the same results for the first taxable year in which the dollar-value LIFO and IPIC methods are used. Therefore, this example illustrates only how R will compute the IPI for, and determine the LIFO value of, its dollar-value pool for 2002.
(ii) *Select a BLS table and appropriate month for 2002.* R determines that the appropriate month for 2002 is November.

(iii) *Assign inventory items to BLS categories for 2002.* For 2002, R assigns all items in the dollar-value pool to the most-detailed BLS categories listed in Table 6 of the November 2002 “PPI Detailed Report” that contain those items. The BLS categories and the current-year cost of the items assigned to them are summarized as follows:

Commodity code	Category	Current-year cost
12120103	Living Room Desks	$125,008.00
12120211	Dining Room Table	136,216.00
12120216	Dining Room Chairs	113,569.00
12130101	Upholstered Sofas	343,900.00
12130111	Upholstered Chairs	233,050.00
Total		951,743.00

(iv) *Compute category inflation indexes for 2002.* Because R uses the link-chain IPIC method and did not elect the 10 percent method, the category inflation indexes are computed in accordance with paragraph (e)(3)(iii)(D)(*3*)(*iii*) of this section (BLS price indexes for November 2002 divided by BLS price indexes for

October 2001). R computes the category inflation indexes for 2002 as follows:

Category	(I) Nov. 2002 index	(II) Oct. 2001 index	(III) Category inflation index: (I)/(II)
Living Room Desks	172.6	162.0	1.065432
Dining Room Table	174.8	171.9	1.016870
Dining Room Chairs	177.0	172.8	1.024306
Upholstered Sofas	144.9	142.2	1.018987
Upholstered Chairs	136.6	134.1	1.018643

(v) *Compute IPI for 2002.* As provided in paragraph (e)(3)(iii)(E)(*2*) of this section, R must compute the IPI for 2002 by multiplying the weighted harmonic mean of the category inflation indexes for 2002 by the IPI for 2001. The IPI for 2002 is computed as follows:

Category	(I) Weight	(II) Category inflation index	(III) Quotient: (I)/(II)
Living Room Desks	$125,008.00	1.065432	$117,330.81
Dining Room Table	136,216.00	1.016870	133,956.16
Dining Room Chairs	113,569.00	1.024306	110,874.09
Upholstered Sofas	343,900.00	1.018987	337,492.04
Upholstered Chairs	233,050.00	1.018643	228,784.77

Category	(I) Weight	(II) Category inflation index	(III) Quotient: (I)/(II)
Total	951,743.00		928,437.87

(IV) Sum of weights	(V) Sum of (weight/ category inflation index)	(VI) Weighted harmonic mean of category inflation indexes for 2002: (IV)/(V)	(VII) Inventory price index for 2001	(VIII) Inventory price index for 2002: (VI)*(VII)
$951,743.00	$928,437.87	1.02510144	1.01433821	1.03979956

(vi) *Determine the LIFO value of the pool for 2002.* R determines the total base-year cost of its ending inventory by dividing the total current-year cost of the items in the dollar-value pool by the IPI for 2002. The total base-year cost of the ending inventory is $915,313.91 ($951,743.00 / 1.03979956). Comparing the base-year cost of the ending inventory to the base-year cost of the beginning inventory, R determines that the base-year cost of the 2002 layer is $6,958.11 ($915,313.91-$908,355.80). R multiplies the base-year cost of the 2002 layer by the IPI for 2002 and determines that the LIFO value of the 2002 layer is $7,235.04 ($6,958.11 * 1.03979956). Thus, the LIFO value of R's total inventory at the end of 2002 is $916,427.56 ($850,000.00 (opening inventory) + $59,192.52 (2001 layer) + $7,235.04 (2002 layer)).

(iv) ***Adoption or change of method*** —

(A) ***Adoption or change to IPIC method.*** The use of an inventory price index computed under the IPIC method is a method of accounting. A taxpayer permitted to adopt the dollar-value LIFO method without first securing the Commissioner's consent also may adopt the IPIC method without first securing the Commissioner's consent. The IPIC method may be adopted and used, however, only if the taxpayer provides the following information on a Form 970, “Application to Use LIFO Inventory Method,” or in another manner as may be acceptable to the Commissioner: A complete list of dollar-value pools (including a description of the items in each dollar-value pool); the BLS table (i.e., CPI or PPI) selected for each dollar-value pool; the representative month, if applicable, elected for each dollar-value pool; the BLS categories to which the items in each dollar-value pool will be

assigned; the method of assigning items to BLS categories (e.g., the 10 percent method) for each dollar-value pool; and the method of computing the IPI (i.e., double-extension IPIC method or link-chain IPIC method) for each dollar-value pool. In the case of a taxpayer permitted to adopt the IPIC method without requesting the Commissioner's consent, the Form 970 must be attached to the taxpayer's income tax return for the taxable year of adoption. In all other cases, a taxpayer may change to the IPIC method only after securing the Commissioner's consent as provided in § 1.446-1(e). In these latter cases, the Form 970 containing the information described in this paragraph (e)(3)(iv)(A) must be attached to a Form 3115, "Application for Change in Accounting Method," filed as required by § 1.446-1(e). A taxpayer that simultaneously changes to the dollar-value LIFO and IPIC methods from another LIFO method must apply the rules of paragraph (f)(2) of this section before applying the rules of paragraph (e)(3)(iv)(B)(*1*) of this section. To satisfy the requirements of § 1.472-2(h), taxpayers must maintain adequate books and records, including those concerning the use of the IPIC method and necessary computations. Notwithstanding the rules in paragraph (e)(1) of this section, a taxpayer that adopts, or changes to, the link-chain IPIC method is not required to demonstrate that the use of any other method of determining the LIFO value of a dollar-value pool is impractical.

(B) ***New base year*** —

(*1*) ***Voluntary change*** —

(*i*) ***In general.*** In the case of a taxpayer using a non-IPIC method to determine the LIFO value of inventory, the layers previously determined under that method, if any, and the LIFO values of those layers are retained if the taxpayer voluntarily changes to the IPIC method. Instead of using the earliest taxable year for which the taxpayer adopted the LIFO method for any items in the dollar-value pool, the year of change is used as the new base year for the purpose of determining the amount of increments and liquidations, if any, for the year of change and subsequent taxable years. The base-year cost of the layers in a dollar-value pool at the beginning of the year of change must be restated in terms of new base-year cost using the year of change as the new base year and, if applicable, the indexes for the previously determined layers must be recomputed accordingly. The recomputed indexes will be used to determine the LIFO value of subsequent liquidations. For purposes of computing an IPI under paragraph (e)(3)(iii)(E) of this section, the IPI for the immediately preceding year is 1.00. The new total base-year cost of the items in a dollar-value pool for the purpose of determining future increments and liquidations is equal to the total current-year cost of the items in the dollar-value pool (determined using the taxpayer's method of determining the total current-year cost of the items in the dollar-value pool under paragraph (e)(2)(ii) of this section). A taxpayer must allocate this new total base-year cost to each layer based on the ratio of the old base-year cost of the layer to the old total base-year cost of the dollar-value pool.

(*ii*) ***Example.*** The following example illustrates the rules of this paragraph (e)(3)(iv)(B)(*1*):

> *Example.* (i) In 1990, X elected to use a dollar-value LIFO method (other than the IPIC method) for its single dollar-value pool. X is granted

permission to change to the link-chain IPIC method, beginning with the taxable year ending December 31, 2001. X will continue using a single dollar-value pool. X's beginning inventory as of January 1, 2001, computed using its former inventory method, is as follows:

Layer	(I) Base-year cost	(II) Inflation index	(III) LIFO value: (I) * (II)
Base layer	$135,000	1.00	$135,000
1991 layer	20,000	1.43	28,600
1994 layer	60,000	1.55	93,000
1995 layer	13,000	1.59	20,670
1997 layer	2,000	1.61	3,220
Total	230,000		280,490

(ii) Under X's method of determining the current-year cost of items in a dollar-value pool, the current-year cost of the beginning inventory is $391,000. Thus, X's new base-year cost as of January 1, 2001, is $391,000. X allocates this new base-year cost to each layer based on the ratio of old base-year cost of the layer to the total old base-year cost of the dollar-value pool. To recompute the inflation indexes for each of its layers, X divides the LIFO value of each layer by the new base-year cost attributable to the layer. The new base-year cost, recomputed inflation indexes, and LIFO value of X's layers as of January 1, 2001, are as follows:

Layer	(I) Base-year cost	(II) Inflation index	(III) LIFO value: (I) * (II)
Base layer	$229,500	0.588235	$135,000
1991 layer	34,000	0.841176	28,600
1994 layer	102,000	0.911765	93,000
1995 layer	22,100	0.935294	20,670
1997 layer	3,400	0.947059	3,220
Total	391,000		280,490

(iii) In 2001, the current-year cost of X's ending inventory is $430,139. The weighted harmonic mean of the category inflation indexes applicable to X's ending inventory is 1.075347, and in accordance with paragraph

(e)(3)(iv)(B)(*1*)(*i*) of this section, the inflation index for the immediately preceding taxable year is 1.00. Thus, X's IPI for 2001 is 1.075347 (1.00 * 1.075347). The total base-year cost of X's ending inventory is $400,000 ($430,139/1.075347). The base-year cost, IPI, and LIFO value of X's layers as of December 31, 2001, are as follows:

Layer	(I) Base-year cost	(II) Inventory price index	(III) LIFO value: (I) * (II)
Base layer	$229,500	0.588235	$135,000
1991 layer	34,000	0.841176	28,600
1994 layer	102,000	0.911765	93,000
1995 layer	22,100	0.935294	20,670
1997 layer	3,400	0.947059	3,220
2001 layer	9,000	1.075347	9,678
Total	400,000		290,168

(iv) In 2002, the current-year cost of X's ending inventory is $418,000. The weighted harmonic mean of the category inflation indexes applicable to X's ending inventory is 1.02292562, and the IPI for the immediately preceding year is 1.075347. Thus, X's IPI for 2001 is 1.10 (1.075347 * 1.02292562). The total base-year cost of X's ending inventory is $380,000 ($418,000/1.10), which results in a liquidation of $20,000 ($400,000−$380,000) in terms of base-year cost. This liquidation eliminates the 2001 layer ($9,000 base-year cost), the 1997 layer ($3,400 base-year cost), and part of the 1995 layer ($7,600 base-year cost). The base-year cost, indexes, and LIFO value of X's layers as of December 31,

2002, are as follows:

Layer	(I) Base-year cost	(II) Inventory price index	(III) LIFO value: (I) * (II)
Base layer	$229,500	0.588235	$135,000
1991 layer	34,000	0.841176	28,600
1994 layer	102,000	0.911765	93,000
1995 layer	14,500	0.935294	13,562
Total	380,000		270,162

(2) *Involuntary change—*

(i) ***In general.*** If a taxpayer uses a non-IPIC method to compute the LIFO value of a dollar-value pool, and if the Commissioner determines that the taxpayer's method does not clearly reflect income, the Commissioner may require the taxpayer to change to the IPIC method. If the Commissioner requires a taxpayer to change to the IPIC method, and the taxpayer does not provide sufficient information from its books and records to compute an adjustment under section 481, the Commissioner may implement the change using the simplified transition method described in paragraph (e)(3)(iv)(B)(2)(*ii*) of this section.

(*ii*) ***Simplified Transition Method.*** Under the simplified transition method, the Commissioner will recompute the LIFO value of each dollar-value pool as of the beginning of the year of change using the double-extension IPIC method or the link-chain IPIC method. The adjustment under section 481 is equal to the difference between the recomputed LIFO value and the LIFO value of the pool determined under the taxpayer's former method. The Commissioner will compute an IPI using the double-extension IPIC method or link-chain IPIC method for each taxable year in which the LIFO method was used by the taxpayer based on the assumptions that the ending inventory of the pool in each taxable year was comprised of items that fall into the same BLS categories as the items in the ending inventory of the year of change and that the relative weights of those BLS categories in all prior years were the same as the relative weights of those BLS categories in the ending inventory of the year of change. The base-year cost of the items in a dollar-value pool at the end of a taxable year will be determined by dividing the IPI computed for the taxable year into the current-year cost of the items in that pool determined in accordance with paragraph (e)(2)(ii) of this section. If the comparison of the base-year cost

of the beginning and ending inventory produces a current-year increment, the base-year cost of that increment will be multiplied by the IPI computed for that taxable year to determine the LIFO value of that layer.

(*iii*) ***Example.*** The following example illustrates the rules of this paragraph (e)(3)(iv)(B)(2)(*ii*).

Example. (i) Z began using a dollar-value LIFO method other than the IPIC method in the taxable year ending December 31, 1998, and maintains a single dollar-value pool. Z's beginning inventory as of January 1, 2000, computed using its method of accounting, was as follows:

Layer	(I) Base-year cost	(II) Inflation index	(III) LIFO value: (I)*(II)
Base layer	$105,000	1.00	$105,000
1998 layer	3,000	1.40	4,200
Total	108,000		109,200

(ii) Upon examining Z's federal income tax return for the taxable year ending December 31, 2000, the examining agent determines that Z's dollar-value LIFO method does not clearly reflect income. The examining agent chooses to change Z to the double-extension IPIC method for 2000 and implements the change using the simplified transition method as follows. First, the inventory in Z's dollar-value pool at the end of 2000 is assigned to the most-detailed categories in the CPI or PPI, whichever is appropriate. Assume that 80 percent of the current-year cost of Z's inventory as of December 31, 2000, is assigned to Category 1, 10 percent is assigned to Category 2, and 10 percent is assigned to Category 3. Assume further that the current-year cost of the inventory in Z's dollar-value pool at the end of 1998 and 1999 was $133,000 and $145,000, respectively.
(iii) The category inflation indexes for 1998 computed under the double-extension IPIC method are 1.17 for Category 1, 1.26 for Category 2, and 1.19 for Category 3. The weights to be used in computing the IPI for 1998

are $106,400 ($133,000 * 80 percent) for Category 1, $13,300 ($133,000 * 10 percent) for Category 2, and $13,300 ($133,000 * 10 percent) for Category 3. The IPI for 1998 is computed as follows:

Category	(I) Weight	(II) Category inflation index	(III) Quotient: (I)/(II)
1	$106,400	1.17	90,940
2	13,300	1.26	10,556
3	13,300	1.19	11,176
Total	133,000		112,672

(IV) Sum of weights	(V) Sum of (weight/category inflation index)	(VI) Inventory price index: (IV)/(V)
$133,000	$112,672	1.180417

(iv) The base-year cost of the inventory in Z's pool at the end of 1998 is $112,672 ($133,000/1.180417), and the base-year cost of the 1998 increment is $7,672 ($112,672−$105,000). The LIFO value of the 1998 layer is $9,056 ($7,672 × 1.180417).

(v) The category inflation indexes for 1999 computed under the double-extension IPIC method were 1.21 for Category 1, 1.29 for Category 2 and 1.23 for Category 3. The weights to be used in computing the IPI for 1999 are $116,000 ($145,000 × 80 percent) for Category 1, $14,500 ($145,000 × 10 percent) for Category 2, and $14,500 ($145,000 × 10 percent) for Category 3. The IPI for 1999 is computed as follows:

Category	(I) Weight	(II) Category inflation index	(III) Quotient: (I)/(II)
1	$116,000	1.21	$95,868
2	14,500	1.29	11,240
3	14,500	1.23	11,789

Category	(I) Weight	(II) Category inflation index	(III) Quotient: (I)/(II)
Total	145,000		118,897

(IV) Sum of weights	(V) Sum of (weight/category inflation index)	(VI) Inventory price index: (IV)/(V)
$145,000	$118,897	1.219543

(vi) The base-year cost of the inventory in Z's pool at the end of 1999 is $118,897 ($145,000/1.219543), and the base-year cost of the 1999 layer is $6,225 ($118,897−$112,672). The LIFO value of the 1999 layer is $7,592 ($6,225 × 1.219543).
(vii) The LIFO value of Z's dollar-value pool at the end of 1999 computed under the double-extension IPIC method is as follows:

Layer	(I) Base-year cost	(II) Inventory price index	(III) LIFO value: (I)*(II)
Base layer	$105,000	1.000000	$105,000
1998 layer	7,672	1.180417	9,056
1999 layer	6,225	1.219542	7,592
Total	118,897		121,648

(viii) The section 481(a) adjustment is equal to the difference between the LIFO value of the inventory at the beginning of 2000 computed under Z's former method of accounting and recomputed by the examining agent under the double-extension IPIC method, or $12,448 ($121,648—$109,200).

(ix) Finally, the examining agent will recompute Z's taxable income for 2000 and succeeding taxable years using the double-extension IPIC method.

(v) ***Effective date*** —

(A) ***In general.*** The rules of this paragraph (e)(3) and paragraphs (b)(4) and (c)(2) of this section are applicable for taxable years ending on or after December 31, 2001.

(B) ***Change in method of accounting.*** Any change in a taxpayer's method of accounting necessary to comply with this paragraph (e)(3) or with paragraphs (b)(4) or (c)(2) of this section is a change in method of accounting to which the provisions of section 446 and the regulations thereunder apply. For the first or second taxable year ending on or after December 31, 2001, a taxpayer is granted the consent of the Commissioner to change its method of accounting to a method required or permitted by this paragraph (e)(3) and paragraphs (b)(4) and (c)(2) of this section. A taxpayer that wants to change its method of accounting under this paragraph (e)(3)(v) must follow the automatic consent procedures in Rev. Proc. 2002-9 (2002-3 I.R.B. xxx) (see § 601.601(d)(2) of this chapter). However, the scope limitations in section 4.02 of Rev. Proc. 2002-9 do not apply, and the five-year limitation on the readoption of the LIFO method under section 10.01(2) of the appendix is waived. In addition, if the taxpayer's method of accounting for its LIFO inventories is an issue under consideration at the time the application is filed with the national office, the audit protection of section 7 of Rev. Proc. 2002-9 does not apply. If a taxpayer changing its method of accounting under this paragraph (e)(3)(v)(B) is under examination, before an appeals office, or before a federal court with respect to any income tax issue, the taxpayer must provide a copy of the application to the examining agent(s), appeals officer or counsel for the government, as appropriate, at the same time it files the application with the national office. Any change under this paragraph (e)(3)(v)(B) must be made using a cut-off method and new base year. See paragraph (e)(3)(iv)(B)(*1*) of this section for an example of this computation. Because a change under this paragraph (e)(3)(v)(B) is made using a cut-off method, a section 481(a) adjustment is not permitted. However, a taxpayer changing its method of accounting under this paragraph (e)(3)(v)(B) must comply with the requirements of section 10.06(3) of the APPENDIX of Rev. Proc. 2002-9 (concerning bargain purchases).

(f) ***Change to dollar-value method from another method of pricing LIFO inventories*** —

(1) ***Consent required.*** Except as provided in § 1.472-3 in the case of a taxpayer electing to use a LIFO inventory method for the first time, or in the case of a taxpayer changing to the dollar-value method and continuing to use the same pools as were used under another LIFO method, a taxpayer using another LIFO method of pricing inventories may not change to the dollar-value method of pricing such inventories unless he first secures the consent of the Commissioner in accordance with paragraph (e) of § 1.446-1.

(2) ***Method of converting inventory.*** Where the taxpayer changes from one method of pricing LIFO inventories to the dollar-value method, the ending LIFO inventory for the taxable year immediately preceding the year of change shall be converted to the dollar-value LIFO method. This is done to establish the base-year cost for subsequent calculations. Thus, if the taxpayer was previously valuing LIFO inventories on the specific goods method, these separate values shall be combined into appropriate pools. For this purpose, the base year for the pool shall be the earliest taxable year for

which the LIFO inventory method had been adopted for any item in that pool. No change will be made in the overall LIFO value of the opening inventory for the year of change as a result of the conversion, and that inventory will merely be restated in the manner used under the dollar-value method. All layers of increment for such inventory must be retained, except that all layers of increment which occurred in the same taxable year must be combined. The following examples illustrate the provisions of this subparagraph:

Example 1. (i) Assume that the taxpayer has used another LIFO method for finished goods since 1954 and has complied with all the requirements prerequisite for a change to the dollar-value method. Items A, B, and C, which have previously been inventoried under the specific goods LIFO method, may properly be included in a single dollar-value LIFO pool. The LIFO inventory value of items A, B, and C at December 31, 1960, is $12,200, computed as follows:

Year	Base quantity and yearly increments	Unit cost	Dec. 31, 1960, inventory at LIFO value
Item A			
1954 (base year)	100	$1	$100
1955	200	2	400
1956	100	4	400
1960	100	6	600
Total	500		1,500
Item B			
1954 (base year)	300	6	1,800
1955	100	8	800
1960	50	10	500
Total	450		3,100
Item C			
1954 (base year)	1,000	4	4,000
1955	200	6	1,200
1956	300	8	2,400
Total	1,500		7,600
LIFO value of items A, B, and C at Dec. 31, 1960			12,200

There were no increments in the years 1957, 1958, or 1959.

(ii) The computation of the ratio of the total current-year cost to the total base-year cost for

the base year and each layer of increment in Pool No. 1 is shown as follows:

Item	1954 base-year unit cost	Year 1954	Increments		
			1955	1956	1960
A					
Base-year cost	$1.00	$100	$200	$100	$100
LIFO value		100	400	400	600
B					
Base-year cost	6.00	1,800	600		300
LIFO value		1,800	800		500
C					
Base-year cost	4.00	4,000	800	1,200	
LIFO value		4,000	1,200	2,400	
Total—Base-year cost	5,900	1,600	1,300	400	
Total—LIFO value	5,900	2,400	2,800	1,100	
Ratio of total current-year cost to total base-year cost (percent)		100.00	150.00	215.38	275.00

(iii) On the basis of the foregoing computations, the LIFO inventory of Pool No. 1, at December 31, 1960, is restated as follows:

	Dec. 31, 1960, inventory at base-year cost	Ratio of total current-year cost to total base-year cost (percent)	Dec. 31, 1960, inventory at LIFO value
1954 base cost	$5,900	100.00	$5,900
1955 increment	1,600	150.00	2,400
1956 increment	1,300	215.38	2,800
1960 increment	400	275.00	1,100
Total	9,200		12,200

Example 2. Assume the same facts as in Example 1 and assume further that the base-year cost of Pool No. 1 at December 31, 1961, is $8,350. Since the closing inventory for the taxable year 1961 at base-year cost is less than the opening inventory for that year at base-

year cost, a liquidation has occurred during 1961. This liquidation absorbs all of the 1960 layer of increment and part of the 1956 layer of increment. The December 31, 1961, inventory is $10,131, computed as follows:

	Dec. 31, 1961, inventory at base-year cost	Ratio of total current-year cost to total base-year cost (percent)	Dec. 31, 1961, inventory at LIFO value
1954 base cost	$5,900	100.00	$5,900
1955 increment	1,600	150.00	2,400
1956 increment	850	215.38	1,831
Total	8,350		10,131

(g) *Transitional rules* —

(1) ***Change in method of pooling.*** Any method of pooling authorized by this section and used by the taxpayer in computing his LIFO inventories under the dollar-value method shall be treated as a method of accounting. Any method of pooling which is authorized by this section shall be used for the year of adoption and for all subsequent taxable years unless a change is required by the Commissioner in order to clearly reflect income, or unless permission to change is granted by the Commissioner as provided in paragraph (e) of § 1.446-1. Where the taxpayer changes from one method of pooling to another method of pooling permitted by this section, the ending LIFO inventory for the taxable year preceding the year of change shall be restated under the new method of pooling.

(2) ***Manner of combining or separating dollar-value pools.***

(i) A taxpayer who has been using the dollar-value LIFO method and who is permitted or required to change his method of pooling, shall combine or separate the LIFO value of his inventory for the base year and each yearly layer of increment in order to conform to the new pool or pools. Each yearly layer of increment in the new pool or pools must be separately accounted for and a record thereof maintained, and any liquidation occurring in the new pool or pools subsequent to the formation thereof shall be treated in the same manner as if the new pool or pools had existed from the date the taxpayer first adopted the LIFO inventory method. The combination or separation of the LIFO value of his inventory for the base year and each yearly layer of increment shall be made in accordance with the appropriate method set forth in this subparagraph, unless the use of a different method is approved by the Commissioner.

(ii) Where the taxpayer is permitted or required to separate a pool into more than one pool, the separation shall be made in the following manner: First, each item in the former pool shall be placed in an appropriate new pool. Every item in each new pool is then extended at its base-year unit cost and the extensions are totaled. Each total is the amount of inventory for each new pool expressed in terms of base-year cost. Then a ratio of the total base-year cost of each new pool to the base-year cost of the former pool is computed. The resulting ratio is applied to

the amount of inventory for the base year and each yearly layer of increment of the former pool to obtain an allocation to each new pool of the base-year inventory of the former pool and subsequent layers of increment thereof. The foregoing may be illustrated by the following example of a change for the taxable year 1961:

Example. (a) Assume that items A, B, C, and D are all grouped together in one pool prior to December 31, 1960. The LIFO inventory value at December 31, 1960, is computed as follows:

	Pool ABCD		
	Dec. 31, 1960, inventory at Jan. 1, 1956, base-year cost	**Ratio of total current-year cost to total base-year cost (percent)**	**Dec. 31, 1960, inventory at LIFO value**
Jan. 1, 1956, base cost	$10,000	100	$10,000
Dec. 31, 1956, increment	1,000	110	1,100
Dec. 31, 1958, increment	5,000	120	6,000
Dec. 31, 1960, increment	4,000	125	5,000
Total	20,000		22,100

(b) The extension of the quantity of items A, B, C, and D at respective base-year unit costs is as follows:

Item	Quantity	Base-year unit cost	Amount
A	2,000	$2	$4,000
B	1,000	3	3,000
C	1,000	5	5,000
D	4,000	2	8,000
Total			20,000

(c) Under the provisions of this section the taxpayer separates former Pool ABCD into

two pools, Pool AB and Pool CD. The computation of the ratio of total base-year cost for each of the new pools to the base-year cost of the former pool is as follows:

Item	Total base-year cost	Ratio
Pool AB:		
A	$4,000	
B	3,000	
	7,000	7,000/20,000
Pool CD:		
C	5,000	
D	8,000	
	13,000	13,000/20,000
Total for pool ABCD	20,000	

(d) The ratio of the base-year cost of new Pools AB and CD to the base-year cost of former Pool ABCD is 7,000/20,000 and 13,000/20,000, respectively. The allocation of the January 1, 1956 base cost and subsequent yearly layers of increment of former Pool ABCD to new Pools AB and CD is as follows:

	Base-year cost to be allocated	Pool	
		AB	CD
Jan. 1, 1956, base cost	$10,000	$3,500	$6,500
Dec. 31, 1956, increment	1,000	350	650
Dec. 31, 1958, increment	5,000	1,750	3,250
Dec. 31, 1960, increment	4,000	1,400	2,600
Total	20,000	7,000	13,000

(e) The LIFO value of new Pools AB and CD at December 31, 1960, as allocated, is as follows:

	Dec. 31, 1960, inventory at Jan. 1, 1956, base-year cost	Ratio of total current-year cost to total base-year cost (percent)	Dec. 31, 1960, inventory at LIFO value
Pool AB			

	Dec. 31, 1960, inventory at Jan. 1, 1956, base-year cost	Ratio of total current-year cost to total base-year cost (percent)	Dec. 31, 1960, inventory at LIFO value
Jan. 1, 1956, base cost	$3,500	100	$3,500
Dec. 31, 1956, increment	350	110	385
Dec. 31, 1958, increment	1,750	20	2,100
Dec. 31, 1960, increment	1,400	125	1,750
Total	7,000		7,735
Pool CD			
Jan. 1, 1956, base cost	6,500	100	6,500
Dec. 31, 1956, increment	650	110	715
Dec. 31, 1958, increment	3,250	120	3,900
Dec. 31, 1960, increment	2,600	125	3,250
Total	13,000		14,365

(iii) Where the taxpayer is permitted or required to combine two or more pools having the same base year, they shall be combined into one pool in the following manner: The LIFO value of the base-year inventory of each of the former pools is combined to obtain a LIFO value of the base-year inventory for the new pool. Then, any layers of increment in the various pools which occurred in the same taxable year are combined into one total layer of increment for that taxable year. However, layers of increment which occurred in different taxable years may not be combined. In combining the layers of increment a new ratio of current-year cost to base-year cost is computed for each of the combined layers of increment. The foregoing may be illustrated by the following example:

Example. (a) Assume the taxpayer has two pools at December 31, 1960. Under the provisions of this section the taxpayer combines these pools into a single pool as of

January 1, 1961. The LIFO inventory value of each pool at December 31, 1960, is shown as follows:

	Dec. 31, 1960, inventory at Jan. 1, 1957, base-year cost	Ratio of total current-year cost to total base-year cost (percent)	Dec. 31, 1960, inventory at LIFO value
Pool No. 1			
Jan. 1, 1956, base cost	$10,000	100	$10,000
Dec. 31, 1957, increment	2,000	110	2,200
Dec. 31, 1960, increment	1,000	120	1,200
Total	13,000		13,400
Pool No. 2			
Jan. 1, 1957, base cost	5,000	100	5,000
Dec. 31, 1960, increment	3,000	140	4,200
Total	8,000		9,200

(b) The computation of the ratio of the total current-year cost to the total base-year cost for the base year and each yearly layer of increment in the new pool is as follows:

Pool	Base year 1957	Increments	
		Dec. 31, 1957	Dec. 31, 1960
No. 1:			
Base-year cost	$10,000	$2,000	$1,000
LIFO value	10,000	2,200	1,200
No. 2:			
Base-year cost	5,000		3,000

Pool	Base year 1957	Increments	
		Dec. 31, 1957	Dec. 31, 1960
LIFO value	5,000		4,200
Total, base-year cost	15,000	2,000	4,000
Total, LIFO value	15,000	2,200	5,400
Ratio of total current-year cost to total base-year cost (percent)	100	110	135

(c) On the basis of the foregoing computations, the LIFO inventory of the new pool at December 31, 1960, is restated as follows:

	Dec. 31, 1960, inventory at Jan. 1, 1957, base-year cost	Ratio of total current-year cost to total base-year cost (percent)	Dec. 31, 1960, inventory at LIFO value
Jan. 1, 1957, base cost	$15,000	100	$15,000
Dec. 31, 1957, increment	2,000	110	2,200
Dec. 31, 1960, increment	4,000	135	5,400
Total	21,000		22,600

(iv) In combining pools having different base years, the principles set forth in subdivision (iii) of this subparagraph are to be applied, except that all base years subsequent to the earliest base year shall be treated as increments, and the base-year costs for all pools having a base year subsequent to the earliest base year of any pool shall be redetermined in terms of the base cost for the earliest base year. The foregoing may be illustrated by the following example:

Example. (a) Assume that the taxpayer has two pools at December 31, 1960. Under the provisions of this section the taxpayer combines these pools into a single pool as of January 1, 1961. The LIFO inventory value of each pool at December 31, 1960, is shown

as follows:

	Dec. 31, 1960, inventory at Jan. 1, 1956, base-year cost	Ratio of total current rent-year cost to total base-year cost (percent)	Dec. 31, 1960, inventory at LIFO value
Pool No. 1			
Jan. 1, 1956, base cost	$7,000	100	$7,000
Dec. 31, 1956, increment	1,000	105	1,050
Dec. 31, 1957, increment	500	110	550
Dec. 31, 1958, increment	500	110	550
Dec. 31, 1960, increment	1,000	120	1,200
Total	10,000		10,350
Pool No. 2			
Jan. 1, 1958, base cost	3,500	100	3,500
Dec. 31, 1958, increment	1,000	110	1,100
Dec. 31, 1959, increment	500	115	575
Total	5,000		5,175

(b) The next step is to redetermine the 1958 base-year cost for Pool No. 2 in terms of 1956 base-year cost. January 1, 1956 base-year unit cost must be reconstructed or established in accordance with paragraph (e)(2) of this section for each item in Pool No. 2. Such costs are assumed to be $9.00 for item A, $20.00 for item B, and $1.80 for item C. A ratio of the 1958 total base-year cost to the 1956 total base-year cost for Pool No. 2

is computed as follows:

Item	Quantity	Jan. 1, 1956, base-year unit cost	Jan. 1, 1956, base-year cost
A	250	$9.00	$2,250
B	75	20.00	1,500
C	500	1.80	900
Total			4,650
A	250	10.00	2,500
B	75	20.00	1,500
C	500	2.00	1,000
Total			5,000

(c) The ratio of the 1956 total base-year cost to the 1958 total base-year cost for Pool No. 2 is 4,650/5,000 or 93 percent. The January 1, 1958 base cost and each yearly layer of increment at 1958 base-year cost is multiplied by this ratio. Such computation is as follows:

	Dec. 31, 1960, inventory at Jan. 1, 1958, base-year cost	Ratio (percent)	Dec. 31, 1960, inventory restated at Jan. 1, 1956, base-year cost
Jan. 1, 1958, base cost	$3,500	93	$3,255
Dec. 31, 1958, increment	1,000	93	930
Dec. 31, 1959, increment	500	93	465
Total			4,650

(d) The computation of the ratio of the total current-year cost to the total base-year cost

for the base year (1956) and each yearly layer of increment in the new pool is as follows:

Pool	Base year 1956	Increments				
		Dec. 31, 1956	Dec. 31, 1957	Dec. 31, 1958	Dec. 31, 1959	Dec. 31, 1960
No. 1:						
Base-year cost	$7,000	$1,000	$500	$500		$1,000
LIFO value	7,000	1,050	550	550		1,200
No. 2:						
Base-year cost as restated			3,255	930	$465	
LIFO value			3,500	1,100	575	
Total, base-year cost	7,000	1,000	3,755	1,430	465	1,000
Total, LIFO value	7,000	1,050	4,050	1,650	575	1,200
Ratio of total current-year cost to total base-year cost (percent)	100.00	105.00	107.86	115.38	133.66	120.00

(*e*) On the basis of the foregoing computation, the LIFO inventory of the new pool at December 31, 1960, is restated as follows:

	Dec. 31, 1960, inventory at Jan. 1, 1956, base-year cost	Ratio of total current-year cost to total base-year cost (percent)	Dec. 31, 1960, inventory at LIFO value
Jan. 1, 1956, base cost	$7,000	100.00	$7,000
Dec. 31, 1956, increment	1,000	105.00	1,050
Dec. 31, 1957, increment	3,755	107.86	4,050
Dec. 31, 1958, increment	1,430	115.38	1,650
Dec. 31, 1959, increment	465	123.66	575

	Dec. 31, 1960, inventory at Jan. 1, 1956, base-year cost	Ratio of total current-year cost to total base-year cost (percent)	Dec. 31, 1960, inventory at LIFO value
Dec. 31, 1960, increment	1,000	120.00	1,200
Total	14,650		15,525

(3) ***Change in methods of computation at the LIFO value of a dollar-value pool.*** For the first taxable year beginning after December 31, 1960, the taxpayer must use a method authorized by paragraph (e)(1) of this section in computing the base-year cost and current-year cost of a dollar-value inventory pool for the end of such year. If the taxpayer had previously used any methods other than one authorized by paragraph (e)(1) of this section, he shall not be required to recompute his LIFO inventories for taxable years beginning on or before December 31, 1960, under a method authorized by such paragraph. The base cost and layers of increment previously computed by such other method shall be retained and treated as if such base cost and layers of increment had been computed under a method authorized by paragraph (e)(1) of this section. The taxpayer shall use the year of change as the base year in applying the double-extension method or other method approved by the Commissioner, instead of the earliest year for which he adopted the LIFO method for any items in the pool.

(h) ***LIFO inventories received in certain nonrecognition transactions*** —

(1) ***In general.*** Except as provided in paragraph (h)(3) of this section, if inventory items accounted for under the LIFO method are received in a transaction described in paragraph (h)(2) of this section, then, for the purpose of determining future increments and liquidations, the transferee must use the year of transfer as the base year and must use its current-year cost (computed under the transferee's method of accounting) of those items as their new base-year cost. If the transferee had opening inventories in the year of transfer, then, for the purpose of determining future increments and liquidations, the transferee must use its current-year cost (computed under the transferee's method of accounting) of those inventories as their new base-year cost. For this purpose, “opening inventory” refers to all items owned by the transferee before the transfer for which the transferee uses, or elects to use, the LIFO method. The total new base-year cost of the transferee's inventory as of the beginning of the year of transfer is equal to the new base-year cost of the inventory received from the transferor and the new base-year cost of the transferee's opening inventory. The index (or, the cumulative index in the case of the link-chain method) for the year immediately preceding the year of transfer is 1.00. The base-year cost of any layers in the dollar-value pool, as determined after the transfer, must be recomputed accordingly. See paragraph (e)(3)(iv)(B)(*1*) of this section for an example of this computation.

(2) ***Transactions to which this paragraph (h) applies.*** The rules in this paragraph (h) apply to a transaction in which—

(i) The transferee determines its basis in the inventories, in whole or in part, by reference to the basis of the inventories in the hands of the transferor;

(ii) The transferor used the dollar-value LIFO method to account for the transferred inventories;

(iii) The transferee uses the dollar-value LIFO method to account for the inventories in the year of the transfer; and

(iv) The transaction is not described in section 381(a).

(3) ***Anti-avoidance rule.*** The rules in this paragraph (h) do not apply to a transaction entered into with the principal purpose to avail the transferee of a method of accounting that would be unavailable to the transferor (or would be unavailable to the transferor without securing consent from the Commissioner). In determining the principal purpose of a transfer, consideration will be given to all of the facts and circumstances. However, a transfer is deemed made with the principal purpose to avail the transferee of a method of accounting that would be unavailable to the transferor without securing consent from the Commissioner if the transferor acquired inventory in a bargain purchase within the five taxable years preceding the year of the transfer and used a dollar-value LIFO method to account for that inventory that did not treat the bargain purchase inventory and physically identical inventory acquired at market prices as separate items. Inventory is deemed acquired in a bargain purchase if the actual cost of the inventory (or, if appropriate, the allocated cost of the inventory) was less than or equal to 50 percent of the replacement cost of physically identical inventory. Inventory is not considered acquired in a bargain purchase if the actual cost of the inventory (or, if appropriate, the allocated cost of the inventory) was greater than or equal to 75 percent of the replacement cost of physically identical inventory.

(4) ***Effective date.*** The rules of this paragraph (h) are applicable for transfers that occur during a taxable year ending on or after December 31, 2001.

[T.D. 6539, 26 FR 518, Jan. 20, 1961, as amended by T.D. 7814, 47 FR 11272, Mar. 16, 1982; T.D. 8976, 67 FR 1082, Jan. 9, 2002; 67 FR 5062, 5148, Feb. 4, 2002]

§ 1.475-0 Table of contents.

This section lists the major captions in §§ 1.475(a)-3, 1.475(a)-4, 1.475(b)-1, 1.475(b)-2, 1.475(c)-1, 1.475(c)-2, 1.475(d)-1 and 1.475(g)-1.

§§ 1.475(a)-1—1.475(a)-2 [Reserved]

§ 1.475(a)-3 Acquisition by a dealer of a security with a substituted basis.

(a) Scope.

(b) Rules.

§ 1.475(a)-4 Safe Harbor for Valuation Under Section 475.

(a) Overview.

(1) Purpose.

(2) Dealer business model.

(3) Summary of paragraphs.

(b) Safe harbor.

(1) General rule.

(2) Example. Use of eligible and non-eligible methods.

(3) Scope of the safe harbor.

(c) Eligible taxpayer.

(d) Eligible method.

(1) Sufficient consistency.

(2) General requirements.

(i) Frequency.

(ii) Recognition at the mark.

(iii) Recognition on disposition.

(iv) Fair value standard.

(3) Limitations.

(i) Bid-ask method.

(A) General Rule.

(B) Safe harbor.

(ii) Valuations based on present values of projected cash flows.

(iii) Accounting for costs and risks.

(4) Examples.

(e) Compliance with other rules.

(f) Election.

(1) Making the election.

(2) Duration of the election.

(3) Revocation.

(i) By the taxpayer.

(ii) By the Commissioner.

(4) Re-election.

(g) Eligible positions.

(h) Applicable financial statement.

(1) Definition.

(2) Primary financial statement.

(i) Statement required to be filed with Securities and Exchange Commission (SEC).

(ii) Statement filed with a Federal agency other than the IRS.

(iii) Certified audited financial statement.

(3) Example. Primary financial statement.

(4) Financial statements of equal priority.

(5) Consolidated groups.

(6) Supplement or amendment to a financial statement.

(7) Certified audited financial statement.

(i) [Reserved]

(j) Significant business use.

(1) In general.

(2) Financial statement value.

(3) Management of a business as a dealer.

(4) Significant use.

(k) Retention and production of records.

(1) In general.

(2) Specific requirements.

(i) Reconciliation.

(A) In general.

(B) Values on books and records with supporting schedules.

(C) Consolidation schedules.

(ii) Instructions provided by the Commissioner.

(3) Time for producing records.

(4) Retention period for records.

(5) Agreements with the Commissioner.

(l) [Reserved]

(m) Use of different values.

§ 1.475(b)-1 Scope of exemptions from mark-to-market requirement.

(a) Securities held for investment or not held for sale.

(b) Securities deemed identified as held for investment.

(1) In general.

(2) Relationships.

(i) General rule.

(ii) Attribution.

(iii) Trusts treated as partnerships.

(3) Securities traded on certain established financial markets.

(4) Changes in status.

(i) Onset of prohibition against marking.

(ii) Termination of prohibition against marking.

(iii) Examples.

(c) Securities deemed not held for investment; dealers in notional principal contracts and derivatives.

(d) Special rule for hedges of another member's risk.

(e) Transitional rules.

(1) Stock, partnership, and beneficial ownership interests in certain controlled corporations, partnerships, and trusts before January 23, 1997.

(i) In general.

(ii) Control defined.

(iii) Applicability.

(2) Dealers in notional principal contracts and derivatives acquired before January 23, 1997.

(i) General rule.

(ii) Exception for securities not acquired in dealer capacity.

(iii) Applicability.

§ 1.475(b)-2 Exemptions—identification requirements.

(a) Identification of the basis for exemption.

(b) Time for identifying a security with a substituted basis.

(c) Integrated transactions under § 1.1275-6.

(1) Definitions.

(2) Synthetic debt held by a taxpayer as a result of legging in.

(3) Securities held after legging out.

§ 1.475(b)-3 [Reserved]

§ 1.475(c)-1 Definitions—dealer in securities.

(a) Dealer-customer relationship.

(1) [Reserved]

(2) Transactions described in section 475(c)(1)(B).

(i) In general.

(ii) Examples.

(3) Related parties.

(i) General rule.

(ii) Special rule for members of a consolidated group.

(iii) The intragroup-customer election.

(A) Effect of election.

(B) Making and revoking the election.

(iv) Examples.

(b) Sellers of nonfinancial goods and services.

(1) Purchases and sales of customer paper.

(2) Definition of customer paper.

(3) Exceptions.

(4) Election not to be governed by the exception for sellers of nonfinancial goods or services.

(i) Method of making the election.

(A) Taxable years ending after December 24, 1996.

(B) Taxable years ending on or before December 24, 1996.

(ii) Continued applicability of an election.

(c) Taxpayers that purchase securities from customers but engage in no more than negligible sales of the securities.

(1) Exemption from dealer status.

(i) General rule.

(ii) Election to be treated as a dealer.

(2) Negligible sales.

(3) Special rules for members of a consolidated group.

(i) Intragroup-customer election in effect.

(ii) Intragroup-customer election not in effect.

(4) Special rules.

(5) Example.

(d) Issuance of life insurance products.

§ 1.475(c)-2 Definitions—security.

(a) Items that are not securities.

(b) Synthetic debt that § 1.1275-6(b) treats the taxpayer as holding.

(c) Negative value REMIC residuals acquired before January 4, 1995.

(1) Description.

(2) Special rules applicable to negative value REMIC residuals acquired before January 4, 1995.

§ 1.475(d)-1 Character of gain or loss.

(a) Securities never held in connection with the taxpayer's activities as a dealer in securities.

(b) Ordinary treatment for notional principal contracts and derivatives held by dealers in notional principal contracts and derivatives.

§ 1.475(g)-1 Effective dates.

[T.D. 8700, 61 FR 67719, Dec. 24, 1996, as amended by T.D. 9328, 72 FR 32177, June 12, 2007; T.D. 9849, 84 FR 9235, Mar. 14, 2019]

§§ 1.475(a)-1-1.475(a)-2 [Reserved]

§ 1.475(a)-3 Acquisition by a dealer of a security with a substituted basis.

(a) ***Scope.*** This section applies if—

(1) A dealer in securities acquires a security that is subject to section 475(a) and the dealer's basis in the security is determined, in whole or in part, by reference to the basis of that security in the hands of the person from whom the security was acquired; or

(2) A dealer in securities acquires a security that is subject to section 475(a) and the dealer's basis in the security is determined, in whole or in part, by reference to other property held at any time by the dealer.

(b) ***Rules.*** If this section applies to a security—

(1) Section 475(a) applies only to changes in value of the security occurring after the acquisition; and

(2) Any built-in gain or loss with respect to the security (based on the difference between the fair market value of the security on the date the dealer acquired it and its basis to the dealer on that date) is taken into account at the time, and has the character, provided by the sections of the Internal Revenue Code that would apply to the built-in gain or loss if section 475(a) did not apply to the security.

[T.D. 8700, 61 FR 67720, Dec. 24, 1996]

§ 1.475(a)-4 Valuation safe harbor.

(a) ***Overview*** —

(1) ***Purpose.*** This section sets forth a safe harbor that, under certain circumstances, permits taxpayers to elect to use the values of positions reported on certain financial statements as the fair market values of those positions for purposes of section 475. This safe harbor is based on the principle that, if a mark-to-market method used for financial reporting is sufficiently consistent with the requirements of section 475 and if the financial statement employing that method has certain indicia of reliability, then the values used on that financial statement may be used for purposes of section 475. If other provisions of the Internal Revenue Code or regulations require adjustments to fair market value, use of the safe harbor does not eliminate the need for those adjustments. See paragraph (e) of this section.

(2) ***Dealer business model.*** The safe harbor is based on the business model for a derivatives dealer. Under this model, the dealer seeks to capture and profit from bid-ask spreads in the marketplace by entering into substantially offsetting positions with customers that will remain on the derivatives dealer's books over their terms. Because the positions in the aggregate tend to offset each other, the dealer has achieved a predictable net cash flow (for example, a synthetic annuity) that reflects the captured bid-ask spread. This net cash flow is generally impervious to market fluctuations in the values on which the component derivatives are based. Section 475 requires current recognition of the present value of the net cash flow attributable to the capture of these spreads.

(3) ***Summary of paragraphs.*** Paragraph (b) of this section sets forth the safe harbor. To determine who may use the safe harbor, paragraph (c) of this section defines the term “eligible taxpayer.” Paragraph (d) of this section sets forth the basic requirements for determining whether the method used for financial reporting is sufficiently consistent with the requirements of section 475. Paragraph (e) of this section describes adjustments to the financial statement values that may be required for purposes of applying this safe harbor. Paragraph (f) of this section describes the procedure for making the safe harbor election and the conditions under which the election may be revoked. Paragraph (g) of this section provides that the Commissioner will issue a revenue procedure that lists the types of securities and commodities that are eligible positions for purposes of the safe harbor. Using rules for determining priorities among financial statements, paragraph (h) of this section defines the term “applicable financial statement” and so describes the financial statement, if any, whose values may be used in the safe harbor. In some cases, as required by paragraph (j) of this

section, the safe harbor is available only if the taxpayer's operations make significant business use of financial statement values. Paragraph (k) of this section sets forth requirements for record retention and record production. Paragraph (m) of this section provides that the Commissioner may use fair market values that clearly reflect income, but which differ from values used on the applicable financial statement, if an electing taxpayer fails to comply with the recordkeeping and record production requirements of paragraph (k) of this section.

(b) *Safe harbor* —

(1) *General rule.* Subject to any adjustment required by paragraph (e) of this section, if an eligible taxpayer uses an eligible method for the valuation of an eligible position on its applicable financial statement and the eligible taxpayer is subject to the election described in paragraph (f) of this section, the value that the eligible taxpayer assigns to that eligible position on its applicable financial statement is the fair market value of the eligible position for purposes of section 475 and must be used for purposes of section 475, even if that value is not the fair market value of the position for any other purpose of the internal revenue laws. Notwithstanding the rule set forth in this paragraph, the Commissioner may, in certain circumstances, use fair market values that clearly reflect income but differ from the values used on the applicable financial statement. See paragraph (m) of this section.

(2) *Example. Use of eligible and non-eligible methods.* X uses eligible methods on its applicable financial statement for some, but not all, securities and commodities that are eligible positions. When X elects into the safe harbor, the election applies to all eligible positions for which X has an eligible method. Therefore, once the election is in effect, the financial statement values for eligible positions for which X has an eligible method are the fair market values of those eligible positions for purposes of section 475. Since X, however, does not have an eligible method for all eligible positions, those eligible positions for which X does not have an eligible method remain subject to the fair market value requirements of section 475 as set out in case law and otherwise.

(3) *Scope of the safe harbor.* The safe harbor may be used only to determine values for eligible positions that are properly marked to market under section 475. It does not determine whether any positions may or may not be subject to mark-to-market accounting under section 475.

(c) *Eligible taxpayer.* An eligible taxpayer is—

(1) A dealer in securities, as defined in section 475(c)(1); or

(2) A dealer in commodities, as defined in section 475(e), that is subject to an election under section 475(e).

(d) *Eligible method* —

(1) *Sufficient consistency.* An eligible method is a mark-to-market method that is sufficiently consistent with the requirements of a mark-to-market method under section 475. To be sufficiently consistent with the requirements of a mark-to-market method under section 475, the eligible method must satisfy all of the requirements of paragraph (d)(2) and paragraph (d)(3) of this section.

(2) *General requirements.* The method—

(i) *Frequency.* Must require a valuation of the eligible position no less frequently than annually, including a valuation as of the last business day of the taxable year;

(ii) ***Recognition at the mark.*** Must recognize into income on the income statement for each taxable year mark-to-market gain or loss based upon the valuation or valuations described in paragraph (d)(2)(i) of this section;

(iii) ***Recognition on disposition.*** Must require, on disposition of the eligible position, recognition into income (on the income statement for the taxable year of disposition) as if a year-end mark occurred immediately before such disposition; and

(iv) ***Fair value standard.*** Must require use of a valuation standard that arrives at fair value in accordance with U.S. Generally Accepted Accounting Principles (U.S. GAAP).

(3) ***Limitations*** —

(i) ***Bid-ask method*** —

(A) ***General rule.*** Except for eligible positions that are traded on a qualified board or exchange, as defined in section 1256(g)(7), or eligible positions that the Commissioner designates in a revenue procedure or other published guidance, the valuation standard used must not, other than on a *de minimis* portion of a taxpayer's positions, permit values at or near the bid or ask value. Consequently, the valuation method described in § 1.471-4(a)(1) fails to satisfy this paragraph (d)(3)(i)(A).

(B) ***Safe harbor.*** The restriction in paragraph (d)(3)(i)(A) of this section is satisfied if the method consistently produces values that are closer to the mid-market values than they are to the bid or ask values.

(ii) ***Valuations based on present values of projected cash flows.*** If the method of valuation consists of projecting cash flows from an eligible position or positions and determining the present value of those cash flows, the method must not take into account any cash flows attributable to a period or time on or before the valuation date. In addition, adjustment of the gain or loss recognized on the mark may be required with respect to payments that will be made after the valuation date to the extent that portions of the payments have been recognized for tax purposes before the valuation and appropriate adjustment has not been made for purposes of determining financial statement value.

(iii) ***Accounting for costs and risks.*** Valuations may account for appropriate costs and risks, but no cost or risk may be accounted for more than once, either directly or indirectly. Further, no valuation adjustment for any cost or risk may be made for purposes of this safe harbor if that valuation adjustment is not also permitted by, and taken for, U.S. GAAP purposes on the taxpayer's applicable financial statement. If appropriate, the costs and risks that may be accounted for include, but are not limited to, credit risk (appropriately adjusted for any credit enhancement), future administrative costs, and model risk. An adjustment for credit risk is implicit in computing the present value of cash flows using a discount rate greater than a risk-free rate. Accordingly, a determination of whether any further downward adjustment to value for credit risk is warranted, or whether an upward adjustment is required, must take that implicit adjustment into consideration.

(4) ***Examples.*** The following examples illustrate this paragraph (d):

> *Example 1.* (i) X, a calendar year taxpayer, is a dealer in securities within the meaning of section 475(c)(1). X generally maintains a balanced portfolio of interest rate swaps and other

interest rate derivatives, capturing bid-ask spreads and keeping its market exposure within desired limits (using, if necessary, additional derivatives for this purpose). X uses a mark-to-market method on a statement that it is required to file with the United States Securities and Exchange Commission and that satisfies paragraph (d)(2) of this section with respect to both the contracts with customers and the additional derivatives. When determining the amount of any gain or loss realized on a sale, exchange, or termination of a position, X makes a proper adjustment for amounts taken into account respecting payments or receipts. X and all of its counterparties on the derivatives have the same general credit quality as each other.
(ii) Under X's valuation method, as of each valuation date, X determines a mid-market probability distribution of future cash flows under the derivatives and computes the present values of these cash flows. In computing these present values, X uses an industry standard yield curve that is appropriate for obligations by persons with this same general credit quality. In addition, based on information that includes its own knowledge about the counterparties, X adjusts some of these present values either upward or downward to reflect X's reasonable judgment about the extent to which the true credit status of each counterparty's obligation, taking credit enhancements into account, differs from the general credit quality used in the yield curve to present value the derivatives.

(iii) X's methodology does not violate the requirement in paragraph (d)(3)(iii) of this section that the same cost or risk not be taken into account, directly or indirectly, more than once.

(iv) *Applicability date.* This *Example 1* applies to valuations of securities on or after July 6, 2011.

Example 2. (i) The facts are the same as in *Example 1,* except that X uses a better credit quality in determining the yield curve to discount the payments to be received under the derivatives. Based on information that includes its own knowledge about the counterparties, X adjusts these present values to reflect X's reasonable judgment about the extent to which the true credit status of each counterparty's obligation, taking credit enhancements into account, differs from this better credit quality obligation.
(ii) X's methodology does not violate the requirement in paragraph (d)(3)(iii) of this section that the same cost or risk not be taken into account, directly or indirectly, more than once.

(iii) *Applicability date.* This *Example 2* applies to valuations of securities on or after July 6, 2011.

Example 3. (i) The facts are the same as in *Example 1,* except that, after computing present values using the discount rates that are appropriate for obligors with the same general credit quality, and based on information that includes X's own knowledge about the counterparties, X adjusts some of these present values either upward or downward to reflect X's reasonable judgment about the extent to which the true credit status of each counterparty's obligation,

taking credit enhancements into account, differs from a better credit quality.
(ii) X's methodology violates the requirement in paragraph (d)(3)(iii) of this section that the same cost or risk not be taken into account, directly or indirectly, more than once. By using the same general credit quality discount rate, X's method takes into account the difference between risk-free obligations and obligations with that lower credit quality. By adjusting values for the difference between a higher credit quality and that lower credit quality, X takes into account risks that it had already accounted for through the discount rates that it used. The same result would occur if X judged some of its counterparties' obligations to be of a higher credit quality but X failed to adjust the values of those obligations to reflect the difference between a higher credit quality and the lower credit quality.

(iii) *Applicability date.* This *Example 3* applies to valuations of securities on or after July 6, 2011.

Example 4. (i) The facts are the same as in *Example 1,* except that X determines the mid-market value for each derivative and then subtracts the corresponding part of the bid-ask spread.
(ii) X's methodology violates the rule in paragraph (d)(3)(i) of this section that forbids valuing positions at or near the bid or ask value.

Example 5. (i) The facts are the same as in *Example 1,* and, in addition, X's adjustments for all risks and costs, including credit risk, future administrative costs and model risk, may occasionally cause the adjusted value of an eligible position to be at or near the bid value or ask value.
(ii) X's methodology does not violate the rule in paragraph (d)(3)(i)(A) of this section that forbids valuing eligible positions at or near the bid or ask value.

(e) ***Compliance with other rules.*** Notwithstanding any other provisions of this section, the fair market values for purposes of the safe harbor must be consistent with section 482, or rules that adopt section 482 principles, when applicable. For example, if a notional principal contract is subject to section 482 or section 482 principles, the values of future cash flows taken into account in determining the value of the contract for purposes of section 475 must be consistent with section 482.

(f) ***Election*** —

(1) ***Making the election.*** Unless the Commissioner prescribes otherwise, an eligible taxpayer elects under this section by filing with the Commissioner a statement declaring that the taxpayer makes the safe harbor election in this section for all eligible positions for which it has an eligible method. In addition to any other information that the Commissioner may require, the statement must describe the taxpayer's applicable financial statement for the first taxable year for which the election is effective and must state that the taxpayer agrees to provide upon the request of the Commissioner all information, records, and schedules in the manner required by paragraph (k) of this section. The statement must be attached to a timely filed Federal income tax return (including extensions) for the taxable year for which the election is first effective.

(2) ***Duration of the election.*** Once made, the election continues in effect for all subsequent taxable years unless revoked.

(3) ***Revocation*** —

(i) ***By the taxpayer.*** An eligible taxpayer that is subject to an election under this section may revoke the election only with the consent of the Commissioner.

(ii) ***By the Commissioner.*** The Commissioner, after consideration of the relevant facts and circumstances, may revoke an election under this section, effective beginning with the first open year for which the election is effective or with any subsequent year, if—

(A) The taxpayer fails to comply with paragraph (k) of this section (concerning record retention and production) and the taxpayer does not show reasonable cause for this failure;

(B) The taxpayer ceases to have an applicable financial statement or ceases to use an eligible method; or

(C) For any other reason, no more than a de minimis number of eligible positions, or no more than a de minimis fraction of the taxpayer's eligible positions, are covered by the safe harbor in paragraph (b) of this section.

(4) ***Re-election.*** If an election is revoked, either by the Commissioner or by the taxpayer, the taxpayer (or any successor in interest of the taxpayer) may not make the election without the consent of the Commissioner for any taxable year that begins before the date that is six years after the first day of the earliest taxable year affected by the revocation.

(g) ***Eligible positions.*** For any taxpayer, an eligible position is any security or commodity that the Commissioner in a revenue procedure or other published guidance designates as an eligible position with respect to that taxpayer for purposes of this safe harbor.

(h) ***Applicable financial statement*** —

(1) ***Definition.*** An eligible taxpayer's applicable financial statement for a taxable year is the taxpayer's primary financial statement for that year if that primary financial statement is described in paragraph (h)(2)(i) of this section (concerning statements required to be filed with the SEC) or if that primary financial statement both meets the requirements of paragraph (j) of this section (concerning significant business use) and is described in either paragraph (h)(2)(ii) or (iii) of this section. Otherwise, or if the taxpayer does not have a primary financial statement for the taxable year, the taxpayer does not have an applicable financial statement for the taxable year.

(2) ***Primary financial statement.*** For any taxable year, an eligible taxpayer's primary financial statement is the financial statement, if any, described in one or more of paragraphs (h)(2)(i), (ii), and (iii) of this section. If more than one financial statement of the taxpayer for the year is so described, the primary financial statement is the one first described in paragraphs (h)(2)(i), (ii), and (iii) of this section. A taxpayer has only one primary financial statement for any taxable year.

(i) ***Statement required to be filed with the Securities and Exchange Commission (SEC).*** A financial statement that is prepared in accordance with U.S. GAAP and that is required to be filed with the SEC, such as the 10--K or the Annual Statement to Shareholders.

(ii) ***Statement filed with a Federal agency other than the Internal Revenue Service.*** A financial statement that is prepared in accordance with U.S. GAAP and that is required to be provided to the Federal government or any of its agencies other than the Internal Revenue Service (IRS).

(iii) Certified audited financial statement. A certified audited financial statement that is prepared in accordance with U.S. GAAP; that is given to creditors for purposes of making lending decisions, given to equity holders for purposes of evaluating their investment in the eligible taxpayer, or provided for other substantial non-tax purposes; and that the taxpayer reasonably anticipates will be directly relied on for the purposes for which it was given or provided.

(3) ***Example. Primary financial statement.*** X prepares financial statement FS1, which is required to be filed with a Federal government agency other than the SEC or the IRS. FS1 is thus described in paragraph (h)(2)(ii) of this section. X also prepares financial statement FS2, which is a certified audited financial statement that is given to creditors and that X reasonably anticipates will be relied on for purposes of making lending decisions. FS2 is thus described in paragraph (h)(2)(iii) of this section. Because FS1, which is described in paragraph (h)(2)(ii) of this section, is described before FS2, which is described in paragraph (h)(2)(iii) of this section, FS1 is X's primary financial statement.

(4) ***Financial statements of equal priority.*** If the rules of paragraph (h)(2) of this section cause two or more financial statements to be of equal priority, then the statement that results in the highest aggregate valuation of eligible positions being marked to market under section 475 is the primary financial statement.

(5) ***Consolidated groups.*** If the taxpayer is a member of an affiliated group that files a consolidated return, the primary financial statement of the taxpayer is the primary financial statement, if any, of the common parent (within the meaning of section 1504(a)(1)) of the consolidated group.

(6) ***Supplement or amendment to a financial statement.*** A financial statement includes any supplement or amendment to the financial statement.

(7) ***Certified audited financial statement.*** For purposes of this paragraph (h), a financial statement is a certified audited financial statement if it is certified by an independent certified public accountant from a Registered Public Accounting firm, as defined in section 2(a)(12) of the Sarbanes-Oxley Act of 2002, Public Law 107-204, 116 Stat. 746 (July 30, 2002), 15 U.S.C. § 7201(a)(12), and rules promulgated under that Act, and is—

(i) Certified to be fairly presented (a “clean” opinion);

(ii) Certified to be fairly presented subject to a concern about a contingency, other than a contingency relating to the value of eligible positions (a qualified “subject to” opinion); or

(iii) Certified to be fairly presented except for a method of accounting with which the Certified Public Accountant disagrees and which is not a method used to determine the value of an eligible position held by the eligible taxpayer (a qualified “except for” opinion).

(i) [Reserved]

(j) ***Significant business use*** —

(1) ***In general.*** A financial statement is described in this paragraph (j) if—

(i) The financial statement contains values for eligible positions;

(ii) The eligible taxpayer makes significant use of financial statement values in most of the significant management functions of its business; and

(iii) That use is related to the management of all or substantially all of the eligible taxpayer's business.

(2) ***Financial statement value.*** For purposes of this paragraph (j), the term *financial statement value* means—

(i) A value that is taken from the financial statement; or

(ii) A value that is produced by a process that is in all respects identical to the process that produces the values that appear on the financial statement but that is not taken from the statement because either—

(A) The value was determined as of a date for which the financial statement does not value eligible positions; or

(B) The value is used in the management of the business before the financial statement has been prepared.

(3) ***Management functions of a business.*** For purposes of this paragraph (j), the term *management functions of a business* refers to the financial and commercial oversight of the business. Oversight includes, but is not limited to, senior management review of business-unit profitability, market risk measurement or management, credit risk measurement or management, internal allocation of capital, and compensation of personnel. Management functions of a business do not include either tax accounting or reporting the results of operations to persons other than directors or employees.

(4) ***Significant use.*** If an eligible taxpayer uses financial statement values for some significant management functions and uses values that are not financial statement values for other significant management functions, then the determination of whether the taxpayer has made significant use of the financial statement values is made on the basis of all the facts and circumstances. This determination must particularly take into account whether the taxpayer's reliance on the financial statement values exposes the taxpayer to material adverse economic consequences if the values are incorrect.

(k) ***Retention and production of records*** —

(1) ***In general.*** In addition to all records that section 6001 otherwise requires to be retained, an eligible taxpayer subject to the election provided by this section must keep, and timely provide to the Commissioner upon request, records and books of account that are sufficient to establish that the financial statement to which the income tax return conforms is the taxpayer's applicable financial statement, that the method used on that statement is an eligible method, and that the values used for eligible positions for purposes of section 475 are the values used in the applicable financial statement. This obligation extends to all records and books that are required to be maintained for any period for financial or regulatory reporting purposes, even if these records or books may not otherwise be specifically covered by section 6001. All records and books described in this paragraph (k) must be maintained for the period described in paragraph (k)(4) of this section, even if a lesser period of retention applies for financial statement or regulatory purposes.

(2) ***Specific requirements*** —

(i) ***Verification and reconciliation.*** Unless the Commissioner otherwise provides—

(A) ***In general.*** An eligible taxpayer must provide books and records to verify the appropriate use of the safe harbor and reconciliation schedules between the applicable financial statement for the taxable year and the Federal income tax return for that year. The required verification materials and reconciliation schedules include all supporting schedules, exhibits, computer programs, and any other information used in producing the values and schedules, including the documentation of rules and procedures governing determination of the values. The required reconciliation schedules must also include a detailed explanation of any adjustments necessitated by the imperfect overlap between the eligible positions that the taxpayer marks to market under section 475 and the eligible positions for which the applicable financial statement uses an eligible method. In the time and manner provided by the Commissioner, a corporate taxpayer subject to this paragraph (k) must reconcile the net income amount reported on its applicable financial statement to the amount reported on the applicable forms and schedules on its Federal income tax return (such as the Schedule M-1, "Net Income(Loss) Reconciliation for Corporations With Total Assets of $10 Million or More"; Schedule M-3, "Net Income(Loss) Reconciliation for Corporations With Total Assets of $10 Million or More"; and Form 1120F, "U.S. Income Tax Return of a Foreign Corporation"). Eligible taxpayers that are not otherwise required to file a Schedule M-1 or Schedule M-3 must reconcile net income using substitute schedules similar to Schedule M-1 and Schedule M-3, and these substitute schedules must be attached to the return.

(B) ***Values on books and records with supporting schedules.*** The books and records must state the value used for each eligible position separately from the value used for any other eligible position. However, an eligible taxpayer may make adjustments to values on a pooled basis, if the taxpayer demonstrates that it can compute gain or loss attributable to the sale or other disposition of an individual eligible position.

(C) ***Consolidation schedules.*** An eligible taxpayer must provide a schedule showing the consolidation and de-consolidation that is used in preparing the applicable financial statement, along with exhibits and subordinate schedules. This schedule must provide information that addresses the differences for consolidation and de-consolidation between the applicable financial statement and the Federal income tax return.

(ii) ***Instructions provided by the Commissioner.*** The Commissioner may provide an alternative time or manner in which an eligible taxpayer subject to this paragraph (k) must establish that the same values used for eligible positions on the applicable financial statement are also the values used for purposes of section 475 on the Federal income tax return.

(3) ***Time for producing records.*** All documents described in this paragraph (k) must be produced within 30 days of a request by the Commissioner, unless the Commissioner grants a written extension. Generally, the Commissioner will exercise his discretion to excuse a minor or inadvertent failure to provide requested documents if the taxpayer shows reasonable cause for the failure, has made a good faith effort to comply with the requirement to produce records, and promptly remedies the failure. For failures to maintain, or timely produce, records, see paragraph (f)(3)(ii) of this section (allowing the Commissioner to revoke the election), and see paragraph (m) of this section (allowing the Commissioner, but not the taxpayer, to use for eligible positions that otherwise might be subject to the safe harbor fair market values that clearly reflect income but that are different from the values used on the applicable financial statement).

(4) ***Retention period for records.*** All materials required by this paragraph (k) and section 6001 must be retained as long as their contents may become material in the administration of any internal revenue law.

(5) ***Agreements with the Commissioner.*** The Commissioner and an eligible taxpayer may enter into a written agreement that establishes, for purposes of this paragraph (k), which records must be maintained, how they must be maintained, and for how long they must be maintained.

(l) [Reserved]

(m) ***Use of different values.*** If, with respect to the records that relate to certain eligible positions for a taxable year, the taxpayer fails to satisfy paragraph (k) of this section (concerning record retention and record production), then, for those eligible positions for that year, the Commissioner may use values that the Commissioner determines to be fair market values that are appropriate to clearly reflect income, even if the values so determined are different from the values reported for those positions on the applicable financial statement. See also paragraph (f)(3)(ii) of this section (concerning revocation of the election by the Commissioner when a taxpayer does not produce required records and fails to demonstrate reasonable cause for the failure).

[T.D. 9328, 72 FR 32177, June 12, 2007, as amended by T.D. 9533, 76 FR 39281, July 6, 2011; T.D. 9637, 78 FR 54760, Sept. 6, 2013]

§ 1.475(b)-1 Scope of exemptions from mark-to-market requirement.

(a) ***Securities held for investment or not held for sale.*** Except as otherwise provided by this section and subject to the identification requirements of section 475(b)(2), a security is held for investment (within the meaning of section 475(b)(1)(A)) or not held for sale (within the meaning of section 475(b)(1)(B)) if it is not held by the taxpayer primarily for sale to customers in the ordinary course of the taxpayer's trade or business.

(b) ***Securities deemed identified as held for investment*** —

(1) ***In general.*** The following items held by a dealer in securities are per se held for investment within the meaning of section 475(b)(1)(A) and are deemed to be properly identified as such for purposes of section 475(b)(2)—

(i) Except as provided in paragraph (b)(3) of this section, stock in a corporation, or a partnership or beneficial ownership interest in a widely held or publicly traded partnership or trust, to which the taxpayer has a relationship specified in paragraph (b)(2) of this section; or

(ii) A contract that is treated for federal income tax purposes as an annuity, endowment, or life insurance contract (see sections 72, 817, and 7702).

(2) ***Relationships*** —

(i) ***General rule.*** The relationships specified in this paragraph (b)(2) are—

(A) Those described in section 267(b) (2), (3), (10), (11), or (12); or

(B) Those described in section 707(b)(1)(A) or (B).

(ii) ***Attribution.*** The relationships described in paragraph (b)(2)(i) of this section are determined taking into account sections 267(c) and 707(b)(3), as appropriate.

(iii) ***Trusts treated as partnerships.*** For purposes of this paragraph (b)(2), the phrase partnership or trust is substituted for the word *partnership* in sections 707(b) (1) and (3), and a reference to beneficial ownership interest is added to each reference to capital interest or profits interest in those sections.

(3) ***Securities traded on certain established financial markets.*** Paragraph (b)(1)(i) of this section does not apply to a security if—

(i) The security is actively traded within the meaning of § 1.1092(d)-1(a) taking into account only established financial markets identified in § 1.1092(d)-1(b)(1) (i) or (ii) (describing national securities exchanges and interdealer quotation systems);

(ii) Less than 15 percent of all of the outstanding shares or interests in the same class are held by the taxpayer and all persons having a relationship to the taxpayer that is specified in paragraph (b)(2) of this section; and

(iii) If the security was acquired (e.g., on original issue) from a person having a relationship to the taxpayer that is specified in paragraph (b)(2) of this section, then, after the time the security was acquired—

(A) At least one full business day has passed; and

(B) There has been significant trading involving persons not having a relationship to the taxpayer that is specified in paragraph (b)(2) of this section.

(4) ***Changes in status*** —

(i) ***Onset of prohibition against marking.***

(A) Once paragraph (b)(1) of this section begins to apply to the security and for so long as it continues to apply, section 475(a) does not apply to the security in the hands of the taxpayer.

(B) If a security has not been timely identified under section 475(b)(2) and, after the last day on which such an identification would have been timely, paragraph (b)(1) of this section begins to apply to the security, then the dealer must recognize gain or loss on the security as if it were sold for its fair market value as of the close of business of the last day before paragraph (b)(1) of this section begins to apply to the security, and gain or loss is taken into account at that time.

(ii) ***Termination of prohibition against marking.*** If a taxpayer did not timely identify a security under section 475(b)(2), and paragraph (b)(1) of this section applies to the security on the last day on which such an identification would have been timely but thereafter ceases to apply—

(A) An identification of the security under section 475(b)(2) is timely if made on or before the close of the day paragraph (b)(1) of this section ceases to apply; and

(B) Unless the taxpayer timely identifies the security under section 475(b)(2) (taking into account the additional time for identification that is provided by paragraph (b)(4)(ii)(A) of this section), section 475(a) applies to changes in value of the security after the cessation in the same manner as under section 475(b)(3).

(iii) ***Examples.*** These examples illustrate this paragraph (b)(4):

Example 1. Onset of prohibition against marking. (A) *Facts.* Corporation *H* owns 75 percent of the stock of corporation *D,* a dealer in securities within the meaning of section 475(c)(1). On December 1, 1995, *D* acquired less than half of the stock in corporation *X.* *D* did not identify the stock for purposes of section 475(b)(2). On July 17, 1996, *H* acquired from other persons 70 percent of the stock of *X.* As a result, *D* and *X* became related within the meaning of paragraph (b)(2)(i) of this section. The stock of *X* is not described in paragraph (b)(3) of this section (concerning some securities traded on certain established financial markets).
(B) *Holding.* Under paragraph (b)(4)(i) of this section, *D* recognizes gain or loss on its *X* stock as if the stock were sold for its fair market value at the close of business on July 16, 1996, and the gain or loss is taken into account at that time. As with any application of section 475(a), proper adjustment is made in the amount of any gain or loss subsequently realized. After July 16, 1996, section 475(a) does not apply to D's *X* stock while paragraph (b)(1)(i) of this section (concerning the relationship between *X* and *D*) continues to apply.

Example 2. Termination of prohibition against marking; retained securities identified as held for investment. (A) *Facts.* On July 1, 1996, corporation *H* owned 60 percent of the stock of corporation *Y* and all of the stock of corporation *D,* a dealer in securities within the meaning of section 475(c)(1). Thus, *D* and *Y* are related within the meaning of paragraph (b)(2)(i) of this section. Also on July 1, 1996, *D* acquired, as an investment, 10 percent of the stock of *Y.* The stock of *Y* is not described in paragraph (b)(3) of this section (concerning some securities traded on certain established financial markets). When *D* acquired its shares of *Y* stock, it did not identify them for purposes of section 475(b)(2). On December 24, 1996, *D* identified its shares of *Y* stock as held for investment under section 475(b)(2). On December 30, 1996, *H* sold all of its shares of stock in *Y* to an unrelated party. As a result, *D* and *Y* ceased to be related within the meaning of paragraph (b)(2)(i) of this section.
(B) *Holding.* Under paragraph (b)(4)(ii)(A) of this section, identification of the *Y* shares is timely if done on or before the close of December 30, 1996. Because *D* timely identified its *Y* shares under section 475(b)(2), it continues after December 30, 1996, to refrain from marking to market its *Y* stock.

Example 3. Termination of prohibition against marking; retained securities not identified as held for investment. (A) *Facts.* The facts are the same as in *Example 2* above, except that *D* did not identify its stock in *Y* for purposes of section 475(b)(2) on or before December 30, 1996. Thus, *D* did not timely identify these securities under section 475(b)(2) (taking into account the additional time for identification provided in paragraph (b)(4)(ii)(A) of this section).

(B) *Holding.* Under paragraph (b)(4)(ii)(B) of this section, section 475(a) applies to changes in value of *D*'s *Y* stock after December 30, 1996, in the same manner as under section 475(b)(3).

Thus, any appreciation or depreciation that occurred while the securities were prohibited from being marked to market is suspended. Further, section 475(a) applies only to those changes occurring after December 30, 1996.

Example 4. Acquisition of actively traded stock from related party. (A) *Facts.* Corporation *P* is the parent of a consolidated group whose taxable year is the calendar year, and corporation *M,* a member of that group, is a dealer in securities within the meaning of section 475(c)(1). Corporation *M* regularly acts as a market maker with respect to common and preferred stock of corporation *P.* Corporation *P* has outstanding 2,000,000 shares of series *X* preferred stock, which are traded on a national securities exchange. During the business day on December 29, 1997, corporation *P* sold 100,000 shares of series *X* preferred stock to corporation *M* for $100 per share. Subsequently, also on December 29, 1997, persons not related to corporation *M* engaged in significant trading of the series *X* preferred stock. At the close of business on December 30, 1997, the fair market value of series *X* stock was $99 per share. At the close of business on December 31, 1997, the fair market value of series *X* stock was $98.50 per share. Corporation *M* sold the series *X* stock on the exchange on January 2, 1998. At all relevant times, corporation *M* and all persons related to *M* owned less than 15% of the outstanding series *X* preferred stock.
(B) *Holding.* The 100,000 shares of series *X* preferred stock held by corporation *M* are not subject to mark-to-market treatment under section 475(a) on December 29, 1997, because at that time the stock was held for less than one full business day and is therefore treated as properly identified as held for investment. At the close of business on December 30, 1997, that prohibition on marking ceases to apply, and section 475(b)(3) begins to apply. The built-in loss is suspended, and subsequent appreciation and depreciation are subject to section 475(a). Accordingly, when corporation *M* marks the series *X* stock to market at the close of business on December 31, 1997, under section 475(a) it recognizes and takes into account a loss of $.50 per share. Under section 475(b)(3), when corporation *M* sells the series *X* stock on January 2, 1998, it takes into account the suspended loss, that is, the difference between the $100 per share it paid corporation *P* for that stock and the $99-per-share fair market value when section 475(b)(1) ceased to be applied to the stock. No deduction, however, is allowed for that loss. (See § 1.1502-13(f)(6), under which no deduction is allowed to a member of a consolidated group for a loss with respect to a share of stock of the parent of that consolidated group, if the member does not take the gain or loss into account pursuant to section 475(a).)

(c) ***Securities deemed not held for investment; dealers in notional principal contracts and derivatives.***

(1) Except as otherwise determined by the Commissioner in a revenue ruling, revenue procedure, or letter ruling, section 475(b)(1)(A) (exempting from mark-to-market accounting certain securities that are held for investment) does not apply to a security if—

(i) The security is described in section 475(c)(2) (D) or (E) (describing certain notional principal contracts and derivative securities); and

(ii) The taxpayer is a dealer in such securities.

(2) See § 1.475(d)-1(b) for a rule concerning the character of gain or loss on securities described in this paragraph (c).

(d) ***Special rule for hedges of another member's risk.*** A taxpayer may identify under section 475(b)(1)(C) (exempting certain hedges from mark-to-market accounting) a security that hedges a position of another member of the taxpayer's consolidated group if the security meets the following requirements—

(1) The security is a hedging transaction within the meaning of § 1.1221-2(b);

(2) The security is timely identified as a hedging transaction under § 1.1221-2(f) (including identification of the hedged item); and

(3) The security hedges a position that is not marked to market under section 475(a).

(e) ***Transitional rules*** —

(1) ***Stock, partnership, and beneficial ownership interests in certain controlled corporations, partnerships, and trusts before January 23, 1997*** —

(i) ***In general.*** The following items held by a dealer in securities are per se held for investment within the meaning of section 475(b)(1)(A) and are deemed to be properly identified as such for purposes of section 475(b)(2)—

(A) Stock in a corporation that the taxpayer controls (within the meaning of paragraph (e)(1)(ii) of this section); or

(B) A partnership or beneficial ownership interest in a widely held or publicly traded partnership or trust that the taxpayer controls (within the meaning of paragraph (e)(1)(ii) of this section).

(ii) ***Control defined.*** Control means the ownership, directly or indirectly through persons described in section 267(b) (taking into account section 267(c)), of—

(A) 50 percent or more of the total combined voting power of all classes of stock entitled to vote; or

(B) 50 percent or more of the capital interest, the profits interest, or the beneficial ownership interest in the widely held or publicly traded partnership or trust.

(iii) ***Applicability.*** The rules of this paragraph (e)(1) apply only before January 23, 1997.

(2) ***Dealers in notional principal contracts and derivatives acquired before January 23, 1997*** —

(i) ***General rule.*** Section 475(b)(1)(A) (exempting certain securities from mark-to-market accounting) does not apply to a security if—

(A) The security is described in section 475(c)(2) (D) or (E) (describing certain notional principal contracts and derivative securities); and

(B) The taxpayer is a dealer in such securities.

(ii) ***Exception for securities not acquired in dealer capacity.*** This paragraph (e)(2) does not apply if the taxpayer establishes unambiguously that the security was not acquired in the taxpayer's capacity as a dealer in such securities.

(iii) ***Applicability.*** The rules of paragraph (e)(2) apply only to securities acquired before January 23, 1997.

[T.D. 8700, 61 FR 67720, Dec. 24, 1996, as amended by T.D. 8985, 67 FR 12865, Mar. 20, 2002]

§ 1.475(b)-2 Exemptions—identification requirements.

(a) ***Identification of the basis for exemption.*** An identification of a security as exempt from mark to market does not satisfy section 475(b)(2) if it fails to state whether the security is described in—

(1) Either of the first two subparagraphs of section 475(b)(1) (identifying a security as held for investment or not held for sale); or

(2) The third subparagraph thereof (identifying a security as a hedge).

(b) ***Time for identifying a security with a substituted basis.*** For purposes of determining the timeliness of an identification under section 475(b)(2), the date that a dealer acquires a security is not affected by whether the dealer's basis in the security is determined, in whole or in part, either by reference to the basis of the security in the hands of the person from whom the security was acquired or by reference to other property held at any time by the dealer. See § 1.475(a)-3 for rules governing how the dealer accounts for such a security if this identification is not made.

(c) ***Integrated transactions under § 1.1275-6*** —

(1) ***Definitions.*** The following terms are used in this paragraph (c) with the meanings that are given to them by § 1.1275-6: integrated transaction, legging into, legging out, qualifying debt instrument, § 1.1275-6 hedge, and synthetic debt instrument.

(2) ***Synthetic debt held by a taxpayer as a result of legging in.*** If a taxpayer is treated as the holder of a synthetic debt instrument as the result of legging into an integrated transaction, then, for purposes of the timeliness of an identification under section 475(b)(2), the synthetic debt instrument is treated as having the same acquisition date as the qualifying debt instrument. A pre-leg-in identification of the qualifying debt instrument under section 475(b)(2) applies to the integrated transaction as well.

(3) ***Securities held after legging out.*** If a taxpayer legs out of an integrated transaction, then, for purposes of the timeliness of an identification under section 475(b)(2), the qualifying debt instrument, or the § 1.1275-6 hedge, that remains in the taxpayer's hands is generally treated as having been acquired, originated, or entered into, as the case may be, immediately after the leg-out. If any loss or deduction determined under § 1.1275-6(d)(2)(ii)(B) is disallowed by § 1.1275-6(d)(2)(ii)(D) (which disallows deductions when a taxpayer legs out of an integrated transaction within 30 days of legging in), then, for purposes of this section and section 475(b)(2), the qualifying debt instrument that remains in the taxpayer's hands is treated as having been acquired on the same date that the synthetic debt instrument was treated as having been acquired.

[T.D. 8700, 61 FR 67722, Dec. 24, 1996]

§ 1.475(b)-3 [Reserved]

§ 1.475(c)-1 Definitions—dealer in securities.

(a) ***Dealer-customer relationship.*** Whether a taxpayer is transacting business with customers is determined on the basis of all of the facts and circumstances.

(1) [Reserved]

(2) ***Transactions described in section 475(c)(1)(B)*** —

(i) ***In general.*** For purposes of section 475(c)(1)(B), the term *dealer in securities* includes, but is not limited to, a taxpayer that, in the ordinary course of the taxpayer's trade or business, regularly holds itself out as being willing and able to enter into either side of a transaction enumerated in section 475(c)(1)(B).

(ii) ***Examples.*** The following examples illustrate the rules of this paragraph (a)(2). In the following examples, B is a bank and is not a member of a consolidated group:

Example 1. B regularly offers to enter into interest rate swaps with other persons in the ordinary course of its trade or business. B is willing to enter into interest rate swaps under which it either pays a fixed interest rate and receives a floating rate or pays a floating rate and receives a fixed rate. B is a dealer in securities under section 475(c)(1)(B), and the counterparties are its customers.

Example 2. B, in the ordinary course of its trade or business, regularly holds itself out as being willing and able to enter into either side of positions in a foreign currency with other banks in the interbank market. B's activities in the foreign currency make it a dealer in securities under section 475(c)(1)(B), and the other banks in the interbank market are its customers.

Example 3. B engages in frequent transactions in a foreign currency in the interbank market. Unlike the facts in *Example 2,* however, B does not regularly hold itself out as being willing and able to enter into either side of positions in the foreign currency, and all of B's transactions are driven by its internal need to adjust its position in the currency. No other circumstances are present to suggest that B is a dealer in securities for purposes of section 475(c)(1)(B). B's activity in the foreign currency does not qualify it as a dealer in securities for purposes of section 475(c)(1)(B), and its transactions in the interbank market are not transactions with customers.

(3) ***Related parties*** —

(i) ***General rule.*** Except as provided in paragraph (a)(3)(ii) of this section (concerning transactions between members of a consolidated group, as defined in § 1.1502-1(h)), a taxpayer's transactions with related persons may be transactions with customers for purposes of section 475. For example, if a taxpayer, in the ordinary course of the taxpayer's trade or business, regularly holds itself out to its foreign subsidiaries or other related persons as being willing and able to enter into either side of transactions enumerated in section 475(c)(1)(B), the taxpayer is a dealer in securities within the meaning of section 475(c)(1), even if it engages in no other transactions with customers.

(ii) ***Special rule for members of a consolidated group.*** Solely for purposes of paragraph (c)(1) of section 475 (concerning the definition of dealer in securities) and except as provided in paragraph (a)(3)(iii) of this section, a taxpayer's transactions with other members of its consolidated group are not with customers. Accordingly, notwithstanding paragraph (a)(2) of this section, the fact that a taxpayer regularly holds itself out to other members of its consolidated group as being willing and able to enter into either side of a transaction enumerated in section 475(c)(1)(B) does not cause the taxpayer to be a dealer in securities within the meaning of section 475(c)(1)(B).

(iii) ***The intragroup-customer election*** —

(A) ***Effect of election.*** If a consolidated group makes the intragroup-customer election, paragraph (a)(3)(ii) of this section (special rule for members of a consolidated group) does not apply to the members of the group. Thus, a member of a group that has made this election may be a dealer in securities within the meaning of section 475(c)(1) even if its only customer transactions are with other members of its consolidated group.

(B) ***Making and revoking the election.*** Unless the Commissioner otherwise prescribes, the intragroup-customer election is made by filing a statement that says, "[Insert name and employer identification number of common parent] hereby makes the Intragroup-Customer Election (as described in § 1.475(c)-1(a)(3)(iii) of the income tax regulations) for the taxable year ending [describe the last day of the year] and for subsequent taxable years." The statement must be signed by the common parent and attached to the timely filed federal income tax return for the consolidated group for that taxable year. The election applies for that year and continues in effect for subsequent years until revoked. The election may be revoked only with the consent of the Commissioner.

(iv) ***Examples.*** The following examples illustrate this paragraph (a)(3):

General Facts. HC, a hedging center, provides interest rate hedges to all of the members of its affiliated group (as defined in section 1504(a)(1)). Because of the efficiencies created by having a centralized risk manager, group policy prohibits members other than *HC* from entering into derivative interest rate positions with outside parties. *HC* regularly holds itself out as being willing and able to, and in fact does, enter into either side of interest rate swaps with its fellow members. *HC* periodically computes its aggregate position and hedges the net risk with an unrelated party. *HC* does not otherwise enter into interest rate positions with persons that are not members of the affiliated group. *HC* attempts to operate at cost, and the terms of its swaps do not factor in any risk of default by the affiliate. Thus, *HC*'s affiliates receive somewhat more favorable terms then they would receive from an unrelated swaps dealer (a fact that may subject *HC* and its fellow members to reallocation of income under section 482). No other circumstances are present to suggest that *HC* is a dealer in securities for purposes of section 475(c)(1)(B).

Example 1. General rule for related persons. In addition to the *General Facts* stated above, assume that *HC*'s affiliated group has not elected under section 1501 to file a consolidated return. Under paragraph (a)(3)(i) of this section, *HC*'s transactions with its affiliates can be

transactions with customers for purposes of section 475(c)(1). Thus, under paragraph (a)(2)(i) of this section, *HC* is a dealer in securities within the meaning of section 475(c)(1)(B), and the members of the group with which it does business are its customers.

Example 2. Special rule for members of a consolidated group. In addition to the *General Facts* stated above, assume that *HC*'s affiliated group has elected to file consolidated returns and has not made the intragroup-customer election. Under paragraph (a)(3)(ii) of this section, *HC*'s interest rate swap transactions with the members of its consolidated group are not transactions with customers for purposes of determining whether *HC* is a dealer in securities within the meaning of section 475(c)(1). Further, the fact that *HC* regularly holds itself out to members of its consolidated group as being willing and able to enter into either side of a transaction enumerated in section 475(c)(1)(B) does not cause *HC* to be a dealer in securities within the meaning of section 475(c)(1)(B). Because no other circumstances are present to suggest that *HC* is a dealer in securities for purposes of section 475(c)(1)(B), *HC* is not a dealer in securities.

Example 3. Intragroup-customer election. In addition to the *General Facts* stated above, assume that *HC*'s affiliated group has elected to file a consolidated return but has also made the intragroup-customer election under paragraph (a)(3)(iii) of this section. Thus, the analysis and result are the same as in *Example 1*.

(b) ***Sellers of nonfinancial goods and services*** —

(1) ***Purchases and sales of customer paper.*** Except as provided in paragraph (b)(3) of this section, if a taxpayer would not be a dealer in securities within the meaning of section 475(c)(1) but for its purchases and sales of debt instruments that, at the time of purchase or sale, are customer paper with respect to either the taxpayer or a corporation that is a member of the same consolidated group (as defined in § 1.1502-1(h)) as the taxpayer, then for purposes of section 475 the taxpayer is not a dealer in securities.

(2) ***Definition of customer paper.*** A debt instrument is customer paper with respect to a person at a point in time if—

(i) The person's principal activity is selling nonfinancial goods or providing nonfinancial services;

(ii) The debt instrument was issued by a purchaser of the goods or services at the time of the purchase of those goods or services in order to finance the purchase; and

(iii) At all times since the debt instrument was issued, it has been held either by the person selling those goods or services or by a corporation that is a member of the same consolidated group as that person.

(3) ***Exceptions.*** Paragraph (b)(1) of this section does not apply if—

(i) For purposes of section 471, the taxpayer accounts for any security (as defined in section 475(c)(2)) as inventory;

(ii) The taxpayer is subject to an election under paragraph (b)(4) of this section; or

(iii) The taxpayer is not described in paragraph (b)(2)(i) of this section and one or more debt instruments that are customer paper with respect to a corporation that is a member of the same consolidated group as the taxpayer are accounted for by the taxpayer, or by a corporation that is a member of the same consolidated group as the taxpayer, in a manner that allows recognition of unrealized gains or losses or deductions for additions to a reserve for bad debts.

(4) ***Election not to be governed by the exception for sellers of nonfinancial goods or services*** —

(i) ***Method of making the election.*** Unless the Commissioner otherwise prescribes, an election under this paragraph (b)(4) must be made in the manner, and at the time, prescribed in this paragraph (b)(4)(i). The taxpayer must file with the Internal Revenue Service a statement that says, "[Insert name and taxpayer identification number of the taxpayer] hereby elects not to be governed by § 1.475(c)-1(b)(1) of the income tax regulations for the taxable year ending [describe the last day of the year] and for subsequent taxable years."

(A) ***Taxable years ending after December 24, 1996.*** If the first taxable year subject to an election under this paragraph (b)(4) ends after December 24, 1996, the statement must be attached to a timely filed federal income tax return for that taxable year.

(B) ***Taxable years ending on or before December 24, 1996.*** If the first taxable year subject to an election under this paragraph (b)(4) ends on or before December 24, 1996 and the election changes the taxpayer's taxable income for any taxable year the federal income tax return for which was filed before February 24, 1997, the statement must be attached to an amended return for the earliest such year that is so affected, and that amended return (and an amended return for any other such year that is so affected) must be filed not later than June 23, 1997. If the first taxable year subject to an election under this paragraph (b)(4) ends on or before December 24, 1996 but the taxpayer is not described in the preceding sentence, the statement must be attached to the first federal income tax return that is for a taxable year subject to the election and that is filed on or after February 24, 1997.

(ii) ***Continued applicability of an election.*** An election under this paragraph (b)(4) continues in effect for subsequent taxable years until revoked. The election may be revoked only with the consent of the Commissioner.

(c) ***Taxpayers that purchase securities from customers but engage in no more than negligible sales of the securities*** —

(1) ***Exemption from dealer status*** —

(i) ***General rule.*** A taxpayer that regularly purchases securities from customers in the ordinary course of a trade or business (including regularly making loans to customers in the ordinary course of a trade or business of making loans) but engages in no more than negligible sales of the securities so acquired is not a dealer in securities within the meaning of section 475(c)(1) unless the taxpayer elects to be so treated or, for purposes of section 471, the taxpayer accounts for any security (as defined in section 475(c)(2)) as inventory.

(ii) ***Election to be treated as a dealer.*** A taxpayer described in paragraph (c)(1)(i) of this section elects to be treated as a dealer in securities by filing a federal income tax return reflecting the application of section 475(a) in computing its taxable income.

(2) ***Negligible sales.*** Solely for purposes of paragraph (c)(1) of this section, a taxpayer engages in negligible sales of debt instruments that it regularly purchases from customers in the ordinary course of its business if, and only if, during the taxable year, either—

(i) The taxpayer sells all or part of fewer than 60 debt instruments, regardless how acquired; or

(ii) The total adjusted basis of the debt instruments (or parts of debt instruments), regardless how acquired, that the taxpayer sells is less than 5 percent of the total basis, immediately after acquisition, of the debt instruments that it acquires in that year.

(3) ***Special rules for members of a consolidated group*** —

(i) ***Intragroup-customer election in effect.*** If a taxpayer is a member of a consolidated group that has made the intragroup-customer election (described in paragraph (a)(3)(iii) of this section), the negligible sales test in paragraph (c)(2) of this section takes into account all of the taxpayer's sales of debt instruments to other group members.

(ii) ***Intragroup-customer election not in effect.*** If a taxpayer is a member of a consolidated group that has not made the intragroup-customer election (described in paragraph (a)(3)(iii) of this section), the taxpayer satisfies the negligible sales test in paragraph (c)(2) of this section if either—

(A) The test is satisfied by the taxpayer, taking into account sales of debt instruments to other group members (as in paragraph (c)(3)(i) of this section); or

(B) The test is satisfied by the group, treating the members of the group as if they were divisions of a single corporation.

(4) ***Special rules.*** Whether sales of securities are negligible is determined without regard to—

(i) Sales of securities that are necessitated by exceptional circumstances and that are not undertaken as recurring business activities;

(ii) Sales of debt instruments that decline in quality while in the taxpayer's hands and that are sold pursuant to an established policy of the taxpayer to dispose of debt instruments below a certain quality; or

(iii) Acquisitions and sales of debt instruments that are qualitatively different from all debt instruments that the taxpayer purchases from customers in the ordinary course of its business.

(5) ***Example.*** The following example illustrates paragraph (c)(4)(iii) of this section:

Example. I, an insurance company, regularly makes policy loans to its customers but does not sell them. *I,* however, actively trades Treasury securities. No other circumstances are present to suggest that *I* is a dealer in securities for purposes of section 475(c)(1). Since the Treasuries are qualitatively different from the policy loans that *I* originates, under paragraph (c)(4)(iii) of this section, *I* disregards the purchases and sales of Treasuries in applying the negligible sales test in paragraph (c)(2) of this section.

(d) ***Issuance of life insurance products.*** A life insurance company that is not otherwise a dealer in securities within the meaning of section 475(c)(1) does not become a dealer in securities solely because it regularly issues life insurance products to its customers in the ordinary course of a trade or business. For purposes of the preceding sentence, the term *life insurance product* means a contract that is treated for federal income tax purposes as an annuity, endowment, or life insurance contract. See sections 72, 817, and 7702.

[T.D. 8700, 61 FR 67723, Dec. 24, 1996]

§ 1.475(c)-2 Definitions—security.

(a) ***Items that are not securities.*** The following items are not securities within the meaning of section 475(c)(2) with respect to a taxpayer and, therefore, are not subject to section 475—

(1) A security (determined without regard to this paragraph (a)) if section 1032 prevents the taxpayer from recognizing gain or loss with respect to that security;

(2) A debt instrument issued by the taxpayer (including a synthetic debt instrument, within the meaning of § 1.1275-6(b)(4), that § 1.1275-6(b) treats the taxpayer as having issued); or

(3) A REMIC residual interest, or an interest or arrangement that is determined by the Commissioner to have substantially the same economic effect, if the residual interest or the interest or arrangement is acquired on or after January 4, 1995.

(b) ***Synthetic debt that § 1.1275-6(b) treats the taxpayer as holding.*** If § 1.1275-6 treats a taxpayer as the holder of a synthetic debt instrument (within the meaning of § 1.1275-6(b)(4)), the synthetic debt instrument is a security held by the taxpayer within the meaning of section 475(c)(2)(C).

(c) ***Negative value REMIC residuals acquired before January 4, 1995.*** A REMIC residual interest that is described in paragraph (c)(1) of this section or an interest or arrangement that is determined by the Commissioner to have substantially the same economic effect is not a security within the meaning of section 475(c)(2).

(1) ***Description.*** A residual interest in a REMIC is described in this paragraph (c)(1) if, on the date the taxpayer acquires the residual interest, the present value of the anticipated tax liabilities associated with holding the interest exceeds the sum of—

(i) The present value of the expected future distributions on the interest; and

(ii) The present value of the anticipated tax savings associated with holding the interest as the REMIC generates losses.

(2) ***Special rules applicable to negative value REMIC residuals acquired before January 4, 1995.*** Solely for purposes of this paragraph (c)—

(i) If a transferee taxpayer acquires a residual interest with a basis determined by reference to the transferor's basis, then the transferee is deemed to acquire the interest on the date the transferor acquired it (or is deemed to acquire it under this paragraph (c)(2)(i)).

(ii) Anticipated tax liabilities, expected future distributions, and anticipated tax savings are determined under the rules in § 1.860E-2(a)(3) and without regard to the operation of section 475.

(iii) Present values are determined under the rules in § 1.860E-2(a)(4).

[T.D. 8700, 61 FR 67725, Dec. 24, 1996]

§ 1.475(d)-1 Character of gain or loss.

(a) ***Securities never held in connection with the taxpayer's activities as a dealer in securities.*** If a security is never held in connection with the taxpayer's activities as a dealer in securities, section 475(d)(3)(A) does not affect the character of gain or loss from the security, even if the taxpayer fails to identify the security under section 475(b)(2).

(b) ***Ordinary treatment for notional principal contracts and derivatives held by dealers in notional principal contracts and derivatives.*** Section 475(d)(3)(B)(ii) (concerning the character of gain or loss with respect to a security held by a person other than in connection with its activities as a dealer in securities) does not apply to a security if § 1.475(b)-1(c) and the absence of a determination by the Commissioner prevent section 475(b)(1)(A) from applying to the security.

[T.D. 8700, 61 FR 67725, Dec. 24, 1996]

§ 1.475(g)-1 Effective dates.

(a)-(b) [Reserved]

(c) Section 1.475(a)-3 (concerning acquisition by a dealer of a security with a substituted basis) applies to securities acquired, originated, or entered into on or after January 4, 1995.

(d) Section 1.475(a)-4 (concerning a safe harbor to use applicable financial statement values for purposes of section 475) applies to taxable years ending on or after June 12, 2007.

(e) Except as provided elsewhere in this paragraph (d), § 1.475(b)-1 (concerning the scope of exemptions from the mark-to-market requirement) applies to taxable years ending on or after December 31, 1993.

(1) Section 1.475(b)-1(b) applies as follows:

(i) Section 1.475(b)-1(b)(1)(i) (concerning equity interests issued by a related person) applies beginning June 19, 1996. If, on June 18, 1996, a security is subject to mark-to-market accounting and, on June 19, 1996, § 1.475(b)-1(b)(1) begins to apply to the security solely because of the effective dates in this paragraph (d) (rather than because of a change in facts), then the rules of § 1.475(b)-1(b)(4)(i)(A) (concerning the prohibition against marking) apply, but § 1.475(b)-1(b)(4)(i)(B) (imposing a mark-to-market on the day before the onset of the prohibition) does not apply.

(ii) Section 1.475(b)-1(b)(2) (concerning relevant relationships for purposes of determining whether equity interests in related persons are prohibited from being marked to market) applies beginning June 19, 1996.

(iii) Section 1.475(b)-1(b)(3) (concerning certain actively traded securities) applies beginning June 19, 1996, to securities held on or after that date, except for securities described in § 1.475(b)-1(e)(1)(i) (concerning equity interests issued by controlled entities). If a security is described in § 1.475(b)-1(e)(1)(i), § 1.475(b)-1(b)(3) applies only on or after January 23, 1997 if the security is held on or after that date. If § 1.475(b)-1(b)(1) ceases to apply to a security by virtue of the operation of this paragraph (d)(1)(iii), the rules of § 1.475(b)-1(b)(4)(ii) apply to the cessation.

(iv) Except to the extent provided in paragraph (d)(1) of this section, § 1.475(b)-1(b)(4) (concerning changes in status) applies beginning June 19, 1996.

(2) Section 1.475(b)-1(c) (concerning securities deemed not held for investment by dealers in notional principal contracts and derivatives) applies to securities acquired on or after January 23, 1997.

(3) Section 1.475(b)-1(d) (concerning the special rule for hedges of another member's risk) is effective for securities acquired, originated, or entered into on or after January 23, 1997.

(f) Section 1.475(b)-2 (concerning identification of securities that are exempt from mark-to-market treatment) applies as follows:

(1) Section 1.475(b)-2(a) (concerning the general rules for identification of basis for exemption from mark to market treatment) applies to identifications made on or after July 1, 1997.

(2) Section 1.475(b)-2(b) (concerning time for identifying a security with a substituted basis) applies to securities acquired, originated, or entered into on or after January 4, 1995.

(3) Section 1.475(b)-2(c) (concerning identification in the context of integrated transactions under § 1.1275-6) applies on and after August 13, 1996 (the effective date of § 1.1275-6).

(g)-(h) [Reserved]

(i) Section 1.475(c)-1 applies as follows:

(1) Except as otherwise provided in this paragraph (h)(1), § 1.475(c)-1(a) (concerning the dealer-customer relationship) applies to taxable years beginning on or after January 1, 1995.

(i) [Reserved]

(ii) Section 1.475(c)-1(a)(2)(ii) (illustrating rules concerning the dealer-customer relationship) applies to taxable years beginning on or after June 20, 1996.

(iii)

(A) Section 1.475(c)-1(a)(3) applies to taxable years beginning on or after June 20, 1996, except for transactions between members of the same consolidated group.

(B) For transactions between members of the same consolidated group, paragraph § 1.475(c)-1(a)(3) applies to taxable years beginning on or after December 24, 1996.

(2) Section 1.475(c)-1(b) (concerning sellers of nonfinancial goods and services) applies to taxable years ending on or after December 31, 1993.

(3) Except as otherwise provided in this paragraph (h)(3), section 1.475(c)-1(c) (concerning taxpayers that purchase securities but engage in no more than negligible sales of the securities) applies to taxable years ending on or after December 31, 1993.

(i) Section 1.475(c)-1(c)(3) (special rules for members of a consolidated group) is effective for taxable years beginning on or after December 24, 1996.

(ii) A taxpayer may rely on the rules set out in § 1.475(c)-1T(b) (as contained in 26 CFR part 1 revised April 1, 1996) for taxable years beginning before January 23, 1997, provided the taxpayer applies that paragraph reasonably and consistently.

(4) Section 1.475(c)-1(d) (concerning the issuance of life insurance products) applies to taxable years beginning on or after January 1, 1995.

(j) Section 1.475(c)-2 (concerning the definition of security) applies to taxable years ending on or after December 31, 1993. By its terms, however, § 1.475(c)-2(a)(3) applies only to residual interests or to interests or arrangements that are acquired on or after January 4, 1995; and the integrated transactions that are referred to in §§ 1.475(c)-2(a)(2) and 1.475(c)-2(b) exist only after August 13, 1996 (the effective date of § 1.1275-6).

(k) Section 1.475(d)-1 (concerning the character of gain or loss) applies to taxable years ending on or after December 31, 1993.

[T.D. 8700, 61 FR 67725, Dec. 24, 1996. Redesignated and amended by T.D. 9328, 72 FR 32181, June 12, 2007; T.D. 9849, 84 FR 9235, Mar. 14, 2019]

ADJUSTMENTS

§ 1.481-1 Adjustments in general.

(a)

(1) Section 481 prescribes the rules to be followed in computing taxable income in cases where the taxable income of the taxpayer is computed under a method of accounting different from that under which the taxable income was previously computed. A change in method of accounting to which section 481 applies includes a change in the over-all method of accounting for gross income or deductions, or a change in the treatment of a material item. For rules relating to changes in methods of accounting, see section 446(e) and paragraph (e) of § 1.446-1. In computing taxable income for the taxable year of the change, there shall be taken into account those adjustments which are determined to be necessary solely by reason of such change in order to prevent amounts from being duplicated or omitted. The “year of the change” is the taxable year for which the taxable income of the taxpayer is computed under a method of accounting different from that used for the preceding taxable year.

(2) Unless the adjustments are attributable to a change in method of accounting initiated by the taxpayer, no part of the adjustments required by subparagraph (1) of this paragraph shall be based on amounts which were taken into account in computing income (or which should have been taken into account had the new method of accounting been used) for taxable years beginning before January 1, 1954, or ending before August 17, 1954 (hereinafter referred to as pre-1954 years).

(b) The adjustments specified in section 481(a) and this section shall take into account inventories, accounts receivable, accounts payable, and any other item determined to be necessary in order to prevent amounts from being duplicated or omitted.

(c)

(1) The term “adjustments”, as used in section 481, has reference to the net amount of the adjustments required by section 481(a) and paragraph (b) of this section. In the case of a change in the over-all method of accounting, such as from the cash receipts and disbursements method to an accrual method, the term “net amount of the adjustments” means the consolidation of adjustments (whether the amounts thereof represent increases or decreases in items of income or deductions) arising with respect to balances in various accounts, such as inventory, accounts receivable, and accounts payable, at the beginning of the taxable year of the change in method of accounting. With respect to the portion of the adjustments attributable to pre-1954 years, it is immaterial that the same items or class of items with respect to which adjustments would have to be made (for the first taxable year to

which section 481 applies) do not exist at the time the actual change in method of accounting occurs. For purposes of section 481, only the net dollar balance is to be taken into account. In the case of a change in the treatment of a single material item, the amount of the adjustment shall be determined with reference only to the net dollar balances in that particular account.

(2) If a change in method of accounting is voluntary (i.e., initiated by the taxpayer), the entire amount of the adjustments required by section 481(a) is generally taken into account in computing taxable income in the taxable year of the change, regardless of whether the adjustments increase or decrease taxable income. See, however, §§ 1.446-1(e)(3) and 1.481-4 which provide that the Commissioner may prescribe the taxable year or years in which the adjustments are taken into account.

(3) If the change in method of accounting is involuntary (i.e., not initiated by the taxpayer), then only the amount of the adjustments required by section 481(a) that is attributable to taxable years beginning after December 31, 1953, and ending after August 16, 1954, (hereinafter referred to as post-1953 years) is taken into account. This amount is generally taken into account in computing taxable income in the taxable year of the change, regardless of whether the adjustments increase or decrease taxable income. See, however, §§ 1.446-1(e)(3) and 1.481-4 which provide that the Commissioner may prescribe the taxable year or years in which the adjustments are taken into account. See also § 1.481-3 for rules relating to adjustments attributable to pre-1954 years.

(4) For any adjustments attributable to post-1953 years that are taken into account entirely in the year of change and that increase taxable income by more than $3,000, the limitations on tax provided in section 481(b) (1) or (2) apply. See § 1.481-2 for rules relating to the limitations on tax provided by sections 481(b) (1) and (2).

(5) A change in the method of accounting initiated by the taxpayer includes not only a change which he originates by securing the consent of the Commissioner, but also a change from one method of accounting to another made without the advance approval of the Commissioner. A change in the taxpayer's method of accounting required as a result of an examination of the taxpayer's income tax return will not be considered as initiated by the taxpayer. On the other hand, a taxpayer who, on his own initiative, changes his method of accounting in order to conform to the requirements of any Federal income tax regulation or ruling shall not, merely because of such fact, be considered to have made an involuntary change.

(d) Any adjustments required under section 481(a) that are taken into account during a taxable year must be properly taken into account for purposes of computing gross income, adjusted gross income, or taxable income in determining the amount of any item of gain, loss, deduction, or credit that depends on gross income, adjusted gross income, or taxable income.

[T.D. 6500, 25 FR 11731, Nov. 26, 1960, as amended by T.D. 8608, 60 FR 40078, Aug. 7, 1995]

§ 1.481-2 Limitation on tax.

(a) ***Three-year allocation.*** Section 481(b)(1) provides a limitation on the tax under chapter 1 of the Internal Revenue Code for the taxable year of change that is attributable to the adjustments required under section 481(a) and § 1.481-1 if the entire amount of the adjustments is taken into account in the year of change. If such adjustments increase the taxpayer's taxable income for the taxable year of the change by more than $3,000, then the tax for such taxable year that is attributable to the adjustments shall not exceed the lesser of the tax attributable to taking such adjustments into account in computing taxable

income for the taxable year of the change under section 481(a) and § 1.481-1, or the aggregate of the increases in tax that would result if the adjustments were included ratably in the taxable year of the change and the two preceding taxable years. For the purpose of computing the limitation on tax under section 481(b)(1), the adjustments shall be allocated ratably to the taxable year of the change and the two preceding taxable years, whether or not the adjustments are in fact attributable in whole or in part to such years. The limitation on the tax provided in this paragraph shall be applicable only if the taxpayer used the method of accounting from which the change was made in computing taxable income for the two taxable years preceding the taxable year of the change.

(b) ***Allocation under new method of accounting.*** Section 481(b)(2) provides a second alternative limitation on the tax for the taxable year of change under chapter 1 of the Internal Revenue Code that is attributable to the adjustments required under section 481(a) and § 1.481-1 where such adjustments increase taxable income for the taxable year of change by more than $3,000. If the taxpayer establishes from his books of account and other records what his taxable income would have been under the new method of accounting for one or more consecutive taxable years immediately preceding the taxable year of the change, and if the taxpayer in computing taxable income for such years used the method of accounting from which the change was made, then the tax attributable to the adjustments shall not exceed the smallest of the following amounts:

(1) The tax attributable to taking the adjustments into account in computing taxable income for the taxable year of the change under section 481(a) and § 1.481-1;

(2) The tax attributable to such adjustments computed under the 3-year allocation provided in section 481(b)(1), if applicable; or

(3) The net increase in the taxes under chapter 1 (or under corresponding provisions of prior revenue laws) which would result from allocating that portion of the adjustments to the one or more consecutive preceding taxable years to which properly allocable under the new method of accounting and from allocating the balance thereof to the taxable year of the change.

(c) ***Rules for computation of tax.***

(1) The first step in determining whether either of the limitations described in section 481(b) (1) or (2) applies is to compute the increase in tax for the taxable year of the change that is attributable to the increase in taxable income for such year resulting solely from the adjustments required under section 481(a) and § 1.481-1. This increase in tax is the excess of the tax for the taxable year computed by taking into account such adjustments under section 481(a) over the tax computed for such year without taking the adjustments into account.

(2) The next step is to compute under section 481(b)(1) the tax attributable to the adjustments referred to in paragraph (c)(1) of this section for the taxable year of the change and the two preceding taxable years as if an amount equal to one-third of the net amount of such adjustments had been received or accrued in each of such taxable years. The increase in tax attributable to the adjustments for each such taxable year is the excess of the tax for such year computed with the allocation of one-third of the net adjustments to such taxable year over the tax computed without the allocation of any part of the adjustments to such year. For the purpose of computing the aggregate increase in taxes for such taxable years, there shall be taken into account the increase or decrease in tax for any taxable year preceding the taxable year of the change to which no adjustment is allocated under section 481(b)(1) but which is affected by a net operating loss under section 172 or by a capital loss carryback or carryover under section 1212, determined with reference to taxable years with respect to which adjustments under section 481(b)(1) are allocated.

(3) In the event that the taxpayer satisfies the conditions set forth in section 481(b)(2), the next step is to determine the amount of the net increase in tax attributable to the adjustments referred to in paragraph (c)(1) of this section for:

(i) The taxable year of the change,

(ii) The consecutive taxable year or years immediately preceding the taxable year of the change for which the taxpayer can establish his taxable income under the new method of accounting, and

(iii) Any taxable year preceding the taxable year of the change to which no adjustment is allocated under section 481(b)(2), but which is affected by a net operating loss or by a capital loss carryback or carryover determined with reference to taxable years with respect to which such adjustments are allocated.

The net increase in tax for the taxable years specified in subdivisions (i), (ii), and (iii) of this subparagraph shall be computed as if the amount of the adjustments for the prior taxable years to which properly allocable in accordance with section 481(b)(2) had been received or accrued, or paid or incurred, as the case may be, in such prior years and the balance of the adjustments in the taxable year of the change. The amount of tax attributable to such adjustments for the taxable years specified in subdivisions (i), (ii), and (iii) of this subparagraph is the aggregate of the differences (increases and decreases) between the tax for each such year computed by taking into account the allocable portion of the adjustments in computing taxable income and the tax computed without taking into account any portion of the adjustments in computing taxable income. Generally, where there is an increase in taxable income for a preceding consecutive taxable year established under the new method of accounting, computed without regard to adjustments attributable to any preceding taxable year, the amount of the adjustments to be allocated to each such year shall be an amount equal to such increase. However, where the amount of the adjustments to be allocated to a prior taxable year is less than the increase in taxable income for such year established under the new method of accounting, the amount of the increase in such taxable income for purposes of determining the increase in tax under section 481(b)(2) for such year shall be considered to be the amount so allocated. For example, if the amount of the adjustments required by section 481(a) for 1958 (the taxable year of the change) is $60,000, and the increase in taxable income is determined by the taxpayer to be $40,000, $5,000, and $35,000, computed under the new method of accounting, for the taxable years 1957, 1956, and 1955, respectively, then the amount of the adjustments to be allocated to 1955 will be the balance of the adjustments, or $15,000.

(4) The tax for the taxable year of the change shall be the tax for such year, computed without taking any of the adjustments referred to in paragraph (c)(1) of this section into account, increased by the smallest of the following amounts—

(i) The amount of tax for the taxable year of the change attributable solely to taking into account the entire amount of the adjustments required by section 481(a) and § 1.481-1;

(ii) The sum of the increases in tax liability for the taxable year of the change and the two immediately preceding taxable years that would have resulted solely from taking into account one-third of the amount of such adjustments required for each of such years as though such amounts had been properly attributable to such years (computed in accordance with paragraph (c)(2) of this section); or

(iii) The net increase in tax attributable to allocating such adjustments under the new method of accounting (computed in accordance with paragraph (c)(3) of this section).

(5)

(i) In the case of a change in method of accounting by a partnership, the adjustments required by section 481 shall be made with respect to the taxable income of the partnership but the limitations on tax under section 481(b) shall apply to the individual partners. Each partner shall take into account his distributive share of the partnership items, as so adjusted, for the taxable year of the change. Section 481(b) applies to a partner whose taxable income is so increased by more than $3,000 as a result of such adjustments to the partnership taxable income. It is not necessary for the partner to have been a member of the partnership for the two taxable years immediately preceding the taxable year of the change of the partnership's accounting method in order to have the limitation provided by section 481(b)(1) apply. Further, a partner may apply section 481(b)(2) even though he was not a member of the partnership for all the taxable years affected by the computation thereunder.

(ii) In the case of a change in method of accounting by an electing small business corporation under subchapter S, chapter 1 of the Code, the adjustments required by section 481 shall be made with respect to the taxable income of such electing corporation in the year of the change, but the limitations on tax under section 481(b) shall apply to the individual shareholders. Section 481(b) applies to a shareholder of an electing small business corporation whose taxable income is so increased by more than $3,000 as a result of such adjustments to such corporation's taxable income. It is not necessary for the shareholder to have been a member of the electing small business corporation, or for such corporation to have been an electing small business corporation, for the two taxable years immediately preceding the taxable year of the change of the corporation's accounting method in order to have the limitation provided by section 481(b)(1) apply. Further, a shareholder may apply section 481(b)(2), even though he was not a shareholder, or the corporation was not an electing small business corporation, for all the taxable years affected by the computation thereunder.

(6) For the purpose of the successive computations of the limitations on tax under section 481(b) (1) or (2), if the treatment of any item under the provisions of the Internal Revenue Code of 1986 (or corresponding provisions of prior internal revenue laws) depends upon the amount of gross income, adjusted gross income, or taxable income (for example, medical expenses, charitable contributions, or credits against the tax), such item shall be determined for the purpose of each such computation by taking into account the proper portion of the amount of any adjustments required to be taken into account under section 481 in each such computation.

(7) The increase or decrease in the tax for any taxable year for which an assessment of any deficiency, or a credit or refund of any overpayment, is prevented by any law or rule of law, shall be determined by reference to the tax previously determined (within the meaning section 1314(a) for such year.

(8) In applying section 7807(b)(1), the provisions of chapter 1 (other than subchapter E, relating to tax on self-employment income) and chapter 2 of the Internal Revenue Code of 1939 shall be treated as the corresponding provisions of the Internal Revenue Code of 1939.

(d) ***Examples.*** The application of section 481(b) (1) and (2) may be illustrated by the following examples. Although the examples in this paragraph are based upon adjustments required in the case of a change in the over-all method of accounting, the principles illustrated would be equally applicable to adjustments required in the case of a change in method of accounting for a particular material item, provided the treatment of such adjustments is not specifically subject to some other provision of the Internal Revenue Code of 1986.

Example 1. An unmarried individual taxpayer using the cash receipts and disbursements method of accounting for the calendar year is required by the Commissioner to change to an accrual method effective with the year 1958. As of January 1, 1958, he had an opening inventory of $11,000. On December 31, 1958, he had a closing inventory of $12,500. Merchandise purchases during the year amounted to $22,500, and net sales were $32,000. Total deductible business expenses were $5,000. There were no receivables or payables at January 1, 1958. The computation of taxable income for 1958, assuming no other adjustments, using the new method of accounting follows:

Net sales		$32,000
Opening inventory	$11,000	
Purchases	22,500	
Total	33,500	
Less closing inventory	12,500	
Cost of goods sold		21,000
Gross profit		11,000
Business expenses		5,000
Business income		6,000
Personal exemption and itemized deductions		1,600
Taxable income		4,400

Under the cash receipts and disbursements method of accounting, only $9,000 of the $11,000 opening inventory had been included in the cost of goods sold and claimed as a deduction for the taxable years 1954 through 1957; the remaining $2,000 had been so accounted for in pre-1954 years. In order to prevent the same item from reducing taxable income twice, an adjustment of $9,000 must be made to the taxable income of 1958 under the provisions of section 481(a) and § 1.481-1. Since the change in method of accounting was not initiated by the taxpayer, the $2,000 of opening inventory which had been included in cost of goods sold in pre-1954 years is not taken into account. Taxable income for 1958 is accordingly increased by $9,000 under section 481(a) to $13,400. Assuming that the tax on $13,400 is $4,002 and that the tax on $4,400 (income without the adjustment) is $944, the increase in tax attributable to the adjustment, if taken into account for the taxable year of the change, would be the difference between the two, or $3,058. Since the adjustment required by section 481(a) and § 1.481-1 ($9,000) increases taxable income by more than $3,000, the increase in tax for the taxable year 1958 attributable to the adjustment of $9,000 (i.e., $3,058) may be limited under the provisions of section 481(b) (1) or (2). See examples (2) and (3).

Example 2. Assume that the taxpayer in Example 1 used the cash receipts and disbursements method of accounting in computing taxable income for the years 1956 and 1957 and that the taxable income for these years determined under such method was $4,000 and $6,000, respectively. The section 481(b)(1)

limitation on tax with a pro rata three-year allocation of the $9,000 adjustment is computed as follows:

Taxable year	Taxable income before adjustment	Taxable income with adjustment	Assume total tax	Assumed tax before adjustment	Increase in tax attributable to adjustment
1956	$4,000	$7,000	$1,660	$840	$820
1957	6,000	9,000	2,300	1,360	940
1958	4,400	7,400	1,780	944	836
Total					2,596

Since this increase in tax of $2,596 is less than the increase in tax attributable to the inclusion of the entire adjustment in the income for the taxable year of the change ($3,058), the limitation provided by section 481(b)(1) applies, and the total tax for 1958, the taxable year of the change, if section 481(b)(2) does not apply, is determined as follows:

Tax without any portion of adjustment	$944
Increase in tax attributable to adjustment computed under section 481(b)(1)	2,596
Total tax for taxable year of the change	3,540

Example 3. (i) Assume the same facts as in Example 1 and, in addition, assume that the taxpayer used the cash receipts and disbursements method of accounting in computing taxable income for the years 1953 through 1957; that he established his taxable income under the new method for the taxable years 1953, 1954, and 1957, but did not have sufficient records to establish his taxable income under such method for the taxable years 1955 and 1956. The original taxable income and taxable income as redetermined are as follows:

Taxable year	Taxable income		Increase or (decrease) in taxable income
	Determined under cash receipts and disbursements method	Established under new method	
1953	$5,000	$7,000	$2,000
1954	6,000	7,000	1,000
1955	5,500	([1])	
1956	4,000	([1])	

[1] *Undetermined.*

Taxable year	Taxable income		Increase or (decrease) in taxable income
	Determined under cash receipts and disbursements method	Established under new method	
1957	6,000	10,000	4,000

[1] *Undetermined.*

As in examples (1) and (2), the total adjustment under section 481(a) is $9,000. Of the $9,000 adjustment, $4,000 may be allocated to 1957, which is the only year consecutively preceding the taxable year of the change for which the taxpayer was able to establish his income under the new method. Since the income cannot be established under the new method for 1956 and 1955, no allocation may be made to 1954 or 1953, even though the taxpayer has established his income for those years under the new method of accounting. The balance of $5,000 ($9,000 minus $4,000) must be allocated to 1958.

(ii) The limitation provided by section 481(b)(2) is computed as follows: The tax for 1957, based on taxable income of $6,000, is assumed to be $1,360. Under the new method, based on taxable income of $10,000, the tax for 1957 is assumed to be $2,640, the increase attributable to $4,000 of the $9,000 section 481(a) adjustment being $1,280, ($2,640 minus $1,360). The tax for 1958, computed on the basis of taxable income of $4,400 (determined under the new method), is assumed to be $944. The tax computed for 1958 on taxable income of $9,400 ($4,400 plus the $5,000 adjustment allocated to 1958) is assumed to be $2,436, leaving a difference of $1,492 ($2,436 minus $944) attributable to the inclusion in 1958 of the portion of the total adjustment to be taken into account which could not be properly allocated to the taxable year or years consecutively preceding 1958.
(iii) The tax attributable to the adjustment is determined by selecting the smallest of the three following amounts:

Increase in tax attributable to adjustment computed under section 481(b)(2) ($1,280 + $1,492)	$2,772
Increase in tax attributable to adjustment computed under section 481(b)(1) (Example 2)	2,596
Increase in tax if the entire adjustment is taken into account in the taxable year of the change (Example 1)	3,058

The final tax for 1958 is then $3,540 computed as follows:

Tax before inclusion of any adjustment	$944

Increase in tax attributable to adjustments (smallest of $2,772, $2,596 or $3,058)	2,596
Total tax for 1958 (limited in accordance with section 481(b)(1))	3,540

Example 4. Assume that X Corporation has maintained its books of account and filed its income tax returns using the cash receipts and disbursements method of accounting for the years 1953 through 1957. The corporation secures permission to change to an accrual method of accounting for the calendar year 1958. The following tabulation presents the data with respect to the taxpayer's income for the years involved:

Year	Taxable income under the cash receipts and disbursements method		Taxable income established under accrual method	Increase or (decrease) attributable to change	Changes in taxable income due to changes in net loss carryback
	Before application of net operating loss carryback	After application of net operating loss carryback			
1953	$2,000	0	([1])		$2,000
1954	4,000	$1,000	([1])		3,000
1955	(5,000)		$1,000	$6,000	
1956	80,000	80,000	77,000	(3,000)	
1957	90,000	90,000	96,000	6,000	
1958			100,000		

[1] *Not established.*

As indicated above, taxable income for 1953 and 1954, as determined under the cash receipts and disbursements method of accounting, was $2,000 and $4,000, respectively, and after application of the net operating loss carryback from 1955, the taxable income was reduced to zero in 1953 and to $1,000 in 1954. The taxpayer was unable to establish taxable income for these years under an accrual method of accounting; however, under section 481(b)(3)(A), increases or decreases in the tax for taxable years to which no adjustment is allocated must, nevertheless, be taken into account to the extent the tax for such years would be affected by a net operating loss determined with reference to taxable years to which adjustments are allocated. The total amount of the adjustments required under section 481(a) and attributable to the taxable years 1953 through 1957 in this example is assumed to be $10,000. The redetermination of taxable income established by the taxpayer for the taxable years 1955, 1956, and 1957 appears under the heading “Taxable income established under accrual method” in the above tabulation. The tabulation assumes that the taxpayer has been able to recompute the income for those years so as to establish a net adjustment of $9,000, which leaves a balance of $1,000 unaccounted for. In accordance

with the requirements of section 481(b)(2), the $1,000 amount is allocated to 1958, the taxable year of the change. The following computations are necessary in order to determine the tax attributable to the adjustments under section 481(a):

INCREASE IN TAX ATTRIBUTABLE TO INCLUSION IN 1958 OF THE ENTIRE $10,000 ADJUSTMENT

Tax on income of 1958 increased by entire amount of adjustment ($100,000 + $10,000)	$51,700
Tax on income of 1958 without adjustment ($100,000)	46,500
Increase in tax attributable to inclusion of entire adjustment in year of the change	5,200

INCREASE IN TAX ATTRIBUTED TO ADJUSTMENT COMPUTED UNDER SECTION 481(B)(1)

Year	Amount of adjustment	Tax before adjustment	Tax after adjustment	Increase in tax liability attributable to adjustment
1958	$3,334	$46,500	$48,234	$1,734
1957	3,333	41,300	43,033	1,733
1956	3,333	36,100	37,833	1,733
Increase in tax attributable to adjustment computed under section 481(b)(1)				5,200
Increase in tax attributed to adjustment computed under section 481(b)(2)				
1953	[1] $2,000	0	[1] $600	$600
1954	[1] 3,000	$300	[1] 1,200	900
1955	6,000	0	300	300
1956	(3,000)	36,100	34,540	(1,560)
1957	96,000	41,300	44,420	3,120
1958	[2] 1,000	46,500	[2] 47,020	520
Increase in tax attributable to the				3,880

[1] Attributable to recomputations of net operating loss carrybacks determined with reference to net operating loss in 1955.

[2] Attributable to the inclusion of $1,000 in the year of the change which represents the portion of the $10,000 adjustment not allocated to taxable years prior to the year of the change for which taxable income is established under the new method.

Year	Amount of adjustment	Tax before adjustment	Tax after adjustment	Increase in tax liability attributable to adjustment
adjustment computed under section 481(b)(2)				

[1] *Attributable to recomputations of net operating loss carrybacks determined with reference to net operating loss in 1955.*

[2] *Attributable to the inclusion of $1,000 in the year of the change which represents the portion of the $10,000 adjustment not allocated to taxable years prior to the year of the change for which taxable income is established under the new method.*

Since the limitation under section 481(b)(2) ($3,880) on the amount of tax attributable to the adjustments is applicable, the final tax for the taxable year of the change is computed by adding such amount to the tax for that year computed without the inclusion of any amount attributable to the adjustments, that is, $46,500 plus $3,880, or $50,380.

[T.D. 6500, 25 FR 11732, Nov. 26, 1960, as amended by T.D. 6490, 25 FR 8374, Sept. 1, 1960; T.D. 7301, 39 FR 963, Jan. 4, 1974; T.D. 8608, 60 FR 40078, Aug. 7, 1995]

§ 1.481-3 Adjustments attributable to pre-1954 years where change was not initiated by taxpayer.

If the adjustments required by section 481(a) and § 1.481-1 are attributable to a change in method of accounting which was not initiated by the taxpayer, no portion of any adjustments which is attributable to pre-1954 years shall be taken into account in computing taxable income. For example, if the total adjustments in the case of a change in method of accounting which is not initiated by the taxpayer amount to $10,000, of which $4,000 is attributable to pre-1954 years, only $6,000 of the $10,000 total adjustments is required to be taken into account under section 481 in computing taxable income. The portion of the adjustments which is attributable to pre-1954 years is the net amount of the adjustments which would have been required if the taxpayer had changed his method of accounting in his first taxable year which began after December 31, 1953, and ended after August 16, 1954.

[T.D. 6500, 25 FR 11735, Nov. 26, 1960, as amended by T.D. 8608, 60 FR 40079, Aug. 7, 1995]

§ 1.481-4 Adjustments taken into account with consent.

(a) In addition to the terms and conditions prescribed by the Commissioner under § 1.446-1(e)(3) for effecting a change in method of accounting, including the taxable year or years in which the amount of the adjustments required by section 481(a) is to be taken into account, or the methods of allocation described in section 481(b), a taxpayer may request approval of an alternative method of allocating the amount of the adjustments under section 481. See section 481(c). Requests for approval of an alternative method of allocation shall set forth in detail the facts and circumstances upon which the taxpayer bases its request. Permission will be granted only if the taxpayer and the Commissioner agree to the terms and conditions under which the allocation is to be effected. See § 1.446-1(e) for the rules regarding how to secure the Commissioner's consent to a change in method of accounting.

(b) An agreement to the terms and conditions of a change in method of accounting under § 1.446-1(e)(3), including the taxable year or years prescribed by the Commissioner under that section (or an alternative method described in paragraph (a) of this section) for taking the amount of the adjustments under section 481(a) into account, shall be in writing and shall be signed by the Commissioner and the taxpayer. It shall set forth the items to be adjusted, the amount of the adjustments, the taxable year or years for which the adjustments are to be taken into account, and the amount of the adjustments allocable to each year. The agreement shall be binding on the parties except upon a showing of fraud, malfeasance, or misrepresentation of material fact.

[T.D. 8608, 60 FR 40079, Aug. 7, 1995]

§ 1.481-5 Eligible terminated S corporation.

(a) ***Scope.*** Section 481(d)(2) of the Internal Revenue Code (Code) and this section provide rules relating to the qualification of a corporation as an eligible terminated S corporation (ETSC). Paragraph (b) of this section sets forth the requirements a corporation must meet to qualify as an ETSC. Paragraph (c) of this section describes certain transfers and other events that are disregarded for purposes of determining whether a corporation qualifies as an ETSC, as well as the treatment of revocations for which the effective date is the first day of the taxable year during which the revocation is made. Paragraph (d) of this section contains examples illustrating the rules of this section.

(b) ***ETSC qualification.*** For a C corporation to qualify as an ETSC, it must satisfy the following requirements:

(1) The corporation must have been an S corporation on December 21, 2017;

(2) During the 2-year period beginning on December 22, 2017, the corporation must have made a valid revocation of its S election under section 1362(d)(1) and the regulatory provisions in this part under section 1362 of the Code (revocation); and

(3) Except as provided in paragraph (c) of this section, the owners of the shares of stock of the corporation must be the same (and in identical proportions) on both:

(i) December 22, 2017; and

(ii) The day on which the revocation is made.

(c) ***Special rules*** —

(1) ***Certain disregarded events.*** The following events are disregarded for purposes of determining whether the requirement in paragraph (b)(3) of this section is satisfied:

(i) Transfers of stock between a shareholder and that shareholder's trust treated as wholly owned by that shareholder under subpart E of subchapter J of chapter 1 of the Code;

(ii) Transfers of stock between a shareholder and an entity owned by that shareholder that is disregarded as separate from its owner under § 301.7701-2(c)(2)(i) of the Procedure and Administration Regulations;

(iii) An election by a shareholder trust to be treated as part of a decedent's estate under section 645 of the Code or the termination of an election under that section;

(iv) A change in the status of a shareholder trust from one type of eligible S corporation shareholder trust described in section 1361(c)(2)(A) of the Code to another type of eligible S corporation shareholder trust; for example, a trust to which the shares of stock were transferred pursuant to the terms of a will (testamentary trust) described in section 1361(c)(2)(A)(iii) that elects to become an electing small business trust described in section 1361(c)(2)(A)(v) and (e); and

(v) A transaction that includes more than one of the events described in this paragraph (c)(1).

(2) ***Certain revocations.*** For purposes of paragraphs (b)(2) and (b)(3)(ii) of this section, a revocation with an effective date that is the first day of the taxable year during which the revocation is made pursuant to section 1362(d)(1)(C)(i) may be treated as having been made on the day the revocation was made or on the effective date of the revocation.

(d) ***Examples.*** Paragraphs (d)(1) through (3) of this section (*Examples 1* through *3*) illustrate the rules of this section. For purposes of paragraphs (d)(1) through (3) of this section (*Examples 1* through *3*), as of December 1, 2017, X is a calendar year S corporation with 100 shares of stock outstanding that is owned equally by unrelated individuals A and B. Pursuant to section 1362(d)(1) and §§ 1.1362-2 and 1.1362-6, X made a valid revocation of its S election on March 15, 2019, effective on January 1, 2019. X treats the revocation as having been made on March 15, 2019, for purposes of paragraphs (b)(2) and (b)(3)(ii). At all times, X has a single class of stock outstanding. Paragraphs (d)(1) through (3) of this section (*Examples 1* through *3*) describe all relevant transactions involving the X stock from December 1, 2017, until March 15, 2019.

(1) ***Example 1*** —

(i) ***Facts.*** On June 5, 2018, A contributed 20 of its shares of X stock to Y, a wholly owned limited liability company that is disregarded as an entity separate from A pursuant to § 301.7701-2(c)(2)(i). On June 14, 2018, A contributed all of its interest in Y to Trust, which was a revocable trust treated as a wholly owned grantor trust of A pursuant to sections 671 and 676 of the Code. On December 27, 2018, B sold 10 shares of its X stock to C, an unrelated person.

(ii) ***Analysis.*** X is an ETSC if it satisfies the requirements of paragraph (b) of this section.

(A) ***S corporation.*** X was an S corporation on December 21, 2017. Therefore, X satisfies the requirement of paragraph (b)(1) of this section.

(B) ***Date of revocation.*** X made a valid revocation of its S election pursuant to section 1362(d)(1) on March 15, 2019, which is during the two-year period specified in paragraph (b)(2) of this section. Therefore, X satisfies the requirement of paragraph (b)(2) of this section.

(C) ***Ownership.*** For purposes of the requirement in paragraph (b)(3) of this section, the relevant dates are: December 22, 2017, and March 15, 2019 (the date X made a revocation of its S corporation status).

(*1*) ***A's ownership interest.*** As of December 22, 2017, A owned 50 shares of the outstanding shares of X stock. On June 5, 2018, A contributed 20 of its shares of X stock to Y (Transfer). On June 14, 2018, A contributed all of its interest in Y to Trust (Contribution). Both the Transfer and the Contribution are disregarded for purposes of determining whether the requirement of paragraph (b)(3) of this section is satisfied. See paragraphs (c)(2) and (1) of this section, respectively. Therefore, A owns 50 shares of the outstanding stock of X on March 15, 2019.

(2) ***B's ownership interest.*** As of December 22, 2017, B owned 50 shares of the outstanding shares of X stock. On December 27, 2018, B sold 10 shares to C. Therefore, B owns 40 shares of the outstanding stock of X on March 15, 2019.

(3) ***C's ownership interest.*** As of December 22, 2017, C owned no shares of X stock. On December 27, 2018, C purchased 10 shares from B. Therefore, C owns 10 shares of the outstanding stock of X on March 15, 2019.

(4) ***Failure to satisfy the requirement in paragraph (b)(3) of this section.*** As described in paragraphs (d)(1)(ii)(C)(*2*) and (*3*) of this section, B's and C's interest in X were not in the same proportions on December 22, 2017, and March 15, 2019. Therefore, X does not satisfy the requirement of paragraph (b)(3) of this section and does not qualify as an ETSC.

(iii) ***Restoration of interests prior to end of PTTP.*** If C transferred its shares of X stock back to B on February 1, 2019, then on December 22, 2017, and March 15, 2019, A and B will have owned 50 shares of the outstanding stock of X. Under these facts, X satisfies the requirement of paragraph (b)(3) of this section and qualifies as an ETSC.

(2) ***Example 2*** —

(i) ***Facts.*** The facts are the same as in paragraph (d)(1)(i) of this section, except that B sold 10 shares of its X stock to C on December 18, 2017, in addition to the sale of 10 shares of X stock on December 27, 2018.

(ii) ***Analysis.*** The analysis in paragraph (d)(1)(ii)(A) and (B) of this section remains the same regarding the requirements of paragraph (b)(1) and (2) of this section. With respect to the requirement of paragraph (b)(3) of this section, on December 22, 2017, A owned 50%, B owned 40%, and C owned 10% of the outstanding stock of X. As in paragraph (d)(1)(ii)(C)(*1*) of this section, the Transfer and the Contribution are disregarded for purposes of determining whether the requirement of paragraph (b)(3) of this section is satisfied. Therefore, on March 15, 2019, A owned 50% (50 shares), B owned 30% (30 shares), and C owned 20% (20 shares) of the outstanding shares of X. Even though A, B, and C owned shares of X on December 22, 2017, B's and C's proportionate ownership interest of X stock was not the same on December 22, 2017, and March 15, 2019. Therefore, X does not satisfy the requirement of paragraph (b)(3) of this section and does not qualify as an ETSC.

(3) ***Example 3*** —

(i) ***Facts.*** The facts are the same as in paragraph (d)(1)(i) of this section, except that X made a valid revocation of its S election on November 1, 2019, effective on January 1, 2020.

(ii) ***Analysis.*** The analysis in paragraph (d)(1)(ii)(A) through (C) of this section remains the same regarding the requirements of paragraph (b)(1) through (3) of this section, except that the relevant dates are: December 22, 2017, and November 1, 2019 (the date X made a revocation of its S corporation status). Although the effective date of X's revocation of its S election (January 1, 2020) occurs after the conclusion of the two-year period specified in paragraph (b)(2) of this section, it is irrelevant for purposes of determining whether the requirements of paragraph (b)(2) and (3) of this section are satisfied.

[T.D. 9914, 85 FR 66476, Oct. 20, 2020]

§ 1.481-6 Effective dates; applicability dates.

(a) Sections 1.481-1, 1.481-2, 1.481-3, and 1.481-4 are effective for Consent Agreements signed on or after December 27, 1994. For Consent Agreements signed before December 27, 1994, see §§ 1.481-1, 1.481-2, 1.481-3, 1.481-4, and 1.481-5 as contained in 26 CFR part 1, revised as of April 1, 1995.

(b) Section 1.481-5 applies to taxable years beginning October 20, 2020. However, a corporation may choose to apply the rules in §§ 1.481-5, 1.1371-1, and 1.1371-2 in their entirety to taxable years beginning on or before October 20, 2020. If a corporation makes the choice described in the previous sentence, the corporation must continue to apply the rules in §§ 1.481-5, 1.1371-1, and 1.1371-2 in their entirety for the corporation's subsequent taxable years.

[T.D. 9914, 85 FR 66478, Oct. 20, 2020]

§ 1.482-0 Outline of regulations under section 482.

This section contains major captions for §§ 1.482-1 through 1.482-9.

§ 1.482-1 Allocation of income and deductions among taxpayers.

(a) In general.

(1) Purpose and scope.

(2) Authority to make allocations.

(3) Taxpayer's use of section 482.

(b) Arm's length standard.

(1) In general.

(2) Arm's length methods.

(i) Methods.

(ii) Selection of category of method applicable to transaction.

(iii) Coordination of methods applicable to certain intangible development arrangements.

(c) Best method rule.

(1) In general.

(2) Determining the best method.

(i) Comparability.

(ii) Data and assumptions.

(A) Completeness and accuracy of data.

(B) Reliability of assumptions.

(C) Sensitivity of results to deficiencies in data and assumptions.

(iii) Confirmation of results by another method.

(d) Comparability.

(1) In general.

(2) Standard of comparability.

(3) Factors for determining comparability.

(i) Functional analysis.

(ii) Contractual terms.

(A) In general.

(B) Identifying contractual terms.

(*1*) Written agreement.

(*2*) No written agreement.

(C) Examples.

(iii) Risk.

(A) In general.

(B) Identification of party that bears risk.

(C) Examples.

(iv) Economic conditions.

(v) Property or services.

(4) Special circumstances.

(i) Market share strategy.

(ii) Different geographic markets.

(A) In general.

(B) Example.

(C) Location savings.

(D) Example.

(iii) Transactions ordinarily not accepted as comparables.

(A) In general.

(B) Examples.

(e) Arm's length range.

(1) In general.

(2) Determination of arm's length range.

(i) Single method.

(ii) Selection of comparables.

(iii) Comparables included in arm's length range.

(A) In general.

(B) Adjustment of range to increase reliability.

(C) Interquartile range.

(3) Adjustment if taxpayer's results are outside arm's length range.

(4) Arm's length range not prerequisite to allocation.

(5) Examples.

(f) Scope of review.

(1) In general.

(i) Intent to evade or avoid tax not a prerequisite.

(ii) Realization of income not a prerequisite.

(A) In general.

(B) Example.

(iii) Nonrecognition provisions may not bar allocation.

(A) In general.

(B) Example.

(iv) Consolidated returns.

(2) Rules relating to determination of true taxable income.

(i) [Reserved]

(ii) Allocation based on taxpayer's actual transactions.

(A) In general.

(B) [Reserved]

(iii) Multiple year data.

(A) In general.

(B) Circumstances warranting consideration of multiple year data.

(C) Comparable effect over comparable period.

(D) Applications of methods using multiple year averages.

(E) Examples.

(iv) Product lines and statistical techniques.

(v) Allocations apply to results, not methods.

(A) In general.

(B) Example.

(g) Collateral adjustments with respect to allocations under section 482.

(1) In general.

(2) Correlative allocations.

(i) In general.

(ii) Manner of carrying out correlative allocation.

(iii) Events triggering correlative allocation.

(iv) Examples.

(3) Adjustments to conform accounts to reflect section 482 allocations.

(i) In general.

(ii) Example.

(4) Setoffs.

(i) In general.

(ii) Requirements.

(iii) Examples.

(h) Special rules.

(1) Small taxpayer safe harbor. [Reserved]

(2) Effect of foreign legal restrictions.

(i) In general.

(ii) Applicable legal restrictions.

(iii) Requirement for electing the deferred income method of accounting.

(iv) Deferred income method of accounting.

(v) Examples.

(3) Coordination with section 936.

(i) Cost sharing under section 936.

(ii) Use of terms.

(i) Definitions.

(j) Effective/applicability date.

§ 1.482-2 Determination of taxable income in specific situations.

(a) Loans or advances.

(1) Interest on bona fide indebtedness.

(i) In general.

(ii) Application of paragraph (a) of this section.

(A) Interest on bona fide indebtedness.

(B) Alleged indebtedness.

(iii) Period for which interest shall be charged.

(A) General rule.

(B) Exception for certain intercompany transactions in the ordinary course of business.

(C) Exception for trade or business of debtor member located outside the United States.

(D) Exception for regular trade practice of creditor member or others in creditor's industry.

(E) Exception for property purchased for resale in a foreign country.

(*1*) General rule.

(*2*) Interest-free period.

(*3*) Average collection period.

(*4*) Illustration.

(iv) Payment; book entries.

(2) Arm's length interest rate.

(i) In general.

(ii) Funds obtained at situs of borrower.

(iii) Safe haven interest rates for certain loans and advances made after May 8, 1986.

(A) Applicability.

(*1*) General rule.

(2) Grandfather rule for existing loans.

(B) Safe haven interest rate based on applicable Federal rate.

(C) Applicable Federal rate.

(D) Lender in business of making loans.

(E) Foreign currency loans.

(3) Coordination with interest adjustments required under certain other Internal Revenue Code sections.

(4) Examples.

(b) Rendering of services.

(c) Use of tangible property.

(1) General rule.

(2) Arm's length charge.

(i) In general.

(ii) Safe haven rental charge.

(iii) Subleases.

(d) Transfer of property.

(e) Cost sharing arrangement.

(f) Effective/applicability Date.

(1) In general.

(2) Election to apply paragraph (b) to earlier taxable years.

§ 1.482-3 Methods to determine taxable income in connection with a transfer of tangible property.

(a) In general.

(b) Comparable uncontrolled price method.

(1) In general.

(2) Comparability and reliability considerations.

(i) In general.

(ii) Comparability.

(A) In general.

(B) Adjustments for differences between controlled and uncontrolled transactions.

(iii) Data and assumptions.

(3) Arm's length range.

(4) Examples.

(5) Indirect evidence of comparable uncontrolled transactions.

(i) In general.

(ii) Limitations.

(iii) Examples.

(c) Resale price method.

(1) In general.

(2) Determination of arm's length price.

(i) In general.

(ii) Applicable resale price.

(iii) Appropriate gross profit.

(iv) Arm's length range.

(3) Comparability and reliability considerations.

(i) In general.

(ii) Comparability.

(A) Functional comparability.

(B) Other comparability factors.

(C) Adjustments for differences between controlled and uncontrolled transactions.

(D) Sales agent.

(iii) Data and assumptions.

(A) In general.

(B) Consistency in accounting.

(4) Examples.

(d) Cost plus method.

(1) In general.

(2) Determination of arm's length price.

(i) In general.

(ii) Appropriate gross profit.

(iii) Arm's length range.

(3) Comparability and reliability considerations.

(i) In general.

(ii) Comparability.

(A) Functional comparability.

(B) Other comparability factors.

(C) Adjustments for differences between controlled and uncontrolled transactions.

(D) Purchasing agent.

(iii) Data and assumptions.

(A) In general.

(B) Consistency in accounting.

(4) Examples.

(e) Unspecified methods.

(1) In general.

(2) Example.

(f) Coordination with intangible property rules.

§ 1.482-4 Methods to determine taxable income in connection with a transfer of intangible property.

(a) In general.

(b) Definition of intangible.

(c) Comparable uncontrolled transaction method.

(1) In general.

(2) Comparability and reliability considerations.

(i) In general.

(ii) Reliability.

(iii) Comparability.

(A) In general.

(B) Factors to be considered in determining comparability.

(*1*) Comparable intangible property.

(*2*) Comparable circumstances.

(iv) Data and assumptions.

(3) Arm's length range.

(4) Examples.

(d) Unspecified methods.

(1) In general.

(2) Example.

(e) Coordination with tangible property rules.

(f) Special rules for transfers of intangible property.

(1) Form of consideration.

(2) Periodic adjustments.

(i) General rule.

(ii) Exceptions.

(A) Transactions involving the same intangible.

(B) Transactions involving comparable intangible.

(C) Methods other than comparable uncontrolled transaction.

(D) Extraordinary events.

(E) Five-year period.

(iii) Examples.

(3) Ownership of intangible property.

(i) Identification of owner.

(A) In general.

(B) Cost sharing arrangements.

(ii) Examples.

(4) Contribution to the value of intangible property owned by another.

(i) In general.

(ii) Examples.

(5) Consideration not artificially limited.

(6) Lump sum payments

(i) In general.

(ii) Exceptions.

(iii) Example.

(g) Coordination with rules governing cost sharing arrangements.

(h) Effective/applicability date.

(1) In general.

(2) Election to apply regulation to earlier taxable years.

§ 1.482-5 Comparable profits method.

(a) In general.

(b) Determination of arm's length result.

(1) In general.

(2) Tested party.

(i) In general.

(ii) Adjustments for tested party.

(3) Arm's length range.

(4) Profit level indicators.

(i) Rate of return on capital employed.

(ii) Financial ratios.

(iii) Other profit level indicators.

(c) Comparability and reliability considerations.

(1) In general.

(2) Comparability.

(i) In general.

(ii) Functional, risk and resource comparability.

(iii) Other comparability factors.

(iv) Adjustments for differences between tested party and the uncontrolled taxpayers.

(3) Data and assumptions.

(i) In general.

(ii) Consistency in accounting.

(iii) Allocations between the relevant business activity and other activities.

(d) Definitions.

(e) Examples.

§ 1.482-6 Profit split method.

(a) In general.

(b) Appropriate share of profits and losses.

(c) Application.

(1) In general.

(2) Comparable profit split.

(i) In general.

(ii) Comparability and reliability considerations.

(A) In general.

(B) Comparability.

(*1*) In general.

(*2*) Adjustments for differences between the controlled and uncontrolled taxpayers.

(C) Data and assumptions.

(D) Other factors affecting reliability.

(3) Residual profit split.

(i) In general.

(A) Allocate income to routine contributions.

(B) Allocate residual profit.

(*1*) Nonroutine contributions generally.

(*2*) Nonroutine contributions of intangible property.

(ii) Comparability and reliability considerations.

(A) In general.

(B) Comparability.

(C) Data and assumptions.

(D) Other factors affecting reliability

(d) Effective/applicability date.

(iii) Example.

§ 1.482-7 Methods to determine taxable income in connection with a cost sharing arrangement.

(a) In general.

(1) RAB share method for cost sharing transactions (CSTs).

(2) Methods for platform contribution transactions (PCTs).

(3) Methods for other controlled transactions.

(i) Contribution to a CSA by a controlled taxpayer that is not a controlled participant.

(ii) Transfer of interest in a cost shared intangible.

(iii) Other controlled transactions in connection with a CSA.

(iv) Controlled transactions in the absence of a CSA.

(4) Coordination with the arm's length standard.

(b) Cost sharing arrangement.

(1) Substantive requirements.

(i) CSTs.

(ii) PCTs.

(iii) Divisional interests.

(iv) Examples.

(2) Administrative requirements.

(3) Date of a PCT.

(4) Divisional interests.

(i) In general.

(ii) Territorial based divisional interests.

(iii) Field of use based divisional interests.

(iv) Other divisional bases.

(v) Examples.

(5) Treatment of certain arrangements as CSAs.

(i) Situation in which Commissioner must treat arrangement as a CSA.

(ii) Situation in which Commissioner may treat arrangement as a CSA.

(iii) Examples.

(6) Entity classification of CSAs.

(c) Platform contributions.

(1) In general.

(2) Terms of platform contributions.

(i) Presumed to be exclusive.

(ii) Rebuttal of Exclusivity.

(iii) Proration of PCT Payments to the extent allocable to other business activities.

(A) In general.

(B) Determining the proration of PCT Payments.

(3) Categorization of the PCT.

(4) Certain make-or-sell rights excluded.

(i) In general.

(ii) Examples.

(5) Examples.

(d) Intangible development costs.

(1) Determining whether costs are IDCs.

(i) Definition and scope of the IDA.

(ii) Reasonably anticipated cost shared intangible.

(iii) Costs included in IDCs.

(iv) Examples.

(2) Allocation of costs.

(3) Stock-based compensation.

(i) In general.

(ii) Identification of stock-based compensation with the IDA.

(iii) Measurement and timing of stock-based compensation IDC.

(A) In general.

(*1*) Transfers to which section 421 applies.

(*2*) Deductions of foreign controlled participants.

(*3*) Modification of stock option.

(*4*) Expiration or termination of CSA.

(B) Election with respect to options on publicly traded stock.

(*1*) In general.

(*2*) Publicly traded stock.

(*3*) Generally accepted accounting principles.

(*4*) Time and manner of making the election.

(C) Consistency.

(4) IDC share.

(5) Examples.

(e) Reasonably anticipated benefits share.

(1) Definition.

(i) In general.

(ii) Reliability.

(iii) Examples.

(2) Measure of benefits.

(i) In general.

(ii) Indirect bases for measuring anticipated benefits.

(A) Units used, produced, or sold.

(B) Sales.

(C) Operating profit.

(D) Other bases for measuring anticipated benefits.

(E) Examples.

(iii) Projections used to estimate benefits.

(A) In general.

(B) Examples.

(f) Changes in participation under a CSA.

(1) In general.

(2) Controlled transfer of interests.

(3) Capability variation.

(4) Arm's length consideration for a change in participation.

(5) Examples.

(g) Supplemental guidance on methods applicable to PCTs.

(1) In general.

(2) Best method analysis applicable for evaluation of a PCT pursuant to a CSA.

(i) In general.

(ii) Consistency with upfront contractual terms and risk allocation—the investor model.

(A) In general.

(B) Example.

(iii) Consistency of evaluation with realistic alternatives.

(A) In general.

(B) Examples.

(iv) Aggregation of transactions.

(v) Discount rate.

(A) In general.

(B) Considerations in best method analysis of discount rate.

(*1*) Discount rate variation between realistic alternatives.

(*2*) [Reserved]

(*3*) Discount rate variation between forms of payment.

(*4*) Post-tax rate.

(C) Example.

(vi) Financial projections.

(vii) Accounting principles.

(A) In general.

(B) Examples.

(viii) Valuations of subsequent PCTs.

(A) Date of subsequent PCT.

(B) Best method analysis for subsequent PCT.

(ix) Arm's length range.

(A) In general.

(B) Methods based on two or more input parameters.

(C) Variable input parameters.

(D) Determination of arm's length PCT Payment.

(*1*) No variable input parameters.

(*2*) One variable input parameter.

(*3*) More than one variable input parameter.

(E) Adjustments.

(x) Valuation undertaken on a pre-tax basis.

(3) Comparable uncontrolled transaction method.

(4) Income method.

(i) In general.

(A) Equating cost sharing and licensing alternatives.

(B) Cost sharing alternative.

(C) Licensing alternative.

(D) Only one controlled participant with nonroutine platform contributions.

(E) Income method payment forms.

(F) Discount rates appropriate to cost sharing and licensing alternatives.

(G) The effect of taxation on determining the arm's length amount.

(ii) Evaluation of PCT Payor's cost sharing alternative.

(iii) Evaluation of PCT Payor's licensing alternative.

(A) Evaluation based on CUT.

(B) Evaluation based on CPM.

(iv) Lump sum payment form.

(v) [Reserved]

(vi) Best method analysis considerations.

(A) Coordination with § 1.482-1(c).

(B) Assumptions Concerning Tax Rates.

(C) Coordination with § 1.482-4(c)(2).

(D) Coordination with § 1.482-5(c).

(E) Certain Circumstances Concerning PCT Payor.

(F) Discount rates.

(*1*) Reflection of similar risk profiles of cost sharing alternative and licensing alternative.

(*2*) [Reserved]

(vii) Routine platform and operating contributions.

(viii) Examples.

(5) Acquisition Price Method.

(i) In general.

(ii) Determination of arm's length charge.

(iii) Adjusted acquisition price.

(iv) Best method analysis considerations.

(v) Example.

(6) Market capitalization method.

(i) In general.

(ii) Determination of arm's length charge.

(iii) Average market capitalization.

(iv) Adjusted average market capitalization.

(v) Best method analysis considerations.

(vi) Examples.

(7) Residual profit split method.

(i) In general.

(ii) Appropriate share of profits and losses.

(iii) Profit split.

(A) In general.

(B) Determine nonroutine residual divisional profit or loss.

(C) Allocate nonroutine residual divisional profit or loss.

(*1*) In general.

(*2*) Relative value determination.

(*3*) Determination of PCT Payments.

(*4*) Routine platform and operating contributions.

(iv) Best method analysis considerations.

(A) In general.

(B) Comparability.

(C) Data and assumptions.

(D) Other factors affecting reliability.

(v) Examples.

(8) Unspecified methods.

(h) Form of payment rules.

(1) CST Payments.

(2) PCT Payments.

(i) In general.

(ii) No PCT Payor stock.

(iii) Specified form of payment.

(A) In general.

(B) Contingent payments.

(C) Examples.

(iv) Conversion from fixed to contingent form of payment.

(3) Coordination of best method rule and form of payment.

(i) Allocations by the Commissioner in connection with a CSA.

(1) In general.

(2) CST allocations.

(i) In general.

(ii) Adjustments to improve the reliability of projections used to estimate RAB shares.

(A) Unreliable projections.

(B) Foreign-to-foreign adjustments.

(C) Correlative adjustments to PCTs.

(D) Examples.

(iii) Timing of CST allocations.

(3) PCT allocations.

(4) Allocations regarding changes in participation under a CSA.

(5) Allocations when CSTs are consistently and materially disproportionate to RAB shares.

(6) Periodic adjustments.

(i) In general.

(ii) PRRR.

(iii) AERR.

(A) In general.

(B) PVTP.

(C) PVI.

(iv) ADR.

(A) In general.

(B) Publicly traded companies.

(C) Publicly traded.

(D) PCT Payor WACC.

(E) Generally accepted accounting principles.

(v) Determination of periodic adjustments.

(A) In general.

(B) Adjusted RPSM as of Determination Date.

(vi) Exceptions to periodic adjustments.

(A) Controlled participants establish periodic adjustment not warranted.

(*1*) Transactions involving the same platform contribution as in the Trigger PCT.

(*2*) Results not reasonably anticipated.

(*3*) Reduced AERR does not cause Periodic Trigger.

(*4*) Increased AERR does not cause Periodic Trigger.

(B) Circumstances in which Periodic Trigger deemed not to occur.

(*1*) 10-year period.

(*2*) 5-year period.

(vii) Examples.

(j) Definitions and special rules.

(1) Definitions.

(i) In general.

(ii) Examples.

(2) Special rules.

(i) Consolidated group.

(ii) Trade or business.

(iii) Partnership.

(3) Character.

(i) CST Payments.

(ii) PCT Payments.

(iii) Examples.

(k) CSA administrative requirements.

(1) CSA contractual requirements.

(i) In general.

(ii) Contractual provisions.

(iii) Meaning of contemporaneous.

(A) In general.

(B) Example.

(iv) Interpretation of contractual provisions.

(A) In general.

(B) Examples.

(2) CSA documentation requirements.

(i) In general.

(ii) Additional CSA documentation requirements.

(iii) Coordination rules and production of documents.

(A) Coordination with penalty regulations.

(B) Production of documentation.

(3) CSA accounting requirements.

(i) In general.

(ii) Reliance on financial accounting.

(4) CSA reporting requirements.

(i) CSA Statement.

(ii) Content of CSA Statement.

(iii) Time for filing CSA Statement.

(A) 90-day rule.

(B) Annual return requirement.

(*1*) In general.

(*2*) Special filing rule for annual return requirement.

(iv) Examples.

(l) Effective/applicability date.

(m) Transition rule.

(1) In general.

(2) Transitional modification of applicable provisions.

(3) Special rule for certain periodic adjustments.

§ 1.482-8 Examples of the best method rule.

(a) Introduction.

(b) Examples.

(c) Effective/applicability date.

§ 1.482-9 Methods to determine taxable income in connection with a controlled services transaction.

(a) In general.

(b) Services cost method.

(1) In general.

(2) Eligibility for the services cost method.

(3) Covered services.

(i) Specified covered services.

(ii) Low margin covered services.

(4) Excluded activities.

(5) Not services that contribute significantly to fundamental risks of business success or failure.

(6) Adequate books and records.

(7) Shared services arrangement.

(i) In general.

(ii) Requirements for shared services arrangement.

(A) Eligibility.

(B) Allocation.

(C) Documentation.

(iii) Definitions and special rules.

(A) Participant.

(B) Aggregation.

(C) Coordination with cost sharing arrangements.

(8) Examples.

(c) Comparable uncontrolled services price method.

(1) In general.

(2) Comparability and reliability considerations.

(i) In general.

(ii) Comparability.

(A) In general.

(B) Adjustments for differences between controlled and uncontrolled transactions.

(iii) Data and assumptions.

(3) Arm's length range.

(4) Examples.

(5) Indirect evidence of the price of a comparable uncontrolled services transaction.

(i) In general.

(ii) Example.

(d) Gross services margin method.

(1) In general.

(2) Determination of arm's length price.

(i) In general.

(ii) Relevant uncontrolled transaction.

(iii) Applicable uncontrolled price.

(iv) Appropriate gross services profit.

(v) Arm's length range.

(3) Comparability and reliability considerations.

(i) In general.

(ii) Comparability.

(A) Functional comparability.

(B) Other comparability factors.

(C) Adjustments for differences between controlled and uncontrolled transactions.

(D) Buy-sell distributor.

(iii) Data and assumptions.

(A) In general.

(B) Consistency in accounting.

(4) Examples.

(e) Cost of services plus method.

(1) In general.

(2) Determination of arm's length price.

(i) In general.

(ii) Appropriate gross services profit.

(iii) Comparable transactional costs.

(iv) Arm's length range.

(3) Comparability and reliability considerations.

(i) In general.

(ii) Comparability.

(A) Functional comparability.

(B) Other comparability factors.

(C) Adjustments for differences between the controlled and uncontrolled transactions.

(iii) Data and assumptions.

(A) In general.

(B) Consistency in accounting.

(4) Examples.

(f) Comparable profits method.

(1) In general.

(2) Determination of arm's length result.

(i) Tested party.

(ii) Profit level indicators.

(iii) Comparability and reliability considerations—Data and assumptions—Consistency in accounting.

(3) Examples.

(g) Profit split method.

(1) In general.

(2) Examples.

(h) Unspecified methods.

(i) Contingent-payment contractual terms for services.

(1) Contingent-payment contractual terms recognized in general.

(2) Contingent-payment arrangement.

(i) General requirements.

(A) Written contract.

(B) Specified contingency.

(C) Basis for payment.

(ii) Economic substance and conduct.

(3) Commissioner's authority to impute contingent-payment terms.

(4) Evaluation of arm's length charge.

(5) Examples.

(j) Total services costs.

(k) Allocation of costs.

(1) In general.

(2) Appropriate method of allocation and apportionment.

(i) Reasonable method standard.

(ii) Use of general practices.

(3) Examples.

(l) Controlled services transaction.

(1) In general.

(2) Activity.

(3) Benefit.

(i) In general.

(ii) Indirect or remote benefit.

(iii) Duplicative activities.

(iv) Shareholder activities.

(v) Passive association.

(4) Disaggregation of transactions.

(5) Examples.

(m) Coordination with transfer pricing rules for other transactions.

(1) Services transactions that include other types of transactions.

(2) Services transactions that effect a transfer of intangible property.

(3) Coordination with rules governing cost sharing arrangements.

(4) Other types of transactions that include controlled services transactions.

(5) Examples.

(n) Effective/applicability dates.

(1) In general.

(2) Election to apply regulations to earlier taxable years.

[T.D. 8552, 59 FR 34988, July 8, 1994, as amended by T.D. 8632, 60 FR 65557, Dec. 20, 1995; 61 FR 7157, Feb. 26, 1996; T.D. 8670, 61 FR 21956, May 13, 1996; T.D. 9088, 68 FR 51177, Aug. 26, 2003; T.D. 9278, 71 FR 44479, Aug. 4, 2006; T.D. 9441, 74 FR 348, Jan. 5, 2009, 74 FR 9571, Mar. 5, 2009; T.D. 9456, 74 FR 38837, Aug. 4, 2009; T.D. 9568, 76 FR 80087, Dec. 22, 2011; T.D. 9738, 80 FR 55540, Sept. 16, 2015]

§ 1.482-1 Allocation of income and deductions among taxpayers.

(a) *In general* —

(1) ***Purpose and scope.*** The purpose of section 482 is to ensure that taxpayers clearly reflect income attributable to controlled transactions and to prevent the avoidance of taxes with respect to such transactions. Section 482 places a controlled taxpayer on a tax parity with an uncontrolled taxpayer by determining the true taxable income of the controlled taxpayer. This section sets forth general principles and guidelines to be followed under section 482. Section 1.482-2 provides rules for the determination of the true taxable income of controlled taxpayers in specific situations, including controlled transactions involving loans or advances or the use of tangible property. Sections 1.482-3 through 1.482-6 provide rules for the determination of the true taxable income of controlled taxpayers in cases involving the transfer of property. Section 1.482-7T sets forth the cost sharing provisions applicable to taxable years beginning on or after January 5, 2009. Section 1.482-8 provides examples illustrating the application of the best method rule. Finally, § 1.482-9 provides rules for the determination of the true taxable income of controlled taxpayers in cases involving the performance of services.

(2) ***Authority to make allocations.*** The district director may make allocations between or among the members of a controlled group if a controlled taxpayer has not reported its true taxable income. In such case, the district director may allocate income, deductions, credits, allowances, basis, or any other item or element affecting taxable income (referred to as allocations). The appropriate allocation may take the form of an increase or decrease in any relevant amount.

(3) ***Taxpayer's use of section 482.*** If necessary to reflect an arm's length result, a controlled taxpayer may report on a timely filed U.S. income tax return (including extensions) the results of its controlled transactions based upon prices different from those actually charged. Except as provided in this paragraph, section 482 grants no other right to a controlled taxpayer to apply the provisions of section 482 at will or to compel the district director to apply such provisions. Therefore, no untimely or amended returns will be permitted to decrease taxable income based on allocations or other adjustments with respect to controlled transactions. See § 1.6662-6T(a)(2) or successor regulations.

(b) *Arm's length standard* —

(1) ***In general.*** In determining the true taxable income of a controlled taxpayer, the standard to be applied in every case is that of a taxpayer dealing at arm's length with an uncontrolled taxpayer. A controlled transaction meets the arm's length standard if the results of the transaction are consistent with the results that would have been realized if uncontrolled taxpayers had engaged in the same transaction under the same circumstances (arm's length result). However, because identical transactions can rarely be located, whether a transaction produces an arm's length result generally will be determined by reference to the results of comparable transactions under comparable circumstances. See §

1.482-1(d)(2) (Standard of comparability). Evaluation of whether a controlled transaction produces an arm's length result is made pursuant to a method selected under the best method rule described in § 1.482-1(c).

(2) *Arm's length methods* —

(i) ***Methods.*** Sections 1.482-2 through 1.482-7 and 1.482-9 provide specific methods to be used to evaluate whether transactions between or among members of the controlled group satisfy the arm's length standard, and if they do not, to determine the arm's length result. This section provides general principles applicable in determining arm's length results of such controlled transactions, but do not provide methods, for which reference must be made to those other sections in accordance with paragraphs (b)(2)(ii) and (iii) of this section. Section 1.482-7 provides the specific methods to be used to evaluate whether a cost sharing arrangement as defined in § 1.482-7 produces results consistent with an arm's length result.

(ii) ***Selection of category of method applicable to transaction.*** The methods listed in § 1.482-2 apply to different types of transactions, such as transfers of property, services, loans or advances, and rentals. Accordingly, the method or methods most appropriate to the calculation of arm's length results for controlled transactions must be selected, and different methods may be applied to interrelated transactions if such transactions are most reliably evaluated on a separate basis. For example, if services are provided in connection with the transfer of property, it may be appropriate to separately apply the methods applicable to services and property in order to determine an arm's length result. But see § 1.482-1(f)(2)(i) (Aggregation of transactions). In addition, other applicable provisions of the Code may affect the characterization of a transaction, and therefore affect the methods applicable under section 482. See for example section 467.

(iii) ***Coordination of methods applicable to certain intangible development arrangements.*** Section 1.482-7 provides the specific methods to be used to determine arm's length results of controlled transactions in connection with a cost sharing arrangement as defined in § 1.482-7. Sections 1.482-4 and 1.482-9, as appropriate, provide the specific methods to be used to determine arm's length results of arrangements, including partnerships, for sharing the costs and risks of developing intangibles, other than a cost sharing arrangement covered by § 1.482-7. See also §§ 1.482-4(g) (Coordination with rules governing cost sharing arrangements) and 1.482-9(m)(3) (Coordination with rules governing cost sharing arrangements).

(c) *Best method rule* —

(1) ***In general.*** The arm's length result of a controlled transaction must be determined under the method that, under the facts and circumstances, provides the most reliable measure of an arm's length result. Thus, there is no strict priority of methods, and no method will invariably be considered to be more reliable than others. An arm's length result may be determined under any method without establishing the inapplicability of another method, but if another method subsequently is shown to produce a more reliable measure of an arm's length result, such other method must be used. Similarly, if two or more applications of a single method provide inconsistent results, the arm's length result must be determined under the application that, under the facts and circumstances, provides the most reliable measure of an arm's length result. See § 1.482-8 for examples of the application of the best method rule. See § 1.482-7 for the applicable methods in the case of a cost sharing arrangement.

(2) ***Determining the best method.*** Data based on the results of transactions between unrelated parties provides the most objective basis for determining whether the results of a controlled transaction are arm's length. Thus, in determining which of two or more available methods (or applications of a single method) provides the most reliable measure of an arm's length result, the two primary factors to take into account are the degree of comparability between the controlled transaction (or taxpayer) and any uncontrolled comparables, and the quality of the data and assumptions used in the analysis. In addition, in certain circumstances, it also may be relevant to consider whether the results of an analysis are consistent with the results of an analysis under another method. These factors are explained in paragraphs (c)(2)(i), (ii), and (iii) of this section.

(i) ***Comparability.*** The relative reliability of a method based on the results of transactions between unrelated parties depends on the degree of comparability between the controlled transaction or taxpayers and the uncontrolled comparables, taking into account the factors described in § 1.482-1(d)(3) (Factors for determining comparability), and after making adjustments for differences, as described in § 1.482-1(d)(2) (Standard of comparability). As the degree of comparability increases, the number and extent of potential differences that could render the analysis inaccurate is reduced. In addition, if adjustments are made to increase the degree of comparability, the number, magnitude, and reliability of those adjustments will affect the reliability of the results of the analysis. Thus, an analysis under the comparable uncontrolled price method will generally be more reliable than analyses obtained under other methods if the analysis is based on closely comparable uncontrolled transactions, because such an analysis can be expected to achieve a higher degree of comparability and be susceptible to fewer differences than analyses under other methods. See § 1.482-3(b)(2)(ii)(A). An analysis will be relatively less reliable, however, as the uncontrolled transactions become less comparable to the controlled transaction.

(ii) ***Data and assumptions.*** Whether a method provides the most reliable measure of an arm's length result also depends upon the completeness and accuracy of the underlying data, the reliability of the assumptions, and the sensitivity of the results to possible deficiencies in the data and assumptions. Such factors are particularly relevant in evaluating the degree of comparability between the controlled and uncontrolled transactions. These factors are discussed in paragraphs (c)(2)(ii) (A), (B), and (C) of this section.

(A) ***Completeness and accuracy of data.*** The completeness and accuracy of the data affects the ability to identify and quantify those factors that would affect the result under any particular method. For example, the completeness and accuracy of data will determine the extent to which it is possible to identify differences between the controlled and uncontrolled transactions, and the reliability of adjustments that are made to account for such differences. An analysis will be relatively more reliable as the completeness and accuracy of the data increases.

(B) ***Reliability of assumptions.*** All methods rely on certain assumptions. The reliability of the results derived from a method depends on the soundness of such assumptions. Some assumptions are relatively reliable. For example, adjustments for differences in payment terms between controlled and uncontrolled transactions may be based on the assumption that at arm's length such differences would lead to price differences that reflect the time value of money. Although selection of the appropriate interest rate to use in making such adjustments involves some judgement, the economic analysis on which the assumption is based is relatively sound. Other assumptions may be less reliable. For example, the residual profit split method may be based on the assumption that capitalized intangible

development expenses reflect the relative value of the intangible property contributed by each party. Because the costs of developing an intangible may not be related to its market value, the soundness of this assumption will affect the reliability of the results derived from this method.

(C) ***Sensitivity of results to deficiencies in data and assumptions.*** Deficiencies in the data used or assumptions made may have a greater effect on some methods than others. In particular, the reliability of some methods is heavily dependent on the similarity of property or services involved in the controlled and uncontrolled transaction. For certain other methods, such as the resale price method, the analysis of the extent to which controlled and uncontrolled taxpayers undertake the same or similar functions, employ similar resources, and bear similar risks is particularly important. Finally, under other methods, such as the profit split method, defining the relevant business activity and appropriate allocation of costs, income, and assets may be of particular importance. Therefore, a difference between the controlled and uncontrolled transactions for which an accurate adjustment cannot be made may have a greater effect on the reliability of the results derived under one method than the results derived under another method. For example, differences in management efficiency may have a greater effect on a comparable profits method analysis than on a comparable uncontrolled price method analysis, while differences in product characteristics will ordinarily have a greater effect on a comparable uncontrolled price method analysis than on a comparable profits method analysis.

(iii) ***Confirmation of results by another method.*** If two or more methods produce inconsistent results, the best method rule will be applied to select the method that provides the most reliable measure of an arm's length result. If the best method rule does not clearly indicate which method should be selected, an additional factor that may be taken into account in selecting a method is whether any of the competing methods produce results that are consistent with the results obtained from the appropriate application of another method. Further, in evaluating different applications of the same method, the fact that a second method (or another application of the first method) produces results that are consistent with one of the competing applications may be taken into account.

(d) ***Comparability*** —

(1) ***In general.*** Whether a controlled transaction produces an arm's length result is generally evaluated by comparing the results of that transaction to results realized by uncontrolled taxpayers engaged in comparable transactions under comparable circumstances. For this purpose, the comparability of transactions and circumstances must be evaluated considering all factors that could affect prices or profits in arm's length dealings (comparability factors). While a specific comparability factor may be of particular importance in applying a method, each method requires analysis of all of the factors that affect comparability under that method. Such factors include the following—

(i) Functions;

(ii) Contractual terms;

(iii) Risks;

(iv) Economic conditions; and

(v) Property or services.

(2) ***Standard of comparability.*** In order to be considered comparable to a controlled transaction, an uncontrolled transaction need not be identical to the controlled transaction, but must be sufficiently similar that it provides a reliable measure of an arm's length result. If there are material differences between the controlled and uncontrolled transactions, adjustments must be made if the effect of such differences on prices or profits can be ascertained with sufficient accuracy to improve the reliability of the results. For purposes of this section, a material difference is one that would materially affect the measure of an arm's length result under the method being applied. If adjustments for material differences cannot be made, the uncontrolled transaction may be used as a measure of an arm's length result, but the reliability of the analysis will be reduced. Generally, such adjustments must be made to the results of the uncontrolled comparable and must be based on commercial practices, economic principles, or statistical analyses. The extent and reliability of any adjustments will affect the relative reliability of the analysis. See § 1.482-1(c)(1) (Best method rule). In any event, unadjusted industry average returns themselves cannot establish arm's length results.

(3) ***Factors for determining comparability.*** The comparability factors listed in § 1.482-1(d)(1) are discussed in this section. Each of these factors must be considered in determining the degree of comparability between transactions or taxpayers and the extent to which comparability adjustments may be necessary. In addition, in certain cases involving special circumstances, the rules under paragraph (d)(4) of this section must be considered.

(i) ***Functional analysis.*** Determining the degree of comparability between controlled and uncontrolled transactions requires a comparison of the functions performed, and associated resources employed, by the taxpayers in each transaction. This comparison is based on a functional analysis that identifies and compares the economically significant activities undertaken, or to be undertaken, by the taxpayers in both controlled and uncontrolled transactions. A functional analysis should also include consideration of the resources that are employed, or to be employed, in conjunction with the activities undertaken, including consideration of the type of assets used, such as plant and equipment, or the use of valuable intangibles. A functional analysis is not a pricing method and does not itself determine the arm's length result for the controlled transaction under review. Functions that may need to be accounted for in determining the comparability of two transactions include—

(A) Research and development;

(B) Product design and engineering;

(C) Manufacturing, production and process engineering;

(D) Product fabrication, extraction, and assembly;

(E) Purchasing and materials management;

(F) Marketing and distribution functions, including inventory management, warranty administration, and advertising activities;

(G) Transportation and warehousing; and

(H) Managerial, legal, accounting and finance, credit and collection, training, and personnel management services.

(ii) ***Contractual terms*** —

(A) ***In general.*** Determining the degree of comparability between the controlled and uncontrolled transactions requires a comparison of the significant contractual terms that could affect the results of the two transactions. These terms include—

(*1*) The form of consideration charged or paid;

(*2*) Sales or purchase volume;

(*3*) The scope and terms of warranties provided;

(*4*) Rights to updates, revisions or modifications;

(*5*) The duration of relevant license, contract or other agreements, and termination or renegotiation rights;

(*6*) Collateral transactions or ongoing business relationships between the buyer and the seller, including arrangements for the provision of ancillary or subsidiary services; and

(*7*) Extension of credit and payment terms. Thus, for example, if the time for payment of the amount charged in a controlled transaction differs from the time for payment of the amount charged in an uncontrolled transaction, an adjustment to reflect the difference in payment terms should be made if such difference would have a material effect on price. Such comparability adjustment is required even if no interest would be allocated or imputed under § 1.482-2(a) or other applicable provisions of the Internal Revenue Code or regulations.

(B) *Identifying contractual terms*—(*1*) *Written agreement.* The contractual terms, including the consequent allocation of risks, that are agreed to in writing before the transactions are entered into will be respected if such terms are consistent with the economic substance of the underlying transactions. In evaluating economic substance, greatest weight will be given to the actual conduct of the parties, and the respective legal rights of the parties (see, for example, § 1.482-4(f)(3) (Ownership of intangible property)). If the contractual terms are inconsistent with the economic substance of the underlying transaction, the district director may disregard such terms and impute terms that are consistent with the economic substance of the transaction.

(*2*) *No written agreement.* In the absence of a written agreement, the district director may impute a contractual agreement between the controlled taxpayers consistent with the economic substance of the transaction. In determining the economic substance of the transaction, greatest weight will be given to the actual conduct of the parties and their respective legal rights (see, for example, § 1.482-4(f)(3) (Ownership of intangible property)). For example, if, without a written agreement, a controlled taxpayer operates at full capacity and regularly sells all of its output to another member of its controlled group, the district director may impute a purchasing contract from the course of conduct of the controlled taxpayers, and determine that the producer bears little risk that the buyer will fail to purchase its full output. Further, if an established industry convention or usage of trade assigns a risk or resolves an issue, that convention or usage will be followed if the conduct of the taxpayers is consistent with it. See UCC 1-205. For example, unless otherwise agreed, payment generally is due at the time and place at which the buyer is to receive goods. See UCC 2-310.

(C) *Examples.* The following examples illustrate this paragraph (d)(3)(ii).

Example 1. Differences in volume. USP, a United States agricultural exporter, regularly buys transportation services from FSub, its foreign subsidiary, to ship its products from the United States to overseas markets. Although FSub occasionally provides transportation services to URA, an unrelated domestic corporation, URA accounts for only 10% of the gross revenues of FSub, and the remaining 90% of FSub's

gross revenues are attributable to FSub's transactions with USP. In determining the degree of comparability between FSub's uncontrolled transaction with URA and its controlled transaction with USP, the difference in volumes involved in the two transactions and the regularity with which these services are provided must be taken into account if such difference would have a material effect on the price charged. Inability to make reliable adjustments for these differences would affect the reliability of the results derived from the uncontrolled transaction as a measure of the arm's length result.

Example 2. Reliability of adjustment for differences in volume. (i) FS manufactures product XX and sells that product to its parent corporation, P. FS also sells product XX to uncontrolled taxpayers at a price of $100 per unit. Except for the volume of each transaction, the sales to P and to uncontrolled taxpayers take place under substantially the same economic conditions and contractual terms. In uncontrolled transactions, FS offers a 2% discount for quantities of 20 per order, and a 5% discount for quantities of 100 per order. If P purchases product XX in quantities of 60 per order, in the absence of other reliable information, it may reasonably be concluded that the arm's length price to P would be $100, less a discount of 3.5%.
(ii) If P purchases product XX in quantities of 1,000 per order, a reliable estimate of the appropriate volume discount must be based on proper economic or statistical analysis, not necessarily a linear extrapolation from the 2% and 5% catalog discounts applicable to sales of 20 and 100 units, respectively.

Example 3. Contractual terms imputed from economic substance. (i) FP, a foreign producer of wristwatches, is the registered holder of the YY trademark in the United States and in other countries worldwide. In year 1, FP enters the United States market by selling YY wristwatches to its newly organized United States subsidiary, USSub, for distribution in the United States market. USSub pays FP a fixed price per wristwatch. USSub and FP undertake, without separate compensation, marketing activities to establish the YY trademark in the United States market. Unrelated foreign producers of trademarked wristwatches and their authorized United States distributors respectively undertake similar marketing activities in independent arrangements involving distribution of trademarked wristwatches in the United States market. In years 1 through 6, USSub markets and sells YY wristwatches in the United States. Further, in years 1 through 6, USSub undertakes incremental marketing activities in addition to the activities similar to those observed in the independent distribution transactions in the United States market. FP does not directly or indirectly compensate USSub for performing these incremental activities during years 1 through 6. Assume that, aside from these incremental activities, and after any adjustments are made to improve the reliability of the comparison, the price paid per wristwatch by the independent, authorized distributors of wristwatches would provide the most reliable measure of the arm's length price paid per YY wristwatch by USSub.

(ii) By year 7, the wristwatches with the YY trademark generate a premium return in the United States market, as compared to wristwatches marketed by the independent distributors. In year 7, substantially all the premium return from the YY trademark in the United States market is attributed to FP, for example through an increase in the price paid per watch by USSub, or by some other means.

(iii) In determining whether an allocation of income is appropriate in year 7, the Commissioner may consider the economic substance of the arrangements between USSub and FP, and the parties' course of conduct throughout their relationship. Based on this analysis, the Commissioner determines that it is unlikely that, *ex ante,* an uncontrolled taxpayer operating at arm's length would engage in the incremental marketing activities to develop or enhance intangible property owned by another party unless it received contemporaneous compensation or otherwise had a reasonable anticipation of receiving a future benefit from those activities. In this case, USSub's undertaking the incremental marketing activities in years 1 through 6 is a course of conduct that is inconsistent with the parties' attribution to FP in year 7 of substantially all the premium return from the enhanced YY trademark in the United States market. Therefore, the Commissioner may impute one or more agreements between USSub and FP, consistent with the economic substance of their course of conduct, which would afford USSub an appropriate portion of the premium return from the YY trademark wristwatches. For example, the Commissioner may impute a separate services agreement that affords USSub contingent-payment compensation for its incremental marketing activities in years 1 through 6, which benefited FP by contributing to the value of the trademark owned by FP. In the alternative, the Commissioner may impute a long-term, exclusive agreement to exploit the YY trademark in the United States that allows USSub to benefit from the incremental marketing activities it performed. As another alternative, the Commissioner may require FP to compensate USSub for terminating USSub's imputed long-term, exclusive agreement to exploit the YY trademark in the United States, an agreement that USSub made more valuable at its own expense and risk. The taxpayer may present additional facts that could indicate which of these or other alternative agreements best reflects the economic substance of the underlying transactions, consistent with the parties' course of conduct in the particular case.

Example 4. Contractual terms imputed from economic substance. (i) FP, a foreign producer of athletic gear, is the registered holder of the AA trademark in the United States and in other countries worldwide. In year 1, FP enters into a licensing agreement that affords its newly organized United States subsidiary, USSub, exclusive rights to certain manufacturing and marketing intangible property (including the AA trademark) for purposes of manufacturing and marketing athletic gear in the United States under the AA trademark. The contractual terms of this agreement obligate USSub to pay FP a royalty based on sales, and also obligate both FP and USSub to undertake without separate compensation specified types and levels of marketing activities. Unrelated foreign businesses license independent United States businesses to manufacture and market athletic gear in the United States, using trademarks owned by the unrelated foreign businesses. The contractual terms of these uncontrolled transactions require the

licensees to pay royalties based on sales of the merchandise, and obligate the licensors and licensees to undertake without separate compensation specified types and levels of marketing activities. In years 1 through 6, USSub manufactures and sells athletic gear under the AA trademark in the United States. Assume that, after adjustments are made to improve the reliability of the comparison for any material differences relating to marketing activities, manufacturing or marketing intangible property, and other comparability factors, the royalties paid by independent licensees would provide the most reliable measure of the arm's length royalty owed by USSub to FP, apart from the additional facts in paragraph (ii) of this *Example 4*.
(ii) In years 1 through 6, USSub performs incremental marketing activities with respect to the AA trademark athletic gear, in addition to the activities required under the terms of the license agreement with FP, that are also incremental as compared to those observed in the comparables. FP does not directly or indirectly compensate USSub for performing these incremental activities during years 1 through 6. By year 7, AA trademark athletic gear generates a premium return in the United States, as compared to similar athletic gear marketed by independent licensees. In year 7, USSub and FP enter into a separate services agreement under which FP agrees to compensate USSub on a cost basis for the incremental marketing activities that USSub performed during years 1 through 6, and to compensate USSub on a cost basis for any incremental marketing activities it may perform in year 7 and subsequent years. In addition, the parties revise the license agreement executed in year 1, and increase the royalty to a level that attributes to FP substantially all the premium return from sales of the AA trademark athletic gear in the United States.

(iii) In determining whether an allocation of income is appropriate in year 7, the Commissioner may consider the economic substance of the arrangements between USSub and FP and the parties' course of conduct throughout their relationship. Based on this analysis, the Commissioner determines that it is unlikely that, ex ante, an uncontrolled taxpayer operating at arm's length would engage in the incremental marketing activities to develop or enhance intangible property owned by another party unless it received contemporaneous compensation or otherwise had a reasonable anticipation of a future benefit. In this case, USSub's undertaking the incremental marketing activities in years 1 through 6 is a course of conduct that is inconsistent with the parties' adoption in year 7 of contractual terms by which FP compensates USSub on a cost basis for the incremental marketing activities that it performed. Therefore, the Commissioner may impute one or more agreements between USSub and FP, consistent with the economic substance of their course of conduct, which would afford USSub an appropriate portion of the premium return from the AA trademark athletic gear. For example, the Commissioner may impute a separate services agreement that affords USSub contingent-payment compensation for the incremental activities it performed during years 1 through 6, which benefited FP by contributing to the value of the trademark owned by FP. In the alternative, the Commissioner may impute a long-term, exclusive United States license agreement that allows USSub to benefit from the incremental activities. As another alternative, the Commissioner may require FP to compensate USSub for terminating USSub's imputed long-term United States license agreement, a license that USSub made more

valuable at its own expense and risk. The taxpayer may present additional facts that could indicate which of these or other alternative agreements best reflects the economic substance of the underlying transactions, consistent with the parties' course of conduct in this particular case.

Example 5. Non-arm's length compensation. (i) The facts are the same as in paragraph (i) of *Example 4.* As in *Example 4,* assume that, after adjustments are made to improve the reliability of the comparison for any material differences relating to marketing activities, manufacturing or marketing intangible property, and other comparability factors, the royalties paid by independent licensees would provide the most reliable measure of the arm's length royalty owed by USSub to FP, apart from the additional facts described in paragraph (ii) of this *Example 5.*
(ii) In years 1 through 4, USSub performs certain incremental marketing activities with respect to the AA trademark athletic gear, in addition to the activities required under the terms of the basic license agreement, that are also incremental as compared with those activities observed in the comparables. At the start of year 1, FP enters into a separate services agreement with USSub, which states that FP will compensate USSub quarterly, in an amount equal to specified costs plus X%, for these incremental marketing functions. Further, these written agreements reflect the intent of the parties that USSub receive such compensation from FP throughout the term of the agreement, without regard to the success or failure of the promotional activities. During years 1 through 4, USSub performs marketing activities pursuant to the separate services agreement and in each year USSub receives the specified compensation from FP on a cost of services plus basis.

(iii) In evaluating year 4, the Commissioner performs an analysis of independent parties that perform promotional activities comparable to those performed by USSub and that receive separately-stated compensation on a current basis without contingency. The Commissioner determines that the magnitude of the specified cost plus X% is outside the arm's length range in each of years 1 through 4. Based on an evaluation of all the facts and circumstances, the Commissioner makes an allocation to require payment of compensation to USSub for the promotional activities performed in year 4, based on the median of the interquartile range of the arm's length markups charged by the uncontrolled comparables described in paragraph (e)(3) of this section.

(iv) Given that based on facts and circumstances, the terms agreed by the controlled parties were that FP would bear all risks associated with the promotional activities performed by USSub to promote the AA trademark product in the United States market, and given that the parties' conduct during the years examined was consistent with this allocation of risk, the fact that the cost of services plus markup on USSub's services was outside the arm's length range does not, without more, support imputation of additional contractual terms based on alternative views of the economic substance of the transaction, such as terms indicating that USSub, rather than FP, bore the risk associated with these activities.

Example 6. Contractual terms imputed from economic substance. (i) Company X is a member of

a controlled group that has been in operation in the pharmaceutical sector for many years. In years 1 through 4, Company X undertakes research and development activities. As a result of those activities, Company X developed a compound that may be more effective than existing medications in the treatment of certain conditions.
(ii) Company Y is acquired in year 4 by the controlled group that includes Company X. Once Company Y is acquired, Company X makes available to Company Y a large amount of technical data concerning the new compound, which Company Y uses to register patent rights with respect to the compound in several jurisdictions, making Company Y the legal owner of such patents. Company Y then enters into licensing agreements with group members that afford Company Y 100% of the premium return attributable to use of the intangible property by its subsidiaries.

(iii) In determining whether an allocation is appropriate in year 4, the Commissioner may consider the economic substance of the arrangements between Company X and Company Y, and the parties' course of conduct throughout their relationship. Based on this analysis, the Commissioner determines that it is unlikely that an uncontrolled taxpayer operating at arm's length would make available the results of its research and development or perform services that resulted in transfer of valuable know how to another party unless it received contemporaneous compensation or otherwise had a reasonable anticipation of receiving a future benefit from those activities. In this case, Company X's undertaking the research and development activities and then providing technical data and know-how to Company Y in year 4 is inconsistent with the registration and subsequent exploitation of the patent by Company Y. Therefore, the Commissioner may impute one or more agreements between Company X and Company Y consistent with the economic substance of their course of conduct, which would afford Company X an appropriate portion of the premium return from the patent rights. For example, the Commissioner may impute a separate services agreement that affords Company X contingent-payment compensation for its services in year 4 for the benefit of Company Y, consisting of making available to Company Y technical data, know-how, and other fruits of research and development conducted in previous years. These services benefited Company Y by giving rise to and contributing to the value of the patent rights that were ultimately registered by Company Y. In the alternative, the Commissioner may impute a transfer of patentable intangible property rights from Company X to Company Y immediately preceding the registration of patent rights by Company Y. The taxpayer may present additional facts that could indicate which of these or other alternative agreements best reflects the economic substance of the underlying transactions, consistent with the parties' course of conduct in the particular case.

(iii) *Risk*—(A) *Comparability.* Determining the degree of comparability between controlled and uncontrolled transactions requires a comparison of the significant risks that could affect the prices that would be charged or paid, or the profit that would be earned, in the two transactions. Relevant risks to consider include—

(*1*) Market risks, including fluctuations in cost, demand, pricing, and inventory levels;

(*2*) Risks associated with the success or failure of research and development activities;

(*3*) Financial risks, including fluctuations in foreign currency rates of exchange and interest rates;

(*4*) Credit and collection risks;

(*5*) Product liability risks; and

(*6*) General business risks related to the ownership of property, plant, and equipment.

(B) *Identification of taxpayer that bears risk.* In general, the determination of which controlled taxpayer bears a particular risk will be made in accordance with the provisions of § 1.482-1(d)(3)(ii)(B) (Identifying contractual terms). Thus, the allocation of risks specified or implied by the taxpayer's contractual terms will generally be respected if it is consistent with the economic substance of the transaction. An allocation of risk between controlled taxpayers after the outcome of such risk is known or reasonably knowable lacks economic substance. In considering the economic substance of the transaction, the following facts are relevant—

(*1*) Whether the pattern of the controlled taxpayer's conduct over time is consistent with the purported allocation of risk between the controlled taxpayers; or where the pattern is changed, whether the relevant contractual arrangements have been modified accordingly;

(*2*) Whether a controlled taxpayer has the financial capacity to fund losses that might be expected to occur as the result of the assumption of a risk, or whether, at arm's length, another party to the controlled transaction would ultimately suffer the consequences of such losses; and

(*3*) The extent to which each controlled taxpayer exercises managerial or operational control over the business activities that directly influence the amount of income or loss realized. In arm's length dealings, parties ordinarily bear a greater share of those risks over which they have relatively more control.

(C) *Examples.* The following examples illustrate this paragraph (d)(3)(iii).

Example 1. FD, the wholly-owned foreign distributor of USM, a U.S. manufacturer, buys widgets from USM under a written contract. Widgets are a generic electronic appliance. Under the terms of the contract, FD must buy and take title to 20,000 widgets for each of the five years of the contract at a price of $10 per widget. The widgets will be sold under FD's label, and FD must finance any marketing strategies to promote sales in the foreign market. There are no rebate or buy back provisions. FD has adequate financial capacity to fund its obligations under the contract under any circumstances that could reasonably be expected to arise. In Years 1, 2 and 3, FD sold only 10,000 widgets at a price of $11 per unit. In Year 4, FD sold its entire inventory of widgets at a price of $25 per unit. Since the contractual terms allocating market risk were agreed to before the outcome of such risk was known or reasonably knowable, FD had the financial capacity to bear the market risk that it would be unable to sell all of the widgets it purchased currently, and its conduct was consistent over time, FD will be deemed to bear the risk.

Example 2. The facts are the same as in *Example 1,* except that in Year 1 FD had only $100,000 in total capital, including loans. In subsequent years USM makes no additional contributions to the capital of FD, and FD is unable to obtain any capital through loans from an unrelated party. Nonetheless, USM continues to sell 20,000 widgets annually to FD under the terms of the contract, and USM extends credit to FD to enable it to finance the purchase. FD does not have the financial capacity in Years 1, 2 and 3 to finance the purchase of the widgets given that it could not sell most of the widgets it purchased during those years. Thus, notwithstanding the terms of the contract, USM and not FD assumed the market risk that a substantial portion of the widgets could not be sold, since in that event FD would not be able to pay USM for all of the widgets it purchased.

Example 3. S, a Country X corporation, manufactures small motors that it sells to P, its U.S. parent. P incorporates the motors into various products and sells those products to uncontrolled customers in the United States. The contract price for the motors is expressed in U.S. dollars, effectively allocating the currency risk for these transactions to S for any currency fluctuations between the time the contract is signed and payment is made. As long as S has adequate financial capacity to bear this currency risk (including by hedging all or part of the risk) and the conduct of S and P is consistent with the terms of the contract (i.e., the contract price is not adjusted to reflect exchange rate movements), the agreement of the parties to allocate the exchange risk to S will be respected.

Example 4. USSub is the wholly-owned U.S. subsidiary of FP, a foreign manufacturer. USSub acts as a distributor of goods manufactured by FP. FP and USSub execute an agreement providing that FP will bear any ordinary product liability costs arising from defects in the goods manufactured by FP. In practice, however, when ordinary product liability claims are sustained against USSub and FP, USSub pays the resulting damages. Therefore, the district director disregards the contractual arrangement regarding product liability costs between FP and USSub, and treats the risk as having been assumed by USSub.

(iv) *Economic conditions.* Determining the degree of comparability between controlled and uncontrolled transactions requires a comparison of the significant economic conditions that could affect the prices that would be charged or paid, or the profit that would be earned in each of the transactions. These factors include—

(A) The similarity of geographic markets;

(B) The relative size of each market, and the extent of the overall economic development in each market;

(C) The level of the market (e.g., wholesale, retail, etc.);

(D) The relevant market shares for the products, properties, or services transferred or provided;

(E) The location-specific costs of the factors of production and distribution;

(F) The extent of competition in each market with regard to the property or services under review;

(G) The economic condition of the particular industry, including whether the market is in contraction or expansion; and

(H) The alternatives realistically available to the buyer and seller.

(v) *Property or services.* Evaluating the degree of comparability between controlled and uncontrolled transactions requires a comparison of the property or services transferred in the transactions. This comparison may include any intangible property that is embedded in tangible property or services being transferred (embedded intangibles). The comparability of the embedded intangibles will be analyzed using the factors listed in § 1.482-4(c)(2)(iii)(B)(*1*) (comparable intangible property). The relevance of product comparability in evaluating the relative reliability of the results will depend on the method applied. For guidance concerning the specific comparability considerations applicable to transfers of tangible and intangible property and performance of services, *see* §§ 1.482-3 through 1.482-6 and § 1.482-9; *see also* §§ 1.482-3(f), 1.482-4(f)(4), and 1.482-9(m), dealing with the coordination of intangible and tangible property and performance of services rules.

(4) *Special circumstances*—(i) *Market share strategy.* In certain circumstances, taxpayers may adopt strategies to enter new markets or to increase a product's share of an existing market (market share strategy). Such a strategy would be reflected by temporarily increased market development expenses or resale prices that are temporarily lower than the prices charged for comparable products in the same market. Whether or not the strategy is reflected in the transfer price depends on which party to the controlled transaction bears the costs of the pricing strategy. In any case, the effect of a market share strategy on a controlled transaction will be taken into account only if it can be shown that an uncontrolled taxpayer engaged in a comparable strategy under comparable circumstances for a comparable period of time, and the taxpayer provides documentation that substantiates the following—

(A) The costs incurred to implement the market share strategy are borne by the controlled taxpayer that would obtain the future profits that result from the strategy, and there is a reasonable likelihood that the strategy will result in future profits that reflect an appropriate return in relation to the costs incurred to implement it;

(B) The market share strategy is pursued only for a period of time that is reasonable, taking into consideration the industry and product in question; and

(C) The market share strategy, the related costs and expected returns, and any agreement between the controlled taxpayers to share the related costs, were established before the strategy was implemented.

(ii) *Different geographic markets*—(A) *In general.* Uncontrolled comparables ordinarily should be derived from the geographic market in which the controlled taxpayer operates, because there may be significant differences in economic conditions in different markets. If information from the same market is not available, an uncontrolled comparable derived from a different geographic market may be considered if adjustments are made to account for differences between the two markets. If information permitting adjustments for such differences is not available, then information derived from uncontrolled comparables in the most similar market for which reliable data is available may be used, but the extent of such differences may affect the reliability of the method for purposes of the best method rule. For this purpose, a geographic market is any geographic area in which the economic conditions for the relevant product or service are substantially the same, and may include multiple countries, depending on the economic conditions.

(B) *Example.* The following example illustrates this paragraph (d)(4)(ii).

Example. Manuco, a wholly-owned foreign subsidiary of P, a U.S. corporation, manufactures products in Country Z for sale to P. No uncontrolled transactions are located that would provide a reliable measure of the arm's length result under the comparable uncontrolled price method. The district director considers applying the cost plus method or the comparable profits method. Information on uncontrolled taxpayers performing comparable functions under comparable circumstances in the same geographic market is not available. Therefore, adjusted data from uncontrolled manufacturers in other markets may be considered in order to apply the cost plus method. In this case, comparable uncontrolled manufacturers are found in the United States. Accordingly, data from the comparable U.S. uncontrolled manufacturers, as adjusted to account for differences between the United States and Country Z's geographic market, is used to test the arm's length price paid by P to Manuco. However, the use of such data may affect the reliability of the results for purposes of the best method rule. See § 1.482-1(c).

(C) *Location savings.* If an uncontrolled taxpayer operates in a different geographic market than the controlled taxpayer, adjustments may be necessary to account for significant differences in costs attributable to the geographic markets. These adjustments must be based on the effect such differences would have on the consideration charged or paid in the controlled transaction given the relative competitive positions of buyers and sellers in each market. Thus, for example, the fact that the total costs of operating in a controlled manufacturer's geographic market are less than the total costs of operating in other markets ordinarily justifies higher profits to the manufacturer only if the cost differences would increase the profits of comparable uncontrolled manufacturers operating at arm's length, given the competitive positions of buyers and sellers in that market.

(D) *Example.* The following example illustrates the principles of this paragraph (d)(4)(ii)(C).

Example. Couture, a U.S. apparel design corporation, contracts with Sewco, its wholly owned Country Y subsidiary, to manufacture its clothes. Costs of operating in Country Y are significantly lower than the operating costs in the United States. Although clothes with the Couture label sell for a premium price, the actual production of the clothes does not require significant specialized knowledge that could not be acquired by actual or potential competitors to Sewco at reasonable cost. Thus, Sewco's functions could be performed by several actual or potential competitors to Sewco in geographic markets that are similar to Country Y. Thus, the fact that production is less costly in Country Y will not, in and of itself, justify additional profits derived from lower operating costs in Country Y inuring to Sewco, because the competitive positions of the other actual or potential producers in similar geographic markets capable of performing the same functions at the same low costs indicate that at arm's length such profits would not be retained by Sewco.

(iii) *Transactions ordinarily not accepted as comparables*—(A) *In general.* Transactions ordinarily will not constitute reliable measures of an arm's length result for purposes of this section if—

(*1*) They are not made in the ordinary course of business; or

(*2*) One of the principal purposes of the uncontrolled transaction was to establish an arm's length result with respect to the controlled transaction.

(B) *Examples.* The following examples illustrate the principle of this paragraph (d)(4)(iii).

Example 1. Not in the ordinary course of business. USP, a United States manufacturer of computer software, sells its products to FSub, its foreign distributor in country X. Compco, a United States competitor of USP, also sells its products in X through unrelated distributors. However, in the year under review, Compco is forced into bankruptcy, and Compco liquidates its inventory by selling all of its products to unrelated distributors in X for a liquidation price. Because the sale of its entire inventory was not a sale in the ordinary course of business, Compco's sale cannot be used as an uncontrolled comparable to determine USP's arm's length result from its controlled transaction.

Example 2. Principal purpose of establishing an arm's length result. USP, a United States manufacturer of farm machinery, sells its products to FSub, its wholly-owned distributor in Country Y. USP, operating at nearly full capacity, sells 95% of its inventory to FSub. To make use of its excess capacity, and also to establish a comparable uncontrolled price for its transfer price to FSub, USP increases its production to full capacity. USP sells its excess inventory to Compco, an unrelated foreign distributor in Country X. Country X has approximately the same economic conditions as that of Country Y.

Because one of the principal purposes of selling to Compco was to establish an arm's length price for its controlled transactions with FSub, USP's sale to Compco cannot be used as an uncontrolled comparable to determine USP's arm's length result from its controlled transaction.

(e) *Arm's length range* —

(1) ***In general.*** In some cases, application of a pricing method will produce a single result that is the most reliable measure of an arm's length result. In other cases, application of a method may produce a number of results from which a range of reliable results may be derived. A taxpayer will not be subject to adjustment if its results fall within such range (arm's length range).

(2) *Determination of arm's length range* —

(i) ***Single method.*** The arm's length range is ordinarily determined by applying a single pricing method selected under the best method rule to two or more uncontrolled transactions of similar comparability and reliability. Use of more than one method may be appropriate for the purposes described in paragraph (c)(2)(iii) of this section (Best method rule).

(ii) ***Selection of comparables.*** Uncontrolled comparables must be selected based upon the comparability criteria relevant to the method applied and must be sufficiently similar to the controlled transaction that they provide a reliable measure of an arm's length result. If material differences exist between the controlled and uncontrolled transactions, adjustments must be made to the results of the uncontrolled transaction if the effect of such differences on price or profits can be ascertained with sufficient accuracy to improve the reliability of the results. See § 1.482-1(d)(2) (Standard of comparability). The arm's length range will be derived only from those uncontrolled comparables that have, or through adjustments can be brought to, a similar level of comparability and reliability, and uncontrolled comparables that have a significantly lower level of comparability and reliability will not be used in establishing the arm's length range.

(iii) *Comparables included in arm's length range* —

(A) ***In general.*** The arm's length range will consist of the results of all of the uncontrolled comparables that meet the following conditions: the information on the controlled transaction and the uncontrolled comparables is sufficiently complete that it is likely that all material differences have been identified, each such difference has a definite and reasonably ascertainable effect on price or profit, and an adjustment is made to eliminate the effect of each such difference.

(B) ***Adjustment of range to increase reliability.*** If there are no uncontrolled comparables described in paragraph (e)(2)(iii)(A) of this section, the arm's length range is derived from the results of all the uncontrolled comparables, selected pursuant to paragraph (e)(2)(ii) of this section, that achieve a similar level of comparability and reliability. In such cases the reliability of the analysis must be increased, where it is possible to do so, by adjusting the range through application of a valid statistical method to the results of all of the uncontrolled comparables so selected. The reliability of the analysis is increased when statistical methods are used to establish a range of results in which the limits of the range will be determined such that there is a 75 percent probability of a result falling above the lower end of the range and a 75 percent probability of a result falling below the upper end of the range. The interquartile range ordinarily provides an acceptable measure of this range; however a different statistical method may be applied if it provides a more reliable measure.

(C) ***Interquartile range.*** For purposes of this section, the interquartile range is the range from the 25th to the 75th percentile of the results derived from the uncontrolled comparables. For this purpose, the 25th percentile is the lowest result derived from an uncontrolled comparable such that at least 25 percent of the results are at or below the value of that result. However, if exactly 25 percent of the results are at or below a result, then the 25th percentile is equal to the average of that result and the next higher result derived from the uncontrolled comparables. The 75th percentile is determined analogously.

(3) ***Adjustment if taxpayer's results are outside arm's length range.*** If the results of a controlled transaction fall outside the arm's length range, the district director may make allocations that adjust the controlled taxpayer's result to any point within the arm's length range. If the interquartile range is used to determine the arm's length range, such adjustment will ordinarily be to the median of all the results. The median is the 50th percentile of the results, which is determined in a manner analogous to that described in paragraph (e)(2)(iii)(C) of this section (Interquartile range). In other cases, an adjustment normally will be made to the arithmetic mean of all the results. See § 1.482-1(f)(2)(iii)(D) for determination of an adjustment when a controlled taxpayer's result for a multiple year period falls outside an arm's length range consisting of the average results of uncontrolled comparables over the same period.

(4) ***Arm's length range not prerequisite to allocation.*** The rules of this paragraph (e) do not require that the district director establish an arm's length range prior to making an allocation under section 482. Thus, for example, the district director may properly propose an allocation on the basis of a single comparable uncontrolled price if the comparable uncontrolled price method, as described in § 1.482-3(b), has been properly applied. However, if the taxpayer subsequently demonstrates that the results claimed on its income tax return are within the range established by additional equally reliable comparable uncontrolled prices in a manner consistent with the requirements set forth in § 1.482-1(e)(2)(iii), then no allocation will be made.

(5) ***Examples.*** The following examples illustrate the principles of this paragraph (e).

> *Example 1. Selection of comparables.* (i) To evaluate the arm's length result of a controlled transaction between USSub, the United States taxpayer under review, and FP, its foreign parent, the district director considers applying the resale price method. The district director identifies ten potential uncontrolled transactions. The distributors in all ten uncontrolled transactions purchase and resell similar products and perform similar functions to those of USSub.
> (ii) Data with respect to three of the uncontrolled transactions is very limited, and although some material differences can be identified and adjusted for, the level of comparability of these three uncontrolled comparables is significantly lower than that of the other seven. Further, of those seven, adjustments for the identified material differences can be reliably made for only four of the uncontrolled transactions. Therefore, pursuant to § 1.482-1(e)(2)(ii) only these four uncontrolled comparables may be used to establish an arm's length range.

> *Example 2. Arm's length range consists of all the results.* (i) The facts are the same as in *Example 1.* Applying the resale price method to the four uncontrolled comparables, and making adjustments to the uncontrolled comparables pursuant to § 1.482-1(d)(2), the district

director derives the following results:

Comparable	Result (price)
1	$44.00
2	45.00
3	45.00
4	45.50

(ii) The district director determines that data regarding the four uncontrolled transactions is sufficiently complete and accurate so that it is likely that all material differences between the controlled and uncontrolled transactions have been identified, such differences have a definite and reasonably ascertainable effect, and appropriate adjustments were made for such differences. Accordingly, if the resale price method is determined to be the best method pursuant to § 1.482-1(c), the arm's length range for the controlled transaction will consist of the results of all of the uncontrolled comparables, pursuant to paragraph (e)(2)(iii)(A) of this section. Thus, the arm's length range in this case would be the range from $44 to $45.50.

Example 3. Arm's length range limited to interquartile range. (i) The facts are the same as in *Example 2,* except in this case there are some product and functional differences between the four uncontrolled comparables and USSub. However, the data is insufficiently complete to determine the effect of the differences. Applying the resale price method to the four uncontrolled comparables, and making adjustments to the uncontrolled comparables pursuant to § 1.482-1(d)(2), the district director derives the following results:

Uncontrolled comparable	Result (price)
1	$42.00
2	44.00
3	45.00
4	47.50

(ii) It cannot be established in this case that all material differences are likely to have been identified and reliable adjustments made for those differences. Accordingly, if the resale price method is determined to be the best method pursuant to § 1.482-1(c), the arm's length range for the controlled transaction must be established pursuant to paragraph (e)(2)(iii)(B) of this section. In this case, the district director uses the interquartile range to determine the arm's

length range, which is the range from $43 to $46.25. If USSub's price falls outside this range, the district director may make an allocation. In this case that allocation would be to the median of the results, or $44.50.

Example 4. Arm's length range limited to interquartile range. (i) To evaluate the arm's length result of controlled transactions between USP, a United States manufacturing company, and FSub, its foreign subsidiary, the district director considers applying the comparable profits method. The district director identifies 50 uncontrolled taxpayers within the same industry that potentially could be used to apply the method.
(ii) Further review indicates that only 20 of the uncontrolled manufacturers engage in activities requiring similar capital investments and technical know-how. Data with respect to five of the uncontrolled manufacturers is very limited, and although some material differences can be identified and adjusted for, the level of comparability of these five uncontrolled comparables is significantly lower than that of the other 15. In addition, for those five uncontrolled comparables it is not possible to accurately allocate costs between the business activity associated with the relevant transactions and other business activities. Therefore, pursuant to § 1.482-1(e)(2)(ii) only the other fifteen uncontrolled comparables may be used to establish an arm's length range.

(iii) Although the data for the fifteen remaining uncontrolled comparables is relatively complete and accurate, there is a significant possibility that some material differences may remain. The district director has determined, for example, that it is likely that there are material differences in the level of technical expertise or in management efficiency. Accordingly, if the comparable profits method is determined to be the best method pursuant to § 1.482-1(c), the arm's length range for the controlled transaction may be established only pursuant to paragraph (e)(2)(iii)(B) of this section.

(f) ***Scope of review*** —

(1) ***In general.*** The authority to determine true taxable income extends to any case in which either by inadvertence or design the taxable income, in whole or in part, of a controlled taxpayer is other than it would have been had the taxpayer, in the conduct of its affairs, been dealing at arm's length with an uncontrolled taxpayer.

(i) ***Intent to evade or avoid tax not a prerequisite.*** In making allocations under section 482, the district director is not restricted to the case of improper accounting, to the case of a fraudulent, colorable, or sham transaction, or to the case of a device designed to reduce or avoid tax by shifting or distorting income, deductions, credits, or allowances.

(ii) ***Realization of income not a prerequisite*** —

(A) ***In general.*** The district director may make an allocation under section 482 even if the income ultimately anticipated from a series of transactions has not been or is never realized. For example, if a controlled taxpayer sells a product at less than an arm's length price to a related taxpayer in one taxable year and the second controlled taxpayer resells

the product to an unrelated party in the next taxable year, the district director may make an appropriate allocation to reflect an arm's length price for the sale of the product in the first taxable year, even though the second controlled taxpayer had not realized any gross income from the resale of the product in the first year. Similarly, if a controlled taxpayer lends money to a related taxpayer in a taxable year, the district director may make an appropriate allocation to reflect an arm's length charge for interest during such taxable year even if the second controlled taxpayer does not realize income during such year. Finally, even if two controlled taxpayers realize an overall loss that is attributable to a particular controlled transaction, an allocation under section 482 is not precluded.

(B) ***Example.*** The following example illustrates this paragraph (f)(1)(ii).

Example. USSub is a U.S. subsidiary of FP, a foreign corporation. Parent manufactures product X and sells it to USSub. USSub functions as a distributor of product X to unrelated customers in the United States. The fact that FP may incur a loss on the manufacture and sale of product X does not by itself establish that USSub, dealing with FP at arm's length, also would incur a loss. An independent distributor acting at arm's length with its supplier would in many circumstances be expected to earn a profit without regard to the level of profit earned by the supplier.

(iii) ***Nonrecognition provisions may not bar allocation*** —

(A) ***In general.*** If necessary to prevent the avoidance of taxes or to clearly reflect income, the district director may make an allocation under section 482 with respect to transactions that otherwise qualify for nonrecognition of gain or loss under applicable provisions of the Internal Revenue Code (such as section 351 or 1031).

(B) ***Example.*** The following example illustrates this paragraph (f)(1)(iii).

> *Example.* (i) In Year 1 USP, a United States corporation, bought 100 shares of UR, an unrelated corporation, for $100,000. In Year 2, when the value of the UR stock had decreased to $40,000, USP contributed all 100 shares of UR stock to its wholly-owned subsidiary in exchange for subsidiary's capital stock. In Year 3, the subsidiary sold all of the UR stock for $40,000 to an unrelated buyer, and on its U.S. income tax return, claimed a loss of $60,000 attributable to the sale of the UR stock. USP and its subsidiary do not file a consolidated return.
> (ii) In determining the true taxable income of the subsidiary, the district director may disallow the loss of $60,000 on the ground that the loss was incurred by USP. *National Securities Corp. v Commissioner,* 137 F.2d 600 (3rd Cir. 1943), cert. denied, 320 U.S. 794 (1943).

(iv) ***Consolidated returns.*** Section 482 and the regulations thereunder apply to all controlled taxpayers, whether the controlled taxpayer files a separate or consolidated U.S. income tax return. If a controlled taxpayer files a separate return, its true separate taxable income will be determined. If a controlled taxpayer is a party to a consolidated return, the true consolidated taxable income of the affiliated group and the true separate taxable income of the controlled taxpayer must be determined consistently with the principles of a consolidated return.

(2) ***Rules relating to determination of true taxable income.*** The following rules must be taken into account in determining the true taxable income of a controlled taxpayer.

(i)

(A) through (E) [Reserved]. For further guidance see § 1.482-1T(f)(2)(i)(A) through (E).

(ii) ***Allocation based on taxpayer's actual transactions*** —

(A) ***In general.*** The Commissioner will evaluate the results of a transaction as actually structured by the taxpayer unless its structure lacks economic substance. However, the Commissioner may consider the alternatives available to the taxpayer in determining whether the terms of the controlled transaction would be acceptable to an uncontrolled taxpayer faced with the same alternatives and operating under comparable circumstances. In such cases the Commissioner may adjust the consideration charged in the controlled transaction based on the cost or profit of an alternative as adjusted to account for material differences between the alternative and the controlled transaction, but will not restructure the transaction as if the alternative had been adopted by the taxpayer. *See* paragraph (d)(3) of this section (factors for determining comparability; contractual terms and risk); §§ 1.482-3(e), 1.482-4(d), and 1.482-9(h) (unspecified methods).

(B) [Reserved]. For further guidance see § 1.482-1T(f)(2)(ii)(B).

(iii) ***Multiple year data*** —

(A) ***In general.*** The results of a controlled transaction ordinarily will be compared with the results of uncontrolled comparables occurring in the taxable year under review. It may be appropriate, however, to consider data relating to the uncontrolled comparables or the controlled taxpayer for one or more years before or after the year under review. If data relating to uncontrolled comparables from multiple years is used, data relating to the controlled taxpayer for the same years ordinarily must be considered. However, if such data is not available, reliable data from other years, as adjusted under paragraph (d)(2) (Standard of comparability) of this section may be used.

(B) ***Circumstances warranting consideration of multiple year data.*** The extent to which it is appropriate to consider multiple year data depends on the method being applied and the issue being addressed. Circumstances that may warrant consideration of data from multiple years include the extent to which complete and accurate data are available for the taxable year under review, the effect of business cycles in the controlled taxpayer's industry, or the effects of life cycles of the product or intangible property being examined. Data from one or more years before or after the taxable year under review must ordinarily be considered for purposes of applying the provisions of paragraph (d)(3)(iii) of this section (risk), paragraph (d)(4)(i) of this section (market share strategy), § 1.482-4(f)(2) (periodic adjustments), § 1.482-5 (comparable profits method), § 1.482-9(f) (comparable profits method for services), and § 1.482-9(i) (contingent-payment contractual terms for services). On the other hand, multiple year data ordinarily will not be considered for purposes of applying the comparable uncontrolled price method of § 1.482-3(b) or the comparable uncontrolled services price method of § 1.482-9(c) (except to the extent that risk or market share strategy issues are present).

(C) ***Comparable effect over comparable period.*** Data from multiple years may be considered to determine whether the same economic conditions that caused the controlled taxpayer's results had a comparable effect over a comparable period of time on the uncontrolled comparables that establish the arm's length range. For example, given that uncontrolled taxpayers enter into transactions with the ultimate expectation of earning a profit, persistent losses among controlled taxpayers may be an indication of non-arm's length dealings. Thus, if a controlled taxpayer that realizes a loss with respect to a controlled transaction seeks to demonstrate that the loss is within the arm's length range, the district director may take into account data from taxable years other than the taxable year of the transaction to determine whether the loss was attributable to arm's length dealings. The rule of this paragraph (f)(2)(iii)(C) is illustrated by *Example 3* of paragraph (f)(2)(iii)(E) of this section.

(D) ***Applications of methods using multiple year averages.*** If a comparison of a controlled taxpayer's average result over a multiple year period with the average results of uncontrolled comparables over the same period would reduce the effect of short-term variations that may be unrelated to transfer pricing, it may be appropriate to establish a range derived from the average results of uncontrolled comparables over a multiple year period to determine if an adjustment should be made. In such a case the district director may make an adjustment if the controlled taxpayer's average result for the multiple year period is not within such range. Such a range must be determined in accordance with § 1.482-1(e) (Arm's length range). An adjustment in such a case ordinarily will be equal to the difference, if any, between the controlled taxpayer's result for the taxable year and the mid-point of the uncontrolled comparables' results for that year. If the interquartile range is used to determine the range of average results for the multiple year period, such adjustment will ordinarily be made to the median of all the results of the uncontrolled comparables for the taxable year. See *Example 2* of § 1.482-5(e). In other cases, the adjustment normally will be made to the arithmetic mean of all the results of the uncontrolled comparables for the taxable year. However, an adjustment will be made only to the extent that it would move the controlled taxpayer's multiple year average closer to the arm's length range for the multiple year period or to any point within such range. In determining a controlled taxpayer's average result for a multiple year period, adjustments made under this section for prior years will be taken into account only if such adjustments have been finally determined, as described in § 1.482-1(g)(2)(iii). See *Example 3* of § 1.482-5(e).

(E) ***Examples.*** The following examples, in which S and P are controlled taxpayers, illustrate this paragraph (f)(2)(iii). *Examples 1* and *4* also illustrate the principle of the arm's length range of paragraph (e) of this section.

Example 1. P sold product Z to S for $60 per unit in 1995. Applying the resale price method to data from uncontrolled comparables for the same year establishes an arm's length range of prices for the controlled transaction from $52 to $59 per unit. Since the price charged in the controlled transaction falls outside the range, the district director would ordinarily make an allocation under section 482. However, in this case there are cyclical factors that affect the results of the uncontrolled comparables (and that of the controlled transaction) that cannot be adequately accounted for by specific adjustments to the data for 1995. Therefore, the district director considers results over multiple years to account for these factors. Under these circumstances, it is

appropriate to average the results of the uncontrolled comparables over the years 1993, 1994, and 1995 to determine an arm's length range. The averaged results establish an arm's length range of $56 to $58 per unit. For consistency, the results of the controlled taxpayers must also be averaged over the same years. The average price in the controlled transaction over the three years is $57. Because the controlled transfer price of product Z falls within the arm's length range, the district director makes no allocation.

Example 2. (i) FP, a Country X corporation, designs and manufactures machinery in Country X. FP's costs are incurred in Country X currency. USSub is the exclusive distributor of FP's machinery in the United States. The price of the machinery sold by FP to USSub is expressed in Country X currency. Thus, USSub bears all of the currency risk associated with fluctuations in the exchange rate between the time the contract is signed and the payment is made. The prices charged by FP to USSub for 1995 are under examination. In that year, the value of the dollar depreciated against the currency of Country X, and as a result, USSub's gross margin was only 8%.
(ii) UD is an uncontrolled distributor of similar machinery that performs distribution functions substantially the same as those performed by USSub, except that UD purchases and resells machinery in transactions where both the purchase and resale prices are denominated in U.S. dollars. Thus, UD had no currency exchange risk. UD's gross margin in 1995 was 10%. UD's average gross margin for the period 1990 to 1998 has been 12%.

(iii) In determining whether the price charged by FP to USSub in 1995 was arm's length, the district director may consider USSub's average gross margin for an appropriate period before and after 1995 to determine whether USSub's average gross margin during the period was sufficiently greater than UD's average gross margin during the same period such that USSub was sufficiently compensated for the currency risk it bore throughout the period. See § 1.482-1(d)(3)(iii) (Risk).

Example 3. FP manufactures product X in Country M and sells it to USSub, which distributes X in the United States. USSub realizes losses with respect to the controlled transactions in each of five consecutive taxable years. In each of the five consecutive years a different uncontrolled comparable realized a loss with respect to comparable transactions equal to or greater than USSub's loss. Pursuant to paragraph (f)(3)(iii)(C) of this section, the district director examines whether the uncontrolled comparables realized similar losses over a comparable period of time, and finds that each of the five comparables realized losses in only one of the five years, and their average result over the five-year period was a profit. Based on this data, the district director may conclude that the controlled taxpayer's results are not

within the arm's length range over the five year period, since the economic conditions that resulted in the controlled taxpayer's loss did not have a comparable effect over a comparable period of time on the uncontrolled comparables.

Example 4. (i) USP, a U.S. corporation, manufactures product Y in the United States and sells it to FSub, which acts as USP's exclusive distributor of product Y in Country N. The resale price method described in § 1.482-3(c) is used to evaluate whether the transfer price charged by USP to FSub for the 1994 taxable year for product Y was arm's length. For the period 1992 through 1994, FSub had a gross profit margin for each year of 13%. A, B, C and D are uncontrolled distributors of products that compete directly with product Y in country N. After making appropriate adjustments in accordance with §§ 1.482-1(d)(2) and 1.482-3(c), the gross profit margins for A, B, C, and D are as follows:

	1992	1993	1994	Average
A	13	3	8	8.00
B	11	13	2	8.67
7C	4	7	13	8.00
7D	7	9	6	7.33

(ii) Applying the provisions of § 1.482-1(e), the district director determines that the arm's length range of the average gross profit margins is between 7.33 and 8.67. The district director concludes that FSub's average gross margin of 13% is not within the arm's length range, despite the fact that C's gross profit margin for 1994 was also 13%, since the economic conditions that caused S's result did not have a comparable effect over a comparable period of time on the results of C or the other uncontrolled comparables. In this case, the district director makes an allocation equivalent to adjusting FSub's gross profit margin for 1994 from 13% to the mean of the uncontrolled comparables' results for 1994 (7.25%).

(iv) ***Product lines and statistical techniques.*** The methods described in §§ 1.482-2 through 1.482-6 are generally stated in terms of individual transactions. However, because a taxpayer may have controlled transactions involving many different products, or many separate transactions involving the same product, it may be impractical to analyze every individual transaction to determine its arm's length price. In such cases, it is permissible to evaluate the arm's length results by applying the appropriate methods to the overall results for product lines or other

groupings. In addition, the arm's length results of all related party transactions entered into by a controlled taxpayer may be evaluated by employing sampling and other valid statistical techniques.

(v) ***Allocations apply to results, not methods*** —

(A) ***In general.*** In evaluating whether the result of a controlled transaction is arm's length, it is not necessary for the district director to determine whether the method or procedure that a controlled taxpayer employs to set the terms for its controlled transactions corresponds to the method or procedure that might have been used by a taxpayer dealing at arm's length with an uncontrolled taxpayer. Rather, the district director will evaluate the result achieved rather than the method the taxpayer used to determine its prices.

(B) ***Example.*** The following example illustrates this paragraph (f)(2)(v).

> *Example.* (i) FS is a foreign subsidiary of P, a U.S. corporation. P manufactures and sells household appliances. FS operates as P's exclusive distributor in Europe. P annually establishes the price for each of its appliances sold to FS as part of its annual budgeting, production allocation and scheduling, and performance evaluation processes. FS's aggregate gross margin earned in its distribution business is 18%.
> (ii) ED is an uncontrolled European distributor of competing household appliances. After adjusting for minor differences in the level of inventory, volume of sales, and warranty programs conducted by FS and ED, ED's aggregate gross margin is also 18%. Thus, the district director may conclude that the aggregate prices charged by P for its appliances sold to FS are arm's length, without determining whether the budgeting, production, and performance evaluation processes of P are similar to such processes used by ED.

(g) ***Collateral adjustments with respect to allocations under section 482*** —

(1) ***In general.*** The district director will take into account appropriate collateral adjustments with respect to allocations under section 482. Appropriate collateral adjustments may include correlative allocations, conforming adjustments, and setoffs, as described in this paragraph (g).

(2) ***Correlative allocations*** —

(i) ***In general.*** When the district director makes an allocation under section 482 (referred to in this paragraph (g)(2) as the primary allocation), appropriate correlative allocations will also be made with respect to any other member of the group affected by the allocation. Thus, if the district director makes an allocation of income, the district director will not only increase the income of one member of the group, but correspondingly decrease the income of the other member. In addition, where appropriate, the district director may make such further correlative allocations as may be required by the initial correlative allocation.

(ii) ***Manner of carrying out correlative allocation.*** The district director will furnish to the taxpayer with respect to which the primary allocation is made a written statement of the amount and nature of the correlative allocation. The correlative allocation must be reflected in the

documentation of the other member of the group that is maintained for U.S. tax purposes, without regard to whether it affects the U.S. income tax liability of the other member for any open year. In some circumstances the allocation will have an immediate U.S. tax effect, by changing the taxable income computation of the other member (or the taxable income computation of a shareholder of the other member, for example, under the provisions of subpart F of the Internal Revenue Code). Alternatively, the correlative allocation may not be reflected on any U.S. tax return until a later year, for example when a dividend is paid.

(iii) ***Events triggering correlative allocation.*** For purposes of this paragraph (g)(2), a primary allocation will not be considered to have been made (and therefore, correlative allocations are not required to be made) until the date of a final determination with respect to the allocation under section 482. For this purpose, a final determination includes—

(A) Assessment of tax following execution by the taxpayer of a Form 870 (Waiver of Restrictions on Assessment and Collection of Deficiency in Tax and Acceptance of Overassessment) with respect to such allocation;

(B) Acceptance of a Form 870-AD (Offer of Waiver of Restriction on Assessment and Collection of Deficiency in Tax and Acceptance of Overassessment);

(C) Payment of the deficiency;

(D) Stipulation in the Tax Court of the United States; or

(E) Final determination of tax liability by offer-in-compromise, closing agreement, or final resolution (determined under the principles of section 7481) of a judicial proceeding.

(iv) ***Examples.*** The following examples illustrate this paragraph (g)(2). In each example, X and Y are members of the same group of controlled taxpayers and each regularly computes its income on a calendar year basis.

> *Example 1.* (i) In 1996, Y, a U.S. corporation, rents a building owned by X, also a U.S. corporation. In 1998 the district director determines that Y did not pay an arm's length rental charge. The district director proposes to increase X's income to reflect an arm's length rental charge. X consents to the assessment reflecting such adjustment by executing Form 870, a Waiver of Restrictions on Assessment and Collection of Deficiency in Tax and Acceptance of Overassessment. The assessment of the tax with respect to the adjustment is made in 1998. Thus, the primary allocation, as defined in paragraph (g)(2)(i) of this section, is considered to have been made in 1998.
> (ii) The adjustment made to X's income under section 482 requires a correlative allocation with respect to Y's income. The district director notifies X in writing of the amount and nature of the adjustment made with respect to Y. Y had net operating losses in 1993, 1994, 1995, 1996, and 1997. Although a correlative adjustment will not have an effect on Y's U.S. income tax liability for 1996, an adjustment increasing Y's net operating loss for 1996 will be made for purposes of determining Y's U.S. income tax liability for 1998 or a later taxable year to which the increased net operating loss may be carried.

Example 2. (i) In 1995, X, a U.S. construction company, provided engineering services to Y, a U.S. corporation, in the construction of Y's factory. In 1997, the district director determines that the fees paid by Y to X for its services were not arm's length and proposes to make an adjustment to the income of X. X consents to an assessment reflecting such adjustment by executing Form 870. An assessment of the tax with respect to such adjustment is made in 1997. The district director notifies X in writing of the amount and nature of the adjustment to be made with respect to Y.
(ii) The fees paid by Y for X's engineering services properly constitute a capital expenditure. Y does not place the factory into service until 1998. Therefore, a correlative adjustment increasing Y's basis in the factory does not affect Y's U.S. income tax liability for 1997. However, the correlative adjustment must be made in the books and records maintained by Y for its U.S. income tax purposes and such adjustment will be taken into account in computing Y's allowable depreciation or gain or loss on a subsequent disposition of the factory.

Example 3. In 1995, X, a U.S. corporation, makes a loan to Y, its foreign subsidiary not engaged in a U.S. trade or business. In 1997, the district director, upon determining that the interest charged on the loan was not arm's length, proposes to adjust X's income to reflect an arm's length interest rate. X consents to an assessment reflecting such allocation by executing Form 870, and an assessment of the tax with respect to the section 482 allocation is made in 1997. The district director notifies X in writing of the amount and nature of the correlative allocation to be made with respect to Y. Although the correlative adjustment does not have an effect on Y's U.S. income tax liability, the adjustment must be reflected in the documentation of Y that is maintained for U.S. tax purposes. Thus, the adjustment must be reflected in the determination of the amount of Y's earnings and profits for 1995 and subsequent years, and the adjustment must be made to the extent it has an effect on any person's U.S. income tax liability for any taxable year.

(3) ***Adjustments to conform accounts to reflect section 482 allocations*** —

(i) ***In general.*** Appropriate adjustments must be made to conform a taxpayer's accounts to reflect allocations made under section 482. Such adjustments may include the treatment of an allocated amount as a dividend or a capital contribution (as appropriate), or, in appropriate cases, pursuant to such applicable revenue procedures as may be provided by the Commissioner (see § 601.601(d)(2) of this chapter), repayment of the allocated amount without further income tax consequences.

(ii) ***Example.*** The following example illustrates the principles of this paragraph (g)(3).

Example. Conforming cash accounts. (i) USD, a United States corporation, buys Product from its foreign parent, FP. In reviewing USD's income tax return, the district director determines that the arm's length price would have increased USD's taxable income by $5 million. The district director accordingly adjusts USD's income to reflect its true taxable income.

> (ii) To conform its cash accounts to reflect the section 482 allocation made by the district director, USD applies for relief under Rev. Proc. 65-17, 1965-1 C.B. 833 (see § 601.601(d)(2)(ii)(*b*) of this chapter), to treat the $5 million adjustment as an account receivable from FP, due as of the last day of the year of the transaction, with interest accruing therefrom.

(4) ***Setoffs*** —

(i) ***In general.*** If an allocation is made under section 482 with respect to a transaction between controlled taxpayers, the Commissioner will take into account the effect of any other non-arm's length transaction between the same controlled taxpayers in the same taxable year which will result in a setoff against the original section 482 allocation. Such setoff, however, will be taken into account only if the requirements of paragraph (g)(4)(ii) of this section are satisfied. If the effect of the setoff is to change the characterization or source of the income or deductions, or otherwise distort taxable income, in such a manner as to affect the U.S. tax liability of any member, adjustments will be made to reflect the correct amount of each category of income or deductions. For purposes of this setoff provision, the term arm's length refers to the amount defined in paragraph (b) of this section (arm's length standard), without regard to the rules in § 1.482-2(a) that treat certain interest rates as arm's length rates of interest.

(ii) ***Requirements.*** The district director will take a setoff into account only if the taxpayer—

(A) Establishes that the transaction that is the basis of the setoff was not at arm's length and the amount of the appropriate arm's length charge;

(B) Documents, pursuant to paragraph (g)(2) of this section, all correlative adjustments resulting from the proposed setoff; and

(C) Notifies the district director of the basis of any claimed setoff within 30 days after the earlier of the date of a letter by which the district director transmits an examination report notifying the taxpayer of proposed adjustments or the date of the issuance of the notice of deficiency.

(iii) ***Examples.*** The following examples illustrate this paragraph (g)(4).

Example 1. P, a U.S. corporation, renders construction services to S, its foreign subsidiary in Country Y, in connection with the construction of S's factory. An arm's length charge for such services determined under § 1.482-9 would be $100,000. During the same taxable year P makes available to S the use of a machine to be used in the construction of the factory, and the arm's length rental value of the machine is $25,000. P bills S $125,000 for the services, but does not charge S for the use of the machine. No allocation will be made with respect to the undercharge for the machine if P notifies the district director of the basis of the claimed setoff within 30 days after the date of the letter from the district director transmitting the examination report notifying P of the proposed adjustment, establishes that the excess amount charged for services was equal to an arm's length charge for the use of the machine and that the taxable income and income tax liabilities of P are not distorted, and documents the correlative allocations resulting from the proposed setoff.

Example 2. The facts are the same as in *Example 1,* except that, if P had reported $25,000 as rental income and $25,000 less as service income, it would have been subject to the tax on personal holding companies. Allocations will be made to reflect the correct amounts of rental income and service income.

(h) ***Special rules*** —

(1) ***Small taxpayer safe harbor.*** [Reserved]

(2) ***Effect of foreign legal restrictions*** —

(i) ***In general.*** The district director will take into account the effect of a foreign legal restriction to the extent that such restriction affects the results of transactions at arm's length. Thus, a foreign legal restriction will be taken into account only to the extent that it is shown that the restriction affected an uncontrolled taxpayer under comparable circumstances for a comparable period of time. In the absence of evidence indicating the effect of the foreign legal restriction on uncontrolled taxpayers, the restriction will be taken into account only to the extent provided in paragraphs (h)(2) (iii) and (iv) of this section (Deferred income method of accounting).

(ii) ***Applicable legal restrictions.*** Foreign legal restrictions (whether temporary or permanent) will be taken into account for purposes of this paragraph (h)(2) only if, and so long as, the conditions set forth in paragraphs (h)(2)(ii) (A) through (D) of this section are met.

(A) The restrictions are publicly promulgated, generally applicable to all similarly situated persons (both controlled and uncontrolled), and not imposed as part of a commercial transaction between the taxpayer and the foreign sovereign;

(B) The taxpayer (or other member of the controlled group with respect to which the restrictions apply) has exhausted all remedies prescribed by foreign law or practice for obtaining a waiver of such restrictions (other than remedies that would have a negligible prospect of success if pursued);

(C) The restrictions expressly prevented the payment or receipt, in any form, of part or all of the arm's length amount that would otherwise be required under section 482 (for example, a restriction that applies only to the deductibility of an expense for tax purposes is not a restriction on payment or receipt for this purpose); and

(D) The related parties subject to the restriction did not engage in any arrangement with controlled or uncontrolled parties that had the effect of circumventing the restriction, and have not otherwise violated the restriction in any material respect.

(iii) ***Requirement for electing the deferred income method of accounting.*** If a foreign legal restriction prevents the payment or receipt of part or all of the arm's length amount that is due with respect to a controlled transaction, the restricted amount may be treated as deferrable if the following requirements are met—

(A) The controlled taxpayer establishes to the satisfaction of the district director that the payment or receipt of the arm's length amount was prevented because of a foreign legal restriction and circumstances described in paragraph (h)(2)(ii) of this section; and

(B) The controlled taxpayer whose U.S. tax liability may be affected by the foreign legal restriction elects the deferred income method of accounting, as described in paragraph (h)(2)(iv) of this section, on a written statement attached to a timely U.S. income tax return (or an amended return) filed before the IRS first contacts any member of the controlled group concerning an examination of the return for the taxable year to which the foreign legal restriction applies. A written statement furnished by a taxpayer subject to the Coordinated Examination Program will be considered an amended return for purposes of this paragraph (h)(2)(iii)(B) if it satisfies the requirements of a qualified amended return for purposes of § 1.6664-2(c)(3) as set forth in those regulations or as the Commissioner may prescribe by applicable revenue procedures. The election statement must identify the affected transactions, the parties to the transactions, and the applicable foreign legal restrictions.

(iv) ***Deferred income method of accounting.*** If the requirements of paragraph (h)(2)(ii) of this section are satisfied, any portion of the arm's length amount, the payment or receipt of which is prevented because of applicable foreign legal restrictions, will be treated as deferrable until payment or receipt of the relevant item ceases to be prevented by the foreign legal restriction. For purposes of the deferred income method of accounting under this paragraph (h)(2)(iv), deductions (including the cost or other basis of inventory and other assets sold or exchanged) and credits properly chargeable against any amount so deferred, are subject to deferral under the provisions of § 1.461- 1(a)(4). In addition, income is deferrable under this deferred income method of accounting only to the extent that it exceeds the related deductions already claimed in open taxable years to which the foreign legal restriction applied.

(v) ***Examples.*** The following examples, in which Sub is a Country FC subsidiary of U.S. corporation, Parent, illustrate this paragraph (h)(2).

Example 1. Parent licenses an intangible to Sub. FC law generally prohibits payments by any person within FC to recipients outside the country. The FC law meets the requirements of paragraph (h)(2)(ii) of this section. There is no evidence of unrelated parties entering into transactions under comparable circumstances for a comparable period of time, and the foreign legal restrictions will not be taken into account in determining the arm's length amount. The arm's length royalty rate for the use of the intangible property in the absence of the foreign restriction is 10% of Sub's sales in country FC. However, because the requirements of paragraph (h)(2)(ii) of this section are satisfied, Parent can elect the deferred income method of accounting by attaching to its timely filed U.S. income tax return a written statement that satisfies the requirements of paragraph (h)(2)(iii)(B) of this section.

Example 2. (i) The facts are the same as in *Example 1,* except that Sub, although it makes no royalty payment to Parent, arranges with an unrelated intermediary to make payments equal to an arm's length amount on its behalf to Parent.
(ii) The district director makes an allocation of royalty income to Parent, based on the arm's length royalty rate of 10%. Further, the district director determines that because the arrangement with the third party had the effect of circumventing the FC law, the requirements of paragraph (h)(2)(ii)(D) of this section are not satisfied. Thus, Parent could not validly elect the deferred income method of accounting, and

> the allocation of royalty income cannot be treated as deferrable. In appropriate circumstances, the district director may permit the amount of the distribution to be treated as payment by Sub of the royalty allocated to Parent, under the provisions of § 1.482-1(g) (Collateral adjustments).

Example 3. The facts are the same as in *Example 1,* except that the laws of FC do not prevent distributions from corporations to their shareholders. Sub distributes an amount equal to 8% of its sales in country FC. Because the laws of FC did not expressly prevent all forms of payment from Sub to Parent, Parent cannot validly elect the deferred income method of accounting with respect to any of the arm's length royalty amount. In appropriate circumstances, the district director may permit the 8% that was distributed to be treated as payment by Sub of the royalty allocated to Parent, under the provisions of § 1.482-1(g) (Collateral adjustments).

Example 4. The facts are the same as in *Example 1,* except that Country FC law permits the payment of a royalty, but limits the amount to 5% of sales, and Sub pays the 5% royalty to Parent. Parent demonstrates the existence of a comparable uncontrolled transaction for purposes of the comparable uncontrolled transaction method in which an uncontrolled party accepted a royalty rate of 5%. Given the evidence of the comparable uncontrolled transaction, the 5% royalty rate is determined to be the arm's length royalty rate.

(3) ***Coordination with section 936*** —

(i) ***Cost sharing under section 936.*** If a possessions corporation makes an election under section 936(h)(5)(C)(i)(I), the corporation must make a section 936 cost sharing payment that is at least equal to the payment that would be required under section 482 if the electing corporation were a foreign corporation. In determining the payment that would be required under section 482 for this purpose, the provisions of §§ 1.482-1 and 1.482-4 will be applied, and to the extent relevant to the valuation of intangibles, §§ 1.482-5 and 1.482-6 will be applied. The provisions of section 936(h)(5)(C)(i)(II) (Effect of Election—electing corporation treated as owner of intangible property) do not apply until the payment that would be required under section 482 has been determined.

(ii) ***Use of terms.*** A cost sharing payment, for the purposes of section 936(h)(5)(C)(i)(I), is calculated using the provisions of section 936 and the regulations thereunder and the provisions of this paragraph (h)(3). The provisions relating to cost sharing under section 482 do not apply to payments made pursuant to an election under section 936(h)(5)(C)(i)(I). Similarly, a profit split payment, for the purposes of section 936(h)(5)(C)(ii)(I), is calculated using the provisions of section 936 and the regulations thereunder, not section 482 and the regulations thereunder.

(i) ***Definitions.*** The definitions set forth in paragraphs (i)(1) through (i)(10) of this section apply to this section and §§ 1.482-2 through 1.482-9.

(1) ***Organization*** includes an organization of any kind, whether a sole proprietorship, a partnership, a trust, an estate, an association, or a corporation (as each is defined or understood in the Internal Revenue Code or the regulations thereunder), irrespective of the place of organization, operation, or conduct of the trade or business, and regardless of whether it is a domestic or foreign organization,

whether it is an exempt organization, or whether it is a member of an affiliated group that files a consolidated U.S. income tax return, or a member of an affiliated group that does not file a consolidated U.S. income tax return.

(2) ***Trade* or *business*** includes a trade or business activity of any kind, regardless of whether or where organized, whether owned individually or otherwise, and regardless of the place of operation. Employment for compensation will constitute a separate trade or business from the employing trade or business.

(3) ***Taxpayer*** means any person, organization, trade or business, whether or not subject to any internal revenue tax.

(4) ***Controlled*** includes any kind of control, direct or indirect, whether legally enforceable or not, and however exercisable or exercised, including control resulting from the actions of two or more taxpayers acting in concert or with a common goal or purpose. It is the reality of the control that is decisive, not its form or the mode of its exercise. A presumption of control arises if income or deductions have been arbitrarily shifted.

(5) ***Controlled taxpayer*** means any one of two or more taxpayers owned or controlled directly or indirectly by the same interests, and includes the taxpayer that owns or controls the other taxpayers. *Uncontrolled taxpayer* means any one of two or more taxpayers not owned or controlled directly or indirectly by the same interests.

(6) ***Group, controlled group,*** and *group of controlled taxpayers* mean the taxpayers owned or controlled directly or indirectly by the same interests.

(7) ***Transaction*** means any sale, assignment, lease, license, loan, advance, contribution, or any other transfer of any interest in or a right to use any property (whether tangible or intangible, real or personal) or money, however such transaction is effected, and whether or not the terms of such transaction are formally documented. A transaction also includes the performance of any services for the benefit of, or on behalf of, another taxpayer.

(8) ***Controlled transaction* or *controlled transfer*** means any transaction or transfer between two or more members of the same group of controlled taxpayers. The term *uncontrolled transaction* means any transaction between two or more taxpayers that are not members of the same group of controlled taxpayers.

(9) ***True taxable income*** means, in the case of a controlled taxpayer, the taxable income that would have resulted had it dealt with the other member or members of the group at arm's length. It does not mean the taxable income resulting to the controlled taxpayer by reason of the particular contract, transaction, or arrangement the controlled taxpayer chose to make (even though such contract, transaction, or arrangement is legally binding upon the parties thereto).

(10) ***Uncontrolled comparable*** means the uncontrolled transaction or uncontrolled taxpayer that is compared with a controlled transaction or taxpayer under any applicable pricing methodology. Thus, for example, under the comparable profits method, an uncontrolled comparable is any uncontrolled taxpayer from which data is used to establish a comparable operating profit.

(j) ***Effective dates*** —

(1) The regulations in this are generally effective for taxable years beginning after October 6, 1994.

(2) Taxpayers may elect to apply retroactively all of the provisions of these regulations for any open taxable year. Such election will be effective for the year of the election and all subsequent taxable years.

(3) Although these regulations are generally effective for taxable years as stated, the final sentence of section 482 (requiring that the income with respect to transfers or licenses of intangible property be commensurate with the income attributable to the intangible) is generally effective for taxable years beginning after December 31, 1986. For the period prior to the effective date of these regulations, the final sentence of section 482 must be applied using any reasonable method not inconsistent with the statute. The IRS considers a method that applies these regulations or their general principles to be a reasonable method.

(4) These regulations will not apply with respect to transfers made or licenses granted to foreign persons before November 17, 1985, or before August 17, 1986, for transfers or licenses to others. Nevertheless, they will apply with respect to transfers or licenses before such dates if, with respect to property transferred pursuant to an earlier and continuing transfer agreement, such property was not in existence or owned by the taxpayer on such date.

(5) The last sentences of paragraphs (b)(2)(i) and (c)(1) of this section and of paragraph (c)(2)(iv) of § 1.482-5 apply for taxable years beginning on or after August 26, 2003.

(6)

(i) The provisions of paragraphs (a)(1), (d)(3)(ii)(C) *Example 3*, *Example 4*, *Example 5*, and *Example 6*, (d)(3)(v), (f)(2)(ii)(A), (f)(2)(iii)(B), (g)(4)(i), (g)(4)(iii), and (i) of this section are generally applicable for taxable years beginning after July 31, 2009. The provision of paragraph (b)(2)(iii) of this section is generally applicable on January 5, 2009.

(ii) A person may elect to apply the provisions of paragraphs (a)(1), (b)(2)(i), (d)(3)(ii)(C) *Example 3*, *Example 4*, *Example 5*, and *Example 6*, (d)(3)(v), (f)(2)(ii)(A), (f)(2)(iii)(B), (g)(4)(i), (g)(4)(iii), and (i) of this section to earlier taxable years in accordance with the rules set forth in § 1.482-9(n)(2).

(7) [Reserved]. For further guidance see § 1.482-1T(j)(7).

[T.D. 8552, 59 FR 34990, July 8, 1994, as amended by T.D. 9088, 68 FR 51177, Aug. 26, 2003; T.D. 9278, 71 FR 44481, Aug. 4, 2006; 71 FR 76903, Dec. 22, 2006; T.D. 9441, 74 FR 351, Jan. 5, 2009; T.D. 9456, 74 FR 38839, Aug. 4, 2009; 74 FR 46345, Sept. 9, 2009; T.D. 9568, 76 FR 80089, Dec. 22, 2011; 77 FR 3606, Jan. 25, 2012; T.D. 9738, 80 FR 55541, Sept. 16, 2015]

§ 1.482-1T Allocation of income and deductions among taxpayers (temporary).

(a) through (f) (2) [Reserved]. For further guidance see § 1.482-1(a) through (f)(2).

(i) ***Compensation independent of the form or character of controlled transaction*** —

(A) ***In general.*** All value provided between controlled taxpayers in a controlled transaction requires an arm's length amount of compensation determined under the best method rule of § 1.482-1(c). Such amount must be consistent with, and must account for all of, the value provided between the parties in the transaction, without regard to the form or character of the transaction. For this purpose, it is necessary to consider the entire arrangement between the parties, as determined by the contractual terms, whether written or imputed in accordance with

the economic substance of the arrangement, in light of the actual conduct of the parties. See, e.g., § 1.482-1(d)(3)(ii)(B) (identifying contractual terms) and (f)(2)(ii)(A) (regarding reference to realistic alternatives).

(B) ***Aggregation.*** The combined effect of two or more separate transactions (whether before, during, or after the year under review), including for purposes of an analysis under multiple provisions of the Code or regulations, may be considered if the transactions, taken as a whole, are so interrelated that an aggregate analysis of the transactions provides the most reliable measure of an arm's length result determined under the best method rule of § 1.482-1(c). Whether two or more transactions are evaluated separately or in the aggregate depends on the extent to which the transactions are economically interrelated and on the relative reliability of the measure of an arm's length result provided by an aggregate analysis of the transactions as compared to a separate analysis of each transaction. For example, consideration of the combined effect of two or more transactions may be appropriate to determine whether the overall compensation in the transactions is consistent with the value provided, including any synergies among items and services provided.

(C) ***Coordinated best method analysis and evaluation.*** Consistent with the principles of paragraphs (f)(2)(i)(A) and (B) of this section, a coordinated best method analysis and evaluation of two or more controlled transactions to which one or more provisions of the Code or regulations apply may be necessary to ensure that the overall value provided, including any synergies, is properly taken into account. A coordinated best method analysis would include a consistent consideration of the facts and circumstances of the functions performed, resources employed, and risks assumed in the relevant transactions, and a consistent measure of the arm's length results, for purposes of all relevant statutory and regulatory provisions.

(D) ***Allocations of value.*** In some cases, it may be necessary to allocate one or more portions of the arm's length result that was properly determined under a coordinated best method analysis described in paragraph (f)(2)(i)(C) of this section. Any such allocation of the arm's length result determined under the coordinated best method analysis must be made using the method that, under the facts and circumstances, provides the most reliable measure of an arm's length result for each allocated amount. For example, if the full value of compensation due in controlled transactions whose tax treatment is governed by multiple provisions of the Code or regulations has been most reliably determined on an aggregate basis, then that full value must be allocated in a manner that provides the most reliable measure of each allocated amount.

(E) ***Examples.*** The following examples illustrate the provisions of this paragraph (f)(2)(i). For purposes of the examples in this paragraph (E), P is a domestic corporation, and S1, S2, and S3 are foreign corporations that are wholly owned by P.

Example 1. Aggregation of interrelated licensing, manufacturing, and selling activities. P enters into a license agreement with S1 that permits S1 to use a proprietary manufacturing process and to sell the output from this process throughout a specified region. S1 uses the manufacturing process and sells its output to S2, which in turn resells the output to uncontrolled parties in the specified region. In evaluating whether the royalty paid by S1 to P is an arm's length amount, it may be appropriate to evaluate the royalty in combination with the transfer prices charged by S1 to S2 and the aggregate profits earned by S1 and S2 from the use of the manufacturing process and the sale to uncontrolled parties of the products produced by S1.

Example 2. Aggregation of interrelated manufacturing, marketing, and services activities. S1 is the exclusive Country Z distributor of computers manufactured by P. S2 provides marketing services in connection with sales of P computers in Country Z and in this regard uses significant marketing intangibles provided by P. S3 administers the warranty program with respect to P computers in Country Z, including maintenance and repair services. In evaluating whether the transfer prices paid by S1 to P, the fees paid by S2 to P for the use of P marketing intangibles, and the service fees earned by S2 and S3 are arm's length amounts, it would be appropriate to perform an aggregate analysis that considers the combined effects of these interrelated transactions if they are most reliably analyzed on an aggregated basis.

Example 3. Aggregation and reliability of comparable uncontrolled transactions. The facts are the same as in *Example 2.* In addition, U1, U2, and U3 are uncontrolled taxpayers that carry out functions comparable to those of S1, S2, and S3, respectively, with respect to computers produced by unrelated manufacturers. R1, R2, and R3 constitute a controlled group of taxpayers (unrelated to the P controlled group) that carry out functions comparable to those of S1, S2, and S3 with respect to computers produced by their common parent. Prices charged to uncontrolled customers of the R group differ from the prices charged to customers of U1, U2, and U3. In determining whether the transactions of U1, U2, and U3, or the transactions of R1, R2, and R3, would provide a more reliable measure of the arm's length result, it is determined that the interrelated R group transactions are more reliable than the wholly independent transactions of U1, U2, and U3, given the interrelationship of the P group transactions.

Example 4. Non-aggregation of transactions that are not interrelated. P enters into a license agreement with S1 that permits S1 to use a proprietary process for manufacturing product X and to sell product X to uncontrolled parties throughout a specified region. P also sells to S1 product Y, which is manufactured by P in the United States and unrelated to product X. Product Y is resold by S1 to uncontrolled parties in the specified region. There is no connection between product X and product Y other than the fact that they are both sold in the same specified region. In evaluating whether the royalty paid by S1 to P for the use of the manufacturing process for product X and the transfer prices charged for unrelated product Y are arm's length amounts, it would not be appropriate to consider the combined effects of these separate and unrelated transactions.

Example 5. Aggregation of interrelated patents. P owns 10 individual patents that, in combination, can be used to manufacture and sell a successful product. P anticipates that it could earn profits of $25x from the patents based on a discounted cash flow analysis that provides a more reliable measure of the value of the patents exploited as a bundle rather than separately. P licenses all 10 patents to S1 to be exploited as a bundle. Evidence of uncontrolled licenses of similar individual patents indicates that, exploited separately, each license of each patent would warrant a price of $1x, implying a total price for the patents of $10x. Under paragraph (f)(2)(i)(B) of this section, in determining the arm's length royalty for the license of the bundle of patents, it would not be appropriate to use the uncontrolled licenses as comparables for the license of the bundle of patents, because, unlike the discounted cash flow analysis, the uncontrolled licenses considered separately do not reliably reflect the enhancement to value resulting from the interrelatedness of the 10 patents exploited as a bundle.

Example 6. Consideration of entire arrangement, including imputed contractual terms—(i) P conducts a business ("Business") from the United States, with a worldwide clientele, but until Date X has no foreign operations. The success of Business significantly depends on intangibles (including marketing, manufacturing, technological, and goodwill or going concern value intangibles, collectively the "IP"), as well as ongoing support activities performed by P (including related research and development, central marketing, manufacturing process enhancement, and oversight activities, collectively "Support"), to maintain and improve the IP and otherwise maximize the profitability of Business.
(ii) On Date X, Year 1, P contributes the foreign rights to conduct Business, including the foreign rights to the IP, to newly incorporated S1. S1, utilizing the IP of which it is now the owner, commences foreign operations consisting of local marketing, manufacturing, and back office activities in order to conduct and expand Business in the foreign market.

(iii) Later, on Date Y, Year 1, P and S1 enter into a cost sharing arrangement ("CSA") to develop and exploit the rights to conduct the Business. Under the CSA, P is entitled to the U.S. rights to conduct the Business, and S1 is entitled to the rest-of-the-world ("ROW") rights to conduct the Business. P continues after Date Y to perform the Support, employing resources, capabilities, and rights that as a factual matter were not contributed to S1 in the Date X transaction, for the benefit of the Business worldwide. Pursuant to the CSA, P and S1 share the costs of P's Support in proportion to their reasonably anticipated benefit shares from their respective rights to the Business.

(iv) P treats the Date X transaction as a transfer described in section 351 that is subject to 367 and treats the Date Y transaction as the commencement of a CSA subject to section 482 and § 1.482-7. P takes the position that the only platform contribution transactions ("PCTs") in connection with the Date Y CSA consist of P's contribution of the U.S. Business IP rights and S1's contribution of the ROW Business IP rights of which S1 had become the owner on account of the prior Date X transaction.

(v) Pursuant to paragraph (f)(2)(i)(A) of this section, in determining whether an allocation of income is appropriate in Year 1 or subsequent years, the Commissioner may consider the economic substance of the entire arrangement between P and S1, including the parties' actual conduct throughout their relationship, regardless of the form or character of the contractual arrangement the parties have expressly adopted. The Commissioner determines that the parties' formal arrangement fails to reflect the full scope of the value provided between the parties in accordance with the economic substance of their arrangement.

Therefore, the Commissioner may impute one or more agreements between P and S1, consistent with the economic substance of their arrangement, that fully reflect their respective reasonably anticipated commitments in terms of functions performed, resources employed, and risks assumed over time. For example, because P continues after Date Y to perform the Support, employing resources, capabilities, and rights not contributed to S1, for the benefit of the Business worldwide, the Commissioner may impute another PCT on Date Y pursuant to which P commits to so continuing the Support. See § 1.482-7(b)(1)(ii). The taxpayer may present additional facts that could indicate whether this or another alternative agreement best reflects the economic substance of the underlying transactions and course of conduct, provided that the taxpayer's position fully reflects the value of the entire arrangement consistent with the realistic alternatives principle.

Example 7. Distinguishing provision of value from characterization—(i) P developed a collection of resources, capabilities, and rights ("Collection") that it uses on an interrelated basis in ongoing research and development of computer code that is used to create a successful line of software products. P can continue to use the Collection on such interrelated basis in the future to further develop computer code and, thus, further build on its successful line of software products. Under § 1.482-7(g)(2)(ix), P determines that the interquartile range of the net present value of its own use of the Collection in future research and development and software product marketing is between $1000x and $1100x, and this range provides the most reliable measure of the value to P of continuing to use the Collection on an interrelated basis in future research, development, and exploitation. Instead, P enters into an exchange described in section 351 in which it transfers certain intangible property related to the Collection to S1 for use in future research, development, and exploitation but continues to perform the same development functions that it did prior to the exchange, now on behalf of S1, under express or implied commitments in connection with S1's use of the intangible property. P takes the position that a portion of the Collection, consisting of computer code and related instruction manuals and similar intangible property (Portion 1), was transferrable intangible property and was the subject of the section 351 exchange and compensable under section 367(d). P claims that another portion of the Collection consists of items that either do not constitute property for purposes of section 367 or are not transferrable (Portion 2). P then takes the position that the value of Portion 2 does not give rise to income under section 367(d) or gain under section 367(a).
(ii) Under paragraphs (f)(2)(i)(A) and (C) of this section, any part of the value in Portion 2 that is not taken into account in an exchange under section 367 must nonetheless be evaluated under section 482 and the regulations thereunder to

> determine arm's length compensation for any value provided to S1. Accordingly, even if P's assertion that certain items were either not property or not capable of being transferred were correct, arm's length compensation is nonetheless required for all of the value associated with P's contributions under the section 482 regulations. Alternatively, the Commissioner may determine under all the facts and circumstances that P's assertion is incorrect and that the transaction in fact constitutes an exchange of property subject to, and therefore to be taken into account under, section 367. Thus, whether any item that P identifies as being within Portion 2 is properly characterized as property under section 367 (transferable or otherwise) is irrelevant because any value in Portion 2 that is provided to S1 must be compensated by S1 in a manner consistent with the $1000x to $1100x interquartile range of the overall value.

Example 8. Arm's length compensation for equivalent provisions of intangibles under sections 351 and 482. P owns the worldwide rights to manufacturing and marketing intangibles that it uses to manufacture and market a product in the United States ("US intangibles") and the rest of the world ("ROW intangibles"). P transfers all the ROW intangibles to S1 in an exchange described in section 351 and retains the US intangibles. Immediately after the exchange, P and S1 entered into a CSA described in § 1.482-7(b) that covers all research and development of intangibles conducted by the parties. A realistic alternative that was available to P and that would have involved the controlled parties performing similar functions, employing similar resources, and assuming similar risks as in the controlled transaction, was to transfer all ROW intangibles to S1 upon entering into the CSA in a platform contribution transaction described in § 1.482-7(c), rather than in an exchange described in section 351 immediately before entering into the CSA. Under paragraph (f)(2)(i)(A) of this section, the arm's length compensation for the ROW intangibles must correspond to the value provided between the parties, regardless of the form of the transaction. Accordingly, the arm's length compensation for the ROW intangibles is the same in both scenarios, and the analysis of the amount to be taken into account under section 367(d) pursuant to §§ 1.367(d)-1T(c) and 1.482-4 should include consideration of the amount that P would have charged for the realistic alternative determined under § 1.482-7(g) (and § 1.482-4, to the extent of any make-or-sell rights transferred). See §§ 1.482-1(b)(2)(iii) and 1.482-4(g).

Example 9. Aggregation of interrelated manufacturing and marketing intangibles governed by different statutes and regulations. The facts are the same as in *Example 8* except that P transfers only the ROW intangibles related to manufacturing to S1 in an exchange described in section 351 and, upon entering into the CSA, then transfers the ROW intangibles related to marketing to S1 in a platform contribution transaction described in § 1.482-7(c) (rather than transferring all ROW intangibles only upon entering into the CSA or only in a prior exchange described in section 351). The value of the ROW intangibles that P transferred in the two transactions is greater in the aggregate, due to synergies among the different types of ROW intangibles, than if valued as two separate transactions. Under paragraph (f)(2)(i)(B) of this section, the arm's length standard requires these synergies to be taken into account in determining the arm's length results for the transactions.

Example 10. Services provided using intangibles.—(i) P's worldwide group produces and markets Product X and subsequent generations of products, which result from research and development performed by P's R&D Team. Through this collaboration with respect to P's proprietary products, the members of the R&D Team have individually and as a group acquired specialized knowledge and expertise subject to non-disclosure agreements (collectively, "knowhow").
(ii) P arranges for the R&D Team to provide research and development services to create a new line of products, building on the Product X platform, to be owned and exploited by S1 in the overseas market. P asserts that the arm's length charge for the services is only reimbursement to P of its associated R&D Team compensation costs.

(iii) Even though P did not transfer the platform or the R&D Team to S1, P is providing value associated with the use of the platform, along with the value associated with the use of the knowhow, to S1 by way of the services performed by the R&D Team for S1 using the platform and the knowhow. The R&D Team's use of intangible property, and any other valuable resources, in P's provision of services (regardless of whether the service effects a transfer of intangible property or valuable resources and regardless of whether the property is relatively high or low value) must be evaluated under the section 482 regulations, including the regulations specifically applicable to controlled services transactions in § 1.482-9, to ensure that P receives arm's length compensation for any value (attributable to such property or services) provided to S1 in a controlled transaction. See §§ 1.482-4 and 1.482-9(m). Under paragraph (f)(2)(i)(A) of this section, the arm's length compensation for the services performed by the R&D Team for S1 must be consistent with the value provided to S1, including the value of the knowhow and any synergies with the platform. Under paragraphs (f)(2)(i)(B) and (C) of this section, the best method analysis may determine that the compensation is most reliably determined on an aggregate basis reflecting the interrelated value of the services and embedded value of the platform and knowhow.

(iv) In the alternative, the facts are the same as above, except that P assigns to S1 all or a pertinent portion of the R&D Team and the relevant rights in the platform. P takes the position that, although the transferred platform rights must be compensated, the knowhow does not have substantial value independent of the services of any individual on the R&D Team and therefore is not an intangible within the meaning of § 1.482-4(b). In P's view, S1 owes no compensation to P on account of the R&D Team, as S1 will directly bear the cost of the relevant R&D Team compensation. However, in assembling and arranging to assign the relevant R&D Team, and thereby making available the value of the knowhow to S1, rather than other employees without the knowhow, P is performing services for S1 under

imputed contractual terms based on the parties' course of conduct. Therefore, even if P's position were correct that the knowhow is not an intangible under § 1.482-4(b), a position that the Commissioner may challenge, arm's length compensation is required for all of the value that P provides to S1 through the interrelated provision of platform rights, knowhow, and services under paragraphs (f)(2)(i)(A), (B), and (C) of this section.

Example 11. Allocating arm's length compensation determined under an aggregate analysis—(i) P provides services to S1, which is incorporated in Country A. In connection with those services, P licenses intellectual property to S2, which is incorporated in Country B. S2 sublicenses the intellectual property to S1.
(ii) Under paragraph (f)(2)(i)(B) of this section, if an aggregate analysis of the service and license transactions provides the most reliable measure of an arm's length result, then an aggregate analysis must be performed. Under paragraph (f)(2)(i)(D) of this section, if an allocation of the value that results from such an aggregate analysis is necessary, for example, for purposes of sourcing the services income that P receives from S1 or determining deductible expenses incurred by S1, then the value determined under the aggregate analysis must be allocated using the method that provides the most reliable measure of the services income and deductible expenses.

(ii)

(A) [Reserved]. For further guidance see § 1.482-1(f)(2)(ii)(A).

(B) ***Example.*** The following example illustrates this paragraph (f)(2)(ii):

Example. P and S are controlled taxpayers. P licenses a proprietary process to S for S's use in manufacturing product X. Using its sales and marketing employees, S sells product X to related and unrelated customers outside the United States. If the license between P and S has economic substance, the Commissioner ordinarily will not restructure the taxpayer's transaction to treat P as if it had elected to exploit directly the manufacturing process. However, because P could have directly exploited the manufacturing process and manufactured product X itself, this realistic alternative may be taken into account under § 1.482-4(d) in determining the arm's length consideration for the controlled transaction. For examples of such an analysis, see *Examples 7* and *8* in paragraph (f)(2)(i)(E) of this section and the *Example* in § 1.482-4(d)(2).

(iii) through (j)(6) [Reserved]. For further guidance see § 1.482-1(f)(2)(iii) through (j)(6).

(7) *Certain effective/applicability dates*—(i) Paragraphs (f)(2)(i)(A) through (E) and (f)(2)(ii)(B) of this section apply to taxable years ending on or after September 14, 2015.

(ii) ***Expiration date.*** The applicability of paragraphs (f)(2)(i)(A) through (E) and (f)(2)(ii)(B) of this section expires on or before September 14, 2018.

[T.D. 9738, 80 FR 55541, Sept. 16, 2015]

§ 1.482-2 Determination of taxable income in specific situations.

(a) *Loans or advances* —

(1) *Interest on bona fide indebtedness* —

(i) ***In general.*** Where one member of a group of controlled entities makes a loan or advance directly or indirectly to, or otherwise becomes a creditor of, another member of such group and either charges no interest, or charges interest at a rate which is not equal to an arm's length rate of interest (as defined in paragraph (a)(2) of this section) with respect to such loan or advance, the district director may make appropriate allocations to reflect an arm's length rate of interest for the use of such loan or advance.

(ii) *Application of paragraph (a) of this section* —

(A) ***Interest on bona fide indebtedness.*** Paragraph (a) of this section applies only to determine the appropriateness of the rate of interest charged on the principal amount of a bona fide indebtedness between members of a group of controlled entities, including—

(*1*) Loans or advances of money or other consideration (whether or not evidenced by a written instrument); and

(*2*) Indebtedness arising in the ordinary course of business from sales, leases, or the rendition of services by or between members of the group, or any other similar extension of credit.

(B) ***Alleged indebtedness.*** This paragraph (a) does not apply to so much of an alleged indebtedness which is not in fact a bona fide indebtedness, even if the stated rate of interest thereon would be within the safe haven rates prescribed in paragraph (a)(2)(iii) of this section. For example, paragraph (a) of this section does not apply to payments with respect to all or a portion of such alleged indebtedness where in fact all or a portion of an alleged indebtedness is a contribution to the capital of a corporation or a distribution by a corporation with respect to its shares. Similarly, this paragraph (a) does not apply to payments with respect to an alleged purchase-money debt instrument given in consideration for an alleged sale of property between two controlled entities where in fact the transaction constitutes a lease of the property. Payments made with respect to alleged indebtedness (including alleged stated interest thereon) shall be treated according to their substance. See § 1.482-2(a)(3)(i).

(iii) *Period for which interest shall be charged* —

(A) ***General rule.*** This paragraph (a)(1)(iii) is effective for indebtedness arising after June 30, 1988. See § 1.482-2(a)(3) (26 CFR Part 1 edition revised as of April 1, 1988) for indebtedness arising before July 1, 1988. Except as otherwise provided in paragraphs (a)(1)(iii)(B) through (E) of this section, the period for which interest shall be charged with respect to a bona fide indebtedness between controlled entities begins on the day after the day the indebtedness arises and ends on the day the indebtedness is satisfied (whether by payment, offset, cancellation, or otherwise). Paragraphs (a)(1)(iii)(B) through (E) of this section provide certain alternative periods during which interest is not required to be charged on certain indebtedness. These exceptions apply only to indebtedness described in paragraph (a)(1)(ii)(A)(2) of this section (relating to indebtedness incurred in the ordinary course of business from sales, services, etc., between members of the group)

and not evidenced by a written instrument requiring the payment of interest. Such amounts are hereinafter referred to as intercompany trade receivables. The period for which interest is not required to be charged on intercompany trade receivables under this paragraph (a)(1)(iii) is called the interest-free period. In general, an intercompany trade receivable arises at the time economic performance occurs (within the meaning of section 461(h) and the regulations thereunder) with respect to the underlying transaction between controlled entities. For purposes of this paragraph (a)(1)(iii), the term United States includes any possession of the United States, and the term foreign country excludes any possession of the United States.

(B) ***Exception for certain intercompany transactions in the ordinary course of business.*** Interest is not required to be charged on an intercompany trade receivable until the first day of the third calendar month following the month in which the intercompany trade receivable arises.

(C) ***Exception for trade or business of debtor member located outside the United States.*** In the case of an intercompany trade receivable arising from a transaction in the ordinary course of a trade or business which is actively conducted outside the United States by the debtor member, interest is not required to be charged until the first day of the fourth calendar month following the month in which such intercompany trade receivable arises.

(D) ***Exception for regular trade practice of creditor member or others in creditor's industry.*** If the creditor member or unrelated persons in the creditor member's industry, as a regular trade practice, allow unrelated parties a longer period without charging interest than that described in paragraph (a)(1)(iii)(B) or (C) of this section (whichever is applicable) with respect to transactions which are similar to transactions that give rise to intercompany trade receivables, such longer interest-free period shall be allowed with respect to a comparable amount of intercompany trade receivables.

(E) ***Exception for property purchased for resale in a foreign country—***

(1) ***General rule.*** If in the ordinary course of business one member of the group (related purchaser) purchases property from another member of the group (related seller) for resale to unrelated persons located in a particular foreign country, the related purchaser and the related seller may use as the interest-free period for the intercompany trade receivables arising during the related seller's taxable year from the purchase of such property within the same product group an interest-free period equal the sum of—

(*i*) The number of days in the related purchaser's average collection period (as determined under paragraph (a)(1)(iii)(E)(*2*) of this section) for sales of property within the same product group sold in the ordinary course of business to unrelated persons located in the same foreign country; plus

(*ii*) Ten (10) calendar days.

(*2*) ***Interest-free period.*** The interest-free period under this paragraph (a)(1)(iii)(E), however, shall in no event exceed 183 days. The related purchaser does not have to conduct business outside the United States in order to be eligible to use the interest-free period of this paragraph (a)(1)(iii)(E). The interest-free period under this paragraph (a)(1)(iii)(E) shall not apply to intercompany trade receivables attributable to property which is manufactured, produced, or constructed (within the meaning of

§ 1.954-3(a)(4)) by the related purchaser. For purposes of this paragraph (a)(1)(iii)(E) a product group includes all products within the same three-digit Standard Industrial Classification (SIC) Code (as prepared by the Statistical Policy Division of the Office of Management and Budget, Executive Office of the President.)

(*3*) ***Average collection period.*** An average collection period for purposes of this paragraph (a)(1)(iii)(E) is determined as follows—

(*i*) ***Step 1.*** Determine total sales (less returns and allowances) by the related purchaser in the product group to unrelated persons located in the same foreign country during the related purchaser's last taxable year ending on or before the first day of the related seller's taxable year in which the intercompany trade receivable arises.

(*ii*) ***Step 2.*** Determine the related purchaser's average month-end accounts receivable balance with respect to sales described in paragraph (a)(1)(iii)(E)(*2*)(*i*) of this section for the related purchaser's last taxable year ending on or before the first day of the related seller's taxable year in which the intercompany trade receivable arises.

(*iii*) ***Step 3.*** Compute a receivables turnover rate by dividing the total sales amount described in paragraph (a)(1)(iii)(E)(*2*)(*i*) of this section by the average receivables balance described in paragraph (a)(1)(iii)(E)(*2*)(*ii*) of this section.

(*iv*) ***Step 4.*** Divide the receivables turnover rate determined under paragraph (a)(1)(iii)(E)(*2*)(*iii*) of this section into 365, and round the result to the nearest whole number to determine the number of days in the average collection period.

(*v*) ***Other considerations.*** If the related purchaser makes sales in more than one foreign country, or sells property in more than one product group in any foreign country, separate computations of an average collection period, by product group within each country, are required. If the related purchaser resells fungible property in more than one foreign country and the intercompany trade receivables arising from the related party purchase of such fungible property cannot reasonably be identified with resales in particular foreign countries, then solely for the purpose of assigning an interest-free period to such intercompany trade receivables under this paragraph (a)(1)(iii)(E), an amount of each such intercompany trade receivable shall be treated as allocable to a particular foreign country in the same proportion that the related purchaser's sales of such fungible property in such foreign country during the period described in paragraph (a)(1)(iii)(E)(2)(i) of this section bears to the related purchaser's sales of all such fungible property in all such foreign countries during such period. An interest-free period under this paragraph (a)(1)(iii)(E) shall not apply to any intercompany trade receivables arising in a taxable year of the related seller if the related purchaser made no sales described in paragraph (a)(1)(iii)(E)(2)(i) of this section from which the appropriate interest-free period may be determined.

(*4*) ***Illustration.*** The interest-free period provided under paragraph (a)(1)(iii)(E) of this section may be illustrated by the following example:

Example. (i)*Facts.* X and Y use the calendar year as the taxable year and are members of the same group of controlled entities within the meaning of section 482. For Y's 1988 calendar taxable year X and Y intend to use the interest-free period determined under this paragraph (a)(1)(iii)(E) for intercompany trade receivables attributable to X's purchases of certain products from Y for resale by X in the ordinary course of business to unrelated persons in country Z. For its 1987 calendar taxable year all of X's sales in country Z were of products within a single product group based upon a three-digit SIC code, were not manufactured, produced, or constructed (within the meaning of § 1.954-3(a)(4)) by X, and were sold in the ordinary course of X's trade or business to unrelated persons located only in country Z. These sales and the month-end accounts receivable balances (for such sales and for such sales uncollected from prior months) are as follows:

Month	Sales	Accounts receivable
Jan. 1987	$500,000	$2,835,850
Feb.	600,000	2,840,300
Mar.	450,000	2,850,670
Apr.	550,000	2,825,700
May.	650,000	2,809,360
June	525,000	2,803,200
July	400,000	2,825,850
Aug.	425,000	2,796,240
Sept.	475,000	2,839,390
Oct.	525,000	2,650,550
Nov.	450,000	2,775,450
Dec. 1987	650,000	2,812,600
Totals	6,200,000	33,665,160

(ii) *Average collection period.* X's total sales within the same product group to unrelated persons within country Z for the period are $6,200,000. The average receivables balance for the period is $2,805,430 ($33,665,160/12). The average collection period in whole days is determined as follows:

$$\text{Receivables Turnover Rate} = \frac{\$6{,}200{,}000}{\$2{,}805{,}430} = 2.21$$

$$\text{Average Collection Period} = \frac{365}{2.21} = \begin{array}{c}\text{165.16 days, rounded to the} \\ \text{nearest whole day} = \text{165 days.}\end{array}$$

(iii) ***Interest-free period.*** Accordingly, for intercompany trade receivables incurred by X during Y's 1988 calendar taxable year attributable to the purchase of property from Y for resale to unrelated persons located in country Z and included in the product group, X may use an interest-free period of 175 days (165 days in the average collection period plus 10 days, but not in excess of a maximum of 183 days). All other intercompany trade receivables incurred by X are subject to the interest-free periods described in paragraphs (a)(1)(iii) (B), (C), or (D), whichever are applicable. If X makes sales in other foreign countries in addition to country Z or makes sales of property in more than one product group in any foreign country, separate computations of X's average collection period, by product group within each country, are required in order for X and Y to determine an interest-free period for such product groups in such foreign countries under this paragraph (a)(1)(iii)(E).

(iv) ***Payment; book entries*** —

(A) Except as otherwise provided in this paragraph (a)(1)(iv), in determining the period of time for which an amount owed by one member of the group to another member is outstanding, payments or other credits to an account are considered to be applied against the earliest amount outstanding, that is, payments or credits are applied against amounts in a first-in, first-out (FIFO) order. Thus, tracing payments to individual intercompany trade receivables is generally not required in order to determine whether a particular intercompany trade receivable has been paid within the applicable interest-free period determined under paragraph (a)(1)(iii) of this section. The application of this paragraph (a)(1)(iv)(A) may be illustrated by the following example:

> *Example.* (i) *Facts.* X and Y are members of a group of controlled entities within the meaning of section 482. Assume that the balance of intercompany trade receivables owed by X to Y on June 1 is $100, and that all of the $100 balance represents amounts incurred by X to Y during the month of May. During the month of June X incurs an additional $200 of intercompany trade receivables to Y. Assume that on July 15, $60 is properly credited against X's intercompany account to Y, and that $240 is properly credited against the intercompany account on August 31. Assume that under paragraph (a)(1)(iii)(B) of this section interest must be charged on X's intercompany trade receivables to Y beginning with the first day of the third calendar month following the month the intercompany trade receivables arise, and that no alternative interest-free period applies. Thus, the interest-free period for intercompany trade receivables incurred during the month of May ends on July 31, and the interest-free period for intercompany trade receivables incurred during the month of June ends on August 31.
> (ii) *Application of payments.* Using a FIFO payment order, the aggregate payments of $300 are applied first to the opening June balance, and then to the additional amounts incurred during the month of June. With respect to X's June opening balance of $100, no interest is required to be accrued on $60 of such balance paid by X on July 15, because such portion was paid within its interest-free period. Interest for 31 days, from August 1 to August 31 inclusive, is required to be accrued

on the $40 portion of the opening balance not paid until August 31. No interest is required to be accrued on the $200 of intercompany trade receivables X incurred to Y during June because the $240 credited on August 31, after eliminating the $40 of indebtedness remaining from periods before June, also eliminated the $200 incurred by X during June prior to the end of the interest-free period for that amount. The amount of interest incurred by X to Y on the $40 amount during August creates bona fide indebtedness between controlled entities and is subject to the provisions of paragraph (a)(1)(iii)(A) of this section without regard to any of the exceptions contained in paragraphs (a)(1)(iii)(B) through (E).

(B) Notwithstanding the first-in, first-out payment application rule described in paragraph (a)(1)(iv)(A) of this section, the taxpayer may apply payments or credits against amounts owed in some other order on its books in accordance with an agreement or understanding of the related parties if the taxpayer can demonstrate that either it or others in its industry, as a regular trade practice, enter into such agreements or understandings in the case of similar balances with unrelated parties.

(2) *Arm's length interest rate* —

(i) ***In general.*** For purposes of section 482 and paragraph (a) of this section, an arm's length rate of interest shall be a rate of interest which was charged, or would have been charged, at the time the indebtedness arose, in independent transactions with or between unrelated parties under similar circumstances. All relevant factors shall be considered, including the principal amount and duration of the loan, the security involved, the credit standing of the borrower, and the interest rate prevailing at the situs of the lender or creditor for comparable loans between unrelated parties.

(ii) ***Funds obtained at situs of borrower.*** Notwithstanding the other provisions of paragraph (a)(2) of this section, if the loan or advance represents the proceeds of a loan obtained by the lender at the situs of the borrower, the arm's length rate for any taxable year shall be equal to the rate actually paid by the lender increased by an amount which reflects the costs or deductions incurred by the lender in borrowing such amounts and making such loans, unless the taxpayer establishes a more appropriate rate under the standards set forth in paragraph (a)(2)(i) of this section.

(iii) ***Safe haven interest rates for certain loans and advances made after May 8, 1986*** —

(A) ***Applicability*** —

(*1*) ***General rule.*** Except as otherwise provided in paragraph (a)(2) of this section, paragraph (a)(2)(iii)(B) applies with respect to the rate of interest charged and to the amount of interest paid or accrued in any taxable year—

(*i*) Under a term loan or advance between members of a group of controlled entities where (except as provided in paragraph (a)(2)(iii)(A)(*2*)(*ii*) of this section) the loan or advance is entered into after May 8, 1986; and

(*ii*) After May 8, 1986 under a demand loan or advance between such controlled entities.

(2) ***Grandfather rule for existing loans.*** The safe haven rates prescribed in paragraph (a)(2)(iii)(B) of this section shall not apply, and the safe haven rates prescribed in § 1.482-2(a)(2)(iii) (26 CFR part 1 edition revised as of April 1, 1985), shall apply to—

(*i*) Term loans or advances made before May 9, 1986; and

(*ii*) Term loans or advances made before August 7, 1986, pursuant to a binding written contract entered into before May 9, 1986.

(B) ***Safe haven interest rate based on applicable Federal rate.*** Except as otherwise provided in this paragraph (a)(2), in the case of a loan or advance between members of a group of controlled entities, an arm's length rate of interest referred to in paragraph (a)(2)(i) of this section shall be for purposes of chapter 1 of the Internal Revenue Code—

(*1*) The rate of interest actually charged if that rate is—

(*i*) Not less than 100 percent of the applicable Federal rate (lower limit); and

(*ii*) Not greater than 130 percent of the applicable Federal rate (upper limit); or

(*2*) If either no interest is charged or if the rate of interest charged is less than the lower limit, then an arm's length rate of interest shall be equal to the lower limit, compounded semiannually; or

(*3*) If the rate of interest charged is greater than the upper limit, then an arm's length rate of interest shall be equal to the upper limit, compounded semiannually, unless the taxpayer establishes a more appropriate compound rate of interest under paragraph (a)(2)(i) of this section. However, if the compound rate of interest actually charged is greater than the upper limit and less than the rate determined under paragraph (a)(2)(i) of this section, or if the compound rate actually charged is less than the lower limit and greater than the rate determined under paragraph (a)(2)(i) of this section, then the compound rate actually charged shall be deemed to be an arm's length rate under paragraph (a)(2)(i). In the case of any sale-leaseback described in section 1274(e), the lower limit shall be 110 percent of the applicable Federal rate, compounded semiannually.

(C) ***Applicable Federal rate.*** For purposes of paragraph (a)(2)(iii)(B) of this section, the term applicable Federal rate means, in the case of a loan or advance to which this section applies and having a term of—

(*1*) Not over 3 years, the Federal short-term rate;

(*2*) Over 3 years but not over 9 years, the Federal mid-term rate; or

(*3*) Over 9 years, the Federal long-term rate, as determined under section 1274(d) in effect on the date such loan or advance is made. In the case of any sale or exchange between controlled entities, the lower limit shall be the lowest of the applicable Federal rates in effect for any month in the 3-calendar- month period ending with the first calendar month in which there is a binding written contract in effect for such sale or exchange (lowest 3-month rate, as defined in section 1274(d)(2)). In the case of a demand loan or advance to which this section applies, the applicable Federal rate means the Federal short-term rate determined under section 1274(d) (determined without regard to the lowest 3-month short term rate determined under

section 1274(d)(2)) in effect for each day on which any amount of such loan or advance (including unpaid accrued interest determined under paragraph (a)(2) of this section) is outstanding.

(D) ***Lender in business of making loans.*** If the lender in a loan or advance transaction to which paragraph (a)(2) of this section applies is regularly engaged in the trade or business of making loans or advances to unrelated parties, the safe haven rates prescribed in paragraph (a)(2)(iii)(B) of this section shall not apply, and the arm's length interest rate to be used shall be determined under the standards described in paragraph (a)(2)(i) of this section, including reference to the interest rates charged in such trade or business by the lender on loans or advances of a similar type made to unrelated parties at and about the time the loan or advance to which paragraph (a)(2) of this section applies was made.

(E) ***Foreign currency loans.*** The safe haven interest rates prescribed in paragraph (a)(2)(iii)(B) of this section do not apply to any loan or advance the principal or interest of which is expressed in a currency other than U.S. dollars.

(3) ***Coordination with interest adjustments required under certain other Code sections.*** If the stated rate of interest on the stated principal amount of a loan or advance between controlled entities is subject to adjustment under section 482 and is also subject to adjustment under any other section of the Internal Revenue Code (for example, section 467, 483, 1274 or 7872), section 482 and paragraph (a) of this section may be applied to such loan or advance in addition to such other Internal Revenue Code section. After the enactment of the Tax Reform Act of 1964, Pub. L. 98-369, and the enactment of Pub. L. 99-121, such other Internal Revenue Code sections include sections 467, 483, 1274 and 7872. The order in which the different provisions shall be applied is as follows—

(i) First, the substance of the transaction shall be determined; for this purpose, all the relevant facts and circumstances shall be considered and any law or rule of law (assignment of income, step transaction, etc.) may apply. Only the rate of interest with respect to the stated principal amount of the bona fide indebtedness (within the meaning of paragraph (a)(1) of this section), if any, shall be subject to adjustment under section 482, paragraph (a) of this section, and any other Internal Revenue Code section.

(ii) Second, the other Internal Revenue Code section shall be applied to the loan or advance to determine whether any amount other than stated interest is to be treated as interest, and if so, to determine such amount according to the provisions of such other Internal Revenue Code section.

(iii) Third, whether or not the other Internal Revenue Code section applies to adjust the amounts treated as interest under such loan or advance, section 482 and paragraph (a) of this section may then be applied by the district director to determine whether the rate of interest charged on the loan or advance, as adjusted by any other Code section, is greater or less than an arm's length rate of interest, and if so, to make appropriate allocations to reflect an arm's length rate of interest.

(iv) Fourth, section 482 and paragraphs (b) through (d) of this section and §§ 1.482-3 through 1.482-7, if applicable, may be applied by the district director to make any appropriate allocations, other than an interest rate adjustment, to reflect an arm's length transaction based upon the principal amount of the loan or advance and the interest rate as adjusted under paragraph (a)(3) (i), (ii) or (iii) of this section. For example, assume that two commonly controlled taxpayers enter into a deferred payment sale of tangible property and no interest is

provided, and assume also that section 483 is applied to treat a portion of the stated sales price as interest, thereby reducing the stated sales price. If after this recharacterization of a portion of the stated sales price as interest, the recomputed sales price does not reflect an arm's length sales price under the principles of § 1.482-3, the district director may make other appropriate allocations (other than an interest rate adjustment) to reflect an arm's length sales price.

(4) ***Examples.*** The principles of paragraph (a)(3) of this section may be illustrated by the following examples:

Example 1. An individual, A, transfers $20,000 to a corporation controlled by A in exchange for the corporation's note which bears adequate stated interest. The district director recharacterizes the transaction as a contribution to the capital of the corporation in exchange for preferred stock. Under paragraph (a)(3)(i) of this section, section 1.482-2(a) does not apply to the transaction because there is no bona fide indebtedness.

Example 2. B, an individual, is an employee of Z corporation, and is also the controlling shareholder of Z. Z makes a term loan of $15,000 to B at a rate of interest that is less than the applicable Federal rate. In this instance the other operative Code section is section 7872. Under section 7872(b), the difference between the amount loaned and the present value of all payments due under the loan using a discount rate equal to 100 percent of the applicable Federal rate is treated as an amount of cash transferred from the corporation to B and the loan is treated as having original issue discount equal to such amount. Under paragraph (a)(3)(iii) of this section, section 482 and paragraph (a) of this section may also be applied by the district director to determine if the rate of interest charged on this $15,000 loan (100 percent of the AFR, compounded semiannually, as adjusted by section 7872) is an arm's length rate of interest. Because the rate of interest on the loan, as adjusted by section 7872, is within the safe haven range of 100-130 percent of the AFR, compounded semiannually, no further interest rate adjustments under section 482 and paragraph (a) of this section will be made to this loan.

Example 3. The facts are the same as in Example 2 except that the amount lent by Z to B is $9,000, and that amount is the aggregate outstanding amount of loans between Z and B. Under the $10,000 de minimis exception of section 7872(c)(3), no adjustment for interest will be made to this $9,000 loan under section 7872. Under paragraph (a)(3)(iii) of this section, the district director may apply section 482 and paragraph (a) of this section to this $9,000 loan to determine whether the rate of interest charged is less than an arm's length rate of interest, and if so, to make appropriate allocations to reflect an arm's length rate of interest.

Example 4. X and Y are commonly controlled taxpayers. At a time when the applicable Federal rate is 12 percent, compounded semiannually, X sells property to Y in exchange for a note with a stated rate of interest of 18 percent, compounded semiannually. Assume that the other applicable Code section to the transaction is section 483. Section 483 does not apply to this transaction because, under section 483(d), there is no total unstated interest under the contract using the test rate of interest equal to 100 percent of the applicable Federal rate. Under paragraph (a)(3)(iii) of this section, section 482 and paragraph (a) of this section may be applied by the district director to determine whether the rate of interest under the note is excessive, that is, to determine whether the 18 percent stated interest rate under the note exceeds an arm's length rate of interest.

Example 5. Assume that A and B are commonly controlled taxpayers and that the applicable Federal rate is 10 percent, compounded semiannually. On June 30, 1986, A sells property to B and receives in exchange B's purchase-money note in the amount of $2,000,000. The stated interest rate on the note is 9%, compounded semiannually, and the stated redemption price at maturity on the note is $2,000,000. Assume that the other applicable Code section to this transaction is section 1274. As provided in section 1274A(a) and (b), the discount rate for purposes of section 1274 will be nine percent, compounded semiannually, because the stated principal amount of B's note does not exceed $2,800,000. Section 1274 does not apply to this transaction because there is adequate stated interest on the debt instrument using a discount rate equal to 9%, compounded semiannually, and the stated redemption price at maturity does not exceed the stated principal amount. Under paragraph (a)(3)(iii) of this section, the district director may apply section 482 and paragraph (a) of this section to this $2,000,000 note to determine whether the 9% rate of interest charged is less than an arm's length rate of interest, and if so, to make appropriate allocations to reflect an arm's length rate of interest.

(b) ***Rendering of services.*** For rules governing allocations under section 482 to reflect an arm's length charge for controlled transactions involving the rendering of services, *see* § 1.482-9.

(c) ***Use of tangible property*** —

(1) ***General rule.*** Where possession, use, or occupancy of tangible property owned or leased by one member of a group of controlled entities (referred to in this paragraph as the owner) is transferred by lease or other arrangement to another member of such group (referred to in this paragraph as the user) without charge or at a charge which is not equal to an arm's length rental charge (as defined in paragraph (c)(2)(i) of this section) the district director may make appropriate allocations to properly reflect such arm's length charge. Where possession, use, or occupancy of only a portion of such property is transferred, the determination of the arm's length charge and the allocation shall be made with reference to the portion transferred.

(2) ***Arm's length charge*** —

(i) ***In general.*** For purposes of paragraph (c) of this section, an arm's length rental charge shall be the amount of rent which was charged, or would have been charged for the use of the same or similar property, during the time it was in use, in independent transactions with or between unrelated parties under similar circumstances considering the period and location of the use, the owner's investment in the property or rent paid for the property, expenses of maintaining the property, the type of property involved, its condition, and all other relevant facts.

(ii) ***Safe haven rental charge.*** See § 1.482-2(c)(2)(ii) (26 CFR Part 1 revised as of April 1, 1985), for the determination of safe haven rental charges in the case of certain leases entered into before May 9, 1986, and for leases entered into before August 7, 1986, pursuant to a binding written contract entered into before May 9, 1986.

(iii) ***Subleases*** —

(A) Except as provided in paragraph (c)(2)(iii)(B) of this section, where possession, use, or occupancy of tangible property, which is leased by the owner (lessee) from an unrelated party is transferred by sublease or other arrangement to the user, an arm's length rental charge shall be considered to be equal to all the deductions claimed by the owner (lessee) which are attributable to the property for the period such property is used by the user. Where only a portion of such property was transferred, any allocations shall be made with reference to the portion transferred. The deductions to be considered include the rent paid

or accrued by the owner (lessee) during the period of use and all other deductions directly and indirectly connected with the property paid or accrued by the owner (lessee) during such period. Such deductions include deductions for maintenance and repair, utilities, management and other similar deductions.

(B) The provisions of paragraph (c)(2)(iii)(A) of this section shall not apply if either—

(*1*) The taxpayer establishes a more appropriate rental charge under the general rule set forth in paragraph (c)(2)(i) of this section; or

(*2*) During the taxable year, the owner (lessee) or the user was regularly engaged in the trade or business of renting property of the same general type as the property in question to unrelated persons.

(d) ***Transfer of property.*** For rules governing allocations under section 482 to reflect an arm's length consideration for controlled transactions involving the transfer of property, see §§ 1.482-3 through 1.482-6.

(e) ***Cost sharing arrangement.*** For rules governing allocations under section 482 to reflect an arm's length consideration for controlled transactions involving a cost sharing arrangement, see § 1.482-7.

(f) ***Effective/applicability date*** —

(1) ***In general.*** The provision of paragraph (b) of this section is generally applicable for taxable years beginning after December 31, 2006. The provision of paragraph (e) of this section is generally applicable on January 5, 2009.

(2) ***Election to apply paragraph (b) to earlier taxable years.*** A person may elect to apply the provisions of paragraph (b) of this section to earlier taxable years in accordance with the rules set forth in § 1.482-9(n)(2).

[T.D. 8552, 59 FR 35002, July 8, 1994; 60 FR 16381, 16382, Mar. 30, 1995; T.D. 9278, 71 FR 44484, Aug. 4, 2006; T.D. 9456, 74 FR 38842, Aug. 4, 2009; T.D. 9568, 76 FR 80090, Dec. 22, 2011]

§ 1.482-3 Methods to determine taxable income in connection with a transfer of tangible property.

(a) ***In general.*** The arm's length amount charged in a controlled transfer of tangible property must be determined under one of the six methods listed in this paragraph (a). Each of the methods must be applied in accordance with all of the provisions of § 1.482-1, including the best method rule of § 1.482-1(c), the comparability analysis of § 1.482-1(d), and the arm's length range of § 1.482-1(e). The methods are—

(1) The comparable uncontrolled price method, described in paragraph (b) of this section;

(2) The resale price method, described in paragraph (c) of this section;

(3) The cost plus method, described in paragraph (d) of this section;

(4) The comparable profits method, described in § 1.482-5;

(5) The profit split method, described in § 1.482-6; and

(6) Unspecified methods, described in paragraph (e) of this section.

(b) *Comparable uncontrolled price method* —

(1) ***In general.*** The comparable uncontrolled price method evaluates whether the amount charged in a controlled transaction is arm's length by reference to the amount charged in a comparable uncontrolled transaction.

(2) *Comparability and reliability considerations* —

(i) ***In general.*** Whether results derived from applications of this method are the most reliable measure of the arm's length result must be determined using the factors described under the best method rule in § 1.482-1(c). The application of these factors under the comparable uncontrolled price method is discussed in paragraph (b)(2)(ii) and (iii) of this section.

(ii) *Comparability* —

(A) ***In general.*** The degree of comparability between controlled and uncontrolled transactions is determined by applying the provisions of § 1.482-1(d). Although all of the factors described in § 1.482-1(d)(3) must be considered, similarity of products generally will have the greatest effect on comparability under this method. In addition, because even minor differences in contractual terms or economic conditions could materially affect the amount charged in an uncontrolled transaction, comparability under this method depends on close similarity with respect to these factors, or adjustments to account for any differences. The results derived from applying the comparable uncontrolled price method generally will be the most direct and reliable measure of an arm's length price for the controlled transaction if an uncontrolled transaction has no differences with the controlled transaction that would affect the price, or if there are only minor differences that have a definite and reasonably ascertainable effect on price and for which appropriate adjustments are made. If such adjustments cannot be made, or if there are more than minor differences between the controlled and uncontrolled transactions, the comparable uncontrolled price method may be used, but the reliability of the results as a measure of the arm's length price will be reduced. Further, if there are material product differences for which reliable adjustments cannot be made, this method ordinarily will not provide a reliable measure of an arm's length result.

(B) ***Adjustments for differences between controlled and uncontrolled transactions.*** If there are differences between the controlled and uncontrolled transactions that would affect price, adjustments should be made to the price of the uncontrolled transaction according to the comparability provisions of § 1.482-1(d)(2). Specific examples of the factors that may be particularly relevant to this method include—

(*1*) Quality of the product;

(*2*) Contractual terms (e.g., scope and terms of warranties provided, sales or purchase volume, credit terms, transport terms);

(*3*) Level of the market (i.e., wholesale, retail, etc.);

(*4*) Geographic market in which the transaction takes place;

(*5*) Date of the transaction;

(*6*) Intangible property associated with the sale;

(*7*) Foreign currency risks; and

(8) Alternatives realistically available to the buyer and seller.

(iii) ***Data and assumptions.*** The reliability of the results derived from the comparable uncontrolled price method is affected by the completeness and accuracy of the data used and the reliability of the assumptions made to apply the method. See § 1.482-1(c) (Best method rule).

(3) ***Arm's length range.*** See § 1.482-1(e)(2) for the determination of an arm's length range.

(4) ***Examples.*** The principles of this paragraph (b) are illustrated by the following examples.

Example 1. Comparable Sales of Same Product. USM, a U.S. manufacturer, sells the same product to both controlled and uncontrolled distributors. The circumstances surrounding the controlled and uncontrolled transactions are substantially the same, except that the controlled sales price is a delivered price and the uncontrolled sales are made f.o.b. USM's factory. Differences in the contractual terms of transportation and insurance generally have a definite and reasonably ascertainable effect on price, and adjustments are made to the results of the uncontrolled transaction to account for such differences. No other material difference has been identified between the controlled and uncontrolled transactions. Because USM sells in both the controlled and uncontrolled transactions, it is likely that all material differences between the two transactions have been identified. In addition, because the comparable uncontrolled price method is applied to an uncontrolled comparable with no product differences, and there are only minor contractual differences that have a definite and reasonably ascertainable effect on price, the results of this application of the comparable uncontrolled price method will provide the most direct and reliable measure of an arm's length result. See § 1.482-3(b)(2)(ii)(A).

Example 2. Effect of Trademark. The facts are the same as in *Example 1,* except that USM affixes its valuable trademark to the property sold in the controlled transactions, but does not affix its trademark to the property sold in the uncontrolled transactions. Under the facts of this case, the effect on price of the trademark is material and cannot be reliably estimated. Because there are material product differences for which reliable adjustments cannot be made, the comparable uncontrolled price method is unlikely to provide a reliable measure of the arm's length result. See § 1.482-3(b)(2)(ii)(A).

Example 3. Minor Product Differences. The facts are the same as in *Example 1,* except that USM, which manufactures business machines, makes minor modifications to the physical properties of the machines to satisfy specific requirements of a customer in controlled sales, but does not make these modifications in uncontrolled sales. If the minor physical differences in the product have a material effect on prices, adjustments to account for these differences must be made to the results of the uncontrolled transactions according to the provisions of § 1.482- 1(d)(2), and such adjusted results may be used as a measure of the arm's length result.

Example 4. Effect of Geographic Differences. FM, a foreign specialty radio manufacturer, sells its radios to a controlled U.S. distributor, AM, that serves the West Coast of the United States. FM sells its radios to uncontrolled distributors to serve other regions in the United States. The product in the controlled and uncontrolled transactions is the same, and all other circumstances surrounding the controlled and uncontrolled transactions are substantially the same, other than the geographic differences. If the geographic differences are unlikely to have a material effect on price, or they have definite and reasonably ascertainable effects for which adjustments are made, then the adjusted results of the uncontrolled sales may be used under the comparable uncontrolled price method to establish an arm's length range pursuant to § 1.482-1(e)(2)(iii)(A). If the effects of the geographic differences would be material but cannot

be reliably ascertained, then the reliability of the results will be diminished. However, the comparable uncontrolled price method may still provide the most reliable measure of an arm's length result, pursuant to the best method rule of § 1.482-1(c), and, if so, an arm's length range may be established pursuant to § 1.482-1(e)(2)(iii)(B).

(5) ***Indirect evidence of comparable uncontrolled transactions*** —

(i) ***In general.*** A comparable uncontrolled price may be derived from data from public exchanges or quotation media, but only if the following requirements are met—

(A) The data is widely and routinely used in the ordinary course of business in the industry to negotiate prices for uncontrolled sales;

(B) The data derived from public exchanges or quotation media is used to set prices in the controlled transaction in the same way it is used by uncontrolled taxpayers in the industry; and

(C) The amount charged in the controlled transaction is adjusted to reflect differences in product quality and quantity, contractual terms, transportation costs, market conditions, risks borne, and other factors that affect the price that would be agreed to by uncontrolled taxpayers.

(ii) ***Limitation.*** Use of data from public exchanges or quotation media may not be appropriate under extraordinary market conditions.

(iii) ***Examples.*** The following examples illustrate this paragraph (b)(5).

> *Example 1. Use of Quotation Medium.* (i) On June 1, USOil, a United States corporation, enters into a contract to purchase crude oil from its foreign subsidiary, FS, in Country Z. USOil and FS agree to base their sales price on the average of the prices published for that crude in a quotation medium in the five days before August 1, the date set for delivery. USOil and FS agree to adjust the price for the particular circumstances of their transactions, including the quantity of the crude sold, contractual terms, transportation costs, risks borne, and other factors that affect the price.
> (ii) The quotation medium used by USOil and FS is widely and routinely used in the ordinary course of business in the industry to establish prices for uncontrolled sales. Because USOil and FS use the data to set their sales price in the same way that unrelated parties use the data from the quotation medium to set their sales prices, and appropriate adjustments were made to account for differences, the price derived from the quotation medium used by USOil and FS to set their transfer prices will be considered evidence of a comparable uncontrolled price.

Example 2. Extraordinary Market Conditions. The facts are the same as in *Example 1*, except that before USOil and FS enter into their contract, war breaks out in Countries X and Y, major oil producing countries, causing significant instability in world petroleum markets. As a result, given the significant instability in the price of oil, the prices listed on the quotation medium may not reflect a reliable measure of an arm's length result. See § 1.482-3(b)(5)(ii).

(c) *Resale price method* —

(1) ***In general.*** The resale price method evaluates whether the amount charged in a controlled transaction is arm's length by reference to the gross profit margin realized in comparable uncontrolled transactions. The resale price method measures the value of functions performed, and is ordinarily used in cases involving the purchase and resale of tangible property in which the reseller has not added substantial value to the tangible goods by physically altering the goods before resale. For this purpose, packaging, repackaging, labelling, or minor assembly do not ordinarily constitute physical alteration. Further the resale price method is not ordinarily used in cases where the controlled taxpayer uses its intangible property to add substantial value to the tangible goods.

(2) *Determination of arm's length price* —

(i) ***In general.*** The resale price method measures an arm's length price by subtracting the appropriate gross profit from the applicable resale price for the property involved in the controlled transaction under review.

(ii) ***Applicable resale price.*** The applicable resale price is equal to either the resale price of the particular item of property involved or the price at which contemporaneous resales of the same property are made. If the property purchased in the controlled sale is resold to one or more related parties in a series of controlled sales before being resold in an uncontrolled sale, the applicable resale price is the price at which the property is resold to an uncontrolled party, or the price at which contemporaneous resales of the same property are made. In such case, the determination of the appropriate gross profit will take into account the functions of all members of the group participating in the series of controlled sales and final uncontrolled resales, as well as any other relevant factors described in § 1.482-1(d)(3).

(iii) ***Appropriate gross profit.*** The appropriate gross profit is computed by multiplying the applicable resale price by the gross profit margin (expressed as a percentage of total revenue derived from sales) earned in comparable uncontrolled transactions.

(iv) ***Arm's length range.*** See § 1.482-1(e)(2) for determination of the arm's length range.

(3) *Comparability and reliability considerations* —

(i) ***In general.*** Whether results derived from applications of this method are the most reliable measure of the arm's length result must be determined using the factors described under the best method rule in § 1.482-1(c). The application of these factors under the resale price method is discussed in paragraphs (c)(3) (ii) and (iii) of this section.

(ii) *Comparability* —

(A) ***Functional comparability.*** The degree of comparability between an uncontrolled transaction and a controlled transaction is determined by applying the comparability provisions of § 1.482-1(d). A reseller's gross profit provides compensation for the performance of resale functions related to the product or products under review, including an operating profit in return for the reseller's investment of capital and the assumption of risks. Therefore, although all of the factors described in § 1.482-1(d)(3) must be considered, comparability under this method is particularly dependent on similarity of functions performed, risks borne, and contractual terms, or adjustments to account for the effects of any such differences. If possible, appropriate gross profit margins should be derived from comparable uncontrolled purchases and resales of the reseller involved in the controlled

sale, because similar characteristics are more likely to be found among different resales of property made by the same reseller than among sales made by other resellers. In the absence of comparable uncontrolled transactions involving the same reseller, an appropriate gross profit margin may be derived from comparable uncontrolled transactions of other resellers.

(B) ***Other comparability factors.*** Comparability under this method is less dependent on close physical similarity between the products transferred than under the comparable uncontrolled price method. For example, distributors of a wide variety of consumer durables might perform comparable distribution functions without regard to the specific durable goods distributed. Substantial differences in the products may, however, indicate significant functional differences between the controlled and uncontrolled taxpayers. Thus, it ordinarily would be expected that the controlled and uncontrolled transactions would involve the distribution of products of the same general type (e.g., consumer electronics). Furthermore, significant differences in the value of the distributed goods due, for example, to the value of a trademark, may also affect the reliability of the comparison. Finally, the reliability of profit measures based on gross profit may be adversely affected by factors that have less effect on prices. For example, gross profit may be affected by a variety of other factors, including cost structures (as reflected, for example, in the age of plant and equipment), business experience (such as whether the business is in a start-up phase or is mature), or management efficiency (as indicated, for example, by expanding or contracting sales or executive compensation over time). Accordingly, if material differences in these factors are identified based on objective evidence, the reliability of the analysis may be affected.

(C) ***Adjustments for differences between controlled and uncontrolled transactions.*** If there are material differences between the controlled and uncontrolled transactions that would affect the gross profit margin, adjustments should be made to the gross profit margin earned with respect to the uncontrolled transaction according to the comparability provisions of § 1.482-1(d)(2). For this purpose, consideration of operating expenses associated with functions performed and risks assumed may be necessary, because differences in functions performed are often reflected in operating expenses. If there are differences in functions performed, however, the effect on gross profit of such differences is not necessarily equal to the differences in the amount of related operating expenses. Specific examples of the factors that may be particularly relevant to this method include—

(*1*) Inventory levels and turnover rates, and corresponding risks, including any price protection programs offered by the manufacturer;

(*2*) Contractual terms (e.g., scope and terms of warranties provided, sales or purchase volume, credit terms, transport terms);

(*3*) Sales, marketing, advertising programs and services, (including promotional programs, rebates, and co-op advertising);

(*4*) The level of the market (e.g., wholesale, retail, etc.); and

(*5*) Foreign currency risks.

(D) ***Sales agent.*** If the controlled taxpayer is comparable to a sales agent that does not take title to goods or otherwise assume risks with respect to ownership of such goods, the commission earned by such sales agent, expressed as a percentage of the uncontrolled sales price of the goods involved, may be used as the comparable gross profit margin.

(iii) ***Data and assumptions*** —

(A) ***In general.*** The reliability of the results derived from the resale price method is affected by the completeness and accuracy of the data used and the reliability of the assumptions made to apply this method. See § 1.482-1(c) (Best method rule).

(B) ***Consistency in accounting.*** The degree of consistency in accounting practices between the controlled transaction and the uncontrolled comparables that materially affect the gross profit margin affects the reliability of the result. Thus, for example, if differences in inventory and other cost accounting practices would materially affect the gross profit margin, the ability to make reliable adjustments for such differences would affect the reliability of the results. Further, the controlled transaction and the uncontrolled comparable should be consistent in the reporting of items (such as discounts, returns and allowances, rebates, transportation costs, insurance, and packaging) between cost of goods sold and operating expenses.

(4) ***Examples.*** The following examples illustrate the principles of this paragraph (c).

Example 1. A controlled taxpayer sells property to another member of its controlled group that resells the property in uncontrolled sales. There are no changes in the beginning and ending inventory for the year under review. Information regarding an uncontrolled comparable is sufficiently complete to conclude that it is likely that all material differences between the controlled and uncontrolled transactions have been identified and adjusted for. If the applicable resale price of the property involved in the controlled sale is $100 and the appropriate gross profit margin is 20%, then an arm's length result of the controlled sale is a price of $80 ($100 minus (20% × $100)).

Example 2. (i) S, a U.S. corporation, is the exclusive distributor for FP, its foreign parent. There are no changes in the beginning and ending inventory for the year under review. S's total reported cost of goods sold is $800, consisting of $600 for property purchased from FP and $200 of other costs of goods sold incurred to unrelated parties. S's applicable resale price and reported gross profit are as follows:

Applicable resale price	$1000
Cost of goods sold:	
Cost of purchases from FP	600
Costs incurred to unrelated parties	200
Reported gross profit	200

(ii) The district director determines that the appropriate gross profit margin is 25%.

Therefore, S's appropriate gross profit is $250 (i.e., 25% of the applicable resale price of $1000). Because S is incurring costs of sales to unrelated parties, an arm's length price for property purchased from FP must be determined under a two-step process. First, the appropriate gross profit ($250) is subtracted from the applicable resale price ($1000). The resulting amount ($750) is then reduced by the costs of sales incurred to unrelated parties ($200). Therefore, an arm's length price for S's cost of sales of FP's product in this case equals $550 (i.e., $750 minus $200).

Example 3. FP, a foreign manufacturer, sells Product to USSub, its U.S. subsidiary, which in turn sells Product to its domestic affiliate Sister. Sister sells Product to unrelated buyers. In this case, the applicable resale price is the price at which Sister sells Product in uncontrolled transactions. The determination of the appropriate gross profit margin for the sale from FP to USSub will take into account the functions performed by USSub and Sister, as well as other relevant factors described in § 1.482-1(d)(3).

Example 4. USSub, a U.S. corporation, is the exclusive distributor of widgets for its foreign parent. To determine whether the gross profit margin of 25% earned by USSub is an arm's length result, the district director considers applying the resale price method. There are several uncontrolled distributors that perform similar functions under similar circumstances in uncontrolled transactions. However, the uncontrolled distributors treat certain costs such as discounts and insurance as cost of goods sold, while USSub treats such costs as operating expenses. In such cases, accounting reclassifications, pursuant to § 1.482-3(c)(3)(iii)(B), must be made to ensure consistent treatment of such material items. Inability to make such accounting reclassifications will decrease the reliability of the results of the uncontrolled transactions.

Example 5. (i) USP, a U.S. corporation, manufactures Product X, an unbranded widget, and sells it to FSub, its wholly owned foreign subsidiary. FSub acts as a distributor of Product X in country M, and sells it to uncontrolled parties in that country. Uncontrolled distributors A, B, C, D, and E distribute competing products of approximately similar value in country M. All such products are unbranded.
(ii) Relatively complete data is available regarding the functions performed and risks borne by the uncontrolled distributors and the contractual terms under which they operate in the uncontrolled transactions. In addition, data is available to ensure accounting consistency between all of the uncontrolled distributors and FSub. Because the available data is sufficiently complete and accurate to conclude that it is likely that all material differences between the controlled and uncontrolled transactions have been identified, such differences have a definite and reasonably ascertainable effect, and reliable adjustments are made to account for such differences, the results of each of the uncontrolled distributors may be used to establish an arm's length range pursuant to § 1.482-1(e)(2)(iii)(A).

Example 6. The facts are the same as *Example 5,* except that sufficient data is not available to determine whether any of the uncontrolled distributors provide warranties or to determine the payment terms of the contracts. Because differences in these contractual terms could

materially affect price or profits, the inability to determine whether these differences exist between the controlled and uncontrolled transactions diminishes the reliability of the results of the uncontrolled comparables. However, the reliability of the results may be enhanced by the application of a statistical method when establishing an arm's length range pursuant to § 1.482-1(e)(2)(iii)(B).

Example 7. The facts are the same as in *Example 5,* except that Product X is branded with a valuable trademark that is owned by P. A, B, and C distribute unbranded competing products, while D and E distribute products branded with other trademarks. D and E do not own any rights in the trademarks under which their products are sold. The value of the products that A, B, and C sold are not similar to the value of the products sold by S. The value of products sold by D and E, however, is similar to that of Product X. Although close product similarity is not as important for a reliable application of the resale price method as for the comparable uncontrolled price method, significant differences in the value of the products involved in the controlled and uncontrolled transactions may affect the reliability of the results. In addition, because in this case it is difficult to determine the effect the trademark will have on price or profits, reliable adjustments for the differences cannot be made. Because D and E have a higher level of comparability than A, B, and C with respect to S, pursuant to § 1.482-1(e)(2)(ii), only D and E may be included in an arm's length range.

(d) ***Cost plus method*** —

(1) ***In general.*** The cost plus method evaluates whether the amount charged in a controlled transaction is arm's length by reference to the gross profit markup realized in comparable uncontrolled transactions. The cost plus method is ordinarily used in cases involving the manufacture, assembly, or other production of goods that are sold to related parties.

(2) ***Determination of arm's length price*** —

(i) ***In general.*** The cost plus method measures an arm's length price by adding the appropriate gross profit to the controlled taxpayer's costs of producing the property involved in the controlled transaction.

(ii) ***Appropriate gross profit.*** The appropriate gross profit is computed by multiplying the controlled taxpayer's cost of producing the transferred property by the gross profit markup, expressed as a percentage of cost, earned in comparable uncontrolled transactions.

(iii) ***Arm's length range.*** See § 1.482-1(e)(2) for determination of an arm's length range.

(3) ***Comparability and reliability considerations*** —

(i) ***In general.*** Whether results derived from the application of this method are the most reliable measure of the arm's length result must be determined using the factors described under the best method rule in § 1.482-1(c).

(ii) ***Comparability*** —

(A) ***Functional comparability.*** The degree of comparability between controlled and uncontrolled transactions is determined by applying the comparability provisions of § 1.482-1(d). A producer's gross profit provides compensation for the performance of the production functions related to the product or products under review, including an operating profit for the producer's investment of capital and assumption of risks. Therefore, although all of the factors described in § 1.482-1(d)(3) must be considered, comparability under this

method is particularly dependent on similarity of functions performed, risks borne, and contractual terms, or adjustments to account for the effects of any such differences. If possible, the appropriate gross profit markup should be derived from comparable uncontrolled transactions of the taxpayer involved in the controlled sale, because similar characteristics are more likely to be found among sales of property by the same producer than among sales by other producers. In the absence of such sales, an appropriate gross profit markup may be derived from comparable uncontrolled sales of other producers whether or not such producers are members of the same controlled group.

(B) ***Other comparability factors.*** Comparability under this method is less dependent on close physical similarity between the products transferred than under the comparable uncontrolled price method. Substantial differences in the products may, however, indicate significant functional differences between the controlled and uncontrolled taxpayers. Thus, it ordinarily would be expected that the controlled and uncontrolled transactions involve the production of goods within the same product categories. Furthermore, significant differences in the value of the products due, for example, to the value of a trademark, may also affect the reliability of the comparison. Finally, the reliability of profit measures based on gross profit may be adversely affected by factors that have less effect on prices. For example, gross profit may be affected by a variety of other factors, including cost structures (as reflected, for example, in the age of plant and equipment), business experience (such as whether the business is in a start-up phase or is mature), or management efficiency (as indicated, for example, by expanding or contracting sales or executive compensation over time). Accordingly, if material differences in these factors are identified based on objective evidence, the reliability of the analysis may be affected.

(C) ***Adjustments for differences between controlled and uncontrolled transactions.*** If there are material differences between the controlled and uncontrolled transactions that would affect the gross profit markup, adjustments should be made to the gross profit markup earned in the comparable uncontrolled transaction according to the provisions of § 1.482-1(d)(2). For this purpose, consideration of the operating expenses associated with the functions performed and risks assumed may be necessary, because differences in functions performed are often reflected in operating expenses. If there are differences in functions performed, however, the effect on gross profit of such differences is not necessarily equal to the differences in the amount of related operating expenses. Specific examples of the factors that may be particularly relevant to this method include—

(*1*) The complexity of manufacturing or assembly;

(*2*) Manufacturing, production, and process engineering;

(*3*) Procurement, purchasing, and inventory control activities;

(*4*) Testing functions;

(*5*) Selling, general, and administrative expenses;

(*6*) Foreign currency risks; and

(*7*) Contractual terms (e.g., scope and terms of warranties provided, sales or purchase volume, credit terms, transport terms).

(D) ***Purchasing agent.*** If a controlled taxpayer is comparable to a purchasing agent that does not take title to property or otherwise assume risks with respect to ownership of such goods, the commission earned by such purchasing agent, expressed as a percentage of the purchase price of the goods, may be used as the appropriate gross profit markup.

(iii) ***Data and assumptions*** —

(A) ***In general.*** The reliability of the results derived from the cost plus method is affected by the completeness and accuracy of the data used and the reliability of the assumptions made to apply this method. See § 1.482-1(c) (Best method rule).

(B) ***Consistency in accounting.*** The degree of consistency in accounting practices between the controlled transaction and the uncontrolled comparables that materially affect the gross profit markup affects the reliability of the result. Thus, for example, if differences in inventory and other cost accounting practices would materially affect the gross profit markup, the ability to make reliable adjustments for such differences would affect the reliability of the results. Further, the controlled transaction and the comparable uncontrolled transaction should be consistent in the reporting of costs between cost of goods sold and operating expenses. The term *cost of producing* includes the cost of acquiring property that is held for resale.

(4) ***Examples.*** The following examples illustrate the principles of this paragraph (d).

> *Example 1.* (i) USP, a domestic manufacturer of computer components, sells its products to FS, its foreign distributor. UT1, UT2, and UT3 are domestic computer component manufacturers that sell to uncontrolled foreign purchasers.
> (ii) Relatively complete data is available regarding the functions performed and risks borne by UT1, UT2, and UT3, and the contractual terms in the uncontrolled transactions. In addition, data is available to ensure accounting consistency between all of the uncontrolled manufacturers and USP. Because the available data is sufficiently complete to conclude that it is likely that all material differences between the controlled and uncontrolled transactions have been identified, the effect of the differences are definite and reasonably ascertainable, and reliable adjustments are made to account for the differences, an arm's length range can be established pursuant to § 1.482-1(e)(2)(iii)(A).

Example 2. The facts are the same as in *Example 1,* except that USP accounts for supervisory, general, and administrative costs as operating expenses, which are not allocated to its sales to FS. The gross profit markups of UT1, UT2, and UT3, however, reflect supervisory, general, and administrative expenses because they are accounted for as costs of goods sold. Accordingly, the gross profit markups of UT1, UT2, and UT3 must be adjusted as provided in paragraph (d)(3)(iii)(B) of this section to provide accounting consistency. If data is not sufficient to determine whether such accounting differences exist between the controlled and uncontrolled transactions, the reliability of the results will be decreased.

Example 3. The facts are the same as in *Example 1,* except that under its contract with FS, USP uses materials consigned by FS. UT1, UT2, and UT3, on the other hand, purchase their own materials, and their gross profit markups are determined by including the costs of materials. The fact that USP does not carry an inventory risk by purchasing its own materials while the uncontrolled

producers carry inventory is a significant difference that may require an adjustment if the difference has a material effect on the gross profit markups of the uncontrolled producers. Inability to reasonably ascertain the effect of the difference on the gross profit markups will affect the reliability of the results of UT1, UT2, and UT3.

> *Example 4.* (i) FS, a foreign corporation, produces apparel for USP, its U.S. parent corporation. FS purchases its materials from unrelated suppliers and produces the apparel according to designs provided by USP. The district director identifies 10 uncontrolled foreign apparel producers that operate in the same geographic market and are similar in many respect to FS.
> (ii) Relatively complete data is available regarding the functions performed and risks borne by the uncontrolled producers. In addition, data is sufficiently detailed to permit adjustments for differences in accounting practices. However, sufficient data is not available to determine whether it is likely that all material differences in contractual terms have been identified. For example, it is not possible to determine which parties in the uncontrolled transactions bear currency risks. Because differences in these contractual terms could materially affect price or profits, the inability to determine whether differences exist between the controlled and uncontrolled transactions will diminish the reliability of these results. Therefore, the reliability of the results of the uncontrolled transactions must be enhanced by the application of a statistical method in establishing an arm's length range pursuant to § 1.482-1(e)(2)(iii)(B).

(e) ***Unspecified methods*** —

(1) ***In general.*** Methods not specified in paragraphs (a)(1), (2), (3), (4), and (5) of this section may be used to evaluate whether the amount charged in a controlled transaction is arm's length. Any method used under this paragraph (e) must be applied in accordance with the provisions of § 1.482-1. Consistent with the specified methods, an unspecified method should take into account the general principle that uncontrolled taxpayers evaluate the terms of a transaction by considering the realistic alternatives to that transaction, and only enter into a particular transaction if none of the alternatives is preferable to it. For example, the comparable uncontrolled price method compares a controlled transaction to similar uncontrolled transactions to provide a direct estimate of the price to which the parties would have agreed had they resorted directly to a market alternative to the controlled transaction. Therefore, in establishing whether a controlled transaction achieved an arm's length result, an unspecified method should provide information on the prices or profits that the controlled taxpayer could have realized by choosing a realistic alternative to the controlled transaction. As with any method, an unspecified method will not be applied unless it provides the most reliable measure of an arm's length result under the principles of the best method rule. See § 1.482-1(c). Therefore, in accordance with § 1.482-1(d) (Comparability), to the extent that a method relies on internal data rather than uncontrolled comparables, its reliability will be reduced. Similarly, the reliability of a method will be affected by the reliability of the data and assumptions used to apply the method, including any projections used.

(2) ***Example.*** The following example illustrates an application of the principle of this paragraph (e).

Example. Amcan, a U.S. company, produces unique vessels for storing and transporting toxic waste, toxicans, at its U.S. production facility. Amcan agrees by contract to supply its Canadian subsidiary, Cancan, with 4000 toxicans per year to serve the Canadian market for toxicans. Prior to entering into the contract with Cancan, Amcan had received a bona fide offer from an independent Canadian waste disposal company, Cando, to serve as the Canadian distributor for toxicans and to purchase a similar number of toxicans at a price of $5,000 each. If the circumstances and terms of the Cancan supply contract are sufficiently similar to those of the Cando offer, or sufficiently reliable adjustments can be made for differences between them, then the Cando offer price of $5,000 may provide reliable information indicating that an arm's length consideration under the Cancan contract will not be less than $5,000 per toxican.

(f) ***Coordination with intangible property rules.*** The value of an item of tangible property may be affected by the value of intangible property, such as a trademark affixed to the tangible property (embedded intangible). Ordinarily, the transfer of tangible property with an embedded intangible will not be considered a transfer of such intangible if the controlled purchaser does not acquire any rights to exploit the intangible property other than rights relating to the resale of the tangible property under normal commercial practices. Pursuant to § 1.482-1(d)(3)(v), however, the embedded intangible must be accounted for in evaluating the comparability of the controlled transaction and uncontrolled comparables. For example, because product comparability has the greatest effect on an application of the comparable uncontrolled price method, trademarked tangible property may be insufficiently comparable to unbranded tangible property to permit a reliable application of the comparable uncontrolled price method. The effect of embedded intangibles on comparability will be determined under the principles of § 1.482-4. If the transfer of tangible property conveys to the recipient a right to exploit an embedded intangible (other than in connection with the resale of that item of tangible property), it may be necessary to determine the arm's length consideration for such intangible separately from the tangible property, applying methods appropriate to determining the arm's length result for a transfer of intangible property under § 1.482-4. For example, if the transfer of a machine conveys the right to exploit a manufacturing process incorporated in the machine, then the arm's length consideration for the transfer of that right must be determined separately under § 1.482-4.

[T.D. 8552, 59 FR 35011, July 8, 1994; 60 FR 16382, Mar. 30, 1995]

§ 1.482-4 Methods to determine taxable income in connection with a transfer of intangible property.

(a) ***In general.*** The arm's length amount charged in a controlled transfer of intangible property must be determined under one of the four methods listed in this paragraph (a). Each of the methods must be applied in accordance with all of the provisions of § 1.482-1, including the best method rule of § 1.482-1(c), the comparability analysis of § 1.482-1(d), and the arm's length range of § 1.482-1(e). The arm's length consideration for the transfer of an intangible determined under this section must be commensurate with the income attributable to the intangible. See § 1.482-4(f)(2) (Periodic adjustments). The available methods are—

(1) The comparable uncontrolled transaction method, described in paragraph (c) of this section;

(2) The comparable profits method, described in § 1.482-5;

(3) The profit split method, described in § 1.482-6; and

(4) Unspecified methods described in paragraph (d) of this section.

(b) ***Definition of intangible.*** For purposes of section 482, an intangible is an asset that comprises any of the following items and has substantial value independent of the services of any individual—

(1) Patents, inventions, formulae, processes, designs, patterns, or know-how;

(2) Copyrights and literary, musical, or artistic compositions;

(3) Trademarks, trade names, or brand names;

(4) Franchises, licenses, or contracts;

(5) Methods, programs, systems, procedures, campaigns, surveys, studies, forecasts, estimates, customer lists, or technical data; and

(6) Other similar items. For purposes of section 482, an item is considered similar to those listed in paragraph (b)(1) through (5) of this section if it derives its value not from its physical attributes but from its intellectual content or other intangible properties.

(c) ***Comparable uncontrolled transaction method*** —

(1) ***In general.*** The comparable uncontrolled transaction method evaluates whether the amount charged for a controlled transfer of intangible property was arm's length by reference to the amount charged in a comparable uncontrolled transaction. The amount determined under this method may be adjusted as required by paragraph (f)(2) of this section (Periodic adjustments).

(2) ***Comparability and reliability considerations*** —

(i) ***In general.*** Whether results derived from applications of this method are the most reliable measure of an arm's length result is determined using the factors described under the best method rule in § 1.482-1(c). The application of these factors under the comparable uncontrolled transaction method is discussed in paragraphs (c)(2)(ii), (iii), and (iv) of this section.

(ii) ***Reliability.*** If an uncontrolled transaction involves the transfer of the same intangible under the same, or substantially the same, circumstances as the controlled transaction, the results derived from applying the comparable uncontrolled transaction method will generally be the most direct and reliable measure of the arm's length result for the controlled transfer of an intangible. Circumstances between the controlled and uncontrolled transactions will be considered substantially the same if there are at most only minor differences that have a definite and reasonably ascertainable effect on the amount charged and for which appropriate adjustments are made. If such uncontrolled transactions cannot be identified, uncontrolled transactions that involve the transfer of comparable intangibles under comparable circumstances may be used to apply this method, but the reliability of the analysis will be reduced.

(iii) ***Comparability*** —

(A) ***In general.*** The degree of comparability between controlled and uncontrolled transactions is determined by applying the comparability provisions of § 1.482-1(d). Although all of the factors described in § 1.482-1(d)(3) must be considered, specific factors may be particularly relevant to this method. In particular, the application of this method requires that the controlled and uncontrolled transactions involve either the same intangible property or comparable intangible property, as defined in paragraph (c)(2)(iii)(B)(*1*) of this section. In addition, because differences in contractual terms, or the economic conditions

in which transactions take place, could materially affect the amount charged, comparability under this method also depends on similarity with respect to these factors, or adjustments to account for material differences in such circumstances.

(B) ***Factors to be considered in determining comparability*** —

(*1*) ***Comparable intangible property.*** In order for the intangible property involved in an uncontrolled transaction to be considered comparable to the intangible property involved in the controlled transaction, both intangibles must—

(*i*) Be used in connection with similar products or processes within the same general industry or market; and

(*ii*) Have similar profit potential. The profit potential of an intangible is most reliably measured by directly calculating the net present value of the benefits to be realized (based on prospective profits to be realized or costs to be saved) through the use or subsequent transfer of the intangible, considering the capital investment and start-up expenses required, the risks to be assumed, and other relevant considerations. The need to reliably measure profit potential increases in relation to both the total amount of potential profits and the potential rate of return on investment necessary to exploit the intangible. If the information necessary to directly calculate net present value of the benefits to be realized is unavailable, and the need to reliably measure profit potential is reduced because the potential profits are relatively small in terms of total amount and rate of return, comparison of profit potential may be based upon the factors referred to in paragraph (c)(2)(iii)(B)(*2*) of this section. See *Example 3* of § 1.482-4(c)(4). Finally, the reliability of a measure of profit potential is affected by the extent to which the profit attributable to the intangible can be isolated from the profit attributable to other factors, such as functions performed and other resources employed.

(*2*) ***Comparable circumstances.*** In evaluating the comparability of the circumstances of the controlled and uncontrolled transactions, although all of the factors described in § 1.482-1(d)(3) must be considered, specific factors that may be particularly relevant to this method include the following—

(*i*) The terms of the transfer, including the exploitation rights granted in the intangible, the exclusive or nonexclusive character of any rights granted, any restrictions on use, or any limitations on the geographic area in which the rights may be exploited;

(*ii*) The stage of development of the intangible (including, where appropriate, necessary governmental approvals, authorizations, or licenses) in the market in which the intangible is to be used;

(*iii*) Rights to receive updates, revisions, or modifications of the intangible;

(*iv*) The uniqueness of the property and the period for which it remains unique, including the degree and duration of protection afforded to the property under the laws of the relevant countries;

(*v*) The duration of the license, contract, or other agreement, and any termination or renegotiation rights;

(*vi*) Any economic and product liability risks to be assumed by the transferee;

(*vii*) The existence and extent of any collateral transactions or ongoing business relationships between the transferee and transferor; and

(*viii*) The functions to be performed by the transferor and transferee, including any ancillary or subsidiary services.

(iv) ***Data and assumptions.*** The reliability of the results derived from the comparable uncontrolled transaction method is affected by the completeness and accuracy of the data used and the reliability of the assumptions made to apply this method. See § 1.482-1(c) (Best method rule).

(3) ***Arm's length range.*** See § 1.482-1(e)(2) for the determination of an arm's length range.

(4) ***Examples.*** The following examples illustrate the principles of this paragraph (c).

Example 1. (i) USpharm, a U.S. pharmaceutical company, develops a new drug Z that is a safe and effective treatment for the disease zeezee. USpharm has obtained patents covering drug Z in the United States and in various foreign countries. USpharm has also obtained the regulatory authorizations necessary to market drug Z in the United States and in foreign countries.
(ii) USpharm licenses its subsidiary in country X, Xpharm, to produce and sell drug Z in country X. At the same time, it licenses an unrelated company, Ydrug, to produce and sell drug Z in country Y, a neighboring country. Prior to licensing the drug, USpharm had obtained patent protection and regulatory approvals in both countries and both countries provide similar protection for intellectual property rights. Country X and country Y are similar countries in terms of population, per capita income and the incidence of disease zeezee. Consequently, drug Z is expected to sell in similar quantities and at similar prices in both countries. In addition, costs of producing and marketing drug Z in each country are expected to be approximately the same.

(iii) USpharm and Xpharm establish terms for the license of drug Z that are identical in every material respect, including royalty rate, to the terms established between USpharm and Ydrug. In this case the district director determines that the royalty rate established in the Ydrug license agreement is a reliable measure of the arm's length royalty rate for the Xpharm license agreement.

Example 2. The facts are the same as in *Example 1,* except that the incidence of the disease zeezee in Country Y is much higher than in Country X. In this case, the profit potential from exploitation of the right to make and sell drug Z is likely to be much higher in country Y than it is in Country X. Consequently, the Ydrug license agreement is unlikely to provide a reliable measure of the arm's length royalty rate for the Xpharm license.

Example 3. (i) FP, is a foreign company that designs, manufactures and sells industrial

equipment. FP has developed proprietary components that are incorporated in its products. These components are important in the operation of FP's equipment and some of them have distinctive features, but other companies produce similar components and none of these components by itself accounts for a substantial part of the value of FP's products.
(ii) FP licenses its U.S. subsidiary, USSub, exclusive North American rights to use the patented technology for producing component X, a heat exchanger used for cooling operating mechanisms in industrial equipment. Component X incorporates proven technology that makes it somewhat more efficient than the heat exchangers commonly used in industrial equipment. FP also agrees to provide technical support to help adapt component X to USSub's products and to assist with initial production. Under the terms of the license agreement USSub pays FP a royalty equal to 3 percent of sales of USSub equipment incorporating component X.

(iii) FP does not license unrelated parties to use component X, but many similar components are transferred between uncontrolled taxpayers. Consequently, the district director decides to apply the comparable uncontrolled transaction method to evaluate whether the 3 percent royalty for component X is an arm's length royalty.

(iv) The district director uses a database of company documents filed with the Securities and Exchange Commission (SEC) to identify potentially comparable license agreements between uncontrolled taxpayers that are on file with the SEC. The district director identifies 40 license agreements that were entered into in the same year as the controlled transfer or in the prior or following year, and that relate to transfers of technology associated with industrial equipment that has similar applications to USSub's products. Further review of these uncontrolled agreements indicates that 25 of them involved components that have a similar level of technical sophistication as component X and could be expected to play a similar role in contributing to the total value of the final product.

(v) The district director makes a detailed review of the terms of each of the 25 uncontrolled agreements and finds that 15 of them are similar to the controlled agreement in that they all involve—

(A) The transfer of exclusive rights for the North American market;

(B) Products for which the market could be expected to be of a similar size to the market for the products into which USSub incorporates component X;

(C) The transfer of patented technology;

(D) Continuing technical support;

(E) Access to technical improvements;

(F) Technology of a similar age; and

(G) A similar duration of the agreement.

(vi) Based on these factors and the fact that none of the components to which these license agreements relate accounts for a substantial part of the value of the final products, the district director concludes that these fifteen intangibles have similar profit potential to the component X technology.

(vii) The 15 uncontrolled comparables produce the following royalty rates:

License	Royalty rate (percent)
1	1.0
2	1.0
3	1.25
4	1.25
5	1.5
6	1.5
7	1.75
8	2.0
9	2.0
10	2.0
11	2.25
12	2.5
13	2.5
14	2.75
15	3.0

(viii) Although the uncontrolled comparables are clearly similar to the controlled transaction, it is likely that unidentified material differences exist between the uncontrolled comparables and the controlled transaction. Therefore, an appropriate statistical technique must be used to establish the arm's length range. In this case the district director uses the interquartile range to determine the arm's length range. Therefore, the arm's length range covers royalty rates from 1.25 to 2.5 percent, and an

adjustment is warranted to the 3 percent royalty charged in the controlled transfer. The district director determines that the appropriate adjustment corresponds to a reduction in the royalty rate to 2.0 percent, which is the median of the uncontrolled comparables.

Example 4. (i) USdrug, a U.S. pharmaceutical company, has developed a new drug, Nosplit, that is useful in treating migraine headaches and produces no significant side effects. Nosplit replaces another drug, Lessplit, that USdrug had previously produced and marketed as a treatment for migraine headaches. A number of other drugs for treating migraine headaches are already on the market, but Nosplit can be expected rapidly to dominate the worldwide market for such treatments and to command a premium price since all other treatments produce side effects. Thus, USdrug projects that extraordinary profits will be derived from Nosplit in the U.S. market and other markets.
(ii) USdrug licenses its newly established European subsidiary, Eurodrug, the rights to produce and market Nosplit in the European market. In setting the royalty rate for this license, USdrug considers the royalty that it established previously when it licensed the right to produce and market Lessplit in the European market to an unrelated European pharmaceutical company. In many respects the two license agreements are closely comparable. The drugs were licensed at the same stage in their development and the agreements conveyed identical rights to the licensees. Moreover, there appear to have been no significant changes in the European market for migraine headache treatments since Lessplit was licensed. However, at the time that Lessplit was licensed there were several other similar drugs already on the market to which Lessplit was not in all cases superior. Consequently, the projected and actual Lessplit profits were substantially less than the projected Nosplit profits. Thus, USdrug concludes that the profit potential of Lessplit is not similar to the profit potential of Nosplit, and the Lessplit license agreement consequently is not a comparable uncontrolled transaction for purposes of this paragraph (c) in spite of the other indicia of comparability between the two intangibles.

(d) ***Unspecified methods*** —

(1) ***In general.*** Methods not specified in paragraphs (a)(1), (2), and (3) of this section may be used to evaluate whether the amount charged in a controlled transaction is arm's length. Any method used under this paragraph (d) must be applied in accordance with the provisions of § 1.482-1. Consistent with the specified methods, an unspecified method should take into account the general principle that uncontrolled taxpayers evaluate the terms of a transaction by considering the realistic alternatives to that transaction, and only enter into a particular transaction if none of the alternatives is preferable to it. For example, the comparable uncontrolled transaction method compares a controlled transaction to similar uncontrolled transactions to provide a direct estimate of the price the parties would have agreed to had they resorted directly to a market alternative to the controlled transaction. Therefore, in establishing whether a controlled transaction achieved an arm's length result, an unspecified method should provide information on the prices or profits that the controlled

taxpayer could have realized by choosing a realistic alternative to the controlled transaction. As with any method, an unspecified method will not be applied unless it provides the most reliable measure of an arm's length result under the principles of the best method rule. See § 1.482-1(c). Therefore, in accordance with § 1.482-1(d) (Comparability), to the extent that a method relies on internal data rather than uncontrolled comparables, its reliability will be reduced. Similarly, the reliability of a method will be affected by the reliability of the data and assumptions used to apply the method, including any projections used.

(2) ***Example.*** The following example illustrates an application of the principle of this paragraph (d).

> *Example.* (i) USbond is a U.S. company that licenses to its foreign subsidiary, Eurobond, a proprietary process that permits the manufacture of Longbond, a long-lasting industrial adhesive, at a substantially lower cost than otherwise would be possible. Using the proprietary process, Eurobond manufactures Longbond and sells it to related and unrelated parties for the market price of $550 per ton. Under the terms of the license agreement, Eurobond pays USbond a royalty of $100 per ton of Longbond sold. USbond also manufactures and markets Longbond in the United States.
> (ii) In evaluating whether the consideration paid for the transfer of the proprietary process to Eurobond was arm's length, the district director may consider, subject to the best method rule of § 1.482-1(c), USbond's alternative of producing and selling Longbond itself. Reasonably reliable estimates indicate that if USbond directly supplied Longbond to the European market, a selling price of $300 per ton would cover its costs and provide a reasonable profit for its functions, risks and investment of capital associated with the production of Longbond for the European market. Given that the market price of Longbond was $550 per ton, by licensing the proprietary process to Eurobond, USbond forgoes $250 per ton of profit over the profit that would be necessary to compensate it for the functions, risks and investment involved in supplying Longbond to the European market itself. Based on these facts, the district director concludes that a royalty of $100 for the proprietary process is not arm's length.

(e) ***Coordination with tangible property rules.*** See § 1.482-3(f) for the provisions regarding the coordination between the tangible property and intangible property rules.

(f) ***Special rules for transfers of intangible property*** —

(1) ***Form of consideration.*** If a transferee of an intangible pays nominal or no consideration and the transferor has retained a substantial interest in the property, the arm's length consideration shall be in the form of a royalty, unless a different form is demonstrably more appropriate.

(2) ***Periodic adjustments*** —

(i) General rule. If an intangible is transferred under an arrangement that covers more than one year, the consideration charged in each taxable year may be adjusted to ensure that it is commensurate with the income attributable to the intangible. Adjustments made pursuant to this paragraph (f)(2) shall be consistent with the arm's length standard and the provisions of § 1.482-1. In determining whether to make such adjustments in the taxable year under examination, the district director may consider all relevant facts and circumstances throughout the period the intangible is used. The determination in an earlier year that the amount charged

for an intangible was an arm's length amount will not preclude the district director in a subsequent taxable year from making an adjustment to the amount charged for the intangible in the subsequent year. A periodic adjustment under the commensurate with income requirement of section 482 may be made in a subsequent taxable year without regard to whether the taxable year of the original transfer remains open for statute of limitation purposes. For exceptions to this rule see paragraph (f)(2)(ii) of this section.

(ii) *Exceptions* —

(A) ***Transactions involving the same intangible.*** If the same intangible was transferred to an uncontrolled taxpayer under substantially the same circumstances as those of the controlled transaction; this transaction serves as the basis for the application of the comparable uncontrolled transaction method in the first taxable year in which substantial periodic consideration was required to be paid; and the amount paid in that year was an arm's length amount, then no allocation in a subsequent year will be made under paragraph (f)(2)(i) of this paragraph for a controlled transfer of intangible property.

(B) ***Transactions involving comparable intangible.*** If the arm's length result is derived from the application of the comparable uncontrolled transaction method based on the transfer of a comparable intangible under comparable circumstances to those of the controlled transaction, no allocation will be made under paragraph (f)(2)(i) of this section if each of the following facts is established—

(*1*) The controlled taxpayers entered into a written agreement (controlled agreement) that provided for an amount of consideration with respect to each taxable year subject to such agreement, such consideration was an arm's length amount for the first taxable year in which substantial periodic consideration was required to be paid under the agreement, and such agreement remained in effect for the taxable year under review;

(*2*) There is a written agreement setting forth the terms of the comparable uncontrolled transaction relied upon to establish the arm's length consideration (uncontrolled agreement), which contains no provisions that would permit any change to the amount of consideration, a renegotiation, or a termination of the agreement, in circumstances comparable to those of the controlled transaction in the taxable year under review (or that contains provisions permitting only specified, non-contingent, periodic changes to the amount of consideration);

(*3*) The controlled agreement is substantially similar to the uncontrolled agreement, with respect to the time period for which it is effective and the provisions described in paragraph (f)(2)(ii)(B)(*2*) of this section;

(*4*) The controlled agreement limits use of the intangible to a specified field or purpose in a manner that is consistent with industry practice and any such limitation in the uncontrolled agreement;

(*5*) There were no substantial changes in the functions performed by the controlled transferee after the controlled agreement was executed, except changes required by events that were not foreseeable; and

(6) The aggregate profits actually earned or the aggregate cost savings actually realized by the controlled taxpayer from the exploitation of the intangible in the year under examination, and all past years, are not less than 80% nor more than 120% of the prospective profits or cost savings that were foreseeable when the comparability of the uncontrolled agreement was established under paragraph (c)(2) of this section.

(C) ***Methods other than comparable uncontrolled transaction.*** If the arm's length amount was determined under any method other than the comparable uncontrolled transaction method, no allocation will be made under paragraph (f)(2)(i) of this section if each of the following facts is established—

(1) The controlled taxpayers entered into a written agreement (controlled agreement) that provided for an amount of consideration with respect to each taxable year subject to such agreement, and such agreement remained in effect for the taxable year under review;

(2) The consideration called for in the controlled agreement was an arm's length amount for the first taxable year in which substantial periodic consideration was required to be paid, and relevant supporting documentation was prepared contemporaneously with the execution of the controlled agreement;

(3) There have been no substantial changes in the functions performed by the transferee since the controlled agreement was executed, except changes required by events that were not foreseeable; and

(4) The total profits actually earned or the total cost savings realized by the controlled transferee from the exploitation of the intangible in the year under examination, and all past years, are not less than 80% nor more than 120% of the prospective profits or cost savings that were foreseeable when the controlled agreement was entered into.

(D) ***Extraordinary events.*** No allocation will be made under paragraph (f)(2)(i) of this section if the following requirements are met—

(1) Due to extraordinary events that were beyond the control of the controlled taxpayers and that could not reasonably have been anticipated at the time the controlled agreement was entered into, the aggregate actual profits or aggregate cost savings realized by the taxpayer are less than 80% or more than 120% of the prospective profits or cost savings; and

(2) All of the requirements of paragraph (f)(2)(ii) (B) or (C) of this section are otherwise satisfied.

(E) ***Five-year period.*** If the requirements of § 1.482-4 (f)(2)(ii)(B) or (f)(2)(ii)(C) are met for each year of the five-year period beginning with the first year in which substantial periodic consideration was required to be paid, then no periodic adjustment will be made under paragraph (f)(2)(i) of this section in any subsequent year.

(iii) ***Examples.*** The following examples illustrate this paragraph (f)(2).

> *Example 1.* (i) USdrug, a U.S. pharmaceutical company, has developed a new drug, Nosplit, that is useful in treating migraine headaches and produces no significant side effects. A number of other drugs for treating migraine headaches are already on the

market, but Nosplit can be expected rapidly to dominate the worldwide market for such treatments and to command a premium price since all other treatments produce side effects. Thus, USdrug projects that extraordinary profits will be derived from Nosplit in the U.S. and European markets.
(ii) USdrug licenses its newly established European subsidiary, Eurodrug, the rights to produce and market Nosplit for the European market for 5 years. In setting the royalty rate for this license, USdrug makes projections of the annual sales revenue and the annual profits to be derived from the exploitation of Nosplit by Eurodrug. Based on the projections, a royalty rate of 3.9% is established for the term of the license.

(iii) In Year 1, USdrug evaluates the royalty rate it received from Eurodrug. Given the high profit potential of Nosplit, USdrug is unable to locate any uncontrolled transactions dealing with licenses of comparable intangible property. USdrug therefore determines that the comparable uncontrolled transaction method will not provide a reliable measure of an arm's length royalty. However, applying the comparable profits method to Eurodrug, USdrug determines that a royalty rate of 3.9% will result in Eurodrug earning an arm's length return for its manufacturing and marketing functions.

(iv) In Year 5, the U.S. income tax return for USdrug is examined, and the district director must determine whether the royalty rate between USdrug and Eurodrug is commensurate with the income attributable to Nosplit. In making this determination, the district director considers whether any of the exceptions in § 1.482-4(f)(2)(ii) are applicable. In particular, the district director compares the profit projections attributable to Nosplit made by USdrug against the actual profits realized by Eurodrug. The projected and actual profits are as follows:

	Profit projections	Actual profits
Year 1	200	250
Year 2	250	300
Year 3	500	600
Year 4	350	200
Year 5	100	100
Total	1400	1450

(v) The total profits earned through Year 5 were not less than 80% nor more than 120% of the profits that were projected when the license was entered into. If the district director determines that the other requirements of § 1.482-4(f)(2)(ii)(C) were met, no adjustment will be made to the royalty rate between USdrug and Eurodrug for the license

of Nosplit.

Example 2. (i) The facts are the same as in *Example 1,* except that Eurodrug's actual profits earned were much higher than the projected profits, as follows:

	Profit projections	Actual profits
Year 1	200	250
Year 2	250	500
Year 3	500	800
Year 4	350	700
Year 5	100	600
Total	1400	2850

(ii) In examining USdrug's tax return for Year 5, the district director considers the actual profits realized by Eurodrug in Year 5, and all past years. Accordingly, although Years 1 through 4 may be closed under the statute of limitations, for purposes of determining whether an adjustment should be made with respect to the royalty rate in Year 5 with respect to Nosplit, the district director aggregates the actual profits from those years with the profits of Year 5. However, the district director will make an adjustment, if any, only with respect to Year 5.

Example 3. (i) FP, a foreign corporation, licenses to USS, its U.S. subsidiary, a new air-filtering process that permits manufacturing plants to meet new environmental standards. The license runs for a 10-year period, and the profit derived from the new process is projected to be $15 million per year, for an aggregate profit of $150 million.
(ii) The royalty rate for the license is based on a comparable uncontrolled transaction involving a comparable intangible under comparable circumstances. The requirements of paragraphs (f)(2)(ii)(B)(*1*) through (*5*) of this section have been met. Specifically, FP and USS have entered into a written agreement that provides for a royalty in each year of the license, the royalty rate is considered arm's length for the first taxable year in which a substantial royalty was required to be paid, the license limited the use of the process to a specified field, consistent with industry practice, and there are no substantial changes in the functions performed by USS after the license was entered into.

(iii) In examining Year 4 of the license, the district director determines that the aggregate actual profits earned by USS through Year 4 are $30 million, less than 80% of the projected profits of $60 million. However, USS establishes to the satisfaction of the

> district director that the aggregate actual profits from the process are less than 80% of the projected profits in Year 3 because an earthquake severely damaged USS's manufacturing plant. Because the difference between the projected profits and actual profits was due to an extraordinary event that was beyond the control of USS, and could not reasonably have been anticipated at the time the license was entered into, the requirement under § 1.482-4(f)(2)(ii)(D) has been met, and no adjustment under this section is made.

(3) ***Ownership of intangible property*** —

(i) ***Identification of owner*** —

(A) ***In general.*** The legal owner of intangible property pursuant to the intellectual property law of the relevant jurisdiction, or the holder of rights constituting an intangible property pursuant to contractual terms (such as the terms of a license) or other legal provision, will be considered the sole owner of the respective intangible property for purposes of this section unless such ownership is inconsistent with the economic substance of the underlying transactions. *See* § 1.482-1(d)(3)(ii)(B) (identifying contractual terms). If no owner of the respective intangible property is identified under the intellectual property law of the relevant jurisdiction, or pursuant to contractual terms (including terms imputed pursuant to § 1.482-1(d)(3)(ii)(B)) or other legal provision, then the controlled taxpayer who has control of the intangible property, based on all the facts and circumstances, will be considered the sole owner of the intangible property for purposes of this section.

(B) ***Cost sharing arrangements.*** The rules in this paragraph (f)(3) regarding ownership with respect to cost shared intangibles and cost sharing arrangements will apply only as provided in § 1.482-7.

(ii) ***Examples.*** The principles of this paragraph (f)(3) are illustrated by the following examples:

Example 1. FP, a foreign corporation, is the registered holder of the AA trademark in the United States. FP licenses to its U.S. subsidiary, USSub, the exclusive rights to manufacture and market products in the United States under the AA trademark. FP is the owner of the trademark pursuant to intellectual property law. USSub is the owner of the license pursuant to the terms of the license, but is not the owner of the trademark. *See* paragraphs (b)(3) and (4) of this section (defining an intangible as, among other things, a trademark or a license).

Example 2. The facts are the same as in *Example 1.* As a result of its sales and marketing activities, USSub develops a list of several hundred creditworthy customers that regularly purchase AA trademarked products. Neither the terms of the contract between FP and USSub nor the relevant intellectual property law specify which party owns the customer list. Because USSub has knowledge of the contents of the list, and has practical control over its use and dissemination, USSub is considered the sole owner of the customer list for purposes of this paragraph (f)(3).

(4) ***Contribution to the value of intangible property owned by another*** —

(i) ***In general.*** The arm's length consideration for a contribution by one controlled taxpayer that develops or enhances the value, or may be reasonably anticipated to develop or enhance the value, of intangible property owned by another controlled taxpayer will be determined in accordance with the applicable rules under section 482. If the consideration for such a contribution is embedded within the contractual terms for a controlled transaction that involves such intangible property, then ordinarily no separate allocation will be made with respect to such contribution. In such cases, pursuant to § 1.482-1(d)(3), the contribution must be accounted for in evaluating the comparability of the controlled transaction to uncontrolled comparables, and accordingly in determining the arm's length consideration in the controlled transaction.

(ii) ***Examples.*** The principles of this paragraph (f)(4) are illustrated by the following examples:

Example 1. A, a member of a controlled group, allows B, another member of the controlled group, to use tangible property, such as laboratory equipment, in connection with B's development of an intangible that B owns. By furnishing tangible property, A makes a contribution to the development of intangible property owned by another controlled taxpayer, B. Pursuant to paragraph (f)(4)(i) of this section, the arm's length charge for A's furnishing of tangible property will be determined under the rules for use of tangible property in § 1.482-2(c).

Example 2. (i) *Facts.* FP, a foreign producer of wristwatches, is the registered holder of the YY trademark in the United States and in other countries worldwide. FP enters into an exclusive, five-year, renewable agreement with its newly organized U.S. subsidiary, USSub. The contractual terms of the agreement grant USSub the exclusive right to re-sell YY trademark wristwatches in the United States, obligate USSub to pay a fixed price per wristwatch throughout the entire term of the contract, and obligate both FP and USSub to undertake without separate compensation specified types and levels of marketing activities.
(ii) The consideration for FP's and USSub's marketing activities, as well as the consideration for the exclusive right to re-sell YY trademarked merchandise in the United States, are embedded in the transfer price paid for the wristwatches. Accordingly, pursuant to paragraph (f)(4)(i) of this section, ordinarily no separate allocation would be appropriate with respect to these embedded contributions.

(iii) Whether an allocation is warranted with respect to the transfer price for the wristwatches is determined under §§ 1.482-1, 1.482-3, and this section through § 1.482-6. The comparability analysis would include consideration of all relevant factors, including the nature of the intangible property embedded in the wristwatches and the nature of the marketing activities required under the agreement. This analysis would also take into account that the compensation for the activities performed by USSub and FP, as well as the consideration for USSub's

use of the YY trademark, is embedded in the transfer price for the wristwatches, rather than provided for in separate agreements. *See* §§ 1.482-3(f) and 1.482-9(m)(4).

Example 3. (i) *Facts.* FP, a foreign producer of athletic gear, is the registered holder of the AA trademark in the United States and in other countries. In year 1, FP licenses to a newly organized U.S. subsidiary, USSub, the exclusive rights to use certain manufacturing and marketing intangible property to manufacture and market athletic gear in the United States under the AA trademark. The license agreement obligates USSub to pay a royalty based on sales of trademarked merchandise. The license agreement also obligates FP and USSub to perform without separate compensation specified types and levels of marketing activities. In year 1, USSub manufactures and sells athletic gear under the AA trademark in the United States.
(ii) The consideration for FP's and USSub's respective marketing activities is embedded in the contractual terms of the license for the AA trademark. Accordingly, pursuant to paragraph (f)(4)(i) of this section, ordinarily no separate allocation would be appropriate with respect to the embedded contributions in year 1. *See* § 1.482-9(m)(4).

(iii) Whether an allocation is warranted with respect to the royalty under the license agreement would be analyzed under § 1.482-1, and this section through § 1.482-6. The comparability analysis would include consideration of all relevant factors, such as the term and geographical exclusivity of the license, the nature of the intangible property subject to the license, and the nature of the marketing activities required to be undertaken pursuant to the license. Pursuant to paragraph (f)(4)(i) of this section, the analysis would also take into account the fact that the compensation for the marketing services is embedded in the royalty paid for use of the AA trademark, rather than provided for in a separate services agreement. For illustrations of application of the best method rule, *see* § 1.482-8 *Examples 10*, *11*, and *12*.

Example 4. (i) *Facts.* The year 1 facts are the same as in *Example 3*, with the following exceptions. In year 2, USSub undertakes certain incremental marketing activities in addition to those required by the contractual terms of the license for the AA trademark executed in year 1. The parties do not execute a separate agreement with respect to these incremental marketing activities performed by USSub. The license agreement executed in year 1 is of sufficient duration that it is reasonable to anticipate that USSub will obtain the benefit of its incremental activities, in the form of increased sales or revenues of trademarked products in the U.S. market.

(ii) To the extent that it was reasonable to anticipate that USSub's incremental marketing activities would increase the value only of USSub's intangible property (that is, USSub's license to use the AA trademark for a specified term), and not the value of the AA trademark owned by FP, USSub's incremental activities do not constitute a contribution for which an allocation is warranted under paragraph (f)(4)(i) of this section.

Example 5. (i) *Facts.* The year 1 facts are the same as in *Example 3.* In year 2, FP and USSub enter into a separate services agreement that obligates USSub to perform certain incremental marketing activities to promote AA trademark athletic gear in the United States, above and beyond the activities specified in the license agreement executed in year 1. In year 2, USSub begins to perform these incremental activities, pursuant to the separate services agreement with FP.
(ii) Whether an allocation is warranted with respect to USSub's incremental marketing activities covered by the separate services agreement would be evaluated under §§ 1.482-1 and 1.482-9, including a comparison of the compensation provided for the services with the results obtained under a method pursuant to § 1.482-9, selected and applied in accordance with the best method rule of § 1.482-1(c).

(iii) Whether an allocation is warranted with respect to the royalty under the license agreement is determined under § 1.482-1, and this section through § 1.482-6. The comparability analysis would include consideration of all relevant factors, such as the term and geographical exclusivity of the license, the nature of the intangible property subject to the license, and the nature of the marketing activities required to be undertaken pursuant to the license. The comparability analysis would take into account that the compensation for the incremental activities by USSub is provided for in the separate services agreement, rather than embedded in the royalty paid for use of the AA trademark. For illustrations of application of the best method rule, *see* § 1.482-8 *Examples 10*, *11*, and *12*.

Example 6. (i) *Facts.* The year 1 facts are the same as in *Example 3.* In year 2, FP and USSub enter into a separate services agreement that obligates FP to perform incremental marketing activities, not specified in the year 1 license, by advertising AA trademarked athletic gear in selected international sporting events, such as the Olympics and the soccer World Cup. FP's corporate advertising department develops and coordinates these special promotions. The separate services agreement obligates USSub to pay an amount to FP for the benefit to USSub that may reasonably be anticipated as the result of FP's incremental activities. The separate services agreement is not a qualified cost sharing arrangement under §

1.482-7T. FP begins to perform the incremental activities in year 2 pursuant to the separate services agreement.
(ii) Whether an allocation is warranted with respect to the incremental marketing activities performed by FP under the separate services agreement would be evaluated under § 1.482-9. Under the circumstances, it is reasonable to anticipate that FP's activities would increase the value of USSub's license as well as the value of FP's trademark. Accordingly, the incremental activities by FP may constitute in part a controlled services transaction for which USSub must compensate FP. The analysis of whether an allocation is warranted would include a comparison of the compensation provided for the services with the results obtained under a method pursuant to § 1.482-9, selected and applied in accordance with the best method rule of § 1.482-1(c).

(iii) Whether an allocation is appropriate with respect to the royalty under the license agreement would be evaluated under §§ 1.482-1 through 1.482-3, this section, and §§ 1.482-5 and 1.482-6. The comparability analysis would include consideration of all relevant factors, such as the term and geographical exclusivity of USSub's license, the nature of the intangible property subject to the license, and the marketing activities required to be undertaken by both FP and USSub pursuant to the license. This comparability analysis would take into account that the compensation for the incremental activities performed by FP was provided for in the separate services agreement, rather than embedded in the royalty paid for use of the AA trademark. For illustrations of application of the best method rule, *see* § 1.482-8, *Example 10*, *Example 11*, and *Example 12*.

(5) ***Consideration not artificially limited.*** The arm's length consideration for the controlled transfer of an intangible is not limited by the consideration paid in any uncontrolled transactions that do not meet the requirements of the comparable uncontrolled transaction method described in paragraph (c) of this section. Similarly, the arm's length consideration for an intangible is not limited by the prevailing rates of consideration paid for the use or transfer of intangibles within the same or similar industry.

(6) ***Lump sum payments*** —

(i) ***In general.*** If an intangible is transferred in a controlled transaction for a lump sum, that amount must be commensurate with the income attributable to the intangible. A lump sum is commensurate with income in a taxable year if the equivalent royalty amount for that taxable year is equal to an arm's length royalty. The equivalent royalty amount for a taxable year is the amount determined by treating the lump sum as an advance payment of a stream of royalties over the useful life of the intangible (or the period covered by an agreement, if shorter), taking into account the projected sales of the licensee as of the date of the transfer. Thus, determining the equivalent royalty amount requires a present value calculation based on the lump sum, an appropriate discount rate, and the projected sales over the relevant period. The equivalent royalty amount is subject to periodic adjustments under § 1.482-4(f)(2)(i) to the same extent as an actual royalty payment pursuant to a license agreement.

(ii) ***Exceptions.*** No periodic adjustment will be made under paragraph (f)(2)(i) of this section if any of the exceptions to periodic adjustments provided in paragraph (f)(2)(ii) of this section apply.

(iii) ***Example.*** The following example illustrates the principle of this paragraph (f)(5).

Example. Calculation of the equivalent royalty amount. (i) FSub is the foreign subsidiary of USP, a U.S. company. USP licenses FSub the right to produce and sell the whopperchopper, a patented new kitchen appliance, for the foreign market. The license is for a period of five years, and payment takes the form of a single lump-sum charge of $500,000 that is paid at the beginning of the period.
(ii) The equivalent royalty amount for this license is determined by deriving an equivalent royalty rate equal to the lump-sum payment divided by the present discounted value of FSub's projected sales of whopperchoppers over the life of the license. Based on the riskiness of the whopperchopper business, an appropriate discount rate is determined to be 10 percent. Projected sales of whopperchoppers for each year of the license are as follows:

Year	Projected sales
1	$2,500,000
2	2,600,000
3	2,700,000
4	2,700,000
5	2,750,000

(iii) Based on this information, the present discounted value of the projected whopperchopper sales is approximately $10 million, yielding an equivalent royalty rate of approximately 5%. Thus, the equivalent royalty amounts for each year are as follows:

Year	Projected sales	Equivalent royalty amount
1	$2,500,000	$125,000
2	2,600,000	130,000
3	2,700,000	135,000
4	2,700,000	135,000
5	2,750,000	137,500

(iv) If in any of the five taxable years the equivalent royalty amount is determined not to be an arm's length amount, a periodic adjustment may be made pursuant to §

> 1.482-4(f)(2)(i). The adjustment in such case would be equal to the difference between the equivalent royalty amount and the arm's length royalty in that taxable year.

(g) ***Coordination with rules governing cost sharing arrangements.*** Section 1.482-7 provides the specific methods to be used to determine arm's length results of controlled transactions in connection with a cost sharing arrangement. This section provides the specific methods to be used to determine arm's length results of a transfer of intangible property, including in an arrangement for sharing the costs and risks of developing intangibles other than a cost sharing arrangement covered by § 1.482-7. In the case of such an arrangement, consideration of the principles, methods, comparability, and reliability considerations set forth in § 1.482-7 is relevant in determining the best method, including an unspecified method, under this section, as appropriately adjusted in light of the differences in the facts and circumstances between such arrangement and a cost sharing arrangement.

(h) ***Effective/applicability date*** —

(1) ***In general.*** Except as provided in the succeeding sentence, the provisions of paragraphs (f)(3) and (4) of this section are generally applicable for taxable years beginning after December 31, 2006. The provisions of paragraphs (f)(3)(i)(B) and (g) of this section are generally applicable on January 5, 2009.

(2) ***Election to apply regulation to earlier taxable years.*** A person may elect to apply the provisions of paragraphs (f)(3) and (4) of this section to earlier taxable years in accordance with the rules set forth in § 1.482-9(n)(2).

[T.D. 8552, 59 FR 35016, July 8, 1994; T.D. 9278, 71 FR 44484, Aug. 4, 2006; T.D. 9456, 74 FR 38842, Aug. 4, 2009; T.D. 9568, 76 FR 80090, Dec. 22, 2011]

§ 1.482-5 Comparable profits method.

(a) ***In general.*** The comparable profits method evaluates whether the amount charged in a controlled transaction is arm's length based on objective measures of profitability (profit level indicators) derived from uncontrolled taxpayers that engage in similar business activities under similar circumstances.

(b) ***Determination of arm's length result*** —

(1) ***In general.*** Under the comparable profits method, the determination of an arm's length result is based on the amount of operating profit that the tested party would have earned on related party transactions if its profit level indicator were equal to that of an uncontrolled comparable (comparable operating profit). Comparable operating profit is calculated by determining a profit level indicator for an uncontrolled comparable, and applying the profit level indicator to the financial data related to the tested party's most narrowly identifiable business activity for which data incorporating the controlled transaction is available (relevant business activity). To the extent possible, profit level indicators should be applied solely to the tested party's financial data that is related to controlled transactions. The tested party's reported operating profit is compared to the comparable operating profits derived from the profit level indicators of uncontrolled comparables to determine whether the reported operating profit represents an arm's length result.

(2) ***Tested party*** —

(i) ***In general.*** For purposes of this section, the tested party will be the participant in the controlled transaction whose operating profit attributable to the controlled transactions can be verified using the most reliable data and requiring the fewest and most reliable adjustments, and for which reliable data regarding uncontrolled comparables can be located. Consequently, in most cases the tested party will be the least complex of the controlled taxpayers and will not own valuable intangible property or unique assets that distinguish it from potential uncontrolled comparables.

(ii) ***Adjustments for tested party.*** The tested party's operating profit must first be adjusted to reflect all other allocations under section 482, other than adjustments pursuant to this section.

(3) ***Arm's length range.*** See § 1.482-1(e)(2) for the determination of the arm's length range. For purposes of the comparable profits method, the arm's length range will be established using comparable operating profits derived from a single profit level indicator.

(4) ***Profit level indicators.*** Profit level indicators are ratios that measure relationships between profits and costs incurred or resources employed. A variety of profit level indicators can be calculated in any given case. Whether use of a particular profit level indicator is appropriate depends upon a number of factors, including the nature of the activities of the tested party, the reliability of the available data with respect to uncontrolled comparables, and the extent to which the profit level indicator is likely to produce a reliable measure of the income that the tested party would have earned had it dealt with controlled taxpayers at arm's length, taking into account all of the facts and circumstances. The profit level indicators should be derived from a sufficient number of years of data to reasonably measure returns that accrue to uncontrolled comparables. Generally, such a period should encompass at least the taxable year under review and the preceding two taxable years. This analysis must be applied in accordance with § 1.482-1(f)(2)(iii)(D). Profit level indicators that may provide a reliable basis for comparing operating profits of the tested party and uncontrolled comparables include the following—

(i) ***Rate of return on capital employed.*** The rate of return on capital employed is the ratio of operating profit to operating assets. The reliability of this profit level indicator increases as operating assets play a greater role in generating operating profits for both the tested party and the uncontrolled comparable. In addition, reliability under this profit level indicator depends on the extent to which the composition of the tested party's assets is similar to that of the uncontrolled comparable. Finally, difficulties in properly valuing operating assets will diminish the reliability of this profit level indicator.

(ii) ***Financial ratios.*** Financial ratios measure relationships between profit and costs or sales revenue. Since functional differences generally have a greater effect on the relationship between profit and costs or sales revenue than the relationship between profit and operating assets, financial ratios are more sensitive to functional differences than the rate of return on capital employed. Therefore, closer functional comparability normally is required under a financial ratio than under the rate of return on capital employed to achieve a similarly reliable measure of an arm's length result. Financial ratios that may be appropriate include the following—

(A) Ratio of operating profit to sales; and

(B) Ratio of gross profit to operating expenses. Reliability under this profit level indicator also depends on the extent to which the composition of the tested party's operating expenses is similar to that of the uncontrolled comparables.

(iii) ***Other profit level indicators.*** Other profit level indicators not described in this paragraph (b)(4) may be used if they provide reliable measures of the income that the tested party would have earned had it dealt with controlled taxpayers at arm's length. However, profit level indicators based solely on internal data may not be used under this paragraph (b)(4) because they are not objective measures of profitability derived from operations of uncontrolled taxpayers engaged in similar business activities under similar circumstances.

(c) ***Comparability and reliability considerations*** —

(1) ***In general.*** Whether results derived from application of this method are the most reliable measure of the arm's length result must be determined using the factors described under the best method rule in § 1.482-1(c).

(2) ***Comparability*** —

(i) ***In general.*** The degree of comparability between an uncontrolled taxpayer and the tested party is determined by applying the provisions of § 1.482-1(d)(2). The comparable profits method compares the profitability of the tested party, measured by a profit level indicator (generally based on operating profit), to the profitability of uncontrolled taxpayers in similar circumstances. As with all methods that rely on external market benchmarks, the greater the degree of comparability between the tested party and the uncontrolled taxpayer, the more reliable will be the results derived from the application of this method. The determination of the degree of comparability between the tested party and the uncontrolled taxpayer depends upon all the relevant facts and circumstances, including the relevant lines of business, the product or service markets involved, the asset composition employed (including the nature and quantity of tangible assets, intangible assets and working capital), the size and scope of operations, and the stage in a business or product cycle.

(ii) ***Functional, risk and resource comparability.*** An operating profit represents a return for the investment of resources and assumption of risks. Therefore, although all of the factors described in § 1.482-1(d)(3) must be considered, comparability under this method is particularly dependent on resources employed and risks assumed. Moreover, because resources and risks usually are directly related to functions performed, it is also important to consider functions performed in determining the degree of comparability between the tested party and an uncontrolled taxpayer. The degree of functional comparability required to obtain a reliable result under the comparable profits method, however, is generally less than that required under the resale price or cost plus methods. For example, because differences in functions performed often are reflected in operating expenses, taxpayers performing different functions may have very different gross profit margins but earn similar levels of operating profit.

(iii) ***Other comparability factors.*** Other factors listed in § 1.482-1(d)(3) also may be particularly relevant under the comparable profits method. Because operating profit usually is less sensitive than gross profit to product differences, reliability under the comparable profits method is not as dependent on product similarity as the resale price or cost plus method. However, the reliability of profitability measures based on operating profit may be adversely affected by factors that have less effect on results under the comparable uncontrolled price, resale price, and cost plus methods. For example, operating profit may be affected by varying cost structures (as reflected, for example, in the age of plant and equipment), differences in business experience (such as whether the business is in a start-up phase or is mature), or differences in management efficiency (as indicated, for example, by objective evidence such as

expanding or contracting sales or executive compensation over time). Accordingly, if material differences in these factors are identified based on objective evidence, the reliability of the analysis may be affected.

(iv) ***Adjustments for the differences between the tested party and the uncontrolled taxpayers.*** If there are differences between the tested party and an uncontrolled comparable that would materially affect the profits determined under the relevant profit level indicator, adjustments should be made according to the comparability provisions of § 1.482-1(d)(2). In some cases, the assets of an uncontrolled comparable may need to be adjusted to achieve greater comparability between the tested party and the uncontrolled comparable. In such cases, the uncontrolled comparable's operating income attributable to those assets must also be adjusted before computing a profit level indicator in order to reflect the income and expense attributable to the adjusted assets. In certain cases it may also be appropriate to adjust the operating profit of the tested party and comparable parties. For example, where there are material differences in accounts payable among the comparable parties and the tested party, it will generally be appropriate to adjust the operating profit of each party by increasing it to reflect an imputed interest charge on each party's accounts payable. As another example, it may be appropriate to adjust the operating profit of a party to account for material differences in the utilization of or accounting for stock-based compensation (as defined by § 1.482-7(d)(3)(i)) among the tested party and comparable parties.

(3) ***Data and assumptions*** —

(i) ***In general.*** The reliability of the results derived from the comparable profits method is affected by the quality of the data and assumptions used to apply this method.

(ii) ***Consistency in accounting.*** The degree of consistency in accounting practices between the controlled transaction and the uncontrolled comparables that materially affect operating profit affects the reliability of the result. Thus, for example, if differences in inventory and other cost accounting practices would materially affect operating profit, the ability to make reliable adjustments for such differences would affect the reliability of the results.

(iii) ***Allocations between the relevant business activity and other activities.*** The reliability of the allocation of costs, income, and assets between the relevant business activity and other activities of the tested party or an uncontrolled comparable will affect the reliability of the determination of operating profit and profit level indicators. If it is not possible to allocate costs, income, and assets directly based on factual relationships, a reasonable allocation formula may be used. To the extent direct allocations are not made, the reliability of the results derived from the application of this method is reduced relative to the results of a method that requires fewer allocations of costs, income, and assets. Similarly, the reliability of the results derived from the application of this method is affected by the extent to which it is possible to apply the profit level indicator to the tested party's financial data that is related solely to the controlled transactions. For example, if the relevant business activity is the assembly of components purchased from both controlled and uncontrolled suppliers, it may not be possible to apply the profit level indicator solely to financial data related to the controlled transactions. In such a case, the reliability of the results derived from the application of this method will be reduced.

(d) ***Definitions.*** The definitions set forth in paragraphs (d)(1) through (6) of this section apply for purposes of this section.

(1) ***Sales revenue*** means the amount of the total receipts from sale of goods and provision of services, less returns and allowances. Accounting principles and conventions that are generally accepted in the trade or industry of the controlled taxpayer under review must be used.

(2) ***Gross profit*** means sales revenue less cost of goods sold.

(3) ***Operating expenses*** includes all expenses not included in cost of goods sold except for interest expense, foreign income taxes (as defined in § 1.901-2(a)), domestic income taxes, and any other expenses not related to the operation of the relevant business activity. Operating expenses ordinarily include expenses associated with advertising, promotion, sales, marketing, warehousing and distribution, administration, and a reasonable allowance for depreciation and amortization.

(4) ***Operating profit*** means gross profit less operating expenses. Operating profit includes all income derived from the business activity being evaluated by the comparable profits method, but does not include interest and dividends, income derived from activities not being tested by this method, or extraordinary gains and losses that do not relate to the continuing operations of the tested party.

(5) ***Reported operating profit*** means the operating profit of the tested party reflected on a timely filed U.S. income tax return. If the tested party files a U.S. income tax return, its operating profit is considered reflected on a U.S. income tax return if the calculation of taxable income on its return for the taxable year takes into account the income attributable to the controlled transaction under review. If the tested party does not file a U.S. income tax return, its operating profit is considered reflected on a U.S. income tax return in any taxable year for which income attributable to the controlled transaction under review affects the calculation of the U.S. taxable income of any other member of the same controlled group. If the comparable operating profit of the tested party is determined from profit level indicators derived from financial statements or other accounting records and reports of comparable parties, adjustments may be made to the reported operating profit of the tested party in order to account for material differences between the tested party's operating profit reported for U.S income tax purposes and the tested party's operating profit for financial statement purposes. In addition, in accordance with § 1.482-1(f)(2)(iii)(D), adjustments under section 482 that are finally determined may be taken into account in determining reported operating profit.

(6) ***Operating assets.*** The term operating assets means the value of all assets used in the relevant business activity of the tested party, including fixed assets and current assets (such as cash, cash equivalents, accounts receivable, and inventories).

The term does not include investments in subsidiaries, excess cash, and portfolio investments. Operating assets may be measured by their net book value or by their fair market value, provided that the same method is consistently applied to the tested party and the comparable parties, and consistently applied from year to year. In addition, it may be necessary to take into account recent acquisitions, leased assets, intangibles, currency fluctuations, and other items that may not be explicitly recorded in the financial statements of the tested party or uncontrolled comparable. Finally, operating assets must be measured by the average of the values for the beginning of the year and the end of the year, unless substantial fluctuations in the value of operating assets during the year make this an inaccurate measure of the average value over the year. In such a case, a more accurate measure of the average value of operating assets must be applied.

(e) ***Examples.*** The following examples illustrate the application of this section.

> *Example 1. Transfer of tangible property resulting in no adjustment.* (i) FP is a publicly traded foreign corporation with a U.S. subsidiary, USSub, that is under audit for its 1996 taxable year. FP manufactures a

consumer product for worldwide distribution. USSub imports the assembled product and distributes it within the United States at the wholesale level under the FP name.
(ii) FP does not allow uncontrolled taxpayers to distribute the product. Similar products are produced by other companies but none of them is sold to uncontrolled taxpayers or to uncontrolled distributors.

(iii) Based on all the facts and circumstances, the district director determines that the comparable profits method will provide the most reliable measure of an arm's length result. USSub is selected as the tested party because it engages in activities that are less complex than those undertaken by FP.

There is data from a number of independent operators of wholesale distribution businesses. These potential comparables are further narrowed to select companies in the same industry segment that perform similar functions and bear similar risks to USSub. An analysis of the information available on these taxpayers shows that the ratio of operating profit to sales is the most appropriate profit level indicator, and this ratio is relatively stable where at least three years are included in the average. For the taxable years 1994 through 1996, USSub shows the following results:

	1994	1995	1996	Average
Sales	$500,000	$560,000	$500,000	$520,000
Cost of Goods Sold	393,000	412,400	400,000	401,800
Operating Expenses	80,000	110,000	104,600	98,200
Operating Profit	27,000	37,600	(4,600)	20,000

(iv) After adjustments have been made to account for identified material differences between USSub and the uncontrolled distributors, the average ratio of operating profit to sales is calculated for each of the uncontrolled distributors. Applying each ratio to USSub would lead to the following comparable operating profit (COP) for USSub:

Uncontrolled distributor	OP/S (percent)	USSub COP
A	1.7	$8,840
B	3.1	16,120
C	3.8	19,760
D	4.5	23,400
E	4.7	24,440
F	4.8	24,960
G	4.9	25,480
H	6.7	34,840

Uncontrolled distributor	OP/S (percent)	USSub COP
I	9.9	51,480
J	10.5	54,600

(v) The data is not sufficiently complete to conclude that it is likely that all material differences between USSub and the uncontrolled distributors have been identified. Therefore, an arm's length range can be established only pursuant to § 1.482- 1(e)(2)(iii)(B). The district director measures the arm's length range by the interquartile range of results, which consists of the results ranging from $19,760 to $34,840. Although USSub's operating income for 1996 shows a loss of $4,600, the district director determines that no allocation should be made, because USSub's average reported operating profit of $20,000 is within this range.

Example 2. Transfer of tangible property resulting in adjustment. (i) The facts are the same as in *Example 1* except that USSub reported the following income and expenses:

	1994	1995	1996	Average
Sales	$500,000	$560,000	$500,000	$520,000
Cost of Good Sold	370,000	460,000	400,000	410,000
Operating Expenses	110,000	110,000	110,000	110,000
Operating Profit	20,000	(10,000)	(10,000)	0

(ii) The interquartile range of comparable operating profits remains the same as derived in *Example 1:* $19,760 to $34,840. USSub's average operating profit for the years 1994 through 1996 ($0) falls outside this range. Therefore, the district director determines that an allocation may be appropriate.
(iii) To determine the amount, if any, of the allocation, the district director compares USSub's reported operating profit for 1996 to comparable operating profits derived from the uncontrolled distributors' results for 1996. The ratio of operating profit to sales in 1996 is calculated for each of the uncontrolled comparables and applied to USSub's 1996 sales to derive the following results:

Uncontrolled distributor	OP/S (percent)	USSub COP
C	0.5	$2,500
D	1.5	7,500
E	2.0	10,000

Uncontrolled distributor	OP/S (percent)	USSub COP
A	1.6	13,000
F	2.8	14,000
B	2.9	14,500
J	3.0	15,000
I	4.4	22,000
H	6.9	34,500
G	7.4	37,000

(iv) Based on these results, the median of the comparable operating profits for 1996 is $14,250. Therefore, USSub's income for 1996 is increased by $24,250, the difference between USSub's reported operating profit for 1996 and the median of the comparable operating profits for 1996.

Example 3. Multiple year analysis. (i) The facts are the same as in *Example 2.* In addition, the district director examines the taxpayer's results for the 1997 taxable year. As in *Example 2,* the district director increases USSub's income for the 1996 taxable year by $24,250. The results for the 1997 taxable year, together with the 1995 and 1996 taxable years, are as follows:

	1995	1996	1997	Average
Sales	$560,000	$500,000	$530,000	$530,000
Cost of Good Sold	460,000	400,000	430,000	430,000
Operating Expenses	110,000	110,000	110,000	110,000
Operating Profit	(10,000)	(10,000)	(10,000)	(10,000)

(ii) The interquartile range of comparable operating profits, based on average results from the uncontrolled comparables and average sales for USSub for the years 1995 through 1997, ranges from $15,500 to $30,000. In determining whether an allocation for the 1997 taxable year may be made, the district director compares USSub's average reported operating profit for the years 1995 through 1997 to the interquartile range of average comparable operating profits over this period. USSub's average reported operating profit is determined without regard to the adjustment made with respect to the 1996 taxable year. See § 1.482-1(f)(2)(iii)(D). Therefore, USSub's average reported operating profit for the years 1995 through 1997 is ($10,000). Because this amount of income falls outside the interquartile range, the district director determines that an allocation may be appropriate.
(iii) To determine the amount, if any, of the allocation for the 1997 taxable year, the district director compares USSub's reported operating profit for 1997 to the median of the comparable operating profits derived from the uncontrolled distributors' results for 1997. The median of the comparable operating

profits derived from the uncontrolled comparables results for the 1997 taxable year is $12,000. Based on this comparison, the district director increases USSub's 1997 taxable income by $22,000, the difference between the median of the comparable operating profits for the 1997 taxable year and USSub's reported operating profit of ($10,000) for the 1997 taxable year.

Example 4. Transfer of intangible to offshore manufacturer. (i) DevCo is a U.S. developer, producer and marketer of widgets. DevCo develops a new "high tech widget" (htw) that is manufactured by its foreign subsidiary ManuCo located in Country H. ManuCo sells the htw to MarkCo (a U.S. subsidiary of DevCo) for distribution and marketing in the United States. The taxable year 1996 is under audit, and the district director examines whether the royalty rate of 5 percent paid by ManuCo to DevCo is an arm's length consideration for the htw technology.
(ii) Based on all the facts and circumstances, the district director determines that the comparable profits method will provide the most reliable measure of an arm's length result. ManuCo is selected as the tested party because it engages in relatively routine manufacturing activities, while DevCo engages in a variety of complex activities using unique and valuable intangibles. Finally, because ManuCo engages in manufacturing activities, it is determined that the ratio of operating profit to operating assets is an appropriate profit level indicator.

(iii) Uncontrolled taxpayers performing similar functions cannot be found in country H. It is determined that data available in countries M and N provides the best match of companies in a similar market performing similar functions and bearing similar risks. Such data is sufficiently complete to identify many of the material differences between ManuCo and the uncontrolled comparables, and to make adjustments to account for such differences. However, data is not sufficiently complete so that it is likely that no material differences remain. In particular, the differences in geographic markets might have materially affected the results of the various companies.

(iv) In a separate analysis, it is determined that the price that ManuCo charged to MarkCo for the htw's is an arm's length price under § 1.482-3(b). Therefore, ManuCo's financial data derived from its sales to MarkCo are reliable. ManuCo's financial data from 1994-1996 is as follows:

	1994	1995	1996	Average
Assets	$24,000	$25,000	$26,000	$25,000
Sales to MarkCo	25,000	30,000	35,000	30,000
Cost of Goods Sold	6,250	7,500	8,750	7,500
Royalty to DevCo (5%)	1,250	1,500	1,750	1,500
Other	5,000	6,000	7,000	6,000
Operating Expenses	1,000	1,000	1,000	1,000

	1994	1995	1996	Average
Operating Profit	17,750	21,500	25,250	21,500

(v) Applying the ratios of average operating profit to operating assets for the 1994 through 1996 taxable years derived from a group of similar uncontrolled comparables located in country M and N to ManuCo's average operating assets for the same period provides a set of comparable operating profits. The interquartile range for these average comparable operating profits is $3,000 to $4,500. ManuCo's average reported operating profit for the years 1994 through 1996 ($21,500) falls outside this range. Therefore, the district director determines that an allocation may be appropriate for the 1996 taxable year.
(vi) To determine the amount, if any, of the allocation for the 1996 taxable year, the district director compares ManuCo's reported operating profit for 1996 to the median of the comparable operating profits derived from the uncontrolled distributors' results for 1996. The median result for the uncontrolled comparables for 1996 is $3,750. Based on this comparison, the district director increases royalties that ManuCo paid by $21,500 (the difference between $25,250 and the median of the comparable operating profits, $3,750).

Example 5. Adjusting operating assets and operating profit for differences in accounts receivable. (i) USM is a U.S. company that manufactures parts for industrial equipment and sells them to its foreign parent corporation. For purposes of applying the comparable profits method, 15 uncontrolled manufacturers that are similar to USM have been identified.
(ii) USM has a significantly lower level of accounts receivable than the uncontrolled manufacturers. Since the rate of return on capital employed is to be used as the profit level indicator, both operating assets and operating profits must be adjusted to account for this difference. Each uncontrolled comparable's operating assets is reduced by the amount (relative to sales) by which they exceed USM's accounts receivable. Each uncontrolled comparable's operating profit is adjusted by deducting imputed interest income on the excess accounts receivable. This imputed interest income is calculated by multiplying the uncontrolled comparable's excess accounts receivable by an interest rate appropriate for short-term debt.

Example 6. Adjusting operating profit for differences in accounts payable. (i) USD is the U.S. subsidiary of a foreign corporation. USD purchases goods from its foreign parent and sells them in the U.S. market. For purposes of applying the comparable profits method, 10 uncontrolled distributors that are similar to USD have been identified.
(ii) There are significant differences in the level of accounts payable among the uncontrolled distributors and USD. To adjust for these differences, the district director increases the operating profit of the uncontrolled distributors and USD to reflect interest expense imputed to the accounts payable. The imputed interest expense for each company is calculated by multiplying the company's accounts payable by an interest rate appropriate for its short-term debt.

[T.D. 8552, 59 FR 35021, July 8, 1994; 60 FR 16703, Mar. 31, 1995; T.D. 9088, 68 FR 51177, Aug. 26, 2003; T.D. 9441, 74 FR 352, Jan. 5, 2009;T.D. 9568, 76 FR 80090, Dec. 22, 2011]

§ 1.482-6 Profit split method.

(a) ***In general.*** The profit split method evaluates whether the allocation of the combined operating profit or loss attributable to one or more controlled transactions is arm's length by reference to the relative value of each controlled taxpayer's contribution to that combined operating profit or loss. The combined operating profit or loss must be derived from the most narrowly identifiable business activity of the controlled taxpayers for which data is available that includes the controlled transactions (relevant business activity).

(b) ***Appropriate share of profits and losses.*** The relative value of each controlled taxpayer's contribution to the success of the relevant business activity must be determined in a manner that reflects the functions performed, risks assumed, and resources employed by each participant in the relevant business activity, consistent with the comparability provisions of § 1.482-1(d)(3). Such an allocation is intended to correspond to the division of profit or loss that would result from an arrangement between uncontrolled taxpayers, each performing functions similar to those of the various controlled taxpayers engaged in the relevant business activity. The profit allocated to any particular member of a controlled group is not necessarily limited to the total operating profit of the group from the relevant business activity. For example, in a given year, one member of the group may earn a profit while another member incurs a loss. In addition, it may not be assumed that the combined operating profit or loss from the relevant business activity should be shared equally, or in any other arbitrary proportion. The specific method of allocation must be determined under paragraph (c) of this section.

(c) ***Application*** —

(1) ***In general.*** The allocation of profit or loss under the profit split method must be made in accordance with one of the following allocation methods—

(i) The comparable profit split, described in paragraph (c)(2) of this section; or

(ii) The residual profit split, described in paragraph (c)(3) of this section.

(2) ***Comparable profit split*** —

(i) ***In general.*** A comparable profit split is derived from the combined operating profit of uncontrolled taxpayers whose transactions and activities are similar to those of the controlled taxpayers in the relevant business activity. Under this method, each uncontrolled taxpayer's percentage of the combined operating profit or loss is used to allocate the combined operating profit or loss of the relevant business activity.

(ii) ***Comparability and reliability considerations—***

(A) ***In general.*** Whether results derived from application of this method are the most reliable measure of the arm's length result is determined using the factors described under the best method rule in § 1.482-1(c).

(B) ***Comparability*** —

(*1*) ***In general.*** The degree of comparability between the controlled and uncontrolled taxpayers is determined by applying the comparability provisions of § 1.482-1(d). The comparable profit split compares the division of operating profits among the controlled taxpayers to the division of operating profits among uncontrolled

taxpayers engaged in similar activities under similar circumstances. Although all of the factors described in § 1.482-1(d)(3) must be considered, comparability under this method is particularly dependent on the considerations described under the comparable profits method in § 1.482-5(c)(2) or § 1.482-9(f)(2)(iii) because this method is based on a comparison of the operating profit of the controlled and uncontrolled taxpayers. In addition, because the contractual terms of the relationship among the participants in the relevant business activity will be a principal determinant of the allocation of functions and risks among them, comparability under this method also depends particularly on the degree of similarity of the contractual terms of the controlled and uncontrolled taxpayers. Finally, the comparable profit split may not be used if the combined operating profit (as a percentage of the combined assets) of the uncontrolled comparables varies significantly from that earned by the controlled taxpayers.

(2) ***Adjustments for differences between the controlled and uncontrolled taxpayers.*** If there are differences between the controlled and uncontrolled taxpayers that would materially affect the division of operating profit, adjustments must be made according to the provisions of § 1.482-1(d)(2).

(C) ***Data and assumptions.*** The reliability of the results derived from the comparable profit split is affected by the quality of the data and assumptions used to apply this method. In particular, the following factors must be considered—

(1) The reliability of the allocation of costs, income, and assets between the relevant business activity and the participants' other activities will affect the accuracy of the determination of combined operating profit and its allocation among the participants. If it is not possible to allocate costs, income, and assets directly based on factual relationships, a reasonable allocation formula may be used. To the extent direct allocations are not made, the reliability of the results derived from the application of this method is reduced relative to the results of a method that requires fewer allocations of costs, income, and assets. Similarly, the reliability of the results derived from the application of this method is affected by the extent to which it is possible to apply the method to the parties' financial data that is related solely to the controlled transactions. For example, if the relevant business activity is the assembly of components purchased from both controlled and uncontrolled suppliers, it may not be possible to apply the method solely to financial data related to the controlled transactions. In such a case, the reliability of the results derived from the application of this method will be reduced.

(2) The degree of consistency between the controlled and uncontrolled taxpayers in accounting practices that materially affect the items that determine the amount and allocation of operating profit affects the reliability of the result. Thus, for example, if differences in inventory and other cost accounting practices would materially affect operating profit, the ability to make reliable adjustments for such differences would affect the reliability of the results. Further, accounting consistency among the participants in the controlled transaction is required to ensure that the items determining the amount and allocation of operating profit are measured on a consistent basis.

(D) ***Other factors affecting reliability.*** Like the methods described in §§ 1.482-3, 1.482-4, 1.482-5, and 1.482-9, the comparable profit split relies exclusively on external market benchmarks. As indicated in § 1.482-1(c)(2)(i), as the degree of comparability between the controlled and uncontrolled transactions increases, the relative weight accorded the analysis under this method will increase. In addition, the reliability of the analysis under this method may be enhanced by the fact that all parties to the controlled transaction are evaluated under the comparable profit split. However, the reliability of the results of an analysis based on information from all parties to a transaction is affected by the reliability of the data and the assumptions pertaining to each party to the controlled transaction. Thus, if the data and assumptions are significantly more reliable with respect to one of the parties than with respect to the others, a different method, focusing solely on the results of that party, may yield more reliable results.

(3) ***Residual profit split*** —

(i) ***In general.*** Under this method, the combined operating profit or loss from the relevant business activity is allocated between the controlled taxpayers following the two-step process set forth in paragraphs (c)(3)(i)(A) and (B) of this section.

(A) ***Allocate income to routine contributions.*** The first step allocates operating income to each party to the controlled transactions to provide a market return for its routine contributions to the relevant business activity. Routine contributions are contributions of the same or a similar kind to those made by uncontrolled taxpayers involved in similar business activities for which it is possible to identify market returns. Routine contributions ordinarily include contributions of tangible property, services and intangible property that are generally owned by uncontrolled taxpayers engaged in similar activities. A functional analysis is required to identify these contributions according to the functions performed, risks assumed, and resources employed by each of the controlled taxpayers. Market returns for the routine contributions should be determined by reference to the returns achieved by uncontrolled taxpayers engaged in similar activities, consistent with the methods described in §§ 1.482-3, 1.482-4, 1.482-5 and 1.482-9.

(B) ***Allocate residual profit*** —

(*1*) ***Nonroutine contributions generally.*** The allocation of income to the controlled taxpayer's routine contributions will not reflect profits attributable to each controlled taxpayer's contributions to the relevant business activity that are not routine (nonroutine contributions). A nonroutine contribution is a contribution that is not accounted for as a routine contribution. Thus, in cases where such nonroutine contributions are present, there normally will be an unallocated residual profit after the allocation of income described in paragraph (c)(3)(i)(A) of this section. Under this second step, the residual profit generally should be divided among the controlled taxpayers based upon the relative value of their nonroutine contributions to the relevant business activity. The relative value of the nonroutine contributions of each taxpayer should be measured in a manner that most reliably reflects each nonroutine contribution made to the controlled transaction and each controlled taxpayer's role in the nonroutine contributions. If the nonroutine contribution by one of the controlled taxpayers is also used in other business activities (such as transactions with other controlled taxpayers), an appropriate allocation of the value of the nonroutine contribution must be made among all the business activities in which it is used.

(2) ***Nonroutine contributions of intangible property.*** In many cases, nonroutine contributions of a taxpayer to the relevant business activity may be contributions of intangible property. For purposes of paragraph (c)(3)(i)(B)(*1*) of this section, the relative value of nonroutine intangible property contributed by taxpayers may be measured by external market benchmarks that reflect the fair market value of such intangible property. Alternatively, the relative value of nonroutine intangible property contributions may be estimated by the capitalized cost of developing the intangible property and all related improvements and updates, less an appropriate amount of amortization based on the useful life of each intangible property. Finally, if the intangible property development expenditures of the parties are relatively constant over time and the useful life of the intangible property contributed by all parties is approximately the same, the amount of actual expenditures in recent years may be used to estimate the relative value of nonroutine intangible property contributions.

(ii) ***Comparability and reliability considerations*** —

(A) ***In general.*** Whether results derived from this method are the most reliable measure of the arm's length result is determined using the factors described under the best method rule in § 1.482-1(c). Thus, comparability and the quality of data and assumptions must be considered in determining whether this method provides the most reliable measure of an arm's length result. The application of these factors to the residual profit split is discussed in paragraph (c)(3)(ii)(B), (C), and (D) of this section.

(B) ***Comparability.*** The first step of the residual profit split relies on market benchmarks of profitability. Thus, the comparability considerations that are relevant for the first step of the residual profit split are those that are relevant for the methods that are used to determine market returns for the routine contributions. The second step of the residual profit split, however, may not rely so directly on market benchmarks. Thus, the reliability of the results under this method is reduced to the extent that the allocation of profits in the second step does not rely on market benchmarks.

(C) ***Data and assumptions.*** The reliability of the results derived from the residual profit split is affected by the quality of the data and assumptions used to apply this method. In particular, the following factors must be considered—

(*1*) The reliability of the allocation of costs, income, and assets as described in paragraph (c)(2)(ii)(C)(*1*) of this section;

(*2*) Accounting consistency as described in paragraph (c)(2)(ii)(C)(*2*) of this section;

(*3*) The reliability of the data used and the assumptions made in valuing the intangible property contributed by the participants. In particular, if capitalized costs of development are used to estimate the value of intangible property, the reliability of the results is reduced relative to the reliability of other methods that do not require such an estimate, for the following reasons. First, in any given case, the costs of developing the intangible may not be related to its market value. Second, the calculation of the capitalized costs of development may require the allocation of indirect costs between the relevant business activity and the controlled taxpayer's other activities, which may affect the reliability of the analysis. Finally, the calculation of costs may require assumptions regarding the useful life of the intangible property.

(D) ***Other factors affecting reliability.*** Like the methods described in §§ 1.482-3, 1.482-4, 1.482-5, and 1.482-9, the first step of the residual profit split relies exclusively on external market benchmarks. As indicated in § 1.482-1(c)(2)(i), as the degree of comparability between the controlled and uncontrolled transactions increases, the relative weight accorded the analysis under this method will increase. In addition, to the extent the allocation of profits in the second step is not based on external market benchmarks, the reliability of the analysis will be decreased in relation to an analysis under a method that relies on market benchmarks. Finally, the reliability of the analysis under this method may be enhanced by the fact that all parties to the controlled transaction are evaluated under the residual profit split. However, the reliability of the results of an analysis based on information from all parties to a transaction is affected by the reliability of the data and the assumptions pertaining to each party to the controlled transaction. Thus, if the data and assumptions are significantly more reliable with respect to one of the parties than with respect to the others, a different method, focusing solely on the results of that party, may yield more reliable results.

(iii) ***Example.*** The provisions of this paragraph (c)(3) are illustrated by the following example.

> *Example—Application of Residual Profit Split.* (i) XYZ is a U.S. corporation that develops, manufactures and markets a line of products for police use in the United States. XYZ's research unit developed a bulletproof material for use in protective clothing and headgear (Nulon). XYZ obtains patent protection for the chemical formula for Nulon. Since its introduction in the U.S., Nulon has captured a substantial share of the U.S. market for bulletproof material.
> (ii) XYZ licensed its European subsidiary, XYZ-Europe, to manufacture and market Nulon in Europe. XYZ-Europe is a well- established company that manufactures and markets XYZ products in Europe. XYZ-Europe has a research unit that adapts XYZ products for the defense market, as well as a well-developed marketing network that employs brand names that it developed.
>
> (iii) XYZ-Europe's research unit alters Nulon to adapt it to military specifications and develops a high-intensity marketing campaign directed at the defense industry in several European countries. Beginning with the 1995 taxable year, XYZ-Europe manufactures and sells Nulon in Europe through its marketing network under one of its brand names.
>
> (iv) For the 1995 taxable year, XYZ has no direct expenses associated with the license of Nulon to XYZ-Europe and incurs no expenses related to the marketing of Nulon in Europe. For the 1995 taxable year, XYZ-Europe's Nulon sales and pre-royalty expenses are $500 million and $300 million, respectively, resulting in net pre-royalty profit of $200 million related to the Nulon business. The operating assets employed in XYZ-Europe's Nulon business are $200 million. Given the facts and circumstances, the district director determines under the best method rule that a residual profit split will provide the most reliable measure of an arm's length result. Based on an examination of a sample of European companies performing functions similar to those of XYZ-Europe, the district

director determines that an average market return on XYZ-Europe's operating assets in the Nulon business is 10 percent, resulting in a market return of $20 million (10% × $200 million) for XYZ- Europe's Nulon business, and a residual profit of $180 million.

(v) Since the first stage of the residual profit split allocated profits to XYZ-Europe's contributions other than those attributable to highly valuable intangible property, it is assumed that the residual profit of $180 million is attributable to the valuable intangibles related to Nulon, i.e., the European brand name for Nulon and the Nulon formula (including XYZ-Europe's modifications). To estimate the relative values of these intangibles, the district director compares the ratios of the capitalized value of expenditures as of 1995 on Nulon-related research and development and marketing over the 1995 sales related to such expenditures.

(vi) Because XYZ's protective product research and development expenses support the worldwide protective product sales of the XYZ group, it is necessary to allocate such expenses among the worldwide business activities to which they relate. The district director determines that it is reasonable to allocate the value of these expenses based on worldwide protective product sales. Using information on the average useful life of its investments in protective product research and development, the district director capitalizes and amortizes XYZ's protective product research and development expenses. This analysis indicates that the capitalized research and development expenditures have a value of $0.20 per dollar of global protective product sales in 1995.

(vii) XYZ-Europe's expenditures on Nulon research and development and marketing support only its sales in Europe. Using information on the average useful life of XYZ-Europe's investments in marketing and research and development, the district director capitalizes and amortizes XYZ-Europe's expenditures and determines that they have a value in 1995 of $0.40 per dollar of XYZ-Europe's Nulon sales.

(viii) Thus, XYZ and XYZ-Europe together contributed $0.60 in capitalized intangible development expenses for each dollar of XYZ-Europe's protective product sales for 1995, of which XYZ contributed one-third (or $0.20 per dollar of sales). Accordingly, the district director determines that an arm's length royalty for the Nulon license for the 1995 taxable year is $60 million, i.e., one-third of XYZ-Europe's $180 million in residual Nulon profit.

(d) ***Effective/applicability date*** —

(1) ***In general.*** The provisions of paragraphs (c)(2)(ii)(B)(*1*) and (D), (c)(3)(i)(A) and (B), and (c)(3)(ii)(D) of this section are generally applicable for taxable years beginning after July 31, 2009.

(2) ***Election to apply regulation to earlier taxable years.*** A person may elect to apply the provisions of paragraphs (c)(2)(ii)(B)(*1*) and (D), (c)(3)(i)(A) and (B), and (c)(3)(ii)(D) of this section to earlier taxable years in accordance with the rules set forth in § 1.482-9(n)(2).

[T.D. 8552, 59 FR 35025, July 8, 1994; 60 FR 16382, Mar. 30, 1995, as amended by T.D. 9278, 71 FR 44486, Aug. 4, 2006; T.D. 9456, 74 FR 38844, Aug. 4, 2009; 74 FR 46345, Sept. 9, 2009]

§ 1.482-7 Methods to determine taxable income in connection with a cost sharing arrangement.

(a) ***In general.*** The arm's length amount charged in a controlled transaction reasonably anticipated to contribute to developing intangibles pursuant to a cost sharing arrangement (CSA), as described in paragraph (b) of this section, must be determined under a method described in this section. Each method must be applied in accordance with the provisions of § 1.482-1, except as those provisions are modified in this section.

(1) ***RAB share method for cost sharing transactions (CSTs).*** See paragraph (b)(1)(i) of this section regarding the requirement that controlled participants, as defined in section (j)(1)(i) of this section, share intangible development costs (IDCs) in proportion to their shares of reasonably anticipated benefits (RAB shares) by entering into cost sharing transactions (CSTs).

(2) ***Methods for platform contribution transactions (PCTs).*** The arm's length amount charged in a platform contribution transaction (PCT) described in paragraph (b)(1)(ii) of this section must be determined under the method or methods applicable under the other section or sections of the section 482 regulations, as supplemented by paragraph (g) of this section. See § 1.482-1(b)(2)(ii) (Selection of category of method applicable to transaction), § 1.482-1(b)(2)(iii) (Coordination of methods applicable to certain intangible development arrangements), and paragraph (g) of this section (Supplemental guidance on methods applicable to PCTs).

(3) ***Methods for other controlled transactions*** —

(i) ***Contribution to a CSA by a controlled taxpayer that is not a controlled participant.*** If a controlled taxpayer that is not a controlled participant contributes to developing a cost shared intangible, as defined in section (j)(1)(i) of this section, it must receive consideration from the controlled participants under the rules of § 1.482-4(f)(4) (Contribution to the value of an intangible owned by another). Such consideration will be treated as an intangible development cost for purposes of paragraph (d) of this section.

(ii) ***Transfer of interest in a cost shared intangible.*** If at any time (during the term, or upon or after the termination, of a CSA) a controlled participant transfers an interest in a cost shared intangible to another controlled taxpayer, the controlled participant must receive an arm's length amount of consideration from the transferee under the rules of §§ 1.482-4 through 1.482-6 as supplemented by paragraph (f)(4) of this section regarding arm's length consideration for a change in participation. For this purpose, a capability variation described in paragraph (f)(3) of this section is considered to be a controlled transfer of interests in cost shared intangibles.

(iii) ***Other controlled transactions in connection with a CSA.*** Controlled transactions between controlled participants that are not PCTs or CSTs and are not described in paragraph (a)(3)(ii) of this section (for example, provision of a cross operating contribution, as defined in paragraph

(j)(1)(i) of this section, or make-or-sell rights, as defined in paragraph (c)(4) of this section) require arm's length consideration under the rules of §§ 1.482-1 through 1.482-6, and 1.482-9 as supplemented by paragraph (g)(2)(iv) of this section.

(iv) ***Controlled transactions in the absence of a CSA.*** If a controlled transaction is reasonably anticipated to contribute to developing intangibles pursuant to an arrangement that is not a CSA described in paragraph (b)(1) or (5) of this section, whether the results of any such controlled transaction are consistent with an arm's length result must be determined under the applicable rules of the other sections of the regulations under section 482. For example, an arrangement for developing intangibles in which one controlled taxpayer's costs of developing the intangibles significantly exceeds its share of reasonably anticipated benefits from exploiting the developed intangibles would not in substance be a CSA, as described in paragraphs (b)(1)(i) through (iii) of this section or paragraph (b)(5)(i) of this section. In such a case, unless the rules of this section are applicable by reason of paragraph (b)(5) of this section, the arrangement must be analyzed under other applicable sections of regulations under section 482 to determine whether it achieves arm's length results, and if not, to determine any allocations by the Commissioner that are consistent with such other regulations under section 482. See § 1.482-1(b)(2)(ii) (Selection of category of method applicable to transaction) and (iii) (Coordination of methods applicable to certain intangible development arrangements).

(4) ***Coordination with the arm's length standard.*** A CSA produces results that are consistent with an arm's length result within the meaning of § 1.482-1(b)(1) if, and only if, each controlled participant's IDC share (as determined under paragraph (d)(4) of this section) equals its RAB share, each controlled participant compensates its RAB share of the value of all platform contributions by other controlled participants, and all other requirements of this section are satisfied.

(b) ***Cost sharing arrangement.*** A cost sharing arrangement is an arrangement by which controlled participants share the costs and risks of developing cost shared intangibles in proportion to their RAB shares. An arrangement is a CSA if and only if the requirements of paragraphs (b)(1) through (4) of this section are met.

(1) ***Substantive requirements*** —

(i) ***CSTs.*** All controlled participants must commit to, and in fact, engage in cost sharing transactions. In CSTs, the controlled participants make payments to each other (CST Payments) as appropriate, so that in each taxable year each controlled participant's IDC share is in proportion to its respective RAB share.

(ii) ***PCTs.*** All controlled participants must commit to, and in fact, engage in platform contributions transactions to the extent that there are platform contributions pursuant to paragraph (c) of this section. In a PCT, each other controlled participant (PCT Payor) is obligated to, and must in fact, make arm's length payments (PCT Payments) to each controlled participant (PCT Payee) that provides a platform contribution. For guidance on determining such arm's length obligation, see paragraph (g) of this section.

(iii) ***Divisional interests.*** Each controlled participant must receive a non-overlapping interest in the cost shared intangibles without further obligation to compensate another controlled participant for such interest.

(iv) ***Examples.*** The following examples illustrate the principles of this paragraph (b)(1):

Example 1. Company A and Company B, who are members of the same controlled group, execute an agreement to jointly develop vaccine X and own the exclusive rights to commercially exploit vaccine X in their respective territories, which together comprise the whole world. The agreement provides that they will share some, but not all, of the costs for developing Vaccine X in proportion to RAB share. Such agreement is not a CSA because Company A and Company B have not agreed to share all of the IDCs in proportion to their respective RAB shares.

Example 2. Company A and Company B agree to share all the costs of developing Vaccine X. The agreement also provides for employing certain resources and capabilities of Company A in this program including a skilled research team and certain research facilities, and provides for Company B to make payments to Company A in this respect. However, the agreement expressly provides that the program will not employ, and so Company B is expressly relieved of the payments in regard to, certain software developed by Company A as a medical research tool to model certain cellular processes expected to be implicated in the operation of Vaccine X even though such software would reasonably be anticipated to be relevant to developing Vaccine X and, thus, would be a platform contribution. See paragraph (c) of this section. Such agreement is not a CSA because Company A and Company B have not engaged in a necessary PCT for purposes of developing Vaccine X.

Example 3. Companies C and D, who are members of the same controlled group, enter into a CSA. In the first year of the CSA, C and D conduct the intangible development activity, as described in paragraph (d)(1) of this section. The total IDCs in regard to such activity are $3,000,000 of which C and D pay $2,000,000 and $1,000,000, respectively, directly to third parties. As between C and D, however, their CSA specifies that they will share all IDCs in accordance with their RAB shares (as described in paragraph (e)(1) of this section), which are 60% for C and 40% for D. It follows that C should bear $1,800,000 of the total IDCs (60% of total IDCs of $3,000,000) and D should bear $1,200,000 of the total IDCs (40% of total IDCs of $3,000,000). D makes a CST payment to C of $200,000, that is, the amount by which D's share of IDCs in accordance with its RAB share exceeds the amount of IDCs initially borne by D ($1,200,000-$1,000,000), and which also equals the amount by which the total IDCs initially borne by C exceeds its share of IDCS in accordance with its RAB share ($2,000,000—$1,800,000). As a result of D's CST payment to C, the IDC shares of C and D are in proportion to their respective RAB shares.

(2) ***Administrative requirements.*** The CSA must meet the requirements of paragraph (k) of this section.

(3) ***Date of a PCT.*** The controlled participants must enter into a PCT as of the earliest date on or after the CSA is entered into on which a platform contribution is reasonably anticipated to contribute to developing cost shared intangibles.

(4) ***Divisional interests*** —

(i) ***In general.*** Pursuant to paragraph (b)(1)(iii) of this section, each controlled participant must receive a non-overlapping interest in the cost shared intangibles without further obligation to compensate another controlled participant for such interest. Each controlled participant must be entitled to the perpetual and exclusive right to the profits from transactions of any member of the controlled group that includes the controlled participant with uncontrolled taxpayers to the extent that such profits are attributable to such interest in the cost shared intangibles.

(ii) ***Territorial based divisional interests.*** The CSA may divide all interests in cost shared intangibles on a territorial basis as follows. The entire world must be divided into two or more non-overlapping geographic territories. Each controlled participant must receive at least one such territory, and in the aggregate all the participants must receive all such territories. Each controlled participant will be assigned the perpetual and exclusive right to exploit the cost shared intangibles through the use, consumption, or disposition of property or services in its territories. Thus, compensation will be required if other members of the controlled group exploit the cost shared intangibles in such territory.

(iii) ***Field of use based divisional interests.*** The CSA may divide all interests in cost shared intangibles on the basis of all uses (whether or not known at the time of the division) to which cost shared intangibles are to be put as follows. All anticipated uses of cost shared intangibles must be identified. Each controlled participant must be assigned at least one such anticipated use, and in the aggregate all the participants must be assigned all such anticipated uses. Each controlled participant will be assigned the perpetual and exclusive right to exploit the cost shared intangibles through the use or uses assigned to it and one controlled participant must be assigned the exclusive and perpetual right to exploit cost shared intangibles through any unanticipated uses.

(iv) ***Other divisional bases.***

(A) In the event that the CSA does not divide interests in the cost shared intangibles on the basis of exclusive territories or fields of use as described in paragraphs (b)(4)(ii) and (iii) of this section, the CSA may adopt some other basis on which to divide all interests in the cost shared intangibles among the controlled participants, provided that each of the following criteria is met:

(*1*) The basis clearly and unambiguously divides all interests in cost shared intangibles among the controlled participants.

(*2*) The consistent use of such basis for the division of all interests in the cost shared intangibles can be dependably verified from the records maintained by the controlled participants.

(*3*) The rights of the controlled participants to exploit cost shared intangibles are non-overlapping, exclusive, and perpetual.

(*4*) The resulting benefits associated with each controlled participant's interest in cost shared intangibles are predictable with reasonable reliability.

(B) See paragraph (f)(3) of this section for rules regarding the requirement of arm's length consideration for changes in participation in CSAs involving divisions of interest described in this paragraph (b)(4)(iv).

(v) ***Examples.*** The following examples illustrate the principles of this paragraph (b)(4):

Example 1. Companies P and S, both members of the same controlled group, enter into a CSA to develop product Z. Under the CSA, P receives the interest in product Z in the United States and S receives the interest in product Z in the rest of the world, as described in paragraph (b)(4)(ii) of this section. Both P and S have plants for manufacturing product Z located in their respective geographic territories. However, for commercial reasons, product Z is nevertheless manufactured by P in the United States for sale to customers in certain

locations just outside the United States in close proximity to P's U.S. manufacturing plant. Because S owns the territorial rights outside the United States, P must compensate S to ensure that S realizes all the cost shared intangible profits from P's sales of product Z in S's territory. The pricing of such compensation must also ensure that P realizes an appropriate return for its manufacturing efforts. Benefits projected with respect to such sales will be included for purposes of estimating S's, but not P's, RAB share.

Example 2. The facts are the same as in *Example 1* except that P and S agree to divide their interest in product Z based on site of manufacturing. P will have exclusive and perpetual rights in product Z manufactured in facilities owned by P. S will have exclusive and perpetual rights to product Z manufactured in facilities owned by S. P and S agree that neither will license manufacturing rights in product Z to any related or unrelated party. Both P and S maintain books and records that allow production at all sites to be verified. Both own facilities that will manufacture product Z and the relative capacities of these sites are known. All facilities are currently operating at near capacity and are expected to continue to operate at near capacity when product Z enters production so that it will not be feasible to shift production between P's and S's facilities. P and S have no plans to build new facilities and the lead time required to plan and build a manufacturing facility precludes the possibility that P or S will build a new facility during the period for which sales of Product Z are expected. Based on these facts, this basis for the division of interests in Product Z is a division described in paragraph (b)(4)(iv) of this section. The basis for the division of interest is unambiguous and clearly defined and its use can be dependably verified. P and S both have non-overlapping, exclusive and perpetual rights in Product Z. The division of interest results in the participant's relative benefits being predictable with reasonable reliability.

Example 3. The facts are the same as in *Example 2* except that P's and S's manufacturing facilities are not expected to operate at full capacity when product Z enters production. Production of Product Z can be shifted at any time between sites owned by P and sites owned by S, although neither P nor S intends to shift production as a result of the agreement. The division of interests in Product Z between P and S based on manufacturing site is not a division described in paragraph (b)(4)(iv) of this section because their relative shares of benefits are not predictable with reasonable reliability. The fact that neither P nor S intends to shift production is irrelevant.

(5) ***Treatment of certain arrangements as CSAs*** —

(i) ***Situation in which Commissioner must treat arrangement as a CSA.*** The Commissioner must apply the rules of this section to an arrangement among controlled taxpayers if the administrative requirements of paragraph (b)(2) of this section are met with respect to such arrangement and the controlled taxpayers reasonably concluded that such arrangement was a CSA meeting the requirements of paragraphs (b)(1), (3), and (4) of this section.

(ii) ***Situation in which Commissioner may treat arrangement as a CSA.*** For arrangements among controlled taxpayers not described in paragraph (b)(5)(i) of this section, the Commissioner may apply the provisions of this section if the Commissioner concludes that the administrative requirements of paragraph (b)(2) of this section are met, and, notwithstanding technical failure to meet the substantive requirements of paragraph (b)(1), (3), or (4) of this section, the rules of

this section will provide the most reliable measure of an arm's length result. See § 1.482-1(c)(1) (the best method rule). For purposes of applying this paragraph (b)(5)(ii), any such arrangement shall be interpreted by reference to paragraph (k)(1)(iv) of this section.

(iii) ***Examples.*** The following examples illustrate the principles of this paragraph (b)(5). In the examples, assume that Companies P and S are both members of the same controlled group.

Example 1. (i) P owns the patent on a formula for a capsulated pain reliever, P-Cap. P reasonably anticipates, pending further research and experimentation, that the P-Cap formula could form the platform for a formula for P-Ves, an effervescent version of P-Cap. P also owns proprietary software that it reasonably anticipates to be critical to the research efforts. P and S execute a contract that purports to be a CSA by which they agree to proportionally share the costs and risks of developing a formula for P-Ves. The agreement reflects the various contractual requirements described in paragraph (k)(1) of this section and P and S comply with the documentation, accounting, and reporting requirements of paragraphs (k)(2) through (4) of this section. Both the patent rights for P-Cap and the software are reasonably anticipated to contribute to the development of P-Ves and therefore are platform contributions for which compensation is due from S as part of PCTs. Though P and S enter into and implement a PCT for the P-Cap patent rights that satisfies the arm's length standard, they fail to enter into a PCT for the software.
(ii) In this case, P and S have substantially complied with the contractual requirements of paragraph (k)(1) of this section and the documentation, accounting, and reporting requirements of paragraphs (k)(2) through (4) of this section and therefore have met the administrative requirements of paragraph (b)(2) of this section. However, because they did not enter into a PCT, as required under paragraphs (b)(1)(ii) and (b)(3) of this section, for the software that was reasonably anticipated to contribute to the development of P-Ves (see paragraph (c) of this section), they cannot reasonably conclude that their arrangement was a CSA. Accordingly, the Commissioner is not required under paragraph (b)(5)(i) of this section to apply the rules of this section to their arrangement.

(iii) Nevertheless, the arrangement between P and S closely resembles a CSA. If the Commissioner concludes that the rules of this section provide the most reliable measure of an arm's length result for such arrangement, then pursuant to paragraph (b)(5)(ii) of this section, the Commissioner may apply the rules of this section and treat P and S as entering into a PCT for the software in accordance with the requirements of paragraph (b)(1)(ii) of this section, and make any appropriate allocations under paragraph (i) of this section. Alternatively, the Commissioner may conclude that the rules of this section do not provide the most reliable measure of an arm's length result. In such case, the arrangement would be analyzed under the methods under other sections of the 482 regulations to determine whether the arrangement reaches an arm's length result.

Example 2. The facts are the same as in *Example 1* except that P and S do enter into and implement a PCT for the software as required under this paragraph (b). The Commissioner determines that the PCT Payments for the software were not arm's length; nevertheless, under the facts and circumstances at the time they entered into the CSA and PCTs, P and S reasonably concluded their arrangement to be a CSA. Because P and S have met the requirements of paragraph (b)(2) of this section and reasonably concluded their arrangement is a CSA, pursuant to paragraph (b)(5)(i) of this section, the Commissioner must apply the rules of this section to their arrangement. Accordingly, the Commissioner treats the arrangement as a CSA and makes adjustments to the PCT Payments as appropriate under this section to achieve an arm's length result for the PCT for the software.

Example 3. (i) The facts are the same as in *Example 1* except that P and S do enter into a PCT for the software as required under this paragraph (b). The agreement entered into by P and S provides for a fixed consideration of $50 million per year for four years, payable at the end of each year. This agreement satisfies the arm's length standard. However, S actually pays P consideration at the end of each year in the form of four annual royalties equal to two percent of sales. While such royalties at the time of the PCT were expected to be $50 million per year, actual sales during the first year were less than anticipated and the first royalty payment was only $25 million.
(ii) In this case, P and S failed to implement the terms of their agreement. Under these circumstances, P and S could not reasonably conclude that their arrangement was a CSA, as described in paragraph (b)(1) of this section. Accordingly, the Commissioner is not required under paragraph (b)(5)(i) of this section to apply the rules of this section to their arrangement.

(iii) Nevertheless, the arrangement between P and S closely resembles a CSA. If the Commissioner concludes that the rules of this section provide the most reliable measure of an arm's length result for such arrangement, then pursuant to paragraph (b)(5)(ii) of this section, the Commissioner may apply the rules of this section and make any appropriate allocations under paragraph (i) of this section. Alternatively, the Commissioner may conclude that the rules of this section do not provide the most reliable measure of an arm's length result. In such case, the arrangement would be analyzed under the methods under other sections of the 482 regulations to determine whether the arrangement reaches an arm's length result.

Example 4. (i) The facts are the same as in *Example 1* except that P does not own proprietary software and P and S use a method for determining the arm's length amount of the PCT Payment for the P-Cap patent rights different from the method used in *Example 1.*

(ii) P and S determine that the arm's length amount of the PCT Payments for the P-Cap patent is $10 million. However, the Commissioner determines the best method for determining the arm's length amount of the PCT Payments for the P-Cap patent rights and under such method the arm's length amount is $100 million. To determine this $10 million present value, P and S assumed a useful life of eight years for the platform contribution, because the P-Cap patent rights will expire after eight years. However, the P-Cap patent rights are expected to lead to benefits attributable to exploitation of the cost shared intangibles extending many years beyond the expiration of the P-Cap patent, because use of the P-Cap patent rights will let P and S bring P-Ves to market before the competition, and because P and S expect to apply for additional patents covering P-Ves, which would bar competitors from selling that product for many future years. The assumption by P and S of a useful life for the platform contribution that is less than the anticipated period of exploitation of the cost shared intangibles is contrary to paragraph (g)(2)(ii) of this section, and reduces the reliability of the method used by P and S.

(iii) The method used by P and S employs a declining royalty. The royalty starts at 8% of sales, based on an application of the CUT method in which the purported CUTs all involve licenses to manufacture and sell the current generation of P-Cap, and declines to 0% over eight years, declining by 1% each year. Such make-or-sell rights are fundamentally different from use of the P-Cap patent rights to generate a new product. This difference raises the issue of whether the make-or-sell rights are sufficiently comparable to the rights that are the subject of the PCT Payment. See § 1.482-4(c). While a royalty rate for make-or-sell rights can form the basis for a reliable determination of an arm's length PCT Payment in the CUT-based implementation of the income method described in paragraph (g)(4) of this section, under that method such royalty rate does not decline to zero. Therefore, the use of a declining royalty rate based on an initial rate for make-or-sell rights further reduces the reliability of the method used by P and S.

(iv) Sales of the next-generation product are not anticipated until after seven years, at which point the royalty rate will have declined to 1%. The temporal mismatch between the period of the royalty rate decline and the period of exploitation raises further concerns about the method's reliability.

(v) For the reasons given in paragraphs (ii) through (iv) of this *Example 4*, the method used by P and S is so unreliable and so contrary to provisions of this section that P and S could not reasonably conclude that they had contracted to make arm's length PCT Payments as required by paragraphs (b)(1)(ii) and (b)(3) of

this section, and thus could not reasonably conclude that their arrangement was a CSA. Accordingly, the Commissioner is not required under paragraph (b)(5)(i) of this section to apply the rules of this section to their arrangement.

(vi) Nevertheless, the arrangement between P and S closely resembles a CSA. If the Commissioner concludes that the rules of this section provide the most reliable measure of an arm's length result for such arrangement, then pursuant to paragraph (b)(5)(ii) of this section, the Commissioner may apply the rules of this section and make any appropriate allocations under paragraph (i) of this section. Alternatively, the Commissioner may conclude that the rules of this section do not provide the most reliable measure of an arm's length result. In such case, the arrangement would be analyzed under the methods under other section 482 regulations to determine whether the arrangement reaches an arm's length result.

(6) ***Entity classification of CSAs.*** See § 301.7701-1(c) of this chapter for the classification of CSAs for purposes of the Internal Revenue Code.

(c) ***Platform contributions*** —

(1) ***In general.*** A platform contribution is any resource, capability, or right that a controlled participant has developed, maintained, or acquired externally to the intangible development activity (whether prior to or during the course of the CSA) that is reasonably anticipated to contribute to developing cost shared intangibles. The determination whether a resource, capability, or right is reasonably anticipated to contribute to developing cost shared intangibles is ongoing and based on the best available information. Therefore, a resource, capability, or right reasonably determined not to be a platform contribution as of an earlier point in time, may be reasonably determined to be a platform contribution at a later point in time. The PCT obligation regarding a resource or capability or right once determined to be a platform contribution does not terminate merely because it may later be determined that such resource or capability or right has not contributed, and no longer is reasonably anticipated to contribute, to developing cost shared intangibles. Notwithstanding the other provisions of this paragraph (c), platform contributions do not include rights in land or depreciable tangible property, and do not include rights in other resources acquired by IDCs. See paragraph (d)(1) of this section.

(2) ***Terms of platform contributions*** —

(i) ***Presumed to be exclusive.*** For purposes of a PCT, the PCT Payee's provision of a platform contribution is presumed to be exclusive. Thus, it is presumed that the platform resource, capability, or right is not reasonably anticipated to be committed to any business activities other than the CSA Activity, as defined in paragraph (j)(1)(i) of this section, whether carried out by the controlled participants, other controlled taxpayers, or uncontrolled taxpayers.

(ii) ***Rebuttal of exclusivity.*** The controlled participants may rebut the presumption set forth in paragraph (c)(2)(i) of this section to the satisfaction of the Commissioner. For example, if the platform resource is a research tool, then the controlled participants could rebut the presumption by establishing to the satisfaction of the Commissioner that, as of the date of the

PCT, the tool is reasonably anticipated not only to contribute to the CSA Activity but also to be licensed to an uncontrolled taxpayer. In such case, the PCT Payments may need to be prorated as described in paragraph (c)(2)(iii) of this section.

(iii) ***Proration of PCT Payments to the extent allocable to other business activities*** —

(A) ***In general.*** Some transfer pricing methods employed to determine the arm's length amount of the PCT Payments do so by considering the overall value of the platform contributions as opposed to, for example, the value of the anticipated use of the platform contributions in the CSA Activity. Such a transfer pricing method is consistent with the presumption that the platform contribution is exclusive (that is, that the resources, capabilities or rights that are the subject of a platform contribution are reasonably anticipated to contribute only to the CSA Activity). See paragraph (c)(2)(i) (Terms of platform contributions—Presumed to be exclusive) of this section. The PCT Payments determined under such transfer pricing method may have to be prorated if the controlled participants can rebut the presumption that the platform contribution is exclusive to the satisfaction of the Commissioner as provided in paragraph (c)(2)(ii) of this section. In the case of a platform contribution that also contributes to lines of business of a PCT Payor that are not reasonably anticipated to involve exploitation of the cost shared intangibles, the need for explicit proration may in some cases be avoided through aggregation of transactions. See paragraph (g)(2)(iv) of this section (Aggregation of transactions).

(B) ***Determining the proration of PCT Payments.*** Proration will be done on a reasonable basis in proportion to the relative economic value, as of the date of the PCT, reasonably anticipated to be derived from the platform contribution by the CSA Activity as compared to the value reasonably anticipated to be derived from the platform contribution by other business activities. In the case of an aggregate valuation done under the principles of paragraph (g)(2)(iv) of this section that addresses payment for resources, capabilities, or rights used for business activities other than the CSA Activity (for example, the right to exploit an existing intangible without further development), the proration of the aggregate payments may have to reflect the economic value attributable to such resources, capabilities, or rights as well. For purposes of the best method rule under § 1.482-1(c), the reliability of the analysis under a method that requires proration pursuant to this paragraph is reduced relative to the reliability of an analysis under a method that does not require proration.

(3) ***Categorization of the PCT.*** For purposes of § 1.482-1(b)(2)(ii) and paragraph (a)(2) of this section, a PCT must be identified by the controlled participants as a particular type of transaction (for example, a license for royalty payments). See paragraph (k)(2)(ii)(H) of this section. Such designation must be consistent with the actual conduct of the controlled participants. If the conduct is consistent with different, economically equivalent types of transactions then the controlled participants may designate the PCT as being any of such types of transactions. If the controlled participants fail to make such designation in their documentation, the Commissioner may make a designation consistent with the principles of paragraph (k)(1)(iv) of this section.

(4) ***Certain make-or-sell rights excluded*** —

(i) ***In general.*** Any right to exploit an existing resource, capability, or right without further development of such item, such as the right to make, replicate, license, or sell existing products, does not constitute a platform contribution to a CSA (and the arm's length

compensation for such rights (make-or-sell rights) does not satisfy the compensation obligation under a PCT) unless exploitation without further development of such item is reasonably anticipated to contribute to developing or further developing a cost shared intangible.

(ii) ***Examples.*** The following examples illustrate the principles of this paragraph (c)(4):

Example 1. P and S, which are members of the same controlled group, execute a CSA. Under the CSA, P and S will bear their RAB shares of IDCs for developing the second generation of ABC, a computer software program. Prior to that arrangement, P had incurred substantial costs and risks to develop ABC. Concurrent with entering into the arrangement, P (as the licensor) executes a license with S (as the licensee) by which S may make and sell copies of the existing ABC. Such make-or-sell rights do not constitute a platform contribution to the CSA. The rules of §§ 1.482-1 and 1.482-4 through 1.482-6 must be applied to determine the arm's length consideration in connection with the make-or-sell licensing arrangement. In certain circumstances, this determination of the arm's length consideration may be done on an aggregate basis with the evaluation of compensation obligations pursuant to the PCTs entered into by P and S in connection with the CSA. See paragraph (g)(2)(iv) of this section.

Example 2. (i) P, a software company, has developed and currently exploits software program ABC. P and S enter into a CSA to develop future generations of ABC. The ABC source code is the platform on which future generations of ABC will be built and is therefore a platform contribution of P for which compensation is due from S pursuant to a PCT. Concurrent with entering into the CSA, P licenses to S the make-or-sell rights for the current version of ABC. P has entered into similar licenses with uncontrolled parties calling for sales-based royalty payments at a rate of 20%. The current version of ABC has an expected product life of three years. P and S enter into a contingent payment agreement to cover both the PCT Payments due from S for P's platform contribution and payments due from S for the make-or-sell license. Based on the uncontrolled make-or-sell licenses, P and S agree on a sales-based royalty rate of 20% in Year 1 that declines on a straight line basis to 0% over the 3 year product life of ABC.
(ii) The make-or-sell rights for the current version of ABC are not platform contributions, though paragraph (g)(2)(iv) of this section provides for the possibility that the most reliable determination of an arm's length charge for the platform contribution and the make-or-sell license may be one that values the two transactions in the aggregate. A contingent payment schedule based on the uncontrolled make-or-sell licenses may provide an arm's length charge for the separate make-or-sell license between P and S, provided the royalty rates in the uncontrolled licenses similarly decline, but as a measure of the aggregate PCT and licensing payments it does not account for the arm's length value of P's platform contributions which include the rights in the source code and future development rights in ABC.

Example 3. S is a controlled participant that owns Patent Q, which protects S's use of a research tool that is helpful in developing and testing new pharmaceutical compounds. The research tool, which is not itself such a compound, is used in the CSA Activity to develop such compounds. However, the CSA Activity is not anticipated to result in the further development of the research tool or in patents based on Patent Q. Although the right to use Patent Q is not anticipated to result in the further development of Patent Q or the technology that it protects, that right constitutes a platform contribution (as opposed to make-or-sell rights) because it is anticipated to contribute to the research activity to develop cost shared intangibles relating to pharmaceutical compounds covered by the CSA.

(5) ***Examples.*** The following examples illustrate the principles of this paragraph (c). In each example, Companies P and S are members of the same controlled group, and execute a CSA providing that each will have the exclusive right to exploit cost shared intangibles in its own territory. See paragraph (b)(4)(ii) of this section (Territorial based divisional interests).

Example 1. Company P has developed and currently markets version 1.0 of a new software application XYZ. Company P and Company S execute a CSA under which they will share the IDCs for developing future versions of XYZ. Version 1.0 is reasonably anticipated to contribute to the development of future versions of XYZ and therefore Company P's rights in version 1.0 constitute a platform contribution from Company P that must be compensated by Company S pursuant to a PCT. Pursuant to paragraph (c)(3) of this section, the controlled participants designate the platform contribution as a transfer of intangibles that would otherwise be governed by § 1.482-4, if entered into by controlled parties. Accordingly, pursuant to paragraph (a)(2) of this section, the applicable method for determining the arm's length value of the compensation obligation under the PCT between Company P and Company S will be governed by § 1.482-4 as supplemented by paragraph (g) of this section. Absent a showing to the contrary by P and S, the platform contribution in this case is presumed to be the exclusive provision of the benefit of all rights in version 1.0, other than the rights described in paragraph (c)(4) of this section (Certain make-or-sell rights excluded). This includes the right to use version 1.0 for purposes of research and the exclusive right in S's territory to exploit any future products that incorporated the technology of version 1.0, and would cover a term extending as long as the controlled participants were to exploit future versions of XYZ or any other product based on the version 1.0 platform. The compensation obligation of Company S pursuant to the PCT will reflect the full value of the platform contribution, as limited by Company S's RAB share.

Example 2. Company P and Company S execute a CSA under which they will share the IDCs for developing Vaccine Z. Company P will commit to the project its research team that has successfully developed a number of other vaccines. The expertise and existing integration of the research team is a unique resource or capability of Company P which is reasonably anticipated to contribute to the development of Vaccine Z. Therefore, P's provision of the capabilities of the research team constitute a platform contribution for which compensation is due from Company S as part of a PCT. Pursuant to paragraph (c)(3) of this section, the controlled parties designate the platform contribution as a provision of services that would otherwise be governed by § 1.482-9(a) if entered into by controlled parties. Accordingly, pursuant to paragraph (a)(2) of this section, the applicable method for determining the arm's length value of the compensation obligation under the PCT between Company P and Company S will be governed by § 1.482-9(a) as supplemented by paragraph (g) of this section. Absent a showing to the contrary by P and S, the platform contribution in this case is presumed to be the

exclusive provision of the benefits by Company P of its research team to the development of Vaccine Z. Because the IDCs include the ongoing compensation of the researchers, the compensation obligation under the PCT is only for the value of the commitment of the research team by Company P to the CSA's development efforts net of such researcher compensation. The value of the compensation obligation of Company S for the PCT will reflect the full value of the provision of services, as limited by Company S's RAB share.

(d) ***Intangible development costs*** —

(1) ***Determining whether costs are IDCs.*** Costs included in IDCs are determined by reference to the scope of the intangible development activity (IDA).

(i) ***Definition and scope of the IDA.*** For purposes of this section, the IDA means the activity under the CSA of developing or attempting to develop reasonably anticipated cost shared intangibles. The scope of the IDA includes all of the controlled participants' activities that could reasonably be anticipated to contribute to developing the reasonably anticipated cost shared intangibles. The IDA cannot be described merely by a list of particular resources, capabilities, or rights that will be used in the CSA, because such a list would not identify reasonably anticipated cost shared intangibles. Also, the scope of the IDA may change as the nature or identity of the reasonably anticipated cost shared intangibles changes or the nature of the activities necessary for their development become clearer. For example, the relevance of certain ongoing work to developing reasonably anticipated cost shared intangibles or the need for additional work may only become clear over time.

(ii) ***Reasonably anticipated cost shared intangible.*** For purposes of this section, *reasonably anticipated cost shared intangible* means any intangible, within the meaning of § 1.482-4(b), that, at the applicable point in time, the controlled participants intend to develop under the CSA. Reasonably anticipated cost shared intangibles may change over the course of the CSA. The controlled participants may at any time change the reasonably anticipated cost shared intangibles but must document any such change pursuant to paragraph (k)(2)(ii)(A)(*1*) of this section. Removal of reasonably anticipated cost shared intangibles does not affect the controlled participants' interests in cost shared intangibles already developed under the CSA. In addition, the reasonably anticipated cost shared intangibles automatically expand to include the intended result of any further development of a cost shared intangible already developed under the CSA, or applications of such an intangible. However, the controlled participants may override this automatic expansion in a particular case if they separately remove specified further development of such intangible (or specified applications of such intangible) from the IDA, and document such separate removal pursuant to paragraph (k)(2)(ii)(A)(*3*) of this section.

(iii) ***Costs included in IDCs.*** For purposes of this section, *IDCs* mean all costs, in cash or in kind (including stock-based compensation, as described in paragraph (d)(3) of this section), but excluding acquisition costs for land or depreciable property, in the ordinary course of business after the formation of a CSA that, based on analysis of the facts and circumstances, are directly identified with, or are reasonably allocable to, the IDA. Thus, IDCs include costs incurred in attempting to develop reasonably anticipated cost shared intangibles regardless of whether such costs ultimately lead to development of those intangibles, other intangibles developed unexpectedly, or no intangibles. IDCs shall also include the arm's length rental charge for the use of any land or depreciable tangible property (as determined under § 1.482-2(c) (Use of tangible property)) directly identified with, or reasonably allocable to, the IDA. Reference to generally accepted accounting principles or Federal income tax accounting rules may provide a

useful starting point but will not be conclusive regarding inclusion of costs in IDCs. IDCs do not include interest expense, foreign income taxes (as defined in § 1.901-2(a)), or domestic income taxes.

(iv) ***Examples.*** The following examples illustrate the principles of this paragraph (d)(1):

Example 1. A contract that purports to be a CSA provides that the IDA to which the agreement applies consists of all research and development activity conducted at laboratories A, B, and C but not at other facilities maintained by the controlled participants. The contract does not describe the reasonably anticipated cost shared intangibles with respect to which research and development is to be undertaken. The contract fails to meet the requirements set forth in paragraph (k)(1)(ii)(B) of this section because it fails to adequately describe the scope of the IDA to be undertaken.

Example 2. A contract that purports to be a CSA provides that the IDA to which the agreement applies consists of all research and development activity conducted by any of the controlled participants with the goal of developing a cure for a particular disease. Such a cure is thus a reasonably anticipated cost shared intangible. The contract also contains a provision that the IDA will exclude any activity that builds on the results of the controlled participants' prior research concerning Enzyme X even though such activity could reasonably be anticipated to contribute to developing such cure. The contract fails to meet the requirement set forth in paragraph (d)(1)(i) of this section that the scope of the IDA include all of the controlled participants' activities that could reasonably be anticipated to contribute to developing reasonably anticipated cost shared intangibles.

(2) ***Allocation of costs.*** If a particular cost is directly identified with, or reasonably allocable to, a function the results of which will benefit both the IDA and other business activities, the cost must be allocated on a reasonable basis between the IDA and such other business activities in proportion to the relative economic value that the IDA and such other business activities are anticipated to derive from such results.

(3) ***Stock-based compensation*** —

(i) ***In general.*** As used in this section, the term *stock-based compensation* means any compensation provided by a controlled participant to an employee or independent contractor in the form of equity instruments, options to acquire stock (stock options), or rights with respect to (or determined by reference to) equity instruments or stock options, including but not limited to property to which section 83 applies and stock options to which section 421 applies, regardless of whether ultimately settled in the form of cash, stock, or other property.

(ii) ***Identification of stock-based compensation with the IDA.*** The determination of whether stock-based compensation is directly identified with, or reasonably allocable to, the IDA is made as of the date that the stock-based compensation is granted. Accordingly, all stock-based compensation that is granted during the term of the CSA and, at date of grant, is directly identified with, or reasonably allocable to, the IDA is included as an IDC under paragraph (d)(1) of this section. In the case of a repricing or other modification of a stock option, the determination of whether the repricing or other modification constitutes the grant of a new stock option for purposes of this paragraph (d)(3)(ii) will be made in accordance with the rules of section 424(h) and related regulations.

(iii) ***Measurement and timing of stock-based compensation IDC*** —

(A) ***In general.*** Except as otherwise provided in this paragraph (d)(3)(iii), the cost attributable to stock-based compensation is equal to the amount allowable to the controlled participant as a deduction for federal income tax purposes with respect to that stock-based compensation (for example, under section 83(h)) and is taken into account as an IDC under this section for the taxable year for which the deduction is allowable.

(*1*) ***Transfers to which section 421 applies.*** Solely for purposes of this paragraph (d)(3)(iii)(A), section 421 does not apply to the transfer of stock pursuant to the exercise of an option that meets the requirements of section 422(a) or 423(a).

(*2*) *Deductions of foreign controlled participants.* Solely for purposes of this paragraph (d)(3)(iii)(A), an amount is treated as an allowable deduction of a foreign controlled participant to the extent that a deduction would be allowable to a United States taxpayer.

(*3*) *Modification of stock option.* Solely for purposes of this paragraph (d)(3)(iii)(A), if the repricing or other modification of a stock option is determined, under paragraph (d)(3)(ii) of this section, to constitute the grant of a new stock option not identified with, or reasonably allocable to, the IDA, the stock option that is repriced or otherwise modified will be treated as being exercised immediately before the modification, provided that the stock option is then exercisable and the fair market value of the underlying stock then exceeds the price at which the stock option is exercisable. Accordingly, the amount of the deduction that would be allowable (or treated as allowable under this paragraph (d)(3)(iii)(A)) to the controlled participant upon exercise of the stock option immediately before the modification must be taken into account as an IDC as of the date of the modification.

(*4*) ***Expiration or termination of CSA.*** Solely for purposes of this paragraph (d)(3)(iii)(A), if an item of stock-based compensation identified with, or reasonably allocable to, the IDA is not exercised during the term of a CSA, that item of stock-based compensation will be treated as being exercised immediately before the expiration or termination of the CSA, provided that the stock-based compensation is then exercisable and the fair market value of the underlying stock then exceeds the price at which the stock-based compensation is exercisable. Accordingly, the amount of the deduction that would be allowable (or treated as allowable under this paragraph (d)(3)(iii)(A)) to the controlled participant upon exercise of the stock-based compensation must be taken into account as an IDC as of the date of the expiration or termination of the CSA.

(B) *Election with respect to options on publicly traded stock*—(*1*) *In general.* With respect to stock-based compensation in the form of options on publicly traded stock, the controlled participants in a CSA may elect to take into account all IDCs attributable to those stock options in the same amount, and as of the same time, as the fair value of the stock options reflected as a charge against income in audited financial statements or disclosed in footnotes to such financial statements, provided that such statements are prepared in accordance with United States generally accepted accounting principles by or on behalf of the company issuing the publicly traded stock.

(*2*) *Publicly traded stock.* As used in this paragraph (d)(3)(iii)(B), the term *publicly traded stock* means stock that is regularly traded on an established United States securities market and is issued by a company whose financial statements are prepared in accordance with United States generally accepted accounting principles for the taxable year.

(*3*) *Generally accepted accounting principles.* For purposes of this paragraph (d)(3)(iii)(B), a financial statement prepared in accordance with a comprehensive body of generally accepted accounting principles other than United States generally accepted accounting principles is considered to be prepared in accordance with United States generally accepted accounting principles provided that either—

(*i*) The fair value of the stock options under consideration is reflected in the reconciliation between such other accounting principles and United States generally accepted accounting principles required to be incorporated into the financial statement by the securities laws governing companies whose stock is regularly traded on United States securities markets; or

(*ii*) In the absence of a reconciliation between such other accounting principles and United States generally accepted accounting principles that reflects the fair value of the stock options under consideration, such other accounting principles require that the fair value of the stock options under consideration be reflected as a charge against income in audited financial statements or disclosed in footnotes to such statements.

(*4*) *Time and manner of making the election.* The election described in this paragraph (d)(3)(iii)(B) is made by an explicit reference to the election in the written contract required by paragraph (k)(1) of this section or in a written amendment to the CSA entered into with the consent of the Commissioner pursuant to paragraph (d)(3)(iii)(C) of this section. In the case of a CSA in existence on August 26, 2003, the election by written amendment to the CSA may be made without the consent of the Commissioner if such amendment is entered into not later than the latest due date (with regard to extensions) of a federal income tax return of any controlled participant for the first taxable year beginning after August 26, 2003.

(C) *Consistency.* Generally, all controlled participants in a CSA taking options on publicly traded stock into account under paragraph (d)(3)(ii), (d)(3)(iii)(A), or (d)(3)(iii)(B) of this section must use that same method of identification, measurement and timing for all options on publicly traded stock with respect to that CSA. Controlled participants may change their method only with the consent of the Commissioner and only with respect to stock options granted during taxable years subsequent to the taxable year in which the Commissioner's consent is obtained. All controlled participants in the CSA must join in requests for the Commissioner's consent under this paragraph (d)(3)(iii)(C). Thus, for example, if the controlled participants make the election described in paragraph (d)(3)(iii)(B) of this section upon the formation of the CSA, the election may be revoked only with the consent of the Commissioner, and the consent will apply only to stock options granted in taxable years subsequent to the taxable year in which consent is obtained. Similarly, if controlled participants already have granted stock options that have been or will be taken into account under the general rule of paragraph (d)(3)(iii)(A) of this section, then except in cases specified in the last sentence of paragraph (d)(3)(iii)(B)(*4*) of this section, the controlled participants may make the election described in paragraph (d)(3)(iii)(B) of this section only with the consent of the Commissioner, and the consent will apply only to stock options granted in taxable years subsequent to the taxable year in which consent is obtained.

(4) ***IDC share.*** A controlled participant's IDC share for a taxable year is equal to the controlled participant's cost contribution for the taxable year, divided by the sum of all IDCs for the taxable year. A controlled participant's cost contribution for a taxable year means all of the IDCs initially borne by

the controlled participant, plus all of the CST Payments that the participant makes to other controlled participants, minus all of the CST Payments that the participant receives from other controlled participants.

(5) ***Examples.*** The following examples illustrate this paragraph (d):

Example 1. Foreign parent (FP) and its U.S. subsidiary (USS) enter into a CSA to develop a better mousetrap. USS and FP share the costs of FP's R&D facility that will be exclusively dedicated to this research, the salaries of the researchers at the facility, and overhead costs attributable to the project. They also share the cost of a conference facility that is at the disposal of the senior executive management of each company. Based on the facts and circumstances, the cost of the conference facility cannot be directly identified with, and is not reasonably allocable to, the IDA. In this case, the cost of the conference facility must be excluded from the amount of IDCs.

Example 2. U.S. parent (USP) and its foreign subsidiary (FS) enter into a CSA to develop intangibles for producing a new device. USP and FS share the costs of an R&D facility, the salaries of the facility's researchers, and overhead costs attributable to the project. Although USP also incurs costs related to field testing of the device, USP does not include those costs in the IDCs that USP and FS will share under the CSA. The Commissioner may determine, based on the facts and circumstances, that the costs of field testing are IDCs that the controlled participants must share.

Example 3. U.S. parent (USP) and its foreign subsidiary (FS) enter into a CSA to develop a new process patent. USP assigns certain employees to perform solely R&D to develop a new mathematical algorithm to perform certain calculations. That algorithm will be used both to develop the new process patent and to develop a new design patent the development of which is outside the scope of the CSA. During years covered by the CSA, USP compensates such employees with cash salaries, stock-based compensation, or a combination of both. USP and FS anticipate that the economic value attributable to the R&D will be derived from the process patent and the design patent in a relative proportion of 75% and 25%, respectively. Applying the principles of paragraph (d)(2) of this section, 75% of the compensation of such employees must be allocated to the development of the new process patent and, thus, treated as IDCs. With respect to the cash salary compensation, the IDC is 75% of the face value of the cash. With respect to the stock-based compensation, the IDC is 75% of the value of the stock-based compensation as determined under paragraph (d)(3)(iii) of this section.

Example 4. Foreign parent (FP) and its U.S. subsidiary (USS) enter into a CSA to develop a new computer source code. FP has an executive officer who oversees a research facility and employees dedicated solely to the IDA. The executive officer also oversees other research facilities and employees unrelated to the IDA, and performs certain corporate overhead functions. The full amount of the costs of the research facility and employees dedicated solely to the IDA can be directly identified with the IDA and, therefore, are IDCs. In addition, based on the executive officer's records of time worked on various matters, the controlled participants reasonably allocate 20% of the executive officer's compensation to supervision of the facility and employees dedicated to the IDA, 50% of the executive officer's compensation to supervision of the facilities and employees unrelated to the IDA, and 30% of the executive officer's compensation to corporate overhead functions. The controlled participants also reasonably determine that the results of the executive officer's corporate overhead functions yield equal economic benefit to the IDA and the other business activities of FP. Applying the principles of paragraph (d)(1) of this section, the executive officer's compensation allocated to

supervising the facility and employees dedicated to the IDA (amounting to 20% of the executive officer's total compensation) must be treated as IDCs. Applying the principles of paragraph (d)(2) of this section, half of the executive officer's compensation allocated to corporate overhead functions (that is, half of 30% of the executive officer's total compensation), must be treated as IDCs. Therefore, a total of 35% (20% plus 15%) of the executive officer's total compensation must be treated as IDCs.

(e) ***Reasonably anticipated benefits share*** —

(1) ***Definition*** —

(i) ***In general.*** A controlled participant's share of reasonably anticipated benefits is equal to its reasonably anticipated benefits divided by the sum of the reasonably anticipated benefits, as defined in paragraph (j)(1)(i) of this section, of all the controlled participants. RAB shares must be updated to account for changes in economic conditions, the business operations and practices of the participants, and the ongoing development of intangibles under the CSA. For purposes of determining RAB shares at any given time, reasonably anticipated benefits must be estimated over the entire period, past and future, of exploitation of the cost shared intangibles, and must reflect appropriate updates to take into account the most reliable data regarding past and projected future results available at such time. RAB shares determined for a particular purpose shall not be further updated for that purpose based on information not available at the time that determination needed to be made. For example, RAB shares determined in order to determine IDC shares for a particular taxable year (as set forth in paragraphs (b)(1)(i) and (d)(4) of this section) shall not be recomputed based on information not available at that time. Similarly, RAB shares determined for the purpose of using a particular method such as the acquisition price method (as set forth in paragraph (g)(5)(ii) of this section) to evaluate the arm's length amount charged in a PCT shall not be recomputed based on information not available at the date of that PCT. However, nothing in this paragraph (e)(1)(i) shall limit the Commissioner's use of subsequently available information for purposes of its allocation determinations in accordance with the provisions of paragraph (i) (Allocations by the Commissioner in connection with a CSA) of this section.

(ii) ***Reliability.*** A controlled participant's RAB share must be determined by using the most reliable estimate. In determining which of two or more available estimates is most reliable, the quality of the data and assumptions used in the analysis must be taken into account, consistent with § 1.482-1(c)(2)(ii) (Data and assumptions). Thus, the reliability of an estimate will depend largely on the completeness and accuracy of the data, the soundness of the assumptions, and the relative effects of particular deficiencies in data or assumptions on different estimates. If two estimates are equally reliable, no adjustment should be made based on differences between the estimates. The following factors will be particularly relevant in determining the reliability of an estimate of RAB shares:

(A) The basis used for measuring benefits, as described in paragraph (e)(2)(ii) of this section.

(B) The projections used to estimate benefits, as described in paragraph (e)(2)(iii) of this section.

(iii) ***Examples.*** The following examples illustrate the principles of this paragraph (e)(1):

> *Example 1.* (i) USP and FS plan to conduct research to develop Product Lines A and B. USP and FS reasonably anticipate respective benefits from Product Line A of 100X and

200X and respective benefits from Product Line B, respectively, of 300X and 400X. USP and FS thus reasonably anticipate combined benefits from Product Lines A and B of 400X and 600X, respectively.
(ii) USP and FS could enter into a separate CSA to develop Product Line A with respective RAB shares of $33^{1}/_{3}$ percent and $66^{2}/_{3}$ percent (reflecting a ratio of 100X to 200X), and into a separate CSA to develop Product Line B with respective RAB shares of $42^{6}/_{7}$ percent and $57^{1}/_{7}$ percent (reflecting a ratio of 300X to 400X). Alternatively, USP and FS could enter into a single CSA to develop both Product Lines A and B with respective RAB shares of 40 percent and 60 percent (in the ratio of 400X to 600X). If the separate CSAs are chosen, then any costs for activities that contribute to developing both Product Line A and Product Line B will constitute IDCs of the respective CSAs as required by paragraphs (d)(1) and (2) of this section.

Example 2. (i) USP, a US company, wholly owns foreign subsidiary, FS. USP and FS enter into a CSA at the start of Year 1. The CSA's total IDCs are $100,000 in each year for Years 1 through 4. In Year 1, USP correctly estimates its RAB share as 50%, based on information available at the time, and therefore correctly computes $50,000 as its cost contribution for Year 1.
(ii) In Year 4, USP correctly estimates its RAB share to be 70%, based on information available at the time and, therefore, correctly computes $70,000 as its cost contribution for Year 4.

(iii) In Year 4, USP also files an amended return for Year 1 in which USP deducts a cost contribution of $70,000, asserting that, for this purpose, it should revise its Year 1 estimated RAB share to 70% based on the information that is now available to it in Year 4. The Commissioner determines that USP is incorrect for two reasons. First, a RAB share determined for a particular purpose (here, to determine USP's IDC shares and thus USP's cost contributions in Year 1) should not be revised based on information not available to USP until Year 4. See paragraph (e)(1)(i) of this section. Second, more generally, USP is not permitted to file an amended return for this purpose under § 1.482-1(a)(3). Therefore, for both of these reasons, Commissioner adjusts USP's amended return for Year 1 by disallowing $20,000 of the $70,000 deduction.

(2) ***Measure of benefits*** —

(i) ***In general.*** In order to estimate a controlled participant's RAB share, the amount of each controlled participant's reasonably anticipated benefits must be measured on a basis that is consistent for all such participants. See paragraph (e)(2)(ii)(E) *Example 9* of this section. If a controlled participant transfers a cost shared intangible to another controlled taxpayer, other than by way of a transfer described in paragraph (f) of this section, that controlled participant's benefits from the transferred intangible must be measured by reference to the transferee's benefits, disregarding any consideration paid by the transferee to the controlled participant

(such as a royalty pursuant to a license agreement). Reasonably anticipated benefits are measured either on a direct basis, by reference to estimated benefits to be generated by the use of cost shared intangibles (generally based on additional revenues plus cost savings less any additional costs incurred), or on an indirect basis, by reference to certain measurements that reasonably can be assumed to relate to benefits to be generated. Such indirect bases of measurement of anticipated benefits are described in paragraph (e)(2)(ii) of this section. A controlled participant's reasonably anticipated benefits must be measured on the basis, whether direct or indirect, that most reliably determines RAB shares. In determining which of two bases of measurement is most reliable, the factors set forth in § 1.482-1(c)(2)(ii) (Data and assumptions) must be taken into account. It normally will be expected that the basis that provided the most reliable estimate for a particular year will continue to provide the most reliable estimate in subsequent years, absent a material change in the factors that affect the reliability of the estimate. Regardless of whether a direct or indirect basis of measurement is used, adjustments may be required to account for material differences in the activities that controlled participants undertake to exploit their interests in cost shared intangibles. See *Examples 4* and *7* of paragraph (e)(2)(ii)(E) of this section.

(ii) ***Indirect bases for measuring anticipated benefits.*** Indirect bases for measuring anticipated benefits from participation in a CSA include the following:

(A) ***Units used, produced, or sold.*** Units of items used, produced, or sold by each controlled participant in the business activities in which cost shared intangibles are exploited may be used as an indirect basis for measuring its anticipated benefits. This basis of measurement will more reliably determine RAB shares to the extent that each controlled participant is expected to have a similar increase in net profit or decrease in net loss attributable to the cost shared intangibles per unit of the item or items used, produced, or sold. This circumstance is most likely to arise when the cost shared intangibles are exploited by the controlled participants in the use, production, or sale of substantially uniform items under similar economic conditions.

(B) ***Sales.*** Sales by each controlled participant in the business activities in which cost shared intangibles are exploited may be used as an indirect basis for measuring its anticipated benefits. This basis of measurement will more reliably determine RAB shares to the extent that each controlled participant is expected to have a similar increase in net profit or decrease in net loss attributable to cost shared intangibles per dollar of sales. This circumstance is most likely to arise if the costs of exploiting cost shared intangibles are not substantial relative to the revenues generated, or if the principal effect of using cost shared intangibles is to increase the controlled participants' revenues (for example, through a price premium on the products they sell) without affecting their costs substantially. Sales by each controlled participant are unlikely to provide a reliable basis for measuring RAB shares unless each controlled participant operates at the same market level (for example, manufacturing, distribution, etc.).

(C) ***Operating profit.*** Operating profit of each controlled participant from the activities in which cost shared intangibles are exploited, as determined before any expense (including amortization) on account of IDCs, may be used as an indirect basis for measuring anticipated benefits. This basis of measurement will more reliably determine RAB shares to the extent that such profit is largely attributable to the use of cost shared intangibles, or if the share of profits attributable to the use of cost shared intangibles is expected to be similar for each controlled participant. This circumstance is most likely to arise when cost

shared intangibles are closely associated with the activity that generates the profit and the activity could not be carried on or would generate little profit without use of those intangibles.

(D) ***Other bases for measuring anticipated benefits.*** Other bases for measuring anticipated benefits may in some circumstances be appropriate, but only to the extent that there is expected to be a reasonably identifiable relationship between the basis of measurement used and additional revenue generated or net costs saved by the use of cost shared intangibles. For example, a division of costs based on employee compensation would be considered unreliable unless there were a relationship between the amount of compensation and the expected additional revenue generated or net costs saved by the controlled participants from using the cost shared intangibles.

(E) ***Examples.*** The following examples illustrates this paragraph (e)(2)(ii):

Example 1. Controlled parties A and B enter into a CSA to develop product and process intangibles for already existing Product P. Without such intangibles, A and B would each reasonably anticipate revenue, in present value terms, of $100M from sales of Product P until it becomes obsolete. With the intangibles, A and B each reasonably anticipate selling the same number of units each year, but reasonably anticipate that the price will be higher. Because the particular product intangible is more highly regarded in A's market, A reasonably anticipates an increase of $20M in present value revenue from the product intangible, while B reasonably anticipates an increase of only $10M in present value from the product intangible. Further, A and B each reasonably anticipate spending an additional amount equal to $5M in present value in production costs to include the feature embodying the product intangible. Finally, A and B each reasonably anticipate saving an amount equal to $2M in present value in production costs by using the process intangible. A and B reasonably anticipate no other economic effects from exploiting the cost shared intangibles. A's reasonably anticipated benefits from exploiting the cost shared intangibles equal its reasonably anticipated increase in revenue ($20M) plus its reasonably anticipated cost savings ($2M) less its reasonably anticipated increased costs ($5M), which equals $17M. Similarly, B's reasonably anticipated benefits from exploiting the cost shared intangibles equal its reasonably anticipated increase in revenue ($10M) plus its reasonably anticipated cost savings ($2M) less its reasonably anticipated increased costs ($5M), which equals $7M. Thus A's reasonably anticipated benefits are $17M and B's reasonably anticipated benefits are $7M.

Example 2. Foreign Parent (FP) and U.S. Subsidiary (USS) both produce a feedstock for the manufacture of various high-performance plastic products. Producing the feedstock requires large amounts of electricity, which accounts for a significant portion of its production cost. FP and USS enter into a CSA to develop a new process that will reduce the amount of electricity required to produce a unit of the feedstock. FP and USS currently both incur an electricity cost of $2 per unit of feedstock produced and rates for each are expected to remain similar in the future. The new process, if it is successful, will reduce the amount of electricity required by each company to produce a unit of the feedstock by 50%. Switching to the new process would not require FP or USS to incur significant investment or other costs. Therefore, the cost savings each company is expected to achieve after implementing the new process are $1 per unit of feedstock produced. Under the CSA, FP and USS divide the costs of

developing the new process based on the units of the feedstock each is anticipated to produce in the future. In this case, units produced is the most reliable basis for measuring RAB shares and dividing the IDCs because each controlled participant is expected to have a similar $1 (50% of current charge of $2) decrease in costs per unit of the feedstock produced.

Example 3. The facts are the same as in *Example 2,* except that currently USS pays $3 per unit of feedstock produced for electricity while FP pays $6 per unit of feedstock produced. In this case, units produced is not the most reliable basis for measuring RAB shares and dividing the IDCs because the participants do not expect to have a similar decrease in costs per unit of the feedstock produced. The Commissioner determines that the most reliable measure of RAB shares may be based on units of the feedstock produced if FP's units are weighted relative to USS's units by a factor of 2. This reflects the fact that FP pays twice as much as USS for electricity and, therefore, FP's savings of $3 per unit of the feedstock (50% reduction of current charge of $6) would be twice USS's savings of $1.50 per unit of feedstock (50% reduction of current charge of $3) from any new process eventually developed.

Example 4. The facts are the same as in *Example 3,* except that to supply the particular needs of the U.S. market USS manufactures the feedstock with somewhat different properties than FP's feedstock. This requires USS to employ a somewhat different production process than does FP. Because of this difference, USS would incur significant construction costs in order to adopt any new process that may be developed under the cost sharing agreement. In this case, units produced is not the most reliable basis for measuring RAB shares. In order to reliably determine RAB shares, the Commissioner measures the reasonably anticipated benefits of USS and FP on a direct basis. USS's reasonably anticipated benefits are its reasonably anticipated total savings in electricity costs, less its reasonably anticipated costs of adopting the new process. FS's reasonably anticipated benefits are its reasonably anticipated total savings in electricity costs.

Example 5. U.S. Parent (USP) and Foreign Subsidiary (FS) enter into a CSA to develop new anesthetic drugs. USP obtains the right to market any resulting drugs in the United States and FS obtains the right to market any resulting drugs in the rest of the world. USP and FS determine RAB shares on the basis of their respective total anticipated operating profit from all drugs under development. USP anticipates that it will receive a much higher profit than FS per unit sold because the price of the drugs is not regulated in the United States, whereas the price of the drugs is regulated in many non-U.S. jurisdictions. In both controlled participants' territories, the anticipated operating profits are almost entirely attributable to the use of the cost shared intangibles. In this case, the controlled participants' basis for measuring RAB shares is the most reliable.

Example 6. (i) Foreign Parent (FP) and U.S. Subsidiary (USS) manufacture and sell fertilizers. They enter into a CSA to develop a new pellet form of a common agricultural fertilizer that is currently available only in powder form. Under the CSA, USS obtains the rights to produce and sell the new form of fertilizer for the U.S. market while FP obtains the rights to produce and sell the

new form of fertilizer in the rest of the world. The costs of developing the new form of fertilizer are divided on the basis of the anticipated sales of fertilizer in the controlled participants' respective markets.
(ii) If the research and development is successful, the pellet form will deliver the fertilizer more efficiently to crops and less fertilizer will be required to achieve the same effect on crop growth. The pellet form of fertilizer can be expected to sell at a price premium over the powder form of fertilizer based on the savings in the amount of fertilizer that needs to be used. This price premium will be a similar premium per dollar of sales in each territory. If the research and development is successful, the costs of producing pellet fertilizer are expected to be approximately the same as the costs of producing powder fertilizer and the same for both FP and USS. Both FP and USS operate at approximately the same market levels, selling their fertilizers largely to independent distributors.

(iii) In this case, the controlled participants' basis for measuring RAB shares is the most reliable.

Example 7. The facts are the same as in *Example 6,* except that FP distributes its fertilizers directly while USS sells to independent distributors. In this case, sales of USS and FP are not the most reliable basis for measuring RAB shares unless adjustments are made to account for the difference in market levels at which the sales occur.

Example 8. Foreign Parent (FP) and U.S. Subsidiary (USS) enter into a CSA to develop materials that will be used to train all new entry-level employees. FP and USS determine that the new materials will save approximately ten hours of training time per employee. Because their entry-level employees are paid on differing wage scales, FP and USS decide that they should not measure benefits based on the number of entry-level employees hired by each. Rather, they measure benefits based on compensation paid to the entry-level employees hired by each. In this case, the basis used for measuring RAB shares is the most reliable because there is a direct relationship between compensation paid to new entry-level employees and costs saved by FP and USS from the use of the new training materials.

Example 9. U.S. Parent (USP), Foreign Subsidiary 1 (FS1), and Foreign Subsidiary 2 (FS2) enter into a CSA to develop computer software that each will market and install on customers' computer systems. The controlled participants measure benefits on the basis of projected sales by USP, FS1, and FS2 of the software in their respective geographic areas. However, FS1 plans not only to sell but also to license the software to unrelated customers, and FS1's licensing income (which is a percentage of the licensees' sales) is not counted in the projected benefits. In this case, the basis used for measuring the benefits of each controlled participant is not the most reliable because all of the benefits received by controlled participants are not taken into account. In order to reliably determine RAB shares, FS1's projected benefits from licensing must be included in the measurement on a basis that is the same as that

used to measure its own and the other controlled participants' projected benefits from sales (for example, all controlled participants might measure their benefits on the basis of operating profit).

(iii) ***Projections used to estimate benefits*** —

(A) ***In general.*** The reliability of an estimate of RAB shares also depends upon the reliability of projections used in making the estimate. Projections required for this purpose generally include a determination of the time period between the inception of the research and development activities under the CSA and the receipt of benefits, a projection of the time over which benefits will be received, and a projection of the benefits anticipated for each year in which it is anticipated that the cost shared intangible will generate benefits. A projection of the relevant basis for measuring anticipated benefits may require a projection of the factors that underlie it. For example, a projection of operating profits may require a projection of sales, cost of sales, operating expenses, and other factors that affect operating profits. If it is anticipated that there will be significant variation among controlled participants in the timing of their receipt of benefits, and consequently benefit shares are expected to vary significantly over the years in which benefits will be received, it normally will be necessary to use the present value of the projected benefits to reliably determine RAB shares. See paragraph (g)(2)(v) of this section for best method considerations regarding discount rates used for this purpose. If it is not anticipated that benefit shares will significantly change over time, current annual benefit shares may provide a reliable projection of RAB shares. This circumstance is most likely to occur when the CSA is a long-term arrangement, the arrangement covers a wide variety of intangibles, the composition of the cost shared intangibles is unlikely to change, the cost shared intangibles are unlikely to generate unusual profits, and each controlled participant's share of the market is stable.

(B) ***Examples.*** The following examples illustrate the principles of this paragraph (e)(2)(iii):

> *Example 1.* (i) Foreign Parent (FP) and U.S. Subsidiary (USS) enter into a CSA to develop a new car model. The controlled participants plan to spend four years developing the new model and four years producing and selling the new model. USS and FP project total sales of $4 billion and $2 billion, respectively, over the planned four years of exploitation of the new model. The controlled participants determine RAB shares for each year of $66^{2}/_{3}$% for USS and $33^{1}/_{3}$% for FP, based on projected total sales.
> (ii) USS typically begins producing and selling new car models a year after FP begins producing and selling new car models. In order to reflect USS's one-year lag in introducing new car models, a more reliable projection of each participant's RAB share would be based on a projection of all four years of sales for each participant, discounted to present value.

Example 2. U.S. Parent (USP) and Foreign Subsidiary (FS) enter into a CSA to develop new and improved household cleaning products. Both controlled participants have sold household cleaning products for many years and have stable worldwide market

shares. The products under development are unlikely to produce unusual profits for either controlled participant. The controlled participants determine RAB shares on the basis of each controlled participant's current sales of household cleaning products. In this case, the controlled participants' RAB shares are reliably projected by current sales of cleaning products.

Example 3. The facts are the same as in *Example 2,* except that FS's market share is rapidly expanding because of the business failure of a competitor in its geographic area. The controlled participants' RAB shares are not reliably projected by current sales of cleaning products. FS's benefit projections should take into account its growth in market share.

Example 4. Foreign Parent (FP) and U.S. Subsidiary (USS) enter into a CSA to develop synthetic fertilizers and insecticides. FP and USS share costs on the basis of each controlled participant's current sales of fertilizers and insecticides. The market shares of the controlled participants have been stable for fertilizers, but FP's market share for insecticides has been expanding. The controlled participants' projections of RAB shares are reliable with regard to fertilizers, but not reliable with regard to insecticides; a more reliable projection of RAB shares would take into account the expanding market share for insecticides.

(f) ***Changes in participation under a CSA*** —

(1) ***In general.*** A change in participation under a CSA occurs when there is either a controlled transfer of interests or a capability variation. A change in participation requires arm's length consideration under paragraph (a)(3)(ii) of this section, and as more fully described in this paragraph (f).

(2) ***Controlled transfer of interests.*** A controlled transfer of interests occurs when a participant in a CSA transfers all or part of its interests in cost shared intangibles under the CSA in a controlled transaction, and the transferee assumes the associated obligations under the CSA. For example, a change in the territorial based divisional interests or field of use based divisional interests, as described in paragraph (b)(4), is a controlled transfer of interests. After the controlled transfer of interests occurs, the CSA will still exist if at least two controlled participants still have interests in the cost shared intangibles. In such a case, the transferee will be treated as succeeding to the transferor's prior history under the CSA as pertains to the transferred interests, including the transferor's cost contributions, benefits derived, and PCT Payments attributable to such rights or obligations. A transfer that would otherwise constitute a controlled transfer of interests for purposes of this paragraph (f)(2) shall not constitute a controlled transfer of interests if it also constitutes a capability variation for purposes of paragraph (f)(3) of this section.

(3) ***Capability variation.*** A capability variation occurs when, in a CSA in which interests in cost shared intangibles are divided as described in paragraph (b)(4)(iv) of this section, the controlled participants' division of interests or their relative capabilities or capacities to benefit from the cost shared intangibles are materially altered. For purposes of paragraph (a)(3)(ii) of this section, a capability variation is considered to be a controlled transfer of interests in cost shared intangibles, in which any controlled participant whose RAB share decreases as a result of the capability variation is a transferor, and any controlled participant whose RAB share thus increases is the transferee of the interests in cost shared intangibles.

(4) ***Arm's length consideration for a change in participation.*** In the event of a change in participation, the arm's length amount of consideration from the transferee, under the rules of §§ 1.482-1 and 1.482-4 through 1.482-6 and paragraph (a)(3)(ii) of this section, will be determined consistent with the reasonably anticipated incremental change in the returns to the transferee and transferor resulting from such change in participation. Such changes in returns will themselves depend on the reasonably anticipated incremental changes in the benefits from exploiting the cost shared intangibles, IDCs borne, and PCT Payments (if any). However, any arm's length consideration required under this paragraph (f)(4) with respect to a capability variation shall be reduced as necessary to prevent duplication of an adjustment already performed under paragraph (i)(2)(ii)(A) of this section that resulted from the same capability variation. If an adjustment has been performed already under this paragraph (f)(4) with respect to a capability variation, then for purposes of any adjustment to be performed under paragraph (i)(2)(ii)(A) of this section, the controlled participants' projected benefit shares referred to in paragraph (i)(2)(ii)(A) of this section shall be considered to be the controlled participants' respective RAB shares after the capability variation occurred.

(5) ***Examples.*** The following examples illustrate the principles of this paragraph (f):

Example 1. X, Y, and Z are the only controlled participants in a CSA. The CSA divides interests in cost shared intangibles on a territorial basis as described in paragraph (b)(4)(ii) of this section. X is assigned the territories of the Americas, Y is assigned the territory of the UK and Australia, and Z is assigned the rest of the world. When the CSA is formed, X has a platform contribution T. Under the PCTs for T, Y and Z are each obligated to pay X royalties equal to five percent of their respective sales. Aside from T, there are no platform contributions. Two years after the formation of the CSA, Y transfers to Z its interest in cost shared intangibles relating to the UK territory, and the associated obligations, in a controlled transfer of interests described in paragraph (f)(2) of this section. At that time the reasonably anticipated benefits from exploiting cost shared intangibles in the UK have a present value of $11M, the reasonably anticipated IDCs to be borne relating to the UK territory have a present value of $3M, and the reasonably anticipated PCT Payments to be made to X relating to sales in the UK territory have a present value of $2M. As arm's length consideration for the change in participation due to the controlled transfer of interests, Z must pay Y compensation with an anticipated present value of $11M, less $3M, less $2M, which equals $6M.

Example 2. As in *Example 2* of paragraph (b)(4)(v) of this section, companies P and S, both members of the same controlled group, enter into a CSA to develop product Z. P and S agree to divide their interest in product Z based on site of manufacturing. P will have exclusive and perpetual rights in product Z manufactured in facilities owned by P. S will have exclusive and perpetual rights to product Z manufactured in facilities owned by S. P and S agree that neither will license manufacturing rights in product Z to any related or unrelated party. Both P and S maintain books and records that allow production at all sites to be verified. Both own facilities that will manufacture product Z and the relative capacities of these sites are known. All facilities are currently operating at near capacity and are expected to continue to operate at near capacity when product Z enters production so that it will not be feasible to shift production between P's and S's facilities. P and S have no plans to build new facilities and the lead time required to plan and build a manufacturing facility precludes the possibility that P or S will build a new facility during the period for which sales of Product Z are expected. When the CSA is formed, P has a platform contribution T. Under the PCT for T, S is obligated to pay P sales-based royalties according to a certain formula. Aside from T, there are no other platform contributions. Two years after the formation of the CSA, owing to a change in plans not reasonably foreseeable at

the time the CSA was entered into, S acquires additional facilities F for the manufacture of Product Z. Such acquisition constitutes a capability variation described in paragraph (f)(3) of this section. Under this capability variation, S's RAB share increases from 50% to 60%. Accordingly, there is a compensable change in participation under paragraph (f)(3) of this section.

(g) *Supplemental guidance on methods applicable to PCTs* —

(1) ***In general.*** This paragraph (g) provides supplemental guidance on applying the methods listed in this paragraph (g)(1) for purposes of evaluating the arm's length amount charged in a PCT. Each method will yield a value for the compensation obligation of each PCT Payor consistent with the product of the combined pre-tax value to all controlled participants of the platform contribution that is the subject of the PCT and the PCT Payor's RAB share. Each method must yield results consistent with measuring the value of a platform contribution by reference to the future income anticipated to be generated by the resulting cost shared intangibles. The methods are—

(i) The comparable uncontrolled transaction method described in § 1.482-4(c), or the comparable uncontrolled services price method described in § 1.482-9(c), as further described in paragraph (g)(3) of this section;

(ii) The income method, described in paragraph (g)(4) of this section;

(iii) The acquisition price method, described in paragraph (g)(5) of this section;

(iv) The market capitalization method, described in paragraph (g)(6) of this section;

(v) The residual profit split method, described in paragraph (g)(7) of this section; and

(vi) Unspecified methods, described in paragraph (g)(8) of this section.

(2) *Best method analysis applicable for evaluation of a PCT pursuant to a CSA* —

(i) ***In general.*** Each method must be applied in accordance with the provisions of § 1.482-1, including the best method rule of § 1.482-1(c), the comparability analysis of § 1.482-1(d), and the arm's length range of § 1.482-1(e), except as those provisions are modified in this paragraph (g).

(ii) *Consistency with upfront contractual terms and risk allocation—the investor model* —

(A) ***In general.*** Although all of the factors entering into a best method analysis described in § 1.482-1(c) and (d) must be considered, specific factors may be particularly relevant in the context of a CSA. In particular, the relative reliability of an application of any method depends on the degree of consistency of the analysis with the applicable contractual terms and allocation of risk under the CSA and this section among the controlled participants as of the date of the PCT, unless a change in such terms or allocation has been made in return for arm's length consideration. In this regard, a CSA involves an upfront division of the risks as to both reasonably anticipated obligations and reasonably anticipated benefits over the reasonably anticipated term of the CSA Activity. Accordingly, the relative reliability of an application of a method also depends on the degree of consistency of the analysis with the assumption that, as of the date of the PCT, each controlled participant's aggregate net investment in the CSA Activity (including platform contributions, operating contributions, as such term is defined in paragraph (j)(1)(i) of this section, operating cost contributions, as such term is defined in paragraph (j)(1)(i) of this

section, and cost contributions) is reasonably anticipated to earn a rate of return (which might be reflected in a discount rate used in applying a method) appropriate to the riskiness of the controlled participant's CSA Activity over the entire period of such CSA Activity. If the cost shared intangibles themselves are reasonably anticipated to contribute to developing other intangibles, then the period described in the preceding sentence includes the period, reasonably anticipated as of the date of the PCT, of developing and exploiting such indirectly benefited intangibles.

(B) ***Example.*** The following example illustrates the principles of this paragraph (g)(2)(ii):

Example. (i) P, a U.S. corporation, has developed a software program, DEF, which applies certain algorithms to reconstruct complete DNA sequences from partially-observed DNA sequences. S is a wholly-owned foreign subsidiary of P. On the first day of Year 1, P and S enter into a CSA to develop a new generation of genetic tests, GHI, based in part on the use of DEF. DEF is therefore a platform contribution of P for which compensation is due from S pursuant to a PCT. S makes no platform contributions to the CSA. Sales of GHI are projected to commence two years after the inception of the CSA and then to continue for eight more years. Based on industry experience, P and S are confident that GHI will be replaced by a new type of genetic testing based on technology unrelated to DEF or GHI and that, at that point, GHI will have no further value. P and S project that that replacement will occur at the end of Year 10.
(ii) For purposes of valuing the PCT for P's platform contribution of DEF to the CSA, P and S apply a type of residual profit split method that is not described in paragraph (g)(7) of this section and which, accordingly, constitutes an unspecified method. See paragraph (g)(7)(i) (last sentence) of this section. The principles of this paragraph (g)(2) apply to any method for valuing a PCT, including the unspecified method used by P and S.

(iii) Under the method employed by P and S, in each year, a portion of the income from sales of GHI in S's territory is allocated to certain routine contributions made by S. The residual of the profit or loss from GHI sales in S's territory after the routine allocation step is divided between P and S pro rata to their capital stocks allocable to S's territory. Each controlled participant's capital stock is computed by capitalizing, applying a capital growth factor to, and amortizing its historical expenditures regarding DEF allocable to S's territory (in the case of P), or its ongoing cost contributions towards developing GHI (in the case of S). The amortization of the capital stocks is effected on a straight-line basis over an assumed four-year life for the relevant expenditures. The capital stocks are grown using an assumed growth factor that P and S consider to be appropriate.

(iv) The assumption that all expenditures amortize on a straight-line basis over four years does not appropriately reflect the principle that as of the date of the PCT regarding DEF, every contribution to the development of GHI, including DEF, is reasonably anticipated to have value throughout the entire period of exploitation of GHI which is projected to continue through Year 10. Under this method as applied by P and S, the share of the residual profit in S's territory that is allocated to P as a PCT Payment from S will decrease every year. After Year 4, P's capital stock in DEF will necessarily be $0, so that P will receive none of the residual profit or loss from GHI sales in S's territory after Year 4 as a PCT Payment.

(v) As a result of this limitation of the PCT Payments to be made by S, the anticipated return to S's aggregate investment in the CSA, over the whole period of S's CSA Activity, is at a rate that is significantly higher than the appropriate rate of return for S's CSA Activity (as determined by a reliable method). This discrepancy is not consistent with the investor model principle that S should anticipate a rate of return to its aggregate investment in the CSA, over the whole period of its CSA Activity, appropriate for the riskiness of its CSA Activity. The inconsistency of the method with the investor model materially lessens its reliability for purposes of a best method analysis. See § 1.482-1(c)(2)(ii)(B).

(iii) ***Consistency of evaluation with realistic alternatives*** —

(A) ***In general.*** The relative reliability of an application of a method also depends on the degree of consistency of the analysis with the assumption that uncontrolled taxpayers dealing at arm's length would have evaluated the terms of the transaction, and only entered into such transaction, if no alternative is preferable. This condition is not met, therefore, where for any controlled participant the total anticipated present value of its income attributable to its entering into the CSA, as of the date of the PCT, is less than the total anticipated present value of its income that could be achieved through an alternative arrangement realistically available to that controlled participant. In principle, this comparison is made on a post-tax basis but, in many cases, a comparison made on a pre-tax basis will yield equivalent results. See also paragraph (g)(2)(v)(B)(*1*) of this section (Discount rate variation between realistic alternatives).

(B) ***Examples.*** The following examples illustrate the principles of this paragraph (g)(2)(iii):

Example 1. (i) P, a corporation, and S, a wholly-owned subsidiary of P, enter into a CSA to develop a personal transportation device (the product). Under the arrangement, P will undertake all of the R&D, and manufacture and market the product in Country X. S will make CST Payments to P for its appropriate share of P's R&D costs, and manufacture and market the product in the rest of the world. P owns existing patents and trade secrets that are reasonably anticipated to contribute to the development of the product. Therefore the rights in the patents and trade secrets are platform contributions for which compensation is due from S

as part of a PCT.
(ii) S's manufacturing and distribution activities under the CSA will be routine in nature, and identical to the activities it would undertake if it alternatively licensed the product from P.

(iii) Reasonably reliable estimates indicate that P could develop the product without assistance from S and license the product outside of Country X for a royalty of 20% of sales. Based on reliable financial projections that include all future development costs and licensing revenue that are allocable to the non-Country X market, and using a discount rate appropriate for the riskiness of P's role as a licensor (see paragraph (g)(2)(v) of this section), the post-tax present value of this licensing alternative to P for the non-Country X market (measured as of the date of the PCT) would be $500 million. Thus, based on this realistic alternative, the anticipated post-tax present value under the CSA to P in the non-Country X market (measured as of the date of the PCT), taking into account anticipated development costs allocable to the non-Country X market, and anticipated CST Payments and PCT Payments from S, and using a discount rate appropriate for the riskiness of P's role as a participant in the CSA, should not be less than $500 million.

Example 2. (i) The facts are the same as in *Example 1,* except that there are no reliable estimates of the value to P from the licensing alternative to the CSA. Further, reasonably reliable estimates indicate that an arm's length return for S's routine manufacturing and distribution activities is a 10% mark-up on total costs of goods sold plus operating expenses related to those activities. Finally, the Commissioner determines that the respective activities undertaken by P and S (other than licensing payments, cost contributions, and PCT Payments) would be identical regardless of whether the arrangement was undertaken as a CSA (cost sharing alternative) or as a long-term licensing arrangement (licensing alternative). In particular, in both alternatives, P would perform all research activities and S would undertake routine manufacturing and distribution activities associated with its territory.
(ii) P undertakes an economic analysis that derives S's cost contributions under the CSA, based on reliable financial projections. Based on this and further economic analysis, P determines S's PCT Payment as a certain lump sum amount to be paid as of the date of the PCT (Date D).

(iii) Based on reliable financial projections that include S's cost contributions and that incorporate S's PCT Payment, as computed by P, and using a discount rate appropriate for the riskiness of S's role as a CSA participant (see paragraphs (g)(2)(v) and (4)(vi)(F) of this section), the anticipated post-tax net present value to S in the cost sharing alternative (measured as of Date D) is $800 million. Further,

based on these same reliable projections (but incorporating S's licensing payments instead of S's cost contributions and PCT Payment), and using a discount rate appropriate for the riskiness of S's role as a long-term licensee, the anticipated post-tax net present value to S in the licensing alternative (measured as of Date D) is $100 million. Thus, S's anticipated post-tax net present value is $700 million greater in the cost sharing alternative than in the licensing alternative. This result suggests that P's anticipated post-tax present value must be significantly less under the cost sharing alternative than under the licensing alternative. This means that the reliability of P's analysis as described in paragraph (ii) of this *Example 2* is reduced, because P would not be expected to enter into a CSA if its alternative of being a long-term licensor is preferable.

Example 3. (i) The facts are the same as in paragraphs (i) and (ii) of *Example 2*. In addition, based on reliable financial projections that include S's cost contributions and S's PCT Payment, and using a discount rate appropriate for the riskiness of S's role as a CSA participant, the anticipated post-tax net present value to S under the CSA (measured as of the date of the PCT) is $50 million. Also, instead of entering the CSA, S has the realistic alternative of manufacturing and distributing product Z unrelated to the personal transportation device, with the same anticipated 10% mark-up on total costs that it would anticipate for its routine activities in *Example 2*. Under its realistic alternative, at a discount rate appropriate for the riskiness of S's role with respect to product Z, S anticipates a present value of $100 million.
(ii) Because the lump sum PCT Payment made by S results in S having a considerably lower anticipated net present value than S could achieve through an alternative arrangement realistically available to it, the reliability of P's calculation of the lump sum PCT Payment is reduced.

(iv) ***Aggregation of transactions.*** The combined effect of multiple contemporaneous transactions, consisting either of multiple PCTs, or of one or more PCT and one or more other transactions in connection with a CSA that are not governed by this section (such as transactions involving cross operating contributions or make-or-sell rights), may require evaluation in accordance with the principles of aggregation described in § 1.482-1(f)(2)(i). In such cases, it may be that the multiple transactions are reasonably anticipated, as of the date of the PCT(s), to be so interrelated that the method that provides the most reliable measure of an arm's length charge is a method under this section applied on an aggregate basis for the PCT(s) and other transactions. A section 482 adjustment may be made by comparing the aggregate arm's length charge so determined to the aggregate payments actually made for the multiple transactions. In such a case, it generally will not be necessary to allocate separately the aggregate arm's length charge as between various PCTs or as between PCTs and such other transactions. However, such an allocation may be necessary for other purposes, such as applying paragraph (i)(6) (Periodic adjustments) of this section. An aggregate determination of the arm's length charge for multiple transactions will often yield a payment for a controlled participant that is equal to the aggregate value of the platform contributions and other resources, capabilities,

and rights covered by the multiple transactions multiplied by that controlled participant's RAB share. Because RAB shares only include benefits from cost shared intangibles, the reliability of an aggregate determination of payments for multiple transactions may be reduced to the extent that it includes transactions covering resources, capabilities, and rights for which the controlled participants' expected benefit shares differ substantially from their RAB shares.

(v) ***Discount rate*** —

(A) ***In general.*** The best method analysis in connection with certain methods or forms of payment may depend on a rate or rates of return used to convert projected results of transactions to present value, or to otherwise convert monetary amounts at one or more points in time to equivalent amounts at a different point or points in time. For this purpose, a discount rate or rates should be used that most reliably reflect the market-correlated risks of activities or transactions and should be applied to the best estimates of the relevant projected results, based on all the information potentially available at the time for which the present value calculation is to be performed. Depending on the particular facts and circumstances, the market-correlated risk involved and thus, the discount rate, may differ among a company's various activities or transactions. Normally, discount rates are most reliably determined by reference to market information.

(B) ***Considerations in best method analysis of discount rate*** —(*1*) *Discount rate variation between realistic alternatives.* Realistic alternatives may involve varying risk exposure and, thus, may be more reliably evaluated using different discount rates. See paragraphs (g)(4)(i)(F) and (vi)(F) of this section. In some circumstances, a party may have less risk as a licensee of intangibles needed in its operations, and so require a lower discount rate, than it would have by entering into a CSA to develop such intangibles, which may involve the party's assumption of additional risk in funding its cost contributions to the IDA. Similarly, self-development of intangibles and licensing out may be riskier for the licensor, and so require a higher discount rate, than entering into a CSA to develop such intangibles, which would relieve the licensor of the obligation to fund a portion of the IDCs of the IDA.

(*2*) *Implied discount rates.* In some circumstances, the particular discount rate or rates used for certain activities or transactions logically imply that certain other activities will have a particular discount rate or set of rates (implied discount rates). To the extent that an implied discount rate is inappropriate in light of the facts and circumstances, which may include reliable direct evidence of the appropriate discount rate applicable for such other activities, the reliability of any method is reduced where such method is based on the discount rates from which such an inappropriate implied discount rate is derived. See paragraphs (g)(4)(vi)(F)(*2*) and (g)(4)(viii), *Example 8* of this section.

(*3*) ***Discount rate variation between forms of payment.*** Certain forms of payment may involve different risks than others. For example, ordinarily a royalty computed on a profits base would be more volatile, and so require a higher discount rate to discount projected payments to present value, than a royalty computed on a sales base.

(*4*) ***Post-tax rate.*** In general, discount rate estimates that may be inferred from the operations of the capital markets are post-tax discount rates. Therefore, an analysis would in principle apply post-tax discount rates to income net of expense items including taxes (post-tax income). However, in certain circumstances the result of applying a post-tax discount rate to post-tax income is equivalent to the product of the result of applying a post-tax discount rate to income net of expense items other than

taxes (pre-tax income), and the difference of one minus the tax rate (as defined in paragraph (j)(1)(i) of this section). Therefore, in such circumstances, calculation of pre-tax income, rather than post-tax income, may be sufficient. See, for example, paragraph (g)(4)(i)(G) of this section.

(C) *Example.* The following example illustrates the principles of this paragraph (g)(2)(v):

> *Example.* (i) P and S form a CSA to develop intangible X, which will be used in product Y. P will develop X, and S will make CST Payments as its cost contributions. At the start of the CSA, P has a platform contribution, for which S commits to make a PCT Payment of 5% of its sales of product Y. As part of the evaluation of whether that PCT Payment is arm's length, the Commissioner considers whether P had a more favorable realistic alternative (see paragraph (g)(2)(iii) of this section). Specifically, the Commissioner compares P's anticipated post-tax discounted present value of the financial projections under the CSA (taking into account S's PCT payment of 5% of its sale of product Y) with P's anticipated post-tax discounted present value of the financial projections under a reasonably available licensing alternative that consists of developing intangible X on its own and then licensing X to S or to an uncontrolled party similar to S. In undertaking the analysis, the Commissioner determines that, because it would be funding the entire development of the intangible, P undertakes greater risks in the licensing alternative than in the cost sharing alternative (in the cost sharing alternative P would be funding only part of the development of the intangible).
> (ii) The Commissioner determines that, as between the two scenarios, all of the components of P's anticipated financial flows are identical, except for the CST and PCT Payments under the CSA, compared to the licensing payments under the licensing alternative. Accordingly, the Commissioner concludes that the differences in market-correlated risks between the two scenarios, and therefore the differences in discount rates between the two scenarios, relate to the differences in these components of the financial projections.

(vi) *Financial projections.* The reliability of an estimate of the value of a platform or operating contribution in connection with a PCT will often depend upon the reliability of projections used in making the estimate. Such projections should reflect the best estimates of the items projected (normally reflecting a probability weighted average of possible outcomes and thus also reflecting non-market-correlated risk). Projections necessary for this purpose may include a projection of sales, IDCs, costs of developing operating contributions, routine operating expenses, and costs of sales. Some method applications directly estimate projections of items attributable to separate development and exploitation by the controlled participants within their respective divisions. Other method applications indirectly estimate projections of items from the perspective of the controlled group as a whole, rather than from the perspective of a particular participant, and then apportion the items so estimated on some assumed basis. For example, in some applications, sales might be directly projected by division, but worldwide projections of other items such as operating expenses might be apportioned among divisions in the same ratio as the divisions' respective sales. Which approach is more reliable depends on which provides the most reliable measure of an arm's length result, considering the competing perspectives under the facts and circumstances in light of the completeness and accuracy of the underlying data, the reliability of the assumptions, and the sensitivity of the results to possible deficiencies in the data and assumptions. For these purposes,

projections that have been prepared for non-tax purposes are generally more reliable than projections that have been prepared solely for purposes of meeting the requirements in this paragraph (g).

(vii) *Accounting principles*—(A) *In general.* Allocations or other valuations done for accounting purposes may provide a useful starting point but will not be conclusive for purposes of the best method analysis in evaluating the arm's length charge in a PCT, particularly where the accounting treatment of an asset is inconsistent with its economic value.

(B) *Examples.* The following examples illustrate the principles of this paragraph (g)(2)(vii):

Example 1. (i) USP, a U.S. corporation and FSub, a wholly-owned foreign subsidiary of USP, enter into a CSA in Year 1 to develop software programs with application in the medical field. Company X is an uncontrolled software company located in the United States that is engaged in developing software programs that could significantly enhance the programs being developed by USP and FSub. Company X is still in a startup phase, so it has no currently exploitable products or marketing intangibles and its workforce consists of a team of software developers. Company X has negligible liabilities and tangible property. In Year 2, USP purchases Company X as part of an uncontrolled transaction in order to acquire its in-process technology and workforce for purposes of the development activities of the CSA. USP files a consolidated return that includes Company X. For accounting purposes, $50 million of the $100 million acquisition price is allocated to the in-process technology and workforce, and the residual $50 million is allocated to goodwill.
(ii) The in-process technology and workforce of Company X acquired by USP are reasonably anticipated to contribute to developing cost shared intangibles and therefore the rights in the in-process technology and workforce of Company X are platform contributions for which FSub must compensate USP as part of a PCT. In determining whether to apply the acquisition price or another method for purposes of evaluating the arm's length charge in the PCT, relevant best method analysis considerations must be weighed in light of the general principles of paragraph (g)(2) of this section. The allocation for accounting purposes raises an issue as to the reliability of using the acquisition price method in this case because it suggests that a significant portion of the value of Company X's nonroutine contributions to USP's business activities is allocable to goodwill, which is often difficult to value reliably and which, depending on the facts and circumstances, might not be attributable to platform contributions that are to be compensated by PCTs. See paragraph (g)(5)(iv)(A) of this section.

(iii) Paragraph (g)(2)(vii)(A) of this section provides that accounting treatment may be a starting point, but is not determinative for purposes of assessing or applying methods to evaluate the arm's length charge in a PCT. The facts here reveal that Company X has nothing of economic value aside from its in-process technology and assembled workforce. The $50 million of the acquisition price allocated to goodwill for accounting purposes, therefore, is economically attributable to either of, or both, the in-process technology and the workforce.

That moots the potential issue under the acquisition price method of the reliability of valuation of assets not to be compensated by PCTs, since there are no such assets. Assuming the acquisition price method is otherwise the most reliable method, the aggregate value of Company X's in-process technology and workforce is the full acquisition price of $100 million. Accordingly, the aggregate value of the arm's length PCT Payments due from FSub to USP for the platform contributions consisting of the rights in Company X's in-process technology and workforce will equal $100 million multiplied by FSub's RAB share.

Example 2. (i) The facts are the same as in *Example 1,* except that Company X is a mature software business in the United States with a successful current generation of software that it markets under a recognized trademark, in addition to having the research team and new generation software in process that could significantly enhance the programs being developed under USP's and FSub's CSA. USP continues Company X's existing business and integrates the research team and the in-process technology into the efforts under its CSA with FSub. For accounting purposes, the $100 million price for acquiring Company X is allocated $50 million to existing software and trademark, $25 million to in-process technology and research workforce, and the residual $25 million to goodwill and going concern value.
(ii) In this case an analysis of the facts indicates a likelihood that, consistent with the allocation under the accounting treatment (although not necessarily in the same amount), a significant amount of the nonroutine contributions to the USP's business activities consist of goodwill and going concern value economically attributable to the existing U.S. software business rather than to the platform contributions consisting of the rights in the in-process technology and research workforce. In addition, an analysis of the facts indicates that a significant amount of the nonroutine contributions to USP's business activities consist of the make-or-sell rights under the existing software and trademark, which are not platform contributions and might be difficult to value. Accordingly, further consideration must be given to the extent to which these circumstances reduce the relative reliability of the acquisition price method in comparison to other potentially applicable methods for evaluating the PCT Payment.

Example 3. (i) USP, a U.S. corporation, and FSub, a wholly-owned foreign subsidiary of USP, enter into a CSA in Year 1 to develop Product A. Company Y is an uncontrolled corporation that owns Technology X, which is critical to the development of Product A. Company Y currently markets Product B, which is dependent on Technology X. USP is solely interested in acquiring Technology X, but is only able to do so through the acquisition of Company Y in its entirety for $200 million in an uncontrolled transaction in Year 2. For accounting purposes, the acquisition price is allocated as follows: $120 million to Product B and the underlying Technology X, $30 million to trademark and other marketing intangibles, and the residual $50 million to goodwill and going concern value. After the acquisition of Company Y, Technology

X is used to develop Product A. No other part of Company Y is used in any manner. Immediately after the acquisition, product B is discontinued, and, therefore, the accompanying marketing intangibles become worthless. None of the previous employees of Company Y is retained.
(ii) The Technology X of Company Y acquired by USP is reasonably anticipated to contribute to developing cost shared intangibles and is therefore a platform contribution for which FSub must compensate USP as part of a PCT. Although for accounting purposes a significant portion of the acquisition price of Company Y was allocated to items other than Technology X, the facts demonstrate that USP had no intention of using and therefore placed no economic value on any part of Company Y other than Technology X. If USP was willing to pay $200 million for Company Y solely for purposes of acquiring Technology X, then assuming the acquisition price method is otherwise the most reliable method, the value of Technology X is the full $200 million acquisition price. Accordingly, the value of the arm's length PCT Payment due from FSub to USP for the platform contribution consisting of the rights in Technology X will equal the product of $200 million and FSub's RAB share.

(viii) *Valuations of subsequent PCTs*—(A) *Date of subsequent PCT.* The date of a PCT may occur subsequent to the inception of the CSA. For example, an intangible initially developed outside the IDA may only subsequently become a platform contribution because that later time is the earliest date on which it is reasonably anticipated to contribute to developing cost shared intangibles within the IDA. In such case, the date of the PCT, and the analysis of the arm's length amount charged in the subsequent PCT, is as of such later time.

(B) *Best method analysis for subsequent PCT.* In cases where PCTs occur on different dates, the determination of the arm's length amount charged, respectively, in the prior and subsequent PCTs must be coordinated in a manner that provides the most reliable measure of an arm's length result. In some circumstances, a subsequent PCT may be reliably evaluated independently of other PCTs, as may be possible for example, under the acquisition price method. In other circumstances, the results of prior and subsequent PCTs may be interrelated and so a subsequent PCT may be most reliably evaluated under the residual profit split method of paragraph (g)(7) of this section. In those cases, for purposes of allocating the present value of nonroutine residual divisional profit or loss, and so determining the present value of the subsequent PCT Payments, in accordance with paragraph (g)(7)(iii)(C) of this section, the PCT Payor's interest in cost shared intangibles, both already developed and in process, are treated as additional PCT Payor operating contributions as of the date of the subsequent PCT.

(ix) *Arm's length range*—(A) *In general.* The guidance in § 1.482-1(e) regarding determination of an arm's length range, as modified by this section, applies in evaluating the arm's length amount charged in a PCT under a transfer pricing method provided in this section (applicable method). Section 1.482-1(e)(2)(i) provides that the arm's length range is ordinarily determined by applying a single pricing method selected under the best method rule to two or more uncontrolled transactions of similar comparability and reliability although use of more than one method may be appropriate for the purposes described in § 1.482-1(c)(2)(iii). The rules provided in § 1.482-1(e) and this section for determining an arm's length range shall not override the rules provided in paragraph (i)(6) of this section for periodic adjustments by the Commissioner. The provisions in paragraphs (g)(2)(ix)(C) and (D) of this section apply only to applicable methods that are based on two or more input

parameters as described in paragraph (g)(2)(ix)(B) of this section. For an example of how the rules of this section for determining an arm's length range of PCT Payments are applied, see paragraph (g)(4)(viii) of this section.

(B) *Methods based on two or more input parameters.* An applicable method may determine PCT Payments based on calculations involving two or more parameters whose values depend on the facts and circumstances of the case (input parameters). For some input parameters (market-based input parameters), the value is most reliably determined by reference to data that derives from uncontrolled transactions (market data). For example, the value of the return to a controlled participant's routine contributions, as such term is defined in paragraph (j)(1)(i) of this section, to the CSA Activity (which value is used as an input parameter in the income method described in paragraph (g)(4) of this section) may in some cases be most reliably determined by reference to the profit level of a company with rights, resources, and capabilities comparable to those routine contributions. See § 1.482-5. As another example, the value for the discount rate that reflects the riskiness of a controlled participant's role in the CSA (which value is used as an input parameter in the income method described in paragraph (g)(4) of this section) may in some cases be most reliably determined by reference to the stock beta of a company whose overall risk is comparable to the riskiness of the controlled participant's role in the CSA.

(C) *Variable input parameters.* For some market-based input parameters (variable input parameters), the parameter's value is most reliably determined by considering two or more observations of market data that have, or with adjustment can be brought to, a similar reliability and comparability, as described in § 1.482-1(e)(2)(ii) (for example, profit levels or stock betas of two or more companies). See paragraph (g)(2)(ix)(B) of this section.

(D) *Determination of arm's length PCT Payment.* For purposes of applying this paragraph (g)(2)(ix), each input parameter is assigned a single most reliable value, unless it is a variable input parameter as described in paragraph (g)(2)(ix)(C) of this section. The determination of the arm's length payment depends on the number of variable input parameters.

(*1*) *No variable input parameters.* If there are no variable input parameters, the arm's length PCT Payment is a single value determined by using the single most reliable value determined for each input parameter.

(*2*) *One variable input parameter.* If there is exactly one variable input parameter, then under the applicable method, the arm's length range of PCT Payments is the interquartile range, as described in § 1.482-1(e)(2)(iii)(C), of the set of PCT Payment values calculated by selecting—

(*i*) Iteratively, the value of the variable input parameter that is based on each observation as described in paragraph (g)(2)(ix)(C) of this section; and

(*ii*) The single most reliable values for each other input parameter.

(*3*) *More than one variable input parameter.* If there are two or more variable input parameters, then under the applicable method, the arm's length range of PCT Payments is the interquartile range, as described in § 1.482-1(e)(2)(iii)(C), of the set of PCT Payment values calculated iteratively using every possible combination of permitted choices of values for the input parameters. For input parameters other than a variable input parameter, the only such permitted choice is the single most reliable value. For variable input parameters, such permitted choices include any value that is—

(*i*) Based on one of the observations described in paragraph (g)(2)(ix)(C) of this section; and

(*ii*) Within the interquartile range (as described in § 1.482-1(e)(2)(iii)(C)) of the set of all values so based.

(E) *Adjustments.* Section 1.482-1(e)(3), applied as modified by this paragraph (g)(2)(ix), determines when the Commissioner may make an adjustment to a PCT Payment due to the taxpayer's results being outside the arm's length range. Adjustment will be to the median, as defined in § 1.482-1(e)(3). Thus, the Commissioner is not required to establish an arm's length range prior to making an allocation under section 482.

(x) *Valuation undertaken on a pre-tax basis.* PCT Payments in general may increase the PCT Payee's tax liability and decrease the PCT Payor's tax liability. The arm's length amount of a PCT Payment determined under the methods in this paragraph (g) is the value of the PCT Payment itself, without regard to such tax effects. Therefore, the methods under this section must be applied, with suitable adjustments if needed, to determine the PCT Payments on a pre-tax basis. See paragraphs (g)(2)(v)(B) and (4)(i)(G) of this section.

(3) *Comparable uncontrolled transaction method.* The comparable uncontrolled transaction (CUT) method described in § 1.482-4(c), and the comparable uncontrolled services price (CUSP) method described in § 1.482-9(c), may be applied to evaluate whether the amount charged in a PCT is arm's length by reference to the amount charged in a comparable uncontrolled transaction. Although all of the factors entering into a best method analysis described in § 1.482-1(c) and (d) must be considered, comparability and reliability under this method are particularly dependent on similarity of contractual terms, degree to which allocation of risks is proportional to reasonably anticipated benefits from exploiting the results of intangible development, similar period of commitment as to the sharing of intangible development risks, and similar scope, uncertainty, and profit potential of the subject intangible development, including a similar allocation of the risks of any existing resources, capabilities, or rights, as well as of the risks of developing other resources, capabilities, or rights that would be reasonably anticipated to contribute to exploitation within the parties' divisions, that is consistent with the actual allocation of risks between the controlled participants as provided in the CSA in accordance with this section. When applied in the manner described in § 1.482-4(c) or 1.482-9(c), the CUT or CUSP method will typically yield an arm's length total value for the platform contribution that is the subject of the PCT. That value must then be multiplied by each PCT Payor's respective RAB share in order to determine the arm's length PCT Payment due from each PCT Payor. The reliability of a CUT or CUSP that yields a value for the platform contribution only in the PCT Payor's division will be reduced to the extent that value is not consistent with the total worldwide value of the platform contribution multiplied by the PCT Payor's RAB share.

(4) ***Income method*** —

(i) ***In general*** —

(A) ***Equating cost sharing and licensing alternatives.*** The income method evaluates whether the amount charged in a PCT is arm's length by reference to a controlled participant's best realistic alternative to entering into a CSA. Under this method, the arm's length charge for a PCT Payment will be an amount such that a controlled participant's present value, as of the date of the PCT, of its cost sharing alternative of entering into a CSA equals the present value of its best realistic alternative. In general, the best realistic alternative of the PCT Payor to entering into the CSA would be to license intangibles to be developed by an uncontrolled licensor that undertakes the commitment to bear the entire risk of intangible

development that would otherwise have been shared under the CSA. Similarly, the best realistic alternative of the PCT Payee to entering into the CSA would be to undertake the commitment to bear the entire risk of intangible development that would otherwise have been shared under the CSA and license the resulting intangibles to an uncontrolled licensee. Paragraphs (g)(4)(i)(B) through (vi) of this section describe specific applications of the income method, but do not exclude other possible applications of this method.

(B) ***Cost sharing alternative.*** The PCT Payor's cost sharing alternative corresponds to the actual CSA in accordance with this section, with the PCT Payor's obligation to make the PCT Payments to be determined and its commitment for the duration of the IDA to bear cost contributions.

(C) ***Licensing alternative.*** The licensing alternative is derived on the basis of a functional and risk analysis of the cost sharing alternative, but with a shift of the risk of cost contributions to the licensor. Accordingly, the PCT Payor's licensing alternative consists of entering into a license with an uncontrolled party, for a term extending for what would be the duration of the CSA Activity, to license the make-or-sell rights in to-be-developed resources, capabilities, or rights of the licensor. Under such license, the licensor would undertake the commitment to bear the entire risk of intangible development that would otherwise have been shared under the CSA. Apart from any difference in the allocation of the risks of the IDA, the licensing alternative should assume contractual provisions with regard to non-overlapping divisional intangible interests, and with regard to allocations of other risks, that are consistent with the actual CSA in accordance with this section. For example, the analysis under the licensing alternative should assume a similar allocation of the risks of any existing resources, capabilities, or rights, as well as of the risks of developing other resources, capabilities, or rights that would be reasonably anticipated to contribute to exploitation within the parties' divisions, that is consistent with the actual allocation of risks between the controlled participants as provided in the CSA in accordance with this section. Accordingly, the financial projections associated with the licensing and cost sharing alternatives are necessarily the same except for the licensing payments to be made under the licensing alternative and the cost contributions and PCT Payments to be made under the CSA.

(D) ***Only one controlled participant with nonroutine platform contributions.*** This method involves only one of the controlled participants providing nonroutine platform contributions as the PCT Payee. For a method under which more than one controlled participant may be a PCT Payee, see the application of the residual profit method pursuant to paragraph (g)(7) of this section.

(E) ***Income method payment forms.*** The income method may be applied to determine PCT Payments in any form of payment (for example, lump sum, royalty on sales, or royalty on divisional profit). For converting to another form of payment, see generally paragraph (h) (Form of payment rules) of this section.

(F) ***Discount rates appropriate to cost sharing and licensing alternatives.*** The present value of the cost sharing and licensing alternatives, respectively, should be determined using the appropriate discount rates in accordance with paragraphs (g)(2)(v) and (g)(4)(vi)(F) of this section. See, for example, § 1.482-7(g)(2)(v)(B)(*1*) (Discount rate variation between

realistic alternatives). In circumstances where the market-correlated risks as between the cost sharing and licensing alternatives are not materially different, a reliable analysis may be possible by using the same discount rate with respect to both alternatives.

(G) ***The effect of taxation on determining the arm's length amount.*** (*1*) In principle, the present values of the cost sharing and licensing alternatives should be determined by applying post-tax discount rates to post-tax income (including the post-tax value to the controlled participant of the PCT Payments). If such approach is adopted, then the post-tax value of the PCT Payments must be appropriately adjusted in order to determine the arm's length amount of the PCT Payments on a pre-tax basis. See paragraph (g)(2)(x) of this section.

(*2*) In certain circumstances, post-tax income may be derived as the product of the result of applying a post-tax discount rate to pre-tax income, and a factor equal to one minus the tax rate (as defined in (j)(1)(i)). See paragraph (g)(2)(v)(B) of this section.

(*3*) To the extent that a controlled participant's tax rate is not materially affected by whether it enters into the cost sharing or licensing alternative (or reliable adjustments may be made for varying tax rates), the factor (that is, one minus the tax rate) may be cancelled from both sides of the equation of the cost sharing and licensing alternative present values. Accordingly, in such circumstance it is sufficient to apply post-tax discount rates to projections of pre-tax income for the purpose of equating the cost sharing and licensing alternatives. The specific applications of the income method described in paragraphs (g)(4)(ii) through (iv) of this section and the examples set forth in paragraph (g)(4)(viii) of this section assume that a controlled participant's tax rate is not materially affected by whether it enters into the cost sharing or licensing alternative.

(ii) ***Evaluation of PCT Payor's cost sharing alternative.*** The present value of the PCT Payor's cost sharing alternative is the present value of the stream of the reasonably anticipated residuals over the duration of the CSA Activity of divisional profits or losses, minus operating cost contributions, minus cost contributions, minus PCT Payments.

(iii) ***Evaluation of PCT Payor's licensing alternative*** —

(A) ***Evaluation based on CUT.*** The present value of the PCT Payor's licensing alternative may be determined using the comparable uncontrolled transaction method, as described in § 1.482-4(c)(1) and (2). In this case, the present value of the PCT Payor's licensing alternative is the present value of the stream, over what would be the duration of the CSA Activity under the cost sharing alternative, of the reasonably anticipated residuals of the divisional profits or losses that would be achieved under the cost sharing alternative, minus operating cost contributions that would be made under the cost sharing alternative, minus the licensing payments as determined under the comparable uncontrolled transaction method.

(B) ***Evaluation based on CPM.*** The present value of the PCT Payor's licensing alternative may be determined using the comparable profits method, as described in § 1.482-5. In this case, the present value of the licensing alternative is determined as in paragraph (g)(4)(iii)(A) of this section, except that the PCT Payor's licensing payments, as defined in paragraph (j)(1)(i) of this section, are determined in each period to equal the reasonably anticipated residuals of the divisional profits or losses that would be achieved under the cost sharing alternative, minus operating cost contributions that would be made under the cost sharing alternative, minus market returns for routine contributions, as defined in

paragraph (j)(1)(i) of this section. However, treatment of net operating contributions as operating cost contributions shall be coordinated with the treatment of other routine contributions pursuant to this paragraph so as to avoid duplicative market returns to such contributions.

(iv) ***Lump sum payment form.*** Where the form of PCT Payment is a lump sum as of the date of the PCT, then, based on paragraphs (g)(4)(i) through (iii) of this section, the PCT Payment equals the difference between—

(A) The present value, using the discount rate appropriate for the cost sharing alternative, of the stream of the reasonably anticipated residuals over the duration of the CSA Activity of divisional profits or losses, minus cost contributions and operating cost contributions; and

(B) The present value of the licensing alternative.

(v) ***Application of income method using differential income stream.*** In some cases, the present value of an arm's length PCT Payment may be determined as the present value, discounted at the appropriate rate, of the PCT Payor's reasonably anticipated stream of additional positive or negative income over the duration of the CSA Activity that would result (before PCT Payments) from undertaking the cost sharing alternative rather than the licensing alternative (differential income stream). See *Example 9* of paragraph (g)(4)(viii) of this section.

(vi) ***Best method analysis considerations.***

(A) ***Coordination with § 1.482-1(c).*** Whether results derived from this method are the most reliable measure of an arm's length result is determined using the factors described under the best method rule in § 1.482-1(c). Thus, comparability and the quality of data, the reliability of the assumptions, and the sensitivity of the results to possible deficiencies in the data and assumptions, must be considered in determining whether this method provides the most reliable measure of an arm's length result.

(B) ***Assumptions Concerning Tax Rates.*** This method will be more reliable to the extent that the controlled participants' respective tax rates are not materially affected by whether they enter into the cost sharing or licensing alternative. Even if this assumption of invariant tax rates across alternatives does not hold, this method may still be reliable to the extent that reliable adjustments can be made to reflect the variation in tax rates.

(C) ***Coordination with § 1.482-4(c)(2).*** If the licensing alternative is evaluated using the comparable uncontrolled transactions method, as described in paragraph (g)(4)(iii)(A) of this section, any additional comparability and reliability considerations stated in § 1.482-4(c)(2) may apply.

(D) ***Coordination with § 1.482-5(c).*** If the licensing alternative is evaluated using the comparable profits method, as described in paragraph (g)(4)(iii)(B) of this section, any additional comparability and reliability considerations stated in § 1.482-5(c) may apply.

(E) ***Certain Circumstances Concerning PCT Payor.*** This method may be used even if the PCT Payor furnishes significant operating contributions, or commits to assume the risk of significant operating cost contributions, to the PCT Payor's division. However, in such a case, any comparable uncontrolled transactions described in paragraph (g)(4)(iii)(A) of

this section, and any comparable transactions used under § 1.482-5(c) as described in paragraphs (g)(4)(iii)(B) of this section, should be consistent with such contributions (or reliable adjustments must be made for material differences).

(F) ***Discount rates*** —(*1*) *Reflection of similar risk profiles of cost sharing alternative and licensing alternative.* Because the financial projections associated with the licensing and cost sharing alternatives are the same, except for the licensing payments to be made under the licensing alternative and the cost contributions and PCT Payments to be made under the cost sharing alternative, the analysis of the risk profile and financial projections for a realistic alternative to the cost sharing alternative must be closely associated with the risk profile and financial projections associated with the cost sharing alternative, differing only in the treatment of licensing payments, cost contributions, and PCT Payments. When using discount rates in applying the income method, this means that even if different discount rates are warranted for the two alternatives, the risk profiles for the two discount rates are closely related to each other because the discount rate for the licensing alternative and the discount rate for the cost sharing alternative are both derived from the single probability-weighted financial projections associated with the CSA Activity. The difference, if any, in market-correlated risks between the licensing and cost sharing alternatives is due solely to the different effects on risks of the PCT Payor making licensing payments under the licensing alternative, on the one hand, and the PCT Payor making cost contributions and PCT Payments under the cost sharing alternative, on the other hand. That is, the difference in the risk profile between the two scenarios solely reflects the incremental risk, if any, associated with the cost contributions taken on by the PCT Payor in developing the cost shared intangible under the cost sharing alternative, and the difference, if any, in risk associated with the particular payment forms of the licensing payments and the PCT Payments, in light of the fact that the licensing payments in the licensing alternative are partially replaced by cost contributions and partially replaced by PCT Payments in the cost sharing alternative, each with its own payment form. An analysis under the income method that uses a different discount rate for the cost sharing alternative than for the licensing alternative will be more reliable the greater the extent to which the difference, if any, between the two discount rates reflects solely these differences in the risk profiles of these two alternatives. See, for example, paragraph (g)(2)(iii), *Example 2* of this section.

(*2*) *Use of differential income stream as a consideration in assessing the best method.* An analysis under the income method that uses a different discount rate for the cost sharing alternative than for the licensing alternative will be more reliable the greater the extent to which the implied discount rate for the projected present value of the differential income stream is consistent with reliable direct evidence of the appropriate discount rate applicable for activities reasonably anticipated to generate an income stream with a similar risk profile to the differential income stream. Such differential income stream is defined as the stream of the reasonably anticipated residuals of the PCT Payor's licensing payments to be made under the licensing alternative, minus the PCT Payor's cost contributions to be made under the cost sharing alternative. See *Example 8* of paragraph (g)(4)(viii) of this section.

(vii) ***Routine platform and operating contributions.*** For purposes of this paragraph (g)(4), any routine contributions that are platform or operating contributions, the valuation and PCT Payments for which are determined and made independently of the income method, are treated similarly to

cost contributions and operating cost contributions, respectively. Accordingly, wherever used in this paragraph (g)(4), the term “routine contributions” shall not include routine platform or operating contributions, and wherever the terms “cost contributions” and “operating cost contributions” appear in this paragraph, they shall include net routine platform contributions and net routine operating contributions, respectively. Net routine platform contributions are the value of a controlled participant's total reasonably anticipated routine platform contributions, plus its reasonably anticipated PCT Payments to other controlled participants in respect of their routine platform contributions, minus the reasonably anticipated PCT Payments it is to receive from other controlled participants in respect of its routine platform contributions. Net routine operating contributions are the value of a controlled participant's total reasonably anticipated routine operating contributions, plus its reasonably anticipated arm's length compensation to other controlled participants in respect of their routine operating contributions, minus the reasonably anticipated arm's length compensation it is to receive from other controlled participants in respect of its routine operating contributions.

(viii) ***Examples.*** The following examples illustrate the principles of this paragraph (g)(4):

Example 1. (i) For simplicity of calculation in this *Example 1,* all financial flows are assumed to occur at the beginning of each period. USP, a software company, has developed version 1.0 of a new software application that it is currently marketing. In Year 1 USP enters into a CSA with its wholly-owned foreign subsidiary, FS, to develop future versions of the software application. Under the CSA, USP will have the rights to exploit the future versions in the United States, and FS will have the rights to exploit them in the rest of the world. The future rights in version 1.0, and USP's development team, are reasonably anticipated to contribute to the development of future versions and therefore the rights in version 1.0 and the research and development team are platform contributions for which compensation is due from FS as part of a PCT. USP does not transfer the current exploitation rights in version 1.0 to FS. FS will not perform any research or development activities and does not furnish any platform contributions nor does it control any operating intangibles at the inception of the CSA that would be relevant to the exploitation of version 1.0 or future versions of the software.
(ii) FS undertakes financial projections in its territory of the CSA:

(1) Year	(2) Sales	(3) Operating costs	(4) Cost contributions	(5) Operating income under cost sharing alternative (excluding PCT)
1	0	0	50	−50
2	0	0	50	−50

(1) Year	(2) Sales	(3) Operating costs	(4) Cost contributions	(5) Operating income under cost sharing alternative (excluding PCT)
3	200	100	50	50
4	400	200	50	150
5	600	300	60	240
6	650	325	65	260
7	700	350	70	280
8	750	375	75	300
9	750	375	75	300
10	675	338	68	269
11	608	304	61	243
12	547	273	55	219
13	410	205	41	164
14	308	154	31	123
15	231	115	23	93

FS anticipates that activity on this application will cease after Year 15. The application was derived from software developed by Company Q, an uncontrolled party. FS has a license under Company Q's copyright, but that license expires after Year 15 and will not be renewed.

(iii) In evaluating the cost sharing alternative, FS concludes that the cost sharing alternative represents a riskier alternative for FS than the licensing alternative because, in cost sharing, FS will take on the additional risks associated with cost contributions. Taking this difference into account, FS concludes that the appropriate discount rate to apply in assessing the licensing alternative, based on discount rates of comparable uncontrolled companies undertaking comparable licensing transactions, would be 13% per year, whereas the appropriate discount rate to apply in assessing the cost sharing alternative would be 15% per year. FS determines that the arm's length rate USP would have charged an uncontrolled licensee for a license of future versions of the software (if USP had further developed version 1.0 on its own) is 35% of the sales price, as determined under the CUT method in § 1.482-4(c). FS also determines that the tax rate applicable to it will be the same in the licensing alternative as in the CSA. Accordingly,

the financial projections associated with the licensing alternative are:

(6) Year	(7) Sales	(8) Operating costs	(9) Licensing payments	(10) Operating income under licensing alternative	(11) Operating income under cost sharing alternative minus operating income under licensing alternative
1	0	0	0	0	−50
2	0	0	0	0	−50
3	200	100	70	30	20
4	400	200	140	60	90
5	600	300	210	90	150
6	650	325	228	97	163
7	700	350	245	105	175
8	750	375	263	112	188
9	750	375	263	112	188
10	675	338	236	101	168
11	608	304	213	91	152
12	547	273	191	83	136
13	410	205	144	61	103
14	308	154	108	46	77
15	231	115	81	35	58

(iv) Based on these projections and applying the appropriate discount rate, FS determines that under the cost sharing alternative, the present value of the stream of residuals of its anticipated divisional profits, reduced by the anticipated operating cost contributions and cost contributions, but not reduced by any PCT Payments (that is, the stream of anticipated operating income as shown in column 5) would be $889 million. Under the licensing alternative, the present value of the stream of residuals of its anticipated divisional profits and losses minus the operating cost contributions (that is, the stream of anticipated operating income before licensing payments, which is the present value of column 7 reduced by column 8) would be $1.419 billion, and the present value of the licensing payments would be $994 million. Therefore, the total value of the licensing alternative would be $425 million. In order for the present value of the cost sharing alternative to equal the present value of the licensing alternative, the present value of the PCT Payments must equal $464 million. Therefore, the taxpayer makes and

reports PCT Payments with a present value of $464 million.

Example 2. Arm's length range. (i) The facts are the same as in *Example 1.* The Commissioner accepts the financial projections undertaken by FS. Further, the Commissioner determines that the licensing discount rate and the CUT licensing rate are most reliably determined by reference to comparable uncontrolled discount rates and license rates, respectively. The observations that are in the interquartile range of the respective input parameters (see paragraph (g)(2)(ix) of this section) are as follows:

Observations that are within interquartile range	Comparable uncontrolled discount rate
1	11%
2	12
3 (Median)	13
4	15
5	17

Observations that are within interquartile range	Comparable uncontrolled licensing rate
1	30%
2	32
3 (Median)	35
4	37
5	40

(ii) Following the principles of paragraph (g)(2)(ix) of this section, the Commissioner undertakes 25 different applications of the income method, using each combination of the discount rate and licensing rate parameters. In undertaking this analysis, the Commissioner assumes that the ratio of the median discount rate for the cost sharing alternative to the median discount rate for the licensing alternative (that is, 15% to 13%) is maintained. The results of the 25 applications of the income method, sorted in

ascending order of calculated present value of the PCT Payment, are as follows:

INCOME METHOD APPLICATION NUMBER::	Comparable uncontrolled licensing discount rate	Comparable uncontrolled CSA discount rate	Comparable uncontrolled licensing rate	Calculated lump sum PCT payment	Interquartile range of PCT payments
1	17%	19.6%	30%	217	
2	17	19.6	32	263	
3	15	17.3	30	264	
4	15	17.3	32	315	
5	13	15	30	321	
6	17	19.6	35	331	
7	12	13.8	30	354	LQ = 354
8	17	19.6	37	376	
9	13	15	32	378	
10	11	12.7	30	391	
11	15	17.3	35	391	
12	12	13.8	32	415	
13	15	17.3	37	442	Median = 442
14	17	19.6	40	444	
15	11	12.7	32	455	
16	13	15	35	464	
17	12	13.8	35	505	
18	15	17.3	40	517	
19	13	15	37	520	UQ = 520
20	11	12.7	35	551	
21	12	13.8	37	566	
22	13	15	40	605	
23	11	12.7	37	615	
24	12	13.8	40	655	
25	11	12.7	40	710	

(iii) Accordingly, the Commissioner determines that a taxpayer will not be subject to adjustment if its initial (ex ante) determination of the present value of PCT Payments is between $354 million and $520 million (the lower and upper quartile results as shown in the last column). Because FS's determination of the present value of the PCT Payments, $464 million, is within the interquartile range, no adjustments are warranted.

Example 3. (i) For simplicity of calculation in this *Example 3,* all financial flows are assumed to occur at the beginning of each period. USP, a U.S. software company, has developed version 1.0 of a new software application, employed to store and retrieve complex data sets in certain types of storage media. Version 1.0 is currently being marketed. In Year 1, USP enters into a CSA with its wholly-owned foreign subsidiary, FS, to develop future versions of the software application. Under the CSA, USP will have the exclusive rights to exploit the future versions in the U.S., and FS will have the exclusive rights to exploit them in the rest of the world. USP's rights in version 1.0, and its development team, are reasonably anticipated to contribute to the development of future versions of the software application and, therefore, the rights in version 1.0 are platform contributions for which compensation is due from FS as part of a PCT. USP also transfers the current exploitation rights in version 1.0 to FS and the arm's length amount of the compensation for such transfer is determined in the aggregate with the arm's length PCT Payments in this *Example 3.* FS does not furnish any platform contributions to the CSA nor does it control any operating intangibles at the inception of the CSA that would be relevant to the exploitation of version 1.0 or future versions of the software. It is reasonably anticipated that FS will have gross sales of $1000X in its territory for 5 years attributable to its exploitation of version 1.0 and the cost shared intangibles, after which time the software application will be rendered obsolete and unmarketable by the obsolescence of the storage medium technology to which it relates. FS's costs reasonably attributable to the CSA, other than cost contributions and operating cost contributions, are anticipated to be $250X per year. Certain operating cost contributions that will be borne by FS are reasonably anticipated to equal $200X per annum for 5 years. In addition, FS is reasonably anticipated to pay cost contributions of $200X per year as a controlled participant in the CSA.

(ii) FS concludes that its realistic alternative would be to license software from an uncontrolled licensor that would undertake the commitment to bear the entire risk of software development. Applying CPM using the profit levels experienced by uncontrolled licensees with contractual provisions and allocations of risk that are comparable to those of FS's licensing alternative, FS determines that it could, as a licensee, reasonably expect a (pre-tax) routine return equal to 14% of gross sales or $140X per year for 5 years. The remaining net revenue would be paid to the uncontrolled licensor as a license fee of $410X per year. FS determines that the discount rate that would be applied to determine the present value of income and costs attributable to its participation in the licensing alternative would be 12.5% as compared to the 15% discount rate that would be applicable in determining the present value of the net income attributable to its participation in the CSA (reflecting the increased risk borne by FS in bearing a share of the R & D costs in the cost sharing alternative). FS also determines that the tax rate applicable to it will be the same in the licensing alternative as in the CSA.

(iii) On these facts, the present value to FS of entering into the cost sharing alternative equals the present value of the annual divisional profits ($1,000X minus $250X) minus operating cost contributions ($200X) minus cost contributions ($200X) minus PCT Payments, determined over 5 years by discounting at a discount rate of 15%. Thus, the present value of the residuals, prior to subtracting the present value of the PCT Payments, is $1349X.

(iv) On these facts, the present value to FS of entering into the licensing alternative would be $561X determined by discounting, over 5 years, annual divisional profits ($1,000X minus $250X) minus operating cost contributions ($200X) and licensing payments ($410X) at a discount rate of 12.5% per annum. The present value of the cost sharing alternative must also equal $561X but equals $1349X prior to subtracting the present value of the PCT Payments. Consequently, the PCT Payments must have a present value of $788X.

Example 4. Pre-tax PCT Payment derived from post-tax information. (i) For simplicity of calculation in this *Example 4,* it is assumed that all payments are made at the end of each year. Domestic controlled participant USP has developed a technology, Z, that it would like to exploit for three years in a CSA. USP enters into a CSA with its wholly-owned foreign subsidiary, FS, that provides for PCT Payments from FS to USP with respect to USP's platform contribution to the CSA of Z in the form of three annual installment payments due from FS to USP on the last day of each of the first three years of the CSA. FS makes no platform contributions to the CSA. Prior to entering into the CSA, FS considers that it has the realistic alternative available to it of licensing Z from USP rather than entering into a CSA with USP to further develop Z for three years.
(ii) FS undertakes financial projections for both the licensing and cost sharing alternatives for exploitation of Z in its territory of the CSA. These projections are set forth in the following tables. The example assumes that there is a reasonably anticipated effective tax rate of 25% in each of years 1 through 3 under both the licensing and cost sharing alternatives. FS determines that the appropriate post-tax discount rate under the licensing alternative is 12.5%, and that the appropriate post-tax discount rate under the cost sharing alternative is 15%.

Licensing alternative	Present value (12.5% DR)	Year 1	Year 2	Year 3
(1) Sales		$1000	$1100	$1210
(2) License Fee		400	440	484
(3) Operating costs		500	550	605

Licensing alternative	Present value (12.5% DR)	Year 1	Year 2	Year 3
(4) Operating Income	$261	100	110	121
(5) Tax (25%)		25	28	30
(6) Post-tax income	$196	$75	$82	$91

Cost sharing alternative	Present value (15% DR)	Year 1	Year 2	Year 3
(7) Sales		$1000	$1100	$1210
(8) Cost Contributions		200	220	242
(9) PCT Payments	D	A	B	C
(10) Operating costs		500	550	605
(11) Operating income excluding PCT	$749	300	330	363
(12) Operating income	H	E	F	G
(13) Tax				
(14) Post-tax income excluding PCT	$562	$225	$248	$272
(15) Post-tax income	L	I	J	K

(iii) Under paragraph (g)(4) of this section, the arm's length charge for a PCT Payment will be an amount such that a controlled participant's present value, as of the date of the PCT of its cost sharing alternative of entering into a CSA equals the present value of its best realistic alternative. This requires that L, the present value of the post-tax income under the CSA, equals the present value of the post-tax income under the licensing alternative, or $196.

(iv) FS determines that PCT Payments for Z should be $196 in Year 1 (A), $215 in Year 2 (B), and $236 in Year 3 (C). By using these amounts for A, B, and C in the table above, FS is able to derive the values of E, F, G, I, J, and K in the table above. Based on these PCT Payments for Z, the post-tax income will be $78 in Year 1 (I), $86 in Year 2 (J), and $95 in Year 3 (K). When this post-tax income stream is discounted at the appropriate rate for the cost sharing alternative (15%), the net present value is $196 (L). The present value of the PCT Payments, when discounted at the appropriate post-tax rate, is $488 (D).

(v) The Commissioner undertakes an audit of the PCT Payments made by FS to USP for Z in Years 1 through 3. The Commissioner concludes that the PCT Payments for Z are arm's length in accordance with this paragraph (g)(4).

Example 5. Pre-tax PCT Payment derived from post-tax information. (i) The facts are the same as in paragraphs (i) and (ii) of *Example 4.* In addition, under this paragraph (g)(4), the arm's length charge for a PCT Payment will be an amount such that a controlled participant's present value, as of the date of the PCT of its cost sharing alternative equals the present value of its best realistic alternative. This requires that L, the present value of the post-tax income under the CSA, equals the present value of the post-tax income under the licensing alternative, or $196.
(ii) FS determines that the post-tax present value of the cost sharing alternative (excluding PCT Payments) is $562. The post-tax present value of the licensing alternative is $196. Accordingly, payments with a post-tax present value of $366 are required.

(iii) The Commissioner undertakes an audit of the PCT Payments made by FS to USP for Z in Years 1 through 3. In correspondence to the Commissioner, USP maintains that the arm's length PCT Payment for Z should have a present value of $366 (D).

(iv) The Commissioner considers that if FS makes PCT Payments for Z with a present value of $366, then the post-tax present value under the CSA (considering the deductibility of the PCT Payments) will be $287, substantially higher than the post-tax present value of the licensing arrangement, $196. The Commissioner determines that, under the specific facts and assumptions of this example, the present value of the post-tax payments may be grossed up by a factor of (one minus the tax rate), resulting in a present value of pre-tax payments of $488. Accordingly, FS must make yearly PCT Payments (A, B, and C) such that the present value of the Payments is $488 (D). (When FS's post-tax income after these PCT Payments for Z is discounted at the appropriate rate for the cost sharing alternative (15%), the net present value is $196 (L), which is equal to the present value of post-tax income under the licensing alternative.) The Commissioner concludes that the calculations that it has made for the PCT Payments for Z are arm's length in accordance with this paragraph (g)(4) and, accordingly, makes the appropriate adjustments to USP's income tax return to account for the gross-up required by paragraph (g)(2)(x) of this section.

Example 6. Pre-tax PCT Payment derived from pre-tax information. (i) The facts are the same as in paragraphs (i) and (ii) of *Example 4.* In addition, under paragraph (g)(4) of this section, the arm's length charge for a PCT Payment will be an amount such that a controlled participant's present value, as of the date of the PCT of its cost sharing alternative of entering into a CSA equals the present value of its best realistic alternative. This requires that “L,” the present value of the post-tax income under the CSA, equals the present value of the post-tax income under the licensing alternative, or $196.

(ii) Under the specific facts and assumptions of this *Example 6* (see paragraph (g)(4)(i)(G) of this section), and using the same (post-tax) discount rates as in *Example 4,* the present value of pre-tax income under the licensing alternative (that is, the operating income) is $261, and the present value of pre-tax income under the cost sharing alternative (excluding PCT Payments) is $749. Accordingly, FS determines that its PCT Payments for Z should have a present value equal to the difference between the two, or $488 (D). Such PCT Payments for Z result in a present value of post-tax income under the cost sharing alternative of $196 (L), which is equal to the present value of post-tax income under the licensing alternative.

(iii) The Commissioner undertakes an audit of the PCT Payments for Z made by FS to USP in Years 1 through 3. The Commissioner concludes that the PCT Payments for Z are arm's length in accordance with this paragraph (g)(4).

Example 7. Application of income method with a terminal value calculation. (i) For simplicity of calculation in this *Example 7,* all financial flows are assumed to occur at the beginning of each period. USP's research and development team, Q, has developed a technology, Z, for which it has several applications on the market now and several planned for release at future dates. In Year 1, USP, enters into a CSA with its wholly-owned subsidiary, FS, to develop future applications of Z. Under the CSA, USP will have the rights to further develop and exploit the future applications of Z in the United States, and FS will have the rights to further develop and exploit the future applications of Z in the rest of the world. Both Q and the rights to further develop and exploit future applications of Z are reasonably anticipated to contribute to the development of future applications of Z. Therefore, both Q and the rights to further develop and exploit the future applications of Z are platform contributions for which compensation is due from FS to USP as part of a PCT. USP does not transfer the current exploitation rights for current applications of Z to FS. FS will not perform any research or development activities on Z and does not furnish any platform contributions to the CSA, nor does it control any operating intangibles at the inception of the CSA that would be relevant to the exploitation of either current or future applications of Z.
(ii) At the outset of the CSA, FS undertakes an analysis of the PCTs involving Q and the rights with respect to Z in order to determine the arm's length PCT Payments owing from FS to USP under the CSA. In that evaluation, FS concludes that the cost sharing alternative represents a riskier alternative for FS than the licensing alternative. FS further concludes that the appropriate discount rate to apply in assessing the licensing alternative, based on discount rates of comparable uncontrolled companies undertaking comparable licensing transactions, would be 13% per annum, whereas the appropriate discount rate to apply in assessing the cost sharing alternative would be 14% per annum. FS undertakes financial projections and anticipates making $100 million in sales

during the first two years of the CSA in its territory with sales in Years 3 through 8 increasing to $200 million, $400 million, $600 million, $650 million, $700 million, and $750 million, respectively. After Year 8, FS expects its sales of all products based upon exploitation of Z in the rest of the world to grow at 3% per annum for the future. FS and USP do not anticipate cessation of the CSA Activity with respect to Z at any determinable date. FS anticipates that its manufacturing and distribution costs for exploiting Z (including its operating cost contributions), will equal 60% of gross sales of Z from Year 1 onwards, and anticipates its cost contributions will equal $25 million per annum for Years 1 and 2, $50 million per annum for Years 3 and 4, and 10% of gross sales per annum thereafter.

(iii) Based on this analysis, FS determines that the arm's length royalty rate that USP would have charged an uncontrolled licensee for a license of future applications of Z if USP had further developed future applications of Z on its own is 30% of the sales price of the Z-based product, as determined under the comparable uncontrolled transaction method in § 1.482-4(c). In light of the expected sales growth and anticipation that the CSA Activity will not cease as of any determinable date, FS's determination includes a terminal value calculation. FS further determines that under the cost sharing alternative, the present value of FS's divisional profits, reduced by the present values of the anticipated operating cost contributions and cost contributions, would be $1,361 million. Under the licensing alternative, the present value of the operating divisional profits and losses, reduced by the operating cost contributions, would be $2,113 million, and the present value of the licensing payments would be $1,585 million. Therefore, the total value of the licensing alternative would be $528 million. In order for the present value of the cost sharing alternative to equal the present value of the licensing alternative, the present value of the PCT Payments must equal $833 million. Accordingly, FS pays USP a lump sum PCT Payment of $833 million in Year 1 for USP's platform contributions of Z and Q.

(iv) The Commissioner undertakes an audit of the PCTs and concludes, based on his own analysis, that this lump sum PCT Payment is within the interquartile range of arm's length results for these platform contributions. The calculations made by FS in determining the PCT Payment in this *Example 7* are set forth in the following tables:

Cost Sharing Alternative

Time Period (Y = Year, TV = Terminal Value)	Y1	Y2	Y3	Y4	Y5	Y6	Y7	Y8	TV
Discount Period	0	1	2	3	4	5	6	7	7
Items of Income/Expense at Beginning of Year:									
1 Sales	100	100	200	400	600	650	700	750	(3% annual growth in each year from previous year).
2 Routine Cost and Operating Cost Contributions (60% of sales amount in row 1 of relevant year)	60	60	120	240	360	390	420	450	(60% of annual sales in row 1 for each year).
3 Cost Contributions (10% of sales amount in row 1 for relevant year after Year 5)	25	25	50	50	60	65	70	75	(10% of annual sales in row 1 for each year).
4 Profit = amount in row 1 reduced by amounts in rows 2 and 3	15	15	30	110	180	195	210	225	(row 1 minus rows 2 and 3 for each year).
5 PV (using 14% discount rate)	15	13.2	23.1	74.2	107	101	95.7	89.9	842.
6 TOTAL PV of Cost Sharing Alternative = Sum of all PV amounts in Row 5 for all Time Periods = $1,361 million.									

Licensing Alternative

Time Period (Y = Year, TV = Terminal Value)	Y1	Y2	Y3	Y4	Y5	Y6	Y7	Y8	TV
Discount Period	0	1	2	3	4	5	6	7	7
Items of Income/Expense at Beginning of Year:									
7 Sales	100	100	200	400	600	650	700	750	(3% annual growth in each year from previous year).
8 Routine Cost and Operating Cost Contributions (60% of sales amount in row 7 of relevant year).	60	60	120	240	360	390	420	450	(60% of annual sales in row 7 for each year).
9 Operating Profit = amount in Row 7 reduced by amount in Row 8	40	40	80	160	240	260	280	300	(Row 7 minus row 8 for each year).
10 PV of row 9 (using 13% discount rate)	40	35.4	62.7	111	147	141	135	128	1313.
11 TOTAL PV FOR ALL AMOUNTS IN ROW 10 = $2,112.7 million									
12 Licensing Payments (30% of sales amount in row 7)	30	30	60	120	180	195	210	225	(30% of amount in row 7 for each year).
13 PV of amount in row 12 (using 13% discount rate)	30	26.5	47	83.2	110	106	101	95.6	985.
14 TOTAL PV FOR ALL AMOUNTS IN ROW 13 = $1,584.5 million.									
15 TOTAL PV of Licensing Alternative = Row 11 minus Row 14 = $528 million.									

CALCULATION OF PCT PAYMENT

16	TOTAL PV OF COST SHARING ALTERNATIVE (FROM ROW 6 ABOVE) =	$1,361 million.
17	TOTAL PV OF LICENSING ALTERNATIVE (FROM ROW 15 ABOVE) =	$528 million.
18	LUMP SUM PCT PAYMENT = ROW 16 − ROW 17 =	$833 million.

Example 8. (i) The facts are the same as in *Example 1,* except that the taxpayer determines that the appropriate discount rate for the cost sharing alternative is 20%. In addition, the taxpayer determines that the appropriate discount rate for the licensing alternative is 10%. Accordingly, the taxpayer determines that the appropriate present value of the PCT Payment is $146 million.
(ii) Based on the best method analysis described in *Example 2,* the Commissioner determines that the taxpayer's calculation of the present value of the PCT Payments is outside of the interquartile range (as shown in the sixth column of *Example 2*), and thus warrants an adjustment. Furthermore, in evaluating the taxpayer's analysis, the Commissioner undertakes an analysis based on the difference in the financial projections between the cost sharing and licensing alternatives (as shown in column 11 of *Example 1*). This column shows the anticipated differential income stream of additional positive or negative income for FS over the duration of the CSA Activity that would result from undertaking the cost sharing alternative (before any PCT Payments) rather than the licensing alternative. This anticipated differential income stream thus reflects the anticipated incremental undiscounted profits to FS from the incremental activity of undertaking the risk of developing the cost shared intangibles and enjoying the value of its divisional interests. Taxpayer's analysis logically implies that the present value of this stream must be $146 million, since only then would FS have the same anticipated value in both the cost sharing and licensing alternatives. A present value of $146 million implies that the discount rate applicable to this stream is 34.4%. Based on a reliable calculation of discount rates applicable to the anticipated income streams of uncontrolled companies whose resources, capabilities, and rights consist primarily of software applications intangibles and research and development teams similar to USP's platform contributions to the CSA, and which income streams, accordingly, may be reasonably anticipated to reflect a similar risk profile to the differential income stream, the Commissioner concludes that an appropriate discount rate for the anticipated income stream associated with USP's platform contributions (that is, the additional positive or negative income over the duration of the CSA Activity that would result,

before PCT Payments, from switching from the licensing alternative to the cost sharing alternative) is 16%, which is significantly less than 34.4%. This conclusion further suggests that Taxpayer's analysis is unreliable. See paragraphs (g)(2)(v)(B)(*2*) and (g)(4)(vi)(F)(*1*) and (*2*) of this section.

(iii) The Commissioner makes an adjustment of $296 million, so that the present value of the PCT Payments is $442 million (the median results as shown in column 6 of *Example 2*).

Example 9. The facts are the same as in *Example 1,* except that additional data on discount rates are available that were not available in *Example 1.* The Commissioner determines the arm's length charge for the PCT Payment by discounting at an appropriate rate the differential income stream associated with the rights contributed by USP in the PCT (that is, the stream of income in column (11) of *Example 1*). Based on an analysis of a set of public companies whose resources, capabilities, and rights consist primarily of resources, capabilities, and rights similar to those contributed by USP in the PCT, the Commissioner determines that 15% to 17% is an appropriate range of discount rates to use to assess the value of the differential income stream associated with the rights contributed by USP in the PCT. The Commissioner determines that applying a discount rate of 17% to the differential income stream associated with the rights contributed by USP in the PCT yields a present value of $446 million, while applying a discount rate of 15% to the differential income stream associated with the rights contributed by USP in the PCT yields a present value of $510 million. Because the taxpayer's result, $464 million, is within the interquartile range determined by the Commissioner, no adjustments are warranted. See paragraphs (g)(2)(v)(B)(*2*), (g)(4)(v), and (g)(4)(vi)(F)(*1*) of this section.

(5) ***Acquisition price method*** —

(i) ***In general.*** The acquisition price method applies the comparable uncontrolled transaction method of § 1.482-4(c), or the comparable uncontrolled services price method described in § 1.482-9(c), to evaluate whether the amount charged in a PCT, or group of PCTs, is arm's length by reference to the amount charged (the acquisition price) for the stock or asset purchase of an entire organization or portion thereof (the target) in an uncontrolled transaction. The acquisition price method is ordinarily used where substantially all the target's nonroutine contributions, as such term is defined in paragraph (j)(1)(i) of this section, made to the PCT Payee's business activities are covered by a PCT or group of PCTs.

(ii) ***Determination of arm's length charge.*** Under this method, the arm's length charge for a PCT or group of PCTs covering resources, capabilities, and rights of the target is equal to the adjusted acquisition price, as divided among the controlled participants according to their respective RAB shares.

(iii) ***Adjusted acquisition price.*** The adjusted acquisition price is the acquisition price of the target increased by the value of the target's liabilities on the date of the acquisition, other than liabilities not assumed in the case of an asset purchase, and decreased by the value of the target's tangible property on that date and by the value on that date of any other resources, capabilities, and rights not covered by a PCT or group of PCTs.

(iv) ***Best method analysis considerations.*** The comparability and reliability considerations stated in § 1.482-4(c)(2) apply. Consistent with those considerations, the reliability of applying the acquisition price method as a measure of the arm's length charge for the PCT Payment normally is reduced if—

(A) A substantial portion of the target's nonroutine contributions to the PCT Payee's business activities is not required to be covered by a PCT or group of PCTs, and that portion of the nonroutine contributions cannot reliably be valued;

(B) A substantial portion of the target's assets consists of tangible property that cannot reliably be valued; or

(C) The date on which the target is acquired and the date of the PCT are not contemporaneous.

(v) ***Example.*** The following example illustrates the principles of this paragraph (g)(5):

Example. USP, a U.S. corporation, and its newly incorporated, wholly-owned foreign subsidiary (FS) enter into a CSA at the start of Year 1 to develop Group Z products. Under the CSA, USP and FS will have the exclusive rights to exploit the Group Z products in the U.S. and the rest of the world, respectively. At the start of Year 2, USP acquires Company X for cash consideration worth $110 million. At this time USP's RAB share is 60%, and FS's RAB share is 40% and is not reasonably anticipated to change as a result of this acquisition. Company X joins in the filing of a U.S. consolidated income tax return with USP. Under paragraph (j)(2)(i) of this section, Company X and USP are treated as one taxpayer for purposes of this section. Accordingly, the rights in any of Company X's resources and capabilities that are reasonably anticipated to contribute to the development activities of the CSA will be considered platform contributions furnished by USP. Company X's resources and capabilities consist of its workforce, certain technology intangibles, $15 million of tangible property and other assets and $5 million in liabilities. The technology intangibles, as well as Company X's workforce, are reasonably anticipated to contribute to the development of the Group Z products under the CSA and, therefore, the rights in the technology intangibles and the workforce are platform contributions for which FS must make a PCT Payment to USP. None of Company X's existing intangible assets or any of its workforce are anticipated to contribute to activities outside the CSA. For purposes of this example, it is assumed that no additional adjustment on account of tax liabilities is needed. Applying the acquisition price method, the value of USP's platform contributions is the adjusted acquisition price of $100 million ($110 million acquisition price plus $5 million liabilities less $15 million tangible property and other assets). FS must make a PCT Payment to USP for these platform contributions with a reasonably anticipated present value of $40 million, which is the product of $100 million (the value of the platform contributions) and 40% (FS's RAB share).

(6) ***Market capitalization method*** —

(i) ***In general.*** The market capitalization method applies the comparable uncontrolled transaction method of § 1.482-4(c), or the comparable uncontrolled services price method described in § 1.482-9(c), to evaluate whether the amount charged in a PCT, or group of PCTs, is arm's length by reference to the average market capitalization of a controlled participant (PCT Payee) whose

stock is regularly traded on an established securities market. The market capitalization method is ordinarily used where substantially all of the PCT Payee's nonroutine contributions to the PCT Payee's business are covered by a PCT or group of PCTs.

(ii) ***Determination of arm's length charge.*** Under the market capitalization method, the arm's length charge for a PCT or group of PCTs covering resources, capabilities, and rights of the PCT Payee is equal to the adjusted average market capitalization, as divided among the controlled participants according to their respective RAB shares.

(iii) ***Average market capitalization.*** The average market capitalization is the average of the daily market capitalizations of the PCT Payee over a period of time beginning 60 days before the date of the PCT and ending on the date of the PCT. The daily market capitalization of the PCT Payee is calculated on each day its stock is actively traded as the total number of shares outstanding multiplied by the adjusted closing price of the stock on that day. The adjusted closing price is the daily closing price of the stock, after adjustments for stock-based transactions (dividends and stock splits) and other pending corporate (combination and spin-off) restructuring transactions for which reliable arm's length adjustments can be made.

(iv) ***Adjusted average market capitalization.*** The adjusted average market capitalization is the average market capitalization of the PCT Payee increased by the value of the PCT Payee's liabilities on the date of the PCT and decreased by the value on such date of the PCT Payee's tangible property and of any other resources, capabilities, or rights of the PCT Payee not covered by a PCT or group of PCTs.

(v) ***Best method analysis considerations.*** The comparability and reliability considerations stated in § 1.482-4(c)(2) apply. Consistent with those considerations, the reliability of applying the comparable uncontrolled transaction method using the adjusted market capitalization of a company as a measure of the arm's length charge for the PCT Payment normally is reduced if—

(A) A substantial portion of the PCT Payee's nonroutine contributions to its business activities is not required to be covered by a PCT or group of PCTs, and that portion of the nonroutine contributions cannot reliably be valued;

(B) A substantial portion of the PCT Payee's assets consists of tangible property that cannot reliably be valued; or

(C) Facts and circumstances demonstrate the likelihood of a material divergence between the average market capitalization of the PCT Payee and the value of its resources, capabilities, and rights for which reliable adjustments cannot be made.

(vi) ***Examples.*** The following examples illustrate the principles of this paragraph (g)(6):

> *Example 1.* (i) USP, a publicly traded U.S. company, and its newly incorporated wholly-owned foreign subsidiary (FS) enter into a CSA on Date 1 to develop software. At that time USP has in-process software but has no software ready for the market. Under the CSA, USP and FS will have the exclusive rights to exploit the software developed under the CSA in the United States and the rest of the world, respectively. On Date 1, USP's RAB share is 70% and FS's RAB share is 30%. USP's assembled team of researchers and its in-process software are reasonably anticipated to contribute to the development of the software under the CSA. Therefore, the rights in the research team and in-process

software are platform contributions for which compensation is due from FS. Further, these rights are not reasonably anticipated to contribute to any business activity other than the CSA Activity.
(ii) On Date 1, USP had an average market capitalization of $205 million, tangible property and other assets that can be reliably valued worth $5 million, and no liabilities. Aside from those assets, USP had no assets other than its research team and in-process software. Applying the market capitalization method, the value of USP's platform contributions is $200 million ($205 million average market capitalization of USP less $5 million of tangible property and other assets). The arm's length value of the PCT Payments FS must make to USP for the platform contributions, before any adjustment on account of tax liability as described in paragraph (g)(2)(ii) of this section, is $60 million, which is the product of $200 million (the value of the platform contributions) and 30% (FS's RAB share on Date 1).

Example 2. Aggregation with make-or-sell rights. (i) The facts are the same as in *Example 1,* except that on Date 1 USP also has existing software ready for the market. USP separately enters into a license agreement with FS for make-or-sell rights for all existing software outside the United States. No marketing has occurred, and USP has no marketing intangibles. This license of current make-or-sell rights is a transaction governed by § 1.482-4. However, after analysis, it is determined that the arm's length PCT Payments and the arm's length payments for the make-or-sell license may be most reliably determined in the aggregate using the market capitalization method, under principles described in paragraph (g)(2)(iv) of this section, and it is further determined that those principles are most reliably implemented by computing the aggregate arm's length charge as the product of the aggregate value of the existing and in-process software and FS's RAB share on Date 1.
(ii) Applying the market capitalization method, the aggregate value of USP's platform contributions and the make-or-sell rights in its existing software is $250 million ($255 million average market capitalization of USP less $5 million of tangible property and other assets). The total arm's length value of the PCT Payments and licensing payments FS must make to USP for the platform contributions and current make-or-sell rights, before any adjustment on account of tax liability, if any, is $75 million, which is the product of $250 million (the value of the platform contributions and the make-or-sell rights) and 30% (FS's RAB share on Date 1).

Example 3. Reduced reliability. The facts are the same as in *Example 1* except that USP also has significant nonroutine assets that will be used solely in a nascent business division that is unrelated to the subject of the CSA and that cannot themselves be reliably valued. Those nonroutine contributions are not platform contributions and accordingly are not required to be covered by a PCT. The reliability of using the market capitalization method to determine the value of USP's platform contributions to the CSA is significantly reduced in

this case because that method would require adjusting USP's average market capitalization to account for the significant nonroutine contributions that are not required to be covered by a PCT.

(7) ***Residual profit split method*** —

(i) ***In general.*** The residual profit split method evaluates whether the allocation of combined operating profit or loss attributable to one or more platform contributions subject to a PCT is arm's length by reference to the relative value of each controlled participant's contribution to that combined operating profit or loss. The combined operating profit or loss must be derived from the most narrowly identifiable business activity (relevant business activity) of the controlled participants for which data are available that include the CSA Activity. The residual profit split method may not be used where only one controlled participant makes significant nonroutine contributions (including platform or operating contributions) to the CSA Activity. The provisions of § 1.482-6 shall apply to CSAs only to the extent provided and as modified in this paragraph (g)(7). Any other application to a CSA of a residual profit method not described in paragraphs (g)(7)(ii) and (iii) of this section will constitute an unspecified method for purposes of sections 482 and 6662(e) and the regulations under those sections.

(ii) ***Appropriate share of profits and losses.*** The relative value of each controlled participant's contribution to the success of the relevant business activity must be determined in a manner that reflects the functions performed, risks assumed, and resources employed by each participant in the relevant business activity, consistent with the best method analysis described in § 1.482-1(c) and (d). Such an allocation is intended to correspond to the division of profit or loss that would result from an arrangement between uncontrolled taxpayers, each performing functions similar to those of the various controlled participants engaged in the relevant business activity. The profit allocated to any particular controlled participant is not necessarily limited to the total operating profit of the group from the relevant business activity. For example, in a given year, one controlled participant may earn a profit while another controlled participant incurs a loss. In addition, it may not be assumed that the combined operating profit or loss from the relevant business activity should be shared equally, or in any other arbitrary proportion.

(iii) ***Profit split*** —

(A) ***In general.*** Under the residual profit split method, the present value of each controlled participant's residual divisional profit or loss attributable to nonroutine contributions (nonroutine residual divisional profit or loss) is allocated between the controlled participants that each furnish significant nonroutine contributions (including platform or operating contributions) to the relevant business activity in that division.

(B) ***Determine nonroutine residual divisional profit or loss.*** The present value of each controlled participant's nonroutine residual divisional profit or loss must be determined to reflect the most reliable measure of an arm's length result. The present value of nonroutine residual divisional profit or loss equals the present value of the stream of the reasonably anticipated residuals over the duration of the CSA Activity of divisional profit or loss, minus market returns for routine contributions, minus operating cost contributions, minus cost contributions, using a discount rate appropriate to such residuals in accordance with paragraph (g)(2)(v) of this section. As used in this paragraph (g)(7), the phrase “market returns for routine contributions” includes market returns for operating cost contributions and excludes market returns for cost contributions.

(C) ***Allocate nonroutine residual divisional profit or loss*** —(*1*) *In general.* The present value of nonroutine residual divisional profit or loss in each controlled participant's division must be allocated among all of the controlled participants based upon the relative values, determined as of the date of the PCTs, of the PCT Payor's as compared to the PCT Payee's nonroutine contributions to the PCT Payor's division. For this purpose, the PCT Payor's nonroutine contribution consists of the sum of the PCT Payor's nonroutine operating contributions and the PCT Payor's RAB share of the PCT Payor's nonroutine platform contributions. For this purpose, the PCT Payee's nonroutine contribution consists of the PCT Payor's RAB share of the PCT Payee's nonroutine platform contributions.

(*2*) *Relative value determination.* The relative values of the controlled participants' nonroutine contributions must be determined so as to reflect the most reliable measure of an arm's length result. Relative values may be measured by external market benchmarks that reflect the fair market value of such nonroutine contributions. Alternatively, the relative value of nonroutine contributions may be estimated by the capitalized cost of developing the nonroutine contributions and updates, as appropriately grown or discounted so that all contributions may be valued on a comparable dollar basis as of the same date. If the nonroutine contributions by a controlled participant are also used in other business activities (such as the exploitation of make-or-sell rights described in paragraph (c)(4) of this section), an allocation of the value of the nonroutine contributions must be made on a reasonable basis among all the business activities in which they are used in proportion to the relative economic value that the relevant business activity and such other business activities are anticipated to derive over time as the result of such nonroutine contributions.

(*3*) *Determination of PCT Payments.* Any amount of the present value of a controlled participant's nonroutine residual divisional profit or loss that is allocated to another controlled participant represents the present value of the PCT Payments due to that other controlled participant for its platform contributions to the relevant business activity in the relevant division. For purposes of paragraph (j)(3)(ii) of this section, the present value of a PCT Payor's PCT Payments under this paragraph shall be deemed reduced to the extent of the present value of any PCT Payments owed to it from other controlled participants under this paragraph (g)(7). The resulting remainder may be converted to a fixed or contingent form of payment in accordance with paragraph (h) (Form of payment rules) of this section.

(*4*) *Routine platform and operating contributions.* For purposes of this paragraph (g)(7), any routine platform or operating contributions, the valuation and PCT Payments for which are determined and made independently of the residual profit split method, are treated similarly to cost contributions and operating cost contributions, respectively. Accordingly, wherever used in this paragraph (g)(7), the term “routine contributions” shall not include routine platform or operating contributions, and wherever the terms “cost contributions” and “operating cost contributions” appear in this paragraph (g)(7), they shall include net routine platform contributions and net routine operating contributions, respectively, as defined in paragraph (g)(4)(vii) of this section. However, treatment of net operating contributions as operating cost contributions shall be coordinated with the treatment of other routine contributions pursuant to paragraphs (g)(4)(iii)(B) and (7)(iii)(B) of this section so as to avoid duplicative market returns to such contributions.

(iv) ***Best method analysis considerations*** —

(A) ***In general.*** Whether results derived from this method are the most reliable measure of the arm's length result is determined using the factors described under the best method rule in § 1.482-1(c). Thus, comparability and quality of data, reliability of assumptions, and sensitivity of results to possible deficiencies in the data and assumptions, must be considered in determining whether this method provides the most reliable measure of an arm's length result. The application of these factors to the residual profit split in the context of the relevant business activity of developing and exploiting cost shared intangibles is discussed in paragraphs (g)(7)(iv)(B) through (D) of this section.

(B) ***Comparability.*** The derivation of the present value of nonroutine residual divisional profit or loss includes a carveout on account of market returns for routine contributions. Thus, the comparability considerations that are relevant for that purpose include those that are relevant for the methods that are used to determine market returns for the routine contributions.

(C) ***Data and assumptions.*** The reliability of the results derived from the residual profit split is affected by the quality of the data and assumptions used to apply this method. In particular, the following factors must be considered:

(*1*) The reliability of the allocation of costs, income, and assets between the relevant business activity and the controlled participants' other activities that will affect the reliability of the determination of the divisional profit or loss and its allocation among the controlled participants. See § 1.482-6(c)(2)(ii)(C)(*1*).

(*2*) The degree of consistency between the controlled participants and uncontrolled taxpayers in accounting practices that materially affect the items that determine the amount and allocation of operating profit or loss affects the reliability of the result. See § 1.482-6(c)(2)(ii)(C)(*2*).

(*3*) The reliability of the data used and the assumptions made in estimating the relative value of the nonroutine contributions by the controlled participants. In particular, if capitalized costs of development are used to estimate the relative value of nonroutine contributions, the reliability of the results is reduced relative to the reliability of other methods that do not require such an estimate. This is because, in any given case, the costs of developing a nonroutine contribution may not be related to its market value and because the calculation of the capitalized costs of development may require the allocation of indirect costs between the relevant business activity and the controlled participant's other activities, which may affect the reliability of the analysis.

(D) ***Other factors affecting reliability.*** Like the methods described in §§ 1.482-3 through 1.482-5 and § 1.482-9(c), the carveout on account of market returns for routine contributions relies exclusively on external market benchmarks. As indicated in § 1.482-1(c)(2)(i), as the degree of comparability between the controlled participants and uncontrolled transactions increases, the relative weight accorded the analysis under this method will increase. In addition, to the extent the allocation of nonroutine residual divisional profit or loss is not based on external market benchmarks, the reliability of the analysis will be decreased in relation to an analysis under a method that relies on market benchmarks. Finally, the reliability of the analysis under this method may be enhanced by the fact that all the controlled participants are evaluated under the residual profit split. However, the reliability of the results of an analysis based on information from all the

controlled participants is affected by the reliability of the data and the assumptions pertaining to each controlled participant. Thus, if the data and assumptions are significantly more reliable with respect to one of the controlled participants than with respect to the others, a different method, focusing solely on the results of that party, may yield more reliable results.

(v) ***Examples.*** The following examples illustrate the principles of this paragraph (g)(7):

Example 1. (i) For simplicity of calculation in this *Example 1,* all financial flows are assumed to occur at the beginning of each period. USP, a U.S. electronic data storage company, has partially developed technology for a type of extremely small compact storage devices (nanodisks) which are expected to provide a significant increase in data storage capacity in various types of portable devices such as cell phones, MP3 players, laptop computers and digital cameras. At the same time, USP's wholly-owned subsidiary, FS, has developed significant marketing intangibles outside the United States in the form of customer lists, ongoing relations with various OEMs, and trademarks that are well recognized by consumers due to a long history of marketing successful data storage devices and other hardware used in various types of consumer electronics. At the beginning of Year 1, USP enters into a CSA with FS to develop nanodisk technologies for eventual commercial exploitation. Under the CSA, USP will have the right to exploit nanodisks in the United States, while FS will have the right to exploit nanodisks in the rest of the world. The partially developed nanodisk technologies owned by USP are reasonably anticipated to contribute to the development of commercially exploitable nanodisks and therefore the rights in the nanodisk technologies constitute platform contributions of USP for which compensation is due under PCTs. FS does not have any platform contributions for the CSA. Due to the fact that nanodisk technologies have yet to be incorporated into any commercially available product, neither USP nor FS transfers rights to make or sell current products in conjunction with the CSA.
(ii) Because only in FS's territory do both controlled participants make significant nonroutine contributions, USP and FS determine that they need to determine the relative value of their respective contributions to residual divisional profit or loss attributable to the CSA Activity only in FS's territory. FS anticipates making no nanodisk sales during the first year of the CSA in its territory with revenues in Year 2 reaching $200 million. Revenues through Year 5 are reasonably anticipated to increase by 50% per year. The annual growth rate for revenues is then expected to decline to 30% per annum in Years 6 and 7, 20% per annum in Years 8 and 9 and 10% per annum in Year 10. Revenues are then expected to decline 10% in Year 11 and 5% per annum, thereafter. The routine costs (defined here as costs other than cost contributions, routine platform and operating contributions, and nonroutine contributions) that are allocable to this revenue in calculating FS's divisional profit or loss, are anticipated to equal $40 million for the first year of the CSA and $130 for the second year and $200 and $250 million in Years 3 and 4. Total operating expenses attributable to product exploitation (including operating cost

contributions) equal 52% of sales per year. FS undertakes routine distribution activities in its markets that constitute routine contributions to the relevant business activity of exploiting nanodisk technologies. USP and FS estimate that the total market return on these routine contributions will amount to 6% of the routine costs. FS expects its cost contributions to be $60 million in Year 1, rise to $100 million in Years 2 and 3, and then decline again to $60 million in Year 4. Thereafter, FS's cost contributions are expected to equal 10% of revenues.

(iii) USP and FS determine the present value of the stream of the reasonably anticipated residuals in FS's territory over the duration of the CSA Activity of the divisional profit or loss (revenues minus routine costs), minus the market returns for routine contributions, the operating cost contributions, and the cost contributions. USP and FS determine, based on the considerations discussed in paragraph (g)(2)(v) of this section, that the appropriate discount rate is 17.5% per annum. Therefore, the present value of the nonroutine residual divisional profit is $1,395 million.

(iv) After analysis, USP and FS determine that the relative value of the nanodisk technologies contributed by USP to CSA (giving effect only to its value in FS's territory) is roughly 150% of the value of FS's marketing intangibles (which only have value in FS's territory). Consequently, 60% of the nonroutine residual divisional profit is attributable to USP's platform contribution. Therefore, FS's PCT Payments should have an expected present value equal to $837 million (.6 × $1,395 million).

(v) The calculations for this *Example 1* are displayed in the following table:

Time Period (Y = Year) (TV = Terminal Value)	Y1	Y2	Y3	Y4	Y5	Y6	Y7	Y8	Y9	Y10	Y11	TV
Discount Period	0	1	2	3	4	5	6	7	8	9	10	10
[1] Sales	0	200	300	450	675	878	1141	1369	1643	1807	1626	
[2] Growth Rate			50%	50%	50%	30%	30%	20%	20%	10%	−10%	
[3] Exploitation Costs and Operating Cost Contributions (52% of Sales [1])	40	130	200	250	351	456	593	712	854	940	846	
[4] Return on [3] (6% of [3])	2.4	8	12	15	21	27	36	43	51	56	51	
[5] Cost Contributions (10% of Sales [1] after Year 5)	60	100	100	60	68	88	114	137	164	181	163	
[6] Residual Profit = [1] minus {[3] + [4] + [5]}	−102	−38	−12	125	235	306	398	477	573	630	567	2395
[7] Residual Profit [6] Discounted at 17.5% discount rate	−102	−32	−9	77	124	137	151	154	158	148	113	477
[8] Sum of all amounts in [7] for all time periods = $1,395 million												
[9] Relative value in FS's division of USP's nanotechnology to FS's marketing intangibles = 150%												
[10] Profit Split (USP)	60% = 1.5 × [11]											
[11] Profit Split (FS)	40%											
[12] FS's PCT Payments	[8] × [10] = $1,395 million × 60% = $837 million											

Example 2. (i) For simplicity of calculation in this *Example 2,* all financial flows are assumed to occur at the beginning of each period. USP is a U.S. automobile manufacturing company that has completed significant research on the development of diesel-electric hybrid engines that, if they could be successfully manufactured, would result in providing a significant increased fuel economy for a wide variety of motor vehicles. Successful commercialization of the diesel-electric hybrid engine will require the development of a new class of advanced battery that will be light, relatively cheap to manufacture and yet capable of holding a substantial electric charge. FS, a foreign subsidiary of USP, has completed significant research on developing lithium-ion batteries that appear likely to have the requisite characteristics. At the beginning of Year 1, USP enters into a CSA with FS to further develop diesel-electric hybrid engines and lithium-ion battery technologies for eventual commercial exploitation. Under the CSA, USP will have the right to exploit the diesel-electric hybrid engine and lithium-ion battery technologies in the United States, while FS will have the right to exploit such technologies in the rest of the world. The partially developed diesel-electric hybrid engine and lithium-ion battery technologies owned by USP and FS, respectively, are reasonably anticipated to contribute to the development of commercially exploitable automobile engines and therefore the rights in both these technologies constitute platform contributions of USP and of FS for which compensation is due under PCTs. At the time of inception of the CSA, USP owns operating intangibles in the form of self-developed marketing intangibles which have significant value in the United States, but not in the rest of the world, and that are relevant to exploiting the cost shared intangibles. Similarly, FS owns self-developed marketing intangibles which have significant value in the rest of the world, but not in the United States, and that are relevant to exploiting the cost shared intangibles. Although the new class of diesel-electric hybrid engine using lithium-ion batteries is not yet ready for commercial exploitation, components based on this technology are beginning to be incorporated in current-generation gasoline-electric hybrid engines and the rights to make and sell such products are transferred from USP to FS and vice-versa in conjunction with the inception of the CSA, following the same territorial division as in the CSA.

(ii) USP's estimated RAB share is 66.7%. During Year 1, it is anticipated that sales in USP's territory will be $1000X in Year 1. Sales in FS's territory are anticipated to be $500X. Thereafter, as revenue from the use of components in gasoline-electric hybrids is supplemented by revenues from the production of complete diesel-electric hybrid engines using lithium-ion battery technology, anticipated sales in both territories will increase rapidly at a rate of 50% per annum through Year 4. Anticipated sales are then anticipated to increase at a rate of 40% per annum for another 4 years. Sales are then anticipated to increase at a rate of 30% per annum through Year 10. Thereafter, sales are anticipated to decrease at a rate of 5% per annum for the foreseeable future as new

automotive drivetrain technologies displace diesel-electric hybrid engines and lithium-ion batteries. Total operating expenses attributable to product exploitation (including operating cost contributions) equal 40% of sales per year for both USP and FS. USP and FS estimate that the total market return on these routine contributions to the CSA will amount to 6% of these operating expenses. USP is expected to bear $^{2}/_{3}$ of the total cost contributions for the foreseeable future. Cost contributions are expected to total $375X in Year 1 (of which $250X are borne by USP) and increase at a rate of 25% per annum through Year 6. In Years 7 through 10, cost contributions are expected to increase 10% a year. Thereafter, cost contributions are expected to decrease by 5% a year for the foreseeable future.

(iii) USP and FS determine the present value of the stream of FS's reasonably anticipated residual divisional profit, which is the stream of FS's reasonably anticipated divisional profit or loss, minus the market returns for routine contributions, minus operating cost contributions, minus cost contributions. USP and FS determine, based on the considerations discussed in paragraph (g)(2)(v) of this section, that the appropriate discount rate is 12% per year. Therefore, the present value of the nonroutine residual divisional profit in USP's territory is $41,727X and in CFC's territory is $20,864X.

(iv) After analysis, USP and FS determine that, in the United States the relative value of the technologies contributed by USP and FS to the CSA and of the operating intangibles used by USP in the exploitation of the cost shared intangibles (reported as equaling 100 in total), equals: USP's platform contribution (59.5); FS's platform contribution (25.5); and USP's operating intangibles (15). Consequently, the present value of the arm's length amount of the PCT Payments that USP should pay to FS for FS's platform contribution is $10,640X (.255 × $41,727X). Similarly, USP and FS determine that, in the rest of the world, the relative value of the technologies contributed by USP and FS to the CSA and of the operating intangibles used by FS in the exploitation of the cost shared intangibles can be divided as follows: USP's platform contribution (63); FS's platform contribution (27); and FS's operating intangibles (10). Consequently, the present value of the arm's length amount of the PCT Payments that FS should pay to USP for USP's platform contribution is $13,144X (.63 × $20,864X). Therefore, FS is required to make a net payment to USP with a present value of $2,504X ($13,144X − 10,640X).

(v) The calculations for this *Example 2* are displayed in the following tables:

Calculation of USP's PCT Payment to FS

Time Period (Y = Year) (TV = Terminal Value)	Y1	Y2	Y3	Y4	Y5	Y6	Y7	Y8	Y9	Y10	TV
Discount Period	0	1	2	3	4	5	6	7	8	9	9
[1] Sales	1000	1500	2250	3375	4725	6615	9261	12965	16855	21912	
[2] Growth Rate		50%	50%	50%	40%	40%	40%	40%	30%	30%	
[3] Exploitation Costs and Operating Cost Contributions (40% of Sales [1])	400	600	900	1350	1890	2646	3704	5186	6742	8765	
[4] Return on [3] = 6% of [3]	24	36	54	81	113	159	222	311	405	526	
[5] Cost Contributions	250	313	391	488	610	763	839	923	1015	1117	
[6] Residual Profit = [1] minus {[3] + [4] + [5]}	326	552	905	1456	2111	3047	4495	6545	8693	11504	64287
[7] Residual Profit [6] Discounted at 12% discount rate	326	492	722	1036	1342	1729	2277	2961	3511	4148	23183
[8] Sum of all amounts in [7] for all time periods = $41,727X											
Profit Split for Calculation of USP's PCT Payment to FS: [Total of US contributions = 74.5%]											
[9] USP's Platform Contribution = 59.5%											
[10] FS's Platform Contribution = 25.5%											
[11] USP's Operating Intangibles = 15%											
[12] USP's PCT Payment to FS = [8] × [10] = $41,727X multiplied by 25.5% = $10,640X											

Calculation of FS's Net PCT Payment to USF

Time Period (Y = Year) (TV = Terminal Value)	Y1	Y2	Y3	Y4	Y5	Y6	Y7	Y8	Y9	Y10	TV
Discount Period	0	1	2	3	4	5	6	7	8	9	9
[13] Sales	500	750	1125	1688	2363	3308	4631	6483	8428	10956	
[14] Growth Rate		50%	50%	50%	40%	40%	40%	40%	30%	30%	
[15] Exploitation Costs and Operating Cost Contributions (40% of Sales [13])	200	300	450	675	945	1323	1852	2593	3371	4382	
[16] Return on [15] = 6% of [15]	12	18	27	41	57	79	111	156	202	263	
[17] Cost Contributions	125	156	195	244	305	381	420	462	508	559	
[18] Residual Profit = [13] minus {[15] + [16] + [17]}	163	276	453	728	1056	1524	2248	3272	4347	5752	32144
[19] Residual Profit [18] Discounted at 12% discount rate	163	246	361	518	671	865	1139	1480	1755	2074	11591
[20] Sum of all amounts in [19] for all time periods = $20,864X											
Profit Split for Calculation of FS's PCT Payment to USP: [Total of FS's contributions = 37%]											
[21] USP's Platform Contribution = 63%											
[22] FS's Platform Contribution = 27%											
[23] FS's Operating Intangibles = 10%											
[24] FS's PCT Payment to USP = [20] × [21] = $20,864X multiplied by 63% = $13,144X											
[25] FS's Net PCT Payment to USP = [24] minus [12] = $13,144X minus $10,640X = $2,504X											

(8) ***Unspecified methods.*** Methods not specified in paragraphs (g)(3) through (7) of this section may be used to evaluate whether the amount charged for a PCT is arm's length. Any method used under this paragraph (g)(8) must be applied in accordance with the provisions of § 1.482-1 and of paragraph (g)(2) of this section. Consistent with the specified methods, an unspecified method should take into account the general principle that uncontrolled taxpayers evaluate the terms of a transaction by considering the realistic alternatives to that transaction, and only enter into a particular transaction if none of the alternatives is preferable to it. Therefore, in establishing whether a PCT achieved an arm's length result, an unspecified method should provide information on the prices or profits that the controlled participant could have realized by choosing a realistic alternative to the CSA. See paragraph (k)(2)(ii)(J) of this section. As with any method, an unspecified method will not be applied unless it provides the most reliable measure of an arm's length result under the principles of the best method rule. See § 1.482-1(c) (Best method rule). In accordance with § 1.482-1(d) (Comparability), to the extent that an unspecified method relies on internal data rather than uncontrolled comparables, its reliability will be reduced. Similarly, the reliability of a method will be affected by the reliability of the data and assumptions used to apply the method, including any projections used.

(h) ***Form of payment rules*** —

(1) ***CST Payments.*** CST Payments may not be paid in shares of stock in the payor (or stock in any member of the controlled group that includes the controlled participants).

(2) ***PCT Payments*** —(i) *In general.* The consideration under a PCT for a platform contribution may take one or a combination of both of the following forms:

(A) Payments of a fixed amount (fixed payments), either paid in a lump sum payment or in installment payments spread over a specified period, with interest calculated in accordance with § 1.482-2(a) (Loans or advances).

(B) Payments contingent on the exploitation of cost shared intangibles by the PCT Payor (contingent payments). Accordingly, controlled participants have flexibility to adopt a form and period of payment, provided that such form and period of payment are consistent with an arm's length charge as of the date of the PCT. See also paragraphs (h)(2)(iv) and (3) of this section.

(ii) *No PCT Payor Stock.* PCT Payments may not be paid in shares of stock in the PCT Payor (or stock in any member of the controlled group that includes the controlled participants).

(iii) *Specified form of payment*—(A) *In general.* The form of payment selected (subject to the rules of this paragraph (h)) for any PCT, including, in the case of contingent payments, the contingent base and structure of the payments as set forth in paragraph (h)(2)(iii)(B) of this section, must be specified no later than the due date of the applicable tax return (including extensions) for the later of the taxable year of the PCT Payor or PCT Payee that includes the date of that PCT.

(B) ***Contingent payments.*** In accordance with paragraph (k)(1)(iv)(A) of this section, a provision of a written contract described in paragraph (k)(1) of this section, or of the additional documentation described in paragraph (k)(2) of this section, that provides for payments for a PCT (or group of PCTs) to be contingent on the exploitation of cost shared intangibles will be respected as consistent with economic substance only if the allocation between the controlled participants of the risks attendant on such form of payment is determinable before the outcomes of such allocation that would have materially affected the PCT pricing are known or reasonably knowable. A contingent payment provision must clearly and unambiguously specify the basis on which the contingent payment obligations are to be determined. In particular, the

contingent payment provision must clearly and unambiguously specify the events that give rise to an obligation to make PCT Payments, the royalty base (such as sales or revenues), and the computation used to determine the PCT Payments. The royalty base specified must be one that permits verification of its proper use by reference to books and records maintained by the controlled participants in the normal course of business (for example, books and records maintained for financial accounting or business management purposes).

(C) ***Examples.*** The following examples illustrate the principles of this paragraph (h)(2).

Example 1. A CSA provides that PCT Payments with respect to a particular platform contribution shall be contingent payments equal to 15% of the revenues from sales of products that incorporate cost shared intangibles. The terms further permit (but do not require) the controlled participants to adjust such contingent payments in accordance with a formula set forth in the arrangement so that the 15% rate is subject to adjustment by the controlled participants at their discretion on an after-the-fact, uncompensated basis. The Commissioner may impute payment terms that are consistent with economic substance with respect to the platform contribution because the contingent payment provision does not specify the computation used to determine the PCT Payments.

Example 2. Taxpayer, an automobile manufacturer, is a controlled participant in a CSA that involves research and development to perfect certain manufacturing techniques necessary to the actual manufacture of a state-of-the-art, hybrid fuel injection system known as DRL337. The arrangement involves the platform contribution of a design patent covering DRL337. Pursuant to paragraph (h)(2)(iii)(B) of this section, the CSA provides for PCT Payments with respect to the platform contribution of the patent in the form of royalties contingent on sales of automobiles that contain the DRL337 system. However, Taxpayer's system of book- and record-keeping does not enable Taxpayer to track which automobile sales involve automobiles that contain the DRL337 system. Because Taxpayer has not complied with paragraph (h)(2)(iii)(B) of this section, the Commissioner may impute payment terms that are consistent with economic substance and susceptible to verification by the Commissioner.

> *Example 3.* (i) Controlled participants A and B enter into a CSA that provides for PCT Payments from A to B with respect to B's platform contribution, Z, in the form of three annual installment payments due from A to B on the last day of each of the first three years of the CSA.
> (ii) On audit, based on all the facts and circumstances, the Commissioner determines that the installment PCT Payments are consistent with an arm's length charge as of the date of the PCT. Accordingly, the Commissioner does not make an adjustment with respect to the PCT Payments in any year.

> *Example 4.* (i) The facts are the same as in *Example 3* except that the CSA contains an additional term with respect to the PCT Payments. Under this provision, A and B further agreed that, if the present value (as of the CSA Start Date) of A's actual divisional operating profit or loss during the three-year period is less than the present value (as of the CSA Start Date) of the divisional operating profit or loss

that the parties projected for A upon formation of the CSA for that period, then the third installment payment shall be subject to a compensating adjustment in the amount necessary to reduce the present value (as of the CSA Start Date) of the aggregate PCT Payments for those three years to the amount that would have been calculated if the actual results had been used for the calculation instead of the projected results.
(ii) This provision further specifies that A will pay B an additional amount, $Q, in the first year of the CSA to compensate B for taking on additional downside risk through the contingent payment term described in paragraph (i) of this *Example 4*.

(iii) During the first two years, A pays B installment payments as agreed, as well as the additional amount, $Q. In the third year, A and B determine that the present value (as of the CSA Start Date) of A's actual divisional operating profit or loss during the three-year period is less than the present value (as of the CSA Start Date) of the divisional operating profit or loss that the parties projected for A upon formation of the CSA for that period. A reduces the PCT Payment to B in the third year in the amount necessary to reduce the present value (as of the CSA Start Date) of the aggregate PCT Payments for those three years to the amount that would have been calculated if the actual results had been used for the calculation instead of the projected results.

(iv) On audit, based on all the facts and circumstances, the Commissioner determines that the installment PCT Payments agreed to be paid by A to B were consistent with an arm's length charge as of the date of the PCT. The Commissioner further determines that the contingency was sufficiently specified such that its occurrence or nonoccurrence was unambiguous and determinable; that the projections were reliable; and that the contingency did, in fact, occur. Finally, the Commissioner determines, based on all the facts and circumstances, that $Q was within the arm's length range for the additional allocation of risk to B. Accordingly, no adjustment is made with respect to the installment PCT Payments, or the additional PCT Payment for the contingent payment term, in any year.

Example 5. (i) The facts are the same as in *Example 4* except that the CSA states the amount that A will pay B for the contingent payment term is $X, an amount that is less than $Q, and A pays B $X in the first year of the CSA.
(ii) On audit, based on all the facts and circumstances, the Commissioner determines that the installment PCT Payments agreed to be paid by A to B were consistent with an arm's length charge as of the date of the PCT. The Commissioner further determines that the contingency was sufficiently specified such that its occurrence or nonoccurrence was unambiguous and determinable; that the projections were reliable; and that the contingency did, in fact, occur.

However, the Commissioner also determines, based on all the facts and circumstances, that the additional PCT Payment of $X from A to B for the contingent payment term was not an arm's length charge for the additional allocation of risk as of the CSA Start Date in connection with the contingent payment term. Accordingly, the Commissioner makes an adjustment to B's results equal to the difference between $X and the median of the arm's length range of charges for the contingent payment term.

Example 6. (i) The facts are the same as in *Example 3* except that A and B further agreed that, if the present value (as of the CSA Start Date) of A's actual divisional operating profit or loss during the three-year period is either less or greater than the present value (as of the CSA Start Date) of the divisional operating profit or loss that the parties projected for A upon formation of the CSA for that period, then A may make a compensating adjustment to the third installment payment in the amount necessary to reduce (if actual divisional operating profit or loss is less than the projections) or increase (if actual divisional operating profit or loss exceeds the projections) the present value (as of the CSA Start Date) of the aggregate PCT Payments for those three years to the amount that would have been calculated if the actual results had been used for the calculation instead of the projected results. (ii) On audit, the Commissioner determines that the contingent payment term lacks economic substance under §§ 1.482-1(d)(3)(iii)(B) and 1.482-7(h)(2)(iii)(B). It lacks economic substance because the allocation of the risks between A and B was indeterminate as of the CSA Start Date due to the elective nature of the potential compensating adjustments. Specifically, the parties agreed upfront only that A might make compensating adjustments to the installment payments. By the terms of the agreement, A could decide whether to make such adjustments after the outcome of the risks was known or reasonably knowable. Even though the contingency and potential compensating adjustments were clearly defined in the CSA, no compensating adjustments were required by the CSA regardless of the occurrence or nonoccurrence of the contingency. As a result, the contingent payment terms did not clearly and unambiguously specify the events that give rise to an obligation to make PCT Payments, and, accordingly, the obligation to make compensating adjustments pursuant to the contingency was indeterminate. The contingent payment term allows the taxpayer to make adjustments that are favorable to its overall tax position in those years where the agreement allows it to make such adjustments, but decline to exercise its right to make any adjustment in those years in which such an adjustment would be unfavorable to its overall tax position. Such terms do not reflect a substantive upfront allocation of risk. In

addition, the vagueness of the agreement makes it impossible to determine whether such contingent payment term warrants an additional arm's length charge and, if so, how much.

(iii) Accordingly, the Commissioner may disregard the contingent payment term under §§ 1.482-1(d)(3)(ii)(B)(*1*) and 1.482-7(k)(1)(iv) and may impute other contractual terms in its place consistent with the economic substance of the CSA.

Example 7. (i) The facts are the same as in *Example 6* except that the contingent payment term provides that, if the present value (as of the CSA Start Date) of A's actual divisional operating profit or loss during the three-year period is either less or greater than the present value (as of the CSA Start Date) of the divisional operating profit or loss that the parties projected for A upon formation of the CSA for that period, then A will make a compensating adjustment to the third installment payment. The CSA does not specify the amount of (or a formula for) any such compensating adjustments.
(ii) On audit, the Commissioner determines that the contingent payment term lacks economic substance under §§ 1.482-1(d)(3)(iii)(B) and 1.482-7(h)(2)(iii)(B). It lacks economic substance because the allocation of the risks between A and B was indeterminate as of the CSA Start Date due to the failure to specify the amount of (or a formula for) the compensating adjustments that must be made if a contingency occurs. The basis on which the compensating adjustments were to be determined was neither clear nor unambiguous. Even though the contingency was clearly defined in the CSA and the requirement of a compensating adjustment in the event of a contingency was clearly specified in the CSA, the parties had no agreement regarding the amount of such compensating adjustments. As a result, the computation used to determine the PCT Payments was indeterminate. The parties could choose to make a small positive compensating adjustment if the actual results turned out to be much greater than the projections, and could choose to make a significant negative compensating adjustment if the actual results turned out to be less than the projections. Such terms do not reflect a substantive upfront allocation of risk. In addition, the vagueness of the agreement makes it impossible to determine whether such contingent payment term warrants an additional arm's length charge and, if so, how much.

(iii) Accordingly, the Commissioner may disregard the contingent price term under §§ 1.482-1(d)(3)(ii)(B)(*1*) and 1.482-7(k)(1)(iv) and may impute other contractual terms in its place consistent with economic substance of the CSA.

(iv) *Conversion from fixed to contingent form of payment.* With regard to a conversion of a fixed present value to a contingent form of payment, see paragraphs (g)(2)(v) (Discount rate) and (vi) (Financial projections) of this section.

(3) ***Coordination of best method rule and form of payment.*** A method described in paragraph (g)(1) of this section evaluates the arm's length amount charged in a PCT in terms of a form of payment (method payment form). For example, the method payment form for the acquisition price method described in paragraph (g)(5) of this section, and for the market capitalization method described in paragraph (g)(6) of this section, is fixed payment. Applications of the income method provide different method payment forms. See paragraphs (g)(4)(i)(E) and (iv) of this section. The method payment form may not necessarily correspond to the form of payment specified pursuant to paragraphs (h)(2)(iii) and (k)(2)(ii)(I) of this section (specified payment form). The determination under § 1.482-1(c) of the method that provides the most reliable measure of an arm's length result is to be made without regard to whether the respective method payment forms under the competing methods correspond to the specified payment form. If the method payment form of the method determined under § 1.482-1(c) to provide the most reliable measure of an arm's length result differs from the specified payment form, then the conversion from such method payment form to such specified payment form will be made to the satisfaction of the Commissioner.

(i) ***Allocations by the Commissioner in connection with a CSA*** —

(1) ***In general.*** The Commissioner may make allocations to adjust the results of a controlled transaction in connection with a CSA so that the results are consistent with an arm's length result, in accordance with the provisions of this paragraph (i).

(2) ***CST allocations*** —

(i) ***In general.*** The Commissioner may make allocations to adjust the results of a CST so that the results are consistent with an arm's length result, including any allocations to make each controlled participant's IDC share, as determined under paragraph (d)(4) of this section, equal to that participant's RAB share, as determined under paragraph (e)(1) of this section. Such allocations may result from, for purposes of CST determinations, adjustments to—

(A) Redetermine IDCs by adding any costs (or cost categories) that are directly identified with, or are reasonably allocable to, the IDA, or by removing any costs (or cost categories) that are not IDCs;

(B) Reallocate costs between the IDA and other business activities;

(C) Improve the reliability of the selection or application of the basis used for measuring benefits for purposes of estimating a controlled participant's RAB share;

(D) Improve the reliability of the projections used to estimate RAB shares, including adjustments described in paragraph (i)(2)(ii) of this section; and

(E) Allocate among the controlled participants any unallocated interests in cost shared intangibles.

(ii) ***Adjustments to improve the reliability of projections used to estimate RAB shares*** —

(A) ***Unreliable projections.*** A significant divergence between projected benefit shares and benefit shares adjusted to take into account any available actual benefits to date (adjusted benefit shares) may indicate that the projections were not reliable for purposes of

estimating RAB shares. In such a case, the Commissioner may use adjusted benefit shares as the most reliable measure of RAB shares and adjust IDC shares accordingly. The projected benefit shares will not be considered unreliable, as applied in a given taxable year, based on a divergence from adjusted benefit shares for every controlled participant that is less than or equal to 20% of the participant's projected benefits share. Further, the Commissioner will not make an allocation based on such divergence if the difference is due to an extraordinary event, beyond the control of the controlled participants, which could not reasonably have been anticipated at the time that costs were shared. The Commissioner generally may adjust projections of benefits used to calculate benefit shares in accordance with the provisions of § 1.482-1. In particular, if benefits are projected over a period of years, and the projections for initial years of the period prove to be unreliable, this may indicate that the projections for the remaining years of the period are also unreliable and thus should be adjusted. For purposes of this paragraph (i)(2)(ii)(A), all controlled participants that are not U.S. persons are treated as a single controlled participant. Therefore, an adjustment based on an unreliable projection of RAB shares will be made to the IDC shares of foreign controlled participants only if there is a matching adjustment to the IDC shares of controlled participants that are U.S. persons. Nothing in this paragraph (i)(2)(ii)(A) prevents the Commissioner from making an allocation if a taxpayer did not use the most reliable basis for measuring anticipated benefits. For example, if the taxpayer measures its anticipated benefits based on units sold, and the Commissioner determines that another basis is more reliable for measuring anticipated benefits, then the fact that actual units sold were within 20% of the projected unit sales will not preclude an allocation under this section.

(B) ***Foreign-to-foreign adjustments.*** Adjustments to IDC shares based on an unreliable projection also may be made among foreign controlled participants if the variation between actual and projected benefits has the effect of substantially reducing U.S. tax.

(C) ***Correlative adjustments to PCTs.*** Correlative adjustments will be made to any PCT Payments of a fixed amount that were determined based on RAB shares that are subsequently adjusted on a finding that they were based on unreliable projections. No correlative adjustments will be made to contingent PCT Payments regardless of whether RAB shares were used as a parameter in the valuation of those payments.

(D) ***Examples.*** The following examples illustrate the principles of this paragraph (i)(2)(ii):

Example 1. U.S. Parent (USP) and Foreign Subsidiary (FS) enter into a CSA to develop new food products, dividing costs on the basis of projected sales two years in the future. In Year 1, USP and FS project that their sales in Year 3 will be equal, and they divide costs accordingly. In Year 3, the Commissioner examines the controlled participants' method for dividing costs. USP and FS actually accounted for 42% and 58% of total sales, respectively. The Commissioner agrees that sales two years in the future provide a reliable basis for estimating benefit shares. Because the differences between USP's and FS's adjusted and projected benefit shares are less than 20% of their projected benefit shares, the projection of future benefits for Year 3 is reliable.

Example 2. The facts are the same as in *Example 1,* except that in Year 3 USP and FS actually accounted for 35% and 65% of total sales, respectively. The divergence between USP's projected and adjusted benefit shares is greater than 20% of USP's projected benefit share and is not due to an extraordinary event beyond the control of

the controlled participants. The Commissioner concludes that the projected benefit shares were unreliable, and uses adjusted benefit shares as the basis for an adjustment to the cost shares borne by USP and FS.

Example 3. U.S. Parent (USP), a U.S. corporation, and its foreign subsidiary (FS) enter into a CSA in Year 1. They project that they will begin to receive benefits from cost shared intangibles in Years 4 through 6, and that USP will receive 60% of total benefits and FS 40% of total benefits. In Years 4 through 6, USP and FS actually receive 50% each of the total benefits. In evaluating the reliability of the controlled participants' projections, the Commissioner compares the adjusted benefit shares to the projected benefit shares. Although USP's adjusted benefit share (50%) is within 20% of its projected benefit share (60%), FS's adjusted benefit share (50%) is not within 20% of its projected benefit share (40%). Based on this discrepancy, the Commissioner may conclude that the controlled participants' projections were unreliable and may use adjusted benefit shares as the basis for an adjustment to the cost shares borne by USP and FS.

Example 4. Three controlled taxpayers, USP, FS1, and FS2 enter into a CSA. FS1 and FS2 are foreign. USP is a domestic corporation that controls all the stock of FS1 and FS2. The controlled participants project that they will share the total benefits of the cost shared intangibles in the following percentages: USP 50%; FS1 30%; and FS2 20%. Adjusted benefit shares are as follows: USP 45%; FS1 25%; and FS2 30%. In evaluating the reliability of the controlled participants' projections, the Commissioner compares these adjusted benefit shares to the projected benefit shares. For this purpose, FS1 and FS2 are treated as a single controlled participant. The adjusted benefit share received by USP (45%) is within 20% of its projected benefit share (50%). In addition, the non-US controlled participant's adjusted benefit share (55%) is also within 20% of their projected benefit share (50%). Therefore, the Commissioner concludes that the controlled participant's projections of future benefits were reliable, despite the fact that FS2's adjusted benefit share (30%) is not within 20% of its projected benefit share (20%).

Example 5. The facts are the same as in *Example 4.* In addition, the Commissioner determines that FS2 has significant operating losses and has no earnings and profits, and that FS1 is profitable and has earnings and profits. Based on all the evidence, the Commissioner concludes that the controlled participants arranged that FS1 would bear a larger cost share than appropriate in order to reduce FS1's earnings and profits and thereby reduce inclusions USP otherwise would be deemed to have on account of FS1 under subpart F. Pursuant to paragraph (i)(2)(ii)(B) of this section, the Commissioner may make an adjustment solely to the cost shares borne by FS1 and FS2 because FS2's projection of future benefits was unreliable and the variation between adjusted and projected benefits had the effect of substantially reducing USP's U.S. income tax liability (on account of FS1 subpart F income).

> *Example 6.* (i)(A) Foreign Parent (FP) and U.S. Subsidiary (USS) enter into a CSA in 1996 to develop a new treatment for baldness. USS's interest in any treatment developed is the right to produce and sell the treatment in the U.S. market while FP retains rights to produce and sell the treatment in the rest of

the world. USS and FP measure their anticipated benefits from the CSA based on their respective projected future sales of the baldness treatment. The following sales projections are used:

SALES
[IN MILLIONS OF DOLLARS]

Year	USS	FP
1	5	10
2	20	20
3	30	30
4	40	40
5	40	40
6	40	40
7	40	40
8	20	20
9	10	10
10	5	5

(B) In Year 1, the first year of sales, USS is projected to have lower sales than FP due to lags in U.S. regulatory approval for the baldness treatment. In each subsequent year, USS and FP are projected to have equal sales. Sales are projected to build over the first three years of the period, level off for several years, and then decline over the final years of the period as new and improved baldness treatments reach the market.

(ii) To account for USS's lag in sales in the Year 1, the present discounted value of sales over the period is used as the basis for measuring benefits. Based on the risk associated with this venture, a discount rate of 10 percent is selected. The present discounted value of projected sales is determined to be approximately $154.4 million for USS and $158.9 million for FP. On this basis USS and FP are projected to obtain approximately 49.3% and 50.7% of the benefit, respectively, and the costs of developing the baldness treatment are shared accordingly.

(iii)(A) In Year 6, the Commissioner examines the CSA. USS and FP have obtained the following sales results through Year 5:

SALES
[IN MILLIONS OF DOLLARS]

Year	USS	FP
1	0	17
2	17	35
3	25	35
4	38	41
5	39	41

(B) USS's sales initially grew more slowly than projected while FP's sales grew more quickly. In each of the first three years of the period, the share of total sales of at least one of the parties diverged by over 20% from its projected share of sales. However, by Year 5 both parties' sales had leveled off at approximately their projected values. Taking into account this leveling off of sales and all the facts and circumstances, the Commissioner determines that it is appropriate to use the original projections for the remaining years of sales. Combining the actual results through Year 5 with the projections for subsequent years, and using a discount rate of 10%, the present discounted value of sales is approximately $141.6 million for USS and $187.3 million for FP. This result implies that USS and FP obtain approximately 43.1% and 56.9%, respectively, of the anticipated benefits from the baldness treatment. Because these adjusted benefit shares are within 20% of the benefit shares calculated based on the original sales projections, the Commissioner determines that, based on the difference between adjusted and projected benefit shares, the original projections were not unreliable. No adjustment is made based on the difference between adjusted and projected benefit shares.

Example 7. (i) The facts are the same as in *Example 6,* except that the actual

sales results through Year 5 are as follows:

SALES
[IN MILLIONS OF DOLLARS]

Year	USS	FP
1	0	17
2	17	35
3	25	44
4	34	54
5	36	55

(ii) Based on the discrepancy between the projections and the actual results and on consideration of all the facts, the Commissioner determines that for the remaining years the following sales projections are more reliable than the original projections:

SALES
[IN MILLIONS OF DOLLARS]

Year	USS	FP
6	36	55
7	36	55
8	18	28
9	9	14
10	4.5	7

(iii) Combining the actual results through Year 5 with the projections for subsequent years, and using a discount rate of 10%, the present discounted value of sales is approximately $131.2 million for USS and $229.4 million for FP. This result implies that USS and FP obtain approximately 35.4% and 63.6%, respectively, of the anticipated benefits from the baldness treatment. These adjusted benefit shares diverge by greater than 20% from the benefit shares calculated based on the original sales projections, and the Commissioner

> determines that, based on the difference between adjusted and projected benefit shares, the original projections were unreliable. The Commissioner adjusts cost shares for each of the taxable years under examination to conform them to the recalculated shares of anticipated benefits.

(iii) ***Timing of CST allocations.*** If the Commissioner makes an allocation to adjust the results of a CST, the allocation must be reflected for tax purposes in the year in which the IDCs were incurred. When a CST payment is owed by one controlled participant to another controlled participant, the Commissioner may make appropriate allocations to reflect an arm's length rate of interest for the time value of money, consistent with the provisions of § 1.482-2(a) (Loans or advances).

(3) ***PCT allocations.*** The Commissioner may make allocations to adjust the results of a PCT so that the results are consistent with an arm's length result in accordance with the provisions of the applicable sections of the regulations under section 482, as determined pursuant to paragraph (a)(2) of this section.

(4) ***Allocations regarding changes in participation under a CSA.*** The Commissioner may make allocations to adjust the results of any controlled transaction described in paragraph (f) of this section if the controlled participants do not reflect arm's length results in relation to any such transaction.

(5) ***Allocations when CSTs are consistently and materially disproportionate to RAB shares.*** If a controlled participant bears IDC shares that are consistently and materially greater or lesser than its RAB share, then the Commissioner may conclude that the economic substance of the arrangement between the controlled participants is inconsistent with the terms of the CSA. In such a case, the Commissioner may disregard such terms and impute an agreement that is consistent with the controlled participants' course of conduct, under which a controlled participant that bore a disproportionately greater IDC share received additional interests in the cost shared intangibles. See §§ 1.482-1(d)(3)(ii)(B) (Identifying contractual terms) and 1.482-4(f)(3)(ii) (Identification of owner). Such additional interests will consist of partial undivided interests in the other controlled participant's interest in the cost shared intangible. Accordingly, that controlled participant must receive arm's length consideration from any controlled participant whose IDC share is less than its RAB share over time, under the provisions of §§ 1.482-1 and 1.482-4 through 1.482-6 to provide compensation for the latter controlled participants' use of such partial undivided interest.

(6) ***Periodic adjustments*** —

(i) ***In general.*** Subject to the exceptions in paragraph (i)(6)(vi) of this section, the Commissioner may make periodic adjustments for an open taxable year (the Adjustment Year) and for all subsequent taxable years for the duration of the CSA Activity with respect to all PCT Payments, if the Commissioner determines that, for a particular PCT (the Trigger PCT), a particular controlled participant that owes or owed a PCT Payment relating to that PCT (such controlled participant being referred to as the PCT Payor for purposes of this paragraph (i)(6)) has realized an Actually Experienced Return Ratio (AERR) that is outside the Periodic Return Ratio Range (PRRR). The satisfaction of the condition stated in the preceding sentence is referred to as a Periodic Trigger. See paragraphs (i)(6)(ii) through (vi) of this section regarding the PRRR, the AERR, and periodic adjustments. In determining whether to make such adjustments, the Commissioner may consider whether the outcome as adjusted more reliably reflects an arm's length result under all the relevant facts and circumstances, including any information known

as of the Determination Date. The Determination Date is the date of the relevant determination by the Commissioner. The failure of the Commissioner to determine for an earlier taxable year that a PCT Payment was not arm's length will not preclude the Commissioner from making a periodic adjustment for a subsequent year. A periodic adjustment under this paragraph (i)(6) may be made without regard to whether the taxable year of the Trigger PCT or any other PCT remains open for statute of limitations purposes or whether a periodic adjustment has previously been made with respect to any PCT Payment.

(ii) ***PRRR.*** Except as provided in the next sentence, the *PRRR* will consist of return ratios that are not less than .667 nor more than 1.5. Alternatively, if the controlled participants have not substantially complied with the documentation requirements referenced in paragraph (k) of this section, as modified, if applicable, by paragraphs (m)(2) and (3) of this section, the PRRR will consist of return ratios that are not less than .8 nor more than 1.25.

(iii) ***AERR*** —

(A) ***In general.*** The *AERR* is the present value of total profits (PVTP) divided by the present value of investment (PVI). In computing PVTP and PVI, present values are computed using the applicable discount rate (ADR), and all information available as of the Determination Date is taken into account.

(B) ***PVTP.*** The *PVTP* is the present value, as of the CSA Start Date, as defined in section (j)(1)(i) of this section, of the PCT Payor's actually experienced divisional profits or losses from the CSA Start Date through the end of the Adjustment Year.

(C) ***PVI.*** The *PVI* is the present value, as of the CSA Start Date, of the PCT Payor's investment associated with the CSA Activity, defined as the sum of its cost contributions and its PCT Payments, from the CSA Start Date through the end of the Adjustment Year. For purposes of computing the PVI, PCT Payments means all PCT Payments due from a PCT Payor before netting against PCT Payments due from other controlled participants pursuant to paragraph (j)(3)(ii) of this section.

(iv) ***ADR*** —

(A) ***In general.*** Except as provided in paragraph (i)(6)(iv)(B) of this section, the ADR is the discount rate pursuant to paragraph (g)(2)(v) of this section, subject to such adjustments as the Commissioner determines appropriate.

(B) ***Publicly traded companies.*** If the PCT Payor meets the conditions of paragraph (i)(6)(iv)(C) of this section, the ADR is the PCT Payor WACC as of the date of the Trigger PCT. However, if the Commissioner determines, or the controlled participants establish to the satisfaction of the Commissioner, that a discount rate other than the PCT Payor WACC better reflects the degree of risk of the CSA Activity as of such date, the ADR is such other discount rate.

(C) ***Publicly traded.*** A PCT Payor meets the conditions of this paragraph (i)(6)(iv)(C) if—

(*1*) Stock of the PCT Payor is publicly traded; or

(*2*) Stock of the PCT Payor is not publicly traded, provided the PCT Payor is included in a group of companies for which consolidated financial statements are prepared; and a publicly traded company in such group owns, directly or indirectly, stock in PCT Payor. Stock of a company is publicly traded within the meaning of this paragraph

(i)(6)(iv)(C) if such stock is regularly traded on an established United States securities market and the company issues financial statements prepared in accordance with United States generally accepted accounting principles for the taxable year.

(D) ***PCT Payor WACC.*** The *PCT Payor WACC* is the WACC, as defined in paragraph (j)(1)(i) of this section, of the PCT Payor or the publicly traded company described in paragraph (i)(6)(iv)(C)(*2*)(*ii*) of this section, as the case may be.

(E) ***Generally accepted accounting principles.*** For purposes of paragraph (i)(6)(iv)(C) of this section, a financial statement prepared in accordance with a comprehensive body of generally accepted accounting principles other than United States generally accepted accounting principles is considered to be prepared in accordance with United States generally accepted accounting principles provided that the amounts of debt, equity, and interest expense are reflected in any reconciliation between such other accounting principles and United States generally accepted accounting principles required to be incorporated into the financial statement by the securities laws governing companies whose stock is regularly traded on United States securities markets.

(v) ***Determination of periodic adjustments.*** In the event of a Periodic Trigger, subject to paragraph (i)(6)(vi) of this section, the Commissioner may make periodic adjustments with respect to all PCT Payments between all PCT Payors and PCT Payees for the Adjustment Year and all subsequent years for the duration of the CSA Activity pursuant to the residual profit split method as provided in paragraph (g)(7) of this section, subject to the further modifications in this paragraph (i)(6)(v). A periodic adjustment may be made for a particular taxable year without regard to whether the taxable years of the Trigger PCT or other PCTs remain open for statute of limitation purposes.

(A) ***In general.*** Periodic adjustments are determined by the following steps:

(*1*) First, determine the present value, as of the date of the Trigger PCT, of the PCT Payments under paragraph (g)(7)(iii)(C)(*3*) of this section pursuant to the Adjusted RPSM as defined in paragraph (i)(6)(v)(B) of this section (first step result).

(*2*) Second, convert the first step result into a stream of contingent payments on a base of reasonably anticipated divisional profits or losses over the entire duration of the CSA Activity, using a level royalty rate (second step rate). See paragraph (h)(2)(iv) of this section (Conversion from fixed to contingent form of payment). This conversion is made based on all information known as of the Determination Date.

(*3*) Third, apply the second step rate to the actual divisional profit or loss for taxable years preceding and including the Adjustment Year to yield a stream of contingent payments for such years, and convert such stream to a present value as of the CSA Start Date under the principles of paragraph (g)(2)(v) of this section (third step result). For this purpose, the second step rate applied to a loss for a particular year will yield a negative contingent payment for that year.

(*4*) Fourth, convert any actual PCT Payments up through the Adjustment Year to a present value as of the CSA Start Date under the principles of paragraph (g)(2)(v) of this section. Then subtract such amount from the third step result. Determine the

nominal amount in the Adjustment Year that would have a present value as of the CSA Start Date equal to the present value determined in the previous sentence to determine the periodic adjustment in the Adjustment Year.

(*5*) Fifth, apply the second step rate to the actual divisional profit or loss for each taxable year after the Adjustment Year up to and including the taxable year that includes the Determination Date to yield a stream of contingent payments for such years. For this purpose, the second step rate applied to a loss will yield a negative contingent payment for that year. Then subtract from each such payment any actual PCT Payment made for the same year to determine the periodic adjustment for such taxable year.

(*6*) For each taxable year subsequent to the year that includes the Determination Date, the periodic adjustment for such taxable year (which is in lieu of any PCT Payment that would otherwise be payable for that year under the taxpayer's position) equals the second step rate applied to the actual divisional profit or loss for that year. For this purpose, the second step rate applied to a loss for a particular year will yield a negative contingent payment for that year.

(*7*) If the periodic adjustment for any taxable year is a positive amount, then it is an additional PCT Payment owed from the PCT Payor to the PCT Payee for such year. If the periodic adjustment for any taxable year is a negative amount, then it is an additional PCT Payment owed by the PCT Payee to the PCT Payor for such year.

(B) *Adjusted RPSM as of Determination Date.* The Adjusted RPSM is the residual profit split method pursuant to paragraph (g)(7) of this section applied to determine the present value, as of the date of the Trigger PCT, of the PCT Payments under paragraph (g)(7)(iii)(C)(*3*) of this section, with the following modifications.

(*1*) Actual results up through the Determination Date shall be substituted for what otherwise were the projected results over such period, as reasonably anticipated as of the date of the Trigger PCT.

(*2*) Projected results for the balance of the CSA Activity after the Determination Date, as reasonably anticipated as of the Determination Date, shall be substituted for what otherwise were the projected results over such period, as reasonably anticipated as of the date of the Trigger PCT.

(*3*) The requirement in paragraph (g)(7)(i) of this section, that at least two controlled participants make significant nonroutine contributions, does not apply.

(vi) *Exceptions to periodic adjustments*—(A) *Controlled participants establish periodic adjustment not warranted.* No periodic adjustment will be made under paragraphs (i)(6)(i) and (v) of this section if the controlled participants establish to the satisfaction of the Commissioner that all the conditions described in one of paragraphs (i)(6)(vi)(A)(*1*) through (*4*) of this section apply with respect to the Trigger PCT.

(*1*) *Transactions involving the same platform contribution as in the Trigger PCT.*

(*i*) The same platform contribution is furnished to an uncontrolled taxpayer under substantially the same circumstances as those of the relevant Trigger PCT and with a similar form of payment as the Trigger PCT;

(*ii*) This transaction serves as the basis for the application of the comparable uncontrolled transaction method described in paragraph (g)(3) of this section, in the first year and all subsequent years in which substantial PCT Payments relating to the Trigger PCT were required to be paid; and

(*iii*) The amount of those PCT Payments in that first year was arm's length.

(*2*) *Results not reasonably anticipated.* The differential between the AERR and the nearest bound of the PRRR is due to extraordinary events beyond the control of the controlled participants that could not reasonably have been anticipated as of the date of the Trigger PCT.

(*3*) *Reduced AERR does not cause Periodic Trigger.* The Periodic Trigger would not have occurred had the PCT Payor's divisional profits or losses used to calculate its PVTP both taken into account expenses on account of operating cost contributions and routine platform contributions, and excluded those profits or losses attributable to the PCT Payor's routine contributions to its exploitation of cost shared intangibles, nonroutine contributions to the CSA Activity, operating cost contributions, and routine platform contributions.

(*4*) *Increased AERR does not cause Periodic Trigger*—(*i*) The Periodic Trigger would not have occurred had the divisional profits or losses of the PCT Payor used to calculate its PVTP included its reasonably anticipated divisional profits or losses after the Adjustment Year from the CSA Activity, including from its routine contributions, its operating cost contributions, and its nonroutine contributions to that activity, and had the cost contributions and PCT Payments of the PCT Payor used to calculate its PVI included its reasonably anticipated cost contributions and PCT Payments after the Adjustment Year. The reasonably anticipated amounts in the previous sentence are determined based on all information available as of the Determination Date.

(*ii*) For purposes of this paragraph (i)(6)(vi)(A)(*4*), the controlled participants may, if they wish, assume that the average yearly divisional profits or losses for all taxable years prior to and including the Adjustment Year, in which there has been substantial exploitation of cost shared intangibles resulting from the CSA (exploitation years), will continue to be earned in each year over a period of years equal to 15 minus the number of exploitation years prior to and including the Determination Date.

(B) ***Circumstances in which Periodic Trigger deemed not to occur.*** No Periodic Trigger will be deemed to have occurred at the times and in the circumstances described in paragraph (i)(6)(vi)(B)(*1*) or (*2*) of this section.

(*1*) ***10-year period.*** In any year subsequent to the 10-year period beginning with the first taxable year in which there is substantial exploitation of cost shared intangibles resulting from the CSA, if the AERR determined is within the PRRR for each year of such 10-year period.

(*2*) ***5-year period.*** In any year of the 5-year period beginning with the first taxable year in which there is substantial exploitation of cost shared intangibles resulting from the CSA, if the AERR falls below the lower bound of the PRRR.

(vii) *Examples.* The following examples illustrate the rules of this paragraph (i)(6):

> *Example 1.* (i) For simplicity of calculation in this *Example 1,* all financial flows are assumed to occur at the beginning of the year. At the beginning of Year 1,

USP, a publicly traded U.S. company, and FS, its wholly-owned foreign subsidiary, enter into a CSA to develop new technology for cell phones. USP has a platform contribution, the rights for an in-process technology that when developed will improve the clarity of calls, for which compensation is due from FS. FS has no platform contributions to the CSA, no operating contributions, and no operating cost contributions. USP and FS agree to fixed PCT payments of $40 million in Year 1 and $10 million per year for Years 2 through 10. At the beginning of Year 1, the weighted average cost of capital of the controlled group that includes USP and FS is 15%. In Year 9, the Commissioner audits Years 5 through 7 of the CSA and considers whether any periodic adjustments should be made. USP and FS have substantially complied with the documentation requirements of paragraph (k) of this section.

(ii) FS experiences the results reported in the following table from its participation in the CSA through Year 7. In the table, all present values (PV) are reported as of the CSA Start Date, which is the same as the date of the PCT (and reflect a 15% discount rate as discussed in paragraph (iii) of this *Example 1*). Thus, in any year the present value of the cumulative investment is PVI and of the cumulative divisional profit or loss is PVTP. All amounts in this table and the tables that follow are reported in millions of dollars and cost contributions are referred to as “CCs” (for simplicity of calculation in this *Example 1,* all financial flows are assumed to occur at the beginning of the year).

a	b	c	d	e	f	g	h
Year	Sales	Non CC costs	CCs	PCT payments	Investment (d + e)	Divisional profit or loss (b-c)	AERR (PVTP/PVI) (g/f)
1	0	0	15	40	55	0	
2	0	0	17	10	27	0	
3	0	0	18	10	28	0	
4	705	662	20	10	30	46	
5	886	718	22	10	32	168	
6	1,113	680	24	10	34	433	
7	1,179	747	27	10	37	432	
PV through Year 5	970	846	69	69	138	124	0.90
PV through Year 6	1,523	1,184	81	74	155	340	2.20
PV through Year 7	2,033	1,507	93	78	171	526	3.09

(iii) Because USP is publicly traded in the United States and is a member of the controlled group to which FS (the PCT Payor) belongs, for purposes of calculating the AERR for FS, the present values of its PVTP and PVI are determined using an ADR of 15%, the weighted average cost of capital of the controlled group. (It is assumed that no other rate was determined or established, under paragraph (i)(6)(iv)(B) of this section, to better reflect the relevant degree of risk.) At a 15% discount rate, the PVTP, calculated as of Year 1, and based on actual profits realized by FS through Year 7 from exploiting the new cell phone technology developed by the CSA, is $526 million. The PVI, based on FS's cost contributions and its PCT Payments, is $171 million. The AERR for FS is equal to its PVTP divided by its PVI, $526 million/$171 million, or 3.09. There is a Periodic Trigger because FS's AERR of 3.09 falls outside the PRRR of .67 to 1.5, the applicable PRRR for controlled participants complying with the documentation requirements of this section.
(iv) At the time of the Determination Date, it is determined that the first Adjustment Year in which a Periodic Trigger occurred was Year 6, when the AERR of FS was determined to be 2.20. It is also determined that for Year 6 none of the exceptions to periodic adjustments described in paragraph (i)(6)(vi) of this section applies. The Commissioner exercises its discretion under paragraph (i)(6)(i) of this section to make periodic adjustments using Year 6 as the Adjustment Year. Therefore, the arm's length PCT Payments from FS to USP shall be determined for each taxable year using the adjusted residual profit split method described in paragraphs (g)(7) and (i)(6)(v)(B) of this section. Periodic adjustments will be made for each year to the extent the PCT Payments actually made by FS differ from the PCT Payment calculation under the adjusted residual profit split method.

(v) It is determined, as of the Determination Date, that the cost shared intangibles will be exploited through Year 10. FS's return for routine contributions (determined by the Commissioner, based on the return for

comparable functions undertaken by comparable uncontrolled companies, to be 8% of non-CC costs), and its actual and projected results, are described in the following table.

a	b	c	d	e	f	g
Year	**Sales**	**Non-CC costs**	**Divisional profit or loss (b-c)**	**CCs**	**Routing return**	**Residual proift (d-e-f)**
1	0	0	0	15	0	−15
2	0	0	0	17	0	−17
3	0	0	0	18	0	−18
4	705	662	43	20	53	−30
5	886	718	168	22	57	89
6	1,113	680	433	24	54	355
7	1,179	747	432	27	60	345
8	1,238	822	416	29	66	321
9	1,300	894	406	32	72	302
10	1,365	974	391	35	78	278
Cumulative PV through Year 10 as of CSA Start Date	3,312	2,385	927	124	191	612

(vi) The periodic adjustments are calculated in a series of steps set out in paragraph (i)(6)(v)(A) of this section. First, a lump sum for the PCT Payment is determined using the adjusted residual profit split method. Under the method, based on the considerations discussed in paragraph (g)(2)(v) of this section, the appropriate discount rate is 15% per year. The nonroutine residual divisional profit or loss described in paragraph (g)(7)(iii)(B) of this section is $612 million. Further, under paragraph (g)(7)(iii)(C) of this section, the entire nonroutine residual divisional profit constitutes the PCT Payment because only USP has nonroutine contributions.

(vii) In step two, the first step result ($612 million) is converted into a level royalty rate based on the reasonably anticipated divisional profit or losses of the CSA Activity, the PV of which is reported in the table above (net PV of divisional profit or loss for Years 1 through 10 is $927 million). Consequently, the step two result is a level royalty rate of 66.0% ($612/$927) of the divisional profit in Years 1 through 10.

(viii) In step three, the Commissioner calculates the PCT Payments due through Year 6 by applying the step two royalty rate to the actual divisional profits for each year and then determines the aggregate PV of these PCT Payments as of the CSA Start Date ($224 million as reported in the following table). In step four, the PCT Payments actually made through Year 6 are similarly converted to PV as of the CSA Start Date ($74 million) and subtracted from the amount determined in step three ($224 million—$74 million = $150 million). That difference of $150 million, representing a net PV as of the CSA Start Date, is then converted to a nominal amount, as of the Adjustment Year, of equivalent present value (again using a discount rate of 15%). That nominal amount is $302 million (not shown in the table), and is the periodic adjustment in Year 6.

a	b	c	d	e
Year	**Divisional profit**	**Royalty rate**	**Nominal royalty due under adjusted RPSM (b*c)**	**Nominal payments made**
Year 1	0	66.0	$0	$40
Year 2	0	66.0	0	10
Year 3	0	66.0	0	10
Year 4	43	66.0	28	10
Year 5	168	66.0	111	10
Year 6	433	66.0	286	10
Cumulative PV as of Year 1			224	74

(ix) Under step five, the royalties due from FS to USP for Year 7 (the year after the Adjustment Year) through Year 9 (the year including the Determination Date) are determined. (These determinations are made for Years 8 and 9 after the divisional profit for those years becomes available.) For each year, the periodic adjustment is a PCT Payment due in addition to the $10 million PCT Payment that must otherwise be paid under the CSA as described in paragraph (i) of this *Example 1*. That periodic adjustment is calculated as the product of the step two royalty rate and the divisional profit, minus the $10 million that was otherwise paid for that year. The calculations are shown in the following

table:

a	b	c	d	e	f
Year	Divisional profit	Royalty rate	Royalty due (b*c)	PCT Payments otherwise paid	Periodic adjustment d-e)
7	432	66.0%	$285	$10	$275
8	416	66.0	275	10	265
9	406	66.0	268	10	258

(x) Under step six, the periodic adjustment for Year 10 (the only exploitation year after the year containing the Determination Date) will be determined by applying the step two royalty rate to the divisional profit. This periodic adjustment is a PCT Payment payable from FS to USP, and is in lieu of the $10 payment otherwise due. The calculations are shown in the following table, based on a divisional profit of $391 million. USP and FS experienced the following results in Year 10.

Year	Divisional profit	Royalty rate	Royalty due	PCT payment called for under original agreement but not made	Periodic adjustment
10	391	66.0%	$258	$10 (not paid)	$258

Example 2. The facts are the same as in paragraphs (i) through (iii) of *Example 1.* At the time of the Determination Date, it is determined that the first Adjustment Year in which a Periodic Trigger occurred was Year 6, when the AERR of FS was determined to be 2.73. Upon further investigation as to what may have caused the high return in FS's market, the Commissioner learns that, in Years 4 through 6, USP's leading competitors experienced severe, unforeseen disruptions in their supply chains resulting in a significant increase in USP's and FS's market share for cell phones. Further analysis determines that without this unforeseen occurrence the Periodic Trigger would not have occurred. Based on paragraph (i)(6)(vi)(A)(2) of this section, the Commissioner determines to his satisfaction that no adjustments are warranted.

Example 3. (i) USP, a U.S. corporation, and its wholly-owned foreign subsidiaries FS1, FS2, and FS3 enter into a CSA at the start of Year 1 to develop version 2.0 of a computer program. USP makes a platform contribution, version 1.0 of the program (upon which version 2.0 will be based), for which compensation is due from FS1, FS2, and FS3. None of the foreign subsidiaries makes any platform contributions.

(ii) In Year 6, the Commissioner audits Years 3 through 5 of the CSA and considers whether any periodic adjustments should be made. At the time of the Determination Date, the Commissioner determines that the first Adjustment Year in which a Periodic Trigger occurred was Year 3, and further determines that none of the exceptions to periodic adjustments described in paragraph (i)(6)(vi) of this section applies. The Commissioner exercises his discretion under paragraph (i)(6)(i) of this section to make periodic adjustments using Year 3 as the Adjustment Year. Therefore, the arm's length PCT Payments from FS1, FS2, and FS3 to USP shall be determined using the adjusted residual profit split method described in paragraphs (g)(7)(v)(B) and (i)(6)(v)(B) of this section. Periodic adjustments will be made for each year to the extent the PCT Payments actually made by FS1, FS2, and FS3 differ from the PCT Payment calculation under the adjusted residual profit split method.

(iii) The periodic adjustments are calculated in a series of steps set out in paragraph (i)(6)(v)(A) of this section. First, a lump sum for the PCT Payments is determined using the adjusted residual profit split method. The following results are calculated (based on actual results for years for which actual results are available and projected results for all years thereafter) in order to apply the adjusted residual profit split method (it is determined that the cost shared intangibles will be exploited through Year 7, so the results reported in the following table are cumulative values through Year 7):

Participant	Divisional profits (cumulative PV through year 7 as of the CSA start date)	Residual profits (cumulative PV through year 7 as of the CSA start date)
FS1	$667	$314
FS2	271	159
FS3	592	295

Because only USP had nonroutine contributions, under paragraph (g)(7)(iii)(C) of this section, the entire nonroutine residual divisional profit constitutes the PCT Payment owed to USP. Therefore, the present values (as of the CSA Start Date) of the PCT Payments owed are as follows:

PCT Payment owed from FS1 to USP: $314 million

PCT Payment owed from FS2 to USP: $159 million

PCT Payment owed from FS3 to USP: $295 million

Pursuant to paragraph (i)(6)(v)(A) of this section, the steps in paragraphs (i)(6)(v)(A)(2) through (7) of this section are performed separately for the PCT Payments that are owed to USP by each of FS1, FS2, and FS3.

(iv) First, the steps are performed with respect to FS1. In step two, the first step result ($314 million) is converted into a level royalty rate based on FS1's reasonably anticipated divisional profits or losses through Year 7 (the PV of which is $667 million). Consequently, the step two result is a level royalty rate of 47.1% ($314/$667) of the divisional profits in Years 1 through 7. In step three, the Commissioner calculates the PCT Payments due through Year 3 (the Adjustment Year) by applying the step two royalty rate (47.1%) to FS1's actual divisional profits for each year up to and including Year 3 and then determining the aggregate PV of these PCT Payments as of Year 3. In step four, the PCT Payments actually made by FS1 to USP through Year 3 are similarly converted to a PV as of Year 3 and subtracted from the amount determined in step three. That difference is the periodic adjustment in Year 3 with respect to the PCT Payments made for Years 1 through 3 from FS1 to USP. Under step five, the royalties due from FS1 to USP for Year 4 (the year after the Adjustment Year) through Year 6 (the year including the Determination Date) are determined. The periodic adjustment for each of these years is calculated as the product of the step two royalty rate and the divisional profit for that year, minus any actual PCT Payment made by FS1 to USP in that year. The periodic adjustment for each such year is a PCT Payment due in addition to the PCT Payment from FS1 to USP that was already made under the CSA. Under step six, the periodic adjustment for Year 7 (the only exploitation year after the year containing the Determination Date) will be determined by applying the step two royalty rate to FS1's divisional profit for that year. This periodic adjustment for Year 7 is a PCT Payment payable from FS1 to USP and is in lieu of any PCT Payment from FS1 to USP otherwise due.
(v) Next, the steps in paragraphs (i)(6)(v)(A)(2) through (7) of this section are performed with respect to FS2. In step two, the first step result ($159 million) is converted into a level royalty rate based on FS2's reasonably anticipated divisional profits or losses through Year 7 (the PV of which is $271 million). Consequently, the step two result is a level royalty rate of 58.7% ($159/$271) of the divisional profits in Years 1 through 7. In step three, the Commissioner calculates the PCT Payments due through Year 3 (the Adjustment Year) by applying the step two royalty rate (58.7%) to FS2's actual divisional profits for each year up to and including Year 3 and then determining the aggregate PV of these PCT Payments as of Year 3. In step four, the PCT Payments actually made by FS2 to USP through Year 3 are similarly converted to a PV as of Year 3 and subtracted from the amount determined in step three. That difference is the periodic adjustment in Year 3 with respect to the PCT Payments made for Years 1 through 3 from FS2 to USP. Under step five, the royalties due from FS2 to USP for Year 4 (the year after the Adjustment Year) through Year 6 (the year including the Determination Date) are determined. The periodic adjustment for each of these years is calculated as the product of the step two royalty rate and the divisional profit for that year,

minus any actual PCT Payment made by FS2 to USP in that year. The periodic adjustment for each such year is a PCT Payment due in addition to the PCT Payment from FS2 to USP that was already made under the CSA. Under step six, the periodic adjustment for Year 7 (the only exploitation year after the year containing the Determination Date) will be determined by applying the step two royalty rate to FS2's divisional profit for that year. This periodic adjustment for Year 7 is a PCT Payment payable from FS2 to USP and is in lieu of any PCT Payment from FS2 to USP otherwise due.

(vi) Finally, the steps in paragraphs (i)(6)(v)(A)(2) through (7) of this section are performed with respect to FS3. In step two, the first step result ($295 million) is converted into a level royalty rate based on FS3's reasonably anticipated divisional profits or losses through Year 7 (the PV of which is $592 million). Consequently, the step two result is a level royalty rate of 49.8% ($295/$592) of the divisional profits in Years 1 through 7. In step three, the Commissioner calculates the PCT Payments due through Year 3 (the Adjustment Year) by applying the step two royalty rate (49.8%) to FS3's actual divisional profits for each year up to and including Year 3 and then determining the aggregate PV of these PCT Payments as of Year 3. In step four, the PCT Payments actually made by FS3 to USP through Year 3 are similarly converted to a PV as of Year 3 and subtracted from the amount determined in step three. That difference is the periodic adjustment in Year 3 with respect to the PCT Payments made for Years 1 through 3 from FS3 to USP. Under step five, the royalties due from FS3 to USP for Year 4 (the year after the Adjustment Year) through Year 6 (the year including the Determination Date) are determined. The periodic adjustment for each of these years is calculated as the product of the step two royalty rate and the divisional profit for that year, minus any actual PCT Payment made by FS3 to USP in that year. The periodic adjustment for each such year is a PCT Payment due in addition to the PCT Payment from FS3 to USP that was already made under the CSA. Under step six, the periodic adjustment for Year 7 (the only exploitation year after the year containing the Determination Date) will be determined by applying the step two royalty rate to FS3's divisional profit for that year. This periodic adjustment for Year 7 is a PCT Payment payable from FS3 to USP and is in lieu of any PCT Payment from FS3 to USP otherwise due.

(j) ***Definitions and special rules*** —

(1) ***Definitions*** —

(i) ***In general.*** For purposes of this section—

Term	Definition	Main cross references
Acquisition price		§ 1.482-7(g)(5)(i).

Term	Definition	Main cross references
Adjusted acquisition price		§ 1.482-7(g)(5)(iii).
Adjusted average market capitalization		§ 1.482-7(g)(6)(iv).
Adjusted benefit shares		§ 1.482-7(i)(2)(ii)(A).
Adjusted RPSM		§ 1.482-7(i)(6)(v)(B).
Adjustment Year		§ 1.482-7(i)(6)(i).
ADR		§ 1.482-7(i)(6)(iv).
AERR		§ 1.482-7(i)(6)(iii).
Applicable Method		§ 1.482-7(g)(2)(ix)(A).
Average market capitalization		§ 1.482-7(g)(6)(iii).
Benefits	*Benefits* mean the sum of additional revenue generated, plus cost savings, minus any cost increases from exploiting cost shared intangibles.	§ 1.482-7(e)(1)(i).
Capability variation		§ 1.482-7(f)(3).
Change in participation under a CSA		§ 1.482-7(f).
Consolidated group		§ 1.482-7(j)(2)(i).
Contingent payments		§ 1.482-7(h)(2)(i)(B).
Controlled participant	*Controlled participant* means a controlled taxpayer, as defined under § 1.482-1(i)(5), that is a party to the contractual agreement that underlies the CSA, and that reasonably anticipates that it will derive benefits, as defined in paragraph (e)(1)(i) of this section, from exploiting one or more cost shared intangibles.	§ 1.482-7(a)(1).
Controlled transfer of interests		§ 1.482-7(f)(2).
Cost		§ 1.482-7(d)(4).

Term	Definition	Main cross references
contribution		
Cost shared intangible	*Cost shared intangible* means any intangible, within the meaning of § 1.482-4(b), that is developed by the IDA, including any portion of such intangible that reflects a platform contribution. Therefore, an intangible developed by the IDA is a cost shared intangible even though the intangible was not always or was never a reasonably anticipated cost shared intangible.	§ 1.482-7(b).
Cost sharing alternative		§ 1.482-7(g)(4)(i)(B).
Cost sharing arrangement or CSA		§ 1.482-7(a), (b).
Cost sharing transactions or CSTs		§ 1.482-7(a)(1), (b)(1)(i).
Cross operating contributions	A cross operating contribution is any resource or capability or right, other than a platform contribution, that a controlled participant has developed, maintained, or acquired prior to the CSA Start Date, or subsequent to the CSA start date by means other than operating cost contributions or cost contributions, that is reasonably anticipated to contribute to the CSA Activity within another controlled participant's division.	§ 1.482-7(a)(3)(iii), (g)(2)(iv).
CSA Activity	*CSA Activity* is the activity of developing and exploiting cost shared intangibles.	§ 1.482-7(c)(2)(i).
CSA Start Date	The *CSA Start Date* is the earlier of the date of the CSA contract or the first occurrence of any IDC to which the CSA applies, in accordance with § 1.482-7(k)(1)(iii).	§ 1.482-7(i)(6)(iii)(B) and (k)(1)(ii) and (iii).
CST Payments		§ 1.482-7(b)(1).
Date of PCT		§ 1.482-7(b)(3).
Determination Date		§ 1.482-7(i)(6)(i).
Differential income stream		§ 1.482-7(g)(4)(vi)(F)(2).
Division	*Division* means the territory or other division that serves as the basis of the division of interests under the CSA in the cost shared intangibles pursuant to § 1.482-7(b)(4).	See definitions of divisional profit or loss, operating contribution, and operating cost contribution.
Divisional		§ 1.482-7(b)(1)(iii),

Term	Definition	Main cross references
interest		(b)(4).
Divisional profit or loss	*Divisional profit or loss* means the operating profit or loss as separately earned by each controlled participant in its division from the CSA Activity, determined before any expense (including amortization) on account of cost contributions, operating cost contributions, routine platform and operating contributions, nonroutine contributions (including platform and operating contributions), and tax.	§ 1.482-7(g)(4)(iii).
Fixed payments		§ 1.482-7(h)(2)(i)(A).
Implied discount rate		§ 1.482-7(g)(2)(v)(B)(*2*).
IDC share		§ 1.482-7(d)(4).
Input parameters		§ 1.482-7(g)(2)(ix)(B).
Intangible development activity or IDA		§ 1.482-7(d)(1).
Intangible development costs or IDCs		§ 1.482-7(a)(1), (d)(1).
Licensing alternative		§ 1.482-7(g)(4)(i)(C).
Licensing payments	*Licensing payments* means payments pursuant to the licensing obligations under the licensing alternative.	§ 1.482-7(g)(4)(iii).
Make-or-sell rights		§ 1.482-7(c)(4), (g)(2)(iv).
Market-based input parameter		§ 1.482-7(g)(2)(ix)(B).
Market returns for routine contributions	*Market returns for routine contributions* means returns determined by reference to the returns achieved by uncontrolled taxpayers engaged in activities similar to the relevant business activity in the controlled participant's division, consistent with the methods described in §§ 1.482-3, 1.482-4, 1.482-5, or § 1.482-9(c)	§ 1.482-7(g)(4), (g)(7).
Method payment form		§ 1.482-7(h)(3).
Nonroutine contributions	*Nonroutine contributions* means a controlled participant's contributions to the relevant business activities that are not routine contributions. Nonroutine	§ 1.482-7(g).

Term	Definition	Main cross references
	contributions ordinarily include both nonroutine platform contributions and nonroutine operating contributions used by controlled participants in the commercial exploitation of their interests in the cost shared intangibles (for example, marketing intangibles used by a controlled participant in its division to sell products that are based on the cost shared intangible).	
Nonroutine residual divisional profit or loss		§ 1.482-7(g)(7)(iii).
Operating contributions	An *operating contribution* is any resource or capability or right, other than a platform contribution, that a controlled participant has developed, maintained, or acquired prior to the CSA Start Date, or subsequent to the CSA Start Date by means other than operating cost contributions or cost contributions, that is reasonably anticipated to contribute to the CSA Activity within the controlled participant's division.	§ 1.482-7(g)(2)(ii), (g)(4)(vi)(E), (g)(7)(iii)(A) and (C).
Operating cost contributions	*Operating cost contributions* means all costs in the ordinary course of business on or after the CSA Start Date that, based on analysis of the facts and circumstances, are directly identified with, or are reasonably allocable to, developing resources, capabilities, or rights (other than reasonably anticipated cost shared intangibles) that are reasonably anticipated to contribute to the CSA Activity within the controlled participant's division.	§ 1.482-7(g)(2)(ii), (g)(4)(iii), (g)(7)(iii)(B).
PCT Payee		§ 1.482-7(b)(1)(ii).
PCT Payment		§ 1.482-7(b)(1)(ii).
PCT Payor		§ 1.482-7(b)(1)(ii), (i)(6)(i).
PCT Payor WACC		§ 1.482-7(i)(6)(iv)(D).
Periodic adjustments		§ 1.482-7(i)(6)(i).
Periodic Trigger		§ 1.482-7(i)(6)(i).
Platform contribution transaction or PCT		§ 1.482-7(a)(2), (b)(1)(ii).
Platform		§ 1.482-7(c)(1).

Term	Definition	Main cross references
contributions		
Post-tax income		§ 1.482-7(g)(2)(v)(B)(*4*), (g)(4)(i)(G).
Pre-tax income		§ 1.482-7(g)(2)(v)(B)(*4*), (g)(4)(i)(G).
Projected benefit shares		§ 1.482-7(i)(2)(ii)(A).
PRRR		§ 1.482-7(i)(6)(ii).
PVI		§ 1.482-7(i)(6)(iii)(C).
PVTP		§ 1.482-7(i)(6)(iii)(B).
Reasonably anticipated benefits	A controlled participant's *reasonably anticipated benefits* mean the benefits that reasonably may be anticipated to be derived from exploiting cost shared intangibles. For purposes of this definition, benefits mean the sum of additional revenue generated, plus cost savings, minus any cost increases from exploiting cost shared intangibles.	§ 1.482-7(e)(1).
Reasonably anticipated benefits or RAB shares		§ 1.482-7(a)(1), (e)(1).
Reasonably anticipated cost shared intangible		§ 1.482-7(d)(1)(ii).
Relevant business activity		§ 1.482-7(g)(7)(i).
Routine contributions	*Routine contributions* means a controlled participant's contributions to the relevant business activities that are of the same or similar kind to those made by uncontrolled taxpayers involved in similar business activities for which it is possible to identify market returns. Routine contributions ordinarily include contributions of tangible property, services and intangibles that are generally owned by uncontrolled taxpayers engaged in similar activities. A functional analysis is required to identify these contributions according to the functions performed, risks assumed, and resources employed by each of the controlled participants.	§ 1.482-7(g)(4), (g)(7).
Routine platform and		§ 1.482-7(g)(4)(vii), 1.482-7(g)(7)(iii)(C)(*4*).

Term	Definition	Main cross references
operating contributions, and net routine platform and operating contributions		
Specified payment form		§ 1.482-7(h)(3).
Stock-based compensation		§ 1.482-7(d)(3).
Stock options		§ 1.482-7(d)(3)(i).
Subsequent PCT		§ 1.482-7(g)(2)(viii).
Target		§ 1.482-7(g)(5)(i).
Tax rate	Reasonably anticipated effective tax rate with respect to the pre-tax income to which the tax rate is being applied. For example, under the income method, this rate would be the reasonably anticipated effective tax rate of the PCT Payor or PCT Payee under the cost sharing alternative or the licensing alternative, as appropriate.	§ 1.482-7(g)(2)(v)(B)(*4*)(*ii*), (g)(4)(i)(G).
Trigger PCT		§ 1.482-7(i)(6)(i).
Variable input parameter		§ 1.482-7(g)(2)(ix)(C).
WACC	*WACC* means weighted average cost of capital.	§ 1.482-7(i)(6)(iv)(D).

(ii) ***Examples.*** The following examples illustrate certain definitions in paragraph (j)(1)(i) of this section:

Example 1. Controlled participant. Foreign Parent (FP) is a foreign corporation engaged in the extraction of a natural resource. FP has a U.S. subsidiary (USS) to which FP sells supplies of this resource for sale in the United States. FP enters into a CSA with USS to develop a new machine to extract the natural resource. The machine uses a new extraction process that will be patented in the United States and in other countries. The CSA provides that USS will receive the rights to exploit the machine in the extraction of the natural resource in the United States, and FP will receive the rights in the rest of the world. This resource does not, however, exist in the United States. Despite the fact that USS has received the right to exploit this process in the United States, USS is not a controlled participant because it will not derive a benefit from exploiting the intangible developed under the CSA.

Example 2. Controlled participants. (i) U.S. Parent (USP), one foreign subsidiary (FS), and a second foreign subsidiary constituting the group's research arm (R + D)

enter into a CSA to develop manufacturing intangibles for a new product line A. USP and FS are assigned the exclusive rights to exploit the intangibles respectively in the United States and the rest of the world, where each presently manufactures and sells various existing product lines. R + D is not assigned any rights to exploit the intangibles. R + D's activity consists solely in carrying out research for the group. It is reliably projected that the RAB shares of USP and FS will be $66^{2}/_{3}$% and $33^{1}/_{3}$%, respectively, and the parties' agreement provides that USP and FS will reimburse $66^{2}/_{3}$% and $33^{1}/_{3}$%, respectively, of the IDCs incurred by R + D with respect to the new intangible.

(ii) R + D does not qualify as a controlled participant within the meaning of paragraph (j)(1)(i) of this section, because it will not derive any benefits from exploiting cost shared intangibles. Therefore, R + D is treated as a service provider for purposes of this section and must receive arm's length consideration for the assistance it is deemed to provide to USP and FS, under the rules of paragraph (a)(3) of this section and §§ 1.482-4(f)(3)(iii) and (4), and 1.482-9, as appropriate. Such consideration must be treated as IDCs incurred by USP and FS in proportion to their RAB shares (that is, $66^{2}/_{3}$% and $33^{1}/_{3}$%, respectively). R + D will not be considered to bear any share of the IDCs under the arrangement.

Example 3. Cost shared intangible, reasonably anticipated cost shared intangible. U.S. Parent (USP) has developed and currently exploits an antihistamine, XY, which is manufactured in tablet form. USP enters into a CSA with its wholly-owned foreign subsidiary (FS) to develop XYZ, a new improved version of XY that will be manufactured as a nasal spray. Work under the CSA is fully devoted to developing XYZ, and XYZ is developed. During the development period, XYZ is a reasonably anticipated cost shared intangible under the CSA. Once developed, XYZ is a cost shared intangible under the CSA.

Example 4. Cost shared intangible. The facts are the same as in *Example 3,* except that in the course of developing XYZ, the controlled participants by accident discover ABC, a cure for disease D. ABC is a cost shared intangible under the CSA.

Example 5. Reasonably anticipated benefits. Controlled parties A and B enter into a cost sharing arrangement to develop product and process intangibles for an already existing Product P. Without such intangibles, A and B would each reasonably anticipate revenue, in present value terms, of $100M from sales of Product P until it became obsolete. With the intangibles, A and B each reasonably anticipate selling the same number of units each year, but reasonably anticipate that the price will be higher. Because the particular product intangible is more highly regarded in A's market, A reasonably anticipates an increase of $20M in present value revenue from the product intangible, while B reasonably anticipates only an increase of $10M. Further, A and B each reasonably anticipate spending an extra $5M present value in production costs to include the feature embodying the product intangible. Finally, A and B each reasonably anticipate saving $2M present value in production costs by using the process intangible. A and B reasonably anticipate no other economic effects from exploiting the cost shared intangibles. A's reasonably anticipated

benefits from exploiting the cost shared intangibles equal its reasonably anticipated increase in revenue ($20M) plus its reasonably anticipated cost savings ($2M) minus its reasonably anticipated increased costs ($5M), which equals $17M. Similarly, B's reasonably anticipated benefits from exploiting the cost shared intangibles equal its reasonably anticipated increase in revenue ($10M) plus its reasonably anticipated cost savings ($2M) minus its reasonably anticipated increased costs ($5M), which equals $7M. Thus A's reasonably anticipated benefits are $17M and B's reasonably anticipated benefits are $7M.

(2) *Special rules* —

(i) ***Consolidated group.*** For purposes of this section, all members of the same consolidated group shall be treated as one taxpayer. For these purposes, the term *consolidated group* means all members of a group of controlled entities created or organized within a single country and subjected to an income tax by such country on the basis of their combined income.

(ii) ***Trade or business.*** A participant that is a foreign corporation or nonresident alien individual will not be treated as engaged in a trade or business within the United States solely by reason of its participation in a CSA. See generally § 1.864-2(a).

(iii) ***Partnership.*** A CSA, or an arrangement to which the Commissioner applies the rules of this section, will not be treated as a partnership to which the rules of subchapter K of the Internal Revenue Code apply. See § 301.7701-1(c) of this chapter.

(3) *Character* —

(i) ***CST Payments.*** CST Payments generally will be considered the payor's costs of developing intangibles at the location where such development is conducted. For these purposes, IDCs borne directly by a controlled participant that are deductible are deemed to be reduced to the extent of any CST Payments owed to it by other controlled participants pursuant to the CSA. Each cost sharing payment received by a payee will be treated as coming pro rata from payments made by all payors and will be applied pro rata against the deductions for the taxable year that the payee is allowed in connection with the IDCs. Payments received in excess of such deductions will be treated as in consideration for use of the land and tangible property furnished for purposes of the CSA by the payee. For purposes of the research credit determined under section 41, CST Payments among controlled participants will be treated as provided for intra-group transactions in § 1.41-6(i). Any payment made or received by a taxpayer pursuant to an arrangement that the Commissioner determines not to be a CSA will be subject to the provisions of §§ 1.482-1 through 1.482-6 and 1.482-9. Any payment that in substance constitutes a cost sharing payment will be treated as such for purposes of this section, regardless of its characterization under foreign law.

(ii) ***PCT Payments.*** A PCT Payor's payment required under paragraph (b)(1)(ii) of this section is deemed to be reduced to the extent of any payments owed to it under such paragraph from other controlled participants. Each PCT Payment received by a PCT Payee will be treated as coming pro rata out of payments made by all PCT Payors. PCT Payments will be characterized consistently with the designation of the type of transaction pursuant to paragraphs (c)(3) and (k)(2)(ii)(H) of this section. Depending on such designation, such payments will be treated as either consideration for a transfer of an interest in intangible property or for services.

(iii) ***Examples.*** The following examples illustrate this paragraph (j)(3):

Example 1. U.S. Parent (USP) and its wholly owned Foreign Subsidiary (FS) form a CSA to develop a miniature widget, the Small R. Based on RAB shares, USP agrees to bear 40% and FS to bear 60% of the costs incurred during the term of the agreement. The principal IDCs are operating costs incurred by FS in Country Z of 100X annually, and costs incurred by USP in the United States also of 100X annually. Of the total costs of 200X, USP's share is 80X and FS's share is 120X so that FS must make a payment to USP of 20X. The payment will be treated as a reimbursement of 20X of USP's costs in the United States. Accordingly, USP's Form 1120 will reflect an 80X deduction on account of activities performed in the United States for purposes of allocation and apportionment of the deduction to source. The Form 5471 "Information Return of U.S. Persons With Respect to Certain Foreign Corporations" for FS will reflect a 100X deduction on account of activities performed in Country Z and a 20X deduction on account of activities performed in the United States.

Example 2. The facts are the same as in *Example 1,* except that the 100X of costs borne by USP consist of 5X of costs incurred by USP in the United States and 95X of arm's length rental charge, as described in paragraph (d)(1)(iii) of this section, for the use of a facility in the United States. The depreciation deduction attributable to the U.S. facility is 7X. The 20X net payment by FS to USP will first be applied in reduction pro rata of the 5X deduction for costs and the 7X depreciation deduction attributable to the U.S. facility. The 8X remainder will be treated as rent for the U.S. facility.

Example 3. (i) Four members (A, B, C, and D) of a controlled group form a CSA to develop the next generation technology for their business. Based on RAB shares, the participants agree to bear shares of the costs incurred during the term of the agreement in the following percentages: A 40%; B 15%; C 25%; and D 20%. The arm's length values of the platform contributions they respectively own are in the following amounts for the taxable year: A 80X; B 40X; C 30X; and D 30X. The provisional (before offsets) and final PCT Payments among A, B, C, and D are shown in the table as follows:
(All amounts stated in X's)

	A	B	C	D
Payments	<40>	<21>	<37.5>	<30>
Receipts	48	34	22.5	24
Final	8	13	<15>	<6>

(ii) The first row/first column shows A's provisional PCT Payment equal to the product of 100X (sum of 40X, 30X, and 30X) and A's RAB share of 40%. The second row/first column shows A's provisional PCT receipts equal to the sum of the products of 80X and B's, C's, and D's RAB shares (15%, 25%, and 20%, respectively).

> The other entries in the first two rows of the table are similarly computed. The last row shows the final PCT receipts/payments after offsets. Thus, for the taxable year, A and B are treated as receiving the 8X and 13X, respectively, pro rata out of payments by C and D of 15X and 6X, respectively.

(k) ***CSA administrative requirements.*** A controlled participant meets the requirements of this paragraph if it substantially complies, respectively, with the CSA contractual, documentation, accounting, and reporting requirements of paragraphs (k)(1) through (4) of this section.

(1) ***CSA contractual requirements*** —

(i) ***In general.*** A CSA must be recorded in writing in a contract that is contemporaneous with the formation (and any revision) of the CSA and that includes the contractual provisions described in this paragraph (k)(1).

(ii) ***Contractual provisions.*** The written contract described in this paragraph (k)(1) must include provisions that—

(A) List the controlled participants and any other members of the controlled group that are reasonably anticipated to benefit from the use of the cost shared intangibles, including the address of each domestic entity and the country of organization of each foreign entity;

(B) Describe the scope of the IDA to be undertaken and each reasonably anticipated cost shared intangible or class of reasonably anticipated cost shared intangibles;

(C) Specify the functions and risks that each controlled participant will undertake in connection with the CSA;

(D) Divide among the controlled participants all divisional interests in cost shared intangibles and specify each controlled participant's divisional interest in the cost shared intangibles, as described in paragraphs (b)(1)(iii) and (4) of this section, that it will own and exploit without any further obligation to compensate any other controlled participant for such interest;

(E) Provide a method to calculate the controlled participants' RAB shares, based on factors that can reasonably be expected to reflect the participants' shares of anticipated benefits, and require that such RAB shares must be updated, as described in paragraph (e)(1) of this section (see also paragraph (k)(2)(ii)(F) of this section);

(F) Enumerate all categories of IDCs to be shared under the CSA;

(G) Specify that the controlled participant must use a consistent method of accounting to determine IDCs and RAB shares, as described in paragraphs (d) and (e) of this section, respectively, and must translate foreign currencies on a consistent basis;

(H) Require the controlled participant to enter into CSTs covering all IDCs, as described in paragraph (b)(1)(i) of this section, in connection with the CSA;

(I) Require the controlled participants to enter into PCTs covering all platform contributions, as described in paragraph (b)(1)(ii) of this section, in connection with the CSA;

(J) Specify the form of payment due under each PCT (or group of PCTs) in existence at the formation (and any revision) of the CSA, including information and explanation that reasonably supports an analysis of applicable provisions of paragraph (h) of this section; and

(K) Specify the date on which the CSA is entered into (CSA Start Date) and the duration of the CSA, the conditions under which the CSA may be modified or terminated, and the consequences of a modification or termination (including consequences described under the rules of paragraph (f) of this section).

(iii) ***Meaning of contemporaneous*** —

(A) ***In general.*** For purposes of this paragraph (k)(1), a written contractual agreement is contemporaneous with the formation (or revision) of a CSA if, and only if, the controlled participants record the CSA, in its entirety, in a document that they sign and date no later than 60 days after the first occurrence of any IDC described in paragraph (d) of this section to which such agreement (or revision) is to apply.

(B) ***Example.*** The following example illustrates the principles of this paragraph (k)(1)(iii):

Example. Companies A and B, both of which are members of the same controlled group, commence an IDA on March 1, Year 1. Company A pays the first IDCs in relation to the IDA, as cash salaries to A's research staff, for the staff's work during the first week of March, Year 1. A and B, however, do not sign and date any written contractual agreement until August 1, Year 1, whereupon they execute a “Cost Sharing Agreement” that purports to be “effective as of” March 1 of Year 1. The arrangement fails the requirement that the participants record their arrangement in a written contractual agreement that is contemporaneous with the formation of a CSA. The arrangement has failed to meet the requirements set forth in paragraph (b)(2) of this section and, pursuant to paragraph (b) of this section, cannot be a CSA.

(iv) ***Interpretation of contractual provisions*** —

(A) ***In general.*** The provisions of a written contract described in this paragraph (k)(1) and of the additional documentation described in paragraph (k)(2) of this section must be clear and unambiguous. The provisions will be interpreted by reference to the economic substance of the transaction and the actual conduct of the controlled participants. See § 1.482-1(d)(3)(ii)(B) (Identifying contractual terms). Accordingly, the Commissioner may impute contractual terms in a CSA consistent with the economic substance of the CSA and may disregard contractual terms that lack economic substance. An allocation of risk between controlled participants after the outcome of such risk is known or reasonably knowable lacks economic substance. See § 1.482-1(d)(3)(iii)(B) (Identification of taxpayer that bears risk). A contractual term that is disregarded due to a lack of economic substance does not satisfy a contractual requirement set forth in this paragraph (k)(1) or documentation requirement set forth in paragraph (k)(2) of this section. See paragraph (b)(5) of this section for the treatment of an arrangement among controlled taxpayers that fails to comply with the requirements of this section.

(B) ***Examples.*** The following examples illustrate the principles of this paragraph (k)(1)(iv). In each example, it is assumed that the Commissioner will exercise the discretion granted pursuant to paragraph (b)(5)(ii) of this section to apply the provisions of this section to the arrangement that purports to be a CSA.

Example 1. The contractual provisions recorded upon formation of an arrangement that purports to be a CSA provide that PCT Payments with respect to a particular platform contribution will consist of payments contingent on sales. Contrary to the contractual provisions, the PCT Payments actually made are contingent on profits. Because the controlled participants' actual conduct is different from the contractual terms, the Commissioner may determine, based on the facts and circumstances, that—
(i) The actual payments have economic substance and, therefore, impute payment terms in the CSA consistent with the actual payments; or

(ii) The contract terms reflect the economic substance of the arrangement and, therefore, the actual payments must be adjusted to conform to the terms.

Example 2. An arrangement that purports to be a CSA provides that PCT Payments with respect to a particular platform contribution shall be contingent payments equal to 10% of sales of products that incorporate cost shared intangibles. The contract terms further provide that the controlled participants must adjust such contingent payments in accordance with a formula set forth in the terms. During the first three years of the arrangement, the controlled participants fail to make the adjustments required by the terms with respect to the PCT Payments. The Commissioner may determine, based on the facts and circumstances, that—
(i) The contingent payment terms with respect to the platform contribution do not have economic substance because the controlled participants did not act in accordance with their upfront risk allocation; or

(ii) The contract terms reflect the economic substance of the arrangement and, therefore, the actual payments must be adjusted to conform to the terms.

(2) ***CSA documentation requirements*** —

(i) ***In general.*** The controlled participants must timely update and maintain sufficient documentation to establish that the participants have met the CSA contractual requirements of paragraph (k)(1) of this section and the additional CSA documentation requirements of this paragraph (k)(2).

(ii) ***Additional CSA documentation requirements.*** The controlled participants to a CSA must timely update and maintain documentation sufficient to—

(A) Describe the current scope of the IDA and identify—

(*1*) Any additions or subtractions from the list of reasonably anticipated cost shared intangibles reported pursuant to paragraph (k)(1)(ii)(B) of this section;

(*2*) Any cost shared intangible, together with each controlled participant's interest therein; and

(*3*) Any further development of intangibles already developed under the CSA or of specified applications of such intangible which has been removed from the IDA (see paragraphs (d)(1)(ii) and (j)(1)(i) of this section for the definitions of reasonably anticipated cost shared intangible and cost shared intangible) and the steps (including any accounting classifications and allocations) taken to implement such removal;

(B) Establish that each controlled participant reasonably anticipates that it will derive benefits from exploiting cost shared intangibles;

(C) Describe the functions and risks that each controlled participant has undertaken during the term of the CSA;

(D) Provide an overview of each controlled participant's business segments, including an analysis of the economic and legal factors that affect CST and PCT pricing;

(E) Establish the amount of each controlled participant's IDCs for each taxable year under the CSA, including all IDCs attributable to stock-based compensation, as described in paragraph (d)(3) of this section (including the method of measurement and timing used in determining such IDCs, and the data, as of the date of grant, used to identify stock-based compensation with the IDA);

(F) Describe the method used to estimate each controlled participant's RAB share for each year during the course of the CSA, including—

(*1*) All projections used to estimate benefits;

(*2*) All updates of the RAB shares in accordance with paragraph (e)(1) of this section; and

(*3*) An explanation of why that method was selected and why the method provides the most reliable measure for estimating RAB shares;

(G) Describe all platform contributions;

(H) Designate the type of transaction involved for each PCT or group of PCTs;

(I) Specify, within the time period provided in paragraph (h)(2)(iii) of this section, the form of payment due under each PCT or group of PCTs, including information and explanation that reasonably supports an analysis of applicable provisions of paragraph (h) of this section;

(J) Describe and explain the method selected to determine the arm's length payment due under each PCT, including—

(*1*) An explanation of why the method selected constitutes the best method, as described in § 1.482-1(c)(2), for measuring an arm's length result;

(*2*) The economic analyses, data, and projections relied upon in developing and selecting the best method, including the source of the data and projections used;

(3) Each alternative method that was considered, and the reason or reasons that the alternative method was not selected;

(4) Any data that the controlled participant obtains, after the CSA takes effect, that would help determine if the controlled participant's method selected has been applied in a reasonable manner;

(5) The discount rate or rates, where applicable, used for purposes of evaluating PCT Payments, including information and explanation that reasonably supports an analysis of applicable provisions of paragraph (g)(2)(v) of this section;

(6) The estimated arm's length values of any platform contributions as of the dates of the relevant PCTs, in accordance with paragraph (g)(2)(ii) of this section;

(7) A discussion, where applicable, of why transactions were or were not aggregated under the principles of paragraph (g)(2)(iv) of this section;

(8) The method payment form and any conversion made from the method payment form to the specified payment form, as described in paragraph (h)(3) of this section; and

(9) If applicable under paragraph (i)(6)(iv) of this section, the WACC of the parent of the controlled group that includes the controlled participants.

(iii) ***Coordination rules and production of documents*** —

(A) ***Coordination with penalty regulations.*** See § 1.6662-6(d)(2)(iii)(D) regarding coordination of the rules of this paragraph (k) with the documentation requirements for purposes of the accuracy-related penalty under section 6662(e) and (h).

(B) ***Production of documentation.*** Each controlled participant must provide to the Commissioner, within 30 days of a request, the items described in this paragraph (k)(2) and paragraph (k)(3) of this section. The time for compliance described in this paragraph (k)(2)(iii)(B) may be extended at the discretion of the Commissioner.

(3) ***CSA accounting requirements*** —

(i) ***In general.*** The controlled participants must maintain books and records (and related or underlying data and information) that are sufficient to—

(A) Establish that the controlled participants have used (and are using) a consistent method of accounting to measure costs and benefits;

(B) Permit verification that the amount of any contingent PCT Payments due have been (and are being) properly determined;

(C) Translate foreign currencies on a consistent basis; and

(D) To the extent that the method of accounting used materially differs from U.S. generally accepted accounting principles, explain any such material differences.

(ii) ***Reliance on financial accounting.*** For purposes of this section, the controlled participants may not rely solely upon financial accounting to establish satisfaction of the accounting requirements of this paragraph (k)(3). Rather, the method of accounting must clearly reflect income. *Thor Power Tools Co.* v. *Commissioner,* 439 U.S. 522 (1979).

(4) ***CSA reporting requirements*** —

(i) ***CSA Statement.*** Each controlled participant must file with the Internal Revenue Service, in the manner described in this paragraph (k)(4), a "Statement of Controlled Participant to § 1.482-7 Cost Sharing Arrangement" (CSA Statement) that complies with the requirements of this paragraph (k)(4).

(ii) ***Content of CSA Statement.*** The CSA Statement of each controlled participant must—

(A) State that the participant is a controlled participant in a CSA;

(B) Provide the controlled participant's taxpayer identification number;

(C) List the other controlled participants in the CSA, the country of organization of each such participant, and the taxpayer identification number of each such participant;

(D) Specify the earliest date that any IDC described in paragraph (d)(1) of this section occurred; and

(E) Indicate the date on which the controlled participants formed (or revised) the CSA and, if different from such date, the date on which the controlled participants recorded the CSA (or any revision) contemporaneously in accordance with paragraphs (k)(1)(i) and (iii) of this section.

(iii) ***Time for filing CSA Statement*** —

(A) ***90-day rule.*** Each controlled participant must file its original CSA Statement with the Internal Revenue Service Ogden Campus (addressed as follows: "Attn: CSA Statements, Mail Stop 4912, Internal Revenue Service, 1973 North Rulon White Blvd., Ogden, Utah 84404-0040"), no later than 90 days after the first occurrence of an IDC to which the newly-formed CSA applies, as described in paragraph (k)(1)(iii)(A) of this section, or, in the case of a taxpayer that became a controlled participant after the formation of the CSA, no later than 90 days after such taxpayer became a controlled participant. A CSA Statement filed in accordance with this paragraph (k)(4)(iii)(A) must be dated and signed, under penalties of perjury, by an officer of the controlled participant who is duly authorized (under local law) to sign the statement on behalf of the controlled participant.

(B) ***Annual return requirement*** —(*1*) *In general.* Each controlled participant must attach to its U.S. income tax return, for each taxable year for the duration of the CSA, a copy of the original CSA Statement that the controlled participant filed in accordance with the 90-day rule of paragraph (k)(4)(iii)(A) of this section. In addition, the controlled participant must update the information reflected on the original CSA Statement annually by attaching a schedule that documents changes in such information over time.

(*2*) *Special filing rule for annual return requirement.* If a controlled participant is not required to file a U.S. income tax return, the participant must ensure that the copy or copies of the CSA Statement and any updates are attached to Schedule M of any Form 5471, any Form 5472 "Information Return of a Foreign Owned Corporation," or any Form 8865 "Return of U.S. Persons With Respect to Certain Foreign Partnerships," filed with respect to that participant.

(iv) ***Examples.*** The following examples illustrate this paragraph (k)(4). In each example, Companies A and B are members of the same controlled group.

Example 1. A and B, both of which file U.S. tax returns, agree to share the costs of developing a new chemical formula in accordance with the provisions of this section. On March 30, Year 1, A and B record their agreement in a written contract styled, "Cost Sharing Agreement." The contract applies by its terms to IDCs occurring after March 1, Year 1. The first IDCs to which the CSA applies occurred on March 15, Year 1. To comply with paragraph (k)(4)(iii)(A) of this section, A and B individually must file separate CSA Statements no later than 90 days after March 15, Year 1 (June 13, Year 1). Further, to comply with paragraph (k)(4)(iii)(B) of this section, A and B must attach copies of their respective CSA Statements to their respective Year 1 U.S. income tax returns.

Example 2. The facts are the same as in *Example 1,* except that a year has passed and C, which files a U.S. tax return, joined the CSA on May 9, Year 2. To comply with the annual filing requirement described in paragraph (k)(4)(iii)(B) of this section, A and B must each attach copies of their respective CSA Statements (as filed for Year 1) to their respective Year 2 income tax returns, along with a schedule updated appropriately to reflect the changes in information described in paragraph (k)(4)(ii) of this section resulting from the addition of C to the CSA. To comply with both the 90-day rule described in paragraph (k)(4)(iii)(A) of this section and the annual filing requirement described in paragraph (k)(4)(iii)(B) of this section, C must file a CSA Statement no later than 90 days after May 9, Year 2 (August 7, Year 2), and must attach a copy of such CSA Statement to its Year 2 income tax return.

(l) ***Effective/applicability dates.*** Except as otherwise provided in this paragraph (l), this section applies on December 16, 2011. Paragraphs (g)(2)(v)(B)(*2*), (g)(4)(vi)(F)(*2*), and (g)(4)(viii), *Example 8* of this section apply to taxable years beginning on or after December 19, 2011. Paragraphs (g)(4)(v) and (g)(4)(viii), *Example 9* apply to taxable years beginning on or after August 27, 2013.

(m) ***Transition rule*** —

(1) ***In general.*** An arrangement in existence on January 5, 2009, will be considered a CSA, as described under paragraph (b) of this section, if, prior to such date, it was a qualified cost sharing arrangement under the provisions of § 1.482-7 (as contained in the 26 CFR part 1 edition revised as of January 1, 1996, hereafter referred to as "former § 1.482-7"), but only if the written contract, as described in paragraph (k)(1) of this section, is amended, if necessary, to conform with, and only if the activities of the controlled participants substantially comply with, the provisions of this section, as modified by paragraphs (m)(2) and (m)(3) of this section, by July 6, 2009.

(2) ***Transitional modification of applicable provisions.*** For purposes of this paragraph (m), conformity and substantial compliance with the provisions of this section shall be determined with the following modifications:

(i) CSTs and PCTs occurring prior to January 5, 2009, shall be subject to the provisions of former § 1.482-7 rather than this section.

(ii) Except to the extent provided in paragraph (m)(3) of this section, PCTs that occur under a CSA that was a qualified cost sharing arrangement under the provisions of former § 1.482-7 and remained in effect on January 5, 2009, shall be subject to the periodic adjustment rules of § 1.482-4(f)(2) rather than the rules of paragraph (i)(6) of this section.

(iii) Paragraphs (b)(1)(iii) and (b)(4) of this section shall not apply.

(iv) Paragraph (k)(1)(ii)(D) of this section shall not apply.

(v) Paragraphs (k)(1)(ii)(H) and (I) of this section shall be construed as applying only to transactions entered into on or after January 5, 2009.

(vi) The deadline for recordation of the revised written contractual agreement pursuant to paragraph (k)(1)(iii) of this section shall be no later than July 6, 2009.

(vii) Paragraphs (k)(2)(ii)(G) through (J) of this section shall be construed as applying only with reference to PCTs entered into on or after January 5, 2009.

(viii) Paragraph (k)(4)(iii)(A) of this section shall be construed as requiring a CSA Statement with respect to the revised written contractual agreement described in paragraph (m)(2)(vi) of this section no later than September 2, 2009.

(ix) Paragraph (k)(4)(iii)(B) of this section shall be construed as only applying for taxable years ending after the filing of the CSA Statement described in paragraph (m)(2)(viii) of this section.

(3) ***Special rule for certain periodic adjustments.*** The periodic adjustment rules in paragraph (i)(6) of this section (rather than the rules of § 1.482-4(f)(2)) shall apply to PCTs that occur on or after the date of a material change in the scope of the CSA from its scope as of January 5, 2009. A material change in scope would include a material expansion of the activities undertaken beyond the scope of the intangible development area, as described in former § 1.482-7(b)(4)(iv). For this purpose, a contraction of the scope of a CSA, absent a material expansion into one or more lines of research and development beyond the scope of the intangible development area, does not constitute a material change in scope of the CSA. Whether a material change in scope has occurred is determined on a cumulative basis. Therefore, a series of expansions, any one of which is not a material expansion by itself, may collectively constitute a material expansion.

[T.D. 9568, 76 FR 80090, Dec. 22, 2011, as amended by T.D. 9569, 76 FR 80250, Dec. 23, 2011; 77 FR 3606, Jan. 25, 2012, 77 FR 8814, Feb. 14, 2012; T.D. 9630, 78 FR 52855, Aug. 27, 2013; 78 FR 62426, Oct. 22, 2013]

§ 1.482-8 Examples of the best method rule.

(a) ***Introduction.*** In accordance with the best method rule of § 1.482-1(c), a method may be applied in a particular case only if the comparability, quality of data, and reliability of assumptions under that method make it more reliable than any other available measure of the arm's length result. The following examples illustrate the comparative analysis required to apply this rule. As with all of the examples in these regulations, these examples are based on simplified facts, are provided solely for purposes of illustrating the type of analysis required under the relevant rule, and do not provide rules of general application. Thus, conclusions reached in these examples as to the relative reliability of methods are based on the assumed facts of the examples, and are not general conclusions concerning the relative reliability of any method.

(b) ***Examples.***

Example 1. Preference for comparable uncontrolled price method. Company A is the U.S. distribution subsidiary of Company B, a foreign manufacturer of consumer electrical appliances. Company A purchases toaster ovens from Company B for resale in the U.S. market. To exploit other outlets for its toaster ovens, Company B also sells its toaster ovens to Company C, an unrelated U.S. distributor of toaster ovens. The products sold to Company A and Company C are identical in every respect and there are no material differences between the transactions. In this case application of the CUP

method, using the sales of toaster ovens to Company C, generally will provide a more reliable measure of an arm's length result for the controlled sale of toaster ovens to Company A than the application of any other method. See §§ 1.482-1(c)(2)(i) and -3(b)(2)(ii)(A).

Example 2. Resale price method preferred to comparable uncontrolled price method. The facts are the same as in Example 1, except that the toaster ovens sold to Company A are of substantially higher quality than those sold to Company C and the effect on price of such quality differences cannot be accurately determined. In addition, in order to round out its line of consumer appliances Company A purchases blenders from unrelated parties for resale in the United States. The blenders are resold to substantially the same customers as the toaster ovens, have a similar resale value to the toaster ovens, and are purchased under similar terms and in similar volumes. The distribution functions performed by Company A appear to be similar for toaster ovens and blenders. Given the product differences between the toaster ovens, application of the resale price method using the purchases and resales of blenders as the uncontrolled comparables is likely to provide a more reliable measure of an arm's length result than application of the comparable uncontrolled price method using Company B's sales of toaster ovens to Company C.

Example 3. Resale price method preferred to comparable profits method. (i) The facts are the same as in *Example 2* except that Company A purchases all its products from Company B and Company B makes no uncontrolled sales into the United States. However, six uncontrolled U.S. distributors are identified that purchase a similar line of products from unrelated parties. The uncontrolled distributors purchase toaster ovens from unrelated parties, but there are significant differences in the characteristics of the toaster ovens, including the brandnames under which they are sold.
(ii) Under the facts of this case, reliable adjustments for the effect of the different brandnames cannot be made. Except for some differences in payment terms and inventory levels, the purchases and resales of toaster ovens by the three uncontrolled distributors are closely similar to the controlled purchases in terms of the markets in which they occur, the volume of the transactions, the marketing activities undertaken by the distributor, inventory levels, warranties, allocation of currency risk, and other relevant functions and risks. Reliable adjustments can be made for the differences in payment terms and inventory levels. In addition, sufficiently detailed accounting information is available to permit adjustments to be made for differences in accounting methods or in reporting of costs between cost of goods sold and operating expenses. There are no other material differences between the controlled and uncontrolled transactions.

(iii) Because reliable adjustments for the differences between the toaster ovens, including the trademarks under which they are sold, cannot be made, these uncontrolled transactions will not serve as reliable measures of an arm's length result under the comparable uncontrolled price method. There is, however, close functional similarity between the controlled and uncontrolled transactions and reliable adjustments have been made for material differences that would be likely to affect gross profit. Under these circumstances, the gross profit margins derived under the resale price method are less likely to be susceptible to any

unidentified differences than the operating profit measures used under the comparable profits method. Therefore, given the close functional comparability between the controlled and uncontrolled transactions, and the high quality of the data, the resale price method achieves a higher degree of comparability and will provide a more reliable measure of an arm's length result. See § 1.482-1(c) (Best method rule).

Example 4. Comparable profits method preferred to resale price method. The facts are the same as in *Example 3,* except that the accounting information available for the uncontrolled comparables is not sufficiently detailed to ensure consistent reporting between cost of goods sold and operating expenses of material items such as discounts, insurance, warranty costs, and supervisory, general and administrative expenses. These expenses are significant in amount. Therefore, whether these expenses are treated as costs of goods sold or operating expenses would have a significant effect on gross margins. Because in this case reliable adjustments can not be made for such accounting differences, the reliability of the resale price method is significantly reduced. There is, however, close functional similarity between the controlled and uncontrolled transactions and reliable adjustments have been made for all material differences other than the potential accounting differences. Because the comparable profits method is not adversely affected by the potential accounting differences, under these circumstances the comparable profits method is likely to produce a more reliable measure of an arm's length result than the resale price method. See § 1.482-1(c) (Best method rule).

Example 5. Cost plus method preferred to comparable profits method. (i) USS is a U.S. company that manufactures machine tool parts and sells them to its foreign parent corporation, FP. Four U.S. companies are identified that also manufacture various types of machine tool parts but sell them to uncontrolled purchasers.
(ii) Except for some differences in payment terms, the manufacture and sales of machine tool parts by the four uncontrolled companies are closely similar to the controlled transactions in terms of the functions performed and risks assumed. Reliable adjustments can be made for the differences in payment terms. In addition, sufficiently detailed accounting information is available to permit adjustments to be made for differences between the controlled transaction and the uncontrolled comparables in accounting methods and in the reporting of costs between cost of goods sold and operating expenses.

(iii) There is close functional similarity between the controlled and uncontrolled transactions and reliable adjustments can be made for material differences that would be likely to affect gross profit. Under these circumstances, the gross profit markups derived under the cost plus method are less likely to be susceptible to any unidentified differences than the operating profit measures used under the comparable profits method. Therefore, given the close functional comparability between the controlled and uncontrolled transactions, and the high quality of the data, the cost plus method achieves a higher degree of comparability and will provide a more reliable measure of an arm's length result. See § 1.482-1(c) (Best method rule).

Example 6. Comparable profits method preferred to cost plus method. The facts are the same as in *Example 5,* except that there are significant differences between the controlled and uncontrolled transactions in terms of the types of parts and components manufactured and the complexity of the manufacturing process. The resulting functional differences are likely to materially affect gross profit margins, but it is not possible to identify the specific differences and reliably adjust for their effect on gross profit. Because these functional differences would be reflected in differences in operating expenses, the operating profit measures used under the comparable profits method implicitly reflect to some extent these functional differences. Therefore, because in this case the comparable profits method is less sensitive than the cost plus method to the potentially significant functional differences between the controlled and uncontrolled transactions, the comparable profits method is likely to produce a more reliable measure of an arm's length result than the cost plus method. See § 1.482-1(c) (Best method rule).

Example 7. Preference for comparable uncontrolled transaction method. (i) USpharm, a U.S. pharmaceutical company, develops a new drug Z that is a safe and effective treatment for the disease zeezee. USpharm has obtained patents covering drug Z in the United States and in various foreign countries. USpharm has also obtained the regulatory authorizations necessary to market drug Z in the United States and in foreign countries.
(ii) USpharm licenses its subsidiary in country X, Xpharm, to produce and sell drug Z in country X. At the same time, it licenses an unrelated company, Ydrug, to produce and sell drug Z in country Y, a neighboring country. Prior to licensing the drug, USpharm had obtained patent protection and regulatory approvals in both countries and both countries provide similar protection for intellectual property rights. Country X and country Y are similar countries in terms of population, per capita income and the incidence of disease zeezee. Consequently, drug Z is expected to sell in similar quantities and at similar prices in both countries. In addition, costs of producing drug Z in each country are expected to be approximately the same.

(iii) USpharm and Xpharm establish terms for the license of drug Z that are identical in every material respect, including royalty rate, to the terms established between USpharm and Ydrug. In this case the district director determines that the royalty rate established in the Ydrug license agreement is a reliable measure of the arm's length royalty rate for the Xpharm license agreement. Given that the same property is transferred in the controlled and uncontrolled transactions, and that the circumstances under which the transactions occurred are substantially the same, in this case the comparable uncontrolled transaction method is likely to provide a more reliable measure of an arm's length result than any other method. See § 1.482-4(c)(2)(ii).

Example 8. Residual profit split method preferred to other methods. (i) USC is a U.S. company that develops, manufactures and sells communications equipment. EC is the European subsidiary of USC. EC is an established company that carries out extensive research and development activities and develops, manufactures and sells communications

equipment in Europe. There are extensive transactions between USC and EC. USC licenses valuable technology it has developed to EC for use in the European market but EC also licenses valuable technology it has developed to USC. Each company uses components manufactured by the other in some of its products and purchases products from the other for resale in its own market.
(ii) Detailed accounting information is available for both USC and EC and adjustments can be made to achieve a high degree of consistency in accounting practices between them. Relatively reliable allocations of costs, income and assets can be made between the business activities that are related to the controlled transactions and those that are not. Relevant marketing and research and development expenditures can be identified and reasonable estimates of the useful life of the related intangibles are available so that the capitalized value of the intangible development expenses of USC and EC can be calculated. In this case there is no reason to believe that the relative value of these capitalized expenses is substantially different from the relative value of the intangible property of USC and EC. Furthermore, comparables are identified that could be used to estimate a market return for the routine contributions of USC and EC. Based on these facts, the residual profit split could provide a reliable measure of an arm's length result.

(iii) There are no uncontrolled transactions involving property that is sufficiently comparable to much of the tangible and intangible property transferred between USC and EC to permit use of the comparable uncontrolled price method or the comparable uncontrolled transaction method. Uncontrolled companies are identified in Europe and the United States that perform somewhat similar activities to USC and EC; however, the activities of none of these companies are as complex as those of USC and EC and they do not use similar levels of highly valuable intangible property that they have developed themselves. Under these circumstances, the uncontrolled companies may be useful in determining a market return for the routine contributions of USC and EC, but that return would not reflect the value of the intangible property employed by USC and EC. Thus, none of the uncontrolled companies is sufficiently similar so that reliable results would be obtained using the resale price, cost plus, or comparable profits methods. Moreover, no uncontrolled companies can be identified that engaged in sufficiently similar activities and transactions with each other to employ the comparable profit split method.

(iv) Given the difficulties in applying the other methods, the reliability of the internal data on USC and EC, and the fact that acceptable comparables are available for deriving a market return for the routine contributions of USC and EC, the residual profit split method is likely to provide the most reliable measure of an arm's length result in this case.

Example 9. Comparable profits method preferred to profit split. (i) Company X is a large, complex U.S. company that carries out extensive research and development activities and manufactures and markets a variety of products. Company X has developed a new process

by which compact disks can be fabricated at a fraction of the cost previously required. The process is expected to prove highly profitable, since there is a large market for compact disks. Company X establishes a new foreign subsidiary, Company Y, and licenses it the rights to use the process to fabricate compact disks for the foreign market as well as continuing technical support and improvements to the process. Company Y uses the process to fabricate compact disks which it supplies to related and unrelated parties.
(ii) The process licensed to Company Y is unique and highly valuable and no uncontrolled transfers of intangible property can be found that are sufficiently comparable to permit reliable application of the comparable uncontrolled transaction method. Company X is a large, complex company engaged in a variety of activities that owns unique and highly valuable intangible property. Consequently, no uncontrolled companies can be found that are similar to Company X. Furthermore, application of the profit split method in this case would involve the difficult and problematic tasks of allocating Company X's costs and assets between the relevant business activity and other activities and assigning a value to Company X's intangible contributions. On the other hand, Company Y performs relatively routine manufacturing and marketing activities and there are a number of similar uncontrolled companies. Thus, application of the comparable profits method using Company Y as the tested party is likely to produce a more reliable measure of an arm's length result than a profit split in this case.

Example 10. Cost of services plus method preferred to other methods. (i) FP designs and manufactures consumer electronic devices that incorporate advanced technology. In year 1, FP introduces Product X, an entertainment device targeted primarily at the youth market. FP's wholly-owned, exclusive U.S. distributor, USSub, sells Product X in the U.S. market. USSub hires an independent marketing firm, Agency A, to promote Product X in the U.S. market. Agency A has successfully promoted other electronic products on behalf of other uncontrolled parties. USSub executes a one-year, renewable contract with Agency A that requires it to develop the market for Product X, within an annual budget set by USSub. In years 1 through 3, Agency A develops advertising, buys media, and sponsors events featuring Product X. Agency A receives a markup of 25% on all expenses of promoting Product X, with the exception of media buys, which are reimbursed at cost. During year 3, sales of Product X decrease sharply, as Product X is displaced by competitors' products. At the end of year 3, sales of Product X are discontinued.
(ii) Prior to the start of year 4, FP develops a new entertainment device, Product Y. Like Product X, Product Y is intended for sale to the youth market, but it is marketed under a new trademark distinct from that used for Product X. USSub decides to perform all U.S. market promotion for Product Y. USSub hires key Agency A staff members who handled the successful Product X campaign. To promote Product Y, USSub intends to use methods similar to those used successfully by Agency A to promote Product X (print advertising, media, event sponsorship, *etc.*). FP and USSub enter into a one-year, renewable agreement

concerning promotion of Product Y in the U.S. market. Under the agreement, FP compensates USSub for promoting Product Y, based on a cost of services plus markup of A%. Third-party media buys by USSub in connection with Product Y are reimbursed at cost.

(iii) Assume that under the contractual arrangements between FP and USSub, the arm's length consideration for Product Y and the trademark or other intangible property may be determined reliably under one or more transfer pricing methods. At issue in this example is the separate evaluation of the arm's length compensation for the year 4 promotional activities performed by USSub pursuant to its contract with FP.

(iv) USSub's accounting records contain reliable data that separately state the costs incurred to promote Product Y. A functional analysis indicates that USSub's activities to promote Product Y in year 4 are similar to activities performed by Agency A during years 1 through 3 under the contract with USSub. In other respects, no material differences exist in the market conditions or the promotional activities performed in year 4, as compared to those in years 1 through 3.

(v) It is possible to identify uncontrolled distributors or licensees of electronic products that perform, as one component of their business activities, promotional activities similar to those performed by USSub. However, it is unlikely that publicly available accounting data from these companies would allow computation of the comparable transactional costs or total services costs associated with the marketing or promotional activities that these entities perform, as one component of business activities. If that were possible, the comparable profits method for services might provide a reliable measure of an arm's length result. The functional analysis of the marketing activities performed by USSub in year 4 indicates that they are similar to the activities performed by Agency A in years 1 through 3 for Product X. Because reliable information is available concerning the markup on costs charged in a comparable uncontrolled transaction, the most reliable measure of an arm's length price is the cost of services plus method in § 1.482-9(e).

Example 11. CPM for services preferred to other methods. (i) FP manufactures furniture and accessories for residential use. FP sells its products to retailers in Europe under the trademark, "Moda." FP holds all worldwide rights to the trademark, including in the United States. USSub is FP's wholly-owned subsidiary in the U.S. market and the exclusive U.S. distributor of FP's merchandise. Historically, USSub dealt only with specialized designers in the U.S. market and advertised in trade publications targeted to this market. Although items sold in the U.S. and Europe are physically identical, USSub's U.S. customers generally resell the merchandise as non-branded merchandise.
(ii) FP retains an independent firm to evaluate the feasibility of selling FP's trademarked merchandise in the general wholesale and retail market in the United States. The study concludes that this segment of the U.S. market, which is not exploited by USSub, may

generate substantial profits. Based on this study, FP enters into a separate agreement with USSub, which provides that USSub will develop this market in the United States for the benefit of FP. USSub separately accounts for personnel expenses, overhead, and out-of-pocket costs attributable to the initial stage of the marketing campaign (Phase I). USSub receives as compensation its costs, plus a markup of X%, for activities in Phase I. At the end of Phase I, FP will evaluate the program. If success appears likely, USSub will begin full-scale distribution of trademarked merchandise in the new market segment, pursuant to agreements negotiated with FP at that time.

(iii) Assume that under the contractual arrangements in effect between FP and USSub, the arm's length consideration for the merchandise and the trademark or other intangible property may be determined reliably under one or more transfer pricing methods. At issue in this example is the separate evaluation of the arm's length compensation for the marketing activities conducted by USSub in years 1 and following.

(iv) A functional analysis reveals that USSub's activities consist primarily of modifying the promotional materials created by FP, negotiating media buys, and arranging promotional events. FP separately compensates USSub for all Phase I activities, and detailed accounting information is available regarding the costs of these activities. The Phase I activities of USSub are similar to those of uncontrolled companies that perform, as their primary business activity, a range of advertising and media relations activities on a contract basis for uncontrolled parties.

(v) No information is available concerning the comparable uncontrolled prices for services in transactions similar to those engaged in by FP and USSub. Nor is any information available concerning uncontrolled transactions that would allow application of the cost of services plus method. It is possible to identify uncontrolled distributors or licensees of home furnishings that perform, as one component of their business activities, promotional activities similar to those performed by USSub. However, it is unlikely that publicly available accounting data from these companies would allow computation of the comparable transactional costs or total services costs associated with the marketing or promotional activities that these entities performed, as one component of their business activities. On the other hand, it is possible to identify uncontrolled advertising and media relations companies, the principal business activities of which are similar to the Phase I activities of USSub. Under these circumstances, the most reliable measure of an arm's length price is the comparable profits method of § 1.482-9(f). The uncontrolled advertising comparables' treatment of material items, such as classification of items as cost of goods sold or selling, general, and administrative expenses, may differ from that of USSub. Such inconsistencies in accounting treatment between the uncontrolled comparables and the tested party, or among the comparables, are less important when using the ratio of operating profit to total services costs under the comparable profits method for services in § 1.482-9(f). Under this method,

the operating profit of USSub from the Phase I activities is compared to the operating profit of uncontrolled parties that perform general advertising and media relations as their primary business activity.

Example 12. Residual profit split preferred to other methods. (i) USP is a manufacturer of athletic apparel sold under the AA trademark, to which FP owns the worldwide rights. USP sells AA trademark apparel in countries throughout the world, but prior to year 1, USP did not sell its merchandise in Country X. In year 1, USP acquires an uncontrolled Country X company which becomes its wholly-owned subsidiary, XSub. USP enters into an exclusive distribution arrangement with XSub in Country X. Before being acquired by USP in year 1, XSub distributed athletic apparel purchased from uncontrolled suppliers and resold that merchandise to retailers. After being acquired by USP in year 1, XSub continues to distribute merchandise from uncontrolled suppliers and also begins to distribute AA trademark apparel. Under a separate agreement with USP, XSub uses its best efforts to promote the AA trademark in Country X, with the goal of maximizing sales volume and revenues from AA merchandise.
(ii) Prior to year 1, USP executed long-term endorsement contracts with several prominent professional athletes. These contracts give USP the right to use the names and likenesses of the athletes in any country in which AA merchandise is sold during the term of the contract. These contracts remain in effect for five years, starting in year 1. Before being acquired by USP, XSub renewed a long-term agreement with SportMart, an uncontrolled company that owns a nationwide chain of sporting goods retailers in Country X. XSub has been SportMart's primary supplier from the time that SportMart began operations. Under the agreement, SportMart will provide AA merchandise preferred shelf-space and will feature AA merchandise at no charge in its print ads and seasonal promotions. In consideration for these commitments, USP and XSub grant SportMart advance access to new products and the right to use the professional athletes under contract with USP in SportMart advertisements featuring AA merchandise (subject to approval of content by USP).

(iii) Assume that it is possible to segregate all transactions by XSub that involve distribution of merchandise acquired from uncontrolled distributors (non-controlled transactions). In addition, assume that, apart from the activities undertaken by USP and XSub to promote AA apparel in Country X, the arm's length compensation for other functions performed by USP and XSub in the Country X market in years 1 and following can be reliably determined. At issue in this *Example 12* is the application of the residual profit split analysis to determine the appropriate division between USP and XSub of the balance of the operating profits from the Country X market, that is the portion attributable to nonroutine contributions to the marketing and promotional activities.

(iv) A functional analysis of the marketing and promotional activities conducted in the Country X market, as described in this example, indicates that both USP and XSub made nonroutine contributions to the business activity. USP contributed the long-term endorsement

contracts with professional athletes. XSub contributed its long-term contractual rights with SportMart, which were made more valuable by its successful, long-term relationship with SportMart.

(v) Based on the facts and circumstances, including the fact that both USP and XSub made valuable nonroutine contributions to the marketing and promotional activities and an analysis of the availability (or lack thereof) of comparable and reliable market benchmarks, the Commissioner determines that the most reliable measure of an arm's length result is the residual profit split method in § 1.482-9(g). The residual profit split analysis would take into account both routine and nonroutine contributions by USP and XSub, in order to determine an appropriate allocation of the combined operating profits in the Country X market from the sale of AA merchandise and from related promotional and marketing activities.

Example 13. Preference for acquisition price method. (i) USP develops, manufacturers, and distributes pharmaceutical products. USP and FS, USP's wholly-owned subsidiary, enter into a CSA to develop a new oncological drug, Oncol. Immediately prior to entering into the CSA, USP acquires Company X, an unrelated U.S. pharmaceutical company. Company X is solely engaged in oncological pharmaceutical research, and its only significant resources and capabilities are its workforce and its sole patent, which is associated with Compound X, a promising molecular compound derived from a rare plant, which USP reasonably anticipates will contribute to developing Oncol. All of Company X researchers will be engaged solely in research that is reasonably anticipated to contribute to developing Oncol as well. The rights in the Compound X and the commitment of Company X's researchers to the development of Oncol are platform contributions for which compensation is due from FS as part of a PCT.
(ii) In this case, the acquisition price method, based on the lump sum price paid by USP for Company X, is likely to provide a more reliable measure of an arm's length PCT Payment due to USP than the application of any other method. See §§ 1.482-4(c)(2) and 1.482-7(g)(5)(iv)(A).

Example 14. Preference for market capitalization method. (i) Company X is a publicly traded U.S. company solely engaged in oncological pharmaceutical research and its only significant resources and capabilities are its workforce and its sole patent, which is associated with Compound Y, a promising molecular compound derived from a rare plant. Company X has no marketable products. Company X enters into a CSA with FS, a newly-formed foreign subsidiary, to develop a new oncological drug, Oncol, derived from Compound Y. Compound Y is reasonably anticipated to contribute to developing Oncol. All of Company X researchers will be engaged solely in research that is reasonably anticipated to contribute to developing Oncol under the CSA. The rights in Compound Y and the commitment of Company X's researchers are platform contributions for which compensation is due from FS as part of a PCT.

(ii) In this case, given that Company X's platform contributions covered by PCTs relate to its entire economic value, the application of the market capitalization method, based on the market capitalization of Company X, provides a reliable measure of an arm's length result for Company X's PCTs to the CSA. See §§ 1.482-4(c)(2) and 1.482-7(g)(6)(v)(A).

Example 15. Preference for market capitalization method. (i) MicroDent, Inc. (MDI) is a publicly traded company that developed a new dental surgical microscope ScopeX-1, which drastically shortens many surgical procedures. On January 1 of Year 1, MDI entered into a CSA with a wholly-owned foreign subsidiary (FS) to develop ScopeX-2, the next generation of ScopeX-1. In the CSA, divisional interests are divided on a territorial basis. The rights associated with ScopeX-1, as well as MDI's research capabilities are reasonably anticipated to contribute to the development of ScopeX-2 and are therefore platform contributions for which compensation is due from FS as part of a PCT. At the time of the PCT, MDI's only product was the ScopeX-I microscope, although MDI was in the process of developing ScopeX-2. Concurrent with the CSA, MDI separately transfers exclusive and perpetual exploitation rights associated with ScopeX-1 to FS in the same territory as assigned to FS in the CSA.
(ii) Although the transactions between MDI and FS under the CSA are distinct from the transactions between MDI and FS relating to the exploitation rights for ScopeX-1, it is likely to be more reliable to evaluate the combined effect of the transactions than to evaluate them in isolation. This is because the combined transactions between MDI and FS relate to all of the economic value of MDI (that is, the exploitation rights and research rights associated with ScopeX-1, as well as the research capabilities of MDI). In this case, application of the market capitalization method, based on the enterprise value of MDI on January 1 of Year 1, is likely to provide a reliable measure of an arm's length payment for the aggregated transactions. See §§ 1.482-4(c)(2) and 1.482-7(g)(6)(v)(A).

(iii) Notwithstanding that the market capitalization method provides the most reliable measure of the aggregated transactions between MDI and FS, see § 1.482-7(g)(2)(iv) for further considerations of when further analysis may be required to distinguish between the remuneration to MDI associated with PCTs under the CSA (for research rights and capabilities associated with ScopeX-1) and the remuneration to MDI for the exploitation rights associated with ScopeX-1.

Example 16. Income method (applied using CPM) preferred to acquisition price method. The facts are the same as in *Example 13,* except that the acquisition occurred significantly in advance of formation of the CSA, and reliable adjustments cannot be made for this time difference. In addition, Company X has other valuable molecular patents and associated research capabilities, apart from Compound X, that are not reasonably anticipated to contribute to the development of Oncol and that cannot be reliably valued. The CSA divides divisional interests on a territorial basis. Under the terms of the CSA, USP will undertake all R&D (consisting of laboratory research and clinical testing) and manufacturing associated with Oncol, as well as the distribution activities for its territory (the United States). FS will

distribute Oncol in its territory (the rest of the world). FS's distribution activities are routine in nature, and the profitability from its activities may be reliably determined from third-party comparables. FS does not furnish any platform contributions. At the time of the PCT, reliable (ex ante) financial projections associated with the development of Oncol and its separate exploitation in each of USP's and FSub's assigned geographical territories are undertaken. In this case, application of the income method using CPM is likely to provide a more reliable measure of an arm's length result than application of the acquisition price method based on the price paid by USP for Company X. See § 1.482-7(g)(4)(vi) and (5)(iv)(C).

Example 17. Evaluation of alternative methods. (i) The facts are the same as in *Example 13,* except that the acquisition occurred sometime prior to the CSA, and Company X has some areas of promising research that are not reasonably anticipated to contribute to developing Oncol. For purposes of this example, the CSA is assumed to divide divisional interests on a territorial basis. In general, the Commissioner determines that the acquisition price data is useful in informing the arm's length price, but not necessarily determinative. Under the terms of the CSA, USP will undertake all R&D (consisting of laboratory research and clinical testing) and manufacturing associated with Oncol, as well as the distribution activities for its territory (the United States). FS will distribute Oncol in its territory (the rest of the world). FS's distribution activities are routine in nature, and the profitability from its activities may be reliably determined from third-party comparables. At the time of the PCT, financial projections associated with the development of Oncol and its separate exploitation in each of USP's and FSub's assigned geographical territories are undertaken.
(ii) Under the facts, it is possible that the acquisition price method or the income method using CPM might reasonably be applied. Whether the acquisition price method or the income method provides the most reliable evidence of the arm's length price of USP's contributions depends on a number of factors, including the reliability of the financial projections, the reliability of the discount rate chosen, and the extent to which the acquisition price of Company X can be reliably adjusted to account for changes in value over the time period between the acquisition and the formation of the CSA and to account for the value of the in-process research done by Company X that does not constitute platform contributions to the CSA. See § 1.482-7(g)(4)(vi) and (5)(iv)(A) and (C).

Example 18. Evaluation of alternative methods. (i) The facts are the same as in *Example 17,* except that FS has a patent on Compound Y, which the parties reasonably anticipate will be useful in mitigating potential side effects associated with Compound X and thereby contribute to the development of Oncol. The rights in Compound Y constitute a platform contribution for which compensation is due from USP as part of a PCT. The value of FS's platform contribution cannot be reliably measured by market benchmarks.
(ii) Under the facts, it is possible that either the acquisition price method and the income method together or the residual profit split method might reasonably be applied to determine the arm's length PCT Payments due between USP and FS. Under the first option the PCT

Payment for the platform contributions related to Company X's workforce and Compound X would be determined using the acquisition price method referring to the lump sum price paid by USP for Company X. Because the value of these platform contributions can be determined by reference to a market benchmark, they are considered routine platform contributions. Accordingly, under this option, the platform contribution related to Compound Y would be the only nonroutine platform contribution and the relevant PCT Payment is determined using the income method. Under the second option, rather than looking to the acquisition price for Company X, all the platform contributions are considered nonroutine and the RPSM is applied to determine the PCT Payments for each platform contribution. Under either option, the PCT Payments will be netted against each other.

(iii) Whether the acquisition price method together with the income method or the residual profit split method provides the most reliable evidence of the arm's length price of the platform contributions of USP and FS depends on a number of factors, including the reliability of the determination of the relative values of the platform contributions for purposes of the RPSM, and the extent to which the acquisition price of Company X can be reliably adjusted to account for changes in value over the time period between the acquisition and the formation of the CSA and to account for the value of the rights in the in-process research done by Company X that does not constitute platform contributions to the CSA. In these circumstances, it is also relevant to consider whether the results of each method are consistent with each other, or whether one or both methods are consistent with other potential methods that could be applied. See § 1.482-7(g)(4)(vi), (5)(iv), and (7)(iv).

(c) ***Effective/applicability date*** —

(1) ***In general.*** Paragraphs (a) and (b) *Examples 10* through *12* of this section are generally applicable for taxable years beginning after December 31, 2006. Paragraph (b) *Examples 13* through *18* of this section are generally applicable on January 5, 2009.

(2) ***Election to apply regulation to earlier taxable years.*** A person may elect to apply the provisions of paragraph (b) *Examples 10,11,* and *12* of this section to earlier taxable years in accordance with the rules set forth in § 1.482-9(n)(2).

[T.D. 8552, 59 FR 35028, July 8, 1994, as amended by T.D. 9278, 71 FR 44487, Aug. 4, 2006; T.D. 9441, 74 FR 388, Jan. 5, 2009; T.D. 9456, 74 FR 38845, Aug. 4, 2009; 74 FR 46346, Sept. 9, 2009; T.D. 9568, 76 FR 80134, Dec. 22, 2011]

§ 1.482-9 Methods to determine taxable income in connection with a controlled services transaction.

(a) ***In general.*** The arm's length amount charged in a controlled services transaction must be determined under one of the methods provided for in this section. Each method must be applied in accordance with the provisions of § 1.482-1, including the best method rule of § 1.482-1(c), the comparability analysis of § 1.482-1(d), and the arm's length range of § 1.482-1(e), except as those provisions are modified in this section. The methods are—

(1) The services cost method, described in paragraph (b) of this section;

(2) The comparable uncontrolled services price method, described in paragraph (c) of this section;

(3) The gross services margin method, described in paragraph (d) of this section;

(4) The cost of services plus method, described in paragraph (e) of this section;

(5) The comparable profits method, described in § 1.482-5 and in paragraph (f) of this section;

(6) The profit split method, described in § 1.482-6 and in paragraph (g) of this section; and

(7) Unspecified methods, described in paragraph (h) of this section.

(b) *Services cost method* —

(1) ***In general.*** The services cost method evaluates whether the amount charged for certain services is arm's length by reference to the total services costs (as defined in paragraph (j) of this section) with no markup. If a taxpayer applies the services cost method in accordance with the rules of this paragraph (b), then it will be considered the best method for purposes of § 1.482-1(c), and the Commissioner's allocations will be limited to adjusting the amount charged for such services to the properly determined amount of such total services costs.

(2) ***Eligibility for the services cost method.*** To apply the services cost method to a service in accordance with the rules of this paragraph (b), all of the following requirements must be satisfied with respect to the service—

(i) The service is a covered service as defined in paragraph (b)(3) of this section;

(ii) The service is not an excluded activity as defined in paragraph (b)(4) of this section;

(iii) The service is not precluded from constituting a covered service by the business judgment rule described in paragraph (b)(5) of this section; and

(iv) Adequate books and records are maintained as described in paragraph (b)(6) of this section.

(3) ***Covered services.*** For purposes of this paragraph (b), covered services consist of a controlled service transaction or a group of controlled service transactions (*see* § 1.482-1(f)(2)(i) (aggregation of transactions)) that meet the definition of specified covered services or low margin covered services.

(i) ***Specified covered services.*** Specified covered services are controlled services transactions that the Commissioner specifies by revenue procedure. Services will be included in such revenue procedure based upon the Commissioner's determination that the specified covered services are support services common among taxpayers across industry sectors and generally do not involve a significant median comparable markup on total services costs. For the definition of the median comparable markup on total services costs, *see* paragraph (b)(3)(ii) of this section. The Commissioner may add to, subtract from, or otherwise revise the specified covered services described in the revenue procedure by subsequent revenue procedure, which amendments will ordinarily be prospective only in effect.

(ii) ***Low margin covered services.*** Low margin covered services are controlled services transactions for which the median comparable markup on total services costs is less than or equal to seven percent. For purposes of this paragraph (b), the median comparable markup on total services costs means the excess of the arm's length price of the controlled services transaction determined under the general section 482 regulations without regard to this paragraph (b),

using the interquartile range described in § 1.482-1(e)(2)(iii)(C) and as necessary adjusting to the median of such interquartile range, over total services costs, expressed as a percentage of total services costs.

(4) ***Excluded activity.*** The following types of activities are excluded activities:

(i) Manufacturing.

(ii) Production.

(iii) Extraction, exploration, or processing of natural resources.

(iv) Construction.

(v) Reselling, distribution, acting as a sales or purchasing agent, or acting under a commission or other similar arrangement.

(vi) Research, development, or experimentation.

(vii) Engineering or scientific.

(viii) Financial transactions, including guarantees.

(ix) Insurance or reinsurance.

(5) ***Not services that contribute significantly to fundamental risks of business success or failure.*** A service cannot constitute a covered service unless the taxpayer reasonably concludes in its business judgment that the service does not contribute significantly to key competitive advantages, core capabilities, or fundamental risks of success or failure in one or more trades or businesses of the controlled group, as defined in § 1.482-1(i)(6). In evaluating the reasonableness of the conclusion required by this paragraph (b)(5), consideration will be given to all the facts and circumstances.

(6) ***Adequate books and records.*** Permanent books of account and records are maintained for as long as the costs with respect to the covered services are incurred by the renderer. Such books and records must include a statement evidencing the taxpayer's intention to apply the services cost method to evaluate the arm's length charge for such services. Such books and records must be adequate to permit verification by the Commissioner of the total services costs incurred by the renderer, including a description of the services in question, identification of the renderer and the recipient of such services, and sufficient documentation to allow verification of the methods used to allocate and apportion such costs to the services in question in accordance with paragraph (k) of this section.

(7) ***Shared services arrangement*** —

(i) ***In general.*** If the services cost method is used to evaluate the amount charged for covered services, and such services are the subject of a shared services arrangement, then the arm's length charge to each participant for such services will be the portion of the total costs of the services otherwise determined under the services cost method of this paragraph (b) that is properly allocated to such participant pursuant to the arrangement.

(ii) ***Requirements for shared services arrangement.*** A shared services arrangement must meet the requirements described in this paragraph (b)(7).

(A) ***Eligibility.*** To be eligible for treatment under this paragraph (b)(7), a shared services arrangement must—

(1) Include two or more participants;

(2) Include as participants all controlled taxpayers that reasonably anticipate a benefit (as defined under paragraph (l)(3)(i) of this section) from one or more covered services specified in the shared services arrangement; and

(3) Be structured such that each covered service (or each reasonable aggregation of services within the meaning of paragraph (b)(7)(iii)(B) of this section) confers a benefit on at least one participant in the shared services arrangement.

(B) ***Allocation.*** The costs for covered services must be allocated among the participants based on their respective shares of the reasonably anticipated benefits from those services, without regard to whether the anticipated benefits are in fact realized. Reasonably anticipated benefits are benefits as defined in paragraph (l)(3)(i) of this section. The allocation of costs must provide the most reliable measure of the participants' respective shares of the reasonably anticipated benefits under the principles of the best method rule. *See* § 1.482-1(c). The allocation must be applied on a consistent basis for all participants and services. The allocation to each participant in each taxable year must reasonably reflect that participant's respective share of reasonably anticipated benefits for such taxable year. If the taxpayer reasonably concluded that the shared services arrangement (including any aggregation pursuant to paragraph (b)(7)(iii)(B) of this section) allocated costs for covered services on a basis that most reliably reflects the participants' respective shares of the reasonably anticipated benefits attributable to such services, as provided for in this paragraph (b)(7), then the Commissioner may not adjust such allocation basis.

(C) ***Documentation.*** The taxpayer must maintain sufficient documentation to establish that the requirements of this paragraph (b)(7) are satisfied, and include—

(1) A statement evidencing the taxpayer's intention to apply the services cost method to evaluate the arm's length charge for covered services pursuant to a shared services arrangement;

(2) A list of the participants and the renderer or renderers of covered services under the shared services arrangement;

(3) A description of the basis of allocation to all participants, consistent with the participants' respective shares of reasonably anticipated benefits; and

(4) A description of any aggregation of covered services for purposes of the shared services arrangement, and an indication whether this aggregation (if any) differs from the aggregation used to evaluate the median comparable markup for any low margin covered services described in paragraph (b)(3)(ii) of this section.

(iii) ***Definitions and special rules*** —

(A) ***Participant.*** A participant is a controlled taxpayer that reasonably anticipates benefits from covered services subject to a shared services arrangement that substantially complies with the requirements described in this paragraph (b)(7).

(B) ***Aggregation.*** Two or more covered services may be aggregated in a reasonable manner taking into account all the facts and circumstances, including whether the relative magnitude of reasonably anticipated benefits of the participants sharing the costs of such

aggregated services may be reasonably reflected by the allocation basis employed pursuant to paragraph (b)(7)(ii)(B) of this section. The aggregation of services under a shared services arrangement may differ from the aggregation used to evaluate the median comparable markup for any low margin covered services described in paragraph (b)(3)(ii) of this section, provided that such alternative aggregation can be implemented on a reasonable basis, including appropriately identifying and isolating relevant costs, as necessary.

(C) ***Coordination with cost sharing arrangements.*** To the extent that an allocation is made to a participant in a shared services arrangement that is also a participant in a cost sharing arrangement subject to § 1.482-7T, such amount with respect to covered services is first allocated pursuant to the shared services arrangement under this paragraph (b)(7). Costs allocated pursuant to a shared services arrangement may (if applicable) be further allocated between the intangible property development activity under § 1.482-7T and other activities of the participant.

(8) ***Examples.*** The application of this section is illustrated by the following examples. No inference is intended whether the presence or absence of one or more facts is determinative of the conclusion in any example. For purposes of *Examples 1* through *14,* assume that Company P and its subsidiaries, Company Q and Company R, are corporations and members of the same group of controlled entities (PQR Controlled Group). For purposes of *Example 15,* assume that Company P and its subsidiary, Company S, are corporations and members of the same group of controlled entities (PS Controlled Group). For purposes of *Examples 16* through *24,* assume that Company P and its subsidiaries, Company X, Company Y, and Company Z, are corporations and members of the same group of controlled entities (PXYZ Group) and that Company P and its subsidiaries satisfy all of the requirements for a shared services arrangement specified in paragraphs (b)(7)(ii) and (iii) of this section.

> *Example 1. Data entry services.* (i) Company P, Company Q, and Company R own and operate hospitals. Each owns an electronic database of medical information gathered by doctors and nurses during interviews and treatment of its patients. All three databases are maintained and updated by Company P's administrative support employees who perform data entry activities by entering medical information from the paper records of Company P, Company Q, and Company R into their respective databases.
> (ii) Assume that these services relating to data entry are specified covered services within the meaning of paragraph (b)(3)(i) of this section. Under the facts and circumstances of the business of the PQR Controlled Group, the taxpayer could reasonably conclude that these services do not contribute significantly to the controlled group's key competitive advantages, core capabilities, or fundamental risks of success or failure in the group's business. If these services meet the other requirements of this paragraph (b), Company P will be eligible to charge these services to Company Q and Company R in accordance with the services cost method.

> *Example 2. Data entry services.* (i) Company P, Company Q, and Company R specialize in data entry, data processing, and data conversion. Company Q and Company R's data entry

activities involve converting medical information data contained in paper records to a digital format. Company P specializes in data entry activities. This specialization reflects, in part, proprietary quality control systems and specially trained data entry experts used to ensure the highest degree of accuracy of data entry services. Company P is engaged by Company Q and Company R to perform these data entry activities for them. Company Q and Company R then charge their customers for the data entry activities performed by Company P.
(ii) Assume that these services performed by Company P relating to data entry are specified covered services within the meaning of paragraph (b)(3)(i) of this section. Under the facts and circumstances, the taxpayer is unable to reasonably conclude that these services do not contribute significantly to the controlled group's key competitive advantages, core capabilities, or fundamental risks of success or failure in the group's business. Company P is not eligible to charge these services to Company Q and Company R in accordance with the services cost method.

Example 3. Recruiting services. (i) Company P, Company Q, and Company R are manufacturing companies that sell their products to unrelated retail establishments. Company P's human resources department recruits mid-level managers and engineers for itself as well as for Company Q and Company R by attending job fairs and other recruitment events. For recruiting higher-level managers and engineers, each of these companies uses recruiters from unrelated executive search firms.
(ii) Assume that these services relating to recruiting are specified covered services within the meaning of paragraph (b)(3)(i) of this section. Under the facts and circumstances of the business of the PQR Controlled Group, the taxpayer could reasonably conclude that these services do not contribute significantly to the controlled group's key competitive advantages, core capabilities, or fundamental risks of success or failure in the group's business. If these services meet the other requirements of this paragraph (b), Company P will be eligible to charge these services to Company Q and Company R in accordance with the services cost method.

Example 4. Recruiting services. (i) Company Q and Company R are executive recruiting service companies that are hired by other companies to recruit professionals. Company P is a recruiting agency that is engaged by Company Q and Company R to perform recruiting activities on their behalf in certain geographic areas.
(ii) Assume that the services performed by Company P are specified covered services within the meaning of paragraph (b)(3)(i) of this section. Under the facts and circumstances, the taxpayer is unable to reasonably conclude that these services do not contribute significantly to the controlled group's key competitive advantages, core capabilities, or fundamental risks of success or failure in the group's business. Company P is not eligible to charge these services to Company Q and Company R in accordance with the services cost method.

Example 5. Credit analysis services. (i) Company P is a manufacturer and distributor of clothing for retail stores. Company Q and Company R are distributors of clothing for retail stores. As part of its operations, personnel in Company P perform credit analysis on its customers. Most of the customers have a history of purchases from Company P, and the credit analysis involves a review of the recent payment history of the customer's account. For new customers, the personnel in Company P perform a basic credit check of the customer using reports from a credit reporting agency. On behalf of Company Q and Company R, Company P performs credit analysis on customers who order clothing from Company Q and Company R using the same method as Company P uses for itself.
(ii) Assume that these services relating to credit analysis are specified covered services within the meaning of paragraph (b)(3)(i) of this section. Under the facts and circumstances of the business of the PQR Controlled Group, the taxpayer could reasonably conclude that these services do not contribute significantly to the controlled group's key competitive advantages, core capabilities, or fundamental risks of success or failure in the group's business. If these services meet the other requirements of this paragraph (b), Company P will be eligible to charge these services to Company Q and Company R in accordance with the services cost method.

Example 6. Credit analysis services. (i) Company P, Company Q, and Company R lease furniture to retail customers who present a significant credit risk and are generally unable to lease furniture from other providers. As part of its leasing operations, personnel in Company P perform credit analysis on each of the potential lessees. The personnel have developed special expertise in determining whether a particular customer who presents a significant credit risk (as indicated by credit reporting agencies) will be likely to make the requisite lease payments on a timely basis. Also, as part of its operations, Company P performs similar credit analysis services for Company Q and Company R, which charge correspondingly high monthly lease payments.
(ii) Assume that these services relating to credit analysis are specified covered services within the meaning of paragraph (b)(3)(i) of this section. Under the facts and circumstances, the taxpayer is unable to reasonably conclude that these services do not contribute significantly to the controlled group's key competitive advantages, core capabilities, or fundamental risks of success or failure in the group's business. Company P is not eligible to charge these services to Company Q and Company R in accordance with the services cost method.

Example 7. Credit analysis services. (i) Company P is a large full-service bank, which provides products and services to corporate and consumer markets, including unsecured loans, secured loans, lines of credit, letters of credit, conversion of foreign currency, consumer loans, trust services, and sales of certificates of deposit. Company Q makes routine consumer loans to individuals, such as auto loans and home equity loans. Company R

makes only business loans to small businesses.
(ii) Company P performs credit analysis and prepares credit reports for itself, as well as for Company Q and Company R. Company P, Company Q and Company R regularly employ these credit reports in the ordinary course of business in making decisions regarding extensions of credit to potential customers (including whether to lend, rate of interest, and loan terms).

(iii) Assume that these services relating to credit analysis are specified covered services within the meaning of paragraph (b)(3)(i) of this section. Under the facts and circumstances, the credit analysis services constitute part of a "financial transaction" described in paragraph (b)(4)(viii) of this section. Company P is not eligible to charge these services to Company Q and Company R in accordance with the services cost method.

Example 8. Data verification services. (i) Company P, Company Q and Company R are manufacturers of industrial supplies. Company P's accounting department performs periodic reviews of the accounts payable information of Company P, Company Q and Company R, and identifies any inaccuracies in the records, such as double-payments and double-charges.
(ii) Assume that these services relating to verification of data are specified covered services within the meaning of paragraph (b)(3)(i) of this section. Under the facts and circumstances of the business of the PQR Controlled Group, the taxpayer could reasonably conclude that these services do not contribute significantly to the controlled group's key competitive advantages, core capabilities, or fundamental risks of success or failure in the group's business. If these services meet the other requirements of this paragraph (b), Company P will be eligible to charge these services to Company Q and Company R in accordance with the services cost method.

Example 9. Data verification services. (i) Company P gathers and inputs information regarding accounts payable and accounts receivable from unrelated parties and utilizes its own computer system to analyze that information for purposes of identifying errors in payment and receipts (data mining). Company P is compensated for these services based on a fee that reflects a percentage of amounts collected by customers as a result of the data mining services. These activities constitute a significant portion of Company P's business. Company P performs similar activities for Company Q and Company R by analyzing their accounts payable and accounts receivable records.
(ii) Assume that these services relating to data mining are specified covered services within the meaning of paragraph (b)(3)(i) of this section. Under the facts and circumstances, the taxpayer is unable to reasonably conclude that these services do not contribute significantly to the controlled group's key competitive advantages, core capabilities, or fundamental risks of success or failure in the group's business. Company P is not eligible to charge these services to Company Q and Company R in accordance with the services cost method.

Example 10. Legal services. (i) Company P is a domestic corporation with two wholly-owned foreign

subsidiaries, Company Q and Company R. Company P and its subsidiaries manufacture and distribute equipment used by industrial customers. Company P maintains an in-house legal department consisting of attorneys experienced in a wide range of business and commercial matters. Company Q and Company R maintain small legal departments, consisting of attorneys experienced in matters that most frequently arise in the normal course of business of Company Q and Company R in their respective jurisdictions.
(ii) Company P seeks to maintain in-house legal staff with the ability to address the majority of legal matters that arise in the United States with respect to the operations of Company P, as well as any U.S. reporting or compliance obligations of Company Q or Company R. These include the preparation and review of corporate contracts relating to, for example, product sales, equipment purchases and leases, business liability insurance, real estate, employee salaries and benefits. Company P relies on outside attorneys for major business transactions and highly technical matters such as patent licenses. The in-house legal staffs of Company Q and Company R are much more limited. It is necessary for Company P to retain several local law firms to handle litigation and business disputes arising from the activities of Company Q and Company R. Although Company Q and Company R pay the fees of these law firms, the hiring authority and general oversight of the firms' representation is in the legal department of Company P.

(iii) In determining what portion of the legal expenses of Company P may be allocated to Company Q and Company R, Company P first excludes any expenses relating to legal services that constitute shareholder activities and other items that are not properly analyzed as controlled services. Assume that the remaining services relating to general legal functions performed by in-house legal counsel are specified covered services within the meaning of paragraph (b)(3)(i) of this section. Under the facts and circumstances of the business of the PQR Controlled Group, the taxpayer could reasonably conclude that these latter services do not contribute significantly to the controlled group's key competitive advantages, core capabilities, or fundamental risks of success or failure in the group's business. If these services meet the other requirements of this paragraph (b), Company P will be eligible to charge these services to Company Q and Company R in accordance with the services cost method.

Example 11. Legal services. (i) Company P is a domestic holding company whose operating companies, Company Q and Company R, generate electric power for consumers by operating nuclear plants. Assume that, although Company P owns 100% of the stock of Companies Q and R, the companies do not elect to file a consolidated Federal income tax return with Company P.
(ii) Company P maintains an in-house legal department that includes attorneys who are experts in the areas of Federal utilities regulation, Federal labor and environmental law, and securities law. Companies Q and R maintain their own, smaller in-house legal staffs comprising experienced attorneys in the areas of state and local utilities regulation, state labor and employment law, and general commercial law. The legal department of Company P performs general oversight of the legal affairs of the company and determines whether a particular matter would be more efficiently handled by the Company P legal department, by the legal staffs in the operating companies, or in rare cases, by retained outside counsel. In general, Company P has succeeded in minimizing duplication and overlap of functions between the legal staffs of the various companies or by retained outside counsel.

(iii) The domestic nuclear power plant operations of Companies Q and R are subject to extensive regulation by the U.S. Nuclear Regulatory Commission (NRC). Operators are required to obtain pre-construction approval, operating licenses, and, at the end of the operational life of the nuclear reactor, nuclear decommissioning certificates. Company P files consolidated financial statements on behalf of itself, as well as Companies Q and R, with the United States Securities and Exchange Commission (SEC). In these SEC filings, Company P discloses that failure to obtain any of these licenses (and the related periodic renewals) or agreeing to licenses on terms less favorable than those granted to competitors would have a material adverse impact on the operations of Company Q or Company R. Company Q and Company R do not have in-house legal staff with experience in the NRC area. Company P maintains a group of in-house attorneys with specialized expertise in the NRC area that exclusively represents Company Q and Company R before the NRC. Although Company P occasionally hires an outside law firm or industry expert to assist on particular NRC matters, the majority of the work is performed by the specialized legal staff of Company P.

(iv) Certain of the legal services performed by Company P constitute duplicative or shareholder activities that do not confer a benefit on the other companies and therefore do not need to be allocated to the other companies, while certain other legal services are eligible to be charged to Company Q and Company R in accordance with the services cost method.

(v) Assume that the specialized legal services relating to nuclear licenses performed by in-house legal counsel of Company P are specified covered services within the meaning of paragraph (b)(3)(i) of this section. Under the facts and circumstances, the taxpayer is unable to reasonably conclude that these services do not contribute significantly to the controlled group's key competitive advantages, core capabilities, or fundamental risks of success or failure in the group's business. Company P is not eligible to charge these services to Company Q and Company R in accordance with the services cost method.

Example 12. Group of services. (i) Company P, Company Q, and Company R are manufacturing companies that sell their products to unrelated retail establishments. Company P has an enterprise resource planning (ERP) system that maintains data relating to accounts payable and accounts receivable information for all three companies. Company P's personnel perform the daily operations on this ERP system such as inputting data relating to accounts payable and accounts receivable into the system and extracting data relating to accounts receivable and accounts payable in the form of reports or electronic media and providing those data to all three companies. Periodically, Company P's computer specialists also modify the ERP system to adapt to changing business functions in all three companies. Company P's computer specialists make these changes by either modifying the underlying software program or by purchasing additional software or hardware from unrelated third party vendors.
(ii) Assume that the services relating to accounts payable and accounts receivable are specified covered services within the meaning of paragraph (b)(3)(i) of this section. Under the facts and circumstances of the business of the PQR Controlled Group, the taxpayer could reasonably conclude that these services do not contribute significantly to the controlled group's key competitive advantages, core capabilities, or

fundamental risks of success or failure in the group's business. If these services meet the other requirements of this paragraph (b), Company P will be eligible to charge these services to Company Q and Company R in accordance with the services cost method.

(iii) Assume that the services performed by Company P's computer specialists that relate to modifying the ERP system are specifically excluded from the services described in a revenue procedure referenced in paragraph (b)(3) of this section as developing hardware or software solutions (such as systems integration, Web site design, writing computer programs, modifying general applications software, or recommending the purchase of commercially available hardware or software). If these services do not constitute low margin covered services within the meaning of paragraph (b)(3)(ii) of this section, then Company P is not eligible to charge these services to Company Q and Company R in accordance with the services cost method.

Example 13. Group of services. (i) Company P manufactures and sells widgets under an exclusive contract to Customer 1. Company Q and Company R sell widgets under exclusive contracts to Customer 2 and Customer 3, respectively. At least one year in advance, each of these customers can accurately forecast its need for widgets. Using these forecasts, each customer over the course of the year places orders for widgets with the appropriate company, Company P, Company Q, or Company R. A customer's actual need for widgets seldom deviates from that customer's forecasted need.
(ii) It is most efficient for the PQR Controlled Group companies to manufacture and store an inventory of widgets in advance of delivery. Although all three companies sell widgets, only Company P maintains a centralized warehouse for widgets. Pursuant to a contract, Company P provides storage of these widgets to Company Q and Company R at an arm's length price.

(iii) Company P's personnel also obtain orders from all three companies' customers to draw up purchase orders for widgets as well as make payment to suppliers for widget replacement parts. In addition, Company P's personnel use data entry to input information regarding orders and sales of widgets and replacement parts for all three companies into a centralized computer system. Company P's personnel also maintain the centralized computer system and extract data for all three companies when necessary.

(iv) Assume that these services relating to tracking purchases and sales of inventory are specified covered services within the meaning of paragraph (b)(3)(i) of this section. Under the facts and circumstances of the business of the PQR Controlled Group, the taxpayer could reasonably conclude that these services do not contribute significantly to the controlled group's key competitive advantages, core capabilities, or fundamental risks of success or failure in the group's business. If these services meet the other requirements of this paragraph (b), Company P will be eligible to charge these services to Company Q and Company R in accordance with the services cost method.

Example 14. Group of services. (i) Company P, Company Q, and Company R assemble and sell gadgets to unrelated customers. Each of these companies purchases the components necessary for assembly of the gadgets from unrelated suppliers. As a service to its subsidiaries, Company P's personnel obtain orders for

components from all three companies, prepare purchase orders, and make payment to unrelated suppliers for the components. In addition, Company P's personnel use data entry to input information regarding orders and sales of gadgets for all three companies into a centralized computer. Company P's personnel also maintain the centralized computer system and extract data for all three companies on an as-needed basis. The services provided by Company P personnel, in conjunction with the centralized computer system, constitute a state-of-the-art inventory management system that allows Company P to order components necessary for assembly of the gadgets on a "just-in-time" basis.
(ii) Unrelated suppliers deliver the components directly to Company P, Company Q and Company R. Each company stores the components in its own facilities for use in filling specific customer orders. The companies do not maintain any inventory that is not identified in specific customer orders. Because of the efficiencies associated with services provided by personnel of Company P, all three companies are able to significantly reduce their inventory-related costs. Company P's Chief Executive Officer makes a statement in one of its press conferences with industry analysts that its inventory management system is critical to the company's success.

(iii) Assume that these services relating to tracking purchases and sales of inventory are specified covered services within the meaning of paragraph (b)(3)(i) of this section. Under the facts and circumstances, the taxpayer is unable to reasonably conclude that these services do not contribute significantly to the controlled group's key competitive advantages, core capabilities, or fundamental risks of success or failure in the group's business. Company P is not eligible to charge these services to Company Q and Company R in accordance with the services cost method.

Example 15. Low margin covered services. Company P renders certain accounting services to Company S. Company P uses the services cost method for the accounting services, and determines the amount charged as its total cost of rendering the services, with no markup. Based on an application of the section 482 regulations without regard to this paragraph (b), the interquartile range of arm's length markups on total services costs for these accounting services is between 3% and 9%, and the median is 6%. Because the median comparable markup on total services costs is 6%, which is less than 7%, the accounting services constitute low margin covered services within the meaning of paragraph (b)(3)(ii) of this section.

Example 16. Shared services arrangement and reliable measure of reasonably anticipated benefit (allocation key). (i) Company P operates a centralized data processing facility that performs automated invoice processing and order generation for all of its subsidiaries, Companies X, Y, Z, pursuant to a shared services arrangement.
(ii) In evaluating the shares of reasonably anticipated benefits from the centralized data processing services, the total value of the merchandise on the invoices and orders may not provide the most reliable measure of reasonably anticipated benefits shares, because value of merchandise sold does not bear a relationship to the anticipated benefits from the underlying covered services.

(iii) The total volume of orders and invoices processed may provide a more reliable basis for evaluating the shares of reasonably anticipated benefits from the data processing services. Alternatively, depending on the facts and circumstances, total central processing unit time attributable to the transactions of each subsidiary may provide a more reliable basis on which to evaluate the shares of reasonably anticipated benefits.

Example 17. Shared services arrangement and reliable measure of reasonably anticipated benefit (allocation key). (i) Company P operates a centralized center that performs human resources functions, such as administration of pension, retirement, and health insurance plans that are made available to employees of its subsidiaries, Companies X, Y, Z, pursuant to a shared services arrangement.
(ii) In evaluating the shares of reasonably anticipated benefits from these centralized services, the total revenues of each subsidiary may not provide the most reliable measure of reasonably anticipated benefit shares, because total revenues do not bear a relationship to the shares of reasonably anticipated benefits from the underlying services.

(iii) Employee headcount or total compensation paid to employees may provide a more reliable basis for evaluating the shares of reasonably anticipated benefits from the covered services.

Example 18. Shared services arrangement and reliable measure of reasonably anticipated benefit (allocation key). (i) Company P performs human resource services (service A) on behalf of the PXYZ Group that qualify for the services cost method. Under that method, Company P determines the amount charged for these services pursuant to a shared services arrangement based on an application of paragraph (b)(7) of this section. Service A constitutes a specified covered service described in a revenue procedure pursuant to paragraph (b)(3)(i) of this section. The total services costs for service A otherwise determined under the services cost method is 300.

(ii) Companies X, Y and Z reasonably anticipate benefits from service A. Company P does not reasonably anticipate benefits from service A. Assume that if relative reasonably anticipated benefits were precisely known, the appropriate allocation of charges pursuant to paragraph (k) of this section to Company X, Y and Z for service A is as follows:

SERVICE A
[TOTAL COST 300]

Company	
X	150
Y	75
Z	75

(iii) The total number of employees (employee headcount) in each company is as follows:
Company X—600 employees.

Company Y—250 employees.

Company Z—250 employees.

(iv) Company P allocates the 300 total services costs of service A based on employee headcount as follows:

SERVICE A
[TOTAL COST 300]

Allocation key	Company	
	Headcount	Amount
X	600	164
Y	250	68

Allocation key	Company	
	Headcount	Amount
Z	250	68

(v) Based on these facts, Company P may reasonably conclude that the employee headcount allocation basis most reliably reflects the participants' respective shares of the reasonably anticipated benefits attributable to service A.

Example 19. Shared services arrangement and reliable measure of reasonably anticipated benefit (allocation key). (i) Company P performs accounts payable services (service B) on behalf of the PXYZ Group and determines the amount charged for the services under such method pursuant to a shared services arrangement based on an application of paragraph (b)(7) of this section. Service B is a specified covered service described in a revenue procedure pursuant to paragraph (b)(3)(i) of this section. The total services costs for service B otherwise determined under the services cost method is 500.

(ii) Companies X, Y and Z reasonably anticipate benefits from service B. Company P does not reasonably anticipate benefits from service B. Assume that if relative reasonably anticipated benefits were precisely known, the appropriate allocation of charges pursuant to paragraph (k) of this section to Companies X, Y and Z for service B is as follows:

SERVICE B
[TOTAL COST 500]

Company	
X	125
Y	205
Z	170

(iii) The total number of employees (employee headcount) in each company is as follows:

Company X —600.

Company Y —200.

Company Z —200.

(iv) The total number of transactions (transaction volume) with uncontrolled customers by each company is as follows:

Company X —2,000.

Company Y —4,000.

Company Z —3,500.

(v) If Company P allocated the 500 total services costs of service B based on employee headcount, the resulting allocation would be as follows:

SERVICE B
[TOTAL COST 500]

Allocation key	Company	
	Headcount	Amount
X	600	300
Y	200	100
Z	200	100

(vi) In contrast, if Company P used volume of transactions with uncontrolled customers as the allocation basis under the shared services arrangement, the allocation would be as follows:

SERVICE B
[TOTAL COST 500]

Allocation key	Company	
	Transaction Volume	Amount
X	2,000	105
Y	4,000	211
Z	3,500	184

(vii) Based on these facts, Company P may reasonably conclude that the transaction volume, but not the employee headcount, allocation basis most reliably reflects the participants' respective shares of the reasonably anticipated benefits attributable to service B.

> *Example 20. Shared services arrangement and aggregation.* (i) Company P performs human resource services (service A) and accounts payable services (service B) on

behalf of the PXYZ Group that qualify for the services cost method. Company P determines the amount charged for these services under such method pursuant to a shared services arrangement based on an application of paragraph (b)(7) of this section. Service A and service B are specified covered services described in a revenue procedure pursuant to paragraph (b)(3)(i) of this section. The total services costs otherwise determined under the services cost method for service A is 300 and for service B is 500; total services costs for services A and B are 800. Company P determines that aggregation of services A and B for purposes of the arrangement is appropriate. (ii) Companies X, Y and Z reasonably anticipate benefits from services A and B. Company P does not reasonably anticipate benefits from services A and B. Assume that if relative reasonably anticipated benefits were precisely known, the appropriate allocation of total charges pursuant to paragraph (k) of this section to Companies X, Y and Z for services A and B is as follows:

SERVICES A AND B
[TOTAL COST 800]

Company	
X	350
Y	100
Z	350

(iii) The total volume of transactions with uncontrolled customers in each company is as follows:
Company X—2,000.

Company Y—4,000.

Company Z—4,000.

(iv) The total number of employees in each company is as follows:

Company X—600.

Company Y—200.

Company Z—200.

(v) If Company P allocated the 800 total services costs of services A and B based on transaction volume or employee headcount, the resulting allocation would be as follows:

AGGREGATED SERVICES AB
[TOTAL COST 800]

Company	Allocation key		Allocation key	
	Transaction volume	Amount	Headcount	Amount
X	2,000	160	600	480
Y	4,000	320	200	160
Z	4,000	320	200	160

(vi) In contrast, if aggregated services AB were allocated by reference to the total U.S. dollar value of sales to uncontrolled parties (trade sales) by each company, the following results would obtain:

AGGREGATED SERVICES AB
[TOTAL COSTS 800]

Company	Allocation key	
	Trade sales (millions)	Amount
X	$400	314
Y	120	94
Z	500	392

(vii) Based on these facts, Company P may reasonably conclude that the trade sales, but not the transaction volume or the employee headcount, allocation basis most reliably reflects the participants' respective shares of the reasonably anticipated benefits attributable to services AB.

Example 21. Shared services arrangement and aggregation. (i) Company P performs services A through P on behalf of the PXYZ Group that qualify for the services cost method. Company P determines the amount charged for these services under such method pursuant to a shared services arrangement based on an application of

paragraph (b)(7) of this section. All of these services A through P constitute either specified covered services or low margin covered services described in paragraph (b)(3) of this section. The total services costs for services A through P otherwise determined under the services cost method is 500. Company P determines that aggregation of services A through P for purposes of the arrangement is appropriate.
(ii) Companies X and Y reasonably anticipate benefits from services A through P and Company Z reasonably anticipates benefits from services A through M but not from services N through P (Company Z performs services similar to services N through P on its own behalf). Company P does not reasonably anticipate benefits from services A through P. Assume that if relative reasonably anticipated benefits were precisely known, the appropriate allocation of total charges pursuant to paragraph (k) of this section to Company X, Y, and Z for services A through P is as follows:

Company	Services A-M (cost 490)	Services N-P (cost 10)	Services A-P (total cost 500)
X	90	5	95
Y	240	5	245
Z	160	160	

(iii) The total volume of transactions with uncontrolled customers in each company is as follows:
Company X—2,000.

Company Y—4,500.

Company Z—3,500.

(iv) Company P allocates the 500 total services costs of services A through P based on transaction volume as follows:

AGGREGATED SERVICES A-Z
[TOTAL COSTS 500]

Company	Allocation key	
	Transaction volume	Amount
X	2,000	100
Y	4,500	225
Z	3,500	175

(v) Based on these facts, Company P may reasonably conclude that the transaction volume allocation basis most reliably reflects the participants' respective shares of the reasonably anticipated benefits attributable to services A through P.

Example 22. Renderer reasonably anticipates benefits. (i) Company P renders services on behalf of the PXYZ Group that qualify for the services cost method. Company P determines the amount charged for these services under such method. Company P's share of reasonably anticipated benefits from services A, B, C, and D is 20% of the total reasonably anticipated benefits of all participants. Company P's total services cost for services A, B, C, and D charged within the group is 100.
(ii) Based on an application of paragraph (b)(7) of this section, Company P charges 80 which is allocated among Companies X, Y, and Z. No charge is made to Company P under the shared services arrangement for activities that it performs on its own behalf.

Example 23. Coordination with cost sharing arrangement. (i) Company P performs human resource services (service A) on behalf of the PXYZ Group that qualify for the services cost method. Company P determines the amount charged for these services under such method pursuant to a shared services arrangement based on an application of paragraph (b)(7) of this section. Service A constitutes a specified covered service described in a revenue procedure pursuant to paragraph (b)(3)(i) of this section. The total services costs for service A otherwise determined under the services cost method is 300.

(ii) Company X, Y, Z, and P reasonably anticipate benefits from service A. Using a basis of allocation that is consistent with the controlled participants' respective shares of the reasonably anticipated benefits from the shared services, the total charge of 300 is allocated as follows:

X—100.

Y—50.

Z—25.

P—125.

(iii) In addition to performing services, P undertakes 500 of R&D and incurs manufacturing and other costs of 1,000.

(iv) Companies P and X enter into a cost sharing arrangement in accordance with § 1.482-7T. Under the arrangement, Company P will undertake all intangible property development activities. All of Company P's research and development (R&D) activity is devoted to the intangible property development activity under the cost sharing arrangement. Company P will manufacture, market, and otherwise exploit the product in its defined territory. Companies P and X will share intangible property development costs in accordance with their reasonably anticipated benefits from the intangible property, and Company X will make payments to Company P as required under § 1.482-7T. Company X will manufacture, market, and otherwise exploit the product in the rest of the world.

(v) A portion of the charge under the shared services arrangement is in turn allocable to the intangible property development activity undertaken by Company P. The most reliable estimate of the proportion allocable to the intangible property development activity is determined to be 500 (Company P's R&D expenses) divided by 1,500 (Company P's total non-covered services costs), or one-third. Accordingly, one-third of Company P's charge of 125, or 42, is allocated to the intangible property development activity. Companies P and X must share the intangible property development costs of the cost shared intangible property (including the charge of 42 that is allocated under the shared services arrangement) in proportion to their respective shares of reasonably anticipated benefits under the cost sharing arrangement. That is, the reasonably anticipated benefit shares under the cost sharing arrangement are determined separately from reasonably anticipated benefit shares under the shared services arrangement.

Example 24. Coordination with cost sharing arrangement. (i) The facts and analysis

are the same as in *Example 25,* except that Company X also performs intangible property development activities related to the cost sharing arrangement. Using a basis of allocation that is consistent with the controlled participants' respective shares of the reasonably anticipated benefits from the shared services, the 300 of service costs is allocated as follows:
X—100.

Y—50.

Z—25.

P—125.

(ii) In addition to performing services, Company P undertakes 500 of R&D and incurs manufacturing and other costs of 1,000. Company X undertakes 400 of R&D and incurs manufacturing and other costs of 600.

(iii) Companies P and X enter into a cost sharing arrangement in accordance with § 1.482-7T. Under the arrangement, both Companies P and X will undertake intangible property development activities. All of the research and development activity conducted by Companies P and X is devoted to the intangible property development activity under the cost sharing arrangement. Both Companies P and X will manufacture, market, and otherwise exploit the product in their respective territories and will share intangible property development costs in accordance with their reasonably anticipated benefits from the intangible property, and both will make payments as required under § 1.482-7T.

(iv) A portion of the charge under the shared services arrangement is in turn allocable to the intangible property development activities undertaken by Companies P and X. The most reliable estimate of the portion allocable to Company P's intangible property development activity is determined to be 500 (Company P's R&D expenses) divided by 1,500 (P's total non-covered services costs), or one-third. Accordingly, one-third of Company P's allocated services cost method charge of 125, or 42, is allocated to its intangible property development activity.

(v) In addition, it is necessary to determine the portion of the charge under the shared services arrangement to Company X that should be further allocated to Company X's intangible property development activities under the cost sharing arrangement. The most reliable estimate of the portion allocable to Company X's intangible property development activity is 400 (Company X's R&D expenses) divided by 1,000 (Company X's costs), or 40%. Accordingly, 40% of the 100 that was allocated to Company X, or 40, is allocated in turn to Company X's intangible property development activities. Company X

makes a payment to Company P of 100 under the shared services arrangement and includes 40 of services cost method charges in the pool of intangible property development costs.

(vi) The parties' respective contributions to intangible property development costs under the cost sharing arrangement are as follows:

P: 500 + (0.333 * 125) = 542

X: 400 + (0.40 * 100) = 440

(c) ***Comparable uncontrolled services price method*** —

(1) ***In general.*** The comparable uncontrolled services price method evaluates whether the amount charged in a controlled services transaction is arm's length by reference to the amount charged in a comparable uncontrolled services transaction.

(2) ***Comparability and reliability considerations*** —

(i) ***In general.*** Whether results derived from application of this method are the most reliable measure of the arm's length result must be determined using the factors described under the best method rule in § 1.482-1(c). The application of these factors under the comparable uncontrolled services price method is discussed in paragraphs (c)(2)(ii) and (iii) of this section.

(ii) ***Comparability*** —

(A) ***In general.*** The degree of comparability between controlled and uncontrolled transactions is determined by applying the provisions of § 1.482-1(d). Although all of the factors described in § 1.482-1(d)(3) must be considered, similarity of the services rendered, and of the intangible property (if any) used in performing the services, generally will have the greatest effects on comparability under this method. In addition, because even minor differences in contractual terms or economic conditions could materially affect the amount charged in an uncontrolled transaction, comparability under this method depends on close similarity with respect to these factors, or adjustments to account for any differences. The results derived from applying the comparable uncontrolled services price method generally will be the most direct and reliable measure of an arm's length price for the controlled transaction if an uncontrolled transaction has no differences from the controlled transaction that would affect the price, or if there are only minor differences that have a definite and reasonably ascertainable effect on price and for which appropriate adjustments are made. If such adjustments cannot be made, or if there are more than minor differences between the controlled and uncontrolled transactions, the comparable uncontrolled services price method may be used, but the reliability of the results as a measure of the arm's length price will be reduced. Further, if there are material differences for which reliable adjustments cannot be made, this method ordinarily will not provide a reliable measure of an arm's length result.

(B) ***Adjustments for differences between controlled and uncontrolled transactions.*** If there are differences between the controlled and uncontrolled transactions that would affect price, adjustments should be made to the price of the uncontrolled transaction according to the comparability provisions of § 1.482-1(d)(2). Specific examples of factors that may be particularly relevant to application of this method include—

(*1*) Quality of the services rendered;

(*2*) Contractual terms (for example, scope and terms of warranties or guarantees regarding the services, volume, credit and payment terms, allocation of risks, including any contingent-payment terms and whether costs were incurred without a provision for current reimbursement);

(*3*) Intangible property (if any) used in rendering the services;

(*4*) Geographic market in which the services are rendered or received;

(*5*) Risks borne (for example, costs incurred to render the services, without provision for current reimbursement);

(*6*) Duration or quantitative measure of services rendered;

(*7*) Collateral transactions or ongoing business relationships between the renderer and the recipient, including arrangement for the provision of tangible property in connection with the services; and

(*8*) Alternatives realistically available to the renderer and the recipient.

(iii) ***Data and assumptions.*** The reliability of the results derived from the comparable uncontrolled services price method is affected by the completeness and accuracy of the data used and the reliability of the assumptions made to apply the method. *See* § 1.482-1(c) (best method rule).

(3) ***Arm's length range. See*** § 1.482-1(e)(2) for the determination of an arm's length range.

(4) ***Examples.*** The principles of this paragraph (c) are illustrated by the following examples:

Example 1. Internal comparable uncontrolled services price. Company A, a United States corporation, performs shipping, stevedoring, and related services for controlled and uncontrolled parties on a short-term or as-needed basis. Company A charges uncontrolled parties in Country X a uniform fee of $60 per container to place loaded cargo containers in Country X on oceangoing vessels for marine transportation. Company A also performs identical services in Country X for its wholly-owned subsidiary, Company B, and there are no substantial differences between the controlled and uncontrolled transactions. In evaluating the appropriate measure of the arm's length price for the container-loading services performed for Company B, because Company A renders substantially identical services in Country X to both controlled and uncontrolled parties, it is determined that the comparable uncontrolled services price constitutes the best method for determining the arm's length price for the controlled services transaction. Based on the reliable data provided by Company A concerning the price charged for services in comparable uncontrolled transactions, a loading charge of $60 per cargo container will be considered the most reliable measure of the arm's length price for the services rendered to Company B. *See* paragraph (c)(2)(ii)(A) of this section.

Example 2. External comparable uncontrolled services price. (i) The facts are the

same as in *Example 1,* except that Company A performs services for Company B, but not for uncontrolled parties. Based on information obtained from unrelated parties (which is determined to be reliable under the comparability standards set forth in paragraph (c)(2) of this section), it is determined that uncontrolled parties in Country X perform services comparable to those rendered by Company A to Company B, and that such parties charge $60 per cargo container.
(ii) In evaluating the appropriate measure of an arm's length price for the loading services that Company A renders to Company B, the $60 per cargo container charge is considered evidence of a comparable uncontrolled services price. *See* paragraph (c)(2)(ii)(A) of this section.

Example 3. External comparable uncontrolled services price. The facts are the same as in *Example 2,* except that uncontrolled parties in Country X render similar loading and stevedoring services, but only under contracts that have a minimum term of one year. If the difference in the duration of the services has a material effect on prices, adjustments to account for these differences must be made to the results of the uncontrolled transactions according to the provisions of § 1.482-1(d)(2), and such adjusted results may be used as a measure of the arm's length result.

Example 4. Use of valuable intangible property. (i) Company A, a United States corporation in the biotechnology sector, renders research and development services exclusively to its affiliates. Company B is Company A's wholly-owned subsidiary in Country X. Company A renders research and development services to Company B.
(ii) In performing its research and development services function, Company A uses proprietary software that it developed internally. Company A uses the software to evaluate certain genetically engineered compounds developed by Company B. Company A owns the copyright on this software and does not license it to uncontrolled parties.

(iii) No uncontrolled parties can be identified that perform services identical or with a high degree of similarity to those performed by Company A. Because there are material differences for which reliable adjustments cannot be made, the comparable uncontrolled services price method is unlikely to provide a reliable measure of the arm's length price. *See* paragraph (c)(2)(ii)(A) of this section.

Example 5. Internal comparable. (i) Company A, a United States corporation, and its subsidiaries render computer consulting services relating to systems integration and networking to business clients in various countries. Company A and its subsidiaries render only consulting services, and do not manufacture computer hardware or software nor distribute such products. The controlled group is organized according to industry specialization, with key industry specialists working for Company A. These personnel typically form the core consulting group that teams with consultants from the local-country subsidiaries to serve clients in the subsidiaries' respective countries.

(ii) Company A and its subsidiaries sometimes undertake engagements directly for clients, and sometimes work as subcontractors to unrelated parties on more extensive supply-chain consulting engagements for clients. In undertaking the latter engagements with third party consultants, Company A typically prices its services based on consulting hours worked multiplied by a rate determined for each category of employee. The company also charges, at no markup, for out-of-pocket expenses such as travel, lodging, and data acquisition charges. The Company has established the following schedule of hourly rates:

Category	Rate
Project managers	$400 per hour.
Technical staff	$300 per hour.

(iii) Thus, for example, a project involving 100 hours of the time of project managers and 400 hours of technical staff time would result in the following project fees (without regard to any out-of-pocket expenses): ([100 hrs. × $400/hr.] + [400 hrs. × $300/hr.]) = $40,000 + $120,000 = $160,000.

(iv) Company B, a Country X subsidiary of Company A, contracts to perform consulting services for a Country X client in the banking industry. In undertaking this engagement, Company B uses its own consultants and also uses Company A project managers and technical staff that specialize in the banking industry for 75 hours and 380 hours, respectively. In determining an arm's length charge, the price that Company A charges for consulting services as a subcontractor in comparable uncontrolled transactions will be considered evidence of a comparable uncontrolled services price. Thus, in this case, a payment of $144,000, (or [75 hrs. × $400/hr.] + [380 hrs. × $300/hr.] = $30,000 + $114,000) may be used as a measure of the arm's length price for the work performed by Company A project mangers and technical staff. In addition, if the comparable uncontrolled services price method is used, then, consistent with the practices employed by the comparables with respect to similar types of expenses, Company B must reimburse Company A for appropriate out-of-pocket expenses. *See* paragraph (c)(2)(ii)(A) of this section.

Example 6. Adjustments for differences. (i) The facts are the same as in *Example 5,* except that the engagement is undertaken with the client on a fixed fee basis. That is, prior to undertaking the engagement Company B and Company A estimate the resources required to undertake the engagement, and, based on hourly fee rates, charge the client a single fee for completion of the project. Company A's portion of the engagement results in fees of $144,000.

(ii) The engagement, once undertaken, requires 20% more hours by each of Companies A and B than originally estimated. Nevertheless, the unrelated client pays the fixed fee that was agreed upon at the start of the engagement. Company B pays Company A $144,000, in accordance with the fixed fee arrangement.

(iii) Company A often enters into similar fixed fee engagements with clients. In addition, Company A's records for similar engagements show that when it experiences cost overruns, it does not collect additional fees from the client for the difference between projected and actual hours. Accordingly, in evaluating whether the fees paid by Company B to Company A are arm's length, it is determined that no adjustments to the intercompany service charge are warranted. *See* § 1.482-1(d)(3)(ii) and paragraph (c)(2)(ii)(A) of this section.

(5) ***Indirect evidence of the price of a comparable uncontrolled services transaction*** —

(i) ***In general.*** The price of a comparable uncontrolled services transaction may be derived based on indirect measures of the price charged in comparable uncontrolled services transactions, but only if—

(A) The data are widely and routinely used in the ordinary course of business in the particular industry or market segment for purposes of determining prices actually charged in comparable uncontrolled services transactions;

(B) The data are used to set prices in the controlled services transaction in the same way they are used to set prices in uncontrolled services transactions of the controlled taxpayer, or in the same way they are used by uncontrolled taxpayers to set prices in uncontrolled services transactions; and

(C) The amount charged in the controlled services transaction may be reliably adjusted to reflect differences in quality of the services, contractual terms, market conditions, risks borne (including contingent-payment terms), duration or quantitative measure of services rendered, and other factors that may affect the price to which uncontrolled taxpayers would agree.

(ii) ***Example.*** The following example illustrates this paragraph (c)(5):

Example. Indirect evidence of comparable uncontrolled services price. (i) Company A is a United States insurance company. Company A's wholly-owned Country X subsidiary, Company B, performs specialized risk analysis for Company A as well as for uncontrolled parties. In determining the price actually charged to uncontrolled entities for performing such risk analysis, Company B uses a proprietary, multi-factor computer program, which relies on the gross value of the policies in the customer's portfolio, the relative composition of those policies, their location, and the estimated number of personnel hours necessary to complete the project. Uncontrolled companies that perform comparable risk analysis in the same industry or market-segment use similar proprietary computer programs to price transactions with uncontrolled customers (the

competitors' programs may incorporate different inputs, or may assign different weights or values to individual inputs, in arriving at the price).
(ii) During the taxable year subject to audit, Company B performed risk analysis for uncontrolled parties as well as for Company A. Because prices charged to uncontrolled customers reflected the composition of each customer's portfolio together with other factors, the prices charged in Company B's uncontrolled transactions do not provide a reliable basis for determining the comparable uncontrolled services price for the similar services rendered to Company A. However, in evaluating an arm's length price for the studies performed by Company B for Company A, Company B's proprietary computer program may be considered as indirect evidence of the comparable uncontrolled services price that would be charged to perform the services for Company A. The reliability of the results obtained by application of this internal computer program as a measure of an arm's length price for the services will be increased to the extent that Company A used the internal computer program to generate actual transaction prices for risk-analysis studies performed for uncontrolled parties during the same taxable year under audit; Company A used data that are widely and routinely used in the ordinary course of business in the insurance industry to determine the price charged; and Company A reliably adjusted the price charged in the controlled services transaction to reflect differences that may affect the price to which uncontrolled taxpayers would agree.

(d) *Gross services margin method* —

(1) ***In general.*** The gross services margin method evaluates whether the amount charged in a controlled services transaction is arm's length by reference to the gross profit margin realized in comparable uncontrolled transactions. This method ordinarily is used in cases where a controlled taxpayer performs services or functions in connection with an uncontrolled transaction between a member of the controlled group and an uncontrolled taxpayer. This method may be used where a controlled taxpayer renders services (agent services) to another member of the controlled group in connection with a transaction between that other member and an uncontrolled taxpayer. This method also may be used in cases where a controlled taxpayer contracts to provide services to an uncontrolled taxpayer (intermediary function) and another member of the controlled group actually performs a portion of the services provided.

(2) *Determination of arm's length price* —

(i) ***In general.*** The gross services margin method evaluates whether the price charged or amount retained by a controlled taxpayer in the controlled services transaction in connection with the relevant uncontrolled transaction is arm's length by determining the appropriate gross profit of the controlled taxpayer.

(ii) ***Relevant uncontrolled transaction.*** The relevant uncontrolled transaction is a transaction between a member of the controlled group and an uncontrolled taxpayer as to which the controlled taxpayer performs agent services or an intermediary function.

(iii) ***Applicable uncontrolled price.*** The applicable uncontrolled price is the price paid or received by the uncontrolled taxpayer in the relevant uncontrolled transaction.

(iv) ***Appropriate gross services profit.*** The appropriate gross services profit is computed by multiplying the applicable uncontrolled price by the gross services profit margin in comparable uncontrolled transactions. The determination of the appropriate gross services profit will take into account any functions performed by other members of the controlled group, as well as any other relevant factors described in § 1.482-1(d)(3). The comparable gross services profit margin may be determined by reference to the commission in an uncontrolled transaction, where that commission is stated as a percentage of the price charged in the uncontrolled transaction.

(v) ***Arm's length range. See*** § 1.482-1(e)(2) for determination of the arm's length range.

(3) ***Comparability and reliability considerations*** —

(i) ***In general.*** Whether results derived from application of this method are the most reliable measure of the arm's length result must be determined using the factors described under the best method rule in § 1.482-1(c). The application of these factors under the gross services margin method is discussed in paragraphs (d)(3)(ii) and (iii) of this section.

(ii) ***Comparability*** —

(A) ***Functional comparability.*** The degree of comparability between an uncontrolled transaction and a controlled transaction is determined by applying the comparability provisions of § 1.482-1(d). A gross services profit provides compensation for services or functions that bear a relationship to the relevant uncontrolled transaction, including an operating profit in return for the investment of capital and the assumption of risks by the controlled taxpayer performing the services or functions under review. Therefore, although all of the factors described in § 1.482-1(d)(3) must be considered, comparability under this method is particularly dependent on similarity of services or functions performed, risks borne, intangible property (if any) used in providing the services or functions, and contractual terms, or adjustments to account for the effects of any such differences. If possible, the appropriate gross services profit margin should be derived from comparable uncontrolled transactions by the controlled taxpayer under review, because similar characteristics are more likely found among different transactions by the same controlled taxpayer than among transactions by other parties. In the absence of comparable uncontrolled transactions involving the same controlled taxpayer, an appropriate gross services profit margin may be derived from transactions of uncontrolled taxpayers involving comparable services or functions with respect to similarly related transactions.

(B) ***Other comparability factors.*** Comparability under this method is not dependent on close similarity of the relevant uncontrolled transaction to the related transactions involved in the uncontrolled comparables. However, substantial differences in the nature of the relevant uncontrolled transaction and the relevant transactions involved in the uncontrolled comparables, such as differences in the type of property transferred or service provided in the relevant uncontrolled transaction, may indicate significant differences in the services or functions performed by the controlled and uncontrolled taxpayers with respect to their respective relevant transactions. Thus, it ordinarily would be expected that the services or functions performed in the controlled and uncontrolled transactions would be with respect to relevant transactions involving the transfer of property within the same product categories or the provision of services of the same general type (for example, information-technology systems design). Furthermore, significant differences in the intangible property (if any) used by the controlled taxpayer in

the controlled services transaction as distinct from the uncontrolled comparables may also affect the reliability of the comparison. Finally, the reliability of profit measures based on gross services profit may be adversely affected by factors that have less effect on prices. For example, gross services profit may be affected by a variety of other factors, including cost structures or efficiency (for example, differences in the level of experience of the employees performing the service in the controlled and uncontrolled transactions). Accordingly, if material differences in these factors are identified based on objective evidence, the reliability of the analysis may be affected.

(C) ***Adjustments for differences between controlled and uncontrolled transactions.*** If there are material differences between the controlled and uncontrolled transactions that would affect the gross services profit margin, adjustments should be made to the gross services profit margin, according to the comparability provisions of § 1.482-1(d)(2). For this purpose, consideration of the total services costs associated with functions performed and risks assumed may be necessary because differences in functions performed are often reflected in these costs. If there are differences in functions performed, however, the effect on gross services profit of such differences is not necessarily equal to the differences in the amount of related costs. Specific examples of factors that may be particularly relevant to this method include—

(*1*) Contractual terms (for example, scope and terms of warranties or guarantees regarding the services or function, volume, credit and payment terms, and allocation of risks, including any contingent-payment terms);

(*2*) Intangible property (if any) used in performing the services or function;

(*3*) Geographic market in which the services or function are performed or in which the relevant uncontrolled transaction takes place; and

(*4*) Risks borne, including, if applicable, inventory-type risk.

(D) ***Buy-sell distributor.*** If a controlled taxpayer that performs an agent service or intermediary function is comparable to a distributor that takes title to goods and resells them, the gross profit margin earned by such distributor on uncontrolled sales, stated as a percentage of the price for the goods, may be used as the comparable gross services profit margin.

(iii) ***Data and assumptions*** —

(A) ***In general.*** The reliability of the results derived from the gross services margin method is affected by the completeness and accuracy of the data used and the reliability of the assumptions made to apply this method. *See* § 1.482-1(c) (best method rule).

(B) ***Consistency in accounting.*** The degree of consistency in accounting practices between the controlled transaction and the uncontrolled comparables that materially affect the gross services profit margin affects the reliability of the results under this method.

(4) ***Examples.*** The principles of this paragraph (d) are illustrated by the following examples:

Example 1. Agent services. Company A and Company B are members of a controlled group. Company A is a foreign manufacturer of industrial equipment. Company B is a U.S. company that acts as a commission agent for Company A by arranging for Company A to make direct sales of the equipment it manufactures to unrelated purchasers in the U.S. market. Company B does not take title to the equipment but instead receives from Company A commissions that are

determined as a specified percentage of the sales price for the equipment that is charged by Company A to the unrelated purchaser. Company B also arranges for direct sales of similar equipment by unrelated foreign manufacturers to unrelated purchasers in the U.S. market. Company B charges these unrelated foreign manufacturers a commission fee of 5% of the sales price charged by the unrelated foreign manufacturers to the unrelated U.S. purchasers for the equipment. Information regarding the comparable agent services provided by Company B to unrelated foreign manufacturers is sufficiently complete to conclude that it is likely that all material differences between the controlled and uncontrolled transactions have been identified and adjustments for such differences have been made. If the comparable gross services profit margin is 5% of the price charged in the relevant transactions involved in the uncontrolled comparables, then the appropriate gross services profit that Company B may earn and the arm's length price that it may charge Company A for its agent services is equal to 5% of the applicable uncontrolled price charged by Company A in sales of equipment in the relevant uncontrolled transactions.

Example 2. Agent services. The facts are the same as in *Example 1*, except that Company B does not act as a commission agent for unrelated parties and it is not possible to obtain reliable information concerning commission rates charged by uncontrolled commission agents that engage in comparable transactions with respect to relevant sales of property. It is possible, however, to obtain reliable information regarding the gross profit margins earned by unrelated parties that briefly take title to and then resell similar property in uncontrolled transactions, in which they purchase the property from foreign manufacturers and resell the property to purchasers in the U.S. market. Analysis of the facts and circumstances indicates that, aside from certain minor differences for which adjustments can be made, the uncontrolled parties that resell property perform similar functions and assume similar risks as Company B performs and assumes when it acts as a commission agent for Company A's sales of property. Under these circumstances, the gross profit margin earned by the unrelated distributors on the purchase and resale of property may be used, subject to any adjustments for any material differences between the controlled and uncontrolled transactions, as a comparable gross services profit margin. The appropriate gross services profit that Company B may earn and the arm's length price that it may charge Company A for its agent services is therefore equal to this comparable gross services margin, multiplied by the applicable uncontrolled price charged by Company A in its sales of equipment in the relevant uncontrolled transactions.

Example 3. Agent services. (i) Company A and Company B are members of a controlled group. Company A is a U.S. corporation that renders computer consulting services, including systems integration and networking, to business clients.
(ii) In undertaking engagements with clients, Company A in some cases pays a commission of 3% of its total fees to unrelated parties that assist Company A in obtaining consulting engagements. Typically, such fees are paid to non-computer consulting firms that provide strategic management services for their clients. When Company A obtains a consulting engagement with a client of a non-computer consulting firm, Company A does not subcontract with the other consulting firm, nor does the other consulting firm play any role in Company A's consulting engagement.

(iii) Company B, a Country X subsidiary of Company A, assists Company A in obtaining an engagement to perform computer consulting services for a Company B banking industry client in Country X. Although Company B has an established relationship with its Country X client and was instrumental in arranging for Company A's engagement with the client, Company A's particular expertise was the primary consideration in motivating the client to engage Company A. Based on the relative contributions of Companies A and B in obtaining and undertaking the engagement, Company B's role was primarily to facilitate the consulting engagement between Company A and the Country X client. Information regarding the commissions paid by Company A to unrelated parties for providing similar services to facilitate Company A's consulting engagements is sufficiently complete to conclude that it is likely that all material differences between these uncontrolled transactions and the controlled transaction between Company B and Company A have been identified and that appropriate adjustments have been made for any such differences. If the comparable gross services margin earned by unrelated parties in providing such agent services is 3% of total fees charged in the relevant transactions involved in the uncontrolled comparables, then the appropriate gross services profit that Company B may earn and the arm's length price that it may charge Company A for its agent services is equal to this comparable gross services margin (3%), multiplied by the applicable uncontrolled price charged by Company A in its relevant uncontrolled consulting engagement with Company B's client.

Example 4. Intermediary function. (i) The facts are the same as in *Example 3*, except that Company B contracts directly with its Country X client to provide computer consulting services and Company A performs the consulting services on behalf of Company B. Company A does not enter into a consulting engagement with Company B's Country X client. Instead, Company B charges its Country X client an uncontrolled price for the consulting services, and Company B pays a portion of the uncontrolled price to Company A for performing the consulting services on behalf of Company B.
(ii) Analysis of the relative contributions of Companies A and B in obtaining and undertaking the consulting contract indicates that Company B functioned primarily as an intermediary contracting party, and the gross services margin method is the most reliable method for determining the amount that Company B may retain as compensation for its intermediary function with respect to Company A's consulting services. In this case, therefore, because Company B entered into the relevant uncontrolled transaction to provide services, Company B receives the applicable uncontrolled price that is paid by the Country X client for the consulting services. Company A technically performs services for Company B when it performs, on behalf of Company B, the consulting services Company B contracted to provide to the Country X client. The arm's length amount that Company A may charge Company B for performing the consulting services on Company B's behalf is equal to the applicable uncontrolled

price received by Company B in the relevant uncontrolled transaction, less Company B's appropriate gross services profit, which is the amount that Company B may retain as compensation for performing the intermediary function.

(iii) Reliable data concerning the commissions that Company A paid to uncontrolled parties for assisting it in obtaining engagements to provide consulting services similar to those it has provided on behalf of Company B provide useful information in applying the gross services margin method. However, consideration should be given to whether the third party commission data may need to be adjusted to account for any additional risk that Company B may have assumed as a result of its function as an intermediary contracting party, compared with the risk it would have assumed if it had provided agent services to assist Company A in entering into an engagement to provide its consulting service directly. In this case, the information regarding the commissions paid by Company A to unrelated parties for providing agent services to facilitate its performance of consulting services for unrelated parties is sufficiently complete to conclude that all material differences between these uncontrolled transactions and the controlled performance of an intermediary function, including possible differences in the amount of risk assumed in connection with performing that function, have been identified and that appropriate adjustments have been made. If the comparable gross services margin earned by unrelated parties in providing such agent services is 3% of total fees charged in Company B's relevant uncontrolled transactions, then the appropriate gross services profit that Company B may retain as compensation for performing an intermediary function (and the amount, therefore, that is deducted from the applicable uncontrolled price to arrive at the arm's length price that Company A may charge Company B for performing consulting services on Company B's behalf) is equal to this comparable gross services margin (3%), multiplied by the applicable uncontrolled price charged by Company B in its contract to provide services to the uncontrolled party.

Example 5. External comparable. (i) The facts are the same as in *Example 4,* except that neither Company A nor Company B engages in transactions with third parties that facilitate similar consulting engagements.
(ii) Analysis of the relative contributions of Companies A and B in obtaining and undertaking the contract indicates that Company B's role was primarily to facilitate the consulting arrangement between Company A and the Country X client. Although no reliable internal data are available regarding comparable transactions with uncontrolled entities, reliable data exist regarding commission rates for similar facilitating services between uncontrolled parties. These data indicate that a 3% commission (3% of total engagement fee) is charged in such transactions. Information regarding the uncontrolled comparables is sufficiently complete to conclude that it is likely that all material differences between the controlled and uncontrolled transactions have been identified

> and adjusted for. If the appropriate gross services profit margin is 3% of total fees, then an arm's length result of the controlled services transaction is for Company B to retain an amount equal to 3% of total fees paid to it.

(e) *Cost of services plus method* —

(1) ***In general.*** The cost of services plus method evaluates whether the amount charged in a controlled services transaction is arm's length by reference to the gross services profit markup realized in comparable uncontrolled transactions. The cost of services plus method is ordinarily used in cases where the controlled service renderer provides the same or similar services to both controlled and uncontrolled parties. This method is ordinarily not used in cases where the controlled services transaction involves a contingent-payment arrangement, as described in paragraph (i)(2) of this section.

(2) *Determination of arm's length price* —

(i) ***In general.*** The cost of services plus method measures an arm's length price by adding the appropriate gross services profit to the controlled taxpayer's comparable transactional costs.

(ii) ***Appropriate gross services profit.*** The appropriate gross services profit is computed by multiplying the controlled taxpayer's comparable transactional costs by the gross services profit markup, expressed as a percentage of the comparable transactional costs earned in comparable uncontrolled transactions.

(iii) ***Comparable transactional costs.*** Comparable transactional costs consist of the costs of providing the services under review that are taken into account as the basis for determining the gross services profit markup in comparable uncontrolled transactions. Depending on the facts and circumstances, such costs typically include all compensation attributable to employees directly involved in the performance of such services, materials and supplies consumed or made available in rendering such services, and may include as well other costs of rendering the services. Comparable transactional costs must be determined on a basis that will facilitate comparison with the comparable uncontrolled transactions. For that reason, comparable transactional costs may not necessarily equal total services costs, as defined in paragraph (j) of this section, and in appropriate cases may be a subset of total services costs. Generally accepted accounting principles or Federal income tax accounting rules (where Federal income tax data for comparable transactions or business activities are available) may provide useful guidance but will not conclusively establish the appropriate comparable transactional costs for purposes of this method.

(iv) ***Arm's length range. See*** § 1.482-1(e)(2) for determination of an arm's length range.

(3) *Comparability and reliability considerations* —

(i) ***In general.*** Whether results derived from the application of this method are the most reliable measure of the arm's length result must be determined using the factors described under the best method rule in § 1.482-1(c).

(ii) *Comparability* —

(A) ***Functional comparability.*** The degree of comparability between controlled and uncontrolled transactions is determined by applying the comparability provisions of § 1.482-1(d). A service renderer's gross services profit provides compensation for performing services

related to the controlled services transaction under review, including an operating profit for the service renderer's investment of capital and assumptions of risks. Therefore, although all of the factors described in § 1.482-1(d)(3) must be considered, comparability under this method is particularly dependent on similarity of services or functions performed, risks borne, intangible property (if any) used in providing the services or functions, and contractual terms, or adjustments to account for the effects of any such differences. If possible, the appropriate gross services profit markup should be derived from comparable uncontrolled transactions of the same taxpayer participating in the controlled services transaction because similar characteristics are more likely to be found among services provided by the same service provider than among services provided by other service providers. In the absence of such services transactions, an appropriate gross services profit markup may be derived from comparable uncontrolled services transactions of other service providers. If the appropriate gross services profit markup is derived from comparable uncontrolled services transactions of other service providers, in evaluating comparability the controlled taxpayer must consider the results under this method expressed as a markup on total services costs of the controlled taxpayer, because differences in functions performed may be reflected in differences in service costs other than those included in comparable transactional costs.

(B) ***Other comparability factors.*** Comparability under this method is less dependent on close similarity between the services provided than under the comparable uncontrolled services price method. Substantial differences in the services may, however, indicate significant functional differences between the controlled and uncontrolled taxpayers. Thus, it ordinarily would be expected that the controlled and uncontrolled transactions would involve services of the same general type (for example, information-technology systems design). Furthermore, if a significant amount of the controlled taxpayer's comparable transactional costs consists of service costs incurred in a tax accounting period other than the tax accounting period under review, the reliability of the analysis would be reduced. In addition, significant differences in the value of the services rendered, due for example to the use of valuable intangible property, may also affect the reliability of the comparison. Finally, the reliability of profit measures based on gross services profit may be adversely affected by factors that have less effect on prices. For example, gross services profit may be affected by a variety of other factors, including cost structures or efficiency-related factors (for example, differences in the level of experience of the employees performing the service in the controlled and uncontrolled transactions). Accordingly, if material differences in these factors are identified based on objective evidence, the reliability of the analysis may be affected.

(C) ***Adjustments for differences between the controlled and uncontrolled transactions.*** If there are material differences between the controlled and uncontrolled transactions that would affect the gross services profit markup, adjustments should be made to the gross services profit markup earned in the comparable uncontrolled transaction according to the provisions of § 1.482-1(d)(2). For this purpose, consideration of the comparable transactional costs associated with the functions performed and risks assumed may be necessary, because differences in the functions performed are often reflected in these costs. If there are differences in functions performed, however, the effect on gross services profit of such differences is not necessarily equal to the differences in the amount of related comparable transactional costs. Specific examples of the factors that may be particularly relevant to this method include—

(1) The complexity of the services;

(2) The duration or quantitative measure of services;

(3) Contractual terms (for example, scope and terms of warranties or guarantees provided, volume, credit and payment terms, allocation of risks, including any contingent-payment terms);

(4) Economic circumstances; and

(5) Risks borne.

(iii) ***Data and assumptions*** —

(A) ***In general.*** The reliability of the results derived from the cost of services plus method is affected by the completeness and accuracy of the data used and the reliability of the assumptions made to apply this method. *See* § 1.482-1(c) (Best method rule).

(B) ***Consistency in accounting.*** The degree of consistency in accounting practices between the controlled transaction and the uncontrolled comparables that materially affect the gross services profit markup affects the reliability of the results under this method. Thus, for example, if differences in cost accounting practices would materially affect the gross services profit markup, the ability to make reliable adjustments for such differences would affect the reliability of the results obtained under this method. Further, reliability under this method depends on the extent to which the controlled and uncontrolled transactions reflect consistent reporting of comparable transactional costs. For purposes of this paragraph (e)(3)(iii)(B), the term *comparable transactional costs* includes the cost of acquiring tangible property that is transferred (or used) with the services, to the extent that the arm's length price of the tangible property is not separately evaluated as a controlled transaction under another provision.

(4) ***Examples.*** The principles of this paragraph (e) are illustrated by the following examples:

> *Example 1. Internal comparable.* (i) Company A designs and assembles information-technology networks and systems. When Company A renders services for uncontrolled parties, it receives compensation based on time and materials as well as certain other related costs necessary to complete the project. This fee includes the cost of hardware and software purchased from uncontrolled vendors and incorporated in the final network or system, plus a reasonable allocation of certain specified overhead costs incurred by Company A in providing these services. Reliable accounting records maintained by Company A indicate that Company A earned a gross services profit markup of 10% on its time, materials and specified overhead in providing design services during the year under examination on information technology projects for uncontrolled entities.
> (ii) Company A designed an information-technology network for its Country X subsidiary, Company B. The services rendered to Company B are similar in scope and complexity to services that Company A rendered to uncontrolled parties during the year under examination. Using Company A's accounting records (which are determined to be reliable under paragraph (e)(3) of this section), it is possible to identify the comparable transactional costs involved in

the controlled services transaction with reference to the costs incurred by Company A in rendering similar design services to uncontrolled parties. Company A's records indicate that it does not incur any additional types of costs in rendering similar services to uncontrolled customers. The data available are sufficiently complete to conclude that it is likely that all material differences between the controlled and uncontrolled transactions have been identified and adjusted for. Based on the gross services profit markup data derived from Company A's uncontrolled transactions involving similar design services, an arm's length result for the controlled services transaction is equal to the price that will allow Company A to earn a 10% gross services profit markup on its comparable transactional costs.

Example 2. Inability to adjust for differences in comparable transactional costs. The facts are the same as in *Example 1*, except that Company A's staff that rendered the services to Company B consisted primarily of engineers in training status or on temporary rotation from other Company A subsidiaries. In addition, the Company B network incorporated innovative features, including specially designed software suited to Company B's requirements. The use of less-experienced personnel and staff on temporary rotation, together with the special features of the Company B network, significantly increased the time and costs associated with the project as compared to time and costs associated with similar projects completed for uncontrolled customers. These factors constitute material differences between the controlled and the uncontrolled transactions that affect the determination of Company A's comparable transactional costs associated with the controlled services transaction, as well as the gross services profit markup. Moreover, it is not possible to perform reliable adjustments for these differences on the basis of the available accounting data. Under these circumstances, the reliability of the cost of services plus method as a measure of an arm's length price is substantially reduced.

Example 3. Operating loss by reference to total services costs. The facts and analysis are the same as in *Example 1*, except that an unrelated Company C, instead of Company A, renders similar services to uncontrolled parties and publicly available information indicates that Company C earned a gross services profit markup of 10% on its time, materials and certain specified overhead in providing those services. As in *Example 1*, Company A still provides services for its Country X subsidiary, Company B. In accordance with the requirements in paragraph (e)(3)(ii) of this section, the taxpayer performs additional analysis and restates the results of Company A's controlled services transaction with its Country X subsidiary, Company B, in the form of a markup on Company A's total services costs. This analysis by reference to total services costs shows that Company A generated an operating loss on the controlled services transaction, which indicates that functional differences likely exist between the controlled services transaction performed by Company A and uncontrolled services transactions performed by Company C, and that these differences may not be reflected in the comparable transactional costs. Upon further scrutiny, the presence of such functional differences between the controlled and uncontrolled transactions may indicate that the cost of services plus method does not provide the most reliable measure of an arm's length result under the facts and circumstances.

Example 4. Internal comparable. (i) Company A, a U.S. corporation, and its subsidiaries perform computer consulting services relating to systems integration and

networking for business clients in various countries. Company A and its subsidiaries render only consulting services and do not manufacture or distribute computer hardware or software to clients. The controlled group is organized according to industry specialization, with key industry specialists working for Company A. These personnel typically form the core consulting group that teams with consultants from the local-country subsidiaries to serve clients in the subsidiaries' respective countries.

(ii) On some occasions, Company A and its subsidiaries undertake engagements directly for clients. On other occasions, they work as subcontractors for uncontrolled parties on more extensive consulting engagements for clients. In undertaking the latter engagements with third-party consultants, Company A typically prices its services at four times the compensation costs of its consultants, defined as the consultants' base salary plus estimated fringe benefits, as defined in this table:

Category	Rate
Project managers	$100 per hour.
Technical staff	$75 per hour.

(iii) In uncontrolled transactions, Company A also charges the customer, at no markup, for out-of-pocket expenses such as travel, lodging, and data acquisition charges. Thus, for example, a project involving 100 hours of time from project managers, and 400 hours of technical staff time would result in total compensation costs to Company A of (100 hrs. × $100/hr.) + (400 hrs. × $75/hr.) = $10,000 + $30,000 = $40,000. Applying the markup of 300%, the total fee charged would thus be (4 × $40,000), or $160,000, plus out-of-pocket expenses.

(iv) Company B, a Country X subsidiary of Company A, contracts to render consulting services to a Country X client in the banking industry. In undertaking this engagement, Company B uses its own consultants and also uses the services of Company A project managers and technical staff that specialize in the banking industry for 75 hours and 380 hours, respectively. The data available are sufficiently complete to conclude that it is likely that all material differences between the controlled and uncontrolled transactions have been identified and adjusted for. Based on reliable data concerning the compensation costs to Company A, an arm's length result for the controlled services transaction is equal to $144,000. This is calculated as follows: [4 × (75 hrs. × $100/hr.)] + [4 × (380 hrs. × $75/hr.)] = $30,000 + $114,000 = $144,000, reflecting a 300% markup on the total compensation costs for Company A project managers and technical staff. In addition, consistent with Company A's pricing of uncontrolled transactions, Company B must reimburse Company A for appropriate out-of-pocket expenses incurred in performing the services.

(f) *Comparable profits method* —

(1) ***In general.*** The comparable profits method evaluates whether the amount charged in a controlled transaction is arm's length, based on objective measures of profitability (profit level indicators) derived from uncontrolled taxpayers that engage in similar business activities under similar circumstances. The rules in § 1.482-5 relating to the comparable profits method apply to controlled services transactions, except as modified in this paragraph (f).

(2) ***Determination of arm's length result*** —

(i) ***Tested party.*** This paragraph (f) applies where the relevant business activity of the tested party as determined under § 1.482-5(b)(2) is the rendering of services in a controlled services transaction. Where the tested party determined under § 1.482-5(b)(2) is instead the recipient of the controlled services, the rules under this paragraph (f) are not applicable to determine the arm's length result.

(ii) ***Profit level indicators.*** In addition to the profit level indicators provided in § 1.482-5(b)(4), a profit level indicator that may provide a reliable basis for comparing operating profits of the tested party involved in a controlled services transaction and uncontrolled comparables is the ratio of operating profit to total services costs (as defined in paragraph (j) of this section).

(iii) ***Comparability and reliability considerations*** —*Data and assumptions—Consistency in accounting.* Consistency in accounting practices between the relevant business activity of the tested party and the uncontrolled service providers is particularly important in determining the reliability of the results under this method, but less than in applying the cost of services plus method. Adjustments may be appropriate if materially different treatment is applied to particular cost items related to the relevant business activity of the tested party and the uncontrolled service providers. For example, adjustments may be appropriate where the tested party and the uncontrolled comparables use inconsistent approaches to classify similar expenses as “cost of goods sold” and “selling, general, and administrative expenses.” Although distinguishing between these two categories may be difficult, the distinction is less important to the extent that the ratio of operating profit to total services costs is used as the appropriate profit level indicator. Determining whether adjustments are necessary under these or similar circumstances requires thorough analysis of the functions performed and consideration of the cost accounting practices of the tested party and the uncontrolled comparables. Other adjustments as provided in § 1.482-5(c)(2)(iv) may also be necessary to increase the reliability of the results under this method.

(3) ***Examples.*** The principles of this paragraph (f) are illustrated by the following examples:

> *Example 1. Ratio of operating profit to total services costs as the appropriate profit level indicator.* (i) A Country T parent firm, Company A, and its Country Y subsidiary, Company B, both engage in manufacturing as their principal business activity. Company A also performs certain advertising services for itself and its affiliates. In year 1, Company A renders advertising services to Company B.
> (ii) Based on the facts and circumstances, it is determined that the comparable profits method will provide the most reliable measure of an arm's length result. Company A is selected as the tested party. No data are available for comparable independent manufacturing firms that render advertising services to third parties. Financial data are

available, however, for ten independent firms that render similar advertising services as their principal business activity in Country X. The ten firms are determined to be comparable under § 1.482-5(c). Neither Company A nor the comparable companies use valuable intangible property in rendering the services.

(iii) Based on the available financial data of the comparable companies, it cannot be determined whether these comparable companies report costs for financial accounting purposes in the same manner as the tested party. The publicly available financial data of the comparable companies segregate total services costs into cost of goods sold and sales, general and administrative costs, with no further segmentation of costs provided. Due to the limited information available regarding the cost accounting practices used by the comparable companies, the ratio of operating profits to total services costs is determined to be the most appropriate profit level indicator. This ratio includes total services costs to minimize the effect of any inconsistency in accounting practices between Company A and the comparable companies.

Example 2. Application of the operating profit to total services costs profit level indicator. (i) Company A is a foreign subsidiary of Company B, a U.S. corporation. Company B is under examination for its year 1 taxable year. Company B renders management consulting services to Company A. Company B's consulting function includes analyzing Company A's operations, benchmarking Company A's financial performance against companies in the same industry, and to the extent necessary, developing a strategy to improve Company A's operational performance. The accounting records of Company B allow reliable identification of the total services costs of the consulting staff associated with the management consulting services rendered to Company A. Company A reimburses Company B for its costs associated with rendering the consulting services, with no markup.
(ii) Based on all the facts and circumstances, it is determined that the comparable profits method will provide the most reliable measure of an arm's length result. Company B is selected as the tested party, and its rendering of management consulting services is identified as the relevant business activity. Data are available from ten domestic companies that operate in the industry segment involving management consulting and that perform activities comparable to the relevant business activity of Company B. These comparables include entities that primarily perform management consulting services for uncontrolled parties. The comparables incur similar risks as Company B incurs in performing the consulting services and do not make use of valuable intangible property or special processes.

(iii) Based on the available financial data of the comparables, it cannot be determined whether the comparables report their costs for financial accounting purposes in the same manner as Company B reports its costs in the relevant business activity. The available financial data for the comparables report only an aggregate figure for costs of goods sold

and operating expenses, and do not segment the underlying services costs. Due to this limitation, the ratio of operating profits to total services costs is determined to be the most appropriate profit level indicator.

(iv) For the taxable years 1 through 3, Company B shows the following results for the services performed for Company A:

	Year 1	Year 2	Year 3	Average
Revenues	1,200,000	1,100,000	1,300,000	1,200,000
Cost of Goods Sold	100,000	100,000	N/A	66,667
Operating Expenses	1,100,000	1,000,000	1,300,000	1,133,333
Operating Profit	0	0	0	0

(v) After adjustments have been made to account for identified material differences between the relevant business activity of Company B and the comparables, the average ratio for the taxable years 1 through 3 of operating profit to total services costs is calculated for each of the uncontrolled service providers. Applying each ratio to Company B's average total services costs from the relevant business activity for the taxable years 1 through 3 would lead to the following comparable operating profit (COP) for the services rendered by Company B:

Uncontrolled service provider	OP/Total service costs (percent)	Company B COP
Company 1	15.75	$189,000
Company 2	15.00	180,000
Company 3	14.00	168,000
Company 4	13.30	159,600
Company 5	12.00	144,000
Company 6	11.30	135,600
Company 7	11.25	135,000
Company 8	11.18	134,160
Company 9	11.11	133,320
Company 10	10.75	129,000

(vi) The available data are not sufficiently complete to conclude that it is likely that all material differences between the relevant business activity of Company B and the

comparables have been identified. Therefore, an arm's length range can be established only pursuant to § 1.482-1(e)(2)(iii)(B). The arm's length range is established by reference to the interquartile range of the results as calculated under § 1.482-1(e)(2)(iii)(C), which consists of the results ranging from $168,000 to $134,160. Company B's reported average operating profit of zero ($0) falls outside this range. Therefore, an allocation may be appropriate.
(vii) Because Company B reported income of zero, to determine the amount, if any, of the allocation, Company B's reported operating profit for year 3 is compared to the comparable operating profits derived from the comparables' results for year 3. The ratio of operating profit to total services costs in year 3 is calculated for each of the comparables and applied to Company B's year 3 total services costs to derive the following results:

Uncontrolled service provider	OP/Total service costs (for year 3) (percent)	Company B COP
Company 1	15.00	$195,000
Company 2	14.75	191,750
Company 3	14.00	182,000
Company 4	13.50	175,500
Company 5	12.30	159,900
Company 6	11.05	143,650
Company 7	11.03	143,390
Company 8	11.00	143,000
Company 9	10.50	136,500
Company 10	10.25	133,250

(viii) Based on these results, the median of the comparable operating profits for year 3 is $151,775. Therefore, Company B's income for year 3 is increased by $151,775, the difference between Company B's reported operating profit for year 3 of zero and the median of the comparable operating profits for year 3.

Example 3. Material difference in accounting for stock-based compensation. (i) Taxpayer, a U.S. corporation the stock of which is publicly traded, performs controlled services for its wholly-owned subsidiaries. The arm's length price of these controlled services is evaluated under the comparable profits method for services in paragraph (f) of this section by reference to the net cost plus profit level indicator (PLI). Taxpayer is the tested party under paragraph (f)(2)(i) of this section. The Commissioner identifies the most narrowly identifiable business activity of the tested party for which data are available that incorporate the controlled transaction (the relevant business activity). The Commissioner also identifies four

uncontrolled domestic service providers, Companies A, B, C, and D, each of which performs exclusively activities similar to the relevant business activity of Taxpayer that is subject to analysis under paragraph (f) of this section. The stock of Companies A, B, C, and D is publicly traded on a U.S. stock exchange. Assume that Taxpayer makes an election to apply these regulations to earlier taxable years.

(ii) Stock options are granted to the employees of Taxpayer that engage in the relevant business activity. Assume that, as determined under a method in accordance with U.S. generally accepted accounting principles, the fair value of such stock options attributable to the employees' performance of the relevant business activity is 500 for the taxable year in question. In evaluating the controlled services, Taxpayer includes salaries, fringe benefits, and related compensation of these employees in "total services costs," as defined in paragraph (j) of this section. Taxpayer does not include any amount attributable to stock options in total services costs, nor does it deduct that amount in determining "reported operating profit" within the meaning of § 1.482-5(d)(5), for the year under examination.

(iii) Stock options are granted to the employees of Companies A, B, C, and D. Under a fair value method in accordance with U.S. generally accepted accounting principles, the comparables include in total compensation the value of the stock options attributable to the employees' performance of the relevant business activity for the annual financial reporting period, and treat this amount as an expense in determining operating profit for financial accounting purposes. The treatment of employee stock options is summarized in the following table:

	Salaries and other non-option compensation	Stock options fair value	Stock options expensed
Taxpayer	1,000	500	0
Company A	7,000	2,000	2,000
Company B	4,300	250	250
Company C	12,000	4,500	4,500
Company D	15,000	2,000	2,000

(iv) A material difference in accounting for stock-based compensation (within the meaning of § 1.482-7T(d)(3)(i)) exists. Analysis indicates that this difference would materially affect the measure of an arm's length result under this paragraph (f). In making an adjustment to improve comparability under §§ 1.482-1(d)(2) and 1.482-5(c)(2)(iv), the Commissioner

includes in total services costs of the tested party the total compensation costs of 1,500 (including stock option fair value). In addition, the Commissioner calculates the net cost plus PLI by reference to the financial-accounting data of Companies A, B, C, and D, which take into account compensatory stock options.

Example 4. Material difference in utilization of stock-based compensation. (i) The facts are the same as in paragraph (i) of *Example 3.*
(ii) No stock options are granted to the employees of Taxpayer that engage in the relevant business activity. Thus, no deduction for stock options is made in determining "reported operating profit" (within the meaning of § 1.482-5(d)(5)) for the taxable year under examination.

(iii) Stock options are granted to the employees of Companies A, B, C, and D, but none of these companies expense stock options for financial accounting purposes. Under a method in accordance with U.S. generally accepted accounting principles, however, Companies A, B, C, and D disclose the fair value of the stock options for financial accounting purposes. The utilization and treatment of employee stock options is summarized in the following table:

	Salaries and other non-option compensation	Stock options fair value	Stock options expensed
Taxpayer	1,000	0	N/A
Company A	7,000	2,000	0
Company B	4,300	250	0
Company C	12,000	4,500	0
Company D	15,000	2,000	0

(iv) A material difference in the utilization of stock-based compensation (within the meaning of § 1.482-7T(d)(3)(i)) exists. Analysis indicates that these differences would materially affect the measure of an arm's length result under this paragraph (f). In evaluating the comparable operating profits of the tested party, the Commissioner uses Taxpayer's total services costs, which include total compensation costs of 1,000. In considering whether an adjustment is necessary to improve comparability under §§ 1.482-1(d)(2) and 1.482-5(c)(2)(iv), the Commissioner recognizes that the total compensation provided to employees of Taxpayer is comparable to the total compensation provided to employees of Companies A, B, C, and D. Because Companies A, B, C, and D do not expense stock-based

compensation for financial accounting purposes, their reported operating profits must be adjusted in order to improve comparability with the tested party. The Commissioner increases each comparable's total services costs, and also reduces its reported operating profit, by the fair value of the stock-based compensation incurred by the comparable company.

(v) The adjustments to the data of Companies A, B, C, and D described in paragraph (iv) of this *Example 4* are summarized in the following table:

	Salaries and other non-option compensation	Stock options fair value	Total services costs (A)	Operating profit (B)	Net cost plus PLI (B/A) (Percent)
Per financial statements:					
Company A	7,000	2,000	25,000	6,000	24.00
Company B	4,300	250	12,500	2,500	20.00
Company C	12,000	4,500	36,000	11,000	30.56
Company D	15,000	2,000	27,000	7,000	25.93
As adjusted:					
Company A	7,000	2,000	27,000	4,000	14.81
Company B	4,300	250	12,750	2,250	17.65
Company C	12,000	4,500	40,500	6,500	16.05
Company D	15,000	2,000	29,000	5,000	17.24

Example 5. Non-material difference in utilization of stock-based compensation. (i) The facts are the same as in paragraph (i) of *Example 3*.

(ii) Stock options are granted to the employees of Taxpayer that engage in the relevant business activity. Assume that, as determined under a method in accordance with U.S. generally accepted accounting principles, the fair value of such stock options attributable to the employees' performance of the relevant business activity is 50 for the taxable year. Taxpayer includes salaries, fringe benefits, and all other compensation of these employees (including the stock option fair value) in “total services costs,” as defined in paragraph (j) of this section, and deducts these amounts in determining “reported operating profit” within the meaning of § 1.482-5(d)(5), for the taxable year under examination.

(iii) Stock options are granted to the employees of Companies A, B, C, and D, but none of these companies expense stock options for financial accounting purposes. Under a method in accordance with U.S. generally accepted accounting principles, however, Companies A, B, C, and D disclose the fair value of the stock options for financial accounting purposes. The utilization and treatment of employee stock options is summarized in the following table:

	Salaries and other non-option compensation	Stock options fair value	Stock options expensed
Taxpayer	1,000	50	50
Company A	7,000	100	0
Company B	4,300	40	0
Company C	12,000	130	0
Company D	15,000	75	0

(iv) Analysis of the data reported by Companies A, B, C, and D indicates that an adjustment for differences in utilization of stock-based compensation would not have a material effect on the determination of an arm's length result.

	Salaries and other non-option compensation	Stock options fair value	Total services costs (A)	Operating profit (B)	Net cost plus PLI (B/A) (percent)
Per financial statements:					
Company A	7,000	100	25,000	6,000	24.00
Company B	4,300	40	12,500	2,500	20.00
Company C	12,000	130	36,000	11,000	30.56
Company D	15,000	75	27,000	7,000	25.93
As adjusted:					
Company A	7,000	100	25,100	5,900	23.51
Company B	4,300	40	12,540	2,460	19.62
Company C	12,000	130	36,130	10,870	30.09

	Salaries and other non-option compensation	Stock options fair value	Total services costs (A)	Operating profit (B)	Net cost plus PLI (B/A) (percent)
Company D	15,000	75	27,075	6,925	25.58

(v) Under the circumstances, the difference in utilization of stock-based compensation would not materially affect the determination of the arm's length result under this paragraph (f). Accordingly, in calculating the net cost plus PLI, no comparability adjustment is made to the data of Companies A, B, C, or D pursuant to §§ 1.482-1(d)(2) and 1.482-5(c)(2)(iv).

Example 6. Material difference in comparables' accounting for stock-based compensation.
(i) The facts are the same as in paragraph (i) of *Example 3*.
(ii) Stock options are granted to the employees of Taxpayer that engage in the relevant business activity. Assume that, as determined under a method in accordance with U.S. generally accepted accounting principles, the fair value of such stock options attributable to employees' performance of the relevant business activity is 500 for the taxable year. Taxpayer includes salaries, fringe benefits, and all other compensation of these employees (including the stock option fair value) in "total services costs," as defined in paragraph (j) of this section, and deducts these amounts in determining "reported operating profit" (within the meaning of § 1.482-5(d)(5)) for the taxable year under examination.

(iii) Stock options are granted to the employees of Companies A, B, C, and D. Companies A and B expense the stock options for financial accounting purposes in accordance with U.S. generally accepted accounting principles. Companies C and D do not expense the stock options for financial accounting purposes. Under a method in accordance with U.S. generally accepted accounting principles, however, Companies C and D disclose the fair value of these options in their financial statements. The utilization and accounting treatment of options are depicted in the following table:

	Salary and other non-option compensation	Stock options fair value	Stock options expensed
Taxpayer	1,000	500	500
Company A	7,000	2,000	2,000
Company B	4,300	250	250

	Salary and other non-option compensation	Stock options fair value	Stock options expensed
Company C	12,000	4,500	0
Company D	15,000	2,000	0

(iv) A material difference in accounting for stock-based compensation (within the meaning of § 1.482-7T(d)(3)(i)) exists. Analysis indicates that this difference would materially affect the measure of the arm's length result under paragraph (f) of this section. In evaluating the comparable operating profits of the tested party, the Commissioner includes in total services costs Taxpayer's total compensation costs of 1,500 (including stock option fair value of 500). In considering whether an adjustment is necessary to improve comparability under §§ 1.482-1(d)(2) and 1.482-5(c)(2)(iv), the Commissioner recognizes that the total employee compensation (including stock options provided by Taxpayer and Companies A, B, C, and D) provides a reliable basis for comparison. Because Companies A and B expense stock-based compensation for financial accounting purposes, whereas Companies C and D do not, an adjustment to the comparables' operating profit is necessary. In computing the net cost plus PLI, the Commissioner uses the financial-accounting data of Companies A and B, as reported. The Commissioner increases the total services costs of Companies C and D by amounts equal to the fair value of their respective stock options, and reduces the operating profits of Companies C and D accordingly.

(v) The adjustments described in paragraph (iv) of this *Example 6* are depicted in the following table. For purposes of illustration, the unadjusted data of Companies A and B are also included.

	Salaries and other non-option compensation	Stock options fair value	Total services costs (A)	Operating profit (B)	Net cost plus PLI (B/A) (percent)
Per financial statements:					
Company A	7,000	2,000	27,000	4,000	14.80
Company B	4,300	250	12,750	2,250	17.65
As adjusted:					
Company C	12,000	4,500	40,500	6,500	16.05

	Salaries and other non-option compensation	Stock options fair value	Total services costs (A)	Operating profit (B)	Net cost plus PLI (B/A) (percent)
Company D	15,000	2,000	29,000	5,000	17.24

(g) *Profit split method* —

(1) ***In general.*** The profit split method evaluates whether the allocation of the combined operating profit or loss attributable to one or more controlled transactions is arm's length by reference to the relative value of each controlled taxpayer's contribution to that combined operating profit or loss. The relative value of each controlled taxpayer's contribution is determined in a manner that reflects the functions performed, risks assumed and resources employed by such controlled taxpayer in the relevant business activity. For application of the profit split method (both the comparable profit split and the residual profit split), *see* § 1.482-6. The residual profit split method may not be used where only one controlled taxpayer makes significant nonroutine contributions.

(2) ***Examples.*** The principles of this paragraph (g) are illustrated by the following examples:

Example 1. Residual profit split. (i) Company A, a corporation resident in Country X, auctions spare parts by means of an interactive database. Company A maintains a database that lists all spare parts available for auction. Company A developed the software used to run the database. Company A's database is managed by Company A employees in a data center located in Country X, where storage and manipulation of data also take place. Company A has a wholly-owned subsidiary, Company B, located in Country Y. Company B performs marketing and advertising activities to promote Company A's interactive database. Company B solicits unrelated companies to auction spare parts on Company A's database, and solicits customers interested in purchasing spare parts online. Company B owns and maintains a computer server in Country Y, where it receives information on spare parts available for auction. Company B has also designed a specialized communications network that connects its data center to Company A's data center in Country X. The communications network allows Company B to enter data from uncontrolled companies on Company A's database located in Country X. Company B's communications network also allows uncontrolled companies to access Company A's interactive database and purchase spare parts. Company B bore the risks and cost of developing this specialized communications network. Company B enters into contracts with uncontrolled companies and provides the companies access to Company A's database through the Company B network.
(ii) Analysis of the facts and circumstances indicates that both Company A and Company B possess valuable intangible property that they use to conduct the spare parts auction business. Company A bore the economic risks of developing and maintaining software and the interactive database. Company B bore the economic risks of developing the necessary

technology to transmit information from its server to Company A's data center, and to allow uncontrolled companies to access Company A's database. Company B helped to enhance the value of Company A's trademark and to establish a network of customers in Country Y. In addition, there are no market comparables for the transactions between Company A and Company B to reliably evaluate them separately. Given the facts and circumstances, the Commissioner determines that a residual profit split method will provide the most reliable measure of an arm's length result.

(iii) Under the residual profit split method, profits are first allocated based on the routine contributions of each taxpayer. Routine contributions include general sales, marketing or administrative functions performed by Company B for Company A for which it is possible to identify market returns. Any residual profits will be allocated based on the nonroutine contributions of each taxpayer. Since both Company A and Company B provided nonroutine contributions, the residual profits are allocated based on these contributions.

Example 2. Residual profit split. (i) Company A, a Country 1 corporation, provides specialized services pertaining to the processing and storage of Level 1 hazardous waste (for purposes of this example, the most dangerous type of waste). Under long-term contracts with private companies and governmental entities in Country 1, Company A performs multiple services, including transportation of Level 1 waste, development of handling and storage protocols, recordkeeping, and supervision of waste-storage facilities owned and maintained by the contracting parties. Company A's research and development unit has also developed new and unique processes for transport and storage of Level 1 waste that minimize environmental and occupational effects. In addition to this novel technology, Company A has substantial know-how and a long-term record of safe operations in Country 1.
(ii) Company A's subsidiary, Company B, has been in operation continuously for a number of years in Country 2. Company B has successfully completed several projects in Country 2 involving Level 2 and Level 3 waste, including projects with government-owned entities. Company B has a license in Country 2 to handle Level 2 waste (Level 3 does not require a license). Company B has established a reputation for completing these projects in a responsible manner. Company B has cultivated contacts with procurement officers, regulatory and licensing officials, and other government personnel in Country 2.

(iii) Country 2 government publishes invitations to bid on a project to handle the country's burgeoning volume of Level 1 waste, all of which is generated in government-owned facilities. Bidding is limited to companies that are domiciled in Country 2 and that possess a license from the government to handle Level 1 or Level 2 waste. In an effort to submit a winning bid to secure the contract, In an effort to submit a winning bid to secure the contract, Company B points to its Level 2 license and its record of successful completion of projects, and also demonstrates to Country 2 government that it has access to substantial technical expertise pertaining to processing of Level 1 waste.

(iv) Company A enters into a long-term technical services agreement with Company B. Under this agreement, Company A agrees to supply to Company B project managers and other technical staff who have detailed knowledge of Company A's proprietary Level 1 remediation techniques. Company A commits to perform under any long-term contracts entered into by Company B. Company B agrees to compensate Company A based on a markup on Company A's marginal costs (pro rata compensation and current expenses of Company A personnel). In the bid on the Country 2 contract for Level 1 waste remediation, Company B proposes to use a multi-disciplinary team of specialists from Company A and Company B. Project managers from Company A will direct the team, which will also include employees of Company B and will make use of physical assets and facilities owned by Company B. Only Company A and Company B personnel will perform services under the contract. Country 2 grants Company B a license to handle Level 1 waste.

(v) Country 2 grants Company B a five-year, exclusive contract to provide processing services for all Level 1 hazardous waste generated in County 2. Under the contract, Company B is to be paid a fixed price per ton of Level 1 waste that it processes each year. Company B undertakes that all services provided will meet international standards applicable to processing of Level 1 waste. Company B begins performance under the contract.

(vi) Analysis of the facts and circumstances indicates that both Company A and Company B make nonroutine contributions to the Level 1 waste processing activity in Country 2. In addition, it is determined that reliable comparables are not available for the services that Company A provides under the long-term contract, in part because those services incorporate specialized knowledge and process intangible property developed by Company A. It is also determined that reliable comparables are not available for the Level 2 license in Country 2, the successful track record, the government contacts with Country 2 officials, and other intangible property that Company B provided. In view of these facts, the Commissioner determines that the residual profit split method for services in paragraph (g) of this section provides the most reliable means of evaluating the arm's length results for the transaction. In evaluating the appropriate returns to Company A and Company B for their respective contributions, the Commissioner takes into account that the controlled parties incur different risks, because the contract between the controlled parties provides that Company A will be compensated on the basis of marginal costs incurred, plus a markup, whereas the contract between Company B and the government of Country 2 provides that Company B will be compensated on a fixed-price basis per ton of Level 1 waste processed.

(vii) In the first stage of the residual profit split, an arm's length return is determined for routine activities performed by Company B in Country 2, such as transportation, recordkeeping, and administration. In addition, an arm's length return is determined for routine activities performed by Company A (administrative, human resources, *etc.*) in connection with providing personnel to Company B. After the arm's length return for these

functions is determined, residual profits may be present. In the second stage of the residual profit split, any residual profit is allocated by reference to the relative value of the nonroutine contributions made by each taxpayer. Company A's nonroutine contributions include its commitment to perform under the contract and the specialized technical knowledge made available through the project managers under the services agreement with Company B. Company B's nonroutine contributions include its licenses to handle Level 1 and Level 2 waste in Country 2, its knowledge of and contacts with procurement, regulatory and licensing officials in the government of Country 2, and its record in Country 2 of successfully handling non-Level 1 waste.

(h) ***Unspecified methods.*** Methods not specified in paragraphs (b) through (g) of this section may be used to evaluate whether the amount charged in a controlled services transaction is arm's length. Any method used under this paragraph (h) must be applied in accordance with the provisions of § 1.482-1. Consistent with the specified methods, an unspecified method should take into account the general principle that uncontrolled taxpayers evaluate the terms of a transaction by considering the realistic alternatives to that transaction, including economically similar transactions structured as other than services transactions, and only enter into a particular transaction if none of the alternatives is preferable to it. For example, the comparable uncontrolled services price method compares a controlled services transaction to similar uncontrolled transactions to provide a direct estimate of the price to which the parties would have agreed had they resorted directly to a market alternative to the controlled services transaction. Therefore, in establishing whether a controlled services transaction achieved an arm's length result, an unspecified method should provide information on the prices or profits that the controlled taxpayer could have realized by choosing a realistic alternative to the controlled services transaction (for example, outsourcing a particular service function, rather than performing the function itself). As with any method, an unspecified method will not be applied unless it provides the most reliable measure of an arm's length result under the principles of the best method rule. *See* § 1.482-1(c). Therefore, in accordance with § 1.482-1(d) (comparability), to the extent that an unspecified method relies on internal data rather than uncontrolled comparables, its reliability will be reduced. Similarly, the reliability of a method will be affected by the reliability of the data and assumptions used to apply the method, including any projections used.

Example. (i) Company T, a U.S. corporation, develops computer software programs including a real estate investment program that performs financial analysis of commercial real properties. Companies U, V, and W are owned by Company T. The primary business activity of Companies U, V, and W is commercial real estate development. For business reasons, Company T does not sell the computer program to its customers (on a compact disk or via download from Company T's server through the Internet). Instead, Company T maintains the software program on its own server and allows customers to access the program through the Internet by using a password. The transactions between Company T and Companies U, V, and W are structured as controlled services transactions whereby Companies U, V, and W obtain access via the Internet to Company T's software program for financial analysis. Each year, Company T provides a revised version of the computer program including the most recent data on the commercial real estate market, rendering the old version obsolete.

(ii) In evaluating whether the consideration paid by Companies U, V, and W to Company T was arm's length, the Commissioner may consider, subject to the best method rule of § 1.482-1(c), Company T's alternative of selling the computer program to Companies U, V, and W on a compact disk or via download through the Internet. The Commissioner determines that the controlled services transactions between Company T and Companies U, V, and W are comparable to the transfer of a similar software program on a compact disk or via download through the Internet between uncontrolled parties. Subject to adjustments being made for material differences between the controlled services transactions and the comparable uncontrolled transactions, the uncontrolled transfers of tangible property may be used to evaluate the arm's length results for the controlled services transactions between Company T and Companies U, V, and W.

(i) *Contingent-payment contractual terms for services* —

(1) ***Contingent-payment contractual terms recognized in general.*** In the case of a contingent-payment arrangement, the arm's length result for the controlled services transaction generally would not require payment by the recipient to the renderer in the tax accounting period in which the service is rendered if the specified contingency does not occur in that period. If the specified contingency occurs in a tax accounting period subsequent to the period in which the service is rendered, the arm's length result for the controlled services transaction generally would require payment by the recipient to the renderer on a basis that reflects the recipient's benefit from the services rendered and the risks borne by the renderer in performing the activities in the absence of a provision that unconditionally obligates the recipient to pay for the activities performed in the tax accounting period in which the service is rendered.

(2) ***Contingent-payment arrangement.*** For purposes of this paragraph (i), an arrangement will be treated as a contingent-payment arrangement if it meets all of the requirements in paragraph (i)(2)(i) of this section and is consistent with the economic substance and conduct requirement in paragraph (i)(2)(ii) of this section.

(i) *General requirements* —

(A) ***Written contract.*** The arrangement is set forth in a written contract entered into prior to, or contemporaneous with, the start of the activity or group of activities constituting the controlled services transaction.

(B) ***Specified contingency.*** The contract states that payment for a controlled services transaction is contingent (in whole or in part) upon the happening of a future benefit (within the meaning of § 1.482-9(l)(3)) for the recipient directly related to the activity or group of activities. For purposes of the preceding sentence, whether the future benefit is directly related to the activity or group of activities is evaluated based on all the facts and circumstances.

(C) ***Basis for payment.*** The contract provides for payment on a basis that reflects the recipient's benefit from the services rendered and the risks borne by the renderer.

(ii) ***Economic substance and conduct.*** The arrangement, including the contingency and the basis for payment, is consistent with the economic substance of the controlled transaction and the conduct of the controlled parties. *See* § 1.482-1(d)(3)(ii)(B).

(3) ***Commissioner's authority to impute contingent-payment terms.*** Consistent with the authority in § 1.482-1(d)(3)(ii)(B), the Commissioner may impute contingent-payment contractual terms in a controlled services transaction if the economic substance of the transaction is consistent with the existence of such terms.

(4) ***Evaluation of arm's length charge.*** Whether the amount charged in a contingent-payment arrangement is arm's length will be evaluated in accordance with this section and other applicable regulations under section 482. In evaluating whether the amount charged in a contingent-payment arrangement for the manufacture, construction, or development of tangible or intangible property owned by the recipient is arm's length, the charge determined under the rules of §§ 1.482-3 and 1.482-4 for the transfer of similar property may be considered. *See* § 1.482-1(f)(2)(ii).

(5) ***Examples.*** The principles of this paragraph (i) are illustrated by the following examples:

Example 1. (i) Company X is a member of a controlled group that has operated in the pharmaceutical sector for many years. In year 1, Company X enters into a written services agreement with Company Y, another member of the controlled group, whereby Company X will perform certain research and development activities for Company Y. The parties enter into the agreement before Company X undertakes any of the research and development activities covered by the agreement. At the time the agreement is entered into, the possibility that any new products will be developed is highly uncertain and the possible market or markets for any products that may be developed are not known and cannot be estimated with any reliability. Under the agreement, Company Y will own any patent or other rights that result from the activities of Company X under the agreement and Company Y will make payments to Company X only if such activities result in commercial sales of one or more derivative products. In that event, Company Y will pay Company X, for a specified period, x% of Company Y's gross sales of each of such products. Payments are required with respect to each jurisdiction in which Company Y has sales of such a derivative product, beginning with the first year in which the sale of a product occurs in the jurisdiction and continuing for six additional years with respect to sales of that product in that jurisdiction.
(ii) As a result of research and development activities performed by Company X for Company Y in years 1 through 4, a compound is developed that may be more effective than existing medications in the treatment of certain conditions. Company Y registers the patent rights with respect to the compound in several jurisdictions in year 4. In year 6, Company Y begins commercial sales of the product in Jurisdiction A and, in that year, Company Y makes the payment to Company X that is required under the agreement. Sales of the product continue in Jurisdiction A in years 7 through 9 and Company Y makes the payments to Company X in years 7 through 9 that are required under the agreement.

(iii) The years under examination are years 6 through 9. In evaluating whether the contingent-payment terms will be recognized, the Commissioner considers whether the conditions of paragraph (i)(2) of this section are met and whether the arrangement, including the specified contingency and basis of payment, is consistent with the economic substance of the

controlled services transaction and with the conduct of the controlled parties. The Commissioner determines that the contingent-payment arrangement is reflected in the written agreement between Company X and Company Y; that commercial sales of products developed under the arrangement represent future benefits for Company Y directly related to the controlled services transaction; and that the basis for the payment provided for in the event such sales occur reflects the recipient's benefit and the renderer's risk. Consistent with § 1.482-1(d)(3)(ii)(B) and (iii)(B), the Commissioner determines that the parties' conduct over the term of the agreement has been consistent with their contractual allocation of risk; that Company X has the financial capacity to bear the risk that its research and development services may be unsuccessful and that it may not receive compensation for such services; and that Company X exercises managerial and operational control over the research and development, such that it is reasonable for Company X to assume the risk of those activities. Based on all these facts, the Commissioner determines that the contingent-payment arrangement is consistent with economic substance.

(iv) In determining whether the amount charged under the contingent-payment arrangement in each of years 6 through 9 is arm's length, the Commissioner evaluates under this section and other applicable rules under section 482 the compensation paid in each year for the research and development services. This analysis takes into account that under the contingent-payment terms Company X bears the risk that it might not receive payment for its services in the event that those services do not result in marketable products and the risk that the magnitude of its payment depends on the magnitude of product sales, if any. The Commissioner also considers the alternatives reasonably available to the parties in connection with the controlled services transaction. One such alternative, in view of Company X's willingness and ability to bear the risk and expenses of research and development activities, would be for Company X to undertake such activities on its own behalf and to license the rights to products successfully developed as a result of such activities. Accordingly, in evaluating whether the compensation of x% of gross sales that is paid to Company X during the first four years of commercial sales of derivative products is arm's length, the Commissioner may consider the royalties (or other consideration) charged for intangible property that are comparable to those incorporated in the derivative products and that resulted from Company X's research and development activities under the contingent-payment arrangement.

Example 2. (i) The facts are the same as in *Example 1,* except that no commercial sales ever materialize with regard to the patented compound so that, consistent with the agreement, Company Y makes no payments to Company X in years 6 through 9.
(ii) Based on all the facts and circumstances, the Commissioner determines that the contingent-payment arrangement is consistent with economic substance, and the result (no payments in years 6 through 9) is consistent with an arm's length result.

Example 3. (i) The facts are the same as in *Example 1,* except that, in the event that Company X's activities result in commercial sales of one or more derivative products by Company Y, Company Y will pay Company X a fee equal to the research and development costs borne by Company X plus an amount equal to x% of such costs, with the payment to be made in the first year in which any such sales occur. The x% markup on costs is within the range, ascertainable in year 1, of markups on costs of independent contract researchers that are compensated under terms that unconditionally obligate the recipient to pay for the activities performed in the tax accounting period in which the service is rendered. In year 6, Company Y makes the single payment to Company X that is required under the arrangement. (ii) The years under examination are years 6 through 9. In evaluating whether the contingent-payment terms will be recognized, the Commissioner considers whether the requirements of paragraph (i)(2) of this section were met at the time the written agreement was entered into and whether the arrangement, including the specified contingency and basis for payment, is consistent with the economic substance of the controlled services transaction and with the conduct of the controlled parties. The Commissioner determines that the contingent-payment terms are reflected in the written agreement between Company X and Company Y and that commercial sales of products developed under the arrangement represent future benefits for Company Y directly related to the controlled services transaction. However, in this case, the Commissioner determines that the basis for payment provided for in the event such sales occur (costs of the services plus x%, representing the markup for contract research in the absence of any nonpayment risk) does not reflect the recipient's benefit and the renderer's risks in the controlled services transaction. Based on all the facts and circumstances, the Commissioner determines that the contingent-payment arrangement is not consistent with economic substance.

(iii) Accordingly, the Commissioner determines to exercise its authority to impute contingent-payment contractual terms that accord with economic substance, pursuant to paragraph (i)(3) of this section and § 1.482-1(d)(3)(ii)(B). In this regard, the Commissioner takes into account that at the time the arrangement was entered into, the possibility that any new products would be developed was highly uncertain and the possible market or markets for any products that may be developed were not known and could not be estimated with any reliability. In such circumstances, it is reasonable to conclude that one possible basis of payment, in order to reflect the recipient's benefit and the renderer's risks, would be a charge equal to a percentage of commercial sales of one or more derivative products that result from the research and development activities. The Commissioner in this case may impute terms that require Company Y to pay Company X a percentage of sales of the products developed under the agreement in each of years 6 through 9.

(iv) In determining an appropriate arm's length charge under such imputed contractual terms, the Commissioner conducts an analysis under this section and other applicable rules under section 482, and considers the alternatives reasonably available to the parties in connection

> with the controlled services transaction. One such alternative, in view of Company X's willingness and ability to bear the risks and expenses of research and development activities, would be for Company X to undertake such activities on its own behalf and to license the rights to products successfully developed as a result of such activities. Accordingly, for purposes of its determination, the Commissioner may consider the royalties (or other consideration) charged for intangible property that are comparable to those incorporated in the derivative products that resulted from Company X's research and development activities under the contingent-payment arrangement.

(j) ***Total services costs.*** For purposes of this section, total services costs means all costs of rendering those services for which total services costs are being determined. Total services costs include all costs in cash or in kind (including stock-based compensation) that, based on analysis of the facts and circumstances, are directly identified with, or reasonably allocated in accordance with the principles of paragraph (k)(2) of this section to, the services. In general, costs for this purpose should comprise provision for all resources expended, used, or made available to achieve the specific objective for which the service is rendered. Reference to generally accepted accounting principles or Federal income tax accounting rules may provide a useful starting point but will not necessarily be conclusive regarding inclusion of costs in total services costs. Total services costs do not include interest expense, foreign income taxes (as defined in § 1.901-2(a)), or domestic income taxes.

(k) ***Allocation of costs*** —

(1) ***In general.*** In any case where the renderer's activity that results in a benefit (within the meaning of paragraph (l)(3) of this section) for one recipient in a controlled services transaction also generates a benefit for one or more other members of a controlled group (including the benefit, if any, to the renderer), and the amount charged under this section in the controlled services transaction is determined under a method that makes reference to costs, costs must be allocated among the portions of the activity performed for the benefit of the first mentioned recipient and such other members of the controlled group under this paragraph (k). The principles of this paragraph (k) must also be used whenever it is appropriate to allocate and apportion any class of costs (for example, overhead costs) in order to determine the total services costs of rendering the services. In no event will an allocation of costs based on a generalized or non-specific benefit be appropriate.

(2) ***Appropriate method of allocation and apportionment*** —

(i) ***Reasonable method standard.*** Any reasonable method may be used to allocate and apportion costs under this section. In establishing the appropriate method of allocation and apportionment, consideration should be given to all bases and factors, including, for example, total services costs, total costs for a relevant activity, assets, sales, compensation, space utilized, and time spent. The costs incurred by supporting departments may be apportioned to other departments on the basis of reasonable overall estimates, or such costs may be reflected in the other departments' costs by applying reasonable departmental overhead rates. Allocations and apportionments of costs must be made on the basis of the full cost, as opposed to the incremental cost.

(ii) ***Use of general practices.*** The practices used by the taxpayer to apportion costs in connection with preparation of statements and analyses for the use of management, creditors, minority shareholders, joint venturers, clients, customers, potential investors, or other parties or agencies in interest will be considered as potential indicators of reliable allocation methods,

but need not be accorded conclusive weight by the Commissioner. In determining the extent to which allocations are to be made to or from foreign members of a controlled group, practices employed by the domestic members in apportioning costs among themselves will also be considered if the relationships with the foreign members are comparable to the relationships among the domestic members of the controlled group. For example, if for purposes of reporting to public stockholders or to a governmental agency, a corporation apportions the costs attributable to its executive officers among the domestic members of a controlled group on a reasonable and consistent basis, and such officers exercise comparable control over foreign members of the controlled group, such domestic apportionment practice will be considered in determining the allocations to be made to the foreign members.

(3) ***Examples.*** The principles of this paragraph (k) are illustrated by the following examples:

Example 1. Company A pays an annual license fee of 500x to an uncontrolled taxpayer for unlimited use of a database within the corporate group. Under the terms of the license with the uncontrolled taxpayer, Company A is permitted to use the database for its own use and in rendering research services to its subsidiary, Company B. Company B obtains benefits from the database that are similar to those that it would obtain if it had independently licensed the database from the uncontrolled taxpayer. Evaluation of the arm's length charge (under a method in which costs are relevant) to Company B for the controlled services that incorporate use of the database must take into account the full amount of the license fee of 500x paid by Company A, as reasonably allocated and apportioned to the relevant benefits, although the incremental use of the database for the benefit of Company B did not result in an increase in the license fee paid by Company A.

Example 2. (i) Company A is a consumer products company located in the United States. Companies B and C are wholly-owned subsidiaries of Company A and are located in Countries B and C, respectively. Company A and its subsidiaries manufacture products for sale in their respective markets. Company A hires a consultant who has expertise regarding a manufacturing process used by Company A and its subsidiary, Company B. Company C, the Country C subsidiary, uses a different manufacturing process, and accordingly will not receive any benefit from the outside consultant hired by Company A. In allocating and apportioning the cost of hiring the outside consultant (100), Company A determines that sales constitute the most appropriate allocation key.
(ii) Company A and its subsidiaries have the following sales:

Company	A	B	C	Total
Sales	400	100	200	700

(iii) Because Company C does not obtain any benefit from the consultant, none of the costs are allocated to it. Rather, the costs of 100 are allocated and apportioned ratably to Company A and Company B as the entities that obtain a benefit from the campaign,

based on the total sales of those entities (500). An appropriate allocation of the costs of the consultant is as follows:

Company	A	B	Total
Allocation	400/500	100/500	
Amount	80	20	100

(l) *Controlled services transaction* —

(1) ***In general.*** A controlled services transaction includes any activity (as defined in paragraph (l)(2) of this section) by one member of a group of controlled taxpayers (the renderer) that results in a benefit (as defined in paragraph (l)(3) of this section) to one or more other members of the controlled group (the recipient(s)).

(2) ***Activity.*** An activity includes the performance of functions, assumptions of risks, or use by a renderer of tangible or intangible property or other resources, capabilities, or knowledge, such as knowledge of and ability to take advantage of particularly advantageous situations or circumstances. An activity also includes making available to the recipient any property or other resources of the renderer.

(3) *Benefit* —

(i) ***In general.*** An activity is considered to provide a benefit to the recipient if the activity directly results in a reasonably identifiable increment of economic or commercial value that enhances the recipient's commercial position, or that may reasonably be anticipated to do so. An activity is generally considered to confer a benefit if, taking into account the facts and circumstances, an uncontrolled taxpayer in circumstances comparable to those of the recipient would be willing to pay an uncontrolled party to perform the same or similar activity on either a fixed or contingent-payment basis, or if the recipient otherwise would have performed for itself the same activity or a similar activity. A benefit may result to the owner of intangible property if the renderer engages in an activity that is reasonably anticipated to result in an increase in the value of that intangible property. Paragraphs (l)(3)(ii) through (v) of this section provide guidelines that indicate the presence or absence of a benefit for the activities in the controlled services transaction.

(ii) ***Indirect or remote benefit.*** An activity is not considered to provide a benefit to the recipient if, at the time the activity is performed, the present or reasonably anticipated benefit from that activity is so indirect or remote that the recipient would not be willing to pay, on either a fixed or contingent-payment basis, an uncontrolled party to perform a similar activity, and would not be willing to perform such activity for itself for this purpose. The determination whether the benefit from an activity is indirect or remote is based on the nature of the activity and the situation of the recipient, taking into consideration all facts and circumstances.

(iii) ***Duplicative activities.*** If an activity performed by a controlled taxpayer duplicates an activity that is performed, or that reasonably may be anticipated to be performed, by another controlled taxpayer on or for its own account, the activity is generally not considered to provide a benefit to the recipient, unless the duplicative activity itself provides an additional benefit to the recipient.

(iv) ***Shareholder activities.*** An activity is not considered to provide a benefit if the sole effect of that activity is either to protect the renderer's capital investment in the recipient or in other members of the controlled group, or to facilitate compliance by the renderer with reporting, legal, or regulatory requirements applicable specifically to the renderer, or both. Activities in the nature of day-to-day management generally do not relate to protection of the renderer's capital investment. Based on analysis of the facts and circumstances, activities in connection with a corporate reorganization may be considered to provide a benefit to one or more controlled taxpayers.

(v) ***Passive association.*** A controlled taxpayer generally will not be considered to obtain a benefit where that benefit results from the controlled taxpayer's status as a member of a controlled group. A controlled taxpayer's status as a member of a controlled group may, however, be taken into account for purposes of evaluating comparability between controlled and uncontrolled transactions.

(4) ***Disaggregation of transactions.*** A controlled services transaction may be analyzed as two separate transactions for purposes of determining the arm's length consideration, if that analysis is the most reliable means of determining the arm's length consideration for the controlled services transaction. *See* the best method rule under § 1.482-1(c).

(5) ***Examples.*** The principles of this paragraph (l) are illustrated by the following examples. In each example, assume that Company X is a U.S. corporation and Company Y is a wholly-owned subsidiary of Company X in Country B.

Example 1. In general. In developing a worldwide advertising and promotional campaign for a consumer product, Company X pays for and obtains designation as an official sponsor of the Olympics. This designation allows Company X and all its subsidiaries, including Company Y, to identify themselves as sponsors and to use the Olympic logo in advertising and promotional campaigns. The Olympic sponsorship campaign generates benefits to Company X, Company Y, and other subsidiaries of Company X.

Example 2. Indirect or remote benefit. Based on recommendations contained in a study performed by its internal staff, Company X implements certain changes in its management structure and the compensation of managers of divisions located in the United States. No changes were recommended or considered for Company Y in Country B. The internal study and the resultant changes in its management may increase the competitiveness and overall efficiency of Company X. Any benefits to Company Y as a result of the study are, however, indirect or remote. Consequently, Company Y is not considered to obtain a benefit from the study.

Example 3. Indirect or remote benefit. Based on recommendations contained in a study performed by its internal staff, Company X decides to make changes to the management structure and management compensation of its subsidiaries, in order to increase their profitability. As a result of the recommendations in the study, Company X implements substantial changes in the management structure and management compensation scheme of Company Y. The study and the changes implemented as a result of the recommendations are anticipated to increase the

profitability of Company X and its subsidiaries. The increased management efficiency of Company Y that results from these changes is considered to be a specific and identifiable benefit, rather than remote or speculative.

Example 4. Duplicative activities. At its corporate headquarters in the United States, Company X performs certain treasury functions for Company X and for its subsidiaries, including Company Y. These treasury functions include raising capital, arranging medium and long-term financing for general corporate needs, including cash management. Under these circumstances, the treasury functions performed by Company X do not duplicate the functions performed by Company Y's staff. Accordingly, Company Y is considered to obtain a benefit from the functions performed by Company X.

Example 5. Duplicative activities. The facts are the same as in *Example 4,* except that Company Y's functions include ensuring that the financing requirements of its own operations are met. Analysis of the facts and circumstances indicates that Company Y independently administers all financing and cash-management functions necessary to support its operations, and does not utilize financing obtained by Company X. Under the circumstances, the treasury functions performed by Company X are duplicative of similar functions performed by Company Y's staff, and the duplicative functions do not enhance Company Y's position. Accordingly, Company Y is not considered to obtain a benefit from the duplicative activities performed by Company X.

Example 6. Duplicative activities. Company X's in-house legal staff has specialized expertise in several areas, including intellectual property. The intellectual property legal staff specializes in technology licensing, patents, copyrights, and negotiating and drafting intellectual property agreements. Company Y is involved in negotiations with an unrelated party to enter into a complex joint venture that includes multiple licenses and cross-licenses of patents and copyrights. Company Y retains outside counsel that specializes in intellectual property law to review the transaction documents. Company Y does not have in-house counsel of its own to review intellectual property transaction documents. Outside counsel advises that the terms for the proposed transaction are advantageous to Company Y and that the contracts are valid and fully enforceable. Company X's intellectual property legal staff possess valuable knowledge of Company Y's patents and technological achievements. They are capable of identifying particular scientific attributes protected under patent that strengthen Company Y's negotiating position, and of discovering flaws in the patents offered by the unrelated party. To reduce risk associated with the transaction, Company X's intellectual property legal staff reviews the transaction documents before Company Y executes the contracts. Company X's intellectual property legal staff also separately evaluates the patents and copyrights with respect to the licensing arrangements and concurs in the opinion provided by outside counsel. The activities performed by Company X substantially duplicate the legal services obtained by Company Y, but they also reduce risk associated with the transaction in a way that confers an additional benefit on Company Y.

Example 7. Shareholder activities. Company X is a publicly held corporation. U.S. laws and regulations applicable to publicly held corporations such as Company X require the preparation and filing of periodic reports that show, among other things, profit and loss statements, balance sheets, and other material financial information concerning the company's operations. Company X, Company Y and each of the other subsidiaries maintain their own separate accounting departments that record individual transactions and prepare financial statements in accordance with their local accounting practices. Company Y, and the other subsidiaries, forward the results of their financial performance to Company X, which analyzes and compiles

these data into periodic reports in accordance with U.S. laws and regulations. Because Company X's preparation and filing of the reports relate solely to its role as an investor of capital or shareholder in Company Y or to its compliance with reporting, legal, or regulatory requirements, or both, these activities constitute shareholder activities and therefore Company Y is not considered to obtain a benefit from the preparation and filing of the reports.

Example 8. Shareholder activities. The facts are the same as in *Example 7,* except that Company Y's accounting department maintains a general ledger recording individual transactions, but does not prepare any financial statements (such as profit and loss statements and balance sheets). Instead, Company Y forwards the general ledger data to Company X, and Company X analyzes and compiles financial statements for Company Y, as well as for Company X's overall operations, for purposes of complying with U.S. reporting requirements. Company Y is subject to reporting requirements in Country B similar to those applicable to Company X in the United States. Much of the data that Company X analyzes and compiles regarding Company Y's operations for purposes of complying with the U.S. reporting requirements are made available to Company Y for its use in preparing reports that must be filed in Country B. Company Y incorporates these data, after minor adjustments for differences in local accounting practices, into the reports that it files in Country B. Under these circumstances, because Company X's analysis and compilation of Company Y's financial data does not relate solely to its role as an investor of capital or shareholder in Company Y, or to its compliance with reporting, legal, or regulatory requirements, or both, these activities do not constitute shareholder activities.

Example 9. Shareholder activities. Members of Company X's internal audit staff visit Company Y on a semiannual basis in order to review the subsidiary's adherence to internal operating procedures issued by Company X and its compliance with U.S. anti-bribery laws, which apply to Company Y on account of its ownership by a U.S. corporation. Because the sole effect of the reviews by Company X's audit staff is to protect Company X's investment in Company Y, or to facilitate Company X's compliance with U.S. anti-bribery laws, or both, the visits are shareholder activities and therefore Company Y is not considered to obtain a benefit from the visits.

Example 10. Shareholder activities. Country B recently enacted legislation that changed the foreign currency exchange controls applicable to foreign shareholders of Country B corporations. Company X concludes that it may benefit from changing the capital structure of Company Y, thus taking advantage of the new foreign currency exchange control laws in Country B. Company X engages an investment banking firm and a law firm to review the Country B legislation and to propose possible changes to the capital structure of Company Y. Because Company X's retention of the firms facilitates Company Y's ability to pay dividends and other amounts and has the sole effect of protecting Company X's investment in Company Y, these activities constitute shareholder activities and Company Y is not considered to obtain a benefit from the activities.

Example 11. Shareholder activities. The facts are the same as in *Example 10,* except that Company Y bears the full cost of retaining the firms to evaluate the new foreign currency control laws in Country B and to make appropriate changes to its stock ownership by Company X. Company X is considered to obtain a benefit from the rendering by Company Y of these activities, which would be shareholder activities if conducted by Company X (*see Example 10*).

Example 12. Shareholder activities. The facts are the same as in *Example 10,* except that the new laws relate solely to corporate governance in Country B, and Company X retains the law firm and investment banking firm in order to evaluate whether restructuring would increase Company Y's

profitability, reduce the number of legal entities in Country B, and increase Company Y's ability to introduce new products more quickly in Country B. Because Company X retained the law firm and the investment banking firm primarily to enhance Company Y's profitability and the efficiency of its operations, and not solely to protect Company X's investment in Company Y or to facilitate Company X's compliance with Country B's corporate laws, or to both, these activities do not constitute shareholder activities.

Example 13. Shareholder activities. Company X establishes detailed personnel policies for its subsidiaries, including Company Y. Company X also reviews and approves the performance appraisals of Company Y's executives, monitors levels of compensation paid to all Company Y personnel, and is involved in hiring and firing decisions regarding the senior executives of Company Y. Because this personnel-related activity by Company X involves day-to-day management of Company Y, this activity does not relate solely to Company X's role as an investor of capital or a shareholder of Company Y, and therefore does not constitute a shareholder activity.

Example 14. Shareholder activities. Each year, Company X conducts a two-day retreat for its senior executives. The purpose of the retreat is to refine the long-term business strategy of Company X and its subsidiaries, including Company Y, and to produce a confidential strategy statement. The strategy statement identifies several potential growth initiatives for Company X and its subsidiaries and lists general means of increasing the profitability of the company as a whole. The strategy statement is made available without charge to Company Y and the other subsidiaries of Company X. Company Y independently evaluates whether to implement some, all, or none of the initiatives contained in the strategy statement. Because the preparation of the strategy statement does not relate solely to Company X's role as an investor of capital or a shareholder of Company Y, the expense of preparing the document is not a shareholder expense.

Example 15. Passive association/benefit. Company X is the parent corporation of a large controlled group that has been in operation in the information-technology sector for ten years. Company Y is a small corporation that was recently acquired by the Company X controlled group from local Country B owners. Several months after the acquisition of Company Y, Company Y obtained a contract to redesign and assemble the information-technology networks and systems of a large financial institution in Country B. The project was significantly larger and more complex than any other project undertaken to date by Company Y. Company Y did not use Company X's marketing intangible property to solicit the contract, and Company X had no involvement in the solicitation, negotiation, or anticipated execution of the contract. For purposes of this section, Company Y is not considered to obtain a benefit from Company X or any other member of the controlled group because the ability of Company Y to obtain the contract, or to obtain the contract on more favorable terms than would have been possible prior to its acquisition by the Company X controlled group, was due to Company Y's status as a member of the Company X controlled group and not to any specific activity by Company X or any other member of the controlled group.

Example 16. Passive association/benefit. The facts are the same as in *Example 15,* except that Company X executes a performance guarantee with respect to the contract, agreeing to assist in the project if Company Y fails to meet certain mileposts. This performance guarantee allowed Company Y to obtain the contract on materially more favorable terms than otherwise would have been possible. Company Y is considered to obtain a benefit from Company X's execution of the performance guarantee.

Example 17. Passive association/benefit. The facts are the same as in *Example 15,* except that Company X began the process of negotiating the contract with the financial institution in Country B before acquiring Company Y. Once Company Y was acquired by Company X, the contract with the financial institution was entered into by Company Y. Company Y is considered to obtain a benefit from Company X's negotiation of the contract.

Example 18. Passive association/benefit. The facts are the same as in *Example 15,* except that Company X sent a letter to the financial institution in Country B, which represented that Company X had a certain percentage ownership in Company Y and that Company X would maintain that same percentage ownership interest in Company Y until the contract was completed. This letter allowed Company Y to obtain the contract on more favorable terms than otherwise would have been possible. Since this letter from Company X to the financial institution simply affirmed Company Y's status as a member of the controlled group and represented that this status would be maintained until the contract was completed, Company Y is not considered to obtain a benefit from Company X's furnishing of the letter.

Example 19. Passive association/benefit. (i) S is a company that supplies plastic containers to companies in various industries. S establishes the prices for its containers through a price list that offers customers discounts based solely on the volume of containers purchased.
(ii) Company X is the parent corporation of a large controlled group in the information technology sector. Company Y is a wholly-owned subsidiary of Company X located in Country B. Company X and Company Y both purchase plastic containers from unrelated supplier S. In year 1, Company X purchases 1 million units and Company Y purchases 100,000 units. S, basing its prices on purchases by the entire group, completes the order for 1.1 million units at a price of $0.95 per unit, and separately bills and ships the orders to each company. Companies X and Y undertake no bargaining with supplier S with respect to the price charged, and purchase no other products from supplier S.

(iii) R1 and its wholly-owned subsidiary R2 are a controlled group of taxpayers (unrelated to Company X or Company Y) each of which carries out functions comparable to those of Companies X and Y and undertakes purchases of plastic containers from supplier S, identical to those purchased from S by Company X and Company Y, respectively. S, basing its prices on purchases by the entire group, charges R1 and R2 $0.95 per unit for the 1.1 million units ordered. R1 and R2 undertake no bargaining with supplier S with respect to the price charged, and purchase no other products from supplier S.

(iv) U is an uncontrolled taxpayer that carries out comparable functions and undertakes purchases of plastic containers from supplier S identical to Company Y. U is not a member of a controlled group, undertakes no bargaining with supplier S with respect to the price charged, and purchases no other products from supplier S. U purchases 100,000 plastic containers from S at the price of $1.00 per unit.

(v) Company X charges Company Y a fee of $5,000, or $0.05 per unit of plastic containers purchased by Company Y, reflecting the fact that Company Y receives the volume discount from supplier S.

(vi) In evaluating the fee charged by Company X to Company Y, the Commissioner considers whether the transactions between R1, R2, and S or the transactions between U and S provide a more reliable measure of the transactions between Company X, Company Y and S. The Commissioner determines that Company Y's status as a member of a controlled group should be taken into account for purposes of evaluating comparability of the transactions, and concludes that the transactions between R1, R2, and S are more reliably comparable to the transactions between Company X, Company Y, and S. The comparable charge for the purchase was $0.95 per unit. Therefore, obtaining the plastic containers at a favorable rate (and the resulting $5,000 savings) is entirely due to Company Y's status as a member of the Company X controlled group and not to any specific activity by Company X or any other member of the controlled group. Consequently, Company Y is not considered to obtain a benefit from Company X or any other member of the controlled group.

Example 20. Disaggregation of transactions. (i) X, a domestic corporation, is a pharmaceutical company that develops and manufactures ethical pharmaceutical products. Y, a Country B corporation, is a distribution and marketing company that also performs clinical trials for X in Country B. Because Y does not possess the capability to conduct the trials, it contracts with a third party to undertake the trials at a cost of $100. Y also incurs $25 in expenses related to the third-party contract (for example, in hiring and working with the third party).
(ii) Based on a detailed functional analysis, the Commissioner determines that Y performed functions beyond merely facilitating the clinical trials for X, such as audit controls of the third party performing those trials. In determining the arm's length price, the Commissioner may consider a number of alternatives. For example, for purposes of determining the arm's length price, the Commissioner may determine that the intercompany service is most reliably analyzed on a disaggregated basis as two separate transactions: in this case, the contract between Y and the third party could constitute an internal CUSP with a price of $100. Y would be further entitled to an arm's length remuneration for its facilitating services. If the most reliable method is one that provides a markup on Y's costs, then "total services cost" in this context would be $25. Alternatively, the Commissioner may determine that the intercompany service is most reliably analyzed as a single transaction, based on comparable uncontrolled transactions involving the facilitation of similar clinical trial services performed by third parties. If the most reliable method is one that provides a markup on all of Y's costs, and the base of the markup determined by the comparable companies includes the third-party clinical trial costs, then such a markup would be applied to Y's total services cost of $125.

Example 21. Disaggregation of transactions. (i) X performs a number of administrative functions for its subsidiaries, including Y, a distributor of widgets in Country B. These services include those relating to working capital (inventory and accounts receivable/payable) management. To facilitate provision of these services, X purchases an ERP system specifically dedicated to optimizing working capital management. The system, which entails significant third-party costs and which includes substantial intellectual property relating to its software, costs $1,000.
(ii) Based on a detailed functional analysis, the Commissioner determines that in providing administrative services for Y, X performed functions beyond merely operating the ERP system itself, since X was effectively using the ERP as an input to the administrative services it was providing to Y. In determining arm's length price for the services, the Commissioner may consider a number of alternatives. For example, if the most reliable uncontrolled data is derived from companies that use similar ERP systems purchased from third parties to perform similar administrative functions for uncontrolled parties, the Commissioner may determine that a CPM is the best method for measuring the functions performed by X, and, in addition, that a markup on total services costs, based on the markup from the comparable companies, is the most reliable PLI. In this case, total services cost, and the basis for the markup, would include appropriate reflection of the ERP costs of $1,000. Alternatively, X's functions may be most reliably measured based on comparable uncontrolled companies that perform similar administrative functions using their customers' own ERP systems. Under these circumstances, the total services cost would equal X's costs of providing the administrative services excluding the ERP cost of $1,000.

(m) ***Coordination with transfer pricing rules for other transactions*** —

(1) ***Services transactions that include other types of transactions.*** A transaction structured as a controlled services transaction may include other elements for which a separate category or categories of methods are provided, such as a loan or advance, a rental, or a transfer of tangible or intangible property. *See* §§ 1.482-1(b)(2) and 1.482-2(a), (c), and (d). Whether such an integrated transaction is evaluated as a controlled services transaction under this section or whether one or more elements should be evaluated separately under other sections of the section 482 regulations depends on which approach will provide the most reliable measure of an arm's length result. Ordinarily, an integrated transaction of this type may be evaluated under this section and its separate elements need not be evaluated separately, provided that each component of the transaction may be adequately accounted for in evaluating the comparability of the controlled transaction to the uncontrolled comparables and, accordingly, in determining the arm's length result in the controlled transaction. *See* § 1.482-1(d)(3).

(2) ***Services transactions that effect a transfer of intangible property.*** A transaction structured as a controlled services transaction may in certain cases include an element that constitutes the transfer of intangible property or may result in a transfer, in whole or in part, of intangible property.

Notwithstanding paragraph (m)(1) of this section, if such element relating to intangible property is material to the evaluation, the arm's length result for the element of the transaction that involves intangible property must be corroborated or determined by an analysis under § 1.482-4.

(3) ***Coordination with rules governing cost sharing arrangements.*** Section 1.482-7 provides the specific methods to be used to determine arm's length results of controlled transactions in connection with a cost sharing arrangement. This section provides the specific methods to be used to determine arm's length results of a controlled service transaction, including in an arrangement for sharing the costs and risks of developing intangibles other than a cost sharing arrangement covered by § 1.482-7. In the case of such an arrangement, consideration of the principles, methods, comparability, and reliability considerations set forth in § 1.482-7 is relevant in determining the best method, including an unspecified method, under this section, as appropriately adjusted in light of the differences in the facts and circumstances between such arrangement and a cost sharing arrangement.

(4) ***Other types of transactions that include controlled services transactions.*** A transaction structured other than as a controlled services transaction may include one or more elements for which separate pricing methods are provided in this section. Whether such an integrated transaction is evaluated under another section of the section 482 regulations or whether one or more elements should be evaluated separately under this section depends on which approach will provide the most reliable measure of an arm's length result. Ordinarily, a single method may be applied to such an integrated transaction, and the separate services component of the transaction need not be separately analyzed under this section, provided that the controlled services may be adequately accounted for in evaluating the comparability of the controlled transaction to the uncontrolled comparables and, accordingly, in determining the arm's length results in the controlled transaction. *See* § 1.482-1(d)(3).

(5) ***Examples.*** The principles of this paragraph (m) are illustrated by the following examples:

> *Example 1.* (i) U.S. parent corporation Company X enters into an agreement to maintain equipment of Company Y, a foreign subsidiary. The maintenance of the equipment requires the use of spare parts. The cost of the spare parts necessary to maintain the equipment amounts to approximately 25 percent of the total costs of maintaining the equipment. Company Y pays a fee that includes a charge for labor and parts.
> (ii) Whether this integrated transaction is evaluated as a controlled services transaction or is evaluated as a controlled services transaction and the transfer of tangible property depends on which approach will provide the most reliable measure of an arm's length result. If it is not possible to find comparable uncontrolled services transactions that involve similar services and tangible property transfers as the controlled transaction between Company X and Company Y, it will be necessary to determine the arm's length charge for the controlled services, and then to evaluate separately the arm's length charge for the tangible property transfers under § 1.482-1 and §§ 1.482-3 through 1.482-6. Alternatively, it may be possible to apply the comparable profits method of § 1.482-5 to evaluate the arm's length profit of Company X or Company Y from the integrated controlled transaction. The comparable profits method may provide the most reliable measure of an arm's length result if uncontrolled parties are identified that perform similar, combined functions of maintaining and providing spare parts for similar equipment.

Example 2. (i) U.S. parent corporation Company X sells industrial equipment to its foreign subsidiary, Company Y. In connection with this sale, Company X renders to Company Y services that consist of demonstrating the use of the equipment and assisting in the effective start-up of the equipment. Company X structures the integrated transaction as a sale of tangible property and determines the transfer price under the comparable uncontrolled price method of § 1.482-3(b).
(ii) Whether this integrated transaction is evaluated as a transfer of tangible property or is evaluated as a controlled services transaction and a transfer of tangible property depends on which approach will provide the most reliable measure of an arm's length result. In this case, the controlled services may be similar to services rendered in the transactions used to determine the comparable uncontrolled price, or they may appropriately be considered a difference between the controlled transaction and comparable transactions with a definite and reasonably ascertainable effect on price for which appropriate adjustments can be made. *See* § 1.482-1(d)(3)(ii)(A)(*6*). In either case, application of the comparable uncontrolled price method to evaluate the integrated transaction may provide a reliable measure of an arm's length result, and application of a separate transfer pricing method for the controlled services element of the transaction is not necessary.

Example 3. (i) The facts are the same as in *Example 2* except that, after assisting Company Y in start-up, Company X also renders ongoing services, including instruction and supervision regarding Company Y's ongoing use of the equipment. Company X structures the entire transaction, including the incremental ongoing services, as a sale of tangible property, and determines the transfer price under the comparable uncontrolled price method of § 1.482-3(b).
(ii) Whether this integrated transaction is evaluated as a transfer of tangible property or is evaluated as a controlled services transaction and a transfer of tangible property depends on which approach will provide the most reliable measure of an arm's length result. It may not be possible to identify comparable uncontrolled transactions in which a seller of merchandise renders services similar to the ongoing services rendered by Company X to Company Y. In such a case, the incremental services in connection with ongoing use of the equipment could not be taken into account as a comparability factor because they are not similar to the services rendered in connection with sales of similar tangible property. Accordingly, it may be necessary to evaluate separately the transfer price for such services under this section in order to produce the most reliable measure of an arm's length result. Alternatively, it may be possible to apply the comparable profits method of § 1.482-5 to evaluate the arm's length profit of Company X or Company Y from the integrated controlled transaction. The comparable profits method may provide the most reliable measure of an arm's length result if uncontrolled parties are identified that perform the combined functions of selling equipment

and rendering ongoing after-sale services associated with such equipment. In that case, it would not be necessary to separately evaluate the transfer price for the controlled services under this section.

Example 4. (i) Company X, a U.S. corporation, and Company Y, a foreign corporation, are members of a controlled group. Both companies perform research and development activities relating to integrated circuits. In addition, Company Y manufactures integrated circuits. In years 1 through 3, Company X engages in substantial research and development activities, gains significant know-how regarding the development of a particular high-temperature resistant integrated circuit, and memorializes that research in a written report. In years 1 through 3, Company X generates overall net operating losses as a result of the expenditures associated with this research and development effort. At the beginning of year 4, Company X enters into a technical assistance agreement with Company Y. As part of this agreement, the researchers from Company X responsible for this project meet with the researchers from Company Y and provide them with a copy of the written report. Three months later, the researchers from Company Y apply for a patent for a high-temperature resistant integrated circuit based in large part upon the know-how obtained from the researchers from Company X.
(ii) The controlled services transaction between Company X and Company Y includes an element that constitutes the transfer of intangible property (such as, know-how). Because the element relating to the intangible property is material to the arm's length evaluation, the arm's length result for that element must be corroborated or determined by an analysis under § 1.482-4.

(6) ***Global dealing operations.*** [Reserved]

(n) ***Effective/applicability date*** —

(1) ***In general.*** This section is generally applicable for taxable years beginning after July 31, 2009. In addition, a person may elect to apply the provisions of this section to earlier taxable years. *See* paragraph (n)(2) of this section.

(2) ***Election to apply regulations to earlier taxable years*** —

(i) ***Scope of election.*** A taxpayer may elect to apply § 1.482-1(a)(1), (b)(2)(i), (d)(3)(ii)(C) *Examples 3* through *6,* (d)(3)(v), (f)(2)(ii)(A), (f)(2)(iii)(B), (g)(4)(i), (g)(4)(iii) *Example 1,* (i), (j)(6)(i) and (j)(6)(ii), § 1.482-2(b), (f)(1) and (2), § 1.482-4(f)(3)(i)(A), (f)(3)(ii) *Examples 1* and *2,* (f)(4), (h)(1) and (2), § 1.482-6(c)(2)(ii)(B)(1), (c)(2)(ii)(D), (c)(3)(i)(A), (c)(3)(i)(B), (c)(3)(ii)(D), and (d), § 1.482-8(b) *Examples 10* through *12,* (c)(1) and (c)(2), § 1.482-9(a) through (m)(2), and (m)(4) through (n)(2), § 1.861-8(a)(5)(ii), (b)(3), (e)(4), (f)(4)(i), (g) *Examples 17, 18,* and *30,* § 1.6038A-3(a)(3) *Example 4* and (i), § 1.6662-6(d)(2)(ii)(B), (d)(2)(iii)(B)(*4*), (d)(2)(iii)(B)(*6*), and (g), and § 31.3121(s)-1(c)(2)(iii) and (d) of this chapter to any taxable year beginning after September 10, 2003. Such election requires that all of the provisions of such sections be applied to such taxable year and all subsequent taxable years (earlier taxable years) of the taxpayer making the election.

(ii) ***Effect of election.*** An election to apply the regulations to earlier taxable years has no effect on the limitations on assessment and collection or on the limitations on credit or refund (*see* Chapter 66 of the Internal Revenue Code).

(iii) ***Time and manner of making election.*** An election to apply the regulations to earlier taxable years must be made by attaching a statement to the taxpayer's timely filed U.S. tax return (including extensions) for its first taxable year beginning after July 31, 2009.

(iv) ***Revocation of election.*** An election to apply the regulations to earlier taxable years may not be revoked without the consent of the Commissioner.

[T.D. 9456, 74 FR 38846, Aug. 4, 2009, as amended by 74 FR 46345, Sept. 9, 2009; T.D. 9568, 76 FR 80136, Dec. 22, 2011]

§ 1.483-1 Interest on certain deferred payments.

(a) ***Amount constituting interest in certain deferred payment transactions —***

(1) ***In general.*** Except as provided in paragraph (c) of this section, section 483 applies to a contract for the sale or exchange of property if the contract provides for one or more payments due more than 1 year after the date of the sale or exchange, and the contract does not provide for adequate stated interest. In general, a contract has adequate stated interest if the contract provides for a stated rate of interest that is at least equal to the test rate (determined under § 1.483-3) and the interest is paid or compounded at least annually. Section 483 may apply to a contract whether the contract is express (written or oral) or implied. For purposes of section 483, a sale or exchange is any transaction treated as a sale or exchange for tax purposes. In addition, for purposes of section 483, property includes debt instruments and investment units, but does not include money, services, or the right to use property. For the treatment of certain obligations given in exchange for services or the use of property, see sections 404 and 467. For purposes of this paragraph (a), money includes functional currency and, in certain circumstances, nonfunctional currency. See § 1.988-2(b)(2) for circumstances when nonfunctional currency is treated as money rather than as property.

(2) ***Treatment of contracts to which section 483 applies —***

(i) ***Treatment of unstated interest.*** If section 483 applies to a contract, unstated interest under the contract is treated as interest for tax purposes. Thus, for example, unstated interest is not treated as part of the amount realized from the sale or exchange of property (in the case of the seller), and is not included in the purchaser's basis in the property acquired in the sale or exchange.

(ii) ***Method of accounting for interest on contracts subject to section 483.*** Any stated or unstated interest on a contract subject to section 483 is taken into account by a taxpayer under the taxpayer's regular method of accounting (e.g., an accrual method or the cash receipts and disbursements method). See §§ 1.446-1, 1.451-1, and 1.461-1. For purposes of the preceding sentence, the amount of interest (including unstated interest) allocable to a payment under a contract to which section 483 applies is determined under § 1.446-2(e).

(b) ***Definitions —***

(1) ***Deferred payments.*** For purposes of the regulations under section 483, a deferred payment means any payment that constitutes all or a part of the sales price (as defined in paragraph (b)(2) of this section), and that is due more than 6 months after the date of the sale or exchange. Except as provided in section 483(c)(2) (relating to the treatment of a debt instrument of the purchaser), a payment may be made in the form of cash, stock or securities, or other property.

(2) ***Sales price.*** For purposes of section 483, the sales price for any sale or exchange is the sum of the amount due under the contract (other than stated interest) and the amount of any liability included in the amount realized from the sale or exchange. See § 1.1001-2. Thus, the sales price for any sale or exchange includes any amount of unstated interest under the contract.

(c) ***Exceptions to and limitations on the application of section 483*** —

(1) ***In general.*** Sections 483(d), 1274(c)(4), and 1275(b) contain exceptions to and limitations on the application of section 483.

(2) ***Sales price of $3,000 or less.*** Section 483(d)(2) applies only if it can be determined at the time of the sale or exchange that the sales price cannot exceed $3,000, regardless of whether the sales price eventually paid for the property is less than $3,000.

(3) ***Other exceptions and limitations*** —

(i) ***Certain transfers subject to section 1041.*** Section 483 does not apply to any transfer of property subject to section 1041 (relating to transfers of property between spouses or incident to divorce).

(ii) ***Treatment of certain obligees.*** Section 483 does not apply to an obligee under a contract for the sale or exchange of personal use property (within the meaning of section 1275(b)(3)) in the hands of the obligor and that evidences a below-market loan described in section 7872(c)(1).

(iii) ***Transactions involving certain demand loans.*** Section 483 does not apply to any payment under a contract that evidences a demand loan that is a below-market loan described in section 7872(c)(1).

(iv) ***Transactions involving certain annuity contracts.*** Section 483 does not apply to any payment under an annuity contract described in section 1275(a)(1)(B) (relating to annuity contracts excluded from the definition of debt instrument).

(v) ***Options.*** Section 483 does not apply to any payment under an option to buy or sell property.

(d) ***Assumptions.*** If a debt instrument is assumed, or property is taken subject to a debt instrument, in connection with a sale or exchange of property, the debt instrument is treated for purposes of section 483 in a manner consistent with the rules of § 1.1274-5.

(e) ***Aggregation rule.*** For purposes of section 483, all sales or exchanges that are part of the same transaction (or a series of related transactions) are treated as a single sale or exchange, and all contracts calling for deferred payments arising from the same transaction (or a series of related transactions) are treated as a single contract. This rule, however, generally only applies to contracts and to sales or exchanges involving a single buyer and a single seller.

(f) ***Effective date.*** This section applies to sales and exchanges that occur on or after April 4, 1994. Taxpayers, however, may rely on this section for sales and exchanges that occur after December 21, 1992, and before April 4, 1994.

[T.D. 8517, 59 FR 4805, Feb. 2, 1994]

§ 1.483-2 Unstated interest.

(a) ***In general*** —

(1) ***Adequate stated interest.*** For purposes of section 483, a contract has unstated interest if the contract does not provide for adequate stated interest. A contract does not provide for adequate stated interest if the sum of the deferred payments exceeds—

(i) The sum of the present values of the deferred payments and the present values of any stated interest payments due under the contract; or

(ii) In the case of a cash method debt instrument (within the meaning of section 1274A(c)(2)) received in exchange for property in a potentially abusive situation (as defined in § 1.1274-3), the fair market value of the property reduced by the fair market value of any consideration other than the debt instrument, and reduced by the sum of all principal payments that are not deferred payments.

(2) ***Amount of unstated interest.*** For purposes of section 483, unstated interest means an amount equal to the excess of the sum of the deferred payments over the amount described in paragraph (a)(1)(i) or (a)(1)(ii) of this section, whichever is applicable.

(b) ***Operational rules*** —

(1) ***In general.*** For purposes of paragraph (a) of this section, rules similar to those in § 1.1274-2 apply to determine whether a contract has adequate stated interest and the amount of unstated interest, if any, on the contract.

(2) ***Present value.*** For purposes of paragraph (a) of this section, the present value of any deferred payment or interest payment is determined by discounting the payment from the date it becomes due to the date of the sale or exchange at the test rate of interest applicable to the contract in accordance with § 1.483-3.

(c) ***Examples.*** The following examples illustrate the rules of this section.

Example 1. Contract that does not have adequate stated interest. On January 1, 1995, A sells B nonpublicly traded property under a contract that calls for a $100,000 payment of principal on January 1, 2005, and 10 annual interest payments of $9,000 on January 1 of each year, beginning on January 1, 1996. Assume that the test rate of interest is 9.2 percent, compounded annually. The contract does not provide for adequate stated interest because it does not provide for interest equal to 9.2 percent, compounded annually. The present value of the deferred payments is $98,727.69. As a result, the contract has unstated interest of $1,272.31 ($100,000 − $98,727.69).

Example 2. Contract that does not have adequate stated interest; no interest for initial short period. On May 1, 1996, A sells B nonpublicly traded property under a contract that calls for B to make a principal payment of $200,000 on December 31, 1998, and semiannual interest payments of $9,000, payable on June 30 and December 31 of each year, beginning on December 31, 1996. Assume that the test rate of interest is 9 percent, compounded semiannually. Even though the contract calls for a stated rate of interest no lower than the test rate of interest, the contract does not provide for adequate stated interest because the stated rate of interest does not apply for the short period from May 1, 1996, through June 30, 1996.

Example 3. Potentially abusive situation. (i) *Facts.* In a potentially abusive situation, a contract for the sale of nonpublicly traded personal property calls for the issuance of a cash method debt instrument (as defined in section 1274A(c)(2)) with a stated principal amount of $700,000, payable in 5 years. No other consideration is given. The debt instrument calls for annual payments of interest over its entire term at a rate of 9.2 percent, compounded annually (the test rate of interest applicable to the debt instrument). Thus, the present value of the deferred payment and the interest payments is $700,000. Assume that the fair market value of the property is $500,000.
(ii) *Amount of unstated interest.* A cash method debt instrument received in exchange for property in a potentially abusive situation provides for adequate stated interest only if the sum of the deferred payments under the instrument does not exceed the fair market value of the property. Because the deferred payment ($700,000) exceeds the fair market value of the property ($500,000), the debt instrument does not provide for adequate stated interest. Therefore, the debt instrument has unstated interest of $200,000.

Example 4. Variable rate debt instrument with adequate stated interest; variable rate as of the issue date greater than the test rate. (i) *Facts.* A contract for the sale of nonpublicly traded property calls for the issuance of a debt instrument in the principal amount of $75,000 due in 10 years. The debt instrument calls for interest payable semiannually at a rate of 3 percentage points above the yield on 6-month Treasury bills at the mid-point of the semiannual period immediately preceding each interest payment date. Assume that the interest rate is a qualified floating rate and that the debt instrument is a variable rate debt instrument within the meaning of § 1.1275-5.
(ii) *Adequate stated interest.* Under paragraph (b)(1) of this section, rules similar to those in § 1.1274-2(f) apply to determine whether the debt instrument has adequate stated interest. Assume that the test rate of interest applicable to the debt instrument is 9 percent, compounded semiannually. Assume also that the yield on 6-month Treasury bills on the date of the sale is 8.89 percent, which is greater than the yield on 6-month Treasury bills on the first date on which there is a binding written contract that substantially sets forth the terms under which the sale is consummated. Under § 1.1274-2(f), the debt instrument is tested for adequate stated interest as if it provided for a stated rate of interest of 11.89 percent (3 percent plus 8.89 percent), compounded semiannually, payable over its entire term. Because the test rate of interest is 9 percent, compounded semiannually, and the debt instrument is treated as providing for stated interest of 11.89 percent, compounded semiannually, the debt instrument provides for adequate stated interest.

(d) ***Effective date.*** This section applies to sales and exchanges that occur on or after April 4, 1994. Taxpayers, however, may rely on this section for sales and exchanges that occur after December 21, 1992, and before April 4, 1994.

[T.D. 8517, 59 FR 4806, Feb. 2, 1994]

§ 1.483-3 Test rate of interest applicable to a contract.

(a) ***General rule.*** For purposes of section 483, the test rate of interest for a contract is the same as the test rate that would apply under § 1.1274-4 if the contract were a debt instrument. Paragraph (b) of this section, however, provides for a lower test rate in the case of certain sales or exchanges of land between related individuals.

(b) ***Lower rate for certain sales or exchanges of land between related individuals*** —

(1) ***Test rate.*** In the case of a qualified sale or exchange of land between related individuals (described in section 483(e)), the test rate is not greater than 6 percent, compounded semiannually, or an equivalent rate based on an appropriate compounding period.

(2) ***Special rules.*** The following rules and definitions apply in determining whether a sale or exchange is a qualified sale under section 483(e):

(i) ***Definition of family members.*** The members of an individual's family are determined as of the date of the sale or exchange. The members of an individual's family include those individuals described in section 267(c)(4) and the spouses of those individuals. In addition, for purposes of section 267(c)(4), full effect is given to a legal adoption, ancestor means parents and grandparents, and lineal descendants means children and grandchildren.

(ii) ***$500,000 limitation.*** Section 483(e) does not apply to the extent that the stated principal amount of the debt instrument issued in the sale or exchange, when added to the aggregate stated principal amount of any other debt instruments to which section 483(e) applies that were issued in prior qualified sales between the same two individuals during the same calendar year, exceeds $500,000. See *Example 3* of paragraph (b)(3) of this section.

(iii) ***Other limitations.*** Section 483(e) does not apply if the parties to a contract include persons other than the related individuals and the parties enter into the contract with an intent to circumvent the purposes of section 483(e). In addition, if the property sold or exchanged includes any property other than land, section 483(e) applies only to the extent that the stated principal amount of the debt instrument issued in the sale or exchange is attributable to the land (based on the relative fair market values of the land and the other property).

(3) ***Examples.*** The following examples illustrate the rules of this paragraph (b).

Example 1. On January 1, 1995, A sells land to B, A's child, for $650,000. The contract for sale calls for B to make a $250,000 down payment and issue a debt instrument with a stated principal amount of $400,000. Because the stated principal amount of the debt instrument is less than $500,000, the sale is a qualified sale and section 483(e) applies to the debt instrument.

Example 2. The facts are the same as in *Example 1* of paragraph (b)(3) of this section, except that on June 1, 1995, A sells additional land to B under a contract that calls for B to issue a debt instrument with a stated principal amount of $100,000. The stated principal amount of this debt instrument ($100,000) when added to the stated principal amount of the prior debt instrument ($400,000) does not exceed $500,000. Thus, section 483(e) applies to both debt instruments.

Example 3. The facts are the same as in *Example 1* of paragraph (b)(3) of this section, except that on June 1, 1995, A sells additional land to B under a contract that calls for B to issue a debt instrument with a stated principal amount of $150,000. The stated principal amount of this debt instrument when added to the stated principal amount of the prior debt instrument

($400,000) exceeds $500,000. Thus, for purposes of section 483(e), the debt instrument issued in the sale of June 1, 1995, is treated as two separate debt instruments: a $100,000 debt instrument (to which section 483(e) applies) and a $50,000 debt instrument (to which section 1274, if otherwise applicable, applies).

(c) ***Effective date.*** This section applies to sales and exchanges that occur on or after April 4, 1994. Taxpayers, however, may rely on this section for sales and exchanges that occur after December 21, 1992, and before April 4, 1994.

[T.D. 8517, 59 FR 4807, Feb. 2, 1994]

§ 1.483-4 Contingent payments.

(a) ***In general.*** This section applies to a contract for the sale or exchange of property (the overall contract) if the contract provides for one or more contingent payments and the contract is subject to section 483. This section applies even if the contract provides for adequate stated interest under § 1.483-2. If this section applies to a contract, interest under the contract is generally computed and accounted for using rules similar to those that would apply if the contract were a debt instrument subject to § 1.1275-4(c). Consequently, all noncontingent payments under the overall contract are treated as if made under a separate contract, and interest accruals on this separate contract are computed under rules similar to those contained in § 1.1275-4(c)(3). Each contingent payment under the overall contract is characterized as principal and interest under rules similar to those contained in § 1.1275-4(c)(4). However, any interest, or amount treated as interest, on a contract subject to this section is taken into account by a taxpayer under the taxpayer's regular method of accounting (e.g., an accrual method or the cash receipts and disbursements method).

(b) ***Examples.*** The following examples illustrate the provisions of paragraph (a) of this section:

> *Example 1. Deferred payment sale with contingent interest.* (i) *Facts.* On December 31, 1996, A sells depreciable personal property to B. As consideration for the sale, B issues to A a debt instrument with a maturity date of December 31, 2001. The debt instrument provides for a principal payment of $200,000 on the maturity date, and a payment of interest on December 31 of each year, beginning in 1997, equal to a percentage of the total gross income derived from the property in that year. However, the total interest payable on the debt instrument over its entire term is limited to a maximum of $50,000. Assume that on December 31, 1996, the short-term applicable Federal rate is 4 percent, compounded annually, and the mid-term applicable Federal rate is 5 percent, compounded annually.
> (ii) *Treatment of noncontingent payment as separate contract.* Each payment of interest is a contingent payment. Accordingly, under paragraph (a) of this section, for purposes of applying section 483 to the debt instrument, the right to the noncontingent payment of $200,000 is treated as a separate contract. The amount of unstated interest on this separate contract is equal to $43,295, which is the amount by which the payment ($200,000) exceeds the present value of the payment ($156,705), calculated using the test rate of 5 percent, compounded annually. The $200,000 payment is thus treated as consisting of a payment of interest of $43,295 and a payment of principal of $156,705. The interest is includible in A's gross income, and deductible by B, under their respective methods of accounting.

(iii) *Treatment of contingent payments.* Assume that the amount of the contingent payment that is paid on December 31, 1997, is $20,000. Under paragraph (a) of this section, the $20,000 payment is treated as a payment of principal of $19,231 (the present value, as of the date of sale, of the $20,000 payment, calculated using a test rate equal to 4 percent, compounded annually) and a payment of interest of $769. The $769 interest payment is includible in A's gross income, and deductible by B, in their respective taxable years in which the payment occurs. The amount treated as principal gives B additional basis in the property on December 31, 1997. The remaining contingent payments on the debt instrument are accounted for similarly, using a test rate of 4 percent, compounded annually, for the payments made on December 31, 1998, and December 31, 1999, and a test rate of 5 percent, compounded annually, for the payments made on December 31, 2000, and December 31, 2001.

Example 2. Contingent stock payout. (i) *Facts.* M Corporation and N Corporation each owns one-half of the stock of O Corporation. On December 31, 1996, pursuant to a reorganization qualifying under section 368(a)(1)(B), M acquires the one-half interest of O held by N in exchange for 30,000 shares of M voting stock and a non-assignable right to receive up to 10,000 additional shares of M's voting stock during the next 3 years, provided the net profits of O exceed certain amounts specified in the contract. No interest is provided for in the contract. No additional shares are received in 1997 or in 1998. In 1999, the annual earnings of O exceed the specified amount, and, on December 31, 1999, an additional 3,000 M voting shares are transferred to N. The fair market value of the 3,000 shares on December 31, 1999, is $300,000. Assume that on December 31, 1996, the short-term applicable Federal rate is 4 percent, compounded annually. M and N are calendar year taxpayers.
(ii) *Allocation of interest.* Section 1274 does not apply to the right to receive the additional shares because the right is not a debt instrument for federal income tax purposes. As a result, the transfer of the 3,000 M voting shares to N is a deferred payment subject to section 483 and a portion of the shares is treated as unstated interest under that section. The amount of interest allocable to the shares is equal to the excess of $300,000 (the fair market value of the shares on December 31, 1999) over $266,699 (the present value of $300,000, determined by discounting the payment at the test rate of 4 percent, compounded annually, from December 31, 1999, to December 31, 1996). As a result, the amount of interest allocable to the payment of the shares is $33,301 ($300,000-$266,699). Both M and N take the interest into account in 1999.

(c) ***Effective date.*** This section applies to sales and exchanges that occur on or after August 13, 1996.

[T.D. 8674, 61 FR 30138, June 14, 1996]

REGULATIONS APPLICABLE FOR TAXABLE YEARS BEGINNING ON OR BEFORE APRIL 21, 1993

§ 1.482-1A Allocation of income and deductions among taxpayers.

(a) ***Definitions.*** When used in this section and in § 1.482-2—

(1) The term "organization" includes any organization of any kind, whether it be a sole proprietorship, a partnership, a trust, an estate, an association, or a corporation (as each is defined or understood in the Internal Revenue Code or the regulations thereunder), irrespective of the place where organized, where operated, or where its trade or business is conducted, and regardless of whether domestic or foreign, whether exempt, whether affiliated, or whether a party to a consolidated return.

(2) The term "trade" or "business" includes any trade or business activity of any kind, regardless of whether or where organized, whether owned individually or otherwise, and regardless of the place where carried on.

(3) The term "controlled" includes any kind of control, direct or indirect, whether legally enforceable, and however exercisable or exercised. It is the reality of the control which is decisive, not its form or the mode of its exercise. A presumption of control arises if income or deductions have been arbitrarily shifted.

(4) The term "controlled taxpayer" means any one of two or more organizations, trades, or businesses owned or controlled directly or indirectly by the same interests.

(5) The terms "group" and "group of controlled taxpayers" mean the organizations, trades, or businesses owned or controlled by the same interests.

(6) The term "true taxable income" means, in the case of a controlled taxpayer, the taxable income (or, as the case may be, any item or element affecting taxable income) which would have resulted to the controlled taxpayer, had it in the conduct of its affairs (or, as the case may be, in the particular contract, transaction, arrangement, or other act) dealt with the other member or members of the group at arm's length. It does not mean the income, the deductions, the credits, the allowances, or the item or element of income, deductions, credits, or allowances, resulting to the controlled taxpayer by reason of the particular contract, transaction, or arrangement, the controlled taxpayer, or the interests controlling it, chose to make (even though such contract, transaction, or arrangement be legally binding upon the parties thereto).

(b) *Scope and purpose.*

(1) The purpose of section 482 is to place a controlled taxpayer on a tax parity with an uncontrolled taxpayer, by determining, according to the standard of an uncontrolled taxpayer, the true taxable income from the property and business of a controlled taxpayer. The interests controlling a group of controlled taxpayers are assumed to have complete power to cause each controlled taxpayer so to conduct its affairs that its transactions and accounting records truly reflect the taxable income from the property and business of each of the controlled taxpayers. If, however, this has not been done, and the taxable incomes are thereby understated, the district director shall intervene, and, by making such distributions, apportionments, or allocations as he may deem necessary of gross income, deductions, credits, or allowances, or of any item or element affecting taxable income, between or among the controlled taxpayers constituting the group, shall determine the true taxable income of each controlled taxpayer. The standard to be applied in every case is that of an uncontrolled taxpayer dealing at arm's length with another uncontrolled taxpayer.

(2) Section 482 and this section apply to the case of any controlled taxpayer, whether such taxpayer makes a separate or a consolidated return. If a controlled taxpayer makes a separate return, the determination is of its true separate taxable income. If a controlled taxpayer is a party to a consolidated return, the true consolidated taxable income of the affiliated group and the true separate taxable income of the controlled taxpayer are determined consistently with the principles of a consolidated return.

(3) Section 482 grants no right to a controlled taxpayer to apply its provisions at will, nor does it grant any right to compel the district director to apply such provisions. It is not intended (except in the case of the computation of consolidated taxable income under a consolidated return) to effect in any case such a distribution, apportionment, or allocation of gross income, deductions, credits, or allowances, or any item of gross income, deductions, credits, or allowances, as would produce a result equivalent to a computation of consolidated taxable income under subchapter A, chapter 6 of the Code.

(c) ***Application.*** Transactions between one controlled taxpayer and another will be subjected to special scrutiny to ascertain whether the common control is being used to reduce, avoid, or escape taxes. In determining the true taxable income of a controlled taxpayer, the district director is not restricted to the case of improper accounting, to the case of a fraudulent, colorable, or sham transaction, or to the case of a device designed to reduce or avoid tax by shifting or distorting income, deductions, credits, or allowances. The authority to determine true taxable income extends to any case in which either by inadvertence or design the taxable income, in whole or in part, of a controlled taxpayer, is other than it would have been had the taxpayer in the conduct of his affairs been an uncontrolled taxpayer dealing at arm's length with another uncontrolled taxpayer.

(d) ***Method of allocation.***

(1) The method of allocating, apportioning, or distributing income, deductions, credits, and allowances to be used by the district director in any case, including the form of the adjustments and the character and source of amounts allocated, shall be determined with reference to the substance of the particular transactions or arrangements which result in the avoidance of taxes or the failure to clearly reflect income. The appropriate adjustments may take the form of an increase or decrease in gross income, increase or decrease in deductions (including depreciation), increase or decrease in basis of assets (including inventory), or any other adjustment which may be appropriate under the circumstances. See § 1.482-2 for specific rules relating to methods of allocation in the case of several types of business transactions.

(2) Whenever the district director makes adjustments to the income of one member of a group of controlled taxpayers (such adjustments being referred to in this paragraph as “primary” adjustments) he shall also make appropriate correlative adjustments to the income of any other member of the group involved in the allocation. The correlative adjustment shall actually be made if the U.S. income tax liability of the other member would be affected for any pending taxable year. Thus, if the district director makes an allocation of income, he shall not only increase the income of one member of the group, but shall decrease the income of the other member if such adjustment would have an effect on the U.S. income tax liability of the other member for any pending taxable year. For the purposes of this subparagraph, a “pending taxable year” is any taxable year with respect to which the U.S. income tax return of the other member has been filed by the time the allocation is made, and with respect to which a credit or refund is not barred by the operation of any law or rule of law. If a correlative adjustment is not actually made because it would have no effect on the U.S. income tax liability of the other member involved in the allocation for any pending taxable year, such adjustment shall nevertheless be deemed to have been made for the purpose of determining the U.S. income tax liability of such member for a later taxable year, or for the purposes of determining the U.S. income tax liability of any person for any taxable year. The district director shall furnish to the taxpayer with respect to which the primary adjustment is made a written statement of the amount and nature of the correlative adjustment which is deemed to have been made. For purposes

of this subparagraph, a primary adjustment shall not be considered to have been made (and therefore a correlative adjustment is not required to be made) until the first occurring of the following events with respect to the primary adjustment:

(i) The date of assessment of the tax following execution by the taxpayer of a Form 870 (Waiver of Restrictions on Assessment and Collection of Deficiency in Tax and Acceptance of Overassessment) with respect to such adjustment,

(ii) Acceptance of a Form 870-AD (Offer of Waiver of Restriction on Assessment and Collection Deficiency in Tax and Acceptance of Overassessment),

(iii) Payment of the deficiency,

(iv) Stipulation in the Tax Court of the United States, or

(v) Final determination of tax liability by offer-in-compromise, closing agreement, or court action.

The principles of this subparagraph may be illustrated by the following examples in each of which it is assumed that X and Y are members of the same group of controlled entities and that they regularly compute their incomes on the basis of a calendar year:

Example 1. Assume that in 1968 the district director proposes to adjust X's income for 1966 to reflect an arm's length rental charge for Y's use of X's tangible property in 1966; that X consents to an assessment reflecting such adjustment by executing a Waiver, Form 870; and that an assessment of the tax with respect to such adjustment is made in 1968. The primary adjustment is therefore considered to have been made in 1968. Assume further that both X and Y are United States corporations and that Y had net operating losses in 1963, 1964, 1965, 1966, and 1967. Although a correlative adjustment would not have an effect on Y's U.S. income tax liability for any pending taxable year, an adjustment increasing Y's net operating loss for 1966 shall be deemed to have been made for the purposes of determining Y's U.S. income tax liability for 1968 or a later taxable year to which the increased operating loss may be carried. The district director shall notify X in writing of the amount and nature of the adjustment which is deemed to have been made to Y.

Example 2. Assume that X and Y are United States corporations; that X is in the business of rendering engineering services; that in 1968 the district director proposes to adjust X's income for 1966 to reflect an arm's length fee for the rendition of engineering services by X in 1966 relating to the construction of Y's factory; that X consents to an assessment reflecting such adjustment by executing a Waiver, Form 870; and that an assessment of the tax with respect to such adjustment is made in 1968. Assume further that fees for such services would properly constitute a capital expenditure by Y, and that Y does not place the factory in service until 1969. Although a correlative adjustment (increase in basis) would not have an effect on Y's U.S. income tax liability for a pending taxable year, an adjustment increasing the basis of Y's assets for 1966 shall be deemed to have been made in 1968 for the purpose of computing allowable depreciation or gain or loss on disposition for 1969 and any future taxable year. The district director shall notify X in writing of the amount and nature of the adjustment which is deemed to have been made to Y.

Example 3. Assume that X is a U.S. taxpayer and Y is a foreign taxpayer not engaged in a trade or business in the United States; that in 1968 the district director proposes to adjust X's income for 1966 to reflect an arm's length interest charge on a loan made to Y; that X consents to an assessment reflecting such allocation by executing a Waiver, Form 870; and that an

assessment of the tax with respect to such adjustment is made in 1968. Although a correlative adjustment would not have an effect on Y's U.S. income tax liability, an adjustment in Y's income for 1966 shall be deemed to have been made in 1968 for the purposes of determining the amount of Y's earnings and profits for 1966 and subsequent years, and of any other effect it may have on any person's U.S. income tax liability for any taxable year. The district director shall notify X in writing of the amount and nature of the allocation which is deemed to have been made to Y.

(3) In making distributions, apportionments, or allocations between two members of a group of controlled entities with respect to particular transactions, the district director shall consider the effect upon such members of an arrangement between them for reimbursement within a reasonable period before or after the taxable year if the taxpayer can establish that such an arrangement in fact existed during the taxable year under consideration. The district director shall also consider the effect of any other nonarm's length transaction between them in the taxable year which, if taken into account, would result in a setoff against any allocation which would otherwise be made, provided the taxpayer is able to establish with reasonable specificity that the transaction was not at arm's length and the amount of the appropriate arm's length charge. For purposes of the preceding sentence, the term arm's length refers to the amount which was charged or would have been charged in independent transactions with unrelated parties under the same or similar circumstances considering all the relevant facts and without regard to the rules found in § 1.482-2 by which certain charges are deemed to be equal to arm's length. For example, assume that one member of a group performs services which benefit a second member, which would in itself require an allocation to reflect an arm's length charge for the performance of such services. Assume further that the first member can establish that during the same taxable year the second member engages in other nonarm's length transactions which benefit the first member, such as by selling products to the first member at a discount, or purchasing products from the first member at a premium, or paying royalties to the first member in an excessive amount. In such case, the value of the benefits received by the first member as a result of the other activities will be set-off against the allocation which would otherwise be made. If the effect of the set-off is to change the characterization or source of the income or deductions, or otherwise distort taxable income, in such a manner as to affect the United States tax liability of any member, allocations will be made to reflect the correct amount of each category of income or deductions. In order to establish that a set-off to the adjustments proposed by the district director is appropriate, the taxpayer must notify the district director of the basis of any claimed set-off at any time before the expiration of the period ending 30 days after the date of a letter by which the district director transmits an examination report notifying the taxpayer of proposed adjustments or before July 16, 1968, whichever is later. The principles of this subparagraph may be illustrated by the following examples, in each of which it is assumed that P and S are calendar year corporations and are both members of the same group of controlled entities:

Example 1. P performs services in 1966 for the benefit of S in connection with S's manufacture and sale of a product. S does not pay P for such services in 1966, but in consideration for such services, agrees in 1966 to pay P a percentage of the amount of sales of the product in 1966 through 1970. In 1966 it appeared this agreement would provide adequate consideration for the services. No allocation will be made with respect to the services performed by P.

Example 2. P renders services to S in connection with the construction of S's factory. An arm's length charge for such services, determined under paragraph (b) of § 1.482-2, would be $100,000. During the same taxable year P makes available to S a machine to be used in such construction. P bills S $125,000 for the services, but does not bill for the use of the machine.

No allocation will be made with respect to the excessive charge for services or the undercharge for the machine if P can establish that the excessive charge for services was equal to an arm's length charge for the use of the machine, and if the taxable income and income tax liabilities of P and S are not distorted.

Example 3. Assume the same facts as in Example 2, except that, if P had reported $25,000 as rental income and $25,000 less service income, it would have been subject to the tax on personal holding companies. Allocations will be made to reflect the correct amounts of rental income and service income.

(4) If the members of a group of controlled taxpayers engage in transactions with one another, the district director may distribute, apportion, or allocate income, deductions, credits, or allowances to reflect the true taxable income of the individual members under the standards set forth in this section and in § 1.482-2 notwithstanding the fact that the ultimate income anticipated from a series of transactions may not be realized or is realized during a later period. For example, if one member of a controlled group sells a product at less than an arm's length price to a second member of the group in one taxable year and the second member resells the product to an unrelated party in the next taxable year, the district director may make an appropriate allocation to reflect an arm's length price for the sale of the product in the first taxable year, notwithstanding that the second member of the group had not realized any gross income from the resale of the product in the first year. Similarly, if one member of a group lends money to a second member of the group in a taxable year, the district director may make an appropriate allocation to reflect an arm's length charge for interest during such taxable year even if the second member does not realize income during such year. The provisions of this subparagraph apply even if the gross income contemplated from a series of transactions is never, in fact, realized by the other members.

(5) Section 482 may, when necessary to prevent the avoidance of taxes or to clearly reflect income, be applied in circumstances described in sections of the Code (such as section 351) providing for nonrecognition of gain or loss. See, for example, "National Securities Corporation v. Commissioner of Internal Revenue", 137 F. 2d 600 (3d Cir. 1943), cert. denied 320 U.S. 794 (1943).

(6) If payment or reimbursement for the sale, exchange, or use of property, the rendition of services, or the advance of other consideration among members of a group of controlled entities was prevented, or would have been prevented, at the time of the transaction because of currency or other restrictions imposed under the laws of any foreign country, any distributions, apportionments, or allocations which may be made under section 482 with respect to such transactions may be treated as deferrable income or deductions, providing the taxpayer has, for the year to which the distributions, apportionments, or allocations relate, elected to use a method of accounting in which the reporting of deferrable income is deferred until the income ceases to be deferrable income. Under such method of accounting, referred to in this section as the deferred income method of accounting, any payments or reimbursements which were prevented or would have been prevented, and any deductions attributable directly or indirectly to such payments or reimbursements, shall be deferred until they cease to be deferrable under such method of accounting. If such method of accounting has not been elected with respect to the taxable year to which the allocations under section 482 relate, the taxpayer may elect such method with respect to such allocations (but not with respect to other deferrable income) at any time before the first occurring of the following events with respect to the allocations:

(i) Execution by the taxpayer of Form 870 (Waiver of Restrictions on Assessment and Collection of Deficiency in Tax and Acceptance of Overassessment);

(ii) Expiration of the period ending 30 days after the date of a letter by which the district director transmits an examination report notifying the taxpayer of proposed adjustments reflecting such allocations or before July 16, 1968, whichever is later; or

(iii) Execution of a closing agreement or offer-in-compromise.

The principles of this subparagraph may be illustrated by the following example in which it is assumed that X, a domestic corporation, and Y, a foreign corporation, are members of the same group of controlled entities:

Example. X, which is in the business of rendering a certain type of service to unrelated parties, renders such services for the benefit of Y in 1965. The direct and indirect costs allocable to such services are $60,000, and an arm's length charge for such services is $100,000. Assume that the district director proposes to increase X's income by $100,000, but that the country in which Y is located would have blocked payment in 1965 for such services. If, prior to the first occurring of the events described in subdivisions (i), (ii), or (iii) of this subparagraph, X elects to use the deferred income method of accounting with respect to such allocation, the $100,000 allocation and the $60,000 of costs are deferrable until such amounts cease to be deferrable under X's method of accounting.

[T.D. 6595, 27 FR 3598, Apr. 14, 1962, as amended by T.D. 6952, 33 FR 5848, Apr. 16, 1968. Redesignated by T.D. 8470, 58 FR 5271, Jan. 21, 1993]

§ 1.482-2A Determination of taxable income in specific situations.

(a)-(c) For applicable rules, see § 1.482-2T (a) through (c).

(d) ***Transfer or use of intangible property*** —

(1) ***In general.***

(i) Except as otherwise provided in subparagraph (4) of this paragraph, where intangible property or an interest therein is transferred, sold, assigned, loaned, or otherwise made available in any manner by one member of a group of controlled entities (referred to in this paragraph as the transferor) to another member of the group (referred to in this paragraph as the transferee) for other than an arm's length consideration, the district director may make appropriate allocations to reflect an arm's length consideration for such property or its use. Subparagraph (2) of this paragraph provides rules for determining the form an amount of an appropriate allocation, subparagraph (3) of this paragraph provides a definition of “intangible property”, and subparagraph (4) of this paragraph provides rules with respect to certain cost-sharing arrangements in connection with the development of intangible property. For purposes of this paragraph, an interest in intangible property may take the form of the right to use such property.

(ii)

(*a*) In the absence of a bona fide cost-sharing arrangement (as defined in subparagraph (4) of this paragraph), where one member of a group of related entities undertakes the development of intangible property as a developer within the meaning of (*c*) of this subdivision, no allocation with respect to such development activity shall be made under the rules of this paragraph or any other paragraph of this section (except as provided in (*b*) of this subdivision) until such time as any property developed, or any interest therein, is or is deemed to be transferred, sold, assigned, loaned, or otherwise made available in any manner by the developer to a related entity in a transfer subject to the rules of this

paragraph. Where a member of the group other than the developer acquires an interest in the property developed by virtue of obtaining a patent or copyright, or by any other means, the developer shall be deemed to have transferred such interest in such property to the acquiring member in a transaction subject to the rules of this paragraph. For example, if one member of a group (the developer) undertakes to develop a new patentable product and the costs of development are incurred by that entity over a period of 3 years, no allocation with respect to that entity's activity shall be made during such period. The amount of any allocation that may be appropriate at the expiration of such development period when, for example, the patent on the product is transferred, or deemed transferred, to a related entity for other than an arm's length consideration, shall be determined in accordance with the rules of this paragraph.

(*b*) Where one member of a group renders assistance in the form of loans, services, or the use of tangible or intangible property to a developer in connection with an attempt to develop intangible property, the amount of any allocation that may be appropriate with respect to such assistance shall be determined in accordance with the rules of the appropriate paragraph or paragraphs of this section. Thus, where one entity allows a related entity, which is the developer, to use tangible property, such as laboratory equipment, in connection with the development of intangible property, the amount of any allocation that may be appropriate with respect to such use shall be determined in accordance with the rules of paragraph (*c*) of this section. In the event that the district director does not exercise his discretion to make allocations with respect to the assistance rendered to the developer, the value of the assistance shall be allowed as a set-off against any allocation that the district director may make under this paragraph as a result of the transfer of the intangible property to the entity rendering the assistance.

(*c*) The determination as to which member of a group of related entities is a developer and which members of the group are rendering assistance to the developer in connection with its development activities shall be based upon all the facts and circumstances of the individual case. Of all the facts and circumstances to be taken into account in making this determination, greatest weight shall be given to the relative amounts of all the direct and indirect costs of development and the corresponding risks of development borne by the various members of the group, and the relative values of the use of any intangible property of members of the group which is made available without adequate consideration for use in connection with the development activity, which property is likely to contribute to a substantial extent in the production of intangible property. For this purpose, the risk to be borne with respect to development activity is the possibility that such activity will not result in the production of intangible property or that the intangible property produced will not be of sufficient value to allow for the recovery of the costs of developing it. A member will not be considered to have borne the costs and corresponding risks of development unless such member is committed to bearing such costs in advance of, or contemporaneously with, their incurrence and without regard to the success of the project. Other factors that may be relevant in determining which member of the group is the developer include the location of the development activity, the capabilities of the various members to carry on the project independently, and the degree of control over the project exercised by the various members.

(*d*) The principles of this subdivision (ii) may be illustrated by the following examples in which it is assumed that X and Y are corporate members of the same group:

Example 1. X, at the request of Y, undertakes to develop a new machine which will function effectively in the climate in which Y's factory is located. Y agrees to bear all the direct and indirect costs of the project whether or not X successfully develops the machine. Assume that X does not make any of its own intangible property available for use in connection with the project. The machine is successfully developed and Y obtains possession of the intangible property necessary to produce such machine. Based on the facts and circumstances as stated, Y shall be considered to be the developer of the intangible property and, therefore, Y shall not be treated as having obtained the property in a transfer subject to the rules of this paragraph. Any amount which may be allocable with respect to the assistance rendered by X shall be determined in accordance with the rules of (*b*) of this subdivision.

Example 2. Assume the same facts as in Example 1 except that Y agrees to reimburse X for its costs only in the event that the property is successfully developed. In such case X is the developer and Y is deemed to have received the property in a transfer subject to the rules of this paragraph. Therefore, the district director may make an allocation to reflect an arm's length consideration for such property.

Example 3. In 1967 X undertakes to develop product M in its research and development department. X incurs direct and indirect costs of $1 million per year in connection with the project in 1967, 1968, and 1969. In connection with the project, X employs the formula for compound N, which it owns, and which is likely to contribute substantially to the success of the project. The value of the use of the formula for compound N in connection with this project is $750,000. In 1968, 4 chemists employed by Y spend 6 months working on the project in X's laboratory. The salary and other expenses connected with the chemists' employment for that period ($100,000) are paid by Y, for which no charge is made to X. In 1969, product M is perfected and Y obtains patents thereon. X is considered to be the developer of product M since, among other things, it bore the greatest relative share of the costs and risks incurred in connection with this project and made available intangible property (formula for compound N) which was likely to contribute substantially in the development of product M. Accordingly, no allocation with respect to X's development activity should be made before 1969. The property is deemed to have been transferred to Y at that time by virtue of the fact that Y obtained the patent rights to product M. In such case the district director may make an allocation to reflect an arm's length consideration for such transfer. In the event that the district director makes such an allocation and he has not made or does not make an allocation for 1968 with respect to the services of the chemists in accordance with the principles of paragraph (b) of this section, the value of the assistance shall be allowed as a set-off against the amount of the allocation reflecting an arm's length consideration for the transfer of the intangible property.

(2) ***Arm's length consideration.***

(i) An arm's length consideration shall be in a form which is consistent with the form which would be adopted in transactions between unrelated parties under the same circumstances. To the extent appropriate, an arm's length consideration may take any one or more of the following forms:

(*a*) Royalties based on the transferee's output, sales, profits, or any other measure;

(*b*) Lump-sum payments; or

(*c*) Any other form, including reciprocal licensing rights, which might reasonably have been adopted by unrelated parties under the circumstances, provided that the parties can establish that such form was adopted pursuant to an arrangement which in fact existed between them.

However, where the transferee pays nominal or no consideration for the property or interest therein and where the transferor has retained a substantial interest in the property, an allocation shall be presumed not to take the form of a lump-sum payment.

(ii) In determining the amount of an arm's length consideration, the standard to be applied is the amount that would have been paid by an unrelated party for the same intangible property under the same circumstances. Where there have been transfers by the transferor to unrelated parties involving the same or similar intangible property under the same or similar circumstances the amount of the consideration for such transfers shall generally be the best indication of an arm's length consideration.

(iii) Where a sufficiently similar transaction involving an unrelated party cannot be found, the following factors, to the extent appropriate (depending upon the type of intangible property and the form of the transfer), may be considered in arriving at the amount of the arm's length consideration:

(*a*) The prevailing rates in the same industry or for similar property,

(*b*) The offers of competing transferors or the bids of competing transferees,

(*c*) The terms of the transfer, including limitations on the geographic area covered and the exclusive or nonexclusive character of any rights granted,

(*d*) The uniqueness of the property and the period for which it is likely to remain unique,

(*e*) The degree and duration of protection afforded to the property under the laws of the relevant countries.

(*f*) Value of services rendered by the transferor to the transferee in connection with the transfer within the meaning of paragraph (b)(8) of this section,

(*g*) Prospective profits to be realized or costs to be saved by the transferee through its use or subsequent transfer of the property,

(*h*) The capital investment and starting up expenses required of the transferee,

(*i*) The next subdivision is (*j*),

(*j*) The availability of substitutes for the property transferred,

(*k*) The arm's length rates and prices paid by unrelated parties where the property is resold or sublicensed to such parties,

(*l*) The costs incurred by the transferor in developing the property, and

(*m*) Any other fact or circumstance which unrelated parties would have been likely to consider in determining the amount of an arm's length consideration for the property.

(3) *Definition of intangible property.* (i) Solely for the purposes of this section, intangible property shall consist of the items described in subdivision (ii) of this subparagraph, provided that such items have substantial value independent of the services of individual persons.

(ii) The items referred to in subdivision (i) of this subparagraph are as follows:

(*a*) Patents, inventions, formulas, processes, designs, patterns, and other similar items;

(*b*) Copyrights, literary, musical, or artistic compositions, and other similar items;

(*c*) Trademarks, trade names, brand names, and other similar items;

(*d*) Franchises, licenses, contracts, and other similar items;

(*e*) Methods, programs, systems, procedures, campaigns, surveys, studies, forecasts, estimates, customer lists, technical data, and other similar items.

(4) *Sharing of costs and risks.* Where a member of a group of controlled entities acquires an interest in intangible property as a participating party in a bona fide cost sharing arrangement with respect to the development of such intangible property, the district director shall not make allocations with respect to such acquisition except as may be appropriate to reflect each participant's arm's length share of the costs and risks of developing the property. A bona fide cost sharing arrangement is an agreement, in writing, between two or more members of a group of controlled entities providing for the sharing of the costs and risks of developing intangible property in return for a specified interest in the intangible property that may be produced. In order for the arrangement to qualify as a bona fide arrangement, it must reflect an effort in good faith by the participating members to bear their respective shares of all the costs and risks of development on an arm's length basis. In order for the sharing of costs and risk to be considered on an arm's length basis, the terms and conditions must be comparable to those which would have been adopted by unrelated parties similarly situated had they entered into such an arrangement. If an oral cost sharing arrangement, entered into prior to April 16, 1968, and continued in effect after that date, is otherwise in compliance with the standards prescribed in this subparagraph, it shall constitute a bona fide cost sharing arrangement if it is reduced to writing prior to January 1, 1969.

(e) *Sales of tangible property*—(1) *In general.* (i) Where one member of a group of controlled entities (referred to in this paragraph as the “seller”) sells or otherwise disposes of tangible property to another member of such group (referred to in this paragraph as the “buyer”) at other than an arm's length price (such a sale being referred to in this paragraph as a “controlled sale”), the district director may make appropriate allocations between the seller and the buyer to reflect an arm's length price for such sale or disposition. An arm's length price is the price that an unrelated party would have paid under the same circumstances for the property involved in the controlled sale. Since unrelated parties normally sell products at a profit, an arm's length price normally involves a profit to the seller.

(ii) Subparagraphs (2), (3), and (4) of this paragraph describe three methods of determining an arm's-length price and the standards for applying each method. They are, respectively, the comparable uncontrolled price method, the resale price method, and the cost-plus method. In addition, a special rule is provided in subdivision (v) of this subparagraph for use (notwithstanding any other provision of this subdivision) in determining an arm's-length price for an ore or mineral. If there are comparable uncontrolled sales as defined in subparagraph (2) of this paragraph, the comparable uncontrolled price method must be utilized because it is the method likely to result in the most accurate estimate of an arm's-length price (for the reason that it is based upon the price actually paid by unrelated parties for the same or similar products). If there are no comparable uncontrolled sales, then the resale price method must be utilized if the standards for its application are met because it is the method likely to result in the next most accurate estimate in such instances (for the reason that, in such instances, the arm's-length price determined under such method is based more directly upon actual arm's-length transactions than is the cost-plus method). A typical situation where the resale price method may be required is where a manufacturer sells products to a related distributor which, without further processing, resells the products

in uncontrolled transactions. If all the standards for the mandatory application of the resale price method are not satisfied, then, as provided in subparagraph (3)(iii) of this paragraph, either that method or the cost-plus method may be used, depending upon which method is more feasible and is likely to result in a more accurate estimate of an arm's-length price. A typical situation where the cost-plus method may be appropriate is where a manufacturer sells products to a related entity which performs substantial manufacturing, assembly, or other processing of the product or adds significant value by reason of its utilization of its intangible property prior to resale in uncontrolled transactions.

(iii) Where the standards for applying one of the three methods of pricing described in subdivision (ii) of this subparagraph are met, such method must, for the purposes of this paragraph, be utilized unless the taxpayer can establish that, considering all the facts and circumstances, some method of pricing other than those described in subdivision (ii) of this subparagraph is clearly more appropriate. Where none of the three methods of pricing described in subdivision (ii) of this subparagraph can reasonably be applied under the facts and circumstances as they exist in a particular case, some appropriate method of pricing other than those described in subdivision (ii) of this subparagraph, or variations on such methods, can be used.

(iv) The methods of determining arm's length prices described in this section are stated in terms of their application to individual sales of property. However, because of the possibility that a taxpayer may make controlled sales of many different products, or many separate sales of the same product, it may be impractical to analyze every sale for the purposes of determining the arm's length price. It is therefore permissible to determine or verify arm's length prices by applying the appropriate methods of pricing to product lines or other groupings where it is impractical to ascertain an arm's length price for each product or sale. In addition, the district director may determine or verify the arm's length price of all sales to a related entity by employing reasonable statistical sampling techniques.

(v) The price for a mineral product which is sold at the stage at which mining or extraction ends shall be determined under the provisions of §§ 1.613-3 and 1.613-4.

(2) ***Comparable uncontrolled price method.***

(i) Under the method of pricing described as the “comparable uncontrolled price method”, the arm's length price of a controlled sale is equal to the price paid in comparable uncontrolled sales, adjusted as provided in subdivision

(ii) of this subparagraph.

(ii) “Uncontrolled sales” are sales in which the seller and the buyer are not members of the same controlled group. These include (*a*) sales made by a member of the controlled group to an unrelated party, (*b*) sales made to a member of the controlled group by an unrelated party, and (*c*) sales made in which the parties are not members of the controlled group and are not related to each other. However, uncontrolled sales do not include sales at unrealistic prices, as for example where a member makes uncontrolled sales in small quantities at a price designed to justify a nonarm's length price on a large volume of controlled sales. Uncontrolled sales are considered comparable to controlled sales if the physical property and circumstances involved in the uncontrolled sales are identical to the physical property and circumstances involved in the controlled sales, or if such properties and circumstances are so nearly identical that any differences either have no effect on price, or such differences can be reflected by a reasonable number of adjustments to the price of uncontrolled sales. For this purpose, differences can be reflected by adjusting prices only where such differences have a definite and reasonably ascertainable effect on price. If the differences can be reflected by such adjustment, then the

price of the uncontrolled sale as adjusted constitutes the comparable uncontrolled sale price. Some of the differences which may affect the price of property are differences in the quality of the product, terms of sale, intangible property associated with the sale, time of sale, and the level of the market and the geographic market in which the sale takes place. Whether and to what extent differences in the various properties and circumstances affect price, and whether differences render sales noncomparable, depends upon the particular circumstances and property involved. The principles of this subdivision may be illustrated by the following examples, in each of which it is assumed that X makes both controlled and uncontrolled sales of the identical property:

Example 1. Assume that the circumstances surrounding the controlled and the uncontrolled sales are identical, except for the fact that the controlled sales price is a delivered price and the uncontrolled sales are made f.o.b. X's factory. Since differences in terms of transportation and insurance generally have a definite and reasonably ascertainable effect on price, such differences do not normally render the uncontrolled sales noncomparable to the controlled sales.

Example 2. Assume that the circumstances surrounding the controlled and uncontrolled sales are identical, except for the fact that X affixes its valuable trademark in the controlled sales, and does not affix its trademark in uncontrolled sales. Since the effects on price of differences in intangible property associated with the sale of tangible property, such as trademarks, are normally not reasonably ascertainable, such differences would normally render the uncontrolled sales noncomparable.

Example 3. Assume that the circumstances surrounding the controlled and uncontrolled sales are identical, except for the fact that X, a manufacturer of business machines, makes certain minor modifications in the physical properties of the machines to satisfy safety specifications or other specific requirements of a customer in controlled sales, and does not make these modifications in uncontrolled sales. Since minor physical differences in the product generally have a definite and reasonably ascertainable effect on prices, such differences do not normally render the uncontrolled sales noncomparable to the controlled sales.

(iii) Where there are two or more comparable uncontrolled sales susceptible of adjustment as defined in subdivision (ii) of this subparagraph, the comparable uncontrolled sale or sales requiring the fewest and simplest adjustments provided in subdivision (ii) of this subparagraph should generally be selected. Thus, for example, if a taxpayer makes comparable uncontrolled sales of a particular product which differ from the controlled sale only with respect to the terms of delivery, and makes other comparable uncontrolled sales of the product which differ from the controlled sale with respect to both terms of delivery and terms of payment, the comparable uncontrolled sales differing only with respect to terms of delivery should be selected as the comparable uncontrolled sale.

(iv) One of the circumstances which may affect the price of property is the fact that the seller may desire to make sales at less than a normal profit for the primary purpose of establishing or maintaining a market for his products. Thus, a seller may be willing to reduce the price of a product, for a time, in order to introduce his product into an area or in order to meet competition. However, controlled sales may be priced in such a manner only if such price would have been charged in an uncontrolled sale under comparable circumstances. Such fact may be demonstrated by showing that the buyer in the controlled sale made corresponding reductions

in the resale price to uncontrolled purchasers, or that such buyer engaged in substantially greater sales promotion activities with respect to the product involved in the controlled sale than with respect to other products. For example, assume X, a manufacturer of batteries, commences to sell car batteries to Y, a subsidiary of X, for resale in a new market. In its existing markets X's batteries sell to independent retailers at $20 per unit, and X sells them to wholesalers at $17 per unit. Y also sells X's batteries to independent retailers at $20 per unit. X's batteries are not known in the new market in which Y is operating. In order to engage competitively in the new market Y incurs selling and advertising costs substantially higher than those incurred for its sales of other products. Under these circumstances X may sell to Y, for a time, at less than $17 to take into account the increased selling and advertising activities of Y in penetrating and establishing the new market. This may be done even though it may result in a transfer price from X to Y which is below X's full costs of manufacturing the product.

(3) ***Resale price method.***

(i) Under the pricing method described as the “resale price method”, the arm's length price of a controlled sale is equal to the applicable resale price (as defined in subdivision (iv) or (v) of this subparagraph), reduced by an appropriate markup, and adjusted as provided in subdivision (ix) of this subparagraph. An appropriate markup is computed by multiplying the applicable resale price by the appropriate markup percentage as defined in subdivision (vi) of this subparagraph. Thus, where one member of a group of controlled entities sells property to another member which resells the property in uncontrolled sales, if the applicable resale price of the property involved in the uncontrolled sale is $100 and the appropriate markup percentage for resales by the buyer is 20 percent, the arm's length price of the controlled sale is $80 ($100 minus 20 percent × $100), adjusted as provided in subdivision (ix) of this subparagraph.

(ii) The resale price method must be used to compute an arm's length price of a controlled sale if all the following circumstances exist:

(*a*) There are no comparable uncontrolled sales as defined in subparagraph (2) of this paragraph.

(*b*) An applicable resale price, as defined in subdivision (iv) or (v) of this subparagraph, is available with respect to resales made within a reasonable time before or after the time of the controlled sale.

(*c*) The buyer (reseller) has not added more than an insubstantial amount to the value of the property by physically altering the product before resale. For this purpose packaging, repacking, labeling, or minor assembly of property does not constitute physical alteration.

(*d*) The buyer (reseller) has not added more than an insubstantial amount to the value of the property by the use of intangible property. See § 1.482-2(d)(3) for the definition of intangible property.

(iii) Notwithstanding the fact that one or both of the requirements of subdivision (ii) (*c*) or (*d*) of this subparagraph may not be met, the resale price method may be used if such method is more feasible and is likely to result in a more accurate determination of an arm's length price than the use of the cost plus method. Thus, even though one of the requirements of such subdivision is not satisfied, the resale price method may nevertheless be more appropriate than the cost plus method because the computations and evaluations required under the former method may be fewer and easier to make than under the latter method. In general, the resale price method is more appropriate when the

functions performed by the seller are more extensive and more difficult to evaluate than the functions performed by the buyer (reseller). The principle of this subdivision may be illustrated by the following examples in each of which it is assumed that corporation X developed a valuable patent covering product M which it manufactures and sells to corporation Y in a controlled sale, and for which there is no comparable uncontrolled sale:

Example 1. Corporation Y adds a component to product M and resells the assembled product in an uncontrolled sale within a reasonable time after the controlled sale of product M. Assume further that the addition of the component added more than an insubstantial amount to the value of product M, but that Y's function in purchasing the component and assembling the product prior to sale was subject to reasonably precise valuation. Although the controlled sale and resale does not meet the requirements of subdivision (ii)(*c*) of this subparagraph, the resale price method may be used under the circumstances because that method involves computations and evaluations which are fewer and easier to make than under the cost plus method. This is because X's use of a patent may be more difficult to evaluate in determining an appropriate gross profit percentage under the cost plus method, than is evaluation of Y's assembling function in determining the appropriate markup percentage under the resale price method.

Example 2. Corporation Y resells product M in an uncontrolled sale within a reasonable time after the controlled sale after attaching its valuable trademark to it. Assume further that it can be demonstrated through comparison with other uncontrolled sales of Y that the addition of Y's trademark to a product usually adds 25 percent to the markup on its sales. On the other hand, the effect of X's use of its patent is difficult to evaluate in applying the cost plus method because no reasonable standard of comparison is available. Although the controlled sale and resale does not meet the requirements of subdivision (ii)(*d*) of this subparagraph, the resale price method may be used because that method involves computations and evaluation which are fewer and easier to make than under the cost plus method. That is because, under the circumstances, X's use of a patent is more difficult to evaluate in determining an appropriate gross profit percentage under the cost plus method, than is evaluation of the use of Y's trademark in determining the appropriate markup percentage under the resale price method.

(iv) For the purposes of this subparagraph the "applicable resale price" is the price at which it is anticipated that property purchased in the controlled sale will be resold by the buyer in an uncontrolled sale. The "applicable resale price" will generally be equal to either the price at which current resales of the same property are being made or the resale price of the particular item of property involved.

(v) Where the property purchased in the controlled sale is resold in another controlled sale, the "applicable resale price" is the price at which such property is finally resold in an uncontrolled sale, providing that the series of sales as a whole meets all the requirements of subdivision (ii) of this subparagraph or that the resale price method is used pursuant to subdivision (iii) of this subparagraph. In such case, the determination of the appropriate markup percentage shall take into account the function or functions performed by all members of the group participating in the series of sales and resales. Thus, if X sells a product to Y in a controlled sale, Y sells the product to Z in a controlled sale, and Z sells the product in an uncontrolled sale, the resale price method must be used if Y and Z together have not added more than an insubstantial amount to the value of the product through physical alteration or the application of intangible property, and the final resale occurs within a reasonable time of the sale from X to Y. In such case, the

applicable resale price is the price at which Z sells the product in the uncontrolled sale, and the appropriate markup percentage shall take into account the functions performed by both Y and Z.

(vi) For the purposes of this subparagraph, the appropriate markup percentage is equal to the percentage of gross profit (expressed as a percentage of sales) earned by the buyer (reseller) or another party on the resale of property which is both purchased and resold in an uncontrolled transaction, which resale is most similar to the applicable resale of the property involved in the controlled sale. The following are the most important characteristics to be considered in determining the similarity of resales:

(*a*) The type of property involved in the sales. For example: machine tools, men's furnishings, small household appliances.

(*b*) The functions performed by the reseller with respect to the property. For example: packaging, labeling, delivering, maintenance of inventory, minor assembly, advertising, selling at wholesale, selling at retail, billing, maintenance of accounts receivable, and servicing.

(*c*) The effect on price of any intangible property utilized by the reseller in connection with the property resold. For example: patents, trademarks, trade names.

(*d*) The geographic market in which the functions are performed by the reseller.

In general, the similarity to be sought relates to the probable effect upon the markup percentage of any differences in such characteristics between the uncontrolled purchases and resales on the one hand and the controlled purchases and resales on the other hand. Thus, close physical similarity of the property involved in the sales compared is not required under the resale price method since a lack of close physical similarity is not necessarily indicative of dissimilar markup percentages.

(vii) Whenever possible, markup percentages should be derived from uncontrolled purchases and resales of the buyer (reseller) involved in the controlled sale, because similar characteristics are more likely to be found among different resales of property made by the same reseller than among sales made by other resellers. In the absence of resales by the same buyer (reseller) which meet the standards of subdivision (vi) of this subparagraph, evidence of an appropriate markup percentage may be derived from resales by other resellers selling in the same or a similar market in which the controlled buyer (reseller) is selling providing such resellers perform comparable functions. Where the function performed by the reseller is similar to the function performed by a sales agent which does not take title, such sales agent will be considered a reseller for the purpose of determining an appropriate markup percentage under this subparagraph and the commission earned by such sales agent, expressed as a percentage of the sales price of the goods, may constitute the appropriate markup percentage. If the controlled buyer (reseller) is located in a foreign country and information on resales by other resellers in the same foreign market is not available, then markup percentages earned by United States resellers performing comparable functions may be used. In the absence of data on markup percentages of particular sales or groups of sales, the prevailing markup percentage in the particular industry involved may be appropriate.

(viii) In calculating the markup percentage earned on uncontrolled purchases and resales, and in applying such percentage to the applicable resale price to determine the appropriate markup, the same elements which enter into the computation of the sales price and the costs of goods

sold of the property involved in the comparable uncontrolled purchases and resales should enter into such computation in the case of the property involved in the controlled purchases and resales. Thus, if freight-in and packaging expense are elements of the cost of goods sold in comparable uncontrolled purchases, then such elements should also be taken into account in computing the cost of goods sold of the controlled purchase. Similarly, if the comparable markup percentage is based upon net sales (after reduction for returns and allowances) of uncontrolled resellers, such percentage must be applied to net sales of the buyer (reseller).

(ix) In determining an arm's length price appropriate adjustment must be made to reflect any material differences between the uncontrolled purchases and resales used as the basis for the calculation of the appropriate markup percentage and the resales of property involved in the controlled sale. The differences referred to in this subdivision are those differences in functions or circumstances which have a definite and reasonably ascertainable effect on price. The principles of this subdivision may be illustrated by the following example:

Example. Assume that X and Y are members of the same group of controlled entities and that Y purchases electric mixers from X and electric toasters from uncontrolled entities. Y performs substantially similar functions with respect to resales of both the mixers and the toasters, except that it does not warrant the toasters, but does provide a 90-day warranty for the mixers. Y normally earns a gross profit on toasters of 20 percent of gross selling price. The 20-percent gross profit on the resale of toasters is an appropriate markup percentage, but the price of the controlled sale computed with reference to such rate must be adjusted to reflect the difference in terms (the warranty).

(4) ***Cost plus method.***

(i) Under the pricing method described as the “cost plus method”, the arm's length price of a controlled sale of property shall be computed by adding to the cost of producing such property (as computed in subdivision (ii) of this subparagraph), an amount which is equal to such cost multiplied by the appropriate gross profit percentage (as computed in subdivision (iii) of this subparagraph), plus or minus any adjustments as provided in subdivision (v) of this subparagraph.

(ii) For the purposes of this subparagraph, the cost of producing the property involved in the controlled sale, and the costs which enter into the computation of the appropriate gross profit percentage shall be computed in a consistent manner in accordance with sound accounting practices for allocating or apportioning costs, which neither favors nor burdens controlled sales in comparison with uncontrolled sales. Thus, if the costs used in computing the appropriate gross profit percentage are comprised of the full cost of goods sold, including direct and indirect costs, then the cost of producing the property involved in the controlled sales must be comprised of the full cost of goods sold, including direct and indirect costs. On the other hand, if the costs used in computing the appropriate gross profit percentage are comprised only of direct costs, the cost of producing the property involved in the controlled sale must be comprised only of direct costs. The term “cost of producing”, as used in this subparagraph, includes the cost of acquiring property which is held for resale.

(iii) For the purposes of this subparagraph, the appropriate gross profit percentage is equal to the gross profit percentage (expressed as a percentage of cost) earned by the seller or another party on the uncontrolled sale or sales of property which are most similar to the controlled sale in question. The following are the most important characteristics to be considered in determining the similarity of the uncontrolled sale or sales:

(*a*) The type of property involved in the sales. For example: machine tools, men's furnishings, small household appliances.

(*b*) The functions performed by the seller with respect to the property sold. For example: contract manufacturing, product assembly, selling activity, processing, servicing, delivering.

(*c*) The effect of any intangible property used by the seller in connection with the property sold. For example: patents, trademarks, trade names.

(*d*) The geographic market in which the functions are performed by the seller. In general, the similarity to be sought relates to the probable effect upon the margin of gross profit of any differences in such characteristics between the uncontrolled sales and the controlled sale. Thus, close physical similarity of the property involved in the sales compared is not required under the cost plus method since a lack of close physical similarity is not necessarily indicative of dissimilar profit margins. See subparagraph (2)(iv) of this paragraph, relating to sales made at less than a normal profit for the primary purpose of establishing or maintaining a market.

(iv) Whenever possible, gross profit percentages should be derived from uncontrolled sales made by the seller involved in the controlled sale, because similar characteristics are more likely to be found among sales of property made by the same seller than among sales made by other sellers. In the absence of such sales, evidence of an appropriate gross profit percentage may be derived from similar uncontrolled sales by other sellers whether or not such sellers are members of the controlled group. Where the function performed by the seller is similar to the function performed by a purchasing agent which does not take title, such purchasing agent will be considered a seller for the purpose of determining an appropriate gross profit percentage under this subparagraph and the commission earned by such purchasing agent, expressed as a percentage of the purchase price of the goods, may constitute the appropriate gross profit percentage. In the absence of data on gross profit percentages of particular sales or groups of sales which are similar to the controlled sale, the prevailing gross profit percentages in the particular industry involved may be appropriate.

(v) Where the most similar sale or sales from which the appropriate gross profit percentage is derived differ in any material respect from the controlled sale, the arm's length price which is computed by applying such percentage must be adjusted to reflect such differences to the extent such differences would warrant an adjustment of price in uncontrolled transactions. The differences referred to in this subdivision are those differences which have a definite and reasonably ascertainable effect on price.

(Sec. 385 and 7805 of the Internal Revenue Code of 1954 (83 Stat. 613 and 68A Stat. 917; 26 U.S.C. 385 and 7805))

[T.D. 6952, 33 FR 5849, Apr. 16, 1968]

Editorial Note: For Federal Register citations affecting § 1.482-2A, see the List of CFR Sections Affected, which appears in the Finding Aids section of the printed volume and at *www.govinfo.gov*.

Regulations applicable on or before January 4, 2009.

§ 1.482-7A Methods to determine taxable income in connection with a cost sharing arrangement.

(a) *In general* —

(1) *Scope and application of the rules in this section.* A cost sharing arrangement is an agreement under which the parties agree to share the costs of development of one or more intangibles in proportion to their shares of reasonably anticipated benefits from their individual exploitation of the interests in the intangibles assigned to them under the arrangement. A taxpayer may claim that a cost sharing arrangement is a qualified cost sharing arrangement only if the agreement meets the requirements of paragraph (b) of this section. Consistent with the rules of § 1.482-1(d)(3)(ii)(B) (Identifying contractual terms), the district director may apply the rules of this section to any arrangement that in substance constitutes a cost sharing arrangement, notwithstanding a failure to comply with any requirement of this section. A qualified cost sharing arrangement, or an arrangement to which the district director applies the rules of this section, will not be treated as a partnership to which the rules of subchapter K apply. See § 301.7701-3(e) of this chapter. Furthermore, a participant that is a foreign corporation or nonresident alien individual will not be treated as engaged in trade or business within the United States solely by reason of its participation in such an arrangement. See generally § 1.864-2(a).

(2) *Limitation on allocations.* The district director shall not make allocations with respect to a qualified cost sharing arrangement except to the extent necessary to make each controlled participant's share of the costs (as determined under paragraph (d) of this section) of intangible development under the qualified cost sharing arrangement equal to its share of reasonably anticipated benefits attributable to such development, under the rules of this section. If a controlled taxpayer acquires an interest in intangible property from another controlled taxpayer (other than in consideration for bearing a share of the costs of the intangible's development), then the district director may make appropriate allocations to reflect an arm's length consideration for the acquisition of the interest in such intangible under the rules of §§ 1.482-1 and 1.482-4 through 1.482-6. See paragraph (g) of this section. An interest in an intangible includes any commercially transferable interest, the benefits of which are susceptible of valuation. See § 1.482-4(b) for the definition of an intangible.

(3) *Coordination with § 1.482-1.* A qualified cost sharing arrangement produces results that are consistent with an arm's length result within the meaning of § 1.482-1(b)(1) if, and only if, each controlled participant's share of the costs (as determined under paragraph (d) of this section) of intangible development under the qualified cost sharing arrangement equals its share of reasonably anticipated benefits attributable to such development (as required by paragraph (a)(2) of this section) and all other requirements of this section are satisfied.

(4) *Cross references.* Paragraph (c) of this section defines participant. Paragraph (d) of this section defines the costs of intangible development. Paragraph (e) of this section defines the anticipated benefits of intangible development. Paragraph (f) of this section provides rules governing cost allocations. Paragraph (g) of this section provides rules governing transfers of intangibles other than in consideration for bearing a share of the costs of the intangible's development. Rules governing the character of payments made pursuant to a qualified cost sharing arrangement are provided in paragraph (h) of this section. Paragraph (i) of this section provides accounting requirements. Paragraph (j) of this section provides administrative requirements. Paragraph (k) of this section provides an effective date. Paragraph (l) provides a transition rule.

(b) *Qualified cost sharing arrangement.* A qualified cost sharing arrangement must—

(1) Include two or more participants;

(2) Provide a method to calculate each controlled participant's share of intangible development costs, based on factors that can reasonably be expected to reflect that participant's share of anticipated benefits;

(3) Provide for adjustment to the controlled participants' shares of intangible development costs to account for changes in economic conditions, the business operations and practices of the participants, and the ongoing development of intangibles under the arrangement; and

(4) Be recorded in a document that is contemporaneous with the formation (and any revision) of the cost sharing arrangement and that includes—

(i) A list of the arrangement's participants, and any other member of the controlled group that will benefit from the use of intangibles developed under the cost sharing arrangement;

(ii) The information described in paragraphs (b)(2) and (b)(3) of this section;

(iii) A description of the scope of the research and development to be undertaken, including the intangible or class of intangibles intended to be developed;

(iv) A description of each participant's interest in any covered intangibles. A covered intangible is any intangible property that is developed as a result of the research and development undertaken under the cost sharing arrangement (intangible development area);

(v) The duration of the arrangement; and

(vi) The conditions under which the arrangement may be modified or terminated and the consequences of such modification or termination, such as the interest that each participant will receive in any covered intangibles.

(c) ***Participant*** —

(1) ***In general.*** For purposes of this section, a participant is a controlled taxpayer that meets the requirements of this paragraph (c)(1) (controlled participant) or an uncontrolled taxpayer that is a party to the cost sharing arrangement (uncontrolled participant). See § 1.482-1(i)(5) for the definitions of controlled and uncontrolled taxpayers. A controlled taxpayer may be a controlled participant only if it—

(i) Reasonably anticipates that it will derive benefits from the use of covered intangibles;

(ii) Substantially complies with the accounting requirements described in paragraph (i) of this section; and

(iii) Substantially complies with the administrative requirements described in paragraph (j) of this section.

(iv) The following example illustrates paragraph (c)(1)(i) of this section:

Example. Foreign Parent (FP) is a foreign corporation engaged in the extraction of a natural resource. FP has a U.S. subsidiary (USS) to which FP sells supplies of this resource for sale in the United States. FP enters into a cost sharing arrangement with USS to develop a new machine to extract the natural resource. The machine uses a new extraction process that will be patented in the United States and in other countries. The cost sharing arrangement provides that USS will receive the rights to use the machine in the extraction of the natural resource in the United

States, and FP will receive the rights in the rest of the world. This resource does not, however, exist in the United States. Despite the fact that USS has received the right to use this process in the United States, USS is not a qualified participant because it will not derive a benefit from the use of the intangible developed under the cost sharing arrangement.

(2) ***Treatment of a controlled taxpayer that is not a controlled participant*** —

(i) ***In general.*** If a controlled taxpayer that is not a controlled participant (within the meaning of this paragraph (c)) provides assistance in relation to the research and development undertaken in the intangible development area, it must receive consideration from the controlled participants under the rules of § 1.482-4(f)(3)(iii) (Allocations with respect to assistance provided to the owner). For purposes of paragraph (d) of this section, such consideration is treated as an operating expense and each controlled participant must be treated as incurring a share of such consideration equal to its share of reasonably anticipated benefits (as defined in paragraph (f)(3) of this section).

(ii) ***Example.*** The following example illustrates this paragraph (c)(2):

> *Example.* (i) U.S. Parent (USP), one foreign subsidiary (FS), and a second foreign subsidiary constituting the group's research arm (R + D) enter into a cost sharing agreement to develop manufacturing intangibles for a new product line A. USP and FS are assigned the exclusive rights to exploit the intangibles respectively in the United States and the rest of the world, where each presently manufactures and sells various existing product lines. R + D is not assigned any rights to exploit the intangibles. R + D's activity consists solely in carrying out research for the group. It is reliably projected that the shares of reasonably anticipated benefits of USP and FS will be $66^{2}/_{3}$% and $33^{1}/_{3}$, respectively, and the parties' agreement provides that USP and FS will reimburse $66^{2}/_{3}$% and $33^{1}/_{3}$%, respectively, of the intangible development costs incurred by R + D with respect to the new intangible.
> (ii) R + D does not qualify as a controlled participant within the meaning of paragraph (c) of this section, because it will not derive any benefits from the use of covered intangibles. Therefore, R + D is treated as a service provider for purposes of this section and must receive arm's length consideration for the assistance it is deemed to provide to USP and FS, under the rules of § 1.482-4(f)(3)(iii). Such consideration must be treated as intangible development costs incurred by USP and FS in proportion to their shares of reasonably anticipated benefits (i.e., $66^{2}/_{3}$% and $33^{1}/_{3}$%, respectively). R + D will not be considered to bear any share of the intangible development costs under the arrangement.

(3) ***Treatment of consolidated group.*** For purposes of this section, all members of the same affiliated group (within the meaning of section 1504(a)) that join in the filing of a consolidated return for the taxable year under section 1501 shall be treated as one taxpayer.

(d) ***Costs*** —

(1) ***Intangible development costs.*** For purposes of this section, a controlled participant's costs of developing intangibles for a taxable year mean all of the costs incurred by that participant related to the intangible development area, plus all of the cost sharing payments it makes to other controlled and uncontrolled participants, minus all of the cost sharing payments it receives from other controlled and uncontrolled participants. Costs incurred related to the intangible development area consist of the following items: operating expenses as defined in § 1.482-5(d)(3), other than depreciation or amortization expense, plus (to the extent not included in such operating expenses, as defined in § 1.482-5(d)(3)) the charge for the use of any tangible property made available to the qualified cost sharing arrangement. If tangible property is made available to the qualified cost sharing arrangement by a controlled participant, the determination of the appropriate charge will be governed by the rules of § 1.482-2(c) (Use of tangible property). Intangible development costs do not include the consideration for the use of any intangible property made available to the qualified cost sharing arrangement. See paragraph (g)(2) of this section. If a particular cost contributes to the intangible development area and other areas or other business activities, the cost must be allocated between the intangible development area and the other areas or business activities on a reasonable basis. In such a case, it is necessary to estimate the total benefits attributable to the cost incurred. The share of such cost allocated to the intangible development area must correspond to covered intangibles' share of the total benefits. Costs that do not contribute to the intangible development area are not taken into account.

(2) ***Stock-based compensation*** —

(i) ***In general.*** For purposes of this section, a controlled participant's operating expenses include all costs attributable to compensation, including stock-based compensation. As used in this section, the term *stock-based compensation* means any compensation provided by a controlled participant to an employee or independent contractor in the form of equity instruments, options to acquire stock (stock options), or rights with respect to (or determined by reference to) equity instruments or stock options, including but not limited to property to which section 83 applies and stock options to which section 421 applies, regardless of whether ultimately settled in the form of cash, stock, or other property.

(ii) ***Identification of stock-based compensation related to intangible development.*** The determination of whether stock-based compensation is related to the intangible development area within the meaning of paragraph (d)(1) of this section is made as of the date that the stock-based compensation is granted. Accordingly, all stock-based compensation that is granted during the term of the qualified cost sharing arrangement and is related at date of grant to the development of intangibles covered by the arrangement is included as an intangible development cost under paragraph (d)(1) of this section. In the case of a repricing or other modification of a stock option, the determination of whether the repricing or other modification constitutes the grant of a new stock option for purposes of this paragraph (d)(2)(ii) will be made in accordance with the rules of section 424(h) and related regulations.

(iii) ***Measurement and timing of stock-based compensation expense*** —

(A) ***In general.*** Except as otherwise provided in this paragraph (d)(2)(iii), the operating expense attributable to stock-based compensation is equal to the amount allowable to the controlled participant as a deduction for Federal income tax purposes with respect to that stock-based compensation (for example, under section 83(h)) and is taken into account as an operating expense under this section for the taxable year for which the deduction is allowable.

(1) ***Transfers to which section 421 applies.*** Solely for purposes of this paragraph (d)(2)(iii)(A), section 421 does not apply to the transfer of stock pursuant to the exercise of an option that meets the requirements of section 422(a) or 423(a).

(2) *Deductions of foreign controlled participants.* Solely for purposes of this paragraph (d)(2)(iii)(A), an amount is treated as an allowable deduction of a controlled participant to the extent that a deduction would be allowable to a United States taxpayer.

(3) *Modification of stock option.* Solely for purposes of this paragraph (d)(2)(iii)(A), if the repricing or other modification of a stock option is determined, under paragraph (d)(2)(ii) of this section, to constitute the grant of a new stock option not related to the development of intangibles, the stock option that is repriced or otherwise modified will be treated as being exercised immediately before the modification, provided that the stock option is then exercisable and the fair market value of the underlying stock then exceeds the price at which the stock option is exercisable. Accordingly, the amount of the deduction that would be allowable (or treated as allowable under this paragraph (d)(2)(iii)(A)) to the controlled participant upon exercise of the stock option immediately before the modification must be taken into account as an operating expense as of the date of the modification.

(4) *Expiration or termination of qualified cost sharing arrangement.* Solely for purposes of this paragraph (d)(2)(iii)(A), if an item of stock-based compensation related to the development of intangibles is not exercised during the term of a qualified cost sharing arrangement, that item of stock-based compensation will be treated as being exercised immediately before the expiration or termination of the qualified cost sharing arrangement, provided that the stock-based compensation is then exercisable and the fair market value of the underlying stock then exceeds the price at which the stock-based compensation is exercisable. Accordingly, the amount of the deduction that would be allowable (or treated as allowable under this paragraph (d)(2)(iii)(A)) to the controlled participant upon exercise of the stock-based compensation must be taken into account as an operating expense as of the date of the expiration or termination of the qualified cost sharing arrangement.

(B) ***Election with respect to options on publicly traded stock*** —

(1) ***In general.*** With respect to stock-based compensation in the form of options on publicly traded stock, the controlled participants in a qualified cost sharing arrangement may elect to take into account all operating expenses attributable to those stock options in the same amount, and as of the same time, as the fair value of the stock options reflected as a charge against income in audited financial statements or disclosed in footnotes to such financial statements, provided that such statements are prepared in accordance with United States generally accepted accounting principles by or on behalf of the company issuing the publicly traded stock.

(2) ***Publicly traded stock.*** As used in this paragraph (d)(2)(iii)(B), the term *publicly traded stock* means stock that is regularly traded on an established United States securities market and is issued by a company whose financial statements are prepared in accordance with United States generally accepted accounting principles for the taxable year.

(*3*) ***Generally accepted accounting principles.*** For purposes of this paragraph (d)(2)(iii)(B), a financial statement prepared in accordance with a comprehensive body of generally accepted accounting principles other than United States generally accepted accounting principles is considered to be prepared in accordance with United States generally accepted accounting principles provided that either—

(*i*) The fair value of the stock options under consideration is reflected in the reconciliation between such other accounting principles and United States generally accepted accounting principles required to be incorporated into the financial statement by the securities laws governing companies whose stock is regularly traded on United States securities markets; or

(*ii*) In the absence of a reconciliation between such other accounting principles and United States generally accepted accounting principles that reflects the fair value of the stock options under consideration, such other accounting principles require that the fair value of the stock options under consideration be reflected as a charge against income in audited financial statements or disclosed in footnotes to such statements.

(*4*) ***Time and manner of making the election.*** The election described in this paragraph (d)(2)(iii)(B) is made by an explicit reference to the election in the written cost sharing agreement required by paragraph (b)(4) of this section or in a written amendment to the cost sharing agreement entered into with the consent of the Commissioner pursuant to paragraph (d)(2)(iii)(C) of this section. In the case of a qualified cost sharing arrangement in existence on August 26, 2003, the election must be made by written amendment to the cost sharing agreement not later than the latest due date (with regard to extensions) of a Federal income tax return of any controlled participant for the first taxable year beginning after August 26, 2003, and the consent of the Commissioner is not required.

(C) ***Consistency.*** Generally, all controlled participants in a qualified cost sharing arrangement taking options on publicly traded stock into account under paragraph (d)(2)(iii)(A) or (B) of this section must use that same method of measurement and timing for all options on publicly traded stock with respect to that qualified cost sharing arrangement. Controlled participants may change their method only with the consent of the Commissioner and only with respect to stock options granted during taxable years subsequent to the taxable year in which the Commissioner's consent is obtained. All controlled participants in the qualified cost sharing arrangement must join in requests for the Commissioner's consent under this paragraph. Thus, for example, if the controlled participants make the election described in paragraph (d)(2)(iii)(B) of this section upon the formation of the qualified cost sharing arrangement, the election may be revoked only with the consent of the Commissioner, and the consent will apply only to stock options granted in taxable years subsequent to the taxable year in which consent is obtained. Similarly, if controlled participants already have granted stock options that have been or will be taken into account under the general rule of paragraph (d)(2)(iii)(A) of this section, then except in cases specified in the last sentence of paragraph (d)(2)(iii)(B)(*4*) of this section, the controlled participants may make the election described in paragraph (d)(2)(iii)(B) of this section only with the consent of the Commissioner, and the consent will apply only to stock options granted in taxable years subsequent to the taxable year in which consent is obtained.

(3) ***Examples.*** The following examples illustrate this paragraph (d):

Example 1. Foreign Parent (FP) and U.S. Subsidiary (USS) enter into a qualified cost sharing arrangement to develop a better mousetrap. USS and FP share the costs of FP's research and development facility that will be exclusively dedicated to this research, the salaries of the researchers, and reasonable overhead costs attributable to the project. They also share the cost of a conference facility that is at the disposal of the senior executive management of each company but does not contribute to the research and development activities in any measurable way. In this case, the cost of the conference facility must be excluded from the amount of intangible development costs.

Example 2. U.S. Parent (USP) and Foreign Subsidiary (FS) enter into a qualified cost sharing arrangement to develop a new device. USP and FS share the costs of a research and development facility, the salaries of researchers, and reasonable overhead costs attributable to the project. USP also incurs costs related to field testing of the device, but does not include them in the amount of intangible development costs of the cost sharing arrangement. The district director may determine that the field testing costs are intangible development costs that must be shared.

(e) ***Anticipated benefits*** —

(1) ***Benefits.*** Benefits are additional income generated or costs saved by the use of covered intangibles.

(2) ***Reasonably anticipated benefits.*** For purposes of this section, a controlled participant's reasonably anticipated benefits are the aggregate benefits that it reasonably anticipates that it will derive from covered intangibles.

(f) ***Cost allocations*** —

(1) ***In general.*** For purposes of determining whether a cost allocation authorized by paragraph (a)(2) of this section is appropriate for a taxable year, a controlled participant's share of intangible development costs for the taxable year under a qualified cost sharing arrangement must be compared to its share of reasonably anticipated benefits under the arrangement. A controlled participant's share of intangible development costs is determined under paragraph (f)(2) of this section. A controlled participant's share of reasonably anticipated benefits under the arrangement is determined under paragraph (f)(3) of this section. In determining whether benefits were reasonably anticipated, it may be appropriate to compare actual benefits to anticipated benefits, as described in paragraph (f)(3)(iv) of this section.

(2) ***Share of intangible development costs*** —

(i) ***In general.*** A controlled participant's share of intangible development costs for a taxable year is equal to its intangible development costs for the taxable year (as defined in paragraph (d) of this section), divided by the sum of the intangible development costs for the taxable year (as defined in paragraph (d) of this section) of all the controlled participants.

(ii) ***Example.*** The following example illustrates this paragraph (f)(2):

> *Example.* (i) U.S. Parent (USP), Foreign Subsidiary (FS), and Unrelated Third Party (UTP) enter into a cost sharing arrangement to develop new audio technology. In the first year of the arrangement, the controlled participants incur $2,250,000 in the intangible development area, all of which is incurred directly by USP. In the first year, UTP makes a

$250,000 cost sharing payment to USP, and FS makes a $800,000 cost sharing payment to USP, under the terms of the arrangement. For that year, the intangible development costs borne by USP are $1,200,000 (its $2,250,000 intangible development costs directly incurred, minus the cost sharing payments it receives of $250,000 from UTP and $800,000 from FS); the intangible development costs borne by FS are $800,000 (its cost sharing payment); and the intangible development costs borne by all of the controlled participants are $2,000,000 (the sum of the intangible development costs borne by USP and FS of $1,200,000 and $800,000, respectively). Thus, for the first year, USP's share of intangible development costs is 60% ($1,200,000 divided by $2,000,000), and FS's share of intangible development costs is 40% ($800,000 divided by $2,000,000).
(ii) For purposes of determining whether a cost allocation authorized by paragraph § 1.482-7(a)(2) is appropriate for the first year, the district director must compare USP's and FS's shares of intangible development costs for that year to their shares of reasonably anticipated benefits. See paragraph (f)(3) of this section.

(3) ***Share of reasonably anticipated benefits*** —

(i) ***In general.*** A controlled participant's share of reasonably anticipated benefits under a qualified cost sharing arrangement is equal to its reasonably anticipated benefits (as defined in paragraph (e)(2) of this section), divided by the sum of the reasonably anticipated benefits (as defined in paragraph (e)(2) of this section) of all the controlled participants. The anticipated benefits of an uncontrolled participant will not be included for purposes of determining each controlled participant's share of anticipated benefits. A controlled participant's share of reasonably anticipated benefits will be determined using the most reliable estimate of reasonably anticipated benefits. In determining which of two or more available estimates is most reliable, the quality of the data and assumptions used in the analysis must be taken into account, consistent with § 1.482-1(c)(2)(ii) (Data and assumptions). Thus, the reliability of an estimate will depend largely on the completeness and accuracy of the data, the soundness of the assumptions, and the relative effects of particular deficiencies in data or assumptions on different estimates. If two estimates are equally reliable, no adjustment should be made based on differences in the results. The following factors will be particularly relevant in determining the reliability of an estimate of anticipated benefits—

(A) The reliability of the basis used for measuring benefits, as described in paragraph (f)(3)(ii) of this section; and

(B) The reliability of the projections used to estimate benefits, as described in paragraph (f)(3)(iv) of this section.

(ii) ***Measure of benefits.*** In order to estimate a controlled participant's share of anticipated benefits from covered intangibles, the amount of benefits that each of the controlled participants is reasonably anticipated to derive from covered intangibles must be measured on a basis that is consistent for all such participants. See paragraph (f)(3)(iii)(E), *Example 8,* of this section. If a controlled participant transfers covered intangibles to another controlled taxpayer, such participant's benefits from the transferred intangibles must be measured by reference to the transferee's benefits, disregarding any consideration paid by the transferee to the controlled participant (such as a royalty pursuant to a license agreement). Anticipated benefits are

measured either on a direct basis, by reference to estimated additional income to be generated or costs to be saved by the use of covered intangibles, or on an indirect basis, by reference to certain measurements that reasonably can be assumed to be related to income generated or costs saved. Such indirect bases of measurement of anticipated benefits are described in paragraph (f)(3)(iii) of this section. A controlled participant's anticipated benefits must be measured on the most reliable basis, whether direct or indirect. In determining which of two bases of measurement of reasonably anticipated benefits is most reliable, the factors set forth in § 1.482-1(c)(2)(ii) (Data and assumptions) must be taken into account. It normally will be expected that the basis that provided the most reliable estimate for a particular year will continue to provide the most reliable estimate in subsequent years, absent a material change in the factors that affect the reliability of the estimate. Regardless of whether a direct or indirect basis of measurement is used, adjustments may be required to account for material differences in the activities that controlled participants undertake to exploit their interests in covered intangibles. See *Example 6* of paragraph (f)(3)(iii)(E) of this section.

(iii) ***Indirect bases for measuring anticipated benefits.*** Indirect bases for measuring anticipated benefits from participation in a qualified cost sharing arrangement include the following:

(A) ***Units used, produced or sold.*** Units of items used, produced or sold by each controlled participant in the business activities in which covered intangibles are exploited may be used as an indirect basis for measuring its anticipated benefits. This basis of measurement will be more reliable to the extent that each controlled participant is expected to have a similar increase in net profit or decrease in net loss attributable to the covered intangibles per unit of the item or items used, produced or sold. This circumstance is most likely to arise when the covered intangibles are exploited by the controlled participants in the use, production or sale of substantially uniform items under similar economic conditions.

(B) ***Sales.*** Sales by each controlled participant in the business activities in which covered intangibles are exploited may be used as an indirect basis for measuring its anticipated benefits. This basis of measurement will be more reliable to the extent that each controlled participant is expected to have a similar increase in net profit or decrease in net loss attributable to covered intangibles per dollar of sales. This circumstance is most likely to arise if the costs of exploiting covered intangibles are not substantial relative to the revenues generated, or if the principal effect of using covered intangibles is to increase the controlled participants' revenues (e.g., through a price premium on the products they sell) without affecting their costs substantially. Sales by each controlled participant are unlikely to provide a reliable basis for measuring benefits unless each controlled participant operates at the same market level (e.g., manufacturing, distribution, etc.).

(C) ***Operating profit.*** Operating profit of each controlled participant from the activities in which covered intangibles are exploited may be used as an indirect basis for measuring its anticipated benefits. This basis of measurement will be more reliable to the extent that such profit is largely attributable to the use of covered intangibles, or if the share of profits attributable to the use of covered intangibles is expected to be similar for each controlled participant. This circumstance is most likely to arise when covered intangibles are integral to the activity that generates the profit and the activity could not be carried on or would generate little profit without use of those intangibles.

(D) ***Other bases for measuring anticipated benefits.*** Other bases for measuring anticipated benefits may, in some circumstances, be appropriate, but only to the extent that there is expected to be a reasonably identifiable relationship between the basis of measurement used and additional income generated or costs saved by the use of covered intangibles. For example, a division of costs based on employee compensation would be considered unreliable unless there were a relationship between the amount of compensation and the expected income of the controlled participants from the use of covered intangibles.

(E) ***Examples.*** The following examples illustrate this paragraph (f)(3)(iii):

Example 1. Foreign Parent (FP) and U.S. Subsidiary (USS) both produce a feedstock for the manufacture of various high-performance plastic products. Producing the feedstock requires large amounts of electricity, which accounts for a significant portion of its production cost. FP and USS enter into a cost sharing arrangement to develop a new process that will reduce the amount of electricity required to produce a unit of the feedstock. FP and USS currently both incur an electricity cost of X% of its other production costs and rates for each are expected to remain similar in the future. How much the new process, if it is successful, will reduce the amount of electricity required to produce a unit of the feedstock is uncertain, but it will be about the same amount for both companies. Therefore, the cost savings each company is expected to achieve after implementing the new process are similar relative to the total amount of the feedstock produced. Under the cost sharing arrangement FP and USS divide the costs of developing the new process based on the units of the feedstock each is anticipated to produce in the future. In this case, units produced is the most reliable basis for measuring benefits and dividing the intangible development costs because each participant is expected to have a similar decrease in costs per unit of the feedstock produced.

Example 2. The facts are the same as in *Example 1,* except that USS pays X% of its other production costs for electricity while FP pays 2X% of its other production costs. In this case, units produced is not the most reliable basis for measuring benefits and dividing the intangible development costs because the participants do not expect to have a similar decrease in costs per unit of the feedstock produced. The district director determines that the most reliable measure of benefit shares may be based on units of the feedstock produced if FP's units are weighted relative to USS's units by a factor of 2. This reflects the fact that FP pays twice as much as USS as a percentage of its other production costs for electricity and, therefore, FP's savings per unit of the feedstock would be twice USS's savings from any new process eventually developed.

Example 3. The facts are the same as in *Example 2,* except that to supply the particular needs of the U.S. market USS manufactures the feedstock with somewhat different properties than FP's feedstock. This requires USS to employ a somewhat different production process than does FP. Because of this difference, it will be more costly for USS to adopt any new process that may be developed under the cost sharing agreement. In this case, units produced is not the most reliable basis for measuring benefit shares. In order to reliably determine benefit shares, the district director offsets the reasonably anticipated costs of adopting the new process against the reasonably anticipated total savings in electricity costs.

Example 4. U.S. Parent (USP) and Foreign Subsidiary (FS) enter into a cost sharing arrangement to develop new anesthetic drugs. USP obtains the right to use any resulting patent in the U.S. market, and FS obtains the right to use the patent in the European market. USP and FS divide costs on the basis of anticipated operating profit from each patent under development. USP anticipates that it will receive a much higher profit than FS per unit sold because drug prices are uncontrolled in the U.S., whereas drug prices are regulated in many European countries. In this case, the controlled taxpayers' basis for measuring benefits is the most reliable.

Example 5. (i) Foreign Parent (FP) and U.S. Subsidiary (USS) both manufacture and sell fertilizers. They enter into a cost sharing arrangement to develop a new pellet form of a common agricultural fertilizer that is currently available only in powder form. Under the cost sharing arrangement, USS obtains the rights to produce and sell the new form of fertilizer for the U.S. market while FP obtains the rights to produce and sell the fertilizer for the rest of the world. The costs of developing the new form of fertilizer are divided on the basis of the anticipated sales of fertilizer in the participants' respective markets.

(ii) If the research and development is successful the pellet form will deliver the fertilizer more efficiently to crops and less fertilizer will be required to achieve the same effect on crop growth. The pellet form of fertilizer can be expected to sell at a price premium over the powder form of fertilizer based on the savings in the amount of fertilizer that needs to be used. If the research and development is successful, the costs of producing pellet fertilizer are expected to be approximately the same as the costs of producing powder fertilizer and the same for both FP and USS. Both FP and USS operate at approximately the same market levels, selling their fertilizers largely to independent distributors.

(iii) In this case, the controlled taxpayers' basis for measuring benefits is the most reliable.

Example 6. The facts are the same as in *Example 5,* except that FP distributes its fertilizers directly while USS sells to independent distributors. In this case, sales of USS and FP are not the most reliable basis for measuring benefits unless adjustments are made to account for the difference in market levels at which the sales occur.

Example 7. Foreign Parent (FP) and U.S. Subsidiary (USS) enter into a cost sharing arrangement to develop materials that will be used to train all new entry-level employees. FP and USS determine that the new materials will save approximately ten hours of training time per employee. Because their entry-level employees are paid on differing wage scales, FP and USS decide that they should not divide costs based on the number of entry-level employees hired by each. Rather, they divide costs based on compensation paid to the entry-level employees hired by each. In this case, the

basis used for measuring benefits is the most reliable because there is a direct relationship between compensation paid to new entry-level employees and costs saved by FP and USS from the use of the new training materials.

Example 8. U.S. Parent (USP), Foreign Subsidiary 1 (FS1) and Foreign Subsidiary 2 (FS2) enter into a cost sharing arrangement to develop computer software that each will market and install on customers' computer systems. The participants divide costs on the basis of projected sales by USP, FS1, and FS2 of the software in their respective geographic areas. However, FS1 plans not only to sell but also to license the software to unrelated customers, and FS1's licensing income (which is a percentage of the licensees' sales) is not counted in the projected benefits. In this case, the basis used for measuring the benefits of each participant is not the most reliable because all of the benefits received by participants are not taken into account. In order to reliably determine benefit shares, FS1's projected benefits from licensing must be included in the measurement on a basis that is the same as that used to measure its own and the other participants' projected benefits from sales (e.g., all participants might measure their benefits on the basis of operating profit).

(iv) ***Projections used to estimate anticipated benefits*** —

(A) ***In general.*** The reliability of an estimate of anticipated benefits also depends upon the reliability of projections used in making the estimate. Projections required for this purpose generally include a determination of the time period between the inception of the research and development and the receipt of benefits, a projection of the time over which benefits will be received, and a projection of the benefits anticipated for each year in which it is anticipated that the intangible will generate benefits. A projection of the relevant basis for measuring anticipated benefits may require a projection of the factors that underlie it. For example, a projection of operating profits may require a projection of sales, cost of sales, operating expenses, and other factors that affect operating profits. If it is anticipated that there will be significant variation among controlled participants in the timing of their receipt of benefits, and consequently benefit shares are expected to vary significantly over the years in which benefits will be received, it may be necessary to use the present discounted value of the projected benefits to reliably determine each controlled participant's share of those benefits. If it is not anticipated that benefit shares will significantly change over time, current annual benefit shares may provide a reliable projection of anticipated benefit shares. This circumstance is most likely to occur when the cost sharing arrangement is a long-term arrangement, the arrangement covers a wide variety of intangibles, the composition of the covered intangibles is unlikely to change, the covered intangibles are unlikely to generate unusual profits, and each controlled participant's share of the market is stable.

(B) ***Unreliable projections.*** A significant divergence between projected benefit shares and actual benefit shares may indicate that the projections were not reliable. In such a case, the district director may use actual benefits as the most reliable measure of anticipated benefits. If benefits are projected over a period of years, and the projections for initial years of the period prove to be unreliable, this may indicate that the projections for the remaining years of the period are also unreliable and thus should be adjusted. Projections will not be considered unreliable based on a divergence between a controlled participant's projected benefit share and actual benefit share if the amount of such divergence for every controlled participant is less than or equal to 20% of the participant's projected

benefit share. Further, the district director will not make an allocation based on such divergence if the difference is due to an extraordinary event, beyond the control of the participants, that could not reasonably have been anticipated at the time that costs were shared. For purposes of this paragraph, all controlled participants that are not U.S. persons will be treated as a single controlled participant. Therefore, an adjustment based on an unreliable projection will be made to the cost shares of foreign controlled participants only if there is a matching adjustment to the cost shares of controlled participants that are U.S. persons. Nothing in this paragraph (f)(3)(iv)(B) will prevent the district director from making an allocation if the taxpayer did not use the most reliable basis for measuring anticipated benefits. For example, if the taxpayer measures anticipated benefits based on units sold, and the district director determines that another basis is more reliable for measuring anticipated benefits, then the fact that actual units sold were within 20% of the projected unit sales will not preclude an allocation under this section.

(C) ***Foreign-to-foreign adjustments.*** Notwithstanding the limitations on adjustments provided in paragraph (f)(3)(iv)(B) of this section, adjustments to cost shares based on an unreliable projection also may be made solely among foreign controlled participants if the variation between actual and projected benefits has the effect of substantially reducing U.S. tax.

(D) ***Examples.*** The following examples illustrate this paragraph (f)(3)(iv):

> *Example 1.* (i) Foreign Parent (FP) and U.S. Subsidiary (USS) enter into a cost sharing arrangement to develop a new car model. The participants plan to spend four years developing the new model and four years producing and selling the new model. USS and FP project total sales of $4 billion and $2 billion, respectively, over the planned four years of exploitation of the new model. Cost shares are divided for each year based on projected total sales. Therefore, USS bears $66^{2}/_{3}$% of each year's intangible development costs and FP bears $33^{1}/_{3}$% of such costs.
> (ii) USS typically begins producing and selling new car models a year after FP begins producing and selling new car models. The district director determines that in order to reflect USS's one-year lag in introducing new car models, a more reliable projection of each participant's share of benefits would be based on a projection of all four years of sales for each participant, discounted to present value.

Example 2. U.S. Parent (USP) and Foreign Subsidiary (FS) enter into a cost sharing arrangement to develop new and improved household cleaning products. Both participants have sold household cleaning products for many years and have stable market shares. The products under development are unlikely to produce unusual profits for either participant. The participants divide costs on the basis of each participant's current sales of household cleaning products. In this case, the participants' future benefit shares are reliably projected by current sales of cleaning products.

Example 3. The facts are the same as in *Example 2,* except that FS's market share is rapidly expanding because of the business failure of a competitor in its geographic area. The district director determines that the participants' future benefit shares are not reliably projected by current sales of cleaning products and that FS's benefit projections should take into account its growth in sales.

Example 4. Foreign Parent (FP) and U.S. Subsidiary (USS) enter into a cost sharing arrangement to develop synthetic fertilizers and insecticides. FP and USS share costs on the basis of each participant's current sales of fertilizers and insecticides. The market shares of the participants have been stable for fertilizers, but FP's market share for insecticides has been expanding. The district director determines that the participants' projections of benefit shares are reliable with regard to fertilizers, but not reliable with regard to insecticides; a more reliable projection of benefit shares would take into account the expanding market share for insecticides.

Example 5. U.S. Parent (USP) and Foreign Subsidiary (FS) enter into a cost sharing arrangement to develop new food products, dividing costs on the basis of projected sales two years in the future. In year 1, USP and FS project that their sales in year 3 will be equal, and they divide costs accordingly. In year 3, the district director examines the participants' method for dividing costs. USP and FS actually accounted for 42% and 58% of total sales, respectively. The district director agrees that sales two years in the future provide a reliable basis for estimating benefit shares. Because the differences between USP's and FS's actual and projected benefit shares are less than 20% of their projected benefit shares, the projection of future benefits for year 3 is reliable.

Example 6. The facts are the same as in *Example 5,* except that the in year 3 USP and FS actually accounted for 35% and 65% of total sales, respectively. The divergence between USP's projected and actual benefit shares is greater than 20% of USP's projected benefit share and is not due to an extraordinary event beyond the control of the participants. The district director concludes that the projection of anticipated benefit shares was unreliable, and uses actual benefits as the basis for an adjustment to the cost shares borne by USP and FS.

Example 7. U.S. Parent (USP), a U.S. corporation, and its foreign subsidiary (FS) enter a cost sharing arrangement in year 1. They project that they will begin to receive benefits from covered intangibles in years 4 through 6, and that USP will receive 60% of total benefits and FS 40% of total benefits. In years 4 through 6, USP and FS actually receive 50% each of the total benefits. In evaluating the reliability of the participants' projections, the district director compares these actual benefit shares to the projected benefit shares. Although USP's actual benefit share (50%) is within 20% of its projected benefit share (60%), FS's actual benefit share (50%) is not within 20% of its projected benefit share (40%). Based on this discrepancy, the district director may conclude that the participants' projections were not reliable and may use actual benefit shares as the basis for an adjustment to the cost shares borne by USP and FS.

Example 8. Three controlled taxpayers, USP, FS1 and FS2 enter into a cost sharing arrangement. FS1 and FS2 are foreign. USP is a United States corporation that controls all the stock of FS1 and FS2. The participants project that they will share the

total benefits of the covered intangibles in the following percentages: USP 50%; FS1 30%; and FS2 20%. Actual benefit shares are as follows: USP 45%; FS1 25%; and FS2 30%. In evaluating the reliability of the participants' projections, the district director compares these actual benefit shares to the projected benefit shares. For this purpose, FS1 and FS2 are treated as a single participant. The actual benefit share received by USP (45%) is within 20% of its projected benefit share (50%). In addition, the non-US participants' actual benefit share (55%) is also within 20% of their projected benefit share (50%). Therefore, the district director concludes that the participants' projections of future benefits were reliable, despite the fact that FS2's actual benefit share (30%) is not within 20% of its projected benefit share (20%).

Example 9. The facts are the same as in *Example 8.* In addition, the district director determines that FS2 has significant operating losses and has no earnings and profits, and that FS1 is profitable and has earnings and profits. Based on all the evidence, the district director concludes that the participants arranged that FS1 would bear a larger cost share than appropriate in order to reduce FS1's earnings and profits and thereby reduce inclusions USP otherwise would be deemed to have on account of FS1 under subpart F. Pursuant to § 1.482-7 (f)(3)(iv)(C), the district director may make an adjustment solely to the cost shares borne by FS1 and FS2 because FS2's projection of future benefits was unreliable and the variation between actual and projected benefits had the effect of substantially reducing USP's U.S. income tax liability (on account of FS1 subpart F income).

Example 10. (i)(A) Foreign Parent (FP) and U.S. Subsidiary (USS) enter into a cost sharing arrangement in 1996 to develop a new treatment for baldness. USS's interest in any treatment developed is the right to produce and sell the treatment in the U.S. market while FP retains rights to produce and sell the treatment in the rest of the world. USS and FP measure their anticipated benefits from the cost sharing arrangement based on their respective projected future sales of the baldness treatment. The following sales projections are used:

SALES
[IN MILLIONS OF DOLLARS]

Year	USS	FP
1997	5	10
1998	20	20
1999	30	30
2000	40	40
2001	40	40

Year	USS	FP
2002	40	40
2003	40	40
2004	20	20
2005	10	10
2006	5	5

(B) In 1997, the first year of sales, USS is projected to have lower sales than FP due to lags in U.S. regulatory approval for the baldness treatment. In each subsequent year USS and FP are projected to have equal sales. Sales are projected to build over the first three years of the period, level off for several years, and then decline over the final years of the period as new and improved baldness treatments reach the market.

(ii) To account for USS's lag in sales in the first year, the present discounted value of sales over the period is used as the basis for measuring benefits. Based on the risk associated with this venture, a discount rate of 10 percent is selected. The present discounted value of projected sales is determined to be approximately $154.4 million for USS and $158.9 million for FP. On this basis USS and FP are projected to obtain approximately 49.3% and 50.7% of the benefit, respectively, and the costs of developing the baldness treatment are shared accordingly.

(iii) (A) In the year 2002 the district director examines the cost sharing arrangement. USS and FP have obtained the following sales results through the year 2001:

SALES
[IN MILLIONS OF DOLLARS]

Year	USS	FP
1997	0	17
1998	17	35
1999	25	41
2000	38	41

Year	USS	FP
2001	39	41

(B) USS's sales initially grew more slowly than projected while FP's sales grew more quickly. In each of the first three years of the period the share of total sales of at least one of the parties diverged by over 20% from its projected share of sales. However, by the year 2001 both parties' sales had leveled off at approximately their projected values. Taking into account this leveling off of sales and all the facts and circumstances, the district director determines that it is appropriate to use the original projections for the remaining years of sales. Combining the actual results through the year 2001 with the projections for subsequent years, and using a discount rate of 10%, the present discounted value of sales is approximately $141.6 million for USS and $187.3 million for FP. This result implies that USS and FP obtain approximately 43.1% and 56.9%, respectively, of the anticipated benefits from the baldness treatment. Because these benefit shares are within 20% of the benefit shares calculated based on the original sales projections, the district director determines that, based on the difference between actual and projected benefit shares, the original projections were not unreliable. No adjustment is made based on the difference between actual and projected benefit shares.

Example 11. (i) The facts are the same as in *Example 10,* except that the actual sales results through the year 2001 are as follows:

SALES
[IN MILLIONS OF DOLLARS]

Year	USS	FP
1997	0	17
1998	17	35
1999	25	44
2000	34	54
2001	36	55

(ii) Based on the discrepancy between the projections and the actual results

and on consideration of all the facts, the district director determines that for the remaining years the following sales projections are more reliable than the original projections:

SALES
[IN MILLIONS OF DOLLARS]

Year	USS	FP
2002	36	55
2003	36	55
2004	18	28
2005	9	14
2006	4.5	7

(iii) Combining the actual results through the year 2001 with the projections for subsequent years, and using a discount rate of 10%, the present discounted value of sales is approximately $131.2 million for USS and $229.4 million for FP. This result implies that USS and FP obtain approximately 35.4% and 63.6%, respectively, of the anticipated benefits from the baldness treatment. These benefit shares diverge by greater than 20% from the benefit shares calculated based on the original sales projections, and the district director determines that, based on the difference between actual and projected benefit shares, the original projections were unreliable. The district director adjusts costs shares for each of the taxable years under examination to conform them to the recalculated shares of anticipated benefits.

(4) ***Timing of allocations.*** If the district director reallocates costs under the provisions of this paragraph (f), the allocation must be reflected for tax purposes in the year in which the costs were incurred. When a cost sharing payment is owed by one member of a qualified cost sharing arrangement to another member, the district director may make appropriate allocations to reflect an arm's length rate of interest for the time value of money, consistent with the provisions of § 1.482-2(a) (Loans or advances).

(g) ***Allocations of income, deductions or other tax items to reflect transfers of intangibles (buy-in)*** —

(1) ***In general.*** A controlled participant that makes intangible property available to a qualified cost sharing arrangement will be treated as having transferred interests in such property to the other controlled participants, and such other controlled participants must make buy-in payments to it, as provided in paragraph (g)(2) of this section. If the other controlled participants fail to make such payments, the district director may make appropriate allocations, under the provisions of §§ 1.482-1

and 1.482-4 through 1.482-6, to reflect an arm's length consideration for the transferred intangible property. Further, if a group of controlled taxpayers participates in a qualified cost sharing arrangement, any change in the controlled participants' interests in covered intangibles, whether by reason of entry of a new participant or otherwise by reason of transfers (including deemed transfers) of interests among existing participants, is a transfer of intangible property, and the district director may make appropriate allocations, under the provisions of §§ 1.482-1 and 1.482-4 through 1.482-6, to reflect an arm's length consideration for the transfer. See paragraphs (g) (3), (4), and (5) of this section. Paragraph (g)(6) of this section provides rules for assigning unassigned interests under a qualified cost sharing arrangement.

(2) ***Pre-existing intangibles.*** If a controlled participant makes pre-existing intangible property in which it owns an interest available to other controlled participants for purposes of research in the intangible development area under a qualified cost sharing arrangement, then each such other controlled participant must make a buy-in payment to the owner. The buy-in payment by each such other controlled participant is the arm's length charge for the use of the intangible under the rules of §§ 1.482-1 and 1.482-4 through 1.482-6, multiplied by the controlled participant's share of reasonably anticipated benefits (as defined in paragraph (f)(3) of this section). A controlled participant's payment required under this paragraph (g)(2) is deemed to be reduced to the extent of any payments owed to it under this paragraph (g)(2) from other controlled participants. Each payment received by a payee will be treated as coming pro rata out of payments made by all payors. See paragraph (g)(8), *Example 4,* of this section. Such payments will be treated as consideration for a transfer of an interest in the intangible property made available to the qualified cost sharing arrangement by the payee. Any payment to or from an uncontrolled participant in consideration for intangible property made available to the qualified cost sharing arrangement will be shared by the controlled participants in accordance with their shares of reasonably anticipated benefits (as defined in paragraph (f)(3) of this section). A controlled participant's payment required under this paragraph (g)(2) is deemed to be reduced by such a share of payments owed from an uncontrolled participant to the same extent as by any payments owed from other controlled participants under this paragraph (g)(2). See paragraph (g)(8), *Example 5,* of this section.

(3) ***New controlled participant.*** If a new controlled participant enters a qualified cost sharing arrangement and acquires any interest in the covered intangibles, then the new participant must pay an arm's length consideration, under the provisions of §§ 1.482-1 and 1.482-4 through 1.482-6, for such interest to each controlled participant from whom such interest was acquired.

(4) ***Controlled participant relinquishes interests.*** A controlled participant in a qualified cost sharing arrangement may be deemed to have acquired an interest in one or more covered intangibles if another controlled participant transfers, abandons, or otherwise relinquishes an interest under the arrangement, to the benefit of the first participant. If such a relinquishment occurs, the participant relinquishing the interest must receive an arm's length consideration, under the provisions of §§ 1.482-1 and 1.482-4 through 1.482-6, for its interest. If the controlled participant that has relinquished its interest subsequently uses that interest, then that participant must pay an arm's length consideration, under the provisions of §§ 1.482-1 and 1.482-4 through 1.482-6, to the controlled participant that acquired the interest.

(5) ***Conduct inconsistent with the terms of a cost sharing arrangement.*** If, after any cost allocations authorized by paragraph (a)(2) of this section, a controlled participant bears costs of intangible development that over a period of years are consistently and materially greater or lesser than its share of reasonably anticipated benefits, then the district director may conclude that the economic substance of the arrangement between the controlled participants is inconsistent with the terms of

the cost sharing arrangement. In such a case, the district director may disregard such terms and impute an agreement consistent with the controlled participants' course of conduct, under which a controlled participant that bore a disproportionately greater share of costs received additional interests in covered intangibles. See § 1.482-1(d)(3)(ii)(B) (Identifying contractual terms) and § 1.482- 4(f)(3)(ii) (Identification of owner). Accordingly, that participant must receive an arm's length payment from any controlled participant whose share of the intangible development costs is less than its share of reasonably anticipated benefits over time, under the provisions of §§ 1.482-1 and 1.482-4 through 1.482-6.

(6) ***Failure to assign interests under a qualified cost sharing arrangement.*** If a qualified cost sharing arrangement fails to assign an interest in a covered intangible, then each controlled participant will be deemed to hold a share in such interest equal to its share of the costs of developing such intangible. For this purpose, if cost shares have varied materially over the period during which such intangible was developed, then the costs of developing the intangible must be measured by their present discounted value as of the date when the first such costs were incurred.

(7) ***Form of consideration.*** The consideration for an acquisition described in this paragraph (g) may take any of the following forms:

(i) ***Lump sum payments.*** For the treatment of lump sum payments, see § 1.482-4(f)(5) (Lump sum payments);

(ii) ***Installment payments.*** Installment payments spread over the period of use of the intangible by the transferee, with interest calculated in accordance with § 1.482-2(a) (Loans or advances); and

(iii) ***Royalties.*** Royalties or other payments contingent on the use of the intangible by the transferee.

(8) ***Examples.*** The following examples illustrate allocations described in this paragraph (g):

Example 1. In year one, four members of a controlled group enter into a cost sharing arrangement to develop a commercially feasible process for capturing energy from nuclear fusion. Based on a reliable projection of their future benefits, each cost sharing participant bears an equal share of the costs. The cost of developing intangibles for each participant with respect to the project is approximately $1 million per year. In year ten, a fifth member of the controlled group joins the cost sharing group and agrees to bear one-fifth of the future costs in exchange for part of the fourth member's territory reasonably anticipated to yield benefits amounting to one-fifth of the total benefits. The fair market value of intangible property within the arrangement at the time the fifth company joins the arrangement is $45 million. The new member must pay one-fifth of that amount (that is, $9 million total) to the fourth member from whom it acquired its interest in covered intangibles.

Example 2. U.S. Subsidiary (USS), Foreign Subsidiary (FS) and Foreign Parent (FP) enter into a cost sharing arrangement to develop new products within the Group X product line. USS manufactures and sells Group X products in North America, FS manufactures and sells Group X products in South America, and FP manufactures and sells Group X products in the rest of the world. USS, FS and FP project that each will manufacture and sell a third of the Group X products under development, and they share costs on the basis of projected sales of manufactured products. When the new Group X products are developed, however, USS ceases to manufacture Group X products, and FP sells its Group X products to USS for resale in the North American market. USS earns a return on its resale activity that is appropriate given its function as a distributor, but does not earn a return attributable to exploiting covered

intangibles. The district director determines that USS's share of the costs (one-third) was greater than its share of reasonably anticipated benefits (zero) and that it has transferred an interest in the intangibles for which it should receive a payment from FP, whose share of the intangible development costs (one-third) was less than its share of reasonably anticipated benefits over time (two-thirds). An allocation is made under §§ 1.482-1 and 1.482-4 through 1.482-6 from FP to USS to recognize USS' one-third interest in the intangibles. No allocation is made from FS to USS because FS did not exploit USS's interest in covered intangibles.

Example 3. U.S. Parent (USP), Foreign Subsidiary 1 (FS1), and Foreign Subsidiary 2 (FS2) enter into a cost sharing arrangement to develop a cure for the common cold. Costs are shared USP-50%, FS1-40% and FS2-10% on the basis of projected units of cold medicine to be produced by each. After ten years of research and development, FS1 withdraws from the arrangement, transferring its interests in the intangibles under development to USP in exchange for a lump sum payment of $10 million. The district director may review this lump sum payment, under the provisions of § 1.482-4(f)(5), to ensure that the amount is commensurate with the income attributable to the intangibles.

Example 4. (i) Four members A, B, C, and D of a controlled group form a cost sharing arrangement to develop the next generation technology for their business. Based on a reliable projection of their future benefits, the participants agree to bear shares of the costs incurred during the term of the agreement in the following percentages: A 40%; B 15%; C 25%; and D 20%. The arm's length charges, under the rules of §§ 1.482-1 and 1.482-4 through 1.482-6, for the use of the existing intangible property they respectively make available to the cost sharing arrangement are in the following amounts for the taxable year: A 80X; B 40X; C 30X; and D 30X. The provisional (before offsets) and final buy-in payments/receipts among A, B, C, and D are shown in the table as follows:

[ALL AMOUNTS STATED IN X'S]

	A	B	C	D
Payments	<40>	<21>	<37.5>	<30>
Receipts	48	34	22.5	24
Final	8	13	<15>	<6>

(ii) The first row/first column shows A's provisional buy-in payment equal to the product of 100X (sum of 40X, 30X, and 30X) and A's share of anticipated benefits of 40%. The second row/first column shows A's provisional buy-in receipts equal to the sum of the products of 80X and B's, C's, and D's anticipated benefits shares (15%, 25%, and 20%, respectively). The other entries in the first two rows of the table are similarly computed. The last row shows the final buy-in receipts/payments after offsets. Thus, for the taxable

> year, A and B are treated as receiving the 8X and 13X, respectively, pro rata out of payments by C and D of 15X and 6X, respectively.

Example 5. A and B, two members of a controlled group form a cost sharing arrangement with an unrelated third party C to develop a new technology useable in their respective businesses. Based on a reliable projection of their future benefits, A and B agree to bear shares of 60% and 40%, respectively, of the costs incurred during the term of the agreement. A also makes available its existing technology for purposes of the research to be undertaken. The arm's length charge, under the rules of §§ 1.482-1 and 1.482-4 through 1.482-6, for the use of the existing technology is 100X for the taxable year. Under its agreement with A and B, C must make a specified cost sharing payment as well as a payment of 50X for the taxable year on account of the pre- existing intangible property made available to the cost sharing arrangement. B's provisional buy-in payment (before offsets) to A for the taxable year is 40X (the product of 100X and B's anticipated benefits share of 40%). C's payment of 50X is shared provisionally between A and B in accordance with their shares of reasonably anticipated benefits, 30X (50X times 60%) to A and 20X (50X times 40%) to B. B's final buy-in payment (after offsets) is 20X (40X less 20X). A is treated as receiving the 70X total provisional payments (40X plus 30X) pro rata out of the final payments by B and C of 20X and 50X, respectively.

(h) ***Character of payments made pursuant to a qualified cost sharing arrangement*** —

(1) ***In general.*** Payments made pursuant to a qualified cost sharing arrangement (other than payments described in paragraph (g) of this section) generally will be considered costs of developing intangibles of the payor and reimbursements of the same kind of costs of developing intangibles of the payee. For purposes of this paragraph (h), a controlled participant's payment required under a qualified cost sharing arrangement is deemed to be reduced to the extent of any payments owed to it under the arrangement from other controlled or uncontrolled participants. Each payment received by a payee will be treated as coming pro rata out of payments made by all payors. Such payments will be applied pro rata against deductions for the taxable year that the payee is allowed in connection with the qualified cost sharing arrangement. Payments received in excess of such deductions will be treated as in consideration for use of the tangible property made available to the qualified cost sharing arrangement by the payee. For purposes of the research credit determined under section 41, cost sharing payments among controlled participants will be treated as provided for intra-group transactions in § 1.41-6(e). Any payment made or received by a taxpayer pursuant to an arrangement that the district director determines not to be a qualified cost sharing arrangement, or a payment made or received pursuant to paragraph (g) of this section, will be subject to the provisions of §§ 1.482-1 and 1.482-4 through 1.482-6. Any payment that in substance constitutes a cost sharing payment will be treated as such for purposes of this section, regardless of its characterization under foreign law.

(2) ***Examples.*** The following examples illustrate this paragraph (h):

Example 1. U.S. Parent (USP) and its wholly owned Foreign Subsidiary (FS) form a cost sharing arrangement to develop a miniature widget, the Small R. Based on a reliable projection of their future benefits, USP agrees to bear 40% and FS to bear 60% of the costs incurred during the term of the agreement. The principal costs in the intangible development area are operating expenses incurred by FS in Country Z of 100X annually, and operating expenses incurred by USP in the United States also of 100X annually. Of the total costs of 200X, USP's share is 80X

and FS's share is 120X, so that FS must make a payment to USP of 20X. This payment will be treated as a reimbursement of 20X of USP's operating expenses in the United States. Accordingly, USP's Form 1120 will reflect an 80X deduction on account of activities performed in the United States for purposes of allocation and apportionment of the deduction to source. The Form 5471 for FS will reflect a 100X deduction on account of activities performed in Country Z, and a 20X deduction on account of activities performed in the United States.

Example 2. The facts are the same as in *Example 1,* except that the 100X of costs borne by USP consist of 5X of operating expenses incurred by USP in the United States and 95X of fair market value rental cost for a facility in the United States. The depreciation deduction attributable to the U.S. facility is 7X. The 20X net payment by FS to USP will first be applied in reduction pro rata of the 5X deduction for operating expenses and the 7X depreciation deduction attributable to the U.S. facility. The 8X remainder will be treated as rent for the U.S. facility.

(i) ***Accounting requirements.*** The accounting requirements of this paragraph are that the controlled participants in a qualified cost sharing arrangement must use a consistent method of accounting to measure costs and benefits, and must translate foreign currencies on a consistent basis.

(j) ***Administrative requirements*** —

(1) ***In general.*** The administrative requirements of this paragraph consist of the documentation requirements of paragraph (j)(2) of this section and the reporting requirements of paragraph (j)(3) of this section.

(2) ***Documentation*** —

(i) ***Requirements.*** A controlled participant must maintain sufficient documentation to establish that the requirements of paragraphs (b)(4) and (c)(1) of this section have been met, as well as the additional documentation specified in this paragraph (j)(2)(i), and must provide any such documentation to the Internal Revenue Service within 30 days of a request (unless an extension is granted by the district director). Documents necessary to establish the following must also be maintained—

(A) The total amount of costs incurred pursuant to the arrangement;

(B) The costs borne by each controlled participant;

(C) A description of the method used to determine each controlled participant's share of the intangible development costs, including the projections used to estimate benefits, and an explanation of why that method was selected;

(D) The accounting method used to determine the costs and benefits of the intangible development (including the method used to translate foreign currencies), and, to the extent that the method materially differs from U.S. generally accepted accounting principles, an explanation of such material differences;

(E) Prior research, if any, undertaken in the intangible development area, any tangible or intangible property made available for use in the arrangement, by each controlled participant, and any information used to establish the value of pre-existing and covered intangibles; and

(F) The amount taken into account as operating expenses attributable to stock-based compensation, including the method of measurement and timing used with respect to that amount as well as the data, as of date of grant, used to identify stock-based compensation related to the development of covered intangibles.

(ii) ***Coordination with penalty regulation.*** The documents described in paragraph (j)(2)(i) of this section will satisfy the principal documents requirement under § 1.6662-6(d)(2)(iii)(B) with respect to a qualified cost sharing arrangement.

(3) ***Reporting requirements.*** A controlled participant must attach to its U.S. income tax return a statement indicating that it is a participant in a qualified cost sharing arrangement, and listing the other controlled participants in the arrangement. A controlled participant that is not required to file a U.S. income tax return must ensure that such a statement is attached to Schedule M of any Form 5471 or to any Form 5472 filed with respect to that participant.

(k) ***Effective date.*** This section applies for taxable years beginning on or after January 1, 1996. However, paragraphs (a)(3), (d)(2) and (j)(2)(i)(F) of this section apply for stock-based compensation granted in taxable years beginning on or after August 26, 2003.

(l) ***Transition rule.*** A cost sharing arrangement will be considered a qualified cost sharing arrangement, within the meaning of this section, if, prior to January 1, 1996, the arrangement was a bona fide cost sharing arrangement under the provisions of § 1.482-7T (as contained in the 26 CFR part 1 edition revised as of April 1, 1995), but only if the arrangement is amended, if necessary, to conform with the provisions of this section by December 31, 1996.

[T.D. 8632, 60 FR 65557, Dec. 20, 1995, as amended by T.D. 8670, 61 FR 21956, May 13, 1996; 61 FR 33656, June 28, 1996; T.D. 8930, 66 FR 295, Jan. 3, 2001; T.D. 9088, 68 FR 51177, Aug. 26, 2003; 69 FR 13473, Mar. 23, 2004. Redesignated by T.D. 9441, 74 FR 352, Jan. 5, 2009]

§§ 1.484-1.500 [Reserved]

EXEMPT ORGANIZATIONS

General Rule

§ 1.501(a)-1 Exemption from taxation.

(a) ***In general; proof of exemption.***

(1) Section 501(a) provides an exemption from income taxes for organizations which are described in section 501 (c) or (d) and section 401(a), unless such organization is a *feeder organization* (see section 502), or unless it engages in a transaction described in section 503. However, the exemption does not extend to *unrelated business taxable income* of such an organization (see part III (Section 511 and following), subchapter F, chapter 1 of the Code).

(2) An organization, other than an employees' trust described in section 401(a), is not exempt from tax merely because it is not organized and operated for profit. In order to establish its exemption, it is necessary that every such organization claiming exemption file an application form as set forth below with the appropriate office as designated by the Commissioner in guidance published in the Internal Revenue Bulletin, forms, or instructions to the applicable forms. Subject only to the Commissioner's inherent power to revoke rulings, including with retroactive effect as permitted

under section 7805(b), because of a change in the law or regulations or for other good cause, an organization that has been determined by the Commissioner (or previously by a district director) to be exempt under section 501(a) or the corresponding provision of prior law may rely upon such determination so long as there are no substantial changes in the organization's character, purposes, or methods of operation. An organization that has been determined to be exempt under the provisions of the Internal Revenue Code of 1939 or prior law is not required to secure a new determination of exemption merely because of the enactment of the Internal Revenue Code of 1954 unless affected by substantive changes in law made by such Code.

(3) An organization claiming exemption under section 501(a) and described in any paragraph of section 501(c) (other than section 501(c)(1) shall file the form of application prescribed by the Commissioner and shall include thereon such information as required by such form and the instructions issued with respect thereto. For rules relating to the obtaining of a determination of exempt status by an employees' trust described in section 401(a), see the regulations under section 401.

(b) ***Additional proof by particular classes of organizations.***

(1) Unless otherwise prescribed by applicable regulations or other guidance published in the Internal Revenue Bulletin, organizations mentioned below shall submit with and as a part of their applications the following information:

(i) Mutual insurance companies shall submit copies of the policies or certificates of membership issued by them.

(ii) In the case of title holding companies described in section 501(c)(2), if the organization for which title is held has not been specifically notified in writing by the Internal Revenue Service that it is held to be exempt under section 501(a), the title holding company shall submit the information indicated herein as necessary for a determination of the status of the organization for which title is held.

(iii) An organization described in section 501(c)(3) shall submit with, and as a part of, an application filed after July 26, 1959, a detailed statement of its proposed activities.

(2) In addition to the information specifically called for by this section, the Commissioner may require any additional information deemed necessary for a proper determination of whether a particular organization is exempt under section 501(a), and when deemed advisable in the interest of an efficient administration of the internal revenue laws, he may in the cases of particular types of organizations prescribe the form in which the proof of exemption shall be furnished.

(3) An organization claiming to be specifically exempted by section 6033(a) from filing annual returns shall submit with and as a part of its application (or in such other manner as is prescribed in guidance published in the Internal Revenue Bulletin) a statement of all the facts on which it bases its claim.

(c) ***Private shareholder or individual defined.*** The words *private shareholder or individual* in section 501 refer to persons having a personal and private interest in the activities of the organization.

(d) ***Requirement of annual returns.*** For the annual return requirements of organizations exempt under section 501(a), see section 6033 and § 1.6033-1.

(e) ***Certain Puerto Rican pension, etc., trusts.*** Effective for taxable years beginning after December 31, 1973, section 1022(i)(1) of the Employee Retirement Income Security Act of 1974 (ERISA) (88 Stat. 942) provides that trusts under certain Puerto Rican pension, etc., plans (as defined under P.R. Laws Ann. tit. 13, section 3165, and the articles thereunder), all of the participants of which are residents of the Commonwealth of Puerto Rico, are to be treated only for purposes of section 501(a) as trusts described in section 401(a). The practical effect of section 1022(i)(1) is to exempt these trusts from U.S. income tax on income from their U.S. investments. For purposes of section 1022(i)(1), the term *residents of the Commonwealth of Puerto Rico* means bona fide residents of Puerto Rico, and persons who perform labor or services primarily within the Commonwealth of Puerto Rico, regardless of residence for other purposes, and the term *participants* is restricted to current employees who are not excluded under the eligibility provisions of the plan.

(f) ***Effective/applicability date.*** Paragraphs (a)(2), (b)(1), and (b)(3) of this section apply on and after July 1, 2014.

[T.D. 6500, 25 FR 11737, Nov. 26, 1960, as amended by T.D. 7428, 41 FR 34619, Aug. 16, 1976; T.D. 7859, 47 FR 54298, Dec. 2, 1982; T.D. 9674, 79 FR 37631, July 2, 2014; T.D. 9819, 82 FR 29732, June 30, 2017]

§ 1.501(c)(2)-1 Corporations organized to hold title to property for exempt organizations.

(a) A corporation described in section 501(c)(2) and otherwise exempt from tax under section 501(a) is taxable upon its unrelated business taxable income. For taxable years beginning before January 1, 1970, see § 1.511-2(c)(4). Since a corporation described in section 501(c)(2) cannot be exempt under section 501(a) if it engages in any business other than that of holding title to property and collecting income therefrom, it cannot have unrelated business taxable income as defined in section 512 other than income which is treated as unrelated business taxable income solely because of the applicability of section 512(a)(3)(C); or debt financed income which is treated as unrelated business taxable income solely because of section 514; or certain interest, annuities, royalties, or rents which are treated as unrelated business taxable income solely because of section 512(b) (3)(B)(ii) or (13). Similarly, exempt status under section 501(c)(2) shall not be affected where certain rents from personal property leased with real property are treated as unrelated business taxable income under section 512(b)(3)(A)(ii) solely because such rents attributable to such personal property are more than incidental when compared to the total rents received or accrued under the lease, or under section 512(b)(3)(B)(i) solely because such rents attributable to such personal property exceed 50 percent of the total rents received or accrued under the lease.

(b) A corporation described in section 501(c)(2) cannot accumulate income and retain its exemption, but it must turn over the entire amount of such income, less expenses, to an organization which is itself exempt from tax under section 501(a).

[T.D. 6500, 25 FR 11737, Nov. 26, 1960, as amended by T.D. 7658, 45 FR 33972, May 21, 1980]

§ 1.501(c)(3)-1 Organizations organized and operated for religious, charitable, scientific, testing for public safety, literary, or educational purposes, or for the prevention of cruelty to children or animals.

(a) ***Organizational and operational tests.***

(1) In order to be exempt as an organization described in section 501(c)(3), an organization must be both organized and operated exclusively for one or more of the purposes specified in such section. If an organization fails to meet either the organizational test or the operational test, it is not exempt.

(2) The term *exempt purpose or purposes,* as used in this section, means any purpose or purposes specified in section 501(c)(3), as defined and elaborated in paragraph (d) of this section.

(b) ***Organizational test*** —

(1) ***In general.***

(i) An organization is organized exclusively for one or more exempt purposes only if its articles of organization (referred to in this section as its *articles*) as defined in subparagraph (2) of this paragraph:

(A) Limit the purposes of such organization to one or more exempt purposes; and

(B) Do not expressly empower the organization to engage, otherwise than as an insubstantial part of its activities, in activities which in themselves are not in furtherance of one or more exempt purposes.

(ii) In meeting the organizational test, the organization's purposes, as stated in its articles, may be as broad as, or more specific than, the purposes stated in section 501(c)(3). Therefore, an organization which, by the terms of its articles, is formed *for literary and scientific purposes within the meaning of section 501(c)(3) of the Code* shall, if it otherwise meets the requirements in this paragraph, be considered to have met the organizational test. Similarly, articles stating that the organization is created solely *to receive contributions and pay them over to organizations which are described in section 501(c)(3) and exempt from taxation under section 501(a)*) are sufficient for purposes of the organizational test. Moreover, it is sufficient if the articles set for the purpose of the organization to be the operation of a school for adult education and describe in detail the manner of the operation of such school. In addition, if the articles state that the organization is formed for *charitable purposes,* such articles ordinarily shall be sufficient for purposes of the organizational test (see subparagraph (5) of this paragraph for rules relating to construction of terms).

(iii) An organization is not organized exclusively for one or more exempt purposes if its articles expressly empower it to carry on, otherwise than as an insubstantial part of its activities, activities which are not in furtherance of one or more exempt purposes, even though such organization is, by the terms of such articles, created for a purpose that is no broader than the purposes specified in section 501(c)(3). Thus, an organization that is empowered by its articles *to engage in a manufacturing business,* or *to engage in the operation of a social club* does not meet the organizational test regardless of the fact that its articles may state that such organization is created *for charitable purposes within the meaning of section 501(c)(3) of the Code.*

(iv) In no case shall an organization be considered to be organized exclusively for one or more exempt purposes, if, by the terms of its articles, the purposes for which such organization is created are broader than the purposes specified in section 501(c)(3). The fact that the actual operations of such an organization have been exclusively in furtherance of one or more exempt purposes shall not be sufficient to permit the organization to meet the organizational test.

Similarly, such an organization will not meet the organizational test as a result of statements or other evidence that the members thereof intend to operate only in furtherance of one or more exempt purposes.

(v) Unless otherwise prescribed by applicable regulations or other guidance published in the Internal Revenue Bulletin, an organization must, in order to establish its exemption, submit a detailed statement of its proposed activities with and as a part of its application for exemption (see § 1.501(a)-1(b)).

(2) ***Articles of organization.*** For purposes of this section, the term *articles of organization* or *articles* includes the trust instrument, the corporate charter, the articles of association, or any other written instrument by which an organization is created.

(3) ***Authorization of legislative or political activities.*** An organization is not organized exclusively for one or more exempt purposes if its articles expressly empower it:

(i) To devote more than an insubstantial part of its activities to attempting to influence legislation by propaganda or otherwise; or

(ii) Directly or indirectly to participate in, or intervene in (including the publishing or distributing of statements), any political campaign on behalf of or in opposition to any candidate for public office; or

(iii) To have objectives and to engage in activities which characterize it as an *action* organization as defined in paragraph (c)(3) of this section.

The terms used in subdivisions (i), (ii), and (iii) of this subparagraph shall have the meanings provided in paragraph (c)(3) of this section. An organization's articles will not violate the provisions of paragraph (b)(3)(i) of this section even though the organization's articles expressly empower it to make the election provided for in section 501(h) with respect to influencing legislation and, only if it so elects, to make lobbying or grass roots expenditures that do not normally exceed the ceiling amounts prescribed by section 501(h)(2) (B) and (D).

(4) ***Distribution of assets on dissolution.*** An organization is not organized exclusively for one or more exempt purposes unless its assets are dedicated to an exempt purpose. An organization's assets will be considered dedicated to an exempt purpose, for example, if, upon dissolution, such assets would, by reason of a provision in the organization's articles or by operation of law, be distributed for one or more exempt purposes, or to the Federal Government, or to a State or local government, for a public purpose, or would be distributed by a court to another organization to be used in such manner as in the judgment of the court will best accomplish the general purposes for which the dissolved organization was organized. However, an organization does not meet the organizational test if its articles or the law of the State in which it was created provide that its assets would, upon dissolution, be distributed to its members or shareholders.

(5) ***Construction of terms.*** The law of the State in which an organization is created shall be controlling in construing the terms of its articles. However, any organization which contends that such terms have under State law a different meaning from their generally accepted meaning must establish such special meaning by clear and convincing reference to relevant court decisions, opinions of the State attorney-general, or other evidence of applicable State law.

(6) ***Applicability of the organizational test.*** A determination by the Commissioner that an organization is described in section 501(c)(3) and exempt under section 501(a) will not be granted after July 26, 1959, regardless of when the application is filed, unless such organization meets the organizational test prescribed by this paragraph (b). If, before July 27, 1959, an organization has been determined by the Commissioner or district director to be exempt as an organization described in section 501(c)(3) or in a corresponding provision of prior law and such determination has not been revoked before such date, the fact that such organization does not meet the organizational test prescribed by this paragraph (b) shall not be a basis for revoking such determination. Accordingly, an organization that has been determined to be exempt before July 27, 1959, and which does not seek a new determination of exemption is not required to amend its articles of organization to conform to the rules of this paragraph (b), but any organization that seeks a determination of exemption after July 26, 1959, must have articles of organization that meet the rules of this paragraph (b). For the rules relating to whether an organization determined to be exempt before July 27, 1959, is organized exclusively for one or more exempt purposes, see 26 CFR (1939) 39.101(6)-1 (Regulations 118) as made applicable to the Code by Treasury Decision 6091, approved August 16, 1954 (19 FR 5167; 1954-2 CB 47).

(c) ***Operational test*** —

(1) ***Primary activities.*** An organization will be regarded as *operated exclusively* for one or more exempt purposes only if it engages primarily in activities which accomplish one or more of such exempt purposes specified in section 501(c)(3). An organization will not be so regarded if more than an insubstantial part of its activities is not in furtherance of an exempt purpose.

(2) ***Distribution of earnings.*** An organization is not operated exclusively for one or more exempt purposes if its net earnings inure in whole or in part to the benefit of private shareholders or individuals. For the definition of the words *private shareholder or individual,* see paragraph (c) of § 1.501(a)-1.

(3) ***Action organizations.***

(i) An organization is not operated exclusively for one or more exempt purposes if it is an *action* organization as defined in subdivisions (ii), (iii), or (iv) of this subparagraph.

(ii) An organization is an *action* organization if a substantial part of its activities is attempting to influence legislation by propaganda or otherwise. For this purpose, an organization will be regarded as attempting to influence legislation if the organization:

(*a*) Contacts, or urges the public to contact, members of a legislative body for the purpose of proposing, supporting, or opposing legislation; or

(*b*) Advocates the adoption or rejection of legislation.

The term *legislation,* as used in this subdivision, includes action by the Congress, by any State legislature, by any local council or similar governing body, or by the public in a referendum, initiative, constitutional amendment, or similar procedure. An organization will not fail to meet the operational test merely because it advocates, as an insubstantial part of its activities, the adoption or rejection of legislation. An organization for which the expenditure test election of section 501(h) is in effect for a taxable year will not be considered an *action* organization by reason of this paragraph (c)(3)(ii) for that year if it is not denied exemption from taxation under section 501(a) by reason of section 501(h).

(iii) An organization is an *action* organization if it participates or intervenes, directly or indirectly, in any political campaign on behalf of or in opposition to any candidate for public office.

The term *candidate for public office* means an individual who offers himself, or is proposed by others, as a contestant for an elective public office, whether such office be national, State, or local. Activities which constitute participation or intervention in a political campaign on behalf of or in opposition to a candidate include, but are not limited to, the publication or distribution of written or printed statements or the making of oral statements on behalf of or in opposition to such a candidate.

(iv) An organization is an *action* organization if it has the following two characteristics:

(*a*) Its main or primary objective or objectives (as distinguished from its incidental or secondary objectives) may be attained only by legislation or a defeat of proposed legislation; and

(*b*) it advocates, or campaigns for, the attainment of such main or primary objective or objectives as distinguished from engaging in nonpartisan analysis, study, or research and making the results thereof available to the public. In determining whether an organization has such characteristics, all the surrounding facts and circumstances, including the articles and all activities of the organization, are to be considered.

(v) An *action* organization, described in subdivisions (ii) or (iv) of this subparagraph, though it cannot qualify under section 501(c)(3), may nevertheless qualify as a social welfare organization under section 501(c)(4) if it meets the requirements set out in paragraph (a) of § 1.501(c)(4)-1.

(d) ***Exempt purposes*** —

(1) ***In general.***

(i) An organization may be exempt as an organization described in section 501(c)(3) if it is organized and operated exclusively for one or more of the following purposes:

(*a*) Religious,

(*b*) Charitable,

(*c*) Scientific,

(*d*) Testing for public safety,

(*e*) Literary,

(*f*) Educational, or

(*g*) Prevention of cruelty to children or animals.

(ii) An organization is not organized or operated exclusively for one or more of the purposes specified in subdivision (i) of this subparagraph unless it serves a public rather than a private interest. Thus, to meet the requirement of this subdivision, it is necessary for an organization to establish that it is not organized or operated for the benefit of private interests such as designated individuals, the creator or his family, shareholders of the organization, or persons controlled, directly or indirectly, by such private interests.

(iii) ***Examples.*** The following examples illustrate the requirement of paragraph (d)(1)(ii) of this section that an organization serve a public rather than a private interest:

Example 1. (i) O is an educational organization the purpose of which is to study history and immigration. O's educational activities include sponsoring lectures and publishing a journal. The focus of O's historical studies is the genealogy of one family, tracing the descent of its present members. O actively solicits for membership only individuals who are members of that one family. O's research is directed toward publishing a history of that family that will document the pedigrees of family members. A major objective of O's research is to identify and locate living descendants of that family to enable those descendants to become acquainted with each other.
(ii) O's educational activities primarily serve the private interests of members of a single family rather than a public interest. Therefore, O is operated for the benefit of private interests in violation of the restriction on private benefit in paragraph (d)(1)(ii) of this section. Based on these facts and circumstances, O is not operated exclusively for exempt purposes and, therefore, is not described in section 501(c)(3).

Example 2. (i) O is an art museum. O's principal activity is exhibiting art created by a group of unknown but promising local artists. O's activity, including organized tours of its art collection, promotes the arts. O is governed by a board of trustees unrelated to the artists whose work O exhibits. All of the art exhibited is offered for sale at prices set by the artist. Each artist whose work is exhibited has a consignment arrangement with O. Under this arrangement, when art is sold, the museum retains 10 percent of the selling price to cover the costs of operating the museum and gives the artist 90 percent.
(ii) The artists in this situation directly benefit from the exhibition and sale of their art. As a result, the principal activity of O serves the private interests of these artists. Because O gives 90 percent of the proceeds from its sole activity to the individual artists, the direct benefits to the artists are substantial and O's provision of these benefits to the artists is more than incidental to its other purposes and activities. This arrangement causes O to be operated for the benefit of private interests in violation of the restriction on private benefit in paragraph (d)(1)(ii) of this section. Based on these facts and circumstances, O is not operated exclusively for exempt purposes and, therefore, is not described in section 501(c)(3).

Example 3. (i) O is an educational organization the purpose of which is to train individuals in a program developed by P, O's president. The program is of interest to academics and professionals, representatives of whom serve on an advisory panel to O. All of the rights to the program are owned by Company K, a for-profit corporation owned by P. Prior to the existence of O, the teaching of the program was conducted by Company K. O licenses, from Company K, the right to conduct seminars and lectures on the program and to use the name of the program as part of O's name, in exchange for specified royalty payments. Under the license agreement, Company K provides O with the services of trainers and with course materials on the program. O may develop and

copyright new course materials on the program but all such materials must be assigned to Company K without consideration if and when the license agreement is terminated. Company K sets the tuition for the seminars and lectures on the program conducted by O. O has agreed not to become involved in any activity resembling the program or its implementation for 2 years after the termination of O's license agreement.
(ii) O's sole activity is conducting seminars and lectures on the program. This arrangement causes O to be operated for the benefit of P and Company K in violation of the restriction on private benefit in paragraph (d)(1)(ii) of this section, regardless of whether the royalty payments from O to Company K for the right to teach the program are reasonable. Based on these facts and circumstances, O is not operated exclusively for exempt purposes and, therefore, is not described in section 501(c)(3).

(iv) Since each of the purposes specified in subdivision (i) of this subparagraph is an exempt purpose in itself, an organization may be exempt if it is organized and operated exclusively for any one or more of such purposes. If, in fact, an organization is organized and operated exclusively for an exempt purpose or purposes, exemption will be granted to such an organization regardless of the purpose or purposes specified in its application for exemption. For example, if an organization claims exemption on the ground that it is *educational,* exemption will not be denied if, in fact, it is *charitable*.

(2) ***Charitable defined.*** The term *charitable* is used in section 501(c)(3) in its generally accepted legal sense and is, therefore, not to be construed as limited by the separate enumeration in section 501(c)(3) of other tax-exempt purposes which may fall within the broad outlines of *charity* as developed by judicial decisions. Such term includes: Relief of the poor and distressed or of the underprivileged; advancement of religion; advancement of education or science; erection or maintenance of public buildings, monuments, or works; lessening of the burdens of Government; and promotion of social welfare by organizations designed to accomplish any of the above purposes, or

(i) to lessen neighborhood tensions;

(ii) to eliminate prejudice and discrimination;

(iii) to defend human and civil rights secured by law; or

(iv) to combat community deterioration and juvenile delinquency. The fact that an organization which is organized and operated for the relief of indigent persons may receive voluntary contributions from the persons intended to be relieved will not necessarily prevent such organization from being exempt as an organization organized and operated exclusively for charitable purposes. The fact that an organization, in carrying out its primary purpose, advocates social or civic changes or presents opinion on controversial issues with the intention of molding public opinion or creating public sentiment to an acceptance of its views does not preclude such organization from qualifying under section 501(c)(3) so long as it is not an *action* organization of any one of the types described in paragraph (c)(3) of this section.

(3) ***Educational defined*** —

(i) ***In general.*** The term *educational,* as used in section 501(c)(3), relates to:

(*a*) The instruction or training of the individual for the purpose of improving or developing his capabilities; or

(*b*) The instruction of the public on subjects useful to the individual and beneficial to the community.

An organization may be educational even though it advocates a particular position or viewpoint so long as it presents a sufficiently full and fair exposition of the pertinent facts as to permit an individual or the public to form an independent opinion or conclusion. On the other hand, an organization is not educational if its principal function is the mere presentation of unsupported opinion.

(ii) ***Examples of educational organizations.*** The following are examples of organizations which, if they otherwise meet the requirements of this section, are educational:

Example 1. An organization, such as a primary or secondary school, a college, or a professional or trade school, which has a regularly scheduled curriculum, a regular faculty, and a regularly enrolled body of students in attendance at a place where the educational activities are regularly carried on.

Example 2. An organization whose activities consist of presenting public discussion groups, forums, panels, lectures, or other similar programs. Such programs may be on radio or television.

Example 3. An organization which presents a course of instruction by means of correspondence or through the utilization of television or radio.

Example 4. Museums, zoos, planetariums, symphony orchestras, and other similar organizations.

(4) ***Testing for public safety defined.*** The term *testing for public safety,* as used in section 501(c)(3), includes the testing of consumer products, such as electrical products, to determine whether they are safe for use by the general public.

(5) ***Scientific defined.***

(i) Since an organization may meet the requirements of section 501(c)(3) only if it serves a public rather than a private interest, a *scientific* organization must be organized and operated in the public interest (see subparagraph (1)(ii) of this paragraph). Therefore, the term *scientific,* as used in section 501(c)(3), includes the carrying on of scientific research in the public interest. Research when taken alone is a word with various meanings; it is not synonymous with *scientific*; and the nature of particular research depends upon the purpose which it serves. For research to be *scientific,* within the meaning of section 501(c)(3), it must be carried on in furtherance of a *scientific* purpose. The determination as to whether research is *scientific* does not depend on whether such research is classified as *fundamental* or *basic* as contrasted with *applied* or *practical.* On the other hand, for purposes of the exclusion from unrelated business taxable income provided by section 512(b)(9), it is necessary to determine whether the organization is operated primarily for purposes of carrying on *fundamental,* as contrasted with *applied,* research.

(ii) Scientific research does not include activities of a type ordinarily carried on as an incident to commercial or industrial operations, as, for example, the ordinary testing or inspection of materials or products or the designing or construction of equipment, buildings, etc.

(iii) Scientific research will be regarded as carried on in the public interest:

(*a*) If the results of such research (including any patents, copyrights, processes, or formulae resulting from such research) are made available to the public on a nondiscriminatory basis;

(*b*) If such research is performed for the United States, or any of its agencies or instrumentalities, or for a State or political subdivision thereof; or

(*c*) If such research is directed toward benefiting the public. The following are examples of scientific research which will be considered as directed toward benefiting the public, and, therefore, which will be regarded as carried on in the public interest:

(*1*) Scientific research carried on for the purpose of aiding in the scientific education of college or university students;

(*2*) scientific research carried on for the purpose of obtaining scientific information, which is published in a treatise, thesis, trade publication, or in any other form that is available to the interested public;

(*3*) scientific research carried on for the purpose of discovering a cure for a disease; or

(*4*) scientific research carried on for the purpose of aiding a community or geographical area by attracting new industry to the community or area or by encouraging the development of, or retention of, an industry in the community or area. Scientific research described in this subdivision will be regarded as carried on in the public interest even though such research is performed pursuant to a contract or agreement under which the sponsor or sponsors of the research have the right to obtain ownership or control of any patents, copyrights, processes, or formulae resulting from such research.

(iv) An organization will not be regarded as organized and operated for the purpose of carrying on scientific research in the public interest and, consequently, will not qualify under section 501(c)(3) as a *scientific* organization, if:

(*a*) Such organization will perform research only for persons which are (directly or indirectly) its creators and which are not described in section 501(c)(3), or

(*b*) Such organization retains (directly or indirectly) the ownership or control of more than an insubstantial portion of the patents, copyrights, processes, or formulae resulting from its research and does not make such patents, copyrights, processes, or formulae available to the public. For purposes of this subdivision, a patent, copyright, process, or formula shall be considered as made available to the public if such patent, copyright, process, or formula is made available to the public on a nondiscriminatory basis. In addition, although one person is granted the exclusive right to the use of a patent, copyright, process, or formula, such patent, copyright, process, or formula shall be considered as made available to the public if the granting of such exclusive right is the only practicable manner in which the patent, copyright, process, or formula can be utilized to benefit the public. In such a case, however, the research from which the patent, copyright, process, or formula resulted will be regarded as carried on in the public interest (within the meaning of subdivision (iii) of this subparagraph) only if it is carried on for a person described in subdivision (iii)(*b*) of this subparagraph or if it is scientific research described in subdivision (iii)(*c*) of this subparagraph.

(v) The fact that any organization (including a college, university, or hospital) carries on research which is not in furtherance of an exempt purpose described in section 501(c)(3) will not preclude such organization from meeting the requirements of section 501(c)(3) so long as the organization meets the organizational test and is not operated for the primary purpose of carrying on such research (see paragraph (e) of this section, relating to organizations carrying on a trade or business). See paragraph (a)(5) of § 1.513-2, with respect to research which constitutes an unrelated trade or business, and section 512(b) (7), (8), and (9), with respect to income derived from research which is excludable from the tax on unrelated business income.

(vi) The regulations in this subparagraph are applicable with respect to taxable years beginning after December 31, 1960.

(e) *Organizations carrying on trade or business* —

(1) ***In general.*** An organization may meet the requirements of section 501(c)(3) although it operates a trade or business as a substantial part of its activities, if the operation of such trade or business is in furtherance of the organization's exempt purpose or purposes and if the organization is not organized or operated for the primary purpose of carrying on an unrelated trade or business, as defined in section 513. In determining the existence or nonexistence of such primary purpose, all the circumstances must be considered, including the size and extent of the trade or business and the size and extent of the activities which are in furtherance of one or more exempt purposes. An organization which is organized and operated for the primary purpose of carrying on an unrelated trade or business is not exempt under section 501(c)(3) even though it has certain religious purposes, its property is held in common, and its profits do not inure to the benefit of individual members of the organization. See, however, section 501(d) and § 1.501(d)-1, relating to religious and apostolic organizations.

(2) ***Taxation of unrelated business income.*** For provisions relating to the taxation of unrelated business income of certain organizations described in section 501(c)(3), see sections 511 to 515, inclusive, and the regulations thereunder.

(f) *Interaction with section 4958* —

(1) ***Application process.*** An organization that applies for recognition of exemption under section 501(a) as an organization described in section 501(c)(3) must establish its eligibility under this section. The Commissioner may deny an application for exemption for failure to establish any of section 501(c)(3)'s requirements for exemption. Section 4958 does not apply to transactions with an organization that has failed to establish that it satisfies all of the requirements for exemption under section 501(c)(3). See § 53.4958-2.

(2) ***Substantive requirements for exemption still apply to applicable tax-exempt organizations described in section 501(c)(3)*** —

(i) ***In general.*** Regardless of whether a particular transaction is subject to excise taxes under section 4958, the substantive requirements for tax exemption under section 501(c)(3) still apply to an applicable tax-exempt organization (as defined in section 4958(e) and § 53.4958-2) described in section 501(c)(3) whose disqualified persons or organization managers are subject to excise taxes under section 4958. Accordingly, an organization will no longer meet the requirements for tax-exempt status under section 501(c)(3) if the organization fails to satisfy the requirements of paragraph (b), (c) or (d) of this section. See § 53.4958-8(a).

(ii) ***Determination of whether revocation of tax-exempt status is appropriate when section 4958 excise taxes also apply.*** In determining whether to continue to recognize the tax-exempt status of an applicable tax-exempt organization (as defined in section 4958(e) and § 53.4958-2) described in section 501(c)(3) that engages in one or more excess benefit transactions (as defined in section 4958(c) and § 53.4958-4) that violate the prohibition on inurement under section 501(c)(3), the Commissioner will consider all relevant facts and circumstances, including, but not limited to, the following—

(A) The size and scope of the organization's regular and ongoing activities that further exempt purposes before and after the excess benefit transaction or transactions occurred;

(B) The size and scope of the excess benefit transaction or transactions (collectively, if more than one) in relation to the size and scope of the organization's regular and ongoing activities that further exempt purposes;

(C) Whether the organization has been involved in multiple excess benefit transactions with one or more persons;

(D) Whether the organization has implemented safeguards that are reasonably calculated to prevent excess benefit transactions; and

(E) Whether the excess benefit transaction has been corrected (within the meaning of section 4958(f)(6) and § 53.4958-7), or the organization has made good faith efforts to seek correction from the disqualified person(s) who benefited from the excess benefit transaction.

(iii) All factors will be considered in combination with each other. Depending on the particular situation, the Commissioner may assign greater or lesser weight to some factors than to others. The factors listed in paragraphs (f)(2)(ii)(D) and (E) of this section will weigh more heavily in favor of continuing to recognize exemption where the organization discovers the excess benefit transaction or transactions and takes action before the Commissioner discovers the excess benefit transaction or transactions. Further, with respect to the factor listed in paragraph (f)(2)(ii)(E) of this section, correction after the excess benefit transaction or transactions are discovered by the Commissioner, by itself, is never a sufficient basis for continuing to recognize exemption.

(iv) ***Examples.*** The following examples illustrate the principles of paragraph (f)(2)(ii) of this section. For purposes of each example, assume that O is an applicable tax-exempt organization (as defined in section 4958(e) and § 53.4958-2) described in section 501(c)(3). The examples read as follows:

> *Example 1.* (i) O was created as a museum for the purpose of exhibiting art to the general public. In Years 1 and 2, O engages in fundraising and in selecting, leasing, and preparing an appropriate facility for a museum. In Year 3, a new board of trustees is elected. All of the new trustees are local art dealers. Beginning in Year 3 and continuing to the present, O uses a substantial portion of its revenues to purchase art solely from its trustees at prices that exceed fair market value. O exhibits and offers for sale all of the art it purchases. O's Form 1023, “Application for Recognition of Exemption,” did not disclose the possibility that O would purchase art from its trustees.

(ii) O's purchases of art from its trustees at more than fair market value constitute excess benefit transactions between an applicable tax-exempt organization and disqualified persons under section 4958. Therefore, these transactions are subject to the applicable excise taxes provided in that section. In addition, O's purchases of art from its trustees at more than fair market value violate the proscription against inurement under section 501(c)(3) and paragraph (c)(2) of this section.

(iii) The application of the factors in paragraph (f)(2)(ii) of this section to these facts is as follows. Beginning in Year 3, O does not engage primarily in regular and ongoing activities that further exempt purposes because a substantial portion of O's activities consists of purchasing art from its trustees and dealing in such art in a manner similar to a commercial art gallery. The size and scope of the excess benefit transactions collectively are significant in relation to the size and scope of any of O's ongoing activities that further exempt purposes. O has been involved in multiple excess benefit transactions, namely, purchases of art from its trustees at more than fair market value. O has not implemented safeguards that are reasonably calculated to prevent such improper purchases in the future. The excess benefit transactions have not been corrected, nor has O made good faith efforts to seek correction from the disqualified persons who benefited from the excess benefit transactions (the trustees). The trustees continue to control O's Board. Based on the application of the factors to these facts, O is no longer described in section 501(c)(3) effective in Year 3.

Example 2. (i) The facts are the same as in *Example 1*, except that in Year 4, O's entire board of trustees resigns, and O no longer offers all exhibited art for sale. The former board is replaced with members of the community who are not in the business of buying or selling art and who have skills and experience running charitable and educational programs and institutions. O promptly discontinues the practice of purchasing art from current or former trustees, adopts a written conflicts of interest policy, adopts written art valuation guidelines, hires legal counsel to recover the excess amounts O had paid its former trustees, and implements a new program of activities to further the public's appreciation of the arts.
(ii) O's purchases of art from its former trustees at more than fair market value constitute excess benefit transactions between an applicable tax-exempt organization and disqualified persons under section 4958. Therefore, these transactions are subject to the applicable excise taxes provided in that section. In addition, O's purchases of art from its trustees at more than fair market value violate the proscription against inurement under section 501(c)(3) and paragraph (c)(2) of this section.

(iii) The application of the factors in paragraph (f)(2)(ii) of this section to these facts is as follows. In Year 3, O does not engage primarily in regular and ongoing activities that further exempt purposes. However, in Year 4, O elects a new board of trustees

comprised of individuals who have skills and experience running charitable and educational programs and implements a new program of activities to further the public's appreciation of the arts. As a result of these actions, beginning in Year 4, O engages in regular and ongoing activities that further exempt purposes. The size and scope of the excess benefit transactions that occurred in Year 3, taken collectively, are significant in relation to the size and scope of O's regular and ongoing exempt function activities that were conducted in Year 3. Beginning in Year 4, however, as O's exempt function activities grow, the size and scope of the excess benefit transactions that occurred in Year 3 become less and less significant as compared to the size and scope of O's regular and ongoing exempt function activities. O was involved in multiple excess benefit transactions in Year 3. However, by discontinuing its practice of purchasing art from its current and former trustees, by replacing its former board with independent members of the community, and by adopting a conflicts of interest policy and art valuation guidelines, O has implemented safeguards that are reasonably calculated to prevent future violations. In addition, O has made a good faith effort to seek correction from the disqualified persons who benefited from the excess benefit transactions (its former trustees). Based on the application of the factors to these facts, O continues to meet the requirements for tax exemption under section 501(c)(3).

Example 3. (i) O conducts educational programs for the benefit of the general public. Since its formation, O has employed its founder, C, as its Chief Executive Officer. Beginning in Year 5 of O's operations and continuing to the present, C caused O to divert significant portions of O's funds to pay C's personal expenses. The diversions by C significantly reduced the funds available to conduct O's ongoing educational programs. The board of trustees never authorized C to cause O to pay C's personal expenses from O's funds. Certain members of the board were aware that O was paying C's personal expenses. However, the board did not terminate C's employment and did not take any action to seek repayment from C or to prevent C from continuing to divert O's funds to pay C's personal expenses. C claimed that O's payments of C's personal expenses represented loans from O to C. However, no contemporaneous loan documentation exists, and C never made any payments of principal or interest.
(ii) The diversions of O's funds to pay C's personal expenses constitute excess benefit transactions between an applicable tax-exempt organization and a disqualified person under section 4958. Therefore, these transactions are subject to the applicable excise taxes provided in that section. In addition, these transactions violate the proscription against inurement under section 501(c)(3) and paragraph (c)(2) of this section.

(iii) The application of the factors in paragraph (f)(2)(ii) of this section to these facts is as follows. O has engaged in regular and ongoing activities that further exempt purposes both before and after the excess benefit transactions occurred. However, the size and scope of the excess benefit transactions engaged in by O beginning in Year 5,

collectively, are significant in relation to the size and scope of O's activities that further exempt purposes. Moreover, O has been involved in multiple excess benefit transactions. O has not implemented any safeguards that are reasonably calculated to prevent future diversions. The excess benefit transactions have not been corrected, nor has O made good faith efforts to seek correction from C, the disqualified person who benefited from the excess benefit transactions. Based on the application of the factors to these facts, O is no longer described in section 501(c)(3) effective in Year 5.

Example 4. (i) O conducts activities that further exempt purposes. O uses several buildings in the conduct of its exempt activities. In Year 1, O sold one of the buildings to Company K for an amount that was substantially below fair market value. The sale was a significant event in relation to O's other activities. C, O's Chief Executive Officer, owns all of the voting stock of Company K. When O's board of trustees approved the transaction with Company K, the board did not perform due diligence that could have made it aware that the price paid by Company K to acquire the building was below fair market value. Subsequently, but before the IRS commences an examination of O, O's board of trustees determines that Company K paid less than the fair market value for the building. Thus, O concludes that an excess benefit transaction occurred. After the board makes this determination, it promptly removes C as Chief Executive Officer, terminates C's employment with O, and hires legal counsel to recover the excess benefit from Company K. In addition, O promptly adopts a conflicts of interest policy and new contract review procedures designed to prevent future recurrences of this problem.
(ii) The sale of the building by O to Company K at less than fair market value constitutes an excess benefit transaction between an applicable tax-exempt organization and a disqualified person under section 4958 in Year 1. Therefore, this transaction is subject to the applicable excise taxes provided in that section. In addition, this transaction violates the proscription against inurement under section 501(c)(3) and paragraph (c)(2) of this section.

(iii) The application of the factors in paragraph (f)(2)(ii) of this section to these facts is as follows. O has engaged in regular and ongoing activities that further exempt purposes both before and after the excess benefit transaction occurred. Although the size and scope of the excess benefit transaction were significant in relation to the size and scope of O's activities that further exempt purposes, the transaction with Company K was a one-time occurrence. By adopting a conflicts of interest policy and new contract review procedures and by terminating C, O has implemented safeguards that are reasonably calculated to prevent future violations. Moreover, O took corrective actions before the IRS commenced an examination of O. In addition, O has made a good faith

effort to seek correction from Company K, the disqualified person who benefited from the excess benefit transaction. Based on the application of the factors to these facts, O continues to be described in section 501(c)(3).

Example 5. (i) O is a large organization with substantial assets and revenues. O conducts activities that further its exempt purposes. O employs C as its Chief Financial Officer. During Year 1, O pays $2,500 of C's personal expenses. O does not make these payments pursuant to an accountable plan, as described in § 53.4958-4(a)(4)(ii). In addition, O does not report any of these payments on C's Form W-2, "Wage and Tax Statement," or on a Form 1099-MISC, "Miscellaneous Income," for C for Year 1, and O does not report these payments as compensation on its Form 990, "Return of Organization Exempt From Income Tax," for Year 1. Moreover, none of these payments can be disregarded as nontaxable fringe benefits under § 53.4958-4(c)(2) and none consisted of fixed payments under an initial contract under § 53.4958-4(a)(3). C does not report the $2,500 of payments as income on his individual Federal income tax return for Year 1. O does not repeat this reporting omission in subsequent years and, instead, reports all payments of C's personal expenses not made under an accountable plan as income to C.
(ii) O's payment in Year 1 of $2,500 of C's personal expenses constitutes an excess benefit transaction between an applicable tax-exempt organization and a disqualified person under section 4958. Therefore, this transaction is subject to the applicable excise taxes provided in that section. In addition, this transaction violates the proscription against inurement in section 501(c)(3) and paragraph (c)(2) of this section.

(iii) The application of the factors in paragraph (f)(2)(ii) of this section to these facts is as follows. O engages in regular and ongoing activities that further exempt purposes. The payment of $2,500 of C's personal expenses represented only a de minimis portion of O's assets and revenues; thus, the size and scope of the excess benefit transaction were not significant in relation to the size and scope of O's activities that further exempt purposes. The reporting omission that resulted in the excess benefit transaction in Year 1 occurred only once and is not repeated in subsequent years. Based on the application of the factors to these facts, O continues to be described in section 501(c)(3).

Example 6. (i) O is a large organization with substantial assets and revenues. O furthers its exempt purposes by providing social services to the population of a specific geographic area. O has a sizeable workforce of employees and volunteers to conduct its work. In Year 1, O's board of directors adopted written procedures for setting executive compensation at O. O's executive compensation procedures were modeled on the procedures for establishing a rebuttable presumption of reasonableness under § 53.4958-6. In accordance with these procedures, the board appointed a compensation

committee to gather data on compensation levels paid by similarly situated organizations for functionally comparable positions. The members of the compensation committee were disinterested within the meaning of § 53.4958-6(c)(1)(iii). Based on its research, the compensation committee recommended a range of reasonable compensation for several of O's existing top executives (the Top Executives). On the basis of the committee's recommendations, the board approved new compensation packages for the Top Executives and timely documented the basis for its decision in board minutes. The board members were all disinterested within the meaning of § 53.4958-6(c)(1)(iii). The Top Executives were not involved in setting their own compensation. In Year 1, even though payroll expenses represented a significant portion of O's total operating expenses, the total compensation paid to O's Top Executives represented only an insubstantial portion of O's total payroll expenses. During a subsequent examination, the IRS found that the compensation committee relied exclusively on compensation data from organizations that perform similar social services to O. The IRS concluded, however, that the organizations were not similarly situated because they served substantially larger geographic regions with more diverse populations and were larger than O in terms of annual revenues, total operating budget, number of employees, and number of beneficiaries served. Accordingly, the IRS concluded that the compensation committee did not rely on “appropriate data as to comparability” within the meaning of § 53.4958-6(c)(2) and, thus, failed to establish the rebuttable presumption of reasonableness under § 53.4958-6. Taking O's size and the nature of the geographic area and population it serves into account, the IRS concluded that the Top Executives' compensation packages for Year 1 were excessive. As a result of the examination, O's board added new members to the compensation committee who have expertise in compensation matters and also amended its written procedures to require the compensation committee to evaluate a number of specific factors, including size, geographic area, and population covered by the organization, in assessing the comparability of compensation data. O's board renegotiated the Top Executives' contracts in accordance with the recommendations of the newly constituted compensation committee on a going forward basis. To avoid potential liability for damages under state contract law, O did not seek to void the Top Executives' employment contracts retroactively to Year 1 and did not seek correction of the excess benefit amounts from the Top Executives. O did not terminate any of the Top Executives. (ii) O's payments of excessive compensation to the Top Executives in Year 1 constituted excess benefit transactions between an applicable tax-exempt organization and disqualified persons under section 4958. Therefore, these payments are subject to the applicable excise taxes provided under that section, including second-tier taxes if there is no correction by the disqualified persons. In addition, these payments violate the proscription against inurement under section 501(c)(3) and paragraph (c)(2) of this section.

(iii) The application of the factors in paragraph (f)(2)(ii) of this section to these facts is as follows. O has engaged in regular and ongoing activities that further exempt purposes both before and after the excess benefit transactions occurred. The size and scope of the excess benefit transactions, in the aggregate, were not significant in relation to the size and scope of O's activities that further exempt purposes. O engaged in multiple excess benefit transactions. Nevertheless, prior to entering into these excess benefit transactions, O had implemented written procedures for setting the compensation of its top management that were reasonably calculated to prevent the occurrence of excess benefit transactions. O followed these written procedures in setting the compensation of the Top Executives for Year 1. Despite the board's failure to rely on appropriate comparability data, the fact that O implemented and followed these written procedures in setting the compensation of the Top Executives for Year 1 is a factor favoring continued exemption. The fact that O amended its written procedures to ensure the use of appropriate comparability data and renegotiated the Top Executives' compensation packages on a going-forward basis are also factors favoring continued exemption, even though O did not void the Top Executives' existing contracts and did not seek correction from the Top Executives. Based on the application of the factors to these facts, O continues to be described in section 501(c)(3).

(3) ***Applicability.*** The rules in paragraph (f) of this section will apply with respect to excess benefit transactions occurring after March 28, 2008.

(g) ***Applicability of regulations in this section.*** The regulations in this section are, except as otherwise expressly provided, applicable with respect to taxable years beginning after July 26, 1959. For the rules applicable with respect to taxable years beginning before July 27, 1959, see 26 CFR (1939) 39.101(6)-1 (Regulations 118) as made applicable to the Code by Treasury Decision 6091, approved August 16, 1954 (19 FR 5167; C.B. 1954-2, 47).

(h) ***Effective/applicability date.*** Paragraphs (b)(1)(v) and (b)(6) of this section apply on and after July 1, 2014.

[T.D. 6500, 25 FR 11737, Nov. 26, 1960, as amended by T.D. 6525, 26 FR 189, Jan. 11, 1961; T.D. 6939, 32 FR 17661, Dec. 12, 1967; T.D. 7428, 41 FR 34620, Aug. 16, 1976; T.D. 8308, 55 FR 35587, Aug. 31, 1990; T.D. 9390, 73 FR 16521, Mar. 28, 2008; T.D. 9390, 73 FR 23069, Apr. 29, 2008; T.D. 9674, 79 FR 37631, July 2, 2014; T.D. 9819, 82 FR 29732, June 30, 2017]

§ 1.501(c)(4)-1 Civic organizations and local associations of employees.

(a) ***Civic organizations*** —

(1) ***In general.*** A civic league or organization may be exempt as an organization described in section 501(c)(4) if—

(i) It is not organized or operated for profit; and

(ii) It is operated exclusively for the promotion of social welfare.

(2) ***Promotion of social welfare*** —

(i) ***In general.*** An organization is operated exclusively for the promotion of social welfare if it is primarily engaged in promoting in some way the common good and general welfare of the people of the community. An organization embraced within this section is one which is operated primarily for the purpose of bringing about civic betterments and social improvements. A *social welfare* organization will qualify for exemption as a charitable organization if it falls within the definition of *charitable* set forth in paragraph (d)(2) of § 1.501(c)(3)-1 and is not an *action* organization as set forth in paragraph (c)(3) of § 1.501(c)(3)-1.

(ii) ***Political or social activities.*** The promotion of social welfare does not include direct or indirect participation or intervention in political campaigns on behalf of or in opposition to any candidate for public office. Nor is an organization operated primarily for the promotion of social welfare if its primary activity is operating a social club for the benefit, pleasure, or recreation of its members, or is carrying on a business with the general public in a manner similar to organizations which are operated for profit. See, however, section 501(c)(6) and § 1.501(c)(6)-1, relating to business leagues and similar organizations. A social welfare organization that is not, at any time after October 4, 1976, exempt from taxation as an organization described in section 501(c)(3) may qualify under section 501(c)(4) even though it is an *action* organization described in § 1.501(c)(3)-1(c)(3)(ii) or (iv), if it otherwise qualifies under this section. For rules relating to an organization that is, after October 4, 1976, exempt from taxation as an organization described in section 501(c)(3), see section 504 and § 1.504-1.

(b) ***Local associations of employees.*** Local associations of employees described in section 501(c)(4) are expressly entitled to exemption under section 501(a). As conditions to exemption, it is required

(1) that the membership of such an association be limited to the employees of a designated person or persons in a particular municipality, and

(2) that the net earnings of the association be devoted exclusively to charitable, educational, or recreational purposes. The word *local* is defined in paragraph (b) of § 1.501(c)(12)-1. See paragraph (d) (2) and (3) of § 1.501(c)(3)-1 with reference to the meaning of *charitable* and *educational* as used in this section.

[T.D. 6500, 25 FR 11737, Nov. 26, 1960; 25 FR 14021, Dec. 31, 1960, as amended by T.D. 8308, 55 FR 35588, Aug. 31, 1990]

§ 1.501(c)(5)-1 Labor, agricultural, and horticultural organizations.

(a) The organizations contemplated by section 501(c)(5) as entitled to exemption from income taxation are those which:

(1) Have no net earnings inuring to the benefit of any member, and

(2) Have as their objects the betterment of the conditions of those engaged in such pursuits, the improvement of the grade of their products, and the development of a higher degree of efficiency in their respective occupations.

(b)

(1) ***General rule.*** An organization is not an organization described in section 501(c)(5) if the principal activity of the organization is to receive, hold, invest, disburse or otherwise manage funds associated with savings or investment plans or programs, including pension or other retirement savings plans or programs.

(2) ***Exception.*** Paragraph (b)(1) of this section shall not apply to an organization which—

(i) Is established and maintained by another labor organization described in section 501(c)(5) (determined without regard to this paragraph (b)(2));

(ii) Is not directly or indirectly established or maintained in whole or in part by one or more—

(A) Employers;

(B) Governments or agencies or instrumentalities thereof; or

(C) Government controlled entities;

(iii) Is funded by membership dues from members of the labor organization described in this paragraph (b)(2) and earnings thereon; and

(iv) Has not at any time after September 2, 1974 (the date of enactment of the Employee Retirement Income Security Act of 1974, Pub. L. 93-406, 88 Stat. 829) provided for, permitted or accepted employer contributions.

(3) ***Example.*** The principles of this paragraph (b) are illustrated by the following example:

Example. Trust A is organized in accordance with a collective bargaining agreement between labor union K and multiple employers. Trust A forms part of a plan that is established and maintained pursuant to the agreement and which covers employees of the signatory employers who are members of K. Representatives of both the employers and K serve as trustees. A receives contributions from the employers who are subject to the agreement. Retirement benefits paid to K's members as specified in the agreement are funded exclusively by the employers' contributions and accumulated earnings. A also provides information to union members about their retirement benefits and assists them with administrative tasks associated with the benefits. Most of A's activities are devoted to these functions. From time to time, A also participates in the renegotiation of the collective bargaining agreement. A's principal activity is to receive, hold, invest, disburse, or otherwise manage funds associated with a retirement savings plan. In addition, A does not satisfy all the requirements of the exception described in paragraph (b)(2) of this section. (For example, A accepts contributions from employers.) Therefore, A is not a labor organization described in section 501(c)(5).

(c) Organizations described in section 501(c)(5) and otherwise exempt from tax under section 501(a) are taxable upon their unrelated business taxable income. See part II (section 511 and following), subchapter F, chapter 1 of the Code, and the regulations thereunder.

[T.D. 6500, 25 FR 11737, Nov. 26, 1960; 25 FR 14021, Dec. 31, 1960, as amended by T.D. 8726, 62 FR 40449, July 29, 1997]

§ 1.501(c)(6)-1 Business leagues, chambers of commerce, real estate boards, and boards of trade.

A business league is an association of persons having some common business interest, the purpose of which is to promote such common interest and not to engage in a regular business of a kind ordinarily carried on for profit. It is an organization of the same general class as a chamber of commerce or board of trade. Thus, its activities should be directed to the improvement of business conditions of one or more lines of business as distinguished from the performance of particular services for individual persons. An organization whose purpose is to engage in a regular business of a kind ordinarily carried on for profit, even though the business is conducted on a cooperative basis or produces only sufficient income to be self-sustaining, is not a business league. An association engaged in furnishing information to prospective investors, to enable them to make sound investments, is not a business

league, since its activities do not further any common business interest, even though all of its income is devoted to the purpose stated. A stock or commodity exchange is not a business league, a chamber of commerce, or a board of trade within the meaning of section 501(c)(6) and is not exempt from tax. Organizations otherwise exempt from tax under this section are taxable upon their unrelated business taxable income. See part II (section 511 and following), subchapter F, chapter 1 of the Code, and the regulations thereunder.

§ 1.501(c)(7)-1 Social clubs.

(a) The exemption provided by section 501(a) for organizations described in section 501(c)(7) applies only to clubs which are organized and operated exclusively for pleasure, recreation, and other nonprofitable purposes, but does not apply to any club if any part of its net earnings inures to the benefit of any private shareholder. In general, this exemption extends to social and recreation clubs which are supported solely by membership fees, dues, and assessments. However, a club otherwise entitled to exemption will not be disqualified because it raises revenue from members through the use of club facilities or in connection with club activities.

(b) A club which engages in business, such as making its social and recreational facilities available to the general public or by selling real estate, timber, or other products, is not organized and operated exclusively for pleasure, recreation, and other nonprofitable purposes, and is not exempt under section 501(a). Solicitation by advertisement or otherwise for public patronage of its facilities is prima facie evidence that the club is engaging in business and is not being operated exclusively for pleasure, recreation, or social purposes. However, an incidental sale of property will not deprive a club of its exemption.

§ 1.501(c)(8)-1 Fraternal beneficiary societies.

(a) A fraternal beneficiary society is exempt from tax only if operated under the *lodge system* or for the exclusive benefit of the members so operating. *Operating under the lodge system* means carrying on its activities under a form of organization that comprises local branches, chartered by a parent organization and largely self-governing, called lodges, chapters, or the like. In order to be exempt it is also necessary that the society have an established system for the payment to its members or their dependents of life, sick, accident, or other benefits.

[T.D. 6500, 25 FR 11737, Nov. 26, 1960, as amended by T.D. 7061, 35 FR 14770, Sept. 23, 1970]

§ 1.501(c)(9)-1 Voluntary employees' beneficiary associations, in general.

To be described in section 501(c)(9) an organization must meet all of the following requirements:

(a) The organization is an employees' association,

(b) Membership in the association is voluntary,

(c) The organization provides for the payment of life, sick, accident, or other benefits to its members or their dependents or designated beneficiaries, and substantially all of its operations are in furtherance of providing such benefits, and

(d) No part of the net earnings of the organization inures, other than by payment of the benefits referred to in paragraph (c) of this section, to the benefit of any private shareholder or individual.

[T.D. 7750, 45 FR 1721, Jan. 7, 1981]

§ 1.501(c)(9)-2 Membership in a voluntary employees' beneficiary association; employees; voluntary association of employees.

(a) *Membership* —

(1) *In general.* The membership of an organization described in section 501(c)(9) must consist of individuals who become entitled to participate by reason of their being employees and whose eligibility for membership is defined by reference to objective standards that constitute an employment-related common bond among such individuals. Typically, those eligible for membership in an organization described in section 501(c)(9) are defined by reference to a common employer (or affiliated employers), to coverage under one or more collective bargaining agreements (with respect to benefits provided by reason of such agreement(s)), to membership in a labor union, or to membership in one or more locals of a national or international labor union. For example, membership in an association might be open to all employees of a particular employer, or to employees in specified job classifications working for certain employers at specified locations and who are entitled to benefits by reason of one or more collective bargaining agreements. In addition, employees of one or more employers engaged in the same line of business in the same geographic locale will be considered to share an employment-related bond for purposes of an organization through which their employers provide benefits. Employees of a labor union also will be considered to share an employment-related common bond with members of the union, and employees of an association will be considered to share an employment-related common bond with members of the association. Whether a group of individuals is defined by reference to a permissible standard or standards is a question to be determined with regard to all the facts and circumstances, taking into account the guidelines set forth in this paragraph. Exemption will not be denied merely because the membership of an association includes some individuals who are not employees (within the meaning of paragraph (b) of this section), provided that such individuals share an employment-related bond with the employee-members. Such individuals may include, for example, the proprietor of a business whose employees are members of the association. For purposes of the preceding two sentences, an association will be considered to be composed of employees if 90 percent of the total membership of the association on one day of each quarter of the association's taxable year consists of employees (within the meaning of paragraph (b) of this section).

(2) *Restrictions* —

(i) *In general.* Eligibility for membership may be restricted by geographic proximity, or by objective conditions or limitations reasonably related to employment, such as a limitation to a reasonable classification of workers, a limitation based on a reasonable minimum period of service, a limitation based on maximum compensation, or a requirement that a member be employed on a full-time basis. Similarly, eligibility for benefits may be restricted by objective conditions relating to the type or amount of benefits offered. Any objective criteria used to restrict eligibility for membership or benefits may not, however, be selected or administered in a manner that limits membership or benefits to officers, shareholders, or highly compensated employees of an employer contributing to or otherwise funding the employees' association. Similarly, eligibility for benefits may not be subject to conditions or limitations that have the effect of entitling officers, shareholders, or highly compensated employees of an employer contributing to or otherwise funding the employees' association to benefits that are disproportionate in relation to benefits to which other members of the association are entitled.

See § 1.501(c)(9)-4(b). Whether the selection or administration of objective conditions has the effect of providing disproportionate benefits to officers, shareholders, or highly compensated employees generally is to be determined on the basis of all the facts and circumstances.

(ii) ***Generally permissible restrictions or conditions.*** In general the following restrictions will not be considered to be inconsistent with § 1.501(c)(9)-2(a)(2)(i) or § 1.501(c)(9)-4(b):

(A) In the case of an employer-funded organization, a provision that excludes or has the effect of excluding from membership in the organization or participation in a particular benefit plan employees who are members of another organization or covered by a different plan, funded or contributed to by the employer, to the extent that such other organization or plan offers similar benefits on comparable terms to the excluded employees.

(B) In the case of an employer funded-organization, a provision that excludes from membership, or limits the type or amount of benefits provided to, individuals who are included in a unit of employees covered by an agreement which the Secretary of Labor finds to be a collective bargaining agreement between employee representatives and one or more employers, if there is evidence that the benefit or benefits provided by the organization were the subject of good faith bargaining between such employee representatives and such employer or employers.

(C) Restrictions or conditions on eligibility for membership or benefits that are determined through collective bargaining, by trustees designated pursuant to a collective bargaining agreement, or by the collective bargaining agents of the members of an association or trustees named by such agent or agents.

(D) The allowance of benefits only on condition that a member or recipient contribute to the cost of such benefits, or the allowance of different benefits based solely on differences in contributions, provided that those making equal contributions are entitled to comparable benefits.

(E) A requirement that a member (or a member's dependents) meet a reasonable health standard related to eligibility for a particular benefit.

(F) The provision of life benefits in amounts that are a uniform percentage of the compensation received by the individual whose life is covered.

(G) The provision of benefits in the nature of wage replacement in the event of disability in amounts that are a uniform percentage of the compensation of the covered individuals (either before or after taking into account any disability benefits provided through social security or any similar plan providing for wage replacement in the event of disability).

(3) ***Examples.*** The provisions of this section may be illustrated by the following examples:

Example 1. Pursuant to a collective bargaining agreement entered into by X Corporation and W, a labor union which represents all of X Corporation's hourly-paid employees, the X Corporation Union Benefit Plan is established to provide life insurance benefits to employees of X represented by W. The Plan is funded by contributions from X, and is jointly administered by X and W. In order to provide its non-unionized employees with comparable life insurance benefits, X also establishes and funds the X Corporation Life Insurance Trust. The Trust will not be ineligible for exemption as an organization described in section 501(c)(9) solely because membership is restricted to those employees of X who are not members of W.

Example 2. The facts are the same as in Example 1 except that the life insurance benefit provided to the non-unionized employees of X differs from the life insurance benefit provided to the unionized employees of X pursuant to the collective bargaining agreement. The trust will not be ineligible for exemption as an organization described in section 501(c)(9) solely because the life insurance benefit provided to X's nonunionized employees is not same as the life insurance benefit provided to X's unionized employees.

Example 3. S corporation established a plan to provide health benefits to all its employees. In accordance with the provisions of the plan each employee may secure insurance coverage by making an election under which the employee agrees to contribute periodically to the plan an amount which is determined solely by whether the employee elects a high option coverage or a low option coverage and on whether the employee is unmarried or has a family. As an alternative, the employee may elect high or low options, self only or self and family, coverage through a local prepaid group medical plan. The contributions required of those electing the prepaid group medical plan also vary with the type of coverage selected, and differ from those required of employees electing insurance. The difference between the amount contributed by employees electing the various coverages and the actual cost of purchasing the coverage is made up through contributions by S to the plan, and under the plan, S provides approximately the same proportion of the cost for each coverage. To fund the plan, S established an arrangement in the nature of a trust under applicable local law and contributes all employee contributions, and all amounts which by the terms of the plan it is required to contribute, to the trust. The terms of the plan do not provide for disproportionate benefits to the employees of S and will not be considered inconsistent with § 1.501(c)(9)-2(a)(2)(i).

Example 4. The facts are the same as in Example 3 except that, for those employees or former employees covered by Medicare, the plan provides a distinct coverage which supplements Medicare benefits. Eligibility for Medicare is an objective condition relating to a type of benefit offered, and the provision of separate coverage for those eligible for Medicare will not be considered inconsistent with § 1.501(c)(9)-2(a)(2)(i).

(b) ***Meaning of employee.*** Whether an individual is an *employee* is determined by reference to the legal and bona fide relationship of employer and employee. The term *employee* includes the following:

(1) An individual who is considered an employee:

(i) For employment tax purposes under subtitle C of the Internal Revenue Code and the regulations thereunder, or

(ii) For purposes of a collective bargaining agreement,

whether or not the individual could qualify as an employee under applicable common law rules. This would include any person who is considered an employee for purposes of the Labor Management Relations Act of 1947, 61 Stat. 136, *as amended,* 29 U.S.C. 141 (1979).

(2) An individual who became entitled to membership in the association by reason of being or having been an employee. Thus, an individual who would otherwise qualify under this paragraph will continue to qualify as an employee even though such individual is on leave of absence, works temporarily for another employer or as an independent contractor, or has been terminated by reason of retirement, disability or layoff. For example, an individual who in the normal course of employment is employed intermittently by more than one employer in an industry characterized by short-term employment by several different employers will not, by reason of temporary unemployment, cease to be an employee within the meaning of this paragraph.

(3) The surviving spouse and dependents of an employee (if, for purposes of the 90-percent test of § 1.501(c)(9)-2(a)(1) they are considered to be members of the association).

(c) ***Description of voluntary association of employees*** —

(1) ***Association.*** To be described in section 501(c)(9) and this section there must be an entity, such as a corporation or trust established under applicable local law, having an existence independent of the member-employees or their employer.

(2) ***Voluntary.*** Generally, membership in an association is voluntary if an affirmative act is required on the part of an employee to become a member rather than the designation as a member due to employee status. However, an association shall be considered voluntary although membership is required of all employees, provided that the employees do not incur a detriment (for example, in the form of deductions from pay) as the result of membership in the association. An employer is not deemed to have imposed involuntary membership on the employee if membership is required as the result of a collective bargaining agreement or as an incident of membership in a labor organization.

(3) ***Of employees.*** To be described in this section, an organization must be controlled—

(i) By its membership,

(ii) By independent trustee(s) (such as a bank), or

(iii) By trustees or other fiduciaries at least some of whom are designated by, or on behalf of, the membership. Whether control by or on behalf of the membership exists is a question to be determined with regard to all of the facts and circumstances, but generally such control will be deemed to be present when the membership (either directly or through its representative) elects, appoints or otherwise designates a person or persons to serve as chief operating officer(s), administrator(s), or trustee(s) of the organization. For purposes of this paragraph an organization will be considered to be controlled by independent trustees if it is an *employee welfare benefit plan,* as defined in section 3(1) of the Employee Retirement Income Security Act of 1974 (ERISA), and, as such, is subject to the requirements of parts 1 and 4 of subtitle B, title I of ERISA. Similarly, a plan will be considered to be controlled by its membership if it is controlled by one or more trustees designated pursuant to a collective bargaining agreement (whether or not the bargaining agent of the represented employees bargained for and obtained the right to participate in selecting the trustees).

(4) ***Examples.*** The provisions of this section may be illustrated by the following examples:

Example 1. X, a labor union, represents all the hourly-paid employees of Y Corporation. A health insurance benefit plan was established by X and Y as the result of a collective bargaining agreement entered into by them. The plan established the terms and conditions of membership in, and the benefits to be provided by, the plan. In accordance with the terms of the agreement, Y Corporation is obligated to establish a trust fund and make contributions thereto at specified rates. The trustees, some of whom are designated by X and some by Y, are authorized to hold and invest the assets of the trust and to make payments on instructions issued by Y Corporation in accordance with the conditions contained in the plan. The interdependent benefit plan agreement and trust indenture together create a voluntary employees' beneficiary association over which the employees posses the requisite control through the trustees designated by their representative, X.

Example 2. Z Corporation unilaterally established an educational benefit plan for its employees. The purpose of the plan is to provide payments for job-related educational or training courses, such as apprenticeship training programs, for Z Corporation employees, according to objective criteria set forth in the plan. Z establishes a separate bank account which it uses to fund payments to the plan. Contributions to the account are to be made at the discretion of and solely by Z Corporation, which also administers the plan and retains control over the assets in the fund. Z Corporation's educational benefit plan and the related account do not constitute an association having an existence independent of Z Corporation and therefore do not constitute a voluntary employees' beneficiary association.

Example 3. A, an individual, is the incorporator and chief operating officer of Lawyers' Beneficiary Association (LBA). LBA is engaged in the business of providing medical benefits to members of the Association and their families. Membership is open only to practicing lawyers located in a particular metropolitan area who are neither self-employed nor partners in a law firm. Membership in LBA is solicited by insurance agents under the control of X Corporation (owned by A) which, by contract with LBA, is the exclusive sales agent. Medical benefits are paid from a trust account containing periodic *contributions* paid by the members, together with proceeds from the investment of those contributions. Contribution and benefit levels are set by LBA. The *members* of LBA do not hold meetings, have no right to elect officers or directors of the Association, and no right to replace trustees. Collectively, the subscribers for medical benefits from LBA cannot be said to control the association and membership is neither more than nor different from the purchase of an insurance policy from a stock insurance company. LBA is not a voluntary employees' beneficiary association.

Example 4. U corporation unilaterally established a plan to provide benefits to its employees. In accordance with the provisions of the plan, each employee may secure insurance or benefit coverage by making an election under which the employee agrees to contribute to the plan an amount which is determined solely by whether the employee elects a high option coverage or a low option coverage and on whether the employee elects self only or self and family coverage. The difference between the amount contributed by employees electing the various coverages and the actual cost of the coverage is made up through contributions by U to the plan. To fund the plan, U established an arrangement in the nature of a trust under applicable local law and contributed all employee contributions, and all amounts which by the term of the plan it was required to provide to the plan, to the trust. The trust constitutes an *employee welfare benefit plan* within the meaning of, and subject to relevant requirements of, ERISA. It will be considered to meet the requirements of § 1.501(c)(9)-2(c)(3).

[T.D. 7750, 46 FR 1723, Jan. 7, 1981]

§ 1.501(c)(9)-3 Voluntary employees' beneficiary associations; life, sick, accident, or other benefits.

(a) ***In general.*** The life, sick, accident, or other benefits provided by a voluntary employees' beneficiary association must be payable to its members, their dependents, or their designated beneficiaries. For purposes of section 501(c)(9), *dependent* means the member's spouse; any child of the member or the member's spouse who is a minor or a student (within the meaning of section 151(e)(4)); any other minor child residing with the member; and any other individual who an association, relying on information furnished to it by a member, in good faith believes is a person described in section 152(a). Life, sick, accident, or other benefits may take the form of cash or noncash benefits. A voluntary employees'

beneficiary association is not operated for the purpose of providing life, sick, accident, or other benefits unless substantially all of its operations are in furtherance of the provision of such benefits. Further, an organization is not described in this section if it systematically and knowingly provides benefits (of more than a *de minimis* amount) that are not permitted by paragraphs (b), (c), (d), or (e) of this section.

(b) ***Life benefits.*** The term *life benefits* means a benefit (including a burial benefit or a wreath) payable by reason of the death of a member or dependent. A *life benefit* may be provided directly or through insurance. It generally must consist of current protection, but also may include a right to convert to individual coverage on termination of eligibility for coverage through the association, or a permanent benefit as defined in, and subject to the conditions in, the regulations under section 79. A *life benefit* also includes the benefit provided under any life insurance contract purchased directly from an employee-funded association by a member or provided by such an association to a member. The term *life benefit* does not include a pension, annuity or similar benefit, except that a benefit payable by reason of the death of an insured may be settled in the form of an annuity to the beneficiary in lieu of a lump-sum death benefit (whether or not the contract provides for settlement in a lump sum).

(c) ***Sick and accident benefits.*** The term *sick and accident benefits* means amounts furnished to or on behalf of a member or a member's dependents in the event of illness or personal injury to a member or dependent. Such benefits may be provided through reimbursement to a member or a member's dependents for amounts expended because of illness or personal injury, or through the payment of premiums to a medical benefit or health insurance program. Similarly, a sick and accident benefit includes an amount paid to a member in lieu of income during a period in which the member is unable to work due to sickness or injury. Sick benefits also include benefits designed to safeguard or improve the health of members and their dependents. Sick and accident benefits may be provided directly by an association to or on behalf of members and their dependents, or may be provided indirectly by an association through the payment of premiums or fees to an insurance company, medical clinic, or other program under which members and their dependents are entitled to medical services or to other sick and accident benefits. Sick and accident benefits may also be furnished in noncash form, such as, for example, benefits in the nature of clinical care services by visiting nurses, and transportation furnished for medical care.

(d) ***Other benefits.*** The term *other benefits* includes only benefits that are similar to life, sick, or accident benefits. A benefit is similar to a life, sick, or accident benefit if:

(1) It is intended to safeguard or improve the health of a member or a member's dependents, or

(2) It protects against a contingency that interrupts or impairs a member's earning power.

(e) ***Examples of other benefits.*** Paying vacation benefits, providing vacation facilities, reimbursing vacation expenses, and subsidizing recreational activities such as athletic leagues are considered *other benefits.* The provision of child-care facilities for preschool and school-age dependents are also considered *other benefits.* The provision of job readjustment allowances, income maintenance payments in the event of economic dislocation, temporary living expense loans and grants at times of disaster (such as fire or flood), supplemental unemployment compensation benefits (as defined in section 501(c)(17)(D)(i) of the Code), severance benefits (under a severance pay plan within the meaning of 29 CFR 2510.3-2(b)) and education or training benefits or courses (such as apprentice training programs) for members, are considered *other benefits* because they protect against a contingency that interrupts earning power. Personal legal service benefits which consist of payments or credits to one or more organizations or trusts described in section 501(c)(20) are considered *other benefits.* Except to the extent otherwise provided in these regulations, as amended from time to time, *other benefits* also include any benefit provided in the manner permitted by paragraphs (5) *et seq.* of section 302(c) of the Labor Management Relations Act of 1947, 61 Stat. 136, *as amended,* 29 U.S.C. 186(c) (1979).

(f) ***Examples of nonqualifying benefits.*** Benefits that are not described in paragraphs (d) or (e) of this section are not *other benefits.* Thus, *other benefits* do not include the payment of commuting expenses, such as bridge tolls or train fares, the provision of accident or homeowner's insurance benefits for damage to property, the provision of malpractice insurance, or the provision of loans to members except in times of distress (as permitted by § 1.501(c)(9)-3(e)). *Other benefits* also do not include the provision of savings facilities for members. The term *other benefits* does not include any benefit that is similar to a pension or annuity payable at the time of mandatory or voluntary retirement, or a benefit that is similar to the benefit provided under a stock bonus or profit-sharing plan. For purposes of section 501(c)(9) and these regulations, a benefit will be considered similar to that provided under a pension, annuity, stock bonus or profit-sharing plan if it provides for deferred compensation that becomes payable by reason of the passage of time, rather than as the result of an unanticipated event. Thus, for example, supplemental unemployment benefits, which generally become payable by reason of unanticipated layoff, are not, for purposes of these regulations, considered similar to the benefit provided under a pension, annuity, stock bonus or profit-sharing plan.

(g) ***Examples.*** The provisions of this section may be further illustrated by the following examples:

Example 1. V was organized in connection with a vacation plan created pursuant to a collective bargaining agreement between M, a labor union, which represents certain hourly paid employees of T corporation, and T. The agreement calls for the payment by T to V of a specified sum per hour worked by T employees who are covered by the collective bargaining agreement. T includes the amounts in the covered employees' wages and withholds income and FICA taxes. The amounts are paid by T to V to provide vacation benefits provided under the collective bargaining agreement. Generally, each covered employee receives a check in payment of his or her vacation benefit during the year following the year in which contributions were made by T to V. The amount of the vacation benefit is determined by reference to the contributions during the prior year to V by T on behalf of each employee, and is distributed in cash to each such employee. If the earnings on investments by V during the year preceding distribution are sufficient after deducting the expenses of administering the plan, each recipient of a vacation benefit is paid an amount, in addition to the contributions on his or her behalf, equal to his/her ratable share of the net earnings of V during such year. The plan provides a vacation benefit that constitutes an eligible *other benefit* described in section 501(c)(9) and § 1.501(c)(9)-3(e).

Example 2. The facts are the same as in Example 1, except that each covered employee of T is entitled, at his or her discretion, to contribute up to an additional $1,000 each year to V, which agrees in respect of such sum to pay interest at a stated rate from the time of contribution until the time at which the contributing employee's vacation benefit is distributed. In addition, each employee may elect to leave all or a portion of his/her distributable benefit on deposit past the time of distribution, in which case interest will continue to accrue. Because the plan more closely resembles a savings arrangement than a vacation plan, the benefit payable to the covered employees of T is not a *vacation benefit* and is not an eligible *other benefit* described in section 501(c)(9) and § 1.501(c)(9)-3 (d) or (e).

[T.D. 7750, 46 FR 1724, Jan. 7, 1981]

§ 1.501(c)(9)-4 Voluntary employees' beneficiary associations; inurement.

(a) ***General rule.*** No part of the net earnings of an employees' association may inure to the benefit of any private shareholder or individual other than through the payment of benefits permitted by § 1.501(c)(9)-3. The disposition of property to, or the performance of services for, a person for less than the greater of fair

market value or cost (including indirect costs) to the association, other than as a life, sick, accident or other permissible benefit, constitutes prohibited inurement. Generally, the payment of unreasonable compensation to the trustees or employees of the association, or the purchase of insurance or services for amounts in excess of their fair market value from a company in which one or more of the association's trustees, officers or fiduciaries has an interest, will constitute prohibited inurement. Whether prohibited inurement has occurred is a question to be determined with regard to all of the facts and circumstances, taking into account the guidelines set forth in this section. The guidelines and examples contained in this section are not an exhaustive list of the activities that may constitute prohibited inurement, or the persons to whom the association's earnings could impermissibly inure. See § 1.501(a)-1(c).

(b) ***Disproportionate benefits.*** For purposes of subsection (a), the payment to any member of disproportionate benefits, where such payment is not pursuant to objective and nondiscriminatory standards, will not be considered a benefit within the meaning of § 1.501(c)(9)-3 even though the benefit otherwise is one of the type permitted by that section. For example, the payment to highly compensated personnel of benefits that are disproportionate in relation to benefits received by other members of the association will constitute prohibited inurement. Also, the payment to similarly situated employees of benefits that differ in kind or amount will constitute prohibited inurement unless the difference can be justified on the basis of objective and reasonable standards adopted by the association or on the basis of standards adopted pursuant to the terms of a collective bargaining agreement. In general, benefits paid pursuant to standards or subject to conditions that do not provide for disproportionate benefits to officers, shareholders, or highly compensated employees will not be considered disproportionate. See § 1.501(c)(9)-2(a) (2) and (3).

(c) ***Rebates.*** The rebate of excess insurance premiums, based on the mortality or morbidity experience of the insurer to which the premiums were paid, to the person or persons whose contributions were applied to such premiums, does not constitute prohibited inurement. A voluntary employees' beneficiary association may also make administrative adjustments strictly incidental to the provision of benefits to its members.

(d) ***Termination of plan or dissolution of association.*** It will not constitute prohibited inurement if, on termination of a plan established by an employer and funded through an association described in section 501(c)(9), any assets remaining in the association, after satisfaction of all liabilities to existing beneficiaries of the plan, are applied to provide, either directly or through the purchase of insurance, life, sick, accident or other benefits within the meaning of § 1.501(c)(9)-3 pursuant to criteria that do not provide for disproportionate benefits to officers, shareholders, or highly compensated employees of the employer. See § 1.501(c)(9)-2(a)(2). Similarly, a distribution to members upon the dissolution of the association will not constitute prohibited inurement if the amount distributed to members are determined pursuant to the terms of a collective bargaining agreement or on the basis of objective and reasonable standards which do not result in either unequal payments to similarly situated members or in disproportionate payments to officers, shareholders, or highly compensated employees of an employer contributing to or otherwise funding the employees' association. Except as otherwise provided in the first sentence of this paragraph, if the association's corporate charter, articles of association, trust instrument, or other written instrument by which the association was created, as amended from time to time, provides that on dissolution its assets will be distributed to its members' contributing employers, or if in the absence of such provision the law of the state in which the association was created provides for such distribution to the contributing employers, the association is not described in section 501(c)(9).

(e) ***Example.*** The provisions of this section may be illustrated by the following example:

Example. Employees A, B and C, members of the X voluntary employees' beneficiary association, are unemployed. They receive unemployment benefits from X. Those to A include an amount in addition to those provided to B and C, to provide for A's retraining. B has been found pursuant to objective and reasonable standards not to qualify for the retraining program. C, although eligible for retraining benefits has declined. X's additional payment to A for retraining does not constitute prohibited inurement.

[T.D. 7750, 46 FR 1725, Jan. 7, 1981]

§ 1.501(c)(9)-5 Voluntary employees' beneficiary associations; recordkeeping requirements.

(a) ***Records.*** In addition to such other records which may be required (for example, by section 512(a)(3) and the regulations thereunder), every organization described in section 501(c)(9) must maintain records indicating the amount contributed by each member and contributing employer, and the amount and type of benefits paid by the organization to or on behalf of each member.

(b) ***Cross reference.*** For provisions relating to annual information returns with respect to payments, see section 6041 and the regulations thereunder.

[T.D. 7750, 46 FR 1725, Jan. 7, 1981]

§ 1.501(c)(9)-6 Voluntary employees' beneficiary associations; benefits includible in gross income.

(a) ***In general.*** Cash and noncash benefits realized by a person on account of the activities of an organization described in section 501(c)(9) shall be included in gross income to the extent provided in the Internal Revenue Code of 1954, including, but not limited to, sections 61, 72, 101, 104 and 105 of the Code and regulations thereunder.

(b) ***Availability of statutory exclusions from gross income.*** The availability of any statutory exclusion from gross income with respect to contributions to, or the payment of benefits from, an organization described in section 501(c)(9) is determined by the statutory provision conferring the exclusion, and the regulations and rulings thereunder, not by whether an individual is eligible for membership in the organization or by the permissibility of the benefit paid. Thus, for example, if a benefit is paid by an employer-funded organization described in section 501(c)(9) to a member who is not an *employee,* a statutory exclusion from gross income that is available only for *employees* would be unavailable in the case of a benefit paid to such individual. Similarly, the fact that, for example, under some circumstances educational benefits constitute *other benefits* does not of itself mean that such benefits are eligible for the exclusion of either section 117 or section 127 of the Code.

[T.D. 7750, 46 FR 1725, Jan. 7, 1981]

§ 1.501(c)(9)-7 Voluntary employees' beneficiary associations; section 3(4) of ERISA.

The term *voluntary employees' beneficiary association* in section 501(c)(9) of the Internal Revenue Code is not necessarily coextensive with the term *employees' beneficiary association* as used in section 3(4) of the Employee Retirement Income Security Act of 1974 (ERISA), 29 U.S.C. 1002(4), and the requirements which an organization

must meet to be an *employees' beneficiary association* within the meaning of section 3(4) of ERISA are not necessarily identical to the requirements that an organization must meet in order to be a *voluntary employees' beneficiary association* within the meaning of section 501(c)(9) of the Code.

[T.D. 7750, 46 FR 1725, Jan. 7, 1981]

§ 1.501(c)(9)-8 Voluntary employees' beneficiary associations; effective date.

(a) ***General rule.*** Except as otherwise provided in this section, the provisions of §§ 1.501(c)(9)-1 through 1.501(c)(9)-7 shall apply with respect to taxable years beginning after December 31, 1954.

(b) ***Pre-1970 taxable years.*** For taxable years beginning before January 1, 1970, section 501(c)(9)(B) (relating to the requirement that 85 percent or more of the association's income consist of amounts collected from members and contributed by employers), as in effect for such years, shall apply.

(c) ***Existing associations.*** Except as otherwise provided in paragraph (d), the provisions of § 1.501(c)(9)-2(a)(1) and (c)(3) shall apply with respect to taxable years beginning after December 31, 1980.

(d) ***Collectively-bargained plans.*** In the case of a voluntary employees' beneficiary association which receives contributions from one or more employers pursuant to one or more collective bargaining agreements in effect on December 31, 1980, the provisions of §§ 1.501(c)(9)-1 through 1.501(c)(9)-5 shall apply with respect to taxable years beginning after the date on which the agreement terminates (determined without regard to any extension thereof agreed to after December 31, 1980).

(e) ***Election.*** Notwithstanding paragraphs (c) and (d) of this section, an organization may choose to be subject to all or a portion of one or more of the provisions of these regulations for any taxable year beginning after December 31, 1954.

[T.D. 7750, 46 FR 1725, Jan. 7, 1981; 46 FR 11971, Feb. 12, 1981]

§ 1.501(c)(10)-1 Certain fraternal beneficiary societies.

(a) For taxable years beginning after December 31, 1969, an organization will qualify for exemption under section 501(c)(10) if it:

(1) Is a domestic fraternal beneficiary society order, or association, described in section 501(c)(8) and the regulations thereunder except that it does not provide for the payment of life, sick, accident, or other benefits to its members, and

(2) Devotes its net earnings exclusively to religious, charitable, scientific, literary, educational, and fraternal purposes

Any organization described in section 501(c)(7), such as, for example, a national college fraternity, is not described in section 501(c)(10) and this section.

[T.D. 7172, 37 FR 5618, Mar. 17, 1972]

§ 1.501(c)(12)-1 Local benevolent life insurance associations, mutual irrigation and telephone companies, and like organizations.

(a) An organization described in section 501(c)(12) must receive at least 85 percent of its income from amounts collected from members for the sole purpose of meeting losses and expenses. If an organization issues policies for stipulated cash premiums, or if it requires advance deposits to cover the cost of the insurance and maintains investments from which more than 15 percent of its income is derived, it is not entitled to exemption. On the other hand, an organization may be entitled to exemption, although it makes advance assessments for the sole purpose of meeting future losses and expenses, provided that the balance of such assessments remaining on hand at the end of the year is retained to meet losses and expenses or is returned to members.

(b) The phrase *of a purely local character* applies to benevolent life insurance associations, and not to the other organizations specified in section 501(c)(12). It also applies to any organization seeking exemption on the ground that it is an organization similar to a benevolent life insurance association. An organization of a purely local character is one whose business activities are confined to a particular community, place, or district, irrespective, however, of political subdivisions. If the activities of an organization are limited only by the borders of a State it cannot be considered to be purely local in character.

(c) For taxable years of a mutual or cooperative telephone company beginning after December 31, 1974, the 85 percent member-income test described in paragraph (a) of this section is applied without taking into account income received or accrued from another telephone company for the performance of communication services involving the completion of long distance calls to, from, or between members of the mutual or cooperative telephone company. For example, if, in one year, a cooperative telephone company receives $85x from its members for telephone calls, $15x as interest income, and $20x as credits under long distance interconnection agreements with other telephone companies for the performance of communication services involving the completion of long distance calls to, from, or between the cooperative's members (whether or not the credits may be offset, in whole or in part, by amounts due the other companies under the interconnection agreements), the member-income fraction is calculated without taking into account, either in the numerator or denominator, the $20x credits received from the other telephone companies. In this example, the 85 percent member-income test is satisfied because at least 85 percent

$$\frac{\text{member income}}{\text{total income}} = \frac{85x}{85x + 15x} = \frac{85}{100} = 85\%$$

of the cooperative's total income is derived from member income.

[T.D. 6500, 25 FR 11737, Nov. 26, 1960; 25 FR 14021, Dec. 31, 1960, as amended at 44 FR 59523, Oct. 16, 1979]

§ 1.501(c)(13)-1 Cemetery companies and crematoria.

(a) ***Nonprofit mutual cemetery companies.*** A nonprofit cemetery company may be entitled to exemption if it is owned by and operated exclusively for the benefit of its lot owners who hold such lots for bona fide burial purposes and not for the purpose of fesale. A mutual cemetery company which also engages in charitable activities, such as burial of paupers, will be regarded as operating in conformity with this standard. Further, the fact that a mutual cemetery company limits its membership to a particular class of individuals, such as members of a family, will not affect its status as mutual so long as all the other requirements of section 501(c)(13) are met.

(b) ***Nonprofit cemetery companies and crematoria.*** Any nonprofit corporation, chartered solely for the purpose of the burial, or (for taxable years beginning after December 31, 1970) the cremation of bodies, and not permitted by its charter to engage in any business not necessarily incident to that purpose, is exempt from income tax, provided that no part of its net earnings inures to the benefit of any private shareholder or individual.

(c) ***Preferred stock*** —

(1) ***In general.*** Except as provided in subparagraph (3) of this paragraph, a cemetery company or crematorium is not described in section 501(c)(13) if it issues preferred stock on or after November 28, 1978.

(2) ***Transitional rule for preferred stock issued prior to November 28, 1978.*** In the case of preferred stock issued prior to November 28, 1978, a cemetery company or crematorium which issued such stock shall not fail to be exempt from income tax solely because it issued preferred stock which entitled the holders to dividends at a fixed rate, not exceeding the legal rage of interest in the State of incorporation or 8 percent per annum, whichever is greater, on the value of the consideration for which the stock was issued, if its articles of incorporation require:

(i) That the preferred stock be retired at par as rapidly as funds therefor become available from operations, and

(ii) That all funds not required for the payment of dividends upon or for the retirement of preferred stock be used by the company for the care and inprovement of the cemetery property. The term *legal rate of interest* shall mean the rate of interest prescribed by law in the State of incorporation which prevails in the absence of an agreement between contracting parties fixing a rate.

(3) ***Transitional rule for preferred stock issued on or after November 28, 1978.*** In the case of preferred stok issued on or after November 28, 1978, a cemetery company or crematorium shall not fail to be exempt from income tax if its articles of incorporation and the preferred stock meet the requirements of paragraph (c)(2) and if such stock is issued pursuant to a plan which has been reduced to writing and adopted prior to November 28, 1978. The adoption of the plan must be shown by the acts of the duly constituted responsible officers and appear upon the official records of the cemetery company or crematorium.

(d) ***Sales to exempt cemetery companies and crematoria.*** Except as provided in paragraph (c)(2) or (c)(3) of this section (relating to transitional rules for preferred stock), no person may have any interest in the net earnings of a tax-exempt cemetery company or crematorium. Thus, a cemetery company or crematorium is not exempt from tax if property is transferred to such organization in exchange for an interest in the net earnings of the organization so long as such interest remains outstanding. An interest in a cemetery company or crematorium that constitutes an equity interest within the meaning of section 385 will be considered an interest in the net earnings of the cemetery. However, an interest in a cemetery company or crematorium that does not constitute an equity interest within the meaning of section 385 may nevertheless constitute an interest in the net earning of the organization. Thus, for example, a bond or other evidence of indebtedness issued by a cemetery company or crematorium which provides for a fixed rate of interest but which, in addition, provides for additional interest payments contingent upon the revenues or income of the organization is considered an interest in the net earnings of the organization. Similarly, a convertible debt obligation issued by a cemetery company or crematorium after July 7, 1975, is considered an interest in the net earnings of the organization.

[T.D. 7698, 45 FR 33972, May 21, 1980]

§ 1.501(c)(14)-1 Credit unions and mutual insurance funds.

Credit unions (other than Federal credit unions described in section 501(c)(1)) without capital stock, organized and operated for mutual purposes and without profit, are exempt from tax under section 501(a). Corporations or associations without capital stock organized before September 1, 1951 and operated for mutual purposes and without profit for the purpose of providing reserve funds for, and insurance of, shares or deposits in:

(a) Domestic building and loan associations as defined in section 7701(a)(19),

(b) Cooperative banks without capital stock organized and operated for mutual purposes and without profit, or

(c) Mutual savings banks not having capital stock represented by shares

are also exempt from tax under section 501(a). In addition, corporations or associations of the type described in the preceding sentence which were organized on or after September 1, 1951, but before September 1, 1957, are exempt from tax under section 501(a) for taxable years beginning after December 31, 1959.

[T.D. 6493, 25 FR 9219, Sept. 27, 1960]

§ 1.501(c)(15)-1 Mutual insurance companies or associations.

(a) ***Taxable years beginning after December 31, 1962.*** An insurance company or association described in section 501(c)(15) is exempt under section 501(a) if it is a mutual company or association (other than life or marine) or if it is a mutual interinsurer or reciprocal underwriter (other than life or marine) and if the gross amount received during the taxable year from the sum of the following items does not exceed $150,000:

(1) The gross amount of income during the taxable year from:

(i) Interest (including tax-exempt interest and partially tax-exempt interest), as described in § 1.61-7. Interest shall be adjusted for amortization of premium and accrual of discount in accordance with the rules prescribed in section 822(d)(2) and the regulations thereunder.

(ii) Dividends, as described in § 1.61-9.

(iii) Rents and royalties, as described in § 1.61-8.

(iv) The entering into of any lease, mortgage, or other instrument or agreement from which the company may derive interest, rents, or royalties.

(v) The alteration or termination of any instrument or agreement described in subdivision (iv) of this subparagraph.

(2) The gross income from any trade or business (other than an insurance business) carried on by the company or association, or by a partnership of which the company or association is a partner.

(3) Premiums (including deposits and assessments).

(b) ***Taxable years beginning after December 31, 1954, and before January 1, 1963.*** An insurance company or association described in section 501(c)(15) and paragraph (a) of this section is exempt under section 501(a) if the gross amount received during the taxable year from the sum of the items described in paragraph (a) (1), (2), and (3) of this section does not exceed $75,000.

(c) ***No double inclusion of income.*** In computing the gross income from any trade or business (other than an insurance business) carried on by the company or association, or by a partnership of which the company or association is a partner, any item described in section 822(b)(1) (A), (B), or (C) and paragraph (a)(1) of this section shall not be considered as gross income arising from the conduct of such trade or business, but shall be taken into account under section 822(b)(1) (A), (B), or (C) and paragraph (a)(1) of this section.

(d) ***Taxable years beginning after December 31, 1953, and before January 1, 1955.*** An insurance company or association described in section 501(c)(15) is exempt under section 501(a) if it is a mutual company or association (other than life or marine) or if it is a mutual interinsurer or reciprocal underwriter (other than life or marine) and if the gross amount received during the taxable year from the sum of the following items does not exceed $75,000:

(1) The gross amount of income during the taxable year from—

(i) Interest (including tax-exempt interest and partially tax-exempt interest), as described in § 1.61-7. Interest shall be adjusted for amortization of premium and accrual of discount in accordance with the rules prescribed in section 822(d)(2) and § 1.822-3.

(ii) Dividends, as described in § 1.61-9.

(iii) Rents (but excluding royalties), as described in § 1.61-8.

(2) Premiums (including deposits and assessments).

(e) ***Exclusion of capital gains.*** Gains from sales or exchanges of capital assets to the extent provided in subchapter P (section 1201 and following, relating to capital gains and losses), chapter 1 of the Code, shall be excluded from the amounts described in this section.

[T.D. 6662, 28 FR 6972, July 29, 1963]

§ 1.501(c)(16)-1 Corporations organized to finance crop operations.

A corporation organized by a farmers' cooperative marketing or purchasing association, or the members thereof, for the purpose of financing the ordinary crop operations of such members or other producers is exempt, provided the marketing or purchasing association is exempt under section 521 and the financing corporation is operated in conjunction with the marketing or purchasing association. The provisions of § 1.521-1 relating to a reserve or surplus and to capital stock shall also apply to corporations coming under this section.

§ 1.501(c)(17)-1 Supplemental unemployment benefit trusts.

(a) ***Requirements for qualification.***

(1) A supplemental unemployment benefit trust may be exempt as an organization described in section 501(c)(17) if the requirements of subparagraphs (2) through (6) of this paragraph are satisfied.

(2) The trust is a valid, existing trust under local law and is evidenced by an executed written document.

(3) The trust is part of a written plan established and maintained by an employer, his employees, or both the employer and his employees, solely for the purpose of providing supplemental unemployment compensation benefits (as defined in section 501(c)(17)(D) and paragraph (b)(1) of § 1.501(c)(17)-1).

(4) The trust is part of a plan which provides that the corpus and income of the trust cannot (in the taxable year, and at any time thereafter, before the satisfaction of all liabilities to employees covered by the plan) be used for, or diverted to, any purpose other than the providing of supplemental unemployment compensation benefits. Thus, if the plan provides for the payment of any benefits other than supplemental unemployment compensation benefits as defined in paragraph (b) of this section, the trust will not be entitled to exemption as an organization described in section 501(c)(17). However, the payment of any necessary or appropriate expenses in connection with the administration of a plan providing supplemental unemployment compensation benefits shall be considered a payment to provide such benefits and shall not affect the qualification of the trust.

(5) The trust is part of a plan whose eligibility conditions and benefits do not discriminate in favor of employees who are officers, shareholders, persons whose principal duties consist of supervising the work of other employees, or highly compensated employees. See sections 401(a)(3)(B) and 401(a)(4) and §§ 1.401-3 and 1.401(a)(4)-0 through 1.401(a)(4)-13. However, a plan is not discriminatory within the meaning of section 501(c)(17)(A)(iii), relating to the requirement that the benefits paid under the plan be nondiscriminatory, merely because the benefits received under the plan bear a uniform relationship to the total compensation, or the basic or regular rate of compensation, of the employees covered by the plan. Accordingly, the benefits provided for highly paid employees may be greater than the benefits provided for lower paid employees if the benefits are determined by reference to their compensation; but, in such a case, the plan will not qualify if the benefits paid to the higher paid employees bear a larger ratio to their compensation than the benefits paid to the lower paid employees bear to their compensation. In addition, section 501(c)(17)(B) sets forth certain other instances in which a plan will not be considered discriminatory (see paragraph (c) of § 1.501(c)(17)-2).

(6) The trust is part of a plan which requires that benefits are to be determined according to objective standards. Thus, a plan may provide similarly situated employees with benefits which differ in kind and amount, but may not permit such benefits to be determined solely in the discretion of the trustees.

(b) ***Meaning of terms.*** The following terms are defined for purposes of section 501(c)(17):

(1) ***Supplemental unemployment compensation benefits.*** The term *supplemental unemployment compensation benefits* means only:

(i) Benefits paid to an employee because of his involuntary separation from the employment of the employer, whether or not such separation is temporary, but only when such separation is one resulting directly from a reduction in force, the discontinuance of a plant or operation, or other similar conditions; and

(ii) Sick and accident benefits subordinate to the benefits described in subdivision (i) of this subparagraph.

(2) ***Employee.*** The term *employee* means an individual whose status is that of an employee under the usual common-law rules applicable in determining the employer-employee relationship. The term *employee* also includes an individual who qualifies as an *employee* under the State or Federal unemployment compensation law covering his employment, whether or not such an individual could qualify as an employee under such common-law rules.

(3) ***Involuntary separation from the employment of the employer.*** Whether a *separation from the employment of the employer* occurs is a question to be decided with regard to all the facts and circumstances. However, for purposes of section 501(c)(17), the term *separation* includes both a temporary separation and a permanent severance of the employment relationship. Thus, for example, an employee may be separated from the employment of his employer even though at the time of separation it is believed that he will be reemployed by the same employer. Whether or not an employee is *involuntarily* separated from the employment of the employer is a question of fact. However, normally, an employee will not be deemed to have separated himself voluntarily from the employment of his employer merely because his collective bargaining agreement provides for the termination of his services upon the happening of a condition subsequent and that condition does in fact occur. For example, if the collective bargaining agreement provides that the employer may automate a given department and thereby dislocate several employees, the fact that the employees' collective bargaining agent has consented to such a condition will not render any employee's subsequent unemployment for such cause voluntary.

(4) ***Other similar conditions.*** Involuntary separation directly resulting from *other similar conditions* includes, for example, involuntary separation from the employment of the employer resulting from cyclical, seasonal, or technological causes. Some causes of involuntary separation from the employment of the employer which are not similar to those enumerated in section 501(c)(17)(D)(i) are separation for disciplinary reasons or separation because of age.

(5) ***Subordinate sick and accident benefits.*** In general, a sick and accident benefit payment is an amount paid to an employee in the event of his illness or personal injury (whether or not such illness or injury results in the employee's separation from the service of his employer). In addition, the phrase *sick and accident benefits* includes amounts provided under the plan to reimburse an employee for amounts he expends because of the illness or injury of his spouse or a dependent (as defined in section 152). Sick and accident benefits may be paid by a trust described in section 501(c)(17) only if such benefits are subordinate to the separation payments provided under the plan of which the trust forms a part. Whether the sick and accident benefits provided under a supplemental unemployment compensation benefit plan are subordinate to the separation benefits provided under such plan is a question to be decided with regard to all the facts and circumstances.

[T.D. 6972, 33 FR 12900, Sept. 12, 1968, as amended by T.D. 9849, 84 FR 9235, Mar. 14, 2019]

§ 1.501(c)(17)-2 General rules.

(a) ***Supplemental unemployment compensation benefits.*** Supplemental unemployment compensation benefits as defined in section 501(c)(17)(D) and paragraph (b)(1) of § 1.501(c)(17)-1 may be paid in a lump sum or installments. Such benefits may be paid to an employee who has, subsequent to his separation from the employment of the employer, obtained other part-time, temporary, or permanent employment. Furthermore, such payments may be made in cash, services, or property. Thus, supplemental unemployment compensation benefits provided to involuntarily separated employees may include, for example, the following: Furnishing of medical care at an established clinic, furnishing of food, job training

and schooling, and job counseling. If such benefits are furnished in services or property, the fair market value of the benefits must satisfy the requirements of section 501(c)(17)(A)(iii), relating to nondiscrimination as to benefits. However, supplemental unemployment compensation benefits may be provided only to an employee and only under circumstances described in paragraph (b)(1) of § 1.501(c)(17)-1. Thus, a trust described in section 501(c)(17) may not provide, for example, for the payment of a death, vacation, or retirement benefit.

(b) ***Sick and accident benefits.*** If a trust described in section 501(c)(17) provides for the payment of sick and accident benefits, such benefits may only be provided for employees who are eligible for receipt of separation benefits under the plan of which the trust is a part. However, the sick and accident benefits need not be provided for all the employees who are eligible for receipt of separation benefits, so long as the plan does not discriminate in favor of persons with respect to whom discrimination is proscribed in section 501(c)(17)(A) (ii) and (iii). Furthermore, the portion of the plan which provides for the payment of sick and accident benefits must satisfy the nondiscrimination requirements of section 501(c)(17)(A) (ii) and (iii) without regard to the portion of the plan which provides for the payment of benefits because of involuntary separation.

(c) ***Correlation with other plans.***

(1) In determining whether a plan meets the requirements of section 501(c)(17)(A) (ii) and (iii), any benefits provided under any other plan shall not be taken into consideration except in the particular instances enumerated in section 501(c)(17)(B) (i), (ii), and (iii). In general, these three exceptions permit a plan providing for the payment of supplemental unemployment compensation benefits to satisfy the nondiscrimination requirements in section 501(c)(17)(A) (ii) and (iii) if the plan is able to satisfy such requirements when it is correlated with one or more of the plans described in section 501(c)(17)(B).

(2) Under section 501(c)(17)(B)(i), a plan will not be considered discriminatory merely because the benefits under the plan which are first determined in a nondiscriminatory manner (within the meaning of section 501(c)(17)(A)) are then reduced by any sick, accident, or unemployment compensation benefits received under State or Federal law, or are reduced by a portion of these benefits if determined in a nondiscriminatory manner. Under this exception, a plan may, for example, satisfy the requirements of section 501(c)(17)(A)(iii) if it provides for the payment of an unemployment benefit and the amount of such benefit is determined as a percentage of the employee's compensation which is then reduced by any unemployment benefit which the employee receives under a State plan. In addition, a plan could provide for the reduction of such a plan benefit by a percentage of the State benefit. Furthermore, a plan may also satisfy the requirements of section 501(c)(17)(A) if it provides for the payment to an employee of an amount which when added to any State unemployment benefit equals a percentage of the employee's compensation.

(3) Under section 501(c)(17)(B)(ii), a plan will not be considered discriminatory merely because the plan provides benefits only for employees who are not eligible to receive sick, accident, or unemployment compensation benefits under State or Federal law. In such a case, however, the benefits provided under the plan seeking to satisfy the requirements of section 501(c)(17) must be the same benefits, or a portion of the same benefits if determined in a nondiscriminatory manner, which such ineligible employees would receive under State or Federal law if they were eligible for such benefits. Under this exception, for example, an employer may establish a plan only for employees who have exhausted their benefits under the State law, and, if the plan provides for such employees the same benefits which they would receive under the State plan, the State plan and the plan of the employer will be considered as one plan in determining whether the requirements relating to nondiscrimination in

section 501(c)(17)(A) are satisfied. Furthermore, such a plan could also qualify even though it does not provide all of the benefits provided under the State plan. Thus, a plan could provide for the payment of a reduced amount of the benefits, or for the payment of only certain of the types of benefits, provided by the State plan. For example, if the State plan provides for the payment of sick, accident, and separation benefits, the plan of the employer may provide for the payment of only separation benefits, or for the payment of an amount equal to only one-half of the State provided benefit. However, if a plan provides benefits for employees who are not eligible to receive the benefits provided under a State plan and such benefits are greater or of a different type than those under the State plan, the plan of the employer must satisfy the requirements of section 501(c)(17)(A) without regard to the benefits and coverage provided by the State plan.

(4) Under section 501(c)(17)(B)(iii), a plan is not considered discriminatory merely because the plan provides benefits only for employees who are not eligible to receive benefits under another plan which satisfies the requirements of section 501(c)(17)(A) and which is funded solely by contributions of the employer. In such a case, the plan seeking to qualify under section 501(c)(17) must provide the same benefits, or a portion of such benefits if determined in a nondiscriminatory manner, as are provided for the employees under the plan funded solely by employer contributions. Furthermore, this exception only applies if the employees eligible to receive benefits under both plans would satisfy the requirements in section 501(c)(17)(A)(ii), relating to nondiscrimination as to coverage. The plan of the employer which is being correlated with the plan seeking to satisfy the requirements of section 501(c)(17) may be a plan which forms part of a voluntary employees' beneficiary association described in section 501(c)(9), if such plan satisfies all the requirements of section 501(c)(17)(A). Under this exception, for example, if an employer has established a plan providing for the payment of supplemental unemployment compensation benefits for his hourly wage employees and such plan satisfies the requirements of section 501(c)(17)(A) (even though the plan forms part of a voluntary employees' beneficiary association described in section 501(c)(9)), the salaried employees of such employee may establish a plan for themselves, and, if such plan provides for the same benefits as the plan covering hourly-wage employees, both plans may be considered as one plan in determining whether the plan covering the salaried employees satisfies the requirement that is be nondiscriminatory as to coverage. The foregoing example would also be applicable if the benefits provided for the salaried employees were funded solely or in part by employer contributions.

(d) ***Permanency of the plan.*** A plan providing for the payment of supplemental unemployment compensation benefits contemplates a permanent as distinguished from a temporary program. Thus, although there may be reserved the right to change or terminate the plan, and to discontinue contributions thereunder, the abandonment of the plan for any reason other than business necessity within a few years after it has taken effect will be evidence that the plan from its inception was not a bona fide program for the purpose of providing supplemental unemployment compensation benefits to employees. Whether or not a particular plan constitutes a permanent arrangement will be determined by all of the surrounding facts and circumstances. However, merely because a collective bargaining agreement provides that a plan may be modified at the termination of such agreement, or that particular provisions of the plan are subject to renegotiation during the duration of such agreement, does not necessarily imply that the plan is not a permanent arrangement. Moreover, the fact that the plan provides that the assets remaining in the trust after the satisfaction of all liabilities (including contingent liabilities) under the plan may be returned to the employer does not imply that the plan is not a permanent arrangement nor preclude the trust from qualifying under section 501(c)(17).

(e) ***Portions of years.*** A plan must satisfy the requirements of section 501(c)(17) throughout the entire taxable year of the trust in order for the trust to be exempt for such year. However, section 501(c)(17)(C) provides that a plan will satisfy the nondiscrimination as to classification requirements of section 501(c)(17)(A) if on at least one day in each quarter of the taxable year of the trust it satisfies such requirements.

(f) ***Several trusts constituting one plan.*** Several trusts may be designated as constituting part of one plan which is intended to satisfy the requirements of section 501(c)(17), in which case all of such trusts taken as a whole must meet the requirements of such section. The fact that a combination of trusts fails to satisfy the requirements of section 501(c)(17) as one plan does not prevent such of the trusts as satisfy the requirements of section 501(c)(17) from qualifying for exemption under that section.

(g) ***Plan of several employers.*** A trust forming part of a plan of several employers, or the employees of several employers, will be a supplemental unemployment benefit trust described in section 501(c)(17) if all the requirements of that section are otherwise satisfied.

(h) ***Investment of trust funds.*** No specific limitations are provided in section 501(c)(17) with respect to investments which may be made by the trustees of a trust qualifying under that section. Generally, the contributions may be used by the trustees to purchase any investments permitted by the trust agreement to the extent allowed by local law. However, the tax-exempt status of the trust will be forfeited if the investments made by the trustees constitute *prohibited transactions* within the meaning of section 503. See section 503 and the regulations thereunder. In addition, such a trust will be subject to tax under section 511 with respect to any *unrelated business taxable income* (as defined in section 512) realized by it from its investments. See sections 511 to 515, inclusive, and the regulations thereunder.

(i) ***Allocations.*** If a plan which provides sick and accident benefits is financed solely by employer contributions to the trust, and such sick and accident benefits are funded by payment of premiums on an accident or health insurance policy (whether on a group or individual basis) or by contributions to a separate fund which pays such sick and accident benefits, the plan must specify that portion of the contributions to be used to fund such benefits. If a plan which is financed in whole or in part by employee contributions provides sick and accident benefits, the plan must specify the portion, if any, of employee contributions allocated to the cost of funding such benefits, and must allocate the cost of funding such benefits between employer contributions and employee contributions.

(j) ***Required records and returns.*** Every trust described in section 501(c)(17) must maintain records indicating the amount of separation benefits and sick and accident benefits which have been provided to each employee. If a plan is financed, in whole or in part, by employee contributions to the trust, the trust must maintain records indicating the amount of each employee's total contributions allocable to separation benefits. In addition, every trust described in section 501(c)(17) which makes one or more payments totaling $600 or more in 1 year to an individual must file an annual information return in the manner described in paragraph (b)(1) of § 1.6041-2. However, if the payments from such trust are subject to income tax withholding under section 3402(o) and the regulations thereunder, the trust must file, in lieu of such annual information return, the returns of income tax withheld from wages required by section 6011 and the regulations thereunder. In such circumstances, the trust must also furnish the statements to the recipients of trust distributions required by section 6051 and the regulations thereunder.

[T.D. 6972, 33 FR 12901, Sept. 12, 1968, as amended by T.D. 7068, 35 FR 17328, Nov. 11, 1970]

§ 1.501(c)(17)-3 Relation to other sections of the Code.

(a) ***Taxability of benefit distributions*** —

(1) ***Separation benefits.*** If the separation benefits described in section 501(c)(17)(D)(i) are funded entirely by employer contributions, then the full amount of any separation benefit payment received by an employee is includible in his gross income under section 61(a). If any such separation benefit is funded by both employer and employee contributions, or solely by employee contributions, the amount of any separation benefit payment which is includible in the gross income of the employee is the amount by which such distribution and any prior distributions of such separation payments exceeds the employee's total contributions to fund such separation benefits.

(2) ***Sick and accident benefits.*** Any benefit payment received from the trust under the part of the plan, if any, which provides for the payment of sick and accident benefits must be included in gross income under section 61(a), unless specifically excluded under section 104 or 105 and the regulations thereunder. See section 105(b) and § 1.105-2 for benefit payments expended for medical care, benefit payments in excess of actual medical expenses, and benefit payments which an employee is entitled to receive irrespective of whether or not he incurs expenses for medical care. See section 213 and § 1.213-1(g) for benefit payments representing reimbursement for medical expenses paid in prior years. See § 1.501(c)(17)-2(i) for the requirement that a trust described in section 501(c)(17) which receives employee contributions must be part of a written plan which provides for the allocation of the cost of funding sick and accident benefits.

(b) ***Exemption as a voluntary employees' beneficiary association.*** Section 501(c)(17)(E) contemplates that a trust forming part of a plan providing for the payment of supplemental unemployment compensation benefits may, if it qualifies, apply for exemption from income tax under section 501(a) either as a voluntary employees' beneficiary association described in section 501(c)(9) or as a trust described in section 501(c)(17).

(c) ***Returns.*** A trust which is described in section 501(c)(17) and which is exempt from tax under section 501(a) must file a return in accordance with section 6033 and the regulations thereunder. If such a trust realizes any unrelated business taxable income, as defined in section 512, the trust is also required to file a return with respect to such income.

(d) ***Effective date.*** Section 501(c)(17) shall apply to taxable years beginning after December 31, 1959, and shall apply to supplemental unemployment benefit trusts regardless of when created or organized.

[T.D. 6972, 33 FR 12902, Sept. 12, 1968]

§ 1.501(c)(18)-1 Certain funded pension trusts.

(a) ***In general.*** Organizations described in section 501(c)(18) are trusts created before June 25, 1959, forming part of a plan for the payment of benefits under a pension plan funded only by contributions of employees. In order to be exempt, such trusts must also meet the requirements set forth in section 501(c)(18) (A), (B), and (C), and in paragraph (b) of this section.

(b) ***Requirements for qualification.*** A trust described in section 501(c)(18) must meet the following requirements:

(1) ***Local law.*** The trust must be a valid, existing trust under local law, and must be evidenced by an executed written document.

(2) ***Funding.*** The trust must be funded solely from contributions of employees who are members of the plan. For purposes of this section, the term *contributions of employees* shall include earnings on, and gains derived from, the assets of the trust which were contributed by employees.

(3) *Creation before June 25, 1959* —

(i) ***In general.*** The trust must have been created before June 25, 1959. A trust created before June 25, 1959 is described in section 501(c)(18) and this section even though changes in the makeup of the trust have occurred since that time so long as these are not fundamental changes in the character of the trust or in the character of the beneficiaries of the trust. Increases in the beneficiaries of the trust by the addition of employees in the same or related industries, whether such additions are of individuals or of units (such as local units of a union) will generally not be considered a fundamental change in the character of the trust. A merger of a trust created after June 25, 1959 into a trust created before such date is not in itself a fundamental change in the character of the latter trust if the two trusts are for the benefit of employees of the same or related industries.

(ii) ***Examples.*** The provisions of this subparagraph may be illustrated by the following examples:

Example 1. Assume that trust C, for the benefit of members of participating locals of National Union X, was established in 1950 and adopted by 29 locals before June 25, 1959. The subsequent adoption of trust C by additional locals of National Union X in 1962 will not constitute a fundamental change in the character of trust C, since such subsequent adoption is by employees in a related industry.

Example 2. Assume the facts as stated in example 1, except that in 1965 National Union X merged with National Union Y, whose members are engaged in trades related to those engaged in by X's members. Assume further that trust D, the employee funded pension plan and fund for employees of Y, was subsequently merged into trust C. The merger of trust D into trust C would not in itself constitute a fundamental change in the character of trust C, since both C and D are for the benefit of employees of related industries.

(4) ***Payment of benefits.*** The trust must provide solely for the payment of pension or retirement benefits to its beneficiaries. For purposes of this section, the term *retirement benefits* is intended to include customary and incidental benefits, such as death benefits within the limits permissible under section 401.

(5) ***Diversion.*** The trust must be part of a plan which provides that, before the satisfaction of all liabilities to employees covered by the plan, the corpus and income of the trust cannot (within the taxable year and at any time thereafter) be used for, or diverted to, any purpose other than the providing of pension or retirement benefits. Payment of expenses in connection with the administration of a plan providing pension or retirement benefits shall be considered a payment to provide such benefits and shall not affect the qualification of the trust.

(6) ***Discrimination.*** The trust must be part of a plan whose eligibility conditions and benefits do not discriminate in favor of employees who are officers, shareholders, persons whose principal duties consist of supervising the work of other employees, or highly compensated employees. See sections 401(a)(3)(B) and 401(a)(4) and §§ 1.401-3 and 1.401(a)(4)-0 through 1.401(a)(4)-13. However, a plan is not discriminatory within the meaning of section 501(c)(18) merely because the benefits received under the plan bear a uniform relationship to the total compensation, or the basic or regular rate of compensation, of the employees covered by the plan. Accordingly, the benefits provided for highly paid employees may be greater than the benefits provided for lower paid employees if the benefits are determined by reference to their compensation; but, in such a case, the plan will not qualify if the benefits paid to the higher paid employees are a larger portion of compensation than the benefits paid to lower paid employees.

(7) ***Objective standards.*** The trust must be part of a plan which requires that benefits be determined according to objective standards. Thus, while a plan may provide similarly situated employees with benefits which differ in kind and amount, these benefits may not be determined solely in the discretion of the trustees.

(c) ***Effective date.*** The provisions of section 501(c)(18) and this section shall apply with respect to taxable years beginning after December 31, 1969.

[T.D. 7172, 37 FR 5618, Mar. 17, 1972, as amended by T.D. 9849, 84 FR 9235, Mar. 14, 2019]

§ 1.501(c)(19)-1 War veterans organizations.

(a) ***In general.***

(1) For taxable years beginning after December 31, 1969, a veterans post or organization which is organized in the United States or any of its possessions may be exempt as an organization described in section 501(c)(19) if the requirements of paragraphs (b) and (c) of this section are met and if no part of its net earnings inures to the benefit of any private shareholder or individual. Paragraph (b) of this section contains the membership requirements such a post or organization must meet in order to qualify under section 501(c)(19). Paragraph (c) of this section outlines the purposes, at least one of which such a post or organization must have in order to so qualify.

(2) In addition, an auxiliary unit or society described in paragraph (d) of this section of such a veterans post or organization and a trust or foundation described in paragraph (e) of this section for such post or organization may be exempt as an organization described in section 501(c)(19).

(b) ***Membership requirements.***

(1) In order to be described in section 501(c)(19) under paragraph (a)(1) of this section, an organization must meet the membership requirements of section 501(c)(19)(B) and this paragraph. There are two requirements that must be met under this paragraph. The first requirement is that at least 75 percent of the members of the organization must be war veterans. For purposes of this section the term *war veterans* means persons, whether or not present members of the United States Armed Forces, who have served in the Armed Forces of the United States during a period of war (including the Korean and Vietnam conflicts).

(2) The second requirement of this paragraph is that at least 97.5 percent of all members of the organization must be described in one or more of the following categories:

(i) War veterans,

(ii) Present or former members of the United States Armed Forces,

(iii) Cadets (including only students in college or university ROTC programs or at Armed Services academies), or

(iv) Spouses, widows, or widowers of individuals referred to in paragraph (b)(2) (i), (ii) or (iii) of this section.

(c) ***Exempt purposes.*** In addition to the requirements of paragraphs (a)(1) and (b) of this section, in order to be described in section 501(c)(19) under paragraph (a)(1) of this section an organization must be operated exclusively for one or more of the following purposes:

(1) To promote the social welfare of the community as defined in § 1.501(c)(4)-1(a)(2).

(2) To assist disabled and needy war veterans and members of the United States Armed Forces and their dependents, and the widows and orphans of deceased veterans,

(3) To provide entertainment, care, and assistance to hospitalized veterans or members of the Armed Forces of the United States,

(4) To carry on programs to perpetuate the memory of deceased veterans and members of the Armed Forces and to comfort their survivors,

(5) To conduct programs for religious, charitable, scientific, literary, or educational purposes,

(6) To sponsor or participate in activities of a patriotic nature,

(7) To provide insurance benefits for their members or dependents of their members or both, or

(8) To provide social and recreational activities for their members.

(d) ***Auxiliary units or societies for war veterans organizations.*** A unit or society may be exempt as an organization described in section 501(c)(19) and paragraph (a)(2) of this section if it is an auxiliary unit or society of a post or organization of war veterans described in paragraph (a)(1) of this section. A unit or society is an auxiliary unit or society or such a post or organization if it meets the following requirements:

(1) It is affiliated with, and organized in accordance with, the bylaws and regulations formulated by an organization described in paragraph (a)(1) of this section,

(2) At least 75 percent of its members are either war veterans, or spouses of war veterans, or are related to a war veteran within two degrees of consanguinity (i.e., grandparent, brother, sister, grandchild, represent the most distant allowable relationships),

(3) All of its members are either members of an organization described in paragraph (a)(1) of this section, or spouses of a member of such an organization or are related to a member of such an organization, within two degrees of consanguinity, and

(4) No part of its net earnings inures to the benefit of any private shareholder or individual.

(e) ***Trusts or foundations.*** A trust or foundation may be exempt as an organization described in section 501(c)(19) and paragraph (a)(2) of this section if it is a trust or foundation for a post or organization of war veterans described in paragraph (a)(1) of this section. A trust or foundation is a trust or foundation for such a post or organization if it meets the following requirements:

(1) The trust or foundation is in existence under local law and, if organized for charitable purposes, has a dissolution provision described in § 1.501(c)(3)-1(b)(4).

(2) The corpus or income cannot be diverted or used other than for the funding of a post or organization of war veterans described in paragraph (a)(1) of this section, for section 170(c)(4) purposes, or as an insurance set aside (as defined in § 1.512(a)-4(b)).

(3) The trust income is not unreasonably accumulated and, if the trust or foundation is not an insurance set aside, a substantial portion of the income is in fact distributed to such post or organization or for section 170(c)(4) charitable purposes, and

(4) It is organized exclusively for one or more of those purposes enumerated in paragraph (c) of this section.

[T.D. 7438, 41 FR 44392, Oct. 8, 1976]

§ 1.501(c)(21)-1 Black lung trusts—certain terms.

(a) ***Created or organized in the United States.*** A trust is not *created or organized in the United States* unless it is maintained at all times as a domestic trust in the United States. For this purpose, section 7701(a)(9) limits the term *United States* to the District of Columbia and States of the United States.

(b) ***Insurance company.*** The term *insurance company* means an insurance, surety, bonding or other company whose liability for the kinds of claims to which section 501(c)(21)(A)(i) applies is as an insurer or guarantor of the liabilities of another.

(c) ***Black Lung Acts.*** The term *Black Lung Acts* includes any State law providing compensation for disability or death due to pneumoconiosis even though the State law compensates for other kinds of injuries. In such a case, section 501(c)(21) applies only to the extent that the liability is attributable to disability or death due to pneumoconiosis. For this purpose, the term *pneumoconiosis* has the same meaning as it has under federal law. See 30 U.S.C. 902.

(d) ***Insurance exclusively covering such liability.*** The term *insurance exclusively covering such liability* includes insurance that covers risk for liabilities in addition to the liabilities to which section 501(c)(21)(A)(i) applies. In such a case, payment for premiums may be made from the trust only to the extent of that portion of the premiums that has been separately allocated and stated by the insurer as attributable solely to coverage of the liabilities to which section 501(c)(21)(A)(i) applies.

(e) ***Administrative and other incidental expenses.*** The term *administrative and other incidental expenses* means expenditures that are appropriate and helpful to the trust making them in carrying out the purposes for which its assets may be used under section 501(c)(21)(B). The term includes any exicse tax imposed on the trust under section 4952 (relating to taxes on taxable expenditures) and reasonable expenses, such as legal expenses, incurred by the trust in connection with an assertion against the trust of liability for a taxable expenditure. The term does not include an excise tax imposed on the trustee or on other disqualified persons under section 4951 (relating to taxes on self-dealing) or under section 4953 (relating to tax on excess contributions to black lung benefit trusts) or any expenses incurred in connection with the assertion of these taxes other than expenses that are treated as part of reasonable compensation under section 4951(d)(2)(C). See §§ 53.4941 (d)-2(f)(3) and (d)-3(c) for interpretations of similar provisions under section 4941(d)(2)(E), relating to reasonable compensation for private foundation disqualified persons.

(f) ***Public debt securities of the United States.*** The term *public debt securities of the United States* means obligations that are taken into consideration for purposes of the public debt limit. See, for example 31 U.S.C. 757b.

(g) ***Obligations of a State or local government.*** The term *obligations of a State or local government* means the obligations of a State or local governmental unit the interest on which is exempt from tax under section 103(a). See § 1.103-1(a).

(h) ***Time or demand deposits.*** The term *time or demand deposits* includes checking accounts, savings accounts, certificates of deposit or other time or demand deposits. The term does not include common or collective trust funds such as a common trust fund as defined in section 584.

[44 FR 52197, Sept. 7, 1979]

§ 1.501(c)(21)-2 Same—trust instrument.

As trust does not meet the requirements of section 501(c)(21) if it is not established and maintained pursuant to a written instrument. The trust instrument must definitely and affirmatively prohibit a diversion or use of trust assets that is not permitted under section 501(c)(21)(B) or section 4953(c), whether by operation or natural termination of the trust, by power of revocation or amendment by the happening of a contingency by collateral arrangement, or by any other means. No particular form for the trust instrument is required. A trust may meet the requirements of section 501(c)921) although the trust instrument fails to contain provisions the effects of which are to prohibit acts that are subject to section 4951 (relating to taxes on self-dealing), section 4952 (relating to taxes on taxable expenditures) or the retention of contributions subject to section 4953 (relating to tax on excess contributions to black lung benefit trusts).

[44 FR 52197, Sept. 7, 1979]

§ 1.501(c)(29)-1 CO-OP Health Insurance Issuers.

(a) ***Organizations must notify the Commissioner that they are applying for recognition of section 501(c)(29) status.*** An organization will not be treated as described in section 501(c)(29) unless the organization has given notice to the Commissioner that it is applying for recognition as an organization described in section 501(c)(29) in the manner prescribed by the Commissioner in published guidance.

(b) ***Effective date of recognition of section 501(c)(29) status.*** An organization may be recognized as an organization described in section 501(c)(29) as of a date prior to the date of the notice required by paragraph (a) of this section if the notice is given in the manner and within the time prescribed by the Commissioner and the organization's purposes and activities prior to giving such notice were consistent with the requirements for exempt status under section 501(c)(29). However, an organization may not be recognized as an organization described in section 501(c)(29) before the later of its formation or March 23, 2010.

(c) ***Effective/applicability date.*** Paragraphs (a) and (b) of this section are applicable beginning February 7, 2012.

[T.D. 9709, 80 FR 4793, Jan. 29, 2015]

§ 1.501(d)-1 Religious and apostolic associations or corporations.

(a) Religious or apostolic associations or corporations are described in section 501(d) and are exempt from taxation under section 501(a) if they have a common treasury or community treasury, even though they engage in business for the common benefit of the members, provided each of the members includes (at the time of filing his return) in his gross income his entire pro rata share, whether distributed or not, of the net income of the association or corporation for the taxable year of the association or corporation ending with or during his taxable year. Any amount so included in the gross income of a member shall be treated as a dividend received.

(b) For annual return requirements of organizations described in section 501(d), see section 6033 and paragraph (a)(5) of § 1.6033-1.

§ 1.501(e)-1 Cooperative hospital service organizations.

(a) ***General rule.*** Section 501(e) is the exclusive and controlling section under which a cooperative hospital service organization can qualify as a charitable organization. A cooperative hospital service organization which meets the requirements of section 501(e) and this section shall be treated as an organization described in section 501(c)(3), exempt from taxation under section 501(a), and referred to in section 170(b)(1)(A) (iii) (relating to percentage limitations on charitable contributions). In order to qualify for tax exempt status, a cooperative hospital service organization must—

(1) Be organized and operated on a cooperative basis,

(2) Perform, on a centralized basis, only one or more specifically enumerated services which, if performed directly by a tax exempt hospital, would constitute activities in the exercise or performance of the purpose or function constituting the basis for its exemption, and

(3) Perform such service or services solely for two or more patron-hospitals as described in paragraph (d) of this section.

(b) ***Organized and operated on a cooperative basis*** —

(1) ***In general.*** In order to meet the requirements of section 501(e), the organization must be organized and operated on a cooperative basis (whether or not under a specific statute on cooperatives) and must allocate or pay all of its net earnings within $8^{1}/_{2}$ months after the close of the taxable year to its patron-hospitals on the basis of the percentage of its services performed for each patron. To *allocate* its net earnings to its patron-hospitals, the organization must make appropriate bookkeeping entries and provide timely written notice to each patron-hospital disclosing to the patron-hospital the amount allocated to it on the books of the organization. For the recordkeeping requirements of a section 501(e) organization, see § 1.521-1(a)(1).

(2) ***Percentage of services defined.*** The percentage of services performed for each patron-hospital may be determined on the basis of either the value or the quantity of the services provided by the organization to the patron-hospital, provided such basis is realistic in terms of the actual cost of the services to the organization.

(3) ***Retention of net earnings.*** Exemption will not be denied a cooperative hospital service organization solely because the organization, instead of paying all net earnings to its patron-hospitals, retains an amount for such purposes as retiring indebtedness, expanding the services of the organization, or for any other necessary purpose and allocates such amounts to its patrons. However, such funds may not be accumulated beyond the reasonably anticipated needs of the organization. See, § 1.537-1(b). Whether there is an improper accumulation of funds depends upon the particular circumstances of each case. Moreover, where an organization retains net earnings for necessary purposes, the organization's records must show each patron's rights and interests in the funds retained. For purposes of this paragraph, the term *net earnings* does not include capital contributions to the organization and such contributions need not satisfy the allocation or payment requirements.

(4) ***Nonpatronage and other income.*** An organization described in section 501(e) may, in addition to net earnings, receive membership dues and related membership assessment fees, gifts, grants and income from nonpatronage sources such as investment of retained earnings. However, such an organization cannot be exempt if it engages in any business other than that of providing the specified services, described in paragraph (c), for the specified patron-hospitals, described in paragraph (d). Thus, an organization described in section 501(e) generally cannot have unrelated business taxable income as defined in section 512, although it may earn certain interest, annuities,

royalties, and rents which are excluded from unrelated business taxable income because of the modifications contained in sections 512(b) (1), (2) or (3). An organization described in section 501(e) may, however, have debt-financed income which is treated as unrelated business taxable income solely because of the applicability of section 514. In addition, exempt status under section 501(e) will not be affected where rent from personal property leased with real property is treated as unrelated business taxable income under section 512(b)(3)(A)(ii) solely because the rent attributable to the personal property is more than incidental or under section 512(b)(3)(B)(i) solely because the rent attributable to the personal property exceeds 50 percent of the total rent received or accrued under the lease. Exemption will not be affected solely because the determination of the amount of rent depends in whole or in part on the income or profits derived from the property leased. See, section 512(b)(3)(B)(ii). An organization described in section 501(e) may also derive nonpatronage income from sources that are incidental to the conduct of its exempt purposes or functions. For example, income derived from the operation of a cafeteria or vending machines primarily for the convenience of its employees or the disposition of by-products in substantially the same state they were in on completion of the exempt function (e.g., the sale of silver waste produced in the processing of x-ray film) will not be considered unrelated business taxable income. See, section 513(a)(2) and § 1.513-1(d)(4)(ii). The nonpatronage and other income permitted under this subparagraph (4) must be allocated or paid as provided in subparagraph (1) or retained as provided in subparagraph (3).

(5) *Stock ownership* —

(i) ***Capital stock of organization.*** An organization does not meet the requirements of section 501(e) unless all of the organization's outstanding capital stock, if there is such stock, is held solely by its patron-hospitals. However, no amount may be paid as dividends on the capital stock of the organization. For purposes of the preceding sentence, the term *capital stock* includes common stock (whether voting or nonvoting), preferred stock, or any other form evidencing a proprietary interest in the organization.

(ii) ***Stock ownership as a condition for obtaining credit.*** If by statutory requirement a cooperative hospital service organization must be a shareholder in a United States or state chartered corporation as a condition for obtaining credit from that corporate-lender, the ownership of shares and the payment of dividends thereon will not for such reason be a basis for the denial of exemption to the organization. See, e.g., National Consumer Cooperative Bank, 12 U.S.C. 3001 *et seq.*

(c) *Scope of services* —

(1) ***Permissible services.*** An organization meets the requirements of section 501(e) only if the organization performs, on a centralized basis, one or more of the following services and only such services: data processing, purchasing (including the purchasing and dispensing of drugs and pharmaceuticals to patron-hospitals), warehousing, billing and collection, food, clinical (including radiology), industrial engineering (including the installation, maintenance and repair of biomedical and similar equipment), laboratory, printing, communications, record center, and personnel (including recruitment, selection, testing, training, education and placement of personnel) services. An organization is not described in section 501(e) if, in addition to or instead of one or more of these specified services, the organization performs any other service (other than services referred to under paragraph (b)(4) that are incidental to the conduct of exempt purposes or functions).

(2) ***Illustration.*** The provisions of this subparagraph may be illustrated by the following example.

Example. An organization performs industrial engineering services on a cooperative basis solely for patron-hospitals each of which is an organization described in section 501(c)(3) and exempt from taxation under section 501(a). However, in addition to this service, the organization operates laundry services for its patron-hospitals. This cooperative organization does not meet the requirements of this paragraph because it performs laundry services not specified in this paragraph.

(d) ***Patron-hospitals*** —

(1) ***Defined.*** Section 501(e) only applies if the organization performs its services solely for two or more patron-hospitals each of which is—

(i) An organization described in section 501(c)(3) which is exempt from taxation under section 501(a),

(ii) A constituent part of an organization described in section 501(c)(3) which is exempt from taxation under section 501(a) and which, if organized and operated as a separate entity, would constitute an organization described in section 501(c)(3), or

(iii) Owned and operated by the United States, a State, the District of Columbia, or a possession of the United States, or a political subdivision or an agency or instrumentality of any of the foregoing.

(2) ***Business with nonvoting patron-hospitals.*** Exemption will not be denied a cooperative hospital service organization solely because the organization (whether organized on a stock or membership basis) transacts business with patron-hospitals which do not have voting rights in the organization and therefore do not participate in the decisions affecting the operation of the organization. Where the organization has both patron-hospitals with voting rights and patron-hospitals without such rights, the organization must provide at least 50 percent of its services to patron-hospitals with voting rights in the organization. Thus, the percentage of services provided to nonvoting patrons may not exceed the percentage of such services provided to voting patrons. A patron-hospital will be deemed to have voting rights in the cooperative hospital service organization if the patron-hospital may vote directly on matters affecting the operation of the organization or if the patron-hospital may vote in the election of cooperative board members. Notwithstanding that an organization may have both voting and nonvoting patron-hospitals, patronage refunds must nevertheless be allocated or paid to all patron-hospitals solely on the basis specified in paragraph (b) of this section.

(3) ***Services to other organizations.*** An organization does not meet the requirements of section 501(e) if, in addition to performing services for patron-hospitals (entities described in subdivisions (i), (ii) or (iii) of subparagraph (1)), the organization performs any service for any other organization. For example, a cooperative hospital service organization is not exempt if it performs services for convalescent homes for children or the aged, vocational training facilities for the handicapped, educational institutions which do not provide hospital care in their facilities, and proprietary hospitals. However, the provision of the specified services between or among cooperative hospital service organizations meeting the requirements of section 501(e) and this section is permissible. Also permissible is the provision of the specified services to entities which are not patron-hospitals, but only if such services are de minimis and are mandated by a governmental unit as, for example, a condition for licensing.

(e) ***Effective dates.*** An organization, other than an organization performing clinical services, may meet the requirements of section 501(e) and be a tax exempt organization for taxable years ending after June 28, 1968. An organization performing clinical services may meet the requirements of section 501(e) and be a tax exempt organization for taxable years ending after December 31, 1976. However, pursuant to the

authority contained in section 7805(b) of the Internal Revenue Code, these regulations shall not become effective with respect to an organization which has received a ruling or determination letter from the Internal Revenue Service recognizing its exemption under section 501(e) until January 2, 1987.

[T.D. 8100, 51 FR 31615, Sept. 4, 1986; 51 FR 33593, Sept. 22, 1986]

§ 1.501(h)-1 Application of the *expenditure test* to expenditures to influence legislation; introduction.

(a) ***Scope.***

(1) There are certain requirements an organization must meet in order to be a *charity* described in section 501(c)(3). Among other things, section 501(c)(3) states that "no substantial part of the activities of [a charity may consist of] carrying on propaganda, or otherwise attempting to influence legislation, (except as otherwise provided in subsection (h))." This requirement is called the *substantial part test.*

(2) Under section 501(h), many public charities may elect the *expenditure test* as a substitute for the substantial part test. The expenditure test is described in section 501(h) and this § 1.501(h). A public charity is any charity that is not a private foundation under section 509(a). (Unlike a public charity, a private foundation may not make any lobbying expenditures: If a private foundation does make a lobbying expenditure, it is subject to an excise tax under section 4945). Section 1.501(h)-2 lists which public charities are eligible to make the expenditure test election. Section 1.501(h)-2 also provides information about how a public charity makes and revokes the election to be covered by the expenditure test.

(3) A public charity that makes the election may make lobbying expenditures within specified dollar limits. If an electing public charity's lobbying expenditures are within the dollar limits determined under section 4911(c), the electing public charity will not owe tax under section 4911 nor will it lose its tax exempt status as a charity by virtue of section 501(h). If, however, that electing public charity's lobbying expenditures exceed its section 4911 lobbying limit, the organization is subject to an excise tax on the excess lobbying expenditures. Further, under section 501(h), if an electing public charity's lobbying expenditures normally are more than 150 percent of its section 4911 lobbying limit, the organization will cease to be a charity described in section 501(c)(3).

(4) A public charity that elects the expenditure test may nevertheless lose its tax exempt status if it is an action organization under § 1.501(c)(3)-1(c)(3)(iii) or (iv). A public charity that does not elect the expenditure test remains subject to the substantial part test. The substantial part test is applied without regard to the provisions of section 501(h) and 4911 and the related regulations.

(b) ***Effective date.*** The provisions of § 1.501(h)-1 through § 1.501(h)-3, are effective for taxable years beginning after August 31, 1990. An election made before August 31, 1990, under the provisions of § 7.0(c)(4) or the instructions to Form 5768, will be effective under these regulations without again filing Form 5768.

[T.D. 8308, 55 FR 35588, Aug. 31, 1990]

§ 1.501(h)-2 Electing the expenditure test.

(a) ***In general.*** The election to be governed by section 501(h) may be made by an eligible organization (as described in paragraph (b) of this section) for any taxable year of the organization beginning after December 31, 1976, other than the first taxable year for which a voluntary revocation of the election is effective (see paragraph (d) of this section). The election is made by filing a completed Form 5768, Election/Revocation of Election by an Eligible Section 501(c)(3) Organization to Make Expenditures to Influence Legislation, with the appropriate Internal Revenue Service Center listed on that form. Under section 501(h)(6), the election is effective with the beginning of the taxable year in which the form is filed. For example, if an eligible organization whose taxable year is the calendar year files Form 5768 on December 31, 1979, the organization is governed by section 501(h) for its taxable year beginning January 1, 1979. Once made, the expenditure test election is effective (without again filing Form 5768) for each succeeding taxable year for which the organization is an eligible organization and which begins before a notice of revocation is filed under paragraph (d) of this section.

(b) ***Organizations eligible to elect the expenditure test*** —

(1) ***In general.*** For purposes of section 501(h) and the regulations thereunder, an organization is an eligible organization for a taxable year if, for that taxable year, it is—

(i) Described in section 501(c)(3) (determined, in any year for which an election is in effect, without regard to the substantial part test of section 501(c)(3)),

(ii) Described in section 501(h)(4) and paragraph (b)(2) of this section, and

(iii) Not a disqualified organization described in section 501(h)(5) and paragraph (b)(3) of this section.

(2) ***Certain organizations listed.*** An organization is described in section 501(h)(4) and this paragraph (b)(2) if it is an organization described in—

(i) Section 170(b)(1)(A)(ii) (relating to educational institutions),

(ii) Section 170(b)(1)(A)(iii) (relating to hospitals and medical research organizations),

(iii) Section 170(b)(1)(A)(iv) (relating to organizations supporting government schools),

(iv) Section 170(b)(1)(A)(vi) (relating to organizations publicly supported by charitable contributions),

(v) Section 509(a)(2) (relating to organizations publicly supported by admissions, sales, etc.), or

(vi) Section 509(a)(3) (relating to organizations supporting public charities), except that for purposes of this paragraph (b)(2), section 509(a)(3) shall be applied without regard to the last sentence of section 509(a).

(3) ***Disqualified organizations.*** An organization is a disqualified organization described in section 501(h)(5) and this paragraph (b)(3) if the organization is—

(i) Described in section 170(b)(1)(A)(i) (relating to churches),

(ii) An integrated auxiliary of a church or of a convention or association of churches see (§ 1.6033-2(g)(5)), or

(iii) Described in section 501(c)(3) and affiliated (within the meaning of § 56.4911-7) with one or more organizations described in paragraph (b)(3) (i) or (ii) of this section.

(4) ***Other organizations ineligible to elect.*** Under section 501(h)(4), certain organizations, although not disqualified organizations, are not eligible to elect the expenditure test. For example, organizations described in section 509(a)(4) are not listed in section 501(h)(4) and therefore are not eligible to elect. Similarly, private foundations (within the meaning of section 509(a)) are not eligible to elect. For the treatment of expenditures by a private foundation for the purpose of carrying on propaganda, or otherwise attempting, to influence legislation, see § 53.4945-2.

(c) ***New organizations.*** A newly created organization may submit Form 5768 to elect the expenditure test under section 501(h) before it is determined to be an eligible organization and may submit Form 5768 at the time it submits its application for recognition of exemption (Form 1023). If the newly created organization is determined to be an eligible organization, the election will be effective under the provisions of paragraph (a) of this section, that is, with the beginning of the taxable year in which the Form 5768 is filed by the eligible organization. However, if a newly created organization is determined by the Service not to be an eligible organization, the organization's election will not be effective and the substantial part test will apply from the effective date of its section 501(c)(3) classification.

(d) ***Voluntary revocation of expenditure test election*** —

(1) ***Revocation effective.*** An organization may voluntarily revoke an expenditure test election by filing a notice of voluntary revocation with the appropriate Internal Revenue Service Center listed on Form 5768. Under section 501(h)(6)(B), a voluntary revocation is effective with the beginning of the first taxable year after the taxable year in which the notice is filed. If an organization voluntarily revokes its election, the substantial part test of section 501(c)(3) will apply with respect to the organization's activities in attempting to influence legislation beginning with the taxable year for which the voluntary revocation is effective.

(2) ***Re-election of expenditure test.*** If an organization's expenditure test election is voluntarily revoked, the organization may again make the expenditure test election, effective no earlier than for the taxable year following the first taxable year for which the revocation is effective.

(3) ***Example.*** X, an organization whose taxable year is the calendar year, plans to voluntarily revoke its expenditure test election effective beginning with its taxable year 1985. X must file its notice of voluntary revocation on Form 5768 after December 31, 1983, and before January 1, 1985. If X files a notice of voluntary revocation on December 31, 1984, the revocation is effective beginning with its taxable year 1985. The organization may again elect the expenditure test by filing Form 5768. Under paragraph (d)(2) of this section, the election may not be made for taxable year 1985. Under paragraph (a) of this section, a new expenditure test election will be effective for taxable years beginning with taxable year 1986, if the Form 5768 is filed after December 31, 1985, and before January 1, 1987.

(e) ***Involuntary revocation of expenditure test election.*** If, while an election by an eligible organization is in effect, the organization ceases to be an eligible organization, its election is automatically revoked. The revocation is effective with the beginning of the first full taxable year for which it is determined that the organization is not an eligible organization. If an organization's expenditure test election is involuntarily revoked under this paragraph (e) but the organization continues to be described in section 501(c)(3), the substantial part test of section 501(c)(3) will apply with respect to the organization's activities in attempting to influence legislation beginning with the first taxable year for which the involuntary revocation is effective.

(f) ***Supersession.*** This section supersedes § 7.0(c)(4) of the Temporary Income Tax Regulations under the Tax Reform Act of 1976, effective August 31, 1990.

[T.D. 8308, 55 FR 35588, Aug. 31, 1990]

§ 1.501(h)-3 Lobbying or grass roots expenditures normally in excess of ceiling amount.

(a) ***Scope.*** This section provides rules under section 501(h) for determining whether an organization that has elected the expenditure test and that is not a member of an affiliated group of organizations (as defined in § 56.4911-7(e)) either normally makes lobbying expenditures in excess of its lobbying ceiling amount or normally makes grass roots expenditures in excess of its grass roots ceiling amount. Under section 501(h) and this section, an organization that has elected the expenditure test and that normally makes expenditures in excess of the corresponding ceiling amount will cease to be exempt from tax under section 501(a) as an organization described in section 501(c)(3). For similar rules relating to members of an affiliated group of organizations, see § 56.4911-9.

(b) ***Loss of exemption*** —

(1) ***In general.*** Under section 501(h)(1), an organization that has elected the expenditure test shall be denied exemption from taxation under section 501(a) as an organization described in section 501(c)(3) for the taxable year following a determination year if—

(i) The sum of the organization's lobbying expenditures for the base years exceeds 150 percent of the sum of its lobbying nontaxable amounts for the base years, or

(ii) The sum of the organization's grass roots expenditures for its base years exceeds 150 percent of the sum of its grass roots nontaxable amounts for the base years.

The organization thereafter shall not be exempt from tax under section 501(a) as an organization described in section 501(c)(3) unless, pursuant to paragraph (d) of this section, the organization reapplies for recognition of exemption and is recognized as exempt.

(2) ***Special exception for organization's first election.*** For the first, second, or third consecutive determination year for which an organization's first expenditure test election is in effect, no determination is required under paragraph (b)(1) of this section, and the organization will not be denied exemption from tax by reason of section 501(h) and this section if, taking into account as base years only those years for which the expenditure test election is in effect—

(i) The sum of the organization's lobbying expenditures for such base years does not exceed 150 percent of the sum of its lobbying nontaxable amounts for the same base years, and

(ii) The sum of the organization's grass roots expenditure for those base years does not exceed 150 percent of the sum of its grass roots nontaxable amounts for such base years. If an organization does not satisfy the requirements of this paragraph (b)(2), paragraph (b)(1) of this section will apply.

(c) ***Definitions.*** For purposes of this section—

(1) The term *lobbying expenditures* means lobbying expenditures as defined in section 4911(c)(1) or section 4911(f)(4)(A) and § 56.4911-2(a).

(2) The term *lobbying nontaxable amount* is defined in § 56.4911-1(c)(1).

(3) An organization's *lobbying ceiling amount* is 150 percent of the organization's lobbying nontaxable amount for a taxable year.

(4) The term *grass roots expenditures* means expenditures for grass roots lobbying communications as defined in section 4911(c)(3) or section 4911(f)(4)(A) and §§ 56.4911-2 and 56.4911-3.

(5) The term *grass roots nontaxable amount* is defined in § 56.4911-1(c)(2).

(6) An organization's *grass roots ceiling amount* is 150 percent of the organization's grass roots nontaxable amount for a taxable year.

(7) In general, the term *base years* means the determination year and the three taxable years immediately preceding the determination year. The base years, however, do not include any taxable year preceding the taxable year for which the organization is first treated as described in section 501(c)(3).

(8) A taxable year is a *determination year* if it is a year for which the expenditure test election is in effect, other than the taxable year for which the organization is first treated as described in section 501(c)(3).

(d) ***Reapplication for recognition of exemption*** —

(1) ***Time of application.*** An organization that is denied exemption from taxation under section 501(a) by reason of section 501(h) and this section may apply on Form 1023 for recognition of exemption as an organization described in section 501(c)(3) for any taxable year following the first taxable year for which exemption is so denied. See paragraphs (d)(2) and (d)(3) of this section for material to be included with an application described in the preceding sentence.

(2) ***Section 501(h) calculation.*** An application described in paragraph (d)(1) of this section must demonstrate that the organization would not be denied exemption from taxation under section 501(a) by reason of section 501(h) if the expenditure test election has been in effect for all of its last taxable year ending before the application is made by providing the calculations, described either in paragraphs (b)(1) (i) and (ii) of this section or in § 56.4911-9(b), that would have applied to the organization for that year.

(3) ***Operations not disqualifying.*** An application described in paragraph (d)(1) of this section must include information that demonstrates to the satisfaction of the Commissioner that the organization will not knowingly operate in a manner that would disqualify the organization for tax exemption under section 501(c)(3) by reason of attempting to influence legislation.

(4) ***Reelection of expenditure test.*** If an organization is denied exemption from tax for a taxable year by reason of section 501(h) and this section, and thereafter is again recognized as an organization described in section 501(c)(3) pursuant to this paragraph (d), it may again elect the expenditure test under section 501(h) in accordance with § 1.501(h)-2(a).

(e) ***Examples.*** The provisions of this section are illustrated by the following examples, which also illustrate the operation of the tax imposed by section 4911.

> *Example 1.* (1) The following table contains information used in this example concerning

organization X.

Year	Exempt purpose expenditures (EPE)	Calculation	Lobbying	
			Nontaxable amount (LNTA)	Lobbying expenditures (LE)
1979	$400,000	(20% of $400,000=)	$80,000	$100,000
1980	300,000	(20% of $300,000=)	60,000	100,000
1981	600,000	(20% of $500,000 + 15% of $100,000=)	115,000	120,000
1982	500,000	(20% of $500,000=)	100,000	100,000
Totals	1,800,000		355,000	420,000

(2) Organization X, whose taxable year is the calendar year, was organized in 1971. X first made the expenditure test election under section 501(h) effective for taxable years beginning with 1979 and has not revoked the election. None of X's lobbying expenditures for its taxable years 1979 through 1982 are grass roots expenditures. Under section 4911(a) and § 56.4911-1(a), X must determine for each year for which the expenditure test election is effective whether it is liable for the 25 percent excise tax imposed by section 4911(a) on excess lobbying expenditures. X is liable for this tax for each of its taxable years 1979, 1980, and 1981, because in each year its lobbying expenditures exceeded its lobbying nontaxable amount for the year. For 1979, the tax imposed by section 4911(a) is $5,000 {25% × ($100,000−$80,000) = $5,000}. For 1980, the tax is $10,000. For 1981, the tax is $1,250.

(3) The taxable years 1979 through 1981 are all determination years under paragraph (c)(8) of this section. On its annual return for determination year 1979, the first year of its first election, X can demonstrate, under paragraph (b)(2) of this section, that its lobbying expenditures during 1979 ($100,000) do not exceed 150 percent of its lobbying nontaxable amount for 1979 ($120,000). For determination year 1980, under paragraph (b)(2), X can demonstrate that the sum of its lobbying expenditures for 1979 and 1980 ($200,000) does not exceed 150 percent of the sum of its lobbying nontaxable amounts for 1979 and 1980 ($210,000). For 1981, under paragraph (b)(2), X can demonstrate that the sum of its lobbying expenditures for 1979, 1980, and 1981 ($320,000) does not exceed 150 percent of the sum of its lobbying nontaxable amounts for 1979, 1980, and 1981 ($382,500). For each of the determination years 1979, 1980, and 1981, the first three years of its first election, X satisfies the requirements of paragraph (b)(2). Accordingly, no determination under paragraph (b)(1) of this section is required for those years, and X is not denied tax exemption by reason of section 501(h).

(4) Under paragraph (b)(1) of this section, X must determine for its determination year 1982 whether it has normally made lobbying expenditures in excess of the lobbying ceiling amount. This determination takes into account expenditures in base years 1979 through 1982. The sum of X's lobbying expenditures for the base years ($420,000) does not exceed 150 percent of the sum of the lobbying nontaxable amounts for the base years (150% × $355,000 = $532,500). Accordingly, X is not denied tax exemption by reason of section 501(h).

Example 2. (1) The following table contains information used in this example concerning W.

Year	Exempt purpose expenditures (EPE) (dollars)	Calculation	Lobbying nontaxable amount (LNTA) (dollars)	Lobbying expenditures (LE) (dollars)	Grass roots nontaxable amount (25 percent of LNTA) (dollars)	Grass roots expenditures (dollars)
1979	700,000	(20% of $500,000 + 15% of $200,000=)	130,000	120,000	32,500	30,000
1980	800,000	(20% of $500,000 + 15% of $300,000=)	145,000	100,000	36,250	60,000
1981	800,000	(20% of $500,000 + 15% of $300,000=)	145,000	100,000	36,250	65,000
1982	900,000	(20% of $500,000 + 15% of $400,000=)	160,000	150,000	40,000	65,000
Total	3,200,000		580,000	470,000	145,000	220,000

(2) Organization W, whose taxable year is the calendar year, made the expenditure test election under section 501(h) effective for taxable years beginning with 1979 and has not revoked the election. W has been treated as an organization described in section 501(c)(3) for each of its taxable years beginning within its taxable year 1974.
(3) Under section 4911(a) and § 56.4911-1(a), W must determine for each year for which the expenditure test election is effective whether it is liable for the 25 percent excise tax imposed by section 4911(a) on excess lobbying expenditures. In 1980, 1981, and 1982, W has excess lobbying expenditures because its grass roots expenditures in each of those years exceeded its grass roots

nontaxable amount for the year. Therefore, W is liable for the excise tax under section 4911(a) for those years. The tax imposed by section 4911(a) for 1980 is $5,937.50 {25% × ($60,000−$36,250)= $5,937.50}. For 1981, the tax is $7,187.50. For 1982, the tax is $6,250.

(4) On its annual return for its determination years 1979, 1980, and 1981, the first three years of its first election, W demonstrates that it satisfies the requirements of paragraph (b)(2) of this section. Accordingly, no determination under paragraph (b)(1) of this section is required for those years, and W is not denied tax exemption by reason of section 501(h).

(5) On its annual return for its determination year 1982, W must determine under paragraph (b)(1) whether it has normally made lobbying expenditures or grass roots expenditures in excess of the corresponding ceiling amount. This determination takes into account expenditures in base years 1979 through 1982. The sum of W's lobbying expenditures for the base years ($470,000) does not exceed 150% of the sum of W's lobbying nontaxable amounts for those years (150% × $580,000 = $870,000). However, the sum of W's grass roots expenditures for the base years ($220,000) does exceed 150% of the sum of W's grass roots nontaxable amonts for those years (150% × $145,000 = $217,500). Under section 501(h), W is denied tax exemption under section 501(a) as an organization described in section 501(c)(3) for its taxable year 1983. For its taxable year 1984 and any taxable year thereafter, W is exempt from tax as an organization described in section 501(c)(3) only if W applies for recognition of its exempt status under paragraph (d) of this section and is recognized as exempt from tax.

Example 3. (1) The following table contains information used in this example concerning organization Y.

Taxable Year	Exempt purpose expenditures (EPE) (dollars)	Calculation	Lobbying nontaxable amount (LNTA) (dollars)	Lobbying expenditures (LE)(dollars)	Grass roots nontaxable amount (25 percent of LNTA)(dollars)	Grass roots expenditures (dollars)
1977	700,000	(20% of $500,000 + 15% of $200,000=)	130,000	182,000	32,500	30,000
1978	800,000	(20% of $500,000 + 15% of $300,000=)	145,000	224,750	36,250	35,000
Subtotal	1,500,000		275,000	406,750	68,750	65,000
1979	900,000	(20% of	160,000	264,000	40,000	50,000

Taxable Year	Exempt purpose expenditures (EPE) (dollars)	Calculation	Lobbying nontaxable amount (LNTA) (dollars)	Lobbying expenditures (LE)(dollars)	Grass roots nontaxable amount (25 percent of LNTA)(dollars)	Grass roots expenditures (dollars)
		$500,000 + 15% of $400,000=)				
Totals:	2,400,000		435,000	670,750	108,750	115,000

(2) Organization Y, whose taxable year is the calendar year, was first treated as an organization described in section 501(c)(3) on February 1, 1977. Y made the expenditure test election under section 501(h) effective for taxable years beginning with 1977 and has not revoked the election.
(3) For 1977, Y has excess lobbying expenditures of $52,000 because its lobbying expenditures ($182,000) exceed its lobbying nontaxable amount ($130,000) for the taxable year. Accordingly, Y is liable for the 25 percent excise tax imposed by section 4911(a). The amount of the tax is $13,000 [25% × ($182,000−$130,000) = $13,000].

(4) For 1978, Y again has excess lobbying expenditures and is again liable for the 25 percent excise tax imposed by section 4911(a). The amount of the tax is $19,937.50 [25% × ($224,750−$145,000) = $19,937.50].

(5) For 1979, Y's lobbying expenditures ($264,000) exceed its lobbying nontaxable amount ($160,000) by $104,000, and its grass roots expenditures ($50,000) exceed its grass roots nontaxable amount ($40,000) by $10,000. Under § 56.4911-1(b), Y's excess lobbying expenditures are the greater of $104,000 or $10,000. The amount of the tax, therefore, is $26,000 [25% × $104,000 = $26,000].

(6) Under paragraph (c)(8) of this section, 1977 is not a determination year because it is the first year for which the organization is treated as described in section 501(c)(3). For 1977, Y need not determine whether it has normally made lobbying expenditures or grass roots expenditures in excess of the corresponding ceiling amount for purposes of determining whether it is denied exemption under section 501(h) for its taxable year 1978.

(7) For determination year 1978, Y must determine whether it has normally made lobbying or grass roots expenditures in excess of the corresponding ceiling amount, taking into account expenditures for the base years 1977 and 1978. For Y, the determination under paragraph (b)(2) of this section considers the same base years as the determination under paragraph (b)(1) of this section and is, therefore, redundant. Accordingly, Y proceeds to determine, under (b)(1), whether it is denied exemption. Y's grass roots expenditures for 1977 and 1978 ($65,000) did not exceed 150

percent of the sum of its grass roots nontaxable amounts for those years ($103,125). Y's lobbying expenditures for 1977 and 1978 ($406,750) did not exceed 150% of its lobbying nontaxable amount for those years (150% × $275,000 = $412,500). Therefore, Y is not denied tax exemption under section 501(h) for its taxable year 1979.

(8) For determination year 1979, the sum of Y's grass roots expenditures in base years 1977, 1978, and 1979 does not exceed 150 percent of its grass roots nontaxable amount (calculation omitted). However, the sum of Y's lobbying expenditures for the base years ($670,750) does exceed 150% of the sum of the lobbying nontaxable amounts for those years (150% × $435,000 = $652,500). Since Y was not described in section 501(c)(3) prior to 1977, only the years 1977, 1978, and 1979 may be considered in determining whether Y has normally made lobbying expenditures in excess of its lobbying ceiling. Therefore, Y determines that it has normally made lobbying expenditures in excess of its lobbying ceiling. Under section 501(h), Y is denied tax exemption under section 501(a) as an organization described in section 501(c)(3) for its taxable year 1980. For its taxable year 1981, and any taxable year thereafter, Y is exempt from tax as an organization described in section 501(c)(3) only if Y applies for recognition of its exempt status under paragraph (d) of this section and is recognized as exempt from tax.

Example 4. Organization M made the expenditure test election under section 501(h) effective for taxable years beginning with 1977 and has not revoked the election. M has $500,000 of exempt purpose expenditures during each of the years 1981 through 1984. In addition, during each of those years, M spends $75,000 for direct lobbying and $25,000 for grass roots lobbying. Since the amount expended for M's lobbying (both total lobbying and grass roots lobbying) is within the respective nontaxable expenditure limitations, M is not liable for the 25 percent excise tax imposed under section 4911(a) upon excess lobbying expenditures, nor is M denied tax-exempt status by reason of section 501 (h).

Example 5. Assume the same facts as in Example 4, except that, on behalf of M, numerous unpaid volunteers conduct substantial lobbying activities with no reimbursement. Since the substantial lobbying activities of the unpaid volunteers are not counted towards the expenditure limitations and the amount expended for M's lobbying is within the respective nontaxable expenditure limitations, M is not liable for the 25 percent excise tax under section 4911, nor is M denied tax-exempt status by reason of section 501(h).

[T.D. 8308, 55 FR 35589, Aug. 31, 1990]

§ 1.501(r)-0 Outline of regulations.

This section lists the table of contents for §§ 1.501(r)-1 through 1.501(r)-7.

§ 1.501(r)-1 Definitions.

(a) Application.

(b) Definitions.

(1) Amounts generally billed (AGB).

(2) AGB percentage.

(3) Application period.

(4) Authorized body of a hospital facility.

(5) Billing and collections policy.

(6) Date provided.

(7) Discharge.

(8) Disregarded entity.

(9) Emergency medical care.

(10) Emergency medical conditions.

(11) Extraordinary collection action (ECA).

(12) Financial assistance policy (FAP).

(13) FAP application.

(14) FAP application form.

(15) FAP-eligible.

(16) Gross charges.

(17) Hospital facility.

(18) Hospital organization.

(19) Medicaid.

(20) Medicare fee-for-service.

(21) Noncompliant facility income.

(22) Operating a hospital facility.

(23) Partnership agreement.

(24) Plain language summary of the FAP.

(25) Presumptive FAP-eligibility determination.

(26) Private health insurer.

(27) Referring.

(28) Substantially-related entity.

(29) Widely available on a Web site.

§ 1.501(r)-2 Failures to satisfy section 501(r).

(a) Revocation of section 501(c)(3) status.

(b) Minor omissions and errors.

(1) In general.

(2) Minor.

(3) Inadvertent.

(4) Reasonable cause.

(c) Excusing certain failures if hospital facility corrects and discloses.

(d) Taxation of noncompliant hospital facilities.

(1) In general.

(2) Noncompliant facility income.

(3) No aggregation.

(4) Interaction with other Code provisions.

(e) Instances in which a hospital organization is not required to meet section 501(r).

§ 1.501(r)-3 Community health needs assessments.

(a) In general.

(b) Conducting a CHNA.

(1) In general.

(2) Date a CHNA is conducted.

(3) Community served by a hospital facility.

(4) Assessing community health needs.

(5) Persons representing the broad interests of the community.

(6) Documentation of a CHNA.

(7) Making the CHNA report widely available to the public.

(c) Implementation strategy.

(1) In general.

(2) Description of how the hospital facility plans to address a significant health need.

(3) Description of why a hospital facility is not addressing a significant health need.

(4) Joint implementation strategies.

(5) When the implementation strategy must be adopted.

(d) Exception for acquired, new, and terminated hospital facilities.

(1) Acquired hospital facilities.

(2) New hospital organizations.

(3) New hospital facilities.

(4) Transferred or terminated hospital facilities.

(e) Transition rule for CHNAs conducted in taxable years beginning before March 23, 2012.

§ 1.501(r)-4 Financial assistance policy and emergency medical care policy.

(a) In general.

(b) Financial assistance policy.

(1) In general.

(2) Eligibility criteria and basis for calculating amounts charged to patients.

(3) Method for applying for financial assistance.

(4) Actions that may be taken in the event of nonpayment.

(5) Widely publicizing the FAP.

(6) Readily obtainable information.

(7) Providing documents electronically.

(8) Medically necessary care.

(c) Emergency medical care policy.

(1) In general.

(2) Interference with provision of emergency medical care.

(3) Relation to federal law governing emergency medical care.

(4) Examples.

(d) Establishing the FAP and other policies.

(1) In general.

(2) Implementing a policy.

(3) Establishing a policy for more than one hospital facility.

§ 1.501(r)-5 Limitation on charges.

(a) In general.

(b) Amounts generally billed.

(1) In general.

(2) Meaning of charged.

(3) Look-back method.

(4) Prospective Medicare or Medicaid method.

(5) Examples.

(c) Gross charges.

(d) Safe harbor for certain charges in excess of AGB.

(e) Medically necessary care.

§ 1.501(r)-6 Billing and collection.

(a) In general.

(b) Extraordinary collection actions.

(1) In general.

(2) Certain debt sales that are not ECAs.

(3) Liens on certain judgments, settlements, or compromises.

(4) Bankruptcy claims.

(c) Reasonable efforts.

(1) In general.

(2) Presumptive FAP-eligibility determinations based on third-party information or prior FAP-eligibility determinations.

(3) Reasonable efforts based on notification and processing of applications.

(4) Notification.

(5) Incomplete FAP applications.

(6) Complete FAP applications.

(7) When no FAP application is submitted.

(8) Suspending ECAs while a FAP application is pending.

(9) Waiver does not constitute reasonable efforts.

(10) Agreements with other parties.

(11) Clear and conspicuous placement.

(12) Providing documents electronically.

§ 1.501(r)-7 Effective/applicability date.

(a) Effective/applicability date.

(b) Reasonable interpretation for taxable years beginning on or before December 29, 2015.

[T.D. 9708, 79 FR 78997, Dec. 31, 2014; 80 FR 12762, Mar. 11, 2015]

§ 1.501(r)-1 Definitions.

(a) ***Application.*** The definitions set forth in this section apply to §§ 1.501(r)-2 through 1.501(r)-7.

(b) ***Definitions*** —

(1) ***Amounts generally billed*** (*AGB*) means the amounts generally billed for emergency or other medically necessary care to individuals who have insurance covering such care, determined in accordance with § 1.501(r)-5(b).

(2) ***AGB percentage*** means a percentage of gross charges that a hospital facility uses under § 1.501(r)-5(b)(3) to determine the AGB for any emergency or other medically necessary care it provides to an individual who is eligible for assistance under its financial assistance policy (FAP).

(3) ***Application period*** means the period during which a hospital facility must accept and process an application for financial assistance under its FAP submitted by an individual in order to have made reasonable efforts to determine whether the individual is FAP-eligible under § 1.501(r)-6(c). A hospital facility may accept and process an individual's FAP application submitted outside of the application period. With respect to any care provided by a hospital facility to an individual, the application period begins on the date the care is provided and ends on the later of the 240th day after the date that the first post-discharge billing statement for the care is provided or either—

(i) In the case of an individual who the hospital facility is notifying as described in § 1.501(r)-6(c)(4), the deadline specified by a written notice described in § 1.501(r)-6(c)(4); or

(ii) In the case of an individual who the hospital facility has presumptively determined to be eligible for less than the most generous assistance available under the FAP as described in § 1.501(r)-6(c)(2), the end of the reasonable period of time described in § 1.501(r)-6(c)(2)(i)(B).

(4) ***Authorized body of a hospital facility*** means—

(i) The governing body (that is, the board of directors, board of trustees, or equivalent controlling body) of the hospital organization that operates the hospital facility or a committee of, or other party authorized by, that governing body to the extent such committee or other party is permitted under state law to act on behalf of the governing body; or

(ii) The governing body of an entity that is disregarded or treated as a partnership for federal tax purposes that operates the hospital facility or a committee of, or other party authorized by, that governing body to the extent such committee or other party is permitted under state law to act on behalf of the governing body.

(5) ***Billing and collections policy*** means a written policy that includes all of the elements described in § 1.501(r)-4(b)(4)(i).

(6) ***Date provided*** means, in the case of any billing statement, written notice, or other written communication that is mailed, the date of mailing. The date that a billing statement, written notice, or other written communication is provided can also be the date such communication is sent electronically or delivered by hand.

(7) ***Discharge*** means to release from a hospital facility after the care at issue has been provided, regardless of whether that care has been provided on an inpatient or outpatient basis. Thus, a billing statement for care is considered "post-discharge" if it is provided to an individual after the care has been provided and the individual has left the hospital facility.

(8) ***Disregarded entity*** means an entity that is generally disregarded as separate from its owner for federal tax purposes under § 301.7701-3 of this chapter. One example of a disregarded entity is a domestic single member limited liability company that does not elect to be classified as an association taxable as a corporation for federal tax purposes.

(9) ***Emergency medical care*** means care provided by a hospital facility for emergency medical conditions.

(10) ***Emergency medical conditions*** means emergency medical conditions as defined in section 1867 of the Social Security Act (42 U.S.C. 1395dd).

(11) ***Extraordinary collection action*** (*ECA*) means an action described in § 1.501(r)-6(b)(1).

(12) ***Financial assistance policy*** (*FAP*) means a written policy that meets the requirements described in § 1.501(r)-4(b).

(13) ***FAP application*** means the information and accompanying documentation that an individual submits to apply for financial assistance under a hospital facility's FAP. An individual is considered to have submitted a complete FAP application if he or she provides information and documentation sufficient for the hospital facility to determine whether the individual is FAP-eligible and an incomplete FAP application if he or she provides some, but not sufficient, information and documentation to determine FAP-eligibility. The term "FAP application" does not refer only to written submissions, and a hospital facility may obtain information from an individual in writing or orally (or a combination of both).

(14) ***FAP application form*** means the application form (and any accompanying instructions) that a hospital facility makes available for individuals to submit as part of a FAP application.

(15) ***FAP-eligible*** means eligible for financial assistance under a hospital facility's FAP for care covered by the FAP, without regard to whether an individual has applied for assistance under the FAP.

(16) ***Gross charges,*** or the *chargemaster rate,* means a hospital facility's full, established price for medical care that the hospital facility consistently and uniformly charges patients before applying any contractual allowances, discounts, or deductions.

(17) ***Hospital facility*** means a facility that is required by a state to be licensed, registered, or similarly recognized as a hospital. Multiple buildings operated under a single state license are considered to be a single hospital facility. For purposes of this paragraph (b)(17), the term "state" includes only the 50 states and the District of Columbia and not any U.S. territory or foreign country. References to a hospital facility taking actions include instances in which the hospital organization operating the hospital facility takes actions through or on behalf of the hospital facility.

(18) ***Hospital organization*** means an organization recognized (or seeking to be recognized) as described in section 501(c)(3) that operates one or more hospital facilities. If the section 501(c)(3) status of such an organization is revoked, the organization will, for purposes of section 4959, continue to be treated as a hospital organization during the taxable year in which such revocation becomes effective.

(19) ***Medicaid*** means any medical assistance program administered by the state in which a hospital facility is licensed in accordance with Title XIX of the Social Security Act (42 U.S.C. 1396 through 1396w-5), including programs in which such medical assistance is provided through a contract between the state and a Medicaid managed care organization or a prepaid inpatient health plan.

(20) ***Medicare fee-for-service*** means health insurance available under Medicare Part A and Part B of Title XVIII of the Social Security Act (42 U.S.C. 1395c through 1395w-5).

(21) ***Noncompliant facility income*** means income that a hospital organization operating more than one hospital facility derives from a hospital facility that fails to meet one or more of the requirements of section 501(r) during a taxable year as determined in accordance with § 1.501(r)-2(d).

(22) ***Operating a hospital facility*** —

(i) ***In general.*** Operating a hospital facility includes operating the facility through the organization's own employees or contracting out to another organization to operate the facility. For example, if an organization hires a management company to operate the facility, the hiring organization is considered to operate the facility. An organization also operates a hospital facility if it is the sole member or owner of a disregarded entity that operates the hospital facility. In addition, an organization operates a hospital facility if it owns a capital or profits interest in an entity treated as a partnership for federal tax purposes that operates the hospital facility, unless paragraph (b)(22)(ii) of this section applies. For purposes of this paragraph (b)(22), an organization is considered to own a capital or profits interest in an entity treated as a partnership for federal tax purposes if it owns such an interest directly or indirectly through one or more lower-tier entities treated as partnerships for federal tax purposes.

(ii) ***Exception for certain partnerships.*** An organization does not operate a hospital facility despite owning a capital or profits interest in an entity treated as a partnership for federal tax purposes that operates the hospital facility if—

(A) The organization does not have control over the operation of the hospital facility operated by the partnership sufficient to ensure that the operation of the hospital facility furthers an exempt purpose described in section 501(c)(3) and thus treats the operation of the hospital facility, including the facility's provision of medical care, as an unrelated trade or business described in section 513 with respect to the hospital organization; or

(B) At all times since March 23, 2010, the organization has been organized and operated primarily for educational or scientific purposes and has not engaged primarily in the operation of one or more hospital facilities and, pursuant to a partnership agreement entered into before March 23, 2010—

(*1*) Does not own more than 35 percent of the capital or profits interest in the partnership (determined in accordance with section 707(b)(3));

(*2*) Does not own a general partner interest, managing-member interest, or similar interest in the partnership; and

(*3*) Does not have control over the operation of the hospital facility sufficient to ensure that the hospital facility complies with the requirements of section 501(r).

(23) ***Partnership agreement*** means, for purposes of paragraph (b)(22)(ii)(B) of this section, all written agreements among the partners, or between one or more partners and the partnership, and concerning affairs of the partnership and responsibilities of the partners, whether or not embodied in

a document referred to by the partners as the partnership agreement. A partnership agreement also includes any modifications to the agreement agreed to by all partners, or adopted in any other manner provided by the partnership agreement, except for modifications adopted on or after March 23, 2010, that affect whether or not the agreement is described in paragraph (b)(22)(ii)(B) of this section. In addition, a partnership agreement includes provisions of federal, state, or local law that were in effect before March 23, 2010, and continue to be in effect that govern the affairs of the partnership or are considered under such law to be part of the partnership agreement.

(24) ***Plain language summary of the FAP*** means a written statement that notifies an individual that the hospital facility offers financial assistance under a FAP and provides the following additional information in language that is clear, concise, and easy to understand:

(i) A brief description of the eligibility requirements and assistance offered under the FAP.

(ii) A brief summary of how to apply for assistance under the FAP.

(iii) The direct Web site address (or URL) and physical locations where the individual can obtain copies of the FAP and FAP application form.

(iv) Instructions on how the individual can obtain a free copy of the FAP and FAP application form by mail.

(v) The contact information, including telephone number and physical location, of the hospital facility office or department that can provide information about the FAP and of either—

(A) The hospital facility office or department that can provide assistance with the FAP application process; or

(B) If the hospital facility does not provide assistance with the FAP application process, at least one nonprofit organization or government agency that the hospital facility has identified as an available source of assistance with FAP applications.

(vi) A statement of the availability of translations of the FAP, FAP application form, and plain language summary of the FAP in other languages, if applicable.

(vii) A statement that a FAP-eligible individual may not be charged more than AGB for emergency or other medically necessary care.

(25) ***Presumptive FAP-eligibility determination*** means a determination that an individual is FAP-eligible based on information other than that provided by the individual or based on a prior FAP-eligibility determination, as described in § 1.501(r)-6(c)(2).

(26) ***Private health insurer*** means any organization that is not a governmental unit that offers health insurance, including nongovernmental organizations administering a health insurance plan under Medicare Advantage (Part C of Title XVIII of the Social Security Act, 42 U.S.C. 1395w-21 through 1395w-29). For purposes of § 1.501(r)-5(b), medical assistance provided through a contract between the state and a Medicaid managed care organization or a prepaid inpatient health plan is not considered to be a reimbursement from or a claim allowed by a private health insurer.

(27) ***Referring*** an individual's debt to a debt collection agency or other party means contracting with, delegating to, or otherwise using the debt collection agency or other party to collect amounts owed by the individual to the hospital facility while still maintaining ownership of the debt.

(28) ***Substantially-related entity*** means, with respect to a hospital facility operated by a hospital organization, an entity treated as a partnership for federal tax purposes in which the hospital organization owns a capital or profits interest, or a disregarded entity of which the hospital organization is the sole member or owner, that provides emergency or other medically necessary care in the hospital facility, unless the provision of such care is an unrelated trade or business described in section 513 with respect to the hospital organization. Notwithstanding the preceding sentence, a partnership that qualifies for the exception described in paragraph (b)(22)(ii)(B) of this section is not considered a substantially-related entity within the meaning of this paragraph (b)(28).

(29) ***Widely available on a Web site*** means—

(i) The hospital facility conspicuously posts a complete and current version of the document on—

(A) The hospital facility's Web site;

(B) If the hospital facility does not have its own Web site separate from the hospital organization that operates it, the hospital organization's Web site; or

(C) A Web site established and maintained by another entity, but only if the Web site of the hospital facility or hospital organization (if the facility or organization has a Web site) provides a conspicuously-displayed link to the Web page where the document is posted, along with clear instructions for accessing the document on that Web site;

(ii) Individuals with access to the Internet can access, download, view, and print a hard copy of the document from the Web site—

(A) Without requiring special computer hardware or software (other than software that is readily available to members of the public without payment of any fee);

(B) Without paying a fee to the hospitality facility, hospital organization, or other entity maintaining the Web site; and

(C) Without creating an account or being otherwise required to provide personally identifiable information; and

(iii) The hospital facility provides individuals who ask how to access a copy of the document online with the direct Web site address, or URL, of the Web page where the document is posted.

[T.D. 9708, 79 FR 78998, Dec. 31, 2014; 80 FR 12762, Mar. 11, 2015]

§ 1.501(r)-2 Failures to satisfy section 501(r).

(a) ***Revocation of section 501(c)(3) status.*** Except as otherwise provided in paragraphs (b) and (c) of this section, a hospital organization failing to meet one or more of the requirements of section 501(r) separately with respect to one or more hospital facilities it operates may have its section 501(c)(3) status revoked as of the first day of the taxable year in which the failure occurs. In determining whether to continue to recognize the section 501(c)(3) status of a hospital organization that fails to meet one or more of the requirements of section 501(r) with respect to one or more hospital facilities, the Commissioner will consider all relevant facts and circumstances including, but not limited to, the following:

(1) Whether the organization has previously failed to meet the requirements of section 501(r), and, if so, whether the same type of failure previously occurred.

(2) The size, scope, nature, and significance of the organization's failure(s).

(3) In the case of an organization that operates more than one hospital facility, the number, size, and significance of the facilities that have failed to meet the section 501(r) requirements relative to those that have complied with these requirements.

(4) The reason for the failure(s).

(5) Whether the organization had, prior to the failure(s), established practices or procedures (formal or informal) reasonably designed to promote and facilitate overall compliance with the section 501(r) requirements.

(6) Whether the practices or procedures had been routinely followed and the failure(s) occurred through an oversight or mistake in applying them.

(7) Whether the organization has implemented safeguards that are reasonably calculated to prevent similar failures from occurring in the future.

(8) Whether the organization corrected the failure(s) as promptly after discovery as is reasonable given the nature of the failure(s).

(9) Whether the organization took the measures described in paragraphs (a)(7) and (a)(8) of this section before the Commissioner discovered the failure(s).

(b) *Minor omissions and errors* —

(1) ***In general.*** A hospital facility's omission of required information from a policy or report described in § 1.501(r)-3 or § 1.501(r)-4, or error with respect to the implementation or operational requirements described in §§ 1.501(r)-3 through 1.501(r)-6, will not be considered a failure to meet a requirement of section 501(r) if the following conditions are satisfied:

(i) Such omission or error was minor and either inadvertent or due to reasonable cause.

(ii) The hospital facility corrects such omission or error as promptly after discovery as is reasonable given the nature of the omission or error. Such correction must include establishment (or review and, if necessary, revision) of practices or procedures (formal or informal) that are reasonably designed to promote and facilitate overall compliance with the requirements of section 501(r).

(2) ***Minor.*** In the case of multiple omissions or errors, the omissions or errors are considered minor for purposes of this paragraph (b) only if they are minor in the aggregate.

(3) ***Inadvertent.*** For purposes of this paragraph (b), the fact that the same omission or error has been made and corrected previously is a factor tending to show that an omission or error is not inadvertent.

(4) ***Reasonable cause.*** For purposes of this paragraph (b), the fact that a hospital facility has established practices or procedures (formal or informal) reasonably designed to promote and facilitate overall compliance with the section 501(r) requirements prior to the occurrence of an omission or error is a factor tending to show that the omission or error is due to reasonable cause.

(c) ***Excusing certain failures if hospital facility corrects and discloses.*** A hospital facility's failure to meet one or more of the requirements described in §§ 1.501(r)-3 through 1.501(r)-6 that is neither willful nor egregious shall be excused for purposes of this section if the hospital facility corrects and makes disclosure in accordance with rules set forth by revenue procedure, notice, or other guidance published in

the Internal Revenue Bulletin. For purposes of this paragraph (c), a "willful" failure includes a failure due to gross negligence, reckless disregard, or willful neglect, and an "egregious" failure includes only a very serious failure, taking into account the severity of the impact and the number of affected persons. Whether a failure is willful or egregious will be determined based on all of the facts and circumstances. A hospital facility's correction and disclosure of a failure in accordance with the relevant guidance is a factor tending to show that the failure was not willful.

(d) ***Taxation of noncompliant hospital facilities*** —

(1) ***In general.*** Except as otherwise provided in paragraphs (b) and (c) of this section, if a hospital organization that operates more than one hospital facility fails to meet one or more of the requirements of section 501(r) separately with respect to a hospital facility during a taxable year, the income derived from the noncompliant hospital facility ("noncompliant facility income") during that taxable year will be subject to tax computed as provided in section 11 (or as provided in section 1(e) if the hospital organization is a trust described in section 511(b)(2)), but substituting the term "noncompliant facility income" for "taxable income," if—

(i) The hospital organization continues to be recognized as described in section 501(c)(3) during the taxable year; but

(ii) The hospital organization would not continue to be recognized as described in section 501(c)(3) during the taxable year based on the facts and circumstances described in paragraph (a) of this section (but disregarding paragraph (a)(3) of this section) if the noncompliant hospital facility were the only hospital facility operated by the organization.

(2) ***Noncompliant facility income*** —

(i) ***In general.*** For purposes of this paragraph (d), the noncompliant facility income derived from a hospital facility during a taxable year will be the gross income derived from that hospital facility during the taxable year, less the deductions allowed by chapter 1 that are directly connected to the operation of that hospital facility during the taxable year, excluding any gross income and deductions taken into account in computing any unrelated business taxable income described in section 512 that is derived from the facility during the taxable year.

(ii) ***Directly connected deductions.*** For purposes of this paragraph (d), to be directly connected with the operation of a hospital facility that has failed to meet the requirements of section 501(r), an item of deduction must have proximate and primary relationship to the operation of the hospital facility. Expenses, depreciation, and similar items attributable solely to the operation of a hospital facility are proximately and primarily related to such operation, and therefore qualify for deduction to the extent that they meet the requirements of section 162, section 167, or other relevant provisions of the Internal Revenue Code (Code). Where expenses, depreciation, and similar items are attributable to a noncompliant hospital facility and other hospital facilities operated by the hospital organization (and/or to other activities of the hospital organization unrelated to the operation of hospital facilities), such items shall be allocated among the hospital facilities (and/or other activities) on a reasonable basis. The portion of any such item so allocated to a noncompliant hospital facility is proximately and primarily related to the operation of that facility and shall be allowable as a deduction in computing the facility's noncompliant facility income in the manner and to the extent it would meet the requirements of section 162, section 167, or other relevant provisions of the Code.

(3) ***No aggregation.*** In computing the noncompliant facility income of a hospital facility, the gross income from (and the deductions allowed with respect to) the hospital facility may not be aggregated with the gross income from (and the deductions allowed with respect to) the hospital organization's other noncompliant hospital facilities subject to tax under this paragraph (d) or its unrelated trade or business activities described in section 513.

(4) ***Interaction with other Code provisions*** —

(i) ***Hospital organization operating a noncompliant hospital facility continues to be treated as tax-exempt.*** A hospital organization operating a noncompliant hospital facility subject to tax under this paragraph (d) shall continue to be treated as an organization that is exempt from tax under section 501(a) because it is described in section 501(c)(3) for all purposes of the Code. In addition, the application of this paragraph (d) shall not, by itself, result in the operation of the noncompliant hospital facility being considered an unrelated trade or business described in section 513 with respect to the hospital organization. Thus, for example, the application of this paragraph (d) shall not, by itself, affect the tax-exempt status of bonds issued to finance the noncompliant hospital facility.

(ii) ***Noncompliant hospital facility operated by a tax-exempt hospital organization is subject to tax.*** A noncompliant hospital facility described in paragraph (d)(1) of this section is subject to tax under this paragraph (d), notwithstanding the fact that the hospital organization operating the hospital facility is otherwise exempt from tax under section 501(a) and subject to tax under section 511(a) and that § 1.11-1(a) of this chapter states such organizations are not liable for the tax imposed under section 11.

(iii) ***Noncompliant hospital facility not a business entity.*** A noncompliant hospital facility subject to tax under this paragraph (d) is not considered a business entity for purposes of § 301.7701-2(b)(7) of this chapter.

(e) ***Instances in which a hospital organization is not required to meet section 501(r).*** A hospital organization is not required to meet the requirements of section 501(r) (and, therefore, is not subject to any consequence described in this section for failing to meet the requirements of section 501(r)) with respect to—

(1) Any hospital facility it is not “operating” within the meaning of § 1.501(r)-1(b)(22);

(2) The operation of a facility that is not required by a state to be licensed, registered, or similarly recognized as a hospital; or

(3) Any activities that constitute an unrelated trade or business described in section 513 with respect to the hospital organization.

[T.D. 9708, 79 FR 78998, Dec. 31, 2014; 80 FR 12762, Mar. 11, 2015]

§ 1.501(r)-3 Community health needs assessments.

(a) ***In general.*** With respect to any taxable year, a hospital organization meets the requirements of section 501(r)(3) with respect to a hospital facility it operates only if—

(1) The hospital facility has conducted a community health needs assessment (CHNA) that meets the requirements of paragraph (b) of this section in such taxable year or in either of the two taxable years immediately preceding such taxable year (except as provided in paragraph (d) of this section); and

(2) An authorized body of the hospital facility (as defined in § 1.501(r)-1(b)(4)) has adopted an implementation strategy to meet the community health needs identified through the CHNA, as described in paragraph (c) of this section, on or before the 15th day of the fifth month after the end of such taxable year.

(b) *Conducting a CHNA* —

(1) ***In general.*** To conduct a CHNA for purposes of paragraph (a) of this section, a hospital facility must complete all of the following steps:

(i) Define the community it serves.

(ii) Assess the health needs of that community.

(iii) In assessing the health needs of the community, solicit and take into account input received from persons who represent the broad interests of that community, including those with special knowledge of or expertise in public health.

(iv) Document the CHNA in a written report (CHNA report) that is adopted for the hospital facility by an authorized body of the hospital facility.

(v) Make the CHNA report widely available to the public.

(2) ***Date a CHNA is conducted.*** For purposes of this section, a hospital facility will be considered to have conducted a CHNA on the date it has completed all of the steps described in paragraph (b)(1) of this section. Solely for purposes of determining the taxable year in which a CHNA has been conducted under this paragraph (b)(2), a hospital facility will be considered to have completed the step of making a CHNA report widely available to the public on the date it first makes the CHNA report widely available to the public as described in paragraph (b)(7)(i) of this section.

(3) ***Community served by a hospital facility.*** In defining the community it serves for purposes of paragraph (b)(1)(i) of this section, a hospital facility may take into account all of the relevant facts and circumstances, including the geographic area served by the hospital facility, target population(s) served (for example, children, women, or the aged), and principal functions (for example, focus on a particular specialty area or targeted disease). However, a hospital facility may not define its community to exclude medically underserved, low-income, or minority populations who live in the geographic areas from which the hospital facility draws its patients (unless such populations are not part of the hospital facility's target patient population(s) or affected by its principal functions) or otherwise should be included based on the method the hospital facility uses to define its community. In addition, in determining its patient populations for purposes of defining its community, a hospital facility must take into account all patients without regard to whether (or how much) they or their insurers pay for the care received or whether they are eligible for assistance under the hospital facility's financial assistance policy. In the case of a hospital facility consisting of multiple buildings that operate under a single state license and serve different geographic areas or populations, the community served by the hospital facility is the aggregate of such areas or populations.

(4) ***Assessing community health needs.*** To assess the health needs of the community it serves for purposes of paragraph (b)(1)(ii) of this section, a hospital facility must identify significant health needs of the community, prioritize those health needs, and identify resources (such as organizations, facilities, and programs in the community, including those of the hospital facility) potentially available to address those health needs. For these purposes, the health needs of a community include requisites for the improvement or maintenance of health status both in the community at

large and in particular parts of the community (such as particular neighborhoods or populations experiencing health disparities). These needs may include, for example, the need to address financial and other barriers to accessing care, to prevent illness, to ensure adequate nutrition, or to address social, behavioral, and environmental factors that influence health in the community. A hospital facility may determine whether a health need is significant based on all of the facts and circumstances present in the community it serves. In addition, a hospital facility may use any criteria to prioritize the significant health needs it identifies, including, but not limited to, the burden, scope, severity, or urgency of the health need; the estimated feasibility and effectiveness of possible interventions; the health disparities associated with the need; or the importance the community places on addressing the need.

(5) ***Persons representing the broad interests of the community*** —

(i) ***In general.*** For purposes of paragraph (b)(1)(iii) of this section, a hospital facility must solicit and take into account input received from all of the following sources in identifying and prioritizing significant health needs and in identifying resources potentially available to address those health needs:

(A) At least one state, local, tribal, or regional governmental public health department (or equivalent department or agency), or a State Office of Rural Health described in section 338J of the Public Health Service Act (42 U.S.C. 254r), with knowledge, information, or expertise relevant to the health needs of that community.

(B) Members of medically underserved, low-income, and minority populations in the community served by the hospital facility, or individuals or organizations serving or representing the interests of such populations. For purposes of this paragraph (b), medically underserved populations include populations experiencing health disparities or at risk of not receiving adequate medical care as a result of being uninsured or underinsured or due to geographic, language, financial, or other barriers.

(C) Written comments received on the hospital facility's most recently conducted CHNA and most recently adopted implementation strategy.

(ii) ***Additional sources of input.*** In addition to the sources described in paragraph (b)(5)(i) of this section, a hospital facility may solicit and take into account input received from a broad range of persons located in or serving its community, including, but not limited to, health care consumers and consumer advocates, nonprofit and community-based organizations, academic experts, local government officials, local school districts, health care providers and community health centers, health insurance and managed care organizations, private businesses, and labor and workforce representatives.

(6) ***Documentation of a CHNA*** —

(i) ***In general.*** For purposes of paragraph (b)(1)(iv) of this section, the CHNA report adopted for the hospital facility by an authorized body of the hospital facility must include—

(A) A definition of the community served by the hospital facility and a description of how the community was determined;

(B) A description of the process and methods used to conduct the CHNA;

(C) A description of how the hospital facility solicited and took into account input received from persons who represent the broad interests of the community it serves;

(D) A prioritized description of the significant health needs of the community identified through the CHNA, along with a description of the process and criteria used in identifying certain health needs as significant and prioritizing those significant health needs;

(E) A description of the resources potentially available to address the significant health needs identified through the CHNA; and

(F) An evaluation of the impact of any actions that were taken, since the hospital facility finished conducting its immediately preceding CHNA, to address the significant health needs identified in the hospital facility's prior CHNA(s).

(ii) ***Process and methods used to conduct the CHNA.*** A hospital facility's CHNA report will be considered to describe the process and methods used to conduct the CHNA for purposes of paragraph (b)(6)(i)(B) of this section if the CHNA report describes the data and other information used in the assessment, as well as the methods of collecting and analyzing this data and information, and identifies any parties with whom the hospital facility collaborated, or with whom it contracted for assistance, in conducting the CHNA. In the case of data obtained from external source material, the CHNA report may cite the source material rather than describe the method of collecting the data.

(iii) ***Input from persons who represent the broad interests of the community served by the hospital facility.*** A hospital facility's CHNA report will be considered to describe how the hospital facility took into account input received from persons who represent the broad interests of the community it serves for purposes of paragraph (b)(6)(i)(C) of this section if the CHNA report summarizes, in general terms, any input provided by such persons and how and over what time period such input was provided (for example, whether through meetings, focus groups, interviews, surveys, or written comments and between what approximate dates); provides the names of any organizations providing input and summarizes the nature and extent of the organization's input; and describes the medically underserved, low-income, or minority populations being represented by organizations or individuals that provided input. A CHNA report does not need to name or otherwise identify any specific individual providing input on the CHNA. In the event a hospital facility solicits, but cannot obtain, input from a source described in paragraph (b)(5)(i) of this section, the hospital facility's CHNA report also must describe the hospital facility's efforts to solicit input from such source.

(iv) ***Separate CHNA reports.*** While a hospital facility may conduct its CHNA in collaboration with other organizations and facilities (including, but not limited to, related and unrelated hospital organizations and facilities, for-profit and government hospitals, governmental departments, and nonprofit organizations), every hospital facility must document the information described in this paragraph (b)(6) in a separate CHNA report to satisfy paragraph (b)(1)(iv) of this section unless it adopts a joint CHNA report as described in paragraph (b)(6)(v) of this section. However, if a hospital facility is collaborating with other facilities and organizations in conducting its CHNA or if another organization (such as a state or local public health department) has conducted a CHNA for all or part of the hospital facility's community, portions of the hospital facility's CHNA report may be substantively identical to portions of a CHNA report of a collaborating hospital facility or other organization conducting a CHNA, if appropriate under the facts and circumstances. For example, if two hospital facilities with overlapping, but not identical, communities are collaborating in conducting a CHNA, the portions of each hospital facility's CHNA report relevant to the shared areas of their communities might be identical. Similarly, if the state or local public health department with

jurisdiction over the community served by a hospital facility conducts a CHNA for an area that includes the hospital facility's community, the hospital facility's CHNA report might include portions of the state or local public health department's CHNA report that are relevant to its community.

(v) ***Joint CHNA reports*** —

(A) ***In general.*** A hospital facility that collaborates with other hospital facilities or other organizations (such as state or local public health departments) in conducting its CHNA will satisfy paragraph (b)(1)(iv) of this section if an authorized body of the hospital facility adopts for the hospital facility a joint CHNA report produced for the hospital facility and one or more of the collaborating facilities and organizations, provided that the following conditions are met:

(*1*) The joint CHNA report meets the requirements of paragraph (b)(6)(i) of this section.

(*2*) The joint CHNA report is clearly identified as applying to the hospital facility.

(*3*) All of the collaborating hospital facilities and organizations included in the joint CHNA report define their community to be the same.

(B) ***Example.*** The following example illustrates this paragraph (b)(6)(v):

> ***Example.*** P is one of 10 hospital facilities located in and serving the populations of a particular Metropolitan Statistical Area (MSA). P and seven other facilities in the MSA, some of which are unrelated to P, decide to collaborate in conducting a CHNA for the MSA and to each define their community as constituting the entire MSA. The eight hospital facilities work together with the state and local health departments of jurisdictions in the MSA to assess the health needs of the MSA and collaborate in conducting surveys and holding public forums to solicit and receive input from the MSA's residents, including its medically underserved, low-income, and minority populations. The hospital facilities also consider the written comments received on their most recently conducted CHNAs and most recently adopted implementation strategies. The hospital facilities then work together to prepare a joint CHNA report documenting this joint CHNA process that contains all of the elements described in paragraph (b)(6)(i) of this section. The joint CHNA report identifies all of the collaborating hospital facilities included in the report, including P, by name, both within the report itself and on the cover page. The board of directors of the hospital organization operating P adopts the joint CHNA report for P. P has complied with the requirements of this paragraph (b)(6)(v) and, accordingly, has satisfied paragraph (b)(1)(iv) of this section.

(7) ***Making the CHNA report widely available to the public*** —

(i) ***In general.*** For purposes of paragraph (b)(1)(v) of this section, a hospital facility's CHNA report is made widely available to the public only if the hospital facility—

(A) Makes the CHNA report widely available on a Web site, as defined in § 1.501(r)-1(b)(29), at least until the date the hospital facility has made widely available on a Web site its two subsequent CHNA reports; and

(B) Makes a paper copy of the CHNA report available for public inspection upon request and without charge at the hospital facility at least until the date the hospital facility has made available for public inspection a paper copy of its two subsequent CHNA reports.

(ii) ***Making draft CHNA reports widely available.*** Notwithstanding paragraph (b)(7)(i) of this section, if a hospital facility makes widely available on a Web site (and/or for public inspection) a version of the CHNA report that is expressly marked as a draft on which the public may comment, the hospital facility will not be considered to have made the CHNA report widely available to the public for purposes of determining the date on which the hospital facility has conducted a CHNA under paragraph (b)(2) of this section.

(c) ***Implementation strategy*** —

(1) ***In general.*** For purposes of paragraph (a)(2) of this section, a hospital facility's implementation strategy to meet the community health needs identified through the hospital facility's CHNA is a written plan that, with respect to each significant health need identified through the CHNA, either—

(i) Describes how the hospital facility plans to address the health need; or

(ii) Identifies the health need as one the hospital facility does not intend to address and explains why the hospital facility does not intend to address the health need.

(2) ***Description of how the hospital facility plans to address a significant health need.*** A hospital facility's implementation strategy will have described a plan to address a significant health need identified through a CHNA for purposes of paragraph (c)(1)(i) of this section if the implementation strategy—

(i) Describes the actions the hospital facility intends to take to address the health need and the anticipated impact of these actions;

(ii) Identifies the resources the hospital facility plans to commit to address the health need; and

(iii) Describes any planned collaboration between the hospital facility and other facilities or organizations in addressing the health need.

(3) ***Description of why a hospital facility is not addressing a significant health need.*** In explaining why it does not intend to address a significant health need for purposes of paragraph (c)(1)(ii) of this section, a brief explanation of the hospital facility's reason for not addressing the health need is sufficient. Such reasons may include, for example, resource constraints, other facilities or organizations in the community addressing the need, a relative lack of expertise or competency to effectively address the need, the need being a relatively low priority, and/or a lack of identified effective interventions to address the need.

(4) ***Joint implementation strategies.*** A hospital facility may develop an implementation strategy in collaboration with other hospital facilities or other organizations, including, but not limited to, related and unrelated hospital organizations and facilities, for-profit and government hospitals, governmental departments, and nonprofit organizations. In general, a hospital facility that collaborates with other facilities or organizations in developing its implementation strategy must still document its implementation strategy in a separate written plan that is tailored to the particular hospital facility, taking into account its specific resources. However, a hospital facility that adopts a joint CHNA report described in paragraph (b)(6)(v) of this section may also adopt a joint implementation strategy that, with respect to each significant health need identified through the joint CHNA, either describes how one or more of the collaborating facilities or organizations plan to address the health need or identifies the health need as one the collaborating facilities or

organizations do not intend to address and explains why they do not intend to address the health need. For a collaborating hospital facility to meet the requirements of paragraph (a)(2) of this section, such a joint implementation strategy adopted for the hospital facility must—

(i) Be clearly identified as applying to the hospital facility;

(ii) Clearly identify the hospital facility's particular role and responsibilities in taking the actions described in the implementation strategy and the resources the hospital facility plans to commit to such actions; and

(iii) Include a summary or other tool that helps the reader easily locate those portions of the joint implementation strategy that relate to the hospital facility.

(5) ***When the implementation strategy must be adopted*** —

(i) ***In general.*** For purposes of paragraph (a)(2) of this section, an authorized body of the hospital facility must adopt the implementation strategy on or before the 15th day of the fifth month after the end of the taxable year in which the hospital facility completes the final step for the CHNA described in paragraph (b)(1) of this section, regardless of whether the hospital facility began working on the CHNA in a prior taxable year.

(ii) ***Example.*** The following example illustrates this paragraph (c)(5):

Example. M is a hospital facility that last conducted a CHNA and adopted an implementation strategy in Year 1. In Year 3, M defines the community it serves, assesses the significant health needs of that community, and solicits and takes into account input received from persons who represent the broad interests of that community. In Year 4, M documents its CHNA in a CHNA report that is adopted by an authorized body of M, makes the CHNA report widely available on a Web site, and makes paper copies of the CHNA report available for public inspection. To meet the requirements of paragraph (a)(2) of this section, an authorized body of M must adopt an implementation strategy to meet the health needs identified through the CHNA completed in Year 4 by the 15th day of the fifth month of Year 5.

(d) ***Exception for acquired, new, and terminated hospital facilities*** —

(1) ***Acquired hospital facilities.*** A hospital organization that acquires a hospital facility (whether through merger or acquisition) must meet the requirements of section 501(r)(3) with respect to the acquired hospital facility by the last day of the organization's second taxable year beginning after the date on which the hospital facility was acquired. In the case of a merger between two organizations that results in the liquidation of one organization and the survival of the other organization, the hospital facility or facilities formerly operated by the liquidated organization will be considered “acquired” for purposes of this paragraph (d)(1).

(2) ***New hospital organizations.*** An organization that becomes newly subject to the requirements of section 501(r) because it is recognized as described in section 501(c)(3) and is operating a hospital facility must meet the requirements of section 501(r)(3) with respect to any hospital facility by the last day of the second taxable year beginning after the later of the effective date of the determination letter or ruling recognizing the organization as described in section 501(c)(3) or the first date that a facility operated by the organization was licensed, registered, or similarly recognized by a state as a hospital.

(3) ***New hospital facilities.*** A hospital organization must meet the requirements of section 501(r)(3) with respect to a new hospital facility it operates by the last day of the second taxable year beginning after the date the facility was licensed, registered, or similarly recognized by its state as a hospital.

(4) ***Transferred or terminated hospital facilities.*** A hospital organization is not required to meet the requirements of section 501(r)(3) with respect to a hospital facility in a taxable year if, before the end of that taxable year, the hospital organization transfers all ownership of the hospital facility to another organization or otherwise ceases its operation of the hospital facility or the facility ceases to be licensed, registered, or similarly recognized as a hospital by a state.

(e) ***Transition rule for CHNAs conducted in taxable years beginning before March 23, 2012.*** A hospital facility that conducted a CHNA described in section 501(r)(3) in either its first taxable year beginning after March 23, 2010, or its first taxable year beginning after March 23, 2011, does not need to meet the requirements of section 501(r)(3) again until the third taxable year following the taxable year in which the hospital facility conducted that CHNA, provided that the hospital facility adopted an implementation strategy to meet the community health needs identified through that CHNA on or before the 15th day of the fifth calendar month following the close of its first taxable year beginning after March 23, 2012.

[T.D. 9708, 79 FR 78998, Dec. 31, 2014; 80 FR 12762, Mar. 11, 2015]

§ 1.501(r)-4 Financial assistance policy and emergency medical care policy.

(a) ***In general.*** A hospital organization meets the requirements of section 501(r)(4) with respect to a hospital facility it operates only if the hospital organization establishes for that hospital facility—

(1) A written financial assistance policy (FAP) that meets the requirements of paragraph (b) of this section; and

(2) A written emergency medical care policy that meets the requirements of paragraph (c) of this section.

(b) ***Financial assistance policy*** —

(1) ***In general.*** To satisfy paragraph (a)(1) of this section, a hospital facility's FAP must—

(i) Apply to all emergency and other medically necessary care provided by the hospital facility, including all such care provided in the hospital facility by a substantially-related entity (as defined in § 1.501(r)-1(b)(28));

(ii) Be widely publicized as described in paragraph (b)(5) of this section; and

(iii) Include—

(A) The eligibility criteria for financial assistance and whether such assistance includes free or discounted care;

(B) The basis for calculating amounts charged to patients;

(C) The method for applying for financial assistance;

(D) In the case of a hospital facility that does not have a separate billing and collections policy, the actions that may be taken in the event of nonpayment;

(E) If applicable, any information obtained from sources other than an individual seeking financial assistance that the hospital facility uses, and whether and under what circumstances it uses prior FAP-eligibility determinations, to presumptively determine that the individual is FAP-eligible, as described in § 1.501(r)-6(c)(2); and

(F) A list of any providers, other than the hospital facility itself, delivering emergency or other medically necessary care in the hospital facility that specifies which providers are covered by the hospital facility's FAP and which are not.

(2) ***Eligibility criteria and basis for calculating amounts charged to patients*** —

(i) ***In general.*** To satisfy paragraphs (b)(1)(iii)(A) and (b)(1)(iii)(B) of this section, the FAP must specify the following:

(A) All financial assistance available under the FAP, including all discounts and free care available under the FAP and, if applicable, the amount(s) (for example, gross charges) to which any discount percentages available under the FAP will be applied.

(B) The eligibility criteria that an individual must satisfy to receive each discount, free care, or other level of assistance available under the FAP.

(C) The method under § 1.501(r)-5(b) the hospital facility uses to determine the amounts generally billed to individuals who have insurance covering emergency or other medically necessary care (AGB). If the hospital facility uses the look-back method described in § 1.501(r)-5(b)(3), the FAP also must state the AGB percentage(s) that the hospital facility uses to determine AGB and describe how the hospital facility calculated such percentage(s) or, alternatively, explain how members of the public may readily obtain such percentage(s) and accompanying description of the calculation in writing and free of charge. In addition, the FAP must indicate that, following a determination of FAP-eligibility, a FAP-eligible individual may not be charged more than AGB for emergency or other medically necessary care.

(ii) ***Examples.*** The following examples illustrate this paragraph (b)(2):

> *Example 1.* (i) Q is a hospital facility that establishes a FAP that provides assistance to all uninsured and underinsured individuals whose family income is less than or equal to x% of the Federal Poverty Level (FPL), with the level of discount for which an individual is eligible under Q's FAP determined based upon the individual's family income as a percentage of FPL. Q's FAP defines the meaning of “uninsured,” “underinsured,” “family income,” and “Federal Poverty Level.” Q's FAP also states that Q determines AGB by multiplying the gross charges for any emergency or other medically necessary care it provides to a FAP-eligible individual by an AGB percentage of 56%. The FAP states, further, that Q calculated the AGB percentage of 56% based on all claims allowed by Medicare and private health insurers over a specified 12-month period, divided by the associated gross charges for those claims. Q's FAP contains the following chart, specifying each discount available under the FAP, the amounts (gross charges) to which

these discounts will be applied, and the specific eligibility criteria for each such discount:

Family income as % of FPL	Discount off of gross charges
>y% – x%	50%.
>z% – y%	75%.
≤z%	Free.

(ii) Q's FAP also contains a statement that no FAP-eligible individual will be charged more for emergency or other medically necessary care than AGB because Q's AGB percentage is 56% of gross charges and the most a FAP-eligible individual will be charged is 50% of gross charges. Q's FAP satisfies the requirements of this paragraph (b)(2).

Example 2. (i) R is a hospital facility that establishes a FAP that provides assistance based on household income. R's FAP defines the meaning of "household income." R's FAP contains the following chart specifying the assistance available under the FAP and the specific eligibility criteria for each level of assistance offered, which R updates occasionally to account for inflation:

Household income	Maximum amount individual will be responsible for paying
>$b – $a	40% of gross charges, up to the lesser of AGB or x% of household income.
>$c – $b	20% of gross charges, up to the lesser of AGB or y% of household income.
≤$c	$0 (free).

(ii) R's FAP contains a statement that no FAP-eligible individual will be charged more for emergency or other medically necessary care than AGB. R's FAP also states that R determines AGB by multiplying the gross charges for any emergency or other medically necessary care it provides by AGB percentages, which are based on claims allowed under Medicare. In addition, the FAP provides a Web site address individuals can visit, and a telephone number they can call, if they would like to obtain an information sheet stating R's AGB percentages and explaining how these AGB percentages were calculated. This information sheet, which R makes available on its Web site and provides to any individual who requests it, states that R's AGB percentages are 35% of gross

> charges for inpatient care and 61% of gross charges for outpatient care. It also states that these percentages were based on all claims allowed for R's emergency or other medically necessary inpatient and outpatient care by Medicare over a specified 12-month period, divided by the associated gross charges for those claims. R's FAP satisfies the requirements of this paragraph (b)(2).

(3) ***Method for applying for financial assistance*** —

(i) ***In general.*** To satisfy paragraph (b)(1)(iii)(C) of this section, a hospital facility's FAP must describe how an individual applies for financial assistance under the FAP. In addition, either the hospital facility's FAP or FAP application form (including accompanying instructions) must describe the information and documentation the hospital facility may require an individual to provide as part of his or her FAP application and provide the contact information described in § 1.501(r)-1(b)(24)(v). A hospital facility may not deny financial assistance under its FAP based on an applicant's failure to provide information or documentation unless that information or documentation is described in the FAP or FAP application form. However, a hospital facility may grant financial assistance under its FAP notwithstanding an applicant's failure to provide information or documentation described in the FAP or FAP application form and may, for example, rely on other evidence of eligibility or an attestation by the applicant to determine that the applicant is FAP-eligible.

(ii) ***Example.*** The following example illustrates this paragraph (b)(3):

Example. S is a hospital facility with a FAP that bases eligibility solely on an individual's household income. S's FAP provides that an individual may apply for financial assistance by completing and submitting S's FAP application form. S's FAP also describes how individuals can obtain copies of the FAP application form. S's FAP application form contains lines on which the applicant lists all items of household income received by the applicant's household over the last month and the names of the applicant's household members. The instructions to S's FAP application form tell applicants where to submit the application and provide that an applicant must attach to his or her FAP application form proof of household income in the form of payroll check stubs from the last month or, if last month's wages are not representative of the applicant's annual income, a copy of the applicant's most recent federal tax return. Alternatively, the instructions state that an applicant may provide documentation of his or her qualification for certain specified state means-tested programs. The instructions also state that if an applicant does not have any of the listed documents proving household income, he or she may call S's financial assistance office and discuss other evidence that may be provided to demonstrate eligibility. S does not deny financial assistance to FAP applicants based on a failure to submit any information or documentation not mentioned in the FAP application form or instructions. S's FAP application form instructions also provide the contact information of the hospital facility office that can provide an applicant with information about the FAP and assistance with the FAP application process. S's FAP satisfies the requirements of this paragraph (b)(3).

(4) ***Actions that may be taken in the event of nonpayment*** —

(i) ***In general.*** To satisfy paragraph (b)(1)(iii)(D) of this section, either a hospital facility's FAP or a separate written billing and collections policy established for the hospital facility must describe—

(A) Any actions that the hospital facility (or other authorized party) may take related to obtaining payment of a bill for medical care, including, but not limited to, any extraordinary collection actions (ECAs) described in § 1.501(r)-6(b);

(B) The process and time frames the hospital facility (or other authorized party) uses in taking the actions described in paragraph (b)(4)(i)(A) of this section, including, but not limited to, the reasonable efforts it will make to determine whether an individual is FAP-eligible before engaging in any ECAs, as described in § 1.501(r)-6(c); and

(C) The office, department, committee, or other body with the final authority or responsibility for determining that the hospital facility has made reasonable efforts to determine whether an individual is FAP-eligible and may therefore engage in ECAs against the individual.

(ii) ***Separate billing and collections policy.*** In the case of a hospital facility that satisfies paragraph (b)(1)(iii)(D) of this section by establishing a separate written billing and collections policy, the hospital facility's FAP must state that the actions the hospital facility may take in the event of nonpayment are described in a separate billing and collections policy and explain how members of the public may readily obtain a free copy of this separate policy.

(5) ***Widely publicizing the FAP*** —

(i) ***In general.*** To satisfy the requirement in paragraph (b)(1)(ii) of this section to widely publicize its FAP, a hospital facility must—

(A) Make the FAP, FAP application form, and plain language summary of the FAP (as defined in § 1.501(r)-1(b)(24)) widely available on a Web site (as defined in § 1.501(r)-1(b)(29));

(B) Make paper copies of the FAP, FAP application form, and plain language summary of the FAP available upon request and without charge, both by mail and in public locations in the hospital facility, including, at a minimum, in the emergency room (if any) and admissions areas;

(C) Notify and inform members of the community served by the hospital facility about the FAP in a manner reasonably calculated to reach those members who are most likely to require financial assistance from the hospital facility; and

(D) Notify and inform individuals who receive care from the hospital facility about the FAP by—

(*1*) Offering a paper copy of the plain language summary of the FAP to patients as part of the intake or discharge process;

(*2*) Including a conspicuous written notice on billing statements that notifies and informs recipients about the availability of financial assistance under the hospital facility's FAP and includes the telephone number of the hospital facility office or department that can provide information about the FAP and FAP application process and the direct Web site address (or URL) where copies of the FAP, FAP application form, and plain language summary of the FAP may be obtained; and

(*3*) Setting up conspicuous public displays (or other measures reasonably calculated to attract patients' attention) that notify and inform patients about the FAP in public locations in the hospital facility, including, at a minimum, the emergency room (if any) and admissions areas.

(ii) ***Accessibility to limited English proficient individuals.*** To widely publicize its FAP, a hospital facility must accommodate all significant populations that have limited English proficiency (LEP) by translating its FAP, FAP application form, and plain language summary of the FAP into the primary language(s) spoken by such populations. A hospital facility will satisfy this translation requirement in a taxable year if it makes available translations of its FAP, FAP application form, and plain language summary of the FAP in the language spoken by each LEP language group that constitutes the lesser of 1,000 individuals or 5 percent of the community served by the hospital facility or the population likely to be affected or encountered by the hospital facility. For purposes of this paragraph (b)(5)(ii), a hospital facility may determine the percentage or number of LEP individuals in the hospital facility's community or likely to be affected or encountered by the hospital facility using any reasonable method.

(iii) ***Meaning of notify and inform.*** For purposes of paragraphs (b)(5)(i)(C) and (b)(5)(i)(D)(*3*) of this section, a measure will notify and inform members of a community or patients about the hospital facility's FAP if the measure, at a minimum, notifies the reader or listener that the hospital facility offers financial assistance under a FAP and informs him or her about how or where to obtain more information about the FAP and FAP application process and to obtain copies of the FAP, FAP application form, and plain language summary of the FAP.

(iv) ***Meaning of reasonably calculated.*** Whether one or more measures to widely publicize a hospital facility's FAP are reasonably calculated to notify and inform members of a community or patients about the hospital facility's FAP in the manner described in paragraphs (b)(5)(i)(C) and (b)(5)(i)(D)(*3*) of this section will depend on all of the facts and circumstances, including the primary language(s) spoken by the members of the community served by the hospital facility and other attributes of the community and the hospital facility.

(v) ***Examples.*** The following examples illustrate this paragraph (b)(5):

> *Example 1.* (i) Z is a hospital facility. The home page and main billing page of Z's Web site conspicuously display the following message: “Need help paying your bill? You may be eligible for financial assistance. Click *here* for more information.” When readers click on the link, they are taken to a Web page that explains the various discounts available under Z's FAP and the specific eligibility criteria for each such discount. This Web page also provides all of the other information required to be included in a plain language summary of the FAP (as defined in § 1.501(r)-1(b)(24)), including a telephone number of Z that individuals can call and a room number of Z that individuals can visit for more information about the FAP and assistance with FAP applications. In addition, the Web page contains prominently-displayed links that allow readers to download PDF files of the FAP and the FAP application form, free of charge and without being required to create an account or provide personally identifiable information. Z provides any individual who asks how to access a copy of the FAP, FAP application form, or plain language summary of the FAP online with the URL of this Web page. By implementing

these measures, Z has made its FAP widely available on a Web site within the meaning of paragraph (b)(5)(i)(A) of this section.
(ii) Z distributes copies of the plain language summary of its FAP and its FAP application form to all of its referring staff physicians and to the community health centers serving its community. Z also distributes copies of these documents to the local health department and to numerous public agencies and nonprofit organizations in its community that address the health issues and other needs of low-income populations, in quantities sufficient to meet demand. In addition, every issue of the quarterly newsletter that Z mails to the individuals in its customer database contains a prominently-displayed advertisement informing readers that Z offers financial assistance and that people having trouble paying their hospital bills may be eligible for financial assistance. The advertisement provides readers with the URL of the Web page where Z's FAP and FAP application form can be accessed and a telephone number of Z that individuals can call and a room number of Z that individuals can visit with questions about the FAP or assistance with the FAP application process. By implementing these measures, Z notifies and informs members of its community about the FAP within the meaning of paragraph (b)(5)(i)(C) of this section.

(iii) Z makes paper copies of the FAP, FAP application form, and plain language summary of the FAP available upon request and without charge, both by mail and in its admissions areas and emergency room. Z also conspicuously displays a sign in large font regarding the FAP in its admissions areas and emergency room. The sign says: “Uninsured? Having trouble paying your hospital bill? You may be eligible for financial assistance.” The sign also provides the URL of the Web page where Z's FAP and FAP application form can be accessed. In addition, the sign provides a telephone number of Z that individuals can call and a room number of Z that individuals can visit with questions about the FAP or assistance with the FAP application process. Underneath each sign, Z conspicuously displays copies of a brochure that contains all of the information required to be included in a plain language summary of the FAP (as defined in § 1.501(r)-1(b)(24)). Z makes these brochures available in quantities sufficient to meet visitor demand. Z also offers a plain language summary of the FAP as part of its intake process. Z's billing statements include a conspicuously-placed statement in large font containing the same information that Z includes on its signs. By implementing these measures, Z makes a paper copy of the FAP, FAP application form, and plain language summary of the FAP available upon request within the meaning of paragraph (b)(5)(i)(B) of this section and notifies and informs individuals who receive care from the hospital facility about the FAP within the meaning of paragraph (b)(5)(i)(D) of this section.

(iv) Because Z takes measures to widely publicize the FAP described in paragraphs (b)(5)(i)(A), (b)(5)(i)(B), (b)(5)(i)(C), and (b)(5)(i)(D) of this section, Z meets the requirement to widely publicize its FAP under paragraph (b)(1)(ii) of this section.

> ***Example 2.*** Assume the same facts as *Example 1*, except that Z serves a community in which 6% of the members speak Spanish and have limited proficiency in English. Z translates its FAP, FAP application form, and FAP brochure (which constitutes a plain language summary of the FAP) into Spanish, and displays and distributes both Spanish and English versions of these documents in its hospital facility using all of the measures described in *Example 1*. Z also distributes Spanish versions of its FAP application form and FAP brochure to organizations serving Spanish-speaking members of its community. Moreover, the home page and main billing page of Z's Web site conspicuously display an "¿Habla Español?" link that takes readers to a Web page that summarizes the FAP in Spanish and contains links that allow readers to download PDF files of the Spanish versions of the FAP and FAP application form, free of charge and without being required to create an account or provide personally identifiable information. Z meets the requirement to widely publicize its FAP under paragraph (b)(1)(ii) of this section.

(6) ***Readily obtainable information.*** For purposes of paragraphs (b)(2)(i)(C) and (b)(4)(ii) of this section, information is readily obtainable by members of the public if a hospital facility—

(i) Makes the information available free of charge on a Web site and via a paper copy upon request in a manner similar to that described in paragraphs (b)(5)(i)(A) and (b)(5)(i)(B) of this section; and

(ii) Provides translations of the information as described in paragraph (b)(5)(ii) of this section.

(7) ***Providing documents electronically.*** A hospital facility may provide electronically (for example, on an electronic screen, by email, or by providing the direct Web site address, or URL, of the Web page where the document or information is posted) any document or information that is required by this paragraph (b) to be provided in the form of a paper copy to any individual who indicates he or she prefers to receive or access the document or information electronically.

(8) ***Medically necessary care.*** For purposes of meeting the requirements of this section, a hospital facility may (but is not required to) use a definition of medically necessary care applicable under the laws of the state in which it is licensed, including the Medicaid definition, or a definition that refers to the generally accepted standards of medicine in the community or to an examining physician's determination.

(c) ***Emergency medical care policy*** —

(1) ***In general.*** To satisfy paragraph (a)(2) of this section, a hospital organization must establish a written policy for a hospital facility that requires the hospital facility to provide, without discrimination, care for emergency medical conditions to individuals regardless of whether they are FAP-eligible.

(2) ***Interference with provision of emergency medical care.*** A hospital facility's emergency medical care policy will not be described in paragraph (c)(1) of this section unless it prohibits the hospital facility from engaging in actions that discourage individuals from seeking emergency medical care, such as by demanding that emergency department patients pay before receiving treatment for emergency medical conditions or by permitting debt collection activities that interfere with the provision, without discrimination, of emergency medical care.

(3) ***Relation to federal law governing emergency medical care.*** Subject to paragraph (c)(2) of this section, a hospital facility's emergency medical care policy will be described in paragraph (c)(1) of this section if it requires the hospital facility to provide the care for emergency medical conditions that the hospital facility is required to provide under Subchapter G of Chapter IV of Title 42 of the Code of Federal Regulations (or any successor regulations).

(4) ***Examples.*** The following examples illustrate this paragraph (c):

Example 1. F is a hospital facility with a dedicated emergency department that is subject to the Emergency Medical Treatment and Labor Act (EMTALA) and is not a critical access hospital. F establishes a written emergency medical care policy requiring F to comply with EMTALA by providing medical screening examinations and stabilizing treatment and referring or transferring an individual to another facility, when appropriate, and providing emergency services in accordance with 42 CFR 482.55 (or any successor regulation). F's emergency medical care policy also states that F prohibits any actions that would discourage individuals from seeking emergency medical care, such as by demanding that emergency department patients pay before receiving treatment for emergency medical conditions or permitting debt collection activities that interfere with the provision, without discrimination, of emergency medical care. F's emergency medical care policy is described in paragraph (c)(1) of this section.

Example 2. G is a rehabilitation hospital facility. G does not have a dedicated emergency department, nor does it have specialized capabilities that would make it appropriate to accept transfers of individuals who need stabilizing treatment for an emergency medical condition. G establishes a written emergency medical care policy that addresses how it appraises emergencies, provides initial treatment, and refers or transfers an individual to another facility, when appropriate, in a manner that complies with 42 CFR 482.12(f)(2) (or any successor regulation). G's emergency medical care policy also prohibits G from engaging in actions that discourage individuals from seeking emergency medical care, such as by demanding that patients pay before receiving initial treatment for emergency medical conditions or permitting debt collection activities that interfere with the facility's appraisal and provision, without discrimination, of such initial treatment. G's emergency medical care policy is described in paragraph (c)(1) of this section.

(d) ***Establishing the FAP and other policies*** —

(1) ***In general.*** A hospital organization has established a FAP, a billing and collections policy, or an emergency medical care policy for a hospital facility only if an authorized body of the hospital facility (as defined in § 1.501(r)-1(b)(4)) has adopted the policy for the hospital facility and the hospital facility has implemented the policy.

(2) ***Implementing a policy.*** For purposes of this paragraph (d), a hospital facility will be considered to have implemented a policy if the hospital facility has consistently carried out the policy.

(3) ***Establishing a policy for more than one hospital facility.*** A hospital organization may establish a FAP, billing and collections policy, and/or emergency medical care policy for a hospital facility that is identical to that of other hospital facilities or a joint policy that is shared with multiple hospital facilities provided that any joint policy clearly identifies each facility to which it applies. However, hospital facilities that have different AGB percentages or use different methods to determine AGB must include in their FAPs (or, in the case of information related to AGB percentages, otherwise make readily obtainable) different information regarding AGB to meet the requirements of paragraph (b)(2)(i)(C) of this section.

[T.D. 9708, 79 FR 78998, Dec. 31, 2014]

§ 1.501(r)-5 Limitation on charges.

(a) ***In general.*** A hospital organization meets the requirements of section 501(r)(5) with respect to a hospital facility it operates only if the hospital facility (and any substantially-related entity, as defined in § 1.501(r)-1(b)(28)) limits the amount charged for care it provides to any individual who is eligible for assistance under its financial assistance policy (FAP) to—

(1) In the case of emergency or other medically necessary care, not more than the amounts generally billed to individuals who have insurance covering such care (AGB), as determined under paragraph (b) of this section; and

(2) In the case of all other medical care covered under the FAP, less than the gross charges for such care, as described in paragraph (c) of this section.

(b) ***Amounts generally billed*** —

(1) ***In general.*** For purposes of meeting the requirements of paragraph (a)(1) of this section, a hospital facility must determine AGB for emergency or other medically necessary care using a method described in paragraph (b)(3) or (b)(4) of this section or any other method specified in regulations or other guidance published in the Internal Revenue Bulletin. A hospital facility may use only one of these methods to determine AGB at any one time, but different hospital facilities operated by the same hospital organization may use different methods. A hospital facility may change the method it uses to determine AGB at any time.

(2) ***Meaning of charged.*** For purposes of paragraph (a)(1) of this section, a FAP-eligible individual is considered to be “charged” only the amount he or she is personally responsible for paying, after all deductions, discounts (including discounts available under the FAP), and insurance reimbursements have been applied. Thus, in the case of a FAP-eligible individual who has health insurance coverage, a hospital facility will meet the requirements of paragraph (a)(1) of this section if the FAP-eligible individual is not personally responsible for paying (for example, in the form of co-payments, co-insurance, and deductibles) more than AGB for the care after all reimbursements by the health insurer have been applied, even if the total amount paid by the FAP-eligible individual and his or her health insurer together exceeds AGB.

(3) ***Look-back method*** —

(i) ***In general.*** A hospital facility may determine AGB for any emergency or other medically necessary care it provides to a FAP-eligible individual by multiplying the hospital facility's gross charges for the care by one or more percentages of gross charges (AGB percentage(s)). A hospital facility using this method must calculate its AGB percentage(s) at least annually by dividing the sum of the amounts of all of its claims for emergency and other medically necessary care that have been allowed by health insurers described in paragraph (b)(3)(ii) of this section during a prior 12-month period by the sum of the associated gross charges for those claims. Whether a claim is used in calculating a hospital facility's AGB percentage(s) depends on whether the claim was allowed by a health insurer during the 12-month period used in the calculation, not on whether the care resulting in the claim was provided during that 12-month period. If the amount a health insurer will allow for a claim has not been finally determined as of the last day of the 12-month period used to calculate the AGB percentage(s), a hospital facility should exclude the amount of the claim from that calculation and include it in

the subsequent 12-month period during which the amount allowed is finally determined. When including allowed claims in calculating its AGB percentage(s), the hospital facility should include the full amount that has been allowed by the health insurer, including both the amount the insurer will pay or reimburse and the amount (if any) the individual is personally responsible for paying in the form of co-payments, co-insurance, and deductibles, regardless of whether or when the full amount allowed is actually paid and disregarding any discounts applied to the individual's portion.

(ii) ***Health insurers used in calculating AGB percentage(s).*** In calculating its AGB percentage(s), a hospital facility must include the claims allowed during a prior 12-month period by—

(A) Medicare fee-for-service;

(B) Medicare fee-for-service and all private health insurers that pay claims to the hospital facility; or

(C) Medicaid, either alone or in combination with the insurer(s) described in paragraph (b)(3)(ii)(A) or (b)(3)(ii)(B) of this section.

(iii) ***One or multiple AGB percentages.*** A hospital facility's AGB percentage that is calculated using the method described in this paragraph (b)(3) may be one average percentage of gross charges for all emergency and other medically necessary care provided by the hospital facility. Alternatively, a hospital facility may calculate multiple AGB percentages for separate categories of care (such as inpatient and outpatient care or care provided by different departments) or for separate items or services, as long as the hospital facility calculates AGB percentages for all emergency and other medically necessary care provided by the hospital facility.

(iv) ***Start date for applying AGB percentages.*** For purposes of determining AGB under this paragraph (b)(3), with respect to any AGB percentage that a hospital facility has calculated, the hospital facility must begin applying the AGB percentage by the 120th day after the end of the 12-month period the hospital facility used in calculating the AGB percentage.

(v) ***Use of all claims for medical care.*** A hospital facility determining AGB under this paragraph (b)(3) may use claims allowed for all medical care during a prior 12-month period rather than just those allowed for emergency and other medically necessary care.

(vi) ***Determining AGB percentages for more than one hospital facility.*** Although generally a hospital organization must calculate AGB percentage(s) separately for each hospital facility it operates, hospital facilities that are covered under the same Medicare provider agreement (as defined in 42 CFR 489.3 or any successor regulations) may calculate one AGB percentage (or multiple AGB percentages for separate categories of care or for separate items or services) using the method described in this paragraph (b)(3) based on the claims and gross charges for all such hospital facilities and implement the AGB percentage(s) across all such hospital facilities.

(4) ***Prospective Medicare or Medicaid method.*** A hospital facility may determine AGB for any emergency or other medically necessary care provided to a FAP-eligible individual by using the billing and coding process the hospital facility would use if the FAP-eligible individual were a Medicare fee-for-service or Medicaid beneficiary and setting AGB for the care at the amount the hospital facility determines would be the total amount Medicare or Medicaid would allow for the care (including both the amount that would be reimbursed by Medicare or Medicaid and the amount the beneficiary would be personally responsible for paying in the form of co-payments, co-insurance, and deductibles). A

hospital facility using the method described in this paragraph (b)(4) may base AGB on Medicare fee-for-service or Medicaid or both, provided that, if it uses both, its FAP describes the circumstance under which it will use Medicare fee-for-service or Medicaid in determining AGB.

(5) ***Examples.*** The following examples illustrate this paragraph (b):

Example 1. On March 15 of Year 1, Y, a hospital facility, generates data on the amount of all of Y's claims for emergency and other medically necessary care that were allowed by all private health insurers and Medicare fee-for-service over the immediately preceding calendar year. Y determines that the private health insurers allowed a total amount of $250 million and Medicare fee-for-service allowed a total amount of $150 million, with the total allowed amounts including both the portion the insurers agreed to reimburse and the portion that the insured patients were personally responsible for paying. Y's gross charges for these claims totaled $800 million. Y calculates that its AGB percentage is 50% of gross charges ($400 million/$800 million). Y updates its FAP to reflect the new AGB percentage of 50% and makes the updated FAP widely available (both on its Web site and via paper copies upon request) on April 1 of Year 1. Between April 1 of Year 1 (less than 120 days after the end of the preceding calendar year) and March 31 of Year 2, Y determines AGB for any emergency or other medically necessary care it provides to a FAP-eligible individual by multiplying the gross charges for the care provided to the individual by 50%. Y has determined AGB between April 1 of Year 1 and March 31 of Year 2 in accordance with this paragraph (b) by using the look-back method described in paragraph (b)(3) of this section.

Example 2. On August 20 of Year 1, X, a hospital facility, generates data on the amount of all of X's claims for emergency and other medically necessary care that were allowed by Medicare fee-for-service over the 12 months ending on July 31 of Year 1. X determines that, of these claims for inpatient services, Medicare allowed a total amount of $100 million (including both the portion Medicare agreed to reimburse and the portion Medicare beneficiaries were personally responsible for paying). X's gross charges for these inpatient claims totaled $250 million. Of the claims for outpatient services, Medicare allowed a total amount of $125 million. X's gross charges for these outpatient claims totaled $200 million. X calculates that its AGB percentage for inpatient services is 40% of gross charges ($100 million/$250 million) and its AGB percentage for outpatient services is 62.5% of gross charges ($125 million/$200 million). Y discloses its AGB percentages and describes how they were calculated on the Web page where its FAP can be accessed, and it updates this Web page to reflect the new AGB percentages on November 1. Y also starts making an updated information sheet with the new AGB percentages available upon request on and after November 1. Between November 1 of Year 1 (less than 120 days after the end of the 12-month claim period) and October 31 of Year 2, X determines AGB for any emergency or other medically necessary inpatient care it provides to a FAP-eligible individual by multiplying the gross charges for the inpatient care it provides to the individual by 40% and AGB for any emergency or other medically necessary outpatient care it provides to a FAP-eligible individual by multiplying the gross charges for the outpatient care it provides to the individual by 62.5%. X has determined AGB between November 1 of Year 1 and October 31 of Year 2 in accordance with this paragraph (b) by using the look-back method described in paragraph (b)(3) of this section.

Example 3. Whenever Z, a hospital facility, provides emergency or other medically necessary care to a FAP-eligible individual, Z determines the AGB for the care by using the billing and coding process it would use if the individual were a Medicare fee-for-service beneficiary and setting

AGB for the care at the amount it determines Medicare and the Medicare beneficiary together would be expected to pay for the care. Z has determined AGB in accordance with this paragraph (b) by using the prospective Medicare method described in paragraph (b)(4) of this section.

Example 4. Using the look-back method described in paragraph (b)(3) of this section, W, a hospital facility, calculates that its AGB percentage for Year 1 is 60% of gross charges. Under W's FAP, which applies to all emergency and other medically necessary care provided by W and which has been updated to reflect the AGB percentage for Year 1, the most that W charges a FAP-eligible individual is 50% of gross charges. W properly implements its FAP and charges no FAP-eligible individual more for emergency or other medically necessary care than 50% of gross charges in Year 1. W has met the requirements of paragraphs (a)(1) and (b) of this section in Year 1.

Example 5. A, an individual, receives medically necessary care from hospital facility V for which the AGB is $3y. A is insured by U, a health insurer. Under U's contracts with V and A, the amount allowed for the care V provided to A is $5y. Of that amount allowed, A is personally responsible for paying $1y (in co-payments and deductibles) while U is responsible for paying $4y. Based on the eligibility criteria specified in its FAP, V determines that A is FAP-eligible. Pursuant to paragraph (b)(2) of this section, V may charge U and A collectively $5y while still meeting the requirements of paragraph (a)(1) of this section because the amount A is personally responsible for paying in co-payments and deductibles ($1y) is less than the AGB for the care ($3y).

Example 6. Assume the same facts as *Example 5,* except that under U's contracts with V and A, A is personally responsible for paying $4y (in co-payments and deductibles) for the care while U is responsible for paying V $1y. Because A is FAP-eligible under V's FAP, paragraph (a)(1) of this section requires that A not be personally responsible for paying V more than $3y (the AGB for the care provided).

(c) ***Gross charges.*** A hospital facility must charge a FAP-eligible individual less than the gross charges for any medical care covered under the hospital facility's FAP. A billing statement issued by a hospital facility to a FAP-eligible individual for medical care covered under the FAP may state the gross charges for such care and apply contractual allowances, discounts, or deductions to the gross charges, provided that the actual amount the individual is personally responsible for paying is less than the gross charges for such care.

(d) ***Safe harbor for certain charges in excess of AGB.*** A hospital facility will be deemed to meet the requirements of paragraph (a) of this section, even if it charges more than AGB for emergency or other medically necessary care (or gross charges for any medical care covered under the FAP) provided to a FAP-eligible individual, if—

(1) The charge in excess of AGB was not made or requested as a pre-condition of providing medically necessary care to the FAP-eligible individual (for example, an upfront payment that a hospital facility requires before providing medically necessary care);

(2) As of the time of the charge, the FAP-eligible individual has not submitted a complete FAP application to the hospital facility to obtain financial assistance for the care or has not otherwise been determined by the hospital facility to be FAP-eligible for the care; and

(3) If the individual subsequently submits a complete FAP application and is determined to be FAP-eligible for the care, the hospital facility refunds any amount the individual has paid for the care (whether to the hospital facility or any other party to whom the hospital facility has referred or sold

the individual's debt for the care) that exceeds the amount he or she is determined to be personally responsible for paying as a FAP-eligible individual, unless such excess amount is less than $5 (or such other amount set by notice or other guidance published in the Internal Revenue Bulletin).

(e) ***Medically necessary care.*** For purposes of meeting the requirements of this section, a hospital facility may (but is not required to) use a definition of medically necessary care applicable under the laws of the state in which it is licensed, including the Medicaid definition, or a definition that refers to the generally accepted standards of medicine in the community or to an examining physician's determination.

[T.D. 9708, 79 FR 78998, Dec. 31, 2014]

§ 1.501(r)-6 Billing and collection.

(a) ***In general.*** A hospital organization meets the requirements of section 501(r)(6) with respect to a hospital facility it operates only if the hospital facility does not engage in extraordinary collection actions (ECAs), as defined in paragraph (b) of this section, against an individual to obtain payment for care before the hospital facility has made reasonable efforts to determine whether the individual is eligible for assistance for the care under its financial assistance policy (FAP), as described in paragraph (c) of this section. For purposes of this section, with respect to any debt owed by an individual for care provided by a hospital facility—

(1) ECAs against the individual include ECAs to obtain payment for the care against any other individual who has accepted or is required to accept responsibility for the individual's hospital bill for the care; and

(2) The hospital facility will be deemed to have engaged in an ECA against the individual to obtain payment for the care, or to have taken one or more of the steps necessary to have made reasonable efforts to determine whether the individual is FAP-eligible for the care, if any purchaser of the individual's debt, any debt collection agency or other party to which the hospital facility has referred the individual's debt, or any substantially-related entity (as defined in § 1.501(r)-1(b)(28)) has engaged in such an ECA or taken such steps (whichever is applicable).

(b) ***Extraordinary collection actions*** —

(1) ***In general.*** Except as otherwise provided in this paragraph (b), the following actions taken by a hospital facility against an individual related to obtaining payment of a bill for care covered under the hospital facility's FAP are ECAs:

(i) Selling an individual's debt to another party (other than debt sales described in paragraph (b)(2) of this section).

(ii) Reporting adverse information about the individual to consumer credit reporting agencies or credit bureaus.

(iii) Deferring or denying, or requiring a payment before providing, medically necessary care because of an individual's nonpayment of one or more bills for previously provided care covered under the hospital facility's FAP (which is considered an ECA to obtain payment for the previously provided care, not the care being potentially deferred or denied). If a hospital facility requires a payment before providing medically necessary care to an individual with one or more outstanding bills for previously provided care, such a requirement for payment will be presumed

to be because of the individual's nonpayment of such bill(s) unless the hospital facility can demonstrate that it required the payment from the individual based on factors other than, and without regard to, the individual's nonpayment of past bills.

(iv) Actions that require a legal or judicial process, including but not limited to—

(A) Placing a lien on an individual's property (other than a lien described in paragraph (b)(3) of this section);

(B) Foreclosing on an individual's real property;

(C) Attaching or seizing an individual's bank account or any other personal property;

(D) Commencing a civil action against an individual;

(E) Causing an individual's arrest;

(F) Causing an individual to be subject to a writ of body attachment; and

(G) Garnishing an individual's wages.

(2) ***Certain debt sales that are not ECAs.*** A hospital facility's sale of an individual's debt for care provided by the hospital facility will not be considered an ECA if, prior to the sale, the hospital facility has entered into a legally binding written agreement with the purchaser of the debt pursuant to which—

(i) The purchaser is prohibited from engaging in any ECAs to obtain payment for the care;

(ii) The purchaser is prohibited from charging interest on the debt in excess of the rate in effect under section 6621(a)(2) at the time the debt is sold (or such other interest rate set by notice or other guidance published in the Internal Revenue Bulletin);

(iii) The debt is returnable to or recallable by the hospital facility upon a determination by the hospital facility or the purchaser that the individual is FAP-eligible; and

(iv) If the individual is determined to be FAP-eligible and the debt is not returned to or recalled by the hospital facility, the purchaser is required to adhere to procedures specified in the agreement that ensure that the individual does not pay, and has no obligation to pay, the purchaser and the hospital facility together more than he or she is personally responsible for paying as a FAP-eligible individual.

(3) ***Liens on certain judgments, settlements, or compromises.*** Any lien that a hospital facility is entitled to assert under state law on the proceeds of a judgment, settlement, or compromise owed to an individual (or his or her representative) as a result of personal injuries for which the hospital facility provided care is not an ECA.

(4) ***Bankruptcy claims.*** The filing of a claim in any bankruptcy proceeding is not an ECA.

(c) ***Reasonable efforts*** —

(1) ***In general.*** A hospital facility will have made reasonable efforts to determine whether an individual is FAP-eligible for care only if the hospital facility meets the requirements described in paragraph (c)(2) or (c)(3) of this section.

(2) ***Presumptive FAP-eligibility determinations based on third-party information or prior FAP-eligibility determinations*** —

(i) ***In general.*** With respect to any care provided by a hospital facility to an individual, the hospital facility will have made reasonable efforts to determine whether the individual is FAP-eligible for the care if it determines that the individual is FAP-eligible for the care based on information other than that provided by the individual or based on a prior FAP-eligibility determination and, if the individual is presumptively determined to be eligible for less than the most generous assistance available under the FAP, the hospital facility—

(A) Notifies the individual regarding the basis for the presumptive FAP-eligibility determination and the way to apply for more generous assistance available under the FAP;

(B) Gives the individual a reasonable period of time to apply for more generous assistance before initiating ECAs to obtain the discounted amount owed for the care; and

(C) If the individual submits a complete FAP application seeking more generous assistance during the application period (as defined in § 1.501(r)-1(b)(3)), determines whether the individual is eligible for a more generous discount and otherwise meets the requirements described in paragraph (c)(6) of this section with respect to that complete FAP application.

(ii) ***Examples.*** The following examples illustrate this paragraph (c)(2):

Example 1. V is a hospital facility with a FAP under which the specific assistance for which an individual is eligible depends exclusively upon that individual's household income. The most generous assistance offered for care under V's FAP is free care. V's FAP states that V uses enrollment in certain specified means-tested public programs to presumptively determine that individuals are FAP-eligible. D, an individual, receives care from V. Although D does not submit a FAP application to V, V learns that D is eligible for certain benefits under a state program that bases eligibility on household income. Based on this knowledge, V presumptively determines that D is eligible to receive free care under its FAP. V notifies D that it has determined he is eligible for free care based on his eligibility for the benefits under the state program and therefore does not owe V anything for the care he received. V has made reasonable efforts to determine whether D is FAP-eligible under this paragraph (c)(2).

Example 2. X is a hospital facility with a FAP that describes the data, including both hospital and publicly-available data, X uses to make presumptive FAP-eligibility determinations. On January 16, F, an individual, receives care from X. Using the hospital and publicly-available data described in its FAP, X presumptively determines that F is eligible for a 50% discount under its FAP, a discount that is not the most generous discount available under the FAP. The first billing statement that X sends to F indicates that F has been given a 50% discount under X's FAP, explains the basis for this presumptive FAP-eligibility determination, and informs F that she may apply for financial assistance if she believes she is eligible for a more generous discount. The billing statement indicates that F may call 1-800-888-xxxx or visit X's Web site at *www.hospitalX.org/FAP* to learn more about the FAP or the FAP application process. X sends F three more billing statements, each of which contains the standard written notice about the FAP that X includes on all of its billing statements in accordance with § 1.501(r)-4(b)(5), but F neither pays the amount she is personally responsible for paying nor applies for more generous financial assistance. The time between the first and fourth billing statement constitutes a reasonable period of time for F to apply for more generous assistance. V has made reasonable efforts to determine whether D is FAP-eligible under this paragraph (c)(2).

(3) ***Reasonable efforts based on notification and processing of applications.*** With respect to any care provided by a hospital facility to an individual, the hospital facility will have made reasonable efforts to determine whether the individual is FAP-eligible for the care if it—

(i) Notifies the individual about the FAP as described in paragraph (c)(4) of this section before initiating any ECAs to obtain payment for the care and refrains from initiating such ECAs (with the exception of an ECA described in paragraph (b)(1)(iii) of this section) for at least 120 days from the date the hospital facility provides the first post-discharge billing statement for the care;

(ii) In the case of an individual who submits an incomplete FAP application during the application period, notifies the individual about how to complete the FAP application and gives the individual a reasonable opportunity to do so as described in paragraph (c)(5) of this section; and

(iii) In the case of an individual who submits a complete FAP application during the application period, determines whether the individual is FAP-eligible for the care and otherwise meets the requirements described in paragraph (c)(6) of this section.

(4) ***Notification*** —

(i) ***In general.*** With respect to any care provided by a hospital facility to an individual and except as provided in paragraph (c)(4)(iii) of this section, a hospital facility will have notified an individual about its FAP for purposes of paragraph (c)(3)(i) of this section only if the hospital facility does the following at least 30 days before first initiating one or more ECA(s) to obtain payment for the care:

(A) Provides the individual with a written notice that indicates financial assistance is available for eligible individuals, that identifies the ECA(s) that the hospitality facility (or other authorized party) intends to initiate to obtain payment for the care, and that states a deadline after which such ECA(s) may be initiated that is no earlier than 30 days after the date that the written notice is provided.

(B) Provides the individual with a plain language summary of the FAP (as defined in § 1.501(r)-1(b)(24)) with the written notice described in paragraph (c)(4)(i)(A) of this section (or, if applicable, paragraph (c)(4)(iii) of this section).

(C) Makes a reasonable effort to orally notify the individual about the hospital facility's FAP and about how the individual may obtain assistance with the FAP application process.

(ii) ***Notification in the event of multiple episodes of care.*** A hospital facility may satisfy the notification requirements described in paragraph (c)(4)(i) of this section simultaneously for multiple episodes of care and notify the individual about the ECA(s) the hospital facility intends to initiate to obtain payment for multiple outstanding bills for care. However, if a hospital facility aggregates an individual's outstanding bills for multiple episodes of care before initiating one or more ECAs to obtain payment for those bills, it will have not have made reasonable efforts to determine whether the individual is FAP-eligible under paragraph (c)(3) of this section unless it refrains from initiating the ECA(s) until 120 days after it provided the first post-discharge billing statement for the most recent episode of care included in the aggregation.

(iii) ***Notification before deferring or denying care due to nonpayment for prior care.*** In the case of an ECA described in paragraph (b)(1)(iii) of this section, a hospital facility may notify the individual about its FAP less than 30 days before initiating the ECA, provided that the hospital facility does the following:

(A) Otherwise meets the requirements of paragraph (c)(4)(i) of this section but, instead of the notice described in paragraph (c)(4)(i)(A) of this section, provides the individual with a FAP application form and a written notice indicating that financial assistance is available for eligible individuals and stating the deadline, if any, after which the hospital facility will no longer accept and process a FAP application submitted (or, if applicable, completed) by the individual for the previously provided care at issue. This deadline must be no earlier than the later of 30 days after the date that the written notice is provided or 240 days after the date that the first post-discharge billing statement for the previously provided care was provided.

(B) If the individual submits a FAP application for the previously provided care on or before the deadline described in paragraph (c)(4)(iii)(A) of this section (or at any time, if the hospital facility didn't provide any such deadline to the individual), processes the FAP application on an expedited basis.

(iv) ***Examples.*** The following example illustrates this paragraph (c)(4):

Example 1. A, an individual, receives care from T, a hospital facility, in February. T provides A with the first post-discharge billing statement for that care on March 3. This and subsequent billing statements that T sends to A contain the standard written notice about the FAP that X includes on all of its billing statements in accordance with § 1.501(r)-4(b)(5). A has not paid her bill or submitted a FAP application when T provides her with the third billing statement for the care, postmarked June 1. With this third billing statement, T includes a plain language summary of the FAP and a letter informing A that if she does not pay the amount owed or submit a FAP application by July 1, T intends to report A's delinquency to credit reporting agencies. T also calls A and informs her about the financial assistance available to eligible patients under T's FAP and about how to obtain assistance with the FAP application process. A does not pay her bill or submit a FAP application by July 1. T has made reasonable efforts to determine whether A is FAP-eligible, and thus may report A's delinquency to credit reporting agencies, as of July 2.

Example 2. G, an individual, receives care from Y, a hospital facility, on May 25 of Year 1. Y also makes numerous attempts to encourage G to apply for financial assistance, including by calling G to inform her about the financial assistance available to eligible patients under Y's FAP and to offer assistance with the FAP application process. By June 24 of Year 2, Y, which had not previously initiated any ECAs against G to obtain payment for the care, notifies G in writing that if G does not pay or complete a FAP application by July 24 of Year 2, Y intends to file a lawsuit seeking a judgment for the amount G owes for the care and to seek court permission to enforce the judgment by either seizing G's bank account or garnishing G's wages. The written notice also includes a plain language summary of the FAP. G fails to pay or submit a FAP application by July 24 of Year 2. Y has made reasonable efforts to determine whether G is FAP-eligible, and may seek a judgment for the amount G owes and court permission to enforce the judgment by seizing G's bank account or garnishing G's wages, as of July 25 of Year 2.

(5) ***Incomplete FAP applications —***

(i) ***In general.*** With respect to any care provided by a hospital facility to an individual, if an individual submits an incomplete FAP application during the application period, the hospital facility will have notified the individual about how to complete the FAP application and given the individual a reasonable opportunity to do so for purposes of paragraph (c)(3)(ii) of this section only if the hospital facility—

(A) Suspends any ECAs to obtain payment for the care as described in paragraph (c)(8) of this section; and

(B) Provides the individual with a written notice that describes the additional information and/or documentation required under the FAP or FAP application form that must be submitted to complete the FAP application and that includes the contact information described in § 1.501(r)-1(b)(24)(v).

(ii) ***FAP application completed.*** If an individual who has submitted an incomplete FAP application during the application period subsequently completes the FAP application during the application period (or, if later, within a reasonable timeframe given to respond to requests for additional information and/or documentation), the individual will be considered to have submitted a complete FAP application during the application period, and the hospital facility will have made reasonable efforts to determine whether the individual is FAP-eligible only if it meets the requirements for complete FAP applications described in paragraph (c)(6) of this section.

(iii) ***Examples.*** The following examples illustrate this paragraph (c)(5):

> *Example 1.* (i) Assume the same facts as *Example 1* in paragraph (c)(4)(iv) of this section and the following additional facts: A submits an incomplete FAP application to T on July 15, which is before the last day of the application period on October 29 but after T has already initiated ECAs. Eligibility for assistance under T's FAP is based solely on an individual's family income and the instructions to T's FAP application form require applicants to attach to their application forms certain documentation verifying family income. The FAP application form that A submits to T on July 15 includes all of the required income information, but A fails to attach the required documentation verifying her family income. On July 22, a member of T's staff calls A to inform her that she failed to attach any of the required documentation of her family income and explains what kind of documentation A needs to submit and how she can submit it. T indicates that the documentation should be provided by September 22. T also sends A a letter that describes the missing documentation that A must submit by September 22 (and how to submit it) and provides a telephone number A can call and room number she can visit to get assistance with the FAP application process. T does not initiate any new ECAs against A and does not take any further action on the ECAs T previously initiated against A between July 15 and September 22. A does not respond to T's letter and does not submit any missing documentation by September 22. T has made reasonable efforts to determine whether A is FAP-eligible, and may initiate or resume ECAs against A, as of September 23.

(ii) On October 10, before the last day of the application period on October 29, A provides T with the missing documentation. Because A has submitted a complete FAP application during the application period, to meet the requirements of paragraph (a) of this section, T must process the FAP application documentation to determine whether A is FAP-eligible and otherwise meet the requirements for complete FAP applications described in paragraph (c)(6) of this section.

Example 2. (i) B, an individual, receives care from U, a hospital facility, on January 10. U has established a FAP that provides assistance to all individuals whose household income is less than $y, and the instructions to U's FAP application form specify the documentation that applicants must provide to verify their household income. Shortly after receiving care, B submits a FAP application form to U indicating that he has household income of less than $y. B's FAP application form includes all of the required income information, but B fails to attach the required documentation verifying household income.
(ii) On February 9, U sends B the first post-discharge billing statement for the care that contains the standard written notice about the FAP that U includes on all of its billing statements in accordance with § 1.501(r)-4(b)(5). With this first post-discharge billing statement, U includes a letter informing B that the income information he provided on his FAP application form indicates that he may be eligible to pay only x% of the amount stated on the billing statement if he can provide documentation that verifies his household income. In addition, this letter describes the type of documentation (which is also described in the instructions to U's FAP application form) that B needs to provide to complete his FAP application and provides a telephone number that B may call and room number he may visit if he has questions or needs assistance with the FAP application process. By the time U is getting ready to send B a third billing statement for the care, B has not provided any response to U's request for the missing documentation. Accordingly, with the third billing statement postmarked May 10, U includes a plain language summary of the FAP plus a written notice informing B that U intends to report B's delinquency to credit reporting agencies if B does not submit the missing documentation or pay the amount due by June 9. U also calls B to inform B about the impending ECA and to see if he has questions about the missing documentation that U has requested. B does not provide any response to U's request for the missing documentation by June 9. U has made reasonable efforts to determine whether B is FAP-eligible, and thus may report B's delinquency to credit reporting agencies, as of June 10.

(6) ***Complete FAP applications*** —

(i) ***In general.*** With respect to any care provided by a hospital facility to an individual, if an individual submits a complete FAP application during the application period, the hospital facility will have made reasonable efforts to determine whether the individual is FAP-eligible for the care only if the hospital facility does the following in a timely manner:

(A) Suspends any ECAs to obtain payment for the care as described in paragraph (c)(8) of this section.

(B) Makes a determination as to whether the individual is FAP-eligible for the care and notifies the individual in writing of this eligibility determination (including, if applicable, the assistance for which the individual is eligible) and the basis for this determination.

(C) If the hospital facility determines the individual is FAP-eligible for the care, does the following:

(*1*) If the individual is determined to be eligible for assistance other than free care, provides the individual with a billing statement that indicates the amount the individual owes for the care as a FAP-eligible individual and how that amount was determined and that states, or describes how the individual can get information regarding, the AGB for the care.

(*2*) Refunds to the individual any amount he or she has paid for the care (whether to the hospital facility or any other party to whom the hospital facility has referred or sold the individual's debt for the care) that exceeds the amount he or she is determined to be personally responsible for paying as a FAP-eligible individual, unless such excess amount is less than $5 (or such other amount set by notice or other guidance published in the Internal Revenue Bulletin).

(*3*) Takes all reasonably available measures to reverse any ECA (with the exception of a sale of debt and an ECA described in paragraph (b)(1)(iii) of this section) taken against the individual to obtain payment for the care. Such reasonably available measures generally include, but are not limited to, measures to vacate any judgment against the individual, lift any levy or lien (other than a lien described in paragraph (b)(3) of this section) on the individual's property, and remove from the individual's credit report any adverse information that was reported to a consumer reporting agency or credit bureau.

(ii) ***Anti-abuse rule for complete FAP applications.*** A hospital facility will not have made reasonable efforts to determine whether an individual is FAP-eligible if the hospital facility bases its determination that the individual is not FAP-eligible on information that the hospital facility has reason to believe is unreliable or incorrect or on information obtained from the individual under duress or through the use of coercive practices. For purposes of this paragraph (c)(6)(ii), a coercive practice includes delaying or denying emergency medical care to an individual until the individual has provided information requested to determine whether the individual is FAP-eligible for the care being delayed or denied.

(iii) ***Determination based on complete FAP applications sufficient for reasonable efforts.*** A hospital facility will have made reasonable efforts to determine whether an individual is FAP-eligible with respect to any ECAs it initiates to obtain payment for care if, before initiating any such ECAs, it determines whether the individual is FAP-eligible for the care based on a complete FAP application and otherwise meets the requirements described in this paragraph (c)(6). If these conditions are satisfied, the hospital facility will have made reasonable efforts to determine

whether the individual is FAP-eligible for the care regardless of whether it has notified the individual as described in paragraph (c)(4) of this section or, if applicable, in paragraph (c)(5)(i)(B) of this section.

(iv) ***Determining Medicaid eligibility.*** A hospital facility will not fail to have made reasonable efforts to determine whether an individual is FAP-eligible for care if, upon receiving a complete FAP application from an individual who the hospital facility believes may qualify for Medicaid, the hospital facility postpones determining whether the individual is FAP-eligible for the care until after the individual's Medicaid application has been completed and submitted and a determination as to the individual's Medicaid eligibility has been made.

(v) ***Examples.*** The following examples illustrate this paragraph (c)(6):

Example 1. C, an individual, receives care from W, a hospital facility, on September 1. W has established a FAP that provides assistance only to individuals whose family income is less than or equal to x% of the Federal Poverty Level (FPL), which, in the case of C's family size, is $y. Upon discharge, W's staff gives C a plain language summary of the FAP and informs C that if she needs assistance filling out a FAP application form, W has a social worker on staff who can assist her. C expresses interest in getting assistance with a FAP application while she is still on site and is directed to K, one of W's social workers. K explains the eligibility criteria in W's FAP to C, and C realizes that to determine her family income as a percentage of FPL she needs to look at her prior year's tax returns. On September 20, after returning home and obtaining the necessary information, C submits a FAP application to W that contains all of the information and documentation required in the FAP application form instructions. W's staff promptly examines C's FAP application and, based on the information and documentation therein, determines that C's family income is well in excess of $y. On October 1, W sends C her first post-discharge billing statement for the care she received on September 1. With the billing statement, W includes a letter informing C that she is not eligible for financial assistance because her FAP application indicates that she has family income in excess of x% of FPL ($y for a family the size of C's family) and W only provides financial assistance to individuals with family income that is less than x% of FPL. W has made reasonable efforts to determine whether C is FAP-eligible as of October 1.

Example 2. E, an individual, receives care from P, a hospital facility, from February 24 to 28. E pays a co-payment of $30 at discharge and is determined by her insurer to be personally responsible for paying another $550 in deductibles. P sends E several billing statements starting on March 20 indicating that E owes $550. By July 30, E has not paid the $550 or submitted a FAP application. On July 30, P notifies E in writing that if E does not pay or complete a FAP application by August 30, P intends to report B's delinquency to credit reporting agencies. The written notice also includes a plain language summary of the FAP. In addition, P calls E and informs her about the financial assistance available to eligible patients under P's FAP and about how to obtain assistance with the FAP application process. E fails to pay or submit a FAP application by August 30. P subsequently reports E's delinquency to credit reporting agencies. E then provides a complete FAP application to P on November 10, before the last day of the application period on November 15. P promptly examines the application and determines that E is eligible for free care under P's FAP. P contacts the credit reporting agencies to which it had reported E's delinquency and asks them to remove the adverse information from E's credit report. P also sends E a letter that informs her that she is eligible for free care under P's FAP and explains the

basis for this eligibility determination and includes with this letter a check for $30 (the co-payment E had paid). P has made reasonable efforts to determine whether E is FAP-eligible.

Example 3. R, a hospital facility, has established a FAP that provides financial assistance only to individuals whose family income is less than or equal to x% of the Federal Poverty Level (FPL), based on their prior year's federal tax return. L, an individual, receives care from R. While L is being discharged from R, she is approached by M, an employee of a debt collection company that has a contract with R to handle all of R's patient billing. M asks L for her family income information, telling L that this information is needed to determine whether L is eligible for financial assistance. L tells M that she does not know what her family income is and would need to consult her tax returns to determine it. M tells L that she can just provide a "rough estimate" of her family income. L states that her family income may be around $y, an amount slightly above the amount that would allow her to qualify for financial assistance. M enters $y on the income line of a FAP application form with L's name on it and marks L as not FAP-eligible. Based on M's information collection, R determines that L is not FAP-eligible and notifies L of this determination with her first billing statement. Because M had reason to believe that the income estimate provided by L was unreliable, R has violated the anti-abuse rule described in paragraph (c)(6)(ii) of this section. Thus, R has not made reasonable efforts to determine whether L is FAP-eligible.

(7) ***When no FAP application is submitted.*** Unless and until an individual submits a FAP application during the application period, any paragraphs of this section that are conditioned on an individual's submitting a FAP application (namely, paragraphs (c)(2)(i)(C), (c)(3)(ii), and (c)(3)(iii) of this section) do not apply, and the hospital facility will have made reasonable efforts to determine whether the individual is FAP-eligible for care, and may initiate one or more ECAs to obtain payment for the care, once it has met the requirements of this section that are not contingent on an individual's submission of a FAP application. For example, unless and until a hospital facility receives a FAP application from an individual during the application period, the hospital facility has made reasonable efforts to determine whether the individual is FAP-eligible for care (and thus may initiate ECAs to obtain payment for the care) once it has notified the individual about the FAP as described in paragraph (c)(3)(i) of this section.

(8) ***Suspending ECAs while a FAP application is pending.*** With respect to any care provided by a hospital facility to an individual, if an individual submits a FAP application during the application period, the hospital facility (or other authorized party) will have suspended ECAs for purposes of this paragraph (c) only if, after receiving the application, the hospital facility (or other authorized party) does not initiate, or take further action on any previously-initiated, ECAs (with the exception of an ECA described in paragraph (b)(1)(iii) of this section) to obtain payment for the care until either—

(i) The hospital facility has determined whether the individual is FAP-eligible based on a complete FAP application and otherwise met the requirements of paragraph (c)(6) of this section; or

(ii) In the case of an incomplete FAP application, the individual has failed to respond to requests for additional information and/or documentation within a reasonable period of time given to respond to such requests.

(9) ***Waiver does not constitute reasonable efforts.*** For purposes of this paragraph (c), obtaining a signed waiver from an individual, such as a signed statement that the individual does not wish to apply for assistance under the FAP or receive the information described in paragraphs (c)(4) or (c)(5) of this

section, will not itself constitute a determination that the individual is not FAP-eligible and will not satisfy the requirement to make reasonable efforts to determine whether the individual is FAP-eligible before engaging in ECAs against the individual.

(10) ***Agreements with other parties.*** With the exception of sales described in paragraph (b)(2) of this section, if a hospital facility sells or refers an individual's debt related to care to another party, the hospital facility will have made reasonable efforts to determine whether the individual is FAP-eligible for the care only if it first enters into (and, to the extent applicable, enforces) a legally binding written agreement with the party that is reasonably designed to ensure that no ECAs are taken to obtain payment for the care until reasonable efforts have been made to determine whether the individual is FAP-eligible for the care. At a minimum, such an agreement must provide the following:

(i) If the individual submits a FAP application after the referral or sale of the debt but before the end of the application period, the party will suspend ECAs to obtain payment for the care as described in paragraph (c)(8) of this section.

(ii) If the individual submits a FAP application after the referral or sale of the debt but before the end of the application period and is determined to be FAP-eligible for the care, the party will do the following in a timely manner:

(A) Adhere to procedures specified in the agreement that ensure that the individual does not pay, and has no obligation to pay, the party and the hospital facility together more than he or she is required to pay for the care as a FAP-eligible individual.

(B) If applicable and if the party (rather than the hospital facility) has the authority to do so, take all reasonably available measures to reverse any ECA (other than the sale of a debt or an ECA described in paragraph (b)(1)(iii) of this section) taken against the individual as described in paragraph (c)(6)(i)(C)(*3*) of this section.

(iii) If the party refers or sells the debt to yet another party during the application period, the party will obtain a written agreement from that other party including all of the elements described in this paragraph (c)(10).

(11) ***Clear and conspicuous placement.*** A hospital facility may print any written notice or communication described in this paragraph (c), including any plain language summary of the FAP, on a billing statement or along with other descriptive or explanatory matter, provided that the required information is conspicuously placed and of sufficient size to be clearly readable.

(12) ***Providing documents electronically.*** A hospital facility may provide any written notice or communication described in this paragraph (c) electronically (for example, by email) to any individual who indicates he or she prefers to receive the written notice or communication electronically.

[T.D. 9708, 79 FR 78998, Dec. 31, 2014; 80 FR 12762, Mar. 11, 2015]

§ 1.501(r)-7 Effective/applicability dates.

(a) ***Effective/applicability date.*** The rules of §§ 1.501(r)-1 through 1.501(r)-6 apply to taxable years beginning after December 29, 2015.

(b) ***Reasonable interpretation for taxable years beginning on or before*** December 29, 2015. For taxable years beginning on or before December 29, 2015, a hospital facility may rely on a reasonable, good faith interpretation of section 501(r). A hospital facility will be deemed to have operated in accordance with a reasonable, good faith interpretation of section 501(r) if it has complied with the provisions of the proposed or final regulations under section 501(r) (REG-130266-11 and/or REG-106499-12). Accordingly, a hospital facility may rely on § 1.501(r)-3 of the proposed or final regulations, or another reasonable interpretation of section 501(r)(3), for any CHNA conducted or implementation strategy adopted before the first day of the hospital organization's first taxable year beginning after December 29, 2015.

[T.D. 9708, 79 FR 78998, Dec. 31, 2014]

§ 1.502-1 Feeder organizations.

(a) In the case of an organization operated for the primary purpose of carrying on a trade or business for profit, exemption is not allowed under section 501 on the ground that all the profits of such organization are payable to one or more organizations exempt from taxation under section 501. In determining the primary purpose of an organization, all the circumstances must be considered, including the size and extent of the trade or business and the size and extent of those activities of such organization which are specified in the applicable paragraph of section 501.

(b) If a subsidiary organization of a tax-exempt organization would itself be exempt on the ground that its activities are an integral part of the exempt activities of the parent organization, its exemption will not be lost because, as a matter of accounting between the two organizations, the subsidiary derives a profit from its dealings with its parent organization, for example, a subsidiary organization which is operated for the sole purpose of furnishing electric power used by its parent organization, a tax-exempt educational organization, in carrying on its educational activities. However, the subsidiary organization is not exempt from tax if it is operated for the primary purpose of carrying on a trade or business which would be an unrelated trade or business (that is, unrelated to exempt activities) if regularly carried on by the parent organization. For example, if a subsidiary organization is operated primarily for the purpose of furnishing electric power to consumers other than its parent organization (and the parent's tax-exempt subsidiary organizations), it is not exempt since such business would be an unrelated trade or business if regularly carried on by the parent organization. Similarly, if the organization is owned by several unrelated exempt organizations, and is operated for the purpose of furnishing electric power to each of them, it is not exempt since such business would be an unrelated trade or business if regularly carried on by any one of the tax-exempt organizations. For purposes of this paragraph, organizations are related only if they consist of:

(1) A parent organization and one or more of its subsidiary organizations; or

(2) Subsidiary organizations having a common parent organization

An exempt organization is not related to another exempt organization merely because they both engage in the same type of exempt activities.

(c) In certain cases an organization which carries on a trade or business for profit but is not operated for the primary purpose of carrying on such trade or business is subject to the tax imposed under section 511 on its unrelated business taxable income.

(d) ***Exception*** —

(1) ***Taxable years beginning before January 1, 1970.*** For purposes of section 502 and this section, for taxable years beginning before January 1, 1970, the term *trade or business* does not include the rental by an organization of its real property (including personal property leased with the real property).

(2) ***Taxable years beginning after December 31, 1969.*** For purposes of section 502 and this section, for taxable years beginning after December 31, 1969, the term *trade or business* does not include:

(i) The deriving of rents described in section 512(b)(3)(A),

(ii) Any trade or business in which substantially all the work in carrying on such trade or business is performed for the organization without compensation, or

(iii) Any trade or business (such as a *thrift shop*) which consists of the selling of merchandise, substantially all of which has been received by the organization as gifts or contributions

For purposes of the exception described in subdivision (i) of this subparagraph, if the rents derived by an organization would not be excluded from unrelated business income pursuant to section 512(b)(3) and the regulations thereunder, the deriving of such rents shall be considered a *trade or business*.

(3) ***Cross references and special rules.***

(i) For determination of when rents are excluded from the tax on unrelated business income see section 512(b)(3) and the regulations thereunder.

(ii) The rules contained in § 1.513-1(e)(1) shall apply in determining whether a trade or business is described in section 502(b)(2) and subparagraph (2)(ii) of this paragraph.

(iii) The rules contained in § 1.513-1(e)(3) shall apply in determining whether a trade or business is described in section 502(b)(3) and subparagraph (2)(iii) of this paragraph.

[T.D. 6500, 25 FR 11737, No. 26, 1960, as amended by T.D. 6662, 28 FR 6973, July 29, 1963; T.D. 7033, 35 FR 19997, Dec. 31, 1970]

§ 1.503(a)-1 Denial of exemption to certain organizations engaged in prohibited transactions.

(a)

(1) Prior to January 1, 1970, section 503 applies to those organizations described in sections 501(c)(3), 501(c)(17), and section 401(a) except:

(i) A religious organization (other than a trust);

(ii) An educational organization which normally maintains a regular faculty and curriculum and normally has a regularly enrolled body of pupils or students in attendance at the place where its educational activities are regularly carried on;

(iii) An organization which normally receives a substantial part of its support (exclusive or income received in the exercise or performance by such organization of its charitable, educational, or other purpose or function constituting the basis for its exemption under section 501(a)) from the United States or any State or political subdivision thereof or from direct of indirect contributions from the general public,

(iv) An organization which is operated, supervised, controlled or principally supported by a religious organization (other than a trust) which is itself not subject to the provisions of this section; and

(v) An organization the principal purposes or functions of which are the providing of medical or hospital care or medical education or medical research or agricultural research.

(2) Effective January 1, 1907, and prior to January 1, 1975, section 503 shall apply only to organizations described in section 501(c) (17) or (18) or section 401(a).

(3) Effective January 1, 1975, section 503 shall apply only to organization described in section 501(c) (17) or (18) or described in section 401(a) and referred to in section 4975(g) (2) or (3).

(b) The prohibited transactions enumerated in section 503(b) are in addition to and not in limitation of the restrictions contained in section 501(c) (3), (17), or (18) or section 401(a). Even though an organization has not engaged in any of the prohibited transactions referred to in section 503(b), it still may not qualify for tax exemptions in view of the general provisions of section 501(c) (3), (17), or (18) or section 401(a). Thus, if a trustee or other fiduciary of the organization (whether or not he is also a creater or such organization) enters into a transaction with the organization, such transaction will be closely scrutinized in the light of the fiduciary principle requiring undivided loyalty to ascertain whether the organization is in fact being operated for the stated exempt purpose.

(c) An organization—

(1) Described in section 501(c)(3) which after July 1, 1950, but before January 1, 1970, has engaged in any prohibited transaction as defined in section 503(b), unless it is excepted by the provisions of paragraph (a)(1) of this section;

(2) Described in section 401(a) and referred to in section 4975(g) (2) or (3) which after March 1, 1954, has engaged in any prohibited transaction as defined in section 503(b);

(3) Described in section 401(a) and not referred to in section 4975(g) (2) or (3) which after March 1, 1954, but before January 1, 1975, has engaged in any prohibited transaction as defined in section 503(b) or which after December 31, 1962, but before January 1, 1975, has engaged in any prohibited transaction as defined in section 503(g) prior to its repeal by section 2003(b)(5) of the Employee Retirement Income Security Act of 1974 (88 Stat. 978);

(4) Described in section 501(c)(17) which after December 31, 1959, has engaged in any prohibited transaction as defined in section 503(b); or

(5) Described in section 501(c)(18) which after December 31, 1969, has engaged in any prohibited transaction described in section 503(b)

Shall not be exempt from taxation under section 501(a) for any taxable year subsequent to the taxable year in which there is mailed to it a notice in writing by the Commissioner that it has engaged in such prohibited transactions. Such notification by the Commissioner shall be by registered or certified mail to the last known name and address of the organization. However, notwithstanding the requirement of notification by the Commissioner, the exemption shall be denied with respect to any taxable year if such organization during or prior to such taxable year commenced the prohibited transaction with the purpose of diverting income or corpus from its exempt purposes and such transaction involved a substantial party of the income or corpus of such organization. For the purpose of this section, the term *taxable year* means the established annual accounting period of the organization; or, if the organization has no such established annual accounting period, the *taxable year* of the organizations means a calendar year. See 26 CFR § 1.503(j)-1 (rev. as of Apr. 1, 1974) for provisions relating to the definition of prohibited transactions in the case of trusts benefitting certain owner-employees after December 31, 1962, but prior to January 1, 1975. See also section 2003 (c)(1)(B) of the Employee Retirement Income Security Act of 1974 (88 Stat.

978) in the case of an organization described in section 401(a) with respect to which a disqualified person elects to pay a tax in the amount and manner provided with respect to the tax imposed by section 4975 of the Code so that the organization may avoid denial of exemption under section 503. For further guidance regarding the definition of last known address, see § 301.6212-2 of this chapter.

(d) The application of section 503(b) may be illustrated by the following examples:

Example 1. A creates a foundation in 1954 ostensibly for educational purposes. B, a trustee, accumulates the foundation's income from 1957 until 1959 and then uses a substantial part of this accumulated income to send A's children to college. The foundation would lose its exemption for the taxable years 1957 through 1959 and for subsequent taxable years until it regains its exempt status.

Example 2. If under the facts in Example 1 such private benefit was the purpose of the foundation from its inception, such foundation is not exempt by reason of the general provisions of section 501(c)(3), without regard to the provisions of section 503, for all years since its inception, that is, for the taxable years 1954 through 1959 and subsequent taxable years, since under section 501(c)(3) the organization must be organized and operated exclusively for exempt purposes. See § 1.501(c)(3)-1.

[T.D. 7428, 41 FR 34621, Aug. 16, 1976, as amended by T.D. 8939, 66 FR 2819, Jan. 12, 2001]

§ 1.503(b)-1 Prohibited transactions.

(a) ***In general.*** The term *prohibited transaction* means any transaction set forth in section 503(b) engaged in by any organization described in paragraph (a) of § 1.503(a)-1. Whether a transaction is a prohibited transaction depends on the facts and circumstances of the particular case. This section is intended to deny tax-exempt status to such organizations which engage in certain transactions which inure to the private advantage of

(1) the creator of such organization (if it is a trust);

(2) any substantial contributor to such organization;

(3) a member of the family (as defined in section 267(c)(4) of an individual who is such creator of or such substantial contributor to such organization; or

(4) a corporation controlled, as set forth in section 503(b), by such creator or substantial contributor.

(b) ***Loans as prohibited transactions under section 503(b)(1)*** —

(1) ***Adequate security.*** For the purposes of section 503(b)(1), which treats as prohibited transactions certain loans by an organization without receipt of adequate security and a reasonable rate of interest, the term *adequate security* means something in addition to and supporting a promise to pay, which is so pledged to the organization that it may be sold, foreclosed upon, or otherwise disposed of in default of repayment of the loan, the value and liquidity of which security is such that it may reasonably be anticipated that loss of principal or interest will not result from the loan. Mortgages or liens on property, accommodation endorsements of those financially capable of meeting the indebtedness, and stock or securities issued by corporations other than the borrower may constitute security for a loan to the persons or organizations described in section 503(b). Stock of a borrowing corporation does not constitute adequate security. A borrower's evidence of indebtedness, irrespective of its name, is not security for a loan, whether or not it was issued directly to the exempt organization. However, if any such evidence of indebtedness provides for security that may be sold, foreclosed upon, or otherwise disposed of in default of repayment of the loan, there may be

adequate security for such loan. If an organization subject to section 503(b) purchases debentures issued by a person specified in section 503(b), the purchase is considered, for purposes of section 503(b)(1), as a loan made by the purchaser to the issuer on the date of such purchase. For example, if an exempt organization subject to section 503(b) makes a purchase through a registered security exchange of debentures issued by a person described in section 503(b), and owned by an unknown third party, the purchase will be considered as a loan to the issuer by the purchaser. For rules relating to loan of funds to, or investment of funds in stock or securities of, persons described in section 503(b) by an organization described in section 401(a), see paragraph (b)(5) of § 1.401-1.

(2) ***Effective dates.*** The effective dates for the application of the definition of adequate security in paragraph (b)(1) of this paragraph are:

(i) March 15, 1956, for loans (other than debentures) made after March 15, 1956;

(ii) January 31, 1957, for loans (other than debentures) made before March 16, 1956, and continued after January 31, 1957;

(iii) November 8, 1956, for debentures which were purchased after November 8, 1956;

(iv) December 1, 1958, for debentures which were purchased before November 9, 1956, and held after December 1, 1958;

(v) If an employees' pension, stock bonus, or profit-sharing trust described in section 401(a) made a loan before March 1, 1954, repayable by its terms after December 31, 1955, and which would constitute a prohibited transaction if made on or after March 1, 1954, the loan shall not constitute a prohibited transaction if held until maturity (determined without regard to any extension or renewal thereof);

(vi) January 1, 1960, for loans (including the purchase of debentures) made by supplemental unemployment benefit trusts, described in section 501 (c)(17);

(vii) January 1, 1970, for loans (including the purchase of debentures) made by employees' contribution pension plan trusts described in section 501(c)(18).

(3) ***Certain exceptions to section 503(b)(1).*** See section 503(e) and § 1.503(e)-1, 1.503(e)-2, and 1.503(e)-3 for special rules providing that certain obligations acquired by trusts described in section 401(a) or section 501(c) (17) or (18) shall not be treated as loans made without the receipt of adequate security for purposes of section 503(b)(1). See section 503(f) and § 1.503(f)-1 for an exception to the application of sections 503(b)(1) for certain loans made by employees' trusts described in section 401(a).

(c) ***Examples.*** The principles of this section are illustrated by the following examples: (Assume that section 503 (e) and (f) are not applicable.)

Example 1. A, creator of an exempt trust subject to section 503, borrows $100,000 from such trust in 1960, giving his unsecured promissory note. The net worth of A is $1,000,000. The net worth of A is not *security* for such loan and the transaction is a prohibited transaction. If, however, the note is secured by a mortgage on property of sufficient value, or is accompanied by acceptable collateral of sufficient value, or carries with it the secondary promise of repayment by an accommodation endorser financially capable of meeting the indebtedness, it may be adequately secured. However, subordinated debentures bonds of a partnership which are guaranteed by the general partners are not adequately secured since the general partners are liable for the firm's debt and their guaranty adds no additional security.

Example 2. Assume the same facts as in example 1 except that A's promissory note in the amount of $100,000 to the trust is secured by property which has a fair market value of $75,000. A's promissory note secured to the extent of $75,000 is not adequately secured within the meaning of section 503(b)(1) since the security at the time of the transaction must be sufficient to repay the indebtedness, interest, and charges which may pertain thereto.

Example 3. Corporation M, a substantial contributor to an exempt organization subject to section 503, borrows $150,000 from such organization in 1960, giving its promissory note accompanied by stock of the borrowing corporation with a fair market value of $200,000. Since promissory notes and debentures have priority over stock in the event of liquidation of the corporation, stock of a borrowing corporation is not adequate security. Likewise, debenture bonds which are convertible on default into voting stock of the issuing corporation do not constitute *adequate security* under section 503(b)(1).

Example 4. B, creator of an exempt trust subject to section 503, borrows $100,000 from such trust in 1960, giving his secured promissory note at the rate of 3 percent interest. The prevailing rate of interest charged by financial institutions in the community where the transaction takes place is 5 percent for a loan of the same duration and similarly secured. The loan by the trust to the grantor is a prohibited transaction since section 503(b)(1) requires both adequate security and a reasonable rate of interest. Further, a promise to repay the loan plus a percentage of future profits which may be greater than the prevailing rate of interest does not meet the reasonable rate of interest requirement.

Example 5. N Corporation, a substantial contributor to an exempt organization subject to section 503 borrows $50,000 on or after March 16, 1956, from the organization. If the loan is not adequately secured, the organization has committed a prohibited transaction at the time the loan was made. If the loan had been made on or before March 15, 1956, and is continued after January 31, 1957, it must be adequately secured on February 1, 1957, or it will be considered a prohibited transaction on that date. However, if the exempt organization were an employees' trust, described in section 401(a), and the loan were made before March 1, 1954, repayable by its terms after December 31, 1955, it would not have to be adequately secured on February 1, 1957. Moreover, if the exempt organization were a supplemental unemployment benefit trust, described in section 501(c)(17), and the loan were made before January 1, 1960, repayable by its terms after December 31, 1959, it would not have to be adequately secured on January 1, 1960.

Example 6. An exempt organization subject to section 503 purchases a debenture issued by O Corporation, which is a substantial contributor to the organization. The organization purchases the debenture in an arm's length transaction from a third person on or after November 9, 1956. The purchase is considered as a loan by the organization to O Corporation. The loan must be adequately secured when it is made, or it is considered as a prohibited transaction at that time. If the organization purchased the debenture before November 9, 1956, and holds it after December 1, 1958, the debenture must be adequately secured on December 2, 1958, or it will then be considered as a prohibited transaction. However, if the organization were an employees' trust described in section 401(a), and if the debenture were purchased before March 1, 1954, and its maturity date is after December 31, 1955, the debenture does not have to be adequately secured. Moreover, if the organization were an employees' contribution pension plan trust described in section 501(c)(18), and if the debenture were purchased before January 1, 1970, and its maturity date is after December 31, 1969, the debenture does not have to be adequately secured.

[T.D. 7428, 41 FR 34621, Aug. 16, 1976]

§ 1.503(c)-1 Future status of organizations denied exemption.

(a) Any organization described in section 501(c) (3), (17), or (18), or an employees' trust described in section 401(a), which is denied exemption under section 501(a) by reason of the provisions of section 503(a), may file, in any taxable year following the taxable year in which notice of denial was issued, a claim for exemption. In the case of organizations described in section 501(c) (3), (17), or (18), the appropriate exemption application shall be used for this purpose, and shall be filed with the district director. In the case of an enmployees' trust described in section 401(a), the information described in § 1.404(a)-2 shall be submitted with a letter claiming exemption. All employees' trust described in section 401(a) shall submit this information to the district director with whom a request for a determination as to its qualification under section 401 and exemption under section 501 may be submitted under paragraph (s) of § 601.201 of this chapter (Statement of Procedural Rules). A claim for exemption must contain or have attached to it, in addition to the information generally required of such an organization claiming exemption as an organization described in section 501(c) (17), or (18), or section 401(a) (or section 501(c)(3) prior to January 1, 1970), a written declaration made under the penalities of perjury by principal officer of such organization authorized to make such declaration that the organization will not knowingly again engage in a prohibited transaction, (as defined in section 503(b) (or 4975(c) if such section applies to such organization)). In the case of section 501(c)(3) organizations which have lost their exemption after December 31, 1969, pursuant to section 503, a claim for exemption must contain or have attached to it a written agreement made under penalities of perjury by a principal officer of such organization authorized to make such agreement that the organization will not violate the provisions of chapter 42. In addition, such organization must comply with the rules for governing instruments as prescribed in § 1.508-3. See § 1.501(a)-1 for proof of exemption requirements in general.

(b) If the Commissioner is satisfied that such organization will not knowingly again engage in a prohibited transaction (as defined under section 503(b) or 4975(c), as applicable to such organization) or in the case of a section 501(c)(3) organization, will not violate the provisions of chapter 42, and the organization also satisfied all the other requirements under section 501(c) (3), (17), or (18), or section 401(a), the organization will be so notified in writing. In such case the organization will be exempt (subject to the provisions of section 501(c)(3), or sections 501(c) (17), (18) or 401(a), and 503, and 504 when applicable) with respect to the taxable years subsequent to the taxable year in which the claim described in section 503(c) is filed. Section 503 contemplates that an organization denied exemption because of the terms of such section will be subject to taxation for at least one full taxable year. For the purpose of this section, the term *taxable year* means the established annual accounting period of the organization; or, if the organization has no such established annual accounting period, the *taxable year* of the organization means the calendar year.

(c) For taxable years beginning after December 31, 1969, the denial of an exemption pursuant to this section, for a taxable year prior to January 1, 1970, of an organization described in section 501(c)(3) shall not cause such organization to cease to be described in section 501(c)(3) for purposes of part II of subchapter F, chapter 1 and for purposes of the application of chapter 42 taxes.

(d) In the case of an organization described in section 501(c)(3), which has lost its exemption pursuant to section 503, and which has not notified the Commissioner that it is applying for recognition of its exempt status under section 508(a) and this section, no gift or contribution made after December 31, 1969, which would otherwise be deductible under section 170, 642(c), or 545(b)(2) shall be allowed as a deduction.

[T.D. 7428, 41 FR 34622, Aug. 16, 1976, as amended by T.D. 7896, 48 FR 23817, May 27, 1983; T.D. 9849, 84 FR 9235, Mar. 14, 2019]

§ 1.503(d)-1 Cross references.

For provisions relating to loans described in section 503(b)(1) by a trust described in section 401(a), see § 1.503(b)-1 and section 503 (e) and (f) and the regulations thereunder.

[T.D. 7428, 41 FR 34623, Aug. 16, 1976]

§ 1.503(e)-1 Special rules.

(a) ***In general.***

(1) Section 503(e) provides that for purposes of section 503(b)(1) (relating to loans made without the receipt of adequate security and a reasonable rate of interest) the acquisition of a bond, debenture, note, or certificate or other evidence of indebtedness shall not be treated as a loan made without the receipt of adequate security if certain requirements are met. Those requirements are described in § 1.503(e)-2.

(2) Section 503(e) does not affect the requirement in section 503(b)(1) of a reasonable rate of interest. Thus, although the acquistion of a certificate of indebtedness which meets all of the requirements of section 503(e) and of § 1.503(e)-2 will not be considered as a loan made without the receipt of adequate security, the acquisition of such an indebtedness does consitute a prohibited transaction if the indebtedness does not bear a reasonable rate of interest.

(3) The provisions of section 503(e) do not limit the effect of section 401(a) and § 1.401-2, section 501(c)(17)(A)(i), or section 501(c)(18)(A), all relating to the use of diversion of corpus or incopme of the respective employee trusts. Furthermore, the provisions of section 503(e) do not limit the effect of any of the provisions of section 503 other than section 503(b)(1). Thus, for example, although a loan made by employees' trust described in section 503(a)(1)(B) meets all the requirements of section 503(e) and therefore is not treated as a loan made without the receipt of adequate security, such an employees' trust making such a loan will lose its exempt status if the loan is not considered as made for the exclusive benefit of the employees or their beneficiaries. Similarly, a loan which meets the requirements of section 503(e) will constitute a prohibited transaction within the meaning of section 503(b)(6) if it results in a substantial diversion of the trust's income or corpus to a person described in section 503(b).

(b) ***Definitions.*** For purposes of section 503(e):

(1) The term *obligation* means bond, debenture, note, or certificate or other evidence of indebtedness.

(2) The term *issuer* includes any person described in section 503(b) who issues an obligation.

(3)

(i) The term *person independent of the issuer* means a person who is not related to the issuer by blood, by marriage, or by reason of any substantial business interests. Persons who will be considered not to be independent of the issuer include but are not limited to:

(*a*) The spouse, ancestor, lineal descendant, or brother or sister (whether by whole or half blood) of an individual who is the issuer of an obligation;

(*b*) A corporation controlled directly or indirectly by an individual who is the issuer, or directly or indirectly by the spouse, ancestor, lineal descendant, or brother or sister (whether by whole or half blood) of an individual who is the issuer;

(c) A corporation which directly or indirectly controls, or is controlled by, a corporate issuer;

(d) A controlling shareholder of a corporation which is the issuer, or which controls the issuer;

(e) An officer, director, or other employee of the issuer, of a corporation controlled by the issuer, or of a corporation which controls the issuer;

(f) A fiduciary of any trust created by the issuer, by a corporation which controls the issuer, or by a corporation which is controlled by the issuer; or

(g) A corporation controlled by a person who controls a corporate issuer.

(ii) For purposes of paragraph (b)(3)(i) of this section, the term *control* means, with respect to a corporation, direct or indirect ownership of 50 percent or more of the total combined voting power of all voting stock or 50 percent or more of the total value of shares of all classes of stock. If the aggregate amount of stock in a corporation owned by an individual and by the spouse, ancestors, lineal descendants, brothers and sisters (whether by whole of half blood) of the individual is 50 percent or more of the total combined voting power of all voting stock or is 50 percent or more of the total value of all classes of stock, then each of these persons shall be considered as the controlling shareholder of the corporation.

(iii) In determining family relationships for purposes of paragraph (b)(3)(i) of this section, a legally adopted child of an individual shall be treated as a child of such individual by blood.

(4) The term *issue* means all the obligations of an issuer which are offered for sale on substantially the same terms. Obligations shall be considered offered for sale on substantially the same terms if such obligation would, at the same time and under the same circumstances, be traded on the market at the same price. On the other hand, if the terms on which obligations are offered for sale differ in such manner as would cause such obligations to be traded on the market at different prices, then such obligations are not part of the same issue. The following are examples of terms which, if different, would cause obligations to be traded on the market at different prices:

(i) Interest rate;

(ii) Maturity date;

(iii) Collateral; and

(iv) Conversion provisions

The fact that obligations are offered for sale on different dates will not preclude such obligations from being part of the same issue if they all mature on the same date and if the terms on which they are offered for sale are otherwise the same, since such obligations would, at the same time and under the same conditions, be traded on the market at the same price. Obligations shall not be considered part of the same issue merely because they are part of the same authorization or because they are registered as part of the same issue with the Securities and Exchange Commission.

[T.D. 7428, 41 FR 34623, Aug. 16, 1976]

§ 1.503(e)-2 Requirements.

(a) ***In general.*** The requirements which must be met under section 503(e) for an obligation not to be treated as a loan made without the receipt of adequate security for purposes of section 503(b)(1) are described in paragraphs (b), (c), and (d) of this section. For purposes of this section, the term *employee trust* shall mean any of the three kinds of organizations described in section 503(a)(1).

(b) ***Methods of acquisition*** —

(1) ***In general.*** The employee trust must acquire the obligation of the market, by purchase from an underwriter, or by purchase from the issuer, in the manner described in subparagraph (2), (3), or (4) of this paragraph.

(2) ***On the market.***

(i) An obligation is acquired on the market when it is purchased through a national securities exchange which is registered with the Securities and Exchange Commission, or when it is purchased in an over-the-counter transaction. For purposes of the preceding sentence, securities purchased through an exchange which is not a national securities exchange registered with the Securities and Exchange Commission shall be treated as securities purchased in an over-the-counter transaction.

(ii)

(*a*) If the obligation is listed on a national securities exchange registered with the Securities and Exchange Commission, it must be purchased through such an exchange or in an over-the-counter transaction at a price not greater than the price of the obligation prevailing on such an exchange at the time of the purchase by the employee trust.

(*b*) For purposes of section 503(e), the price of the obligation prevailing at the time of the purchase means the price which accurately reflects the market value of the obligation. In the case of an obligation purchased through a national securities exchange which is registered with the Securities and Exchange Commission, the price paid for the obligation will be considered the prevailing price of the obligation. In the case of an obligation purchased in an over-the-counter transaction, the prevailing price may be the price at which the last sale of the obligation was affected on such national securities exchange immediately before the employee trust's purchase of such obligation on the same day or may be the mean between the highest and lowest prices at which sales were effected on such exchange on the same day or on the immediately preceding day or on the last day during which there were sales of such obligation or may be a price determined by any other method which accurately reflects the market value of the obligation.

(iii)

(*a*) If the obligation is not listed on a national securities exchange which is registered with the Securities and Exchange Commission, it must be purchased in an over-the-counter transaction at a price not greater than the offering price for the obligation as established by current bid and asked prices quoted by persons independent of the issuer.

(*b*) For purposes of section 503(e) the offering price for the obligation at the time of the purchase means the price which accurately reflects the market value of the obligation. The offering price may be the price at which the last sale of the obligation to a person independent of the issuer was effected immediately before the employee trust's purchase

of such obligation on the same day or may be the mean between the highest and lowest prices at which sales to persons independent of the issuer were effected on the same day or on the last day during which they were sales of such obligation or may be a price determinated by any other method which accurately reflects the market value of the obligation. The offering price for an obligation must be a valid price for the amount of the obligations which the trust is purchasing. For example, if an employees' trust described in section 503(a)(1)(B) purchases 1,000 bonds of the employer corporation at the offering price established by current prices for a lot of 10 such bonds, such offering price may not be a valid price for 1,000 bonds and the purchase may therefore not meet the requirements of this subdivision. For a purchase of an obligation to qualify under this subdivision, there must be sufficient current prices quoted by persons independent of the issuer to establish accurately the current value of the obligation. Thus, if there are no current prices quoted by persons independent of the issuer, an over-the-counter transaction will not qualify under this subparagraph even though the obligation was purchased in an arms's length transaction from a person independent of the issuer.

(iv) For purposes of this section, an over-the-counter transaction is one not executed on a national securities exchange which is registered with the Securities and Exchange Commission. An over-the-counter transaction may be made through a dealer or an exchange which is not such a national securities exchange or may be made directly from the seller to the purchaser.

(3) ***From an underwriter.*** An obligation may be purchased from an underwriter if it is purchased at a price not greater than:

(i) The public offering price for the obligation as set forth in a prospectus or offering circular filed with the Securities and Exchange Commission, or

(ii) The price at which a substantial portion of the issue including such obligation is acquired by persons independent of the issuer

whichever is the lesser price. For purposes of this subparagraph, a portion of the issue will be considered substantial if the purchasers of such portion by persons independent of the issuer are sufficient to establish that fair market value of the obligations included in such issue. In determining whether the purchases are sufficient to establish the fair market value, all the surrounding facts and circumstances will be considered, including the number of independent purchasers, the aggregate amount purchased by each such independent purchaser, and the number of transactions. In the case of a large issue, purchases of a small percentage of the outstanding obligations may be considered purchases of a substantial portion of the issue; whereas, in the case of a small issue, purchases of a larger percentage of the outstanding obligations will ordinarily be required. The requirement in paragraph (b)(3)(ii) of this section contemplates purchase of the obligations by persons independent of the issuer contemporaneously with the purchase by the employee trust. If a substantial portion has been purchased at different prices, the price of the portion may be based on the average of such prices, and if several substantial portions have been sold to persons independent of the issuer, the price of any of the substantial portions may be used for pusposes of this subparagraph.

(4) ***From the issuer.*** An obligation may be purchased directly from the issuer at a price not greater than the price paid currently for a substantial portion of the same issue by persons independent of the issuer. This requirement contemplates purchase of a substantial portion of the same issue by persons independent of the issuer contemporaneously with the purchase by the employee trust. For purposes of this subparagraph, a portion of the issue will be considered substantial if the purchases

of such portion by persons independent of the issuer are sufficient to establish the fair market value of the obligations included in such issue. In determining whether the purchases are sufficient to establish the fair market value, all the surrounding facts and circumstances will be considered, including the number of independent purchasers, the aggregage amount purchased by each such independent purchaser, and the number of transactions. In the case of a large issue, purchases of a small percentage of the outstanding obligations may be considered purchases of a substantial portion of the issue; whereas, in the case of a small issue, purchases of a larger percentage of the outstanding obligations will ordinarily be required. The price paid for a substantial portion of the issue may be determined in the manner privided in paragraph (b)(3) of this section.

(c) ***Limitations on holdings of obligations.***

(1) Immediately following acquisition of the obligation by the employee trust:

(i) Not more than 25 percent of the aggregate amount of the obligations issued in such issue and outstanding immediately after acquisition by the trust may be held by the trust, and

(ii) At least 50 percent of such aggregate amount must be held by persons independent of the issuer.

(2)

(i) For purposes of paragraph (c)(1) of this section, an obligation is not considered as outstanding if it is held by the issuer. For example, if an obligation which has been issued and outstanding is repurchased and held by the issuer, without cancellation or retirement, such an obligation is not considered outstanding.

(ii) For purposes of paragraph (c)(1) of this section, the amounts of the obligations held by the trust and by persons independent of the issuer shall be computed on the basis of the face amount of the obligations.

(d) ***Limitation on amount invested in obligations.***

(1)

(i) Immediately following acquisition of the obligation, not more 25 percent of the assets of the employee trust may be invested in all obligations of all persons described in section 503(b). For purposes of determining the amount of the trust's assets which are invested in obligations of persons described in section 503(b) immediately following acquisition of the obligation, those obligations shall be valued as follows:

(*a*) Those obligations included in the acquisition in respect of which the percentage test in the first sentence of this subdivision is being applied shall be valued at their adjusted basis, as provided in section 1011, relating to adjusted basis for determining gain or loss; and

(*b*) All other obligations of persons described in section 503(b) which were part of the trust's assets immediately before the acquisition of the obligations described in (d)(1)(i)(*a*) of this section shall be valued at their fair market value on the day that the obligations described in (d)(1)(i)(*a*) of this section were acquired. For purposes of determining the total amount of the assets of the trust (including obligations of persons described in section 503(b)), there shall be used the fair market value of those assets on the day the obligation is acquired.

(ii) The application of the rules in paragraph (d)(1)(i) of this section may be illustrated by the following example:

Example. On February 1, 1960, an exempt employees' trust described in section 401(a) purchases unsecured debentures issued by the employer corporation for $1,000. At the time of this purchase, such debentures have a fair market value of $1,200. Immediately after the purchase of such unsecured debentures, the assets of the trust consist of the following:

	Cost	Fair market value on Feb. 1, 1960
(a) Assets other than obligations of persons described in sec. 503(b)	$5,000	$7,800
(b) Obligations of persons described in sec. 503(b) acquired before Feb. 1, 1960	500	1,000
(c) Unsecured debentures of employer purchased on Feb. 1, 1960	1,000	1,200

Immediately following acquisition of the unsecured debentures by the trust, the percent of the assets of the trust that are invested in all obligations of all persons described in section 503(b) is computed as follows:

(1) Obligations of persons described in section 503(b) acquired before Feb. 1, 1960 (valued at fair market value)	$1,000
(2) Unsecured debentures of employer purchased on Feb. 1, 1960 (valued at cost)	1,000
(3) Total amount of trust's assets invested in obligations of persons described in section 503(b) ((1) plus (2))	2,000
(4) Assets of the trust other than obligations of persons described in section 503(b) (valued at fair market value on Feb. 1, 1960)	7,800
(5) Obligations of persons described in section 503(b) acquired before Feb. 1, 1960 (valued at fair market value on Feb. 1, 1960)	1,000
(6) Unsecured debentures of employer purchased on Feb. 1, 1960 (valued at fair market value on Feb. 1, 1960)	$1,200
(7) Total assets of the trust valued at fair market value on Feb. 1, 1960 (sum of (4), (5), and (6))	10,000
(8) Percent of assets of the trust invested in all obligations of all persons described in section 503(b) immediately following purchase of unsecured	20%

debentures on Feb. 1, 1960 ((3) ÷ (7), that is, $2,000 ÷ $10,000)

(2) In determining for purposes of subparagraph (1) of this paragraph the amount invested in obligations of persons described in section 503(b), there shall be included amounts invested in any obligations issued by any such person, irrespective of whether the obligation is secured, and irrespective of whether the obligation meets the conditions of section 503(e) or section 503(f). Obligations of persons described in section 503(b) other than the issuer of the obligation to which section 503(e) applies are also included within the 25 percent limitation. For example, if on February 19, 1959, an exempt employees' trust described in section 401(a) purchases unsecured debentures issued by the employer corporation in a transaction effected on the New York Stock Exchange, and if immediately after the purchase 10 percent of the trust's assets is invested in such debentures and 20 percent of its assets is invested in a loan made with adequate security on January 12, 1959, to the wholly-owned subsidiary of the employer corporation, then the purchase of the employer's debentures will not qualify under section 503(e), since 30 percent of the trust's assets are then invested in obligations of persons described in section 503(b).

(e) ***Change of terms of an obligation.*** A change in terms of an obligation is considered as the acquisition of a new obligation. If such new obligation is not adequately secured, the requirements of section 503(e) must be met at the time the terms of the obligation are changed for such section to be applicable to such new loan.

[T.D. 7428, 41 FR 34624, Aug. 16, 1976]

§ 1.503(e)-3 Effective dates.

(a) Section 503(e) and §§ 1.503(e)-1 and 1.503(e)-3 are effective in the case of an employees' trust described in section 401(a) for taxable years ending after March 15, 1956. Thus, if during a taxable year ending before March 16, 1956, an employees' trust made a loan which meets the requirements of section 503(e), such loan will not be treated as made without the receipt of adequate security and will not cause the loss of exemption for taxable years ending after March 15, 1956, although such loan was not considered adequately secured when made. (However, section 503 does not apply to organizations described in section 401(a) not referred to in section 4975(g) (2) or (3) for transactions occurring after December 31, 1974.)

(b)

(1) In the case of obligations acquired by an employees' trust described in section 401(a) before September 2, 1958, which were held on that date, the requirements described in paragraphs (c) and (d) of § 1.503(e)-2 which were not satisfied immediately following the acquisition shall be treated as satisfied at that time if those requirements would have been satisfied had the obligations been acquired on September 2, 1958. For example, on January 3, 1955, an employees' trust described in section 401(a) purchased through the New York Stock Exchange unsecured debentures issued by the employer corporation. Under section 503(e) the acquisition of such debentures by the trust will not be treated for taxable years ending after March 15, 1956, as a loan made without the receipt of

adequate security if the debentures were held by the employees' trust on September 2, 1958, and if the requirements of paragraphs (c) and (d) of § 1.503(e)-2 which were not met on January 3, 1955, were met on September 2, 1958, as if that date were the date of acquisition.

(2) In the case of obligations acquired before September 2, 1958, which were not held by the employees' trust described in section 401(a) on that date, only the requirements described in paragraph (b) of § 1.503(e)-2 must be satisfied for section 503(e) to be applicable to such acquisition. For example, if on December 5, 1956, an employees' trust lent money to the employer corporation by purchasing a debenture issued by the employer and if the trust sold the debenture on August 1, 1958, such loan would not be treated as made without the receipt of adequate security if the requirement described in paragraph (b) of § 1.503(e)-2 was met on December 5, 1956.

(c) Section 503(e) and §§ 1.503(e)-1 and 1.503(e)-2 are effective in the case of trusts described in section 501(c)(17) with respect to loans made, renewed, or, in the case of demand loans, continued after December 31, 1959, and in the case of trusts described in section 501(c)(18) with respect to loans made, renewed or, in the case of demand loans, continued after December 31, 1969.

(d) See paragraph (b)(2) of § 1.503(b)-1 for the effective dates for the application of the definition of adequate security.

[T.D. 7428, 41 FR 34626, Aug. 16, 1976]

§ 1.503(f)-1 Loans by employers who are prohibited from pledging assets.

(a) ***In general.***

(1) Section 503(f) provides that section 503(b)(1) shall not apply to a loan made to the employer by an employees' trust described in section 401(a) if the loan bears a reasonable rate of interest and certain conditions are met. Section 503(f) also applies to the renewal of loans to the employer and, in the case of demand loans, to the continuation of such loans.

(2) The provisions of section 503(f) do not limit the effect of section 401(a) and § 1.401-2, relating to use or diversion of corpus or income of an employees' trust, or the effect of any of the provisions of section 503 other than section 503(b)(1). Consequently, although a loan made by an employees' trust described in section 503(a)(1)(B) meets all the requirements of section 503(f) and therefore is not treated as a loan made without the receipt of adequate security, an employees' trust making such a loan will lose its exempt status if the loan is not considered as made for the exclusive benefit of the employees or their beneficiaries. Similarly, a loan which meets the requirements of section 503(f) will constitute a prohibited transaction within the meaning of section 503(b)(6) if it results in a substantial diversion of the trust's income or corpus to a person described in section 503(b).

(b) ***Conditions.***

(1) Section 503(f) applies to a loan only if, with respect to the making or renewal of the loan, the conditions described in paragraphs (b) (2), (3), and (4) of this section are met. For purpose of this paragraph, the mere continuance of a demand loan is not considered as the making or renewal of such a loan.

(2) The employer must be prohibited (at the time of the making or renewal of the loan) by any law of the United States or regulations thereunder from directly or indirectly pledging, as security for such a loan, a particular class or classes of his assets the value of which (at such time) represents more than one-half of the value of all his assets. If a loan is made or renewed when the employer is

prohibited by a law of the United States (or the regulations thereunder) from pledging a class of his assets, the qualification of such a loan under section 503(f) will not be affected by a subsequent change in such law or regulations permitting the employer to pledge such assets, unless such loan is renewed after such change. See section 8(a) of the Securities Exchange Act of 1934, as amended (15 U.S.C. 78h(a)), which prohibits certain persons from pledging a class of assets as security for loans, and 12 CFR 220.5(a) (credit by brokers, dealers, and members of national securities exchanges).

(3) The making or renewal, as the case may be, must be approved in writing as an investment which is consistent with the exempt purposes of the trust by a trustee who is independent of the employer, and such written approval must not have been previously refused by any other such trustee. A trustee is independent of the employer, for purposes of this subparagraph, if he is entirely free of influence or controlled by the employer. For example, if the employer is a partnership, then a partner in such partnership, or a member of a partner's family would not be considered independent of the employer. Similarly, an employee of the employer would not be considered independent of the employer. For purposes of this subparagraph, the term *trustee* means, with respect to any trust for which there are two trustees who are independent of the employer, both of such trustees and, with respect to any trust for which there are more than two such independent trustees, a majority of the trustees independent of the employer.

(4)

(i) Immediately following the making or renewal, as the case may be, the aggregate amount lent by the trust to the employer, without the receipt of adequate security must not exceed 25 percent of the value of all the assets of the trust.

(ii) For purposes of paragraph (b)(4)(i) of this section, the determination as to whether any amount lent by the trust to the employer is a loan made without the receipt of adequate security shall be made without regard to section 503(e). Thus, if an employees' trust makes a loan on January 2, 1959, to the employer without adequate security (but which loan is not considered as made without adequate security under section 503(e)), and if immediately after making such loan 10 percent of the value of all its assets is invested in such loan, then the trust may on that day invest not more than an additional 15 percent of its assets in a loan which would be considered made without adequate security if it were not for the provisions of section 503(f).

(iii) For purposes of paragraph (b)(4)(i) of this section, in determining the value of all the assets of the trust, there shall be used the fair market value of those assets on the day of the making or renewal.

(c) ***Reasonable rate of interest.*** Section 503(f) only applies if, in addition to meeting the conditions described in paragraph (b) of this section, the loan bears a reasonable rate of interest when it is made, renewed, or, in the case of demand loans, during the period of its existence.

(d) ***Change of terms of loan.*** A change in the terms of a loan (including a reduction in the security for a loan) is considered as the making of a new loan. If such a new loan is not adequately secured, the requirements of section 503(f) must be met at the time the terms of the loan are changed for such section to be applicable to such new loan.

(e) ***Effective date.***

(1) This section and section 503(f) are effective for taxable years ending after September 2, 1958, but only with respect to periods after such date. Thus, if a loan was made on or before September 2, 1958, without the receipt of adequate security and if, when such loan was made, it met all of the requirements of section 503(f) and this section, then the loan is not subject to section 503(b)(1) after September 2, 1958, and would not consitite a prohibited transaction after that date because of a lack of adequate security.

(2) See paragraph (b)(2) of § 1.503(b)-1 for the effective dates for application of the definition of adequate security.

[T.D. 7428, 41 FR 34626, Aug. 16, 1976]

§ 1.504-1 Attempts to influence legislation; certain organizations formerly described in section 501(c)(3) denied exemption.

Section 504(a) and this section apply to an organization that is exempt from taxation at any time after October 4, 1976, as an organization described in section 501(c)(3), and that ceases to be described in that section because it—

(a) Is an *action* organization within the meaning of § 1.501(c)(3)-1(c)(3)(ii) or (iv), on account of activities occurring after October 4, 1976, or

(b) Is denied exemption under the provisions of section 501(h) (see § 1.501(h)-3 or § 56.4911-9).

This section does not apply, however, to an organization that was described in section 501(h)(5) and § 1.501(h)-2(b)(3) (relating generally to churches) for its taxable year immediately preceding the first taxable year for which it is no longer an organization described in section 501(c)(3). An organization to which section 504(a) and this section apply shall not be treated as described in section 501(c)(4) at any time after the organization ceases to be described in section 501(c)(3). Further, an organization denied treatment as an organization described in section 501(c)(4) under this section may not be treated as an organization described in section 501(c) other than as an organization described in section 501(c)(3). For rules relating to recognition of exemption after exemption is denied under section 501(h), § 1.501(h)-3(d).

[T.D. 8308, 55 FR 35592, Aug. 31, 1990]

§ 1.504-2 Certain transfers made to avoid section 504(a).

(a) ***Scope.*** Under section 504(b), a transfer described in paragraph (b) or (c) of this section to an organization exempt from tax under section 501(a) may result in loss of exemption by the transferee unless the Commissioner determines, under paragraph (e) of this section, that the original transfer did not effect an avoidance of section 504(a). For purposes of this section, the term *transfer* includes any use by, or for the benefit of, the recipient of the transfer, but does not include any transfer made for adequate and full consideration.

(b) ***Transferor and transferee commonly controlled*** —

(1) ***Loss of exemption.*** A transfer is described in this paragraph (b) if it is described in paragraphs (b)(2) through (b)(6). The transferee of a transfer described in this paragraph will cease to be exempt from tax under section 501(a), unless the provisions of paragraph (e) of this section apply.

(2) ***Transferor organization.*** A transfer is described in this paragraph (b)(2) only if it is from an organization that—

(i) Is or was described in section 501(c)(3), but not in section 501(h)(5), and

(ii) Is determined to be an "action" organization (as defined in § 1.501(c)(3)-1(c)(3)(ii) or (iv)), or is denied exemption from tax by reason of section 501(h) and either § 1.501(h)-3 or § 56.4911-9.

(3) ***Transferor and transferee commonly controlled.*** A transfer is described in this paragraph (b)(3) only if, at the time of the transfer or at any time during the transferee's ten taxable years following the year in which the transfer was made, the transferee is controlled (directly or indirectly), as defined in paragraph (f) of this section, by the same person or persons who control the transferor.

(4) ***Time of transfer.*** A transfer is described in this paragraph (b)(4) only if the transfer is made—

(i) After the date that is 24 months before the earliest of the effective date of the determination under section 501(h) that the transferor is not exempt, the effective date of the Commissioner's determination that the transferor is an "action" organization (as defined in § 1.501(c)(3)(ii) or (iv)), or the date on which the Commissioner proposes to treat it as no longer described in section 501(c)(3), and

(ii) Before the transferor again is recognized as an organization described in section 501(c)(3).

(5) ***Transferee.*** A transfer is described in this paragraph (b)(5) only if the transferee is exempt from tax under section 501(a) but the transferee is neither—

(i) An organization described in section 501(c)(3), nor

(ii) An organization described in section 401(a) to which the transferor contributes as an employer.

(6) ***Amount of transfer.*** A transfer is described in this paragraph (b)(6) only if the amount of the transfer exceeds the lesser of 30 percent of the net fair market value of the transferor's assets or 50 percent of the net fair market value of the transferee's assets, computed immediately before the transfer. For purposes of this paragraph (b)(6)—

(i) The amount of a transfer by a transferor is the sum of the amounts transferred to any number of transferees in any number of transfers, all of which are described in paragraphs (b)(2) through (b)(5) of this section, and the time of the transfer is the time of the first transfer so taken into account; and

(ii) The amount of a transfer to a transferee is the sum of the amounts transferred by a transferor to the transferee in any number of transfers, all of which are described in paragraphs (b)(2) through (b)(5) of this section, and the time of the transfer is the time of the first transfer so taken into account.

(c) ***Other transfers*** —

(1) ***Transfers included.*** A transfer is described in this paragraph (c) if it would be described in paragraph (b) of this section except that either—

(i) The amount of the transfer is less than the amount determined in paragraph (b)(6) of this section, or

(ii) The transferor and transferee are not commonly controlled as described in paragraph (b)(3) of this section, or

(iii) The transferee is an organization described in sections 501(c)(3) and 501(h)(4).

(2) ***Loss of exemption.*** The transferee of a transfer described in this paragraph (c) will cease to be exempt under section 501(a) if the Commissioner determines on all the facts and circumstances that the transfer effected an avoidance of section 504(a). In determining whether a transfer effected an avoidance of section 504(a), the Commissioner may consider whether the transferee engages, or has engaged, in attempts to influence legislation and may also consider any factors enumerated in paragraph (e) of this section.

(d) ***Date of loss of exempt status.*** A transferee of a transfer described in paragraph (b), (c)(1)(ii), or (c)(1)(iii) of this section will cease to be exempt from tax under section 501(a) on the date that all requirements of paragraph (b), (c)(1)(ii), or (c)(1)(iii) (other than the determination by the Commissioner) are satisfied. A transferee of a transfer described in paragraph (c)(1)(i) of this section will cease to be exempt from tax under section 501(a) on the date of the last transfer preceding notification of the transferee that the Commissioner proposes to treat the transferee as other than an exempt organization.

(e) ***Transfers not in avoidance of section 504(a).*** Notwithstanding paragraph (b) of this section, if, based on all the facts and circumstances, the Commissioner determines that a transfer described in paragraph (b) did not effect an avoidance of section 504(a), the transferee will not be denied exemption from tax by reason of section 504(b) and this section. In making the determination called for in the preceding sentence, the Commissioner may consider all relevant factors including:

(1) Whether enforceable and effective conditions on the transfer preclude use of any of the transferred assets for any purpose that, if it were a substantial part of an organization's activities, would be inconsistent with exemption as an organization described in section 501(c)(3);

(2) In the absence of conditions described in paragraph (e)(1) of this section, whether the transferred assets are used exclusively for purposes that are consistent with the transferor's exemption as an organization described in section 501(c)(3);

(3) Whether the assets transferred would be describe in § 53.4942(a)(-2(c)(3) before, as well as after, the transfer if both the transferor and transferee were private foundations;

(4) Whether and to what extent the transfer would satisfy the provisions of § 1.507-2(a) (7) and (8) if the transferor were a private foundation;

(5) Whether all of the transferred assets have been expended during a period when the transferee was not controlled (directly or indirectly) by the same person or persons who controlled the transferor; and

(6) Whether the entire amount of the transferred assets were in turn transferred, before the close of the transferee's taxable year following the taxable year in which the transferred assets were received, to one or more organizations described in section 507(b)(1)(A) none of which are controlled (directly or indirectly) by the same persons who control either the original transferor or transferee.

(f) ***Control.*** For purposes of section 504 and the regulations thereunder—

(1) The transferor will be presumed to control any organization with which it is affiliated within the meaning of § 56.4911-7(a), or would be if both organizations were described in section 501(c)(3), and

(2) The transferee will be treated as controlled (directly of indirectly) by the same person or persons who control the transferor if the transferee would be treated as controlled under § 53.4942(a)-3(a)(3), for which purpose the transferor shall be treated as a private foundation.

[T.D. 8308, 55 FR 35592, Aug. 31, 1990]

§ 1.505(c)-1T Questions and answers relating to the notification requirement for recognition of exemption under paragraphs (9), (17) and (20) of Section 501(c) (temporary).

Q-1: What does section 505(c) of the Internal Revenue Code provide?

A-1: Section 505(c) provides that an organization will not be recognized as exempt under section 501(c)(9) as a voluntary employees' beneficiary association, under section 501(c)(17) as a trust forming part of a plan providing for the payment of supplemental unemployment compensation benefits, or under section 501(c)(20) as a trust forming part of a qualified group legal services plan unless notification is given to the Internal Revenue Service. The notification required of a trust created pursuant to section 501(c)(20) and forming part of a qualified group legal services plan is set forth in Q&A-2. The notification required of an organization organized after July 18, 1984, and applying for exempt status as an organization described in section 501(c) (9) or (17) is set forth in Q&A-3 through Q&A-8. The notification required of an organization organized on or before July 18, 1984, and claiming exemption as an organization described in section 501(c) (9) or (17) is set forth in Q&A-9 through Q&A-11. However, an organization that has previously notified the Internal Revenue Service of its claim to exemption under section 501(c) (9), (17), or (20) or its claim to exemption under those sections pursuant to another provision of the Code, is not required, under section 505(c), to submit a renotification (See Q&A-2 and Q&A-12).

Section 501(c)(20) Trusts

Q-2: What is the notice required of a trust created pursuant to section 501(c)(20) and forming part of a qualified group legal services plan under section 120?

A-2: (a) A trust claiming exemption as an organization described in section 501(c)(20) will be recognized as exempt if the exclusive function of the trust is to form part of a qualified group legal services plan or plans. Exemption of the trust under section 501(c)(20) will generally be dependent upon and coextensive with recognition of the plan as a qualified group legal services plan. Therefore, a trust organized pursuant to section 501(c)(20) after July 18, 1984, need not file a separate notice with the Internal Revenue Service of its claim to exemption because the notice required by section 120(c)(4) will suffice for purposes of section 505(c), provided a copy of the trust instrument is filed with the Form 1024 submitted by the group legal services plan. If the trust instrument has not been filed with the Form 1024 submitted by the group legal services plan, the trust must comply with (and exemption will be dependent upon) the filing applicable to a trust organized on or before July 18, 1984. For the notice required and effective dates of exemption of a qualified group legal services plan under section 120, see § 1.120-3.

(b) A trust organized on or before July 18, 1984, that claims exempt status as a trust described in section 501(c)(20) and that forms part of a qualified group legal services plan which has been recognized as exempt under section 120, must file a copy of its trust instrument with the Internal Revenue Service before February 4, 1987. If a copy of the trust instrument is filed within the time provided, the trust's exemption will be recognized retroactively to the date the qualified group legal services plan was recognized as exempt under section 120. However, if a copy of the trust instrument is filed after the time provided, exemption will be recognized only for the period after the copy of the trust instrument is filed with the Internal Revenue Service. See Q&A-7 for a further discussion of *date of filing.* A trust that has previously filed a copy of its trust instrument with the Service need not refile that document.

Section 501(c)(9) and (17) Organizations Organized After July 18, 1984

Q-3: What is the notice required of an organization or trust, organized after July 18, 1984, that is applying for recognition of tax exempt status under section 501(c) (9) or (17)?

A-3: An organization or trust that is organized after July 18, 1984, will not be treated as described in paragraphs (9) or (17) of section 501(c), unless the organization notifies the Internal Revenue Service that it is applying for recognition of exemption. In addition, unless the required notice is given in the manner and within the time prescribed by these regulations, an organization will not be treated as exempt for any period before the giving of the required notice. The notice is filed by submitting a properly completed and executed Form 1024, "Application for Recognition of Exemption Under Section 501(a) or for Determination Under Section 120" together with the additional information required under Q&A-4 and Q&A-5. The notice is filed with the district director for the key district in which the organization's principal place of business or principal office is located.

The notice may be filed by either the plan administrator (as defined in section 414(g)) or the trustee. The Internal Revenue Service will not accept a Form 1024 for any organization or trust before such entity has been organized.

Q-4: What information, in addition to the information required by Form 1024, must be submitted by an organization or trust seeking recognition of exemption under section 501(c) (9) or (17)?

A-4: A notice will not be considered complete unless, in addition to a properly completed and executed Form 1024, the organization or trust submits a full description of the benefits available to participants under section 501(c) (9) or (17). Moreover, both the terms and conditions of eligibility for membership and the terms and conditions of eligibility for benefits must be set forth. This information may be contained in a separate document, such as a *plan document,* or it may be contained in the creating document of the entity (e.g., the articles of incorporation or association, or a trust indenture). For benefits provided through a policy or policies of insurance, all such policies must be included with the notice. Where individual policies of insurance are provided to the participants, single exemplar copies, typical of policies generally issued to participants, are acceptable, provided they adequately describe all forms of insurance available to participants. In providing a full description of the benefits available, the benefits provided must be sufficiently described so that each benefit is definitely determinable. A benefit is definitely determinable if the amount of the benefit, its duration, and the persons eligible to receive it are ascertainable from the plan document or other instrument. Thus, a benefit is not definitely determinable if the rules governing either its amount, its duration, or its recipients are not ascertainable from the plan document or other instrument but are instead subject to the discretion of a person or committee. Likewise, a benefit is not definitely determinable if the amount for any individual is based upon a percentage share of any item that is within the discretion of the employer. However, a disability benefit will not fail to be considered definitely determinable merely because the determination of whether an individual is disabled is made under established guidelines by an authorized person or committee.

Q-5: What is the notice required of collectively bargained plans?

A-5: If an organization or trust claiming exemption under section 501(c) (9) or (17) is organized and maintained pursuant to a collective bargaining agreement between employee representatives and one or more employer, only one Form 1024 is required to be filed for the organization or trust, regardless of the number of employers originally participating in the agreement. Moreover, once a Form 1024 is filed pursuant to a collective bargaining areement, an additional Form 1024 is not required to be filed by an employer who thereafter

participates in that agreement. When benefits are provided pursuant to a collective bargaining agreement, the notice will not be considered complete unless, in addition to a properly completed and executed Form 1024, a copy of the collective bargaining agreement is also submitted together with the additional information delineated in Q&A-4.

Q-6: When must the required notice be filed by an organization or trust, organized after July 18, 1984, that seeks recognition of exemption under section 501(c) (9) or (17)?

A-6: An organization or trust applying for exemption must file the required notice by the later of February 4, 1987 or 15 months from the end of the month in which the organization or trust was organized. An extension of time for filing the required notice may be granted by the district director if the request is submitted before the end of the applicable period and it is demonstrated that additional time is needed.

Q-7: What is the effective date of exemption for a new organization or trust, organized after July 18, 1984, that has submitted the required notice?

A-7: If the required notice is filed within the time provided by these regulations, the organization's exemption will be recognized retroactively to the date the organization was organized, provided its purpose, organization and operation (including compliance with the applicable nondiscrimination requirements) during the period prior to the date of the determination letter are in accordance with the applicable law. However, if the required notice is filed after the time provided by these regulations, exemption will be recognized only for the period after the application is filed with the Internal Revenue Service. The date of filing is the date of the United States postmark on the cover in which an exemption application is mailed or, if no postmark appears on the cover, the date the application is stamped as received by the Service. If an extension for filing the required notice has been granted to the organization, a notice filed on or before the last day specified in the extension will be considered timely and not the otherwise applicable date under Q&A-6.

Q-8: What is the effect on exemption of the filing of an incomplete notice?

A-8: Although a properly completed and executed Form 1024 together with the required additional information (See Q&A-4 and Q&A-5) must be submitted to satisfy the notice required by section 505(c), the failure to file, within the time specified, all of the information necessary to complete such notice will not alone be sufficient to deny recognition of exemption from the date of organization to the date the completed information is submitted to the Service. If the notice which is filed with the Service within the required time is substantially complete, and the organization supplies the necessary additional information requested by the Service within the additional time allowed, the original notice will be considered timely. However, if the notice is not substantially complete or the additional information is not provided within the additional time allowed, exemption will be recognized only from the date of filing of the additional information.

Section 501(c)(9) and (17) Organizations Organized on or Before July 18, 1984

Q-9: What is the notice required of an organization or trust organized on or before July 18, 1984, that claims exempt status as an organization described in section 501(c) (9) or (17)?

A-9: Section 505(c) provides a special rule for existing organizations and trusts organized on or before July 18, 1984. Such an organization or trust will not be treated as described in paragraphs (9) or (17) of section 501(c) unless the organization or trust notifies the Internal Revenue Service in the manner and within the time prescribed in these regulations that it is claiming exemption under the particular section. The type of notice, the manner for filing that notice, and the additional information required is the same as that set forth in Q&A-3 through Q&A-5 for new organizations.

Q-10: When must the required notice be filed by an organization or trust organized on or before July 18, 1984?

A-10: An organization or trust organized on or before July 18, 1984, that claims exempt status as an organization described in section 501(c) (9) or (17), must file the required notice before February 4, 1987. An extension of time for filing the required notice may be granted by the district director if the request is submitted before the due date of the notice and it is demonstrated that additional time is needed.

Q-11: What is the effective date of exemption for an organization or trust organized on or before July 18, 1984, that has submitted the required notice?

A-11: If the required notice is filed within the time provided by these regulations, the organization's exemption will be recognized retroactively to the date the organization was organized, provided its purpose, organization and operation (including compliance with the applicable nondiscrimination requirements) during the period prior to the date of the determination letter are in accordance with the applicable law. If, on the other hand, the required notice is filed after the time provided by these regulations, exemption will be recognized only for the period after the notice is received by the Internal Revenue Service. See Q&A-7 for a further discussion of *date of filing.* See also Q&A-8 for the effect on exemption of a notice that has been timely filed but is incomplete.

Exceptions to Notice Requirement

Q-12: Are any organizations or trusts claiming recognition of exemption as an organization described in section 501(c) (9) or (17) excepted from the notice requirement of section 505(c)?

A-12: An organization or trust that has previously notified the Internal Revenue Service of its claim to exemption by filing Form 1024 is not required, under section 505(c), to renotify the Service. Thus, an organization that has filed a Form 1024 that is pending with the Service need not refile that form. Also, an organization that has received a ruling or determination letter from the Service recognizing its exemption from taxation need not submit the notification required by section 505(c).

[T.D. 8073, 51 FR 4330, Feb. 4, 1986]

§ 1.506-1 Organizations required to notify Commissioner of intent to operate under section 501(c)(4).

(a) ***Notification requirement*** —

(1) ***In general.*** Except as provided in paragraph (b) of this section, an organization (whether domestic or foreign) described in section 501(c)(4) must, no later than 60 days after the date the organization is organized, notify the Commissioner that it is operating as an organization described in section 501(c)(4) by submitting a completed Form 8976, "Notice of Intent to Operate Under Section 501(c)(4)," or its successor (the notification). The notification must be submitted in accordance with

the form and its instructions. The notification must include the information specified in paragraph (a)(2) of this section and be accompanied by payment of the user fee described in paragraph (a)(3) of this section. Additional guidance on the procedure for submitting the notification may be provided in published guidance in the Internal Revenue Bulletin (see § 601.601(d)(2) of this chapter) or in other guidance, such as forms or instructions, issued with respect to the notification.

(2) ***Contents of the notification.*** The notification must include the following information:

(i) The name, address, and taxpayer identification number of the organization.

(ii) The date on which, and the state or other jurisdiction under the laws of which, the organization was organized (that is, formed as a legal entity). For an organization formed outside the United States, the jurisdiction is the foreign country under the laws of which it is organized.

(iii) A statement of the purpose of the organization.

(iv) Such additional information as may be specified in published guidance in the Internal Revenue Bulletin (see § 601.601(d)(2) of this chapter) or in other guidance, such as forms or instructions, issued with respect to the notification.

(3) ***User fee.*** The notification must be accompanied by payment of the user fee set forth by published guidance in the Internal Revenue Bulletin (see § 601.601(d)(2) of this chapter) or in other guidance, such as forms or instructions, issued with respect to the notification.

(4) ***Extension for reasonable cause.*** The Commissioner may, for reasonable cause, extend the 60-day period for submitting the notification.

(b) ***Special rules for organizations that were organized on or before July 8, 2016*** —

(1) ***Notification requirement does not apply to organizations that filed with the IRS on or before December 18, 2015.*** The requirement to submit the notification does not apply to any organization described in section 501(c)(4) that, on or before December 18, 2015, either—

(i) Applied for a written determination of recognition as an organization described in section 501(c)(4) in accordance with § 1.501(a)-1 and all applicable guidance published in the Internal Revenue Bulletin (see § 601.601(d)(2) of this chapter), forms, and instructions; or

(ii) Filed at least one annual information return or annual electronic notification required under section 6033(a)(1) or (i).

(2) ***Transition relief available for organizations that filed with the IRS on or before July 8, 2016.*** An organization described in section 501(c)(4) is not required to submit the notification if, on or before July 8, 2016, the organization either—

(i) Applied for a written determination of recognition as an organization described in section 501(c)(4) in accordance with § 1.501(a)-1 and all applicable guidance published in the Internal Revenue Bulletin (see § 601.601(d)(2) of this chapter), forms, and instructions; or

(ii) Filed at least one annual information return or annual electronic notification required under section 6033(a)(1) or (i).

(3) ***Extended due date.*** An organization that was organized on or before July 8, 2016, and is not described in paragraph (b)(1) or (2) of this section, satisfies the requirement to submit the notification if the notification was submitted on or before September 6, 2016.

(c) ***Failure to submit the notification.*** For information on the penalties for failure to submit the notification, the applicable reasonable cause exception, and applicable special rules, see section 6652(c)(4) through (6).

(d) ***Acknowledgment of receipt.*** Within 60 days after receipt of the notification, the Commissioner will send the organization an acknowledgment of such receipt. This acknowledgment is not a determination by the Commissioner that the organization qualifies for exemption under section 501(a) as an organization described in section 501(c)(4). See paragraph (e) of this section.

(e) ***Separate procedure by which an organization may request an IRS determination that it qualifies for section 501(c)(4) tax-exempt status.*** Submission of the notification does not constitute a request by an organization for a determination by the Commissioner that the organization qualifies for exemption under section 501(a) as an organization described in section 501(c)(4). An organization seeking IRS recognition of its tax-exempt status must separately request such a determination in accordance with § 1.501(a)-1 and all applicable guidance published in the Internal Revenue Bulletin (see § 601.601(d)(2) of this chapter), forms, and instructions.

(f) ***Applicability date.*** This section applies on and after July 8, 2016.

[T.D. 9873, 84 FR 35306, July 23, 2019]

PRIVATE FOUNDATIONS

§ 1.507-1 General rule.

(a) ***In general.*** Except as provided in § 1.507-2, the status of any organization as a private foundation shall be terminated only if:

(1) Such organization notifies the district director of its intent to accomplish such termination, or

(2)

(i) With respect to such organization, there have been either willful repeated acts (or failures to act), or a willful and flagrant act (or failure to act), giving rise to liability for tax under chapter 42, and

(ii) The Commissioner notifies such organization that, by reason of subdivision (i) of this subparagraph, such organization is liable for the tax imposed by section 507(c)

and either such organization pays the tax imposed by section 507(c) (or any portion not abated under section 507(g)) or the entire amount of such tax is abated under section 507(g).

(b) ***Termination under section 507(a)(1).***

(1) In order to terminate its private foundation status under paragraph (a)(1) of this section, an organization must submit a statement to the district director of its intent to terminate its private foundation status under section 507(a)(1). Such statement must set forth in detail the computation and amount of tax imposed under section 507(c). Unless the organization requests abatement of such tax pursuant to section 507(g), full payment of such tax must be made at the time the statement is filed under section 507(a)(1). An organization may request the abatement of all of the tax imposed under section 507(c), or may pay any part thereof and request abatement of the unpaid portion of the amount of tax assessed. If the organization requests abatement of the tax imposed

under section 507(c) and such request is denied, the organization must pay such tax in full upon notification by the Internal Revenue Service that such tax will not be abated. For purposes of subtitle F of the Code, the statement described in this subparagraph, once filed, shall be treated as a return.

(2) Termination of private foundation status under section 507(a)(1) does not relieve a private foundation, or any disqualified person with respect thereto, of liability for tax under chapter 42 with respect to acts or failures to act prior to termination or for any additional taxes imposed for failure to correct such acts or failures to act. See subparagraph (8) of this paragraph as to the possible imposition of transferee liability in cases not involving termination of private foundation status.

(3) In the case of an organization which has terminated its private foundation status under section 507(a) and continues in operation thereafter, if such organization wishes to be treated as described in section 501(c)(3), then pursuant to section 509(c) and § 1.509(c)-1 such organization must apply for recognition of exemption as an organization described in section 501(c)(3) in accordance with the provisions of section 508(a).

(4) See § 53.4947-1(c)(7) of this chapter as to the application of section 507(a) to certain split-interest trusts.

(5) For purposes of section 508(d)(1), the Internal Revenue Service shall make notice to the public (such as by publication in the Internal Revenue Bulletin) of any notice received from a private foundation pursuant to section 507(a)(1) or of any notice given to a private foundation pursuant to section 507(a)(2).

(6) If a private foundation transfers all or part of its assets to one or more other private foundations (or one or more private foundations and one or more section 509(a) (1), (2), (3), or (4) organizations) pursuant to a transfer described in section 507(b)(2) and § 1.507-3(c), such transferor foundation will not have terminated its private foundation status under section 507(a)(1). See § 1.507-3, however, for the special rules applicable to private foundations participating in section 507(b)(2) transfers.

(7) Neither a transfer of all of the assets of a private foundation nor a significant disposition of assets (as defined in § 1.507-3(c)(2)) by a private foundation (whether or not any portion of such significant disposition of assets is made to another private foundation) shall be deemed to result in a termination of the transferor private foundation under section 507(a) unless the transferor private foundation elects to terminate pursuant to section 507(a)(1) or section 507(a)(2) is applicable. Thus, if a private foundation transfers all of its assets to one or more persons, but less than all of its net assets to one or more organizations described in section 509(a)(1) which have been in existence and so described for a continuous period of 60 calendar months, for purposes of this paragraph such transferor foundation will not be deemed by reason of such transfer to have terminated its private foundation status under section 507 (a) or (b) unless section 507(a)(2) is applicable. Such foundation will continue to be treated as a private foundation for all purposes. For example, if a private foundation transfers all of its net assets to a section 509(a)(2) organization in 1971 and receives a bequest in 1973, the bequest will be regarded as having been made to a private foundation and the foundation will be subject to the provisions of chapter 42 with respect to such funds. If a private foundation makes a transfer of all of its net assets to a section 509(a) (2) or (3) organization, for example, it must retain sufficient income or assets to pay the tax imposed under section 4940 for that portion of its taxable year prior to such transfer. For additional rules applicable to a transfer by a private foundation of all of its net assets to a section 509(a)(1) organization which has not been in existence and so described for a continuous period of 60 calendar months, see § 1.507-3(e).

(8) If a private foundation makes a transfer described in subparagraph (7) of this paragraph and prior to, or in connection with, such transfer, liability for any tax under chapter 42 is incurred by the transferor foundation, transferee liability may be applied against the transferee organization for payment of such taxes. For purposes of this subparagraph, liability for any tax imposed under chapter 42 for failure to correct any act or failure to act shall be deemed incurred on the date on which the act or failure to act giving rise to the initial tax liability occurred.

(9) A private foundation which transfers all of its net assets is required to file the annual information return required by section 6033, and the foundation managers are required to file the annual report of a private foundation required by section 6056, for the taxable year in which such transfer occurs. However, neither such foundation nor its foundation managers will be required to file such returns for any taxable year following the taxable year in which the last of any such transfers occurred, if at no time during the subsequent taxable years in question the foundation has either legal or equitable title to any assets or engages in any activity.

(c) ***Involuntary termination under section 507(a)(2).***

(1) For purposes of section 507(a)(2)(A), the term *willful repeated acts (or failures to act*) means at least two acts or failures to act both of which are voluntary, conscious, and intentional.

(2) For purposes of section 507(a)(2)(A), a *willful and flagrant act (or failure to act*) is one which is voluntarily, consciously, and knowingly committed in violation of any provision of chapter 42 (other than section 4940 or 4948(a)) and which appears to a reasonable man to be a gross violation of any such provision.

(3) An act (or failure to act) may be treated as an act (or failure to act) by the private foundation for purposes of section 507(a)(2) even though tax is imposed upon one or more foundation managers rather than upon the foundation itself.

(4) For purposes of section 507(a)(2), the failure to correct the act or acts (or failure or failures to act) which gave rise to liability for tax under any section of chapter 42 by the close of the correction period for such section may be a willful and flagrant act (or failure to act).

(5) No motive to avoid the restrictions of the law or the incurrence of any tax is necessary to make an act (or failure to act) willful. However, a foundation's act (or failure to act) is not willful if the foundation (or a foundation manager, if applicable) does not know that it is an act of self-dealing, a taxable expenditure, or other act (or failure to act) to which chapter 42 applies. Rules similar to the regulations under chapter 42 (see, for example, § 53.4945-1(a)(2)(iii) of this chapter) shall apply in determining whether a foundation or a foundation manager *knows* that an act (or failure to act) is an act of self-dealing a taxable expenditure or other such act (or failure to act).

[T.D. 7233, 37 FR 28157, Dec. 21, 1972, as amended by T.D. 7290, 38 FR 31833, Nov. 19, 1973]

§ 1.507-2 Special rules; transfer to, or operation as, public charity.

(a) ***Transfer to public charities*** —

(1) ***General rule.*** Under section 507(b)(1)(A) a private foundation, with respect to which there have not been either willful repeated acts (or failures to act) or a willful and flagrant act (or failure to act) giving rise to liability for tax under Chapter 42, may terminate its private foundation status by distributing all of its net assets to one or more organizations described in section 170(b)(1)(A) (other than in clauses (vii) and (viii)) each of which has been in existence and so described for a

continuous period of at least 60 calendar months immediately preceding such distribution. Because section 507(a) does not apply to such a termination, a private foundation which makes such a termination is not required to give the notification described in section 507(a)(1). A private foundation that terminates its private foundation status under section 507(b)(1)(A) does not incur tax under section 507(c) and, therefore, no abatement of such tax under section 507(g) is required.

(2) ***Effect of current ruling.*** A private foundation seeking to terminate its private foundation status pursuant to section 507(b)(1)(A) may rely on a ruling or determination letter issued to a potential distributee organization that such distributee organization is an organization described in section 170(b)(1)(A)(i), 170(b)(1)(A)(ii), 170(b)(1)(A)(iii), 170(b)(1)(A)(iv), 170(b)(1)(A)(v), or 170(b)(1)(A)(vi) in accordance with the provisions of § 1.509(a)-7.

(3) ***Organizations described in more than one clause of section 170(b)(1)(A).*** For purposes of this paragraph and section 507(b)(1)(A), the parenthetical term "other than in clauses (vii) and (viii)" shall refer only to an organization that is described only in section 170(b)(1)(A)(vii) or section 170(b)(1)(A)(viii). Thus, an organization described in section 170(b)(1)(A)(i), 170(b)(1)(A)(ii), 170(b)(1)(A)(iii), 170(b)(1)(A)(iv), 170(b)(1)(A)(v), or 170(b)(1)(A)(vi) will not be precluded from being a distributee described in section 507(b)(1)(A) merely because it also appears to meet the description of an organization described in section 170(b)(1)(A)(vii) or section 170(b)(1)(A)(viii).

(4) ***Applicability of Chapter 42 to foundations terminating under section 507(b)(1)(A).*** An organization that terminates its private foundation status pursuant to section 507(b)(1)(A) will remain subject to the provisions of Chapter 42 until the distribution of all of its net assets to distributee organizations described in section 507(b)(1)(A) has been completed.

(5) ***Return required from organizations terminating private foundation status under section 507(b)(1)(A)*** —

(i) An organization that terminates its private foundation status under section 507(b)(1)(A) is required to file a return under the provisions of section 6043(b).

(ii) An organization that terminates its private foundation status under section 507(b)(1)(A) is not required to comply with section 6104(d) for the taxable year in which such termination occurs.

(6) ***Distribution of net assets.*** A private foundation will meet the requirement to "distribute all of its net assets" within the meaning of section 507(b)(1)(A) only if it transfers all of its right, title, and interest in and to all of its net assets to one or more organizations referred to in section 507(b)(1)(A).

(7) ***Effect of restrictions and conditions upon distributions of net assets*** —

(i) ***In general.*** In order to effectuate a transfer of "all of its right, title, and interest in and to all of its net assets" within the meaning of paragraph (a)(6) of this section, a transferor private foundation may not impose any material restriction or condition that prevents the transferee organization referred to in section 507(b)(1)(A) (herein sometimes referred to as the "public charity") from freely and effectively employing the transferred assets, or the income derived therefrom, in furtherance of its exempt purposes. Whether or not a particular condition or restriction imposed upon a transfer of assets is material (within the meaning of this paragraph (a)(7)) must be determined from all of the facts and circumstances of the transfer. Some of the more significant facts and circumstances to be considered in making such a determination are—

(A) Whether the public charity (including a participating trustee, custodian, or agent in the case of a community trust) is the owner in fee of the assets it receives from the private foundation;

(B) Whether such assets are to be held and administered by the public charity in a manner consistent with one or more of its exempt purposes;

(C) Whether the governing body of the public charity has the ultimate authority and control over such assets, and the income derived therefrom; and

(D) Whether, and to what extent, the governing body of the public charity is organized and operated so as to be independent from the transferor.

(ii) ***Independent governing body.*** As provided in paragraph (a)(7)(i)(D) of this section, one of the more significant facts and circumstances to be considered in making the determination whether a particular condition or restriction imposed upon a transfer of assets is material within the meaning of this paragraph (a)(7) is whether, and the extent to which, the governing body is organized and operated so as to be independent from the transferor. In turn, the determination as to such factor must be determined from all of the facts and circumstances. Some of the more significant facts and circumstances to be considered in making such a determination are—

(A) Whether, and to what extent, members of the governing body are comprised of persons selected by the transferor private foundation or disqualified persons with respect thereto or are themselves such disqualified persons;

(B) Whether, and to what extent, members of the governing body are selected by public officials acting in their capacities as such; and

(C) How long a period of time each member of the governing body may serve in such capacity. In the case of a transfer that is to a community trust, the community trust shall meet this paragraph (a)(7)(ii)(C) if—

(*1*) Its governing body is comprised of members who may serve a period of not more than ten consecutive years; and

(*2*) Upon completion of a period of service (beginning before or after the date of transfer), no member may serve again within a period consisting of the lesser of five years or the number of consecutive years the member has immediately completed serving.

(iii) ***Factors not adversely affecting determination.*** The presence of some or all of the following factors will not be considered as preventing the transferee "from freely and effectively employing the transferred assets, or the income derived therefrom, in furtherance of its exempt purposes" (within the meaning of paragraph (a)(7)(i) of this section):

(A) ***Name.*** The fund is given a name or other designation which is the same as or similar to that of the transferor private foundation or otherwise memorializes the creator of the foundation or his family.

(B) ***Purpose.*** The income and assets of the fund are to be used for a designated purpose or for one or more particular section 509(a)(1), section 509(a)(2), or section 509(a)(3) organization, and such use is consistent with the charitable, educational, or other basis for the exempt status of the public charity under section 501(c)(3).

(C) ***Administration.*** The transferred assets are administered in an identifiable or separate fund, some or all of the principal of which is not to be distributed for a specified period, if the public charity (including a participating trustee, custodian, or agent in the case of a community trust) is the legal and equitable owner of the fund and the governing body exercises ultimate and direct authority and control over such fund, as, for example, a fund to endow a chair at a university or a medical research fund at a hospital. In the case of a community trust, the transferred assets must be administered in or as a component part of the community trust within the meaning of § 1.170A-9(f)(11).

(D) ***Restrictions on disposition.*** The transferor private foundation transfers property the continued retention of which by the transferee is required by the transferor if such retention is important to the achievement of charitable or other similar purposes in the community because of the peculiar features of such property, as, for example, where a private foundation transfers a woodland preserve which is to be maintained by the public charity as an arboretum for the benefit of the community. Such a restriction does not include a restriction on the disposition of an investment asset or the distribution of income.

(iv) ***Adverse factors.*** The presence of any of the following factors will be considered as preventing the transferee "from freely and effectively employing the transferred assets, or the income derived therefrom, in furtherance of its exempt purposes" (within the meaning of paragraph (a)(7)(i) of this section):

(A) ***Distributions.*** (*1*) With respect to distributions made after April 19, 1977, the transferor private foundation, a disqualified person with respect thereto, or any person or committee designated by, or pursuant to the terms of an agreement with, such a person (hereinafter referred to as donor), reserves the right, directly or indirectly, to name (other than by designation in the instrument of transfer of particular section 509(a)(1), section 509(a)(2), or section 509(a)(3) organizations) the persons to which the transferee public charity must distribute, or to direct the timing of such distributions (other than by direction in the instrument of transfer that some or all of the principal, as opposed to specific assets, not be distributed for a specified period) as, for example, by a power of appointment. The IRS will examine carefully whether the seeking of advice by the transferee from, or the giving of advice by, any donor after the assets have been transferred to the transferee constitutes an indirect reservation of a right to direct such distributions. In any such case, the reservation of such a right will be considered to exist where the only criterion considered by the public charity in making a distribution of income or principal from a donor's fund is advice offered by the donor. Whether there is a reservation of such a right will be determined from all of the facts and circumstances, including, but not limited to, the factors contained in paragraphs (a)(7)(iv)(A)(*2*) and (a)(7)(iv)(A)(*3*) of this section.

(*2*) The presence of some or all of the following factors will indicate that the reservation of a right to direct distributions does not exist:

(*i*) There has been an independent investigation by the staff of the public charity evaluating whether the donor's advice is consistent with specific charitable needs most deserving of support by the public charity (as determined by the public charity).

(*ii*) The public charity has promulgated guidelines enumerating specific charitable needs consistent with the charitable purposes of the public charity and the donor's advice is consistent with such guidelines.

(*iii*) The public charity has instituted an educational program publicizing to donors and other persons the guidelines enumerating specific charitable needs consistent with the charitable purposes of the public charity.

(*iv*) The public charity distributes funds in excess of amounts distributed from the donor's fund to the same or similar types of organizations or charitable needs as those recommended by the donor.

(*v*) The public charity's solicitations (written or oral) for funds specifically state that such public charity will not be bound by advice offered by the donor.

(*3*) The presence of some or all of the following factors will indicate the reservation of a right to direct distributions does exist:

(*i*) The solicitations (written or oral) of funds by the public charity state or imply, or a pattern of conduct on the part of the public charity creates an expectation, that the donor's advice will be followed.

(*ii*) The advice of a donor (whether or not restricted to a distribution of income or principal from the donor's trust or fund) is limited to distributions of amounts from the donor's fund, and the factors described in paragraph (a)(7)(iv)(A)(*2*)(*i*) or paragraph (a)(7)(iv)(A)(*2*)(*ii*) of this section are not present.

(*iii*) Only the advice of the donor as to distributions of such donor's fund is solicited by the public charity and no procedure is provided for considering advice from persons other than the donor with respect to such fund.

(*iv*) For the taxable year and all prior taxable years the public charity follows the advice of all donors with respect to their funds substantially all of the time.

(B) ***Other action or withholding of action.*** The terms of the transfer agreement, or any expressed or implied understanding, required the public charity to take or withhold action with respect to the transferred assets which is not designed to further one or more of the exempt purposes of the public charity, and such action or withholding of action would, if performed by the transferor private foundation with respect to such assets, have subjected the transferor to tax under Chapter 42 (other than with respect to the minimum investment return requirement of section 4942(e)).

(C) ***Assumption of leases, contractual obligations, or liabilities.*** The public charity assumes leases, contractual obligations, or liabilities of the transferor private foundation, or takes the assets thereof subject to such liabilities (including obligations under commitments or pledges to donees of the transferor private foundation), for purposes inconsistent with the purposes or best interests of the public charity, other than the payment of the transferor's Chapter 42 taxes incurred prior to the transfer to the public charity to the extent of the value of the assets transferred.

(D) ***Retention of investment assets.*** The transferee public charity is required by any restriction or agreement (other than a restriction or agreement imposed or required by law or regulatory authority), express or implied, to retain any securities or other investment assets transferred to it by the private foundation. In a case where such transferred assets consistently produce a low annual return of income, the IRS will examine carefully whether the transferee is required by any such restriction or agreement to retain such assets.

(E) ***Right of first refusal.*** An agreement is entered into in connection with the transfer of securities or other property which grants directly or indirectly to the transferor private foundation or any disqualified person with respect thereto a right of first refusal with respect to the transferred securities or other property when and if disposed of by the public charity, unless such securities or other property was acquired by the transferor private foundation subject to such right of first refusal prior to October 9, 1969.

(F) ***Relationships.*** An agreement is entered into between the transferor private foundation and the transferee public charity which establishes irrevocable relationships with respect to the maintenance or management of assets transferred to the public charity, such as continuing relationships with banks, brokerage firms, investment counselors, or other advisors with regard to the investments or other property transferred to the public charity (other than a relationship with a trustee, custodian, or agent for a community trust acting as such). The transfer of property to a public charity subject to contractual obligations which were established prior to November 11, 1976, between the transferor private foundation and persons other than disqualified persons with respect to such foundation will not be treated as prohibited under the preceding sentence, but only if such contractual obligations were not entered into pursuant to a plan to terminate the private foundation status of the transferor under section 507(b)(1)(A) and if the continuation of such contractual obligations is in the best interests of the public charity.

(G) ***Other conditions.*** Any other condition is imposed on action by the public charity which prevents it from exercising ultimate control over the assets received from the transferor private foundation for purposes consistent with its exempt purposes.

(v) ***Examples.*** The provisions of this paragraph (a)(7) may be illustrated by the following examples:

Example 1. The M Private Foundation transferred all of its net assets to the V Cancer Institute, a public charity described in section 170(b)(1)(A)(iii). Prior to the transfer, M's activities consisted of making grants to hospitals and universities to further research into the causes of cancer. Under the terms of the transfer, V is required to keep M's assets in a separate fund and use the income and principal to further cancer research. Although the assets may be used only for a limited purpose, this purpose is consistent with and in furtherance of V's exempt purposes, and does not prevent the transfer from being a distribution for purposes of section 507(b)(1)(A).

Example 2. The N Private Foundation transferred all of its net assets to W University, a public charity described in section 170(b)(1)(A)(ii). Under the terms of the transfer, W is required to use the income and principal to endow a chair at the university to be known as the "John J. Doe Memorial Professorship," named after N's creator. Although the transferred assets are to be used for a specified purpose by W, this purpose is in furtherance of W's exempt educational purposes, and there are no conditions on investment or reinvestment

of the principal or income. The use of the name of the foundation's creator for the chair is not a restriction which would prevent the transfer from being a distribution for purposes of section 507(b)(1)(A).

Example 3. The O Private Foundation transferred all of its net assets to X Bank as trustee for the Q Community Trust, a community trust that is a public charity described in section 170(b)(1)(A)(vi). Under the terms of the transfer, X is to hold the assets in trust for Q and is directed to distribute the income annually to the Y Church, a public charity described in section 170(b)(1)(A)(i). The distribution of income to Y Church is consistent with Q's exempt purposes. If the trust created by this transfer otherwise meets the requirements of § 1.170A-9(f)(11) as a component part of the Q Community Trust, the assets transferred by O to X will be treated as distributed to one or more public charities within the meaning of section 507(b)(1)(A). The direction to distribute the income to Y Church meets the conditions of paragraph (a)(7)(iii)(B) of this section and will therefore not disqualify the transfer under section 507(b)(1)(A).

Example 4. (i) The P Private Foundation transferred all of its net assets to Z Bank as trustee for the R Community Trust, a community trust that is a public charity described in section 170(b)(1)(A)(vi). Under the terms of the transfer, Z is to hold the assets in trust for R and distribute the income to those public charities described in section 170(b)(1)(A)(i) through (b)(1)(A)(vi) that are designated by B, the creator of P. R's governing body has no authority during B's lifetime to vary B's direction. Under the terms of the transfer, it is intended that Z retain the transferred assets in their present form for a period of 20 years, or until the date of B's death if it occurs before the expiration of such period. Upon the death of B, R will have the power to distribute the income to such public charities as it selects and may dispose of the corpus as it sees fit.
(ii) Under paragraph (a)(7)(iv)(A) or paragraph (a)(7)(iv)(D) of this section, as a result of the restrictions imposed with respect to the transferred assets, there has been no distribution of all P's net assets within the meaning of section 507(b)(1)(A) at the time of the transfer. In addition, P has not transferred its net assets to a component part of R Community Trust, but rather to a separate trust described in § 1.170A-9(f)(12).

(b) ***Operation as a public charity*** —

(1) ***In general.*** Under section 507(b)(1)(B), an organization can terminate its private foundation status if the organization—

(i) Meets the requirements of section 509(a)(1), section 509(a)(2) or section 509(a)(3) for a continuous period of 60 calendar months beginning with the first day of any taxable year that begins after December 31, 1969;

(ii) In compliance with section 507(b)(1)(B)(ii) and paragraph (b)(3) of this section, properly notifies the IRS, in such manner as may be provided by published guidance, publication, form or instructions, before the commencement of such 60-month period, that it is terminating its private foundation status; and

(iii) Properly establishes immediately after the expiration of such 60-month period that such organization has complied with the requirements of section 509(a)(1), section 509(a)(2) or section 509(a)(3) during the 60-month period, in the manner described in paragraph (b)(4) of this section.

(2) ***Relationship of section 507(b)(1)(B) to sections 507(a), 507(c), and 507(g).*** Because section 507(a) does not apply to a termination described in section 507(b)(1)(B), a private foundation's notification that it is commencing a termination pursuant to section 507(b)(1)(B) will not be treated as a notification described in section 507(a) even if the private foundation does not successfully terminate its private foundation status pursuant to section 507(b)(1)(B). A private foundation that terminates its private foundation status under section 507(b)(1)(B) does not incur tax under section 507(c) and, therefore, no abatement of such tax under section 507(g) is required.

(3) ***Notification of termination.*** In order to comply with the requirements under section 507(b)(1)(B)(ii), an organization shall before the commencement of the 60-month period under section 507(b)(1)(B)(i) notify the IRS, in such manner as may be provided by published guidance, publication, form or instructions, of its intention to terminate its private foundation status. Such notification shall contain the following information—

(i) The name and address of the private foundation;

(ii) Its intention to terminate its private foundation status;

(iii) The Code section under which it seeks classification (section 509(a)(1), section 509(a)(2) or section 509(a)(3));

(iv) If section 509(a)(1) is applicable, the clause of section 170(b)(1)(A) involved;

(v) The date its regular taxable year begins; and

(vi) The date of commencement of the 60-month period.

(4) ***Establishment of termination.*** In order to comply with the requirements under section 507(b)(1)(B)(iii), an organization shall within 90 days after the expiration of the 60-month period file such information with the IRS, in such manner as may be provided by published guidance, publication, form or instructions, as is necessary to make a determination as to the organization's status as an organization described under section 509(a)(1), section 509(a)(2) or section 509(a)(3) and the related regulations. See paragraph (c) of this section as to the information required to be submitted under this paragraph (b)(4).

(5) ***Incomplete information.*** The failure to supply, within the required time, all of the information required by paragraph (b)(3) or paragraph (b)(4) of this section is not alone sufficient to constitute a failure to satisfy the requirements of section 507(b)(1)(B). If the information that is submitted within the required time is incomplete and the organization supplies the necessary additional information at the request of the Commissioner within the additional time period allowed by him, the original submission will be considered timely.

(6) ***Application of special rules and filing requirements.*** An organization that has terminated its private foundation status under section 507(b)(1)(B) is not required to comply with the special rules set forth in sections 508(a) and 508(b). Such organization is also not required to file a return under the provisions of section 6043(b) by reason of termination of its private foundation status under the provisions of section 507(b)(1)(B).

(7) ***Extension of time to assess deficiencies.*** If a private foundation files a notification (described in paragraph (b)(3) of this section) that it intends to begin a 60-month termination pursuant to section 507(b)(1)(B) and does not file a request for an advance ruling pursuant to paragraph (d) of this section, such private foundation may file with the notification described in paragraph (b)(3) of this section a consent under section 6501(c)(4) to the effect that the period of limitation upon assessment under section 4940 for any taxable year within the 60-month termination period shall not expire prior to one year after the date of expiration of the time prescribed by law for the assessment of a deficiency for the last taxable year within the 60-month period. Such consents, if filed, will ordinarily be accepted by the Commissioner. See paragraph (e)(3) of this section for an illustration of the procedure required to obtain a refund of the tax imposed by section 4940 in a case where such a consent is not in effect.

(c) ***Sixty-month terminations —***

(1) ***Method of determining normal sources of support.***

(i) In order to meet the requirements of section 507(b)(1)(B) for the 60-month termination period as a section 509(a)(1) or section 509(a)(2) organization, an organization must meet the requirements of section 509(a)(1) or section 509(a)(2), as the case may be, for a continuous period of at least 60 calendar months. In determining whether an organization seeking status under section 509(a)(1) as an organization described in section 170(b)(1)(A)(iv) or section 170(b)(1)(A)(vi) or under section 509(a)(2) normally meets the requirements set forth under such sections, support received in taxable years prior to the commencement of the 60-month period shall not be taken into consideration, except as otherwise provided in this section.

(ii) For purposes of section 507(b)(1)(B), an organization will be considered to be a section 509(a)(1) organization described in section 170(b)(1)(A)(vi) for a continuous period of 60 calendar months only if the organization satisfies the provisions of § 1.170A-9(f), other than § 1.170A-9(f)(4)(v), based upon aggregate data for such entire period. The calculation of public support shall be made over the period beginning with the date of the commencement of the 60-month period, and ending with the last day of the 60-month period.

(iii) For purposes of section 507(b)(1)(B), an organization will be considered to be a section 509(a)(2) organization only if such organization meets the support requirements set forth in sections 509(a)(2)(A) and 509(a)(2)(B) and the related regulations, other than § 1.509(a)-3(d), for the continuous period of 60 calendar months prescribed under section 507(b)(1)(B). The calculation of public support shall be made over the period beginning with the date of the commencement of the 60-month period, and ending with the last day of the 60-month period.

(2) ***Organizational and operational tests.*** In order to meet the requirements of section 507(b)(1)(B) for the 60-month termination period as an organization described in section 170(b)(1)(A)(i), 170(b)(1)(A)(ii), 170(b)(1)(A)(iii), 170(b)(1)(A)(iv), or 170(b)(1)(A)(v) or section 509(a)(3), as the case may be, an organization must meet the requirements of the applicable provisions for a continuous period of at least 60 calendar months. For purposes of section 507(b)(1)(B), an organization will be considered

to be such an organization only if it satisfies the requirements of the applicable provision (including with respect to section 509(a)(3), the organizational and operational test set forth in section 509(a)(3)(A)) at the commencement of such 60-month period and continuously thereafter during such period.

(d) *Advance rulings for 60-month terminations* —

(1) ***In general.*** An organization that files the notification required by section 507(b)(1)(B)(ii) that it is commencing a 60-month termination may obtain an advance ruling from the Commissioner that it can be expected to satisfy the requirements of section 507(b)(1)(B)(i) during the 60-month period. Such an advance ruling may be issued if the organization can reasonably be expected to meet the requirements of section 507(b)(1)(B)(i) during the 60-month period. The issuance of a ruling will be discretionary with the Commissioner.

(2) ***Basic consideration.*** In determining whether an organization can reasonably be expected (within the meaning of paragraph (d)(1) of this section) to meet the requirements of section 507(b)(1)(B)(i) for the 60-month period, the basic consideration is whether its organizational structure (taking into account any revisions made prior to the beginning of the 60-month period), current or proposed programs or activities, actual or intended method of operation, and current or projected sources of support are such as to indicate that the organization is likely to satisfy the requirements of section 509(a)(1), section 509(a)(2), or section 509(a)(3) and paragraph (c) of this section during the 60-month period. In making such a determination, all pertinent facts and circumstances shall be considered.

(3) ***Reliance by grantors and contributors.*** For purposes of sections 170, 545(b)(2), 642(c), 4942, 4945, 4966, 2055, 2106(a)(2), and 2522, grants or contributions to an organization which has obtained a ruling referred to in this paragraph will be treated as made to an organization described in section 509(a)(1), section 509(a)(2), or section 509(a)(3), as the case may be, until the IRS publishes notice that such advance ruling is being revoked (such as by publication in the Internal Revenue Bulletin). However, a grantor or contributor may not rely on such an advance ruling if the grantor or contributor was responsible for, or aware of, the act or failure to act that resulted in the organization's failure to meet the requirements of section 509(a)(1), section 509(a)(2), or section 509(a)(3), or acquired knowledge that the IRS had given notice to such organization that its advance ruling would be revoked. Prior to the making of any grant or contribution which allegedly will not result in the grantee's failure to meet the requirements of section 509(a)(1), section 509(a)(2), or section 509(a)(3), a potential grantee organization may request a ruling whether such grant or contribution may be made without such failure. A request for such ruling may be filed by the grantee organization with the IRS. The issuance of such ruling will be at the sole discretion of the Commissioner. The organization must submit all information necessary to make a determination on the factors referred to in paragraph (d)(2) of this section. If a favorable ruling is issued, such ruling may be relied upon by the grantor or contributor of the particular contribution in question for purposes of sections 170, 507, 545(b)(2), 642(c), 4942, 4945, 4966, 2055, 2106(a)(2), and 2522.

(4) ***Reliance by organization.*** An organization obtaining an advance ruling pursuant to this paragraph cannot rely on such a ruling. Consequently, if the organization does not pay the tax imposed by section 4940 for any taxable year or years during the 60-month period, and it is subsequently determined that such tax is due for such year or years (because the organization did not in fact complete a successful termination pursuant to section 507(b)(1)(B) and was not treated as an organization described in section 509(a)(1), section 509(a)(2), or section 509(a)(3) for such year or years), the organization is liable for interest in accordance with section 6601 if any amount of tax

under section 4940 has not been paid on or before the last date prescribed for payment. However, because any failure to pay such tax during the 60-month period (or prior to the revocation of such ruling) is due to reasonable cause, the penalty under section 6651 with respect to the tax imposed by section 4940 shall not apply.

(5) ***Extension of time to assess deficiencies.*** The advance ruling described in paragraph (d)(1) of this section shall be issued only if such organization's request for an advance ruling is filed with a consent under section 6501(c)(4) to the effect that the period of limitations upon assessment under section 4940 for any taxable year within the advance ruling period shall not expire prior to one year after the date of the expiration of the time prescribed by law for the assessment of a deficiency for the last taxable year within the 60-month period.

(e) ***Effect on grantors or contributors and on the organization itself*** —

(1) ***Effect of satisfaction of requirements for termination; treatment during the termination period.*** In the event that an organization satisfies the requirements of section 507(b)(1)(B) for termination of its private foundation status during the continuous 60-month period, such organization shall be treated for such entire 60-month period in the same manner as an organization described in section 509(a)(1), section 509(a)(2), or section 509(a)(3), as the case may be.

(2) ***Failure to meet termination requirements*** —

(i) ***In general.*** Except as otherwise provided in paragraphs (d) and (e)(2)(ii) of this section, any organization that fails to satisfy the requirements of section 507(b)(1)(B) for termination of its private foundation status during the continuous 60-month period shall be treated as a private foundation for the entire 60-month period, for purposes of sections 507 through 509 and Chapter 42, and grants or contributions to such an organization shall be treated as made to a private foundation for purposes of sections 170, 507(b)(1)(A), 4942, and 4945.

(ii) ***Certain 60-month terminations.*** Notwithstanding paragraph (e)(2)(i) of this section, if an organization fails to satisfy the requirements of section 509(a)(1), section 509(a)(2), or section 509(a)(3) for the continuous 60-month period but does satisfy the requirements of section 509(a)(1), section 509(a)(2), or section 509(a)(3), as the case may be, for any taxable year or years during such 60-month period, the organization shall be treated as a section 509(a)(1), section 509(a)(2), or section 509(a)(3) organization for such taxable year or years, and grants or contributions made during such taxable year or years shall be treated as made to an organization described in section 509(a)(1), section 509(a)(2), or section 509(a)(3). In addition, sections 507 through 509 and Chapter 42 shall not apply to such organization for any taxable year within such 60-month period for which it does meet such requirements. For purposes of determining whether an organization satisfies the requirements of section 509(a)(1), section 509(a)(2), or section 509(a)(3) for any taxable year in the 60-month period, the calculation of public support shall be made over the period beginning with the date of the commencement of the 60-month period, and ending with the last day of the taxable year being tested. The organization shall not be treated as a section 509(a)(1) or section 509(a)(2) organization for any taxable year during the 60-month period solely by reason of having met a public support test for the preceding year. In addition, the transition rules in §§ 1.170-9(f)(14)(iii) and 1.509(a)-3(n)(iii) shall not apply.

(iii) ***Aggregate tax benefit.*** For purposes of section 507(d), the organization's aggregate tax benefit resulting from the organization's section 501(c)(3) status shall continue to be computed from the date from which such computation would have been made, but for the notice filed under

section 507(b)(1)(B)(ii), except that any taxable year within such 60-month period for which such organization meets the requirements of section 509(a)(1), section 509(a)(2), or section 509(a)(3) shall be excluded from such computations.

(iv) ***Excess business holdings.*** See section 4943 and the related regulations for rules relating to decreases in a private foundation's holdings in a business enterprise which are caused by the foundation's failure to terminate its private foundation status after giving the notification for termination under section 507(b)(1)(B)(ii).

(3) ***Example.*** The provisions of this paragraph (e) may be illustrated by the following example:

Example 1. Y, a calendar year private foundation, notifies the IRS that it intends to terminate its private foundation status by converting into a publicly supported organization described in section 170(b)(1)(A)(vi) and that its 60-month termination period will commence on January 1, 2010. Y does not obtain a ruling described in paragraph (d) of this section. Based upon its support for 2010, Y does not qualify as a publicly supported organization within the meaning of § 1.170A-9(f) and this paragraph for 2010. Consequently, in order to avoid the risks of penalties and interest if Y fails to terminate within the 60-month period, Y files its 2010 return as a private foundation and pays the tax imposed by section 4940. Because a consent (described in paragraph (b)(7) of this section), which would prevent the period of limitations for all years in the 60-month period from expiring, is not in effect, in order to be able to file a claim for refund, Y and the IRS must agree to extend the period of limitation for all taxes imposed under Chapter 42 for 2010. Based on the aggregate data for the entire 60-month period (2010 through 2014), Y does qualify as a publicly-supported organization for the entire 60-month period. Consequently, Y is treated as a publicly-supported organization for the entire 60-month period. Y files a claim for refund for the taxes paid under section 4940 for 2010, and such taxes are refunded.

(f) ***Effective/applicability date*** —

(1) ***Effective date.*** These regulations are effective on September 8, 2011.

(2) ***Applicability date.*** The regulations in this section shall apply to tax years beginning on or after January 1, 2008. For taxable years beginning after December 31, 1969, and beginning before January 1, 2008, see § 1.507-2 (as contained in 26 CFR part 1 revised April 1, 2008).

[T.D. 9549, 76 FR 55760, Sept. 8, 2011]

§ 1.507-3 Special rules; transferee foundations.

(a) ***General rule.***

(1) For purposes of part II, subchapter F, chapter 1 of the Code, in the case of a transfer of assets of any private foundation to another private foundation pursuant to any liquidation, merger, redemption, recapitalization, or other adjustment, organization, or reorganization, the transferee organization shall not be treated as a newly created organization. Thus, in the case of a significant disposition of assets to one or more private foundations within the meaning of paragraph (c) of this section, the transferee organization shall not be treated as a newly created organization. A transferee organization to which this paragraph applies shall be treated as possessing those attributes and characteristics of the transferor organization which are described in subparagraphs (2), (3), and (4) of this paragraph.

(2)

(i) A transferee organization to which this paragraph applies shall succeed to the aggregate tax benefit of the transferor organization in an amount determined as follows: Such amount shall be an amount equal to the amount of such aggregate tax benefit multiplied by a fraction the numerator of which is the fair market value of the assets (less encumbrances) transferred to such transferee and the denominator of which is the fair market value of the assets of the transferor (less encumbrances) immediately before the transfer. Fair market value shall be determined as of the time of the transfer.

(ii) Notwithstanding subdivision (i) of this subparagraph, a transferee organization which is not effectively controlled (within the meaning of § 1.482-1(a)(3)), directly or indirectly, by the same person or persons who effectively control the transferor organization shall not succeed to an aggregate tax benefit in excess of the fair market value of the assets transferred at the time of the transfer.

(iii) This subparagraph may be illustrated by the following examples:

Example 1. Pursuant to a transfer described in section 507(b)(2), F, a private foundation, transfers to G, a private foundation, all of its assets, which have a fair market value of $400,000. Immediately before the transfer F's aggregate tax benefit was $200,000, and G's aggregate tax benefit was $300,000. After the transfer G's aggregate tax benefit is $500,000 ($200,000 + $300,000).

Example 2. Pursuant to a transfer described in section 507(b)(2), M, a private foundation, transfers all of its assets, which immediately prior to the transfer have a fair market value of $100,000. The assets were transferred to the following organizations at the following fair market values (determined at the time of transfer) $40,000 to N, a private foundation, $30,000 to O, a private foundation, and $30,000 to P, an organization described in section 170(b)(1)(A)(vi). Immediately before the transfer M's aggregate tax benefit was $50,000. Therefore, N succeeds to M's aggregate tax benefit to the extent of $20,000 ($50,000 × $40,000/$100,000) and O succeeds to M's aggregate tax benefit to the extent of $15,000 ($50,000 × $30,000/$100,000). The remaining $15,000 of M's aggregate tax benefit is retained by M as M has not terminated under section 507.

Example 3. Assume the same facts as in Example 2 except that the transfers were made as follows: M transferred $30,000 to N on January 1, 1972, $40,000 to P on July 1, 1972, and $30,000 to O on December 31, 1972. Further, assume that the fair market value of the assets and the aggregate tax benefit do not change during 1972 and that O is not effectively controlled (directly or indirectly) by the same person or persons who effectively control M. N succeeds to M's aggregate tax benefit to the extent of $15,000 ($50,000 × $30,000/$100,000). However, since $40,000 of the remaining $70,000 ($100,000−$30,000) of assets of M was transferred to P on July 1, 1972, immediately before the transfer to O, the fair market value of the assets held by M is $30,000 ($70,000−$40,000). On the other hand, because P is not a private foundation, M's aggregate tax benefit immediately before the transfer to O remains $35,000 ($50,000−$15,000). Therefore, before applying subdivision (ii) of this subparagraph, O would succeed to $35,000 ($35,000 × $30,000/$30,000) of M's aggregate tax benefit. However, applying subdivision (ii) of this subparagraph since M transferred only $30,000 to O, O shall succeed to only $30,000 of M's aggregate tax benefit. The remaining $5,000 ($35,000−$30,000) of M's aggregate tax benefit is retained by M as M has not terminated under section 507.

(3) For purposes of section 507(d)(2), in the event of a transfer of assets described in section 507(b)(2), any person who is a *substantial contributor* (within the meaning of section 507(d)(2)) with respect to the transferor foundation shall be treated as a *substantial contributor* with respect to the transferee foundation, regardless of whether such person meets the $5,000-two percent test with respect to the transferee organization at any time. If a private foundation makes a transfer described in section 507(b)(2) to two or more transferee private foundations, any person who is a *substantial contributor* with respect to the transferor foundation prior to such transfer shall be considered a *substantial contributor* with respect to each transferee private foundation.

(4) If a private foundation incurs liability for one or more of the taxes imposed under chapter 42 (or any penalty resulting therefrom) prior to, or as a result of, making a transfer of assets described in section 507(b)(2) to one or more private foundations, in any case where transferee liability applies each transferee foundation shall be treated as receiving the transferred assets subject to such liability to the extent that the transferor foundation does not satisfy such liability.

(5) Except as provided in subparagraph (9) of this paragraph, a private foundation is required to meet the distribution requirements of section 4942 for any taxable year in which it makes a section 507(b)(2) transfer of all or part of its net assets to another private foundation. Such transfer shall itself be counted toward satisfaction of such requirements to the extent the amount transferred meets the requirements of section 4942(g). However, where the transferor has disposed of all of its assets, the recordkeeping requirements of section 4942(g)(3)(B) shall not apply during any period in which it has no assets. Such requirements are applicable for any taxable year other than a taxable year during which the transferor has no assets.

(6) For purposes of section 4943(c) (4), (5), and (6), whenever a private foundation makes a section 507(b)(2) transfer of all or part of its net assets to another private foundation, the applicable period of time described in section 4943(c) (4), (5), or (6) shall include both the period during which the transferor foundation held such assets and the period during which the transferee foundation holds such assets.

(7) Except as provided in subparagraph (9) of this paragraph, where the transferor has disposed of all of its assets, during any period in which the transferor has no assets, section 4945 (d)(4) and (h) shall not apply to the transferee or the transferor with respect to any *expenditure responsibility* grants made by the transferor. However, the exception contained in this subparagraph shall not apply with respect to any information reporting requirements imposed by section 4945 and the regulations thereunder for any year in which any such transfer is made.

(8)

(i) Except as provided in subdivision (ii) of this subparagraph or subparagraph (6) or (9) of this paragraph or whenever a private foundation makes a transfer of assets described in section 507(b)(2) to one or more private foundations, the transferee foundation:

(*a*) Will not be treated as being in existence prior to January 1, 1970, with respect to any transferred assets;

(*b*) Will not be treated as holding the transferred assets prior to January 1, 1970; and

(*c*) Will not be treated as having engaged in, or become subject to, any transaction, lease, contract, or other obligation with respect to the transferred assets prior to January 1, 1970.

(ii) Notwithstanding subdivision (i) of this subparagraph, the provisions enumerated in (*a*) through (*g*) of this subdivision shall apply to the transferee foundation with respect to the assets transferred to the same extent and in the same manner that they would have applied to the transferor foundation had the transfer described in section 507(b)(2) not been effected:

(*a*) Section 4940(c)(4)(B) and the regulations thereunder with respect to basis of property,

(*b*) Section 4942(f)(4) and the regulations thereunder with respect to distributions of income,

(*c*) Section 101(l)(2) of the Tax Reform Act of 1969 (83 Stat. 533), as amended by sections 1301 and 1309 of the Tax Reform Act of 1976 (90 Stat. 1713, 1729), with respect to the provisions of section 4941,

(*d*) Section 101(*l*)(3)(A) of the Tax Reform Act of 1969 (83 Stat. 534) with respect to the provisions of section 4942, but only if the transferor qualified for the application of such section immediately before the transfer, and at least 85 percent of the fair market value of the net assets of the transferee immediately after the transfer was received pursuant to the transfer,

(*e*) Section 101(*l*)(3) (B) through (E) of the Tax Reform Act of 1969 (83 Stat. 534) with respect to the provisions of section 4942,

(*f*) Section 101(l)(5) of the Tax Reform Act of 1969 (83 Stat. 535) with respect to the provisions of section 4945, and

(*g*) Section 101(*l*)(6) of the Tax Reform Act of 1969 (83 Stat. 535) with respect to the provisions of section 508(e).

(9)

(i) If a private foundation transfers all of its net assets to one or more private foundations which are effectively controlled (within the meaning of § 1.482-1(a)(3)), directly or indirectly, by the same person or persons which effectively controlled the transferor private foundation, for purposes of chapter 42 (section 4940 *et seq.*) and part II of subchapter F of chapter 1 of the Code (sections 507 through 509) such a transferee private foundation shall be treated as if it were the transferor. However, where proportionality is appropriate, such a transferee private foundation shall be treated as if it were the transferor in the proportion which the fair market value of the assets (less encumbrances) transferred to such transferee bears to the fair market value of the assets (less encumbrances) of the transferor immediately before the transfer.

(ii) Subdivision (i) of this subparagraph shall not apply to the requirements under sections 6033, 6056, and 6104 which must be complied with by the transferor private foundation, nor to the requirement under section 6043 that the transferor file a return with respect to its liquidation, dissolution, or termination.

(iii) This subparagraph may be illustrated by the following examples:

> ***Example 1.*** The trustees of X charitable trust, a private foundation, form the Y charitable corporation, also a private foundation, in order to facilitate the conduct of their activities. The trustees of X are also the directors of Y. Y has the same charitable purposes as X. All of the assets of X are transferred to Y, and Y continues to carry on X's charitable activities. Under such circumstances, Y shall be treated as if it were X for the purposes of subdivision (i) of

> this subparagraph. Thus, for example, Y will be permitted to take advantage of any special rules or savings provisions with respect to chapter 42 to the same extent as X could have if X had continued in existence.

> ***Example 2.*** A and B are the trustees of the P charitable trust, a private foundation, and are the only substantial contributors to P. On July 1, 1973, in order to facilitate accomplishment of diverse charitable purposes, A and B create and control the R Foundation, the S Foundation and the T Foundation and transfer the net assets of P to R, S, and T. As of the end of 1973, P has an outstanding grant to Foundation W and has been required to exercise expenditure responsibility with respect to this grant under sections 4945 (d)(4) and (h). Under these circumstances, R, S, and T shall each be treated as if they are P in the proportion the fair market value of the assets transferred to each bears to the fair market value of the assets of P immediately before the transfer. Since R, S, and T are treated as P, absent a specific provision for exercising expenditure responsibility with respect to the grant to W, each of them is required to exercise expenditure responsibility with respect to such grant. If, as a part of the transfer to R, P assigned, and R assumed, P's duties with respect to the expenditure responsibility grant to W, only R would be required to exercise expenditure responsibility with respect to the grant to W. Since R, S, and T are treated as P rather than as recipients of *expenditure responsibility* grants, there are no expenditure responsibility requirements which must be exercised under sections 4945 (d)(4) and (h) with respect to the transfers of assets to R, S, and T.

(10) For certain rules relating to filing requirements where a private foundation has transferred all its net assets, see § 1.507-1(b)(9).

(b) ***Status of transferee organization under section 507(b)(2).*** Since a transfer of assets pursuant to any liquidation, merger, redemption, recapitalization, or other adjustment, organization or reorganization to an organization not described in section 501(c)(3) (other than an organization described in section 509(a)(4)) or 4947 is a taxable expenditure under section 4945(d)(5), in order for such a transfer of assets not to be a taxable expenditure, it must be to an organization described in section 501(c)(3) (other than an organization described in section 509(a)(4)) or treated as described in section 501(c)(3) under section 4947. See § 53.4945-6(c)(3) of this chapter. Consequently, unless such a transferee is an organization described in section 509(a) (1), (2), or (3), the transferee is a private foundation and the rules of section 507(b)(2) and paragraph (a) of this section apply. On the other hand, if such a transfer of assets is made to a transferee organization which is not described in either section 501(c)(3) (other than an organization described in section 509(a)(4)) or 4947, and in order to correct the making of a taxable expenditure, such assets are transferred to a private foundation, section 507(b)(2) and paragraph (a) of this section shall apply as if the transfer of assets had been made directly to such private foundation.

(c) ***Section 507(b)(2) transfers.***

(1) A transfer of assets is described in section 507(b)(2) if it is made by a private foundation to another private foundation pursuant to any liquidation, merger, redemption, recapitalization, or other adjustment, organization, or reorganization. This shall include any organization or reorganization described in subchapter C of chapter 1. For purposes of section 507(b)(2), the terms *other adjustment, organization, or reorganization* shall include any partial liquidation or any other significant disposition of assets to one or more private foundations, other than transfers for full and adequate consideration or distributions out of current income. For purposes of this paragraph, a distribution out of current income shall include any distribution described in section 4942(h)(1) (A) and (B).

(2) The term *significant disposition of assets to one or more private foundations* shall include any disposition for a taxable year where the aggregate of:

(i) The dispositions to one or more private foundations for the taxable year, and

(ii) Where any disposition to one or more private foundations for the taxable year is part of a series of related dispositions made during prior taxable years, the total of the related dispositions made during such prior taxable years, is 25 percent or more of the fair market value of the net assets of the foundation at the beginning of the taxable year (in the case of subdivision (i) of this subparagraph) or at the beginning of the first taxable year in which any of the series of related dispositions was made (in the case of subdivision (ii) of this subparagraph). A *significant disposition of assets* may occur in a single taxable year (as in subdivision (i) of this subparagraph) or over the course of two or more taxable years (as in subdivision (ii) of this subparagraph). The determination whether a significant disposition has occurred through a series of related distributions (within the meaning of subdivision (ii) of this subparagraph) will be made on the basis of all the facts and circumstances of the particular case. However, if one or more persons who are disqualified persons (within the meaning of section 4946) with respect to the transferor private foundation are also disqualified persons with respect to any of the transferee private foundations, such fact shall be evidence that the transfer is part of a series of related dispositions (within the meaning of subdivision (ii) of this subparagraph). In the case of a series of related dispositions described in subdivision (ii) of this subparagraph, each transferee private foundation shall (on any date) be subject to the provisions of section 507(b)(2) (with respect to all such dispositions made to it on or before such date) to the extent described in paragraphs (a) and (b) of this section.

(3) A private foundation which fails to meet the requirements of section 507(b)(1)(A) for a taxable year may be required to file a return under section 6043(b) by reason of a transfer of assets to one or more sections 509(a) (1), (2), or (3) organizations. Hence, such filing does not necessarily mean that a section 507(b)(2) transfer has occurred. See § 1.6043-3(f)(1).

(4) This paragraph applies to any section 507(b)(2) transfer made by a private foundation referred to in section 170(b)(1)(E) (i), (ii), or (iii).

(5) The provisions of this paragraph may be illustrated by the following examples:

Example 1. M is a private foundation on the calendar year basis. It has net assets worth $100,000 as of January 1, 1971. In 1971, in addition to distributions out of current income, M transfers $10,000 to N, $10,000 to O, and $10,000 to P. N, O, and P are all private foundations. Under subparagraph (2)(i) of this paragraph, M has made a significant disposition of its assets in 1971 since M has disposed of more than 25 percent of its net assets (with respect to the fair market value of such assets as of January 1, 1971). M has therefore made section 507(b)(2) transfers within the meaning of this paragraph, and section 507(b)(2) applies to the transfers made to N, O, and P.

Example 2. U, a tax-exempt private foundation on the calendar year basis, has net assets worth $100,000 as of January 1, 1971. As part of a series of related dispositions in 1971 and 1972, U transfers in 1971, in addition to distributions out of current income, $10,000 to private foundation X and $10,000 to private foundation Y, and in 1972, in addition to distributions out of current income, U transfers $10,000 to private foundation Z. Under subparagraph (2)(ii) of this paragraph, U is treated as having made a series of related dispositions in 1971 and 1972. The aggregate of the 1972 disposition (under subparagraph (2)(i) of this paragraph) and the series of related dispositions (under subparagraph (2)(ii) of this paragraph) is $30,000, which is more than 25 percent of the fair market

value of U's net assets as of the beginning of 1971 ($100,000), the first year in which any such disposition was made. Thus, U has made a significant disposition of its assets and has made transfers described in section 507(b)(2). The provisions of paragraphs (a) and (b) of this section apply to each of the transferees as of the date on which it received assets from U.

(d) ***Inapplicability of section 507(a) to section 507(b)(2) transfers.*** Unless a private foundation voluntarily gives notice pursuant to section 507(a)(1), a transfer of assets described in section 507(b)(2) will not constitute a termination of the transferor's private foundation status under section 507(a)(1). Such transfer must, nevertheless, satisfy the requirements of any pertinent provisions of chapter 42. See subparagraphs (5) through (7) of paragraph (a) of this section. However, if such transfer constitutes an act or failure to act which is described in section 507(a)(2)(A), then such transfer will be subject to the provisions of section 507(a)(2) rather than section 507(b)(2). For example, X, a private nonoperating foundation, transfers all of its net assets to Y, a private operating foundation, in 1971. X does not file the notice referred to in section 507(a)(1) and the transfer does not constitute either a willful and flagrant act (or failure to act), or one of a series of willful repeated acts (or failures to act), giving rise to liability for tax under chapter 42. Under these circumstances, the transfer is described in section 507(b)(2) and the provisions of paragraph (a) of this section apply with respect to Y. The private foundation status of X has not been terminated under section 507(a).

(e) ***Transfers to certain section 509(a) (1), (2), or (3) organizations.*** If a private foundation transfers all or part of its assets to one or more organizations described in section 509(a) (1), (2), or (3) and, within a period of 3 years from the date of such transfers, one or more of the transferee organizations lose their section 509(a) (1), (2), or (3) status and become private foundations, then for purposes of this section, a transfer of assets within the meaning of paragraph (c) of this section to such an organization which becomes a private foundation will be treated as a transfer described in section 507(b)(2), and the provisions of paragraph (a) of this section shall be treated as applying to such a transferee organization from the date on which any such transfer was made to it.

(f) ***Certain transfers made during section 507(b)(1)(B) terminations.*** If:

(1) During the course of the 12-month or 60-month period described in section 507(b)(1)(B), a private foundation makes one or more transfers to one or more private foundations;

(2) Such transfers are described in § 1.507-3(c)(1); and

(3) Even though the transferor foundation thereafter meets the requirements of section 507(b)(1)(B)

then for purposes of this section, the provisions of § 1.507-2(e) shall not apply with respect to such transfers, and such transfers will be treated as transfers described in section 507(b)(2) and § 1.507-3 rather than as transfers from an organization described in section 509(a) (1), (2), or (3).

[T.D. 7233, 37 FR 28158, Dec. 21, 1972; 38 FR 3189, Feb. 2, 1973, as amended by T.D. 7678, 45 FR 12415, Feb. 26, 1980]

§ 1.507-4 Imposition of tax.

(a) ***General rule.*** Section 507(c) imposes on each organization the private foundation status of which is terminated under section 507(a) a tax equal to the lower of:

(1) The amount which such organization substantiates by adequate records (or other corroborating evidence which may be required by the Commissioner) as the aggregate tax benefit (as defined in section 507(d)) resulting from the section 501(c)(3) status of such organization, or

(2) The value of the net assets of such organization.

(b) ***Transfers not subject to section 507(c).*** Private foundations which make transfers described in section 507(b)(1)(A) or (2) are not subject to the tax imposed under section 507(c) with respect to such transfers unless the provisions of section 507(a) become applicable. See §§ 1.507-1(b), 1.507-2(a)(6) and 1.507-3(d).

[T.D. 7233, 37 FR 28161, Dec. 21, 1972]

§ 1.507-5 Aggregate tax benefit; in general.

(a) ***General rule.*** For purposes of section 507(c)(1), the aggregate tax benefit resulting from the section 501(c)(3) status of any private foundation is the sum of:

(1) The aggregate increases in tax under chapters 1, 11, and 12 (or the corresponding provisions of prior law) which would have been imposed with respect to all substantial contributors to the foundation if deductions for all contributions made by such contributors to the foundation after February 28, 1913, had been disallowed,

(2) The aggregate increases in tax under chapter 1 (or the corresponding provisions of prior law) which would have been imposed with respect to the income of the private foundation for taxable years beginning after December 31, 1912, if

(i) it had not been exempt from tax under section 501(a) (or the corresponding provisions of prior law), and

(ii) in the case of a trust, deductions under section 642(c) (or the corresponding provisions of prior law) had been limited to 20 percent of the taxable income of the trust (computed without the benefit of section 642(c) but with the benefit of section 170(b)(1)(A)),

(3) The amount succeeded to from transferors under § 1.507-3(a) and section 507(b)(2), and

(4) Interest on the increases in tax determined under subparagraphs (1), (2), and (3) of this paragraph from the first date on which each such increase would have been due and payable to the date on which the organization ceases to be a private foundation.

(b) ***Contributions.*** In computing the amount of the aggregate increases in tax under subparagraph (1) of this paragraph, all deductions attributable to a particular contribution shall be included. For example, if a substantial contributor has taken deductions under sections 170 and 2522 (or the corresponding provisions of prior law) with respect to the same contribution, the amount of each deduction shall be included in the computations under section 507(d)(1)(A). Accordingly, the aggregate tax benefit may exceed the fair market value of the property transferred.

[T.D. 7233, 37 FR 28161, Dec. 21, 1972]

§ 1.507-6 Substantial contributor defined.

(a) ***Definition*** —

(1) ***In general.*** Except as provided in subparagraph (2) of this paragraph, the term *substantial contributor* means, with respect to a private foundation, any person (within the meaning of section 7701(a)(1)), whether or not exempt from taxation under section 501(a), who contributed or bequeathed an aggregate amount of more than $5,000 to the private foundation, if such amount is more than 2

percent of the total contributions and bequests received by the private foundation before the close of the taxable year of the private foundation in which a contribution or bequest is received by the foundation from such person. In the case of a trust, the term *substantial contributor* also means the creator of the trust. Such term does not include a governmental unit described in section 170(c)(1).

(2) ***Special rules.*** For purposes of sections 170(b)(1)(E)(iii), 507(d)(1), 508(d), 509(a) (1) and (3), and chapter 42, the term *substantial contributor* shall not include an organization which is described in section 509(a) (1), (2), or

(3) or any other organization which is wholly owned by such section 509(a) (1), (2), or (3) organization. Furthermore, taking section 4941 (relating to taxes on self-dealing) in context, it would unduly restrict the activities of private foundations if the term *substantial contributor* were to include any section 501(c)(3) organizations. It was not intended, for example, that a large grant for charitable purposes from one private foundation to another world forever preclude the latter from making any grants to, or otherwise dealing with, the former. Accordingly, for purposes of section 4941 only, the term *substantial contributor* shall not only include any organization which is described in section 501(c)(3) (other than an organization described in section 509(a)(4)).

(b) ***Determination of substantial contributor*** —

(1) ***In general.*** In determining under paragraph (a) of this section whether the aggregate of contributions and bequests from a person exceeds 2 percent of the total contributions and bequests received by a private foundation, both the total of such amounts received by the private foundation, and the aggregate of such amounts contributed and bequeathed by such person, shall be determined as of the last day of each taxable year commencing with the first taxable year ending after October 9, 1969. Generally, under section 507(d)(2) and this section, except for purposes of valuation under section 507(d)(2)(B)(i), all contributions and bequests made before October 9, 1969, are deemed to have been made on October 9, 1969. For purposes of section 509(a)(2) and the support test described in § 1.509(a)-3(c), contributions and bequests before October 9, 1969, will be taken into account in the year when actually made. For example, in the case of a contribution or bequest of $6,000 in 1967, such contribution or bequest shall be treated as made by a substantial contributor in 1967 for purposes of section 509(a)(2) and § 1.509(a)-3(c) if such person met the $5,000—2 percent test as of December 31, 1967, and December 31, 1969 (in the case of a calendar year accounting period). Although the determination of the percentage of total contributions and bequests represented by a given donor's contributions and bequests is not made until the end of the foundation's taxable year, a donor is a substantial contributor as of the first date when the foundation received from him an amount sufficient to make him a substantial contributor. Except as otherwise provided in this subparagraph, such amount is treated for all purposes as made by a substantial contributor. Thus, the total contributions and bequests received by the private foundation from all persons, and the aggregate contributions and bequests made by a particular person, are to be determined as of December 31, 1969 (in the case of a calendar year organization which was in existence on that date), and the amounts included in each respective total would be all contributions and bequests received by the organization on or before that date, and all contributions and bequests made by the person on or before that date. Thereafter, a similar determination is to be made with respect to such private foundation as of the end of each of its succeeding taxable years. Status as a substantial contributor, however, will date from the time when the donor first met the $5,000 and 2 percent test. Once a person is a substantial contributor with respect to a private foundation, he remains a substantial contributor even though he might not be so classified if a determination were first made at some later date. For instance, even though the aggregate contributions and bequests

of a person become less than 2 percent of the total received by a private foundation (for example, because of subsequent contributions and bequests by other persons), such person remains a substantial contributor with respect to the foundation.

(2) ***Examples.*** The provisions of paragraph (a) of this section and this paragraph (b) may be illustrated by the following examples:

Example 1. On January 1, 1968, A, an individual, gave $4,500 to M, a private foundation on a calendar year basis. On June 1, 1969, A gave M the further sum of $1,500. Throughout its existence, through December 31, 1969, M has received $250,000 in contributions and bequests from all sources. As of June 1, 1969, A is a substantial contributor to M for purposes of section 509(a)(2).

Example 2. On September 9, 1966, B, an individual, gave $3,500 to N, a private foundation on a calendar year basis. On March 15, 1970, B gave N the further sum of $3,500. Throughout its existence, through December 31, 1970, N has received $200,000 in contributions and bequests from all sources. B is a substantial contributor to N as of March 15, 1970, since that is the first date on which his contributions met the 2 percent-$5,000 test.

Example 3. On July 21, 1964, X, a corporation, gave $2,000 to O, a private foundation on a calendar year basis. As of December 31, 1969, O had received $150,000 from all sources. On September 17, 1970, X gave O the further sum of $3,100. Through September 17, 1970, O had received $245,000 from all sources as total contributions and bequests. Between September 17, 1970, and December 31, 1970, however, O received $50,000 in contributions and bequests from others. X is not a substantial contributor to O, since X's contributions to O were not more than 2 percent of the total contributions and bequests received by O by December 31, 1970, the end of O's taxable year, even though X's contributions met that test at one point during the year.

Example 4. On September 16, 1970, C, an individual, gave $10,000 to P, a private foundation on a calendar year basis. Throughout its existence, and through December 31, 1970, the close of its taxable year, P had received a total of $100,000 in contributions and bequests. On January 3, 1971, P received a bequest of $1 million. C is a substantial contributor to P since he was a substantial contributor as of September 16, 1970, and therefore remains one even though he no longer meets the 2-percent test on a later date after the end of the taxable year of the foundation in which he first became a substantial contributor.

(c) ***Special rules*** —

(1) ***Contributions defined.*** The term *contribution* shall, for purposes of section 507(d)(2), have the same meaning as such term has under section 170(c) and also include bequests, legacies, devises, and transfers within the meaning of section 2055 or 2106(a)(2). Thus, for purposes of section 507(d)(2), any payment of money or transfer of property without adequate consideration shall be considered a *contribution.* Where payment is made or property transferred as consideration for admissions, sales of merchandise, performance of services, or furnishing of facilities to the donor, the qualification of all or any part of such payment or transfer as a contribution under section 170(c) shall determine whether and to what extent such payment or transfer constitutes a *contribution* under section 507(d)(2).

(2) ***Valuation of contributions and bequests.*** Each contribution or bequest to a private foundation shall be valued at fair market value when actually received by the private foundation.

(3) ***Contributions and bequests by a spouse.*** An individual shall be considered, for purposes of this section, to have made all contributions and bequests made by his spouse during the period of their marriage. Thus, for example, where W contributed $500,000 to P, a private foundation, in 1941 and that amount exceeded 2 percent of the total contributions received by P as of the end of P's first taxable year ending after October 9, 1969, H (W's spouse at the time of the 1941 gift) is considered to have made such contribution (even if W died prior to October 9, 1969, or their marriage was otherwise terminated prior to such date). Similarly, any bequest or devise shall be treated as having been made by the decedent's surviving spouse.

[T.D. 7241, 37 FR 28743, Dec. 29, 1972; 38 FR 24206, Sept. 6, 1973]

§ 1.507-7 Value of assets.

(a) ***In general.*** For purposes of section 507(c), the value of the net assets shall be determined at whichever time such value is higher:

(1) The first day on which action is taken by the organization which culminates in its ceasing to be a private foundation, or

(2) The date on which it ceases to be a private foundation.

(b) ***Valuation dates.***

(1) In the case of a termination under section 507(a)(1), the date referred to in paragraph (a)(1) of this section shall be the date on which the terminating foundation gives the notification described in section 507(a)(1).

(2) In the case of a termination under section 507(a)(2), the date referred to in paragraph (a)(1) of this section shall be the date of occurrence of the willful and flagrant act (or failure to act) or the first of the series of willful repeated acts (or failures to act) giving rise to liability for tax under chapter 42 and the imposition of tax under section 507(a)(2).

(c) ***Fair market value.*** For purposes of this section, fair market value shall be determined pursuant to the provisions of § 53.4942(a)-2(c)(4) of this chapter.

(d) ***Net assets.*** For purposes of section 507 and the regulations thereunder, the term *net assets* shall mean the gross assets of a private foundation reduced by all liabilities of the foundation, including appropriate estimated and contingent liabilities. Thus, a determination of net assets may reflect reductions for any liability or contingent liability for tax imposed upon the private foundation under chapter 42 with respect to acts or failures to act prior to termination, for any liability or contingent liability for failures to correct such acts or failures to act, or for any liability or estimated or contingent liability with respect to expenses associated with winding up the organization. If a private foundation's determination of net assets reflects any reduction for any estimated or contingent liability, such private foundation must establish, to the satisfaction of the Commissioner, the reasonableness of such reduction. If the amount of net assets reflects a reduction for any estimated or contingent liability, at the earlier of the final determination of the contingency or the termination of a reasonable time, any excess of the amount by which the gross assets was reduced over the amount of the liability shall be treated in the same manner as if such excess had been considered part of the net assets.

[T.D. 7233, 37 FR 28161, Dec. 21, 1972]

§ 1.507-8 Liability in case of transfers.

For purposes of determining liability for the tax imposed under section 507(c) in the case of assets transferred by the private foundation, such tax shall be deemed to have been imposed on the first day on which action is taken by the organization which culminates in its ceasing to be a private foundation. If an organization's private foundation status is terminated under section 507(a)(2), the first day on which action is taken which culminates in its ceasing to be a private foundation (within the meaning of section 507(f)) shall be the date described in § 1.507-7(b)(2). If an organization terminates its private foundation status under section 507(a)(1), the first day on which action is taken which culminates in its ceasing to be a private foundation (within the meaning of section 507(f)) shall be the date described in § 1.507-7(b)(1).

[T.D. 7233, 37 FR 28161, Dec. 21, 1972]

§ 1.507-9 Abatement of taxes.

(a) ***General rule.*** The Commissioner may at his discretion abate the unpaid portion of the assessment of any tax imposed by section 507(c), or any liability in respect thereof, if:

(1) The private foundation distributes all of its net assets to one or more organizations described in section 170(b)(1)(A) (other than in clauses (vii) or (viii)) each of which has been in existence and so described for a continuous period of at least 60 calendar months, or

(2) Effective assurance is given to the Commissioner in accordance with paragraphs (b) and (c) of this section that the assets of the organization which are dedicated to charitable purposes will, in fact, be used for charitable purposes

The provisions of § 1.507-2(a) (2), (3), and (7) shall apply to distributions under subparagraph (1) of this paragraph. Since section 507(g) provides only for the abatement of tax imposed under section 507(c), no tax imposed under any provision of chapter 42 shall be abated under section 507(g). Where the taxpayer files a petition with the Tax Court with respect to a notice of deficiency regarding any tax under section 507(c), such tax shall be treated as having been assessed for the purposes of abatement of such tax under section 507(g) and the regulations thereunder.

(b) ***State proceedings.***

(1) The Commissioner may at his discretion abate the unpaid portion of the assessment of any tax imposed by section 507(c), or any liability in respect thereof, under the procedures outlined in subparagraphs (2) and (3) of this paragraph. Such tax may not be abated by the Commissioner unless he determines that corrective action as defined in paragraph (c) of this section has been taken. The Commissioner may not abate by reason of section 507(g) any amount of such tax which has already been collected since only the unpaid portion thereof can be abated.

(2) The appropriate State officer shall have 1 year from the date of notification prescribed in section 6104(c) that a notice of deficiency of tax imposed under section 507(c) has been issued with respect to a foundation, to advise the Commissioner that corrective action has been initiated pursuant to State law as may be ordered or approved by a court of competent jurisdiction. Corrective action may be initiated either by the appropriate State officer or by an organization described in section 509(a) (1), (2), or (3) which is a beneficiary of the private foundation and has enforceable rights against such foundation under State law. Copies of all pleadings and other documents filed with the court at the initial stages of the proceedings shall be attached to the notification made by the State officer to the Commissioner. Prior to notification by the appropriate State officer that

corrective action has been initiated, the Commissioner shall follow those procedures which would apply with respect to the assessment and collection of the tax imposed under section 507(c) without regard to section 507(g)(2). Subsequent to notification by the appropriate State officer that corrective action has been initiated, the Commissioner shall suspend action with respect to the assessment or collection of tax imposed under section 507(c) until notified of the final determination of such corrective action, as long as any such resulting delay does not jeopardize the collection of such tax and does not cause collection to be barred by operation of law or any rule of law. In any case where collection of such tax is about to be barred by operation of section 6502 and the Commissioner has not been advised of the final determination of corrective action, the Commissioner should make every effort to obtain appropriate agreements with the foundation subject to such tax to extend the period of limitations under section 6502(a)(2). Where such agreements are obtained, action with respect to the assessment and collection of such tax may be suspended to the extent not inconsistent with this subparagraph.

(3) Upon receipt of certification from the appropriate State officer that action has been ordered or approved by a court of competent jurisdiction, the Commissioner may abate the unpaid portion of the assessment of tax imposed by section 507(c), or any liability in respect thereof, if in his judgment such action is corrective action within the meaning of paragraph (c) of this section. In the event that such action is not corrective action, the Commissioner may in his discretion again suspend action on the assessment and collection of such tax until corrective action is obtained, or if in his judgment corrective action cannot be obtained, he may resume the assessment and collection of such tax.

(c) ***Corrective action.*** The term *corrective action* referred to in paragraph (b) of this section means vigorous enforcement of State laws sufficient to assure implementation of the provisions of chapter 42 and insure that the assets of such private foundation are preserved for such charitable or other purposes specified in section 501(c)(3). Except where assets of the terminated private foundation are transferred to an organization described in section 509(a) (1) through (4) the State is required to take such action to assure that the provisions of section 508(e)(1) (A) and (B) are applicable to the terminated foundation (or any transferee) with respect to such assets as if such organization were a private foundation. Thus, the governing instrument of such organization must include provisions with respect to such assets:

(1) Requiring its income therefrom for each taxable year to be distributed at such time and in such manner as not to subject such organization to tax under section 4942 (as if the organization were a private foundation),

(2) Prohibiting such organization from engaging in any act of self-dealing (as defined in section 4941(d) as if the organization were a private foundation),

(3) Prohibiting such organization from retaining any excess business holdings (as defined in section 4943(c) as if the organization were a private foundation),

(4) Prohibiting such organization from making any investments in such manner as to subject such organization to tax under section 4944 (as if the organization were a private foundation), and

(5) Prohibiting such organization from making any taxable expenditures (as defined in section 4945(d) as if the organization were a private foundation). Consequently, in cases where the preceding sentence applies, although the private foundation status of an organization is terminated for tax purposes, it is contemplated that its status under State law would remain unchanged, because the tax under section 507(c) has been abated solely because the Commissioner has been given effective assurance that there is vigorous enforcement of State laws sufficient to assure

implementation of the provisions of chapter 42. Therefore, in such a case while chapter 42 will not apply to acts occurring subsequent to termination which previously would have resulted in the imposition of tax under chapter 42, it is contemplated that there will be vigorous enforcement of State laws (including laws made applicable by the provisions in the governing instrument) with respect to such acts. Notwithstanding the preceding three sentences, no amendment to the organization's governing instrument is necessary where there are provisions of State law which have the effect of requiring a terminated private foundation to which the rules of subparagraphs (1) through (5) of this paragraph apply to be subject to such rules whether or not there are such provisions in such terminated private foundation's governing instrument.

[T.D. 7233, 37 FR 28161, Dec. 21, 1972]

§ 1.508-1 Notices.

(a) ***New organizations must notify the Commissioner that they are applying for recognition of section 501(c)(3) status*** —

(1) ***In general.*** Except as provided in subparagraph (3) of this paragraph, an organization that is organized after October 9, 1969, will not be treated as described in section 501(c)(3):

(i) Unless such organization has given the Commissioner notice in the manner prescribed in subparagraph (2) of this paragraph; or

(ii) For any period before the giving of such notice, unless such notice is given in the manner and within the time prescribed in subparagraph (2) of this paragraph

No organization shall be exempt from taxation under section 501(a) by reason of being described in section 501(c)(3) whenever such organization is not treated as described in section 501(c)(3) by reason of section 508(a) and this paragraph. See section 508(d)(2)(B) and § 1.508-2(b) regarding the deductibility of charitable contributions to an organization during the period such organization is not exempt under section 501(a) as an organization described in section 501(c)(3) by reason of failing to file a notice under section 508(a) and this subparagraph. See also § 1.508-2(b)(1)(viii) regarding the deductibility of charitable contributions to trusts described in section 4947(a)(1).

(2) ***Filing of notice.***

(i) For purposes of paragraph (a)(1) of this section, except as provided in paragraph (a)(3) of this section, an organization seeking exemption under section 501(c)(3) must file the notice described in section 508(a) within 15 months from the end of the month in which the organization was organized. Such notice is filed by submitting a properly completed and executed Form 1023 (or, if applicable, Form 1023-EZ) exemption application. Notice should be filed with the appropriate office as designated by the Commissioner in guidance published in the Internal Revenue Bulletin, forms, or instructions to the applicable forms. A request for extension of time for the filing of such notice should be submitted to such appropriate office. Such request may be granted if it demonstrates that additional time is required.

(ii) Although the information required by either Form 1023 or Form 1023-EZ must be submitted to satisfy the notice required by this section, the failure to supply, within the required time, all of the information required to complete such form is not alone sufficient to deny exemption from the date of organization to the date such complete information for such form is submitted by

the organization. If the information that is submitted within the required time is incomplete, and the organization supplies the necessary additional information requested by the Commissioner within the additional time period allowed, the original notice will be considered timely.

(iii) For purposes of subdivision (i) of this subparagraph and paragraph (b)(2)(i) of this section, an organization shall be considered *organized* on the date it becomes an organization described in section 501(c)(3) (determined without regard to section 508(a)).

(iv) Since a trust described in section 4947(a)(2) is not an organization described in section 501(c)(3), it is not required to file a notice described in section 508(a).

(v) For the treatment of community trusts, and the trusts or funds comprising them, under section 508, see the special rules under § 1.170A-9(e).

(vi) A foreign organization shall, for purposes of section 508, be treated in the same manner as a domestic organization, except that section 508 shall not apply to a foreign organization which is described in section 4948(b).

(3) ***Exceptions from notice.***

(i) Paragraphs (a) (1) and (2) of this section are inapplicable to the following organizations:

(*a*) Churches, interchurch organizations of local units of a church, conventions or associations of churches, or integrated auxiliaries of a church. See § 1.6033-2(h) regarding the definition of integrated auxiliary of a church;

(*b*) Any organization which is not a private foundation (as defined in section 509(a)) and the gross receipts of which in each taxable year are normally not more than $5,000 (as described in subdivision (ii) of this subparagraph);

(*c*) Subordinate organizations (other than private foundations) covered by a group exemption letter;

(*d*) Solely for purposes of sections 507, 508(d)(1), 508(d)(2)(A) and 508(d)(3), 508(e), 509 and chapter 42, a trust described in section 4947(a)(1). (However, a trust described in section 501(c)(3) which was organized after October 9, 1969, shall be exempt under section 501(a) by reason of being described in section 501(c)(3) only if it files such notice); and

(*e*) Any other class of organization that the Commissioner from time to time excludes from the requirement of filing notice under section 508(a).

(ii) For purposes of subdivision (i) (*b*) of this subparagraph and paragraph (b)(7)(ii) of this section, the gross receipts (as defined in subdivision (iii) of this subparagraph) of an organization are normally not more than $5,000 if:

(*a*) During the first taxable year of the organization the organization has received gross receipts of $7,500 or less;

(*b*) During its first 2 taxable years the aggregate gross receipts received by the organization are $12,000 or less; and

(*c*) In the case of an organization which has been in existence for at least 3 taxable years, the aggregate gross receipts received by the organization during the immediately preceding 2 taxable years, plus the current year are $15,000 or less

If an organization fails to meet the requirements of (*a*), (*b*), or (*c*) of this subdivision, then with respect to the organization, such organization shall be required to file the notices described in section 508 (a) and (b) within 90 days after the end of the period described in (*a*), (*b*), or (*c*) of this subdivision or before March 22, 1973, whichever is later, in lieu of the period prescribed in subparagraph (2)(i) of this paragraph. Thus, for example, if an organization meets the $7,500 requirement of (*a*) of this subdivision for its first taxable year, but fails to meet the $12,000 requirement of (*b*) of this subdivision for the period ending with its second taxable year, then such organization shall meet the notification requirements of section 508(a)(1) and 508(b) and subparagraph (2)(i) of this paragraph if it files such notification within 90 days after the close of its second taxable year. If an organization which has been in existence at least 3 taxable years meets the requirements of (*a*), (*b*), and (*c*) with respect to all prior taxable years, but fails to meet the requirements of (*c*) of this subdivision with respect to the current taxable year, then even if the organization fails to make such notification within 90 days after the close of the current taxable year, section 508(a)(1) and 508(b) shall not apply with respect to its prior years. In such a case, the organization shall not be treated as described in section 501(c)(3) for a period beginning with such current taxable year and ending when such notice is given under section 508(a)(2).

(iii) For a definition of *gross receipts* for purposes of subdivision (i)(*b*) of this subparagraph and paragraph (b)(7)(ii) of this section, see § 1.6033-2(g)(4).

(4) ***Voluntary filings by new organizations excepted from filing notice.*** Any organization excepted from the requirement of filing notice under section 508(a) will be exempt from taxation under section 501(c)(3) if it meets the requirements of that section, whether or not it files such notice. However, in order to establish its exemption with the Internal Revenue Service and receive a ruling or determination letter recognizing its exempt status, an organization excepted from the notice requirement by reason of subparagraph (3) of this paragraph should file proof of its exemption in the manner prescribed in § 1.501(a)-1.

(b) ***Presumption that old and new organizations are private foundations*** —

(1) ***In general.*** Except as provided in subparagraph (7) of this paragraph, any organization (including an organization in existence on October 9, 1969) which is described in section 501(c)(3), and which does not notify the Commissioner within the time and in the manner prescribed in subparagraph (2) that it is not a private foundation, will be presumed to be a private foundation.

(2) ***Filing of notice.***

(i) Except as provided in subparagraph (7) of this paragraph, an organization must file the notice described in section 508(b) and subparagraph (1) of this paragraph within 15 months from the end of the month in which such organization was organized, or before March 22, 1973, whichever comes later. See paragraph (a)(2)(iii) of this section, for rules pertaining to when an organization is *organized*.

(ii) Any organization filing notice under this paragraph that has received a ruling or determination letter from the Internal Revenue Service dated on or before July 13, 1970, recognizing its exemption from taxation under section 501(c)(3) (or the corresponding provisions of prior law), shall file the notice described in section 508(b) by submitting a properly completed and executed Form 4653, Notification Concerning Foundation Status.

(iii) The financial schedule on Form 4653 need be completed only if the organization is, or thinks it might be, described in section 170(b)(1)(A) (iv) or (vi) or section 509(a)(2).

(iv) Any organization filing notice under this paragraph (b)(2)(iv) shall file its notice by submitting a properly completed and executed Form 1023 (or, if applicable, Form 1023-EZ) and providing information that it is not a private foundation. The organization shall also submit all information required by the regulations under section 170 or 509 (whichever is applicable) necessary to establish recognition of its classification as an organization described in section 509(a)(1), (2), (3), or (4). The notice required by this paragraph (b)(2)(iv) should be filed with the appropriate office as designated by the Commissioner in guidance published in the Internal Revenue Bulletin, forms, or instructions to the applicable forms.

(v) An extension of time for the filing of a notice under this paragraph (b)(2) may be granted by the office with which the notice is filed upon timely request by the organization, if the organization demonstrates that additional time is required.

(3) ***Effect of notice upon the filing organization.***

(i) The notice filed under this paragraph may not be relied upon by the organization so filing unless and until the Internal Revenue Service notifies the organization that it is an organization described in paragraph (1), (2), (3), or (4), of section 509(a). For purposes of the preceding sentence, an organization that has filed notice under section 508(b), and has previously received a ruling that it is an organization described in section 170(b)(1)(A) (other than clauses (vii) and (viii) thereof), will be considered to have been notified by the Internal Revenue Service that it is an organization described in paragraph (1) of section 509(a) if

(*a*) the facts and circumstances forming the basis for the issuance of such ruling have not substantially changed, and

(*b*) the ruling issued under that section has not been revoked expressly or by a subsequent change of the law or regulations under which the ruling was issued.

(ii) If an organization has filed a notice under section 508(b) stating that it is not a private foundation and designating only one paragraph of section 509(a) under which it claims recognition of its classification (such as an organization described in section 509(a)(2)), and if it has received a ruling or determination letter which recognizes that it is not a private foundation but which fails to designate the paragraph under section 509(a) in which it is described, then such organization will be treated as described under the paragraph designated by it, until such ruling or determination letter is modified or revoked. The rule in the preceding sentence shall not apply to an organization which indicated that it does not know its status under section 509(a) or which claimed recognition of its status under more than one paragraph of section 509(a).

(4) ***Effect of notice upon grantors or contributors to the filing organization.*** In the case of grants, contributions, or distributions made prior to:

(i) In the case of community trusts, 6 months after the date on which corrective and clarifying regulations designated as § 1.170A-9(e)(10) become final;

(ii) In the case of medical research organizations, 6 months after the date on which corrective and clarifying regulations designated as § 1.170A-9(b)(2), become final, and

(iii) In all other cases, January 1, 1976, any organization which has properly filed the notice described in section 508(b) prior to March 22, 1973 will not be treated as a private foundation for purposes of making any determination under the internal revenue laws with respect to a

grantor, contributor or distributor (as for example, a private foundation distributing all of its net assets pursuant to a section 507(b)(1)(A) termination) thereto, unless the organization is controlled directly or indirectly by such grantor, contributor or distributor, if by the 30th day after the day on which such notice is filed, the organization has not been notified by the Commissioner that the notice filed by such organization has failed to establish that such organization is not a private foundation. See subparagraph (6) of this paragraph for the effect of an adverse notice by the Internal Revenue Service. For purposes of this subparagraph, an organization which has properly filed notice described in section 508(b) prior to March 22, 1973, and which has claimed recognition of its status under only one paragraph of section 509(a) in such notice, will be treated only for purposes of grantors, contributors or distributors as having the classification claimed in the notice if the provisions of this subparagraph are otherwise satisfied.

(5) ***Statement that old and new organizations are operating foundations.***

(i) Any organization (including an organization in existence on October 9, 1969) which is described in section 501(c)(3) may submit a statement, in the form and manner provided for notice in subparagraph (2) of this paragraph, that it is an operating foundation (as defined in section 4942(j)(3)) and include in such statement:

(*a*) Necessary supporting information as required by the regulations under section 4942(j)(3) to confirm such determination (including a statement identifying the clause of section 4942(j)(3)(B) that is applicable); and

(*b*) A written declaration by the principal officer, manager, or authorized trustee that there is a reasonable basis in law and in fact that the organization so filing is an operating foundation, and that to the best of the knowledge and belief of such officer, manager or trustee, the information submitted is complete and correct.

(ii) The statement filed under this subparagraph may not be relied upon by the organization so filing unless and until the Internal Revenue Service notifies the organization that it is an operating foundation described in section 4942(j)(3).

(iii) In the case of grants, contributions, or distributions made prior to March 22, 1973, any organization which has properly filed the statement described in this subparagraph prior to such date will be treated as an operating foundation for purposes of making any determination under the internal revenue laws with respect to a grantor, contributor, or distributor thereto, unless the organization is controlled directly or indirectly by such grantor, contributor, or distributor, if by the 30th day after the day on which such statement is filed, the organization has not been notified by the Commissioner or his delegate that its statement has failed to establish that such organization is an operating foundation. See subparagraph (6) of this paragraph for the effect of an adverse notice by the Internal Revenue Service.

(6) ***Effect of notice by Internal Revenue Service concerning organization's notice or statement.*** Subparagraph (4) and subdivision (iii) of subparagrph (5) of this paragraph shall have no effect:

(i) With respect to a grantor, contributor, or distributor to any organization for any period after the date on which the Internal Revenue Service makes notice to the public (such as by publication in the Internal Revenue Bulletin) that a grantor, contributor, or distributor to such organization can no longer rely upon the notice or statement submitted by such organization; and

(ii) Upon any grant, contribution, or distribution made to an organization on or after the date on which a grantor, contributor, or distributor acquired knowledge that the Internal Revenue Service has given notice to such organization that its notice or statement has failed to establish that such organization either is not a private foundation, or is an operating foundation, as the case may be.

(7) ***Exceptions from notice.*** Subparagraphs (1) and (2) of this paragraph are inapplicable to the following organizations:

(i) Churches, interchurch organizations of local units of a church, conventions or associations of churches, or integrated auxiliaries of a church, such as a men's or women's organization, religious school, mission society, or youth group;

(ii) Any organization which is not a private foundation (as defined in section 509(a)) and the gross receipts of which in each taxable year are normally not more than $5,000 (as determined under paragraph (a)(3)(ii) of this section);

(iii) Subordinate organizations (other than private foundations) covered by a group exemption letter but only if the parent or supervisory organization submits a notice covering the subordinates;

(iv) Trusts described in section 4947(a)(1); and

(v) Any other class of organization that the Commissioner from time to time excludes from the notification requirements of section 508(b).

(8) ***Voluntary filings by organizations excepted from filing notice.*** Any organization excepted from the requirement of filing notice under section 508(b) by reason of subdivisions (i), (ii), and (v) of subparagraph (7) of this paragraph may receive the benefits of subparagraph (4) of this paragraph by filing such notice.

(c) ***Effective/applicability date.*** Paragraphs (a)(2)(i), (a)(2)(ii), (b)(2)(iv), and (b)(2)(v) of this section apply on and after July 1, 2014.

(Secs. 508 and 7805 of the Internal Revenue Code of 1954 (68A Stat. 917; 26 U.S.C. 7805))

[T.D. 7232, 37 FR 28289, Dec. 22, 1972, as amended by T.D. 7342, 40 FR 1237, Jan. 7, 1975; T.D. 7395, 41 FR 1063, Jan. 6, 1976; T.D. 8640, 60 FR 65552, Dec. 20, 1995; T.D. 9674, 79 FR 37632, July 2, 2014; T.D. 9819, 82 FR 29733, June 30, 2017]

§ 1.508-2 Disallowance of certain charitable, etc., deductions.

(a) ***Gift or bequest to organizations subject to section 507(c) tax*** —

(1) ***General rule.*** No gift or bequest made to an organization upon which the tax provided by section 507(c) has been imposed shall be allowed as a deduction under section 170, 545(b)(2), 556(b)(2), 642(c), 2055, 2106(a)(2), or 2522, if such gift or bequest is made:

(i) By any person after notification has been made by the organization under section 507(a)(1) or after notification has been made by the Commissioner under section 507(a)(2)(B), or

(ii) By a substantial contributor (as defined in section 507(d)(2)) in his taxable year which includes the first day on which action is taken by such organization which culminates in the imposition of tax under section 507(c) and any subsequent taxable year

For purposes of subdivision (ii) of this subparagraph, the first day on which action is taken by an organization which culminates in the imposition of tax under section 507(c) shall be determined under the rules set forth in § 1.507-7(b) (1) and (2).

(2) ***Exception.*** Subparagraph (1) of this paragraph shall not apply if the entire amount of the unpaid portion of the tax imposed by section 507(c) is abated by the Commissioner under section 507(g).

(b) ***Gift or bequest to taxable private foundation, section 4947 trust, etc.*** —

(1) ***General rule.***

(i) Except as provided in subparagraph (2) of this paragraph, no gift or bequest made to an organization shall be allowed as a deduction under section 170, 545(b)(2), 556(b)(2), 642(c), 2055, 2106(a)(2), or 2522, if such gift or bequest is made:

(*a*) To a private foundation or a trust described in section 4947(a)(2) in a taxable year for which it fails to meet the requirements of section 508(e) (determined without regard to section 508(e)(2) (B) and (C), or

(*b*) To any organization in a period for which it is not treated as an organization described in section 501(c)(3) by reason of section 508(a).

(ii) For purposes of subdivision (i)(*a*) of this subparagraph the term *taxable year* refers to the taxable year of the donee or beneficiary organization. In the event a bequest is made to a private foundation or trust described in section 4947(a)(2) which is not in existence at the date of the testator's death (but which is created under the terms of the testator's will), the term *taxable year* shall mean the first taxable year of the private foundation or trust.

(iii) For purposes of subdivision (i)(*a*) of this subparagraph, an organization does not fail to meet the requirements of section 508(e) for a taxable year, unless it fails to meet such requirements for the entire year. Therefore, even if a donee organization fails to meet the requirements of section 508(e) on the date it receives a grant from a donor, the donor's grant will not be disallowed by operation of section 508(d)(2)(A) and subdivision (i)(*a*) of this subparagraph, if the organization meets the requirements of section 508(e) (determined without regard to section 508(e)(2) (B) or (C)) by the end of its taxable year.

(iv) No deduction will be disallowed under section 508(d)(2)(A) with respect to a deduction under section 170, 545(b)(2), 556(b)(2), 642(c), 2055, 2106(a)(2), or 2522 if during the taxable year in question, the private foundation or trust described in section 4947(a)(2) has instituted a judicial proceeding which is necessary to reform its governing instrument or other instrument in order to meet the requirements of section 508(e)(1). This subdivision shall not apply unless within a reasonable time such judicial proceedings succeed in so reforming such instrument.

(v) No deduction will be disallowed under section 508(d)(2)(A) and subdivision (i)(*a*) of this subparagraph for any taxable year beginning before January 1, 1972, with respect to a private foundation or trust described in section 4947 organized before January 1, 1970. See also § 1.508-3(g) regarding transitional rules for extending compliance with section 508(e)(1).

(vi)

(*a*) In the case of a contribution or bequest to a trust described in section 4947(a)(2) other than to a trust to which subdivision (vii) of this subparagraph applies, no deduction shall be disallowed by reason of section 508(d)(2)(A) on the grounds that such trust's

governing instrument contains no provisions with respect to section 4942. Similarly, if for a taxable year such trust is also a trust described in section 4947(b)(3), no deduction for such year shall be so disallowed on the grounds that the governing instrument contains no provision with respect to section 4943 or 4944.

(*b*) This subdivision may be illustrated by the following example:

Example. H executes a will on January 1, 1977, establishing a charitable remainder trust (as described in section 664) with income payable to W, his wife, for life, remainder to X university, an organization described in section 170(b)(1)(A)(ii). The will provides that the trust is prohibited from engaging in activities which would subject itself, its foundation manager or a disqualified person to taxes under section 4941 or 4945 of the Code. The will is silent as to sections 4942, 4943, and 4944. H dies February 12, 1978. Section 508(d)(2)(A) will not operate to disallow any deduction to H's estate under section 2055 with respect to such trust.

(vii)

(*a*) In the case of a trust described in section 4947(a)(2) which by its terms will become a trust described in section 4947(a)(1) and the governing instrument of which is executed after March 22, 1973, the governing instrument shall not meet the requirements of section 508(e)(1) if it does not contain provisions to the effect that the trust must comply with the provisions of section 4942, or sections 4942, 4943, and 4944 (as the case may be) to the extent such section or sections shall become applicable to such trust.

(*b*) This subdivision may be illustrated by the following example:

Example. H executes a will on January 1, 1977, establishing a charitable remainder trust (as described in section 664) with income payable to W, his wife, for life, remainder in trust in perpetuity for the benefit of an organization described in section 170(c). By its terms the trust will become a trust described in section 4947(a)(1), and will become a private foundation. The will provides that the trust is prohibited from engaging in activities which would subject itself, its foundation manager or a disqualified person to taxes under sections 4941 or 4945 of the Code. The will is silent as to sections 4942, 4943, and 4944. H dies February 12, 1978. Unless the trust's governing instrument is amended prior to the end of the trust's first taxable year, or judicial proceedings have been instituted under subdivision (iv) of this subparagraph, section 508(d)(2)(A) will operate to disallow any deduction to H's estate under section 2055 with respect to such trust.

(viii) Since a charitable trust described in section 4947(a)(1) is not required to file a notice under section 508(a), section 508(d)(2)(B) and subdivision (i)(*b*) of this subparagraph are not applicable to such a trust.

(2) ***Transitional rules.*** Any deduction which would otherwise be allowable under section 642(c)(2), 2106(a)(2), or 2055 shall not be disallowed under section 508(d)(2)(A) if such deduction is attributable to:

(i) Property passing under the terms of a will executed on or before October 9, 1969,

(*a*) If the decedent dies after October 9, 1969, but before October 9, 1972, without having amended any dispositive provision of the will after October 9, 1969, by codicil or otherwise,

(*b*) If the decedent dies after October 9, 1969, and at no time after that date had the right to change the portions of the will which pertains to the passing of property to, or for the use of, an organization described in section 170(c)(2)(B) or 2055(a), or

(*c*) If no dispositive provision of the will is amended by the decedent, by codicil or otherwise, before October 9, 1972, and the decedent is on October 9, 1972, and at all times thereafter under a mental disability (as defined in § 1.642(c)-2(b)(3)(ii)) to amend the will by codicil or otherwise, or

(ii) Property transferred in trust on or before October 9, 1969,

(*a*) If the grantor dies after October 9, 1969, but before October 9, 1972, without having amended, after October 9, 1969, any dispositive provision of the instrument governing the disposition of the property,

(*b*) If the property transferred was an irrevocable interest to, or for the use of, an organization described in section 170(c)(2)(B) or 2055(a),

(*c*) In the case of a deduction under section 2106(a)(2) or 2055; if no dispositive provision of the instrument governing the disposition of the property is amended by the grantor before October 9, 1972, and the grantor is on October 9, 1972, and at all times thereafter under a mental disability (as defined in § 1.642(c)-2(b)(3)(ii)) to change the disposition of the property, or

(*d*) In the case of a deduction under section 642(c)(2)(A), if the grantor is at all times after October 9, 1969, and up to, and including, the last day of the taxable year for which the deduction under such section is claimed, under a mental disability (as defined in § 1.642(c)-2(b)(3)(ii)) to change the terms of the trust

See also § 1.508-3(g) regarding the extension of time for compliance with section 508(e), § 1.664-1(f)(3) (ii) and (g) regarding the special transitional rules for charitable remainder annuity and unitrusts described in section 664 which were created prior to December 31, 1972, and § 20.2055-2(e)(4) of this chapter regarding the rules for determining if the dispositive provisions have been amended.

[T.D. 7232, 37 FR 28291, Dec. 22, 1972]

§ 1.508-3 Governing instruments.

(a) ***General rule.*** A private foundation shall not be exempt from taxation under section 501(a) for a taxable year unless by the end of such taxable year its governing instrument includes provisions the effects of which are:

(1) To require distributions at such times and in such manner as not to subject the foundation to tax under section 4942, and

(2) To prohibit the foundation from engaging in any act of self-dealing (as defined in section 4941(d)), from retaining any excess business holdings (as defined in section 4943(c)), from making any investments in such manner as to subject the foundation to tax under section 4944, and from making any taxable expenditures (as defined in section 4945(d)).

(b) ***Effect and nature of governing instrument*** —

(1) ***In general.*** Except as provided in paragraph (d) of this section, the provisions of a foundation's governing instrument must require or prohibit, as the case may be, the foundation to act or refrain from acting so that the foundation, and any foundation managers or other disqualified persons with respect thereto, shall not be liable for any of the taxes imposed by sections 4941, 4942, 4943, 4944, and 4945 of the Code or, in the case of a split-interest trust described in section 4947(a)(2), any of the taxes imposed by those sections of chapter 42 made applicable under section 4947. Specific reference to these sections of the Code will generally be required to be included in the governing instrument, unless equivalent language is used which is deemed by the Commissioner to have the same full force and effect. However, a governing instrument which contains only language sufficient to satisfy the requirements of the organizational test under § 1.501(c)(3)-1(b) will not be considered as meeting the requirements of this subparagraph, regardless of the interpretation placed on such language as a matter of law by a State court in a particular jurisdiction, unless the requirements of paragraph (d) of this section are satisfied.

(2) ***Corpus.*** A governing instrument does not meet the requirements of paragraph (a)(1) of this section if it expressly prohibits the distribution of capital or corpus.

(3) ***Savings provisions.*** For purposes of sections 508(d)(2) (A) and (e), a governing instrument need not include any provision which is inconsistent with section 101(l) (2), (3), (4), or (5) of the Tax Reform Act of 1969 (83 Stat. 533), as amended by sections 1301 and 1309 of the Tax Reform Act of 1976 (90 Stat. 1713, 1729), with respect to the organization. Accordingly, a governing instrument complying with the requirements of subparagraph (1) of this paragraph may incorporate any savings provision contained in section 101(l) (2), (3), (4), or (5) of the Tax Reform Act of 1969, as amended by sections 1301 and 1309 of the Tax Reform Act of 1976, as a specific exception to the general provisions of paragraph (a) of this section. In addition, in the absence of any express provisions to the contrary, the exceptions contained in such savings provisions will generally be regarded as contained in a governing instrument meeting the requirements of subparagraph (1) of this paragraph.

(4) ***Excess holdings.*** For purposes of paragraph (a)(2) of this section, the prohibition against *retaining any excess business holdings (as defined in section 4943(c)*) shall be deemed only to prohibit the foundation from retaining any excess business holdings when such holdings would subject the foundation to tax under section 4943(a).

(5) ***Revoked ruling on status.*** In the case of an organization which:

(i) Has been classified as an organization described in section 509(a) (1), (2), (3), or (4), and

(ii) Subsequently receives a ruling or determination letter stating that it is no longer described in section 509(a) (1), (2), (3), or (4), but is a private foundation within the meaning of section 509,

such organization shall have 1 year from the date of receipt of such ruling or determination letter, or the final ruling or determination letter if a protest is filed to an earlier one, to meet the requirements of section 508(e). Section 508(d)(2)(A) shall not be applicable with respect to gifts and bequests made during this 1-year period if such requirements are met within the 1-year period.

(6) ***Judicial proceeding.*** For purposes of paragraphs (a), (b)(5), (d)(2), and (e)(3) of this section, an organization shall be deemed to have met the requirements of section 508(e) within a year, if a judicial proceeding which is necessary to reform its governing instrument or other instrument is instituted within the year and within a reasonable time the organization, in fact, meets the requirements of section 508(e). For purposes only of paragraphs (b)(5), (d)(2), and (e)(3) of this

section, if an organization organized before January 1, 1970, institutes such a judicial proceeding within such 1-year period, section 508 (e)(2)(C) shall be applied as if such proceeding had been instituted prior to January 1, 1972.

(c) ***Meaning of governing instrument.*** For purposes of section 508(e), the term *governing instrument* shall have the same meaning as the term *articles of organization* under § 1.501(c)(3)-1(b)(2). The bylaws of an organization shall not constitute its governing instrument for purposes of section 508(e).

(d) ***Effect of State law*** —

(1) ***In general.*** A private foundation's governing instrument shall be deemed to conform with the requirements of paragraph (a) of this section if valid provisions of State law have been enacted which:

(i) Require it to act or refrain from acting so as not to subject the foundation to the taxes imposed by section 4941 (relating to taxes on self-dealing), 4942 (relating to taxes on failure to distribute income), 4943 (relating to taxes on excess business holdings), 4944 (relating to taxes on investments which jeopardize charitable purpose), and 4945 (relating to taxable expenditures); or

(ii) Treat the required provisions as contained in the foundation's governing instrument.

(2) ***Validity.***

(i) Any provision of State law described in subparagraph (1) of this paragraph shall be presumed valid as enacted, and in the absence of State provisions to the contrary, to apply with respect to any foundation that does not specifically disclaim coverage under State law (either by notification to the appropriate State official or by commencement of judicial proceedings) except as provided in subdivisions (ii) and (iii) of this subparagraph.

(ii) If such provision is declared invalid or inapplicable with respect to a class of foundations by the highest appellate court of the State or by the Supreme Court of the United States, the foundations covered by the determination must meet the requirements of section 508(e) within 1 year from the date on which the time for perfecting an application for review by the Supreme Court expires. If such application is filed, the requirements of section 508(e) must be met within a year from the date on which the Supreme Court disposes of the case, whether by denial of the application for review or decision on the merits.

(iii) In addition, if such provision of State law is declared invalid or inapplicable with respect to a class of foundations by any court of competent jurisdiction which decision is not reviewed by a court referred to in subdivision (ii) of this subparagraph, and the Commissioner makes notice to the general public (such as by publication in the Internal Revenue Bulletin) that such provision has been so declared invalid or inapplicable, then all foundations in such State must meet the requirements of section 508(e), without reliance upon such statute to the extent declared invalid or inapplicable by such decision, within 1 year from the date such notice is made public.

(iv) This subparagraph shall not apply to any foundation that is subject to a final judgment entered by a court of competent jurisdiction, holding the law invalid or inapplicable with respect to such foundation. See paragraph (b)(6) of this section for the effect of certain judicial proceedings that are brought within 1 year.

(3) ***Conflicting instrument.*** For taxable years beginning after March 22, 1973 in order for a private foundation or trust described in section 4947(a)(2) to receive the benefit of coverage under any State statute which makes applicable the requirements of section 508(e)(1) (A) and (B), where the statute by its terms does not apply to a governing instrument which contains a mandatory direction conflicting with any of such requirements, such organization must indicate on its annual return required to be filed under section 6033 (or section 6012 in the case of a trust described in section 4947(a)) that its governing instrument contains no mandatory directions which conflict with the requirements of section 508(e)(1) (A) or (B), as incorporated by the State statute. General language in a governing instrument empowering the trustee to make investments without being limited to those investments authorized by law will not be regarded as a mandatory conflicting direction.

(4) ***Exclusion from statute.***

(i) For any taxable year beginning after March 22, 1973 in the case of a private foundation or trust described in section 4947(a)(2) subject to a State statute which makes applicable the requirements of section 508(e)(1) (A) and (B) to the governing instruments of such organizations, other than those which take action to be excluded therefrom (such as by filing a notice of exclusion or by instituting appropriate judicial proceedings), an organization will receive the benefit of such State statute only if it indicates on its annual return required to be filed under section 6033 (or section 6012 in the case of a trust described in section 4947(a)) that it has not so taken action to be excluded.

(ii) This paragraph permits certain organizations that are subject to the provisions of such a State law, to avoid changing their governing instruments in order to meet the requirements of section 508(e)(1). Since an organization which avoids the application of a provision or provisions of State law, such as by filing a notice of exclusion, is not entitled to the benefits of this paragraph, such an organization must meet the requirements of section 508(e)(1) without regard to this paragraph and except as provided in section 508(e)(2)(C) or paragraph (g)(1)(iii) of this section must change its governing instrument to the extent inconsistent with section 508(e)(1).

(5) ***Treatment of prevailing conflicting clause.*** If provisions of State law are inapplicable to a clause in a governing instrument which is contrary to the provisions of section 508(e)(1), the requirements of section 508(e)(2)(C) and paragraph (g)(1)(iii) of this section are not satisfied by a provision of State law which purports to eliminate the need for litigation under such circumstances. Therefore, except as otherwise provided in this section unless the governing instrument is changed or litigation is commenced pursuant to section 508(e)(2)(B) by an organization organized before January 1, 1970, or pursuant to paragraph (g)(1)(ii) of this section, to amend the nonconforming provision to meet the requirements of section 508(e)(1) (A) and (B), then pursuant to section 508(e), such organization will not be exempt from taxation.

(6) ***Retroactive application to grants or bequests.*** If valid provisions of such a State law apply retroactively to a taxable year within which an organization has received a grant or request, section 508(d)(2)(A) shall not apply so as to disallow such grant or bequest, but only if such valid provisions of State law are enacted within 2 years of such grant or bequest.

(e) ***Effect of section 508(e) upon section 4947 trusts*** —

(1) ***Section 4947(a)(1) trusts.*** A charitable trust described in section 4947(a)(1) (unless also described in a paragraph of section 509(a)) is subject to all the provisions of paragraph (a) of this section.

(2) ***Section 4947(a)(2) trusts.*** A split-interest trust described in section 4947(a)(2), as long as it is so described, is subject to the provisions of paragraph (a)(2) of this section, except to the extent that section 4947 makes any such provisions inapplicable to certain trusts and certain amounts in trust. The governing instrument of a trust described in section 4947(a)(2) may except amounts described in section 4947(a)(2) (A), (B), and (C) from the requirements of paragraph (a)(2) of this section. In the case of a trust having amounts transferred to it both before May 27, 1969, and after May 26, 1969, its governing instrument may except from the provisions of paragraph (a)(2) of this section only those segregated amounts excluded from the application of section 4947(a)(2) by reason of section 4947(a)(2)(C) and the regulations thereunder. Also, the governing instrument of such a trust may exclude the application of sections 4943 and 4944 for any period during which such trust is described in section 4947(b)(3) (A) or (B). See § 53.4947-1(c) of this chapter for rules relating to the applicability of section 4947 to split-interest trusts and § 1.508-2(b)(1) (vi) and (vii) for rules relating to the deductibility of grants or bequests to such trusts.

(3) ***A section 4947(a)(2) trust becoming a section 4947(a)(1) trust.*** If the governing instrument of a trust described in section 4947(a)(2) meets the applicable requirements of paragraph (a)(2) of this section and such trust ceases to be so described and becomes instead a trust described in section 4947(a)(1), then such governing instrument must meet, prior to the end of 12 months from the date such trust first becomes described in section 4947(a)(1) (except as otherwise provided in this section) all the requirements of paragraph (a) of this section in order to comply with section 508(e).

(f) ***Special rules for existing private foundations.***

(1) Pursuant to section 508(e)(2), section 508(e)(1) and paragraph (a) of this section shall not apply in the case of any organization whose governing instrument was executed before January 1, 1970:

(i) To any taxable year beginning before January 1, 1972;

(ii) To any period after December 31, 1971, during the pendency of any judicial proceeding begun before January 1, 1972, by the private foundation which is necessary to reform, or to excuse such foundation from compliance with, its governing instrument or any other instrument in order to meet the requirements of section 508(e)(1); and

(iii) To any period after the termination of any judicial proceeding described in subdivision (ii) of this subparagraph during which its governing instrument or any other instrument does not permit it to meet the requirements of section 508(e)(1).

(2) For purposes of subparagraph (1) of this paragraph, and § 1.508-2(b)(1)(vi)(*a*), a governing instrument will not be treated as executed before the applicable date, if, after such date the dispositive provisions of the instrument are amended (determined under rules similar to the rules set forth in § 20.2055-2(e)(4) of this chapter).

(3) For purposes of subparagraph (1) (ii) and (iii) of this paragraph, a private foundation will be treated as meeting the requirements of section 508(e)(2) (B) and (C) if it has commenced a necessary and timely proceeding in an appropriate court of original jurisdiction and such court has ruled that the foundation's governing instrument or any other instrument does not permit it to meet the requirements of section 508(e)(1). Such foundation is not required to commence proceedings in any court of appellate jurisdiction in order to comply with section 508(e)(2)(C). See also § 1.508-2(b)(2).

(g) ***Extension of time for compliance with section 508(e).***

(1) Except as provided in subparagraph (2) of this paragraph, section 508(e)(1) shall not apply to any private foundation (regardless of when organized) with respect:

(i) To any taxable year beginning before the transitional date,

(ii) To any period on or after the transitional date during the pendency of any judicial proceeding begun before the transitional date by the private foundation which is necessary to reform, or to excuse such foundation from compliance with, its governing instrument or any other instrument in order to meet the requirements of section 508(e)(1), and

(iii) To any period after the termination of any judicial proceeding described in subdivision (ii) of this subparagraph during which its governing instrument or any other instrument does not permit it to meet the requirements of section 508(e)(1).

(2) Subparagraph (1) of this paragraph shall apply only to gifts or bequests referred to in section 508(d)(2)(A) that are made before the transitional date.

(3) For purposes of this paragraph the term *transitional dates* means the earlier of the following dates:

(i) In the case of a medical research organization, May 21, 1976 or in the case of a community trust February 10, 1977, or

(ii) The 91st day after the date an organization receives a final ruling or determination letter that it is a private foundation under section 509(a).

[T.D. 7232, 37 FR 28292, Dec. 22, 1972, as amended by T.D. 7440, 41 FR 50656, Nov. 17, 1976; T.D. 7678, 45 FR 12415, Feb. 26, 1980]

§ 1.508-4 Effective date.

Except as otherwise provided, §§ 1.508-1 through 1.508-3 shall take effect on January 1, 1970.

(Sec. 7805 of the Internal Revenue Code of 1954, 68A Stat. 917; 26 U.S.C. 7805)

[T.D. 7232, 37 FR 28294, Dec. 22, 1972]

§ 1.509(a)-1 Definition of private foundation.

In general. Section 509(a) defines the term *private foundation* to mean any domestic or foreign organization described in section 501(c)(3) other than an organization described in section 509(a) (1), (2), (3), or (4). Organizations which fall into the categories excluded from the definition of *private foundation* are generally those which either have broad public support or actively function in a supporting relationship to such organizations. Organizations which test for public safety are also excluded.

[T.D. 7212, 37 FR 21907, Oct. 17, 1972]

§ 1.509(a)-2 Exclusion for certain organizations described in section 170(b)(1)(A).

(a) ***General rule.*** *Organizations described in section 170(b)(1)(A) (other than in clauses (vii) and (viii)) are excluded from the definition of private foundation by section 509(a)(1). For the requirements to be met by organizations described in section 170(b)(1)(A) (i) through (vi), see § 1.170A-9 (a) through (e) and paragraph (b) of this section. For purposes of this section, the parenthetical language other than in clauses (vii) and*

(viii) used in section 509(a)(1) means *other than an organization which is described only in clause (vii) or (viii).* For purposes of this section, an organization may qualify as a section 509(a)(1) organization regardless of the fact that it does not satisfy section 170(c)(2) because:

(1) Its funds are not used within the United States or its possessions, or

(2) It was created or organized other than in, or under the law of, the United States, any State or territory, the District of Columbia, or any possession of the United States.

(b) ***Medical research organizations.*** In order to qualify under section 509(a)(1) as a medical research organization described in section 170(b)(1)(A)(iii), an organization must meet the requirements of section 170(b)(1)(A)(iii) and § 1.170A-9(c)(2), except that, solely for purposes of classification as a section 509(a)(1) organization, such organization need not be committed to spend every contribution for medical research before January 1 of the fifth calendar year which begins after the date such contribution is made.

[T.D. 7212, 37 FR 21907, Oct. 17, 1972]

§ 1.509(a)-3 Broadly, publicly supported organizations.

(a) ***In general*** —

(1) ***General rule.*** Section 509(a)(2) excludes certain types of broadly, publicly supported organizations from private foundation status. An organization will be excluded under section 509(a)(2) if it meets the one-third support test under section 509(a)(2)(A) and the not-more-than-one-third support test under section 509(a)(2)(B).

(2) ***One-third support test.*** An organization will meet the one-third support test if it normally (within the meaning of paragraph (c) or paragraph (d) of this section) receives from permitted sources more than one-third of its support in each taxable year from any combination of—

(i) Gifts, grants, contributions, or membership fees; and

(ii) Gross receipts from admissions, sales of merchandise, performance of services, or furnishing of facilities, in an activity that is not an unrelated trade or business (within the meaning of section 513), subject to certain limitations described in paragraph (b) of this section. For purposes of this section, governmental units, organizations described in section 509(a)(1), and persons other than disqualified persons with respect to the organization shall be referred to as permitted sources. For purposes of this section, the amount of support received from the sources described in paragraph (a)(2)(i) of this section and this paragraph (a)(2)(ii) (subject to the limitations referred to in this paragraph (a)(2)) will be referred to as the numerator of the one-third support fraction, and the total amount of support received (as defined in section 509(d)) will be referred to as the denominator of the one-third support fraction. Section 1.509(a)-3(f) distinguishes gifts and contributions from gross receipts; § 1.509(a)-3(g) distinguishes grants from gross receipts; § 1.509(a)-3(h) defines membership fees; § 1.509(a)-3(i) defines “any bureau or similar agency of a governmental unit”; § 1.509(a)-3(j) describes the treatment of certain indirect forms of support; paragraph (k) of this section describes the method of accounting for support; § 1.509(a)-3(l) describes the treatment of gross receipts from section 513(a)(1), section 513(a)(2), or section 513(a)(3) activities; §

1.509(a)-3(m) distinguishes gross receipts from gross investment income; and § 1.509(a)-3(n) describes transition rules for organizations that received advance rulings that expire on or after June 9, 2008.

(3) ***Not-more-than-one-third support test*** —

(i) ***In general.*** An organization will meet the not-more-than-one-third support test under section 509(a)(2)(B) if it normally (within the meaning of paragraph (c) or (d) of this section) receives not more than one-third of its support in each taxable year from the sum of its gross investment income (as defined in section 509(e)) and the excess (if any) of the amount of its unrelated business taxable income (as defined in section 512, without regard to section 512(a)(6), or with regard to section 512(a)(6), if the organization so chooses) derived from trades or businesses that were acquired by the organization after June 30, 1975, over the amount of tax imposed on such income by section 511. For purposes of this section the amount of support received from items described in section 509(a)(2)(B) will be referred to as the numerator of the not-more-than-one-third support fraction, and the total amount of support (as defined in section 509(d)) will be referred to as the denominator of the not-more-than-one-third support fraction. For purposes of section 509(a)(2), paragraph (m) of this section distinguishes gross receipts from gross investment income. For purposes of section 509(e), gross investment income includes the items of investment income described in § 1.512(b)-1(a).

(ii) ***Trade or business.*** For purposes of section 509(a)(2)(B)(ii), a trade or business acquired after June 30, 1975, by an organization shall include, in addition to other trades or businesses:

(A) A trade or business acquired after such date from, or as a result of the liquidation of, an organization's subsidiary which is described in section 502 whether or not the subsidiary was held on June 30, 1975.

(B) A new trade or business commenced by an organization after such date.

(iii) ***Allocation of deductions between businesses acquired before, and businesses acquired after, June 30, 1975.*** Deductions which are allowable under section 512 but are not directly connected to a particular trade or business, such as deductions referred to in paragraphs (10) and (12) of section 512(b), shall be allocated in the proportion that the unrelated trade or business taxable income derived from trades or businesses acquired after June 30, 1975, bears to the organization's total unrelated business taxable income, both amounts being determined without regard to such deductions.

(iv) ***Allocation of tax.*** The tax imposed by section 511 shall be allocated in the same proportion as in paragraph (a)(3)(iii) of this section.

(4) ***Unrelated business activities.*** The denominator of the one-third support fraction and the denominator of the not-more-than-one-third support fraction both include net income from unrelated business activities, whether or not such activities are carried on regularly as a trade or business. The term *net income from unrelated business activities* includes (but is not limited to) an organization's unrelated business taxable income (UBTI) within the meaning of section 512. However, when calculating UBTI for purposes of determining the denominator of both support fractions, section 512(a)(6) does not apply. Accordingly, in the case of an organization that derives gross income from the regular conduct of two or more unrelated business activities, support includes the aggregate of gross income from

all such unrelated business activities less the aggregate of the deductions allowed with respect to all such unrelated business activities. Nonetheless, when determining support, such organization can use either its UBTI calculated under section 512(a)(6) or its UBTI calculated in the aggregate.

(5) ***Purposes.*** The one-third support test and the not-more-than-one-third support test are designed to insure that an organization which is excluded from private foundation status under section 509(a)(2) is responsive to the general public, rather than to the private interests of a limited number of donors or other persons.

(b) ***Limitation on gross receipts*** —

(1) ***General rule.*** In computing the amount of support received from gross receipts under section 509(a)(2)(A)(ii) for purposes of the one-third support test of section 509(a)(2)(A), gross receipts from related activities received from any person, or from any bureau or similar agency of a governmental unit, are includible in any taxable year only to the extent that such receipts do not exceed the greater of $5,000 or 1 percent of the organization's support in such taxable year.

(2) ***Examples.*** The application of this paragraph may be illustrated by the examples set forth below. For purposes of these examples, the term *general public* is defined as persons other than disqualified persons and other than persons from whom the foundation receives gross receipts in excess of the greater of $5,000 or 1 percent of its support in any taxable year, and the term *gross receipts* is limited to receipts from activities which are not unrelated trade or business (within the meaning of section 513).

Example 1. For the taxable year 1970, X, an organization described in section 501(c)(3), received support of $10,000 from the following sources:

Bureau M (a governmental bureau from which X received gross receipts for services rendered)	$25,000
Bureau N (a governmental bureau from which X received gross receipts for services rendered)	25,000
General public (gross receipts for services rendered)	20,000
Gross investment income	15,000
Contributions from individual substantial contributors (defined as disqualified persons under section 4946(a)(2))	15,000
Total support	100,000

Since the $25,000 received from each bureau amounts to more than the greater of $5,000 or 1 percent of X's support for 1970 (1% of $100,000 = $1,000) under section 509(a)(2)(A)(ii), each amount is includible in the numerator of the one-third support fraction only to the extent

of $5,000. Thus, for the taxable year 1970, X received support from sources which are taken into account in meeting the one-third support test of section 509(a)(2)(A) computed as follows:

Bureau M	$5,000
Bureau N	5,000
General public	20,000
Total	30,000

Therefore, in making the computations required under paragraph (c), (d), or (e) of this section, only $30,000 is includible in the aggregate numerator and $100,000 is includible in the aggregate denominator of the support fraction.

Example 2. For the taxable year 1970, Y, an organization described in section 501(c)(3), received support of $600,000 from the following sources:

Bureau O (gross receipts for services rendered)	$10,000
Bureau P (gross receipts for services rendered)	10,000
General public (gross receipts for services rendered)	150,000
General public (contributions)	40,000
Gross investment income	150,000
Contributions from substantial contributors	240,000
Total support	600,000

Since the $10,000 received from each bureau amounts to more than the greater of $5,000 or 1 percent of Y's support for 1970 (1% of $600,000 = $6,000), each amount is includible in the numerator of the one-third support fraction only to the extent of $6,000. Thus, for the taxable year 1970, Y received support from sources required to meet the one-third support test of section 509(a)(2)(A) computed as follows:

Bureau O	$6,000
Bureau P	6,000
General public (gross receipts)	150,000
General public (contributions)	40,000

Total	202,000

Therefore, in making the computations required under paragraph (c), (d), or (e) of this section, $202,000 is includible in the aggregate numerator and $600,000 is includible in the aggregate denominator of the support fraction.

(c) ***Normally*** —

(1) ***In general*** —

(i) ***Definition.*** The support tests set forth in section 509(a)(2) are to be computed on the basis of the nature of the organization's normal sources of support. An organization will be considered as "normally" receiving one third of its support from any combination of gifts, grants, contributions, membership fees, and gross receipts from permitted sources (subject to the limitations described in § 1.509(a)-3(b)) and not more than one third of its support from items described in section 509(a)(2)(B) for a taxable year and the taxable year immediately succeeding such year, if, for such taxable year and the four taxable years immediately preceding such taxable year, the aggregate amount of the support received during the applicable period from gifts, grants, contributions, membership fees, and gross receipts from permitted sources (subject to the limitations described in § 1.509(a)-3(b)) is more than one third, and the aggregate amount of the support received from items described in section 509(a)(2)(B) is not more than one third, of the total support of the organization for such five-year period. A publicly supported organization described under section 509(a)(2) that has failed to meet either the one-third support test of paragraph (a)(2) of this section or the not-more-than-one-third support test of paragraph (a)(3) of this section for two consecutive years will be treated as a private foundation as of the first day of the second consecutive taxable year only for purposes of sections 507, 4940, and 6033. Such an organization must file a Form 990-PF, "Return of Private Foundation or Section 4947(a)(1) Nonexempt Charitable Trust Treated as a Private Foundation," and will be liable for the net investment tax imposed by section 4940 and, if applicable, the private foundation termination tax imposed by section 507(c), for that second consecutive failed year. For the succeeding years, the organization will be treated as a private foundation for all purposes.

(ii) ***First five years of an organization's existence.*** See paragraph (d)(1) of this section for the definition of "normally" for organizations in the first five years of their existence.

(2) ***Terminations under section 507(b)(1)(B).*** For the special rules applicable to the term normally as applied to private foundations that elect to terminate their private foundation status pursuant to the 60-month procedure provided in section 507(b)(1)(B), see the regulations under such section.

(3) ***Exclusion of unusual grants.*** For purposes of applying the tests for support set forth in paragraphs (a)(2) and (a)(3) of this section, one or more contributions may be excluded from the numerator of the one-third support fraction and from the denominator of both the one-third support and not-more-than-one-third support fractions only if such a contribution meets the requirements of this paragraph (c)(3). The exclusion provided by this paragraph (c)(3) is generally intended to apply to substantial contributions and bequests from disinterested parties, which contributions or bequests—

(i) Are attracted by reason of the publicly supported nature of the organization;

(ii) Are unusual or unexpected with respect to the amount thereof; and

(iii) Would by reason of their size, adversely affect the status of the organization as normally meeting the one-third support test for any of the applicable periods described in this paragraph (c) or paragraph (d) of this section. In the case of a grant (as defined in § 1.509(a)-3(g)) that meets the requirements of this paragraph (c)(3), if the terms of the granting instrument require that the funds be paid to the recipient organization over a period of years, the grant amounts may be excluded for such year or years in which they would otherwise be includible in computing support under the method of accounting on the basis of which the organization regularly computes its income in keeping its books under section 446. However, no item described in section 509(a)(2)(B) may be excluded under this paragraph (c)(3). The provisions of this paragraph (c)(3) shall apply to exclude unusual grants made during any of the applicable periods described in this paragraph (c) or paragraph (d) of this section. See paragraph (c)(5) of this section as to reliance by a grantee organization upon an unusual grant ruling under this paragraph (c)(3).

(4) ***Determining factors.*** In determining whether a particular contribution may be excluded under paragraph (c)(3) of this section, all pertinent facts and circumstances will be taken into consideration. No single factor will necessarily be determinative. Among the factors to be considered are—

(i) Whether the contribution was made by any person (or persons standing in a relationship to such person which is described in section 4946(a)(1)(C) through 4946(a)(1)(G)) who created the organization, previously contributed a substantial part of its support or endowment, or stood in a position of authority, such as a foundation manager (within the meaning of section 4946(b)), with respect to the organization. A contribution made by a person other than those persons described in this paragraph (c)(4)(i) will ordinarily be given more favorable consideration than a contribution made by a person described in this paragraph (c)(4)(i);

(ii) Whether the contribution was a bequest or an inter vivos transfer. A bequest will ordinarily be given more favorable consideration than an inter vivos transfer;

(iii) Whether the contribution was in the form of cash, readily marketable securities, or assets which further the exempt purposes of the organization, such as a gift of a painting to a museum;

(iv) Except in the case of a new organization, whether, prior to the receipt of the particular contribution, the organization has carried on an actual program of public solicitation and exempt activities and has been able to attract a significant amount of public support;

(v) Whether the organization may reasonably be expected to attract a significant amount of public support subsequent to the particular contribution. In this connection, continued reliance on unusual grants to fund an organization's current operating expenses (as opposed to providing new endowment funds) may be evidence that the organization cannot reasonably be expected to attract future support from the general public;

(vi) Whether, prior to the year in which the particular contribution was received, the organization met the one-third support test described in paragraph (a)(2) of this section without the benefit of any exclusions of unusual grants pursuant to paragraph (c)(3) of this section;

(vii) Whether neither the contributor nor any person standing in a relationship to such contributor which is described in section 4946(a)(1)(C) through 4946(a)(1)(G) continues directly or indirectly to exercise control over the organization;

(viii) Whether the organization has a representative governing body as described in § 1.509(a)-3(d)(3)(i); and

(ix) Whether material restrictions or conditions (within the meaning of § 1.507-2(a)(7)) have been imposed by the transferor upon the transferee in connection with such transfer.

(5) ***Grantors and contributors.*** Prior to the making of any grant or contribution expected to meet the requirements for exclusion under paragraph (c)(3) of this section, a potential grantee organization may request a determination whether such grant or contribution may be so excluded. Requests for such determination may be filed by the grantee organization in the time and manner specified by revenue procedure or other guidance published in the Internal Revenue Bulletin. The issuance of such determination will be at the sole discretion of the Commissioner. The organization must submit all information necessary to make a determination of the applicability of paragraph (c)(3) of this section, including all information relating to the factors described in paragraph (c)(4) of this section. If a favorable determination is issued, such determination may be relied upon by the grantor or contributor of the particular contribution in question for purposes of sections 170, 507, 545(b)(2), 642(c), 4942, 4945, 4966, 2055, 2106(a)(2), and 2522 and by the grantee organization for purposes of paragraph (c)(3) of this section.

(6) ***Examples.*** The application of the principles set forth in this paragraph is illustrated by the examples as follows. For purposes of these examples, the term *general public* is defined as persons other than disqualified persons and other than persons from whom the foundation received gross receipts in excess of the greater of $5,000 or 1 percent of its support in any taxable year, the term *gross investment income* is as defined in section 509(e), and the term *gross receipts* is limited to receipts from activities which are not unrelated trades or businesses (within the meaning of section 513).

Example 1. (i) For the years 2008 through 2012, X, an organization exempt under section 501(c)(3) that makes scholarship grants to needy students of a particular city, received support from the following sources:

2008:	
Gross receipts (general public)	$35,000
Contributions (substantial contributors)	36,000
Gross investment income	29,000
Total support	100,000
2009:	
Gross receipts (general public)	34,000
Contributions (substantial contributors)	35,000
Gross investment income	31,000
Total support	100,000

2010:	
Gross receipts (general public)	35,000
Contributions (substantial contributors)	30,000
Gross investment income	35,000
Total support	100,000
2011:	
Gross receipts (general public)	33,000
Contributions (substantial contributors)	32,000
Gross investment income	35,000
Total support	100,000
2012:	
Gross receipts (general public)	31,000
Contributions (substantial contributors)	39,000
Gross investment income	30,000
Total support	100,000

(ii) In applying section 509(a)(2) to the taxable year 2012, on the basis of paragraph (c)(1)(i) of this section, the total amount of support from gross receipts from the general public ($168,000) for the period 2008 through 2012, was more than one third, and the total amount of support from gross investment income ($160,000) was less than one third, of X's total support for the same period ($500,000). For the taxable years 2012 and 2013, X is therefore considered normally to receive more than one third of its support from the public sources described in section 509(a)(2)(A) and less than one third of its support from items described in section 509(a)(2)(B). The fact that X received less than one third of its support from section 509(a)(2)(A) sources in 2012 and more than one third of its support from items described in section 509(a)(2)(B) in 2011 does not affect its status because it normally met the applicable tests over a five-year period.

Example 2. Assume the same facts as in *Example 1* except that in 2012, X also received an unexpected bequest of $50,000 from A, an elderly widow who was interested in encouraging the work of X, but had no other relationship to it. Solely by reason of the bequest, A became a disqualified person. X used the bequest to create five new scholarships. Its operations otherwise remained the same. Under these circumstances, if A's bequest is included in X's support calculation, X could not meet the five-year support test because the total amount received from gross receipts from the general public ($168,000) would not be more than one-third of its total support for the five-year period ($550,000). Because A is a disqualified person, her bequest cannot be included in the numerator of the one-third support test under section 509(a)(2)(A). However, based on the factors set forth in paragraph (c)(4) of this section, A's bequest may be excluded as an unusual grant under paragraph (c)(3) of this section. Therefore, X will be considered to have met the support test for the taxable years 2012 and 2013.

Example 3. Y, an organization described in section 501(c)(3), was created by A, the holder of all the common stock in M corporation; B, A's wife; and C, A's business associate. The purpose of Y was to sponsor and equip athletic teams for underprivileged children in the community. Each of the three creators makes small cash contributions to Y. A, B, and C have been active participants in the affairs of Y since its creation. Y regularly raises small amounts of contributions through fundraising drives and selling admission to some of the sponsored sporting events. The operations of Y are carried out on a small scale, usually being restricted to the sponsorship of two to four baseball teams of underprivileged children. In 2009, M recapitalizes and creates a first and second class of 6 percent nonvoting preferred stock, most of which is held by A and B. In 2010, A contributes 49 percent of his common stock in M to Y. A's contribution of M's common stock was substantial and constitutes 90 percent of Y's total support for 2010. A combination of the facts and circumstances described in paragraph (c)(4) of this section preclude A's contribution of M's common stock in 2010 from being excluded as an unusual grant under paragraph (c)(3) of this section for purposes of determining whether Y meets the one-third support test under section 509(a)(2).

Example 4. (i) M is organized in 2009 to promote the appreciation of ballet in a particular region of the United States. Its principal activities consist of erecting a theater for the performance of ballet and the organization and operation of a ballet company. M receives a determination letter that it is an organization described in section 501(c)(3) and that it is a public charity described in section 509(a)(2). The governing body of M consists of nine prominent unrelated citizens residing in the region who have either an expertise in ballet or a strong interest in encouraging appreciation of the art form.
(ii) In 2010, Z, a private foundation, proposes to makes a grant of $500,000 in cash to M to provide sufficient capital for M to commence its activities. Although A, the creator of Z, is one of the nine members of M's governing body, was one of M's original founders, and continues to lend his prestige to M's activities and fund raising efforts, A does not, directly or indirectly, exercise any control over M. M also receives a significant amount of support from a number of smaller contributions and pledges from other members of the general public. M charges admission to the ballet performances to the general public.

(iii) Although the support received in 2010 will not impact M's status as a public charity for its first five taxable years, it will be relevant to the determination of whether M meets the one-third support test under section 509(a)(2) for the 2014 taxable year, using the computation period 2010 through 2014. Within the appropriate timeframe, M may submit a request for a private letter ruling that the $500,000 contribution from Z qualifies as an unusual grant.

(iv) Under the above circumstances, even though A was a founder and member of the governing body of M, M may exclude Z's contribution of $500,000 in 2010 as an unusual grant under paragraph (c)(3) of this section for purposes of determining whether M meets the one-third support test under section 509(a)(2) for 2014.

Example 5. (i) Assume the same facts as *Example 4(i)* except that, in addition, in 2013, B, a widow, passes away and bequeaths $4 million to M. During 2009 through 2013, B made small contributions to M, none exceeding $10,000 in any year. During 2009 through 2013, M received approximately $450,000 from receipts for admissions and contributions from the general public. At the time of B's death, no person standing in a relationship to B described in section 4946(a)(1)(C) through 4946(a)(1)(G) was a member of M's governing body. B's bequest was in the form of cash and readily marketable securities. The only condition placed upon the bequest was that it be used by M to advance the art of ballet.
(ii) Although the support received in 2013 will not impact M's status as a public charity for its first five taxable years, it will be relevant to the determination of whether M meets the one-third support test under section 509(a)(2) for future years. Within the appropriate timeframe, M may submit a request for a private letter ruling that the $4 million bequest from B qualifies as an unusual grant.

(iii) Under the above circumstances, M may exclude B's bequest of $4 million in 2013 as an unusual grant under paragraph (c)(3) of this section for purposes of determining whether M meets the one-third support test under section 509(a)(2) for 2014 and subsequent years.

Example 6. (i) N is a research organization that was created by A in 2009 for the purpose of carrying on economic studies primarily through persons receiving grants from N and engaging in the sale of economic publications. N received a determination letter that it is described in section 501(c)(3) and that it is a public charity described in 509(a)(2). N's five-member governing body consists of A; A's sons, B and C; and two unrelated economists. In 2009, A made a contribution to N of $100,000 to help establish the organization. During 2009 through 2013, A made annual contributions to N averaging $20,000 a year. During the same period, N received annual contributions from members of the general public averaging $15,000 per year and receipts from the sale of its publications averaging $50,000 per year. In 2013, B made an inter vivos contribution to N of $600,000 in cash and readily marketable securities.
(ii) Although the support received in 2013 will not impact N's status as a public charity for its first five taxable years, it will be relevant to the determination of whether N meets the one-third support test under section 509(a)(2) for future years. In determining whether B's contribution of $600,000 in 2013 may be excluded as an unusual grant, the support N received in 2009 through 2013 is relevant in considering the factor described in paragraph (c)(4)(vi) of this section, notwithstanding that N received a determination letter that it is described in section 509(a)(2).

(iii) Under the above circumstances, in particular the facts that B is a disqualified person described in section 4946(a)(1)(D) and N does not have a representative governing body as described in paragraphs (c)(4)(viii) and (d)(3)(i) of this section, N cannot exclude B's contribution of $600,000 in 2013 as an unusual grant under paragraph (c)(3) of this section for purposes of determining whether N meets the one-third support test under section 509(a)(2) for 2014 and future years.

Example 7. (i) O is an educational organization created in 2009. O received a determination letter that it is described in section 501(c)(3) and that it is a public charity described in section 509(a)(2). The governing body of O has 9 members, consisting of A, a prominent civic leader, and 8 other unrelated civic leaders and educators in the community, all of whom participated in the creation of O. During 2009 through 2013, the principal source of income for O has been receipts from the sale of its educational periodicals. These sales have amounted to $200,000 for this period. Small contributions amounting to $50,000 have also been received during the same period from members of the governing body, including A, as well as other members of the general public.
(ii) In 2013, A contributed $750,000 of the nonvoting stock of S, a closely held corporation, to O. A retained a substantial portion of the voting stock of S. By a majority vote, the governing body of O decided to retain the S stock for a period of at least five years.

(iii) Although the support received in 2013 will not impact O's status as a public charity for its first five taxable years, it will be relevant to the determination of whether O meets the one-third support test under section 509(a)(2) for future years. In determining whether A's contribution of the S stock in 2013 may be excluded as an unusual grant, the support O received in 2009 through 2013 is relevant in considering the factor described in paragraph (c)(4)(vi) of this section, notwithstanding that O received a determination letter that it is described in section 509(a)(2).

(iv) Under the above circumstances, in particular the facts that A is a foundation manager within the meaning of section 4946(b) and A's contribution is in the form of closely held stock, O cannot exclude A's contribution of the S stock in 2013 as an unusual grant under paragraph (c)(3) of this section for purposes of determining whether O meets the one-third support test under section 509(a)(2) for 2014 and future years.

(d) ***Definition of normally; first five years of an organization's existence*** —

(1) ***In general.*** An organization will “normally” meet the one-third support test and the not-more-than-one-third support test during its first five taxable years as a section 501(c)(3) organization if the organization can reasonably be expected to meet the requirements of the one-third support test and the not-more-than-one-third support test during that period. With respect to an organization's sixth

taxable year, the general definition of normally in paragraph (c)(1) of this section applies. Alternatively, the organization shall be treated as normally meeting the one-third support test and the not-more-than-one-third support test for its sixth taxable year (but not its seventh taxable year) if it meets the one-third support test and the not-more-than-one-third support test under the definition of normally set forth in paragraph (c)(1)(i) of this section for its fifth taxable year (based on support received in its first through fifth taxable years). If a new publicly supported organization described under section 509(a)(2) cannot meet the requirements of the one-third support test or the not-more-than-one-third support test for its sixth taxable year using either the general definition of normally in paragraph (c)(1) of this section or the alternate rule above (effectively failing to meet a public support test for both its fifth and sixth years), it will be reclassified as a private foundation as of the first day of its sixth taxable year only for purposes of sections 507, 4940, and 6033. Such an organization must file a Form 990-PF, "Return of Private Foundation or Section 4947(a)(1) Nonexempt Charitable Trust Treated as a Private Foundation," and is liable for the net investment tax imposed by section 4940 and, if applicable, the private foundation termination tax imposed by section 507(c), for its sixth taxable year. Beginning the first day of its seventh taxable year, the organization will be treated as a private foundation for all purposes.

(2) ***Basic consideration.*** In determining whether an organization can reasonably be expected (within the meaning of paragraph (c)(1)(i) of this section) to meet the one-third support test under section 509(a)(2)(A) and the not-more-than-one-third support test under section 509(a)(2)(B) described in paragraph (a) of this section during its first five taxable years, the basic consideration is whether its organizational structure, current or proposed programs or activities, and actual or intended method of operation are such as to attract the type of broadly based support from the general public, public charities, and governmental units that is necessary to meet such tests. The factors that are relevant to this determination, and the weight accorded to each of them, may differ from case to case, depending on the nature and functions of the organization. An organization cannot reasonably be expected to meet the one-third support test and the not-more-than-one-third support test where the facts indicate that an organization is likely during its first five taxable years to receive less than one-third of its support from permitted sources (subject to the limitations of paragraph (b) of this section) or to receive more than one-third of its support from items described in section 509(a)(2)(B).

(3) ***Factors taken into account.*** All pertinent facts and circumstances shall be taken into account under paragraph (d)(2) of this section in determining whether the organizational structure, programs or activities, and method of operation of an organization are such as to enable it to meet the tests under section 509(a)(2) during its first five taxable years. Some of the pertinent factors are:

(i) Whether the organization has or will have a representative governing body which is comprised of public officials, or individuals chosen by public officials acting in their capacity as such; of persons having special knowledge in the particular field or discipline in which the organization is operating; of community leaders, such as elected officials, clergymen, and educators; or, in the case of a membership organization, of individuals elected pursuant to the organization's governing instrument or bylaws by a broadly based membership. This characteristic does not exist if the membership of the organization's governing body is such as to indicate that it represents the personal or private interests of disqualified persons, rather than the interests of the community or the general public.

(ii) Whether a substantial portion of the organization's initial funding is to be provided by the general public, by public charities, or by government grants, rather than by a limited number of grantors or contributors who are disqualified persons with respect to the organization. The fact

that the organization plans to limit its activities to a particular community or region or to a special field which can be expected to appeal to a limited number of persons will be taken into consideration in determining whether those persons providing the initial support for the organization are representative of the general public. On the other hand, the subsequent sources of funding which the organization can reasonably expect to receive after it has become established and fully operational will also be taken into account.

(iii) Whether a substantial proportion of the organization's initial funds are placed, or will remain, in an endowment, and whether the investment of such funds is unlikely to result in more than one third of its total support being received from items described in section 509(a)(2)(B).

(iv) In the case of an organization that carries on fundraising activities, whether the organization has developed a concrete plan for solicitation of funds from the general public on a community or area-wide basis; whether any steps have been taken to implement such plan; whether any firm commitments of financial or other support have been made to the organization by civic, religious, charitable, or similar groups within the community; and whether the organization has made any commitments to, or established any working relationships with, those organizations or classes of persons intended as the future recipients of its funds.

(v) In the case of an organization that carries on community services, such as combating community deterioration in an economically depressed area that has suffered a major loss of population and jobs, whether the organization has a concrete program to carry out its work in the community; whether any steps have been taken to implement that program; whether it will receive any part of its funds from a public charity or governmental agency to which it is in some way held accountable as a condition of the grant or contribution; and whether it has enlisted the sponsorship or support of other civic or community leaders involved in community service programs similar to those of the organization.

(vi) In the case of an organization that carries on educational or other exempt activities for, or on behalf of, members, whether the solicitation for dues-paying members is designed to enroll a substantial number of persons in the community, area, profession, or field of special interest (depending on the size of the area and the nature of the organization's activities); whether membership dues for individual (rather than institutional) members have been fixed at rates designed to make membership available to a broad cross-section of the public rather than to restrict membership to a limited number of persons; and whether the activities of the organization will be likely to appeal to persons having some broad common interest or purpose, such as educational activities in the case of alumni associations, musical activities in the case of symphony societies, or civic affairs in the case of parent-teacher associations.

(vii) In the case of an organization that provides goods, services, or facilities, whether the organization is or will be required to make its services, facilities, performances, or products available (regardless of whether a fee is charged) to the general public, public charities, or governmental units, rather than to a limited number of persons or organizations; whether the organization will avoid executing contracts to perform services for a limited number of firms or governmental agencies or bureaus; and whether the service to be provided is one which can be expected to meet a special or general need among a substantial portion of the general public.

(4) ***Example.*** The application of this paragraph (d) may be illustrated by the following example:

> *Example.* (i) Organization X was formed in January 2008 and uses a taxable year ending

December 31. After September 9, 2008, and before December 31, 2008, Organization X filed Form 1023 requesting recognition of exemption as an organization described in section 501(c)(3) and in section 509(a)(2). In its application, Organization X established that it can reasonably be expected to operate as a publicly supported organization under paragraph (d) of this section. Subsequently, Organization X received a ruling or determination letter that it is an organization described in sections 501(c)(3) and 509(a)(2) effective as of the date of its formation.
(ii) Organization X is described in section 509(a)(2) for its first five taxable years (for the taxable years ending December 31, 2008, through December 31, 2012).

(iii) Organization X can qualify as a publicly supported organization beginning with the taxable year ending December 31, 2013, if Organization X can meet the requirements of either § 1.170A-9(f)(2) or § 1.170A-9(f)(3) or paragraphs (a) and (b) of this section for the taxable years ending December 31, 2009, through December 31, 2013, or for the taxable years ending December 31, 2008, through December 31, 2012.

(e) ***Determinations on foundation classification and reliance.***

(1) A ruling or determination letter that an organization is described in section 509(a)(2) may be issued to an organization. Such determination may be made in conjunction with the recognition of the organization's tax-exempt status or at such other time as the organization believes it is described in section 509(a)(2). The ruling or determination letter that the organization is described in section 509(a)(2) may be revoked if, upon examination, the organization has not met the requirements of this section. The ruling or determination letter that the organization is described in section 509(a)(2) also may be revoked if the organization's application for a ruling or determination contained one or more material misstatements or omissions of fact or such application was part of a scheme or plan to avoid or evade any provision of the Code. The revocation of the determination that an organization is described in section 509(a)(2) does not preclude revocation of the determination that the organization is described in section 501(c)(3).

(2) ***Status of grantors or contributors.***

(i) For purposes of sections 170, 507, 545(b)(2), 642(c), 4942, 4945, 4966, 2055, 2106(a)(2), and 2522, grantors and contributors may rely upon a determination letter or ruling that an organization is described in section 509(a)(2) until the IRS publishes notice of a change of status (for example, in the Internal Revenue Bulletin or Publication 78, “Cumulative List of Organizations described in Section 170(c) of the Internal Revenue Code of 1986,” which can be searched at *http://www.irs.gov*). For this purpose, grantors or contributors may also rely on an advance ruling that expires on or after June 9, 2008. However, a grantor or contributor may not rely on such an advance ruling or any determination letter or ruling if the grantor or contributor was responsible for, or aware of, the act or failure to act that resulted in the organization's loss of classification under section 509(a)(2) or acquired knowledge that the IRS had given notice to such organization that it would be deleted from such classification.

(ii) A grantor or contributor (other than one of the organization's founders, creators, or foundation managers (within the meaning of section 4946(b))) will not be considered to be responsible for, or aware of, the act or failure to act that resulted in the loss of the organization's publicly

supported classification under section 509(a)(2) if such grantor or contributor has made such grant or contribution in reliance upon a written statement by the grantee organization that such grant or contribution will not result in the loss of such organization's classification as not a private foundation under section 509(a). Such statement must be signed by a responsible officer of the grantee organization and must set forth sufficient information, including a summary of the pertinent financial data for the five taxable years immediately preceding the current taxable year, to assure a reasonably prudent person that his grant or contribution will not result in the loss of the grantee organization's classification as a publicly supported organization under section 509(a). If a reasonable doubt exists as to the effect of such grant or contribution, or if the grantor or contributor is one of the organization's founders, creators, or foundation managers, the procedure for requesting a determination letter set forth in paragraph (c)(5) of this section may be followed by the grantee organization for the protection of the grantor or contributor.

(3) ***Examples.*** The provisions of this paragraph (e) may be illustrated by the following examples:

Example 1. Y, a calendar year organization described in section 501(c)(3), is created in February 2008 for the purpose of displaying African art. On its exemption application Y shows, under penalties of perjury, that it can reasonably, in accordance with the requirements of paragraph (d) of this section, expect to receive support from the public in 2008 through 2012 that will satisfy the one-third support and not-more-than-one-third support tests described in section 509(a)(2) for its first five taxable years, 2008 through 2012. Y may therefore receive a determination that it meets the requirements of paragraph (a) of this section for its first five taxable years (2008, 2009, 2010, 2011, and 2012), regardless of the public support Y in fact receives during this period.

Example 2. Z, a calendar year organization described in section 501(c)(3), is created in July 2008. On its exemption application Z shows, under penalties of perjury, that it can reasonably, in accordance with the requirements of paragraph (d) of this section, expect to receive support from the public in 2008 through 2012 that will satisfy the one-third support and not-more-than-one-third support tests described in section 509(a)(2) for its first five taxable years, 2008 through 2012. Z receives a determination that it is described in section 509(a)(2). However, the support actually received from the public over Z's first five taxable years (2008 through 2012) does not satisfy the one-third support and not-more-than-one-third support tests described in section 509(a)(2). Moreover, the support Z receives from 2009 through 2013, also does not meet the one-third support and not-more-than-one-third support tests described in section 509(a)(2). Z is described in section 509(a)(2) during its first five years for all purposes. However, because Z has not met the requirements of paragraph (a) of this section for either 2008 through 2012 or 2009 through 2013, Z is not described in section 509(a)(2) for its taxable year 2013. If Z is not described in section 509(a)(1), section 509(a)(3), or section 509(a)(4), then Z will be reclassified as a private foundation as of the first day of 2013. However, for 2013, Z will be treated as a private foundation only for purposes of sections 507, 4940 and 6033. Z must file Form 990-PF and will be liable for the net investment tax imposed by section 4940 and, if applicable, the private foundation termination tax imposed by section 507(c) for 2013. For 2014 and succeeding years, Z will be treated as a private foundation for all purposes (except as provided in paragraph (e)(2) of this section with respect to grantors and contributors).

(f) ***Gifts and contributions distinguished from gross receipts —***

(1) ***In general.*** In determining whether an organization normally receives more than one-third of its support from permitted sources, all *gifts* and *contributions* (within the meaning of section 509(a)(2)(A)(i)) received from permitted sources, are includible in the numerator of the support fraction in each taxable year. However, *gross receipts* (within the meaning of section 509(a)(2)(A)(ii)) from admissions, sales of merchandise, performance of services, or furnishing of facilities, in an activity which is not an unrelated trade or business, are includible in the numerator of the support fraction in any taxable year only to the extent that such gross receipts do not exceed the limitation with respect to the greater of $5,000 or 1 percent of support which is describing paragraph (b) of this section. The terms *gifts* and *contributions* shall, for purposes of section 509(a)(2), have the same meaning as such terms have under section 170(c) and also include bequests, legacies, devises, and transfers within the meaning of section 2055 or 2106(a)(2). Thus, for purposes of section 509(a)(2)(A), any payment of money or transfer of property without adequate consideration shall be considered a *gift* or *contribution.* Where payment is made or property transferred as consideration for admissions, sales of merchandise, performance of services, or furnishing of facilities to the donor, the status of the payment or transfer under section 170(c) shall determine whether and to what extent such payment or transfer constitutes a *gift* or *contribution* under section 509(a)(2)(A)(i) as distinguished from *gross receipts* from related activities under section 509(a)(2)(A)(ii). For purposes of section 509(a)(2), the term *contributions* includes qualified sponsorship payments (as defined in § 1.513-4) in the form of money or property (but not services).

(2) ***Valuation of property.*** For purposes of section 509(a)(2), the amount includible in computing support with respect to gifts, grants or contributions of property or use of such property shall be the fair market or rental value of such property at the date of such gift or contribution.

(3) ***Examples.*** The provisions of this paragraph (f) may be illustrated by the following examples:

Example 1. P is a local agricultural club described in section 501(c)(3). In order to encourage interest and proficiency by young people in farming and raising livestock, it makes awards at its annual fair for outstanding specimens of produce and livestock. Most of these awards are cash or other property donated by local businessmen. When the awards are made, the donors are given recognition for their donations by being identified as the donor of the award. The recognition given to donors is merely incidental to the making of the award to worthy youngsters. For these reasons, the donations will constitute *contributions* for purposes of section 509(a)(2)(A)(i). The amount includible in computing support with respect to such contributions is equal to the cash contributed or the fair market value of other property on the dates contributed.

Example 2. Q, a performing arts center, enters into a contract with a large company to be the exclusive sponsor of the center's theatrical events. The company makes a payment of cash and products in the amount of $100,000 to Q, and in return, Q agrees to make a broadcast announcement thanking the company before each show and to provide $2,000 of advertising in the show's program (2% of $100,000 is $2,000). The announcement constitutes use or acknowledgment pursuant to section 513(i)(2). Because the value of the advertising does not exceed 2% of the total payment, the entire $100,000 is a qualified sponsorship payment under section 513(i), and $100,000 is treated as a contribution for purposes of section 509(a)(2)(A)(i).

Example 3. R, a charity, enters into a contract with a law firm to be the exclusive sponsor of the charity's outreach program. Instead of making a cash payment, the law firm agrees to perform $100,000 of legal services for the charity. In return, R agrees to acknowledge the law firm in all

its informational materials. The total fair market value of the legal services, or $100,000, is a qualified sponsorship payment under section 513(i), but no amount is treated as a contribution under section 509(a)(2)(A)(i) because the contribution is of services.

(g) *Grants distinguished from gross receipts* —

(1) ***In general.*** In determining whether an organization normally receives more than one-third of its support from public sources, all *grants* (within the meaning of section 509(a)(2)(A)(i)) received from permitted sources are includible in full in the numerator of the support fraction in each taxable year. However, *gross receipts* (within the meaning of section 509(a)(2)(A)(ii)) from admissions, sales of merchandise, performance of services, or furnishing of facilities, in an activity which is not an unrelated trade or business, are includible in the numerator of the support fraction in any taxable year only to the extent that such gross receipts do not exceed the limitation with respect to the greater of $5,000 or 1 percent of support which is described in paragraph (b) of this section. A grant is normally made to encourage the grantee organization to carry on certain programs or activities in furtherance of its exempt purposes. It may contain certain terms and conditions imposed by the grantor to insure that the grantee's programs or activities are conducted in a manner compatible with the grantor's own programs and policies and beneficial to the public. The grantee may also perform a service or produce a work product which incidentally benefits the grantor. Because of the imposition of terms and conditions, the frequent similarlity of public purposes of grantor and grantee, and the possibility of benefit resulting to the grantor, amounts received as grants *for* the carrying on of exempt activities are sometimes difficult to distinguish from amounts received as gross receipts *from* the carrying on of exempt activities. The fact that the agreement, pursuant to which payment is made, is designated a *contract* or a *grant* is not controlling for purposes of classifying the payment under section 509(a)(2).

(2) ***Distinguishing factors.*** For purposes of section 509(a)(2)(A)(ii), in distinguishing the term *gross receipts* from the term *grants,* the term *gross receipts* means amounts received from an activity which is not an unrelated trade or business, if a specific service, facility, or product is provided to serve the direct and immediate needs of the payor, rather than primarily to confer a direct benefit upon the general public. In general, payments made primarily to enable the payor to realize or receive some economic or physical benefit as a result of the service, facility, or product obtained will be treated as *gross receipts* with respect to the payee. The fact that a profitmaking organization would, primarily for its own economic or physical betterment, contract with a nonprofit organization for the rendition of a comparable service, facility or product from such organization constitutes evidence that any payments received by the nonprofit payee organization (whether from a governmental unit, a nonprofit or a profitmaking organization) for such services, facilities or products are primarily for the economic or physical benefit of the payor and would therefore be considered *gross receipts,* rather than *grants* with respect to the payee organization. For example, if a nonprofit hospital described in section 170(b)(1)(A)(iii) engages an exempt research and development organization to develop a more economical system of preparing food for its own patients and personnel, and it can be established that a hospital operated for profit might engage the services of such an organization to perform a similar benefit for its economic betterment, such fact would constitute evidence that the payments received by the research and development organization constitute *gross receipts,* rather than *grants.* Research leading to the development of tangible products for the use or benefit of the payor will generally be treated as a service provided to serve the direct and immediate needs of the payor, while basic research or studies carried on in the physical or social sciences will generally be treated as primarily to confer a direct benefit upon the general public.

(3) ***Examples.*** The application of this paragraph may be illustrated by the following examples:

Example 1. M, a nonprofit research organization described in section 501(c)(3), engages in some contract research. It receives funds from the government to develop a specific electronic device needed to perfect articles of space equipment. The initiative for the project came solely from the government. Furthermore, the government could have contracted with profitmaking research organizations which carry on similar activities. The funds received from the government for this project are gross receipts and do not constitute *grants* within the meaning of section 509(a)(2)(A)(i). M provided a specific product at the government's request and thus was serving the direct and immediate needs of the payor within the meaning of subparagraph (2) of this paragraph.

Example 2. N is a nonprofit educational organization described in section 501(c)(3). Its principal activity is to operate institutes to train employees of various industries in the principles of management and administration. The government pays N to set up a special institute for certain government employees and to train them over a 2-year period. Management training is also provided by profitmaking organizations. The funds received are included as *gross receipts*. The particular services rendered were to serve the direct and immediate needs of the government in the training of its employees within the meaning of subparagraph (2) of this paragraph.

Example 3. The Office of Economic Opportunity makes a community action program grant to O, an organization described in section 509(a)(1). O serves as a *delegate agency* of OEO for purposes of financing a local community action program. As part of this program, O signs an agreement with X, an educational and charitable organization described in section 501(c)(3), to carry out a housing program for the benefit of poor families. Pursuant to this agreement, O pays X out of the funds provided by OEO to build or rehabilitate low income housing and to provide advisory services to other nonprofit organizations in order for them to meet similar housing objectives, all on a nonprofit basis. Payments made from O to X constitute *grants* for purposes of section 509(a)(2)(A) because such program is carried on primarily for the direct benefit of the community.

Example 4. P is an educational institute described in section 501(c)(3). It carries on studies and seminars to assist institutions of higher learning. It receives funds from the government to research and develop a program of black studies for institutions of higher learning. The performance of such a service confers a direct benefit upon the public. Because such program is carried on primarily for the direct benefit of the public, the funds are considered a *grant*.

Example 5. Q is an organization described in section 501(c)(3) which carries on medical research. Its efforts have primarily been directed toward cancer research. Q sought funds from the government for a particular project being contemplated in connection with its work. In order to encourage its activities, the government gives Q the sum of $25,000. The research project sponsored by government funds is primarily to provide direct benefit to the general public, rather than to serve the direct and immediate needs of the government. The funds are therefore considered a *grant*.

Example 6. R is a public service organization described in section 501(c)(3) and composed of State and local officials involved in public works activities. The Bureau of Solid Waste, Management of the Department of Health, Education, and Welfare paid R to study the feasibility of a particular system for disposal of solid waste. Upon completion of the study, R was required to prepare a final report setting forth its findings and conclusions. Although R is providing the Bureau of Solid Waste Management with a final report, such report is the result of basic

research and study in the physical sciences and is primarily to provide direct benefit to the general public by serving to further the general functions of government, rather than a direct and immediate governmental needs. The funds paid to R are therefore a *grant* within the meaning of section 509(a)(2).

Example 7. R is the public service organization referred to in example 6. W, a municipality described in section 170(c)(1), decides to construct a sewage disposal plant. W pays R to study a number of possible locations for such plant and to make recommendations to W, based upon a number of factors, as to the best location. W instructed R that in making its recommendation, primary consideration should be given to minimizing the costs of the project to W. Since the study commissioned by W was primarily directed toward producing an economic benefit to W in the form of minimizing the costs of its project, the services rendered are treated as serving W's direct and immediate needs and are includible as *gross receipts* by R.

Example 8. S in an organization described in section 501(c)(3). It was organized and is operated to further African development and strengthen understanding between the United States and Africa. To further these purposes, S receives funds from the Agency for International Development and the Department of State under which S is required to carry out the following programs: Selection, transportation, orientation, counseling, and language training of African students admitted to American institutions of higher learning; payment of tuition, other fees, and maintenance of such students; and operation of schools and vocational training programs in underdeveloped countries for residents of those countries. Since the programs carried on by S are primarily to provide direct benefit to the general public, all of the funds received by S from the Federal agencies are considered *grants* within the meaning of section 509(a)(2).

(h) ***Definition of membership fees*** —

(1) ***General rule.*** For purposes of section 509(a)(2), the fact that a membership organization provides services, admissions, facilities, or merchandise to its members as part of its overall activities will not, in itself, result in the classification of fees received from members as *gross receipts* rather than *membership fees.* If an organization uses membership fees as a means of selling admissions, merchandise, services, or the use of facilities to members of the general public who have no common goal or interest (other than the desire to purchase such admissions, merchandise, services, or use of facilities), then the income received from such fees shall not constitute *membership fees* under section 509(a)(2)(A)(i), but shall, if from a related activity, constitute *gross receipts* under section 509(a)(2)(A)(ii). On the other hand, to the extent the basic purpose for making the payment is to provide support for the organization rather than to purchase admissions, merchandise, services, or the use of facilities, the income received from such payment shall constitute *membership fees.*

(2) ***Examples.*** The provisions of this paragraph may be illustrated by the following examples:

Example 1. M is a symphony society described in section 501(c)(3). Its primary purpose is to support the local symphony orchestra. The organization has three classes of membership. Contributing members pay annual dues of $10, sustaining members pay $25, and honorary members pay $100. The dues are placed in a maintenance fund which is used to provide financial assistance in underwriting the orchestra's annual deficit. Members have the privilege of purchasing subscriptions to the concerts before they go on sale to the general public, but must pay the same price as any other member of the public. They also are entitled to attend a number of rehearsals each season without charge. Under these circumstances, M's receipts from the members constitute *membership fees* for purposes of section 509(a)(2)(A)(i).

Example 2. N is a theater association described in section 501(c)(3). Its purpose is to support a repertory company in the community in order to make live theatrical performances available to the public. The organization sponsors six plays each year. Members of the organization are entitled to a season subscription to the plays. The fee paid as dues approximates the retail price of the six plays, less a 10-percent discount. Tickets to each performance are also sold directly to the general public. The organization also holds a series of lectures on the theater which members may attend. Under these circumstances, the fees paid by members as dues will be considered *gross receipts* from a related activity. Although the fees are designated as membership fees, they are actually admissions to a series of plays.

(i) ***Bureau*** defined—

(1) ***In general.*** The term *any bureau or similar agency of a governmental unit* (within the meaning of section 509(a)(2)(A)(ii)), refers to a specialized operating unit of the executive, judicial, or legislative branch of government where business is conducted under certain rules and regulations. Since the term *bureau* refers to a unit functioning at the operating, as distinct from the policymaking, level of government, it is normally descriptive of a subdivision of a department of government. The term *bureau,* for purposes of section 509(a)(2)(A)(ii), would therefore not usually include those levels of government which are basically policymaking or administrative, such as the office of the Secretary or Assistant Secretary of a department, but would consist of the highest operational level under such policymaking or administrative levels. Each subdivision of a larger unit within the Federal Government, which is headed by a Presidential appointee holding a position at or above Level V of the Executive Schedule under 5 U.S.C. 5316, will normally be considered an administrative or policymaking, rather than an operating, unit. Amounts received from a unit functioning at the policymaking or administrative level of government will be treated as received from one bureau or similar agency of such unit. Units of a governmental agency above the operating level shall be aggregated and considered a separate bureau for this purpose. Thus, an organization receiving gross receipts from both a policymaking or administrative unit and an operational unit of a department will be treated as receiving gross receipts from two *bureaus* within the meaning of section 509(a)(2)(A)(ii). For purposes of this subparagraph, the Departments of Air Force, Army, and Navy are separate departments and each is considered as having its own policymaking, administrative, and operating units.

(2) ***Examples.*** The provisions of this paragraph may be illustrated by the following examples:

Example 1. The Bureau of Health Insurance is considered a *bureau* within the meaning of section 509(a)(2)(A)(ii). It is a part of the Department of Health, Education, and Welfare, whose Secretary performs a policymaking function, and is under the Social Security Administration, which is basically an administrative unit. The Bureau of Health Insurance is in the first operating level within the Social Security Administration. Similarly, the National Cancer Institute would be considered a *bureau,* as it is an operating part of the National Institutes of Health within the Department of Health, Education, and Welfare.

Example 2. The Bureau for Africa and the Bureau for Latin America are considered *bureaus* within the meaning of section 509(a)(2)(A)(ii). Both are separate operating units under the administrator of the Agency for International development, a policymaking official. If an organization received gross receipts from both of these bureaus, the amount of gross receipts received from each would be subject to the greater of $5,000 or 1 percent limitation under section 509(a)(2)(A)(ii).

Example 3. The Bureau of International Affairs of the Civil Aeronautics Board is considered a *bureau* within the meaning of section 509(a)(2)(A)(ii). It is an operating unit under the administrative office of the Executive Director. The subdivisions of the Bureau of International Affairs are Geographic Areas and Project Development Staff. If an organization received gross receipts from these subdivisions, the total gross receipts from these subdivisions would be considered gross receipts from the same *bureau,* the Bureau of International Affairs, and would be subject to the greater of $5,000 or 1 percent limitation under section 509(a)(2)(A)(ii).

Example 4. The Department of Mental Health, a State agency which is an operational part of State X's Department of Public Health, is considered a *bureau.* The Department of Public Health is basically an administrative agency and the Department of Mental Health is at the first operational level within it.

Example 5. The Aeronautical Systems Division of the Air Force Systems Command, and other units on the same level, are considered separate *bureaus* with the meaning of section 509(a)(2)(A)(ii). They are part of the Department of the Air Force which is a separate department for this purpose, as are the Army and Navy. The Secretary and the Under Secretary of the Air Force perform the policymaking function, the Chief of Staff and the Air Force Systems Command are basically administrative, having a comprehensive complement of staff functions to provide administration for the various divisions. The Aeronautical Systems Division and other units on the same level are thus the first operating level, as evidenced by the fact that they are the units that let contracts and perform the various operating functions.

Example 6. The Division of Space Nuclear Systems, the Division of Biology and Medicine, and other units on the same level within the Atomic Energy Commission are each separate *bureaus* within the meaning of section 509(a)(2)(A)(ii). The Commissioners (which make up the Commission) are the policymakers. The general manager and the various assistant general managers perform the administrative function. The various divisions perform the operating function as evidenced by the fact that each has separate programs to pursue and contracts specifically for these various programs.

(j) ***Grants from public charities*** —

(1) ***General rule.*** For purposes of the one-third support test in section 509(a)(2)(A), grants (as defined in paragraph (g) of this section) received from an organization described in section 509(a)(1) (hereinafter referred to in this subparagraph as a *public charity*) are generally includible in full in computing the numerator of the recipient's support fraction of the taxable year in question. It is sometimes necessary to determine whether the recipient of a grant from a public charity has received such support from the public charity as a grant, or whether the recipient has in fact received such support as an indirect contribution from a donor to the public charity. If the amount received is considered a grant from the public charity, it is fully includible in the numerator of the support fraction under section 509(a)(2)(A). However, if the amount received is considered to be an indirect contribution from one of the public charity's donors which has passed through the public chairty to the recipient organization, such amount will retain its character as a contribution from such donor and, if, for example, the donor is a substantial contributor (as defined in section 507(d)(2)) with respect to the ultimate recipient, such amount shall be excluded from the numerator of the support fraction under section 509(a)(2). If a public charity makes both an indirect contribution from its donor and an additional grant to the ultimate recipient, the indirect contribution shall be treated as made first.

(2) ***Indirect contributions.*** For purposes of subparagraph (1) of this paragraph, an indirect contribution is one which is expressly or impliedly ear-marked by the donor as being for, or for the benefit of, a particular recipient (rather than for a particular purpose).

(3) ***Examples.*** The provisions of this paragraph may be illustrated by the following examples:

Example 1. M, a national foundation for the encouragement of the musical arts, is an organization described in section 170(b)(1)(A)(vi). A gives M a donation of $5,000 without imposing any restrictions or conditions upon the gift. M subsequently makes a $5,000 grant to X, an organization devoted to giving public performances of chamber music. Since the grant to X is treated as being received from M, it is fully includible in the numerator of X's support fraction for the taxable year of receipt.

Example 2. Assume M is the same organization described in example 1. B gives M a donation of $10,000, but requires that M spend the money for the purpose of supporting organizations devoted to the advancement of contemporary American music. M has complete discretion as to the organizations of the type described to which it will make a grant. M decides to make grants of $5,000 each to Y and Z, both being organizations described in section 501(c)(3) and devoted to furthering contemporary American music. Since the grants to Y and Z are treated as being received from M, Y and Z may each include one of the $5,000 grants in the numerator of its support fraction for purposes of section 509(a)(2)(A). Although the donation to M was conditioned upon the use of the funds for a particular purpose, M was free to select the ultimate recipient.

Example 3. N is a national foundation for the encouragement of art and is an organization described in section 170(b)(1)(A)(vi). Grants to N are permitted to be earmarked for particular purposes. O, which is an art workshop devoted to training young artists and claiming status under section 509(a)(2), persuades C, a private foundation, to make a grant of $25,000 to N. C is a disqualified person with respect to O. C made the grant to N with the understanding that N would be bound to make a grant to O in the sum of $25,000, in addition to a matching grant of N's funds to O in the sum of $25,000. Only the $25,000 received directly from N is considered a grant from N. The other $25,000 is deemed an indirect contribution from C to O and is to be excluded from the numerator of O's support fraction.

(k) ***Method of accounting.*** For purposes of section 509(a)(2), an organization's support will be determined under the method of accounting on the basis of which the organization regularly computes its income in keeping its books under section 446. For example, if a grantor makes a grant to an organization payable over a term of years, such grant will be includible in the support fraction of the grantee organization under the method of accounting on the basis of which it regularly computes its income in keeping its books under section 446.

(l) ***Gross receipts from section 513(a) (1), (2), or (3) activities.*** For purposes of section 509(a)(2)(A)(ii), gross receipts from activities described in section 513(a) (1), (2), or (3) will be considered gross receipts from activities which are not unrelated trade or business.

(m) ***Gross receipts distinguished from gross investment income.***

(1) For purposes of section 509(a)(2), where the charitable purpose of an organization described in section 501(c)(3) is accomplished through the furnishing of facilities for a rental fee or loans to a particular class of persons, such as aged, sick, or needy persons, the support received from such persons will be considered *gross receipts* (within the meaning of section 509(d)(2)) from an activity which is not an unrelated trade or business, rather than *gross investment income.* However, if such

organization also furnishes facilities or loans to persons who are not members of such class and such furnishing does not contribute importantly to the accomplishment of such organization's exempt purposes (aside from the need of such organization for income or funds or the use it makes of the profits derived), the support received from such furnishing will be considered *rents* or *interest* and therefore will be treated as *gross investment income* within the meaning of section 509(d)(4), unless such income is included in computing the tax imposed by section 511.

(2) The provisions of this paragraph may be illustrated by the following example:

Example. X, an organization described in section 501(c)(3), is organized and operated to provide living facilities for needy widows of deceased servicemen. X charges such widows a small rental fee for the use of such facilities. Since X is accomplishing its exempt purpose through the rental of such facilities, the support received from the widows is considered *gross receipts* within the meaning of section 509(d)(2). However, if X rents part of its facilities to persons having no relationship to X's exempt purpose, the support received from such rental will be considered *gross investment income* within the meaning of section 509(d)(4), unless such income is included in computing the tax imposed by section 511.

(n) ***Transition rules.***

(1) An organization that received an advance ruling, that expires on or after June 9, 2008, that it will be treated as an organization described in section 509(a)(2) will be treated as meeting the requirements of paragraph (d)(1) of this section for the first five taxable years of its existence as a section 501(c)(3) organization unless the IRS issued to the organization a proposed determination prior to September 9, 2008, that the organization is not described in sections 170(b)(1)(A)(vi) and 509(a)(1) or in section 509(a)(2).

(2) Paragraph (d)(1) of this section shall not apply to an organization that received an advance ruling that expired prior to June 9, 2008, and that did not timely file with the IRS the required information to establish that it is an organization described in sections 170(b)(1)(A)(vi) and 509(a)(1) or in section 509(a)(2).

(3) An organization that fails to meet a public support test for its first taxable year beginning on or after January 1, 2008, under the regulations in this section may use the prior test set forth in §§ 1.509(a)-3(a)(2) and 1.509(a)-3(a)(3) or § 1.170A-9(e)(2) or § 1.170A-9(e)(3) as in effect before September 9, 2008, (as contained in 26 CFR part 1 revised April 1, 2008) to determine whether the organization may be publicly supported for its 2008 taxable year based on its satisfaction of a public support test for taxable year 2007, computed over the period 2003 through 2006.

(4) ***Examples.*** The application of this paragraph (n) may be illustrated by the following examples:

> *Example 1.* (i) Organization M was formed in January 2004, and uses a taxable year ending June 30. Organization M received an advance ruling letter that it is recognized as an organization described in section 501(c)(3) effective as of the date of its formation and that it is treated as a publicly supported organization under section 509(a)(2) during the five-year advance ruling period that will end on June 30, 2008. This date is on or after June 9, 2008.

(ii) Under the transition rule, Organization M is a publicly supported organization described in section 509(a)(2) for the taxable years ending June 30, 2004, through June 30, 2008. Organization M does not need to establish within 90 days after June 30, 2008, that it met a public support test under § 1.170A-9(e) or § 1.509(a)-3, as in effect prior to September 9, 2008, (as contained in 26 CFR part 1 revised April 1, 2008) for its advance ruling period.

(iii) Organization M can qualify as a public charity beginning with the taxable year ending June 30, 2009, if Organization M can meet the requirements of § 1.170A-9(f)(2) or § 1.170A-9(f)(3) or paragraphs (a)(2) and (a)(3) of this section for the taxable years ending June 30, 2005, through June 30, 2009, or for the taxable years ending June 30, 2004, through June 30, 2008. In addition, for its taxable year ending June 30, 2009, Organization M may qualify as a publicly supported organization by availing itself of the transition rule contained in paragraph (n)(iii) of this section, which looks to support received by M in the taxable years ending June 30, 2004, through June 30, 2007.

Example 2. (i) Organization N was formed in January 2000 and uses a December 31 taxable year. Organization N received a final determination that it was recognized as tax-exempt under section 501(c)(3) and as a public charity prior to September 9, 2008.
(ii) For taxable year 2008, Organization N will qualify as publicly supported if it meets the requirements under either § 1.170A-9(f)(2) or § 1.170A-9(f)(3) or paragraphs (a)(2) and (a)(3) of this section for the five-year period January 1, 2004, through December 31, 2008. Organization N will also qualify as publicly supported for taxable year 2008 if it meets the requirements under either § 1.170A-9(e)(2) or § 1.170A-9(e)(3) or §§ 1.509(a)-3(a)(2) and 1.509(a)-3(a)(3) as in effect prior to September 9, 2008, (as contained in 26 CFR part 1 revised April 1, 2008) for taxable year 2007, using the four-year period from January 1, 2003, through December 31, 2006.

(o) ***Applicability date.*** This section generally applies to taxable years beginning after December 31, 1969, except paragraphs (a)(3)(i) and (a)(4) of this section apply to taxable years beginning on or after December 2, 2020. Taxpayers may choose to apply this section to taxable years beginning on or after January 1, 2018, and before December 2, 2020. Otherwise, for taxable years beginning before December 2, 2020, see these paragraphs as in effect and contained in 26 CFR part 1 revised as of April 1, 2020.

[T.D. 7212, 37 FR 21907, Oct. 17, 1972, as amended by T.D. 7784, 46 FR 37889, July 23, 1981; T.D. 8423, 57 FR 33443, July 29, 1992; T.D. 8991, 67 FR 20437, Apr. 25, 2002; T.D. 9423, 73 FR 52549, Sept. 9, 2008; T.D. 9549, 76 FR 55764, Sept. 8, 2011; T.D. 9549, 76 FR 61946, Oct. 6, 2011; T.D. 9933, 85 FR 77979, Dec. 2, 2020]

§ 1.509(a)-4 Supporting organizations.

(a) ***In general.***

(1) Section 509(a)(3) excludes from the definition of *private foundation* those organizations which meet the requirements of subparagraphs (A), (B), and (C) thereof.

(2) Section 509(a)(3)(A) provides that a section 509(a)(3) organization must be organized, and at all times thereafter operated, exclusively for the benefit of, to perform the functions of, or to carry out the purposes of one or more specified organizations described in section 509(a) (1) or (2). Section 509(a)(3)(A) describes the nature of the support or benefit which a section 509(a)(3) organization must provide to one or more section 509(a) (1) or (2) organizations. For purposes of section 509(a)(3)(A), paragraph (b) of this section generally describes the organizational and operational tests; paragraph (c) of this section describes permissible purposes under the organizational test; paragraph (d) of this section describes the requirement of supporting or benefiting one or more *specified* publicly supported organizations; and paragraph (e) of this section describes permissible beneficiaries and activities under the operational test.

(3) Section 509(a)(3)(B) provides that a section 509(a)(3) organization must be operated, supervised, or controlled by or in connection with one or more organizations described in section 509(a) (1) or (2). Section 509(a)(3)(B) and paragraph (f) of this section describe the nature of the relationship which must exist between the section 509(a)(3) and section 509(a) (1) or (2) organizations. For purposes of section 509(a)(3)(B), paragraph (g) of this section defines *operated, supervised, or controlled by*; paragraph (h) of this section defines *supervised or controlled in connection with;* and paragraph (i) of this section defines *operated in connection with*.

(4) Section 509(a)(3)(C) provides that a section 509(a)(3) organization must not be controlled directly or indirectly by disqualified persons (other than foundation managers or organizations described in section 509(a) (1) or (2)). Section 509(a)(3)(C) and paragraph (j) of this section prescribe a limitation on the control over the section 509(a)(3) organization.

(5) For purposes of this section, the term *supporting organization* means either an organization described in section 509(a)(3) or an organization seeking section 509(a)(3) status, depending upon its context. For purposes of this section, the term *publicly supported organization* means an organization described in section 509(a) (1) or (2).

(6) For purposes of paragraph (i) of this section, the term “supported organization” means a specified publicly supported organization described in paragraphs (d)(2)(iv) or (d)(4) of this section.

(b) ***Organizational and operational tests.***

(1) Under subparagraph (A) of section 509(a)(3), in order to qualify as a supporting organization, an organization must be both organized and operated exclusively *for the benefit of, to perform the functions of, or to carry out the purposes of* (hereinafter referred to in this section as being organized and operated *to support or benefit*) one or more specified publicly supported organizations. If an organization fails to meet either the organizational or the operational test, it cannot qualify as a supporting organization.

(2) In the case of supporting organizations created prior to January 1, 1970, the organizational and operational tests shall apply as of January 1, 1970. Therefore, even though the original articles of organization did not limit its purposes to those required under section 509(a)(3)(A) and even though it operated before January 1, 1970, for some purpose other than those required under section 509(a)(3)(A), an organization will satisfy the organizational and operational tests if, on January 1, 1970, and at all times thereafter, it is so constituted as to comply with these tests. For the special rules pertaining to the application of the organizational and operational tests to organizations terminating their private foundation status under the 12-month or 60-month termination period provided under section 507(b)(1)(B) by becoming *public* under section 509(a)(3), see the regulations under section 507(b).

(c) *Organizational test* —

(1) ***In general.*** An organization is organized exclusively for one or more of the purposes specified in section 509(a)(3)(A) only if its articles of organization (as defined in § 1.501(c)(3)-1(b)(2)):

(i) Limit the purposes of such organization to one or more of the purposes set forth in section 509(a)(3)(A);

(ii) Do not expressly empower the organization to engage in activities which are not in furtherance of the purposes referred to in subdivision (i) of this subparagraph;

(iii) State the specified publicly supported organizations on whose behalf such organization is to be operated (within the meaning of paragraph (d) of this section); and

(iv) Do not expressly empower the organization to operate to support or benefit any organization other than the specified publicly supported organizations referred to in subdivision (iii) of this subparagraph.

(2) ***Purposes.*** In meeting the organizational test, the organization's purposes, as stated in its articles, may be as broad as, or more specific than, the purposes set forth in section 509(a)(3)(A). Therefore, an organization which, by the terms of its articles, is formed *for the benefit of* one or more specified publicly supported organizations shall, if it otherwise meets the other requirements of this paragraph, be considered to have met the organizational test. Similarly, articles which state that an organization is formed *to perform the publishing functions* of a specified university are sufficient to comply with the organizational test. An organization which is *operated, supervised, or controlled by* (within the meaning of paragraph (g) of this section) or *supervised or controlled in connection with* (within the meaning of paragraph (h) of this section) one or more sections 509(a) (1) or (2) organizations to carry out the purposes of such organizations, will be considered as meeting the requirements of this paragraph if the purposes set forth in its articles are similar to, but no broader than, the purposes set forth in the articles of its controlling section 509(a) (1) or (2) organizations. If, however, the organization by which it is operated, supervised, or controlled is a publicly supported section 501(c) (4), (5), or (6) organization (deemed to be a section 509(a)(2) organization for purposes of section 509(a)(3) under the provisions of section 509(a)), the supporting organization will be considered as meeting the requirements of this paragraph if its articles require it to carry on charitable, etc., activities within the meaning of section 170(c)(2).

(3) ***Limitations.*** An organization is not organized exclusively for the purposes set forth in section 509(a)(3)(A) if its articles expressly permit it to operate to support or benefit any organization other than those specified publicly supported organizations referred to in subparagraph (1)(iii) of this paragraph. Thus, for example, an organization will not meet the organizational test under section 509(a)(3)(A) if its articles expressly empower it to pay over any part of its income to, or perform any service for, any organization other than those publicly supported organizations specified in its articles (within the meaning of paragraph (d) of this section). The fact that the actual operations of such organization have been exclusively for the benefit of the specified publicly supported organizations shall not be sufficient to permit it to meet the organizational test.

(d) *Specified organizations* —

(1) ***In general.*** In order to meet the requirements of section 509(a)(3)(A), an organization must be organized and operated exclusively to support or benefit one or more *specified* publicly supported organizations. The manner in which the publicly supported organizations must be *specified* in the articles for purposes of section 509(a)(3)(A) will depend upon whether the supporting organization

is *operated, supervised, or controlled by* or *supervised or controlled in connection with* (within the meaning of paragraphs (g) and (h) of this section) such organizations or whether it is *operated in connection with* (within the meaning of paragraph (i) of this section) such organizations.

(2) ***Nondesignated publicly supported organizations; requirements.***

(i) Except as provided in paragraph (d)(2)(iv) of this section, in order to meet the requirements of paragraph (d)(1) of this section, the articles of the supporting organization must designate each of the *specified* organizations by name unless:

(A) The supporting organization is operated, supervised, or controlled by (within the meaning of paragraph (g) of this section), or is supervised or controlled in connection with (within the meaning of paragraph (h) of this section) one or more publicly supported organizations; and

(B) The articles of organization of the supporting organization require that it be operated to support or benefit one or more beneficiary organizations which are designated by class or purpose and which include:

(*1*) The publicly supported organizations referred to in paragraph (d)(2)(i)(A) of this section (without designating such organizations by name); or

(*2*) Publicly supported organizations which are closely related in purpose or function to those publicly supported organizations referred to in paragraph (d)(2)(i)(A) of this section or this paragraph (d)(2)(i)(B)(*2*) (without designating such organization by name).

(ii) If a supporting organization is described in paragraph (d)(2)(i)(A) of this section, it will not be considered as failing to meet the requirements of paragraph (d)(1) of this section that the publicly supported organizations be specified merely because its articles of organization permit the conditions described in paragraphs (d)(3)(i) through (iii) and (d)(4)(i)(A) and (B) of this section.

(iii) This paragraph (d)(2) may be illustrated by the following examples:

(A) ***Example 1.*** X is an organization described in section 501(c)(3) which operates for the benefit of institutions of higher learning in the State of Y. X is controlled by these institutions (within the meaning of paragraph (g) of this section) and such institutions are all section 509(a)(1) organizations. X's articles will meet the organizational test if they require X to operate for the benefit of institutions of higher learning or educational organizations in the State of Y (without naming each institution). X's articles would also meet the organizational test if they provided for the giving of scholarships to enable students to attend institutions of higher learning but only in the State of Y.

(B) ***Example 2.*** M is an organization described in section 501(c)(3) which was organized and operated by representatives of N church to run a home for the aged. M is controlled (within the meaning of paragraph (g) of this section) by N church, a section 509(a)(1) organization. The care of the sick and the aged are longstanding temporal functions and purposes of organized religion. By operating a home for the aged, M is operating to support or benefit N church in carrying out one of its temporal purposes. Thus M's articles will meet the organizational test if they require M to care for the aged since M is operating to support one of N church's purposes (without designating N church by name).

(iv) A supporting organization will meet the requirements of paragraph (d)(1) of this section even though its articles do not designate each of the *specified* organizations by name if:

(A) There has been an historic and continuing relationship between the supporting organization and the section 509(a) (1) or (2) organizations; and

(B) By reason of such relationship, there has developed a substantial identity of interests between such organizations.

(3) ***Nondesignated publicly supported organizations; scope of rule.*** If the requirements of paragraph (d)(2)(i)(A) of this section are met, a supporting organization will not be considered as failing the test of being organized for the benefit of *specified* organizations solely because its articles:

(i) Permit the substitution of one publicly supported organization within a designated class for another publicly supported organization either in the same or a different class designated in the articles;

(ii) Permit the supporting organization to operate for the benefit of new or additional publicly supported organizations of the same or a different class designated in the articles; or

(iii) Permit the supporting organization to vary the amount of its support among different publicly supported organizations within the class or classes of organizations designated by the articles

For example, X is an organization which operates for the benefit of private colleges in the State of Y. If X is controlled by these colleges (within the meaning of paragraph (g) of this section) and such colleges are all section 509(a)(1) organizations, X's articles will meet the organization test even if they permit X to operate for the benefit of any new colleges created in State Y in addition to the existing colleges or in lieu of one which has ceased to operate, or if they permit X to vary its support by paying more to one college than to another in a particular year.

(4) ***Designated publicly supported organizations.***

(i) If an organization is organized and operated to support one or more publicly supported organizations and it is *operated in connection with* such organization or organizations, then, except as provided in paragraph (d)(2)(iv) of this section, its articles of organization must, for purposes of satisfying the organizational test under section 509(a)(3)(A), designate the *specified* organizations by name. Under the circumstances described in this paragraph (d)(4), a supporting organization which has one or more *specified* organizations designated by name in its articles, will not be considered as failing the test of being organized for the benefit of *specified* organizations solely because its articles:

(A) Permit a publicly supported organization which is designated by class or purpose, rather than by name, to be substituted for the publicly supported organization or organizations designated by name in the articles, but only if such substitution is conditioned upon the occurrence of an event which is beyond the control of the supporting organization, such as loss of exemption, substantial failure or abandonment of operations, or dissolution of the publicly supported organization or organizations designated in the articles;

(B) Permit the supporting organization to operate for the benefit of a beneficiary organization which is not a publicly supported organization, but only if such supporting organization is currently operating for the benefit of a publicly supported organization and the possibility of its operating for the benefit of other than a publicly supported organization is a remote contingency; or

(C) Permit the supporting organization to vary the amount of its support between different designated organizations, so long as it meets the requirements of the integral part test set forth in paragraph (i)(1)(iii) of this section with respect to at least one beneficiary organization.

(ii) If the beneficiary organization referred to in paragraph (d)(4)(i)(B) of this section is not a publicly supported organization, the supporting organization will not then meet the operational test of paragraph (e)(1) of this section. Therefore, if a supporting organization substituted in accordance with such paragraph (d)(4)(i)(B) a beneficiary other than a publicly supported organization and operated in support of such beneficiary organization, the supporting organization would not be described in section 509(a)(3).

(iii) This paragraph (d)(4) may be illustrated by the following example:

(A) ***Example.*** X is a charitable trust described in section 4947(a)(1) organized in 1968. Under the terms of its trust instrument, X's trustees are required to pay over all of X's annual income to M University Medical School for urological research. If M University Medical School is unable or unwilling to devote these funds to urological research, the trustees are required to pay all of such income to N University Medical School. However if N University Medical School is also unable or unwilling to devote these funds to urological research, X's trustees are directed to choose a similar organization willing to apply X's funds for urological research. From 1968 to 1973, X pays all of its net income to M University Medical School pursuant to the terms of the trust. M and N are publicly supported organizations. Although the contingent remainderman may not be a publicly supported organization, the possibility that X may operate for the benefit of other than a publicly supported organization is, in 1973, a remote possibility, and X will be considered as operating for the benefit of a *specified* publicly supported organization under subdivision (i)(*b*) of this subparagraph. However, if, at some future date, X actually substituted a nonpublicly supported organization as beneficiary, X would fail the requirements of the operational test set forth in paragraph (e)(1) of this section.

(B) [Reserved]

(e) ***Operational test*** —

(1) ***Permissible beneficiaries.*** A supporting organization will be regarded as *operated exclusively* to support one or more specified publicly supported organizations (hereinafter referred to as the *operational test*) only if it engages solely in activities which support or benefit the specified publicly supported organizations. Such activities may include making payments to or for the use of, or providing services or facilities for, individual members of the charitable class benefited by the specified publicly supported organization. A supporting organization may also, for example, make a payment indirectly through another unrelated organization to a member of a charitable class benefited by the specified publicly supported organization, but only if such a payment constitutes a grant to an individual rather than a grant to an organization. In determining whether a grant is indirectly to an individual rather than to an organization the same standard shall be applied as in § 53.4945-4(a)(4) of this chapter. Similarly, an organization will be regarded as *operated exclusively* to support or benefit one or more specified publicly supported organizations even if it supports or benefits an organization, other than a private foundation, which is described in section 501(c)(3) and is operated, supervised, or controlled directly by or in connection with such publicly supported

organizations, or which is described in section 511(a)(2)(B). However, an organization will not be regarded as operated exclusively if any part of its activities is in furtherance of a purpose other than supporting or benefiting one or more specified publicly supported organizations.

(2) ***Permissible activities.*** A supporting organization is not required to pay over its income to the publicly supported organizations in order to meet the operational test. It may satisfy the test by using its income to carry on an independent activity or program which supports or benefits the specified publicly supported organizations. All such support must, however, be limited to permissible beneficiaries in accordance with subparagraph (1) of this paragraph. The supporting organization may also engage in fund raising activities, such as solicitations, fund raising dinners, and unrelated trade or business to raise funds for the publicly supported organizations, or for the permissible beneficiaries.

(3) ***Examples.*** The provisions of this paragraph (e) may be illustrated by the following examples:

(i) ***Example 1.*** M is a separately incorporated alumni association of X University and is an organization described in section 501(c)(3). X University is designated in M's articles as the sole beneficiary of its support. M uses all of its dues and income to support its own program of educational activities for alumni, faculty, and students of X University and to encourage alumni to maintain a close relationship with the university and to make contributions to it. M does not distribute any of its income directly to X for the latter's general purposes. M pays no part of its funds to, or for the benefit of, any organization other than X. Under these circumstances, M is considered as operated exclusively to perform the functions and carry out the purpose of X. Although it does not pay over any of its funds to X, it carries on a program which both supports and benefits X.

(ii) ***Example 2.*** N is a separately incorporated religious and educational organization described in section 501(c)(3). It was formed and is operated by Y Church to provide religious training for the members of the church. While it does not maintain a regular faculty, N conducts a Sunday school, weekly adult education lectures on religious subjects, and other similar activities for the benefit of the church members. All of its funds are disbursed in furtherance of such activities and no part of its funds is paid to, or for the benefit of, any organization other than Y Church. N is considered as operated exclusively to perform the educational functions of Y Church and to carry out its religious purposes by providing various forms of religious instruction.

(iii) ***Example 3.*** P is an organization described in section 501(c)(3). Its primary activity is providing financial assistance to S, a publicly supported organization which aids underdeveloped nations in Central America. P's articles of organization designate S as the principal recipient of P's assistance. However, P also makes a small annual general purpose grant to T, a private foundation engaged in work similar to that carried on by S. T performs a particular function that assists in the overall aid program carried on by S. Even though P is operating primarily for the benefit of S, a specified publicly supported organization, it is not considered as operated exclusively for the purposes set forth in section 509(a)(3)(A). The grant to T, a private foundation, prevents it from complying with the operational test under section 509(a)(3)(A).

(iv) ***Example 4.*** Assume the same facts as example 3, except that T is a section 501(c)(3) organization other than a private foundation and is operated in connection with S. Under these circumstances, P will be considered as operated exclusively to support S within the meaning of section 509(a)(3)(A).

(v) *Example 5.* Assume the same facts as example 3 except that instead of the annual general purpose grant made to T, each grant made by P to T is specifically earmarked for the training of social workers and teachers, designated by name, from Central America. Under these circumstances, P's grants to T would be treated as grants to the individual social workers and teachers under section 4945(d)(3) and § 53.4945-4(a)(4), rather than as grants to T under section 4945(d)(4). These social workers and teachers are part of the charitable class benefitted by S. P would thus be considered as operating exclusively to support S within the meaning of section 509(a)(3)(A).

(f) *Nature of relationship required between organizations* —

(1) *In general.* Section 509(a)(3)(B) describes the nature of the relationship required between a section 501(c)(3) organization and one or more publicly supported organizations in order for such section 501(c)(3) organization to qualify under the provisions of section 509(a)(3). To meet the requirements of section 509(a)(3), an organization must be operated, supervised, or controlled by or in connection with one or more publicly supported organizations. If an organization does not stand in one of such relationships (as provided in this paragraph) to one or more publicly supported organizations, it is not an organization described in section 509(a)(3).

(2) *Types of relationships.* Section 509(a)(3)(B) sets forth three different types of relationships, one of which must be met in order to meet the requirements of subparagraph (1) of this paragraph. Thus, a supporting organization may be:

(i) Operated, supervised, or controlled by,

(ii) Supervised or controlled in connection with, or

(iii) Operated in connection with, one or more publicly supported organizations.

(3) *Requirements of relationships.* Although more than one type of relationship may exist in any one case, any relationship described in section 509(a)(3)(B) must insure that:

(i) The supporting organization will be responsive to the needs of demands of one or more publicly supported organizations; and

(ii) The supporting organization will constitute an integral part of, or maintain a significant involvement in, the operations of one or more publicly supported organizations.

(4) *General description of relationships.* In the case of supporting organizations which are *operated, supervised, or controlled by* one or more publicly supported organizations, the distinguishing feature of this type of relationship is the presence of a substantial degree of direction by the publicly supported organizations over the conduct of the supporting organization, as described in paragraph (g) of this section. In the case of supporting organizations which are *supervised or controlled in connection with* one or more publicly supported organizations, the distinguishing feature is the presence of common supervision or control among the governing bodies of all organizations involved, such as the presence of common directors, as described in paragraph (h) of this section. In the case of a supporting organization which is *operated in connection with* one or more publicly supported organizations, the distinguishing feature is that the supporting organization is responsive to, and significantly involved in the operations of, the publicly supported organization, as described in paragraph (i) of this section.

(5) *Contributions from controlling donors* —

(i) ***In general.*** For any taxable year, a supporting organization shall not be considered to be operated, supervised, or controlled by, or operated in connection with, one or more publicly supported organizations, if the supporting organization accepts any gift or contribution from any person who is—

(A) A person (other than an organization described in section 509(a)(1), (2), or (4)) who directly or indirectly controls, either alone or together with persons described in paragraphs (f)(5)(i)(B) or (f)(5)(i)(C) of this section, the governing body of a specified publicly supported organization supported by such supporting organization;

(B) A member of the family (determined under section 4958(f)(4)) of an individual described in paragraph (f)(5)(i)(A) of this section; or

(C) A 35-percent controlled entity (as defined in section 4958(f)(3) by substituting "clause (i) or (ii) of section 509(f)(2)(B)" for "subparagraph (A) or (B) of paragraph (1)" in paragraph (f)(3)(A)(i) thereof).

(ii) ***Meaning of control.*** For purposes of paragraph (f)(5)(i) of this section, the governing body of a supported organization will be considered *controlled* by a person described in paragraph (f)(5)(i)(A) of this section if that person, alone or by aggregating the person's votes or positions of authority with persons described in paragraph (f)(5)(i)(B) or (C) of this section, may require the governing body of the supported organization to perform any act that significantly affects its operations or may prevent the governing body of the supported organization from performing any such act. The governing body of a supported organization will be considered to be controlled directly or indirectly by one or more persons described in paragraph (f)(5)(i)(A), (B), or (C) of this section if the voting power of such persons is 50 percent or more of the total voting power of such governing body or if one or more of such persons have the right to exercise veto power over the actions of the governing body of the supported organization. Thus, if the governing body of a supported organization is composed of five members, none of whom has a veto power over the actions of the supported organization, and no more than two members are at any time described in paragraph (f)(5)(i)(A), (B), or (C) of this section, such supported organization will not be considered to be controlled directly or indirectly by such persons by reason of this fact alone. However, all pertinent facts and circumstances will be taken into consideration in determining whether one or more persons do in fact directly or indirectly control the governing body of a supported organization.

(g) ***Meaning of operated, supervised, or controlled by.***

(1)

(i) Each of the items *operated by, supervised by,* and *controlled by,* as used in section 509(a)(3)(B), presupposes a substantial degree of direction over the policies, programs, and activities of a supporting organization by one or more publicly supported organizations. The relationship required under any one of these terms is comparable to that of a parent and subsidiary, where the subsidiary is under the direction of, and accountable or responsible to, the parent organization. This relationship is established by the fact that a majority of the officers, directors, or trustees of the supporting organization are appointed or elected by the governing body, members of the governing body, officers acting in their official capacity, or the membership of one or more publicly supported organizations.

(ii) A supporting organization may be *operated, supervised, or controlled by* one or more publicly supported organizations within the meaning of section 509(a)(3)(B) even though its governing body is not comprised of representatives of the specified publicly supported organizations for whose benefit it is operated within the meaning of section 509(a)(3)(A). A supporting organization may be *operated, supervised, or controlled by* one or more publicly supported organizations (within the meaning of section 509(a)(3)(B)) and be operated *for the benefit of* one or more different publicly supported organizations (within the meaning of section 509(a)(3)(A)) only if it can be demonstrated that the purposes of the former organizations are carried out by benefitting the latter organizations.

(2) The provisions of this paragraph (g) may be illustrated by the following examples:

(i) ***Example 1.*** X is a university press which is organized and operated as a nonstock educational corporation to perform the publishing and printing for M University, a publicly supported organization. Control of X is vested in a Board of Governors appointed by the Board of Trustees of M University upon the recommendation of the president of the university. X is considered to be operated, supervised, or controlled by M University within the meaning of section 509(a)(3)(B).

(ii) ***Example 2.*** Y Council was organized under the joint sponsorship of seven independent publicly supported organizations, each of which is dedicated to the advancement of knowledge in a particular field of social science. The sponsoring organizations organized Y Council as a means of pooling their ideas and resources for the attainment of common objectives, including the conducting of scholarly studies and formal discussions in various fields of social science. Under Y Council's by-laws, each of the seven sponsoring organizations elects three members to Y's board of trustees for 3-year terms. Y's board also includes the president of Y Council and eight other individuals elected at large by the board. Pursuant to policies established or approved by the board, Y Council engages in research, planning, and evaluation in the social sciences and sponsors or arranges conferences, seminars, and similar programs for scholars and social scientists. It carries out these activities through its own full-time professional staff, through a part-time committee of scholars, and through grant recipients. Under the above circumstances, Y Council is subject to a substantial degree of direction by the sponsoring publicly supported organizations. It is therefore considered to be operated, supervised, or controlled by such sponsoring organizations within the meaning of section 509(a)(3)(B).

(iii) ***Example 3.*** Z is a charitable trust created by A in 1972. It has three trustees, all of whom are appointed by M University, a publicly supported organization. The trust was organized and is operated to pay over all of its net income for medical research to N, O, and P, each of which is specified in the trust, is a hospital described in section 509(a)(1), and is located in the same city as M. Members of M's biology department are permitted to use the research facilities of N, O, and P. Under paragraph (g)(1)(ii) of this section, Z is considered to be operated, supervised, or controlled by M within the meaning of section 509(a)(3)(B), even though it is operated for the benefit of N, O, and P within the meaning of section 509(a)(3)(A).

(h) ***Meaning of supervised or controlled in connection with.***

(1) In order for a supporting organization to be *supervised or controlled in connection with* one or more publicly supported organizations, there must be common supervision or control by the persons supervising or controlling both the supporting organization and the publicly supported organizations to insure that the supporting organization will be responsive to the needs and requirements of the

publicly supported organizations. Therefore, in order to meet such requirement, the control or management of the supporting organization must be vested in the same persons that control or manage the publicly supported organizations.

(2) A supporting organization will not be considered to be *supervised or controlled in connection with* one or more publicly supported organizations if such organization merely makes payments (mandatory or discretionary) to one or more named publicly supported organizations, even if the obligation to make payments to the named beneficiaries is enforceable under State law by such beneficiaries and the supporting organization's governing instrument contains provisions whose effect is described in section 508(e)(1) (A) and (B). Such arrangements do not provide a sufficient *connection* between the payor organization and the needs and requirements of the publicly supported organizations to constitute supervision or control in connection with such organizations.

(3) The provisions of this paragraph (h) may be illustrated by the following examples:

(i) ***Example 1.*** A, a philanthropist, founded X school for orphan boys (a publicly supported organization). At the same time A founded X school, he also established Y trust into which he transferred all of the operating assets of the school, together with a substantial endowment for it. Under the provisions of the trust instrument, the same persons who control and manage the school also control and manage the trust. The sole function of Y trust is to hold legal title to X school's operating and endowment assets, to invest the endowment assets and to apply the income from the endowment to the benefit of the school in accordance with direction from the school's governing body. Under these circumstances, Y trust is organized and operated *for the benefit of* X school and is *supervised or controlled in connection with* such organization within the meaning of section 509(a)(3). The fact that the same persons control both X and Y insures Y's responsiveness to X's needs.

(ii) ***Example 2.*** In 1972, B, a philanthropist, created P, a charitable trust for the benefit of Z, a symphony orchestra described in section 509(a)(2). B transferred 100 shares of common stock to P. Under the terms of the trust instrument, the trustees (none of whom is under the control of B) were required to pay over all of the income produced by the trust assets to Z. The governing instrument of P contains certain provisions whose effect is described in section 508(e)(1) (A) and (B). Under applicable State law, Z can enforce the provisions of the trust instrument and compel payment to Z in a court of equity. There is no relationship between the trustees of P and the governing body of Z. Under these circumstances P is not supervised or controlled in connection with a publicly supported organization. Because of the lack of any common supervision or control by the trustees of P and the governing body of Z, P is not supervised or controlled in connection with Z within the meaning of section 509(a)(3)(B).

(iii) ***Example 3.*** T is a charitable trust described in section 501(c)(3) and created under the will of D. Prior to his death, D was a leader and very active in C church, a publicly supported organization. D created T to perpetuate his interest in, and assistance to, C. The sole purpose of T was to provide financial support for C and its related institutions. All of the original named trustees of T are members of C, are leaders in C, and hold important offices in one or more of C's related institutions. Successor trustees of T are by the terms of the charitable trust instrument to be chosen by the remaining trustees and are also to be members of C. All of the original trustees have represented that any successor trustee will be a leader in C and will hold an important office in one or more of C's related institutions. By reason of the foregoing relationship T and its trustees are responsive to the needs and requirements of C and its related institutions. Under

these circumstances, T trust is organized and operated *for the benefit of* C and is *supervised or controlled in connection with* C and its related institutions within the meaning of section 509(a)(3)(B).

(i) ***Meaning of operated in connection with*** —

(1) ***General rule.*** For each taxable year, a supporting organization is operated in connection with one or more supported organizations (that is, is a "Type III supporting organization") only if it is not disqualified by reason of paragraph (f)(5) (relating to acceptance of contributions from controlling donors) or paragraph (i)(10) (relating to foreign supported organizations) of this section, and it satisfies—

(i) The notification requirement, which is set forth in paragraph (i)(2) of this section;

(ii) The responsiveness test, which is set forth in paragraph (i)(3) of this section; and

(iii) The integral part test, which is satisfied by maintaining significant involvement in the operations of one or more supported organizations and providing support on which the supported organization(s) are dependent; in order to satisfy this test, the supporting organization must meet the requirements either for—

(A) Functionally integrated Type III supporting organizations set forth in paragraph (i)(4) of this section; or

(B) Non-functionally integrated Type III supporting organizations set forth in paragraph (i)(5) of this section.

(2) ***Notification requirement*** —

(i) ***Annual notification.*** For each taxable year (Reporting Year), a Type III supporting organization must provide the following documents to each of its supported organizations:

(A) A written notice addressed to a principal officer of the supported organization describing the type and amount of all of the support (including all of the distributions described in paragraph (i)(6) of this section, if applicable) the supporting organization provided to the supported organization during the supporting organization's taxable year immediately preceding the Reporting Year (and during any other taxable year of the supporting organization ending after December 28, 2012, for which such support information has not previously been provided), including a brief narrative description of the support provided and sufficient financial detail for the recipient to identify the types and amounts of support being reported;

(B) A copy of the supporting organization's Form 990, "Return of Organization Exempt from Income Tax," or other annual information return required to be filed under section 6033 (although the supporting organization may redact from the return the name and address of any contributor to the organization) that was most recently filed as of the date the notification is provided (and any such return for any other taxable year of the supporting organization ending after December 28, 2012, that has not previously been provided to the supported organization); and

(C) A copy of the supporting organization's governing documents as in effect on the date the notification is provided, including its articles of organization and bylaws (if any) and any amendments to such documents, unless such documents have been previously provided and not subsequently amended.

(ii) ***Electronic media.*** The notification documents required by this paragraph (i)(2) may be provided by electronic media.

(iii) ***Due date.*** The notification documents required by this paragraph (i)(2) must be delivered or electronically transmitted by the last day of the fifth calendar month of the Reporting Year.

(iv) ***Principal officer.*** For purposes of paragraph (i)(2)(i)(A) of this section, a principal officer includes, but is not limited to, a person who, regardless of title, has ultimate responsibility for—

(A) Implementing the decisions of the governing body of a supported organization;

(B) Supervising the management, administration, or operation of the supported organization; or

(C) Managing the finances of the supported organization.

(3) ***Responsiveness test*** —

(i) ***General rule.*** A supporting organization meets the responsiveness test only if it is responsive to the needs or demands of each of its supported organizations. Except as provided in paragraph (i)(3)(v) of this section, in order to meet this test, a supporting organization must satisfy the requirements of paragraphs (i)(3)(ii) and (iii) of this section with respect to each of its supported organizations.

(ii) ***Relationship of officers, directors, or trustees.*** A supporting organization satisfies the requirements of this paragraph (i)(3)(ii) with respect to a supported organization only if—

(A) One or more officers, directors, or trustees of the supporting organization are elected or appointed by the officers, directors, trustees, or membership of the supported organization;

(B) One or more members of the governing body of the supported organization are also officers, directors, or trustees of, or hold other important offices in, the supporting organization; or

(C) The officers, directors, or trustees of the supporting organization maintain a close and continuous working relationship with the officers, directors, or trustees of the supported organization.

(iii) ***Significant voice.*** A supporting organization satisfies the requirements of this paragraph (i)(3)(iii) only if, by reason of paragraphs (i)(3)(ii)(A), (i)(3)(ii)(B), or (i)(3)(ii)(C) of this section, the officers, directors, or trustees of the supported organization have a significant voice in the investment policies of the supporting organization, the timing of grants, the manner of making grants, and the selection of grant recipients by such supporting organization, and in otherwise directing the use of the income or assets of the supporting organization.

(iv) ***Examples.*** The provisions of this paragraph (i)(3) may be illustrated by the following examples:

(A) *Example 1.* X, an organization described in section 501(c)(3), is a trust created under the last will and testament of Decedent. The trustee of X (Trustee) is a bank. Under the trust instrument, X supports M, a private university described in section 509(a)(1). The trust instrument provides that Trustee has discretion regarding the timing and amount of distributions consistent with the Trustee's fiduciary duties. Representatives of Trustee and an officer of M have quarterly face-to-face or telephonic meetings during which they discuss M's projected needs and ways in which M would like X to use its income and invest its assets. Additionally, Trustee communicates regularly with that officer of M regarding X's investments and plans for distributions from X. Trustee provides the officer of M with quarterly investment statements, the information required under paragraph (i)(2) of this section, and an annual accounting statement. Based on these facts, X meets the responsiveness test of this paragraph (i)(3) with respect to M.

(B) *Example 2.* Y is an organization described in section 501(c)(3) and is a trust under State law. The trustee of Y (Trustee) is a bank. Y supports charities P, Q, and R, each an organization described in section 509(a)(1). Y makes annual cash payments to P, Q, and R. Once a year, Trustee sends to P, Q, and R the cash payment, the information required under paragraph (i)(2) of this section, and an accounting statement. Trustee has no other communication with P, Q, or R. Y does not meet the responsiveness test of this paragraph (i)(3).

(C) *Example 3.* Z is described in section 501(c)(3). Z's organizational documents provide that it supports ten different organizations, each of which is described in section 509(a)(1). One of the directors of S (one of the supported organizations) is a voting member of Z's board of directors and participates in Z's regular board meetings. Officers of Z hold regularly scheduled face-to-face or telephonic meetings during the year, to which officers of all the supported organizations are invited. Z's meetings with the supported organizations may be held jointly or separately. Prior to the meetings, Z makes available to the supported organizations (including by email) up-to-date information about its activities, including its assets and liabilities, receipts and distributions, and investment policies and returns. In the meetings, officers of each of the supported organizations have an opportunity to ask questions and discuss with officers of Z the projected needs of their organizations, as well as Z's investment and grant making policies and practices. In addition to holding these meetings with the supported organizations, Z provides the contact information of one of its officers to each of the supported organizations and encourages them to contact that officer if they have questions, or if they wish to schedule additional meetings to discuss the projected needs of their organization and how Z should distribute its income and invest its assets. Z provides the information required under paragraph (i)(2) of this section and a copy of its annual audited financial statements to the principal officers of the supported organizations. Z meets the relationship requirement of paragraph (i)(3)(ii)(B) or (C) of this section with respect to each of its supported organizations. Based on these facts, Z also satisfies the significant voice requirement of paragraph (i)(3)(iii) of this section, and therefore meets the responsiveness test of this paragraph (i)(3) with respect to each of its ten supported organizations.

(v) ***Exception for pre-November 20, 1970 organizations.*** In the case of a supporting organization that was supporting or benefiting a supported organization before November 20, 1970, additional facts and circumstances, such as a historic and continuing relationship between the organizations, may be taken into account, in addition to the factors described in paragraphs (i)(3)(ii) and (i)(3)(iii) of this section, to establish compliance with the responsiveness test.

(4) ***Integral part test—functionally integrated Type III supporting organization*** —

(i) ***General rule.*** A supporting organization meets the integral part test and will be considered functionally integrated within the meaning of section 4943(f)(5)(B), if it—

(A) Engages in activities substantially all of which directly further the exempt purposes of one or more supported organizations and otherwise meets the requirements described in paragraph (i)(4)(ii) of this section;

(B) Is the parent of each of its supported organizations, as described in paragraph (i)(4)(iii) of this section; or

(C) Supports a governmental supported organization and otherwise meets the requirements of paragraph (i)(4)(iv) of this section.

(ii) ***Substantially all activities directly further exempt purposes*** —

(A) ***In general.*** A supporting organization meets the requirements of this paragraph (i)(4)(ii) if it engages in activities substantially all of which—

(1) Directly further the exempt purposes of one or more supported organizations by performing the functions of, or carrying out the purposes of, such supported organization(s); and

(2) But for the involvement of the supporting organization, would normally be engaged in by such supported organization(s).

(B) ***Meaning of substantially all.*** For purposes of paragraph (i)(4)(ii)(A) of this section, in determining whether substantially all of a supporting organization's activities directly further the exempt purposes of one or more supported organization(s), all pertinent facts and circumstances will be taken into consideration.

(C) ***Meaning of directly further.*** Activities “directly further” the exempt purposes of one or more supported organizations for purposes of this paragraph (i)(4) only if they are conducted by the supporting organization itself, rather than by a supported organization. Holding title to and managing exempt-use assets described in paragraph (i)(8)(ii) of this section are activities that directly further the exempt purposes of the supported organization within the meaning of this paragraph (i)(4). Conversely, except as provided in paragraph (i)(4)(ii)(D) of this section, fundraising, making grants (whether to the supported organization or to third parties), and investing and managing non-exempt-use assets are not activities that directly further the exempt purposes of the supported organization within the meaning of this paragraph (i)(4).

(D) ***Payments to individual beneficiaries.*** The making or awarding of grants, scholarships, or other payments to individual beneficiaries who are members of the charitable class benefited by a supported organization will be treated as an activity that directly furthers the exempt purposes of that supported organization for purposes of this paragraph (i)(4) only if—

(*1*) The individual beneficiaries are selected on an objective and nondiscriminatory basis (as described in § 53.4945-4(b));

(*2*) The officers, directors, or trustees of the supported organization have a significant voice in the timing of the payments, the manner of making them, and the selection of recipients; and

(*3*) The making or awarding of such payments is part of an active program of the supporting organization that directly furthers the exempt purposes of the supported organization and in which the supporting organization maintains significant involvement, as defined in § 53.4942(b)-1(b)(2)(ii) (except that "supporting organization" shall be substituted for "foundation").

(iii) ***Parent of supported organization(s)*** —

(A) ***In general.*** For purposes of paragraph (i)(4)(i)(B) of this section, in order for a supporting organization to qualify as the parent of each of its supported organizations—

(*1*) The supporting organization and its supported organizations must be part of an integrated system (such as, for example, a hospital system);

(*2*) The supporting organization must direct the overall policies, programs, and activities of the supported organizations (such as, for example, coordinating the activities of the supported organizations and engaging in overall planning, policy development, budgeting, and resource allocation); and

(*3*) The supporting organization's governing body, members of the governing body, or officers (acting in their official capacities) must appoint or elect, directly or indirectly, a majority of the officers, directors, or trustees of each supported organization and have the power to remove and replace such directors, officers, or trustees, or otherwise have an ongoing power to appoint or elect such directors, officers or trustees with reasonable frequency.

(B) ***Subsidiary organizations.*** A supporting organization may meet the requirements of paragraph (i)(4)(iii)(A)(*3*) of this section with respect to a second-tier (or lower) subsidiary provided that the supporting organization, by control of its first-tier subsidiary, has the power to appoint or elect (as described in paragraph (i)(4)(iii)(A)(*3*) of this section) a majority of the officers, directors, or trustees of the lower-tier subsidiary. For example, if the board of directors of supporting organization A elects a majority of the directors of supported organization B, and the board of directors of B, in turn elect, by a simple majority vote, a majority of the directors of supported organization C, the directors of supporting organization A will be treated as electing a majority of the directors of both supported organization B and supported organization C.

(iv) ***Supporting a governmental supported organization*** —

(A) ***In general.*** A supporting organization satisfies the requirements of this paragraph (i)(4)(iv) if—

(*1*) The supporting organization only supports one or more governmental supported organizations;

(*2*) In any case in which the supporting organization supports more than one governmental supported organization, all of the governmental supported organizations either—

(*i*) Operate within the same city, county, or metropolitan area; or

(*ii*) Work in close coordination or collaboration with one another to conduct a service, program, or activity that the supporting organization supports; and

(*3*) A substantial part of the supporting organization's total activities are activities that directly further, as defined by paragraph (i)(4)(ii)(C) of this section, the exempt purposes of at least one governmental supported organization.

(B) ***Governmental supported organization defined.*** For purposes of paragraph (i)(4)(iv)(A) of this section, the term *governmental supported organization* means a supported organization that is:

(*1*) A governmental unit described in section 170(c)(1), including all of its agencies, departments, and divisions (all of which will be treated as one governmental supported organization for purposes of this paragraph (i)(4)(iv)); or

(*2*) An organization described in section 170(c)(2) and (b)(1)(A) (other than in clauses (vii) and (viii)) that is an instrumentality of one or more governmental units described in section 170(c)(1).

(C) ***Close coordination or collaboration.*** To satisfy the close coordination or collaboration requirement of paragraph (i)(4)(iv)(A)(*2*) of this section, the supporting organization must maintain on file a letter from each of the governmental supported organizations (or a joint letter from all of them) describing their coordination or collaboration efforts with respect to the particular service, program, or activity.

(D) ***Substantial part.*** For purposes of paragraph (i)(4)(iv)(A)(*3*) of this section, in determining whether a substantial part of a supporting organization's activities directly further the exempt purposes of one or more governmental supported organization(s), all pertinent facts and circumstances will be taken into consideration.

(E) ***Exception for organizations supporting a governmental supported organization on or before February 19, 2016.*** A Type III supporting organization in existence on or before February 19, 2016, will be treated as meeting the requirements of this paragraph (i)(4)(iv) if it met and continues to meet the following requirements:

(*1*) It supports one or more governmental supported organizations described in paragraph (i)(4)(iv)(B) of this section and does not support more than one supported organization that is not a governmental supported organization;

(*2*) Each of the supported organizations is designated by the supporting organization as provided in paragraph (d)(4) of this section on or before February 19, 2016; and

(3) A substantial part (as defined in paragraph (i)(4)(iv)(D) of this section) of the supporting organization's total activities are activities that directly further (as defined by paragraph (i)(4)(ii)(C) of this section) the exempt purposes of its governmental supported organization(s).

(F) ***Transition rule for supporting organizations in existence on or before February 19, 2016.*** Until the first day of the organization's second taxable year beginning after February 19, 2016, a Type III supporting organization in existence on or before February 19, 2016, will be treated as meeting the requirements of this paragraph (i)(4)(iv) if it continuously met the following requirements prior to the first day of the organization's second taxable year beginning after February 19, 2016—

(1) It supported at least one supported organization that was a governmental entity to which the supporting organization was responsive within the meaning of paragraph (i)(3) of this section; and

(2) It engaged in activities for or on behalf of the governmental supported organization described in paragraph (i)(4)(iv)(E)(1) of this section that performed the functions of, or carried out the purposes of, that governmental supported organization and that, but for the involvement of the supporting organization, would normally have been engaged in by the governmental supported organization itself.

(v) ***Examples.*** The provisions of this paragraph (i)(4) may be illustrated by the following examples:

(A) ***Example 1.*** N, an organization described in section 501(c)(3), is the parent organization of a healthcare system consisting of two hospitals (Q and R) and an outpatient clinic (S), each of which is described in section 509(a)(1), and a taxable subsidiary (T). N is the sole member of each of Q, R, and S. Under the charter and bylaws of each of Q, R, and S, N appoints all members of the board of directors of each corporation. N engages in the overall coordination and supervision of the healthcare system's exempt subsidiary corporations Q, R, and S in approval of their budgets, strategic planning, marketing, resource allocation, securing tax-exempt bond financing, and community education. N also manages and invests assets that serve as endowments of Q, R, and S. Based on these facts, N qualifies as a functionally integrated Type III supporting organization under paragraph (i)(4)(i)(B) of this section.

(B) ***Example 2.*** V, an organization described in section 501(c)(3), is organized and operated as a supporting organization to L, a church described in section 509(a)(1). V meets the responsiveness test described in paragraph (i)(3) of this section with respect to L. L transferred to V title to the buildings in which L conducts religious services, Bible study, and community enrichment programs. Substantially all of V's activities consist of holding and maintaining these buildings, which L continues to use, free of charge, to further its exempt purposes. But for the activities of V, L would hold and maintain the buildings. Based on these facts, V satisfies the requirements of paragraph (i)(4)(ii) of this section.

(C) ***Example 3.*** O is a local nonprofit food pantry described in section 501(c)(3). O collects donated food from local growers, grocery stores, and individuals and distributes this food free of charge to poor and needy people in O's community. O is organized and operated as a supporting organization to eight churches of a particular denomination located in O's community, each of which is described in section 509(a)(1). Control of O is vested in a five-member Board of Directors, which includes an official from one of the churches as

well as four lay members of the churches' congregations. The officers of O maintain a close and continuing working relationship with each of the eight churches and as a result of such relationship, each of the eight churches has a significant voice in directing the use of the income and assets of O. As a result, O is responsive to its supported organizations. All of O's activities directly further the exempt purposes of the eight supported organizations to which it is responsive. Additionally, but for the activities of O, the churches would normally operate food pantries themselves. Based on these facts, O satisfies the requirements of paragraph (i)(4)(ii) of this section.

(D) ***Example 4.*** M, an organization described in section 501(c)(3), was created by B, an individual, to provide scholarships for students of U, a private secondary school and an organization described in section 509(a)(1). U establishes the scholarship criteria, publicizes the scholarship program, solicits and reviews applications, and selects the scholarship recipients. M invests its assets and disburses the funds for scholarships to the recipients selected by U. M does not provide the scholarships as part of an active program in which it maintains significant involvement, as defined in § 53.4942(b)-1(b)(2)(ii). Based on these facts, M does not satisfy the requirements of paragraph (i)(4)(ii) of this section.

(E) ***Example 5.*** J, an organization described in section 501(c)(3), is organized as a supporting organization to community foundation G, an organization described in section 509(a)(1). J meets the responsiveness test described in paragraph (i)(3) of this section with respect to G. In addition to maintaining field-of-interest funds, sponsoring donor advised funds, and conducting general grantmaking activities, G also engages in activities to beautify and maintain local parks. Substantially all of J's activities consist of maintaining all of the local parks in the area of community foundation G by performing activities such as establishing and maintaining trails, planting trees, and removing trash. But for the activities of J, G would normally engage in these efforts to beautify and maintain the local parks. Based on these facts, J satisfies the requirements of paragraph (i)(4)(ii) of this section.

(F) ***Example 6.*** X, an organization described in section 501(c)(3), is organized and operated as a supporting organization to two organizations, City and Park. X meets the responsiveness test described in paragraph (i)(3) of this section with respect to both City and Park. City and Park are both governmental units described in section 170(c)(1). Park maintains a state park located within the same county as City. X does not support any other organizations. X supports Park by operating an information center for visitors to Park. The information center provides educational material and informational sessions to visitors to Park. X's activities related to operating the Park information center constitute a substantial part of X's activities. X also makes grants directly to City to fund City's other programs. X's grant making activities constitute a substantial part of X's activities. X meets the requirements of paragraph (i)(4)(iv)(A)(*1*) of this section because X only supports City and Park, both of which are governmental supported organizations described in paragraph (i)(4)(iv)(B) of this section. X meets the requirements of paragraph (i)(4)(iv)(A)(*2*) of this section because City and Park operate within the same county in accordance with paragraph (i)(4)(iv)(A)(*2*)(*i*) of this section. Finally, X meets the requirements of paragraph (i)(4)(iv)(A)(*3*) of this section because a substantial part of X's activities directly further (within the meaning of paragraph (i)(4)(ii)(C) of this section)

Park's exempt purposes, even though X's grants to City are also a substantial part of X's activities. Based on these facts, X qualifies as functionally integrated under paragraph (i)(4)(iv) of this section.

(5) ***Integral part test—non-functionally integrated Type III supporting organization*** —

(i) ***General rule.*** A supporting organization meets the integral part test and will be considered non-functionally integrated if it satisfies either—

(A) The distribution requirement of paragraph (i)(5)(ii) of this section and the attentiveness requirement of paragraph (i)(5)(iii) of this section; or

(B) The pre-November 20, 1970 trust requirements of paragraph (i)(9) of this section.

(ii) ***Distribution requirement*** —

(A) ***Annual distribution.*** With respect to each taxable year, a supporting organization must make distributions described in paragraph (i)(6) of this section in a total amount equaling or exceeding the supporting organization's distributable amount for the taxable year, as defined in paragraph (i)(5)(ii)(B) of this section, on or before the last day of the taxable year.

(B) ***Distributable amount.*** Except as provided in paragraphs (i)(5)(ii)(D) and (E) of this section, the distributable amount for a taxable year is an amount equal to the greater of 85 percent of the supporting organization's adjusted net income (as determined by applying the principles of section 4942(f) and § 53.4942(a)-2(d) of this chapter) for the taxable year immediately preceding the taxable year of the required distribution (immediately preceding taxable year) or its minimum asset amount (as defined in paragraph (i)(5)(ii)(C) of this section) for the immediately preceding taxable year.

(C) ***Minimum asset amount.*** For purposes of this paragraph (i)(5), a supporting organization's minimum asset amount for the immediately preceding taxable year is 3.5 percent of the excess of the aggregate fair market value of all of the supporting organization's non-exempt-use assets (determined under paragraph (i)(8) of this section) in that immediately preceding taxable year over the acquisition indebtedness with respect to such non-exempt-use assets (determined under section 514(c)(1) without regard to the taxable year in which the indebtedness was incurred), increased by—

(*1*) Amounts received or accrued during the immediately preceding taxable year as repayments of amounts which were taken into account by the organization to meet the distribution requirement imposed in this paragraph (i)(5)(ii) for any taxable year;

(*2*) Amounts received or accrued during the immediately preceding taxable year from the sale or other disposition of property to the extent that the acquisition of such property was taken into account by the organization to meet the distribution requirement imposed in this paragraph (i)(5)(ii) for any taxable year; and

(*3*) Any amount set aside under paragraph (i)(6)(v) of this section to the extent it is determined during the immediately preceding taxable year that such amount is not necessary for the purposes for which it was set aside and such amount was taken into account by the organization to meet the distribution requirement imposed in this paragraph (i)(5)(ii) for any taxable year.

(D) ***First taxable year.*** The distributable amount for the first taxable year an organization is treated as a non-functionally integrated Type III supporting organization is zero. Notwithstanding the foregoing, for purposes of determining whether an excess amount is created under paragraph (i)(7)(ii) of this section, the distributable amount for the first taxable year an organization is treated as a non-functionally integrated Type III supporting organization is the distributable amount that would apply under paragraph (i)(5)(ii)(B) of this section in the absence of this paragraph (i)(5)(ii)(D).

(E) ***Emergency temporary reduction.*** The Secretary may provide by publication in the Internal Revenue Bulletin (see § 601.601(d)(2)(ii)(*b*) of this chapter) for a temporary reduction in the distributable amount in the case of a disaster or emergency.

(F) ***Reasonable cause exception.*** A non-functionally integrated Type III supporting organization that fails to meet the distribution requirement of this paragraph (i)(5)(ii) will not be classified as a private foundation for the taxable year in which it fails to meet the distribution requirement if the organization establishes to the satisfaction of the Secretary that—

(*1*) The failure was due solely to unforeseen events or circumstances that are beyond the organization's control, a clerical error, or an incorrect valuation of assets;

(*2*) The failure was due to reasonable cause and not to willful neglect; and

(*3*) The distribution requirement is met within 180 days after the organization is first able to distribute its distributable amount notwithstanding the unforeseen events or circumstances, or 180 days after the date the incorrect valuation or clerical error was or should have been discovered; however, no amounts paid to meet a distribution requirement for a prior taxable year under this paragraph (i)(5)(ii)(F)(*3*) may be counted toward the distribution requirement for the taxable year in which such amounts are paid.

(iii) ***Attentiveness requirement*** —

(A) ***General rule.*** With respect to each taxable year, a non-functionally integrated Type III supporting organization must distribute one-third or more of its distributable amount to one or more supported organizations that are attentive to the operations of the supporting organization (within the meaning of paragraph (i)(5)(iii)(B) of this section).

(B) ***Attentiveness.*** A supported organization is attentive to the operations of the supporting organization during a taxable year if, in the taxable year, at least one of the following requirements is satisfied:

(*1*) The supporting organization distributes to the supported organization amounts equaling or exceeding 10 percent of the supported organization's total support (or, in the case of a particular department or school of a university, hospital, or church, the total support of the department or school) received during the supported organization's last taxable year ending before the beginning of the supporting organization's taxable year.

(*2*) The amount of support received from the supporting organization is necessary to avoid the interruption of the carrying on of a particular function or activity of the supported organization. The support is necessary if the supporting organization or

the supported organization earmarks the support for a particular program or activity of the supported organization, even if such program or activity is not the supported organization's primary program or activity, as long as such program or activity is a substantial one.

(3) Based on the consideration of all pertinent factors, including the number of supported organizations, the length and nature of the relationship between the supported organization and supporting organization, and the purpose to which the funds are put, the amount of support received from the supporting organization is a sufficient part of a supported organization's total support (or, in the case of a particular department or school of a university, hospital, or church, the total support of the department or school) to ensure attentiveness. Normally the attentiveness of a supported organization is influenced by the amounts received from the supporting organization. Thus, the more substantial the amount involved in terms of a percentage of the supported organization's total support, the greater the likelihood that the required degree of attentiveness will be present. However, in determining whether the amount received from the supporting organization is sufficient to ensure the attentiveness of the supported organization to the operations of the supporting organization (including attentiveness to the nature and yield of the supporting organization's investments), evidence of actual attentiveness by the supported organization is of almost equal importance. A supported organization is not considered to be attentive solely because it has enforceable rights against the supporting organization under state law.

(C) ***Distribution to donor advised fund disregarded.*** Notwithstanding paragraph (i)(5)(iii)(B) of this section, in determining whether a supported organization will be considered attentive to the operations of a supporting organization, any amount received from the supporting organization that is held by the supported organization in a donor advised fund described in section 4966(d)(2) will be disregarded.

(D) ***Examples.*** This paragraph (i)(5)(iii) is illustrated by the following examples:

(1) ***Example 1.*** K, an organization described in section 501(c)(3), annually pays an aggregate amount equaling or exceeding its distributable amount described in paragraph (i)(5)(ii)(B) of this section to L, a museum described in section 509(a)(2). K meets the responsiveness test described in paragraph (i)(3) of this section with respect to L. In recent years, L has earmarked the income received from K to underwrite the cost of carrying on a chamber music series consisting of 12 performances a year that are performed for the general public free of charge at its premises. The chamber music series is not L's primary activity but it is a substantial activity. L could not continue the performances without K's support. Based on these facts, K meets the requirements of paragraph (i)(5)(iii)(B)(2) of this section.

(2) ***Example 2.*** M, an organization described in section 501(c)(3), annually pays an aggregate amount equaling or exceeding its distributable amount described in paragraph (i)(5)(ii)(B) of this section to the Law School of N University, an organization described in section 509(a)(1). M meets the responsiveness test described in paragraph (i)(3) of this section with respect to N. M has earmarked the income paid over to N's Law School to endow a chair in International Law. Without

M's continued support, N could not continue to maintain this chair. The chair is not N's primary activity but it is a substantial activity. Based on these facts, M meets the requirements of paragraph (i)(5)(iii)(B)(*2*) of this section.

(*3*) ***Example 3.*** R is a charitable trust created under the will of B, who died in 1969. R's purpose is to hold assets as an endowment for S (a hospital), T (a university), and U (a national medical research organization), all organizations described in section 509(a)(1) and specifically named in the trust instrument, and to distribute all of the income each year in equal shares among the three named beneficiaries. Each year, R pays to S, T, and U an aggregate amount equaling or exceeding its distributable amount described in paragraph (i)(5)(ii)(B) of this section. Such payments equal less than one percent of the total support that each supported organization received in its most recently completed taxable year. Based on these facts, R does not meet the requirements of paragraph (i)(5)(iii)(B)(*1*) of this section. However, because B died prior to November 20, 1970, R could meet the requirements of paragraph (i)(5)(i)(B) of this section upon meeting all of the requirements of paragraph (i)(9) of this section.

(*4*) ***Example 4.*** O is an organization described in section 501(c)(3). O is organized to support five private universities, V, W, X, Y, and Z, each of which is described in section 509(a)(1). O meets the responsiveness test described in paragraph (i)(3) of this section with respect to each of its supported organizations. Each year, O distributes an aggregate amount that equals its distributable amount described in paragraph (i)(5)(ii)(B) of this section and distributes an equal amount to each of the five universities. O distributes annually to each of V and W an amount that equals more than 10 percent of each university's total annual support received in its most recently completed taxable year. Based on these facts, O meets the requirements of paragraph (i)(5)(iii) of this section because it distributes two-fifths (more than the required one-third) of its distributable amount to supported organizations that are attentive to O.

(6) ***Distributions that count toward distribution requirement.*** For purposes of this paragraph (i)(6), the amount of a distribution made to a supported organization is the amount of cash distributed or the fair-market value of the property distributed as of the date the distribution is made. The amount of a distribution will be determined solely on the cash receipts and disbursements method of accounting described in section 446(c)(1). Distributions by the supporting organization that count toward the distribution requirement imposed in paragraph (i)(5)(ii) of this section are limited to—

(i) Any amount paid to a supported organization to accomplish the supported organization's exempt purposes;

(ii) Any amount paid by the supporting organization to perform an activity that satisfies the requirements of paragraph (i)(4)(ii) of this section, but only to the extent such amount exceeds any income derived by the supporting organization from the activity;

(iii) Any reasonable and necessary—

(A) Administrative expenses paid to accomplish the exempt purposes of the supported organization, which do not include expenses incurred in the production of investment income or expenses incurred in the conduct of fundraising activities (except solicitation expenses described in paragraph (i)(6)(iii)(B) of this section); and

(B) Expenses incurred to solicit contributions that are received directly by a supported organization (rather than by the supporting organization), but only to the extent the amount of the reasonable and necessary expenses the supporting organization incurs for each solicitation does not exceed the amount of contributions that are actually received by the supported organization directly from donors as a result of each such solicitation, as substantiated in a written report by the supported organization to the supporting organization that is postmarked or electronically transmitted by the due date of the supporting organization's Form 990 (or successor form) for the year of the solicitation(s) (without regard to extensions);

(iv) Any amount paid to acquire an exempt-use asset described in paragraph (i)(8)(ii) of this section; and

(v) Any amount set aside for a specific project that accomplishes the exempt purposes of a supported organization, with such set-aside counting toward the distribution requirement for the taxable year in which the amount is set aside but not in the year in which it is actually paid, if at the time of the set-aside, the supporting organization—

(A) Obtains a written statement from each supported organization whose exempt purposes the specific project accomplishes, signed under penalty of perjury by one of the supported organization's principal officers, as defined in paragraph (i)(2)(iv) of this section, stating that the supported organization approves the project as one that accomplishes one or more of the supported organization's exempt purposes and also approves the supporting organization's determination that the project is one that can be better accomplished by such a set-aside than by the immediate payment of funds;

(B) Establishes to the satisfaction of the Commissioner, by meeting the approval and information requirements described in § 53.4942(a)-3(b)(7)(i) of this chapter and by providing the written statement described in paragraph (i)(6)(v)(A) of this section, that the amount set aside will be paid for the specific project within 60 months after it is set aside and that the project is one that can better be accomplished by the set-aside than by the immediate payment of funds; and

(C) Evidences the set-aside by the entry of a dollar amount on the books and records of the supporting organization as a pledge or obligation to be paid at a future date or dates within 60 months of the set aside.

(7) *Carryover of excess amounts* —

(i) ***In general.*** If with respect to any taxable year, an excess amount, as defined in paragraph (i)(7)(ii) of this section, is created, such excess amount may be used to reduce the distributable amount in any of the five taxable years immediately following the taxable year in which the excess amount is created. An excess amount created in a taxable year can only be carried over for five taxable years.

(ii) ***Excess amount.*** An excess amount is created for any taxable year beginning after December 28, 2012, if the total distributions made in that taxable year that count toward the distribution requirement exceed the supporting organization's distributable amount for the taxable year, as determined under paragraph (i)(5)(ii)(B) of this section. With respect to any taxable year to which an excess amount is carried over, in determining whether an excess amount is created in

that taxable year, the distributable amount is first reduced by any excess amounts carried over (with the oldest excess amounts applied first) and then by any distributions made in that taxable year.

(8) ***Valuation of non-exempt-use assets.*** For purposes of determining its distributable amount for a taxable year, a supporting organization determines its minimum asset amount, as defined in paragraph (i)(5)(ii)(C) of this section, by determining the aggregate fair market value of all of its non-exempt-use assets in the immediately preceding taxable year. For these purposes, the determination of the aggregate fair market value of all non-exempt-use assets shall be made using the valuation methods described in § 53.4942(a)-2(c) of this chapter. The aggregate fair market value of the supporting organization's non-exempt-use assets shall not be reduced by any amount that is set aside under paragraph (i)(6)(v) of this section. For these purposes, the non-exempt use assets of the supporting organization are all assets of the supporting organization other than—

(i) Assets described in § 53.4942(a)-2(c)(2)(i) through (iv) of this chapter (with the term "supporting organization" being substituted for "foundation" or "private foundation" and the date "August 17, 2006" being substituted for "December 31, 1969"); and

(ii) Exempt-use assets, which are assets that are used (or held for use) directly in carrying out the exempt purposes of the supporting organization's supported organization(s) (determined by applying the principles described in § 53.4942(a)-2(c)(3) of this chapter) by either—

(A) The supporting organization; or

(B) One or more supported organizations, but only if the supporting organization makes the asset available to the supported organization(s) at no cost (or nominal rent) to the supported organization(s).

(9) ***Alternate integral part test for certain trusts.*** A trust (whether or not exempt from taxation under section 501(a)) that on November 20, 1970, met and continues to meet the requirements of paragraphs (i)(9)(i) through (i)(9)(v) of this section, shall be treated as meeting the requirements of paragraph (i)(5) of this section if for taxable years beginning after October 16, 1972, the trustee of such trust makes annual written reports to all of the trust's supported organizations, setting forth a description of the trust's assets, including a detailed list of the assets and the income produced by such assets. A trust that meets the requirements of this paragraph (i)(9) may request a ruling that it is described in section 509(a)(3) in such manner as the Commissioner may prescribe. The requirements of this paragraph (i)(9) are as follows:

(i) All the unexpired interests in the trust are devoted to one or more purposes described in section 170(c)(1) or (c)(2)(B) and a deduction was allowed with respect to such interests under sections 170, 545(b)(2), 556(b)(2), 642(c), 2055, 2106(a)(2), 2522, or corresponding provisions of prior law (or would have been allowed such a deduction if the trust had not been created before 1913).

(ii) The trust was created prior to November 20, 1970, and did not receive any grant, contribution, bequest or other transfer on or after such date. For purposes of this paragraph (i)(9)(ii), a split-interest trust described in section 4947(a)(2) that was created prior to November 20, 1970, was irrevocable on such date, and that becomes a charitable trust described in section 4947(a)(1) after such date shall be treated as having been created prior to such date.

(iii) The trust is required by its governing instrument to distribute all of its net income currently to a designated beneficiary supported organization. If more than one beneficiary supported organization is designated in the governing instrument of a trust, all of the net income must be distributable and must be distributed currently to each of such supported organizations in fixed shares pursuant to such governing instrument. For purposes of this paragraph (i)(9)(iii), the governing instrument of a charitable trust shall be treated as requiring distribution to a designated supported organization when the trust instrument describes the charitable purpose of the trust so completely that such description can apply to only one existing supported organization and is of sufficient particularity as to vest in such organization rights against the trust enforceable in a court possessing equitable powers.

(iv) The trustee of the trust does not have discretion to vary either the beneficiary supported organizations or the amounts payable to the supported organizations. For purposes of this paragraph (i)(9)(iv), a trustee shall not be treated as having such discretion if the trustee has discretion to make payments of principal to the single supported organization that is currently entitled to receive all of the trust's income or if the trust instrument provides that the trustee may cease making income payments to a particular supported organization in the event of certain specific occurrences, such as the loss of exemption under section 501(c)(3) or classification under section 509(a)(1) or (a)(2) by the supported organization or the failure of the supported organization to carry out its charitable purpose properly.

(v) None of the trustees would be disqualified persons within the meaning of section 4946(a) (other than foundation managers under section 4946(a)(1)(B)) with respect to the trust if such trust were treated as a private foundation.

(10) ***Foreign supported organizations.*** A supporting organization is not operated in connection with one or more supported organizations if it supports any supported organization organized outside of the United States.

(11) ***Transition rules*** —

(i) ***Notification requirement.*** A Type III supporting organization will be treated as having satisfied the notification requirement described in paragraph (i)(2) of this section for its taxable year that includes December 28, 2012, if the required notification is postmarked or electronically transmitted by the later of the last day of the fifth calendar month following the close of that taxable year or the due date (including extensions) of the supporting organization's annual information return described in section 6033 for that taxable year.

(ii) ***Integral part test*** —

(A) ***Qualification as a functionally integrated Type III supporting organization.*** A Type III supporting organization in existence on December 28, 2012, that met and continues to meet the requirements of Treas. Reg. § 1.509(a)-4(i)(3)(ii), as in effect prior to December 28, 2012, will be treated as meeting the requirements of paragraph (i)(4) of this section until the first day of the organization's second taxable year beginning after December 28, 2012.

(B) ***Qualification as a non-functionally integrated Type III supporting organization.*** A Type III supporting organization in existence on December 28, 2012, that met and continues to meet the requirements of Treas. Reg. § 1.509(a)-4(i)(3)(iii), as in effect prior to December 28, 2012, will be treated as meeting the requirements of paragraph (i)(5)(i)(A) of this section until the first day of its second taxable year beginning after December 28, 2012.

Notwithstanding the foregoing, in determining whether an excess amount is created under paragraph (i)(7)(ii) of this section in the first taxable year beginning after December 28, 2012, the distributable amount for that taxable year of a Type III supporting organization treated as meeting the requirements of paragraph (i)(5)(i)(A) of this section under this paragraph (i)(11)(ii)(B) is the amount described in § 1.509(a)-4T(i)(5)(ii)(B).

(C) ***Transitioning to a non-functionally integrated Type III supporting organization in the first taxable year after effective date.*** A Type III supporting organization in existence on December 28, 2012, that meets the requirements of Treas. Reg. § 1.509(a)-4(i)(3)(ii), as in effect prior to December 28, 2012, in its taxable year including December 28, 2012, but not in its first taxable year beginning after December 28, 2012, is a non-functionally integrated Type III supporting organization and will be treated as having a distributable amount of zero for purposes of meeting the requirements of paragraph (i)(5)(i)(A) of this section during the organization's first taxable year beginning after December 28, 2012. Notwithstanding the foregoing, in determining whether an excess amount is created under paragraph (i)(7)(ii) of this section in the first taxable year beginning after December 28, 2012, the distributable amount for that taxable year of a Type III supporting organization described in this paragraph (i)(11)(ii)(C) is the amount described in § 1.509(a)-4T(i)(5)(ii)(B), determined without regard to paragraph (i)(5)(ii)(D) of this section.

(D) ***Second taxable year after effective date.*** Beginning in the second taxable year beginning after December 28, 2012, and in all succeeding taxable years, all Type III supporting organizations described in this paragraph (i)(11)(ii) must meet either the requirements of paragraph (i)(4) or (i)(5) of this section. If a Type III supporting organization described in paragraph (i)(11)(ii)(A) of this section does not meet the requirements of paragraph (i)(4) of this section during its second taxable year beginning after December 28, 2012, its distributable amount for that second taxable year will be determined under § 1.509(a)-4T(i)(5)(ii)(B), without regard to paragraph (i)(5)(ii)(D) of this section. Any Type III supporting organization intending to meet the requirements of paragraph (i)(5) of this section in its second taxable year beginning after December 28, 2012, must value its assets in accordance with § 1.509(a)-4T(i)(8) beginning in its first taxable year beginning after December 28, 2012.

(E) ***Judicial proceedings to reform instruments.*** During any taxable years in which there is pending a judicial proceeding that meets the requirements of this paragraph (i)(11)(ii)(E), a non-functionally integrated Type III supporting organization organized before September 24, 2009, will not have to comply with the distribution requirement under paragraph (i)(5)(ii) of this section to the extent such compliance would be inconsistent with mandatory provisions of a governing instrument or other instrument executed before September 24, 2009, that prohibits distributing capital or corpus. Beginning with the first taxable year following the taxable year in which such judicial proceeding is terminated, such a non-functionally integrated Type III supporting organization must satisfy the distribution requirement under paragraph (i)(5)(ii) of this section, regardless of the outcome of the judicial proceeding. Thus, if, during a taxable year after such a judicial proceeding, an organization fails to comply with paragraph (i)(5)(ii) of this section, the organization will not qualify as a non-functionally integrated Type III supporting organization, regardless of whether such failure to comply was a result of the organization operating in accordance with its governing instrument or other instrument. To meet the requirements of this paragraph (i)(11)(ii)(E), a judicial proceeding must be—

(1) Necessary to reform, or to excuse the supporting organization from compliance with, a governing instrument or other instrument (as in effect on September 24, 2009, and all times thereafter) in order to permit the organization to satisfy paragraph (i)(5)(ii) of this section;

(2) Commenced before June 26, 2013; and

(3) Not subject to any unreasonable delay for which the supporting organization is responsible.

(j) ***Control by disqualified persons*** —

(1) ***In general.*** Under the provisions of section 509(a)(3)(C) a supporting organization may not be controlled directly or indirectly by one or more disqualified persons (as defined in section 4946) other than foundation managers and other than one or more publicly supported organizations. If a person who is a disqualified person with respect to a supporting organization, such as a substantial contributor to the supporting organization, is appointed or designated as a foundation manager of the supporting organization by a publicly supported beneficiary organization to serve as the representative of such publicly supported organization, then for purposes of this paragraph such person will be regarded as a disqualified person, rather than as a representative of the publicly supported organization. An organization will be considered *controlled,* for purposes of section 509(a)(3)(C), if the disqualified persons, by aggregating their votes or positions of authority, may require such organization to perform any act which significantly affects its operation or may prevent such organization from performing such act. This includes, but is not limited to, the right of any substantial contributor or his spouse to designate annually the recipients, from among the publicly supported organizations of the income attributable to his contribution to the supporting organization. Except as provided in subparagraph (2) of this paragraph, a supporting organization will be considered to be controlled directly or indirectly by one or more disqualified persons if the voting power of such persons is 50 percent or more of the total voting power of the organization's governing body or if one or more of such persons have the right to exercise veto power over the actions of the organization. Thus, if the governing body of a foundation is composed of five trustees, none of whom has a veto power over the actions of the foundation, and no more than two trustees are at any time disqualified persons, such foundation will not be considered to be controlled directly or indirectly by one or more disqualified persons by reason of this fact alone. However, all pertinent facts and circumstances including the nature, diversity, and income yield of an organization's holdings, the length of time particular stocks, securities, or other assets are retained, and its manner of exercising its voting rights with respect to stocks in which members of its governing body also have some interest, will be taken into consideration in determining whether a disqualified person does in fact indirectly control an organization.

(2) ***Proof of independent control.*** Notwithstanding subparagraph (1) of this paragraph, an organization shall be permitted to establish to the satisfaction of the Commissioner that disqualified persons do not directly or indirectly control it. For example, in the case of a religious organization operated in connection with a church, the fact that the majority of the organization's governing body is composed of lay persons who are substantial contributors to the organization will not disqualify the organization under section 509(a)(3)(C) if a representative of the church, such as a bishop or other official, has control over the policies and decisions of the organization.

(k) ***Organizations operated in conjunction with certain section 501(c) (4), (5), or (6) organizations.***

(1) For purposes of section 509(a)(3), an organization which is operated in conjunction with an organization described in section 501(c) (4), (5), or (6) (such as a social welfare organization, labor or agricultural organization, business league, or real estate board) shall, if it otherwise meets the requirements of section 509(a)(3), be considered an organization described in section 509(a)(3) if such section 501(c) (4), (5), or (6) organization would be described in section 509(a)(2) if it were an organization described in section 501(c)(3). The section 501(c) (4), (5), or (6) organization, which the supporting organization is operating in conjunction with, must therefore meet the one-third tests of a publicly supported organization set forth in section 509(a)(2).

(2) This paragraph (k) may be illustrated by the following example:

(i) ***Example.*** X medical association, described in section 501(c)(6), is supported by membership dues and funds resulting from the performance of its exempt activities. This support, which is entirely from permitted sources, constitutes more than one-third of X's support. X does not normally receive more than one-third of its support from items described in section 509(a)(2)(B). X organized and operated an endowment fund for the sole purpose of furthering medical education. The fund is an organization described in section 501(c)(3). Since more than one-third of X's support is derived from membership dues and from funds resulting from the performance of exempt purposes (all of which are from permitted sources) and not more than one-third of its support is from items described in section 509(a)(2)(B), it would be a publicly supported organization described in section 509(a)(2) if it were described in section 501(c)(3) rather than section 501(c)(6). Accordingly, if the fund otherwise meets the requirements of section 509(a)(3) with respect to X, it will be considered an organization described in section 509(a)(3).

(ii) [Reserved]

(l) ***Applicability dates.***

(1) Paragraphs (a)(6), (f)(5), and (i) of this section are applicable on December 28, 2012, except—

(i) Paragraphs (i)(4)(ii)(C), (i)(5)(ii)(C) and (D), (i)(6)(iv), (i)(7)(ii), and (i)(8) of this section are applicable on December 21, 2015; and

(ii) Paragraphs (d)(4)(i)(C), (f)(5)(ii), (i)(2)(i) and (iii), (i)(3)(i), (i)(3)(iv)(C) (*Example 3*), (i)(4)(ii)(A)(*1*), (i)(4)(ii)(B), (i)(4)(iii) and (iv), (i)(4)(v)(F) (*Example 6*), (i)(5)(ii)(A) and (B), (i)(5)(iii)(A), (i)(5)(iii)(D)(*4*) (*Example 4*), (i)(6) introductory text, and (i)(6)(iii) and (v) of this section are applicable to taxable years beginning on or after October 16, 2023.

(2) Taxpayers may choose to apply the paragraphs listed in paragraph (l)(1)(ii) of this section to taxable years beginning on or after February 19, 2016, and before October 16, 2023, provided the taxpayer applies the provisions listed in paragraph (l)(1)(ii) of this section in their entirety and in a consistent manner.

(3) See paragraphs (i)(5)(ii)(B) and (C) and (i)(8) of § 1.509(a)-4T contained in 26 CFR part 1, revised as of April 1, 2015, for certain rules regarding non-functionally integrated Type III supporting organizations effective before December 21, 2015. See paragraphs (i)(5)(ii)(A) and (B) and (i)(5)(iii)(D) of § 1.509(a)-4 contained in 26 CFR part 1, revised as of April 1, 2023, for certain rules regarding non-functionally integrated Type III supporting organizations effective before October 16, 2023.

[T.D. 7212, 37 FR 21916, Oct. 17, 1972, as amended by T.D. 7784, 46 FR 37890, July 23, 1981; 77 FR 76394, Dec. 28, 2012; T.D. 9746, 80 FR 79686, Dec. 23, 2015; T.D. 9981, 88 FR 71298, Oct. 16, 2023]

§ 1.509(a)-5 Special rules of attribution.

(a) ***Retained character of gross investment income.***

(1) For purposes of determining whether an organization meets the not-more-than-one-third support test set forth in section 509(a)(2)(B), amounts received by such organization from:

(i) An organization which seeks to be described in section 509(a)(3) by reason of its support of such organization; or

(ii) A charitable trust, corporation, fund, or association described in section 501(c)(3) (including a charitable trust described in section 4947(a)(1)) or a split interest trust described in section 4947(a)(2), which is required by its governing instrument or otherwise to distribute, or which normally does distribute, at least 25 percent of its adjusted net income (within the meaning of section 4942(f)) to such organization, and such distribution normally comprises at least 5 percent of such distributee organization's adjusted net income

will retain their character as gross investment income (rather than gifts or contributions) to the extent that such amounts are characterized as gross investment income in the possession of the distributing organization described in subdivision (i) or (ii) of this subparagraph or, if the distributing organization is a split interest trust described in section 4947(a)(2), to the extent that such amounts would be characterized as gross investment income attributable to transfers in trust after May 26, 1969, if such trust were a private foundation. For purposes of this section, all income which is characterized as gross investment income in the possession of the distributing organization shall be deemed to be distributed first by such organization and shall retain its character as such in the possession of the recipient of amounts described in this paragraph. If an organization described in subdivision (i) or (ii) of this subparagraph makes distributions to more than one organization, the amount of gross investment income deemed distributed shall be prorated among the distributees.

(2) For purposes of subparagraph (1) of this paragraph, amounts paid by an organization to provide goods, services, or facilities for the direct benefit of an organization seeking section 509(a)(2) status (rather than for the direct benefit of the general public) shall be treated in the same manner as amounts received by the latter organization. Such amounts will be treated as gross investment income to the extent that such amounts are characterized as gross investment income in the possession of the organization spending such amounts. For example, X is an organization described in subparagraph (1)(i) of this paragraph. It uses part of its funds to provide Y, an organization seeking section 509(a)(2) status, with certain services which Y would otherwise be required to purchase on its own. To the extent that the funds used by X to provide such services for Y are characterized as gross investment income in the possession of X, such funds will be treated as gross investment income received by Y.

(3) An organization seeking section 509(a)(2) status shall file a separate statement with its return required by section 6033, setting forth all amounts received from organizations described in paragraph (a)(1) (i) or (ii) of this section.

(b) ***Relationships created for avoidance purposes.***

(1) If a relationship between an organization seeking section 509(a)(3) status and an organization seeking section 509(a)(2) status:

(i) Is established or availed of after October 9, 1969, and

(ii) One of the purposes of establishing or utilizing such relationship is to avoid classification as a private foundation with respect to either organization, the character and amount of support received by the section 509(a)(3) organization will be attributed to the section 509(a)(2) organization for purposes of determining whether the latter meets the one-third support test and the not-more-than-one-third support test under section 509(a)(2). If a relationship described in this subparagraph is established or utilized by an organization seeking section 509(a)(3) status and two or more organizations seeking section 509(a)(2) status, the amount of support received by the former organization will be prorated among the latter organizations and the character of each class of support (as defined in section 509(d)) will be attributed pro rata to each such organization. The provisions of this paragraph and of paragraph (a) of this section are not mutually exclusive.

(2) In determining whether a relationship between one or more organizations seeking section 509(a)(2) status (hereinafter referred to as *beneficiary organizations*) and an organization seeking section 509(a)(3) status (hereinafter referred to as the *supporting organization*) has been established or availed of to avoid classification as a private foundation (within the meaning of subparagraph (1) of this paragraph), all pertinent facts and circumstances, including the following, shall be taken into account as evidence that a relationship was not established or availed of to avoid classification as a private foundation:

(i) The supporting organization is operated to support or benefit several specified beneficiary organizations.

(ii) The beneficiary organization has a substantial number of dues-paying members (in relation to the public it serves and the nature of its activities) and such members have an effective voice in the management of both the supporting and beneficiary organizations.

(iii) The beneficiary organization is composed of several membership organizations, each of which has a substantial number of members (in relation to the public it serves and the nature of its activities), and such membership organizations have an effective voice in the management of the supporting and beneficiary organizations.

(iv) The beneficiary organization receives a substantial amount of support from the general public, public charities, or governmental grants.

(v) The supporting organization uses its funds to carry on a meaningful program of activities to support or benefit the beneficiary organization and such use would, if such supporting organization were a private foundation, be sufficient to avoid the imposition of any tax upon such organization under section 4942.

(vi) The supporting organization is not able to exercise substantial control or influence over the beneficiary organization by reason of the former's receiving support or holding assets which are disproportionately large in comparison with the support received or the assets held by the latter.

(vii) Different persons manage the operations of the beneficiary and supporting organizations and each organization performs a different function.

(3) The provisions of this paragraph may be illustrated by the following examples:

Example 1. M, an organization described in section 509(a)(2), is a council composed of 10 learned societies. Each member society has a large membership of scholars interested in a particular academic area. In 1970 M established N, an organization seeking section 509(a)(3) status, for the purpose of carrying on research and study projects of interest to the member societies. The principal source of funds for N's activities is from foundation and government grants and contracts. The principal source of funds for M's activities after the creation of N is membership dues. M continued to maintain a wide variety of activities for its members, such as publishing periodicals and carrying on seminars and conferences. N is subject to complete control by the governing body of M. Under these circumstances, the relationship between these organizations is not one which is described in subparagraph (1) of this paragraph.

Example 2. Q is a local medical research organization described in section 509(a)(2). Its fixed assets are negligible and it carries on research activities on a limited scale. It also makes a limited number of grants to scientists and doctors who are engaged in medical research of interest to Q. It receives support through small government grants and a few research contracts from private foundations. R is an organization described in section 501(c)(3). As of January 1, 1970, R was classified as a private foundation under section 509. It has a substantial endowment which it uses to make grants to various charitable and scientific organizations described in section 501(c)(3). During 1970, R agrees to subsidize the research activities of Q. R amends its governing instrument to provide specifically that all of R's support will be used for research activities which are approved and supervised by Q. R also amends its bylaws to permit a minority of Q's board of directors to be members of R's governing body. R then gives timely notification under section 507(b)(1)(B)(ii) that R is terminating its private foundation status by meeting the requirements of section 509(a)(3) by the end of the 12-month period described in section 507(b)(1)(B)(i). For purposes of determining whether R has met the requirements of section 509(a)(3) by the end of the 12-month period, as well as determining Q's status under section 509(a)(2), the character and amount of support received by R will be attributed to Q.

(c) ***Effect on organizations claiming section 509(a)(3) status.*** If an organization claiming section 509(a)(2) status fails to meet either the one-third support test or the not-more-than-one-third support test under section 509(a)(2) by reason of the application of the provisions of paragraph (a) or (b) of this section, and such organization is one of the specified organizations (within the meaning of section 509(a)(3)(A)) for whose support or benefit an organization claiming section 509(a)(3) status is operated, the organization claiming section 509(a)(3) status will not be considered to be operated exclusively to support or benefit one or more section 509(a) (1) or (2) organizations.

[T.D. 7212, 37 FR 21922, Oct. 17, 1972, as amended by T.D. 7290, 38 FR 31834, Nov. 19, 1973; T.D. 7784, 46 FR 37890, July 23, 1981]

§ 1.509(a)-6 Classification under section 509(a).

If an organization is described in section 509(a)(1) and also in another paragraph of section 509(a), it will be treated as described in section 509(a)(1). For purposes of this section, the parenthetical language *other than in clauses (vii) and (viii*) used in section 509(a)(1) shall be construed to mean *other than an organization which is described only in clause (vii) or (viii*). For example, X is an organization which is described in section 170(b)(1)(A)(vi), but could also meet the description of section 170(b)(1)(A)(viii) as an organization described in section 509(a)(2). For purposes of the one-third support test in section 509(a)(2)(A), contributions from X to other organizations will be treated as support from an organization described in section 170(b)(1)(A)(vi) rather than from an organization described in section 170(b)(1)(A)(viii).

[T.D. 7212, 37 FR 21923, Oct. 17, 1972]

§ 1.509(a)-7 Reliance by grantors and contributors to section 509(a) (1), (2), and (3) organizations.

(a) ***General rule.*** Once an organization has received a final ruling or determination letter classifying it as an organization described in section 509(a) (1), (2), or (3), the treatment of grants and contributions and the status of grantors and contributors to such organization under sections 170, 507, 545(b)(2), 556(b)(2), 642(c), 4942, 4945, 2055, 2106(a)(2), and 2522 will not be affected by reason of a subsequent revocation by the service of the organization's classification as described in section 509(a) (1), (2), or (3) until the date on which notice of change of status is made to the public (such as by publication in the Internal Revenue Bulletin) or another applicable date, if any, specified in such public notice. In appropriate cases, however, the treatment of grants and contributions and the status of grantors and contributors to an organization described in section 509(a) (1), (2), or (3) may be affected pending verification of the continued classification of such organization under section 509(a) (1), (2), or (3). Notice to this affect will be made in a public announcement by the service. In such cases the effect of grants and contributions made after the date of the announcement will depend upon the statutory qualification of the organization as an organization described in section 509(a) (1), (2), or (3).

(b) ***Exceptions.***

(1) Paragraph (a) of this section shall not apply if the grantor or contributor:

(i) Had knowledge of the revocation of the ruling or determination letter classifying the organization as an organization described in section 509(a) (1), (2), or (3), or

(ii) Was in part responsible for, or was aware of, the act, the failure to act, or the substantial and material change on the part of the organization which gave rise to the revocation of the ruling or determination letter classifying the organization as an organization described in section 509(a) (1), (2), or (3).

(2) Paragraph (a) of this section shall not apply where a different rule is otherwise expressly provided in the regulations under sections 170(b)(1)(A), 507(b)(1)(B), or 509.

[T.D. 7212, 37 FR 21923, Oct. 17, 1972]

§ 1.509(b)-1 Continuation of private foundation status.

(a) ***In general.*** If an organization is a private foundation (within the meaning of section 509(a)) on October 9, 1969, or becomes a private foundation on any subsequent date, such organization shall be treated as a private foundation for all periods after October 9, 1969, or after such subsequent date, unless its status as such is terminated under section 507. Therefore, if an organization was described in section 501(c)(3) and was a private foundation within the meaning of section 509(a) on October 9, 1969, it shall be treated as a private foundation for all periods thereafter, even though it may also satisfy the requirements of an organization described in some other paragraph of section 501(c). For example, if on October 9, 1969, an organization was described in section 501(c)(3), but because of its activities, it could also have qualified as an organization described in section 501(c)(4), such organization will continue to be treated as a private foundation, if it was a private foundation within the meaning of section 509(a) on October 9, 1969.

(b) ***Taxable private foundations.*** If an organization is a private foundation on October 9, 1969, and it is determined that it is not exempt under section 501(a) as an organization described in section 501(c)(3) as of any date after October 9, 1969, such organization, even though it may operate thereafter as a

taxable entity, will continue to be treated as a private foundation unless its status as such is terminated under section 507. For example, X organization is a private foundation on October 9, 1969. It is subsequently determined that, as of July 1, 1972, X is no longer exempt under section 501(a) as an organization described in section 501(c)(3) because, for example, it has not conformed its governing instrument pursuant to section 508(e). X will continue to be treated as a private foundation after July 1, 1972, unless its status as such is terminated under section 507. However, if an organization is not exempt under section 501(a) as an organization described in section 501(c)(3) on October 9, 1969, then it will not be treated as a private foundation within the meaning of section 509(a) by reason of section 509(b), unless it becomes a private foundation on a subsequent date.

[T.D. 7212, 37 FR 21924, Oct. 17, 1972]

§ 1.509(c)-1 Status of organization after termination of private foundation status.

(a) ***In general.*** For purposes of part II of subchapter F of this chapter, an organization whose status as a private foundation is terminated under section 507 shall be treated as an organization created on the day after the date of such termination. An organization whose private foundation status has been terminated under the provisions of section 507(a) will, if it continues to operate, be treated as a new organization and must, if it desires to be classified under section 501(c)(3), give notification that it is applying for recognition of section 501(c)(3) status pursuant to the provisions of section 508(a).

(b) ***Effect upon section 507(d)(1).*** If the private foundation status of an organization has been terminated under section 507(b)(1)(B) and the regulations thereunder, and:

(1) Such organization does not continue at all times thereafter to meet the requirements of section 509(a) (1), (2), or (3) (and is therefore no longer excluded from the definition of a private foundation); and

(2) The status of such organization as a private foundation is thereafter terminated under section 507(a)

then the tax imposed under section 507(c)(1) upon the aggregate tax benefit (described in section 507(d)(1)) resulting from section 501(c)(3) status shall be computed only upon the aggregate tax benefit resulting after the date on which the organization again becomes a private foundation under subparagraph (1) of this paragraph.

[T.D. 7212, 37 FR 21924, Oct. 17, 1972]

§ 1.509(d)-1 Definition of support.

For purposes of section 509(a)(2), the term *support* does not include amounts received in repayment of the principal of a loan or other indebtedness. See, however, section 509(e) as to amounts received as interest on a loan or other indebtedness.

[T.D. 7212, 37 FR 21924, Oct. 17, 1972]

§ 1.509(e)-1 Definition of gross investment income.

For the distinction between gross receipts and gross investment income, see § 1.509(a)-3(m).

(Sec. 7805, Internal Revenue Code of 1954, 68A Stat. 917; 26 U.S.C. 7805)

[T.D. 7212, 37 FR 21925, Oct. 17, 1972]

TAXATION OF BUSINESS INCOME OF CERTAIN EXEMPT ORGANIZATIONS

§ 1.511-1 Imposition and rates of tax.

Section 511(a) imposes a tax upon the unrelated business taxable income of certain organizations otherwise exempt from Federal income tax. Under section 511(a)(1), organizations described in section 511(a)(2)(A) and in paragraph (a) of § 1.511-2 and organizations described in section 511(a)(2)(B) are subject to normal tax and surtax at the corporate rates provided by section 11. Under section 511(b)(1), trusts described in section 511(b)(2) are subject to tax at the individual rates prescribed in section 1(d) of the Code as amended by the Tax Reform Act of 1969 (section 1 for taxable years ending before Jan. 1, 1971). The deduction for personal exemption provided in section 642(b) in the case of a trust taxable under subchapter J, chapter 1 of the Code, is not allowed in computing unrelated business taxable income.

[T.D. 7117, 36 FR 9421, May 25, 1971]

§ 1.511-2 Organizations subject to tax.

(a) ***Organizations other than trusts and title holding companies.***

(1)

(i) The taxes imposed by section 511(a)(1) apply in the case of any organization (other than a trust described in section 511(b)(2) or an organization described in section 501(c)(1)) which is exempt from taxation under section 501(a) (except as provided in sections 507 through 515). For special rules concerning corporations described in section 501(c)(2), see paragraph (c) of this section.

(ii) In the case of an organization described in section 501(c)(4), (7), (8), (9), (10), (11), (12), (13), (14)(A), (15), (16), or (18), the taxes imposed by section 511(a)(1) apply only for taxable years beginning after December 31, 1969. In the case of an organization described in section 501(c)(14) (B) or (C), the taxes imposed by section 511(a)(1) apply only for taxable years beginning after February 2, 1966.

(2) The taxes imposed by section 511(a) apply in the case of any college or university which is an agency or instrumentality of any government or any political subdivision thereof, or which is owned or operated by a government or any political subdivision thereof or by any agency or instrumentality of any one or more governments or political subdivisions. Such taxes also apply in the case of any corporation wholly owned by one or more such colleges or universities. As here used, the word *government* includes any foreign government (to the extent not contrary to any treaty obligation of the United States) and all domestic governments (the United States and any of its Territories or possessions, any State, and the District of Columbia). Elementary and secondary schools operated by such governments are not subject to the tax on unrelated business income.

(3)

(i) For taxable years beginning before January 1, 1970, churches and associations or conventions of churches are exempt from the taxes imposed by section 511. The exemption is applicable only to an organization which itself is a church or an association or convention of churches. Subject to the provisions of subdivision (ii) of this subparagraph, religious organizations,

including religious orders, if not themselves churches or associations or conventions of churches, and all other organizations which are organized or operated under church auspices, are subject to the tax imposed by section 511, whether or not they engage in religious, educational, or charitable activities approved by a church.

(ii) The term *church* includes a religious order or a religious organization if such order or organization (*a*) is an integral part of a church, and (*b*) is engaged in carrying out the functions of a church, whether as a civil law corporation or otherwise. In determining whether a religious order or organization is an integral part of a church, consideration will be given to the degree to which it is connected with, and controlled by, such church. A religious order or organization shall be considered to be engaged in carrying out the functions of a church if its duties include the ministration of sacerdotal functions and the conduct of religious worship. If a religious order or organization is not an integral part of a church, or if such an order or organization is not authorized to carry out the functions of a church (ministration of sacerdotal functions and conduct of religious worship) then it is subject to the tax imposed by section 511 whether or not it engages in religious, educational, or charitable activities approved by a church. What constitutes the conduct of religious worship or the ministration of sacerdotal functions depends on the tenets and practices of a particular religious body constituting a church. If a religious order or organization can fully meet the requirements stated in this subdivision, exemption from the tax imposed by section 511 will apply to all its activities, including those which it conducts through a separate corporation (other than a corporation described in section 501(c)(2)) or other separate entity which it wholly owns and which is not operated for the primary purpose of carrying on a trade or business for profit. Such exemption from tax will also apply to activities conducted through a separate corporation (other than a corporation described in section 501(c)(2)) or other separate entity which is wholly owned by more than one religious order or organization, if all such orders or organizations fully meet the requirements stated in this subdivision and if such corporation or other entity is not operated for the primary purpose of carrying on a trade or business for profit.

(iii) For taxable years beginning after December 31, 1969, churches and conventions or associations of churches are subject to the taxes imposed by section 511, unless otherwise entitled to the benefit of the transitional rules of section 512(b)(14) and § 1.512(b)-1(i).

(b) *Trusts* —

(1) ***In general.*** The taxes imposed by section 511(b) apply in the case of any trust which is exempt from taxation under section 501(a) (except as provided in sections 507 through 515), and which, if it were not for such exemption, would be subject to the provisions of subchapter J, chapter 1, of the Code. An organization which is considered as *trustee* of a stock bonus, pension, or profit-sharing plan described in section 401(a), a supplemental unemployment benefit trust described in section 501(c)(17), or a pension plan described in section 501(c)(18) (regardless of the form of such organization) is subject to the taxes imposed by section 511(b)(1) on its unrelated business income. However, if such an organization conducts a business which is a separate taxable entity on the basis of all the facts and circumstances, for example, an association taxable as a corporation, the business will be taxable as a feeder organization described in section 502.

(2) ***Effective dates.*** In the case of a trust described in section 501(c)(3), the taxes imposed by section 511(b) apply for taxable years beginning after December 31, 1953. In the case of a trust described in section 401(a), the taxes imposed by section 511(b) apply for taxable years beginning after June 30, 1954. In the case of a trust described in section 501(c)(17), the taxes imposed by section 511(b)

apply for taxable years beginning after December 31, 1959. In the case of any other trust described in subparagraph (1) of this paragraph, the taxes imposed by section 511(b) apply for taxable years beginning after December 31, 1969.

(c) *Title Holding Companies* —

(1) ***In general.*** If a corporation described in section 501(c)(2) pays any amount of its net income for a taxable year to an organization exempt from taxation under section 501(a) (or would pay such an amount but for the fact that the expenses of collecting its income exceed its income), and if such corporation and such organization file a consolidated income tax return for such taxable year, then such corporation shall be treated, for purposes of the tax imposed by section 511(a), as being organized and operated for the same purposes as such organization, as well as for its title-holding purpose. Therefore, if an item of income of the section 501(c)(2) corporation is derived from a source which is related to the exempt function of the exempt organization to which such income is payable and with which such corporation files a consolidated return, such item is, together with all deductions directly connected therewith, excluded from the determination of unrelated business taxable income under section 512 and shall not be subject to the tax imposed by section 511(a). If, however, such item of income is derived from a source which is not so related, then such item, less all deductions directly connected therewith, is, subject to the modifications provided in section 512(b), unrelated business taxable income subject to the tax imposed by section 511(a).

(2) The provisions of subparagraph (1) of this paragraph may be illustrated by the following example:

Example. The income of X, a section 501(c)(2) corporation, is required to be distributed to exempt organization A. During the taxable year X realizes net income of $900,000 from source M and $100,000 from source N. Source M is related to A's exempt function, while source N is not so related. X and A file a consolidated return for such taxable year. X has net unrelated business income of $100,000, subject to the modifications in section 512(b).

(3) ***Cross reference.*** For rules relating generally to the filing of consolidated returns by certain organizations exempt from taxation under section 501(a), see section 1504(e) of the Code and § 1.1502-100.

(4) ***Effective dates.*** Subparagraphs (1) through (3) of this paragraph apply with respect to taxable years beginning after December 31, 1969. For taxable years beginning before January 1, 1970, a corporation described in section 501(c)(2) and otherwise exempt from taxation under section 501(a) is taxable upon its unrelated business taxable income only if such income is payable either:

(i) To a church or convention or association of churches, or

(ii) To any organization subject, for taxable years beginning before January 1, 1970, to the tax imposed by section 511(a)(1).

(d) The fact that any class of organizations exempt from taxation under section 501(a) is subject to the unrelated business income tax under section 511 and this section does not in any way enlarge the permissible scope of business activities of such class for purposes of the continued qualification of such class under section 501(a).

(e) *ABLE programs* —

(1) ***Unrelated business taxable income.*** A qualified ABLE program described in section 529A and § 1.529A-1(b)(14) generally is exempt from Federal income taxation, but is subject to taxes imposed by section 511 relating to the imposition of tax on unrelated business income. A qualified ABLE

program is required to file Form 990-T, "Exempt Organization Business Income Tax Return," if such filing would be required under the rules of §§ 1.6012-2(e) and 1.6012-3(a)(5) if the ABLE program were an organization described in those sections.

(2) ***Applicability date.*** This paragraph (e) applies to taxable years beginning after December 31, 2020.

[T.D. 6500, 25 FR 11737, Nov. 26, 1960, as amended by T.D. 7183, 37 FR 7884, Apr. 21, 1972; T.D. 7632, 44 FR 42681, July 20, 1979; T.D. 9923, 85 FR 74034, Nov. 19, 2020]

§ 1.511-3 Provisions generally applicable to the tax on unrelated business income.

(a) ***Assessment and collections.*** Since the taxes imposed by section 511 are taxes imposed by subtitle A of the Code, all provisions of law and of the regulations applicable to the taxes imposed by subtitle A are applicable to the assessment and collection of the taxes imposed by section 511. Organizations subject to the tax imposed by section 511(a)(1) are subject to the same provisions, including penalties, as are provided in the case of the income tax of other corporations. In the case of a trust subject to the tax imposed by section 511(b)(1), the fiduciaries for such trust are subject to the same provisions, including penalties, as are applicable to fiduciaries in the case of the income tax of other trusts. See section 6151, *et seq.*, and the regulations prescribed thereunder, for provisions relating to payment of tax.

(b) ***Returns.*** For requirements of filing annual returns with respect to unrelated business taxable income by organizations subject to the tax on such income, see section 6012, paragraph (e) of § 1.6012-2, and paragraph (a)(5) of § 1.6012-3.

(c) ***Taxable years, method of accounting, etc.*** The taxable year (fiscal year or calendar year, as the case may be) of an organization shall be determined without regard to the fact that such organization may have been exempt from tax during any prior period. See sections 441 and 446, and the regulations thereunder in this part, and section 7701 and the regulations in part 301 of this chapter (Regulations on Procedure and Administration). Similarly, in computing unrelated business taxable income, the determination of the taxable year for which an item of income or expense is taken into account shall be made under the provisions of sections 441, 446, 451, and 461, and the regulations thereunder, whether or not the item arose during a taxable year beginning before, on, or after the effective date of the provisions imposing a tax upon unrelated business taxable income. If a method for treating bad debts was selected in a return of income (other than an information return) for a previous taxable year, the taxpayer must follow such method in its returns under section 511, unless such method is changed in accordance with the provisions of § 1.166-1. A taxpayer which has not previously selected a method for treating bad debts may, in its first return under section 511, exercise the option granted in § 1.166-1.

(d) ***Foreign tax credit.*** See section 515 for provisions applicable to the credit for foreign taxes provided in section 901.

§ 1.511-4 Minimum tax for tax preferences.

The tax imposed by section 56 applies to an organization subject to tax under section 511 with respect to items of tax preference which enter into the computation of unrelated business taxable income. For this purpose, only those items of income and those deductions entering into the determination of the tax imposed by this section are considered in the determination of the items of tax preference under section 57. For rules relating to the minimum tax for tax preferences, see sections 56 through 58 and the regulations thereunder.

[T.D. 7564, 43 FR 40494, Sept. 12, 1978]

§ 1.512(a)-1 Definition.

(a) ***In general.*** Except as otherwise provided in § 1.512(a)-3, § 1.512(a)-4, or paragraph (f) of this section, section 512(a)(1) defines *unrelated business taxable income* as the gross income derived from any unrelated trade or business regularly carried on, less those deductions allowed by chapter 1 of the Internal Revenue Code (Code) which are directly connected with the carrying on of such trade or business, subject to certain modifications referred to in § 1.512(b)-1. To be deductible in computing unrelated business taxable income, therefore, expenses, depreciation, and similar items not only must qualify as deductions allowed by chapter 1 of the Code, but also must be directly connected with the carrying on of unrelated trade or business. Except as provided in paragraph (d)(2) of this section, to be *directly connected with* the conduct of unrelated business for purposes of section 512, an item of deduction must have proximate and primary relationship to the carrying on of that business. In the case of an organization with more than one unrelated trade or business, unrelated business taxable income is calculated separately with respect to each such trade or business. *See* § 1.512(a)-6. For the treatment of amounts of income or loss of common trust funds, see § 1.584-2(c)(3).

(b) ***Expenses attributable solely to unrelated business activities.*** Expenses, depreciation, and similar items attributable solely to the conduct of unrelated business activities are proximately and primarily related to that business activity, and therefore qualify for deduction to the extent that they meet the requirements of section 162, section 167, or other relevant provisions of the Code. Thus, for example, salaries of personnel employed full-time in carrying on unrelated business activities are directly connected with the conduct of that activity and are deductible in computing unrelated business taxable income if they otherwise qualify for deduction under the requirements of section 162.

(c) ***Dual use of facilities or personnel.*** Where facilities are used both to carry on exempt activities and to conduct unrelated trade or business activities, expenses, depreciation and similar items attributable to such facilities (as, for example, items of overhead), shall be allocated between the two uses on a reasonable basis. Similarly, where personnel are used both to carry on exempt activities and to conduct unrelated trade or business activities, expenses and similar items attributable to such personnel (as, for example, items of salary) shall be allocated between the two uses on a reasonable basis. The portion of any such item so allocated to the unrelated trade or business activity is proximately and primarily related to that business activity, and shall be allowable as a deduction in computing unrelated business taxable income in the manner and to the extent permitted by section 162, section 167, or other relevant provisions of the Code. Thus, for example, assume that X, an exempt organization subject to the provisions of section 511, pays its president a salary of $20,000 a year. X derives gross income from the conduct of unrelated trade or business activities. The president devotes approximately 10 percent of his time during the year to the unrelated business activity. For purposes of computing X's unrelated business taxable income, a deduction of $2,000 (10 percent of $20,000), would be allowable for the salary paid to its president. However, allocation of expenses, depreciation, and similar items is not reasonable if the cost of providing a good or service in a related and an unrelated activity is substantially the same, but the price charged for that good or service in the unrelated activity is greater than the price charged in the related activity and no adjustment is made to equalize the price difference for purposes of allocating expenses, depreciation, and similar items based on revenue between related and unrelated activities. For example, if a social club described in section 501(c)(7) charges nonmembers a higher price than it charges members for the same good or service but does not adjust the price of the good or service provided to members for purposes of allocating expenses, depreciation, and similar items attributable to the provision of that good or service, the allocation method is not reasonable.

(d) ***Exploitation of exempt activities*** —

(1) ***In general.*** In certain cases, gross income is derived from an unrelated trade or business activity which exploits an exempt activity. One example of such exploitation is the sale of advertising in a periodical of an exempt organization which contains editorial material related to the accomplishment of the organization's exempt purpose. Except as specified in subparagraph (2) of this paragraph and paragraph (f) of this section, in such cases, expenses, depreciation and similar items attributable to the conduct of the exempt activities are not deductible in computing unrelated business taxable income. Since such items are incident to an activity which is carried on in furtherance of the exempt purpose of the organization, they do not possess the necessary proximate and primary relationship to the unrelated trade or business activity and are therefore not directly connected with that business activity.

(2) ***Allowable deductions.*** Where an unrelated trade or business activity is of a kind carried on for profit by taxable organizations and where the exempt activity exploited by the business is a type of activity normally conducted by taxable organizations in pursuance of such business, expenses, depreciation, and similar items which are attributable to the exempt activity qualify as directly connected with the carrying on of the unrelated trade or business activity to the extent that:

(i) The aggregate of such items exceeds the income (if any) derived from or attributable to the exempt activity; and

(ii) The allocation of such excess to the unrelated trade or business activity does not result in a loss from such unrelated trade or business activity

Under the rule of the preceding sentence, expenses, depreciation and similar items paid or incurred in the performance of an exempt activity must be allocated first to the exempt activity to the extent of the income derived from or attributable to the performance of that activity. Furthermore, such items are in no event allocable to the unrelated trade or business activity exploiting such exempt activity to the extent that their deduction would result in a loss carryover or carryback with respect to that trade or business activity. Similarly, they may not be taken into account in computing unrelated business taxable income attributable to any unrelated trade or business activity not exploiting the same exempt activity. See paragraph (f) of this section for the application of these rules to periodicals published by exempt organizations.

(e) ***Examples.*** This section is illustrated by the following examples:

Example 1. W is an exempt business league with a large membership. Under an arrangement with an advertising agency W regularly mails brochures, pamphlets and other advertising materials to its members, charging the agency an agreed amount per enclosure. The distribution of the advertising materials does not contribute importantly to the accomplishment of the purpose for which W is granted exemption. Accordingly, the payments made to W by the advertising agency constitute gross income from an unrelated trade or business activity. In computing W's unrelated business taxable income, the expenses attributable solely to the conduct of the business, or allocable to such business under the rule of paragraph (c) of this section, are allowable as deductions in accordance with the provisions of section 162. Such deductions include the costs of handling and mailing, the salaries of personnel used full-time in the unrelated business activity and an allocable portion of the salaries of personnel used both to carry on exempt activities and to conduct the unrelated business activity. However, costs of developing W's membership and carrying on its exempt activities are not deductible. Those costs are necessary to the maintenance of the intangible asset exploited in the unrelated business activity—W's membership—but are incurred primarily in connection with W's

fundamental purpose as an exempt organization. As a consequence, they do not have proximate and primary relationship to the conduct of the unrelated business activity and do not qualify as directly connected with it.

Example 2. (i) P, a manufacturer of photographic equipment, underwrites a photography exhibition organized by M, an art museum described in section 501(c)(3). In return for a payment of $100,000, M agrees that the exhibition catalog sold by M in connection with the exhibit will advertise P's product. The exhibition catalog will also include educational material, such as copies of photographs included in the exhibition, interviews with photographers, and an essay by the curator of M's department of photography. For purposes of this example, assume that none of the $100,000 is a qualified sponsorship payment within the meaning of section 513(i) and § 1.513-4, that M's advertising activity is regularly carried on, and that the entire amount of the payment is unrelated business taxable income to M. Expenses directly connected with generating the unrelated business taxable income (i.e., direct advertising costs) total $25,000. Expenses directly connected with the preparation and publication of the exhibition catalog (other than direct advertising costs) total $110,000. M receives $60,000 of gross revenue from sales of the exhibition catalog. Expenses directly connected with the conduct of the exhibition total $500,000.
(ii) The computation of unrelated business taxable income is as follows:

(A) Unrelated trade or business (sale of advertising):		
Income	$100,000	
Directly-connected expenses	(25,000)	
Subtotal	75,000	$75,000
(B) Exempt function (publication of exhibition catalog):		
Income (from catalog sales)	60,000	
Directly-connected expenses	(110,000)	
Net exempt function income (loss)	(50,000)	(50,000)
Unrelated business taxable income		25,000

(iii) Expenses related to publication of the exhibition catalog exceed revenues by $50,000. Because the unrelated business activity (the sale of advertising) exploits an exempt activity (the publication of the exhibition catalog), and because the publication of editorial material is an activity normally conducted by taxable entities that sell advertising, the net loss from the exempt publication activity is allowed as a deduction from unrelated business income under paragraph (d)(2) of this section. In contrast, the presentation of an exhibition is not an activity normally conducted by taxable entities engaged in advertising and publication activity for purposes of paragraph (d)(2) of this section. Consequently, the $500,000 cost of presenting

> the exhibition is not directly connected with the conduct of the unrelated advertising activity and does not have a proximate and primary relationship to that activity. Accordingly, M has unrelated business taxable income of $25,000.

(f) ***Determination of unrelated business taxable income derived from sale of advertising in exempt organization periodicals*** —

(1) ***In general.*** Under section 513 (relating to the definition of unrelated trade or business) and § 1.513-1, amounts realized by an exempt organization from the sale of advertising in a periodical constitute gross income from an unrelated trade or business activity involving the exploitation of an exempt activity; namely, the circulation and readership of the periodical developed through the production and distribution of the readership content of the periodical. Paragraph (d) of this section provides for the allowance of deductions attributable to the production and distribution of the readership content of the periodical. Thus, subject to the limitations of paragraph (d)(2) of this section, where the circulation and readership of an exempt organization periodical are utilized in connection with the sale of advertising in the periodical, expenses, depreciation, and similar items of deductions attributable to the production and distribution of the editorial or readership content of the periodical shall qualify as items of deductions directly connected with the unrelated advertising activity. Subparagraphs (2) through (6) of this paragraph provide rules for determining the amount of unrelated business taxable income attributable to the sale of advertising in exempt organization periodicals. Subparagraph (7) of this paragraph provides rules for determining when the unrelated business taxable income of two or more exempt organization periodicals may be determined on a consolidated basis.

(2) ***Computation of unrelated business taxable income attributable to sale of advertising*** —

(i) ***Excess advertising costs.*** If the direct advertising costs of an exempt organization periodical (determined under subparagraph (6)(ii) of this paragraph) exceed gross advertising income (determined under subparagraph (3)(ii) of this paragraph), such excess shall be allowable as a deduction in determining unrelated business taxable income from any unrelated trade or business activity carried on by the organization.

(ii) ***Excess advertising income.*** If the gross advertising income of an exempt organization periodical exceeds direct advertising costs, paragraph (d)(2) of this section provides that items of deduction attributable to the production and distribution of the readership content of an exempt organization periodical shall qualify as items of deduction directly connected with unrelated advertising activity in computing the amount of unrelated business taxable income derived from the advertising activity to the extent that such items exceed the income derived from or attributable to such production and distribution, but only to the extent that such items do not result in a loss from such advertising activity. Furthermore, such items of deduction shall not qualify as directly connected with such advertising activity to the extent that their deduction would result in a loss carryback or carryover with respect to such advertising activity. Similarly, such items of deduction shall not be taken into account in computing unrelated business taxable income attributable to any unrelated trade or business activity other than such advertising activity. Thus:

(*a*) If the circulation income of the periodical (determined under subparagraph (3)(iii) of this paragraph) equals or exceeds the readership costs of such periodical (determined under subparagraph (6)(iii) of this paragraph), the unrelated business taxable income attributable to the periodical is the excess of the gross advertising income of the periodical over direct advertising costs; but

(*b*) If the readership costs of an exempt organization periodical exceed the circulation income of the periodical, the unrelated business taxable income is the excess, if any, of the total income attributable to the periodical (determined under subparagraph (3) of this paragraph) over the total periodical costs (as defined in subparagraph (6)(i) of this paragraph)

See subparagraph (7) of this paragraph for rules relating to the consolidation of two or more periodicals.

(iii) ***Examples.*** The application of this paragraph may be illustrated by the following examples. For purposes of these examples it is assumed that the production and distribution of the readership content of the periodical is related to the organization's exempt purpose.

Example 1. X, an exempt trade association, publishes a single periodical which carries advertising. During 1971, X realizes a total of $40,000 from the sale of advertising in the periodical (gross advertising income) and $60,000 from the sales of the periodical to members and nonmembers (circulation income). The total periodical costs are $90,000 of which $50,000 is directly connected with the sale and publication of advertising (direct advertising costs) and $40,000 is attributable to the production and distribution of the readership content (readership costs). Since the direct advertising costs of the periodical ($50,000) exceed gross advertising income ($40,000), pursuant to subdivision (i) of this subparagraph, the unrelated business taxable income attributable to advertising is determined solely on the basis of the income and deductions directly connected with the production and sale of the advertising:

Gross advertising revenue	$40,000
Direct advertising costs	(50,000)
Loss attributable to advertising	(10,000)

X has realized a loss of $10,000 from its advertising activity. This loss is an allowable deduction in computing X's unrelated business taxable income derived from any other unrelated trade or business activity.

Example 2. Assume the facts as stated in example 1, except that the circulation income of X periodical is $100,000 instead of $60,000, and that of the total periodical costs, $25,000 are direct advertising costs, and $65,000 are readership costs. Since the circulation

income ($100,000) exceeds the total readership costs ($65,000), pursuant to subdivision (ii)(*a*) of this subparagraph the unrelated business taxable income attributable to the advertising activity is $15,000, the excess of gross advertising income ($40,000) over direct advertising costs ($25,000).

Example 3. Assume the facts as stated in example 1, except that of the total periodical costs, $20,000 are direct advertising costs and $70,000 are readership costs. Since the readership costs of the periodical ($70,000), exceed the circulation income ($60,000), pursuant to subdivision (ii) (*b*) of this subparagraph the unrelated business taxable income attributable to advertising is the excess of the total income attributable to the periodical over the total periodical costs. Thus, X has unrelated business taxable income attributable to the advertising activity of $10,000 ($100,000 total income attributable to the periodical less $90,000 total periodical costs).

Example 4. Assume the facts as stated in example 1, except that the total periodical costs are $120,000 of which $30,000 are direct advertising costs and $90,000 are readership costs. Since the readership costs of the periodical ($90,000), exceed the circulation income ($60,000), pursuant to subdivision (ii) (*b*) of this subparagraph the unrelated business taxable income attributable to advertising is the excess, if any, of the total income attributable to the periodical over the total periodical costs. Since the total income of the periodical ($100,000) does not exceed the total periodical costs ($120,000), X has not derived any unrelated business taxable income from the advertising activity. Further, only $70,000 of the $90,000 of readership costs may be deducted in computing unrelated business taxable income since as provided in subdivision (ii) of this subparagraph, such costs may be deducted, to the extent they exceed circulation income, only to the extent they do not result in a loss from the advertising activity. Thus, there is no loss from such activity, and no amount may be deducted on this account in computing X's unrelated trade or business income derived from any other unrelated trade or business activity.

(3) ***Income attributable to exempt organization periodicals*** —

(i) ***In general.*** For purposes of this paragraph the total income attributable to an exempt organization periodical is the sum of its gross advertising income and its circulation income.

(ii) ***Gross advertising income.*** The term *gross advertising income* means all amounts derived from the unrelated advertising activities of an exempt organization periodical (or for purposes of this paragraph in the case of a taxable organization, all amounts derived from the advertising activities of the taxable organization).

(iii) ***Circulation income.*** The term *circulation income* means the income attributable to the production, distribution or circulation of a periodical (other than gross advertising income) including all amounts realized from or attributable to the sale or distribution of the readership content of the periodical, such as amounts realized from charges made for reprinting or republishing articles and special items in the periodical and amounts realized from sales of back issues. Where the right to receive an exempt organization periodical is associated with membership or similar status in such organization for which dues, fees or other charges are received (hereinafter referred to as *membership receipts*), circulation income includes the portion of such membership receipts allocable to the periodical (hereinafter referred to as *allocable membership receipts*). Allocable membership receipts is the amount which would have been charged and paid if:

(*a*) The periodical was that of a taxable organization.

(*b*) The periodical was published for profit, and

(*c*) The member was an unrelated party dealing with the taxable organization at arm's length

See subparagraph (4) of this paragraph for a discussion of the factors to be considered in determining allocable membership receipts of an exempt organization periodical under the standard described in the preceding sentence.

(4) ***Allocable membership receipts.*** The allocable membership receipts of an exempt organization periodical shall be determined in accordance with the following rules:

(i) ***Subscription price charged to nonmembers.*** If 20 percent or more of the total circulation of a periodical consist of sales to nonmembers, the subscription price charged to such nonmembers shall determine the price of the periodical for purposes of allocating membership receipts to the periodical.

(ii) ***Subscription price to nonmembers.*** If paragraph (f)(4)(i) of this section does not apply and if the membership dues from 20 percent or more of the members of an exempt organization are less than those received from the other members because the former members do not receive the periodical, the amount of the reduction in membership dues for a member not receiving the periodical shall determine the price of the periodical for purposes of allocating membership receipts to the periodical.

(iii) ***Pro rata allocation of membership receipts.*** Since it may generally be assumed that membership receipts and gross advertising income are equally available for all the exempt activities (including the periodical) of the organization, the share of membership receipts allocated to the periodical, where paragraphs (f)(4) (i) and (ii) of this section do not apply, shall be an amount equal to the organization's membership receipts multiplied by a fraction the numerator of which is the total periodical costs and the denominator of which is such costs plus the cost of other exempt activities of the organization. For example, assume that an exempt organization has total periodical costs of $30,000 and other exempt costs of $70,000. Further assume that the membership receipts of the organization are $60,000 and that paragraphs (f)(4) (i) and (ii) of this section do not apply. Under these circumstances $18,000 ($60,000 times $30,000/$100,000) is allocated to the periodical's circulation income.

(5) ***Examples.*** The rules set forth in paragraph (f)(4) of this section may be illustrated by the following examples. For purposes of these examples it is assumed that the exempt organization periodical contains advertising, and that the production and distribution of the readership content of the periodical is related to the organization's exempt purpose.

Example 1. U is an exempt scientific organization with 10,000 members who pay annual dues of $15 per year. One of U's activities is the publication of a monthly periodical which is distributed to all of its members. U also distributes 5,000 additional copies of its periodical to nonmember subscribers at a cost of $10 per year. Pursuant to paragraph (f)(4)(i) of this section, since the nonmember circulation of U's periodical represents $33^1/_3$ percent of its total circulation the subscription price charged to nonmembers will be used to determine the portion of U's membership receipts allocable to the periodical. Thus, U's allocable membership receipts will be $100,000 ($10 times 10,000 members), and U's total circulation income for the periodical will be $150,000 ($100,000 from members plus $50,000 from sales to nonmembers).

Example 2. Assume the facts as stated in example 1, except that U sells only 500 copies of its periodical to nonmembers, at a price of $10 per year. Assume further that U's members may elect not to receive the periodical, in which case their annual dues are reduced from $15 per year to $6 per year, and that only 3,000 members elect to receive the periodical and pay the full dues of $15 per year. U's stated subscription price to members of $9 consistently results in an excess of total income (including gross advertising income) attributable to the periodical over total costs of the periodical. Since the 500 copies of the periodical distributed to nonmembers represents only 14 percent of the 3,500 copies distributed, pursuant to paragraph (f)(4)(i) of this section, the $10 subscription price charged to nonmembers will not be used in determining the portion of membership receipts allocable to the periodical. On the other hand, since 70 percent of the members elect not to receive the periodical and pay $9 less per year in dues, pursuant to paragraph (f)(4)(ii) of this section, such $9 price will be used in determining the subscription price charged to members. Thus, the allocable membership receipts will be $9 per member, or $27,000 ($9 times 3,000 copies) and U's total circulation income will be $32,000 ($27,000 plus $5,000).

Example 3. (a) W, an exempt trade association, has 800 members who pay annual dues of $50 per year. W publishes a monthly journal the editorial content and advertising of which are directed to the business interests of its own members. The journal is distributed to all of W's members and no receipts are derived from nonmembers.
(b) W has total receipts of $100,000 of which $40,000 ($50 × 800) are membership receipts and $60,000 are gross advertising income. W's total costs for the journal and other exempt activities is $100,000. W has total periodical costs of $76,000 of which $41,000 are direct advertising costs and $35,000 are readership costs.

(c) Paragraph (f)(4)(i) of this section will not apply since no copies are available to nonmembers. Therefore, the allocation of membership receipts shall be made in accordance with paragraph (f)(4)(iii) of this section. Based upon pro rata allocation of membership receipts (40,000) by a fraction the numerator of which is total periodical costs ($76,000) and the denominator of which is the total costs of the journal and the other exempt activities ($100,000), $30,400 ($76,000/$100,000 times $40,000) of membership receipts is circulation income.

(6) ***Deductions attributable to exempt organization periodicals*** —

(i) ***In general.*** For purposes of this paragraph the term *total periodical costs* means the total deductions attributable to the periodical. For purposes of this paragraph the total periodical costs of an exempt organization periodical are the sum of the direct advertising costs of the periodical (determined under subdivision (ii) of this subparagraph) and the readership costs of the periodical (determined under subdivision (iii) of this subparagraph). Items of deduction properly attributable to exempt activities other than the publication of an exempt organization periodical may not be allocated to such periodical. Where items are attributable both to an exempt organization periodical and to other activities of an exempt organization, the allocation of such items must be made on a reasonable basis which fairly reflects the portion of such item properly attributable to each such activity. The method of allocation will vary with the

nature of the item, but once adopted, a reasonable method of allocation with respect to an item must be used consistently. Thus, for example, salaries may generally be allocated among various activities on the basis of the time devoted to each activity; occupancy costs such as rent, heat and electricity may be allocated on the basis of the portion of space devoted to each activity; and depreciation may be allocated on the basis of space occupied and the portion of the particular asset utilized in each activity. Allocations based on dollar receipts from various exempt activities will generally not be reasonable since such receipts are usually not an accurate reflection of the costs associated with activities carried on by exempt organizations.

(ii) ***Direct advertising costs.***

(*a*) The direct advertising costs of an exempt organization periodical include all expenses, depreciation, and similar items of deduction which are directly connected with the sale and publication of advertising as determined in accordance with paragraphs (a), (b), and (c) of this section. These items are allowable as deductions in the computation of unrelated business income of the organization for the taxable year to the extent they meet the requirements of section 162, section 167, or other relevant provisions of the Code. The items allowable as deductions under this subdivision do not include any items of deduction attributable to the production or distribution of the readership content of the periodical.

(*b*) The items allowable as deductions under this subdivision would include agency commissions and other direct selling costs, such as transportation and travel expenses, office salaries, promotion and research expenses, and direct office overhead directly connected with the sale of advertising lineage in the periodical. Also included would be other items of deduction commonly classified as advertising costs under standard account classification, such as art work and copy preparation, telephone, telegraph, postage, and similar costs directly connected with advertising.

(*c*) In addition to the items of deduction normally included in standard account classifications relating to advertising costs, it is also necessary to ascertain the portion of mechanical and distribution costs attributable to advertising lineage. For this purpose, the general account classifications of items includible in mechanical and distribution costs ordinarily employed in business-paper and consumer publication accounting provide a guide for the computation. Thus, the mechanical and distribution costs in such cases would include the portion of the costs and other expenses of composition, presswork, binding, mailing (including paper and wrappers used for mailing), and the bulk postage attributable to the advertising lineage of the publication. The portion of mechanical and distribution costs attributable to advertising lineage of the periodical will be determined on the basis of the ratio of advertising lineage to total lineage of the periodical, and the application of that ratio to the total mechanical and distribution costs of the periodical, where records are not kept in such a manner as to reflect more accurately the allocation of mechanical and distributions costs to advertising lineage of the periodical, and where there is no factor in the character of the periodical to indicate that such an allocation would be unreasonable.

(iii) ***Readership costs.*** The *readership costs* of an exempt organization periodical include expenses, depreciation or similar items which are directly connected with the production and distribution of the readership content of the periodical and which would otherwise be allowable as deductions in determining unrelated business taxable income under section 512 and the regulations thereunder if such production and distribution constituted an unrelated trade or

business activity. Thus, readership costs include all the items of deduction attributable to an exempt organization periodical which are not allocated to direct advertising costs under subdivision (ii) of this subparagraph, including the portion of such items attributable to the readership content of the periodical, as opposed to the advertising content, and the portion of mechanical and distribution costs which is not attributable to advertising lineage in the periodical.

(7) ***Consolidation*** —

(i) ***In general.*** Where an exempt organization subject to unrelated business income tax under section 511 publishes two or more periodicals for the production of income, it may treat the gross income from all (but not less than all) of such periodicals and the items of deduction directly connected with such periodicals (including readership costs of such periodicals), on a consolidated basis as if such periodicals were one periodical in determining the amount of unrelated business taxable income derived from the sale of advertising in such periodical. Such treatment must, however, be followed consistently and once adopted shall be binding unless the consent of the Commissioner is obtained as provided in sections 446(e) and § 1.446-1(e).

(ii) ***Production of income.*** For purposes of this subparagraph, an exempt organization periodical is *published for the production of income* if:

(*a*) The organization generally receives gross advertising income from the periodical equal to at least 25 percent of the readership costs of such periodical, and

(*b*) The publication of such periodical is an activity engaged in for profit

For purposes of the preceding sentence, the determination whether the publication of a periodical is an activity engaged in for profit is to be made by reference to objective standards taking into account all the facts and circumstances involved in each case. The facts and circumstances must indicate that the organization carries on the activity with the objective that the publication of the periodical will result in economic profit (without regard to tax consequences), although not necessarily in a particular year. Thus, an exempt organization periodical may be treated as having been published with such an objective even though in a particular year its total periodical costs exceed its total income. Similarly, if an exempt organization begins publishing a new periodical, the fact that the total periodical costs exceed the total income for the startup years because of a lack of advertising sales does not mean that the periodical was published without an objective of economic profit. The organization may establish that the activity was carried on with such an objective. This might be established by showing, for example, that there is a reasonable expectation that the total income, by reason of an increase in advertising sales, will exceed costs within a reasonable time. See § 1.183-2 for additional factors bearing on this determination.

(iii) ***Example.*** This subparagraph may be illustrated by the following example:

Example. Y, an exempt trade association, publishes three periodicals which it distributes to its members: a weekly newsletter, a monthly magazine, and quarterly journal. Both the monthly magazine and the quarterly journal contain advertising which accounts for gross advertising income equal to more than 25 percent of their respective readership costs. Similarly, the total income attributable to each such periodical has exceeded the total deductions attributable to each such periodical for substantially all the years they have been published. The newsletter carries no advertising and its annual subscription price is not intended to cover the cost of publication. The newsletter is a service of Y distributed

to all of its members in an effort to keep them informed of changes occurring in the business world and is not engaged in for profit. Under these circumstances, Y may consolidate the income and deductions from the monthly and quarterly journals in computing its unrelated business taxable income, but may not consolidate the income and deductions attributable to the publication of the newsletter with the income and deductions of its other periodicals since the newsletter is not published for the production of income.

(g) *Foreign organizations* —

(1) ***In general.*** The unrelated business taxable income of a foreign organization exempt from taxation under section 501(a) consists of:

(i) The organization's unrelated business taxable income which is derived from sources within the United States but which is not effectively connected with the conduct of a trade or business within the United States, plus

(ii) The organization's unrelated business taxable income effectively connected with the conduct of a trade or business within the United States (whether or not such income is derived from sources within the United States)

To determine whether income realized by a foreign organization is derived from sources within the United States or is effectively connected with the conduct of a trade or business within the United States, see part 1, subchapter N, chapter 1 of the Code (section 861 and following) and the regulations thereunder.

(2) ***Effective dates.*** Subparagraph (1) of this paragraph applies to taxable years beginning after December 31, 1969. For taxable years beginning on or before December 31, 1969, the unrelated business taxable income of a foreign organization exempt from taxation under section 501(a) consists of the organization's unrelated business taxable income which:

(i) For taxable years beginning after December 31, 1966, is effectively connected with the conduct of a trade or business within the United States, whether or not such income is derived from sources within the United States;

(ii) For taxable years beginning on or before December 31, 1966, is derived from sources within the United States.

(h) ***Applicability date.*** This section generally applies to taxable years beginning after December 12, 1967, except as provided in paragraph (g)(2) of this section, and except that paragraphs (a) through (c) of this section apply to taxable years beginning on or after December 2, 2020. For taxable years beginning before December 2, 2020, see these paragraphs as in effect and contained in 26 CFR part 1 revised as of April 1, 2020.

[T.D. 7392, 40 FR 58638, Dec. 18, 1975, as amended by T.D. 7438, 41 FR 44392, Oct. 8, 1976; T.D. 7935, 49 FR 1694, Jan. 13, 1984; T.D. 8991, 67 FR 20437, Apr. 25, 2002; T.D. 9933, 85 FR 77979, Dec. 2, 2020]

§ 1.512(a)-2 Definition applicable to taxable years beginning before December 13, 1967.

(a) ***In general.*** The unrelated business taxable income which is subject to the tax imposed by section 511 is the gross income, derived by any organization to which section 511 applies, from any unrelated trade or business regularly carried on by it, less the deductions allowed by chapter 1 of the Code which are directly

connected with the carrying on of such trade or business, subject to certain exceptions, additions, and limitations referred to below. In the case of an organization which regularly carries on two or more unrelated businesses, its unrelated business taxable income is the aggregate of its gross income from all such unrelated businesses, less the aggregate of the deductions allowed with respect to all such unrelated businesses. For provisions generally applicable to the unrelated business tax, see § 1.511-3, and for rules applicable to the determination of the adjusted basis of property, see paragraph (a)(2) of § 1.514(a)-1.

(b) ***Effective date.*** Except as provided in paragraph (f) of § 1.512(a)-1, this section is applicable with respect to taxable years beginning before December 13, 1967.

[T.D. 6500, 25 FR 11737, Nov. 26, 1960, as amended by T.D. 6939, 32 FR 17660, Dec. 12, 1967]

§ 1.512(a)-3 [Reserved]

§ 1.512(a)-4 Special rules applicable to war veterans organizations.

(a) ***In general.*** For taxable years beginning after December 31, 1969, this section provides special rules for the determination of the unrelated business taxable income of an organization described in section 501(c)(19). In general, the rules contained in sections 511 through 514 which are applicable to any organization listed in section 501(c) apply in determining the unrelated business taxable income of an organization described in section 501(c)(19). However, that amount which is paid by members to the organization for the purpose described in paragraph (b)(1) of this section, if set aside from other organizational monies and accounts in an insurance set aside, may be excluded from the unrelated business taxable income of the organization. The insurance set aside shall be used exclusively for providing insurance benefits, for the purposes specified in section 170(c)(4) of the Code, for the reasonable costs of administering the insurance program that are directly related to such set aside, or for the reasonable costs of distributing funds for section 170(c)(4) purposes. If an amount so set aside is used for any purposes other than those described in the preceding sentence, it shall be included in unrelated business taxable income without regard to any modifications provided by section 512(b), in the taxable year in which it is withdrawn from such set aside. Amounts will be considered to have been withdrawn from an insurance set aside if they are used in any manner inconsistent with providing insurance benefits, paying the reasonable costs of administering the insurance program for section 170(c)(4) purposes and for costs of distributing funds for section 170(c)(4) purposes. An example of a use of funds which would be considered a withdrawal would be the use of such funds as security for a loan.

(b) ***Insurance set aside*** —

(1) ***Purpose of payments by members.*** Payments by members (including commissions on such payments earned by the set aside as agent for an insurance company) into an insurance set aside must be for the sole purpose of obtaining life, sick, accident or health insurance benefits from the organization or for the reasonable costs of administration of the insurance program, except that such purpose is not violated when excess funds from an experience gain are utilized for those purposes specified in section 170(c)(4) or the reasonable costs of distributing funds for such purposes. Funds for any other purpose may not be set aside in the insurance set aside.

(2) ***Income from set aside.*** In addition to the payments by members described in paragraph (b)(1) of this section, only income from amounts in the insurance set aside (including commissions earned as agent for an insurance company) may be so set aside. Moreover unless such income is used for

providing insurance benefits, for those purposes specified in section 170(c)(4), or for reasonable costs of administration, such income must be set aside within the period described in paragraph (b)(3) of this section in order to avoid being included as an item of unrelated business taxable income under section 512(a)(4).

(3) ***Time within which income must be set aside.*** Income from amounts in the insurance set aside generally must be set aside in the taxable year in which it would be includible in gross income but for this section. However, income set aside on or before the date prescribed for filing the organization's return of unrelated business taxable income (whether or not it had such income) for the taxable year (including any extension of time) may, at the election of the organization, be treated as having been set aside in such taxable year.

(4) ***Computation of income from set aside.*** Income from amounts in the insurance set aside shall consist solely of items of investment income from, and other gains derived from dealings in, property in the set aside. The deductions allowed against such items of income or other gains are those amounts which are related to the production of such income or other gains. Only the amounts of income or other gain which are in excess of such deductions may be set aside in the insurance set aside.

(5) ***Requirements for set aside.*** An amount is not properly set aside if the organization commingles it with any amount which is not to be set aside. However, adequate records describing the amount set aside and indicating that it is to be used for the designated purpose are sufficient. Amounts that are set aside need not be permanently committed to such use either under state law or by contract. Thus, for example, it is not necessary that the organization place these funds in an irrevocable trust. Although set aside income may be accumulated, any accumulation which is unreasonable in amount or duration is evidence that the income was not accumulated for the purposes set forth. For purposes of the preceding sentence, accumulations which are reasonably necessary for the purpose of providing life, sick, health, or accident insurance benefits on the basis of recognized mortality or morbidity tables and assumed rates of interest under an actuarially acceptable method would not be unreasonable even though such accumulations are quite large and the time between the receipt by the organization of such amounts and the date of payment of the benefits is quite long. For example, an accumulation of income for 20 years or longer which is determined to be reasonable necessary to pay life insurance benefits to members, their dependents or designated beneficiaries, generally would not be an unreasonable accumulation. Income which has been set aside may be invested, pending the action contemplated by the set aside, without being regarded as having been used for other purposes.

[T.D. 7438, 41 FR 44393, Oct. 8, 1976]

§ 1.512(a)-5 Questions and answers relating to the unrelated business taxable income of organizations described in paragraphs (9) or (17) of section 501(c).

(a)

(1) ***Q-1.*** What does section 512(a)(3) provide with respect to organizations described in paragraphs (9) or (17) of section 501(c)?

(2) ***A-1.***

(i) In general, section 512(a)(3) provides rules for determining the unrelated business income tax of voluntary employees' beneficiary associations (VEBAs) and supplemental unemployment benefit trusts (SUBs). Under section 512(a)(3)(A), a Covered Entity's “unrelated business

taxable income" (UBTI) means all income except exempt function income. Under section 512(a)(3)(B), exempt function income includes income that is set aside for exempt purposes, as described in paragraph (b) of this section, subject to certain limits, as described in paragraph (c) of this section.

(ii) For purposes of this section, a "Covered Entity" means a VEBA or a SUB, and, to the extent provided in section 512(a)(3)(C), a corporation described in section 501(c)(2).

(b)

(1) *Q-2.* What is exempt function income?

(2) *A-2.*

(i) Under section 512(a)(3)(B), the exempt function income of a Covered Entity for a taxable year means the sum of—

(A) Amounts referred to in the first sentence of section 512(a)(3)(B) that are paid by members of the Covered Entity and employer contributions to the Covered Entity (collectively "member contributions");

(B) Other income of the Covered Entity (including earnings on member contributions) that is set aside for a purpose specified in section 170(c)(4) and reasonable costs of administration directly connected with such purpose; and

(C) Other income of the Covered Entity (including earnings on member contributions) that, subject to the limitation of section 512(a)(3)(E) (as described in paragraph (c) of this section), is set aside for the payment of life, sick, accident, or other benefits and reasonable costs of administration directly connected with such purpose.

(ii) The other income described in paragraphs (b)(2)(i)(B) and (C) of this section does not include the gross income derived from any unrelated trade or business (as defined in section 513) regularly carried on by the Covered Entity, computed as if the organization were subject to section 512(a)(1).

(c)

(1) *Q-3.* What are the limits on the amount that may be set aside?

(2) *A-3.*

(i) Pursuant to section 512(a)(3)(E)(i), and except as provided in paragraph (c)(2)(ii) of this section, the amount of investment income (as defined in paragraph (c)(2)(iii) of this section) set aside by a Covered Entity as of the close of a taxable year of such Covered Entity to provide for the payment of life, sick, accident, or other benefits (and administrative costs associated with the provision of such benefits) is not taken into account for purposes of determining the amount of that income that constitutes "exempt function income" to the extent that the total amount of the assets of the Covered Entity at the end of the taxable year set aside to provide for the payment of life, sick, accident, or other benefits (and related administrative costs) exceeds the applicable account limit for such taxable year of the Covered Entity (as described in paragraph (c)(2)(iv) of this section). Accordingly, any investment income a Covered Entity earns during the taxable year is subject to unrelated business income tax to the extent the Covered Entity's year-end assets exceed the applicable account limit. The rule in this paragraph (c)(2) applies regardless of whether the Covered Entity spends or retains (or is deemed to

spend or deemed to retain) that investment income during the course of the year. Thus, in addition to the unrelated business taxable income derived by a Covered Entity from any unrelated trade or business (as defined in section 513) regularly carried on by it, computed as if the organization were subject to section 512(a)(1), the unrelated business taxable income of a Covered Entity for a taxable year of such an organization includes the lesser of—

(A) The investment income of the Covered Entity for the taxable year; and

(B) The excess (if any) of—

(*1*) The total amount of the assets of the Covered Entity (excluding amounts set aside for a purpose described in section 170(c)(4)) as of the close of the taxable year; over

(*2*) The applicable account limit for the taxable year.

(ii) In accordance with section 512(a)(3)(E)(iii), a Covered Entity is not subject to the limits described in this paragraph (c) if substantially all of the contributions to the Covered Entity are made by employers who were tax exempt throughout the five year taxable period ending with the taxable year in which the contributions are made.

(iii) For purposes of this section, a Covered Entity's “investment income”—

(A) Means all income except—

(*1*) Member contributions described in paragraph (b)(2)(i)(A) of this section;

(*2*) Income set aside as described in paragraph (b)(2)(i)(B) of this section; or

(*3*) Income from any unrelated trade or business described in paragraph (b)(2)(ii) of this section; and

(B) Includes gain realized by the Covered Entity on the sale or disposition of any asset during such year (other than gain on the sale or disposition of assets of an unrelated trade or business described in paragraph (b)(2)(ii) of this section), except to the extent provided in section 512(a)(3)(D).

(C) For purposes of paragraph (c)(2)(iii)(B) of this section, the gain realized by a Covered Entity on the sale or disposition of an asset is equal to the amount realized by the organization over the basis of such asset in the hands of the organization reduced by any qualified direct costs attributable to such asset (under paragraphs (b), (c), and (d) of Q&A-6 of § 1.419A-1T).

(iv) In calculating the total amount of the assets of a Covered Entity as of the close of the taxable year, certain assets with useful lives extending substantially beyond the end of the taxable year (for example, buildings and licenses) are not to be taken into account to the extent they are used in the provision of life, sick, accident, or other benefits. By contrast, cash and securities (and other similar investments) held by a Covered Entity are taken into account in calculating the total amount of the assets of a Covered Entity as of the close of the taxable year because they may be used to pay welfare benefits, rather than merely used in the provision of such benefits.

(v) The determination of the applicable account limit for purposes of this paragraph (c) is made under the rules of sections 419A(c) and 419A(f)(7), except that a reserve for post-retirement medical benefits under section 419A(c)(2)(A) is not to be taken into account. See § 1.419A-2T for special rules relating to collectively bargained welfare benefit funds.

(vi) The limits of this paragraph (c) apply to a Covered Entity that is part of a 10 or more employer plan, as defined in section 419A(f)(6). For purposes of this paragraph (c), the account limit is determined as if the plan is not subject to the exception under section 419A(f)(6).

(vii) The following examples illustrate the calculation of a VEBA's UBTI.

(A) ***Example 1.***

(*1*) Employer *X* establishes a VEBA as of January 1, 2015, through which it provides health benefits to active employees. The plan year is the calendar year. The VEBA has no employee contributions or member dues, receives no income from an unrelated trade or business regularly carried on by the VEBA, and has no income set aside for a purpose specified in section 170(c)(4). The VEBA's investment income in 2020 is $1,000. As of December 31, 2020, the applicable account limit under section 512(a)(3)(E)(i) is $5,000 and the total amount of assets of the VEBA is $7,000.

(*2*) The VEBA's UBTI for 2020 is $1,000. This is because the UBTI is the lesser of the investment income for the year ($1,000) and the excess of the VEBA assets over the account limit at the end of the year ($7,000 over $5,000, or $2,000).

(B) ***Example 2.***

(*1*) The facts are the same as in the example in paragraph (c)(2)(vii)(A) of this section (*Example 1*), except that the VEBA's applicable account limit under section 512(a)(3)(E)(i) as of December 31, 2020, is $6,500.

(*2*) The VEBA's UBTI for 2020 is $500. This is because the UBTI for 2020 is the lesser of the investment income for the year ($1,000) and the excess of the VEBA assets over the account limit at the end of the year ($7,000 over $6,500, or $500).

(C) ***Example 3.***

(*1*) Employer *Y* contributes to a VEBA through which *Y* provides health benefits to active and retired employees. The plan year is the calendar year. At the end of 2020, there was no carryover of excess contributions within the meaning of section 419(d), the balance in the VEBA was $25,000, the Incurred but Unpaid (IBU) claims reserve was $6,000, the reserve for post-retirement medical benefits (PRMB) (computed in accordance with section 419A(c)(2)) was $19,000, and there were no existing reserves within the meaning of section 512(a)(3)(E)(ii). During 2021, the VEBA receives $70,000 in employer contributions and $5,000 in investment income, pays $72,000 in benefit payments and $7,000 in administrative expenses, and receives no income from an unrelated trade or business regularly carried on by the VEBA. All the 2021 benefit payments are with respect to active employees and the IBU claims reserve (that is, the account limit under section 419A(c)(1)) at the end of 2021 was $7,200. The reserve for PRMB at the end of 2021 is $20,000. All amounts designated as “administrative expenses” are expenses incurred in connection with the administration of the employee health benefits. “Investment income” is net of

administrative costs incurred in the production of the investment income (for example, investment management and/or brokerage fees). Only employers contributed to the VEBA (that is, there were no employee contributions or member dues/fees). The VEBA does not set aside any income for the purpose specified in section 170(c)(4).

(2) The total amount of assets of the VEBA at the end of 2021 is $21,000 (that is, $25,000 beginning of year balance + $70,000 contributions + $5,000 investment income−($72,000 in benefit payments + $7,000 in administrative expenses)).

(3) The applicable account limit under section 512(a)(3)(E)(i) (that is, the account limit under section 419A(c), excluding the reserve for post-retirement medical benefits) is the IBU claims reserve ($7,200).

(4) The total amount of assets of the VEBA as of the close of the year ($21,000) exceeds the applicable account limit ($7,200) by $13,800.

(5) The unrelated business taxable income of the VEBA is $5,000 (that is, the lesser of investment income ($5,000) and the excess of the amount of assets of the VEBA as of the close of the taxable year over the applicable account limit ($13,800)).

(D) ***Example 4.***

(1) The facts are the same as in the example in paragraph (c)(2)(vii)(C) of this section (*Example 3*) except that the 2020 year-end balance was $15,000.

(2) The total amount of assets in the VEBA at the end of 2021 is $11,000 (that is, $15,000 beginning of year balance + $70,000 contributions + $5,000 investment income−($72,000 in benefit payments + $7,000 in administrative expenses)).

(3) The applicable account limit under section 512(a)(3)(E)(i) remains $7,200.

(4) The total amount of assets of the VEBA as of the close of the year ($11,000) exceeds the applicable account limit ($7,200) by $3,800.

(5) The VEBA's unrelated business taxable income is $3,800 (that is, the lesser of investment income ($5,000) and the excess of the total amount of assets of the VEBA at the close of the taxable year over the applicable account limit ($3,800)).

(d)

(1) ***Q-4.*** What is the effective date of the amendments to section 512(a)(3) and what transition rules apply to “existing reserves for post-retirement medical or life insurance benefits”?

(2) ***A-4.***

(i) The amendments to section 512(a)(3), made by the Tax Reform Act of 1984, apply to income earned by a Covered Entity after December 31, 1985, in the taxable years of such an organization ending after such date.

(ii) Section 512(a)(3)(E)(ii)(I) provides that income that is attributable to “existing reserves for post-retirement medical or life insurance benefits” will not be treated as unrelated business taxable income. This includes income that is either directly or indirectly attributable to existing reserves. An “existing reserve for post-retirement medical or life insurance benefits” (as defined in section 512(a)(3)(E)(ii)(II)) is the total amount of assets actually set aside by a Covered

Entity on July 18, 1984 (calculated in the manner set forth in paragraph (c) of this section, and adjusted under paragraph (c) of Q&A-11 of § 1.419-1T), reduced by employer contributions to the fund on or before such date to the extent such contributions are not deductible for the taxable year of the employer including July 18, 1984, and for any prior taxable year of the employer, for purposes of providing such post-retirement benefits. For purposes of the preceding sentence only, an amount that was not actually set aside on July 18, 1984, will be treated as having been actually set aside on such date if the amount was—

(A) Incurred by the employer (without regard to section 461(h)) as of the close of the last taxable year of the Covered Entity ending before July 18, 1984; and

(B) Actually contributed to the Covered Entity within $8^{1}/_{2}$ months following the close of such taxable year.

(iii) In addition, section 512(a)(3)(E)(ii)(I) applies to existing reserves for such post-retirement benefits only to the extent that such "existing reserves" do not exceed the amount that could be accumulated under the principles set forth in Revenue Rulings 69-382, 1969-2 CB 28; 69-478, 1969-2 CB 29; and 73-599, 1973-2 CB 40. Thus, amounts attributable to any such excess "existing reserves" are not within the transition rule of section 512(a)(3)(E)(ii)(I) even though they were actually set aside on July 18, 1984. See § 601.601(d)(2)(ii)(*b*) of this chapter.

(iv) All post-retirement medical or life insurance benefits (or other benefits to the extent paid with amounts set aside to provide post-retirement medical or life insurance benefits) provided after July 18, 1984 (whether or not the employer has maintained a reserve or fund for such benefits) are to be charged, first, against the "existing reserves" within the transition rule of section 512(a)(3)(E)(ii)(I) (including amounts attributable to "existing reserves" within the transition rule of section 512(a)(3)(E)(ii)(I) for post-retirement medical benefits or for post-retirement life insurance benefits (as the case may be)) and, second, against all other amounts. For purposes of this paragraph (d)(2)(iv), the qualified direct cost of an asset with a useful life extending substantially beyond the end of the taxable year (as determined under Q&A-6 of § 1.419-1T) will be treated as a benefit provided and thus charged against the "existing reserve" based on the extent to which such asset is used in the provision of post-retirement medical benefits or post-retirement life insurance benefits (as the case may be). All plans of an employer providing post-retirement medical benefits are to be treated as one plan for purposes of section 512(a)(3)(E)(ii)(III), and all plans of an employer providing post-retirement life insurance benefits are to be treated as one plan for purposes of section 512(a)(3)(E)(ii)(III).

(v) In calculating the unrelated business taxable income of a Covered Entity for a taxable year of such organization, the total income of the Covered Entity for the taxable year is reduced by the income attributable to "existing reserves" within the transition rule of section 512(a)(3)(E)(ii)(I) before such income is compared to the excess of the total amount of the assets of the Covered Entity as of the close of the taxable year over the applicable account limit for the taxable year.

(vi) The following example illustrates the calculation of UBTI for a VEBA that has existing reserves.

(A) ***Example.*** Assume that the total income of a VEBA for a taxable year is $1,000, and that the excess of the total amount of the assets of the VEBA as of the close of the taxable year over the applicable account limit is $600. Assume also that of the $1,000 of total income, $540 is attributable to "existing reserves" within the transition rule of section 512(a)(3)(E)(ii)(I). The unrelated business taxable income of this VEBA for the taxable year is $460, determined as the lesser of the following two amounts:

(1) The total income of the VEBA for the taxable year, reduced by the extent to which such income is attributable to "existing reserves" within the meaning of the transition rule of section 512(a)(3)(E)(ii)(I) ($1,000−$540 = $460); and

(2) The excess of the total amount of the assets of the VEBA as of the close of the taxable year over the applicable account limit ($600).

(B) [Reserved]

(e)

(1) *Q-5.* What is the applicability date of this section?

(2) *A-5.* Except as otherwise provided in this paragraph (e)(2), this section is applicable to taxable years beginning on or after December 10, 2019. For rules that apply to earlier periods, see § 1.512(a)-5T, as contained in 26 CFR part 1, revised April 1, 2019.

[T.D. 9886, 84 FR 67373, Dec. 10, 2019]

§ 1.512(a)-6 Special rule for organizations with more than one unrelated trade or business.

(a) *More than one unrelated trade or business* —

(1) *In general.* An organization with more than one unrelated trade or business must compute unrelated business taxable income (UBTI) separately with respect to each such trade or business, without regard to the specific deduction in section 512(b)(12), including for purposes of determining any net operating loss (NOL) deduction. An organization with more than one unrelated trade or business computes its total UBTI under paragraph (g) of this section.

(2) *Separate trades or businesses.* An organization determines whether it regularly carries on unrelated trades or businesses by applying sections 511 through 514. For purposes of section 512(a)(6)(A) and paragraph (a)(1) of this section, an organization identifies its separate unrelated trades or businesses using the methods described in paragraphs (b) through (e) of this section.

(3) *Reporting changes in identification.* An organization that changes the identification of a separate unrelated trade or business under paragraph (a)(2) of this section must report the change in the taxable year of that change in accordance with forms and instructions. For this purpose, a change in identification of a separate unrelated trade or business includes the changed identification of the separate unrelated trade or business with respect to a partnership interest that was incorrectly designated as a qualifying partnership interest (QPI). In the case of an incorrect designation of a QPI, paragraph (c)(2)(iii) of this section (regarding designation of qualifying partnership interests) does not apply. In all cases, to report the change in identification, an organization must provide the following information with respect to each separate change in identification—

(i) The identification of the separate unrelated trade or business in the previous taxable year;

(ii) The identification of the separate unrelated trade or business in the current taxable year; and

(iii) The reason for the change.

(b) *North American Industry Classification System* —

(1) ***In general.*** Except as provided in paragraphs (c) through (e) of this section, an organization identifies each of its separate unrelated trades or businesses using the first two digits of the North American Industry Classification System code (NAICS 2-digit code) that most accurately describes the unrelated trade or business based on the more specific NAICS code, such as at the 6-digit level, that describes the activity it conducts and subject to the requirements of paragraph (b)(2) and (3) of this section. The descriptions in the current NAICS manual (available at *www.census.gov*) of trades or businesses using more than two digits of the NAICS codes are relevant in this determination. In the case of the sale of goods, both online and in stores, the separate unrelated trade or business is identified by the goods sold in stores if the same goods generally are sold both online and in stores.

(2) ***Codes must identify the unrelated trade or business.*** The NAICS 2-digit code must identify the unrelated trade or business in which the organization engages (directly or indirectly) and not activities the conduct of which are substantially related to the exercise or performance by such organization of its charitable, educational, or other purpose or function constituting the basis for its exemption under section 501 (or, in the case of an organization described in section 511(a)(2)(B), to the exercise or performance of any purpose or function described in section 501(c)(3)). For example, a college or university described in section 501(c)(3) cannot use the NAICS 2-digit code for educational services to identify all its separate unrelated trades or businesses, and a qualified retirement plan described in section 401(a) cannot use the NAICS 2-digit code for finance and insurance to identify all of its unrelated trades or businesses.

(3) ***Codes only reported once.*** An organization will report each NAICS 2-digit code only once. For example, a hospital organization that operates several hospital facilities in a geographic area (or multiple geographic areas), all of which include pharmacies that sell goods to the general public, would include all the pharmacies under the NAICS 2-digit code for retail trade, regardless of whether the hospital organization keeps separate books and records for each pharmacy.

(c) ***Activities in the nature of investments*** —

(1) ***In general.*** An organization's activities in the nature of investments (investment activities) are treated collectively as a separate unrelated trade or business for purposes of section 512(a)(6) and paragraph (a) of this section. Except as provided in paragraphs (c)(7) and (c)(8) of this section, an organization's investment activities are limited to its—

(i) Qualifying partnership interests (described in paragraph (c)(2) of this section);

(ii) Qualifying S corporation interests (described in paragraph (e)(2)(i) of this section); and

(iii) Debt-financed property or properties (within the meaning of section 514).

(2) ***Qualifying partnership interests*** —

(i) ***Directly-held partnership interests.*** An interest in a partnership is a qualifying partnership interest (QPI) if the exempt organization holds a direct interest in the partnership (directly-held partnership interest) that meets the requirements of either the de minimis test (described in paragraph (c)(3) of this section) or the participation test (described in paragraph (c)(4) of this section).

(ii) ***Indirectly-held partnership interests*** —

(A) ***Look through rule.*** If an organization holds a direct interest in a partnership but that directly-held partnership interest is not a QPI because it does not meet the requirements of the de minimis test (described in paragraph (c)(3) of this section) or the participation

test (described in paragraph (c)(4) of this section), any partnership in which the organization holds an indirect interest through the directly-held partnership interest (indirectly-held partnership interest) may be a QPI if the indirectly-held partnership interest meets the requirements of paragraph (c)(2)(ii)(B) or (c)(2)(ii)(C) of this section.

(B) ***Indirectly-held partnership interests that meet the requirements of the de minimis test.*** An indirectly-held partnership interest meets the requirements of this paragraph (c)(2)(ii)(B) if the indirectly-held partnership interest meets the requirements of the de minimis test described in paragraph (c)(3) of this section with regard to the organization. For example, if an organization directly holds 50 percent of the capital interests of a partnership and the directly-held partnership holds 4 percent of the capital and profits interest of lower-tier partnership A, the organization may aggregate its interest in lower-tier partnership A with its other QPIs because the organization indirectly holds 2 percent of the capital and profits interests of lower-tier partnership A (4 percent × 50 percent).

(C) ***Indirectly-held partnership interests that meet the requirements of the participation test.*** An indirectly-held partnership interest meets the requirements of this paragraph (c)(2)(ii)(C) if the indirectly-held partnership interest meets the requirements of the participation test (described in paragraph (c)(4) of this section) with respect to the partnership that directly owns the interest in the indirectly-held partnership. For purposes of applying the participation test to a partnership, the term *organization* in paragraph (c)(4) of this section refers to the partnership that directly holds the indirectly-held partnership interest being tested for QPI status. Additionally, the list of officers, directors, trustees, or employees of an organization found in paragraphs (c)(4)(iii)(B) and (C) includes a general partner that directly owns an interest in the lower-tier partnership.

(D) ***Example.***

(*1*) Organization D is described in section 501(c) and is exempt from Federal income tax under section 501(a). Organization D owns 50 percent of the capital interest in Partnership A. Partnership A owns 30 percent of the capital interest in Partnership B, but Partnership A does not significantly participate in Partnership B within the meaning of paragraph (c)(4)(iii) of this section. Further, Partnership B owns 15 percent of the capital interest in Partnership C, in which Partnership B does not significantly participate within the meaning of paragraph (c)(4)(iii) of this section. No other organizations related (within the meaning of paragraph (c)(4)(ii) of this section) to either Organization D or the partnerships owns an interest in any of the lower-tier partnerships.

(*2*) Neither the interest in Partnership A nor B is a QPI. Organization D's interest in Partnership A does not meet the requirements of either the de minimis test or the participation test because it owns 50 percent of the interest in the partnership. Organization D's indirect interest in Partnership B (50 percent of 30 percent, or 15 percent) does not meet the de minimis test. Additionally, because Partnership A owns greater than 20 percent interest in Partnership B, Partnership A's interest in Partnership B does not meet the participation test. However, Organization D's interest in Partnership C is a QPI because Partnership C meets the participation test. That is, Partnership B holds a 15 percent interest in Partnership C and does not significantly participate in Partnership C.

(iii) ***Designation.*** An organization that has a partnership interest meeting the requirements of paragraph (c)(2)(i) or (ii) of this section in a taxable year may designate that partnership interest as a QPI by including its share of partnership gross income (and directly connected deductions) with the gross income (and directly connected deductions) from its other investment activities (see paragraph (c)(1) of this section) in accordance with forms and instructions. Any partnership interest that is designated as a QPI remains a QPI unless and until it no longer meets the requirements of paragraph (c)(2)(i) or (ii) of this section. For example, if an organization designates a directly-held partnership interest that meets the requirements of the de minimis rule as a QPI in one taxable year, the organization cannot, in the next taxable year, use NAICS 2-digit codes to describe the partnership trades or businesses that are unrelated trades or businesses with respect to the organization unless the directly-held partnership interest fails to meet the requirements of both the de minimis test and the participation test (after application of the grace period described in paragraph (c)(6) of this section, if appropriate).

(3) ***De minimis test.*** A partnership interest is a QPI that meets the requirements of the de minimis test if the organization holds directly (within the meaning of paragraph (c)(2)(i) of this section) or indirectly (within the meaning of paragraph (c)(2)(ii) of this section) no more than 2 percent of the profits interest and no more than 2 percent of the capital interest during the organization's taxable year with which or in which the partnership's taxable year ends.

(4) ***Participation test*** —

(i) ***In general.*** A partnership interest is a QPI that meets the requirements of the participation test if the organization holds directly (within the meaning of paragraph (c)(2)(i) of this section) or indirectly (within the meaning of paragraph (c)(2)(ii) of this section) no more than 20 percent of the capital interest during the organization's taxable year with which or in which the partnership's taxable year ends and the organization does not significantly participate in the partnership within the meaning of paragraph (c)(4)(iii) of this section.

(ii) ***Combining related interests.*** When determining an organization's percentage interest in a partnership for purposes of paragraph (c)(4)(i) of this section, the interests of a supporting organization (as defined in section 509(a)(3) and § 1.509(a)-4), other than a Type III supporting organization (as defined in § 1.509(a)-4(i)) that is not a parent of its supported organization, or of a controlled entity (as defined in section 512(b)(13)(D) and § 1.512(b)-1(l)) in the same partnership will be taken into account. For example, if an organization owns 10 percent of the capital interests in a partnership, and its Type I supporting organization owns an additional 15 percent capital interest in that partnership, the organization would not meet the requirements of the participation test because its aggregate percentage interest exceeds 20 percent (10 percent + 15 percent = 25 percent).

(iii) ***Significant Participation.*** An organization significantly participates in a partnership if—

(A) The organization, by itself, may require the partnership to perform, or may prevent the partnership from performing (other than through a unanimous voting requirement or through minority consent rights), any act that significantly affects the operations of the partnership;

(B) Any of the organization's officers, directors, trustees, or employees have rights to participate in the management of the partnership at any time;

(C) Any of the organization's officers, directors, trustees, or employees have rights to conduct the partnership's business at any time; or

(D) The organization, by itself, has the power to appoint or remove any of the partnership's officers or employees or a majority of directors.

(5) *Determining percentage interest* —

(i) ***Profits interest.*** For purposes of the de minimis test described in paragraph (c)(3) of this section, an organization's profits interest in a partnership is determined in the same manner as its distributive share of partnership taxable income. See section 704(b) (relating to the determination of the distributive share by the income or loss ratio) and §§ 1.704-1 through 1.704-4.

(ii) ***Capital interest.*** For purposes of the de minimis test (described in paragraph (c)(3) of this section) and the participation test (described in paragraph (c)(4)(i) of this section), in the absence of a provision in the partnership agreement, an organization's capital interest in a partnership is determined on the basis of its interest in the assets of the partnership which would be distributable to such organization upon its withdrawal from the partnership, or upon liquidation of the partnership, whichever is the greater.

(iii) ***Average percentage interest.*** For purposes of the de minimis test (described in paragraph (c)(3) of this section) and the participation test (described in paragraph (c)(4)(i) of this section), an organization determines its percentage interest by taking the average of the organization's percentage interest at the beginning and the end of the partnership's taxable year, or, in the case of a partnership interest held for less than a year, the percentage interest held at the beginning and end of the period of ownership within the partnership's taxable year. For example, if an organization acquires an interest in a partnership that files on a calendar year basis in May and the partnership reports on Schedule K-1 (Form 1065) that the partner held a 3 percent profits interest at the date of acquisition but held a 1 percent profits interest at the end of the calendar year, the organization will be considered to have held 2 percent of the profits interest in that partnership for that year ((3 percent + 1 percent)/2).

(iv) ***Reliance on Schedule K-1 (Form 1065).*** When determining the organization's average percentage interest (described in paragraph (c)(5)(iii) of this section) in a partnership for purposes of the de minimis test (described in paragraph (c)(3) of this section) and the participation test (described in paragraph (c)(4) of this section), an organization may rely on the Schedule K-1 (Form 1065) (or its successor) it receives from the partnership if the form lists the organization's percentage profits interest or its percentage capital interest, or both, at the beginning and end of the year. However, the organization may not rely on the form to the extent that any information about the organization's percentage interest is not specifically provided. For example, if the Schedule K-1 (Form 1065) an organization receives from a partnership lists the organization's profits interest as “variable” but lists its percentage capital interest at the beginning and end of the year, the organization may rely on the form only with respect to its percentage capital interest.

(6) ***Changes in percentage interest.*** A partnership interest that fails to meet the requirements of the de minimis test (described in paragraph (c)(3) of this section) or the participation test (described in paragraph (c)(4) of this section) because of an increase in percentage interest in the organization's current taxable year may be treated for the taxable year of the change as meeting the requirements of the test it met in the prior taxable year if—

(i) The partnership interest met the requirements of the de minimis test or participation test, respectively, in the organization's prior taxable year without application of this paragraph (c)(6);

(ii) The increase in percentage interest is solely due to the actions of one or more partners other than the organization; and

(iii) In the case of a partnership interest that met the requirements of the participation test in the prior taxable year, the interest of the partner or partners that caused the increase in paragraph (c)(6)(ii) of this section was not combined for the prior taxable year and is not combined for the taxable year of the change with the organization's partnership interest for purposes of paragraph (c)(4)(ii) of this section.

(7) ***UBTI from the investment activities of organizations subject to section 512(a)(3).*** For purposes of paragraph (c)(1) of this section, UBTI from the investment activities of an organization subject to section 512(a)(3) includes any amount that—

(i) Would be excluded from the calculation of UBTI under section 512(b)(1), (2), (3), or (5) if the organization were subject to section 512(a)(1);

(ii) Is attributable to income set aside (and not in excess of the set aside limit described in section 512(a)(3)(E)), but not used, for a purpose described in section 512(a)(3)(B)(i) or (ii); or

(iii) Is in excess of the set aside limit described in section 512(a)(3)(E).

(8) ***Limitations*** —

(i) ***Social clubs.*** Paragraphs (c)(2) (regarding QPIs) and (c)(9) (transition rule for certain partnership interests) of this section do not apply to social clubs described in section 501(c)(7).

(ii) ***General partnership interests.*** Any partnership in which an organization, or an organization whose interest is combined with that organization's interest for purposes of paragraph (c)(4)(ii) of this section, is a general partner under applicable state law is not a QPI within the meaning of paragraph (c)(2) of this section, regardless of the organization's percentage interest. Such partnership interest cannot be a QPI for any organization or for any of the organizations whose interest is combined with that organization's interest for purposes of paragraph (c)(4)(ii) of this section.

(iii) ***Application of other sections.*** This paragraph (c) does not otherwise impact application of section 512(c) and the fragmentation rule under section 513(c).

(9) ***Transition rule for certain partnership interests*** —

(i) ***In general.*** If a directly-held partnership interest acquired prior to August 21, 2018, is not a QPI, an organization may treat such partnership interest as a separate unrelated trade or business for purposes of section 512(a)(6) regardless of the number of unrelated trades or businesses directly or indirectly conducted by the partnership. For example, if an organization has a 35 percent capital interest in a partnership acquired prior to August 21, 2018, it can treat the partnership as a single trade or business even if the partnership's investments generated UBTI from lower-tier partnerships that were engaged in multiple trades or businesses. A partnership interest acquired prior to August 21, 2018, will continue to meet the requirement of this rule even if the organization's percentage interest in such partnership changes before the end of the transition period (see paragraph (c)(9)(iii) of this section).

(ii) ***Exclusivity.*** An organization may apply either the transition rule in paragraph (c)(9)(i) of this section or the look-through rule in paragraph (c)(2)(ii) of this section, but not both, to a partnership interest described in paragraph (c)(9)(i) of this section that also qualifies for application of the look-through rule described in paragraph (c)(2)(ii).

(iii) ***Transition period.*** An organization may rely on this transition rule until the first day of the organization's first taxable year beginning after December 2, 2020.

(d) ***Income from certain controlled entities*** —

(1) ***Specified payments from controlled entities.*** If an organization (controlling organization) controls another entity (within the meaning of section 512(b)(13)(D)) (controlled entity), all specified payments (as defined in section 512(b)(13)(C)) received by a controlling organization from that controlled entity are treated as gross income from a separate unrelated trade or business for purposes of paragraph (a) of this section. If a controlling organization receives specified payments from two different controlled entities, the payments from each controlled entity are treated as a separate unrelated trade or business. For example, a controlling organization that receives rental payments from two controlled entities has two separate unrelated trades or businesses, one for each controlled entity. The specified payments from a controlled entity are treated as gross income from one trade or business regardless of whether the controlled entity engages in more than one unrelated trade or business or whether the controlling organization receives more than one type of specified payment from that controlled entity.

(2) ***Certain amounts derived from controlled foreign corporations.*** All amounts included in UBTI under section 512(b)(17) are treated as income derived from a separate unrelated trade or business for purposes of paragraph (a) of this section.

(e) ***S corporation interests*** —

(1) ***In general.*** Except as provided in paragraph (e)(2) of this section, if an organization owns stock in an S corporation (S corporation interest), such S corporation interest is treated as an interest in a separate unrelated trade or business for purposes of paragraph (a) of this section. Thus, if an organization owns two S corporation interests, neither of which is described in paragraph (e)(2) of this section, the exempt organization reports two separate unrelated trades or businesses, one for each S corporation interest. The UBTI from an S corporation interest is the amount described in section 512(e)(1)(B).

(2) ***Exception for a qualifying S corporation interest.*** Notwithstanding paragraph (e)(1) of this section, an organization may aggregate its UBTI from an S corporation interest with its UBTI from other investment activities (described in paragraph (c)(1) of this section) if the organization's ownership interest in the S corporation meets the criteria for a QPI as described in paragraph (c)(2)(i) of this section (substituting “S corporation” for “partnership” and “shareholder” or “shareholders” for “partner” or “partners,” as applicable, throughout paragraphs (c)(2)(i), (c)(3), (c)(4), (c)(5)(iii), (c)(5)(iv), and (c)(6) of this section; “no more than 2 percent of stock ownership” for “no more than 2 percent of the profits interest and no more than 2 percent of the capital interest” in paragraph (c)(3) of this section; “no more than 20 percent of stock ownership” in place of “no more than 20 percent of the capital interest” in paragraph (c)(4)(i) of this section; and “Schedule K-1 (Form 1120-S)” for “Schedule K-1 (Form 1065)” for purposes of paragraph (c)(5)(iv) of this section). Paragraphs (c)(5)(i) and (c)(5)(ii) do not apply for purposes of determining an organization's ownership interest in an S corporation; rather, the average percentage stock ownership determined under paragraph (c)(5)(iii) of this section applies for purposes of this paragraph (e)(2). For purposes of paragraph (c)(5)(iv) of

this section, an organization can rely on the Schedule K-1 (Form 1120-S) (or its successor) it receives from the S corporation only if the form lists information sufficient to determine the organization's percentage of stock ownership for the year. A Schedule K-1 (Form 1120-S) that reports "zero" as the organization's number of shares of stock in either the beginning or end of the S corporation's taxable year does not list information sufficient to determine the organization's percentage of stock ownership for the year. The grace period described in paragraph (c)(6) of this section applies to changes in an exempt organization's percentage of stock ownership in an S corporation.

(f) ***Allocation of deductions.*** An organization must allocate deductions between separate unrelated trades or businesses using the method described in § 1.512(a)-1(c).

(g) ***Total UBTI*** —

(1) ***In general.*** The total UBTI of an organization with more than one unrelated trade or business is the sum of the UBTI computed with respect to each separate unrelated trade or business (as identified under paragraph (a)(2) of this section and subject to the limitation described in paragraph (g)(2) of this section), less a charitable contribution deduction, an NOL deduction for losses arising in taxable years beginning before January 1, 2018 (pre-2018 NOLs), and a specific deduction under section 512(b)(12), as applicable.

(2) ***UBTI not less than zero.*** For purposes of paragraph (g)(1) of this section, the UBTI with respect to any separate unrelated trade or business identified under paragraph (a)(2) of this section cannot be less than zero.

(h) ***Net operating losses*** —

(1) ***In general.*** For taxable years beginning after December 31, 2017, an exempt organization with more than one unrelated trade or business determines the NOL deduction allowed by sections 172(a) and 512(b)(6) separately with respect to each of its unrelated trades or businesses. Accordingly, if an exempt organization has more than one unrelated trade or business, § 1.512(b)-1(e) applies separately with respect to each such unrelated trade or business.

(2) ***Coordination of pre-2018 and post-2017 NOLs.*** An organization with pre-2018 NOLs, and with losses arising in a taxable year beginning after December 31, 2017 (post-2017 NOLs), deducts its pre-2018 NOLs from total UBTI before deducting any post-2017 NOLs with regard to a separate unrelated trade or business against the UBTI from such trade or business. Pre-2018 NOLs are taken against the total UBTI as determined under paragraph (g) of this section in a manner that allows for maximum utilization of post-2017 NOLs in a taxable year. For example, an organization could choose to allocate all of its pre-2018 NOLs to one of its separate unrelated trades or businesses or it could allocate its pre-2018 NOLs ratably among its separate unrelated trades or businesses, whichever results in the greatest utilization of the post-2017 NOLs in that taxable year.

(3) ***Treatment of NOLs upon the termination, sale, exchange, or other disposition of a separate unrelated trade or business.*** After offsetting any gain resulting from the termination, sale, exchange, or disposition of a separate unrelated trade or business, any NOL remaining is suspended. However, the suspended NOLs may be used if that previous separate unrelated trade or business is later resumed or if a new unrelated trade or business that is accurately identified using the same NAICS 2-digit code as the previous separate unrelated trade or business is commenced or acquired in a future taxable year.

(4) ***Treatment of NOLs when the identification of a separate unrelated trade or business changes*** —

(i) ***In general.*** For purposes of section 512(a)(6) and this section, a separate unrelated trade or business for which the appropriate identification (within the meaning of paragraph (a) of this section) changes is treated as if the originally identified separate unrelated trade or business is terminated and a new separate unrelated trade or business is commenced. None of the NOLs from the previously identified separate unrelated trade or business will be carried over to the newly identified separate unrelated trade or business. For example, if the nature of a separate unrelated trade or business changes such that it is more accurately described by another NAICS 2-digit code, the separate unrelated trade or business is treated as a new separate unrelated trade or business with no NOLs. The change in identification may apply to all or a part of the originally identified separate unrelated trade or business. If the change in identification applies to the originally identified separate trade or business in its entirety, any NOLs attributable to that separate unrelated trade or business are suspended in accordance with paragraph (h)(3) of this section. If the change in identification applies to the originally identified separate unrelated trade or business in part, the originally identified separate unrelated trade or business that is not changing retains the full NOLs attributable to the originally identified separate unrelated trade or business, without allocation to the portion that became a newly identified separate unrelated trade or business. This paragraph (h)(4) also applies to each QPI that becomes a non-QPI. In this case, any NOLs attributable to the QPI that became a non-QPI are retained with the organization's investment activities described in paragraph (c) of this section.

(ii) ***Exception for non-material changes.*** In the case of a separate unrelated trade or business that is accidentally identified using the wrong NAICS 2-digit code or if an organization has determined that a separate unrelated trade or business that has not materially changed is more accurately identified by another NAICS 2-digit code, any NOL attributable to the originally identified separate unrelated trade or business becomes an NOL of the newly identified separate unrelated trade or business.

(iii) ***Effective date of change in identification.*** A change in identification described in this paragraph (h)(4) is effective on the first day of the taxable year in which the change in identification is made. Accordingly, the newly identified separate unrelated trade or business is treated as commencing on this date.

(iv) ***Examples*** —

(A) ***In general.*** The following examples illustrate the rules described in this paragraph (h)(4).

(B) ***Example 1. Erroneous code.***

(*1*) Organization G is described in section 501(c) and is exempt from Federal income tax under section 501(a). In addition to its investment activities, Organization G has two separate unrelated trades or businesses—Q and R—that are identified with different NAICS 2-digit codes. Both Q and R have NOLs carried over from post-2017 taxable years.

(2) In Year 2 (a post-2017 taxable year), Organization G realizes that it accidentally used the wrong NAICS 2-digit code to identify R. The NOLs attributable to R under the old NAICS 2-digit code become the NOLs of R under the new NAICS 2-digit code as of the first day of Year 2.

(C) ***Example 2. Material change.***

(1) Same facts as *Example 1,* except assume that, in addition to its investment activities, Organization G has three separate unrelated trades or businesses—Q, R, and S—that are identified with different NAICS 2-digit codes. Q, R, and S all have NOLs carried over from post-2017 taxable years.

(2) Organization G changes the NAICS 2-digit code identifying R to the same NAICS 2-digit code identifying S because the nature of the unrelated trade or business materially changed. Any post-2017 NOLs attributable to R are suspended (see paragraph (h)(4)(i) of this section). Organization G now has two separate unrelated trades or businesses—Q and S—as of the first day of Year 2.

(D) ***Example 3. Partial material change.*** Same facts as *Example 1,* except assume that Organization G determines that a part of R has materially changed such that R should be identified as two separate unrelated trades or businesses—R1 and R2. R1 retains the NAICS 2-digit code originally identifying R, and R2 is identified with a new NAICS 2-digit code that is not the same NAICS 2-digit code identifying Q. R2 is treated as a new separate unrelated trade or business with no NOLs as of the first day of Year 2. Any post-2017 NOLs attributable to R remain with R1.

(E) ***Example 4. QPI to non-QPI.***

(1) Same facts as *Example 1,* but assume that Organization G has a partnership interest in T that was, for prior taxable years, a QPI included with Organization G's investment activities. In Year 3 (a post-2017 taxable year), Organization G acquires more than 20 percent of the capital interests in T. The grace period described in paragraph (c)(6) of this section does not apply because the increase in percentage interest was not due to the actions of other partners.

(2) T conducts two trade or business activities that are unrelated trade or business activities with respect to Organization G—T1 and T2. Both T1 and T2 will be treated as new separate unrelated trades or business as of the first day of Year 2. Organization G identifies T1 with the same NAICS 2-digit code used to identify Q and T2 with a NAICS 2-digit code that is different than the NAICS 2-digit codes used to identify Q and R. In addition to its investment activities, Organization G has three separate unrelated trades or businesses—Q, R, and T2. Any post-2017 NOLs attributable to the QPI remain with Organization G's other investment activities separate unrelated trade or business.

(i) ***Applicability dates.*** This section is applicable to taxable years beginning on or after December 2, 2020. Taxpayers may choose to apply this section to taxable years beginning on or after January 1, 2018, and before December 2, 2020.

[T.D. 9933, 85 FR 77979, Dec. 2, 2020; 86 FR 9286, Feb. 12, 2021]

§ 1.512(b)-1 Modifications.

Whether a particular item of income falls within any of the modifications provided in section 512(b) shall be determined by all the facts and circumstances of each case. For example, if a payment termed *rent* by the parties is in fact a return of profits by a person operating the property for the benefit of the tax-exempt organization or is a share of the profits retained by such organization as a partner or joint venturer, such payment is not within the modification for rents. The modifications provided in section 512(b) are as follows:

(a) *Certain Investment Income.*

(1) Dividends (including an inclusion of subpart F income under section 951(a)(1)(A) or an inclusion of global intangible low-taxed income (GILTI) under section 951A(a), both of which are treated in the same manner as a dividend for purposes of section 512(b)(1)), interest, payments with respect to securities loans (as defined in section 512(a)(5)), annuities, income from notional principal contracts (as defined in § 1.837-7 or regulations issued under section 446), other substantially similar income from ordinary and routine investments to the extent determined by the Commissioner, and all deductions directly connected with any of the foregoing items of income must be excluded in computing unrelated business taxable income.

(2) *Limitations.* The exclusions under paragraph (a)(1) of this section do not apply to income derived from and deductions in connection with debt-financed property (as defined in section 514(b)). Moreover, the exclusions under paragraph (a)(1) of this section do not apply to gains or losses from the sale, exchange, or other disposition of any property, or to gains or losses from the lapse or termination of options to buy or sell securities. For rules regarding the treatment of these gains and losses, see section 512(b)(5) and § 1.512(b)-1(d). Furthermore, the exclusions under paragraph (a)(1) of this section do not apply to interest and annuities derived from and deductions in connection with controlled organizations. For rules regarding the treatment of such amounts, see section 512(b)(13) and § 1.512(b)-1(l). Finally, the exclusions under paragraph (a)(1) of this section of income from notional principal contracts and income that the Commissioner determines to be substantially similar income from ordinary and routine investments do not apply to income earned by brokers or dealers (including organizations that make a market in derivative financial products, as described in Treasury Regulations 26 CFR 1.954-2T(a)(4)(iii)(B)).

(3) *Effective dates.* The effective dates of the rules of paragraphs (a)(1) and (a)(2) of this section that were in effect prior to August 30, 1991, remain the same. The exclusion under paragraph (a)(1) of this section of income from notional principal contracts is effective for amounts received after August 30, 1991. However, an organization may apply the exclusion under paragraph (a)(1) of this section of income from notional principal contracts prior to that date, provided that such amounts are treated consistently for all open taxable years. Unless otherwise provided by the Commissioner, the exclusion under paragraph (a)(1) of this section of income that the Commissioner determines to be substantially similar income from ordinary and routine investments is effective for amounts received after the date of the Commissioner's determination. The exclusion under paragraph (a)(1) of this section of an inclusion of subpart F income under section 951(a)(1)(A) or an inclusion of GILTI under section 951A(a) from income (both inclusions being treated in the same manner as dividends) is applicable to taxable years beginning on or after December 2, 2020. However, an organization may choose to apply this exclusion to taxable years beginning before December 2, 2020.

(b) *Royalties.* Royalties, including overriding royalties, and all deductions directly connected with such income shall be excluded in computing unrelated business taxable income. However, for taxable years beginning after December 31, 1969, certain royalties from and certain deductions in connection with either, debt-financed property (as defined in section 514(b)) or controlled organizations (as defined in paragraph (l) of this section) shall be included in computing unrelated business taxable income. Mineral royalties shall be excluded whether measured by production or by gross or taxable income from the mineral property. However, where an organization owns a working interest in a mineral property, and is not relieved of its share of the development costs by the terms of any agreement with an operator, income received from such an interest shall not be excluded. To the extent not treated as a loan under section 636, payments in discharge of mineral production payments shall be treated in the same manner as royalty payments for

the purpose of computing unrelated business taxable income. To the extent treated as a loan under section 636, the amount of any payment in discharge of a production payment which is the equivalent of interest shall be treated as interest for purposes of section 512(b)(1) and paragraph (a) of this section.

(c) ***Rents*** —

(1) ***Taxable years beginning before January 1, 1970.*** For taxable years beginning before January 1, 1970, rents from real property (including personal property leased with the real property) and the deductions directly connected therewith shall be excluded in computing unrelated business taxable income, except that certain rents from, and certain deductions in connection with, a business lease (as defined in section 514(f)) shall be included in computing unrelated business taxable income. See subparagraph (5) of this paragraph for rules governing amounts received for the rendering of services.

(2) ***Taxable years beginning after December 31, 1969*** —

(i) ***In general.*** For taxable years beginning after December 31, 1969, except as provided in subdivision (iii) of this subparagraph, rents from property described in subdivision (ii) of this subparagraph, and the deductions directly connected therewith, shall be excluded in computing unrelated business taxable income. However, notwithstanding subdivision (ii) of this subparagraph, certain rents from and certain deductions in connection with either debt-financed property (as defined in section 514(b)) or property rented to controlled organizations (as defined in paragraph (l) of this section) shall be included in computing unrelated business taxable income.

(ii) ***Excluded rents.*** The rents which are excluded from unrelated business income under section 512(b)(3)(A) and this paragraph are:

(*a*) ***Real property.*** All rents from real property; and

(*b*) ***Personal property.*** All rents from personal property leased with real property if the rents attributable to such personal property are an incidental amount of the total rents received or accrued under the lease, determined at the time sonal property are an incidental amount service by the lessee

For purposes of the preceding sentence, rents attributable to personal property generally are not an incidental amount of the total rents if such rents exceed 10 percent of the total rents from all the property leased. For example, if the rents attributable to the personal property leased are determined to be $3,000 per year, and the total rents from all property leased are $10,000 per year, then such $3,000 amount is not to be excluded from the computation of unrelated business taxable income by operation of section 512(b)(3)(A)(ii) and this paragraph, since such amount is not an incidental portion of the total rents.

(iii) ***Exception.*** Subdivision (ii) of this subparagraph shall not apply, if either:

(*a*) ***Excess personal property rents.*** More than 50 percent of the total rents are attributable to personal property, determined at the time such personal property is first placed in service by the lessee; or

(*b*) ***Net profits.*** The determination of the amount of such rents depends in whole or in part on the income or profits derived by any person from the property leased, other than an amount based on a fixed percentage or percentages of the gross receipts or sales. For purposes of the preceding sentence, the rules contained in paragraph (b) (3) and (6) (other than paragraph (b)(6)(ii)) of § 1.856-4 shall apply.

(iv) ***Illustration.*** This subparagraph may be illustrated by the following example:

Example. A, an exempt organization, owns a printing factory which consists of a building housing two printing presses and other equipment necessary for printing. On January 1, 1971, A rents the building and the printing equipment to B for $10,000 a year. The lease states that $9,000 of such rent is for the building and $1,000 for the printing equipment. However, it is determined that notwithstanding the terms of the lease $4,000, or 40 percent ($4,000/$10,000), of the rent is actually attributable to the printing equipment. During 1971, A has $3,000 of deductions, all of which are properly allocable to the land and building. Under these circumstances, A shall not take into account in computing its unrelated business taxable income the $6,000 of rent attributable to the building and the $3,000 of deductions directly connected with such rent. However, the $4,000 of rent attributable to the printing equipment is not excluded from the computation of A's unrelated business taxable income by operation of section 512(b)(3)(A)(ii) or this paragraph since such rent represents more than an incidental portion of the total rents.

(3) ***Definitions and special rules.*** For purposes of subparagraph (2) of this paragraph:

(i) ***Real property defined.*** The term *real property* means all real property, including any property described in sections 1245(a)(3)(C) and 1250(c) and the regulations thereunder.

(ii) ***Personal property defined.*** The term *personal property* means all personal property, including any property described in section 1245(a)(3)(B) and the regulations thereunder.

(iii) ***Multiple leases.*** If separate leases are entered into with respect to real and personal property, and such properties have an integrated use (e.g., one or more leases for real property and another lease or leases for personal property to be used upon such real property), all such leases shall be considered as one lease.

(iv) ***Placed in service.*** Property is *placed in service* by the lessee when it is first subject to his use in accordance with the terms of the lease. For example, property subject to a lease entered into on November 1, 1971, for a term commencing on January 1, 1972, shall be considered as placed in service on January 1, 1972, regardless of when the property is first actually used by the lessee.

(v) ***Changes in rent charged or personal property rented.*** If:

(*a*) By reason of the placing of additional or substitute personal property in service, there is an increase of 100 percent or more in the rent attributable to all the personal property leased, or

(*b*) There is a modification of the lease by which there is a change in the rent charged (whether or not there is a change in the amount of personal property rented), the rent attributable to personal property shall be recomputed to determine whether the exclusion under subparagraph (2)(ii)(*b*) of this paragraph or the exception under subparagraph

(2)(iii)(*a*) of this paragraph applies. Any change in the treatment of rents, attributable to a recomputation under this subdivision, shall be effective only with respect to rents for the period beginning with the event which occasioned the recomputation.

(4) ***Examples.*** Subparagraphs (2) and (3) of this paragraph may be illustrated by the following examples:

Example 1. On January 1, 1971, A, an exempt organization, executes two leases with B. One is for the rental of a computer, with a stated annual rent of $750. The other is for the rental of office space in which to use the computer, at a stated annual rent of $7,250. The total annual rent under both leases for 1971 is $8,000. At the time the computer is first placed in service, however, taking both leases into consideration, it is determined that notwithstanding the terms of the leases $3,000, or 37.5 percent ($3,000/$8,000), of the rent is actually attributable to the computer. Therefore, for 1971, only the $5,000 ($8,000−$3,000) attributable to the rental of the office space is excluded from the computation of A's unrelated business taxable income by operation of section 512(b)(3).

Example 2. Assume the facts as stated in example 1. Assume further that the leases to which the computer and office space are subject in example 1 provide that the rent may be increased or decreased, depending upon the prevailing rental value for similar computers and office space. On January 1, 1972, the total annual rent is increased in the computer lease to $2,000, and in the office space lease to $9,000. For 1972, it is determined that notwithstanding the terms of the leases $6,000, or 54.5 percent ($6,000/$11,000), of the total rent is actually attributable to the computer as of that time. Even though the rent attributable to personal property now exceeds 50 percent of the total rent, the rent attributable to real property will continue to be excluded, since there was no modification of the terms of the leases and since the increase in the rent was not attributable to the placing of new personal property in service. See subparagraph (3)(v) of this paragraph. Thus, for 1972 the $5,000 of rent attributable to the office space continues to be excluded from the computation of A's unrelated business taxable income by operation of section 512(b)(3).

Example 3. Assume the facts as stated in example 1, except that on January 1, 1973, B rents a second computer from A, which is placed in service on that date. The total rent is increased to $2,000 for the computer lease and to $10,000 for the office space lease. It is determined at the time the second computer is first placed in service that notwithstanding the terms of the leases $7,000 of the rent is actually attributable to the computers. Since the rent attributable to personal property has increased by more than 100 percent ($4,000 / $3,000 = 133 percent), a redetermination must be made pursuant to subparagraph (3)(v) (*a*) of this paragraph. As a result, 58.3 percent ($7,000/$12,000) of the total rent is determined to be attributable to personal property. Accordingly, since more than 50 percent of the total rent A receives is attributable to the personal property leased, none of the rents are excluded from the computation of A's unrelated business taxable income by operation of section 512(b)(3).

Example 4. Assume the facts as stated in example 3, except that on June 30, 1975, the lease between B and A is modified. The total rent for the computer lease is reduced to $1,500 and the total rent for the office space lease is reduced to $7,500. Pursuant to subdivision (3)(v)(*b*) of this paragraph, a redetermination is made as of June 30, 1975. As of the modification date, it is determined that notwithstanding the terms of the leases, the rent actually attributable to the computers is $4,000, or 44.4 percent ($4,000/$9,000), of the total rent. Since less than 50 percent of the total rent is now attributable to personal property, the rent attributable to real property ($5,000), for periods after June 30, 1975, is excluded from the computation of A's

unrelated business taxable income by operation of section 512(b)(3). However, the rent attributable to personal property ($4,000) is not excluded from unrelated business taxable income for such periods by operation of section 512(b)(3), since it represents more than an incidental portion of the total rent.

(5) ***Rendering of services.*** For purposes of this paragraph, payments for the use or occupancy of rooms and other space where services are also rendered to the occupant, such as for the use or occupancy of rooms or other quarters in hotels, boarding houses, or apartment houses furnishing hotel services, or in tourist camps or tourist homes, motor courts, or motels, or for the use of occupancy of space in parking lots, warehouses, or storage garages, does not constitute rent from real property. Generally, services are considered rendered to the occupant if they are primarily for his convenience and are other than those usually or customarily rendered in connection with the rental of rooms or other space for occupancy only. The supplying of maid service, for example, constitutes such service; whereas the furnishing of heat and light, the cleaning of public entrances, exists, stairways, and lobbies, the collection of trash, etc., are not considered as services rendered to the occupant. Payments for the use or occupancy of entire private residences or living quarters in duplex or multiple housing units, of offices in any office building, etc., are generally treated as rent from real property.

(d)

(1) ***Gains and losses from the sale, etc. of property.*** There shall also be excluded from the computation of unrelated business taxable income gains or losses from the sale, exchange, or other disposition of property other than

(i) stock in trade or other property of a kind which would properly be included in the inventory of the organization if on hand at the close of the taxable year, or

(ii) property held primarily for sale to customers in the ordinary course of the trade or business. This exclusion does not apply with respect to the cutting of timber which is considered, upon the application of section 631(a), as a sale or exchange of such timber. In addition, for taxable years beginning after December 31, 1969, this exclusion does not apply to the gain derived from the sale or other disposition of debt-financed property (as defined in section 514(b)). Otherwise, the exclusion under section 512(b)(5) applies with respect to gains and losses from involuntary conversions, casualties, etc.

(2) There shall be excluded from the computation of unrelated business taxable income any gain from the lapse or termination after December 31, 1975, of options to buy or sell securities (as that term is defined in section 1236(c)). An option is considered terminated when the organization's obligation under the option ceases by any means other than by reason of the exercise or lapse of such option. If the exclusion is otherwise available it will apply whether or not the organization owns the securities upon which the option is written, that is, whether or not the option is *covered.* However, income from the lapse or termination of an option is excludable only if the option is written in connection with the organization's investment activities. Thus, for example, if the securities upon which the options are written are held by the organization as inventory or for sale to customers in the ordinary course of a trade or business, the income from the lapse or termination will not be excludable under the provisions of this paragraph. Similarly, if an organization is engaged in the trade or business of writing options (whether or not such options are covered) the exclusion will not be available.

(e) ***Net operating losses.***

(1) The net operating loss deduction provided in section 172 shall be allowed in computing unrelated business taxable income. However, the net operating loss carryback or carryover (from a taxable year for which the taxpayer is subject to the provisions of section 511) shall be determined under section 172 without taking into account any amount of income or deduction which is not included under section 511 in computing unrelated business taxable income. For example, a loss attributable to an unrelated trade or business shall not be diminished by reason of the receipt of dividend income.

(2) For the purpose of computing the net operating loss deduction provided by section 172, any prior taxable year for which an organization was not subject to the provisions of section 511, or a corresponding provision of prior law, shall not be taken into account. Thus, if the organization was not subject to the provisions of section 511 or supplement U of the Internal Revenue Code of 1939 for a preceding taxable year, the net operating loss is not a carryback to such preceding taxable year, and the net operating loss carryover to succeeding taxable years is not reduced by the taxable income for such preceding taxable year.

(3) A net operating loss carryback or carryover shall be allowed only from a taxable year for which the taxpayer is subject to the provisions of section 511, or a corresponding provision of prior law.

(4) In determining the span of years for which a net operating loss may be carried for purposes of section 172, taxable years in which an organization was not subject to the provisions of section 511 or a corresponding provision of prior law shall be taken into account. Thus, for example, if an organization is subject to the provisions of section 511 for the taxable year 1955 and has a net operating loss for that year, the last taxable year to which any part thereof may be carried over is the year 1960 regardless of whether the organization is subject to the provisions of section 511 in any of the intervening taxable years.

(5) See § 1.512(a)-6(h) regarding the computation of the net operating loss deduction when an organization has more than one unrelated trade or business.

(f) ***Research.***

(1) Income derived from research for the United States or any of its agencies or instrumentalities or a State or political subdivision thereof, and all deductions directly connected with such income, shall be excluded in computing unrelated business taxable income.

(2) In the case of a college, university, or hospital, all income derived from research performed for any person and all deductions directly connected with such income, shall be excluded in computing unrelated business taxable income.

(3) In the case of an organization operated primarily for the purpose of carrying on fundamental research (as distinguished from applied research) the results of which are freely available to the general public, all income derived from research performed for any person and all deductions directly connected with such income shall be excluded in computing unrelated business taxable income.

(4) For the purpose of §§ 1.512(a)-1, 1.512(a)-2, and this section, the term *research* does not include activities of a type ordinarily carried on as an incident to commercial or industrial operations, for example, the ordinary testing or inspection of materials or products or the designing or construction of equipment, buildings, etc. The term *fundamental research* does not include research carried on for the primary purpose of commercial or industrial application.

(g) *Charitable, etc., contributions.*

(1) In computing the unrelated business taxable income of an organization described in section 511(a)(2) the deduction from gross income allowed by section 170 (relating to charitable contributions and gifts) shall be allowed, whether or not the contribution is directly connected with the carrying on of the trade or business. Section 512(b)(10) provides that this deduction shall not exceed 5 percent of the organization's unrelated business taxable income computed without regard to that deduction. The provisions of section 170(b)(2) are not applicable to contributions by the organizations described in section 511(a)(2).

(2) In computing the unrelated business taxable income of a trust described in section 511(b)(2), the deduction allowed by section 170 (relating to charitable contributions and gifts) shall be allowed whether or not the contribution is directly connected with the carrying on of the trade or business. The deduction is limited as provided in section 170(b)(1) (A) and (B), except that the amounts so allowed are determined on the basis of unrelated business taxable income computed without regard to this deduction (rather than on the basis of adjusted gross income). For purposes of this deduction, a distribution by a trust described in section 511(b)(2) made pursuant to the trust instrument to a beneficiary described in section 170 shall be treated in the same manner as gifts or contributions.

(3) The contribution, whether made by a trust or other exempt organization, must be paid to another organization to be allowable. For example, a university described in section 501(c)(3) which is exempt from tax and which operates an unrelated business, shall be allowed a deduction, not in excess of 5 percent of its unrelated business taxable income, for gifts or contributions to another university described in section 501(c)(3) for educational work but shall not be allowed any deduction for amounts expended in administering its own educational program.

(4) The term *unrelated business taxable income* as used in section 512(b)(10) and (11) refers to unrelated business taxable income after application of section 512(a)(6).

(5) Paragraph (g)(4) of this section is applicable to taxable years beginning on or after December 2, 2020. Taxpayers may choose to apply this section to taxable years beginning on or after January 1, 2018, and before December 2, 2020.

(h) *Specific deduction* —

(1) ***In general.*** In computing unrelated business taxable income a specific deduction from gross income of $1,000 is allowed. However, for taxable years beginning after December 31, 1969, such specific deduction is not allowed in computing the net operating loss under section 172 and paragraph (6) of section 512(b).

(2) ***Special rule for a diocese, province of a religious order, or a convention or association of churches.***

(i) In the case of a diocese, province of a religious order, or a convention or association of churches, there shall be allowed with respect to each parish, individual church, district, or other local unit a specific deduction equal to the lower of $1,000 or the gross income derived from an unrelated trade or business regularly conducted by such local unit. However, a diocese, province of a religious order, or a convention or association of churches shall not be entitled to a specific deduction for a local unit which, for a taxable year, files a separate return. In the case of a local unit which, for a taxable year, files a separate return, such local unit may claim a specific deduction equal to the lower of $1,000 or the gross income derived from any unrelated trade or business which it regularly conducts.

(ii) The provisions of this subparagraph may be illustrated by the following example:

Example. X is an association of churches on the calendar year basis. X is divided into local units A, B, C, and D. During 1973, A, B, C, and D derive gross income of, respectively, $1,200, $800, $1,500, and $700 from unrelated businesses which they regularly conduct. Furthermore, for such taxable year, D files a separate return. X may claim a specific deduction of $1,000 with respect to A, $800 with respect to B, and $1,000 with respect to C. X may not claim a specific deduction with respect to D. D, however, may claim a specific deduction of $700 on its return.

(i) ***Transitional period for churches.***

(1)

(i) In the case of an unrelated trade or business (as defined in section 513) carried on before May 27, 1969, by a church or convention or association of churches (as defined in § 1.511-2(a)(3)(ii)), or by the predecessor of a church or convention or association of churches which predecessor was itself a church or convention or association of churches, all gross income derived from such unrelated trade or business and all deductions directly connected with the carrying on of such unrelated trade or business shall be excluded from the determination of unrelated business taxable income under section 512(a) for all taxable years beginning before January 1, 1976. Notwithstanding the preceding sentence, in the case of income from debt-financed property (and the deductions attributable thereto), as defined in section 514, of a church or convention or association of churches or by the predecessor of a church or convention or association of churches, the provisions of paragraphs (a) through (e) of section 514 and paragraph (4) of section 512(b) shall apply for taxable years beginning after December 31, 1969.

(ii) The provisions of subdivision (i) may be illustrated by the following example:

Example. X, a church as defined in § 1.511-2(a)(3)(ii), realizes gross income from an unrelated business (as defined in section 513) of $100,000 for calendar year 1972. X's predecessor church, Y, began conducting such unrelated business in January 1, 1968. Of the $100,000 realized for calendar year 1972, $40,000 is attributable to debt-financed property (as defined in section 514). Since the unrelated business was conducted by Y prior to May 27, 1969, and since X's taxable year begins before January 1, 1976, that amount of the income realized from such business (and all deductions directly connected therewith) which is not attributable to debt-financed property shall be excluded from the determination of unrelated business taxable income under section 512(a). Therefore, of the $100,000 realized, $60,000 ($100,000 less $40,000 attributable to debt-financed property), and all deductions directly connected therewith shall be excluded from the determination of such unrelated business taxable income for purposes of imposition of the tax under section 511(a). The remaining $40,000 and the deductions attributable thereto shall be subject to the provisions of paragraphs (a) through (e) of section 514 and paragraph (4) of section 512(b).

(2) This paragraph shall not apply in the case of income from property, or deductions directly connected with such income, if title to the property is held by a corporation described in section 501(c)(2) for a church or convention or association of churches. Thus, if such income is derived from an unrelated trade or business, the corporation shall be liable for tax imposed by section 511(a) on such income.

(j) ***Special rule for certain unrelated trades or businesses carried on by a religious order or by an educational institution maintained by such order.***

(1) Except as provided in subparagraph (2) of this paragraph, gross income realized by a religious order (or an educational organization described in section 170(b)(1)(A)(ii) maintained by such order) from an unrelated trade or business, together with all deductions directly connected therewith, shall be excluded from the determination of unrelated business taxable income under section 512(a), if:

(i) The trade or business has been operated by such order or by such institution since before May 27, 1959,

(ii) The trade or business consists of providing services under a license issued by a Federal regulatory agency,

(iii) More than 90 percent of the net income from the business is, for each taxable year for which gross income from such business is so excluded by reason of section 512(b)(15) and this paragraph, devoted to religious, charitable, or educational purposes, and

(iv) It is established to the satisfaction of an officer no lower than the Regional Commissioner that the rates or other charges for such services are fully competitive with rates or other charges charged for such services by persons not exempt from taxation. Rates or other charges for such services shall be considered as fully competitive with rates or other charges charged for such services by persons not exempt from taxation if the rates charged by such unrelated trade or business are neither materially higher nor materially lower than the rates charged by similar businesses operating in the same general area.

(2) The provisions of this paragraph shall not apply with respect to income from debt-financed property (as defined in section 514) and the deductions attributable thereto. For taxable years beginning after December 31, 1969, such income and deductions are subject to the provisions of paragraphs (a) through (e) of section 514 and paragraph (4) of section 512(b).

(k) ***Income and deductions from debt-financed property.*** For taxable years beginning after December 31, 1969, in the case of debt-financed property (as defined in section 514(b)), there shall be included in the unrelated business taxable income of an exempt organization, as an item of gross income derived from an unrelated trade or business, the amount of unrelated debt-financed income determined under section 514(a)(1) and § 1.514(a)-1(a), and there shall be allowed, as a deduction with respect to such income, the amount determined under section 514(a)(2) and § 1.514(a)-1(b).

(l) ***Interest, annuities, royalties, and rents from controlled organizations*** —

(1) ***In general.*** For taxable years beginning after December 31, 1969, if an exempt organization (hereinafter referred to as the *controlling organization*) has control (as defined in subparagraph (4) of this paragraph) of another organization (hereinafter referred to as the *controlled organization*), the controlling organization shall include as an item of gross income in computing its unrelated business taxable income, the amount of interest, annuities, royalties, and rents derived from the controlled organization determined under subparagraph (2) or (3) of this paragraph. The preceding sentence shall apply whether or not the activity conducted by the controlling organization to derive such amounts represents a trade or business or is regularly carried on. Thus, amounts received by a controlling organization from the rental of its real property to a controlled organization may be included in the unrelated business taxable income of the controlling organization, even though the rental of such property is not an activity regularly carried on by the controlling organization.

(2) ***Exempt controlled organization*** —

(i) ***In general.*** If the controlled organization is exempt from taxation under section 501(a), the amount referred to in subparagraph (1) of this paragraph is an amount which bears the same ratio to the interest, annuities, royalties, and rents received by the controlling organization from the controlled organization as the unrelated business taxable income of the controlled organization bears to whichever of the following amounts is the greater:

(*a*) The taxable income of the controlled organization, computed as though the controlled organization were not exempt from taxation under section 501(a), or

(*b*) The unrelated business taxable income of the controlled organization

both determined without regard to any amounts paid directly or indirectly to the controlling organization. The controlling organization shall be allowed all deductions directly connected with amounts included in gross income under the preceding sentence.

(ii) ***Examples.*** This subparagraph may be illustrated by the following examples:

Example 1. A, an exempt scientific organization described in section 501(c)(3), owns all the stock of B, another exempt scientific organization described in section 501(c)(3). During 1971, A rents space for a laboratory to B for $15,000 a year. A's total deductions for 1971 with respect to the leased property are $3,000: $1,000 for maintenance and $2,000 for depreciation. If B were not an exempt organization, its total taxable income would be $300,000, disregarding rent paid to A. B's unrelated business taxable income, disregarding rent paid to A, is $100,000. Under these circumstances, $4,000 of the rent paid by B will be included by A as net rental income in determining its unrelated business taxable income, computed as follows:

B's unrelated business taxable income (disregarding rent paid to A)	$100,000
B's taxable income (computed as though B were not exempt and disregarding rent paid to A)	300,000
Ratio ($100,000/$300,000)	1/3
Total rent	15,000
Total deductions	3,000
Rental income treated as gross income from an unrelated trade or business (1/3 of $15,000)	5,000
Less deductions directly connected with such income (1/3 of $3,000)	1,000
Net rental income included by A in computing its unrelated business taxable income	$4,000

Example 2. Assume the facts as stated in example 1, except that B's taxable income is $90,000 (computed as though B were not an exempt organization, and disregarding rents paid to A). B's unrelated business taxable income ($100,000) is therefore greater than its taxable income ($90,000). Thus, the ratio used to determine the portion of rent received by A which is to be taken into account is one since both the numerator and denominator of

such ratio is B's unrelated business taxable income. Consequently, all the rent received by A from B ($15,000), and all the deductions directly connected therewith ($3,000), are included by A in computing its unrelated business taxable income.

(3) ***Nonexempt controlled organization*** —

(i) ***In general.*** If the controlled organization is not exempt from taxation under section 501(a), the amount referred to in subparagraph (1) of this paragraph is an amount which bears the same ratio to the interest, annuities, royalties, and rents received by the controlling organization from the controlled organization as the *excess taxable income* (as defined in subdivision (ii) of this subparagraph) of the controlled organization bears to whichever of the following amounts is the greater:

(*a*) The taxable income of the controlled organization, or

(*b*) The excess taxable income of the controlled organization

both determined without regard to any amount paid directly or indirectly to the controlling organization. The controlling organization shall be allowed all deductions which are directly connected with amounts included in gross income under the preceding sentence.

(ii) ***Excess taxable income.*** For purposes of this paragraph, the term *excess taxable income* means the excess of the controlled organization's taxable income over the amount of such taxable income which, if derived directly by the controlling organization, would not be unrelated business taxable income.

(iii) ***Examples.*** This subparagraph may be illustrated by the following examples:

Example 1. A, an exempt university described in section 501(c)(3), owns all the stock of M, a nonexempt organization. During 1971, M leases a factory and a dormitory from A for a total annual rent of $100,000. During the taxable year, M has $500,000 of taxable income, disregarding the rent paid to A: $150,000 from a dormitory for students of A university, and $350,000 from the operation of a factory which is a business unrelated to A's exempt purpose. A's deductions for 1971 with respect to the leased property are $4,000 for the dormitory and $16,000 for the factory. Under these circumstances, $56,000 of the rent paid by M will be included by A as net rental income in determining its unrelated business taxable income, computed as follows:

M's taxable income (disregarding rent paid to A)	$500,000
Less taxable income from dormitory	150,000
Excess taxable income	$350,000
Ratio ($350,000/$500,000)	7/10
Total rent paid to A	$100,000
Total deductions ($4,000 + $16,000)	20,000
Rental income treated as gross income from an unrelated trade or	70,000

business (7/10 of $100,000)	
Less deductions directly connected with such income (7/10 of $20,000)	14,000
Net rental income included by A in computing its unrelated business taxable income	$56,000

Example 2. Assume the facts as stated in example 1, except that M's taxable income (disregarding rent paid to A) is $300,000, consisting of $350,000 from the operation of the factory and a $50,000 loss from the operation of the dormitory. Thus, M's *excess taxable income* is also $300,000, since none of M's taxable income would be excluded from the computation of A's unrelated business taxable income if received directly by A. The ratio of M's *excess taxable income* to its taxable income is therefore one ($300,000/$300,000). Thus, all the rent received by A from M ($100,000), and all the deductions directly connected therewith ($20,000), are included in the computation of A's unrelated business taxable income.

(4) ***Control*** —

(i) ***In general.*** For purposes of this paragraph—

(*a*) ***Stock corporation.*** In the case of an organization which is a stock corporation, the term *control* means ownership by an exempt organization of stock possessing at least 80 percent of the total combined voting power of all classes of stock entitled to vote and at least 80 percent of the total number of shares of all other classes of stock of such corporation.

(*b*) ***Nonstock organization.*** In the case of a nonstock organization, the term *control* means that at least 80 percent of the directors or trustees of such organization are either representatives of or directly or indirectly controlled by an exempt organization. A trustee or director is a representative of an exempt organization if he is a trustee, director, agent, or employee of such exempt organization. A trustee or director is controlled by an exempt organization if such organization has the power to remove such trustee or director and designate a new trustee or director.

(ii) ***Gain or loss of control.*** If control of an organization (as defined in subdivision (i) of this subparagraph) is acquired or relinquished during the taxable year, only the interest, annuities, royalties, and rents paid or accrued to the controlling organization in accordance with its method of accounting for that portion of the taxable year it has control shall be subject to the tax on unrelated business income.

(5) ***Amounts taxable under other provisions of the Code*** —

(i) ***In general.*** Except as provided in subdivision (ii) of this subparagraph, section 512(b)(13) and this paragraph do not apply to amounts which are included in the computation of unrelated business taxable income by operation of any other provision of the Code. However, amounts which are not included in unrelated business taxable income by operation of section 512(a)(1), or which are excluded by operation of section 512(b) (1), (2), or (3), may be included in unrelated business taxable income by operation of section 512(b)(13) and this paragraph.

(ii) ***Debt-financed property.*** Rents deprived from the lease of debt-financed property by a controlling organization to a controlled organization are subject to the rules contained in section 512(b)(13) and this paragraph. Thus, if a controlling organization leases debt-financed property to a controlled organization, the amount of rents includible in the controlling organization's unrelated business taxable income shall first be determined under section 512(b)(13) and this paragraph, and only the portion of such rents not taken into account by operation of section 512(b)(13) are taken into account by operation of section 514. See example 3 of § 1.514(b)-1(b)(3).

[T.D. 6500, 25 FR 11737, Nov. 26, 1960, as amended by T.D. 6939, 32 FR 17661, Dec. 12, 1967; T.D. 7177, 37 FR 7089, Apr. 8, 1972; T.D. 7183, 37 FR 7885, Apr. 21, 1972; T.D. 7261, 38 FR 5466, Mar. 1, 1973; 38 FR 6387, Mar. 9, 1973; T.D. 7632, 44 FR 42681, July 20, 1979; T.D. 7767, 46 FR 11265, Feb. 6, 1981; T.D. 8423, 57 FR 33443, July 29, 1992; 57 FR 42490, Sept. 15, 1992; T.D. 9933, 85 FR 77984, Dec. 2, 2020]

§ 1.512(c)-1 Special rules applicable to partnerships; in general.

In the event an organization to which section 511 applies is a member of a partnership regularly engaged in a trade or business which is an unrelated trade or business with respect to such organization, the organization shall include in computing its unrelated business taxable income so much of its share (whether or not distributed) of the partnership gross income as is derived from that unrelated business and its share of the deductions attributable thereto. For this purpose, both the gross income and the deductions shall be computed with the necessary adjustments for the exceptions, additions, and limitations referred to in section 512(b) and in § 1.512(b)-1. For example, if an exempt educational institution is a partner in a partnership which operates a factory and if such partnership also holds stock in a corporation, the exempt organization shall include in computing its unrelated business taxable income its share of the gross income from the operation of the factory, but not its share of any dividends received by the partnership from the corporation. If the taxable year of the organization differs from that of the partnership, the amounts included or deducted in computing unrelated business taxable income shall be based upon the income and deductions of the partnership for each taxable year of the partnership ending within or with the taxable year of the organization.

§ 1.513-1 Definition of unrelated trade or business.

(a) ***In general.*** As used in section 512 the term *unrelated business taxable income* means the gross income derived by an organization from any unrelated trade or business regularly carried on by it, less the deductions and subject to the modifications provided in section 512. Section 513 specifies with certain exceptions that the phrase *unrelated trade or business* means, in the case of an organization subject to the tax imposed by section 511, any trade or business the conduct of which is not substantially related (aside from the need of such organization for income or funds or the use it makes of the profits derived) to the exercise or performance by such organization of its charitable, educational, or other purpose or function constituting the basis for its exemption under section 501 (or, in the case of an organization described in section 511(a)(2)(B), to the exercise or performance of any purpose or function described in section 501(c)(3)). For certain exceptions from this definition, see paragraph (e) of this section. For a special definition of *unrelated trade or business* applicable to certain trusts, see paragraph (f) of this section. Therefore, unless one of the specific exceptions of section 512 or 513 is applicable, gross income of an exempt organization subject to the tax imposed by section 511 is includible in the computation of unrelated business taxable income if:

(1) It is income from trade or business;

(2) such trade or business is regularly carried on by the organization; and

(3) the conduct of such trade or business is not substantially related (other than through the production of funds) to the organization's performance of its exempt functions.

(b) ***Trade or business.*** The primary objective of adoption of the unrelated business income tax was to eliminate a source of unfair competition by placing the unrelated business activities of certain exempt organizations upon the same tax basis as the nonexempt business endeavors with which they compete. On the other hand, where an activity does not possess the characteristics of a trade or business within the meaning of section 162, such as when an organization sends out low-cost articles incidental to the solicitation of charitable contributions, the unrelated business income tax does not apply since the organization is not in competition with taxable organizations. However, in general, any activity of a section 511 organization which is carried on for the production of income and which otherwise possesses the characteristics required to constitute *trade or business* within the meaning of section 162—and which, in addition, is notsubstantially related to the performance of exempt functions—presents sufficient likelihood of unfair competition to be within the policy of the tax. Accordingly, for purposes of section 513 the term *trade or business* has the same meaning it has in section 162, and generally includes any activity carried on for the production of income from the sale of goods or performance of services. Thus, the term *trade or business* in section 513 is not limited to integrated aggregates of assets, activities and good will which comprise businesses for the purposes of certain other provisions of the Internal Revenue Code. Activities of producing or distributing goods or performing services from which a particular amount of gross income is derived do not lose identity as trade or business merely because they are carried on within a larger aggregate of similar activities or within a larger complex of other endeavors which may, or may not, be related to the exempt purposes of the organization. Thus, for example, the regular sale of pharmaceutical supplies to the general public by a hospital pharmacydoes not lose identity as trade or business merely because the pharmacy also furnishes supplies to the hospital and patients of the hospital in accordance with its exempt purposes or in compliance with the terms of section 513(a)(2). Similarly, activities of soliciting, selling, and publishing commercial advertising do not lose identity as a trade or business even though the advertising is published in an exempt organization periodical which contains editorial matter related to the exempt purposes of the organization. However, where an activity carried on for the production of income constitutes an unrelated trade or business, no part of such trade or business shall be excluded from such classification merely because it does not result in profit.

(c) ***Regularly carried on*** —

(1) ***General principles.*** In determining whether trade or business from which a particular amount of gross income derives is *regularly carried on,* within the meaning of section 512, regard must be had to the frequency and continuity with which the activities productive of the income are conducted and the manner in which they are pursued. This requirement must be applied in light of the purpose of the unrelated business income tax to place exempt organization business activities upon the same tax basis as the nonexempt business endeavors with which they compete. Hence, for example, specific business activities of an exempt organization will ordinarily be deemed to be *regularly carried on* if they manifest a frequency and continuity, and are pursued in a manner, generally similar to comparable commercial activities of nonexempt organizations.

(2) ***Application of principles in certain cases*** —

(i) ***Normal time span of activities.*** Where income producing activities are of a kind normally conducted by nonexempt commercial organizations on a year-round basis, the conduct of such activities by an exempt organization over a period of only a few weeks does not constitute the regular carrying on of trade or business. For example, the operation of a sandwich stand by a hospital auxiliary for only 2 weeks at a state fair would not be the regular conduct of trade or

business. However, the conduct of year-round business activities for one day each week would constitute the regular carrying on of trade or business. Thus, the operation of a commercial parking lot on Saturday of each week would be the regular conduct of trade or business. Where income producing activities are of a kind normally undertaken by nonexempt commercial organizations only on a seasonal basis, the conduct of such activities by an exempt organization during a significant portion of the season ordinarilyconstitutes the regular conduct of trade or business. For example, the operation of a track for horse racing for several weeks of a year would be considered the regular conduct of trade or business because it is usual to carry on such trade or business only during a particular season.

(ii) ***Intermittent activities; in general.*** In determining whether or not intermittently conducted activities are regularly carried on, the manner of conduct of the activities must be compared with the manner in which commercial activities are normally pursued by nonexempt organizations. In general, exempt organization business activities which are engaged in only discontinuously or periodically will not be considered regularly carried on if they are conducted without the competitive and promotional efforts typical of commercial endeavors. For example, the publication of advertising in programs for sports events or music or drama performances will not ordinarily be deemed to be the regular carrying on of business. Similarly, where an organization sells certain types of goods or services to a particular class of persons in pursuance of its exempt functions or *primarily for the convenience* of such persons within the meaning of section 513(a)(2) (as, for example, the sale of books by a college bookstore to students or the sale of pharmaceutical supplies by a hospital pharmacy to patients of the hospital), casual sales in the course of such activity which do not qualify as related to the exempt function involved or as described in section 513(a)(2) will not be treated as regular. On the other hand, where the nonqualifyingsales are not merely casual, but are systematically and consistently promoted and carried on by the organization, they meet the section 512 requirement of regularity.

(iii) ***Intermittent activities; special rule in certain cases of infrequent conduct.*** Certain intermittent income producing activities occur so infrequently that neither their recurrence nor the manner of their conduct will cause them to be regarded as trade or business regularly carried on. For example, income producing or fund raising activities lasting only a short period of time will not ordinarily be treated as regularly carried on if they recur only occasionally or sporadically. Furthermore, such activities will not be regarded as regularly carried on merely because they are conducted on an annually recurrent basis. Accordingly, income derived from the conduct of an annual dance or similar fund raising event for charity would not be income from trade or business regularly carried on.

(d) ***Substantially related*** —

(1) ***In general.*** Gross income derives from *unrelated trade or business,* within the meaning of section 513(a), if the conduct of the trade or business which produces the income is not substantially related (other than through the production of funds) to the purposes for which exemption is granted. The presence of this requirement necessitates an examination of the relationship between the business activities which generate the particular income in question—the activities, that is, of producing or distributing the goods or performing the services involved—and the accomplishment of the organization's exempt purposes.

(2) ***Type of relationship required.*** Trade or business is *related* to exempt purposes, in the relevant sense, only where the conduct of the business activities has causal relationship to the achievement of exempt purposes (other than through the production of income); and it is *substantially related,* for purposes of section 513, only if the causal relationship is a substantial one. Thus, for the conduct of trade or business from which a particular amount of gross income is derived to be substantially related to purposes for which exemption is granted, the production or distribution of the goods or the performance of the services from which the gross income is derived must contribute importantly to the accomplishment of those purposes. Where the production or distribution of the goods or the performance of the services does not contribute importantly to the accomplishment of the exempt purposes of an organization, the income from the sale of the goods or the performance of the services does not derive from the conduct of related trade or business. Whether activities productive of gross income contribute importantly to the accomplishment of any purpose for which an organization is granted exemption depends in each case upon the facts and circumstances involved.

(3) ***Size and extent of activities.*** In determining whether activities contribute importantly to the accomplishment of an exempt purpose, the size and extent of the activities involved must be considered in relation to the nature and extent of the exempt function which they purport to serve. Thus, where income is realized by an exempt organization from activities which are in part related to the performance of its exempt functions, but which are conducted on a larger scale than is reasonably necessary for performance of such functions, the gross income attributable to that portion of the activities in excess of the needs of exempt functions constitutes gross income from the conduct of unrelated trade or business. Such income is not derived from the production or distribution of goods or the performance of services which contribute importantly to the accomplishment of any exempt purpose of the organization.

(4) ***Application of principles*** —

(i) ***Income from performance of exempt functions—***

(A) ***In general.*** Gross income derived from charges for the performance of exempt functions does not constitute gross income from the conduct of unrelated trade or business.

(B) ***Examples.*** The following examples illustrate the application of this paragraph (d)(4)(i):

(*1*) Example 1. M, an organization described in section 501(c)(3), operates a school for training children in the performing arts, such as acting, singing, and dancing. It presents performances by its students and derives gross income from admission charges for the performances. The students' participation in performances before audiences is an essential part of their training. Since the income realized from the performances derives from activities which contribute importantly to the accomplishment of M's exempt purposes, it does not constitute gross income from unrelated trade or business. (For specific exclusion applicable in certain cases of contributed services, see section 513(a)(1) and paragraph (e)(1) of this section.)

(*2*) Example 2. N is a trade union qualified for exemption under section 501(c)(5). To improve the trade skills of its members, N conducts refresher training courses and supplies handbooks and technical manuals. N receives payments from its members for these services and materials. However, the development and improvement of the skills of its members is one of the purposes for which exemption is granted N; and

the activities described contribute importantly to that purpose. Therefore, the income derived from these activities does not constitute gross income from unrelated trade or business.

(3) Example 3. O is an industry trade association qualified for exemption under section 501(c)(6). It presents a trade show in which members of its industry join in an exhibition of industry products. O derives income from charges made to exhibitors for exhibit space and admission fees charged patrons or viewers of the show. The show is not a sales facility for individual exhibitors; its purpose is the promotion and stimulation of interest in, and demand for, the industry's products in general, and it is conducted in a manner reasonably calculated to achieve that purpose. The stimulation of demand for the industry's products in general is one of the purposes for which exemption is granted O. Consequently, the activities productive of O's gross income from the show—that is, the promotion, organization and conduct of the exhibition—contribute importantly to the achievement of an exempt purpose, and the income does not constitute gross income from unrelated trade or business. See also section 513(d) and regulations thereunder regarding sales activity.

(4) ***Example 4.*** P is a qualified ABLE program described in section 529A and § 1.529A-1(b)(14). P receives amounts in order to establish or maintain ABLE accounts, as administrative or maintenance fees and other similar fees including service charges. Because the payment of these amounts is essential to the operation of a qualified ABLE program, the income generated from the activity does not constitute gross income from an unrelated trade or business.

(ii) ***Disposition of product of exempt functions.*** Ordinarily, gross income from the sale of products which result from the performance of exempt functions does not constitute gross income from the conduct of unrelated trade or business if the product is sold in substantially the same state it is in on completion of the exempt functions. Thus, in the case of an organization described in section 501(c)(3) and engaged in a program of rehabilitation of handicapped persons, income from sale of articles made by such persons as a part of their rehabilitation training would not be gross income from conduct of unrelated trade or business. The income in such case would be from sale of products, the production of which contributed importantly to the accomplishment of purposes for which exemption is granted the organization—namely, rehabilitation of the handicapped. On the other hand, if a product resulting from an exempt function is utilized or exploitedin further business endeavor beyond that reasonably appropriate or necessary for disposition in the state it is in upon completion of exempt functions, the gross income derived therefrom would be from conduct of unrelated trade or business. Thus, in the case of an experimental dairy herd maintained for scientific purposes by a research organization described in section 501(c)(3), income from sale of milk and cream produced in the ordinary course of operation of the project would not be gross income from conduct of unrelated trade or business. On the other hand, if the organization were to utilize the milk and cream in the further manufacture of food items such as ice cream, pastries, etc., the gross income from the sale of such products would be from the conduct of unrelated trade or business unless the manufacturing activities themselves contribute importantly to the accomplishment of an exempt purpose of the organization.

(iii) ***Dual use of assets or facilities.*** In certain cases, an asset or facility necessary to the conduct of exempt functions may also be employed in a commercial endeavor. In such cases, the mere fact of the use of the asset or facility in exempt functions does not, by itself, make the income

from the commercial endeavor gross income from related trade or business. The test, instead, is whether the activities productive of the income in question contribute importantly to the accomplishment of exempt purposes. Assume, for example, that a museum exempt under section 501(c)(3) has a theater auditorium which is specially designed and equipped for showing of educational films in connection with its program of public education in the arts and sciences. The theater is a principal feature of the museum and is in continuous operation during the hours the museum is open to the public. If the organization were to operate the theater as an ordinary motion picture theater for public entertainment during the evening hours when the museum was closed, gross income from such operation would be gross income from conduct of unrelated trade or business.

(iv) ***Exploitation of exempt functions.*** In certain cases, activities carried on by an organization in the performance of exempt functions may generate good will or other intangibles which are capable of being exploited in commercial endeavors. Where an organization exploits such an intangible in commercial activities, the mere fact that the resultant income depends in part upon an exempt function of the organization does not make it gross income from related trade or business. In such cases, unless the commercial activities themselves contribute importantly to the accomplishment of an exempt purpose, the income which they produce is gross income from the conduct of unrelated trade or business. The application of this subdivision is illustrated in the following examples:

Example 1. U, an exempt scientific organization, enjoys an excellent reputation in the field of biological research. It exploits this reputation regularly by selling endorsements of various items of laboratory equipment to manufacturers. The endorsing of laboratory equipment does not contribute importantly to the accomplishment of any purpose for which exemption is granted U. Accordingly, the income derived from the sale of endorsements is gross income from unrelated trade or business.

Example 2. V, an exempt university, has a regular faculty and a regularly enrolled student body. During the school year, V sponsors the appearance of professional theater companies and symphony orchestras which present drama and musical performances for the students and faculty members. Members of the general public are also admitted. V advertises these performances and supervises advance ticket sales at various places, including such university facilities as the cafeteria and the university bookstore. V derives gross income from the conduct of the performances. However, while the presentation of the performances makes use of an intangible generated by V's exempt educational functions—the presence of the student body and faculty—the presentation of such drama and music events contributes importantly to the overall educational and cultural function of the university. Therefore, the income which V receives does not constitute gross income from the conduct of unrelated trade or business.

Example 3. W is an exempt business league with a large membership. Under an arrangement with an advertising agency, W regularly mails brochures, pamphlets and other commercial advertising materials to its members, for which service W charges the agency an agreed amount per enclosure. The distribution of the advertising materials does not contribute importantly to the accomplishment of any purpose for which W is granted exemption. Accordingly, the payments made to W by the advertising agency constitute gross income from unrelated trade or business.

Example 4. X, an exempt organization for the advancement of public interest in classical music, owns a radio station and operates it in a manner which contributes importantly to the accomplishment of the purposes for which the organization is granted exemption. However, in the course of the operation of the station the organization derives gross income from the regular sale of advertising time and services to commercial advertisers in the manner of an ordinary commercial station. Neither the sale of such time nor the performance of such services contributes importantly to the accomplishment of any purpose for which the organization is granted exemption. Notwithstanding the fact that the production of the advertising income depends upon the existence of the listening audience resulting from performance of exempt functions, such income is gross income from unrelated trade or business.

Example 5. Y, an exempt university, provides facilities, instruction and faculty supervision for a campus newspaper operated by its students. In addition to news items and editorial commentary, the newspaper publishes paid advertising. The solicitation, sale, and publication of the advertising are conducted by students, under the supervision and instruction of the university. Although the services rendered to advertisers are of a commercial character, the advertising business contributes importantly to the university's educational program through the training of the students involved. Hence, none of the income derived from publication of the newspaper constitutes gross income from unrelated trade or business. The same result would follow even though the newspaper is published by a separately incorporated section 501(c)(3) organization, qualified under the university rules for recognition of student activities, and even though such organization utilizes its own facilities and is independent of faculty supervision, but carries out its educational purposes by means of student instruction of other students in the editorial and advertising activities and student participation in those activities.

Example 6. Z is an association exempt under section 501(c)(6), formed to advance the interests of a particular profession and drawing its membership from the members of that profession. Z publishes a monthly journal containing articles and other editorial material which contribute importantly to the accomplishment of purposes for which exemption is granted the organization. Income from the sale of subscriptions to members and others in accordance with the organization's exempt purposes, therefore, does not constitute gross income from unrelated trade or business. In connection with the publication of the journal, Z also derives income from the regular sale of space and services for general consumer advertising,including advertising of such products as soft drinks, automobiles, articles of apparel, and home appliances. Neither the publication of such advertisements nor the performance of services for such commercial advertisers contributes importantly to the accomplishment of any purpose for which exemption is granted. Therefore, notwithstanding the fact that the production of income from advertising utilizes the circulation developed and maintained in performance of exempt functions, such income is gross income from unrelated trade or business.

Example 7. The facts are as described in the preceding example, except that the advertising in Z's journal promotes only products which are within the general area of professional interest of its members. Following a practice common among taxable magazines which publish advertising, Z requires its advertising to comply with certain general standards of taste, fairness, and accuracy; but within those limits the form, content, and manner of presentation of the advertising messages are governed by the basic objective of the

advertisers to promote the sale of the advertised products. While the advertisements contain certain information, the informational function of the advertising is incidental to the controlling aim of stimulating demand for the advertised products and differs in no essential respect from the informational function of any commercial advertising. Like taxable publishers of advertising, Z accepts advertising only from those who are willing to pay its prescribed rates. Although continuing education of itsmembers in matters pertaining to their profession is one of the purposes for which Z is granted exemption, the publication of advertising designed and selected in the manner of ordinary commercial advertising is not an educational activity of the kind contemplated by the exemption statute; it differs fundamentally from such an activity both in its governing objective and in its method. Accordingly, Z's publication of advertising does not contribute importantly to the accomplishment of its exempt purposes; and the income which it derives from advertising constitutes gross income from unrelated trade or business.

(e) ***Exceptions.*** Section 513(a) specifically states that the term *unrelated trade or business* does not include:

(1) Any trade or business in which substantially all the work in carrying on such trade or business is performed for the organization without compensation; or

(2) Any trade or business carried on by an organization described in section 501(c)(3) or by a governmental college or university described in section 511(a)(2)(B), primarily for the convenience of its members, students, patients, officers, or employees; or, any trade or business carried on by a local association of employees described in section 501(c)(4) organized before May 27, 1969, which consists of the selling by the organization of items of work-related clothes and equipment and items normally sold through vending machines, through food dispensing facilities, or by snack bars, for the convenience of its members at their usual places of employment; or

(3) Any trade or business which consists of selling merchandise, substantially all of which has been received by the organization as gifts or contributions

An example of the operation of the first of the exceptions mentioned above would be an exempt orphanage operating a retail store and selling to the general public, where substantially all the work in carrying on such business is performed for the organization by volunteers without compensation. An example of the first part of the second exception, relating to an organization described in section 501(c)(3) or a governmental college or university described in section 511(a)(2)(B), would be a laundry operated by a college for the purpose of laundering dormitory linens and the clothing of students. The latter part of the second exception, dealing with certain sales by local employee associations, will not apply to sales of these items at locations other than the usual place of employment of the employees; therefore sales at such other locations will continue to be treated as unrelated trade or business. The third exception applies to so-called *thrift shops* operated by a tax-exempt organization where those desiring to benefit such organization contribute old clothes, books, furniture, et cetera, to be sold to the general public with the proceeds going to the exempt organization.

(f) ***Special definition of "unrelated trade or business" for trusts.*** In the case of a trust computing its unrelated business taxable income under section 512 for purposes of section 681, or a trust described in section 401(a) or section 501(c)(17), which is exempt from tax under section 501(a), section 513(b) provides that the term *unrelated trade or business* means any trade or business regularly carried on by such trust or by a partnership of which it is a member. This definition also applies to an individual retirement account described in section 408 that, under section 408(e), is subject to the tax imposed by section 511.

(g) ***Special rule respecting publishing businesses prior to 1970.*** For a special rule for taxable years beginning before January 1, 1970, with respect to publishing businesses carried on by an organization, see section 513(c) of the Code prior to its amendment by section 121(c) of the Tax Reform Act of 1969 (83 Stat. 542).

(h) ***Effective date.*** This section is applicable with respect to taxable years beginning after December 12, 1967. However, if a taxpayer wishes to rely on the rules stated in this section for taxable years beginning before December 13, 1967, it may do so. Paragraph (f) of this section applies to taxable years beginning on or after December 2, 2020.

[T.D. 6939, 32 FR 17657, Dec. 12, 1967; 32 FR 17890, Dec. 14, 1967; 32 FR 17938, Dec. 15, 1967; T.D. 7107, 36 FR 6421, Apr. 3, 1971; T.D. 7392, 40 FR 58642, Dec. 18, 1975; T.D. 7896, 48 FR 23817, May 27, 1983; T.D. 9923, 85 FR 74034, Nov. 19, 2020; T.D. 9933, 85 FR 77984, Dec. 2, 2020]

§ 1.513-2 Definition of unrelated trade or business applicable to taxable years beginning before December 13, 1967.

(a) ***In general.***

(1) As used in section 512(a), the term *unrelated business taxable income* includes only income from an unrelated trade or business regularly carried on, and the term *trade or business* has the same meaning as it has in section 162.

(2) The income of an exempt organization is subject to the tax on unrelated business income only if two conditions are present with respect to such income. The first condition is that the income must be from a trade or business which is regularly carried on by the organization. The second condition is that the trade or business must not be substantially related (aside from the need of the organization for income or funds or the use it makes of the profits derived) to the exercise or performance by such organization of its charitable, educational, or other purpose or function constituting the basis for its exemption under section 501, or in the case ofan organization described in section 511(a)(2)(B) (governmental colleges, etc.) to the exercise or performance of any purpose or function described in section 501(c)(3). Whether or not an organization is subject to the tax imposed by section 511 shall be determined by the application of these tests to the particular circumstances involved in each individual case. For certain exceptions from the term *unrelated trade or business,* see paragraph (b) of this section.

(3) A trade or business is regularly carried on when the activity is conducted with sufficient consistency to indicate a continuing purpose of the organization to derive some of its income from such activity. An activity may be regularly carried on even though its performance is infrequent or seasonal.

(4) Ordinarily, a trade or business is substantially related to the activities for which an organization is granted exemption if the principal purpose of such trade or business is to further (other than through the production of income) the purpose for which the organization is granted exemption. In the usual case the nature and size of the trade or business must be compared with the nature and extent of the activities for which the organization is granted exemption in order to determine whether the principal purpose of such trade or business is to further (other than through the production of income) the purpose for which the organization is granted exemption. For example, the operation of a wheat farm is substantially related to the exempt activity of an agricultural college if the wheat farm isoperated as a part of the educational program of the college, and is not operated on a scale disproportionately large when compared with the educational program of the college. Similarly, a university radio station or press is considered a related trade or business if operated primarily as an

integral part of the educational program of the university, but is considered an unrelated trade or business if operated in substantially the same manner as a commercial radio station or publishing house. A trade or business not otherwise related does not become substantially related to an organization's exempt purpose merely because incidental use is made of the trade or business in order to further the exempt purpose. For example, the manufacture and sale of a product by an exempt college would not become substantially related merely because students as part of their educational program perform clerical or bookkeeping functions in the business. In some cases, the business may be substantially related because it is a necessary part of the exempt activity. For example, in the case of an organization described in section 501(c)(3) and engaged in the rehabilitation of handicapped persons, the business of selling articles made by such persons as a part of their rehabilitation training would not be considered an unrelated business since such business is a necessary part of the rehabilitation program.

(5) If an organization receives a payment pursuant to a contract or agreement under which such organization is to perform research which constitutes an unrelated trade or business, the entire amount of such payment is income from an unrelated trade or business. See, however, section 512(b), (7), (8), and (9), relating to the exclusion from unrelated business taxable income of income derived from research for the United States, or any State, and of income derived from research performed for any person by a college, university, hospital, or organization operated primarily for the purpose of carrying on fundamental research the results of which are freely available to the general public.

(b) ***Exceptions.*** Section 513(a) specifically states that the term *unrelated trade or business* does not include:

(1) Any trade or business in which substantially all the work in carrying on such trade or business is performed for the organization without compensation; or

(2) Any trade or business carried on by an organization described in section 501(c)(3) or by a governmental college or university described in section 511(a)(2)(B), primarily for the convenience of its members, students, patients, officers, or employees; or

(3) Any trade or business which consists of selling merchandise, substantially all of which has been received by the organization as gifts or contributions

An example of the operation of the first of the exceptions mentioned above would be an exempt orphanage operating a retail store and selling to the general public, where substantially all the work in carrying on such business is performed for the organization by volunteers without compensation. An example of the second exception would be a laundry operated by a college for the purpose of laundering dormitory linens and the clothing of students. The third exception applies to so-called *thrift shops* operated by a tax-exempt organization where those desiring to benefit such organization contribute old clothes, books, furniture, etc., to be sold to the general public with the proceeds going to the exempt organization.

(c) ***Special rules respecting publishing businesses.*** For a special rule with respect to publishing businesses carried on by an organization, see section 513(c) of the Code prior to its amendment by section 121(c) of the Tax Reform Act of 1969 (83 Stat. 542).

(d) ***Effective date.*** Except as provided in paragraph (g) of § 1.513-1, this section is applicable with respect to taxable years beginning before December 13, 1967.

(Sec. 513 as amended by sec. 4, Act of July 14, 1960 (P.L. 86-667, 74 Stat. 536); secs. 121 (b)(4) and (c), Tax Reform Act of 1969 (83 Stat. 536, 542))

[T.D. 6500, 25 FR 11737, Nov. 26, 1960, as amended by T.D. 6525, 26 FR 190, Jan. 11, 1961; T.D. 6939, 32 FR 17657, Dec. 12, 1967; T.D. 7392, 40 FR 58643, Dec. 18, 1975; 40 FR 60053, Dec. 31, 1975]

§ 1.513-3 Qualified convention and trade show activity.

(a) ***Introduction*** —

(1) ***In general.*** Section 513(d) and § 1.513-3(b) provide that convention and trade show activities carried on by a qualifying organization in connection with a qualified convention or trade show will not be treated as unrelated trade or business. Consequently, income from qualified convention and trade show activities, derived by a qualifying organization that sponsors the qualified convention or trade show, will not be subject to the tax imposed by section 511. Section 1.513-3(c) defines qualifying organizations and qualified conventions or trade shows. Section 1.513-3(d) concerns the treatment of income derived from certain activities, including rental of exhibition space at a qualified convention or trade show where sales activity is permitted, and the treatment of supplier exhibits at qualified conventions and trade shows.

(2) ***Effective date.*** This section is effective for taxable years beginning after October 4, 1976.

(b) ***Qualified activities not unrelated.*** A convention or trade show activity, as defined in section 513(d)(3)(A) and § 1.513-3(c)(4), will not be considered unrelated trade or business if it is conducted by a qualifying organization described in section 513(d)(3)(C) and § 1.513-3(c)(1), in conjunction with a qualified convention or trade show, as defined in section 513(d)(3)(B) and § 1.513-3(c)(2), sponsored by the qualifying organization. Such an activity is a qualified convention or trade show activity. A convention or trade show activity which is conducted by an organization described in section 501(c) (5) or (6), but which otherwise is not so qualified under this section, will be considered unrelated trade or business.

(c) ***Definitions*** —

(1) ***Qualifying organization.*** Under section 513(d)(3)(C), a qualifying organization is one which:

(i) Is described in either section 501(c) (5) or (6), and

(ii) Regularly conducts as one of its substantial exempt purposes a qualified convention or trade show.

(2) ***Qualified convention or trade show.*** For purposes of this section, the term *qualified convention or trade show* means a show that meets the following requirements:

(i) It is conducted by a qualifying organization described in section 513(d)(3)(C);

(ii) At least one purpose of the sponsoring organization in conducting the show is the education of its members, or the promotion and stimulation of interest in, and demand for, the products or services of the industry (or segment thereof) of the members of the qualifying organization; and

(iii) The show is designed to achieve that purpose through the character of a significant portion of the exhibits or the character of conferences and seminars held at a convention or meeting.

(3) ***Show.*** For purposes of this section, the term *show* includes an international, national, state, regional, or local convention, annual meeting or show.

(4) ***Convention and trade show activity.*** For purposes of this section, convention and trade show activity means any activity of a kind traditionally carried on at shows. It includes, but is not limited to—

(i) Activities designed to attract to the show members of the sponsoring organization, members of an industry in general, and members of the public, to view industry products or services and to stimulate interest in, and demand for such products or services;

(ii) Activities designed to educate persons in the industry about new products or services or about new rules and regulations affecting the industry; and

(iii) Incidental activities, such as furnishing refreshments, of a kind traditionally carried on at such shows.

(d) *Certain activities* —

(1) ***Rental of exhibition space.*** The rental of display space to exhibitors (including exhibitors who are suppliers) at a qualified trade show or at a qualified convention and trade show will not be considered unrelated trade or business even though the exhibitors who rent the space are permitted to sell or solicit orders.

(2) ***Suppliers defined.*** For purposes of subparagraph (1), a supplier's exhibit is one in which the exhibitor displays goods or services that are supplied to, rather than by, the members of the qualifying organization in the conduct of such members' own trades or businesses.

(e) ***Example.*** The provisions of this section may be illustrated by the following examples:

Example 1. X, an organization described in section 501(c)(6), was formed to promote the construction industry. Its membership is made up of manufacturers of heavy construction machinery many of whom own, rent, or lease one or more digital computers produced by various computer manufacturers. X is a qualifying organization under section 513(d)(3)(C) that regularly holds an annual meeting. At this meeting a national industry sales campaign and methods of consumer financing for heavy construction machinery are discussed. In addition, new construction machinery developed for use in the industry is on display with representatives of the various manufacturers present to promote their machinery. Both members and nonmembers attend this portion of the conference. In addition, manufacturers of computers are present to educate X's members. While this aspect of the conference is a supplier exhibit (as defined in paragraph (d) of this section), income earned from such activity by X will not constitute unrelated business taxable income to X because the activity is conducted as part of a qualified trade show described in § 1.513-3(c).

Example 2. Assume the same facts as in Example 1, but the only goods or services displayed are those of suppliers, the computer manufacturers. Selling and order taking are permitted. No member exhibits are maintained. Standing alone, this supplier exhibit (as defined in paragraph (d)(2) of this section) would constitute a supplier show and not a qualified convention or trade show. In this situation, however, the rental of exhibition space to suppliers is not unrelated trade or business. It is conducted by a qualifying organization in conjunction with a qualified convention or trade show. The show (the annual meeting) is a qualified convention or trade show because one of its purposes is the promotion and stimulation of interest in, and demand for, the products or services of the industry through the character of the annual meeting.

Example 3. Y is an organization described in section 501(c)(6). The organization conducts an annual show at which its members exhibit their products and services in order to promote public interest in the line of business. Potential customers are invited to the show, and sales and order taking are permitted. The organization secures the exhibition facility, undertakes the planning and direction of

the show, and maintains exhibits designed to promote the line of business in general. The show is a qualified convention or trade show described in paragraph (c)(2) of this section. The provision of exhibition space to individual members is a qualified trade show activity, and is not unrelated trade or business.

Example 4. Z is an organization described in section 501(c)(6) that sponsors an annual show. As the sole activity at the show, suppliers to the members of Z exhibit their products and services for the purpose of stimulating the sale of their products. Selling and order taking are permitted. The show is a supplier show and does not meet the definition of a qualified convention show as it does not satisfy any of the three alternative bases for qualification. First, the show does not stimulate interest in the members' products through the character of product exhibits as the only products exhibited are those of suppliers rather than members. Second, the show does not stimulate interest in members' products through conferences or seminars as no such conferences are held at the show. Third, the show does not meet the definition of a qualified show on the basis of educational activities as the exhibition of suppliers' products is designed primarily to stimulate interest in, and sale of, suppliers' products. Thus, the organization's provision of exhibition space is not a qualified convention or trade show activity. Income derived from rentals of exhibition space to suppliers will be unrelated business taxable income under section 512.

[T.D. 7896, 48 FR 23817, May 27, 1983]

§ 1.513-4 Certain sponsorship not unrelated trade or business.

(a) ***In general.*** Under section 513(i), the receipt of qualified sponsorship payments by an exempt organization which is subject to the tax imposed by section 511 does not constitute receipt of income from an unrelated trade or business.

(b) ***Exception.*** The provisions of this section do not apply with respect to payments made in connection with qualified convention and trade show activities. For rules governing qualified convention and trade show activity, see § 1.513-3. The provisions of this section also do not apply to income derived from the sale of advertising or acknowledgments in exempt organization periodicals. For this purpose, the term *periodical* means regularly scheduled and printed material published by or on behalf of the exempt organization that is not related to and primarily distributed in connection with a specific event conducted by the exempt organization. For this purpose, printed material includes material that is published electronically. For rules governing the sale of advertising in exempt organization periodicals, see § 1.512(a)-1(f).

(c) ***Qualified sponsorship payment*** —

(1) ***Definition.*** The term *qualified sponsorship payment* means any payment by any person engaged in a trade or business with respect to which there is no arrangement or expectation that the person will receive any substantial return benefit. In determining whether a payment is a qualified sponsorship payment, it is irrelevant whether the sponsored activity is related or unrelated to the recipient organization's exempt purpose. It is also irrelevant whether the sponsored activity is temporary or permanent. For purposes of this section, payment means the payment of money, transfer of property, or performance of services.

(2) ***Substantial return benefit*** —

(i) ***In general.*** For purposes of this section, a *substantial return benefit* means any benefit other than a use or acknowledgment described in paragraph (c)(2)(iv) of this section, or disregarded benefits described in paragraph (c)(2)(ii) of this section.

(ii) ***Certain benefits disregarded.*** For purposes of paragraph (c)(2)(i) of this section, benefits are disregarded if the aggregate fair market value of all the benefits provided to the payor or persons designated by the payor in connection with the payment during the organization's taxable year is not more than 2% of the amount of the payment. If the aggregate fair market value of the benefits exceeds 2% of the amount of the payment, then (except as provided in paragraph (c)(2)(iv) of this section) the entire fair market value of such benefits, not merely the excess amount, is a substantial return benefit. Fair market value is determined as provided in paragraph (d)(1) of this section.

(iii) ***Benefits defined.*** For purposes of this section, benefits provided to the payor or persons designated by the payor may include:

(A) Advertising as defined in paragraph (c)(2)(v) of this section.

(B) Exclusive provider arrangements as defined in paragraph (c)(2)(vi)(B) of this section.

(C) Goods, facilities, services or other privileges.

(D) Exclusive or nonexclusive rights to use an intangible asset (e.g., trademark, patent, logo, or designation) of the exempt organization.

(iv) ***Use or acknowledgment.*** For purposes of this section, a substantial return benefit does not include the use or acknowledgment of the name or logo (or product lines) of the payor's trade or business in connection with the activities of the exempt organization. Use or acknowledgment does not include advertising as described in paragraph (c)(2)(v) of this section, but may include the following: exclusive sponsorship arrangements; logos and slogans that do not contain qualitative or comparative descriptions of the payor's products, services, facilities or company; a list of the payor's locations, telephone numbers, or Internet address; value-neutral descriptions, including displays or visual depictions, of the payor's product-line or services; and the payor's brand or trade names and product or service listings. Logos or slogans that are an established part of a payor's identity are not considered to contain qualitative or comparative descriptions. Mere display or distribution, whether for free or remuneration, of a payor's product by the payor or the exempt organization to the general public at the sponsored activity is not considered an inducement to purchase, sell or use the payor's product for purposes of this section and, thus, will not affect the determination of whether a payment is a qualified sponsorship payment.

(v) ***Advertising.*** For purposes of this section, the term *advertising* means any message or other programming material which is broadcast or otherwise transmitted, published, displayed or distributed, and which promotes or markets any trade or business, or any service, facility or product. Advertising includes messages containing qualitative or comparative language, price information or other indications of savings or value, an endorsement, or an inducement to purchase, sell, or use any company, service, facility or product. A single message that contains both advertising and an acknowledgment is advertising. This section does not apply to activities conducted by a payor on its own. For example, if a payor purchases broadcast time from a television station to advertise its product during commercial breaks in a sponsored program, the exempt organization's activities are not thereby converted to advertising.

(vi) ***Exclusivity arrangements*** —

(A) ***Exclusive sponsor.*** An arrangement that acknowledges the payor as the exclusive sponsor of an exempt organization's activity, or the exclusive sponsor representing a particular trade, business or industry, generally does not, by itself, result in a substantial return benefit. For example, if in exchange for a payment, an organization announces that its event is sponsored exclusively by the payor (and does not provide any advertising or other substantial return benefit to the payor), the payor has not received a substantial return benefit.

(B) ***Exclusive provider.*** An arrangement that limits the sale, distribution, availability, or use of competing products, services, or facilities in connection with an exempt organization's activity generally results in a substantial return benefit. For example, if in exchange for a payment, the exempt organization agrees to allow only the payor's products to be sold in connection with an activity, the payor has received a substantial return benefit.

(d) ***Allocation of payment*** —

(1) ***In general.*** If there is an arrangement or expectation that the payor will receive a substantial return benefit with respect to any payment, then only the portion, if any, of the payment that exceeds the fair market value of the substantial return benefit is a qualified sponsorship payment. However, if the exempt organization does not establish that the payment exceeds the fair market value of any substantial return benefit, then no portion of the payment constitutes a qualified sponsorship payment.

(i) ***Treatment of payments other than qualified sponsorship payments.*** The unrelated business income tax (UBIT) treatment of any payment (or portion thereof) that is not a qualified sponsorship payment is determined by application of sections 512, 513 and 514. For example, payments related to an exempt organization's providing facilities, services, or other privileges to the payor or persons designated by the payor, advertising, exclusive provider arrangements described in paragraph (c)(2)(vi)(B) of this section, a license to use intangible assets of the exempt organization, or other substantial return benefits, are evaluated separately in determining whether the exempt organization realizes unrelated business taxable income.

(ii) ***Fair market value.*** The fair market value of any substantial return benefit provided as part of a sponsorship arrangement is the price at which the benefit would be provided between a willing recipient and a willing provider of the benefit, neither being under any compulsion to enter into the arrangement and both having reasonable knowledge of relevant facts, and without regard to any other aspect of the sponsorship arrangement.

(iii) ***Valuation date.*** In general, the fair market value of the substantial return benefit is determined when the benefit is provided. However, if the parties enter into a binding, written sponsorship contract, the fair market value of any substantial return benefit provided pursuant to that contract is determined on the date the parties enter into the sponsorship contract. If the parties make a material change to a sponsorship contract, it is treated as a new sponsorship contract as of the date the material change is effective. A material change includes an extension or renewal of the contract, or a more than incidental change to any amount payable (or other consideration) pursuant to the contract.

(iv) ***Examples.*** The following examples illustrate the provisions of this section:

Example 1. On June 30, 2001, a national corporation and Z, a charitable organization, enter into a five-year binding, written contract effective for years 2002 through 2007. The contract provides that the corporation will make an annual payment of $5,000 to Z, and in return

the corporation will receive no benefit other than advertising. On June 30, 2001, the fair market value of the advertising to be provided to the corporation in each year of the agreement is $75, which is less than the disregarded benefit amount provided for in paragraph (c)(2)(ii) of this section (2% of $5,000 is $100). In 2002, pursuant to the sponsorship contract, the corporation makes a payment to Z of $5,000, and receives the specified benefit (advertising). As of January 1, 2002, the fair market value of the advertising to be provided by Z each year has increased to $110. However, for purposes of this section, the fair market value of the advertising benefit is determined on June 30, 2001, the date the parties entered into the sponsorship contract. Therefore, the entire $5,000 payment received in 2002 is a qualified sponsorship payment.

Example 2. The facts are the same as *Example 1,* except that the contract provides for an initial payment by the corporation to Z of $5,000 in 2002, followed by annual payments of $1,000 during each of years 2003-2007. In 2003, pursuant to the sponsorship contract, the corporation makes a payment to Z of $1,000, and receives the specified advertising benefit. In 2003, the fair market value of the benefit provided ($75, as determined on June 30, 2001) exceeds 2% of the total payment received (2% of $1,000 is $20). Therefore, only $925 of the $1,000 payment received in 2003 is a qualified sponsorship payment.

(2) ***Anti-abuse provision.*** To the extent necessary to prevent avoidance of the rule stated in paragraphs (d)(1) and (c)(2) of this section, where the exempt organization fails to make a reasonable and good faith valuation of any substantial return benefit, the Commissioner (or the Commissioner's delegate) may determine the portion of a payment allocable to such substantial return benefit and may treat two or more related payments as a single payment.

(e) ***Special rules*** —

(1) ***Written agreements.*** The existence of a written sponsorship agreement does not, in itself, cause a payment to fail to be a qualified sponsorship payment. The terms of the agreement, not its existence or degree of detail, are relevant to the determination of whether a payment is a qualified sponsorship payment. Similarly, the terms of the agreement and not the title or responsibilities of the individuals negotiating the agreement determine whether a payment (or any portion thereof) made pursuant to the agreement is a qualified sponsorship payment.

(2) ***Contingent payments.*** The term *qualified sponsorship payment* does not include any payment the amount of which is contingent, by contract or otherwise, upon the level of attendance at one or more events, broadcast ratings, or other factors indicating the degree of public exposure to the sponsored activity. The fact that a payment is contingent upon sponsored events or activities actually being conducted does not, by itself, cause the payment to fail to be a qualified sponsorship payment.

(3) ***Determining public support.*** Qualified sponsorship payments in the form of money or property (but not services) are treated as contributions received by the exempt organization for purposes of determining public support to the organization under section 170(b)(1)(A)(vi) or 509(a)(2). See §§ 1.509(a)-3(f)(1) and 1.170A-9(e)(6)(i). The fact that a payment is a qualified sponsorship payment that is treated as a contribution to the payee organization does not determine whether the payment is deductible by the payor under section 162 or 170.

(f) ***Examples.*** The provisions of this section are illustrated by the following examples. The tax treatment of any payment (or portion of a payment) that does not constitute a qualified sponsorship payment is governed by general UBIT principles. In these examples, the recipients of the payments at issue are section 501(c) organizations. The expectations or arrangements of the parties are those specifically indicated in the example. The examples are as follows:

Example 1. M, a local charity, organizes a marathon and walkathon at which it serves to participants drinks and other refreshments provided free of charge by a national corporation. The corporation also gives M prizes to be awarded to winners of the event. M recognizes the assistance of the corporation by listing the corporation's name in promotional fliers, in newspaper advertisements of the event and on T-shirts worn by participants. M changes the name of its event to include the name of the corporation. M's activities constitute acknowledgment of the sponsorship. The drinks, refreshments and prizes provided by the corporation are a qualified sponsorship payment, which is not income from an unrelated trade or business.

Example 2. N, an art museum, organizes an exhibition and receives a large payment from a corporation to help fund the exhibition. N recognizes the corporation's support by using the corporate name and established logo in materials publicizing the exhibition, which include banners, posters, brochures and public service announcements. N also hosts a dinner for the corporation's executives. The fair market value of the dinner exceeds 2% of the total payment. N's use of the corporate name and logo in connection with the exhibition constitutes acknowledgment of the sponsorship. However, because the fair market value of the dinner exceeds 2% of the total payment, the dinner is a substantial return benefit. Only that portion of the payment, if any, that N can demonstrate exceeds the fair market value of the dinner is a qualified sponsorship payment.

Example 3. O coordinates sports tournaments for local charities. An auto manufacturer agrees to underwrite the expenses of the tournaments. O recognizes the auto manufacturer by including the manufacturer's name and established logo in the title of each tournament as well as on signs, scoreboards and other printed material. The auto manufacturer receives complimentary admission passes and pro-am playing spots for each tournament that have a combined fair market value in excess of 2% of the total payment. Additionally, O displays the latest models of the manufacturer's premier luxury cars at each tournament. O's use of the manufacturer's name and logo and display of cars in the tournament area constitute acknowledgment of the sponsorship. However, the admission passes and pro-am playing spots are a substantial return benefit. Only that portion of the payment, if any, that O can demonstrate exceeds the fair market value of the admission passes and pro-am playing spots is a qualified sponsorship payment.

Example 4. P conducts an annual college football bowl game. P sells to commercial broadcasters the right to broadcast the bowl game on television and radio. A major corporation agrees to be the exclusive sponsor of the bowl game. The detailed contract between P and the corporation provides that in exchange for a $1,000,000 payment, the name of the bowl game will include the name of the corporation. In addition, the contract provides that the corporation's name and established logo will appear on player's helmets and uniforms, on the scoreboard and stadium signs, on the playing field, on cups used to serve drinks at the game, and on all related printed material distributed in connection with the game. P also agrees to give the corporation a block of game passes for its employees and to provide advertising in the bowl game program book. The fair market value of the passes is $6,000, and the fair market value of the program advertising is $10,000. The agreement is contingent upon the game being broadcast on television and radio, but the amount of the payment is not contingent upon the number of people attending the game or the television ratings. The contract provides that television cameras will focus on the corporation's name and logo on the field at certain

intervals during the game. P's use of the corporation's name and logo in connection with the bowl game constitutes acknowledgment of the sponsorship. The exclusive sponsorship arrangement is not a substantial return benefit. Because the fair market value of the game passes and program advertising ($16,000) does not exceed 2% of the total payment (2% of $1,000,000 is $20,000), these benefits are disregarded and the entire payment is a qualified sponsorship payment, which is not income from an unrelated trade or business.

Example 5. Q organizes an amateur sports team. A major pizza chain gives uniforms to players on Q's team, and also pays some of the team's operational expenses. The uniforms bear the name and established logo of the pizza chain. During the final tournament series, Q distributes free of charge souvenir flags bearing Q's name to employees of the pizza chain who come out to support the team. The flags are valued at less than 2% of the combined fair market value of the uniforms and operational expenses paid. Q's use of the name and logo of the pizza chain in connection with the tournament constitutes acknowledgment of the sponsorship. Because the fair market value of the flags does not exceed 2% of the total payment, the entire amount of the funding and supplied uniforms are a qualified sponsorship payment, which is not income from an unrelated trade or business.

Example 6. R is a liberal arts college. A soft drink manufacturer enters into a binding, written contract with R that provides for a large payment to be made to the college's English department in exchange for R agreeing to name a writing competition after the soft drink manufacturer. The contract also provides that R will allow the soft drink manufacturer to be the exclusive provider of all soft drink sales on campus. The fair market value of the exclusive provider component of the contract exceeds 2% of the total payment. R's use of the manufacturer's name in the writing competition constitutes acknowledgment of the sponsorship. However, the exclusive provider arrangement is a substantial return benefit. Only that portion of the payment, if any, that R can demonstrate exceeds the fair market value of the exclusive provider arrangement is a qualified sponsorship payment.

Example 7. S is a noncommercial broadcast station that airs a program funded by a local music store. In exchange for the funding, S broadcasts the following message: "This program has been brought to you by the Music Shop, located at 123 Main Street. For your music needs, give them a call today at 555-1234. This station is proud to have the Music Shop as a sponsor." Because this single broadcast message contains both advertising and an acknowledgment, the entire message is advertising. The fair market value of the advertising exceeds 2% of the total payment. Thus, the advertising is a substantial return benefit. Unless S establishes that the amount of the payment exceeds the fair market value of the advertising, none of the payment is a qualified sponsorship payment.

Example 8. T, a symphony orchestra, performs a series of concerts. A program guide that contains notes on guest conductors and other information concerning the evening's program is distributed by T at each concert. The Music Shop makes a $1,000 payment to T in support of the concert series. As a supporter of the event, the Music Shop receives complimentary concert tickets with a fair market value of $85, and is recognized in the program guide and on a poster in the lobby of the concert hall. The lobby poster states that, "The T concert is sponsored by the Music Shop, located at 123 Main Street, telephone number 555-1234." The program guide contains the same information and also states, "Visit the Music Shop today for the finest selection of music CDs and cassette tapes." The fair market value of the advertisement in the program guide is $15. T's use of the Music Shop's name, address and telephone number in the lobby poster constitutes acknowledgment of the sponsorship. However, the combined fair market value of the advertisement in the program guide and complimentary tickets is $100 ($15 + $85), which exceeds 2% of the total payment (2% of

$1,000 is $20). The fair market value of the advertising and complimentary tickets, therefore, constitutes a substantial return benefit and only that portion of the payment, or $900, that exceeds the fair market value of the substantial return benefit is a qualified sponsorship payment.

Example 9. U, a national charity dedicated to promoting health, organizes a campaign to inform the public about potential cures to fight a serious disease. As part of the campaign, U sends representatives to community health fairs around the country to answer questions about the disease and inform the public about recent developments in the search for a cure. A pharmaceutical company makes a payment to U to fund U's booth at a health fair. U places a sign in the booth displaying the pharmaceutical company's name and slogan, "Better Research, Better Health," which is an established part of the company's identity. In addition, U grants the pharmaceutical company a license to use U's logo in marketing its products to health care providers around the country. The fair market value of the license exceeds 2% of the total payment received from the company. U's display of the pharmaceutical company's name and slogan constitutes acknowledgment of the sponsorship. However, the license granted to the pharmaceutical company to use U's logo is a substantial return benefit. Only that portion of the payment, if any, that U can demonstrate exceeds the fair market value of the license granted to the pharmaceutical company is a qualified sponsorship payment.

Example 10. V, a trade association, publishes a monthly scientific magazine for its members containing information about current issues and developments in the field. A textbook publisher makes a large payment to V to have its name displayed on the inside cover of the magazine each month. Because the monthly magazine is a periodical within the meaning of paragraph (b) of this section, the section 513(i) safe harbor does not apply. See § 1.512(a)-1(f).

Example 11. W, a symphony orchestra, maintains a Web site containing pertinent information and its performance schedule. The Music Shop makes a payment to W to fund a concert series, and W posts a list of its sponsors on its Web site, including the Music Shop's name and Internet address. W's Web site does not promote the Music Shop or advertise its merchandise. The Music Shop's Internet address appears as a hyperlink from W's Web site to the Music Shop's Web site. W's posting of the Music Shop's name and Internet address on its Web site constitutes acknowledgment of the sponsorship. The entire payment is a qualified sponsorship payment, which is not income from an unrelated trade or business.

Example 12. X, a health-based charity, sponsors a year-long initiative to educate the public about a particular medical condition. A large pharmaceutical company manufactures a drug that is used in treating the medical condition, and provides funding for the initiative that helps X produce educational materials for distribution and post information on X's Web site. X's Web site contains a hyperlink to the pharmaceutical company's Web site. On the pharmaceutical company's Web site, the statement appears, "X endorses the use of our drug, and suggests that you ask your doctor for a prescription if you have this medical condition." X reviewed the endorsement before it was posted on the pharmaceutical company's Web site and gave permission for the endorsement to appear. The endorsement is advertising. The fair market value of the advertising exceeds 2% of the total payment received from the pharmaceutical company. Therefore, only the portion of the payment, if any, that X can demonstrate exceeds the fair market value of the advertising on the pharmaceutical company's Web site is a qualified sponsorship payment.

[T.D. 8991, 67 FR 20438, Apr. 25, 2002]

§ 1.513-5 Certain bingo games not unrelated trade or business.

(a) ***In general.*** Under section 513(f), and subject to the limitations in paragraph (C) of this section, in the case of an organization subject to the tax imposed by section 511, the term *unrelated trade or business* does not include any trade or business that consists of conducting bingo games (as defined in paragraph (d) of this section).

(b) ***Exception.*** The provisions of this section shall not apply with respect to any bingo game otherwise excluded from the term *unrelated trade or business* by reason of section 513(a)(1) and § 1.513-1(e)(1) (relating to trades or businesses in which substantially all the work is performed without compensation).

(c) ***Limitations*** —

(1) ***Bingo games must be legal.*** Paragraph (a) of this section shall not apply with respect to any bingo game conducted in violation of State or local law.

(2) ***No commercial competition.*** Paragraph (a) of this section shall not apply with respect to any bingo game conducted in a jurisdiction in which bingo games are ordinarily carried out on a commercial basis. Bingo games are *ordinarily carried out on a commercial basis* within a jursidiction if they are regularly carried on (within the meaning of § 1.513-1(c)) by for-profit organizations in any part of that jurisidiction. Normally, the entire State will constitute the appropriate jurisdiction for determining whether bingo games are ordinarily carried out on a commercial basis. However, if State law permits local jurisdictions to determine whether bingo games may be conducted by for-profit organizations, or if State law limits or confines the conduct of bingo games by for-profit organizations to specific local jurisdictions, then the local jurisdiction will constitute the appropriate jurisdiction for determining whether bingo games are ordinarily carried out on a commercial basis.

(3) ***Examples.*** The application of this paragraph is illustrated by the examples that follow. In each example, it is assumed that the bingo games referred to are operated by individuals who are compensated for their services. Accordingly, none of the bingo games would be excluded from the term *unrelated trade or business* under section 513 (a) (1).

Example 1. Church Z, a tax-exempt organization, conducts weekly bingo games in State O. State and local laws in State O expressly provide that bingo games may be conducted by tax-exempt organizations. Bingo games are not conducted in State O by any for-profit businesses. Since Z's bingo games are not conducted in violation of State or local law and are not the type of activity ordinarily carried out on a commercial basis in State O, Z's bingo games do not constitute unrelated trade or business.

Example 2. Rescue Squad X, a tax-exempt organization, conducts weekly bingo games in State M. State M has a statutory provision that prohibits all forms of gambling including bingo games. However, that law generally is not enforced by State officials against local charitable organizations such as X that conduct bingo games to raise funds. Since bingo games are illegal under State law, X's bingo games constitute unrelated trade or business regardless of the degree to which the State law is enforced.

Example 3. Veteran's organizations Y and X, both tax-exempt organizations, are organized under the laws of State N. State N has a statutory provision that permits bingo games to be conducted by tax-exempt organizations. In addition, State N permits bingo games to be conducted by for-profit organizations in city S, a resort community located in county R. Several for-profit organizations conduct nightly bingo games in city S. Y conducts weekly bingo games in city S. X conducts weekly bingo games in county R. Since State law confines the conduct of bingo

games by for-profit organizations to city S, and since bingo games are regularly carried on there by those organizations, Y's bingo games conducted in city S constitute unrelated trade or business. However, X's bingo games conducted in county R outside of city S do not constitute unrelated trade or business.

(d) ***Bingo game defined.*** A bingo game is a game of chance played with cards that are generally printed with five rows of five squares each. Participants place markers over randomly called numbers on the cards in an attempt to form a preselected pattern such as a horizontal, vertical, or diagonal line, or all four corners. The first participant to form the preselected pattern wins the game. As used in this section, the term *bingo game* means any game of bingo of the type described above in which wagers are placed, winners are determined, and prizes or other property is distributed in the presence of all persons placing wagers in that game. The term *bingo game* does not refer to any game of chance (including, but not limited to, keno games, dice games, card games, and lotteries) other than the type of game described in this paragraph.

(e) ***Effective date.*** Section 513(f) and this section apply to taxable years beginning after December 31, 1969.

[T.D. 7699, 45 FR 33970, May 21, 1980]

§ 1.513-6 Certain hospital services not unrelated trade or business.

(a) ***In general.*** Under section 513(e), the furnishing of a service listed in section 501(e)(1)(A) by a hospital to one or more other hospitals will not constitute unrelated trade or business if—

(1) The service is provided solely to hospitals that have facilities to serve not more than 100 inpatients,

(2) The service would, if performed by the recipient hospital, constitute an activity consistent with that hospital's exempt purposes, and

(3) The service is provided at a fee not in excess of actual cost, including straight line depreciation and a reasonable rate of return on the capital goods used to provide the service. For purposes of this section, a rate of return on capital goods will be considered *reasonable* provided that it does not exceed, on an annual basis, the percentage described below which is based on the average of the rates of interest on special issues of public debt obligations issued to the Federal Hospital Insurance Trust Fund for each of the months included in the taxable year of the hospital duringwhich the captial goods are used in providing the service. Determinations as to the cost of services and the applicable rate of return should be made as prescribed by 42 U.S.C. 1395x(v)(1) (A) and (B) and the regulations thereunder (permitting a health care facility to be reimbursed under the Medicare program for the *reasonable cost of (its) services,* including, in the case of certain proprietary facilities, a *reasonable return on equity capital*). For taxable years beginning on or before May 14, 1986, the rate of return shall be one and one-half times the average of the rates of interest on public debt obligations described above which were in effect on or before April 20, 1983.

(b) ***Hospital defined.*** As used in this section the word *hospital* means a hospital described in section 170(b)(1)(A)(iii).

(c) ***Example.*** The provisions of this section are illustrated by the following example:

Example. A large metropolitan hospital provides various services to other hospitals. The hospital furnishes a purchasing service to hosptials N and O, a data processing service to hospitals R and S, and a food service to hospitals X and Y. All the hospitals are described in section 170(b)(1)(A)(iii). All the hospitals have facilities to serve not more than 100 inpatients except hospital N. The services are furnished at cost to all hospitals except that hospital R is charged a fee in excess of cost for its use

of the data processing service. The purchasing service constitutes unrelated trade or business because it is not provided solely to hospitals having facilities to serve not more than 100 inpatients. The data processing service constitutes unrelated trade or business because it is provided at a fee in excess of cost. The food service satisfies all three requirements of paragraph (a) of this section and does not constitute unrelated trade or business.

(d) ***Effective date.*** Section 513(e) and this section apply to taxable years beginning after December 31, 1953.

[T.D. 8075, 51 FR 5322, Feb. 13, 1986; 51 FR 8490, Mar. 12, 1986]

§ 1.513-7 Travel and tour activities of tax exempt organizations.

(a) Travel tour activities that constitute a trade or business, as defined in § 1.513-1(b), and that are not substantially related to the purposes for which exemption has been granted to the organization constitute an unrelated trade or business with respect to that organization. Whether travel tour activities conducted by an organization are substantially related to the organization's exempt purpose is determined by looking at all relevant facts and circumstances, including, but not limited to, how a travel tour is developed, promoted and operated. Section 513(c) and § 1.513-1(b) also apply to travel tour activity. Application of the rules of section 513(c) and § 1.513-1(b) may result in different treatment for individual tours within an organization's travel tour program.

(b) ***Examples.*** The provisions of this section are illustrated by the following examples. In all of these examples, the travel tours are priced to produce a profit for the exempt organization. The examples are as follows:

Example 1. O, a university alumni association, is exempt from federal income tax under section 501(a) as an educational organization described in section 501(c)(3). As part of its activities, O operates a travel tour program. The program is open to all current members of O and their guests. O works with travel agencies to schedule approximately 10 tours annually to various destinations around the world. Members of O pay $x to the organizing travel agency to participate in a tour. The travel agency pays O a per person fee for each participant. Although the literature advertising the tours encourages O's members to continue their lifelong learning by joining the tours, and a faculty member of O's related university frequently joins the tour as a guest of the alumni association, none of the tours includes any scheduled instruction or curriculum related to the destinations being visited. The travel tours made available to O's members do not contribute importantly to the accomplishment of O's educational purpose. Rather, O's program is designed to generate revenues for O by regularly offering its members travel services. Accordingly, O's tour program is an unrelated trade or business within the meaning of section 513(a).

Example 2. N is an organization formed for the purpose of educating individuals about the geography and culture of the United States. It is exempt from federal income tax under section 501(a) as an educational and cultural organization described in section 501(c)(3). N engages in a number of activities to accomplish its purposes, including offering courses and publishing periodicals and books. As one of its activities, N conducts study tours to national parks and other locations within the UnitedStates. The study tours are conducted by teachers and other personnel certified by the Board of Education of the State of P. The tours are directed toward students enrolled in degree programs at educational institutions in P, as reflected in the promotional materials, but are open to all who agree to participate in the required study program. Each tour's study program consists of instruction on subjects related to the location being visited on the tour. During the tour, five or six hours per day are devoted to organized study, preparation of reports, lectures, instruction and

recitation by the students. Each tour group brings along a library of material related to the subject being studied on the tour. Examinations are given at the end of each tour and the P StateBoard of Education awards academic credit for tour participation. Because the tours offered by N include a substantial amount of required study, lectures, report preparation, examinations and qualify for academic credit, the tours are substantially related to N's educational purpose. Accordingly, N's tour program is not an unrelated trade or business within the meaning of section 513(a).

Example 3. R is a section 501(c)(4) social welfare organization devoted to advocacy on a particular issue. On a regular basis throughout the year, R organizes travel tours for its members to Washington, DC. While in Washington, the members follow a schedule according to which they spend substantially all of their time during normal business hours over several days attending meetings with legislators and government officials and receiving briefings on policy developments related to the issue that is R's focus. Members do have some time on their own in the evenings to engage in recreational or social activities of their own choosing. Bringing members to Washington to participate in advocacy on behalf of the organization and learn about developments relating to the organization's principal focus is substantially related to R's social welfare purpose. Therefore, R's operation of the travel tours does not constitute an unrelated trade or business within the meaning of section 513(a).

Example 4. S is a membership organization formed to foster cultural unity and to educate X Americans about X, their country of origin. It is exempt from federal income tax under section 501(a) and is described in section 501(c)(3) as an educational and cultural organization. Membership in S is open to all Americans interested in the X heritage. As part of its activities, S sponsors a program of travel tours to X. The tours are divided into two categories. Category A tours are trips to X that are designed to immerse participants in the X history, culture and language. Substantially all of the daily itinerary includes scheduled instruction on the X language, history and cultural heritage, and visits to destinations selected because of their historical or cultural significance or because of instructional resources they offer. Category B tours are also trips to X, but rather than offering scheduled instruction, participants are given the option of taking guided tours of various X locations included in their itinerary. Other than the optional guided tours, Category B tours offer no instruction or curriculum. Destinations of principally recreational interest, rather than historical or cultural interest, are regularly included on Category B tour itineraries. Based on the facts and circumstances, sponsoring Category A tours is an activity substantially related to S's exempt purposes, and does not constitute an unrelated trade or business within the meaning of section 513(a). However, sponsoring Category B tours does not contribute importantly to S's accomplishment of its exempt purposes and, thus, constitutes an unrelated trade or business within the meaning of section 513(a).

Example 5. T is a scientific organization engaged in environmental research. T is exempt from federal income tax under section 501(a) as an organization described in section 501(c)(3). T is engaged in a long-term study of how agricultural pesticide and fertilizer use affects the populations of various bird species. T collects data at several bases located in an important agricultural region of country U. The minutes of a meeting of T's Board of Directors state that, after study, the Board has determined that non-scientists can reliably perform needed data collection in the field, under supervision of T's biologists. The Board minutes reflect that the Board approved offering one-week trips to T's bases in U, where participants will assist T's biologists in collecting data for the study. Tour participants collect data during the same hours as T's biologists. Normally, data collection occurs during the early morning and evening hours, although the work schedule varies by season. Each base has rustic accommodations and few amenities, but country U is renowned for its beautiful scenery and abundant wildlife. T promotes the trips in its newsletter and on its Internet site and through various conservation organizations. The promotional materials describe the work schedule and emphasize

the valuable contribution made by trip participants to T's research activities. Based on the facts and circumstances, sponsoring trips to T's bases in country U is an activity substantially related to T's exempt purpose, and, thus, does not constitute an unrelated trade or business within the meaning of section 513(a).

Example 6. V is an educational organization devoted to the study of ancient history and cultures and is exempt from federal income tax under section 501(a) as an organization described in section 501(c)(3). In connection with its educational activities, V conducts archaeological expeditions around the world, including in the Y region of country Z. In cooperation with the National Museum of Z, V recently presented an exhibit on ancient civilizations of the Y region of Z, including artifacts from the collection of the Z National Museum. V instituted a program of travel tours to V's archaeological sites located in the Y region. The tours were initially proposed by V staff members as a means of educating the public about ongoing field research conducted by V. V engaged a travel agency to handle logistics such as accommodations and transportation arrangements. In preparation for the tours, V developed educational materials relating to each archaeological site to be visited on the tour, describing in detail the layout of the site, the methods used by V's researchers in exploring the site, the discoveries made at the site, and their historical significance. V also arranged special guided tours of its exhibit on the Y region for individuals registered for the travel tours. Two archaeologists from V (both of whom had participated in prior archaeological expeditions in the Y region) accompanied the tours. These experts led guided tours of each site and explained the significance of the sites to tour participants. At several of the sites, tour participants also met with a working team of archaeologists from V and the National Museum of Z, who shared their experiences. V prepared promotional materials describing the educational nature of the tours, including the daily trips to V's archaeological sites and the educational background of the tour leaders, and providing a recommended reading list. The promotional materials do not refer to any particular recreational or sightseeing activities. Based on the facts and circumstances, sponsoring trips to the Y region is an activity substantially related to V's exempt purposes. The scheduled activities, which include tours of archaeological sites led by experts, are part of a coordinated educational program designed to educate tour participants about the ancient history of the Y region of Z and V's ongoing field research. Therefore, V's tour program does not constitute an unrelated trade or business within the meaning of section 513(a).

Example 7. W is an educational organization devoted to the study of the performing arts and is exempt from federal income tax under section 501(a) as an organization described in section 501(c)(3). In connection with its educational activities, W presents public performances of musical and theatrical works. Individuals become members of W by making an annual contribution to W of $q. Each year, W offers members an opportunity to travel as a group to one or more major cities in the United States or abroad. In each city, tour participants are provided tickets to attend a public performance of a play, concert or dance program each evening. W also arranges a sightseeing tour of each city and provides evening receptions for tour participants. W views its tour program as an important means to develop and strengthen bonds between W and its members, and to increase their financial and volunteer support of W. W engaged a travel agency to handle logistics such as accommodations and transportation arrangements. No educational materials are prepared by W or provided to tour participants in connection with the tours. Apart from attendance at the evening cultural events, the tours offer no scheduled instruction, organized study or group discussion. Although several members of W's administrative staff accompany each tour group, their role is to facilitate member interaction. The staff members have no special expertise in the performing arts and play no educational role in the tours. W prepared promotional materials describing the sightseeing opportunities on the tours and emphasizing the opportunity for members to socialize informally and

interact with one another and with W staff members, while pursuing shared interests. Although W's tour program may foster goodwill among W members, it does not contribute importantly to W's educational purposes. W's tour program is primarily social and recreational in nature. The scheduled activities, which include sightseeing and attendance at various cultural events, are not part of a coordinated educational program. Therefore, W's tour program is an unrelated trade or business within the meaning of section 513(a).

[T.D. 8874, 65 FR 5773, Feb. 7, 2000; 65 FR 16143, Mar. 27, 2000]

§ 1.514(a)-1 Unrelated debt-financed income and deductions.

(a) ***Income includible in gross income:***

(1) ***Percentage of income taken into account*** —

(i) ***In general.*** For taxable years beginning after December 31, 1969, there shall be included with respect to each debt-financed property (as defined in section 514 and § 1.514(b)-1) as an item of gross income derived from an unrelated trade or business the amount of unrelated debt-financed income (as defined in subdivision (ii) of this subparagraph). See paragraph (a)(5) of § 1.514(c)-1 for special rules regarding indebtedness incurred before June 28, 1966, applicable for taxable years beginning before January 1, 1972, and for special rules applicable to churches or conventions or associations of churches.

(ii) ***Unrelated debt-financed income.*** The *unrelated debt-financed income* with respect to each debt-financed property is an amount which is the same percentage (but not in excess of 100 percent) of the total gross income derived during the taxable year from or on account of such property as:

(*a*) The average acquisition indebtedness (as defined in subparagraph (3) of this paragraph) with respect to the property is of

(*b*) The average adjusted basis of such property (as defined in subparagraph (2) of this paragraph).

(iii) ***Debt/basis percentage.*** The percentage determined under subdivision (ii) of this subparagraph is hereinafter referred to as the *debt/basis percentage.*

(iv) ***Example.*** Subdivisions (i), (ii), and (iii) of this subparagraph are illustrated by the following example. For purposes of this example it is assumed that the property is debt-financed property.

Example. X, an exempt trade association, owns an office building which in 1971 produces $10,000 of gross rental income. The average adjusted basis of the building for 1971 is $100,000, and the average acquisition indebtedness with respect to the building for 1971 is $50,000. Accordingly, the debt/basis percentage for 1971 is 50 percent (the ratio of $50,000 to $100,000). Therefore, the unrelated debt-financed income with respect to the building for 1971 is $5,000 (50 percent of $10,000).

(v) ***Gain from sale or other disposition.*** If debt-financed property is sold or otherwise disposed of, there shall be included in computing unrelated business taxable income an amount with respect to such gain (or loss) which is the same percentage (but not in excess of 100 percent) of the total gain (or loss) derived from such sale or other disposition as:

(*a*) The highest acquisition indebtedness with respect to such property during the 12-month period, preceding the date of disposition, is of

(*b*) The average adjusted basis of such property.

The tax on the amount of gain (or loss) included in unrelated business taxable income pursuant to the preceding sentence shall be determined in accordance with the rules set forth in subchapter P, chapter 1 of the Code (relating to capital gains and losses). See also section 511(d) and the regulations thereunder (relating to the minimum tax for tax preferences).

(2) ***Average adjusted basis*** —

(i) ***In general.*** The *average adjusted basis* of debt-financed property is the average amount of the adjusted basis of such property during that portion of the taxable year it is held by the organization. This amount is the average of:

(*a*) The adjusted basis of such property as of the first day during the taxable year that the organization holds the property, and

(*b*) The adjusted basis of such property as of the last day during the taxable year that the organization holds the property

See section 1011 and the regulations thereunder for determination of the adjusted basis of property.

(ii) ***Adjustments for prior taxable years.*** For purposes of subdivision (i) of this subparagraph, the determination of the average adjusted basis of debt-financed property is not affected by the fact that the organization was exempt from taxation for prior taxable years. Proper adjustment must be made under section 1011 for the entire period since the acquisition of the property. For example, adjustment must be made for depreciation for all prior taxable years whether or not the organization was exempt from taxation for any such years. Similarly, the fact that only a portion of the depreciation allowance may be taken into account in computing the percentage of deductions allowable under section 514(a)(2) does not affect the amount of the adjustment for depreciation which is used in determining average adjusted basis.

(iii) ***Cross reference.*** For the determination of the basis of debt-financed property acquired in a complete or partial liquidation of a corporation in exchange for its stock, see § 1.514(d)-1.

(iv) ***Example.*** This subparagraph may be illustrated by the following example. For purposes of this example it is assumed that the property is debt-financed property.

> *Example.* On July 10, 1970, X, an exempt educational organization, purchased an office building for $510,000, using $300,000 of borrowed funds. During 1970 the only adjustment to basis is $20,000 for depreciation. As of December 31, 1970, the adjusted basis of the building is $490,000 and the indebtedness is still $300,000. X files its return on a calendar year basis. Under these circumstances, the debt/basis percentage for

1970 is 60 percent, calculated in the following manner:

	Basis
As of July 10, 1970 (acquisition date)	$510,000
As of December 31, 1970	490,000
Total	1,000,000

Average Adjusted basis:

$$\$1,000,000 \div 2 = \$500,000$$

Debt/basis percentage:

Average acquisition indebtedness ($300,000) / Average adjusted basis ($500,000) = 60 percent

For an illustration of the determination of the debt/basis percentage as changes in the acquisition indebtedness occur, see example 1 of subparagraph (3)(iii) of this paragraph.

(3) ***Average acquisition indebtedness*** —

(i) ***In general.*** The *average acquisition indebtedness* with respect to debt-financed property is the average amount of the outstanding principal indebtedness during that portion of the taxable year the property is held by the organization.

(ii) ***Computation.*** The average acquisition indebtedness is computed by determining the amount of the outstanding principal indebtedness on the first day in each calendar month during the taxable year that the organization holds the property, adding these amounts together, and then dividing this sum by the total number of months during the taxable year that the organization held such property. A fractional part of a month shall be treated as a full month in computing average acquisition indebtedness.

(iii) ***Examples.*** The application of this subparagraph may be illustrated by the following examples. For purposes of these examples it is assumed that the property is debt-financed property.

Example 1. Assume the facts as stated in the example in subparagraph (2)(iv) of this paragraph, except that beginning July 20, 1970, the organization makes payments of $21,000 a month ($20,000 of which is attributable to principal and $1,000 to interest). In this situation, the average acquisition indebtedness for 1970 is $250,000. Thus, the

debt/basis percentage for 1970 is 50 percent, calculated in the following manner:

Month:	*Indebtedness on the first day in each calendar month that the property is held*
July	$300,000
August	280,000
September	260,000
October	240,000
November	220,000
December	200,000
Total	1,500,000

Average acquisition indebtedness:

$1,500,000 ÷ 6 months = $250,000

Debt/basis percentage:

Average acquisition indebtedness ($250,000) / Average adjusted basis ($500,000) = 50 percent

Example 2. Y, an exempt organization, owns stock in a corporation which it does not control. At the beginning of the year, Y has an outstanding principal indebtedness with respect to such stock of $12,000. Such indebtedness is paid off at the rate of $2,000 per month beginning January 30, so that it is retired at the end of 6 months. The average acquisition indebtedness for the taxable year is $3,500, calculated in the following manner:

Month:	*Indebtedness on the first day in each calendar month that the property is held*
January	$12,000
February	10,000
March	8,000
April	6,000
May	4,000

	Indebtedness on the first day in each calendar month that the property is held
June	2,000
July thru December	0
Total	42,000

Average acquisition indebtedness:

$$\$42,000 \div 6 \text{ months} = \$3,500$$

(4) ***Indeterminate price*** —

(i) ***In general.*** If an exempt organization acquires (or improves) property for an indeterminate price, the initial acquisition indebtedness and the unadjusted basis shall be determined in accordance with subdivisions (ii) and (iii) of this paragraph, unless the organization has obtained the consent of the Commissioner to use another method to compute such amounts.

(ii) ***Unadjusted basis.*** For purposes of this subparagraph, the unadjusted basis of property (or of an improvement) is the fair market value of the property (or improvement) on the date of acquisition (or the date of completion of the improvement). The average adjusted basis of such property shall be determined in accordance with paragraph (a)(2) of this section.

(iii) ***Initial acquisition indebtedness.*** For purposes of this subparagraph, the initial acquisition indebtedness is the fair market value of the property (or improvement) on the date of acquisition (or the date of completion of the improvement) less any down payment or other initial payment applied to the principal indebtedness. The average acquisition indebtednessith respect to such property shall be computed in accordance with paragraph (a)(3) of this section.

(iv) ***Example.*** The application of this subparagraph may be illustrated by the following example. For purposes of this example it is assumed that the property is debt-financed property.

Example. On January 1, 1971, X, an exempt trade association, acquires an office building for a down payment of $310,000 and an agreement to pay 10 percent of the income generated by the building for 10 years. Neither the sales price nor the amount which X is obligated to pay in the future is certain. The fair market value of the building on the date of acquisition is $600,000. The depreciation allowance for 1971 is $40,000. Unless X obtains the consent of the Commissioner to use another method, the unadjusted basis of the property is $600,000 (the fair market value of the property on the date of acquisition), and the initial acquisition indebtedness is $290,000 (fair market value of $600,000 less initial payment of $310,000). Under these circumstances, the average adjusted basis of the property for 1971 is $580,000, calculated as follows: [Initial fair market value + (initial fair market value less depreciation)] ÷ 2 = [$600,000 + ($600,000 − $40,000)] ÷ 2 = $580,000. If no payment other than the initial payment is made in 1971, the average acquisition indebtedness for

1971 is $290,000. Thus, the debt/basis percentage for 1971 is 50 percent, calculated as follows: Average acquisition indebtedness ÷ average adjusted basis = $290,000 ÷ $580,000 = 50 percent

(b) ***Deductions*** —

(1) ***Percentage of deductions taken into account.*** Except as provided in subparagraphs (4) and (5) of this paragraph, there shall be allowed as a deduction with respect to each debt-financed property an amount determined by applying the debt/basis percentage to the sum of the deductions allowable under subparagraph (2) of this paragraph.

(2) ***Deductions allowable.*** The deductions allowable are those items allowed as deductions by chapter 1 of the Code which are directly connected with the debt-financed property or the income therefrom (including the dividends received deductions allowed by sections 243, 244, and 245), except that:

(i) The allowable deductions are subject to the modifications provided by section 512(b) on computation of the unrelated business taxable income, and

(ii) If the debt-financed property is of a character which is subject to the allowance for depreciation provided in section 167, such allowance shall be computed only by use of the straight-line method of depreciation.

(3) ***Directly connected with.*** To be *directly connected with* debt-financed property or the income therefrom, an item of deduction must have proximate and primary relationship to such property or the income therefrom. Expenses, depreciation, and similar items attributable solely to such property are proximately and primarily related to such property or the income therefrom, and therefore qualify for deduction, to the extent they meet the requirements of subparagraph (2) of this paragraph. Thus, for example, if the straight-line depreciation allowance for an office building is $10,000 a year, an organization would be allowed a deduction for depreciation of $10,000 if the entire building were debt-financed property. However, if only one-half of the building were treated as debt-financed property, then the depreciation allowed as a deduction would be $5,000. (See example 2 of § 1.514(b)-1(b)(1)(iii).)

(4) ***Capital losses*** —

(i) ***In general.*** If the sale or exchange of debt-financed property results in a capital loss, the amount of such loss taken into account in the taxable year in which the loss arises shall be computed in accordance with paragraph (a)(1)(v) of this section. If, however, any portion of such capital loss not taken into account in such year may be carried back or carried over to another taxable year, the debt/basis percentage is not applied to determine what portion of such capital loss may be taken as a deduction in the year to which such capital loss is carried.

(ii) ***Example.*** This subparagraph is illustrated by the following example. For purposes of this example it is assumed that the property is debt-financed property.

Example. X, an exempt educational organization, owns securities which are capital assets and which it has held for more than 6 months. In 1972 X sells the securities at a loss of $20,000. The debt/basis percentage with respect to computing the gain (or loss) derived from the sale of the securities is 40 percent. Thus, X has sustained a capital loss of $8,000 (40 percent of $20,000) with respect to the sale of the securities. For 1972 and the

preceding three taxable years X has no other capital transactions. Under these circumstances, the $8,000 of capital loss may be carried over to the succeeding 5 taxable years without further application of the debt/basis percentage.

(5) ***Net operating loss*** —

(i) ***In general.*** If, after applying the debt/basis percentage to the income derived from debt-financed property and the deductions directly connected with such income, such deductions exceed such income, the organization has sustained a net operating loss for the taxable year. This amount may be carried back or carried over to other taxable years in accordance with section 512(b)(6). However, the debt/ basis percentage shall not be applied in such other years to determine the amounts that may be taken as a deduction in those years.

(ii) ***Example.*** This subparagraph may be illustrated by the following example. For purposes of this example it is assumed that the property is debt-financed property.

Example. During 1974, Y, an exempt organization, receives $20,000 of rent from a building which it owns. Y has no other unrelated business taxable income for 1974. For 1974 the deductions directly connected with this building are property taxes of $5,000, interest of $5,000 on the acquisition indebtedness, and salary of $15,000 to the manager of the building. The debt/basis percentage for 1974 with respect to the building is 50 percent. Under these circumstances, Y shall take into account in computing its unrelated business taxable income for 1974, $10,000 of income (50 percent of $20,000) and $12,500 (50 percent of $25,000) of the deductions directly connected with such income. Thus, for 1974 Y has sustained a net operating loss of $2,500 ($10,000 of income less $12,500 of deductions) which may be carried back or carried over to other taxable years without further application of the debt/basis percentage.

[T.D. 7229, 37 FR 28143, Dec. 21, 1972]

§ 1.514(a)-2 Business lease rents and deductions for taxable years beginning before January 1, 1970.

(a) ***Effective date.*** This section applies to taxable years beginning before January 1, 1970.

(b) ***In general*** —

(1) ***Rents includible in gross income.*** There shall be included with respect to each business lease, as an item of gross income derived from an unrelated trade or business, an amount which is the same percentage (but not in excess of 100 percent) of the total rents derived during the taxable year under such lease as:

(i) The amount of the business lease indebtedness at the close of the taxable year of the lessor tax-exempt organization, with respect to the premises covered by such lease, is of

(ii) The adjusted basis of such premises at the close of such taxable year

For definition of business lease as a lease for a term of more than 5 years, and for rules for determining the computation of such 5-year term in certain specific situations, see § 1.514(f)-1. For definition of business lease indebtedness and allocation of business lease indebtedness where only a portion of the property is subject to a business lease, see § 1.514(g)-1.

(2) ***Determination of basis.*** For purposes of the unrelated business income tax the basis (unadjusted) of property is determined under section 1012, and the adjusted basis of property is determined under section 1011. The determination of the adjusted basis of property is not affected by the fact that the organization was exempt from tax for prior taxable years. Proper adjustment must be made under section 1011 for the entire period since the acquisition of the property. Thus adjustment must be made for depreciation for all taxable years whether or not the organization was exempt from tax for any of such years. Similarly, for taxable years during which the organization is subject to the tax on unrelated business taxable income the fact that only a portion of the deduction for depreciation is taken into account under paragraph (c)(1) of this section does not affect the amount of the adjustment for depreciation.

(3) ***Examples.*** The application of this paragraph may be illustrated by the following examples, in each of which it is assumed that the taxpayer makes its returns under section 511 on the basis of the calendar year, and that the lease is not substantially related to the purpose for which the organization is granted exemption from tax.

Example 1. Assume that a tax-exempt educational organization purchased property in 1952 for $600,000, using borrowed funds, and leased the building for a period of 20 years. Assume further that the adjusted basis of such building at the close of 1954 is $500,000 and that, at the close of 1954, $200,000 of the indebtedness incurred to acquire the property remains outstanding. Since the amount of the outstanding indebtedness is two-fifths of the adjusted basis of the building at the close of 1954, two-fifths of the gross rental received from the building during 1954 shall be included as an item of gross income in computing unrelated business taxable income. If, at the close of a subsequent taxable year, the outstanding indebtedness is $100,000 and the adjusted basis of the building is $400,000, one-fourth of the gross rental for such taxable year shall be included as an item of gross income in computing unrelated business taxable income for such taxable year.

Example 2. Assume that a tax-exempt organization owns a four-story building, that in 1954 it borrows $100,000 which it uses to improve the whole building, and that it thereafter in 1954 rents the first and second floors of the building under six-year leases at rentals of $4,000 a year. The third and fourth floors of the building are leased on a yearly basis during 1954. Assume, also, that the adjusted basis of the real property at the end of 1954 (after reflecting the expenditures for improving the building) is $200,000, allocable equally to each of the four stories. Under these facts, only one-half of the real property is subject to a business lease since only one-half is rented under a lease for more than 5 years. See § 1.514(f)-1. The percentage of the rent under such lease which is taken into account is determined by the ratio which the allocable part of the business lease indebtedness bears to the allocable part of the adjusted basis of the real property, that is, the ratio which one-half of the $100,000 of business lease indebtedness outstanding at the close of 1954, or $50,000, bears to one-half of the adjusted basis of the business lease premises at the close of 1954, or $100,000. The percentage of rent which is business lease income for 1954 is, therefore, one-half (the ratio of $50,000 to $100,000) of $8,000, or $4,000, and this amount of $4,000 is considered an item of gross income derived from an unrelated trade or business.

(c) ***Deductions —***

(1) ***Deductions allowable against gross income.*** The same percentage is used in determining both the portion of the rent and the portion of the deductions taken into account with respect to the business lease in computing unrelated business taxable income. Such percentage is applicable only to the sum of the following deductions allowable under section 161:

(i) Taxes and other expenses paid or accrued during the taxable year upon or with respect to the real property subject to the business lease;

(ii) Interest paid or accrued during the taxable year on the business lease indebtedness;

(iii) A reasonable allowance for exhaustion, wear and tear (including a reasonable allowance for obsolescence) of the real property subject to such lease.

Where only a portion of the real property is subject to the business lease, there shall be taken into account only those amounts of the above-listed deductions which are properly allocable to the premises covered by such lease.

(2) ***Excess deductions.*** The deductions allowable under subparagraph (1) of this paragraph with respect to a business lease are not limited by the amount included in gross income with respect to the rent from such lease. Any excess of such deductions over such gross income shall be applied against other items of gross income in computing unrelated business taxable income taxable under section 511(a).

(3) ***Example.*** The application of this paragraph may be illustrated by the following example:

Example. Assume the same facts as those in example 1 in paragraph (b)(3) of this section. Assume, also that for 1954 the organization pays taxes of $4,000 on the property, interest of $6,000 on its business lease indebtedness, and that the depreciation allowable for 1954 under section 167 is $10,000. Under the facts set forth in such example 1 and in this example, the deductions to be taken into account for 1954 in computing unrelated business taxable income would be two-fifths of the total of the deductions of $20,000, that is $8,000.

[T.D. 7229, 37 FR 28145, Dec. 21, 1972]

§ 1.514(b)-1 Definition of debt-financed property.

(a) ***In general.*** For purposes of section 514 and the regulations thereunder, the term *debt-financed property* means any property which is held to produce income (e.g., rental real estate, tangible personal property, and corporate stock), and with respect to which there is an acquisition indebtedness (determined without regard to whether the property is debt-financed property) at any time during the taxable year. The term *income* is not limited to recurring income but applies as well to gains from the disposition of property. Consequently, when any property held to produce income by an organization which is not used in a manner described in section 514(b)(1) (A), (B), (C), or (D) is disposed of at a gain during the taxable year, and there was an acquisition indebtedness outstanding with respect to such property at any time during the 12-month period preceding the date of disposition (even though such period covers more than 1 taxable year), such property is *debt-financed property.* For example, assume that on June 1, 1972, an organization is given mortgaged, unimproved property which it does not use in a manner described in section 514(b)(1) (A), (B), (C), or (D) and that the organization assumes payment ofthe mortgage on such property. On July 15, 1972, the organization sells such property for a gain. Such property is *debt-financed property* and such gain is taxable as unrelated debt-financed income. See section 514(c) and § 1.514(c)-1

for rules relating to when there is acquisition indebtedness with respect to property. See paragraph (a) of § 1.514(a)-1 for rules determining the amount of income or gain from debt-financed property which is treated as unrelated debt-financed income.

(b) ***Exceptions*** —

(1) ***Property related to certain exempt purposes.***

(i) To the extent that the use of any property is substantially related (aside from the need of the organization for income or funds or the use it makes of the profits derived) to the exercise or performance by an organization of its charitable, educational, or other purpose or function constituting its basis for exemption under section 501 (or, in the case of an organization described in section 511(a)(2)(B), to the exercise or performance of any purpose or function designated in section 501(c)(3)) such property shall not be treated as *debt-financed property.* See § 1.513-1 for principles applicable in determining whether there is a substantial relationship to the exempt purpose of the organization.

(ii) If substantially all of any property is used in a manner described in subdivision (i) of this subparagraph, such property shall not be treated as *debt-financed property.* In general the preceding sentence shall apply if 85 percent or more of the use of such property is devoted to the organization's exempt purpose. The extent to which property is used for a particular purpose shall be determined on the basis of all the facts and circumstances. These may include (where appropriate):

(*a*) A comparison of the portion of time such property is used for exempt purposes with the total time such property is used,

(*b*) A comparison of the portion of such property that is used for exempt purposes with the portion of such property that is used for all purposes, or

(*c*) Both the comparisons described in (*a*) and (*b*) of this subdivision.

(iii) This subparagraph may be illustrated by the following examples. For purposes of these examples it is assumed that the indebtedness is acquisition indebtedness.

Example 1. W, an exempt organization, owns a computer with respect to which there is an outstanding principal indebtedness and which is used by W in the performance of its exempt purpose. W sells time for the use of the computer to M corporation on occasions when the computer is not in full-time use by W. W uses the computer in furtherance of its exempt purpose more than 85 percent of the time it is in use and M uses the computer less than 15 percent of the total operating time the computer is in use. In this situation, substantially all the use of the computer is related to the performance of W's exempt purpose. Therefore, no portion of the computer is treated as debt-financed property.

Example 2. X, an exempt college, owns a four story office building which has been purchased with borrowed funds. In 1971, the lower two stories of the building are used to house computers which are used by X for administrative purposes. The top two stories are rented to the public for purposes not described in section 514(b)(1) (A), (B), (C), or (D). The gross income derived by X from the building is $6,000, all of which is attributable to the rents paid by tenants. There are $2,000 of expenses, allocable equally

to each use of the building. The average adjusted basis of the building for1971 is $100,000, and the outstanding principal indebtedness throughout 1971 is $60,000. Thus, the average acquisition indebtedness for 1971 is $60,000. In accordance with subdivision (i) of this subparagraph, only the upper half of the building is debt-financed property. Consequently, only the rental income and the deductions directly connected with such income are to be taken into account in computing unrelated business taxable income. The portion of such amounts to be taken into account is determined by multiplying the $6,000 of rental income and $1,000 of deductions directly connected with such rental income by the debt/basis percentage. The debt/basis percentage is the ratio which the allocable part of the average acquisition indebtedness is of the allocable part of the average adjusted basis of the property, that is, the ratio which $30,000 (one-half of $60,000) bears to $50,000 (one-half of $100,000). Thus, the debt/basis percentage for 1971 is 60 percent (the ratio of $30,000 to $50,000). Under these circumstances, X shall include net rental income of $3,000 in its unrelated business taxable income for 1971, computed as follows:

Total rental income	$6,000
Deductions directly connected with rental income	$1,000
Debt/basis percentage ($30,000/$50,000)	60%
Rental income treated as gross income from an unrelated trade or business (60 percent of $6,000)	$3,600
Less the allowable portion of deductions directly connected with such income (60 percent of $1,000)	$600
Net rental income included by X in computing its unrelated business taxable income pursuant to section 514	$3,000

Example 3. Assume the facts as stated in example 2 except that on December 31, 1971, X sells the building and realizes a long-term capital gain of $10,000. This is X's only capital transaction for 1971. An allocable portion of this gain is subject to tax. This amount is determined by multiplying the gain related to the nonexempt use, $5,000 (one-half of $10,000), by the ratio which the debtedness for the 12-month period preceding the date of sale, $30,000 (one-half of $60,000), is of the allocable part of the average adjusted basis, $50,000 (one-half of $100,000). Thus, the debt/basis percentage with respect to computing the gain (or loss) derived from the sale of the building is 60 percent (the ratio of $30,000 to $50,000). Consequently, $3,000 (60 percent of $5,000) is a net section 1201 gain (capital gain net income for taxable years beginning after December 31, 1976). The portion of such gain which is taxable shall be determined in accordance with rules contained in subchapter P, chapter 1 of the Code (relating to capital gains and losses). See also section 511(d) and the regulations thereunder (relating to the minimum tax for tax preferences).

(2) ***Property used in an unrelated trade or business*** —

(i) ***In general.*** To the extent that the gross income from any property is treated as income from the conduct of an unrelated trade or business, such property shall not be treated as *debt-financed property.* However, any gain on the disposition of such property which is not included in the income of an unrelated trade or business by reason of section 512(b)(5) is includible as gross income derived *from or on account of debt-financed property* under paragraph (a)(1) of § 1.514(a)-1.

(ii) ***Amounts specifically taxable under other provisions of the Code.*** Section 514 does not apply to amounts which are otherwise included in the computation of unrelated business taxable income, such as rents from personal property includible pursuant to section 512(b)(13) or rents and interest from controlled organizations includible pursuant to section 512(b)(3). See paragraph (1)(5) of § 1.512(b)-1 for the rules determining the manner in which amounts are taken into account where such amounts may be included in the computation of unrelated business taxable income by operation of more than one provision of the Code.

(3) ***Examples.*** Subparagraphs (1) and (2) of this paragraph may be illustrated by the following examples. For purposes of these examples it is assumed that the indebtedness is acquisition indebtedness.

Example 1. X, an exempt scientific organization, owns a 10-story office building. During 1972, four stories are occupied by X's administrative offices, and the remaining six stories are rented to the public for purposes not described in section 514(b)(1) (A), (B), (C), or (D). On December 31, 1972, the building is sold and X realizes a long-term capital gain of $100,000. This is X's only capital transaction for 1972. The debt/basis percentage with respect to computing the gain (or loss) derived from the sale of the building is 30 percent. Since 40 percent of the building was used for X's exempt purpose, only 60 percent of the building is debt-financed property. Thus, only $60,000 of the gain (60 percent of $100,000) is subject to this section. Consequently, the amount of gain treated as unrelated debt-financed income is $18,000 ($60,000 multiplied by the debt/basis percentage of 30 percent). The portion of such $18,000 which is taxable shall be determined in accordance with the rules contained in subchapter P, chapter 1 of the Code. See also section 511(d) and the regulations thereunder (relating to the minimum tax for tax preferences).

Example 2. Y, an exempt organization, owns two properties, a restaurant and an office building. In 1972, all the space in the office building, except for the portion utilized by Y to house the administrative offices of the restaurant, is rented to the public for purposes not described in section 514(b)(1) (A), (B), (C), or (D). The average adjusted basis of the office building for 1972 is $2 million. The outstanding principal indebtedness throughout 1972 is $1 million. Thus, the highest acquisition indebtedness in the calendar year of 1972 is $1 million. It is determined that 30 percent of the space in the office building is used for the administrative functions engaged in by the employees of the organization with respect to the restaurant. Since the income attributable to the restaurant is attributable to the conduct of an unrelated trade or business, only 70 percent of the building is treated as debt-financed property for purposes of determining the portion of the rental income which is unrelated debt-financed income. On December 31, 1972, the office building is sold and Y realizes a long-term capital gain of $250,000. This is Y's only capital transaction for 1972. In accordance with subparagraph (2)(i) of this paragraph, all the gain derived from this sale is taken into account in computing the amount of such gain subject to tax. The portion of such gain which is taxable is determined by multiplying the $250,000 gain by the debt/basis percentage. The debt/basis percentage is the ratio which the highest acquisition indebtedness for the 12-month period preceding the date of sale, $1 million, is of the averageadjusted basis, $2 million. Thus, the debt/basis percentage with respect to

computing the gain (or loss) derived from the sale of the building is 50 percent (the ratio of $1 million to $2 million). Consequently, $125,000 (50 percent of $250,000) is a net section 1201 gain (net capital gain for taxable years beginning after December 31, 1976). The amount of such gain which is taxable shall be determined in accordance with the rules contained in subchapter P, chapter 1 of the Code. See also section 511(d) and the regulations thereunder.

Example 3. (a) Z, an exempt university, owns all the stock of M, a nonexempt corporation. During 1971 M leases from Z University a factory unrelated to Z's exempt purpose and a dormitory for the students of Z, for a total annual rent of $100,000: $80,000 for the factory and $20,000 for the dormitory. During 1971, M has $500,000 of taxable income, disregarding the rent paid to Z: $150,000 from the dormitory and $350,000 from the factory. The factory is subject to a mortgage of $150,000. Its average adjusted basis for 1971 is determined to be $300,000. Z's deductions for 1971 with respect to the leased property are $4,000 for the dormitory and $16,000 for the factory. In accordance with subdivision (ii) of this subparagraph, section 514 applies only to that portion of the rent which is excluded from the computation of unrelated business taxable income by operation of section 512(b)(3) and not included in such computation pursuant to section 512(b)(13). Since all the rent received by Z is derived from real property, section 512(b)(3) would exclude all such rent from computation of Z's unrelated business taxable income. However, 70 percent of the rent paid to Z with respect to the factory and 70 percent of the deductions directly connected with such rent shall be taken into account by Z in determining its unrelated business taxable income pursuant to section 512(b)(15), computed as follows:

M's taxable income (disregarding rent paid to Z)	$500,000
Less taxable income from dormitory	$150,000
Excess taxable income	$350,000
Ratio ($350,000/$500,000)	7/10
Total rent paid to Z	$100,000
Total deductions ($4,000 + $16,000)	$20,000
Rental income treated under section 512(b)(15) as gross income from an unrelated trade or business (7/10 of $100,000)	$70,000
Less deductions directly connected with such income (7/10 of $20,000)	$14,000
Net rental income included by Z in computing its unrelated business taxable income pursuant to section 512(b)(15)	$56,000

(b) Since only that portion of the rent derived from the factory and the deductions directly connected with such rent not taken into account pursuant to section 512(b)(15) may be included in computing unrelated business taxable income by operation of

section 514, only $10,000 ($80,000 minus $70,000) of rent and $2,000 ($16,000 minus $14,000) of deductions are so taken into account. The portion of such amounts to be taken into account is determined by multiplying the $10,000 of income and $2,000 of deductions by the debt/basis percentage. The debt/basis percentage is the ratio which the average acquisition indebtedness ($150,000) is of the average adjusted basis of the property ($300,000). Thus, the debt/basis percentage for 1971 is 50 percent (the ratio of $150,000 to $300,000). Under these circumstances, Z shall include net rental income of $4,000 in its unrelated business taxable income for 1971, computed as follows:

Total rents	$10,000
Deductions directly connected with such rents	$2,000
Debt/basis percentage ($150,000/$300,000)	50%
Rental income treated as gross income from an unrelated trade or business (50 percent of $10,000)	$5,000
Less the allowable portion of deductions directly connected with such income (50 percent of $2,000)	$1,000
Net rental income included by Z in computing its unrelated business taxable income pursuant to section 514	$4,000

(4) ***Property related to research activities.*** To the extent that the gross income from any property is derived from research activities excluded from the tax on unrelated business income by paragraph (7), (8), or (9) of section 512(b), such property shall not be treated as *debt-financed property.*

(5) ***Property used in thrift shops,*** etc. To the extent that property is used in any trade or business which is excepted from the definition of *unrelated trade or business* by paragraph (1), (2), or (3) of section 513(a), such property shall not be treated as *debt-financed property.*

(6) ***Use by a related organization.*** For purposes of subparagraph (1), (4), or (5) of this paragraph, use of property by a related exempt organization (as defined in paragraph (c)(2)(ii) of this section) for a purpose described in such subparagraphs shall be taken into account in order to determine the extent to which such property is used for a purpose described in such subparagraphs.

(c) ***Special rules*** —

(1) ***Medical clinic.*** Property is not debt-financed property if it is real property subject to a lease to a medical clinic, and the lease is entered into primarily for purposes which are substantially related (aside from the need of such organization for income or funds or the use it makes of the rents derived) to the exercise or performance by the lessor of its charitable, educational, or other purpose or function constituting the basis for its exemption under section 501. For example, assume that an exempt hospital leases all of its clinic space to an unincorporated association of physicians and surgeons who, by the provisions of the lease, agree to provide all of the hospital's out-patient medical and surgical services and to train all of the hospital's residents and interns. In this situation, the rents received by the hospital from this clinic are not to be treated as unrelated debt-financed income.

(2) *Related exempt uses* —

(i) ***In general.*** Property owned by an exempt organization and used by a related exempt organization or by an exempt organization related to such related exempt organization shall not be treated as *debt-financed property* to the extent such property is used by either organization in furtherance of the purpose constituting the basis for its exemption under section 501. Furthermore, property shall not be treated as *debt-financed property* to the extent such property is used by a related exempt organization for a purpose described in paragraph (b)(4) or (5) of this section.

(ii) ***Related organizations.*** For purposes of subdivision (i) of this subparagraph, an exempt organization is related to another exempt organization only if:

(*a*) One organization is an exempt holding company described in section 501(c)(2) and the other organization receives the profits derived by such exempt holding company,

(*b*) One organization has control of the other organization within the meaning of paragraph (1)(4) of § 1.512(b)-1,

(*c*) More than 50 percent of the members of one organization are members of the other organization, or

(*d*) Each organization is a local organization which is directly affiliated with a common state, national, or international organization which is also exempt.

(iii) ***Examples.*** This subparagraph may be illustrated by the following examples. For purposes of these examples it is assumed that the indebtedness is acquisition indebtedness.

Example 1. M, an exempt trade association described in section 501(c)(6), leases 70 percent of the space of an office building for furtherance of its exempt purpose. The title to such building is held by N, an exempt holding company described in section 501(c)(2), which acquired title to the building with borrowed funds. The other 30 percent of the space in this office building is leased to L, a nonstock exempt trade association described in section 501(c)(6). L uses such office space in furtherance of its exemptpurpose. The members of L's Board of Trustees serves for fixed terms and M's Board of Directors has the power to select all such members. N pays over to M all the profits it derives from the leasing of space in this building to M and L. Accordingly, M is *related* to N (as such term is defined in subdivision (ii)(*a*) of this subparagraph) and L is *related* to M (as such term is defined in subdivision (ii)(*b*) of this subparagraph). Under these circumstances, since all the available space in the building is leased to either an exempt organization related to the exempt organization holding title to the building or an exempt organization related to such related exempt organization, no portion of the building is treated as debt-financed property.

Example 2. W, an exempt labor union described in section 501(c)(5), owns a 10-story office building which has been purchased with borrowed funds. Five floors of the building are used by W in furtherance of its exempt purpose. Four of the other floors are rented to X which is an exempt voluntary employees' beneficiary association described in section 501(c)(9), operated for the benefit of W's members. X uses such office space in furtherance of its exempt purpose. Seventy percent of the members of W are also members of X. Accordingly, X is *related* to W (as such term is defined in subdivision (ii)(*c*) of this subparagraph). The remaining floor of the building is rented to the general public

for purposes not described in section 514(b)(1) (A), (B), (C), or (D). Under thesecircumstances, no portion of this building is treated as debt-financed property since more than 85 percent of the office space available in this building is used either by W or X, an exempt organization related to W, in furtherance of their respective exempt purpose. See paragraph (b)(1) of this section for rules relating to the use of property substantially related to an exempt purpose. See paragraph (b)(6) of this section for rules relating to uses by related exempt organizations.

Example 3. Assume the same facts as in example 2, except that W and X are each exempt local labor unions described in section 501(c)(5) having no common membership and are each affiliated with N, an exempt international labor union described in section 501(c)(5). Under these circumstances, no portion of this building is treated as debt-financed property since more than 85 percent of the office space available in this building is used either by W or X, an exempt organization related to W, in furtherance of their respective exempt purpose.

Example 4. Assume the same facts as in example 3, except that W and X are directly affiliated with different exempt international labor unions and that W and X are not otherwise affiliated with, or members of, a common exempt organization, other than an association of international labor unions. Under these circumstances, the portions of this building which are rented to X and to the general public are treated as debt-financed property since X is not related to W and W uses less than 85 percent of the building for its exempt purpose.

(3) ***Life income contracts.***

(i) Property shall not be treated as *debt-financed property* when:

(*a*) An individual transfers property to a trust or a fund subject to a contract providing that the income is to be paid to him or other individuals or both for a period of time not to exceed the life of such individual or individuals in a transaction in which the payments to the individual or individuals do not constitute the proceeds of a sale or exchange of the property so transferred, and

(*b*) The remainder interest is payable to an exempt organization described in section 501(c)(3).

(ii) Subdivision (i) of this subparagraph is illustrated by the following example.

Example. On January 1, 1967, A transfers property to X, an exempt organization described in section 501(c)(3), which immediately places the property in a fund. On January 1, 1971, A transfers additional property to X, which property is also placed in the fund. In exchange for each transfer, A receives income participation fund certificates which entitle him to a proportionate part of the fund's income for his life and for the life of another individual. None of the payments made by X are treated by the recipients as the proceeds of a sale or exchange of the property transferred. In this situation, none of the property received by X from A is treated as debt-financed property.

(d) ***Property acquired for prospective exempt use*** —

(1) ***Neighborhood land*** —

(i) ***In general.*** If an organization acquires real property for the principal purpose of using the land in the exercise or performance of its exempt purpose, commencing within 10 years of the time of acquisition, such property will not be treated as debt-financed property, so long as (*a*) such

property is in the neighborhood of other property owned by the organization which is used in the performance of its exempt purpose, and (*b*) the organization does not abandon its intent to use the land in such a manner within the 10-year period. The rule expressed in this subdivision is hereinafter referred to as the *neighborhood land rule*.

(ii) ***Neighborhood*** defined. Property shall be considered in the *neighborhood* of property owned and used by the organization in the performance of its exempt purpose if the acquired property is contiguous with the exempt purpose property or would be contiguous with such property except for the interposition of a road, street, railroad, stream, or similar property. If the acquired property is not contiguous with exempt function property, it may still be in the *neighborhood* of such property, but only if it is within 1 mile of such property and the facts and circumstances of the particular situation make the acquisition of contiguous property unreasonable. Some of the criteria to consider in determining this question include the availability of land and the intended future use of the land. For example, a university attempts to purchase land contiguous to its present campus but cannot do so because the owners either refuse to sell or ask unreasonable prices. The nearest land of sufficient size and utility is a block away from the campus. The university purchases such land. Under these circumstances, the contiguity requirement is unreasonable and the land purchased would be considered *neighborhood land*.

(iii) ***Exception.*** The neighborhood land rule shall not apply to any property after the expiration of 10 years from the date of acquisition. Further, the neighborhood land rule shall apply after the first 5 years of the 10-year period only if the organization establishes to the satisfaction of the Commissioner that future use of the acquired land in furtherance of the organization's exempt purpose before the expiration of the 10-year period is reasonably certain. In order to satisfy the Commissioner, the organization does not necessarily have to show binding contracts. However, it must at least have a definite plan detailing a specific improvement and a completion date, and some affirmative action toward the fulfillment of such a plan. This information shall be forwarded to the Commissioner of Internal Revenue, Washington, DC 20224, for a ruling at least 90 days before the end of the fifth year after acquisition of the land.

(2) ***Actual use.*** If the neighborhood land rule is inapplicable because:

(i) The acquired land is not in the neighborhood of other property used by the organization in performance of its exempt purpose, or

(ii) The organization (for the period after the first 5 years of the 10-year period) is unable to establish to the satisfaction of the Commissioner that the use of the acquired land for its exempt purposes within the 10-year period is reasonably certain

but the land is actually used by the organization in furtherance of its exempt purpose within the 10-year period, such property (subject to the provisions of subparagraph (4) of this paragraph) shall not be treated as debt-financed property for any period prior to such conversion.

(3) ***Limitations*** —

(i) ***Demolition or removal required. (a***) Subparagraphs (1) and (2) of this paragraph shall apply with respect to any structure on the land when acquired by the organization, or to the land occupied by the structure, only so long as the intended future use of the land in furtherance of the organization's exempt purpose requires that the structure be demolished or removed in order to use the land in such a manner. Thus, during the first 5 years after acquisition (and for subsequent years if there is a favorable ruling in accordance with subparagraph (1)(iii) of this paragraph) improved property is not debt-financed so long as the organization does not

abandon its intent to demolish the existing structures and use the land in furtherance of its exempt purpose. Furthermore, if there is an actual demolition of such structures, the use made of the land need not be the one originally intended. Therefore, the actual use requirement of this subdivision may be satisfied by using the land in any manner which furthers the exempt purpose of the organization.

(*b*) Subdivision (i)(*a*) of this subparagraph may be illustrated by the following examples. For purposes of the following examples it is assumed that but for the application of the neighborhood land rule such property would be debt-financed property.

Example 1. An exempt university acquires a contiguous tract of land on which there is an apartment building. The university intends to demolish the apartment building and build classrooms and does not abandon this intent during the first 4 years after acquisition. In the fifth year after acquisition it abandons the intent to demolish and sells the apartment building. Under these circumstances, such property is not debt-financed property for the first 4 years after acquisition even though there was no eventual demolition or use made of such land in furtherance of the university's exempt purpose. However, such property is debt-financed property as of the time in the fifth year that the intent to demolish the building is abandoned and any gain on the sale of property is subject to section 514.

Example 2. Assume the facts as stated in Example 1 except that the university did not abandon its intent to demolish the existing building and construct a classroom building until the eighth year after acquisition when it sells the property. Assume further that the university did not receive a favorable ruling in accordance with subparagraph (1)(iii) of this paragraph. Under these circumstances, the building is debt- financed property for the sixth, seventh, and eighth years. It is not, however, treated as debt-financed property for the first 5 years after acquisition.

Example 3. Assume the facts as stated in Example 2 except that the university received a favorable ruling in accordance with subparagraph (1)(iii) of this paragraph. Under these circumstances, the building is not debt-financed property for the first 7 years after acquisition. It only becomes debt-financed property as of the time in the eighth year when the university abandoned its intent to demolish the existing structure.

> *Example 4.* (1) Assume that a university acquires a contiguous tract of land containing an office building for the principal purpose of demolishing the office building and building a modern dormitory. Five years later the dormitory has not been constructed, and the university has failed to satisfy the Commissioner that the office building will be demolished and the land will be used in furtherance of its exempt purpose (and consequently has failed to obtain a favorable ruling under subparagraph (1)(iii) of this paragraph). In the ninth taxable year after acquisition the university converts the office building into an administration building. Under these circumstances, during the sixth, seventh, and eighth years after acquisition, the office building is treated as debt-financed property because the office building was not demolished or removed. Therefore, the income derived from such property during these years shall be subject to the tax on unrelated business income.

(2) Assume that instead of converting the office building to an administration building, the university demolishes the office building in the ninth taxable year after acquisition and then constructs a new administration building. Under these circumstances, the land would not be considered debt-financed property for any period following the acquisition, and the university would be entitled to a refund of taxes paid on the income derived from such property for the sixth through eighth taxable years after the acquisition in accordance with subparagraph (4) of this paragraph.

(ii) ***Subsequent construction.*** Subparagraphs (1) and (2) of this paragraph do not apply to structures erected on the land after the acquisition of the land.

(iii) ***Property subject to business lease.*** Subparagraphs (1) and (2) of this paragraph do not apply to property subject to a lease which is a business lease (as defined in § 1.514(f)-1) whether the organization acquired the property subject to the lease or whether it executed the lease subsequent to acquisition. If only a portion of the real property is subject to a lease, paragraph (c) of § 1.514(f)-1 applies in determining whether such lease is a business lease.

(4) ***Refund of taxes.***

(i) If an organization has not satisfied the actual use condition of subparagraph (2) of this paragraph or paragraph (e)(3) of this section before the date prescribed by law (including extensions) for filing the return for the taxable year, the tax for such year shall be computed without regard to the application of such actual use condition. However, if:

(*a*) A credit or refund of any overpayment of taxes is allowable for a prior taxable year as a result of the satisfaction of such actual use condition, and

(*b*) Such credit or refund is prevented by the operation of any law or rule of law (other than chapter 74, relating to closing agreements and compromises)

such credit or refund may nevertheless be allowed or made, if a claim is filed within 1 year after the close of the taxable year in which such actual use condition is satisfied. For a special rule with respect to the payment of interest at the rate of 4 percent per annum, see section 514(b)(3)(D), prior to its amendment by section 7(b) of the Act of January 3, 1975 (Pub. L. 93-625, 88 Stat. 2115).

(ii) This subparagraph may be illustrated by the following example. For purposes of this example it is assumed that but for the neighborhood land rule such property would be debt-financed property.

Example. Y, a calendar year exempt organization, acquires real property in January 1970, which is contiguous with other property used by Y in furtherance of its exempt purpose. However, Y does not satisfy the Commissioner by January 1975, that the existing structure will be demolished and the land will be used in furtherance of its exempt purpose. In accordance with this subparagraph, from 1975 until the property is converted to an exempt use, the income derived from such property shall be subject to the tax on unrelated business income. During July 1979, Y demolishes the existing structure on the land and begins using the land in furtherance of its exempt purpose. At this time Y

may file claims for refund for the open years 1976 through 1978. Further, in accordance with this subparagraph, Y may also file a claim for refund for 1975, even though a claim for such taxable year may be barred by the statute of limitations, provided such claim is filed before the close of 1980.

(e) *Churches* —

(1) ***In general.*** If a church or association or convention of churches acquires real property, for the principal purpose of using the land in the exercise or performance of its exempt purpose, commencing within 15 years of the time of acquisition, such property shall not be treated as debt-financed property so long as the organization does not abandon its intent to use the land in such a manner within the 15-year period.

(2) ***Exception.*** This paragraph shall not apply to any property after the expiration of the 15-year period. Further, this paragraph shall apply after the first 5 years of the 15-year period only if the church or association or convention of churches establishes to the satisfaction of the Commissioner that use of the acquired land in furtherance of the organization's exempt purpose before the expiration of the 15-year period is reasonably certain. For purposes of the preceding sentence, the rules contained in paragraph (d)(1)(iii) of this section with respect to satisfying the Commissioner that the exempt organization intends to use the land within the prescribed time in furtherance of its exempt purpose shall apply.

(3) ***Actual use.*** If the church or association or convention of churches for the period after the first 5 years of the 15-year period is unable to establish to the satisfaction of the Commissioner that the use of the acquired land for its exempt purpose within the 15-year period is reasonably certain, but such land is in fact converted to an exempt use within the 15-year period, the land (subject to the provisions of paragraph (d)(4) of this section) shall not be treated as debt-financed property for any period prior to such conversion.

(4) ***Limitations.*** The limitations stated in paragraph (d)(3)(i) and (ii) of this section shall similarly apply to the rules contained in this paragraph.

[T.D. 7229, 37 FR 28146, Dec. 21, 1972; 39 FR 6607, Feb. 21, 1974, as amended by T.D. 7384, 40 FR 49322, Oct. 22, 1975; T.D. 7632, 44 FR 42681, July 20, 1979; T.D. 7728, 45 FR 72651, Nov. 3, 1980]

§ 1.514(c)-1 Acquisition indebtedness.

(a) *In general* —

(1) ***Definition of acquisition indebtedness.*** For purposes of section 514 and the regulations thereunder, the term *acquisition indebtedness* means, with respect to any debt-financed property, the outstanding amount of:

(i) The principal indebtedness incurred by the organization in acquiring or improving such property.

(ii) The principal indebtedness incurred before the acquisition or improvement of such property if such indebtedness would not have been incurred but for such acquisition or improvement; and

(iii) The principal indebtedness incurred after the acquisition or improvement of such property if such indebtedness would not have been incurred but for such acquisition or improvement and the incurrence of such indebtedness was reasonably foreseeable at the time of such acquisition or improvement

Whether the incurrence of an indebtedness is reasonably foreseeable depends upon the facts and circumstances of each situation. The fact that an organization did not actually foresee the need for the incurrence of an indebtedness prior to the acquisition or improvement does not necessarily mean that the subsequent incurrence of indebtedness was not reasonably foreseeable.

(2) ***Examples.*** The application of subparagraph (1) of this paragraph may be illustrated by the following examples:

Example 1. X, an exempt organization, pledges some of its investment securities with a bank for a loan and uses the proceeds of such loan to purchase an office building which it leases to the public for purposes other than those described in section 514(b)(1) (A), (B), (C), or (D). The outstanding principal indebtedness with respect to the loan constitutes acquisition indebtedness incurred prior to the acquisition which would not have been incurred but for such acquisition.

Example 2. Y, an exempt scientific organization, mortgages its laboratory to replace working capital used in remodeling an office building which Y rents to an insurance company for purposes not described in section 514(b)(1) (A), (B), (C), or (D). The indebtedness is *acquisition indebtedness* since such indebtedness, though incurred subsequent to the improvement of the office building, would not have been incurred but for such improvement, and the indebtedness was reasonably foreseeable when, to make such improvement, Y reduced its working capital below the amount necessary to continue current operations.

Example 3. (a) U, an exempt private preparatory school, as its sole educational facility owns a classroom building which no longer meets the needs of U's students. In 1971, U sells this building for $3 million to Y, a corporation which it does not control. U receives $1 million as a down payment from Y and takes back a purchase money mortgage of $2 million which bears interest at 10 percent per annum. At the time U became the mortgagee of the $2 million purchase money mortgage, U realized that it would have to construct a new classroom building and knew that it would have to incur an indebtedness in the construction of the new classroom building. In 1972, U builds a new classroom building for a cost of $4 million. In connection with the construction of this building, U borrows $2.5 million from X Bank pursuant to a deed of trust bearing interest at 6 percent perannum. Under these circumstances, $2 million of the $2.5 million borrowed to finance construction of the new classroom building would not have been borrowed but for the retention of the $2 million purchase money mortgage. Since such indebtedness was reasonably foreseeable, $2 million of the $2.5 million borrowed to finance the construction of the new classroom building is acquisition indebtedness with respect to the purchase money mortgage and the purchase money mortgage is debt-financed property.
(*b*) In 1972, U receives $200,000 in interest from Y (10 percent of $2 million) and makes a $150,000 interest payment to X (6 percent of $2.5 million). In addition, assume that for 1972 the debt/basis percentage is 100 percent ($2 million/$2 million). Accordingly, all the interest and all the deductions directly connected with such interest income are to be taken into account in computing unrelated business taxable income. Thus, $200,000 of

interest income and $120,000 ($150,000 × $2 million/$2.5 million) of deductions directly connected with such interest income are taken into account. Under these circumstances, U shall include net interest income of $80,000 ($200,000 of income less $120,000 of deductions directly connected with such income) in its unrelated business taxable income for 1972.

Example 4. In 1972 X, an exempt organization, forms a partnership with A and B. The partnership agreement provides that all three partners shall share equally in the profits of the partnership, shall each invest $3 million, and that X shall be a limited partner. X invests $1 million of its own funds in the partnership and $2 million of borrowed funds. The partnership purchases as its sole asset an office building which is leased to the general public for purposes other than those described in section 514(b)(1) (A), (B), (C), or (D). The office building cost the partnership $24 million of which $15 million is borrowed from Y bank. This loan is secured by a mortgage on the entire office building. By agreement with Y bank, X is held not to be personally liable for payment of such mortgage. By reason of section 702(b) the character of any item realized by the partnership and included in the partner's distributive share shall be determined as if the partner realized such item directly from the source from which it was realized by the partnership and in the same manner. Therefore, a portion of X's income from the building is debt-financed income. Under these circumstances, since both the $2 million indebtedness incurred by X in acquiring its partnership interest and $5 million, the allocable portion of the partnership'sindebtedness incurred with respect to acquiring the office building which is attributable to X in computing the debt/basis percentage (one-third of $15 million), were incurred in acquiring income-producing property, X has acquisition indebtedness of $7 million ($2 million plus $5 million). Similarly, the allocable portion of the partnership's adjusted basis in the office building which is attributable to X in computing the debt-basis percentage is $8 million (one-third of $24 million). Assuming no payment with respect to either indebtedness and no adjustments to basis in 1972, X's average acquisition indebtedness is $7 million and X's average adjusted basis is $8 million for such year. Therefore, X's debt/basis percentage with respect to its share of the partnership income for 1972 is 87.5 percent ($7 million/$8 million).

(3) ***Changes in use of property.*** Since property used in a manner described in section 514(b)(1) (A), (B), (C), or (D) is not considered debt-financed property, indebtedness with respect to such property is not acquisition indebtedness. However, if an organization converts such property to a use which is not described in section 514(b)(1) (A), (B), (C), or (D) and such property is otherwise treated as debt-financed property, the outstanding principal indebtedness with respect to such property will thereafter be treated as *acquisition indebtedness.* For example, assume that in 1971 a university borrows funds to acquire an apartment building as housing for married students. In 1974 the university rents the apartment building to the public for purposes not described in section 514(b)(1) (A), (B), (C), or (D). The outstanding principal indebtedness is *acquisition indebtedness* as of the time in 1974 when the building is first rented to the public.

(4) ***Continued indebtedness.*** If:

(i) An organization sells or exchanges property, subject to an indebtedness (incurred in a manner described in subparagraph (1) of this paragraph),

(ii) Acquires another property without retiring the indebtedness, and

(iii) The newly acquired property is otherwise treated as debt-financed property

the outstanding principal indebtedness with respect to the acquired property is *acquisition indebtedness,* even though the original property was not debt-financed property. For example, to house its administrative offices, an exempt organization purchases a building with $600,000 of its own funds and $400,000 of borrowed funds secured by a pledge of its securities. It later sells the building for $1,000,000 without redeeming the pledge. It uses these proceeds to purchase an apartment building which it rents to the public for purposes not described in section 514(b)(1) (A), (B), (C), or (D). The indebtedness of $400,000 is *acquisition indebtedness* with respect to the apartment building even though the office building was not debt-financed property.

(5) ***Indebtedness incurred before June 28, 1966.*** For taxable years beginning before January 1, 1972, *acquisition indebtedness* does not include any indebtedness incurred before June 28, 1966, unless such indebtedness was incurred on rental real property subject to a business lease and such indebtedness constituted business lease indebtedness. Furthermore, in the case of a church or convention or association of churches, the preceding sentence applies without regard to whether the indebtedness incurred before June 28, 1966, constituted business lease indebtedness.

(b) ***Property acquired subject to lien*** —

(1) ***Mortgages.*** Except as provided in subparagraphs (3) and (4) of this paragraph, whenever property is acquired subject to a mortgage, the amount of the outstanding principal indebtedness secured by such mortgage is treated as *acquisition indebtedness* with respect to such property even though the organization did not assume or agree to pay such indebtedness. The preceding sentence applies whether property is acquired by purchase, gift, devise, bequest, or any other means. Thus, for example, assume that an exempt organization pays $50,000 for real property valued at $150,000 and subject to a $100,000 mortgage. The $100,000 of outstanding principal indebtedness is *acquisition indebtedness* just as though the organization had borrowed $100,000 to buy the property.

(2) ***Other liens.*** For purposes of this paragraph, liens similar to mortgages shall be treated as mortgages. A lien is similar to a mortgage if title to property is encumbered by the lien for the benefit of a creditor. However, in the case where State law provides that a tax lien attaches to property prior to the time when such lien becomes due and payable, such lien shall not be treated as similar to a mortgage until after it has become due and payable and the organization has had an opportunity to pay such lien in accordance with State law. Liens similar to mortgages include (but are not limited to):

(i) Deeds of trust,

(ii) Conditional sales contracts,

(iii) Chattel mortgages,

(iv) Security interests under the Uniform Commercial Code,

(v) Pledges,

(vi) Agreements to hold title in escrow, and

(vii) Tax liens (other than those described in the third sentence of this subparagraph).

(3) ***Certain encumbered property acquired by gift, bequest or devise*** —

(i) ***Bequest or devise.*** Where property subject to a mortgage is acquired by an organization by bequest or devise, the outstanding principal indebtedness secured by such mortgage is not to be treated as *acquisition indebtedness* during the 10-year period following the date of acquisition. For purposes of the preceding sentence, the date of acquisition is the date the organization receives the property.

(ii) ***Gifts.*** If an organization acquires property by gift subject to a mortgage, the outstanding principal indebtedness secured by such mortgage shall not be treated as *acquisition indebtedness* during the 10-year period following the date of such gift, so long as:

(*a*) The mortgage was placed on the property more than 5 years before the date of the gift, and

(*b*) The property was held by the donor for more than 5 years before the date of the gift

For purposes of the preceding sentence, the date of the gift is the date the organization receives the property.

(iii) ***Limitation.*** Subdivisions (i) and (ii) of this subparagraph shall not apply if:

(*a*) The organization assumes and agrees to pay all or any part of the indebtedness secured by the mortgage, or

(*b*) The organization makes any payment for the equity owned by the decedent or the donor in the property (other than a payment pursuant to an annuity excluded from the definition of *acquisition indebtedness* by paragraph (e) of this section)

Whether an organization has assumed and agreed to pay all or any part of an indebtedness in order to acquire the property shall be determined by the facts and circumstances of each situation.

(iv) ***Examples.*** The application of this subparagraph may be illustrated by the following examples:

Example 1. A dies on January 1, 1971. His will devises an office building subject to a mortgage to U, an exempt organization described in section 501(c)(3). U does not at any time assume the mortgage. For the period 1971 through 1980, the outstanding principal indebtedness secured by the mortgage is not acquisition indebtedness. However, after December 31, 1980, the outstanding principal indebtedness secured by the mortgage is acquisition indebtedness if the building is otherwise treated as debt-financed property.

Example 2. Assume the facts as stated in example 1 except that on January 1, 1975, U assumes the mortgage. After January 1, 1975, the outstanding principal indebtedness secured by the mortgage is acquisition indebtedness if the building is otherwise treated as debt-financed property.

(4) ***Bargain sale before October 9, 1969.*** Where property subject to a mortgage is acquired by an organization before October 9, 1969, the outstanding principal indebtedness secured by such mortgage is not to be treated as *acquisition indebtedness* during the 10-year period following the date of acquisition if:

(i) The mortgage was placed on the property more than 5 years before the purchase, and

(ii) The organization paid the seller a total amount no greater than the amount of the seller's cost (including attorney's fees) directly related to the transfer of such property to the organization, but in any event no more than 10 percent of the value of the seller's equity in the property transferred.

(c) *Extension of obligations* —

(1) ***In general.*** An extension, renewal, or refinancing of an obligation evidencing a preexisting indebtedness is considered as a continuation of the old indebtedness to the extent the outstanding principal amount thereof is not increased. Where the principal amount of the modified obligation exceeds the outstanding principal amount of the preexisting indebtedness, the excess shall be treated as a separate indebtedness for purposes of section 514 and the regulations thereunder. For example, if the interest rate on an obligation incurred prior to June 28, 1966, by an exempt university is modified subsequent to such date, the modified obligation shall be deemed to have been incurred prior to June 28, 1966. Thus, such an indebtedness will not be treated as acquisition indebtedness for taxable years beginning before January 1, 1972, unless the original indebtedness was business lease indebtedness (as defined in § 1.514(g)-1).

(2) ***Extension or renewal.*** In general, any modification or substitution of the terms of an obligation by the organization shall be an extension or renewal of the original obligation, rather than the creation of a new indebtedness to the extent that the outstanding principal amount of the indebtedness is not increased. The following are examples of acts which result in the extension or renewal of an obligation:

(i) Substitution of liens to secure the obligation;

(ii) Substitution of obligees, whether or not with the consent of the organization;

(iii) Renewal, extension or acceleration of the payment terms of the obligation; and

(iv) Addition, deletion, or substitution of sureties or other primary or secondary obligors.

(3) ***Allocation.*** In cases where the outstanding principal amount of the modified obligation exceeds the outstanding principal amount of the unmodified obligation and only a portion of such refinanced indebtedness is to be treated as acquisition indebtedness, payments on the amount of the refinanced indebtedness shall be apportioned prorata between the amount of the preexisting indebtedness and the excess amount. For example, assume that an organization has an outstanding principal indebtedness of $500,000 which is treated as acquisition indebtedness. It borrows another $100,000, which is not acquisition indebtedness, from the same lending institution and gives the lender a $600,000 note for its total obligation. In this situation, a payment of $60,000 on the amount of the total obligation would reduce the acquisition indebtedness by $50,000 and the excess indebtedness by $10,000.

(d) ***Indebtedness incurred in performing exempt purpose. Acquisition indebtedness*** does not include the incurrence of an indebtedness inherent in the performance or exercise of the purpose or function constituting the basis of the organization's exemption. Thus, *acquisition indebtedness* does not include the indebtedness incurred by an exempt credit union in accepting deposits from its members or the obligation incurred by an exempt organization in accepting payments from its members to provide such members with insurance, retirement or other similar benefits.

(e) *Annuities* —

(1) ***Requirements.*** The obligation to make payment of an annuity is not *acquisition indebtedness* if the annuity meets all the following requirements:

(i) It must be the sole consideration (other than a mortgage to which paragraph (b)(3) of this section applies) issued in exchange for the property acquired;

(ii) At the time of the exchange, the present value of the annuity (determined in accordance with subparagraph (2) of this paragraph) must be less than 90 percent of the value of the prior owner's equity in the property received in the exchange;

(iii) The annuity must be payable over the life of one individual in being at the time the annuity is issued, or over the lives of two individuals in being at such time; and

(iv) The annuity must be payable under a contract which:

(*a*) Does not guarantee a minimum number of payments or specify a maximum number of payments, and

(*b*) Does not provide for any adjustment of the amount of the annuity payments by reference to the income received from the transferred property or any other property.

(2) ***Valuation.*** For purposes of this paragraph, the value of an annuity at the time of exchange shall be computed in accordance with section 1011(b), § 1.1011-2(e)(1)(iii)(*b*)(2), and section 3 of Rev. Rul. 62-216, C.B. 1962-2, 30.

(3) ***Examples.*** The application of this paragraph may be illustrated by the following examples. For purposes of these examples it is assumed that the property transferred is used for purposes other than those described in section 514(b)(1) (A), (B), (C), or (D).

Example 1. On January 1, 1971, X, an exempt organization, receives property valued at $100,000 from donor A, a male aged 60. In return X promises to pay A $6,000 a year for the rest of A's life, with neither a minimum nor maximum number of payments specified. The annuity is payble on December 31, of each year. The amounts paid under the annuity are not dependent on the income derived from the property transferred to X. The present value of this annuity is $81,156, determined in accordance with Table A of Rev. Rul. 62-216. Since the value of the annuity is less than 90 percent of A's equity in the property transferred and the annuity meets all the other requirements of subparagraph (1) of this paragraph, the obligation to make annuity payments is not acquisition indebtedness.

Example 2. On January 1, 1971, B transfers an office building to Y, an exempt university, subject to a mortgage. In return Y agrees to pay B $5,000 a year for the rest of his life, with neither a minimum nor maximum number of payments specified. The amounts paid under the annuity are not dependent on the income derived from the property transferred to Y. It is determined that the actual value of the annuity is less than 90 percent of the value of B's equity in the property transferred. Y does not assume the mortgage. For the taxable years 1971 through 1980, the outstanding principal indebtedness secured by the mortgage is not treated as acquisition indebtedness. Further, Y's obligation to make annuity payments to B never constitutes acquisition indebtedness.

(f) ***Certain Federal financing. Acquisition indebtedness*** does not include an obligation to finance the purchase, rehabilitation, or construction of housing for low and moderate income persons to the extent that it is insured by the Federal Housing Administration. Thus, for example, to the extent that an obligation is

insured by the Federal Housing Administration under section 221(d)(3) (12 U.S.C. 1715(l)(d)(3)) or section 236 (12 U.S.C. 1715z-1) of title II of the National Housing Act, as amended, the obligation is not *acquisition indebtedness*.

(g) ***Certain obligations of charitable remainder trusts.*** For purposes of section 664(c) and § 1.664-1(c), a charitable remainder trust (as defined in § 1.664-1(a)(1)(iii)(*a*) does not incur *acquisition indebtedness* when the sole consideration it is required to pay in exchange for unencumbered property is an *annuity amount* or a *unitrust amount* (as defined in § 1.664-1(a)(1)(iii)(*b*) and (*c*)).

[T.D. 7229, 37 FR 28151, Dec. 21, 1972; 38 FR 21918, Aug. 14, 1973; T.D. 7698, 45 FR 33973, May 21, 1980]

§ 1.514(c)-2 Permitted allocations under section 514(c)(9)(E).

(a) ***Table of contents.*** This paragraph contains a listing of the major headings of this § 1.514(c)-2.

(a) Table of contents.

(b) Application of section 514(c)(9)(E), relating to debt-financed real property held by partnerships.

(1) In general.

(i) The fractions rule.

(ii) Substantial economic effect.

(2) Manner in which fractions rule is applied.

(i) In general.

(ii) Subsequent changes.

(c) General definitions.

(1) Overall partnership income and loss.

(i) Items taken into account in determining overall partnership income and loss.

(ii) Guaranteed payments to qualified organizations.

(2) Fractions rule percentage.

(3) Definitions of certain terms by cross reference to partnership regulations.

(4) Example.

(d) Exclusion of reasonable preferred returns and guaranteed payments.

(1) Overview.

(2) Preferred returns.

(3) Guaranteed payments.

(4) Reasonable amount.

(i) In general.

(ii) Safe harbor.

(5) Unreturned capital.

(i) In general.

(ii) Return of capital.

(6) Timing rules.

(i) Limitation on allocations of income with respect to reasonable preferred returns for capital.

(ii) Reasonable guaranteed payments may be deducted only when paid in cash.

(7) Examples.

(e) Chargebacks and offsets.

(1) In general.

(2) Disproportionate allocations.

(i) In general.

(ii) Limitation on chargebacks of partial allocations.

(3) Minimum gain chargebacks attributable to nonrecourse deductions.

(4) Minimum gain chargebacks attributable to distribution of nonrecourse debt proceeds.

(i) Chargebacks disregarded until allocations made.

(ii) Certain minimum gain chargebacks related to returns of capital.

(5) Examples.

(f) Exclusion of reasonable partner-specific items of deduction or loss.

(g) Exclusion of unlikely losses and deductions.

(h) Provisions preventing deficit capital account balances.

(i) [Reserved]

(j) Exception for partner nonrecourse deductions.

(1) Partner nonrecourse deductions disregarded until actually allocated.

(2) Disproportionate allocation of partner nonrecourse deductions to a qualified organization.

(k) Special rules.

(1) Changes in partnership allocations arising from a change in the partners' interests.

(2) De minimis interest rule.

(i) In general.

(ii) Example.

(3) De minimis allocations disregarded.

(4) Anti-abuse rule.

(l) [Reserved]

(m) Tiered partnerships.

(1) In general.

(2) Examples.

(n) Effective date.

(1) In general.

(2) General effective date of the regulations.

(3) Periods after June 24, 1990, and prior to December 30, 1992.

(4) Periods prior to the issuance of Notice 90-41.

(5) Material modifications to partnership agreements.

(b) ***Application of section 514(c)(9)(E), relating to debt-financed real property held by partnerships*** —

(1) ***In general.*** This § 1.514(c)-2 provides rules governing the application of section 514(c)(9)(E). To comply with section 514(c)(9)(E), the following two requirements must be met:

(i) ***The fractions rule.*** The allocation of items to a partner that is a qualified organization cannot result in that partner having a percentage share of overall partnership income for any partnership taxable year greater than that partner's fractions rule percentage (as defined in paragraph (c)(2) of this section).

(ii) ***Substantial economic effect.*** Each partnership allocation must have substantial economic effect. However, allocations that cannot have economic effect must be deemed to be in accordance with the partners' interests in the partnership pursuant to § 1.704-1(b)(4), or (if § 1.704-1(b)(4) does not provide a method for deeming the allocations to be in accordance with the partners' interests in the partnership) must otherwise comply with the requirements of § 1.704-1(b)(4). Allocations attributable to nonrecourse liabilities or partner nonrecourse debt must comply with the requirements of § 1.704-2(e) or § 1.704-2(i).

(2) ***Manner in which fractions rule is applied*** —

(i) ***In general.*** A partnership must satisfy the fractions rule both on a prospective basis and on an actual basis for each taxable year of the partnership, commencing with the first taxable year of the partnership in which the partnership holds debt-financed real property and has a qualified organization as a partner. Generally, a partnership does not qualify for the unrelated business income tax exception provided by section 514(c)(9)(A) for any taxable year of its existence unless it satisfies the fractions rule for every year the fractions rule applies. However, if an actual allocation described in paragraph (e)(4), (h), (j)(2), or (m)(1)(ii) of this section (regarding certain allocations that are disregarded or not taken into account for purposes of the fractions rule until an actual allocation is made) causes the partnership to violate the fractions rule, the partnership ordinarily is treated as violating the fractions rule only for the taxable year of the actual allocation and subsequent taxable years. For purposes of applying the fractions rule, the term *partnership agreement* is defined in accordance with § 1.704-1(b)(2)(ii)(*h*), and informal understandings are considered part of the partnership agreement in appropriate circumstances. See paragraph (k) of this section for rules relating to changes in the partners' interests and *de minimis* exceptions to the fractions rule.

(ii) ***Subsequent changes.*** A subsequent change to a partnership agreement that causes the partnership to violate the fractions rule ordinarily causes the partnership's income to fail the exception provided by section 514(c)(9)(A) only for the taxable year of the change and subsequent taxable years.

(c) ***General definitions*** —

(1) ***Overall partnership income and loss.*** Overall partnership income is the amount by which the aggregate items of partnership income and gain for the taxable year exceed the aggregate items of partnership loss and deduction for the year. Overall partnership loss is the amount by which the aggregate items of partnership loss and deduction for the taxable year exceed the aggregate items of partnership income and gain for the year.

(i) ***Items taken into account in determining overall partnership income and loss.*** Except as otherwise provided in this section, the partnership items that are included in computing overall partnership income or loss are those items of income, gain, loss, and deduction (including

expenditures described in section 705(a)(2)(B)) that increase or decrease the partners' capital accounts under § 1.704-1(b)(2)(iv). Tax items allocable pursuant to section 704(c) or § 1.704-1(b)(2)(iv)(*f*)(*4*) are not included in computing overall partnership income or loss. Nonetheless, allocations pursuant to section 704(c) or § 1.704-1(b)(2)(iv)(*f*)(*4*) may be relevant in determining that this section is being applied in a manner that is inconsistent with the fractions rule. See paragraph (k)(4) of this section.

(ii) ***Guaranteed payments to qualified organizations.*** Except to the extent otherwise provided in paragraph (d) of this section—

(A) A guaranteed payment to a qualified organization is not treated as an item of partnership loss or deduction in computing overall partnership income or loss; and

(B) Income that a qualified organization may receive or accrue with respect to a guaranteed payment is treated as an allocable share of overall partnership income or loss for purposes of the fractions rule.

(2) ***Fractions rule percentage.*** A qualified organization's fractions rule percentage is that partner's percentage share of overall partnership loss for the partnership taxable year for which that partner's percentage share of overall partnership loss will be the smallest.

(3) ***Definitions of certain terms by cross reference to partnership regulations. Minimum gain chargeback, nonrecourse deduction, nonrecourse liability, partner nonrecourse debt, partner nonrecourse debt minimum gain, partner nonrecourse debt minimum gain chargeback, partner nonrecourse deduction,*** and *partnership minimum gain* have the meanings provided in § 1.704-2.

(4) ***Example.*** The following example illustrates the provisions of this paragraph (c).

> *Example.* Computation of overall partnership income and loss for a taxable year. (i) Taxable corporation TP and qualified organization QO form a partnership to own and operate encumbered real property. Under the partnership agreement, all items of income, gain, loss, deduction, and credit are allocated 50 percent to TP and 50 percent to QO. Neither partner is entitled to a preferred return. However, the partnership agreement provides for a $900 guaranteed payment for services to QO in each of the partnership's first two taxable years. No part of the guaranteed payments qualify as a reasonable guaranteed payment under paragraph (d) of this section.
> (ii) The partnership violates the fractions rule. Due to the existence of the guaranteed payment, QO's percentage share of any overall partnership income in the first two years will exceed QO's fractions rule percentage. For example, the partnership might have bottom-line net income of $5,100 in its first taxable year that is comprised of $10,000 of rental income, $4,000 of salary expense, and the $900 guaranteed payment to QO. The guaranteed payment would not be treated as an item of deduction in computing overall partnership income or loss because it does not qualify as a reasonable guaranteed payment. See paragraph (c)(1)(ii)(A) of this section. Accordingly, overall partnership income for the year would be $6,000, which would consist of $10,000 of rental income less $4,000 of salary expense. See paragraph (c)(1)(i) of this section. The $900 QO would include in income with respect to the guaranteed payment would be treated as an allocable share of the $6,000 of overall partnership income.

See paragraph (c)(1)(ii)(B) of this section. Therefore, QO's allocable share of the overall partnership income for the year would be $3,450, whichwould be comprised of the $900 of income pertaining to QO's guaranteed payment, plus QO's $2,550 allocable share of the partnership's net income for the year (50 percent of $5,100). QO's $3,450 allocable share of overall partnership income would equal 58 percent of the $6,000 of overall partnership income and would exceed QO's fractions rule percentage, which is less than 50 percent. (If there were no guaranteed payment, QO's fractions rule percentage would be 50 percent. However, the existence of the guaranteed payment to QO that is not disregarded for purposes of the fractions rule pursuant to paragraph (d) of this section means that QO's fractions rule percentage is less than 50 percent.)

(d) ***Exclusion of reasonable preferred returns and guaranteed payments*** —

(1) ***Overview.*** This paragraph (d) sets forth requirements for disregarding reasonable preferred returns for capital and reasonable guaranteed payments for capital or services for purposes of the fractions rule. To qualify, the preferred return or guaranteed payment must be set forth in a binding, written partnership agreement.

(2) ***Preferred returns.*** Items of income (including gross income) and gain that may be allocated to a partner with respect to a current or cumulative reasonable preferred return for capital (including allocations of minimum gain attributable to nonrecourse liability (or partner nonrecourse debt) proceeds distributed to the partner as a reasonable preferred return) are disregarded in computing overall partnership income or loss for purposes of the fractions rule. Similarly, if a partnership agreement effects a reasonable preferred return with an allocation of what would otherwise be overall partnership income, those items comprising that allocation are disregarded in computing overall partnership income for purposes of the fractions rule.

(3) ***Guaranteed payments.*** A current or cumulative reasonable guaranteed payment to a qualified organization for capital or services is treated as an item of deduction in computing overall partnership income or loss, and the income that the qualified organization may receive or accrue from the current or cumulative reasonable guaranteed payment is not treated as an allocable share of overall partnership income or loss. The treatment of a guaranteed payment as reasonable for purposes of section 514(c)(9)(E) does not affect its possible characterization as unrelated business taxable income under other provisions of the Internal Revenue Code.

(4) ***Reasonable amount*** —

(i) ***In general.*** A guaranteed payment for services is reasonable only to the extent the amount of the payment is reasonable under § 1.162-7 (relating to the deduction of compensation for personal services). A preferred return or guaranteed payment for capital is reasonable only to the extent it is computed, with respect to unreturned capital, at a rate that is commercially reasonable based on the relevant facts and circumstances.

(ii) ***Safe harbor.*** For purposes of this paragraph (d)(4), a rate is deemed to be commercially reasonable if it is no greater than four percentage points more than, or if it is no greater than 150 percent of, the highest long-term applicable federal rate (AFR) within the meaning of section 1274(d), for the month the partner's right to a preferred return or guaranteed payment is

first established or for any month in the partnership taxable year for which the return or payment on capital is computed. A rate in excess of the rates described in the preceding sentence may be commercially reasonable, based on the relevant facts and circumstances.

(5) ***Unreturned capital*** —

(i) ***In general.*** Unreturned capital is computed on a weighted-average basis and equals the excess of—

(A) The amount of money and the fair market value of property contributed by the partner to the partnership (net of liabilities assumed, or taken subject to, by the partnership); over

(B) The amount of money and the fair market value of property (net of liabilities assumed, or taken subject to, by the partner) distributed by the partnership to the partner as a return of capital.

(ii) ***Return of capital.*** In determining whether a distribution constitutes a return of capital, all relevant facts and circumstances are taken into account. However, the designation of distributions in a written partnership agreement generally will be respected in determining whether a distribution constitutes a return of capital, so long as the designation is economically reasonable.

(6) ***Timing rules*** —

(i) ***Limitation on allocations of income with respect to reasonable preferred returns for capital.*** Items of income and gain (or part of what would otherwise be overall partnership income) that may be allocated to a partner in a taxable year with respect to a reasonable preferred return for capital are disregarded for purposes of the fractions rule only to the extent the allocable amount will not exceed—

(A) The aggregate of the amount that has been distributed to the partner as a reasonable preferred return for the taxable year of the allocation and prior taxable years, on or before the due date (not including extensions) for filing the partnership's return for the taxable year of the allocation; minus

(B) The aggregate amount of corresponding income and gain (and what would otherwise be overall partnership income) allocated to the partner in all prior years.

(ii) ***Reasonable guaranteed payments may be deducted only when paid in cash.*** If a partnership that avails itself of paragraph (d)(3) of this section would otherwise be required (by virtue of its method of accounting) to deduct a reasonable guaranteed payment to a qualified organization earlier than the taxable year in which it is paid in cash, the partnership must delay the deduction of the guaranteed payment until the taxable year it is paid in cash. For purposes of this paragraph (d)(6)(ii), a guaranteed payment that is paid in cash on or before the due date (not including extensions) for filing the partnership's return for a taxable year may be treated as paid in that prior taxable year.

(7) ***Examples.*** The following examples illustrate the provisions of this paragraph (d).

> *Facts.* Qualified organization QO and taxable corporation TP form a partnership. QO contributes $9,000 to the partnership and TP contributes $1,000. The partnership borrows $50,000 from a third party lender and purchases an office building for $55,000. At all relevant

times the safe harbor rate described in paragraph (d)(4)(ii) of this section equals 10 percent.

Example 1. Allocations made with respect to preferred returns. (i) The partnership agreement provides that in each taxable year the partnership's *distributable cash* is first to be distributed to QO as a 10 percent preferred return on its unreturned capital. To the extent the partnership has insufficient cash to pay QO its preferred return in any taxable year, the preferred return is compounded (at 10 percent) and is to be paid in future years to the extent the partnership has distributable cash. The partnership agreement first allocates gross income and gain 100 percent to QO, to the extent cash has been distributed to QO as a preferred return. All remaining profit or loss is allocated 50 percent to QO and 50 percent to TP.
(ii) The partnership satisfies the fractions rule. Items of income and gain that may be specially allocated to QO with respect to its preferred return are disregarded in computing overall partnership income or loss for purposes of the fractions rule because the requirements of paragraph (d) of this section are satisfied. After disregarding those allocations, QO's fractions rule percentage is 50 percent (see paragraph (c)(2) of this section), and under the partnership agreement QO may not be allocated more than 50 percent of overall partnership income in any taxable year.

(iii) The facts are the same as in paragraph (i) of this *Example 1,* except that QO's preferred return is computed on unreturned capital at a rate that exceeds a commercially reasonable rate. The partnership violates the fractions rule. The income and gain that may be specially allocated to QO with respect to the preferred return is not disregarded in computing overall partnership income or loss to the extent it exceeds a commercially reasonable rate. See paragraph (d) of this section. As a result, QO's fractions rule percentage is less than 50 percent (see paragraph (c)(2) of this section), and allocations of income and gain to QO with respect to its preferred return could result in QO being allocated more than 50 percent of the overall partnership income in a taxable year.

Example 2. Guaranteed payments and the computation of overall partnership income or loss. (i) The partnership agreement allocates all bottom-line partnership income and loss 50 percent to QO and 50 percent to TP throughout the life of the partnership. The partnership agreement provides that QO is entitled each year to a 10 percent guaranteed payment on unreturned capital. To the extent the partnership is unable to make a guaranteed payment in any taxable year, the unpaid amount is compounded at 10 percent and is to be paid in future years.
(ii) Assuming the requirements of paragraph (d)(6)(ii) of this section are met, the partnership satisfies the fractions rule. The guaranteed payment is disregarded for purposes of the fractions rule because it is computed with respect to unreturned capital at the safe harbor rate described in paragraph (d)(4)(ii) of this section. Therefore, the guaranteed payment is

treated as an item of deduction in computing overall partnership income or loss, and the corresponding income that QO may receive or accrue with respect to the guaranteed payment is not treated as an allocable share of overall partnership income or loss. See paragraph (d)(3) of this section. Accordingly, QO's fractions rule percentage is 50 percent (see paragraph (c)(2) of this section), and under the partnership agreement QO may not be allocated more than 50 percent of overall partnership income in any taxable year.

(e) ***Chargebacks and offsets*** —

(1) ***In general.*** The following allocations are disregarded in computing overall partnership income or loss for purposes of the fractions rule—

(i) Allocations of what would otherwise be overall partnership income that may be made to chargeback (i.e., reverse) prior disproportionately large allocations of overall partnership loss (or part of the overall partnership loss) to a qualified organization, and allocations of what would otherwise be overall partnership loss that may be made to chargeback prior disproportionately small allocations of overall partnership income (or part of the overall partnership income) to a qualified organization;

(ii) Allocations of income or gain that may be made to a partner pursuant to a minimum gain chargeback attributable to prior allocations of nonrecourse deductions to the partner;

(iii) Allocations of income or gain that may be made to a partner pursuant to a minimum gain chargeback attributable to prior allocations of partner nonrecourse deductions to the partner and allocations of income or gain that may be made to other partners to chargeback compensating allocations of other losses, deductions, or section 705(a)(2)(B) expenditures to the other partners; and

(iv) Allocations of items of income or gain that may be made to a partner pursuant to a qualified income offset, within the meaning of § 1.704-1(b)(2)(ii)(*d*).

(v) Allocations made in taxable years beginning on or after January 1, 2002, that are mandated by statute or regulation other than subchapter K of chapter 1 of the Internal Revenue Code and the regulations thereunder.

(2) ***Disproportionate allocations*** —

(i) ***In general.*** To qualify under paragraph (e)(1)(i) of this section, prior disproportionate allocations may be reversed in full or in part, and in any order, but must be reversed in the same ratio as originally made. A prior allocation is disproportionately large if the qualified organization's percentage share of that allocation exceeds its fractions rule percentage. A prior allocation is disproportionately small if the qualified organization's percentage share of that allocation is less than its fractions rule percentage. However, a prior allocation (or allocations) is not considered disproportionate unless the balance of the overall partnership income or loss for the taxable year of the allocation is allocated in a manner that would independently satisfy the fractions rule.

(ii) ***Limitation on chargebacks of partial allocations.*** Except in the case of a chargeback allocation pursuant to paragraph (e)(4) of this section, and except as otherwise provided by the Internal Revenue Service by revenue ruling, revenue procedure, or, on a case-by-case basis, by letter ruling, paragraph (e)(1)(i) of this section applies to a chargeback of an allocation of part of the

overall partnership income or loss only if that part consists of a pro rata portion of each item of partnership income, gain, loss, and deduction (other than nonrecourse deductions, as well as partner nonrecourse deductions and compensating allocations) that is included in computing overall partnership income or loss.

(3) ***Minimum gain chargebacks attributable to nonrecourse deductions.*** Commencing with the first taxable year of the partnership in which a minimum gain chargeback (or partner nonrecourse debt minimum gain chargeback) occurs, a chargeback to a partner is attributable to nonrecourse deductions (or separately, on a debt-by-debt basis, to partner nonrecourse deductions) in the same proportion that the partner's percentage share of the partnership minimum gain (or separately, on a debt-by-debt basis, the partner nonrecourse debt minimum gain) at the end of the immediately preceding taxable year is attributable to nonrecourse deductions (or partner nonrecoursedeductions). The partnership must determine the extent to which a partner's percentage share of the partnership minimum gain (or partner nonrecourse debt minimum gain) is attributable to deductions in a reasonable and consistent manner. For example, in those cases in which none of the exceptions contained in § 1.704-2(f) (2) through (5) are relevant, a partner's percentage share of the partnership minimum gain generally is attributable to nonrecourse deductions in the same ratio that—

(i) The aggregate amount of the nonrecourse deductions previously allocated to the partner but not charged back in prior taxable years; bears to

(ii) The sum of the amount described in paragraph (e)(3)(i) of this section, plus the aggregate amount of distributions previously made to the partner of proceeds of a nonrecourse liability allocable to an increase in partnership minimum gain but not charged back in prior taxable years.

(4) ***Minimum gain chargebacks attributable to distribution of nonrecourse debt proceeds*** —

(i) ***Chargebacks disregarded until allocations made.*** Allocations of items of income and gain that may be made pursuant to a provision in the partnership agreement that charges back minimum gain attributable to the distribution of proceeds of a nonrecourse liability (or a partner nonrecourse debt) are taken into account for purposes of the fractions rule only to the extent an allocation is made. (See paragraph (d)(2) of this section, pursuant to which there is permanently excluded chargeback allocations of minimum gain that are attributable to proceeds distributed as a reasonable preferred return.)

(ii) ***Certain minimum gain chargebacks related to returns of capital.*** Allocations of items of income or gain that (in accordance with § 1.704-2(f)(1)) may be made to a partner pursuant to a minimum gain chargeback attributable to the distribution of proceeds of a nonrecourse liability are disregarded in computing overall partnership income or loss for purposes of the fractions rule to the extent that the allocations (subject to the requirements of paragraph (e)(2) of this section) also charge back prior disproportionately large allocations of overall partnership loss (or part of the overall partnership loss) to a qualified organization. This exception applies only to the extent the disproportionately large allocation consisted of depreciation from real property (other than items of nonrecourse deduction or partner nonrecourse deduction) that subsequently was used to secure the nonrecourse liability providing the distributed proceeds, and only if those proceeds were distributed as a return of capital and in the same proportion as the disproportionately large allocation.

(5) ***Examples.*** The following examples illustrate the provisions of this paragraph (e).

Example 1. Chargebacks of disproportionately large allocations of overall partnership loss. (i) Qualified organization QO and taxable corporation TP form a partnership. QO contributes $900 to the partnership and TP contributes $100. The partnership agreement allocates overall partnership loss 50 percent to QO and 50 percent to TP until TP's capital account is reduced to zero; then 100 percent to QO until QO's capital account is reduced to zero; and thereafter 50 percent to QO and 50 percent to TP. *Overall partnership income* is allocated first 100 percent to QO to chargeback overall partnership loss allocated 100 percent to QO, and thereafter 50 percent to QO and 50 percent to TP.
(ii) The partnership satisfies the fractions rule. QO's fractions rule percentage is 50 percent. See paragraph (c)(2) of this section. Therefore, the 100 percent allocation of overall partnership loss to QO is disproportionately large. See paragraph (e)(2)(i) of this section. Accordingly, the 100 percent allocation to QO of what would otherwise be overall partnership income (if it were not disregarded), which charges back the disproportionately large allocation of overall partnership loss, is disregarded in computing overall partnership income and loss for purposes of the fractions rule. The 100 percent allocation is in the same ratio as the disproportionately large loss allocation, and the rest of the allocations for the taxable year of the disproportionately large loss allocation will independently satisfy the fractions rule. See paragraph (e)(2)(i) of this section. After disregarding the chargeback allocation of 100 percent of what would otherwise be overall partnership income, QO will not be allocated a percentage share of overall partnership income in excess of its fractions rule percentage for any taxable year.

Example 2. Chargebacks of disproportionately small allocations of overall partnership income. (i) Qualified organization QO and taxable corporation TP form a partnership. QO contributes $900 to the partnership and TP contributes $100. The partnership purchases real property with money contributed by its partners and with money borrowed by the partnership on a recourse basis. In any year, the partnership agreement allocates the first $500 of overall partnership income 50 percent to QO and 50 percent to TP; the next $100 of overall partnership income 100 percent to TP (as an incentive for TP to achieve significant profitability in managing the partnership'soperations); and all remaining overall partnership income 50 percent to QO and 50 percent to TP. *Overall partnership loss* is allocated first 100 percent to TP to chargeback overall partnership income allocated 100 percent to TP at any time in the prior three years and not reversed; and thereafter 50 percent to QO and 50 percent to TP.
(ii) The partnership satisfies the fractions rule. QO's fractions rule percentage is 50 percent because qualifying chargebacks are disregarded pursuant to paragraph (e)(1)(i) in computing overall partnership income or loss. See paragraph (c)(2) of this section. The zero percent allocation to QO of what would otherwise be overall partnership loss is a qualifying chargeback that is disregarded because it is in the same ratio as the income allocation it charges back, because the rest of the allocations for the taxable year of that income

allocation will independently satisfy the fractions rule (see paragraph (e)(2)(i) of this section), and because it charges back an allocation of zero overall partnership income to QO, which is proportionately smaller (i.e., disproportionately small) than QO's 50 percent fractions rule percentage. After disregarding the chargeback allocation of 100 percent of what would otherwise be overall partnership loss, QO will not be allocated a percentage share of overall partnership income in excess of its fractions rule percentage for any taxable year.

Example 3. Chargebacks of partner nonrecourse deductions and compensating allocations of other items. (i) Qualified organization QO and taxable corporation TP form a partnership to own and operate encumbered real property. QO and TP each contribute $500 to the partnership. In addition, QO makes a $300 nonrecourse loan to the partnership. The partnership agreement contains a partner nonrecourse debt minimum gain chargeback provision and a provision that allocates partner nonrecourse deductions to the partner who bears the economic burden of the deductions in accordance with § 1.704-2. The partnership agreement also provides that to the extent partner nonrecourse deductions are allocated to QO in any taxable year, other compensating items of partnership loss or deduction (and, if appropriate, section 705(a)(2)(B) expenditures) will first be allocated 100 percent to TP. In addition, to the extent items of income or gain are allocated to QO in any taxable year pursuant to a partner nonrecourse debt minimum gain chargeback of deductions, items of partnership income and gain will first be allocated 100 percent to TP. The partnership agreement allocates all other overall partnership income or loss 50 percent to QO and 50 percent to TP.
(ii) The partnership satisfies the fractions rule on a prospective basis. The allocations of the partner nonrecourse deductions and the compensating allocation of other items of loss, deduction, and expenditure that may be made to TP (but which will not be made unless there is an allocation of partner nonrecourse deductions to QO) are not taken into account for purposes of the fractions rule until a taxable year in which an allocation is made. See paragraph (j)(1) of this section. In addition, partner nonrecourse debt minimum gain chargebacks of deductions and allocations of income or gain to other partners that chargeback compensating allocations of other deductions are disregarded in computing overall partnership income or loss for purposes of the fractions rule. See paragraph (e)(1)(iii) of this section. Since all other overall partnership income and loss is allocated 50 percent to QO and 50 percent to TP, QO's fractions rule percentage is 50 percent (see paragraph (c)(2) of this section), and QO will not be allocated a percentage share of overall partnership income in excess of its fractions rule percentage for any taxable year.

(iii) The facts are the same as in paragraph (i) of this *Example 3,* except that the partnership agreement provides that compensating allocations of loss or deduction (and section 705(a)(2)(B) expenditures) to TP will not be charged back until year 10. The partners expect

$300 of partner nonrecourse deductions to be allocated to QO in year 1 and $300 of income or gain to be allocated to QO in year 2 pursuant to the partner nonrecourse debt minimum gain chargeback provision.

(iv) The partnership fails to satisfy the fractions rule on a prospective basis under the anti-abuse rule of paragraph (k)(4) of this section. If the partners' expectations prove correct, at the end of year 2, QO will have been allocated $300 of partner nonrecourse deductions and an offsetting $300 of partner nonrecourse debt minimum gain. However, the $300 of compensating deductions and losses that may be allocated to TP will not be charged back until year 10. Thus, during the period beginning at the end of year 2 and ending eight years later, there may be $300 more of unreversed deductions and losses allocated to TP than to QO, which would be inconsistent with the purpose of the fractions rule.

Example 4. Minimum gain chargeback attributable to distributions of nonrecourse debt proceeds. (i) Qualified organization QO and taxable corporation TP form a partnership. QO contributes $900 to the partnership and TP contributes $100. The partnership agreement generally allocates overall partnership income and loss 90 percent to QO and 10 percent to TP. However, the partnership agreement contains a minimum gain chargeback provision, and also provides that in any partnership taxable year in which there is a chargeback of partnership minimum gain to QO attributable to distributions of proceeds of nonrecourse liabilities, all other items comprising overall partnership income or loss will be allocated in a manner such that QO is not allocated more than 90 percent of the overall partnership income for the year.
(ii) The partnership satisfies the fractions rule on a prospective basis. QO's fractions rule percentage is 90 percent. See paragraph (c)(2) of this section. The chargeback that may be made to QO of minimum gain attributable to distributions of nonrecourse liability proceeds is taken into account for purposes of the fractions rule only to the extent an allocation is made. See paragraph (e)(4) of this section. Accordingly, that potential allocation to QO is disregarded in applying the fractions rule on a prospective basis (see paragraph (b)(2) of this section), and QO is treated as not being allocated a percentage share of overall partnership income in excess of its fractions rule percentage in any taxable year. (Similarly, QO is treated as not being allocated items of income or gain in a taxable year when the partnership has an overall partnership loss.)

(iii) In year 3, the partnership borrows $400 on a nonrecourse basis and distributes it to QO as a return of capital. In year 8, the partnership has $400 of gross income and cash flow and $300 of overall partnership income, and the partnership repays the $400 nonrecourse borrowing.

(iv) The partnership violates the fractions rule for year 8 and all future years. Pursuant to the minimum gain chargeback provision, the entire $400 of partnership gross income is allocated to QO. Accordingly, notwithstanding the curative provision in the partnership agreement that would allocate to TP the next $44 (($400 ÷ .9) × 10%) of income and gain included in computing overall partnership income, the partnership has no other items of income and gain to allocate to QO. Because the $400 of gross income actually allocated to QO is taken into account for purposes of the fractions rule in the year an allocation is made (see paragraph (e)(4) of this section), QO's percentage share of overall partnership income in year 8 is greater than 100 percent. Since this exceeds QO's fractions rule percentage (i.e., 90 percent), the partnership violates the fractions rule for year 8 and all subsequent taxable years. See paragraph (b)(2) of this section.

(f) ***Exclusion of reasonable partner-specific items of deduction or loss.*** Provided that the expenditures are allocated to the partners to whom they are attributable, the following partner-specific expenditures are disregarded in computing overall partnership income or loss for purposes of the fractions rule—

(1) Expenditures for additional record-keeping and accounting incurred in connection with the transfer of a partnership interest (including expenditures incurred in computing basis adjustments under section 743(b));

(2) Additional administrative costs that result from having a foreign partner;

(3) State and local taxes or expenditures relating to those taxes; and

(4) Expenditures designated by the Internal Revenue Service by revenue ruling or revenue procedure, or, on a case-by-case basis, by letter ruling. (See § 601.601(d)(2)(ii)(*b*) of this chapter).

(g) ***Exclusion of unlikely losses and deductions.*** Unlikely losses or deductions (other than items of nonrecourse deduction) that may be specially allocated to partners that bear the economic burden of those losses or deductions are disregarded in computing overall partnership income or loss for purposes of the fractions rule, so long as a principal purpose of the allocation is not tax avoidance. To be excluded under this paragraph (g), a loss or deduction must have a low likelihood of occurring, taking into account all relevant facts, circumstances, and information available to the partners (including bona fide financial projections). The types of events that may give rise to unlikely losses or deductions, depending on the facts and circumstances, include tort and other third-party litigation that give rise to unforeseen liabilities in excess of reasonable insurance coverage; unanticipated labor strikes; unusual delays in securing required permits or licenses; abnormal weather conditions (considering the season and the job site); significant delays in leasing property due to an unanticipated severe economic downturn in the geographic area; unanticipated cost overruns; and the discovery of environmental conditions that require remediation. No inference is drawn as to whether a loss or deduction is unlikely from the fact that the partnership agreement includes a provision for allocating that loss or deduction.

(h) ***Provisions preventing deficit capital account balances.*** A provision in the partnership agreement that allocates items of loss or deduction away from a qualified organization in instances where allocating those items to the qualified organization would cause or increase a deficit balance in its capital account that the qualified organization is not obligated to restore (within the meaning of § 1.704-1(b)(2)(ii) (*b*) or (*d*)), is disregarded for purposes of the fractions rule in taxable years of the partnership in which no such allocations are made pursuant to the provision. However, this exception applies only if, at the time the

provision becomes part of the partnership agreement, all relevant facts, circumstances, and information (including bona fide financial projections) available to the partners reasonably indicate that it is unlikely that an allocation will be made pursuant to the provision during the life of the partnership.

(i) [Reserved]

(j) *Exception for partner nonrecourse deductions* —

(1) ***Partner nonrecourse deductions disregarded until actually allocated.*** Items of partner nonrecourse deduction that may be allocated to a partner pursuant to § 1.704-2, and compensating allocations of other items of loss, deduction, and section 705(a)(2)(B) expenditures that may be allocated to other partners, are not taken into account for purposes of the fractions rule until the taxable years in which they are allocated.

(2) ***Disproportionate allocation of partner nonrecourse deductions to a qualified organization.*** A violation of the fractions rule will be disregarded if it arises because an allocation of partner nonrecourse deductions to a qualified organization that is not motivated by tax avoidance reduces another qualified organization's fractions rule percentage below what it would have been absent the allocation of the partner nonrecourse deductions.

(k) *Special rules* —

(1) ***Changes in partnership allocations arising from a change in the partners' interests.*** A qualified organization that acquires a partnership interest from another qualified organization is treated as a continuation of the prior qualified organization partner (to the extent of that acquired interest) for purposes of applying the fractions rule. Changes in partnership allocations that result from other transfers or shifts of partnership interests will be closely scrutinized (to determine whether the transfer or shift stems from a prior agreement, understanding, or plan or could otherwise be expected given the structure of the transaction), but generally will be taken into account only in determining whether the partnership satisfies the fractions rule in the taxable year of the change and subsequent taxable years.

(2) *De minimis interest rule* —

(i) ***In general.*** Section 514(c)(9)(B)(vi) does not apply to a partnership otherwise subject to that section if—

(A) Qualified organizations do not hold, in the aggregate, interests of greater than five percent in the capital or profits of the partnership; and

(B) Taxable partners own substantial interests in the partnership through which they participate in the partnership on substantially the same terms as the qualified organization partners.

(ii) ***Example.*** Partnership *PRS* has two types of limited partnership interests that participate in partnership profits and losses on different terms. Qualified organizations (QOs) only own one type of limited partnership interest and own no general partnership interests. In the aggregate, the QOs own less than five percent of the capital and profits of *PRS*. Taxable partners also own the same type of limited partnership interest that the QOs own. These limited partnership interests owned by the taxable partners are 30 percent of the capital and profits of *PRS*. Thirty percent is a substantial interest in the partnership. Therefore, *PRS* satisfies paragraph (k)(2) of this section and section 514(c)(9)(B)(vi) does not apply.

(3) ***De minimis allocations disregarded.*** A qualified organization's fractions rule percentage of the partnership's items of loss and deduction, other than nonrecourse and partner nonrecourse deductions, that are allocated away from the qualified organization and to other partners in any taxable year are treated as having been allocated to the qualified organization for purposes of the fractions rule if—

(i) The allocation was neither planned nor motivated by tax avoidance; and

(ii) The total amount of those items of partnership loss or deduction is less than both—

(A) One percent of the partnership's aggregate items of gross loss and deduction for the taxable year; and

(B) $50,000.

(4) ***Anti-abuse rule.*** The purpose of the fractions rule is to prevent tax avoidance by limiting the permanent or temporary transfer of tax benefits from tax-exempt partners to taxable partners, whether by directing income or gain to tax-exempt partners, by directing losses, deductions, or credits to taxable partners, or by some other similar manner. This section may not be applied in a manner that is inconsistent with the purpose of the fractions rule.

(l) [Reserved]

(m) ***Tiered partnerships*** —

(1) ***In general.*** If a qualified organization holds an indirect interest in real property through one or more tiers of partnerships (a chain), the fractions rule is satisfied only if—

(i) The avoidance of tax is not a principal purpose for using the tiered-ownership structure (investing in separate real properties through separate chains of partnerships so that section 514(c)(9)(E) is, effectively, applied on a property-by-property basis is not, in and of itself, a tax avoidance purpose); and

(ii) The relevant partnerships can demonstrate under any reasonable method that the relevant chains satisfy the requirements of paragraphs (b)(2) through (k) of this section. For purposes of applying § 1.704-2(k) under the independent chain approach described in Example 3 of paragraph (m)(2) of this section, allocations of items of income or gain that may be made pursuant to a provision in the partnership agreement that charges back minimum gain are taken into account for purposes of the fractions rule only to the extent an allocation is made.

(2) ***Examples.*** The following examples illustrate the provisions of this paragraph (m).

> *Example 1. Tiered partnerships—collapsing approach.* (i) Qualified organization QO3 and taxable individual TP3 form upper-tier partnership P2. The P2 partnership agreement allocates overall partnership income 20 percent to QO3 and 80 percent to TP3. Overall partnership loss is allocated 30 percent to QO3 and 70 percent to TP3. P2 and taxable individual TP2 form lower-tier partnership P1. The P1 partnership agreement allocates overall partnership income 60 percent to P2 and 40 percent to TP2. Overall partnership loss is allocated 40 percent to P2 and 60 percent to TP2. The only asset of P2 (which has no outstanding debt) is its interest in P1. P1 purchases real property with money contributed by its partners and with borrowed money. There is no tax avoidance purpose for the use of the

tiered-ownership structure, which is illustrated by the following diagram.

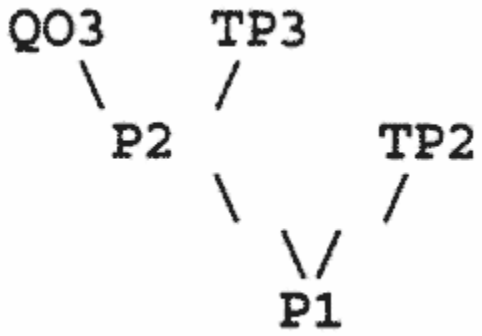

(ii) P2 can demonstrate that the P2/P1 chain satisfies the requirements of paragraphs (b)(2) through (k) of this section by collapsing the tiered-partnership structure. On a collapsed basis, QO3's fractions rule percentage is 12 percent (30 percent of 40 percent). See paragraph (c)(2) of this section. P2 satisfies the fractions rule because QO3 may not be allocated more than 12 percent (20 percent of 60 percent) of overall partnership income in any taxable year.

Example 2. Tiered partnerships—entity-by-entity approach. (i) Qualified organization QO3A is a partner with taxable individual TP3A in upper-tier partnership P2A. Qualified organization QO3B is a partner with taxable individual TP3B in upper-tier partnership P2B. P2A, P2B, and taxable individual TP2 are partners in lower-tier partnership P1, which owns encumbered real estate. None of QO3A, QO3B, TP3A, TP3B or TP2 has a direct or indirect ownership interest in each other. P2A has been established for the purpose of investing in numerous real estate properties independently of P2B and its partners. P2B has been established for the purpose of investing in numerous real estate properties independently of P2A and its partners. Neither P2A nor P2B has outstanding debt. There is no tax avoidance purpose for the use of the tiered-ownership structure, which is illustrated by the following diagram.

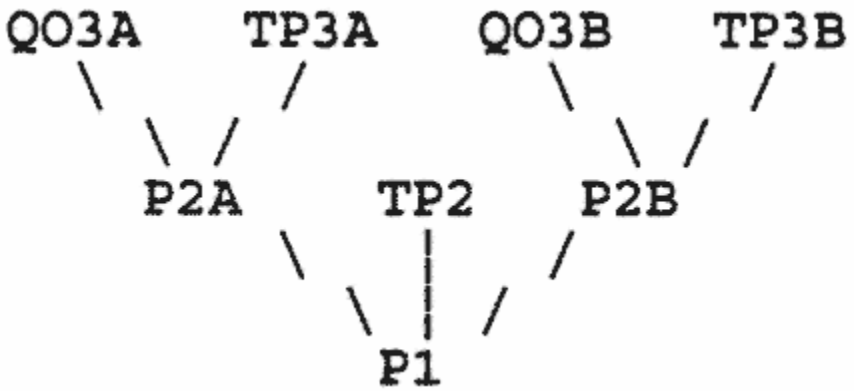

(ii) The P2A/P1 chain (Chain A) will satisfy the fractions rule if P1 and P2A can demonstrate in a reasonable manner that they satisfy the requirements of paragraphs (b)(2) through (k) of this section. The P2B/P1 chain (Chain B) will satisfy the fractions rule if P1 and P2B can demonstrate in a reasonable manner that they satisfy the requirements of paragraphs (b)(2)

through (k) of this section. To meet its burden, P1 treats P2A and P2B as qualified organizations. Provided that the allocations that may be made by P1 would satisfy the fractions rule if P2A and P2B were direct qualified organization partners in P1, Chain A will satisfy the fractions rule (for the benefit of QO3A) if the allocations that may be made by P2A satisfy the requirements of paragraphs (b)(2) through (k) of this section. Similarly, Chain B will satisfy the fractions rule (for the benefit of QO3B) if the allocations that may be made by P2B satisfy the requirements of paragraphs (b)(2) through (k) of this section. Under these facts, QO3A does not have to know how income and loss may be allocated by P2B, and QO3B does not have to know how income and loss may be allocated by P2A. QO3A's and QO3B's burden would not change even if TP2 were not a partner in P1.

Example 3. Tiered partnerships—independent chain approach. (i) Qualified organization QO3 and taxable corporation TP3 form upper-tier partnership P2. P2 and taxable corporation TP2 form lower-tier partnership P1A. P2 and qualified organization QO2 form lower-tier partnership P1B. P2 has no outstanding debt. P1A and P1B each purchase real property with money contributed by their respective partners and with borrowed money. Each partnership's real property is completely unrelated to the real property owned by the other partnership. P1B's allocations do not satisfy the requirements of paragraphs (b)(2) through (k) of this section because of allocations that may be made to QO2. However, if P2's interest in P1B were completely disregarded, the P2/P1A chain would satisfy the requirements of paragraphs (b)(2) through (k) of this section. There is no tax avoidance purpose for the use of the tiered-ownership structure, which is illustrated by the following diagram.

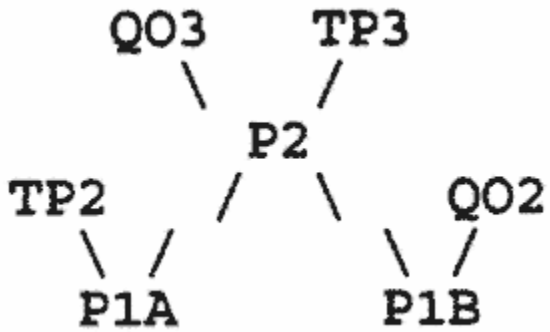

(ii) P2 satisfies the fractions rule with respect to the P2/P1A chain, but only if the P2 partnership agreement allocates those items allocated to P2 by P1A separately from those items allocated to P2 by P1B. For this purpose, allocations of items of income or gain that may be made pursuant to a provision in the partnership agreement that charges back minimum gain, are taken into account for purposes of the fractions rule only to the extent an allocation is made. See paragraph (m)(1)(ii) of this section. P2 does not satisfy the fractions rule with respect to the P2/P1B chain.

(n) *Effective date* —

(1) ***In general.*** Section 514(c)(9)(E), as amended by sections 2004(h) (1) and (2) of the Technical and Miscellaneous Revenue Act of 1988, Pub. L. 100-647, applies generally with respect to property acquired by partnerships after October 13, 1987, and to partnership interests acquired after October 13, 1987.

(2) ***General effective date of the regulations.*** Section 1.514(c)-2 (a) through (m) applies with respect to partnership agreements entered into after December 30, 1992, property acquired by partnerships after December 30, 1992, and partnership interests acquired by qualified organizations after December 30, 1992 (other than a partnership interest that at all times after October 13, 1987, and prior to the acquisition was held by a qualified organization). For this purpose, paragraphs (a) through (m) of this section will be treated as satisfied with respect to partnership agreements entered into on or before May 13, 1994, property acquired by partnerships on or before May 13, 1994, and partnership interests acquired by qualified organizations on or before May 13, 1994, if the guidance set forth in (paragraphs (a) through (m) of § 1.514(c)-2 of) PS-56-90, published at 1993-5 I.R.B. 42, February 1, 1993, is satisfied. (See § 601.601(d)(2)(ii)(*b*) of this chapter).

(3) ***Periods after June 24, 1990, and prior to December 30, 1992.*** To satisfy the requirements of section 514(c)(9)(E) with respect to partnership agreements entered into after June 24, 1990, property acquired by partnerships after June 24, 1990, and partnership interests acquired by qualified organizations after June 24, 1990, (other than a partnership interest that at all times after October 13, 1987, and prior to the acquisition was held by a qualified organization) to which paragraph (n)(2) of this section does not apply, paragraphs (a) through (m) of this section must be satisfied as of the first day that section 514(c)(9)(E) applies with respect to the partnership, property, or acquired interest. For this purpose, paragraphs (a) through (m) of this section will be treated as satisfied if the guidance in sections I through VI of Notice 90-41, 90-1 C.B. 350, (see § 601.601(d)(2)(ii)(*b*) of this chapter) has been followed.

(4) ***Periods prior to the issuance of Notice 90-41.*** With respect to partnerships commencing after October 13, 1987, property acquired by partnerships after October 13, 1987, and partnership interests acquired by qualified organizations after October 13, 1987, to which neither paragraph (n)(2) nor (n)(3) of this section applies, the Internal Revenue Service will not challenge an interpretation of section 514(c)(9)(E) that is reasonable in light of the underlying purposes of section 514(c)(9)(E) (as reflected in its legislative history) and that is consistently applied as of the first day that section 514(c)(9)(E) applies with respect to the partnership, property, or acquired interest. A reasonable interpretation includes an interpretation that substantially follows the guidance in either sections I through VI of Notice 90-41, (see § 601.601(d)(2)(ii)(*b*) of this chapter) or paragraphs (a) through (m) of this section.

(5) Material modifications to partnership agreements. A material modification will cause a partnership agreement to be treated as a new partnership agreement in appropriate circumstances for purposes of this paragraph (n).

[T.D. 8539, 59 FR 24928, May 13, 1994, as amended by T.D. 9047, 68 FR 12825, Mar. 18, 2003]

§ 1.514(d)-1 Basis of debt-financed property acquired in corporate liquidation.

(a) If debt-financed property is acquired by an exempt organization in a complete or partial liquidation of a corporation in exchange for its stock, the organization's basis in such property shall be the same as it would be in the hands of the transferor corporation, increased by the amount of gain recognized to the transferor corporation upon such distribution and by the amount of any gain which is includible, on account of such distribution, in the gross income of the organization as unrelated debt-financed income.

(b) The application of this section may be illustrated by the following example:

Example. On July 1, 1970, T, an exempt trust, exchanges $15,000 of borrowed funds for 50 percent of the shares of M Corporation's stock. M uses $35,000 of borrowed funds in acquiring depreciable assets which are not used at any time for purposes described in section 514(b)(1) (A), (B), (C), or (D). On July 1, 1978, and for the 12-month period preceding this date, T's acquisition indebtedness with respect to M's stock has been $3,000. On this date, there is a complete liquidation of M Corporation to which section 331(a)(1) applies. In the liquidation T receives a distribution in kind of depreciable assets and assumes $7,000 of M's indebtedness which remains unpaid with respect to the depreciable assets. On this date, M's adjusted basis of these depreciable assets is $9,000, and such assets have a fair market value of $47,000. M recognizes gain of $6,000 with respect to this liquidation pursuant to sections 1245 and 1250. T realizes a gain of $25,000 (the difference between the excess of fair market value of the property received over the indebtedness assumed, $40,000 ($47,000-$7,000) and T's basis in M's stock, $15,000). A portion of this gain is to be treated as unrelated debt-financed income. This amount is determined by multiplying T's gain of $25,000 by the debt/basis percentage. The debt/basis percentage is 20 percent, the ratio which the average acquisition indebtedness ($3,000) is of the average adjusted basis ($15,000). Thus, $5,000 (20 percent of $25,000) is unrelated debt-financed income. This amount and the gain recognized pursuant to sections 1245 and 1250 are added to M's basis to determine T's basis in the property received. Consequently, T's basis in the property received from M Corporation is $20,000, determined as follows:

M Corporation's adjusted basis	$9,000
Gain recognized by M Corporation on the distribution	6,000
Unrelated debt-financed income recognized by T with respect to the distribution	5,000
T's transferred basis	20,000

[T.D. 7229, 37 FR 28153, Dec. 21, 1972]

§ 1.514(e)-1 Allocation rules.

Where only a portion of property is debt-financed property, proper allocation of the basis, indebtedness, income, and deductions with respect to such property must be made to determine the amount of income or gain derived from such property which is to be treated as unrelated debt-financed income. See examples 2 and 3 of paragraph (b)(1)(iii) of § 1.514(b)-1 and examples 1, (2), and (3) of paragraph (b)(3)(iii) of § 1.514(b)-1 for illustrations of proper allocation.

[T.D. 7229, 37 FR 28153, Dec. 21, 1972]

§ 1.514(f)-1 Definition of business lease.

(a) ***In general.*** The term *business lease* means any lease, with certain exceptions discussed in paragraph (c) of this section, for a term of more than 5 years of real property by an organization subject to section 511 (or by a partnership of which it is a member) if at the close of the organization's taxable year there is a business lease indebtedness as defined in section 514(g) and § 1.514(g)-1 with respect to such property. For the purpose of this section the term *real property* and the term *premises* include personal property of the lessor tax-exempt organization leased by it to a lessee of its real estate if the lease of such personal property is made under, or in connection with, the lease of such real estate. For amounts of business lease rents and deductions to be included in computing unrelated business taxable income for taxable years beginning before January 1, 1970, see § 1.514(a)-2.

(b) ***Special rules.***

(1) In computing the term of the lease, the period for which a lease may be renewed or extended by reason of an option contained therein shall be considered as part of the term. For example, a 3-year lease with an option for renewal for another such period is considered a lease for a term of 6 years. Another example is the case of a 1-year lease with option of renewal for another such term, where the parties at the end of each year renew the arrangement. In this case, during the fifth year (but not during the first 4 years), the lease falls within the 5-year rule, since the lease then involves 5 years and there is an option for the sixth year. In determining the term of the lease, an option for renewal of the lease is taken into account whether or not the exercise of the option depends upon conditions or contingencies.

(2) If the property is acquired subject to a lease, the term of such lease shall be considered to begin on the date of such acquisition. For example, if an exempt organization purchases, in whole or in part with borrowed funds, real property subject to a 10-year lease which has 3 years left to run, and such lease contains no right of renewal or extension, the lease shall be considered a 3-year lease and hence does not meet the definition of a business lease in section 514(f) and paragraph (a) of this section. However, if this lease contains an option to renew for a period of 3 years or more, it is a business lease.

(3) Under the provisions of section 514(f)(2)(B) a lease is considered as continuing for more than 5 years if the same lessee has occupied the premises for a total period of more than 5 years, whether the occupancy is under one or more leases, renewals, extensions, or continuations. Continued occupancy shall be considered to be by the same lessee if the occupants during the period are so related that losses in respect of sales or exchanges of property between them would be disallowed under section 267(a). Such period shall be considered as commencing not earlier than the date of

the acquisition of the property by the tax-exempt organization or trust. This rule is applicable only in the sixth and succeeding years of such occupancy by the same lessee. See, however, paragraph (c)(3) of this section.

(c) ***Exceptions.***

(1) A lease shall not be considered a business lease if such lease is entered into primarily for a purpose which is substantially related (aside from the need of such organization for income or funds, or the use it makes of the rents derived) to the exercise or performance by such organization of its charitable, educational, or other purpose or function constituting the basis for its exemption. For example, where a tax-exempt hospital leases real property owned by it to an association of doctors for use as a clinic, the rents derived under such lease would not be included in computing unrelated business taxable income if the clinic is substantially related to the carrying on of hospital functions. See § 1.513-1 for principles applicable in determining whether there is a substantial relationship to the exempt purpose of an organization.

(2) A lease is not a business lease if the lease is of premises in a building primarily designed for occupancy and occupied by the tax-exempt organization.

(3) If a lease for more than 5 years to a tenant is for only a portion of the real property, and space in the real property is rented during the taxable year under a lease for not more than 5 years to any other tenant of the tax-exempt organization, all leases of the real property for more than 5 years shall be considered as business leases during the taxable year only if:

(i) The rents derived from the real property during the taxable year under leases for more than 5 years represent 50 percent or more of the total rents derived during the taxable year from the real property; or the area of the premises occupied under leases for more than 5 years represents, at any time during the taxable year, 50 percent or more of the total area of the real property rented at such time; or

(ii) The rent derived from the real property during the taxable year from any tenant under a lease for more than 5 years, or from a group of tenants (under such leases) who are either members of an affiliated group (as defined in section 1504) or are partners, represents more than 10 percent of the total rents derived during the taxable year from such property; or the area of the premises occupied by any one such tenant, or by any such group of tenants, represents at any time during the taxable year more than 10 percent of the total area of the real property rented at such time

In determining whether 50 percent or more of the total rents are derived from leases for more than 5 years, or whether 50 percent or more of the total area is occupied under leases for more than 5 years:

(iii) An occupancy which is considered to be a lease of more than 5 years solely by reason of the provisions of paragraph (b)(3) of this subparagraph shall not be treated as such a lease for purposes of subdivision (i) of this subparagraph, and

(iv) An occupancy which is considered to be a lease of more than 5 years solely by reason of the provisions of paragraph (b)(3) of this section shall be treated as such a lease for purposes of subdivision (ii) of this subparagraph, and

(v) If during the last half of the term of a lease a new lease is made to take effect after the expiration of such lease, the unexpired portion of the first lease will not be added to the second lease to determine whether such second lease is a lease for more than 5 years for purposes of subdivision (i) of this subparagraph.

(4) The application of subparagraph (3) of this paragraph may be illustrated by the following example:

Example. In 1954 an educational organization, which is on the calendar year basis, begins the erection of an 11-story apartment building using funds borrowed for that purpose, and immediately leases for a 10-year term the first floor to a real estate development company to sublet for stores and shops. As fast as the new apartments are completed, they are rented on an annual basis. At the end of 1959 all except the 10th and 11th floors are rented. Those two floors are completed during 1960 and rented. Assume that for 1954 and each subsequent taxable year through 1959, and for the taxable year 1963, the gross rental for the first floor represents more than 10 percent of the total gross rents derived during the taxable year from the building. Under this set of facts the 10-year lease of the first floor would be considered to be a business lease for all except the taxable years 1961, 1962, and 1964.

[T.D. 7229, 37 FR 28154, Dec. 21, 1972]

§ 1.514(g)-1 Business lease indebtedness.

(a) ***Definition.*** The term *business lease indebtedness* means, with respect to any real property leased by a tax-exempt organization for a term of more than 5 years, the unpaid amount of:

(1) The indebtedness incurred by the lessor tax-exempt organization in acquiring or improving such property;

(2) The indebtedness incurred by the lessor tax-exempt organization prior to the acquisition or improvement of such property if such indebtedness would not have been incurred but for such acquisition or improvement; and

(3) The indebtedness incurred by the lessor tax-exempt organization subsequent to the acquisition or improvement of such property if such indebtedness would not have been incurred but for such acquisition or improvement and the incurrence of the indebtedness was reasonably foreseeable at the time of such acquisition or improvement

See paragraph (i) of this section with respect to subsidiary corporations.

(b) ***Examples.*** The rules of section 514(g) respecting business leases also cover certain cases where the leased property itself is not subject to an indebtedness. For example, they apply to cases such as the following:

Example 1. A university pledges some of its investment securities with a bank for a loan and uses the proceeds of such loan to purchase (either directly or through a subsidiary corporation) a building, which building is subject to a lease that then has more than 5 years to run. This would be an example of a business lease indebtedness incurred prior to the acquisition of the property which would not have been incurred but for such acquisition.

Example 2. If the building itself in example 1 in this paragraph is later mortgaged to raise funds to release the pledged securities, the lease would continue to be a business lease.

Example 3. If a scientific organization mortgages its laboratory building to replace working capital used in remodeling another one of its buildings or a building held by its subsidiary corporation, which other building is free of indebtedness and is subject to a lease that then has more than 5 years to run, the lease would be a business lease inasmuch as the indebtedness though incurred subsequent to the improvement of such property would not have been incurred but for such improvement, and the incurrence of the indebtedness was reasonably foreseeable when, to make such improvement, the organization reduced its working capital below the amount necessary to continue current operations.

(c) ***Property acquired subject to lien.*** Where real property is acquired subject to a mortgage or similar lien, whether the acquisition be by gift, bequest, devise, or purchase, the amount of the indebtedness secured by such mortgage or lien is a business lease indebtedness (unless paragraph (d)(1) of this section applies) even though the lessor does not assume or agree to pay the indebtedness. For example, a university pays $100,000 for real estate valued at $300,000 and subject to a $200,000 mortgage. For the purpose of the tax on unrelated business taxable income, the result is the same as if $200,000 of borrowed funds had been used to buy the property.

(d) ***Certain property acquired by gifts, etc.***

(1) Where real property was acquired by gift, bequest, or devise, before July 1, 1950, subject to a mortgage or other similar lien, the amount of such mortgage or other similar lien shall not be considered as an indebtedness of the lessor tax-exempt organization incurred in acquiring such property. An indebtedness not otherwise covered by this exception is not brought within the exception by reason of a transfer of the property between a parent and its subsidiary corporation.

(2) Where real property was acquired by gift, bequest, or devise, before July 1, 1950, subject to a lease requiring improvements in such property upon the happening of stated contingencies, indebtedness incurred in improving such property in accordance with the terms of such lease shall not be considered as indebtedness described in section 514(g) and in this section. An indebtedness not otherwise covered by this exception is not brought within the exception by reason of a transfer of the property between a parent and its subsidiary corporation.

(e) ***Certain corporations described in section 501(c)(2).*** In the case of a title holding corporation described in section 501(c)(2), all of the stock of which was acquired before July 1, 1950, by an organization described in section 501(c) (3), (5), or (6) (and more than one-third of such stock was acquired by such organization by gift or bequest), any indebtedness incurred by such corporation before July 1, 1950, and any indebtedness incurred by such corporation on or after such date in improving real property in accordance with the terms of a lease entered into before such date, shall not be considered an indebtedness described in section 514(g) and in this section with respect to either such section 501(c)(2) corporation or such section 501(c) (3), (5), or (6) organization.

(f) ***Certain trusts described in section 401(a).*** In the case of a trust described in section 401(a), or in the case of a corporation described in section 501(c)(2) all of the stock of which was acquired before March 1, 1954, by such a trust, any indebtedness incurred by such trust or such corporation before such date, in connection with real property which is leased before such date, and any indebtedness incurred by such trust or such corporation on or after such date necessary to carry out the terms of such lease, shall not be considered as an indebtedness described in section 514(g) and in this section.

(g) ***Business lease on portion of property.*** Where only a portion of the real property is subject to a business lease, proper allocation of the indebtedness applicable to the whole property must be made to the premises covered by the lease. See example 2 of paragraph (b)(3) of § 1.514(a)-2.

(h) ***Special rule applicable to trusts described in section 401(a).*** If an employees' trust described in section 401(a) lends any money to another such employees' trust of the same employer, for the purpose of acquiring or improving real property, such loan will not be treated as an indebtedness of the borrowing trust except to the extent that the loaning trust:

(1) Incurs any indebtedness in order to make such loan;

(2) Incurred indebtedness before the making of such loan which would not have been incurred but for the making of such loan; or

(3) Incurred indebtedness after the making of such loan which would not have been incurred but for the making of such loan and which was reasonably foreseeable at the time of making such loan.

(i) ***Subsidiary corporations.*** The provisions of section 514(f), (g), and (h) are applicable whether or not a subsidiary corporation of the type described in section 501(c)(2) is availed of in making the business lease. For example, assume a parent organization borrows funds to purchase realty and sets up a separate section 501(c)(2) corporation as a subsidiary to hold the property. Such subsidiary corporation leases the property for a period of more than 5 years, collects the rents and pays over all of the income, less expenses, to the parent organization, the parent organization being liable for the indebtedness. Under these assumed facts, the lease by section 501(c)(2) subsidiary corporation would be a business lease with respect to such subsidiary corporation, and the rental income would be subject to the tax, whether or not the subsidiary itself assumes the indebtedness and whether or not the property is subject to the indebtedness.

(j) ***Certain trusts described in section 501(c)(17).***

(1) In the case of a supplemental unemployment benefit trust described in section 501(c)(17), or in the case of a corporation described in section 501(c)(2) all of the stock of which was acquired before January 1, 1960, by such a trust, any indebtedness incurred by such trust or such corporation before such date, in connection with real property which is leased before such date, and any indebtedness incurred by such trust or such corporation on or after such date necessary to carry out the terms of such lease, shall not be considered as an indebtedness described in section 514(g) and in this section.

(2) If a supplemental unemployment benefit trust described in section 501(c)(17) lends any money to another such supplemental unemployment benefit trust forming part of the same plan, for the purpose of acquiring or improving real property, such loan will not be treated as an indebtedness of the borrowing trust except to the extent that the loaning trust:

(i) Incurs any indebtedness in order to make such loan;

(ii) Incurred indebtedness before the making of such loan which would not have been incurred but for the making of such loan; or

(iii) Incurred indebtedness after the making of such loan which would not have been incurred but for the making of such loan and which was reasonably foreseeable at the time of making such loan.

[T.D. 7229, 37 FR 28155, Dec. 21, 1972]

Farmers' Cooperatives

§ 1.521-1 Farmers' cooperative marketing and purchasing associations; requirements for exemption under section 521.

(a)

(1) Cooperative associations engaged in the marketing of farm products for farmers, fruit growers, livestock growers, dairymen, etc., and turning back to the producers the proceeds of the sales of their products, less the necessary operating expenses, on the basis of either the quantity or the value of the products furnished by them, are exempt from income tax except as otherwise provided in section 522, or part I, subchapter T chapter 1 of the Code, and the regulations thereunder. For instance, cooperative dairy companies which are engaged in collecting milk and disposing of it or the products thereof and distributing the proceeds, less necessary operating expenses, among the producers upon the basis of either the quantity or the value of milk or of butterfat in the milk furnished by such producers, are exempt from the tax. If the proceeds of the business are distributed in anyother way than on such a proportionate basis, the association does not meet the requirements of the Code and is not exempt. In other words, nonmember patrons must be treated the same as members insofar as the distribution of patronage dividends is concerned. Thus, if products are marketed for nonmember producers, the proceeds of the sale, less necessary operating expenses, must be returned to the patrons from the sale of whose goods such proceeds result, whether or not such patrons are members of the association. In order to show its cooperative nature and to establish compliance with the requirement of the Code that the proceeds of sales, less necessary expenses, be turned back to all producers on the basis of either the quantity or the value of the products furnished by them, it is necessary for such an association to keep permanent records of the business done both with members and nonmembers. The Code does not require, however, that the association keep ledger accounts with each producer selling through the association. Any permanent records which show that the association was operating during the taxable year on a cooperative basis in the distribution of patronage dividends to all producers will suffice. While under the Code patronage dividends must be paid to all producers on the same basis, this requirement is complied with if an association instead of paying patronage dividends to nonmember producers incash, keeps permanent records from which the proportionate shares of the patronage dividends due to nonmember producers can be determined, and such shares are made applicable toward the purchase price of a share of stock or of a membership in the association. See, however, paragraph (c)(1) of § 1.1388-1 for the meaning of *payment in money* for purposes of qualifying a written notice of allocation.

(2) An association which has capital stock will not for such reason be denied exemption

(i) if the dividend rate of such stock is fixed at not to exceed the legal rate of interest in the State of incorporation or 8 percent per annum, whichever is greater, on the value of the consideration for which the stock was issued, and

(ii) if substantially all of such stock (with the exception noted below) is owned by producers who market their products or purchase their supplies and equipment through the association. Any ownership of stock by others than such actual producers must be satisfactorily explained in the association's application for exemption. The association will be required to show that the ownership of its capital stock has been restrictedas far as possible to such actual producers. If by statutory requirement all officers of an association must be shareholders, the ownership of a share of stock by a nonproducer to qualify him as an officer will not destroy the association's exemption. Likewise, if a shareholder for any reason ceases to be a producer and the association is unable, because of a constitutional restriction or prohibition or other reason

beyond the control of the association, to purchase or retire the stock of such nonproducer, the fact that under such circumstances a small amount of the outstanding capital stock is owned by shareholders who are no longer producers will not destroy the exemption. The restriction placed on the ownership of capital stock of an exempt cooperative association shall not apply to nonvoting preferred stock, provided the owners of such stock are not entitled or permitted to participate, directly or indirectly, in the profits of the association, upon dissolution or otherwise, beyond the fixed dividends.

(3) The accumulation and maintenance of a reserve required by State statute, or the accumulation and maintenance of a reasonable reserve or surplus for any necessary purpose, such as to provide for the erection of buildings and facilities required in business or for the purchase and installation of machinery and equipment or to retire indebtedness incurred for such purposes, will not destroy the exemption. An association will not be denied exemption because it markets the products of nonmembers, provided the value of the products marketed for nonmembers does not exceed the value of the products marketed for members. Anyone who shares in the profits of a farmers' cooperative marketing association, and is entitled to participate in the management of the association, must be regarded as a member of such association within the meaning of section 521.

(b) Cooperative associations engaged in the purchasing of supplies and equipment for farmers, fruit growers, livestock growers, dairymen, etc., and turning over such supplies and equipment to them at actual cost, plus the necessary operating expenses, are exempt. The term *supplies and equipment* as used in section 521 includes groceries and all other goods and merchandise used by farmers in the operation and maintenance of a farm or farmer's household. The provisions of paragraph (a) of this section relating to a reserve or surplus and to capital stock shall apply to associations coming under this paragraph. An association which purchases supplies and equipment for nonmembers will not for such reason be denied exemption, provided the value of the purchases for nonmembers does not exceed the value of the supplies and equipment purchased for members, and provided the value of the purchases made for nonmembers who are not producers does not exceed 15 percent of the value of all its purchases.

(c) In order to be exempt under either paragraph (a) or (b) of this section an association must establish that it has no taxable income for its own account other than that reflected in a reserve or surplus authorized in paragraph (a) of this section. An association engaged both in marketing farm products and in purchasing supplies and equipment is exempt if as to each of its functions it meets the requirements of the Code. Business done for the United States or any of its agencies shall be disregarded in determining the right to exemption under section 521 and this section. An association to be entitled to exemption must not only be organized but actually operated in the manner and for the purposes specified in section 521.

(d) Cooperative organizations engaged in occupations dissimilar from those of farmers, fruit growers, and the like, are not exempt.

(e) An organization is not exempt from taxation under this section merely because it claims that it complies with the requirements prescribed therein. In order to establish its exemption every organization claiming exemption under section 521 is required to file a Form 1028. The Form 1028, executed in accordance with the instructions on the form or issued therewith, should be filed with the district director for the internal revenue district in which is located the principal place of business or principal office of the organization. However, an organization which has been granted exemption under the provisions of the Internal Revenue Code of 1939 or prior law may rely on that ruling, unless affected by substantive changes in the Internal Revenue Code of 1954 or any changes in the character, purposes, or methods of operation of the organization, and it is not necessary in such case for the organization to request a new determination as to its exempt status.

(f) A cooperative association will not be denied exemption merely because it makes payments solely in nonqualified written notices of allocation to those patrons who do not consent as provided in section 1388 and § 1.1388-1, but makes payments of 20 percent in cash and the remainder in qualified written notices of allocation to those patrons who do so consent. Nor will such an association be denied exemption merely because, in the case of patrons who have so consented, payments of less than $5 are made solely in nonqualified written notices of allocation while payments of $5 or more are made in the form of 20 percent in cash and the remainder in qualified written notices of allocation. In addition, a cooperative association will not be denied exemption if it pays a smaller amount of interest or dividends on nonqualified written notices of allocation held by persons who have not consented as provided in section 1388 and § 1.1388-1 (or on per-unit retain certificates issued to patrons who are not qualifying patrons with respect thereto within the meaning of § 1.61-5(d)(2)) than it pays on qualified written notices of allocation held by persons who have so consented (or on per-unit retain certificates issued to patrons who are qualifying patrons with respect thereto) provided that the amount of the interest or dividend reduction isreasonable in relation to the fact that the association receives no tax benefit with respect to such nonqualified written notices of allocation (or such certificates issued to nonqualifying patrons) until redeemed. However, such an association will be denied exemption if it otherwise treats patrons who have not consented (or are not qualifying patrons) differently from patrons who have consented (or are qualifying patrons), either with regard to the original payment or allocation or with regard to the redemption of written notices of allocation or per-unit retain certificates. For example, if such an association pays patronage dividends in the form of written notices of allocation accompanied by qualified checks, and provides that any patron who does not cash his check within a specified time will forfeit the portion of the patronage dividend represented by such check, then the cooperative association will be denied exemption under this section as it does not treat all patrons alike.

[T.D. 6500, 25 FR 11737, Nov. 26, 1960, as amended by T.D. 6643, 28 FR 3162, Apr. 2, 1963; T.D. 6855, 30 FR 13135, Oct. 15, 1965]

§ 1.522-1 Tax treatment of farmers' cooperative marketing and purchasing associations exempt under section 521.

(a) ***In general.***

(1) Section 522 is applicable to farmers', fruit growers', or like associations organized and operated on a cooperative basis in the manner prescribed in section 521. Although such an association is subject to both normal tax and surtax, as in the case of corporations generally, certain special rules for the computation of taxable income are provided in section 522(b) and § 1.522-2. For the purpose of any law which refers to organizations exempt from income taxes such an association shall, however, be considered as an organization exempt under section 501. Thus, the provisions of section 243, providing a credit for dividends received from a domestic corporation subject to taxation, are not applicable to dividends received from a cooperative association subject to section 522. The provisions of section 1501, relating to consolidated returns, are likewise not applicable.

(2) Rules governing the manner in which amounts allocated as patronage dividends, refunds, or rebates are to be taken into account in computing the taxable income of such an association are set forth in § 1.522-3. For the tax treatment, as to patrons, of amounts received during the taxable year as patronage dividends, rebates, or refunds, see section 61 and § 1.61-5.

(b) ***Meaning of terms.*** For purposes of §§ 1.522-1 to 1.522-3, inclusive, §§ 1.6044-1 and 1.61-5, the following terms shall have the meaning ascribed below:

(1) ***Cooperative association.*** The term *cooperative association* includes any corporation operating on a cooperative basis and allocating amounts to patrons on the basis of the business done with or for such patrons, except that the term does not include any cooperative or nonprofit corporation (including any cooperative or nonprofit corporation engaged in rural electrification) exempt from taxation under section 501(a) and described in section 501(c) (12) or (15) or any corporation subject to a tax imposed by subchapter L, chapter 1 of the Code (relating to insurance companies).

(2) ***Patron.*** The term *patron* includes any person with whom or for whom the cooperative association does business on a cooperative basis, whether a member or a nonmember of the cooperative association, and whether an individual, a trust, estate, partnership, company, corporation, or cooperative association.

(3) ***Allocation.*** The term *allocation* includes distributions made by a cooperative association to a patron in cash, merchandise, capital stock, revolving fund certificates, retain certificates, certificates of indebtedness, letters of advice, similar documents, or in any other manner whereby there is disclosed to a patron the dollar amount apportioned on the books of the association for the account of such patron. Thus, a mere credit to the account of a patron on the books of the cooperative association, without disclosure to the patron, is not an allocation.

(4) ***Patronage dividends, rebates, and refunds.*** The term *patronage dividend, rebate, or refund* includes any amount allocated by a cooperative association, to the account of a patron on the basis of the business done with or for such patron. The following are not patronage dividends, rebates, or refunds:

(i) Amounts distributed in redemption of capital stock, or in redemption or satisfaction of certificates of indebtedness, revolving fund certificates, retain certificates, letters of advice, or other similar documents;

(ii) Amounts allocated (whether in cash, merchandise, capital stock, revolving fund certificates, retain certificates, certificates of indebtedness, letters of advice, or in some other manner that discloses to each patron the amount of such dividend, refund, or rebate) by the association for products of members or other patrons to the extent such amounts are fixed without reference to the earnings of the cooperative association. For this purpose, the term *earnings* includes the excess of amounts retained (or assessed) by the association to cover expenses or other items over the amount of such expenses or other items.

(c) ***Examples.*** The application of paragraph (b) of this section may be illustrated by the following examples:

Example 1. Cooperative A, a marketing association operating on a pooling basis, receives the products of patron W on January 5, 1954. On the same day Cooperative A advances to W 45 cents per unit for the products so delivered and allocates to him a *retain certificate* having a face value calculated at the rate of 5 cents per unit. During the operatiion of the pool, and before substantially all the products in the pool are disposed of, Cooperative A advances to W an additional 40 cents per unit, the amount being determined by reference to the market price of the products sold and the anticipated price of the unsold products. At the close of the pool on November 10, 1954, Cooperative A determines the excess of its receipts over the sum of its expenses and its previous advances to patrons, and allocates to W an additional 3 cents per unit and shares of the capital stock of A having an aggregate of face value calculated at the rate of 2 cents per unit. The amount of patronage dividends, rebates, or refunds allocated to W during 1954 amount to 5 cents per unit, consisting of the aggregate of the following per-unit allocations: The amount of cash distribution (3 cents), and the face value of the capital stock of A (2 cents), which are fixed with reference to the earnings of A.

The amount of the two distributions in cash (85 cents) and the face amount of the *retain certificate* (5 cents), which are fixed without reference to the earnings of A, do not constitute patronage dividends, rebates, or refunds.

Example 2. Cooperative B, a marketing association operating on a pooling basis, receives the products of patron X on March 5, 1954. On the same day Cooperative B pays to X $1.00 per unit for such products, this amount being determined by reference to the market price of the product when received, and issues to him a participation certificate having no face value but which entitles X on the close of the pool to the proceeds derived from the sale of his products less the previous payment of $1.00 and the expenses and other charges attributable to such products. On March 5, 1957, Cooperative B, having sold the products in the pool, having deducted the previous payments for such products, and having determined the expenses and other charges of the pool, redeems the participation certificate of X in cash for 10 cents per unit. The allocation made to X during 1957, amounting to 10 cents per unit, is a patronage dividend, rebate, or refund. Neither the payment to X in 1954 of $1.00 nor the issuance to him of the participation certificate in that year constitutes a patronage dividend, rebate, or refund within the meaning of this section.

Example 3. Cooperative C, a purchasing association, obtains supplies for patron Y on May 1, 1954, and receives in return therefor $100. On February 1, 1955, Cooperative C, having determined the excess of its receipts over its costs and expenses, allocates to Y a cash distribution of $1.00 and a revolving fund certificate of a face amount of $1.00. The amount of patronage dividends, rebates, or refunds allocated to Y for 1955 is $2.00, the aggregate of the cash distribution of $1.00, and the face amount, $1.00, of the revolving fund certificate.

Example 4. Cooperative D, a service association, sells the products of members on a fee basis. It receives the products of patron Z under an agreement not to pool his products with those of other members, to sell his products, and to deliver to him the proceeds of the sale. Patron Z makes payments to Cooperative D during 1954 aggregating $75 for service rendered him by Cooperative D during that year. On May 15, 1955, Cooperative D, having determined the excess of its receipts over its costs and expenses, allocates to Z a cash distribution of $2.00. Such amount is a patronage dividend, rebate, or refund allocated by Cooperative D during 1955.

(d) ***Returns of exempt cooperative associations.*** For requirements of annual returns by exempt cooperative associations, see sections 6012 and 6072(d) and paragraph (f) of § 1.6012-2.

§ 1.522-2 Manner of taxation of cooperative associations subject to section 522.

(a) ***In general.*** Farmers', fruit growers', or like associations, organized and operated in compliance with the requirements of section 521 and § 1.521-1 shall be subject to the taxes imposed by section 11 or section 1201, except that there shall be allowed as deductions from gross income, in addition to the other deductions allowable under chapter 1 of the Code, certain special deductions provided in section 522(b)(1)(A) and paragraph (c) of this section, and section 522(b)(1)(B) and paragraph (d) of this section. Amounts allocated as patronage dividends, refunds, or rebates, whether in cash, merchandise, capital stock, revolving fund certificates, retain certificates, certificates of indebtedness, letters of advice, or in some other manner that discloses to each patron the dollar amount allocated, with respect to patronage for the taxable year or for preceding taxable years, shall be taken into account in the manner provided in section 522 and in § 1.522-3.

(b) ***Cooperative association exempt from tax before January 1, 1952.***

(1) For the purpose of determining the method of accounting under section 446 in the case of a cooperative association which was exempt from tax for taxable years beginning prior to January 1, 1952, the method of accounting, recognized under sections 41, 42, and 43 of the Internal Revenue Code of 1939 and the regulations prescribed thereunder and utilized in the return of such association for its last taxable year to which the Internal Revenue Code of 1939 was applicable, shall be deemed to constitute the method of accounting regularly employed by the cooperative association. Any change from this method may be made only if permission is obtained from the Commissioner to change to another recognized method in accordance with section 446 and the regulations thereunder.

(2) In any case where inventories are an income-producing factor, see sections 471 and 472 and the regulations thereunder. The elective method of inventorying goods provided in section 472 may be adopted by the cooperative association for any taxable year beginning after December 31, 1953, inaccordance with the requirements of section 472 and the regulations thereunder. However, in order to use such method for such a taxable year the cooperative association (unless it has used such method for a taxable year beginning after 1951 and before 1954 pursuant to an election exercised as provided in 26 CFR (1939) 39.22(d)-3 (Regulations 118) must exercise the election provided in section 472 and the regulations thereunder, even if it may have utilized such method for accounting purposes for taxable years beginning before January 1, 1952.

(3) The following rules shall be applicable in computing the net operating loss deduction provided in section 172: No net operating loss carryover shall be allowed from a taxable year beginning prior to January 1, 1952, for which the cooperative association was exempt from tax under section 101(12) of the Internal Revenue Code of 1939. In the case of a taxable year beginning prior to January 1, 1952, for which the association was not exempt under section 101(12) of the Internal Revenue Code of 1939 and of any taxable year beginning after December 31, 1951, the amount of the net operating loss carryback or carryover from such year shall not be reduced by reference to the income of any taxable year beginning prior to January 1, 1952, for which the association was exempt from tax under section 101(12) of the Internal Revenue Code of 1939. However, any taxable year beginning prior to January 1, 1952, for which the cooperative association was exempt under section 101(12) of the Internal Revenue Code of 1939 shall be taken into account in determining the period for which a net operating loss may be carried back or carried over, as the case may be.

(4) The adjustments to the cost or other basis provided in sections 1011 and 1016 and the regulations thereunder, are applicable for the entire period since the acquisition of the property. Thus, proper adjustment to basis must be made under section 1016 for depreciation, obsolescence, amortization, and depletion for all taxable years beginning prior to January 1, 1952, although the cooperative association was exempt from tax under section 521 or corresponding provisions of prior law for such years. However, no adjustment for percentage or discovery depletion is to be made for any year during which the association was exempt from tax. If a cooperative association has made a proper election in accordance with section 1020 and the regulations prescribed thereunder with respect to a taxable year beginning before 1952 in which the association was not exempt from tax, the adjustment to basis for depreciation for such years shall be limited in accordance with the provisions of section 1016(a)(2).

(5) In the case of tax exempt and partially taxable bonds purchased at a premium and subject to amortization under section 171, proper adjustment to basis must be made to reflect amortization with respect to such premium from the date of acquisition of the bond. (For principles governing the method of computation, see the example in paragraph (b) of § 1.1016-9, relating to mutual savings banks, building and loan associations, and cooperative banks.) The basis of a fully taxable bond

purchased at a premium shall be adjusted from the date of the election to amortize such premium in accordance with the provisions of section 171 except that no adjustment shall be allowable for such portion of the premium attributable to the period prior to the election.

(6) In the case of a mortgage acquired at a premium where the principal of such mortgage is payable in installments, adjustments to the basis for the premium must be made for all taxable years (whether or not the association was exempt from tax under section 521 during such years) in which installment payments are received. Such adjustments may be made on an individual mortgage basis or on a composite basis by reference to the average period of payments of the mortgage loans of such association. For the purpose of this adjustment, the term *premium* includes the excess of the acquisition value of the mortgage over its maturity value. The acquisition value of the mortgage is the cost including buying commissions, attorneys' fees or brokerage fees, but such value does not include amounts paid for accrued interest.

(c) ***Deduction for dividends paid.*** There is allowable as a deduction from the gross income of a cooperative association operated in compliance with the requirements of section 521 and § 1.521-1, amounts paid as dividends during the taxable year upon the capital stock of the cooperative association. For the purpose of the preceding sentence, the term *capital stock* includes common stock (whether voting or nonvoting), preferred stock, or any other form of capital represented by capital retain certificates, revolving fund certificates, letters of advice, or other evidence of a proprietary interest in a cooperative association. Such deduction is applicable only to the taxable year in which the dividends are actually or constructively paid to the holder of capital stock or other proprietary interest of the cooperative association. If a dividend is paid by check and the check bearing a date within the taxable year is deposited in the mail, in a cover properly stamped and addressed tothe shareholder at his last known address, at such time that in the ordinary handling of the mails the check would be received by such holder within the taxable year, a presumption arises that the dividend was paid to such holder in such year. The determination of whether a dividend has been paid to such holder by the corporation during its taxable year is in no way dependent upon the method of accounting regularly employed by the corporation in keeping its books. For further rules as to the determination of the right to a deduction for dividends paid, under certain specific circumstances, see section 561 and the regulations thereunder.

(d) ***Deduction for amounts allocated from income not derived from patronage.*** There is allowable as a deduction from the gross income of a cooperative association operated in compliance with the requirements of section 521 and § 1.521-1 amounts allocated during the taxable year to patrons with respect to its income not derived from patronage (whether or not such income was derived during such taxable year) whether such amounts are paid in cash, merchandise, capital stock, revolving fund certificates, retain certificates, certificates of indebtedness, letters of advice, or in some other manner that discloses to each patron the dollar amount allocated to him. For this purpose, allocations made after the close of the taxable year and on or before the 15th day of the ninth month following the close of the taxable year shall be considered as made on the last day of such taxable year to the extent that such allocations are attributable toincome derived during the taxable year or during years prior to the taxable year. As used in this paragraph, the term *income not derived from patronage* means incidental income derived from sources not directly related to the marketing, purchasing, or service activities of the cooperative association. For example, income derived from the lease of premises, from investment in securities, from the sale or exchange of capital assets, constitutes income not derived from patronage. Business done with the United States shall constitute income not derived from patronage. In order that the deduction for income not derived from patronage may be applicable, it is necessary that the amount sought to be deducted be allocated on a patronage basis in proportion, insofar as is practicable, to the amount of business done by or for patrons during the period to which such income is attributable. Thus, if

capital gains are realized from the sale or exchange of capital assets acquired and disposed of during the taxable year, income realized from such gains must be allocated to patrons of such year in proportion to theamount of business done by such patrons during the taxable year. Similarly, if capital gains are realized by the association from the sale or exchange of capital assets held for a period of more than one taxable year income realized from such gains must be allocated, in proportion insofar as is practicable, to the patrons of the taxable years during which the asset was owned by the association, and to the amount of business done by such patrons during such taxable years.

§ 1.522-3 Patronage dividends, rebates, or refunds; treatment as to cooperative associations entitled to tax treatment under section 522.

(a) ***General rule.*** Patronage dividends, refunds, or rebates, allocated by a cooperative association entitled to tax treatment under section 522 to a patron shall be taken into account in computing the gross income of such association for the taxable year, as an increase in its other cost of goods sold in the case of an association marketing products for patrons, or as a reduction in its gross receipts, in the case of an association purchasing supplies and equipment or performing services for patrons, as the case may be, if:

(1) The allocation is made in fulfillment and satisfaction of a valid obligation of such association to the patron, which obligation was in existence prior to the receipt by the cooperative association of the amount allocated, and

(2) The allocation is made on or before the 15th day of the ninth month following the close of the taxable year in which the amounts allocated were received by the cooperative association

For the purpose of subparagraph (1) of this paragraph, amounts allocated by a cooperative association entitled to tax treatment under section 522 will be deemed allocated in fulfillment and satisfaction of a valid enforceable obligation, if made pursuant to provisions of the bylaws, articles of incorporation, or other contract, whereby the association is obligated to make such allocation after the retention of *reasonable reserves* and after payment of dividends on capital stock or other proprietary capital interests. Notwithstanding the provisions of subparagraphs (1) and (2) of this paragraph, amounts allocated as patronage dividends, refunds, or rebates during the taxable year, on or before the 15th day of the ninth month following the close of such year, with respect to patronage for years preceding the taxable year, shall be taken into account as an increase in its other cost of goods sold, or as a reduction in gross receipts, for the taxable year, as the case may be, where retention as *reasonable reserves* of the amounts so allocated beyond the year in which earned was proper in accordance with the provisions of section 521 and where the allocation is made to the patron on a patronage basis is proportion insofar as is practicable, to the amount of business done by such patrons during the taxable year or years in which the retained amounts were received by the cooperative association.

(b) ***Examples.*** This section may be illustrated by the following examples:

Example 1. E, a cooperative association entitled to tax treatment under section 522, organized without capital stock, is engaged in the business of marketing products for its patrons on a non-pool basis. The by-laws of Cooperative E provide that there shall be allocated to patrons as patronage dividends within a reasonable time following the close of the year all of the gross returns from sales, less expenses of operation for the year and amounts retained as *reasonable reserves* necessary to the operation of Cooperative E. At the close of the taxable year, 1954, it is determined that from the gross returns from sales less operating expenses and all taxes for such year, $5,000 is to be retained as *reasonable reserves* for various necessary purposes of Cooperative E. It is assumed that the retention of such amount is proper in accordance with the provisions of section 521. Such $5,000 is

apportioned on the books of Cooperative E to patrons of 1954 on a patronage basis, or permanent records are kept from which an apportionment to such patrons can be made. On March 1, 1955, pursuant tothe terms of the by-laws, $200,000, the balance of the gross returns for the taxable year, is allocated to patrons of 1954 on the basis of patronage. $100,000 of such $200,000 is allocated in cash. The remaining $100,000 is allocated in *retain certificates,* bearing no interest and redeemable in the discretion of the Board of Directors of Cooperative E. There may be added to the cost of goods sold by Cooperative E for 1954, $200,000 ($100,000 in cash, $100,000 in retain certificates), the total amount allocated as patronage dividends, rebates, or refunds in fulfillment and satisfaction of the obligation of the by-laws, on March 1, 1955, before the 15th day of the ninth month following the close of 1954. There may not be added to the cost of goods sold by Cooperative E for 1954, $5,000, the amount retained as reserves apportioned on the books, but not allocated as patronage dividends, rebates, or refunds.

Example 2. The facts are the same as example 1, it additionally appearing that at the close of 1955 it is determined by Cooperative E to allocate as cash patronage dividends, rebates, or refunds to patrons of 1954, $5,000, the amount retained as *reasonable reserves* for 1954 in accordance with the provisions of section 521. On March 1, 1956, such amount is allocated. There may be added to the cost of goods sold by Cooperative E for 1955, $5,000, the amount allocated with respect to patronage of a preceding year, 1954, properly maintained as a reserve under section 521.

§ 1.522-4 Taxable years affected.

Section 522 and §§ 1.522-1, 1.522-2, and 1.522-3, are applicable to taxable years beginning before January 1, 1963, and also to amounts paid during taxable years beginning after December 31, 1962, the tax treatment of which is not prescribed in section 1382 and the regulations thereunder.

[T.D. 6643, 28 FR 3163, Apr. 2, 1963]

§ 1.527-1 Political organizations; generally.

Section 527 provides that a political organization is considered an organization exempt from income taxes for the purpose of any law which refers to organizations exempt from income taxes. A political organization is subject to tax only to the extent provided in section 527. In general, a political organization is an organization that is organized and operated primarily for an exempt function as defined in § 1.527-2(c). Section 527 provides that a political organization is taxed on its political organization taxable income (see § 1.527-4) which, in general, does not include the exempt function income (see § 1.527-3) of the political organization. Furthermore, section 527 provides that an exempt organization, other than a political organization, may be subject to tax under section 527 when it expends an amount for an exempt function, see § 1.527-6. The taxation of newsletter funds is provided under section 527(g) and § 1.527-7. A special rule for principal campaign committees is provided under section 527(h) and § 1.527-9.

[T.D. 8041, 50 FR 30817, July 30, 1985]

§ 1.527-2 Definitions.

For purposes of section 527 and these regulations:

(a) ***Political organization*** —

(1) ***In general.*** A *political organization* is a party, committee, association, fund, or other organization (whether or not incorporated) organized and operated primarily for the purpose of directly or indirectly accepting contributions or making expenditures for an exempt function activity (as defined in paragraph (c) of this section). Accordingly, a political organization may include a committee or other group which accepts contributions or makes expenditures for the purpose of promoting the nomination of an individual for an elective public office in a primary election, or in a meeting or caucus of a political party. A segregated fund (as defined in paragraph (b) of this section) established and maintained by an individual may qualify as a political organization.

(2) ***Organizational test.*** A political organization meets the organizational test if its articles of organization provide that the primary purpose of the organization is to carry on one or more exempt functions. A political organization is not required to be formally chartered or established as a corporation, trust, or association. If an organization has no formal articles of organization, consideration is given to statements of the members of the organization at the time the organization is formed that they intend to operate the organization primarily to carry on one or more exempt functions.

(3) ***Operational test.*** A political organization does not have to engage exclusively in activities that are an exempt function. For example, a political organization may:

(i) Sponsor nonpartisan educational workshops which are not intended to influence or attempt to influence the selection, nomination, election, or appointment of any individual for public office,

(ii) Pay an incumbent's office expenses, or

(iii) Carry on social activities which are unrelated to its exempt function,

provided these are not the organization's primary activities. However, expenditures for purposes described in the preceding sentence are not for an exempt function. See § 1.527-2 (c) and (d). Furthermore, it is not necessary that a political organization operate in accordance with normal corporate formalities as ordinarily established in bylaws or under state law.

(b) ***Segregated fund*** —

(1) ***General rule.*** A *segregated fund* is a fund which is established and maintained by a political organization or an individual separate from the assets of the organization or the personal assets of the individual. The purpose of such a fund must be to receive and segregate exempt function income (and earnings on such income) for use only for an exempt function or for an activity necessary to fulfill an exempt function. Accordingly, the amounts in the fund must be dedicated for use only for an exempt function. Thus, expenditures for the establishment or administration of a political organization or the solicitation of political contributions may be made from the segregated fund, if necessary to fulfill an exempt function. The fund must be clearly identified and established for the pruposes intended. A savings or checking account into which only contributions to the political organization are placed and from which only expenditures for exempt functions are made may be a segregated fund. If an organization that had designated a fund to be a segregated fund for purposes of segregating amounts referred to in section 527(c)(3) (A) through (D), expends more than an insubstantial amount from the segregated fund for activities that are not for an exempt function during a taxable year, the fund will not be treated as a segregated fund for such year. In such a case amounts referred to in section 527(c)(3)(A)-(D),segregated in such fund will not be exempt function income. Further, if more than insubstantial amounts segregated for an exempt function in prior years are expended for other than an exempt function the facts and circumstances may indicate that the fund was never a segregated fund as defined in this paragraph.

(2) ***Record keeping.*** The organization or individual maintaining a segregated fund must keep records that are adequate to verify receipts and disbursements of the fund and identify the exempt function activity for which each expenditure is made.

(c) ***Exempt function*** —

(1) ***Directly related expenses.*** An *exempt function,* as defined in section 527(e)(2), includes all activities that are directly related to and support the process of influencing or attempting to influence the selection, nomination, election, or appointment of any individual to public office or office in a political organization (the selection process). Whether an expenditure is for an exempt function depends upon all the facts and circumstances. Generally, where an organization supports an individual's campaign for public office, the organization's activities and expenditures in futherance of the individual's election or appointment to that office are for an exempt function of the organization. The individual does not have to be an announced candidate for the office. Furthermore, the fact that an individual never becomes a candidate is not crucial in determining whether an organization is engaging in an exempt function. An activity engaged in between elections which is directly related to, and supports, the process of selection, nomination, or election of an individual in the next applicable political campaign is an exempt function activity.

(2) ***Indirect expenses.*** Expenditures that are not directly related to influencing or attempting to influence the selection process may also be an expenditure for an exempt function by a political organization. These are expenses which are necessary to support the directly related activities of the political organization. Activities which support the directly related activities are those which must be engaged in to allow the political organization to carry out the activity of influencing or attempting to influence the selection process. For example, expenses for overhead and record keeping are necessary to allow the political organization to be established and to engage in political activities. Similarly, expenses incurred in soliciting contributions to the political organization are necessary to support the activities of the political organization.

(3) ***Terminating activities.*** An exempt function includes an activity which is in furtherance of the process of terminating a political organization's existence. For example, where a political organization is established for a single campaign, payment of campaign debts after the conclusion of the campaign is an exempt function activity.

(4) ***Illegal expenditures.*** Expenditures which are illegal or are for a judicially determined illegal activity are not considered expenditures in furtherance of an exempt function, even though such expenditures are made in connection with the selection process.

(5) ***Examples.*** The following examples illustrate the principles of paragraph (c) of this section. The term *exempt function* when used in the following examples means exempt function within the meaning of section 527(e)(2).

(i) ***Example 1.*** A wants to run for election to public office in State X. A is not a candidate. A travels throughout X in order to rally support for A's intended candidacy. While in X, A attends a convention of an organization for the purpose of attempting to solicit its support. The amount expended for travel, lodging, food, and similar expenses are for an exempt function.

(ii) ***Example 2.*** B, a member of the United States House of Representatives, is a candidate for reelection. B travels with B's spouse to the district B represents. B feels it is important for B's reelection that B's spouse accompany B. While in the district, B makes speeches and appearances for the purpose of persuading voters to reelect B. The travel expenses of B and B's spouse are for an exempt function.

(iii) ***Example 3.*** C is a candidate for public office. In connection with C's campaign, C takes voice and speech lessons to improve C's skills. The expenses for these lessons are for an exempt function.

(iv) ***Example 4.*** D, an officeholder and candidate for reelection, purchases tickets to a testimonial dinner. D's attendance at the dinner is intended to aid D's reelection. Such expenditures are for an exempt function.

(v) ***Example 5.*** E, an officeholder, expends amounts for periodicals of general circulation in order to keep informed on national and local issues. Such expenditures are not for an exempt function.

(vi) ***Example 6.*** N is an organization described in section 501(c) and is exempt from taxation under section 501(a). F is employed as president of N. F, as a representative of N, testifies in response to a written request from a Congressional committee in support of the confirmation of an individual to a cabinet position. The expenditures by N that are directly related to F's testimony are not for an exempt function.

(vii) ***Example 7.*** P is a political organization described in section 527(e)(2). Between elections P does not support any particular individual for public office. However, P does train staff members for the next election, drafts party rules, implements party reform proposals, and sponsors a party convention. The expenditures for these activities are for an exempt function.

(viii) ***Example 8.*** Q is a political organization described in section 527(e)(2). Q finances seminars and conferences which are intended to influence persons who attend to support individuals to public office whose political philosophy is in harmony with the political philosophy of Q. The expenditures for these activities are for an exempt function.

(d) ***Public office.*** The facts and circumstances of each case will determine whether a particular Federal, State, or local office is a *public office.* Principles consistent with those found under § 53.4946-1(g)(2) (relating to the definition of public office) will be applied.

(e) ***Principal campaign committee.*** A *principal campaign committee* is the political committee designated by a candidate for Congress as his or her principal campaign committee for purposes of section 302(e) of the Federal Election Campaign Act of 1971 (2 U.S.C. section 432(e)), as amended, and section 527(h) and § 1.527-9.

[T.D. 7744, 45 FR 85731, Dec. 30, 1980, as amended by T.D. 8041, 50 FR 30817, July 30, 1985]

§ 1.527-3 Exempt function income.

(a) ***General rule.***

(1) For purposes of section 527, exempt function income consists solely of amounts received as:

(i) Contributions of money or other property,

(ii) Membership dues, fees, or assessments from a member of a political organization, or

(iii) Proceeds from a political fund raising or entertainment event, or proceeds from the sale of political campaign materials, which are not received in the ordinary course of any trade or business,

but only to the extent such income is segregated for use only for exempt functions of the political organization.

(2) Income will be considered segregated for use only for an exempt function only if it is received into and disbursed from a segregated fund as defined in § 1.527-2(b).

(b) ***Contributions.*** The rules of section 271(b)(2) apply in determining whether the transfer of money or other property constitutes a contribution. Generally, money or other property, whether solicited personally, by mail, or through advertising, qualifies as a contribution. In addition, to the extent a political organization receives Federal, State, or local funds under the $1 *checkoff* provision (sections 9001-9013), or any other provision for financing of campaigns, such amounts are to be treated as contributions.

(c) ***Dues, fees, and assessments.*** Amounts received as membership fees and assessments from members of a political organization may constitute exempt function income to the political organization. Membership fees and assessments received in consideration for services, goods, or other items of value do not constitute exempt function income. However, filing fees paid by an individual directly or indirectly to a political party in order that the individual may run as a candidate in a primary election of the party (or run in a general election as a candidate of that party) are to be treated as exempt function income. For example, some States provide that a certain percentage of the first year's salary of the office sought must be paid to the State as a filing (or *qualifying*) fee and party assessment. The State then transfers part of this fee to the candidate's party. In such a case, the entire amount transferred to the party is to be treated as exempt function income. Furthermore, amounts paid by an individual directly to the party as a qualification fee are treated similarly.

(d) ***Fund raising events*** —

(1) ***In general.*** Amounts received from fund raising and entertainment events are eligible for treatment as exempt function income if the events are political in nature and are not carried on in the ordinary course of a trade or business. Whether an event is *political* in nature depends on all facts and circumstances. One factor that indicates an event is a political event is the extent to which the event is related to a political activity aside from the need of the organization for income or funds. For example, an event that is intended to rally and encourage support for an individual for public office would be a political fund raising event. Examples of political events can include dinners, breakfasts, receptions, picnics, dances, and athletic exhibitions.

(2) ***Ordinary course of any trade or business.*** Whether an activity is in the ordinary course of a trade or business depends on the facts and circumstances of each case. Generally, proceeds from casual, sporadic fund raising or entertainment events are not in the ordinary course of a trade or business. Factors to be taken into account in determining whether an activity is a trade or business include the frequency of the activity, the manner in which the activity is conducted, and the span of time over which the activity is carried on.

(e) ***Sale of campaign materials.*** Amounts received from the sale of campaign materials are eligible for treatment as exempt function income if the sale is not carried on in the ordinary course of a trade or business (as defined in paragraph (d)(2) of this section), and is related to a political activity of the organization aside from the need of such organization for income or funds. Proceeds from the sale of political memorabilia, bumper stickers, campaign buttons, hats, shirts, political posters, stationery, jewelry, or cookbooks are related to such a political acitivity where such items can be identified as relating to distributing political literature or organizing voters to vote for a candidate for public office.

[T.D. 7744, 45 FR 85732, Dec. 30, 1980]

§ 1.527-4 Special rules for computation of political organization taxable income.

(a) ***In general.*** Political organization taxable income is determined according to the provisions of section 527(b) and the rules set forth in this section.

(b) ***Limitation on capital losses.*** If for any taxable year a political organization has a net capital loss, the rules of sections 1211(a) and 1212(a) apply.

(c) ***Allowable deductions*** —

(1) ***In general.*** To be deductible in computing political organization taxable income, expenses, depreciation, and similar items must not only qualify as deductions allowed by chapter 1 of the Code, but must also be directly connected with the production of political organization taxable income.

(2) ***Directly connected with defined.*** To be *directly connected with* the production of political organization taxable income, an item of deduction must have a proximate and primary relationship to the production of such income and have been incurred in the production of such income. Items of deduction attributable solely to items of political organization taxable income are proximately and primarily related to such income. Whether an item of deduction is incurred in the production of political organization taxable income is determined on the basis of all the facts and circumstances of each case.

(3) ***Dual use of facilities or personnel.*** Expenses, depreciation, and similar items that are attributable to the production of exempt function income and political organization taxable income shall be allocated between the two on a reasonable and consistent basis. For example, where facilities are used both for an exempt function of the organization and for the production of political organization taxable income, expenses, depreciation, and similar items attributable to such facilities (for example, items of overhead) shall be allocated between the two uses of a reasonable and consistent basis. Similarly, where personnel are employed both for an exempt function and for the production of political organization taxable income, expenses and similar items attributable to such personnel (for example, items of salary) shall be allocated between the activities on a reasonable and consistent basis. The portion of any such item so allocated to the production of political organization taxable income is directly connected with such income and is allowable as a deduction in computing political organization taxable income to the extent that it qualifies as an item of deduction allowed by chapter 1 of the Code. Thus, for example, assume that X, a political organization, pays its manager a salary of $10,000 a year and that it derives political organization taxable income. If 10 percent of the manager's time during the year is devoted to deriving X's gross income (other than exempt function income), a deduction of $1,000 (10 percent of $10,000) would generally be allowable for purposes of computing X's political organization taxable income.

[T.D. 7744, 45 FR 85733, Dec. 30, 1980]

§ 1.527-5 Activities resulting in gross income to an individual or political organization.

(a) ***In general*** —

(1) ***General rule.*** Amounts expended by a political organization for an exempt function are not income to the individual or individuals on whose behalf such expenditures are made. However, where a political organization expends any other amount for the personal use of any individual, the individual on whose behalf the amount is expended will be in receipt of income. Amounts are expended for the

personal use of an individual where a direct or indirect financial benefit accrues to such individual. For example, if a political organization pays a personal legal obligation of a candidate for public office, such as the candidate's federal income tax liability, the amount paid is includible in such candidate's gross income. Similarly, if a political organization expends anyamount of its exempt function income for other than an exempt function, and the expenditure results in a direct or indirect financial benefit to the political organization, it must include the amount of such expenditure in its gross income. For example, if a political organization expends exempt function income for making an improvement or addition to its facilities, or for equipment, which is not necessary for or used in carrying out an exempt function, the amount of the expenditure will be included in the political organization's gross income. However, if a political organization expends exempt function income to make ordinary and necessary repairs on the facilities the political organization uses in conducting its exempt function, such amounts will not be included in the political organization's gross income.

(2) ***Expenditure for an illegal activity.*** Expenditures by a political organization that are illegal or for an activity that is judicially determined to be illegal are treated as amounts not segregated for use only for the exempt function and shall be included in the political organization's taxable income. However, expenses incurred in defense of civil or criminal suits against the organization are not treated as taxable to the organization. Similarly, voluntary reimbursement to the participants in the illegal activity for similar expenses incurred by them are not taxable to the organization if the organization can demonstrate that such payments do not constitute a part of the inducement to engage in the illegal activity or part of the agreed upon compensation therefor. However, if the organization entered into an agreement with the participants to defray such expenses as part of the inducement, such payments would be treated as an expenditure for an illegal activity. Except where necessary to prevent the period of limitation for assessment and collection of a tax from expiring, a notice of deficiency will not generally be issued until after there has been a final determination of illegality by an appropriate court in a criminal proceeding.

(b) ***Certain uses not treated as income to a candidate.*** Except as otherwise provided in paragraph (a) of this section, if a political organization:

(1) Contributes any amount to or for the use of any political organization described in section 527(e)(1) or newsletter fund described in section 527(g),

(2) Contributes any amount to or for the use of any organization described in paragraph (1) and (2) of section 509(a) which is exempt from taxation under section 501(a), or

(3) Deposits any amount in the general fund of the U.S. Treasury or in the general fund of any State or local government,

such amount shall not be treated as an amount expended for the personal use of a candidate or other person. No deduction shall be allowed under the Internal Revenue Code of 1954 for the contribution or deposit described in the preceding sentence.

(c) ***Excess funds —***

(1) ***General rule.*** Generally, funds controlled by a political organization or other person after a campaign or election are excess funds and are treated as expended for the personal use of the person having control over the ultimate use of such funds. However, such funds will not be treated as excess funds to the extent they are:

(i) Transferred within a reasonable period of time by the person controlling the funds in accordance with paragraph (b) of this section, or

(ii) Held in reasonable anticipation of being used by the political organization for future exempt functions.

(2) ***Excess funds transferred at death.*** Where excess funds are held by an individual who dies, and these funds go to the individual's estate or any other person (other than an organization or fund described in paragraph (b) of this section), the funds are income of the decedent and will be included in the decedent's gross estate unless the estate or other person receiving such funds transfers the funds within a reasonable period of time in accordance with paragraph (b) of this section.

This paragraph (c)(2) will not apply where the individual who dies provides that the funds be transferred to an organization or fund described in paragraph (b) of this section.

[T.D. 7744, 45 FR 85733, Dec. 30, 1980]

§ 1.527-6 Inclusion of certain amounts in the gross income of an exempt organization which is not a political organization.

(a) ***Exempt organizations—General rule.*** If an organization described in section 501(c) which is exempt from tax under section 501(a) expends any amount for an exempt function, it may be subject to tax. There is included in the gross income of such organization for the taxable year an amount equal to the lesser of:

(1) The net investment income of such organization for the taxable year, or

(2) The aggregate amount expended during the taxable year for an exempt function.

The amount included will be treated as political organization taxable income.

(b) ***Exempt function expenditures*** —

(1) ***Directly related expenses.***

(i) Except as provided in this section, the term *exempt function* will generally have the same meaning it has in § 1.527-2(c). Thus, expenditures which are directly related to the selection process as defined in § 1.527-2(c)(1) are expenditures for an exempt function. Expenditures for indirect expenses as defined in § 1.527-2(c)(2), when made by a section 501(c) organization are for an exempt function only to the extent provided in paragraph (b)(2) of this section. Expenditures of a section 501 (c) organization which are otherwise allowable under the Federal Election Campaign Act or similar State statute are for an exempt function only to the extent provided in paragraph (b)(3) of this section.

(ii) An expenditure may be made for an exempt function directly or through another organization. A section 501(c) organization will not be absolutely liable under section 527(f)(1) for amounts transferred to an individual or organization. A section 501(c) organization is, however, required to take reasonable steps to ensure that the transferee does not use such amounts for an exempt function.

(2) ***Indirect expenses.*** [Reserved]

(3) ***Expenditures allowed by Federal Election Campaign Act.*** [Reserved]

(4) ***Appointments or confirmations.*** Where an organization described in paragraph (a) of this section appears before any legislative body in response to a written request by such body for the purpose of influencing the appointment or confirmation of an individual to a public office, any expenditure directly related to such appearance is not treated as an expenditure for an exempt function.

(5) ***Nonpartisan activity.*** Expenditures for nonpartisan activities by an organization to which paragraph (a) of this section applies are not expenditures for an exempt function. Nonpartisan activities include voter registration and *get-out-the-vote* campaigns. To be nonpartisan voter registration and *get-out-the-vote* campaigns must not be specifically identified by the organization with any candidate or political party.

(c) ***Character of items included in gross income*** —

(1) ***General rule.*** The items of income included in the gross income of an organization under paragraph (a) of this section retain their character as ordinary income or capital gain.

(2) ***Special rule in determining character of item.*** If the amount included in gross income is determined under paragraph (a)(2)(ii) of this section, the character of the items of income is determined by multiplying the total amount included in gross income under such paragraph by a fraction, the numerator of which is the portion of the organization's net investment income that is gain from the sale or exchange of a capital asset, and the denominator of which is the organization's net investment income. For example, if $5,000 is included in the gross income of an organization under paragraph (a)(2) of this section, and the organization had $100,000 of net investment income of which $10,000 is long term capital gain, then $500 would be treated as long term capital gain:

$$\frac{\text{Capital gain}}{\text{net investment income}} \times \begin{array}{c}\text{Amount expended}\\ \text{on an exempt function}\end{array} = \begin{array}{c}\text{Portion of income}\\ \text{subject to tax under SS}\\ \text{section 1201}\end{array}$$

$$\frac{\$10{,}000}{\$100{,}000} \times \$5{,}000 = \$500$$

(d) ***Modifications.*** The modifications described in section 527(c)(2) apply in computing the tax under paragraph (a)(2) of this section. Thus, no net operating loss is allowed under section 172 nor is any deduction allowed under part VIII of subchapter B. However, there is allowed a specific deduction of $100.

(e) ***Transfer not treated as exempt function expenditures.*** Provided the provisions of this paragraph (e) are met, a transfer of political contributions or dues collected by a section 501(c) organization to a separate segregated fund as defined in paragraph (f) of this section is not treated as an expenditure for an exempt function (within the meaning of § 1.527-2(c)). Such transfers must be made promptly after the receipt of such amounts by the section 501(c) organization, and must be made directly to the separate segregated fund. A transfer is considered promptly and directly made if:

(1) The procedures followed by the section 501(c) organization satisfy the requirements of applicable Federal or State campaign law and regulations;

(2) The section 501(c) organization maintains adequate records to demonstrate that amounts transferred in fact consist of political contributions or dues, rather than investment income; and

(3) The political contributions or dues transferred were not used to earn investment income for the section 501(c) organization.

(f) ***Separate segregated fund.*** An organization or fund described in section 527(f)(3) is a separate segregated fund. To avoid the application of paragraph (a) of this section, an organization described in section 501(c) that is exempt from taxation under section 501(a) may, if it is consistent with its exempt status, establish and maintain such a separate segregated fund to receive contributions and make expenditures in a

political campaign. If such a fund meets the requirements of § 1.527-2(a) (relating to the definition of a political organization), it shall be treated as a political organization subject to the provisions of section 527. A segregated fund established under the Federal Election Campaign Act will continue to be treated as a segregated fund when it engages in exempt function activities as defined in § 1.527-2(c), relating to State campaigns.

(g) ***Effect of expenditures on exempt status.*** Section 527(f) and this section do not sanction the intervention in any political campaign by an organization described in section 501(c) if such activity is inconsistent with its exempt status under section 501(c). For example, an organization described in section 501(c)(3) is precluded from engaging in any political campaign activities. The fact that section 527 imposes a tax on the exempt function (as defined in § 1.527-2(c)) expenditures of section 501(c) organizations and permits such organizations to establish separate segregated funds to engage in campaign activities does not sanction the participation in these activities by section 501(c)(3) organizations.

[T.D. 7744, 45 FR 85734, Dec. 30, 1980]

§ 1.527-7 Newsletter funds.

(a) ***In general.*** For purposes of this section, a fund established and maintained by an individual who holds, has been elected to, or is a candidate (within the meaning of section 41(c)(2)) for nomination or election to, any Federal, State, or local elective public office for the use by such individual exclusively for an exempt function, as defined in paragraph (c) of this section, shall be a newsletter fund. If assets of a newsletter fund are used for any purpose other than the exempt function of the newsletter fund as defined in paragraph (c) of this section, such amount shall be treated as expended for the personal use of the individual who established and maintained such fund. In addition, future contributions to such fund are treated as income to the individual who established and maintained the fund. In such a case, the facts and circumstances may indicate that the fund was never established and maintained exclusively for an exempt function as defined in paragraph (c) of this section.

(b) ***Determination of taxable income.*** A newsletter fund shall be treated as if it were a political organization for purposes of determining its taxable income. However, the specific $100 deduction provided by section 527(c)(2)(A) shall not be allowed.

(c) ***Exempt function.*** For purposes of this section, the exempt function of a newsletter fund consists solely of the preparation and circulation of the newsletter. Among the expenditures treated as preparation and circulation expenditures of the newsletter are:

(1) Secretarial services,

(2) Printing,

(3) Addressing, and

(4) Mailing.

(d) ***Nonexempt function purposes.*** Newsletter fund assets may not be used for campaign activities. Therefore, an exempt function of a newsletter fund does not include:

(1) Expenditures for an exempt function as defined in § 1.527-2(c) or

(2) Transfers of unexpended amounts to a political organization described in section 527(e)(1).

(e) ***Excess funds.*** Excess funds held by a newsletter fund which has ceased to engage in the preparation and circulation of the newsletter are treated as expended for the personal use of the individual who established and maintained such fund. However, to the extent such excess funds are within a reasonable period of time:

(1) Contributed to or for the use of any organization described in paragraph (1) or (2) of section 509(a) which is exempt from taxation under section 501(a),

(2) Deposited in the general fund of the U.S. Treasury or in the general fund of any State or local government (including the District of Columbia), or

(3) Contributed to any other newsletter fund as described in paragraph (a) of this section,

the excess funds are not treated as expended for the personal use of such individual. In such a case the individual is not allowed a deduction under the Internal Revenue Code of 1954 for such contribution or deposit.

[T.D. 7744, 45 FR 85735, Dec. 30, 1980]

§ 1.527-8 Effective date; filing requirements; and miscellaneous provisions.

(a) ***Assessment and collections.*** Since the taxes imposed by section 527 are taxes imposed by subtitle A of the Code, all provisions of law and of the regulations applicable to the taxes imposed by subtitle A are applicable to the assessment and collection of the taxes imposed by section 527. Organizations subject to the tax imposed by section 527 are subject to the same provisions, including penalties, as are provided for corporations, in general, except that the requirements of section 6154 concerning the payment of estimated tax do not apply. See, generally, sections 6151, et. seq., and the regulations prescribed thereunder, for provisions relating to payment of tax.

(b) ***Returns.*** For requirements of filing annual returns with respect to political organization taxable income, see section 6012 (a) (6) and the applicable regulations.

(c) ***Taxable years, method of accounting, etc.*** The taxable year (fiscal year or calendar year, as the case may be) of a political organization is determined without regard to the fact that such organization may have been exempt from tax during any prior period. See sections 441 and 446, and the regulations thereunder in this part, and section 7701 and the regulations in Part 301 of this chapter (Regulations on Procedure and Administration). Similarly, in computing political organization taxable income, the determination of the taxable year for which an item of income or expense is taken into account is made under the provisions of sections 441, 446, 451, 461, and the regulations thereunder, whether or not the item arose during a taxable year beginning before, on, or after the effective date of the provisions imposing a tax upon political organization taxable income. If a method for treating bad debts was selected in a return of income (other than an information return) for a previous taxable year, the taxpayer must follow such method in its returns under section 527, unless such method is changed inaccordance with the provisions of § 1.166-1. A taxpayer who has not previously selected a method for treating bad debts may, in its first return under section 6012 (a) (6), exercise the option granted in § 1.166-1.

(d) ***Effective date.*** Except as provided in paragraph (b)(2) of § 1.527-6 and in paragraph (a) of § 1.527-9, the regulations under section 527 apply to taxable years beginning after December 31, 1974.

[T.D. 7744, 45 FR 85735, Dec. 30, 1980, as amended by T.D. 8041, 50 FR 30817, July 30, 1985]

§ 1.527-9 Special rule for principal campaign committees.

(a) ***In general.*** Effective with respect to taxable years beginning after December 31, 1981, the tax imposed by section 527(b) on the political organization taxable income of a principal campaign committee shall be computed by multiplying the political organization taxable income by the appropriate rates of tax specified in section 11(b). The political organization taxable income of a campaign committee not a principal campaign committee is taxed at the highest rate of tax specified in section 11(b). A candidate for Congress may designate one political committee to serve as his or her principal campaign committee for purposes of section 527(h)(1). If a designation is made, it shall be made in accordance with the requirements of paragraph (b) of this section. A candidate for Congress may have only one designation in effect at any time. Under 11 CFR 102.12, no political committee may be designated as the principal campaign committee of more than one candidate for Congress. Further, no political committee that supports or has supported more than one candidate for Congress may be designated as a principal campaign committee. No designation need be made where there is only one political campaign committee with respect to a candidate.

(b) ***Manner of designation.*** If a candidate for Congress elects to make a designation under section 527(h) and this section, he or she shall designate his or her principal campaign committee by appending a copy of his or her Statement of Candidacy (that is, the Federal Election Commission Form 2, or equivalent statement that the candidate filed with the Federal Election Commission under 11 CFR 101.1(a)), to the Form 1120-POL filed by the principal campaign committee for each taxable year for which the designation is effective. This designation may also be made by appending to the Form 1120-POL statement containing the following information: The name and address of the candidate for Congress; his or her taxpayer identification number; his or her party affiliation and the office sought; the district and State in which the office is sought; and the name and address of the principal campaign committee. This designation shall be made on or before the due date (as extended) for filing Form 1120-POL. Only a candidate for Congress may make a designation in accordance with this paragraph.

(c) ***Manner of revoking designation.*** A designation of a principal campaign committee that has been filed in accordance with this section may be revoked only with the consent of the Commissioner. In general, the Commissioner will grant such consent in every case where the candidate for Congress has revoked his or her designation in compliance with the requirements of the Federal Election Commission by filing an amended Statement of Organization or its equivalent pursuant to 11 CFR 102.2(a)(2). In the case of the revocation of the designation of a principal campaign committee by a candidate followed by the designation of another principal campaign committee by such candidate, for purposes of determining the appropriate rate of tax under section 11(b) for a taxable year, the political organization taxable income of the first principal campaign committee shall be treated as that of the subsequent principal campaign committee. In a case where consent to revoke a designation of a principal campaign committee is granted and a new designation is filed, the Commissioner may condition his consent upon the agreement of the candidate for Congress to insure compliance with the preceding sentence.

[T.D. 8041, 50 FR 30817, July 30, 1985]

HOMEOWNERS ASSOCIATIONS

§ 1.528-1 Homeowners associations.

(a) ***In general.*** Section 528 only applies to taxable years of homeowners associations beginning after December 31, 1973. To qualify as a homeowners association an organization must either be a condominium management association or a residential real estate management association. For the purposes of Section 528 and the regulations under that section, the term *homeowners association* shall refer only to an organization described in section 528. Cooperative housing corporations and organizations based on a similar form of ownership are not eligible to be taxed as homeowners associations. As a general rule, membership in either a condominium management association or a residential real estate management association is confined to the developers and the owners of the units, residences, or lots. Furthermore, membership in either type of association is normally required as a condition of such ownership. However, if the membership of an organization consists of other homeowners associations, the owners of units, residences, or lots who are members of such other homeowners associations will be treated as the members of the organization for the purposes of the regulations under section 528.

(b) ***Condominium.*** The term *condominium* means an interest in real property consisting of an undivided interest in common in a portion of a parcel of real property (which may be a fee simple estate or an estate for years, such as a leasehold or subleasehold) together with a separate interest in space in a building located on such property. An interest in property is not a condominium unless the undivided interest in the common elements are vested in the unit holders. In addition, a condominium must meet the requirements of applicable state or local law relating to condominiums or horizontal property regimes.

(c) ***Residential real estate management association.*** Residential real estate management associations are normally composed of owners of single-family residential units located in a subdivision, development, or similar area. However, they may also include as members, owners of multiple-family dwelling units located in such areas. They are commonly formed to administer and enforce covenants relating to the architecture and appearance of the real estate development as well as to perform certain maintenance duties relating to common areas.

(d) ***Tenants.*** Tenants will not be considered members for purposes of meeting the source of income test under section 528(c)(1)(B) and § 1.528-5. However, the fact that tenants of members of a homeowners association are permitted to be members of the association will not disqualify an association under section 528(c)(1) if it otherwise meets the requirements of section 528(c) and these regulations.

[T.D. 7692, 45 FR 26321, Apr. 18, 1980]

§ 1.528-2 Organized and operated to provide for the acquisition, construction, management, maintenance and care of association property.

(a) ***Organized and operated*** —

(1) ***Organized.*** To be treated as a homeowners association an organization must be organized and operated primarily for the purpose of carrying on one or more of the exempt functions of a homeowners association. For the purposes of section 528 and these regulations, the exempt functions of a homeowners association are the acquisition, construction, management, maintenance, and care of association property. In determining whether an organization is organized and operated primarily to carry on one or more exempt functions, all the facts and circumstances of each case shall be considered. For example, when an organization provides in its articles of organization that its sole purpose is to carry on one or more exempt functions, in the absence of

other relevant factors it will be considered to have met the organizational test. (The term *articles of organization* means the organization's corporate charter, trust instruments, articles of association or other instrument by which it is created.)

(2) ***Operated.*** An organization will be treated as being operated for the purpose of carrying on one or more of the exempt functions of a homeowners association if it meets the provisions of §§ 1.528-5 and 1.528-6.

(b) ***Terms to be interpreted according to common meaning and usage.*** As used in section 528 and these regulations, the terms acquisition, construction, management, maintenance, and care are to be interpreted according to their common meaning and usage. For example, maintenance of association property includes the painting and repairing of such property as well as the gardening and janitorial services associated with its upkeep. Similarly, the term *construction* of association property includes covenants or other rules for preserving the architectural and general appearance of the area. The term also includes regulations relating to the location, color and allowable building materials to be used in all structures. (For the definition of association property see § 1.528-3.)

[T.D. 7692, 45 FR 26321, Apr. 18, 1980]

§ 1.528-3 Association property.

(a) ***Property owned by the organization. Association property*** includes real and personal property owned by the organization or owned as tenants in common by the members of the organization. Such property must be available for the common benefit of all members of the organization and must be of a nature that tends to enhance the beneficial enjoyment of the private residences by their owners. If two or more facilities or items of property of a similar nature are owned by a homeowners association, and if the use of any particular facility or item is restricted to fewer than all association members, such facilities or items neverthelesswill be considered association property if all association members are treated equitably and have similar rights with respect to comparable items or facilities. Among the types of property that ordinarily will be considered association property are swimming pools and tennis courts. On the other hand, facilities or areas set aside for the use of nonmembers, or in fact used primarily by nonmembers, are not association property for the purposes of this section. For example, property owned by an organization for the purpose of leasing it to groups consisting primarily of nonmembers to be used as a meeting place or a retreat will not be considered association property.

(b) ***Property normally owned by a governmental unit. Association property*** also includes areas and facilities traditionally recognized and accepted as being of direct governmental concern in the exercise of the powers and duties entrusted to governments to regulate community health, safety and welfare. Such areas and facilities would normally include roadways, parklands, sidewalks, streetlights and firehouses. Property described in this paragraph will be considered association property regardless of whether it is owned by the organization itself, by its members as tenants in common or by a governmental unit and used for the benefit of the residents of such unit including the members of the organization.

(c) ***Privately owned property. Association property*** may also include property owned privately by members of the organization. However, to be so included the condition of such property must affect the overall appearance or structure of the residential units which make up the organization. Such property may include the exterior walls and roofs of privately owned residences as well as the lawn and shrubbery on privately owned land and any other privately owned property the appearance of which may directly affect the appearance of the entire organization. However, privately owned property will not be considered association property unless:

(1) There is a covenant or similar requirement relating to exterior appearance or maintenance that applies on the same basis to all such property (or to a reasonable classification of such property);

(2) There is a pro rata mandatory assessment (at least once a year) on all members of the association for maintaining such property; and

(3) Membership in the organization is a condition of ownership of such property.

[T.D. 7692, 45 FR 26321, Apr. 18, 1980]

§ 1.528-4 Substantiality test.

(a) ***In general.*** In order for an organization to be considered a condominium management association or a residential real estate management association (and therefore in order for it to be considered a homeowners association), substantially all of its units, lots or buildings must be used by individuals for residences. For the purposes of applying paragraph (b) or (c) of this section, and organization which has attributes of both a condominium management association and a residential real estate management association shall be considered that association which, based on all the facts and circumstances, it more closely resembles. In addition, those paragraphs shall be applied based on conditions existing on the last day of the organization's taxable year.

(b) ***Condominium management associations.*** Substantially all of the units of a condominium management association will be considered as used by individuals for residences if at least 85% of the total square footage of all units within the project is used by individuals for residential purposes. If a completed unit has never been occupied, it will nonetheless be considered as used for residential purposes if, based on all the facts and circumstances, it appears to have been constructed for use as a residence. Similarly, a unit which is not occupied but which has been in the past will be considered as used for residential purposes if, based on all the facts and circumstances, it appears that it was constructed for use as a residence, and the last individual to occupy it did in fact use it as a residence. Units which are used for purposes auxiliary to residential use (such as laundry areas, swimming pools, tennis courts, storage rooms and areas used by maintenance personnel) shall be considered used for residential purposes.

(c) ***Residential real estate management associations.*** Substantially all of the lots or buildings of a residential real estate management association (including unimproved lots) will be considered as used by individuals as residences if at least 85% of the lots are zoned for residential purposes. Lots shall be treated as zoned for residential purposes even if under such zoning lots may be used for parking spaces, swimming pools, tennis courts, schools, fire stations, libraries, churches and other similar purposes which are auxiliary to residential use. However, commercial shopping areas (and their auxiliary parking areas) are not lots zoned for residential purposes.

(d) ***Exception.*** Notwithstanding any other provision of this section, a unit, or building will not be considerd used for residential purposes, if for more than one-half the days in the association's taxable year, such unit, or building is occupied by a person or series of persons, each of whom so occupies such unit, or building for less than 30 days.

[T.D. 7692, 45 FR 26322, Apr. 18, 1980; T.D. 7692, 45 FR 24879, May 23, 1980]

§ 1.528-5 Source of income test.

An organization cannot qualify as a homeowners association under section 528 for a taxable year unless 60 percent or more of its gross income for such taxable year is exempt function income as defined in § 1.528-9. The determiniation of whether an organization meets the provisions of this section shall be made after the close of the organization's taxable year.

[T.D. 7692, 45 FR 26322, Apr. 18, 1980]

§ 1.528-6 Expenditure test.

(a) ***In general.*** An organization cannot qualify as a homeowners association under section 528 for a taxable year unless 90 percent or more of its expenditures for such taxable year are qualifying expenditures as defined in paragraphs (b) and (c) of this section. The determination of whether an organization meets the provisions of this section shall be made after the close of the organization's taxable year. Investments or transfers of funds to be held to meet future costs shall not be taken into account as expenditures. For example, transfers to a sinking fund account for the replacement of a roof would not be considered an expenditure for the purposes of this section even if the roof is association property. In addition, excess assessments which are either rebated to members or applied against the members' following year's assessments will not be considered an expenditure for the purposes of this section.

(b) ***Qualifying expenditures.*** Qualifying expenditures are expenditures by an organization for the acquisition, construction, management, maintenance, and care of the organization's association property. They include both current operating and capital expenditures on association property. Qualifying expenditures include expenditures on association property despite the fact that such property may produce income which is not exempt function income. Thus expenditures on a swimming pool are qualifying expenditures despite the fact that fees from guests of members using the pool are not exempt function income. Where expenditures by an organization are used both for association property as well as other property, an allocation shall be made between the two uses on a reasonable basis. Only that portion of the expenditures which is properly allocable to the acquisition, construction, management, maintenance or care of association property, shall constitute qualifying expenditures.

(c) ***Examples of qualifying expenditures.*** Qualifying expenditures may include (but are not limited to) expenditures for:

(1) Salaries of an association manager and secretary;

(2) Paving of streets;

(3) Street signs;

(4) Security personnel;

(5) Legal fees;

(6) Upkeep of tennis courts;

(7) Swimming pools;

(8) Recreation rooms and halls;

(9) Replacement of common buildings, facilities, air conditioning, etc;

(10) Insurance premiums on association property;

(11) Accountant's fees;

(12) Improvement of private property to the extent it is association property; and

(13) Real estate and personal property taxes imposed on association property by a State or local government.

[T.D. 7692, 45 FR 26322, Apr. 18, 1980]

§ 1.528-7 Inurement.

An organization is not a homeowners association if any part of its net earnings inures (other than as a direct result of its engaging in one or more exempt functions) to the benefit of any private person. Thus, to the extent that members receive a benefit from the general maintenance, etc., of association property, this benefit generally would not constitute inurement. If an organization pays rebates from amounts other than exempt function income, such rebates will constitute inurement. In general, in determining whether an organization is in violation of this section, the principles used in making similar determinations under Section 501(c) will be applied.

[T.D. 7692, 45 FR 26323, Apr. 18, 1980]

§ 1.528-8 Election to be treated as a homeowners association.

(a) ***General rule.*** An organization wishing to be treated as a homeowners association under section 528 and this section for a taxable year must elect to be so treated. Except as otherwise provided in this section such election shall be made by the filing of a properly completed Form 1120-H (or such other form as the Secretary may prescribe). A separate election must be made for each taxable year.

(b) ***Taxable years ending after December 30, 1976.*** For taxable years ending after December 30, 1976, the election must be made not later than the time, including extensions, for filing an income tax return for the year in which the election is to apply.

(c) ***Taxable years ending before December 31, 1976, for which a return was filed before January 31, 1977.*** For taxable years ending before December 31, 1976, for which a return was filed before January 31, 1977, the election must be made not later than the time provided by law for filing a claim for credit or refund of overpayment of taxes for the year in which the election is to apply. Such an election shall be made by filing an amended return on Form 1120-H (or such other form as the Secretary may prescribe).

(d) ***Taxable years ending before December 31, 1976, for which a return was not filed before January 31, 1977.*** For taxable years ending before December 31, 1976, for which a return was not filed before January 31, 1977, the election must be made by October 20, 1980. Instead of making such an election in the manner described in paragraph (a) of this section, such an election may be made by a statement attached to the applicable income tax return or amended return for the year in which the election is made. The statement should identify the election being made, the period for which it applies and the taxpayer's basis for making the election.

(e) ***Revocation of exempt status.*** If an organization is notified after the close of a taxable year that its exemption for such taxable year under section 501(a) is being revoked retroactively, it may make a timely election under section 528 for such taxable year. Notwithstanding any other provisions of this section, such an election will be considered timely if it is made within 6 months after the date of revocation. The

preceding sentence shall apply to revocations made after April 18, 1980. If the revocation was made on or before April 18, 1980, the election will be considered timely if it is made before the expiration of the period for filing a claim for credit or refund for the taxable year for which it is to apply.

(f) ***Effect of election*** —

(1) ***Revocation.*** An election to be treated as an organization described in section 528 is binding on the organization for the taxable year and may not be revoked without the consent of the Commissioner.

(2) ***Exception.*** Notwithstanding paragraph (f)(1) of this section, an election under this section may be revoked prior to July 18, 1980. Such a revocation shall be made by filing a statement with the director of the Internal Revenue Service Center with whom the return of the organization for the year in which the revocation is to apply was filed. The statement shall include the following information:

(i) The name of the organization.

(ii) The fact that it is revoking an election made under section 528.

(iii) The taxable year for which the revocation is to apply.

[T.D. 7692, 45 FR 26323, Apr. 18, 1980]

§ 1.528-9 Exempt function income.

(a) ***General rule.*** For the purposes of section 528 exempt function income consists solely of income which is attributable to membership dues, fees, or assessments of owners of residential units or residential lots. It is not necessary that the source of income be labeled as membership dues, fees, or assessments. What is important is that such income be derived from owners of residential units or residential lots in their capacity as owner-members rather than in some other capacity such as customers for services. Generally, for the membership dues, fees, or assessments with respect to a residential unit or lot to be exempt function income, the unit must be used for (or the unit or lot must be expected to be used) for residential purposes. However, dues, fees, or assessments paid to an organization by a developerwith respect to unfinished or finished but unsold units or lots shall be exempt function income even though the developer does not use the units or lots. If an assessment is more in the nature of a fee for the provision of services in the course of a trade or business than a fee for a common activity undertaken by a collective group of owners for the purpose of enhancing or maintaining the value of their residences, the assessment will not be considered exempt function income to the organization. Furthermore, income attributable to dues, fees, or assessments will not be considered exempt function income unless each member's liability for payment arises solely from membership in the association. Dues, fees, or assessments that are based on the extent, if any, to which a member avails him or herself of a facility or facilities are not exempt function income. For the purposes of section 528, dues, fees, or assessments which are based on the assessed value or size of property will be considered as arising solely as a result of membership in the organization. Regardless of the organization's method of accounting, excess assessments during a taxable year which are either rebated to the members or applied to their future assessments are not considered gross income and therefore will not be considered exempt function income for such taxable year. However, if such excess assessments are applied to a future year's assessments, they will be considered gross income and exempt function income for that future year. In addition, assessments in a taxable year, such as an assessment for a capital improvement, which are not treated as gross income do not enter into the determination of whether the organization meets the source of income test for that taxable year.

(b) ***Examples of exempt function income.*** Assessments which are considered more in the nature of a fee for common activity than for the providing of services and which will therefore generally be considered exempt function income include assessments made for the purpose of:

(1) Paying the principal and interest on debts incurred for the acquisition of association property;

(2) Paying real estate taxes on association property;

(3) Maintaining association property;

(4) Removing snow from public areas; and

(5) Removing trash.

(c) ***Examples of receipts which are not exempt function income.*** Exempt function income does not include:

(1) Amounts which are not includible in the organization's gross income other than by reason of section 528 (for example, tax-exempt interest);

(2) Amounts received from persons who are not members of the association;

(3) Amounts received from members for special use of the organization's facilities, the use of which is not available to all members as a result of having paid the dues, fees or assessments required to be paid by all members;

(4) Interest earned on amounts set aside in a sinking fund;

(5) Amounts received for work done on privately owned property which is not association property; or

(6) Amounts received from members in return for their transportation to or from shopping areas, work location, etc.

(d) ***Special rule.*** Notwithstanding paragraphs (a) and (c)(3) of this section, amounts received from members or tenants of residential units owned by members (notwithstanding § 1.528-1(d)) for special use of an association's facilities will be considered exempt function income if:

(1) The amounts paid by the members are not paid more than once in any 12 month period; and

(2) The privilege obtained from the payment of such amounts lasts for the entire 12 month period or portion thereof in which the facility is commonly in use.

Thus, amounts received as the result of payments by members of a yearly fee for use of tennis courts or a swimming pool shall be considered exempt function income. However, amounts received for the use of a building for an evening, weekend, week, etc., shall not be considered exempt function income.

[T.D. 7692, 45 FR 26323, Apr. 18, 1980]

§ 1.528-10 Special rules for computation of homeowners association taxable income and tax.

(a) ***In general.*** Homeowners association taxable income shall be determined according to the provisions of section 528(d) and the rules set forth in this section.

(b) ***Limitation on capital losses.*** If for any taxable year a homeowners association has a net capital loss, the rules of sections 1211(a) and 1212(a) shall apply.

(c) ***Allowable deductions*** —

(1) ***In general.*** To be deductible in computing the unrelated business taxable income of a homeowners association, expenses, depreciation and similar items must not only qualify as items of deduction allowed by chapter 1 of the Code but must also be directly connected with the production of gross income (excluding exempt function income). To be *directly connected with* the production of gross income (excluding exempt function income), an item of deduction must have both proximate and primary relationship to the production of such income and have been incurred in the production of such income. Items of deduction attributable solely to items of gross income (excluding exempt function income) are proximately and primarily related to such income. Whether an item of deduction is incurred in the production of gross income (excluding exempt function income) is determined on the basis of all the facts and circumstances involved in each case.

(2) ***Dual use of facilities or personnel.*** Where facilities are used both for exempt functions of the organization and for the production of gross income (excluding exempt function income), expenses, depreciation and similar items attributable to such facilities (for example, items of overhead) shall be allocated between the two uses on a reasonable basis. Similarly where personnel are employed both for exempt functions and for the production of gross income (excluding exempt function income), expenses and similar items attributable to such personnel (for example, items of salary) shall be allocated between the two activities on a reasonable basis. The portion of any such item so allocated to the production of gross income (excluding exempt function income) is directly connected with such income and shall be allowable as a deduction in computing homeowners association taxable income to the extent that it qualifies as an item of deduction allowed by chapter 1 of the Code. Thus, for example, assume that X, a homeowners association, pays its manager a salary of $10,000 a year and that it derives gross income other than exempt function income. If 10 percent of the manager's time during the year is devoted to deriving X's gross income (other than exempt function income), a deduction of $1,000 (10 percent of $10,000) would generally be allowable for purposes of computing X's homeowners association taxable income.

(d) ***Investment credit.*** A homeowners association is not entitled to an investment credit.

(e) ***Cross reference.*** For the definition of exempt function income, see § 1.528-9.

[T.D. 7692, 45 FR 26324, Apr. 18, 1980]

Qualified ABLE Programs

Source: T.D. 9923, 85 FR 74034, Nov. 19, 2020, unless otherwise noted.

§ 1.529A-0 Table of contents.

This section lists the following captions contained in §§ 1.529A-1 through 1.529A-8.

§ 1.529A-1 *Exempt status of qualified ABLE program and definitions.*

(a) In general.

(b) Definitions.

(1) ABLE account.

(2) Contribution.

(3) Designated beneficiary.

(4) Disability certification.

(5) Distribution.

(6) Earnings.

(7) Earnings ratio.

(8) Eligible individual.

(9) Excess contribution.

(10) Excess aggregate contribution.

(11) Investment in the account.

(12) Member of the family.

(13) Program-to-program transfer.

(14) Qualified ABLE program.

(15) Qualified disability expenses.

(16) Rollover.

(c) Applicability date.

§ 1.529A-2 *Qualified ABLE program.*

(a) In general.

(b) Established and maintained by a State or agency or instrumentality of a State.

(1) Established.

(2) Maintained.

(i) In general.

(ii) Multiple States, agencies, or instrumentalities.

(3) Community Development Financial Institutions (CDFIs).

(c) Establishment of an ABLE account and signature authority.

(1) Establishment of the ABLE account.

(2) Signature authority.

(3) Only one ABLE account.

(4) Beneficial interest.

(d) Eligible individual.

(1) Documentation.

(2) Frequency of recertification.

(3) Loss of qualification as an eligible individual.

(e) Disability certification.

(1) In general.

(2) Marked and severe functional limitations.

(3) Compassionate allowance list.

(4) Additional guidance.

(5) Restriction on use of certification.

(f) Change of designated beneficiary.

(1) In general.

(2) Change effective upon death.

(g) Contributions.

(1) Permissible property.

(2) Annual contributions limit.

(3) Cumulative limit.

(4) Return of excess contributions, excess compensation contributions, and excess aggregate contributions.

(5) Restriction of contributors.

(h) Qualified disability expenses.

(1) In general.

(2) Example.

(i) Separate accounting.

(j) Program-to-program transfers.

(k) Carryover of attributes.

(1) In general.

(2) Annual contribution limit.

(3) Investment direction limit.

(l) Investment direction.

(m) No pledging of interest as security.

(n) No sale or exchange.

(o) Post-death payments.

(p) Reporting requirements.

(q) Applicability date.

§ 1.529A-3 *Tax treatment.*

(a) Taxation of distributions.

(1) In general.

(2) Additional period.

(b) Additional exclusions from gross income.

(1) Rollover.

(2) Program-to-program transfers.

(3) Change of designated beneficiary.

(4) Payments to creditors post-death.

(c) Computation of earnings.

(d) Additional tax on amounts includible in gross income.

(1) In general.

(2) Exceptions.

(e) Tax on excess contributions.

(f) Filing requirements.

(g) No inference outside section 529A.

(h) Applicability date.

§ 1.529A-4 *Gift, estate, and generation-skipping transfer taxes.*

(a) Contributions.

(1) In general.

(2) Generation-skipping transfer (GST) tax.

(3) Designated beneficiary as contributor.

(b) Distributions.

(c) Transfer to another designated beneficiary.

(d) Transfer tax on death of designated beneficiary.

(e) Applicability date.

§ 1.529A-5 *Reporting of the establishment of and contributions to an ABLE account.*

(a) In general.

(b) Additional definitions.

(1) Filer.

(2) TIN.

(c) Requirement to file return.

(1) Form of return.

(2) Information included on return.

(3) Time and manner of filing return.

(d) Requirement to furnish statement.

(1) In general.

(2) Time and manner of furnishing statement.

(3) Copy of Form 5498-QA.

(e) Request for TIN of designated beneficiary.

(f) Penalties.

(1) Failure to file return.

(2) Failure to furnish TIN.

(g) Applicability date.

§ 1.529A-6 *Reporting of distributions from and termination of an ABLE account.*

(a) In general.

(b) Requirement to file return.

(1) Form of return.

(2) Information included on return.

(3) Information excluded.

(4) Time and manner of filing return.

(c) Requirement to furnish statement.

(1) In general.

(2) Time and manner of furnishing statement.

(3) Copy of Form 1099-QA.

(d) Request for TIN of contributor(s).

(1) In general.

(2) Exception.

(e) Penalties.

(1) Failure to file return.

(2) Failure to furnish TIN.

(f) Applicability date.

§ 1.529A-7 *Electronic furnishing of statements to designated beneficiaries and contributors.*

(a) Electronic furnishing of statements.

(1) In general.

(2) Consent.

(3) Required disclosures.

(4) Format.

(5) Notice.

(6) Access period.

(b) Applicability date.

§ 1.529A-8 *Applicability dates and transition relief.*

(a) Applicability dates.

(b)Transition relief.

(1) In general.

(2) Transition period.

(3) Compliance after transition period.

§ 1.529A-1 Exempt status of qualified ABLE program and definitions.

(a) ***In general.*** A qualified ABLE program described in section 529A is exempt from Federal income tax, except for the tax imposed under section 511 on any unrelated business taxable income of that program. See § 1.511-2(e).

(b) ***Definitions.*** For purposes of section 529A, this section and §§ 1.529A-2 through 1.529A-8—

(1) ***ABLE account*** means an account established under a qualified ABLE program and owned by the designated beneficiary of that account.

(2) ***Contribution*** means any payment directly allocated to an ABLE account for the benefit of a designated beneficiary, including amounts transferred to an ABLE account between December 22, 2017, and January 1, 2026, from a qualified tuition program described in section 529.

(3) ***Designated beneficiary*** means the individual for whom the account was established at a time when he or she was an eligible individual or who has succeeded the former designated beneficiary in that capacity (successor designated beneficiary). The designated beneficiary is the owner of the ABLE account. If the designated beneficiary is not able to exercise signature authority over his or her ABLE account or chooses to have an ABLE account established but not to exercise signature authority, references to the designated beneficiary with respect to his or her actions include actions by the person with signature authority over the account. See § 1.529A-2(c)(1) and (2).

(4) ***Disability certification*** means a certification to establish a certain level of an individual's physical or mental impairment that meets the requirements described in § 1.529A-2(e).

(5) ***Distribution*** means any payment from an ABLE account. However, a program-to-program transfer, a Medicaid reimbursement under § 1.529A-2(o), or a payment of administrative or investment fees charged by a qualified ABLE program is not a distribution.

(6) ***Earnings*** attributable to an ABLE account are the excess of the total account balance on a particular date over the investment in the account as of that date.

(7) ***Earnings ratio*** as applied to a particular distribution means the amount of earnings attributable to the ABLE account as of the date of the distribution, divided by the total account balance on that same date.

(8) ***Eligible individual*** for a taxable year means an individual who either:

(i) Is receiving benefits under title II or XVI of the Social Security Act based on blindness or disability or whose entitlement to such benefits under title XVI has been suspended solely due to excess income or resources, provided that such blindness or disability occurred before the date on which the individual attained age 26 (and, for this purpose, an individual is deemed to attain age 26 on his or her 26th birthday); or

(ii) Is the subject of a disability certification filed with the Secretary of the Treasury or his delegate (Secretary) for that taxable year.

(9) ***Excess contribution*** means the amount by which the amount contributed during the taxable year of the designated beneficiary to an ABLE account exceeds the limit in effect under section 2503(b) for the calendar year in which the taxable year of the designated beneficiary begins.

(10) ***Excess aggregate contribution*** means—

(i) The amount contributed during the taxable year of the designated beneficiary that causes the total of amounts contributed since the establishment of the ABLE account (or of an ABLE account for the same designated beneficiary that was rolled into the current ABLE account) to exceed the limit in effect under section 529(b)(6); or

(ii) In the context of the safe harbor in § 1.529A-2(g)(3), the amount contributed that causes the account balance to exceed the limit in effect under section 529(b)(6).

(11) ***Investment in the account*** means—

(i) The sum of all contributions made to the ABLE account, reduced by the aggregate amount of contributions included in distributions, if any, made from the account; or

(ii) In the case of a rollover contribution into an ABLE account, the amount of the rollover contribution that constituted the amount described in paragraph (b)(11)(i) of this section with respect to the ABLE account from which the rollover contribution was made.

(12) ***Member of the family*** means a sibling, whether by blood or by adoption, and includes a brother, sister, stepbrother, stepsister, half-brother, and half-sister.

(13) ***Program-to-program transfer*** means—

(i) The direct transfer of the entire balance of an ABLE account into an ABLE account of the same designated beneficiary after which the transferor ABLE account is closed upon completion of the transfer; or

(ii) The direct transfer of part or all of the balance to an ABLE account of another eligible individual who is a member of the family of the former designated beneficiary.

(14) ***Qualified ABLE program*** means a program established and maintained by a State, or agency or instrumentality of a State, under which an ABLE account may be established by and for the benefit of the account's designated beneficiary who is an eligible individual, and that meets the requirements described in § 1.529A-2.

(15) ***Qualified disability expenses*** means any expenses incurred at a time when the designated beneficiary is an eligible individual that relate to the blindness or disability of the designated beneficiary of an ABLE account, including expenses that are for the benefit of the designated beneficiary in maintaining or improving his or her health, independence, or quality of life. See § 1.529A-2(h). However, any expenses incurred at a time when a designated beneficiary is neither disabled nor blind within the meaning of § 1.529A-1(b)(8)(i) or § 1.529A-2(e)(1)(i), even if the designated beneficiary is an eligible individual for that entire taxable year, do not relate to blindness or disability and therefore are not qualified disability expenses.

(16) ***Rollover*** means a contribution to an ABLE account of a designated beneficiary (or of an eligible individual who is a member of the family of the designated beneficiary) of all or a portion of an amount distributed from the designated beneficiary's ABLE account, provided the contribution is

made within 60 days of the date of the withdrawal and, in the case of a rollover to the designated beneficiary's ABLE account, no rollover has been made to an ABLE account of the designated beneficiary within the 12 month period immediately preceding the rollover to the ABLE account.

(c) ***Applicability date.*** This section applies to calendar years beginning on or after January 1, 2021. See § 1.529A-8 for the provision of transition relief.

§ 1.529A-2 Qualified ABLE program.

(a) ***In general.*** A qualified ABLE program is a program established and maintained by a State, or an agency or instrumentality of a State, that satisfies all of the requirements of this section and under which—

(1) An ABLE account may be established for the purpose of meeting the qualified disability expenses of the designated beneficiary of the account;

(2) A designated beneficiary is limited to only one ABLE account at a time except as otherwise provided in paragraph (c)(3) of this section;

(3) Any person may make contributions to such an ABLE account, subject to the limitations described in paragraph (g) of this section; and

(4) Distributions (other than returns of contributions as described in paragraph (g)(4) of this section) may be made only to or for the benefit of the designated beneficiary of the ABLE account.

(b) ***Established and maintained by a State or agency or instrumentality of a State*** —

(1) ***Established.*** A program is established by a State or its agency or instrumentality if the program is initiated by State statute or regulation or by an act of a State official or agency with the authority to act on behalf of the State.

(2) ***Maintained*** —

(i) ***In general.*** A program is maintained by a State or an agency or instrumentality of a State if—

(A) The State or its agency or instrumentality sets all of the terms and conditions of the program, including but not limited to who may contribute to the program, who may be a designated beneficiary of the program, and what benefits the program may provide; and

(B) The State or its agency or instrumentality is actively involved on an ongoing basis in the administration of the program, including supervising the implementation of decisions relating to the investment of assets contributed under the program. Factors that are relevant in determining whether a State or its agency or instrumentality is actively involved in the administration of the program include, but are not limited to: Whether the State or its agency or instrumentality provides services to designated beneficiaries that are not provided to persons who are not designated beneficiaries; whether the State or its agency or instrumentality establishes detailed operating rules for administering the program; whether officials of the State or its agency or instrumentality play a substantial role in the operation of the program, including selecting, supervising, monitoring, auditing, and terminating the relationship with any private contractors that provide services under the program; whether the State or its agency or instrumentality holds the private contractors that provide services under the program to the same standards and requirements that apply when private contractors handle funds that belong to the State or its agency or instrumentality or provide services to the State or its agency or instrumentality; whether the State or its agency or instrumentality provides funding for the program; and whether

the State or its agency or instrumentality acts as trustee or holds program assets directly or for the benefit of the designated beneficiaries. For example, if the State or its agency or instrumentality exercises the same authority over the funds invested in the program as it does over the investments in or pool of funds of a State employees' defined benefit pension plan, then the State or its agency or instrumentality will be considered actively involved on an ongoing basis in the administration of the program.

(ii) ***Multiple States, agencies, or instrumentalities.*** A program may be maintained by two or more States or the agencies or instrumentalities of two or more States if the program meets the requirements of paragraph (b)(2)(i) of this section for each of the States represented. If a State or an agency or instrumentality of a State participates in such a consortium of States or agencies or instrumentalities of States, the consortium's program is considered to be the program of each State represented.

(3) ***Community Development Financial Institutions (CDFIs).*** In addition to having the ability to contract with private contractors as provided in paragraph (b)(2)(i)(B) of this section, a State or its agency or instrumentality or qualified ABLE program may contract with one or more Community Development Financial Institutions (CDFIs) (as defined in 12 U.S.C. 4702(5) and 12 CFR 1805.104) to perform some or all of the services described in paragraphs (b)(2)(i)(A) and (B) of this section.

(c) ***Establishment of an ABLE account and signature authority*** —

(1) ***Establishment of the ABLE account*** —

(i) ***In general.*** A qualified ABLE program must provide that an ABLE account may be established only for an eligible individual.

(A) The ABLE account may be established by the eligible individual;

(B) The ABLE account may be established by a person selected by the eligible individual; or

(C) If an eligible individual (whether a minor or adult) is unable to establish his or her own ABLE account, an ABLE account may be established on behalf of the eligible individual by the eligible individual's agent under a power of attorney or, if none, by a conservator or legal guardian, spouse, parent, sibling, grandparent of the eligible individual, or a representative payee appointed for the eligible individual by the Social Security Administration (SSA), in that order.

(ii) ***Authority.*** A qualified ABLE program may accept a certification, made under penalties of perjury, from the person seeking to establish an ABLE account as to the basis for the person's authority to establish the ABLE account, and that there is no other person with a higher priority, under paragraphs (c)(1)(i)(A), (B), and (C) of this section, to establish the ABLE account.

(2) ***Signature authority*** —

(i) ***Signatory.*** In general, the designated beneficiary will have signature authority over his or her ABLE account. However, if an individual other than the designated beneficiary establishes the account in accordance with paragraph (c)(1)(i)(B) or (C) of this section, such individual will have signature authority.

(A) At any time, the designated beneficiary may remove and replace any person with signature authority over the designated beneficiary's ABLE account. The replacement may be the designated beneficiary or any other person selected by the designated beneficiary.

(B) The designated beneficiary may designate a successor to the person with signature authority. In the absence of any designation of a successor by the designated beneficiary, a person with signature authority over the designated beneficiary's ABLE account may designate a successor, consistent with the ordering rules in paragraph (c)(1)(i)(C) of this section.

(ii) ***Co-signatories.*** A qualified ABLE program may permit an ABLE account to have co-signatories, consistent with paragraph (c)(1)(i)(C) of this section. If co-signatories are permitted, all of the other provisions of this paragraph (c)(2) continue to apply, and references to the *signatory* refer to the co-signatories acting separately or jointly, as determined by that qualified ABLE program.

(iii) ***Authority over sub-accounts.*** The person with signature authority over the ABLE account may appoint and from time to time may remove, replace, or name a successor for any person with signature authority over a sub-account described in paragraph (c)(3)(iii) of this section.

(3) ***Only one ABLE account*** —

(i) ***In general.*** Except as provided in paragraph (c)(3)(ii) of this section, a designated beneficiary is limited to one ABLE account at a time, regardless of where located. To ensure that this requirement is met, a qualified ABLE program must obtain a verification, signed under penalties of perjury by the person establishing the ABLE account, that the individual establishing the ABLE account neither knows nor has reason to know that the eligible individual already has an existing ABLE account (other than an ABLE account that will terminate with the rollover or program-to-program transfer of its assets into the new ABLE account) before that program can permit the establishment of an ABLE account for that eligible individual. In the case of a rollover, the ABLE account from which amounts were distributed must be closed as of the 60th day after the date of the distribution in order to allow the account receiving the rollover to be treated as an ABLE account.

(ii) ***Treatment of additional accounts.*** If an individual is the designated beneficiary of an ABLE account established in accordance with paragraph (c)(1) of this section, no other account subsequently established for that individual under a qualified ABLE program (additional account) will be an ABLE account. The preceding sentence does not apply to an additional account, and that additional account is an ABLE account, if—

(A) The additional account is established for the purpose of receiving a rollover or program-to-program transfer;

(B) All of the contributions to the additional account are returned in accordance with the rules that apply to the return of excess contributions and excess aggregate contributions under paragraph (g)(4) of this section; or

(C) All amounts in the additional account are transferred to the designated beneficiary's preexisting ABLE account and any excess contributions and excess aggregate contributions are returned in accordance with the rules that apply to the return of excess contributions and excess aggregate contributions under paragraph (g)(4) of this section.

(iii) ***Sub-accounts.*** A qualified ABLE program may establish an ABLE account (primary account) that may include multiple sub-accounts. The person with signature authority over the ABLE account, at any time and from time to time, may create one or more sub-accounts, may transfer funds in the ABLE account to one or more of the sub-accounts, and may close one or more of the sub-accounts, to facilitate the acquisition of certain goods or services for the designated

beneficiary. Each sub-account may have a different person with signature authority over that sub-account, appointed in accordance with the rules of paragraph (c)(2)(iii) of this section, and that person's authority is limited to making distributions from that sub-account. The primary account and the sub-accounts collectively constitute a single ABLE account and therefore must be aggregated for all purposes, including without limitation the limit on the number of permissible changes in investment direction under paragraph (l) of this section, the contribution limits under paragraphs (g)(2) and (3) of this section, the computation of gross income and other tax provisions, and the reporting requirements.

(iv) ***Investment options.*** A qualified ABLE program may offer different investment options within each ABLE account without violating the only-one-ABLE-account rule in this paragraph (c)(3). For example, an ABLE account may include a cash fund as well as one or more stock or bond funds.

(4) ***Beneficial interest.*** A person other than the designated beneficiary with signature authority over the ABLE account of the designated beneficiary may neither have nor acquire any beneficial interest in the ABLE account during the lifetime of the designated beneficiary and must administer the ABLE account for the benefit of the designated beneficiary of the account.

(d) ***Eligible individual*** —

(1) ***Documentation*** —

(i) ***In general.*** Whether an individual is an eligible individual is determined for each taxable year of that individual, and that determination applies for the entire year. A qualified ABLE program must specify the documentation that an individual must provide, both at the time an ABLE account is established and thereafter, in order to ensure that the designated beneficiary of the ABLE account is, and continues to be, determined an eligible individual. For purposes of determining whether an individual is an eligible individual, a disability certification as described in paragraph (e)(1) of this section will be deemed to be filed with the Secretary once the qualified ABLE program has received the disability certification or a disability certification has been deemed to have been received under the rules of the qualified ABLE program, which information the qualified ABLE program will file in accordance with the filing requirements under § 1.529A-5(c)(2)(iv).

(ii) ***Safe harbor.*** A qualified ABLE program may establish that an individual is an eligible individual if the person establishing the ABLE account certifies under penalties of perjury—

(A) The basis for the individual's status as an eligible individual (entitlement to benefits based on blindness or disability under title II or XVI of the Social Security Act, or a disability certification described in paragraph (e)(1) of this section);

(B) That the individual is blind or has a medically determinable physical or mental impairment as described in paragraph (e)(1)(i) of this section;

(C) That such blindness or disability occurred before the date on which the individual attained age 26 (and, for this purpose, an individual is deemed to attain age 26 on his or her 26th birthday);

(D) If the basis of the individual's eligibility is a disability certification, that the individual has received and agrees to retain a written diagnosis as described in paragraph (e)(1)(iii) of this section, accompanied by the name and address of the diagnosing physician and the date of the written diagnosis;

(E) The applicable diagnostic code from those listed on Form 5498-QA (or in the instructions to such form) identifying the type of the individual's impairment;

(F) That the person establishing the account is the individual who will be the designated beneficiary of the account or is the person authorized under paragraph (c)(1)(i) of this section to establish the account; and

(G) If required by the qualified ABLE program, the information provided by the diagnosing physician as to the categorization of the disability that may be used to determine, under the particular State's program, the appropriate frequency of required recertifications.

(2) ***Frequency of recertification*** —

(i) ***In general.*** A determination of eligibility must be made annually unless the qualified ABLE program adopts a different method of ensuring a designated beneficiary's continuing status as an eligible individual. Alternative methods may include, without limitation, the use of certifications by the designated beneficiary under penalties of perjury, and the imposition of different recertification frequencies for different types of impairments.

(ii) ***Considerations.*** In developing its rules on recertification, a qualified ABLE program may take into consideration whether an impairment is incurable and, if so, the likelihood that a cure may be found in the future. For example, a qualified ABLE program may provide that the initial certification will be deemed to be valid for a stated number of years, which may vary with the type of impairment. Even if the qualified ABLE program imposes an enforceable obligation on the designated beneficiary or other person with signature authority over the ABLE account to promptly report changes in the designated beneficiary's condition that would result in the designated beneficiary's failing to satisfy the definition of an eligible individual, the designated beneficiary will be considered an eligible individual until the end of the taxable year in which the change in the designated beneficiary's condition occurred. A qualified ABLE program that is compliant with the rules regarding recertification will not be considered to be noncompliant solely because a designated beneficiary fails to comply with this enforceable obligation.

(3) ***Loss of qualification as an eligible individual.*** If the designated beneficiary of an ABLE account ceases to be an eligible individual, then for each taxable year in which the designated beneficiary is not an eligible individual, the account will continue to be an ABLE account, the designated beneficiary will continue to be the designated beneficiary of the ABLE account (and will be referred to as such), and the ABLE account will not be deemed to have been distributed. However, beginning on the first day of the designated beneficiary's first taxable year for which the designated beneficiary does not satisfy the definition of an eligible individual, additional contributions to the designated beneficiary's ABLE account must not be accepted by the qualified ABLE program. In addition, no expense incurred at a time when a designated beneficiary is neither disabled nor blind within the meaning of § 1.529A-1(b)(8)(i) or § 1.529A-2(e)(1)(i), whichever had applied, is a qualified disability expense even if the individual is an eligible individual for the rest of the year under paragraph (d)(1)(i) of this section. If the designated beneficiary subsequently again satisfies the definition of an eligible

individual, contributions to the designated beneficiary's ABLE account again may be accepted, subject to the contribution limits under section 529A, and expenses that are incurred thereafter may meet the definition of a qualified disability expense in § 1.529A-1(b)(15) and paragraph (h) of this section.

(e) ***Disability certification*** —

(1) ***In general.*** Except as provided in paragraph (e)(3) of this section or in additional guidance described in paragraph (e)(4) of this section, a disability certification with respect to an individual, that will be deemed filed with the Secretary as provided in paragraph (d)(1)(i) of this section, and is deemed satisfactory to the Secretary, is a certification signed under penalties of perjury by the individual, or by another individual establishing the ABLE account for the individual, that—

(i) Certifies that the individual—

(A) Has a medically determinable physical or mental impairment that results in marked and severe functional limitations (as defined in paragraph (e)(2) of this section), and that—

(*1*) Can be expected to result in death; or

(*2*) Has lasted or can be expected to last for a continuous period of not less than 12 months; or

(B) Is blind (within the meaning of section 1614(a)(2) of the Social Security Act);

(ii) Certifies that such blindness or disability occurred before the date on which the individual attained age 26 (and, for this purpose, an individual is deemed to attain age 26 on his or her 26th birthday); and

(iii) Includes a certification that the individual has obtained and will continue to retain a copy of the individual's diagnosis relating to the individual's relevant impairment or impairments, signed by a physician meeting the criteria of section 1861(r)(1) of the Social Security Act (42 U.S.C. 1395x(r)) and including the name and address of the diagnosing physician and the date of the diagnosis.

(2) ***Marked and severe functional limitations.*** For purposes of paragraph (e)(1) of this section, the phrase *marked and severe functional limitations* means the standard of disability in the Social Security Act for children claiming Supplemental Security Income for the Aged, Blind, and Disabled (SSI) benefits based on disability (see 20 CFR 416.906), but without regard to age or to whether the individual engages in substantial gainful activity. Specifically, this is a level of severity that meets, medically equals, or functionally equals the severity of any listing in appendix 1 of subpart P of 20 CFR part 404. See 20 CFR 416.906, 416.924 and 416.926a. Such phrase also includes any impairment or standard of disability identified in future guidance published in the Internal Revenue Bulletin (see § 601.601(d)(2) of this chapter). Consistent with the regulations promulgated by the SSA, the level of severity is determined by taking into account the effect of the individual's prescribed treatment. See 20 CFR 416.930.

(3) ***Compassionate allowance list.*** Conditions listed in the “List of Compassionate Allowances Conditions” maintained by the SSA are deemed to meet the requirements of section 529A(e)(1)(B) regarding the filing of a disability certification, if the condition was present and produced marked and severe functional limitations before the date on which the individual attained age 26. To establish that an individual with such a condition satisfies the definition of an eligible individual, the

individual must identify the condition and certify to the qualified ABLE program both the presence of the condition and its resulting marked and severe functional limitations prior to age 26, in a manner specified by the qualified ABLE program.

(4) ***Additional guidance.*** Additional guidance on conditions deemed to meet the requirements of section 529A(e)(1)(B) may be identified in future guidance published in the Internal Revenue Bulletin. See § 601.601(d)(2) of this chapter.

(5) ***Restriction on use of certification.*** No inference may be drawn from a disability certification described in this paragraph (e) for purposes of establishing eligibility for benefits under title II, XVI, or XIX of the Social Security Act.

(f) ***Change of designated beneficiary*** —

(1) ***In general.*** A qualified ABLE program must permit a change in the designated beneficiary of an ABLE account made during the life of the designated beneficiary. At the time when the change becomes effective, the successor designated beneficiary must be an eligible individual. However, a qualified ABLE program may limit the change in designated beneficiary to a member of the family as defined in § 1.529A-1(b)(12) of the current designated beneficiary.

(2) ***Change effective upon death.*** A qualified ABLE program may permit a change in the designated beneficiary of an ABLE account, made during the life of the designated beneficiary, to take effect upon the death of the designated beneficiary. The amount to be transferred pursuant to such a beneficiary designation is first subject to the payment of any qualified disability expenses incurred before the designated beneficiary's death but not yet paid and those described in paragraph (o) of this section, and is subject to the provisions of § 1.529A-4.

(g) ***Contributions*** —

(1) ***Permissible property.*** Except in the case of a program-to-program transfer or a change in designated beneficiary to a new designated beneficiary who is an eligible individual and a member of the family of the former designated beneficiary, contributions to an ABLE account may be made only in cash. A qualified ABLE program may allow cash contributions to be made in the form of a check, money order, credit card, electronic transfer, after-tax payroll deduction, or similar method.

(2) ***Annual contributions limit*** —

(i) ***In general.*** Except as provided in paragraph (g)(2)(ii) of this section, a qualified ABLE program must provide that no contribution to an ABLE account will be accepted to the extent such contribution, when added to all other contributions (whether from the designated beneficiary or one or more other persons) to that ABLE account made during the designated beneficiary's taxable year causes the total of such contributions during that year to exceed the amount in effect under section 2503(b) for the calendar year in which the designated beneficiary's taxable year begins. See paragraph (k)(2) of this section for purposes of applying the rules in this paragraph (g)(2) to rollovers, program-to-program transfers, and designated beneficiary changes.

(ii) ***Additional contributions by an employed designated beneficiary*** —

(A) ***In general.*** An employed designated beneficiary defined in paragraph (g)(2)(iii)(A) of this section may contribute amounts up to the limit specified in paragraph (g)(2)(ii)(B) of this section in addition to the amount specified in paragraph (g)(2)(i) of this section. Although a designated beneficiary's contributions subject to this compensation income limit do not

have to be made from that compensation income, any contribution of the designated beneficiary's compensation income made directly by the designated beneficiary's employer is a contribution made by the designated beneficiary. Once the designated beneficiary has made contributions equal to the limit described in paragraph (g)(2)(ii)(B) of this section, additional contributions by the designated beneficiary may be made if permissible under paragraph (g)(2)(i) of this section.

(B) ***Amount of additional permissible contribution.*** Any additional contribution made by the designated beneficiary pursuant to paragraph (g)(2)(ii)(A) of this section is limited to the lesser of—

(*1*) The designated beneficiary's compensation as defined by section 219(f)(1) for the taxable year; or

(*2*) An amount equal to the applicable poverty line, as defined in paragraph (g)(2)(iii)(B) of this section, for a one-person household for the calendar year preceding the calendar year in which the designated beneficiary's taxable year begins.

(iii) ***Additional definitions.*** In addition to the definitions in § 1.529A-1(b), the following definitions also apply for the purposes of this section—

(A) ***Employed designated beneficiary*** means a designated beneficiary who is an employee (including an employee within the meaning of section 401(c)), with respect to whom no contribution is made for the taxable year to—

(*1*) A defined contribution plan (within the meaning of section 414(i)) with respect to which the requirements of sections 401(a) or 403(a) are met;

(*2*) An annuity contract described in section 403(b); and

(*3*) An eligible deferred compensation plan described in section 457(b).

(B) ***Applicable poverty line*** means the amount provided in the poverty guidelines updated periodically in the FEDERAL REGISTER by the U.S. Department of Health and Human Services under the authority of 42 U.S.C. 9902(2) for the State of residence of the employed designated beneficiary. If the designated beneficiary lives in more than one State during the taxable year, the applicable poverty line is the poverty line for the State in which the designated beneficiary resided longer than in any other State during that year.

(C) ***Excess compensation contribution*** means the amount by which the amount contributed during the taxable year of an employed designated beneficiary to the designated beneficiary's ABLE account exceeds the limit in effect under section 529A(b)(2)(B)(ii) and paragraph (g)(2)(ii)(B) of this section for the calendar year in which the taxable year of the employed designated beneficiary begins.

(iv) ***Example.*** The provisions of paragraph (g)(2)(ii) of this section may be illustrated by the following example: In 2020, A, an employed designated beneficiary as defined in paragraph (g)(2)(iii)(A) of this section, lives in Hawaii. A's compensation, as defined by section 219(f)(1), for 2020 is $20,000. The poverty line for a one-person household in Hawaii was $14,380 in 2019. Because A's compensation exceeded the applicable poverty line amount, A's additional permissible contribution in 2019 is limited to $14,380, the amount of the 2019 applicable poverty line.

(v) *Ensuring contribution limit is met* —

(A) ***Responsibility.*** The employed designated beneficiary, or the person acting on his or her behalf, is solely responsible for ensuring that the requirements in section 529A(b)(2)(B)(ii) and paragraph (g)(2)(ii) of this section are met and for maintaining adequate records for that purpose.

(B) ***Certification.*** A qualified ABLE program may allow a designated beneficiary (or the person acting on his or her behalf) to certify, under penalties of perjury, and in the manner specified by the qualified ABLE program that—

(*1*) The designated beneficiary is an employed designated beneficiary; and

(*2*) The designated beneficiary's contributions of compensation are not excess compensation contributions.

(3) *Cumulative limit* —

(i) ***In general.*** A qualified ABLE program must provide adequate safeguards to prevent aggregate contributions on behalf of a designated beneficiary in excess of the limit established by that State under section 529(b)(6). For purposes of the preceding sentence, aggregate contributions on behalf of a designated beneficiary include contributions to any prior ABLE account maintained by any State or its agency or instrumentality for the same designated beneficiary, or any former designated beneficiary to the extent his or her ABLE account funds were transferred to the designated beneficiary's ABLE account. The transfer of a designated beneficiary's ABLE account from one qualified ABLE program to another with a lower cumulative limit will not violate this rule, but qualified ABLE programs must prohibit subsequent contributions under this general rule. For purposes of this paragraph (g)(3), contributions do not include rollovers, program-to-program transfers or a designated beneficiary change to a new designated beneficiary who is an eligible individual and member of the family of the former designated beneficiary as defined in § 1.529A-1(b)(12).

(ii) ***Safe harbor.*** A qualified ABLE program maintained by a State or its agency or instrumentality satisfies the requirement under section 529A(b)(6) if it refuses to accept any additional contribution to an ABLE account (except as provided to the contrary in paragraph (g)(3)(i) of this section) while the balance in that account equals or exceeds the limit established by that State under section 529(b)(6). Nevertheless, without regard to the categories of transfers that caused the account balance to exceed the State limit, once the account balance falls below that limit, additional contributions, subject to the annual contributions limit under paragraph (g)(2) of this section and the limit established by such State under section 529(b)(6), again may be accepted.

(4) ***Return of excess contributions, excess compensation contributions, and excess aggregate contributions.*** If an excess contribution as defined in § 1.529A-1(b)(9), an excess compensation contribution as defined in paragraph (g)(2)(iii)(C) of this section, or an excess aggregate contribution as defined in § 1.529A-1(b)(10) is deposited into or allocated to the ABLE account of a designated beneficiary, a qualified ABLE program must return that excess contribution, excess compensation contribution, or excess aggregate contribution, including all net income attributable to that contribution, as determined under the rules set forth in § 1.408-11 (treating references to an IRA as references to an ABLE account and references to returned contributions under section 408(d)(4) as references to excess contributions or excess aggregate contributions), to the person or persons who made that contribution. Each excess contribution, excess compensation contribution, and excess

aggregate contribution must be returned to its contributor(s) on a last-in-first-out basis until the entire excess, along with all net income attributable to such excess, has been returned. In the case of an excess compensation contribution, the employed designated beneficiary, or the person acting on the employed designated beneficiary's behalf, is responsible for identifying any excess compensation contribution and for requesting the return of the excess compensation contribution. Returned contributions must be received by the contributor(s) on or before the due date (including extensions) of the Federal income tax return of the designated beneficiary for the taxable year in which the excess contribution or excess aggregate contribution was made. See § 1.529A-3(a) for Federal income tax considerations for the contributor(s). If an excess contribution or excess aggregate contribution and the net income attributable to the excess contribution or excess aggregate contribution are returned to a contributor other than the designated beneficiary, the qualified ABLE program must notify the designated beneficiary of such return at the time of the return. No notification is required if amounts are rejected by the qualified ABLE program before they are deposited into or allocated to the designated beneficiary's ABLE account.

(5) ***Restriction of contributors.*** A qualified ABLE program may allow the designated beneficiary, from time to time, to restrict who may make contributions to the designated beneficiary's ABLE account.

(h) ***Qualified disability expenses*** —

(1) ***In general.*** Qualified disability expenses are expenses incurred that relate to the blindness or disability of the designated beneficiary of the ABLE account and are for the benefit of that designated beneficiary in maintaining or improving his or her health, independence, or quality of life. See § 1.529A-1(b)(15). Such expenses include, but are not limited to, expenses related to the designated beneficiary's education, housing, transportation, employment training and support, assistive technology and related services, personal support services, health, prevention and wellness, financial management and administrative services, legal fees, expenses for oversight and monitoring, and funeral and burial expenses, as well as other expenses that may be identified from time to time in future guidance published in the Internal Revenue Bulletin. See § 601.601(d)(2) of this chapter. Qualified disability expenses include basic living expenses and are not limited to items for which there is a medical necessity or which solely benefit an individual with a disability.

(2) ***Example.*** The following example illustrates this paragraph (h): B, an individual, has a medically determined mental impairment that causes marked and severe limitations on B's ability to navigate and communicate. A smart phone would enable B to navigate and communicate more safely and effectively, thereby helping B to maintain B's independence and to improve B's quality of life. Therefore, the expense of buying, using, and maintaining a smart phone that is used by B would be a qualified disability expense.

(i) ***Separate accounting.*** A program will not be treated as a qualified ABLE program unless it provides separate accounting for each ABLE account. Separate accounting requires that contributions for the benefit of a designated beneficiary and any earnings attributable thereto must be allocated to that designated beneficiary's ABLE account. Whether or not a program provides each designated beneficiary an annual account statement showing the total account balance, the investment in the account, the accrued earnings, and the distributions from the account, the program must give this information to the designated beneficiary upon request.

(j) ***Program-to-program transfers.*** A qualified ABLE program may permit a change of qualified ABLE program or a change of designated beneficiary by means of a program-to-program transfer as defined in § 1.529A-1(b)(13). In that event, subject to any contrary provisions or limitations adopted by the qualified

ABLE program, rules similar to the rules of § 1.401(a)(31)-1, Q&A-3 and 4 (which apply for purposes of a direct rollover from a qualified plan to an eligible retirement plan) apply for purposes of determining whether an amount is paid in the form of a program-to-program transfer.

(k) *Carryover of attributes* —

(1) ***In general.*** Upon a rollover, program-to-program transfer, or change of designated beneficiary, all of the attributes of the former ABLE account relevant for purposes of calculating the investment in the account are applicable to the recipient ABLE account. The portion of the rollover or transfer amount that constituted investment in the account from which the distribution or transfer was made is added to investment in the recipient ABLE account. In addition, the portion of the rollover or transfer amount that constituted earnings of the account from which the distribution or transfer was made is added to the earnings of the recipient ABLE account.

(2) ***Annual contribution limit.*** Upon a rollover or program-to-program transfer, for purposes of applying the annual contribution limit under paragraph (g)(2) of this section to the transferee account, annual contributions to the designated beneficiary's transferor ABLE account during the taxable year in which the rollover or program-to-program transfer occurs are included. However, upon a change of designated beneficiary, or upon a rollover or program-to-program transfer to the ABLE account of a different designated beneficiary who is both a member of the family as defined in § 1.529A-1(b)(12) and an eligible individual, no amounts contributed to the prior designated beneficiary's ABLE account are included when applying the annual contribution limit under paragraph (g)(2) of this section.

(3) ***Investment direction limit.*** Upon a rollover or program-to-program transfer, the number of investment directions by the designated beneficiary include the number of investment directions made prior to the rollover or program-to-program transfer during the same taxable year for purposes of paragraph (l) of this section. However, upon a change of designated beneficiary, or upon a rollover or program-to-program transfer to the ABLE account of a different designated beneficiary who is both a member of the family as defined in § 1.529A-1(b)(12) and an eligible individual, the number of investment directions made for the prior designated beneficiary's ABLE account are not included in determining the number of investment directions made for the new designated beneficiary's ABLE account in that same year.

(l) ***Investment direction.*** A program will not be treated as a qualified ABLE program unless it provides that the designated beneficiary of an ABLE account established under such program may direct, whether directly or indirectly, the investment of any contributions to the program (or any earnings thereon) no more than two times in any calendar year. Such an investment direction does not include a request to transfer any part of the account balance from an investment option to a cash equivalent option to effectuate a distribution, or the automatic rebalancing of the assets of an ABLE account to maintain the asset allocation level chosen when the account was established or by a subsequent investment direction.

(m) ***No pledging of interest as security for a loan.*** A program will not be treated as a qualified ABLE program unless the terms of the program, or a State statute or regulation that governs the program, prohibit any interest in the program or any portion thereof from being used as security for a loan. For this purpose, the program administrator's advance of funds to satisfy a withdrawal request during the period between the sale of an asset in the ABLE account (whose value is sufficient to satisfy the withdrawal request) and the clearing or settlement of that sale, does not constitute a loan, pledge, or grant of security for a loan. Similarly, the use of checking accounts or debit cards to facilitate a qualified ABLE program's ability to make distributions will not be treated as a pledge or grant of security for a loan during the period between

the use of the check or debit card and the clearing or settlement of that transaction, provided that the ABLE program does not advance funds to a designated beneficiary in excess of the amount in the designated beneficiary's ABLE account.

(n) ***No sale or exchange.*** A qualified ABLE program must ensure that no interest in an ABLE account may be sold or exchanged.

(o) ***Post-death payments.*** A qualified ABLE program must provide that a portion or all of the balance remaining in the ABLE account of a deceased designated beneficiary must be distributed to a State that files a claim against the designated beneficiary or the ABLE account itself with respect to benefits provided to the designated beneficiary under that State's Medicaid plan established under title XIX of the Social Security Act. The payment of such claim (if any) will be made only after providing for the payment from the designated beneficiary's ABLE account of the designated beneficiary's funeral and burial expenses (including the unpaid balance of a pre-death contract for those services) and all outstanding payments due for his or her other qualified disability expenses, and will be limited to the amount of the total medical assistance paid for the designated beneficiary after the establishment of the ABLE account over the amount of any premiums paid, whether from the ABLE account or otherwise by or on behalf of the designated beneficiary, to a Medicaid Buy-In program under any such State Medicaid plan. The establishment of the ABLE account is the date on which the ABLE account was established or, if earlier, the date on which was established any ABLE account for the same designated beneficiary from which amounts were rolled over or transferred to the ABLE account, but in no event earlier than the date on which the designated beneficiary became the designated beneficiary of the account from which amounts were transferred. After the expiration of the applicable statute of limitations for filing Medicaid claims against the designated beneficiary's estate, a qualified ABLE program may distribute the balance of the ABLE account to the successor designated beneficiary or, if none, to the deceased designated beneficiary's estate. A State law prohibiting the filing of such a claim against either the ABLE account or the designated beneficiary's estate will not prevent that State's program from being a qualified ABLE program.

(p) ***Reporting requirements.*** A qualified ABLE program must comply with all applicable reporting requirements, including without limitation those described in §§ 1.529A-5 through 1.529A-7.

(q) ***Applicability date.*** This section applies to calendar years beginning on or after January 1, 2021. See § 1.529A-8 for the provision of transition relief.

§ 1.529A-3 Tax treatment.

(a) ***Taxation of distributions*** —

(1) ***In general.*** Each distribution from an ABLE account consists of an earnings portion of the account (computed in accordance with paragraph (c) of this section) and investment in the account. If the total amount distributed from an ABLE account to or for the benefit of the designated beneficiary of that ABLE account during his or her taxable year does not exceed the qualified disability expenses of the designated beneficiary paid during that year, no amount distributed is includible in the gross income of the designated beneficiary for that year. If the total amount distributed from an ABLE account to or for the benefit of the designated beneficiary of that ABLE account during his or her taxable year exceeds the qualified disability expenses of the designated beneficiary paid during that year (regardless of when incurred), the distributions from the ABLE account, except to the extent excluded from gross income under this section or any other provision of chapter 1 of the Internal Revenue Code, must be included in the gross income of the designated beneficiary in the manner provided under this section and section 72. The amount to be included in gross income is based on

the earnings portion of each distribution, computed in accordance with paragraph (c) of this section. The earnings portion that is includible in gross income is the sum of the earnings portion of all distributions made in that year, reduced by an amount that bears the same ratio to the total earnings portion as the amount of qualified disability expenses paid during the year bears to such total distributions during the year. If an excess contribution or excess aggregate contribution is returned within the time period required in § 1.529A-2(g)(4), any net income distributed is includible in the gross income of the contributor(s) in the taxable year in which the excess contribution or excess aggregate contribution was made.

(2) ***Additional period.*** The designated beneficiary may treat as having been paid during the preceding taxable year qualified disability expenses paid on or before the 60th day immediately following the end of the designated beneficiary's preceding taxable year. Qualified disability expenses treated, pursuant to the rule in the preceding sentence, as having been paid during the designated beneficiary's taxable year immediately prior to the year of their actual payment may not be included in the total qualified disability expenses for the year in which they were paid.

(b) ***Additional exclusions from gross income*** —

(1) ***Rollover.*** A rollover as defined in § 1.529A-1(b)(16) is not included in gross income under paragraph (a) of this section.

(2) ***Program-to-program transfers.*** A program-to-program transfer as defined in § 1.529A-1(b)(13) is not a distribution and is not included in gross income under paragraph (a) of this section.

(3) ***Change of designated beneficiary*** —

(i) ***In general.*** A change of designated beneficiary of an ABLE account is not treated as a distribution for purposes of section 529A, and is not included in gross income under paragraph (a) of this section, if the successor designated beneficiary is—

(A) An eligible individual for the taxable year in which the change is made; and

(B) A member of the family (as defined in § 1.529A-1(b)(12)) of the former designated beneficiary.

(ii) ***Other designated beneficiary changes.*** In the case of any change of designated beneficiary not described in paragraph (b)(3)(i) of this section, the former designated beneficiary of that ABLE account will be treated as having received a distribution of the fair market value of the assets in that ABLE account on the date on which the change is made to the new designated beneficiary.

(4) ***Payments to creditors post-death.*** Distributions made after the death of the designated beneficiary in payment of outstanding obligations due for qualified disability expenses, as well as the funeral and burial expenses of the designated beneficiary, are not included in gross income of the designated beneficiary or his or her estate. Included among these obligations is the post-death payment of any part of a claim filed against the deceased designated beneficiary or his or her estate or ABLE account by a State with respect to benefits provided to the designated beneficiary under that State's Medicaid plan.

(c) ***Computation of earnings.*** The earnings portion of a distribution is equal to the product of the amount of the distribution and the earnings ratio, as defined in § 1.529A-1(b)(7). The balance of the distribution (the amount of the distribution minus the earnings portion of that distribution) is the portion of that distribution that constitutes the return of investment in the account.

(d) *Additional tax on amounts includible in gross income* —

(1) *In general.* If any amount of a distribution from an ABLE account is includible in the gross income of a person for any taxable year under paragraph (a) of this section (includible amount), the income tax imposed on that person by chapter 1 of the Internal Revenue Code will be increased by an amount equal to 10 percent of the includible amount.

(2) *Exceptions* —

(i) *Distributions on or after the death of the designated beneficiary.* Paragraph (d)(1) of this section does not apply to any distribution made from the ABLE account on or after the death of the designated beneficiary to the estate of the designated beneficiary, to an heir or legatee of the designated beneficiary, or to a creditor described in paragraph (b)(4) of this section.

(ii) *Returned excess contributions and additional accounts.* Paragraph (d)(1) of this section does not apply to any return made in accordance with § 1.529A-2(g)(4) of an excess contribution as defined in § 1.529A-1(b)(9), an excess compensation contribution as defined in § 1.529A-2(g)(2)(iii)(C), excess aggregate contribution as defined in § 1.529A-1(b)(10), or an additional account as referenced in § 1.529A-2(c)(3)(ii)(A), (B), or (C).

(e) *Tax on excess contributions.* Under section 4973(h), a contribution to an ABLE account in excess of the annual contributions limit described in § 1.529A-2(g)(2) is subject to an excise tax in an amount equal to 6 percent of the excess contribution. However, any the excess contribution or excess compensation contribution as defined in § 1.529A-2(g)(2)(iii)(C) returned in accordance with the provisions of § 1.529A-2(g)(4) is not treated as a contribution.

(f) *Filing requirements.* A qualified ABLE program is not required to file Form 990, "Return of Organization Exempt From Income Tax," Form 1041, "U.S. Income Tax Return for Estates and Trusts," or Form 1120, "U.S. Corporation Income Tax Return." However, a qualified ABLE program is required to file Form 990-T, "Exempt Organization Business Income Tax Return," if such filing would be required under the rules of §§ 1.6012-2(e) and 1.6012-3(a)(5) if the ABLE program were an organization described in those sections.

(g) *No inference outside section 529A.* The rules provided in this section concerning the Federal tax treatment of contributions apply only for purposes of the application of section 529A. No inference is intended with respect to the application of any other Code provisions or Federal tax doctrines. For example, a contribution made by an employer to the ABLE account of an employee or an employee's family member is subject to the rules governing the Federal taxation of compensation.

(h) *Applicability date.* This section applies to calendar years beginning on or after January 1, 2021. See § 1.529A-8 for the provision of transition relief.

§ 1.529A-4 Gift, estate, and generation-skipping transfer taxes.

(a) *Contributions* —

(1) *In general.* Each contribution by a person to an ABLE account other than by the designated beneficiary of that account is treated as a completed gift to the designated beneficiary of the account for gift tax purposes. Under the applicable Federal gift tax rules, a contribution from a corporation, partnership, trust, estate, or other entity is treated as a gift by the shareholders, partners, or other beneficial owners in proportion to their respective ownership interests in the entity. See § 25.2511-1(c) and (h) of this chapter. A gift to an ABLE account is not treated as either a gift of a future interest in property, or a qualified transfer under section 2503(e). To the extent a contributor's gifts to the designated beneficiary, including gifts paid into the designated beneficiary's

ABLE account, do not exceed the annual limit in section 2503(b), the contribution is not a taxable gift. This provision, however, does not change any other provision applicable to the transfer. For example, a contribution by the employer of the designated beneficiary's parent continues to constitute earned income to the parent and then a gift by the parent to the designated beneficiary. The timely return of an excess contribution or an excess aggregate contribution in accordance with § 1.529A-2(g)(4) is not a taxable gift.

(2) ***Generation-skipping transfer (GST) tax.*** To the extent the contribution into an ABLE account is a nontaxable gift for Federal gift tax purposes, the inclusion ratio for purposes of the GST tax will be zero pursuant to section 2642(c)(1).

(3) ***Designated beneficiary as contributor.*** A designated beneficiary may make a contribution to fund his or her own ABLE account. That contribution is not a gift.

(b) ***Distributions.*** No distribution from an ABLE account to or for the benefit of the designated beneficiary is treated as a taxable gift to that designated beneficiary.

(c) ***Transfer to another designated beneficiary.*** Neither gift tax nor generation-skipping transfer tax applies to the transfer (by rollover, program-to-program transfer, or change of beneficiary) of part or all of an ABLE account to the ABLE account of a different designated beneficiary if the successor designated beneficiary is both an eligible individual and a member of the family (as described in § 1.529A-1(b)(12)) of the designated beneficiary. Any other transfer will constitute a gift by the designated beneficiary to the successor designated beneficiary, and the usual gift and GST tax rules will apply.

(d) ***Transfer tax on death of designated beneficiary.*** Upon the death of the designated beneficiary, the designated beneficiary's ABLE account is includible in his or her gross estate for estate tax purposes under section 2031. The payment of outstanding qualified disability expenses and the payment of certain claims made by a State under its Medicaid plan may be deductible for estate tax purposes if the requirements of section 2053 are satisfied.

(e) ***Applicability date.*** This section applies to calendar years beginning on or after January 1, 2021. See § 1.529A-8 for the provision of transition relief.

§ 1.529A-5 Reporting of the establishment of and contributions to an ABLE account.

(a) ***In general.*** A filer defined in paragraph (b)(1) of this section must, with respect to each ABLE account—

(1) File an annual information return, as described in paragraph (c) of this section, with the Internal Revenue Service; and

(2) Furnish an annual statement, as described in paragraph (d) of this section, to the designated beneficiary of the ABLE account.

(b) ***Additional definitions.*** In addition to the definitions in § 1.529A-1(b), the following definitions also apply for purposes of this section—

(1) ***Filer*** means the State or its agency or instrumentality that establishes and maintains the qualified ABLE program under which an ABLE account is established. The filing may be done by either an officer or employee of the State or its agency or instrumentality having control of the qualified ABLE program, or the officer's or employee's designee.

(2) ***TIN*** means taxpayer identification number as defined in section 7701(a)(41).

(c) ***Requirement to file return*** —

(1) ***Form of return.*** For purposes of reporting the information described in paragraph (c)(2) of this section, the filer must file Form 5498-QA, "ABLE Account Contribution Information," or any successor form, together with Form 1096, "Annual Summary and Transmittal of U.S. Information Returns."

(2) ***Information included on return.*** With respect to each ABLE account, the filer must include on the return—

(i) The name, address, and TIN of the designated beneficiary of the ABLE account;

(ii) The name, address, and TIN of the filer;

(iii) Information regarding the establishment of the ABLE account, as required by the form and its instructions;

(iv) Information regarding the disability certification or other basis for eligibility of the designated beneficiary, as required by the form and its instructions. For further information regarding eligibility and disability certification, see § 1.529A-2(d) and (e), respectively;

(v) The total amount of any contributions made with respect to the ABLE account during the calendar year; such contributions do not include any contribution rejected and returned to the contributor before being deposited into or allocated to the ABLE account or any excess contributions, excess compensation contributions, or excess aggregate contributions returned as described in § 1.529A-2(g)(4);

(vi) The fair market value of the ABLE account as of the last day of the calendar year; and

(vii) Any other information required by the form, its instructions, or published guidance. See §§ 601.601(d) and 601.602 of this chapter.

(3) ***Time and manner of filing return*** —

(i) ***In general.*** Except as provided in paragraph (c)(3)(ii) of this section, the information returns required under this paragraph must be filed on or before May 31 of the year following the calendar year with respect to which the return is being filed, in accordance with the forms and their instructions.

(ii) ***Extensions of time.*** See §§ 1.6081-1 and 1.6081-8 for rules relating to extensions of time to file information returns required in this section.

(iii) ***Electronic filing.*** See § 301.6011-2 of this chapter for rules relating to electronic filing. See also Instructions for Forms 1099-QA and 5498-QA, Distributions From ABLE Accounts and ABLE Account Contribution Information.

(iv) ***Substitute forms.*** The filer may file the returns required under this paragraph (c) on an acceptable substitute form. See Publication 1179, "General Rules and Specifications for Substitute Forms 1096, 1098, 1099, 5498, and Certain Other Information Returns."

(d) ***Requirement to furnish statement*** —

(1) ***In general.*** The filer must furnish a statement to the designated beneficiary of the ABLE account for which it is required to file a Form 5498-QA (or any successor form). The statement must include—

(i) The information required under paragraph (c)(2) of this section;

(ii) A legend that identifies the statement as important tax information that is being furnished to the Internal Revenue Service; and

(iii) The name and address of the office or department of the filer that is the information contact for questions regarding the ABLE account to which the Form 5498-QA relates.

(2) *Time and manner of furnishing statement* —

(i) ***In general.*** Except as provided in paragraph (d)(2)(ii) of this section, the filer must furnish the statement described in paragraph (d)(1) of this section to the designated beneficiary on or before March 15 of the year following the calendar year with respect to which the statement is being furnished. If mailed, the statement must be sent to the designated beneficiary's last known address. The statement may be furnished electronically, as provided in § 1.529A-7.

(ii) ***Extensions of time.*** The Internal Revenue Service may, at its discretion, grant an extension of time to furnish statements required in this section.

(3) ***Copy of Form 5498-QA.*** The filer may satisfy the requirement of this paragraph (d) by furnishing either a copy of Form 5498-QA (or successor form) or an acceptable substitute form. See Publication 1179, "General Rules and Specifications for Substitute Forms 1096, 1098, 1099, 5498, and Certain Other Information Returns."

(e) ***Request for TIN of designated beneficiary.*** The filer must request the TIN of the designated beneficiary at the time the ABLE account is established if the filer does not already have a record of the designated beneficiary's correct TIN. The filer must clearly notify the designated beneficiary that the law requires the designated beneficiary to furnish a TIN so that it may be included on an information return to be filed by the filer. The designated beneficiary may provide his or her TIN in any manner including orally, in writing, or electronically. If the TIN is furnished in writing, no particular form is required. Form W-9, "Request for Taxpayer Identification Number and Certification," may be used, or the request may be incorporated into the forms related to the establishment of the ABLE account.

(f) *Penalties* —

(1) ***Failure to file return.*** The section 6693 penalty may apply to the filer that fails to file information returns at the time and in the manner required by this section, unless it is shown that such failure is due to reasonable cause. See section 6693 and § 301.6693-1 of this chapter.

(2) ***Failure to furnish TIN.*** The section 6723 penalty may apply to any designated beneficiary who fails to furnish his or her TIN to the filer. See section 6723, and § 301.6723-1 of this chapter, for rules relating to the penalty for failure to furnish a TIN.

(g) ***Applicability date.*** The rules of this section apply to information returns required to be filed, and payee statements required to be furnished, after December 31, 2020. See § 1.529A-8 for the provision of transition relief.

§ 1.529A-6 Reporting of distributions from and termination of an ABLE account.

(a) ***In general.*** The filer as defined in § 1.529A-5(b)(1) must, with respect to each ABLE account from which any distribution is made or which is terminated during the calendar year—

(1) File an annual information return, as described paragraph (b) of this section, with the Internal Revenue Service; and

(2) Furnish an annual statement, as described in paragraph (c) of this section, to the designated beneficiary of the ABLE account and to each contributor who received a returned contribution in accordance with § 1.529A-2(g)(4) attributable to the calendar year.

(b) *Requirement to file return* —

(1) ***Form of return.*** For purposes of reporting the information in paragraph (b)(2) of this section, the filer must file Form 1099-QA, "Distributions From ABLE Accounts," or any successor form, together with Form 1096, "Annual Summary and Transmittal of U.S. Information Returns."

(2) ***Information included on return.*** The filer must include on the return—

(i) The name, address, and TIN of the recipient of the payment, whether the designated beneficiary of the ABLE account or any contributor who received a returned contribution in accordance with § 1.529A-2(g)(4) attributable to the calendar year;

(ii) The name, address, and TIN of the filer;

(iii) Whether the return is being filed with respect to the designated beneficiary or to a contributor;

(iv) The aggregate amount of distributions or returned contributions (including net income attributable to the returned contributions) from the ABLE account to the recipient during the calendar year;

(v) Information as to basis and earnings with respect to such distributions or returns of contributions;

(vi) Information regarding termination (if any) of the ABLE account if the recipient is the designated beneficiary;

(vii) Information regarding each program-to-program transfer from the ABLE account during the designated beneficiary's taxable year; and

(viii) Any other information required by the form, its instructions, or published guidance. See §§ 601.601(d) and 601.602 of this chapter.

(3) ***Information excluded.*** A State filing a claim against the estate or ABLE account of a deceased designated beneficiary with respect to benefits provided to the designated beneficiary under that State's Medicaid plan is a creditor, and not a beneficiary, so the payment of the claim is not a distribution from the ABLE account and should not be reported as such on the Form 1099-QA for that year.

(4) *Time and manner of filing return* —

(i) ***In general.*** Except as provided in paragraph (b)(4)(ii) of this section, the Forms 1099-QA and 1096 must be filed on or before February 28 (March 31 if filing electronically) of the year following the calendar year with respect to which the return is being filed, in accordance with the forms and their instructions.

(ii) ***Extensions of time.*** See §§ 1.6081-1 and 1.6081-8 for rules relating to extensions of time to file information returns required in this section.

(iii) ***Electronic filing.*** See § 301.6011-2 of this chapter for rules relating to electronic filing. See also Instructions for Forms 1099-QA and 5498-QA, Distributions From ABLE Accounts and ABLE Account Contribution Information.

(iv) ***Substitute forms.*** The filer may file the return required under this paragraph (b) on an acceptable substitute form. See Publication 1179, "General Rules and Specifications for Substitute Forms 1096, 1098, 1099, 5498, and Certain Other Information Returns."

(c) *Requirement to furnish statement* —

(1) ***In general.*** The filer must furnish a statement to the designated beneficiary and each contributor (if any) of the ABLE account for which it is required to file a Form 1099-QA (or any successor form). The statement must include—

(i) The information required under paragraph (b)(2) of this section.

(ii) A legend that identifies the statement as important tax information that is being furnished to the Internal Revenue Service; and

(iii) The name and address of the office or department of the filer that is the information contact for questions regarding the ABLE account to which the Form 1099-QA relates.

(2) *Time and manner of furnishing statement* —

(i) ***In general.*** Except as provided in paragraph (c)(2)(ii) of this section, a filer must furnish the statement described in paragraph (c)(1) of this section to the designated beneficiary or contributor on or before January 31 of the year following the calendar year with respect to which the statement is being furnished. If mailed, the statement must be sent to the recipient's last known address. The statement may be furnished electronically, as provided in § 1.529A-7.

(ii) ***Extensions of time.*** The Internal Revenue Service may, at its discretion, grant an extension of time to furnish statements required in this section.

(3) ***Copy of Form 1099-QA.*** A filer may satisfy the requirement of this paragraph (c) by furnishing either a copy of Form 1099-QA (or successor form) or an acceptable substitute form. See Publication 1179, "General Rules and Specifications for Substitute Forms 1096, 1098, 1099, 5498, and Certain Other Information Returns."

(d) *Request for TIN of contributor(s)* —

(1) ***In general.*** Except as provided in paragraph (d)(2) of this section, a filer must request the TIN of each contributor to the ABLE account at the time a contribution is made, if the filer does not already have a record of that person's correct TIN.

(2) ***Exception.*** If the filer has a system in place to identify and reject amounts that either would constitute an excess contribution or excess aggregate contribution (as defined in § 1.529A-1(b)(9) or (10), respectively) or were contributed to an additional ABLE account as described in § 1.529A-2(c)(3)(ii)(C) (excess amounts) before those excess amounts are deposited into or allocated to an ABLE account, the filer need not request the TIN of each contributor at the time of contribution. A filer with such a system must request a contributor's TIN only if and when an excess contribution or excess aggregate contribution nevertheless is deposited into or allocated to an account and the filer must return the excess amounts including net income to the contributor. The filer must clearly notify each such contributor to the account that the law requires that person to furnish a TIN so that it may be included on an information return to be filed by the filer. The contributor may provide his or her TIN in any manner including orally, in writing, or electronically. If the TIN is furnished in writing, no particular form is required. Form W-9, "Request for Taxpayer Identification Number and Certification," may be used, or the request may be incorporated into the forms related to the establishment of the ABLE account.

(e) *Penalties* —

(1) ***Failure to file return.*** The section 6693 penalty may apply to a filer that fails to file information returns at the time and in the manner required by this section, unless it is shown that such failure is due to reasonable cause. See section 6693 and § 301.6693-1 of this chapter.

(2) ***Failure to furnish TIN.*** The section 6723 penalty may apply to any contributor who fails to furnish his or her TIN to the filer in accordance with paragraph (d) of this section. See section 6723, and § 301.6723-1 of this chapter, for rules relating to the penalty for failure to furnish a TIN.

(f) ***Applicability date.*** The rules of this section apply to information returns required to be filed, and payee statements required to be furnished, after December 31, 2020. See § 1.529A-8 for the provision of transition relief.

§ 1.529A-7 Electronic furnishing of statements to designated beneficiaries and contributors.

(a) ***Electronic furnishing of statements*** —

(1) ***In general.*** A filer required under § 1.529A-5 or § 1.529A-6 to furnish a written statement to a designated beneficiary of or contributor to an ABLE account may furnish the statement in an electronic format in lieu of a paper format. A filer who meets the requirements of paragraphs (a)(2) through (6) of this section is treated as furnishing the required statement.

(2) ***Consent*** —

(i) ***In general.*** The recipient of the statement must have affirmatively consented to receive the statement in an electronic format. The consent may be made electronically in any manner that reasonably demonstrates that the recipient can access the statement in the electronic format in which it will be furnished to the recipient. Alternatively, the consent may be made in a paper document if it is confirmed electronically.

(ii) ***Withdrawal of consent.*** The consent requirement of this paragraph (a)(2) is not satisfied if the recipient withdraws the consent and the withdrawal takes effect before the statement is furnished. The filer may provide that a withdrawal of consent takes effect either on the date it is received by the filer or on another date no more than 60 days later. The filer also may provide that a request for a paper statement will be treated as a withdrawal of consent.

(iii) ***Change in hardware or software requirements.*** If a change in the hardware or software required to access the statement creates a material risk that the recipient will not be able to access the statement, the filer must, prior to changing the hardware or software, provide the recipient with a notice. The notice must describe the revised hardware and software required to access the statement and inform the recipient that a new consent to receive the statement in the revised electronic format must be provided to the filer if the recipient does not want to withdraw the consent. After implementing the revised hardware and software, the filer must obtain from the recipient, in the manner described in paragraph (a)(2)(i) of this section, a new consent or confirmation of consent to receive the statement electronically.

(iv) ***Examples.*** For purposes of the following examples that illustrate the rules of this paragraph (a)(2), assume that the requirements of § 1.529A-7(a)(3) have been met:

(A) ***Example 1.*** Filer F sends Recipient R a letter stating that R may consent to receive statements required under § 1.529A-5 or § 1.529A-6 electronically on a website instead of in a paper format. The letter contains instructions explaining how to consent to receive the statements electronically by accessing the website, downloading the consent document, completing the consent document, and emailing the completed consent back

to F. The consent document posted on the website uses the same electronic format that F will use for the electronically furnished statements. R reads the instructions and submits the consent in the manner provided in the instructions. R has consented to receive the statements electronically in the manner described in paragraph (a)(2)(i) of this section.

(B) ***Example 2.*** Filer F sends Recipient R an email stating that R may consent to receive statements required under § 1.529A-5 or § 1.529A-6 electronically instead of in a paper format. The email contains an attachment instructing R how to consent to receive the statements electronically. The email attachment uses the same electronic format that F will use for the electronically furnished statements. R opens the attachment, reads the instructions, and submits the consent in the manner provided in the instructions. R has consented to receive the statements electronically in the manner described in paragraph (a)(2)(i) of this section.

(C) ***Example 3.*** Filer F posts a notice on its website stating that Recipient R may receive statements required under § 1.529A-5 or § 1.529A-6 electronically instead of in a paper format. The website contains instructions on how R may access a secure web page and consent to receive the statements electronically. By accessing the secure web page and giving consent, R has consented to receive the statements electronically in the manner described in paragraph (a)(2)(i) of this section.

(3) ***Required disclosures*** —

(i) ***In general.*** Prior to, or at the time of, a recipient's consent, the filer must provide to the recipient a clear and conspicuous disclosure statement containing each of the disclosures described in paragraphs (a)(3)(ii) through (viii) of this section.

(ii) ***Paper statement.*** The recipient must be informed that the statement will be furnished on paper if the recipient does not consent to receive it electronically.

(iii) ***Scope and duration of consent.*** The recipient must be informed of the scope and duration of the consent. For example, the recipient must be informed whether the consent applies to statements furnished every year after the consent is given until it is withdrawn in the manner described in paragraph (a)(3)(v)(A) of this section, or only to the statement required to be furnished on or before the due date immediately following the date on which the consent is given.

(iv) ***Post-consent request for a paper statement.*** The recipient must be informed of any procedure for obtaining a paper copy of the recipient's statement after giving the consent and whether a request for a paper statement will be treated as a withdrawal of consent.

(v) ***Withdrawal of consent.*** The recipient must be informed that—

(A) The recipient may withdraw a consent by writing (electronically or on paper) to the person or department whose name, mailing address, and email address is provided in the disclosure statement;

(B) The filer will confirm, in writing (electronically or on paper), the withdrawal and the date on which it takes effect; and

(C) A withdrawal of consent does not apply to a statement that was furnished electronically in the manner described in this paragraph (a) before the date on which the withdrawal of consent takes effect.

(vi) ***Notice of termination.*** The recipient must be informed of the conditions under which a filer will cease furnishing statements electronically to the recipient.

(vii) ***Updating information.*** The recipient must be informed of the procedures for updating the information needed by the filer to contact the recipient. The filer must inform the recipient of any change in the filer's contact information.

(viii) ***Hardware and software requirements.*** The recipient must be provided with a description of the hardware and software required to access, print, and retain the statement, and the date when the statement will no longer be available on the website.

(4) ***Format.*** The electronic version of the statement must contain all required information. See Publication 1179, "General Rules and Specifications for Substitute Forms 1096, 1098, 1099, 5498, and Certain Other Information Returns."

(5) ***Notice*** —

(i) ***In general.*** If the statement is furnished on a website, the filer must notify the recipient that the statement is posted on a website. The notice may be delivered by mail, electronic mail, or in person. The notice must provide instructions on how to access and print the statement. The notice must include the following statement in capital letters, "IMPORTANT TAX RETURN DOCUMENT AVAILABLE." If the notice is provided by electronic mail, the foregoing statement must be in the subject line of the electronic mail.

(ii) ***Undeliverable electronic address.*** If an electronic notice described in paragraph (a)(5)(i) of this section is returned as undeliverable, and the correct electronic address cannot be obtained from the filer's records or from the recipient, then the filer must furnish the notice by mail or in person within 30 days after the electronic notice is returned.

(iii) ***Corrected statements.*** If the filer has corrected a recipient's statement that was furnished electronically, the filer must furnish the corrected statement to the recipient electronically. If the recipient's statement was furnished through a website posting and the filer has corrected the statement, the filer must notify the recipient that it has posted the corrected statement on the website within 30 days of such posting in the manner described in paragraph (a)(5)(i) of this section. The corrected statement or the notice must be furnished by mail or in person if—

(A) An electronic notice of the website posting of an original statement or the corrected statement was returned as undeliverable; and

(B) The recipient has not provided a new email address.

(6) ***Access period.*** Statements furnished on a website must be retained on the website through October 15 of the year following the calendar year to which the statements relate (or the first business day after such October 15 if October 15 falls on a Saturday, Sunday, or legal holiday). The filer must maintain access to corrected statements that are posted on the website through October 15 of the year following the calendar year to which the statements relate (or the first business day after such October 15 if October 15 falls on a Saturday, Sunday, or legal holiday) or the date 90 days after the corrected statements are posted, whichever is later. The rules in this paragraph (a)(6) do not replace the filer's obligation to keep records under section 6001 and § 1.6001-1(a).

(b) ***Applicability date.*** This section applies to statements required to be furnished after December 31, 2020. See § 1.529A-8 for the provision of transition relief.

§ 1.529A-8 Applicability dates and transition relief.

(a) ***Applicability dates.*** Except as otherwise provided in paragraph (b) of this section, §§ 1.529A-1 through 1.529A-4 apply for calendar years beginning on or after January 1, 2021, §§ 1.529A-5 and 1.529A-6 apply to information returns required to be filed, and payee statements required to be furnished, after December 31, 2020, and § 1.529A-7 applies to statements required to be furnished after December 31, 2020.

(b) ***Transition relief*** —

(1) ***In general.*** Any program purporting to be a qualified ABLE program will not be disqualified during the transition period set forth in paragraph (b)(2) of this section (transition period) solely because of noncompliance with one or more provisions of §§ 1.529A-1 through 1.529A-7, provided that the program is established and operated in accordance with a reasonable, good faith interpretation of section 529A. Similarly, no ABLE account established and maintained under a program that meets the requirements of this paragraph will fail to qualify as an ABLE account during the transition period. However, to be a qualified ABLE program and an ABLE account under such a program after the transition period, the program and each account established and maintained under the program must be in compliance with §§ 1.529A-1 through 1.529A-7 by the end of the transition period. In no event, however, will a complete failure to file and furnish reports, information returns and payee statements required under section 529A(d)(1) for any accounts established and maintained under the program (including for calendar years beginning prior to January 1, 2021), be deemed to be due to reasonable cause for purposes of avoiding penalties imposed under section 6693.

(2) ***Transition period.*** For purposes of paragraph (b)(1) of this section, the transition period begins with the establishment of the program purporting to be a qualified ABLE program and continues through the later of—

(i) November 21, 2022; or

(ii) The day immediately preceding the first day of the qualified ABLE program's first taxable year beginning after the close of the first regular session of the State legislature that begins after November 19, 2020. If a State has a two-year legislative session, each calendar year of such session will be deemed to be a separate regular session of the State legislature for purposes of this paragraph.

(3) ***Compliance after transition period.*** After the transition period, a program and an account established and maintained under that program must be in compliance with §§ 1.529A-1 through 1.529A-7.

CORPORATIONS USED TO AVOID INCOME TAX ON SHAREHOLDERS

Corporations Improperly Accumulating Surplus

§ 1.531-1 Imposition of tax.

Section 531 imposes (in addition to the other taxes imposed upon corporations by chapter 1 of the Code) a graduated tax on the accumulated taxable income of every corporation described in section 532 and § 1.532-1. In the case of an affiliated group which makes or is required to make a consolidated return see § 1.1502-43. All of the taxes on corporations under chapter 1 of the Code are treated as one tax for purposes of assessment, collection, payment, period of limitations, etc. See section 535 and §§ 1.535-1, 1.535-2, and 1.535-3 for the definition and determination of accumulated taxable income.

(Secs. 1502 and 7805 of the Internal Revenue Code of 1954 (68A Stat. 637, 917; 26 U.S.C. 1502, 7805))

[T.D. 6500, 25 FR 11737, Nov. 26, 1960, as amended by T.D. 7244, 37 FR 28897, Dec. 30, 1972; T.D. 7937, 49 FR 3462, Jan. 27, 1984]

§ 1.532-1 Corporations subject to accumulated earnings tax.

(a) ***General rule.***

(1) The tax imposed by section 531 applies to any domestic or foreign corporation (not specifically excepted under section 532(b) and paragraph (b) of this section) formed or availed of to avoid or prevent the imposition of the individual income tax on its shareholders, or on the shareholders of any other corporation, by permitting earnings and profits to accumulate instead of dividing or distributing them. See section 533 and § 1.533-1, relating to evidence of purpose to avoid income tax with respect to shareholders.

(2) The tax imposed by section 531 may apply if the avoidance is accomplished through the formation or use of one corporation or a chain of corporations. For example, if the capital stock of the M Corporation is held by the N Corporation, the earnings and profits of the M Corporation would not be returned as income subject to the individual income tax until such earnings and profits of the M Corporation were distributed to the N Corporation and distributed in turn by the N Corporation to its shareholders. If either the M Corporation or the N Corporation was formed or is availed of for the purpose of avoiding or preventing the imposition of the individual income tax upon the shareholders of the N Corporation, the accumulated taxable income of the corporation so formed or availed of (M or N, as the case may be) is subject to the tax imposed by section 531.

(b) ***Exceptions.*** The accumulated earnings tax imposed by section 531 does not apply to a personal holding company (as defined in section 542), to a foreign personal holding company (as defined in section 552), or to a corporation exempt from tax under subchapter F, chapter 1 of the Code.

(c) ***Foreign corporations.*** Section 531 is applicable to any foreign corporation, whether resident or nonresident, with respect to any income derived from sources, within the United States, if any of its shareholders are subject to income tax on the distributions of the corporation by reason of being

(1) citizens or residents of the United States, or

(2) nonresident alien individuals to whom section 871 is applicable, or

(3) foreign corporations if a beneficial interest therein is owned directly or indirectly by any shareholder specified in subparagraph (1) or (2) of this paragraph.

§ 1.533-1 Evidence of purpose to avoid income tax.

(a) ***In general.***

(1) The Commissioner's determination that a corporation was formed or availed of for the purpose of avoiding income tax with respect to shareholders is subject to disproof by competent evidence. Section 533(a) provides that the fact that earnings and profits of a corporation are permitted to accumulate beyond the reasonable needs of the business shall be determinative of the purpose to avoid the income tax with respect to shareholders unless the corporation, by the preponderance of the evidence, shall prove to the contrary. The burden of proving that earnings and profits have been permitted to accumulate beyond the reasonable needs of the business may be shifted to the

Commissioner under section 534. See §§ 1.534-1 through 1.534-4. Section 533(b) provides that the fact that the taxpayer is a mere holding or investment company shall be prima facie evidence of the purpose to avoid income tax with respect to shareholders.

(2) The existence or nonexistence of the purpose to avoid income tax with respect to shareholders may be indicated by circumstances other than the conditions specified in section 533. Whether or not such purpose was present depends upon the particular circumstances of each case. All circumstances which might be construed as evidence of the purpose to avoid income tax with respect to shareholders cannot be outlined, but among other things, the following will be considered:

(i) Dealings between the corporation and its shareholders, such as withdrawals by the shareholders as personal loans or the expenditure of funds by the corporation for the personal benefit of the shareholders,

(ii) The investment by the corporation of undistributed earnings in assets having no reasonable connection with the business of the corporation (see § 1.537-3), and

(iii) The extent to which the corporation has distributed its earnings and profits.

The fact that a corporation is a mere holding or investment company or has an accumulation of earnings and profits in excess of the reasonable needs of the business is not absolutely conclusive against it if the taxpayer satisfies the Commissioner that the corporation was neither formed nor availed of for the purpose of avoiding income tax with respect to shareholders.

(b) ***General burden of proof and statutory presumptions.*** The Commissioner may determine that the taxpayer was formed or availed of to avoid income tax with respect to shareholders through the medium of permitting earnings and profits to accumulate. In the case of litigation involving any such determination (except where the burden of proof is on the Commissioner under section 534), the burden of proving such determination wrong by a preponderance of the evidence, together with the corresponding burden of first going forward with the evidence, is on the taxpayer under principles applicable to income tax cases generally. For the burden of proof in a proceeding before the Tax Court with respect to the allegation that earnings and profits have been permitted to accumulate beyond the reasonable needs of the business, see section 534 and §§ 1.534-2 through 1.534-4. For a definition of a holding or investment company, see paragraph (c) of this section. For determination of the reasonable needs of the business, see section 537 and §§ 1.537-1 through 1.537-3. If the taxpayer is a mere holding or investment company, and the Commissioner therefore determines that the corporation was formed or availed of for the purpose of avoiding income tax with respect to shareholders, then section 533(b) gives further weight to the presumption ofcorrectness already arising from the Commissioner's determination by expressly providing an additional presumption of the existence of a purpose to avoid income tax with respect to shareholders. Further, if it is established (after complying with section 534 where applicable) that earnings and profits were permitted to accumulate beyond the reasonable needs of the business and the Commissioner has therefore determined that the corporation was formed or availed of for the purpose of avoiding income tax with respect to shareholders, then section 533(a) adds still more weight to the Commissioner's determination. Under such circumstances, the existence of such an accumulation is made determinative of the purpose to avoid income tax with respect to shareholders unless the taxpayer proves to the contrary by the preponderance of the evidence.

(c) ***Holding or investment company.*** A corporation having practically no activities except holding property and collecting the income therefrom or investing therein shall be considered a holding company within the meaning of section 533(b). If the activities further include, or consist substantially of, buying and selling

stocks, securities, real estate, or other investment property (whether upon an outright or marginal basis) so that the income is derived not only from the investment yield but also from profits upon market fluctuations, the corporation shall be considered an investment company within the meaning of section 533(b).

(d) ***Small business investment companies.*** A corporation which is licensed to operate as a small business investment company under the Small Business Investment Act of 1958 (15 U.S.C. ch. 14B) and the regulations thereunder (13 CFR part 107) will generally be considered to be a *mere holding or investment company* within the meaning of section 533(b). However, the presumption of the existence of the purpose to avoid income tax with respect to shareholders which results from the fact that such a company is a *mere holding or investment company* will be considered overcome so long as such company:

(1) Complies with all the provisions of the Small Business Investment Act of 1958 and the regulations thereunder; and

(2) Actively engages in the business of providing funds to small business concerns through investment in the equity capital of, or through the disbursement of long-term loans to, such concerns in such manner and under such terms as the company may fix in accordance with regulations promulgated by the Small Business Administration (see secs. 304 and 305 of the Small Business Investment Act of 1958, as amended (15 U.S.C. 684, 685)).

On the other hand, if such a company violates or fails to comply with any of the provisions of the Small Business Investment Act of 1958, as amended, or the regulations thereunder, or ceases to be actively engaged in the business of providing funds to small business concerns in the manner provided in subparagraph (2) of this paragraph, it will not be considered to have overcome the presumption by reason of any rules provided in this paragraph.

[T.D. 6500, 25 FR 11737, Nov. 26, 1960, as amended by T.D. 6652, 28 FR 4786, May 14, 1963]

§ 1.533-2 Statement required.

The corporation may be required to furnish a statement of its accumulated earnings and profits, the payment of dividends, the name and address of, and number of shares held by, each of its shareholders, the amounts that would be payable to each of the shareholders if the income of the corporation were distributed and other information required under section 6042.

§ 1.534-1 Burden of proof as to unreasonable accumulations generally.

For purposes of applying the presumption provided for in section 533(a) and in determining the extent of the accumulated earnings credit under section 535(c)(1), the burden of proof with respect to an allegation by the Commissioner that all or any part of the earnings and profits of the corporation have been permitted to accumulate beyond the reasonable needs of the business may vary under section 534 as between litigation in the Tax Court and that in any other court. In case of a proceeding in a court other than the Tax Court, see paragraph (b) of § 1.533-1.

§ 1.534-2 Burden of proof as to unreasonable accumulations in cases before the Tax Court.

(a) ***Burden of proof on Commissioner.*** Under the general rule provided in section 534(a), in any proceeding before the Tax Court involving a notice of deficiency based in whole or in part on the allegation that all or any part of the earnings and profits have been permitted to accumulate beyond the reasonable needs of the business, the burden of proof with respect to such allegation is upon the Commissioner if:

(1) A notification, as provided for in section 534(b) and paragraph (c) of this section, has not been sent to the taxpayer; or

(2) A notification, as provided for in section 534(b) and paragraph (c) of this section, has been sent to the taxpayer and, in response to such notification, the taxpayer has submitted a statement, as provided in section 534(c) and paragraph (d) of this section, setting forth the ground or grounds (together with facts sufficient to show the basis thereof) on which it relies to establish that all or any part of its earnings and profits have not been permitted to accumulate beyond the reasonable needs of the business. However, the burden of proof in the latter case is upon the Commissioner only with respect to the relevant ground or grounds set forth in the statement submitted by the taxpayer, and only if such ground or grounds are supported by facts (contained in the statement) sufficient to show the basis thereof.

(b) ***Burden of proof on the taxpayer.*** The burden of proof in a Tax Court proceeding with respect to an allegation that all or any part of the earnings and profits have been permitted to accumulate beyond the reasonable needs of the business is upon the taxpayer if:

(1) A notification, as provided for in section 534(b) and paragraph (c) of this section, has been sent to the taxpayer and the taxpayer has not submitted a statement, in response to such notification, as provided in section 534(c) and paragraph (d) of this section; or

(2) A statement has been submitted by the taxpayer in response to such notification, but the ground or grounds on which the taxpayer relies are not relevant to the allegation or, if relevant, the statement does not contain facts sufficient to show the basis thereof.

(c) ***Notification to the taxpayer.*** Under section 534(b) a notification informing the taxpayer that the proposed notice of deficiency includes an amount with respect to the accumulated earnings tax imposed by section 531 may be sent by registered mail (or by certified or registered mail, if the notification is mailed after September 2, 1958) to the taxpayer at any time before the mailing of the notice of deficiency in the case of a taxable year beginning after December 31, 1953, and ending after August 16, 1954. See § 1.534-4 for rules relating to taxable years subject to the Internal Revenue Code of 1939. See section 534(d) and § 1.534-3 with respect to a notification in the case of a jeopardy assessment.

(d) ***Statement by taxpayer.***

(1) A taxpayer who has received a notification, as provided in section 534(b) and paragraph (c) of this section, that the proposed notice of deficiency includes an amount with respect to the accumulated earnings tax imposed by section 531, may, under section 534(c), submit a statement that all or any part of the earnings and profits of the corporation have not been permitted to accumulate beyond the reasonable needs of the business. Such statement shall set forth the ground or grounds (together with facts sufficient to show the basis thereof) on which the taxpayer relies to establish that there has been no accumulation of earnings and profits beyond the reasonable needs of the business. See paragraphs (a) and (b) of this section for rules concerning the effect of the statement with respect to burden of proof. See §§ 1.537-1 to 1.537-3, inclusive, relating to reasonable needs of the business.

(2) The taxpayer's statement, under section 534(c) and this paragraph, must be submitted to the Internal Revenue office which issued the notification (referred to in section 534(b) and paragraph (c) of this section) within 60 days after the mailing of such notification. If the taxpayer is unable, for good cause, to submit the statement within such 60-day period, an additional period not exceeding 30 days may be granted upon receipt in the Internal Revenue office concerned (before the expiration of

the 60-day period provided herein) of a request from the taxpayer, setting forth the reasons for such request. See section 534(d) and § 1.534-3 with respect to a statement in the case of a jeopardy assessment.

§ 1.534-3 Jeopardy assessments in Tax Court cases.

In the case of a jeopardy assessment, a notice of deficiency is required to be sent to the taxpayer by registered mail (or by certified or registered mail, if the notice is mailed after September 2, 1958) within 60 days after the making of the assessment. See section 6861. If a jeopardy assessment is made before the mailing of the deficiency notice, then in the case of a proceeding in the Tax Court, if the deficiency notice informs the taxpayer that an amount of accumulated earnings tax is included in the deficiency, such notice shall constitute the notification provided for in section 534(b) and paragraph (c) of § 1.534-2. Under such circumstances the statement described in section 534(c) and paragraph (d) of § 1.534-2 shall instead be included in the taxpayer's petition to the Tax Court, if the taxpayer desires to submit such statement. See paragraph (b) of § 1.534-2, relating to burden of proof on the taxpayer.

§ 1.535-1 Definition.

(a) The accumulated earnings tax is imposed by section 531 on the accumulated taxable income. Accumulated taxable income is the taxable income of the corporation with the adjustments prescribed by section 535(b) and § 1.535-2, minus the sum of the dividends paid deduction and the accumulated earnings credit. See section 561 and the regulations thereunder, relating to the definition of the deduction for dividends paid, and section 535(c) and § 1.535-3, relating to the accumulated earnings credit.

(b) In the case of a foreign corporation, whether resident or nonresident, which files or causes to be filed a return, the accumulated taxable income shall be the taxable income from sources within the United States with the adjustments prescribed by section 535(b) and § 1.535-2 minus the sum of the dividends paid deduction and the accumulated earnings credit. In the case of a foreign corporation which files no return, the accumulated taxable income shall be the gross income from sources within the United States without allowance of any deductions (including the accumulated earnings credit).

[T.D. 6500, 25 FR 11737, Nov. 26, 1960, as amended by T.D. 7244, 37 FR 28897, Dec. 30, 1972]

§ 1.535-2 Adjustments to taxable income.

(a) *Taxes* —

(1) ***United States taxes.*** In computing accumulated taxable income for any taxable year, there shall be allowed as a deduction the amount by which Federal income and excess profits taxes accrued during the taxable year exceed the credit provided by section 33 (relating to taxes of foreign countries and possessions of the United States), except that no deduction shall be allowed for

(i) the accumulated earnings tax imposed by section 531 (or a corresponding section of a prior law),

(ii) the personal holding company tax imposed by section 541 (or a corresponding section of a prior law), and

(iii) the excess profits tax imposed by subchapter E, chapter 2 of the Internal Revenue Code of 1939, for taxable years beginning after December 31, 1940. The deduction is for taxes accrued during the taxable year, regardless of whether the corporation uses an accrual method of

accounting, the cash receipts and disbursements method, or any other allowable method of accounting. In computing the amount of taxes accrued, an unpaid tax which is being contested is not considered accrued until the contest is resolved.

(2) ***Taxes of foreign countries and United States possessions.*** In determining accumulated taxable income for any taxable year, if the taxpayer chooses the benefits of section 901 for such taxable year, a deduction shall be allowed for:

(i) The income, war profits, and excess profits taxes imposed by foreign countries or possessions of the United States and accrued during such taxable year, and

(ii) In the case of a domestic corporation, the foreign income taxes deemed to be paid for such taxable year under section 902(a) in accordance with §§ 1.902-1 and 1.902-2 or section 960(a)(1) in accordance with § 1.960-7.

In no event shall the amount under subdivision (ii) of this subparagraph exceed the amount includible in gross income with respect to such taxes under section 78 and § 1.78-1. The credit for such taxes provided by section 901 shall not be allowed against the accumulated earnings tax imposed by section 531. See section 901(a).

(b) ***Charitable contributions.*** Section 535(b)(2) provides that, in computing the accumulated taxable income of a corporation, the deduction for charitable contributions shall be computed without regard to section 170(b)(2). Thus, the amount of charitable contributions made during the taxable year not allowable as a deduction under section 170 by reason of the limitations imposed by section 170(b)(2) shall be allowed as a deduction in computing accumulated taxable income for the taxable year. However, any excess of the amount of the charitable contributions made in a prior taxable year over the amount allowed as a deduction under section 170 for such year shall not be allowed as a deduction from taxable income in computing accumulated taxable income for the taxable year.

(c) ***Special deductions disallowed.*** Sections 241 through 248 provide for the allowance of special deductions for such items as partially tax-exempt interest, certain dividends received, dividends paid on certain preferred stock of public utilities, and organizational expenses. Such special deductions, except the deduction provided by section 248 (relating to organizational expenses) shall be disallowed in computing accumulated taxable income.

(d) ***Net operating loss.*** The net operating loss deduction provided in section 172 is not allowed for purposes of computing accumulated taxable income.

(e) ***Capital losses.***

(1) Losses from sales or exchanges of capital assets during the taxable year, which are disallowed as deductions under section 1211(a) in computing taxable income, shall be allowed as deductions in computing accumulated taxable income.

(2) The computation of the capital losses allowable as a deduction in computing accumulated taxable income may be illustrated by the following example:

Example. X Corporation has capital losses of $30,000 which are disallowed under section 1211(a) for the taxable year ended December 31, 1956. This amount represents a loss of $25,000 from the sale or exchange of capital assets during the taxable year ended December 31, 1956, plus a $5,000 capital loss carryover resulting from the sale or exchange of capital assets during the taxable year ended

December 31, 1955. In computing accumulated taxable income for the taxable year ended December 31, 1956, only the loss of $25,000 arising from the sale or exchange of capital assets during that taxable year will be allowed as a deduction.

(f) ***Long-term capital gains.***

(1) There is allowed as a deduction in computing accumulated taxable income, the excess of the net long-term capital gain for the taxable year over the net short-term capital loss for such year (determined without regard to the capital loss carryover provided in section 1212) minus the taxes attributable to such excess as provided by section 535(b)(6). The tax attributable to such excess is the difference between:

(i) The taxes (except the accumulated earnings tax) imposed by subtitle A of the Code for such year, and

(ii) The taxes (except the accumulated earnings tax) imposed by subtitle A computed for such year as if taxable income were reduced by the excess of the net long-term capital gain over net short-term capital loss (including the capital loss carryover to such year)

Where the tax (except the accumulated earnings tax) imposed by subtitle A includes an amount computed under section 1201(a)(2), the tax attributable to such excess is such amount computed under section 1201(a)(2).

(2) The application of the rule in subparagraph (1) of this paragraph may be illustrated by the following example:

Example. Assume that D Corporation, for the taxable year ended December 31, 1956, has taxable income of $103,000 of which $8,000 is the excess of net long-term capital gain of $12,000 over a net short-term capital loss of $9,000. The $9,000 net short-term capital loss includes a capital loss carryover of $5,000. The amount allowable as a deduction under section 535(b)(6) and subparagraph (1) of this paragraph is $7,250, computed as follows: Net long-term capital gain less net short-term capital loss (computed without regard to the capital loss carryover) is $8,000 (that is, $12,000 net long-term capital gain less $4,000 net short-term capital loss computed without regard to the capital loss carryover of $5,000). The tax attributable to the excess of net long-term capital gain over net short-term capital loss (computed by taking the capital loss carryover into account) is $750, that is, 25 percent of such excess of $3,000, computed under section 1201(a)(2). The difference of $7,250 ($8,000 less $750) is the amount allowable as a deduction in computing accumulated taxable income.

(3) Section 631(c) (relating to gain or loss in the case of disposal of coal or domestic iron ore) shall have no application in determining the amount of the deduction allowable under section 535(b)(6).

(g) ***Capital loss carrybacks and carryovers.*** Capital losses carried to a taxable year under section 1212(a) shall have no application for purposes of computing accumulated taxable income for such year.

(h) ***Bank affiliates.*** There is allowed the deduction provided by section 601 in the case of bank affiliates (as defined in section 2 of the Banking Act of 1933; 12 U. S. C. 221a(c)).

[T.D. 6500, 25 FR 11737, Nov. 26, 1960, as amended by T.D. 6805, 30 FR 3209, Mar. 9, 1965; T.D. 6841, 30 FR 9305, July 27, 1965; T.D. 7301, 39 FR 964, Jan. 4, 1974; T.D. 7649, 44 FR 60086, Oct. 18, 1979]

§ 1.535-3 Accumulated earnings credit.

(a) ***In general.*** As provided in section 535(a) and § 1.535-1, the accumulated earnings credit, provided by section 535(c), reduces taxable income in computing accumulated taxable income. In the case of a corporation, not a mere holding or investment company, the accumulated earnings credit is determined as provided in paragraph (b) of this section and, in the case of a holding or investment company, as provided in paragraph (c) of this section.

(b) ***Corporation which is not a mere holding or investment company —***

(1) ***General rule.***

(i) In the case of a corporation, not a mere holding or investment company, the accumulated earnings credit is the amount equal to such part of the earnings and profits of the taxable year which is retained for the reasonable needs of the business, minus the deduction allowed by section 535(b)(6) (see paragraph (f) of § 1.535-2, relating to the deduction for long-term capital gains). In no event shall the accumulated earnings credit be less than the minimum credit provided for in section 535(c)(2) and subparagraph (2) of this paragraph. The amount of the earnings and profits for the taxable year retained is the amount by which the earnings and profits for the taxable year exceed the dividends paid deduction for such taxable year. See section 561 and §§ 1.561-1 and 1.561-2, relating to the deduction for dividends paid.

(ii) In determining whether any amount of the earnings and profits of the taxable year has been retained for the reasonable needs of the business, the accumulated earnings and profits of prior years will be taken into consideration. Thus, for example, if such accumulated earnings and profits of prior years are sufficient for the reasonable needs of the business, then any earnings and profits of the current taxable year which are retained will not be considered to be retained for the reasonable needs of the business. See section 537 and §§ 1.537-1 and 1.537-2.

(2) ***Minimum credit.*** Section 535(c)(2) provides for the allowance of a minimum accumulated earnings credit in the case of a corporation which is not a mere holding or investment company. Except as otherwise provided in section 243(b)(3) and § 1.243-5 (relating to effect of 100-percent dividends received deduction under section 243(b)) and sections 1561, 1562, and 1564 (relating to limitations on certain tax benefits in the case of certain controlled corporations), in the case of such a corporation, this minimum credit shall in no case be less than the amount by which $150,000 ($100,000 in the case of taxable years beginning before January 1, 1975) exceeds the accumulated earnings and profits of the corporation at the close of the preceding taxable year. See paragraph (d) of this section for the effect of dividends paid after the close of the taxable year in determining accumulated earnings and profits at the close of the preceding taxable year. In determining the amount of the minimum credit allowable under section 535(c)(2), the needs of the business are not taken into consideration. If the taxpayer has accumulated earnings and profits at the close of the preceding taxable year equal to or in excess of $150,000 ($100,000 in the case of taxable years beginning before January 1, 1975), thecredit, if any, is determined without regard to section 535(c)(2). It is not intended that the provision for the minimum credit shall in any way create an inference that an accumulation in excess of $150,000 ($100,000 in the case of taxable years beginning before January 1, 1975) is unreasonable. The reasonable needs of the business may require the accumulation of more or less than $150,000 ($100,000 in the case of taxable years beginning before January 1, 1975), depending upon the circumstances in the case, but such needs

shall not be taken into consideration to any extent in cases where the minimum accumulated earnings credit is applicable. For a discussion of the reasonable needs of the business, see section 537 and §§ 1.537-1, 1.537-2, and 1.537-3.

(3) ***Illustrations of accumulated earnings credit.*** The computation of the accumulated earnings credit provided by section 535(c) may be illustrated by the following examples:

Example 1. The X Corporation, which is not a mere holding or investment company, has accumulated earnings and profits in the amount of $125,000 as of December 31, 1974. Thus, the minimum credit provided by section 535(c)(2) exceeds the accumulated earnings and profits of X by $25,000. It has earnings and profits for the taxable year ended December 31, 1975, in the amount of $100,000 and has a dividends paid deduction under section 561 in the amount of $30,000 so that the earnings and profits for the taxable year which are retained in the business amount to $70,000. Assume that it has been determined that the earnings and profits for the taxable year which may be retained for the reasonable needs of the business amount to $55,000 and that a deduction has been allowed under section 535(b)(6) in the amount of $5,000. Since the amount by which $150,000 exceeds the accumulated earnings and profits at the close of the preceding taxable year is less than $50,000 ($55,000-$5,000), the minimum credit provided by section 535(c)(2) will not apply and the accumulated earnings credit must be computed under section 535(c)(1) on the basis of the reasonable needs of the business. In this case, the accumulated earnings credit for the taxable year ended December 31, 1975, will be $50,000 computed as follows:

Earnings and profits of the taxable year determined to be retained for the reasonable needs of the business	$55,000
Less: The deduction for long-term capital gains (less applicable tax) allowed under sec. 535(b)(6)	5,000
Accumulated earnings credit allowable under sec. 535(c)(1)	50,000

Example 2. The Z Corporation which is not a mere holding or investment company, has accumulated earnings and profits in the amount of $45,000 as of December 31, 1974; it has earnings and profits for the taxable year ended December 31, 1975, in the amount of $115,000 and has a dividends paid deduction under section 561 in the amount of $10,000, so that the earnings and profits for the taxable year which are retained amount to $105,000. Assume that it has been determined that the accumulated earnings and profits of the taxable year which may be retained for the reasonable needs of the business amount to $20,000 and that no deduction is allowable for long-term capital gains under section 535(b)(6). The accumulated earnings credit allowable under section 535(c)(1) on the basis of the reasonable needs of the business is determined to be only $20,000. However, since the amount by which $150,000 exceeds the accumulated earnings and profits at the close of the preceding taxable year is more than $20,000, the minimum accumulated earnings credit provided by section 535(c)(2) is applicable. The allowable credit will be the amount by which $150,000

exceeds the accumulated earnings and profits at the close of the preceding taxable year (*i.e.,* $105,000, $150,000 less $45,000 of accumulated earnings and profits at the close of the preceding taxable year).

(c) ***Holding and investment companies.*** Section 535(c)(3) provides that, in the case of a mere holding or investment company, the accumulated earnings credit shall be the amount, if any, by which $150,000 ($100,000 in the case of taxable years beginning before January 1, 1975) exceeds the accumulated earnings and profits of the corporation at the close of the preceding taxable year. Thus, if such a corporation has accumulated earnings equal to or in excess of $150,000 ($100,000 in the case of taxable years beginning before January 1, 1975) at the close of its preceding taxable year, no accumulated earnings credit is allowable in computing the accumulated taxable income. See paragraph (c) of § 1.533-1 for a definition of a holding or investment company. For the accumulated earnings credit of a mere holding or investment company which is a member of an affiliated group which has elected the 100-percent dividends received deduction under section 243(b), see section 243(b)(3) and § 1.243-5. For the accumulated earnings credit of a mere holding or investment company which is a component member of a controlled group of corporations (as defined in section 1563), see sections 1561, 1562, and 1564.

(Sec. 1561(a) (83 Stat. 599; 26 U.S.C. 1561(a)))

[T.D. 6500, 25 FR 11737, Nov. 26, 1960, as amended by T.D. 6992, 34 FR 826, Jan. 18, 1969; T.D. 7181, 37 FR 8066, Apr. 25, 1972; T.D. 7244, 37 FR 28897, Dec. 30, 1972; T.D. 7376, 40 FR 42744, Sept. 16, 1975; T.D. 7528, 42 FR 64694, Dec. 28, 1977]

§ 1.536-1 Short taxable years.

Accumulated taxable income for a taxable year consisting of a period of less than 12 months shall not be placed on an annual basis for the purpose of the accumulated earnings tax imposed by section 531. In such cases accumulated taxable income shall be computed on the basis of the taxable income for such period of less than 12 months, adjusted in the manner provided by section 535(b) and § 1.535-2.

§ 1.537-1 Reasonable needs of the business.

(a) ***In general.*** The term *reasonable needs of the business* includes

(1) the reasonably anticipated needs of the business (including product liability loss reserves, as defined in paragraph (f) of this section),

(2) the section 303 redemption needs of the business, as defined in paragraph (c) of this section, and

(3) the excess business holdings redemption needs of the business as described in paragraph (d) of this section. See paragraph (e) of this section for additional rules relating to the section 303 redemption needs and the excess business holdings redemption needs of the business. An accumulation of the earnings and profits (including the undistributed earnings and profits of prior years) is in excess of the reasonable needs of the business if it exceeds the amount that a prudent businessman would consider appropriate for the present business purposes and for the reasonably anticipated future needs of the business. The need to retain earnings and profits must be directly connected with the needs of thecorporation itself and must be for bona fide business purposes. For purposes of this paragraph the section 303 redemption needs of the business and the excess business holdings redemption needs of the business are deemed to be directly connected with the needs of the business and for a bona fide business purpose. See § 1.537-3 for a discussion of what constitutes the business of the corporation. The extent to which earnings and profits have been distributed by

the corporation may be taken into account in determining whether or not retained earnings and profits exceed the reasonable needs of the business. See § 1.537-2, relating to grounds for accumulation of earnings and profits.

(b) ***Reasonable anticipated needs.***

(1) In order for a corporation to justify an accumulation of earnings and profits for reasonably anticipated future needs, there must be an indication that the future needs of the business require such accumulation, and the corporation must have specific, definite, and feasible plans for the use of such accumulation. Such an accumulation need not be used immediately, nor must the plans for its use be consummated within a short period after the close of the taxable year, provided that such accumulation will be used within a reasonable time depending upon all the facts and circumstances relating to the future needs of the business. Where the future needs of the business are uncertain or vague, where the plans for the future use of an accumulation are not specific, definite, and feasible, or where the execution of such a plan is postponed indefinitely, an accumulation cannot be justified on the grounds of reasonably anticipated needs of the business.

(2) Consideration shall be given to reasonably anticipated needs as they exist on the basis of the facts at the close of the taxable year. Thus, subsequent events shall not be used for the purpose of showing that the retention of earnings or profits was unreasonable at the close of the taxable year if all the elements of reasonable anticipation are present at the close of such taxable year. However, subsequent events may be considered to determine whether the taxpayer actually intended to consummate or has actually consummated the plans for which the earnings and profits were accumulated. In this connection, projected expansion or investment plans shall be reviewed in the light of the facts during each year and as they exist as of the close of the taxable year. If a corporation has justified an accumulation for future needs by plans never consummated, the amount of such an accumulation shall be taken into account in determining the reasonableness of subsequent accumulations.

(c) ***Section 303 redemption needs of the business.***

(1) The term *section 303 redemption needs* means, with respect to the taxable year of the corporation in which a shareholder of the corporation died or any taxable year thereafter, the amount needed (or reasonably anticipated to be needed) to redeem stock included in the gross estate of such shareholder but not in excess of the amount necessary to effect a distribution to which section 303 applies. For purposes of this paragraph, the term *shareholder* includes an individual in whose gross estate stock of the corporation is includable upon his death for Federal estate tax purposes.

(2) This paragraph applies to a corporation to which section 303(c) would apply if a distribution described therein were made.

(3) If stock included in the gross estate of a decedent is stock of two or more corporations described in section 303(b)(2)(B), the amount needed by each such corporation for section 303 redemption purposes under this section shall, unless the particular facts and circumstances indicate otherwise, be that amount which bears the same ratio to the amount described in section 303(a) as the fair market value of such corporation's stock included in the gross estate of such decedent bears to the fair market value of all of the stock of such corporations included in the gross estate. For example, facts and circumstances indicating that the allocation prescribed by this subparagraph is not required would include notice given to the corporations by the executor or administrator of the

decedent's estate that he intends to request the redemption of stock of only one of such corporations or the redemption of stock of such corporations in a ratio which is unrelated to the respective fair market values of the stock of the corporations included in the decedent's gross estate.

(4) The provisions of this paragraph apply only to taxable years ending after May 26, 1969.

(d) ***Excess business holdings redemption needs.***

(1) The term *excess business holdings redemption needs* means, with respect to taxable years of the corporation ending after May 26, 1969, the amount needed (or reasonably anticipated to be needed) to redeem from a private foundation stock which:

(i) Such foundation held on May 26, 1969 (or which was received by such foundation pursuant to a will or irrevocable trust to which section 4943(c)(5) applies), and either

(ii) Constituted excess business holdings on such date or would have constituted excess business holdings as of that date if there were taken into account (*a*) stock received pursuant to a will or trust described in subdivision (i) of this subparagraph and (*b*) the reduction in the total outstanding stock of the corporation which would have resulted solely from the redemption of stock held by the private foundation, or

(iii) Constituted stock redemption of which before January 1, 1975, or after October 4, 1976, and before January 1, 1977, is, by reason of section 101(l)(2)(B) of the Tax Reform Act of 1969, as amended by section 1309 of the Tax Reform Act of 1976, and § 53.4941(d)-4(b), permitted without imposition of tax under section 4941, but only to the extent such stock is to be redeemed before January 1, 1975 or after October 4, 1976, and before January 1, 1977, or is to be redeemed thereafter pursuant to the terms of a binding contract entered into on or before such date to redeem all of the stock of the corporation held by the private foundation on such date.

(2) The purpose of subparagraph (1) of this paragraph is to facilitate a private-foundation's disposition of certain excess business holdings, in order for the private foundation not to be liable for tax under section 4943. See section 4943(c) and the regulations thereunder for the definition of excess business holdings. For purposes of section 537(b)(2) and this paragraph, however, any determination of the existence of excess business holdings shall be made without taking into account the provisions of section 4943(c)(4) which treat certain excess business holdings as held by a disqualified person (rather than by the private foundation), except that the periods described in section 4943(c)(4) (B), (C), and (D), if applicable, shall be taken into account in determining the period during which an excess business holdings redemption need may be deemed to exist. Thus, an excess business holdings redemption need may, depending upon the facts and circumstances, be deemed to exist for a part or all of the 20-year, 15-year, or 10-year period specified in section 4943(c)(4)(B) during which the interest in the corporation held by the private foundation is treated as held by a disqualified person rather than by the private foundation, and, if applicable, (i) any suspension of such 20-year, 15-year, or 10-year period as provided by section 4943(c)(4)(C) and (ii) the 15-year *second phase* specified in section 4943(c)(4)(D). The foregoing sentence is not to be construed to prevent an accumulation of earnings and profits for the purpose of effecting a redemption of excess business holdings at a time or times prior to expiration of the periods described in such sentence. This subparagraph is not to be construed to prevent an accumulation of earnings and profits for the purpose of effecting a redemption described in subdivision (iii) of subparagraph (1) of this paragraph.

(3) The extent of an excess business holdings redemption need cannot exceed the total number of shares of stock so held or received by the private foundation

(i) redemption of which alone would sufficiently reduce such private foundation's proportionate share of the corporation's total outstanding stock in order for the private foundation not to be liable for tax under section 4943, or

(ii) redemption of which is, by reason of § 53.4941(d)-4(b), permitted without imposition of tax under section 4941 provided that such redemption is accomplished within the period and in the manner prescribed in subdivision

(iii) of subparagraph (1) of this paragraph. Thus, excess business holdings of a private foundation attributable to an increase in the private foundation's proportionate share of the corporation's total outstanding stock by reason of a redemption of stock after May 26, 1969, from any person other than the private foundation do not give rise to an excess business holdings redemption need.

(4) For purposes of subdivision (ii) of subparagraph (1) of this paragraph, an excess business holdings redemption need can arise with respect to shares of the corporation's stock under section 537(a)(3) only following actual acquisition by the private foundation of such shares and their characterization as an excess business holding. Thus, this paragraph does not apply to an accumulation of earnings and profits in one taxable year in anticipation of redemption of excess business holdings to be acquired by a private foundation in a subsequent year pursuant to a will or irrevocable trust to which section 4943(c)(5) applies or in anticipation of shares held becoming excess business holdings of the private foundation in a subsequent year by reason of additional shares to be received by the private foundation in such subsequent year pursuant to a will or irrevocable trust to which section 4943(c)(5) applies. Once having arisen, however, an excess business holdings redemption need may continue until redemption of the private foundation's excess business holdings described in this paragraph or other disposition of such excess business holdings by the private foundation.

(5) Notwithstanding any other provision of this paragraph, an excess business holdings redemption need will not be deemed to exist with respect to stock held by a private foundation the redemption of which would subject any person to tax under section 4941.

(6) For purposes of subdivision (ii) of subparagraph (1) of this paragraph, the number of shares of stock held by a private foundation on May 26, 1969 (or received pursuant to a will or irrevocable trust to which section 4943(c)(5) applies), redemption of which alone would sufficiently reduce such foundation's proportionate share of a corporation's total outstanding stock in order for the foundation not to be liable for tax under section 4943 may be determined by application of the following formula:

$$X = \frac{PH - (Y \times SO)}{1 - Y}$$

X = Number of shares to be redeemed.

Y = Maximum percentage of outstanding stock which private foundation can hold without being liable for tax under section 4943.

PH = Number of shares of stock held by private foundation on May 26, 1969, or received pursuant to a will or irrevocable trust to which section 4943(c)(5) applies.

SO = Total number of shares of stock outstanding unreduced by any redemption from a person other than the private foundation.

(7) The provisions of this paragraph may be illustrated by the following example:

Example. (i) On May 26, 1969, Private Foundation A holds 60 of the 100 outstanding shares of the capital stock of corporation X, which is not a disqualified person with respect to A. None of the remaining 40 shares is owned by a disqualified person within the meaning of section 4946(a). On June 1, 1975, X redeems 10 shares of its stock from individual B, thus reducing its outstanding stock to 90 shares. On June 1, 1976, A receives 20 additional shares of X stock by bequest under a will to which section 4943(c)(5) applies. As of June 1, 1976, then, A holds 80 of the 90 outstanding shares of X. Solely for purposes of this example and to illustrate the application of this paragraph, it will be assumed that in order not to be liable for the initial tax under section 4943, A must, before the close of the *second phase* described in section 4943(c)(4)(D), reduce its proportionate stock interest in X to 35 percent. A requests X to redeem from it a sufficient number of its shares to so reduce its proportionate stock interest in X to 35 percent, and X agrees to effect such a redemption.
(ii) As of May 26, 1969, A's excess business holdings are 25 shares of X, the number of shares which A would be required to dispose of to a person other than X in order to reduce its proportionate holdings in X to no more than 35percent. If the disposition is to be by means of a redemption, however, A's excess business holdings on May 26, 1969, for purposes of determining X's excess business holdings redemption needs, are 39 shares, i.e., the number of shares X would be required to redeem in order to reduce A's proportionate stock interest to 35 percent. Although the redemption of 10 shares from B on June 1, 1975, creates additional excess business holdings of A because it effectively increases A's proportionate stock interest in X, this increase does not create an additional excess business holdings redemption need because it resulted from a redemption from a person other than A. The bequest of 20 shares of X received by A on June 1, 1976, creates a further excess business holdings redemption need as of that date in the amount needed (or reasonably anticipated to be needed) to redeem an additional 31 shares from A, *i.e.,* the number of shares which, when added to the excess business holdings of A on May 26, 1969, would have to be redeemed to reduce A's proportionate stock interest in X to 35 percent without taking the earlier redemption from B into account.

(e)

(1) A determination whether and to what extent an amount is needed (or reasonably anticipated to be needed) for the purpose described in subparagraph (1) of paragraph (c) or (d) of this section is dependent upon the particular circumstances of the case, including the total amount of earnings and profits accumulated in prior years which may be available for such purpose and the existence of a reasonable expectation that a redemption described in paragraph (c) or (d) of this section will in fact be effected. Although paragraph (c) or (d) of this section may apply even though no redemption of

stock is in fact effected, the failure to effect such redemption may be taken into account in determining whether the accumulation was needed (or reasonably anticipated to be needed) for a purpose described in paragraph (c) or (d).

(2) In applying subparagraph (1) of paragraph (c) or (d) of this section, the discharge of an obligation incurred to make a redemption shall be treated as the making of the redemption.

(3) In determining whether an accumulation is in excess of the reasonable needs of the business for a particular year, the fact that one of the exceptions specified in paragraph (c) or (d) of this section applies in a subsequent year is not to give rise to an inference that the accumulation would not have been for the reasonable needs of the business in the prior year. Also, no inference is to be drawn from the enactment of section 537(a) (2) and (3) that accumulations in any prior year would not have been for the reasonable needs of the business in the absence of such provisions. Thus, the reasonableness of accumulations in years prior to a year in which one of the exceptions specified in paragraph (c) or (d) of this section applies is to be determined solely upon the facts and circumstances existing at the times the accumulations occur.

(f) ***Product liability loss reserves.***

(1) The term *product liability loss reserve* means, with respect to taxable years beginning after September 30, 1979, reasonable amounts accumulated for the payment of reasonably anticipated product liability losses, as defined in section 172(j) and § 1.172-13(b)(1).

(2) For purposes of this paragraph, whether an accumulation for anticipated product liability losses is reasonable in amount and whether such anticipated product liability losses are likely to occur shall be determined in light of all facts and circumstances of the taxpayer making such accumulation. Some of the factors to be considered in determining the reasonableness of the accumulation include the taxpayer's previous product liability experience, the extent of the taxpayer's coverage by commercial product liability insurance, the income tax consequences of the taxpayer's ability to deduct product liability losses and related expenses, and the taxpayer's potential future liability due to defective products in light of the taxpayer's plans to expand the production of products currently being manufactured, provided such plans are specific, definite and feasible. Additionally, a factor to be considered in determining whether the accumulation is reasonable in amount is whether the taxpayer, in accounting for its potential future liability, took into account the reasonably estimated present value of the potential future liability.

(3) Only those accumulations made with respect to products that have been manufactured, leased, or sold shall be considered as accumulations made under this paragraph. Thus, for example, accumulations with respect to a product which has not progressed beyond the development stage are not reasonable accumulations under this paragraph.

[T.D. 6500, 25 FR 11737, Nov. 26, 1960, as amended by T.D. 7165, 37 FR 5022, Mar. 9, 1972, 37 FR 5703, Mar. 18, 1972; T.D. 7678, 44 FR 12416, Feb. 26, 1980; T.D. 8096, 51 FR 30483, Aug. 27, 1986]

§ 1.537-2 Grounds for accumulation of earnings and profits.

(a) ***In general.*** Whether a particular ground or grounds for the accumulation of earnings and profits indicate that the earnings and profits have been accumulated for the reasonable needs of the business or beyond such needs is dependent upon the particular circumstances of the case. Listed below in paragraphs (b) and (c) of this section are some of the grounds which may be used as guides under ordinary circumstances.

(b) ***Reasonable accumulation of earnings and profits.*** Although the following grounds are not exclusive, one or more of such grounds, if supported by sufficient facts, may indicate that the earnings and profits of a corporation are being accumulated for the reasonable needs of the business provided the general requirements under §§ 1.537-1 and 1.537-3 are satisfied:

(1) To provide for bona fide expansion of business or replacement of plant;

(2) To acquire a business enterprise through purchasing stock or assets;

(3) To provide for the retirement of bona fide indebtedness created in connection with the trade or business, such as the establishment of a sinking fund for the purpose of retiring bonds issued by the corporation in accordance with contract obligations incurred on issue;

(4) To provide necessary working capital for the business, such as, for the procurement of inventories;

(5) To provide for investments or loans to suppliers or customers if necessary in order to maintain the business of the corporation; or

(6) To provide for the payment of reasonably anticipated product liability losses, as defined in section 172(j), §§ 1.172-13(b)(1), and 1.537-1(f).

(c) ***Unreasonable accumulations of earnings and profits.*** Although the following purposes are not exclusive, accumulations of earnings and profits to meet any one of such objectives may indicate that the earnings and profits of a corporation are being accumulated beyond the reasonable needs of the business:

(1) Loans to shareholders, or the expenditure of funds of the corporation for the personal benefit of the shareholders;

(2) Loans having no reasonable relation to the conduct of the business made to relatives or friends of shareholders, or to other persons;

(3) Loans to another corporation, the business of which is not that of the taxpayer corporation, if the capital stock of such other corporation is owned, directly or indirectly, by the shareholder or shareholders of the taxpayer corporation and such shareholder or shareholders are in control of both corporations;

(4) Investments in properties, or securities which are unrelated to the activities of the business of the taxpayer corporation; or

(5) Retention of earnings and profits to provide against unrealistic hazards.

[T.D. 6500, 25 FR 11737, Nov. 26, 1960, as amended by T.D. 8096, 51 FR 30484, Aug. 27, 1986]

§ 1.537-3 Business of the corporation.

(a) The business of a corporation is not merely that which it has previously carried on but includes, in general, any line of business which it may undertake.

(b) If one corporation owns the stock of another corporation and, in effect, operates the other corporation, the business of the latter corporation may be considered in substance, although not in legal form, the business of the first corporation. However, investment by a corporation of its earnings and profits in stock and securities of another corporation is not, of itself, to be regarded as employment of the earnings and profits in its business. Earnings and profits of the first corporation put into the second corporation through the purchase of stock or securities or otherwise, may, if a subsidiary relationship is established,

constitute employment of the earnings and profits in its own business. Thus, the business of one corporation may be regarded as including the business of another corporation if such other corporation is a mere instrumentality of the first corporation; that may be established by showing that the first corporation owns at least 80 percent of the voting stock of the second corporation. If the taxpayer's ownership of stock is less than 80 percent in the other corporation, the determination of whether the funds are employed in a business operated by the taxpayer will depend upon the particular circumstances of the case. Moreover, the business of one corporation does not include the business of another corporation if such other corporation is a personal holding company, an investment company, or a corporation not engaged in the active conduct of a trade or business.

PERSONAL HOLDING COMPANIES

§ 1.541-1 Imposition of tax.

(a) Section 541 imposes a graduated tax upon corporations classified as personal holding companies under section 542. This tax, if applicable, is in addition to the tax imposed upon corporations generally under section 11. Unless specifically excepted under section 542(c) the tax applies to domestic and foreign corporations and, to the extent provided by section 542(b), to an affiliated group of corporations filing a consolidated return. Corporations classified as personal holding companies are exempt brom the accumulated earnings tax imposed under section 531 but are not exempt from other income taxes imposed upon corporations, generally, under any other provisions of the Code. Unlike the accumulated earnings tax imposed under section 531, the personal holding company tax imposed by section 541 applies to all personal holding companies as defined in section 542, whether or not they were formed or availed of to avoid income tax upon shareholders. See section 6501(f) and § 301.6501(f)-1 of this chapter (Regulations on Procedure and Administration) with respect to the period of limitation on assessment of personal holding company tax upon failure to file a schedule of personal holding company income.

(b) A foreign corporation, whether resident or nonresident, which is classified as a personal holding company is subject to the tax imposed under section 541 with respect to its income from sources within the United States, even though such income is not fixed or determinable annual or periodical income specified in section 881. A foreign corporation is not classified as a personal holding company subject to tax under section 541 if it is a foreign personal holding company as defined in section 552 or if it meets the requirements of the exception provided in section 542(c)(10).

§ 1.542-1 General rule.

A personal holding company is any corporation (other than one specifically excepted under section 542(c)) which, for the taxable year, meets:

(a) The gross income requirement specified in section 542(a)(1) and § 1.542-2, and

(b) The stock ownership requirement specified in section 542(a)(2) and § 1.542-3.

Both requirements must be satisfied with respect to each taxable year.

§ 1.542-2 Gross income requirement.

To meet the gross income requirement it is necessary that at least 80 percent of the total gross income of the corporation for the taxable year be personal holding company income as defined in section 543 and §§ 1.543-1 and 1.543-2. For the definition of *gross income* see section 61 and §§ 1.61-1 through 1.61-14. Under such provisions

gross income is not necessarily synonymous with gross receipts. Further, in the case of transactions in stocks and securities and in commodities transactions, gross income for personal holding company tax purposes shall include only the excess of gains over losses from such transactions. See section 543(b), paragraph (b) (5) and (6) of § 1.543-1 and § 1.543-2. For determining the character of the amount includible in gross income under section 951(a), see paragraph (a) of § 1.951-1.

[T.D. 6500, 25 FR 11737, Nov. 26, 1960, as amended by T.D. 6795, 30 FR 934, Jan. 29, 1965]

§ 1.542-3 Stock ownership requirement.

(a) ***General rule.*** To meet the stock ownership requirement, it is necessary that at some time during the last half of the taxable year more than 50 percent in value of the outstanding stock of the corporation be owned, directly or indirectly, by or for not more than 5 individuals. Any organization or trust to which subparagraph (1) of this paragraph applies shall be considered as one individual for purposes of this stock ownership requirement subject, however, to the exception in subparagraph (2) of this paragraph which is applicable only to taxable years beginning after December 31, 1954. Thus, if an organization or trust which is considered as an individual owns 51 percent in value of the outstanding stock of the corporation at any time during the last half of the taxable year, the stock ownership requirement will be met by ownership of the required percentage by one individual. See section 544 and §§ 1.544-1 through 1.544-7 for the determination of stock ownership.

(1) ***An organization or trust considered as an individual.*** Any of the following organizations or trusts shall be considered as an individual:

(i) An organization to which section 503 applies, namely, any organization described in section 501(c)(3) (relating to charitable, etc., organizations) or section 401(a) (relating to employees' pension trust, etc.) other than an organization excepted from the application of section 503 by paragraphs (1) to (5) of section 503(b). Therefore, a religious organization (other than a trust) excepted under section 503(b)(1) is not considered an individual for purposes of the stock ownership requirement of section 542(a)(2).

(ii) A portion of a trust permanently set aside or to be used exclusively for the purposes described in section 642(c), relating to amounts set aside for charitable purposes, or described in a corresponding provision of the prior income tax law (such as section 162(a), Internal Revenue Code of 1939).

(2) ***Exception.*** For taxable years beginning after December 31, 1954, an organization or trust to which subparagraph (1) of this paragraph applies shall not be considered an individual if all of the following conditions are met:

(i) It was organized or created before July 1, 1950.

(ii) At all times on or after July 1, 1950, and before the close of the taxable year, it owned all of the common stock and at least 80 percent of the total number of shares of all other classes of stock of the corporation.

(iii) For the taxable year it is not denied exemption under section 504(a) or the unlimited charitable deduction under section 681(c). In determining whether, for the purpose of section 542(a)(2), exemption is not denied under section 504(a) or the unlimited charitable deduction is not denied under section 681(c) all the income of the corporation which is available for distribution as dividends to its shareholders shall be deemed to have been distributed at the close of the

taxable year whether or not any portion of such income was in fact distributed. If the amounts described in section 504(a) or section 681(c), increased by the income of the corporation deemed distributed pursuant to the preceding sentence, would be sufficient to deny exemption or the unlimited charitable deduction, the organization or trust will be considered to be an individual for the purpose of section 542(a)(2). For the purpose of this subdivision the restrictions in sections 504(a)(1) and 681(c)(1) against unreasonable accumulations will not apply to income attributable to property of a decedent dying before January 1, 1951, which was transferred during his lifetime to a trust or property that was transferred under his will to such trust, and

(iv) This subparagraph is illustrated by the following example:

Example. The X Charitable Foundation (an organization described in section 501(c)(3) to which section 503 is applicable) has owned all of the stock of the Y Corporation since Y's organization in 1949. Both X and Y are calendar-year corporations. At the end of the year 1955, X has accumulated $100,000 out of income and has actually paid out only $75,000 of this amount, leaving a balance of $25,000 on December 31, 1955. X was not denied an exemption under section 504(a) for the year 1955. Y, during the calendar year 1955, has $400,000 taxable income of which $200,000 is available for distribution as dividends at the end of the year. X will be considered to have accumulated out of income during the calendar year 1955 the amount of $225,000 for the purpose of determining whether it would have been denied an exemption under section 504(a)(1). If X would have been denied an exemption under section 504(a)(1) by reason of having been deemed to have accumulated $225,000, the stock ownership requirement of section 542(a)(2) and this section will have been satisfied. If Y Corporation also satisfies the gross income requirement of section 542(a)(1) and § 1.542-2 it will be a personal holding company.

(b) ***Changes in stock outstanding.*** It is necessary to consider any change in the stock outstanding during the last half of the taxable year, whether in the number of shares or classes of stock, or in the ownership thereof. Stock subscribed and paid for will be considered as stock outstanding, whether or not such stock is evidenced by issued certificates. Treasury stock shall not be considered as stock outstanding.

(c) ***Value of stock outstanding.*** The value of the stock outstanding shall be determined in the light of all the circumstances. The value may be determined upon the basis of the company's net worth, earning and dividend paying capacity, appreciation of assets, together with such other factors as have a bearing upon the value of the stock. If the value of the stock is greatly at variance with that reflected by the corporate books, the evidence of such value should be filed with the return. In any case where there are two or more classes of stock outstanding, the total value of all the stock should be allocated among the different classes according to the relative value of each class.

[T.D. 6500, 25 FR 11737, Nov. 26, 1960, as amended by T.D. 6739, 29 FR 7713, June 17, 1964]

§ 1.542-4 Corporations filing consolidated returns.

(a) ***General rule.*** A consolidated return under section 1501 shall determine the application of the personal holding company tax to the group and to any member thereof on the basis of the consolidated gross income and consolidated personal holding company income of the group, as determined under the regulations prescribed pursuant to section 1502 (relating to consolidated returns); however, this rule shall not apply to either

(1) an ineligible affiliated group as defined in section 542(b)(2) and paragraph (b) of this section, or

(2) an affiliated group of corporations a member of which is excluded from the definition of a personal holding company under section 542(c) and paragraph (c) of this section. Thus, in the latter two instances the gross income requirement provided in section 542(a)(1) and § 1.542-2 shall apply to each individual member of the affiliated group of corporations.

(b) *Ineligible affiliated group.*

(1) Except for certain affiliated railroad corporations, as provided in subparagraph (2) of this paragraph, an affiliated group of corporations is an ineligible affiliated group and therefore may not use its consolidated gross income and consolidated personal holding company income to determine the liability of the group or any member thereof for personal holding company tax (as provided in paragraph (a) of this section), if (i) any member of such group, including the common parent, derived gross income from sources outside the affiliated group for the taxable year in an amount equal to 10 percent or more of its gross income from all sources for that year and (ii) 80 percent or more of the gross income from sources outside the affiliated group consists of personal holding company income as defined in section 543 and §§ 1.543-1 and 1.543-2. For purposes of subdivision (i) of this subparagraph gross income shall not include certain dividend income receivedby a common parent from a corporation not a member of the affiliated group which qualifies under section 542(b)(4) and paragraph (d) of this section. See particularly the examples contained in paragraph (d)(2) of this section. Intercorporate dividends received by members of the affiliated group (including the common parent) are to be included in the gross income from all sources for purposes of the test in subdivision

(i) of this subparagraph. For purposes of subdivision

(ii) of this subparagraph, section 543 and paragraph (a) of § 1.543-1 shall be applied as if the amount of gross income derived from sources outside the affiliated group by a corporation which is a member of such group is the gross income of such corporation.

(2) An affiliated group of railroad corporations shall not be considered to be an ineligible affiliated group, notwithstanding any other provisions of section 542(b)(2) and this paragraph, if the common parent of such group would be eligible to file a consolidated return under section 141 of the Internal Revenue Code of 1939 prior to its amendment by the Revenue Act of 1942 (56 Stat. 798).

(3) See section 562(d) and § 1.562-3 for dividends paid deduction in the case of a distribution by a member of an ineligible affiliated group.

(4) The determination of whether an affiliated group of corporations is an ineligible group under section 542(b)(2) and this paragraph, may be illustrated by the following examples:

Example 1. Corporations X, Y, and Z constitute an affiliated group of corporations which files a consolidated return for the calendar year 1954; Corporations Y and Z are wholly-owned subsidiaries of Corporation X and derive no gross income from sources outside the affiliated group; Corporation X, the common parent, has gross income in the amount of $250,000 for the taxable year 1954. $200,000 of such gross income consists of dividends received from Corporations Y and Z. The remaining $50,000 was derived from sources outside the affiliated group, $40,000 of which represents personal holding company income as defined in section 543. The $50,000 included in the gross income of Corporation X and derived from sources outside the affiliated group is more than 10 percent of X's gross income ($50,000/$250,000) and the $40,000 which represents personal holding company income is 80 percent of $50,000 (the amount considered to be the gross income of

Corporation X). Accordingly, Corporations X, Y, and Z would be an ineligible affiliated group and the gross income requirement under section 542(a)(1) and § 1.542-2 would be applied to each corporation individually.

Example 2. If, in the above example, only $30,000 of the $50,000 derived from sources outside the affiliated group by Corporation X represented personal holding company income, this group of affiliated corporations would not be an ineligible affiliated group. Although the $50,000 representing the gross income of Corporation X from sources outside the affiliated group is more than 10 percent of its total gross income, the amount of $30,000 representing personal holding company income is not 80 percent or more of the amount considered to be gross income for the purpose of this test. Under section 542(b)(2) and subparagraph (1) of this paragraph both the gross income and the personal holding company income requirements must be satisfied in determining that an affiliated group constitutes an ineligible group. Since both of these requirements have not been satisfied in this example this group of affiliated corporations would not be an ineligible group.

(c) ***Excluded corporations.*** The general rule for determining liability of an affiliated group under paragraph (a) of this section shall not apply if any member thereof is a corporation which is excluded, under section 542(c), from the definition of a personal holding company.

(d) ***Certain dividend income received by a common parent.***

(1) Dividends received by the common parent of an affiliated group from a corporation which is not a member of the affiliated group shall not be included in gross income or personal holding company income, for the purpose of the test under section 542(b)(2):

(i) If such common parent owned, directly or indirectly, more than 50 percent of the outstanding voting stock of the dividend paying corporation at the time such common parent became entitled to the dividend, and

(ii) If the dividend paying corporation is not a personal holding company for the taxable year in which the dividends are paid

Thus, if the tests in subdivisions (i) and (ii) of this subparagraph are met, the dividend income received by the common parent from such other corporation will not be considered gross income for purposes of the test in section 542(b)(2)(A) (paragraph (b) of this section), that is, either to determine gross income from sources outside the affiliated group or to determine gross income from all sources.

(2) The application of subparagraph (1) of this paragraph may be illustrated by the following examples:

Example 1. Corporation X is the common parent of Corporation Y and Corporation Z and together they constitute an affiliated group which files a consolidated return under section 1501. Corporation Y and Corporation Z derived no income from sources outside the affiliated group. Corporation X, the common parent, had gross income of $100,000 for the calendar year 1954 of which amount $20,000 represented a dividend received from Corporation W, and $4,000 represented interest from Corporation T. The remaining gross income of X, $76,000, was received from Corporations Y and Z. Corporation X, for its entire taxable year, owned 60 percent of the voting stock of Corporation W which was not a personal holding company for the calendar year 1954. For the purpose of the gross income and personal holding company income test under section 542(b)(2) and paragraph (b) of this section, the $20,000 dividend received from Corporation W would not be included in the gross income or personal holding company income of Corporation X. The affiliated group would not be an ineligible group under section 542(b)(2) because 10 percent or more of its gross income was not from sources outside the affiliated group as required by

section 542(b)(2)(A). Inasmuch as the $20,000 dividend from Corporation W is not included in the gross income of Corporation X for purposes of section 542(b)(2) Corporation X only has $4,000 gross income from sources outside the affiliated group which is only 5 percent of its gross income from all sources, $80,000.

Example 2. If, in example 1, Corporation X owned 50 percent or less of the voting stock of Corporation W at the time X became entitled to the dividend, or if Corporation W had been a personal holding company for the taxable year in which the dividends were paid, the $20,000 dividends received by Corporation X would be included in gross income and personal holding company income of Corporation X for the purpose of the test under section 542(b)(2) and paragraph (b) of this section. Thus, the affiliated group would be an ineligible affiliated group under section 542(b)(2) because 24 percent of its gross income was from sources outside the affiliated group ($24,000/$100,000) and 100 percent of this $24,000 was personal holding company income.

§ 1.543-1 Personal holding company income.

(a) ***General rule.*** The term *personal holding company income* means the portion of the gross income which consists of the classes of gross income described in paragraph (b) of this section. See section 543(b) and § 1.543-2 for special limitations on gross income and personal holding company income in cases of gains from stocks', securities', and commodities' transactions.

(b) ***Definitions*** —

(1) ***Dividends.*** The term *dividends* includes dividends as defined in section 316 and amounts required to be included in gross income under section 551 and §§ 1.551-1—1.551-2 (relating to foreign personal holding company income taxed to United States shareholders).

(2) ***Interest.*** The term *interest* means any amounts, includible in gross income, received for the use of money loaned. However, (i) interest which constitutes *rent* shall not be classified as interest but shall be classified as *rents* (see subparagraph (10) of this paragraph) and (ii) interest on amounts set aside in a reserve fund under section 511 or 607 of the Merchant Marine Act, 1936 (46 U.S.C. 1161 or 1177), shall not be included in personal holding company income.

(3) ***Royalties (other than mineral, oil, or gas royalties or certain copyright royalties).*** The term *royalties* (other than mineral, oil, or gas royalties or certain copyright royalties) includes amounts received for the privilege of using patents, copyrights, secret processes and formulas, good will, trade marks, trade brands, franchises, and other like property. It does not, however, include rents. For rules relating to rents see section 543(a)(7) and subparagraph (10) of this paragraph. For rules relating to mineral, oil, or gas royalties, see section 543(a)(8) and subparagraph (11) of this paragraph. For rules relating to certain copyright royalties for taxable years beginning after December 31, 1959, see section 543(a)(9) and subparagraph (12) of this paragraph.

(4) ***Annuities.*** The term *annuities* includes annuities only to the extent includible in the computation of gross income. See section 72 and §§ 1.72-1—1.72-14 for rules relating to the inclusion of annuities in gross income.

(5) ***Gains from the sale or exchange of stock or securities.***

(i) Except in the case of regular dealers in stock or securities as provided in subdivision (ii) of this subparagraph, gross income and personal holding company income include the amount by which the gains exceed the losses from the sale or exchange of stock or securities. See section 543(b)(1) and § 1.543-2 for provisions relating to this limitation. For this purpose, there shall be

taken into account all those gains includible in gross income (including gains from liquidating dividends and other distributions from capital) and all those losses deductible from gross income which are considered under chapter 1 of the Code to be gains or losses from the sale or exchange of stock or securities. The term *stock or securities* as used in section 543(a)(2) and this subparagraph includes shares or certificates of stock, stock rights or warrants, or interest in any corporation (including any joint stock company, insurance company, association, or other organization classified as a corporation by the Code), certificates of interest or participation in any profit-sharing agreement, or in any oil, gas, or other mineral property, or lease, collateral trust certificates, voting trust certificates, bonds, debentures, certificates of indebtedness, notes, car trust certificates, bills of exchange, obligations issued by or on behalf of a State, Territory, or political subdivision thereof.

(ii) In the case of *regular dealers in stock or securities* there shall not be included gains or losses derived from the sale or exchange of stock or securities made in the normal course of business. The term *regular dealer in stock or securities* means a corporation with an established place of business regularly engaged in the purchase of stock or securities and their resale to customers. However, such corporations shall not be considered as regular dealers with respect to stock or securities which are held for investment. See section 1236 and § 1.1236-1.

(6) ***Gains from futures transactions in commodities.*** Gross income and personal holding company income include the amount by which the gains exceed the losses from futures transactions in any commodity on or subject to the rules of a board of trade or commodity exchange. See § 1.543-2 for provisions relating to this limitation. In general, for the purpose of determining such excess, there are included all gains and losses on futures contracts which are speculative. However, for the purpose of determining such excess, there shall not be included gains or losses from cash transactions, or gains or losses by a producer, processor, merchant, or handler of the commodity, which arise out of bona fide hedging transactions reasonably necessary to the conduct of its business in the manner in which such business is customarily and usually conducted by others. See section 1233 and § 1.1233-1.

(7) ***Estates and trusts.*** Under section 543(a)(4) personal holding company income includes amounts includible in computing the taxable income of the corporation under part I, subchapter J, chapter 1 of the Code (relating to estates, trusts, and beneficiaries); and any gain derived by the corporation from the sale or other disposition of any interest in an estate or trust.

(8) ***Personal service contracts.***

(i) Under section 543(a)(5) amounts received under a contract under which the corporation is to furnish personal services, as well as amounts received from the sale or other disposition of such contract, shall be included as personal holding company income if:

(*a*) Some person other than the corporation has the right to designate (by name or by description) the individual who is to perform the services, or if the individual who is to perform the services is designated (by name or by description) in the contract; and

(*b*) At any time during the taxable year 25 percent or more in value of the outstanding stock of the corporation is owned, directly or indirectly, by or for the individual who has performed, is to perform, or may be designated (by name or by description) as the one to perform, such services. For this purpose, the amount of stock outstanding and its value shall be determined in accordance with the rules set forth in the last two sentences of paragraph (b) and in paragraph (c) of § 1.542-3. It should be noted that the stock ownership

requirement of section 543(a)(5) and this subparagraph relates to the stock ownership at any time during the taxable year. For rules relating to the determination of stock ownership, see section 544 and §§ 1.544-1 through 1.544-7.

(ii) If the contract, in addition to requiring the performance of services by a 25-percent stockholder who is designated or who could be designated (as specified in section 543(a)(5) and subdivision (i) of this subparagraph), requires the performance of services by other persons which are important and essential, then only that portion of the amount received under such contract which is attributable to the personal services of the 25-percent stockholder shall constitute personal holding company income. Incidental personal services of other persons employed by the corporation to facilitate the performance of the services by the 25-percent stockholder, however, shall not constitute important or essential services. Under section 482 gross income, deductions, credits, or allowances between or among organizations, trades, or businesses may be allocated if it is determined that allocation is necessary in order to prevent evasion of taxes or clearly to reflect the income of any such organizations, trades, or businesses.

(iii) The application of section 543(a)(5) and this subparagraph may be illustrated by the following examples:

Example 1. A, whose profession is that of an actor, owns all of the outstanding capital stock of the M Corporation. The M Corporation entered into a contract with A under which A was to perform personal services for the person or persons whom the M Corporation might designate, in consideration of which A was to receive $10,000 a year from the M Corporation. The M Corporation entered into a contract with the O Corporation in which A was designated to perform personal services for the O Corporation in consideration of which the O Corporation was to pay the M Corporation $500,000 a year. The $500,000 received by the M Corporation from the O Corporation constitutes personal holding company income.

Example 2. Assume the same facts as in example 1, except that, in addition to A's contract with the M Corporation, B, whose profession is that of a dancer and C, whose profession is that of a singer, were also under contract to the M Corporation to perform personal services for the person or persons whom the M Corporation might designate, in consideration of which they were each to receive $25,000 a year from the M Corporation. Neither B nor C were stockholders of the M Corporation. The contract entered into by the MCorporation with the O Corporation, in addition to designating that A was to perform personal services for the O Corporation, designated that B and C were also to perform personal services for the O Corporation. Although the O Corporation particularly desired the services of A for an entertainment program it planned, it also desired the services of B and C, who were prominent in their fields, to provide a good supporting cast for the program. The services of B and C required under the contract are determined to be important and essential; therefore, only that portion of the $500,000 received by the M Corporation which is attributable to the personal services of A constitutes personal holding company income. The same result would obtain although the dancer and the singer required by the contract were not designated by name but the contract gave the M Corporation discretion to select and provide the services of a singer and a dancer for the program and such services were provided.

Example 3. The N Corporation is engaged in engineering. Its entire outstanding capital stock is owned by four individuals. The N Corporation entered into a contract with the R Corporation to perform engineering services in consideration of which the R Corporation was to pay the N Corporation

$50,000. The individual who was to perform the services was not designated (by name or by description) in the contract and no one but the N Corporation had the right to designate (by name or by description) such individual. The $50,000 received by the N Corporation from the R Corporation does not constitute personal holding company income.

(9) ***Compensation for use of property.*** Under section 543(a)(6) amounts received as compensation for the use of, or right to use, property of the corporation shall be included as personal holding company income if, at any time during the taxable year, 25 percent or more in value of the outstanding stock of the corporation is owned, directly or indirectly, by or for an individual entitled to the use of the property. Thus, if a shareholder who meets the stock ownership requirement of section 543(a)(6) and this subparagraph uses, or has the right to use, a yacht, residence, or other property owned by the corporation, the compensation to the corporation for such use, or right to use, the property constitutes personal holding company income. This is true even though the shareholder may acquire the use of, or the right to use, the property by means of a sublease or under any other arrangement involving parties other than the corporation and the shareholder. However, if the personal holding company income of the corporation (after excluding any such income described in section 543(a)(6) and this subparagraph, relating to compensation for use of property, and after excluding any such income described in section 543(a)(7) and subparagraph (10) of this paragraph, relating to rents) is not more than 10 percent of its grossincome, compensation for the use of property shall not constitute personalholding company income. For purposes of the preceding sentence, in determining whether personal holding company income is more than 10 percent of gross income, copyright royalties constitute personal holding company income, regardless of whether such copyright royalties are excluded from personal holding company income under section 543(a)(9) and subparagraph (12)(ii) of this paragraph. For purposes of applying section 543(a)(6) and this subparagraph, the amount of stock outstanding and its value shall be determined in accordance with the rules set forth in the last two sentences of paragraph (b) and in paragraph (c) of § 1.542-3. It should be noted that the stock ownership requirement of section 543(a)(6) and this subparagraph relates to the stock outstanding at any time during the entire taxable year. For rules relating to the determination of stock ownership, see section 544 and §§ 1.544-1 through 1.544-7.

(10) ***Rents (including interest constituting rents).*** Rents which are to be included as personal holding company income consist of compensation (however designated) for the use, or right to use, property of the corporation. The term *rents* does not include amounts includible in personal holding company income under section 543(a)(6) and subparagraph (9) of this paragraph. The amounts considered as rents include charter fees, etc., for the use of, or the right to use, property, as well as interest on debts owed to the corporation (to the extent such debts represent the price for which real property held primarily for sale to customers in the ordinary course of the corporation's trade or business was sold or exchanged by the corporation). However, if the amount of the rents includible under section 543(a)(7) and this subparagraph constitutes 50 percent or more of the gross income of the corporation, such rents shall not be considered to be personal holding company income.

(11) ***Mineral, oil, or gas royalties.***

(i) The income from mineral, oil, or gas royalties is to be included as personal holding company income, unless

(*a*) the aggregate amount of such royalties constitutes 50 percent or more of the gross income of the corporation for the taxable year and

(*b*) the aggregate amount of deductions allowable under section 162 (other than compensation for personal services rendered by the shareholders of the corporation) equals 15 percent or more of the gross income of the corporation for the taxable year.

(ii) The term *mineral, oil, or gas royalties* means all royalties, including overriding royalties and, to the extent not treated as loans under section 636, mineral production payments, received from any interest in mineral, oil, or gas properties. The term *mineral* includes those minerals which are included within the meaning of the term *minerals* in the regulations under section 611.

(iii) The first sentence of subdivision (ii) of this subparagraph shall apply to overriding royalties received from the sublessee by the operating company which originally leased and developed the natural resource property in respect of which such overriding royalties are paid, and to mineral, oil, or gas production payments, only with respect to amounts received after September 30, 1958.

(12) ***Copyright royalties*** —

(i) ***In general.*** The income from copyright royalties constitutes, generally, personal holding company income. However, for taxable years beginning after December 31, 1959, those copyright royalties which come within the definition of *copyright royalties* in section 543(a)(9) and subdivision (iv) of this subparagraph shall be excluded from personal holding company income only if the conditions set forth in subdivision (ii) of this subparagraph are satisfied.

(ii) ***Exclusion from personal holding company income.*** For taxable years beginning after December 31, 1959, copyright royalties (as defined in section 543(a)(9) and subdivision (iv) of this subparagraph) shall be excluded from personal holding company income only if the conditions set forth in (*a*), (*b*), and (*c*) of this subdivision are met.

(*a*) Such copyright royalties for the taxable year must constitute 50 percent or more of the corporation's gross income. For this purpose, copyright royalties shall be computed by excluding royalties received for the use of, or the right to use, copyrights or interests in copyrights in works created, in whole or in part, by any person who, at any time during the corporation's taxable year, is a shareholder.

(*b*) Personal holding company income for the taxable year must be 10 percent or less of the corporation's gross income. For this purpose, personal holding company income shall be computed by excluding

(*1*) copyright royalties (except that there shall be included royalties received for the use of, or the right to use, copyrights or interests in copyrights in works created, in whole or in part, by any shareholder owning, at any time during the corporation's taxable year, more than 10 percent in value of the outstanding stock of the corporation), and

(*2*) dividends from any corporation in which the taxpayer owns, on the date the taxpayer becomes entitled to the dividends, at least 50 percent of all classes of stock entitled to vote and at least 50 percent of the total value of all classes of stock, provided the corporation which pays the dividends meets the requirements of subparagraphs (A), (B), and (C) of section 543(a)(9).

(c) The aggregate amount of the deductions allowable under section 162 must constitute 50 percent or more of the corporation's gross income for the taxable year. For this purpose, the deductions allowable under section 162 shall be computed by excluding deductions for compensation for personal services rendered by, and deductions for copyright and other royalties to, shareholders of the corporation.

(iii) ***Determination of stock value and stock ownership.*** For purposes of section 543(a)(9) and this subparagraph, the following rules shall apply:

(a) The amount and value of the outstanding stock of a corporation shall be determined in accordance with the rules set forth in the last two sentences of paragraph (b) and in paragraph (c) of § 1.542-3.

(b) The ownership of stock shall be determined in accordance with the rules set forth in section 544 and §§ 1.544-1 through 1.544-7.

(c) Any person who is considered to own stock within the meaning of section 544 and §§ 1.544-1 through 1.544-7 shall be a shareholder.

(iv) ***Copyright royalties defined.*** For purposes of section 543(a)(9) and this subparagraph, the term *copyright royalties* means compensation, however designated, for the use of, or the right to use, copyrights in works protected by copyright issued under title 17 of the United States Code (other than by reason of section 2 or 6 thereof), and to which copyright protection is also extended by the laws of any foreign country as a result of any international treaty, convention, or agreement to which the United States is a signatory. Thus, *copyright royalties* includes not only royalties from sources within the United States under protection of United States laws relating to statutory copyrights but also royalties from sources within a foreign country with respect to United States statutory copyrights protected in such foreign country by any international treaty, convention, or agreement to which the United States is a signatory. The term *copyright royalties* includes compensation for the use of, or right to use, an interest in any such copyrighted works as well as payments from any person for performing rights in any such copyrighted works.

(v) ***Compensation which is rent.*** Section 543(a)(9) and subdivisions (i) through (iv) of this subparagraph shall not apply to compensation which is *rent* within the meaning of the second sentence of section 543(a)(7).

[T.D. 6500, 25 FR 11737, Nov. 26, 1960, as amended by T.D. 6739, 29 FR 7713, June 17, 1964; T.D. 7261, 38 FR 5467, Mar. 1, 1973]

§ 1.543-2 Limitation on gross income and personal holding company income in transactions involving stocks, securities, and commodities.

(a) Under section 543(b)(1) the gains which are to be included in gross income, and in personal holding company income with respect to transactions described in section 543(a)(2) and paragraph (b)(5) of § 1.543-1, shall be the net gains from the sale or exchange of stock or securities. If there is an excess of losses over gains from such transactions, such excess (or net loss) shall not be used to reduce gross income or personal holding company income for purposes of the personal holding company tax. Similarly, under section 543(b)(2) the gains which are to be included in gross income, and in personal holding company income with respect to transactions described in section 543(a)(3) and paragraph (b)(6) of § 1.543-1, shall be the net gains from commodity transactions which reflect personal holding company

income. Any excess of losses over gains from such transactions (resulting in a net loss) shall not be used to reduce gross income or personal holding company income. The capital loss carryover under section 1212 shall not be taken into account.

(b) The application of section 543(b) may be illustrated by the following examples:

Example 1. The P Corporation, not a regular dealer in stocks and securities, received rentals of $250,000 for its property from a 25-percent shareholder, and also had gains of $50,000 during the taxable year from the sale of stocks and securities. It also had losses on the sale of stocks and securities in the amount of $30,000. Accordingly, P Corporation had gross income during the taxable year of $270,000 ($250,000 plus $20,000 net gain from the sales of stocks and securities). It had personal holding company income of $20,000. (The rentals of $250,000 would not be personal holding company income under section 543(a)(6) since the personal holding company income of the corporation, $20,000 (after excluding any such income described in section 543(a)(6)), is not more than 10 percent of its gross income.)

Example 2. The R Corporation, not a regular dealer in stocks or securities, realized total gains during the taxable year of $900,000 from commodity futures transactions and $200,000 from the sales of stocks and securities. It also sustained total losses of $1,000,000 on such commodity futures transactions, resulting in a net gain for the taxable year or $100,000. None of the commodity futures transactions are hedging or other types of futures transactions excluded from the application of section 543(a)(3). No part of the loss on commodity futures transactions is to be taken into account in determining personal holding company income and gross income for personal holding company tax purposes for the taxable year. The full amount of the $200,000 in gains from the sales of stocks and securities is to be included in personal holding company income and in gross income for personal holding company tax purposes for the taxable year.

§ 1.544-1 Constructive ownership.

(a) Rules relating to the constructive ownership of stock are provided by section 544 for the purpose of determining whether the stock ownership requirements of the following sections are satisfied:

(1) Section 542(a)(2), relating to ownership of stock by five or fewer individuals.

(2) Section 543(a)(5), relating to personal holding company income derived from personal service contracts.

(3) Section 543(a)(6), relating to personal holding company income derived from property used by shareholders.

(4) Section 543(a)(9), relating to personal holding company income derived from copyright royalties.

(b) Section 544 provides four general rules with respect to constructive ownership. These rules are:

(1) Constructive ownership by reason of indirect ownership. See section 544(a)(1) and § 1.544-2.

(2) Constructive ownership by reason of family and partnership ownership. See section 544(a) (2), (4), (5), and (6), and §§ 1.544-3, 1.544-6, and 1.544-7.

(3) Constructive ownership by reason of ownership of options. See section 544(a) (3), (4), (5), and (6), and §§ 1.544-4, 1.544-6, and 1.544-7.

(4) Constructive ownership by reason of ownership of convertible securities. See section 544(b) and § 1.544-5.

Each of the rules referred to in subparagraphs (2), (3), and (4) of this paragraph is applicable only if it has the effect of satisfying the stock ownership requirement of the section to which applicable; that is, when applied to section 542(a)(2), its effect is to make the corporation a personal holding company, or when applied to section 543(a)(5), section 543(a)(6), or section 543(a)(9), its effect is to make the amounts described in such provisions includible as personal holding company income.

(c) All forms and classes of stock, however denominated, which represent the interests of shareholders, members, or beneficiaries in the corporation shall be taken into consideration in applying the constructive ownership rules of section 544.

(d) For rules applicable in treating constructive ownership, determined by one application of section 544, as actual ownership for purposes of a second application of section 544, see section 544(a)(5) and § 1.544-6.

[T.D. 6500, 25 FR 11737, Nov. 26, 1960, as amended by T.D. 6739, 29 FR 7715, June 17, 1964]

§ 1.544-2 Constructive ownership by reason of indirect ownership.

The following example illustrates the application of section 544(a)(1), relating to constructive ownership by reason of indirect ownership:

Example. A and B, two individuals, are the exclusive and equal beneficiaries of a trust or estate which owns the entire capital stock of the M Corporation. The M Corporation in turn owns the entire capital stock of the N Corporation. Under such circumstances the entire capital stock of both the M Corporation and the N Corporation shall be considered as being owned equally by A and B as the individuals owning the beneficial interest therein.

§ 1.544-3 Constructive ownership by reason of family and partnership ownership.

(a) The following example illustrates the application of section 544(a)(2), relating to constructive ownership by reason of family and partnership ownership.

Example. The M Corporation at some time during the last half of the taxable year, had 1,800 shares of outstanding stock, 450 of which were held by various individuals having no relationship to one another and none of whom were partners, and the remaining 1,350 were held by 51 shareholders as follows:

Relationships	Shares	Shares	Shares	Shares	Shares
An individual	(A)100	(B)20	(C)20	(D)20	(E)20
His father	(AF)10	(BF)10	(CF)10	(DF)10	(EF)10
His wife	(AW)10	(BW)40	(CW)40	(DW)40	(EW)40
His brother	(AB)10	(BB)10	(CB)10	(DB)10	(EB)10
His son	(AS)10	(BS)40	(CS)40	(DS)40	(ES)40
His daughter by former marriage (son's					

Relationships	Shares	Shares	Shares	Shares	Shares
half-sister)	(ASHS)10	(BSHS)40	(CSHS)40	(DSHS)40	(ESHS)40
His brother's wife	(ABW)10	(BBW)10	(CBW)10	(DBW)160	(EBW)10
His wife's father	(AWF)10	(BWF)10	(CWF)110	(DWF)10	(EWF)10
His wife's brother	(AWB)10	(BWB)10	(CWB)10	(DWB)10	(EWB)10
His wife's brother's wife	(AWBW)10	(BWBW)10	(CWBW)10	(DWBW)10	(EWBW)110
Individual's partner	(AP)10				

By applying the statutory rule provided in section 544(a)(2) five individuals own more than 50 percent of the outstanding stock as follows:

A (including AF, AW, AB, AS, ASHS, AP)	160
B (including BF, BW, BB, BS, BSHS)	160
CW (including C, CS, CWF, CWB)	220
DB (including D, DF, DBW)	200
EWB (including EW, EWF, EWBW)	170
Total, or more than 50 percent	910

Individual A represents the obvious case where the head of the family owns the bulk of the family stock and naturally is the head of the group. A's partner owns 10 shares of the stock. Individual B represents the case where he is still head of the group because of the ownership of stock by his immediate family. Individuals C and D represent cases where the individuals fall in groups headed in C's case by his wife and in D's case by his brother because of the preponderance of holdings on the part of relatives by marriage. Individual E represents the case where the preponderant holdings of others eliminate that individual from the group.

(b) For the restriction on the applicability of the family and partnership ownership rules of this section, see paragraph (b) of § 1.544-1. For rules relating to constructive ownership as actual ownership, see § 1.544-6.

§ 1.544-4 Options.

The shares of stock which may be acquired by reason of an option shall be considered to be constructively owned by the individual having the option to acquire such stock. For example: If C, an individual, on March 1, 1955, purchases an option, or otherwise comes into possession of an option, to acquire 100 shares of the capital stock of M Corporation, such 100 shares of stock shall be considered to be constructively owned by C as if C had actually acquired the stock on that date. If C has an option on an option (or one of a series of options) to acquire such stock, he shall also be considered to have constructive ownership of the stock which may be acquired by reason of the

option (or the series of options). Under such circumstances, C shall be considered to have acquired constructive ownership of the stock on the date he acquired his option. For the restriction on the applicability of the rule of this section, see paragraph (b) of § 1.544-1.

§ 1.544-5 Convertible securities.

Under section 544(b) outstanding securities of a corporation such as bonds, debentures, or other corporate obligations, convertible into stock of the corporation (whether or not convertible during the taxable year) shall be considered as outstanding stock of the corporation. The consideration of convertible securities as outstanding stock is subject to the exception that, if some of the outstanding securities are convertible only after a later date than in the case of others, the class having the earlier conversion date may be considered as outstanding stock although the others are not so considered, but no convertible securities shall be considered as outstanding stock unless all outstanding securities having a prior conversion date are also so considered. For example, if outstanding securities are convertible in 1954, 1955 and 1956, those convertible in 1954 can be properly considered as outstanding stock without so considering those convertible in 1955 or 1956, and those convertible in 1954 and 1955 can be properly considered as outstanding stock without so considering those convertible in 1956. However, the securities convertible in 1955 could not be properly considered as outstanding stock without so considering those convertible in 1954 and the securities convertible in 1956 could not be properly considered as outstanding stock without so considering those convertible in 1954 and 1955. For the restriction on the applicability of the rule of this section, see paragraph (b) of § 1.544-1.

§ 1.544-6 Constructive ownership as actual ownership.

(a) ***General rules.***

(1) Stock constructively owned by a person by reason of the application of the rule provided in section 544(a)(1), relating to stock not owned by an individual, shall be considered as actually owned by such person for the purpose of again applying such rule or of applying the family and partnership rule provided in section 544(a)(2), in order to make another person the constructive owner of such stock, and

(2) Stock constructively owned by a person by reason of the application of the option rule provided in section 544(a)(3) shall be considered as actually owned by such person for the purpose of applying either the rule provided in section 544(a)(1), relating to stock not owned by an individual, or the family and partnership rule provided in section 544(a)(2) in order to make another person the constructive owner of such stock, but

(3) Stock constructively owned by an individual by reason of the application of the family and partnership rule provided in section 544(a)(2) shall not be considered as actually owned by such individual for the purpose of again applying such rule in order to make another individual the constructive owner of such stock.

(b) ***Examples.*** The application of this section may be illustrated by the following examples:

Example 1. A's wife, AW, owns all the stock of the M Corporation, which in turn owns all the stock of the O Corporation. The O Corporation in turn owns all the stock of the P Corporation. Under the rule provided in section 544(a)(1), relating to stock not owned by an individual, the stock in the P Corporation owned by the O Corporation is considered to be owned constructively by the M Corporation, the sole shareholder of the O Corporation. Such constructive ownership of the stock of the M Corporation is considered as actual ownership for the purpose of again applying such rule in order to make AW, the sole shareholder of the M Corporation, the constructive owner of the stock of

the P Corporation. Similarly, the constructive ownership of the stock by AW is considered as actual ownership for the purpose of applying the family and partnership rule provided in section 544(a)(2) in order to make A the constructive owner of the stock of the P Corporation, if such application is necessary for any of the purposes set forth in paragraph (b) of § 1.544-1. But the stock thus constructively owned by A may not be considered as actual ownership for the purpose of again applying the family and partnership rule in order to make another member of A's family, for example, A's father, the constructive owner of the stock of the P Corporation.

Example 2. B, an individual, owns all the stock of the R Corporation which has an option to acquire all the stock of the S Corporation, owned by C, an individual, who is not related to B. Under the option rule provided in section 544(a)(3) the R Corporation may be considered as owning constructively the stock of the S Corporation owned by C. Such constructive ownership of the stock by the R Corporation is considered as actual ownership for the purpose of applying the rule provided in section 544(a)(1), relating to stock not owned by an individual, in order to make B, the sole shareholder of the R Corporation, the constructive owner of the stock of the S Corporation. The stock thus constructively owned by B by reason of the application of the rule provided in section 544(a)(1) likewise is considered as actual ownership for the purpose, if necessary, of applying the family and partnership rule provided in section 544(a)(2), in order to make another member of B's family, for example, B's wife, BW, the constructive owner of the stock of the S Corporation. However, the family and partnership rule could not again be applied so as to make still another individual the constructive owner of the stock of the S Corporation, that is, the stock constructively owned by BW could not be considered as actually owned by her in order to make BW's father the constructive owner of such stock by a second application of the family and partnership rule.

§ 1.544-7 Option rule in lieu of family and partnership rule.

(a) If, in determining the ownership of stock, such stock may be considered as constructively owned by an individual by an application of either the family and partnership rule (section 544(a)(2)) or the option rule (section 544(a)(3)), such stock shall be considered as owned constructively by the individual by reason of the application of the option rule.

(b) The application of this section may be illustrated by the following example:

Example. Two brothers, A and B, each own 10 percent of the stock of the M Corporation, and A's wife, AW, also owns 10 percent of the stock of such corporation. AW's husband, A, has an option to acquire the stock owned by her at any time. It becomes necessary, for one of the purposes stated in section 544(a)(4), to determine the stock ownership of B in the M Corporation. If the family and partnership rule were the only rule that applied in the case, B would be considered, under that rule, as owning 20 percent of the stock of the M Corporation, namely, his own stock plus the stock owned by his brother. In that event, B could not be considered as owning the stock held by AW since

(1) AW is not a member of B's family and

(2) the constructive ownership of such stock by A through the application of the family and partnership rule in his case is not considered as actual ownership so as to make B the constructive owner by a second application of the same rule with respect to the ownership of the stock. However, there is more than the family and partnership rule involved in this example. As the holder of an option upon the stock, A may be considered the constructive owner of his wife's stock by the application of the option rule and without reference to the family relationship between A and AW. If A is considered as owning the stock of his wife by application of the option rule, then such constructive ownership by A is regarded as actual ownership for the

purpose of applying the family and partnership rule so as to make another member of A's family, for example, B, the constructive owner of the stock. Hence, since A may be considered as owning his wife's stock by applying either the family-partnership rule or the option rule, the provisions of section 544(a)(6) apply and accordingly A must be considered the constructive owner of his wife's stock under the option rule rather than the family-partnership rule. B thus becomes the constructive owner of 30 percent of the stock of the M corporation, namely, his own 10 percent, A's 10 percent, and AW's 10 percent constructively owned by A as the holder of an option on the stock.

§ 1.545-1 Definition.

(a) Undistributed personal holding company income is the amount which is subject to the personal holding company tax imposed under section 541. Undistributed personal holding company income is the taxable income of the corporation adjusted in the manner described in section 545(b) and § 1.545-2, and section 545(c) and § 1.545-3, less the deduction for dividends paid. See part IV (section 561 and following), subchapter G, chapter 1 of the Code, and the regulations thereunder, relating to the dividends paid deduction.

(b) For purposes of the imposition of the personal holding company tax on a foreign corporation, resident or nonresident, which files or causes to be filed a return, the undistributed personal holding company income shall be computed on the basis of the taxable income from sources within the United States, and such income shall be adjusted in accordance with the principles of section 545(b) and § 1.545-2, and section 545(c) and § 1.545-3. For purposes of the imposition of such tax on a foreign corporation, resident or nonresident, which files no return, the undistributed personal holding company income shall be computed on the basis of the gross income from sources within the United States without allowance of any deductions. For purposes of this paragraph, a nonresident foreign corporation will be considered to have filed a return for any taxable year ending before September 9, 1958, if the return for any such taxable year is filed on or before February 5, 1960.

[T.D. 6949, 33 FR 5525, Apr. 9, 1968]

§ 1.545-2 Adjustments to taxable income.

(a) ***Taxes*** —

(1) ***General rule.***

(i) In computing undistributed personal holding company income for any taxable year, there shall be allowed as a deduction the amount by which Federal income and excess profits taxes accrued during the taxable year exceed the credit provided by section 33 (relating to taxes of foreign countries and possessions of the United States), and the income, war profits, and excess profits taxes of foreign countries and possessions of the United States accrued during the taxable year (to the extent provided by subparagraph (3) of this paragraph), except that no deduction shall be allowed for (*a*) the accumulated earnings tax imposed by section 531 (or a corresponding section of a prior law), (*b*) the personal holding company tax imposed by section 541 (or a corresponding section of a prior law), and (*c*) the excess profits tax imposed by subchapter E, chapter 2 of the Internal Revenue Code of 1939, for taxable years beginning after December 31, 1940. The deduction is for taxes for the taxable year, determined under the accrual method of accounting, regardless of whether the corporation uses an accrual method

of accounting, the cash receipts and disbursement method, or any other allowable method of accounting. In computing the amount of taxes accrued, an unpaid tax which is being contested is not considered accrued until the contest is resolved.

(ii) However, the taxpayer shall deduct taxes paid, rather than taxes accrued, if it used that method with respect to Federal taxes for each taxable year for which it was subject to the tax imposed by section 500 of the Internal Revenue Code of 1939, unless an election is made under subparagraph (2) of this paragraph to deduct taxes accrued.

(2) ***Election by taxpayer which deducted taxes paid.***

(i) If the corporation was subject to the personal holding company tax imposed by section 500 of the Internal Revenue Code of 1939 and, for the purpose of that tax, deducted Federal taxes paid rather than such taxes accrued for each taxable year for which it was subject to such taxes, the corporation may elect for any taxable year ending after June 30, 1954, to deduct taxes accrued, including taxes of foreign countries and possessions of the United States, rather than taxes paid, for the purposes of the tax imposed by section 541 of the Internal Revenue Code of 1954. The election shall be made by deducting such taxes accrued on Schedule PH, Form 1120, to be filed with the return. The schedule shall, in addition, contain a statement that the corporation has made such election and shall set forth the year to which such election was first applicable. The deduction of taxes accrued in the year of election precludes the deduction of taxes paid during such year. The election, if made, shall be irrevocable and the deduction for taxes accrued shall be allowed for the year of election and for all subsequent taxable years.

(ii) Pursuant to section 7851(a)(1)(C), the election provided for in subdivision (i) of this subparagraph may be made with respect to a taxable year ending after June 30, 1954, even though such taxable year is subject to the Internal Revenue Code of 1939.

(3) ***Taxes of foreign countries and United States possessions.*** In determining undistributed personal holding company income for any taxable year, if the taxpayer chooses the benefits of section 901 for such taxable year, a deduction shall be allowed for:

(i) The income, war profits, and excess profits taxes imposed by foreign countries or possessions of the United States and accrued (or paid, if required under subparagraph (1)(ii) of this paragraph) during such taxable year, and

(ii) In the case of a domestic corporation, the foreign income taxes deemed to be paid for such taxable year under section 902(a) in accordance with §§ 1.902-1 and 1.902-2 or section 960(a)(1) in accordance with § 1.960-7.

In no event shall the amount under subdivision (ii) of this subparagraph exceed the amount includible in gross income with respect to such taxes under section 78 and § 1.78-1. The credit for such taxes provided by section 901 shall not be allowed against the personal holding company tax imposed by section 541. See section 901(a).

(b) ***Charitable contributions*** —

(1) ***Taxable years beginning before January 1, 1970.***

(i) Section 545(b)(2) provides that, in computing the deduction for charitable contributions for purposes of determining undistributed personal holding company income of a corporation for taxable years beginning before January 1, 1970, the limitations in section 170(b)(1) (A) and (B),

relating to charitable contributions by individuals, shall apply and section 170(b) (2) and (5), relating to charitable contributions by corporations and carryover of certain excess charitable contributions made by individuals, respectively, shall not apply.

(ii) Although the limitations of section 170(b)(1) (A) and (B) are 10 and 20 percent, respectively, of the individual's adjusted gross income, the limitations are applied for purposes of section 545(b)(2) by using 10 and 20 percent, respectively, of the corporation's taxable income as adjusted for purposes of section 170(b)(2), that is, the same amount of taxable income to which the 5-percent limitation applied. Thus, the term *adjusted gross income* when used in section 170(b)(1) means the corporation's taxable income computed with the adjustments, other than the 5-percent limitation, provided in the first sentence of section 170(b)(2). However, a further adjustment for this purpose is that the taxable income shall also be computed without the deduction of the amount disallowed under section 545(b)(8), relating to expenses and depreciation applicable to property of the taxpayer. The carryover of charitable contributions made in a prior year, otherwise allowable as a deduction in computing taxable income to the extent provided in section 170(b)(2) and, with respect to contributions paid in taxable years beginning after December 31, 1963, in section 170(b)(5), shall not be allowed as a deduction in computing undistributed personal holding company income for any taxable year.

(iii) See § 1.170-2 with respect to the charitable contributions to which the 10-percent limitation is applicable and the charitable contributions to which the 20-percent limitation is applicable.

(2) ***Taxable years beginning after December 31, 1969.***

(i) Section 545(b)(2) provides that, in computing the deduction allowable for charitable contributions for purposes of determining undistributed personal holding company income of a corporation for taxable years beginning after December 31, 1969, the limitations in section 170(b)(1) (A), (B), and (D)(i) (relating to charitable contributions by individuals) shall apply, and section 170(b)(1)(D)(ii) (relating to excess charitable contributions by individuals of certain capital gain property, section 170(b)(2) (relating to the 5-percent limitation on charitable contributions by corporations), and section 170(d) (relating to carryovers of excess contributions of individuals and corporations) shall not apply.

(ii) Although the limitations of section 170(b)(1) (A), (B), and (D)(i) are 50, 20, and 30 percent, respectively, of an individual's contribution base, these limitations are applied for purposes of section 545(b)(2) by using 50, 20, and 30 percent, respectively, of the corporation's taxable income as adjusted for purposes of section 170(b)(2), that is, the same amount of taxable income to which the 5-percent limitation applies. Thus, the term *contribution base* when used in section 170(b)(1) means the corporation's taxable income computed with the adjustments, other than the 5-percent limitation, provided in section 170(b)(2). However, a further adjustment for this purpose is that the taxable income shall also be computed without the deduction of the amount disallowed under section 545(b)(8), relating to expenses and depreciation applicable to property of the taxpayer. The carryover of charitable contributions made in a prior year, otherwise allowable as a deduction in computing taxable income to the extent provided in section 170(b)(1)(D)(ii) and (d), shall not be allowed as a deduction in computing undistributed personal holding company income for any taxable year.

(iii) See § 1.170A-8 for the rules with respect to the charitable contributions to which the 50-, 20-, and 30-percent limitations apply.

(c) ***Special deductions disallowed.*** Part VIII, subchapter B, chapter 1 of the Code, allows corporations, in computing taxable income, special deductions for such matters as partially tax- exempt interest, certain dividends received, dividends paid on certain preferred stock of public utilities, organizational expenses, etc. See section 241. Such special deductions, except the deduction provided by section 248 (relating to organizational expenses) shall be disallowed in computing undistributed personal holding company income.

(d) ***Net operating loss.*** The net operating loss deduction provided in section 172 is not allowed for purposes of the computation of undistributed personal holding company income. For purposes of such a computation, however, there is allowed as a deduction the amount of the net operating loss (as defined in section 172(c)) for the preceding taxable year, except that, in computing undistributed personal holding company income for a taxable year beginning after December 31, 1957, the amount of such net operating loss shall be computed without the deductions provided in part VIII (section 241 and following, except section 248), subchapter B, chapter 1 of the Code.

(e) ***Long-term capital gains.***

(1) There is allowed as a deduction the excess of the net long-term capital gain for the taxable year over the net short-term capital loss for such year, minus the taxes attributable to such excess, as provided in section 545(b)(5).

(2) Section 631(c) (relating to gain or loss in the case of disposal of coal or domestic iron ore) shall have no application.

(f) ***Bank affiliates.*** There is allowed the deduction provided by section 601 in the case of bank affiliates (as defined in section 2 of the Banking Act of 1933; 12 U.S.C. 221a (c)).

(g) ***Payment of indebtedness incurred prior to January 1, 1934*** —

(1) ***General rule.*** In computing undistributed personal holding company income, section 545(b)(7) provides that there shall be allowed as a deduction amounts used or irrevocably set aside to pay or to retire indebtedness of any kind incurred before January 1, 1934, if such amounts are reasonable with reference to the size and terms of such indebtedness. See § 1.545-3 for the deduction in computing undistributed personal holding company income of amounts used or irrevocably set aside to pay or retire qualified indebtedness (as defined in paragraph (d) of § 1.545-3).

(2) ***Indebtedness.*** The term *indebtedness* means an obligation absolute and not contingent, to pay on demand or within a given time, in cash or other medium, a fixed amount. The term *indebtedness* does not include the obligation of a corporation on its capital stock. The indebtedness must have been incurred (or, if incurred by assumption, assumed) by the taxpayer before January 1, 1934. An indebtedness evidenced by bonds, notes, or other obligations issued by a corporation is ordinarily incurred as of the date such obligations are issued and the amount of such indebtedness is the amount represented by the face value of the obligations. In the case of refunding, renewal, or other change in the form of an indebtedness, the giving of a new promise to pay by the taxpayer will not have the effect of changing the date the indebtedness was incurred.

(3) ***Amounts used or irrevocably set aside.*** The deduction is allowable, in any taxable year, only for amounts used or irrevocably set aside in that year. The use or irrevocable setting aside must be to effect the extinguishment or discharge of indebtedness. In the case of refunding, renewal, or other change in the form of an indebtedness, the mere giving of a new promise to pay by the taxpayer will not result in an allowable deduction. If amounts are set aside in one year, no deduction is allowable for such amounts for a later year in which actually paid. As long as all other conditions are satisfied,

the aggregate amount allowable as a deduction for any taxable year includes all amounts (from whatever source) used and all amounts (from whatever source) irrevocably set aside, irrespective of whether in cash or other medium. Double deductions shall not be allowed.

(4) ***Reasonableness of the amounts with reference to the size and terms of the indebtedness.***

(i) The reasonableness of the amounts used or irrevocably set aside must be determined by reference to the size and terms of the particular indebtedness. Hence, all the facts and circumstances with respect to the nature, scope, conditions, amount, maturity, and other terms of the particular indebtedness must be shown in each case.

(ii) Ordinarily an amount used to pay or retire an indebtedness, in whole or in part, at or prior to the maturity and in accordance with the terms thereof will be considered reasonable, and may be allowable as a deduction for the year in which so used. However, if an amount has been set aside in a prior year for payment or retirement of the same indebtedness, the amount so set aside shall not be allowed as a deduction in the year of the payment.

(iii) All amounts irrevocably set aside for the payment or retirement of an indebtedness in accordance with and pursuant to the terms of the obligation, for example, the annual contribution to trustees required by the provisions of a mandatory sinking fund agreement, will be considered as complying with the requirement of reasonableness. To be considered reasonable, it is not necessary that the plan of retirement provide for a retroactive setting aside of amounts for years prior to that in which the plan is adopted. However, if a voluntary plan was adopted before 1934, no adjustment is allowable in respect of the amounts set aside in the years prior to 1934.

(5) ***Burden of proof.*** The burden of proof will rest upon the taxpayer to sustain the deduction claimed. Therefore, the taxpayer must furnish the information required by the return, and such other information as the district director may require in substantiation of the deduction claimed.

(6) ***Allowance to a successor corporation.*** For allowance of deduction for pre-1934 indebtedness to a successor corporation, see section 381(c)(15).

(h) ***Expenses and depreciation applicable to property of the taxpayer.***

(1) In computing undistributed personal holding company income in the case of a personal holding company which owns or operates property, section 545(b)(8) provides a specific limitation with respect to the allowance of deductions for trade or business expenses and depreciation allocable to the operation or maintenance of such property. Under this limitation, these deductions shall not be allowed in an amount in excess of the aggregate amount of the rent or other compensation received for the use of, or the right to use, the property, unless it is established to the satisfaction of the Commissioner:

(i) That the rent or other compensation received was the highest obtainable, or if none was received, that none was obtainable;

(ii) That the property was held in the course of a business carried on bona fide for profit; and

(iii) Either that there was reasonable expectation that the operation of the property would result in a profit, or that the property was necessary to the conduct of the business.

(2) The burden of proof will rest upon the taxpayer to sustain the deduction claimed. If, in computing undistributed personal holding company income, a personal holding company claims deductions for expenses and depreciation allocable to the operation and maintenance of property owned or operated by the company, in an aggregate amount in excess of the rent or other compensation received for the use of, or the right to use, the property, it shall attach to its income tax return a statement setting forth its claim for allowance of the additional deductions, together with a complete statement of the facts and circumstances pertinent to its claim and the arguments on which it relies. Such statement shall set forth:

(i) A description of the property;

(ii) The cost or other basis to the corporation and the nature and value of the consideration paid for the property;

(iii) The name and address of the person from whom the property was acquired and the date the property was acquired;

(iv) The name and address of the person to whom the property is leased or rented, or the person permitted to use the property, and the number of shares of stock, if any, held by such person and the members of his family;

(v) The nature and gross amount of the rent or other compensation received for the use of, or the right to use, the property during the taxable year and for each of the five preceding years and the amount of the expenses incurred with respect to, and the depreciation sustained on, the property for such years;

(vi) Evidence that the rent or other compensation was the highest obtainable or, if none was received, a statement of the reasons therefore;

(vii) A copy of the contract, lease or rental agreement;

(viii) The purpose for which the property was used;

(ix) The business, carried on by the corporation, with respect to which the property was held and the gross income, expenses, and taxable income derived from the conduct of such business for the taxable year and for each of the five preceding years;

(x) A statement of any reasons which existed for expectation that the operation of the property would be profitable, or a statement of the necessity for the use of the property in the business of the corporation, and the reasons why the property was acquired; and

(xi) Any other information pertinent to the taxpayer's claim.

(i) ***Amount of a lien in favor of the United States.***

(1) If notices of lien are filed in the manner provided in section 6323(f), the amount of the liability to the United States outstanding at the close of the taxable year, and secured by such liens which are in effect at that time, shall be allowed as a deduction in computing undistributed personal holding company income. However, the amount of such deduction which may be allowed for any taxable year shall not exceed the taxable income (as adjusted for purposes of determining the undistributed personal holding company income, but without regard to the deduction under section 545(b)(9)) for such year. The fact that the amount of, or any part of, the outstanding obligation to the United States

was deducted for one taxable year does not prevent its deduction for a subsequent taxable year to the extent the obligation is still outstanding at the close of the subsequent taxable year and is secured by a lien, notice of which has been filed.

(2) Subparagraph (1) of this paragraph may be illustrated by the following example:

Example. If the taxpayer (on the calendar year basis) is subject to a lien (notice of which has been properly filed) in the amount of $500,000 at the close of the calendar year 1954 and has taxable income of $400,000 for such taxable year, the deduction allowable by reason of the lien for the calendar year 1954 is $400,000. If, at the close of the taxable year ended December 31, 1955, the taxpayer is still subject to the same lien of $500,000 and it has taxable income of $450,000, a deduction is allowed by reason of such lien in the amount of $450,000.

(3) When the obligation secured by the lien in favor of the United States has been satisfied or released, the sum of the amounts which have been allowed as deductions under section 545(b)(9) in respect of such obligation shall be restored to taxable income for the year in which such lien is satisfied or released. If only a part of the obligation secured by the lien has been satisfied, the sum of the amounts which have been allowed as deductions under section 545(b)(9) in respect of such part shall be included in taxable income for the year of the satisfaction for the purpose of determining undistributed personal holding company income. It should be noted, however, that only the sum of the amounts which have been allowed as deductions under section 545(b)(9) and subparagraph (1) of this paragraph shall be included in taxable income. Thus, any amounts which were allowed as deductions under section 504(e) of the Internal Revenue Code of 1939 shall not be included as taxable income for any taxable year under section 545(b)(9) and subparagraph (1) of this paragraph.

(4) The application of subparagraph (3) of this paragraph may be illustrated by the following example:

> *Example.* Assume the same facts as in the example in subparagraph (2) of this paragraph, and assume further that the corporation has $100,000 taxable income both for 1956 (before including the $400,000 described below) and for 1957. In 1956, the corporation pays $200,000 of the obligation, thereby reducing its liability from $500,000 to $300,000. In such case, $400,000 is included in taxable income in computing its undistributed personal holding company income for 1956, that is, the sum of the $200,000 deduction for 1954 and the $200,000 deduction for 1955 in respect of the liability which is paid in 1956. In 1957, property of the corporation is discharged from the lien by reason of the fact that the value of the remaining property of the corporation exceeds double the outstanding liability. (See section 6325(b)(1).) Since this was not a release or satisfaction of the lien, no amount is added to taxable income for 1957 with respect to the property discharged from the lien. In 1958, the remaining property is released from the lien by reason of a bond being accepted under section 6325(a)(2). There is added to taxable income in computing undistributed personal holding company income for 1958, $850,000, that is, the sum of the deductions allowed for 1954, 1955, 1956, and 1957 in respect of the $300,000 liability, the lien for which was

released in 1958. This amount of $850,000, is computed as follows:

Year	Outstanding liability	Taxable income	Deduction as limited by taxable income	Amount attributable to part payment of $200,000 in 1956	Amount attributable to release of lien in 1958
1954	$500,000	$400,000	$400,000	$200,000	$200,000
1955	500,000	450,000	450,000	200,000	250,000
1956	300,000	500,000	300,000		300,000
1957	300,000	100,000	100,000		100,000
Total					850,000

(5)

(i) If an amount has been included in undistributed personal holding company income of the personal holding company by reason of section 545(b)(9), any shareholder of the company may elect to compute his income tax with respect to such of his dividends as are attributable to such amount as though such dividends were received ratably over the period the lien was in effect.

(ii) For purposes of section 545(b)(9), the dividends paid during the taxable year of the personal holding company (computed as of the close of such year) shall be deemed attributable first to undistributed personal holding company income by reason of section 545(b)(9) (computed as of the close of the taxable year of the personal holding company). If the period over which the lien was in effect consists of several taxable years of the personal holding company, the dividend deemed received for any taxable year shall be deemed received on the last day of such taxable year of the personal holding company.

(iii) Such election shall be made in a statement showing the amount of the deduction under section 545(b)(9) for each taxable year of the period in which the lien was in effect, the amount of such deduction, if any, which was added to undistributed personal holding company income in a later year or years as a result of partial satisfaction or release of such lien, and the details thereof, the taxable year or years to which such dividends are allocable, and a computation of tax, on the basis of the election, for all taxable years affected by such ratable allocation of the dividends. Further, the statement shall show the district director's office in which the returns, for the years to which the dividends are allocable, were filed, the kind of returns which were filed (separate returns or joint returns), and the name and address under which the returns were filed. The statement shall be attached to the shareholder's return for the taxable year for which the dividend would be reported but for such election.

(iv) The operation of this subparagraph may be illustrated as follows: If, in the example under subparagraph (4) of this paragraph, shareholder A owns 75 percent in value of the outstanding stock of the personal holding company, and receives a dividend of $540,000 from such company during 1958 (the total dividend distribution being $720,000) he may elect to compute his income tax with respect to the $540,000 in dividends for 1958 as if he had received

$127,058.82 of such dividends for 1954 ($200,000/850,000 of $540,000), $158,823.53 of such dividends for 1955 ($250,000/850,000 of $540,000), $190,588.23 of such dividends for 1956 ($300,000/850,000 of $540,000), and $63,529.41 of such dividends for 1957 ($100,000/850,000 of $540,000). Accordingly, the tax computed for 1958 with respect to such dividends shall be the aggregate of the taxes attributable to such amounts had they been distributed in the respective years.

[T.D. 6500, 25 FR 11737, Nov. 26, 1960, as amended by T.D. 6805, 30 FR 3209, Mar. 9, 1965; T.D. 6841, 30 FR 9305, July 27, 1965; T.D. 6949, 33 FR 5526, Apr. 9, 1968; T.D. 7207, 37 FR 20796, Oct. 5, 1972; T.D. 7429, 41 FR 35492, Aug. 23, 1976; T.D. 7649, 44 FR 60086, Oct. 18, 1979]

§ 1.545-3 Special adjustment to taxable income.

(a) ***In general.*** In computing undistributed personal holding company income for any taxable year beginning after December 31, 1963, section 545(c) (1) provides that, except as otherwise provided in section 545(c), there shall be allowed as a deduction amounts used or amounts irrevocably set aside (to the extent reasonable with reference to the size and terms of the indebtedness) during such year to pay or retire qualified indebtedness (as defined in section 545(c)(3) and paragraph (d) of this section). The reasonableness of amounts irrevocably set aside shall be determined under the rules of paragraph (g)(4) of § 1.545-2.

(b) ***Amounts used or irrevocably set aside*** —

(1) ***In general.*** The deduction is allowable, in any taxable year, only for amounts used or irrevocably set aside in that year to extinguish or discharge qualified indebtedness. If amounts are set aside in 1 year, no deduction is allowable for a later year in which such amounts are actually paid. As long as all other conditions are satisfied, the aggregate amount allowable as a deduction for any taxable year includes all amounts (from whatever source) used and all amounts (from whatever source) irrevocably set aside, irrespective of whether in cash or other medium. The same item shall not be deducted more than once.

(2) ***Refunding, etc., of qualified indebtedness.***

(i) A refunding, renewal or mere change in the form of a qualified indebtedness which does not involve a substantial change in the economic terms of the indebtedness will not result in an allowable deduction whether or not funds are obtained from such refunding, renewal, or change in form, and whether or not such funds are applied on the prior obligation, and will not constitute a reduction in the amount of such qualified indebtedness. For purposes of this section, if, in connection with a refunding, renewal, or other change in the form of an indebtedness, the rate of interest or principal amount of such debt, or the date when payment is due with respect to such debt or significantly changed, or if, after the refunding, renewal, or other change in the form of such debt, the creditor to whom such debt is owed is neither the creditor to whom such debt was owed before such refunding, renewal, or other change, nor a person standing in a relationship to such creditor described in section 267(b), then a substantial change in the economic terms of such indebtedness will normally have occurred.

(ii) The application of this subparagraph may be illustrated by the following examples:

Example 1. On December 31, 1963, M owes $10,000 to X represented by a 6-percent, 90-day note payable on January 31, 1964. On January 31, 1964, M renews the debt, giving X a new 6-percent, 90-day note (payable on Apr. 30, 1964) and paying the accrued interest on the old note. Since the date when payment is due has been significantly changed, a substantial change in the economic terms of the indebtedness has occurred.

Example 2. On December 31, 1963, S owes $5,000 to T represented by a 6-percent note payable on January 1, 1965. On December 23, 1964, S liquidates the note, giving T a new note for $5,000 due on January 2, 1965, and bearing interest at 6 percent. Since the transaction does not involve a substantial change in the economic terms of the indebtedness, the transaction will not result in an allowable deduction, and the amount of the qualified indebtedness will not be reduced.

> *Example 3.* (i) On December 31, 1963, Q owes $45,000 to R represented by a demand note. On July 1, 1964, Q renews $30,000 of the indebtedness by issuing a new demand note to R and liquidates $15,000 of the debt. Since the principal amount of the debt has been significantly changed, there has been a substantial change in the economic terms of the indebtedness.
> (ii) If Q had issued renewal notes for $44,000 and had paid only $1,000 of the total indebtedness, then a significant change in the principal amount of the debt would not have occurred and Q would have been entitled to only a $1,000 deduction (the amount actually paid during the taxable year). In addition, the amount of qualified indebtedness would have been reduced to $44,000.

(c) ***Corporations to which applicable.*** Section 545(c)(2) describes the corporations to which section 545(c) applies. In order to qualify under section 545(c)(2), the corporation must be one:

(1) Which for at least one of its two most recent taxable years ending before February 26, 1964, was not a personal holding company under section 542, but which would have been a personal holding company under section 542 for such taxable year if the law applicable for the first taxable year beginning after December 31, 1963, had been applicable to such taxable year; or

(2) Which is an acquiring corporation treated as a corporation described in subparagraph (1) of this paragraph by reason of section 381(c)(15) (relating to the carryover of certain indebtedness in corporate acquisitions), but only to the extent of the qualified indebtedness to which it has succeeded under section 381(c)(15) and the indebtedness referred to in paragraph (d)(1)(ii) of this section incurred to replace qualified indebtedness to which it has succeeded under section 381(c)(15)

The law applicable for the first taxable year beginning after December 31, 1963, for purposes of this paragraph means part II (section 541 and following), subchapter G, chapter 1 of the Code as applicable to such year but does not include amendments to other parts of the Code first applicable with respect to such year. For an example of a corporation described in subparagraph (1) of this paragraph see paragraph (f)(1) of § 1.333-5.

(d) ***Qualified indebtedness*** —

(1) ***General definition.*** Except as provided in subparagraphs (2), (3), and (4) of this paragraph the term *qualified indebtedness* means:

(i) The outstanding indebtedness (as defined in subparagraph (6) of this paragraph) incurred after December 31, 1933, and before January 1, 1964, by the taxpayer (or to which the taxpayer succeeded in a transaction to which section 381(c)(15) applies), and

(ii) The outstanding indebtedness (as defined in subparagraph (6) of this paragraph) incurred after December 31, 1963, by the taxpayer (or to which the taxpayer succeeded in a transaction to which section 381(c)(15) applies) for the purpose of making a payment or set-aside referred to in paragraph (a) of this section in the same taxable year of the debtor in which such indebtedness was incurred. An indebtedness shall be deemed not to have been incurred for the purpose of making a payment or set-aside referred to in paragraph (a) of this section when such indebtedness is a consequence of a refunding, renewal or mere change in the form of a qualified indebtedness which does not involve a substantial change in the economic terms of the qualified indebtedness. (See paragraph (b)(2) of this section for the meaning of *substantial change in the economic terms of the indebtedness.*) In the case of such a payment or set-aside which is made on or after the first day of the first taxable year beginning after December 31, 1963, such indebtedness incurred after December 31, 1963, is treated as qualified indebtedness only to the extent that the deduction from taxable income otherwise allowed by section 545(c)(1) with respect to such payment or set-aside is treated as non-deductible by reason of the election referred to in paragraph (e) of this section.

(2) ***Exception for indebtedness owed to certain shareholders.*** For purposes of subparagraph (1) of this paragraph, qualified indebtedness does not include any amounts which were, at any time after December 31, 1963, and before the payment or set-aside to which this section applies, owed directly or indirectly to a person who at such time owned more than 10 percent in value of the taxpayer's outstanding stock. The rules of section 318(a) and the regulations thereunder apply for the purpose of determining ownership under this subparagraph. Amounts which cease to be qualified indebtedness by reason of this subparagraph may not subsequently become qualified indebtedness as a result of any change in the facts (for example, a subsequent sale of stock by the person to whom the amounts are directly or indirectly owed).

(3) ***Reduction for amounts irrevocably set aside.*** For purposes of subparagraph (1) of this paragraph, qualified indebtedness with respect to a particular contract is reduced when and to the extent that amounts are irrevocably set aside to pay or retire such indebtedness. An amount is not considered to be irrevocably set aside if any person could use such amount for any purpose other than the retirement of the qualified indebtedness with respect to which it was set aside. No deduction is allowed under section 545(c)(1) and this section for payments out of amounts previously set aside. Thus, for example, if a corporation, which is a June 30 fiscal year taxpayer, incurs indebtedness of $1 million on February 1, 1962, and, in accordance with its contract of indebtedness, irrevocably sets aside $50,000 in a sinking fund on February 1, of each of the years 1963, 1964, and 1965, then its qualified indebtedness on January 1, 1964, is $950,000 ($1 million less one set-aside of $50,000 in 1963). The corporation is not allowed a deduction under section 545(c)(1) for the set-aside of $50,000 made during its taxable year ending on June 30, 1964, since section 545(c) is applicable only to taxable years beginning after December 31, 1963, but the qualified indebtedness is nevertheless reduced by such amount. The corporation is allowed a deduction of $50,000 for its taxable year ending June 30, 1965, as a result of the set-aside made during such taxable year, and qualified indebtedness on July 1, 1965, is $850,000. No deduction is allowed to the corporation for a payment in any subsequent taxable year from the amounts so set aside.

(4) ***Reduction on disposition of certain property.***

(i) Section 545(c)(6) provides that the total amount of the taxpayer's qualified indebtedness (as determined under subdivision (ii) of this subparagraph) shall be reduced if property of a character subject to the allowance for exhaustion, wear and tear, obsolescence, amortization, or depletion is disposed of after December 31, 1963. The reduction is made pro rata (in accordance with subdivision (iii) of this subparagraph) for the taxable year of such disposition and is equal in total amount to the excess, if any, of:

(*a*) The adjusted basis of the property disposed of (determined under section 1011 and the regulations thereunder) immediately before such disposition; over

(*b*) The amount of qualified indebtedness which ceased to be qualified indebtedness with respect to the taxpayer by reason of the assumption of indebtedness by the transferee of the property disposed of (whether or not such indebtedness was incurred by the taxpayer in connection with the property disposed of).

For purposes of (*b*) of this subdivision, the transferee will be treated as having assumed qualified indebtedness if such transferee acquires real estate of which the taxpayer is the legal or equitable owner immediately before the transfer and which is subject to indebtedness that, with respect to the taxpayer, is qualified indebtedness immediately before the transfer, provided the taxpayer shows to the satisfaction of the Commissioner that under all the facts and circumstances it no longer bears the burden of discharging such indebtedness.

(ii) The indebtedness reduced under the rule of this subparagraph is the qualified indebtedness which is outstanding with respect to the taxpayer immediately after the disposition referred to in subdivision (i) of this subparagraph.

(iii) The reduction with respect to any particular contract of indebtedness under the rules of this subparagraph shall be determined by multiplying the total reduction (determined under subdivision (i) of this subparagraph) by the ratio which the amount of the qualified indebtedness owed with respect to such contract by the taxpayer on the date referred to in subdivision (ii) of this subparagraph bears to the aggregate qualified indebtedness owed by the taxpayer with respect to all contracts on such date.

(5) ***Total debt consisting of both qualified and nonqualified indebtedness.*** In any case where, with respect to a particular contract of indebtedness, a part of the total indebtedness owed with respect to such contract is qualified indebtedness and the other part is indebtedness which is not qualified indebtedness, then, any amount paid or irrevocably set aside with respect to such contract shall be allocated between both such parts pro rata unless the taxpayer clearly indicates in its return the part of the payment or set-aside which shall be allocated to the qualified indebtedness.

(6) ***Outstanding indebtedness.*** For purposes of determining qualified indebtedness, the term *indebtedness* has the same meaning that it has under section 545(b)(7) and paragraph (g)(2) of § 1.545-2. Indebtedness ceases to be outstanding when the taxpayer no longer has an obligation absolute and not contingent with respect to the payment of such debt. An indebtedness evidenced by bonds, notes, or other obligations issued by a corporation is ordinarily incurred as of the date such obligations are issued, and the amount of such indebtedness is the amount represented by the face value of the obligations. However, a refunding, renewal, or mere change in the form of an indebtedness which does not involve a substantial change in the economic terms of the indebtedness will not have the effect of changing the date the indebtedness was incurred. (See paragraph (b)(2) of this section for the meaning of *substantial change in the economic terms of the indebtedness.*) For purposes of this section, the outstanding indebtedness of a taxpayer includes a

mortgage or other security interest on real estate of which such taxpayer is the legal or equitable owner (even though the taxpayer is not directly liable on the underlying evidence of indebtedness secured by such mortgage or security interest) provided such taxpayer shows to the satisfaction of the Commissioner that under all of the facts and circumstances it bears the burden of discharging such indebtedness. Thus, for example, if X acquires from Y property which is subject to a mortgage (X not assuming the indebtedness underlying such mortgage) and if X actually bears the burden of discharging the indebtedness, then, after the date of acquisition, such underlying indebtedness is outstanding indebtedness with respect to X, and, since Y's obligation to pay is in fact contingent upon X failing to discharge the indebtedness, such indebtedness is not outstanding indebtedness with respect to Y.

(7) ***Examples.*** The application of this paragraph may be illustrated by the following examples:

Example 1. M Corporation, a calendar year taxpayer has $600,000 of indebtedness outstanding on December 31, 1963 (which was incurred after 1933), represented by three demand notes. Individuals A and B (who are not shareholders) each hold one of M Corporation's notes in the amount of $150,000 and N Corporation (which is not a shareholder) holds M Corporation's note in the amount of $300,000. The note held by N Corporation is secured by a mortgage on certain depreciable real estate owned by M Corporation which has an adjusted basis to it on July 1, 1964, of $500,000. On July 1, 1964, M Corporation sells the depreciable real estate to O Corporation in consideration for $200,000 in cash and the assumption by O Corporation of the indebtedness on the note held by N Corporation. M Corporation borrows $200,000 on September 30, 1964, of which amount $150,000 is simultaneously applied to liquidate the note held by B. M Corporation's qualified indebtedness is reduced on July 1, 1964, by $300,000, the qualified indebtedness which ceased to be outstanding by reason of the transfer. In addition, the reduction (computed under section 545(c)(6) and subparagraph (4) of this paragraph) of M Corporation's qualified indebtedness by reason of the disposition of depreciable property on July 1, 1964, is as follows:

Outstanding qualified indebtedness after reduction of qualified indebtedness which ceased to be outstanding by reason of the transfer but before the sec. 545(c)(6) reduction	$300,000
Reduced by:	
The excess of the adjusted basis of depreciable real estate disposed of on July 1, 1964 ($500,000), over the amount of qualified indebtedness assumed by O Corporation ($300,000)	200,000
Qualified indebtedness after reductions from transfer and assumption of	100,000

indebtedness

The pro-rata share of the reduction with respect to each debt is computed as follows:

Note held by A:	
Qualified indebtedness owed by taxpayer on the note held by A before the disposition of depreciable property	$150,000
Less the pro-rata share of the total reduction computed under subparagraph (4) of this paragraph allocable to such note $200,000 × ($150,000 ÷ $300,000)	100,000
Qualified indebtedness owed on the note held by A after the transfer	50,000
Note held by B:	
Qualified indebtedness owed by taxpayer on the note held by B before the transfer of depreciable property	$150,000
Less the pro-rata share of the total reduction computed under subparagraph (4) of this paragraph allocable to such note $200,000 × ($150,000 ÷ $300,000)	100,000
Qualified indebtedness owed on the note held by B after the transfer	50,000

Of the $150,000 paid by M Corporation on September 30, 1964, to retire the note held by B only $50,000 qualified as a use of an amount to pay or retire qualified indebtedness and, thus, only $50,000 is allowable as a deduction for purposes of computing undistributed personal holding company income for 1964.

Example 2. The facts are the same as in example 1 except that M Corporation elects in accordance with paragraph (e) of this section not to deduct $25,000 of the $50,000 amount otherwise deductible. Then $25,000 of the $200,000 of new indebtedness incurred by M Corporation is qualified indebtedness. If the payment on the note held by B had not been made until January 1, 1965, then the new indebtedness would not be qualified indebtedness since the payment was not made in the taxable year in which the new indebtedness was incurred. If M Corporation pays $40,000 on April 1 and July 1, 1965, on the indebtedness incurred September 30, 1964, then (unless M indicates otherwise in its return for 1965 in accordance with subparagraph (5) of this paragraph) the payments made on such dates must

be allocated between qualified and nonqualified indebtedness in the following manner:

	Qualfied	Nonqualified
April 1 payment:		
$40,000 × $25,000 (qualified) ÷ $200,000 (total indebtedness)	$5,000	
$40,000 × $175,000 (nonqualified) ÷ $200,000 (total indebtedness)		$35,000
July 1 payment:		
$40,000 × $20,000 (qualified) ÷ $160,000 (total indebtedness)	5,000	
$40,000 × $140,000 (nonqualified) ÷ $160,000 (total indebtedness)		35,000
Total	10,000	70,000

Thus, a total of $10,000 of the two payments would be considered used to pay or retire qualified indebtedness. The results in examples 1 and 2 would be the same if O Corporation purchased the real estate subject to the indebtedness (not assuming the indebtedness) on the note held by N Corporation, provided M Corporation does not bear the burden of discharging such indebtedness after July 1, 1964.

Example 3. C owns all of the 1000 shares of outstanding capital stock of P Corporation. On December 31, 1963, P Corporation, a calendar year taxpayer, owes $200,000 of outstanding indebtedness to D and$500,000 of outstanding indebtedness to E. These debts were incurred after 1933. On January 15, 1964, P Corporation pays $100,000 in partial liquidation of the $500,000 indebtedness. On March 15, 1964, P Corporation pays $50,000 into a sinking fund with respect to the $200,000 indebtedness owed to D. On April 15, 1964, D purchases one-half of the shares owned by C, constituting 50 percent in value of P Corporation's outstanding stock. P Corporation, on June 15, 1964, pays $50,000 into a sinking fund with respect to the indebtedness owed to D. For purposes of the March 15, 1964, set-aside, the indebtedness owed to D ($200,000) is qualified indebtedness. However, the indebtedness owed to D is not qualified indebtedness for purposes of the June set-aside with respect to such indebtedness since D is a person who after December 31, 1963, and before the June set-aside, owned more than 10 percent in value of P Corporation's outstanding stock. Moreover, any subsequent set-asides made with respect to the indebtedness owed to D will not be made with respect to qualified indebtedness even if the shares owned by D are subsequently sold. Assuming no payments or set-asides are made by P Corporation after June 15, 1964, the P Corporation is entitled to a deduction of $150,000 under section 545(c)(1) for the calendar year 1964 for amounts paid and for amounts irrevocably set aside to pay or retire qualified indebtedness, and the total qualified indebtedness at the end of 1964 is $400,000. No additional deduction is allowed in subsequent taxable years for amounts paid out of the amounts set aside in 1964.

(e) ***Election not to deduct —***

(1) ***In general.*** Section 545(c)(4) provides that a taxpayer may elect to treat as nondeductible amounts otherwise deductible under section 545(c)(1) for the taxable year. The election shall be in the form of a statement of election filed on or before the 15th day of the third month following the close of the taxable year with respect to which the election applies. The election shall be irrevocable after such date.

(2) ***Statement of election.*** The statement of election referred to in subparagraph (1) of this paragraph shall be attached to the taxpayer's Schedule PH (Form 1120) for the year with respect to which such election applies, if such schedule is filed on or before the date referred to in subparagraph (1) of this paragraph. If the taxpayer's Schedule PH (Form 1120) is not filed on or before such date, then the statement of election shall clearly set forth the taxpayer's name, address, and employer identification number, shall be signed by an officer of the taxpayer who is authorized to sign a return of the taxpayer with respect to income, and shall be filed with the district director for the internal revenue district in which the taxpayer's income tax return (for the year with respect to which the election is applicable) would be filed. The following information shall be included in the statement of election:

(i) A statement that the taxpayer wishes to elect in accordance with section 545(c)(4);

(ii) The amounts paid or set aside which are to be treated as nondeductible under section 545(c)(4) and this section;

(iii) All information necessary to identify the qualified indebtedness with respect to which such amounts were paid or set aside;

(iv) The date on which such payments or set-asides were made; and

(v) All information necessary to identify the indebtedness (referred to in section 545(c)(3)(A)(ii) and paragraph (d)(1)(ii) of this section) incurred for the purpose of making the payments or set-asides which the taxpayer elects to treat as nondeductible, including:

(*a*) The date on which such indebtedness was incurred;

(*b*) The amount of such indebtedness;

(*c*) The person or persons to whom such indebtedness is owed; and

(*d*) A statement that such person or persons do not own more than 10 percent in value of the taxpayer's outstanding stock.

(f) ***Limitation on deduction*** —

(1) ***In general.*** Section 545(c)(5) provides certain limitations on the deduction otherwise allowed by section 545(c)(1). Such deduction is reduced by the sum of the following amounts:

(i) The amount, if any, by which:

(*a*) The deductions allowed for the taxable year and all preceding taxable years beginning after December 31, 1963, for exhaustion, wear and tear, obsolescence, amortization, or depletion (other than such deductions which are disallowed in computing undistributed personal holding company income under the rule of paragraph (h) of § 1.545-2), exceed

(*b*) Any reduction, by reason of section 545(c)(5)(A) and this subdivision (i), of the deductions otherwise allowed by section 545(c)(1) for such preceding years; and

(ii) The amount, if any, by which:

(*a*) The deductions allowed under section 545(b)(5) (relating to long-term capital gain deduction) in computing undistributed personal holding company income for the taxable year and all preceding taxable years beginning after December 31, 1963, exceed

(*b*) Any reduction, by reason of section 545(c)(5)(B) and this subdivision (ii), of the deductions otherwise allowed by section 545(c)(1) for such preceding years.

(2) ***Allocation of reduction.*** If the total reduction required by subparagraph (1) of this paragraph is greater than the amount of the payment or set-aside made in respect of qualified indebtedness in a taxable year, then the portion of the reduction which is attributable to either section 545(c)(5)(A) or section 545(c)(5)(B), as the case may be, is that portion which bears the same ratio to the total reduction as the total reduction available under either section 545(c)(5)(A) or section 545(c)(5)(B), respectively, bears to the total reduction available under both such sections.

(3) ***Example.*** The provisions of this paragraph may be illustrated by the following example:

Example. (i) Q Corporation, a calendar year taxpayer, has qualified indebtedness of $400,000 on January 1, 1964, with respect to which payments of $50,000 are made on April 15, 1964, and 1965, and $300,000 on April 15, 1966. In the years 1964 and 1966, Q Corporation is allowed a deduction under section 545(b)(5) of $50,000 for the excess of its net long-term capital gain over its net short-term capital loss, minus the taxes attributable to such excess. Q Corporation is allowed a depreciation deduction of $50,000 for each of its taxable years 1964 through 1966. Q Corporation is a personal holding company with taxable income of $200,000 in each of the years 1964 and 1966.
(ii) For 1964, in computing undistributed personal holding company income, Q Corporation's taxable income is reduced by $50,000 by reason of the deduction under section 545(b)(5). No part of the depreciation deduction is disallowed under the rule of paragraph (h) of § 1.545-2. Q Corporation's deduction for payment of qualified indebtedness otherwise allowable under section 545(c)(1) and this section is reduced to zero by reason of the depreciation deduction and the capital gains deduction. The reduction by reason of section 545(c)(5)(A) and subparagraph (1)(i) of this paragraph (depreciation) is $25,000 [($50,000 ÷ $100,000) × $50,000], and the reduction by reason of section 545(c)(5)(B) and subparagraph (1) (ii) of this paragraph (capital gain) is $25,000 [($50,000 ÷ $100,000) × $50,000].

(iii) For 1966, Q Corporation is allowed a deduction for payment of qualified indebtedness of $100,000 computed as follows:

Amount paid in 1966 to retire qualified indebtedness		$300,000
Less the sum of:		
(*a*) Depreciation deductions allowed for 1964 through	$150,000	

1966 (3 × $50,000)			
Reduction of deductions in preceding taxable years (1964)	25,000	$125,000	
(*b*) Deduction allowed under section 545(b)(5) (relating to long-term capital gains) for 1964 through 1966	100,000		
Reduction of deductions in preceding taxable years (1964)	25,000	75,000	200,000
Deduction after reduction			100,000

(iv) If, in the year 1966, Q Corporation's depreciation deduction had been limited for purposes of computing undistributed personal holding company income to $25,000 by reason of section 545(b)(8), then Q Corporation's deduction for payment of qualified indebtedness would be $125,000, computed as follows:

Amounts paid in 1966 to retire qualified indebtedness			$300,000
Less the sum of:			
(*a*) Depreciation deductions allowed for 1964 through 1966	$125,000		
Reduction of deductions in preceding taxable year (1964)	25,000		
	$100,000		
(*b*) Deduction allowed under section 545(b)(5) (relating to long-term capital gains) for 1964 through 1966	100,000		
Reduction of deductions in preceding taxable years (1964)	25,000	75,000	175,000
Deduction after reduction			125,000

(g) ***Burden of proof.*** The burden of proof rests upon the taxpayer to sustain the deduction claimed under this section. In addition to any information required by this section, the taxpayer must furnish the information required by the return, and such other information as the district director may require in substantiation of the deduction claimed.

(h) ***Application of section 381(c)(15).*** Under section 381(c)(15), if an acquiring corporation assumes liability for qualified indebtedness in a transaction to which section 381(a) applies, then the acquiring corporation is considered to be the distributor or transferor corporation for purposes of section 545(c). Paragraph (c)(2) of this section reflects the application of section 381(c)(15) by including an acquiring corporation within the definition of corporation to which this section applies. Thus, the acquiring corporation is not required to meet the requirements of paragraph (c)(1) or paragraph (d)(1) of this section with respect to such acquired qualified indebtedness to which section 381(c)(15) is applicable. All the other provisions of this section apply in full to the acquiring corporation with respect to such acquired indebtedness.

[T.D. 6949, 33 FR 5526, Apr. 9, 1968; 33 FR 6091, Apr. 20, 1968]

§ 1.547-1 General rule.

Section 547 provides a method under which, by virtue of dividend distributions, a corporation may be relieved from the payment of a deficiency in the personal holding company tax imposed by section 541 (or by a corresponding provision of a prior income tax law), or may be entitled to a credit or refund of a part or all of any such deficiency which has been paid. The method provided by section 547 is to allow an additional deduction for a dividend distribution (which meets the requirements of this section) in computing undistributed personal holding company income for the taxable year for which a deficiency in personal holding company tax is determined. The additional deduction for deficiency dividends will not, however, be allowed for the purpose of determining interest, additional amounts, or assessable penalties, computed with respect to the personal holding company tax prior to the allowance of the additional deduction for deficiency dividends. Such amounts remain payable as if section 547 had not been enacted.

§ 1.547-2 Requirements for deficiency dividends.

(a) ***In general.*** There are certain requirements which must be fulfilled before a deduction is allowed for a deficiency dividend under section 547 and this section. These are:

(1) The taxpayer's liability for personal holding company tax shall be determined only in the manner provided in section 547(c) and paragraph (b)(1) of this section.

(2) The deficiency dividend shall be paid by the corporation on, or within 90 days after, the date of such determination and prior to the filing of a claim under section 547(e) and paragraph (b)(2) of this section for deduction for deficiency dividends. This claim must be filed within 120 days after such determination.

(3) The deficiency dividend must be of such a nature as would have permitted its inclusion in the computation of a deduction for dividends paid under section 561 for the taxable year with respect to which the liability for personal holding company tax exists, if it had been distributed during such year. See section 562 and §§ 1.562-1 through 1.562-3. In this connection, it should be noted that under section 316(b)(2), the term *dividend* means (in addition to the usual meaning under section 316(a)) any distribution of property (whether or not a dividend as defined in section 316(a)) made by a corporation to its shareholders, to the extent of its undistributed personal holding company income (determined under section 545 and §§ 1.545-1 and 1.545-2 without regard to section 316(b)(2)) for the taxable year in respect of which the distribution is made.

(b) ***Special rules*** —

(1) ***Nature and details of determination.***

(i) A determination of a taxpayer's liability for personal holding company tax shall, for the purposes of section 547, be established in the manner specified in section 547(c) and this subparagraph.

(ii) The date of determination by a decision of the Tax Court of the United States is the date upon which such decision becomes final, as prescribed in section 7481.

(iii) The slate upon which a judgment of a court becomes final, which is the date of the determination in such cases, must be determined upon the basis of the facts in the particular case. Ordinarily, a judgment of a United States district court becomes final upon the expiration of the time allowed for taking an appeal, if no such appeal is duly taken within such time; and a judgment of the United States Court of Claims becomes final upon the expiration of the time allowed for filing a petition for certiorari if no such petition is duly filed within such time.

(iv) The date of determination by a closing agreement, made under section 7121, is the date such agreement is approved by the Commissioner.

(v) A determination under section 547(c)(3) may be made by an agreement signed by the district director or such other official to whom authority to sign the agreement is delegated, and by or on behalf of the taxpayer. The agreement shall set forth the total amount of the liability for personal holding company tax for the taxable year or years. An agreement under this subdivision which is signed by the district director (or such other official to whom authority to sign the agreement is delegated) on or after July 15, 1963, shall be sent to the taxpayer at his last known address by either registered or certified mail. For further guidance regarding the definition of last known address, see § 301.6212-2 of this chapter. If registered mail is used for such purpose, the date of registration shall be treated as the date of determination; if certified mail is used for such purpose, the date of the postmark on the sender's receipt for such mail shall be treated as the date of determination. However, if a dividend is paid by the corporation before such registration or postmark date but on or after the date such agreement is signed by the district director or such other official to whom authority to sign the agreement is delegated, the date of determination shall be such date of signing. The date of determination with respect to an agreement which is signed by the district director (or such other official to whom authority to sign the agreement is delegated) before July 15, 1963, shall be the date of the postmark on the cover envelope in which such agreement is sent by ordinary mail, except that if a dividend is paid by the corporation before such postmark date but on or after the date such agreement is signed by the district director or such other official to whom authority to sign the agreement is delegated, the date of determination shall be such date of signing.

(2) *Claim for deduction* —

(i) ***Contents of claim.*** A claim for deduction for a deficiency dividend shall be made with the requisite declaration, on Form 976 and shall contain the following information:

(*a*) The name and address of the corporation;

(*b*) The place and date of incorporation;

(*c*) The amount of the deficiency determined with respect to the tax imposed by section 541 (or a corresponding provision of a prior income tax law) and the taxable year or years involved; the amount of the unpaid deficiency or, if the deficiency has been paid in whole or in part, the date of payment and the amount thereof; a statement as to how the deficiency was established, if unpaid; or if paid in whole or in part, how it was established that any portion of the amount paid was a deficiency at the time when paid and, in either case whether it was by an agreement under section 547(c)(3), by a closing agreement under section 7121, or by a decision of the Tax Court or court judgment and the date thereof; if established by a final judgment in a suit against the United States for refund, the date of payment of the deficiency, the date the claim for refund was filed, and the date the suit was brought; if established by a Tax Court decision or court judgment, a copy thereof shall be attached, together with an explanation of how the decision became final; if established by an agreement under section 547(c)(3), a copy of such agreement shall be attached;

(*d*) The amount and date of payment of the dividend with respect to which the claim for the deduction for deficiency dividends is filed;

(e) A statement setting forth the various classes of stock outstanding, the name and address of each shareholder, the class and number of shares held by each on the date of payment of the dividend with respect to which the claim is filed, and the amount of such dividend paid to each shareholder;

(f) The amount claimed as a deduction for deficiency dividends; and

(g) Such other information as may be required by the claim form.

(ii) ***Filing of claim and corporate resolution.*** The claim together with a certified copy of the resolution of the board of directors or other authority, authorizing the payment of the dividend with respect to which the claim is filed, shall be filed with the district director for the internal revenue district in which the return is filed.

(iii) ***Carryover of deficiency dividends paid by acquiring corporation.*** In the case of the acquisition of assets of a corporation by another corporation in a distribution or transfer described in section 381(a), the distributor or transferor corporation shall be entitled to a deduction for any deficiency dividends (as defined in section 547(d)) paid by the acquiring corporation with respect to such distributor or transferor corporation. See section 381(c)(17).

(68A Stat. 192, 917; 26 U.S.C. 547(c), 7805)

[T.D. 6500, 25 FR 11737, Nov. 26, 1960, as amended by T.D. 6657, 28 FR 5720, June 12, 1963; T.D. 7604, 44 FR 18661, Mar. 29, 1979; T.D. 8939, 66 FR 2819, Jan. 12, 2001]

§ 1.547-3 Claim for credit or refund.

(a) If a deficiency in personal holding company tax is asserted for any taxable year, and the corporation has paid any portion of such asserted deficiency, it is entitled to a credit or refund of such payment to the extent that such payment constitutes an overpayment as the result of a deduction for a deficiency dividend as provided in section 547 and §§ 1.547-1 through 1.547-7. It should be noted that a *determination* under section 547(c) and paragraph (b)(1) of § 1.547-2, of taxpayer's liability for personal holding company tax may take place subsequent to the time the deficiency was paid. To secure credit or refund of such overpayment, the taxpayer must file a claim on Form 843 in addition to the claim for the deduction for deficiency dividends required under section 547(e) and paragraph (b)(2) of § 1.547-2.

(b) No interest shall be allowed on such credit or refund.

(c) Such credit or refund will be allowed as if, on the date of the determination under section 547(c) and paragraph (b)(1) of § 1.547-2, two years remained before the expiration of the period of limitation on the filing of claim for refund for the taxable year to which the overpayment relates.

§ 1.547-4 Effect on dividends paid deduction.

The deficiency dividends deduction shall be allowed as of the date the claim is filed. No duplication of deductions with respect to any deficiency dividends is permitted. If a corporation claims and receives the benefit of the provisions of section 547 (or the corresponding section 506 of the Internal Revenue Code of 1939, or section 407 of the Revenue Act of 1938 (52 Stat. 447)), based upon a distribution of deficiency dividends, that distribution does not become a part of the dividends paid deduction under section 561. Likewise, it will not be made the basis of a dividends paid deduction under section 561 by reason of the application of section 563(b), relating to dividends paid after the close of the taxable year and on or before the 15th day of the third month following the close of such taxable year.

§ 1.547-5 Deduction denied in case of fraud or wilful failure to file timely return.

No deduction for deficiency dividends shall be allowed under section 547(a) if the determination contains a finding that any part of the deficiency is due to fraud with intent to evade tax, or to wilful failure to file an income tax return within the time prescribed by law or prescribed by the Secretary or his delegate in pursuance of law. See § 1.547-7 for effective date.

§ 1.547-6 Suspension of statute of limitations and stay of collection.

(a) ***Statute of limitations.*** If the corporation files a claim for a deduction for deficiency dividends under section 547(e) and paragraph (b)(2) of § 1.547-2, the running of the statute of limitations upon assessment, distraint, and collection in court in respect of the deficiency, and all interest, additional amounts, or assessable penalties, shall be suspended for a period of two years after the date of the determination under section 547(c) and paragraph (b)(1) of § 1.547-2.

(b) ***Stay of collection.*** If a deficiency in personal holding company tax is established by a determination under section 547(c) and paragraph (b)(1) of § 1.547-2, collection by distraint or court proceeding (except in case of jeopardy), of the deficiency and all interest, additional amounts, and assessable penalties, shall be stayed for a period of 120 days after the date of such determination, and, to the extent any part of such deficiency remains after deduction for deficiency dividends, for an additional period until the date the claim is disallowed. After such claim is allowed or rejected, either in whole or in part, the amount of the deficiency which was not eliminated by the application of section 547, together with interest, additional amounts and assessable penalties, will be assessed and collected in the usual manner.

§ 1.547-7 Effective date.

The deduction for deficiency dividends, in computing personal holding company tax for any taxable year, is allowable only with respect to determinations under section 547(c) made after November 14, 1954 (the date falling 90 days after the date of enactment of the Internal Revenue Code of 1954). If the taxable year with respect to which the deficiency is asserted began before January 1, 1954, the deficiency dividends deduction shall include only the amounts which would have been includible in the computation of the basic surtax credit for such taxable year under the Internal Revenue Code of 1939. Section 547(g), relating to the denial of a deficiency dividends deduction if the determination contains a finding that any part of the deficiency is due to fraud, etc., shall apply only if the taxable year with respect to which the deficiency is asserted begins after December 31, 1953.

FOREIGN PERSONAL HOLDING COMPANIES

§ 1.551-1 General rule.

Part III (section 551 and following), subchapter G, chapter 1 of the Code, does not impose a tax on foreign personal holding companies. The undistributed foreign personal holding company income of such companies, however, must be included in the manner and to the extent set forth in section 551, in the gross income of their *United States shareholders,* that is, the shareholders who are individual citizens or residents of the United States, domestic corporations, domestic partnerships, and estates or trusts other than estates or trusts the gross income of which under subtitle A of the Code includes only income from sources within the United States.

§ 1.551-2 Amount included in gross income.

(a) The undistributed foreign personal holding company income is included only in the gross income of the United States shareholders who were shareholders in the company on the last day of its taxable year on which a United States group (as defined in section 552(a)(2)) existed with respect to the company. Such United States shareholders, accordingly, are determined by the stock holdings as of such specified time. This rule applies to every United States shareholder who was a shareholder in the company at the specified time regardless of whether the United States shareholder is included within the United States group. For example, a domestic corporation which is a United States shareholder at the specified time must return its distributive share in the undistributed foreign personal holding company income even though the domestic corporation cannot be included within the United States group since, under section 554, the stock it owns in the foreign corporation is considered as being owned proportionately by its shareholders for the purpose of determining whether the foreign corporation is a foreign personal holding company.

(b) The United States shareholders must include in their gross income their distributive shares of that proportion of the undistributed foreign personal holding company income for the taxable year of the company which is equal in ratio to that which the portion of the taxable year up to and including the last day on which the United States group with respect to the company existed bears to the entire taxable year. Thus, if the last day in the taxable year on which the required United States group existed was also the end of the taxable year, the portion of the taxable year up to and incding such last day would be equal to 100 percent and, in such case, the United States shareholders would be required to return their distributive shares in the entire undistributed foreign personal holding company income. But if the last day on which the required United States group existed was September 30, and the taxable year was a calendar year, the portion of the taxable year up to and including such last day would be equal to nine-twelfths and, in that case, the United States shareholders would be required to return their distributive shares in only nine-twelfths of the undistributed foreign personal holding company income.

(c) The amount which each United States shareholder must return is that amount which he would have received as a dividend if the above-specified portion of the undistributed foreign personal holding company income had in fact been distributed by the foreign personal holding company as a dividend on the last day of its taxable year on which the required United States group existed. Such amount is determined, therefore, by the interest of the United States shareholder in the foreign personal holding company, that is, by the number of shares of stock owned by the United States shareholder and the relative rights of his class of stock, if there are several classes of stock outstanding. Thus, if a foreign personal holding company has both common and preferred stock outstanding and the preferred shareholders are entitled to a specified dividend before any distribution may be made to the common shareholders, then the assumed distribution of the stated portion of the undistributed foreign personal holding company income must first be treated as a payment of the specified dividend on the preferred stock before any part may be allocated as a dividend on the common stock.

(d) The assumed distribution of the required portion of the undistributed foreign personal holding company income must be returned as dividend income by the United States shareholders for their respective taxable years in which or with which the taxable year of the foreign personal holding company ends. For example, if the M Corporation, whose taxable year is the calendar year, is a foreign personal holding company for 1954 and if A, one of its United States shareholders, makes returns on a calendar year basis, while B, another United States shareholder, makes returns on the basis of a fiscal year ending November 30, A must return his assumed dividend as income for the taxable year 1954 and B must return his distributive share as income for the fiscal year ending November 30, 1955. In applying this rule, the date

as of which the United States group last existed with respect to the company is immaterial. Thus, in the foregoing example, if September 30, 1954, was the last day on which the United States group with respect to the M Corporation existed, B would still be required to return his assumed dividend as income for the fiscal year ending November 30, 1955, even though September 30, 1954, the date as of which the distribution is assumed to have been made, does not fall within such fiscal year.

(e) For the treatment of gain on the sale of certain stock, see section 306(f) and paragraph (h) of § 1.306-3.

DEDUCTION FOR DIVIDENDS PAID

§ 1.561-1 Deduction for dividends paid.

(a) The deduction for dividends paid is applicable in determining accumulated taxable income under section 535, undistributed personal holding company income under section 545, undistributed foreign personal holding company income under section 556, investment company taxable income under section 852, and real estate investment trust taxable income under section 857. The deduction for dividends paid includes:

(1) The dividends paid during the taxable year;

(2) The consent dividends for the taxable year, determined as provided in section 565; and

(3) In the case of a personal holding company, the dividend carryover computed as provided in section 564.

(b) For dividends for which the dividends paid deduction is allowable, see section 562 and § 1.562-1. As to when dividends are considered paid, see § 1.561-2.

[T.D. 6500, 25 FR 11737, Nov. 26, 1960, as amended by T.D. 6598, 27 FR 4093, Apr. 28, 1962]

§ 1.561-2 When dividends are considered paid.

(a) ***In general.***

(1) A dividend will be considered as paid when it is received by the shareholder. A deduction for dividends paid during the taxable year will not be permitted unless the shareholder receives the dividend during the taxable year for which the deduction is claimed. See section 563 for special rule with respect to dividends paid after the close of the taxable year.

(2) If a dividend is paid by check and the check bearing a date within the taxable year is deposited in the mails, in a cover properly stamped and addressed to the shareholder at his last known address, at such time that in the ordinary handling of the mails the check would be received by the shareholder within the taxable year, a presumption arises that the dividend was paid to the shareholder in such year.

(3) The payment of a dividend during the taxable year to the authorized agent of the shareholder will be deemed payment of the dividend to the shareholder during such year.

(4) If a corporation, instead of paying the dividend directly to the shareholder, credits the account of the shareholder on the books of the corporation with the amount of the dividend, the deduction for a dividend paid will not be permitted unless it be shown to the satisfaction of the Commissioner that such crediting constituted payment of the dividend to the shareholder within the taxable year.

(5) A deduction will not be permitted for the amount of a dividend credited during the taxable year upon an obligation of the shareholder to the corporation unless it is shown to the satisfaction of the Commissioner that such crediting constituted payment of the dividend to the shareholder within the taxable year.

(6) If the dividend is payable in obligations of the corporation, they should be entered or registered in the taxable year on the books of the corporation, in the name of the shareholder (or his nominee or transferee), and, in the case of obligations payable to bearer, should be received in the taxable year by the shareholder (or his nominee or transferee) to constitute payment of the dividend within the taxable year.

(7) In the case of a dividend from which the tax has been deducted and withheld as required by chapter 3 (section 1441 and following), of the Code the dividend is considered as paid when such deducting and withholding occur.

(b) ***Methods of accounting.*** The determination of whether a dividend has been paid to the shareholder by the corporation during its taxable year is in no way dependent upon the method of accounting regularly employed by the corporation in keeping its books or upon the method of accounting upon the basis of which the taxable income of the corporation is computed.

(c) ***Records.*** Every corporation claiming a deduction for dividends paid shall keep such permanent records as are necessary

(1) to establish that the dividends with respect to which such deduction is claimed were actually paid during the taxable year and

(2) to supply the information required to be filed with the income tax return of the corporation. Such corporation shall file with its return

(i) a copy of the dividend resolution; and

(ii) a concise statement of the pertinent facts relating to the payment of the dividend, clearly specifying (*a*) the medium of payment and (*b*) if not paid in money, the fair market value and adjusted basis (or face value, if paid in its own obligations) on the date of distribution of the property distributed and the manner in which such fair market value and adjusted basis were determined. Canceled dividend checks and receipts obtained from shareholders acknowledging payment of dividends paid otherwise than by check need not be filed with the return but shall be kept by the corporation as a part of its records.

§ 1.562-1 Dividends for which the dividends paid deduction is allowable.

(a) ***General rule.*** Except as otherwise provided in section 562 (b) and (d), the term *dividend,* for purposes of determining dividends eligible for the dividends paid deduction, refers only to a dividend described in section 316 (relating to definition of dividends for purposes of corporate distributions). No distribution, however, which is preferential within the meaning of section 562(c) and § 1.562-2 shall be eligible for the dividends paid deduction. Moreover, when computing the dividends paid deduction with respect to a U.S. person (as defined in section 957(d)), no distribution which is excluded from the gross income of a foreign corporation under section 959(b) with respect to such person or from gross income of such person under section 959(a) shall be eligible for suchdeduction. Further, for purposes of the dividends paid deduction, the term *dividend* does not include a distribution in liquidation unless the distribution is treated as a dividend under section 316(b)(2) and paragraph (b)(2) of § 1.316-1, or under section 333(e)(1) and paragraph (c) of § 1.333-4 or paragraph (c)(2), (d)(1)(ii), or (d)(2) of § 1.333-5, or qualifies

under section 562(b) and paragraph (b) of this section. If a dividend is paid in property (other than money) the amount of the dividends paid deduction with respect to such property shall be the adjusted basis of the property in the hands of the distributing corporation at the time of the distribution. See paragraph (b)(2) of this section for special rules with respect to liquidating distributions by personal holding companies occurring during a taxable year of the distributing corporation beginning after December 31, 1963. Also see section 563 for special rules with respect to dividends paid after the close of the taxable year.

(b) ***Distributions in liquidation*** —

(1) ***General rule*** —

(i) ***In general.*** In the case of amounts distributed in liquidation by any corporation during a taxable year of such corporation beginning before January 1, 1964, or by a corporation other than a personal holding company (as defined in section 542) or a foreign personal holding company (as defined in section 552) during a taxable year of such a corporation beginning after December 31, 1963, section 562(b) makes an exception to the general rule that a deduction for dividends paid is permitted only with respect to dividends described in section 316. In order to qualify under that exception, the distribution must be one either in complete or partial liquidation of a corporation pursuant to sections 331, 332, or 333. See subparagraph (2) of this paragraph for rules relating to the treatment of distributions in complete liquidation made by a corporation which is a personal holding company to corporate shareholders during a taxable year of such distributing corporation beginning after December 31, 1963. As provided by section 346(a), for the purpose of section 562(b), a partial liquidation includes a redemption of stock to which section 302 applies. Amounts distributed in liquidation in a transaction which is preceded, or followed, by a transfer to another corporation of all or part of the assets of the liquidating corporation, may not be eligible for the dividends paid deduction.

(ii) ***Amount of dividends paid deduction allowable—***

(a) ***General rule.*** In the case of distributions in liquidation with respect to which a deduction for dividends paid is permissible under subdivision (i) of this subparagraph, the amount of the deduction is equal to the part of such distribution which is properly chargeable to the earnings and profits accumulated after February 28, 1913. To determine the amount properly chargeable to the earnings and profits accumulated after February 28, 1913, there must be deducted from the amount of the distribution that part allocable to capital account. The capital account, for the purposes of this subdivision, includes not only amounts representing the par or stated value of the stock with respect to which the liquidation distribution is made, but also that stock's proper share of the paid-in surplus, and such other corporate items, if any, which, for purposes of income taxation, are treated like capital in that they are not taxable dividends when distributed but are applied against and reduce the basis of the stock. The remainder of the distribution in liquidation is, ordinarily, properly chargeable to the earnings and profits accumulated after February 28, 1913. Thus, if there is a deficit in earnings and profits on the first day of a taxable year, and the earnings and profits for such taxable year do not exceed such deficit, no dividends paid deduction would be allowed for such taxable year with respect to a distribution in liquidation; if the earnings and profits for such taxable year exceed the deficit in earnings and profits which existed on the first day of such taxable year, then a dividends paid deduction would be allowed to the extent of such excess.

(*b*) ***Special rule.*** Section 562(b)(1)(B) provides that in the case of a complete liquidation occurring within 24 months after the adoption of a plan of liquidation the amount of the deduction is equal to the earnings and profits for each taxable year in which distributions are made. Thus, if there is a distribution in liquidation pursuant to section 333, or a distribution in complete liquidation pursuant to section 331(a)(1) or 332 which occurs within a 24-month period after the adoption of a plan of liquidation, a dividends paid deduction will be allowable to the extent of the current earnings and profits for the taxable year or years even though there was a deficit in earnings and profits on the first day of such taxable year or years. In computing the earnings and profits for the taxable year in which the distributions are made, computation shall be made with the inclusion of capital gains and without any deduction for capital losses.

(*c*) ***Examples.*** The application of this subparagraph may be illustrated by the following examples:

Example 1. The Y Corporation, which makes its income tax returns on the calendar year basis, was organized on January 1, 1910, with an authorized and outstanding capital stock of 2,000 shares of common stock of a par value of $100 each and 1,000 shares of participating preferred stock of a par value of $100 each. The preferred stock was to receive annual dividends of $7 per share and $100 per share on complete liquidation of the corporation in priority to any payments on common stock, and was to participate equally with the common stock in either instance after the common stock had received a similar amount. However, the preferred stock was redeemable in whole or in part at the option of the board of directors at any time at $106 per share plus its proportion of the earnings of the company at the time of such redemption. In 1910 the preferred stock was issued at $106 per share, for a total of $106,000 and the common stock was issued, at $100 per share, for a total of $200,000. On July 15, 1954, the company had a paid-in surplus of $6,000, consisting of the premium received on the preferred stock; earnings and profits of $30,000 accumulated prior to March 1, 1913; and earnings and profits accumulated since February 28, 1913, of $75,000. On July15, 1954, the option with respect to the preferred stock was exercised and the entire amount of such stock was redeemed at $141 per share or a total of $141,000 in a transaction upon which gain or loss to the distributees resulting from the exchange was determined and recognized under section 302(a). The amount of the distribution allocable to capital account was $116,000 ($100,000 attributable to par value, $6,000 attributable to paid-in surplus, and $10,000 attributable to earnings and profits accumulated prior to March 1, 1913). The remainder, $25,000 ($141,000, the amount of the distribution, less $116,000, the amount allocable to capital account) is properly chargeable to the earnings and profits accumulated since February 28, 1913, and is deductible as dividends paid.

Example 2. The M Corporation, a calendar year taxpayer, is completely liquidated on November 1, 1955, pursuant to a plan of liquidation adopted April 1, 1955. On January 1, 1955, the M Corporation has a deficit in earnings and profits of $100,000. During the period January 1, 1955, to the date of liquidation, November 1, 1955, it has earnings and profits of $10,000. The M Corporation is entitled to a dividends paid deduction in the amount of $10,000 as a result of its distribution in complete liquidation on November 1, 1955.

Example 3. The N Corporation, a calendar year taxpayer, is completely liquidated on July 1, 1958, pursuant to a plan of liquidation adopted February 1, 1955. No distributions in liquidation were made pursuant to the plan of liquidation adopted February 1, 1955, until the distribution in complete liquidation on July 1, 1958. On January 1, 1958, N Corporation had a deficit in earnings and profits of $30,000. During the period January 1, 1958, to the date of liquidation, July 1, 1958, the N Corporation has earnings and profits of $5,000. The N Corporation is not entitled to any deduction for dividends paid as a result of the distribution in complete liquidation on July 1, 1958. If the earnings and profits for the period January 1, 1958, to July 1, 1958, had been $32,000, the N Corporation would have been entitled to a deduction for dividends paid in the amount of $2,000.

(2) ***Special rule*** —

(i) ***Distributions to corporate shareholders.*** In the case of amounts distributed in complete liquidation of a personal holding company (as defined in section 542) within 24 months after the adoption of a plan of liquidation, section 562(b)(2) makes a further exception to the general rule that a deduction for dividends paid is permitted only with respect to dividends described in section 316. The exception referred to in the preceding sentence applies only to distributions made in any taxable year of the distributing corporation beginning after December 31, 1963. Under the exception, the amount of any distribution within the 24-month period pursuant to the plan shall be treated as a dividend for purposes of computing the dividends paid deduction, but:

(*a*) Only to the extent that such amount is distributed to corporate distributees, and

(*b*) Only to the extent that such amount represents such corporate distributees' allocable share of undistributed personal holding company income for the taxable year of such distribution (computed without regard to section 316(b)(2)(B) and section 562(b)(2))

Amounts distributed in liquidation in a transaction which is preceded, or followed, by a transfer to another corporation of all or part of the assets of the liquidating corporation, may not be eligible for the dividends paid deduction.

(ii) ***Corporate distributees' allocable share.*** For purposes of subdivision (i)(*b*) of this subparagraph:

(*a*) Except as provided in (*b*) of this subdivision, the corporate distributees' allocable share of undistributed personal holding company income for the taxable year of the distribution (computed without regard to sections 316(b)(2)(B) and 562(b)(2)) shall be determined by multiplying such undistributed personal holding company income by the ratio which the aggregate value of the stock held by all corporate shareholders immediately before the record date of the last liquidating distribution in such year bears to the total value of all stock outstanding on such date. For rules applicable in a case where the distributing corporation has more than one class of stock, see (*c*) of this subdivision (ii).

(*b*) If more than one liquidating distribution was made during the year, and if, after the record date of the first distribution but before the record date of the last distribution, there was a change in the relative shareholdings as between corporate shareholders and noncorporate shareholders, then the corporate distributees' allocable share of undistributed personal holding company income for the taxable year of the distributions (computed without regard to sections 316(b)(2)(B) and 562(b)(2)) shall be determined as follows:

(*1*) First, allocate the corporation's undistributed personal holding company income for the taxable year among the distributions made during such year by reference to the ratio which the aggregate amount of each distribution bears to the total amount of all distributions during such year;

(*2*) Second, determine the corporate distributees' allocable share of the corporation's undistributed personal holding company income for each distribution by multiplying the amount determined under (*1*) of this subdivision (*b*) for each distribution by the ratio which the aggregate value of the stock held by all corporate shareholders immediately before the record date of such distribution bears to the total value of all stock outstanding on such date; and

(*3*) Last, determine the sum of the corporate distributees' allocable share of the corporation's undistributed personal holding company income for all such distributions

For rules applicable in a case where the distributing corporation has more than one class of stock, see (*c*) of this subdivision (ii).

(*c*) Where the distributing corporation has more than one class of stock:

(*1*) The undistributed personal holding company income for the taxable year in which, or in respect of which, the distribution was made shall be treated as a fund from which dividends may properly be paid and shall be allocated between or among the classes of stock in a manner consistent with the dividend rights of such classes under local law and the pertinent governing instruments, such as, for example, the distributing corporation's articles or certificate of incorporation and bylaws;

(*2*) The corporate distributees' allocable share of the undistributed personal holding company income for each class of stock shall be determined separately in accordance with the rules set forth in (*a*) and (*b*) of this subdivision (ii) as if each class of stock were the only class of stock outstanding; and

(*3*) The sum of the corporate distributees' allocable share of the undistributed personal holding company income for the taxable year in which, or in respect of which, the distribution was made shall be the sum of the corporate distributees' allocable share of the undistributed personal holding company income for all classes of stock.

(*d*) For purposes of this subdivision (ii), in any case where the record date of a liquidating distribution cannot be ascertained, the record date of the distribution shall be the date on which the liquidating distribution was actually made.

(iii) ***Example.*** The application of this subparagraph may be illustrated by the following example:

Example. O Corporation, a calendar year taxpayer is completely liquidated on December 31, 1964, pursuant to a plan of liquidation adopted July 1, 1964. No distributions in liquidation were made pursuant to the plan of liquidation adopted July 1, 1964, until the distribution in complete liquidation on December 31, 1964. O Corporation has undistributed personal holding company income of $300,000 for the year 1964 (computed without regard to section 316(b)(2)(B) and section 562(b)(2)). On December 31, 1964, immediately before the record date of the distribution in complete liquidation, P Corporation owns 100 shares of O Corporation's outstanding stock and individual A owns the remaining 200 shares. All

shares are equal in value. The amount which represents P Corporation's allocable share of undistributed personal holding company income is $100,000(100 shares ÷ 300 shares × $300,000), and for purposes of computing the dividends paid deduction, such amount is treated as a dividend under section 562(b)(2) provided that the liquidating distribution to P Corporation equals or exceeds $100,000. P Corporation does not treat the $100,000 distributed to it as a dividend to which section 301 applies. For an example of the treatment of the distribution to individual A see example 5 of paragraph (e) of § 1.316-1.

(iv) ***Distributions to noncorporate shareholders.*** For the rules for determining the extent to which distributions in complete liquidation made to noncorporate shareholders by a personal holding company are dividends within the meaning of section 562(a), see section 316(b)(2)(B) and paragraph (b)(2) of § 1.316-1.

(c) ***Special definition of dividend for nonliquidating distributions by personal holding companies.*** Section 316(b)(2)(A) provides that in the case of a corporation which, under the law applicable to the taxable year in which or in respect of which a distribution is made, is a personal holding company, the term *dividend* (in addition to the general meaning set forth in section 316(a)) also means a nonliquidating distribution to its shareholders to the extent of the corporation's undistributed personal holding company income (determined under section 545 without regard to such distributions) for the taxable year in which or in respect of which the distribution is made. See paragraph (b)(1) of § 1.316-1.

[T.D. 6949, 33 FR 5529, Apr. 9, 1968, as amended by T.D. 7767, 46 FR 11265, Feb. 6, 1981]

§ 1.562-2 Preferential dividends.

(a) Section 562(c) imposes a limitation upon the general rule that a corporation is entitled to a deduction for dividends paid with respect to all dividends which it actually pays during the taxable year. Before a corporation may be entitled to any such deduction with respect to a distribution regardless of the medium in which the distribution is made, every shareholder of the class of stock with respect to which the distribution is made must betreated the same as every other shareholder of that class, and no class of stock may be treated otherwise than in accordance with its dividend rights as a class. The limitation imposed by section 562(c) is unqualified, except in the case of an actual distribution made in connection with a consent distribution (see section 565), if the entire distribution composed of such actual distribution and consent distribution is not preferential. The existence of a preference is sufficient to prohibit the deduction regardless of the fact

(1) that such preference is authorized by all the shareholders of the corporation or

(2) that the part of the distribution received by the shareholder benefited by the preference is taxable to him as a dividend. A corporation will not be entitled to a deduction for dividends paid with respect to any distribution upon a class of stock if there is distributed to any shareholder of such class (in proportion to the number of shares held by him) more or less than his pro rata part of the distribution as compared with the distribution made to any other shareholder of the same class. Nor will a corporation be entitled to a deduction for dividends paid in the case of any distribution upon a class of stock if there is distributed upon such class of stock more or less than the amount to which it is entitled as compared with any other class of stock. A preference exists if any rights to preference inherent in any class of stock are violated. The disallowance, where any preference in fact exists, extends to the entire amount of the distribution and not merely to a part of such distribution. As used in this section, the term *distribution* includes a dividend as defined in subchapter C, chapter 1 of the Code, and a distribution in liquidation referred to in section 562(b).

(b) The application of the provisions of section 562(c) may be illustrated by the following examples:

Example 1. A, B, C, and D are the owners of all the shares of class A common stock in the M Corporation, which makes its income tax returns on a calendar year basis. With the consent of all the shareholders, the M Corporation on July 15, 1954, declared a dividend of $5 a share payable in cash on August 1, 1954, to A. On September 15, 1954, it declared a dividend of $5 a share payable in cash on October 1, 1954, to B, C, and D. No allowance for dividends paid for the taxable year 1954 is permitted to the M Corporation with respect to any part of the dividends paid on August 1, 1954, and October 1, 1954.

Example 2. The N Corporation, which makes its income tax returns on the calendar year basis, has a capital of $100,000 (consisting of 1,000 shares of common stock of a par value of $100) and earnings or profits accumulated after February 28, 1913, in the amount of $50,000. In the year 1954, the N Corporation distributes $7,500 in cancellation of 50 shares of the stock owned by three of the four shareholders of the corporation. No deduction for dividends paid is permissible under section 562(c) and paragraph (a) of this section with respect to such distribution.

Example 3. The P Corporation has two classes of stock outstanding, 10 shares of cumulative preferred, owned by E, entitled to $5 per share and on which no dividends have been paid for two years, and 10 shares of common, owned by F. On December 31, 1954, the corporation distributes a dividend of $125, $50 to E, and $75 to F. The corporation is entitled to no deduction for any part of such dividend paid, since there has been a preference to F. If, however, the corporation had distributed $100 to E and $25 to F, it would have been entitled to include $125 as a dividend paid deduction.

§ 1.562-3 Distributions by a member of an affiliated group.

A personal holding company which files or is required to file a consolidated return with other members of an affiliated group may be required to file a separate personal holding company schedule by reason of the limitations and exceptions provided in section 542(b) and § 1.542-4. Section 562(d) provides that in such case the dividends paid deduction shall be allowed to the personal holding company, with respect to a distribution made to any member of the affiliated group, if such distribution would constitute a dividend if it were made to a shareholder which is not a member of the affiliated group.

§ 1.563-1 Accumulated earnings tax.

In the determination of the dividends paid deduction for purposes of the accumulated earnings tax imposed by section 531, a dividend paid after the close of any taxable year and on or before the 15th day of the third month following the close of such taxable year shall be considered as paid during such taxable year, and shall not be included in the computation of the dividends paid deduction for the year of payment. However, the rule provided in section 563(a) is not applicable to dividends paid during the first two and one-half months of the first taxable year of the corporation subject to tax under chapter 1 of the Internal Revenue Code of 1954.

§ 1.563-2 Personal holding company tax.

In the case of a personal holding company subject to the provisions of section 541, dividends paid after the close of the taxable year and before the 15th day of the third month thereafter shall be included in the computation of the dividends paid deduction for the taxable year only if the taxpayer so elects in its return for such taxable year. The election shall be made by including such dividends in computing its dividends paid deduction. The amount of such dividends which may be included in computing the dividends paid deduction for the taxable year shall not exceed either:

(a) The undistributed personal holding company income of the corporation for the taxable year, computed without regard to this section, or

(b) In the case of a taxable year beginning after December 31, 1969, 20 percent (10 percent, in the case of a taxable year beginning before Jan. 1, 1970) of the sum of the dividends paid during the taxable year (not including consent dividends), computed without regard to this section

In computing the amount of the dividends paid deduction allowable for any taxable year, the amount allowed by reason of section 563(b) for any preceding taxable year is considered a dividend paid in such preceding taxable year and not in the year of actual distribution. Thus, a double deduction is not allowable.

[T.D. 7079, 35 FR 18587, Dec. 8, 1970]

§ 1.563-3 Dividends considered as paid on last day of taxable year.

(a) ***General rule.*** Where a distribution made after the close of the taxable year is considered as paid during such taxable year, for purposes of applying section 562(a) the distribution shall be considered as made on the last day of such taxable year.

(b) ***Personal holding company tax.*** In the case of a corporation which under the law applicable to the taxable year in respect of which a distribution is made under section 563(b) and § 1.563-2 is a personal holding company under the law applicable to such taxable year, section 316(b)(2) provides that the term dividend means (in addition to the general rule under section 316(a)) any distribution to the extent of the corporation's undistributed personal holding company income (determined under section 545 without regard to distributions under section 316(b)(2)) for such year. See paragraph (b) of § 1.316-1.

(c) ***Dividends paid on or before December 15, 1955.*** The Act of June 15, 1955 (Public Law 74, 84th Cong., 69 Stat. 136), repealed sections 452 and 462 of the Code, relating to prepaid income and reserve for estimated expenses. Under section 4(c)(4) of that Act, dividends paid after the 15th day of the third month following the close of the taxable year and on or before December 15, 1955, may be treated as having been paid on the last day of the taxable year for purposes of the accumulated earnings tax or the personal holding company tax and in the case of regulated investment companies, but only to the extent that such dividends are attributable to an increase in taxable income for the taxable year by reason of the repeal of sections 452 and 462. See paragraph (b) of § 1.9000-8, relating to treatment of certain dividends, prescribed pursuant to section 4(c)(4) of the Act of June 15, 1955.

§ 1.564-1 Dividend carryover.

(a) ***General rule.*** The dividend carryover from the two preceding years, allowable only to personal holding companies, is includible in the dividends paid deduction under section 561. It is computed as follows:

(1) If, for each of the preceding two years, the deduction for dividends paid under section 561 (determined without regard to the dividend carryover to each such year) exceeds the taxable income (adjusted as provided in section 545 for purposes of determining undistributed personal holding company income) then the dividend carryover to the taxable year is the sum of both such excess amounts.

(2) If the deduction for dividends paid under section 561 for the second preceding year (determined without regard to the dividend carryover to such year) exceeds the taxable income for such year (adjusted as provided in section 545), and if the taxable income for the first preceding year (as so

adjusted) exceeds the dividends paid deduction for such first preceding year (as so determined), then the dividend carryover to the taxable year shall be such excess amount for the second preceding year, less such excess amount for the first preceding year.

(3) If for the first preceding year the deduction for dividends paid under section 561 (determined without regard to the dividend carryover to such year) exceeds the taxable income (adjusted as provided in section 545) for such year, and such excess is not present in the second preceding year, then the dividend carryover to the taxable year shall be such excess amount for the first preceding year.

(b) ***Dividend carryover from year in which taxpayer was not a personal holding company.*** In computing the dividend carryover, the taxable income as adjusted under section 545 of any preceding taxable year shall be determined as if the corporation was, under the law applicable to such taxable year, a personal holding company.

(c) ***Dividend carryover from year in which taxpayer was subject to 1939 Code.*** In a case where the first or the second preceding taxable year began before the taxpayer's first taxable year under the Internal Revenue Code of 1954, the amount of the dividend carryover shall be determined under the Internal Revenue Code of 1939.

(d) ***Statement to be filed with return.*** Every corporation claiming a dividend carryover for any taxable year shall file with its return for such year a concise statement setting forth the amount of the dividend carryover claimed and all material and pertinent facts relative thereto, including a detailed schedule showing the computation of the dividend carryover claimed.

(e) ***Computation of dividend carryover.*** The computation of the dividend carryover may be illustrated by the following examples:

Example 1. The X Corporation, which files its income tax returns on the calendar year basis, has taxable income, adjusted as required by section 545, in the amount of $110,000 and has a dividends paid deduction of $150,000 for the year 1954. For 1955, its taxable income, adjusted as required by section 545, is $200,000 and its dividends paid deduction is $300,000. The dividend carryover to the year 1956 is $140,000, computed as follows:

Dividends paid deduction for 1954	$150,000
Taxable income for 1954	110,000
Dividend carryover from 1954	40,000
Dividends paid deduction for 1955	300,000
Taxable income for 1955	200,000
Dividend carryover from 1955	100,000
Dividend carryover for 2 preceding taxable years, allowable as a deduction for the year 1956	140,000

Example 2. The Y Corporation, which files its income tax returns on the calendar year basis, has taxable income, adjusted as required by section 545, in the amount of $100,000 and has a dividends paid

deduction of $150,000 for the year 1954. For 1955, its taxable income, adjusted as required by section 545, is $200,000 and its dividends paid deduction is $170,000. The dividend carryover to the year 1956 is $20,000 computed as follows:

Dividends paid deduction for 1954	$150,000
Taxable income for 1954	100,000
Dividend carryover from 1954	50,000
Taxable income for 1955	200,000
Dividends paid deduction for 1955	170,000
Excess of taxable income over dividends paid deduction	30,000
Dividend carryover for second preceding taxable year, allowable as a deduction for the year 1956	20,000

§ 1.565-1 General rule.

(a) ***Consent dividends.*** The dividends paid deduction, as defined in section 561, includes the consent dividends for the taxable year. A consent dividend is a hypothetical distribution (as distinguished from an actual distribution) made by:

(1) A corporation that has a reasonable basis to believe that it is subject to the accumulated earnings tax imposed in part I of subchapter G, chapter 1 of the Code, or

(2) A corporation described in part II (personal holding companies or a corporation with adjusted income from rents described in section 543(a)(2)(A) which utilizes the consent dividends described in section 543(a)(2)(B)(iii) to avoid personal holding company status) or part III (foreign personal holding companies) of subchapter G or in part I (regulated investment companies) or part II (real estate investment trusts) of subchapter M, chapter 1 of the Code.

A consent dividend may be made by a corporation described in this paragraph to any person who owns consent stock on the last day of the taxable year of such corporation and who agrees to treat the hypothetical distribution as an actual dividend, subject to the limitations in section 565, § 1.565-2, and paragraph (c)(2) of this section, by filing a consent at the time and in the manner specified in paragraph (b) of this section.

(b) ***Making and filing of consents.***

(1) A consent shall be made on Form 972 in accordance with this section and the instructions on the form issued therewith. It may be made only by or on behalf of a person who was the actual owner on the last day of the corporation's taxable year of any class of consent stock, that is, the person who would have been required to include in gross income any dividends on such stock actually distributed on the last day of such year. Form 972 shall contain or be verified by a written declaration that it is made under the penalties of perjury. In the consent such person must agree to include in gross income for his taxable year in which or with which the taxable year of the corporation ends a specific amount as a taxable dividend.

(2) See paragraph (c) of this section and § 1.565-2 for the rules as to when all or a portion of the amount so specified will be disregarded for tax purposes.

(3) A consent may be filed at any time not later than the due date (including extensions) of the corporation's income tax return for the taxable year for which the dividends paid deduction is claimed. With such return, and not later than the due date (including extensions) thereof, the corporation must file Forms 972 for each consenting shareholder, and a return on Form 973 showing by classes the stock outstanding on the first and last days of the taxable year, the dividend rights of such stock, distributions made during the taxable year to shareholders, and giving all the other information required by the form. For taxable years beginning before January 1, 2003, the Form 973 filed with the corporation's income tax return shall contain or be verified by a written declaration that is made under the penalties of perjury and the Forms 972 filed with the return must be duly executed by the consenting shareholders. For taxable years beginning after December 31, 2002, the Form 973 filed with the corporation's income tax return shall be verified by signing the return and the Forms 972 filed with the return must be duly executed by the consenting shareholders or, if unsigned, must contain the same information as the duly executed originals. If the corporation submits unsigned Forms 972 with its return for a taxable year beginning after December 31, 2002, the duly executed originals are records that the corporation must retain and keep available for inspection in the manner required by § 1.6001-1(e).

(c) ***Taxability of amounts specified in consents.***

(1) The filing of a consent is irrevocable, and except as otherwise provided in section 565(b), § 1.565-2, and paragraph (c)(2) of this section, the full amount specified in a consent filed by a shareholder of a corporation described in paragraph (a) of this section shall be included in the gross income of the shareholder as a taxable dividend. Where the shareholder is taxable on a dividend only if received from sources within the United States, the amount specified in the consent of the shareholder shall be treated as a dividend from sources within the United States in the same manner as if the dividend has been paid in money to the shareholder on the last day of the corporation's taxable year. See paragraph (b) of this section relating to the making and filing of consents, and section 565(e) and § 1.565-5, with respect to the payment requirement in the case of nonresident aliens and foreign corporations.

(2) To the extent that the Commissioner determines that the corporation making a consent dividend is not a corporation described in paragraph (a) of this section, the amount specified in the consent is not a consent dividend and the amount specified in the consent will not be included in the gross income of the shareholder. In addition, where a corporation is described in paragraph (a)(1) but not paragraph (a)(2) of this section, to the extent that the Commissioner determines that the amount specified in a consent is larger than the amount of earnings subject to the accumulated earnings tax imposed by part I of subchapter G, such excess is not a consent dividend under paragraph (a) of this section and will not be included in the gross income of the shareholder.

(3) Except as provided in section 565(b), § 1.565-2 and paragraph (c)(2) of this section, once a shareholder's consent is filed, the full amount specified in such consent must be included in the shareholder's gross income as a taxable dividend, and the ground upon which a deduction for consent dividends is denied the corporation does not affect the taxability of a shareholder whose consent has been filed for the amount specified in the consent. For example, although described in part I, II, or III of subchapter G, or part I or II of subchapter M, chapter 1 of the Code, the corporation's taxable income (as adjusted under section 535(b), 545(b), 556(b), 852(b)(2), or 857(b)(2), as appropriate) may be less than the total of the consent dividends.

(4) A shareholder who is a nonresident alien or a foreign corporation is taxable on the full amount of the consent dividend that otherwise qualifies under this section even though that payment has not been made as required by section 565(e) and § 1.565-5.

(5) Income of a foreign corporation is not subject to the tax on accumulated earnings under part I of subchapter G, chapter 1 of the Code except to the extent of U.S. source income, adjusted as permitted under section 535. See section 535 (b) and (d) and § 1.535-1(b). Therefore, foreign source earnings (other than those distributions subject to resourcing under section 535(d)) of a foreign corporation that is not described in paragraph (a)(2) of this section cannot qualify for consent dividend treatment. Accordingly, a consent dividend made by a foreign corporation described in paragraph (a)(1) of this section shall not be effective with respect to all of the corporation's earnings, but shall relate solely to earnings which would have been, in the absence of the consent dividend, subject to the accumulated earnings tax.

[T.D. 8244, 54 FR 10538, Mar. 14, 1989, as amended by T.D. 9100, 68 FR 70705, Dec. 19, 2003; T.D. 9300, 71 FR 71042, Dec. 8, 2006]

§ 1.565-2 Limitations.

(a) ***General rule.*** Amounts specified in consents filed by shareholders or other beneficial owners of a corporation described in § 1.565-1(a) are not treated as consent dividends to the extent that—

(1) They would constitute a preferential dividend or

(2) They would not constitute a dividend (as defined in section 316),

if distributed in money to shareholders on the last day of the taxable year of the corporation. If any portion of any amount specified in a consent filed by a shareholder of a corporation described in the preceding sentence is not treated as a consent dividend under section 565(b) and this section, it is disregarded for all tax purposes. For example, it is not taxable to the consenting shareholder, and paragraph (c) of § 1.565-1 is not applicable to this portion of the amount specified in the consent.

(b) ***Preferential distribution.***

(1) A preferential distribution is an actual distribution, or a consent distribution, or a combination of the two, which involves a preference to one or more shares of stock as compared with other shares of the same class or to one class of stock as compared with any other class of stock. See section 562(c) and § 1.562-2.

(2) The application of section 565 (b) (1) and § 1.565-2 (b) may be illustrated by the following examples:

Example 1. The X Corporation, a personal holding company, which makes its income tax returns on the calendar year basis, has 200 shares of stock outstanding, owned by A and B in equal amounts. On December 15, 1987, the corporation distributes $600 to B and $100 to A. As a part of the same distribution, A executes a consent to include $500 in his gross income as a taxable dividend although such amount is not distributed to him. The X Corporation, assuming the other requirements of section 565 have been complied with, is entitled to a consent dividends deduction of $500. Although the consent dividend is deemed to have been paid on December 31, 1987, the last day of the taxable year of the corporation, the total amount of all distributions constitutes a single nonpreferential distribution of $1200.

Example 2. The Y corporation, a personal holding company, which makes its income tax returns on the calendar year basis, has one class of consent stock outstanding, owned in equal amounts by A, B, and C. If A and B each receive a distribution in cash of $5,000 and C consents to include $3,000 in gross income as a taxable dividend, the combined actual and consent distribution of $13,000 is preferential. See section 562 (c) and § 1.562-2 (a). Similarly, if no one receives a distribution in cash, but A and B each consents to include $5,000 as a taxable dividend in gross income and C agrees to include only $3,000, the entire consent distribution is preferential.

Example 3. The Z Corporation, which makes its income tax returns on the calendar year basis and is subject, for the taxable year in question, to the accumulated earnings tax, has only two classes of stock outstanding, each class being consent stock and consisting of 500 shares. Class A, with a par value of $40 per share, is entitled to two-thirds of any distribution of earnings and profits. Class B, with a par value of $20 per share, is entitled to one-third of any distribution of earnings and profits. On December 15, 1987, there is distributed on the class B stock $2 per share, or $1,000, and shareholders of the class A stock consent to include in gross income amounts equal to $2 per share, or $1,000. The entire distribution of $2,000 is preferential, inasmuch as the class B stock has received more than its pro rata share of the combined amounts of the actual distributions and the consent distributions.

(c) ***Section 316 limitation.***

(1) An additional limitation under section 565 (b) is that the amounts specified in consents which may be treated as consent dividends cannot exceed the amounts which would constitute a dividend (as defined in section 316) if the corporation had distributed the total specified amounts in money to shareholders on the last day of the taxable year of the corporation. If only a portion of such total would constitute a dividend, then only a corresponding portion of each specified amount is treated as a consent dividend.

(2) The application of section 565 (b) (2) and § 1.565-2 (c) may be illustrated by the following example:

Example. The X Corporation, a corporation described in § 1.565-(a) (1) or (2), which makes its income tax returns on the calendar year basis, has only one class of stock outstanding, owned in equal amounts by A and B. It makes no distributions during the taxable year 1987. Its earnings and profits for the calendar year 1987 amount to $8,000, there being at the beginning of such year no accumulated earnings or profits. A and B execute proper consents to include $5,000 each in their gross income as a dividend received by them on December 31, 1987. The sum of the amounts specified in the consents executed by A and B is $10,000, but if $10,000 had actually been distributed by the X corporation on December 31, 1987, only $8,000 would have constituted a dividend under section 316 (a). The amount which could be considered as consent dividends in computing the dividends paid deduction for purposes of the accumulated earnings tax is limited to $8,000, or $4,000 of the $5,000 specified in each consent. The remaining $1,000 in each consent is disregarded for all tax purposes. (In the case of a personal holding company, see also the example in § 1.565-3(b).)

[T.D. 8244, 54 FR 10539, Mar. 14, 1989]

§ 1.565-3 Effect of consent.

(a) ***General rule.*** The amount of the consent dividend that is described in paragraph (a) of § 1.565-1 shall be considered, for all purposes of the Code, as if it were distributed in money by the corporation to the shareholder on the last day of the taxable year of the corporation, received by the shareholder on such

day, and immediately contributed by the shareholder as paid-in capital to thecorporation on such day. Thus, the amount of the consent dividend will be treated by the shareholder as a dividend. The shareholder will be entitled to the dividends received deduction under section 243 or 245 with respect to such consent dividend. The basis of the shareholder's consent stock in a corporation will be increased by the amount thus treated in his hands as a dividend which he is considered as having contributed to the corporation as paid-in capital. The amount of the current dividend will also be treated as a dividend received from sources within the United States in the same manner as if the dividend had been paid in money to the shareholders. Among other effects of the consent dividend, the earnings and profits of the corporation will be decreased by the amount of the consent dividends. Moreover, if the shareholder is a corporation, its accumulated earnings and profits will be increased by the amount of the consent dividend with respect to which it makes a consent.

(b) ***Example.*** The application of section 565

(c) may be illustrated by the following example:

Example. Corporation A, a personal holding company and a calendar year taxpayer, has one shareholder, individual B, whose consent to include $10,000 in his gross income for the calendar year 1987 has been timely filed. A has $8,000 of earnings and profits at the beginning of 1987. A has $10,000 of undistributed personal holding company income (determined without regard to distributions under section 316(b)(2)) for 1987. B must include $10,000 in his gross income as a taxable income and is treated as having immediately contributed $10,000 to A as paid-in capital. See section 316(b)(2).

[T.D. 8244, 54 FR 10540, Mar. 14, 1989]

§ 1.565-4 Consent dividends and other distributions.

Section 565(d) provides a rule applicable where a distribution is made in part in consent dividends and in part in money or other property. With respect to such a distribution the entire amount specified in the consents and the amount of such money or other property shall be considered together. Thus, if as a part of the same distribution consents are filed by some of the shareholders and cash is distributed to other shareholders, for example, those who may be unwilling to sign consents, the total amount of the cash and the amounts specified in the consents will be viewed as a single distribution to determine the tax effects of such distribution. For example, the total of such amounts must be considered to determine whether the distribution (including the amounts specified in the consents) is preferential and whether any part of such distribution would not be dividends if the total amounts specified in the consents were distributed in cash. See paragraph (b)(2) of § 1.565-2 for examples illustrating the treatment of distributions which consist in part of consent dividends and in part of other property.

§ 1.565-5 Nonresident aliens and foreign corporations.

(a) ***Withholding.*** In the event that a corporation makes a consent dividend, as described in § 1.565-1 (a), to a shareholder that is subject to a withholding tax under section 1441 or 1442 on a distribution of cash or other property, the corporation must remit an amount of tax equal to the withholding tax that would be imposed under section 1441 or 1442 if an actual cash distribution equal to the consent dividend had been paid to the shareholder on the last day of the corporation's taxable year. Such payment must be in one of the following forms:

(1) Cash,

(2) United States postal money order,

(3) Certified check drawn on a domestic bank, provided that the law of the place where the bank is located does not permit the certification to be rescinded prior to presentation,

(4) A cashier's check of a domestic bank, or

(5) A draft on a domestic bank or a foreign bank maintaining a United States agency or branch and payable in United States funds.

The amount of such payment shall be credited against the tax imposed on the shareholder.

(b) [Reserved]

[T.D. 8244, 54 FR 10540, Mar. 14, 1989]

§ 1.565-6 Definitions.

(a) ***Consent stock.***

(1) The term *consent stock* includes what is generally known as common stock. It also includes participating preferred stock, the participation rights of which are unlimited.

(2) The definition of consent stock may be illustrated by the following example:

Example. If in the case of the X Corporation, a personal holding company, there is only one class of stock outstanding, it would all be consent stock. If, on the other hand, there were two classes of stock, class A and class B, and class A was entitled to 6 percent before any distribution could be made on class B, but class B was entitled to everything distributed after class A had received its 6 percent, only class B stock would be consent stock. Similarly, if class A, after receiving its 6 percent, was to participate equally or in some fixed proportion with class B until it had received a second 6 percent, after which class B alone was entitled to any further distributions, only class B stock would be consent stock. The same result would follow if the order of preferences were class A 6 percent, then class B 6 percent, then class A a second 6 percent, either alone or in conjunction with class B, then class B the remainder. If, however, class A stock is entitled to ultimate participation without limit as to amount, then it, too, may be consent stock. For example, if class A is to receive 3 percent and then share equally or in some fixed proportion with class B in the remainder of the earnings or profits distributed, both class A stock and class B stock are consent stock.

(b) ***Preferred dividends.***

(1) The term *preferred dividends* includes all fixed amounts (whether determined by percentage of par value, a stated return expressed in a certain number of dollars per share, or otherwise) the distribution of which on any class of stock is a condition precedent to a further distribution of earnings or profits (not including a distribution in partial or complete liquidation). A distribution, though expressed in terms of a fixed amount, is not a preferred dividend, however, unless it is preferred over a subsequent distribution within the taxable year upon some class or classes of stock other than one on which it is payable.

(2) The definition of preferred dividends may be illustrated by the following example:

Example. If, in the case of the X Corporation, there are only two classes of stock outstanding, class A and class B, and class A is entitled to a distribution of 6 percent of par, after which the balance of the earnings and profits are distributable on class B exclusively, class A's 6 percent is a preferred dividend. If the order of preferences is class A $6 per share, class B $6 per share, then class A and class B in fixed proportions

until class A receives $3 more per share, then class B the remainder, all of class A's $9 per share and $6 per share of the amount distributable on class B are preferred dividends. The amount which class B is entitled to receive in conjunction with the payment to class A of its last $3 per share is not a preferred dividend, because the payment of such amount is preferred over no subsequent distribution except one made on class B itself. Finally, if a distribution must be $6 on class A, $6 on class B, then on class A and class B share and share alike, the distribution on class A of $6 and the distribution on class B of $6 are both preferred dividends.

[54 FR 10540, Mar. 14, 1989]

BANKING INSTITUTIONS

Rules of General Application to Banking Institutions

§ 1.581-1 Banks.

(a) In order to be a bank as defined in section 581, an institution must be a corporation for federal tax purposes. See § 301.7701-2(b) of this chapter for the definition of a corporation.

(b) This section is effective as of January 1, 1997.

[T.D. 8697, 61 FR 66588, Dec. 18, 1996]

§ 1.581-2 Mutual savings banks, building and loan associations, and cooperative banks.

(a) While the general principles for determining the taxable income of a corporation are applicable to a mutual savings bank, a building and loan association, and a cooperative bank not having capital stock represented by shares, there are certain exceptions and special rules governing the computation in the case of such institutions. See section 593 for special rules concerning reserves for bad debts. See section 591 and § 1.591-1, relating to dividends paid by banking corporations, for special rules concerning deductions for amounts paid to, or credited to the accounts of, depositors or holders of withdrawable accounts as dividends. See also section 594 and § 1.594-1 for special rules governing the taxation of a mutual savings bank conducting a life insurance business.

(b) For the purpose of computing the net operating loss deduction provided in section 172, any taxable year for which a mutual savings bank, building and loan association, or a cooperative bank not having capital stock represented by shares was exempt from tax shall be disregarded. Thus, no net operating loss carryover shall be allowed from a taxable year beginning before January 1, 1952, and, in the case of any taxable year beginning after December 31, 1951, the amount of the net operating loss carryback or carryover from such year shall not be reduced by reference to the income of any taxable year beginning before January 1, 1952.

[T.D. 6500, 25 FR 11737, Nov. 26, 1960; 25 FR 14021, Dec. 31, 1960, as amended by T.D. 8697, 61 FR 66588, Dec. 18, 1996]

§ 1.581-3 Definition of bank prior to September 28, 1962.

Prior to September 28, 1962, for purposes of sections 582 and 584, the term *bank* means a bank or trust company incorporated and doing business under the laws of the United States (including laws relating to the District of Columbia), of any State, or of any Territory, a substantial part of the business of which consists of receiving deposits and making loans and discounts, or of exercising fiduciary powers similar to those permitted to national

banks under section 11(k) of the Federal Reserve Act (38 Stat. 262; 12 U.S.C. 248(k)), and which is subject by law to supervision and examination by State, Territorial, or Federal authority having supervision over banking institutions. Such term also means a domestic building and loan association.

[T.D. 6651, 28 FR 4950, May 17, 1963]

§ 1.582-1 Bad debts, losses, and gains with respect to securities held by financial institutions.

(a) ***Bad debt deduction for banks.*** A bank, as defined in section 581, is allowed a deduction for bad debts to the extent and in the manner provided by subsections (a), (b), and (c) of section 166 with respect to a debt which has become worthless in whole or in part and which is evidenced by a security (a bond, debenture, note, certificate, or other evidence of indebtedness to pay a fixed or determinable sum of money) issued by any corporation (including governments and their political subdivisions), with interest coupons or in registered form.

(b) ***Worthless stock in affiliated bank.*** For purposes of section 165(g)(1), relating to the deduction for losses involving worthless securities, if the taxpayer is a bank (as defined in section 581) and owns directly at least 80 percent of each class of stock of another bank, stock in such other bank shall not be treated as a capital asset.

(c) ***Pre-1970 sales and exchanges of bonds, etc., by banks.*** For taxable years beginning before July 12, 1969, with respect to the taxation under subtitle A of the Code of a bank (as defined in section 581), if the losses of the taxable year from sales or exchanges of bonds, debentures, notes, or certificates, or other evidences of indebtedness, issued by any corporation (including one issued by a government or political subdivision thereof), exceed the gains of the taxable year from such sales or exchanges, no such sale or exchange shall be considered a sale or exchange of a capital asset.

(d) ***Post-1969 sales and exchanges of securities by financial institutions.*** For taxable years beginning after July 11, 1969, the sale or exchange of a security is not considered the sale or exchange of a capital asset if such sale or exchange is made by a financial institution to which any of the following sections applies: Section 585 (relating to banks), 586 (relating to small business investment companies and business development corporations), or 593 (relating to mutual savings banks, domestic building and loan associations, and cooperative banks). This paragraph shall apply to determine the character of gain or loss from the sale or exchange of a security notwithstanding any other provision of subtitle A of the Code, such as section 1233 (relating to short sales). However, this paragraph shall have no effect in the determination of whether a security is a capital asset under section 1221 for purposes of applying any other provision of the Code, such as section 1232 (relating to original issue discount). For purposes of this paragraph, a security is a bond, debenture, note, or certificate or other evidence of indebtedness, issued by any person. See paragraphs (e) and (f) of this section for special transitional rules applicable, respectively, to banks and to small business investment companies and business development corporations.

(e) ***Transition rule for qualifying securities held by banks*** —

(1) ***In general.*** Notwithstanding the provisions of paragraph (d) of this section, if the net long-term capital gain from sales and exchanges of qualifying securities exceeds the net short-term capital loss from such sales and exchanges in any taxable year beginning after July 11, 1969, such excess shall be treated as long-term capital gain, but in an amount not to exceed the net gain from sales and exchanges of securities in such year. For purposes of computing such net gain, a capital loss

carried to the taxable year under section 1212 shall not be taken into account. See section 1222 and the regulations thereunder for definitions of the terms *net long-term capital gain* and *net short-term capital loss.* For purposes of this paragraph:

(i) The term *security* means a security within the meaning of paragraph (d) of this section.

(ii) The term *qualifying security* means a security which is held by the bank on July 11, 1969, and continuously thereafter until it is first sold or exchanged by the bank

See also subparagraph (4) of this paragraph for rules under which the time certain securities are held is deemed to include a period of time determined under section 1223 (1) and (2) with respect to such security.

(2) ***Computation of capital gain or loss.*** For purposes of this paragraph, the amount of gain or loss from the sale or exchange of a qualifying security treated as capital gain or loss is determined by multiplying the amount of gain or loss recognized from such sale or exchange by a fraction the numerator of which is the number of days before July 12, 1969, that such security was held by the bank and the denominator of which is the sum of the number of days included in the numerator and the number of days the security was held by the bank after July 11, 1969.

(3) ***Special rules.*** For purposes of subparagraphs (1) and (2) of this paragraph, the following items are not taken into account:

(i) Any amount treated as original issue discount under section 1232, and

(ii) Any amount which, without regard to section 582(c) and this section, would be treated as gain or loss from the sale or exchange of property which is not a capital asset, such as an amount which is realized from the sale or exchange of a security which is held by a bank as a dealer in securities.

(4) ***Holding period in certain cases.*** For purposes of this paragraph:

(i) The time a security received in an exchange is deemed to have been held by a bank includes a period of time determined under section 1223(1) with respect to such security.

(ii) The time a security transferred to a bank from another bank is deemed to have been held by the transferee bank includes a period of time determined under section 1223(2) with respect to such security

For example, if a bank on December 3, 1972, surrendered an obligation of the United States which it held as a capital asset on July 11, 1969, in a transaction to which section 1037 applied, the time during which the newly received obligation is deemed to have been held includes the time during which the surrendered obligation was deemed to have been held by the bank. Because the surrendered obligation was held on July 11, 1969, the newly acquired obligation is deemed to have been held on that date and is a qualifying security. The period during which the surrendered obligation is deemed to have been held is taken into account in computing the fraction determined under subparagraph (2) of this paragraph with respect to the newly received obligation.

(5) ***Examples.*** The provisions of this paragraph may be illustrated by the following examples:

Example 1. Bank A, a calendar year taxpayer, purchased a qualifying security on July 14, 1968, and held it to maturity on August 20, 1970, when it was redeemed. The redemption resulted in a taxable gain of $10,000. The security was held by the bank for 363 days before July 12, 1969, and for a total of 768 days. During the taxable year, the bank had no other gains and no losses

from sales or exchanges of qualifying securities, but had a net loss of $4,000 from sales of securities other than qualifying securities. The portion of the gain from the redemption of the qualifying security treated as capital gain under subparagraph (2) of this paragraph is $4,726.56 (363/768 × $10,000). Because the net gain of the taxable year from sales and exchanges of securities, $6,000 ($10,000−$4,000), exceeds the portion of the gain on the sale of the qualifying security treated as capital gain under this paragraph, $4,726.56 is treated as long-term capital gain on the sale of the qualifying security for the taxable year.

Example 2. Assume the same facts as in example 1, except that the bank's net loss of the taxable year from the sale of securities other than qualifying securities was $7,000. The amount considered as long-term capital gain under this paragraph is limited by the amount of gain on the sale of securities to $3,000 ($10,000−$7,000).

(f) ***Small business investment companies and business development corporations*** —

(1) ***Election.*** In the case of a small business investment company or a business development corporation, described in section 586(a), section 582(c) does not apply for taxable years beginning after July 11, 1969, and before July 11, 1974, unless the taxpayer elects that such section shall apply. In the case of a small business investment company, see paragraph (a)(1) of § 1.1243-1 if such an election is made, but see paragraph (a)(2) of § 1.1243-1 if such an election is not made. Such election applies to all such taxable years and, except as provided in subparagraph (3) of this paragraph, is irrevocable. Such election must be made not later than

(i) the time, including extensions thereof, prescribed by law for filing the taxpayer's income tax return for its first taxable year beginning after July 11, 1969, or

(ii) June 8, 1970, whichever is later.

(2) ***Manner of making election.*** An election pursuant to the provisions of this paragraph is made by the taxpayer by a written statement attached to the taxpayer's income tax return (or an amended return) for its first taxable year beginning after July 11, 1969. Such statement shall indicate that the election is made pursuant to section 433(d) of the Tax Reform Act of 1969 (83 Stat. 624). The taxpayer shall attach to its income tax return for each subsequent taxable year to which such election is applicable a statement indicating that the election has been made and the amount to which it applies for such year.

(3) ***Revocation of election.*** An election made pursuant to subparagraph (2) of this paragraph shall be irrevocable unless:

(i) A written application for consent to revoke the election, setting forth the reasons therefor, is filed with the Commissioner within 90 days after the permanent regulations relating to section 433(d)(2) of the Tax Reform Act of 1969 (83 Stat. 624) are filed with the Office of the Federal Register, and

(ii) The Commissioner consents to the revocation.

The revocation is effective for all taxable years to which the election applied.

[T.D. 7171, 37 FR 5620, Mar. 17, 1972; 37 FR 6400, Mar. 29, 1972]

§ 1.584-1 Common trust funds.

(a) ***Method of taxation.*** A common trust fund maintained by a bank is not subject to taxation under this chapter and is not considered a corporation. Its participants are taxed on their proportionate share of income from the common trust fund.

(b) ***Conditions for qualification.***

(1) For a fund to be qualified as a common trust fund it must be maintained by a bank (as defined in section 581) in conformity with the rules and regulations of the Comptroller of the Currency, exclusively for the collective investment and reinvestment of contributions to the fund by the bank. The bank may either act alone or with one or more other fiduciaries, but it must act solely in its capacity as one or a combination of the following:

(i) As a trustee of a trust created by will, deed, agreement, declaration of trust, or order of court;

(ii) as an executor of a will or as an administrator of an estate;

(iii) as a guardian (by whatever name known under local law) of the estate of an infant, of an incompentent individual, or of an absent individual; or

(iv) on or after October 3, 1976, as a custodian of a UniformGifts to Minors account. A Uniform Gifts to Minors account is an account established pursuant to a State law substantially similar to the Uniform Gifts to Minors Act. (*See* the Uniform Gifts to Minors Act of 1956 or the Uniform Gifts to Minors Act of 1966, as published by the National Conference of Commissioners on Uniform State Laws.) The Commissioner will publish a list of the States whose laws he determines to be substantially similar to such uniform acts. A bank that maintains a Uniform Gifts to Minors Act account must establish, to the satisfaction of the Commissioner or his delegate, that with respect to the account the bank has duties and responsibilities similar to the duties and responsibilities of a trustee or guardian.

(2) A common trust fund may be a participant in another common trust fund.

(c) ***Affiliated groups.*** For taxable years beginning after December 31, 1975, two or more banks that are members of the same affiliated group (within the meaning of section 1504) are treated, for purposes of section 584, as one bank for the period of their affiliation. A common trust fund may be maintained by one or by more than one member of an affiliated group. Any member of the group may, but need not, contribute to the fund. Further, for purposes of this paragraph, members of an affiliated group may be, but need not be, co-trustees of the common trust fund.

[T.D. 6500, 25 FR 11737, Nov. 26, 1960, as amended by T.D. 7935, 49 FR 1694, Jan. 13, 1984]

§ 1.584-2 Income of participants in common trust fund.

(a) Each participant in a common trust fund is required to include in computing its taxable income for its taxable year within which or with which the taxable year of the fund ends, whether or not distributed and whether or not distributable:

(1) Its proportionate share of short-term capital gains and losses, computed as provided in § 1.584-3;

(2) Its proportionate share of long-term capital gains and losses, computed as provided in § 1.584-3; and

(3) Its proportionate share of the ordinary taxable income or the ordinary net loss of the common trust fund, computed as provided in § 1.584-3.

(b) Any tax withheld at the source from income of the fund (*e.g.,* under section 1441) is deemed to have been withheld proportionately from the participants to whom such income is allocated.

(c)

(1) The proportionate share of each participant's short-term capital gains and losses, long-term capital gains and losses, ordinary taxable income or ordinary net loss, dividends and interest received, and tax withheld at the source shall be determined under the method of accounting adopted by the bank in accordance with the written plan by which the common trust fund is established and administered, provided such method clearly reflects the income of each participant.

(2) Items of income and deductions shall be allocated to the periods between valuation dates established by the plan within the taxable year in which they were realized. Ordinary taxable income or ordinary net loss, short-term capital gains and losses, long-term capital gains and losses, and tax withheld at the source shall be computed for each period. The participants' proportionate shares of income and losses for each period shall then be determined.

(3) For taxable years beginning on or after September 22, 1980, any amount of income or loss of the common trust fund which is included in the computation of a participant's taxable income for the taxable year shall be treated as income or loss from an unrelated trade or business to the extent that such amount would have been income or loss from an unrelated trade or business if such participant had made directly the investments of the common trust fund.

(4) The provisions of this paragraph may be illustrated by the following example:

Example. (i) The plan of a common trust fund provides for quarterly valuation dates and for the computation and the distribution of the income upon a quarterly basis, except that there shall be no distribution of capital gains. The participants are as follows: Trusts A, B, C, and D for the first quarter; Trusts A, B, C, and E for the second quarter; and Trusts A, B, F, and G for the third and fourth quarters, the participants having equal participating interests. As computed upon the quarterly basis, the ordinary taxable income, the short-term capital gain, and the long-term capital loss for the taxable year were as follows:

	First quarter	Second quarter	Third quarter	Fourth quarter	Total
Ordinary taxable income	$200	$300	$200	$400	$1,100
Short-term capital gain	200	100	200	100	600
Long-term capital	100	200	100	200	600

	First quarter	Second quarter	Third quarter	Fourth quarter	Total
loss					

(ii) The participants' shares of ordinary taxable income are as follows:

PARTICIPANTS' SHARES OF ORDINARY TAXABLE INCOME

Participant	First quarter	Second quarter	Third quarter	Fourth quarter	Total
A	$50	$75	$50	$100	$275
B	50	75	50	100	275
C	50	75			125
D	50				50
E		75			75
F			50	100	150
G			50	100	150
Total	200	300	200	400	1,100

(iii) The participants' shares of the short-term capital gain are as follows:

PARTICIPANTS' SHARES OF SHORT-TERM CAPITAL GAIN

Participant	First quarter	Second quarter	Third quarter	Fourth quarter	Total
A	$50	$25	$50	$25	$150
B	50	25	50	25	150
C	50	25			75
D	50				50
E		25			25
F			50	25	75
G			50	25	75

Participant	First quarter	Second quarter	Third quarter	Fourth quarter	Total
Total	200	100	200	100	600

(iv) The participants' shares of the long-term capital loss are as follows:

PARTICIPANTS' SHARES OF LONG-TERM CAPITAL LOSS

Participant	First quarter	Second quarter	Third quarter	Fourth quarter	Total
A	$25	$50	$25	$50	$150
B	25	50	25	50	150
C	25	50			75
D	25				25
E		50			50
F			25	50	75
G			25	50	75
Total	100	200	100	200	600

(v) If in the above example the common trust fund also had short-term capital losses and long-term capital gains, the treatment of such gains or losses would be similar to that accorded to the short-term capital gains and long-term capital losses in the above example.
(vi) Assume in the above example that participant Trust A qualified as a trust forming part of a pension, profit sharing, or stock bonus plan under section 401(a). Assume further that 20 percent of the ordinary taxable income of the common trust fund would be unrelated business taxable income (as defined under section 512(a)(1)) if received directly by Trust A. Under paragraph (c)(3), participant Trust A, for purposes of computing its taxable income, must treat its proportionate share of the common trust fund's ordinary taxable income as income from an unrelated trade or business to the extent such amount would have been income from an unrelated trade or business if Trust A had directly made the investments of the common trust fund. Therefore, participant Trust A must take into account 20 percent of its proportionate share of the common trust fund's ordinary taxable income as income from an unrelated trade or business.

(d) The provisions of part I, subchapter J, chapter 1 of the Code, or, as the case may be, the provisions of subchapters D, F, or H of chapter 1 of the Code, are applicable in determining the extent to which each participant's proportionate share of any income or loss of the common trust fund is taxable to the participant, or to a person other than the participant.

[T.D. 6500, 25 FR 11737, Nov. 26, 1960, as amended by T.D. 7935, 49 FR 1694, Jan. 13, 1984; T.D. 8662, 61 FR 19546, May 2, 1996]

§ 1.584-3 Computation of common trust fund income.

The taxable income of the common trust fund shall be computed in the same manner and on the same basis as in the case of an individual, except that:

(a) No deduction shall be allowed under section 170 (relating to charitable, etc., contributions and gifts);

(b) The gains and losses from sales or exchanges of capital assets of the common trust fund are required to be segregated. A common trust fund is not allowed the benefit of the capital loss carryover provided by section 1212; and

(c) The ordinary taxable income (the excess of the gross income over deductions) or the ordinary net loss (the excess of the deductions over the gross income) shall be computed after excluding all items of gain and loss from sales or exchanges of capital assets.

[T.D. 6500, 25 FR 11737, Nov. 26, 1960, as amended by T.D. 7935, 49 FR 1694, Jan. 13, 1984]

§ 1.584-4 Admission and withdrawal of participants in the common trust fund.

(a) ***Gain or loss.*** The common trust fund realizes no gain or loss by the admission or withdrawal of a participant, and the basis of the assets and the period for which they are deemed to have been held by the common trust fund for the purposes of section 1202 are unaffected by such an admission or withdrawal. For taxable years of participants ending after April 7, 1976, and for transfers occurring after that date, the transfer of property by a participant to a common trust fund is treated as a sale or exchange of the property transferred. If a participant withdraws the whole or any part of its participating interest from the common trust fund, such withdrawal shall be treated as a sale or exchange by the participant of the participating interest or portion thereof which is so withdrawn. A participant is not deemed to have withdrawn any part of its participating interest in the common trust fund so as to have completed a closed transaction by reason of the segregation and administration of an investment of the fund, pursuant to the provisions of 12 CFR 9.18(b)(7) (or, for periods before September 28, 1962, 12 CFR206.17(c)(7)), for the benefit of all the then participants in the common trust fund. Such segregated investment shall be considered as held by, or on behalf of, the common trust fund for the benefit ratably of all participants in the common trust fund at the time of segregation, and any income or loss arising from its administration and liquidation shall constitute income or loss to the common trust fund apportionable among the participants for whose benefit the investment was segregated. When a participating interest is transferred by a bank, or by two or more banks that are members of the same affiliated group (within the meaning of section 1504), as a result of the combination of two or more common trust funds or the division of a single common trust fund, the transfer to the surviving or divided fund is not considered to be an admission or a withdrawal if the combining, dividing, and resulting common trust funds have diversified portfolios. For purposes of this paragraph (a), a common trust fund has a diversified portfolio if it satisfies the 25 and 50-percent tests of section 368(a)(2)(F)(ii), applying the relevant provisions of section 368(a)(2)(F). However, Government securities are included in total assets for purposes of the denominator of the 25 and 50-percent tests (unless the Government securities are acquired to meet the 25 and 50-percent tests), but are not treated as securities of an issuer for purposes of the numerator of the 25 and 50-percent tests. In addition, for a transfer of a participating interest in a division of a common trust fund not to be considered an admission or withdrawal, each participant's pro ratainterest in each of the resulting common trust funds must be substantially the same as was the

participant's pro rata interest in the dividing fund. However, in the case of the division of a common trust fund maintained by two or more banks that are members of the same affiliated group resulting from the termination of such affiliation, the division will be treated as meeting the requirements of the preceding sentence if the written plans of operation of the resulting common trust funds are substantially identical to the plan of operation of the dividing common trust fund, each of the assets of the dividing common trust fund are distributed substantially pro rata to each of the resulting common trust funds, and each participant's aggregate interest in the assets of the resulting common trust funds of which he or she is a participant is substantially the same as was the participant's pro rata interest in the assets of the dividing common trust fund. The plan of operation of a resulting common trust fund will not be considered to be substantially identical to that of the dividing common trust fund where, for example, the plan of operation of the resulting common trust fund contains restrictions as to the types of participants that may invest in the common trust fund where such restrictions were not present in the plan of operation of the dividing common trust fund.

(b) ***Basis for gain or loss upon withdrawal.*** The participant's gain or loss upon withdrawal of its participating interest or portion thereof shall be measured by the difference between the amount received upon such withdrawal and the adjusted basis of the participating interest or portion thereof withdrawn plus the additions prescribed in paragraph (c) of this section and minus the reductions prescribed in paragraph (d) of this section. The amount received by the participant shall be the sum of any money plus the fair market value of property (other than money) received upon such withdrawal. The basis of the participating interest or portion thereof withdrawn shall be the sum of any money plus the fair market value of any property (other than money) contributed by the participant to the common trust fund to acquire the participating interest or portion thereof withdrawn. Such basis shall not be reduced on account of the segregation of any investment in the common trust fund pursuant to the provisions of 12 CFR 9.18(b)(7) (or, for periods before September 28, 1962, 12 CFR 206.17(c)(7)). For the purpose of making the adjustments, additions, and reductions with respect to basis as prescribed in this paragraph, the ward, rather than the guardian, shall be deemed to be the participant; and the grantor, rather than the trust, shall be deemed to be the participant, to the extent that the income of the trust is taxable to the grantor under subpart E (section 671 and following), part I, subchapter J, chapter 1 of the Code.

(c) ***Additions to basis.*** As prescribed in paragraph (b) of this section, in computing the gain or loss upon the withdrawal of a participating interest or portion thereof, there shall be added to the basis of the participating interest or portion thereof withdrawn an amount equal to the aggregate of the following items (to the extent that they were properly allocated to the participant for a taxable year of the common trust fund and were not distributed to the participant prior to withdrawal):

(1) Wholly exempt income of the common trust fund for any taxable year,

(2) Net income of the common trust fund for the taxable years beginning after December 31, 1935, and prior to January 1, 1938,

(3) Net short-term capital gain of the common trust fund for each taxable year beginning after December 31, 1937,

(4) The excess of the gains over the losses recognized to the common trust fund upon sales or exchanges of capital assets held

(i) for more than 18 months for taxable years beginning after December 31, 1937, and before January 1, 1942,

(ii) for more than 6 months for taxable years beginning after December 31, 1941, and before January 1, 1977,

(iii) for more than 9 months for taxable years beginning in 1977, and

(iv) for more than 1 year for taxable years beginning after December 31, 1977, and

(5) Ordinary net or taxable income of the common trust fund for each taxable year beginning after December 31, 1937.

(d) ***Reductions in basis.*** As prescribed in paragraph (b) of this section, in computing the gain or loss upon the withdrawal of a participating interest or portion thereof, the basis of the participating interest or portion thereof withdrawn shall be reduced by such portions of the following items as were allocable to the participant with respect to the participating interest or portion thereof withdrawn:

(1) The amount of the excess of the allowable deductions of the common trust fund over its gross income for the taxable years beginning after December 31, 1935, and before January 1, 1938, and

(2) The amount of the net short-term capital loss, net long-term capital loss, and ordinary net loss of the common trust fund for each taxable year beginning after December 31, 1937.

(e) ***Effective date.*** The eighth sentence of paragraph (a) of this section is effective for combinations and divisions of common trust funds completed on or after May 2, 1996.

[T.D. 6500, 25 FR 11737, Nov. 26, 1960, as amended by T.D. 6651, 28 FR 4950, May 17, 1963; T.D. 7935, 49 FR 1695, Jan. 13, 1984; T.D. 8662, 61 FR 19546, May 2, 1996; 61 FR 39072, July 26, 1996]

§ 1.584-5 Returns of banks with respect to common trust funds.

For rules applicable to filing returns of common trust funds, see section 6032 and the regulations thereunder.

§ 1.584-6 Net operating loss deduction.

The net operating loss deduction is not allowed to a common trust fund. Each participant in a common trust fund, however, will be allowed the benefits of such deduction. In the computation of such deduction, a participant in a common trust fund shall take into account its pro rata share of items of income, gain, loss, deduction, or credit of the common trust fund. The character of any such item shall be determined as if the participant had realized such item directly from the source from which realized by the common trust fund, or incurred such item in the same manner as incurred by the common trust fund.

§ 1.585-1 Reserve for losses on loans of banks.

(a) ***General rule.*** As an alternative to a deduction from gross income under section 166(a) for specific debts which become worthless in whole or in part, a financial institution to which section 585 and this section apply shall be allowed a deduction under section 585(a) (or, for taxable years beginning before January 1, 1987, section 166(c)), for a reasonable addition to a reserve for bad debts provided such financial institution has adopted or adopts the reserve method of treating bad debts in accordance with paragraph (b) of § 1.166-1. In the case of such a taxpayer the amount of the reasonable addition to such reserve for a taxable year beginning after July 11, 1969, shall be an amount determined by the taxpayer which does not exceed the amount computed under § 1.585-2. Such reasonable addition for the taxable year shall be an amount at least equal to the amount provided by § 1.585-2(a)(2). For each taxable year the taxpayer must include in its income tax return (or amended return) for that year a computation of the amount of the addition determined under this section showing the method used to determine that amount. The use of a particular method in the return for a taxable year is not a binding election by the taxpayer to apply such method either for such taxable year or for subsequent taxable years. A financial institution to which

section 585 and this section apply which adopts the reserve method is not entitled to charge off any bad debts pursuant to section 166(a) with respect to a loan (as defined in § 1.585-2(e)(2). Except as provided by § 1.585-3, the reserve for bad debts of a financial institution to which section 585 and this section apply shall be established and maintained in the same manner as is provided by section 585 (or, for taxable years beginning before January 1, 1987, section 166(c)) and theregulations under section 166 with respect to reserves for bad debts. Except as provided by this section, no deduction is allowable for an addition to a reserve for losses on loans as defined in § 1.585-2(e)(2) of a financial institution to which section 585 and this section apply. For rules relating to deduction with respect to debts which are not loans (as defined in § 1.585-2(e)(2)), see section 166(a) and the regulations thereunder. For rules relating to a debt evidenced by a security (as defined in section 165(g)(2)(C), see sections 166 and 582(a) and the regulations thereunder. For the definition of certain terms, see paragraph (e) of § 1.585-2. For rules relating to a transaction to which section 381(a) applies, see § 1.585-4. For rules relating to large banks, see §§ 1.585-5 through 1.585-8.

(b) ***Application of section*** —

(1) ***In general.*** Except as provided in paragraph (b)(2) of this section, section 585 and this section apply to the following financial institutions—

(i) Any bank (as defined in section 581 and the regulations thereunder) other than a mutual savings bank, domestic building and loan association, or cooperative bank, to which section 593 applies; and

(ii) Any corporation to which paragraph (b)(1)(i) of this section would apply except for the fact that it is a foreign corporation and in the case of any such foreign corporation, the rules provided by section 585(a) and (b), this section, §§ 1.585-2, 1.585-3, and 1.585-4 apply only with respect to loans outstanding the interest on which is effectively connected with the conduct of a banking business within the United States.

(2) ***Exception.*** For taxable years beginning after December 31, 1986, section 585(a) and (b) and this section do not apply to any large bank (as defined in § 1.585-5(b)). For these years, a large bank may not deduct any amount under section 585 or any other section for an addition to a reserve for bad debts.

(Sec. 585(b)(4), of the Internal Revenue Code of 1954 (83 Stat. 618; (26 U.S.C. 585(b)(4))))

[T.D. 7532, 43 FR 3109, Jan. 23, 1978, as amended by T.D. 8513, 58 FR 68757, Dec. 29, 1993; 59 FR 15502, Apr. 1, 1994]

§ 1.585-2 Addition to reserve.

(a) ***In general*** —

(1) ***Maximum addition.*** For taxable years beginning before January 1, 1988, the maximum reasonable addition to the reserve for losses on loans as defined in paragraph (e)(2) of this section is the amount allowable under the percentage method provided by paragraph (b) of this section or the experience method provided by paragraph (c) of this section, whichever is greater. For taxable years beginning after December 31, 1987, the maximum reasonable addition to the reserve for losses on loans is the amount determined under the experience method provided by paragraph (c) of this section.

(2) ***Minimum addition.*** For taxable years beginning after December 31, 1976, and before January 1, 1988, a taxpayer to which this section applies shall make a minimum addition to the reserve for losses on loans as defined in paragraph (e)(2) of this section. For purposes of this subparagraph, the term *minimum addition* means an addition to the reserve for losses on loans in an amount equal to the lesser of

(i) the amount allowable under section 585 (b)(3)(A) and paragraph (c)(1)(ii) of this section, or

(ii) the maximum amount allowable under section 585 (b)(2) and paragraph (b) of this section. For taxable years beginning after December 31, 1987, a taxpayer to which this section applies shall make a minimum addition to the reserve for losses on loans for each taxable year in an amount equal to the amount allowable under section 585 (b)(3)(A) and paragraph (c)(1)(ii) of this section.

(b) ***Percentage method*** —

(1) ***In general*** —

(i) ***Maximum addition.*** Except as limited under subparagraph (2) of this paragraph, the maximum reasonable addition to the reserve for losses on loans under the percentage method for a taxable year is the amount determined under paragraph (b)(1) (ii), (iii), or (iv) of this section, whichever is applicable. For purposes of this paragraph, the term *allowable percentage* means 1.8 percent for taxable years beginning before 1976; 1.2 percent for taxable years beginning after 1975 but before 1982; 1.0 percent for taxable years beginning in 1982; and 0.6 percent for taxable years beginning after 1982 and before 1988. This paragraph does not apply for taxable years beginning after 1987.

(ii) ***Reserve less than allowable percentage of eligible loans.***

(A) If the reserve for losses on loans as of the close of the base year is less than the allowable percentage for the taxable year multiplied by the eligible loans outstanding at the close of the base year, the amount determined under this subdivision for the taxable year is the amount necessary to increase the balance of the reserve for losses on loans as of the close of the taxable year to an amount equal to the allowable percentage for the taxable year multiplied by the eligible loans outstanding at the close of that year, except that the amount determined with respect to the reserve deficiency shall not exceed one-fifth of the reserve deficiency. For purposes of this section, the term *reserve deficiency* means the excess of the allowable percentage for the taxable year multiplied by the eligible loans outstanding at the close of the base year over the reserve forlosses on loans as of the close of the base year. Where a taxpayer has recoveries of bad debts for a taxable year which exceed the bad debts sustained for such year, the taxpayer is not required to reduce its otherwise permissible current addition by the amount of the net recovery. A reasonable addition attributable to an increase in eligible loans outstanding at the close of the taxable year over eligible loans outstanding at the close of the base year may be made only for the portion of such increase which does not exceed the excess of eligible loans outstanding at the close of the taxable year over the sum of the amount of eligible loans outstanding at the close of the base year and the amount of previous increases in such loans for which an addition was made in taxable years ending after the close of the base year. For purposes of this subdivision, the order in which the factors which make up the annual reserve addition shall be claimed is:

(*1*) An amount equal to one-fifth of the reserve deficiency;

(2) Net bad debts charged to the reserve; and

(3) An amount attributable to an increase in the amount of eligible loans outstanding.

(B) For its first taxable year, a newly organized financial institution to which § 1.585-1 and this section apply shall be considered to have no reserve deficiency. For example, a new financial institution would compute its annual reserve addition by including in such addition an amount not in excess of the sum of

(1) the amount of its net bad debts charged to the reserve for the taxable year, and

(2) the allowable percentage of the increase in its eligible loans outstanding at the close of the taxable year over the amount of its loans outstanding (zero) at the end of the year preceding its first taxable year. Such amount would be subject to the 0.6 percent limitations provided in subparagraph (2) of the paragraph.

(C) The application of the rules provided by this subdivision may be illustrated by the following example:

Example. The X Bank is a commercial bank which has a calendar year as its taxable year. X adopted the reserve method of accounting for bad debts in 1950. On December 31, 1969, X has $1,000,000 of outstanding eligible loans and a balance of $13,000 in its reserve for losses on loans. The base year is 1969 and, consequently, X has a reserve deficiency of $5,000 ((1.8% × $1,000,000) − $13,000). (a) During 1970, X has net bad debts of $1,000 charged to the reserve for losses on loans. On December 31, 1970, X has $1,050,000 of outstanding eligible loans. The maximum reasonable addition under the percentage method is $2,900 which consists of $1,000 of reserve deficiency ($^1/_5$ × $5,000), the $1,000 in net bad debts charged to the reserve for losses on loans, and $900 attributable to the increase in the balance of eligible loans (1.8% × ($1,050,000 − $1,000,000)). Assuming that X makes an addition to the reserve for losses on loans of $2,900 for the year, the balance of the reserve as of December 31, 1970 is $14,900 ($13,000 − $1,000 + $2,900).

(b) During 1971, X has net bad debts of $1,000 charged to the reserve for losses on loans. On December 31, 1971, X has $800,000 of outstanding eligible loans. The allowable percentage of eligible loans is $14,400 (1.8% × $800,000). The maximum reasonable addition under the percentage method is $500 which is a portion of one-fifth of the reserve deficiency. Assuming that X makes an addition to the reserve for losses on loans of $500 for the year, the balance of the reserve as of December 31, 1971, is $14,400 ($14,900 − $1,000 + $500).

(c) During 1972, X has net bad debts of $600 charged to the reserve for losses on loans. On December 31, 1972, X has $850,000 of outstanding eligible loans. The allowable percentage of eligible loans is $15,300 (1.8% × $850,000). The maximum

reasonable addition under the percentage method is $1,500 which consists of $1,000 of reserve deficiency ($^1/_5$ × $5,000) and $500 of the net bad debts charged to the reserve for losses on loans in 1971. Even though the full addition with respect to the reserve deficiency in 1971 was not made, the amount of the addition that can be made in 1972 with respect to the reserve deficiency is limited to one-fifth of such deficiency. Assuming that X makes an addition to the reserve for losses on loans of $1,500 for the year, the balance of the reserve as of December 31, 1972, is $15,300 ($14,400 − $600 + $1,500).

(d) During 1973, X did not have any net bad debts charged to the reserve for losses on loans. On December 31, 1973, X has $1,000,000 of outstanding eligible loans. The allowable percentage of eligible loans is $18,000 (1.8% × $1,000,000). The maximum reasonable addition under the percentage method is $2,100 which consists of $1,000 of reserve deficiency ($^1/_5$ × $5,000), $500 of net bad debts charged to the reserve for losses in 1971, and $600 of net bad debts charged to the reserve in 1972. Although outstanding eligible loans increased from $850,000 in 1972 to $1,000,000 in 1973, no addition is permitted with respect to the increase because the amount of eligible loans outstanding at the close of 1973 ($1,000,000) does not exceed the sum of the amount of such loans at the close of the base year ($1,000,000) and the amount of previous increases in such loans for which an addition was made in taxable years ending after the close of the base year ($50,000 loan increase in 1970). Assuming that X makes an addition to the reserve for losses on loans of $2,100, the balance of the reserve as of December 31, 1973, is $17,400 ($15,300 + $2,100).

(iii) ***Reserve equal to or greater than allowable percentage and eligible loans have not declined.*** If the reserve for losses on loans as of the close of the base year is equal to or greater than the allowable percentage for the taxable year multiplied by the eligible loans outstanding at the close of the base year and if the amount of eligible loans outstanding at the close of the taxable year is equal to or greater than the amount of eligible loans outstanding at the close of the base year, the amount determined under this subdivision is the amount necessary to increase the reserve to the greater of

(A) the allowable percentage for the taxable year multiplied by the eligible loans outstanding at the close of the year, or

(B) the balance of the reserve as of the close of the base year. The application of the rule provided by this subdivision may be illustrated by the following example:

Example. The M Bank is a commercial bank which has a calendar year as its taxable year. M adopted the reserve method of accounting for bad debts in 1950. On December 31, 1969, M has $1,000,000 of outstanding eligible loans and a balance of $20,000 in its reserve for losses on loans.

(a) During 1970, M has net bad debts of $1,000 charged to the reserve for losses on loans. On December 31, 1970, M has $1,100,000 of outstanding eligible loans. The allowable percentage of eligible loans is $19,800 (1.8% × $1,100,000). The maximum reasonable addition under the percentage method is $1,000 which is the amount sufficient to increase the balance of the reserve as of the close of the taxable year to the balance of the reserve as of the close of the 1969 base year ($20,000). Assuming that M makes an addition to the reserve for losses on loans of $1,000 for the year, the balance of the reserve as of December 31, 1970, is $20,000 ($20,000 − $1,000 + $1,000).

(b) During 1971, M has net bad debts of $1,000 charged to the reserve for losses on loans. On December 31, 1971, M has $1,300,000 of outstanding eligible loans. The allowable percentage of eligible loans is $23,400 (1.8% × $1,300,000). The maximum reasonable addition under the percentage method is $4,400 which is the amount sufficient to increase the balance of the reserve to the allowable percentage of eligible loans outstanding at the close of the taxable year. Assuming that M makes an addition to the reserve for losses on loans of $4,400 for the year, the balance of the reserve as of December 31, 1971, is $23,400 ($20,000 − $1,000 + $4,400).

(c) During 1972, M has net bad debts of $1,000 charged to the reserve for losses on loans. On December 31, 1972, M has $1,200,000 of outstanding eligible loans. The allowable percentage of eligible loans is $21,600 (1.8% × $1,200,000). No reasonable addition may be made under the percentage method because the reserve for losses on loans ($22,400, i.e., $23,400−$1,000) is greater than the allowable percentage of eligible loans outstanding at the close of the taxable year ($21,600) and the balance of the reserve as of the close of the base year ($20,000). Assuming that no amount is added under the experience method provided by paragraph (c) of this section, the balance of the reserve for losses on loans as of December 31, 1972, is $22,400 ($23,400−$1,000).

(d) During 1973, M has net bad debts of $1,000 charged to the reserve for losses on loans. On December 31, 1973, M has $1,200,000 of outstanding eligible loans. The allowable percentage of eligible loans is $21,600 (1.8% × $1,200,000). The maximum reasonable addition under the percentage method is $200 which is the amount sufficient to increase the reserve for losses on loans to the allowable percentage of eligible loans outstanding at the close of the taxable year. Assuming that M makes an addition to the reserve for losses on loans of $200 for the year, the balance of the reserve as of December 31, 1973, is $21,600 ($22,400−$1,000 + $200).

(iv) ***Reserve greater than allowable percentage and eligible loans have declined.*** If the reserve for losses on loans as of the close of the base year is equal to or greater than the allowable percentage of eligible loans outstanding at such time and if the amount of eligible loans at the close of the taxable year is less than the amount of eligible loans outstanding at the close of the base year, the amount determined under this subdivision is the amount necessary to increase the balance of the reserve to the amount which bears the same ratio to eligible loans outstanding at the close of the taxable year as the balance of the reserve as of the close of the base year bears to the amount of eligible loans outstanding at the close of the base year. The application of the rule provided by this subdivision may be illustrated by the following example:

> *Example.* The N Bank is a commercial bank which has a calendar year as its taxable year. N adopted the reserve method of accounting for bad debts in 1950. On December 31, 1969, N has $1,000,000 of outstanding eligible loans and a balance of $20,000 in its reserve for losses on loans.
> (a) During 1970, N has net bad debts of $3,000 charged to the reserve for losses on loans. On December 31, 1970, N has $900,000 of outstanding eligible loans. The maximum reasonable addition under the percentage method is $1,000, which is the amount necessary to increase the balance of the reserve to the amount ($18,000) which bears the same ratio to eligible loans outstanding at the close of the taxable year ($900,000) as the balance of the reserve as of the close of the base year ($20,000) bears to the amount of the eligible loans outstanding at the close of the base year ($1,000,000). Assuming that N makes an addition to the reserve for losses on loans of $1,000 for the year, the balance of the reserve as of December 31, 1970, is $18,000 ($20,000−$3,000 + $1,000).
>
> (b) During 1971, N has net bad debts of $1,000 charged to the reserve for losses on loans. On December 31, 1971, N has $1,100,000 of outstanding eligible loans. The maximum reasonable addition under the percentage method, determined under subdivision (iii) of this subparagraph, is $3,000 which is the amount necessary to increase the balance of the reserve to the greater of the allowable percentage of eligible loans outstanding at the close of the taxable year ($19,800) or the balance of the reserve at the close of the base year ($20,000). Assuming that N makes an addition to the reserve for losses on loans of $3,000 for the year, the balance of the reserve as of December 31, 1971 is $20,000 ($18,000−$1,000 + $3,000).

(2) ***Limitations.*** Notwithstanding any other provision of this paragraph, the maximum reasonable addition to the reserve for losses on loans under the percentage method shall not exceed the greater of:

(i) Six-tenths of 1 percent of the eligible loans outstanding at the close of the taxable year, or

(ii) An amount sufficient to increase the reserve for losses on loans at the close of the taxable year to six-tenths of 1 percent of the eligible loans outstanding at the close of the taxable year.

The application of the rules provided by this subparagraph may be illustrated by the following example:

Example. The Y Bank begins business as a commercial bank on July 1, 1974. Y adopts the calendar year as its taxable year and the reserve method of accounting for bad debts.

(a) During 1974, Y has net bad debts of $1,000. On December 31, 1974, Y has $1,000,000 of outstanding eligible loans. Under subparagraph (1)(ii)(B) of this paragraph, because Y is a newly-organized financial institution, there is no reserve deficiency. Except for the limitations of this subparagraph, the maximum reasonable addition under subparagraph (1)(ii)(A) of this paragraph would be the amount of net bad debts charged to the reserve for losses ($1,000) plus the allowable percentage of outstanding eligible loans at the close of the taxable year $18,000 (1.8% × $1,000,000). However, because of the limitations of this subparagraph, the maximum reasonable addition to the reserve for losses on loans under the percentage method is an amount sufficient to increase the balance of the reserve for losses on loans to $6,000 which is 0.6 percent of the eligible loans outstanding at the close of the taxable year. Assuming that Y makes an addition to the reserve for losses on loans of $7,000 for the year, the balance of the reserve as of December 31, 1974, is $6,000 ($7,000−$1,000). The $7,000 consists of the $1,000 in net bad debts and $6,000 attributable to the increase in eligible loans outstanding.

(b) During 1975, Y has net bad debts of $1,000 charged to the reserve for losses on loans. On December 31, 1975, Y has $1,000,000 of outstanding eligible loans. Except for the limitations of this subparagraph, the maximum reasonable addition under subparagraph (1)(ii)(A) of this paragraph would be the amount of net bad debts charged to the reserve for losses ($1,000) plus an amount attributable to the increase in the amount of eligible loans outstanding with respect to which no reasonable addition was allowed in 1974 ($12,000, *i.e.,* $18,000−$6,000). However, because of the limitations of this paragraph, the maximum reasonable addition to the reserve for losses on loans under the percentage method is $6,000 which is an amount equal to 0.6 percent of the eligible loans outstanding at the close of the taxable year. This amount consists of net bad debts of $1,000 and $5,000 attributable to a portion of the increase in eligible loans in 1974 with respect to which no reasonable addition was allowable for 1974. Assuming that Y makes an addition to the reserve for losses on loans of $6,000 for the year, the balance of the reserve as of December 31, 1975, is $11,000 ($6,000−$1,000 + $6,000).

(c) During 1976, Y has net bad debts charged to the reserve for losses on loans of $1,000. On December 31, 1976, Y has $1,000,000 in outstanding eligible loans. At the close of 1975 (Y's base year for 1976), the amount of outstanding eligible loans was also $1,000,000. Consequently, there is a reserve deficiency of $1,000 ((1.2% × $1,000,000)—$11,000). The maximum reasonable addition to the reserve for losses

> under subparagraph (1)(ii)(A) of this paragraph is $1,200 which consists of one-fifth of the reserve deficiency ($1,000 × $^1/_5$ = $200) and the net bad debts charged to the reserve for losses on loans for the year ($1,000). Because that amount is less than 0.6 percent of the eligible loans outstanding at the close of the taxable year (0.6% × $1,000,000 = $6,000), the limitations of this subparagraph do not apply. Assuming that Y makes an addition to the reserve for losses on loans of $1,200 for the year, the balance of the reserve as of December 31, 1976, is $11,200 ($11,000−$1,000 + $1,200).

(c) *Experience method* —

(1) *In general* —

(i) ***Maximum addition.*** The amount determined under this paragraph for a taxable year is the amount necessary to increase the balance of the reserve for losses on loans (as of the close of the taxable year) to the greater of the amount determined under subdivision (ii) or (iii) of this subparagraph. For special rules for a new financial institution, see subparagraph (2) of this paragraph.

(ii) ***Six-year moving average amount.*** The amount determined under this subdivision is the amount which bears the same ratio to loans outstanding at the close of the taxable year as

(A) the total bad debts sustained during the taxable year and the 5 preceding taxable years (or, with the approval of the Commissioner, a shorter period), adjusted for recoveries of bad debts during such period, bears to

(B) the sum of the loans outstanding at the close of such 6 (or fewer) taxable years. For purposes of applying this subdivision, a period shorter than 6 years generally would be appropriate only where there is a change in the type of a substantial portion of the loans outstanding such that the risk of loss is substantially increased. For example, if the major portion of a bank's portfolio of loans changes fromagricultural loans to industrial loans which results in a substantial increase in the risk of loss, a period shorter than 6 years may be appropriate. Similarly, a bank which has recently altered its lending practices to include in its portfolio of loans consumer-installment loans, when it had previously made only commercial loans, may also qualify to use a period shorter than six years. A decline in the general economic conditions in the area, which substantially increase the risk of loss, is a relevant factor which may be considered. In any case, however, approval to use a shorter period will not be granted unless the taxpayer supplies specific evidence that the loans outstanding at the close of the taxable years for the shorter period requested are not comparable in nature and risk to loans outstanding at the close of the six taxable years. The fact that a bank's bad debt experience has shown a substantial increase is not, by itself, sufficient to justify use of a shorter period. If approval is granted to use a shorter period, the experience for those taxable years which are excluded shall not be used for any subsequent year. A request for approval to exclude the experience of a prior taxable year shall not be considered unless it is sent to the Commissioner at least 30 days before the close of the first taxable year for which such approval is requested.

(iii) ***Base year amount.*** The amount determined under this subdivision is the lower of

(A) the balance of the reserve as of the close of the base year, or

(B) if the amount of loans outstanding at the close of the taxable year is less than the amount of loans outstanding at the close of the base year, the amount which bears the same ratio to loans outstanding at the close of the taxable year as the balance of the reserve as of the close of the base year bears to the amount of loans outstanding at the close of the base year.

(2) *Special rules for new financial institutions* —

(i) ***In general.*** In the case of any taxable year preceded by less than 5 authorization years (as defined in paragraph (e)(5) of this section), subparagraph (1) of this paragraph shall be applied with the adjustments provided by subdivision (ii) of this subparagraph.

(ii) ***Adjustments.***

(A) The total bad debts for the 6-year period computed under subparagraph (1)(ii)(A) of this paragraph shall be the sum of:

(*1*) The bad debts sustained by the taxpayer during its authorization years, adjusted for recoveries of bad debts for such years, and

(*2*) That fraction of the total bad debts sustained by a comparable bank (as defined in paragraph (e)(7) of this section) during the comparison years (as defined in paragraph (e)(6) of this section), adjusted for recoveries of bad debts for such years, which bears the same ratio to such total as the average loans outstanding of the taxpayer during the authorization years bears to the average loans outstanding of the comparable bank during the comparison years.

(B) The total amount of loans outstanding during the 6-year period computed under subparagraph (1)(ii)(B) of this paragraph shall be six times the average loans outstanding of the taxpayer during the authorization years.

(d) *Change in accounting method from specific charge-off method to reserve method of treating bad debts* —

(1) ***In general.*** If a bank is granted permission in accordance with § 1.446-1(e)(3) to change its method of accounting for bad debts from a method under which specific bad debt items are deducted to the reserve method of treating bad debts, the taxpayer shall effect the change as provided in subparagraphs (2) and (3) of this paragraph.

(2) ***Initial balance of the reserve.*** The initial balance of the reserve at the close of the year of change shall be no less than the minimum addition as described in paragraph (a)(2) of this section and shall be no larger than the greater of:

(i) The allowable percentage of eligible loans outstanding at the close of the taxable year of change, or

(ii) The amount which bears the same ratio to loans outstanding at the close of the taxable year as the total bad debts sustained during the taxable year and the 5 preceding taxable years (or, with the approval of the Commissioner, a shorter period), adjusted for recoveries of bad debts during such period, bears to the sum of the loans outstanding at the close of such 6 or fewer taxable years.

In the case of taxable years beginning after 1987, the initial balance of the reserve at the end of the year of change shall be the amount specified in subdivision (ii) of this subparagraph.

(3) ***Deduction with respect to initial balance.*** The deduction with respect to the initial balance of the reserve at the close of the taxable year of change, determined under subparagraph (2) of this paragraph, is allowable ratably over a period of 10 years commencing with the taxable year of change (or a shorter period as may be approved by the Commissioner). Thus, the bad debt deduction under section 166 for the taxable year of change will consist of the amount of debts determined to be wholly or partially worthless and charged-off during such taxable year plus one-tenth (if a 10-year period is used) of the amount of the reserve determined under subparagraph (2) of this paragraph. For each of the 9 taxable years following the taxable year of change, the bad debt deduction will consist of the reasonable addition to the reserve for bad debts for each such year as provided by section 585, as otherwise determined, plus one-tenth of the amount determined to be theinitial balance of the reserve under subparagraph (2) of this paragraph. The amount established as a bad debt reserve for the taxable year of change under subparagraph (2) of this paragraph shall be considered as the balance of the reserve for purposes of determining the amount of subsequent additions to such reserve, even though the entire amount of the reserve may not have been deducted under section 585(a)(1) or former section 166(c) because of the requirement that it be deducted over a number of years.

(e) ***Definitions*** —

(1) ***Base year*** —

(i) ***Percentage method.*** For purposes of paragraph (b) of this section (relating to the percentage method), the term *base year* means: For years beginning before 1976, the last taxable year beginning on or before July 11, 1969; for taxable years beginning after 1975 but before 1983, the last taxable year beginning before 1976; and, for taxable years beginning after 1982, the last taxable year beginning before 1983. However, for purposes of section 585(b)(2)(A) the term *base year* means the last taxable year before the most recent adoption of the percentage method, if later than the base year as determined under the preceding sentence.

(ii) ***Experience method.*** For purposes of paragraph (c) of this section (relating to the experience method), the term *base year* means

(A) the last taxable year before the most recent adoption of the experience method, or

(B) the last taxable year beginning on or before July 11, 1969, which ever is later; and for taxable years beginning after 1987, the last taxable year beginning before 1988.

(iii) ***Example.*** The application of the rules provided by this subparagraph may be illustrated by the following example:

> *Example.* The T Bank is a commercial bank which has a calendar year as its taxable year. T adopted the reserve method of accounting for bad debts in 1950. On December 31, 1969, T has $1,000,000 of outstanding eligible loans and a balance of $19,300 in its reserve for losses on loans.
> (a) During 1970, T has net bad debts of $1,000 charged to the reserve for losses on loans. On December 31, 1970, T has $1,050,000 of outstanding eligible loans. T elects the percentage method. The base year is 1969. The maximum reasonable addition under the percentage method of $1,000 which is the amount sufficient to increase the balance of the reserve as of the close of the taxable year to the balance of the reserve as of the

close of the base year 1969 ($19.300). Assuming that T makes an addition to the reserve for losses on loans of $1,000 for the year, the balance of the reserve for losses on loans as of December 31, 1970, is $19,300 ($19,300−$1,000 + $1,000).

(b) During 1971, T has net bad debts of $8,000 charged to the reserve for losses on loans. On December 31, 1971, T has $1,100,000 of outstanding eligible loans. T elects the experience method. The base year is 1970. The maximum reasonable addition under the experience method is $8,000 which is the amount sufficient to increase the balance of the reserve as of the close of the taxable year to the balance of the reserve as of the close of the 1970 base year ($19,300). Assuming that T makes an addition to the reserve for losses on loans of $8,000 for the year, the balance of the reserve for losses on loans as of December 31, 1971, is $19,300, ($19,300−$8,000 + $8,000).

(c) During 1972, T has net bad debts of $1,000 charged to the reserve for losses on loans. On December 31, 1972, T has $1,200,000 of outstanding eligible loans. T elects the percentage method. The base year is 1971 and there is a reserve deficiency of $500 ((1.8% × $1,100,000)−$19,300). The maximum reasonable addition under the percentage method is $2,900 which consists of $100 of reserve deficiency ($^{1}/_{5}$ × $500), the $1,000 in net bad debts charged to the reserve for losses on loans, and $1,800 attributable to the increase in the balance of eligible loans (1.8% × ($1,200,000−$1,100,000)). Assuming that T makes an addition to the reserve for losses on loans of $2,900 for the year, the balance of the reserve for losses on loans as of December 31, 1972, is $21,200 ($19,300−$1,000 + $2,900).

(2) ***Loan*** —

(i) ***General rule.*** For purposes of this section and §§ 1.585-1, 1.585-3, and 1.585-4, the term *loan* means debt as the term *debt* is used in section 166 and the regulations thereunder. The term *loan* includes (but is not limited to) the following items:

(A) An overdraft in one or more deposit accounts by a customer in good faith whether or not other deposit accounts of the same customer have balances in excess of the overdraft;

(B) A bankers acceptance purchased or discounted by a bank; and

(C) A loan participation to the extent that the taxpayer bears a risk of loss.

For purposes of (B) of this subdivision (i), a bankers acceptance shall be considered as a loan made by the bank which purchased or discounted the bankers acceptance and not a loan made by the originating bank.

(ii) ***Exceptions.*** Notwithstanding the provisions of subdivision (i) of this subparagraph, the term *loan* does not include the following items:

(A) Discount or interest receivable reflected in the face amount of an outstanding loan, which discount or interest has not been included in gross income;

(B) For taxable years beginning after December 31, 1976, commercial paper, however acquired by the bank, including, for example, short-term promissory notes which may be purchased on the open market;

(C) For taxable years beginning after December 31, 1976, a debt evidenced by a security (as defined in section 165(g)(2)(C) and the regulations thereunder);

(D) Any loan which is entered into or acquired for the primary purpose of enlarging the otherwise available bad debt deduction;

(E) Loans which have been contractually committed to the extent that funds have not been disbursed to the borrower or disbursed on behalf of the borrower; and

(F) Any transaction which is in violation of a Federal or State statute that governs the activities of the financial institution.

(3) ***Eligible loan*** —

(i) ***General rule.*** For purposes of this section and §§ 1.585-3 and 1.585-4, the term *eligible loan* means a loan (as defined in subparagraph (2) of this paragraph) which is incurred in the course of the normal customer loan activities of a financial institution and which is not a loan described in subdivision (ii) of this subparagraph. Nothing within the preceding sentence will be construed to exclude from the term *eligible loan* a bona fide loan in a new market or under a novel repayment arrangement if the likelihood of nonrepayment is at least as great as that of other customer loans of the financial institution.

(ii) ***Exceptions.*** Loans which do not constitute eligible loans include:

(A) A loan to a bank (as defined in section 581 and the regulations thereunder) or to a domestic branch of a foreign corporation to which § 1.585-1 applies, including a repurchase transaction or other similar transaction;

(B) Bank funds on deposit in any bank (foreign or domestic) such as a deposit represented by a certificate of deposit or any other form of instrument evidencing the deposit of a sum of money with the issuing bank that will be available on or after a stated date or period of time;

(C) A sale or loan of Federal funds irrespective of the purchaser or borrower;

(D) A loan, to the extent that it is directly or indirectly made to, guaranteed by, or insured by the United States, a possession or instrumentality thereof, or a State or political subdivision thereof; and

(E) A loan which is secured by a deposit in the lending financial institution or in a bank as defined in section 581 or a domestic branch of a foreign corporation to which this section applies to the extent that the financial institution has control over withdrawal of such deposit.

(iii) ***Definition of loan which is secured by a deposit.*** For purposes of subdivision (ii)(E) of this subparagraph:

(A) A loan is considered secured if the loan is on the security of any instrument which makes the deposit specific security for the payment of the loan, provided that such instrument is of such a nature that in the event of default the deposit could be subjected to the satisfaction of the loan;

(B) A deposit includes a guarantee deposit in the form of a *holdback,* pledged collateral that has been reduced to cash, and loan payments that are maintained in a separate account; and

(C) Control over the withdrawal of a deposit is evidenced by possession of a passbook, certificate of deposit, note, or other similar instrument the possession of which is normally required to permit withdrawal. The lending financial institution does not have control over withdrawal of the deposit if the deposit can be withdrawn without consent of the lending financial institution. Thus, the lending financial institution normally does not have control over the withdrawal of a deposit in an account merely because the borrower agrees to maintain a minimum, average, or compensating balance.

(4) ***Predecessor.*** For purposes of this section, the term *predecessor* means

(i) any taxpayer which transferred more than 50 percent of the total amount of its assets to the taxpayer and is described in § 1.585-1, or

(ii) any predecessor of such predecessor.

(5) ***Authorization years.*** For purposes of this section, the term *authorization years* means the number of years, containing 12 complete months, between

(i) the first day of the first full taxable year of the taxpayer for which it (or any predecessor) was authorized to do business as a financial institution described in § 1.585-1, and

(ii) the taxable year.

(6) ***Comparison years.*** For purposes of this section, the term *comparison years* means those consecutive taxable years containing 12 complete months of a comparable bank, the last of which ends within 12 months immediately preceding the beginning of the first taxable year of the taxpayer, which are equal in number to six minus the number of authorization years of the taxpayer.

(7) ***Comparable bank.*** For purposes of this section, the term *comparable bank* means all the financial institutions described in § 1.585-1 located within the same Federal Reserve district.

(8) ***Average loans outstanding.*** For purposes of this section, the term *average loans outstanding* means the sum of the loans outstanding at the close of each taxable year of a period divided by the number of taxable years in such period.

(9) ***Adjusted for recoveries of bad debts.*** For purposes of this section, the term *adjusted for recoveries of bad debts* means an adjustment for the full amount recovered with respect to bad debts previously charged to the reserve during any of the applicable taxable years.

(Sec. 585(b)(4), of the Internal Revenue Code of 1954 (83 Stat. 618; (26 U.S.C. 585(b)(4))))

[T.D. 7532, 43 FR 3109, Jan. 23, 1978, as amended by T.D. 7835, 47 FR 42342, Sept. 27, 1982; T.D. 8513, 58 FR 68757, Dec. 29, 1993]

§ 1.585-3 Special rules.

(a) ***Treatment of reserve.*** For taxable years beginning after July 11, 1969, if a financial institution to which section 585 and § 1.585-1 apply establishes a reserve pursuant to section 585(a) (or, for taxable years beginning before January 1, 1987, section 166(c)), any bad debt in respect of a loan (whether or not such loan is an eligible loan) must be charged to the reserve for losses on loans provided for by § 1.585-1 for the taxable year in which the bad debt occurs. For such a year, any recovery of a bad debt previously charged to the reserve account in respect of a loan (whether or not such loan is an eligible loan) must be credited to such reserve in the taxable year of recovery regardless of whether such credit causes the reserve to exceed the permissible amount. If, as a result of net recoveries during the taxable year, the reserve balance exceeds the permissible amount, a taxpayer is not required to report the excess as taxable income. In such a case, the excess over the otherwise permissible amount in the reserve account precludes current reasonable additions to the reserve and may affect future reasonable additions. Recoveries of bad debts which were not charged to the reserve shall not be credited to such reserve, but shall be treated as taxable income subject to the provisions of section 111. No item other than a loan as defined in § 1.585-2 (e)(2) shall be charged to the reserve for losses on loans.

(b) ***Accounting for reserve.*** A financial institution to which section 585 and § 1.585-1 apply which establishes a reserve pursuant to section 585(a) (or, for taxable years beginning before January 1, 1987, section 166(c)) shall establish and maintain a permanent record of such reserve. Copies of Federal income tax returns and amended returns with attached schedules satisfy the requirements of this paragraph provided that such returns are permanently maintained by the financial institution and the balance of the reserve for losses on loans established pursuant to section 585(a) (or former section 166(c)) can be readily reconciled with the reservefor losses on loans maintained by the financial institution for financial statement purposes. The requirements of this paragraph would also be satisfied if a financial institution establishes and maintains a permanent subsidiary ledger reflecting an account for the reserve for losses on loans established pursuant to section 585(a) (or former section 166(c)) provided the balance in such account can be readily reconciled with the balance of the reserve for losses on loans for financial statement purposes maintained in any other ledger. The permanent records maintained pursuant to this section must reflect any changes in the amount initially added to the reserve for losses on loans and the amount finally determined by the taxpayer to be a reasonable addition to the reserve for losses on loans.

(Sec. 585(b)(4), of the Internal Revenue Code of 1954 (83 Stat. 618; (26 U.S.C. 585(b)(4))))

[T.D. 7532, 43 FR 3114, Jan. 23, 1978, as amended by T.D. 8513, 58 FR 68757, Dec. 29, 1993]

§ 1.585-4 Reorganizations and asset acquisitions.

(a) ***In general.*** In computing a reasonable addition to the reserve for losses on loans for the first taxable year ending after a transaction to which section 381(a) applies and for subsequent taxable years, the separate reserves for losses on loans, the amount of loans outstanding, the total bad debts sustained (adjusted for recoveries), and the amount of eligible loans outstanding of the distributor or transferor corporation and the acquiring corporation (or, in the case of a consolidation, the transferor corporations) shall be combined for all applicable years. Thus, for example, in applying § 1.585-2(c)(1)(i) for the first taxable year ending after the distribution or transfer, the total bad debts sustained during the 5 preceding taxable years are the sum of the bad debts sustained by the acquiring corporation for the 5 preceding taxable years and bad debts sustained by the distributor or transferor corporation for the taxable year ending on the date of distribution or transfer and the 4 preceding taxable years.

(b) ***Base year and base year amounts of acquiring corporation*** —

(1) *Base year.* For transactions to which section 381(a) applies, the base year of the acquiring corporation for the first taxable year ending after the date of distribution or transfer shall be the last taxable year ending on or before the date of distribution or transfer. The balance of the reserve, the amount of loans outstanding, and the amount of eligible loans outstanding at the close of such base year shall be determined in accordance with the provisions of subparagraph (2)(i) of this paragraph. For taxable years subsequent to the first taxable year ending after the date of distribution or transfer, the base year of the acquiring corporation shall be the more recent of the base year provided by the first sentence of this subparagraph or the base year provided by § 1.585-2(e)(1). If § 1.585-2(e)(1) provides the more recent base year, the balance of the reserve for losses on loans, the amount of loans outstanding, and the amount of eligible loans outstanding shall be determined at the close of such base year without regard to this paragraph.

(2) *Base year amounts* —

(i) *Method of determination.* The balance of the reserve for losses on loans, the amount of loans outstanding, and the amount of eligible loans outstanding at the close of the base year provided by the first sentence of subparagraph (1) of this paragraph shall be the total of such amounts of the distributor or transferor corporation and the acquiring corporation (or, in the case of a consolidation, the transferor corporations) at the close of what would have been their respective base years determined under § 1.585-2(e)(1) if the distribution or transfer to which section 381(a) applies had not occurred, except that the method (experience or percentage) used or adopted by the acquiring corporation to determine its reasonable addition to a reserve for losses on loans for the first taxable year ending after the date of the distribution or transfer shall be considered to be the method that the distributor or transferor corporation (or, in the case of a consolidation, that the transferor corporation) would have used or adopted for its first taxable year ending after the date of distribution or transfer if the distribution or transfer had not occurred.

(ii) *Examples.* The application of the rule provided by this subparagraph may be illustrated by the following examples:

Example 1. The X Corporation and the Y Corporation are commercial banks both of which have a calendar year as a taxable year. Both X and Y adopted the reserve method of accounting for bad debts prior to July 11, 1969. For the taxable year 1970 through 1973, X and Y determined their reasonable additions to a reserve for losses on loans as defined in § 1.585-2(e)(2) under the percentage method. On June 30, 1974, the X Bank is merged into the Y Bank; for its short taxable year ending on June 30, 1974, X determines its reasonable addition under the percentage method. If, for the taxable year ending on December 31, 1974 (the first taxable year ending after the date of distribution or transfer), Y determines its reasonable addition to a reserve for losses on loans under the percentage method, then at the close of the base year the reserve balance, the amount of outstanding loans, and the amount of eligible loans outstanding are the sum of X's and Y's respective amounts at the close of the taxable year endingDecember 31, 1969 (the base year of both X and Y determined under § 1.585-2(e)(1) as if the distribution or transfer had not taken place). If, instead of the above, Y adopts the experience method of determining its reasonable addition to a reserve for losses for the taxable year 1974, than at the close of the base year (1973) the reserve balances, the amount of loans outstanding, and the amount of eligible loans outstanding are the sum of X's respective amounts at the close of its short taxable year ending on June 30, 1974 (X's last taxable year before its (Y's) most recent

adoption of the experience method) and of Y's respective amounts at the close of its taxable year 1973 (Y's last taxable year before its most recent adoption of the experience method).

Example 2. The M Corporation and the N Corporation are commercial banks. M has a fiscal year ending September 30, as its taxable year and N has a calendar year as its taxable year. Both M and N adopted the reserve method of accounting for bad debts prior to July 11, 1969. For the taxable years ending in 1970, 1971, and 1972, M determined its reasonable addition to a reserve for losses under the percentage method; for the taxable year ending in 1973 M adopted the experience method. For the taxable years 1970 through 1973 N determined its reasonable addition under the percentage method. M is merged into N on June 30, 1974, and for its short taxable year ending on June 30, 1974, M determines its reasonable addition under the experience method. If, for the taxable year ending on December 31, 1974 (thefirst taxable year ending after the date of distribution or transfer), N determines its reasonable addition to a reserve for losses under the percentage method, then at the close of the base year (1973) the reserve balance, the amount of loans outstanding, and the amount of eligible loans outstanding are the sum of M's respective amounts at the close of (a) if M had a reserve deficiency as of June 30, 1974, its short taxable year ending on June 30, 1974 (M's last taxable year before its (N's) most recent adoption of the percentage method), or (b) if M did not have a reserve deficiency, the taxable year ending on September 30, 1969, and N's respective amounts at the close of its taxable year 1979. If, instead of the above, N adopts the experience method for the taxable year 1974, then at the close of the base year the reserve balance, the amount of outstanding loans, and the amount of eligible loans outstanding are the sum of M's respective amounts at the close of its taxable year ending on September 30, 1972 (the last taxable year before M's most recent adoption of the experience method), and N's respective amounts at the close of the taxable year 1973 (the last taxable year ending before N's most recent adoption of the experience method).

(Sec. 585(b)(4), of the Internal Revenue Code of 1954 (83 Stat. 618; (26 U.S.C. 585(b)(4))))

[T.D. 7532, 43 FR 3114, Jan. 23, 1978]

§ 1.585-5 Denial of bad debt reserves for large banks.

(a) ***General rule.*** For taxable years beginning after December 31, 1986, a large bank (as defined in paragraph (b) of this section) may not deduct any amount under section 585 or any other section for an addition to a reserve for bad debts. However, for these years, except as provided in § 1.585-7, a large bank may deduct amounts allowed under section 166(a) for specific debts that become worthless in whole or in part. Any large bank that maintained a reserve for bad debts under section 585 for the taxable year immediately preceding its disqualification year (as defined in paragraph (d)(1) of this section) must follow the rules prescribed by § 1.585-6 or § 1.585-7 for changing from the reserve method of accounting for bad debts that is allowed by section 585, to the specific charge-off method of accounting for bad debts, in its disqualification year. However, except as may be provided otherwise in regulations prescribed under section 593, the rules prescribed by §§ 1.585-6 and 1.585-7 do not apply to a large bank that maintained a reserve for bad debts under section 593 for the taxable year immediately preceding its disqualification year.

(b) ***Large bank*** —

(1) ***General definition.*** For purposes of this section, a large bank is any institution described in § 1.585-1(b)(1) (i) or (ii) if, for the taxable year (or for any preceding taxable year beginning after December 31, 1986)—

(i) The average total assets of the institution (determined under paragraph (c) of this section) exceed $500,000,000; or

(ii) The institution is a member of a parent-subsidiary controlled group (as defined in paragraph (d)(2) of this section) and the average total assets of the group exceed $500,000,000.

(2) ***Large bank resulting from transfer by large bank*** —

(i) ***In general.*** If a corporation acquires the assets of a large bank (as defined in this paragraph (b)) in an acquisition to which paragraph (b)(2) (ii), (iii) or (iv) of this section applies, the acquiring corporation (the acquiror) is treated as a large bank for any taxable year ending after the date of the acquisition in which it is an institution described in § 1.585-1(b)(1) (i) or (ii).

(ii) ***Transfer of significant portion of assets where control is retained.*** This paragraph (b)(2)(ii) applies to any direct or indirect acquisition of a significant portion of a large bank's assets if, after the acquisition, the transferor large bank owns more than 50 percent (by vote or value) of the outstanding stock of the acquiror. For this purpose, stock of an acquiror is considered owned by a transferor bank if the stock is owned by any member of a parent-subsidiary controlled group (as defined in paragraph (d)(2) of this section) of which the bank is a member, by any related party within the meaning of section 267(b) or 707(b), or by any person that received the stock in a transaction to which section 355 applies.

(iii) ***Transfer to which section 381 applies.*** This paragraph (b)(2)(iii) applies to any acquisition to which section 381(a) applies if, immediately after the acquisition, the acquiror's principal method of accounting for bad debts (determined under § 1.381(c)(4)-1(c)(2)) with respect to its banking business is the specific charge-off method. In applying § 1.381(c)(4)-1(c)(2) for this purpose, the following rules apply: A transferor large bank is considered to use the specific charge-off method for all of its loans immediately before the acquisition; an acquiror is considered to use a reserve method for all of its loans immediately before the acquisition; and all banking businesses of the acquiror immediately after the acquisition are treated as one integrated business. See §§ 1.585-6(c)(3) and 1.585-7(d)(2) for rules on the treatment of assets acquired from large banks in section 381(a) transactions.

(iv) ***Transfer of substantially all assets to related party.*** This paragraph (b)(2)(iv) applies to any direct or indirect acquisition of substantially all of a large bank's assets if the transferor large bank and the acquiror are related parties before or after the acquisition and a principal purpose of the acquisition is to avoid treating the acquired assets as those of a large bank. A transferor bank and an acquiror are considered to be related parties for this purpose if they are members of the same parent-subsidiary controlled group (as defined in paragraph (d)(2) of this section) or related parties within the meaning of section 267(b) or 707(b).

(3) ***Examples.*** The following examples illustrate the principles of this paragraph (b):

Example 1. Bank M, a calendar year taxpayer, is an institution described in § 1.585-1(b)(1)(i). For its taxable year beginning on January 1, 1987, M has average total assets of $600 million. Since M's average total assets for 1987 exceed $500 million, M is a large bank for that year. Pursuant

to § 1.585-5(d)(1), 1987 is M's disqualification year. If M maintained a bad debt reserve under section 585 for its immediately preceding taxable year (1986), M must change in 1987 to the specific charge-off method of accounting for bad debts, in accordance with § 1.585-6 or § 1.585-7.

Example 2. Assume the same facts as in Example 1. Also assume that in 1988 M disposes of a portion of its assets and, as a result, M's average total assets for taxable year 1988 fall to $400 million. M remains a large bank for taxable year 1988 and succeeding taxable years, since its average total assets for a preceding taxable year (1987) beginning after December 31, 1986, exceeded $500 million.

Example 3. Bank P, a calendar year taxpayer, is an institution described in § 1.585-1(b)(1)(i). P has average total assets of $300 million for its taxable year beginning on January 1, 1988. For the same year, P is a member of a parent-subsidiary controlled group (within the meaning of § 1.585-5(d)(2)) that has average total assets of $800 million. In February 1989, the group sells its stock in P to several individual investors. P is a large bank for taxable year 1988 because it is a member of a group described in § 1.585-5(b)(1)(ii) for that year. P also is a large bank for taxable year 1989 and succeeding taxable years because it was a member of a group described in § 1.585-5(b)(1)(ii) for a preceding taxable year (1988) beginning after December 31, 1986.

Example 4. Assume the same facts as in Example 3, except that P's stock is purchased by a corporation that is not a large bank under § 1.585-5(b). Also assume that the purchasing corporation elects under section 338 to treat the stock purchase as an asset acquisition. Under section 338, P is considered to have sold all of its assets on the purchase date and is treated as a new corporation that purchased these assets on the next day. Since P is treated as a new corporation, its prior membership in a group described in § 1.585-5(b)(1)(ii) does not cause it to be treated as a large bank for taxable years ending after the date of its sale by the group. However, P may be treated as a large bank because of new membership in such a group or pursuant to § 1.585-5(b)(1)(i) or (b)(2).

Example 5. Bank Q is a large bank, within the meaning of § 1.585-5(b)(1), for its taxable year beginning on January 1, 1988, and hence for all later years. On March 1, 1989, Q transfers $200 million of its $600 million of assets to Bank R, a newly created subsidiary, in a transaction to which section 351 applies; these assets are R's only assets. On the same day, Q then spins off R in a transaction to which section 355 applies. After these transactions, the shareholders of Q own more than 50 percent of R's outstanding stock. Although R's average total assets do not exceed $500 million, R becomes a large bank on March 1, 1989, pursuant to § 1.585-5(b)(2)(ii). These transactions do not affect Q's status as a large bank.

Example 6. Bank S is a large bank, within the meaning of § 1.585-5(b)(1)(ii), for its taxable year beginning on January 1, 1987. As a result, S changes to the specific charge-off method of accounting for bad debts in that year. Bank T, which is not a large bank under § 1.585-5(b), uses the reserve method of accounting for bad debts. On June 30, 1988, T acquires substantially all of S's assets in a transaction to which section 381(a) applies. Immediately before the acquisition, S's banking business has total assets of $200 million, and T's has total assets of $250 million. To determine whether T is a large bank under § 1.585-5(b)(2)(iii) for taxable years ending after the acquisition, it is necessary to determine T's principal method of accounting for bad debts with respect to its banking business immediately after the acquisition. This determination requires an application of § 1.381(c)(4)-1(c)(2). For this purpose, T's original and

acquired banking businesses are treated as an integrated business. Applying § 1.381(c)(4)-1(c)(2), it is determined that the business's principal method of accounting for bad debts immediately after the acquisition is the reserve method. Hence, the acquisition does not cause T to become a large bank under § 1.585-5(b)(2)(iii).

(c) *Average total assets* —

(1) ***In general.*** For purposes of paragraph (b)(1) of this section, and except as otherwise provided in paragraph (c)(3)(ii) of this section, the average total assets of an institution or group for any taxable year are determined by—

(i) Computing, for each report date (as defined in paragraph (c)(2) of this section) within the taxable year, the amount of total assets (as defined in paragraph (c)(3) of this section) held by the institution or group as of the close of business on the report date;

(ii) Adding these amounts; and

(iii) Dividing the sum of these amounts by the number of report dates within the taxable year.

(2) *Report date* —

(i) *Institutions* —

(A) ***In general.*** A report date for an institution generally is the last day of the regular period for which the institution must report to its primary Federal regulatory agency. However, an institution that is required to report to its primary Federal regulatory agency more frequently than quarterly may choose the last day of the calendar quarter as its report date, and an institution that is required to report to its primary Federal regulatory agency less frequently than quarterly must choose the last day of the calendar quarter as its report date. If an institution does not have a Federal regulatory agency, its primary State regulatory agency is considered its primary Federal regulatory agency for purposes of this paragraph (c)(2)(i)(A). In the case of a short taxable year that does not otherwise include a report date, the first or last day of the taxable year is the institution's report date for the year.

(B) ***Alternative report date.*** In lieu of the report date prescribed by paragraph (c)(2)(i)(A) of this section, for any taxable year an institution may choose as its report date the last day of any regular interval in the taxable year that is more frequent than quarterly (such as bi-monthly, monthly, weekly, or daily).

(ii) ***Groups.*** If all members of a parent-subsidiary controlled group have the same taxable year, a report date for the group is the report date, determined under paragraph (c)(2)(i) of this section, for any one member of the group that is an institution described in § 1.585-1(b)(1) (i) or (ii). The same report date must be used in applying paragraph (b)(1)(ii) of this section to all members of the group for a taxable year. If all members of a parent-subsidiary controlled group do not have the same taxable year, a report date for the group must be determined under similar principles.

(iii) ***Member of group for only part of taxable year.*** If an institution is a member of a parent-subsidiary controlled group for only part of a taxable year, paragraph (b)(1)(ii) of this section is applied to the institution for that year on the basis of the group's average total assets for the portion of the year that the institution is a member of the group. Thus, only the group's report dates (as determined under paragraph (c)(2)(ii) of this section) that are included in that portion of the year are taken into account in determining the group's average total assets for purposes

of applying paragraph (b)(1)(ii) of this section to the institution. If no report date of the group is included in that portion of the year, the first or last day of that portion of the year must be treated as the group's report date for purposes of this paragraph (c)(2)(iii).

(3) *Total assets* —

(i) ***All corporations.*** The amount of total assets held by an institution or group is the amount of cash, plus the sum of the adjusted bases of all other assets, held by the institution or group. For this purpose, the adjusted basis of an asset generally is its basis for Federal income tax purposes, determined under sections 1012, 1016 and other applicable sections of the Internal Revenue Code. In determining the amount of total assets held by a group, any asset of a member of the group that is an interest in another member of the group is not to be counted.

(ii) ***Foreign corporations.*** In determining the amount of total assets held by a foreign corporation, all of the corporation's assets are taken into account, including those that are not effectively connected with the conduct of a banking business within the United States. In the case of a foreign corporation that is not engaged in a trade or business in the United States, the adjusted basis of an asset must be determined substantially in accordance with United States tax principles as provided in regulations under section 964. In the case of a foreign corporation that is engaged in a trade or business in the United States, the amount of its average total assets for a taxable year (within the meaning of paragraph (c)(1) of this section) is the amount of the corporation's average worldwide assets used for purposes of computing the interest expense deduction allowable under section 882 and § 1.882-5 for the taxable year.

(4) *Estimated adjusted tax bases* —

(i) ***In general.*** The amount of the adjusted Federal income tax bases (tax bases) of assets held on a report date may be estimated, for purposes of applying paragraph (c)(3) of this section. This estimate must be based on the adjusted bases of the assets on that date as determined by reference to the asset holder's books and records maintained for financial reporting purposes (book bases). The estimate must reflect any change in the ratio between the asset holder's tax and book bases of assets that occurs during the taxable year, and the estimate must assume that this change occurs ratably. If an institution or group member estimates the tax bases of assets held on any report date during a taxable year, it must do so for all assets (other than cash) held on that report date, and it must do so for all other report dates during the year. However, the tax bases of assets may not be estimated for any report date that is the first or last day of the taxable year or that is determined under paragraph (c)(2)(i)(B) of this section.

(ii) ***Formulas.*** The estimated amount of the tax bases of assets held on any report date during a taxable year is based on the following variables: The total book bases of the assets on the report date (B); the asset holder's *tax/book ratio* as of the close of the preceding taxable year (R); and the result (whether positive or negative) obtained when R is subtracted from the asset holder's *tax/book ratio* as of the close of the current taxable year (Y). For purposes of determining R and Y, an asset holder's *tax/book ratio* is the ratio of the total tax bases of all of the holder's assets (other than cash), to the total book bases of those assets. If an asset holder's taxable year is the calendar year and its report date is the last day of the calendar quarter, its estimated tax bases of assets held on the first three report dates of the year are determined under the following formulas:

1st Report Date = $B \times (R + {}^{1}\!/_{4}Y)$

2nd Report Date = B × (R + $^{1}/_{2}$Y)

3rd Report Date = B × (R + $^{3}/_{4}$Y)

(5) ***Examples.*** The following examples illustrate the principles of this paragraph (c):

Example 1. Bank U is a fiscal year taxpayer, and its fiscal year ends on January 31. U reports to its primary Federal regulatory agency as of the last day of the calendar quarter. U does not choose under § 1.585-5(c)(2)(i)(B) a report date more frequent than quarterly. Thus, U's report dates under § 1.585-5(c)(2)(i)(A) are March 31, June 30, September 30, and December 31. For its taxable year beginning on February 1, 1987, U has total assets (within the meaning of § 1.585-5(c)(3)) of $480 million on March 31, $490 million on June 30, $510 million on September 30, and $540 million on December 31. Thus, pursuant to § 1.585-5(c)(1), U's average total assets for its taxable year beginning on February 1, 1987, are $505 million.

Example 2. Bank W is a calendar year taxpayer, and its report date (within the meaning of § 1.585-5(c)(2)(i)(A)) is the last day of the calendar quarter. Pursuant to § 1.585-5(c)(4), W chooses to estimate the tax bases of its assets for 1990. Therefore, W must estimate the tax bases of all of its assets (other than cash) for its first three report dates in 1990. Since W's fourth report date (December 31) is the last day of its taxable year, the tax bases of its assets may not be estimated for this date. The adjusted tax bases ofall of W's assets (other than cash) are $450z on December 31, 1989, and $480z on December 31, 1990. The book bases of those assets are $500z on December 31, 1989; $520z on March 31, 1990; $540z on June 30, 1990; $560z on September 30, 1990; and $600z on December 31, 1990. Applying the formulas provided in § 1.585-5(c)(4)(ii), W's tax/book ratio as of the close of 1989 (R), is 0.9 (450z/500z). W's tax/book ratio as of the close of 1990 is 0.8 (480z/600z). Thus, Y is −0.1. The estimated adjusted tax bases of all of W's assets (other than cash) on the first three report dates of 1990 are as follows:

$$
\begin{aligned}
1\text{st} &= B \times (R + 1/4Y) \\
&= \$520z \times [0.9 + 1/4(-0.1)] \\
&= \$455z \\
2\text{nd} &= B \times (R + 1/2Y) \\
&= \$540z \times [0.9 + 1/2(-0.1)] \\
&= \$459z \\
3\text{rd} &= B \times (R + 3/4Y) \\
&= \$560z \times [0.9 + 3/4(-0.1)] \\
&= \$462z
\end{aligned}
$$

(d) ***Definitions.*** The following definitions apply for purposes of this section and §§ 1.585-6, 1.585-7 and 1.585-8:

(1) ***Disqualification year.*** A bank's disqualification year is its first taxable year beginning after December 31, 1986, for which the bank is a large bank within the meaning of paragraph (b) of this section.

(2) ***Parent-subsidiary controlled group.*** A parent-subsidiary controlled group includes all of the members of a controlled group of corporations described in section 1563(a)(1). The members of such a group are determined without regard to whether any member is an *excluded member* described in section 1563(b)(2), a foreign entity, or a commercial bank.

(3) ***Example.*** The following example illustrates the principles of this paragraph (d):

Example. Bank X is a large bank within the meaning of § 1.585-5(b)(1)(i). Bank Y is not a large bank under § 1.585-5(b), and it maintains a bad debt reserve under section 585. In 1988, X purchases all of the stock of Y. If the acquisition causes Y to become a member of a parent-subsidiary controlled group described in § 1.585-5(b)(1)(ii), Y is a large bank beginning in its first taxable year that ends after the date of the acquisition. Pursuant to § 1.585-5(d)(1), this year is Y's disqualification year. Y must change in this year to the specific charge-off method of accounting for bad debts, in accordance with § 1.585-6 or § 1.585-7.

[T.D. 8513, 58 FR 68757, Dec. 29, 1993; 59 FR 15502, Apr. 1, 1994]

§ 1.585-6 Recapture method of changing from the reserve method of section 585.

(a) ***General rule.*** This section applies to any large bank (as defined in § 1.585-5(b)) that maintained a reserve for bad debts under section 585 for the taxable year immediately preceding its disqualification year (as defined in § 1.585-5(d)(1)) and that does not elect the cut-off method set forth in § 1.585-7. Except as otherwise provided in paragraphs (c) and (d) of this section, any bank to which this section applies must include in income the amount of its net section 481(a) adjustment (as defined in paragraph (b)(3) of this section) over the four-year period beginning with the bank's disqualification year. If a bank follows the rules prescribed by thissection, its change to the specific charge-off method of accounting for bad debts in its disqualification year will be treated as a change in accounting method that is made with the consent of the Commissioner. Paragraph (b) of this section specifies the portion of the net section 481(a) adjustment to be included in income in each year of the recapture period; paragraph (c) of this section provides rules on the effect of disposing of loans; and paragraph (d) of this section provides rules on the suspension of recapture by financially troubled banks.

(b) ***Four-year spread of net section 481(a) adjustment*** —

(1) ***In general.*** If a bank to which this section applies does not make the election allowed by paragraph (b)(2) of this section, the bank must include in income the following portions of its net section 481(a) adjustment in each year of the four-year recapture period: 10 percent in the bank's disqualification year; 20 percent in its first taxable year after its disqualification year; 30 percent in its second taxable year after its disqualification year; and 40 percent in its third taxable year after its disqualification year.

(2) ***Election to include more than 10 percent in disqualification year.*** A bank to which this section applies may elect to include in income, in its disqualification year, any percentage of its net section 481(a) adjustment that is larger than 10 percent. Any such election must be made at the time and in the manner prescribed by § 1.585-8. If a bank makes such an election, the bank must include in income the remainder, if any, of its net section 481(a) adjustment in the following portions: $^{2}/_{9}$ of the remainder in the bank's first taxable year after its disqualification year; $^{1}/_{3}$ of the remainder in its second taxable year after its disqualification year; and $^{4}/_{9}$ of the remainder in its third taxable year

after its disqualification year. For this purpose, the remainder of a bank's net section 481(a) adjustment is any portion of the adjustment that the bank does not elect to include in income in its disqualification year.

(3) ***Net section 481(a) adjustment.*** For purposes of this section, the amount of a bank's net section 481(a) adjustment is the amount of the bank's reserve for bad debts as of the close of the taxable year immediately preceding its disqualification year. Since the change from the reserve method of section 585 is initiated by the taxpayer, the amount of the bank's bad debt reserve for this purpose is not reduced by amounts attributable to taxable years beginning before 1954.

(4) ***Examples.*** The following examples illustrate the principles of this paragraph (b):

Example 1. Bank M is a large bank within the meaning of § 1.585-5(b). M's disqualification year is its taxable year beginning on January 1, 1989, and M maintained a bad debt reserve under section 585 for the preceding taxable year. Pursuant to § 1.585-5(a), M must change from the reserve method of accounting for bad debts to the specific charge-off method in its disqualification year. M does not elect the cut-off method set forth in § 1.585-7. Thus, M must follow the recapture method set forth in this § 1.585-6. M's net section 481(a) adjustment, as defined in § 1.585-6(b)(3), is $2 million. M does not make the election allowed by § 1.585-6(b)(2). Pursuant to § 1.585-6(b)(1), M must include the following amounts in income: $200,000 in taxable year 1989; $400,000 in 1990; $600,000 in 1991; and $800,000 in 1992.

Example 2. Assume the same facts as in Example 1, except that M elects under § 1.585-6(b)(2) to recapture 55 percent of its net section 481(a) adjustment in its disqualification year. Pursuant to § 1.585-6(b)(2), M must include the following amounts in income: $1,100,000 in taxable year 1989; $200,000 in 1990; $300,000 in 1991; and $400,000 in 1992.

(c) ***Effect of disposing of loans*** —

(1) ***In general.*** Except as provided in paragraphs (c)(2) and (c)(3) of this section, if a bank to which this section applies sells or otherwise disposes of any of its outstanding loans on or after the first day of its disqualification year, the disposition does not affect the bank's obligation under this section to include in income the amount of its net section 481(a) adjustment, and the disposition does not affect the amount of this adjustment.

(2) ***Cessation of banking business*** —

(i) ***In general.*** If a bank to which this section applies ceases to engage in the business of banking before it is otherwise required to include in income the full amount of its net section 481(a) adjustment, the bank must include in income the remaining amount of the adjustment in the taxable year in which it ceases to engage in the business of banking. For this purpose, and except as provided in paragraph (c)(2)(ii) of this section, whether a bank ceases to engage in the business of banking is determined under the principles of § 1.446-1(e)(3)(ii) and its administrative procedures.

(ii) ***Transition rule.*** A bank that ceases to engage in the business of banking as the result of a transaction to which section 381(a) applies is not treated as ceasing to engage in the business of banking if, on or before March 29, 1994, either the transaction occurs or the bank enters into a binding written agreement to carry out the transaction.

(3) ***Certain section 381 transactions.*** This paragraph (c)(3) applies if a bank to which this section applies transfers outstanding loans to another corporation on or after the first day of the bank's disqualification year (and before it has included in income the full amount of its net section 481(a) adjustment) in a transaction to which section 381(a) applies, and under paragraph (c)(2) (i) or (ii) of this section the transferor bank is not treated as ceasing to engage in the business of banking as a result of the transaction. If this paragraph (c)(3) applies, the acquiring corporation (the acquiror) steps into the shoes of the transferor with respect to using the recapture method prescribed by this section and assumes all of the transferor's rights and obligations under paragraph (b) of this section. The unrecaptured balance of the transferor's net section 481(a) adjustment carries over in the transaction to the acquiror, and the acquiror must complete the four-year recapture procedure begun by the transferor. In applying this procedure, the transferor's taxable year that ends on or includes the date of the acquisition and the acquiror's first taxable year ending after the date of the acquisition represent two consecutive taxable years within the four-year recapture period.

(4) ***Examples.*** The following examples illustrate the principles of this paragraph (c):

Example 1. Bank P is a bank to which this § 1.585-6 applies. P's disqualification year is its taxable year beginning on January 1, 1989, and P recaptures 10 percent of its net section 481(a) adjustment in that year pursuant to § 1.585-6(b)(1). In July 1990 P disposes of a portion of its loan portfolio in a transaction to which section 381(a) does not apply, and P continues to engage in the business of banking. Pursuant to § 1.585-6(c)(1), the disposition does not affect P's obligation under § 1.585-6(b)(1) to recapture the remainder of its net section 481(a) adjustment in 1990, 1991 and 1992. Nor does the disposition affect the amount of the adjustment.

Example 2. Assume the same facts as in Example 1, except that P ceases to engage in the business of banking in 1990, as determined under the principles of § 1.446-1(e)(3)(ii) and its administrative procedures. Pursuant to § 1.585-6(c)(2)(i), in 1990 P must include in income the remaining 90 percent of its net section 481(a) adjustment.

Example 3. Assume the same facts as in Example 1, except that P's 1990 disposition of loans is a transaction to which section 381(a) applies, P ceases to engage in the business of banking as a result of the transaction, and P's taxable year ends on the date of the transaction. Thus, in the transaction, P transfers substantially all of its loans to an acquiring corporation (Q). Q is a calendar year taxpayer. Because the transaction occurred before March 29, 1994, the transition rule of § 1.585-6(c)(2)(ii) applies, and P is not treated as ceasing to engage in the business of banking. Pursuant to § 1.585-6(c)(3), Q steps into P's shoes with respect to using the recapture method prescribed by § 1.585-6. The unrecaptured balance of P's net section 481(a) adjustment carries over to Q in the section 381(a) transaction, and Q must complete the four-year recapture procedure begun by P. Pursuant to §§ 1.585-6(b) and 1.585-6(c)(3), P includes 20 percent of its net section 481(a) adjustment in income in its taxable year ending on the date of the section 381(a) transaction, and Q includes 30 percent of the adjustment in income in 1990 and 40 percent in 1991.

Example 4. Assume the same facts as in Example 3. Assume also that Q becomes a large bank under § 1.585-5(b) as a result of the transaction and maintained a bad debt reserve immediately before the transaction. Q must change to the specific charge-off method for all of its loans in the first taxable year that it is a large bank. Thus, Q not only completes the recapture procedure begun by P but also follows the rules prescribed by § 1.585-6 or § 1.585-7 with respect to its own reserve.

Example 5. Assume the same facts as in Example 3. Assume also that Q is not a large bank after the transaction and properly establishes a bad debt reserve for the loans it receives in the transaction. This establishment of the reserve results in a new negative section 481(a) adjustment. Thus, Q not only completes the recapture procedure begun by P but also takes into account the new negative adjustment as required under section 381.

(d) ***Suspension of recapture by financially troubled banks*** —

(1) ***In general.*** Except as provided in paragraph (d)(2) of this section, a bank that is financially troubled (within the meaning of paragraph (d)(3) of this section) for any taxable year must not include any amount in income under paragraphs (a) and (b) of this section for that taxable year and must disregard that taxable year in applying paragraphs (a) and (b) of this section to other taxable years. See paragraph (d)(4) of this section for rules on determining estimated tax payments of financially troubled banks, and see paragraph (d)(5) of this section for examples illustrating this paragraph (d).

(2) ***Election to recapture.*** A bank that is financially troubled (within the meaning of paragraph (d)(3) of this section) for its disqualification year may elect to include in income, in one taxable year, any percentage of its net section 481(a) adjustment that is greater than 10 percent. This election may be made for the bank's disqualification year, for the first taxable year after the disqualification year in which the bank is not financially troubled (within the meaning of paragraph (d)(3) of this section), or for any intervening taxable year. Any such election must be made at the time and in the manner prescribed by § 1.585-8. A bank that makes this election must include an amount in income under paragraphs (a) and (b) of this section in the year for which the election is made (election year) and must not disregard this year in applying paragraphs (a) and (b) of this section to other taxable years. Such a bank must follow the rules of paragraph (b)(2) of this section in applying paragraph (b) of this section to later taxable years, treating the election year as the disqualification year for purposes of applying paragraph (b)(2) of this section. However, if the bank is financially troubled for any year after its election year, the bank must not include any amount in income under paragraphs (a) and (b) of this section for the later year and must disregard the later year in applying paragraphs (a) and (b) of this section to other taxable years.

(3) ***Definition of financially troubled*** —

(i) ***In general.*** For purposes of this section, a bank is considered financially troubled for any taxable year if the bank's nonperforming loan percentage for that year exceeds 75 percent. For this purpose, a bank's nonperforming loan percentage is the percentage determined by dividing the sum of the outstanding balances of the bank's nonperforming loans (as defined in paragraph (d)(3)(iii) of this section) as of the close of each quarter of the taxable year, by the sum of the amounts of the bank's equity (as defined in paragraph (d)(3)(iv) of this section) as of the close of each such quarter. The quarters for a short taxable year of at least 3 months are the same as those of the bank's annual accounting period, except that quarters ending before or after the short year are disregarded. If a taxable year consists of less than 3 months, the first or last day of the taxable year is treated as the last day of its only quarter. In lieu of determining its nonperforming loan percentageon the basis of loans and equity as of the close of each quarter of the taxable year, a bank may, for all years, determine this percentage on the basis of loans and equity as of the close of each report date (as defined in § 1.585-5(c)(2), without regard to § 1.585-5(c)(2)(i)(B)). In the case of a bank that is a foreign corporation, all nonperforming loans and equity of the bank are taken into account, including loans and equity that are not effectively connected with the conduct of a banking business within the United States.

(ii) ***Parent-subsidiary controlled groups*** —

(A) ***In general.*** If a bank is a member of a parent-subsidiary controlled group (as defined in § 1.585-5(d)(2)) for the taxable year, the nonperforming loans and the equity of all members of the bank's financial group (as determined under paragraph (d)(3)(ii)(B) of this section) are treated as the nonperforming loans and the equity of the bank for purposes of paragraph (d)(3)(i) of this section. However, any equity interest that a member of a bank's financial group holds in another member of this group is not to be counted in determining equity. Similarly, any loan that a member of a bank's financial group makes to another member of the group is not to be counted in determining nonperforming loans. All banks that are members of the same parent-subsidiary controlled group must (for all taxable years that they are members of this group) determine their nonperforming loan percentage on the basis of the close of each quarter of the taxable year, or all must (for all such taxable years) determine this percentage on the basis of the close of each report date (as determined under § 1.585-5(c)(2)(ii), applied without regard to § 1.585-5(c)(2)(i)(B)).

(B) ***Financial group*** —

(*1*) ***In general.*** All banks that are members of the same parent-subsidiary controlled group must (for all taxable years that they are members of this group) determine their financial group under paragraph (d)(3)(ii)(B)(*2*) of this section, or all must (for all such taxable years) determine their financial group under paragraph (d)(3)(ii)(B)(*3*) of this section.

(*2*) ***Financial institution members of parent-subsidiary controlled group.*** A bank's financial group, determined under this paragraph (d)(3)(ii)(B)(*2*), consists of all financial institutions within the meaning of section 265(b)(5) (and comparable foreign financial institutions) that are members of the parent-subsidiary controlled group of which the bank is a member.

(*3*) ***All members of parent-subsidiary controlled group.*** A bank's financial group, determined under this paragraph (d)(3)(ii)(B)(*3*), consists of all members of the parent-subsidiary controlled group of which the bank is a member.

(iii) ***Nonperforming loan*** —

(A) ***In general.*** For purposes of this section, a nonperforming loan is any loan (as defined in paragraph (d)(3)(iii)(B) of this section) that is considered to be nonperforming by the holder's primary Federal regulatory agency. Nonperforming loans include the following types of loans as defined by the Federal Financial Institutions Examination Council: Loans that are past due 90 days or more and still accruing; loans that are in nonaccrual status; and loans that are restructured troubled debt. A loan is not considered to be nonperforming merely because it is past due, if it is past due less than 90 days. The outstanding balances of nonperforming loans are determined on the basis of amounts that are required to be reported to the holder's primary Federal regulatory agency. For purposes of this paragraph (d)(3)(iii)(A), a holder that does not have a Federal regulatory agency is treated as Federally regulated under the standards prescribed by the Federal Financial Institutions Examination Council.

(B) ***Loan.*** For purposes of paragraph (d)(3)(iii)(A) of this section, a loan is any extension of credit that is defined and treated as a loan under the standards prescribed by the Federal Financial Institutions Examination Council. (Accordingly, a troubled debt restructuring that

is in substance a foreclosure or repossession is not considered a loan.) In addition, a debt evidenced by a security issued by a foreign government is treated as a loan if the security is issued as an integral part of a restructuring of one or more troubled loans to the foreign government (or an agency or instrumentality thereof). Similarly, a deposit with the central bank of a foreign country is treated as a loan if the deposit is made under a deposit facility agreement that is entered into as an integral part of a restructuring of one or more troubled loans to the foreign country's government (or an agency or instrumentality thereof).

(iv) ***Equity.*** For purposes of this section, the equity of a bank or other financial institution is its equity (i.e., assets minus liabilities) as required to be reported to the institution's primary Federal regulatory agency (or, if the institution does not have a Federal regulatory agency, as required under the standards prescribed by the Federal Financial Institutions Examination Council). The balance in a reserve for bad debts is not treated as equity.

(4) ***Estimated tax payments of financially troubled banks.*** For purposes of applying section 6655(e)(2)(A)(i) with respect to any installment of estimated tax, a bank that is financially troubled as of the due date of the installment is treated as if no amount will be included in income under paragraphs (a) and (b) of this section for the taxable year. For this purpose, a bank is considered financially troubled as of the due date of an installment of estimated tax only if its nonperforming loan percentage (computed under paragraph (d)(3) of this section) would exceed 75 percent for a short taxable year ending on that date. For purposes of computing this nonperforming loan percentage, the ending of such a short taxable year would not cause the last day of that year to be treated as the last day of a quarter of the taxable year.

(5) ***Examples.*** The following examples illustrate the principles of this paragraph (d):

Example 1. Bank R is a bank to which this § 1.585-6 applies. R's disqualification year is its taxable year beginning on January 1, 1987. R is not financially troubled (within the meaning of § 1.585-6(d)(3)) for taxable year 1987 or for any taxable year after 1989, but it is financially troubled for taxable years 1988 and 1989. Since R is not financially troubled for its disqualification year, R must include an amount in income under § 1.585-6 (a) and (b) for that year (taxable year 1987). R may make the election allowed by § 1.585-6(b)(2) for that year. Since R is financially troubled for taxable years 1988 and 1989, pursuant to § 1.585-6(d)(1) R does not include any amount in income under § 1.585-6 (a) and (b) for these years, and it treats taxable years 1990, 1991 and 1992 as the first, second and third taxable years after its disqualification year for purposes of applying § 1.585-6 (a) and (b).

Example 2. Assume the same facts as in Example 1, except that R is financially troubled for taxable year 1987 (its disqualification year). R may make the election allowed by § 1.585-6(d)(2) for 1987 (the disqualification year), for 1990 (the first year after the disqualification year in which R is not financially troubled), or for 1988 or 1989 (the intervening years). R elects to include 60 percent of its net section 481(a) adjustment in income in 1987. Thus, the remainder of the adjustment, for purposes of applying the rules of § 1.585-6(b)(2), is 40 percent. R must include in income $^{2}/_{9}$ of the remainder in 1990, $^{1}/_{3}$ of the remainder in 1991, and $^{4}/_{9}$ of the remainder in 1992.

Example 3. Bank S, which is not a member of a parent-subsidiary controlled group, is a bank to which this § 1.585-6 applies. S's disqualification year is its taxable year beginning on January 1, 1987. S determines its nonperforming loan percentage under § 1.585-6(d)(3) on a quarterly basis. S is not financially troubled for taxable year 1987 and includes 10 percent of its net section 481(a)

adjustment in income in that year. S's outstanding balance of nonperforming loans (as defined in § 1.585-6(d)(3)(iii)) is $80 million on March 31, 1988; $68 million on June 30, 1988; and $59 million on September 30, 1988. The amount of S's equity (as defined in § 1.585-6(d)(3)(iv)) is $100 million on each of these threedates. Thus, S's nonperforming loan percentage, computed under § 1.585-6(d)(3), would be 80 percent (80/100) for a short taxable year ending on April 15 or June 15, 74 percent [(80 + 68) ÷ 200] for a short taxable year ending on September 15, and 69 percent [(80 + 68 + 59) ÷ 300] for a short taxable year ending on December 15. Since S's nonperforming loan percentage for a short taxable year ending on April 15 or June 15 would exceed 75 percent, pursuant to § 1.585-6(d)(4) S is considered financially troubled as of these dates. Thus, S is treated as if no amount will be included in income under § 1.585-6 (a) and (b) for the year for purposes of applying section 6655(e)(2)(A)(i) with respect to the installments of estimated tax that are due on April 15, 1988, and June 15, 1988. However, since S's nonperforming loan percentage for a short taxable year ending on September 15 or December 15 would not exceed 75 percent, S is not considered financially troubled as of these dates. Thus, S is treated as if 20 percent of its net section 481(a) adjustment will be included in income under § 1.585-6 (a) and (b) for the year for purposes of applying section 6655(e)(2)(A)(i) with respect to the installments of estimated tax that are due on September 15, 1988, and December 15, 1988.

[T.D. 8513, 58 FR 68760, Dec. 29, 1993; 59 FR 15502, Apr. 1, 1994]

§ 1.585-7 Elective cut-off method of changing from the reserve method of section 585.

(a) ***General rule.*** Any large bank (as defined in § 1.585-5(b)) that maintained a reserve for bad debts under section 585 for the taxable year immediately preceding its disqualification year (as defined in § 1.585-5(d)(1)) may elect to use the cut-off method set forth in this section. Any such election must be made at the time and in the manner prescribed by § 1.585-8. If a bank makes this election, the bank must maintain its bad debt reserve for its pre- disqualification loans, as prescribed in paragraph (b) of this section, and the bank must include in income any excess balance in this reserve, as required by paragraph (c) of this section. The bank may not deduct, for its disqualification year or any subsequent taxable year, any amount allowed under section 166(a) for pre-disqualification loans (as defined in paragraph (b)(2) of this section) that become worthless in whole or in part, except as allowed by paragraph (b)(1) of this section. However, except as provided in paragraph (d)(3) of this section, the bank may deduct, for its disqualification year or any subsequent taxable year, amounts allowed under section 166(a) for loans that the bank originates or acquires on or after the first day of its disqualification year and that become worthless in whole or in part. If a bank makes the election allowed by this paragraph (a), its change to the specific charge-off method of accounting for bad debts in its disqualification year does not give rise to a section 481(a) adjustment.

(b) ***Maintaining reserve for pre-disqualification loans*** —

(1) ***In general.*** A bank that makes the election allowed by paragraph (a) of this section must maintain its bad debt reserve for its pre-disqualification loans (as defined in paragraph (b)(2) of this section). Except as provided in paragraph (d)(3) of this section, the bank must charge against the reserve the amount of any losses resulting from these loans (including losses resulting from the sale or other disposition of these loans), and the bank must add to the reserve the amount of recoveries with respect to these loans. In general, the reserve must be maintained in the manner provided by former section 166(c) of the Internal Revenue Code and the regulations thereunder. However, after the

balance in the reserve is reduced to zero, the bank is to account for any losses and recoveries with respect to outstanding pre-disqualification loans under the specific charge-off method of accounting for bad debts, as if the bank always had accounted for these loans under this method.

(2) ***Definition of pre-disqualification loans.*** For purposes of this section, a pre-disqualification loan of a bank is any loan that the bank held on the last day of its taxable year immediately preceding its disqualification year (as defined in § 1.585-5(d)(1)). If the amount of a pre-disqualification loan is increased during or after the disqualification year, the amount of the increase is not treated as a pre-disqualification loan.

(c) ***Amount to be included in income when reserve balance exceeds loan balance.*** If, as of the close of any taxable year, the balance in a bank's reserve that is maintained under paragraph (b) of this section exceeds the balance of the bank's outstanding pre-disqualification loans, the bank must include in income the amount of the excess for the taxable year. The balance in the reserve is then reduced by the amount of this excess. See paragraph (d) of this section for rules on the application of this paragraph (c) when a bank disposes of loans.

(d) ***Effect of disposing of loans*** —

(1) ***In general.*** Except as provided in paragraphs (d)(2) and (d)(3) of this section, if a bank that makes the election allowed by paragraph (a) of this section sells or otherwise disposes of any of its outstanding pre-disqualification loans, the bank is to reduce the balance of its outstanding pre-disqualification loans by the amount of the loans disposed of, for purposes of applying paragraph (c) of this section.

(2) ***Section 381 transactions.*** If a bank that makes the election allowed by paragraph (a) of this section transfers outstanding pre-disqualification loans to another corporation in a transaction to which section 381(a) applies, the acquiring corporation (the acquiror) must follow the rules of paragraph (d)(2)(i) or (ii) of this section.

(i) ***Acquiror completes cut-off method of change.*** Except as provided in paragraph (d)(2)(ii) of this section, the acquiror steps into the shoes of the transferor in the section 381(a) transaction with respect to using the cut-off method of change. Thus, the transferor's bad debt reserve immediately before the section 381(a) transaction carries over to the acquiror, and the acquiror must complete the cut-off method begun by the transferor. For purposes of completing the transferor's cut-off method, the acquiror's balance of outstanding pre-disqualification loans immediately after the section 381(a) transaction is the balance of these loans that it receives in the transaction, and the acquiror assumes all of the transferor's rights and obligations under this section.

(ii) ***Acquiror uses reserve method.*** If the acquiror is not a large bank (within the meaning of § 1.585-5(b)) immediately after the section 381(a) transaction and uses a reserve method of accounting for bad debts attributable to the pre-disqualification loans (and any other loans) received in the transaction, the acquiror does not step into the shoes of the transferor with respect to using the cut-off method of change. The transferor's bad debt reserve immediately before the section 381(a) transaction carries over to the acquiror, but the acquiror does not continue the cut-off method begun by the transferor. If the six-year moving average amount (as defined in § 1.585-2(c)(1)(ii)) for all of the loans received in the transaction exceeds the balance of the reserve that carries over to the acquiror, the acquiror increases this balance by the amount of the excess. Any such increase in the reserve results in a negative section 481(a) adjustment that is taken into account as required under section 381.

(3) ***Dispositions intended to change the status of pre-disqualification loans.*** This paragraph (d)(3) applies if a bank that makes the election allowed by paragraph (a) of this section sells, exchanges, or otherwise disposes of a significant amount of its pre-disqualification loans (as defined in paragraph (b)(2) of this section) and a principal purpose of the transaction is to avoid the provisions of this section by increasing the amount of loans for which deductions are allowable under the specific charge-off method. If this paragraph (d)(3) applies, the District Director may disregard the disposition for purposes of paragraphs (b)(1) and (d)(1) of this section or treat the replacement loans as pre-disqualification loans. If loans are so treated as pre-disqualification loans, no deductions are allowable under the specific charge-off method for the loans, except as provided in paragraph (b)(1) of this section, and the disposition that causes the loans to be so treated may be disregarded for purposes of paragraphs (b)(1) and (d)(1) of this section. If a bank sells pre-disqualification loans and uses the proceeds of the sale to originate new loans, this paragraph (d)(3) does not apply to the transaction.

(e) ***Examples.*** The following examples illustrate the principles of this section:

Example 1. Bank M is a bank that properly elects to use the cut-off method set forth in this § 1.585-7. M's disqualification year is its taxable year beginning on January 1, 1987. On December 31, 1986, M had outstanding loans of $700 million (pre-disqualification loans), and the balance in its bad debt reserve was $10 million. M must maintain its reserve for its pre-disqualification loans in accordance with § 1.585-7(b), and it may not deduct any addition to this reserve for taxable year 1987 or any later year. For these years, M may deduct amounts allowed under section 166(a) for loans that it originates or acquires after December 31, 1986, and that become worthless in whole or in part.

Example 2. Assume the same facts as in Example 1. Also assume that in 1987 M collects $150 million of its pre- disqualification loans, M determines that $2 million of its pre-disqualification loans are worthless, and M recovers $1 million of pre-disqualification loans that it had previously charged against the reserve as worthless. On December 31, 1987, the balance in M's bad debt reserve is $9 million ($10 million − $2 million + $1 million), and the balance of its outstanding pre-disqualification loans is $548 million ($700 million − $150 million − $2 million).

Example 3. Assume the same facts as in Examples 1 and 2. Also assume that on December 31, 1990, the balance in M's bad debt reserve is $5 million and the balance of its outstanding pre-disqualification loans is $25 million. In 1991 M collects $21 million of its outstanding pre-disqualification loans and determines that $1 million of its outstanding pre-disqualification loans are worthless. Thus, on December 31, 1991, the balance in M's bad debt reserve is $4 million ($5 million − $1 million), and the balance of its outstanding pre-disqualification loans is $3 million ($25 million − $21 million − $1 million). Accordingly, M must include $1 million ($4 million − $3 million) in income in taxable year 1991, pursuant to § 1.585-7(c). On January 1, 1992, the balance in M's reserve is $3 million ($4 million − $1 million).

Example 4. Assume the same facts as in Examples 1 through 3. Also assume that in 1992 M transfers substantially all of its assets to another corporation (N) in a transaction to which section 381(a) applies, and N is treated as a large bank under § 1.585-5(b)(2) for taxable years ending after the date of the transaction. Pursuant to § 1.585-7(d)(2)(i), N steps into M's shoes with respect to using the cut-off method. M's bad debt reserve immediately before the section 381(a) transaction carries over to N, and N must complete the cut-off procedure begun by M. For this purpose, N's balance of outstanding pre-disqualification loans immediately after the section 381(a) transaction is the balance of these loans that it receives from M.

Example 5. Assume the same facts as in Examples 1 through 4, except that N is not treated as a large bank after the section 381(a) transaction. Also assume that N uses the reserve method of section 585 and plans to use this method for all of the loans it acquires from M (including loans that were not pre-disqualification loans). Pursuant to § 1.585-7(d)(2)(ii), M's bad debt reserve immediately before the section 381(a) transaction carries over to N in the transaction; however, N does not continue the cut-off procedure begun by M and does not treat any loan as a pre-disqualification loan. If the six-year moving average amount (as defined in § 1.585-2(c)(1)(ii)) for all of N's newly acquired loans exceeds the balance of the reserve that carries over to N, N increases this balance by the amount of the excess. Any such increase in the reserve results in a negative section 481(a) adjustment that is taken into account as required under section 381.

[T.D. 8513, 58 FR 68762, Dec. 29, 1993; 59 FR 15502, Apr. 1, 1994]

§ 1.585-8 Rules for making and revoking elections under §§ 1.585-6 and 1.585-7.

(a) ***Time of making elections*** —

(1) ***In general.*** Any election under § 1.585-6(b)(2), § 1.585-6(d)(2) or § 1.585-7(a) must be made on or before the later of—

(i) February 28, 1994; or

(ii) The due date (taking extensions into account) of the electing bank's original tax return for its disqualification year (as defined in § 1.585-5(d)(1)) or, for elections under § 1.585-6(d)(2), the year for which the election is made.

(2) ***No extension of time for payment.*** Payments of tax due must be made in accordance with chapter 62 of the Internal Revenue Code. However, if an election under § 1.585-6(b)(2), § 1.585-6(d)(2) or § 1.585-7(a) is made or revoked on or before February 28, 1994 and the making or revoking of the election results in an underpayment of estimated tax (within the meaning of section 6655(a)) with respect to an installment of estimated tax due on or before the date the election was so made or revoked, no addition to tax will be imposed under section 6655(a) with respect to the amount of the underpayment attributable to the making or revoking of the election.

(b) ***Manner of making elections*** —

(1) ***In general.*** Except as provided in paragraph (b)(2) of this section, an electing bank must make any election under § 1.585-6(b)(2), § 1.585-6(d)(2) or § 1.585-7(a) by attaching a statement to its tax return (or amended return) for its disqualification year or, for elections under § 1.585-6(d)(2), the year for which the election is made. This statement must contain the following information:

(i) The name, address and taxpayer identification number of the electing bank;

(ii) The nature of the election being made (i.e., whether the election is to include in income more than 10 percent of the bank's net section 481(a) adjustment under § 1.585-6 (b)(2) or (d)(2) or to use the cut-off method under § 1.585-7); and

(iii) If the election is under § 1.585-6(b)(2) or (d)(2), the percentage being elected.

(2) ***Certain tax returns filed before December 29, 1993.*** A bank is deemed to have made an election under § 1.585-6(b)(2) or (d)(2) if the bank evidences its intent to make an election under section 585(c)(3)(A)(iii)(I) or section 585(c)(3)(B)(ii) for its disqualification year (or, for elections under § 1.585-6(d)(2), the election year), by designating a specific recapture amount on its tax return or

amended return for that year (or attaching a statement in accordance with § 301.9100-7T(a)(3)(i) of this chapter), and the return is filed before December 29, 1993. A bank is deemed to have made an election under § 1.585-7(a) if the bank evidences its intent to make an election under section 585(c)(4) for its disqualification year by attaching a statement in accordance with § 301.9100-7T(a)(3)(i) of this chapter to its tax return or amended return for that year, and the return is filed before December 29, 1993.

(c) ***Revocation of elections*** —

(1) ***On or before final date for making election.*** An election under § 1.585-6(b)(2), § 1.585-6(d)(2) or § 1.585-7(a) may be revoked without the consent of the Commissioner on or before the final date prescribed by paragraph (a)(1) of this section for making the election. To do so, the bank that made the election must file an amended tax return for its disqualification year (or, for elections under § 1.585-6(d)(2), the year for which the election was made) and attach a statement that—

(i) Includes the bank's name, address and taxpayer identification number;

(ii) Identifies and withdraws the previous election; and

(iii) If the bank is making a new election under § 1.585-6(b)(2), § 1.585-6(d)(2) or § 1.585-7(a), contains the information described in paragraphs (b)(1)(ii) and (b)(1)(iii) of this section.

(2) ***After final date for making election.*** An election under § 1.585-6(b)(2), § 1.585-6(d)(2) or § 1.585-7(a) may be revoked only with the consent of the Commissioner after the final date prescribed by paragraph (a)(1) of this section for making the election. The Commissioner will grant this consent only in extraordinary circumstances.

(d) ***Elections by banks that are members of parent-subsidiary controlled groups.*** In the case of a bank that is a member of a parent-subsidiary controlled group (as defined in § 1.585-5(d)(2)), any election under § 1.585-6(b)(2), § 1.585-6(d)(2) or § 1.585-7(a) with respect to the bank is to be made separately by the bank. An election made by one member of such a group is not binding on any other member of the group.

(e) ***Elections made or revoked by amended return on or before February 28, 1994.*** This paragraph (e) applies to any election that a bank seeks to make under paragraph (b) of this section, or revoke under paragraph (c) of this section, by means of an amended return that is filed on or before February 28, 1994. To make or revoke an election to which this paragraph (e) applies, a bank must file (before expiration of each applicable period of limitations under section 6501) this amended return and amended returns for all taxable years after the taxable year for which the election is made or revoked by amended return, to any extent necessary to report the bank's tax liability in a manner consistent with the making or revoking of the election by amended return.

[T.D. 8513, 58 FR 68764, Dec. 29, 1993; 59 FR 4583, Feb. 1, 1994; 59 FR 15502, Apr. 1, 1994]

MUTUAL SAVINGS BANKS, ETC.

§ 1.591-1 Deduction for dividends paid on deposits.

(a) ***In general.***

(1) In the case of a taxpayer described in paragraph (c)(1) or (2) of this section, whichever is applicable, there are allowed as deductions from gross income amounts which during the taxable year are paid to, or credited to the accounts of, depositors or holders of accounts as dividends or interest on their deposits or withdrawable accounts, if such amounts paid or credited are withdrawable on demand subject only to customary notice of intention to withdraw.

(2) The deduction provided in section 591 is applicable to the taxable year in which amounts credited as dividends or interest become withdrawable by the depositor or holder of an account subject only to customary notice of intention to withdraw. Thus, amounts which, as of the last day of the taxable year, are credited as dividends or interest, but which are not withdrawable by depositors or holders of accounts until the following business day, are deductible under section 591 in the year subsequent to the taxable year in which they were so credited. A deduction under this section will not be denied by reason of the fact that the amounts credited as dividends or interest, otherwise deductible under section 591, are subject to the terms of a pledge agreement between the taxpayer and the depositor or holder of an account. In the case of a domestic building and loan association having nonwithdrawable capital stock represented by shares, no deduction is allowable under this section for amounts paid or credited as dividends on such shares. In the case of a taxable year ending after December 31, 1962, for special rules governing the treatment of dividends or interest paid or credited for periods representing more than 12 months, see section 461(e).

(b) ***Serial associations, bonus plans, etc.*** If a taxpayer described in paragraph (c)(1) or (2) of this section, whichever is applicable, operates in whole or in part as a serial association, maintains a bonus plan, or issues shares, or accepts deposits, subject to fines, penalties, forfeitures, or other withdrawal fees, it may deduct under section 591 the total amount credited as dividends or interest upon such shares or deposits, credited to a bonus account for such shares or deposits, or allocated to a series of shares for the taxable year, notwithstanding that as a customary condition of withdrawal:

(1) Amounts invested in, and earnings credited to, series shares must be withdrawn in multiples of even shares, or

(2) Such taxpayer has the right, pursuant to bylaw, contract, or otherwise, to retain or recover a portion of the total amount invested in, or credited as earnings upon, such shares or deposits, such bonus account, or series of shares, as a fine, penalty, forfeiture, or other withdrawal fee

In any taxable year in which the right referred to in subparagraph (2) of this paragraph is exercised, there is includible in the gross income of such taxpayer for such taxable year amounts retained or recovered by the taxpayer pursuant to the exercise of such right. If the provisions of paragraph (a) of § 1.163-4 (relating to deductions for original issue discount) apply to deposits made with respect to a certificate of deposit, time deposit, bonus plan or other deposit arrangement, the provisions of this paragraph shall not apply.

(c) ***Effective date.*** The provisions of paragraphs (a) and (b) of this section shall apply to:

(1) Dividends or interest paid or credited after October 16, 1962, by any taxpayer which (at the time of such payment or credit) qualifies as

(i) a mutual savings bank not having capital stock represented by shares,

(ii) a domestic building and loan association (as defined in section 7701(a)(19)),

(iii) a cooperative bank (as defined in section 7701(a)(32)), or

(iv) any other savings institution chartered and supervised as a savings and loan or similar association under Federal or State law; and

(2) Dividends paid or credited before October 17, 1962, by any taxpayer which (at the time of such payment or credit) qualifies as

(i) a mutual savings bank not having capital stock represented by shares,

(ii) a cooperative bank without capital stock organized and operated for mutual purposes and without profit, or

(iii) a domestic building and loan association (as defined in section 7701(a)(19) before amendment by section 6(c) of the Revenue Act of 1962 (76 Stat. 982)).

[T.D. 6728, 29 FR 5855, May 5, 1964, as amended by T.D. 7154, 36 FR 24997, Dec. 28, 1971]

§ 1.592-1 Repayment of certain loans by mutual savings banks, building and loan associations, and cooperative banks.

There is deductible, under section 592, from the gross income of a mutual savings bank not having capital stock represented by shares, a domestic building and loan association, or a cooperative bank without capital stock organized and operated for mutual purposes and without profit, amounts paid by such institutions during the taxable year in repayment of loans made before September 1, 1951, by the United States or any agency or instrumentality thereof which is wholly owned by the United States, or by any mutual fund established under the authority of the laws of any State. For example, amounts paid by such institution in repayment of loans made by the Reconstruction Finance Corporation before September 1, 1951, are deductible under this section. Section 592 is not applicable, however, in the case of amounts paid in repayment of loans made by an agency or instrumentality not wholly owned by the United States.

§ 1.594-1 Mutual savings banks conducting life insurance business.

(a) ***Scope of application.*** Section 594 applies to the case of a mutual savings bank not having capital stock represented by shares which conducts a life insurance business, if:

(1) The conduct of the life insurance business is authorized under State law,

(2) The life insurance business is carried on in a separate department of the bank,

(3) The books of account of the life insurance business are maintained separately from other departments of the bank, and

(4) The life insurance department of the bank would, if it were treated as a separate corporation, qualify as a life insurance company under section 801.

(b) ***Computation of tax.*** In the case of a mutual savings bank conducting a life insurance business to which section 594 is applicable, the tax upon such bank consists of the sum of the following:

(1) A partial tax computed under section 11 upon the taxable income of the bank determined without regard to any items of income or deduction properly allocable to the life insurance department, and

(2) A partial tax computed on the income (or, in the case of taxable years beginning before January 1, 1955, the taxable income (as defined in section 803)) of the life insurance department determined without regard to any items of income or deduction not properly allocable to such department, at the rates and in the manner provided in subchapter L (section 801 and following), chapter 1 of the Code, with respect to life insurance companies.

§ 1.596-1 Limitation on dividends received deduction.

(a) ***In general.*** For taxable years beginning after July 11, 1969, in the case of mutual savings banks, domestic building and loan associations, and cooperative banks, if the addition to the reserve for losses on qualifying real property loans for the taxable year is determined under section 593(b)(2) (relating to the percentage of taxable income method), the total amount allowed as a deduction with respect to dividends received under part VIII, subchapter B, chapter 1, subtitle A of the Code (section 241 *et seq.*) (determined without regard to section 596 and this section) for such taxable year is reduced as provided by this section. In such case, the dividends received deduction otherwise determined under part VIII, subchapter B, chapter 1, subtitle A of the Code, is reduced by an amount equal to the applicable percentage for such year (determined solely under subparagraphs (A) and (B) of section 593(b)(2) and the regulations thereunder) of such total amount.

(b) ***Example.*** The provisions of this section may be illustrated by the following example:

Example. X Corporation, a domestic building and loan association, determines the addition to its reserve for losses on qualifying real property loans under section 593(b)(2) for its taxable year beginning in 1971. During that taxable year, X Corporation received a total of $100,000 as dividends from domestic corporations subject to tax under chapter 1 of the Code. X Corporation received no other dividends during the taxable year. Under part VIII, subchapter B, chapter 1, subtitle A of the Code, a deduction, determined without regard to section 596 and this section, of $85,000 would be allowed with respect to the dividends. For the taxable year, the applicable percentage, determined under subparagraphs (A) and (B) of section 593(b)(2), is 54 percent. Under section 596 and this section, the amount allowed as a deduction under section 243 and the regulations thereunder is reduced by $45,900 (54 percent of $85,000) to $39,100 ($85,000 less $45,900).

(c) ***Dividends received by members of a controlled group.*** If a thrift institution that computes a deduction under section 593(b)(2) is a member of a controlled group of corporations (within the meaning of section 1563(a), determined by substituting *50 percent* for *80 percent* each place it appears therein) and if the thrift institution, without a bona fide business purpose, transfers stock, directly or indirectly, to another member of the group, the Commissioner may allocate any dividends with respect to the stock to the thrift institution. If the Commissioner allocates a dividend to a thrifty institution under this paragraph (c), the Commissioner will also make appropriate correlative adjustments to the income of any other member of the group involved in the allocation, at a time and in a manner consistent with the procedures of § 1.482-1(d)(2). This paragraph (c) applies to taxable years ending on or after August 30, 1975.

[T.D. 7149, 36 FR 20944, Nov. 2, 1971, as amended by T.D. 7631, 44 FR 40496, July 11, 1979; T.D. 9849, 84 FR 9235, Mar. 14, 2019]

§ 1.597-1 Definitions.

For purposes of the regulations under section 597—

(a) Unless the context otherwise requires, the terms *consolidated group, member* and *subsidiary* have the meanings provided in § 1.1502-1; and

(b) The following terms have the meanings provided below—

Acquiring. The term *Acquiring* means a corporation that is a transferee in a Taxable Transfer, other than a deemed transferee in a Taxable Transfer described in § 1.597-5(b).

Agency. The term *Agency* means the Resolution Trust Corporation, the Federal Deposit Insurance Corporation, any similar instrumentality of the United States government, and any predecessor or successor of the foregoing (including the Federal Savings and Loan Insurance Corporation).

Agency Control. An Institution or entity is under *Agency Control* if Agency is conservator or receiver of the Institution or entity, or if Agency has the right to appoint any of the Institution's or entity's directors.

Agency Obligation. The term *Agency Obligation* means a debt instrument that Agency issues to an Institution or to a direct or indirect owner of an Institution.

Agency Receivership. An Instit ution or entity is under *Agency Receivership* if an Agency is acting as receiver for such Institution or entity.

Average Reimbursement Rate. The term *Average Reimbursement Rate* means the percentage of losses (as determined under the terms of the Loss Share Agreement) that would be reimbursed by an Agency or a Controlled Entity if every asset subject to a Loss Share Agreement were disposed of for the Third-Party Price. The Average Reimbursement Rate is determined at the time of the Taxable Transfer and is not adjusted for any changes in Third-Party Price over the life of any asset subject to the Loss Share Agreement or the prior disposition of any asset subject to the Loss Share Agreement.

Bridge Bank. The term *Bridge Bank* means an Institution that is organized by Agency to hold assets and liabilities of another Institution and that continues the operation of the other Institution's business pending its acquisition or liquidation, and that is any of the following—

(1) A national bank chartered by the Comptroller of the Currency under section 11(n) of the Federal Deposit Insurance Act (12 U.S.C. 1821(n)) or section 21A(b)(10)(A) of the Federal Home Loan Bank Act (12 U.S.C. 1441a(b)(10)(A)) or any successor sections;

(2) A Federal savings association chartered by the Director of the Office of Thrift Supervision under section 21A(b)(10)(A) of the Federal Home Loan Bank Act (12 U.S.C. 1441a(b)(10)(A)) or any successor section; or

(3) A similar Institution chartered under any other statutory provisions.

Consolidated Subsidiary. The term *Consolidated Subsidiary* means a corporation that both:

(i) Is a member of the same consolidated group as an Institution; and

(ii) Would be a member of the affiliated group that would be determined under section 1504(a) if the Institution were the common parent thereof.

Continuing Equity. An Institution has *Continuing Equity* for any taxable year if, on the last day of the taxable year, the Institution is not a Bridge Bank, in Agency Receivership, or treated as a New Entity.

Controlled Entity. The term *Controlled Entity* means an entity under Agency Control.

Covered Asset. The term *Covered Asset* means an asset subject to a Loss Guarantee. The fair market value of a Covered Asset equals the asset's Expected Value.

Expected Value. The term *Expected Value* means the sum of the Third-Party Price for a Covered Asset and the amount that an Agency or a Controlled Entity would pay under the Loss Guarantee if the asset actually were sold for the Third-Party Price. For purposes of the preceding sentence, if an asset is subject to a Loss Share Agreement, the amount that an Agency or a Controlled Entity would pay under a Loss

Guarantee with respect to the asset is determined by multiplying the amount of loss that would be realized under the terms of the Loss Share Agreement if the asset were disposed of at the Third-Party Price by the Average Reimbursement Rate.

Federal Financial Assistance (FFA). The term *Federal Financial Assistance* (FFA), as defined by section 597(c), means any money or property provided by Agency to an Institution or to a direct or indirect owner of stock in an Institution under section 406(f) of the National Housing Act (12 U.S.C. 1729(f)), section 21A(b)(4) of the Federal Home Loan Bank Act (12 U.S.C. 1441a(b)(4)), section 11(f) or 13(c) of the Federal Deposit Insurance Act (12 U.S.C. 1821(f), 1823(c)), or under any similar provision of law. Any such money or property is FFA, regardless of whether the Institution or any of its affiliates issues Agency a note or other obligation, stock, warrants, or other rights to acquire stock in connection with Agency's provision of the money or property. FFA includes Net Worth Assistance, Loss Guarantee payments, yield maintenance payments, cost to carry or cost of funds reimbursement payments, expense reimbursement or indemnity payments, and interest (including original issue discount) on an Agency Obligation.

Institution. The term *Institution* means an entity that is, or immediately before being placed under Agency Control was, a bank or domestic building and loan association within the meaning of section 597 (including a Bridge Bank). Except as otherwise provided in the regulations under section 597, the term *Institution* includes a New Entity or Acquiring that is a bank or domestic building and loan association within the meaning of section 597.

Loss Guarantee. The term *Loss Guarantee* means an agreement pursuant to which an Agency or a Controlled Entity guarantees or agrees to pay an Institution a specified amount upon the disposition or charge-off (in whole or in part) of specific assets, an agreement pursuant to which an Institution has a right to put assets to an Agency or a Controlled Entity at a specified price, a Loss Share Agreement, or a similar arrangement.

Loss Share Agreement. The term *Loss Share Agreement* means an agreement pursuant to which an Agency or a Controlled Entity agrees to reimburse the guaranteed party a percentage of losses realized.

Net Worth Assistance. The term *Net Worth Assistance* means money or property (including an Agency Obligation to the extent it has a fixed principal amount) that Agency provides as an integral part of a Taxable Transfer, other than FFA that accrues after the date of the Taxable Transfer. For example, Net Worth Assistance does not include Loss Guarantee payments, yield maintenance payments, cost to carry or cost of funds reimbursement payments, or expense reimbursement or indemnity payments. An Agency Obligation is considered to have a fixed principal amount notwithstanding an agreement providing for its adjustment after issuance to reflect a more accurate determination of the condition of the Institution at the time of the acquisition.

New Entity. The term *New Entity* means the new corporation that is treated as purchasing all of the assets of an Old Entity in a Taxable Transfer described in § 1.597-5(b).

Old Entity. The term *Old Entity* means the Institution or Consolidated Subsidiary that is treated as selling all of its assets in a Taxable Transfer described in § 1.597-5(b).

Residual Entity. The term *Residual Entity* means the entity that remains after an Institution transfers deposit liabilities to a Bridge Bank.

Taxable Transfer. The term *Taxable Transfer* has the meaning provided in § 1.597-5(a)(1).

Third-Party Price. The term *Third-Party Price* means the amount that a third party would pay for an asset absent the existence of a Loss Guarantee.

[T.D. 8641, 60 FR 66094, Dec. 21, 1995, as amended by T.D. 9825, 82 FR 48619, Oct. 19, 2017]

§ 1.597-2 Taxation of FFA.

(a) ***Inclusion in income*** —

(1) ***In general.*** Except as otherwise provided in the regulations under section 597, all FFA is includible as ordinary income to the recipient at the time the FFA is received or accrued in accordance with the recipient's method of accounting. The amount of FFA received or accrued is the amount of any money, the fair market value of any property (other than an Agency Obligation), and the issue price of any Agency Obligation (determined under § 1.597-3(c)(2)). An Institution (and not the nominal recipient) is treated as receiving directly any FFA that an Agency provides in a taxable year to a direct or indirect shareholder of the Institution, to the extent the money or property is transferred to the Institution pursuant to an agreement with an Agency.

(2) ***Cross references.*** See paragraph (c) of this section for rules regarding the timing of inclusion of certain FFA. See paragraph (d) of this section for additional rules regarding the treatment of FFA received in connection with transfers of money or property to an Agency or a Controlled Entity, or paid pursuant to a Loss Guarantee. See § 1.597-5(c)(1) for additional rules regarding the inclusion of Net Worth Assistance in the income of an Institution.

(b) ***Basis of property that is FFA.*** If FFA consists of property, the Institution's basis in the property equals the fair market value of the property (other than an Agency Obligation) or the issue price of the Agency Obligation (as determined under § 1.597-3(c)(2)).

(c) ***Timing of inclusion of certain FFA*** —

(1) ***Scope.*** This paragraph (c) limits the amount of FFA an Institution must include in income currently under certain circumstances and provides rules for the deferred inclusion in income of amounts in excess of those limits. This paragraph (c) does not apply to a New Entity or an Acquiring.

(2) ***Amount currently included in income by an Institution without Continuing Equity.*** The amount of FFA an Institution without Continuing Equity must include in income in a taxable year under paragraph (a)(1) of this section is limited to the sum of—

(i) The excess at the beginning of the taxable year of the Institution's liabilities over the adjusted bases of the Institution's assets; and

(ii) The amount by which the excess for the taxable year of the Institution's deductions allowed by chapter 1 of the Internal Revenue Code (Code) (other than net operating and capital loss carryovers) over its gross income (determined without regard to FFA) is greater than the excess at the beginning of the taxable year of the adjusted bases of the Institution's assets over the Institution's liabilities.

(3) ***Amount currently included in income by an Institution with Continuing Equity.*** The amount of FFA an Institution with Continuing Equity must include in income in a taxable year under paragraph (a)(1) of this section is limited to the sum of—

(i) The excess at the beginning of the taxable year of the Institution's liabilities over the adjusted bases of the Institution's assets;

(ii) The greater of—

(A) The excess for the taxable year of the Institution's deductions allowed by chapter 1 of the Code (other than net operating and capital loss carryovers) over its gross income (determined without regard to FFA); or

(B) The excess for the taxable year of the deductions allowed by chapter 1 of the Code (other than net operating and capital loss carryovers) of the consolidated group of which the Institution is a member on the last day of the Institution's taxable year over the group's gross income (determined without regard to FFA); and

(iii) The excess of the amount of any net operating loss carryover of the Institution (or in the case of a carryover from a consolidated return year of the Institution's current consolidated group, the net operating loss carryover of the group) to the taxable year over the amount described in paragraph (c)(3)(i) of this section.

(4) ***Deferred FFA*** —

(i) ***Maintenance of account.*** An Institution must establish a deferred FFA account commencing in the first taxable year in which it receives FFA that is not currently included in income under paragraph (c)(2) or (3) of this section, and must maintain that account in accordance with the requirements of this paragraph (c)(4). The Institution must add the amount of any FFA that is not currently included in income under paragraph (c)(2) or (3) of this section to its deferred FFA account. The Institution must decrease the balance of its deferred FFA account by the amount of deferred FFA included in income under paragraphs (c)(4)(ii), (iv), and (v) of this section. (See also paragraphs (d)(4) and (d)(5)(i)(B) of this section for other adjustments that decrease the deferred FFA account.) If, under paragraph (c)(3) of this section, FFA is not currently included in income in a taxable year, the Institution thereafter must maintain its deferred FFA account on a FIFO (first in, first out) basis (for example, for purposes of the first sentence of paragraph (c)(4)(iv) of this section).

(ii) ***Deferred FFA recapture.*** In any taxable year in which an Institution has a balance in its deferred FFA account, it must include in income an amount equal to the lesser of the amount described in paragraph (c)(4)(iii) of this section or the balance in its deferred FFA account.

(iii) ***Annual recapture amount*** —

(A) ***Institutions without Continuing Equity*** —

(*1*) ***In general.*** In the case of an Institution without Continuing Equity, the amount described in this paragraph (c)(4)(iii) is the amount by which—

(*i*) The excess for the taxable year of the Institution's deductions allowed by chapter 1 of the Code (other than net operating and capital loss carryovers) over its gross income (taking into account FFA included in income under paragraph (c)(2) of this section) is greater than

(*ii*) The Institution's remaining equity as of the beginning of the taxable year.

(*2*) ***Remaining equity.*** The Institution's remaining equity is—

(*i*) The amount at the beginning of the taxable year in which the deferred FFA account was established equal to the adjusted bases of the Institution's assets minus the Institution's liabilities (which amount may be positive or negative); plus

(*ii*) The Institution's taxable income (computed without regard to any carryover from any other year) in any subsequent taxable year or years; minus

(*iii*) The excess in any subsequent taxable year or years of the Institution's deductions allowed by chapter 1 of the Code (other than net operating and capital loss carryovers) over its gross income.

(B) ***Institutions with Continuing Equity.*** In the case of an Institution with Continuing Equity, the amount described in this paragraph (c)(4)(iii) is the amount by which the Institution's deductions allowed by chapter 1 of the Code (other than net operating and capital loss carryovers) exceed its gross income (taking into account FFA included in income under paragraph (c)(3) of this section).

(iv) ***Additional deferred FFA recapture by an Institution with Continuing Equity.*** To the extent that, as of the end of a taxable year, the cumulative amount of FFA deferred under paragraph (c)(3) of this section that an Institution with Continuing Equity has recaptured under this paragraph (c)(4) is less than the cumulative amount of FFA deferred under paragraph (c)(3) of this section that the Institution would have recaptured if that FFA had been included in income ratably over the six taxable years immediately following the taxable year of deferral, the Institution must include that difference in income for the taxable year. An Institution with Continuing Equity must include in income the balance of its deferred FFA account in the taxable year in which it liquidates, ceases to do business, transfers (other than to a Bridge Bank) substantially all of its assets and liabilities, or is deemed to transfer all of its assets under § 1.597-5(b).

(v) ***Optional accelerated recapture of deferred FFA.*** An Institution that has a deferred FFA account may include in income the balance of its deferred FFA account on its timely filed (including extensions) original federal income tax return for any taxable year that it is not under Agency Control. The balance of its deferred FFA account is income on the last day of that year.

(5) ***Exceptions to limitations on use of losses.*** In computing an Institution's taxable income or alternative minimum taxable income for a taxable year, sections 56(d)(1), 382, and 383 and §§ 1.1502-15, 1.1502-21, and 1.1502-22 (or §§ 1.1502-15A, 1.1502-21A, and 1.1502-22A, as appropriate) do not limit the use of the attributes of the Institution to the extent, if any, that the inclusion of FFA (including recaptured FFA) in income results in taxable income or alternative minimum taxable income (determined without regard to this paragraph (c)(5)) for the taxable year. This paragraph (c)(5) does not apply to any limitation under section 382 or 383 or § 1.1502-15, § 1.1502-21, or § 1.1502-22 (or § 1.1502-15A, § 1.1502-21A, or § 1.1502-22A, as appropriate) that arose in connection with or prior to a corporation becoming a Consolidated Subsidiary of the Institution.

(6) ***Operating rules*** —

(i) ***Bad debt reserves.*** For purposes of paragraphs (c)(2), (3), and (4) of this section, the adjusted bases of an Institution's assets are reduced by the amount of the Institution's reserves for bad debts under section 585 or 593, other than supplemental reserves under section 593.

(ii) ***Aggregation of Consolidated Subsidiaries.*** For purposes of this paragraph (c), an Institution is treated as a single entity that includes the income, expenses, assets, liabilities, and attributes of its Consolidated Subsidiaries, with appropriate adjustments to prevent duplication.

(iii) ***Alternative minimum tax.*** To compute the alternative minimum taxable income attributable to FFA of an Institution for any taxable year under section 55, the rules of this section, and related rules, are applied by using alternative minimum tax basis, deductions, and all other items required to be taken into account. All other alternative minimum tax provisions continue to apply.

(7) ***Earnings and profits.*** FFA that is not currently included in income under this paragraph (c) is included in earnings and profits for all purposes of the Code to the extent and at the time it is included in income under this paragraph (c).

(d) ***Transfers of money or property to an Agency, and Covered Assets*** —

(1) ***Transfers of property to an Agency.*** Except as provided in paragraph (d)(4)(iii) of this section, the transfer of property to an Agency or a Controlled Entity is a taxable sale or exchange in which the Institution is treated as realizing an amount equal to the property's fair market value.

(2) ***FFA with respect to Covered Assets other than on transfer to an Agency*** —

(i) FFA provided pursuant to a Loss Guarantee with respect to a Covered Asset is included in the amount realized with respect to the Covered Asset.

(ii) If an Agency makes a payment to an Institution pursuant to a Loss Guarantee with respect to a Covered Asset owned by an entity other than the Institution, the payment will be treated as made directly to the owner of the Covered Asset and included in the amount realized with respect to the Covered Asset when the Covered Asset is sold or charged off. The payment will be treated as further transferred through chains of ownership to the extent necessary to reflect the actual receipt of such payment. Any such transfer, if a deemed distribution, will not be a preferential dividend for purposes of sections 561, 562, 852, or 857.

(iii) For the purposes of this paragraph (d)(2), references to an amount realized include amounts obtained in whole or partial satisfaction of loans, amounts obtained by virtue of charging off or marking to market a Covered Asset, and other amounts similarly related to property, whether or not disposed of.

(3) ***Treatment of FFA received in exchange for property.*** FFA included in the amount realized for property under this paragraph (d) is not includible in income under paragraph (a)(1) of this section. The amount realized is treated in the same manner as if realized from a person other than an Agency or a Controlled Entity. For example, gain attributable to FFA received with respect to a capital asset retains its character as capital gain. Similarly, FFA received with respect to property that has been charged off for federal income tax purposes is treated as a recovery to the extent of the amount previously charged off. Any FFA provided in excess of the amount realized under this paragraph (d) is includible in income under paragraph (a)(1) of this section.

(4) ***Adjustment to FFA*** —

(i) ***In general.*** If an Institution pays or transfers money or property to an Agency or a Controlled Entity, the amount of money and the fair market value of the property is an adjustment to its FFA to the extent the amount paid and transferred exceeds the amount of money and the fair market value of any property that an Agency or a Controlled Entity provides in exchange.

(ii) ***Deposit insurance.*** This paragraph (d)(4) does not apply to amounts paid to an Agency with respect to deposit insurance.

(iii) ***Treatment of an interest held by an Agency or a Controlled Entity*** —

(A) ***In general.*** For purposes of this paragraph (d), an interest described in § 1.597-3(b) is not treated as property when transferred by the issuer to an Agency or a Controlled Entity nor when acquired from an Agency or a Controlled Entity by the issuer.

(B) ***Dispositions to persons other than issuer.*** On the date an Agency or a Controlled Entity transfers an interest described in § 1.597-3(b) to a holder other than the issuer, an Agency, or a Controlled Entity, the issuer is treated for purposes of this paragraph (d)(4) as having transferred to an Agency an amount of money equal to the sum of the amount of money and the fair market value of property that was paid by the new holder as consideration for the interest.

(iv) ***Affiliated groups.*** For purposes of this paragraph (d), an Institution is treated as having made any transfer to an Agency or a Controlled Entity that was made by any other member of its affiliated group. The affiliated group must make appropriate basis adjustments or other adjustments to the extent the member transferring money or other property is not the member that received FFA.

(5) ***Manner of making adjustments to FFA*** —

(i) ***Reduction of FFA and deferred FFA.*** An Institution adjusts its FFA under paragraph (d)(4) of this section by reducing in the following order and in an aggregate amount not greater than the adjustment—

(A) The amount of any FFA that is otherwise includible in income for the taxable year (before application of paragraph (c) of this section); and

(B) The balance (but not below zero) in the deferred FFA account, if any, maintained under paragraph (c)(4) of this section.

(ii) ***Deduction of excess amounts.*** If the amount of the adjustment exceeds the sum of the amounts described in paragraph (d)(5)(i) of this section, the Institution may deduct the excess to the extent the deduction does not exceed the amount of FFA included in income for prior taxable years reduced by the amount of deductions allowable under this paragraph (d)(5)(ii) in prior taxable years.

(iii) ***Additional adjustments.*** Any adjustment to FFA in excess of the sum of the amounts described in paragraphs (d)(5)(i) and (ii) of this section is treated—

(A) By an Institution other than a New Entity or an Acquiring, as a deduction of the amount in excess of FFA received that is required to be transferred to an Agency under section 11(g) of the Federal Deposit Insurance Act (12 U.S.C. 1821(g)); or

(B) By a New Entity or an Acquiring, as an adjustment to the purchase price paid in the Taxable Transfer (see § 1.338-7).

(e) ***Examples.*** The following examples illustrate the provisions of this section:

> *Example 1. Timing of inclusion of FFA in income.* (i) Institution M, a calendar-year taxpayer without Continuing Equity because it is in Agency Receivership, is not a member of a consolidated group and has not been acquired in a Taxable Transfer. On January 1, 2018, M has assets with a total

adjusted basis of $100 million and total liabilities of $120 million. M's deductions do not exceed its gross income (determined without regard to FFA) for 2018. The Agency provides $30 million of FFA to M in 2018. The amount of this FFA that M must include in income in 2018 is limited by paragraph (c)(2) of this section to $20 million, the amount by which M's liabilities ($120 million) exceed the total adjusted basis of its assets ($100 million) at the beginning of the taxable year. Pursuant to paragraph (c)(4)(i) of this section, M must establish a deferred FFA account for the remaining $10 million.

(ii) If the Agency instead lends M the $30 million, M's indebtedness to the Agency is disregarded and the results are the same as in paragraph (i) of this *Example 1* under section 597(c), paragraph (b) of § 1.597-1, and paragraph (b) of § 1.597-3.

Example 2. Transfer of property to an Agency. (i) Institution M, a calendar-year taxpayer without Continuing Equity because it is in Agency Receivership, is not a member of a consolidated group and has not been acquired in a Taxable Transfer. At the beginning of 2018, M's remaining equity is $0 and M has a deferred FFA account of $10 million. The Agency does not provide any FFA to M in 2018. During the year, M transfers property not subject to a Loss Guarantee to the Agency and does not receive any consideration. The property has an adjusted basis of $5 million and a fair market value of $1 million at the time of the transfer. M has no other taxable income or loss in 2018.

(ii) Under paragraph (d)(1) of this section, M is treated as selling the property for $1 million, its fair market value, thus recognizing a $4 million loss ($5 million−$1 million). In addition, because M did not receive any consideration from the Agency, under paragraph (d)(4) of this section M has an adjustment to FFA of $1 million, the amount by which the fair market value of the transferred property ($1 million) exceeds the consideration M received from the Agency ($0). Because no FFA is provided to M in 2018, this adjustment reduces the balance of M's deferred FFA account to $9 million ($10 million−$1 million) under paragraph (d)(5)(i)(B) of this section. Because M's $4 million loss causes M's deductions to exceed its gross income by $4 million in 2018 and M has no remaining equity, under paragraph (c)(4)(iii)(A) of this section M must include $4 million of deferred FFA in income and must decrease the remaining $9 million balance of its deferred FFA account by the same amount, leaving a balance of $5 million.

Example 3. Loss Guarantee. Institution Q, a calendar-year taxpayer, holds a Covered Asset (Asset Z). Q's adjusted basis in Asset Z is $10,000. Q sells Asset Z to an unrelated third party for $4,000. Pursuant to the Loss Guarantee, an Agency pays Q $6,000 ($10,000−$4,000). Q's amount realized from the sale of Asset Z is $10,000 ($4,000 from the third party and $6,000 from the Agency) under paragraph (d)(2) of this section. Q realizes no gain or loss on the sale ($10,000−$10,000 = $0), and therefore includes none of the $6,000 of FFA it receives pursuant to the Loss Guarantee in income under paragraph (d)(3) of this section.

[T.D. 9825, 82 FR 48620, Oct. 19, 2017]

§ 1.597-3 Other rules.

(a) ***Ownership of assets.*** For all federal income tax purposes, an Agency is not treated as the owner of assets subject to a Loss Guarantee, yield maintenance agreement, or cost to carry or cost of funds reimbursement agreement, regardless of whether it otherwise would be treated as the owner under general federal income tax principles.

(b) ***Debt and equity interests received by an Agency.*** Debt instruments, stock, warrants, or other rights to acquire stock of an Institution (or any of its affiliates) that an Agency or a Controlled Entity receives in connection with a transaction in which FFA is provided are not treated as debt, stock, or other equity interests of or in the issuer for any purpose of the Internal Revenue Code while held by an Agency or a Controlled Entity. On the date an Agency or a Controlled Entity transfers an interest described in this paragraph (b) to a holder other than an Agency or a Controlled Entity, the interest is treated as having been newly issued by the issuer to the holder with an issue price equal to the sum of the amount of money and the fair market value of property paid by the new holder in exchange for the interest.

(c) ***Agency Obligations*** —

(1) ***In general.*** Except as otherwise provided in this paragraph (c), the original issue discount rules of sections 1271 *et seq.* apply to Agency Obligations.

(2) ***Issue price of Agency Obligations provided as Net Worth Assistance.*** The issue price of an Agency Obligation that is provided as Net Worth Assistance and that bears interest at either a single fixed rate or a qualified floating rate (and provides for no contingent payments) is the lesser of the sum of the present values of all payments due under the obligation, discounted at a rate equal to the applicable Federal rate (within the meaning of section 1274(d)(1) and (3)) in effect for the date of issuance, or the stated principal amount of the obligation. The issue price of an Agency Obligation that bears a qualified floating rate of interest (within the meaning of § 1.1275-5(b)) is determined by treating the obligation as bearing a fixed rate of interest equal to the rate in effect on the date of issuance under the obligation.

(3) ***Adjustments to principal amount.*** Except as provided in § 1.597-5(d)(2)(iv), this paragraph (c)(3) applies if an Agency modifies or exchanges an Agency Obligation provided as Net Worth Assistance (or a successor obligation). The issue price of the modified or new Agency Obligation is determined under paragraphs (c)(1) and (2) of this section. If the issue price is greater than the adjusted issue price of the existing Agency Obligation, the difference is treated as FFA. If the issue price is less than the adjusted issue price of the existing Agency Obligation, the difference is treated as an adjustment to FFA under § 1.597-2(d)(4).

(d) ***Successors.*** To the extent necessary to effectuate the purposes of the regulations under section 597, an entity's treatment under the regulations applies to its successor. A successor includes a transferee in a transaction to which section 381(a) applies or a Bridge Bank to which another Bridge Bank transfers deposit liabilities.

(e) [Reserved]

(f) ***Losses and deductions with respect to Covered Assets.*** Prior to the disposition of a Covered Asset, the asset cannot be charged off, marked to a market value, depreciated, amortized, or otherwise treated in a manner that supposes an actual or possible diminution of value below the asset's fair market value. See § 1.597-1(b).

(g) ***Anti-abuse rule.*** The regulations under section 597 must be applied in a manner consistent with the purposes of section 597. Accordingly, if, in structuring or engaging in any transaction, a principal purpose is to achieve a federal income tax result that is inconsistent with the purposes of section 597 and the regulations thereunder, the Commissioner can make appropriate adjustments to income, deductions, and other items that would be consistent with those purposes.

[T.D. 9825, 82 FR 48622, Oct. 19, 2017]

§ 1.597-4 Bridge Banks and Agency Control.

(a) ***Scope.*** This section provides rules that apply to a Bridge Bank or other Institution under Agency Control and to transactions in which an Institution transfers deposit liabilities (whether or not the Institution also transfers assets) to a Bridge Bank.

(b) ***Status as taxpayer.*** A Bridge Bank or other Institution under Agency Control is a corporation within the meaning of section 7701(a)(3) for all purposes of the Internal Revenue Code (Code) and is subject to all Code provisions that generally apply to corporations, including those relating to methods of accounting and to requirements for filing returns, even if an Agency owns stock of the Institution.

(c) ***No section 382 ownership change.*** The imposition of Agency Control, the cancellation of Institution stock by an Agency, a transaction in which an Institution transfers deposit liabilities to a Bridge Bank, and an election under paragraph (g) of this section are disregarded in determining whether an ownership change has occurred within the meaning of section 382(g).

(d) ***Transfers to Bridge Banks*** —

(1) ***In general.*** Except as otherwise provided in paragraph (g) of this section, the rules of this paragraph (d) apply to transfers to Bridge Banks. In general, a Bridge Bank and its associated Residual Entity are together treated as the successor entity to the transferring Institution. If an Institution transfers deposit liabilities to a Bridge Bank (whether or not it also transfers assets), the Institution recognizes no gain or loss on the transfer and the Bridge Bank succeeds to the transferring Institution's basis in any transferred assets. The associated Residual Entity retains its basis in any assets it continues to hold. Immediately after the transfer, the Bridge Bank succeeds to and takes into account the transferring Institution's items described in section 381(c) (subject to the conditions and limitations specified in section 381(c)), taxpayer identification number (TIN), deferred FFA account, and account receivable for future FFA as described in paragraph (g)(4)(ii) of this section. The Bridge Bank also succeeds to and continues the transferring Institution's taxable year.

(2) ***Transfers to a Bridge Bank from multiple Institutions.*** If two or more Institutions transfer deposit liabilities to the same Bridge Bank, the rules in paragraph (d)(1) of this section are modified to the extent provided in this paragraph (d)(2). The Bridge Bank succeeds to the TIN and continues the taxable year of the Institution that transfers the largest amount of deposits. The taxable years of the other transferring Institutions close at the time of the transfer. If all the transferor Institutions are members of the same consolidated group, the Bridge Bank's carryback of losses to the Institution that transfers the largest amount of deposits is not limited by section 381(b)(3). The limitations of section 381(b)(3) do apply to the Bridge Bank's carrybacks of losses to all other transferor Institutions. If the transferor Institutions are not all members of the same consolidated group, the limitations of section 381(b)(3) apply with respect to all transferor Institutions. See paragraph (g)(6)(ii) of this section for additional rules that apply if two or more Institutions that are not members of the same consolidated group transfer deposit liabilities to the same Bridge Bank.

(e) ***Treatment of Bridge Bank and Residual Entity as a single entity.*** A Bridge Bank and its associated Residual Entity or Entities are treated as a single entity for federal income tax purposes and must file a single combined federal income tax return. The Bridge Bank is responsible for filing all federal income tax returns and statements for this single entity and is the agent of each associated Residual Entity to the same extent as if the Bridge Bank were the agent for a consolidated group, within the meaning of § 1.1502-77, including the Residual Entity. The term Institution includes a Residual Entity that files a combined return with its associated Bridge Bank.

(f) ***Rules applicable to members of consolidated groups*** —

(1) ***Status as members.*** Unless an election is made under paragraph (g) of this section, Agency Control of an Institution does not terminate the Institution's membership in a consolidated group. Stock of a subsidiary that is canceled by an Agency is treated as held by the members of the consolidated group that held the stock prior to its cancellation. If an Institution is a member of a consolidated group immediately before it transfers deposit liabilities to a Bridge Bank, the Bridge Bank succeeds to the Institution's status as the common parent or, unless an election is made under paragraph (g) of this section, as a subsidiary of the group. If a Bridge Bank succeeds to an Institution's status as a subsidiary, its stock is treated as held by the shareholders of the transferring Institution, and the stock basis or excess loss account of the Institution carries over to the Bridge Bank. A Bridge Bank is treated as owning stock owned by its associated Residual Entities, including for purposes of determining membership in an affiliated group.

(2) ***Coordination with consolidated return regulations.*** The provisions of the regulations under section 597 take precedence over conflicting provisions in the regulations under section 1502.

(g) ***Elective disaffiliation*** —

(1) ***In general.*** A consolidated group of which an Institution is a subsidiary may elect irrevocably not to include the Institution in its affiliated group if the Institution is placed in Agency Receivership (whether or not assets or deposit liabilities of the Institution are transferred to a Bridge Bank). See paragraph (g)(6) of this section for circumstances under which a consolidated group is deemed to make this election.

(2) ***Consequences of election.*** If the election under this paragraph (g) is made with respect to an Institution, the following consequences occur immediately before the subsidiary Institution to which the election applies is placed in Agency Receivership (or, in the case of a deemed election under paragraph (g)(6) of this section, immediately before the consolidated group is deemed to make the election) and in the following order—

(i) All adjustments of the Institution and its Consolidated Subsidiaries under section 481 are accelerated;

(ii) Deferred intercompany gains and losses and intercompany items with respect to the Institution and its Consolidated Subsidiaries are taken into account and the Institution and its Consolidated Subsidiaries take into account any other items required under the regulations under section 1502 for members that become nonmembers within the meaning of § 1.1502-32(d)(4);

(iii) The taxable year of the Institution and its Consolidated Subsidiaries closes and the Institution includes the amount described in paragraph (g)(3) of this section in income as ordinary income as its last item for that taxable year;

(iv) The members of the consolidated group owning the common stock of the Institution include in income any excess loss account with respect to the Institution's stock under § 1.1502-19 and any other items required under the regulations under section 1502 for members that own stock of corporations that become nonmembers within the meaning of § 1.1502-32(d)(4); and

(v) If the Institution's liabilities exceed the aggregate fair market value of its assets on the date the Institution is placed in Agency Receivership (or, in the case of a deemed election under paragraph (g)(6) of this section, on the date the consolidated group is deemed to make the election), the members of the consolidated group treat their stock in the Institution as worthless. (See §§ 1.337(d)-2, 1.1502-35(f), and 1.1502-36 for rules applicable when a member of a consolidated group is entitled to a worthless stock deduction with respect to stock of another member of the group.) In all other cases, the consolidated group will be treated as owning stock of a nonmember corporation until such stock is disposed of or becomes worthless under rules otherwise applicable.

(3) ***Toll charge.*** The amount described in this paragraph (g)(3) is the excess of the Institution's liabilities over the adjusted bases of its assets immediately before the Institution is placed in Agency Receivership (or, in the case of a deemed election under paragraph (g)(6) of this section, immediately before the consolidated group is deemed to make the election). In computing this amount, the adjusted bases of an Institution's assets are reduced by the amount of the Institution's reserves for bad debts under section 585 or 593, other than supplemental reserves under section 593. For purposes of this paragraph (g)(3), an Institution is treated as a single entity that includes the assets and liabilities of its Consolidated Subsidiaries, with appropriate adjustments to prevent duplication. The amount described in this paragraph (g)(3) for alternative minimum tax purposes is determined using alternative minimum tax basis, deductions, and all other items required to be taken into account. In computing the increase in the group's taxable income or alternative minimum taxable income, sections 56(d)(1), 382, and 383 and §§ 1.1502-15, 1.1502-21, and 1.1502-22 (or §§ 1.1502-15A, 1.1502-21A, and 1.1502-22A, as appropriate) do not limit the use of the attributes of the Institution and its Consolidated Subsidiaries to the extent, if any, that the inclusion of the amount described in this paragraph (g)(3) in income would result in the group having taxable income or alternative minimum taxable income (determined without regard to this sentence) for the taxable year. The preceding sentence does not apply to any limitation under section 382 or 383 or § 1.1502-15, § 1.1502-21, or § 1.1502-22 (or § 1.1502-15A, § 1.1502-21A, or § 1.1502-22A, as appropriate) that arose in connection with or prior to a corporation becoming a Consolidated Subsidiary of the Institution.

(4) ***Treatment of Institutions after disaffiliation*** —

(i) ***In general.*** If the election under this paragraph (g) is made with respect to an Institution, immediately after the Institution is placed in Agency Receivership (or, in the case of a deemed election under paragraph (g)(6) of this section, immediately after the consolidated group is deemed to make the election), the Institution and each of its Consolidated Subsidiaries are treated for federal income tax purposes as new corporations that are not members of the electing group's affiliated group. Each new corporation retains the TIN of the corresponding disaffiliated corporation and is treated as having received the assets and liabilities of the corresponding disaffiliated corporation in a transaction to which section 351 applies (and in which no gain was recognized under section 357(c) or otherwise). Thus, the new corporation has no net operating or capital loss carryforwards. An election under this paragraph (g) does not terminate the single entity treatment of a Bridge Bank and its Residual Entities provided in paragraph (e) of this section.

(ii) ***FFA.*** A new Institution is treated as having a non-interest bearing, nontransferable account receivable for future FFA with a basis equal to the amount described in paragraph (g)(3) of this section. If a disaffiliated Institution has a deferred FFA account at the time of its disaffiliation, the corresponding new Institution succeeds to and takes into account that deferred FFA account.

(iii) ***Filing of consolidated returns.*** If a disaffiliated Institution has Consolidated Subsidiaries at the time of its disaffiliation, the corresponding new Institution is required to file a consolidated federal income tax return with the subsidiaries in accordance with the regulations under section 1502.

(iv) ***Status as Institution.*** If an Institution is disaffiliated under this paragraph (g), the resulting new corporation is treated as an Institution for purposes of the regulations under section 597 regardless of whether it is a bank or domestic building and loan association within the meaning of section 597.

(v) ***Loss carrybacks.*** To the extent a carryback of losses would result in a refund being paid to a fiduciary under section 6402(k), an Institution or Consolidated Subsidiary with respect to which an election under this paragraph (g) (other than under paragraph (g)(6)(ii) of this section) applies is allowed to carry back losses as if the Institution or Consolidated Subsidiary had continued to be a member of the consolidated group that made the election.

(5) ***Affirmative election*** —

(i) ***Original Institution*** —

(A) ***Manner of making election.*** Except as otherwise provided in paragraph (g)(6) of this section, a consolidated group makes the election provided by this paragraph (g) by sending a written statement by certified mail to the affected Institution on or before 120 days after its placement in Agency Receivership. The statement must contain the following legend at the top of the page: "THIS IS AN ELECTION UNDER § 1.597-4(g) TO EXCLUDE THE INSTITUTION AND CONSOLIDATED SUBSIDIARIES REFERENCED IN THIS STATEMENT FROM THE AFFILIATED GROUP," and must include the names and TINs of the common parent and of the Institution and Consolidated Subsidiaries to which the election applies, and the date on which the Institution was placed in Agency Receivership. The consolidated group must send a similar statement to all subsidiary Institutions placed in Agency Receivership during the consistency period described in paragraph (g)(5)(ii) of this section. (Failure to satisfy the requirement in the preceding sentence, however, does not invalidate the election with respect to any subsidiary Institution placed in Agency Receivership during the consistency period described in paragraph (g)(5)(ii) of this section.) The consolidated group must retain a copy of the statement sent to any affected or subsidiary Institution (and the accompanying certified mail receipt) as proof that it mailed the statement to the affected Institution, and the consolidated group must make the statement and receipt available for inspection by the Commissioner upon request. The consolidated group must include an election statement as part of its first federal income tax return filed after the due date under this paragraph (g)(5) for such statement. A statement must be attached to this return indicating that the individual who signed the election was authorized to do so on behalf of the consolidated group. The agent for the group, within the meaning of § 1.1502-77, takes all actions required under this paragraph

(g)(5)(i)(A) to make the election provided under this paragraph (g)(5) for the consolidated group. An Agency cannot make the election provided under this paragraph (g)(5) under the authority of section 6402(k) or otherwise.

(B) ***Consistency limitation on affirmative elections.*** A consolidated group may make an affirmative election under this paragraph (g)(5) with respect to a subsidiary Institution placed in Agency Receivership only if the group made, or is deemed to have made, the election under this paragraph (g) with respect to every subsidiary Institution of the group placed in Agency Receivership within five years preceding the date the subject Institution was placed in Agency Receivership.

(ii) ***Effect on Institutions placed in receivership simultaneously or subsequently.*** An election under this paragraph (g), other than under paragraph (g)(6)(ii) of this section, applies to the Institution with respect to which the election is made or deemed made (the original Institution) and each subsidiary Institution of the group placed in Agency Receivership or deconsolidated in contemplation of Agency Control or the receipt of FFA simultaneously with the original Institution or within five years thereafter.

(6) ***Deemed election*** —

(i) ***Deconsolidations in contemplation.*** If one or more members of a consolidated group deconsolidate (within the meaning of § 1.1502-19(c)(1)(ii)(B)) a subsidiary Institution in contemplation of Agency Control or the receipt of FFA, the consolidated group is deemed to make the election described in this paragraph (g) with respect to the Institution on the date the deconsolidation occurs. A subsidiary Institution is conclusively presumed to have been deconsolidated in contemplation of Agency Control or the receipt of FFA if either event occurs within six months after the deconsolidation.

(ii) ***Transfers to a Bridge Bank from multiple groups.*** On the day an Institution's transfer of deposit liabilities to a Bridge Bank results in the Bridge Bank holding deposit liabilities from both a subsidiary Institution and an Institution not included in the subsidiary Institution's consolidated group, each consolidated group of which a transferring Institution or the Bridge Bank is a subsidiary is deemed to make the election described in this paragraph (g) with respect to its subsidiary Institution. If deposit liabilities of another Institution that is a subsidiary member of any consolidated group subsequently are transferred to the Bridge Bank, the consolidated group of which the Institution is a subsidiary is deemed to make the election described in this paragraph (g) with respect to that Institution at the time of the subsequent transfer.

(h) ***Examples.*** The following examples illustrate the provisions of this section:

Facts. Corporation X, the common parent of a consolidated group, owns all the stock (with a basis of $4 million) of Institution M, an insolvent Institution with no Consolidated Subsidiaries. At the close of business on April 30, 2018, M has $4 million of deposit liabilities, $1 million of other liabilities, and assets with an adjusted basis of $4 million and a fair market value of $3 million.

Example 1. Effect of receivership on consolidation. On May 1, 2018, M is placed in Agency Receivership and the Agency begins liquidating M. X does not make an election under paragraph (g) of this section. M remains a member of the X consolidated group after May 1, 2018 under paragraph (f)(1) of this section.

Example 2. Effect of Bridge Bank on consolidation—(i) *Additional facts.* On May 1, 2018, M is placed in

Agency Receivership and the Agency causes M to transfer all of its assets and deposit liabilities to Bridge Bank MB.

(ii) *Consequences without an election to disaffiliate.* M recognizes no gain or loss from the transfer and MB succeeds to M's basis in the transferred assets, M's items described in section 381(c) (subject to the conditions and limitations specified in section 381(c)), and TIN under paragraph (d)(1) of this section. (If M had a deferred FFA account, MB would also succeed to that account under paragraph (d)(1) of this section.) MB continues M's taxable year and succeeds to M's status as a member of the X consolidated group after May 1, 2018 under paragraphs (d)(1) and (f) of this section. MB and M are treated as a single entity for federal income tax purposes under paragraph (e) of this section.

(iii) *Consequences with an election to disaffiliate.* If, on July 1, 2018, X makes an election under paragraph (g) of this section with respect to M, the following consequences are treated as occurring immediately before M was placed in Agency Receivership. M must include $1 million ($5 million of liabilities −$4 million of adjusted basis) in income as of May 1, 2018 under paragraph (g)(2) and (3) of this section. M is then treated as a new corporation that is not a member of the X consolidated group and that has assets (including a $1 million account receivable for future FFA) with a basis of $5 million and $5 million of liabilities received from disaffiliated corporation M in a section 351 transaction. New corporation M retains the TIN of disaffiliated corporation M under paragraph (g)(4) of this section. Immediately after the disaffiliation, new corporation M is treated as transferring its assets and deposit liabilities to Bridge Bank MB. New corporation M recognizes no gain or loss from the transfer and MB succeeds to M's TIN and taxable year under paragraph (d)(1) of this section. Bridge Bank MB is treated as a single entity that includes M and has $5 million of liabilities, an account receivable for future FFA with a basis of $1 million, and other assets with a basis of $4 million under paragraph (d)(1) of this section.

[T.D. 9825, 82 FR 48623, Oct. 19, 2017]

§ 1.597-5 Taxable Transfers.

(a) ***Taxable Transfers*** —

(1) ***Defined.*** The term *Taxable Transfer* means—

(i) A transaction in which an entity transfers to a transferee other than a Bridge Bank—

(A) Any deposit liability (whether or not the Institution also transfers assets), if FFA is provided in connection with the transaction; or

(B) Any asset for which an Agency or a Controlled Entity has any financial obligation (for example, pursuant to a Loss Guarantee or Agency Obligation); or

(ii) A deemed transfer of assets described in paragraph (b) of this section.

(2) ***Scope.*** This section provides rules governing Taxable Transfers. Rules applicable to both actual and deemed asset acquisitions are provided in paragraphs (c) and (d) of this section. Special rules applicable only to deemed asset acquisitions are provided in paragraph (e) of this section.

(b) ***Deemed asset acquisitions upon stock purchase*** —

(1) ***In general.*** In a deemed transfer of assets under this paragraph (b), an Institution (including a Bridge Bank or a Residual Entity) or a Consolidated Subsidiary of the Institution (the Old Entity) is treated as selling all of its assets in a single transaction and is treated as a new corporation (the New Entity) that purchases all of the Old Entity's assets at the close of the day immediately preceding the occurrence of an event described in paragraph (b)(2) of this section. However, such an event results in a deemed transfer of assets under this paragraph (b) only if it occurs—

(i) In connection with a transaction in which FFA is provided;

(ii) While the Institution is a Bridge Bank;

(iii) While the Institution has a positive balance in a deferred FFA account (see § 1.597-2(c)(4)(v) regarding the optional accelerated recapture of deferred FFA); or

(iv) With respect to a Consolidated Subsidiary, while the Institution of which it is a Consolidated Subsidiary is under Agency Control.

(2) ***Events.*** A deemed transfer of assets under this paragraph (b) results if the Institution or Consolidated Subsidiary—

(i) Becomes a non-member (within the meaning of § 1.1502-32(d)(4)) of its consolidated group, other than pursuant to an election under § 1.597-4(g);

(ii) Becomes a member of an affiliated group of which it was not previously a member, other than pursuant to an election under § 1.597-4(g); or

(iii) Issues stock such that the stock that was outstanding before the imposition of Agency Control or the occurrence of any transaction in connection with the provision of FFA represents 50 percent or less of the vote or value of its outstanding stock (disregarding stock described in section 1504(a)(4) and stock owned by an Agency or a Controlled Entity).

(3) ***Bridge Banks and Residual Entities.*** If a Bridge Bank is treated as selling all of its assets to a New Entity under this paragraph (b), each associated Residual Entity is treated as simultaneously selling its assets to a New Entity in a Taxable Transfer described in this paragraph (b).

(c) ***Treatment of transferor*** —

(1) ***FFA in connection with a Taxable Transfer.*** A transferor in a Taxable Transfer is treated as having directly received immediately before a Taxable Transfer any Net Worth Assistance that an Agency provides to the New Entity or the Acquiring in connection with the transfer. (See § 1.597-2(a) and (c) for rules regarding the inclusion of FFA in income and § 1.597-2(a)(1) for related rules regarding FFA provided to shareholders.) The Net Worth Assistance is treated as an asset of the transferor that is sold to the New Entity or the Acquiring in the Taxable Transfer.

(2) ***Amount realized in a Taxable Transfer.*** In a Taxable Transfer described in paragraph (a)(1)(i) of this section, the amount realized is determined under section 1001(b) by reference to the consideration paid for the assets. In a Taxable Transfer described in paragraph (a)(1)(ii) of this section, the amount realized is the sum of the grossed-up basis of the stock acquired in connection with the Taxable Transfer (excluding stock acquired from the Old or New Entity), plus the amount of liabilities assumed or taken subject to in the deemed transfer, plus other relevant items. The grossed-up basis of the acquired stock equals the acquirers' basis in the acquired stock divided by the percentage of the Old Entity's stock (by value) attributable to the acquired stock.

(3) ***Allocation of amount realized*** —

(i) ***In general.*** The amount realized under paragraph (c)(2) of this section is allocated among the assets transferred in the Taxable Transfer in the same manner as amounts are allocated among assets under § 1.338-6(b) and (c)(1) and (2).

(ii) ***Modifications to general rule.*** This paragraph (c)(3)(ii) modifies certain of the allocation rules of paragraph (c)(3)(i) of this section. Agency Obligations and Covered Assets in the hands of the New Entity or the Acquiring are treated as Class II assets. Stock of a Consolidated Subsidiary is treated as a Class II asset to the extent the fair market value of the Consolidated Subsidiary's Class I and Class II assets (see § 1.597-1(b)) exceeds the amount of its liabilities. The fair market value of an Agency Obligation is deemed to equal its adjusted issue price immediately before the Taxable Transfer.

(d) ***Treatment of a New Entity and an Acquiring*** —

(1) ***Purchase price.*** The purchase price for assets acquired in a Taxable Transfer described in paragraph (a)(1)(i) of this section is the cost of the assets acquired. See § 1.1060-1(c)(1). All assets transferred in related transactions pursuant to an option included in an agreement between the transferor and the Acquiring in the Taxable Transfer are included in the group of assets among which the consideration paid is allocated for purposes of determining the New Entity's or the Acquiring's basis in each of the assets. The purchase price for assets acquired in a Taxable Transfer described in paragraph (a)(1)(ii) of this section is the sum of the grossed-up basis of the stock acquired in connection with the Taxable Transfer (excluding stock acquired from the Old or New Entity), plus the amount of liabilities assumed or taken subject to in the deemed transfer, plus other relevant items. The grossed-up basis of the acquired stock equals the acquirers' basis in the acquired stock divided by the percentage of the Old Entity's stock (by value) attributable to the acquired stock. FFA provided in connection with a Taxable Transfer is not included in the New Entity's or the Acquiring's purchase price for the acquired assets. Any Net Worth Assistance so provided is treated as an asset of the transferor sold to the New Entity or the Acquiring in the Taxable Transfer.

(2) ***Allocation of basis*** —

(i) ***In general.*** Except as otherwise provided in this paragraph (d)(2), the purchase price determined under paragraph (d)(1) of this section is allocated among the assets transferred in the Taxable Transfer in the same manner as amounts are allocated among assets under § 1.338-6(b) and (c)(1) and (2).

(ii) ***Modifications to general rule.*** The allocation rules contained in paragraph (c)(3)(ii) of this section apply to the allocation of basis among assets acquired in a Taxable Transfer. No basis is allocable to an Agency's agreement to provide Loss Guarantees, yield maintenance payments, cost to carry or cost of funds reimbursement payments, or expense reimbursement or indemnity payments. A New Entity's basis in assets it receives from its shareholders is determined under general federal income tax principles and is not governed by this paragraph (d).

(iii) ***Allowance and recapture of additional basis in certain cases.*** The basis of Class I and Class II assets equals their fair market value. See § 1.597-1(b). If the fair market value of the Class I and Class II assets exceeds the purchase price for the acquired assets, the excess is included ratably as ordinary income by the New Entity or the Acquiring over a period of six taxable years beginning in the year of the Taxable Transfer. The New Entity or the Acquiring must include as

ordinary income the entire amount remaining to be recaptured under the preceding sentence in the taxable year in which an event occurs that would accelerate inclusion of an adjustment under section 481.

(iv) *Certain post-transfer adjustments* —

(A) ***Agency Obligations.*** If an adjustment to the principal amount of an Agency Obligation or cash payment to reflect a more accurate determination of the condition of the Institution at the time of the Taxable Transfer is made before the earlier of the date the New Entity or the Acquiring files its first post-transfer federal income tax return or the due date of that return (including extensions), the New Entity or the Acquiring must adjust its basis in its acquired assets to reflect the adjustment. In making adjustments to the New Entity's or the Acquiring's basis in its acquired assets, paragraph (c)(3)(ii) of this section is applied by treating an adjustment to the principal amount of an Agency Obligation pursuant to the first sentence of this paragraph (d)(2)(iv)(A) as occurring immediately before the Taxable Transfer. (See § 1.597-3(c)(3) for rules regarding other adjustments to the principal amount of an Agency Obligation.)

(B) ***Covered Assets.*** If, immediately after a Taxable Transfer, an asset is not subject to a Loss Guarantee but the New Entity or the Acquiring has the right to designate specific assets that will be subject to the Loss Guarantee, the New Entity or the Acquiring must treat any asset so designated as having been subject to the Loss Guarantee at the time of the Taxable Transfer. The New Entity or the Acquiring must adjust its basis in the Covered Assets and in its other acquired assets to reflect the designation in the manner provided by paragraph (d)(2) of this section. The New Entity or the Acquiring must make appropriate adjustments in subsequent taxable years if the designation is made after the New Entity or the Acquiring files its first post-transfer federal income tax return or the due date of that return (including extensions) has passed.

(e) *Special rules applicable to Taxable Transfers that are deemed asset acquisitions* —

(1) ***Taxpayer Identification Numbers.*** Except as provided in paragraph (e)(3) of this section, the New Entity succeeds to the TIN of the Old Entity in a deemed sale under paragraph (b) of this section.

(2) *Consolidated Subsidiaries* —

(i) ***In general.*** A Consolidated Subsidiary that is treated as selling its assets in a Taxable Transfer under paragraph (b) of this section is treated as engaging immediately thereafter in a complete liquidation to which section 332 applies. The consolidated group of which the Consolidated Subsidiary is a member does not take into account gain or loss on the sale, exchange, or cancellation of stock of the Consolidated Subsidiary in connection with the Taxable Transfer.

(ii) ***Certain minority shareholders.*** Shareholders of the Consolidated Subsidiary that are not members of the consolidated group that includes the Institution do not recognize gain or loss with respect to shares of Consolidated Subsidiary stock retained by the shareholder. The shareholder's basis for that stock is not affected by the Taxable Transfer.

(3) *Bridge Banks and Residual Entities* —

(i) ***In general.*** A Bridge Bank or Residual Entity's sale of assets to a New Entity under paragraph (b) of this section is treated as made by a single entity under § 1.597-4(e). The New Entity deemed to acquire the assets of a Residual Entity under paragraph (b) of this section is not treated as a single entity with the Bridge Bank (or with the New Entity acquiring the Bridge Bank's assets) and must obtain a new TIN.

(ii) ***Treatment of consolidated groups.*** At the time of a Taxable Transfer described in paragraph (a)(1)(ii) of this section, treatment of a Bridge Bank as a subsidiary member of a consolidated group under § 1.597-4(f)(1) ceases. However, the New Entity that is deemed to acquire the assets of a Residual Entity is a member of the selling consolidated group after the deemed sale. The group's basis or excess loss account in the stock of the New Entity that is deemed to acquire the assets of the Residual Entity is the group's basis or excess loss account in the stock of the Bridge Bank immediately before the deemed sale, as adjusted for the results of the sale.

(4) ***Certain returns.*** If an Old Entity without Continuing Equity is not a subsidiary of a consolidated group at the time of the Taxable Transfer, the controlling Agency must file all federal income tax returns for the Old Entity for periods ending on or prior to the date of the deemed sale described in paragraph (b) of this section that are not filed as of that date.

(5) ***Basis limited to fair market value.*** If all of the stock of the corporation is not acquired on the date of the Taxable Transfer, the Commissioner may make appropriate adjustments under paragraphs (c) and (d) of this section to the extent using a grossed-up basis of the stock of a corporation results in an aggregate amount realized for, or basis in, the assets other than the aggregate fair market value of the assets.

(f) ***Examples.*** The following examples illustrate the provisions of this section. For purposes of these examples, an Institution's loans are treated as if they were a single asset. However, in applying these regulations, the fair market value of each loan (including, for purposes of a Covered Asset, the Third-Party Price and the Expected Value) must be determined separately.

> *Example 1. Branch sale resulting in Taxable Transfer.* (i) Institution M is a calendar-year taxpayer in Agency Receivership. M is not a member of a consolidated group. On January 1, 2018, M has $200 million of liabilities (including deposit liabilities) and assets with an adjusted basis of $100 million. M has no income or loss for 2018 and, except as otherwise described in this paragraph (i), M receives no FFA. On September 30, 2018, the Agency causes M to transfer six branches (with assets having an adjusted basis of $1 million) together with $120 million of deposit liabilities to N. In connection with the transfer, the Agency provides $121 million in cash to N.
> (ii) The transaction is a Taxable Transfer in which M receives $121 million of Net Worth Assistance under paragraph (a)(1) of this section. (M is treated as directly receiving the $121 million of Net Worth Assistance immediately before the Taxable Transfer under paragraph (c)(1) of this section.) M transfers branches having a basis of $1 million and is treated as transferring $121 million in cash (the Net Worth Assistance) to N in exchange for N's assumption of $120 million of liabilities. Thus, M realizes a loss of $2 million on the transfer. The amount of the FFA M must include in its income in 2018 is limited by paragraph (c) of § 1.597-2 to $102 million, which is the sum of the $100 million excess of M's liabilities ($200 million) over the total adjusted basis of its assets ($100 million) at the beginning of 2018 and the $2 million excess for the taxable year (which

results from the Taxable Transfer) of M's deductions (other than carryovers) over its gross income other than FFA. M must establish a deferred FFA account for the remaining $19 million of FFA under paragraph (c)(4) of § 1.597-2.

(iii) N, as the Acquiring, must allocate its $120 million purchase price for the assets acquired from M among those assets. Cash is a Class I asset. The branch assets are in Classes III and IV. N's adjusted basis in the cash is its amount, that is, $121 million under paragraph (d)(2) of this section. Because this amount exceeds N's purchase price for all of the acquired assets by $1 million, N allocates no basis to the other acquired assets and, under paragraph (d)(2) of this section, must recapture the $1 million excess at an annual rate of $166,667 in the six consecutive taxable years beginning with 2018 (subject to acceleration for certain events).

Example 2. *Stock issuance by Bridge Bank causing Taxable Transfer.* (i) On April 1, 2018, Institution P is placed in Agency Receivership and the Agency causes P to transfer assets and liabilities to Bridge Bank PB. On August 31, 2018, the assets of PB consist of $20 million in cash, loans outstanding with an adjusted basis of $50 million and a Third-Party Price of $40 million, and other non-financial assets (primarily branch assets and equipment) with an adjusted basis of $5 million. PB has deposit liabilities of $95 million and other liabilities of $5 million. P, the Residual Entity, holds real estate with an adjusted basis of $10 million and claims in litigation having a zero basis. P retains no deposit liabilities and has no other liabilities (except its liability to the Agency for having caused its deposit liabilities to be satisfied).
(ii) On September 1, 2018, the Agency causes PB to issue 100 percent of its common stock for $2 million cash to X. On the same day, the Agency issues a $25 million note to PB. The note bears a fixed rate of interest in excess of the applicable Federal rate in effect for September 1, 2018. The Agency provides Loss Guarantees guaranteeing PB a value of $50 million for PB's loans outstanding.

(iii) The stock issuance is a Taxable Transfer in which PB is treated as selling all of its assets to a new corporation, New PB, under paragraph (b)(1) of this section. PB is treated as directly receiving $25 million of Net Worth Assistance (the issue price of the Agency Obligation) immediately before the Taxable Transfer under paragraph (c)(2) of § 1.597-3 and paragraph (c)(1) of this section. The amount of FFA PB must include in income is determined under paragraphs (a) and (c) of § 1.597-2. PB in turn is deemed to transfer the note (with a basis of $25 million) to New PB in the Taxable Transfer, together with $20 million of cash, all its loans outstanding (with a basis of $50 million) and its other non-financial assets (with a basis of $5 million). The amount realized by PB from the sale is $100 million (the amount of PB's liabilities deemed to be assumed by New PB). This amount realized equals PB's basis in its assets; thus, PB realizes no gain or loss on the transfer to New PB.

(iv) Residual Entity P also is treated as selling all its assets (consisting of real estate and claims in litigation) for $0 (the amount of consideration received by P) to a new corporation (New P) in a Taxable Transfer under paragraph (b)(3) of this section. (P's only liability is to the Agency and a liability to the Agency is not treated as a debt under paragraph (b) of § 1.597-3.) P's basis in its assets is $10 million; thus, P realizes a $10 million loss on the transfer to New P. The combined return filed by PB and P for 2018 will reflect a total loss on the Taxable Transfer of $10 million ($0 for PB and $10 million for P) under paragraph (e)(3) of this section. That return also will reflect FFA income from the Net Worth Assistance, determined under paragraphs (a) and (c) of § 1.597-2.

(v) New PB is treated as having acquired the assets it acquired from PB for $100 million, the amount of liabilities assumed. In allocating basis among these assets, New PB treats the Agency note and the loans outstanding (which are Covered Assets) as Class II assets. For the purpose of allocating basis, the fair market value of the Agency note is deemed to equal its adjusted issue price immediately before the transfer ($25 million), and the fair market value of the loans is their Expected Value, $50 million (the sum of the $40 million Third-Party Price and the $10 million that the Agency would pay if PB sold the loans for $40 million) under paragraph (b) of § 1.597-1. Alternatively, if the Third-Party Price for the loans were $60 million, then the fair market value of the loans would be $60 million, and there would be no payment from the Agency.

(vi) New P is treated as having acquired its assets for no consideration. Thus, its basis in its assets immediately after the transfer is zero. New PB and New P are not treated as a single entity under paragraph (e)(3) of this section.

Example 3. *Taxable Transfer of previously disaffiliated Institution.* (i) Corporation X, the common parent of a consolidated group, owns all the stock of Institution M, an insolvent Institution with no Consolidated Subsidiaries. On April 30, 2018, M has $4 million of deposit liabilities, $1 million of other liabilities, and assets with an adjusted basis of $4 million. On May 1, 2018, M is placed in Agency Receivership. X elects under paragraph (g) of § 1.597-4 to disaffiliate M. Accordingly, as of May 1, 2018, new corporation M is not a member of the X consolidated group. On May 1, 2018, the Agency causes M to transfer all of its assets and liabilities to Bridge Bank MB. Under paragraphs (e) and (g)(4) of § 1.597-4, MB and M are thereafter treated as a single entity which has $5 million of liabilities, an account receivable for future FFA with a basis of $1 million, and other assets with a basis of $4 million.
(ii) During May 2018, MB earns $25,000 of interest income and accrues $20,000 of interest expense on depositor accounts and there is no net change in deposits other than the additional $20,000 of interest expense accrued on depositor accounts. MB pays $5,000 of wage expenses and has no other items of income or expense.

(iii) On June 1, 2018, the Agency causes MB to issue 100 percent of its stock to Corporation Y. In connection with the stock issuance, the Agency provides an Agency Obligation for $2 million and no other FFA.

(iv) The stock issuance results in a Taxable Transfer under paragraph (b) of this section. MB is treated as receiving the Agency Obligation immediately prior to the Taxable Transfer under paragraph (c)(1) of this section. MB has $1 million of basis in its account receivable for FFA. This receivable is treated as satisfied, offsetting $1 million of the $2 million of FFA provided by the Agency in connection with the Taxable Transfer. The status of the remaining $1 million of FFA as includible income is determined as of the end of the taxable year under paragraph (c) of § 1.597-2. However, under paragraph (b) of § 1.597-2, MB obtains a $2 million basis in the Agency Obligation received as FFA.

(v) Under paragraph (c)(2) of this section, in the Taxable Transfer, Old Entity MB is treated as selling, to New Entity MB, all of Old Entity MB's assets, having a basis of $6,020,000 (the original $4 million of asset basis as of April 30, 2018, plus $20,000 net cash from May 2018 activities, plus the $2 million Agency Obligation received as FFA), for $5,020,000, the amount of Old Entity MB's liabilities assumed by New Entity MB pursuant to the Taxable Transfer. Therefore, Old Entity MB recognizes, in the aggregate, a loss of $1 million from the Taxable Transfer.

(vi) Because this $1 million loss causes Old Entity MB's deductions to exceed its gross income (determined without regard to FFA) by $1 million, Old Entity MB must include in its income the $1 million of FFA not offset by the FFA receivable under paragraph (c) of § 1.597-2. (As of May 1, 2018, Old Entity MB's liabilities ($5 million) did not exceed MB's $5 million adjusted basis of its assets. For the taxable year, MB's deductions of $1,025,000 ($1 million loss from the Taxable Transfer, $20,000 interest expense and $5,000 of wage expense) exceeded its gross income (disregarding FFA) of $25,000 (interest income) by $1 million. Thus, under paragraph (c) of § 1.597-2, MB includes in income the entire $1 million of FFA not offset by the FFA receivable.)

(vii) Therefore, Old Entity MB's taxable income for the taxable year ending on the date of the Taxable Transfer is $0.

(viii) Residual Entity M is also deemed to engage in a deemed sale of its assets to New Entity M under paragraph (b)(3) of this section, but there are no federal income tax consequences as M has no assets or liabilities at the time of the deemed sale.

(ix) Under paragraph (d)(1) of this section, New Entity MB is treated as purchasing Old Entity MB's assets for $5,020,000, the amount of New Entity MB's liabilities. Of this, $2 million is allocated to the $2 million Agency Obligation, and $3,020,000 is allocated to the other assets New Entity MB is treated as purchasing in the Taxable Transfer.

Example 4. Loss Guarantee. On January 1, 2018, Institution N acquires assets and assumes liabilities of another Institution in a Taxable Transfer. In exchange for assuming $1,100,000 of the transferring Institution's liabilities, N acquires Net Worth Assistance of $200,000, loans with an unpaid principal balance of $1 million, and two foreclosed properties each having a book value of $100,000 in the hands of the transferring Institution. In connection with the Taxable Transfer, an Agency guarantees

N a price of $800,000 on the disposition or charge-off of the loans and a price of $80,000 on the disposition or charge-off of each of the foreclosed properties. This arrangement constitutes a Loss Guarantee. The Third-Party Price is $500,000 for the loans and $50,000 for each of the foreclosed properties. For basis allocation purposes, the loans and foreclosed properties are Class II assets because they are Covered Assets, and N must allocate basis to such assets equal to their fair market value under paragraphs (c)(3)(ii) and (d)(2)(ii) and (iii) of this section. The fair market value of the loans is their Expected Value, $800,000 (the sum of the $500,000 Third-Party Price and the $300,000 that the Agency would pay if N sold the loans for $500,000). The fair market value of each foreclosed property is its Expected Value, $80,000 (the sum of the $50,000 Third-Party Price and the $30,000 that the Agency would pay if N sold the foreclosed property for $50,000) under paragraph (b) of § 1.597-1. Accordingly, N's basis in the loans and in each of the foreclosed properties is $800,000 and $80,000, respectively. Because N's aggregate basis in the cash, loans, and foreclosed properties ($1,160,000) exceeds N's purchase price ($1,100,000) by $60,000, N must include $60,000 in income ratably over six years under paragraph (d)(2)(iii) of this section.

Example 5. Loss Share Agreement. (i) The facts are the same as in *Example 4* of this paragraph (f) except that, in connection with the Taxable Transfer, the Agency agrees to reimburse Institution N in an amount equal to zero percent of any loss realized (based on the $1 million unpaid principal balance of the loans and the $100,000 book value of each of the foreclosed properties) on the disposition or charge-off of the Covered Assets up to $200,000; 50 percent of any loss realized between $200,000 and $700,000; and 95 percent of any additional loss realized. This arrangement constitutes a Loss Guarantee that is a Loss Share Agreement. Thus, the Covered Assets are Class II assets, and N allocates basis to such assets equal to their fair market value under paragraphs (c)(3)(ii) and (d)(2)(ii) and (iii) of this section. Because the Third-Party Price for all of the Covered Assets is $600,000 ($500,000 for the loans and $50,000 for each of the foreclosed properties), the Average Reimbursement Rate is 33.33% ((($200,000 × 0%) + ($400,000 × 50%) + ($0 × 95%))/$600,000). The Expected Value of the loans is $666,667 ($500,000 Third-Party Price + $166,667 (the amount of the loss if the loans were disposed of for the Third-Party Price × 33.33%)), and the Expected Value of each foreclosed property is $66,667 ($50,000 Third-Party Price + $16,667 (the amount of the loss if the foreclosed property were sold for the Third-Party Price × 33.33%)) under paragraph (b) of § 1.597-1. For purposes of allocating basis, the fair market value of the loans is $666,667 (their Expected Value), and the fair market value of each foreclosed property is $66,667 (its Expected Value) under paragraph (b) of § 1.597-1.
(ii) At the end of 2018, the Third-Party Price for the loans drops to $400,000, and the Third-Party Price for each of the foreclosed properties remains at $50,000. The fair market value of the loans at the end of Year 2 is their Expected Value, $600,000 ($400,000 Third-Party Price + $200,000 (the amount of the loss if the loans were disposed of for the Third-Party Price × 33.33%) (the Average Reimbursement Rate does not change)). Thus, if the loans otherwise may be charged off, marked to a market value, depreciated, or amortized, then the loans may be marked down to $600,000. The fair market value of each of the foreclosed properties remains at $66,667 ($50,000 Third-Party Price + $16,667 (the amount of the loss if the foreclosed property were sold for the Third-Party Price × 33.33%)). Therefore, the foreclosed properties may not be charged off or depreciated in 2018.

[T.D. 9825, 82 FR 48625, Oct. 19, 2017, as amended at 82 FR 61177, Dec. 27, 2017]

§ 1.597-6 Limitation on collection of federal income tax.

(a) ***Limitation on collection where federal income tax is borne by an Agency.*** If an Institution without Continuing Equity (or any of its Consolidated Subsidiaries) is liable for federal income tax that is attributable to the inclusion in income of FFA or gain from a Taxable Transfer, the federal income tax will not be collected if it would be borne by an Agency. The final determination of whether the federal income tax would be borne by an Agency is within the sole discretion of the Commissioner. In determining whether federal income tax would be borne by an Agency, the Commissioner will disregard indemnity, tax-sharing, or similar obligations of an Agency, an Institution, or its Consolidated Subsidiaries. Collection of the several federal income tax liability under § 1.1502-6 from members of an Institution's consolidated group other than the Institution or its Consolidated Subsidiaries is not affected by this section. Federal income tax will continue to be subject to collection except as specifically limited in this section. This section does not apply to taxes other than federal income taxes.

(b) ***Amount of federal income tax attributable to FFA or gain on a Taxable Transfer.*** For purposes of paragraph (a) of this section, the amount of federal income tax in a taxable year attributable to the inclusion of FFA or gain from a Taxable Transfer in the income of an Institution (or a Consolidated Subsidiary) is the excess of the actual federal income tax liability of the Institution (or the consolidated group in which the Institution is a member) over the federal income tax liability of the Institution (or the consolidated group in which the Institution is a member) determined without regard to FFA or gain or loss on the Taxable Transfer.

(c) ***Reporting of uncollected federal income tax.*** A taxpayer must specify on a statement included with its Form 1120 (U.S. Corporate Income Tax Return) the amount of federal income tax for the taxable year that is potentially not subject to collection under this section. If an Institution is a subsidiary member of a consolidated group, the amount specified as not subject to collection is zero.

(d) ***Assessments of federal income tax to offset refunds.*** Federal income tax that is not collected under this section will be assessed and, thus, used to offset any claim for refund made by or on behalf of the Institution, the Consolidated Subsidiary, or any other corporation with several liability for the federal income tax.

(e) ***Collection of federal income taxes from an Acquiring or a New Entity*** —

(1) ***Acquiring.*** No federal income tax liability (including the several liability for federal income taxes under § 1.1502-6) of a transferor in a Taxable Transfer will be collected from an Acquiring.

(2) ***New Entity.*** Federal income tax liability (including the several liability for federal income taxes under § 1.1502-6) of a transferor in a Taxable Transfer will be collected from a New Entity only if stock that was outstanding in the Old Entity remains outstanding as stock in the New Entity or is reacquired or exchanged for consideration.

(f) ***Effect on section 7507.*** This section supersedes the application of section 7507, and the regulations thereunder, for the assessment and collection of federal income tax attributable to FFA.

[T.D. 9825, 82 FR 48629, Oct. 19, 2017]

§ 1.597-7 Effective/applicability dates.

(a) ***FIRREA effective date.*** Section 597, as amended by section 1401 of the Financial Institutions Reform, Recovery, and Enforcement Act of 1989 (Public Law 101-73, 103 Stat 183 (1989)) (FIRREA) is generally effective for any FFA received or accrued by an Institution on or after May 10, 1989, and for any

transaction in connection with which such FFA is provided, unless the FFA is provided in connection with an acquisition occurring prior to May 10, 1989. See § 1.597-8 for rules regarding FFA received or accrued on or after May 10, 1989, that relates to an acquisition that occurred before May 10, 1989.

(b) ***Applicability date of §§ 1.597-1 through 1.597-6.*** Sections 1.597-1 through 1.597-6 apply on or after October 19, 2017, except with respect to FFA provided pursuant to a written agreement that is binding before October 19, 2017, and that continues to be binding at all times after such date, in which case §§ 1.597-1 through 1.597-6 as contained in 26 CFR part 1, revised April 1, 2017, will continue to apply unless the taxpayer elects to apply §§ 1.597-1 through 1.597-6 on a retroactive basis pursuant to paragraph (c) of this section.

(c) ***Elective application to prior years and transactions*** —

(1) ***In general.*** Except as limited in this paragraph (c), an election is available to apply §§ 1.597-1 through 1.597-6 to taxable years beginning prior to October 19, 2017. A consolidated group may elect to apply §§ 1.597-1 through 1.597-6 for all members of the group in all taxable years to which section 597, as amended by FIRREA, applies. The agent for the group, within the meaning of § 1.1502-77, makes the election provided by this paragraph (c) for the consolidated group. An entity that is not a member of a consolidated group may elect to apply §§ 1.597-1 through 1.597-6 to all taxable years to which section 597, as amended by FIRREA, applies for which it is not a member of a consolidated group. The election provided by this paragraph (c) is irrevocable.

(2) ***Election unavailable if statute of limitations closed.*** The election provided by this paragraph (c) cannot be made if the period for assessment and collection of federal income tax has expired under the rules of section 6501 for any taxable year in which §§ 1.597-1 through 1.597-6 would affect the determination of the electing entity's or group's income, deductions, gain, loss, basis, or other items.

(3) ***Manner of making election.*** An Institution or consolidated group makes the election provided by this paragraph (c) by including a written statement as a part of the taxpayer's or consolidated group's first annual federal income tax return filed on or after October 19, 2017. The statement must contain the following legend at the top of the page: "THIS IS AN ELECTION UNDER § 1.597-7(c)," and must contain the name, address, and taxpayer identification number of the taxpayer or agent for the group making the election. The statement must include a declaration that "TAXPAYER AGREES TO EXTEND THE STATUTE OF LIMITATIONS ON ASSESSMENT FOR THREE YEARS FROM THE DATE OF THE FILING OF THIS ELECTION UNDER § 1.597-7(c), IF THE LIMITATIONS PERIOD WOULD EXPIRE EARLIER WITHOUT SUCH EXTENSION, FOR ANY ITEMS AFFECTED IN ANY TAXABLE YEAR BY THE FILING OF THIS ELECTION," and a declaration that either "AMENDED RETURNS WILL BE FILED FOR ALL TAXABLE YEARS AFFECTED BY THE FILING OF THIS ELECTION WITHIN 180 DAYS OF MAKING THIS STATEMENT, UNLESS SUCH REQUIREMENT IS WAIVED IN WRITING BY THE INTERNAL REVENUE SERVICE" or "ALL RETURNS PREVIOUSLY FILED ARE CONSISTENT WITH THE PROVISIONS OF §§ 1.597-1 THROUGH 1.597-6." An election with respect to a consolidated group must be made by the agent for the group, not an Agency, and applies to all members of the group.

[T.D. 9825, 82 FR 48629, Oct. 19, 2017]

§ 1.597-8 Transitional rules for Federal financial assistance.

(a) ***Scope.*** This section provides transitional rules for the tax consequences of Federal financial assistance received or accrued on or after May 10, 1989, if the assistance payment relates to an acquisition that occurred before that date.

(b) ***Transitional rules.*** The tax consequences of any payment of Federal financial assistance received or accrued on or after May 10, 1989, are governed by the applicable provisions of section 597 that were in effect prior to the Financial Institutions Reform, Recovery, and Enforcement Act of 1989 ("FIRREA") if either—

(1) The payment—

(i) Is pursuant to an acquisition of a bank or domestic building and loan association before May 10, 1989,

(ii) Is provided pursuant to an assistance agreement executed before May 10, 1989,

(iii) Is provided to a party to that agreement or to such other party as the Commissioner may determine appropriate by letter ruling or other written guidance, and

(iv) Would, if provided before May 10, 1989, have been governed by applicable provisions of section 597 that were in effect prior to FIRREA; or

(2) The payment—

(i) Represents a prepayment of (or a payment in lieu of) a fixed or contingent right to Federal financial assistance that would have satisfied the conditions of paragraphs (b)(1)(i), (ii) and (iv) of this section, and

(ii) Is provided to a party described in paragraph (b)(1)(iii) of this section

(c) ***Definition of Federal financial assistance.*** Federal financial assistance for purposes of this section has the meaning prescribed by section 597(c) as amended by FIRREA.

(d) ***Examples.*** The following examples illustrate the provisions of this section:

Example 1. X corporation acquired Y, a domestic building and loan association on September 10, 1988. Pursuant to a written agreement executed at the time of the acquisition, Y received Federal financial assistance that included a note bearing a market rate of interest, the right to future payments if certain assets were sold at a loss, and the right to future payments if the income produced by certain assets was less than an agreed upon amount. On December 1, 1991, an agreement was executed in which Y relinquished its rights to Federal financial assistance under the September 10, 1988 agreement in return for a lump sum payment. The lump sum payment represented a prepayment of the principal and accrued but unpaid interest for the note, and the rights to the contingent future loss and income payments. The entire prepayment is excluded from the income of Y because it is a prepayment of Federal financial assistance and the assistance

(i) would have been provided pursuant to an acquisition that occurred before May 10, 1989, would have been provided pursuant to an assistance agreement executed before May 10, 1989, and would, if it had been provided prior to May 10, 1989, have been governed by a pre-FIRREA version of section 597; and

(ii) the prepayment is paid to a party to the assistance agreement.

Example 2. The facts are the same as those in *Example 1,* except that the note bears an above market rate of interest and part of the lump sum represents a premium payment for the note. The portion of the lump sum allocable to the premium payment is also excluded from the income of Y because the payment represents the present value of the right to future Federal financial assistance in the form of interest.

Example 3. The facts are the same as those in *Example 1,* except that a portion of the lump sum payment represents compensation for additional expenses Y may incur in the future because of termination of the September 10, 1988 agreement. The portion of the lump sum payment allocable to the compensation for additional expenses must be included in the income of Y because it is not a prepayment of Federal financial assistance provided for by a written agreement entered into prior to May 10, 1989.

Example 4. The facts are the same as those in *Example 1,* except that instead of a new assistance agreement, the September 10, 1988 assistance agreement was modified on December 1, 1991. The modified agreement provided new Federal financial assistance in addition to the amounts previously agreed to. None of the new Federal financial assistance is governed by this regulation because the new assistance was not provided for by a written agreement entered into prior to May 10, 1989. The modification does not, however, affect the tax treatment of assistance provided for by the agreement prior to its modification.

(e) ***Effective date.*** This section is effective April 23, 1992 for assistance received or accrued on or after May 10, 1989 in connection with acquisitions before that date.

[T.D. 8406, 57 FR 14795, Apr. 23, 1992. Redesignated and amended by T.D. 8471, 58 FR 18149, Apr. 8, 1993]

BANK AFFILIATES

§ 1.601-1 Special deduction for bank affiliates.

(a) The special deduction described in section 601 is allowed:

(1) To a holding company affiliate of a bank, as defined in section 2 of the Banking Act of 1933 (12 U.S.C. 221a), which holding company affiliate holds, at the end of the taxable year, a general voting permit granted by the Board of Governors of the Federal Reserve System.

(2) In the amount of the earnings or profits of such holding company affiliate which, in compliance with section 5144 of the Revised Statutes (12 U.S.C. 61), has been devoted by it during the taxable year to the acquisition of readily marketable assets other than bank stock.

(3) Upon certification by the Board of Governors of the Federal Reserve System to the Commissioner that such an amount of the earnings or profits has been so devoted by such affiliate during the taxable year

No deduction is allowable under section 601 for the amount of readily marketable assets in excess of what is required by section 5144 of the Revised Statutes (12 U.S.C. 61) to be acquired by such affiliate, or in excess of the taxable income for the taxable year computed without regard to the special deductions for corporations provided in part VIII (section 241 and following), subchapter B, chapter 1 of the Code. Nor may the aggregate of the deductions allowable under section 601 and the credits allowable under the corresponding provision of any prior income tax law for all taxable years exceed the amount required to be devoted under such section 5144 to the acquisition of readily marketable assets other than bank stock.

(b) Every taxpayer claiming a deduction provided for in section 601 shall attach to its return a supplementary statement setting forth all the facts and information upon which the claim is predicated, including such facts and information as the Board of Governors of the Federal Reserve System may prescribe as necessary to enable it, upon the request of the Commissioner subsequent to the filing of the return, to

certify to the Commissioner the amount of earnings or profits devoted to the acquisition of such readily marketable assets. A certified copy of such supplementary statement shall be forwarded by the taxpayer to the Board of Governors at the time of the filing of the return. The holding company affiliate shall also furnish the Board of Governors such further information as the Board shall require. For the requirements with respect to the amount of such readily marketable assets which must be acquired and maintained by a holding company affiliate to which a voting permit has been granted, see section 5144(b) and (c) of the Revised Statutes (12 U.S.C. 61).

NATURAL RESOURCES

Deductions

§ 1.611-0 Regulatory authority.

Sections 1.611-1 through 1.614-8, inclusive, are prescribed under the authority granted the Secretary or his delegate by section 611(a) of the Code to prescribe regulations under which a reasonable allowance for depletion and depreciation of improvements shall be allowed, according to the peculiar conditions in each case, in the case of mines, oil and gas wells, other natural deposits and timber.

[T.D. 6965, 33 FR 10692, July 26, 1968]

§ 1.611-1 Allowance of deduction for depletion.

(a) ***Depletion of mines, oil and gas wells, other natural deposits, and timber —***

(1) ***In general.*** Section 611 provides that there shall be allowed as a deduction in computing taxable income in the case of mines, oil and gas wells, other natural deposits, and timber, a reasonable allowance for depletion. In the case of standing timber, the depletion allowance shall be computed solely upon the adjusted basis of the property. In the case of other exhaustible natural resources the allowance for depletion shall be computed upon either the adjusted depletion basis of the property (see section 612, relating to cost depletion) or upon a percentage of gross income from the property (see section 613, relating to percentage depletion), whichever results in the greater allowance for depletion for any taxable year. In no case will depletion based upon discovery value be allowed.

(2) See § 1.611-5 for methods of depreciation relating to improvements connected with mineral or timber properties.

(3) See paragraph (d) of this section for definition of terms.

(b) ***Economic interest.***

(1) Annual depletion deductions are allowed only to the owner of an economic interest in mineral deposits or standing timber. An economic interest is possessed in every case in which the taxpayer has acquired by investment any interest in mineral in place or standing timber and secures, by any form of legal relationship, income derived from the extraction of the mineral or severance of the timber, to which he must look for a return of his capital. For an exception in the case of certain mineral production payments, see section 636 and the regulations thereunder. A person who has no capital investment in the mineral deposit or standing timber does not possess an economic interest merely because through a contractual relation he possesses a mere economic or pecuniary advantage derived from production. For example, an agreement between the owner of an economic interest and another entitling the latter to purchase or process the product upon production or

entitling the latter to compensation for extraction or cutting does not convey a depletable economic interest. Further, depletion deductions with respect to an economic interest of a corporation are allowed to the corporation and not to its shareholders.

(2) No depletion deduction shall be allowed the owner with respect to any timber, coal, or domestic iron ore that such owner has disposed of under any form of contract by virtue of which he retains an economic interest in such timber, coal, or iron ore, if such disposal is considered a sale of timber, coal, or domestic iron ore under section 631 (b) or (c).

(c) *Special rules* —

(1) ***In general.*** For the purpose of the equitable apportionment of depletion among the several owners of economic interests in a mineral deposit or standing timber, if the value of any mineral or timber must be ascertained as of any specific date for the determination of the basis for depletion, the values of such several interests therein may be determined separately, but, when determined as of the same date, shall together never exceed the value at that date of the mineral or timber as a whole.

(2) ***Leases.*** In the case of a lease, the deduction for depletion under section 611 shall be equitably apportioned between the lessor and lessee. In the case of a lease or other contract providing for the sharing of economic interests in a mineral deposit or standing timber, such deduction shall be computed by each taxpayer by reference to the adjusted basis of his property determined in accordance with sections 611 and 612, or computed in accordance with section 613, if applicable, and the regulations thereunder.

(3) ***Life tenant and remainderman.*** In the case of property held by one person for life with remainder to another person, the deduction for depletion under section 611 shall be computed as if the life tenant were the absolute owner of the property so that he will be entitled to the deduction during his life, and thereafter the deduction, if any, shall be allowed to the remainderman.

(4) ***Mineral or timber property held in trust.*** If a mineral property or timber property is held in trust, the allowable deduction for depletion is to be apportioned between the income beneficiaries and the trustee on the basis of the trust income from such property allocable to each, unless the governing instrument (or local law) requires or permits the trustee to maintain a reserve for depletion in any amount. In the latter case, the deduction is first allocated to the trustee to the extent that income is set aside for a depletion reserve, and any part of the deduction in excess of the income set aside for the reserve shall be apportioned between the income beneficiaries and the trustee on the basis of the trust income (in excess of the income set aside for the reserve) allocable to each. For example:

(i) If under the trust instrument of local law the income of a trust computed without regard to depletion is to be distributed to a named beneficiary, the beneficiary is entitled to the deduction to the exclusion of the trustee.

(ii) If under the trust instrument or local law the income of a trust is to be distributed to a named beneficiary, but the trustee is directed to maintain a reserve for depletion in any amount, the deduction is allowed to the trustee (except to the extent that income set aside for the reserve is less than the allowable deduction). The same result would follow if the trustee sets aside income for a depletion reserve pursuant to discretionary authority to do so in the governing instrument

No effect shall be given to any allocation of the depletion deduction which gives any beneficiary or the trustee a share of such deduction greater than his pro rata share of the trust income, irrespective of any provisions in the trust instrument, except as otherwise provided in this paragraph when the trust instrument or local law requires or permits the trustee to maintain a reserve for depletion.

(5) ***Mineral or timber property held by estate.*** In the case of a mineral property or timber property held by an estate the deduction for depletion under section 611 shall be apportioned between the estate and the heirs, legatees, and devisees on the basis of income of the estate from such property which is allocable to each.

(d) ***Definitions.*** As used in this part, and the regulations thereunder, the term:

(1) ***Property*** means—

(i) in the case of minerals, each separate economic interest owned in each mineral deposit in each separate tract or parcel of land or an aggregation or combination of such mineral interests permitted under section 614 (b), (c), (d), or (e); and

(ii) in the case of timber, an economic interest in standing timber in each tract or block representing a separate timber account (see paragraph (d) of § 1.611-3). For rules with respect to waste or residue of prior mining, see paragraph (c) of § 1.614-1. When, in the regulations under this part, either the word *mineral* or *timber* precedes the word *property,* such adjectives are used only to classify the type of *property* involved. For further explanation of the term *property,* see section 614 and the regulations thereunder.

(2) ***Fair market value*** of a property is that amount which would induce a willing seller to sell and a willing buyer to purchase.

(3) ***Mineral enterprise*** is the mineral deposit or deposits and improvements, if any, used in mining or in the production of oil and gas, and only so much of the surface of the land as is necessary for purposes of mineral extraction. The value of the mineral enterprise is the combined value of its component parts.

(4) ***Mineral deposit*** refers to minerals in place. When a mineral enterprise is acquired as a unit, the cost of any interest in the mineral deposit or deposits is that proportion of the total cost of the mineral enterprise which the value of the interest in the deposit or deposits bears to the value of the entire enterprise at the time of its acquisition.

(5) ***Minerals*** includes ores of the metals, coal, oil, gas, and all other natural metallic and nonmetallic deposits, except minerals derived from sea water, the air, or from similar inexhaustible sources. It includes but is not limited to all of the minerals and other natural deposits subject to depletion based upon a percentage of gross income from the property under section 613 and the regulations thereunder.

[T.D. 6500, 25 FR 11737, Nov. 26, 1960, as amended by T.D. 6841, 30 FR 9305, July 27, 1965; T.D. 7261, 38 FR 5467, Mar. 1, 1973]

§ 1.611-2 Rules applicable to mines, oil and gas wells, and other natural deposits.

(a) ***Computation of cost depletion of mines, oil and gas wells, and other natural deposits.***

(1) The basis upon which cost depletion is to be allowed in respect of any mineral property is the basis provided for in section 612 and the regulations thereunder. After the amount of such basis applicable to the mineral property has been determined for the taxable year, the cost depletion for

that year shall be computed by dividing such amount by the number of units of mineral remaining as of the taxable year (see subparagraph (3) of this paragraph), and by multiplying the depletion unit, so determined, by the number of units of mineral sold within the taxable year (see subparagraph (2) of this paragraph). In the selection of a unit of mineral for depletion, preference shall be given to the principal or customary unit or units paid for in the products sold, such as tons of ore, barrels of oil, or thousands of cubic feet of natural gas.

(2) As used in this paragraph, the phrase *number of units sold within the taxable year:*

(i) In the case of a taxpayer reporting income on the cash receipts and disbursements method, includes units for which payments were received within the taxable year although produced or sold prior to the taxable year, and excludes units sold but not paid for in the taxable year, and

(ii) In the case of a taxpayer reporting income on the accrual method, shall be determined from the taxpayer's inventories kept in physical quantities and in a manner consistent with his method of inventory accounting under section 471 or 472

The phrase does not include units with respect to which depletion deductions were allowed or allowable prior to the taxable year.

(3) ***The number of units of mineral remaining as of the taxable year*** is the number of units of mineral remaining at the end of the year to be recovered from the property (including units recovered but not sold) plus the *number of units sold within the taxable year* as defined in this section.

(4) In the case of a natural gas well where the annual production is not metered and is not capable of being estimated with reasonable accuracy, the taxpayer may compute the cost depletion allowance in respect of such property for the taxable year by multiplying the adjusted basis of the property by a fraction, the numerator of which is equal to the decline in rock pressure during the taxable year and the denominator of which is equal to the expected total decline in rock pressure from the beginning of the taxable year to the economic limit of production. Taxpayers computing depletion by this method must keep accurate records of periodical pressure determinations.

(5) If an aggregation of two or more separate mineral properties is made during a taxable year under section 614, cost depletion for each such property shall be computed separately for that portion of the taxable year ending immediately before the effective date of the aggregation. Cost depletion with respect to the aggregated property shall be computed for that portion of the taxable year beginning on such effective date. The allowance for cost depletion for the taxable year shall be the sum of such cost depletion computations. For purposes of this paragraph, each such portion of the taxable year shall be considered as a taxable year. Similar rules shall be applied where a separate mineral property is properly removed from an existing aggregation during a taxable year. See section 614 and the regulations thereunder for rules relating to the effective date of an aggregation of mineral interests and for rules relating to the adjusted basis of an aggregation.

(6) The apportionment of the deduction among the several owners of economic interests in the mineral deposit or deposits will be made as provided in paragraph (c) of § 1.611-1.

(b) ***Depletion accounts of mineral property.***

(1) Every taxpayer claiming and making a deduction for depletion of mineral property shall keep a separate account in which shall be accurately recorded the cost or other basis provided by section 1012, of such property together with subsequent allowable capital additions to each account and all the other adjustments required by section 1016.

(2) Mineral property accounts shall thereafter be credited annually with the amounts of the depletion so computed in accordance with section 611 or 613 and the regulations thereunder; or the amounts of the depletion computed in shall be credited to depletion reserve accounts. No further deductions for cost depletion shall be allowed when the sum of the credits for depletion equals the cost or other basis of the property, plus allowable capital additions. However, depletion deductions may be allowable thereafter computed upon a percentage of gross income from the property. See section 613 and the regulations thereunder. In no event shall percentage depletion in excess of cost or other basis of the property be credited to the improvements account or the depreciation reserve account.

(c) ***Determination of mineral contents of deposits.***

(1) If it is necessary to estimate or determine with respect to any mineral deposit as of any specific date the total recoverable units (tons, pounds, ounces, barrels, thousands of cubic feet, or other measure) of mineral products reasonably known, or on good evidence believed, to have existed in place as of that date, the estimate or determination must be made according to the method current in the industry and in the light of the most accurate and reliable information obtainable. In the selection of a unit of estimate, preference shall be given to the principal unit (or units) paid for in the product marketed. The estimate of the recoverable units of the mineral products in the deposit for the purposes of valuation and depletion shall include as to both quantity and grade:

(i) The ores and minerals *in sight, blocked out, developed,* or *assured,* in the usual or conventional meaning of these terms with respect to the type of the deposits, and

(ii) ***Probable*** **or** ***prospective*** ores or minerals (in the corresponding sense), that is, ores or minerals that are believed to exist on the basis of good evidence although not actually known to occur on the basis of existing development. Such *probable* or *prospective* ores or minerals may be estimated:

(*a*) As to quantity, only in case they are extensions of known deposits or are new bodies or masses whose existence is indicated by geological surveys or other evidence to a high degree of probability, and

(*b*) As to grade, only in accordance with the best indications available as to richness.

(2) If the number of recoverable units of mineral in the deposit has been previously estimated for the prior year or years, and if there has been no known change in the facts upon which the prior estimate was based, the number of recoverable units of mineral in the deposit as of the taxable year will be the number remaining from the prior estimate. However, for any taxable year for which it is ascertained either by the taxpayer or the district director from any source, such as operations or development work prior to the close of the taxable year, that the remaining recoverable mineral units as of the taxable year are materially greater or less than the number remaining from the prior estimate, then the estimate of the remaining recoverable units shall be revised, and the annual cost depletion allowance with respect to the property for the taxable year and for subsequent taxable years will be based upon the revised estimate until a change in the facts requires another revision. Such revised estimate will not, however, change the adjusted basis for depletion.

(d) ***Determination of fair market value of mineral properties, and improvements, if any.***

(1) If the fair market value of the mineral property and improvements at a specified date is to be determined for the purpose of ascertaining the basis, such value must be determined, subject to approval or revision by the district director, by the owner of such property and improvements in the light of the conditions and circumstances known at that date, regardless of later discoveries or

developments or subsequent improvements in methods of extraction and treatment of the mineral product. The district director will give due weight and consideration to any and all factors and evidence having a bearing on the market value, such as cost, actual sales and transfers of similar properties and improvements, bona fide offers, market value of stock or shares, royalties and rentals, valuation for local or State taxation, partnership accountings, records of litigation in which the value of the property and improvements was in question, the amount at which the property and improvements may have been inventoried or appraised in probate or similar proceedings, and disinterested appraisals by approved methods.

(2) If the fair market value must be ascertained as of a certain date, analytical appraisal methods of valuation, such as the present value method will not be used:

(i) If the value of a mineral property and improvements, if any, can be determined upon the basis of cost or comparative values and replacement value of equipment, or

(ii) If the fair market value can reasonably be determined by any other method.

(e) ***Determination of the fair market value of mineral property by the present value method.***

(1) To determine the fair market value of a mineral property and improvements by the present value method, the essential factors must be determined for each mineral deposit. The essential factors in determining the fair market value of mineral deposits are:

(i) The total quantity of mineral in terms of the principal or customary unit (or units) paid for in the product marketed,

(ii) The quantity of mineral expected to be recovered during each operating period,

(iii) The average quality or grade of the mineral reserves,

(iv) The allocation of the total expected profit to the several processes or operations necessary for the preparation of the mineral for market,

(v) The probable operating life of the deposit in years,

(vi) The development cost,

(vii) The operating cost,

(viii) The total expected profit,

(ix) The rate at which this profit will be obtained, and

(x) The rate of interest commensurate with the risk for the particular deposit.

(2) If the mineral deposit has been sufficiently developed, the valuation factors specified in subparagraph (1) of this paragraph may be determined from past operating experience. In the application of factors derived from past experience, full allowance should be made for probable future variations in the rate of exhaustion, quality or grade of the mineral, percentage of recovery, cost of development, production, interest rate, and selling price of the product marketed during the expected operating life of the mineral deposit. Mineral deposits for which these factors cannot be determined with reasonable accuracy from past operating experience may also be valued by the present value method; but the factors must be deduced from concurrent evidence, such as the general type of the deposit, the characteristics of the district in which it occurs, the habit of the

mineral deposits, the intensity of mineralization, the oil-gas ratio, the rate at which additional mineral has been disclosed by exploitation, the stage of the operating life of the deposit, and any other evidence tending to establish a reasonable estimate of the required factors.

(3) Mineral deposits of different grades, locations, and probable dates of extraction should be valued separately. The mineral content of a deposit shall be determined in accordance with paragraph (c) of this section. In estimating the average grade of the developed and prospective mineral, account should be taken of probable increases or decreases as indicated by the operating history. The rate of exhaustion of a mineral deposit should be determined with due regard to the limitations imposed by plant capacity, by the character of the deposit, by the ability to market the mineral product, by labor conditions, and by the operating program in force or reasonably to be expected for future operations. The operating life of a mineral deposit is that number of years necessary for the exhaustion of both the developed and prospective mineral content at the rate determined as above. The operating life of oil and gas wells is also influenced by the natural decline in pressure and flow, and by voluntary or enforced curtailment of production. The operating cost includes all current expense of producing, preparing, and marketing the mineral product sold (due consideration being given to taxes) exclusive of allowable capital additions, as described in §§ 1.612-2 and 1.612-4, and deductions for depreciation and depletion, but including cost of repairs. This cost of repairs is not to be confused with the depreciation deduction by which the cost of improvements is returned to the taxpayer free from tax. In general, no estimates of these factors will be approved by the district director which are not supported by the operating experience of the property or which are derived from different and arbitrarily selected periods.

(4) The value of each mineral deposit is measured by the expected gross income (the number of units of mineral recoverable in marketable form multiplied by the estimated market price per unit) less the estimated operating cost, reduced to a present value as of the date for which the valuation is made at the rate of interest commensurate with the risk for the operating life, and further reduced by the value at that date of the improvements and of the capital additions, if any, necessary to realize the profits. The degree of risk is generally lowest in cases where the factors of valuation are fully supported by the operating record of the mineral enterprise before the date for which the valuation is made. On the other hand, higher risks ordinarily attach to appraisals upon any other basis.

(f) ***Revaluation of mineral property not allowed.*** No revaluation of a mineral property whose value as of any specific date has been determined and approved will be made or allowed during the continuance of the ownership under which the value was so determined and approved, except in the case of misrepresentation or fraud or gross error as to any facts known on the date as of which the valuation was made. Revaluation on account of misrepresentation or fraud or such gross error will be made only with the written approval of the Commissioner.

(g) ***Statement to be attached to return when valuation, depletion, or depreciation of mineral property or improvements are claimed.***

(1) For the first taxable year ending before December 31, 1967, for which a taxpayer asserts a value for any mineral property or improvement as of a specific date or claims a deduction for depletion, or depreciation, there shall be attached to the return of the taxpayer for such taxable year a statement setting forth, in complete, summary form, the pertinent information required by this paragraph with respect to each such mineral property or improvement (including oil and gas properties or improvements). The summary statement shall be deemed a part of the income tax return to which it relates. In addition to such summary statement, the taxpayer must assemble, segregate and have readily available at his principal place of business, all the supporting data (listed in subparagraphs

(2), (3), and (4) of this paragraph) which is used in compiling the summary statement. For taxable years after such first taxable year, and ending before December 31, 1967, the taxpayer need attach to his return only an explanation of the changes, if any, in the information previously furnished. For example, when a taxpayer has filed adequate maps with the district director he may be relieved of filing further maps of the same area, if all additional information necessary for keeping the maps up-to-date is filed each year. In any case in which any of the information required by this paragraph has been previously filed by the taxpayer (including information furnished in accordance with corresponding provisions of prior regulations), such information need not be filed again, but a statement should be attached to the return of the taxpayer indicating clearly when and in what form such information was previously filed. For provisions relating to the data which shall be submitted with returns for taxable years ending on or after December 31, 1967, see subparagraph (5) of this paragraph.

(2) The information referred to in subparagraph (1) of this paragraph is as follows:

(i) An adequate map showing the name, description, location, date of surveys, and identification of the deposit or deposits;

(ii) A description of the character of the taxpayer's property, accompanied by a copy of the instrument or instruments by which it was acquired;

(iii) The date of acquisition of the property, the exact terms and dates of expiration of all leases involved, and if terminated, the reasons therefor;

(iv) The cost of the mineral property and improvements, stating the amount paid to each vendor, with his name and address;

(v) The date as of which the mineral property and improvements are valued, if a valuation is necessary to establish the basis as provided by section 1012;

(vi) The value of the mineral property and improvements on that date with a statement of the precise method by which it was determined;

(vii) An allocation of the cost or value among the mineral property, improvements and the surface of the land for purposes other than mineral production;

(viii) The estimated number of units of each kind of mineral at the end of the taxable year, and also at the date of acquisition, if acquired during the taxable year or at the date as of which any valuation is made, together with an explanation of the method used in the estimation, the name and address of the person making the estimate, and an average analysis which will indicate the quality of the mineral valued, including the grade or gravity in the case of oil;

(ix) The number of units sold and the number of units for which payment was received or accrued during the year for which the return is made (in the case of newly developed oil and gas deposits it is desirable that this information be furnished by months);

(x) The gross amount received from the sale of mineral;

(xi) The amount of depreciation for the taxable year and the amount of cost depletion for the taxable year;

(xii) The amounts of depletion and depreciation, if any, stated separately, which for each and every prior year:

(*a*) Were allowed (see section 1016(a)(2)),

(*b*) Were allowable, and

(*c*) Would have been allowable without reference to percentage or discovery depletion;

(xiii) The fractions (however measured) of gross production from the deposit or deposits to which the taxpayer and other persons are entitled together with the names and addresses of such other persons; and

(xiv) Any other data which will be helpful in determining the reasonableness of the valuation asserted or of the deductions claimed.

(3) In the case of oil and gas properties, the following information with respect to each property is required in addition to that information set forth in subparagraph (2) of this paragraph:

(i) The number of acres of producing oil or gas land and, if additional acreage is claimed to be proven, the amount of such acreage and the reasons for believing it to be proven;

(ii) The number of wells producing at the beginning and end of the taxable year;

(iii) The date of completion of each well finished during the taxable year;

(iv) The date of abandonment of each well abandoned during the taxable year;

(v) Maps showing the location of the tracts or leases and of the producing and abandoned wells, dry holes, and proven oil and gas lands (the maps should show depth, initial production, and date of completion of each well, etc., to the extent that these data are available);

(vi) The number of pay sands and average thickness of each pay sand or zone;

(vii) The average depth to the top of each of the different pay sands;

(viii) The annual production of the deposit or of the individual wells, if the latter information is available, from the beginning of its productivity to the end of the taxable year, the average number of wells producing during each year, and the initial daily production of each well (the extent to which oil or gas is used for fuel on the premises should be stated with reasonable accuracy);

(ix) All available data regarding change in operating conditions, such as unit operation, proration, flooding, use of air-gas lift, vacuum, shooting, and similar information, which have a direct effect on the production of the deposit; and

(x) Available geological information having a probable bearing on the oil and gas content; information with respect to edge water, water drive, bottom hole pressures, oil-gas ratio, porosity of reservoir rock, percentage of recovery, expected date of cessation of natural flow, decline in estimated potential, and characteristics similar to characteristics of other known fields.

(4) For rules relating to an additional statement to be attached to the return when the depletion deduction is computed upon a percentage of gross income from the property, see § 1.613-6.

(5) A taxpayer who claims a total deduction of more than $200 for depletion of mines, oil and gas wells, or other natural deposits for the taxable year ending on or after December 31, 1967, and before December 31, 1968, shall submit with his return for such taxable year a filled-out Form M (Mines and Other Natural Deposits—Depletion Data) or Form O (Oil and Gas Depletion Data). See section

6011(a). For the purpose of this subparagraph, the determination under section 631(c) of gain or loss upon the disposition of coal or domestic iron ore with a retained economic interest shall not be regarded as the claiming of a deduction for depletion. Such forms shall be filed for any subsequent taxable year if the Commissioner determines that the forms are required for such year. Where appropriate, both Form M and Form O shall be filed. Forms M and O shall be deemed to be part of the return to which they relate. If a taxpayer mines more than one mineral, a separate Form M shall be filed for each such mineral. If a taxpayer has both domestic and foreign properties, separate forms shall be filed for each country in which a taxpayer's properties are located. All data relating to a taxpayer's domestic oil and gas properties shall be summarized on a single Form O, and data relating to a taxpayer's domestic mineral properties (other than oil and gas properties) shall be summarized on a single Form M for each mineral. Similarly, all data relating to a taxpayer's oil and gas properties in a specific foreign country shall be summarized on a single Form O, and data relating to a taxpayer's mineral properties (other than oil and gas properties) in a specific foreign country shall be summarized on a single Form M for each mineral. In addition, the taxpayer shall assemble, segregate, and have readily available at his principal place of business, the data listed in subparagraphs (2), (3), and (4) of this paragraph.

[T.D. 6500, 25 FR 11737, Nov. 26, 1960, as amended by T.D. 6938, 32 FR 17518, Dec. 7, 1967; T.D. 7170, 37 FR 5373, Mar. 15, 1972]

§ 1.611-3 Rules applicable to timber.

(a) ***Capital recoverable through depletion allowance in case of timber.*** In general, the capital remaining in any year recoverable through depletion allowances is the basis provided by section 612 and the regulations thereunder. For the method of determining fair market value and quantity of timber, see paragraphs (d), (e), and (f) of this section. For capitalization of carrying charges, see section 1016(a)(1)(A). Amounts paid or incurred in connection with the planting of timber (including planting for Christmas tree purposes) shall be capitalized and recoverable through depletion allowances. Such amounts include, for example, expenditures made for the preparation of the timber site for planting or for natural seeding and the cost of seedlings. The apportionment of deductions between the several owners of economic interests in standing timber will be made as provided in paragraph (c) of § 1.611-1.

(b) ***Computation of allowance for depletion of timber for taxable year.***

(1) The depletion of timber takes place at the time timber is cut, but the amount of depletion allowable with respect to timber that has been cut may be computed when the quantity of cut timber is first accurately measured in the process of exploitation. To the extent that depletion is allowable in a particular taxable year with respect to timber the products of which are not sold during such year, the depletion so allowable shall be included as an item of cost in the closing inventory of such products for such year.

(2) The depletion unit of the timber for a given timber account in a given year shall be the quotient obtained by dividing

(i) the basis provided by section 1012 and adjusted as provided by section 1016, of the timber on hand at the beginning of the year plus the cost of the number of units of timber acquired during the year plus proper additions to capital, by

(ii) the total number of units of timber on hand in the given account at the beginning of the year plus the cost of the number of units of timber acquired during the year plus the number of units acquired during the year plus (or minus) the number of units required to be added (or deducted)

by way of correcting the estimate of the number of units remaining available in the account. The number of units of timber of a given timber account cut during any taxable year multiplied by the depletion unit of that timber account applicable to such year shall be the amount of depletion allowable for the taxable year. Those taxpayers who keep their accounts on a monthly basis may, at their option, keep their depletion accounts on such basis, in which case the amount allowable on account of depletion for a given month will be determined in the manner outlined herein for a given year. The total amount of the allowance for depletion in any taxable year shall be the sum of the amounts allowable for the several timber accounts. For a description of timber accounts, see paragraphs (c) and (d) of this section.

(3) When a taxpayer has elected to treat the cutting of timber as a sale or exchange of such timber under the provisions of section 631(a), he shall reduce the timber account containing such timber by an amount equal to the adjusted depletion basis of such timber. In computing any further gain or loss on such timber, see paragraph (e) of § 1.631-1.

(c) ***Timber depletion accounts on books.***

(1) Every taxpayer claiming or expecting to claim a deduction for depletion of timber property shall keep accurate ledger accounts in which shall be recorded the cost or other basis provided by section 1012 of the property and land together with subsequent allowable capital additions in each account and all other adjustments provided by section 1016 and the regulations thereunder.

(2) In such accounts there shall be set up separately the quantity of timber, the quantity of land, and the quantity of other resources, if any, and a proper part of the total cost or value shall be allocated to each after proper provision for immature timber growth. See paragraph (d) of this section. The timber accounts shall be credited each year with the amount of the charges to the depletion accounts computed in accordance with paragraph (b) of this section or the amount of the charges to the depletion accounts shall be credited to depletion reserve accounts. When the sum of the credits for depletion equals the cost or other basis of the timber property, plus subsequent allowable capital additions, no further deduction for depletion will be allowed.

(d) ***Aggregating timber and land for purposes of valuation and accounting.***

(1) With a view to logical and reasonable valuation of timber, the taxpayer shall include his timber in one or more accounts. In general, each such account shall include all of the taxpayer's timber which is located in one *block.* A block may be an operation unit which includes all the taxpayer's timber which would logically go to a single given point of manufacture. In those cases in which the point of manufacture is at a considerable distance, or in which the logs or other products will probably be sold in a log or other market, the block may be a logging unit which includes all of the taxpayer's timber which would logically be removed by a single logging development. Blocks may also be established by geographical or political boundaries or by logical management areas. Timber acquired under cutting contracts should be carried in separate accounts and shall not constitute part of any block. In exceptional cases, provided there are good and substantial reasons, and subject to approval or revision by the district director on audit, the taxpayer may divide the timber in a given block into two or more accounts. For example, timber owned on February 28, 1913, and that purchased subsequently may be kept in separate accounts, or timber owned on February 28, 1913, and the timber purchased since that date in several distinct transactions may be kept in several distinct accounts. Individual tree species or groups of tree species may be carried in distinct accounts, or special timber products may be carried in distinct accounts. Blocks may be divided into

two or more accounts based on the character of the timber or its accessibility, or scattered tracts may be included in separate accounts. If such a division is made, a proper portion of the total value or cost, as the case may be, shall be allocated to each account.

(2) The timber accounts mentioned in subparagraph (1) of this paragraph shall not include any part of the value or cost, as the case may be, of the land. In a manner similar to that prescribed in subparagraph (1) of this paragraph, the land in a given *block* may be carried in a single land account or may be divided into two or more accounts on the basis of its character or accessibility. When such a division is made, a proper portion of the total value or cost, as the case may be, shall be allocated to each account.

(3) The total value or total cost, as the case may be, of land and timber shall be equitably allocated to the timber and land accounts, respectively. In cases in which immature timber growth is a factor, a reasonable portion of the total value or cost shall be allocated to such immature timber, and when the timber becomes merchantable such value or cost shall be recoverable through depletion allowances.

(4) Each of the several land and timber accounts carried on the books of the taxpayer shall be definitely described as to their location on the ground either by maps or by legal descriptions.

(5) For good and substantial reasons satisfactory to the district director, or as required by the district director on audit, the timber or the land accounts may be readjusted by dividing individual accounts, by combining two or more accounts, or by dividing and recombining accounts.

(e) ***Determination of quantity of timber.*** Each taxpayer claiming or expecting to claim a deduction for depletion is required to estimate with respect to each separate timber account the total units (feet board measure, log scale, cords, or other units) of timber reasonably known, or on good evidence believed, to have existed on the ground on March 1, 1913, or on the date of acquisition of the property, whichever date is applicable in determining the basis for cost depletion. This estimate shall state as nearly as possible the number of units which would have been found present by careful estimate made on the specified date with the object of determining 100 percent of the quantity of timber which the area covered by the specific account would have produced on that date if all of the merchantable timber had been cut and utilized in accordance with the standards of utilization prevailing in that region at that time. If subsequently during the ownership of the taxpayer making the return, as the result of the growth of the timber, of changes in standards of utilization, of losses not otherwise accounted for, of abandonment of timber, or of operations or development work, it is ascertained either by the taxpayer or the district director that there remain on the ground, available for utilization, more or less units of timber at the close of the taxable year (or at the close of the month if the taxpayer keeps his depletion accounts on a monthly basis) than remain in the timber account or accounts on the basis of the original estimate, then the original estimate (but not the basis for depletion) shall be revised. The depletion unit shall be changed when such revision has been made. The annual charge to the depletion account with respect to the property shall be computed by using such revised unit for the taxable year for which the revision is made and all subsequent taxable years until a change in facts requires another revision.

(f) ***Determination of fair market value of timber property.***

(1) If the fair market value of the property at a specified date is the basis for depletion deductions, such value shall be determined, subject to approval or revision by the district director upon audit, by the owner of the property in the light of the most reliable and accurate information available with

reference to the condition of the property as it existed at that date, regardless of all subsequent changes, such as changes in surrounding circumstances, and methods of exploitation, in degree of utilization, etc. Such factors as the following will be given due consideration:

(i) Character and quality of the timber as determined by species, age, size, condition, etc.;

(ii) The quantity of timber per acre, the total quantity under consideration, and the location of the timber in question with reference to other timber;

(iii) Accessibility of the timber (location with reference to distance from a common carrier, the topography and other features of the ground upon which the timber stands and over which it must be transported in process of exploitation, the probable cost of exploitation and the climate and the state of industrial development of the locality); and

(iv) The freight rates by common carrier to important markets.

(2) The timber in each particular case will be valued on its own merits and not on the basis of general averages for regions; however, the value placed upon it, taking into consideration such factors as those mentioned in this paragraph, will be coistent with that of other similar timber in the region. The district director will give weight and consideration to any and all facts and evidence having a bearing on the market value, such as cost, actual sales and transfers of similar properties, the margin between the cost of production and the price realized for timber products, market value of stock or shares, royalties and rentals, valuation for local or State taxation, partnership accountings, records of litigation in which the value of the property has been involved, the amount at which the property may have been inventoried or appraised in probate or similar proceedings, disinterested appraisals by approved methods, and other factors.

(g) ***Revaluation of timber property not allowed.*** No revaluation of a timber property whose value as of any specific date has been determined and approved will be made or allowed during the continuance of the ownership under which the value was so determined and approved, except in the case of misrepresentation or fraud or gross error as to any facts known on the date as of which the valuation was made. Revaluation on account of misrepresentation or fraud or such gross error will be made only with the written approval of the Commissioner. The depletion unit shall be revised when such a revaluation of a timber property has been made and the annual charge to the depletion account with respect to the property shall be computed by using such revised unit for the taxable year for which such revision is made and for all subsequent taxable years.

(h) ***Reporting and recordkeeping requirements*** —

(1) ***Taxable years beginning before January 1, 2002.*** A taxpayer claiming a deduction for depletion of timber for a taxable year beginning before January 1, 2002, shall attach to the income tax return of the taxpayer a filled-out Form T (Timber) for the taxable year covered by the income tax return, including the following information—

(i) A map where necessary to show clearly timber and land acquired, timber cut, and timber and land sold;

(ii) Description of, cost of, and terms of purchase of timberland or timber, or cutting rights, including timber or timber rights acquired under any type of contract;

(iii) Profit or loss from sale of land, or timber, or both;

(iv) Description of timber with respect to which claim for loss, if any, is made;

(v) Record of timber cut;

(vi) Changes in each timber account as a result of purchase, sale, cutting, reestimate, or loss;

(vii) Changes in improvements accounts as the result of additions to or deductions from capital and depreciation, and computation of profit or loss on sale or other disposition of such improvements;

(viii) Operation data with respect to raw and finished material handled and inventoried;

(ix) Statement as to application of the election under section 631(a) and pertinent information in support of the fair market value claimed thereunder;

(x) Information with respect to land ownership and capital investment in timberland; and

(xi) Any other data which will be helpful in determining the reasonableness of the depletion or depreciation deductions claimed in the return.

(2) ***Taxable years beginning after December 31, 2001.*** A taxpayer claiming a deduction for depletion of timber on a return filed for a taxable year beginning after December 31, 2001, shall attach to the income tax return of the taxpayer a filled-out Form T (Timber) for the taxable year covered by the income tax return. In addition, the taxpayer must retain records sufficient to substantiate the right of the taxpayer to claim the deduction, including a map, where necessary, to show clearly timber and land acquired, timber cut, and timber and land sold for as long as their contents may become material in the administration of any internal revenue law.

[T.D. 6500, 25 FR 11737, Nov. 26, 1960; 25 FR 14021, Dec. 31, 1960, as amended by T.D. 8989, 67 FR 20031, Apr. 24, 2002; T.D. 9040, 68 FR 4921, Jan. 31, 2003]

§ 1.611-4 Depletion as a factor in computing earnings and profits for dividend purposes.

For rules with respect to computation of earnings and profits where depletion is a factor in the case of corporations, see paragraph (c)(1) of § 1.312-6.

§ 1.611-5 Depreciation of improvements.

(a) ***In general.*** Section 611 provides in the case of mines, oil and gas wells, other natural deposits, and timber that there shall be allowed as a deduction a reasonable allowance for depreciation of improvements. Such allowance shall include exhaustion, wear and tear, and obsolescence. The deduction allowed under section 611 shall be determined under the provisions of section 167 and the regulations thereunder. For purposes of section 167 the unit of production method may, under appropriate circumstances, be considered a reasonable method under section 167(a), and therefore, not subject to the limitations prescribed by section 167(b).

(b) ***Special rules for mines, oil and gas wells, other natural deposits and timber.***

(1) For principles governing the apportioning of depreciation allowances under sections 611 and 167 in the case of property held by one person for life with remainder to another or in the case of property held in trust or by an estate, see § 1.167(h)-1.

(2) A reasonable allowance for depreciation on account of obsolescence or decay shall be required in an appropriate case during periods when the improvement is not used in production or is used in producing at a rate below its normal capacity. This rule is applicable whether or not the taxpayer uses the unit of production method.

(3) See sections 615 and 616 and the regulations thereunder for special rules for treatment of allowances for depreciation of improvements with respect to the exploration and development of a mine or other natural deposit (other than oil or gas).

(4) In the case of operating oil or gas properties, the deduction for depreciation shall be allowed for those costs of improvements such as machinery, tools, equipment, pipes, and other similar items and the costs of installation which are not treated as a deductible expense under section 263(c). See § 1.612-4.

(c) ***Accounting and recordkeeping.*** See § 1.167(a)-7 for accounting and recordkeeping requirements for taxpayers claiming deductions under section 611 and this section.

[T.D. 6500, 25 FR 11737, Nov. 26, 1960, as amended by T.D. 6712, 29 FR 3655, Mar. 24, 1964; T.D. 6836, 30 FR 8902, July 15, 1965]

§ 1.612-1 Basis for allowance of cost depletion.

(a) ***In general.*** The basis upon which the deduction for cost depletion under section 611 is to be allowed in respect of any mineral or timber property is the adjusted basis provided in section 1011 for the purpose of determining gain upon the sale or other disposition of such property except as provided in paragraph (b) of this section. The adjusted basis of such property is the cost or other basis determined under section 1012, relating to the basis of property, adjusted as provided in section 1016, relating to adjustments to basis, and the regulations under such sections. In the case of the sale of a part of such property, the unrecovered basis thereof shall be allocated to the part sold and the part retained.

(b) ***Special rules.***

(1) The basis for cost depletion of mineral or timber property does not include:

(i) Amounts recoverable through depreciation deductions, through deferred expenses, and through deductions other than depletion, and

(ii) The residual value of land and improvements at the end of operations

In the case of any mineral property the basis for cost depletion does not include amounts representing the cost or value of land for purposes other than mineral production. Furthermore, in the case of certain mineral properties, such basis does not include exploration or development expenditures which are treated under section 615(b) or 616(b) as deferred expenses to be taken into account as deductions on a ratable basis as the units of minerals benefited thereby are produced and sold. However, there shall be included in the basis for cost depletion of oil and gas property the amounts of capitalized drilling and development costs which, as provided in § 1.612-4, are recoverable through depletion deductions. In the case of timber property, the basis for cost depletion does not include amounts representing the cost or value of land.

(2) Where a taxpayer elects to treat the cutting of timber as a sale or exchange of such timber, the basis for cost depletion shall be the fair market value of such timber as of the first day of the taxable year in which such timber is cut and such value shall be considered for such taxable year and all subsequent taxable years as the cost of such timber for all purposes for which such cost is a necessary factor. See section 631(a).

(c) ***Cross references.*** In cases where the valuation, revaluation, or mineral content of deposits is a factor, see paragraphs (c), (d), (e), and (f) of § 1.611-2. In cases where the valuation, revaluation, or quantity of timber is a factor, see paragraphs (e), (f), and (g) of § 1.611-3. For definitions of the terms *property, fair market value, mineral enterprise, mineral deposit,* and *minerals,* see paragraph (d) of § 1.611-1. For rules with respect to treatment of depletion accounts on taxpayers' books, see paragraph (b) of § 1.611-2 in the case of mineral property, and paragraph (c) of § 1.611-3 in the case of timber property.

§ 1.612-2 Allowable capital additions in case of mines.

(a) ***In general.*** Expenditures for improvements and for replacements, not including expenditures for ordinary and necessary maintenance and repairs, shall ordinarily be charged to capital account recoverable through depreciation deductions. Expenditures for equipment (including its installation and housing) and for replacements thereof, which are necessary to maintain the normal output solely because of the recession of the working faces of the mine and which:

(1) Do not increase the value of the mine, or

(2) Do not decrease the cost of production of mineral units, or

(3) Do not represent an amount expended in restoring property or in making good the exhaustion thereof for which an allowance is or has been made shall be deducted as ordinary and necessary business expenses.

(b) ***Special rule.*** For special provisions applicable to treatment of expenditures for certain exploration and development costs (other than for the acquisition, restoration, or betterment of improvements) with respect to minerals other than oil or gas, see sections 615 and 616 and the regulations thereunder.

§ 1.612-3 Depletion; treatment of bonus and advanced royalty.

(a) ***Bonus.***

(1) If a bonus in addition to royalties is received upon the grant of an economic interest in a mineral deposit, or standing timber, there shall be allowed to the payee as a cost depletion deduction in respect of the bonus an amount equal to that proportion of his basis for depletion as provided in section 612 and § 1.612-1 which the amount of the bonus bears to the sum of the bonus and the royalties expected to be received. Such allowance shall be deducted from the payee's basis for depletion and the remainder of the basis is recoverable through depletion deductions as the royalties are thereafter received. (But see paragraph (e) of this section.) For example, a taxpayer leases mineral property to another reserving a one-eighth royalty and in addition receives a bonus of $10,000. Assuming that the taxpayer's basis with respect to the mineral property is $21,000 and that the royalties expected to be received are estimated to total $20,000, the depletion on the bonus would be $7,000:

[$21,000 (basis) × $10,000 (bonus)] ÷ $30,000 (bonus plus estimated royalties).

The remaining $14,000 of basis will be recovered through depletion as the royalties are received.

(2) If the grant of an economic interest in a mineral deposit or standing timber with respect to which a bonus was received expires, terminates, or is abandoned before there has been any income derived from the extraction of mineral or cutting of timber, the payee shall adjust his capital account by restoring thereto the depletion deduction taken on the bonus and a corresponding amount must be returned as income in the year of such expiration, termination, or abandonment.

(3) In the case of the payor, payment of the bonus constitutes a capital investment made for the acquisition of an economic interest in a mineral deposit or standing timber recoverable through the depletion allowance. See paragraph (c)(5)(ii) of § 1.613-2 in cases in which percentage depletion is used.

(b) *Advanced royalties.*

(1) If the owner of an operating interest in a mineral deposit or standing timber is required to pay royalties on a specified number of units of such mineral or timber annually whether or not extracted or cut within the year, and may apply any amounts paid on account of units not extracted or cut within the year against the royalty on the mineral or timber thereafter extracted or cut, the payee shall compute cost depletion on the number of units so paid for in advance of extraction or cutting and shall treat the amount so determined as an allowable deduction for depletion from the gross income of the year in which such payment or payments are made. No deduction for depletion by such payee shall be claimed or allowed in any subsequent year on account of the extraction or cutting in such year of any mineral or timber so paid for in advance and for which deduction has once been made. (But see paragraph (e) of this section.)

(2) If the right to extract minerals or to cut timber against which the advanced royalties may be applied expires, terminates, or is abandoned before all such minerals or timber have been extracted or cut, the payee shall adjust his capital account by restoring thereto the depletion deductions made in prior years on account of any units of mineral or timber paid for in advance but not extracted or cut, and a corresponding amount must be returned as income for the year of such expiration, termination or abandonment. (But see paragraph (e) of this section.)

(3) The payor shall treat the advanced royalties paid or accrued in connection with mineral property as deductions from gross income for the year the mineral product, in respect of which the advanced royalties were paid or accrued, is sold. For purposes of the preceding sentence, in the case of mineral sold before production the mineral product is considered to be sold when the mineral is produced (i.e., when a mineral product first exists). However, in the case of advanced mineral royalties paid or accrued in connection with mineral property as a result of a minimum royalty provision, the payor, at his option, may instead treat the advanced royalties as deductions from gross income for the year in which the advanced royalties are paid or accrued. See section 446 (relating to general rule for methods of accounting) and the regulations thereunder. For purposes of this paragraph, a minimum royalty provision requires that a substantially uniform amount of royalties be paid at least annually either over the life of the lease or for a period of at least 20 years, in the absence of mineral production requiring payment of aggregate royalties in a greater amount. For purposes of the preceding sentence, in the case of a lease which is subject to renewal or extension, the period for which it can be renewed or extended shall be treated as part of the term of the original lease. For special rules applicable when the payor is a sublessor of coal or domestic iron ore, see paragraph (b)(3) of § 1.631-3. Every taxpayer who pays or accrues advanced royalties resulting from a minimum royalty provision must make an election as to the treatment of all such advanced royalties in his return for the first taxable year ending after December 31, 1939, in which the advanced royalties are paid or accrued. The taxpayer's treatment of the advanced royalties for the

first year shall be deemed to be the exercise of the election. Accordingly, a failure to deduct the advanced royalties for that year will constitute an election to have all the advanced royalties treated as deductions for the year of the sale of the mineral product in respect of which the advanced royalties are paid or accrued. See section 7807(b)(2). For additional rules relating to elections in the case of partners and partnerships, see section 703(b) and the regulations thereunder. the provisions of this subparagraph do not allow as deductions from gross income amounts disallowed as deductions under other provisions of the Code, such as section 461 (relating to general rule for taxable year of deduction), section 465 (relating to deductions limited to amount at risk in case of certain activities), or section 704(d) (relating to limitation on allowance to partners of partnership losses).

(4) The application of subparagraphs (2) and (3) of this paragraph may be illustrated by the following examples:

Example 1. B leased certain mineral lands from A under a lease in which A reserved a royalty of 10 cents a ton on minerals mined and sold by B. The lease also provided that B had to pay an annual minimum royalty of $10,000 representing the amount due on 100,000 tons of the particular mineral whether or not B mined and sold that amount. It was further provided that, if B did not mine and sell 100,000 tons in any year, he could mine and sell in any subsequent year the amount of mineral on which he had paid the royalty without the payment of any additional royalty. However, this right of recoupment was limited to minerals mined and sold in any later year in excess of the 100,000 tons represented by the $10,000 minimum royalty required to be paid for that later year. Assume that in 1956 B paid A the minimum royalty of $10,000, but mined and sold only 60,000 tons of the mineral and that in 1957 he abandoned the lease without any further production. Since the $10,000 represents royalties on 100,000 tons of mineral and only 60,000 tons were mined and sold, A must restore in 1957 to his capital account the depletion deductions taken in 1956 on $4,000 on account of the 40,000 tons paid for in advance but not mined and sold, and must also return the corresponding amount as income in 1957.

Example 2. Assume that B, under the lease in example 1, paid the $10,000 minimum royalty and mined no minerals in 1956 but that in 1957 B mined and sold 200,000 tons of mineral. If this is B's first such expenditure, B has an option, for the purpose of computing taxable income under section 63, to deduct in 1956 the $10,000 paid in that year although no mineral was mined, or to take the deduction in 1957 when the mineral, for which the $10,000 was paid in 1956, was mined and sold. (For treatment under percentage depletion, see example in paragraph (c)(5)(iii) of § 1.613-2.)

(c) ***Delay rental.***

(1) A delay rental is an amount paid for the privilege of deferring development of the property and which could have been avoided by abandonment of the lease, or by commencement of development operations, or by obtaining production.

(2) Since a delay rental is in the nature of rent it is ordinary income to the payee and not subject to depletion. The payor may at his election deduct such amount as an expense, or under section 266 and the regulations thereunder, charge it to depletable capital account.

(d) ***Percentage depletion deduction with respect to bonus and advanced royalty.*** In lieu of the allowance based on cost depletion computed under paragraphs (a) and (b) of this section, the payees referred to therein may be allowed a depletion deduction in respect of any bonus or advanced royalty for the taxable year in

an amount computed on the basis of the percentage of gross income from the property as provided in section 613 and the regulations thereunder. However, for special rules applicable to certain bonuses and advanced royalties received in connection with oil or gas properties, see paragraph (j) of § 1.613A-3.

(e) ***Cross reference.*** In the case of bonuses and advanced royalties received in connection with a contract of disposal of timber covered by section 631(b) or coal or iron ore covered by section 631(c), see that section and the regulations thereunder.

[T.D. 6500, 25 FR 11737, Nov. 26, 1960, as amended by T.D. 6841, 30 FR 9305, July 27, 1965; T.D. 7523, 42 FR 63641, Dec. 19, 1977; T.D. 8348, 56 FR 21938, May 13, 1991]

§ 1.612-4 Charges to capital and to expense in case of oil and gas wells.

(a) ***Option with respect to intangible drilling and development costs.*** In accordance with the provisions of section 263(c), intangible drilling and development costs incurred by an operator (one who holds a working or operating interest in any tract or parcel of land either as a fee owner or under a lease or any other form of contract granting working or operating rights) in the development of oil and gas properties may at his option be chargeable to capital or to expense. This option applies to all expenditures made by an operator for wages, fuel, repairs, hauling, supplies, etc., incident to and necessary for the drilling of wells and the preparation of wells for the production of oil or gas. Such expenditures have for convenience been termed intangible drilling and development costs. They include the cost to operators of any drilling or development work (excluding amounts payable only out of production or gross or net proceeds from production, if such amounts are depletable income to the recipient, and amounts properly allocable to cost of depreciable property) done for them by contractors under any form of contract, including turnkey contracts. Examples of items to which this option applies are, all amounts paid for labor, fuel, repairs, hauling, and supplies, or any of them, which are used:

(1) In the drilling, shooting, and cleaning of wells,

(2) In such clearing of ground, draining, road making, surveying, and geological works as are necessary in preparation for the drilling of wells, and

(3) In the construction of such derricks, tanks, pipelines, and other physical structures as are necessary for the drilling of wells and the preparation of wells for the production of oil or gas.

In general, this option applies only to expenditures for those drilling and developing items which in themselves do not have a salvage value. For the purpose of this option, labor, fuel, repairs, hauling, supplies, etc., are not considered as having a salvage value, even though used in connection with the installation of physical property which has a salvage value. Included in this option are all costs of drilling and development undertaken (directly or through a contract) by an operator of an oil and gas property whether incurred by him prior or subsequent to the formal grant or assignment to him of operating rights (a leasehold interest, or other form of operating rights, or working interest); except that in any case where any drilling or development project is undertaken for the grant or assignment of a fraction of the operating rights, only that part of the costs thereof which is attributable to such fractional interest is within this option. In the excepted cases, costs of the project undertaken, including depreciable equipment furnished, to the extent allocable to fractions of the operating rights held by others, must be capitalized as the depletable capital cost of the fractional interest thus acquired.

(b) ***Recovery of optional items, if capitalized.***

(1) Items returnable through depletion: If the taxpayer charges such expenditures as fall within the option to capital account, the amounts so capitalized and not deducted as a loss are returnable through depletion insofar as they are not represented by physical property. For the purposes of this section the expenditures for clearing ground, draining, road making, surveying, geological work, excavation, grading, and the drilling, shooting, and cleaning of wells, are considered not to be represented by physical property, and when charged to capital account are returnable through depletion.

(2) Items returnable through depreciation: If the taxpayer charges such expenditures as fall within the option to capital account, the amounts so capitalized and not deducted as a loss are returnable through depreciation insofar as they are represented by physical property. Such expenditures are amounts paid for wages, fuel, repairs, hauling, supplies, etc., used in the installation of casing and equipment and in the construction on the property of derricks and other physical structures.

(3) In the case of capitalized intangible drilling and development costs incurred under a contract, such costs shall be allocated between the foregoing classes of items specified in subparagraphs (1) and (2) for the purpose of determining the depletion and depreciation allowances.

(4) Option with respect to cost of nonproductive wells: If the operator has elected to capitalize intangible drilling and development costs, then an additional option is accorded with respect to intangible drilling and development costs incurred in drilling a nonproductive well. Such costs incurred in drilling a nonproductive well may be deducted by the taxpayer as an ordinary loss provided a proper election is made in the return for the first taxable year beginning after December 31, 1942, in which such a nonproductive well is completed. Such election with respect to intangible drilling and development costs of nonproductive wells is a new election, and, when made, shall be binding for all subsequent years. Any taxpayer who incurs optional drilling and development costs in drilling a nonproductive well must make a clear statement of election under this option in the return for the first taxable year beginning after December 31, 1942, in which such nonproductive well is completed. The absence of a clear indication in such return of an election to deduct as ordinary losses intangible drilling and development costs of nonproductive wells shall be deemed to be an election to recover such costs through depletion to the extent that they are not represented by physical property, and through depreciation to the extent that they are represented by physical property.

(c) ***Nonoptional items distinguished.***

(1) Capital items: The option with respect to intangible drilling and development costs does not apply to expenditures by which the taxpayer acquires tangible property ordinarily considered as having a salvage value. Examples of such items are the costs of the actual materials in those structures which are constructed in the wells and on the property, and the cost of drilling tools, pipe, casing, tubing, tanks, engines, boilers, machines, etc. The option does not apply to any expenditure for wages, fuel, repairs, hauling, supplies, etc., in connection with equipment, facilities, or structures, not incident to or necessary for the drilling of wells, such as structures for storing or treating oil or gas. These are capital items and are returnable through depreciation.

(2) Expense items: Expenditures which must be charged off as expense, regardless of the option provided by this section, are those for labor, fuel, repairs, hauling, supplies, etc., in connection with the operation of the wells and of other facilities on the property for the production of oil or gas.

(d) ***Manner of making election.*** The option granted in paragraph (a) of this section to charge intangible drilling and development costs to expense may be exercised by claiming intangible drilling and development costs as a deduction on the taxpayer's return for the first taxable year in which the taxpayer pays or incurs

such costs; no formal statement is necessary. If the taxpayer fails to deduct such costs as expenses in such return, he shall be deemed to have elected to recover such costs through depletion to the extent that they are not represented by physical property, and through depreciation to the extent that they are represented by physical property.

(e) ***Effect of option and election.*** This section does not grant a new option under paragraph (a) of this section or new election under paragraph (b) of this section. Section 3 of the Act of October 23, 1962 (Public Law 87-863, 76 Stat. 1142) granted any taxpayer who had exercised an option to capitalize intangible drilling and development costs under Regulations 111, § 29.23(m)-16 (1939 Code) or Regulations 118, § 39.23(m)-16 (1939 Code) a new option for the first taxable year ending after October 22, 1962, to deduct such costs as expenses. Unless he has exercised the new option granted by such Act, any taxpayer who exercised an option or made an election under the regulations described in the preceding sentence is, by such option or election, bound with respect to all intangible drilling and development costs (whether made before January 1, 1954, or after December 31, 1953) in connection with oil and gas properties. See section 7807(b)(2). Any taxpayer who has not made intangible drilling and development expenditures in any taxable year beginning after December 31, 1942, prior to his first taxable year beginning after December 31, 1953, and ending after August 16, 1954, must exercise the option granted in paragraph (a) of this section in the return for the first taxable year in which the taxpayer pays or incurs such expenditures. If such return is required by law (including extensions thereof) to be filed before November 1, 1965, the option under paragraph (a) of this section, or the election under paragraph (b) of this section, may be exercised or changed not later than November 1, 1965. The exercise of or change in such option or election shall be effective with respect to the earliest taxable year to which the option or election is applicable in respect of which assessment of a deficiency or credit or refund of an overpayment, as the case may be, resulting from such exercise or change is not prevented by any law or rule of law on the date such option is exercised or such election is made. Any such option or election shall be binding upon the taxpayer for the first taxable year for which it is effective and for all subsequent taxable years.

[T.D. 6836, 30 FR 8902, July 15, 1965]

§ 1.612-5 Charges to capital and to expense in case of geothermal wells.

(a) ***Option with respect to intangible drilling and development costs.*** In accordance with the provisions of section 263(c), intangible drilling and development costs incurred by an operator (one who holds a working or operating interest in any tract or parcel of land either as a fee owner or under a lease or any other form of contract granting working or operating rights) in the development of a geothermal deposit (as defined in section 613(e)(3) and the regulations thereunder) may at the operator's option be chargeable to capital or to expense. This option applies to all expenditures made by an operator for wages, fuel, repairs, hauling, supplies, etc., incident to and necessary for the drilling of wells and the preparation of wells for the production of geothermal steam or hot water. Such expenditures have for convenience been termed intangible drilling and development costs. They include the cost to operators of any drilling or development work (excluding amounts payable only out of production or gross or net proceeds from production, if such amounts are depletable income to the recipient, and amounts properly allocable to cost of depreciable property) done for them by contractors under any form of contract, including turnkey contracts. Examples of items to which this option applies are all amounts paid for labor, fuel, repairs, hauling, and supplies, or any of them, which are used:

(1) In the drilling, shooting, and cleaning of wells,

(2) In such clearing of ground, draining, road making, surveying, and geological work as are necessary in preparation for the drilling of wells, and

(3) In the construction of such derricks, tanks, pipelines, and other physical structures as are necessary for the drilling of wells and the preparation of wells for the production of geothermal steam or hot water.

In general, this option applies only to expenditures for those drilling and developing items which in themselves do *not* have a salvage value. For the purpose of *this* option, labor, fuel, repairs, hauling, supplies, etc. are not considered as having a salvage value, even though used in connection with the installation of physical property which has a salvage value. Included in this option are all costs of drilling and development undertaken (directly or through a contract) by an operator of a geothermal property whether incurred by the operator prior or subsequent to the formal grant or assignment of operating rights (a leasehold interest, or other form of operating rights, or working interest); except that in any case where any drilling or development project is undertaken for the grant or assignment of a fraction of the operating rights, only that part of the costs thereof which is attributable to such fractional interest is within this option. In the excepted cases, costs of the project undertaken, including depreciable equipment furnished, to the extent allocable to fractions of the operating rights held by others, must be capitalized as the depletable capital cost of the fractional interest thus acquired.

(b) ***Recovery of optional items, if capitalized.***

(1) Items recoverable through depletion: If the taxpayer charges such expenditures as fall within the option to capital account, the amounts so capitalized and not deducted as a loss are recoverable through depletion insofar as they are not represented by physical property. For the purposes of this section the expenditures for clearing ground, draining, road making, surveying, geological work, excavation, grading, and the drilling, shooting, and cleaning of wells, are considered not to be represented by physical property, and when charged to capital account are recoverable through depletion.

(2) Items recoverable through depreciation: If the taxpayer charges such expenditures as fall within the option to capital account, the amounts so capitalized and not deducted as a loss are recoverable through depreciation insofar as they are represented by physical property. Such expenditures are amounts paid for wages, fuel, repairs, hauling, supplies, etc. used in the installation of casing and equipment and in the construction on the property of derricks and other physical structures.

(3) In the case of capitalized intangible drilling and development costs incurred under a contract, such costs shall be allocated between the foregoing classes of items specified in paragraphs (b)(1) and (2) of this section for the purpose of determining the depletion and depreciation allowances.

(4) Option with respect to cost of nonproductive wells: If the operator has elected to capitalize intangible drilling and development costs; then an additional option is accorded with respect to intangible drilling and development costs incurred in drilling a nonproductive well. Such costs incurred in drilling a nonproductive well may be deducted by the taxpayer as an ordinary loss provided a proper election is made in the taxpayer's original or amended return for the first taxable year ending on or after October 1, 1978, in which such a nonproductive well is completed. The taxpayer must make a clear statement of election under this option in the return or amended return. The election may be revoked by the filing of an amended return that does not contain such a statement. The absence of a clear indication in such return of an election to deduct as ordinary losses intangible drilling and development costs of nonproductive wells shall be deemed to be an election to recover such costs through depletion to the extent that they are not represented by physical property, and through

depreciation to the exent that they are represented by physical property. Upon the expiration of the time for filing a claim for credit or refund of any overpayment of tax imposed by chapter 1 of the Code with respect to the first taxable year ending on or after October 1, 1978 in which a nonproductive well is completed, the taxpayer is bound for all subsequent years by his exercise of the option to deduct intangible drilling and development costs of nonproductive wells as an ordinary loss or his deemed election to recover such costs through depletion or depreciation.

(c) ***Nonoptional items distinguished*** —

(1) ***Capital Items:*** The option with respect to intangible drilling and development costs does not apply to expenditures by which the taxpayer acquires tangible property ordinarily considered as having a salvage value. Examples of such items are the costs of the actual materials in those structures which are constructed in the wells and on the property, and the cost of drilling tools, pipe, casing, tubing, tanks, engines, boilers, machines, etc. The option does not apply to any expenditure for wages, fuel, repairs, hauling, supplies, etc., in connection with equipment, facilities, or structures, not incident to or necessary for the drilling of wells, such as structures for treating geothermal steam or hot water. These are capital items and are recoverable through depreciation.

(2) ***Expense items:*** Expenditures which must be charged off as expense, regardless of the option provided by this section, are those for labor, fuel, repairs, hauling, supplies, etc., in connection with the operation of the wells and of other facilities on the property for the production of geothermal steam or hot water.

(d) ***Manner of making election.*** The option granted in paragraph (a) of this section to charge intangible drilling and development costs to expense may be exercised by claiming intangible drilling and development costs as a deduction on the taxpayer's original or amended return for the first taxable year ending on or after October 1, 1978, in which the taxpayer pays or incurs such costs with respect to a geothermal well commenced on or after that date. No formal statement is necessary. The exercise of the option may be revoked by the filing of an amended return that does not claim such a deduction. If the taxpayer fails to deduct such costs as expenses in any such return, he shall be deemed to have elected to recover such costs through depletion to the extent that they are not represented by physical property, and through depreciation to the extent that they are represented by physical property. Upon the expiration of the time for filing a claim for credit or refund of any overpayment of tax imposed by chapter 1 of the Code with respect to the first taxable year ending on or after October 1, 1978, in which the taxpayer pays or incurs intangible drilling and development costs with respect to a goethermal well commenced on or after that date, the taxpayer is bound by his exercise of the option to charge such costs to expense or his deemed election to recover such costs through depletion or depreciation for that year and for all subsequent years.

(e) ***Effective date.*** The option granted by paragraph (a) of this section is available only for taxable years ending on or after October 1, 1978, with respect to geothermal wells commenced on or after that date.

(Secs. 263, 9805, Internal Revenue Code of 1954 (92 Stat. 3201, 26 U.S.C. 362; 68A Stat. 917, 26 U.S.C. 7805))

[T.D. 7806, 47 FR 4061, Jan. 28, 1982]

§ 1.613-1 Percentage depletion; general rule.

(a) ***In general.*** In the case of a taxpayer computing the deduction for depletion under section 611 with respect to minerals on the basis of a percentage of gross income from the property, as defined in section 613(c) and §§ 1.613-3 and 1.613-4, the deduction shall be the percentage of the gross income as specified in

section 613(b) and § 1.613-2. The deduction shall not exceed 50 percent (100 percent in the case of oil and gas properties for taxable years beginning after December 31, 1990) of the taxpayer's taxable income from the property (computed without regard to the allowance for depletion). The taxable income shall be computed in accordance with § 1.613-5. In no case shall the deduction for depletion computed under this section be less than the deduction computed upon the cost or other basis of the property provided in section 612 and the regulations thereunder. The apportionment of the deduction between the several owners of economic interests in a mineral deposit will be made as provided in paragraph (c) of § 1.611-1. For rules with respect to "gross income from the property" and for definition of the term "mining," see §§ 1.613-3 and 1.613-4. For definitions of the terms "property," "mineral deposit," and "minerals," see paragraph (d) of § 1.611-1.

(b) ***Denial of percentage depletion in case of oil and gas wells.*** Except as otherwise provided in section 613A and the regulations thereunder, in the case of oil or gas which is produced after December 31, 1974, and to which gross income is attributable after that date, the allowance for depletion shall be computed without regard to section 613.

[T.D. 8348, 56 FR 21938, May 13, 1991, as amended by T.D. 8437, 57 FR 43899, Sept. 23, 1992]

§ 1.613-2 Percentage depletion rates.

(a) ***In general.*** Subject to the provisions of paragraph (b) of this section and as provided in section 613(b), in the case of mines, wells, or other natural deposits, a taxpayer may deduct as an allowance for depletion under section 611 the percentages of gross income from the property as set forth in subparagraphs (1), (2), and (3) of this paragraph.

(1) ***Without regard to situs of deposits.*** The following rates are applicable to the minerals listed in this subparagraph regardless of the situs of the deposits from which the minerals are produced:

(i) 27½ percent—Gas wells, oil wells.

(ii) 23 percent—Sulfur, uranium.

(iii) 15 percent—Ball clay, bentonite, china clay, metal mines,[1] sagger clay, rock asphalt, vermiculite.

(iv) 10 percent—Asbestos,[1] brucite, coal, lignite, perlite, sodium chloride, wollastonite.

(v) 5 percent—Brick and tile clay, gravel, mollusk shells (including clam shells and oyster shells), peat, pumice, sand, scoria, shale, stone (except dimension or ornamental stone). If from brine wells—Bromine, calcium chloride, magnesium chloride.

(2) ***Production from United States deposits.*** A rate of 23 percent is applicable to the minerals listed in this subparagraph if[2] produced from deposits within the United States:[3]

Anorthosite.[2]

[1] Not applicable if the rate prescribed in subparagraph (2) of this paragraph is applicable.

[3] Applicable only for taxable years beginning before January 1, 1964.

[2] The rate prescribed in this subparagraph does not apply except to the extent that alumina and aluminum compounds are extracted therefrom.

Asbestos.
Bauxite.
Beryl.[3]
Celestite.
Chromite.
Corundum.
Fluorspar.
Graphite.
Ilmenite.
Kyanite.
Mica.
Olivine.
Quartz crystals (radio grade).
Rutile.
Block Steatite talc.
Zircon.

Ores of the following metals—

Antimony.
Beryllium.[4]
Bismuth.
Cadmium.
Cobalt.
Columbium.
Lead
Lithium.
Manganese.
Mercury.
Nickel.
Platinum.
latinum group metals.
Tantalum.
Thorium.
Tin.
Titanium.
Tungsten.
Vanadium.
Zinc.

(3) ***Other minerals.*** A rate of 15 percent is applicable to the minerals listed in this subparagraph regardless of the situs of the deposits from which the minerals are produced, provided the minerals are not used or sold for use by the mine owner or operator as rip rap, ballast, road material, rubble, concrete aggregates, or for similar purposes. If, however, such minerals are sold or used for the purposes described in the preceding sentence, a rate of 5 percent is applicable to any of such minerals unless sold on bid in direct competition with a bona fide bid to sell any of the minerals

listed in subdivision (iii) of subparagraph (1) of this paragraph, in which case the rate is 15 percent. In addition, the provisions of this subparagraph are not applicable with respect to any of the minerals listed herein if the rate prescribed in subparagraph (2) of this paragraph is applicable.

Aplite.
Barite.
Bauxite.
Beryl.[5]
Borax.
Calcium carbonates.
Clay, refractory and fire.[6]
Diatomaceous earth.
Dolomite.
Fedlspar.
Flake Graphite.

(4) For purposes of this section, the term *all other minerals* does not include

(i) soil, sod, dirt, turf, water, or mosses; or

(ii) minerals from sea water, the air, or similar inexhaustible sources. However, the term *all other minerals* is not limited in meaning to the minerals listed in section 613(b), but includes all other minerals (except those to which a specific percentage rate applies under subparagraphs (1), (2), (3), (4), and

(5) of section 613(b)): For example, gypsum, novaculite, natural mineral pigments, quartz sand and quartz pebbles, graphite and kyanite (if section 613(b)(2)(B) does not apply), and anorthosite to the extent that alumina and aluminum compounds are not extracted therefrom. The 15-percent rate applies to such *all other minerals* when used or sold for use by the mine owner or operator for purposes other than as rip rap, ballast, road material, rubble, concrete aggregates, or for similar purposes. When any such minerals are used or sold for use by the mine owner or operator as rip rap, ballast, road material, rubble, concrete aggregates, or for similar purposes, the 5-percent rate applies except that, when sold for such use by the mine owner or operator on a bid in direct competition with a bona fide bid to sell a mineral listed in section 613(b)(3), the 15-percent rate applies. For example, limestone sold on a bid in direct competition with a bona fide bid to sell rock asphalt for road building purposes may be entitled to a 15-percent rate. In every case the taxpayer must establish to the satisfaction of the district director that there was a bona fide bid to sell a mineral listed under section 613(b)(3) by a person other than the taxpayer, and that the mineral sold by the taxpayer was sold on a bid in direct competition with such bona fide bid to sell such other material.[7]

Fluorspar
Fullers earth.
Barnet.
Gilsonite.
Granite

[7] The 15-percent rate is applicable only to stone used or sold for use by the mine owner or operator as dimension stone or ornamental stone.

Lepidolite.
Limestone.
Magnesite.
Magnesium carbonates
Marble.
Mica
Phosphate rock.
Potash.
Quartzite.
Slate.
Soapstone.
Spodumene.
Stone (dimension or[7] ornamental).
Talc (including pyrophyllite).
Thernardite.
Tripoli.
Trona.
All other minerals

(b) ***Definition of terms.***

(1) For purposes of this section, the minerals indicated below shall have the following meanings:

(i) Clay, brick and tile—Clay used or sold for use in the manufacture of common brick, drain and roofing tile, sewer pipe, flower pots, and kindred products (other than clay specifically identified as a clay for which a 15 percent rate of percentage allowance is provided).

(ii) Clay, refractory and fire—Clay which has a pyrometric cone equivalent of 19 or higher.

(iii) Pumice—All pumice including pumicite.

(iv) Scoria—Only scoria produced from natural deposits.

(2) For purposes of this section, the term *United States* means the States and the District of Columbia. See section 7701(a)(9).

(3) For purposes of this section, the term *dimension stone* means blocks and slabs of natural stone, subsequently cut to definite shapes and sizes and used or sold for such uses as building stone (excluding rubble), monumental stone, paving blocks, curbing and flagging. For purposes of this section, *ornamental stone* means blocks and slabs of natural stone, subsequently cut to definite shapes and sizes and used or sold for use for making ornaments or statues.

(c) ***Rules for application of paragraph (a) of this section.***

(1) In no case may the allowance for depletion computed upon the basis of a percentage of gross income from the property exceed 50 percent of the taxpayer's taxable income from the property (computed without allowance for depletion). For rules relating to the computation of such taxable income, see § 1.613-5.

(2) In cases in which there are produced from a mineral property two or more minerals, each entitled to a different percentage depletion rate under section 613(b) and this section or any of which is entitled to cost depletion only, the percentage depletion allowance is the sum of the results obtained by

applying the percentage applicable to each mineral (zero, if not entitled to percentage depletion) to the *gross income from the property* attributable to such mineral. The sum so computed is subject to the limitation provided in section 613(a) and § 1.613-1, that is, 50 percent of the taxpayer's taxable income from the property (computed without allowance for depletion). Such taxable income (computed in accordance with § 1.613-4) is the total taxable income resulting from the sale of all minerals produced from the mineral property (as defined in section 614 and the regulations thereunder). The provisions of this subparagraph may be illustrated by the following examples:

Example 1. Pyrite, an iron sulfide, may be sold for either its sulfur content or its iron content, or both. Sulfur is entitled to a percentage depletion deduction based on 23 percent of gross income from the property whereas the percentage depletion deduction for iron is based on 15 percent of such gross income. Therefore, in the case of a taxpayer who sells pyrite for both its sulfur and iron content, 23 percent of his gross income from sulfur plus 15 percent of his gross income from iron would be his maximum allowable percentage depletion deduction. However, this maximum deduction would be subject to the limitation provided for in section 613(a), *i.e.,* 50 percent of *taxable income from the property (computed without allowance for depletion*), such taxable income being the overall taxable income resulting from the sale of both minerals contained in the deposit.

Example 2. Oil and gas are produced from a single mineral property of a taxpayer who operates a retail outlet for the sale of oil products within the meaning of section 613A(d)(2). The taxpayer is not entitled to percentage depletion on the gross income attributable to the oil, but is entitled to percentage depletion on the gross income attributable to gas which is regulated gas under section 613A(b)(2)(B). Accordingly, the taxpayer's maximum allowable percentage depletion deduction would be zero percent of gross income from the property with respect to oil, plus 22 percent (see section 613A(b)(1)) of gross income from the property with respect to gas. This maximum deduction would be subject to the limitation provided for in section 613(a), *i.e.,* 50 percent of *taxable income from the property (computed without allowance for depletion),* such taxable income being the overall taxable income resulting from the sale of both oil and gas. However, in the case of oil or gas production which qualifies for percentage depletion under section 613A(c), see the special allocation rules contained in section 613A(c)(7) (C) and (E) and § 1.613A-4.

(3) Except as provided in section 613(d) and the regulations thereunder relating to special rules for determining rates of depletion for taxable years ending after December 31, 1953, to which the Internal Revenue Code of 1939 applies:

(i) The percentage rates set forth in this section are applicable only for taxable years beginning after December 31, 1953, and ending after August 16, 1954; and

(ii) The percentage rates set forth in 26 CFR (1939) 39.23(m)-5 (Regulations 118) are applicable for taxable years beginning before January 1, 1954, or ending before August 17, 1954.

(4) Percentage depletion is not allowable with respect to the income from a disposal of coal (including lignite) or domestic iron ore (as defined in paragraph (e) of § 1.631-3) with a retained economic interest to the extent that such income is treated as from a sale of coal or iron ore under section 631(c) and § 1.631-3. Rents or royalties paid or incurred by a taxpayer with respect to coal (including lignite) or domestic iron ore shall be excluded by such taxpayer in determining *gross income from the property* without regard to the treatment under section 631(c) of such rents and royalties in the hands of the recipient.

(5)

(i) In all cases there shall be excluded in determining the *gross income from the property* an amount equal to any rents or royalties (which are depletable income to the payee) which are paid or incurred by the taxpayer in respect of the property and are not otherwise excluded from *gross income from the property.* The following example illustrates this rule:

Example. A leases coal-bearing lands to B on condition that B will annually pay a royalty of 25 cents a ton on coal mined and sold by B. During the year 1956, B mines and sells f.o.b. mine 100,000 tons of coal for $600,000. In computing *gross income from the property* for the year 1956, B will exclude $25,000 (100,000 tons × $0.25) in computing his allowable percentage depletion deduction. B's allowable percentage depletion deduction (without reference to the limitation based on taxable income from the property) for the year 1956 will be $57,500 (($600,000−$25,000) × 10 percent).

(ii) If bonus payments have been paid in respect of the property in any taxable year or any prior taxable years, there shall be excluded in determining the *gross income from the property,* an amount equal to that part of such payments which is allocable to the product sold (or otherwise giving rise to gross income) for the taxable year. For purposes of the preceding sentence, bonus payments include payments by the lessee with respect to a production payment which is treated as a bonus under section 636(c). Such a production payment is equally allocable to all mineral from the mineral property burdened thereby. The following examples illustrate the provisions of this subdivision:

Example 1. In 1956, A leases oil bearing lands to B, receiving $200,000 as a bonus and reserving a royalty of one-eighth of the proceeds of all oil produced and sold. It is estimated at the time the lease is entered into that there are 1,000,000 barrels of oil recoverable. In 1956, B produces and sells 100,000 barrels for $240,000. In computing his *gross income from the property* for the year 1956, B will exclude $30,000 ($^{1}/_{8}$ of $240,000), the royalty paid to A, and $20,000 (100,000 bbls. sold/1,000,000 bbls. estimated to be available × $200,000 bonus), the portion of the bonus allocable to the oil produced and sold during the year. However, in computing B's taxable income under section 63, the $20,000 attributable to the bonus payment shall not be either excluded or deducted from B's gross income computed under section 61. (See paragraph (a)(3) of § 1.612-3.)

Example 2. In 1971, C leases to D oil bearing lands estimated to contain 1,000,000 barrels of oil, reserving a royalty of one-eighth of the proceeds of all oil produced and sold and a $500,000 production payment payable out of 50 percent of the first oil produced and sold attributable to the seven-eighths operating interest. In 1972, D produces and sells 100,000 barrels of oil. In computing his *gross income from the property* for the year 1972, D will exclude, in addition to the royalty paid to C, $50,000 (100,000 bbls. sold/1,000,000 bbls. estimated to be available × $500,000 treated under section 636(c) as a bonus), the portion of the production payment allocable to the oil produced and sold during the taxable year. However, in computing D's taxable income under section 63, the $50,000 attributable to the retained production payment shall not be either excluded or deducted from D's gross income computed under section 61.

(iii) If advanced royalties have been paid in respect of the property in any taxable year, the amount excluded from *gross income from the property* of the payor for the current taxable year on account of such payment, shall be an amount equal to the deduction for such taxable year taken on account of such payment pursuant to paragraph (b)(3) of § 1.612-3.

Example. If B in example 2 in paragraph (b)(4) of § 1.612-3, elects to deduct in 1956 the $10,000 paid to A in that year, he must exclude the same amount from *gross income from the property* in 1956; however, if B elects to defer the deduction until 1957 when he mined and sold the mineral, he must exclude the $10,000 from *gross income from the property* in 1957.

[T.D. 6500, 25 FR 11737, Nov. 26, 1960, as amended by T.D. 6841, 30 FR 9306, July 27, 1965; T.D. 7170, 37 FR 5374, Mar. 15, 1972; T.D. 7261, 38 FR 5467, Mar. 1, 1973; T.D. 7487, 42 FR 24263, May 13, 1977]

[4] Applicable only for taxable years beginning after December 31, 1963.
[5] Applicable only for taxable years beginning before January 1, 1964.
[6] Not applicable for taxable years beginning after December 31, 1960.

§ 1.613-3 Gross income from the property.

Oil and gas wells. In the case of oil and gas wells, *gross income from the property,* as used in section 613(c)(1), means the amount for which the taxpayer sells the oil or gas in the immediate vicinity of the well. If the oil or gas is not sold on the premises but is manufactured or converted into a refined product prior to sale, or is transported from the premises prior to sale, the gross income from the property shall be assumed to be equivalent to the representative market or filed price of the oil or gas before conversion or transportation.

[T.D. 6500, 25 FR 11737, Nov. 26, 1960, as amended by T.D. 6965, 33 FR 10692, July 26, 1968; T.D. 8474, 58 FR 25557, Apr. 27, 1993]

§ 1.613-4 Gross income from the property in the case of minerals other than oil and gas.

(a) ***In general.*** The rules contained in this section are applicable to the determination of gross income from the property in the case of minerals other than oil and gas and the rules contained in § 1.613-3 are not applicable to such determination, notwithstanding provisions to the contrary in § 1.613-3. The term *gross income from the property,* as used in section 613(c)(1), means, in the case of a mineral property other than an oil or gas property, gross income from mining. *Gross income from mining* is that amount of income which is attributable to the extraction of the ores or minerals from the ground and the application of mining processes, including mining transportation. For the purpose of this section, *ordinary treatment processes* (applicable to the taxable years beginning before January 1, 1961) and *treatment processes considered as mining* (applicable to the taxable years beginning after December 31, 1960) will be referred to as *mining processes.* Processes, including packaging and transportation, which do not qualify as mining will be referred to as *nonmining processes.* Also for the purpose of this section, transportation which qualifies as *mining* will be referred to as *mining transportation* and transportation which does not qualify as *mining* will be referred to as *nonmining transportation.* See paragraph (f) of this section for the definition of the term *mining* and paragraph (g) of this section for rules relating to nonmining processes.

(b) ***Sales prior to the application of nonmining processes including nonmining transportation.***

(1) Subject to the adjustments required by paragraph (e)(1) of this section, gross income from mining means (except as provided in subparagraph (2) of this paragraph) the actual amount for which the ore or mineral is sold if the taxpayer sells the ore or mineral:

(i) As it emerges from the mine, prior to the application of any process other than a mining process or any transportation, or

(ii) After application of only mining processes, including mining transportation, and before any nonmining transportation

If the taxpayer sells his ore or mineral in more than one form, and if only mining processes are applied to the ore or mineral, gross income from mining is the actual amount for which the various forms of the ore or mineral are sold, after any adjustments required by paragraph (e)(1) of this section. For example, if, at his mine or quarry, a taxpayer sells several sizes of crushed gypsum and also sells gypsum fines produced as an incidental byproduct of his crushing operations, without applying any nonmining processes, gross income from mining will ordinarily be the total amount for which such crushed gypsum and fines are actually sold. See paragraphs (f) and (g) of this section for provisions defining mining and nonmining processes for various minerals.

(2) In the case of sales between members of a controlled group (including sales as to which the district director exercises his authority under section 482 and the regulations thereunder), the prices for such sales (which shall be deemed to be the actual amount for which the ore or mineral is sold) shall be determined, if possible, by use of the representative market or field price method, as described in paragraph (c) of this section; otherwise such prices shall be determined by the appropriate pricing method as provided in paragraph (d)(1) of this section. For the definitions of the terms *controlled* and *group,* see paragraph (j) (1) and (2) of this section.

(c) ***Cases where a representative market or field price for the taxpayer's ore or mineral can be ascertained*** —

(1) ***General rule.*** If the taxpayer processes the ore or mineral before sale by the application of nonmining processes (including nonmining transportation), or uses it in his operations, gross income from mining shall be computed by use of the representative market or field price of an ore or mineral of like kind and grade as the taxpayer's ore or mineral after the application of the mining processes actually applied (if any), including mining transportation (if any), and before any nonmining transportation, subject to any adjustments required by paragraph (e)(1) of this section. See paragraph (e)(2)(i) of this section for certain other situations in which this paragraph shall apply. The objective in computing gross income from mining by the representative market or field price method is to ascertain, on the basis of an analysis of actual competitive sales by the taxpayer or others, the dollar figure or amount which most nearly represents the approximate price at which the taxpayer, in light of market conditions, could have sold his ores or minerals if, prior to the application of nonmining processes, the taxpayer had sold the quantities and types of ores and minerals to which he applied nonmining processes. If it is possible to determine a market or field price under the provisions of this paragraph, and if that price is determined to be representative, the taxpayer's gross income from mining shall be determined on the basis of that price and not under the provisions of paragraph (d) of this section. The taxpayer's own actual sales prices for ores or minerals of like kind and grade shall be taken into account when establishing market or field prices, provided that those sales are determined to be representative.

(2) ***Criteria for determining whether an ore or mineral is of like kind and grade as the taxpayer's ore or mineral.*** An ore or mineral will be considered to be of like kind and grade as the taxpayer's ore or mineral if, in common commercial practice, it is sufficiently similar in chemical, mineralogical, or physical characteristics to the taxpayer's ore or mineral that it is used, or is commercially suitable for use, for essentially the same purposes as the uses to which the taxpayer's ore or mineral is put. Whether an ore or mineral is of like kind and grade as the taxpayer's ore or mineral will generally be determined by reference to industrial or commercial specifications and by consideration of chemical and physical data relating to the minerals and deposits in question. The fact that the taxpayer applies slightly different size reduction processes, or the fact that the taxpayer uses slightly different benefication processes, or the fact that the taxpayer sells his ore or mineral for different purposes, will not, in itself, prevent another person's ore or mineral from being considered to be of like kind and grade as the taxpayer's ore or mineral. On the other hand, the fact that the taxpayer's ore or mineral

is suitable for the same general commercial use as another person's ore or mineral will not cause the two ores or minerals to be considered to be of like kind and grade if the desirable natural constituents of the two ores or minerals are markedly different substances. For example, anthracite coal will not be considered to be of like kind as bituminous coal merely because both types of coal can be used as fuel. Similarly, bituminous coal which does not possess coking qualities will not be considered to be of like grade as bituminous coking coal. However, in the case of a taxpayer who mines and uses his bituminous coal in the production of coke, all bituminous coals in the same marketing area will be considered to be of like kind, and all such bituminous coals having the same or similar coking quality suitable for commercial use by coke producers will be considered to be of like grade as the coal mined and used by the taxpayer

Fine distinctions between various grades of minerals are to be avoided unless those distinctions are clearly shown to have genuine commercial significance.

(3) ***Factors to be considered in determining the representative market or field price for the taxpayer's ore or mineral.*** In determining the representative market or field price for the taxpayer's ore or mineral, consideration shall be given only to prices of ores or minerals of like kind and grade as the taxpayer's ore or mineral and with which, under commercially accepted standards, the taxpayer's ore or mineral would be considered to be in competition if it were sold under the conditions described in paragraph (b)(1) of this section. A weighted average of the competitive selling prices of ores or minerals of like kind and grade as the taxpayer's, beneficiated only by mining processes, if any, in the relevant markets, although not determinative of the representative market or field price, is an important factor in the determination of that price. The taxpayer's own competitive sales prices for minerals which have been subjected only to mining processes shall be taken into account in computing such a weighted average. For purposes of the preceding sentence, if the district director has exercised his authority under section 482 and the regulations thereunder and has determined the appropriate price with respect to specific sales transactions by the taxpayer, that price shall be deemed to be a competitive sales price for those transactions. Sales or purchases, including the taxpayer's, of ores or minerals of like kind and grade as the taxpayer's, will be taken into consideration in determining the representative market or field price for the taxpayer's ore or mineral only if those sales or purchases are the result of competitive transactions. The identity of the taxpayer's relevant markets (including their accessibility to the taxpayer), and the representative market or field price within those markets, are necessarily factual determinations to be made on the basis of the facts and circumstances of each individual case. For the purpose of determining the representative market or field price for the taxpayer's ore or mineral, exceptional, insignificant, unusual, tie-in, or accommodation sales shall be disregarded. Except as provided above, representative market or field prices shall not be determined by reference to prices established between members of a controlled group. See paragraph (j) of this section for the definitions of the terms *controlled* and *group.*

(4) ***Use of prices of mineral of different grade.*** If there is no representative market or field price for a mineral of like kind and grade as the taxpayer's, representative market or field prices for an ore or mineral which is of like kind but which is not of like grade as his ore or mineral may be used, with appropriate adjustments for differences in mineral content. Representative market or field prices of an ore or mineral of like kind but not of like grade may be used only if such adjustments are readily ascertainable. For example, it may be appropriate in a particular case to establish the representative market or field price for an ore having 50 percent X mineral content by reference to the representative market or field price for the same kind of ore having 60 percent X mineral content with an appropriate adjustment for the differences in the valuable mineral content of the two ores, any differences in processing costs attributable to impurities, and any other relevant factors.

(5) ***Information to be furnished by a taxpayer computing gross income from mining by use of a representative market or field price.*** A taxpayer who computes his gross income from mining pursuant to the provisions of this paragraph shall attach to his return a summary statement indicating the prices used by him in computing gross income from mining under this paragraph and the source of his information as to those prices, and the relevant supporting data shall be assembled, segregated, and made readily available at the taxpayer's principal place of business.

(6) ***Limitation on gross income from mining computed under the provisions of this paragraph.*** It shall be presumed that a price is not a representative market or field price for the taxpayer's ore or mineral if the sum of such price plus the total of all costs of the nonmining processes (including nonmining transportation) which the taxpayer applies to his ore or mineral regularly exceeds the taxpayer's actual sales price of his product. For example, if on a regular basis the total of all costs of nonmining processes applied by the taxpayer to coal for the purpose of making coke is $12 per ton, and if the taxpayer's actual sale price for such coke is $18 per ton, a price of $7 per ton would not be a representative market or field price for the taxpayer's coal which is used for making coke. In order to rebut the presumption set forth in the first sentence of this subparagraph, it must be established that the loss on nonmining operations is directly attributable to unusual, peculiar and nonrecurring factors rather than to the use of a market or field price which is not representative. For example, the first sentence of this subparagraph shall not apply if the taxpayer establishes in an appropriate case that the loss on nonmining operations is directly attributable to an event such as a fire, flood, explosion, earthquake, or strike.

(d) ***Cases where a representative market or field price cannot be ascertained*** —

(1) ***General rule.***

(i) If it is impossible to determine a representative market or field price as described in paragraph (c) of this section then, except as provided in subdivision (ii) of this subparagraph, gross income from mining shall be computed by use of the proportionate profits method as set forth in subparagraph (4) of this paragraph. A method of computing gross income from mining under the provisions of this paragraph shall not be deemed to be a method of accounting for purposes of paragraph (e) of § 1.446-1.

(ii)

(*a*) The Office of the Assistant Commissioner (Technical) may determine that a method of computation is more appropriate than the proportionate profits method or the method being used by the taxpayer. The taxpayer may request such a determination (see (*d*) of this subdivision (ii)). If the taxpayer is using a method of computation which has been determined by the Office of Assistant Commissioner (Technical) to be more appropriate than the proportionate profits method, such method shall continue to be used until it is determined by the Office of Assistant Commissioner (Technical) that either the proportionate profits method or another method is more appropriate.

(*b*) The proportionate profits method is more appropriate than the method being used under (*a*) if, under the particular facts and circumstances, the method being used under (*a*) consistently fails to clearly reflect gross income from mining and the proportionate profits method more clearly reflects gross income from mining for the taxable year.

(*c*) An alternative method (a method other than the method being used under (*a*) (if any) and the proportionate profits method) is more appropriate than the method being used under (*a*) (if any) and the proportionate profits method if, under the particular facts and

circumstances, the latter methods consistently fail to clearly reflect gross income from mining, and the alternative method being considered more clearly reflects gross income from mining on a consistent basis than the method being used under (*a*) (if any) and the proportionate profits method. When determining whether a method of computation clearly reflects gross income from mining, it is relevant to compare the gross income from mining produced by such method with the gross income from mining, on an equivalent amount of production, which results from the computation methods used by competitors. When determining the acceptability of proposed alternative methods, primary consideration will be given to computation methods based upon representative charges for ores, minerals, products, or services. See paragraph (c) of this section for principles determining the representative character of a charge.

(*d*) Application for permission to compute gross income from mining by use of an alternative method shall be made by submitting a request to the Commissioner of Internal Revenue, Attention: Assistant Commissioner (Technical), Washington, DC 20224.

(*e*) Among the alternative methods of computation to which consideration will be given, provided that the requirements of this subdivision (ii) are met, are the methods listed in subparagraphs (5), (6), and (7) of this paragraph. The order in which these methods are listed is not significant, and the listing of these methods does not preclude a request to make use of a method which is not listed.

(iii) Approval and continued use of any method of computation under this paragraph depends upon all the facts and circumstances in each case, and shall be subject to such terms and conditions as may be necessary in the opinion of the Commissioner to reflect clearly the gross income from mining. Accordingly, the use of such a method for any taxable year shall be subject to review and change.

(2) ***Costs to be used in computing gross income from mining by use of methods based on the taxpayer's costs.*** In determining the taxpayer's gross income from mining by use of methods based on the taxpayer's costs, only costs actually paid or incurred shall be taken into consideration. In general, if the taxpayer has consistently employed a reasonable method of determining the costs of the various individual phases of his mining and nonmining processes (such as extraction, loading for shipment, calcining, packaging, etc.), such method shall not be disturbed. The amount of any particular item to be taken into account shall, for taxable years beginning after November 30, 1968, be the amount used in determining the taxpayer's income for tax purposes. For example, the depreciation lives, methods, and records used for tax purposes, if different from those used for book purposes, shall be the basis for determining the amount of depreciation to be used. However, a taxpayer may continue to use a reasonable method for determining those costs on the basis of the amounts computed for cost control or similar financial or accounting books and records if that method has been used consistently and is applied to the determination of all those costs.

(3) ***Treatment of particular items in computing gross income from the mining by use of methods based on the taxpayer's costs.***

(i) Except as specifically provided elsewhere in this section, when determining gross income from mining by use of methods based on the taxpayer's costs, the costs attributable to mining transportation shall be treated as mining costs, and the costs attributable to nonmining transportation shall be treated as nonmining costs. Accordingly, except as specifically provided elsewhere in this section, all profits attributable to mining transportation shall be treated as mining profits, and all profits attributable to nonmining transportation shall be treated as

nonmining profits. For this purpose, mining transportation means so much of the transportation of ores or minerals (whether or not by common carrier) from the point of extraction from the ground to plants or mills in which other mining processes are applied thereto as is not in excess of 50 miles or, if the taxpayer files an application pursuant to paragraph (h) of this section and the Commissioner finds that both the physical and other requirements are such that the ores or minerals must be transported a greater distance to such plants or mills, the transportation over the greater distance. Further, for this purpose, nonmining transportation includes the transportation (whether or not by common carrier) of ores, minerals, or the products produced therefrom, from the point of extraction from the ground to nonmining facilities, or from a mining facility to a nonmining facility, or from one nonmining facility to another, or from a nonmining facility to the customers who purchase the taxpayer's first marketable product or group of products. See paragraph (e)(2) of this section for provisions relating to purchased transportation to the customer and paragraph (g)(3) of this section for provisions relating to transportation the primary purpose of which is marketing or distribution. In the absence of other methods which clearly reflect the costs of the various phases of transportation, the cost attributable to nonmining transportation shall be an amount which is in the same ratio to the costs incurred for the total transportation as the distance of the nonmining transportation is to the distance of the total transportation. As an example, where the plants or mills in which mining processes are applied to ores or minerals are in excess of 50 miles from the point of extraction from the ground (or in excess of a greater distance approved by the Commissioner), the costs incurred for transportation to those plants or mills in excess of 50 miles (or of that greater distance) shall be treated as nonmining costs in determining gross income from mining. Accordingly, all profits attributable to that excess transportation are treated as nonmining profits. However, except in the case of transportation performed in conveyances owned or leased by the taxpayer, the preceding sentence shall apply only to taxable years beginning after November 30, 1968.

(ii) In determining gross income from mining by use of methods based on the taxpayer's costs, a process shall not be considered as a mining process to the extent it is applied to ores, minerals, or other materials with respect to which the taxpayer is not entitled to a deduction for depletion under section 611. The costs of such nondepletable ores, minerals, or materials; the costs of the processes (including blending, size reduction, etc.) applied thereto; and the transportation costs thereof, if any, shall be considered as nominating costs in determining gross income from mining. If a mining process is applied to an admixture of depletable and nondepletable material, the cost of the process and the cost of transportation, if any, attributable to the nondepletable material shall be considered as nonmining costs in determining gross income from mining. Accordingly, all profits attributable thereto are treated as nonmining profits. In the absence of other methods which clearly reflect the cost attributable to the processing and transportation, if any, of the nondepletable admixed material, that cost shall be deemed to be that proportion of the costs which the tonnage of nondepletable material bears to the total tonnage of both depletable and nondepletable material.

(iii) In determining gross income from mining by use of methods based on the taxpayer's costs:

(*a*) The costs attributable to containers, bags, packages, pallets, and similar items as well as the costs of materials and labor attributable to bagging, packaging, palletizing, or similar operations shall be considered as nonmining costs.

(*b*) The costs attributable to the bulk loading of manufactured products shall be considered as nonmining costs.

(c) The costs attributable to the operation of warehouses or distribution terminals for manufactured products shall be considered as nonmining costs

Accordingly, all profits attributable thereto are treated as nonmining profits.

(iv) In computing gross income from mining by the use of methods based on the taxpayer's costs, the principles set forth in paragraph (c) of § 1.613-5 shall apply when determining whether selling expenses and trade association dues are to be treated, in whole or in part, as mining costs or as nonmining costs. To the extent that selling expenses and trade association dues are treated as nonmining costs, all profits attributable thereto are treated as nonmining profits.

(v) See paragraph (e)(1) of this section for provisions excluding certain allowances from the taxpayer's gross sales and costs of his first marketable product or group of products.

(4) ***Proportionate profits method.***

(i) The objective of the *proportionate profits method* of computation is to ascertain gross income from mining by applying the principle that each dollar of the total costs paid or incurred to produce, sell, and transport the first marketable product or group of products (as defined in subdivision (iv) of this subparagraph) earns the same percentage of profit. Accordingly, in the proportionate profits method no ranking of costs is permissible which results in excluding or minimizing the effect of any costs incurred to produce, sell, and transport the first marketable product or group of products. For purposes of this subparagraph, members of a controlled group shall be treated as divisions of a single taxpayer. See paragraph (j) of this section for the definitions of the terms *controlled* and *group*.

(ii) The proportionate profits method of computation is applied by multiplying the taxpayer's gross sales (actual or constructive) of his first marketable product or group of products (after making the adjustments required by paragraph (e) of this section) by a fraction whose numerator is the sum of all the costs allocable to those mining processes which are applied to produce, sell, and transport the first marketable product or group of products, and whose denominator is the total of all the mining and nonmining costs paid or incurred to produce, sell, and transport the first marketable product or group of products (after making the adjustments required by this paragraph and paragraph (e) of this section). The method as described herein is merely a restatement of the method formerly set forth in the second sentence of Regulations 118, section 39.23(m)-1 (e)(3) (1939 Code). The proportionate profits method of computation may be illustrated by the following equation:

$$\frac{\text{Mining costs}}{\text{Total costs}} \times \text{Gross sales} = \text{Gross income from mining}$$

(iii) Those costs which are paid or incurred by the taxpayer to produce, sell, and transport the first marketable product or group of products, and which are not directly identifiable with either a particular mining process or a particular nonmining process shall, in the absence of a specific provision of this section providing an apportionment method, be apportioned to mining and to nonmining by use of a method which is reasonable under the circumstances. One method which may be reasonable in a particular case is an allocation based on the proportion that the direct costs of mining processes and the direct costs of nonmining processes bear to each other. For example, the salary of a corporate officer engaged in overseeing all of the taxpayer's processes is an expense which may reasonably be apportioned on the basis of the ratio

between the direct costs of mining and nonmining processes. On the other hand, an expense such as workmen's compensation premiums would normally be apportioned on the basis of direct labor costs. For the rule relating to selling expenses, see paragraph (c)(4) of § 1.613-5.

(iv) As used in this section, the term *first marketable product or group of products* means the product (or group of essentially the same products) produced by the taxpayer as a result of the application of nonmining processes, in the form or condition in which such product or products are first marketed in significant quantities by the taxpayer or by others in the taxpayer's marketing area. For this purpose, bulk and packaged products are considered to be essentially the same product. Sales between members of a controlled group (as defined in paragraph (j) of this section) shall not be considered in making a determination under this subdivision. The first marketable product or group of products does not include any product which results from additional manufacturing or other nonmining processes applied to the product or products first marketed in significant quantities by the taxpayer or others in the taxpayer's marketing area. For example, if a cement manufacturer sells his own finished cement in bulk and bags and also sells concrete blocks or dry ready-mix aggregates containing additives, the finished cement, in bulk and bags, constitutes the first marketable product or group of products produced by him. Similarly, if an integrated iron ore and steel producer sells both pig iron in various sizes and rolled sheet iron or shapes, his first marketable product is the pig iron in its various sizes. Further, if an integrated clay and brick producer sells both unglazed bricks and tiles of various shapes and sizes and additionally manufactured bricks and tiles which are specially glazed, the unglazed products, both packaged and unpackaged, constitute his first marketable product or group of products.

(v)

(*a*) As used in this subparagraph, the term *gross sales (actual or constructive*) means the total of the taxpayer's actual competitive sales to others of the first marketable product or group of products, plus the taxpayer's constructive sales of the first marketable product or group of products used or retained for use in his own subsequent operations, subject to the adjustments required by paragraph (e) of this section. See (*b*) of this subdivision in the case of actual sales between members of controlled groups and in the case of constructive sales. A *constructive sale* occurs when a miner-manufacturer is deemed, for percentage depletion purposes, to be selling the first marketable product or group of products to himself.

(*b*) In the case of sales between members of a controlled group as to which the district director has exercised his authority under section 482 and the regulations thereunder and has determined the appropriate price with respect to specific sales transactions, that price shall be deemed, for those transactions, to be the actual amount for which the first marketable product or group of products is sold for purposes of this subdivision (v). In the case of all other sales between members of a controlled group, and in the case of constructive sales, the prices for such sales shall be determined by use of the principles set forth in paragraph (c) of this section, subject to the adjustments required by paragraph (e) of this section. In the case of constructive sales, see paragraph (c)(4) of this section for rules relating to information to be furnished by the taxpayer.

(vi) The provisions of this subparagraph may be illustrated by the following examples:

> *Example 1.* (a) Facts. A is engaged in the mining of a mineral to which section 613

applies and in the application thereto of nonmining processes. During 1968, A incurred extraction costs of $35,000; other mining costs of $56,000; $150,000 for manufacturing costs; $46,000 for other nonmining processes; and $14,000 for the company president's salary and similiar costs resulting from both nonmining and mining processes. During that year, A produced and sold 70,000 tons of his first marketable product for an actual gross sales price of $420,000, after the adjustments required by paragraph (e) of this section. A representative market or field price for A's mineral before the application of nonmining processes cannot be established.

(*b*) *Computation.* (*1*) The computation of A's gross income from mining by use of the proportionate profits method involves two steps. The first step is to apportion A's costs to mining and to nonmining. A apportions the company president's salary and similiar costs to mining and to nonmining in the manner described in the second and third sentences of subdivision (iii) of this subparagraph, and apportions his remaining costs as follows:

Cost	Mining	Nonmining	Total
Extraction	$35,000		$35,000
Other mining processes	56,000		56,000
Manufacturing		$150,000	150,000
Other nonmining processes		46,000	46,000
Subtotal	91,000	196,000	287,000
President's salary and similar costs	4,439	9,561	14,000
Total costs	95,439	205,561	301,000

(*2*) The second step is to apply the proportionate profits fraction so as to compute A's gross income from mining. To do this, A first computes his gross sales of his first marketable group of products, in this case $420,000. A multiplies his actual gross sales of $420,000 by the proportionate profits fraction, whose numerator consists of his total mining costs ($95,439) and whose denominator consists of his total costs ($301,000). Thus, A's gross income from mining is $133,170 (*i.e.,* 95,439/301,000ths of A's actual gross sales of $420,000).

Example 2. B, who leases a mineral property from C, is engaged in the mining of a mineral to which section 613 applies and in the application thereto of nonmining processes. Pursuant to the terms of the lease, B is required to pay C 10 cents for each ton of mineral which B mines. During 1971, B extracted 100,000 tons of mineral. He sold his first marketable product for an actual gross sales price of $225,000 after the adjustments required by paragraph (e) of this section. A representative market or field price for B's mineral before the application of nonmining processes cannot be established. During 1971, with respect to the 100,000 tons of

mineral extracted, B incurred mining costs of $50,000 and nonmining costs of $100,000, and paid $10,000 to C as C's royalty. Since the royalty payment is considered to be C's share of the gross income from mining under section 613(a), it is not considered to be either a mining cost or a nonmining cost of B. B's gross income from mining is $65,000 under the proportionate profits method, determined as follows: The $225,000 gross receipts must be multiplied by the proportionate profits fraction which is $50,000 mining costs over $150,000 total costs ($50,000 + $100,000 nonmining costs). Since the resulting $75,000 is the total gross income from mining with respect to the property, it must be allocated between B's lease interest and C's royalty interest. The $10,000 paid to C must be subtracted from the $75,000 leaving $65,000 which represents B's gross income from mining. C's gross income from mining is the royalty he received or $10,000.

(5) ***Representative schedule method.*** The *representative schedule method* is a pricing formula which uses representative finished product prices, penalties, charges and adjustments, established in arms-length transactions between unrelated parties, to determine the market or field price for a crude mineral product. The representative character of a price, penalty, charge, or adjustment shall be determined by applying the principles set forth in paragraph (c) of this section. The representative schedule method is principally intended for use in those industries in which such a schedule-type pricing method is in general use to determine the price paid to unintegrated mineral producers for their crude mineral product. For example, if unintegrated producers of copper concentrate in a particular field or market customarily sell their product at prices which are determined in accordance with a schedule-type pricing formula, consideration will be given to the determination of concentrate prices for integrated copper producers in accordance with the same pricing formula. The representative schedule method shall not be used if it is impossible to determine one or more of the elements in the representative schedule formula by reference to prices, penalties, charges, or adjustments established in representative transactions between unrelated parties. See paragraph (c) of this section for principles determining the representative character of a charge.

(6) ***Method using prices outside the taxpayer's market.*** Under the *other market method* the taxpayer uses representative market or field prices established outside his markets, provided that conditions there are substantially the same as in his markets. For example, it may be appropriate in a particular case to establish the representative market or field price for pellets containing 60 percent iron which are produced and used in market area X by reference to the representative market or field price for pellets containing 60 percent iron which are produced and sold in adjacent market area Y, provided that conditions in the two marketing areas are shown to be substantially the same.

(7) ***Rate of return on investment method.*** [Reserved]

(e) ***Reductions of sales price in computing gross income from mining*** —

(1) ***Discounts.*** If a taxpayer computes gross income from mining under the provisions of paragraph (b)(1) of this section, trade discounts and, for taxable years beginning after November 30, 1968, cash discounts actually allowed by the taxpayer shall be subtracted from the sale price of the taxpayer's ore or mineral. If a taxpayer computes gross income from mining under the provisions of paragraph (c) of this section, any such discounts actually allowed (if not otherwise taken into account) by the person or persons making the sales on the basis of which the representative market or field price for the taxpayer's ore or mineral is to be determined shall be subtracted from the sale price in computing such representative market or field price. If a taxpayer computes gross income from mining under the provisions of paragraph (d) of this section, such discounts actually allowed (if not otherwise taken into account) shall be subtracted from the gross sales (actual or constructive),

and shall not be considered a cost, of the first marketable product or group of products. The provisions of this subparagraph shall apply to arrangements which have the same effect as trade or cash discounts, regardless of the form of the arrangements.

(2) ***Purchased transportation to the customer.***

(i) A taxpayer who computes gross income from mining under the provisions of paragraph (c) of this section and who sells his ore or mineral after the application of only mining processes but after nonmining transportation shall use as the representative market or field price his delivered price (if otherwise representative) reduced by costs paid or incurred by him for purchased transportation to the customer as defined in subdivision (iii) of this subparagraph. If the transportation by the taxpayer is not purchased transportation to the customer, or if the taxpayer does not sell the ore or mineral until after the application of nonmining processes, and if other producers in the taxpayer's marketing area sell significant quantities of an ore or mineral of like kind and grade after the application of only mining processes but after purchased transportation to the customer, the representative delivered price at which the ore or mineral is sold by those other producers reduced by representative costs of purchased transportation to the customer paid or incurred by those producers shall be used by the taxpayer as the representative market or field price for his ore or mineral in applying paragraph (c) of this section. Furthermore, appropriate adjustments shall be made to take into account differences in mode of transportation and distance. When applying this subdivision, the representative market or field price so computed shall not exceed the taxpayer's delivered price less his actual costs of transportation to the customer. For purposes of this subdivision, any delivered price shall be adjusted as provided in subparagraph (1) of this paragraph.

(ii) If a taxpayer computes gross income from mining under the provisions of paragraph (d) of this section, the cost of purchased transportation to the customer (as defined in subdivision (iii) of this subparagraph) shall be excluded from the gross sales of his first marketable product or group of products (after any adjustments required by subparagraph (1) of this paragraph), and from the denominator of the proportionate profits fraction, so as not to attribute profits to the cost of that transportation. Similar transportation cost adjustments may be made, if appropriate, in the case of other methods of computation which are based on the taxpayer's costs. For the treatment of costs and profits attributable to transportation which is not purchased transportation to the customer as defined in subdivision (iii) of this subparagraph, see paragraph (d)(3)(i) of this section.

(iii) For purposes of this section, the term *purchased transportation to the customer* means, in general, nonmining transportation of the taxpayer's minerals or mineral products to the customer:

(*a*) Which is not performed in conveyances owned or leased directly or indirectly, in whole or in part, by the taxpayer,

(*b*) Which is performed solely to deliver the taxpayer's minerals or mineral products to the customer, rather than to transport such minerals or products for packaging or other additional processing by the taxpayer (other than incidental storage or handling), and

(*c*) With respect to which the taxpayer ordinarily does not earn any profit

For purposes of the preceding sentence, transportation which is performed by a person controlling or controlled by the taxpayer (within the meaning of paragraph (j)(1) of this section) shall be deemed to have been performed in conveyances owned or leased by the taxpayer

unless it is established by the taxpayer that the price charged by the controlling or controlled person for such transportation constitutes an arm's-length charge (under the standard described in paragraph (b)(1) of § 1.482-1). The term *purchased transportation to the customer* includes transportation to a warehouse, terminal, or distribution facility owned or operated by the taxpayer, provided that such transportation is performed under the conditions described in the first sentence of this subdivision. A taxpayer will not be deemed ordinarily to earn a profit on transportation merely because charges for the transportation are included in the stated selling price, rather than being separately stated or segregated from other billing. A taxpayer will not be deemed ordinarily to earn a profit on transportation if the rates for the transportation constitute an arm's-length charge ordinarily paid by shippers of the same product in similar circumstances. If a taxpayer computes gross income from mining under the provisions of paragraph (d) of this section, the term *purchased transportation to the customer* refers to transportation which conforms to the other requirements of this subdivision and which is performed to transport the taxpayer's first marketable product or group of products (as defined in paragraph (d)(4)(iv) of this section) rather than to transport minerals or mineral products which do not yet constitute the taxpayer's first marketable product or group of products.

(iv) The provisions of this subparagraph may be illustrated by the following examples:

Example 1. A is engaged in the mining of an ore of mineral M and in the production and sale of M concentrate. A retains a portion of his concentrate for use in his own nonmining operations. During 1968, A sold 100,000 tons of M concentrate of ore mined and processed by him, which sales constituted a significant portion of his total production. Eighty thousand tons of that concentrate were sold by A on the basis of a representative price (after adjustments required by subparagraph (1) of this paragraph) of $30 per ton f.o.b. mine or plant, resulting in gross income from mining of $2,400,000. The remaining 20,000 tons were sold by A, both directly and through terminals, on the basis of a delivered price (after adjustments required by subparagraph (1) of this paragraph) at City X of $40 per ton. The delivered price included $15 per ton cost of purchased transportation from the mine or plant to customers in City X. The representative market or field price of the concentrate sold by A on the basis of a delivered price is $25 per ton, determined by subtracting the cost of the purchased transportation to the customer ($15 per ton) from the delivered price for the concentrate ($40 per ton). Accordingly, A's gross income from mining with respect to the 20,000 tons of M concentrate sold on a delivered basis is $500,000. The representative market or field price for the concentrate retained by A and used in his own nonmining operations may be computed by reference to the weighted average price for both A's f.o.b. mine and A's delivered sales of concentrate, with the delivered sales prices reduced in the manner described above. On this basis, the representative market or field price for the retained concentrate is $29 per ton.

Example 2. B is engaged in the mining of an ore of mineral N and in the production of N concentrate. B retained all but an insignificant amount of his concentrate for use in his own nonmining operations. Other producers in B's marketing area sell significant amounts of N concentrate of like kind and grade, both on an f.o.b. mine or plant basis and on a delivered basis. In this case, the prices for both the f.o.b. and the delivered sales made by other producers (after any adjustments required by subparagraph (1) of this paragraph), after reduction of the delivered prices by the cost of purchased transportation to the customer, shall, if such prices are otherwise representative, be taken into account in establishing the representative market or field price for the N concentrate produced and used by B.

(f) ***Definition of mining*** —

(1) ***In general.*** The term *mining* includes only:

(i) The extraction of ores or minerals from the ground;

(ii) Mining processes, as described in subparagraphs (2) through (6) of this paragraph; and

(iii) So much of the transportation (whether or not by common carrier) of ores or minerals from the point of extraction of the ores or minerals from the ground to the plants or mills in which the processes referred to in subdivision (ii) of this subparagraph are applied thereto as is not in excess of 50 miles, and, if the Commissioner finds that both the physical and other requirements are such that the ores or minerals must be transported a greater distance to such plants or mills, the transportation over such greater distance as the Commissioner authorizes. See paragraph (h) of this section for rules relating to the filing of applications to treat as mining any transportation in excess of 50 miles.

(2) ***Definition of mining processes.***

(i) As used in subparagraph (1)(ii) of this paragraph, the term *mining processes* means, for taxable years beginning before January 1, 1961, the ordinary treatment processes normally applied by mine owners or operators in order to obtain the commercially marketable mineral product or products, including the following processes (and the processes necessary or incidental thereto), and, for taxable years beginning after December 31, 1960, the following processes (and the processes necessary or incidental thereto):

(*a*) In the case of coal—cleaning, breaking, sizing, dust allaying, treating to prevent freezing, and loading for shipment;

(*b*) In the case of sulfur recovered by the Frasch process—cleaning, pumping to vats, cooling, breaking, and loading for shipment;

(*c*) In the case of iron ore, bauxite, ball and sagger clay, rock asphalt, and ores or minerals which are customarily sold in the form of a crude mineral product (as defined in subparagraph (3)(iv) of this paragraph):

(*1*) Where applied for the purpose of bringing to shipping grade and form (as defined in subparagraph (3)(iii) of this paragraph)—sorting, concentrating, sintering, and substantially equivalent processes, and

(*2*) Loading for shipment.

(*d*) In the case of lead, zinc, copper, gold, silver, uranium, or fluorspar ores, potash, and ores or minerals which are not customarily sold in the form of the crude mineral product—crushing, grinding, and beneficiation by concentration (gravity, flotation, amalgamation, electrostatic, or magnetic), cyanidation, leaching, crystallization, precipitation (but not including electrolytic deposition, roasting, thermal or electric smelting, or refining), or by substantially equivalent processes or combination of processes used in the separation or extraction of the product or products from the ore or the mineral or minerals from other material from the mine or other natural deposit; and

(*e*) In the case of the following ores or minerals:

(*1*) The furnacing of quicksilver ores,

(*2*) The pulverization of talc,

(3) The burning of magnesite, and

(4) The sintering and nodulizing of phosphate rock.

(ii) The term *mining processes* also includes the following processes (and, except as otherwise provided in this subdivision, the processes necessary or incidental thereto):

(a) For taxable years beginning after December 31, 1960, in the case of calcium carbonates and other minerals when used in making cement—all processes (other than preheating the kiln feed) applied prior to the introduction of the kiln feed into the kiln, but not including any subsequent process;

(b) For taxable years beginning after December 31, 1960, and before November 14, 1966, in the case of clay to which former section 613(b)(5)(B) applied, and for taxable years beginning after November 13, 1966, in the case of clay to which section 613(b) (5) or (6) (B) applies—crushing, grinding, and separating the clay from waste, but not including any subsequent process;

(c) For taxable years beginning after October 9, 1969, in the case of minerals (other than sodium chloride) extracted from brines pumped from a saline perennial lake (as defined in paragraph (b) of § 1.613-2)—the extraction of such minerals from the brines, but in no case including any further processing or refining of such extracted minerals; and

(d) For taxable years beginning after December 30, 1969, in the case of oil shale (as defined in paragraph (b) of § 1.613-2)—extraction from the ground, crushing, loading into the retort, and retorting, but in no case hydrogenation, refining, or any other process subsequent to retorting.

(iii) A process is *necessary* to another related process if it is prerequisite to the performance of the other process. For example, if the concentrating of low-grade iron ores to bring to shipping grade and form cannot be effectively accomplished without fine pulverization, such pulverization shall be treated as a process which is *necessary* to the concentration process. Accordingly, because concentration is a mining process, such pulverization is also a mining process. Furthermore, if mining processes cannot be effectively applied to a mineral without storage of the mineral while awaiting the application of such processes, such storage shall be treated as a process which is *necessary* to the accomplishment of such mining processes. A process is *incidental* to another related process if the cost thereof is insubstantial in relation to the cost of the other process, or if the process is merely the coincidental result of the application of the other process. For example, the sprinkling of coal, prior to loading for shipment, with dots of paper to identify the coal for trade-name purposes will be considered incidental to the loading where the cost of that sprinkling is insubstantial in relation to the cost of the loading process. Also, where crushing of a crude mineral is treated as a mining process, the production of fines as a byproduct is ordinarily the coincidental result of the application of a mining process. If a taxpayer demonstrates that, as a factual matter, a particular process is necessary or incidental to a process named as a mining process in section 613(c)(4) of this paragraph, the necessary or incidental process will also be considered a mining process.

(iv) The term *mining* does not include purchasing minerals from another. Accordingly, the processes listed in this paragraph shall be considered as mining processes only to the extent that they are applied by a mine owner or operator to an ore or mineral in respect of which he is entitled to a deduction for depletion under section 611. The application of these processes to purchased ores, minerals, or materials does not constitute mining.

(3) *Processes recognized as mining for ores or minerals covered by section 613(c)(4)(C).*

(i) As used in section 613(c)(4)(C) and subparagraph (2)(i) (*c*) of this paragraph, the terms *sorting* and *concentrating* mean the process of eliminating substantial amounts of the impurities or foreign matter associated with the ores or minerals in their natural state, or of separating two or more valuable minerals or ores, without changing the physical or chemical identity of the ores or minerals. Examples of sorting and concentrating processes are hand or mechanical sorting, magnetic separation, gravity concentration, jigging, the use of shaking or concentrating tables, the use of spiral concentrators, the use of sluices or sluice boxes, sink-and-float processes, classifiers, hydrotators and flotation processes. Under section 613(c)(4)(C), sorting and concentration will be considered mining processes only where they are applied to bring an ore or mineral to shipping grade and form.

(ii) As used in section 613(c)(4)(C) and subparagraph (2)(i)(*c*) of this paragraph, the term *sintering* means the agglomeration of fine particles by heating to a temperature at which incipient, but not complete, fusion occurs. Sintering will be considered a mining process only where it is applied to an ore or mineral, or a concentrate of an ore or mineral, as an auxiliary process necessary to bring the ore or mineral to shipping form. A thermal action which is applied in the manufacture of a finished product will not be considered to be a mining process even though such thermal action may cause the agglomeration of fine particles by incipient fusion, and even though such action does not cause a chemical change in the agglomerated particles. For example, the sintering of finely ground iron ore concentrate, prior to shipment from the concentration plant, for the purpose of preventing the risk of loss of the finely divided particles during shipment is considered a mining process. On the other hand, for example, a heating process applied to expand or harden clay, shale, perlite, vermiculite, or other materials in the course of the manufacture of lightweight aggregate or other building materials is not considered to be a mining process.

(iii) As used in section 613(c)(4)(C) and this section, to *bring to shipping grade and form* means, with respect to taxable years beginning after December 31, 1960, to bring (by the application of mining processes at the mine or concentration plant) the quality or size of an ore or mineral to the stage or stages at which the ore or mineral is shipped to customers or used in nonmining processes (as defined in paragraph (g) of this section) by the taxpayer.

(iv) An ore or mineral is *customarily sold in the form of a crude mineral product,* within the meaning of section 613 (c)(4)(C), if a significant portion of the production thereof is sold or used in a nonmining process prior to the alteration of its inherent mineral content by some form of beneficiation, concentration, or ore dressing. An ore or mineral does not lose its classification as a crude mineral product by reason of the fact that, before sale or use in a nonmining process, the ore or mineral may be crushed or subjected to other processes which do not alter its inherent mineral content. Whether the portion of production sold or used in the form of a crude mineral product is a significant portion of the total production of an ore or mineral is a question of fact.

(4) *Type of processes recognized as mining for ores or minerals covered by section 613(c)(4)(D).* Cyanidation, leaching, crystallization, and precipitation, which are listed in section 613(c)(4)(D) as treatment processes considered as mining, and the processes (or combination of processes) which are substantially equivalent thereto, will be recognized as mining only to the extent that they are applied to the taxpayer's ore or mineral for the purpose of separation or extraction of the valuable mineral product or products from the ore, or for the purpose of separation or extraction of the

mineral or minerals from other material extracted from the mine or other natural deposit. A process, no matter how denominated, will not be recognized as mining if the process beneficiates the ore or mineral to the degree that such process, in effect, constitutes smelting, refining, or any other nonmining process within the meaning of paragraph (g) of this section. As used in section 613(c)(4)(D) and subparagraph (2)(i) (*d*) of this paragraph, the term *concentration* has the meaning set forth in the first two sentences of subparagraph (3)(i) of this paragraph.

(5) ***Processes recognized as mining under section 613(c)(4)(I).*** Under the authority granted the Secretary or his delegate in section 613(c)(4)(I), the processes which are described in subdivisions (i) through (iv) of this subparagraph, and the processes necessary or incidental thereto, are recognized as mining processes for taxable years beginning after December 31, 1960. The processes described in subdivisions (i) through (iv) of this subparagraph are in addition to the specific processes recognized as mining under section 613(c)(4). Such additional processes are:

(i) Crushing and grinding, but not fine pulverization (as defined in paragraph (g) (6) (v) of this section);

(ii) Size classification processes applied to the products of an allowable mining process;

(iii) Drying to remove free water, provided that such drying does not change the physical or chemical identity or composition of the mineral; and

(iv) Washing or cleaning the surface of mineral particles (including the washing of sand and gravel and the treatment of kaolin particles to remove surface stains), provided that such washing or cleaning does not activate or otherwise change the physical or chemical structure of the mineral particles.

(6) In the case of a process applied subsequent to a nonmining process, see paragraph (g)(2) of this section.

(g) ***Nonmining processes*** —

(1) ***General rule.*** Unless they are otherwise provided for in paragraph (f) of this section as mining processes (or are necessary or incidental to processes listed therein), the following processes are not considered to be mining processes—electrolytic deposition, roasting, calcining, thermal or electric smelting, refining, polishing, fine pulverization, blending with other materials, treatment effecting a chemical change, thermal action, and molding or shaping. See subparagraph (6) of this paragraph for definitions of certain of these terms.

(2) ***Processes subsequent to nonmining processes.*** Notwithstanding any other provision of this section, a process applied subsequent to a nonmining process (other than nonmining transportation) shall also be considered to be a nonmining process. Exceptions to this rule shall be made, however, in those instances in which the rule would discriminate between similarly situated producers of the same mineral. For example, roasting is specifically designated in subparagraph (1) of this paragraph as a nonmining process, but in the case of minerals referred to in section 613(c)(4)(C) sintering is recognized as a mining process. If certain impurities in an ore can only be removed by roasting in order to bring it to the same shipping grade and form as a competitive sintered ore of the same kind which requires no roasting, the subsequent sintering of the roasted ore will be treated as a mining process. In that case, however, the roasting of the ore will nonetheless continue to be treated as a nonmining process.

(3) ***Transportation for the purpose of marketing or distribution; storage.*** Transportation the primary purpose of which is marketing, distribution, or delivery for the application of only nonmining processes shall not be considered as mining. Nor shall transportation be considered as mining merely because, during the course of such transportation, some extraneous matter is removed from the ore or mineral by the operation of forces of nature, such as evaporation, drainage, or gravity flow. Similarly, storage or warehousing of manufactured products shall not be considered as mining. The preceding sentence shall apply even though, during the course of such storage or warehousing, some extraneous matter is removed from the ore or mineral by the operation of forces of nature, such as evaporation, drainage, or gravity flow.

(4) ***Manufacturing, etc.*** The production, packaging, distribution, and marketing of manufactured products, and the processes necessary or incidental thereto, are nonmining processes.

(5) ***Transformation processes.*** Processes which effect a substantial physical or chemical change in a crude mineral product, or which transform a crude mineral product into new or different mineral products, or into refined or manufactured products, are nonmining processes except to the extent that such processes are allowed as mining processes under section 613(c) or under paragraph (f) of this section.

(6) ***Definitions.*** As used in section 613(c)(5) and this section:

(i) The term *calcining* refers to processes used to expel the volatile portions of a mineral by the application of heat, as, for example, the burning of carbonate rock to produce lime, the heating of gypsum to produce calcined gypsum or plaster of Paris, or the heating of clays to reduce water of crystallization.

(ii) The term *thermal smelting* refers to processes which reduce, separate, or remove impurities from ores or minerals by the application of heat, as, for example, the furnacing of copper concentrates, the heating of iron ores, concentrates, or pellets in a blast furnace to produce pig iron, or the heating of iron ores or concentrates in a direct reduction kiln to produce a feed for direct conversion into steel.

(iii) The term *refining* refers to processes (other than mining processes designated in section 613(c)(4) or this section) used to eliminate impurities or foreign matter from smelted or partially processed metallic and nonmetallic ores and minerals, as, for example, the refining of blister copper. In general, a refining process is designed to achieve a high degree of purity by removing relatively small amounts of impurities or foreign matter from smelted or partially processed ores or minerals.

(iv) The term *polishing* refers to processes used to smooth the surface of minerals, as, for example, sawing applied to finish rough cut blocks of stone, sand finishing, buffing, or otherwise smoothing blocks of stone.

(v) The term *fine pulverization* refers to any grinding or other size reduction process applied to reduce the normal topsize of a mineral product to less than .0331 inches, which is the size opening in a No. 20 Screen (U.S. Standard Sieve Series). A mineral product will be considered to have a normal topsize of .0331 inches if at least 98 percent of the product will pass through a No. 20 Screen (U.S. Standard Sieve Series), provided that at least 5 percent of the product is retained on a No. 45 Screen (U.S. Standard Sieve Series). Compliance with the normal topsize test may also be demonstrated by other tests which are shown to be reasonable in the circumstances. The normal topsize test shall be applied to the product of the operation of each separate and distinct piece of size reduction equipment utilized (such as a roller mill), rather

than to the final products for sale. Fine pulverization includes the repeated recirculation of material through crushing or grinding equipment to accomplish fine pulverization. Separating or screening the product of a fine pulverization process (including separation by air or water flotation) shall be treated as a nonmining process.

(vi) The term *blending with other materials* refers to processes used to blend different kinds of minerals with one another, as, for example, blending iodine with common salt for the purpose of producing iodized table salt.

(vii) The term *treatment effecting a chemical change* refers to processes which transform or modify the chemical composition of a crude mineral, as, for example, the coking of coal. The term does not include the use of chemicals to clean the surface of mineral particles provided that such cleaning does not make any change in the physical or chemical structure of the mineral particles.

(viii) The term *thermal action* refers to processes which involve the application of artificial heat to ores or minerals, such as, for example, the burning of bricks, the coking of coal, the expansion or popping of perlite, the exfoliation of vermiculite, the heat treatment of garnet, and the heating of shale, clay, or slate to produce lightweight aggregates. The term does not include drying to remove free water.

(h) ***Application to treat, as mining, transportation in excess of 50 miles.*** If a taxpayer desires to include in the computation of his gross income from mining transportation in excess of 50 miles from the point of extraction of the minerals from the ground, he shall file an original and one copy of an application for the inclusion of such greater distance with the Commissioner of Internal Revenue, Washington, DC 20224. The application must include a statement setting forth in detail the facts concerning the physical and other requirements which prevented the construction and operation of the plant (in which mining processes, as defined in paragraph (f) of this section, are applied) at a place nearer to the point of extraction from the ground. These facts must be sufficient to apprise the Commissioner of the exact basis of the application. If the taxpayer's return is filed prior to receipt of notice of the Commissioner's action upon the application, a copy of such application shall be attached to the return. If, after an application is approved by the Commissioner, there is a material change in any of the facts relied upon in such application, a new application must be submitted by the taxpayer.

(i) ***Extraction from waste or residue. Extraction of ores or minerals from the ground*** means not only the extraction of ores or minerals from a deposit, but also the extraction by mine owners or operators of ores or minerals from waste or residue of their prior mining. It is immaterial whether the waste or residue results from the process of extraction from the ground or from application of mining processes as defined in paragraph (f) of this section. However, extraction of ores or minerals from waste or residue which results from processes which are not allowable as mining processes is not treated as mining. *Extraction of ores or minerals from the ground* does not include extraction of ores or minerals by the purchaser of waste or residue or the purchaser of the rights to extract ores or minerals from waste or residue. The term *purchaser* does not apply to any person who acquires a mineral property, including waste or residue, in a tax-free exchange, such as a corporate reorganization, from a person who was entitled to a depletion allowance upon ores or minerals produced from such waste or residue, or from a person who would have been entitled to such depletion allowance had section 613(c)(3) been in effect at the time of the transfer. The term *purchaser* also does not apply to a lessee who has renewed a mineral lease if the lessee was entitled to a depletion allowance (or would have been so entitled had section 613(c)(3) been in effect at the time of the renewal) upon ores or minerals produced from waste or residue before renewal of the lease. It is not necessary, for purposes of the preceding sentence, that the mineral

lease contain an option for renewal. The term *purchaser* does include a person who acquires waste or residue in a taxable transaction, even though such waste or residue is acquired merely as an incidental part of the entire mineral enterprise. For special rules with respect to certain corporate acquisitions referred to in section 381(a), see section 381(c)(18) and the regulations thereunder.

(j) ***Definition of controlled group.*** When used in this section:

(1) The term *controlled* includes any kind of control, direct or indirect, whether or not legally enforceable, and however exercisable or exercised. It is the reality of the control which is decisive, not its form or the mode of its exercise. A presumption of control arises if income or deductions have been arbitrarily shifted.

(2) The term *group* means the organizations, trades, or businesses owned or controlled by the same interests.

[T.D. 7170, 37 FR 5374, Mar. 15, 1972]

§ 1.613-5 Taxable income from the property.

(a) ***General rule.*** The term *taxable income from the property (computed without allowance for depletion*), as used in section 613 and this part, means *gross income from the property* as defined in section 613(c) and §§ 1.613-3 and 1.613-4, less all allowable deductions (excluding any deduction for depletion) which are attributable to mining processes, including mining transportation, with respect to which depletion is claimed. These deductible items include operating expenses, certain selling expenses, administrative and financial overhead, depreciation, taxes deductible under section 162 or 164, losses sustained, intangible drilling and development costs, exploration and development expenditures, etc. See paragraph (c) of this section for special rules relating to discounts and to certain of these deductible items. Expenditures which may be attributable both to the mineral property upon which depletion is claimed and to other activities shall be properly apportioned to the mineral property and to such other activities. Furthermore, where a taxpayer has more than one mineral property, deductions which are not directly attributable to a specific mineral property shall be properly apportioned among the several properties. In determining the taxpayer's taxable income from the property, the amount of any particular item to be taken into account shall be determined in accordance with the principles set forth in paragraph (d)(2) and (3) of § 1.613-4.

(b) ***Special rule; decrease in mining expenses resulting from gain recognized under section 1245(a)(1).***

(1) If during any taxable year beginning after December 31, 1962, the taxpayer disposes of an item of section 1245 property (as defined in section 1245(a)(3)) which has been used in connection with a mineral property, then for the purpose of computing the taxable income from such mineral property for such taxable year, the allowable deductions taken into account with respect to expenses of mining (that is, expenses attributable to a mineral property other than an oil and gas property) shall be decreased by an amount equal to the portion of any gain recognized under section 1245(a)(1) (relating to treatment of gain from dispositions of certain depreciable property as ordinary income) which is properly allocable to such mineral property in respect of which the taxable income is being computed. The portion of such gain which is properly allocable to such mineral property shall bear the same ratio to the total of such gain as:

(i) The portion of the *adjustments reflected in the adjusted basis* (as such term is defined in paragraph (a)(2) of § 1.1245-2, relating to definition of recomputed basis) of such section 1245 property, which were allowable as deductions from the *gross income from the property* (as defined in section 613 (c) and § 1.613-3) in computing the taxable income from such mineral property, bears to

(ii) The total of the *adjustments reflected in the adjusted basis* of such section 1245 property.

(2) For the purposes of this paragraph, the adjustments reflected in the adjusted basis of the section 1245 property disposed of shall be deemed to have been taken into account in computing the taxable income from the mineral property for any taxable year notwithstanding that for the taxable year the allowance for depletion was determined without reference to percentage depletion under section 613.

(3) If the amount of gain described in subparagraph (1) of this paragraph allocable to a mineral property for a taxable year exceeds the allowable deductions otherwise taken into account in computing the taxable income from the mineral property for the taxable year, the excess may not be taken into account in computing the taxable income from the mineral property for any other taxable year.

(4) To the extent that the adjustments reflected in the adjusted basis of the section 1245 property are allocable to mineral property which the taxpayer no longer owns in the taxable year in which he disposes of the section 1245 property, the gain recognized under section 1245(a)(1) does not result in any tax benefit to the taxpayer under this paragraph since he has no taxable income from the mineral property for such year. However, if a taxpayer has, in the taxable year in which he disposes of an item of section 1245 property, only a portion of the original mineral property to which gain described in subparagraph (1) of this paragraph with respect to the section 1245 property is properly allocable, the entire amount of that gain shall nevertheless be taken into account in computing the taxable income of the remaining portion of the mineral property. Furthermore, the fact that a mineral property to which section 1245 gain is properly allocable is (in the taxable year in which the taxpayer disposes of an item of section 1245 property) no longer in existence merely because the mineral property has been made a part of an aggregation or has been deaggregated will not result in the loss of tax benefits under this section. Accordingly,

(i) If a taxpayer has made an aggregation of mineral properties (see section 614 and the regulations thereunder), the amount of any gain described in subparagraph (1) of this paragraph which is properly allocable to the aggregation shall include the portion of any gain which would be properly allocable to the mineral properties which existed separately prior to the aggregation and of which the aggregation is or was composed, if the prior mineral properties had not been aggregated; and

(ii) If a taxpayer has deaggregated a mineral property, the amount of any gain described in subparagraph (1) of this paragraph which is properly allocable to each of the resulting mineral properties shall include a part of the portion of any gain which would be properly allocable to the prior aggregation if the aggregation had not been deaggregated, the part properly allocable to each of the resulting properties being determined by allocating the gain between the resulting properties in the same manner as basis is allocated between them for tax purposes (see paragraph (a)(2) of § 1.614-6 and example 5 of subparagraph (7) of this paragraph).

(5) In any case in which it is necessary to determine the portion of any gain recognized under section 1245(a)(1) which is properly allocable to the mineral property in respect of which the taxable income is being computed, the taxpayer shall have available permanent records of all the facts necessary to determine with reasonable accuracy the amount of such portion. In the absence of such records, none of the gain recognized under section 1245(a)(1) shall be allocable to such mineral property.

(6) As used in this paragraph, the term *mineral property* has the meaning assigned to it by section 614 and § 1.614-1.

(7) The provisions of this paragraph may be illustrated by the following examples:

Example 1. A, who uses the calendar year as his taxable year, operated and treated as separate properties mines Nos. 1 and 2. On January 1, 1963, A acquired a truck which was section 1245 property. During 1963 and 1964 the truck was used 25 percent of the time at mine No. 1 and 75 percent of the time at mine No. 2. For each such year the depreciation adjustments allowed in respect of the truck were $800 (the amount allowable). In computing the taxable income from mines Nos. 1 and 2 for each such year, $200 (25 percent of $800) of the depreciation adjustments was allocated by A to mine No. 1 and $600 (75 percent of $800) to mine No. 2. Thus, for the 2 years, the total of the depreciation adjustments on the truck was $1,600, of which $400 was allocated to mine No. 1 and $1,200 to mine No. 2. On January 1, 1965, A recognized upon sale of the truck a gain of $500 to which section 1245(a)(1) applied. During 1965, A did not recognize any other gain to which section 1245(a)(1) applied. In computing taxable income from the mines for 1965, the expenses otherwise required to be taken into account are reduced by $125 (that is $400/$1,600 of $500) for mine No. 1 and by $375 (that is $1,200/$1,600 of $500) for mine No. 2.

Example 2. The situation is the same as in example 1, except that the truck in question is used 25 percent of the time at mine No. 1, and 75 percent of the time in a nonmining business owned by A. Accordingly, in computing taxable income from A's mines for 1965, the expenses for mine No. 1 otherwise required to be taken into account are reduced by $125 (that is $400/$1,600 of $500), but no reduction is made in the expenses for mine No. 2, since the truck in question was not used in connection with that mineral property.

Example 3. The situation is the same as in example 1, except that the truck in question was used exclusively at mine No. 1 in 1963. On January 1, 1964, the truck was transferred to mine No. 2, and was used exclusively at mine No. 2 during the remaining period prior to its sale. However, A continued to own and operate mine No. 1. For the 2 years 1963 and 1964, the total of the depreciation adjustments on the truck was $1,600, of which $800 was allocated to mine No. 1 and $800 to mine No. 2. In computing taxable income from A's mines for 1965, the expenses for mines Nos. 1 and 2 otherwise required to be taken into account are reduced by $250 each (that is $800/$1,600 of $500). If A had sold mine No. 1 on January 1, 1964, no reduction in expenses would be allowable as a result of the operation of the truck at mine No. 1, since A would no longer have owned mine No. 1 in the year in which the truck was sold.

Example 4. On January 1, 1963, B, who uses the calendar year as his taxable year and who normally allocates depreciation costs to mines according to the percentage of time which the depreciable asset is used with respect to the mines, acquired a truck which was section 1245 property. During 1963 the truck was used exclusively on mine No. 1, which B operated and treated as a separate property. The depreciation adjustments allowed in respect of the truck for 1963 were $1,000 (the amount allowable), which amount was allocated to mine No. 1 in computing the taxable income therefrom. On January 1, 1964, B acquired and began operating mine No. 2 and elected under section 614(c) to aggregate and treat as one property mines Nos. 1 and 2. During 1964 B used the

truck 60 percent of the time for mine No. 1 and 40 percent of the time for mine No. 2. For 1964 the depreciation adjustments allowed in respect of the truck were $1,000 (the amount allowable), which amount was allocated to the aggregation of mines Nos. 1 and 2 in computing the taxable income therefrom. On December 31, 1964, B sold mine No. 2. For 1965 the depreciation adjustments allowed in respect to the truck were $1,000 (the amount allowable), which amount was allocated to mine No. 1 in computing the taxable income therefrom. On January 1, 1966, B recognized gain upon sale of the truck of $600 to which section 1245(a)(1) applied. In computing the taxable income from mine No. 1 for 1966, the expenses otherwise required to be taken into account are reduced by $600, since all the depreciation adjustments allowed with respect to the truck, including those allowed with respect to the use of the truck at mine No. 2 ($400 for 1964), relate to the same mineral property from which B had taxable income in 1966, the taxable year in which he sold the truck.

Example 5. On January 1, 1962, A, who uses the calendar year as his taxable year, elected under section 614(c) to aggregate and treat as one mineral property his operating mineral interests in mines Nos. 1 and 2. On January 1, 1963, A acquired a truck which was section 1245 property, to be used at both mine No. 1 and mine No. 2. A later elected (with the consent of the Commissioner) to deaggregate mines Nos. 1 and 2, and this deaggregation became effective on January 1, 1964. At the time of deaggregation, half of the tax basis of the aggregated property was allocated to mine No. 1, and the other half to mine No. 2. During each of the years 1963 and 1964, the truck was used 25 percent of the time on mine No. 1 and 75 percent of the time on mine No. 2, and the depreciation adjustments allowed in respect of the truck were $800 (the amount allowable). On January 1, 1965, A recognized upon sale of the truck a gain of $500 to which section 1245(a)(1) applied. In computing taxable income from A's mines for 1965, the expenses otherwise required to be taken into account are reduced by $187.50 (that is half of $250 for 1963 and $200/$800 of $250 for 1964) for mine No. 1 and by $312.50 (that is half of $250 for 1963 and $600/$800 of $250 for 1964) for mine No. 2.

(c) ***Treatment of particular items in computing taxable income from the property.*** In determining taxable income from the property under the provisions of paragraph (a) of this section:

(1) Trade or cash discounts (or allowances determined to have the same effect as trade or cash discounts) which are actually allowed to the taxpayer in connection with the acquisition of property, supplies, or services shall not be included in the cost of such property, supplies, or services.

(2) Intangible drilling and development costs which are deducted under section 263(c) and § 1.612-4 shall be subtracted from the gross income from the property.

(3) Exploration and development expenditures which are deducted for the taxable year under sections 615, 616, or 617 shall be subtracted from the gross income from the property.

(4)

(i) Selling expenses, if any, paid or incurred with respect to a raw mineral product shall be subtracted from gross income from the property. See subdivision (iii) of this subparagraph for the definition of the term *raw mineral product.* For example, the selling expenses paid or incurred by a producer of raw mineral products with respect to products such as crude oil, raw gas, coal, iron ore, or crushed dolomite shall be subtracted from gross income from the property.

(ii) A reasonable portion of the expenses of selling a refined, manufactured, or fabricated product shall be subtracted from gross income from the property. Such reasonable portion shall be equivalent to the typical selling expenses which are incurred by unintegrated miners or producers in the same mineral industry so as to maintain equality in the tax treatment of

unintegrated miners or producers in comparison with integrated miner-manufacturers or producer-manufacturers. If unintegrated miners or producers in the same mineral industry do not typically incur any selling expenses, then no portion of the expenses of selling a refined, manufactured, or fabricated product shall be subtracted from gross income from the property when determining the taxpayer's taxable income from the property.

(iii) For purposes of this subparagraph, a product will be considered to be a raw mineral product if (in the case of oil and gas) it is sold in the immediate vicinity of the well or if (in the case of minerals other than oil and gas) it is sold under the conditions described in paragraph (b)(1) of § 1.613-4. In addition, a product will be considered to be a raw mineral product if only insubstantial value is added to the product by nonmining processes (or, in the case of oil and gas, by conversion or transportation processes). For example, in the case of a producer of crushed granite poultry grit, both bulk and bagged grit will be deemed to be a raw mineral product for purposes of the selling expense rule set forth in this subparagraph.

(iv) The term *selling expenses,* for purposes of this subparagraph, includes sales management salaries, rent of sales offices, sales clerical expenses, salesmen's salaries, sales commissions and bonuses, advertising expenses, sales traveling expenses, and similar expenses, together with an allocable share of the costs of supporting services, but the term does not include delivery expenses.

(5) Taxes which are taken as a credit rather than as a deduction or which are capitalized shall not be subtracted from the gross income from the property.

(6) Trade association dues paid or incurred by a producer of crude oil or gas or a raw mineral product shall be subtracted from the gross income from the property. See subparagraph (4) (iii) of this paragraph for the definition of the term *raw mineral product.* In addition, a reasonable portion of the trade association dues incurred by a producer of a refined, manufactured, or fabricated product shall also be subtracted from gross income from the property if the activities of the association relate to production, treatment and marketing of the crude oil or gas or raw mineral product. One reasonable method of allocating the trade association dues described in the preceding sentence is an allocation based on the proportion that the direct costs of mining processes and the direct costs of nonmining processes (or in the case of oil and gas, conversion and transportation processes) bear to each other. The foregoing rules shall apply even though one of the principal purposes of an association is to advise, promote, or assist in the production, marketing, or sale of refined, manufactured, or fabricated products. For example, a reasonable portion of the trade association dues paid to an association which promotes the sale of cement, refined petroleum, or copper products shall be subtracted from gross income from the property.

[T.D. 6955, 33 FR 6968, May 9, 1968. Redesignated by T.D. 7170, 37 FR 5374, Mar. 15, 1972, as amended by T.D. 7170, 37 FR 5381, Mar. 15, 1972]

§ 1.613-6 Statement to be attached to return when depletion is claimed on percentage basis.

In addition to the requirements set forth in paragraph (g) of § 1.611-2, a taxpayer who claims the percentage depletion deduction under section 613 for any taxable year shall attach to his return for such year a statement setting forth in complete, summary form, with respect to each property for which such deduction is allowable, the following information:

(a) All data necessary for the determination of the *gross income from the property,* as defined in §§ 1.613-3 from 1.613-4, including:

(1) Amounts paid as rents or royalties including amounts which the recipient treats under section 631(c),

(2) Proportion and amount of bonus excluded, and

(3) Amounts paid to holders of other interests in the mineral deposit.

(b) All additional data necessary for the determination of the *taxable income from the property (computed without the allowance for depletion*), as defined in § 1.613-5.

[T.D. 7170, 37 FR 5382, Mar. 15, 1972]

§ 1.613-7 Application of percentage depletion rates provided in section 613(b) to certain taxable years ending in 1954.

(a) ***Election of taxpayer.*** In the case of any taxable year ending after December 31, 1953, to which the Internal Revenue Code of 1939 is applicable, the taxpayer may elect in accordance with section 613(d) and this section to apply the appropriate percentage depletion rate specified in section 613 in respect of any mineral property (within the meaning of the 1939 Code). In the case of mines, wells, or other natural deposits listed in section 613(b), the election may be made by the taxpayer irrespective of whether his depletion allowance with respect to the property for the taxable year was computed upon the basis of cost, discovery value, or upon a percentage of gross income from the property. Once made, the election shall be irrevocable with respect to the property for which it is exercised. The election may be made for any mineral property of the taxpayer and need not be made for all such properties. *Gross income from the property* and *net income from the property* shall have the same meaning as those terms are used in 26 CFR (1939) 39.23(m)-1 (Regulations 118).

(b) ***Computation of depletion allowance.*** The depletion allowance for any taxable year with respect to any property for which the taxpayer makes the election under section 613(d) shall be an amount equal to the sum of:

(1) That portion of a tentative allowance, computed under the provisions of the Internal Revenue Code of 1939 (without regard to paragraph (1) of section 613(d)), which the number of days in the taxable year prior to January 1, 1954, bears to the total number of days in such taxable year; plus

(2) That portion of a tentative allowance, computed by using the appropriate percentage depletion rate specified in section 613(b) (but otherwise computed under the provisions of the Internal Revenue Code of 1939), which the number of days in the taxable year after December 31, 1953, bears to the total number of days in such taxable year

In the case of any taxable year beginning after December 31, 1953, and ending before August 17, 1954, the depletion allowance with respect to any property for which the taxpayer makes the election under section 613(d) shall be computed under the provisions of the Internal Revenue Code of 1939, except that the appropriate percentage depletion rate specified in section 613(b) shall be used. In making such computation, *gross income from the property* and *net income from the property* shall be determined in the same manner as specified in paragraph (a) of this section.

(c) ***Examples.*** The provisions of this section may be illustrated by the following examples:

Example 1. A is a taxpayer who reports income on the basis of a taxable year ending June 30. For the taxable year ended June 30, 1954, A had gross income from a uranium property in the amount of $100,000 and his depletion allowance was computed with reference to percentage depletion. His net income from this property, for purposes of limiting the depletion allowance, was $40,000. The 15-percent rate of depletion provided for in the Internal Revenue Code of 1939 for metal mines resulted in a depletion allowance for the taxable year of $15,000. Percentage depletion computed with reference to the 23-percent rate provided for uranium under section 613(b) is $23,000 ($100,000 times 23 percent). However, the allowance computed on this basis is limited to $20,000 (50 percent of A's net income from the property). If A exercises the election provided for in section 613(d) his depletion allowance for the taxable year is the aggregate of $7,561.64 (184/365 times $15,000) plus $9,917.80 (181/365 times $20,000) or $17,479.44

Example 2. Assume the same facts as in example 1 except that A's depletion allowance was computed on the basis of cost and amounted to $17,500. If the election is made, A's allowance for the taxable year is the aggregate of $8,821.92 (184/365 times $17,500) plus $9,917.80 (181/365 times $20,000) or $18,739.72.

(d) ***Requirement for making election.***

(1) The election under section 613(d) shall be made by filing a statement with the district director with whom the income tax return was filed for the taxable year to which the election is applicable. Such statement shall indicate that an election is being made under section 613(d), shall contain a recomputation of the depletion allowance and the tax liability for all taxable years affected by the exercise of the election, and shall be accompanied either by a claim for refund or credit or by an amended return or returns, whichever is appropriate.

(2) If the treatment of any item upon which a tax previously determined was based, or if the application of any provisions of the internal revenue laws with respect to such tax, depends upon the amount of income (e.g., charitable contributions, foreign tax credit, dividends received credit, and medical expenses), readjustment in these particulars will be necessary as part of any recomputation in conformity with the change in the amount of the income which results solely from the making of the election under section 613(d).

(e) ***Administrative provisions; etc.***

(1) Section 36(b) of the Technical Amendments Act of 1958 (72 Stat. 1633) provides as follows:

> *Sec. 36. Percentage depletion rates for certain taxable years ending in 1954. * * **
>
> (b) *Statute of limitations, etc.; interest.* If refund or credit of any overpayment resulting from the application of the amendment made by subsection (a) of this section is prevented on the date of the enactment of this Act, or within 6 months from such date, by the operation of any law or rule of law (other than section 3760 of the Internal Revenue Code of 1939 or section 7121 of the Internal Revenue Code of 1954, relating to closing agreements, and other than section 3761 of the Internal Revenue Code of 1939 or section 7122 of the Internal Revenue Code of 1954, relating to compromises), refund or credit of such overpayment may, nevertheless, be made or allowed if claim therefor is filed within 6 months from such date. No interest shall be paid on any overpayment resulting from the application of the amendment made by subsection (a) of this section.

(2) If refund or credit of any overpayment resulting from the application of section 613(d) is prevented on September 2, 1958, or on or before March 2, 1959, by the operation of any law or rule of law (other than section 3760 of the Internal Revenue Code of 1939 or section 7121 of the Internal Revenue Code of 1954, relating to closing agreements, and other than section 3761 of the Internal Revenue Code of 1939 or section 7122 of the Internal Revenue Code of 1954, relating to compromises), refund or credit of such overpayment may, nevertheless, be made or allowed if claim therefor is filed on or before March 2, 1959. If such refund or credit is not prevented on or before March 2, 1959, the time for filing claim therefor shall be governed by the rules of law generally applicable to credits and refunds.

(3) The amount of any refund or credit which is allowable by reason of section 613(d) shall not exceed the decrease in income tax liability resulting solely from the application of the percentage rates specified in section 613(b). No interest shall be allowed or paid on any overpayment resulting from the application of section 613(d).

(4) For purposes of this section the *decrease in income tax liability* shall be the amount by which the tax previously determined (as defined in section 3801(d) of the Internal Revenue Code of 1939) exceeds the tax as recomputed under section 613(d) and this section.

(f) ***Adjustment to basis.*** Proper adjustment shall be made to the basis of any property as required by section 113(b)(1) of the Internal Revenue Code of 1939 and 26 CFR (1939) 39.113(b)(*1*)-1(c) (Regulations 118) to reflect any change in the depletion allowance resulting from the application of section 613(d) of the Internal Revenue Code of 1954.

[T.D. 6500, 25 FR 11737, Nov. 26, 1960. Redesignated by T.D. 7170, 37 FR 5374, Mar. 15, 1972]

§ 1.613A-0 Limitations on percentage depletion in the case of oil and gas wells; table of contents.

This section lists the paragraphs contained in §§ 1.613A-0 through 1.613A-7.

§ 1.613A-1 Post-1974 limitations on percentage depletion in case of oil and gas wells; general rule.

§ 1.613A-2 Exemption for certain domestic gas wells.

§ 1.613A-3 Exemption for independent producers and royalty owners.

(a) General rules.

(b) Phase-out table.

(c) Applicable percentage.

(d) Production in excess of depletable quantity.

(1) Primary production.

(2) Secondary or tertiary production.

(3) Taxable income from the property.

(4) Examples.

(e) Partnerships.

(1) General rule.

(2) Initial allocation of adjusted basis of oil or gas property among partners.

(i) General rule.

(ii) Allocation methods.

(3) Adjustments by partnership to allocated adjusted bases.

(i) Capital expenditures by partnership.

(ii) Admission of a new partner or increase in partner's interest.

(A) In general.

(B) Allocation of basis to contributing partner.

(C) Reduction of existing partners' bases.

(iii) Determination of aggregate of partners' adjusted bases in the property.

(A) In general.

(B) Written data.

(C) Assumptions.

(iv) Withdrawal of partner or decrease in partner's interest.

(A) In general.

(B) Special rule for determining a withdrawing partner's basis in the property.

(v) Effective date.

(4) Determination of a partner's interest in partnership capital or income.

(5) Special rules on allocation of adjusted basis to partners.

(6) Miscellaneous rules.

(7) Examples.

(f) S corporations.

(g) Trusts and estates.

(h) Businesses under common control; members of the same family.

(1) Component members of a controlled group.

(2) Aggregation of business entities under common control.

(3) Allocation among members of the same family.

(4) Special rules.

(5) Examples.

(i) Transfer of oil or gas property.

(1) General rule.

(i) In general.

(ii) Examples.

(2) Transfers after October 11, 1990.

(i) General rule.

(ii) Transfer.

(iii) Transferee.

(iv) Effective date.

(v) Examples.

(j) Percentage depletion with respect to bonuses and advanced royalties.

(1) Amounts received or accrued after August 16, 1986.

(2) Amounts received or accrued before August 17, 1986.

(k) Special rules for fiscal year taxpayers.

(l) Information furnished by partnerships, trusts, estates, and operators.

§ 1.613A-4 Limitations on application of § 1.613A-3 exemption.

(a) Limitation based on taxable income.

(b) Retailers excluded.

(c) Certain refiners excluded.

§ 1.613A-5 Election under section 613A (c) (4).

§ 1.613A-6 Recordkeeping requirements.

(a) Principal value of property demonstrated.

(b) Production from secondary or tertiary processes.

(c) Retention of records.

§ 1.613A-7 Definitions.

(a) Domestic.

(b) Natural gas.

(c) Regulated natural gas.

(d) Natural gas sold under fixed contract.

(e) Qualified natural gas from geopressured brine.

(f) Average daily production.

(g) Crude oil.

(h) Depletable oil quantity.

(i) Depletable natural gas quantity.

(j) Barrel.

(k) Secondary or tertiary production.

(l) Controlled group of corporations.

(m) Related person.

(n) Transfer.

(o) Transferee.

(p) Interest in proven oil or gas property.

(q) Amount disallowed.

(r) Retailer.

(s) Refiner.

[T.D. 8348, 56 FR 21938, May 13, 1991, as amended by T.D. 8437, 57 FR 43899, Sept. 23, 1992]

§ 1.613A-1 Post-1974 limitations on percentage depletion in case of oil and gas wells; general rule.

Except as otherwise provided in section 613A and the regulations thereunder, in the case of oil or gas which is produced after December 31, 1974, and to which gross income from the property is attributable after such year, the allowance for depletion under section 611 with respect to any oil or gas well shall be computed without regard to section 613. In the case of a taxable year beginning before January 1, 1975, and ending after that date, the percentage depletion allowance (but not the cost depletion allowance) with respect to oil and gas wells for such taxable year shall be determined by treating the portion thereof in 1974 as if it were a short taxable year for purposes of section 613 and the portion thereof in 1975 as if it were a short taxable year for purposes of section 613A.

[T.D. 7487, 42 FR 24264, May 13, 1977]

§ 1.613A-2 Exemption for certain domestic gas wells.

(a) The allowance for depletion under section 611 shall be computed in accordance with section 613 with respect to:

(1) Regulated natural gas (as defined in paragraph (c) of § 1.613A-7),

(2) Natural gas sold under a fixed contract (as defined in paragraph (d) of § 1.613A-7), and

(3) Any geothermal deposit in the United States or in a possession of the United States that is determined to be a gas well within the meaning of former section 613(b)(1)(A) (as in effect before enactment of the Tax Reduction Act of 1975) for taxable years ending after December 31, 1974, and before October 1, 1978 (see section 613(e) for depletion on geothermal deposits thereafter),

(b) For taxable years ending after September 30, 1978, the allowance for depletion under section 611 shall be computed in accordance with section 613 with respect to any qualified natural gas from geopressured brine (as defined in paragraph (e) of § 1.613A-7), and 10 percent shall be deemed to be specified in section 613(b) for purposes of section 613(a).

(c) For special rules applicable to partnerships, S corporations, trusts, and estates, see paragraphs (e), (f), and (g) of § 1.613A-3.

(d) The provisions of this section may be illustrated by the following examples:

Example 1. A is a producer of natural gas which is sold by A under a contract in effect on February 1, 1975. The contract provides for an increase in the price of the gas sold under the contract to the highest price paid to a producer for natural gas in the area. The gas sold by A qualifies under section 613A(b)(1)(B) for percentage depletion as gas sold under a fixed contract until its price increases, but is presumed not to qualify thereafter unless A demonstrates by clear and convincing evidence that the price increase in no event takes increases in tax liabilities into account.

Example 2. B is a producer of natural gas which is sold by B under a contract in effect on February 1, 1975. The contract provides that beginning January 1, 1980, the price of the gas may be renegotiated. Such a provision does not disqualify gas from qualifying for the exemption under section 613A(b)(1)(B) with respect to the gas sold prior to January 1, 1980. However, gas sold on or after January 1, 1980, does not qualify for the exemption whether or not the price of the gas is renegotiated.

[T.D. 8348, 56 FR 21939, May 13, 1991, as amended by T.D. 8437, 57 FR 43899, Sept. 23, 1992; 58 FR 6678, Feb. 1, 1993]

§ 1.613A-3 Exemption for independent producers and royalty owners.

(a) ***General rules.***

(1) Except as provided in section 613A(d) and § 1.613A-4, the allowance for depletion under section 611 with respect to oil or gas which is produced after December 31, 1974, and to which gross income from the property is attributable after that date, shall be computed in accordance with section 613 with respect to:

(i) So much of the taxpayer's average daily production (as defined in paragraph (f) of § 1.613A-7) of domestic crude oil (as defined in paragraphs (a) and (g) of § 1.613A-7) as does not exceed the taxpayer's depletable oil quantity (as defined in paragraph (h) of § 1.613A-7), and

(ii) So much of the taxpayer's average daily production of domestic natural gas (as defined in paragraphs (a) and (b) of § 1.613A-7) as does not exceed the taxpayer's depletable natural gas quantity (as defined in paragraph (i) of § 1.613A-7), and the applicable percentage (determined in accordance with the table in paragraph (c) of this section shall be deemed to be specified in section 613(b) for purposes of section 613(a).

(2) Except as provided in section 613A(d) and § 1.613A-4, the allowance for depletion under section 611 with respect to oil or gas which is produced after December 31, 1974, and to which gross income from the property is attributable after that date and before January 1, 1984, shall be computed in accordance with section 613 with respect to:

(i) So much of the taxpayer's average daily secondary or tertiary production (as defined in paragraph (k) of § 1.613A-7) of domestic crude oil as does not exceed the taxpayer's depletable oil quantity (determined without regard to section 613A(c)(3)(A)(ii), as in effect prior to the Revenue Reconciliation Act of 1990), and

(ii) So much of the taxpayer's average daily secondary or tertiary production of domestic natural gas as does not exceed the taxpayer's depletable natural gas quantity (determined without regard to section 613A(c)(3)(A)(ii), as in effect prior to the Revenue Reconciliation Act of 1990), and 22 percent shall be deemed to be specified in section 613(b) for purposes of section 613(a).

(3) For purposes of this section, there shall not be taken into account any production with respect to which percentage depletion is allowed pursuant to section 613A(b) or is not allowable by reason of section 613A(c)(9), as in effect prior to the Revenue Reconciliation Act of 1990.

(4) The provisions of this paragraph may be illustrated by the following examples:

Example 1. A, a calendar year taxpayer, owns an oil producing property with 100,000 barrels of production to which income was attributable for 1975 and a gas producing property with 1,200,000,000 cubic feet of production to which income was attributable for 1975. Under section 613A(c)(4), the oil equivalent of 1,200,000,000 cubic feet of gas is 200,000 barrels, bringing A's total production of oil and gas to which income was attributable for 1975 to the equivalent of 300,000 barrels of oil. A's average daily production was 821.92 barrels (300,000 barrels ÷ 365 days) which is less than the depletable oil quantity (2,000 barrels) before reduuction for any election by A under section 613A(c)(4). Accordingly, A may make an election with respect to A's entire gas production and thereby be entitled to percentage depletion with respect to A's entire 1975 income from production of oil and gas. A's allowable depletion pursuant to section 613A(c) and A's oil and gas properties would be the amount determined under section 613(a) computed at the 22 percent rate specified in section 613A(c)(5), as in effect prior to the Revenue Reconciliation Act 1990, for 1975.

Example 2. B, a calendar year taxpayer, owns oil producing properties with 365,000 barrels of production to which income was attributable for 1975. B was a retailer of oil and gas for only the last 3 months of 1975. B's average daily production for 1975 was 1,000 barrels (365,000 barrels ÷ 365 days).

Example 3. C, a calendar year taxpayer, owns property X with 500,000 barrels of primary production to which income was attributable for 1975 and property Y with 200,000 barrels of primary production to which income was attributable for 1975. Property Y had been transferred to C on January 1, 1975, on which date it was a proven property. Therefore, the exemption under section 613A(c)(1) does not apply to C with respect to production from property Y. In determining C's depletable oil quantity for the year, the production from property Y is not taken into account. Thus, C's average daily prduction for 1975 was 1,369.86 barrels (500,000 barrels ÷ 365).

Example 4. D owns an oil property with producing wells X and Y on it. In 1975 D converts well X into an injection well. Prior to the application of the secondary process, it is estimated that without the application of the process the annual production from well X would have been 50x barrels of oil and from well Y would have been 100x barrels of oil. For the taxable year in which injection is commenced production from well X is 10x barrels and from well Y is 180x barrels. Fortyx barrels of oil [190x barrels of oil (actual production from the property)—150x barrels (estimate of primary production from the property)] qualify as secondary production.

Example 5. E, a calendar year taxpayer, owns a domestic oil well which produced 100,000 barrels of oil in 1980. The proceeds from the sale of 15,000 barrels of that production are not includible in E's income until 1981. The 15,000 barrels produced in 1980 are included in E's average daily production for 1981 and excluded from such production for 1980. The tentative quantity and the percentage depletion rate for 1981 are applicable to the 15,000 barrels of oil.

(b) ***Phase-out table.*** For purposes of section 613A(c)(3)(A)(i) and § 1.613A-7(h) (relating to depletable oil quantity)—

In the case of production after 1974 and to which gross income from the property is attributable for the calendar year:	The tentative quantity in barrels per day is:
1975	2,000
1976	1,800
1977	1,600
1978	1,400
1979	1,200
1980 and thereafter	1,000

(c) ***Applicable percentage.*** For purposes of section 613A(c)(1) and paragraph (a) of this section—

In the case of production after 1974 and to which gross income from the property is attributable for the calendar year:	The applicable percentage is:
1975	22
1976	22
1977	22
1978	22
1979	22
1980	22
1981	20
1982	18
1983	16
1984 and thereafter	15

(d) ***Production in excess of depletable quantity*** —

(1) ***Primary production.***

(i) If the taxpayer's average daily production of domestic crude oil exceeds his depletable oil quantity, the allowance for depletion pursuant to section 613A(c)(1)(A) and paragraph (a)(1)(i) of this section with respect to oil produced during the taxable year from each property in the United States shall be that amount which bears the same ratio to the amount of depletion which would have been allowable under section 613(a) for all of the taxpayer's oil produced from the property during the taxable year (computed as if section 613 applied to all of the production at the rate specified in paragraph (c) of this section) as the amount of his depletable oil quantity bears to the aggregate number of barrels representing the average daily production of domestic crude oil of the taxpayer for such year.

(ii) If the taxpayer's average daily production of domestic natural gas exceeds his depletable natural gas quantity, the allowance for depletion pursuant to section 613A(c)(1)(B) and paragraph (a)(1)(ii) of this section with respect to natural gas produced during the taxable year from each property in the United States shall be that amount which bears the same ratio to the amount of depletion which would have been allowable pursuant to section 613(a) for all of the taxpayer's natural gas produced from the property during the taxable year (computed as if section 613 applied to all of the production at the rate specified in paragraph (c) of this section) as the amount of his depletable natural gas quantity in cubic feet bears to the aggregate number of cubic feet representing the average daily production of domestic natural gas of the taxpayer for such year.

(2) ***Secondary or tertiary production.***

(i) If the taxpayer's average daily secondary or tertiary production of domestic crude oil exceeds his depletable oil quantity (determined without regard to section 613A(c)(3)(A)(ii), as in effect prior to the Revenue Reconciliation Act of 1990), the allowance for depletion pursuant to section 613A(c)(6)(A)(i), as in effect prior to the Revenue Reconciliation Act of 1990, and paragraph (a)(2)(i) of this section with respect to oil produced during the taxable year from each property in the United States shall be that amount which bears the same ratio to the amount of depletion which would have been allowable pursuant to section 613(a) for all of the taxpayer's secondary or tertiary production of oil from the property during the taxable year (computed as if section 613 applied to all of the production at the rate specified in paragraph (a)(2) of this section) as the amount of his depletable oil quantity (determined without regard to section 613A(c)(3)(A)(ii), as in effect prior to the Revenue Reconciliation Act of 1990) bears to the aggregate number of barrels representing the average daily secondary or tertiary production of domestic crude oil of the taxpayer for such year.

(ii) If the taxpayer's average daily secondary or tertiary production of domestic natural gas exceeds his depletable natural gas quantity (determined without regard to section 613A(c)(3)(A)(ii), as in effect prior to the Revenue Reconciliation Act of 1990), the allowance for depletion pursuant to section 613A(c)(6)(A)(ii), as in effect prior to the Revenue Reconciliation Act of 1990, and paragraph (a)(2)(ii) of this section with respect to natural gas produced during the taxable year from each property in the United States shall be that amount which bears the same ratio to the amount of depletion which would have been allowable pursuant to section 613(a) for all of the taxpayer's secondary or tertiary production of natural gas from the property during the taxable year (computed as if section 613 applied to all of the production at the rate specified in paragraph (a)(2) of this section) as the amount of his depletable natural gas quantity in cubic feet (determined without regard to section 613A(c)(3)(A)(ii), as in effect prior to the Revenue Reconciliation Act of 1990) bears to the aggregate number of cubic feet representing the average daily secondary or tertiary production of domestic natural gas of the taxpayer for such year.

(iii) This paragraph (d)(2) shall not apply after December 31, 1983.

(3) ***Taxable income from the property.*** If both oil and gas are produced from the property during the taxable year, then for purposes of section 613A(c)(7) (A) and (B) and paragraph (d) of this section the taxable income from the property, in applying the taxable income limitation in section 613(a), shall be allocated between the oil production and the gas production in proportion to the gross income from the property during the taxable year from each. If both gas with respect to which section 613A(b) and § 1.613A-2 apply and oil or gas with respect to which section 613A(c) and this

section apply are produced from the property during the taxable year, then for purposes of section 613A(d)(1) and paragraph (a) of § 1.613A-4 the taxable income from the property, in applying the taxable income limitation in section 613(a), shall also be so allocated. In addition, if both primary production and secondary or tertiary production (to which gross income from the property is attributable before January 1, 1984) are produced from the property during the taxable year and the total amount of production is in excess of the depletable quantity, then for purposes of paragraph (d) of this section the taxable income from the property, in applying the taxable income limitation in section 613(a), shall also be so allocated.

(4) ***Examples.*** The application of this paragraph may be illustrated by the following examples:

Example 1. A owns Y and Z oil producing properties. With respect to properties Y and Z, the percentage depletion allowable pursuant to section 613(a) (computed as if section 613 applied to all of the production at the rate specified in section 613A(c)(5)) for 1975 was $100x and $200x, respectively. A's average daily production for 1975 was 4,000 barrels. A's allowable depletion pursuant to section 613A(c) with respect to property Y was $50x ($100x depletion × 2,000 depletable oil quantity/ 4,000 average daily production). A's allowable depletion pursuant to section 613A(c) with respect to property Z was $100x ($200x depletion × 2,000 depletable oil quantity/ 4,000 average daily production).

Example 2. B owns gas producing properties which had secondary gas production for 1975 of 3,285,000,000 cubic feet, which under section 613A(c)(4) is equivalent to 547,500 barrels of oil. B's average daily secondary production of gas for 1975 was equivalent to 1,500 barrels (547,500 barrels ÷ 365). B elected to have section 613A(c)(4) apply to the gas production. With respect to the production, the percentage depletion allowable pursuant to section 613(a) (computed at the rate specified in section 613A(c)(6)(A), as in effect prior to the Revenue Reconciliation Act of 1990) was $150x. B also owns an oil producing property which had primary oil production for 1975 of 365,000 barrels. B's average daily production of oil for 1975 was 1,000 barrels (365,000 ÷ 365). With respect to the oil property, the percentage depletion allowable pursuant to section 613(a) (computed as if section 613 applied to all of the production at the rate specified in section 613A(c)(5), as in effect prior to the Revenue Reconciliation Act of 1990) was $100x. B's depletable oil quantity for 1975 was 500 barrels (2,000 barrels tentative quantity −1,500 barrels average daily secondary production). B's allowable depletion pursuant to section 613A(c) with respect to the oil property was $50x ($100x depletion × 500 depletable oil quantity/ 1,000 average daily production).

Example 3. Assume the same facts as in *Example 2* except that B's primary production was 6,000,000 cubic feet of natural gas daily rather than its equivalent under section 613A(c)(4) of 1,000 barrels of oil and that B elected to have that section apply to such gas. B's allowable depletion pursuant to section 613A(c) with respect to B's primary production is $50x, the same as in example 2.

Example 4. C is a partner with a one-third interest in Partnerships CDE and CFG with each partnership owning a single oil property. C's percentage depletion allowable under section 613(a) (computed as if section 613 applied to all of the production at the rate specified in section 613A(c)(5), as in effect prior to the Revenue Reconciliation Act of 1990) for 1975 was $20x with respect to 495,000 barrels (his allocable share of Partnership CDE production) and $40x with respect to 600,000 barrels (his allocable share of Partnership CFG production). C's average daily production is 3,000 barrels (1,095,000 total production ÷ 365 days). C's allowable depletion pursuant to section 613A(c) with respect to C's share of the production of Partnership

CDE is $13.33x ($20x depletion × 2,000 depletable oil quantity/ 3,000 average daily production). C's allowable depletion pursuant to section 613A(c) with respect to C's share of the production of Partnership CFG is $26.67x ($40x depletion × 2,000 depletable oil quantity/ 3,000 average daily production). See § 1.613A-3(e) for the rules on computing depletion in the case of a partnership.

Example 5. H owns a property which, during H's fiscal year which began on June 1, 1975, and ended on May 31, 1976, produced gas qualifying under section 613A(b) and oil qualifying under section 613A(c). For the fiscal year H's gross income from the property was $400x, of which $100x was from gas and $300x was from oil. For the oil his gross income from the property for the period beginning June 1, 1975, and ending December 31, 1975, was $100x and for the 1976 portion of the fiscal year was $200x. The percentage depletion allowance (before applying the 50 percent limitation of section 613(a) or the 65 percent limitation of section 613A(d)(1)) was $22x for the gas, $22x for the oil in 1975, and $44x for the oil in 1976. H's taxable income from the property for the fiscal year was $100x. In accordance with paragraph (d)(3) of this section, the taxable income from the property is allocated $25x to the gas:

$$\left[\begin{array}{l}\$100\text{x taxable income}\\ \text{from the property}\end{array}\left(\frac{\$100\text{x gross income from gas from the property}}{\$400\text{x total gross income from the property}}\right)\right]$$

$25x to the 1975 oil:

$$\left[\begin{array}{l}\$100\text{x taxable income}\\ \text{from the property}\end{array}\left(\frac{\$100\text{x gross income from 1975 oil from the property}}{\$400\text{x total gross income from the property}}\right)\right]$$

and $50x to the 1976 oil:

$$\left[\begin{array}{l}\$100\text{x taxable income}\\ \text{from the property}\end{array}\left(\frac{\$200\text{x gross income from 1976 oil from the property}}{\$400\text{x total gross income from the property}}\right)\right]$$

With the application of the 50 percent of taxable income from the property limitation, the allowable percentage depletion (computed without reference to section 613A) is limited to $12.50x for the gas, $12.50x for the oil in 1975, and $25x for the oil in 1976.

(e) ***Partnerships*** —

(1) ***General rule.*** In the case of a partnership, the depletion allowance under section 611 with respect to production from domestic oil and gas properties shall be computed separately by the partners and not by the partnership. The determination of whether cost or percentage depletion is applicable is to be made at the partner level. The partnership must allocate to each partner the partner's proportionate share of the adjusted basis of each partnership oil or gas property in accordance with the provisions of paragraphs (e)(2) through (e)(6) of this section. This allocation of the adjusted basis of oil or gas property does not affect a partner's adjusted basis in his or her partnership interest.

(2) ***Initial allocation of adjusted basis of oil or gas property among partners*** —

(i) ***General rule.*** Each partner shall be allocated his or her proportionate share of the adjusted basis of each partnership domestic oil or gas property. The initial allocation of adjusted basis is to be made as of the later of the date of acquisition of the oil or gas property by the partnership or January 1, 1975.

(ii) ***Allocation methods.*** Except as otherwise provided in paragraph (e)(5) of this section, the provisions of this paragraph (e)(2)(ii) govern the determination under paragraph (e)(2)(i) of this section of a partner's proportionate share of the adjusted basis of oil or gas property. Each partner's proportionate share is determined in accordance with the partner's proportionate interest in partnership capital at the time of the allocation unless both—

(A) The partnership agreement provides that a partner's share of the adjusted basis of one or more properties is determined in accordance with his or her proportionate interest in partnership income; and

(B) At the time of allocation under the partnership agreement the share of each partner in partnership income is reasonably expected to be substantially unchanged throughout the life of the partnership, other than changes merely to reflect the admission of a new partner, an increase in a partners' interest in consideration for money, property, or services, or a partial or complete withdrawal of an existing partner

If the requirements of paragraph (e)(2)(ii) (A) and (B) of this section are met, a partner's proportionate share is determined in accordance with his or her proportionate interest in partnership income. The partners' shares of adjusted basis are determined on a property-by-property basis. Accordingly, the basis of one property may be allocated in proportion to capital and the basis of another property may be allocated in proportion to income. See §§ 1.613A-3(e)(5) and 1.704-1(b)(4)(v) for special rules concerning allocation of the adjusted basis of oil and gas properties.

(3) ***Adjustments by partnership to allocated adjusted bases*** —

(i) ***Capital expenditures by partnership.*** Appropriate adjustments shall be made to the partners' adjusted bases in any domestic oil and gas property for any partnership capital expenditures relating to such property that are made after the initial allocation. These adjustments shall be allocated among the partners in accordance with the principles set forth in paragraph (e)(2)(ii) of this section.

(ii) ***Admission of a new partner or increase in partner's interest*** —

(A) ***In general.*** Upon a contribution of money, other property, or services to the partnership by a new or existing partner ("contributing partner") as consideration for an interest in the partnership, the partnership shall allocate, in accordance with paragraph (e)(3)(ii)(B) of this section, a share of the partnership's basis in each existing oil and gas property to the contributing partner, and each existing partner shall reduce, in accordance with paragraph (e)(3)(ii)(C) of this section, his or her share of the partnership's basis in such property.

(B) ***Allocation of basis to contributing partner.*** The partnership shall allocate to a contributing partner his or her proportionate share (determined under paragraph (e)(2)(ii) of this section in accordance with the partner's proportionate interest in partnership capital or income) of the partnership's adjusted basis in each existing partnership oil or gas

property. For purposes of this allocation, the partnership's adjusted basis in such property equals the aggregate of its partner's adjusted bases in the property, as determined under paragraph (e)(3)(iii) of this section.

(C) ***Reduction of existing partners' bases.*** Each existing partner's basis in each existing partnership oil or gas property is reduced by the percentage of the partnership's aggregate basis in the property that is allocated to the contributing partner. Thus, if one-third of the partnership's aggregate basis in a property is allocated to a contributing partner because the contributing partner has a one-third interest in partnership capital, after the admission of the contributing partner each existing partner's basis (including the contributing partner's pre-existing basis if such partner is also an existing partner) in each property equals the partner's basis (prior to the admission) reduced by one-third.

(iii) ***Determination of aggregate of partners' adjusted bases in the property*** —

(A) ***In general.*** To determine the aggregate of its partners' adjusted bases for purposes of this paragraph (e)(3), the partnership must determine each partner's adjusted basis under either paragraph (e)(3)(iii)(B) (written data) or paragraph (e)(3)(iii)(C) (assumptions) of this section. The partnership is permitted to determine the bases of some partners under paragraph (e)(3)(iii)(B) of this section and of others under paragraph (e)(3)(iii)(C) of this section. For this purpose, a partner's basis in an oil or gas property does not include any basis adjustment under section 743(b).

(B) ***Written data.*** A partnership may determine a partners' basis in an oil or gas property by using written data provided by a partner stating the amount of the partner's adjusted basis or depletion deductions with respect to the property unless the partnership knows or has reason to know that the written data is inaccurate. In determining depletion deductions, a partner must treat as actually deducted any amount disallowed and carried over as a result of the 65 percent-of-income limitation of section 613A(d)(1). If a partnership does not receive written data upon which it may rely, the partnership must use the assumptions provided in paragraph (e)(3)(iii)(C) of this section in determining a partner's adjusted basis in an oil or gas property.

(C) ***Assumptions.*** Except as provided in paragraph (e)(3)(iv)(B) of this section, a partnership that does not use written data pursuant to paragraph (e)(3)(iii)(B) of this section to determine a partner's basis must use the following assumptions to determine the partner's adjusted basis in an oil and gas property:

(*1*) The partner deducted his or her share of deductions under section 263(c) in the first year in which the partner could claim a deduction for such amounts, unless the partnership elected to capitalize such amounts;

(*2*) The partner was not subject to the 65 percent-of-income limitation of section 613A(d)(1) with respect to the partner's depletion allowance under section 611; and

(*3*) The partner was not subject to the following limitations, with respect to the partner's depletion allowance under section 611, except to the extent a limitation applied at the partnership level: the taxable income limitation of section 613(a); the depletable quantity limitations of section 613A(c); the prohibition against claiming percentage depletion on transferred proven property under section 613A(c)(9), prior to its repeal; or the limitations of section 613A(d) (2), (3), and (4) (exclusion of retailers and refiners).

(iv) ***Withdrawal of partner or decrease in partner's interest*** —

(A) ***In general.*** Upon a distribution of money or other property to a withdrawing partner as consideration for an interest in the partnership, the withdrawing partner's adjusted basis in each domestic oil or gas property that continues to be held by the partnership is allocated to the remaining partners in proportion to their proportionate interest in partnership capital or income after taking into account any increase or decrease as a result of the event giving rise to the reallocation. A similar rule shall apply in the case of a diminution of a continuing partner's interest in the partnership.

(B) ***Special rule for determining a withdrawing partner's basis in the property.*** If a partnership is required to determine a withdrawing partner's adjusted basis using the assumptions under paragraph (e)(3)(iii)(C) of this section, the partnership may rebut the assumption in paragraph (e)(3)(iii)(C)(*3*) of this section that the withdrawing partner was not subject to the limitations of sections 613A(d) (2), (3), and (4) exclusion of retailers and refiners) by demonstrating that the withdrawing partner was subject to the limitations of sections 613A(d) (2), (3), or (4).

(v) ***Effective date.*** The provisions of § 1.613A-3(e)(3) (i) through (iv) are effective for taxable years beginning after May 13, 1991. However, a partnership may elect to apply these provisions to taxable years beginning on or before May 13, 1991.

(4) ***Determination of a partner's interest in partnership capital or income.*** For purposes of this paragraph (e), a partner's interest in partnership capital or income is determined by taking into account all facts and circumstances relating to the economic arrangement of the partners. See the factors listed in § 1.704-1(b)(3)(ii).

(5) ***Special rules on allocation of adjusted basis to partners.*** An allocation or reallocation of the adjusted basis of oil or gas property is pursuant to this paragraph (e) of this section deemed to be in accordance with the partner's proportionate interest in partnership capital or income for purposes of this paragraph (e) where so provided in § 1.704-1(b)(4)(v). In addition, in connection with a revaluation described in § 1.704-1(b)(2)(iv)(*f*), the basis of an oil or gas property is allocated among the partners based on the principles used under § 1.704-1(b)(4)(i) of allocating tax items to take into account variations between the adjusted basis of the property and its fair market value. In the case of an oil or gas property contributed to a partnership by a partner, section 704(c) is taken into account in determining the partner's share of the adjusted basis.

(6) ***Miscellaneous rules.***

(i) Each partner must separately keep records of his or her share of the adjusted basis in each domestic oil or gas property of the partnership, adjust his or her share of such basis pursuant to section 1016 (including adjustments for any depletion allowed or allowable with respect to such property), and use that adjusted basis each year in the computation of his or her cost depletion or in the computation of his or her gain or loss on the disposition (including abandonment) of the property by the partnership.

(ii) The adjusted basis of a partner's interest in a partnership is decreased (but not below zero) pursuant to section 705(a)(3) by the amount of the depletion deduction allowed or allowable to the partner with respect to a domestic oil or gas property to the extent such deduction does not exceed the proportionate share of the adjusted basis of such property allocated to the partner under section 613A(c)(7)(D), as adjusted by the partner after the initial allocation. Section 705(a)(1)(C) does not apply to depletion deductions that are not included in a partner's

distributive share under section 702. Accordingly, the adjusted basis of a partner's interest in a partnership is not increased under section 705(a)(1)(C) with respect to depletion of oil or gas properties. See § 1.705-1(a)(2)(iii).

(iii) Upon the disposition of an oil or gas property by the partnership, each partner must subtract the partner's adjusted basis in the property from his or her allocable portion of the amount realized from the sale of the property to determine gain or loss. The partner's allocable portion of amount realized must, except to the extent governed by section 704(c) (or related principles under § 1.704-1(b)(4)(i)), be determined in accordance with § 1.704-1(b)(4)(v). Except as otherwise provided (e.g., section 751), the sale of a partnership interest is not treated as a sale of an oil and gas property.

(iv) In the case of a transfer of an interest in a partnership, the transferor partner's adjusted basis in each partnership oil or gas property carries over to the transferee partner. If an election under section 754 (relating to optional adjustment to the basis of partnership property) is in effect, such basis is adjusted in accordance with section 743.

(v) For purposes of section 732 (relating to basis of distributed property other than money) and section 734(b) (relating to optional adjustment to basis of partnership property), the partnership's adjusted basis in oil and gas property is an amount equal to the aggregate of its partners' adjusted bases in the property as determined under the rules provided in paragraph (e)(3) of this section.

(7) ***Examples.*** The provisions of this paragraph may be illustrated by the following examples:

Example 1. A, B, and C have equal interests in capital in Partnership ABC. On January 1, 1992, the partnership acquired a producing domestic oil property. The partnership's basis in the property was $90x. The partnership allocated the adjusted basis of the property to each partner in proportion to the partner's interest in partnership capital. Accordingly, each partner was allocated an adjusted basis of $30x. Each partner must separately compute his or her depletion allowance. The amount of percentage depletion allowable for each partner for 1992 was $10x. On January 1, 1993, each partner's adjusted basis in the property was $20x ($30x minus $10x). On January 1, 1993, the oil property was sold for $150x. Each partner's gain was $30x ($50x allocable share of amount realized minus the partner's adjusted basis of $20x). Each partner must adjust the partner's adjusted basis in his or her partnership interest to reflect the gain.

Example 2. The facts are the same as in *Example 1* except that on January 1, 1993, the property was not sold but transferred by the partnership to partner A. A's basis in the property was $60x (the sum of A's, B's, and C's adjusted bases in the property).

Example 3. The facts are the same as in *Example 1* with the exception that in 1992 C was a retailer of oil and gas and was only entitled to a cost depletion deduction of $5x. C's gain from the sale of the mineral property on January 1, 1993, was $25x ($50x allocable share of amount realized minus C's adjusted basis of $25x ($30x minus $5x)).

Example 4. D, a calendar year taxpayer, is a partner in Partnership DEF which owns a domestic producing oil property. On January 1, 1993, the partnership's adjusted basis in the property was $900x. On January 1, 1993, D's adjusted basis in D's partnership interest was $300x and D's adjusted basis in the partnership's oil property was $300x. D's allowable percentage depletion for 1993 with respect to production from the oil property was $50x. On January 1, 1994, D's adjusted basis in D's partnership interest was $250x and D's adjusted basis in the partnership's oil property was $250x ($300x minus $50x).

Example 5. On January 1, 1990, G has an adjusted basis of $5x in partnership GH's proven domestic oil property, which is the sole asset of the partnership. On January 1, 1990 G sells G's partnership interest to I for $100x when the election under section 754 is in effect. I has a special basis adjustment for the oil property of $95x (the difference between I's basis, $100x, and I's share of the basis of the partnership property, $5x). I is not entitled to percentage depletion with respect to I's distributive share of the oil property income because I is a transferee of an interest in a proven oil property. However, I is entitled to cost depletion and for this purpose I's interest in the oil property has an adjusted basis to I of $100x ($5x, plus I's special basis adjustment of $95x).

Example 6. On January 1, 1960, Partnership JK acquired a domestic producing oil property. On January 1, 1990, the partnership's adjusted basis in the property was zero. On January 1, 1990, L is admitted as a partner to the partnership. Since the partnership's adjusted basis in the oil property is zero, L's proportionate share of the basis in the property is also zero. L is not entitled to percentage depletion because L is a transferee of a proven oil property (see paragraph (g) of this section). Since the property's basis is zero, L is also not entitled to any cost depletion with respect to production from the property.

Example 7. (i) O and P have equal interests in capital in Partnership OP. On January 1, 1991, the partnership acquired an unproven domestic oil property X the basis of which is $200x to the partnership. The partnership allocates $100x of the basis of the property to each partner in accordance with each partner's proportionate interest in partnership capital. For the 1991 taxable year, O has a $10x cost depletion allowance and P has a $25x percentage depletion allowance. Accordingly, at the end of the 1991 taxable year, O's adjusted basis in the property is $90x, and P's adjusted basis in the property is $75x. On January 1, 1992, Q is admitted as an equal partner. The partnership does not use written data from the partners and must therefore assume that each partner was entitled to $25x depletion based on the assumptions provided in § 1.613A-3(e)(3)(iii). This would result in a $50x combined depletion allowance for the partners and an aggregate adjusted basis in the oil property of $150x. Accordingly, the partnership allocates $50x of the basis of the property to Q, one-third of the aggregate adjusted basis determined by the partnership. O and P must each reduce their basis in the property by one-third. Accordingly, after the admission of Q, O's adjusted basis in the property is $60x ($90x minus $30x), and P's adjusted basis in the property is $50x ($75x minus $25x).

(ii) Assume the same facts as in paragraph (i) of this *Example 7* except that O informs the partnership that its adjusted basis in the property is $90x (determined without regard to section 613A(d)(1)). The partnership uses the written data provided by O and determines the aggregate adjusted basis in the property to be $165x ($90x + $75x). Accordingly, the partnership allocates $55x ($^1/_3$ of $165x) of the basis of the property to Q, and O and P must each reduce their adjusted basis in the property by one-third, as in paragraph (i) of this *Example 7.* Thus, after the admission of Q, O's adjusted basis in the property is $60x and P's adjusted basis in the property is $50x.

(f) ***S corporations.*** For purposes of section 613A(c)(13), adjustments to shareholders' adjusted bases in any domestic oil or gas property to reflect capital expenditures by S corporations, the addition of a new shareholder or an increase in a shareholder's interest by reason of a contribution to the S corporation, the redemption of a shareholder's interest, or other appropriate transaction shall be made in accordance with principles similar to the principles under § 1.613A-3(e) applicable to the entry or withdrawal of a partner.

(g) ***Trusts and estates.***

(1) In the case of production from domestic oil and gas properties held by a trust or estate, the depletion allowance under section 611 shall be computed initially by the trust or estate. The determination of whether cost or percentage depletion is applicable shall be made at the trust or estate level, but such determination shall not result in the disallowance of cost depletion to a beneficiary of a trust or estate for whom cost depletion exceeds percentage depletion. The limitations contained in section 613A (c) and (d), other than section 613A(d)(1), shall be applied at the trust or estate level in its computation of percentage depletion pursuant to section 613A and shall also be applied by a beneficiary with respect to any percentage depletion apportioned to the beneficiary by the trust or estate. The limitation of section 613A(d)(1) shall be applied by each taxpayer (*i.e.,* trust, estate or beneficiary) only with respect to its allocable share of percentage depletion under section 611(b) (3) or (4). For purposes of adjustments to the basis of oil or gas properties held by a trust or estate, in the absence of clear and convincing evidence to the contrary, it shall be presumed that no beneficiary is affected by any section 613A (d) limitations or by the rules contained in section 613A(c)(8) and (9) (relating to businesses under common control and members of the same family and to transfers, respectively), as in effect prior to the Revenue Reconciliation Act of 1990, or has any oil or gas production from sources other than the trust or estate.

(2) The provisions of this paragraph may be illustrated by the following examples.

> *Example 1.* A is the income beneficiary of a trust the only asset of which is a domestic producing oil property. The trust instrument requires that an amount which equals 10 percent of the gross income from the property be set aside annually as a reserve for depletion. In 1975 the property a had production of 1,095,000 barrels of oil. The trust's gross income from the property in 1975 was $30,000x. In that year, after setting aside $3,000x of income for the reserve for depletion, the trustee distributed the remaining income to A which represented 80 percent of the trust's net income. The percentage depletion computed by the trust with respect to the production (computed as if section 613 applied to all of the production at the rate specified in section 613A(c)(5), as in effect prior to the Revenue Reconciliation Act of 1990) for 1975 was $6,600x. The trust's average daily production for 1975 was 3,000 barrels (1,095,000 ÷ 365 days). The trust's allowable depletion pursuant to section 613A(c) with respect to the production was $4,400x:
>
> $$\left[\$6{,}600\text{x depletion}\left(\frac{2{,}000\text{ depletable oil quantity}}{3{,}000\text{ average daily production}}\right)\right]$$

> Pursuant to § 1.611-1(c)(4)(ii), the percentage depletion of $4,400x was apportioned between the trustee and A so that the trustee received $3,000x (an amount equal to the amount of income set aside for the reserve for depletion) and A received $1,400x of the depletion deduction. The $1,400x depletion received by A is attributable to 80 percent of the trust's depletable oil quantity, *i.e.,* 1,600 barrels per day.

Example 2. B, a retailer of oil and gas, is the income beneficiary of a trust the only asset of which is a domestic producing oil property. In 1975 the trustee distributed one-half of the trust's net income and accumulated the other one-half for the benefit of the remainderman. One-half of the percentage depletion computed by the trust with respect to the production from the property was apportioned to B. Since B is a retailer of oil and gas, B is not entitled to deduct any of the percentage depletion apportioned to B. However, B is entitled to take cost depletion with respect to one-half of the production from the oil property, notwithstanding the fact that depletion was computed at the trust level on the basis of percentage depletion.

(h) ***Businesses under common control; members of the same family*** —

(1) ***Component members of a controlled group.*** For purposes of only the depletable quantity limitations contained in section 613A (c) and this section, component members of a controlled group of corporations (as defined in paragraph (1) of § 1.613A-7) shall be treated as one taxpayer. Accordingly, the group shares the depletable oil (or natural gas) quantity prescribed for a taxpayer for the taxable year and the secondary production (to which gross income from the property is attributable before January 1, 1984) of a member of the group will reduce the other members' share of the group's depletable quantity.

(2) ***Aggregation of business entities under common control.*** If 50 percent or more of the beneficial interest in any two or more entities (*i.e.,* corporations, trust, or estates) is owned by the same or related persons (taking into account only each person who owns at least 5 percent of the beneficial interest in an entity and with respect to such person his or her entire interest) as defined in paragraph (m) (2) of § 1.613A-7, the tentative quantity determined under the table in section 613A(c)(3)(B) (as in effect prior to the Revenue Reconciliation Act of 1990) for a taxpayer for the taxable year shall be allocated among all such entities in proportion to their respective production. This paragraph (h)(2) shall not apply to component members of a controlled group of corporations (as defined in § 1.613A-7 (1)). For purposes of determining ownership interest, an interest owned by or for a corporation, partnership, trust, or estate shall be considered as owned directly both by itself and proportionately by its shareholders, partners, or beneficiaries, as the case may be.

(3) ***Allocation among members of the same family.*** In the case of individuals who are members of the same family, the tentative quantity determined under the table in section 613A (c)(3)(B) (as in effect prior to the Revenue Reconciliation Act of 1990) for a taxpayer for the taxable year shall be allocated among such individuals in proportion to the respective production of barrels of domestic crude oil (and the equivalent in barrels to the cubic feet of natural gas determined under paragraph (h)(4)(ii) of this section) during the period in question by such individuals.

(4) ***Special rules.*** For purposes of section 613A (c)(8) and this section—

(i) The family of an individual includes only his spouse and minor children, and

(ii) Each 6,000 cubic feet of domestic natural gas shall be treated as 1 barrel of domestic crude oil.

(5) ***Examples.*** The application of this paragraph may be illustrated by the following examples:

Example 1. A owns 50 percent of the stock of Corporation M and 50 percent of the stock of Corporation N. Both corporations are calendar year taxpayers. For 1975 Corporation M's production of domestic crude oil was 8,000,000 barrels (365,000 of which was secondary production) and Corporation N's was 2,000,000 barrels (all of which was primary production). The tentative quantity (2,000 barrels per day) determined under the table in section 613A (c)(3)(B) (as in effect prior to the Revenue Reconciliation Act of 1990) must be allocated between the two corporations in proportion to their respective barrels of production of domestic crude oil during the taxable year. Corporation M's allocable share of the tentative quantity is 1,600 barrels:

$$\left[2{,}000\left(\frac{8{,}000{,}000}{10{,}000{,}000}\right)\right]$$

and Corporation N's allocable share is 400 barrels:

$$\left[2{,}000\left(\frac{2{,}000{,}000}{10{,}000{,}000}\right)\right]$$

With respect to M's primary production, M's depletable oil quantity is 600 barrels (1,600 barrels − 1,000 barrels [365,000 secondary production ÷ 365 days]). N's depletable oil quantity, unaffected by M's secondary production, is 400 barrels.

Example 2. Assume the same facts as in *Example 1* except that Corporation M is a retailer and Corporation N is not selling its oil through Corporation M. Because Corporation M is a retailer, no portion of the tentative quantity is allocated to Corporation M. Accordingly, Corporation N's depletable oil quantity is the entire 2,000 barrels per day because section 613A (c), which contains the allocation requirements, is inapplicable to retailers.

Example 3. Corporations O and P are members of a controlled group and are treated as one taxpayer as provided in paragraph (h)(1) of this section. Corporation O owns oil properties A and B. Property A had primary production for 1975 of 800,000 barrels of oil. Property B had secondary production for 1975 of 365,000 barrels of oil. Corporation P owns oil property C which had primary production of 660,000 barrels for 1975. The allowable percentage depletion with respect to property B's secondary production was $360x. The controlled group's average daily production was 4,000 barrels [(800,000 + 660,000) ÷ 365]. The controlled group's depletable oil quantity was 1,000 barrels [2,000 tentative quantity − 1,000 average daily secondary production (365,000 ÷ 365)]. The allowable percentage depletion pursuant to section 613 (a) (computed as if section 613 applied to all of the production at the rate specified in section 613A (c)(5), as in effect prior to the Revenue Reconciliation Act of 1990) was $800x with respect to production from property A and $660x with respect to production from property C.

Corporation O's allowable depletion pursuant to section 613A (c) with respect to property B's secondary production (for which depletion is allowable before primary production) for 1975 was $360x. Corporation O's allowable depletion pursuant to section 613A (c) with respect to property A was $200x:

$$\left[\$800\text{x depletion}\left(\frac{1{,}000\text{ depletable oil quantity}}{4{,}000\text{ average daily production}}\right)\right]$$

Therefore, Corporation O's allowable depletion pursuant to section 613A (c) was $560x ($360x relating to property B plus $200x relating to property A). Corporation P's allowable depletion pursuant to section 613A (c) with respect to property C was $165x:

$$\left[\$660\text{x depletion}\left(\frac{1{,}000\text{ depletable oil quantity}}{4{,}000\text{ average daily production}}\right)\right]$$

(i) ***Transfer of oil or gas property*** —

(1) ***General rule*** —

(i) ***In general.*** Except as provided in paragraph (i)(2) of this section, in the case of a transfer (as defined in paragraph (n) of § 1.613A-7) of an interest in any proven oil or gas property (as defined in paragraph (p) of § 1.613A-7), paragraph (a)(1) of this section shall not apply to a transferee (as defined in paragraph (o) of § 1.613A-7) with respect to production of crude oil or natural gas attributable to such interest, and such production shall not be taken into account for any computation by the transferee under this section.

(ii) ***Examples.*** The provisions of this subparagraph may be illustrated by the following examples:

Example 1. On January 1, 1975, Individual A transfers proven oil properties to Corporation M in an exchange to which section 351 applies for shares of its stock. Since there is no allocation requirement pursuant to section 613A(c)(8) between A (the transferor) and Corporation M (the transferee), the transfer of the proven properties by A is a transfer for purposes of section 613A(c)(9) (as in effect prior to the Revenue Reconciliation Act of 1990) and percentage depletion is not allowable to Corporation M with respect to such properties.

Example 2. On January 1, 1975, Corporation N sells proven oil property to Corporation O, its wholly-owned subsidiary. Because the transfer was made between corporations which are members of the same controlled group of corporations, Corporation O is entitled to percentage depletion with respect to production from the property so long as the tentative oil quantity is allocated between the two corporations. If Corporation N were a retailer, the tentative oil quantity would not be required to be allocated between the two corporations (see example 2 of § 1.613A-3(h)(5)), and Corporation O would not be entitled to percentage depletion on the production from the property.

Example 3. B, owner of a proven oil property, died on January 1, 1975. Pursuant to the provisions of B's will, B's estate transferred the oil property on April 1, 1975, into a trust. On July 1, 1976, pursuant to a requirement in B's will, the trustee distributed the oil property to C. The transfer of the oil property by the estate to the trust and the later distribution of the property by the trust to C are transfers at death. Therefore, the trust was entitled to compute percentage depletion with respect to the production from the oil property when the property was owned by the trust and C is entitled to percentage depletion with respect to production from the oil property after the trust distributes the property to C.

Example 4. On January 1, 1975, property which produces oil resulting from secondary processes was transferred to D. The exemption under section 613A(c) applies to D because section 613A(c)(9) (relating to transfers of oil or gas property), as in effect in 1975, does not apply with respect to secondary production. In addition, even if at the time of the transfer the production from the property was primary and D applied secondary processes to the property transferred and obtained secondary production, D would be entitled to percentage depletion with respect to the secondary production.

Example 5. On July 1, 1975, E and F entered into a contract whereby F is given the privilege of drilling a well on E's unproven property, and if F does so F is to own the entire working interest in the property until F has recoverd all the costs of drilling, equipping, and operating the well. Thereafter, 50 percent of the working interest would revert to E. In accordance with the contract, 50 percent of the working interest reverted to E on July 1, 1976. F is entitled to percentage depletion because the transfer of the working interest to F occurred when the property was unproven on July 1, 1975, which is the date of the contract establishing F's right to the working interest. E is entitled to percentage depletion with respect to this working interest since the reversion of such interest with respect to which E was eligible for percentage depletion is not a transfer. However, if on the date of the contract E's property was proven (although not proven when E acquired the property), F would not be entitled to claim percentage depletion with respect to any of the working interest income. Nonetheless, E would still be entitled to percentage depletion with respect to E's working interest since the reversion of the interest is not a transfer.

Example 6. On January 1, 1975, G subleased an oil property to H, retaining a $^{1}/_{8}$ royalty interest with the option to convert G's royalty into a 50-percent working interest. On July 1, 1975, the property was proven and on July 1, 1976, G exercised G's option. G is entitled to claim percentage depletion with respect to G's working interest since the conversion of the royalty interest which is eligible for percentage depletion pursuant to section 613A(c) into an interest which constituted part of an interest previously owned by G is not a transfer pursuant to § 1.613A-7(n)(8).

Example 7. I and J (both of whom are minors) are beneficiaries of a trust which owned a proven oil property. The oil property was transferred to the trust on January 1, 1975, by the father of I and J. For 1975, the trustee allocated all the income from the oil property to I. For 1976, the trustee allocated all the income from such property to J. On January 1, 1977, the trustee distributed the property to I and J as equal tenants in common. Since I, J, and their father are members of the same family within the meaning of section 613A(c)(8)(C), the transfer of the property to the trust by the father, the shifting of income between I and J, and the distribution of the oil property by the trust to I and J are not transfers for purposes

of section 613A(c)(9) (as in effect prior to the Revenue Reconciliation Act of 1990). However, the distribution of the oil property will constitute a transfer to each distributee on the date on which the distributee reaches majority under state law.

Example 8. In 1975, K transferred a proven oil property productive at 5,000 feet to L. Subsequent to the transfer, L drilled new wells on the property finding another reservoir at 10,000 feet. The two zones were combined under section 614 as a single property. L is not entitled to percentage depletion on the gross income attributable to the production from the productive zone at 5,000 feet, but is entitled to percentage depletion on the gross income attributable to the production from the productive zone at 10,000 feet because that zone was not part of the proven property until the date of development expenses by L, which is after the date of the transfer. Accordingly, L's maximum allowable percentage depletion deduction for 1975 would be zero percent of gross income from the property with respect to the production from 5,000 feet, plus 22 percent of gross income from the property with respect to the production from 10,000 feet. This maximum deduction would be subject to the limitation provided for in section 613(a), *i.e.,*50 percent of "taxable income from the property (computed without allowance for depletion)," such taxable income being the overall taxable income resulting from the sale of production from both zones, and would also be subject to the limitations provided in section 613A. The production from the productive zone at 5,000 feet is not taken into account in determining K's depletable oil quantity for the year.

Example 9. On July 1, 1975, M transferred an oil property with a fair market value of $100x to N. On February 1, 1976, N commenced production of oil from the property. The fair market value of the property on February 1, 1976, as reduced by actual costs incurred by N for equipment and intangible drilling and development costs, was $300x. Because the value of the property on transfer was not 50 percent or more of the value on February 1, 1976, the property transferred to N was not a proven property (see § 1.613A-7(p)). However, if there had been only marginal production from the property so that the fair market value of the property on February 1, 1976, was $40x rather than $300x, the property transferred to N would have been a proven property provided the other requirements of a proven property were met.

Example 10. O is the owner of a remainder interest in a trust created January 1, 1970. On that date, the trust held oil and gas properties. On January 1, 1976, O's interest for the first time entitled O to the trust's income from oil and gas production from the properties. The reversion of the remainder interest to O is not a transfer (see § 1.613A-7(n)(7)). Accordingly, the transfer of the interest in oil and gas property to O is deemed to have occurred on January 1, 1970, the date O's interest was created.

Example 11. On January 1, 1976, P, Q, and R entered into a partnership for the acquisition of oil and gas leases. It was agreed that the sharing of income will be divided equally among P, Q, and R. However, it was further agreed that with respect to the first production obtained from each property acquired P will receive 80 percent thereof and Q and R each will receive 10 percent thereof until $100x has been received by P. Assume these allocations have substantial economic effect under section 704 of the Code and the regulations thereunder. On February 1, 1976, Partnership PQR acquired an unproven property and production therefrom was shared pursuant to the partnership agreement. P is entitled to percentage depletion with respect to the production allocated to him since the transfer of right to the production is deemed to have been made on the date the partnership

agreement became applicable to the specific property, at which time the property was unproven. See § 1.613A-7(n) for rules relating to the definition of transfer. Similarly, when $100x has been obtained and Q and R each commence receiving $33^1/_3$ percent of the revenue, Q and R are entitled to percentage depletion with respect to their entire interests. However, if the property had been proven when acquired by the partnership, P, Q, and R would not be entitled to claim any percentage depletion with respect to production from the property.

Example 12. On December 30, 1960, S placed producing oil property in trust for the benefit of S's nephew, T, and executed a trust agreement which required the trustee of the trust to transfer the oil property to T on January 1, 1975. The trustee's transfer of the oil property to T on January 1, 1975, is deemed to have occurred on December 30, 1960 (see § 1.613A-7(n)). Since the transfer is deemed to have occurred before January 1, 1975, section 613A(c) applies with respect to the production from the oil property. Moreover, if the trustee was not required to transfer the oil property on a specific date but was given discretion to select the date of transfer, the transfer of such property would still be deemed to have occurred on December 30, 1960. However, the result would be different if the trust agreement had provided that the trustee, at the trustee's discretion, may transfer the oil property to T on January 1, 1975, but is not under any obligation to transfer the property to T on January 1, 1975, or on any other date. Since the transfer was discretionary, the date of the actual transfer governs.

Example 13. On January 1, 1974, U acquired an oil property. On February 1, 1974, U granted V an option to purchase the oil property. V exercised V's option on March 2, 1975, and subsequently the oil property was conveyed to V. The date of the transfer was March 2, 1975, the day V exercised V's option (on which date both parties were bound).

Example 14. On July 1, 1974, W executed a deed conveying oil and gas property to X. W delivered the deed to X on January 1, 1975. Under state law, the mere execution of the deed without delivery did not give X any rights in the property. Title to the oil property passed to X on the date of delivery. Therefore, the date of transfer was January 1, 1975.

Example 15. Y, owner of a proven oil property, transferred Y's interest therein on July 25, 1975, to a revocable trust of which Y is treated as the owner under section 676. Y is not deemed a transferee and section 613A(c) applies to Y because immediately preceding the transfer Y was entitled to percentage depletion on the production from the property.

Example 16. On January 1, 1975, a proven oil property was transferred to Z; therefore, section 613A(c)(1) did not apply with respect to the production from such property. After Z's death, neither Z's estate nor its beneficiaries are entitled to percentage depletion with respect to the decedent's oil property since Z was a transferee of proven property.

Example 17. Partnership ABC, owner of proven oil and gas properties, admitted D as a partner in 1975 in consideration of cash. The shares of Partners A, B, and C of the partnership income were proportionately reduced so that D had a 25 percent interest in the income. D is not entitled to percentage depletion with respect to D's share of partnership oil and gas income because D is a transferee for purposes of section 613A(c)(9) (as in effect prior to the Revenue Reconciliation Act of 1990). See § 1.613A-7(n).

Example 18. On January 1, 1975, E and F formed Partnership EF to which E contributed proven oil property. For 1975, pursuant to the partnership agreement 70 percent of the mineral income from the property was allocated to E and 30 percent of the mineral income from the property was allocated F. F is not entitled to percentage depletion with respect to production from the property because F is a transferee of an interest in proven property. However, E is not a transferee of an interest in proven property because E was entitled to percentage depletion on the oil produced with respect to the property immediately before the transfer. Therefore, E is entitled to percentage depletion with respect to the income allocated to E. However, if in 1976 the partnership agreement were revised so that E's interest in the income was increased by 10 percent, E would not be entitled to percentage depletion with respect to the additional 10 percent interest because E is a transferee with respect thereto.

Example 19. G is the owner of a $^{1}/_{3}$ interest in a partnership owning a proven oil property, and as such is entitled to $^{1}/_{3}$ of the income from the property. G received a distribution on July 1, 1975, from the partnership of a $^{1}/_{3}$ interest in the proven oil property. Although the transfer of such interest is a transfer for purposes of section 613A(c)(9) (as in effect prior to the Revenue Reconciliation Act of 1990), G is still entitled to percentage depletion with respect to the $^{1}/_{3}$ interest in the oil production from the property since G was entitled to percentage depletion on such production with respect to such property immediately before the transfer. If the entire property were distributed to G, G's percentage depletion allowance would still be based on only $^{1}/_{3}$ of the oil produced.

Example 20. H and I contributed property X and property Y respectively to Partnership HI. The partnership agreement provides that all the gross income from property X is to be allocated to H and all the gross income from property Y is to be allocated to I. Assume these allocations have substantial economic effect under section 704 of the Code and the regulations thereunder. For 1975 H and I each received $100x gross income. Although the contributions of the properties by H and I are transfers for purposes of section 613A(c)(9) (as in effect prior to the Revenue Reconciliation Act of 1990), both H and I are entitled to percentage depletion with respect to the $100x income received since each was entitled to a percentage depletion allowance with respect to the property contributed immediately before the transfer. However, if no special allocation of income were made but H and I are to share equally in the income from both properties, each would be entitled to a depletion allowance based on only one-half of the production with respect to the property he had contributed. If property X produces $100x of gross income from the property and property Y produces $200x of gross income from the property, H would be entitled to percentage depletion but only with respect to $50x (50 percent of $100x) of gross income from the property and I would be entitled to percentage depletion with respect to $100x (50 percent of $200x) of gross income from the property.

(2) ***Transfers after October 11, 1990*** —

(i) ***General rule.*** Section 613A(c) (9) and (10), as in effect prior to the Revenue Reconciliation Act of 1990 (relating to prohibition of percentage depletion on transferred proven properties) has been repealed effective for transfers after October 11, 1990. Accordingly, a transferee of a proven oil or gas property transferred after October 11, 1990 is permitted to claim percentage depletion with respect to production from the property. For purposes of transfers of property occurring

before October 12, 1990 under section 613A(c)(10), prior to its repeal, the disposition of stock after October 11, 1990 by a transferor will not result in a reduction in the depletable quantity of the transferee corporation under section 613A(c)(10)(F).

(ii) ***Transfer.*** The term "transfer" has the same meaning as under § 1.613A-7(n).

(iii) ***Transferee.*** A person shall not be treated as a transferee with respect to a transferred property to the extent that such person held an interest in the property but was not entitled to a percentage depletion allowance on mineral produced with respect to the property immediately before the transfer. Thus, for example, if a taxpayer who is not entitled to claim percentage depletion on a proven property transfers the property to a partnership for an interest in the partnership, the taxpayer is not a transferee with respect to the property in the hands of the partnership.

(iv) ***Effective date.*** The provisions of paragraph (i)(2) of § 1.613A-3 are effective for transfers occurring after May 13, 1991. However, a taxpayer may elect to apply these provisions to transfers occurring after October 11, 1990 and on or before May 13, 1991.

(v) ***Examples.*** The examples below illustrate the provisions of this subparagraph. The examples ignore the application of any restriction on percentage depletion other than the proven property transfer rule.

Example 1. On December 31, 1991, A transfers a proven oil property to B. B may claim percentage depletion with respect to production from the property regardless of whether production from the property was eligible for percentage depletion in A's hands (even if A were a retailer or refiner of oil or gas).

Example 2. On October 10, 1990, A transfers a proven oil property to B. B may not claim percentage depletion with respect to production from the property.

Example 3. On January 1, 1990, C purchases a proven oil property. Because C is a transferee of a proven property, production from the property is not eligible for percentage depletion in C's hands. On December 31, 1991, C contributes the property to Corporation M, an S corporation in which C owns 100 percent of the stock. The contribution of the property is a transfer, but C is not a transferee with respect to the property in the hands of the corporation. Accordingly, C may not claim percentage depletion with respect to production from the property. However, if prior to the contribution C had been entitled to claim percentage depletion with respect to production from the property, C would be entitled to claim percentage depletion with respect to production from the property after the contribution.

Example 4. On December 31, 1991, C contributes a proven oil property (with respect to which C is not entitled to claim percentage depletion) to Corporation N, an S corporation in which C owns 30 percent and D owns 70 percent of the stock. The contribution of the property is a transfer, but C is not a transferee with respect to the property in the hands of the corporation. Accordingly, C may not claim percentage depletion with respect to C's share of the production from the property. D is a transferee with respect to the property in the hands of Corporation N, and may claim percentage depletion with respect to D's share of production from the property.

Example 5. On December 31, 1991, D transfers a proven oil property (with respect to which D is not entitled to claim percentage depletion) to DE, an equal partnership between D and E. E is a transferee with respect to the property and may claim percentage depletion with respect to production from the property allocated to E under the DE partnership agreement. D is not a transferee with respect to the property, and may not claim percentage depletion with respect to production from the property allocated to D under the DE partnership agreement. However, if D had been entitled to claim percentage depletion with respect to production from the property, then D would be entitled to claim percentage depletion with respect to production from the property in the hands of DE.

Example 6. On January 1, 1990, Corporation P contributes a proven property to Corporation O, its wholly owned subsidiary. Under § 1.613A-7(n)(4), the contribution is not treated as a transfer, but only for so long as the tentative quantity is required under section 613A(c)(8) to be allocated between P and O. On December 31, 1991, P sells 90% of the O stock to an unrelated person; accordingly, the tentative quantity is no longer required under section 613A(c)(8) to be allocated between P and O. After the sale of O stock, production from the property in O's hands is eligible for percentage depletion because a transfer of a proven property is deemed to occur upon the transfer of the stock.

Example 7. On October 10, 1990, G transfers a proven oil property to his minor son, H. G had been entitled to claim percentage depletion with respect to production from the property. Under § 1.613A-7(n)(5), H is permitted to claim percentage depletion for so long as G and H are related persons under section 613A(c)(8)(C). On December 31, 1991, H reaches majority and is no longer related to G under section 613A(c)(8)(C). H is entitled to continue to claim percentage depletion on production from the property because the property is treated as being transferred to H on December 31, 1991.

Example 8. On December 31, 1991, I sells a proven property to J, her husband. I had not been entitled to claim percentage depletion with respect to production from the property. Under § 1.613A-7(n)(5), the sale is not a transfer because it is made between persons related under section 613A(c)(8). Accordingly, J may not claim percentage depletion with respect to production from the property. If, however, I had been entitled to claim percentage depletion with respect to production from the property, J would be entitled to claim percentage depletion with respect to production from the property.

Example 9. On December 31, 1991, L inherits a proven property from K. K had not been entitled to claim percentage depletion with respect to production from the property. Under § 1.613A-7(n)(1), the inheritance is not a transfer. Accordingly, L may not claim percentage depletion with respect to production from the property. If, however, K had been entitled to claim percentage depletion with respect to production from the property, L would be entitled to claim percentage depletion with respect to production from the property.

Example 10. On December 31, 1991, Corporation R, a calendar year taxpayer, made an S election effective for the taxable year beginning January 1, 1992 and succeeding taxable years. Since Corporation R is deemed to have transferred its oil and gas properties on January 1, 1992, the shareholders of Corporation R are eligible to claim percentage depletion with respect to the production from the properties.

Example 11. Assume the same facts as in *Example 10* except that Corporation R makes the S election on December 31, 1989, effective for the taxable year beginning January 1, 1990 and succeeding taxable years. Since Corporation R is deemed to have transferred its oil and gas properties on January 1, 1990, the shareholders of Corporation R are not eligible to claim percentage depletion with respect to the production from the properties.

(j) ***Percentage depletion with respect to bonuses and advanced royalties*** —

(1) ***Amounts received or accrued after August 16, 1986.*** In computing the percentage depletion allowance pursuant to section 613A(c) with respect to amounts received or accrued after August 16, 1986, there shall not be taken into account any advance royalty (to the extent that actual production during the taxable year is insufficient to earn such royalty), lease bonus, or other amount payable without regard to production, even though the amount may be taken into account for purposes of sections 61 and 612 (relating to definitions of gross income and cost depletion, respectively).

(2) ***Amounts received or accrued before August 17, 1986.***

(i) A lease bonus or advanced royalty received or accrued before August 17, 1986, with respect to oil or gas property shall be taken into account for purposes of percentage depletion in the taxable year such payment is includible in income. Percentage depletion shall be determined according to the depletion rate and depletable oil and natural gas limitations of section 613A(c)(1) and § 1.613A-3(a) applicable on the date of such inclusion. The payee of the bonus or advanced royalty shall apply the depletable oil and natural gas quantity limitations by attributing a specific number of barrels of oil or cubic feet of natural gas to the lease bonus or advanced royalty. The determination of the number of barrels of oil or cubic feet of natural gas shall be based on the average price of oil or gas produced from the property during the taxable year. If oil or gas is not produced from the property during that year, or if the oil or gas is not sold before conversion or transportation from the premises, the number of barrels of oil or cubic feet of gas shall be based on a price (as of the date of the bonus or advanced royalty) determined under the constructive pricing principles applicable under section 613(a), generally the representative market or field price. In the case where no oil or gas has been produced in such year, the constructive price applicable to the type of production expected to be produced from the property shall apply. However, if the first actual production from the property in a later year is different from the type of production upon which the conversion of the bonus or advanced royalty into barrels of oil or cubic feet of gas was based and the period of limitations on assessment has not expired (see section 6501) for the year in which the lease bonus or advanced royalty is includible in income, the taxpayer should promptly file an amended return, if necessary. In the amended return the conversion shall be recomputed taking into account the pricing applicable to the actual production. For purposes of paragraph (f) of § 1.613A-7, the number of barrels of oil or cubic feet of natural gas attributed to a lease bonus or advanced royalty is deemed to have been extracted on the date the bonus or advanced royalty is includible in the payee's income.

(ii) For purposes of applying the depletable oil and natural gas quantity limitations in taxable years after the year in which the advanced royalty payment is included in income, the payee of an advanced royalty which is recouped out of future production shall not include production which recoups the advanced royalty in such later years. The payor of a bonus or advanced royalty that is not recouped from future production may reduce the production to be taken into account for purposes of applying the depletable quantity limitations in each year in which the payor's gross income from the property is adjusted under § 1.613-2(c)(5)(ii) to reflect the bonus paid by an

amount determined by dividing the portion of the bonus required to be excluded from the payor's gross income from the property by the price of oil or gas applicable to the payee for converting the bonus into barrels of oil or cubic feet of gas.

(iii) See § 1.612-3 (a)(2) and (b)(2) for rules relating to the requirement that certain depletion deductions allowed with respect to lease bonuses and advanced royalties be restored to income.

(k) ***Special rules for fiscal year taxpayers.*** In applying this section to a taxable year which is not a calendar year, each portion of such taxable year which occurs during a single calendar year shall be treated as if it were a short taxable year.

(l) ***Information furnished by partnerships, trusts, estates, and operators.*** Each partnership, trust, or estate producing domestic crude oil or natural gas, and each operator of a well from which domestic crude oil or natural gas was produced, shall provide each partner, beneficiary, or person holding a nonoperating interest, as the case may be, with all information in its possession necessary to determine the amount of his depletion deduction allowable with respect to such crude oil or natural gas. For example, for each property a partnership is required to provide each partner with partnership information relating to the partner's allocable share of gross income from the property, the partner's allocable share of operating expenses, the partner's allocable share of depreciation, the partner's share of allocated overhead, the partner's share of estimated reserves, the partner's share of production in barrels or cubic feet for the taxable year, the partner's original share of the partnership adjusted basis of properties producing domestic crude oil or domestic natural gas, the partner's allocable share of any adjustments made to the basis of such properties by the partnership, and the percentage by which existing partners must reduce their bases in a partnership oil or gas property upon entry of a partner by contribution. In addition, upon the disposition of an oil or gas property by the partnership, the partnership shall inform each partner of his allocable portion of the amount realized from the sale of the property.

[T.D. 8348, 56 FR 21939, May 13, 1991; 57 FR 4913, Feb. 10, 1992; 57 FR 9599, Mar. 19, 1992, as amended by T.D. 8437, 57 FR 43900, Sept. 23, 1992; 57 FR 60474, Dec. 21, 1992; 58 FR 6678, Feb. 1, 1993]

§ 1.613A-4 Limitations on application of § 1.613A-3 exemption.

(a) ***Limitation based on taxable income.***

(1) The aggregate amount of a taxpayer's deductions allowed pursuant to section 613A(c) for the taxable year shall not exceed 65 percent of the taxpayer's taxable income (reduced in the case of an individual by the zero bracket amount for taxable years beginning after December 31, 1976, and before January 1, 1987) for the year, adjusted to eliminate the effects of:

(i) Any depletion with respect to an oil or gas property (other than a gas property with respect to which the depletion allowance for all production is determined pursuant to section 613A(b)) for which percentage depletion would exceed cost depletion in the absence of the depletable quantity limitations contained in section 613A(c) (1) and (6) (as in effect prior to the Revenue Reconciliation Act of 1990) or the taxable income limitation contained in section 613A(d)(1);

(ii) Any net operating loss carryback to the taxable year under section 172;

(iii) Any capital loss carryback to the taxable year under section 1212; and

(iv) In the case of a trust, any distributions to its beneficiaries, except in the case of any trust where any beneficiary of such trust is a member of the family (as defined in section 267(c)(4)) of a settlor who created inter vivos and testamentary trusts for members of the family and such settlor died within the last 6 days of the 5th month in 1970, and the law in the jurisdiction in which such trust was created requires all or a portion of the gross or net proceeds of any royalty or other interest in oil, gas, or other mineral representing any percentage depletion allowance to be allocated to the principal of the trust.

The amount disallowed (as defined in paragraph (q) of § 1.613A-7) shall be carried over to the succeeding year and treated as an amount allowable as a deduction pursuant to section 613A(c) for such succeeding year, subject to the 65-percent limitation of section 613A(d)(1). For rules relating to corporations filing a consolidated return, see the regulations under section 1502. With respect to fiscal year taxpayers, except as provided in § 1.613A-1 for taxable years beginning before January 1, 1975, and ending after that date, the limitation shall be calculated on the entire fiscal year and not applied with respect to each short period included in a fiscal year. For purposes of basis adjustments and determining whether cost depletion exceeds percentage depletion with respect to the production from a property, any amount disallowed as a deduction after the application of this paragraph shall be allocated to the respective properties from which the oil or gas was produced in proportion to the percentage depletion otherwise allowable to such properties pursuant to section 613A(c). Accordingly, the maximum amount which may be allowable as a deduction pursuant to section 613A(c) after application of this paragraph (65 percent × adjusted taxable income) shall be allocated to properties for which percentage depletion pursuant to section 613A(c) would be allowed in the absence of the limitation contained in section 613A(d)(1) by application of the same proportion. However, once it is determined that after application of this paragraph cost depletion exceeds percentage depletion with respect to a property, the maximum amount determined under the preceding sentence shall be reallocated among the remaining properties, and the portion of the amount disallowed which is allocable to such property shall be the amount by which percentage depletion pursuant to section 613A(c) before application of this paragraph exceeds cost depletion. See example 1 of paragraph (a)(2) of this section. If the taxpayer becomes entitled to the deduction in a later year (*i.e.,* because the disallowed depletion does not exceed 65 percent of the taxpayer's taxable income for that year after taking account of any percentage depletion deduction otherwise allowable for that year), then the basis of the taxpayer's properties must be adjusted downward (but not below zero) by the amount of the deduction in proportion to the portion of the amount disallowed to the respective properties in the year of the disallowance. However, if the property in question was disposed of by the taxpayer prior to the beginning of such later year, the amount of the deduction in such later year shall be reduced by the difference between the taxpayer's adjusted basis in the property at the time it is disposed of and the adjusted basis which the taxpayer would have had in the property in the absence of the 65-percent limitation.

(2) The application of this paragraph may be illustrated by the following examples:

> *Example 1.* A owns producing oil properties M, N, and O. With respect to property M, the depletion allowable pursuant to section 613A(c) for 1975 without regard to section 613A(d)(1) was $60 × (cost depletion would have been $40 ×). With respect to property N, the depletion allowable pursuant to section 613A(c) for 1975 without regard to section 613A(d)(1) was $90 × (cost depletion would have been zero). With respect to property O, the depletion pursuant to section 613A(c) for 1975 without regard to section 613A(d)(1) was $50

× (cost depletion would have been $10X). A's taxable income (as adjusted under § 1.613A-4(a)(1)) for 1975 was $100 × ; accordingly, A's percentage depletion pursuant to section 613A(c) for 1975 must be reduced from $200 × to $65 × (65 percent × $100 × taxable income). Of that amount, $19.5 × :

$$\left[65x \text{ dollars} \left(\frac{\$60x}{\$60x + \$90x + \$50x}\right)\right]$$

is tentatively allocated to property M, $29.25 × :

$$\left[65x \text{ dollars} \left(\frac{\$90x}{\$90x + \$60x + \$50x}\right)\right]$$

is tentatively allocated to property N, and $16.25 × :

$$\left[65x \text{ dollars} \left(\frac{\$50x}{\$50x + \$90x + \$60x}\right)\right]$$

is tentatively allocated to property O.

Since cost depletion of $40 × with respect to property M exceeded the percentage depletion of $19.5 × allowable on such property, A claimed the cost depletion. Accordingly, the only percentage depletion deduction allowable to A pursuant to section 613A(c) for 1975 is with respect to properties N and O. Therefore, the $65 × ceiling applies to the percentage depletion allowable on properties N and O. Of that amount, $41.79 × :

$$\left[65x \text{ dollars} \left(\frac{\$90x}{\$90x + \$50x}\right)\right]$$

is allocated to property N, and $23.21 × :

$$\left[65x \text{ dollars} \left(\frac{\$50x}{\$50x + \$90x}\right)\right]$$

is allocated to property O.

Accordingly, A is allowed a total depletion deduction of $105 × ($40 × cost depletion on property M + $41.79 × percentage depletion on property N + $23.21 × percentage depletion on property O). The amount disallowed to A under section 613A(d)(1) is $95 × ($200 × aggregate depletion allowable before application of section 613A(d)(1) − $105 × [$40 × cost

depletion allowable on property M + $41.79 × percentage depletion allowable on property N after application of section 613A(d)(1) + $23.21 × depletion allowable on property O after application of section 613A(d)(1)]). For purposes of basis adjustments, $20 × ($60 × percentage depletion before limitation − $40 × cost depletion allowed) of the amount disallowed is allocated to property M. The balance of the amount disallowed of $75 × is allocated $48.21 × :

$$\left[75x \text{ dollars} \left(\frac{\$90x}{\$90x + \$50x}\right)\right]$$

to property N, and

$$\left[75x \text{ dollars} \left(\frac{50x}{\$50x + \$90x}\right)\right]$$

to property O.

Example 2. The amount disallowed to B as a deduction under this paragraph is $50x for 1975 and $125x for 1976 (including the $50x carried over from 1975). B may carry forward the $125x as a deduction to 1977 and subsequent years.

Example 3. C is a fiscal year taxpayer whose fiscal year ended on May 31, 1975. For purposes of applying the 65 percent of taxable income limitation, the period beginning January 1, 1975, and ending May 31, 1975, is treated as a short taxable year. The depletion allowable pursuant to section 613A(c) without regard to section 613A(d)(1) for such short taxable year was $80x and A's taxable income (as adjusted under § 1.613A-4(a)(1)) during such short taxable year was $100x. Only $65x (65 percent × $100x adjusted taxable income) of the deduction pursuant to section 613A(c) was deductible for such portion of 1975, in addition to any percentage depletion allowable for June 1, 1974, through December 31, 1974. With respect to the taxable year commencing June 1, 1975, and ending May 31, 1976, the 65 percent limitation is applied to the taxable income for the entire taxable year.

Example 4. Under the trust law of State X, a trustee is required to allocate 22 percent of gross mineral income to the principal of a trust for purposes of maintaining a reserve for depletion and the depletion deduction is entirely allocated to the trustee. In 1975 the gross income of a trust in State X the only assets of which were oil properties was $1,000. The trust's allowable percentage depletion pursuant to section 613A(c) without regard to section 613A(d)(1) was $220. The trust incurred expenses of $150 for the taxable year and made distributions to beneficiaries (who are not described in the exception for family members set forth in paragraph (a)(1)(iv) of this section) of $630 ($1,000 gross income −$220 allocated to principal −$150 expenses). The trust's deduction for personal exemption under section 642(b) is $300. For purposes of applying the 65 percent limitation, the trust's taxable income was $550 ($1,000 gross income −$150 expenses −$300 exemption). The limitation under section 613A(d)(1) was $357.50 (65% × $550 taxable income). Accordingly, the trust's percentage depletion allowance was unaffected by the 65 percent limitation.

Example 5. In 1980 the gross income of the estate of D was $1,000. The only assets of the estate were oil properties. The estate's adjusted basis in the oil properties was $0. The estate's allowable percentage depletion pursuant to section 613A(c) without regard to section 613A(d)(1) was $220. The estate incurred expenses of $150 for the taxable year and made distributions to beneficiaries of $425. The distributions thus equaled one half of the net income of the estate (ignoring depletion). Under section 611(b)(4), the percentage depletion is apportioned equally between the estate and its beneficiary. The distribution amount of $425 is deductible under section 661(a) in computing the taxable income of the estate. For purposes of applying the 65 percent limitation to the percentage depletion apportioned to the estate, the estate's taxable income was $0 ($1,000 gross income −$150 expenses −$425 distribution −$600 exemption). The limitation under section 613A(d)(1) was therefore also $0 (65% × $0 taxable income). Accordingly, the $110 amount is disallowed to the estate for the taxable year but may be carried forward by the estate as a deduction to 1981 and subsequent years. The beneficiaries shall apply the 65 percent limitation to the $110 percentage depletion apportioned to them based on their respective taxable incomes.

Example 6. In 1975 E sold an oil property for which E's adjusted basis was $20x. The amount disallowed for 1975 to E under section 613A(d) was $10x. The amount of the carryover under that section to 1976 was $0 ($10x disallowed amount −$10x [$20x adjusted basis of property on sale −$10x adjusted basis which taxpayer would have had in the property in the absence of the 65-percent limitation]). However, if the adjusted basis of the property on disposition had been $0, the amount of the carryover to 1976 would have been $10x ($10x disallowed amount −$0 adjusted basis of property on sale).

Example 7. In 1975 F owned producing properties M, N, O, P, Q, and R. With respect to property M, the allowable cost depletion was $100x (the allowable percentage depletion pursuant to section 613A(c) without regard to the depletable quantity and taxable income limitations contained in section 613A(c)(1), (6) and (d)(1) would have been $90x). With respect to property N, the allowable percentage depletion pursuant to section 613A(c) before applying section 613A(d)(1) was $80x (cost depletion would have been $0). With respect to property O, the allowable cost depletion was $60x (the allowable percentage depletion pursuant to section 613A(c) would have been $70x, except that the application of section 613A(d)(1) reduced allowable percentage depletion to less than $60x). With respect to property P, the allowable percentage depletion pursuant to section 613A(b) was $55x (cost depletion would have been $40x). With respect to property Q, which produces both gas subject to section 613A(b)(1)(B) and oil subject to section 613A(c), the allowable percentage depletion was $45x (cost depletion would have been $40x). With respect to property R, the allowable cost depletion was $40x (the allowable percentage depletion pursuant to section 613A(c) would have been $50x, except that the application of section 613A(c)(7)(A) reduced allowable percentage depletion to less than $40x). Under paragraph (a)(1)(i) of this section, for purposes of applying the 65 percent limitation under section 613A(d)(1), F's taxable income must be reduced by the allowable depletion with respect to property M (for which cost depletion exceeded percentage depletion even in the absence of section 613A(c)(1), (6), and (d)) and property P (for which all depletion is determined pursuant to section 613A(b)), but shall not be reduced by the allowable depletion with respect to properties N, O, Q, and R.

(b) ***Retailers excluded.***

(1) Section 613A(c) and § 1.613A-3 shall not apply in the case of any taxpayer who is a retailer as defined in paragraph (r) of § 1.613A-7.

(2) The application of this paragraph may be illustrated by the following examples (those that involve sales through retail outlets assume, unless otherwise stated, that the $5,000,000 gross receipts requirement section 613A(d)(2) is met):

Example 1. A, owner of producing oil and gas properties, also owns 5 percent in value of the stock of Corporation M, a retailer of oil and gas. None of A's production is sold through Corporation M. Since A may benefit from Corporation M's sales of oil and gas through A's ownership interest in Corporation M, A is considered to be selling oil or natural gas through Corporation M, a related person. Accordingly, the exemption under section 613A(c) does not apply to A, even though none of A's production is sold through Corporation M.

Example 2. Assume the same facts as in *Example 1* except that A has gross receipts of $2 million from sales of oil for the taxable year from A's retail outlets and Corporation M has gross receipts of $4 million from sales of oil for the taxable year from its retail outlets. For purposes of the $5 million gross receipts requirement of section 613A(d)(2), A is treated as having gross receipts of $6 million. Accordingly, the exemption under section 613A(c) does not apply to A.

Example 3. Corporation N, a retailer of oil and gas, owns 5 percent in value of the stock of Corporation O, owner of producing oil and gas properties. None of Corporation O's production is sold through Corporation N. Since Corporation O has no direct or indirect ownership interest in Corporation N, and therefore does not benefit from Corporation N's sales of oil and gas, and since none of Corporation O's production is sold through Corporation N, the exemption under section 613A(c) applies to Corporation O.

Example 4. Corporation P, a producer of oil, owns 70 percent in value of the stock of Corporation Q. Corporation Q owns 30 percent in value of the stock of Corporation R. Corporation R owns 30 percent in value of the stock of Corporation S, a retailer of oil and gas. P indirectly owns 6.3 percent (70 percent × 30 percent × 30 percent) in value of the stock of Corporation S. Since P may benefit from Corporation S's sales of oil and gas through P's indirect ownership interest in Corporation S, P is not entitled to percentage depletion.

Example 5. B is the owner of certain oil and gas properties in Texas and is also the owner of a service station in Washington, DC, which B leases to Corporation T. None of B's production is sold to Corporation T. The exemption under section 613A(c) applies to B. However, if sales of B's production were made to Corporation T and the gross receipts from such sales of B's production to Corporation T exceed 5 million dollars, the exemption under section 613A(c) would not apply to B because B is selling oil or natural gas to a person given authority to occupy a retail outlet leased by the taxpayer, B.

Example 6. C has a $^{1}/_{8}$ royalty interest and Corporation U has a $^{7}/_{8}$ working interest in an oil property. Corporation V, a retailer of oil, owns 5 percent in value of the stock of Corporation U. C has no interest in either corporation. All of the production from the property is sold through Corporation V, C receiving from Corporation U $^{1}/_{8}$ of its receipts therefrom. The exemption under section 613A(c) does not apply to Corporation U because Corporation U is selling oil of natural gas through Corporation V, a related person that is a retailer. However, the exemption applies to C because C, as owner of a nonoperating mineral interest, is not treated as an operator of a retail outlet merely because C's oil and gas is sold on C's behalf through a retail outlet operated by an unrelated person.

Example 7. D owns and operates retail grocery stores where refined oil may be purchased. D also owns oil and gas producing properties. If the sales of refined oil at each store location constitute less than 5 percent of the gross receipts from all sales made at that store, D is not considered a retailer by reason of such sales.

Example 8. Lessee E sells natural gas to lessor F directly from a wellhead gathering pipelines system for F's local agricultural use, in transactions incidental to the acquisition of a natural gas lease. The sales of natural gas to F are not sales through a retail outlet.

Example 9. Corporation W produces natural gas, some of which it sells at retail. For purposes of determining whether Corporation W is a retailer selling gas through a retail outlet within the meaning of § 1.613A-7(r), the business office of Corporation W where a purchaser would normally contact the corporation with respect to its sales to the purchaser is considered the place at which those sales of natural gas are made.

Example 10. G, husband, is the sole owner and operator of a retail outlet which sells oil and gas. H, wife, owns producing oil and gas properties. G is not related to H for purposes of section 613A(d).

Example 11. I, husband, and J, wife, are community property owners of 10 percent in value of the stock of Corporation X which is a retailer of oil and gas. I and J are each treated as owning 5 percent of Corporation X. Therefore, neither I nor J qualify for the exemption under section 613A(c).

Example 12. Corporation Y, an electing small business corporation as defined in section 1371 (as in effect prior to the enactment of the subchapter S Revision Act of 1982), owns producing oil and gas properties. K, a retailer of oil and gas, is a 50 percent interest shareholder of Corporation Y. None of Corporation Y's production is sold through K. Corporation Y is eligible for percentage depletion.

Example 13. Corporation Z, a producer of natural gas, makes bulk sales of natural gas to industrial users. For purposes of determining whether Corporation Z is a retailer under § 1.613A-7(r), the bulk sales are disregarded.

Example 14. L, a calendar year taxpayer, is the owner of a producing oil property. On September 1, 1976, L purchased a chain of gasoline service stations. Therefore, L was a retailer of oil and gas for the last 122 days of 1976. L's gross income from the oil property for the taxable year was $150x and L's taxable income from the property was $30x. L is treated as a retailer with respect to $50x of gross income from the property ($150x × 122/366) and $10x of taxable income from the property ($30x × 122/366). Therefore, L is entitled to percentage depletion with respect to $100x of gross income from the property ($150x minus $50x). However, the allowable percentage depletion is limited by the 50 percent of taxable income from the property limitation to $10x (50 percent times $20x taxable income ($30x minus $10x)).

Example 15. Corporation M is a partner in Partnership MNO which is the owner of an operating interest in a producing oil property. Corporation P, a retailer of oil and gas, owns 5 percent in value of the stock of Corporation M. Partnership MNO sells its production to Corporation P. Corporation M is retailing oil through Corporation P, a related person, because its share of the oil is being sold on its behalf by the partnership through a retail outlet operated by a person related to Corporation M. Therefore, the exemption under section 613A(c) does not apply to Corporation M.

Example 16. AA and BB are beneficiaries of a trust which is a retailer of oil and gas. AA has an interest in the income of the trust for AA's lifetime which, actuarially determined, represents more than 5 percent of the beneficial interests in the trust. BB's interest in the trust, which entitles BB to 5 percent of the corpus of the trust 5 years after AA's death, represents less than 5 percent of the beneficial

interests in the trust prior to AA's death and represents more than 5 percent after AA's death. The trust is a related person of AA but not BB while AA is alive. Accordingly, during AA's lifetime BB is not disqualified from the exemption provided by section 613A(c), but AA is.

Example 17. Assume the same facts as in *Example 16,* except that AA's interest in the income of the trust represents 4 percent of the beneficial interests in the trust. AA is disqualified from the exemption provided by section 613A(c) with respect to the income from the trust but not with respect to income from other sources.

(c) ***Certain refiners excluded.***

(1) Section 613A(c) and § 1.613A-3 shall not apply in the case of any taxpayer who is a refiner as defined in paragraph (s) of § 1.613A-7.

(2) The provisions of this paragraph may be illustrated by the following examples:

Example 1. Corporation M owns a refinery which has refinery runs in excess of 50,000 barrels on at least one day during the taxable year. Corporation M also owns a 5 percent interest in Corporation N, owner of producing oil and gas properties. None of Corporation N's production is sold to Corporation M. The exemption under section 613A(c) does not apply to Corporation N because Corporation M, a related person of Corporation N, engages in the refining of crude oil.

Example 2. A and B are equal partners in Partnership AB, which owns oil and gas producing properties. A owns a refinery which has refinery runs in excess of 50,000 barrels on at least one day during the taxable year and which buys all of Partnership AB's production. B has no ownership interest in any refinery. B is not a refiner.

[T.D. 8348, 56 FR 21946, May 13, 1991; 57 FR 4913, Feb. 10, 1992]

§ 1.613A-5 Election under section 613A(c)(4).

The election under section 613A(c)(4) is an annual election which the taxpayer may make by claiming percentage depletion deductions for the taxable year based upon such election. The election may be made, on an original or amended tax return or a claim for credit or refund, at any time prior to the expiration of the statutory period (including any extensions thereof) for the filing of a claim for credit or refund by the taxpayer. The election may be changed by the taxpayer by filing an amended return or a claim for credit or refund. The election allows the taxpayer to treat as his depletable natural gas quantity an amount equal to 6,000 cubic feet multiplied by the number of barrels of the taxpayer's depletable oil quantity to which the election applies. The election applies to secondary or tertiary production, as well as primary production, but in determining the taxpayer's depletable natural gas quantity with respect to secondary or tertiary production the taxpayer's depletable oil quantity shall be determined without regard to section 613A(c)(3)(A)(ii) with respect to production from secondary or tertiary processes.

[T.D. 7487, 42 FR 24264, May 13, 1977]

§ 1.613A-6 Recordkeeping requirements.

(a) ***Principal value of property demonstrated.*** In the case of a transfer (as defined in § 1.613A-7(n)) after December 31, 1974, of an interest in an oil or gas property (as defined in § 1.613A-7(p)), the transferee (as defined in section 1.613A-7(o)) shall keep records showing the terms of the transfer, any geological and geophysical data in the possession of the transferee or other exploratory data with respect to the property

transferred, and any other information which bears upon the question of whether at the time of the transfer the principal value of the property transferred had been demonstrated by prospecting, exploration, and discovery work.

(b) ***Production from secondary or tertiary processes.*** Every taxpayer who claims depletion with respect to oil or gas produced by secondary or tertiary processes (as defined in § 1.613A-7(k)) shall keep records of the secondary and tertiary processes applied and maintain records of the amount of production so resulting.

(c) ***Retention of records.*** The records required by this section shall be kept at all times available for inspection by authorized Internal Revenue officers or employees, and shall be retained so long as the contents may become material in the administration of any Internal Revenue law.

[T.D. 7487, 42 FR 24264, May 13, 1977]

§ 1.613A-7 Definitions.

For purposes of section 613A and the regulations thereunder—

(a) ***Domestic.*** The term *domestic,* as applied to oil and gas wells (or to production from such wells), refers to wells located in the United States or in a possession of the United States, as defined in section 638 and the regulations thereunder.

(b) ***Natural gas.*** The term *natural gas* means any product (other than crude oil as defined in paragraph (g) of this section) of an oil or gas well if a deduction for depletion is allowable under section 611 with respect to such product.

(c) ***Regulated natural gas.*** Natural gas is considered to be "regulated" only if all of the following requirements are met:

(1) The gas must be domestic gas produced and sold by the producer (whether for himself or on behalf of another person) before July 1, 1976,

(2) The price for which the gas is sold by the producer must not be adjusted to reflect to any extent the increase in liability of the seller for tax under chapter 1 of the Code by reason of the repeal of percentage depletion for gas,

(3) The sale of the gas must have been subject to the jurisdiction of the Federal Power Commission for regulatory purposes,

(4) An order or certificate of the Federal Power Commission must be in effect (or a proceeding to obtain such an order or certificate must have been instituted), and

(5) The price at which the gas is sold must be taken into account, directly or indirectly, in the issuance of the order or certificate by the Federal Power Commission. Price increases after February 1, 1975, are presumed to take increases in tax liabilities into account unless the taxpayer demonstrates to the contrary by clear and convincing evidence that the increases are wholly attributable to a purpose or purposes unrelated to the repeal of percentage depletion for gas (*e.g.,* where the record of the Federal Power Commission clearly establishes that the Commission did not take the repeal into account). Increases to reflect additional State and local real property or severance taxes, increases for additional operating costs (such as costs of secondary or tertiary processes), adjustments for inflation, increases for additional drilling and related costs, or increases to reflect changes in the quality of gas sold, are some examples of increases that are not attributable to the repeal of

percentage depletion for gas. In the absence of a statement in writing by the Federal Power Commission that the price of the gas in question was not in fact regulated, the requirement of paragraph (c)(5) of this section is deemed to have been met in any case in which the Federal Power Commission issued an order or certificate approving the sale to an interstate pipeline company or, in a case in which it is established by the taxpayer that the Federal Power Commission has influenced the price of such gas, an order or certificate permitting the interstate transportation of such gas. In addition, an "emergency" sale of natural gas to an interstate pipeline, which, pursuant to the authority contained in 18 CFR 2.68, 2.70, 157.22, and 157.29, may be made without prior order approving the sale, is deemed to have met the requirements of paragraph (c) (3), (4), and (5) of this section. For purposes of meeting the requirements under this paragraph, it is not necessary that the total gas production from a property qualify as "regulated natural gas." The determination of whether mineral production is "regulated natural gas" shall be made with respect to each sale of the mineral or minerals produced.

(d) ***Natural gas sold under a fixed contract.*** The term *natural gas sold under a fixed contract* means domestic natural gas sold by the producer (whether for himself or on behalf of another person) under a contract, in effect on February 1, 1975, and at all times thereafter before such sale, under which the price for the gas during such period cannot be adjusted to reflect to any extent the increase in liabilities of the seller for tax under chapter 1 of the Code by reason of the repeal of percentage depletion for gas. The term may include gas sold under a fixed contract even though production sold under the contract had previously been treated as regulated natural gas. Price increases after February 1, 1975, are presumed to take increases in tax liabilities into account unless the taxpayer demonstrates to the contrary by clear and convincing evidence. Paragraph (c) of this section provides examples of increases which do not take increases in tax liabilities into account. However, if an adjustment provided for in the contract permits the possible increase in federal income tax liability of the seller to be taken into account to any extent, the gas sold under the contract after such an increase becomes permissible is not gas sold under a fixed contract. If the adjustment provided for in the contract provides for an increase in the price of the contract to the highest price paid to a producer for natural gas in the area, or if the price may be renegotiated, then gas sold under the contract after such an increase becomes permissible is presumed not to be sold under a fixed contract unless the taxpayer demonstrates by clear and convincing evidence that the price increase in no event takes increases in tax liabilities into account. For purposes of meeting the requirements of this paragraph, it is not necessary that the total gas production from a property qualify as "natural gas sold under a fixed contract," for the determination of "natural gas sold under a fixed contract" is to be made with respect to each sale of each type of natural gas sold pursuant to each contract.

(e) ***Qualified natural gas from geopressured brine.*** The term "qualified natural gas from geopressured brine" means any natural gas which is determined in accordance with section 503 of the Natural Gas Policy Act of 1978 to be produced from geopressured brine and which is produced from any well the drilling of which began after September 30, 1978, and before January 1, 1984.

(f) ***Average daily production.***

(1) The term *average daily production* means the taxpayer's aggregate production of domestic crude oil or natural gas, as the case may be, which is extracted after December 31, 1974, and to which gross income from the property is attributable during the taxable year divided by the number of days in such year. As used in the preceding sentence the term *taxpayer* includes a small business corporation as defined in section 1371 (as in effect prior to the enactment of the subchapter S Revision Act of 1982) and the regulations thereunder. Notwithstanding the provisions of § 1.612-3 and except as provided in § 1.613A-3(j)(2), in computing the average daily production for a taxable

year only oil or gas which has been actually produced by the close of such taxable year is taken into account. Average daily production does not include production resulting from secondary or tertiary processes to which gross income from the property is attributable before January 1, 1984.

(2) In the case of a fiscal-year taxpayer, paragraph (f)(1) of this section shall be applied separately to each short taxable year under section 613A(c)(11), as in effect prior to the Revenue Reconciliation Act of 1990.

(3) In the case of a taxpayer holding a partial interest in the production from any property (including an interest of a partner in property of a partnership or a net profit interest) such taxpayer's production shall be considered to be that amount of such production determined by multiplying the total production (which is produced after December 31, 1974, and to which gross income from the property is attributable during the taxable year) of the property by the taxpayer's percentage participation in the gross revenues from the property during the year. However, the portion of trust (or estate) production allocable to a beneficiary shall not exceed that amount of the trust's (or estate's) depletable oil quantity determined by multiplying such quantity by the beneficiary's percentage interest in the trust's (or estate's) gross income from the property.

(g) ***Crude oil.*** For purposes of section 613A and the regulations thereunder, the term *crude oil* means—

(1) A mixture of hydrocarbons which existed in the liquid phase in natural underground reservoirs and which remains liquid at atmospheric pressure after passing through surface separating facilities,

(2) Hydrocarbons which existed in the gaseous phase in natural underground reservoirs but which are liquid at atmospheric pressure after being recovered from oil well (casinghead) gas in lease separators, and

(3) Natural gas liquid recovered from gas well effluent in lease separators or field facilities before any conversion process has been applied to such production.

(h) ***Depletable oil quantity.*** The taxpayer's depletable oil quantity, within the meaning of section 613A(c)(1)(A), shall be equal to the tentative quantity determined under the table contained in section 613A(c)(3)(B) and paragraph (b) of § 1.613A-3 (except that, in the case of determinations with respect to days prior to January 1, 1984, such quantity shall be reduced (but not below zero) by the taxpayer's average daily secondary or tertiary production for the taxable year).

(i) ***Depletable natural gas quantity.*** The taxpayer's depletable natural gas quantity, within the meaning of section 613A(c)(1)(B), shall be equal to 6,000 cubic feet multiplied by the number of barrels of the taxpayer's depletable oil quantity to which the taxpayer elects to have section 613A(c)(4) apply. The taxpayer's depletable oil quantity for any taxable year shall be reduced (in addition to any reduction required to be made under paragraph (h) of this section) by the number of barrels with respect to which an election under section 613A(c)(4) for natural gas has been made. See § 1.613A-5.

(j) ***Barrel.*** The term *barrel* means 42 United States gallons.

(k) ***Secondary or tertiary production.*** For purposes of section 613A the term *secondary or tertiary production* means the increased production of domestic crude oil or natural gas from a property at any time after the application of a secondary or tertiary process. The increased production is the excess of actual production over the maximum primary production which would have resulted during the taxable year if the secondary or tertiary process had not been applied. The increased production may be due to an increase in either the rate or the duration of recovery. A secondary or tertiary process is a process applied for the recovery of hydrocarbons in which liquids, gases, or other matter is injected into the reservoir to

supplement or augment the natural forces required to move the hydrocarbons through the reservoir. However, no process which must be introduced early in the productive life of the mineral property in order to be reasonably effective (such as cycling of gas in the case of a gas-condensate reservoir) is a secondary or tertiary process. A process (such as fire flooding or miscible fluid injection) introduced early in the productive life of the mineral property will not be disqualified as a secondary or tertiary process if a later introduction of the process in the property would still have been reasonably effective.

(l) ***Controlled group of corporations.*** The term *controlled group of corporations* has the meaning given to such term by section 1563(a), except that section 1563(b)(2) shall not apply and except that "more than 50 percent" shall be substituted for " at least 80 percent" each place it appears in section 1563(a).

(m) ***Related person.***

(1) A person is a *related person* to another person, within the meaning of section 613A(d) (2) and (4), paragraphs (b) and (c) of § 1.613A-4, and paragraphs (r) and (s) of this section, if either a significant ownership interest in such person is held by the other, or a third person has a significant ownership interest in both such persons. For purposes of determining a significant ownership interest, an interest owned by or for a corporation, partnership, trust, or estate shall be considered as owned directly both by itself and proportionately by its shareholders, partners, or beneficiaries, as the case may be. The term *significant ownership* means—

(i) With respect to any corporation, direct or indirect ownership of 5 percent or more in value of the outstanding stock of such corporation,

(ii) With respect to a partnership, direct or indirect ownership of 5 percent or more interest in the profits or capital of such partnership, and

(iii) With respect to an estate or trust, direct or indirect ownership of 5 percent or more of the beneficial interests in such estate or trust. The relative percentage ownership of beneficiaries of an estate or trust in the beneficial interests therein shall be determined under actuarial principles.

(2) A person is a "related person" to another person, within the meaning of section 613A(c)(8)(B) and paragraph (h)(2) of § 1.613A-3, if such persons are members of the same controlled group of corporations or if the relationship between such persons would result in a disallowance of losses under section 267 or 707(b), except that for this purpose the family of an individual includes only the individual's spouse and minor children.

(n) ***Transfer.*** The term *transfer* means any change in ownership for federal tax purposes after December 31, 1974, by sale, exchange, gift, lease, sublease, assignment, contract, or other disposition (including any contribution to or any distribution by a corporation, partnership, or trust), any change in the membership of a partnership or the beneficiaries of a trust, or any other change by which a taxpayer's proportionate share of the income subject to depletion of an oil or gas property is increased. For taxable years beginning after 1982, the term "transfer" includes an election by a C corporation to be an S corporation (properties deemed transferred by the C corporation on the day the election first becomes effective) and a termination of an S election (each shareholder's pro rata share of assets of S corporation deemed transferred to C corporation on the day that the termination first becomes effective). However, the term does not include—

(1) A transfer of property at death (including a distribution by an estate, whether or not a pro rata distribution),

(2) An exchange to which section 351 applies,

(3) A change of beneficiaries of a trust by reason of the death, birth, or adoption of any vested beneficiary if the transferee was a beneficiary of the trust or is a lineal descendant of the settlor or any other vested beneficiary of the trust, except in the case of any trust where any beneficiary of the trust is a member of the family (as defined in section 267(c)(4)) of a settlor who created inter vivos and testamentary trusts for members of the family and the settlor died within the last six days of the fifth month in 1970, and the law in the jurisdiction in which the trust was created requires all or a portion of the gross or net proceeds of any royalty or other interest in oil, gas, or other mineral representing any percentage depletion allowance to be allocated to the principal of the trust,

(4) A transfer of property between corporations which are members of the same controlled group of corporations (as defined in section 613A(c)(8)(D)(i)),

(5) A transfer of property between business entities which are under common control (within the meaning of section 613A(c)(8)(B)) or between related persons in the same family (within the meaning of section 613A(c)(8)(C)),

(6) A transfer of property between a trust and members of the same family (within the meaning of section 613A(c)(8)(C)) to the extent that both

(i) the beneficiaries of the trust are and continue to be members of the family that transferred the property, and

(ii) the tentative oil quantity is allocated among the members of such family,

(7) A reversion of all or part of an interest with respect to which the taxpayer was eligible for percentage depletion pursuant to section 613A(c), or

(8) A conversion of a retained interest which is eligible for such depletion into an interest which constituted all or part of an interest previously owned by the taxpayer also eligible for such depletion.

However, paragraph (n) (2), (4), and (5) of this section shall apply only so long as the tentative quantity determined under the table contained in section 613A(c)(3)(B) (as in effect prior to the Revenue Reconciliation Act of 1990) is required to be allocated under section 613A(c)(8) between the transferor and transferee, or among members of a controlled group of corporations. In the case of an individual transferor, the allocation test of the preceding sentence shall not be failed merely because of the death of the transferor. For purposes of paragraph (n) (3) and (6), an individual adopted by a beneficiary is a lineal descendant of that beneficiary. For purposes of paragraph (n) (7) and (8), a taxpayer previously ineligible for percentage depletion solely by reason of section 613A(d) (2) or (4) will be considered to have been eligible for such depletion. A transfer is deemed to occur on the day on which a contract or other commitment to transfer the property becomes binding upon both the transferor and transferee, or, if no such contract or commitment is made, on the day on which ownership of the interest in oil or gas property passes to the transferee.

(o) *Transferee.* The term “transferee”, as used in section 613A(c)(9), paragraph (i)(1) of § 1.613A-3, and this section includes the original transferee of proven property and his or her successors in interest (excluding successors in interest of proven property transferred after October 11, 1990). A person shall not be treated as a transferee of an interest in a proven oil or gas property to the extent that such person was entitled to a percentage depletion allowance on mineral produced with respect to the property immediately before the transfer. However, a person shall be treated as a transferee of an interest in a

proven property to the extent that the interest such person receives is greater than the interest in the property the person held immediately before the transfer. For example, where the owner of a proven oil property transfers his or her entire interest therein to a partnership of which he or she is a member and, as a consequence, becomes entitled to a depletion allowance based on only one-third of the oil produced with respect to that property, the owner (the transferor) is not denied percentage depletion with respect to the one-third interest in oil production which the owner still possesses. If the partnership agreement had made an effective allocation (under section 704 and § 1.704.1) of all the income in respect of such property to the transferor partner, that partner would be entitled to percentage depletion on the entire oil production from that property. For this purpose, a person who has transferred oil or gas property pursuant to a unitization or pooling agreement shall be treated as having been entitled to a depletion allowance immediately before the transfer to that person of the interest in the unit or pool with respect to all of the mineral in respect of which the person receives gross income from the property pursuant to the unitization or pooling agreement, except to the extent such income is attributable to consideration paid by that person for such interest in addition to that person's contribution of the oil or gas property and equipment affixed thereto.

(p) ***Interest in proven oil or gas property.*** The term *interest in an oil or gas property* means an economic interest in oil or gas property. An economic interest includes working or operating interests, royalties, overriding royalties, net profits interests, and, to the extent not treated as loans under section 636, production payments from oil or gas properties. The term also includes an interest in a partnership, S corporation, small business corporation, or trust holding an economic interest in oil or gas property but does not include shares of stock in a corporation (other than an S corporation and small business corporation) owning such an interest. An oil or gas property is “proven” if its principal value has been demonstrated by prospecting, exploration, or discovery work. The principal value of the property has been demonstrated by prospecting, exploration, or discovery work only if at the time of the transfer—

(1) Any oil or gas has been produced from a deposit, whether or not produced by the taxpayer or from the property transferred;

(2) Prospecting, exploration, or discovery work indicate that it is probable that the property will have gross income from oil or gas from the deposit sufficient to justify development of the property; and

(3) The fair market value of the property is 50 percent or more of the fair market value of the property, minus actual expenses of the transferee for equipment and intangible drilling and development costs, at the time of the first production from the property subsequent to the transfer and before the tansferee transfers his or her interest.

For purposes of this paragraph, the property is to be determined by applying section 614 and the regulations thereunder to the transferee at the time of the transfer. If the transfer is of an interest in a partnership, S corporation, small business corporation, or trust, the determination shall be made with respect to each property owned by the partnership, S corporation, small business corporation, or trust. The term *prospecting, exploration, or discovery work* includes activities which produce information relating to the existence, location, extent, or quality of any deposit of oil or gas, such as seismograph surveys and drilling activities (whether for exploration or for the production of oil or gas).

(q) ***Amount disallowed.*** The amount disallowed, within the meaning of section 613A(d)(1) and paragraph (a) of § 1.613A-4, is the excess of the amount of the aggregate of the taxpayer's allowable depletion deductions (whether based upon cost or percentage depletion) computed without regard to section 613A(d)(1) over the amount of the aggregate of such deductions computed with regard to such section.

The disallowed amount shall be carried over to the succeeding year and treated as an amount allowable as a deduction pursuant to section 613A(c) for the succeeding year, subject to the 65-percent limitation of section 613A(d)(1) and the rules contained in § 1.613A-4(a).

(r) ***Retailer.***

(1) Except as otherwise provided in paragraph (r)(2) of this section, the term *retailer* means any taxpayer who directly, or through a related person (as defined in paragraph (m)(1) of this section), sells oil or natural gas, or any product derived from oil or natural gas—

(i) Through any retail outlet operated by the taxpayer or a related person, or

(ii) To any person—

(A) Obligated under an agreement or contract with the taxpayer or a related person to use a trademark, trade name, or service mark or name owned by such taxpayer or a related person, in marketing or distributing oil or natural gas or any product derived from oil or natural gas, or

(B) Given authority, pursuant to an agreement or contract with the taxpayer or a related person, to occupy any retail outlet owned, leased, or in any way controlled by the taxpayer or a related person.

For purposes of the preceding sentence, bulk sales (*i.e.,* sales in very large quantities) of oil or natural gas (but not bulk sales of any product derived from oil or natural gas) to commercial or industrial users shall be disregarded. Bulk sales made after September 18, 1982, of aviation fuels to the Department of Defense shall be also disregarded. In addition, sales of oil or natural gas (whether or not produced by the taxpayer), or of any product derived from oil or natural gas, which are made outside the United States shall be disregarded if no domestic production of oil, natural gas (or products derived therefrom) of the taxpayer or a related person is exported during the taxable year or the immediately preceding taxable year.

(2) Notwithstanding paragraph (r)(1) of this section, the taxpayer shall not be considered a retailer in any case where, during the taxable year of the taxpayer, the combined gross receipts from sales (excluding sales for resale) of oil or natural gas, or products derived therefrom, of all retail outlets taken into account under paragraph (r)(1) of this section (including sales through a retail outlet of oil, natural gas, or a product derived from oil or natural gas which had previously been the subject of a sale described in paragraph (r)(1)(ii) of this section) do not exceed $5 million. If the taxpayer's combined gross receipts for the taxable year exceed $5 million, the taxpayer will be treated as a retailer as of the first day in which a retail sale was made. For purposes of paragraph (r)(1) of this section, a taxpayer shall be deemed to be selling oil or natural gas (or a product derived therefrom) through a related person in any case in which any sale of oil or natural gas (or a derivative product) by the related person produces gross income from which the taxpayer may benefit by reason of the taxpayer's direct or indirect ownership interest in the related person. In such cases (and in any other case in which the taxpayer is selling through a retail outlet referred to in section 613A(d)(2)(A) or is selling such items to a person described in section 613A(d)(2)(B)), it is immaterial whether the oil or natural gas which is sold, or from which is derived a product which is sold, was produced by the taxpayer. A taxpayer shall be deemed to be selling oil or natural gas (or a derivative product) through a retail outlet operated by a related person in any case in which a related person who operates a retail outlet acquires for resale oil or natural gas (or a derivative product) which the taxpayer produced or caused to be made available for acquisition by the related person pursuant to an arrangement whereby some or all of the taxpayer's production is marketed. An owner of a

nonoperating mineral interest (such as a royalty) shall not be treated as an operator of a retail outlet merely because the owner's oil or gas is sold on the owner's behalf through a retail outlet operated by an unrelated person. In addition, the mere fact that a member of a partnership is a retailer shall not result in characterization of the remaining partners as retailers. However, any partner of a partnership who has a 5 percent or more interest in any entity actually engaging in retail activities (including the partnership or another entity to which the partnership is related) is treated as a retailer. See paragraph (m)(1) of this section for rules on the ownership interest by partners in an entity related to a partnership. Similarly, if a trust or estate is a retailer, only its beneficiaries having a 5 percent or more current income interest from the trust or estate are treated as retailers. A person who is a retailer during a portion of the taxable year shall be treated as a retailer with respect to a fraction of that person's gross and taxable income from oil or gas properties for the taxable year, the numerator of which is the number of days during the taxable year in which the taxpayer is a retailer and the denominator of which is the total number of days during the taxable year; except that a person who ceases to be a retailer during the taxable year before the first production of oil or gas during such year shall not be treated as a retailer for any portion of such year.

(3) For purposes of this paragraph (r), the term *any product derived from oil or natural gas* means gasoline, kerosene, Number 2 fuel oil, refined lubricating oils, diesel fuel, butane, propane, and similar products which are recovered from petroleum refineries or extracted from natural gas in field facilities or natural gas processing plants. The term *retail outlet* means any place where sales of oil or natural gas (excluding bulk sales of such items to commercial or industrial users), or a product of oil or natural gas (excluding bulk sales of aviation fuels to the Department of Defense), accounting for more than 5 percent of the gross receipts from all sales made at such place during the taxpayer's taxable year, are systematically made for any purpose other than for resale. For this purpose, sales of oil or natural gas, or any product derived from oil or natural gas, to a person for refining are considered as sales made for resale.

(s) ***Refiner.*** A person is a refiner if such person or a related person (as defined in paragraph (m)(1) of this section) engages in the refining of crude oil (whether or not owned by such person or related person) and if the total refinery runs of such person and any related persons exceed 50,000 barrels on any day during the taxable year. A refinery run is the volume of inputs of crude oil (excluding any product derived from oil) into the refining stream. For purposes of this paragraph, crude oil refined outside the United States shall be taken into account. Refining is any operation by which the physical or chemical characteristics of crude oil are changed, exclusive of such operations as passing crude oil through separators to remove gas, placing crude oil in settling tanks to recover basic sediment and water, dehydrating crude oil, and blending of crude oil products.

[T.D. 8348, 56 FR 21949, May 13, 1991; 57 FR 4913, Feb. 10, 1992, as amended by T.D. 8437, 57 FR 43903, Sept. 23, 1992; 58 FR 6678, Feb. 1, 1993]

§ 1.614-0 Introduction.

Section 614 relates to the definition of property and to the various special rules by means of which taxpayers are permitted to aggregate or combine separate properties or to treat such properties as separate. These rules are set forth in detail in §§ 1.614-1 through 1.614-8. Section 1.614-1 sets forth rules under section 614(a) relating to the definition of the term *property.* Section 1.614-2 contains the rules relating to the election under section 614(b), as it existed prior to its amendment by section 226(a) of the Revenue Act of 1964, to aggregate operating mineral interests. In the case of mines, the rules contained in § 1.614-2 are applicable only to taxable years beginning before January 1, 1958, to which the Internal Revenue Code of 1954 applies. In the case of oil and gas wells, the

rules contained in § 1.614-2 are applicable only to taxable years beginning before January 1, 1964, to which the Internal Revenue Code of 1954 applies. In the case of oil and gas wells, the taxpayer may, however, for taxable years beginning before January 1, 1964, treat any operating mineral interests as if section 614 (a) and (b) (as it existed prior to its amendment by section 226(a) of the Revenue Act of 1964) had not been enacted. If any operating mineral interests are so treated, the rules contained in § 1.614-2 are not applicable to such interests and such interests are, in respect of taxable years beginning before January 1, 1964, subject to the rules set forth in § 1.614-4 relating to the Internal Revenue Code of 1939 treatment of separate operating mineral interests in the case of oil and gas wells. Section 1.614-3 prescribes the rules relating to the election under section 614(c)(1) permitting the aggregation of operating mineral interests in the cases of mines for taxable years beginning after December 31, 1957. Section 1.614-3 also sets forth rules relating to the election under section 614(c)(2) in the case of mines by means of which a taxpayer is permitted to treat a single operating mineral interest as more than one such interest for taxable years beginning after December 31, 1957. At the election of the taxpayer with respect to an operating unit, the rules contained in § 1.614-3 are also applicable to taxable years beginning before January 1, 1958, to which the Internal Revenue Code of 1954 applies. If the taxpayer makes such an election, the rules contained in § 1.614-2 are not applicable to any of the operating mineral interests which are part of the operating unit with respect to which the election described in § 1.614-3 is made. Section 1.614-5 sets forth the rules relating to the aggregation of nonoperating mineral interests. Section 1.614-6 contains the rules relating to basis, holding period, and abandonment and casualty losses where properties have been aggregated or combined. Section 1.614-7 relates to the extension of time for performing certain acts. Section 1.614-8 contains the rules relating to the elections under section 614(b) as amended by section 226(a) of the Revenue Act of 1964 to treat separate operating mineral interests in the case of oil and gas wells as separate properties or in combination for taxable years beginning after December 31, 1963.

[T.D. 6859, 30 FR 13699, Oct. 28, 1965]

§ 1.614-1 Definition of property.

(a) ***General rule.***

(1) For purposes of subtitle A of the Code, in the case of mines, wells, and other natural deposits, the term *property* means each separate interest owned by the taxpayer in each mineral deposit in each separate tract or parcel of land.

(2) The term *interest* means an economic interest in a mineral deposit. See paragraph (b) of § 1.611-1. The term includes working or operating interests, royalties, overriding royalties, net profits interests, and, to the extent not treated as loans under section 636, production payments.

(3) The term *tract or parcel of land* is merely descriptive of the physical scope of the land to which the taxpayer's interest relates. It is not descriptive of the nature of his rights or interests in the land. All contiguous areas (even though separately described) included in a single conveyance or grant or in separate conveyances or grants at the same time from the same owner constitute a single separate tract or parcel of land. Areas included in separate conveyances or grants (whether or not at the same time) from separate owners are separate tracts or parcels of land even though the areas described may be contiguous. If the taxpayer's rights or interests within the same tract or parcel of land are dissimilar, then each such dissimilar interest constitutes a separate property. If the taxpayer's rights or interests (whether or not dissimilar) within the same tract or parcel of land relate to more than one separate mineral deposit, then his interest with respect to each such separate deposit is a separate property.

(4) Upon the transfer of a *property* in any transaction in which the basis of such property in the hands of the transferee is determined by reference to the basis of such property in the hands of the transferor, such property shall, notwithstanding the provisions of subparagraph (3) of this paragraph, retain the same status and identity in the hands of the transferee as it had in the hands of the transferor. See paragraph (c) of § 1.614-6 if the transferor has made a binding election to treat a separate mineral interest as a separate property, to treat a separate mineral interest as more than one property under section 614(c), or to treat two or more separate mineral interests as an aggregated or combined property under section 614(b) (as it existed either before or after its amendment by section 226(a) of the Revenue Act of 1964), (c), or (e).

(5) The provisions of this paragraph may be illustrated by the following examples:

Example 1. A taxpayer owns one tract of land under which lie three separate and distinct seams of coal. Therefore, the taxpayer owns three separate mineral interests each of which constitutes a separate property.

Example 2. A taxpayer conducts mining operations on eight tracts of land as a single unit. He acquired his interests in each of the eight tracts from separate owners. Even if each tract of land contains part of the same mineral deposit, the taxpayer owns eight separate mineral interests each of which constitutes a separate property.

Example 3. A taxpayer owns a tract of land under which lies one mineral deposit. The taxpayer operates a well on part of the tract and leases to another operator the mineral rights in the remainder retaining a royalty interest therein. The taxpayer thereafter owns two separate mineral interests each of which constitutes a separate property.

Example 4. In 1954, a taxpayer acquires from a single owner, in a single deed, three noncontiguous tracts of mineral land for a single consideration. Even if each tract contains part of the same mineral deposit, the taxpayer owns three separate mineral interests each of which constitutes a separate property.

Example 5. In 1954, taxpayer A simultaneously acquires in fee two contiguous tracts of mineral land from two separate owners. The same mineral deposit underlies both tracts. Thereafter, taxpayer A owns two separate mineral interests each of which constitutes a separate property.

Example 6. Assume that in 1955, taxpayer A, in example 5, leases the two contiguous tracts of mineral land that he acquired in 1954 to taxpayer B by means of a single lease. Thereafter, taxpayer B owns one mineral interest which constitutes a separate property for such time as the lease continues in existence.

Example 7. Assume that in 1955, taxpayer A, in example 5, sells at the same time all the mineral land he acquired in 1954 to taxpayer B. Thereafter, taxpayer B owns one mineral interest which constitutes a separate property. If taxpayer B acquires the mineral land in a transaction in which the basis of such mineral land in his hands is determined by reference to the basis of such mineral land in the hands of taxpayer A, then taxpayer B owns two separate mineral interests each of which constitutes a separate property.

Example 8. In 1954, taxpayer A simultaneously acquires two contiguous leasehold interests from two separate owners. The same mineral deposit underlies both tracts. Thereafter, taxpayer A owns two separate mineral interests each of which constitutes a separate property.

Example 9. In 1955, taxpayer A, in example 8, simultaneously assigns the two leases to taxpayer B. Thereafter, taxpayer B owns two separate mineral interests each of which constitutes a separate property.

(b) ***Separation of interests treated as single property*** under prior regulations. Each separate mineral interest which, in accordance with paragraph (a) of this section, is a separate property shall be so treated, notwithstanding the fact that the taxpayer under paragraph (i) of § 39.23(m)-1 of this chapter (Regulations 118) and corresponding provisions of prior regulations may have treated more than one of such interests as a *single property.* The basis of each such separate property must be established by a reasonable method. See, however, section 614 (b) and (d) (as they existed prior to amendment by section 226 of the Revenue Act of 1964), section 614 (c) and (e), and §§ 1.614-2, 1.614-3, 1.614-4, and 1.614-5 for special rules relating to the treatment of two or more separate mineral interests as a single property.

(c) ***Treatment of a waste bank or residue.*** A waste bank or residue of prior mining, the extraction of ores or minerals from which is treated as mining under section 613(c)(3), shall not be considered to be a separate mineral deposit but is a part of the mineral deposit from which it was extracted. However, if the owner of such waste bank or residue has disposed of the deposit from which the waste bank or residue was accumulated, or if the waste bank or residue cannot practicably be attributed to a particular deposit of the owner, the waste bank or residue will be regarded as a separate deposit.

[T.D. 6524, 26 FR 147, Jan. 10, 1961, as amended by T.D. 6859, 30 FR 13699, Oct. 28, 1965; T.D. 7261, 38 FR 5467, Mar. 1, 1973]

§ 1.614-2 Election to aggregate separate operating mineral interests under section 614(b) prior to its amendment by Revenue Act of 1964.

(a) ***General rule.***

(1) The provisions of this section relate to the election, under section 614(b) prior to its amendment by section 226(a) of the Revenue Act of 1964, to aggregate separate operating mineral interests, and, unless otherwise indicated, all references in this section to section 614(b) or any paragraph or subparagraph thereof are references to section 614(b) or a paragraph or subparagraph thereof as it existed prior to such amendment. Notwithstanding the preceding sentence, the definitions contained in paragraphs (b) and (c) of this section shall apply both before and after such amendment. All references in this section to section 614(d) are references to section 614(d) as it existed prior to its amendment by section 226(b)(3) of the Revenue Act of 1964.

(2) A taxpayer who owns two or more separate operating mineral interests, which constitute part or all of an operating unit, may elect under section 614(b) and this section to form one aggregation of any two or more of such operating mineral interests and to treat such aggregation as one property. Any operating mineral interest which the taxpayer does not elect to include within the aggregation within the time prescribed in paragraph (d) of this section shall be treated as a separate property. The aggregation of separate properties which results from exercising the election shall be considered as one property for all purposes of subtitle A of the Code. The preceding sentence does not preclude the use of more than one account under a single method of computing depreciation or the use of more than one method of computing depreciation under section 167, if otherwise proper. Any reasonable and consistently applied method or methods of computing depreciation of the improvements made with respect to the separate properties aggregated may be continued in accordance with section 167 and the regulations thereunder. Operating interests in different minerals which comprise part or all of the same operating unit may be included in the aggregation. It is not necessary for purposes of the aggregation that the separate operating mineral interests be

included in a single tract or parcel of land or in contiguous tracts or parcels of land so long as such interests are a part of the same operating unit. Under section 614(b), a taxpayer cannot elect to form more than one aggregation of separate operating mineral interests within one operating unit. For definitions of *operating mineral interest* and *operating unit* see respectively paragraphs (b) and (c) of this section.

(b) ***Operating mineral interest defined.*** The term *operating mineral interest* means a separate mineral interest as described in section 614(a), in respect of which the costs of production are required to be taken into account by the taxpayer for purposes of computing the limitation of 50 percent of the taxable income from the property in determining the deduction for percentage depletion computed under section 613, or such costs would be so required to be taken into account if the mine, well, or other natural deposit were in the production stage. The term does not include royalty interests or similar interests, such as production payments or net profits interests. For the purpose of determining whether a mineral interest is an operating mineral interest, *costs of production* do not include intangible drilling and development costs, exploration expenditures under section 615, or development expenditures under section 616. Taxes, such as production taxes, payable by holders of nonoperating interests are not considered costs of production for this purpose. A taxpayer may not aggregate operating mineral interests and nonoperating mineral interests such as royalty interests.

(c) ***Operating unit defined.***

(1) The term *operating unit* refers to the operating mineral interests which are operated together for the purpose of producing minerals. An *operating unit* of a particular taxpayer must be determined on the basis of his own operations. It is recognized that operating units may not be uniform in the various natural resources industries or in any one of the natural resources industries, such as coal, oil and gas, and the like. As to a particular taxpayer, business reasons may require the formation of operating units that vary in size and content. The term *operating unit* refers to a producing unit, and not to an administrative or sales organization. Among the factors which indicate that mineral interests are operated together as a unit are:

(i) Common field or operating personnel,

(ii) Common supply and maintenance facilities,

(iii) Common processing or treatment plants, and

(iv) Common storage facilities

However, operating mineral interests which are geographically widespread may not be treated as parts of the same operating unit merely because a single set of accounting records, a single executive organization, or a single sales force is maintained by the taxpayer with respect to such interests, or merely because the products of such interests are processed at the same treatment plant.

(2) If aggregated, an undeveloped operating mineral interest shall be aggregated only with those interests with which it will be operated as a unit when it reaches the production stage.

(3) While a taxpayer may operate an operating mineral interest through an agent, a coowner may aggregate only his operating mineral interests that are actually operated as a unit. For example, if A owned and actually operated the entire working interest in lease X and also owned an undivided

fraction of lease Y in which B owned the remaining interest and which B actually operated as a unit with lease Z, A may not aggregate his interest in lease X with his undivided interest in lease Y, since they are not actually operated as a unit.

(4) The determination of the taxpayer as to what constitutes an operating unit is to be accepted unless there is a clear and convincing basis for a change in such determination.

(d) *Manner and scope of election* —

(1) *Election; when made.*

(i) Except as provided in subparagraph (2)(ii) of this paragraph, the election under section 614(b) and paragraph (a) of this section to treat a mineral interest as part of an aggregation shall be made not later than the time prescribed by law for filing the taxpayer's income tax return (including extensions thereof), for whichever of the following taxable years is the later:

(*a*) The first taxable year beginning after December 31, 1953, and ending after August 16, 1954, or

(*b*) The first taxable year in which any expenditure for exploration, development, or operation in respect of the separate operating mineral interest is made by the taxpayer after the acquisition of such interest

See, however, paragraph (c) of § 1.614-6 as to the binding effect of an election where the basis of a separate operating mineral interest in the hands of the taxpayer is determined by reference to the basis in the hands of a transferor. The election under section 614(b) may not be made with respect to any taxable year beginning after December 31, 1957, except in the case of oil and gas wells. See paragraph (e) of this section for rules with respect to the termination of the election under section 614(b) except in the case of oil and gas wells. If an expenditure has been made in respect of a separate operating mineral interest, it is immaterial whether or not any proven deposit has been discovered with respect to such interest when such expenditure has been made. The provisions of this subdivision may be illustrated by the following example:

> ***Example.*** Taxpayer A is producing from an oil and gas horizon and in 1958 he drills for the purpose of locating a deeper horizon which will be operated in the same operating unit as the upper producing horizon. At the end of the taxable year 1958 he has expended $50,000 drilling for the purpose of locating a deeper horizon although at such time there is no assurance that such a horizon will be found. If taxpayer A desires to aggregate the deeper horizon, if found, with the upper horizon under section 614(b), he must elect to do so in his return for 1958. If the election to aggregate the upper and lower horizons as one property is made, the drilling expenditures with respect to the prospective lower horizon must be taken into account along with the income and expenses with respect to the upper producing horizon in computing the depletion allowance on the aggregated property.

However, where expenditures for development of, or production from, a particular mineral deposit result in the discovery of another mineral deposit, the election with respect to such other deposit shall be made for the taxable year in which it is discovered and not for the taxable year in which the expenditures were first made which resulted in such discovery.

(ii) Except in the case of oil and gas wells, if a taxpayer fails to make an election under section 614(b) to aggregate a particular operating mineral interest on or before the time prescribed for the making of such election, such interest will be treated as if an election had been made under section 614(b) to treat it as a separate property and it cannot be included in any aggregation within the operating unit of which it is a part unless the taxpayer obtains the consent of the Commissioner. However, where the taxpayer owns more than one property within an operating unit, but has elected to treat such properties separately and one or more additional operating mineral interests are subsequently acquired, any one or more of the latter may be aggregated with one of the existing separate properties within the operating unit but not with more than one of them since they cannot be validly aggregated with each other.

(iii) In the case of oil and gas wells, if the taxpayer fails to make an election under section 614(b) with respect to a particular operating mineral interest on or before the time prescribed for the making of such election, the taxpayer shall be deemed to have treated such interest under the provisions of section 614(d). See section 614(d) and § 1.614-4.

(iv) For purposes of section 614(b), the acquisition of an option to acquire an economic interest in minerals in place does not constitute the acquisition of a mineral interest. Thus, a taxpayer who makes expenditures for the exploration of minerals on a particular tract under an option to acquire an economic interest in minerals in place is not required to make an election with respect to such interest at that time. Furthermore, the election need not be made in the taxable year in which payments are made for the acquisition of a lease, such as the payment of a bonus, unless exploratory, development, or operation expenditures are made thereafter with respect to the property in that year.

(2) ***Election; how made.***

(i) The election under section 614(b) must be made by a statement attached to the income tax return of the taxpayer for the first taxable year for which the election is made. This statement shall indicate that the taxpayer is making an aggregation of separate operating mineral interests within an operating unit under section 614(b) and shall contain a description of the aggregation and describe the operating mineral interests within the operating unit which are to be treated as separate properties apart from the aggregation. A general description, accompanied by maps appropriately marked, which accurately circumscribes the scope of the aggregation and identifies the properties which are to be treated separately will be sufficient. The statement shall also contain a description of the operating unit in sufficient detail to show that the aggregated operating mineral interests are properly within a single operating unit. See paragraph (c) of this section. The taxpayer shall maintain adequate records and maps in support of the above information. In the event expenditures are first made on an operating mineral interest within an operating unit after an election with respect to the aggregation of interests in that operating unit has been made, the taxpayer shall furnish only information describing such operating mineral interest, its location in the operating unit, and whether it is to be included within the aggregation.

(ii) If the taxpayer made or did not make the election under section 614(b) with respect to a particular operating mineral interest and the last day prescribed by law for filing the return (including extensions of time therefor) on which the election was required to be made falls on or before May 1, 1961, consent is hereby given to the taxpayer to make or change the election not later than May 1, 1961. Any such election or change of such election shall be effective with respect to the earliest taxable year to which the election is applicable in respect of which

assessment of a deficiency or credit or refund of an overpayment, as the case may be, resulting from such election or change is not prevented by any law or rule of law on the date such election or change is made. An election or change of election made pursuant to this subdivision shall be binding upon the taxpayer for the first taxable year for which it is effective and for all subsequent taxable years unless consent to a different treatment is obtained from the Commissioner. (See, however, paragraph (e) of this section for rules relating to the termination and nonapplicability of the election under section 614(b) except in the case of oil and gas wells.) Such election or change shall be made in the form of a statement setting forth the nature of the election or change, including information substantially the same as that required by subdivision (i) of this subparagraph, and shall be accompanied by an amended return or returns if necessary or, if appropriate, a claim for refund or credit. The appropriate documents must be filed on or before May 1, 1961 with the district director for the district in which the original return was filed.

(3) ***Election; when effective.*** If a taxpayer has elected to aggregate an operating mineral interest, the date on which the aggregation becomes effective is the earliest date within the taxable year affected, on which the taxpayer incurred any expenditure for exploration, development, or operation of such interest. The application of this rule may be illustrated by the following examples:

Example 1. In 1953, a taxpayer owned and operated mineral interests Nos. 1, 2, and 3. All three interests form one operating unit. The taxpayer, who files his return on a calendar year basis, continued to own and operate these interests during the year 1954, and in his return for that year, filed on April 15, 1955, elected to aggregate these three interests. As the result of this election, the aggregation was effective for all purposes of subtitle A of the Code as of January 1, 1954.

Example 2. Assume that, on March 1, 1955, the taxpayer described in example 1 acquired operating mineral interest No. 4 which was also a part of the operating unit composed of operating mineral interests Nos. 1, 2, and 3, that he made his first expenditure for exploration with respect to operating mineral interest No. 4 on September 1, 1955, and that, in his return filed on April 15, 1956, he elected to aggregate operating mineral interest No. 4 with the aggregation consisting of Nos. 1, 2, and 3. As the result of that election, operating mineral interest No. 4 became a part of the aggregation for all purposes of subtitle of the Code on September 1, 1955.

(4) ***Election; binding effect.*** A valid election made under section 614(b) and this section shall be binding upon the taxpayer for the taxable year for which made and all subsequent taxable years unless consent to make a change is obtained from the Commissioner. However, see paragraph (e) of this section for rules with respect to the termination of the election under section 614(b) except in the case of oil and gas wells. For rules relating to the binding effect of an election where the basis of a separate or an aggregated property in the hands of the transferee is determined by reference to the basis in the hands of the transferor, see paragraph (c) of § 1.614-6. A taxpayer can neither include within the aggregation a separate operating mineral interest which he had previously elected to treat separately, nor exclude from the aggregation a separate operating mineral interest previously included therein unless consent to do so is obtained from the Commissioner. A change in tax consequences alone is not sufficient to obtain consent to change the treatment of an operating mineral interest. However, consent may be appropriate where, for example, there has been a substantial change in the taxpayer's operations so that a major part of an aggregation becomes a part of another operating unit. Applications for consent shall be made in writing to the Commissioner of Internal Revenue, Washington, DC 20224. The application must be accompanied

by a statement indicating the reason or reasons for the change and furnishing the information required under subdivision (i) of subparagraph (2) of this paragraph, unless such information has been previously filed and is current.

(5) *Invalid aggregations* —

(i) ***In general.*** In addition to aggregations which are invalid under section 614(b) because of the failure to make timely elections, aggregations may be invalid under such section in situations which may be divided into two general categories. The first category involves basic aggregations which were timely but otherwise initially invalid. The second category involves invalid additions of operating mineral interests to basic aggregations which additions became subject to the election in years subsequent to the year in which the initial basic aggregation or aggregations were formed.

(ii) ***Invalid basic aggregations.*** The term *invalid basic aggregations* refers to those aggregations which are initially invalid. Generally, such basic aggregations will be invalid because more than one aggregation has been formed within an operating unit or because operating mineral interests in two or more operating units have been improperly aggregated. For any year in which an invalid basic aggregation exists, each operating mineral interest included in such aggregation shall be treated for all purposes as a separate property unless consent is obtained from the Commissioner to treat any such interest in a different manner. Consent will be granted in appropriate cases as, for example, where the taxpayer demonstrates that he inadvertently formed an invalid basic aggregation. The provisions of this subdivision may be illustrated by the following examples:

> ***Example 1.*** In 1953, taxpayer A owned six operating mineral interests, designated No. 1 through No. 6, and he continued to own and operate such interests during 1954. He acquired no other operating mineral interests during such year. All six of these operating mineral interests form one operating unit. Assume that A elected under section 614(b) to aggregate operating mineral interests Nos. 1 through 3 into one aggregation and Nos. 4 through 6 into another aggregation. Since A has formed two aggregations in one operating unit, they are invalid basic aggregations. Therefore, interests Nos. 1 through 6 must be treated as separate properties for 1954 and all subsequent taxable years unless consent is obtained from the Commissioner to treat any of such interests in a different manner.

> ***Example 2.*** Assume the same facts as in example 1 and assume also that, in his return for 1954, A correctly elected to aggregate all six operating mineral interests into one aggregation under section 614(b). Assume further that all these operating mineral interests continued to be in one operating unit for the years 1954, 1955, and 1956 but that, because of changes in the facts and circumstances of A's operations, in 1957 operating mineral interests Nos. 1, 2, and 3 became a part of one operating unit and Nos. 4, 5, and 6 became a part of another operating unit. Notwithstanding the change in operations, the election made by A shall continue to be binding unless consent to change such election is obtained from the Commissioner.

(iii) ***Invalid additions.*** The term *additions* refers to the additions that a taxpayer makes by electing to aggregate an operating mineral interest with an aggregation formed in a previous year. Such additions will be invalid where the taxpayer either elected to aggregate an operating mineral interest with an invalid basic aggregation or elected to aggregate an operating mineral interest

which is part of one operating unit with an aggregation of operating mineral interests which is a part of another operating unit. An operating mineral interest which is invalidly added to either a valid basic aggregation or to an invalid basic aggregation shall be considered as a separate property unless consent is obtained from the Commissioner to treat such interest in a different manner. The following are examples of invalid additions:

> ***Example 1.*** In 1953, taxpayer A owned six operating mineral interests designated No. 1 through No. 6 and he continued to own and operate such interests during 1954. He acquired no other operating mineral interests during that year. Nos. 1 through 3 formed one operating unit and Nos. 4 through 6 formed another operating unit. In his return for 1954, A incorrectly elected to aggregate all six operating mineral interests into one aggregation under section 614(b). In 1955, A acquired and commenced development of operating mineral interest No. 7 which is correctly a part of the operating unit of which operating mineral interests Nos. 1, 2, and 3 are a part. A elected under section 614(b), for the year 1955, to aggregate operating mineral interest No. 7 with the invalid basic aggregation composed of Nos. 1 through 6. Since operating mineral interest No. 7 was aggregated with an invalid basic aggregation, it is an invalid addition and must be treated as a separate property unless consent is obtained from the Commissioner to treat it in a different manner.

> ***Example 2.*** In 1953, taxpayer A owned nine operating mineral interests designated No. 1 through No. 9. During 1954, he continued to own and operate such interests and acquired no other operating mineral interest. Interests No. 1 through No. 3 form one operating unit, Nos. 4 through 6 form another operating unit, and Nos. 7 through 9 form a third operating unit. For the year 1954, A elected under section 614(b) to aggregate operating mineral interests Nos. 1, 2, 3, and 4 into one aggregation, to treat Nos. 5 and 6 as separate properties, and to aggregate Nos. 7, 8, and 9 into another aggregation. Assume that in 1955 A acquired and commenced development of operating mineral interest No. 10 which was a part of the operating unit composed of Nos. 1, 2, and 3. Assume further that he elected under section 614(b) to aggregate No. 10 with the aggregation composed of Nos. 7, 8, and 9. This would be an invalid addition to a valid basic aggregation since operating mineral interest No. 10 was not properly a part of the operating unit formed by Nos. 7, 8, and 9. Therefore, interest No. 10 must be treated as a separate property for 1955 and all subsequent taxable years unless consent is obtained from the Commissioner to treat it in a different manner. However, the valid basic aggregation composed of interests Nos. 7 through 9 is not affected by the invalid addition of interest No. 10.

> ***Example 3.*** Assume the same facts as in example 2 except that A elected under section 614(b) in 1955 to aggregate No. 10 with the aggregation of Nos. 1 through 4. This would also be an invalid addition because the aggregation composed of Nos. 1 through 4 is an invalid basic aggregation since operating mineral interest No. 4 is not a part of the operating unit consisting of Nos. 1, 2, and 3. Therefore, interest No. 10 must be treated as a separate property for 1955 and all subsequent taxable years unless consent is obtained from the Commissioner to treat such interest in a different manner.

(e) ***Termination of election —***

(1) ***Taxable years beginning after December 31, 1963, in the case of oil and gas wells.*** In the case of oil and gas wells, the election provided for under section 614(b) and paragraph (a) of this section to form an aggregation of separate operating mineral interests shall not apply with respect to any taxable year beginning after December 31, 1963. In addition, if a taxpayer treated certain separate operating mineral interests in a single tract or parcel of land as separate rather than as an aggregation and decides to continue such treatment for taxable years beginning after December 31, 1963, he must make an appropriate election under section 614(b) as amended by the Revenue Act of 1964. See § 1.614-8.

(2) ***Taxable years beginning after December 31, 1957, in the case of mines.*** Except in the case of oil and gas wells, the election provided for under section 614(b) and paragraph (a) of this section to form an aggregation of separate operating mineral interests shall not apply with respect to any taxable year beginning after December 31, 1957. Thus, if a taxpayer makes a binding election under section 614(b) to form an aggregation of separate operating mineral interests within an operating unit for taxable years beginning before January 1, 1958, he must make a new election for the first taxable year beginning after December 31, 1957, under section 614(c) within the time prescribed in § 1.614-3 if he wishes to aggregate any separate operating mineral interests within such operating unit. A new election must be made under section 614(c) notwithstanding the fact that the aggregation formed under section 614(b) would constitute a valid aggregation under section 614(c). Failure to make such an election within the time prescribed shall constitute an election to treat each separate operating mineral interest within the operating unit as a separate property for taxable years beginning after December 31, 1957.

(3) ***Taxable years beginning before January 1, 1958, in the case of mines.*** An election made under section 614(b) and paragraph (a) of this section to form an aggregation of separate operating mineral interests within a particular operating unit shall not apply with respect to any taxable year beginning prior to January 1, 1958, for which the taxpayer makes an election under section 614(c)(3)(B) and paragraph (f)(2) of § 1.614-3 which is applicable to any separate operating mineral interest within the same operating unit. The provisions of this subparagraph may be illustrated by the following examples:

Example 1. In 1953, taxpayer A owned six separate operating mineral interests, designated No. 1 through No. 6, which he operated as a unit. Operating mineral interests Nos. 1 through 5 comprise a mine, and operating mineral interest No. 6 represents one mineral deposit in a single tract of land which is being extracted by means of two mines. Taxpayer A previously made a binding election under section 614(b) to aggregate operating mineral interests Nos. 1 through 5 and to treat operating mineral interest No. 6 as a separate property. Under section 614(c)(2) and (3)(B) taxpayer A makes an election which is applicable for the taxable year 1954 and all subsequent taxable years to treat operating mineral interest No. 6 as two separate operating mineral interests. Therefore, the previous election of taxpayer A to aggregate operating mineral interests Nos. 1 through 5 under section 614(b) does not apply. Unless taxpayer A also makes an election to aggregate operating mineral interests Nos. 1 through 5 as one property under section 614(c)(1) and (3)(B) within the time prescribed in paragraph (f)(2) of § 1.614-3, he shall be deemed to have made an election to treat each of such interests as a separate property for 1954 and all subsequent taxable years.

Example 2. In 1953, taxpayer B owned six separate operating mineral interests, designated No. 1 through No. 6, which he operated as a unit. Operating mineral interests Nos. 1 through 3 comprise a mine and Nos. 4 through 6 comprise a second mine. Taxpayer B previously made a binding election under section 614(b) to aggregate operating mineral interests Nos. 1 through 8

and to treat Nos. 4 through 6 as separate properties. Under section 614(c) (1) and (3)(B) taxpayer B makes an election which is applicable for the taxable year 1954 and all subsequent taxable years to aggregate operating mineral interests Nos. 4 through 6 as one property. The previous election of the taxpayer under section 614(b) to aggregate operating mineral interests Nos. 1 through 3 does not apply even though such aggregation would constitute a valid aggregation if formed under section 614(c)(1). Therefore, if taxpayer B wishes to continue to treat operating mineral interests Nos. 1 through 3 as one property, he must also make an election to do so under section 614(c) (1) and (3)(B) within the time prescribed in paragraph (f)(2) of § 1.614-3.

(4) ***Bases of separate operating mineral interests.*** If an aggregation formed under section 614(b) is terminated by reason of the provisions of section 614(b)(4)(A), is terminated under section 614(b)(4)(B) for any taxable year after the first taxable year to which the election under section 614(b) applies, or is terminated by reason of the provisions of section 614(b) as amended by the Revenue Act of 1964, the bases of the separate operating mineral interests (and combinations thereof) included in such aggregation shall be determined in accordance with the rules contained in paragraph (a)(2) of § 1.614-6 as of the first day of the first taxable year for which the termination is effective. However, if by reason of the provisions of section 614(b)(4)(B), an election to aggregate under section 614(b) does not apply for any taxable year for which such election was made, the bases of the separate operating mineral interests included in the aggregation formed under section 614(b) shall be determined without regard to the election under section 614(b).

(f) ***Alternative treatment of separate operating mineral interests in the case of oil and gas wells.*** For rules relating to an alternative treatment of separate operating mineral interests in the case of oil and gas wells, see § 1.614-4.

[T.D. 6524, 26 FR 147, Jan. 10, 1961, as amended by T.D. 6859, 30 FR 13700, Oct. 28, 1965]

§ 1.614-3 Rules relating to separate operating mineral interests in the case of mines.

(a) ***Election to aggregate separate operating mineral interests*** —

(1) ***General rule.*** Except in the case of oil and gas wells, a taxpayer who owns two or more separate operating mineral interests, which constitute part or all of the same operating unit, may elect under section 614(c)(1) and this paragraph to form an aggregation of all such operating mineral interests which comprise any one mine or any two or more mines and to treat such aggregation as one property. The aggregated property which results from the exercise of such election shall be considered as one property for all purposes of subtitle A of the Code. The preceding sentence does not preclude the use of more than one account under a single method of computing depreciation or the use of more than one method of computing depreciation under section 167, if otherwise proper. Any reasonable and consistently applied method or methods of computing depreciation of the improvements made with respect to the separate properties aggregated may be continued in accordance with section 167 and the regulations thereunder. It is not necessary for purposes of the aggregation that the separate operating mineral interests be included in a single tract or parcel of land or in contiguous tracts or parcels of land so long as such interests constitute part or all of the same operating unit. A taxpayer may elect to form more than one aggregation of separate operating mineral interests within one operating unit so long as each aggregation consists of all the separate operating mineral interests which comprise any one mine or any two or more mines. Thus, no aggregation may include any separate operating mineral interest which is a part of a mine without

including all of the separate operating mineral interests which comprise such mine in the first taxable year for which the election to aggregate is effective. Any separate operating mineral interest which becomes a part of such mine in a subsequent taxable year must also be included in such aggregation as of the taxable year that such interest becomes a part of such mine. The taxable year in which such interest becomes a part of such mine shall be determined upon the basis of the facts and circumstances of the particular case. If a taxpayer fails to make an election under this paragraph to aggregate a particular operating mineral interest (other than an interest which becomes a part of a mine with respect to which the interests have been aggregated in a prior taxable year) on or before the last day prescribed for making such an election, such interest shall be treated as if an election had been made to treat it as a separate property. A taxpayer may not aggregate operating mineral interests and nonoperating mineral interests such as royalty interests. For definitions of the terms *operating mineral interest, operating unit,* and *mine,* see respectively paragraphs (c), (d), and (e) of this section.

(2) ***Aggregation in subsequent taxable years.*** If the taxpayer has made an election under section 614(c)(1) for a particular taxable year with respect to any operating mineral interest or interests within a particular operating unit, and if, for a subsequent taxable year, the taxpayer desires to make an election with respect to an additional operating mineral interest within the same operating unit, then whether or not the taxpayer may elect to include such additional interest in an aggregation or treat it as a separate property depends upon the nature of such additional interest and of the taxpayer's previous elections. If the additional interest is a part of a mine with respect to which the other interests have been aggregated, the additional interest must be included in such aggregation. If the additional interest is a part of a mine with respect to which the other interests have been treated as separate properties, the additional interest must be treated as a separate property. If the additional interest is part of a mine which previously consisted of only a single interest which has not been aggregated with any other mine, such additional interest may be aggregated or treated as a separate property. If the additional interest is an entire mine, it may, at the election of the taxpayer,

(i) be added to any aggregation within the same operating unit,

(ii) be aggregated with any other single interest which is an entire mine provided both interests are within the same operating unit even though such single interest has previously been treated as a separate property, or

(iii) be treated as a separate property.

(b) ***Election to treat a single operating mineral interest as more than one property*** —

(1) ***General rule.*** Except in the case of oil and gas wells, a taxpayer who owns a separate operating mineral interest in a mineral deposit in a single tract or parcel of land may elect under section 614(c)(2) and this paragraph to treat such interest as two or more separate operating mineral interests if such mineral deposit is being developed or extracted by means of two or more mines. In order for this election to be applicable, there must be at least two mines with respect to each of which an expenditure for development or operation has been made by the taxpayer. The election under section 614(c)(2) may also be made with respect to a separate operating mineral interest formed by a previous election under section 614(c)(2) at such time as the mineral deposit previously allocated to such interest is being developed or extracted by means of two or more mines. If there is more than one mineral deposit in a single tract or parcel of land, an election under section 614(c)(2) with respect to any one of such mineral deposits has no application to the other mineral deposits. The election under section 614(c)(2) may not be made with respect to an aggregated property or with respect to any operating mineral interest which is a part of any aggregation formed by the

taxpayer unless the taxpayer obtains consent from the Commissioner. Such consent will not be granted where the principal purpose for the request to make the election is based on tax consequences. Application for such consent shall be made in writing to the Commissioner of Internal Revenue, Washington, DC 20224. The application must be accompanied by a statement setting forth in detail the reason or reasons for the request to exercise the election with respect to an aggregated property.

(2) ***Allocation of mineral deposit.*** If the taxpayer elects to treat a separate operating mineral interest in a mineral deposit in a single tract or parcel of land as more than one separate operating mineral interest, then all of such mineral deposit therein and all of the portion of the tract or parcel of land allocated thereto must be allocated to the newly formed separate operating mineral interests. A portion of such mineral deposit and such tract or parcel of land must be allocated to each such newly formed separate operating mineral interest. There must be at least one mine, with respect to which an expenditure for development or operation has been made by the taxpayer, with respect to each such portion. The extent of the portion to be allocated to each newly formed separate operating mineral interest is to be determined upon the basis of the facts and circumstances of the particular case.

(3) ***Basis of newly formed separate operating mineral interests.*** The adjusted basis of each of the separate operating mineral interests formed by the making of the election under section 614(c)(2) shall be determined by apportioning the adjusted basis of the separate operating mineral interest with respect to which such election was made between (or among) the newly formed separate operating mineral interests in the same proportion as the fair market value of each such newly formed interest (as of the date on which the election becomes effective) bears to the total fair market value of the interest with respect to which the election was made as of such date.

(4) ***Aggregation of newly formed separate operating mineral interests.*** Any separate operating mineral interest formed by the making of the election under section 614(c)(2) may be included as a part of an aggregation subject to the requirements of paragraph (a) of this section, provided that the time for making the election under section 614(c)(1) to include such separate operating mineral interest in such aggregation has not expired. See paragraph (f) of this section. The provisions of this subparagraph may be illustrated by the following example:

Example. In 1958, taxpayer A acquired two separate operating mineral interests designated No. 1 and No. 2. Each is an interest in a single mineral deposit in a single tract of land. In the same year, taxpayer A made his first development expenditure with respect to a mine on operating mineral interest No. 1 and a mine on operating mineral interest No. 2. Operating mineral interests Nos. 1 and 2 are operated as a unit. Taxpayer A did not elect to aggregate operating mineral interests Nos. 1 and 2 under section 614(c)(1) within the time prescribed for making such an election. In 1960 taxpayer A made his first development expenditure with respect to a second mine on operating mineral interest No. 2. Taxpayer A elected under section 614(c)(2) to treat operating mineral interest No. 2 as two separate operating mineral interests, designated as Nos. 2(a) and 2(b), for the taxable year 1960 and all subsequent taxable years. No. 2(a) contained the mine for which the first development expenditure was made in 1958, and No. 2(b) contained the mine for which the first development expenditure was made in 1960. If taxpayer A wishes to do so, he may elect to aggregate mineral interests Nos. 1 and 2(b) under section 614(c)(1) for the taxable year 1960 and all subsequent taxable years since the first development expenditure with respect to the mine on operating mineral interest No. 2(b) was made during the taxable year 1960. Taxpayer A may not elect to aggregate mineral interests Nos. 1 and 2(a) under such section since the time for making such an election has expired.

(c) ***Operating mineral interest defined.*** For the definition of the term *operating mineral interest* as used in this section, see paragraph (b) of § 1.614-2.

(d) ***Operating unit defined.*** For the definition of the term *operating unit* as used in this section, see paragraph (c) of § 1.614-2.

(e) ***Mine defined.*** For purposes of this section, the term *mine* means any excavation or other workings or series of related excavations or related workings, as the case may be, for the purpose of extracting any known mineral deposit except oil and gas deposits. For the purpose of the preceding sentence, the term *excavations* or *workings* includes quarries, pits, shafts, and wells (except oil and gas wells). The number of excavations or workings that constitute a mine is to be determined upon the basis of the facts and circumstances of the particular case such as the nature and position of the mineral deposit or deposits, the method of mining the mineral, the location of the excavations or other workings in relation to the mineral deposit or deposits, and the topography of the area. The determination of the taxpayer as to the composition of a mine is to be accepted unless there is a clear and convincing basis for a change in such determination.

(f) ***Manner and scope of election —***

(1) ***Election to apply section 614(c) (1) and (2) for taxable years beginning after December 31, 1957.*** Except as provided in subparagraphs (2) and (3) of this paragraph, the election under section 614(c)(1) and paragraph (a) of this section to treat an operating mineral interest as part of an aggregation shall be made under section 614(c)(3)(A) not later than the time prescribed by law for filing the taxpayer's income tax return (including extensions thereof) for whichever of the following taxable years is the later:

(i) The first taxable year beginning after December 31, 1957, or

(ii) The first taxable year in which any expenditure for development or operation in respect of the separate operating mineral interest is made by the taxpayer after the acquisition of such interest

Except as provided in subparagraphs (2) and (3) of this paragraph, the election under section 614(c)(2) and paragraph (b) of this section to treat a single operating mineral interest as more than one operating mineral interest shall be made under section 614(c)(3)(A) not later than the time prescribed by law for filing the taxpayer's income tax return (including extensions thereof) for whichever of the following taxable years is the later:

(iii) The first taxable year beginning after December 31, 1957, or

(iv) The first taxable year in which expenditures for development or operation of more than one mine in respect of the separate operating mineral interest are made by the taxpayer after the acquisition of such interest

However, if the latest time at which an election may be made under this subparagraph falls on or before May 1, 1961, such election may be made or modified at any time on or before May 1, 1961. See paragraph (c) of § 1.614-6 as to the binding effect of an election where the basis of a separate operating mineral interest in the hands of the taxpayer is determined by reference to the basis in the hands of a transferor.

(2) ***Election to apply section 614(c) (1) and (2) for taxable years beginning before January 1, 1958.*** In accordance with section 614(c)(3)(B), the election under section 614(c) (1) and paragraph (a) of this section to treat an operating mineral interest as part of an aggregation may, at the election of the taxpayer, be made not later than the time prescribed by law for filing the taxpayer's income tax return (including extensions thereof) for whichever of the following taxable years is the later:

(i) The first taxable year beginning after December 31, 1953, and ending after August 16, 1954, for which assessment of a deficiency or credit or refund of an overpayment, as the case may be, resulting from an election under section 614(c)(1), is not prevented on September 2, 1958, by the operation of any law or rule of law, or

(ii) The first taxable year in which any expenditure for development or operation in respect of the separate operating mineral interest is made by the taxpayer after the acquisition of such interest

In accordance with section 614(c) (3)(B), the election under section 614(c)(2) and paragraph (b) of this section to treat an operating mineral interest as more than one operating mineral interest may, at the election of the taxpayer, be made not later than the time prescribed by law for filing the taxpayer's income tax return (including extensions thereof) for whichever of the following taxable years is the later:

(iii) The first taxable year beginning after December 31, 1953, and ending after August 16, 1954, for which assessment of a deficiency or credit or refund of an overpayment, as the case may be, resulting from an election under section 614(c)(2), is not prevented on September 2, 1958, by the operation of any law or rule of law, or

(iv) The first taxable year in which expenditures for development or operation of more than one mine in respect of the separate operating mineral interest are made by the taxpayer after the acquisition of such interest

However, if the latest time at which an election may be made under this subparagraph falls on or before May 1, 1961, such election may be made or modified at any time on or before May 1, 1961. See paragraph (c) of § 1.614-6 as to the binding effect of an election where the basis of a separate operating mineral interest in the hands of the taxpayer is determined by reference to the basis in the hands of a transferor.

(3) ***Limitation.*** If the taxpayer makes an election under section 614(c) (1) or (2) in accordance with section 614(c)(3)(B) and subparagraph (2) of this paragraph with respect to any operating mineral interest which constitutes part or all of an operating unit, such taxpayer may not make any election under section 614(c) (1) or (2) in accordance with section 614(c)(3)(A) and subparagraph (1) of this paragraph with respect to any operating mineral interest which constitutes part or all of such operating unit. The provisions of this subparagraph may be illustrated by the following example:

Example: In 1953, taxpayer A owned six separate operating mineral interests, designated No. 1 through No. 6, which he operated as a unit. Operating mineral interests Nos. 1 through 5 comprise a mine, and operating mineral interest No. 6 represents one mineral deposit in a single tract of land which is being extracted by means of two mines. In accordance with section 614(c)(3)(B) and subparagraph (2) of this paragraph, taxpayer A elects under section 614(c)(2) to treat operating mineral interest No. 6 as two separate operating mineral interests for the taxable year 1954 and all subsequent taxable years. Unless taxpayer A also makes an election under section 614(c)(1) to aggregate operating mineral interests Nos. 1 through 5 for the taxable year 1954 and all subsequent taxable years in accordance with section 614(c)(3)(B)

and subparagraph (2) of this paragraph, he shall be deemed to have made an election to treat each of such interests as a separate property. Taxpayer A may not elect, under section 614(c)(1) and (3)(A), to aggregate operating mineral interests Nos. 1 through 5 for the taxable year 1958 or any subsequent taxable year.

(4) ***Statute of limitations.*** If the taxpayer makes any election in accordance with section 614(c)(3)(B) and subparagraph (2) of this paragraph and if assessment of any deficiency for any taxable year resulting from such election is prevented on May 1, 1961, or at any time within one year after such first day, by the operation of any law or rule of law, such assessment may, nevertheless, be made within one year after May 1, 1961. Any election by a taxpayer in accordance with section 614(c)(3)(B) shall constitute consent to the assessment of any deficiency resulting from any such election. If refund or credit of any overpayment of income tax resulting from any election made in accordance with section 614(c)(3)(B) is prevented on May 1, 1961, or at any time within one year after May 1, 1961, by the operation of any law or rule of law, refund or credit of such overpayment may, nevertheless, be made or allowed but only if claim therefor is filed within one year after May 1, 1961. This subparagraph shall not apply with respect to any taxable year of a taxpayer for which an assessment of a deficiency resulting from an election made in accordance with section 614(c)(3)(B) or a refund or credit of an overpayment resulting from any such election, as the case may be, is prevented by the operation of any law or rule of law on September 2, 1958.

(5) ***Elections—how made*** —

(i) ***General rule.*** Except as provided in subdivision

(ii) of this subparagraph, an election under section 614(c) (1) or (2) and paragraph (a) or (b) of this section must be made by a statement attached to the income tax return of the taxpayer for the first taxable year for which the election is made. The statement shall contain the following information:

(*a*) Whether the taxpayer is making an election or elections with respect to the operating unit in accordance with section 614(c)(3) (A) or (B);

(*b*) A description of the operating unit of the taxpayer in sufficient detail to identify the operating mineral interests which are included within such operating unit;

(*c*) A description of each aggregation to be formed within the operating unit in sufficient detail to show that each aggregation consists of all the separate operating mineral interests which comprise any one mine or any two or more mines;

(*d*) A description of each separate operating mineral interest within the operating unit which is to be treated as a separate property in sufficient detail to show that such interest is not a part of any mine for which an election to aggregate has been made;

(*e*) The taxable year in which the first expenditure for development or operation was made by the taxpayer with respect to each separate operating mineral interest within the operating unit, but if the first expenditure for development or operation has not been made with respect to a separate operating mineral interest before the close of the taxable year for which the election under this section is made, such information should also be included;

(*f*) A description of each separate operating mineral interest within the operating unit which the taxpayer elects to treat as more than one such interest under section 614(c)(2) in sufficient detail to show that the separate operating mineral interest was not a part of an aggregation formed by the taxpayer under section 614(c)(1) for any taxable year prior to the taxable year for which the election under section 614(c)(2) is made, and to show that the mineral deposit representing the separate operating mineral interest is being developed or extracted by means of two or more mines;

(*g*) The taxable year in which the first expenditure for development or operation was made by the taxpayer with respect to each mine on the separate operating mineral interest that the taxpayer is electing to treat as more than one such interest; and

(*h*) The allocation of the mineral deposit representing the separate operating mineral interest between (or among) the newly formed interests and the method by which such allocation was made

For the purpose of applying subdivisions (*e*) and (*g*) of this subdivision, if the first expenditure for development or operation with respect to a separate operating mineral interest or a mine was made prior to the first taxable year for which the election with respect to such interest or mine is applicable, the taxpayer may state that such is the case in lieu of identifying the exact taxable year in which such first expenditure was made. In any case where part of the information required under this subdivision can be adequately supplied by means of appropriately marked maps, the statement may be accompanied by such maps and may omit the required descriptive material to the extent replaced by the maps. The taxpayer shall maintain adequate records and maps in support of the above information. In the event that the first expenditure for development or operation with respect to a separate operating mineral interest is made by the taxpayer in a taxable year subsequent to the taxable year for which an election under this section has been made with respect to the operating unit of which such interest is a part, the taxpayer shall furnish information describing such interest in sufficient detail to identify it as a part of such operating unit, to show whether it is a part of a mine with respect to which the interests have previously been aggregated or have previously been treated as separate properties, and to indicate whether it is to be included within an aggregation.

(ii) *Special rule.* If the last day prescribed by law for filing the taxpayer's income tax return (including extensions thereof) for the first taxable year for which an election under section 614(c) (1) or (2) is made falls before May 1, 1961, the statement of election or modification thereof for such taxable year must be filed on or before May 1, 1961, with the district director for the district in which such return was filed. The statement must contain the information as required in subdivision (i) of this subparagraph, must indicate the first taxable year for which the election contained therein is made, and shall be accompanied by an amended return or returns if necessary or, if appropriate, a claim for refund or credit.

(6) *Elections; when effective.* If the taxpayer has elected to form an aggregation under section 614(c)(1) and this section, the date on which the aggregation becomes effective is the first day of the first taxable year for which the election is made; except that if any separate operating mineral interest included in such aggregation was acquired after such first day, the date on which the inclusion of such interest in such aggregation becomes effective is the date of its acquisition. If the taxpayer elects to add another operating mineral interest to such aggregation for a subsequent taxable year, the date on which aggregation of the additional interest becomes effective is the first day of such subsequent taxable year or the date of acquisition of such interest, whichever is later. If an operating mineral interest is required to be included in the aggregation for a subsequent taxable year because such interest becomes a part of a mine which the taxpayer has previously elected to aggregate, the date on which the inclusion of such interest in the aggregation becomes effective is the first day of the subsequent taxable year or the date of acquisition of such interest, whichever is later. If the taxpayer has elected to treat a separate operating

mineral interest as more than one such interest, the date on which the election becomes effective is the first day of the first taxable year for which the election is made or the earliest date on which the first expenditure for development or operation has been made by the taxpayer with respect to a mine on each newly formed separate operating mineral interest, whichever is later.

(7) *Elections; binding effect.* A valid election under section 614(c) (1) or (2) whether made in accordance with section 614(c)(3) (A) or (B) shall be binding upon the taxpayer for the taxable year for which made and for all subsequent taxable years unless consent to change the treatment of an operating mineral interest with respect to which an election has been made is obtained from the Commissioner. For rules relating to the binding effect of an election where the basis of a separate or an aggregated property in the hands of the transferee is determined by reference to the basis in the hands of the transferor, see paragraph (c) of § 1.614-6. A taxpayer can neither include within an aggregation a separate operating mineral interest which he has previously elected to treat as a separate property, nor exclude from an aggregation a separate operating mineral interest which he has properly elected to include within such aggregation unless consent to do so is obtained from the Commissioner. A change in tax consequences alone is not sufficient to obtain consent to change the treatment of an operating mineral interest. However, consent may be appropriate where, for example, there has been a substantial change in the taxpayer's operations so that a major part of an aggregation becomes a part of another operating unit. Applications for consent shall be made in writing to the Commissioner of Internal Revenue, Washington, DC 20224. The application must be accompanied by a statement indicating the reason or reasons for the change and furnishing the information required in subparagraph (5)(i) of this paragraph, unless such information has been previously filed and is current.

(8) *Invalid aggregations*—(i) *General rule.* In addition to aggregations which are invalid under this section because of the failure to make timely elections, aggregations may be invalid under this section in situations which may be divided into two general categories. The first category involves invalid basic aggregations. The second category involves invalid additions to basic aggregations.

(ii) *Invalid basic aggregations.* The term *invalid basic aggregations* refers to aggregations which are initially invalid. Generally, a basic aggregation is initially invalid because it does not include all the separate operating mineral interests which comprise a complete mine or mines or because it includes separate operating mineral interests which are not part of the same operating unit. If the taxpayer makes an invalid basic aggregation, each of the separate operating mineral interests included in such aggregation shall be treated as a separate property for the first taxable year for which the election is made and for all subsequent taxable years unless consent is obtained from the Commissioner to treat any such interest in a different manner. Consent will be granted in appropriate cases. For example, assume that the taxpayer elects to form an aggregation of the operating mineral interests which comprise one or more complete mines. If the taxpayer demonstrates that he inadvertently failed to include a minor part of one of the aggregated mines or inadvertently included a minor part of another mine that is not a part of the aggregation, consent will ordinarily be granted to maintain the aggregation by including the part omitted or by excluding the part included. The provisions of this subdivision may be illustrated by the following examples:

> ***Example 1.*** In 1958, taxpayer A owned ten operating mineral interests, designated No. 1 through No. 10, which he operated as a unit. Interests Nos. 1 through 5 comprised mine X, and interests Nos. 6 through 10 comprised mine Y. Taxpayer A had made his first development expenditure with respect to each of the ten interests before January 1, 1958. Taxpayer A elected under section 614(c) (1) and (3)(A) to aggregate interests Nos. 1 through 8 for 1958 and all subsequent taxable years. The aggregation formed by taxpayer A is an invalid basic aggregation because it does not include all the operating

mineral interests which comprise a complete mine or mines. Therefore, interests Nos. 1 through 8 must be treated as separate properties for 1958 and all subsequent taxable years unless consent is obtained from the Commissioner to treat any of such interests in a different manner.

Example 2. In 1958, taxpayer B owned ten operating mineral interests designated No. 1 through No. 10. Interests Nos. 1 through 5 comprised mine X, and interests Nos. 6 through 10 comprised mine Y. Taxpayer B had made his first development expenditure with respect to each of the ten interests before January 1, 1958. Taxpayer B elected under section 614(c) (1) and (3)(A) to aggregate interests Nos. 1 through 10 for 1958 and all subsequent taxable years. Upon audit, it was determined that mines X and Y were in two separate operating units. Therefore, the aggregation formed by taxpayer B is invalid, and interests Nos. 1 through 10 must be treated as separate properties for 1958 and all subsequent taxable years unless consent is obtained from the Commissioner to treat any of such interests in a different manner.

(iii) *Invalid additions.* The term *invalid addition* refers to an operating mineral interest which is invalidly aggregated with an existing aggregation. Generally, an addition is invalid because it is a part of a mine and is aggregated with an aggregation which does not include other interests which are parts of the same mine, or because it is in one operating unit and is included as part of an aggregation which is in another operating unit. If an invalid addition is properly a part of a mine with respect to which other interests have been validly aggregated for a taxable year prior to the first taxable year for which the election to aggregate the invalid addition is made, then the invalid addition shall be included in the aggregation of which it is properly a part for such first taxable year and all subsequent taxable years. Any other invalid addition shall be treated as a separate property for the first taxable year for which the election to aggregate such addition is made and for all subsequent taxable years unless consent is obtained from the Commissioner to treat any such interest in a different manner. The provisions of this subdivision may be illustrated by the following examples:

Example 1. In 1958, taxpayer A owned six operating mineral interests, designated No. 1 through No. 6, which he operated as a unit. Interests Nos. 1 through 3 comprised mine X, and interests Nos. 4 through 6 comprised mine Y. Taxpayer A had made his first development expenditure with respect to each of the six interests before January 1, 1958. Taxpayer A elected under section 614(c) (1) and (3)(A) to aggregate interests Nos. 1 through 3 for 1958 and all subsequent taxable years. He elected to treat interests Nos. 4 through 6 as separate properties for 1958 and all subsequent taxable years. In 1959, taxpayer A acquired and made his first development expenditure with respect to interest No. 7. Interest No. 7 was a part of the mine composed of interests Nos. 4 through 6. Taxpayer A elected under section 614(c) (1) and (3)(A) to aggregate interest No. 7 with the aggregation of interests Nos. 1 through 3 for 1959 and all subsequent taxable years. Interest No. 7 is an invalid addition and must be treated as a separate property for 1959 and all subsequent taxable years. It cannot be aggregated with interests Nos. 4 through 6 since taxpayer A has previously elected to treat such interests as separate properties. However, the valid basic aggregation composed of interests Nos. 1 through 3 is not affected by the invalid addition of interest No. 7.

Example 2. Assume the same facts as in example 1 except that taxpayer A elected under section 614(c) (1) and (3)(A) to aggregate interests Nos. 1 through 3 as one aggregation and interests Nos. 4 through 6 as another aggregation for 1958 and all subsequent taxable years. The aggregation of interest No. 7 with the aggregation consisting of interests Nos. 1 through 3 constitutes an invalid addition. Interest No. 7 must be included in the aggregation consisting of interests Nos. 4 through 6 for 1959 and all subsequent taxable years.

Example 3. In 1958, taxpayer B owned three operating mineral interests, designated No. 1 through No. 3, which comprised mine X. Taxpayer B had made his first development expenditure with respect to each of the three interests before January 1, 1958. Taxpayer B elected under section 614(c) (1) and (3)(A) to aggregate interests Nos. 1 through 3 for 1958 and all subsequent taxable years. In 1959, taxpayer B acquired interests Nos. 4 through 7 which comprised mine Y. Taxpayer B made his first development expenditure with respect to each of the four interests during 1959. Taxpayer B elected under section 614(c) (1) and (3)(A) to aggregate interests Nos. 4 through 6 and to aggregate interest No. 7 with the aggregation consisting of interests Nos. 1 through 3 for 1959 and all subsequent taxable years. The aggregation consisting of interests Nos. 4 through 6 is an invalid basic aggregation, and the aggregation of interest No. 7 is an invalid addition. Interests Nos. 4 through 7 must be treated as separate properties for 1959 and all subsequent taxable years unless consent is obtained from the Commissioner to treat such interests in a different manner.

(g) *Special rule as to deductions under section 615(a) prior to aggregation*—(1) *General rule.* If an aggregation of operating mineral interests under section 614(c)(1) and paragraph (a) of this section includes any interest or interests in respect of which exploration expenditures, paid or incurred after the acquisition of such interest or interests, were deducted by the taxpayer under section 615(a) for any taxable year which precedes the date on which such aggregation becomes effective, then the tax imposed by chapter 1 of the Code for the taxable year or years in which such exploration expenditures were so deducted shall be recomputed in accordance with the rules contained in this paragraph. If an operating mineral interest is added to such aggregation for a subsequent taxable year and exploration expenditures made with respect to such interest after its acquisition were deducted by the taxpayer under section 615(a) for any taxable year which precedes the date on which the aggregation of such additional interest becomes effective, then the tax imposed by chapter 1 of the Internal Revenue Code of 1954 for the taxable year or years in which such exploration expenditures were so deducted shall be recomputed. For purposes of this paragraph, such taxable year or years shall be referred to as the taxable year or years for which a recomputation is required to be made. See paragraph (f)(6) of this section for rules relating to the date on which an aggregation becomes effective or the date on which the aggregation of an additional interest to an aggregation becomes effective. See subparagraph (3) of this paragraph for rules relating to the method of recomputation of tax. The provisions of this subparagraph may be illustrated by the following examples:

Example 1. In 1954, taxpayer A owned two operating mineral interests designated Nos. 1 and 2. Interest No. 1 was in the production stage prior to 1954. The first exploration expenditures with respect to interest No. 2 were made by taxpayer A in 1954 and were deducted under section 615(a) on his return for that year. In 1955, taxpayer A made his first development expenditure with respect to interest No. 2, and thereafter it was operated with interest No. 1 as a unit. Taxpayer A elected under section 614(c) (1) and (3)(B) to form an aggregation of interests Nos. 1 and 2 for 1955 and all subsequent taxable years. Taxpayer A must recompute his tax for 1954 in accordance with this paragraph.

Example 2. Assume the same facts as in example 1 except that, in 1957, taxpayer A acquired another operating mineral interest, designated No. 3, made his first exploration expenditures with respect to such interest in that year, and deducted such expenditures under section 615(a) on his return for that year. In 1958, taxpayer A made his first development expenditure with respect to interest No. 3. Interest No. 3 was part of the same operating unit as interests Nos. 1 and 2. Taxpayer A elected under section 614(c) (1) and (3)(B) to add interest No. 3 to his aggregation of interests Nos. 1 and 2 for 1958 and all subsequent taxable years. Taxpayer A must recompute his tax for 1957 in accordance with this paragraph.

(2) ***Exceptions*** —(i) *Taxable years beginning before January 1, 1958.* In the case of exploration expenditures deducted by the taxpayer with respect to an operating mineral interest for any taxable year beginning before January 1, 1958, subparagraph (1) of this paragraph shall apply only if the taxpayer has made an election under section 614(c) (1) or (2) with respect to the operating unit of which such interest is a part and such election applies to the taxable year for which such exploration expenditures were deducted. Thus, if the taxpayer does not make an election with respect to the operating unit under section 614(c) (1) or (2) and (3)(B), subparagraph (1) of this paragraph does not apply in the case of exploration expenditures deducted with respect to any operating mineral interest which is a part of such operating unit for any taxable year beginning before January 1, 1958. The provisions of this subdivision may be illustrated by the following examples:

> ***Example 1.*** In 1956, taxpayer A acquired two operating mineral interests designated Nos. 1 and 2. Interest No. 1 was in the production stage at that time. Taxpayer A made his first exploration expenditures with respect to interest No. 2 in 1956, 1957, and 1958 and deducted such expenditures under section 615(a) on his returns for such years. In 1959, taxpayer A made his first development expenditure with respect to interest No. 2. Interests Nos. 1 and 2 were operated as a unit. Taxpayer A elected under section 614(c) (1) and (3)(A) to aggregate interests Nos. 1 and 2 for 1959 and all subsequent taxable years. Only the exploration expenditures deducted by the taxpayer for 1958 must be taken into account for purposes of applying subparagraph (1) of this paragraph.

> ***Example 2.*** In 1954, taxpayer B owned two operating mineral interests, designated Nos. 1 and 2, which he operated as a unit. Interest No. 1 was in the production stage at that time, and interest No. 2 represented one mineral deposit in a single tract of land which was being extracted by means of two mines. Under section 614(c) (2) and (3)(B), taxpayer B elects to treat interest No. 2 as two separate operating mineral interests, designated as Nos. 2(a) and 2(b), for 1954 and all subsequent taxable years. In 1955, taxpayer B acquired operating mineral interest No. 3. He made his first exploration expenditures with respect to interest No. 3 in 1955, 1956, and 1957 and deducted such expenditures under section 615(a) on his returns for such years. In 1958, taxpayer B made his first development expenditure with respect to interest No. 3, and thereafter it was operated with interests Nos. 1, 2(a), and 2(b) as a unit. Taxpayer B elects under section 614(c) (1) and (3)(B) to aggregate interests Nos. 1 and 3 for 1958 and all subsequent taxable years. The exploration expenditures deducted by the taxpayer for 1955, 1956, and 1957 must be taken into account for purposes of applying subparagraph (1) of this paragraph since the taxpayer has made an election under section 614(c)(2) with respect to the operating unit of which interest No. 3 is a part and such election applies to the taxable years 1955, 1956, and 1957.

(ii) ***Interests formed pursuant to an election under section 614(c)(2).*** In the case of exploration expenditures deducted with respect to an operating mineral interest which the taxpayer elects to treat as more than one such interest under section 614(c)(2) and paragraph (b) of this section, subparagraph (1) of this paragraph shall not apply. Thus, if the taxpayer deducts exploration expenditures with respect to an operating mineral interest, subsequently elects to treat such interest as more than one interest under section 614(c)(2), and includes one of the newly formed interests in an aggregation under section 614(c)(1), subparagraph (1) of this paragraph does not apply in the case of the exploration expenditures deducted with respect to the interest which the taxpayer elected to treat as more than one interest. The provisions of this subdivision may be illustrated by the following examples:

Example 1. In 1958, taxpayer A acquired two operating mineral interests, designated Nos. 1 and 2, which he operated as a unit. Each interest was an interest in a single mineral deposit in a single tract or parcel of land. There was a mine in the production stage of each of two interests at that time. Taxpayer A elected under section 614(c)(1)(B) to treat interests Nos. 1 and 2 as separate properties. In 1959 and 1960, taxpayer A made exploration expenditures with respect to interest No. 2 for the purpose of extracting the mineral by means of a second mine, and he deducted such expenditures on his returns for such years. In 1961, taxpayer A made his first development expenditure with respect to a second mine on interest No. 2. Taxpayer A elected under section 614(c)(2) to treat interest No. 2 as two separate operating mineral interests, designated as Nos. 2(a) and 2(b), for 1961 and all subsequent taxable years. Interest No. 2(a) contained the producing mine and interest No. 2(b) contained the subsequently developed mine. In his return for 1961, taxpayer A also elected under section 614(c)(1)(A) to aggregate interests Nos. 1 and 2(b) for 1961 and all subsequent taxable years. The exploration expenditures deducted with respect to interest No. 2 prior to the effective date of the formation of interests Nos. 2(a) and 2(b) need not be taken into account for purposes of applying subparagraph (1) of this paragraph.

Example 2. In 1954, taxpayer B owned two operating mineral interests designated Nos. 1 and 2. Interest No. 1 was an interest in a single mineral deposit in a single tract of land which was being extracted by means of two mines. Taxpayer B elected under section 614(c) (2) and (3)(B) to treat interest No. 1 as two separate operating mineral interests, designated as Nos. 1(a) and 1(b), for 1954 and all subsequent taxable years. In 1955, 1956, and 1957, taxpayer B made exploration expenditures with respect to interest No. 2 and deducted such expenditures on his returns for such years. In 1958, taxpayer B made his first development expenditure with respect to interest No. 2, and, on his return for that year, taxpayer B elected to aggregate interests Nos. 1(a) and 2 under section 614(c)(1) for 1958 and all subsequent taxable years. The exploration expenditures deducted with respect to interest No. 2 for 1955, 1956, and 1957 shall be taken into account for purposes of applying subparagraph (1) of this paragraph since such exploration expenditures were deducted with respect to an interest to which this subdivision does not apply.

(3) *Recomputation of tax*—(i) *General rule.* In the case of an aggregation formed under section 614(c)(1) and paragraph (a) of this section in respect of which a recomputation of tax is required to be made under the provisions of subparagraphs (1) and (2) of this paragraph for any taxable year or years, the tax imposed by chapter 1 of the Internal Revenue Code of 1954 shall be recomputed for each such taxable year as if:

(*a*) The taxpayer had elected to form an aggregation for the taxable year for which the recomputation is required to be made, and

(*b*) Such aggregation had included all the interests included in the aggregation formed under section 614(c)(1) except those interests which the taxpayer did not own during the taxable year for which the recomputation is required to be made and those interests in respect of which the taxpayer had made no expenditures for exploration, development, or operation before or during the taxable year for which the recomputation is required to be made

If a recomputation of tax is required to be made for any taxable year in the case of the aggregation of an additional interest to an existing aggregation under section 614(c)(1), such recomputation shall be made as if:

(*c*) The taxpayer had elected to form an aggregation for the taxable year for which the recomputation is required to be made, and

(*d*) Such aggregation had included all the interests included in the aggregation formed under section 614(c)(1) (including any interest which the taxpayer had disposed of prior to the date on which the aggregation of the additional interest becomes effective) except those interests which the taxpayer did not own during the taxable year for which the recomputation is required to be made and those interests in respect of which the taxpayer had made no expenditures for exploration, development, or operation before or during the taxable year for which the recomputation is required to be made

For purposes of this paragraph, any aggregation which is treated as having been formed under subdivisions (*a*) and (*b*) or under subdivisions (*c*) and (*d*) shall be referred to as the *constructed aggregated property.*

(ii) ***Recomputation of depletion allowance.*** The taxpayer shall compute the depletion allowance with respect to the constructed aggregated property for the taxable year for which the recomputation is required to be made. In making this computation, cost depletion for such taxable year shall be computed with reference to the depletion unit for the constructed aggregated property. See paragraph (a) of § 1.611-2. Percentage depletion for such taxable year shall not exceed 50 percent of the taxable income from the constructed aggregated property computed in accordance with § 1.613-5. If a recomputation is required to be made for the same taxable year with respect to any other aggregation or aggregations formed by the taxpayer under section 614(c)(1), the depletion allowance with respect to the other constructed aggregated property or properties shall be similarly computed. If, for a taxable year in respect of which a recomputation is required, the sum of the depletion allowance or allowances as computed under this subdivision is less than the sum of the depletion allowance or allowances actually deducted for such taxable year with respect to all the properties required to be taken into account in making the computation under this subdivision, then the total depletion allowance deducted by the taxpayer for such taxable year shall be reduced by the difference. The taxable income or net operating loss of the taxpayer for such taxable year shall be adjusted to reflect such reduction for purposes of the recomputation of tax. However, if for a taxable year in respect of which a recomputation is required, the sum of the depletion allowance or allowances as computed under this subdivision exceeds the sum of the depletion allowance or allowances actually deducted for such taxable year with respect to all the properties required to be taken into account in making the computation under this subdivision, the recomputation of tax for such taxable year is disregarded for purposes of applying section 614(c)(4) (B), (C), and (D).

(iii) ***Effect of recomputation with respect to items based on amount of income.*** In making the recomputation of tax under this subparagraph for any taxable year, any deduction, credit, or other allowance which is based upon the adjusted gross income or taxable income of the taxpayer for such year shall be recomputed taking into account the adjustment required under subdivision (ii) of this subparagraph. For example, if a corporate taxpayer's taxable income is increased under the provisions of such subdivision, then the amount of charitable contributions which may be deducted under the limitation contained in section 170(b)(2) shall be correspondingly increased for purposes of the recomputation. Moreover, the effect that the recomputation of any deduction, credit, or other allowance for a taxable year has on the tax imposed for any other taxable year shall also be taken into account for purposes of the

recomputation of tax under this subparagraph. Any change in items of tax preferences (as defined in section 57 and the regulations thereunder) must also be taken into account for purposes of the recomputation under this subparagraph.

(iv) ***Effect of recomputation with respect to a net operating loss and a net operating loss deduction.*** If the recomputation of tax under this subparagraph for the taxable year for which the recomputation is required to be made results in a reduction of a net operating loss for such year, then the taxpayer shall take into account the effect of such reduction on the tax imposed by chapter I of the Internal Revenue Code of 1954 (or by corresponding provisions of the Internal Revenue Code of 1939) for any taxable year affected by such reduction. If the recomputation of tax for the taxable year for which the recomputation is required to be made results in an increase in taxable income as defined in section 172(b)(2) for such year, then the taxpayer shall take into account the effect of such increase on the tax imposed by chapter I of the Internal Revenue Code of 1954 (or by corresponding provisions of the Internal Revenue Code of 1939) for any taxable year affected by such increase. Furthermore, in making the recomputation of tax for any taxable year for which the recomputation is required to be made, the taxpayer shall take into account any change in the net operating loss deduction for such year resulting from the recomputation of tax for any other taxable year for which a recomputation is required to be made. For provisions relating to the net operating loss deduction, see section 172 and the regulations thereunder. For rules relating to the effect of the net operating loss deduction on the minimum tax for tax preferences see section 56 and the regulations thereunder and § 1.58-7.

(v) ***Determination of increase in tax.*** If the taxpayer elects to form an aggregation or aggregations for a taxable year under section 614(c)(1) and if a recomputation of tax is required to be made under this paragraph for any prior taxable year or years, then the taxpayer shall compute the difference between the tax, including the tax imposed by section 56 (relating to the minimum tax for tax preferences), as recomputed under this subparagraph for such prior taxable year or years (and other taxable years affected by the recomputation) and the tax liability previously determined (computed without regard to section 614(c)(4)) with respect to such prior taxable year or years (and other taxable years affected by the recomputation). If the taxpayer is subsequently required to make a recomputation with respect to any taxable year or years for which he has previously made a recomputation, then the taxpayer shall compute the difference between the tax as subsequently recomputed for such taxable year or years (and other taxable years affected by the subsequent recomputation) and the tax as previously recomputed for such taxable year or years (and other taxable years affected by the subsequent recomputation). For treatment of the increase in tax resulting from the recomputation of tax under this subparagraph, see subparagraph (4) of this paragraph.

(4) ***Treatment of increase in tax*** —

(i) ***General rule.*** If the taxpayer elects to form an aggregation or aggregations for a taxable year under section 614(c)(1) and if a recomputation of tax is required to be made for any prior taxable year or years, then the total increase in tax resulting from such recomputation determined under subparagraph (3)(v) of this paragraph shall be taken into account in the first taxable year to which the election to form such aggregation or aggregations is applicable and in each succeeding taxable year until the full amount of such total increase in tax has been taken into account. The number of taxable years over which such total increase shall be taken into account shall be equal to the number of taxable years for which a recomputation of tax is required to be made under subparagraph (1) of this paragraph as limited by subparagraph (2) of

this paragraph and for which such recomputation results in a reduction of the taxpayer's depletion allowance under subparagraph (3)(ii) of this paragraph. The amount of the increase in tax which is to be taken into account in a taxable year is determined by dividing the total increase in tax by the number of taxable years over which such total increase is to be taken into account. The tax imposed by chapter I of the Code for each of the taxable years over which the total increase in tax is to be taken into account shall be increased by the amount determined in accordance with the preceding sentence. However, such increase in tax for each of such taxable years shall have no effect upon the determination of the amount of any credit against the tax for any of such taxable years. For example, the amount of such increase shall not affect the computation of the limitation on the foreign tax credit under section 904. The amount of the increase in tax which is required to be taken into account by the taxpayer in a particular taxable year under section 614(c)(4)(C) shall be treated as a tax imposed with respect to such taxable years even though, without regard to section 614(c)(4) and this paragraph, such taxpayer would otherwise have no tax liability for such taxable year.

(ii) ***Increase in tax not determinable as of first taxable year of aggregation.*** If the recomputation of tax under subparagraph (3) of this paragraph, for any taxable year or years prior to the first taxable year to which the election to form an aggregation or aggregations under section 614(c)(1) applies, results in a reduction of any net operating loss carryover to a taxable year subsequent to such first taxable year, then the total increase in tax resulting from the recomputation is not determinable as of such first taxable year. In such case, the total increase in tax shall be taken into account in equal installments in the first taxable year for which such total increase is determinable and in each succeeding taxable year for which a portion of the increase in tax would have been taken into account under subdivision (i) of this subparagraph if the total increase had been determinable as of the first taxable year to which the election to form the aggregation or aggregations under section 614(c)(1) applies. The provisions of this subdivision may be illustrated by the following example:

Example. Assume that taxpayer A elects under section 614(c)(1) to form an aggregation for 1960 and all subsequent taxable years. Assume further that taxpayer A is required to recompute his tax for four prior taxable years under subparagraphs (1) and (2) of this paragraph and that the recomputation for each of such taxable years results in a reduction of taxpayer A's depletion allowance. Under subdivision (i) of this subparagraph, the total increase in tax resulting from the recomputation is to be taken into account in equal installments in 1960, 1961, 1962, and 1963. However, if the total increase in tax is not determinable until 1961 because the recomputation for the prior taxable years results in the reduction of a net operating loss carryover to 1961, then the total increase shall be taken into account in equal installments in 1961, 1962, and 1963. In like manner, if the total increase in tax is not determinable until 1962, it shall be taken into account in equal installments in 1962 and 1963.

(iii) ***Death or cessation of existence of taxpayer.*** If the taxpayer dies or ceases to exist, the portion of the increase in tax determined under subparagraph (3)(v) of this paragraph which has not been taken into account under subdivision (i) or (ii) of this subparagraph for taxable years prior to the taxable year of the occurrence of such death or such cessation of existence, as the case may be, shall be taken into account for the taxable year in which such death or such cessation of existence, as the case may be, occurs.

(5) ***Adjustments to basis of aggregated property.*** If the taxpayer elects to form an aggregated property or properties under section 614(c)(1) for a taxable year and if a recomputation of tax is required to be made for any taxable year which results in reduction of the depletion allowance previously deducted by the taxpayer for such year, then proper adjustments shall be made with respect to the adjusted basis of such aggregated property or properties. In such a case:

(i) If the sum of the depletion allowances actually deducted with respect to the interests included in a constructed aggregated property exceeds the depletion allowance computed under subparagraph (3)(ii) of this paragraph with respect to such constructed aggregated property, the adjusted basis of the aggregated property formed under section 614(c)(1) shall be increased by such excess, and

(ii) If the depletion allowance computed under subparagraph (3)(ii) of this paragraph with respect to a constructed aggregated property exceeds the sum of the depletion allowances actually deducted with respect to the interests included in such constructed aggregated property, the adjusted basis of the aggregated property formed under section 614(c)(1) shall be reduced (but not below zero) by such excess.

However, the adjusted basis of an aggregated property formed under section 614(c)(1) may be increased only to the extent such excess would have resulted in an increase in such adjusted basis if taken into account under paragraph (a) of § 1.614-6. Thus, if depletion previously allowed with respect to the separate operating mineral interests included in the aggregation formed under section 614(c)(1) exceeds the total of the unadjusted bases of such interests by $5,000, and if the recomputation of tax required to be made under this paragraph results in a depletion allowance which is $7,000 less than the depletion actually deducted with respect to such interests, then the adjusted basis of such aggregation may be increased by only $2,000. If, with respect to the same aggregated property formed under section 614(c)(1), adjustments to adjusted basis are required under this subparagraph as a result of recomputation of tax for two or more taxable years, the total or net amount of such adjustments shall be taken into account. Any adjustment to the adjusted basis of an aggregation required by this subparagraph shall be taken into account as of the effective date of the election to form such aggregation under section 614(c)(1) and shall be effective for all purposes of subtitle A of the Code. For other rules relating to the determination of the adjusted basis of an aggregated property, see paragraph (a) of § 1.614-6.

[T.D. 6524, 26 FR 150, Jan. 10, 1961, as amended by T.D. 7170, 37 FR 5382, Mar. 15, 1972; T.D. 7564, 43 FR 40494, Sept. 12, 1978]

§ 1.614-4 Treatment under the Internal Revenue Code of 1939 with respect to separate operating mineral interests for taxable years beginning before January 1, 1964, in the case of oil and gas wells.

(a) ***General rule.***

(1) All references in this section to section 614(b) or any paragraph or subparagraph thereof are references to section 614(b) or a paragraph or subparagraph thereof as it existed prior to its amendment by section 226(a) of the Revenue Act of 1964. All references in this section to section 614(d) are references to section 614(d) as it existed prior to its amendment by section 226(b)(3) of the Revenue Act of 1964.

(2) For taxable years beginning before January 1, 1964, in the case of oil and gas wells, a taxpayer may treat under section 614(d) and this section any property as if section 614 (a) and (b) had not been enacted. For purposes of this section, the term *property* means each separate operating mineral interest owned by the taxpayer in each mineral deposit in each separate tract or parcel of land.

Separate tracts or parcels of land exist not only when areas of land are separated geographically, but also when areas of land are separated by means of the execution of conveyances or leases. If the taxpayer treats any property or properties under this section, the taxpayer must treat each such property as a separate property except that the taxpayer may treat any two or more properties that are included within the same tract or parcel of land as a single property provided such treatment is consistently followed. If the taxpayer treats two or more properties as a single property under this section, such properties shall be considered as a single property for all purposes of subtitle A of the Internal Revenue Code of 1954. The taxpayer may not make more than one combination of properties within the same tract or parcel of land. Thus, if the taxpayer treats two or more properties that are included within the same tract or parcel of land as a single property, each of the remaining properties included within such tract or parcel of land shall be treated as a separate property. If the taxpayer has treated two or more properties that are included within the same tract or parcel of land as a single property and subsequently discovers or acquires an additional mineral deposit within the same tract or parcel of land, he may include his interest in such deposit with the two or more properties which are being treated as a single property or he may treat his interest in such deposit as a separate property. If the taxpayer has treated each property included within a tract or parcel of land as a separate property and subsequently discovers or acquires an additional mineral deposit within the same tract or parcel of land, he may combine his interest in such deposit with any one of the separate properties included within the tract or parcel of land, but not with more than one of them since they cannot be validly combined with each other. The taxpayer may not combine properties which are included within different tracts or parcels of land under this section irrespective of whether such tracts or parcels of land are contiguous. The treatment of a property as a separate property or the treatment of two or more properties included within a single tract or parcel of land as a single property under this section shall be binding upon the taxpayer for the first taxable year for which such treatment is effective and for all subsequent taxable years beginning before January 1, 1964. For the continuation of such treatment under § 1.614-8 for taxable years beginning after December 31, 1963, see paragraph (d) of § 1.614-8. For provisions relating to the first taxable year for which treatment under this section becomes effective, see paragraph (d) of this section.

(b) ***Treatment consistent with treatment for taxable years prior to 1954.*** If the taxpayer has treated properties in a manner consistent with the rules contained in paragraph (a) of this section for taxable years to which the Internal Revenue Code of 1939 applies and if the taxpayer desires to treat such properties under section 614(d), then such properties must continue to be treated in the same manner. The provisions of this paragraph may be illustrated by the following examples:

Example 1. In 1950, taxpayer A owned two separate tracts of land designated No. 1 and No. 2. Each tract contained three mineral deposits. In the case of tract No. 1, taxpayer A treated the three mineral deposits as a single property. In the case of tract No. 2, taxpayer A treated the first mineral deposit as a separate property and treated the second and third mineral deposits as a single property. This treatment was consistently followed for the taxable years 1950, 1951, 1952, and 1953. Taxpayer A desires, for 1954 and subsequent taxable years, to treat the properties in tracts Nos. 1 and 2 as if section 614 (a) and (b) had not been enacted. For 1954 and subsequent taxable years, the three deposits in tract No. 1 must be treated as a single property; the first deposit in tract No. 2 must be treated as a separate property; and the second and third deposits in tract No. 2 must be treated as a single property.

Example 2. Assume the same facts as in example 1 except that, at the time the treatment under this section is adopted, assessment of any deficiency or credit or refund of any overpayment for the taxable years 1954 and 1955 resulting from the treatment of properties under this section is

prevented by the operation of the statute of limitations. For 1956 and subsequent taxable years, the three deposits in tract No. 1 must be treated as a single property; the first deposit in tract No. 2 must be treated as a separate property; and the second and third deposits in tract No. 2 must be treated as a single property.

(c) ***Bases of separate properties previously included in an aggregation under section 614(b).*** If the taxpayer has made an election under section 614(b) to form an aggregation of operating mineral interests and if such taxpayer subsequently revokes such election for all taxable years for which it was made and treats the properties that are included within such aggregation under section 614(d) and this section by filing the statement required by paragraph (e) of this section, then the adjusted basis of each separate property (as defined in paragraph (a) of this section) that is a part of such aggregation shall be determined as if the taxpayer had made no election under section 614(b). However, if, at the time of the filing of the statement revoking the election under section 614(b), assessment of any deficiency or credit or refund of any overpayment, as the case may be, resulting from such revocation is prevented by the operation of any law or rule of law for any taxable year or years for which the election under section 614(b) was made, then the adjusted basis of each separate property that is a part of the aggregation shall be determined in accordance with the provisions contained in paragraph (a)(2) of § 1.614.6 as of the first day of the first taxable year for which the revocation is effective. After determining the adjusted basis of each separate property included within the aggregation, the taxpayer may treat such properties in any manner which is in accordance with paragraph (a) of this section. See, however, paragraph (b) of this section. The provisions of this paragraph may be illustrated by the following examples:

Example 1. Taxpayer A owns two separate tracts of land, designated No. 1 and No. 2, each of which contains three mineral deposits. The interests in the two tracts of land constitute an operating unit as defined in paragraph (c) of § 1.614-2. Taxpayer A elects under section 614(b) to form an aggregation of all the interests in the operating unit for 1954 and all subsequent taxable years. Subsequently, taxpayer A revokes such election by filing a statement in accordance with paragraph (e) of this section. Such revocation is effective for 1956 and subsequent taxable years because, at the time of the filing of the statement of revocation, assessment of any deficiency or credit or refund of any overpayment for the taxable years 1954 and 1955 resulting from such revocation is prevented by the operation of the statute of limitations. The adjusted bases of the six properties that are included within the aggregation shall be determined in accordance with paragraph (a)(2) of § 1.614-6 as of the beginning of the taxable year 1956.

Example 2. Assume the same facts as in example 1 and, in addition, assume that for taxable years to which the Internal Revenue Code of 1939 is applicable, taxpayer A treated the three deposits in tract No. 1 as a single property and the three deposits in tract No. 2 as a single property. After determining the adjusted basis of each of the six properties as illustrated in example 1, the adjusted basis of the three properties in tract No. 1 must be combined and the adjusted bases of the three properties in tract No. 2 must be combined since the manner in which such properties were treated for taxable years to which the Internal Revenue Code of 1939 is applicable is consistent with the rules contained in paragraph (a) of this section.

(d) ***Treatment; when effective.*** If a taxpayer treats any property in accordance with this section, then such treatment shall be effective for whichever of the following taxable years is the later:

(1) The latest taxable year for which an election could have been made with respect to such property under section 614(b); or

(2) The first taxable year beginning after December 31, 1953, and ending after August 16, 1954, in respect of which assessment of a deficiency or credit or refund of an overpayment, as the case may be, resulting from the treatment of such property under this section, is not prevented by the operation of any law or rule of law on the date such treatment is adopted.

(e) ***Manner of adopting the treatment of properties under this section.*** If the taxpayer does not make an election under section 614(b) with respect to a property within the time prescribed for making such an election, then the taxpayer shall be deemed to have treated such property under this section. In such case, the manner in which such property is treated in filing the taxpayer's income tax return for the first taxable year for which the treatment of such property is effective under paragraph (d) of this section shall establish the treatment which must be consistently followed with respect to such property for subsequent taxable years. However, if the income tax return for such first taxable year is filed prior to May 1, 1961, then the taxpayer may adopt the treatment provided for under this section with respect to the property by filing a statement at any time on or before May 1, 1961, with the district director for the district in which the taxpayer's income tax return was filed for the first taxable year for which the treatment of such property is effective under paragraph (d) of this section. Such statement shall set forth the first taxable year for which the treatment of the property under this section is effective, shall revoke any previous elections made with respect to such property under section 614(b), shall state the manner in which such property was treated for taxable years subject to the Internal Revenue Code of 1939, shall state the manner in which such property is to be treated under this section, and shall be accompanied by an amended return or returns if necessary.

(f) ***Certain treatment under this section precludes election to aggregate under section 614(b) with respect to the same operating unit.*** If the taxpayer's treatment of any properties that are included within an operating unit (as defined in paragraph (c) of § 1.614-2) under section 614(d) and this section would constitute an aggregation under section 614(b) and if such taxpayer elects, or has elected, to form an aggregation within the same operating unit under section 614(b) for any taxable year for which the treatment under section 614(d) is effective, then the election made under section 614(b) shall not apply for any such taxable year.

[T.D. 6524, 26 FR 157, Jan. 10, 1961, as amended by T.D. 6859, 30 FR 13700, Oct. 28, 1965]

§ 1.614-5 Special rules as to aggregating nonoperating mineral interests.

(a) ***Aggregating nonoperating mineral interests for taxable years beginning before January 1, 1958.*** Upon proper showing to the Commissioner, a taxpayer who owns two or more separate nonoperating mineral interests in a single tract or parcel of land, or in two or more contiguous tracts or parcels of land, shall be permitted to aggregate all such interests in each separate kind of mineral deposit and treat them as one property. Permission will be granted by the Commissioner only if the taxpayer establishes that he will sustain an undue hardship if such nonoperating mineral interests are not treated as one property. Such hardship may exist, for example, if it is impossible for the taxpayer to determine the boundaries, source, or costs of the separate interests, or if a taxpayer who owns a single royalty interest, production payment, or net profits interest cannot determine the separate deposits from which his payments will be derived. In no event shall undue hardship be deemed to exist solely by reason of tax disadvantage. The treatment of such interests as one property shall be applicable for all purposes of subtitle A of the Internal Revenue Code of 1954. In no event may nonoperating mineral interests in tracts or parcels of land which are not contiguous be treated as one property. The term *two or more contiguous tracts or parcels of land* means tracts or parcels of land which have common boundaries. Common boundaries include survey lines,

public roads, or similar easements for the use of land without the existence of an intervening mineral right between the tracts or parcels of land. Tracts or parcels of land which touch only at a common corner are not contiguous. For the definition of *nonoperating mineral interests,* see paragraph (g) of this section.

(b) ***Manner and scope of election*** —

(1) ***Time for filing application for permission to aggregate separate nonoperating mineral interests under paragraph (a) of this section.*** The application for permission to aggregate separate nonoperating mineral interests under paragraph (a) of this section shall be filed at any time on or before May 1, 1961. Such application shall indicate the first taxable year for which the aggregation is to be formed. If, prior to January 10, 1961, an application has been filed, the taxpayer need file only a supplemental application containing such additional information as is necessary to comply with the requirements of subparagraph (2) of this paragraph.

(2) ***Contents of application and returns under permission.*** The application for permission to aggregate nonoperating mineral interests under paragraph (a) of this section shall include a complete statement of the facts upon which the taxpayer relies to show the undue hardship which would result if such an aggregation was not permitted. Such application shall also include a description of the nonoperating mineral interests owned by the taxpayer within the tract or tracts of land involved. A general description, accompanied by maps appropriately marked, which accurately circumscribes the scope of the aggregation and shows that the taxpayer is aggregating all the nonoperating mineral interests in a particular kind of mineral deposit within the tract or tracts of land involved will be sufficient. If the Commissioner grants permission, a copy of the letter granting such permission shall be filed with the district director for the district in which the taxpayer's income tax return was filed for the first taxable year for which such permission applies, and shall be accompanied by an amended return or returns if necessary.

(3) ***Election; binding effect.*** The election to aggregate separate nonoperating mineral interests under paragraph (a) of this section shall be binding upon the taxpayer for the first taxable year for which made and all subsequent taxable years beginning before January 1, 1958, unless consent to make a change is obtained from the Commissioner. The application for consent to make a change must set forth in detail the reason or reasons for such change. Consent to a different treatment shall not be granted where the principal purpose for such change is due to tax consequences. For rules relating to the binding effect of an election where the basis of an aggregated property in the hands of the transferee is determined by reference to the basis in the hands of the transferor, see paragraph (c) of § 1.614-6.

(4) ***Aggregations under the Internal Revenue Code of 1939.*** An application for permission to aggregate nonoperating mineral interests under paragraph (a) of this section shall be submitted in accordance with the requirements of this paragraph notwithstanding the fact that the taxpayer may have aggregated such interests for taxable years to which the Internal Revenue Code of 1939 is applicable. If such interests were aggregated for taxable years to which the Internal Revenue Code of 1939 applies and the aggregation was approved by the Internal Revenue Service for such years after full consideration thereof on its merits, such approval will generally be accepted as evidence that undue hardship would result if the aggregation were not permitted.

(c) ***Termination of aggregation of nonoperating mineral interests*** —

(1) ***General rule.*** Any aggregation of nonoperating mineral interests formed under paragraphs (a) and (b) of this section shall not apply with respect to any taxable year beginning after December 31, 1957. Thus, if a taxpayer makes a binding election to form such an aggregation for taxable years beginning

before January 1, 1958, then in order to form an aggregation with respect to any taxable year beginning after December 31, 1957, he must obtain permission in accordance with the rules prescribed in paragraphs (d) and (e) of this section.

(2) ***Bases of separate nonoperating mineral interests.*** If a taxpayer forms an aggregation of nonoperating mineral interests under paragraphs (a) and (b) of this section which is terminated under subparagraph (1) of this paragraph, the adjusted bases of the separate nonoperating mineral interests included in such aggregation shall be determined in accordance with paragraph (a)(2) of § 1.614-6.

(d) ***Aggregating nonoperating mineral interests for taxable years beginning after December 31, 1957, or for earlier taxable years.*** Upon proper showing to the Commissioner, a taxpayer who owns two or more separate nonoperating mineral interests in a single tract or parcel of land, or in two or more adjacent tracts or parcels of land, shall be permitted, under section 614(e), to form an aggregation of all of such interests in each separate kind of mineral deposit and treat such aggregation as one property. Permission shall be granted by the Commissioner only if the taxpayer establishes that a principal purpose in forming the aggregation is not the avoidance of tax. The fact that the aggregation of nonoperating mineral interests will result in a substantial reduction in tax is evidence that avoidance of tax is a principal purpose of the taxpayer. An aggregation formed under the provisions of this paragraph shall be considered as one property for all purposes of the Code. In no event may nonoperating mineral interests in tracts or parcels of land which are not adjacent be aggregated and treated as one property. The term *two or more adjacent tracts or parcels of land* means tracts or parcels of land that are in reasonably close proximity to each other depending on the facts and circumstances of each case. Adjacent tracts or parcels of land do not necessarily have any common boundaries, and may be separated by intervening mineral rights. For the definition of *nonoperating mineral interests,* see paragraph (g) of this section.

(e) ***Manner and scope of election*** —

(1) ***Time for filing application for permission to aggregate separate nonoperating mineral interests under section 614(e).*** The application for permission to aggregate separate nonoperating mineral interests under section 614(e) and paragraph (d) of this section shall be made in writing to the Commissioner of Internal Revenue, Washington, DC 20224. Such application shall be filed within 90 days after the beginning of the first taxable year beginning after December 31, 1957, for which aggregation is desired or within 90 days after the acquisition of one of the nonoperating mineral interests which is to be included in the aggregation, whichever is later. However, if the last day on which the application may be filed under this paragraph falls before May 1, 1961, such application may be filed at any time on or before May 1, 1961. If, prior to January 10, 1961, an application has been filed, the taxpayer need file only a supplemental application containing such additional information as is necessary to comply with subparagraph (4) of this paragraph.

(2) ***Election to apply section 614(e) retroactively.*** The application for permission to aggregate separate nonoperating mineral interests under section 614 (e) and paragraph (d) of this section may be filed, at the election of the taxpayer, for any taxable year beginning before January 1, 1958, to which the Internal Revenue Code of 1954 is applicable. In such case, the application may be filed at any time on or before May 1, 1961. Such application shall designate the first taxable year for which the aggregation is to be formed. If, prior to January 10, 1961, an application has been filed, the taxpayer need file only a supplemental application containing such additional information as is necessary to comply with the requirements of subparagraph (4) of this paragraph.

(3) ***Limitation.*** If the taxpayer forms any aggregation of nonoperating mineral interests under subparagraph (2) of this paragraph, then any aggregation of nonoperating mineral interests formed under paragraphs (a) and (b) of this section shall not apply for any taxable year. The provisions of this subparagraph may be illustrated by the following example:

Example. In 1954, taxpayer A owns six separate nonoperating mineral interests designated No. 1 through No. 6. Interests Nos. 1 through 3 are royalty interests in contiguous tracts of land. Interests Nos. 4 through 6, which are located in an entirely different area from interests Nos. 1 through 3, are royalty interests in tracts of land which are not contiguous but which are adjacent to each other. In 1959 taxpayer A obtains permission and elects under section 614(e) and subparagraph (2) of this paragraph to form an aggregation of interests Nos. 4 through 6 for 1956 and all subsequent taxable years. Taxpayer A may not elect to form an aggregation of interests Nos. 1 through 3 under paragraphs (a) and (b) of this section for 1954 or any subsequent taxable year. If taxpayer A wishes to form an aggregation of interests Nos. 1 through 3, he must obtain permission under paragraph (d) of this section and this paragraph.

(4) ***Contents of application and returns under permission.*** The application for permission to aggregate nonoperating mineral interests under section 614(e) and paragraph (d) of this section shall include a complete statement of the facts upon which the taxpayer relies to show that avoidance of tax is not a principal purpose of forming the aggregation. Such application shall also include a description of the nonoperating mineral interests within the tract or tracts of land involved. A general description, accompanied by maps appropriately marked, which accurately circumscribes the scope of the aggregation and shows that the taxpayer is aggregating all the nonoperating mineral interests in a particular kind of mineral deposit within the tract or tracts of land involved will be sufficient. If the Commissioner grants permission, a copy of the letter granting such permission shall be attached to the taxpayer's income tax return for the first taxable year for which such permission applies. If the taxpayer has already filed such return, a copy of the letter of permission shall be filed with the district director for the district in which such return was filed and shall be accompanied by an amended return or returns if necessary or, if appropriate, a claim for credit or refund.

(5) ***Election; binding effect.*** The election to aggregate separate nonoperating mineral interests under section 614 (e) and paragraph (d) of this section shall be binding upon the taxpayer for the first taxable year for which made and for all subsequent taxable years unless consent to make a change is obtained from the Commissioner. The application for consent to make a change must set forth in detail the reason or reasons for such change. Consent to a different treatment shall not be granted where the principal purpose for such change is due to tax consequences. For rules relating to the binding effect of an election where the basis of an aggregated property in the hands of the transferee is determined by reference to the basis in the hands of the transferor, see paragraph (c) of § 1.614-6.

(6) ***Aggregations under the Internal Revenue Code of 1939.*** An application for permission to aggregate nonoperating mineral interests under section 614 (e) and paragraph (d) of this section shall be submitted in accordance with the requirements of this paragraph notwithstanding the fact that the taxpayer may have aggregated such interests for taxable years to which the Internal Revenue Code of 1939 is applicable. If such interests were aggregated for taxable years to which the Internal Revenue Code of 1939 applies and the aggregation was approved by the Internal Revenue Service for such years after full consideration thereof on its merits, such approval will generally be accepted as evidence that avoidance of tax is not a principal purpose of forming the aggregation.

(f) ***Elections; when effective.*** If the taxpayer has elected to form an aggregation under either paragraph (a) or paragraph (d) of this section, the date on which the aggregation becomes effective is the first day of the first taxable year for which the election is made; except that if any separate nonoperating mineral interest included in such aggregation was acquired after such first day, the date on which the inclusion of such interest in such aggregation becomes effective is the date of its acquisition.

(g) ***Definition of nonoperating mineral interests.*** For purposes of this section, *nonoperating mineral interests* includes only those interests described in section 614(a) which are not operating mineral interests within the meaning of paragraph (b) of § 1.614-2. The taxpayer who holds the operating or working rights in a mineral deposit, but is not actually conducting operations with respect to such deposit, does not have a nonoperating mineral interest in such deposit notwithstanding the fact that he intends to transfer such operating rights at a later time.

[T.D. 6524, 26 FR 158, Jan. 10, 1961]

§ 1.614-6 Rules applicable to basis, holding period, and abandonment losses where mineral interests have been aggregated or combined.

(a) ***Basis of property resulting from aggregation or combination*** —

(1) ***General rule.***

(i) When a taxpayer has aggregated as one property two or more interests under section 614(b) (prior to its amendment by section 226(a) of the Revenue Act of 1964), (c), or (e), the unadjusted basis of such aggregated property shall be the sum of the unadjusted bases of the various mineral interests aggregated. The adjusted basis of the aggregated property on the effective date of the aggregation shall be the unadjusted basis of the aggregated property, adjusted by the total of all adjustments to the bases of the several mineral interests aggregated as required by section 1016 to the effective date of aggregation. Thereafter, the adjustments to basis required by section 1016 shall apply to the total adjusted basis of the aggregated property for all purposes of subtitle A of the Code.

(ii) When a taxpayer has combined as one property two or more interests under section 614(b) (as amended by section 226(a) of the Revenue Act of 1964), the adjusted basis of such combined property shall be the sum of:

(*a*) The unadjusted bases of all such interests which have never been included in an aggregation; and

(*b*) The adjusted bases of all such interests which at some time have been included in an aggregation, as of the date on which they ceased to participate in an aggregation

adjusted by the total of all adjustments to the bases of the several mineral interests combined, as required by section 1016,

(*c*) In the case of interests described in (*a*), for the entire period of the taxpayer's ownership of such interest; and

(*d*) In the case of interests described in (*b*), for the period, if any, between the time of deaggregation and the time of combination.

Thereafter, the adjustments to basis required by section 1016 shall apply to the total adjusted basis of the combined property for all purposes of subtitle A of the Code.

(2) ***Bases upon disposition of part of, or termination of, or change in, an aggregated or combined property*** —

(i) ***In general.***

(*a*) When a taxpayer has aggregated or combined two or more separate mineral interests as one property under section 614(b) (either before or after its amendment by section 226(a) of the Revenue Act of 1964), (c), or (e) and thereafter sells, exchanges, or otherwise disposes of part of such property, the total adjusted basis of the property as of the date of sale, exchange, or other disposition shall be apportioned to determine the adjusted basis of the part disposed of and the part retained for purposes of computing gain or loss, depletion and for all other purposes of subtitle A of the Code. Such adjusted basis shall be determined by apportioning the total adjusted basis of the property between the part of the property disposed of and the part retained in the same proportion as the fair market value of each part (as of the date of sale, exchange, or other disposition) bears to the total fair market value of the property as of such date. For determining gain or loss on the sale or exchange of any part of the aggregated or combined property, the adjusted basis of the aggregated or combined property (from which the adjusted basis of the part is determined) shall not be reduced below zero.

(*b*) If, for any taxable year after the first taxable year for which an aggregation under section 614(b) (prior to its amendment by section 226(a) of the Revenue Act of 1964), (c), or (e) is effective:

(*1*) Any such aggregation is terminated for any reason other than the expiration of an aggregation by reason of section 614(b) as amended by section 226(a) of the Revenue Act of 1964 (see subdivision (ii) of this subparagraph), or

(*2*) The treatment of any mineral interests in any such aggregation is changed after obtaining the consent of the Commissioner

then the adjusted basis of the aggregated property as of the first day of the first taxable year for which such termination or change is effective shall be apportioned to determine the adjusted bases of the resultant separate mineral interests, as of such first day, for purposes of computing gain or loss, depletion, and for all other purposes of subtitle A of the Code. The adjusted bases of such separate mineral interests shall be determined by apportioning the adjusted basis of the aggregated property (as of the first day of the first taxable year for which such termination or change is effective) between or among such interests in the same proportion as the fair market value of each such interest (as of such first day) bears to the total fair market value of the aggregated property as of such first day. For the purpose of determining the adjusted bases of the separate mineral interests, the adjusted basis of the aggregated property (from which the adjusted basis of each separate mineral interest is determined) shall not be reduced below zero.

(ii) ***Allocation of basis of aggregation of operating mineral interests in oil and gas wells as of the first day of the first taxable year beginning after December 31, 1963—***

(a) ***Fair market value method.*** Unless the taxpayer elects to use the allocation of adjustments method of determining basis provided in (b) of this subdivision (ii), the adjusted basis as of the first day of the first taxable year beginning after December 31, 1963, of each interest which was participating in an aggregation of operating mineral interests on the day preceding such first day shall be determined by multiplying the adjusted basis of the

aggregation by a fraction the numerator of which is the fair market value of such interest and the denominator of which is the fair market value of such aggregation. For purposes of this subdivision (*a*), the adjusted basis and the fair market value of the aggregation, and the fair market value of such interest, shall be determined as of the day preceding the first day of the first taxable year which begins after December 31, 1963. Unless the taxpayer elects to use the allocation of adjustments method, he shall obtain accurate and reliable information, and keep records with respect thereto, establishing all facts necessary for making the computation prescribed in this subdivision (*a*). See example 5 of subparagraph (3) of this paragraph.

(*b*) ***Allocation of adjustments method. (i***) The taxpayer may elect to determine basis by an allocation of adjustments in lieu of the fair market value method prescribed in (*a*) of this subdivision (ii). In such a case, the adjusted basis (as of the first day of the first taxable year beginning after December 31, 1963) of each interest which was participating in an aggregation of operating mineral interests on the day preceding such first day is the unadjusted basis of such interest immediately after its acquisition by the taxpayer, adjusted by the total of all adjustments to its basis as required by section 1016 to the effective date of aggregation, and by that portion of those section 1016 adjustments to the basis of the aggregation which is reasonably attributable to such interest. For this purpose, two or more interests which are being combined upon deaggregation shall be treated as one interest. An adjustment to the basis of the aggregation is reasonably attributable to such interest to the extent that the adjustment thereto resulted from inclusion of the interest in the aggregation, even though such interest would not have been entitled to the adjustment to the same extent if such interest had been treated separately because of the 50 percent of taxable income limitation or for any other reason. In a case in which the amount of a percentage depletion deduction which was allowed with respect to an aggregation was limited by the 50 percent of taxable income limitation of section 613(a), the portion of such amount which is attributable to each of the interests in the aggregation shall be determined by multiplying such amount by a fraction, the numerator of which is the gross income from such interest and the denominator of which is the gross income from the aggregation. The determination as to which property a particular adjustment is attributable may be based upon records of production or any other facts which establish the reasonableness of the determination. See example 6 of subparagraph (3) of this paragraph.

(*ii*) If, under the adjustment described in (*i*) of this subdivision (*b*), the total of the adjusted bases of the interests which were included in the aggregation exceeds the adjusted basis of the aggregation, the adjusted bases of the interests shall be further adjusted so that the total of the adjusted bases of the interests equals the adjusted basis of the aggregation. This further adjustment shall be made by reducing the basis of each interest (other than an interest having a basis of zero) by an amount which is determined by multiplying such excess by a fraction, the numerator of which is the adjusted basis of such interest after making the adjustment described in (*i*) of this subdivision (*b*) and the denominator of which is the total of the adjusted bases of all such interests after making the adjustment described in (*i*) of this subdivision (*b*). See example 6 of subparagraph (3) of this paragraph.

(*iii*) The election provided for in this subdivision (*b*) shall be made not later than the time prescribed by law for filing the taxpayer's income tax return (including extensions thereof) for the first taxable year beginning after December 31, 1963, and shall be made in a statement attached to such return.

(3) The application of subparagraphs (1) and (2) of this paragraph may be illustrated by the following examples:

Example 1. A taxpayer owning three operating mineral interests, designated Nos. 1, 2, and 3, within a single operating unit, properly elects to aggregate such properties under section 614(b) for the calendar year 1954 in his income tax return filed on April 15, 1955. The unadjusted bases and adjustments under section 1016 for depletion through December 31, 1953, in respect of such properties are as follows:

	Unadjusted basis	Adjustments under Section 1016
No. 1	$25,000	$27,000
No. 2	18,000	10,000
No. 3	15,000	4,000
Total	58,000	41,000

The adjusted basis of the aggregated property as of January 1, 1954, is $17,000 ($58,000-$41,000).

Example 2. Assume the same facts as in example 1, except that a portion of the aggregated property is sold on June 1, 1956, for $15,000 which is also the fair market value of such portion on the date of sale. In order to determine the gain or loss from this sale as well as the adjusted basis of the retained property, an apportionment must be made. The aggregated property had a fair market value of $25,000 on the date of sale. From January 1, 1954, through May 31, 1956, $10,000 of depletion has been allowed with respect to the aggregated property. The adjusted basis of the portion sold is determined as follows:

$$\$7{,}000\ \text{(adjusted basis of aggregated property)} \times \frac{\$15{,}000}{\$25{,}000} = \$4{,}200\ \text{(adjusted basis of portion sold)}$$

Therefore, the gain on this sale of the portion sold is $10,800 ($15,000-$4,200). The adjusted basis of the property retained is $2,800 ($7,000-$4,200).

Example 3. Assume the same facts as in example 2, except that instead of selling, the taxpayer subleases one of the leases making up the aggregated property, retaining a one-eighth royalty interest therein. The fair market value of such lease is $15,000 on the date of the sublease. The adjusted basis of such royalty interest is $4,200 which is computed as

follows:

$$\$7{,}000\,(\text{adjusted basis of aggregated property}) \times \frac{\$15{,}000\ (\text{FMV of portion transferred})}{\$25{,}000\ (\text{FMV of aggregated property})}$$

Example 4. In 1953, a taxpayer owned mineral interests Nos. 1, 2, and 3 which he operated as a unit. He owned no other operating interests during that year. The unadjusted bases of these properties were $10,000, $15,000, and $20,000, respectively, and depletion allowed through December 31, 1953, was $5,000 with respect to each property. The taxpayer operated these properties during the year 1954 and, in addition, operated as part of the unit mineral interest No. 4 which he acquired on July 1, 1954, on which date he made the first exploration expenditure with respect thereto. He paid $20,000 for No. 4. In his return for the calendar year 1954, the taxpayer elected under section 614(b) to aggregate all of these mineral interests. The taxpayer must compute cost depletion for the calendar year 1954 on the basis of an aggregated property with an adjusted basis of $30,000 ($45,000-$15,000) for the period from January 1 to June 30, and with an adjusted basis of $50,000 (less depletion for the first six months) for the period from July 1 to December 31. If applicable, the taxpayer must compute percentage depletion on the basis of gross income and taxable income from the aggregated property for the entire year, including the gross income and deductions with respect to operating mineral interest No. 4 for the period from July 1 to December 31. If a portion of the aggregated property is sold during the first six months, its adjusted basis must be determined at the time of sale with an adjustment for depletion to the date of sale. If percentage depletion is applicable, it must be allocated on an equitable basis to the periods prior and subsequent to the date of sale in order to determine the adjustment for depletion to the date of sale.

Example 5. A taxpayer owns two operating mineral interests in oil wells, designated Nos. 1 and 2, in tract A, and another such interest, designated No. 3, in tract B. All three interests are in the same operating unit (as defined in paragraph (c) of § 1.614-2). The taxpayer, who is on a calendar year basis, has properly elected under § 1.614-2 to aggregate such interests for the calendar years 1954 through 1963. The unadjusted bases and adjustments under section 1016 for depletion through December 31, 1953, in respect of such interests are as follows:

	Unadjusted basis	Adjustments under section 1016
No. 1	$42,000	$11,000
No. 2	37,000	4,000
No. 3	19,000	23,000

	Unadjusted basis	Adjustments under section 1016
Total	98,000	38,000

The adjusted basis of the aggregated property as of January 1, 1954, is therefore $60,000 ($98,000 minus $38,000). The taxpayer properly elects under section 614(b) and § 1.614-8 to treat Nos. 1 and 2 as separate properties for the calendar year 1964 and thereafter and does not elect to use the allocation of adjustments method of determining basis provided in subparagraph (2) (ii) (*b*) of this paragraph. No. 3 will be treated as a separate property, also, because it is in a different tract than the taxpayer's other interests. From January 1, 1954, through December 31, 1963, $50,000 of depletion has been allowed with respect to the aggregated property, leaving an adjusted basis of $10,000 ($60,000 minus $50,000) on January 1, 1964. On December 31, 1963, the aggregated property has a fair market value of $40,000. Nos. 1, 2, and 3 have fair market values of $16,000, $22,000, and $2,000, respectively. Accordingly, the adjusted bases of Nos. 1, 2, and 3 on January 1, 1964, are $4,000,

$$\left(\begin{array}{l}\$10{,}000\,(\text{adjusted basis}\\ \text{of aggregated property})\end{array}\times\frac{16{,}000}{40{,}000}\right),$$

$5,500 [$10,000 × (22,000/40,000)], and

$500 [$10,000 × (2,000/40,000)] respectively.

Example 6. A taxpayer owns four operating mineral interests in oil wells, designated Nos. 1, 2, 3, and 4. All four interests are in the same operating unit and the same tract or parcel of land. The taxpayer, who is on a calendar year basis, has properly elected under § 1.614-2 to aggregate such interests for the calendar years 1954 through 1963. The taxpayer properly elects under section 614(b) and paragraph (a) of § 1.614-8 to treat Nos. 1 and 2 as separate properties for the calendar year 1964 and thereafter. The taxpayer also properly elects to use the allocation of adjustments method of determining basis as provided in subparagraph (2) (ii) (*b*) of this paragraph. The unadjusted bases of Nos. 1, 2, and combined 3 and 4, the adjustments attributable to each, and the deaggregated basis of each (prior to further adjustment as provided in

subparagraph (2) (ii) (*b*)(*ii*) of this paragraph) are as follows:

	Basis upon acquisition	Adjustments to time of aggregation	Attributable adjustments during aggregation	Basis upon deaggregation after first adjustment
No. 1	$35,000	$1,000	$16,000	$18,000
No. 2	30,000	11,000	23,000	0
No. 3	25,000	3,000	5,000	
No. 4	10,000	12,000	9,000	6,000
Total	100,000	27,000	53,000	24,000

The total of the adjusted bases (prior to further adjustment) of the interests which were included in the aggregation is $24,000 while the adjusted basis of the aggregation is $20,000 ($100,000 minus the sum of $27,000 and $53,000). Therefore, the adjusted bases of the interests are further reduced by $4,000 ($24,000 minus $20,000). The adjusted basis of No. 1 of $18,000 is further reduced by $3,000 [$4,000 × (18,000 ÷ 24,000)] to $15,000. Similarly, the adjusted basis of combined Nos. 3 and 4 of $6,000 is further reduced by $1,000 [$4,000 × (6,000 ÷ 24,000)] to $5,000. Assume further that the taxpayer also owns interest No. 5 in the same tract or parcel of land, that such interest was not a part of any aggregation, that such interest had a basis of $15,000 upon acquisition and had subsequent adjustments in reduction of basis totalling $17,000, and that the taxpayer does not elect to treat such interest as a separate property. In such case, Nos. 3, 4, and 5 will be combined. The combination will have an adjusted basis of $3,000, determined by adding the unadjusted basis of No. 5 ($15,000) and the adjusted bases of combined Nos. 3 and 4 upon deaggregation ($5,000), and subtracting from the total thereof ($20,000) the adjustments to No. 5 ($17,000).

(4) ***Basis for gain and loss where mineral interests acquired before March 1, 1913, are included in an aggregation.*** Where mineral interests acquired before March 1, 1913, are included in an aggregation under section 614 (b), (c), or (e), the aggregated property has two bases, one for the determination of gain and another for the determination of loss upon the disposition of the whole or a part of the aggregated property. For the purpose of determining gain, the adjusted basis of the aggregated property on the effective date of aggregation shall be the sum of:

(i) The unadjusted bases of those mineral interests acquired on or after March 1, 1913, plus

(ii) The cost of any interest acquired before March 1, 1913 (adjusted for the period before March 1, 1913), or the fair market value of such interest as of March 1, 1913, whichever is greater

and such sum shall be adjusted by the total of all adjustments to the bases of the several mineral interests aggregated as required by section 1016 to the effective date of aggregation. For the purpose of determining loss, the adjusted basis of the aggregated property on the effective date of aggregation shall be the sum of:

(iii) The unadjusted bases of those mineral interests acquired on or after March 1, 1913, plus

(iv) The cost of those interests acquired before March 1, 1913, adjusted for the period before March 1, 1913

and such sum shall be adjusted by the total of all adjustments to the bases of the several mineral interests aggregated as required by section 1016 to the effective date of aggregation. Thereafter, the adjustments to basis required by section 1016 shall apply to the total adjusted basis of the aggregated property for all purposes of the Code. Upon disposition of a part of the aggregated property, or upon termination of the aggregation for any reason, or upon change in the treatment of any mineral interests in the aggregation with consent of the Commissioner, the adjusted basis for determining gain and the adjusted basis for determining loss with respect to each resultant part of the aggregated property shall be determined in accordance with subparagraph (2) of this paragraph. The provisions of this subparagraph may be illustrated by the following examples:

Example 1. At the close of 1953 a taxpayer owned two operating mineral interests designated as Nos. 1 and 2 in the same operating unit. Operating mineral interest No. 1 was acquired by the taxpayer before March 1, 1913, and on such date its basis with reference to its fair market value was $50,000 and its adjusted basis with reference to its cost was $44,000. The unadjusted basis of operating mineral interest No. 2, acquired after March 1, 1913, was $30,000. Adjustments under section 1016 for depletion from March 1, 1913, through December 31, 1953, were $37,000 for operating mineral interest No. 1 and $20,000 for operating mineral interest No. 2. Assume that the taxpayer elected for the taxable year 1954 to aggregate operating mineral interests Nos. 1 and 2. The adjusted basis of the aggregated property as of January 1, 1954, for the purpose of determining gain would be $23,000 ($50,000 plus $30,000) minus ($37,000 plus $20,000). For the purpose of determining loss, the adjusted basis would be $17,000 ($44,000 plus $30,000) minus ($37,000 plus $20,000).

Example 2. Assume the same facts as in example 1 and further assume that for the taxable years 1954 and 1955, the taxpayer was allowed $5,000 of depletion on the aggregated property, that on January 1, 1956, he sold a portion of the aggregated property for $20,000, and that, as of January 1, 1956, the aggregated property had a fair market value of $24,000. At the time of sale, the adjusted basis of the aggregated property for the purpose of determining gain was $18,000 ($23,000-$5,000); and the adjusted basis for the purpose of determining loss was $12,000 ($17,000-$5,000). The adjusted basis of the portion sold would be computed as follows:

$$\frac{\$20{,}000\ (\text{FMV of portion sold})}{\$24{,}000\ (\text{FMV of aggregated property})} \times \begin{matrix}\$18{,}000\ (\text{adjusted}\\ \text{basis for gain})\end{matrix} = \begin{matrix}\$15{,}000\ (\text{adjusted}\\ \text{basis of portion sold})\end{matrix}$$

Taxpayer's gain would then be computed as follows:

	$20,000	(amount received for portion sold)
Less:	$15,000	(adjusted basis of portion sold)
	$5,000	(gain on portion sold)

The adjusted basis of the portion retained as of January 1, 1956, for the purpose of determining gain is $3,000 ($18,000-$15,000). For the purpose of determining loss, the adjusted basis is $2,000 ($12,000-$10,000).

Example 3. Assume the same facts as in example 2, except that a portion of the aggregated property was sold for $5,000 and that the fair market value of the aggregated property at the time of sale was $10,000. The adjusted basis of the portion sold would be computed as follows:

$$\frac{\$5{,}000\ (\text{FMV of portion sold})}{\$10{,}000\ (\text{FMV of aggregated property})} \times \begin{matrix}\$12{,}000\ (\text{adjusted}\\ \text{basis for loss})\end{matrix} = \begin{matrix}\$6{,}000\ (\text{adjusted basis}\\ \text{of portion sold})\end{matrix}$$

Taxpayers loss would then be computed as follows:

	$5,000	(amount received for portion sold)
Less:	$6,000	(adjusted basis of portion sold)
	($1,000)	(loss on portion sold)

(5) ***Basis for gain and loss where mineral interests acquired before March 1, 1913, are included in a combination and one or more of such interests have not previously been included in an aggregation.*** Where mineral interests acquired before March 1, 1913, are included in a combination under section 614(b) and § 1.614-8 and one or more of such interests have not previously been included in an aggregation, the combined property has two bases, one for the determination of gain and another for the determination of loss upon the disposition of the whole or a part of the combined property. For the purpose of determining gain, the adjusted basis of the combined property on the effective date of combination shall be the sum of:

(i) The adjusted bases at the time of deaggregation, as determined under subparagraph (2) of this paragraph, of all interests which have previously been included in an aggregation,

(ii) The unadjusted bases of other mineral interests acquired on or after March 1, 1913, and

(iii) The cost of each other interest acquired before March 1, 1913 (adjusted for the period before March 1, 1913), or the fair market value of such interest as of March 1, 1913, whichever is greater

and such sum shall be adjusted by the total of all adjustments to the bases of the mineral interests as required by section 1016 to the effective date of combination. For the purpose of determining loss, the adjusted basis of the combined property on the effective date of combination shall be the sum of:

(iv) The adjusted bases at the time of deaggregation, as determined under subparagraph (2) of this paragraph, of all interests which have previously been included in an aggregation.

(v) The unadjusted bases of other mineral interests acquired on or after March 1, 1913, and

(vi) The cost of other mineral interests acquired before March 1, 1913, adjusted for the period before March 1, 1913

and such sum shall be adjusted by the total of all adjustments to the bases of the mineral interests as required by section 1016 to the effective date of combination. Thereafter, the adjustments to basis required by section 1016 shall apply to the total adjusted basis of the combined property for all purposes of the Code. Upon disposition of a part of the combined property, the adjusted basis for determining gain and the adjusted basis for determining loss with respect to each resultant part of the combined property shall be determined in accordance with subparagraph (2) of this paragraph.

(b) ***Holding period of aggregated or combined properties.*** Where a taxpayer sells or exchanges either a part or all of an aggregated or combined property which includes part or all of a mineral interest which the taxpayer has held for (1 year 6 months for taxable years beginning before 1977; 9 months for taxable years beginning in 1977) or less, the sales price and adjusted basis attributable to the interest sold must be apportioned in proportion to the relative fair market values as of the date of sale to determine the amount of income represented by the sale of property held for (1 year 6 months for taxable years beginning before 1977; 9 months for taxable years beginning in 1977) or less. The application of this rule may be illustrated by the following example:

Example. Taxpayer A owns operating mineral interests Nos. 1, 2, and 3. He acquired interests Nos. 1 and 2 in 1953 but purchased and made development expenditures on interest No. 3 on December 1, 1954. In his return for the taxable year 1954, taxpayer A elects to aggregate interests Nos. 1, 2, and 3 which are operated as a unit. On May 1, 1955, taxpayer A sells the north half of the aggregated property which includes portions of interests Nos. 1, 2, and 3. The sales price of the north half was $80,000; the adjusted basis of the aggregated property as of the date of sale was $20,000; and the fair market value of the aggregated property as of the date of sale was $100,000. The adjusted basis applicable to the north half is computed as follows:

$$\frac{\$80{,}000\ (\text{FMV of portion sold})}{\$100{,}000\ (\text{FMV of aggregated property})} \times \$20{,}000\ (\text{adjusted basis of aggregated property}) = \$16{,}000\ (\text{adjusted basis of portion sold})$$

The total gain on the sale is $64,000 ($80,000−$16,000).

The gain attributable to the sale of the portion held for six months or less is computed as follows (assuming that the fair market value of the portion of No. 3 included in the sale as of the date of sale was $30,000):

$$\frac{\$30{,}000\ (\text{FMV of portion of No. 3 sold})}{\$80{,}000\ (\text{FMV of north half})} \times \$16{,}000\ (\text{adjusted basis of north half}) = \$6{,}000\ (\text{adjusted basis of portion of No. 3 sold})$$

The gain on the portion of No. 3 sold is $24,000 ($30,000-$6,000).

(c) ***Acquisition of property with transferor's basis.*** If a separate property or an aggregated or combined property is acquired in a transaction in which the basis of such property in the hands of the taxpayer is determined by reference to the basis of such property in the hands of a transferor, then the election of such transferor as to the treatment of such separate, aggregated, or combined property shall be binding upon the taxpayer for all taxable years ending after the transfer unless, in the case of an aggregation, the aggregation terminates or consent to make a change is obtained under paragraph (d) (4) of § 1.614-2, paragraph (f) (7) of § 1.614-3, or paragraph (b) (3) or (e) (5) of § 1.614-5, whichever is applicable.

(d) ***Abandonment and casualty losses.*** In the case of mineral interests which are aggregated or combined as one property, no losses resulting from worthlessness or abandonment are allowable until all the mineral rights in the entire aggregated or combined property are proven to be worthless or until the entire aggregated or combined property is disposed of or abandoned. Casualty losses are allowable in accordance with the rules applicable to casualty losses in general. For rules applicable to losses in general, see section 165 and the regulations thereunder.

[T.D. 6524, 26 FR 159, Jan. 10, 1961, as amended by T.D. 6859, 30 FR 13701, Oct. 28, 1965; T.D. 7728, 45 FR 72650, Nov. 3, 1980]

§ 1.614-7 Extension of time for performing certain acts.

Sections 1.614-2 to 1.614-5, inclusive, require certain acts to be performed on or before May 1, 1961 (the first day of the first month which begins more than 90 days after the regulations under section 614 were published in the FEDERAL REGISTER as a Treasury decision). The district director may, upon good cause shown, extend for a period not exceeding 6 months the period within which such acts are to be performed, and shall, if the interests of the Government would otherwise be jeopardized thereby, grant such an extension only if the taxpayer and the district director agree in writing to a corresponding or greater extension of the period prescribed for the assessment of the tax, or in the case of taxable years described in section 614(c)(3)(E), the assessment of the tax resulting from the exercise or change in an election.

[T.D. 6561, 26 FR 3523, Apr. 25, 1961]

§ 1.614-8 Elections with respect to separate operating mineral interests for taxable years beginning after December 31, 1963, in the case of oil and gas wells.

(a) ***Election to treat separate operating mineral interests as separate properties*** —

(1) ***General rule.*** If a taxpayer has more than one operating mineral interest in oil and gas wells in one tract or parcel of land, he may elect to treat one or more of such interests as separate properties for taxable years beginning after December 31, 1963. Any such interests with respect to which the taxpayer does not so elect shall be combined and treated as one property. Nonoperating mineral interests may not be included in such combination. There may be only one such combination in one tract or parcel. Any such combination of interests shall be considered as one property for all purposes of subtitle A of the Code for the period to which the election applies. The preceding

sentence does not preclude the use of more than one account under a single method of computing depreciation or the use of more than one method of computing depreciation under section 167, if otherwise proper. Any reasonable and consistently applied method or methods of computing depreciation of the improvements made with respect to the separate interests which are combined may be continued in accordance with section 167 and the regulations thereunder. Except as provided in paragraph (b) of this section, such an interest in one tract or parcel may not be combined with such an interest in another tract or parcel. For rules with respect to the allocation of the basis of an aggregation of separate operating mineral interests under this section among such interests as of the first day of the first taxable year beginning after December 31, 1963, see paragraph (a) (2) (ii) of § 1.614-6. For the definition of *operating mineral interest* see paragraph (b) of § 1.614-2.

(2) ***Election in respect of newly discovered or acquired interest or interest ceasing to participate in cooperative or unit plan of operation.***

(i) If the taxpayer makes an election under this paragraph in respect of an operating mineral interest in a tract or parcel of land and, after the taxable year for which such election is made, an additional operating mineral interest in the same tract or parcel is discovered or acquired by the taxpayer or is the subject of an election under this paragraph because it ceases to participate in a cooperative or unit plan of operation to which paragraph (b) of this section applies, the additional operating mineral interest shall be treated:

(*a*) If there is no combination of interests in such tract or parcel, as a separate property unless the taxpayer elects to combine it with another interest, or

(*b*) If there is a combination of interests in such tract or parcel, as part of such combination unless the taxpayer elects to treat it as a separate property.

(ii) The application of this subparagraph may be illustrated by the following example:

Example. Prior to 1964 a taxpayer acquired, and incurred development expenditures with respect to, three operating mineral interests in oil, designated Nos. 1, 2, and 3. All three interests are in the same tract or parcel of land. For the taxable year 1964, the taxpayer elects to treat such interests as three separate properties. During the taxable year 1965, the taxpayer discovers and incurs development costs with respect to a fourth operating mineral interest, No. 4, in the same tract of land. During the taxable year 1966, the taxpayer discovers and incurs development costs with respect to a fifth operating mineral interest, No. 5, in the same tract of land. If the taxpayer makes no election relative to No. 4 for 1965, such interest will thereafter be treated as a separate property. Alternatively, the taxpayer may make an election for 1965 to combine No. 4 with any one (and only one) of the three other interests and to treat such combination as one property. If, for example, he elects to combine No. 4 with No. 3, then in 1966, No. 5 will automatically become part of the combination of Nos. 3 and 4 if no election is made to treat it as a separate property. After the combination of Nos. 3 and 4 is formed, Nos. 1 and 2, which were acquired or discovered prior to the formation of the combination and which were not included in such combination within the time prescribed, may not be included in that or any other combination. However, see subparagraph (3) (iv) of this paragraph.

(3) ***Manner and scope of election*** —

(i) ***Election; when made.*** Except as provided hereafter in this subdivision (i), any election under subparagraph (1) or (2) of this paragraph shall be made for each operating mineral interest not later than the time prescribed by law for filing the income tax return (including extensions thereof) for whichever of the following taxable years is later:

(*a*) The first taxable year beginning after December 31, 1963; or

(*b*) The first taxable year in which any expenditure for development or operation in respect of such operating mineral interest is made by the taxpayer after his acquisition of such interest

Notwithstanding the provisions of (*a*) and (*b*), if it is determined that the operating mineral interest in respect of which the election is to be made was, during what would otherwise be the entire effective period of the election insofar as it would apply to the appropriate taxable year determined under (*a*) and (*b*), participating in a cooperative or unit plan of operation to which section 614(b)(3) applies, the election shall be made not later than the time prescribed by law for filing the income tax return (including extensions thereof) for the taxable year in which the interest ceases to participate in the cooperative or unit plan. See subdivision (iii) of this subparagraph for provisions relating to the effective date of an election and paragraph (b) of this section for provisions relating to certain unitization or pooling arrangements. For purposes of this subparagraph, expenditures for development include any intangible drilling or development costs within the purview of section 263(c). Delay rentals are not considered as expenditures for development. For purposes of this subparagraph, the acquisition of an option to acquire an economic interest in minerals in place does not constitute the acquisition of a mineral interest.

(ii) ***Election; how made.*** Any election under this paragraph shall be made by a statement attached to the income tax return of the taxpayer for the first taxable year for which the election is made. This statement shall identify by name, code number, or other means the operating mineral interests within the same tract or parcel of land which the taxpayer is electing to treat as separate properties or in combination, as the case may be. The statement shall also identify by name, code number, or other means the tract or parcel and shall set forth the facts upon which its treatment as a single and entire tract or parcel is based. See paragraph (a) (3) of § 1.614-1. However, if the taxpayer is electing to treat all of his operating mineral interests in a tract or parcel as separate properties, a blanket election with respect to all of such interests in that tract or parcel which are owned by the taxpayer at the time the election is made will suffice and only the tract or parcel itself need be so identified. The taxpayer shall maintain and have available records and maps sufficient to clearly define the tract or parcel and all of the taxpayer's operating mineral interests therein.

(iii) ***Election; when combination effective.***

(*a*) If, by reason of the exercise or nonexercise of an election under this paragraph, a combination is formed of two or more operating mineral interests, all of which are owned and operated by a taxpayer on the first day of the first taxable year beginning after December 31, 1963, and are not participating in a cooperative or unit plan of operation to which paragraph (b) of this section applies on such first day, the combination is effective on such first day.

(*b*) If, by reason of the exercise or nonexercise of an election under this paragraph, a combination of operating mineral interests not described in (*a*) of this subdivision (including a combination described in (*a*) to which another operating mineral interest is added) is formed, the date on which each operating mineral interest which is being combined by the taxpayer for the first time enters into the combination is the later of

(1) the earliest date within the taxable year affected on which the taxpayer incurred any expenditure for development or operation of such interest at a time when such interest was not participating in a cooperative or unit plan of operation to which paragraph (b) of this section applies, or

(2) the earliest date on which the taxpayer incurred any expenditure for development or operation of any other interest with which such interest is to be combined at a time when such other interest was not participating in a cooperative or unit plan of operation to which paragraph (b) of this section applies.

(c) The application of these provisions may be illustrated by the following examples:

Example 1. In 1963, a taxpayer owned and operated mineral interests Nos. 1 and 2, both of which are in the same tract or parcel of land. Neither No. 1 nor No. 2 participates in a cooperative or unit plan of operation. The taxpayer, who is on a calendar year basis, continued to own and operate these interests during the year 1964, and made no election with respect to such interests in his income tax return for that year. As a result, Nos. 1 and 2 are combined as of January 1, 1964.

Example 2. Assume that the taxpayer described in example 1 discovered operating mineral interests Nos. 3 and 4 in the same tract or parcel of land as Nos. 1 and 2, that he made his first expenditures for the development of No. 3 on June 1, 1964, and of No. 4 on September 1, 1964, and that, in a timely return for 1964, he elected to treat No. 3 as a separate property and made no election with respect to No. 4. As a result, No. 3 is treated as a separate property and No. 4 joins the combination of Nos. 1 and 2 as of September 1, 1964.

Example 3. On March 1, 1964, a taxpayer acquired a tract or parcel of land containing operating mineral interests Nos. 1 and 2. The taxpayer made his first operating expenditures on No. 1 on April 1, 1964. On October 1, 1964, the taxpayer made his first development expenditures with respect to operating mineral interest No. 2. The taxpayer made no election with respect to these interests. As a result, Nos. 1 and 2 enter into a combination as of October 1, 1964.

(iv) ***Election; binding effect.*** A valid election made under section 614(b) and this subparagraph shall be binding upon the taxpayer for the first taxable year for which made and for all subsequent taxable years. However, notwithstanding the preceding sentence, an election to treat one or more operating mineral interests as separate properties shall not prevent the making of a later election to combine a newly discovered or acquired operating mineral interest with one of such interests, if no other combination exists in the tract or parcel of land on the date when the later election would become effective under subdivision (iii) of this subparagraph. Nor will an election to treat an operating mineral interest as a separate property prevent its treatment with another interest as a single property under paragraph (b) of this section if such interest later participates in a cooperative or unit plan of operation to which paragraph (b) applies. For rules relating to the binding effect of an election in certain cases in which the basis of a separate or combined property in the hands of the transferee is determined by reference to the basis in the hands of the transferor, see paragraph (c) of § 1.614-6.

(b) ***Certain unitization or pooling arrangements.***

(1) Except as provided in this paragraph, if one or more of the taxpayer's operating mineral interests, or a part or parts thereof, participate, under a voluntary or compulsory unitization or pooling agreement as defined in subparagraph (6) of this paragraph, in a single cooperative or unit plan of operation, then for the period of such participation in taxable years beginning after December 31, 1963, such interest or interests, and part or parts thereof, included in such unit, shall be treated for purposes of subtitle A of the Code as one property, separate from the interest or interests, or part or parts thereof, not included in such unit.

(2) Subparagraph (1) of this paragraph shall apply to a voluntary agreement only if all the operating mineral interests covered by the agreement are in the same deposit or are in two or more deposits, the joint development or production of which is logical, without taking tax benefits into account, from the standpoint of geology, convenience, economy, or conservation, and which are in tracts or parcels of land which are contiguous or in close proximity. Operating mineral interests under a voluntary agreement to which subparagraph (1) does not apply are subject to the rules contained in paragraph (a) of this section. For purposes of this paragraph an agreement is voluntary unless required by the laws or rulings of any State or any agency of any State.

(3) Notwithstanding the provisions of subparagraph (1) of this paragraph, if the taxpayer, for the last taxable year beginning before January 1, 1964, treated as separate properties two or more operating mineral interests which participate, under a voluntary or compulsory unitization or pooling agreement entered into in any taxable year beginning before January 1, 1964, in a single cooperative or unit plan of operation, and if it is determined that such treatment was proper under the law applicable to such taxable year, the taxpayer may continue to treat all such interests in a consistent manner for the period of such participation. If it is determined that such treatment was not proper under the law applicable to such taxable year, or if the taxpayer does not continue to treat all such interests in a manner consistent with the treatment of them for the last taxable year beginning before January 1, 1964, the treatment of the interests shall be in accordance with the provisions of subparagraph (1).

(4) If only a part of an operating mineral interest, which interest is not being treated under paragraph (a) of this section as part of a combination of interests, participates in a unit or pool, such part shall, for the period of its participation in the unit or pool, be treated for purposes of this section as being separate from the nonparticipating portion of the operating mineral interest of which it is a part. A portion of the adjusted basis and of the units of mineral of such operating mineral interest remaining at the beginning of the period described in the preceding sentence shall be allocated to the participating part in accordance with the principles contained in paragraph (a)(2)(i)(*a*) of § 1.614-6 as if such participating part had been sold. If participation in the unit or pool ends, the separate status of the participating part shall immediately terminate. At such time the adjusted basis of such part and the units of mineral with respect to such part remaining at the time of termination shall be added to the adjusted basis and to the remaining units of mineral of the nonparticipating portion of the operating mineral interest. During the period of participation in the unit or pool such participating part shall not be treated separately from the nonparticipating portion of the operating mineral interest in applying section 165.

(5) Where an operating mineral interest which is being treated under paragraph (a) of this section as part of a combination of interests begins participation in a unit or pool, the combination shall remain in force but the treatment of such participating interest as a part of the combination shall be suspended for the period of its participation in the unit or pool. If, for example, a taxpayer owns operating mineral interests Nos. 1, 2, and 3 in a single tract or parcel of land, elects to treat No. 1 as a separate property (with mineral interests Nos. 2 and 3 thus being combined), is later required by an

agency of a State to place No. 2 in a unit, and subsequently discovers operating mineral interest No. 4 in the same tract or parcel of land, then under paragraph (a)(2)(i)(*b*) of this section No. 4 will automatically be combined with No. 3 unless the taxpayer elects to treat it as a separate property. Under this subparagraph, an interest may be treated as part of a combination for a portion of a taxable year and as part of a unit or pool for a portion of a taxable year. At the commencement of participation in the unit or pool, a portion of the adjusted basis of the combination and a portion of the units of mineral with respect to the combination remaining at that time shall be allocated to such participating interest in accordance with the principles contained in paragraph (a)(2)(i)(*a*) of § 1.614-6 as if such interest had been sold. During the period of participation in the unit or pool such participating interest is nevertheless treated as a part of the combination for purposes of paragraph (d) of § 1.614-6. If participation in the unit or pool ends, the treatment of such interest as participating in the unit or pool shall immediately terminate. At such time, the adjusted basis of the participating interest and the units of mineral with respect to such interest remaining at the time of termination shall be added to the adjusted basis and to the remaining units of mineral of the nonparticipating portion of the combination. In determining the adjusted basis of the participating interest at the time of termination there shall be taken into account any section 1016 adjustments attributable to such interest for the period of its participation in the unit or pool. If two or more operating mineral interests of the taxpayer participate in a unit or pool and are treated as one property under subparagraph (1) of this paragraph, and if participation by such interests in the unit or pool terminates, the adjusted basis of each such interest at the time of termination shall be separately determined. If the total of the adjusted bases of such interests upon termination of their participation in the unit or pool exceeds the adjusted basis of such one property, then the adjusted bases of such interests shall be further adjusted by applying the principles contained in paragraph (a)(2)(ii)(*b*)(*ii*) of § 1.614-6 so that the total of the adjusted bases of such interests equals the adjusted basis of such one property. In addition, the units of oil and gas estimated to be attributable to a participating interest at the time of termination of participation shall be restored to the units of oil and gas of the combination of which it is a part. The rules stated in this subparagraph with respect to an operating mineral interest which is being treated under paragraph (a) of this section as part of a combination and which begins participation in a unit or pool shall also apply to a portion of an operating mineral interest which is being treated under paragraph (a) as part of a combination if such portion begins participation in a unit or pool.

(6) As used in this paragraph, the term *unitization or pooling agreement* means an agreement under which two or more persons owning operating mineral interests agree to have the interests operated on a unified basis and further agree to share in production on a stipulated percentage or fractional basis regardless of from which interest or interests the oil or gas is produced. In addition, in a situation in which one person owns operating mineral interests in several leases, an agreement of such person with his several royalty owners to determine the royalties payable to each on a stipulated percentage basis regardless of from which lease or leases oil or gas is obtained is also considered to be a unitization or pooling agreement. No formal cross-conveyance of properties is necessary. An agreement between co-owners of a tract or parcel of land or a part thereof for the development of the property by one of such co-owners for the account of all is not a unitization or pooling agreement, provided that the agreement does not affect ownership of minerals or entitle any such co-owner to share in production from any operating mineral interests other than his own.

(c) ***Operating mineral interest defined.*** For the definition of the term *operating mineral interest* as used in this section, see paragraph (b) of § 1.614-2.

(d) ***Alternative treatment under Internal Revenue Code of 1939.*** If, on the day preceding the first day of the first taxable year beginning after December 31, 1963, the taxpayer has any operating mineral interests which he treats under section 614(d) (as in effect before the amendments made by the Revenue Act of 1964) and § 1.614-4, such treatment shall be continued and shall be deemed to have been adopted pursuant to the provisions of section 614(b) and paragraph (a) of this section. Accordingly, a taxpayer, who has four operating mineral interests in a single tract or parcel of land, and who has treated two of such interests as one property and two of such interests as separate properties under section 614(d) prior to the first day of the first taxable year beginning after December 31, 1963, is deemed to have adopted such treatment pursuant to the provisions of section 614(b) and paragraph (a) of this section. Hence, in the absence of an election to the contrary, a fifth operating mineral interest in the same tract or parcel acquired by the taxpayer in a taxable year beginning after December 31, 1963, will, after an expenditure for development or operation, be combined with the combination of two interests made under section 614(d). Furthermore, an election which was made for a taxable year beginning before January 1, 1964, under section 614(d) as then in effect will be binding for all taxable years beginning after December 31, 1963, even though the time for making an election under section 614(b) and paragraph (a) of this section has not elapsed.

[T.D. 6859, 30 FR 13703, Oct. 28, 1965]

§ 1.615-1 Pre-1970 exploration expenditures.

(a) ***General rule.*** Section 615 prescribes rules for the treatment of expenditures (paid or incurred before January 1, 1970) for ascertaining the existence, location, extent, or quality of any deposit of ore or other mineral (other than oil or gas) paid or incurred by the taxpayer before the beginning of the development stage of the mine or other natural deposit. Such expenditures hereinafter in the regulations under section 615 will be referred to as exploration expenditures. The development stage of the mine or other natural deposit will be deemed to begin at the time when, in consideration of all the facts and circumstances (including the actions of the taxpayer), deposits of ore or other mineral are shown to exist in sufficient quantity and quality to reasonably justify commercial exploitation by the taxpayer. A taxpayer who elects under section (e) may treat exploration expenditures under either section 615(a) or section 615(b). See § 1.615-6 for the method of making the election to treat exploration expenditures under section 615. Under section 615(a), a taxpayer may, at his option, deduct exploration expenditures paid or incurred in an amount not to exceed $100,000 for any taxable year. Under section 615(b) and § 1.615-2, he may elect to defer any part of such amount and deduct such part on a ratable basis as the units of produced minerals benefited by such expenditures are sold. If the taxpayer does not treat exploration expenditures under either section 615 (a) or (b) in any year for which his election under section 615(e) is effective, the expenditures for such year will be charged to depletable capital account. The option to deduct under section 615(a) and the election to defer under section 615(b), however, are subject to the limitation provided in section 615(c) and § 1.615-4. In the case of certain corporations which are members of an affiliated group which has elected the 100 percent dividends received deduction under section 243(b), see section 243(b) (3) and § 1.243-5 for limitations on the option to deduct under section 615(a) and the election to defer under section 615(b).

(b) ***Expenditures to which section 615 is not applicable.***

(1) Section 615 is not applicable to expenditures which would be allowed as a deduction for the taxable year without regard to such section.

(2) Section 615 is not applicable to expenditures which are reflected in improvements subject to allowances for depreciation under sections 167 and 611. However, allowances for depreciation of such improvements which are used in the exploration of ores or minerals are considered exploration expenditures under section 615. If such improvements are used only in part for exploration during a taxable year, an allocable portion of the allowance for depreciation shall be treated as an exploration expenditure.

(3) Section 615 is applicable to exploration expenditures paid or incurred by a taxpayer in connection with the acquisition of a fractional share of the working or operating interest to the extent of the fractional interest so acquired by the taxpayer. The expenditures attributable to the remaining fractional share shall be considered as the cost of his acquired interest and shall be recovered through depletion allowances. For example, taxpayer A owns mineral leases on unexplored mineral lands and agrees to convey an undivided three-fourths ($^3/_4$) interest in such leases to taxpayer B provided B will pay all of the exploration expenditures for ascertaining the existence, location, extent, or quality of any deposit of ore or other mineral which will be incurred before the beginning of the development stage. B shall treat three-fourths of such amount under section 615, and shall treat one-fourth of such amount as part of the cost of his interest, recoverable through depletion.

(4) The provisions of section 615 do not apply to costs of exploration which are reflected in the amount which the taxpayer paid or incurred to acquire the property. Such provisions apply only to costs paid or incurred by the taxpayer for exploration undertaken directly or through a contract by the taxpayer. See, however, sections 381(a) and 381(c) (10) for special rules with respect to deferred exploration expenditures in certain corporate acquisitions.

[T.D. 6500, 25 FR 11737, Nov. 26, 1960, as amended by T.D. 7192, 37 FR 12938, June 30, 1972]

§ 1.615-2 Deduction of pre-1970 exploration expenditures in the year paid or incurred.

(a) ***In general.***

(1) If the election to treat exploration expenditures under section 615 has been made or is deemed made under § 1.615-6(b) subject to the total limitation of $100,000, a taxpayer who has made exploration expenditures prior to January 1, 1970, with respect to more than one mine or other natural deposit may deduct for a taxable year for which such election is effective any portion of such expenditures attributable to each mine or deposit. With respect to a particular mine or other natural deposit, a taxpayer who has made the election described in the preceding sentence may deduct under section 615(a) a portion of the exploration expenditures and may defer and deduct under section 615(b) the balance of such expenditures. For any taxable year for which the election to treat exploration expenditures under section 615 is effective, the taxpayer must charge any amount of exploration expenditures in excess of $100,000 to capital account and must charge to capital account whatever amount has not been deducted currently or deferred. For example, taxpayer A who has elected under section 615(e) has three mines, X, Y, and Z. In the taxable year 1967, A makes exploration expenditures of $75,000 with respect to each mine. The total allowable deduction for exploration expenditures is $100,000. A deducts $50,000 and defers $25,000 with respect to X. He deducts $25,000, and charges to capital account $50,000 with respect to Y, and charges to capital account the entire $75,000 paid with respect to Z. Thus, A has deducted or deferred $100,000 and capitalized the excess.

(2) Except as provided in section 615(e) and § 1.615-6, a taxpayer cannot change his treatment of exploration expenditures for a taxable year after the due date (including extensions of time) for filing the return for the taxable year except where it is subsequently determined that any part of such exploration expenditures deducted under section 615(a) or deferred under section 615(b) are not exploration expenditures for the taxable year. Where the taxpayer has made the election to treat exploration expenditures under section 615 and it is subsequently determined that part of the expenditures deducted under section 615(a) or deferred under section 615(b), for a taxable year, were not exploration expenditures for such taxable year, the exploration expenditures required to be charged to capital account for such taxable year by reason of the limitation may be deducted or deferred (to the extent of the subsequent determination) and proper adjustment made to capital account. A taxpayer claiming a deduction under section 615(a) shall indicate clearly on his income tax return the amount of the deduction claimed under such section with respect to each mine or other natural deposit. Such mine or deposit shall be identified by an adequate description.

[T.D. 7192, 37 FR 12938, June 30, 1972]

§ 1.615-3 Election to defer pre-1970 exploration expenditures.

(a) ***General rule.*** A taxpayer who makes the election provided in section 615(e) may defer any portion of the exploration expenditures made before January 1, 1970, with respect to each mine or other natural deposit, subject to the limitations described in section 615(c) and § 1.615-4. The amounts so deferred shall be deducted ratably as the units of produced ores or minerals discovered or explored by reason of such expenditures are sold.

(b) ***Effect and manner of making election.***

(1) The election to defer exploration expenditures shall apply only to expenditures for the taxable year for which made. However, once made, the election shall be binding with respect to the expenditures for that taxable year. Thus, a taxpayer cannot revoke his election for any reason whatsoever.

(2) The election shall be made for each mine or other natural deposit by a clear indication on the return or by a statement filed with the district director with whom the return was filed, not later than the time prescribed by law for filing such return (including extensions thereof) for the taxable year to which such election is applicable.

(c) ***Expenditures made by the owner who retains a non-operating mineral interest.***

(1) A taxpayer who elects to defer exploration expenditures and thereafter transfers his interest in the mine or other natural deposit, retaining an economic interest therein, shall deduct an amount attributable to such interest on a pro rata basis as the interest pays out. For example, a taxpayer who defers exploration expenditures and then leases his deposit, retaining a royalty interest therein, shall deduct the deferred expenditures ratably as he receives royalties. If the taxpayer receives a bonus or advanced royalties in connection with the transfer of his interest, he shall deduct deferred expenditures allocable to such bonus or advanced royalties in an amount which is in the same proportion to the total of such costs as the bonus or advanced royalties bears to the bonus and total royalties expected to be received. Also, in the case of a transfer of a mine or other natural deposit by a taxpayer who retains a production payment therein, he shall deduct the exploration expenditures ratably over the payments expected to be received.

(2) Where a taxpayer receives an amount, in addition to retaining an economic interest, which amount is treated as from the sale or exchange of a capital asset or property treated under section 1231 (except coal or iron ore to which section 631(c) applies), the deferred exploration expenditures shall be allocated between the interest sold and the interest retained in proportion to the fair market values of each interest as of the date of sale. The amount allocated to the interest sold may not be deducted, but shall be a part of the basis of such interest.

(d) ***Losses from abandonment.*** Section 165 and the regulations thereunder contain general rules relating to the treatment of losses resulting from abandonment.

(e) ***Computation of amount of deduction.*** The amount of the deduction allowable during the taxable year is an amount A, which bears the same ratio to B (the total deferred exploration expenditures for a particular mine or other natural deposit reduced by the amount of such expenditures deducted in prior taxable years) as C (the number of units of the ore or mineral benefited by such expenditures sold during the taxable year) bears to D (the number of units of ore or mineral benefited by such expenditures remaining as of the taxable year). For the purposes of this proportion, the *number of units of ore or mineral benefited by such expenditures remaining as of the taxable year* is the number of units of ore or mineral benefited by the deferred exploration expenditures remaining at the end of the year to be recovered from the mine or other natural deposit (including units benefited by such expenditures recovered but not sold) plus the number of units benefited by such expenditures sold within the taxable year. The principles outlined in § 1.611-2 are applicable in estimating the number of units remaining as of the taxable year and the number of units sold during the taxable year. The estimate is subject to revision in accordance with that section in the event it is ascertained from any source, such as operations or development work, that the remaining units are materially greater or less than the number of units remaining from a prior estimate.

[T.D. 6500, 25 FR 11737, Nov. 26, 1960, as amended by T.D. 6685, 28 FR 11405, Oct. 24, 1963; T.D. 6841, 30 FR 9306, July 27, 1965; T.D. 7192, 37 FR 12939, June 30, 1972]

§ 1.615-4 Limitation of amount deductible.

(a) ***Taxable years beginning before July 7, 1960.*** For any taxable year beginning before July 7, 1960 (including taxable years of less than 12 months), a taxpayer may deduct or defer exploration expenditures paid or incurred in the taxable year in an amount not in excess of $100,000. However, for such taxable years, the taxpayer may not avail himself of the provisions of section 615 for more than four taxable years (including taxable years of less than 12 months and taxable years subject to the Internal Revenue Code of 1939). Such four taxable years need not be consecutive. In determining the number of years in which a taxpayer has availed himself of section 615, a year for which he makes an election to defer exploration expenditures shall count as one year. Any subsequent taxable year in which such deferred expenditures are deducted shall not be taken into account as one of the four years. For purposes of the 4-year limitation, a year in which both a deduction and an election to defer are availed of by the taxpayer shall be taken into account as only one year.

(b) ***Taxable years beginning after July 6, 1960.*** For any taxable year beginning after July 6, 1960 (including taxable years of less than 12 months), a taxpayer who is otherwise eligible may deduct or defer exploration expenditures paid or incurred before January 1, 1970, in the lesser of the following amounts:

(1) The amount paid or incurred in the taxable year,

(2) $100,000, or

(3) $400,000 minus all amounts deducted or deferred for taxable years ending after December 31, 1950

For purposes of this paragraph, the number of taxable years for which the taxpayer availed himself of the provisions of section 615 or the corresponding provisions of prior law is immaterial.

(c) ***Special rules for previously deferred expenditures.*** In determining whether an election to defer was availed of in applying the limitations of paragraphs (a) and (b) of this section, there shall be taken into account any year with respect to which amounts were deferred but not fully deducted because of a sale or other disposition of the mineral property, even though the balance of the deferred amounts was treated as part of the basis of the mineral property in determining gain or loss from the sale.

(d) ***Example of application of provisions.*** The application of the provisions of subparagraphs (a) and (b) of this section may be illustrated by the following example:

Example. A taxpayer on the calendar year basis, who has never claimed the benefits of section 615, or section 23(ff) of the 1939 Code, expended $200,000 for exploration expenditures during the year 1956. For each of the years 1957, 1958, 1959, and 1960 the taxpayer had exploration costs of $80,000. The taxpayer deducted or deferred the maximum amounts allowed for each of the years 1956, 1957, 1958, and 1959. None of the $80,000 expenditures for 1960 could be deducted or deferred by the taxpayer because he had already deducted or deferred exploration expenditures for 4 prior years. In 1961 the taxpayer expended $200,000 for exploration expenditures. The maximum amount the taxpayer may deduct or defer for the taxable year 1961 is $60,000 computed as follows:

(1) Add all yearly amounts deducted or deferred for exploration expenditures by the taxpayer for prior years.

Year	Expenditures	Deducted or deferred
1956	$200,000	$100,000
1957	80,000	80,000
1958	80,000	80,000
1959	80,000	80,000
1960	80,000	0
Total		340,000

(2) Subtract the sum of the amounts obtained in (1), $340,000, from $400,000, the maximum amount allowable to the taxpayer for deductions or deferrals of exploration expenditures.

Maximum amount allowable to taxpayer	$400,000
Sum of amounts obtained in (1)	340,000

60,000

(e) *Transferee of mineral property.*

(1) Where an individual or corporation transfers any property to the taxpayer and the transfer is one to which any of the subdivisions of this subparagraph apply, the taxpayer shall take into account for purposes of the 4-year limitation described in paragraph (a) of this section, all years that the transferor deducted or deferred exploration expenditures, and for purposes of the $400,000 limitation described in paragraph (b) of this section, all amounts that the transferor deducted or deferred.

(i) The taxpayer acquired any mineral property in a transaction described in section 23(ff)(3) of the Internal Revenue Code of 1939, excluding the reference therein to section 113(a)(13).

(ii) The taxpayer would be entitled under section 381(c)(10) to deduct exploration expenditures if the transferor (or distributor) corporation had elected to defer such expenditures. For example, if the taxpayer acquired any mineral property in a transaction described in section 381(a) (relating to the acquisition of assets through certain corporate liquidations and reorganizations), there shall be taken into account in applying the limitations of paragraph (a) of this section the years in which the transferor exercised the election to defer or deduct exploration expenditures, and there shall be taken into account in applying the limitations of paragraph (b) of this section any amount so deducted or deferred. See also section 381(c)(10) and the regulations thereunder.

(iii) The taxpayer acquired any mineral property under circumstances which make applicable the following sections of the Internal Revenue Code:

(*a*) Section 334(b)(1), relating to the liquidation of a subsidiary where the basis of the property in the hands of the distributee is the same as it would be in the hands of the transferor.

(*b*) Section 362 (a) and (b), relating to property acquired by a corporation as paid-in surplus or as a contribution to capital, or in connection with a transaction to which section 351 applies.

(*c*) Section 372(a), relating to reorganization in certain receiverships and bankruptcy proceedings.

(*d*) Section 373(b)(1), relating to property of a railroad corporation acquired in certain bankruptcy or recivership proceedings.

(*e*) Section 1051, relating to property acquired by a corporation that is a member of an affiliated group.

(*f*) Section 1082, relating to property acquired pursuant to a Securities Exchange Commission order.

(2) For purposes of subparagraph (1) of this paragraph, it is immaterial whether a deduction has been allowed or an election has been made by the transferor with respect to the specific mineral property transferred.

(3) Where a mineral property is acquired under any circumstance except those described in subparagraph (1) of this paragraph, the taxpayer is not required to take into account the election exercised by or deduction allowed to his transferor.

(4) For purposes of applying the limitations imposed by section 615(c):

(i) the partner, and not the partnership, shall be considered as the taxpayer (see paragraph (a)(8)(iii) of § 1.702-1), and

(ii) an electing small business corporation, as defined in section 1371(b), and not its shareholders, shall be considered as the taxpayer.

(5) For purposes of subparagraph (1)(iii)(*b*) of this paragraph:

(i) if mineral property is acquired from a partnership, the transfer shall be considered as having been made by the individual partners, so that the number of years for which section 615 has been availed of by each partner and the amounts which each partner has deducted or deferred under section 615 shall be taken into account, or

(ii) if on interest in a partnership having mineral property is transferred, the transfer shall be considered as a transfer of mineral property by the partner or partners relinquishing an interest, so that the number of years for which section 615 has been availed of by each such partner and the amounts which each such partner has deducted or deferred under section 615 shall be taken into account.

(f) ***Examples.*** The application of the provisions of this section may be illustrated by the following examples:

Example 1. A calendar year taxpayer who has never claimed the benefits of section 615 received in 1956 a mineral deposit from X Corporation upon a distribution in complete liquidation of the latter under conditions which would make the provisions of section 334(b)(1) applicable in determining the basis of the property in the hands of the taxpayer. During the year 1955 X Corporation expended $60,000 for exploration expenditures which it elected to treat as deferred expenses. Assume further that the taxpayer made similar expenditures of $150,000, $125,000, $100,000, $60,000, and $180,000 for the years 1956, 1957, 1958, 1959, and 1961, respectively, which the taxpayer elected to deduct for each of those years to the extent allowable. No such expenditures were made for 1960. On the basis of these facts, the taxpayer may deduct or defer $100,000 for each of the years 1956, 1957, and 1958. No deduction or deferral is allowable for 1959 since the 4-year limitation of paragraph (a) of this section applies. The taxpayer may deduct or defer a maximum of $40,000 for 1961 since the $400,000 limitation of paragraph (b) of this section applies, but the 4-year limitation of paragraph (a) does not apply.

Example 2. Assume the same facts stated in example 1 except that, prior to acquisition by the taxpayer of the deposit from X Corporation in 1956, X Corporation had acquired the deposit in 1954 in a similar distribution from Y Corporation which, in the years 1952 and 1953, deducted exploration costs paid in respect of an entirely different deposit in the amounts of $30,000 and $50,000, respectively. Under these circumstances, the taxpayer may deduct or defer exploration expenditures paid or incurred in the amount of $100,000 for 1956. No deduction or deferral is allowable to the taxpayer for expenditures made in 1957, 1958, and 1959 since the 4-year limitation of paragraph (a) applies. The taxpayer may deduct or defer a maximum of $100,000 for 1961 since the 4-year limitation of paragraph (a) of this section no longer applies. If the taxpayer deducted or deferred $100,000 for

each of the years 1956 and 1961 and also made exploration expenditures in 1962, the taxpayer may deduct or defer a maximum of $60,000 for that year under the $400,000 limitation of paragraph (b) of this section.

Example 3. In 1957, A and B transfer assets to a corporation under circumstances making section 351 applicable to such a transfer. Among the assets transferred by A is a mineral lease with respect to certain coal lands. A has deducted exploration expenditures under section 615 for the years 1954 and 1956 in the amounts of $50,000 and $100,000, respectively, made with respect to other deposits not included in the transfer to the corporation. The corporation shall be required to take into account the deductions previously made by A for purposes of applying the limitations of paragraphs (a) and (b) of this section.

Example 4. In 1956, A, B, and C form a partnership for the purpose of exploring for, developing, and producing uranium. A contributes a uranium lease to the partnership. A had individually made exploration expenses in the amount of $50,000 and $100,000 with respect to other mineral properties not contributed to the partnership and which he has deducted under section 615(a) for the years 1954 and 1955, respectively. B contributes a uranium lease to the partnership on which he made exploration expenditures in the amount of $100,000 in 1955 which he elected to defer under section 615(b). This is the only year in which B has used section 615. C contributes only cash to the partnership and has not previously used section 615. Subject to the limitations of section 615, for taxable years beginning before July 7, 1960, A may deduct or defer exploration expenses for two more taxable years (either as to expenditures incurred by him individually or with respect to his distributive share of partnership exploration expenses). B may deduct or defer exploration expenditures for three more years, and C may deduct or defer exploration expenditures for four years. For taxable years beginning after July 6, 1960, subject in each case to the $100,000 limitation per year, A may deduct or defer exploration expenditures in an amount not in excess of $250,000 ($400,000-$150,000), either as to expenditures incurred by him individually or with respect to his distributive share of partnership exploration expenditures. B may similarly deduct or defer exploration expenditures in an amount not in excess of $300,000 ($400,000-$100,000), and C may deduct or defer exploration expenditures in an amount not in excess of $400,000.

[T.D. 6685, 28 FR 11405, Oct. 24, 1963, as amended by T.D. 7192, 37 FR 12939, June 30, 1972]

§ 1.615-5 Time for making election with respect to returns due on or before May 2, 1960.

In the case of any taxable year beginning after December 31, 1953, and ending after August 16, 1954, the income tax return for which is due not later than May 2, 1960, the time for exercising any option or making any election under section 615 shall expire on May 2, 1960.

§ 1.615-6 Election to deduct under section 615.

(a) ***General rule.*** The election to deduct or defer exploration expenditures under section 615 shall be made in a statement filed with the director of the Internal Revenue service center with whom the taxpayer's income tax return is required to be filed. If the election is made within the time period prescribed for filing an income tax return (including extensions thereof) for the first taxable year ending after September 12, 1966, during which the taxpayer pays or incurs expenditures which are within the scope of section 615 and which are paid or incurred by him after September 12, 1966, this statement shall be attached to the taxpayer's income tax return for such taxable year. If the election is made after the time prescribed for filing such return but before the expiration of the period (described in paragraph (e) of this section) for

making the election under section 615(e), the statement must be signed by the taxpayer or his authorized representative. The statement shall be filed even though the taxpayer charges to capital account all such expenditures paid or incurred by him during such taxable year after such date. The statement shall clearly indicate that the taxpayer elects to have section 615 apply to all amounts deducted or deferred by him with respect to exploration expenditures paid or incurred after September 12, 1966, and before January 1, 1970. If the taxpayer desires, he may file this statement by attaching it to his return for a taxable year prior to the first taxable year ending after September 12, 1966, in which he pays or incurs exploration expenditures. Except as provided in paragraph (b) of this section, if the taxpayer does not file such a statement within the period prescribed by section 615(e) and paragraph (e) of this section, any amounts deducted by him with respect to exploration expenditures paid or incurred after September 12, 1966, will be deemed to have been deducted pursuant to an election under section 617(a).

(b) ***Exception.*** The last sentence of paragraph (a) of this section shall not apply if all exploration expenditures paid or incurred by the taxpayer after September 12, 1966, and before January 1, 1970, and deducted by him on his income tax return for the first taxable year ending after September 12, 1966, during which he pays or incurs such expenditures are outside the scope of section 617(a) (as it existed before its amendment by section 504(b) of the Tax Reform Act of 1969). For example, assume that, in his return for his taxable year ending December 31, 1966, a calendar-year taxpayer deducts exploration expenditures paid or incurred after September 12, 1966, and does not attach to his return the statement described in paragraph (a) of this section. However, all of the exploration expenditures paid or incurred by the taxpayer after September 12, 1966, and before the end of the taxable year were paid or incurred with respect to minerals located neither in the United States nor on the Outer Continental Shelf. The taxpayer will be deemed to have made an election under section 615(e) by deducting all or part of those expenditures as expenses in his income tax return.

(c) ***Information to be furnished.*** A taxpayer who makes or has made an election under section 615(e) with respect to expenditures paid or incurred after September 12, 1966, and before January 1, 1970, shall indicate clearly on his income tax return for each taxable year for which he deducts any such expenditures the amount of the deduction claimed under section 615 (a) or (b) with respect to each property or mine. The property or mine shall be identified by a description adequate to permit application of the rules of section 615(g) (relating to effect of transfer of mineral property).

(d) ***Effect of election*** —

(1) ***In general.*** A taxpayer who has made or is deemed to have made an election under section 615(e) may not make an election under section 617(a) with respect to expenditures made before January 1, 1970, unless, within the period set forth in section 615(e), he revokes his election under section 615(e). Except as provided in paragraph (a)(2) of § 1.615-2, a taxpayer who makes an election under section 615(e) may not change his treatment of exploration expenditures deducted, deferred, or capitalized pursuant to such election unless he revokes the election made under section 615(e).

(2) ***Transfer of mineral property.*** The binding effect of a taxpayer's election under section 615(e) shall not be affected by his receiving property with respect to which deductions have been allowed under section 617(a). However, see section 615(g)(2) and § 1.615-7 for rules under which amounts deducted under section 615 by a transferor may be subject to recapture in the hands of a transferee who has made an election under section 617(a). See § 1.617-3(d)(2)(ii) for rules under which amounts deducted under section 617(a) by a transferor may be subject to recapture in the hands of a transferee who has made an election under section 615(e).

(e) ***Time for making election under section 615(e).*** A taxpayer may not make an election under section 615(e) after the expiration of the 3-year period beginning with the date prescribed by section 6072 or other provision of law for filing the taxpayer's income tax return for the first taxable year ending after September 12, 1966, in which the taxpayer pays or incurs expenditures to which section 615(a) would apply if an election were made under section 615(e). This 3-year period shall be determined without regard to any extension of time for filing the taxpayer's income tax return for such year. An election under section 615(e) may not be made after the expiration of the 3-year period even though the taxpayer charged to capital account, or erroneously deducted as development expenditures under section 616, all exploration expenditures paid or incurred by him after September 12, 1966, and before the end of his first taxable year ending after September 12, 1966, in which he paid or incurred such expenditures.

(f) ***Revocation of section 615(e) election*** —

(1) ***Manner of revoking election.*** A taxpayer may revoke an election made by him under section 615(e) by filing with the director of the Internal Revenue service center with whom the taxpayer's income tax return is required to be filed, within the period set forth in subparagraph (2) of this paragraph, a statement, signed by the taxpayer or his authorized representative, which sets forth that the taxpayer is revoking the election previously made by him with respect to exploration expenditures paid or incurred after September 12, 1966, and states with whom and where the document making the election was filed. Such revocation shall be a revocation for all taxable years for which the taxpayer's election was in effect and the taxpayer revoking such an election shall file amended income tax returns, reflecting any increase or decrease in tax attributable to the revocation of election. In applying the revocation of election to the years affected there shall be taken into account the effect that any adjustments resulting from the revocation of election shall have on other items affected thereby (such as the deduction for charitable contributions, the foreign tax credit, net operating loss, and other deductions or credits the amount of which is limited by the taxpayer's income) and the effect that adjustments of any such items have on items in other taxable years.

(2) ***Time for revoking election under section 615(e).*** An election under section 615(e) may be revoked at any time before the expiration of the 3-year period described in paragraph (e) of this section. Such an election may not be revoked after the expiration of the 3-year period.

(3) ***Additional information to be furnished by a transferor of mineral property.*** If, before revoking his election, the taxpayer has transferred any mineral property with respect to which he deducted exploration expenditures paid or incurred after September 12, 1966, and before January 1, 1970, to another person in a transaction as a result of which the basis of such property in the hands of the transferee is determined by reference to the basis in the hands of the transferor, the statement submitted pursuant to subparagraph (1) of this paragraph shall state that such property has been so transferred and shall identify the transferee, the property transferred, and the date of the transfer. The preceding sentence shall not apply in the case of any mineral property transferred after December 31, 1969.

(g) ***Taxable years beginning before September 13, 1966, and ending after September 12, 1966*** —

(1) ***In general.*** An election made under section 615(e) applies only to expenditures paid or incurred after September 12, 1966. The income tax treatment of exploration expenditures paid or incurred before September 13, 1966, will be determined in accordance with the provisions of section 615 prior to its amendment by the Act of September 12, 1966 (Public Law 89-570, 80 Stat. 759). If a taxpayer makes an election under section 615(e) in his income tax return for a taxable year which begins before September 13, 1966, and which ends after September 12, 1966, amounts deducted and amounts deferred under section 615 with respect to expenditures paid or incurred during such taxable year

but before September 13, 1966, will be taken into account in determining whether the $100,000 limitation set forth in section 615(a) is reached during the taxable year. Similarly, a taxpayer who makes an election under section 615(e) shall take into account expenditures deducted or deferred under section 615 for the period prior to September 13, 1966, in determining when the $400,000 overall limitation set forth in section 615(c) is reached. The fact that a taxpayer deducts or defers under section 615 exploration expenditures paid or incurred prior to September 13, 1966, shall not affect his right to make an election under section 617(a) to deduct under section 617 expenditures paid or incurred after September 12, 1966.

(2) ***Allocation in case of inadequate records.*** If a taxpayer pays or incurs exploration expenditures during a taxable year beginning before September 13, 1966, and ending after September 12, 1966, but his records as to any mine or property are inadequate to permit a determination of the amount paid or incurred during the portion of the year ending after September 12, 1966, and the amount paid or incurred on or before such date, the exploration expenditures, as to which the records are inadequate, paid or incurred with respect to the mine or property during the taxable year shall be allocated to each part year (that is, the part occurring before September 13, 1966, and the part occurring after September 12, 1966) in the same ratio which the number of days in each such part year bears to the number of days in the entire taxable year. For example, if the records of a calendar year taxpayer for 1966 are inadequate to permit a determination of the amount of exploration expenditures paid or incurred with respect to a certain mine or property after September 12, 1966, and the amount paid or incurred before September 13, 1966, 255/365 of the total exploration expenditures paid or incurred by the taxpayer with respect to the mine or property during 1966 shall be allocated to the period beginning January 1, 1966, and ending September 12, 1966, and 110/365 of the total exploration expenditures paid or incurred with respect to the mine or property during 1966 shall be allocated to the period beginning September 13, 1966, and ending December 31, 1966.

(3) ***Partnership elections.*** With respect to exploration expenditures paid or incurred by a partnership before September 13, 1966, the option to deduct under section 615(a) and the election to defer under section 615(b) shall be made by the partnership, rather than by the individual partners. With respect to exploration expenditures paid or incurred by a partnership after September 12, 1966, all elections under sections 615 and 617 as to the tax treatment of a partner's distributive share of exploration expenditures paid or incurred by a partnership of which he is a member shall be made by the individual partner, rather than by the partnership. See section 703(b) and the regulations thereunder.

[T.D. 7192, 37 FR 12939, June 30, 1972]

§ 1.615-7 Effect of transfer of mineral property.

(a) ***Transfer before election by transferor.***

(1) If mineral property is transferred in a transaction as a result of which the basis of the property in the hands of the transferee is determined in whole or in part by reference to the basis in the hands of the transferor and the transferor had not made an election under either section 615(e) or 617(a) at the time of the transfer, no election made by the transferor after the transfer shall apply with respect to expenditures properly chargeable to the transferred property which were paid or incurred before the date of the transfer.

(2) For purposes of subparagraph (1) of this paragraph, a transferor of mineral property who made an election under section 617(a) or section 615(e) before the transfer but who revokes such election after such transfer and does not make an election under either section before the expiration of the 3-year period prescribed by section 6072 or other provision of law for filing his income tax return for the taxable year in which such transfer occurred shall be treated with respect to such property as not having made an election under either section.

(b) ***Transfer after election by transferor.*** If a transferee who at the time of the transfer of a mineral property has not made an election under section 617(a) receives property in a transaction in which the basis of such property in his hands is determined in whole or in part by reference to its basis in the hands of the transferor and with respect to such property the transferor has deducted expenditures under section 617(a), the adjusted exploration expenditures properly chargeable to the property immediately after the transfer shall be treated as expenditures allowed as deductions under section 617(a) to the transferee. See section 617 and the regulations thereunder.

(c) ***Transfer after election by transferee.***

(1) If a transferee who makes an election under section 617(a) receives before January 1, 1970, mineral property in a transaction in which the basis of such property in his hands is determined in whole or in part by reference to the basis of the property in the hands of the transferor and the transferor had in effect at the time of the transfer an election under section 615(e), an amount equal to the total of the amounts allowed as deductions to the transferor under section 615 with respect to the transferred mineral property shall be treated as expenditures allowed as deductions under section 617(a) to the transferee. The preceding sentence shall not apply to expenditures which would not have been reflected in the basis of the property in the hands of the transferor had the transferor not made the section 615(e) election.

(2) Any expenditures with respect to the transferred property deferred by the transferor under section 615(b) which are not allowed as deductions to him prior to transfer of the property may not be deducted by the transferee and in his hands shall be charged to capital account.

[T.D. 7192, 37 FR 12940, June 30, 1972]

§ 1.615-8 Termination of section 615.

(a) ***In general.*** The provisions of section 615 shall not apply to exploration expenditures paid or incurred after December 31, 1969. Expenditures paid or incurred before January 1, 1970, which were deferred under section 615(b) will be deductible under such section after such date as the units of ore or mineral discovered or explored by reason of such expenditures are sold. An election under section 615(e) with respect to expenditures paid or incurred prior to January 1, 1970, shall remain in effect with respect to such expenditures unless it is revoked under section 615(e) and § 1.615-6. See § 1.615-9 for treatment of a section 615(e) election with respect to expenditures paid or incurred after December 31, 1969.

(b) ***Taxable years beginning before January 1, 1970, and ending after December 31, 1969*** —

(1) ***In general.*** The termination of section 615 applies to expenditures paid or incurred after December 31, 1969. The income tax treatment of exploration expenditures paid or incurred before January 1, 1970, will be determined in accordance with the provisions of sections 615 and 617 prior to their amendment by the Tax Reform Act of 1969 (83 Stat. 487). The fact that on his income tax return for a taxable year beginning before January 1, 1970, and ending after December 31, 1969, a taxpayer

deducts under section 615 expenditures paid or incurred before January 1, 1970, shall not affect his right to deduct under section 617(a) expenditures paid or incurred during such taxable year after December 31, 1969.

(2) ***Allocation in case of inadequate records.*** If a taxpayer pays or incurs exploration expenditures during a taxable year beginning before January 1, 1970, and ending after December 31, 1969, but his records are inadequate to permit a determination of the amount paid or incurred during the portion of the year ending after December 31, 1969, and the amount paid or incurred on or before such date, the exploration expenditures as to which the records are inadequate paid or incurred with respect to the mine or property during the taxable year shall be allocated to each part of the year (that is, the part before January 1, 1970, and the part occurring after December 31, 1969) in the same ratio which the number of days in each such part year bears to the number of days in the entire taxable year.

[T.D. 7192, 37 FR 12941, June 30, 1972]

§ 1.615-9 Notification under Tax Reform Act of 1969.

(a) ***In general.*** An election under section 615(e) with respect to exploration expenditures paid or incurred prior to January 1, 1970, shall be treated as an election under section 617(a) with respect to exploration expenditures paid or incurred after December 31, 1969.

(b) ***Exception.*** Paragraph (a) of this section shall not apply to an election under section 615(e) if the taxpayer files the notice described in paragraph (c) of this section or the taxpayer revokes his election under section 615(e) before the date prescribed for the filing of notice under paragraph (c)(2) of this section.

(c) ***Filing of notice*** —

(1) ***In general.*** The notice not to have a section 615(e) election treated as a section 617(a) election shall be made in a statement filed with the Director of the Internal Revenue service center with whom the taxpayer's income tax return is required to be filed. If the election is made within the time period prescribed for filing an income tax return (including extensions thereof) for the first taxable year during which the taxpayer pays or incurs, after December 31, 1969, expenditures which would be deductible by the taxpayer under section 617(a) if he made a valid election to deduct exploration expenditures under such section, the statement shall be attached to the taxpayer's income tax return for such year. If the statement is filed after the time prescribed for filing such return but before the expiration of the period (described in paragraph (e) of this section) for filing the notice, the statement must be signed by the taxpayer or his authorized representative. The statement shall be filed even though the taxpayer charges to capital account all such expenditures paid or incurred by him after December 31, 1969. If the taxpayer desires, he may file this statement by attaching it to his return for a taxable year prior to the first taxable year in which he pays or incurs after December 31, 1969, expenditures which would be deductible by him under section 617(a) if at such time he had in effect a valid election under such section.

(2) ***Information to be furnished.*** The notice shall clearly state that the taxpayer elects not to have his section 615(e) election treated as an election under section 617(a). The notice shall state the first taxable year for which the section 615(e) election was effective and with whom and where the election was filed.

(d) ***Effect of notification.*** A taxpayer who has filed notice pursuant to this section may make an election under section 617(a) with respect to exploration expenditures paid or incurred after December 31, 1969, without revoking either his section 615(e) election or his notice under this section.

(e) ***Time for filing notice.*** A taxpayer may not file the notice described in paragraph (c)(1) of this section after the expiration of the 3-year period beginning with the date prescribed by section 6072 or other provision of law for filing the taxpayer's income tax return for the first taxable year in which the taxpayer pays or incurs after December 31, 1969, expenditures which would be deductible by him if he made the election under section 617(a). This 3-year period shall be determined without regard to any extension of time for filing the taxpayer's income tax return.

[T.D. 7192, 37 FR 12941, June 30, 1972]

§ 1.616-1 Development expenditures.

(a) ***General rule.*** Section 616 prescribes rules for treating expenditures paid or incurred during the taxable year by the taxpayer for the development of a mine or other natural deposit (other than an oil or gas well). Development expenditures under section 616 are those which are made after such time when, in consideration of all the facts and circumstances (including actions of the taxpayer), deposits of ore or other mineral are shown to exist in sufficient quantity and quality to reasonably justify commercial exploitation by the taxpayer. Under section 616(a), a taxpayer is allowed a deduction for development expenditures whether or not such expenditures are made in the development or production state of the mine or other natural deposit. Under section 616(b), the taxpayer may elect to defer development expenditures made in the development or producing stage and to deduct such expenditures ratably as the minerals or ores benefited are sold. While the mine or other natural deposit is in the development stage, the election applies only to that portion of the development expenditures which is in excess of net receipts from the mine or other natural deposit. See § 1.616-2 for rules with respect to the election to defer. It is not necessary that the taxpayer incur the development costs directly. He may engage a contractor to make the expenditures on his behalf.

(b) ***Expenditures to which section 616 is not applicable.***

(1) Section 616 is not applicable to development expenditures which are deductible for the taxable year under any other provision of the internal revenue laws.

(2) Section 616 is not applicable to expenditures which are reflected in improvements subject to allowances for depreciation under sections 167 and 611. However, allowance for depreciation of such improvements which are used in the development of ores or minerals are considered development expenditures under section 616. If such improvements are used only in part for development during a taxable year, an allocable portion of the allowance for depreciation shall be treated as a development expenditure.

(3) Section 616 is applicable to development expenditures paid or incurred by a taxpayer in connection with the acquisition of a fractional share of the working or operating interest to the extent of the fractional interest so acquired. The expenditure attributable to the remaining fractional share shall be considered as part of the cost of his acquired interest and shall be capitalized and recovered through depletion allowances. For example, taxpayer A owns mineral leases on undeveloped mineral lands. A agrees to convey an undivided three-fourths ($^{3}/_{4}$) interest in such leases to B, provided B will pay all of the expenditures incurred during the development stage of the deposits on these leases. B may deduct three-fourths ($^{3}/_{4}$) of such amount under section 616, but shall treat one-fourth of such amount as part of the cost of his interest, recoverable through depletion.

(4) The provisions of section 616 do not apply to costs of development paid or incurred by a prior owner which are reflected in the amount which the taxpayer paid or incurred to acquire the property. Such provisions apply only to costs paid or incurred by the taxpayer for development undertaken directly or through contract by the taxpayer. See, however, section 381(a) and 381(c)(10) for special rules with respect to deferred development expenditures in certain corporate acquisitions.

(c) ***Mine or other natural deposit.*** Section 616 has reference to expenditures made for the development of a mine or other natural deposit. Within an aggregated property, as that term is defined in section 614 (b) and (c), or within a single tract or parcel of land, there may be more than one mine or other natural deposit. Where a property, as determined under section 614, contains more than one mine or other natural deposit, the taxpayer may deduct under section 616(a) the development expenditures made with respect to one of such mines or deposits, and may defer under section 616(b) the development expenditures made with respect to another of such mines or deposits. Where there is more than one mine with respect to a single underlying deposit, the taxpayer may deduct under section 616(a) the development expenditures made with respect to one of such mines, and may defer under section 616(b) the development expenditures made with respect to another of such mines. The taxpayer must treat consistently all development expenditures with respect to each such mine or other natural deposit in a taxable year. The taxpayer must make a separate determination of the units of minerals or ores benefited in a mine or other natural deposit (regardless of the computation of the depletion allowance) in order that deferred expenditures with respect to such mine or deposit may be deducted on a ratable basis. See paragraph (f) of § 1.616-2.

§ 1.616-2 Election to defer.

(a) ***General rule.*** In lieu of taking a deduction under section 616(a), in the taxable year when the development expenditures are paid or incurred, a taxpayer may elect under section 616(b) to treat such expenditures with respect to each mine or other natural deposit as deferred expenses to be deducted ratably as the units of the produced ore or minerals benefited by such expenditures are sold. Section 616(b) is applicable to development expenditures paid or incurred both in the development and producing stage of the mine or other natural deposit. However, in the case of such expenditures made in the development stage, this election is applicable only to the excess of the amount of such expenditures over the net receipts from the ore or minerals from such mine or deposit received or accrued during the development stage and in the same taxable year as the expenditures were paid or incurred. Such development expenditures not in excess of such net receipts shall be subject to the provisions of section 616(a).

(b) ***Producing stage; definition of.*** The mine or other natural deposit will be considered to be in a producing stage when the major portion of the mineral production is obtained from workings other than those opened for the purpose of development, or when the principal activity of the mine or other natural deposit is the production of developed ores or minerals rather than the development of additional ores or minerals for mining.

(c) ***Expenditures made by the owner who retains a nonoperating interest.***

(1) A taxpayer who elects to defer development expenditures and thereafter transfers his interest in the mine or other natural deposit, retaining an economic interest therein, shall deduct an amount attributable to such interest on a pro rata basis as the interest pays out. For example, a taxpayer who defers development expenditures and then leases his deposit, retaining a royalty interest therein, shall deduct the deferred expenditures ratably as he receives the royalties. If the taxpayer receives a bonus or advanced royalties in connection with the transfer of his interest, he shall deduct the deferred expenditures allocable to such bonus or advanced royalties in an amount which is in the

same proportion to the total of such costs as the bonus or advanced royalties bears to the bonus and total royalties expected to be received. Also, in the case of a transfer of a mine or other natural deposit by a taxpayer who retains a production payment therein, he may deduct the development expenditures ratably over the payments expected to be received.

(2) Where a taxpayer receives an amount, in addition to retaining an economic interest, which amount is treated as from the sale or exchange of a capital asset or property treated under section 1231 (except coal or iron ore to which section 631(c) applies), the deferred development expenditures shall be allocated between the interest sold and the interest retained in proportion to the fair market value of each interest as of the date of sale. The amount allocated to the interest sold may not be deducted, but shall be a part of the basis of such interest for the purpose of determining gain or loss upon the sale thereof.

(d) ***Losses from abandonment.*** Section 165 and the regulations thereunder contain general rules relating to the treatment of losses resulting from abandonment.

(e) ***Effect of election.***

(1) The election to defer development expenditures shall apply only to expenditures for the taxable year for which made. However, once made, the election shall be binding with respect to the expenditures for that taxable year. Thus, a taxpayer cannot revoke his election for any reason whatsoever.

(2) The election shall be made for each mine or other natural deposit by a clear indication on the return or by a statement filed with the district director with whom the return was filed, not later than the time prescribed by law for filing such return (including extensions thereof) for the taxable year to which such election is applicable.

(f) ***Computation of amount of deduction.*** The amount of the deduction allowable during the taxable year is an amount A, which bears the same ratio to B (the total deferred development expenditures for a particular mine or other natural deposit reduced by the amount of such expenditures deducted in prior taxable years) as C (the number of units of the ore or mineral benefited by such expenditures sold during the taxable year) bears to D (the number of units of ore or mineral benefited by such expenditures remaining as of the taxable year). For the purposes of this proportion, the *number of units of ore or mineral benefited by such expenditures remaining as of the taxable year* is the number of units of ore or mineral benefited by the deferred development expenditures remaining at the end of the year to be recovered from the mine or other natural deposit (including units benefited by such expenditures recovered but not sold) plus the number of units benefited by such expenditures sold within the taxable year. The principles outlined in § 1.611-2 are applicable in estimating the number of units remaining as of the taxable year and the number of units sold during the taxable year. The estimate is subject to revision in accordance with that section in the event it is ascertained, from any source, such as operations or development work, that the remaining units are materially greater or less than the number of units remaining from a prior estimate.

[T.D. 6500, 25 FR 11737, Nov. 26, 1960, as amended by T.D. 6841, 30 FR 9307, July 27, 1965]

§ 1.616-3 Time for making election with respect to returns due on or before May 2, 1960.

In the case of any taxable year beginning after December 31, 1953, and ending after August 16, 1954, the income tax return for which is due not later than May 2, 1960, the time to deduct or defer development expenditures for such a year under section 616 (a) or (b) shall expire on May 2, 1960.

§ 1.617-1 Exploration expenditures.

(a) ***General rule.*** Section 617 prescribes rules for the treatment of expenditures paid or incurred after September 12, 1966, for ascertaining the existence, location, extent, or quality of any deposit of ore or other mineral for which a deduction for depletion is allowable under section 613 (other than oil or gas) paid or incurred by the taxpayer before the beginning of the development stage of the mine or other natural deposit. Such expenditures hereinafter in the regulations under section 617 will be referred to as exploration expenditures. The development stage of the mine or other natural deposit will be deemed to begin at the time when, in consideration of all the facts and circumstances (including the actions of the taxpayer), deposits of ore or other mineral are disclosed in sufficient quantity and quality to reasonably justify commercial exploitation by the taxpayer. For example, core drilling expenditures paid or incurred by the taxpayer to ascertain the existence of commercially marketable ore are exploration expenditures within the meaning of this section. Also, expenditures for exploratory drilling from within a producing mine to ascertain the existence of what appears (on the basis of all of the facts and circumstances known at the time of the expenditures) to be a different ore deposit are exploration expenditures within the meaning of this section. Expenditures paid or incurred in connection with core drilling to further delineate the extent and location of an existing commercially marketable deposit to facilitate its development are development expenditures. Under section 617(a), a taxpayer may deduct exploration expenditures paid or incurred for the exploration of any deposit of ore or other mineral subject to the limitation of section 617(h). Under section 617(b), a taxpayer shall recapture the exploration expenditures previously deducted under section 617(a) either through including in income an amount equal to the amount of the adjusted exploration expenditures (as defined in section 617(f)) or through disallowance of the deduction for depletion under section 611. Certain rules are provided in section 617(c) for recapture of exploration expenditures made with respect to property for which the taxpayer later receives a bonus or royalty. Under section 617(d), gain from dispositions of mining property, with respect to which exploration expenditures have been previously deducted, is to be recognized notwithstanding certain other provisions of the Code.

(b) ***Expenditures to which section 617 is not applicable.***

(1) Section 617 is not applicable to expenditures which would be allowed as deductions for the taxable year without regard to section 617.

(2) Section 617 is not applicable to expenditures which are reflected in improvements subject to allowances for depreciation under sections 167 and 611. However, allowances for depreciation of such improvements which are used in the exploration of ores or minerals are considered exploration expenditures under section 617. If such improvements are used only in part for exploration during the taxable year, an allocable portion of the allowance for depreciation shall be treated as an exploration expenditure.

(3) Section 617 is applicable to exploration expenditures paid or incurred by a taxpayer in connection with the acquisition of a fractional share of the working or operating interest to the extent of the fractional interest so acquired by the taxpayer. The expenditures attributable to the remaining fractional share shall be considered as the cost of his acquired interest and shall be recovered through depletion allowances. For example, taxpayer A owns mineral leases on unexplored mineral lands and agrees to convey an undivided three-fourths ($^3/_4$) interest in such leases to taxpayer B provided B will pay all of the expenses for ascertaining the existence, location, extent, or quality of any deposit of ore or other mineral which will be incurred before the beginning of the development stage. B may elect to treat three-fourths of such amount under section 617. B must treat one-fourth of such amount as part of the cost of his interest, recoverable through depletion.

(4) Section 617 is not applicable to costs of exploration which are reflected in the amount which the taxpayer paid or incurred to acquire the property. Section 617 applies only to costs paid or incurred by the taxpayer for exploration undertaken directly or through a contract by the taxpayer. See, however, sections 381(a) and 381(c)(10) for special rules with respect to deferred exploration expenditures in certain corporate acquisitions.

(5) Section 617 is not applicable to amounts paid or incurred for the purpose of ascertaining the existence, location, extent, or quality of any deposit of oil or gas or of any mineral with respect to which a deduction for percentage depletion is not allowable under section 613. The purpose of the expenditure shall be determined by reference to the facts and circumstances at the time the expenditure is paid or incurred.

(c) *Elections* —

(1) ***Election to deduct under section 617(a).***

(i) The election to deduct exploration expenditures under section 617(a) may be made by deducting such expenditures in the taxpayer's income tax return for his first taxable year ending after September 12, 1966, for which the taxpayer desires to deduct exploration expenditures which are paid or incurred by him during such taxable year and after September 12, 1966. This election may be exercised by deducting such exploration expenditures either in the taxpayer's return for such taxable year or in an amended return filed before the expiration of the period for filing a claim for credit or refund of income tax for such taxable year. Where the election is made in an amended return for a taxable year prior to the most recent year for which the taxpayer has filed a return, the taxpayer shall file amended income tax returns, reflecting any increase or decrease in tax attributable to the election, for all subsequent taxable years affected by the election for which he has filed income tax returns before making the election. See section 617(a)(2)(C) and subparagraph (4) of this paragraph for provisions relating to extension of the period of limitations for the assessment of any deficiency for any taxable year to the extent the deficiency is attributable to an election or revocation of an election under section 617(a). In applying the election to the years affected, there shall be taken into account the effect that any adjustments resulting from the election shall have on other items affected thereby (such as the deduction for charitable contributions, the foreign tax credit, net operating loss, and other deductions or credits the amount of which is limited by the taxpayer's income) and the effect that adjustments of any such items have on items of other taxable years. Amended returns filed for taxable years subsequent to the taxable year for which the election under section 617(a) is made by amended return shall, where appropriate, apply the recapture rules of subsections (b), (c), and (d) of section 617. See §§ 1.617-3 and 1.617-4.

(ii) A taxpayer who makes or has made an election under section 617(a) shall state clearly on his income tax return for each taxable year for which he deducts exploration expenditures the amount of the deduction claimed under section 617(a) with respect to each property or mine. Such property or mine shall be identified by a description adequate to permit application of the recapture rules of section 617 (b), (c), and (d).

(iii) A taxpayer who has made an election under section 617(a) may not make an election under section 615(e) unless, within the period set forth in section 615(e), he revokes his election under section 617(a). A taxpayer who has made and has not revoked an election under section 617(a) may not, in his return for the taxable year for which the election is made or for any subsequent taxable year, charge to capital account any exploration expenditures which are deductible by him under section 617(a); and he must deduct all such expenditures as expenses

in computing adjusted gross income. Any exploration expenditures paid or incurred after December 31, 1969, which are not deductible by the taxpayer under section 617(a) solely because of the application of section 617(h) shall be charged to capital account.

(2) ***Time for making elections.*** The election under section 617(a) may be made at any time before the expiration of the period prescribed for filing a claim for credit or refund of the tax imposed by chapter 1 for the first taxable year for which the taxpayer desires to deduct exploration expenditures under section 617(a).

(3) ***Revocation of election to deduct.***

(i) A taxpayer may revoke an election made by him under section 617(a) by filing with the Internal Revenue service center with which the taxpayer's income tax return is required to be filed, within the period set forth in subdivision (ii) of this subparagraph, a statement, signed by the taxpayer or his authorized representative, which sets forth that the taxpayer is revoking the section 617(a) election previously made by him and states with whom and where the document making the election was filed. A taxpayer revoking a section 617(a) election shall file amended income tax returns which reflect any increase or decrease in tax attributable to the revocation of election for all taxable years affected by the revocation of election for which he has filed income tax returns before revoking the election. See section 617(a)(2)(C) and subparagraph (4) of this paragraph for provisions relating to extension of the period of limitations for the assessment of any deficiency attributable to an election or revocation of an election under section 617(a). In applying the revocation of election to the years affected, there shall be taken into account the effect that any adjustments resulting from the revocation of election shall have on other items affected thereby (such as the deduction for charitable contributions, the foreign tax credit, net operating loss, and other deductions or credits the amount of which is limited by the taxpayer's income) and the effect that adjustments of any such items have on items of other taxable years.

(ii) An election under section 617(a) may be revoked before the expiration of the last day of the third month following the month in which the final regulations under section 617(a) are published in the FEDERAL REGISTER. After the expiration of this period, a taxpayer who has made an election under section 617(a) may not revoke that election unless he obtains the prior consent of the Commissioner of Internal Revenue. Consent will not be granted where a principal purpose for the revocation of the election is to circumvent the recapture provisions of section 517 (b), (c), or (d). The request for consent shall be made in writing to the Commissioner of Internal Revenue, Attention T:I:E, Washington, DC 20224. The request shall include in detail:

(*a*) The reason or reasons for the revocation of election under section 617(a);

(*b*) An itemization of the taxpayer's deductions under section 617(a);

(*c*) A description of all properties and detailed information of the exploration activities with respect to which the taxpayer has taken deductions under section 617(a);

(*d*) A description of any development or production activities on all properties with respect to which exploration expenditures were deducted under section 617(a); and

(e) A recomputation of the tax for each prior taxable year affected by the revocation. A letter setting forth the Commissioner's determination will be mailed to the taxpayer. If consent is granted, a copy of the letter granting such consent shall be filed with the director of the Internal Revenue service center with which the taxpayer's income tax return is required to be filed and shall be accompanied by an amended return or returns, if necessary.

(iii) If, before revoking his election, the taxpayer has transferred any mineral property with respect to which he deducted exploration expenditures under section 617(a), to another person in a transaction as a result of which the basis of such property in the hands of the transferee is determined in whole or in part by reference to the basis in the hands of the transferor, the statement submitted pursuant to subdivision (i) of this paragraph shall state that such property has been so transferred, shall identify the transferee, the property transferred, the date of the transfer, and shall indicate the amount of the adjusted exploration expenditures with respect to such property on such date.

(4) ***Deficiency attributable to election or revocation of election.*** The statutory period for the assessment of any deficiency for any taxable year, to the extent such deficiency is attributable to an election or revocation of an election under section 617(a), shall not expire before the last day of the 2-year period which begins on the day after the date on which such election or revocation of election is made; and such deficiency may be assessed at any time before the expiration of such 2-year period, notwithstanding any law or rule which would otherwise prevent such assessment.

[T.D. 7192, 37 FR 12942, June 30, 1972]

§ 1.617-2 Limitation on amount deductible.

(a) ***Expenditures paid or incurred before January 1, 1970.*** In the case of expenditures paid or incurred before January 1, 1970, a taxpayer may deduct exploration expenditures paid or incurred during the taxable year with respect to any deposit of ore or other mineral for which a deduction for percentage depletion is allowable under section 613 (other than oil or gas) in the United States or on the Outer Continental Shelf (within the meaning of section 2 of the Outer Continental Shelf Lands Act, as amended and supplemented; 43 U.S.C. 1331).

(b) ***Expenditures paid or incurred after December 31, 1969.*** In the case of exploration expenditures paid or incurred after December 31, 1969, with respect to any deposit of ore or other mineral for which a deduction for percentage depletion is allowable under section 613 (other than oil or gas), a taxpayer may deduct:

(1) The amount of such expenditures paid or incurred during the taxable year with respect to any such deposit in the United States (as defined in section 638 and the regulations thereunder), and

(2) With respect to any such deposit located outside the United States (as defined in section 638 and the regulations thereunder) the lesser of:

(i) The amount of the exploration expenditures paid or incurred with respect to such deposits during the taxable year, or

(ii) $400,000 minus the sum of the amount to be deducted under subparagraph (1) of this paragraph for the taxable year and all amounts deducted or treated as deferred expenses during all preceding taxable years under section 617 and section 615 of the Internal Revenue Code of 1954 and section 23(ff) of the Internal Revenue Code of 1939. See paragraph (d) of this section for application of the limitation in the case of a transferee of a mining property.

(c) ***Examples.*** The application of the provisions of paragraphs (a) and (b) of this section may be illustrated by the following examples:

Example 1. A, a calendar-year taxpayer who has claimed the benefits of section 615, expended $100,000 for exploration expenditures during the year 1966. For each of the years 1967, 1968, 1969, and 1970 A had exploration costs of $80,000 all with respect to coal deposits located within the United States. A deducted or deferred the maximum amounts allowable for each of the years 1966 ($100,000), 1967 ($80,000), 1968 ($80,000), and 1969 ($80,000). The $80,000 of exploration expenditures for 1970 may be deducted under section 617 by A.

Example 2. B, a calendar-year taxpayer claimed deductions of $100,000 per year under section 615 for the years 1968 and 1969. In 1970, B deducted $150,000 under section 617 for exploration conducted with respect to coal deposits in the United States. In 1971, B paid $150,000 with respect to exploration of tin deposits outside the United States. The maximum amount B may deduct with respect to the foreign exploration in 1971 is $50,000 computed as follows:
(a) Add all amounts deducted or deferred for exploration expenditures by B for all years:

Year	Expenditures	Deducted or deferred
1968	$100,000	$100,000
1969	100,000	100,000
1970	150,000	150,000
Total		350,000

(b) Subtract from $400,000 (the maximum amount allowable to B for deduction of foreign exploration expenditures) the sum of the amounts obtained in (a) $350,000:

Maximum amount allowable to taxpayer	$400,000
Sum of amounts obtained in (a)	350,000
	50,000

Example 3. Assume the same facts as in example 2 except that in 1971 in addition to the $150,000 paid with respect to exploration outside the United States, B paid $100,000 with

respect to exploration within the United States. As the following computation indicates, B may not deduct any amount with respect to the foreign exploration:
(a) Add all amounts deducted or deferred for exploration expenditures in prior years and the exploration expenditures with respect to exploration in the United States to be deducted in 1971:

Year	Expenditures	Deducted or deferred
1968	$100,000	$100,000
1969	100,000	100,000
1970	150,000	150,000
1971	250,000	[1] 100,000
Total		450,000

[1] *Domestic.*

(b) Because the sum of the amounts obtained in (a), $450,000, exceeds $400,000 no deduction would be allowable to B with respect to foreign exploration expenditures for 1971.

(d) ***Transferee of mineral property.***

(1) Where an individual or corporation transfers any mining property to the taxpayer, the taxpayer shall take into account for purposes of the $400,000 limitation described in paragraph (b)(ii) of this section all amounts deducted and amounts treated as deferred expenses by the transferor if:

(i) The taxpayer acquired any mineral property from the transferor in a transaction described in section 23(ff)(3) of the Internal Revenue Code of 1939, excluding the reference therein to section 113(a)(13),

(ii) The taxpayer acquired any mineral property by reason of the acquisition of assets of a corporation in a transaction described in section 381(a) as a result of which the taxpayer succeeds to and takes into account the items described in section 381(c),

(iii) The taxpayer acquired any mineral property under circumstances which make applicable any of the following sections of the Internal Revenue Code:

(*a*) Section 334(b)(1), relating to the liquidation of a subsidiary where the basis of the property in the hands of the distributee is the same as it would be in the hands of the transferor.

(*b*) Section 362 (a) and (b), relating to property acquired by a corporation as paid-in surplus or as a contribution to capital, or in connection with a transaction to which section 351 applies.

(*c*) Section 372(a), relating to reorganization in certain receiverships and bankruptcy proceedings.

(*d*) Section 373(b)(1), relating to property of a railroad corporation acquired in certain bankruptcy or receivership proceedings.

(*e*) Section 1051, relating to property acquired by a corporation that is a member of an affiliated group.

(*f*) Section 1082, relating to property acquired pursuant to a Securities Exchange Commission order.

(2) For purposes of applying the limitations imposed by section 617(h):

(i) The partner, and not the partnership, shall be considered as the taxpayer (see paragraph (a)(8)(iii) of § 1.702-1), and

(ii) An electing small business corporation, as defined in section 1371(b), and not its shareholders, shall be considered as the taxpayer.

(3) For purposes of subparagraph (1)(iii) (*b*) of this paragraph, relating to a transaction to which section 362 (a) and (b) applies or to which section 351 applies:

(i) If mineral property is acquired from a partnership, the transfer shall be considered as having been made by the individual partners, so that the amounts which each partner has deducted or deferred under sections 615 and 617 of the Internal Revenue Code of 1954 and section 23(ff) of the Internal Revenue Code of 1939 shall be taken into account, or

(ii) If an interest in a partnership having mineral property is transferred, the transfer shall be considered as a transfer of mineral property by the partner or partners relinquishing an interest, so that the amounts which each such partner has deducted or deferred under sections 615 and 617 of the Internal Revenue Code of 1954 and section 23(ff) of the Internal Revenue Code of 1939 shall be taken into account.

(e) ***Examples.*** The application of the provisions of this section may be illustrated by the following example:

Example 1. A calendar year taxpayer (who has never claimed the benefits of section 617) received in 1970 a mineral deposit from X Corporation upon a distribution in complete liquidation of the latter under conditions which make the provisions of section 334(b)(1) applicable in determining the basis of the property in the hands of the taxpayer. During the year 1969, X Corporation expended $60,000 for exploration expenditures which it elected to treat under section 615(b) as deferred expenses. Subsequent to the transfer the taxpayer made similar expenditures for domestic exploration of $250,000 and $140,000, for the years 1970, and 1971, respectively, which the taxpayer elected to deduct. In 1972, the taxpayer made expenditures for domestic exploration of $100,000 and for foreign exploration of $50,000. The taxpayer may deduct the $100,000 domestic exploration expenditures but may not deduct any portion of the $50,000 of foreign exploration expenditures because the $400,000 limitation of section 617(h) applies.

Example 2. In 1971, A and B transfer assets to a corporation in a transfer to which section 351 applied. Among the assets transferred by A is a mineral lease with respect to certain coal lands. A has deducted exploration expenditures under section 615 for the years 1968 and 1969 in the amounts of $50,000 and $100,000, respectively, made with respect to other deposits not included in the transfer to the corporation. The corporation is required to take into account the deductions previously made by A for purpose of applying the $400,000 limitation on deduction of foreign exploration expenditures. Thus, if in 1970 the corporation incurred $400,000 of foreign exploration expenditures, the maximum which it could deduct under section 617(a) is $250,000.

[T.D. 7192, 37 FR 12944, June 30, 1972]

§ 1.617-3 Recapture of exploration expenditures.

(a) *In general.*

(1)

(i) Except as provided in subparagraphs (2) and (3) of this paragraph, if in any taxable year any mine (as defined in paragraph (c) of this section) with respect to which deductions have been allowed under section 617(a) reaches the producing stage (as defined in paragraph (c) of this section) the deduction for depletion under section 611 (whether determined under § 1.611-2 or under section 613) with respect to the property shall be disallowed for the taxable year and each subsequent taxable year until the aggregate amount of depletion which would be allowable but for section 617(b)(1)(B) and this subparagraph equals the amount of the adjusted exploration expenditures (determined under section 617(f)(1) and paragraph (d) of this section) attributable to the mine. The preceding sentence shall apply notwithstanding the fact that such mine is not in the producing stage at the close of such taxable year. In the case of a taxpayer who owns more than one property in a mine with respect to which he has been allowed deductions under section 617(a), the depletion deduction described in the second preceding sentence shall be disallowed with respect to all of the properties until the aggregate amount of depletion disallowed under section 617(b)(1)(B) is equal to the adjusted exploration expenditures with respect to the mine. In the case of a taxpayer who elects under section 614(c)(1) to aggregate a mine, with respect to which he has been allowed deductions under section 617(a), with another mine, no deduction for depletion will be allowable under section 611 with respect to the aggregated property until the amount of depletion disallowed under section 617(b)(1)(B) equals the adjusted exploration expenditures attributable to all of the producing mines included in the aggregated property.

(ii) If a taxpayer who has made an election under section 617(a) receives or accrues a bonus or royalty with respect to a mining property with respect to which deductions have been allowed under section 617(a), the deduction for depletion under section 611 with respect to such bonus or royalty (whether determined under § 1.611-2 or under section 613) shall be disallowed for the taxable year of receipt or accrual and each subsequent taxable year until the aggregate amount of the depletion disallowed under section 617(c) and this section equals the amount of the adjusted exploration expenditures with respect to the property to which the bonus or royalty relates. The preceding sentence shall not apply if the bonus or royalty is paid with respect to a mineral for which a deduction is not allowable under section 617(a). In the case of the disposal of coal or domestic iron ore with a retained economic interest, see paragraph (a)(2) of § 1.617-4.

(2) If the taxpayer so elects with respect to all mines as to which deductions have been allowed under section 617(a) and which reach the producing stage during the taxable year, he shall include in gross income (but not *gross income from the property* for purposes of section 613) for such taxable year an amount equal to the adjusted exploration expenditures (determined under section 617(f)(1) and paragraph (d) of this section) with respect to all of such mines. The amount so included in income shall be treated for purposes of subtitle A of the Internal Revenue Code as expenditures which are paid or incurred on the respective dates on which the mines reach the producing stage and which are properly chargeable to capital account. The fact that a taxpayer does not make the election described in this subparagraph for a taxable year during which mines with respect to which deductions have been allowed under section 617(a) reach the producing stage shall not preclude the taxpayer from making the election with respect to other mines which reach the producing stage

during subsequent taxable years. However, the election described in this subparagraph may not be made for any taxable year with respect to any mines which reached the producing stage during a preceding taxable year.

(3) The provisions of section 617(b)(1) and subparagraphs (1) and (2) of this paragraph do not apply in the case of any deposit of oil or gas. For example, A in exploring for sulphur incurred $500,000 of exploration expenditures which he deducted under section 617(a). In the following year, A did not find sulphur but on the same mineral property located commercially marketable quantities of oil and gas. In computing the depletion allowance with respect to the oil and gas, no depletion would be disallowed because of section 617(b)(1).

(4) In the case of exploration expenditures which are paid or incurred with respect to a mining property which contains more than one mine, the provisions of subparagraphs (1) and (2) of this paragraph shall apply only to the amount of the adjusted exploration expenditures properly chargeable to the mine or mines which reach the producing stage during the taxable year. For example, A owns a mining property which contains mines X, Y, and Z. For 1970, A deducted under section 617(a), $250,000 with respect to X, $100,000 with respect to Y and $70,000 with respect to Z. In 1971, mine X reaches the producing stage. At that time, A will only have to recapture the $250,000 attributable to mine X.

(b) ***Manner and time for making election.***

(1) A taxpayer will be deemed not to have elected pursuant to section 617(b)(1)(A) and paragraph (a)(2) of this section unless he clearly indicates such election on his income tax return for the taxable year in which the mine with respect to which deductions were allowed under section 617(a) reaches the producing stage.

(2) The election described in paragraph (a)(2) of this section may be made (or changed) not later than the time prescribed by law for filing the return (including extensions thereof) for the taxable year in which the mine with respect to which deductions were allowed under section 617(a) reaches the producing stage.

(c) ***Definitions*** —

(1) ***Mine.*** The term *mine* includes all quarries, pits, shafts, and wells, and any other excavations or workings for the purpose of extracting any known deposit of ore or other mineral.

(2) ***Producing stage.*** A mine will be considered to have reached the producing stage when

(i) the major portion of the mineral production is obtained from workings other than those opened for the purpose of development, or

(ii) the principal activity of the mine is the production of developed ores or minerals rather than the development of additional ores or minerals for mining.

(3) ***Mining property.*** The term *mining property* means any property (as the term is defined in section 614(a) after the application of subsections (c) and (e) thereof) with respect to which any expenditures allowed as deductions under section 617(a) are properly chargeable.

(d) ***Adjusted exploration expenditures*** —

(1) ***In general.*** The term *adjusted exploration expenditures* means, with respect to any property or mine:

(i) The aggregate amount of the expenditures allowed as deductions under section 617(a) for the taxable year and all preceding taxable years to the taxpayer or any other person which are properly chargeable to such property or mine and which (but for the election under section 617(a)) would be reflected in the adjusted basis of such property or mine, reduced by

(ii) The excess, if any, of the amount which would have been allowable for all taxable years under section 613 but for the deduction of such expenditures over the amount allowable for depletion under section 611 (determined without regard to section 617(b)(1)(B)). The amount determined under the preceding sentence shall be reduced by the aggregate of the amounts included in gross income for the taxable year and all preceding taxable years under section 617(b) or (c) and the amount treated under section 617(d) as gain from the sale or exchange of the property which is neither a capital asset nor property described in section 1231.

(iii) If a taxpayer pays or incurs exploration expenditures on a property which contains a producing mine and if such taxpayer deducts any portion of such expenditures under section 617(a), an amount equal to the amount so deducted shall be taken into account in computing the taxpayer's *taxable income from the property* for the purposes of the limitation on the percentage depletion deduction under section 613(a) and the regulations thereunder. The amount of the adjusted exploration expenditures with respect to the producing mine shall be reduced by an amount equal to the amount by which the taxpayer's deduction under 617(a) (described in the preceding sentence) reduces the taxpayer's deduction for depletion for the taxable year. See example 1 in subparagraph (6) of this paragraph.

(iv) For purposes of § 1.617-4, the aggregate amount of adjusted exploration expenditures with respect to a mining property includes the aggregate amount of adjusted exploration expenditures properly allocable to all mines on such property.

(v)

(*a*) For purposes of paragraph (a)(1) of this section, the aggregate amount of the adjusted exploration expenditures is determined as of the close of the taxpayer's taxable year.

(*b*) For purposes of § 1.617-4, the aggregate amount of the adjusted exploration expenditures is determined as of the date of the disposition of the mining property or portion thereof.

(2) ***Adjustments for certain expenditures of other taxpayers or in respect of other property.***

(i) For purposes of subparagraph (1) of this paragraph, the exploration expenditures which must be taken into account in determining the adjusted exploration expenditures with respect to any property or mine are not limited to those expenditures with respect to the property disposed of or which entered the production stage nor are such expenditures limited to those deducted by the taxpayer. For the manner of determining the amount of adjusted exploration expenditures immediately after certain dispositions, see subparagraph (4) of this paragraph.

(ii) If a transferee who at the time of the transfer has not made an election under section 617(a) (including a transferee who has made an election under section 615(e)) receives mineral property in a transaction in which the basis of such property in his hands is determined in whole or in part by reference to its basis in the hands of the transferor and with respect to such property the transferor has deducted exploration expenditures under section 617(a), the adjusted exploration expenditures immediately after such transfer shall be treated as exploration expenditures allowed as deductions under section 617(a) to the transferee.

(iii) If a transferee who makes an election under section 617(a) receives mineral property in a transaction in which the basis of such property in his hands is determined in whole or in part by reference to the basis of such property in the hands of the transferor and the transferor had in effect at the time of the transfer an election under section 615(e), an amount equal to the total of the amounts allowed as deductions to the transferor under section 615 with respect to the transferred property shall be treated as expenditures allowed as deductions under section 617(a) to the transferee. The preceding sentence shall not apply to expenditures which could not have been reflected in the basis of the property in the hands of the transferee had the transferor not made the section 615(e) election.

(iv) The provisions of this subparagraph may be illustrated by the following examples:

Example 1. On July 14, 1969, A purchased mineral property Z for $10,000. After deducting exploration expenditures of $20,000 under section 617(a), A transferred the property to his son as a gift on July 9, 1970. Since the exception for gifts in section 617(d)(3) (by incorporation by reference of the provisions of section 1245(b)(1)) applies, A does not recognize gain under section 617(d). On September 30, 1972 after deducting exploration expenditures of $150,000 under section 617(a), the son transfers the mineral property to corporation X in a transaction under which no gain is recognized by the son under section 351. Since the exception of section 617(d)(3) (by incorporation by reference of the provisions of section 1245(b)(3)) applies, the son does not recognize gain under section 617(d). On November 14, 1972, corporation X sells the mineral property. No deductions for exploration expenditures were taken by corporation X. The amount of the adjusted exploration expenditures with respect to mineral property Z to be recaptured by corporation X upon such sale is $170,000 (the total amount deducted by A and the son).

Example 2. Assume the same facts as in example 1 except that A deducted the $20,000 of exploration expenditures under section 615(a). The amount of the adjusted exploration expenditures with respect to mineral property Z in corporation X's hands is $170,000 (the $20,000 deducted under section 615(a) by A plus the $150,000 deducted under section 617(a) by the son).

(3) ***Allocation of certain expenditures.*** A project area consists of that territory which the taxpayer has determined by analysis of certain variables (the size and topography of the area to be explored, existing information with respect to that area and nearby areas, and the quantity of equipment, men, and money available) can be explored advantageously as a single integrated operation. If exploration expenditures are paid or incurred with respect to a project area and one or more areas of interest are identified within such project area, the entire amount of such expenditures shall be allocated equally to each such area of interest. If an area of interest contains one or more mines or deposits the expenditures allocable to such area of interest shall be allocated

(i) if only one mine or deposit is located or identified, entirely to such mine or deposit, or

(ii) if more than one mine or deposit is located or identified, equally among the various mines or deposits located. For purposes of this subparagraph, the term *area of interest* means each separable, noncontiguous portion of the project area which is identified as possessing sufficient mineral-producing potential to merit further exploration. The provisions of this subparagraph may be illustrated by the following example: A pays $100,000 for the exploration of a project area which results in the identification of two areas of interest. A pays an additional $60,000 for the exploration of one of the areas of interest in which he locates mineral deposit X and mineral deposit Y. With respect to the exploration of deposit X he incurs an additional $100,000 of expenses and with respect to deposit Y he incurs an additional $200,000 of

expenses. The exploration expenditures properly attributable to deposit X would be $155,000 ($100,000 plus one-half of $50,000 plus one-half of $60,000) and the exploration expenditures properly attributable to deposit Y would be $255,000 ($200,000 plus one-half of $50,000 plus one-half of $60,000).

(4) ***Partnership distributions.*** The adjusted exploration expenditures with respect to any property or mine received by a taxpayer in a distribution with respect to all or part of his interest in a partnership

(i) include the adjusted exploration expenditures (not otherwise included under section 617(f)(1)) with respect to such property or mine immediately prior to such distribution and

(ii) shall be reduced by the amount of gain to which section 751(b) applies realized by the partnership (as constituted after the distribution) on the distribution of such property or mine. In the case of any property or mine held by a partnership after a distribution to a partner to which section 751(b) applies, the adjusted exploration expenditures with respect to such property or mine shall be reduced by the amount of gain (if any) to which section 751(b) applies realized by such partner with respect to such distribution on account of such property or mine.

(5) ***Amount of transferee's adjusted exploration expenditures immediately after certain acquisitions*** —

(i) ***Transactions in which basis is determined by reference to the cost or fair market value of the property transferred.***

(*a*) If on the date a person acquires mining property his basis for the property is determined solely by reference to its cost (within the meaning of section 1012), then on such date the amount of the adjusted exploration expenditures for the mining property in such person's hands is zero.

(*b*) If on the date a person acquires mining property his basis for the property is determined solely by reason of the application of section 301(d) (relating to basis of property received in corporate distribution) or section 334(a) (relating to basis of property received in a liquidation in which gain or loss is recognized), then on such date the amount of the adjusted exploration expenditures for the mining property in such person's hands is zero.

(*c*) If on the date a person acquires mining property his basis for the property is determined solely under the provisions of section 334(b)(2) or (c) (relating to basis of property received in certain corporate liquidations), then on such date the amount of the adjusted exploration expenditures for the mining property in such person's hands is zero.

(*d*) If on the date a person acquires mining property from a decedent such person's basis is determined, by reason of the application of section 1014(a), solely by reference to the fair market value of the property on the date of the decedent's death or on the applicable date provided in section 2032 (relating to alternate valuation date), then on the date of acquisition the amount of the adjusted exploration expenditures for the mining property in such person's hands is zero.

(ii) ***Gifts and certain tax-free transactions.***

(*a*) If mining property is disposed of in a transaction described in (*b*) of this subdivision (ii), then the amount of the adjusted exploration expenditures for the mining property in the hands of a transferee immediately after the disposition shall be an amount equal to:

(*1*) The amount of the adjusted exploration expenditures with respect to the mining property in the hands of the transferor immediately before the disposition, minus

(*2*) The amount of any gain taken into account under section 617(d) by the transferor upon the disposition.

(*b*) The transactions referred to in paragraph (d)(5)(ii)(*a*) of this section are:

(*1*) A disposition that is in part a sale or exchange and in part a gift;

(*2*) A disposition that is described in section 617(d) through the incorporation by reference of the provisions of section 1245(b)(3) (relating to certain tax free transactions); or

(*3*) A transfer at death where basis of property in the hands of the transferee is determined under section 1022.

(iii) ***Property acquired from a decedent.*** If mining property is acquired in a transfer at death to which section 617(d) applies through incorporation by reference of the provisions of section 1245(b)(2), the amount of the adjusted exploration expenditures with respect to the mining property in the hands of the transferee immediately after the transfer shall include the amount, if any, of the exploration expenditures deducted by the transferee before the decedent's death, to the extent that the basis of the mining property (determined under section 1014(a)) is required to be reduced under the second sentence of section 1014(b)(9) (relating to adjustments to basis where the property is acquired from a decedent prior to his death).

(6) ***Examples.*** The provisions of this paragraph may be illustrated by the following examples:

> *Example 1.* A owns the working interest in a large tract of land located in the United States. A's interest in the entire tract of land constitutes one property for purposes of section 614. In the northwest corner of this tract is an operating mine, X, producing an ore of beryllium, which is entitled to a percentage depletion rate of 22 percent under section 613(b)(2)(B). During 1971, A conducts an exploration program in the southeast corner of this same tract of land, and he incurs $400,000 of expenditures to which section 617(a)(1) applies in connection with this exploration program. A elects to deduct this amount as expenses under section 617(a). During 1971, A's *gross income from the property* computed under section 613 was $1 million, with respect to the property encompassing mine X and the area in which exploration was conducted. A's *taxable income from the property* computed under section 613, before adjustment to reflect the deductions taken with respect to the property during the year under section 617, was $400,000. The cost depletion deduction allowable and deducted with respect to the property during 1971 was $50,000. The amount of adjusted exploration expenditures chargeable to the exploratory mine (hereinafter referred to as mine Y) at the

close of 1971 is $250,000, computed as follows:

Expenditures allowed as deductions under sec. 617(a)		$400,000
Gross income from the property	$1,000,000	
22 percent thereof	220,000	
Taxable income from the property, before adjustment to reflect deductions allowed under sec. 617 during year	400,000	
50 percent thereof—tentative deduction	200,000	
Taxable income from the property after adjustment to reflect deductions allowed under sec. 617 during year ($400,000 minus $400,000)	0	
Cost depletion allowed for year	50,000	
Amount by which allowance for depletion under sec. 611 was reduced on account of deductions under sec. 617 ($200,000 minus $50,000)		150,000
Adjusted exploration expenditures at end of 1971		250,000

Example 2. Assume the same facts as in example 1. Assume further that mine Y, with respect to which exploration expenditures were deducted in 1971, enters the producing stage in 1972, and that no deductions were taken under section 617 with respect to that mine after 1971. A does not make an election under section 617(b)(1)(A) during 1972. Assume that the depletion deduction which would be allowable for 1972 with respect to the property (which includes both mines) but for the application of section 617(b)(1)(B) is $100,000. Pursuant to section 617(b)(1)(B), this depletion deduction is disallowed. Therefore, the amount of adjusted exploration expenditures with respect to mine Y at the end of 1972 is $150,000 ($250,000 less $100,000).

[T.D. 7192, 37 FR 12945, June 30, 1972, as amended by T.D. 9811, 82 FR 6238, Jan. 19, 2017]

§ 1.617-4 Treatment of gain from disposition of certain mining property.

(a) ***In general.***

(1) In general, section 617(d)(1) provides, that, upon a disposition of mining property, the lower of

(i) the *adjusted exploration expenditures* (as defined in section 617(f)(1) and paragraph (d) of § 1.617-3) with respect to the property, or

(ii) the amount, if any, by which the amount realized on the sale, exchange, or involuntary conversion (or the fair market value of the property on any other disposition, exceeds the adjusted basis of the property, shall be treated as gain from the sale of exchange of property which is neither a capital asset nor property described in section 1231 (that is, shall be recognized as ordinary income). However, any amount recognized under the preceding sentence shall not be included by the taxpayer in his *gross income from the property* for purposes of section 613. Generally, the ordinary income treatment applies even though in the

absence of section 617(d) no gain would be recognized under any other provision of the Code. For example, if a corporation distributes mining property as a dividend, gain may be recognized as ordinary income to the corporation even though, in the absence of section 617, section 311(a) would preclude any recognition of gain to the corporation. For an exception to the recognition of gain with respect to dispositions which involve mineral production payments, see section 636 and the regulations thereunder. For the definition of the term *mining property,* see section 617(f)(2) and paragraph (c)(3), of § 1.617-3. For exceptions and limitations to the application of section 617(d)(1), see section 617(d)(3) and paragraph (c) of this section.

(2) In the case of a sale, exchange, or involuntary conversion of mining property, the gain to which section 617(d)(1) applies is the lower of the adjusted exploration expenditures with respect to such property or the excess of the amount realized upon the disposition of the property over the adjusted basis of the property. In the case of a disposition of mining property other than by a manner described in the preceding sentence, the gain to which section 617(d)(1) applies is the lower of the adjusted exploration expenditures with respect to such property or the excess of the fair market value of the property on the date of disposition over the adjusted basis of the property. In the case of a disposal of coal or domestic iron ore subject to a retained economic interest to which section 631(c) applies, the excess of the amount realized over the adjusted basis of the mining property shall be treated as equal to the gain, if any, referred to in section 631(c). For determination of the amount realized upon a disposition of mining property and nonmining property, see paragraph (c)(3)(i) of this section.

(3) The provisions of this paragraph may be illustrated by the following examples:

Example 1. On July 14, 1970, A purchased undeveloped mining property for $100,000. During 1970, A incurred with respect to the property, $50,000 of exploration expenditures which he deducts under section 617(a). In 1971, A incurred $150,000 of exploration expenditures with respect to the property which he deducts on his income tax return. On January 2, 1972, A sells the mining property to B for $250,000. A's gain on the sale is $150,000 ($250,000 amount realized minus $100,000 basis). Since the excess of the amount realized over the adjusted basis of the mining property is less than the adjusted exploration expenditures with respect to the property ($200,000), the entire gain is treated as ordinary income under section 617(d)(1).

Example 2. Assume the same facts as in example 1 except that A sells the mining property to B for $400,000, thereby realizing gain of $300,000 ($400,000 minus $100,000 basis). Since the amount of adjusted exploration expenditures with respect to the mining property ($200,000) is less than the amount realized upon its disposition ($300,000), an amount equal to the amount of adjusted exploration expenditures is treated as ordinary income under section 617(d)(1). The remaining $100,000 is treated by A without regard to section 617(d)(1).

(4) Section 617(d) does not apply to losses. Thus, section 617(d) does not apply if a loss is realized upon a sale, exchange, or involuntary conversion of mining property, nor does section 617(d) apply to a disposition of mining property other than by way of sale, exchange, or involuntary conversion if at the time of the disposition the fair market value of such property is not greater than its adjusted basis.

(b) ***Disposition of portion of mining property.***

(1) For purposes of section 617(d)(1) and paragraph (a) of this section, except as provided in subparagraph (3) of this paragraph, in the case of the disposition of a portion of a mining property (other than an undivided interest), the entire amount of the adjusted exploration expenditures with

respect to such property shall be treated as attributable to such portion to the extent of the amount of the gain to which section 617(d)(1) applies. If the amount of the gain to which section 617(d)(1) applies is less than the amount of the adjusted exploration expenditures with respect to the property, the balance of the adjusted exploration expenditures shall remain subject to recapture in the hands of the taxpayer under the provisions of section 617 (b), (c), and (d). The disposition of a portion of a mining property (other than an undivided interest) includes the disposition of a geographical portion of a mining property. For example, assume that A owns an 80-acre tract of land with respect to which he has deducted exploration expenditures under section 617(a). If A were to sell the north 40 acres, the entire amount of the adjusted exploration expenditures with respect to the 80-acre tract would be treated as attributable to the 40-acre portion sold (to the extent of the amount of the gain to which section 617(d)(1) applies).

(2) For purposes of section 617(d)(1), except as provided in subparagraph (3) of this paragraph, in the case of the disposition of an undivided interest in a mining property (or portion thereof) a proportionate part of the adjusted exploration expenditures with respect to such property shall be treated as attributable to such undivided interest to the extent of the amount of the gain to which section 617(d)(1) applies. For example, assume that A owns an 80-acre tract of land with respect to which he has deducted exploration expenditures under section 617(a). If A were to sell an undivided 40 percent interest in such tract, 40 percent of the adjusted exploration expenditures with respect to the 80-acre tract would be treated as attributable to the 40 percent of the 80-acre tract disposed of (to the extent of the amount of the gain to which section 617(d)(1) applies).

(3) Section 617(d)(2) and subparagraphs (1) and (2) of this paragraph shall not apply to any expenditure to the extent that such expenditure relates neither to the portion (or interest therein) disposed of nor to any mine, in the property held by the taxpayer before the disposition, which has reached the producing stage. In any case where a taxpayer disposes of a mining property (or interest therein) and treats adjusted exploration expenditures with respect to the mining property as if they relate neither to the portion (or interest therein) disposed of nor to any mine, in the property held by the taxpayer before the disposition, which has reached the producing stage, the taxpayer shall attach to its return for the taxable year in which the disposition occurred, a statement which includes:

(i) A description of the portion (or interest therein) disposed of;

(ii) A description of the mineral property which included the portion (or interest therein) disposed of;

(iii) An itemization of all expenditures deducted under sections 617 and 615 with respect to such mineral property; and

(iv) A description of the location of all producing mines on such mineral property.

(c) ***Exceptions.***

(1)

(i) Section 617(d)(3) provides, through incorporation by reference of the provisions of section 1245(b)(1), that no gain shall be recognized under section 617(d) upon a disposition by gift of mining property. For purposes of this paragraph (c), the term *gift* means, except to the extent that paragraph (c)(1)(ii) of this section applies, a transfer of mining property that, in the hands of the transferee, has a basis determined under the provisions of section 1015(a) or 1015(d) (relating to basis of property acquired by gift) or section 1022 (relating to the basis of property

acquired from certain decedents who died in 2010). For reduction in amount of the charitable contribution in case of a gift of section 617 property, see section 170(e) and paragraph (c)(3) of § 1.170-1.

(ii) Where a disposition of mining property is in part a sale or exchange and in part a gift, the gain to which section 617(d) applies is the lower of the adjusted exploration expenditures with respect to such property or the excess of the amount realized upon the disposition of the property over the adjusted basis of such property.

(2) Section 617(d)(3) provides, through incorporation by reference of the provisions of section 1245(b)(2), that, except as provided in section 691 (relating to income in respect to a decedent), no gain shall be recognized under section 617(d) upon a transfer at death. For purposes of this paragraph, the term *transfer at death* means a transfer of mining property which property, in the hands of the transferee, has a basis determined under the provisions of section 1014(a) (relating to basis of property acquired from a decedent) because of the death of the transferor.

(3)

(i) Section 617(d) provides, through incorporation by reference of the provisions of section 1245(b)(3), that upon a transfer of property described in subdivision (ii) of this subparagraph, the amount of gain taken into account by the transferor under section 617(d) shall not exceed the amount of gain recognized to the transferor on the transfer (determined without regard to section 617). For purposes of this subdivision, in case of a transfer of mining property and nonmining property in one transaction, the amount realized from the disposition of the mining property shall be deemed to be equal to the amount which bears the same ratio to the total amount realized as the fair market value of the mining property bears to the aggregate fair market value of all of the property transferred. The preceding sentence shall be applied solely for purposes of computing the portion of the total gain (determined without regard to section 617) which shall be recognized as ordinary income under section 617(d). Section 617(d)(3) does not apply to a disposition of mining property to an organization (other than a cooperative described in section 521) which is exempt from the tax imposed by chapter 1 of the Code.

(ii) The transfers referred to in subdivision (i) of this subparagraph are transfers of mining property in which the basis of the mining property in the hands of the transferee is determined by reference to its basis in the hands of the transferor by reason of the application of any of the following provisions:

(*a*) Section 332 (relating to distributions in complete liquidation of an 80-percent-or-more controlled subsidiary corporation). See subdivision (iii) of this subparagraph.

(*b*) Section 351 (relating to transfer to a corporation controlled by transferor).

(*c*) Section 361 (relating to exchanges pursuant to certain corporate reorganizations).

(*d*) Section 371(a) (relating to exchanges pursuant to certain receivership and bankruptcy proceedings).

(*e*) Section 374(a) (relating to exchanges pursuant to certain railroad reorganizations).

(*f*) Section 721 (relating to transfers to a partnership in exchange for a partnership interest).

(*g*) Section 731 (relating to distributions by a partnership to a partner).

(iii) In the case of a distribution in complete liquidation of an 80-percent-or-more controlled subsidiary to which section 332 applies, the limitation provided in section 617(d)(3), through incorporation by reference of the provisions of section 1245(b)(3), is confined to instances in which the basis of the mining property in the hands of the transferee is determined under section 334(b)(1), by reference to its basis in the hands of the transferor. Thus, for example, the limitation may apply in respect of a liquidating distribution of mining property by an 80-percent-or-more controlled corporation to the parent corporation, but does not apply in respect of a liquidating distribution of mining property to a minority shareholder. Section 617(d)(3) does not apply to a liquidating distribution of property by an 80-percent-or-more controlled subsidiary to its parent if the parent's basis for the property is determined, under section 334(b)(2), by reference to its basis in the stock of the subsidiary.

[T.D. 7192, 37 FR 12947, June 30, 1972, as amended by T.D. 9811, 82 FR 6239, Jan. 19, 2017]

§ 1.617-5 Effective/applicability date.

Sections 1.617-3 and 1.617-4 apply on and after January 19, 2017. For rules before January 19, 2017, see §§ 1.617-3 and 1.617-4 as contained in 26 CFR part 1 revised as of April 1, 2016.

[T.D. 9811, 82 FR 6239, Jan. 19, 2017]

SALES AND EXCHANGES

§ 1.631-1 Election to consider cutting as sale or exchange.

(a) ***Effect of election.***

(1) Section 631 (a) provides an election to certain taxpayers to treat the difference between the actual cost or other basis of certain timber cut during the taxable year and its fair market value as standing timber on the first day of such year as gain or loss from a sale or exchange under section 1231. Thereafter, any subsequent gain or loss shall be determined in accordance with paragraph (e) of this section.

(2) For the purposes of section 631(a) and this section, timber shall be considered cut at the time when in the ordinary course of business the quantity of timber felled is first definitely determined.

(3) The election may be made with respect to any taxable year even though such election was not made with respect to a previous taxable year. If an election has been made under the provisions of section 631(a), or corresponding provisions of prior internal revenue laws, such election shall be binding upon the taxpayer not only for the taxable year for which the election is made but also for all subsequent taxable years, unless the Commissioner on showing by the taxpayer of undue hardship permits the taxpayer to revoke his election for such subsequent taxable years. If the taxpayer has revoked a previous election, such revocation shall preclude any further elections unless the taxpayer obtains the consent of the Commissioner.

(4) Such election shall apply with respect to all timber which the taxpayer has owned, or has had a contract right to cut, for a period of more than 1 year (6 months for taxable years beginning before 1977; 9 months for taxable years beginning in 1977) prior to when such timber is cut for sale or for use in the taxpayer's trade or business, irrespective of whether such timber or contract right was acquired before or after the election. (For purposes of the preceding sentence, the rules with respect

to the holding period of property contained in section 1223 shall be applicable.) However, timber which is not cut for sale or for use in the taxpayer's trade or business (for example, firewood cut for the taxpayer's own household consumption) shall not be considered to have been sold or exchanged upon the cutting thereof.

(b) ***Who may make election.***

(1) A taxpayer who has owned, or has held a contract right to cut, timber for a period of more than 1 year (6 months for taxable years beginning before 1977; 9 months for taxable years beginning in 1977) prior to when the timber is cut may elect under section 631(a) to consider the cutting of such timber during such year for sale or for use in the taxpayer's trade or business as a sale or exchange of the timber so cut. In order to have a *contract right to cut timber* within the meaning of section 631(a) and this section, a taxpayer must have a right to sell the timber cut under the contract on his own account or to use such cut timber in his trade or business.

(2) For purposes of section 631(a) and this section, the term *timber* includes evergreen trees which are more than six years old at the time severed from their roots and are sold for ornamental purposes, such as Christmas decorations. Section 631(a) is not applicable to evergreen trees which are sold in a live state, whether or not for ornamental purposes. Tops and other parts of standing timber are not considered as evergreen trees within the meaning of section 631(a). The term *evergreen trees* is used in its commonly accepted sense and includes pine, spruce, fir, hemlock, cedar, and other coniferous trees.

(c) ***Manner of making election.*** The election under section 631(a) must be made by the taxpayer in his income tax return for the taxable year for which the election is applicable, and such election cannot be made in an amended return for such year. The election in the return shall take the form of a computation under the provisions of section 631(a) and section 1231.

(d) ***Computation of gain or loss under the election.***

(1) If the cutting of timber is considered as a sale or exchange pursuant to an election made under section 631(a), gain or loss shall be recognized to the taxpayer in an amount equal to the difference between the adjusted basis for depletion in the hands of the taxpayer of the timber which has been cut during the taxable year and the fair market value of such timber as of the first day of the taxable year in which such timber is cut. The adjusted basis for depletion of the cut timber shall be based upon the number of units of timber cut during the taxable year which are considered to be sold or exchanged and upon the depletion unit of the timber in the timber account or accounts pertaining to the timber cut, and shall be computed in the same manner as is provided in section 611 and the regulations thereunder with respect to the computation of the allowance for depletion.

(2) The fair market value of the timber as of the first day of the taxable year in which such timber is cut shall be determined, subject to approval or revision by the district director upon examination of the taxpayer's return, by the taxpayer in the light of the most reliable and accurate information available with reference to the condition of the property as it existed at that date, regardless of all subsequent changes, such as changes in surrounding circumstances, methods of exploitation, degree of utilization, etc. The value sought will be the selling price, assuming a transfer between a willing seller and a willing buyer as of that particular day. Due consideration will be given to the factors and the principles involved in the determination of the fair market value of timber as described in the regulations under section 611.

(3) The fair market value as of the beginning of the taxable year of the standing timber cut during the year shall be considered to be the cost of such timber, in lieu of the actual cost or other basis of such timber, for all purposes for which such cost is a necessary factor. See paragraph (e) of this section.

(4) For any taxable year for which the cutting of timber is considered to be a sale or exchange of such timber under section 631(a), the timber so cut shall be considered as property used in the trade or business for the purposes of section 1231, along with other property of the taxpayer used in the trade or business as defined in section 1231(b), regardless of whether such timber is property of a kind which would properly be includible in the inventory of the taxpayer if on hand at the close of the taxable year or property held by the taxpayer primarily for sale to customers in the ordinary course of his trade or business. Whether the gain or loss considered to have resulted from the cutting of the timber will be considered to be gain or loss resulting from the sale or exchange of capital assets held for more than 1 year (6 months for taxable years beginning before 1977; 9 months for taxable years beginning in 1977) depends upon the application of section 1231 to the taxpayer for the taxable year. See section 1231 and the regulations thereunder.

(e) *Computation of subsequent gain or loss.*

(1) In case the products of the timber are sold after cutting, either in the form of logs or lumber or in the form of manufactured products, the income from such actual sales shall be considered ordinary income. When the election under section 631(a) is in effect, the cost of standing timber cut during the taxable year is determined as if the taxpayer had purchased such timber on the first day of the taxable year. Thus, in determining the cost of the products so sold, the cost of the timber shall be the fair market value on the first day of the taxable year in which the standing timber was cut, in lieu of the actual cost or other basis of such timber.

(2) This is also the rule in case the products of the timber cut during one taxable year, with respect to which an election has been made under section 631(a), are sold during a subsequent taxable year, whether or not the election provided in section 631(a) is applicable with respect to such subsequent year. If the products of the timber cut during a taxable year with respect to which an election under section 631(a) was made were not sold during such year and are included in inventory at the close of such year, the fair market value as of the beginning of the year of the timber cut during the year shall be used in lieu of the actual cost of such timber in computing the closing inventory for such year and the opening inventory for the succeeding year. With respect to the costs applicable in the determination of the amount of such inventories, there shall be included the fair market value of the timber cut, the costs of cutting, logging, and all other expenses incident to the cost of converting the standing timber into the products in inventory. See section 471 and the regulations thereunder. The fact that the fair market value as of the first day of the taxable year in which the timber is cut is deemed to be the cost of such timber shall not preclude the taxpayer from computing its inventories upon the basis of cost or market, whichever is lower, if such is the method used by the taxpayer. Nor shall it preclude the taxpayer from computing its inventories under the last-in, first-out inventory method provided by section 472 if such section is applicable to, and has been elected by, the taxpayer.

[T.D. 6500, 25 FR 11737, Nov. 26, 1960; 25 FR 14021, Dec. 31, 1960, as amended by T.D. 7730, 45 FR 72650, Nov. 3, 1980]

§ 1.631-2 Gain or loss upon the disposal of timber under cutting contract.

(a) *In general.*

(1) If an owner disposes of timber held for more than 1 year (6 months for taxable years beginning before 1977; 9 months for taxable years beginning in 1977) before such disposal, under any form or type of contract whereby he retains an economic interest in such timber, the disposal shall be considered to be a sale of such timber. The difference between the amounts realized from disposal of such timber in any taxable year and the adjusted basis for depletion thereof shall be considered to be a gain or loss upon the sale of such timber for such year. Such adjusted basis shall be computed in the same manner as provided in section 611 and the regulations thereunder with respect to the allowance for depletion. See paragraph (e)(2) of this section for definition of *owner.* For the purpose of determining whether or not the timber disposed of was held for more than 1 year (6 months for taxable years beginning before 1977; 9 months for taxable years beginning in 1977) before such disposal the rules with respect to the holding period of property contained in section 1223 shall be applicable.

(2) In the case of such a disposal, the provisions of section 1231 apply and such timber shall be considered to be property used in the trade or business for the taxable year in which it is considered to have been sold, along with other property of the taxpayer used in the trade or business as defined in section 1231(b), regardless of whether such timber is property held by the taxpayer primarily for sale to customers in the ordinary course of his trade or business. Whether gain or loss resulting from the disposition of the timber which is considered to have been sold will be deemed to be gain or loss resulting from a sale of a capital asset held for more than 1 year (6 months for taxable years beginning before 1977; 9 months for taxable years beginning in 1977) will depend upon the application of section 1231 to the taxpayer for the taxable year.

(b) ***Determination of date of disposal.***

(1) For purposes of section 631(b) and this section, the date of disposal of timber shall be deemed to be the date such timber is cut. However, if payment is made to the owner under the contract for timber before such timber is cut the owner may elect to treat the date of payment as the date of disposal of such timber. Such election shall be effective only for purposes of determining the holding period of such timber. Neither section 631(b) nor the election thereunder has any effect on the time of reporting gain or loss. See subchapter E, chapter 1 of the Code and the regulations thereunder. See paragraph (c)(2) of this section for the effect of exercising the election with respect to the payment for timber held for 1 year (6 months for taxable years beginning before 1977; 9 months for taxable years beginning in 1977) or less. See paragraph (d) of this section for the treatment of payments received in advance of cutting.

(2) For purposes of section 631(b) and this section, the *date such timber is cut* means the date when in the ordinary course of business the quantity of timber felled is first definitely determined.

(c) ***Manner and effect of election to treat date of payment as the date of disposal.***

(1) The election to treat the date of payment as the date of disposal of timber shall be evidenced by a statement attached to the taxpayer's income tax return filed on or before the due date (including extensions thereof) for the taxable year in which the payment is received. The statement shall specify the advance payments which are subject to the election and shall identify the contract under which the payments are made. However, in no case shall the time for making the election under section 631(b) expire before the close of March 21, 1958.

(2) Where the election to treat the date of payment as the date of disposal is made with respect to a payment made in advance of cutting, and such payment is made 1 year (6 months for taxable years beginning before 1977; 9 months for taxable years beginning in 1977) or less from the date the timber disposed of was acquired, section 631(b) shall not apply to such payment irrespective of the date such timber is cut, since the timber was not held for more than six months prior to disposal.

(d) ***Payments received in advance of cutting.***

(1) Where the conditions of paragraph (a) of this section are met, amounts received or accrued prior to cutting (such as advance royalty payments or minimum royalty payments) shall be treated under section 631(b) as realized from the sale of timber if the contract of disposal provides that such amounts are to be applied as payment for timber subsequently cut. Such amounts will be so treated irrespective of whether or not an election has been made under paragraph (c) of this section to treat the date of payment as the date of disposal. For example, if no election has been made under paragraph (c) of this section, amounts received or accrued prior to cutting will be treated as realized from the sale of timber, provided the timber paid for is cut more than 1 year (6 months for taxable years beginning before 1977; 9 months for taxable years beginning in 1977) after the date of acquisition of such timber.

(2) However, if the right to cut timber under the contract expires, terminates, or is abandoned before the timber which has been paid for is cut, the taxpayer shall treat payments attributable to the uncut timber as ordinary income and not as received from the sale of timber under section 631(b). Accordingly, the taxpayer shall recompute his tax liability for the taxable year in which such payments were received or accrued. The recomputation shall be made in the form of an amended return where necessary.

(3)

(i) Bonuses received or accrued by an owner in connection with the grant of a contract of disposal shall be treated under section 631(b) as amounts realized from the sale of timber to the extent attributable to timber held for more than 1 year (6 months for taxable years beginning before 1977; 9 months for taxable years beginning in 1977).

(ii) The adjusted depletion basis attributable to the bonus shall be determined under the provisions of section 612 and the regulations thereunder. This subdivision may be illustrated as follows:

> *Example.* Taxpayer A has held timber having a depletion basis of $90,000 for two months when he enters into a contract of disposal with B. B pays A a bonus of $5,000 upon the execution of the contract and agrees to pay X dollars per unit of timber to A as the timber is cut. A does not exercise the election to treat the date of payment as the date of disposal. It is estimated that there are 50,000 units of timber subject to the contract and that the total estimated royalties to be paid to A will be $95,000. A must report the bonus in the taxable year it is received or accrued by him. The portion of the basis of the timber attributable to the bonus is determined by the following formula:

$$\frac{\text{Bonus}}{\text{Bonus} + \text{amount of expected royalties}} \times \text{Basis of timber} = \text{Basis attributable to bonus}$$

$$\frac{\$5{,}000}{\$100{,}000} \times \$90{,}000 = \$4{,}500$$

(iii) To the extent attributable to timber not held for more than 1 year (6 months for taxable years beginning before 1977; 9 months for taxable years beginning in 1977), such bonuses shall be treated as ordinary income subject to depletion. In order to determine the amount of the bonus allocable to timber not held for more than 1 year (6 months for taxable years beginning before 1977; 9 months for taxable years beginning in 1977), the bonus shall be apportioned ratably over the estimated number of units of timber covered by the contract of disposal. This subdivision may be illustrated as follows:

Example. Assume under the facts stated in the example in subdivision (ii) of this subparagraph that B cuts 10,000 units of timber that have been held by A for 1 year (6 months for taxable years beginning before 1977; 9 months for taxable years beginning in 1977), or less. The amount of the bonus (as well as the royalties) attributable to these units must be reported as ordinary income subject to depletion. The amount of the bonus attributable to these units is determined by the following formula:

$$\frac{\text{Number of units cut held for six months or less}}{\text{Total units covered by the contract}} \times \text{Amount of bonus} = \text{Amount of bonus treated as ordinary income subject to depletion}$$

$$\frac{10{,}000}{50{,}000} \times \$5{,}000 = \$1{,}000$$

The amount of the depletion attributable to the portion of the bonus received for timber held for six months or less is determined by the following formula:

$$\frac{\text{Amount of bonus attributable to timber held for six month or less}}{\text{Total bonus}} \times \text{Adjusted basis for depletion of bonus} = \text{Depletion allowance on timber held for six months or less}$$

$$\frac{\$1{,}000}{\$5{,}000} \times \$4{,}500 = \$900$$

The amount of the bonus attributable to timber held for more than 1 year (6 months for taxable years beginning before 1977; 9 months for taxable years beginning in 1977), and which is treated under section 631 (b) as realized from the sale of timber would be $4,000. The gain on such amount is $400 ($4,000−$3,600).

(iv) If the right to cut timber under the contract of disposal expires, terminates, or is abandoned before any timber is cut, the taxpayer shall treat the bonus received under such contract as ordinary income, not subject to depletion. Accordingly, the taxpayer shall recompute his tax liability for the taxable year in which such bonus was received. The recomputation shall be made in the form of an amended return where necessary.

(e) *Other rules for application of section.*

(1) Amounts paid by the lessee for timber or the acquisition of timber cutting rights, whether designated as such or as a rental, royalty, or bonus, shall be treated as the cost of timber and constitute part of the lessee's depletable basis of the timber, irrespective of the treatment accorded such payments in the hands of the lessor.

(2) The provisions of section 631(b) apply only to an owner of timber. An owner of timber means any person who owns an interest in timber, including a sublessor and a holder of a contract to cut timber. Such owner of timber must have a right to cut timber for sale on his own account or for use in his trade or business in order to own an interest in timber within the meaning of section 631(b).

(3) For purposes of section 631(b) and this section, the term *timber* includes evergreen trees which are more than 6 years old at the time severed from their roots and are sold for ornamental purposes such as Christmas decorations. Tops and other parts of standing timber are not considered as evergreen trees within the meaning of section 631(b). The term *evergreen trees* is used in its commonly accepted sense and includes pine, spruce, fir, hemlock, cedar, and other coniferous trees.

[T.D. 6500, 25 FR 11737, Nov. 26, 1960; 25 FR 14021, Dec. 31, 1960, as amended by T.D. 7728, 45 FR 72650, Nov. 3, 1980]

§ 1.631-3 Gain or loss upon the disposal of coal or domestic iron ore with a retained economic interest.

(a) *In general.*

(1) The provisions of section 631(c) apply to an owner who disposes of coal (including lignite), or iron ore mined in the United States, held for more than 1 year (6 months for taxable years beginning before 1977; 9 months for taxable years beginning in 1977) before such disposal under any form or type of contract whereby he retains an economic interest in such coal or iron ore. The difference between the amount realized from disposal of the coal or iron ore in any taxable year, and the adjusted depletion basis thereof plus the deductions disallowed for the taxable year under section 272, shall be gain or loss upon the sale of the coal or iron ore. See paragraph (b)(4) of this section for the definition of *owner.* See paragraph (e) of this section for special rules relating to iron ore.

(2) In the case of such a disposal, the provisions of section 1231 apply, and the coal or iron ore shall be considered to be property used in the trade or business for the taxable year in which it is considered to have been sold, along with other property of the taxpayer used in the trade or business as defined in section 1231(b), regardless of whether the coal or iron ore is property held by the taxpayer primarily for sale to customers in the ordinary course of his trade or business. Whether gain or loss resulting from the disposition of the coal or iron ore which is considered to have been sold will be deemed to be gain or loss resulting from a sale of a capital asset held for more than 1 year (6 months for taxable years beginning before 1977; 9 months for taxable years beginning in 1977) will depend on the application of section 1231 to the taxpayer for the taxable year; *i.e.,* if the gains do not exceed the losses, they shall not be considered as gains and losses from sales or exchanges of capital assets but shall be treated as ordinary gains and losses.

(b) *Rules for application of section.*

(1) For purposes of section 631(c) and this section, the date of disposal of the coal or iron ore shall be deemed to be the date the coal or iron ore is mined. If the coal or iron ore has been held for more than 1 year (6 months for taxable years beginning before 1977; 9 months for taxable years beginning in 1977) on the date it is mined, it is immaterial that it had not been held for more than 1 year (6 months for taxable years beginning before 1977; 9 months for taxable years beginning in 1977) on the date of the contract. There shall be no allowance for percentage depletion provided in section 613 with respect to amounts which are considered to be realized from the sale of coal or iron ore under section 631(c).

(2) The term *adjusted depletion basis* as used in section 631(c) and this section means the basis for allowance of cost depletion provided in section 612 and the regulations thereunder. Such *adjusted depletion basis* shall include exploration or development expenditures treated as deferred expenses under section 615(b) or 616(b), or corresponding provisions of prior income tax laws, and be reduced by adjustments under section 1016(a) (9) and (10), or corresponding provisions of prior income tax laws, relating to deductions of deferred expenses for exploration or development expenditures in the taxable year or any prior taxable years. The depletion unit of the coal or iron ore disposed of shall be determined under the rules provided in the regulations under section 611, relating to cost depletion.

(3)

(i) In determining the gross income, the adjusted gross income, or the taxable income of the lessee, the deductions allowable with respect to rents and royalties (except rents and royalties paid by a lessee with respect to coal or iron ore disposed of by the lessee as an *owner* under section 631(c)) shall be determined without regard to the provisions of section 631(c). Thus, the amounts of rents and royalties paid or incurred by a lessee with respect to coal or iron ore shall be excluded from the lessee's gross income from the property for the purpose of determining his percentage depletion without regard to the treatment of such rents or royalties in the hands of the recipient under this section. See section 613 and the regulations thereunder.

(ii)

(*a*) However, a lessee who is also a sublessor may dispose of coal or iron ore as an *owner* under section 631(c). Rents and royalties paid with respect to coal or iron ore disposed of by such a lessee under section 631(c) shall increase the adjusted depletion basis of the coal or iron ore and are not otherwise deductible.

(*b*) The provisions of this subdivision may be illustrated by the following example:

> ***Example.*** B is a sublessor of a coal lease; A is the lessor; and C is the sublessee. B pays A a royalty of 50 cents per ton. C pays B a royalty of 60 cents per ton. The amount realized by B under section 631(c) is 60 cents per ton and will be reduced by the adjusted depletion basis of 50 cents per ton, leaving a gain of 10 cents per ton taxable under section 631(c).

(4)

(i) The provision of this section apply only to an owner who has disposed of coal or iron ore and retained an economic interest. For the purposes of section 631(c) and this section, the word *owner* means any person who owns an economic interest in coal or iron ore in place, including a sublessor thereof. A person who merely acquires an economic interest and has not disposed of coal or iron ore under a contract retaining an economic interest does not qualify under section 631(c). A successor to the interest of a person who has disposed of coal or iron ore under a contract by virtue of which he retained an economic interest in such coal or iron ore is also entitled to the benefits of this section. Section 631(c) and this section shall not apply with respect to any income realized by any owner as co-adventurer, partner, or principal in the mining of such coal or iron ore.

(ii) The provisions of this subparagraph may be illustrated by the following examples:

Example 1. A owns a tract of coal land in fee. A leases to B the right to mine all the coal in this tract in return for a royalty of 30 cents per ton. B subleases his right to mine coal in this tract to C, who agrees to pay A 30 cents per ton and to pay to B an additional royalty of 10 cents per ton. Section 631(c) applies to the royalties of both A and B, if the other requisites of the section have been met.

Example 2. Assume the same facts as in example 1, except that A dies leaving his royalty interest to D. D has an economic interest in the coal in place and qualifies for section 631(c) treatment with respect to his share of the royalties since he is a successor in title to A.

Example. Assume the same facts as in example 1, except that E agrees to pay a sum of money to C in return for 10 cents per ton on the coal mined by C. E has an economic interest, since he must look solely to the extraction of the coal for the return of his investment. However, E has not made a disposal of coal under a contract wherein he retains an economic interest, and, therefore does not qualify under section 631(c). E is entitled to depletion on his royalties.

(c) ***Payments received in advance of mining.***

(1)

(i) Where the conditions of paragraph (a) of this section are met, amounts received or accrued prior to mining shall be treated under section 631(c) as received from the sale of coal or iron ore if the contract of disposal provides that such amounts are to be applied as payment for coal or iron ore subsequently mined. For example, advance royalty payments or minimum royalty payments received by an owner of coal or iron ore qualify under section 631(c) where the contract of disposal grants the lessee the right to apply such royalties in payment of coal or iron ore mined at a later time.

(ii) The provisions of this subparagraph may be illustrated by the following example:

Example. A acquires coal rights on January 1. On January 30, A enters into a contract of disposal providing that mining shall begin July 2, and mining actually begins no earlier. Any advance payments which A receives qualify under section 631(c).

(2) However, if the right to mine coal or iron ore under the contract expires, terminates, or is abandoned before the coal or iron ore which had been paid for is mined, the taxpayer shall treat payments attributable to the unmined coal or iron ore as ordinary income and not as received from the sale of coal or iron ore under section 631(c). Accordingly, the taxpayer shall recompute his tax liability for the taxable year in which such payments were received. The recomputation shall be made in the form of an amended return where necessary.

(3) Bonuses received or accrued by an owner in connection with the grant of a contract of disposal shall be treated under section 631(c) as received from the sale of coal or iron ore to the extent attributable to coal or iron ore held for more than 1 year (6 months for taxable years beginning before 1977; 9 months for taxable years beginning in 1977). The rules contained in paragraph (d) of § 1.631-2 relating to bonuses in the case of contracts for the disposal of timber shall be equally applicable in the case of bonuses received for the grant of a contract of disposal of coal or iron ore under this section.

(d) ***Nonapplication of section.*** Section 631(c) shall not affect the application of the provisions of subchapter G, chapter 1 of the Code, relating to corporations used to avoid income tax on shareholders. For example, for the purposes of applying section 543 (relating to personal holding companies), the amounts received from a disposal of coal or iron ore subject to section 631(c) shall be considered as mineral royalties. The determination of whether an amount received under a contract to which section 631(c) applies is *personal holding company income* shall be made in accordance with section 543 and the regulations thereunder, without regard to section 631(c) or this section. See also paragraph (e) of § 1.272-1.

(e) ***Special rules with regard to iron ore.***

(1) With regard to iron ore, section 631(c) and this section apply only to amounts received or accrued in taxable years beginning after December 31, 1963, attributable to iron ore mined in such taxable years.

(2) Section 631(c) and this section apply only to disposals of iron ore mined in the United States.

(3) For the purposes of section 631(c) and this section, iron ore is any ore which is used as a source of iron, including but not limited to taconite and jaspilite.

(4) Section 631(c) shall not apply to any disposal of iron ore to a person whose relationship to the person disposing of such iron ore would result in the disallowance of losses under section 267 or 707(b).

(5) Section 631(c)(2) results in the denial of section 631(c) treatment in the case of a contract for disposal of iron ore entered into with a person owned or controlled, directly or indirectly, by the same interests which own or control the person disposing of the iron ore, even though section 631(c) treatment would not be denied under the provisions of section 631(c)(1). For example, section 631(c) treatment is denied in the case of a contract for disposal of iron ore entered into between two *brother and sister* corporations, or a parent corporation and its subsidiary. The presence or absence of control shall be determined by applying the same standards as are applied under section 482 (relating to the allocation of income and deductions between taxpayers).

[T.D. 6841, 30 FR 9307, July 27, 1965, as amended by T.D. 7730, 45 FR 72650, Nov. 3, 1980]

§ 1.632-1 Tax on sale of oil or gas properties.

(a) If the taxpayer, by prospecting and locating claims or by exploring or discovering undeveloped claims, has demonstrated the principal value of oil or gas property, which prior to his efforts had a relatively minor value, the portion of the tax (or, in the case of taxable years beginning before Jan. 1, 1971, the surtax) imposed by section 1 attributable to a sale of such property, or of any interest of the taxpayer therein, shall not exceed 33 percent (or, in the case of taxable year beginning before Jan. 1, 1971, 30 percent) of the selling price of such property or such interest. Shares of stock in a corporation owning oil or gas property do not constitute an interest in such property. To determine the application of section 632 to a

particular case, the taxpayer should first compute the tax (or surtax) imposed by section 1 upon his entire taxable income, including the taxable income from any sale of such property or interest therein, without regard to section 632. The proportion of the tax (or surtax) so computed, indicated by the ratio which the taxpayer's taxable income from the sale of the property or interest therein, computed as prescribed in this section, bears to his total taxable income is the portion of the tax attributable to such sale and, if it exceeds 33 percent (or 30 percent) of the selling price of such property or interest, such portion of the tax (or surtax) shall be reduced to that amount.

(b) In determining the portion of the taxable income attributable to the sale of such oil or gas property or interest therein, the taxpayer shall allocate to the gross income derived from such sale, and to the gross income derived from all other sources, the expenses, losses, and other deductions properly appertaining thereto and shall apply any general expenses, losses, and deductions (which cannot properly be otherwise allocated) ratably to the gross income from all sources. The gross income derived from the sale of such oil or gas property or interest therein, less the deductions properly appertaining thereto and less its proportion of any general deductions, shall be the taxable income attributable to such sale. The taxpayer shall submit with his return a statement fully explaining the manner in which such expenses, losses, and deductions are allocated or apportioned.

[T.D. 6500, 25 FR 11737, Nov. 26, 1960, as amended by T.D. 7117, 36 FR 9421, May 25, 1971]

MINERAL PRODUCTION PAYMENTS

§ 1.636-1 Treatment of production payments as loans.

(a) ***In general.***

(1)

(i) For purposes of subtitle A of the Internal Revenue Code of 1954, a production payment (as defined in paragraph (a) of § 1.636-3) to which this section applies shall be treated as a loan on the mineral property (or properties) burdened thereby and not as an economic interest in mineral in place, except to the extent that § 1.636-2 or paragraph (b) of this section applies. See paragraph (b) of § 1.611-1. A production payment carved out of mineral property which remains in the hands of the person carving out the production payment immediately after the transfer of such production payment shall be treated as a mortgage loan on the mineral property burdened thereby. A production payment created and retained upon the transfer of the mineral property burdened by such production payment shall be treated as a purchase money mortgage loan on the mineral property burdened thereby. Such production payments will be referred to hereinafter in the regulations under section 636 as carved-out production payments and retained production payments, respectively. Moreover, in the case of a transaction involving a production payment treated as a loan pursuant to this section, the production payment shall constitute an item of income (not subject to depletion), consideration for a sale or exchange, a contribution to capital, or a gift if in the transaction a debt obligation used in lieu of the production payment would constitute such an item of income, consideration, contribution to capital, or gift, as the case may be. For the definition of the term *transfer* see paragraph (c) of § 1.636-3.

(ii) The payer of a production payment treated as a loan pursuant to this section shall include the proceeds from (or, if paid in kind, the value of) the mineral produced and applied to the satisfaction of the production payment in his gross income and *gross income from the property* (see section 613(a)) for the taxable year so applied. The payee shall include in his gross

income (but not *gross income from the property*) amounts received with respect to such production payment to the extent that such amounts would be includible in gross income if such production payment were a loan. The payer and payee shall determine their allowable deductions as if such production payment were a loan. See section 483, relating to interest on certain deferred payments in the case of a production payment created and retained upon the transfer of the mineral property burdened thereby, or in the case of a production payment transferred in exchange for property. See section 1232 in the case of a production payment which is originally transferred by a corporation at a discount and is a capital asset in the hands of the payee. In the case of a carved-out production payment treated as a mortgage loan pursuant to this section, the consideration received for such production payment by the taxpayer who created it is not included in either gross income or *gross income from the property* by such taxpayer.

(2) If a production payment is treated as a loan pursuant to this section, no transfer of such production payment or any property burdened thereby (other than a transfer between the payer and payee of the production payment which, if the production payment were a loan, would extinguish the loan) shall cause it to cease to be so treated. For example, A sells operating mineral interest X to B for $100,000, subject to a $500,000 retained production payment payable out of X. Subsequently, A sells the production payment to C, and B sells X to D. C and D must treat the production payment as a purchase money mortgage loan.

(3) The provisions of this paragraph may be illustrated by the following examples:

Example 1. On December 22, 1972, A, a cash-basis calendar-year taxpayer who owns operating mineral interest X, carves out of X a production payment in favor of B for $300,000 plus interest, payable out of 50 percent of the first oil produced and sold from X. In 1972, A treats the $300,000 received from B for the production payment as the proceeds of a mortgage loan on X. In 1973, A produces and sells 125,000 barrels of oil for $373,500. A pays B $186,750 with respect to the production payment, $168,750 being principal and $18,000 being interest. In computing his gross income and *gross income from the property* for the year 1973, A includes the $373,500 and takes as deductions the allowable expenses paid in production of such mineral. A also takes a deduction under section 163 for the $18,000 interest paid with respect to the production payment. For 1973, B would treat $18,000 as ordinary income not subject to the allowance for depletion under section 611.

Example 2. Assume the same facts as in example 1 except that the principal amount of the production payment is to be increased by the amount of the ad valorem tax on the mineral attributable to the production payment which is paid by B. Under State law, the ad valorem tax with respect to the mineral attributable to the production payment is a liability of the owner of the production payment. For 1973, B inlcudes the amount received with respect to such taxes as income and takes a deduction under section 164 for the taxes paid by him. Since the ad valorem taxes paid by B are his liability under State law, A may not take a deduction under section 164 for such taxes.

Example 3. On December 31, 1974, C, a calendar-year taxpayer and owner of the operating mineral interest Y, sells Y to D for $10,000 cash and retains a $40,000 production payment payable out of Y. At the time D acquires the property, it is estimated that 500,000 tons of mineral are recoverable from the property. In 1975, D produces a total of 50,000 tons from the property. D's cost depletion for 1975 is $5,000 determined as follows:
Basis in property: $50,000

> Total recoverable units: 500,000
> Rate of depletion per ton: $0.10 ($50,000 ÷ 500,000)
>
> Cost depletion for year: $5,000
>
> ($0.10 × 50,000)

(b) ***Exception.***

(1) A production payment carved out of a mineral property (or properties) for exploration or development of such property (or properties) shall not be treated as a mortgage loan under section 636(a) and this section to the extent *gross income from the property* (for purposes of section 613) would not be realized by the taxpayer creating such production payment, under the law existing at the time of the creation of such production payment, in the absence of section 636(a). See section 83 and the regulations thereunder, relating to property transferred in connection with the performance of services. For purposes of section 636(a) and this paragraph, an expenditure is for exploration or development to the extent that it is necessary for ascertaining the existence, location, extent, or quality of any deposit of mineral or is incident to and necessary for the preparation of a deposit for the production of mineral. However, an expenditure which relates primarily to the production of mineral (as, for example, in the case of a pilot water flood program with respect to the secondary recovery of oil) is not for exploration or development as those terms are used in section 636(a) and this paragraph. Whether or not a production payment is carved out for exploration or development shall be determined in light of all relevant facts and circumstances, including any prior production of mineral from the mineral deposit burdened by the production payment. However, a production payment shall not be treated as carved out for exploration or development to the extent that the consideration for the production payment:

(i) Is not pledged for use in the future exploration or development of the mineral property (or properties) which is burdened by the production payment;

(ii) May be used for the exploration or development of any other property, or for any other purpose than that described in subdivision (i) of this subparagraph;

(iii) Does not consist of a binding obligation of the payee of the production payment to pay expenses of the exploration or development described in subdivision (i) of this subparagraph; or

(iv) Does not consist of a binding obligation of the payee of the production payment to provide services, materials, supplies, or equipment for the exploration or development described in subdivision (i) of this subparagraph.

(2) In the case of a carved-out production payment only a portion of which is subject to the exception provided in this paragraph, the rules contained in paragraph (a) of this section with respect to the treatment of income and deductions where a production payment is treated as a loan shall apply to the portion of the taxpayer's income or expenses attributable to the production payment which bears the same ratio to the total amount of such income or expenses, as the case may be, as the amount of the consideration for the production payment which would have been realized as income in the absence of section 636(a), by the taxpayer creating such production payment, bears to the total consideration to the taxpayer for the production payment. For example, A, owner of a mineral property, carves out a production payment in favor of B for $600,000 plus interest in return for

$600,000 cash. A pledges to use $400,000 for the development of the burdened mineral property. In each of the payout years loan treatment applies to one-third of the income and expenses of A and B attributable to the production payment.

(c) ***Treatment upon disposition or termination of mineral property burdened by production payment.***

(1)

(i) In the case of a sale or other disposition of the mineral property burdened by a production payment treated as a loan pursuant to this section, there shall be included in determining the amount realized upon such disposition an amount equal to the outstanding principal balance of such production payment on the date of such disposition. However, if such a production payment is created in connection with the disposition, the amount to be so included shall be the fair market value of the production payment, rather than its principal amount, if the fair market value is established by clear and convincing evidence to be an amount which differs from the principal amount. See section 1001 and the regulations thereunder. In determining the cost of the transferred mineral property to the transferee for purposes of section 1012, the outstanding principal balance of the production payment shall be included in the cost.

(ii) The provisions of this subparagraph may be illustrated by the following examples:

Example 1. A, the owner of mineral property X which is burdened by a carved-out production payment to which section 636(a) applies having an outstanding principal balance of $10,000, sells property X to B, an individual, for $100,000 cash. The amount realized by A on the sale of property X is $110,000. B's basis in property X for cost depletion and other purposes is also $110,000.

Example 2. Assume the same facts as in example 1 except that the production payment is retained by A in connection with the sale of property X to B, that section 636(b) applies to the production payment, that the production payment includes, in addition to the $10,000 principal amount, an additional amount equivalent to interest at a rate which precludes application of section 483, and that the fair market value of the production payment is $9,000. The amount realized by A on the sale of property X is $109,000. B's basis in property X for cost depletion and other purposes is $110,000. A's basis in the retained production payment is $9,000. If the production payment is paid in full, A realizes income of $1,000 plus the amount equivalent to interest, which income is includible in A's gross income at the time when such amounts would be so includible if such production payment were a loan.

Example 3. C, the owner of mineral property Y, sells the mineral property to D for $500,000 cash. Property Y is burdened by a carved-out production payment with an outstanding principal balance of $600,000, 40 percent of the consideration for which was pledged for the development of property Y. The amount realized by C on the sale is $860,000 ($500,000 plus $600,000 × .60). D's basis in property Y for cost depletion and other purposes is $860,000.

(2) In the case of the expiration, termination, or abandonment of a mineral property burdened by a production payment treated as a loan pursuant to this section, for purposes of determining the amount of any loss under section 165 with respect to the burdened mineral property the adjusted basis of such property shall be reduced (but not below zero) by an amount equal to the outstanding principal balance of such production payment on the date of such expiration, termination, or abandonment. Thus, in example 2 in subparagraph (1)(ii) of this paragraph, if B abandons the

mineral property at a time when $5,000 of the principal amount of the production payment remains unsatisfied, B's adjusted basis immediately before the abandonment would be reduced by $5,000 for determining his loss on abandonment under section 165.

(3) In the case of a transfer of a portion of the mineral property burdened by a production payment treated as a loan pursuant to this section, such production payment shall be apportioned between the transferred portion and the retained portion by allocating to such transferred portion that part of the outstanding principal balance of the production payment which bears the same ratio to such balance as the value of such transferred portion (exclusive of any value not related to the burdened mineral) bears to the total value of the burdened mineral property (exclusive of any value not related to the burdened mineral).

(4) In general, the entire amount of gain or loss realized pursuant to this paragraph shall be recognized in the taxable year of such realization. See section 1211 for limitation on capital losses. This subparagraph shall not affect the applicability of rules providing exceptions to the recognition of gain or loss which has been realized (e.g., a transfer to which section 351 or 1031 applies). However, see section 357(c) with respect to the assumption of liabilities in excess of basis in certain tax-free exchanges. Furthermore, in the case of a transaction which otherwise qualifies, gain realized on a transfer of a mineral property to which section 636(b) applies may be returned on the installment method under section 453.

[T.D. 7261, 38 FR 5463, Mar. 1, 1973]

§ 1.636-2 Production payments retained in leasing transactions.

(a) ***Treatment by lessee.*** In the case of a production payment (as defined in paragraph (a) of § 1.636-3) which is retained by the lessor in a leasing transaction (including a sublease or the exercise of an option to acquire a lease or sublease), the lessee (or his successors in interest) shall treat the retained production payment for purposes of subtitle A of the Code as if it were a bonus granted by the lessee to the lessor payable in installments. Accordingly, the lessee shall include the proceeds from (or, if paid in kind, the value of) the mineral produced and applied to the satisfaction of the production payment in his gross income for the taxable year so applied. The lessee shall capitalize each payment (including any interest and any amounts added on to the production payment other than amounts for which the lessee would be liable in the absence of the production payment) paid or incurred with respect to such production payment. See paragraph (c)(5)(ii) of § 1.613-2 for rules relating to computation of percentage depletion with respect to a mineral property burdened by a production payment treated as a bonus under section 636(c) and this section.

(b) ***Treatment by lessor.*** The lessor who retains a production payment in a leasing transaction (or his successors in interest) shall treat the production payment without regard to the provisions of section 636 and § 1.636-1. Thus, the production payment will be treated as an economic interest in the mineral in place in the hands of the lessor (or his successors in interest) and the receipts in discharge of the production payment will constitute ordinary income subject to depletion.

(c) ***Example.*** The provisions of this section may be illustrated by the following example:

Example. In 1971, A leases a mineral property to B reserving a one-eighth royalty and a production payment (as defined in § 1.636-3(a)) with a principal amount of $300,000 plus an amount equivalent to interest. In 1972, B pays to A $60,000 with respect to the principal amount of the production payment plus $16,350 equivalent to interest. The adjusted basis of the property in the hands of B for

cost depletion and other purposes for 1972 and subsequent years will include (subject to proper adjustment under section 1016) the $76,350 paid to A. In 1973, B pays to A $60,000 with respect to the principal amount of the production payment plus $12,750 equivalent to interest. The adjusted basis of the property in the hands of B for cost depletion and other purposes for 1973 and subsequent years will include (subject to proper adjustment under section 1016) the $72,750 paid to A. The $76,350 received by A in 1972, and the $72,750 received by A in 1973, will constitute ordinary income subject to depletion in the hands of A in the years of receipt of such amounts by A.

[T.D. 7261, 38 FR 5465, Mar. 1, 1973]

§ 1.636-3 Definitions.

For purposes of section 636 and the regulations thereunder:

(a) ***Production payment.***

(1) The term *production payment* means, in general, a right to a specified share of the production from mineral in place (if, as, and when produced), or the proceeds from such production. Such right must be an economic interest in such mineral in place. It may burden more than one mineral property, and the burdened mineral property need not be an operating mineral interest. Such right must have an expected economic life (at the time of its creation) of shorter duration than the economic life of one or more of the mineral properties burdened thereby. A right to mineral in place which can be required to be satisfied by other than the production of mineral from the burdened mineral property is not an economic interest in mineral in place. A production payment may be limited by a dollar amount, a quantum of mineral, or a period of time. A right to mineral in place has an economic life of shorter duration than the economic life of a mineral property burdened thereby only if such right may not reasonably be expected to extend in substantial amounts over the entire productive life of such mineral property. The term *production payment* includes payments which are commonly referred to as *in-oil payments, gas payments,* or *mineral payments*.

(2) A right which is in substance economically equivalent to a production payment shall be treated as a production payment for purposes of section 636 and the regulations thereunder, regardless of the language used to describe such right, the method of creation of such right, or the form in which such right is cast (even though such form is that of an operating mineral interest). Whether or not a right is in substance economically equivalent to a production payment shall be determined from all the facts and circumstances. An example of an interest which is to be treated as a production payment under this subparagraph is that portion of a *royalty* which is attributable to so much of the rate of the royalty which exceeds the lowest possible rate of the royalty at any subsequent time (disregarding any reductions in the rate of the royalty which are based solely upon changes in volume of production within a specified period of no more than 1 year). For example, assume that A creates a royalty with respect to a mineral property owned by A equal to 5 percent for 5 years and thereafter equal to 4 percent for the balance of the life of the property. An amount equal to 1 percent for 5 years shall be treated as a production payment. On the other hand, if A leases a coal mine to B in return for a royalty of 30 cents per ton on the first 500,000 tons of coal produced from the mine in each year and 20 cents per ton on all coal in excess of 500,000 tons produced from the mine in each year, the fact that the royalty may decline to 20 cents per ton on some of the coal in each year does not result in a production payment of 10 cents per ton of coal on the first 500,000 tons in any year. Another example of an interest which is to be treated as a production payment under this subparagraph is the interest in a partnership engaged in operating oil properties of a partner who

provides capital for the partnership if such interest is subject to a right of another person or persons to acquire or terminate it upon terms which merely provide for such partner's recovery of his capital investment and a reasonable return thereon.

(b) ***Property.*** The term *property* has the meaning assigned to it in section 614(a), without the application of section 614 (b), (c), or (e).

(c) ***Transfer.*** The term *transfer* means any sale, exchange, gift, bequest, devise, or other disposition (including a distribution by an estate or a contribution to or distribution by a corporation, partnership, or trust).

[T.D. 7261, 38 FR 5465, Mar. 1, 1973]

§ 1.636-4 Effective dates of section 636.

(a) ***In general.*** Except as provided hereinafter in this section, section 636 and §§ 1.636-1, 1.636-2, and 1.636-3 apply to production payments created on or after August 7, 1969, other than production payments created before January 1, 1971, pursuant to a binding contract entered into before August 7, 1969.

(b) ***Election.*** Under section 503(c)(2) of the Tax Reform Act of 1969, if the taxpayer so elects, section 636(a) of the Code and §§ 1.636-1 and 1.636-3 apply to all production payments carved out by him after the beginning of his last taxable year ending before August 7, 1969, including such production payments created after such date pursuant to a binding contract entered into before such date. No interest shall be allowed on any refund or credit of any overpayment of tax resulting from an election under section 503(c)(2) for any taxable year ending before August 7, 1969. The provisions of this paragraph may be illustrated by the following example:

Example. A, a fiscal-year taxpayer whose taxable year ends on October 31, carved out and sold (from a producing property) production payments on October 1, 1967, and on July 9, 1969. On August 1, 1969, A entered into a binding contract to create another carved-out production payment (from a different producing property) and the production payment was carved out on December 22, 1969. If A elects under section 503(c)(2), the production payments carved out on July 9, 1969, and December 22, 1969, are treated as mortgage loans under section 636(a). The production payment carved out on October 1, 1967, is not treated as a mortgage loan under section 636(a) because it was carved out before the beginning of A's last taxable year ending before August 7, 1969.

(c) ***Time and manner of making election.***

(1) Any election under section 503(c)(2) of the Tax Reform Act of 1969 must be made not later than May 30, 1973.

(2) An election under section 503(c)(2) shall be made by a statement attached to the taxpayer's income tax return (or amended return) for the first taxable year in which the taxpayer created a production payment

(i) to which the election applies, and

(ii) which, in the absence of section 636, would not have been treated as a loan. A statement shall also be attached to an amended return for each subsequent taxable year for which he has filed his income tax return before making the election, but only if his tax liability for such year is affected by the election. Each such statement shall indicate the taxpayer's election under section 503(c)(2), and shall identify by date, amount, parties, and burdened mineral properties all production payments described in subdivisions (i) and (ii) of this subparagraph which have

been created by the date on which the statement is filed. However, a taxpayer who, prior to the date on which permanent regulations under this section are published in the FEDERAL REGISTER, made a valid election under section 503(c)(2) pursuant to §§ 301.9100-17T and 301.9100-18T of this chapter are not required to amend statements previously furnished which meet the requirements of § 301.9100-17T(b)(1)(ii) of this chapter unless requested to do so by the district director. In applying the election to the taxable years affected, there shall be taken into account the effect that any adjustments resulting therefrom have on other items affected thereby and the effect that adjustments of any such items have on other taxable years. In the case of a member of a consolidated return group (as defined in paragraph (a) of § 1.1502-1), section 503(c)(2) and paragraphs (b), (c), and (d) of this section shall be applied as if such member filed a separate return.

(d) ***Revocation of election.*** A valid election under section 503(c)(2) shall be binding upon the taxpayer unless consent to revoke the election is obtained from the Commissioner. The application to revoke such election must be made in writing to the Commissioner of Internal Revenue, Washington, D.C. 20224, not later than May 30, 1973. Such application must set forth the reasons therefor and a recomputation of the tax reflecting such revocation for each prior taxable year affected by the revocation, whether or not the period of limitations for credit or refund or assessment and collection has expired with respect to such taxable year. Consent shall not be given in any case in which the revocation would result in an increase in the taxpayer's tax liability for a taxable year for which such period of limitations has expired unless the taxpayer waives his right to assert the statute of limitations.

(e) ***Special rule.***

(1) Except as provided in subparagraph (2) of this paragraph, in the case of a taxpayer who does not make the election provided in section 503(c)(2) of the Tax Reform Act of 1969, section 636 of the Code applies to production payments carved out during the taxable year which includes August 7, 1969, as provided in paragraph (a) of this section, only to the extent that the aggregate amount of such production payments exceeds the lesser of:

(i) The excess of:

(*a*) The aggregate amount of production payments carved out and sold by the taxpayer during the 12-month period immediately preceding his taxable year which includes August 7, 1969, over

(*b*) The aggregate amount of production payments carved out and sold before August 7, 1969, by the taxpayer during his taxable year which includes such date, or

(ii) The amount necessary to increase the amount of the taxpayer's gross income within the meaning of chapter 1 of subtitle A of the Code, for his taxable year which includes August 7, 1969, to an amount equal to the amount of his deductions (other than any deduction under section 172) allowable for such year under such chapter

In applying the preceding sentence, production payments carved out for exploration or development are to be taken into account only to the extent, if any, that *gross income from the property* (for purposes of section 613) would have been realized by the taxpayer creating such production payment under the law existing at the time of the creation of such production payment, in the absence of section 636(a).

(2) Subparagraph (1) of this paragraph shall not apply for any taxable year for purposes of determining the amount of any deduction for cost or percentage depletion allowable under section 611 or the limitation on any foreign tax credit under section 904.

(3) The application of this paragraph may be illustrated by the following examples:

Example 1. (a) A, a calendar-year taxpayer who does not make the election provided in section 503(c)(2) of the Tax Reform Act of 1969, carves out and sells on December 31, 1968, a $500,000 production payment. Further, A carves out and sells on March 4, 1969, a $300,000 production payment, and on November 14, 1969, a $150,000 production payment. None of the production payments are carved out for exploration or development. During 1969, A has gross income of $600,000 (determined initially for this purpose by treating the $150,000 production payment carved out on November 14, 1969, as a loan) and allowable deductions of $700,000.
(b) The provisions of section 636 do not apply to a portion of the November 14, 1969, production payment for purposes other than section 611 and section 904 of the Code, determined as follows:

(1) Amount of production payment carved out in 1969 on or after August 7, 1969	$150,000
(2) Amount of production payment carved out during 1968	500,000
(3) Amount of production payment carved out during 1969 taxable year before August 7, 1969	300,000
(4) Item (2) minus item (3)	200,000
(5) Excess of allowable deductions over gross income for 1969	100,000
(6) Amount of production payment carved out in 1969 on or after August 7, 1969, to which section 636 does not apply (lesser of items (1), (4), and (5))	100,000

Thus, A will not treat $100,000 of the consideration received for the production payment carved out on November 14, 1969, as a loan and as a result his gross income for 1969 will be $700,000. However, in computing percentage depletion, A will not include the $100,000 in *gross income from property* and in computing cost depletion A will not include the mineral units attributable thereto. Nor, will A include the $100,000 in determining the limitation on foreign tax credit under section 904.

Example 2. Assume the same facts as in example 1 except that for taxable year 1969 A's gross income (determined initially for this purpose by treating the November 14, 1969, production payment as a loan) exceeds the amount of his allowable deductions under chapter 1 of subtitle A of the Code. The entire amount of the November 14, 1969, production payment is treated as a mortgage loan under section 636(a).

[T.D. 7261, 38 FR 5465, Mar. 1, 1973, as amended by T.D. 8435, 57 FR 43896, Sept. 23, 1992]

CONTINENTAL SHELF AREAS

§ 1.638-1 Continental Shelf areas.

(a) ***General rule.*** For purposes of applying any provision of chapter 1, 2, 3, or 24 (including section 861(a)(3), 862(a)(3), 1441, 3402, or other provisions dealing with the performance of personal services), with respect to mines, oil and gas wells, and other natural deposits:

(1) ***United States and possession of the United States.*** The terms *United States* and *possession of the United States* when used in a geographical sense include the seabed and subsoil of those submarine areas which are adjacent to the territorial waters of the United States or such possession and over which the United States has exclusive rights, in accordance with international law, with respect to the exploration for, and exploitation of, natural resources. The terms *Continental Shelf of the United States* and *Continental Shelf of a possession of the United States,* as used in this section, refer to the seabed and subsoil included, respectively, in the terms *United States* and *possession of the United States,* as provided in the preceding sentence.

(2) ***Foreign country.*** The term *foreign country* when used in a geographical sense includes the seabed and subsoil of those submarine areas which are adjacent to the territorial waters of the foreign country and over which such foreign country has exclusive rights, in accordance with international law, with respect to the exploration for, and exploitation of, natural resources, but this sentence applies only if such foreign country exercises, directly or indirectly, taxing jurisdiction with respect to such exploration or exploitation. The term *foreign continental shelf,* as used in this section, refers to the seabed and subsoil described in the preceding sentence. A foreign country is not to be treated as a country contiguous to the United States by reason of the application of section 638 and this section.

(b) ***Exercise of taxing jurisdiction.*** For purposes of paragraph (a)(2) of this section, the exercise, directly or indirectly, of taxing jurisdiction with respect to the exploration for, or exploitation of, natural resources is deemed to include (but is not limited to) those cases in which a foreign country:

(1) Imposes a tax upon assets, equipment, or other property connected with or income derived from such exploration or exploitation, or

(2) Requires natural resources referred to in paragraph (a)(2) of this section to be transported to points within its landward boundaries and then levies a tax upon such natural resources or upon the income derived from the sale thereof

A foreign country which, for purposes of paragraph (a)(2) of this section, exercises taxing jurisdiction by the imposition of tax upon any person, property, or activity engaged in or related to the exploration for, or exploitation of, natural resources in the seabed or subsoil referred to in paragraph (a)(2) of this section, or the income therefrom of any taxpayer, is deemed to exercise taxing jurisdiction over all such persons, property, and activities and over all income therefrom of all such taxpayers; thus, for example, a foreign country which imposes tax upon a person engaged in exploitation of oil and gas wells in its seabed and subsoil referred to in paragraph (a)(2) of this section is deemed to exercise taxing jurisdiction over property related to exploration for other natural deposits in such seabed and subsoil. A foreign country is deemed to be imposing tax upon a person, property, activity, or income described in the preceding sentence if such foreign country exempts such person, property, activity, or income from tax for a period not in excess of 10 years from the commencement of such exploration or exploitation. Except in the case

of a foreign country which is deemed under the preceding sentence to impose tax by virtue of an exemption for a period not in excess of 10 years, a foreign country which exempts all persons, property, and activities engaged in or related to the exploration for, or exploitation of, natural resources in the seabed or subsoil referred to in paragraph (a)(2) of this section and the income therefrom, from taxation is deemed not to be exercising, directly or indirectly, taxing jurisdiction for purposes of paragraph (a)(2) of this section. For purposes of paragraph (a)(2) of this section, the exercise of taxing jurisdiction with respect to any type of tax constitutes the exercise of taxing jurisdiction with respect to all types of taxes. However, a royalty or other charge (whether payable in a lump sum or over a period of time or in amounts dependent upon the volume of production of natural resources) for the right to explore for or exploit natural resources does not constitute a tax.

(c) ***Scope.***

(1) For purposes of applying this section, persons, property, or activities which are engaged in or related to the exploration for, or exploitation of, mines, oil and gas wells, or other natural deposits need not be physically upon, connected, or attached to the seabed or subsoil referred to in subparagraph (1) or (2) of paragraph (a) of this section to be deemed to be within the United States, a possession of the United States, or a foreign country, as the case may be, to the extent provided in subparagraph (2) or (3) and subparagraph (4) of this paragraph.

(2) Persons, property, or activities which are not in a foreign country (determined without regard to section 638 or this section), and which are engaged in or related to the exploration for, or exploitation of, mines, oil and gas wells, or other natural deposits of the seabed or subsoil referred to in paragraph (a)(1) of this section, are generally within the United States or a possession of the United States, as the case may be, unless such persons, property, or activities are solely involved in or constitute transportation to (or from) the site of exploration or exploitation from (or to) a foreign country, other than transportation on a regular basis from (or to) a base of operations.

(3) Persons, property, or activities which are not in the United States or in a third country (determined in each case without regard to section 638 or this section), and which are engaged in or related to the exploration for, or exploitation of, mines, oil and gas wells, or other natural deposits of the seabed or subsoil of a foreign country referred to in paragraph (a)(2) of this section, are generally within such foreign country, unless such persons, property, or activities are solely involved in or constitute transportation to (or from) the site of exploration or exploitation from (or to) the United States or a possession of the United States or a third country, as the case may be, other than transportation on a regular basis from (or to) a base of operations.

(4) Persons, property, or activities are within the United States, a possession of the United States, or a foreign country, as the case may be, pursuant to this paragraph, only to the extent such persons, property, or activities are engaged in or related to the exploration for or exploitation of, mines, oil and gas wells, or other natural deposits.

(d) ***Natural deposits and natural resources.*** For purposes of this section, the terms *natural deposits* and *natural resources* mean nonliving resources to which section 611(a) applies. Such terms do not include sedentary species (organisms which, at the harvestable stage, either are immovable on or under the seabed or are unable to move except in constant physical contact with the seabed or subsoil), fish or other animal or plant life.

(e) ***Rights under international law.*** Nothing in this section shall prejudice or affect the freedoms of the high seas and other rights under international law, or the exercise of such freedoms and rights by the United States or foreign countries.

(f) ***Examples.*** The application of the provisions of section 638 and this section may be illustrated by the following examples:

Example 1. A, a citizen of the United States employed as an engineer, is engaged in the exploitation of oil and is physically present on an offshore oil drilling platform operated by employees of L Corporation. Such platform is affixed to the foreign continental shelf of foreign country X. Assuming that foreign country X exercises taxing jurisdiction as provided in paragraph (b) of this section, A is to be treated as being employed in foreign country X with respect to compensation for his employment for purposes of chapters 1 and 24.

Example 2. The facts are the same as in example 1 except that B, a citizen of the United States engaged in the private practice of law, is physically present on such platform for the sole purpose of interviewing his client, A, whom he represents in a domestic relations matter. Since B is not engaged in activities related to the exploration for, or exploitation of, natural deposits, he is not to be treated as being in foreign country X for purposes of chapters 1 and 2.

Example 3. The facts are the same as in example 1 except that C, a citizen of the United States engaged in the private practice of medicine, is physically present on such platform for the purpose of making routine physical examinations of L Corporation's employees who are engaged in the exploitation of oil on the platform. C is paid by L Corporation to give such examinations on the platform at regular intervals in order to determine whether the state of any employee's health is such that he should not continue work on the platform. The balance of C's medical practice is conducted at his office on the U.S. mainland. Since C is engaged in activities related to the exploitation of oil, he is treated as being in foreign country X under section 638 and this section while making physical examinations on L Corporation's platform, provided that foreign country X exercise taxing jurisdiction as provided in paragraph (b) of this section. For purposes of chapters 1 and 2, amounts paid by L Corporation to C are treated as derived from sources within foreign country X.

Example 4. C, a nonresident alien individual employed as an engineer in a foreign country, designs equipment for use on oil drilling platforms affixed to the continental shelf of the United States and engaged in the exploitation of oil. Although C's activities in this respect are related to the exploitation of oil, C is not treated as being in the United States under section 638 and this section by reason of such activities.

Example 5. M Corporation, a domestic corporation, chartered a ship from N Corporation, also a domestic corporation, under a time charter under which N Corporation's personnel continued to navigate and manage the shop. M Corporation equipped the ship with special oil exploration equipment and furnished its personnel to operate the equipment. The ship then commenced to explore for oil in the foreign Continental Shelf of foreign country Y. Foreign country Y exercises taxing jurisdiction as provided in paragraph (b) of this section. The ship is treated as being within foreign country Y under section 638 and this section for the period it was engaged in the exploration for oil in such foreign Continental Shelf. Thus, the entire income derived during such period by N Corporation from the charter is income derived from sources within foreign country Y, since N Corporation had property and employees engaged in the exploration for oil in such foreign Continental Shelf.

Example 6. The facts are the same as in example 5 except that C, a citizen of the United States, was employed by N Corporation as a cook and was physically present on the ship. C's sole duties consisted of cooking meals for personnel aboard such ship. In such case, as C's activities are related to the exploration for oil, C is to be treated as being in foreign country Y under section 638 and this section for the period he was aboard such ship while it was engaged in activities relating to

the exploration for oil in the foreign Continental Shelf referred to in example 5. For purposes of chapters 1 and 24, C's compensation as a cook for such period is treated as derived from sources without the United States.

Example 7. Z Corporation, a foreign corporation, entered into a contract with Y Corporation, a United States corporation, to engage in exploratory oil drilling activities on a leasehold held by Y Corporation. Such leasehold was located in the Continental Shelf of the United States. Since Z Corporation is engaged in and has property and activities which are engaged in the exploration for oil, such property and activities are to be treated as being in the United States under section 638 and this section for the period such property and activities were engaged in or related to the exploration for oil in the Continental Shelf of the United States and were not in a foreign country. For purposes of chapters 1 and 3, amounts paid to Z Corporation pursuant to the contract are treated as derived from sources within the United States.

Example 8. M Corporation is a controlled foreign corporation (within the meaning of section 957(b)) for its entire taxable year beginning in 1972. During such taxable year, M Corporation issues a policy of insurance relating to fire damage to an offshore oil drilling platform, owned by N Corporation (a foreign corporation), which is attached to the Continental Shelf of the United States. The income attributable to the issuing of such policy would be taxed under subchapter L, chapter 1, subtitle A of the Code (as modified, for this purpose, by section 953(b) (1), (2), and (3)) if such income were the income of a domestic insurance corporation. Since N Corporation's oil drilling platform is located within the United States under section 638 and this section, M Corporation's income attributable to the issuing of the insurance in connection with such platform is income derived from the insurance of United States risks, within the meaning of section 953(a)(1)(A).

[T.D. 7277, 38 FR 12740, May 15, 1973]

§ 1.638-2 Effective date.

The specific requirements and limitations of § 1.638-1 apply on and after December 30, 1969.

[T.D. 7277, 38 FR 12742, May 15, 1973]

§§ 1.639-1.640 [Reserved]

ESTATES, TRUSTS, BENEFICIARIES, AND DECEDENTS

ESTATES, TRUSTS, AND BENEFICIARIES

General Rules for Taxation of Estates and Trusts

§ 1.641 [Reserved]

§ 1.641(a)-0 Scope of subchapter J.

(a) ***In general.*** Subchapter J (sections 641 and following), chapter 1 of the Code, deals with the taxation of income of estates and trusts and their beneficiaries, and of income in respect of decedents. Part I of subchapter J contains general rules for taxation of estates and trusts (subpart A), specific rules relating to trusts which distribute current income only (subpart B), estates and trusts which may accumulate income or which distribute corpus (subpart C), treatment of excess distributions by trusts (subpart D),

grantors and other persons treated as substantial owners (subpart E), and miscellaneous provisions relating to limitations on charitable deductions, income of an estate or trust in case of divorce, and taxable years to which the provisions of subchapter J are applicable (subpart F). Part I has no application to any organization which is not to be classified for tax purposes as a trust under the classification rules of §§ 301.7701-2, 301.7701-3, and 301.7701-4 of this chapter (Regulations on Procedure and Administration). Part II of subchapter J relates to the treatment of income in respect of decedents. However, the provisions of subchapter J do not apply to employee trusts subject to subchapters D and F, chapter 1 of the Code, and common trust funds subject to subchapter H, chapter 1 of the Code.

(b) ***Scope of subparts A, B, C, and D.*** Subparts A, B, C, and D (section 641 and following), part I, subchapter J, chapter 1 of the Code, relate to the taxation of estates and trusts and their beneficiaries. These subparts have no application to any portion of the corpus or income of a trust which is to be regarded, within the meaning of the Code, as that of the grantor or others treated as its substantial owners. See subpart E (section 671 and following), Part I, subchapter J, chapter 1 of the Code, and the regulations thereunder for rules for the treatment of any portion of a trust where the grantor (or another person) is treated as the substantial owner. So-called alimony trusts are treated under subparts A, B, C, and D, except to the extent otherwise provided in section 71 or section 682. These subparts have no application to beneficiaries of nonexempt employees' trusts. See section 402(b) and the regulations thereunder.

(c) ***Multiple trusts.*** Multiple trusts that have:

(1) No substantially independent purposes (such as independent dispositive purposes),

(2) The same grantor and substantially the same beneficiary, and

(3) The avoidance or mitigation of (*i*) the progressive rates of tax (including mitigation as a result of deferral of tax) or (*ii*) the minimum tax for tax preferences imposed by section 56 as their principal purpose,

shall be consolidated and treated as one trust for the purposes of subchapter J.

[T.D. 6500, 25 FR 11814, Nov. 26, 1960, as amended by T.D. 6989, 34 FR 731, Jan. 17, 1969; T.D. 7204, 37 FR 17158, Aug. 25, 1972]

§ 1.641(a)-1 Imposition of tax; application of tax.

For taxable years beginning after December 31, 1970, section 641 prescribes that the taxes imposed by section 1(d), as amended by the Tax Reform Act of 1969, shall apply to the income of estates or of any kind of property held in trust. For taxable years ending before January 1, 1971, section 641 prescribes that the taxes imposed upon individuals by chapter 1 of the Code apply to the income of estates or of any kind of property held in trust. The rates of tax, the statutory provisions respecting gross income, and, with certain exceptions, the deductions and credits allowed to individuals apply also to estates and trust.

[T.D. 7117, 36 FR 9421, May 25, 1971]

§ 1.641(a)-2 Gross income of estates and trusts.

The gross income of an estate or trust is determined in the same manner as that of an individual. Thus, the gross income of an estate or trust consists of all items of gross income received during the taxable year, including:

(a) Income accumulated in trust for the benefit of unborn or unascertained persons or persons with contingent interests;

(b) Income accumulated or held for future distribution under the terms of the will or trust;

(c) Income which is to be distributed currently by the fiduciary to the beneficiaries, and income collected by a guardian of an infant which is to be held or distributed as the court may direct;

(d) Income received by estates of deceased persons during the period of administration or settlement of the estate; and

(e) Income which, in the discretion of the fiduciary, may be either distributed to the beneficiaries or accumulated. The several classes of income enumerated in this section do not exclude others which also may come within the general purposes of section 641.

§ 1.641(b)-1 Computation and payment of tax; deductions and credits of estates and trusts.

Generally, the deductions and credits allowed to individuals are also allowed to estates and trusts. However, there are special rules for the computation of certain deductions and for the allocation between the estate or trust and the beneficiaries of certain credits and deductions. See section 642 and the regulations thereunder. In addition, an estate or trust is allowed to deduct, in computing its taxable income, the deductions provided by sections 651 and 661 and regulations thereunder, relating to distributions to beneficiaries.

§ 1.641(b)-2 Filing of returns and payment of the tax.

(a) The fiduciary is required to make and file the return and pay the tax on the taxable income of an estate or of a trust. Liability for the payment of the tax on the taxable income of an estate attaches to the person of the executor or administrator up to and after his discharge if, prior to distribution and discharge, he had notice of his tax obligations or failed to exercise due diligence in ascertaining whether or not such obligations existed. For the extent of such liability, see section 3467 of the Revised Statutes, as amended by section 518 of the Revenue Act of 1934 (31 U. S. C. 192). Liability for the tax also follows the assets of the estate distributed to heirs, devisees, legatees, and distributees, who may be required to discharge the amount of the tax due and unpaid to the extent of the distributive shares received by them. See section 6901. The same considerations apply to trusts.

(b) The estate of an infant, incompetent, or other person under a disability, or, in general, of an individual or corporation in receivership or a corporation in bankruptcy is not a taxable entity separate from the person for whom the fiduciary is acting, in that respect differing from the estate of a deceased person or of a trust. See section 6012(b) (2) and (3) for provisions relating to the obligation of the fiduciary with respect to returns of such persons.

[T.D. 6500, 25 FR 11814, Nov. 26, 1960, as amended by T.D. 6580, 26 FR 11486, Dec. 5, 1961]

§ 1.641(b)-3 Termination of estates and trusts.

(a) The income of an estate of a deceased person is that which is received by the estate during the period of administration or settlement. The period of administration or settlement is the period actually required by the administrator or executor to perform the ordinary duties of administration, such as the collection of assets and the payment of debts, taxes, legacies, and bequests, whether the period required is longer or shorter than the period specified under the applicable local law for the settlement of estates. For example, where an executor who is also named as trustee under a will fails to obtain his discharge as executor, the period of administration continues only until the duties of administration are complete and he actually assumes his duties as trustee, whether or not pursuant to a court order. However, the period of administration of an estate cannot be unduly prolonged. If the administration of an estate is unreasonably

prolonged, the estate is considered terminated for Federal income tax purposes after the expiration of a reasonable period for the performance by the executor of all the duties of administration. Further, an estate will be considered as terminated when all the assets have been distributed except for a reasonable amount which is set aside in good faith for the payment of unascertained or contingent liabilities and expenses (not including a claim by a beneficiary in the capacity of beneficiary). Notwithstanding the above, if the estate has joined in making a valid election under section 645 to treat a qualified revocable trust, as defined under section 645(b)(1), as part of the estate, the estate shall not terminate under this paragraph prior to the termination of the section 645 election period. See section 645 and the regulations thereunder for rules regarding the termination of the section 645 election period.

(b) Generally, the determination of whether a trust has terminated depends upon whether the property held in trust has been distributed to the persons entitled to succeed to the property upon termination of the trust rather than upon the technicality of whether or not the trustee has rendered his final accounting. A trust does not automatically terminate upon the happening of the event by which the duration of the trust is measured. A reasonable time is permitted after such event for the trustee to perform the duties necessary to complete the administration of the trust. Thus, if under the terms of the governing instrument, the trust is to terminate upon the death of the life beneficiary and the corpus is to be distributed to the remainderman, the trust continues after the death of the life beneficiary for a period reasonably necessary to a proper winding up of the affairs of the trust. However, the winding up of a trust cannot be unduly postponed and if the distribution of the trust corpus is unreasonably delayed, the trust is considered terminated for Federal income tax purposes after the expiration of a reasonable period for the trustee to complete the administration of the trust. Further, a trust will be considered as terminated when all the assets have been distributed except for a reasonable amount which is set aside in good faith for the payment of unascertained or contingent liabilities and expenses (not including a claim by a beneficiary in the capacity of beneficiary).

(c)

(1) Except as provided in subparagraph (2) of this paragraph, during the period between the occurrence of an event which causes a trust to terminate and the time when the trust is considered as terminated under this section, whether or not the income and the excess of capital gains over capital losses of the trust are to be considered as amounts required to be distributed currently to the ultimate distributee for the year in which they are received depends upon the principles stated in § 1.651(a)-2. See § 1.663-1 *et seq.* for application of the separate share rule.

(2)

(i) Except in cases to which the last sentence of this subdivision applies, for taxable years of a trust ending before September 1, 1957, subparagraph (1) of this paragraph shall not apply and the rule of subdivision (ii) of this subparagraph shall apply unless the trustee elects to have subparagraph (1) of this paragraph apply. Such election shall be made by the trustee in a statement filed on or before April 15, 1959, with the district director with whom such trust's return for any such taxable year was filed. The election provided by this subdivision shall not be available if the treatment given the income and the excess of capital gains over capital losses for taxable years for which returns have been filed was consistent with the provisions of subparagraph (1) of this paragraph.

(ii) The rule referred to in subdivision (i) of this subparagraph is as follows: During the period between the occurrence of an event which causes a trust to terminate and the time when a trust is considered as terminated under this section, the income and the excess of capital gains over capital losses of the trust are in general considered as amounts required to be distributed

for the year in which they are received. For example, a trust instrument provides for the payment of income to A during her life, and upon her death for the payment of the corpus to B. The trust reports on the basis of the calendar year. A dies on November 1, 1955, but no distribution is made to B until January 15, 1956. The income of the trust and the excess of capital gains over capital losses for the entire year 1955, to the extent not paid, credited, or required to be distributed to A or A's estate, are treated under sections 661 and 662 as amounts required to be distributed to B for the year 1955.

(d) If a trust or the administration or settlement of an estate is considered terminated under this section for Federal income tax purposes (as for instance, because administration has been unduly prolonged), the gross income, deductions, and credits of the estate or trust are, subsequent to the termination, considered the gross income, deductions, and credits of the person or persons succeeding to the property of the estate or trust.

[T.D. 6500, 25 FR 11814, Nov. 26, 1960; 25 FR 14021, Dec. 31, 1960, as amended by T.D. 9032, 67 FR 78376, Dec. 24, 2002]

§ 1.641(c)-0 Table of contents.

This section lists the major captions contained in § 1.641(c)-1.

§ 1.641(c)-1Electing small business trust.

(a) In general.

(b) Definitions.

(1) Grantor portion.

(2) S portion.

(3) Non-S portion.

(c) Taxation of grantor portion.

(d) Taxation of S portion.

(1) In general.

(2) Section 1366 amounts.

(3) Gains and losses on disposition of S stock.

(4) State and local income taxes and administrative expenses.

(e) Tax rates and exemption of S portion.

(1) Income tax rate.

(2) Alternative minimum tax exemption.

(f) Adjustments to basis of stock in the S portion under section 1367.

(g) Taxation of non-S portion.

(1) In general.

(2) Dividend income under section 1368(c)(2).

(3) Interest on installment obligations.

(4) Charitable deduction.

(h) Allocation of state and local income taxes and administration expenses.

(i) Treatment of distributions from the trust.

(j) Termination or revocation of ESBT election.

(k) Effective date.

(l) Examples.

[T.D. 8994, 67 FR 34394, May 14, 2002]

§ 1.641(c)-1 Electing small business trust.

(a) ***In general.*** An electing small business trust (ESBT) within the meaning of section 1361(e) is treated as two separate trusts for purposes of chapter 1 of the Internal Revenue Code. The portion of an ESBT that consists of stock in one or more S corporations is treated as one trust. The portion of an ESBT that consists of all the other assets in the trust is treated as a separate trust. The grantor or another person may be treated as the owner of all or a portion of either or both such trusts under subpart E, part I, subchapter J, chapter 1 of the Internal Revenue Code. The ESBT is treated as a single trust for administrative purposes, such as having one taxpayer identification number and filing one tax return. *See* § 1.1361-1(m).

(b) ***Definitions*** —

(1) ***Grantor portion*** —

(i) ***In general.*** Subject to paragraph (b)(1)(ii) of this section, the grantor portion of an ESBT is the portion of the trust that is treated as owned by the grantor or another person under subpart E of the Code.

(ii) ***Nonresident alien deemed owner.*** If, pursuant to section 672(f)(2)(A)(ii), the deemed owner of a grantor portion of the ESBT is a nonresident alien, as defined in section 7701(b)(1)(B) (NRA), the items of income, deduction, and credit from that grantor portion must be reallocated from the grantor portion to the S portion, as defined in paragraph (b)(2) of this section, of the ESBT.

(2) *S portion* —

(i) ***In general.*** Subject to paragraph (b)(2)(ii) of this section, the S portion of an ESBT is the portion of the trust that consists of S corporation stock and that is not treated as owned by the grantor or another person under subpart E of the Code.

(ii) ***N*** onresident alien *(NRA) deemed owner of grantor portion.* The S portion of an ESBT also includes the grantor portion of the items of income, deduction, and credit reallocated under paragraph (b)(1)(ii) of this section from the grantor portion of the ESBT to the S portion of the ESBT.

(3) ***Non-S portion.*** The non-S portion of an ESBT is the portion of the trust that consists of all assets other than S corporation stock and that is not treated as owned by the grantor or another person under subpart E.

(c) ***Taxation of grantor portion.*** The grantor or another person who is treated as the owner of a portion of the ESBT includes in computing taxable income items of income, deductions, and credits against tax attributable to that portion of the ESBT under section 671.

(d) *Taxation of S portion* —

(1) ***In general.*** The taxable income of the S portion is determined by taking into account only the items of income, loss, deduction, or credit specified in paragraphs (d)(2), (3), and (4) of this section, to the extent not attributable to the grantor portion.

(2) *Section 1366 amounts* —

(i) ***In general.*** The S portion takes into account the items of income, loss, deduction, or credit that are taken into account by an S corporation shareholder pursuant to section 1366 and the regulations thereunder. Rules otherwise applicable to trusts apply in determining the extent to which any loss, deduction, or credit may be taken into account in determining the taxable income of the S portion. *See* § 1.1361-1(m)(3)(iv) for allocation of those items in the taxable year of the S corporation in which the trust is an ESBT for part of the year and an eligible shareholder under section 1361(a)(2)(A)(i) through (iv) for the rest of the year.

(ii) ***Special rule for charitable contributions.*** If a deduction described in paragraph (d)(2)(i) of this section is attributable to an amount of the S corporation's gross income that is paid by the S corporation for a charitable purpose specified in section 170(c) (without regard to section 170(c)(2)(A)), the contribution will be deemed to be paid by the S portion pursuant to the terms of the trust's governing instrument within the meaning of section 642(c)(1). The limitations of section 681, regarding unrelated business income, apply in determining whether the contribution is deductible in computing the taxable income of the S portion.

(iii) ***Multiple S corporations.*** If an ESBT owns stock in more than one S corporation, items of income, loss, deduction, or credit from all the S corporations are aggregated for purposes of determining the S portion's taxable income.

(3) *Gains and losses on disposition of S stock* —

(i) ***In general.*** The S portion takes into account any gain or loss from the disposition of S corporation stock. No deduction is allowed under section 1211(b)(1) and (2) for capital losses that exceed capital gains.

(ii) ***Installment method.*** If income from the sale or disposition of stock in an S corporation is reported by the trust on the installment method, the income recognized under this method is taken into account by the S portion. See paragraph (g)(3) of this section for the treatment of interest on the installment obligation. See § 1.1361-1(m)(5)(ii) regarding treatment of a trust as an ESBT upon the sale of all S corporation stock using the installment method.

(iii) ***Distributions in excess of basis.*** Gain recognized under section 1368(b)(2) from distributions in excess of the ESBT's basis in its S corporation stock is taken into account by the S portion.

(4) ***State and local income taxes and administrative expenses*** —

(i) ***In general.*** State and local income taxes and administrative expenses directly related to the S portion and those allocated to that portion in accordance with paragraph (h) are taken into account by the S portion.

(ii) ***Special rule for certain interest.*** Interest paid by the trust on money borrowed by the trust to purchase stock in an S corporation is allocated to the S portion but is not a deductible administrative expense for purposes of determining the taxable income of the S portion.

(e) ***Tax rates and exemption of S portion*** —

(1) ***Income tax rate.*** Except for capital gains, the highest marginal trust rate provided in section 1(e) is applied to the taxable income of the S portion. See section 1(h) for the rates that apply to the S portion's net capital gain.

(2) ***Alternative minimum tax exemption.*** The exemption amount of the S portion under section 55(d) is zero.

(f) ***Adjustments to basis of stock in the S portion under section 1367.*** The basis of S corporation stock in the S portion must be adjusted in accordance with section 1367 and the regulations thereunder. If the ESBT owns stock in more than one S corporation, the adjustments to the basis in the S corporation stock of each S corporation must be determined separately with respect to each S corporation. Accordingly, items of income, loss, deduction, or credit of an S corporation that are taken into account by the ESBT under section 1366 can only result in an adjustment to the basis of the stock of that S corporation and cannot affect the basis in the stock of the other S corporations held by the ESBT.

(g) ***Taxation of non-S portion*** —

(1) ***In general.*** The taxable income of the non-S portion is determined by taking into account all items of income, deduction, and credit to the extent not taken into account by either the grantor portion or the S portion. The items attributable to the non-S portion are taxed under subparts A through D of part I, subchapter J, chapter 1 of the Internal Revenue Code. The non-S portion may consist of more than one share pursuant to section 663(c).

(2) ***Dividend income under section 1368(c)(2).*** Any dividend income within the meaning of section 1368(c)(2) is includible in the gross income of the non-S portion.

(3) ***Interest on installment obligations.*** If income from the sale or disposition of stock in an S corporation is reported by the trust on the installment method, the interest on the installment obligation is includible in the gross income of the non-S portion. See paragraph (d)(3)(ii) of this section for the treatment of income from such a sale or disposition.

(4) ***Charitable deduction.*** For purposes of applying section 642(c)(1) to payments made by the trust for a charitable purpose, the amount of gross income of the trust is limited to the gross income of the non-S portion. See paragraph (d)(2)(ii) of this section for special rules concerning charitable contributions paid by the S corporation that are deemed to be paid by the S portion.

(h) ***Allocation of state and local income taxes and administration expenses.*** Whenever state and local income taxes or administration expenses relate to more than one portion of an ESBT, they must be allocated between or among the portions to which they relate. These items may be allocated in any manner that is reasonable in light of all the circumstances, including the terms of the governing instrument, applicable local law, and the practice of the trustee with respect to the trust if it is reasonable and consistent. The taxes and expenses apportioned to each portion of the ESBT are taken into account by that portion.

(i) ***Treatment of distributions from the trust.*** Distributions to beneficiaries from the S portion or the non-S portion, including distributions of the S corporation stock, are deductible under section 651 or 661 in determining the taxable income of the non-S portion, and are includible in the gross income of the beneficiaries under section 652 or 662. However, the amount of the deduction or inclusion cannot exceed the amount of the distributable net income of the non-S portion. Items of income, loss, deduction, or credit taken into account by the grantor portion or the S portion are excluded for purposes of determining the distributable net income of the non-S portion of the trust.

(j) ***Termination or revocation of ESBT election.*** If the ESBT election of the trust terminates pursuant to § 1.1361-1(m)(5) or the ESBT election is revoked pursuant to § 1.1361-1(m)(6), the rules contained in this section are thereafter not applicable to the trust. If, upon termination or revocation, the S portion has a net operating loss under section 172; a capital loss carryover under section 1212; or deductions in excess of gross income; then any such loss, carryover, or excess deductions shall be allowed as a deduction, in accordance with the regulations under section 642(h), to the trust, or to the beneficiaries succeeding to the property of the trust if the entire trust terminates.

(k) ***Applicability date.*** This section generally is applicable for taxable years of ESBTs beginning on and after May 14, 2002. However, paragraphs (a), (b), (c), and (l)(1)(*Example 1*) of this section are applicable for taxable years of ESBTs that end on and after December 29, 2000. ESBTs may apply paragraphs (d)(4) and (h) of this section for taxable years of ESBTs beginning after December 31, 1996. Paragraphs (b)(1) and (2) of this section, and *Example 6* in paragraph (l)(6) of this section, apply to all ESBTs after December 31, 2017.

(l) ***Examples.*** The following examples illustrate the rules of this section:

(1) ***Example 1: Comprehensive example.***

(i) Trust has a valid ESBT election in effect. Under section 678, *B* is treated as the owner of a portion of Trust consisting of a 10% undivided fractional interest in Trust. No other person is treated as the owner of any other portion of Trust under subpart E. Trust owns stock in *X,* an S corporation, and in *Y,* a C corporation. During 2000, Trust receives a distribution from *X* of $5,100, of which $5,000 is applied against Trust's adjusted basis in the *X* stock in accordance with section 1368(c)(1) and $100 is a dividend under section 1368(c)(2). Trust makes no distributions to its beneficiaries during the year.

(ii) For 2000, Trust has the following items of income and deduction:

TABLE 1 TO PARAGRAPH (L)(1)(II)

Ordinary income attributable to *X* under section 1366	$5,000
Dividend income from *Y*	$900
Dividend from *X* representing C corporation earnings and profits	$100
Total trust income	$6,000
Charitable contributions attributable to *X* under section 1366	$300
Trustee fees	$200
State and local income taxes	$100

(iii) Trust's items of income and deduction are divided into a grantor portion, an S portion, and a non-S portion for purposes of determining the taxation of those items. Income is allocated to each portion as follows:

(A) *B* must take into account the items of income attributable to the grantor portion, that is, 10% of each item, as follows:

TABLE 2 TO PARAGRAPH (L)(1)(III)(A)

Ordinary income from *X*	$500
Dividend income from *Y*	$90
Dividend income from *X*	$10
Total grantor portion income	$600

(B) The total income of the S portion is $4,500, determined as follows:

TABLE 3 TO PARAGRAPH (L)(1)(III)(B)

Ordinary income from *X*	$5,000
Less: Grantor portion	($500)

Total S portion income	$4,500

(C) The total income of the non-S portion is $900 determined as follows:

TABLE 4 TO PARAGRAPH (L)(1)(III)(C)

Dividend income from *Y* (less grantor portion)	$810
Dividend income from *X* (less grantor portion)	$90
Total non-S portion income	$900

(iv) The administrative expenses and the state and local income taxes relate to all three portions and under state law would be allocated ratably to the $6,000 of trust income. Thus, these items would be allocated 10% (600/6000) to the grantor portion, 75% (4500/6000) to the S portion and 15% (900/6000) to the non-S portion.

(v) *B* must take into account the following deductions attributable to the grantor portion of the trust:

TABLE 5 TO PARAGRAPH (L)(1)(V)

Charitable contributions from *X*	$30
Trustee fees	$20
State and local income taxes	$10

(vi) The taxable income of the S portion is $4,005, determined as follows:

TABLE 6 TO PARAGRAPH (L)(1)(VI)

Ordinary income from *X*	$4,500
Less: Charitable contributions from *X* (less grantor portion)	($270)
75% of trustee fees	($150)
75% of state and local income taxes	($75)

Taxable income of S portion	$4,005

(vii) The taxable income of the non-S portion is $755, determined as follows:

TABLE 7 TO PARAGRAPH (L)(1)(VII)

Dividend income from *Y*	$810
Dividend income from *X*	$90
Total non-S portion income	$900
Less: 15% of trustee fees	($30)
15% state and local income taxes	($15)
Personal exemption	($100)
Taxable income of non-S portion	$755

(2) ***Example 2: Sale of S stock.***

Trust has a valid ESBT election in effect and owns stock in *X,* an S corporation. No person is treated as the owner of any portion of Trust under subpart E. In 2003, Trust sells all of its stock in *X* to a person who is unrelated to Trust and its beneficiaries and realizes a capital gain of $5,000. This gain is taken into account by the S portion and is taxed using the appropriate capital gain rate found in section 1(h).

(3) ***Example 3*** —

(i) ***Sale of S stock for an installment note.*** Assume the same facts as in *Example 2,* in paragraph (l)(2) of this section except that Trust sells its stock in *X* for a $400,000 installment note payable with stated interest over ten years. After the sale, Trust does not own any S corporation stock.

(ii) ***Loss on installment sale.*** Assume Trust's basis in its *X* stock was $500,000. Therefore, Trust sustains a capital loss of $100,000 on the sale. Upon the sale, the S portion terminates and the excess loss, after being netted against the other items taken into account by the S portion, is made available to the entire trust as provided in section 641(c)(4).

(iii) ***Gain on installment sale.*** Assume Trust's basis in its *X* stock was $300,000 and that the $100,000 gain will be recognized under the installment method of section 453. Interest income will be recognized annually as part of the installment payments. The portion of the $100,000 gain recognized annually is taken into account by the S portion. However, the annual interest income is includible in the gross income of the non-S portion.

(4) ***Example 4: Charitable lead annuity trust.***

Trust is a charitable lead annuity trust which is not treated as owned by the grantor or another person under subpart E. Trust acquires stock in *X*, an S corporation, and elects to be an ESBT. During the taxable year, pursuant to its terms, Trust pays $10,000 to a charitable organization described in section 170(c)(2). The non-S portion of Trust receives an income tax deduction for the charitable contribution under section 642(c) only to the extent the amount is paid out of the gross income of the non-S portion. To the extent the amount is paid from the S portion by distributing S corporation stock, no charitable deduction is available to the S portion.

(5) ***Example 5: ESBT distributions.***

(i) As of January 1, 2002, Trust owns stock in *X*, a C corporation. No portion of Trust is treated as owned by the grantor or another person under subpart E. *X* elects to be an S corporation effective January 1, 2003, and Trust elects to be an ESBT effective January 1, 2003. On February 1, 2003, *X* makes an $8,000 distribution to Trust, of which $3,000 is treated as a dividend from accumulated earnings and profits under section 1368(c)(2) and the remainder is applied against Trust's basis in the *X* stock under section 1368(b). The trustee of Trust makes a distribution of $4,000 to Beneficiary during 2003. For 2003, Trust's share of *X*'s section 1366 items is $5,000 of ordinary income. For the year, Trust has no other income and no expenses or state or local taxes.

(ii) For 2003, Trust has $5,000 of taxable income in the S portion. This income is taxed to Trust at the maximum rate provided in section 1(e). Trust also has $3,000 of distributable net income (DNI) in the non-S portion. The non-S portion of Trust receives a distribution deduction under section 661(a) of $3,000, which represents the amount distributed to Beneficiary during the year ($4,000), not to exceed the amount of DNI ($3,000). Beneficiary must include this amount in gross income under section 662(a). As a result, the non-S portion has no taxable income.

(6) ***Example 6: NRA as potential current beneficiary.*** Domestic Trust (DT) has a valid ESBT election in effect. DT owns S corporation stock. The S corporation owns U.S. and foreign assets. The foreign assets produce foreign source income. B, an NRA, is the grantor and the only trust beneficiary and potential current beneficiary of DT. B is not a resident of a country with which the United States has an income tax treaty. Under section 677(a), B is treated as the owner of DT because, under the trust documents, income and corpus may be distributed only to B during B's lifetime. Paragraph (b)(2)(ii) of this section requires that the S corporation income of the ESBT that otherwise would have been allocated to B under the grantor trust rules must be reallocated from B's grantor portion to the S portion of DT. In the example in this paragraph (l)(6), the S portion of DT is treated as including the grantor portion of the ESBT, and thus all of DT's income from the S corporation is taxable to DT.

[T.D. 8994, 67 FR 34395, May 14, 2002, as amended by T.D. 9868, 84 FR 28215, June 18, 2019]

§ 1.642(a)(1)-1 Partially tax-exempt interest.

An estate or trust is allowed the credit against tax for partially tax-exempt interest provided by section 35 only to the extent that the credit does not relate to interest properly allocable to a beneficiary under section 652 or 662 and the regulations thereunder. A beneficiary of an estate or trust is allowed the credit against tax for partially tax-exempt interest provided by section 35 only to the extent that the credit relates to interest properly allocable to him under section 652 or 662 and the regulations thereunder. If an estate or trust holds partially tax-exempt bonds and elects under section 171 to treat the premium on the bonds as amortizable, the credit allowable under section 35, with

respect to the bond interest (whether allowable to the estate or trust or to the beneficiary), is reduced under section 171(a)(3) by reducing the shares of the interest allocable, respectively, to the estate or trust and its beneficiary by the portion of the amortization deduction attributable to the shares.

§ 1.642(a)(2)-1 Foreign taxes.

An estate or trust is allowed the credit against tax for taxes imposed by foreign countries and possessions of the United States to the extent allowed by section 901 only for so much of those taxes as are not properly allocable under that section to the beneficiaries. See section 901(b)(4). For purposes of section 901(b)(4), the term *beneficiaries* includes charitable beneficiaries.

§ 1.642(a)(3)-1 Dividends received by an estate or trust.

An estate or trust is allowed a credit against the tax for dividends received on or before December 31, 1964 (see section 34), only for so much of the dividends as are not properly allocable to any beneficiary under section 652 or 662. Section 642(a)(3), and this section do not apply to amounts received as dividends after December 31, 1964. For treatment of the credit in the hands of the beneficiary see § 1.652(b)-1.

[T.D. 6777, 29 FR 17808, Dec. 16, 1964]

§ 1.642(a)(3)-2 Time of receipt of dividends by beneficiary.

In general, dividends are deemed received by a beneficiary in the taxable year in which they are includible in his gross income under section 652 or 662. For example, a simple trust, reporting on the basis of a fiscal year ending October 30, receives quarterly dividends on November 3, 1954, and February 3, May 3, and August 3, 1955. These dividends are all allocable to beneficiary A, reporting on a calendar year basis, under section 652 and are deemed received by A in 1955. See section 652(c). Accordingly, A may take all these dividends into account in determining his credit for dividends received under section 34 and his dividends exclusion under section 116. However, solely for purposes of determining whether dividends deemed received by individuals from trusts or estates qualify under the time limitations of section 34(a) or section 116(a), section 642(a)(3) provides that the time of receipt of the dividends by the trust or estate is also considered the time of receipt by the beneficiary. For example, a simple trust reporting on the basis of a fiscal year ending October 30 receives quarterly dividends on December 3, 1953, and March 3, June 3, and September 3, 1954. These dividends are all allocable to beneficiary A, reporting on the calendar year basis, under section 652 and are includible in his income for 1954. However, for purposes of section 34(a) or section 116(a), these dividends are deemed received by A on the same dates that the trust received them. Accordingly, A may take into account in determining the credit under section 34 only those dividends received by the trust on September 3, 1954, since the dividend received credit is not allowed under section 34 for dividends received before August 1, 1954 (or after December 31, 1964). Section 642(a)(3) and this section do not apply to amounts received by an estate or trust as dividends after December 31, 1964. However, the rules in this section relating to time of receipt of dividends by a beneficiary are applicable to dividends received by an estate or trust prior to January 1, 1965, and accordingly, such dividends are deemed to be received by the beneficiary (even though received after December 31, 1964) on the same dates that the estate or trust received them for purposes of determining the credit under section 34 or the exclusion under section 116.

[T.D. 6777, 29 FR 17808, Dec. 16, 1964]

§ 1.642(a)(3)-3 Cross reference.

See § 1.683-2(c) for examples relating to the treatment of dividends received by an estate or trust during a fiscal year beginning in 1953 and ending in 1954.

§ 1.642(b)-1 Deduction for personal exemption.

In lieu of the deduction for personal exemptions provided by section 151:

(a) An estate is allowed a deduction of $600,

(b) A trust which, under its governing instrument, is required to distribute currently all of its income for the taxable year is allowed a deduction of $300, and

(c) All other trusts are allowed a deduction of $100.

A trust which, under its governing instrument, is required to distribute all of its income currently is allowed a deduction of $300, even though it also distributes amounts other than income in the taxable year and even though it may be required to make distributions which would qualify for the charitable contributions deduction under section 642(c) (and therefore does not qualify as a "simple trust" under sections 651-652). A trust for the payment of an annuity is allowed a deduction of $300 in a taxable year in which the amount of the annuity required to be paid equals or exceeds all the income of the trust for the taxable year. For the meaning of the term *income required to be distributed currently,* see § 1.651(a)-2.

§ 1.642(c)-0 Effective dates.

The provisions of section 642(c) (other than section 642(c)(5)) and of §§ 1.642 (c)-1 through 1.642(c)-4 apply to amounts paid, permanently set aside, or to be used for a charitable purpose in taxable years beginning after December 31, 1969. The provisions of section 642(c)(5) and of §§ 1.642(c)-5 through 1.642(c)-7 apply to transfers in trust made after July 31, 1969. For provisions relating to amounts paid, permanently set aside, or to be used for a charitable purpose in taxable years beginning before January 1, 1970, see 26 CFR 1.642(c)-1 through 1.642(c)-4 (Rev. as of Jan. 1, 1971).

[T.D. 7357, 40 FR 23739, June 2, 1975]

§ 1.642(c)-1 Unlimited deduction for amounts paid for a charitable purpose.

(a) ***In general.***

(1) Any part of the gross income of an estate, or trust which, pursuant to the terms of the governing instrument is paid (or treated under paragraph (b) of this section as paid) during the taxable year for a purpose specified in section 170(c) shall be allowed as a deduction to such estate or trust in lieu of the limited charitable contributions deduction authorized by section 170(a). In applying this paragraph without reference to paragraph (b) of this section, a deduction shall be allowed for an amount paid during the taxable year in respect of gross income received in a previous taxable year, but only if no deduction was allowed for any previous taxable year to the estate or trust, or in the case of a section 645 election, to a related estate, as defined under § 1.645-1(b), for the amount so paid.

(2) In determining whether an amount is paid for a purpose specified in section 170(c)(2) the provisions of section 170(c)(2)(A) shall not be taken into account. Thus, an amount paid to a corporation, trust, or community chest, fund, or foundation otherwise described in section 170(c)(2) shall be considered paid for a purpose specified in section 170(c) even though the corporation, trust, or community chest, fund, or foundation is not created or organized in the United States, any State, the District of Columbia, or any possession of the United States.

(3) See section 642(c)(6) and § 1.642(c)-4 for disallowance of a deduction under this section to a trust which is, or is treated under section 4947(a)(1) as though it were a private foundation (as defined in section 509(a) and the regulations thereunder) and not exempt from taxation under section 501(a).

(b) ***Election to treat contributions as paid in preceding taxable year*** —

(1) ***In general.*** For purposes of determining the deduction allowed under paragraph (a) of this section, the fiduciary (as defined in section 7701(a)(6)) of an estate or trust may elect under section 642(c)(1) to treat as paid during the taxable year (whether or not such year begins before January 1, 1970) any amount of gross income received during such taxable year or any preceding taxable year which is otherwise deductible under such paragraph and which is paid after the close of such taxable year but on or before the last day of the next succeeding taxable year of the estate or trust. The preceding sentence applies only in the case of payments actually made in a taxable year which is a taxable year beginning after December 31, 1969. No election shall be made, however, in respect of any amount which was deducted for any previous taxable year or which is deducted for the taxable year in which such amount is paid.

(2) ***Time for making election.*** The election under subparagraph (1) of this paragraph shall be made not later than the time, including extensions thereof, prescribed by law for filing the income tax return for the succeeding taxable year. Such election shall, except as provided in subparagraph (4) of this paragraph, become irrevocable after the last day prescribed for making it. Having made the election for any taxable year, the fiduciary may, within the time prescribed for making it, revoke the election without the consent of the Commissioner.

(3) ***Manner of making the election.*** The election shall be made by filing with the income tax return (or an amended return) for the taxable year in which the contribution is treated as paid a statement which:

(i) States the name and address of the fiduciary,

(ii) Identifies the estate or trust for which the fiduciary is acting,

(iii) Indicates that the fiduciary is making an election under section 642(c)(1) in respect of contributions treated as paid during such taxable year,

(iv) Gives the name and address of each organization to which any such contribution is paid, and

(v) States the amount of each contribution and date of actual payment or, if applicable, the total amount of contributions paid to each organization during the succeeding taxable year, to be treated as paid in the preceding taxable year.

(4) ***Revocation of certain elections with consent.*** An application to revoke with the consent of the Commissioner any election made on or before June 8, 1970, must be in writing and must be filed not later than September 2, 1975.

No consent will be granted to revoke an election for any taxable year for which the assessment of a deficiency is prevented by the operation of any law or rule of law. If consent to revoke the election is granted, the fiduciary must attach a copy of the consent to the return (or amended return) for each taxable year affected by the revocation. The application must be addressed to the Commissioner of Internal Revenue, Washington, DC 20224, and must indicate:

(i) The name and address of the fiduciary and the estate or trust for which he was acting,

(ii) The taxable year for which the election was made,

(iii) The office of the district director, or the service center, where the return (or amended return) for the year of election was filed, and

(iv) The reason for revoking the election.

[T.D. 7357, 40 FR 23739, June 2, 1975; 40 FR 24361, June 6, 1975; T.D. 9032, 67 FR 78376, Dec. 24, 2002]

§ 1.642(c)-2 Unlimited deduction for amounts permanently set aside for a charitable purpose.

(a) ***Estates.*** Any part of the gross income of an estate which pursuant to the terms of the will:

(1) Is permanently set aside during the taxable year for a purpose specified in section 170(c), or

(2) Is to be used (within or without the United States or any of its possessions) exclusively for religious, charitable, scientific, literary, or educational purposes, or for the prevention of cruelty to children or animals, or for the establishment, acquisition, maintenance, or operation of a public cemetery not operated for profit,

shall be allowed as a deduction to the estate in lieu of the limited charitable contributions deduction authorized by section 170(a).

(b) ***Certain trusts*** —

(1) ***In general.*** Any part of the gross income of a trust to which either subparagraph (3) or (4) of this paragraph applies, that by the terms of the governing instrument:

(i) Is permanently set aside during the taxable year for a purpose specified in section 170(c), or

(ii) Is to be used (within or without the United States or any of its possessions) exclusively for religious, charitable, scientific, literary, or educational purposes, or for the prevention of cruelty to children or animals, or for the establishment, acquisition, maintenance, or operation of a public cemetery not operated for profit,

shall be allowed, subject to the limitation provided in subparagraph (2) of this paragraph, as a deduction to the trust in lieu of the limited charitable contributions deduction authorized by section 170(a). The preceding sentence applied only to a trust which is required by the terms of its governing instrument to set amounts aside. See section 642(c)(6) and § 1.642(c)-4 for disallowance of a deduction under this section to a trust which is, or is treated under section 4947(a)(1) as though it were, a private foundation (as defined in section 509(a) and the regulations thereunder) that is not exempt from taxation under section 501(a).

(2) ***Limitation of deduction.*** Subparagraph (1) of this paragraph applies only to the gross income earned by a trust with respect to amounts transferred to the trust under a will executed on or before October 9, 1969, and satisfying the requirements of subparagraph (4) of this paragraph or transferred to the

trust on or before October 9, 1969. For such purposes, any income, gains, or losses, which are derived at any time from the amounts so transferred to the trust shall also be taken into account in applying subparagraph (1) of this paragraph. If any such amount so transferred to the trust is invested or reinvested at any time, any asset received by the trust upon such investment or reinvestment shall also be treated as an amount which was so transferred to the trust. In the case of a trust to which this paragraph applies which contains

(i) amounts transferred pursuant to transfers described in the first sentence of this subparagraph and

(ii) amounts transferred pursuant to transfers not so described, subparagraph (1) of this paragraph shall apply only if the amounts described in subdivision (i) of this subparagraph, together with all income, gains, and losses derived therefrom, are separately accounted for from the amounts described in subdivision (ii) of this subparagraph, together with all income, gains, and losses derived therefrom. Such separate accounting shall be carried out consistently with the principles of paragraph (c)(4) of § 53.4947-1 of this chapter (Foundation Excise Tax Regulations), relating to accounting for segregated amounts of split-interest trusts.

(3) ***Trusts created on or before October 9, 1969.*** A trust to which this subparagraph applies is a trust, testamentary or otherwise, which was created on or before October 9, 1969, and which qualifies under either subdivision (i) or (ii) of this subparagraph.

(i) ***Transfer of irrevocable remainder interest to charity.*** To qualify under this subdivision the trust must have been created under the terms of an instrument granting an irrevocable remainder interest in such trust to or for the use of an organization described in section 170(c). If the instrument granted a revocable remainder interest but the power to revoke such interest terminated on or before October 9, 1969, without the remainder interest having been revoked, the remainder interest will be treated as irrevocable for purposes of the preceding sentence.

(ii) ***Grantor under a mental disability to change terms of trust.***

(A) To qualify under this subdivision (ii) the trust must have been created by a grantor who was at all times after October 9, 1969, under a mental disability to change the terms of the trust. The term *mental disability* for this purpose means mental incompetence to change the terms of the trust, whether or not there has been an adjudication of mental incompetence and whether or not there has been an appointment of a committee, guardian, fiduciary, or other person charged with the care of the person or property of the grantor.

(B) If the grantor has not been adjudged mentally incompetent, the trustee must obtain from a qualified physician a certificate stating that the grantor of the trust has been mentally incompetent at all times after October 9, 1969, and that there is no reasonable probability that the grantor's mental capacity will ever improve to the extent that he will be mentally competent to change the terms of the trust. A copy of this certification must be filed with the first return on which a deduction is claimed by reason of this subdivision (ii) and subparagraph (1) of this paragraph. Thereafter, a statement referring to such medical opinion must be attached to any return for a taxable year for which such a deduction is claimed and during which the grantor's mental incompetence continues. The original certificate must be retained by the trustee of the trust.

(C) If the grantor has been adjudged mentally incompetent, a copy of the judgment or decree, and any modification thereof, must be filed with the first return on which a deduction is claimed by reason of this subdivision (ii) and subparagraph (1) of this paragraph. Thereafter, a statement referring to such judgment or decree must be attached to any return for a taxable year for which such a deduction is claimed and during which the grantor's mental incompetence continues. A copy of such judgment or decree must also be retained by the trustee of the trust.

(D) This subdivision (ii) applies even though a person charged with the care of the person or property of the grantor has the power to change the terms of the trust.

(4) ***Testamentary trust established by will executed on or before October 9, 1969.*** A trust to which this subparagraph applies is a trust which was established by will executed on or before October 9, 1969, and which qualifies under either subdivision (i), (ii), or (iii) of this subparagraph. This subparagraph does not apply, however, to that portion of any trust, not established by a will executed on or before October 9, 1969, which was transferred to such trust by a will executed on or before October 9, 1969. Nor does it apply to that portion of any trust, not established by a will executed on or before October 9, 1969, which was subject to a testamentary power of appointment that fails by reason of the testator's nonexercise of the power in a will executed on or before October 9, 1969.

(i) ***Testator dying within 3 years without republishing his will.*** To qualify under this subdivision the trust must have been established by the will of a testator who died after October 9, 1969, but before October 9, 1972, without having amended any dispositive provision of the will after October 9, 1969, by codicil or otherwise.

(ii) ***Testator having no right to change his will.*** To qualify under this subdivision the trust must have been established by the will of a testator who died after October 9, 1969, and who at no time after that date had the right to change any portion of such will pertaining to such trust. This subdivision could apply, for example, where a contract has been entered into for the execution of wills containing reciprocal provisions as well as provisions for the benefit of an organization described in section 170(c) and under applicable local law the surviving testator is prohibited from revoking his will because he has accepted the benefit of the provisions of the will of the other contracting party.

(iii) ***Testator under a mental disability to republish his will.*** To qualify under this subdivision the trust must have been established by the will of a testator who died after October 8, 1972, without having amended any dispositive provision of such will after October 9, 1969, and before October 9, 1972, by codicil or otherwise, and who is under a mental disability at all times after October 8, 1972, to amend such will, by codicil or otherwise. The provisions of subparagraph (3)(ii) of this paragraph with respect to mental incompetence apply for purposes of this subdivision.

(iv) ***Amendment of dispositive provisions.*** The provisions of paragraph (e) (4) and (5) of § 20.2055-2 of this chapter (Estate Tax Regulations) are to be applied under subdivisions (i) and (iii) of this subparagraph in determining whether there has been an amendment of a dispositive provision of a will.

(c) ***Pooled income funds.*** Any part of the gross income of a pooled income fund to which § 1.642(c)-5 applies for the taxable year that is attributable to net long-term capital gain (as defined in section 1222(7)) which, pursuant to the terms of the governing instrument, is permanently set aside during the taxable year for a purpose specified in section 170(c) shall be allowed as a deduction to the fund in lieu of the limited

charitable contributions deduction authorized by section 170(a). No amount of net long-term capital gain shall be considered permanently set aside for charitable purposes if, under the terms of the fund's governing instrument and applicable local law, the trustee has the power, whether or not exercised, to satisfy the income beneficiaries' right to income by the payment of either: an amount equal to a fixed percentage of the fair market value of the fund's assets (whether determined annually or averaged on a multiple year basis); or any amount that takes into account unrealized appreciation in the value of the fund's assets. In addition, no amount of net long-term capital gain shall be considered permanently set aside for charitable purposes to the extent the trustee distributes proceeds from the sale or exchange of the fund's assets as income within the meaning of § 1.642(c)-5(a)(5)(i). No deduction shall be allowed under this paragraph for any portion of the gross income of such fund which is

(1) attributable to income other than net long-term capital gain

(2) earned with respect to amounts transferred to such fund before August 1, 1969. However, see paragraph (b) of this section for a deduction (subject to the limitations of such paragraph) for amounts permanently set aside by a pooled income fund which meets the requirements of that paragraph. The principles of paragraph (b) or (2) of this section with respect to investment, reinvestment, and separate accounting shall apply under this paragraph in the case of amounts transferred to the fund after July 31, 1969.

(d) ***Disallowance of deduction for certain amounts not deemed to be permanently set aside for charitable purposes.*** No amount will be considered to be permanently set aside, or to be used, for a purpose described in paragraph (a) or (b)(1) of this section unless under the terms of the governing instrument and the circumstances of the particular case the possibility that the amount set aside, or to be used, will not be devoted to such purpose or use is so remote as to be negligible. Thus, for example, where there is possibility of the invasion of the corpus of a charitable remainder trust, as defined in § 1.664-1(a)(1)(ii), in order to make payment of the annuity amount or unitrust amount, no deduction will be allowed under paragraph (a) of this section in respect of any amount set aside by an estate for distribution to such a charitable remainder trust.

(e) ***Effective dates.*** Generally, the second sentence of paragraph (c) of this section, concerning the loss of any charitable deduction for long-term capital gains if the fund's income may be determined by a fixed percentage of the fair market value of the fund's assets or by any amount that takes into account unrealized appreciation in the value of the fund's assets, applies for taxable years beginning after January 2, 2004. In a state whose statute permits income to be determined by reference to a fixed percentage of, or the unrealized appreciation in, the value of the fund's assets, net long-term capital gain of a pooled income fund may be considered to be permanently set aside for charitable purposes if the fund's governing instrument is amended or reformed to eliminate the possibility of determining income in such a manner and if income has not been determined in this manner. For this purpose, a judicial proceeding to reform the fund's governing instrument must be commenced, or a nonjudicial reformation that is valid under state law must be completed, by the date that is nine months after the later of January 2, 2004 or the effective date of the state statute authorizing determination of income in such a manner.

For treatment of distributions by an estate to a charitable remainder trust, see paragraph (a)(5)(iii) of § 1.664-1.

[T.D. 7357, 40 FR 23740, June 2, 1975; 40 FR 24361, June 6, 1975, as amended by T.D. 9102, 69 FR 17, Jan. 2, 2004]

§ 1.642(c)-3 Adjustments and other special rules for determining unlimited charitable contributions deduction.

(a) ***Income in respect of a decedent.*** For purposes of §§ 1.642(c)-1 and 1.642(c)-2, an amount received by an estate or trust which is includible in its gross income under section 691(a)(1) as income in respect of a decedent shall be included in the gross income of the estate or trust.

(b) ***Determination of amounts deductible under section 642(c) and the character of such amounts*** —

(1) ***Reduction of charitable contributions deduction by amounts not included in gross income.*** If an estate, pooled income fund, or other trust pays, permanently sets aside, or uses any amount of its income for a purpose specified in section 642(c) (1), (2) or (3) and that amount includes any items of estate or trust income not entering into the gross income of the estate or trust, the deduction allowable under § 1.642(c)-1 or § 1.642(c)-2 is limited to the gross income so paid, permanently set aside, or used. In the case of a pooled income fund for which a deduction is allowable under paragraph (c) of § 1.642(c)-2 for amounts permanently set aside, only the gross income of the fund which is attributable to net long-term capital gain (as defined in section 1222(7)) shall be taken into account.

(2) ***Determination of the character of an amount deductible under section 642(c).*** In determining whether the amounts of income so paid, permanently set aside, or used for a purpose specified in section 642(c)(1), (2), or (3) include particular items of income of an estate or trust, whether or not included in gross income, a provision in the governing instrument or in local law that specifically provides the source out of which amounts are to be paid, permanently set aside, or used for such a purpose controls for Federal tax purposes to the extent such provision has economic effect independent of income tax consequences. See § 1.652(b)-2(b). In the absence of such specific provisions in the governing instrument or in local law, the amount to which section 642(c) applies is deemed to consist of the same proportion of each class of the items of income of the estate or trust as the total of each class bears to the total of all classes. See § 1.643(a)-5(b) for the method of determining the allocable portion of exempt income and foreign income. This paragraph (b)(2) is illustrated by the following examples:

Example 1. A charitable lead annuity trust has the calendar year as its taxable year, and is to pay an annuity of $10,000 annually to an organization described in section 170(c). A provision in the trust governing instrument provides that the $10,000 annuity should be deemed to come first from ordinary income, second from short-term capital gain, third from fifty percent of the unrelated business taxable income, fourth from long-term capital gain, fifth from the balance of unrelated business taxable income, sixth from tax-exempt income, and seventh from principal. This provision in the governing instrument does not have economic effect independent of income tax consequences, because the amount to be paid to the charity is not dependent upon the type of income from which it is to be paid. Accordingly, the amount to which section 642(c) applies is deemed to consist of the same proportion of each class of the items of income of the trust as the total of each class bears to the total of all classes.

Example 2. A trust instrument provides that 100 percent of the trust's ordinary income must be distributed currently to an organization described in section 170(c) and that all remaining items of income must be distributed currently to B, a noncharitable beneficiary. This income ordering provision has economic effect independent of income tax consequences because the amount to be paid to the charitable organization each year is dependent upon the amount of ordinary income the trust earns within that taxable year. Accordingly, for purposes of section 642(c), the full amount distributed to charity is deemed to consist of ordinary income.

(3) ***Other examples.*** For examples showing the determination of the character of an amount deductible under § 1.642(c)-1 or § 1.642(c)-2, see examples 1 and 2 in § 1.662(b)-2 and paragraph (e) of the example in § 1.662(c)-4.

(c) ***Capital gains included in charitable contribution.*** Where any amount of the income paid, permanently set aside, or used for a purpose specified in section 642(c) (1), (2), or (3), is attributable to net long-term capital gain (as defined in section 1222(7)), the amount of the deduction otherwise allowable under § 1.642(c)-1 or § 1.642(c)-2, must be adjusted for any deduction provided in section 1202 of 50 percent of the excess, if any, of the net long-term capital gain over the net short-term capital loss. For determination of the extent to which the contribution to which § 1.642(c)-1 or § 1.642(c)-2 applies is deemed to consist of net long-term capital gains, see paragraph (b) of this section. The application of this paragraph may be illustrated by the following examples:

Example 1. Under the terms of the trust instrument, the income of a trust described in § 1.642(c)-2 (b)(3)(i) is currently distributable to A during his life and capital gains are allocable to corpus. No provision is made in the trust instrument for the invasion of corpus for the benefit of A. Upon A's death the corpus of the trust is to be distributed to M University, an organization described in section 501(c)(3) which is exempt from taxation under section 501(a). During the taxable year ending December 31, 1970, the trust has long-term capital gains of $100,000 from property transferred to it on or before October 9, 1969, which are permanently set aside for charitable purposes. The trust includes $100,000 in gross income but is allowed a deduction of $50,000 under section 1202 for the long-term capital gains and a charitable contributions deduction of $50,000 under section 642(c)(2) ($100,000 permanently set aside for charitable purposes less $50,000 allowed as a deduction under section 1202 with respect to such $100,000).

Example 2. Under the terms of the will, $200,000 of the income (including $100,000 capital gains) for the taxable year 1972 of an estate is distributed, one-quarter to each of two individual beneficiaries and one-half to N University, an organization described in section 501(c)(3) which is exempt from taxation under section 501(a). During 1972 the estate has ordinary income of $200,000, long-term capital gains of $100,000, and no capital losses. It is assumed that for 1972 the estate has no other items of income or any deductions other than those discussed herein. The entire capital gains of $100,000 are included in the gross income of the estate for 1972, and N University receives $100,000 from the estate in such year. However, the amount allowable to the estate under section 642(c)(1) is subject to appropriate adjustment for the deduction allowable under section 1202. In view of the distributions of $25,000 of capital gains to each of the individual beneficiaries, the deduction allowable to the estate under section 1202 is limited by such section to $25,000 [($100,000 capital gains less $50,000 capital gains includible in income of individual beneficiaries under section 662) × 50%]. Since the whole of this $25,000 deduction under section 1202 is attributable to the distribution of $50,000 of capital gains to N University, the deduction allowable to the estate in 1972 under section 642(c)(1) is $75,000 [$100,000 (distributed to N) less $25,000 (proper adjustment for section 1202 deduction)].

Example 3. Under the terms of the trust instrument, 30 percent of the gross income (exclusive of capital gains) of a trust described in § 1.642(c)-2(b)(3)(i) is currently distributed to B, the sole income beneficiary. Net capital gains (capital gain net income for taxable years beginning after December 31, 1976) and undistributed ordinary income are allocable to corpus. No provision is made in the trust instrument for the invasion of corpus for the benefit of B. Upon B's death the remainder of the trust is to be distributed to M Church. During the taxable year 1972, the trust has ordinary income of $100,000, long-term capital gains of $15,000, short-term capital gains of $1,000, long-term capital losses of $5,000, and short-term capital losses of $2,500. It is assumed that the trust has no other

items of income or any deductions other than those discussed herein. All the ordinary income and capital gains and losses are attributable to amounts transferred to the trust before October 9, 1969. The trust includes in gross income for 1972 the total amount of $116,000 [$100,000 (ordinary income) + $16,000 (total capital gains determined without regard to capital losses)]. Pursuant to the terms of the governing instrument the trust distributes to B in 1972 the amount of $30,000 ($100,000 × 30%). The balance of $78,500 [($116,000 less $7,500 capital losses) −030,000 distribution] is available for the set-aside for charitable purposes. In determining taxable income for 1972 the capital losses of $7,500 ($5,000 + $2,500) are allowable in full under section 1211(b)(1). The net capital gain (capital gain net income for taxable years beginning after December 31, 1976) of $8,500 ($16,000 less $7,500) is the excess of the net long-term capital gain of $10,000 ($15,000 less $5,000) over the net short-term capital loss of $1,500 ($2,500 less $1,000). The deduction under section 1202 is $4,250 ($8,500 × 50%), all of which is attributable to the set-aside for charitable purposes. Accordingly, for 1972 the deduction allowable to the trust under section 642(c)(2) is $74,250 [$78,500 (set-aside for M) less $4,250 (proper adjustment for section 1202 deduction)].

Example 4. During the taxable year a pooled income fund, as defined in § 1.642(c)-5, has in addition to ordinary income long-term capital gains of $150,000, short-term capital gains of $15,000, long-term capital losses of $100,000, and short-term capital losses of $10,000. Under the Declaration of Trust and pursuant to State law net long-term capital gain is allocable to corpus and net short-term capital gain is to be distributed to the income beneficiaries of the fund. All the capital gains and losses are attributable to amounts transferred to the fund after July 31, 1969. In view of the distribution of the net short-term capital gain of $5,000 ($15,000 less $10,000) to the income beneficiaries, the deduction allowed to the fund under section 1202 is limited by such section to $25,000 [($150,000 (long-term capital gains) less $100,000 (long-term capital losses)) × 50%]. Since the whole of this deduction under section 1202 is attributable to the set-aside for charitable purposes, the deduction of $50,000 ($150,000 less $100,000) otherwise allowable under section 642(c)(3) is subject to appropriate adjustment under section 642(c)(4) for the deduction allowable under section 1202. Accordingly, the amount of the set-aside deduction is $25,000 [$50,000 (set-aside for public charity) less $25,000 (proper adjustment for section 1202 deduction)].

Example 5. The facts are the same as in example 4 except that under the Declaration of Trust and pursuant to State law all the net capital gain (capital gain net income for taxable years beginning after December 31, 1976) for the taxable year is allocable to corpus of the fund. The fund would thus include in gross income total capital gains of $165,000 ($150,000 + $15,000). In determining taxable income for the taxable year the capital losses of $110,000 ($100,000 + $10,000) are allowable in full under section 1211(b)(1). The net capital gain of $55,000 ($165,000 less $110,000) is available for the set-aside for charitable purposes under section 642(c)(3) only in the amount of the net long-term capital gain of $50,000 ($150,000 long-term gains less $100,000 long-term losses). The deduction under section 1202 is $25,000 ($50,000 × 50%), all of which is attributable to the set-aside for charitable purposes. Accordingly, the deduction allowable to the fund under section 642(c)(3) is $25,000 [$50,000 (set-aside for public charity) less $25,000 (proper adjustment for section 1202 deduction)]. The $5,000 balance of net capital gain (capital gain net income for taxable years beginning after December 31, 1976) is taken into account in determining taxable income of the pooled income fund for the taxable year.

(d) ***Disallowance of deduction for amounts allocable to unrelated business income.*** In the case of a trust, the deduction otherwise allowable under § 1.642(c)-1 or § 1.642(c)-2 is disallowed to the extent of amounts allocable to the trust's unrelated business income. See section 681(a) and the regulations thereunder.

(e) ***Disallowance of deduction in certain cases.*** For disallowance of certain deductions otherwise allowable under section 642(c) (1), (2), or (3), see sections 508(d) and 4948(c)(4).

(f) ***Information returns.*** For rules applicable to the annual information return that must be filed by trusts claiming a deduction under section 642(c) for the taxable year, see section 6034 and the regulations thereunder.

(g) ***Payments resulting in state or local tax benefits*** —

(1) ***In general.*** If the trust or decedent's estate makes a payment of gross income for a purpose specified in section 170(c), and the trust or decedent's estate receives or expects to receive a state or local tax benefit in consideration for such payment, § 1.170A-1(h)(3) applies in determining the charitable contribution deduction under section 642(c).

(2) ***Effective/applicability date.*** Paragraph (g)(1) of this section applies to payments of gross income after August 27, 2018.

[T.D. 7357, 40 FR 23741, June 2, 1975; 40 FR 24361, June 6, 1975, as amended by T.D. 7728, 45 FR 72650, Nov. 3, 1980; T.D. 9582, 77 FR 22484, Apr. 16, 2012; T.D. 9864, 84 FR 27530, June 13, 2019]

§ 1.642(c)-4 Nonexempt private foundations.

In the case of a trust which is, or is treated under section 4947(a)(1) as though it were, a private foundation (as defined in section 509(a) and the regulations thereunder) that is not exempt from taxation under section 501(a) for the taxable year, a deduction for amounts paid or permanently set aside, or used for a purpose specified in section 642(c) (1), or (2) shall not be allowed under § 1.642(c)-1 or § 1.642(c)-2, but such trust shall, subject to the provisions applicable to individuals, be allowed a deduction under section 170 for charitable contributions paid during the taxable year. Section 642(c)(6) and this section do not apply to a trust described in section 4947(a)(1) unless such trust fails to meet the requirements of section 508(e). However, if on October 9, 1969, or at any time thereafter, a trust is recognized as being exempt from taxation under section 501(a) as an organization described in section 501(c)(3), if at such time such trust is a private foundation, and if at any time thereafter such trust is determined not to be exempt from taxation under section 501(a) as an organization described in section 501(c)(3), section 642(c)(6) and this section will apply to such trust. See § 1.509 (b)-1 (b).

[T.D. 7357, 40 FR 23742, June 2, 1975; 40 FR 24362, June 6, 1975]

§ 1.642(c)-5 Definition of pooled income fund.

(a) ***In general*** —

(1) ***Application of provisions.*** Section 642(c)(5) prescribes certain rules for the valuation of contributions involving transfers to certain funds described in that section as pooled income funds. This section sets forth the requirements for qualifying as a pooled income fund and provides for the manner of allocating the income of the fund to the beneficiaries. Section 1.642(c)-6 provides for the valuation of a remainder interest in property transferred to a pooled income fund. Section 1.642(c)-7 provides transitional rules under which certain funds may be amended so as to qualify as pooled income funds in respect to transfers of property occurring after July 31, 1969.

(2) ***Tax status of fund and its beneficiaries.*** Notwithstanding any other provision of this chapter, a fund which meets the requirements of a pooled income fund, as defined in section 642(c)(5) and paragraph (b) of this section, shall not be treated as an association within the meaning of section

7701(a)(3). Such a fund, which need not be a trust under local law, and its beneficiaries shall be taxable under part I, subchapter J, chapter 1 of the Code, but the provisions of subpart E (relating to grantors and others treated as substantial owners) of such part shall not apply to such fund.

(3) ***Recognition of gain or loss on transfer to fund.*** No gain or loss shall be recognized to the donor on the transfer of property to a pooled income fund. In such case, the fund's basis and holding period with respect to property transferred to the fund by a donor shall be determined as provided in sections 1015(b) and 1223(2). If, however, a donor transfers property to a pooled income fund and, in addition to creating or retaining a life income interest therein, receives property from the fund, or transfers property to the fund which is subject to an indebtedness, this subparagraph shall not apply to the gain realized by reason of

(i) the receipt of such property or

(ii) the amount of such indebtedness, whether or not assumed by the pooled income fund, which is required to be treated as an amount realized on the transfer. For applicability of the bargain sale rules, see section 1011(b) and the regulations thereunder.

(4) ***Charitable contributions deduction.*** A charitable contributions deduction for the value of the remainder interest, as determined under § 1.642(c)-6, may be allowed under section 170, 2055, 2106, or 2522, where there is a transfer of property to a pooled income fund. For a special rule relating to the reduction of the amount of a charitable contribution of certain ordinary income property or capital gain property, see section 170(e)(1) (A) or (B)(i) and the regulations thereunder.

(5) ***Definitions.*** For purposes of this section, §§ 1.642(c)-6 and 1.642(c)-7:

(i) The term *income* has the same meaning as it does under section 643(b) and the regulations thereunder, except that income generally may not include any long-term capital gains. However, in conformance with the applicable state statute, income may be defined as or satisfied by a unitrust amount, or pursuant to a trustee's power to adjust between income and principal to fulfill the trustee's duty of impartiality, if the state statute both provides for a reasonable apportionment between the income and remainder beneficiaries of the total return of the trust and meets the requirements of § 1.643(b)-1. In exercising a power to adjust, the trustee must allocate to principal, not to income, the proceeds from the sale or exchange of any assets contributed to the fund by any donor or purchased by the fund at least to the extent of the fair market value of those assets on the date of their contribution to the fund or of the purchase price of those assets purchased by the fund. This definition of income applies for taxable years beginning after January 2, 2004.

(ii) The term *donor* includes a decedent who makes a testamentary transfer of property to a pooled income fund.

(iii) The term *governing instrument* means either the governing plan under which the pooled income fund is established and administered or the instrument of transfer, as the context requires.

(iv) The term *public charity* means an organization described in clause (i) to (vi) of section 170(b)(1)(A). If an organization is described in clause (i) to (vi) of section 170(b)(1)(A) and is also described in clause (viii) of such section, it shall be treated as a public charity.

(v) The term *fair market value,* when used with respect to property, means its value in excess of the indebtedness or charges against such property.

(vi) The term *determination date* means each day within the taxable year of a pooled income fund on which a valuation is made of the property in the fund. The property in the fund shall be valued on the first day of the taxable year of the fund and on at least 3 other days within the taxable year. The period between any two consecutive determination dates within the taxable year shall not be greater than 3 calendar months. In the case of a taxable year of less than 12 months, the property in the fund shall be valued on the first day of such taxable year and on such other days within such year as occur at successive intervals of no greater than 3 calendar months. Where a valuation date falls on a Saturday, Sunday, or legal holiday (as defined in section 7503 and the regulations thereunder), the valuation may be made on either the next preceding day which is not a Saturday, Sunday, or legal holiday or the next succeeding day which is not a Saturday, Sunday, or legal holiday, so long as the next such preceding day or next such succeeding day is consistently used where the valuation date falls on a Saturday, Sunday, or legal holiday.

(6) ***Cross references.***

(i) See section 4947(a)(2) and section 4947(b)(3)(B) for the application to pooled income funds of the provisions relating to private foundations and section 508(e) for rules relating to provisions required in the governing instrument prohibiting certain activities specified in section 4947(a)(2).

(ii) For rules for postponing the time for deduction of a charitable contribution of a future interest in tangible personal property, see section 170(a)(3) and the regulations thereunder.

(b) ***Requirements for qualification as a pooled income fund.*** A pooled income fund to which this section applies must satisfy all of the following requirements:

(1) ***Contribution of remainder interest to charity.*** Each donor must transfer property to the fund and contribute an irrevocable remainder interest in such property to or for the use of a public charity, retaining for himself, or creating for another beneficiary or beneficiaries, a life income interest in the transferred property. A contingent remainder interest shall not be treated as an irrevocable remainder interest for purposes of this subparagraph.

(2) ***Creation of life income interest.*** Each donor must retain for himself for life an income interest in the property transferred to such fund, or create an income interest in such property for the life of one or more beneficiaries, each of whom must be living at the time of the transfer of the property to the fund by the donor. The term *one or more beneficiaries* includes those members of a named class who are alive and can be ascertained at the time of the transfer of the property to the fund. In the event more than one beneficiary of the income interest is designated, such beneficiaries may enjoy their shares of income concurrently, consecutively, or both concurrently and consecutively. The donor may retain the power exercisable only by will to revoke or terminate the income interest of any designated beneficiary other than the public charity. The governing instrument must specify at the time of the transfer the particular beneficiary or beneficiaries to whom the income is payable and the share of income distributable to each person so specified. The public charity to or for the use of which the remainder interest is contributed may also be designated as one of the beneficiaries of an income interest. The donor need not retain or create a life interest in all the income from the property transferred to the fund provided any income not payable under the terms of the governing instrument to an income beneficiary is contributed to, and within the taxable year in which it is

received is paid to, the same public charity to or for the use of which the remainder interest is contributed. No charitable contributions deduction shall be allowed to the donor for the value of such income interest of the public charity or for the amount of any such income paid to such organization.

(3) ***Commingling of property required.*** The property transferred to the fund by each donor must be commingled with, and invested or reinvested with, other property transferred to the fund by other donors satisfying the requirements of subparagraphs (1) and (2) of this paragraph. The governing instrument of the pooled income fund must contain a provision requiring compliance with the preceding sentence. The public charity to or for the use of which the remainder interest is contributed may maintain more than one pooled income fund, provided that each such fund is maintained by the organization and is not a device to permit a group of donors to create a fund which may be subject to their manipulation. The fund must not include property transferred under arrangements other than those specified in section 642(c)(5) and this paragraph. However, a fund shall not be disqualified as a pooled income fund under this paragraph because any portion of its properties is invested or reinvested jointly with other properties, not a part of the pooled income fund, which are held by, or for the use of, the public charity which maintains the fund, as for example, with securities in the general endowment fund of the public charity to or for the use of which the remainder interest is contributed. Where such joint investment or reinvestment of properties occurs, records must be maintained which sufficiently identify the portion of the total fund which is owned by the pooled income fund and the income earned by, and attributable to, such portion. Such a joint investment or reinvestment of properties shall not be treated as an association or partnership for purposes of the Code. A bank which serves as trustee of more than one pooled income fund may maintain a common trust fund to which section 584 applies for the collective investment and reinvestment of moneys of such funds.

(4) ***Prohibition against exempt securities.*** The property transferred to the fund by any donor must not include any securities, the income from which is exempt from tax under subtitle A of the Code, and the fund must not invest in such securities. The governing instrument of the fund must contain specific prohibitions against accepting or investing in such securities.

(5) ***Maintenance by charitable organization required.*** The fund must be maintained by the same public charity to or for the use of which the irrevocable remainder interest is contributed. The requirement of maintenance will be satisfied where the public charity exercises control directly or indirectly over the fund. For example, this requirement of control shall ordinarily be met when the public charity has the power to remove the trustee or trustees of the fund and designate a new trustee or trustees. A national organization which carries out its purposes through local organizations, chapters, or auxiliary bodies with which it has an identity of aims and purposes may maintain a pooled income fund (otherwise satisfying the requirements of this paragraph) in which one or more local organizations, chapters, or auxiliary bodies which are public charities have been named as recipients of the remainder interests. For example, a national church body may maintain a pooled income fund where donors have transferred property to such fund and contributed an irrevocable remainder interest therein to or for the use of various local churches or educational institutions of such body. The fact that such local organizations or chapters have been separately incorporated from the national organization is immaterial.

(6) ***Prohibition against donor or beneficiary serving as trustee.*** The fund must not have, and the governing instrument must prohibit the fund from having, as a trustee a donor to the fund or a beneficiary (other than the public charity to or for the use of which the remainder interest is contributed) of an income interest in any property transferred to such fund. Thus, if a donor or beneficiary (other than

such public charity) directly or indirectly has general responsibilities with respect to the fund which are ordinarily exercised by a trustee, such fund does not meet the requirements of section 642(c)(5) and this paragraph. The fact that a donor of property to the fund, or a beneficiary of the fund, is a trustee, officer, director, or other official of the public charity to or for the use of which the remainder interest is contributed ordinarily will not prevent the fund from meeting the requirements of section 642(c)(5) and this paragraph.

(7) ***Income of beneficiary to be based on rate of return of fund.*** Each beneficiary entitled to income of any taxable year of the fund must receive such income in an amount determined by the rate of return earned by the fund for such taxable year with respect to his income interest, computed as provided in paragraph (c) of this section. The governing instrument of the fund shall direct the trustee to distribute income currently or within the first 65 days following the close of the taxable year in which the income is earned. Any such payment made after the close of the taxable year shall be treated as paid on the last day of the taxable year. A statement shall be attached to the return of the pooled income fund indicating the date and amount of such payments after the close of the taxable year. Subject to the provisions of part I, subchapter J, chapter 1 of the Code, the beneficiary shall include in his gross income all amounts properly paid, credited, or required to be distributed to the beneficiary during the taxable year or years of the fund ending within or with his taxable year. The governing instrument shall provide that the income interest of any designated beneficiary shall either terminate with the last regular payment which was made before the death of the beneficiary or be prorated to the date of his death.

(8) ***Termination of life income interest.*** Upon the termination of the income interest retained or created by any donor, the trustee shall sever from the fund an amount equal to the value of the remainder interest in the property upon which the income interest is based. The value of the remainder interest for such purpose may be either

(i) its value as of the determination date next succeeding the termination of the income interest or

(ii) its value as of the date on which the last regular payment was made before the death of the beneficiary if the income interest is terminated on such payment date. The amount so severed from the fund must either be paid to, or retained for the use of, the designated public charity, as provided in the governing instrument. However, see subparagraph (3) of this paragraph for rules relating to commingling of property.

(c) ***Allocation of income to beneficiary*** —

(1) ***In general.*** Every income interest retained or created in property transferred to a pooled income fund shall be assigned a proportionate share of the annual income earned by the fund, such share, or unit of participation, being based on the fair market value of such property on the date of transfer, as provided in this paragraph.

(2) ***Units of participation*** —

(i) ***Unit plan.***

(*a*) On each transfer of property by a donor to a pooled income fund, one or more units of participation in the fund shall be assigned to the beneficiary or beneficiaries of the income interest retained or created in such property, the number of units of participation being equal to the number obtained by dividing the fair market value of the property by the fair market value of a unit in the fund at the time of the transfer.

(*b*) The fair market value of a unit in the fund at the time of the transfer shall be determined by dividing the fair market value of all property in the fund at such time by the number of units then in the fund. The initial fair market value of a unit in a pooled income fund shall be the fair market value of the property transferred to the fund divided by the number of units assigned to the income interest in that property. The value of each unit of participation will fluctuate with each new transfer of property to the fund in relation to the appreciation or depreciation in the fair market value of the property in the fund, but all units in the fund will always have equal value.

(*c*) The share of income allocated to each unit of participation shall be determined by dividing the income of the fund for the taxable year by the outstanding number of units in the fund at the end of such year, except that, consistently with paragraph (b)(7) of this section, income shall be allocated to units outstanding during only part of such year by taking into consideration the period of time such units are outstanding. For this purpose the actual income of such part of the taxable year, or a prorated portion of the annual income, may be used, after making such adjustments as are reasonably necessary to reflect fluctuations during the year in the fair market value of the property in the fund.

(ii) ***Other plans.*** The governing instrument of the fund may provide any other reasonable method not described in subdivision (i) of this subparagraph for assigning units of participation in the fund and allocating income to such units which reaches a result reasonably consistent with the provisions of such subdivision.

(iii) ***Transfers between determination dates.*** For purposes of subdivisions (i) and (ii) of this subparagraph, if a transfer of property to the fund by a donor occurs on other than a determination date, the number of units of participation assigned to the income interest in such property may be determined by using the fair market value of the property in the fund on the determination date immediately preceding the date of transfer (determined without regard to the property so transferred), subject, however, to appropriate adjustments on the next succeeding determination date. Such adjustments may be made by any reasonable method, including the use of a method whereby the fair market value of the property in the fund at the time of the transfer is deemed to be the average of the fair market values of the property in the fund on the determination dates immediately preceding and succeeding the date of transfer. For purposes of determining such average any property transferred to the fund between such preceding and succeeding dates, or on such succeeding date, shall be excluded. The application of this subdivision may be illustrated by the following example:

> ***Example.*** The determination dates of a pooled income fund are the first day of each calendar month. On April 1, 1971, the fair market value of the property in the fund is $100,000, at which time 1,000 units of participation are outstanding with a value of $100 each. On April 15, 1971, B transfers property with a fair market value of $50,000 to the fund, retaining for himself for life an income interest in such property. No other property is transferred to the fund after April 1, 1971. On May 1, 1971, the fair market value of the property in the fund, including the property transferred by B, is $160,000. The average of the fair market values of the property in the fund (excluding the property transferred by B) on April 1 and May 1, 1971, is $105,000 ($100,000 + [$160,000−$50,000] ÷ 2). Accordingly, the fair market value of a unit of participation in the fund on April 15, 1971, at the time of B's transfer may be deemed to be $105 ($105,000/1,000 units), and B is assigned 476.19 units of participation in the fund ($50,000/$105).

(3) ***Special rule for partial allocation of income to charity.*** Notwithstanding subparagraph (2) of this paragraph, the governing instrument may provide that a unit of participation is entitled to share in the income of the fund in a lesser amount than would otherwise be determined under such subparagraph, provided that the income otherwise allocable to the unit under such subparagraph is paid within the taxable year in which it is received to the public charity to or for the use of which the remainder interest is contributed under the governing instrument.

(4) ***Illustrations.*** The application of this paragraph may be illustrated by the following examples:

Example 1. On July 1, 1970, A and B transfer separate properties with a fair market value of $20,000 and $10,000, respectively, to a newly created pooled income fund which is maintained by Y University and uses as its taxable year the fiscal year ending June 30. A and B each retain in themselves for life an income interest in such property, the remainder interest being contributed to Y University. The pooled income fund assigns an initial value of $100 to each unit of participation in the fund, and under the governing instruments A receives 200 units, and B receives 100 units, in the fund. On October 1, 1970, which is a determination date, C transfers property to the fund with a fair market value of $12,000, retaining in himself for life an income interest in such property and contributing the remainder interest to Y University. The fair market value of the property in the fund at the time of C's transfer is $36,000. The fair market value of A's and B's units at the time of such transfer is $120 each ($36,000 / 300). By reason of his transfer of property C is assigned 100 units of participation in the fund ($12,000 / $120).

Example 2. Assume that the pooled income fund in example 1 earns $2,600 for its taxable year ending June 30, 1971, and there are no further contributions of property to the fund in such year. Further assume $300 is earned in the first quarter ending September 30, 1970. Therefore, the fund earns $1 per unit for the first quarter ($300 divided by 300 units outstanding) and $5.75 per unit for the remainder of the taxable year ([$2,600 − $300] divided by 400 units outstanding). If the fund distributes its income for the year based on its actual earnings per quarter, the income must be distributed as follows:

Beneficiary	***Share of income***
A	$1,350 ([200 × $1] + [200 × $5.75]).
B	$675 ([100 × $1] + [100 × $5.75]).
C	$575 (100 × $5.75).

Example 3. (a) On July 1, 1970, A and B transfer separate properties with a fair market value of $10,000 and $20,000, respectively, to a newly created pooled income fund which is maintained by X University and uses as its taxable year the fiscal year ending June 30. A and B each retain in themselves an income interest for life in such property, the remainder interest being contributed to X University. The governing instrument provides that each unit of participation in the fund shall have a value of not more than its initial fair market value; the instrument also provides that the income allocable to appreciation in the fair market value of such unit (to the extent in excess of its initial fair market value) at the end of each quarter of the fiscal year is to be distributed currently to X University. On October 1, 1970, which is a determination date, C contributes to the fund property with a fair market value of $60,000 and retains in himself an income

interest for life in such property, the remainder interest being contributed to X University. The initial fair market value of the units assigned to A, B, and C is $100. A, B, and C's units of participation are as follows:

Beneficiary	*Units of participation*
A	100 ($10,000 divided by $100).
B	200 ($20,000 divided by $100).
C	100 ($10,000 divided by $100).

(b) The fair market value of the property in the fund at the time of C's contribution is $40,000. Assuming the fair market value of the property in the fund is $100,000 on December 31, 1970, and that the income of the fund for the second quarter ending December 31, 1970, is $2,000, the income is shared by the income beneficiaries and X University as follows:

Beneficiary	*Allocation of income*
A, B, and C	90% ($90,000 divided by $100,000).
X University	10% ($10,000 divided by $100,000).

(c) For the quarter ending December 31, 1970, each unit of participation is allocated $2 (90 percent × $2,000 divided by 900) of the income earned for that quarter. A, B, C, and X University share in the income as follows:

Beneficiary	*Share of income*
A	$200 (100 × $2).
B	$400 (200 × $2).
C	$1,200 (600 × $2).
X University	$200 (10% × $2,000).

[T.D. 7105, 36 FR 6477, Apr. 6, 1971; 36 FR 7004, Apr. 13, 1971, as amended by T.D. 7125, 36 FR 11032, June 8, 1971; T.D. 7357, 40 FR 23742, June 2, 1975; T.D. 7633, 44 FR 57925, Oct. 9, 1979; T.D. 9102, 69 FR 18, Jan. 2, 2004]

§ 1.642(c)-6 Valuation of a remainder interest in property transferred to a pooled income fund.

(a) *In general.*

(1) For purposes of sections 170, 2055, 2106, and 2522, the fair market value of a remainder interest in property transferred to a pooled income fund is its present value determined under paragraph (d) of this section.

(2) The present value of a remainder interest at the time of the transfer of property to the pooled income fund is determined by computing the present value (at the time of the transfer) of the life income interest and subtracting that value from the fair market value of the transferred property on the valuation date. The fact that the income beneficiary may not receive the last income payment, as provided in paragraph (b)(7) of § 1.642(c)-5, is not taken into account for purposes of determining the value of the life income interest. For purposes of this section, the valuation date is the date on which property is transferred to the fund by the donor except that, for purposes of section 2055 or 2106, it is the alternate valuation date, if elected, under the provisions and limitations set forth in section 2032 and the regulations thereunder.

(3) Any claim for a deduction on any return for the value of the remainder interest in property transferred to a pooled income fund must be supported by a statement attached to the return showing the computation of the present value of the interest.

(b) ***Actuarial computations by the Internal Revenue Service.*** The regulations in this and in related sections provide tables of actuarial factors and examples that illustrate the use of the tables in determining the value of remainder interests in property. Section 1.7520-1(c)(2) refers to government publications that provide additional tables of factors and examples of computations for more complex situations. If the computation requires the use of a factor that is not provided in this section, the Commissioner may supply the factor upon a request for a ruling. A request for a ruling must be accompanied by a recitation of the facts including the pooled income fund's highest yearly rate of return for the 3 taxable years immediately preceding the date of transfer, the date of birth of each measuring life, and copies of the relevant documents. A request for a ruling must comply with the instructions for requesting a ruling published periodically in the Internal Revenue Bulletin (see §§ 601.201 and 601.601(d)(2)(ii)(*b*) of this chapter) and include payment of the required user fee. If the Commissioner furnishes the factor, a copy of the letter supplying the factor should be attached to the tax return in which the deduction is claimed. If the Commissioner does not furnish the factor, the taxpayer must furnish a factor computed in accordance with the principles set forth in this section.

(c) ***Computation of pooled income fund's yearly rate of return.***

(1) For purposes of determining the present value of the life income interest, the yearly rate of return earned by a pooled income fund for a taxable year is the percentage obtained by dividing the amount of income earned by the pooled income fund for the taxable year by an amount equal to—

(i) The average fair market value of the property in such fund for that taxable year; less

(ii) The corrective term adjustment.

(2) The average fair market value of the property in a pooled income fund for a taxable year shall be the sum of the amounts of the fair market value of all property held by the pooled income fund on each determination date, as defined in paragraph (a)(5)(vi) of § 1.642(c)-5, of such taxable year divided by the number of determination dates in such taxable year. For such purposes the fair market value of property held by the fund shall be determined without including any income earned by the fund.

(3)

(i) The corrective term adjustment shall be the sum of the products obtained by multiplying each income payment made by the pooled income fund within its taxable year by the percentage set forth in column (2) of the following table opposite the period within such year, set forth in column (1), which includes the date on which that payment is made:

TABLE

(1) *Payment period*	(2) *Percentage of payment*
Last week of 4th quarter	0
Balance of 4th quarter	25
Last week of 3d quarter	25
Balance of 3d quarter	50
Last week of 2d quarter	50
Balance of 2d quarter	75
Last week of 1st quarter	75
Balance of 1st quarter	100

(ii) If the taxable year of the fund consists of less than 12 months, the corrective term adjustment shall be the sum of the products obtained by multiplying each income payment made by the pooled income fund within such taxable year by the percentage obtained by subtracting from 1 a fraction the numerator of which is the number of days from the first day of such taxable year to the date of such income payment and the denominator of which is 365.

(4) A pooled income fund's method of calculating its yearly rate of return must be supported by a full statement attached to the income tax return of the pooled income fund for each taxable year.

(5) The application of this paragraph may be illustrated by the following examples:

Example 1. (a) The pooled income fund maintained by W University has established determination dates on the first day of each calendar quarter. The pooled income fund is on a calendar-year basis. The pooled income fund earned $5,000 of income during 1971. The fair market value of its property (determined without including any income earned by the fund), and the income paid out, on the first day of each calendar quarter in 1971 are as follows:

Date	Fair market value of property	Income payment
Jan. 1	$100,000	$1,200
Apr. 1	105,000	1,200
July 1	95,000	1,200
Oct. 1	100,000	1,400

Date	Fair market value of property	Income payment
	400,000	5,000

(b) The average fair market value of the property in the fund for 1971 is $100,000 ($400,000, divided by 4).
(c) The corrective term adjustment for 1971 is $3,050, determined by applying the percentages obtained in column (2) of the table in subparagraph (3) of this paragraph:

Multiplication:	*Product*
100% × $1,200	$1,200
75% × $1,200	900
50% × $1,200	600
25% × $1,400	350
Sum of products	3,050

(d) The pooled income fund's yearly rate of return for 1971 is 5.157 percent, determined as follows:
$5,000 ÷ $100,000 − $3,050 = 0.05157

Example 2. (a) The pooled income fund maintained by X University has established determination dates on the first day of each calendar quarter. The pooled income fund is on a calendar-year basis. The pooled income fund earned $5,000 of income during 1971 and paid out $3,000 on December 15, 1971, and $2,000 on January 15, 1972, the last amount being treated under paragraph (b)(7) of § 1.642(c)-5 as paid on December 31, 1971. The fair market value of its property (determined without including any income earned by the fund) on the determination dates in 1971 and the income paid out during 1971 are as follows:

Date	Fair market value of property	Income payment
Jan. 1	$125,000	
Apr. 1	125,000	
July 1	75,000	
Oct. 1	75,000	
Dec. 15		$3,000

Date	Fair market value of property	Income payment
Dec. 31		2,000
	400,000	5,000

(b) The average fair market value of the property in the fund for 1971 is $100,000 ($400,000 divided by 4).
(c) The corrective term adjustment for 1971 is $750, determined by applying the percentages obtained in column (2) of the table in subparagraph (3) of this paragraph:

	Product
Multiplication:	
0% × $2,000	
25% × $3,000	$750
Sum of products	750

(d) The pooled income fund's yearly rate of return for 1971 is 5.038 percent, determined as follows:
$5,000 ÷ $100,000 − $750 = 0.05038

(d) ***Valuation.*** The present value of the remainder interest in property transferred to a pooled income fund on or after June 1, 2023, is determined under paragraph (e) of this section. The present value of the remainder interest in property transferred to a pooled income fund for which the valuation date is before June 1, 2023, is determined (subject to paragraph (e)(2) of this section) under the following sections:

TABLE 6 TO PARAGRAPH (d)

Valuation dates		Applicable regulations
After	Before	
	01-01-52	§ 1.642(c)-6A(a)
12-31-51	01-01-71	1.642(c)-6A(b)
12-31-70	12-01-83	1.642(c)-6A(c)
11-30-83	05-01-89	1.642(c)-6A(d)
04-30-89	05-01-99	1.642(c)-6A(e)
04-30-99	05-01-09	1.642(c)-6A(f)

Valuation dates		Applicable regulations
After	Before	
04-30-09	06-01-23	1.642(c)-6A(g)

(e) ***Present value of the remainder interest in the case of transfers to pooled income funds for which the valuation date is on or after June 1, 2023*** —

(1) ***In general.*** In the case of transfers to pooled income funds for which the valuation date is on or after June 1, 2023, the present value of a remainder interest is determined under this section. See, however, § 1.7520-3(b) (relating to exceptions to the use of prescribed tables under certain circumstances). The present value of a remainder interest that is dependent on the termination of the life of one individual is computed by using the formula in § 20.2031-7(d)(2)(ii)(B) of this chapter to derive a remainder factor from the appropriate mortality table to at least five decimal places. For the convenience of taxpayers, actuarial factors have been computed by the IRS and appear in Table S. Table S currently is available, at no charge, electronically via the IRS website at *https://www.irs.gov/retirement-plans/actuarial-tables* (or a corresponding URL as may be updated from time to time). Table S is referenced and explained by IRS Publication 1457, *Actuarial Valuations Version 4A,* which will be available within a reasonable time after June 1, 2023. For purposes of the computations under this section, the age of an individual is the age at the individual's nearest birthday.

(2) ***Transitional rule for valuation of transfers to pooled income funds.*** For purposes of section 170, 2055, 2106, 2522, or 2624, in the case of transfers to a pooled income fund for which the valuation date is after April 30, 2019, and on or before June 1, 2023, the present value of the remainder interest under this section is determined by using the section 7520 interest rate for the month in which the valuation date occurs (see §§ 1.7520-1(b) and 1.7520-2(a)(2)) and the appropriate actuarial factors derived from the selected mortality table, either Table 2010CM in § 20.2031-7(d)(7)(ii) of this chapter or Table 2000CM in § 20.2031-7A(g)(4) of this chapter, at the option of the donor or the decedent's executor, as the case may be. If any previously filed income tax return is amended to use the actuarial factors based on Table 2010CM, the amended return must state at the top “AMENDED PURSUANT TO TD 9974.” If any previously filed gift or estate tax return is supplemented to use the actuarial factors based on Table 2010CM, the supplemental return must state at the top “SUPPLEMENTED PURSUANT TO TD 9974.” For the convenience of taxpayers, actuarial factors based on Table 2010CM appear in the current version of Table S, and actuarial factors based on Table 2000CM appear in the previous version of Table S. Both versions of Table S currently are available, at no charge, electronically via the IRS website at *https://www.irs.gov/retirement-plans/actuarial-tables* (or a corresponding URL as may be updated from time to time). The donor or decedent's executor must consistently use the same mortality basis with respect to each interest (income, remainder, partial, etc.) in the same property, and with respect to all transfers occurring on the same valuation date. For example, gift and income tax charitable deductions with respect to the same transfer must be determined based on factors with the same mortality basis, and all assets includible in the gross estate and/or estate tax deductions claimed must be valued based on factors with the same mortality basis.

(3) ***Present value of a remainder interest.*** The present value of a remainder interest in property transferred to a pooled income fund is computed on the basis of—

(i) Life contingencies determined from the values of l_x that are set forth in Table 2010CM in § 20.2031-7(d)(7)(ii) of this chapter (see § 20.2031-7A of this chapter for certain prior periods); and

(ii) Discount at a rate of interest, compounded annually, equal to the highest yearly rate of return of the pooled income fund for the three taxable years immediately preceding its taxable year in which the transfer of property to the fund is made. For purposes of this paragraph (e), the yearly rate of return of a pooled income fund is determined as provided in paragraph (c) of this section unless the highest rate of return is deemed to be the rate described in paragraph (e)(4) of this section for funds in existence less than 3 taxable years. For purposes of this paragraph (e)(3)(ii), the first taxable year of a pooled income fund is considered a taxable year even though the taxable year consists of less than 12 months. However, appropriate adjustments must be made to annualize the rate of return earned by the fund for that period. Where it appears from the facts and circumstances that the highest yearly rate of return of the fund for the three taxable years immediately preceding the taxable year in which the transfer of property is made has been purposely manipulated to be substantially less than the rate of return that otherwise would be reasonably anticipated with the purpose of obtaining an excessive charitable deduction, that rate of return may not be used. In that case, the highest yearly rate of return of the fund is determined by treating the fund as a pooled income fund that has been in existence for less than three preceding taxable years.

(4) ***Pooled income funds in existence less than three taxable years.*** If a pooled income fund has been in existence less than three taxable years immediately preceding the taxable year in which the transfer is made to the fund and the transfer to the fund is made on or after May 1, 1989, the highest rate of return is deemed to be the interest rate (rounded to the nearest two-tenths of one percent) that is one percent less than the highest annual average of the monthly section 7520 rates for the three calendar years immediately preceding the calendar year in which the transfer to the pooled income fund is made. The deemed rate of return for transfers to new pooled income funds is recomputed each calendar year using the monthly section 7520 rates for the three year period immediately preceding the calendar year in which each transfer to the fund is made until the fund has been in existence for three taxable years and can compute its highest rate of return for the three taxable years immediately preceding the taxable year in which the transfer of property to the fund is made in accordance with the rules set forth in the first sentence of paragraph (e)(3)(ii) of this section.

(5) ***Computation of value of remainder interest*** —

(i) ***Factor.*** The factor that is used in determining the present value of a remainder interest that is dependent on the termination of the life of one individual is the factor obtained through use of the formula in § 20.2031-7(d)(2)(ii)(B) of this chapter to derive a remainder factor from the appropriate mortality table to at least five decimal places. For the convenience of taxpayers, actuarial factors have been computed by the IRS and appear in Table S. Table S currently is available, at no charge, electronically via the IRS website at *https://www.irs.gov/retirement-plans/actuarial-tables.* Table S is referenced and explained in IRS Publication 1457, *Actuarial Valuations Version 4A,* which will be available within a reasonable time after June 1, 2023. In using the section of Table S for the interest rate equal to the appropriate yearly rate of return, the appropriate remainder factor is opposite the number that corresponds to the age of the individual upon whose life the value of the remainder interest is based (See § 1.642(c)-6A for

certain prior periods). The tables referenced by IRS Publication 1457, *Actuarial Valuations Version 4A,* include factors for yearly rates of return from 0.2 to 20 percent, inclusive, in increments of two-tenths of one percent. For other situations, see paragraph (b) of this section. If the yearly rate of return is a percentage that is between the yearly rates of return for which factors are provided by Table S, an exact method of obtaining the applicable factors (such as through software using the actual rate of return and the actuarial formulas provided in § 20.2031-7(d)(2)(ii)(B) of this chapter) or a linear interpolation must be used, provided whichever method used is applied consistently in valuing all interests in the same property. The applicable remainder factors derived by an exact method or by interpolation must be expressed to at least five decimal places. The present value of the remainder interest is determined by multiplying the fair market value of the property on the valuation date by the appropriate remainder factor.

(ii) ***Sample factors from actuarial Table S.*** For purposes of the example in paragraph (e)(5)(iii) of this section, the following factors from Table S will be used:

TABLE 7 TO PARAGRAPH (e)(5)(ii)

Age	Annuity	Life estate	Remainder
FACTORS FROM TABLE S—BASED ON TABLE 2010CM			
INTEREST AT 5.4 PERCENT			
55	13.2515	0.71558	0.28442
INTEREST AT 5.6 PERCENT			
55	12.9710	0.72637	0.27363

(iii) ***Example of interpolation.*** After June 1, 2023, A, whose age is 54 years and 8 months, transfers $100,000 to a pooled income fund, and retains a life income interest in the property. The highest yearly rate of return earned by the fund for its 3 preceding taxable years is 5.43 percent. In Table S, the remainder factor opposite 55 years under 5.4 percent is 0.28442 and under 5.6 percent is 0.27363. The present value of the remainder interest is $28,280, computed as illustrated in Figure 1 to this paragraph (e)(5)(iii).

Figure 1 to Paragraph (e)(5)(iii)—Illustration of Interpolation Method

A.	Remainder Factor at 5.4 percent for age 55		0.28442
B.	Less: Remainder Factor at 5.6 percent for age 55	-	0.27363
C.	Difference: A - B		0.01079

D. Interpolation Adjustment:

$$\frac{5.43\% - 5.40\%}{5.60\% - 5.40\%} = \frac{z}{0.01079}$$

E.

$$\frac{5.43\% - 5.40\%}{5.60\% - 5.40\%} \cdot 0.01079 = z = 0.00162$$

F.	Remainder Factor at 5.4 percent for age 55		0.28442
G.	Less: Interpolation Adjustment z	-	0.00162
H.	Interpolated Factor: F - G		0.28280

I.	Amount Transferred	$	100,000
J.	Present Value of Remainder Interest: H x I	$	28,280

(6) ***Actuarial tables.*** In the case of transfers for which the valuation date is on or after June 1, 2023, the present value of a remainder interest dependent on the termination of one life in the case of a transfer to a pooled income fund is determined by using the formula in § 20.2031-7(d)(2)(ii)(B) of this chapter to derive a remainder factor from the appropriate mortality table to at least five decimal places. For the convenience of taxpayers, actuarial factors have been computed by the IRS and appear in Table S. Table S currently is available, at no charge, electronically via the IRS website at *https://www.irs.gov/retirement-plans/actuarial-tables*. Table S is referenced and explained in IRS Publication 1457, *Actuarial Valuations Version 4A,* which will be available within a reasonable time after June 1, 2023.

(f) ***Applicability date.*** This section applies on and after June 1, 2023.

[T.D. 7105, 36 FR 6480, Apr. 6, 1971; 36 FR 9512, May 26, 1971; 36 FR 12290, June 30, 1971, as amended by T.D. 7955, 49 FR 19976, May 11, 1984; T.D. 8540, 59 FR 30105, June 10, 1994; T.D. 8819, 64 FR 23190, Apr. 30, 1999; T.D. 8886, 65 FR 36910, June 12, 2000; T.D. 9448, 74 FR 21440, May 7, 2009; T.D. 9540, 76 FR 49572, Aug. 10, 2011; T.D. 9974, 88 FR 37429, June 7, 2023]

§ 1.642(c)-7 Transitional rules with respect to pooled income funds.

(a) *In general* —

(1) ***Amendment of certain funds.*** A fund created before May 7, 1971, and not otherwise qualifying as a pooled income fund may be treated as a pooled income fund to which § 1.642(c)-5 applies if on July 31, 1969, or on each date of transfer of property to the fund occurring after July 31, 1969, it possessed the initial characteristics described in paragraph (b) of this section and is amended, in the time and manner provided in paragraph (c) of this section, to meet all the requirements of section 642(c)(5) and § 1.642(c)-5. If a fund to which this subparagraph applies is amended in the time and manner provided in paragraph (c) of this section it shall be treated as provided in paragraph (d) of this section for the period beginning on August 1, 1969, or, if later, on the date of its creation and ending the day before the date on which it meets the requirements of section 642(c)(5) and § 1.642(c)-5.

(2) ***Severance of a portion of a fund.*** Any portion of a fund created before May 7, 1971, which consists of property transferred to such fund after July 31, 1969, may be severed from such fund consistently with the principles of paragraph (c)(2) of this section and established before January 1, 1972, as a separate pooled income fund, provided that on and after the date of severance the severed fund meets all the requirements of section 642(c)(5) and § 1.642(c)-5. A separate fund which is established pursuant to this subparagraph shall be treated as provided in paragraph (d) of this section for the period beginning on the day of the first transfer of property which becomes part of the separate fund and ending the day before the day on which the separate fund meets the requirements of section 642(c)(5) and § 1.642(c)-5.

(b) ***Initial characteristics required.*** A fund described in paragraph (a)(1) of this section shall not be treated as a pooled income fund to which section 642(c)(5) applies, even though it is amended as provided in paragraph (c) of this section, unless it possessed the following characteristics on July 31, 1969, or on each date of transfer of property to the fund occurring after July 31, 1969:

(1) It satisfied the requirements of section 642(c)(5)(A) other than that the fund be a trust;

(2) It was constituted in a way to attract and contain commingled properties transferred to the fund by more than one donor satisfying such requirements; and

(3) Each beneficiary of a life income interest which was retained or created in any property transferred to the fund was entitled to receive, but not less often than annually, a proportional share of the annual income earned by the fund, such share being based on the fair market value of the property in which such life interest was retained or created.

(c) ***Amendment requirements.***

(1) A fund described in paragraph (a)(1) of this section and possessing the initial characteristics described in paragraph (b) of this section on the date prescribed therein shall be treated as a pooled income fund if it is amended to meet all the requirements of section 642(c)(5) and § 1.642(c)-5 before January 1, 1972, or, if later, on or before the 30th day after the date on which any judicial proceedings commenced before January 1, 1972, which are required to amend its governing instrument or any other instrument which does not permit it to meet such requirements, become final. However, see paragraph (d) of this section for limitation on the period in which a claim for credit or refund may be filed.

(2) In addition, if the transferred property described in paragraph (b)(2) of this section is commingled with other property, the transferred property must be separated on or before the date specified in subparagraph (1) of this paragraph from the other property and allocated to the fund in accordance with the transferred property's percentage share of the fair market value of the total commingled property on the date of separation. The percentage share shall be the ratio which the fair market value of the transferred property on the date of separation bears to the fair market value of the total commingled property on that date and shall be computed in a manner consistent with paragraph (c) of § 1.642(c)-5. The property which is so allocated to the fund shall be treated as property received from transfers which meet the requirements of section 642(c)(5), and such transfers shall be treated as made on the dates on which the properties giving rise to such allocation were transferred to the fund by the respective donors. The property so allocated to the fund must be representative of all the commingled property other than securities the income from which is exempt from tax under subtitle A of the Code; compensating increases in other commingled property allocated to the fund shall be made where such tax-exempt securities are not allocated to the fund. The application of this subparagraph may be illustrated by the following example:

Example. (a) The trustees of X fund are in the process of amending it in order to qualify as a pooled income fund. The property transferred to the X fund was commingled with other property transferred to the organization by which the fund was established. After taking into account the various transfers and the appreciation in the fair market value of all the properties, the fair market value of the property allocated to the fund on the various transfer dates is set forth in the following schedule and determined in the manner indicated:

TRANSFERS

Date of transfer	Value of all property before transfer	Trust property	Other property	Value of all property after transfer	Property allocated to fund
	(1)	(2)	(3)	(4)	(5)
January 1, 1968		$100,000	$100,000	$200,000	[1] $100,000
September 30, 1968	$300,000	100,000		400,000	[2] 250,000
January 15, 1969	480,000	60,000		540,000	[3] 360,000
November	600,000	200,000		800,000	[4] 600,000

[1] *$100,000 = (the amount in column (2)).*

[2] *$250,000 = ([$100,000/$200,000 × $300,000] + $100,000).*

[3] *$360,000 = ([$250,000/$400,000 × $480,000] + $60,000).*

[4] *$600,000 = ([$360,000/$540,000 × $600,000] + $200,000).*

Date of transfer	Value of all property before transfer	Trust property	Other property	Value of all property after transfer	Property allocated to fund
	(1)	(2)	(3)	(4)	(5)
11, 1969					

[1] *$100,000 = (the amount in column (2)).*

[2] *$250,000 = ([$100,000/$200,000 × $300,000] + $100,000).*

[3] *$360,000 = ([$250,000/$400,000 × $480,000] + $60,000).*

[4] *$600,000 = ([$360,000/$540,000 × $600,000] + $200,000).*

(b) On September 30, 1970, the trustees decide to separate the property of X fund from the other property. The fair market value of all the commingled property is $1 million on September 30, 1970, and there were no additional transfers to the fund after November 11, 1969. Accordingly, the fair market value of the property required to be allocated to X fund must be $750,000 ($600,000/$800,000 × $1,000,000), and X fund's percentage share of the commingled property is 75 percent ($750,000/$1,000,000). Accordingly, assuming that the commingled property consists of Y stock with a fair market value of $800,000 and Z bonds with a fair market value of $200,000, there must be allocated to X fund at the close of September 30, 1970, Y stock with a value of $600,000 ($800,000 × 75%) and Z bonds with a value of $150,000 ($200,000 × 75%).

(d) ***Transactions before amendment of or severance from fund.***

(1) A fund which is amended pursuant to paragraph (c) of this section, or is severed from a fund pursuant to paragraph (a)(2) of this section, shall be treated for all purposes, including the allowance of a deduction for any charitable contribution, as if it were before its amendment or severance a pooled income fund to which section 642(c)(5) and § 1.642(c)-5 apply. Thus, for example, where a donor transferred property in trust to such an amended or severed fund on August 1, 1969, but before its amendment or severance under this section, a charitable contributions deduction for the value of the remainder interest may be allowed under section 170, 2055, 2106, or 2522. The deduction may not be allowed, however, until the fund is amended or severed pursuant to this section and shall be allowed only if a claim for credit or refund is filed within the period of limitation prescribed by section 6511(a).

(2) For purposes of determining under § 1.642(c)-6 the highest yearly rate of return earned by a fund (which is amended pursuant to paragraph (c) of this section) for the 3 preceding taxable years, taxable years of the fund preceding its taxable year in which the fund is so amended and qualifies as a pooled income fund under this section shall be used provided that the fund did not at any time during such preceding years hold any investments in securities the income from which is exempt from tax under subtitle A of the Code. If any such tax-exempt securities were held during such period by such amended fund, or if the fund consists of a portion of a fund which is severed pursuant to

paragraph (a)(2) of this section, the highest yearly rate of return under § 1.642(c)-6 shall be determined by treating the fund as a pooled income fund which has been in existence for less than 3 taxable years preceding the taxable year in which the transfer of property to the fund is made.

(3) Property transferred to a fund before its amendment pursuant to paragraph (c) of this section, or before its severance under paragraph (a)(2) of this section, shall be treated as property received from transfers which meet the requirements of section 642(c)(5).

[T.D. 7105, 36 FR 6486, Apr. 6, 1971, as amended by T.D. 7125, 36 FR 11032, June 8, 1971; T.D. 8540, 59 FR 30102, June 10, 1994]

§ 1.642(d)-1 Net operating loss deduction.

The net operating loss deduction allowed by section 172 is available to estates and trusts generally, with the following exceptions and limitations:

(a) In computing gross income and deductions for the purposes of section 172, a trust shall exclude that portion of the income and deductions attributable to the grantor or another person under sections 671 through 678 (relating to grantors and others treated as substantial owners).

(b) An estate or trust shall not, for the purposes of section 172, avail itself of the deductions allowed by section 642(c) (relating to charitable contributions deductions) and sections 651 and 661 (relating to deductions for distributions).

§ 1.642(e)-1 Depreciation and depletion.

An estate or trust is allowed the deductions for depreciation and depletion, but only to the extent the deductions are not apportioned to beneficiaries under sections 167(h) and 611(b). For purposes of sections 167(h) and 611(b), the term *beneficiaries* includes charitable beneficiaries. See the regulations under those sections.

[T.D. 6712, 29 FR 3655, Mar. 24, 1964]

§ 1.642(f)-1 Amortization deductions.

An estate or trust is allowed amortization deductions with respect to an emergency facility as defined in section 168(d), with respect to a certified pollution control facility as defined in section 169(d), with respect to qualified railroad rolling stock as defined in section 184(d), with respect to certified coal mine safety equipment as defined in section 187(d), with respect to on-the-job training and child-care facilities as defined in section 188(b), and with respect to certain rehabilitations of certified historic structures as defined in section 191, in the same manner and to the same extent as in the case of an individual. However, the principles governing the apportionment of the deductions for depreciation and depletion between fiduciaries and the beneficiaries of an estate or trust (see sections 167(h) and 611(b) and the regulations thereunder) shall be applicable with respect to such amortization deductions.

[T.D. 7700, 45 FR 38055, June 6, 1980]

§ 1.642(g)-1 Disallowance of double deductions; in general.

Amounts allowable under section 2053(a)(2) (relating to administration expenses) or under section 2054 (relating to losses during administration) as deductions in computing the taxable estate of a decedent are not allowed as deductions in computing the taxable income of the estate unless there is filed a statement, in duplicate, to the

effect that the items have not been allowed as deductions from the gross estate of the decedent under section 2053 or 2054 and that all rights to have such items allowed at any time as deductions under section 2053 or 2054 are waived. The statement should be filed with the return for the year for which the items are claimed as deductions or with the district director for the internal revenue district in which the return was filed, for association with the return. The statement may be filed at any time before the expiration of the statutory period of limitation applicable to the taxable year for which the deduction is sought. Allowance of a deduction in computing an estate's taxable income is not precluded by claiming a deduction in the estate tax return, so long as the estate tax deduction is not finally allowed and the statement is filed. However, after a statement is filed under section 642(g) with respect to a particular item or portion of an item, the item cannot thereafter be allowed as a deduction for estate tax purposes since the waiver operates as a relinquishment of the right to have the deduction allowed at any time under section 2053 or 2054.

§ 1.642(g)-2 Deductions included.

It is not required that the total deductions, or the total amount of any deduction, to which section 642(g) is applicable be treated in the same way. One deduction or portion of a deduction may be allowed for income tax purposes if the appropriate statement is filed, while another deduction or portion is allowed for estate tax purposes. Section 642(g) has no application to deductions for taxes, interest, business expenses, and other items accrued at the date of a decedent's death so that they are allowable as a deduction under section 2053(a)(3) for estate tax purposes as claims against the estate, and are also allowable under section 691(b) as deductions in respect of a decedent for income tax purposes. However, section 642(g) is applicable to deductions for interest, business expenses, and other items not accrued at the date of the decedent's death so that they are allowable as deductions for estate tax purposes only as administration expenses under section 2053(a)(2). Although deductible under section 2053(a)(3) in determining the value of the taxable estate of a decedent, medical, dental, etc., expenses of a decedent which are paid by the estate of the decedent are not deductible in computing the taxable income of the estate. See section 213(d) and the regulations thereunder for rules relating to the deductibility of such expenses in computing the taxable income of the decedent.

§ 1.642(h)-1 Unused loss carryovers on termination of an estate or trust.

(a) If, on the final termination of an estate or trust, a net operating loss carryover under section 172 or a capital loss carryover under section 1212 would be allowable to the estate or trust in a taxable year subsequent to the taxable year of termination but for the termination, the carryover or carryovers are allowed under section 642(h)(1) to the beneficiaries succeeding to the property of the estate or trust. See § 1.641(b)-3 for the determination of when an estate or trust terminates.

(b) The net operating loss carryover and the capital loss carryover are the same in the hands of a beneficiary as in the estate or trust, except that the capital loss carryover in the hands of a beneficiary which is a corporation is a short-term loss irrespective of whether it would have been a long-term or short-term capital loss in the hands of the estate or trust. The net operating loss carryover and the capital loss carryover are taken into account in computing taxable income, adjusted gross income, and the tax imposed by section 56 (relating to the minimum tax for tax preferences). The first taxable year of the beneficiary to which the loss shall be carried over is the taxable year of the beneficiary in which or with which the estate or trust terminates. However, for purposes of determining the number of years to which a net operating loss, or a capital loss under paragraph (a) of § 1.1212-1, may be carried over by a beneficiary, the last taxable year of the estate or trust (whether or not a short taxable year) and the first taxable year of the beneficiary to which a loss is carried over each constitute a taxable year, and, in the case of a beneficiary of an estate or trust that is a corporation, capital losses carried over by the estate or trust to any taxable year of the estate or trust beginning after December 31, 1963, shall be treated as if

they were incurred in the last taxable year of the estate or trust (whether or not a short taxable year). For the treatment of the net operating loss carryover when the last taxable year of the estate or trust is the last taxable year to which such loss can be carried over, see § 1.642(h)-2.

(c) The application of this section may be illustrated by the following examples:

Example 1. A trust distributes all of its assets to A, the sole remainderman, and terminates on December 31, 1954, when it has a capital loss carryover of $10,000 attributable to transactions during the taxable year 1952. A, who reports on the calendar year basis, otherwise has ordinary income of $10,000 and capital gains of $4,000 for the taxable year 1954. A would offset his capital gains of $4,000 against the capital loss of the trust and, in addition, deduct under section 1211(b) $1,000 on his return for the taxable year 1954. The balance of the capital loss carryover of $5,000 may be carried over only to the years 1955 and 1956, in accordance with paragraph (a) of § 1.1212-1 and the rules of this section.

Example 2. A trust distributes all of its assets, one-half to A, an individual, and one-half to X, a corporation, who are the sole remaindermen, and terminates on December 31, 1966, when it has a short-term capital loss carryover of $20,000 attributable to short-term transactions during the taxable years 1964, 1965, and 1966, and a long-term capital loss carryover of $12,000 attributable to long-term transactions during such years. A, who reports on the calendar year basis, otherwise has ordinary income of $15,000, short-term capital gains of $4,000 and long-term capital gains of $6,000, for the taxable year 1966. A would offset his short-term capital gains of $4,000 against his share of the short-term capital loss carryover of the trust, $10,000 (one-half of $20,000), and, in addition deduct under section 1211(b) $1,000 (treated as a short-term gain for purposes of computing capital loss carryovers) on his return for the taxable year 1966. A would also offset his long-term capital gains of $6,000 against his share of the long-term capital loss carryover of the trust, $6,000 (one-half of $12,000). The balance of A's share of the short-term capital loss carryover, $5,000, may be carried over as a short-term capital loss carryover to the succeeding taxable year and treated as a short-term capital loss incurred in such succeeding taxable year in accordance with paragraph (b) of § 1.1212-1. X, which also reports on the calendar year basis, otherwise has capital gains of $4,000 for the taxable year 1966. X would offset its capital gains of $4,000 against its share of the capital loss carryovers of the trust, $16,000 (the sum of one-half of each the short-term carryover and the long-term carryover of the trust), on its return for the taxable year 1966. The balance of X's share, $12,000, may be carried over as a short-term capital loss only to the years 1967, 1968, 1969, and 1970, in accordance with paragraph (a) of § 1.1212-1 and the rules of this section.

[T.D. 6500, 25 FR 11814, Nov. 26, 1960, as amended by T.D. 6828, 30 FR 7805, June 17, 1965; T.D. 7564, 43 FR 40495, Sept. 12, 1978]

§ 1.642(h)-2 Excess deductions on termination of an estate or trust.

(a) ***Excess deductions*** —

(1) ***In general.*** If, on the termination of an estate or trust, the estate or trust has for its last taxable year deductions (other than the deductions allowed under section 642(b) (relating to the personal exemption) or section 642(c) (relating to charitable contributions)) in excess of gross income, the excess deductions as determined under paragraph (b) of this section are allowed under section 642(h)(2) as items of deduction to the beneficiaries succeeding to the property of the estate or trust.

(2) ***Treatment by beneficiary.*** A beneficiary may claim all or part of the amount of the deductions provided for in paragraph (a) of this section, as determined after application of paragraph (b) of this section, before, after, or together with the same character of deductions separately allowable to the beneficiary under the Internal Revenue Code for the beneficiary's taxable year during which the estate or trust terminated as provided in paragraph (c) of this section.

(b) ***Character and amount of excess deductions*** —

(1) ***Character.*** The character and amount of the excess deductions on termination of an estate or trust will be determined as provided in this paragraph (b). Each deduction comprising the excess deductions under section 642(h)(2) retains, in the hands of the beneficiary, its character (specifically, as allowable in arriving at adjusted gross income, as a non-miscellaneous itemized deduction, or as a miscellaneous itemized deduction) while in the estate or trust. An item of deduction succeeded to by a beneficiary remains subject to any additional applicable limitation under the Internal Revenue Code and must be separately stated if it could be so limited, as provided in the instructions to Form 1041, *U.S. Income Tax Return for Estates and Trusts,* and the Schedule K-1 (Form 1041), *Beneficiary's Share of Income, Deductions, Credit, etc.,* or successor forms.

(2) ***Amount.*** The amount of the excess deductions in the final year is determined as follows:

(i) Each deduction directly attributable to a class of income is allocated in accordance with the provisions in § 1.652(b)-(a);

(ii) To the extent of any remaining income after application of paragraph (b)(2)(i) of this section, deductions are allocated in accordance with the provisions in § 1.652(b)-3(b) and (d); and

(iii) Deductions remaining after the application of paragraph (b)(2)(i) and (ii) of this section comprise the excess deductions on termination of the estate or trust. These deductions are allocated to the beneficiaries succeeding to the property of the estate of or trust in accordance with § 1.642(h)-4.

(c) ***Year of termination*** —

(1) ***In general.*** The deductions provided for in paragraph (a) of this section are allowable only in the taxable year of the beneficiary in which or with which the estate or trust terminates, whether the year of termination of the estate or trust is of normal duration or is a short taxable year.

(2) ***Example.*** Assume that a trust distributes all its assets to B and terminates on December 31, Year X. As of that date, it has excess deductions of $18,000, all characterized as allowable in arriving at adjusted gross income under section 67(e). B, who reports on the calendar year basis, could claim the $18,000 as a deduction allowable in arriving at B's adjusted gross income for Year X. However, if the deduction (when added to other allowable deductions that B claims for the year) exceeds B's gross income, the excess may not be carried over to any year subsequent to Year X.

(d) ***Net operating loss carryovers.*** A deduction based upon a net operating loss carryover will never be allowed to beneficiaries under both paragraphs (1) and (2) of section 642(h). Accordingly, a net operating loss deduction which is allowable to beneficiaries succeeding to the property of the estate or trust under the provisions of paragraph (1) of section 642(h) cannot also be considered a deduction for purposes of paragraph (2) of section 642(h) and paragraph (a) of this section. However, if the last taxable year of the estate or trust is the last year in which a deduction on account of a net operating loss may be taken, the deduction, to the extent not absorbed in that taxable year by the estate or trust, is considered an “excess deduction” under section 642(h)(2) and paragraph (a) of this section.

(e) ***Items included in net operating loss or capital loss carryovers.*** (c) Any item of income or deduction, or any part thereof, which is taken into account in determining the net operating loss or capital loss carryover of the estate or trust for its last taxable year shall not be taken into account again in determining excess deductions on termination of the trust or estate within the meaning of section 642(h)(2) and paragraph (a) of this section (see example in § 1.642(h)-5).

(f) ***Applicability date.*** Paragraphs (a) through (c) of this section apply to taxable years beginning after October 19, 2020. The rules applicable to taxable years beginning on or before October 19, 2020 are contained in § 1.642(h)-2 as in effect prior to October 19, 2020 (see 26 CFR part 1 revised as of April 1, 2020). Taxpayers may choose to apply paragraphs (a) through (c) of this section to taxable years beginning after December 31, 2017, and on or before October 19, 2020.

[T.D. 6500, 25 FR 11814, Nov. 26, 1960, as amended by T.D. 7564, 43 FR 40495, Sept. 12, 1978; 85 FR 66224, Oct. 19, 2020]

§ 1.642(h)-3 Meaning of "beneficiaries succeeding to the property of the estate or trust".

(a) The phrase *beneficiaries succeeding to the property of the estate or trust* means those beneficiaries upon termination of the estate or trust who bear the burden of any loss for which a carryover is allowed, or of any excess of deductions over gross income for which a deduction is allowed, under section 642(h).

(b) With reference to an intestate estate, the phrase means the heirs and next of kin to whom the estate is distributed, or if the estate is insolvent, to whom it would have been distributed if it had not been insolvent. If a decedent's spouse is entitled to a specified dollar amount of property before any distribution to other heirs and next of kin, and if the estate is less than that amount, the spouse is the beneficiary succeeding to the property of the estate or trust to the extent of the deficiency in amount.

(c) In the case of a testate estate, the phrase normally means the residuary beneficiaries (including a residuary trust), and not specific legatees or devisees, pecuniary legatees, or other nonresiduary beneficiaries. However, the phrase does not include the recipient of a specific sum of money even though it is payable out of the residue, except to the extent that it is not payable in full. On the other hand, the phrase includes a beneficiary (including a trust) who is not strictly a residuary beneficiary but whose devise or bequest is determined by the value of the decedent's estate as reduced by the loss or deductions in question. Thus the phrase includes:

(1) A beneficiary of a fraction of a decedent's net estate after payment of debts, expenses, etc.;

(2) A nonresiduary legatee or devisee, to the extent of any deficiency in his legacy or devise resulting from the insufficiency of the estate to satisfy it in full;

(3) A surviving spouse receiving a fractional share of an estate in fee under a statutory right of election, to the extent that the loss or deductions are taken into account in determining the share. However, the phrase does not include a recipient of dower or curtesy, or any income beneficiary of the estate or trust from which the loss or excess deduction is carried over.

(d) The principles discussed in paragraph (c) of this section are equally applicable to trust beneficiaries. A remainderman who receives all or a fractional share of the property of a trust as a result of the final termination of the trust is a beneficiary succeeding to the property of the trust. For example, if property is transferred to pay the income to A for life and then to pay $10,000 to B and distribute the balance of the trust corpus to C, C and not B is considered to be the succeeding beneficiary except to the extent that the trust corpus is insufficient to pay B $10,000.

§ 1.642(h)-4 Allocation.

The carryovers and excess deductions to which section 642(h) applies are allocated among the beneficiaries succeeding to the property of an estate or trust (see § 1.642(h)-3) proportionately according to the share of each in the burden of the loss or deductions. A person who qualified as a beneficiary succeeding to the property of an estate or trust with respect to one amount and does not qualify with respect to another amount is a beneficiary succeeding to the property of the estate or trust as to the amount with respect to which he qualifies. The application of this section may be illustrated by the following example:

Example. A decedent's will leaves $100,000 to A, and the residue of his estate equally to B and C. His estate is sufficient to pay only $90,000 to A, and nothing to B and C. There is an excess of deductions over gross income for the last taxable year of the estate or trust of $5,000, and a capital loss carryover of $15,000, to both of which section 642(h) applies. A is a beneficiary succeeding to the property of the estate to the extent of $10,000, and since the total of the excess of deductions and the loss carryover is $20,000, A is entitled to the benefit of one half of each item, and the remaining half is divided equally between B and C.

§ 1.642(h)-5 Examples.

Paragraphs (a) and (b) of this section (*Examples 1* and *2*) illustrate the application of section 642(h).

(a) ***Example 1: Computations under section 642(h) when an estate has a net operating loss —***

(1) ***Facts.*** On January 31, 2020, A dies leaving a will that provides for the distribution of all of A's estate equally to B and an existing trust for C. The period of administration of the estate terminates on December 31, 2020, at which time all the property of the estate is distributed to B and the trust. For tax purposes, B and the trust report income on a calendar year basis. During the period of administration, the estate has the following items of income and deductions:

TABLE 1 TO PARAGRAPH (a)(1)

Income:	
Taxable interest	$2,500
Business income	3,000
Total income	5,500

TABLE 2 TO PARAGRAPH (a)(1)

Deductions:	
Business expenses (including administrative expense allocable to business income)	5,000
Administrative expenses not allocable to business income that would not have been incurred if property had not been held in a trust or estate (section 67(e) deductions)	9,800

Total deductions	14,800

(2) ***Computation of net operating loss.***

(i) The amount of the net operating loss carryover is computed as follows:

TABLE 3 TO PARAGRAPH (a)(2)(i)

Gross income	$5,500
Total deductions	14,800
Less adjustment under section 172(d)(4) (allowable non-business expenses ($9,800) limited to non-business income ($2,500))	7,300
Deductions as adjusted	7,500
Net operating loss	2,000

(ii) Under section 642(h)(1), B and the trust are each allocated $1,000 of the $2,000 unused net operating loss carryover of the terminated estate in 2020, with the allowance of any net operating loss carryover to B and the trust determined under section 172. Neither B nor the trust can carry back any of the net operating loss of A's estate made available to them under section 642(h)(1). *See* § 1.642(h)-1(b).

(3) ***Section 642(h)(2) excess deductions.*** The $7,300 of non-business deductions not taken into account in determining the net operating loss of the estate are excess deductions on termination of the estate under section 642(h)(2). Under § 1.642(h)-2(b)(1), such deductions retain their character as section 67(e) deductions. Under § 1.642(h)-4, B and the trust each are allocated $3,650 of excess deductions based on B's and the trust's respective shares of the burden of each cost.

(4) ***Consequences for C.*** The net operating loss carryover and excess deductions are not allowable directly to C, the trust beneficiary. To the extent the distributable net income of the trust is reduced by the net operating loss carryover and excess deductions, however, C may receive an indirect benefit from the carryover and excess deductions.

(b) ***Example 2: Computations under section 642(h)(2)*** —

(1) ***Facts.*** D dies in 2019 leaving an estate of which the residuary legatees are E (75%) and F (25%). The estate's income and deductions in its final year are as follows:

TABLE 4 TO PARAGRAPH (b)(1)

Income:	
Dividends	$3,000
Taxable Interest	500
Rent	2,000
Capital Gain	1,000
Total Income	6,500

TABLE 5 TO PARAGRAPH (b)(1)

Deductions:	
Section 62(a)(4) deductions:	
Rental real estate expenses	2,000
Section 67(e) deductions:	
Probate fees	1,500
Estate tax preparation fees	8,000
Legal fees	2,500
Total Section 67(e) deductions	12,000
Non-miscellaneous itemized deductions:	
Personal property taxes	3,500
Total deductions	17,500

(2) ***Determination of character.*** Pursuant to § 1.642(h)-2(b)(2), the character and amount of the excess deductions is determined by allocating the deductions among the estate's items of income as provided under § 1.652(b)-3. Under § 1.652(b)-3(a), the $2,000 of rental real estate expenses is allocated to the $2,000 of rental income. In the exercise of the executor's discretion pursuant to § 1.652(b)-3(b), D's executor allocates $3,500 of personal property taxes and $1,000 of section 67(e) deductions to the remaining income. As a result, the excess deductions on termination of the estate are $11,000, all consisting of section 67(e) deductions.

(3) ***Allocations among beneficiaries.*** Pursuant to § 1.642(h)-4, the excess deductions are allocated in accordance with E's (75 percent) and F's (25 percent) interests in the residuary estate. E's share of the excess deductions is $8,250, all consisting of section 67(e) deductions. F's share of the excess deductions is $2,750, also all consisting of section 67(e) deductions.

(4) ***Separate statement.*** If the executor instead allocated $4,500 of section 67(e) deductions to the remaining income of the estate, the excess deductions on termination of the estate would be $11,000, consisting of $7,500 of section 67(e) deductions and $3,500 of personal property taxes. The non-miscellaneous itemized deduction for personal property taxes may be subject to limitation on the returns of both B and C's trust under section 164(b)(6)(B) and would have to be separately stated as provided in § 1.642(h)-2(b)(1).

(c) ***Applicability date.*** This section is applicable to taxable years beginning after October 19, 2020. Taxpayers may choose to apply this section to taxable years beginning after December 31, 2017, and on or before October 19, 2020.

[T.D. 9918, 85 FR 66225, Oct. 19, 2020]

§ 1.642(i)-1 Certain distributions by cemetery perpetual care funds.

(a) ***In general.*** Section 642 (i) provides that amounts distributed during taxable years ending after December 31, 1963, by a cemetery perpetual care fund trust for the care and maintenance of gravesites shall be treated as distributions solely for purposes of sections 651 and 661. The deduction for such a distribution is allowable only if the fund is taxable as a trust. In addition, the fund must have been created pursuant to local law by a taxable cemetery corporation (as defined in § 1.642 (i)-2 (a)) expressly for the care and maintenance of cemetery property. A care fund will be treated as having been created by a taxable cemetery corporation (“cemetery”) if the distributee cemetery is taxable, even though the care fund was created by the distributee cemetery in a year that it was tax-exempt or by a predecessor of such distributee cemetery which was tax-exempt in the year the fund was established. The deduction is the amount of the distributions during the fund's taxable year to the cemetery corporation for such care and maintenance that would be otherwise allowable under section 651 or 661, but in no event is to exceed the limitations described in paragraphs (b) and (c) of this section. The provisions of this paragraph shall not have the effect of extending the period of limitations under section 6511.

(b) ***Limitation on amount of deduction.*** The deduction in any taxable year may not exceed the product of $5 multiplied by the aggregate number of gravesites sold by the cemetery corporation before the beginning of the taxable year of the trust. In general, the aggregate number of gravesites sold shall be the aggregate number of interment rights sold by the cemetery corporation (including gravesites sold by the cemetery before a care fund trust law was enacted). In addition, the number of gravesites sold shall include gravesites used to make welfare burials. Welfare burials and pre-trust fund law gravesites shall be included only to the extent that the cemetery cares for and maintain such gravesites. For purposes of this section, a gravesite is sold as of the date on which the purchaser acquires interment rights enforceable under local law. The aggregate number of gravesites includes only those gravesites with respect to which the fund or taxable cemetery corporation has an obligation for care and maintenance.

(c) ***Requirements for deductibility of distributions for care and maintenance*** —

(1) ***Obligation for care and maintenance.*** A deduction is allowed only for distributions for the care and maintenance of gravesites with respect to which the fund or taxable cemetery corporation has an obligation for care and maintenance. Such obligation may be established by the trust instrument, by local law, or by the cemetery's practice of caring for and maintaining gravesites, such as welfare burial plots or gravesites sold before the enactment of a care fund trust law.

(2) ***Distribution actually used for care and maintenance.*** The amount of a deduction otherwise allowable for care fund distributions in any taxable year shall not exceed the portion of such distributions expended by the distributee cemetery corporation for the care and maintenance of gravesites before the end of the fund's taxable year following the taxable year in which it makes the distributions. A 6-month extension of time for filing the trust's return may be obtained upon request under section 6081. The failure of a cemetery to expend the care fund's distributions within a reasonable time before the due date for filing the return will be considered reasonable grounds for granting a 6-month extension of time for section 6081. For purposes of this paragraph, any amount expended by the care fund directly for the care and maintenance of gravesites shall be treated as an additional care fund distribution which is expended on the day of distribution by the cemetery corporation. The fund shall be allowed a deduction for such direct expenditure in the fund's taxable year during which the expenditure is made.

(3) ***Example.*** The application of paragraph (c)(2) of this section is illustrated by the following example:

Example. A, a calendar-year perpetual care fund trust, meeting the requirements of section 642 (i), makes a $10,000 distribution on December 1, 1978 to X, a taxable cemetery corporation operating on a May 31 fiscal year. From this $10,000 distribution, the cemetery makes the following expenditures for the care and maintenance of gravesites: $2,000 on December 20, 1978; $4,000 on June 1, 1979; $2,000 on October 1, 1979; and $1,000 on April 1, 1980. In addition, as authorized by the trust instrument, A itself makes a direct $1,000 payment to a contractor on September 1, 1979 for qualifying care and maintenance work performed. As a result of these transactions, A will be allowed an $8,000 deduction for its 1978 taxable year attributable to the cemetery's expenditures, and a $1,000 deduction for its 1979 taxable year attributable to the fund's direct payment. A will not be allowed a deduction for its 1978 taxable year for the cemetery's expenditure of either the $1,000 expended on April 1, 1980 or the remaining unspent portion of the original $10,000 distribution. The trustee may request a 6-month extension in order to allow the fund until October 15, 1979 to file its return for 1978.

(d) ***Certified statement made by cemetery officials to fund trustees.*** A trustee of a cemetery perpetual care fund shall not be held personally liable for civil or criminal penalties resulting from false statements on the trust's tax return to the extent that such false statements resulted from the trustee's reliance on a certified statement made by the cemetery specifying the number of interments sold by the cemetery or the amount of the cemetery's expenditures for care and maintenance. The statement must indicate the basis upon which the cemetery determined what portion of its expenditures were made for the care and maintenance of gravesites. The statement must be certified by an officer or employee of the cemetery who has the responsibility to make or account for expenditures for care and maintenance. A copy of this statement shall be retained by the trustee along with the trust's return and shall be made available for inspection upon request by the Secretary. This paragraph does not relieve the care fund trust of its liability to pay the proper amount of tax due and to maintain adequate records to substantiate each of its deductions, including the deduction provided in section 642(i) and this section.

[T.D. 7651, 44 FR 61596, Oct. 26, 1979]

§ 1.642(i)-2 Definitions.

(a) ***Taxable cemetery corporation.*** For purposes of section 642(i) and this section, the meaning of the term *taxable cemetery corporation* is limited to a corporation (within the meaning of section 7701(a)(3)) engaged in the business of owning and operating a cemetery that either

(1) is not exempt from Federal tax, or

(2) is subject to tax under section 511 with respect to its cemetery activities.

(b) ***Pursuant to local law.*** A cemetery perpetual care fund is created pursuant to local law if:

(1) The governing law of the relevant jurisdiction (State, district, county, parish, etc.) requires or expressly permits the creation of such a fund, or

(2) The legally enforceable bylaws or contracts of a taxable cemetery corporation require a perpetual care fund.

(c) ***Gravesite.*** A gravesite is any type of interment right that has been sold by a cemetery, including, but not limited to, a burial lot, mausoleum, lawn crypt, niche, or scattering ground. For purposes of § 1.642 (i)-1, the term *gravesites* includes only those gravesites with respect to which the care fund or cemetery has an obligation for care and maintenance within the meaning of § 1.642 (i)-1(c)(1).

(d) ***Care and maintenance.*** For purposes of section 642(i) and this section, the term *care and maintenance of gravesite* shall be generally defined in accordance with the definition of such term under the local law pursuant to which the cemetery perpetual care fund is created. If the applicable local law contains no definition, care and maintenance of gravesites may include the upkeep, repair and preservation of those portions of cemetery property in which gravesites (as defined in paragraph (c) of this section) have been sold; including gardening, road maintenance, water line and drain repair and other activities reasonably necessary to the preservation of cemetery property. The costs for care and maintenance include, but are not limited to, expenditures for the maintenance, repair and replacement of machinery, tools, and equipment, compensation of employees performing such work, insurance premiums, reasonable payments for employees' pension and other benefit plans, and the costs of maintaining necessary records of lot ownership, transfers and burials. However, if some of the expenditures of the cemetery corporation, such as officers' salaries, are for both care and maintenance and for other purposes, the expenditures must be properly allocated between care and maintenance of gravesites and the other purposes. Only those expenditures that are properly allocable to those portions of cemetery property in which gravesites have been sold qualify as expenditures for care and maintenance of gravesites.

[T.D. 7651, 44 FR 61596, Oct. 26, 1979]

§ 1.643(a)-0 Distributable net income; deduction for distributions; in general.

The term *distributable net income* has no application except in the taxation of estates and trusts and their beneficiaries. It limits the deductions allowable to estates and trusts for amounts paid, credited, or required to be distributed to beneficiaries and is used to determine how much of an amount paid, credited, or required to be distributed to a beneficiary will be includible in his gross income. It is also used to determine the character of distributions to the beneficiaries. Distributable net income means for any taxable year, the taxable income (as defined in section 63) of the estate or trust, computed with the modifications set forth in §§ 1.643(a)-1 through 1.643(a)-7.

§ 1.643(a)-1 Deduction for distributions.

The deduction allowable to a trust under section 651 and to an estate or trust under section 661 for amounts paid, credited, or required to be distributed to beneficiaries is not allowed in the computation of distributable net income.

§ 1.643(a)-2 Deduction for personal exemption.

The deduction for personal exemption under section 642(b) is not allowed in the computation of distributable net income.

§ 1.643(a)-3 Capital gains and losses.

(a) ***In general.*** Except as provided in § 1.643(a)-6 and paragraph (b) of this section, gains from the sale or exchange of capital assets are ordinarily excluded from distributable net income and are not ordinarily considered as paid, credited, or required to be distributed to any beneficiary.

(b) ***Capital gains included in distributable net income.*** Gains from the sale or exchange of capital assets are included in distributable net income to the extent they are, pursuant to the terms of the governing instrument and applicable local law, or pursuant to a reasonable and impartial exercise of discretion by the fiduciary (in accordance with a power granted to the fiduciary by applicable local law or by the governing instrument if not prohibited by applicable local law)—

(1) Allocated to income (but if income under the state statute is defined as, or consists of, a unitrust amount, a discretionary power to allocate gains to income must also be exercised consistently and the amount so allocated may not be greater than the excess of the unitrust amount over the amount of distributable net income determined without regard to this subparagraph § 1.643(a)-3(b));

(2) Allocated to corpus but treated consistently by the fiduciary on the trust's books, records, and tax returns as part of a distribution to a beneficiary; or

(3) Allocated to corpus but actually distributed to the beneficiary or utilized by the fiduciary in determining the amount that is distributed or required to be distributed to a beneficiary.

(c) ***Charitable contributions included in distributable net income.*** If capital gains are paid, permanently set aside, or to be used for the purposes specified in section 642(c), so that a charitable deduction is allowed under that section in respect of the gains, they must be included in the computation of distributable net income.

(d) ***Capital losses.*** Losses from the sale or exchange of capital assets shall first be netted at the trust level against any gains from the sale or exchange of capital assets, except for a capital gain that is utilized under paragraph (b)(3) of this section in determining the amount that is distributed or required to be distributed to a particular beneficiary. See § 1.642(h)-1 with respect to capital loss carryovers in the year of final termination of an estate or trust.

(e) ***Examples.*** The following examples illustrate the rules of this section:

Example 1. Under the terms of Trust's governing instrument, all income is to be paid to A for life. Trustee is given discretionary powers to invade principal for A's benefit and to deem discretionary distributions to be made from capital gains realized during the year. During Trust's first taxable year, Trust has $5,000 of dividend income and $10,000 of capital gain from the sale of securities. Pursuant to the terms of the governing instrument and applicable local law, Trustee allocates the $10,000 capital gain to principal. During the year, Trustee distributes to A $5,000, representing A's right to trust income. In addition, Trustee distributes to A $12,000, pursuant to the discretionary power to distribute principal. Trustee does not exercise the discretionary power to deem the discretionary distributions of principal as being paid from capital gains realized during the year. Therefore, the

capital gains realized during the year are not included in distributable net income and the $10,000 of capital gain is taxed to the trust. In future years, Trustee must treat all discretionary distributions as not being made from any realized capital gains.

Example 2. The facts are the same as in *Example 1,* except that Trustee intends to follow a regular practice of treating discretionary distributions of principal as being paid first from any net capital gains realized by Trust during the year. Trustee evidences this treatment by including the $10,000 capital gain in distributable net income on Trust's federal income tax return so that it is taxed to A. This treatment of the capital gains is a reasonable exercise of Trustee's discretion. In future years Trustee must treat all discretionary distributions as being made first from any realized capital gains.

Example 3. The facts are the same as in *Example 1,* except that Trustee intends to follow a regular practice of treating discretionary distributions of principal as being paid from any net capital gains realized by Trust during the year from the sale of certain specified assets or a particular class of investments. This treatment of capital gains is a reasonable exercise of Trustee's discretion.

Example 4. The facts are the same as in *Example 1,* except that pursuant to the terms of the governing instrument (in a provision not prohibited by applicable local law), capital gains realized by Trust are allocated to income. Because the capital gains are allocated to income pursuant to the terms of the governing instrument, the $10,000 capital gain is included in Trust's distributable net income for the taxable year.

Example 5. The facts are the same as in *Example 1,* except that Trustee decides that discretionary distributions will be made only to the extent Trust has realized capital gains during the year and thus the discretionary distribution to A is $10,000, rather than $12,000. Because Trustee will use the amount of any realized capital gain to determine the amount of the discretionary distribution to the beneficiary, the $10,000 capital gain is included in Trust's distributable net income for the taxable year.

Example 6. Trust's assets consist of Blackacre and other property. Under the terms of Trust's governing instrument, Trustee is directed to hold Blackacre for ten years and then sell it and distribute all the sales proceeds to A. Because Trustee uses the amount of the sales proceeds that includes any realized capital gain to determine the amount required to be distributed to A, any capital gain realized from the sale of Blackacre is included in Trust's distributable net income for the taxable year.

Example 7. Under the terms of Trust's governing instrument, all income is to be paid to A during the Trust's term. When A reaches 35, Trust is to terminate and all the principal is to be distributed to A. Because all the assets of the trust, including all capital gains, will be actually distributed to the beneficiary at the termination of Trust, all capital gains realized in the year of termination are included in distributable net income. See § 1.641(b)-3 for the determination of the year of final termination and the taxability of capital gains realized after the terminating event and before final distribution.

Example 8. The facts are the same as *Example 7,* except Trustee is directed to pay B $10,000 before distributing the remainder of Trust assets to A. Because the distribution to B is a gift of a specific sum of money within the meaning of section 663(a)(1), none of Trust's distributable net income that includes all of the capital gains realized during the year of termination is allocated to B's distribution.

Example 9. The facts are the same as *Example 7,* except Trustee is directed to distribute one-half of the principal to A when A reaches 35 and the balance to A when A reaches 45. Trust assets consist entirely of stock in corporation M with a fair market value of $1,000,000 and an adjusted basis of

$300,000. When A reaches 35, Trustee sells one-half of the stock and distributes the sales proceeds to A. All the sales proceeds, including all the capital gain attributable to that sale, are actually distributed to A and therefore all the capital gain is included in distributable net income.

Example 10. The facts are the same as *Example 9,* except when A reaches 35, Trustee sells all the stock and distributes one-half of the sales proceeds to A. If authorized by the governing instrument and applicable state statute, Trustee may determine to what extent the capital gain is distributed to A. The $500,000 distribution to A may be treated as including a minimum of $200,000 of capital gain (and all of the principal amount of $300,000) and a maximum of $500,000 of the capital gain (with no principal). Trustee evidences the treatment by including the appropriate amount of capital gain in distributable net income on Trust's federal income tax return. If Trustee is not authorized by the governing instrument and applicable state statutes to determine to what extent the capital gain is distributed to A, one-half of the capital gain attributable to the sale is included in distributable net income.

Example 11. The applicable state statute provides that a trustee may make an election to pay an income beneficiary an amount equal to four percent of the fair market value of the trust assets, as determined at the beginning of each taxable year, in full satisfaction of that beneficiary's right to income. State statute also provides that this unitrust amount shall be considered paid first from ordinary and tax-exempt income, then from net short-term capital gain, then from net long-term capital gain, and finally from return of principal. Trust's governing instrument provides that A is to receive each year income as defined under state statute. Trustee makes the unitrust election under state statute. At the beginning of the taxable year, Trust assets are valued at $500,000. During the year, Trust receives $5,000 of dividend income and realizes $80,000 of net long-term gain from the sale of capital assets. Trustee distributes to A $20,000 (4% of $500,000) in satisfaction of A's right to income. Net long-term capital gain in the amount of $15,000 is allocated to income pursuant to the ordering rule of the state statute and is included in distributable net income for the taxable year.

Example 12. The facts are the same as in *Example 11,* except that neither state statute nor Trust's governing instrument has an ordering rule for the character of the unitrust amount, but leaves such a decision to the discretion of Trustee. Trustee intends to follow a regular practice of treating principal, other than capital gain, as distributed to the beneficiary to the extent that the unitrust amount exceeds Trust's ordinary and tax-exempt income. Trustee evidences this treatment by not including any capital gains in distributable net income on Trust's Federal income tax return so that the entire $80,000 capital gain is taxed to Trust. This treatment of the capital gains is a reasonable exercise of Trustee's discretion. In future years Trustee must consistently follow this treatment of not allocating realized capital gains to income.

Example 13. The facts are the same as in *Example 11,* except that neither state statutes nor Trust's governing instrument has an ordering rule for the character of the unitrust amount, but leaves such a decision to the discretion of Trustee. Trustee intends to follow a regular practice of treating net capital gains as distributed to the beneficiary to the extent the unitrust amount exceeds Trust's ordinary and tax-exempt income. Trustee evidences this treatment by including $15,000 of the capital gain in distributable net income on Trust's Federal income tax return. This treatment of the capital gains is a reasonable exercise of Trustee's discretion. In future years Trustee must consistently treat realized capital gain, if any, as distributed to the beneficiary to the extent that the unitrust amount exceeds ordinary and tax-exempt income.

Example 14. Trustee is a corporate fiduciary that administers numerous trusts. State statutes provide that a trustee may make an election to distribute to an income beneficiary an amount equal to four percent of the annual fair market value of the trust assets in full satisfaction of that beneficiary's right to income. Neither state statutes nor the governing instruments of any of the trusts administered by Trustee has an ordering rule for the character of the unitrust amount, but leaves such a decision to the discretion of Trustee. With respect to some trusts, Trustee intends to follow a regular practice of treating principal, other than capital gain, as distributed to the beneficiary to the extent that the unitrust amount exceeds the trust's ordinary and tax-exempt income. Trustee will evidence this treatment by not including any capital gains in distributable net income on the Federal income tax returns for those trusts. With respect to other trusts, Trustee intends to follow a regular practice of treating any net capital gains as distributed to the beneficiary to the extent the unitrust amount exceeds the trust's ordinary and tax-exempt income. Trustee will evidence this treatment by including net capital gains in distributable net income on the Federal income tax returns filed for these trusts. Trustee's decision with respect to each trust is a reasonable exercise of Trustee's discretion and, in future years, Trustee must treat the capital gains realized by each trust consistently with the treatment by that trust in prior years.

(f) ***Effective date.*** This section applies for taxable years of trusts and estates ending after January 2, 2004.

[T.D. 9102, 69 FR 18, Jan. 2, 2004]

§ 1.643(a)-4 Extraordinary dividends and taxable stock dividends.

In the case solely of a trust which qualifies under subpart B (section 651 and following) as a "simple trust," there are excluded from distributable net income extraordinary dividends (whether paid in cash or in kind) or taxable stock dividends which are not distributed or credited to a beneficiary because the fiduciary in good faith determines that under the terms of the governing instrument and applicable local law such dividends are allocable to corpus. See section 665(e), paragraph (b) of § 1.665(e)-1, and paragraph (b) of § 1.665(e)-1A for the treatment of such dividends upon subsequent distribution.

[T.D. 7204, 37 FR 17134, Aug. 25, 1972]

§ 1.643(a)-5 Tax-exempt interest.

(a) There is included in distributable net income any tax-exempt interest excluded from gross income under section 103, reduced by disbursements allocable to such interest which would have been deductible under section 212 but for the provisions of section 265 (relating to disallowance of deductions allocable to tax-exempt income).

(b) If the estate or trust is allowed a charitable contributions deduction under section 642(c), the amounts specified in paragraph (a) of this section and § 1.643(a)-6 are reduced by the portion deemed to be included in income paid, permanently set aside, or to be used for the purposes specified in section 642(c). If the governing instrument or local law specifically provides as to the source out of which amounts are paid, permanently set aside, or to be used for such charitable purposes, the specific provision controls for Federal tax purposes to the extent such provision has economic effect independent of income tax consequences. See § 1.652(b)-2(b). In the absence of such specific provisions in the governing instrument or local law, an amount to which section 642(c) applies is deemed to consist of the same

proportion of each class of the items of income of the estate or trust as the total of each class bears to the total of all classes. For illustrations showing the determination of the character of an amount deductible under section 642(c), see *Examples 1* and *2* of § 1.662(b)-2 and § 1.662(c)-4(e).

[T.D. 6500, 25 FR 11814, Nov. 26, 1960; 25 FR 14021, Dec. 31, 1960, as amended by T.D. 9582, 77 FR 22485, Apr. 16, 2012]

§ 1.643(a)-6 Income of foreign trust.

(a) ***Distributable net income of a foreign trust.*** In the case of a foreign trust (see section 7701(a)(31)), the determination of distributable net income is subject to the following rules:

(1) There is included in distributable net income the amounts of gross income from sources without the United States, reduced by disbursements allocable to such foreign income which would have been deductible but for the provisions of section 265 (relating to disallowance of deductions allocable to tax exempt income). See paragraph (b) of § 1.643(a)-5 for rules applicable when an estate or trust is allowed a charitable contributions deduction under section 642(c).

(2) In the case of a distribution made by a trust before January 1, 1963, for purposes of determining the distributable net income of the trust for the taxable year in which the distribution is made, or for any prior taxable year;

(i) Gross income from sources within the United States is determined by taking into account the provisions of section 894 (relating to income exempt under treaty); and

(ii) Distributable net income is determined by taking into account the provisions of section 643(a)(3) (relating to exclusion of certain gains from the sale or exchange of capital assets).

(3) In the case of a distribution made by a trust after December 31, 1962, for purposes of determining the distributable net income of the trust for any taxable year, whether ending before January 1, 1963, or after December 31, 1962;

(i) Gross income (for the entire foreign trust) from sources within the United States is determined without regard to the provisions of section 894 (relating to income exempt under treaty);

(ii) In respect of a foreign trust created by a U.S. person (whether such trust constitutes the whole or only a portion of the entire foreign trust) (see section 643(d) and § 1.643(d)-1), there shall be included in gross income gains from the sale or exchange of capital assets reduced by losses from such sales or exchanges to the extent such losses do not exceed gains from such sales or exchanges, and the deduction under section 1202 (relating to deduction for capital gains) shall not be taken into account; and

(iii) In respect of a foreign trust created by a person other than a U.S. person (whether such trust constitutes the whole or only a portion of the entire foreign trust) (see section 643(d) and § 1.643(d)-1), distributable net income is determined by taking into account all of the provisions of section 643 except section 643(a)(6)(C) (relating to gains from the sale or exchange of capital assets by a foreign trust created by a U.S. person).

(b) ***Examples.*** The application of this section, showing the computation of distributable net income for one of the taxable years for which such a computation must be made, may be illustrated by the following examples:

Example 1. (1) A trust is created in 1952 under the laws of Country X by the transfer to a trustee in

Country X of money and property by a U.S. person. The entire trust constitutes a foreign trust created by a U.S. person. The income from the trust corpus is to be accumulated until the beneficiary, a resident citizen of the United States who was born in 1944, reaches the age of 21 years, and upon his reaching that age, the corpus and accumulated income are to be distributed to him. The trust instrument provides that capital gains are to be allocated to corpus and are not to be paid, credited, or required to be distributed to any beneficiary during the taxable year or paid, permanently set aside, or to be used for the purposes specified in section 642(c). Under the terms of a tax convention between the United States and Country X, interest income received by the trust from U.S. sources is exempt from U.S. taxation. In 1965 the corpus and accumulated income are distributed to the beneficiary. During the taxable year 1964, the trust has the following items of income, loss, and expense:

Interest on bonds of a U.S. corporation	$10,000
Net long-term capital gain from U.S. sources	30,000
Gross income from investments in Country X	40,000
Net short-term capital loss from U.S. sources	5,000
Expenses allocable to gross income from investments in Country X	5,000

(2) The distributable net income for the taxable year 1964 of the foreign trust created by a U.S. person, determined under section 643(a), is $70,000, computed as follows:

Interest on bonds of a U.S. corporation		$10,000
Gross income from investments in Country X		40,000
Net long-term capital gain from U.S. sources	$30,000	
Less: Net short-term capital loss from U.S. sources	5,000	
Excess of net long-term capital gain over net short-term capital loss		25,000
Total		75,000
Less: Expenses allocable to income from investments in Country X		5,000
Distributable net income		70,000

(3) In determining the distributable net income of $70,000, the taxable income of the trust is computed with the following modifications: No deduction is allowed for the personal exemption of the trust (section 643(a)(2)); the interest received on bonds of a U.S. corporation is included in the trust gross income despite the fact that such interest is exempt from U.S. tax under the provisions of the tax treaty between Country X and the United States (section 643(a)(6) (see H. Con. Res. (B)); the excess of net long-term capital gain over net short-term capital loss allocable to corpus is included in distributable net income, but such excess is not subject to the deduction under section 1202 (section 643(a)(6)(C)); and the amount

representing gross income from investments in Country X is included, but such amount is reduced by the amount of the disbursements allocable to such income (section 643(a)(6)(A)).

Example 2. (1) The facts are the same as in example 1 except that money or property has also been transferred to the trust by a person other than a U.S. person and, pursuant to the provisions of § 1.643(d)-1, during 1964 only 60 percent of the entire trust constitutes a foreign trust created by a U.S. person.
(2) The distributable net income for the taxable year 1964 of the foreign trust created by a U.S. person, determined under section 643(a), is $42,000 computed as follows:

Interest on bonds of a U.S. corporation (60 percent of $10,000)		$6,000
Gross income from investments in Country X (60 percent of $40,000)		24,000
Net long-term capital gain from U.S. sources (60 percent of $30,000)	$18,000	
Less: Net short-term capital loss from U.S. sources (60 percent of $5,000)	3,000	
		15,000
Total		45,000
Less: Expenses allocable to income from investments in Country X (60 percent of $5,000)		3,000
Distributable net income		42,000

(3) The distributable net income for the taxable year 1964 of the portion of the entire foreign trust which does not constitute a foreign trust created by a U.S. person, determined under section 643(a), is $18,000, computed as follows:

Interest on bonds of a U.S. corporation (40 percent of $10,000)	$4,000
Gross income from investments in Country X (40 percent of $40,000)	16,000
Total	20,000
Less: Expenses allocable to income from investments in Country X (40 percent of $5,000)	2,000
Distributable net income	18,000

(4) The distributable net income of the entire foreign trust for the taxable year 1964 is $60,000, computed as follows:

Distributable net income of the foreign trust created by a U.S. person	$42,000
Distributable net income of that portion of the entire foreign trust which does not constitute a foreign trust created by a U.S. person	18,000

Distributable net income of the entire foreign trust	60,000

It should be noted that the difference between the $70,000 distributable net income of the foreign trust in example 1 and the $60,000 distributable net income of the entire foreign trust in this example is due to the $10,000 (40 percent of $25,000) net capital gain (capital gain net income for taxable years beginning after December 31, 1976) which under section 643(a)(3) is excluded from the distributable net income of that portion of the foreign trust in example 2 which does not constitute a foreign trust created by a U.S. person.

[T.D. 6989, 34 FR 731, Jan. 17, 1969, as amended by T.D. 7728, 45 FR 72650, Nov. 3, 1980]

§ 1.643(a)-7 Dividends.

Dividends excluded from gross income under section 116 (relating to partial exclusion of dividends received) are included in distributable net income. For this purpose, adjustments similar to those required by § 1.643(a)-5 with respect to expenses allocable to tax-exempt income and to income included in amounts paid or set aside for charitable purposes are not made. See the regulations under section 642(c).

[T.D. 7357, 40 FR 23742, June 2, 1975]

§ 1.643(a)-8 Certain distributions by charitable remainder trusts.

(a) ***Purpose and scope.*** This section is intended to prevent the avoidance of the purposes of the charitable remainder trust rules regarding the characterizations of distributions from those trusts in the hands of the recipients and should be interpreted in a manner consistent with this purpose. This section applies to all charitable remainder trusts described in section 664 and the beneficiaries of such trusts.

(b) ***Deemed sale by trust.***

(1) For purposes of section 664(b), a charitable remainder trust shall be treated as having sold, in the year in which a distribution of an annuity or unitrust amount is made from the trust, a pro rata portion of the trust assets to the extent that the distribution of the annuity or unitrust amount would (but for the application of this paragraph (b)) be characterized in the hands of the recipient as being from the category described in section 664(b)(4) and exceeds the amount of the previously undistributed

(i) Cash contributed to the trust (with respect to which a deduction was allowable under section 170, 2055, 2106, or 2522); plus

(ii) Basis in any contributed property (with respect to which a deduction was allowable under section 170, 2055, 2106, or 2522) that was sold by the trust.

(2) Any transaction that has the purpose or effect of circumventing the rules in this paragraph (b) shall be disregarded.

(3) For purposes of paragraph (b)(1) of this section, trust assets do not include cash or assets purchased with the proceeds of a trust borrowing, forward sale, or similar transaction.

(4) Proper adjustment shall be made to any gain or loss subsequently realized for gain or loss taken into account under paragraph (b)(1) of this section.

(c) ***Examples.*** The following examples illustrate the rules of paragraph (b) of this section:

Example 1. Deemed sale by trust. Donor contributes stock having a fair market value of $2 million to a charitable remainder unitrust with a unitrust amount of 50 percent of the net fair market value of the trust assets and a two-year term. The stock has a total adjusted basis of $400,000. In Year 1, the trust receives dividend income of $20,000. As of the valuation date, the trust's assets have a net fair market value of $2,020,000 ($2 million in stock, plus $20,000 in cash). To obtain additional cash to pay the unitrust amount to the noncharitable beneficiary, the trustee borrows $990,000 against the value of the stock. The trust then distributes $1,010,000 to the beneficiary before the end of Year 1. Under section 664(b)(1), $20,000 of the distribution is characterized in the hands of the beneficiary as dividend income. The rest of the distribution, $990,000, is attributable to an amount received by the trust that did not represent either cash contributed to the trust or a return of basis in any contributed asset sold by the trust during Year 1. Under paragraph (b)(3) of this section, the stock is a trust asset because it was not purchased with the proceeds of the borrowing. Therefore, in Year 1, under paragraph (b)(1) of this section, the trust is treated as having sold $990,000 of stock and as having realized $792,000 of capital gain (the trust's basis in the shares deemed sold is $198,000). Thus, in the hands of the beneficiary, $792,000 of the distribution is characterized as capital gain under section 664(b)(2) and $198,000 is characterized as a tax-free return of corpus under section 664(b)(4). No part of the $990,000 loan is treated as acquisition indebtedness under section 514(c) because the entire loan has been recharacterized as a deemed sale.

Example 2. Adjustment to trust's basis in assets deemed sold. The facts are the same as in *Example 1*. During Year 2, the trust sells the stock for $2,100,000. The trustee uses a portion of the proceeds of the sale to repay the outstanding loan, plus accrued interest. Under paragraph (b)(4) of this section, the trust's adjusted basis in the stock is $1,192,000 ($400,000 plus the $792,000 of gain recognized in Year 1). Therefore, the trust recognizes capital gain (as described in section 664(b)(2)) in Year 2 of $908,000.

Example 3. Distribution of cash contributions. Upon the death of D, the proceeds of a life insurance policy on D's life are payable to T, a charitable remainder annuity trust. The terms of the trust provide that, for a period of three years commencing upon D's death, the trust shall pay an annuity amount equal to $x annually to A, the child of D. After the expiration of such three-year period, the remainder interest in the trust is to be transferred to charity Z. In Year 1, the trust receives payment of the life insurance proceeds and pays the appropriate pro rata portion of the $x annuity to A from the insurance proceeds. During Year 1, the trust has no income. Because the entire distribution is attributable to a cash contribution (the insurance proceeds) to the trust for which a charitable deduction was allowable under section 2055 with respect to the present value of the remainder interest passing to charity, the trust will not be treated as selling a pro rata portion of the trust assets under paragraph (b)(1) of this section. Thus, the distribution is characterized in A's hands as a tax-free return of corpus under section 664(b)(4).

(d) ***Effective date.*** This section is applicable to distributions made by a charitable remainder trust after October 18, 1999.

[T.D. 8926, 66 FR 1037, Jan. 5, 2001]

§ 1.643(b)-1 Definition of income.

For purposes of subparts A through D, part I, subchapter J, chapter 1 of the Internal Revenue Code, “income,” when not preceded by the words “taxable,” “distributable net,” “undistributed net,” or “gross,” means the amount of income of an estate or trust for the taxable year determined under the terms of the governing instrument and applicable local law. Trust provisions that depart fundamentally from traditional principles of income and principal will generally not be recognized. For example, if a trust instrument directs that all the trust income shall be paid to the income beneficiary but defines ordinary dividends and interest as principal, the trust will not be considered one that under its governing instrument is required to distribute all its income currently for purposes of section 642(b) (relating to the personal exemption) and section 651 (relating to simple trusts). Thus, items such as dividends, interest, and rents are generally allocated to income and proceeds from the sale or exchange of trust assets are generally allocated to principal. However, an allocation of amounts between income and principal pursuant to applicable local law will be respected if local law provides for a reasonable apportionment between the income and remainder beneficiaries of the total return of the trust for the year, including ordinary and tax-exempt income, capital gains, and appreciation. For example, a state statute providing that income is a unitrust amount of no less than 3% and no more than 5% of the fair market value of the trust assets, whether determined annually or averaged on a multiple year basis, is a reasonable apportionment of the total return of the trust. Similarly, a state statute that permits the trustee to make adjustments between income and principal to fulfill the trustee's duty of impartiality between the income and remainder beneficiaries is generally a reasonable apportionment of the total return of the trust. Generally, these adjustments are permitted by state statutes when the trustee invests and manages the trust assets under the state's prudent investor standard, the trust describes the amount that may or must be distributed to a beneficiary by referring to the trust's income, and the trustee after applying the state statutory rules regarding the allocation of receipts and disbursements to income and principal, is unable to administer the trust impartially. Allocations pursuant to methods prescribed by such state statutes for apportioning the total return of a trust between income and principal will be respected regardless of whether the trust provides that the income must be distributed to one or more beneficiaries or may be accumulated in whole or in part, and regardless of which alternate permitted method is actually used, provided the trust complies with all requirements of the state statute for switching methods. A switch between methods of determining trust income authorized by state statute will not constitute a recognition event for purposes of section 1001 and will not result in a taxable gift from the trust's grantor or any of the trust's beneficiaries. A switch to a method not specifically authorized by state statute, but valid under state law (including a switch via judicial decision or a binding non-judicial settlement) may constitute a recognition event to the trust or its beneficiaries for purposes of section 1001 and may result in taxable gifts from the trust's grantor and beneficiaries, based on the relevant facts and circumstances. In addition, an allocation to income of all or a part of the gains from the sale or exchange of trust assets will generally be respected if the allocation is made either pursuant to the terms of the governing instrument and applicable local law, or pursuant to a reasonable and impartial exercise of a discretionary power granted to the fiduciary by applicable local law or by the governing instrument, if not prohibited by applicable local law. This section is effective for taxable years of trusts and estates ending after January 2, 2004.

[T.D. 9102, 69 FR 19, Jan. 2, 2004]

§ 1.643(b)-2 Dividends allocated to corpus.

Extraordinary dividends or taxable stock dividends which the fiduciary, acting in good faith, determines to be allocable to corpus under the terms of the governing instrument and applicable local law are not considered “income” for purposes of subpart A, B, C, or D, part I, subchapter J, chapter 1 of the Code. See section 643(a)(4), § 1.643(a)-4, § 1.643(d)-2, section 665(e), paragraph (b) of § 1.665(e)-1, and paragraph (b) of § 1.665(e)-1A for the treatment of such items in the computation of distributable net income.

[T.D. 7204, 37 FR 17134, Aug. 25, 1972]

§ 1.643(c)-1 Definition of "beneficiary".

An heir, legatee, or devisee (including an estate or trust) is a beneficiary. A trust created under a decedent's will is a beneficiary of the decedent's estate. The following persons are treated as beneficiaries:

(a) Any person with respect to an amount used to discharge or satisfy that person's legal obligation as that term is used in § 1.662(a)-4.

(b) The grantor of a trust with respect to an amount applied or distributed for the support of a dependent under the circumstances specified in section 677(b) out of corpus or out of other than income for the taxable year of the trust.

(c) The trustee or cotrustee of a trust with respect to an amount applied or distributed for the support of a dependent under the circumstances specified in section 678(c) out of corpus or out of other than income for the taxable year of the trust.

§ 1.643(d)-1 Definition of "foreign trust created by a United States person".

(a) ***In general.*** For the purpose of part I, subchapter J, chapter 1 of the Internal Revenue Code, the term *foreign trust created by a United States person* means that portion of a foreign trust (as defined in section 7701(a)(31)) attributable to money or property (including all accumulated earnings, profits, or gains attributable to such money or property) of a U.S. person (as defined in section 7701(a)(30)) transferred directly or indirectly, or under the will of a decedent who at the date of his death was a U.S. citizen or resident, to the foreign trust. A foreign trust created by a person who is not a U.S. person, to which a U.S. person transfers his money or property, is a foreign trust created by a U.S. person to the extent that the fair market value of the entire foreign trust is attributable to money or property of the U.S. person transferred to the foreign trust. The transfer of money or property to the foreign trust may be made either directly or indirectly by a U.S. person. Transfers of money or property to a foreign trust do not include transfers of money or property pursuant to a sale or exchange which is made for a full and adequate consideration. Transfers to which section 643(d) and this section apply are transfers of money or property which establish or increase the corpus of a foreign trust. The rules set forth in this section with respect to transfers by a U.S. person to a foreign trust also are applicable with respect to transfers under the will of a decedent who at the date of his death was a U.S. citizen or resident. For provisions relating to the information returns which are required to be filed with respect to the creation of or transfers to foreign trusts, see section 6048.

(b) ***Determination of a foreign trust created by a U.S. person*** —

(1) ***Transfers of money or property only by a U.S. person.*** If all the items of money or property constituting the corpus of a foreign trust are transferred to the trust by a U.S. person, the entire foreign trust is a foreign trust created by a U.S. person.

(2) ***Transfers of money or property by both a U.S. person and a person other than a U.S. person; transfers required to be treated as separate funds.*** Where there are transfers of money or property by both a U.S. person and a person other than a U.S. person to a foreign trust, and it is necessary, either by reason of the provisions of the governing instrument of the trust or by reason of some other requirement such as local law, that the trustee treat the entire foreign trust as composed of two separate funds, one consisting of the money or property (including all accumulated earnings, profits, or gains attributable to such money or property) transferred by the U.S. person and the other

consisting of the money or property (including all accumulated earnings, profits, or gains attributable to such money or property) transferred by the person other than the U.S. person, the foreign trust created by a U.S. person shall be the fund consisting of the money or property transferred by the U.S. person. See example 1 in paragraph (c) of this section.

(3) ***Transfers of money or property by both a U.S. person and a person other than a U.S. person; transfers not required to be treated as separate funds.*** Where the corpus of a foreign trust consists of money or property transferred to the trust (simultaneously or at different times) by a U.S. person and by a person who is not a U.S. person, the foreign trust created by a U.S. person within the meaning of section 643(d) is that portion of the entire foreign trust which, immediately after any transfer of money or property to the trust, the fair market value of money or property (including all accumulated earnings, profits, or gains attributable to such money or property) transferred to the foreign trust by the U.S. person bears to the fair market value of the corpus (including all accumulated earnings, profits, or gains attributable to the corpus) of the entire foreign trust.

(c) ***Examples.*** The provisions of paragraph (b) of this section may be illustrated by the following examples. Example 1 illustrates the application of paragraph (b)(2) of this section. Example (2) illustrates the application of paragraph (b)(3) of this section in a case where there is no provision in the governing instrument of the trust or elsewhere which would require the trustee to treat the corpus of the trust as composed of more than one fund.

Example 1. On January 1, 1964, the date of the creation of a foreign trust, a U.S. person transfers to it stock of a U.S. corporation with a fair market value of $50,000. On the same day, a person other than a U.S. person transfers to the trust Country X bonds with a fair market value of $25,000. The governing instrument of the trust provides that the income from the stock of the U.S. corporation is to be accumulated until A, a U.S. beneficiary, reaches the age of 21 years, and upon his reaching that age, the stock and income accumulated thereon are to be distributed to him. The governing instrument of the trust further provides that the income from the Country X bonds is to be accumulated until B, a U.S. beneficiary, reaches the age of 21 years, and upon his reaching that age, the bonds and income accumulated thereon are to be distributed to him. To comply with the provisions of the governing instrument of the trust that the income from the stock of the U.S. corporation be accumulated and distributed to A and that the income from the Country X bonds be accumulated and distributed to B, it is necessary that the trustee treat the transfers as two separate funds. The fund consisting of the stock of the U.S. corporation is a foreign trust created by a U.S. person.

Example 2. On January 1, 1964, the date of the creation of a foreign trust, a U.S. person transfers to it property having a fair market value of $60,000 and a person other than a U.S. person transfers to it property having a fair market value of $40,000. Immediately after these transfers, the foreign trust created by a U.S. person is 60 percent of the entire foreign trust, determined as follows: $60,000 (Value of property transferred by U.S. person) / $100,000 (Value of entire property transferred to trust) = 60 percent The undistributed net income for the calendar years 1964 and 1965 is $20,000 which increases the value of the entire foreign trust to $120,000 ($100,000 plus $20,000). Accordingly, as of December 31, 1965, the portion of the foreign trust created by the U.S. person is $72,000 (60 percent of $120,000). On January 1, 1966, the U.S. person transfers property having a fair market value of $40,000 increasing the value of the entire foreign trust to $160,000 ($120,000 plus $40,000) and increasing the value of the portion of the foreign trust created by the U.S. person to $112,000 ($72,000 plus $40,000). Immediately, after this transfer, the foreign trust created by the U.S. person is 70 percent of the entire foreign trust, determined as follows: $112,000 (Value of property transferred by U.S. person) / $160,000 (Value of entire property transferred to the trust) = 70 percent

[T.D. 6989, 34 FR 732, Jan. 17, 1969, as amended by T.D. 9849, 84 FR 9235, Mar. 14, 2019]

§ 1.643(d)-2 Illustration of the provisions of section 643.

(a) The provisions of section 643 may be illustrated by the following example:

Example. (1) Under the terms of the trust instrument, the income of a trust is required to be currently distributed to W during her life. Capital gains are allocable to corpus and all expenses are charges against corpus. During the taxable year the trust has the following items of income and expenses:

Dividends from domestic corporations	$30,000
Extraordinary dividends allocated to corpus by the trustee in good faith	20,000
Taxable interest	10,000
Tax-exempt interest	10,000
Long-term capital gains	10,000
Trustee's commissions and miscellaneous expenses allocable to corpus	5,000

(2) The “income” of the trust determined under section 643(b) which is currently distributable to W is $50,000, consisting of dividends of $30,000, taxable interest of $10,000, and tax-exempt interest of $10,000. The trustee's commissions and miscellaneous expenses allocable to tax-exempt interest amount to $1,000 (10,000/50,000 × $5,000).
(3) The “distributable net income” determined under section 643(a) amounts to $45,000, computed as follows:

Dividends from domestic corporations		$30,000
Taxable interest		10,000
Nontaxable interest	$10,000	
Less: Expenses allocable thereto	1,000	
		9,000
Total		49,000
Less: Expenses ($5,000 less $1,000 allocable to tax-exempt interest)		4,000
Distributable net income		45,000

In determining the distributable net income of $45,000, the taxable income of the trust is computed with the following modifications: No deductions are allowed for distributions to W and for personal exemption of the trust (section 643(a) (1) and (2)); capital gains allocable to corpus

> are excluded and the deduction allowable under section 1202 is not taken into account (section 643(a)(3)): the extraordinary dividends allocated to corpus by the trustee in good faith are excluded (sections 643(a)(4)); and the tax- exempt interest (as adjusted for expenses) and the dividend exclusion of $50 are included) section 643(a) (5) and (7)).

(b) See paragraph (c) of the example in § 1.661(c)-2 for the computation of distributable net income where there is a charitable contributions deduction.

[T.D. 6500, 25 FR 11814, Nov. 26, 1960. Redesignated, T.D. 6989, 34 FR 732, Jan. 1, 1969]

§ 1.643(f)-1 Treatment of multiple trusts.

(a) ***General rule.*** For purposes of subchapter J of chapter 1 of subtitle A of Title 26 of the United States Code, two or more trusts will be aggregated and treated as a single trust if such trusts have substantially the same grantor or grantors and substantially the same primary beneficiary or beneficiaries, and if a principal purpose for establishing one or more of such trusts or for contributing additional cash or other property to such trusts is the avoidance of Federal income tax. For purposes of applying this rule, spouses will be treated as one person.

(b) ***Applicability date.*** The provisions of this section apply to taxable years ending after August 16, 2018.

[T.D. 9847, 84 FR 3014, Feb. 8, 2019]

§ 1.643(h)-1 Distributions by certain foreign trusts through intermediaries.

(a) ***In general*** —

(1) ***Principal purpose of tax avoidance.*** Except as provided in paragraph (b) of this section, for purposes of part I of subchapter J, chapter 1 of the Internal Revenue Code, and section 6048, any property (within the meaning of paragraph (f) of this section) that is transferred to a United States person by another person (an intermediary) who has received property from a foreign trust will be treated as property transferred directly by the foreign trust to the United States person if the intermediary received the property from the foreign trust pursuant to a plan one of the principal purposes of which was the avoidance of United States tax.

(2) ***Principal purpose of tax avoidance deemed to exist.*** For purposes of paragraph (a)(1) of this section, a transfer will be deemed to have been made pursuant to a plan one of the principal purposes of which was the avoidance of United States tax if the United States person—

(i) Is related (within the meaning of paragraph (e) of this section) to a grantor of the foreign trust, or has another relationship with a grantor of the foreign trust that establishes a reasonable basis for concluding that the grantor of the foreign trust would make a gratuitous transfer (within the meaning of § 1.671-2(e)(2)) to the United States person;

(ii) Receives from the intermediary, within the period beginning twenty-four months before and ending twenty-four months after the intermediary's receipt of property from the foreign trust, either the property the intermediary received from the foreign trust, proceeds from such property, or property in substitution for such property; and

(iii) Cannot demonstrate to the satisfaction of the Commissioner that—

(A) The intermediary has a relationship with the United States person that establishes a reasonable basis for concluding that the intermediary would make a gratuitous transfer to the United States person;

(B) The intermediary acted independently of the grantor and the trustee of the foreign trust;

(C) The intermediary is not an agent of the United States person under generally applicable United States agency principles; and

(D) The United States person timely complied with the reporting requirements of section 6039F, if applicable, if the intermediary is a foreign person.

(b) ***Exceptions*** —

(1) ***Nongratuitous transfers.*** Paragraph (a) of this section does not apply to the extent that either the transfer from the foreign trust to the intermediary or the transfer from the intermediary to the United States person is a transfer that is not a gratuitous transfer within the meaning of § 1.671-2(e)(2).

(2) ***Grantor as intermediary.*** Paragraph (a) of this section does not apply if the intermediary is the grantor of the portion of the trust from which the property that is transferred is derived. For the definition of *grantor,* see § 1.671-2(e).

(c) ***Effect of disregarding intermediary*** —

(1) ***General rule.*** Except as provided in paragraph (c)(2) of this section, the intermediary is treated as an agent of the foreign trust, and the property is treated as transferred to the United States person in the year the property is transferred, or made available, by the intermediary to the United States person. The fair market value of the property transferred is determined as of the date of the transfer by the intermediary to the United States person. For purposes of section 665(d)(2), the term *taxes imposed on the trust* includes any income, war profits, and excess profits taxes imposed by any foreign country or possession of the United States on the intermediary with respect to the property transferred.

(2) ***Exception.*** If the Commissioner determines, or if the taxpayer can demonstrate to the satisfaction of the Commissioner, that the intermediary is an agent of the United States person under generally applicable United States agency principles, the property will be treated as transferred to the United States person in the year the intermediary receives the property from the foreign trust. The fair market value of the property transferred will be determined as of the date of the transfer by the foreign trust to the intermediary. For purposes of section 901(b), any income, war profits, and excess profits taxes imposed by any foreign country or possession of the United States on the intermediary with respect to the property transferred will be treated as having been imposed on the United States person.

(3) ***Computation of gross income of intermediary.*** If property is treated as transferred directly by the foreign trust to a United States person pursuant to this section, the fair market value of such property is not taken into account in computing the gross income of the intermediary (if otherwise required to be taken into account by the intermediary but for paragraph (a) of this section).

(d) ***Transfers not in excess of $10,000.*** This section does not apply if, during the taxable year of the United States person, the aggregate fair market value of all property transferred to such person from all foreign trusts either directly or through one or more intermediaries does not exceed $10,000.

(e) ***Related parties.*** For purposes of this section, a United States person is treated as related to a grantor of a foreign trust if the United States person and the grantor are related for purposes of section 643(i)(2)(B), with the following modifications—

(1) For purposes of applying section 267 (other than section 267(f)) and section 707(b)(1), "at least 10 percent" is used instead of "more than 50 percent" each place it appears; and

(2) The principles of section 267(b)(10), using "at least 10 percent" instead of "more than 50 percent," apply to determine whether two corporations are related.

(f) ***Definition of property.*** For purposes of this section, the term *property* includes cash.

(g) ***Examples.*** The following examples illustrate the rules of this section. In each example, FT is an irrevocable foreign trust that is not treated as owned by any other person and the fair market value of the property that is transferred exceeds $10,000. The examples are as follows:

Example 1. Principal purpose of tax avoidance. FT was created in 1980 by A, a nonresident alien, for the benefit of his children and their descendants. FT's trustee, T, determines that 1000X of accumulated income should be distributed to A's granddaughter, B, who is a resident alien. Pursuant to a plan with a principal purpose of avoiding the interest charge that would be imposed by section 668, T causes FT to make a gratuitous transfer (within the meaning of § 1.671-2(e)(2)) of 1000X to I, a foreign person. I subsequently makes a gratuitous transfer of 1000X to B. Under paragraph (a)(1) of this section, FT is deemed to have made an accumulation distribution of 1000X directly to B.

Example 2. United States person unable to demonstrate that intermediary acted independently. GM and her daughter, M, are both nonresident aliens. M's daughter, D, is a resident alien. GM creates and funds FT for the benefit of her children. On July 1, 2001, FT makes a gratuitous transfer of XYZ stock to M. M immediately sells the XYZ stock and uses the proceeds to purchase ABC stock. On January 1, 2002, M makes a gratuitous transfer of the ABC stock to D. D is unable to demonstrate that M acted independently of GM and the trustee of FT in making the transfer to D. Under paragraph (a)(2) of this section, FT is deemed to have distributed the ABC stock to D. Under paragraph (c)(1) of this section, M is treated as an agent of FT, and the distribution is deemed to have been made on January 1, 2002.

Example 3. United States person demonstrates that specified conditions are satisfied. Assume the same facts as in *Example 2,* except that M receives 1000X cash from FT instead of XYZ stock. M gives 1000X cash to D on January 1, 2002. Also assume that M receives annual income of 5000X from her own investments and that M has given D 1000X at the beginning of each year for the past ten years. Based on this and additional information provided by D, D demonstrates to the satisfaction of the Commissioner that M has a relationship with D that establishes a reasonable basis for concluding that M would make a gratuitous transfer to D, that M acted independently of GM and the trustee of FT, that M is not an agent of D under generally applicable United States agency principles, and that D timely complied with the reporting requirements of section 6039F. FT will not be deemed under paragraph (a)(2) of this section to have made a distribution to D.

Example 4. Transfer to United States person less than 24 months before transfer to intermediary. Several years ago, A, a nonresident alien, created and funded FT for the benefit of his children and their descendants. A has a close friend, C, who also is a nonresident alien. A's granddaughter, B, is a resident alien. On December 31, 2001, C makes a gratuitous transfer of 1000X to B. On January 15, 2002, FT makes a gratuitous transfer of 1000X to C. B is unable to demonstrate that C has a relationship with B that would establish a reasonable basis for concluding that C would make a gratuitous transfer to B or that C acted independently of A and the trustee of FT in making the

transfer to B. Under paragraph (a)(2) of this section, FT is deemed to have distributed 1000X directly to B. Under paragraph (c)(1) of this section, C is treated as an agent of FT, and the distribution is deemed to have been made on December 31, 2001.

Example 5. United States person receives property in substitution for property transferred to intermediary. GM and her son, S, are both nonresident aliens. S's daughter, GD, is a resident alien. GM creates and funds FT for the benefit of her children and their descendants. On July 1, 2001, FT makes a gratuitous transfer of ABC stock with a fair market value of approximately 1000X to S. On January 1, 2002, S makes a gratuitous transfer of DEF stock with a fair market value of approximately 1000X to GD. GD is unable to demonstrate that S acted independently of GM and the trustee of FT in transferring the DEF stock to GD. Under paragraph (a)(2) of this section, FT is deemed to have distributed the DEF stock to GD. Under paragraph (c)(1) of this section, S is treated as an agent of FT, and the distribution is deemed to have been made on January 1, 2002.

Example 6. United States person receives indirect loan from foreign trust. Several years ago, A, a nonresident alien, created and funded FT for the benefit of her children and their descendants. A's daughter, B, is a resident alien. B needs funds temporarily while she is starting up her own business. If FT were to loan money directly to B, section 643(i) would apply. FT deposits 500X with FB, a foreign bank, on June 30, 2001. On July 1, 2001, FB loans 400X to B. Repayment of the loan is guaranteed by FT's 500X deposit. B is unable to demonstrate to the satisfaction of the Commissioner that FB has a relationship with B that establishes a reasonable basis for concluding that FB would make a loan to B or that FB acted independently of A and the trustee of FT in making the loan. Under paragraph (a)(2) of this section, FT is deemed to have loaned 400X directly to B on July 1, 2001. Under paragraph (c)(1) of this section, FB is treated as an agent of FT. For the treatment of loans from foreign trusts, see section 643(i).

Example 7. United States person demonstrates that specified conditions are satisfied. GM, a nonresident alien, created and funded FT for the benefit of her children and their descendants. One of GM's children is M, who is a resident alien. During the year 2001, FT makes a gratuitous transfer of 500X to M. M reports the 500X on Form 3520 as a distribution received from a foreign trust. During the year 2002, M makes a gratuitous transfer of 400X to her son, S, who also is a resident alien. M files a Form 709 treating the gratuitous transfer to S as a gift. Based on this and additional information provided by S, S demonstrates to the satisfaction of the Commissioner that M has a relationship with S that establishes a reasonable basis for concluding that M would make a gratuitous transfer to S, that M acted independently of GM and the trustee of FT, and that M is not an agent of S under generally applicable United States agency principles. FT will not be deemed under paragraph (a)(2) of this section to have made a distribution to S.M

Example 8. Intermediary as agent of trust; increase in FMV. A, a nonresident alien, created and funded FT for the benefit of his children and their descendants. On December 1, 2001, FT makes a gratuitous transfer of XYZ stock with a fair market value of 85X to B, a nonresident alien. On November 1, 2002, B sells the XYZ stock to a third party in an arm's length transaction for 100X in cash. On November 1, 2002, B makes a gratuitous transfer of 98X to A's grandson, C, a resident alien. C is unable to demonstrate to the satisfaction of the Commissioner that B acted independently of A and the trustee of FT in making the transfer. Under paragraph (a)(2) of this section, FT is deemed to have made a distribution directly to C. Under paragraph (c)(1) of this section, B is treated as an agent of FT, and FT is deemed to have distributed 98X to C on November 1, 2002.

Example 9. Intermediary as agent of United States person; increase in FMV. Assume the same facts as in *Example 8,* except that the Commissioner determines that B is an agent of C under generally applicable United States agency principles. Under paragraph (c)(2) of this section, FT is deemed to have distributed 85X to C on December 1, 2001. C must take the gain of 15X into account in the year 2002.

Example 10. Intermediary as agent of trust; decrease in FMV. Assume the same facts as in *Example 8,* except that the value of the XYZ stock on November 1, 2002, is only 80X. Instead of selling the XYZ stock to a third party and transferring cash to C, B transfers the XYZ stock to C in a gratuitous transfer. Under paragraph (c)(1) of this section, FT is deemed to have distributed XYZ stock with a value of 80X to C on November 1, 2002.

Example 11. Intermediary as agent of United States person; decrease in FMV. Assume the same facts as in *Example 10,* except that the Commissioner determines that B is an agent of C under generally applicable United States agency principles. Under paragraph (c)(2) of this section, FT is deemed to have distributed XYZ stock with a value of 85X to C on December 1, 2001.

(h) ***Effective date.*** The rules of this section are applicable to transfers made to United States persons after August 10, 1999.

[T.D. 8831, 64 FR 43272, Aug. 10, 1999, as amended by T.D. 8890, 65 FR 41332, July 5, 2000]

POOLED INCOME FUND ACTUARIAL TABLES APPLICABLE BEFORE JUNE 1, 2023

§ 1.642(c)-6A Valuation of charitable remainder interests for which the valuation date is before June 1, 2023.

(a) ***Valuation of charitable remainder interests for which the valuation date is before January 1, 1952.*** There was no provision for the qualification of pooled income funds under section 642 until 1969. See § 20.2031-7A(a) of this chapter (Estate Tax Regulations) for the determination of the present value of a charitable remainder interest created before January 1, 1952.

(b) ***Valuation of charitable remainder interests for which the valuation date is after December 31, 1951, and before January 1, 1971.*** No charitable deduction is allowable for a transfer to a pooled income fund for which the valuation date is after the effective dates of the Tax Reform Act of 1969 unless the pooled income fund meets the requirements of section 642(c)(5). See § 20.2031-7A(b) of this chapter (Estate Tax Regulations) for the determination of the present value of a charitable remainder interest for which the valuation date is after December 31, 1951, and before January 1, 1971.

(c) ***Present value of remainder interest in the case of transfers to pooled income funds for which the valuation date is after December 31, 1970, and before December 1, 1983.*** For the determination of the present value of a remainder interest in property transferred to a pooled income fund for which the valuation date is after December 31, 1970, and before December 1, 1983, see § 20.2031-7A(c) of this chapter (Estate Tax Regulations) and former § 1.642(c)-6(e) (as contained in the 26 CFR part 1 edition revised as of April 1, 1994).

(d) ***Present value of remainder interest dependent on the termination of one life in the case of transfers to pooled income funds made after November 30, 1983, for which the valuation date is before May 1, 1989 —***

(1) ***In general.*** For transfers to pooled income funds made after November 30, 1983, for which the valuation date is before May 1, 1989, the present value of the remainder interest at the time of the transfer of property to the fund is determined by computing the present value (at the time of the transfer) of the life income interest in the transferred property (as determined under paragraph (d)(2) of this section) and subtracting that value from the fair market value of the transferred property on the valuation date. The present value of a remainder interest that is dependent on the termination of the life of one individual is computed by use of Table G in paragraph (d)(4) of this section. For purposes of the computation under this section, the age of an individual is to be taken as the age of the individual at the individual's nearest birthday.

(2) ***Present value of life income interest.*** The present value of the life income interest in property transferred to a pooled income fund shall be computed on the basis of:

(i) Life contingencies determined from the values of *lx* that are set forth in Table LN of § 20.2031-7A(d)(6) of this chapter (Estate Tax Regulations); and

(ii) Discount at a rate of interest, compounded annually, equal to the highest yearly rate of return of the pooled income fund for the 3 taxable years immediately preceding its taxable year in which the transfer of property to the fund is made. For purposes of this paragraph (d)(2), the yearly rate of return of a pooled income fund is determined as provided in § 1.642(c)-6(c) unless the highest yearly rate of return is deemed to be 9 percent. For purposes of this paragraph (d)(2), the first taxable year of a pooled income fund is considered a taxable year even though the taxable year consists of less than 12 months. However, appropriate adjustments must be made to annualize the rate of return earned by the fund for that period. Where it appears from the facts and circumstances that the highest yearly rate of return for the 3 taxable years immediately preceding the taxable year in which the transfer of property is made has been purposely manipulated to be substantially less than the rate of return that would otherwise be reasonably anticipated with the purpose of obtaining an excessive charitable deduction, that rate of return may not be used. In that case, the highest yearly rate of return of the fund is determined by treating the fund as a pooled income fund that has been in existence for less than 3 preceding taxable years. If a pooled income fund has been in existence less than 3 taxable years immediately preceding the taxable year in which the transfer of property to the fund is made, the highest yearly rate of return is deemed to be 9 percent.

(3) ***Computation of value of remainder interest.*** The factor which is used in determining the present value of the remainder interest is the factor under the appropriate yearly rate of return in column (2) of Table G opposite the number in column (1) which corresponds to the age of the individual upon whose life the value of the remainder interest is based. If the yearly rate of return is a percentage which is between yearly rates of return for which factors are provided in Table G, a linear interpolation must be made. The present value of the remainder interest is determined by multiplying, by the factor determined under this paragraph (d)(3), the fair market value on the appropriate valuation date. If the yearly rate of return is below 2.2 percent or above 14 percent, see § 1.642(c)-6(b). This paragraph (d)(3) may be illustrated by the following example:

> *Example.* A, who will be 50 years old on April 15, 1985, transfers $100,000 to a pooled income fund on January 1, 1985, and retains a life income interest in such property. The highest yearly rate of return earned by the fund for its 3 preceding taxable years is 9.9 percent. In Table G the figure in column (2) opposite 50 years under 9.8 percent is .15653 and under 10 percent is .15257. The present value of the remainder interest is $15,455, computed

as follows:

Factor at 9.8 percent for person aged 50	.15653
Factor at 10 percent for person aged 50	.15257
Difference	.00396
Interpolation adjustment:	

$$\frac{9.9\% - 9.8\%}{.2\%} = \frac{x}{.00396}$$

Factor at 9.8 percent for person aged 50	0.15653
Less:	
Interpolation adjustment	.00198
Interpolated factor	.15455
Present value of remainder interest ($100,000 × .15455	$15,455

(4) ***Actuarial tables.*** The following tables shall be used in the application of the provisions of this section.

TABLE G

TABLE G—SINGLE LIFE, UNISEX—TABLE SHOWING THE PRESENT WORTH OF THE REMAINDER INTEREST IN PROPERTY TRANSFERRED TO A POOLED INCOME FUND HAVING THE YEARLY RATE OF RETURN SHOWN—APPLICABLE FOR TRANSFERS AFTER NOVEMBER 30, 1983, AND BEFORE MAY 1, 1989

(1) Age	(2) Yearly rate of return				
	2.2%	2.4%	2.6%	2.8%	3.0%
0	.23930	.21334	.19077	.17113	.15401
1	.22891	.20224	.17903	.15880	.14114
2	.23297	.20610	.18265	.16218	.14429
3	.23744	.21035	.18669	.16600	.14787
4	.24212	.21485	.19098	.17006	.15171
5	.24701	.21955	.19547	.17434	.15577

(1) Age	(2) Yearly rate of return				
	2.2%	2.4%	2.6%	2.8%	3.0%
6	.25207	.22442	.20015	.17880	.16001
7	.25726	.22944	.20497	.18342	.16441
8	.26259	.23461	.20995	.18820	.16898
9	.26809	.23995	.21511	.19315	.17373
10	.27373	.24544	.22043	.19828	.17865
11	.27953	.25110	.22592	.20358	.18375
12	.28546	.25690	.23156	.20904	.18902
13	.29149	.26280	.23731	.21462	.19440
14	.29757	.26877	.24312	.22026	.19986
15	.30368	.27476	.24896	.22593	.20535
16	.30978	.28075	.25481	.23161	.21085
17	.31589	.28676	.26068	.23732	.21637
18	.32204	.29280	.26659	.24306	.22193
19	.32825	.29892	.27257	.24889	.22759
20	.33457	.30514	.27867	.25484	.23336
21	.34099	.31148	.28489	.26092	.23927
22	.34751	.31794	.29124	.26712	.24532
23	.35416	.32452	.29773	.27348	.25152
24	.36096	.33127	.30439	.28002	.25791
25	.36793	.33821	.31124	.28676	.26452
26	.37509	.34535	.31832	.29374	.27136
27	.38244	.35269	.32560	.30093	.27844
28	.38998	.36023	.33311	.30836	.28577
29	.39767	.36795	.34080	.31599	.29330
30	.40553	.37584	.34868	.32382	.30104
31	.41352	.38388	.35672	.33182	.30897
32	.42165	.39208	.36494	.34001	.31710
33	.42993	.40044	.37333	.34839	.32543
34	.43834	.40894	.38188	.35694	.33395
35	.44689	.41760	.39060	.36567	.34266
36	.45556	.42640	.39947	.37458	.35156
37	.46435	.43534	.40850	.38365	.36063
38	.47325	.44440	.41767	.39288	.36987
39	.48226	.45358	.42696	.40225	.37927
40	.49136	.46288	.43640	.41177	.38884
41	.50056	.47228	.44596	.42143	.39856
42	.50988	.48182	.45566	.43125	.40846
43	.51927	.49145	.46547	.44120	.41850

(1) Age	(2) Yearly rate of return				
	2.2%	2.4%	2.6%	2.8%	3.0%
44	.52874	.50118	.47540	.45128	.42869
45	.53828	.51099	.48543	.46146	.43899
46	.54788	.52088	.49554	.47176	.44943
47	.55754	.53083	.50574	.48216	.45998
48	.56726	.54087	.51604	.49267	.47065
49	.57703	.55097	.52642	.50327	.48144
50	.58685	.56114	.53688	.51398	.49234
51	.59670	.57136	.54740	.52476	.50333
52	.60658	.58161	.55798	.53560	.51441
53	.61647	.59189	.56859	.54651	.52556
54	.62635	.60217	.57923	.55744	.53675
55	.63622	.61246	.58987	.56840	.54798
56	.64606	.62273	.60052	.57937	.55923
57	.65589	.63299	.61117	.59037	.57052
58	.66569	.64324	.62181	.60136	.58183
59	.67546	.65347	.63246	.61237	.59316
60	.68521	.66368	.64309	.62338	.60450
61	.69492	.67388	.65372	.63440	.61587
62	.70461	.68406	.66434	.64542	.62726
63	.71425	.69420	.67494	.65643	.63865
64	.72384	.70430	.68550	.66742	.65002
65	.73336	.71434	.69602	.67837	.66137
66	.74281	.72431	.70647	.68926	.67267
67	.75216	.73419	.71684	.70009	.68391
68	.76143	.74399	.72714	.71085	.69509
69	.77060	.75370	.73735	.72153	.70622
70	.77969	.76334	.74750	.73215	.71728
71	.78870	.77290	.75758	.74272	.72830
72	.79764	.78240	.76760	.75323	.73928
73	.80646	.79178	.77751	.76364	.75016
74	.81511	.80099	.78725	.77387	.76086
75	.82353	.80995	.79674	.78386	.77132
76	.83169	.81866	.80596	.79357	.78149
77	.83960	.82710	.81491	.80301	.79139
78	.84727	.83530	.82360	.81218	.80101
79	.85473	.84328	.83207	.82112	.81041
80	.86201	.85106	.84034	.82986	.81960
81	.86905	.85861	.84837	.83835	.82853

(1) Age	(2) Yearly rate of return				
	2.2%	2.4%	2.6%	2.8%	3.0%
82	.87585	.86589	.85612	.84655	.83717
83	.88239	.87291	.86360	.85447	.84552
84	.88873	.87971	.87085	.86216	.85362
85	.89487	.88630	.87789	.86963	.86150
86	.90070	.89258	.88459	.87674	.86901
87	.90609	.89838	.89079	.88332	.87597
88	.91106	.90372	.89650	.88939	.88239
89	.91570	.90872	.90184	.89507	.88839
90	.92014	.91350	.90696	.90051	.89416
91	.92435	.91804	.91182	.90569	.89964
92	.92822	.92222	.91630	.91045	.90469
93	.93170	.92597	.92032	.91474	.90923
94	.93477	.92929	.92387	.91853	.91325
95	.93743	.93216	.92695	.92181	.91673
96	.93967	.93458	.92955	.92458	.91966
97	.94167	.93674	.93186	.92704	.92228
98	.94342	.93863	.93389	.92921	.92457
99	94508	94041	.93580	.93124	.92673
100	.94672	.94218	.93770	.93326	.92887
101	.94819	.94377	.93940	.93508	.93080
102	.94979	.94550	.94125	.93704	.93288
103	.95180	.94766	.94357	.93952	.93550
104	.95377	.94979	.94585	.94194	.93806
105	.95663	.95288	.94916	.94547	.94181
106	.96101	.95762	.95425	.95091	.94760
107	.96688	.96398	.96110	.95824	.95539
108	.97569	.97354	.97141	.96928	.96717

(1) Age	(2) Yearly rate of return				
	2.2%	2.4%	2.6%	2.8%	3.0%
109	.98924	.98828	.98733	.98638	.98544

TABLE G

TABLE G—SINGLE LIFE, UNISEX—TABLE SHOWING THE PRESENT WORTH OF THE REMAINDER INTEREST IN PROPERTY TRANSFERRED TO A POOLED INCOME FUND HAVING THE YEARLY RATE OF RETURN SHOWN—APPLICABLE FOR TRANSFERS AFTER NOVEMBER 30, 1983, AND BEFORE MAY 1, 1989

(1) Age	(2) Yearly rate of return				
	3.2%	3.4%	3.6%	3.8%	4.0%
0	.13908	.12603	.11461	.10461	.09583
1	.12570	.11220	.10036	.08998	.08086
2	.12862	.11489	.10284	.09225	.08293
3	.13198	.11802	.10576	.09496	.08544
4	.13559	.12141	.10893	.09793	.08821
5	.13943	.12503	.11234	.10112	.09121
6	.14345	.12884	.11593	.10451	.09439
7	.14763	.13280	.11968	.10805	.09773
8	.15198	.13694	.12360	.11176	.10125
9	.15652	.14126	.12771	.11567	.10495
10	.16123	.14576	.13200	.11975	.10883
11	.16613	.15045	.13648	.12402	.11290
12	.17119	.15531	.14113	.12847	.11715
13	.17638	.16029	.14591	.13304	.12152
14	.18164	.16535	.15076	.13769	.12597
15	.18693	.17044	.15565	.14238	.13045
16	.19224	.17554	.16055	.14707	.13494
17	.19756	.18066	.16547	.15178	.13945
18	.20294	.18584	.17044	.15655	.14401
19	.20840	.19110	.17550	.16140	.14866
20	.21399	.19650	.18069	.16639	.15344
21	.21972	.20203	.18602	.17152	.15836
22	.22559	.20771	.19151	.17680	.16344
23	.23162	.21356	.19716	.18225	.16869

(1) Age	(2) Yearly rate of return				
	3.2%	3.4%	3.6%	3.8%	4.0%
24	.23784	.21960	.20301	.18791	.17414
25	.24429	.22588	.20910	.19380	.17984
26	.25098	.23240	.21545	.19996	.18581
27	.25792	.23918	.22206	.20639	.19205
28	.26512	.24623	.22894	.21310	.19858
29	.27253	.25350	.23605	.22004	.20534
30	.28016	.26100	.24341	.22724	.21236
31	.28799	.26871	.25097	.23464	.21961
32	.29603	.27664	.25877	.24230	.22710
33	.30428	.28478	.26679	.25018	.23484
34	.31273	.29314	.27504	.25830	.24280
35	.32139	.30172	.28351	.26665	.25102
36	.33024	.31050	.29220	.27523	.25948
37	.33929	.31949	.30111	.28404	.26816
38	.34851	.32867	.31022	.29305	.27707
39	.35791	.33804	.31953	.30228	.28620
40	.36749	.34759	.32904	.31172	.29555
41	.37724	.35733	.33874	.32137	.30512
42	.38717	.36727	.34866	.33124	.31493
43	.39727	.37739	.35877	.34132	.32495
44	.40752	.38768	.36906	.35159	.33518
45	.41791	.39811	.37952	.36204	.34560
46	.42844	.40871	.39014	.37267	.35621
47	.43910	.41944	.40092	.38347	.36701
48	.44990	.43034	.41188	.39446	.37801
49	.46083	.44137	.42299	.40562	.38919
50	.47189	.45256	.43427	.41695	.40056
51	.48306	.46386	.44567	.42844	.41209
52	.49432	.47528	.45721	.44006	.42378
53	.50567	.48679	.46886	.45182	.43562
54	.51708	.49838	.48060	.46367	.44756
55	.52854	.51004	.49242	.47563	.45962
56	.54004	.52175	.50430	.48766	.47177
57	.55159	.53352	.51626	.49978	.48402
58	.56316	.54533	.52827	.51196	.49636
59	.57478	.55719	.54036	.52424	.50879
60	.58643	.56910	.55250	.53658	.52131
61	.59811	.58107	.56471	.54901	.53393

(1) Age	(2) Yearly rate of return				
	3.2%	3.4%	3.6%	3.8%	4.0%
62	.60982	.59307	.57697	.56150	.54662
63	.62155	.60510	.58928	.57405	.55940
64	.63327	.61714	.60161	.58664	.57222
65	.64498	.62918	.61395	.59926	.58508
66	.65666	.64120	.62628	.61188	.59796
67	.66829	.65319	.63859	.62448	.61083
68	.67986	.66512	.65086	.63706	.62370
69	.69139	.67702	.66311	.64963	.63656
70	.70286	.68888	.67533	.66218	.64942
71	.71431	.70073	.68754	.67474	.66231
72	.72572	.71255	.69974	.68730	.67520
73	.73704	.72429	.71188	.69980	.68805
74	.74819	.73586	.72384	.71214	.70075
75	.75909	.74718	.73557	.72424	.71320
76	.76971	.75822	.74700	.73606	.72538
77	.78004	.76897	.75815	.74758	.73726
78	.79010	.77944	.76902	.75883	.74886
79	.79993	.78968	.77965	.76984	.76023
80	.80955	.79971	.79008	.78064	.77140
81	.81891	.80948	.80024	.79118	.78230
82	.82796	.81894	.81009	.80140	.79288
83	.83672	.82810	.81962	.81131	.80314
84	.84525	.83700	82891	.82096	.81314
85	.85352	.84567	.83795	.83037	.82291
86	.86141	.85394	.84659	.83936	.83224
87	.86874	.86162	.85461	.84771	.84092
88	.87549	.86870	.86201	.85542	.84893
89	.88182	.87534	.86895	.86266	.85645
90	.88789	.88171	.87562	86961	.86369
91	.89367	.88779	.88198	.87625	.87059
92	.89900	.89338	.88784	.88237	.87697
93	.90379	.89842	.89312	.88788	.88271
94	.90803	.90288	.89780	.89277	.88781
95	.91171	.90675	.90185	.89701	.89223
96	.91481	.91001	.90527	.90058	.89594
97	.91757	.91291	.90831	.90376	.89926
98	.91999	.91546	.91098	.90655	.90217
99	.92227	.91786	.91349	.90917	.90490

(1) Age	(2) Yearly rate of return				
	3.2%	3.4%	3.6%	3.8%	4.0%
100	.92453	.92023	.91598	.91177	.90761
101	.92656	.92236	.91821	.91410	.91003
102	.92875	.92467	.92063	.91662	.91266
103	.93152	.92758	.92367	.91980	91597
104	.93423	.93042	.92665	.92291	.91920
105	.93818	.93458	.93101	.92747	.92395
106	.94430	.94104	.93779	.93457	.93127
107	95256	.94975	.94696	.94418	.94143
108	.96507	96298	.96090	.95883	.95676
109	.98450	.98356	.98263	.98170	.98077

Table G

Table G—Single Life, Unisex—Table Showing the Present Worth of the Remainder Interest in Property Transferred to a Pooled Income Fund Having the Yearly Rate of Return Shown—Applicable for Transfers After November 30, 1983, and Before May 1, 1989

(1) Age	(2) Yearly rate of return				
	4.2%	4.4%	4.6%	4.8%	5.0%
0	.08811	.08132	.07534	.07006	.06539
1	.07283	.06576	.05952	.05400	.04912
2	.07471	.06746	.06106	.05539	.05037
3	.07704	.06962	.06304	.05722	.05205
4	.07962	.07202	.06528	.05930	.05398
5	.08243	.07464	.06773	.06159	.05612
6	.08542	.07745	.07037	.06406	.05844
7	.08857	.08042	.07316	.06669	.06091
8	.09189	.08355	.07612	.06948	.06354
9	.09540	.08687	.07926	.07245	.06635
10	.09908	.09037	.08258	.07560	.06934
11	.10296	.09406	.08609	.07894	.07251
12	.10701	.09793	.08977	.08245	.07586
13	.11119	.10191	.09358	.08608	.07932
14	.11544	.10597	.09745	.08978	.08285

(1) Age	(2) Yearly rate of return				
	4.2%	4.4%	4.6%	4.8%	5.0%
15	.11972	.11007	.10136	.09350	.08640
16	.12402	.11416	.10527	.09723	.08995
17	.12832	.11827	.10919	.10096	.09351
18	.13268	.12243	.11315	.10474	.09711
19	.13712	.12667	.11720	.10860	.10078
20	.14170	.13105	.12138	.11259	.10459
21	.14642	.13557	.12570	.11671	.10853
22	.15129	.14024	.13017	.12099	.11261
23	.15634	.14508	.13481	.12544	.11687
24	.16159	.15013	.13967	.13009	.12133
25	.16709	.15543	.14477	.13500	.12604
26	.17286	.16101	.15014	.14018	.13103
27	.17891	.16686	.15580	.14564	.13630
28	.18525	.17301	.16175	.15140	.14187
29	.19183	.17940	.16796	.15742	.14770
30	.19867	.18606	.17443	.16370	.15380
31	.20574	.19295	.18114	.17023	.16013
32	.21307	.20010	.18811	.17702	.16674
33	.22064	.20751	.19535	.18407	.17362
34	.22846	.21516	.20283	.19138	.18075
35	.23653	.22307	.21058	.19896	.18816
36	.24484	.23124	.21859	.20681	.19584
37	.25340	.23966	.22685	.21492	.20379
38	.26219	.24831	.23536	.22328	.21199
39	.27120	.25720	.24411	.23188	.22044
40	.28045	.26633	.25311	.24075	.22916
41	.28992	.27569	.26236	.24986	.23814
42	.29965	.28532	.27188	.25926	.24741
43	.30960	.29518	.28163	.26890	.25693
44	.31977	.30527	.29164	.27880	.26671
45	.33013	.31557	.30185	.28892	.27673
46	.34071	.32609	.31230	.29929	.28700
47	.35148	.33681	.32296	.30988	.29750
48	.36246	.34777	.33387	.32072	.30826
49	.37364	.35893	.34499	.33179	.31927
50	.38503	.37030	.35634	.34310	.33053
51	.39659	.38187	.36790	.35462	.34201
52	.40832	.39362	.37965	.36636	.35371

(1) Age	(2) Yearly rate of return				
	4.2%	4.4%	4.6%	4.8%	5.0%
53	.42021	.40554	.39158	.37829	.36562
54	.43222	.41760	.40367	.39039	.37771
55	.44436	.42980	.41591	.40264	.38997
56	.45660	.44212	.42828	.41504	.40239
57	.46897	.45456	.44079	.42760	.41498
58	.48142	.46712	.45342	.44030	.42771
59	.49399	.47980	.46620	.45314	.44062
60	.50666	.49260	.47910	.46613	.45367
61	.51944	.50552	.49214	.47927	.46690
62	.53232	.51856	.50531	.49256	.48028
63	.54529	.53169	.51860	.50598	.49381
64	.55832	.54491	.53198	.51950	.50746
65	.57140	.55819	.54544	.53312	.52121
66	.58451	.57152	.55895	.54681	.53506
67	.59763	.58486	.57251	.56054	.54896
68	.61076	.59823	.58609	.57432	.56292
69	.62390	.61162	.59971	.58816	.57695
70	.63705	.62503	.61337	.60204	.59104
71	.65023	.63849	.62709	.61600	.60522
72	.66344	.65199	.64086	.63003	.61949
73	.67661	.66547	.65463	.64407	.63378
74	.68964	.67882	.66827	.65798	.64796
75	.70243	.69193	.68168	.67168	.66192
76	.71495	.70477	.69482	.68511	.67563
77	.72717	.71731	.70768	.69826	.68905
78	.73912	.72959	.72026	.71114	.70221
79	.75083	.74163	.73262	.72379	.71515
80	.76235	.75348	.74479	.73627	.72792
81	.77360	.76506	.75669	.74848	.74043
82	.78452	.77632	.76827	.76036	.75260
83	.79513	.78725	.77952	.77192	.76446
84	.80547	.79792	.79051	.78322	.77606
85	.81557	.80836	.80126	.79429	.78742
86	.82524	.81835	.81157	.80489	.79832
87	.83423	.82764	.82115	.81477	.80847
88	.84253	.83623	.83002	.82390	.81787
89	.85033	.84430	.83836	.83250	.82672
90	.85784	.85208	.84639	.84079	.83525

(1) Age	(2) Yearly rate of return				
	4.2%	4.4%	4.6%	4.8%	5.0%
91	.86502	.85951	.85408	.84871	.84342
92	.87164	.86638	.86118	.85605	.85098
93	.87761	.87257	.86759	.86267	.85781
94	.88290	.87806	.87327	.86854	.86386
95	.88750	.88282	.87820	.87364	.86913
96	.89136	.88683	.88236	.87793	.87355
97	.89481	.89041	.88606	.88176	.87750
98	.89783	.89354	.88930	.88511	.88096
99	.90067	.89649	.89235	.88826	.88420
100	.90349	.89941	.89538	.89138	.88743
101	.90600	.90202	.89807	.89416	.89029
102	.90873	.90484	.90099	.89717	.89339
103	.91217	.90841	.90468	.90099	.99733
104	.91553	.91188	.90827	.90469	.90114
105	.92047	.91701	.91358	.91018	.90680
106	.92819	.92504	.92191	.91880	.91571
107	.93868	.93596	.93325	.93056	.92788
108	.95471	.95267	.95064	.94862	.94661
109	.97985	.97893	.97801	.97710	.97619

Table G

Table G—Single Life, Unisex—Table Showing the Present Worth of the Remainder Interest in Property Transferred to a Pooled Income Fund Having the Yearly Rate of Return Shown—Applicable for Transfers After November 30, 1983, and Before May 1, 1989

(1) Age	(2) Yearly rate of return				
	5.2%	5.4%	5.6%	5.8%	6.0%
0	.06126	.05759	.05433	.05143	.04884
1	.04480	.04096	.03754	.03450	.03179
2	.04591	.04194	.03841	.03527	.03246
3	.04745	.04336	.03972	.03646	.03355
4	.04924	.04502	.04125	.03789	.03487
5	.05124	.04689	.04300	.03952	.03639

(1) Age	(2) Yearly rate of return				
	5.2%	5.4%	5.6%	5.8%	6.0%
6	.05342	.04893	.04492	.04131	.03808
7	.05574	.05112	.04697	.04324	.03990
8	.05822	.05346	.04918	.04533	.04186
9	.06089	.05598	.05156	.04759	.04400
10	.06372	.05866	.05411	.05000	.04630
11	.06673	.06153	.05684	.05260	.04877
12	.06992	.06457	.05973	.05536	.05141
13	.07322	.06772	.06274	.05824	.05415
14	.07659	.07093	.06581	.06117	.05695
15	.07998	.07417	.06890	.06411	.05976
16	.08337	.07739	.07197	.06704	.06255
17	.08675	.08062	.07504	.06996	.06533
18	.09018	.08387	.07813	.07290	.06813
19	.09367	.08720	.08130	.07591	.07099
20	.09730	.09065	.08458	.07904	.07397
21	.10106	.09423	.08800	.08229	.07707
22	.10496	.09796	.09155	.08568	.08030
23	.10903	.10185	.09526	.08923	.08368
24	.11330	.10594	.09918	.09297	.08726
25	.11782	.11028	.10334	.09696	.09108
26	.12262	.11489	.10778	.10122	.09518
27	.12771	.11979	.11249	.10576	.09955
28	.13309	.12499	.11751	.11060	.10421
29	.13873	.13044	.12278	.11570	.10914
30	.14464	.13617	.12833	.12107	.11433
31	.15079	.14214	.13412	.12668	.11977
32	.15722	.14838	.14018	.13256	.12548
33	.16391	.15490	.14652	.13873	.13147
34	.17087	.16168	.15312	.14515	.13772
35	.17811	.16874	.16001	.15186	.14426
36	.18562	.17608	.16717	.15886	.15108
37	.19340	.18369	.17462	.16613	.15819
38	.20144	.19157	.18233	.17368	.16557
39	.20974	.19971	.19031	.18149	.17322
40	.21830	.20812	.19856	.18959	.18115
41	.22714	.21681	.20710	.19797	.18938
42	.23627	.22579	.21594	.20665	.19791
43	.24566	.23505	.22505	.21562	.20673

(1) Age	(2) Yearly rate of return				
	5.2%	5.4%	5.6%	5.8%	6.0%
44	.25532	.24458	.23445	.22488	.21585
45	.26522	.25436	.24410	.23440	.22523
46	.27538	.26441	.25402	.24420	.23490
47	.28579	.27471	.26421	.25427	.24484
48	.29647	.28529	.27469	.26463	.25508
49	.30739	.29613	.28543	.27527	.26562
50	.31859	.30724	.29646	.28620	.27645
51	.33001	.31860	.30774	.29740	.28755
52	.34167	.33020	.31928	.30886	.29893
53	.35355	.34204	.33105	.32057	.31056
54	.36562	.35407	.34304	.33250	.32243
55	.37787	.36630	.35523	.34465	.33452
56	.39029	.37870	.36761	.35699	.34682
57	.40289	.39130	.38020	.36956	.35935
58	.41565	.40408	.39297	.38231	.37208
59	.42859	.41704	.40595	.39529	.38504
60	.44170	.43019	.41912	.40847	.39822
61	.45499	.44353	.43250	.42187	.41164
62	.46845	.45706	.44607	.43548	.42527
63	.48208	.47076	.45984	.44930	.43913
64	.49583	.48461	.47377	.46329	.45317
65	.50971	.49859	.48784	.47744	.46738
66	.52369	.51269	.50204	.49173	.48175
67	.53774	.52688	.51635	.50614	.49625
68	.55187	.54115	.53075	.52066	.51088
69	.56607	.55551	.54526	.53530	.52563
70	.58035	.56997	.55987	.55006	.54053
71	.59474	.58455	.57463	.56498	.55559
72	.60923	.59924	.58952	.58004	.57082
73	.62375	.61398	.60446	.59518	.58613
74	.63818	.62864	.61933	.61026	.60140
75	.65240	.64310	.63402	.62515	.61649
76	.66636	.65731	.64846	.63981	.63135
77	.68005	.67124	.66263	.65420	.64596
78	.69347	.68492	.67655	.66836	.66033
79	.70669	.69840	.69028	.68232	.67452
80	.71973	.71171	.70384	.69613	.68856
81	.73252	.72477	.71717	.70970	.70237

(1) Age	(2) Yearly rate of return				
	5.2%	5.4%	5.6%	5.8%	6.0%
82	.74499	.73751	.73016	.72295	.71587
83	.75713	.74992	.74284	.73589	.72905
84	.76901	.76208	.75527	.74857	.74198
85	.78067	.77402	.76748	.76104	.75471
86	.79185	.78548	.77921	.77304	.76695
87	.80228	.79617	.79015	.78423	.77838
88	.81193	.80607	.80029	.79460	.78899
89	.82102	.81540	.80985	.80438	.79899
90	.82979	.82441	.81909	.81384	.80867
91	.83820	.83304	.82795	.82292	.81796
92	.84598	.84104	.83616	.83134	.82657
93	.85300	.84826	.84357	.83894	.83437
94	.85924	.85468	.85017	.84570	.84130
95	.86466	.86025	.85589	.85158	.84732
96	.86922	.86494	.86071	.85652	.85238
97	.87329	.86913	.86501	.86093	.85690
98	.87685	.87279	.86877	.86479	.86085
99	.88019	.87622	.87230	.86841	.86456
100	.88351	.87964	.87580	.87200	.86824
101	.88646	.88267	.87891	.87519	.87150
102	.88965	.88594	.88227	.87863	.87503
103	.89370	.89011	.88654	.88301	.87952
104	.89763	.89414	.89068	.88725	.88385
105	.90345	.90013	.89683	.89356	.89032
106	.91265	.90961	.90658	.90358	.90060
107	.92522	.92258	.91995	.91734	.91474
108	.94461	.94262	.94063	.93866	.93670

(1) Age	(2) Yearly rate of return				
	5.2%	5.4%	5.6%	5.8%	6.0%
109	.97529	.97438	.97348	.97259	.97170

TABLE G

TABLE G—SINGLE LIFE, UNISEX—TABLE SHOWING THE PRESENT WORTH OF THE REMAINDER INTEREST IN PROPERTY TRANSFERRED TO A POOLED INCOME FUND HAVING THE YEARLY RATE OF RETURN SHOWN—APPLICABLE FOR TRANSFERS AFTER NOVEMBER 30, 1983, AND BEFORE MAY 1, 1989

(1) Age	(2) Yearly rate of return				
	6.2%	6.4%	6.6%	6.8%	7.0%
0	.04653	.04447	.04262	.04095	.03946
1	.02937	.02720	.02525	.02351	.02194
2	.02994	.02769	.02567	.02385	.02221
3	.03094	.02860	.02650	.02460	.02290
4	.03216	.02973	.02755	.02558	.92380
5	.03359	.03106	.02879	.02674	.02488
6	.03517	.03255	.03019	.02805	.02612
7	.03688	.03416	.03171	.02949	.02747
8	.03874	.03592	.03337	.03106	.02896
9	.04077	.03784	.03519	.03279	.03061
10	.04295	.03992	.03717	.03467	.03240
11	.04531	.04217	.03931	.03672	.03436
12	.04782	.04457	.04161	.03892	.02647
13	.05045	.04708	.04402	.04122	.03868
14	.05312	.04964	.04646	.04357	.04093
15	.05581	.05220	.04891	.04591	.04317
16	.05847	.05474	.05134	.04822	.04538
17	.06111	.05726	.05374	.05051	.04756
18	.06378	.05979	.05615	.05280	.04974
19	.06650	.06238	.05861	.05514	.05196
20	.06933	.06507	.06117	.05758	.05429
21	.07228	.06788	.06384	.06013	.05671
22	.07535	.07081	.06664	.06279	.05925
23	.07858	.07389	.06958	.06559	.06192

(1) Age	(2) Yearly rate of return				
	6.2%	6.4%	6.6%	6.8%	7.0%
24	.08201	.07717	.07270	.06858	.06477
25	.08567	.08067	.07606	.07179	.06785
26	.08960	.08444	.07968	.07527	.07118
27	.09380	.08849	.08357	.07901	.07478
28	.09830	.09283	.08775	.08304	.07867
29	.10306	.09742	.09218	.08732	.08280
30	.10808	.10228	.09688	.09187	.08720
31	.11335	.10738	.10182	.09665	.09182
32	.11889	.11275	.10704	.10170	.09672
33	.12471	.11840	.11252	.10703	.10189
34	.13079	.12432	.11827	.11261	.10732
35	.13716	.13052	.12431	.11849	.11305
36	.14381	.13701	.13063	.12465	.11905
37	.15075	.14378	.13724	.13110	.12534
38	.15796	.15083	.14412	.13782	.13190
39	.16545	.15815	.15129	.14483	.13875
40	.17322	.16576	.15874	.15212	.14589
41	.18129	.17367	.16649	.15971	.15332
42	.18967	.18190	.17456	.16763	.16108
43	.19834	.19041	.18293	.17585	.16915
44	.20731	.19924	.19160	.18437	.17753
45	.21655	.20834	.20055	.19318	.18619
46	.22608	.21773	.20981	.20229	.19516
47	.23590	.22741	.21935	.21170	.20443
48	.24602	.23741	.22922	.22144	.21403
49	.25644	.24770	.23939	.23148	.22394
50	.26716	.25831	.24989	.24185	.23419
51	.27816	.26921	.26068	.25253	.24475
52	.28945	.28040	.27176	.26351	.25562
53	.30100	.29187	.28313	.27478	.26679
54	.31279	.30357	.29475	.28631	.27822
55	.32482	.31553	.30663	.29810	.28992
56	.33707	.32771	.31875	.31014	.30188
57	.34955	.34015	.33112	.32244	.31411
58	.36225	.35280	.34372	.33499	.32659
59	.37519	.36571	.35659	.34781	.33936
60	.38836	.37886	.36971	.36089	.35239
61	.40177	.39226	.38309	.37425	.36572

(1) Age	(2) Yearly rate of return				
	6.2%	6.4%	6.6%	6.8%	7.0%
62	.41542	.40591	.39674	.38788	.37932
63	.42930	.41981	.41064	.40178	.39321
64	.44338	.43392	.42477	.41591	.40734
65	.45765	.44823	.43910	.43027	.42171
66	.47208	.46271	.45364	.44483	.43630
67	.48666	.47736	.46834	.45958	.45108
68	.50138	.49215	.48320	.47450	.46605
69	.51624	.50711	.49824	.48961	.48122
70	.53125	.52223	.51345	.50491	.49660
71	.54645	.53755	.52889	.52045	.51223
72	.56183	.55307	.54453	.53621	.52809
73	.57731	.56870	.56030	.55211	.54412
74	.59275	.58431	.57606	.56801	.56015
75	.60803	.59976	.59168	.58379	.57607
76	.62308	.61500	.60709	.59936	.59179
77	.63789	.63000	.62227	.61470	.60730
78	.65247	.64477	.63723	.62984	.62261
79	.66687	.65938	.65203	.64483	.63777
80	.68114	.67386	.66672	.65971	.65284
81	.69518	.68812	.68119	.67438	.66770
82	.70891	.70207	.69535	.68875	.68227
83	.72232	.71572	.70922	.70283	.69655
84	.73550	.72913	.72285	.71668	.71061
85	.74847	.74234	.73630	.73035	.72449
86	.76096	.75506	.74925	.74353	.73789
87	.77263	.76696	.76137	.75585	.75042
88	.78345	.77799	.77261	.76730	.76207
89	.79367	.78842	.78323	.77812	.77308
90	.80356	.79851	.79353	.78862	.78376
91	.81306	.80821	.80344	.79871	.79405
92	.82187	.81722	.81263	.80810	.80361
93	.82984	.82538	.82096	.81659	.81228
94	.83694	.83263	.82837	.82416	.81999
95	.84310	.83893	.83481	.83073	.82670
96	.84829	.84424	.84023	.83626	.83234
97	.85291	.84897	.84506	.84120	.83738
98	.85696	.85310	.84929	.84551	.84177
99	.86075	.85698	.85325	.84956	.84590

(1) Age	(2) Yearly rate of return				
	6.2%	6.4%	6.6%	6.8%	7.0%
100	.86452	.86084	.85719	.85357	.85000
101	.86785	.86424	.86066	.85711	.85360
102	.87146	.86792	.86442	.86094	.85750
103	.87605	.87261	.86921	.86583	.86248
104	.88047	.87713	.87382	.87053	.86727
105	.88710	.88390	.88073	.87758	.87446
106	.89764	.89471	.89179	.88889	.88601
107	.91216	.90960	.90705	.90451	.90199
108	.93474	.93280	.93086	.92894	.92702
109	.97081	.96992	.96904	.96816	.96729

Table G

Table G—Single Life, Unisex—Table Showing the Present Worth of the Remainder Interest in Property Transferred to a Pooled Income Fund Having the Yearly Rate of Return Shown—Applicable for Transfers After November 30, 1983, and Before May 1, 1989

(1) Age	(2) Yearly rate of return				
	7.2%	7.4%	7.6%	7.8%	8.0%
0	.03811	.03689	.03579	.03479	.03388
1	.02052	.01924	.01809	.01704	.01609
2	.02074	.01940	.01819	.01710	.01611
3	.02136	.01996	.01870	.01756	.01652
4	.02219	.02074	.01942	.01822	.01713
5	.02321	.02169	.02031	.01905	.01791
6	.02437	.02278	.02134	.02003	.01883
7	.02565	.02399	.02248	.02111	.01986
8	.02706	.02533	.02376	.02232	.02101
9	.02863	.02682	.02518	.02367	.02230
10	.03034	.02846	.02674	.02517	.02373
11	.03221	.03025	.02846	.02682	.02532
12	.03424	.03219	.03032	.02861	.02704
13	.03635	.03422	.03228	.03049	.02885
14	.03851	.03630	.03427	.03240	.03069

(1) Age	(2) Yearly rate of return				
	7.2%	7.4%	7.6%	7.8%	8.0%
15	.04066	.03836	.03624	.03430	.03252
16	.04277	.04037	.03817	.03615	.03429
17	.04485	.04236	.04007	.03796	.03602
18	.04693	.04434	.04196	.03976	.03773
19	.04904	.04635	.04387	.04159	.03947
20	.05125	.04845	.04588	.04349	.04129
21	.05356	.05065	.04797	.04549	.04319
22	.05597	.05295	.05016	.04758	.04519
23	.05853	.05539	.05248	.04979	.04730
24	.06124	.05799	.05497	.05217	.04957
25	.06420	.06081	.05767	.05475	.05205
26	.06739	.06388	.06062	.05758	.05476
27	.07086	.06721	.06382	.06067	.05773
28	.07460	.07082	.06730	.06402	.06097
29	.07859	.07467	.07102	.06762	.06444
30	.08284	.07879	.07500	.07146	.06815
31	.08733	.08312	.07920	.07553	.07209
32	.09207	.08773	.08366	.07986	.07629
33	.09709	.09260	.08839	.08445	.08075
34	.10237	.09773	.09338	.08929	.08546
35	.10794	.10315	.09865	.09442	.09045
36	.11379	.10884	.10420	.09983	.09572
37	.11992	.11483	.11003	.10552	.10126
38	.12633	.12108	.11614	.11148	.10708
39	.13302	.12762	.12253	.11772	.11318
40	.14000	.13445	.12921	.12425	.11957
41	.14728	.14158	.13619	.13109	.12626
42	.15490	.14904	.14350	.13825	.13328
43	.16260	.15680	.15111	.145072	.14060
44	17104	.16488	.15905	.15351	.14825
45	.17955	.17326	.16727	.16159	.15619
46	.18838	.18194	.17582	.16999	.16445
47	.19751	.19093	.18467	.17870	.17302
48	.20698	.20026	.19386	.18776	.18194
49	.21676	.20991	.20338	.19715	.19119
50	.22689	.21991	.21325	.20689	.20080
51	.23732	.23023	.22344	.21695	.21074
52	.24808	.24086	.23396	.22735	.22102

(1) Age	(2) Yearly rate of return				
	7.2%	7.4%	7.6%	7.8%	8.0%
53	.25914	.25181	.24479	.23807	.24252
54	.27047	.26304	.25591	.24908	.25372
55	.28208	.27455	.26733	.26039	.25372
56	.29395	.28633	.37901	.27197	.26521
57	.30610	.29840	.29099	.28386	.27700
58	.31851	.31074	.30325	.29604	.28909
59	.33122	.32337	.31581	.30853	.30150
60	.34420	.33630	.32867	.32132	.31422
61	.35748	.34953	.34185	.33444	.32727
62	.37106	.36307	.35535	.34788	.34066
63	.38492	.37691	.36915	.36165	.35438
64	.39905	.39102	.38324	.37571	.36841
65	.41342	.40539	.39760	.39005	.38272
66	.42803	.42000	.41221	.40465	.39731
67	.44283	.43483	.42705	.41949	.41215
68	.45784	.44987	.44211	.43457	.42724
69	.47307	.46513	.45741	.44990	.44254
70	.48851	.48063	.47296	.46549	.45821
71	.50422	.49641	.48880	.48139	.47416
72	.52018	.51246	.50493	.49758	.49042
73	.53631	.52870	.52126	.51400	.50691
74	.55247	.54497	.53764	.53048	.52347
75	.56852	.56115	.55393	.54687	.53997
76	.58439	.57714	.57005	.56311	.55632
77	.60005	.59294	.58599	.57917	.57249
78	.61551	.60856	.60174	.59506	.58851
79	.63084	.62405	.61739	.61085	.60443
80	.64609	.63946	.63296	.62657	.62030
81	.66114	.65469	.64835	.64213	.63602
82	.67589	.66963	.66347	.65742	.65146
83	.60937	.68429	.67831	.67243	.66664
84	.70463	.69875	.69296	.68726	.68165
85	.71872	.71304	.70745	.70194	.69651
86	.73233	.72685	.72146	.71614	.71089
87	.74507	.73978	.73458	.72944	.72438
88	.75691	.75181	.74679	.74183	.73694
89	.76810	.76319	.75834	.75355	.74883
90	.77897	.77424	.76957	.76496	.76040

(1) Age	(2) Yearly rate of return				
	7.2%	7.4%	7.6%	7.8%	8.0%
91	.78945	.78490	.78040	.77596	.77158
92	.79919	.79481	.79048	.78621	.78198
93	.80801	.80380	.79963	.79550	.79143
94	.81587	.81180	.80777	.80379	.79985
95	.82271	.81877	.81487	.81100	.80719
96	.82846	.82462	.82083	.81707	.81335
97	.83360	.82985	.82615	.82248	.81885
98	.33808	.83441	.83079	.82720	.82365
99	.84228	.83869	.83514	.83163	.82815
100	.84645	.84294	.83947	.83603	.83262
101	.85012	.84668	.84327	.83988	.83653
102	.85409	.85072	.84737	.84405	.84077
103	.85917	.85588	.85262	.84939	.84619
104	.86403	.86083	.85765	.85449	.85136
105	.87136	.86829	.86524	.86221	.85921
106	.88315	.88032	.87750	.87470	.87192
107	.89949	.89700	.89452	.89206	.88961
108	.92511	.92321	.92132	.91944	.91757
109	.96642	.96555	.96468	.96382	.96296

Table G

Table G—Single Life, Unisex—Table Showing the Present Worth of the Remainder Interest in Property Transferred to a Pooled Income Fund Having the Yearly Rate of Return Shown—Applicable for Transfers After November 30, 1983, and Before May 1, 1989

(1) Age	(2) Yearly rate of return				
	8.2%	8.4%	8.6%	8.8%	9.0%
0	.03305	.03230	.03161	.03098	.03040
1	.01523	.01444	.01372	.01307	.01247
2	.01520	.01438	.01362	.01294	.01230
3	.01557	.01470	.01391	.01319	.01253
4	.01613	.01522	.01439	.01363	.01294
5	.01687	.01591	.01504	.01424	.01351

(1) Age	(2) Yearly rate of return				
	8.2%	8.4%	8.6%	8.8%	9.0%
6	.01774	.01674	.01582	.01498	.01421
7	.01871	.01766	.01670	.01581	.01500
8	.01980	.01870	.01769	.01676	.01591
9	.02104	.01989	.01883	.01785	.01695
10	.02241	.02120	.02009	.01906	.01812
11	.02394	.02267	.02150	.02042	.01943
12	.02560	.02427	.02305	.02192	.02088
13	.02734	.02595	.02467	.02349	.02240
14	.02912	.02766	.02632	.02509	.02394
15	.03087	.02935	.02795	.02666	.02546
16	.03257	.03099	.02952	.02817	.02691
17	.03423	.03257	.03104	.02962	.02831
18	.03586	.03414	.03253	.03105	.02967
19	.03752	.03572	.03404	.03249	.03105
20	.03925	.03737	.03562	.03399	.03248
21	.04107	.03910	.03727	.03557	.03398
22	.04297	.04091	.03899	.03722	.03556
23	.04498	.04283	.04083	.03897	.03723
24	.04715	.04491	.04282	.04087	.03905
25	.04953	.04718	.04499	.04295	.04105
26	.05213	.04968	.04740	.04527	.04327
27	.05499	.05243	.05005	.04782	.04573
28	.05811	.05545	.05295	.05062	.04844
29	.06146	.05868	.05608	.05365	.05136
30	.06506	.06217	.05945	.05691	.05452
31	.06888	.06586	.06303	.06038	.05789
32	.07295	.06981	.06687	.06410	.06149
33	.07728	.07401	.07095	.06806	.06535
34	.08185	.07846	.07527	.07227	.06944
35	.08671	.08319	.07988	.07675	.07380
36	.09184	.08819	.08475	.08150	.07843
37	.09725	.09347	.08989	.08652	.08332
38	.10293	.09901	.09531	.09180	.08848
39	.10889	.10483	.10099	.09736	.09391
40	.11514	.11094	.10697	.10320	.09963
41	.12168	.11735	.11324	.10934	.10564
42	.12856	.12409	.11984	.11581	.11197
43	.13574	.13113	.12675	.12258	.11862

(1) Age	(2) Yearly rate of return				
	8.2%	8.4%	8.6%	8.8%	9.0%
44	.14325	.13850	.13398	.12967	.12558
45	.15105	.14616	.14150	.13706	.13283
46	.15917	.15414	.14935	.14478	.14041
47	.16760	.16244	.15751	.15280	.14831
48	.17639	.17109	.16602	.16119	.15656
49	.18551	.18007	.17488	.16991	.16516
50	.19499	.18942	.18410	.17900	.17412
51	.20480	.19911	.19366	.18844	.18343
52	.21495	.20914	.20357	.19822	.19309
53	.22544	.21951	.21381	.20835	.20309
54	.23622	.23018	.22437	.21878	.21341
55	.24732	.24116	.23524	.22954	.22406
56	.25870	.25244	.24641	.24060	.23501
57	.27040	.26404	.25791	.25200	.24630
58	.28239	.27594	.26971	.26370	.25791
59	.29472	.28817	.28186	.27576	.26987
60	.30736	.30074	.29434	.28816	.28218
61	.32035	.31365	.30718	.30092	.29486
62	.33368	.32692	.32038	.31405	.30791
63	.34735	.34054	.33394	.32754	.32134
64	.36133	.35448	.34783	.34138	.33512
65	.37562	.36873	.36204	.35554	.34924
66	.39019	.38327	.37655	.37002	.36367
67	.40502	.39809	.39134	.38479	.37841
68	.42011	.41317	.40642	.39985	.39345
69	.43547	.42854	.42179	.41522	.40882
70	.45112	.44421	.43748	.43091	.42451
71	.46711	.46023	.45352	.44698	.44059
72	.48342	.47659	.46992	.46341	.45705
73	.49998	.49321	.48660	.48014	.47382
74	.51663	.50994	.50339	.49699	.49073
75	.53322	.52661	.52014	.51381	.50762
76	.54967	.54315	.53678	.53053	.52440
77	.56595	.55954	.55326	.54710	.54106
78	.58209	.57579	.56961	.56355	.55761
79	.59814	.59196	.58590	.57995	.57410
80	.61415	.60810	.60217	.59633	.59060
81	.63001	.62410	.61830	.61260	.60699

(1) Age	(2) Yearly rate of return				
	8.2%	8.4%	8.6%	8.8%	9.0%
82	.64561	.63985	.63419	.62862	.62314
83	.66095	.65535	.64983	.64441	.63907
84	.67612	.67068	.66533	.66005	.65486
85	.69116	.68589	.68070	.67559	.67055
86	.70573	.70063	.69561	.69066	.68578
87	.71939	.71446	.70961	.70481	.70009
88	.73211	.72735	.72265	.71801	.71343
89	.74417	.73956	.73501	.73053	.72609
90	.75590	.75146	.74707	.74273	.73845
91	.76724	.76296	.75873	.75454	.75041
92	.77781	.77368	.76960	.76556	.76158
93	.78740	.78342	.77948	.77558	.77173
94	.79596	.79210	.78829	.78452	.78079
95	.80341	.79967	.79597	.79231	.78869
96	.80967	.80603	.80242	.79885	.79532
97	.81526	.81170	.80818	.80470	.80125
98	.82013	.81665	.81320	.80979	.80641
99	.82470	.82129	.81791	.81456	.81125
100	.82924	.82590	.82258	.81930	.81605
101	.83322	.82993	.82667	.82344	.82024
102	.83751	.83428	.83108	.82791	.82477
103	.84301	.83986	.83674	.83365	.83058
104	.84826	.84518	.84213	.83910	.83610
105	.85623	.85327	.85033	.84741	.84452
106	.86915	.86641	.86369	.86098	.85829
107	.88718	.88476	.88236	.87997	.87759
108	.91571	.91385	.91201	.91017	.90834

(1) Age	(2) Yearly rate of return				
	8.2%	8.4%	8.6%	8.8%	9.0%
109	.96211	.96125	.96041	.95956	.95872

TABLE G

TABLE G—SINGLE LIFE, UNISEX—TABLE SHOWING THE PRESENT WORTH OF THE REMAINDER INTEREST IN PROPERTY TRANSFERRED TO A POOLED INCOME FUND HAVING THE YEARLY RATE OF RETURN SHOWN—APPLICABLE FOR TRANSFERS AFTER NOVEMBER 30, 1983, AND BEFORE MAY 1, 1989

(1) Age	(2) Yearly rate of return				
	9.2%	9.4%	9.6%	9.8%	10.0%
0	.02987	.02938	.02893	.02851	.02812
1	.01192	.01141	.01094	.01051	.01012
2	.01173	.01119	.01070	.01025	.00983
3	.01192	.01136	.01084	.01036	.00992
4	.01229	.01170	.01116	.01066	.01019
5	.01283	.01221	.01164	.01111	.01062
6	.01350	.01284	.01224	.01168	.01116
7	.01425	.01356	.01292	.01233	.01178
8	.01512	.01439	.01372	.01309	.01252
9	.01612	.01535	.01464	.01398	.01337
10	.01724	.01644	.01569	.01499	.01435
11	.01851	.01766	.01688	.01615	.01547
12	.01991	.01902	.01819	.01742	.01671
13	.02139	.02045	.01958	.01877	.01802
14	.02288	.02190	.02098	.02013	.01934
15	.02435	.02331	.02235	.02146	.02063
16	.02575	.02466	.02366	.02272	.02185
17	.02709	.02595	.02490	.02391	.02300
18	.02839	.02721	.02610	.02507	.02410
19	.02971	.02846	.02730	.02621	.02520
20	.03108	.02977	.02855	.02741	.02635
21	.03251	.03114	.02986	.02866	.02755
22	.03402	.03258	.03123	.02998	.02880
23	.03562	.03410	.03269	.03137	.03014

(1) Age	(2) Yearly rate of return				
	9.2%	9.4%	9.6%	9.8%	10.0%
24	.03735	.03577	.03428	.03290	.03159
25	.03927	.03761	.03605	.03459	.03322
26	.04141	.03966	.03803	.03649	.03505
27	.04377	.04194	.04023	.03861	.03710
28	.04639	.04447	.04267	.04098	.03938
29	.04922	.04721	.04532	.04354	.04187
30	.05228	.05017	.04819	.04633	.04457
31	.05554	.05334	.05126	.04930	.04746
32	.05904	.05674	.05456	.05251	.05058
33	.06279	.06038	.05810	.05595	.05392
34	.06677	.06435	.06187	.05962	.05750
35	.07102	.06839	.06590	.06355	.06132
36	.07553	.07278	.07019	.06773	.06540
37	.08030	.07745	.07474	.07217	.06974
38	.08534	.08237	.07955	.07687	.07433
39	.09065	.08755	.08462	.08182	.07917
40	.09624	.09302	.08996	.08706	.08429
41	.10212	.09878	.09560	.09258	.08970
42	.10833	.10486	.10156	.09842	.09543
43	.11484	.11125	.10783	.10456	.10145
44	.12167	.11795	.11441	.11102	.10779
45	.12880	.12495	.12128	.11777	.11442
46	.13625	.13227	.12847	.12484	.12137
47	.14402	.13991	.13599	.13223	.12863
48	.15214	.14791	.14385	.13997	.13626
49	.16060	.15625	.15207	.14806	.14422
50	.16944	.16496	.16065	.15653	.15257
51	.17862	.17401	.16959	.16534	.16126
52	.18816	.18343	.17888	.17451	.17031
53	.19805	.19320	.18853	.18404	.17972
54	.20825	.20328	.19850	.19390	.18946
55	.21878	.21370	.20881	.20409	.19954
56	.22963	.22443	.21943	.21460	.20994
57	.24081	.23551	.23040	.22546	.22069
58	.25231	.24691	.24170	.23665	.23178
59	.26418	.25868	.25336	.24822	.24325
60	.27640	.27081	.26540	.26016	.25509
61	.28899	.28332	.27782	.27249	.26733

(1) Age	(2) Yearly rate of return				
	9.2%	9.4%	9.6%	9.8%	10.0%
62	.30197	.29622	.29064	.28523	.27998
63	.31533	.30950	.30385	.29836	.29304
64	.32905	.32316	.31743	.31188	.30648
65	.34311	.33716	.33138	.32576	.32030
66	.35751	.35151	.34568	.34001	.33449
67	.37221	.36618	.36030	.35459	.34902
68	.38723	.38116	.37526	.36950	.36390
69	.40257	.39649	.39056	.38478	.37914
70	.41826	.41217	.40623	.40043	.39478
71	.43435	.42827	.42233	.41652	.41086
72	.45084	.44478	.43885	.43305	.42739
73	.46765	.46161	.45571	.44994	.44429
74	.48460	.47861	.47274	.46700	.46138
75	.50155	.49561	.48979	.48409	.47851
76	.51841	.51253	.50677	.50112	.49559
77	.53514	.52934	.52364	.51806	.51258
78	.55177	.54605	.54043	.53492	.52951
79	.56837	.56273	.55720	.55177	.54643
80	.58497	.57944	.57401	.56866	.56341
81	.60148	.59606	.59073	.58548	.58033
82	.61775	.61245	.60723	.60210	.59705
83	.63381	.62863	.62354	.61852	.61358
84	.64974	.64470	.63973	.63484	.63002
85	.66558	.66068	.65586	.65110	.64641
86	.68096	.67622	.67154	.66692	.66236
87	.69542	.69082	.68628	.68180	.67738
88	.70891	.70445	.70005	.69570	.69141
89	.72172	.71739	.71312	.70891	.70474
90	.73422	.73004	.72591	.72182	.71779
91	.74632	.74229	.73829	.73435	.73045
92	.75763	.75373	.74988	.74606	.74229
93	.76791	.76414	.76042	.75673	.75308
94	.77710	.77345	.76983	.76626	.76272
95	.78510	.78155	.77804	.77457	.77113
96	.79183	.78837	.78494	.78155	.77819
97	.79783	.79445	.79110	.78779	.78450
98	.80306	.79975	.79647	.79322	.79000
99	.80797	.80471	.80149	.79830	.79514

(1) Age	(2) Yearly rate of return				
	9.2%	9.4%	9.6%	9.8%	10.0%
100	.81283	.80964	.80648	.80335	.80025
101	.81708	.81394	.81082	.80774	.80468
102	.82165	.81856	.81550	.81247	.80946
103	.82754	.82452	.82153	.81857	.81563
104	.83312	.83017	.82723	.82433	.82144
105	.84165	.83880	.83597	.83316	.83038
106	.85562	.85297	.85034	.84772	.84512
107	.87523	.87288	.87054	.86822	.86591
108	.90652	.90471	.90291	.90111	.89932
109	.95788	.95704	.95620	.95537	.95455

Table G

Table G—Single Life, Unisex—Table Showing the Present Worth of the Remainder Interest in Property Transferred to a Pooled Income Fund Having the Yearly Rate of Return Shown—Applicable for Transfers After November 30, 1983, and Before May 1, 1989

(1) Age	(2) Yearly rate of return				
	10.2%	10.4%	10.6%	10.8%	11.0%
0	.02776	.02743	.02712	.02682	.02655
1	.00975	.00941	.00909	.00880	.00852
2	.00945	.00909	.00875	.00844	.00816
3	.00952	.00914	.00879	.00846	.00815
4	.00976	.00936	.00899	.00865	.00832
5	.01016	.00974	.00935	.00898	.00864
6	.01068	.01023	.00981	.00943	.00907
7	.01128	.01080	.01036	.00995	.00957
8	.01198	.01148	.01101	.01058	.01017
9	.01281	.01228	.01179	.01133	.01090
10	.01375	.01319	.01267	.01219	.01173
11	.01483	.01425	.01370	.01318	.01270
12	.01604	.01542	.01484	.01430	.01379
13	.01732	.01666	.01605	.01548	.01494
14	.01860	.01792	.01727	.01667	.01610

(1) Age	(2) Yearly rate of return				
	10.2%	10.4%	10.6%	10.8%	11.0%
15	.01986	.01913	.01845	.01782	.01723
16	.02103	.02027	.01956	.01889	.01827
17	.02214	.02134	.02059	.01989	.01923
18	.02320	.02236	.02157	.02084	.02014
19	.02426	.02337	.02254	.02177	.02104
20	.02536	.02442	.02355	.02273	.02197
21	.02650	.02552	.02460	.02374	.02293
22	.02770	.02667	.02570	.02479	.02394
23	.02898	.02789	.02687	.02591	.02501
24	.03037	.02923	.02815	.02714	.02619
25	.03194	.03073	.02960	.02853	.02752
26	.03370	.03243	.03123	.03010	.02904
27	.03568	.03434	.03307	.03188	.03076
28	.03789	.03647	.03514	.03389	.03271
29	.04029	.03880	.03740	.03608	.03483
30	.04291	.04135	.03987	.03848	.03716
31	.04572	.04407	.04252	.04105	.03966
32	.04875	.04702	.04538	.04384	.04237
33	.05200	.05019	.04847	.04684	.04530
34	.05548	.05358	.05177	.05006	.04843
35	.05921	.05722	.05532	.05352	.05181
36	.06319	.06110	.05911	.05722	.05543
37	.06743	.06524	.06315	.06117	.05929
38	.07191	.06962	.06744	.06536	.06338
39	.07665	.074425	.07197	.06980	.06773
40	.08166	.07916	.07677	.07450	.07233
41	.08696	.08434	.08185	.07947	.07721
42	.09257	.08985	.08725	.08477	.08239
43	.09848	.09564	.09293	.09034	.08787
44	.10470	.10175	.09893	.09623	.09365
45	.11121	.10815	.10522	.10241	.09972
46	.11805	.11486	.11182	.10890	.10610
47	.12519	.12189	.11873	.11569	.11279
48	.13269	.12927	.12600	.12285	.11983
49	.14054	.13600	.13361	.13035	.12721
50	.14876	.14511	.14160	.13822	.13497
51	.15734	.15356	.14994	.14645	.14309
52	.16627	.16238	.15864	.15504	.15156

(1) Age	(2) Yearly rate of return				
	10.2%	10.4%	10.6%	10.8%	11.0%
53	.17557	.17156	.16770	.16399	.16040
54	.18519	.18107	.17710	.17327	.16957
55	.19515	.19092	.18684	.18290	.17909
56	.20544	.20110	.19691	.19286	.18894
57	.21609	.21164	.20734	.20318	.19916
58	.22707	.22252	.21811	.21385	.20972
59	.23844	.23378	.22928	.22491	.22068
60	.25018	.24543	.24082	.23636	.23203
61	.26233	.25749	.25279	.24823	.24381
62	.27490	.26996	.26517	.26052	.25601
63	.28787	.28286	.27798	.27325	.26865
64	.30124	.29615	.29120	.28639	.28171
65	.31500	.30983	.30481	.29993	.29517
66	.32912	.32390	.31881	.31386	.30904
67	.34360	.33832	.33318	.32817	.32328
68	.35843	.35311	.34791	.34285	.33791
69	.37365	.36828	.36305	.35794	.35296
70	.38925	.38386	.37860	.37346	.36844
71	.40532	.39991	.39463	.38946	.38442
72	.42185	.41644	.41115	.40597	.40091
73	.43876	.43336	.42807	.42289	.41782
74	.45588	.45050	.44522	.44005	.43499
75	.47304	.46769	.46244	.45729	.45225
76	.49016	.48485	.47963	.47451	.46949
77	.50721	.50193	.49676	.49168	.48670
78	.52419	.51898	.51385	.50882	.50388
79	.54119	.53604	.53097	.52600	.52111
80	.55825	.55318	.54819	.54328	.53846
81	.57526	.57027	.56536	.56053	.55578
82	.59208	.58718	.58236	.57762	.57295
83	.60871	.60392	.59920	.59455	.58997
84	.62527	.62059	.61597	.61143	.60695
85	.64179	.63723	.63273	.62830	.62393
86	.65787	.65344	.64907	.64475	.64050
87	.67302	.66871	.66446	.66026	.65612
88	.68717	.68298	.67885	.67477	.67074
89	.70063	.69656	.69255	.68858	.68466
90	.71380	.70986	.70597	.70212	.69831

(1) Age	(2) Yearly rate of return				
	10.2%	10.4%	10.6%	10.8%	11.0%
91	.72659	.72278	.71901	.71528	.71160
92	.73856	.73488	.73123	.72762	.72405
93	.74947	.74590	.74236	.73887	.73541
94	.75922	.75575	.75233	.74893	.74557
95	.76773	.76436	.76102	.75772	.75445
96	.77487	.77158	.76832	.76510	.76190
97	.78125	.77803	.77485	.77169	.76856
98	.78681	.78365	.78052	.77742	.77435
99	.79201	.78891	.78583	.78279	.77977
100	.79717	.79412	.79111	.78811	.78515
101	.80165	.79865	.79568	.79273	.78981
102	.80648	.80353	.80060	.79769	.79481
103	.81271	.80982	.80695	.80411	.80129
104	.81858	.81574	.81292	.81013	.80736
105	.83761	.82487	.82214	.81943	.81675
106	.84254	.83998	.83743	.83490	.83238
107	.86362	.86133	.85906	.85681	.85456
108	.89755	.89577	.89401	.89226	.89051
109	.95372	.95290	.95208	.95126	.95045

Table G

Table G—Single Life, Unisex—Table Showing the Present Worth of the Remainder Interest in Property Transferred to a Pooled Income Fund Having the Yearly Rate of Return Shown—Applicable for Transfers After November 30, 1983, and Before May 1, 1989

(1) Age	(2) Yearly rate of return				
	11.2%	11.4%	11.6%	11.8%	12.0%
0	.02630	.02606	.02583	.02562	.02542
1	.00827	.00803	.00780	.00759	.00739
2	.00789	.00763	.00740	.00718	.00697
3	.00787	.00760	.00736	.00712	.00690
4	.00802	.00774	.00748	.00723	.00700
5	.00832	.00802	.00774	.00748	.00724

(1) Age	(2) Yearly rate of return				
	11.2%	11.4%	11.6%	11.8%	12.0%
6	.00873	.00841	.00812	.00784	.00758
7	.00921	.00888	.00856	.00827	.00799
8	.00979	.00944	.00910	.00879	.00850
9	.01049	.01012	.00976	.00943	.00912
10	.01131	.01091	.01053	.01018	.00985
11	.01225	.01183	.01143	.01106	.01070
12	.01331	.01286	.01244	.01205	.01168
13	.01444	.01397	.01352	.01311	.01271
14	.01558	.01508	.01461	.01417	.01375
15	.01667	.01614	.01565	.01519	.01475
16	.01768	.01713	.01661	.01612	.01566
17	.01862	.01803	.01749	.01697	.01649
18	.01949	.01888	.01831	.01776	.01725
19	.02035	.01971	.01910	.01853	.01799
20	.02124	.02056	.01992	.01932	.01875
21	.02217	.02145	.02078	.02014	.01954
22	.02313	.02238	.02166	.02099	.02035
23	.02416	.02336	.02261	.02190	.02122
24	.02529	.02445	.02365	.02290	.02218
25	.02657	.02568	.02484	.02404	.02328
26	.02804	.02710	.02620	.02536	.02456
27	.02970	.02870	.02776	.02686	.02601
28	.03159	.03053	.02953	.02858	.02768
29	.03365	.03253	.03147	.03047	.02951
30	.03591	.03473	.03361	.03255	.03154
31	.03834	.03709	.03591	.03478	.03372
32	.04098	.03966	.03841	.03722	.03610
33	.04383	.04244	.04112	.03987	.03867
34	.04689	.04543	.04403	.04271	.04145
35	.05019	.04865	.04718	.04578	.04445
36	.05372	.05210	.05055	.04907	.04767
37	.05749	.05578	.05416	.05260	.05112
38	.06150	.05970	.05799	.05636	.05480
39	.06575	.06387	.06207	.06035	.05871
40	.07026	.06828	.06639	.06459	.06286
41	.07504	.07297	.07099	.06909	.06728
42	.08013	.07796	.07589	.07390	.07200
43	.08550	.08323	.08106	.07898	.07699

(1) Age	(2) Yearly rate of return				
	11.2%	11.4%	11.6%	11.8%	12.0%
44	.09118	.08881	.08654	.08437	.08228
45	.09714	.09467	.09230	.09003	.08784
46	.10341	.10084	.09837	.09599	.09371
47	.10999	.10731	.10473	.10226	.09988
48	.11693	.11414	.11145	.10888	.10639
49	.12420	.12130	.11852	.11583	.11325
50	.13185	.12884	.12595	.12316	.12047
51	.13985	.13674	.13373	.13084	.12805
52	.14822	.14499	.14188	.13888	.13598
53	.15695	.15361	.15039	.14729	.14428
54	.16601	.16256	.15924	.15602	.15292
55	.17542	.17186	.16843	.16511	.16190
56	.18516	.18150	.17796	.17454	.17122
57	.19527	.19150	.18786	.18433	.18091
58	.20573	.20186	.19811	.19448	.19096
59	.21659	.21262	.20877	.20504	.20142
60	.22784	.22377	.21982	.21599	.21227
61	.23952	.23535	.23131	.22738	.22357
62	.25163	.24737	.24324	.23922	.23531
63	.26418	.25984	.25561	.25151	.24751
64	.27716	.27273	.26842	.26423	.26015
65	.29054	.28604	.28165	.27738	.27322
66	.30434	.29976	.29530	.29096	.28672
67	.31852	.31388	.30935	.30494	.30063
68	.33310	.32840	.32381	.31933	.31496
69	.34809	.34334	.33870	.33417	.32975
70	.36353	.35874	.35405	.34948	.34500
71	.37948	.37466	.36994	.36532	.36081
72	.39595	.39111	.38636	.38172	.37718
73	.41286	.40801	.40325	.39859	.39403
74	.43004	.42518	.42042	.41575	.41118
75	.44730	.44245	.43770	.43304	.42846
76	.46457	.45974	.45500	.45035	.44579
77	.48181	.47700	.47229	.46766	.46311
78	.49903	.49426	.48958	.48497	.48045
79	.51631	.51159	.50694	.50238	.49789
80	.53371	.52905	.52446	.51994	.51550
81	.55110	.54650	.54197	.53752	.53313

(1) Age	(2) Yearly rate of return				
	11.2%	11.4%	11.6%	11.8%	12.0%
82	.56835	.56382	.55937	.55497	.55065
83	.58546	.58101	.57663	.57231	.56806
84	.60253	.59817	.59388	.58965	.58547
85	.61961	.61536	.61116	.60703	.60294
86	.63630	.63215	.62806	.62402	.62004
87	.65203	.64800	.64401	.64007	.63619
88	.66676	.66282	.65894	.65510	.65131
89	.68079	.67696	.67318	.66944	.66574
90	.69455	.69084	.68716	.68353	.67993
91	.70795	.70435	.70078	.69726	.69377
92	.72052	.71703	.71357	.71015	.70677
93	.73198	.72860	.72524	.72192	.71864
94	.74225	.73896	.73570	.73248	.72928
95	.75121	.74801	.74483	.74169	.73858
96	.75874	.75561	.75250	.74943	.74639
97	.76546	.76240	.75936	.75635	.75336
98	.77131	.76830	.76531	.76235	.75942
99	.77678	.77382	.77088	.76798	.76509
100	.78221	.77930	.77642	.77356	.77072
101	.78691	.78404	.78119	.77837	.77557
102	.79196	.78912	.78632	.78353	.78077
103	.79849	.79572	.79297	.79024	.78753
104	.80460	.80188	.79917	.79648	.79381
105	.81408	.81143	.80881	.80620	.80361
106	.82989	.82740	.82494	.82249	.82006
107	.85233	.85012	.84791	.84572	.84353
108	.88877	.88704	.88532	.88361	.88190

(1) Age	(2) Yearly rate of return				
	11.2%	11.4%	11.6%	11.8%	12.0%
109	.94964	.94883	.94803	.94723	.94643

TABLE G

TABLE G—SINGLE LIFE, UNISEX—TABLE SHOWING THE PRESENT WORTH OF THE REMAINDER INTEREST IN PROPERTY TRANSFERRED TO A POOLED INCOME FUND HAVING THE YEARLY RATE OF RETURN SHOWN—APPLICABLE FOR TRANSFERS AFTER NOVEMBER 30, 1983, AND BEFORE MAY 1, 1989

(1) Age	(2) Yearly rate of return				
	12.2%	12.4%	12.6%	12.8%	13.0%
0	.02523	.02505	.02488	.02472	.02456
1	.00721	.00703	.00687	.00671	.00657
2	.00678	.00659	.00642	.00626	.00610
3	.00670	.00650	.00632	.00615	.00599
4	.00678	.00658	.00638	.00620	.00603
5	.00701	.00679	.00658	.00639	.00620
6	.00733	.00710	.00688	.00668	.00648
7	.00733	.00748	.00725	.00703	.00682
8	.00822	.00796	.00771	.00748	.00726
9	.00882	.00854	.00828	.00803	.00780
10	.00953	.00924	.00896	.00869	.00844
11	.01037	.01006	.00976	.00948	.00922
12	.01132	.01099	.01068	.01038	.01010
13	.01234	.01199	.01166	.01134	.01104
14	.01336	.01299	.01264	.01231	.01199
15	.01434	.01395	.01358	.01323	.01289
16	.01522	.01481	.01442	.01405	.01371
17	.01603	.01559	.01518	.01480	.01443
18	.01677	.01631	.01588	.01547	.01508
19	.01748	.01700	.01654	.01611	.01570
20	.01821	.01770	.01722	.01677	.01633
21	.01897	.01843	.01792	.01744	.01698
22	.01975	.01918	.01864	.01813	.01765
23	.02059	.01998	.01941	.01887	.01836

(1) Age	(2) Yearly rate of return				
	12.2%	12.4%	12.6%	12.8%	13.0%
24	.02151	.02087	.02027	.01970	.01915
25	.02257	.02189	.02125	.02064	.02006
26	.02380	.02308	.02240	.02175	.02114
27	.02521	.02445	.02373	.02304	.02239
28	.02683	.02602	.02525	.02452	.02383
29	.02861	.02775	.02694	.02616	.02543
30	.03058	.02967	.02881	.02798	.02720
31	.03270	.03174	.03082	.02995	.02911
32	.03502	.03400	.03303	.03210	.03122
33	.03754	.03646	.03543	.03444	.03350
34	.04025	.03910	.03801	.03697	.03597
35	.04318	.04197	.04081	.03971	.03865
36	.04633	.04505	.04383	.04266	.04154
37	.04971	.04836	.04707	.04583	.04465
38	.05331	.05188	.05052	.04922	.04797
39	.05714	.05564	.05420	.05282	.05150
40	.06121	.05963	.05812	.05667	.05528
41	.06554	.06388	.06229	.06076	.05929
42	.07018	.06843	.06675	.06514	.06360
43	.07508	.07324	.07148	.06979	.06817
44	.08028	.07325	.07651	.07473	.07303
45	.08575	.08373	.08180	.07993	.07814
46	.09152	.08941	.08738	.08543	.08355
47	.09759	.09539	.09326	.09122	.08926
48	.10401	.10171	.09949	.09735	.09530
49	.11076	.10836	.10605	.10382	.10167
50	.11788	.11538	.11297	.11065	.10840
51	.12535	.12276	.12025	.11782	.11548
52	.13319	.13049	.12788	.12536	.12292
53	.14139	.13858	.13588	.13326	.13072
54	.14992	.14701	.14420	.14149	.13885
55	.15880	.15579	.15288	.15006	.14733
56	.16801	.16491	.16190	.15898	.15615
57	.17760	.17439	.17128	.16827	.16534
58	.18755	.18424	.18103	.17792	.17489
59	.19790	.19450	.19119	.18798	.18486
60	.20866	.20516	.20175	.19844	.19523
61	.21986	.21626	.21276	.20936	.20605

(1) Age	(2) Yearly rate of return				
	12.2%	12.4%	12.6%	12.8%	13.0%
62	.23151	.22782	.22423	.22073	.21733
63	.24362	.23984	.23616	.23257	.22908
64	.25617	.25231	.24854	.24487	.24129
65	.26917	.26522	.26137	.25761	.25395
66	.28259	.27857	.27464	.27081	.26707
67	.29643	.29233	.28833	.28443	.38061
68	.31070	.30653	.30246	.29849	.29461
69	.32542	.32120	.31707	.31303	.30908
70	.34063	.33635	.33217	.32807	.32407
71	.35639	.35207	.34784	.34370	.33965
72	.37273	.36837	.36410	.35993	.35583
73	.38955	.38517	.38088	.37667	.37255
74	.40670	.40230	.39799	.39377	.38962
75	.42398	.41958	.41526	.41102	.40686
76	.44131	.43691	.43259	.42825	.42419
77	.45864	.45425	.44994	.44571	.44155
78	.47601	.47164	.46734	.46312	.45897
79	.49348	.48914	.48487	.48067	.47654
80	.51112	.50682	.50259	.49842	.49432
81	.52881	.52455	.52036	.51624	.51218
82	.54639	.54219	.53805	.53398	.52996
83	.56386	.55973	.55566	.55164	.54768
84	.58136	.57730	.57329	.56934	.56545
85	.59891	.59494	.59102	.58715	.58333
86	.61610	.61222	.60839	.60460	.60086
87	.62335	.62856	.62481	.62111	.61746
88	.64757	.64386	.64021	.63659	.63302
89	.66209	.65848	.65491	.65139	.64790
90	.67638	.67287	.66939	.66596	.66256
91	.69032	.68691	.68353	.68019	.67689
92	.70342	.70011	.69683	.69359	.69038
93	.71539	.71217	.70899	.70584	.70271
94	.72612	.72299	.71989	.71683	.71379
95	.73550	.43245	.72943	.72643	.72347
96	.74337	.74039	.73743	.73450	.73160
97	.75041	.74748	.74458	.74171	.73886
98	.74652	.75364	.75079	.74797	.74517
99	.76224	.75941	.75660	.75382	.75106

(1) Age	(2) Yearly rate of return				
	12.2%	12.4%	12.6%	12.8%	13.0%
100	.76791	.76513	.76237	.75963	.75692
101	.77280	.77005	.76732	.67462	.76194
102	.77804	.77532	.77263	.76996	.76732
103	.78485	.78218	.77954	.77692	.77432
104	.79117	.78854	.78594	.78335	.78078
105	.80103	.79848	.78595	.79343	.79093
106	.81764	.81524	.81285	.81048	.80813
107	.84137	.93921	.83706	.83493	.83281
108	.88020	.87851	.87682	.87515	.87348
109	.94563	.94484	.94405	.94326	.94248

Table G

Table G—Single Life, Unisex—Table Showing the Present Worth of the Remainder Interest in Property Transferred to a Pooled Income Fund Having the Yearly Rate of Return Shown—Applicable for Transfers After November 30, 1983, and Before May 1, 1989

(1) Age	(2) Yearly rate of return				
	13.2%	13.4%	13.6%	13.8%	14.0%
0	.02442	.02428	.02414	.02402	.02389
1	.00643	.00629	.00617	.00605	.00594
2	.00596	.00582	.00569	.00556	.00544
3	.00583	.00569	.00555	.00542	.00529
4	.00586	.00571	.00556	.00542	.00529
5	.00603	.00587	.00571	.00556	.00542
6	.00630	.00612	.00595	.00580	.00565
7	.00663	.00644	.00626	.00610	.00594
8	.00705	.00685	.00666	.00648	.00631
9	.00757	.00736	.00716	.00697	.00679
10	.00821	.00798	.00777	.00756	.00737
11	.00896	.00872	.00850	.00828	.00807
12	.00983	.00958	.00934	.00911	.00889
13	.01076	.01049	.01024	.00999	.00976
14	.01170	.01141	.01114	.01088	.01064

(1) Age	(2) Yearly rate of return				
	13.2%	13.4%	13.6%	13.8%	14.0%
15	.01258	.01228	.01200	.01172	.01147
16	.01337	.01306	.01276	.01247	.01220
17	.01408	.01375	.01343	.01313	.01284
18	.01471	.01436	.01403	.01371	.01341
19	.01531	.01494	.01459	.01426	.01394
20	.01592	.01553	.01516	.01481	.01447
21	.01655	.01614	.01574	.01537	.01502
22	.01719	.01675	.01634	.01594	.01557
23	.01787	.01741	.01697	.01655	.01615
24	.01863	.01814	.01768	.01723	.01681
25	.01952	.01899	.01850	.01802	.01757
26	.02056	.02000	.01947	.01897	.01849
27	.02177	.02118	.02061	.02008	.01956
28	.02317	.02254	.02194	.02137	.02082
29	.02472	.02405	.02342	.02281	.02223
30	.02645	.02574	.02506	.02441	.02379
31	.02832	.02756	.02684	.02615	.02549
32	.03037	.02957	.02880	.02806	.02736
33	.03261	.03175	.03093	.03015	.02940
34	.03502	.03411	.03324	.03241	.03162
35	.03764	.03668	.03576	.03488	.03403
36	.04048	.03945	.03847	.03754	.03664
37	.04352	.04244	.04140	.04040	.03945
38	.04677	.04563	.04453	.04347	.04246
39	.05024	.04903	.04787	.04675	.04568
40	.05394	.05266	.05143	.05025	.04912
41	.05789	.05653	.05524	.05399	.05279
42	.06212	.06069	.05932	.05800	.05674
43	.06661	.06511	.06366	.06227	.06093
44	.07138	.06980	.06828	.06682	.06541
45	.07642	.07476	.07316	.07162	.07013
46	.08174	.08000	.07832	.07670	.07514
47	.08736	.08553	.08377	.08207	.08042
48	.09331	.09140	.08955	.08776	.08604
49	.09959	.09759	.09565	.09378	.09198
50	.10624	.10414	.10212	.10016	.09827
51	.11322	.11104	.10892	.10688	.10490
52	.12057	.11829	.11608	.11395	.11188

(1) Age	(2) Yearly rate of return				
	13.2%	13.4%	13.6%	13.8%	14.0%
53	.12827	.12590	.12360	.12138	.11922
54	.13631	.13384	.13145	.12913	.12689
55	.14469	.14213	.13964	.13724	.13490
56	.15341	.15075	.14817	.14567	.14324
57	.16250	.15975	.15708	.15448	.15196
58	.17196	.16911	.16634	.16365	.16104
59	.18183	.17888	.17602	.17324	.17053
60	.19210	.18906	.18611	.18323	.18043
61	.20283	.19970	.19665	.19368	.19079
62	.21402	.21079	.20766	.20460	.20162
63	.22568	.22237	.21914	.21600	.21293
64	.23780	.23440	.23109	.22786	.22471
65	.25038	.24690	.24350	.24019	.23695
66	.26342	.25986	.25638	.25298	.24967
67	.27689	.27325	.26970	.26623	.26284
68	.29081	.28711	.28248	.27994	.27647
69	.30523	.30145	.29776	.29415	.29062
70	.32015	.31632	.31257	.30890	.30530
71	.33568	.33179	.32799	.32426	.32061
72	.35182	.34789	.34404	.34027	.33657
73	.36851	.36455	.36066	.35685	.35311
74	.38555	.38156	.37765	.37381	.37004
75	.40278	.39877	.39484	.39098	.38710
76	.42010	.41608	.41213	.40826	.40445
77	.43746	.43344	.42949	.42561	.42179
78	.45489	.45088	.44693	.44305	.43923
79	.47248	.46848	.46454	.46067	.45686
80	.49028	.48631	.48240	.47854	.47475
82	.50818	.50423	.50035	.49653	.59276
82	.52600	.52210	.51826	.51447	.51074
83	.54377	.53992	.53613	.53238	.52869
84	.56160	.55781	.55407	.55038	.54674
85	.57956	.57584	.57216	.56854	.56496
86	.59717	.59353	.58993	.58638	.58287
87	.61385	.61028	.60676	.60328	.59984
88	.62950	.62601	.62256	.61915	.61578
89	.64445	.64104	.63767	.63434	.63105
90	.65920	.65588	.65259	.64934	.64612

(1) Age	(2) Yearly rate of return				
	13.2%	13.4%	13.6%	13.8%	14.0%
91	.67362	.67039	.66719	.66402	.66089
92	.68720	.68405	.68094	.67786	.67481
93	.69962	.69657	.69354	.69054	.68757
94	.71078	.70780	.70485	.70193	.69903
95	.72053	.71763	.71475	.71189	.70906
96	.72872	.72587	.72305	.72026	.71748
97	.73604	.73325	.73048	.72773	.72501
98	.74239	.73964	.73692	.73422	.73154
99	.74833	.74562	.74294	.74028	.73764
100	.75423	.75156	.74892	.74630	.74370
101	.75928	.75664	.75403	.75144	.74887
102	.76469	.76209	.75950	.75694	.75440
103	.77174	.76918	.76664	.76413	.76163
104	.77824	.77571	.77320	.77071	.76824
105	.78845	.78599	.78354	.78111	.77870
106	.80579	.80346	.80115	.79885	.79657
107	.83070	.82860	.82652	.82444	.82238
108	.87182	.87016	.86852	.86688	.86525
109	.94170	.94092	.94014	.93937	.93860

(e) ***Present value of the remainder interest in the case of transfers to pooled income funds for which the valuation date is after April 30, 1989, and before May 1, 1999*** —

(1) ***In general.*** In the case of transfers to pooled income funds for which the valuation date is after April 30, 1989, and before May 1, 1999, the present value of a remainder interest is determined under this section. See, however, § 1.7520-3(b) (relating to exceptions to the use of prescribed tables under certain circumstances). The present value of a remainder interest that is dependent on the termination of the life of one individual is computed by the use of Table S in paragraph (e)(5) of this section. For purposes of the computations under this section, the age of an individual is the age at the individual's nearest birthday. If the valuation date of a transfer to a pooled income fund is after April 30, 1989, and before June 10, 1994, a transferor can rely on Notice 89-24, 1989-1 C.B. 660, or Notice 89-60, 1989-1 C.B. 700, in valuing the transferred interest. (See § 601.601(d)(2)(ii)(*b*) of this chapter.)

(2) ***Present value of a remainder interest.*** The present value of a remainder interest in property transferred to a pooled income fund is computed on the basis of—

(i) Life contingencies determined from the values of *lx* that are set forth in Table 80CNSMT in § 20.2031-7A(e)(4) of this chapter (Estate Tax Regulations); and

(ii) Discount at a rate of interest, compounded annually, equal to the highest yearly rate of return of the pooled income fund for the 3 taxable years immediately preceding its taxable year in which the transfer of property to the fund is made. The provisions of § 1.642(c)-6(c) apply for determining the yearly rate of return. However, where the taxable year is less than 12 months, the provisions of § 1.642(c)-6(e)(3)(ii) apply for the determining the yearly rate of return.

(3) ***Pooled income funds in existence less than 3 taxable years.*** The provisions of § 1.642(c)-6(e)(4) apply for determining the highest yearly rate of return when the pooled income fund has been in existence less than three taxable years.

(4) ***Computation of value of remainder interest.*** The factor that is used in determining the present value of a remainder interest that is dependent on the termination of the life of one individual is the factor from Table S in paragraph (e)(5) of this section under the appropriate yearly rate of return opposite the number that corresponds to the age of the individual upon whose life the value of the remainder interest is based. Table S in paragraph (e)(5) of this section includes factors for yearly rates of return from 4.2 to 14 percent. Many actuarial factors not contained in Table S in paragraph (e)(5) of this section are contained in Table S in Internal Revenue Service Publication 1457, "Actuarial Values, Alpha Volume," (8-89). Publication 1457 is no longer available for purchase from the Superintendent of Documents, United States Government Printing Office, Washington, DC 20402. However, pertinent factors in this publication may be obtained by a written request to: CC:DOM:CORP:R (IRS Publication 1457), room 5226, Internal Revenue Service, POB 7604, Ben Franklin Station, Washington, DC 20044. For other situations, see § 1.642(c)-6(b). If the yearly rate of return is a percentage that is between the yearly rates of return for which factors are provided, a linear interpolation must be made. The present value of the remainder interest is determined by multiplying the fair market value of the property on the valuation date by the appropriate remainder factor. For an example of a computation of the present value of a remainder interest requiring a linear interpolation adjustment, see § 1.642(c)-6(e)(5).

(5) ***Actuarial tables.*** In the case of transfers for which the valuation date is after April 30, 1989, and before May 1, 1999, the present value of a remainder interest dependent on the termination of one life in the case of a transfer to a pooled income fund is determined by use of the following tables:

Table S—Based on Life Table 80CNSMT Single Life Remainder Factors
[Applicable After April 30, 1989, and Before May 1, 1999]

Age	Interest rate									
	4.2%	4.4%	4.6%	4.8%	5.0%	5.2%	5.4%	5.6%	5.8%	6.0%
0	.07389	.06749	.06188	.05695	.05261	.04879	.04541	.04243	.03978	.03744
1	.06494	.05832	.05250	.04738	.04287	.03889	.03537	.03226	.02950	.02705
2	.06678	.05999	.05401	.04874	.04410	.03999	.03636	.03314	.03028	.02773
3	.06897	.06200	.05587	.05045	.04567	.04143	.03768	.03435	.03139	.02875
4	.07139	.06425	.05796	.05239	.04746	.04310	.03922	.03578	.03271	.02998
5	.07401	.06669	.06023	.05451	.04944	.04494	.04094	.03738	.03421	.03137
6	.07677	.06928	.06265	.05677	.05156	.04692	.04279	.03911	.03583	.03289
7	.07968	.07201	.06521	.05918	.05381	.04903	.04477	.04097	.03757	.03453
8	.08274	.07489	.06792	.06172	.05621	.05129	.04689	.04297	.03945	.03630
9	.08597	.07794	.07079	.06443	.05876	.05370	.04917	.04511	.04148	.03821
10	.08936	.08115	.07383	.06730	.06147	.05626	.05159	.04741	.04365	.04027
11	.09293	.08453	.07704	.07035	.06436	.05900	.05419	.04988	.04599	.04250
12	.09666	.08807	.08040	.07354	.06739	.06188	.05693	.05248	.04847	.04486
13	.10049	.09172	.08387	.07684	.07053	.06487	.05977	.05518	.05104	.04731
14	.10437	.09541	.08738	.08017	.07370	.06788	.06263	.05791	.05364	.04978
15	.10827	.09912	.09090	.08352	.07688	.07090	.06551	.06064	.05623	.05225
16	.11220	.10285	.09445	.08689	.08008	.07394	.06839	.06337	.05883	.05472
17	.11615	.10661	.09802	.09028	.08330	.07699	.07129	.06612	.06144	.05719
18	.12017	.11043	.10165	.09373	.08656	.08009	.07422	.06890	.06408	.05969
19	.12428	.11434	.10537	.09726	.08992	.08327	.07724	.07177	.06679	.06226
20	.12850	.11836	.10919	.10089	.09337	.08654	.08035	.07471	.06959	.06492
21	.13282	.12248	.11311	.10462	.09692	.08991	.08355	.07775	.07247	.06765
22	.13728	.12673	.11717	.10848	.10059	.09341	.08686	.08090	.07546	.07049
23	.14188	.13113	.12136	.11248	.10440	.09703	.09032	.08418	.07858	.07345
24	.14667	.13572	.12575	.11667	.10839	.10084	.09395	.08764	.08187	.07659
25	.15167	.14051	.13034	.12106	.11259	.10486	.09778	.09130	.08536	.07991
26	.15690	.14554	.13517	.12569	.11703	.10910	.10184	.09518	.08907	.08346
27	.16237	.15081	.14024	.13056	.12171	.11359	.10614	.09930	.09302	.08724
28	.16808	.15632	.14555	.13567	.12662	.11831	.11068	.10366	.09720	.09125
29	.17404	.16208	.15110	.14104	.13179	.12329	.11547	.10827	.10163	.09551

Age	Interest rate									
	4.2%	4.4%	4.6%	4.8%	5.0%	5.2%	5.4%	5.6%	5.8%	6.0%
30	.18025	.16808	.15692	.14665	.13721	.12852	.12051	.11313	.10631	.10002
31	.18672	.17436	.16300	.15255	.14291	.13403	.12584	.11827	.11127	.10480
32	.19344	.18090	.16935	.15870	.14888	.13980	.13142	.12367	.11650	.10985
33	.20044	.18772	.17598	.16514	.15513	.14587	.13730	.12936	.12201	.11519
34	.20770	.19480	.18287	.17185	.16165	.15221	.14345	.13533	.12780	.12080
35	.21522	.20215	.19005	.17884	.16846	.15883	.14989	.14159	.13388	.12670
36	.22299	.20974	.19747	.18609	.17552	.16571	.15660	.14812	.14022	.13287
37	.23101	.21760	.20516	.19360	.18286	.17288	.16358	.15492	.14685	.13933
38	.23928	.22572	.21311	.20139	.19048	.18032	.17085	.16201	.15377	.14607
39	.24780	.23409	.22133	.20945	.19837	.18804	.17840	.16939	.16097	.15310
40	.25658	.24273	.22982	.21778	.20654	.19605	.18624	.17706	.16847	.16043
41	.26560	.25163	.23858	.22639	.21499	.20434	.19436	.18502	.17627	.16806
42	.27486	.26076	.24758	.23525	.22370	.21289	.20276	.19326	.18434	.17597
43	.28435	.27013	.25683	.24436	.23268	.22172	.21143	.20177	.19270	.18416
44	.29407	.27975	.26633	.25373	.24191	.23081	.22038	.21057	.20134	.19265
45	.30402	.28961	.27608	.26337	.25142	.24019	.22962	.21966	.21028	.20144
46	.31420	.29970	.28608	.27326	.26120	.24983	.23913	.22904	.21951	.21053
47	.32460	.31004	.29632	.28341	.27123	.25975	.24892	.23870	.22904	.21991
48	.33521	.32058	.30679	.29379	.28151	.26992	.25897	.24862	.23883	.22957
49	.34599	.33132	.31746	.30438	.29201	.28032	.26926	.25879	.24888	.23949
50	.35695	.34224	.32833	.31518	.30273	.29094	.27978	.26921	.25918	.24966
51	.36809	.35335	.33940	.32619	.31367	.30180	.29055	.27987	.26973	.26010
52	.37944	.36468	.35070	.33744	.32486	.31292	.30158	.29081	.28057	.27083
53	.39098	.37622	.36222	.34892	.33629	.32429	.31288	.30203	.29170	.28186
54	.40269	.38794	.37393	.36062	.34795	.33590	.32442	.31349	.30308	.29316
55	.41457	.39985	.38585	.37252	.35983	.34774	.33621	.32522	.31474	.30473
56	.42662	.41194	.39796	.38464	.37193	.35981	.34824	.33720	.32666	.31658
57	.43884	.42422	.41028	.39697	.38426	.37213	.36053	.34945	.33885	.32872
58	.45123	.43668	.42279	.40951	.39682	.38468	.37307	.36196	.35132	.34114
59	.46377	.44931	.43547	.42224	.40958	.39745	.38584	.37471	.36405	.35383
60	.47643	.46206	.44830	.43513	.42250	.41040	.39880	.38767	.37699	.36674
61	.48916	.47491	.46124	.44814	.43556	.42350	.41192	.40080	.39012	.37985
62	.50196	.48783	.47427	.46124	.44874	.43672	.42518	.41408	.40340	.39314
63	.51480	.50081	.48736	.47444	.46201	.45006	.43856	.42749	.41684	.40658
64	.52770	.51386	.50054	.48773	.47540	.46352	.45208	.44105	.43043	.42019

Age	Interest rate									
	4.2%	4.4%	4.6%	4.8%	5.0%	5.2%	5.4%	5.6%	5.8%	6.0%
65	.54069	.52701	.51384	.50115	.48892	.47713	.46577	.45480	.44422	.43401
66	.55378	.54029	.52727	.51472	.50262	.49093	.47965	.46876	.45824	.44808
67	.56697	.55368	.54084	.52845	.51648	.50491	.49373	.48293	.47248	.46238
68	.58026	.56717	.55453	.54231	.53049	.51905	.50800	.49729	.48694	.47691
69	.59358	.58072	.56828	.55624	.54459	.53330	.52238	.51179	.50154	.49160
70	.60689	.59427	.58205	.57021	.55874	.54762	.53683	.52638	.51624	.50641
71	.62014	.60778	.59578	.58415	.57287	.56193	.55131	.54100	.53099	.52126
72	.63334	.62123	.60948	.59808	.58700	.57624	.56579	.55563	.54577	.53617
73	.64648	.63465	.62315	.61198	.60112	.59056	.58029	.57030	.56059	.55113
74	.65961	.64806	.63682	.62590	.61527	.60492	.59485	.58504	.57550	.56620
75	.67274	.66149	.65054	.63987	.62948	.61936	.60950	.59990	.59053	.58140
76	.68589	.67495	.66429	.65390	.64377	.63390	.62427	.61487	.60570	.59676
77	.69903	.68841	.67806	.66796	.65811	.64849	.63910	.62993	.62097	.61223
78	.71209	.70182	.69179	.68199	.67242	.66307	.65393	.64501	.63628	.62775
79	.72500	.71507	.70537	.69588	.68660	.67754	.66867	.65999	.65151	.64321
80	.73768	.72809	.71872	.70955	.70058	.69180	.68320	.67479	.66655	.65849
81	.75001	.74077	.73173	.72288	.71422	.70573	.69741	.68926	.68128	.67345
82	.76195	.75306	.74435	.73582	.72746	.71926	.71123	.70335	.69562	.68804
83	.77346	.76491	.75654	.74832	.74026	.73236	.72460	.71699	.70952	.70219
84	.78456	.77636	.76831	.76041	.75265	.74503	.73756	.73021	.72300	.71592
85	.79530	.78743	.77971	.77212	.76466	.75733	.75014	.74306	.73611	.72928
86	.80560	.79806	.79065	.78337	.77621	.76917	.76225	.75544	.74875	.74216
87	.81535	.80813	.80103	.79404	.78717	.78041	.77375	.76720	.76076	.75442
88	.82462	.81771	.81090	.80420	.79760	.79111	.78472	.77842	.77223	.76612
89	.83356	.82694	.82043	.81401	.80769	.80147	.79533	.78929	.78334	.77747
90	.84225	.83593	.82971	.82357	.81753	.81157	.80570	.79991	.79420	.78857
91	.85058	.84455	.83861	.83276	.82698	.82129	.81567	.81013	.80466	.79927
92	.85838	.85263	.84696	.84137	.83585	.83040	.82503	.81973	.81449	.80933
93	.86557	.86009	.85467	.84932	.84405	.83884	.83370	.82862	.82360	.81865
94	.87212	.86687	.86169	.85657	.85152	.84653	.84160	.83673	.83192	.82717
95	.87801	.87298	.86801	.86310	.85825	.85345	.84872	.84404	.83941	.83484
96	.88322	.87838	.87360	.86888	.86420	.85959	.85502	.85051	.84605	.84165
97	.88795	.88328	.87867	.87411	.86961	.86515	.86074	.85639	.85208	.84782
98	.89220	.88769	.88323	.87883	.87447	.87016	.86589	.86167	.85750	.85337
99	.89612	.89176	.88745	.88318	.87895	.87478	.87064	.86656	.86251	.85850

Age	Interest rate									
	4.2%	4.4%	4.6%	4.8%	5.0%	5.2%	5.4%	5.6%	5.8%	6.0%
100	.89977	.89555	.89136	.88722	.88313	.87908	.87506	.87109	.86716	.86327
101	.90326	.89917	.89511	.89110	.88712	.88318	.87929	.87543	.87161	.86783
102	.90690	.90294	.89901	.89513	.89128	.88746	.88369	.87995	.87624	.87257
103	.91076	.90694	.90315	.89940	.89569	.89200	.88835	.88474	.88116	.87760
104	.91504	.91138	.90775	.90415	.90058	.89704	.89354	.89006	.88661	.88319
105	.92027	.91681	.91337	.90996	.90658	.90322	.89989	.89659	.89331	.89006
106	.92763	.92445	.92130	.91816	.91506	.91197	.90890	.90586	.90284	.89983
107	.93799	.93523	.93249	.92977	.92707	.92438	.92170	.91905	.91641	.91378
108	.95429	.95223	.95018	.94814	.94611	.94409	.94208	.94008	.93809	.93611
109	.97985	.97893	.97801	.97710	.97619	.97529	.97438	.97348	.97259	.97170

Table S—Based on Life Table 80CNSMT Single Life Remainder Factors
[Applicable After April 30, 1989, and Before May 1, 1999]

Age	Interest rate									
	6.2%	6.4%	6.6%	6.8%	7.0%	7.2%	7.4%	7.6%	7.8%	8.0%
0	.03535	.03349	.03183	.03035	.02902	.02783	.02676	.02579	.02492	.02413
1	.02486	.02292	.02119	.01963	.01824	.01699	.01587	.01486	.01395	.01312
2	.02547	.02345	.02164	.02002	.01857	.01727	.01609	.01504	.01408	.01321
3	.02640	.02429	.02241	.02073	.01921	.01785	.01662	.01552	.01451	.01361
4	.02753	.02535	.02339	.02163	.02005	.01863	.01735	.01619	.01514	.01418
5	.02883	.02656	.02453	.02269	.02105	.01956	.01822	.01700	.01590	.01490
6	.03026	.02790	.02578	.02387	.02215	.02060	.01919	.01792	.01677	.01572
7	.03180	.02935	.02714	.02515	.02336	.02174	.02027	.01894	.01773	.01664
8	.03347	.03092	.02863	.02656	.02469	.02300	.02146	.02007	.01881	.01766
9	.03528	.03263	.03025	.02810	.02615	.02438	.02278	.02133	.02000	.01880
10	.03723	.03449	.03201	.02977	.02774	.02590	.02423	.02271	.02133	.02006
11	.03935	.03650	.03393	.03160	.02949	.02757	.02583	.02424	.02279	.02147
12	.04160	.03865	.03598	.03356	.03136	.02936	.02755	.02589	.02438	.02299
13	.04394	.04088	.03811	.03560	.03331	.03123	.02934	.02761	.02603	.02458
14	.04629	.04312	.04025	.03764	.03527	.03311	.03113	.02933	.02768	.02617
15	.04864	.04536	.04238	.03968	.03721	.03496	.03290	.03103	.02930	.02773
16	.05099	.04759	.04451	.04170	.03913	.03679	.03466	.03270	.03090	.02926
17	.05333	.04982	.04662	.04370	.04104	.03861	.03638	.03434	.03247	.03075
18	.05570	.05207	.04875	.04573	.04296	.04044	.03812	.03599	.03404	.03225
19	.05814	.05438	.05095	.04781	.04494	.04231	.03990	.03769	.03565	.03378
20	.06065	.05677	.05321	.04996	.04698	.04424	.04173	.03943	.03731	.03535
21	.06325	.05922	.05554	.05217	.04907	.04623	.04362	.04122	.03901	.03697
22	.06594	.06178	.05797	.05447	.05126	.04831	.04559	.04309	.04078	.03865
23	.06876	.06446	.06051	.05688	.05355	.05048	.04766	.04505	.04265	.04042
24	.07174	.06729	.06321	.05945	.05599	.05281	.04987	.04715	.04465	.04233
25	.07491	.07031	.06609	.06219	.05861	.05530	.05224	.04941	.04680	.04438
26	.07830	.07355	.06918	.06515	.06142	.05799	.05481	.05187	.04915	.04662
27	.08192	.07702	.07250	.06832	.06446	.06090	.05759	.05454	.05170	.04906
28	.08577	.08071	.07603	.07171	.06772	.06402	.06059	.05740	.05445	.05170
29	.08986	.08464	.07981	.07534	.07120	.06736	.06380	.06049	.05742	.05456

Age	Interest rate									
	6.2%	6.4%	6.6%	6.8%	7.0%	7.2%	7.4%	7.6%	7.8%	8.0%
30	.09420	.08882	.08383	.07921	.07492	.07095	.06725	.06381	.06061	.05763
31	.09881	.09327	.08812	.08335	.07891	.07479	.07095	.06738	.06405	.06095
32	.10369	.09797	.09267	.08774	.08315	.07888	.07491	.07120	.06774	.06451
33	.10885	.10297	.09750	.09241	.08767	.08325	.07913	.07529	.07170	.06834
34	.11430	.10824	.10261	.09736	.09246	.08790	.08363	.07964	.07592	.07243
35	.12002	.11380	.10800	.10259	.09754	.09282	.08841	.08428	.08041	.07679
36	.12602	.11963	.11366	.10809	.10288	.09800	.09344	.08917	.08516	.08140
37	.13230	.12574	.11961	.11387	.10850	.10347	.09876	.09433	.09018	.08628
38	.13887	.13214	.12584	.11994	.11441	.10922	.10436	.09978	.09549	.09145
39	.14573	.13883	.13237	.12630	.12061	.11527	.11025	.10553	.10109	.09690
40	.15290	.14583	.13920	.13297	.12712	.12162	.11644	.11157	.10698	.10266
41	.16036	.15312	.14633	.13994	.13393	.12827	.12294	.11792	.11318	.10871
42	.16810	.16071	.15375	.14720	.14103	.13522	.12973	.12456	.11967	.11505
43	.17614	.16858	.16146	.15475	.14842	.14245	.13682	.13149	.12645	.12169
44	.18447	.17675	.16948	.16261	.15613	.15000	.14421	.13873	.13355	.12864
45	.19310	.18524	.17780	.17078	.16414	.15787	.15192	.14630	.14096	.13591
46	.20204	.19402	.18644	.17926	.17247	.16604	.15995	.15418	.14870	.14350
47	.21128	.20311	.19538	.18806	.18112	.17454	.16830	.16238	.15676	.15141
48	.22080	.21249	.20462	.19716	.19007	.18335	.17696	.17090	.16513	.15964
49	.23059	.22214	.21413	.20653	.19930	.19244	.18591	.17970	.17379	.16816
50	.24063	.23206	.22391	.21617	.20881	.20180	.19514	.18879	.18274	.17697
51	.25095	.24225	.23398	.22610	.21861	.21147	.20466	.19818	.19199	.18609
52	.26157	.25275	.24436	.23636	.22874	.22147	.21453	.20791	.20159	.19556
53	.27249	.26357	.25505	.24694	.23919	.23180	.22474	.21799	.21154	.20537
54	.28369	.27466	.26604	.25782	.24995	.24244	.23526	.22839	.22181	.21552
55	.29518	.28605	.27734	.26900	.26103	.25341	.24611	.23912	.23243	.22601
56	.30695	.29774	.28893	.28050	.27242	.26469	.25728	.25019	.24338	.23685
57	.31902	.30973	.30084	.29232	.28415	.27632	.26881	.26161	.25469	.24805
58	.33138	.32203	.31306	.30446	.29621	.28829	.28069	.27339	.26637	.25962
59	.34402	.33461	.32558	.31691	.30859	.30059	.29290	.28550	.27839	.27155
60	.35690	.34745	.33836	.32963	.32124	.31317	.30540	.29792	.29073	.28379
61	.36999	.36050	.35137	.34259	.33414	.32601	.31817	.31062	.30334	.29633
62	.38325	.37374	.36458	.35576	.34726	.33907	.33117	.32356	.31621	.30912
63	.39669	.38717	.37799	.36913	.36060	.35236	.34441	.33674	.32933	.32217
64	.41031	.40078	.39159	.38272	.37415	.36588	.35789	.35016	.34270	.33548

Age	Interest rate									
	6.2%	6.4%	6.6%	6.8%	7.0%	7.2%	7.4%	7.6%	7.8%	8.0%
65	.42416	.41464	.40545	.39656	.38798	.37968	.37166	.36390	.35639	.34912
66	.43825	.42876	.41958	.41070	.40211	.39380	.38576	.37797	.37043	.36312
67	.45260	.44315	.43399	.42513	.41655	.40824	.40019	.39238	.38482	.37749
68	.46720	.45779	.44868	.43985	.43129	.42299	.41494	.40713	.39956	.39221
69	.48197	.47263	.46357	.45478	.44625	.43798	.42995	.42215	.41458	.40722
70	.49686	.48760	.47861	.46988	.46140	.45316	.44516	.43738	.42983	.42248
71	.51182	.50265	.49374	.48508	.47666	.46847	.46051	.45276	.44523	.43790
72	.52685	.51778	.50896	.50038	.49203	.48390	.47599	.46829	.46079	.45349
73	.54194	.53298	.52426	.51578	.50751	.49946	.49161	.48397	.47652	.46926
74	.55714	.54832	.53972	.53134	.52317	.51520	.50744	.49986	.49247	.48527
75	.57250	.56382	.55536	.54710	.53904	.53118	.52351	.51601	.50870	.50156
76	.58803	.57951	.57120	.56308	.55515	.54740	.53984	.53245	.52522	.51817
77	.60369	.59535	.58720	.57923	.57144	.56383	.55639	.54912	.54200	.53504
78	.61942	.61126	.60329	.59549	.58787	.58040	.57310	.56596	.55896	.55212
79	.63508	.62713	.61935	.61174	.60428	.59698	.58983	.58283	.57597	.56925
80	.65059	.64285	.63527	.62785	.62058	.61345	.60646	.59961	.59290	.58632
81	.66579	.65827	.65090	.64368	.63659	.62965	.62283	.61615	.60959	.60316
82	.68061	.67332	.66616	.65914	.65226	.64550	.63886	.63235	.62595	.61968
83	.69499	.68793	.68099	.67418	.66749	.66092	.65447	.64813	.64191	.63579
84	.70896	.70213	.69541	.68881	.68233	.67595	.66969	.66353	.65748	.65153
85	.72256	.71596	.70947	.70308	.69681	.69063	.68456	.67859	.67271	.66693
86	.73569	.72931	.72305	.71688	.71081	.70484	.69896	.69318	.68748	.68188
87	.74818	.74204	.73599	.73003	.72417	.71839	.71271	.70711	.70159	.69616
88	.76011	.75419	.74836	.74261	.73695	.73137	.72588	.72046	.71512	.70986
89	.77169	.76599	.76037	.75484	.74938	.74400	.73870	.73347	.72831	.72323
90	.78302	.77755	.77215	.76683	.76158	.75640	.75129	.74625	.74128	.73638
91	.79395	.78870	.78352	.77842	.77337	.76840	.76349	.75864	.75385	.74913
92	.80423	.79920	.79423	.78933	.78449	.77971	.77499	.77033	.76572	.76118
93	.81377	.80894	.80417	.79946	.79481	.79022	.78568	.78120	.77677	.77239
94	.82247	.81784	.81325	.80873	.80425	.79983	.79547	.79115	.78688	.78266
95	.83033	.82586	.82145	.81709	.81278	.80852	.80431	.80014	.79602	.79195
96	.83729	.83298	.82872	.82451	.82034	.81622	.81215	.80812	.80414	.80019
97	.84361	.83944	.83532	.83124	.82721	.82322	.81927	.81537	.81151	.80769
98	.84929	.84525	.84126	.83730	.83339	.82952	.82569	.82190	.81815	.81443
99	.85454	.85062	.84674	.84290	.83910	.83534	.83161	.82792	.82427	.82066

Age	Interest rate									
	6.2%	6.4%	6.6%	6.8%	7.0%	7.2%	7.4%	7.6%	7.8%	8.0%
100	.85942	.85561	.85184	.84810	.84440	.84074	.83711	.83352	.82997	.82644
101	.86408	.86037	.85670	.85306	.84946	.84589	.84236	.83886	.83539	.83196
102	.86894	.86534	.86177	.85823	.85473	.85126	.84782	.84442	.84104	.83770
103	.87408	.87060	.86714	.86371	.86032	.85695	.85362	.85031	.84703	.84378
104	.87980	.87644	.87311	.86980	.86653	.86328	.86005	.85686	.85369	.85054
105	.88684	.88363	.88046	.87731	.87418	.87108	.86800	.86494	.86191	.85890
106	.89685	.89389	.89095	.88804	.88514	.88226	.87940	.87656	.87374	.87094
107	.91117	.90858	.90600	.90344	.90089	.89836	.89584	.89334	.89085	.88838
108	.93414	.93217	.93022	.92828	.92634	.92442	.92250	.92060	.91870	.91681
109	.97081	.96992	.96904	.96816	.96729	.96642	.96555	.96468	.96382	.96296

Table S—Based on Life Table 80CNSMT Single Life Remainder Factors
[Applicable After April 30, 1989, and Before May 1, 1999]

Age	Interest rate									
	8.2%	8.4%	8.6%	8.8%	9.0%	9.2%	9.4%	9.6%	9.8%	10.0%
0	.02341	.02276	.02217	.02163	.02114	.02069	.02027	.01989	.01954	.01922
1	.01237	.01170	.01108	.01052	.01000	.00953	.00910	.00871	.00834	.00801
2	.01243	.01172	.01107	.01048	.00994	.00944	.00899	.00857	.00819	.00784
3	.01278	.01203	.01135	.01073	.01016	.00964	.00916	.00872	.00832	.00795
4	.01332	.01253	.01182	.01116	.01056	.01001	.00951	.00904	.00862	.00822
5	.01400	.01317	.01241	.01172	.01109	.01051	.00998	.00949	.00904	.00862
6	.01477	.01390	.01310	.01238	.01171	.01110	.01054	.01002	.00954	.00910
7	.01563	.01472	.01389	.01312	.01242	.01178	.01118	.01064	.01013	.00966
8	.01660	.01564	.01477	.01396	.01322	.01254	.01192	.01134	.01081	.01031
9	.01770	.01669	.01577	.01492	.01414	.01342	.01276	.01216	.01159	.01107
10	.01891	.01785	.01688	.01599	.01517	.01442	.01372	.01308	.01249	.01194
11	.02026	.01915	.01814	.01720	.01634	.01555	.01481	.01414	.01351	.01293
12	.02173	.02056	.01950	.01852	.01761	.01678	.01601	.01529	.01463	.01402
13	.02326	.02204	.02092	.01989	.01895	.01807	.01726	.01651	.01582	.01517
14	.02478	.02351	.02234	.02126	.02027	.01935	.01850	.01771	.01698	.01630
15	.02628	.02495	.02372	.02259	.02155	.02058	.01969	.01886	.01810	.01738
16	.02774	.02635	.02507	.02388	.02279	.02178	.02084	.01997	.01917	.01842
17	.02917	.02772	.02637	.02513	.02399	.02293	.02194	.02103	.02018	.01940
18	.03059	.02907	.02767	.02637	.02517	.02406	.02302	.02207	.02118	.02035
19	.03205	.03046	.02899	.02763	.02637	.02521	.02412	.02312	.02218	.02131
20	.03355	.03188	.03035	.02892	.02760	.02638	.02524	.02419	.02320	.02229
21	.03509	.03334	.03173	.03024	.02886	.02758	.02638	.02527	.02424	.02328
22	.03669	.03487	.03318	.03162	.03017	.02882	.02757	.02640	.02532	.02430
23	.03837	.03646	.03470	.03306	.03154	.03013	.02881	.02759	.02644	.02538
24	.04018	.03819	.03634	.03463	.03303	.03155	.03016	.02888	.02767	.02655
25	.04214	.04006	.03812	.03633	.03465	.03309	.03164	.03029	.02902	.02784
26	.04428	.04210	.04008	.03820	.03644	.03481	.03328	.03186	.03052	.02928
27	.04662	.04434	.04223	.04025	.03841	.03670	.03509	.03360	.03219	.03088
28	.04915	.04677	.04456	.04249	.04056	.03876	.03708	.03550	.03403	.03264
29	.05189	.04941	.04709	.04493	.04291	.04102	.03925	.03760	.03604	.03458

Age	Interest rate									
	8.2%	8.4%	8.6%	8.8%	9.0%	9.2%	9.4%	9.6%	9.8%	10.0%
30	.05485	.05226	.04984	.04757	.04546	.04348	.04162	.03988	.03825	.03671
31	.05805	.05535	.05282	.05045	.04824	.04616	.04421	.04238	.04067	.03905
32	.06149	.05867	.05603	.05356	.05124	.04906	.04702	.04510	.04329	.04160
33	.06520	.06226	.05950	.05692	.05449	.05221	.05007	.04806	.04616	.04438
34	.06916	.06609	.06322	.06052	.05799	.05560	.05336	.05125	.04926	.04738
35	.07339	.07020	.06720	.06439	.06174	.05925	.05690	.05469	.05260	.05063
36	.07787	.07455	.07143	.06850	.06573	.06313	.06068	.05836	.05617	.05411
37	.08262	.07917	.07593	.07287	.06999	.06727	.06470	.06228	.05999	.05783
38	.08765	.08407	.08069	.07751	.07451	.07167	.06899	.06646	.06407	.06180
39	.09296	.08925	.08574	.08243	.07931	.07635	.07356	.07092	.06841	.06604
40	.09858	.09472	.09109	.08765	.08440	.08132	.07841	.07565	.07303	.07055
41	.10449	.10050	.09673	.09316	.08978	.08658	.08355	.08067	.07794	.07535
42	.11069	.10656	.10265	.09895	.09544	.09212	.08896	.08596	.08312	.08041
43	.11718	.11291	.10887	.10503	.10140	.09794	.09466	.09154	.08858	.08576
44	.12399	.11958	.11540	.11143	.10766	.10407	.10067	.09743	.09434	.09141
45	.13111	.12656	.12224	.11814	.11423	.11052	.10699	.10362	.10042	.09736
46	.13856	.13387	.12941	.12516	.12113	.11728	.11362	.11013	.10680	.10363
47	.14633	.14150	.13690	.13252	.12835	.12438	.12059	.11697	.11352	.11022
48	.15442	.14945	.14471	.14020	.13589	.13179	.12787	.12412	.12055	.11713
49	.16280	.15769	.15281	.14816	.14373	.13949	.13544	.13157	.12787	.12433
50	.17147	.16622	.16121	.15643	.15186	.14749	.14331	.13931	.13548	.13182
51	.18045	.17507	.16993	.16501	.16030	.15580	.15150	.14737	.14342	.13963
52	.18979	.18427	.17899	.17394	.16911	.16448	.16004	.15579	.15172	.14780
53	.19947	.19383	.18842	.18324	.17828	.17352	.16896	.16458	.16038	.15635
54	.20950	.20372	.19819	.19288	.18779	.18291	.17822	.17372	.16940	.16524
55	.21986	.21397	.20831	.20288	.19767	.19266	.18785	.18322	.17878	.17450
56	.23058	.22457	.21879	.21324	.20791	.20278	.19785	.19310	.18854	.18414
57	.24167	.23554	.22965	.22399	.21854	.21329	.20824	.20338	.19870	.19419
58	.25314	.24690	.24090	.23512	.22956	.22420	.21904	.21407	.20927	.20464
59	.26497	.25863	.25252	.24664	.24097	.23550	.23023	.22515	.22024	.21551
60	.27712	.27068	.26448	.25849	.25272	.24716	.24178	.23659	.23158	.22674
61	.28956	.28304	.27674	.27067	.26480	.25913	.25366	.24837	.24325	.23831
62	.30228	.29567	.28929	.28312	.27717	.27141	.26584	.26045	.25524	.25020
63	.31525	.30857	.30211	.29586	.28982	.28397	.27832	.27284	.26754	.26240
64	.32851	.32176	.31522	.30890	.30278	.29685	.29111	.28555	.28016	.27493

Age	Interest rate									
	8.2%	8.4%	8.6%	8.8%	9.0%	9.2%	9.4%	9.6%	9.8%	10.0%
65	.34209	.33528	.32868	.32229	.31610	.31010	.30429	.29865	.29317	.28787
66	.35604	.34918	.34253	.33609	.32983	.32377	.31788	.31217	.30663	.30124
67	.37037	.36347	.35678	.35028	.34398	.33786	.33191	.32614	.32053	.31508
68	.38508	.37815	.37142	.36489	.35854	.35237	.34638	.34055	.33488	.32937
69	.40008	.39313	.38638	.37982	.37344	.36724	.36120	.35533	.34961	.34405
70	.41533	.40838	.40162	.39504	.38864	.38241	.37634	.37043	.36468	.35907
71	.43076	.42382	.41705	.41047	.40405	.39780	.39171	.38578	.38000	.37436
72	.44638	.43945	.43269	.42611	.41969	.41344	.40733	.40138	.39558	.38991
73	.46218	.45527	.44854	.44197	.43556	.42931	.42321	.41725	.41143	.40575
74	.47823	.47137	.46466	.45812	.45173	.44549	.43940	.43345	.42763	.42195
75	.49459	.48777	.48112	.47462	.46826	.46205	.45598	.45004	.44424	.43856
76	.51127	.50452	.49793	.49148	.48517	.47900	.47297	.46706	.46129	.45563
77	.52823	.52157	.51505	.50867	.50243	.49632	.49033	.48447	.47873	.47311
78	.54541	.53885	.53242	.52613	.51996	.51392	.50800	.50220	.49652	.49094
79	.56267	.55621	.54989	.54369	.53762	.53166	.52582	.52009	.51448	.50897
80	.57987	.57354	.56733	.56125	.55527	.54941	.54366	.53802	.53248	.52705
81	.59685	.59065	.58457	.57860	.57274	.56699	.56134	.55579	.55035	.54499
82	.61351	.60746	.60151	.59567	.58993	.58429	.57875	.57331	.56796	.56270
83	.62978	.62387	.61806	.61236	.60675	.60123	.59581	.59047	.58523	.58007
84	.64567	.63992	.63426	.62869	.62321	.61783	.61253	.60731	.60218	.59713
85	.66125	.65565	.65014	.64472	.63938	.63413	.62896	.62387	.61886	.61392
86	.67636	.67092	.66557	.66030	.65511	.65000	.64496	.64000	.63511	.63030
87	.69081	.68554	.68034	.67522	.67018	.66520	.66031	.65548	.65071	.64602
88	.70468	.69957	.69453	.68956	.68466	.67983	.67507	.67037	.66574	.66117
89	.71821	.71326	.70838	.70357	.69882	.69414	.68952	.68495	.68045	.67601
90	.73153	.72676	.72204	.71739	.71280	.70827	.70379	.69938	.69502	.69071
91	.74447	.73986	.73532	.73083	.72640	.72202	.71770	.71343	.70921	.70504
92	.75669	.75225	.74787	.74354	.73927	.73504	.73087	.72674	.72267	.71864
93	.76807	.76379	.75957	.75540	.75127	.74719	.74317	.73918	.73524	.73135
94	.77849	.77437	.77030	.76627	.76229	.75835	.75446	.75061	.74680	.74303
95	.78792	.78394	.78001	.77611	.77226	.76845	.76468	.76096	.75727	.75362
96	.79630	.79244	.78863	.78485	.78112	.77742	.77377	.77015	.76657	.76303
97	.80391	.80016	.79646	.79280	.78917	.78559	.78203	.77852	.77504	.77160
98	.81076	.80712	.80352	.79996	.79643	.79294	.78948	.78606	.78267	.77931
99	.81709	.81354	.81004	.80657	.80313	.79972	.79635	.79302	.78971	.78644

Age	Interest rate									
	8.2%	8.4%	8.6%	8.8%	9.0%	9.2%	9.4%	9.6%	9.8%	10.0%
100	.82296	.81950	.81609	.81270	.80934	.80602	.80273	.79947	.79624	.79304
101	.82855	.82518	.82185	.81854	.81526	.81201	.80880	.80561	.80245	.79932
102	.83438	.83110	.82785	.82462	.82142	.81826	.81512	.81200	.80892	.80586
103	.84056	.83737	.83420	.83106	.82795	.82487	.82181	.81878	.81577	.81279
104	.84743	.84433	.84127	.83822	.83521	.83221	.82924	.82630	.82338	.82048
105	.85591	.85295	.85001	.84709	.84419	.84132	.83846	.83563	.83282	.83003
106	.86816	.86540	.86266	.85993	.85723	.85454	.85187	.84922	.84659	.84397
107	.88592	.88348	.88105	.87863	.87623	.87384	.87147	.86911	.86676	.86443
108	.91493	.91306	.91119	.90934	.90749	.90566	.90383	.90201	.90020	.89840
109	.96211	.96125	.96041	.95956	.95872	.95788	.95704	.95620	.95537	.95455

Table S—Based on Life Table 80CNSMT Single Life Remainder Factors
[Applicable After April 30, 1989, Before May 1, 1999]

Age	Interest rate									
	10.2%	10.4%	10.6%	10.8%	11.0%	11.2%	11.4%	11.6%	11.8%	12.0%
0	.01891	.01864	.01838	.01814	.01791	.01770	.01750	.01732	.01715	.01698
1	.00770	.00741	.00715	.00690	.00667	.00646	.00626	.00608	.00590	.00574
2	.00751	.00721	.00693	.00667	.00643	.00620	.00600	.00580	.00562	.00544
3	.00760	.00728	.00699	.00671	.00646	.00622	.00600	.00579	.00560	.00541
4	.00786	.00752	.00721	.00692	.00665	.00639	.00616	.00594	.00573	.00554
5	.00824	.00788	.00755	.00724	.00695	.00668	.00643	.00620	.00598	.00578
6	.00869	.00832	.00796	.00764	.00733	.00705	.00678	.00654	.00630	.00608
7	.00923	.00883	.00846	.00811	.00779	.00749	.00720	.00694	.00669	.00646
8	.00986	.00943	.00904	.00867	.00833	.00801	.00771	.00743	.00716	.00692
9	.01059	.01014	.00972	.00933	.00897	.00863	.00831	.00801	.00773	.00747
10	.01142	.01095	.01051	.01009	.00971	.00935	.00901	.00869	.00840	.00812
11	.01239	.01189	.01142	.01098	.01057	.01019	.00983	.00950	.00918	.00889
12	.01345	.01292	.01243	.01197	.01154	.01113	.01075	.01040	.01007	.00975
13	.01457	.01401	.01349	.01300	.01255	.01212	.01172	.01135	.01100	.01067
14	.01567	.01508	.01453	.01402	.01354	.01309	.01267	.01227	.01190	.01155
15	.01672	.01610	.01552	.01498	.01448	.01400	.01356	.01314	.01275	.01238
16	.01772	.01707	.01646	.01589	.01536	.01486	.01439	.01396	.01354	.01315
17	.01866	.01798	.01734	.01674	.01618	.01566	.01516	.01470	.01427	.01386
18	.01958	.01886	.01818	.01755	.01697	.01641	.01590	.01541	.01495	.01452
19	.02050	.01974	.01903	.01837	.01775	.01717	.01662	.01611	.01563	.01517
20	.02143	.02064	.01989	.01919	.01854	.01793	.01735	.01681	.01630	.01582
21	.02238	.02154	.02075	.02002	.01933	.01868	.01807	.01750	.01696	.01646
22	.02336	.02247	.02164	.02087	.02014	.01946	.01882	.01821	.01764	.01711
23	.02438	.02345	.02257	.02176	.02099	.02027	.01959	.01895	.01835	.01778
24	.02550	.02451	.02359	.02273	.02192	.02115	.02044	.01976	.01913	.01853
25	.02673	.02569	.02472	.02381	.02295	.02214	.02138	.02067	.01999	.01936
26	.02811	.02701	.02598	.02502	.02411	.02326	.02246	.02170	.02098	.02031
27	.02965	.02849	.02741	.02639	.02543	.02452	.02367	.02287	.02211	.02140
28	.03134	.03013	.02898	.02790	.02689	.02593	.02503	.02418	.02338	.02262
29	.03322	.03193	.03072	.02958	.02851	.02750	.02654	.02564	.02479	.02398

Age	Interest rate									
	10.2%	10.4%	10.6%	10.8%	11.0%	11.2%	11.4%	11.6%	11.8%	12.0%
30	.03527	.03391	.03264	.03143	.03030	.02923	.02821	.02726	.02635	.02550
31	.03753	.03610	.03475	.03348	.03228	.03115	.03008	.02907	.02811	.02720
32	.04000	.03849	.03707	.03573	.03446	.03326	.03213	.03105	.03004	.02907
33	.04269	.04111	.03961	.03819	.03685	.03558	.03438	.03325	.03217	.03115
34	.04561	.04394	.04236	.04087	.03946	.03812	.03685	.03565	.03451	.03342
35	.04877	.04702	.04535	.04378	.04229	.04087	.03953	.03826	.03706	.03591
36	.05215	.05031	.04856	.04690	.04533	.04384	.04242	.04108	.03980	.03859
37	.05578	.05384	.05200	.05025	.04860	.04703	.04553	.04411	.04276	.04148
38	.05965	.05761	.05568	.05385	.05211	.05045	.04888	.04738	.04595	.04460
39	.06379	.06165	.05962	.05770	.05587	.05412	.05247	.05089	.04939	.04795
40	.06820	.06596	.06383	.06181	.05989	.05806	.05631	.05465	.05307	.05155
41	.07288	.07054	.06832	.06620	.06418	.06226	.06042	.05868	.05701	.05541
42	.07784	.07539	.07306	.07085	.06873	.06671	.06479	.06295	.06119	.05952
43	.08308	.08052	.07808	.07576	.07355	.07143	.06941	.06748	.06564	.06387
44	.08861	.08594	.08340	.08097	.07865	.07644	.07432	.07230	.07036	.06851
45	.09445	.09167	.08901	.08648	.08406	.08174	.07953	.07741	.07538	.07343
46	.10060	.09770	.09494	.09230	.08977	.08735	.08503	.08281	.08068	.07865
47	.10707	.10406	.10119	.09843	.09579	.09327	.09085	.08853	.08630	.08417
48	.11386	.11073	.10774	.10487	.10213	.09949	.09697	.09455	.09222	.08999
49	.12094	.11769	.11458	.11160	.10874	.10600	.10337	.10084	.09842	.09609
50	.12831	.12494	.12172	.11862	.11565	.11280	.11006	.10743	.10490	.10247
51	.13600	.13251	.12917	.12596	.12288	.11991	.11706	.11432	.11169	.10915
52	.14405	.14044	.13698	.13366	.13046	.12738	.12442	.12157	.11883	.11619
53	.15247	.14875	.14517	.14172	.13841	.13522	.13215	.12919	.12635	.12360
54	.16124	.15740	.15370	.15014	.14671	.14341	.14023	.13717	.13421	.13136
55	.17039	.16642	.16261	.15893	.15539	.15198	.14868	.14551	.14244	.13948
56	.17991	.17583	.17190	.16811	.16445	.16092	.15752	.15423	.15106	.14799
57	.18984	.18564	.18160	.17769	.17392	.17029	.16677	.16338	.16010	.15692
58	.20018	.19587	.19172	.18770	.18382	.18007	.17645	.17295	.16956	.16628
59	.21093	.20652	.20225	.19812	.19414	.19028	.18655	.18294	.17945	.17606
60	.22206	.21753	.21316	.20893	.20483	.20087	.19703	.19332	.18972	.18624
61	.23353	.22890	.22442	.22009	.21589	.21182	.20788	.20407	.20037	.19678
62	.24532	.24059	.23601	.23158	.22728	.22311	.21907	.21515	.21135	.20767
63	.25742	.25260	.24793	.24339	.23900	.23473	.23060	.22658	.22268	.21890
64	.26987	.26495	.26019	.25556	.25107	.24671	.24248	.23837	.23438	.23050

Age	Interest rate									
	10.2%	10.4%	10.6%	10.8%	11.0%	11.2%	11.4%	11.6%	11.8%	12.0%
65	.28271	.27771	.27286	.26815	.26357	.25912	.25480	.25059	.24651	.24254
66	.29601	.29093	.28600	.28120	.27654	.27200	.26760	.26331	.25913	.25507
67	.30978	.30462	.29961	.29474	.29000	.28539	.28090	.27653	.27227	.26813
68	.32401	.31879	.31371	.30877	.30396	.29927	.29471	.29027	.28593	.28171
69	.33863	.33336	.32822	.32322	.31835	.31359	.30896	.30445	.30005	.29576
70	.35361	.34829	.34310	.33804	.33311	.32830	.32361	.31903	.31457	.31021
71	.36886	.36349	.35826	.35316	.34818	.34332	.33858	.33394	.32942	.32500
72	.38439	.37899	.37373	.36858	.36356	.35866	.35387	.34919	.34461	.34015
73	.40021	.39479	.38950	.38432	.37927	.37433	.36950	.36478	.36016	.35565
74	.41639	.41096	.40565	.40046	.39538	.39042	.38556	.38081	.37616	.37161
75	.43301	.42758	.42226	.41706	.41198	.40699	.40212	.39734	.39267	.38809
76	.45009	.44467	.43937	.43417	.42908	.42410	.41921	.41443	.40974	.40514
77	.46761	.46221	.45693	.45175	.44667	.44170	.43682	.43203	.42734	.42274
78	.48548	.48013	.47488	.46973	.46468	.45972	.45486	.45009	.44541	.44082
79	.50356	.49826	.49306	.48795	.48294	.47802	.47319	.46845	.46379	.45922
80	.52171	.51647	.51133	.50628	.50132	.49644	.49166	.48695	.48233	.47779
81	.53974	.53457	.52950	.52451	.51961	.51479	.51006	.50541	.50083	.49633
82	.55753	.55245	.54745	.54254	.53771	.53296	.52828	.52369	.51917	.51472
83	.57500	.57001	.56510	.56026	.55551	.55083	.54623	.54170	.53724	.53285
84	.59216	.58726	.58245	.57770	.57304	.56844	.56391	.55945	.55506	.55074
85	.60906	.60428	.59956	.59492	.59034	.58583	.58139	.57702	.57270	.56845
86	.62555	.62088	.61627	.61173	.60725	.60284	.59849	.59420	.58997	.58580
87	.64139	.63683	.63233	.62790	.62352	.61921	.61495	.61076	.60661	.60253
88	.65666	.65221	.64783	.64350	.63923	.63502	.63086	.62675	.62270	.61871
89	.67163	.66730	.66304	.65882	.65466	.65055	.64650	.64249	.63854	.63463
90	.68646	.68226	.67812	.67402	.66998	.66599	.66204	.65814	.65430	.65049
91	.70093	.69686	.69285	.68888	.68496	.68108	.67725	.67347	.66973	.66604
92	.71466	.71073	.70684	.70300	.69920	.69545	.69173	.68806	.68444	.68085
93	.72750	.72370	.71994	.71622	.71254	.70890	.70530	.70174	.69822	.69474
94	.73931	.73562	.73198	.72838	.72481	.72129	.71780	.71434	.71093	.70755
95	.75001	.74644	.74291	.73941	.73595	.73253	.72914	.72579	.72247	.71919
96	.75953	.75606	.75262	.74923	.74586	.74253	.73924	.73598	.73275	.72955
97	.76819	.76481	.76147	.75816	.75489	.75165	.74844	.74526	.74211	.73899
98	.77599	.77270	.76944	.76621	.76302	.75986	.75672	.75362	.75054	.74750
99	.78319	.77998	.77680	.77365	.77053	.76744	.76437	.76134	.75833	.75535

Age	Interest rate									
	10.2%	10.4%	10.6%	10.8%	11.0%	11.2%	11.4%	11.6%	11.8%	12.0%
100	.78987	.78673	.78362	.78054	.77748	.77446	.77146	.76849	.76555	.76263
101	.79622	.79315	.79010	.78708	.78409	.78113	.77819	.77528	.77239	.76953
102	.80283	.79983	.79685	.79390	.79097	.78807	.78519	.78234	.77951	.77671
103	.80983	.80690	.80399	.80111	.79825	.79541	.79260	.78981	.78705	.78430
104	.81760	.81475	.81192	.80912	.80633	.80357	.80083	.79810	.79541	.79273
105	.82726	.82451	.82178	.81907	.81638	.81371	.81106	.80843	.80582	.80322
106	.84137	.83879	.83623	.83368	.83115	.82863	.82614	.82366	.82119	.81874
107	.86211	.85981	.85751	.85523	.85297	.85071	.84847	.84624	.84403	.84182
108	.89660	.89481	.89304	.89127	.88950	.88775	.88601	.88427	.88254	.88081
109	.95372	.95290	.95208	.95126	.95045	.94964	.94883	.94803	.94723	.94643

Table S—Based on Life Table 80CNSMT Single Life Remainder Factors
[Applicable After April 30, 1989, and Before May 1, 1999]

Age	Interest rate									
	12.2%	12.4%	12.6%	12.8%	13.0%	13.2%	13.4%	13.6%	13.8%	14.0%
0	.01683	.01669	.01655	.01642	.01630	.01618	.01607	.01596	.01586	.01576
1	.00559	.00544	.00531	.00518	.00506	.00494	.00484	.00473	.00464	.00454
2	.00528	.00513	.00499	.00485	.00473	.00461	.00449	.00439	.00428	.00419
3	.00524	.00508	.00493	.00479	.00465	.00453	.00441	.00429	.00419	.00408
4	.00536	.00519	.00503	.00488	.00473	.00460	.00447	.00435	.00423	.00412
5	.00558	.00540	.00523	.00507	.00492	.00477	.00464	.00451	.00439	.00427
6	.00588	.00569	.00550	.00533	.00517	.00502	.00487	.00473	.00460	.00448
7	.00624	.00604	.00584	.00566	.00549	.00532	.00517	.00502	.00488	.00475
8	.00668	.00646	.00626	.00606	.00588	.00570	.00554	.00538	.00523	.00509
9	.00722	.00699	.00677	.00656	.00636	.00617	.00600	.00583	.00567	.00552
10	.00785	.00761	.00737	.00715	.00694	.00674	.00655	.00637	.00620	.00604
11	.00861	.00835	.00810	.00786	.00764	.00743	.00723	.00704	.00686	.00668
12	.00946	.00918	.00891	.00866	.00843	.00820	.00799	.00779	.00760	.00741
13	.01035	.01006	.00978	.00951	.00927	.00903	.00880	.00859	.00839	.00819
14	.01122	.01091	.01061	.01034	.01007	.00982	.00958	.00936	.00914	.00894
15	.01203	.01171	.01140	.01110	.01082	.01056	.01031	.01007	.00985	.00963
16	.01279	.01244	.01211	.01181	.01151	.01123	.01097	.01072	.01048	.01025
17	.01347	.01311	.01276	.01244	.01213	.01184	.01156	.01130	.01104	.01081
18	.01411	.01373	.01336	.01302	.01270	.01239	.01210	.01182	.01155	.01130
19	.01474	.01434	.01396	.01359	.01325	.01293	.01262	.01233	.01205	.01178
20	.01537	.01494	.01454	.01415	.01379	.01345	.01313	.01282	.01252	.01224
21	.01598	.01553	.01510	.01470	.01432	.01396	.01361	.01329	.01298	.01268
22	.01660	.01613	.01568	.01525	.01485	.01446	.01410	.01375	.01343	.01312
23	.01725	.01674	.01627	.01581	.01539	.01498	.01460	.01423	.01388	.01355
24	.01796	.01742	.01692	.01644	.01599	.01556	.01515	.01476	.01439	.01404
25	.01876	.01819	.01765	.01714	.01666	.01621	.01577	.01536	.01497	.01460
26	.01967	.01907	.01850	.01796	.01745	.01696	.01650	.01606	.01565	.01525
27	.02072	.02008	.01948	.01890	.01836	.01784	.01735	.01688	.01644	.01601
28	.02190	.02122	.02057	.01996	.01938	.01883	.01831	.01781	.01734	.01689
29	.02322	.02249	.02181	.02116	.02054	.01996	.01940	.01887	.01836	.01788

Age	Interest rate									
	12.2%	12.4%	12.6%	12.8%	13.0%	13.2%	13.4%	13.6%	13.8%	14.0%
30	.02469	.02392	.02319	.02250	.02184	.02122	.02062	.02006	.01952	.01900
31	.02634	.02552	.02475	.02401	.02331	.02264	.02201	.02140	.02083	.02028
32	.02816	.02729	.02647	.02568	.02494	.02423	.02355	.02291	.02229	.02170
33	.03018	.02926	.02838	.02755	.02675	.02600	.02528	.02459	.02393	.02331
34	.03239	.03142	.03048	.02960	.02875	.02795	.02718	.02645	.02575	.02508
35	.03482	.03378	.03279	.03185	.03095	.03009	.02928	.02850	.02775	.02704
36	.03743	.03633	.03528	.03428	.03333	.03242	.03155	.03072	.02992	.02916
37	.04026	.03909	.03798	.03692	.03591	.03494	.03401	.03313	.03228	.03147
38	.04330	.04207	.04089	.03977	.03869	.03767	.03668	.03574	.03484	.03398
39	.04658	.04528	.04403	.04284	.04170	.04061	.03957	.03857	.03762	.03670
40	.05011	.04873	.04741	.04615	.04495	.04379	.04269	.04163	.04061	.03964
41	.05389	.05244	.05104	.04971	.04844	.04721	.04604	.04492	.04384	.04281
42	.05791	.05638	.05491	.05350	.05216	.05086	.04962	.04844	.04729	.04620
43	.06219	.06057	.05902	.05754	.05612	.05475	.05344	.05218	.05098	.04981
44	.06673	.06503	.06340	.06184	.06034	.05890	.05752	.05619	.05491	.05368
45	.07157	.06978	.06806	.06642	.06484	.06332	.06186	.06046	.05911	.05781
46	.07669	.07481	.07301	.07128	.06962	.06802	.06649	.06501	.06358	.06221
47	.08212	.08015	.07826	.07645	.07470	.07302	.07140	.06984	.06834	.06690
48	.08784	.08578	.08380	.08190	.08006	.07830	.07660	.07496	.07338	.07186
49	.09384	.09169	.08961	.08762	.08570	.08384	.08206	.08034	.07868	.07708
50	.10013	.09787	.09570	.09361	.09160	.08966	.08779	.08598	.08424	.08256
51	.10671	.10436	.10209	.09991	.09780	.09577	.09381	.09192	.09009	.08832
52	.11365	.11120	.10883	.10655	.10435	.10222	.10017	.09819	.09628	.09442
53	.12095	.11840	.11593	.11355	.11126	.10904	.10689	.10482	.10282	.10088
54	.12860	.12595	.12338	.12090	.11851	.11619	.11396	.11179	.10970	.10767
55	.13663	.13386	.13120	.12862	.12613	.12372	.12138	.11912	.11694	.11482
56	.14503	.14217	.13940	.13672	.13413	.13162	.12919	.12683	.12456	.12235
57	.15385	.15089	.14801	.14523	.14254	.13994	.13741	.13496	.13259	.13029
58	.16311	.16004	.15706	.15418	.15139	.14868	.14606	.14352	.14105	.13866
59	.17279	.16961	.16654	.16355	.16066	.15786	.15514	.15250	.14994	.14745
60	.18286	.17958	.17640	.17332	.17033	.16743	.16462	.16188	.15922	.15664
61	.19330	.18992	.18665	.18347	.18038	.17738	.17447	.17164	.16889	.16622
62	.20409	.20061	.19724	.19396	.19078	.18768	.18467	.18175	.17891	.17614
63	.21522	.21165	.20818	.20480	.20152	.19833	.19523	.19221	.18928	.18642
64	.22672	.22306	.21949	.21602	.21265	.20937	.20617	.20306	.20003	.19708

Age	Interest rate									
	12.2%	12.4%	12.6%	12.8%	13.0%	13.2%	13.4%	13.6%	13.8%	14.0%
65	.23867	.23491	.23125	.22769	.22423	.22085	.21757	.21437	.21125	.20821
66	.25112	.24727	.24353	.23988	.23632	.23286	.22948	.22619	.22299	.21986
67	.26409	.26016	.25633	.25260	.24896	.24541	.24195	.23857	.23528	.23206
68	.27760	.27359	.26968	.26586	.26214	.25851	.25497	.25151	.24814	.24484
69	.29157	.28748	.28350	.27961	.27581	.27211	.26849	.26495	.26150	.25812
70	.30596	.30181	.29775	.29379	.28992	.28614	.28245	.27884	.27532	.27187
71	.32069	.31648	.31236	.30833	.30440	.30055	.29679	.29312	.28952	.28600
72	.33578	.33151	.32733	.32325	.31925	.31535	.31152	.30778	.30412	.30054
73	.35123	.34691	.34269	.33855	.33450	.33054	.32666	.32286	.31914	.31550
74	.36715	.36279	.35852	.35434	.35024	.34623	.34230	.33845	.33468	.33098
75	.38360	.37921	.37491	.37069	.36656	.36250	.35853	.35464	.35082	.34708
76	.40064	.39623	.39190	.38765	.38349	.37941	.37540	.37148	.36762	.36384
77	.41823	.41381	.40947	.40521	.40103	.39692	.39290	.38895	.38507	.38126
78	.43632	.43189	.42755	.42329	.41910	.41499	.41095	.40698	.40309	.39926
79	.45473	.45032	.44599	.44173	.43755	.43344	.42940	.42543	.42153	.41770
80	.47333	.46894	.46463	.46040	.45623	.45213	.44811	.44414	.44025	.43642
81	.49191	.48755	.48328	.47907	.47493	.47085	.46684	.46290	.45902	.45520
82	.51034	.50603	.50179	.49762	.49351	.48947	.48549	.48157	.47772	.47392
83	.52852	.52427	.52008	.51595	.51189	.50788	.50394	.50006	.49623	.49246
84	.54648	.54228	.53815	.53407	.53006	.52610	.52221	.51836	.51458	.51084
85	.56426	.56013	.55606	.55205	.54810	.54420	.54035	.53656	.53282	.52913
86	.58169	.57764	.57364	.56970	.56581	.56197	.55818	.55445	.55076	.54713
87	.59850	.59452	.59060	.58673	.58291	.57913	.57541	.57174	.56811	.56453
88	.61476	.61086	.60702	.60322	.59947	.59577	.59212	.58851	.58494	.58142
89	.63078	.62697	.62321	.61950	.61583	.61220	.60862	.60508	.60159	.59813
90	.64674	.64302	.63935	.63573	.63215	.62861	.62511	.62165	.61823	.61485
91	.66238	.65877	.65520	.65167	.64819	.64474	.64133	.63795	.63462	.63132
92	.67730	.67379	.67032	.66689	.66350	.66014	.65682	.65354	.65029	.64708
93	.69130	.68789	.68452	.68119	.67789	.67463	.67140	.66820	.66504	.66191
94	.70421	.70090	.69762	.69438	.69118	.68800	.68486	.68175	.67867	.67563
95	.71594	.71272	.70954	.70639	.70326	.70017	.69712	.69409	.69109	.68812
96	.72638	.72325	.72014	.71707	.71403	.71101	.70803	.70507	.70215	.69925
97	.73590	.73285	.72982	.72682	.72385	.72090	.71799	.71510	.71224	.70941
98	.74448	.74149	.73853	.73560	.73269	.72981	.72696	.72414	.72134	.71856
99	.75240	.74948	.74658	.74371	.74086	.73805	.73525	.73248	.72974	.72702

Age	Interest rate									
	12.2%	12.4%	12.6%	12.8%	13.0%	13.2%	13.4%	13.6%	13.8%	14.0%
100	.75974	.75687	.75403	.75121	.74842	.74566	.74292	.74020	.73751	.73484
101	.76669	.76388	.76109	.75833	.75559	.75287	.75018	.74751	.74486	.74223
102	.77393	.77117	.76844	.76573	.76304	.76037	.75773	.75511	.75251	.74993
103	.78158	.77888	.77620	.77355	.77091	.76830	.76571	.76313	.76058	.75805
104	.79007	.78743	.78482	.78222	.77964	.77709	.77455	.77203	.76953	.76705
105	.80065	.79809	.79556	.79304	.79054	.78805	.78559	.78314	.78071	.77829
106	.81631	.81389	.81149	.80911	.80674	.80438	.80204	.79972	.79741	.79511
107	.83963	.83745	.83529	.83313	.83099	.82886	.82674	.82463	.82254	.82045
108	.87910	.87739	.87569	.87400	.87232	.87064	.86897	.86731	.86566	.86401
109	.94563	.94484	.94405	.94326	.94248	.94170	.94092	.94014	.93937	.93860

(f) ***Present value of the remainder interest in the case of transfers to pooled income funds for which the valuation date is after April 30, 1999, and before May 1, 2009*** —

(1) ***In general.*** In the case of transfers to pooled income funds for which the valuation date is after April 30, 1999, and before May 1, 2009, the present value of a remainder interest is determined under this section. See, however, § 1.7520-3(b) (relating to exceptions to the use of prescribed tables under certain circumstances). The present value of a remainder interest that is dependent on the termination of the life of one individual is computed by the use of Table S in paragraph (f)(6) of this section. For purposes of the computations under this section, the age of an individual is the age at the individual's nearest birthday.

(2) ***Transitional rules for valuation of transfers to pooled income funds.***

(i) For purposes of sections 2055, 2106, or 2624, if on May 1, 1999, the decedent was mentally incompetent so that the disposition of the property could not be changed, and the decedent died after April 30, 1999, without having regained competency to dispose of the decedent's property, or the decedent died within 90 days of the date that the decedent first regained competency after April 30, 1999, the present value of a remainder interest is determined as if the valuation date with respect to the decedent's gross estate is either before May 1, 1999, or after April 30, 1999, at the option of the decedent's executor.

(ii) For purposes of sections 170, 2055, 2106, 2522, or 2624, in the case of transfers to a pooled income fund for which the valuation date is after April 30, 1999, and before July 1, 1999, the present value of the remainder interest under this section is determined by use of the section 7520 interest rate for the month in which the valuation date occurs (see §§ 1.7520-1(b) and 1.7520-2(a)(2)) and the appropriate actuarial tables under either paragraph (e)(5) or (f)(6) of this section, at the option of the donor or the decedent's executor, as the case may be.

(iii) For purposes of paragraphs (f)(2)(i) and (f)(2)(ii) of this section, where the donor or decedent's executor is given the option to use the appropriate actuarial tables under either paragraph (e)(5) or (f)(6) of this section, the donor or decedent's executor must use the same actuarial table with respect to each individual transaction and with respect to all transfers occurring on the valuation date (for example, gift and income tax charitable deductions with respect to the same transfer must be determined based on the same tables, and all assets includible in the gross estate and/or estate tax deductions claimed must be valued based on the same tables).

(3) ***Present value of a remainder interest.*** The present value of a remainder interest in property transferred to a pooled income fund is computed on the basis of—

(i) Life contingencies determined from the values of *lx* that are set forth in Table 90CM in § 20.2031-7A(f)(4); and

(ii) Discount at a rate of interest, compounded annually, equal to the highest yearly rate of return of the pooled income fund for the 3 taxable years immediately preceding its taxable year in which the transfer of property to the fund is made. The provisions of § 1.642(c)-6(c) apply for determining the yearly rate of return. However, where the taxable year is less than 12 months, the provisions of § 1.642(c)-6(e)(3)(ii) apply for the determining the yearly rate of return.

(4) ***Pooled income funds in existence less than 3 taxable years.*** The provisions of § 1.642(c)-6(e)(4) apply for determining the highest yearly rate of return when the pooled income fund has been in existence less than 3 taxable years.

(5) ***Computation of value of remainder interest.*** The factor that is used in determining the present value of a remainder interest that is dependent on the termination of the life of one individual is the factor from Table S in paragraph (f)(6) of this section under the appropriate yearly rate of return opposite the number that corresponds to the age of the individual upon whose life the value of the remainder interest is based. Table S in paragraph (f)(6) of this section includes factors for yearly rates of return from 4.2 to 14 percent. Many actuarial factors not contained in Table S in paragraph (f)(6) of this section are contained in Table S in Internal Revenue Service Publication 1457, "Actuarial Values, Book Aleph," (7-99). Publication 1457 is no longer available for purchase from the Superintendent of Documents, United States Government Printing Office. However, pertinent factors in this publication may be obtained by a written request to: CC:PA:LPD:PR (IRS Publication 1457), Room 5205, Internal Revenue Service, P.O. Box 7604, Ben Franklin Station, Washington, DC 20044. For other situations, see § 1.642(c)-6(b). If the yearly rate of return is a percentage that is between the yearly rates of return for which factors are provided, a linear interpolation must be made. The present value of the remainder interest is determined by multiplying the fair market value of the property on the valuation date by the appropriate remainder factor. For an example of a computation of the present value of a remainder interest requiring a linear interpolation adjustment, see § 1.642(c)-6(e)(5).

(6) ***Actuarial tables.*** In the case of transfers for which the valuation date is after April 30, 1999, and before May 1, 2009, the present value of a remainder interest dependent on the termination of one life in the case of a transfer to a pooled income fund is determined by use of the following tables:

Table S—Based on Life Table 90CM Single Life Remainder Factors [Applicable After April 30, 1999, and Before May 1, 2009]

Age	Interest rate									
	4.2%	4.4%	4.6%	4.8%	5.0%	5.2%	5.4%	5.6%	5.8%	6.0%
0	.06752	.06130	.05586	.05109	.04691	.04322	.03998	.03711	.03458	.03233
1	.06137	.05495	.04932	.04438	.04003	.03620	.03283	.02985	.02721	.02487
2	.06325	.05667	.05088	.04580	.04132	.03737	.03388	.03079	.02806	.02563
3	.06545	.05869	.05275	.04752	.04291	.03883	.03523	.03203	.02920	.02668
4	.06784	.06092	.05482	.04944	.04469	.04048	.03676	.03346	.03052	.02791
5	.07040	.06331	.05705	.05152	.04662	.04229	.03845	.03503	.03199	.02928
6	.07310	.06583	.05941	.05372	.04869	.04422	.04025	.03672	.03357	.03076
7	.07594	.06849	.06191	.05607	.05089	.04628	.04219	.03854	.03528	.03236
8	.07891	.07129	.06453	.05853	.05321	.04846	.04424	.04046	.03709	.03407
9	.08203	.07423	.06731	.06115	.05567	.05079	.04643	.04253	.03904	.03592
10	.08532	.07734	.07024	.06392	.05829	.05326	.04877	.04474	.04114	.03790
11	.08875	.08059	.07331	.06683	.06104	.05587	.05124	.04709	.04336	.04002
12	.09233	.08398	.07653	.06989	.06394	.05862	.05385	.04957	.04572	.04226
13	.09601	.08748	.07985	.07304	.06693	.06146	.05655	.05214	.04816	.04458
14	.09974	.09102	.08322	.07624	.06997	.06435	.05929	.05474	.05064	.04694
15	.10350	.09460	.08661	.07946	.07303	.06725	.06204	.05735	.05312	.04930
16	.10728	.09818	.09001	.08268	.07608	.07014	.06479	.05996	.05559	.05164
17	.11108	.10179	.09344	.08592	.07916	.07306	.06755	.06257	.05807	.05399
18	.11494	.10545	.09691	.08921	.08227	.07601	.07034	.06521	.06057	.05636
19	.11889	.10921	.10047	.09259	.08548	.07904	.07322	.06794	.06315	.05880
20	.12298	.11310	.10417	.09610	.08881	.08220	.07622	.07078	.06584	.06135
21	.12722	.11713	.10801	.09976	.09228	.08550	.07935	.07375	.06866	.06403
22	.13159	.12130	.11199	.10354	.09588	.08893	.08260	.07685	.07160	.06682
23	.13613	.12563	.11612	.10748	.09964	.09250	.08601	.08009	.07468	.06975
24	.14084	.13014	.12043	.11160	.10357	.09625	.08958	.08349	.07793	.07284
25	.14574	.13484	.12493	.11591	.10768	.10018	.09334	.08708	.08135	.07611
26	.15084	.13974	.12963	.12041	.11199	.10431	.09728	.09085	.08496	.07956
27	.15615	.14485	.13454	.12513	.11652	.10865	.10144	.09484	.08878	.08322
28	.16166	.15016	.13965	.13004	.12124	.11319	.10580	.09901	.09279	.08706
29	.16737	.15567	.14497	.13516	.12617	.11792	.11035	.10339	.09699	.09109
30	.17328	.16138	.15048	.14047	.13129	.12286	.11510	.10796	.10138	.09532

Age	Interest rate									
	4.2%	4.4%	4.6%	4.8%	5.0%	5.2%	5.4%	5.6%	5.8%	6.0%
31	.17938	.16728	.15618	.14599	.13661	.12799	.12004	.11272	.10597	.09974
32	.18568	.17339	.16210	.15171	.14214	.13333	.12520	.11769	.11076	.10435
33	.19220	.17972	.16824	.15766	.14790	.13889	.13058	.12289	.11578	.10920
34	.19894	.18627	.17460	.16383	.15388	.14468	.13618	.12831	.12102	.11426
35	.20592	.19307	.18121	.17025	.16011	.15073	.14204	.13399	.12652	.11958
36	.21312	.20010	.18805	.17691	.16658	.15701	.14814	.13990	.13225	.12514
37	.22057	.20737	.19514	.18382	.17331	.16356	.15450	.14608	.13825	.13096
38	.22827	.21490	.20251	.19100	.18031	.17038	.16113	.15253	.14452	.13705
39	.23623	.22270	.21013	.19845	.18759	.17747	.16805	.15927	.15108	.14344
40	.24446	.23078	.21805	.20620	.19516	.18487	.17527	.16631	.15795	.15013
41	.25298	.23915	.22626	.21425	.20305	.19259	.18282	.17368	.16514	.15715
42	.26178	.24782	.23478	.22262	.21125	.20062	.19069	.18138	.17267	.16450
43	.27087	.25678	.24360	.23129	.21977	.20898	.19888	.18941	.18053	.17220
44	.28025	.26603	.25273	.24027	.22860	.21766	.20740	.19777	.18873	.18023
45	.28987	.27555	.26212	.24953	.23772	.22664	.21622	.20644	.19724	.18858
46	.29976	.28533	.27179	.25908	.24714	.23591	.22536	.21542	.20606	.19725
47	.30987	.29535	.28171	.26889	.25682	.24546	.23476	.22468	.21518	.20621
48	.32023	.30563	.29190	.27897	.26678	.25530	.24447	.23425	.22460	.21549
49	.33082	.31615	.30234	.28931	.27702	.26543	.25447	.24412	.23434	.22509
50	.34166	.32694	.31306	.29995	.28756	.27586	.26479	.25432	.24441	.23502
51	.35274	.33798	.32404	.31085	.29838	.28658	.27541	.26482	.25479	.24528
52	.36402	.34924	.33525	.32200	.30946	.29757	.28630	.27561	.26547	.25584
53	.37550	.36070	.34668	.33339	.32078	.30882	.29746	.28667	.27643	.26669
54	.38717	.37237	.35833	.34500	.33234	.32031	.30888	.29801	.28766	.27782
55	.39903	.38424	.37019	.35683	.34413	.33205	.32056	.30961	.29918	.28925
56	.41108	.39631	.38227	.36890	.35617	.34405	.33250	.32149	.31099	.30097
57	.42330	.40857	.39455	.38118	.36844	.35629	.34469	.33363	.32306	.31297
58	.43566	.42098	.40699	.39364	.38089	.36873	.35710	.34600	.33538	.32522
59	.44811	.43351	.41956	.40623	.39350	.38133	.36968	.35855	.34789	.33768
60	.46066	.44613	.43224	.41896	.40624	.39408	.38243	.37127	.36058	.35033
61	.47330	.45887	.44505	.43182	.41914	.40699	.39535	.38418	.37347	.36318
62	.48608	.47175	.45802	.44485	.43223	.42011	.40848	.39732	.38660	.37629
63	.49898	.48478	.47115	.45807	.44550	.43343	.42184	.41069	.39997	.38966
64	.51200	.49793	.48442	.47143	.45895	.44694	.43539	.42427	.41357	.40326
65	.52512	.51121	.49782	.48495	.47255	.46062	.44912	.43805	.42738	.41709

Age	Interest rate									
	4.2%	4.4%	4.6%	4.8%	5.0%	5.2%	5.4%	5.6%	5.8%	6.0%
66	.53835	.52461	.51137	.49862	.48634	.47449	.46307	.45206	.44143	.43118
67	.55174	.53818	.52511	.51250	.50034	.48860	.47727	.46633	.45576	.44556
68	.56524	.55188	.53899	.52654	.51452	.50291	.49168	.48083	.47034	.46020
69	.57882	.56568	.55299	.54071	.52885	.51737	.50627	.49552	.48513	.47506
70	.59242	.57951	.56703	.55495	.54325	.53193	.52096	.51034	.50004	.49007
71	.60598	.59332	.58106	.56918	.55767	.54651	.53569	.52520	.51503	.50516
72	.61948	.60707	.59504	.58338	.57206	.56108	.55043	.54009	.53004	.52029
73	.63287	.62073	.60895	.59751	.58640	.57561	.56513	.55495	.54505	.53543
74	.64621	.63435	.62282	.61162	.60073	.59015	.57985	.56984	.56009	.55061
75	.65953	.64796	.63671	.62575	.61510	.60473	.59463	.58480	.57523	.56591
76	.67287	.66160	.65063	.63995	.62954	.61940	.60952	.59989	.59050	.58135
77	.68622	.67526	.66459	.65419	.64404	.63415	.62450	.61509	.60590	.59694
78	.69954	.68892	.67856	.66845	.65858	.64895	.63955	.63036	.62140	.61264
79	.71278	.70250	.69246	.68265	.67308	.66372	.65457	.64563	.63690	.62836
80	.72581	.71588	.70618	.69668	.68740	.67833	.66945	.66077	.65227	.64396
81	.73857	.72899	.71962	.71045	.70147	.69268	.68408	.67566	.66741	.65933
82	.75101	.74178	.73274	.72389	.71522	.70672	.69840	.69024	.68225	.67441
83	.76311	.75423	.74553	.73700	.72864	.72044	.71240	.70451	.69678	.68919
84	.77497	.76645	.75809	.74988	.74183	.73393	.72618	.71857	.71110	.70377
85	.78665	.77848	.77047	.76260	.75487	.74728	.73982	.73250	.72530	.71823
86	.79805	.79025	.78258	.77504	.76764	.76036	.75320	.74617	.73925	.73245
87	.80904	.80159	.79427	.78706	.77998	.77301	.76615	.75940	.75277	.74624
88	.81962	.81251	.80552	.79865	.79188	.78521	.77865	.77220	.76584	.75958
89	.82978	.82302	.81636	.80980	.80335	.79699	.79072	.78455	.77847	.77248
90	.83952	.83309	.82676	.82052	.81437	.80831	.80234	.79645	.79064	.78492
91	.84870	.84260	.83658	.83064	.82479	.81902	.81332	.80771	.80217	.79671
92	.85716	.85136	.84563	.83998	.83441	.82891	.82348	.81812	.81283	.80761
93	.86494	.85942	.85396	.84858	.84326	.83801	.83283	.82771	.82266	.81767
94	.87216	.86690	.86170	.85657	.85149	.84648	.84153	.83664	.83181	.82704
95	.87898	.87397	.86902	.86412	.85928	.85450	.84977	.84510	.84049	.83592
96	.88537	.88060	.87587	.87121	.86659	.86203	.85751	.85305	.84864	.84427
97	.89127	.88672	.88221	.87775	.87335	.86898	.86467	.86040	.85618	.85200
98	.89680	.89245	.88815	.88389	.87968	.87551	.87138	.86730	.86326	.85926
99	.90217	.89803	.89393	.88987	.88585	.88187	.87793	.87402	.87016	.86633
100	.90738	.90344	.89953	.89567	.89183	.88804	.88428	.88056	.87687	.87322

Age	Interest rate									
	4.2%	4.4%	4.6%	4.8%	5.0%	5.2%	5.4%	5.6%	5.8%	6.0%
101	.91250	.90876	.90504	.90137	.89772	.89412	.89054	.88699	.88348	.88000
102	.91751	.91396	.91045	.90696	.90350	.90007	.89668	.89331	.88997	.88666
103	.92247	.91912	.91579	.91249	.90922	.90598	.90276	.89957	.89640	.89326
104	.92775	.92460	.92148	.91839	.91532	.91227	.90924	.90624	.90326	.90031
105	.93290	.92996	.92704	.92415	.92127	.91841	.91558	.91276	.90997	.90719
106	.93948	.93680	.93415	.93151	.92889	.92628	.92370	.92113	.91857	.91604
107	.94739	.94504	.94271	.94039	.93808	.93579	.93351	.93124	.92899	.92675
108	.95950	.95767	.95585	.95404	.95224	.95045	.94867	.94689	.94512	.94336
109	.97985	.97893	.97801	.97710	.97619	.97529	.97438	.97348	.97259	.97170

Table S—Based on Life Table 90CM Single Life Remainder Factors [Applicable After April 30, 1999, and Before May 1, 2009]

Age	Interest rate									
	6.2%	6.4%	6.6%	6.8%	7.0%	7.2%	7.4%	7.6%	7.8%	8.0%
0	.03034	.02857	.02700	.02559	.02433	.02321	.02220	.02129	.02047	.01973
1	.02279	.02094	.01929	.01782	.01650	.01533	.01427	.01331	.01246	.01168
2	.02347	.02155	.01983	.01829	.01692	.01569	.01458	.01358	.01268	.01187
3	.02444	.02243	.02065	.01905	.01761	.01632	.01516	.01412	.01317	.01232
4	.02558	.02349	.02163	.01996	.01846	.01712	.01590	.01481	.01382	.01292
5	.02686	.02469	.02275	.02101	.01945	.01804	.01677	.01562	.01458	.01364
6	.02825	.02600	.02398	.02217	.02053	.01906	.01773	.01653	.01544	.01445
7	.02976	.02742	.02532	.02343	.02172	.02019	.01880	.01754	.01640	.01536
8	.03137	.02894	.02675	.02479	.02301	.02140	.01995	.01864	.01744	.01635
9	.03311	.03059	.02832	.02627	.02442	.02274	.02122	.01985	.01859	.01745
10	.03499	.03237	.03001	.02788	.02595	.02420	.02262	.02118	.01987	.01867
11	.03700	.03428	.03183	.02961	.02760	.02578	.02413	.02262	.02125	.02000
12	.03913	.03632	.03377	.03146	.02937	.02748	.02575	.02418	.02275	.02144
13	.04135	.03843	.03579	.03339	.03122	.02924	.02744	.02580	.02431	.02294
14	.04359	.04057	.03783	.03534	.03308	.03102	.02915	.02744	.02587	.02444
15	.04584	.04270	.03986	.03728	.03493	.03279	.03083	.02905	.02742	.02593
16	.04806	.04482	.04187	.03919	.03674	.03452	.03248	.03063	.02892	.02736
17	.05029	.04692	.04387	.04108	.03855	.03623	.03411	.03218	.03040	.02877
18	.05253	.04905	.04588	.04299	.04036	.03795	.03574	.03373	.03187	.03017
19	.05484	.05124	.04796	.04496	.04222	.03972	.03742	.03532	.03339	.03161
20	.05726	.05354	.05013	.04702	.04418	.04158	.03919	.03700	.03498	.03313
21	.05980	.05595	.05242	.04920	.04625	.04354	.04105	.03877	.03667	.03473
22	.06246	.05847	.05482	.05147	.04841	.04559	.04301	.04063	.03844	.03642
23	.06524	.06112	.05734	.05387	.05069	.04777	.04508	.04260	.04032	.03821
24	.06819	.06392	.06001	.05642	.05312	.05008	.04728	.04470	.04232	.04012
25	.07131	.06690	.06285	.05913	.05570	.05255	.04964	.04695	.04447	.04218
26	.07460	.07005	.06586	.06200	.05845	.05518	.05215	.04936	.04677	.04438
27	.07810	.07340	.06907	.06508	.06140	.05800	.05485	.05195	.04925	.04676
28	.08179	.07693	.07246	.06833	.06451	.06098	.05772	.05469	.05189	.04929
29	.08566	.08065	.07603	.07176	.06780	.06414	.06075	.05761	.05469	.05198
30	.08973	.08456	.07978	.07536	.07127	.06748	.06396	.06069	.05766	.05483

Age	Interest rate									
	6.2%	6.4%	6.6%	6.8%	7.0%	7.2%	7.4%	7.6%	7.8%	8.0%
31	.09398	.08865	.08372	.07915	.07491	.07098	.06733	.06394	.06078	.05785
32	.09843	.09294	.08785	.08313	.07875	.07468	.07089	.06737	.06409	.06103
33	.10310	.09745	.09220	.08732	.08279	.07858	.07466	.07100	.06759	.06441
34	.10799	.10217	.09676	.09173	.08705	.08269	.07862	.07483	.07129	.06798
35	.11314	.10715	.10157	.09638	.09155	.08704	.08283	.07890	.07522	.07179
36	.11852	.11236	.10662	.10127	.09628	.09162	.08726	.08319	.07938	.07581
37	.12416	.11783	.11193	.10641	.10126	.09645	.09194	.08772	.08377	.08006
38	.13009	.12359	.11751	.11183	.10652	.10155	.09689	.09253	.08843	.08459
39	.13629	.12962	.12338	.11753	.11206	.10693	.10212	.09761	.09337	.08938
40	.14281	.13597	.12955	.12355	.11791	.11262	.10766	.10299	.09860	.09447
41	.14966	.14264	.13606	.12989	.12409	.11864	.11352	.10870	.10417	.09989
42	.15685	.14966	.14291	.13657	.13061	.12500	.11972	.11475	.11006	.10564
43	.16437	.15702	.15010	.14360	.13747	.13171	.12627	.12115	.11631	.11174
44	.17224	.16472	.15764	.15098	.14469	.13876	.13317	.12789	.12290	.11819
45	.18042	.17274	.16550	.15867	.15223	.14615	.14040	.13496	.12982	.12496
46	.18893	.18110	.17370	.16671	.16011	.15387	.14796	.14238	.13708	.13207
47	.19775	.18975	.18220	.17505	.16830	.16190	.15584	.15010	.14466	.13950
48	.20688	.19873	.19102	.18373	.17682	.17027	.16406	.15817	.15258	.14727
49	.21633	.20804	.20018	.19274	.18568	.17898	.17262	.16658	.16084	.15539
50	.22612	.21769	.20969	.20210	.19490	.18805	.18155	.17536	.16948	.16388
51	.23625	.22769	.21955	.21182	.20448	.19749	.19084	.18452	.17849	.17275
52	.24669	.23799	.22973	.22186	.21438	.20726	.20047	.19400	.18784	.18196
53	.25742	.24861	.24022	.23222	.22461	.21735	.21043	.20383	.19753	.19151
54	.26845	.25952	.25101	.24290	.23516	.22777	.22072	.21399	.20756	.20140
55	.27978	.27074	.26212	.25389	.24604	.23853	.23136	.22450	.21793	.21166
56	.29140	.28227	.27355	.26522	.25725	.24963	.24233	.23535	.22867	.22227
57	.30333	.29411	.28529	.27686	.26879	.26106	.25365	.24656	.23976	.23324
58	.31551	.30621	.29731	.28878	.28061	.27278	.26528	.25807	.25116	.24453
59	.32790	.31854	.30956	.30095	.29269	.28477	.27716	.26986	.26284	.25610
60	.34050	.33107	.32202	.31334	.30500	.29699	.28929	.28190	.27478	.26794
61	.35331	.34384	.33473	.32598	.31757	.30948	.30170	.29422	.28701	.28007
62	.36639	.35688	.34772	.33892	.33044	.32229	.31443	.30687	.29958	.29255
63	.37974	.37020	.36101	.35216	.34363	.33542	.32750	.31986	.31250	.30539
64	.39334	.38378	.37456	.36568	.35711	.34884	.34087	.33317	.32574	.31857
65	.40718	.39761	.38838	.37947	.37087	.36257	.35455	.34681	.33932	.33208

Age	Interest rate									
	6.2%	6.4%	6.6%	6.8%	7.0%	7.2%	7.4%	7.6%	7.8%	8.0%
66	.42128	.41172	.40249	.39357	.38496	.37663	.36858	.36079	.35326	.34597
67	.43569	.42616	.41694	.40803	.39941	.39107	.38299	.37518	.36761	.36028
68	.45038	.44089	.43170	.42281	.41419	.40585	.39777	.38994	.38235	.37499
69	.46531	.45587	.44672	.43786	.42927	.42094	.41286	.40503	.39743	.39006
70	.48040	.47103	.46194	.45312	.44456	.43626	.42820	.42038	.41278	.40540
71	.49558	.48629	.47727	.46851	.46000	.45174	.44371	.43591	.42832	.42095
72	.51082	.50162	.49268	.48399	.47554	.46733	.45934	.45157	.44401	.43666
73	.52607	.51697	.50813	.49952	.49114	.48299	.47506	.46733	.45981	.45249
74	.54139	.53241	.52367	.51515	.50686	.49879	.49092	.48325	.47578	.46849
75	.55683	.54798	.53936	.53095	.52276	.51477	.50698	.49938	.49197	.48474
76	.57243	.56373	.55524	.54696	.53888	.53100	.52330	.51579	.50846	.50130
77	.58819	.57965	.57132	.56318	.55523	.54747	.53988	.53247	.52523	.51815
78	.60408	.59572	.58755	.57957	.57177	.56414	.55668	.54939	.54225	.53527
79	.62001	.61184	.60385	.59604	.58840	.58092	.57360	.56644	.55943	.55256
80	.63582	.62786	.62007	.61244	.60497	.59765	.59048	.58347	.57659	.56985
81	.65142	.64367	.63608	.62864	.62135	.61421	.60721	.60034	.59361	.58701
82	.66673	.65920	.65182	.64458	.63748	.63052	.62368	.61698	.61041	.60395
83	.68175	.67444	.66728	.66024	.65334	.64656	.63991	.63338	.62696	.62066
84	.69657	.68950	.68256	.67574	.66904	.66246	.65599	.64964	.64340	.63727
85	.71128	.70446	.69775	.69116	.68467	.67830	.67204	.66587	.65982	.65386
86	.72576	.71919	.71272	.70636	.70010	.69394	.68789	.68193	.67606	.67029
87	.73981	.73349	.72726	.72114	.71511	.70917	.70333	.69757	.69190	.68632
88	.75342	.74735	.74137	.73548	.72968	.72396	.71833	.71279	.70732	.70194
89	.76658	.76076	.75503	.74938	.74381	.73832	.73290	.72757	.72231	.71712
90	.77928	.77371	.76823	.76281	.75748	.75221	.74702	.74190	.73684	.73186
91	.79131	.78600	.78075	.77557	.77046	.76542	.76044	.75553	.75068	.74589
92	.80246	.79737	.79235	.78740	.78250	.77767	.77290	.76818	.76353	.75893
93	.81274	.80788	.80307	.79832	.79363	.78899	.78441	.77989	.77542	.77100
94	.82232	.81766	.81306	.80850	.80401	.79956	.79517	.79082	.78653	.78228
95	.83141	.82695	.82254	.81818	.81387	.80961	.80539	.80122	.79710	.79302
96	.83996	.83569	.83147	.82729	.82316	.81907	.81503	.81103	.80707	.80315
97	.84787	.84378	.83973	.83573	.83176	.82784	.82396	.82012	.81632	.81255
98	.85530	.85138	.84750	.84366	.83985	.83609	.83236	.82867	.82502	.82140
99	.86255	.85880	.85508	.85140	.84776	.84415	.84057	.83703	.83353	.83005
100	.86960	.86601	.86246	.85894	.85546	.85200	.84858	.84519	.84183	.83849

Age	Interest rate									
	6.2%	6.4%	6.6%	6.8%	7.0%	7.2%	7.4%	7.6%	7.8%	8.0%
101	.87655	.87313	.86974	.86638	.86305	.85975	.85648	.85324	.85003	.84684
102	.88338	.88012	.87689	.87369	.87052	.86738	.86426	.86116	.85809	.85505
103	.89015	.88706	.88399	.88095	.87793	.87494	.87197	.86903	.86611	.86321
104	.89737	.89446	.89157	.88871	.88586	.88304	.88024	.87745	.87469	.87195
105	.90443	.90170	.89898	.89628	.89360	.89094	.88830	.88568	.88307	.88049
106	.91351	.91101	.90852	.90605	.90359	.90115	.89873	.89632	.89392	.89154
107	.92452	.92230	.92010	.91791	.91573	.91356	.91141	.90927	.90714	.90502
108	.94161	.93987	.93814	.93641	.93469	.93298	.93128	.92958	.92790	.92622
109	.97081	.96992	.96904	.96816	.96729	.96642	.96555	.96468	.96382	.96296

Table S—Based on Life Table 90CM Single Life Remainder Factors [Applicable After April 30, 1999, and Before May 1, 2009]

Age	Interest rate									
	8.2%	8.4%	8.6%	8.8%	9.0%	9.2%	9.4%	9.6%	9.8%	10.0%
0	.01906	.01845	.01790	.01740	.01694	.01652	.01613	.01578	.01546	.01516
1	.01098	.01034	.00977	.00924	.00876	.00833	.00793	.00756	.00722	.00691
2	.01113	.01046	.00986	.00930	.00880	.00834	.00791	.00753	.00717	.00684
3	.01155	.01084	.01020	.00962	.00909	.00860	.00816	.00775	.00737	.00702
4	.01211	.01137	.01069	.01008	.00952	.00900	.00853	.00810	.00770	.00733
5	.01279	.01201	.01130	.01065	.01006	.00952	.00902	.00856	.00814	.00775
6	.01356	.01274	.01199	.01131	.01068	.01011	.00959	.00910	.00865	.00824
7	.01442	.01356	.01277	.01205	.01140	.01079	.01023	.00972	.00925	.00881
8	.01536	.01446	.01363	.01287	.01218	.01154	.01096	.01041	.00991	.00945
9	.01641	.01546	.01460	.01380	.01307	.01240	.01178	.01120	.01068	.01019
10	.01758	.01659	.01567	.01484	.01407	.01336	.01270	.01210	.01154	.01103
11	.01886	.01781	.01686	.01598	.01517	.01442	.01373	.01310	.01251	.01196
12	.02024	.01915	.01814	.01721	.01636	.01558	.01485	.01419	.01357	.01299
13	.02168	.02054	.01948	.01851	.01762	.01679	.01603	.01533	.01467	.01407
14	.02313	.02193	.02083	.01981	.01887	.01801	.01721	.01646	.01578	.01514
15	.02456	.02330	.02214	.02107	.02009	.01918	.01834	.01756	.01684	.01617
16	.02593	.02462	.02340	.02229	.02126	.02030	.01942	.01860	.01785	.01714
17	.02728	.02590	.02463	.02346	.02238	.02138	.02046	.01960	.01880	.01806
18	.02861	.02717	.02584	.02462	.02348	.02243	.02146	.02056	.01972	.01894
19	.02998	.02847	.02708	.02580	.02461	.02351	.02249	.02154	.02066	.01984
20	.03142	.02984	.02839	.02704	.02580	.02465	.02357	.02258	.02165	.02079
21	.03295	.03130	.02978	.02837	.02706	.02585	.02473	.02368	.02271	.02180
22	.03455	.03283	.03124	.02976	.02839	.02712	.02594	.02484	.02382	.02286
23	.03626	.03446	.03279	.03124	.02981	.02847	.02723	.02608	.02500	.02400
24	.03809	.03620	.03446	.03283	.03133	.02993	.02863	.02741	.02628	.02522
25	.04005	.03808	.03625	.03456	.03298	.03151	.03014	.02887	.02768	.02656
26	.04216	.04010	.03819	.03641	.03476	.03322	.03178	.03044	.02919	.02802
27	.04444	.04229	.04029	.03843	.03670	.03508	.03357	.03217	.03085	.02962
28	.04687	.04463	.04254	.04059	.03877	.03708	.03550	.03402	.03263	.03133
29	.04946	.04712	.04493	.04289	.04099	.03922	.03756	.03600	.03455	.03318
30	.05221	.04976	.04748	.04534	.04335	.04149	.03975	.03812	.03659	.03515

Age	Interest rate									
	8.2%	8.4%	8.6%	8.8%	9.0%	9.2%	9.4%	9.6%	9.8%	10.0%
31	.05511	.05255	.05017	.04794	.04585	.04390	.04208	.04037	.03876	.03725
32	.05818	.05551	.05302	.05069	.04851	.04647	.04455	.04276	.04107	.03948
33	.06144	.05866	.05606	.05363	.05135	.04921	.04720	.04532	.04355	.04188
34	.06489	.06200	.05928	.05674	.05436	.05212	.05002	.04805	.04619	.04444
35	.06857	.06555	.06273	.06007	.05758	.05524	.05304	.05097	.04902	.04718
36	.07246	.06932	.06638	.06361	.06101	.05856	.05626	.05409	.05205	.05012
37	.07659	.07332	.07025	.06737	.06466	.06210	.05969	.05742	.05528	.05325
38	.08098	.07758	.07439	.07138	.06855	.06588	.06336	.06099	.05874	.05662
39	.08563	.08210	.07878	.07565	.07270	.06992	.06729	.06480	.06245	.06023
40	.09059	.08692	.08347	.08021	.07714	.07423	.07149	.06889	.06643	.06411
41	.09586	.09206	.08848	.08509	.08189	.07886	.07600	.07329	.07072	.06828
42	.10147	.09753	.09381	.09029	.08696	.08381	.08083	.07800	.07531	.07277
43	.10742	.10334	.09948	.09583	.09237	.08909	.08598	.08304	.08024	.07758
44	.11373	.10950	.10551	.10172	.09813	.09472	.09148	.08841	.08549	.08272
45	.12035	.11599	.11185	.10792	.10420	.10066	.09730	.09410	.09106	.08817
46	.12732	.12281	.11853	.11447	.11061	.10694	.10345	.10013	.09696	.09395
47	.13460	.12995	.12553	.12133	.11733	.11353	.10991	.10646	.10317	.10004
48	.14223	.13743	.13287	.12853	.12439	.12046	.11671	.11313	.10972	.10646
49	.15020	.14526	.14056	.13608	.13181	.12774	.12385	.12015	.11661	.11322
50	.15855	.15347	.14862	.14401	.13960	.13540	.13138	.12754	.12388	.12037
51	.16727	.16205	.15707	.15232	.14777	.14344	.13929	.13532	.13153	.12789
52	.17634	.17098	.16587	.16097	.15630	.15183	.14755	.14345	.13953	.13577
53	.18576	.18027	.17501	.16999	.16518	.16057	.15616	.15194	.14789	.14400
54	.19552	.18990	.18451	.17935	.17441	.16968	.16514	.16078	.15661	.15260
55	.20564	.19989	.19437	.18908	.18402	.17915	.17449	.17001	.16571	.16157
56	.21613	.21025	.20461	.19919	.19400	.18901	.18422	.17962	.17519	.17093
57	.22698	.22098	.21522	.20968	.20436	.19925	.19434	.18961	.18507	.18069
58	.23816	.23204	.22616	.22051	.21507	.20984	.20481	.19996	.19530	.19080
59	.24962	.24339	.23740	.23163	.22608	.22073	.21558	.21062	.20584	.20123
60	.26136	.25502	.24892	.24304	.23738	.23192	.22666	.22158	.21669	.21196
61	.27339	.26695	.26075	.25477	.24900	.24343	.23806	.23288	.22787	.22304
62	.28578	.27925	.27295	.26687	.26100	.25533	.24985	.24456	.23945	.23451
63	.29854	.29192	.28553	.27935	.27339	.26762	.26205	.25666	.25145	.24641
64	.31164	.30494	.29846	.29221	.28615	.28030	.27463	.26915	.26384	.25870
65	.32508	.31831	.31177	.30543	.29930	.29336	.28761	.28203	.27663	.27140

Age	Interest rate									
	8.2%	8.4%	8.6%	8.8%	9.0%	9.2%	9.4%	9.6%	9.8%	10.0%
66	.33891	.33208	.32547	.31906	.31285	.30684	.30101	.29536	.28987	.28456
67	.35318	.34630	.33963	.33316	.32689	.32081	.31491	.30918	.30363	.29823
68	.36785	.36093	.35422	.34770	.34138	.33524	.32928	.32349	.31787	.31240
69	.38290	.37595	.36920	.36265	.35628	.35009	.34408	.33824	.33256	.32703
70	.39823	.39127	.38450	.37791	.37151	.36529	.35924	.35335	.34762	.34204
71	.41378	.40681	.40003	.39343	.38701	.38076	.37467	.36875	.36298	.35736
72	.42950	.42253	.41575	.40914	.40271	.39644	.39034	.38438	.37858	.37293
73	.44535	.43840	.43162	.42502	.41858	.41231	.40619	.40022	.39440	.38872
74	.46139	.45446	.44771	.44112	.43469	.42842	.42230	.41632	.41049	.40479
75	.47769	.47080	.46408	.45752	.45111	.44485	.43874	.43277	.42693	.42123
76	.49430	.48747	.48079	.47427	.46790	.46167	.45558	.44963	.44380	.43811
77	.51123	.50447	.49786	.49139	.48506	.47888	.47282	.46690	.46111	.45543
78	.52845	.52177	.51523	.50884	.50257	.49645	.49044	.48457	.47881	.47317
79	.54584	.53926	.53282	.52650	.52032	.51426	.50833	.50251	.49681	.49122
80	.56325	.55678	.55044	.54423	.53813	.53216	.52630	.52056	.51492	.50939
81	.58054	.57419	.56797	.56186	.55587	.54999	.54422	.53856	.53300	.52754
82	.59762	.59140	.58530	.57931	.57343	.56766	.56198	.55641	.55094	.54557
83	.61448	.60840	.60243	.59657	.59081	.58515	.57958	.57411	.56874	.56346
84	.63124	.62531	.61949	.61376	.60813	.60259	.59715	.59179	.58652	.58134
85	.64800	.64224	.63657	.63099	.62550	.62010	.61478	.60955	.60441	.59934
86	.66461	.65902	.65351	.64810	.64276	.63751	.63233	.62724	.62222	.61728
87	.68083	.67541	.67008	.66483	.65965	.65455	.64953	.64458	.63970	.63489
88	.69663	.69140	.68624	.68116	.67615	.67121	.66634	.66154	.65680	.65213
89	.71201	.70696	.70199	.69708	.69224	.68747	.68276	.67811	.67353	.66900
90	.72694	.72209	.71730	.71257	.70791	.70330	.69876	.69427	.68984	.68547
91	.74117	.73650	.73190	.72735	.72286	.71842	.71404	.70972	.70545	.70123
92	.75439	.74991	.74548	.74110	.73678	.73251	.72829	.72412	.72000	.71593
93	.76664	.76233	.75806	.75385	.74969	.74557	.74150	.73748	.73350	.72957
94	.77809	.77394	.76983	.76578	.76177	.75780	.75388	.75000	.74616	.74237
95	.78899	.78500	.78106	.77715	.77329	.76947	.76569	.76195	.75826	.75460
96	.79928	.79544	.79165	.78790	.78418	.78050	.77686	.77326	.76970	.76617
97	.80883	.80514	.80149	.79787	.79430	.79075	.78725	.78377	.78033	.77693
98	.81781	.81427	.81075	.80727	.80382	.80041	.79703	.79368	.79036	.78708
99	.82661	.82320	.81982	.81648	.81316	.80988	.80662	.80340	.80020	.79704
100	.83519	.83192	.82868	.82547	.82228	.81913	.81600	.81290	.80982	.80678

Age	Interest rate									
	8.2%	8.4%	8.6%	8.8%	9.0%	9.2%	9.4%	9.6%	9.8%	10.0%
101	.84368	.84055	.83744	.83437	.83131	.82829	.82529	.82231	.81936	.81643
102	.85203	.84904	.84607	.84313	.84021	.83731	.83444	.83159	.82876	.82596
103	.86034	.85748	.85465	.85184	.84906	.84629	.84355	.84082	.83812	.83544
104	.86923	.86653	.86385	.86119	.85855	.85593	.85333	.85074	.84818	.84563
105	.87792	.87537	.87283	.87032	.86782	.86534	.86287	.86042	.85799	.85557
106	.88918	.88683	.88450	.88218	.87987	.87758	.87530	.87304	.87079	.86855
107	.90291	.90082	.89873	.89666	.89460	.89255	.89051	.88849	.88647	.88447
108	.92455	.92288	.92123	.91958	.91794	.91630	.91468	.91306	.91145	.90984
109	.96211	.96125	.96041	.95956	.95872	.95788	.95704	.95620	.95537	.95455

Table S—Based on Life Table 90CM Single Life Remainder Factors [Applicable After April 30, 1999, and Before May 1, 2009]

Age	Interest rate									
	10.2%	10.4%	10.6%	10.8%	11.0%	11.2%	11.4%	11.6%	11.8%	12.0%
0	.01488	.01463	.01439	.01417	.01396	.01377	.01359	.01343	.01327	.01312
1	.00662	.00636	.00612	.00589	.00568	.00548	.00530	.00513	.00497	.00482
2	.00654	.00626	.00600	.00576	.00554	.00533	.00514	.00496	.00479	.00463
3	.00670	.00641	.00613	.00588	.00564	.00542	.00522	.00502	.00484	.00468
4	.00699	.00668	.00639	.00612	.00587	.00563	.00542	.00521	.00502	.00484
5	.00739	.00706	.00675	.00646	.00620	.00595	.00571	.00550	.00529	.00510
6	.00786	.00751	.00718	.00687	.00659	.00633	.00608	.00585	.00563	.00543
7	.00841	.00803	.00769	.00736	.00706	.00678	.00652	.00627	.00604	.00582
8	.00902	.00863	.00826	.00791	.00759	.00730	.00702	.00675	.00651	.00628
9	.00973	.00931	.00892	.00856	.00822	.00790	.00760	.00733	.00706	.00682
10	.01055	.01010	.00969	.00930	.00894	.00861	.00829	.00799	.00772	.00746
11	.01146	.01099	.01055	.01014	.00976	.00940	.00907	.00875	.00846	.00818
12	.01246	.01196	.01150	.01106	.01066	.01028	.00993	.00960	.00928	.00899
13	.01351	.01298	.01249	.01204	.01161	.01121	.01084	.01049	.01016	.00985
14	.01455	.01400	.01348	.01300	.01255	.01213	.01173	.01136	.01102	.01069
15	.01555	.01497	.01443	.01392	.01345	.01300	.01259	.01220	.01183	.01148
16	.01648	.01587	.01530	.01477	.01427	.01380	.01336	.01295	.01257	.01220
17	.01737	.01673	.01612	.01556	.01504	.01455	.01408	.01365	.01324	.01286
18	.01822	.01754	.01691	.01632	.01576	.01525	.01476	.01430	.01387	.01347
19	.01908	.01837	.01770	.01708	.01650	.01595	.01544	.01495	.01450	.01407
20	.01999	.01924	.01854	.01788	.01726	.01669	.01615	.01564	.01516	.01471
21	.02096	.02017	.01943	.01874	.01809	.01748	.01691	.01637	.01586	.01539
22	.02197	.02114	.02036	.01963	.01895	.01830	.01770	.01713	.01660	.01610
23	.02306	.02218	.02136	.02059	.01987	.01919	.01855	.01795	.01739	.01686
24	.02424	.02331	.02245	.02163	.02087	.02016	.01948	.01885	.01825	.01769
25	.02552	.02455	.02364	.02278	.02197	.02122	.02051	.01984	.01920	.01861
26	.02692	.02589	.02493	.02403	.02318	.02238	.02162	.02091	.02025	.01961
27	.02846	.02738	.02636	.02541	.02451	.02367	.02287	.02212	.02141	.02074
28	.03012	.02898	.02791	.02690	.02595	.02506	.02422	.02342	.02267	.02196
29	.03190	.03070	.02957	.02851	.02751	.02656	.02567	.02483	.02404	.02329
30	.03381	.03254	.03135	.03023	.02917	.02817	.02723	.02634	.02551	.02471

Age	Interest rate									
	10.2%	10.4%	10.6%	10.8%	11.0%	11.2%	11.4%	11.6%	11.8%	12.0%
31	.03583	.03450	.03324	.03206	.03094	.02989	.02890	.02796	.02707	.02623
32	.03799	.03659	.03527	.03402	.03284	.03173	.03068	.02968	.02874	.02785
33	.04031	.03883	.03744	.03612	.03488	.03371	.03260	.03155	.03055	.02961
34	.04279	.04123	.03976	.03838	.03707	.03583	.03465	.03354	.03249	.03149
35	.04545	.04382	.04227	.04081	.03943	.03812	.03688	.03571	.03459	.03354
36	.04830	.04658	.04495	.04341	.04196	.04058	.03927	.03803	.03685	.03573
37	.05134	.04953	.04782	.04620	.04467	.04321	.04183	.04052	.03928	.03809
38	.05462	.05272	.05092	.04921	.04760	.04606	.04461	.04322	.04191	.04066
39	.05812	.05613	.05424	.05245	.05075	.04913	.04760	.04614	.04475	.04343
40	.06190	.05981	.05782	.05594	.05415	.05245	.05083	.04929	.04783	.04643
41	.06597	.06378	.06170	.05972	.05784	.05605	.05435	.05272	.05118	.04970
42	.07035	.06806	.06587	.06380	.06182	.05994	.05815	.05644	.05481	.05326
43	.07505	.07265	.07036	.06818	.06611	.06414	.06225	.06045	.05874	.05710
44	.08008	.07757	.07518	.07290	.07072	.06865	.06667	.06478	.06298	.06125
45	.08542	.08279	.08029	.07791	.07563	.07346	.07138	.06940	.06750	.06569
46	.09108	.08834	.08573	.08324	.08085	.07858	.07640	.07432	.07233	.07043
47	.09705	.09419	.09147	.08886	.08637	.08399	.08172	.07954	.07745	.07545
48	.10335	.10038	.09754	.09482	.09222	.08973	.08735	.08507	.08288	.08078
49	.10999	.10690	.10394	.10111	.09840	.09581	.09332	.09093	.08864	.08644
50	.11701	.11380	.11073	.10778	.10496	.10225	.09965	.09716	.09477	.09247
51	.12441	.12108	.11789	.11482	.11189	.10907	.10636	.10376	.10126	.09886
52	.13217	.12871	.12540	.12222	.11916	.11623	.11341	.11071	.10810	.10560
53	.14028	.13670	.13327	.12997	.12680	.12375	.12082	.11801	.11529	.11268
54	.14875	.14505	.14150	.13808	.13480	.13163	.12859	.12566	.12284	.12012
55	.15760	.15378	.15011	.14657	.14317	.13989	.13674	.13370	.13077	.12794
56	.16684	.16290	.15911	.15546	.15194	.14855	.14528	.14213	.13909	.13615
57	.17648	.17242	.16851	.16474	.16111	.15760	.15422	.15096	.14781	.14477
58	.18647	.18229	.17827	.17438	.17064	.16702	.16353	.16015	.15689	.15374
59	.19678	.19249	.18835	.18435	.18049	.17676	.17316	.16968	.16631	.16305
60	.20740	.20300	.19875	.19464	.19066	.18682	.18311	.17952	.17604	.17268
61	.21837	.21385	.20949	.20527	.20119	.19724	.19341	.18971	.18613	.18266
62	.22973	.22511	.22064	.21631	.21212	.20807	.20414	.20033	.19664	.19306
63	.24152	.23680	.23222	.22779	.22350	.21934	.21530	.21139	.20760	.20392
64	.25372	.24890	.24422	.23969	.23529	.23103	.22690	.22289	.21899	.21521
65	.26633	.26141	.25664	.25201	.24752	.24316	.23893	.23482	.23083	.22695

Age	Interest rate									
	10.2%	10.4%	10.6%	10.8%	11.0%	11.2%	11.4%	11.6%	11.8%	12.0%
66	.27940	.27439	.26953	.26481	.26023	.25577	.25145	.24724	.24316	.23918
67	.29299	.28790	.28296	.27815	.27348	.26894	.26453	.26024	.25606	.25200
68	.30709	.30193	.29691	.29202	.28728	.28265	.27816	.27378	.26952	.26537
69	.32166	.31643	.31134	.30639	.30157	.29687	.29230	.28785	.28351	.27928
70	.33661	.33133	.32618	.32116	.31628	.31152	.30688	.30235	.29794	.29364
71	.35188	.34654	.34134	.33627	.33133	.32651	.32181	.31722	.31275	.30838
72	.36742	.36204	.35679	.35168	.34668	.34181	.33706	.33241	.32788	.32345
73	.38317	.37776	.37248	.36733	.36229	.35738	.35257	.34788	.34330	.33882
74	.39923	.39380	.38849	.38330	.37823	.37328	.36844	.36370	.35908	.35455
75	.41566	.41021	.40489	.39968	.39459	.38961	.38474	.37997	.37531	.37074
76	.43254	.42709	.42176	.41655	.41144	.40645	.40156	.39677	.39208	.38749
77	.44988	.44444	.43912	.43391	.42880	.42380	.41891	.41411	.40940	.40479
78	.46765	.46224	.45694	.45174	.44665	.44166	.43677	.43197	.42726	.42265
79	.48574	.48037	.47510	.46993	.46487	.45990	.45502	.45024	.44554	.44094
80	.50397	.49865	.49343	.48830	.48327	.47834	.47349	.46873	.46406	.45947
81	.52219	.51693	.51176	.50669	.50171	.49682	.49201	.48729	.48265	.47809
82	.54029	.53510	.53000	.52499	.52007	.51523	.51047	.50580	.50120	.49667
83	.55826	.55315	.54813	.54319	.53834	.53356	.52886	.52424	.51969	.51522
84	.57624	.57123	.56629	.56144	.55666	.55195	.54732	.54277	.53828	.53386
85	.59435	.58944	.58460	.57984	.57516	.57054	.56599	.56151	.55710	.55275
86	.61241	.60762	.60289	.59824	.59365	.58913	.58468	.58029	.57596	.57170
87	.63015	.62548	.62087	.61633	.61185	.60744	.60309	.59880	.59456	.59039
88	.64753	.64299	.63851	.63409	.62973	.62543	.62118	.61700	.61287	.60879
89	.66454	.66013	.65579	.65150	.64726	.64308	.63895	.63488	.63086	.62689
90	.68115	.67689	.67268	.66853	.66442	.66037	.65637	.65241	.64851	.64465
91	.69706	.69294	.68887	.68486	.68089	.67696	.67309	.66925	.66547	.66173
92	.71190	.70792	.70399	.70011	.69627	.69247	.68872	.68501	.68134	.67771
93	.72569	.72184	.71804	.71429	.71057	.70689	.70326	.69967	.69611	.69259
94	.73861	.73490	.73123	.72759	.72400	.72044	.71692	.71344	.71000	.70659
95	.75097	.74739	.74384	.74033	.73686	.73342	.73002	.72665	.72331	.72001
96	.76267	.75922	.75579	.75240	.74905	.74572	.74243	.73917	.73595	.73275
97	.77356	.77022	.76691	.76363	.76039	.75718	.75399	.75084	.74772	.74463
98	.78382	.78059	.77740	.77423	.77110	.76799	.76491	.76186	.75884	.75584
99	.79390	.79079	.78771	.78465	.78162	.77862	.77565	.77270	.76978	.76688
100	.80376	.80076	.79779	.79485	.79193	.78904	.78617	.78333	.78051	.77771

Age	Interest rate									
	10.2%	10.4%	10.6%	10.8%	11.0%	11.2%	11.4%	11.6%	11.8%	12.0%
101	.81353	.81066	.80780	.80497	.80217	.79938	.79662	.79388	.79117	.78847
102	.82318	.82042	.81768	.81496	.81227	.80960	.80694	.80431	.80170	.79911
103	.83278	.83014	.82752	.82491	.82233	.81977	.81723	.81470	.81220	.80971
104	.84310	.84059	.83810	.83563	.83317	.83073	.82831	.82591	.82352	.82115
105	.85318	.85079	.84843	.84607	.84374	.84142	.83911	.83682	.83455	.83229
106	.86633	.86413	.86193	.85975	.85758	.85543	.85329	.85116	.84904	.84694
107	.88247	.88049	.87852	.87656	.87460	.87266	.87073	.86881	.86690	.86500
108	.90825	.90666	.90507	.90350	.90193	.90037	.89881	.89727	.89572	.89419
109	.95372	.95290	.95208	.95126	.95045	.94964	.94883	.94803	.94723	.94643

Table S—Based on Life Table 90CM Single Life Remainder Factors [Applicable After April 30, 1999, and Before May 1, 2009]

Age	Interest rate									
	12.2%	12.4%	12.6%	12.8%	13.0%	13.2%	13.4%	13.6%	13.8%	14.0%
0	.01298	.01285	.01273	.01261	.01250	.01240	.01230	.01221	.01212	.01203
1	.00468	.00455	.00443	.00431	.00420	.00410	.00400	.00391	.00382	.00374
2	.00448	.00435	.00421	.00409	.00398	.00387	.00376	.00366	.00357	.00348
3	.00452	.00437	.00423	.00410	.00398	.00386	.00375	.00365	.00355	.00345
4	.00468	.00452	.00437	.00423	.00410	.00397	.00386	.00375	.00364	.00354
5	.00493	.00476	.00460	.00445	.00431	.00418	.00405	.00393	.00382	.00371
6	.00524	.00506	.00489	.00473	.00458	.00444	.00430	.00418	.00406	.00394
7	.00562	.00543	.00525	.00508	.00492	.00477	.00462	.00449	.00436	.00423
8	.00606	.00586	.00566	.00548	.00531	.00515	.00499	.00485	.00471	.00458
9	.00659	.00637	.00616	.00597	.00579	.00561	.00545	.00529	.00514	.00500
10	.00721	.00698	.00676	.00655	.00636	.00617	.00600	.00583	.00567	.00552
11	.00792	.00767	.00744	.00722	.00701	.00682	.00663	.00645	.00628	.00612
12	.00871	.00845	.00821	.00797	.00775	.00754	.00735	.00716	.00698	.00681
13	.00955	.00928	.00902	.00877	.00854	.00831	.00810	.00790	.00771	.00753
14	.01038	.01009	.00981	.00955	.00930	.00907	.00885	.00864	.00843	.00824
15	.01116	.01085	.01056	.01028	.01002	.00977	.00954	.00932	.00910	.00890
16	.01186	.01153	.01123	.01094	.01066	.01040	.01015	.00992	.00969	.00948
17	.01250	.01215	.01183	.01152	.01124	.01096	.01070	.01045	.01022	.00999
18	.01308	.01272	.01238	.01206	.01175	.01147	.01119	.01093	.01068	.01044
19	.01367	.01329	.01293	.01259	.01227	.01196	.01167	.01140	.01113	.01088
20	.01428	.01388	.01350	.01314	.01280	.01248	.01217	.01188	.01161	.01134
21	.01494	.01451	.01411	.01373	.01337	.01303	.01271	.01240	.01211	.01183
22	.01562	.01517	.01475	.01435	.01397	.01361	.01326	.01294	.01263	.01233
23	.01635	.01588	.01543	.01501	.01460	.01422	.01386	.01351	.01319	.01287
24	.01716	.01665	.01618	.01573	.01530	.01489	.01451	.01415	.01380	.01347
25	.01804	.01751	.01701	.01653	.01608	.01565	.01524	.01485	.01448	.01413
26	.01902	.01845	.01792	.01741	.01693	.01648	.01604	.01563	.01524	.01487
27	.02011	.01951	.01895	.01841	.01790	.01742	.01696	.01652	.01610	.01571
28	.02129	.02066	.02006	.01949	.01895	.01844	.01795	.01748	.01704	.01662
29	.02258	.02191	.02127	.02067	.02009	.01955	.01903	.01853	.01806	.01762
30	.02396	.02325	.02257	.02193	.02132	.02074	.02019	.01966	.01916	.01869

Age	Interest rate									
	12.2%	12.4%	12.6%	12.8%	13.0%	13.2%	13.4%	13.6%	13.8%	14.0%
31	.02543	.02467	.02396	.02328	.02263	.02201	.02143	.02087	.02034	.01983
32	.02701	.02621	.02545	.02472	.02404	.02338	.02276	.02217	.02160	.02106
33	.02871	.02786	.02706	.02629	.02556	.02487	.02420	.02357	.02297	.02240
34	.03054	.02964	.02879	.02797	.02720	.02646	.02576	.02509	.02445	.02383
35	.03253	.03158	.03067	.02981	.02898	.02820	.02745	.02674	.02606	.02541
36	.03467	.03366	.03269	.03178	.03090	.03007	.02928	.02852	.02779	.02710
37	.03697	.03590	.03488	.03391	.03298	.03209	.03125	.03044	.02967	.02893
38	.03947	.03833	.03725	.03622	.03524	.03430	.03340	.03254	.03172	.03094
39	.04217	.04096	.03982	.03873	.03768	.03669	.03573	.03482	.03395	.03312
40	.04510	.04383	.04262	.04146	.04035	.03930	.03828	.03732	.03639	.03550
41	.04830	.04695	.04567	.04445	.04327	.04215	.04108	.04005	.03907	.03812
42	.05177	.05035	.04900	.04770	.04646	.04527	.04413	.04304	.04200	.04100
43	.05553	.05404	.05261	.05123	.04992	.04866	.04746	.04630	.04520	.04413
44	.05960	.05802	.05651	.05506	.05368	.05235	.05107	.04985	.04867	.04754
45	.06395	.06229	.06069	.05917	.05770	.05630	.05495	.05365	.05241	.05121
46	.06860	.06685	.06517	.06356	.06202	.06053	.05911	.05774	.05643	.05516
47	.07353	.07169	.06992	.06823	.06660	.06504	.06353	.06209	.06070	.05936
48	.07877	.07684	.07498	.07320	.07149	.06984	.06826	.06673	.06527	.06385
49	.08433	.08231	.08036	.07849	.07669	.07495	.07329	.07168	.07013	.06864
50	.09026	.08814	.08609	.08413	.08224	.08042	.07867	.07698	.07535	.07378
51	.09655	.09433	.09219	.09013	.08815	.08624	.08440	.08262	.08091	.07926
52	.10318	.10086	.09863	.09647	.09439	.09239	.09046	.08860	.08680	.08506
53	.11017	.10774	.10541	.10315	.10098	.09888	.09686	.09491	.09302	.09120
54	.11750	.11498	.11254	.11019	.10792	.10572	.10361	.10156	.09958	.09767
55	.12522	.12258	.12005	.11759	.11522	.11294	.11072	.10859	.10652	.10451
56	.13332	.13059	.12794	.12539	.12292	.12054	.11823	.11599	.11383	.11174
57	.14183	.13899	.13624	.13359	.13102	.12853	.12613	.12380	.12154	.11936
58	.15070	.14775	.14490	.14215	.13948	.13689	.13439	.13197	.12962	.12734
59	.15990	.15685	.15389	.15103	.14826	.14558	.14298	.14046	.13801	.13564
60	.16942	.16626	.16321	.16024	.15737	.15459	.15189	.14927	.14673	.14426
61	.17929	.17603	.17287	.16981	.16684	.16395	.16115	.15844	.15580	.15324
62	.18960	.18623	.18297	.17980	.17673	.17375	.17085	.16803	.16530	.16264
63	.20035	.19688	.19352	.19025	.18708	.18400	.18100	.17809	.17525	.17250
64	.21154	.20797	.20451	.20114	.19787	.19469	.19159	.18859	.18566	.18281
65	.22318	.21951	.21595	.21249	.20912	.20584	.20265	.19955	.19652	.19358

Age	Interest rate									
	12.2%	12.4%	12.6%	12.8%	13.0%	13.2%	13.4%	13.6%	13.8%	14.0%
66	.23532	.23156	.22790	.22434	.22088	.21751	.21422	.21102	.20791	.20487
67	.24804	.24419	.24044	.23679	.23324	.22977	.22640	.22311	.21990	.21678
68	.26133	.25740	.25356	.24983	.24618	.24263	.23917	.23579	.23250	.22929
69	.27516	.27114	.26723	.26341	.25969	.25605	.25251	.24905	.24567	.24237
70	.28945	.28536	.28137	.27747	.27367	.26996	.26633	.26279	.25934	.25596
71	.30412	.29996	.29590	.29193	.28806	.28427	.28057	.27696	.27343	.26998
72	.31913	.31491	.31078	.30675	.30281	.29895	.29519	.29150	.28790	.28438
73	.33444	.33016	.32597	.32188	.31788	.31396	.31013	.30638	.30271	.29913
74	.35012	.34579	.34155	.33741	.33335	.32938	.32549	.32168	.31795	.31430
75	.36628	.36190	.35762	.35343	.34932	.34530	.34136	.33750	.33372	.33001
76	.38299	.37858	.37427	.37004	.36589	.36183	.35784	.35394	.35011	.34636
77	.40028	.39585	.39151	.38725	.38307	.37898	.37496	.37103	.36716	.36337
78	.41812	.41368	.40933	.40506	.40086	.39675	.39271	.38874	.38485	.38103
79	.43641	.43198	.42762	.42334	.41914	.41502	.41096	.40698	.40308	.39924
80	.45496	.45054	.44619	.44192	.43772	.43360	.42954	.42556	.42164	.41779
81	.47360	.46920	.46487	.46061	.45643	.45231	.44827	.44429	.44038	.43653
82	.49223	.48785	.48355	.47932	.47516	.47106	.46703	.46307	.45916	.45532
83	.51081	.50648	.50221	.49802	.49388	.48982	.48581	.48187	.47799	.47416
84	.52951	.52523	.52101	.51686	.51277	.50874	.50477	.50086	.49701	.49321
85	.54847	.54425	.54009	.53600	.53196	.52798	.52406	.52019	.51638	.51262
86	.56749	.56335	.55926	.55523	.55126	.54734	.54348	.53966	.53591	.53220
87	.58627	.58221	.57820	.57425	.57035	.56650	.56270	.55895	.55526	.55161
88	.60477	.60079	.59688	.59301	.58919	.58542	.58170	.57802	.57439	.57081
89	.62297	.61909	.61527	.61149	.60776	.60408	.60044	.59685	.59330	.58979
90	.64084	.63707	.63335	.62968	.62604	.62246	.61891	.61540	.61194	.60851
91	.65803	.65437	.65076	.64719	.64366	.64017	.63672	.63330	.62993	.62659
92	.67412	.67058	.66707	.66360	.66017	.65678	.65342	.65010	.64682	.64357
93	.68911	.68567	.68227	.67890	.67557	.67227	.66901	.66578	.66258	.65942
94	.70321	.69988	.69657	.69330	.69006	.68686	.68369	.68055	.67744	.67437
95	.71674	.71351	.71031	.70713	.70399	.70088	.69781	.69476	.69174	.68875
96	.72959	.72646	.72335	.72028	.71724	.71422	.71123	.70828	.70534	.70244
97	.74156	.73853	.73552	.73254	.72959	.72666	.72376	.72089	.71804	.71522
98	.75287	.74993	.74702	.74413	.74126	.73842	.73561	.73282	.73006	.72732
99	.76401	.76117	.75834	.75555	.75277	.75002	.74730	.74459	.74191	.73926
100	.77494	.77219	.76946	.76676	.76408	.76142	.75878	.75616	.75357	.75099

Age	Interest rate									
	12.2%	12.4%	12.6%	12.8%	13.0%	13.2%	13.4%	13.6%	13.8%	14.0%
101	.78580	.78315	.78052	.77791	.77532	.77275	.77021	.76768	.76517	.76268
102	.79654	.79399	.79146	.78894	.78645	.78397	.78152	.77908	.77666	.77426
103	.80724	.80479	.80236	.79994	.79755	.79517	.79280	.79046	.78813	.78582
104	.81879	.81646	.81413	.81183	.80954	.80726	.80501	.80276	.80054	.79832
105	.83005	.82782	.82560	.82340	.82121	.81904	.81688	.81474	.81260	.81049
106	.84485	.84277	.84071	.83866	.83662	.83459	.83257	.83057	.82857	.82659
107	.86311	.86124	.85937	.85751	.85566	.85382	.85199	.85017	.84835	.84655
108	.89266	.89114	.88963	.88812	.88662	.88513	.88364	.88216	.88068	.87922
109	.94563	.94484	.94405	.94326	.94248	.94170	.94092	.94014	.93937	.93860

(7) ***Effective/applicability dates.*** Paragraphs (f)(1) through (f)(6) apply after April 30, 1999, and before May 1, 2009.

(g) ***Present value of the remainder interest in the case of transfers to pooled income funds for which the valuation date is on or after May 1, 2009, and before June 1, 2023*** —

(1) ***In general.*** In the case of transfers to pooled income funds for which the valuation date is on or after May 1, 2009, and before June 1, 2023, the present value of a remainder interest is determined under this section. See, however, § 1.7520-3(b) (relating to exceptions to the use of prescribed tables under certain circumstances). The present value of a remainder interest that is dependent on the termination of the life of one individual is computed by the use of Table S in paragraph (g)(6) of this section. For purposes of the computations under this section, the age of an individual is the age at the individual's nearest birthday.

(2) ***Transitional rules for valuation of transfers to pooled income funds.***

(i) For purposes of section 2055, 2106, or 2624, if on May 1, 2009, the decedent was under a mental disability so that the disposition of the property could not be changed, and the decedent died on or after May 1, 2009, but before June 2, 2023, without having regained the ability to dispose of the decedent's property, or if the decedent died within 90 days of the date that the decedent first regained that ability on or after May 1, 2009, but before June 2, 2023, the present value of a remainder interest is determined as if the valuation date with respect to the decedent's gross estate is either before May 1, 2009, or after April 30, 2009, at the option of the decedent's executor.

(ii) For purposes of section 170, 2055, 2106, 2522, or 2624, in the case of transfers to a pooled income fund for which the valuation date is on or after May 1, 2009, and before July 1, 2009, the present value of the remainder interest under this section is determined by using the section 7520 interest rate for the month in which the valuation date occurs (see §§ 1.7520-1(b) and 1.7520-2(a)(2)) and the appropriate actuarial tables under either paragraph (f)(6) or (g)(6) of this section, at the option of the donor or the decedent's executor, as the case may be.

(iii) For purposes of paragraphs (g)(2)(i) and (ii) of this section, where the donor or decedent's executor is given the option to use the appropriate actuarial tables under either paragraph (f)(6) or (g)(6) of this section, the donor or decedent's executor must consistently use the same mortality basis with respect to each interest (income, remainder, partial, etc.) in the same property, and with respect to all transfers occurring on the same valuation date. For example, gift and income tax charitable deductions with respect to the same transfer must be determined based on factors with the same mortality basis, and all assets includible in the gross estate and/or estate tax deductions claimed must be valued based on factors with the same mortality basis.

(iv) In the case of transfers to a pooled income fund for which the valuation date is after April 30, 2019, and before June 1, 2023, the present value of the remainder interest under this section is determined under § 1.642(c)-6(e)(2).

(3) ***Present value of a remainder interest.*** The present value of a remainder interest in property transferred to a pooled income fund is computed on the basis of—

(i) Life contingencies determined from the values of l_x that are set forth in Table 2000CM in § 20.2031-7A(g)(4) of this chapter; and

(ii) Discount at a rate of interest, compounded annually, equal to the highest yearly rate of return of the pooled income fund for the three taxable years immediately preceding its taxable year in which the transfer of property to the fund is made. The provisions of § 1.642(c)-6(c) apply for determining the yearly rate of return. However, where the taxable year is less than 12 months, the provisions of § 1.642(c)-6(e)(3)(ii) apply for the determining the yearly rate of return.

(4) ***Pooled income funds in existence less than three taxable years.*** The provisions of § 1.642(c)-6(e)(4) apply for determining the highest yearly rate of return when the pooled income fund has been in existence less than three taxable years.

(5) ***Computation of value of remainder interest.*** The factor that is used in determining the present value of a remainder interest that is dependent on the termination of the life of one individual is the factor from Table S in paragraph (g)(6) of this section under the appropriate yearly rate of return opposite the number that corresponds to the age of the individual upon whose life the value of the remainder interest is based. Table S in paragraph (g)(6) of this section includes factors for yearly rates of return from 0.2 to 14 percent, inclusive, in increments of two-tenths of one percent. Actuarial factors that do not appear in paragraph (g)(6) of this section may be computed directly by using the formula in § 20.2031-7(d)(2)(ii)(B) of this chapter to derive a remainder factor from the appropriate mortality table to at least five decimal places. For the convenience of taxpayers, actuarial factors have been computed by the IRS and appear in Table S that is referenced and explained by IRS Publication 1457, *Actuarial Valuations Version 3A* (2009). The table is available at no charge, electronically via the IRS website at *https://www.irs.gov/retirement-plans/actuarial-tables* (or a corresponding URL as may be updated from time to time). For other situations, see § 1.642(c)-6(b). If the yearly rate of return is a percentage that is between the yearly rates of return for which factors are provided by Table S, an exact method of obtaining the applicable factors (such as through software using the actual rate of return and actuarial formulas provided in § 20.2031-7(d)(2)(ii)(B) of this chapter) or a linear interpolation must be used, provided whichever method used is applied consistently in valuing all interests in the same property. The present value of the remainder interest is determined by multiplying the fair market value of the property on the valuation date by the appropriate remainder factor. For an example of a computation of the present value of a remainder interest requiring a linear interpolation adjustment, see § 1.642(c)-6(e)(5).

(6) ***Actuarial tables.*** In the case of transfers for which the valuation date is on or after May 1, 2009, and before June 1, 2023, and without regard to the headings in the tables in this paragraph (g)(6) that do not contain this termination date for the applicability of the tables, the present value of a remainder interest dependent on the termination of one life in the case of a transfer to a pooled income fund is determined by using the following tables:

Table S
Based on Life Table 2000CM
Single Life Remainder Factors
Applicable On or After May 1, 2009

Interest Rate

AGE	0.2%	0.4%	0.6%	0.8%	1.0%	1.2%	1.4%	1.6%	1.8%	2.0%
0	.85816	.73751	.63478	.54723	.47252	.40872	.35416	.30747	.26745	.23313
1	.85889	.73863	.63604	.54844	.47355	.40948	.35459	.30752	.26711	.23239
2	.86054	.74145	.63968	.55260	.47802	.41409	.35922	.31209	.27155	.23664
3	.86221	.74433	.64339	.55687	.48263	.41887	.36404	.31685	.27619	.24112
4	.86390	.74725	.64716	.56121	.48733	.42374	.36898	.32175	.28098	.24575
5	.86560	.75018	.65097	.56561	.49209	.42871	.37401	.32675	.28588	.25050
6	.86731	.75314	.65482	.57006	.49692	.43375	.37913	.33186	.29090	.25538
7	.86902	.75611	.65868	.57454	.50180	.43885	.38432	.33704	.29601	.26035
8	.87073	.75909	.66258	.57907	.50674	.44403	.38960	.34233	.30122	.26544
9	.87246	.76209	.66651	.58364	.51173	.44928	.39497	.34771	.30654	.27064
10	.87419	.76511	.67046	.58826	.51679	.45459	.40042	.35319	.31197	.27596
11	.87592	.76814	.67445	.59291	.52190	.45998	.40596	.35876	.31750	.28139
12	.87766	.77119	.67845	.59761	.52706	.46544	.41157	.36443	.32313	.28693
13	.87939	.77424	.68247	.60232	.53225	.47094	.41723	.37015	.32884	.29255
14	.88112	.77728	.68649	.60704	.53746	.47646	.42293	.37592	.33460	.29823
15	.88284	.78031	.69050	.61176	.54267	.48199	.42865	.38172	.34038	.30394
16	.88455	.78333	.69449	.61647	.54788	.48752	.43437	.38752	.34619	.30968
17	.88625	.78633	.69848	.62117	.55309	.49307	.44012	.39336	.35203	.31546
18	.88795	.78933	.70246	.62588	.55830	.49863	.44589	.39923	.35791	.32129
19	.88964	.79232	.70644	.63059	.56354	.50422	.45170	.40514	.36385	.32719
20	.89132	.79532	.71044	.63534	.56882	.50987	.45757	.41114	.36987	.33317
21	.89301	.79832	.71445	.64010	.57413	.51555	.46350	.41719	.37597	.33925
22	.89470	.80133	.71847	.64488	.57947	.52129	.46948	.42332	.38216	.34541
23	.89639	.80434	.72251	.64970	.58486	.52708	.47554	.42954	.38844	.35168
24	.89808	.80737	.72658	.65456	.59031	.53295	.48169	.43586	.39484	.35809
25	.89978	.81042	.73068	.65947	.59583	.53890	.48795	.44230	.40137	.36464
26	.90149	.81349	.73482	.66443	.60141	.54494	.49430	.44886	.40804	.37134
27	.90320	.81657	.73899	.66944	.60707	.55107	.50076	.45554	.41484	.37819
28	.90492	.81968	.74319	.67450	.61278	.55728	.50733	.46233	.42178	.38520
29	.90665	.82279	.74741	.67960	.61856	.56356	.51398	.46924	.42884	.39233
30	.90837	.82591	.75165	.68473	.62438	.56990	.52070	.47623	.43601	.39959
31	.91010	.82904	.75592	.68989	.63024	.57631	.52751	.48333	.44329	.40698
32	.91182	.83218	.76020	.69509	.63616	.58278	.53440	.49052	.45068	.41449
33	.91355	.83532	.76449	.70031	.64212	.58931	.54137	.49780	.45818	.42213
34	.91527	.83847	.76880	.70556	.64811	.59589	.54839	.50516	.46578	.42988

Table S
Based on Life Table 2000CM
Single Life Remainder Factors
Applicable On or After May 1, 2009

Interest Rate

AGE	0.2%	0.4%	0.6%	0.8%	1.0%	1.2%	1.4%	1.6%	1.8%	2.0%
35	.91700	.84162	.77312	.71082	.65414	.60253	.55549	.51261	.47347	.43774
36	.91872	.84477	.77744	.71611	.66021	.60921	.56266	.52014	.48127	.44572
37	.92043	.84792	.78178	.72142	.66631	.61594	.56989	.52774	.48916	.45381
38	.92215	.85107	.78613	.72675	.67244	.62272	.57718	.53544	.49715	.46201
39	.92386	.85422	.79048	.73210	.67860	.62955	.58453	.54320	.50523	.47032
40	.92557	.85736	.79483	.73746	.68479	.63641	.59194	.55104	.51340	.47873
41	.92727	.86050	.79918	.74283	.69100	.64331	.59940	.55894	.52165	.48724
42	.92896	.86364	.80354	.74820	.69723	.65024	.60690	.56691	.52998	.49585
43	.93065	.86677	.80789	.75359	.70348	.65721	.61447	.57495	.53840	.50457
44	.93234	.86990	.81225	.75899	.70976	.66422	.62208	.58305	.54690	.51338
45	.93402	.87302	.81660	.76439	.71605	.67125	.62973	.59122	.55547	.52228
46	.93569	.87613	.82095	.76980	.72236	.67832	.63743	.59945	.56413	.53129
47	.93735	.87924	.82530	.77521	.72867	.68541	.64517	.60773	.57286	.54037
48	.93901	.88233	.82964	.78062	.73501	.69253	.65295	.61606	.58166	.54955
49	.94065	.88541	.83397	.78604	.74135	.69967	.66077	.62446	.59053	.55882
50	.94229	.88849	.83830	.79145	.74771	.70684	.66864	.63292	.59949	.56819
51	.94393	.89156	.84263	.79688	.75409	.71404	.67655	.64143	.60852	.57766
52	.94556	.89462	.84695	.80230	.76048	.72127	.68450	.65001	.61763	.58722
53	.94717	.89767	.85126	.80772	.76687	.72852	.69249	.65863	.62680	.59687
54	.94878	.90070	.85555	.81313	.77326	.73577	.70050	.66730	.63603	.60658
55	.95037	.90371	.85983	.81853	.77964	.74302	.70851	.67598	.64530	.61635
56	.95195	.90670	.86406	.82388	.78599	.75024	.71651	.68465	.65457	.62613
57	.95351	.90965	.86827	.82920	.79230	.75744	.72448	.69332	.66384	.63593
58	.95505	.91257	.87243	.83447	.79857	.76459	.73242	.70195	.67309	.64573
59	.95657	.91546	.87655	.83970	.80479	.77170	.74033	.71057	.68233	.65553
60	.95807	.91832	.88064	.84490	.81098	.77879	.74822	.71918	.69158	.66534
61	.95955	.92115	.88469	.85005	.81713	.78584	.75608	.72776	.70081	.67515
62	.96101	.92395	.88869	.85515	.82323	.79283	.76388	.73630	.71001	.68494
63	.96245	.92670	.89265	.86020	.82926	.79977	.77164	.74479	.71917	.69470
64	.96387	.92942	.89655	.86518	.83524	.80665	.77933	.75323	.72828	.70443
65	.96527	.93210	.90040	.87011	.84116	.81346	.78697	.76162	.73735	.71411
66	.96665	.93476	.90423	.87502	.84706	.82027	.79461	.77002	.74645	.72385
67	.96802	.93739	.90803	.87990	.85292	.82705	.80223	.77841	.75554	.73359
68	.96937	.93999	.91179	.88472	.85874	.83378	.80980	.78676	.76461	.74331
69	.97070	.94255	.91549	.88949	.86449	.84044	.81731	.79504	.77362	.75299
70	.97200	.94506	.91914	.89419	.87016	.84702	.82473	.80326	.78256	.76260

Table S
Based on Life Table 2000CM
Single Life Remainder Factors
Applicable On or After May 1, 2009

Interest Rate

AGE	0.2%	0.4%	0.6%	0.8%	1.0%	1.2%	1.4%	1.6%	1.8%	2.0%
71	.97328	.94754	.92273	.89882	.87577	.85353	.83209	.81140	.79143	.77215
72	.97453	.94997	.92626	.90338	.88129	.85996	.83935	.81945	.80021	.78162
73	.97576	.95234	.92972	.90785	.88671	.86627	.84651	.82739	.80888	.79098
74	.97695	.95466	.93310	.91223	.89202	.87247	.85353	.83518	.81741	.80019
75	.97811	.95692	.93638	.91649	.89720	.87851	.86039	.84281	.82577	.80923
76	.97924	.95910	.93957	.92063	.90224	.88440	.86708	.85026	.83393	.81807
77	.98033	.96122	.94267	.92465	.90715	.89013	.87360	.85753	.84191	.82671
78	.98138	.96327	.94567	.92855	.91190	.89571	.87995	.86461	.84968	.83515
79	.98239	.96526	.94857	.93233	.91652	.90112	.88611	.87149	.85725	.84337
80	.98337	.96717	.95138	.93598	.92098	.90635	.89208	.87817	.86460	.85135
81	.98431	.96901	.95408	.93951	.92529	.91141	.89786	.88463	.87172	.85910
82	.98521	.97077	.95667	.94290	.92944	.91629	.90344	.89088	.87861	.86660
83	.98608	.97247	.95917	.94616	.93343	.92099	.90882	.89691	.88526	.87385
84	.98691	.97409	.96156	.94928	.93727	.92551	.91399	.90271	.89166	.88084
85	.98770	.97565	.96384	.95228	.94094	.92984	.91895	.90828	.89782	.88757
86	.98845	.97713	.96602	.95514	.94446	.93398	.92371	.91362	.90373	.89402
87	.98917	.97854	.96810	.95786	.94781	.93794	.92825	.91873	.90939	.90021
88	.98985	.97988	.97008	.96046	.95100	.94171	.93258	.92361	.91479	.90612
89	.99049	.98115	.97196	.96292	.95404	.94530	.93671	.92826	.91994	.91176
90	.99110	.98235	.97373	.96526	.95691	.94871	.94062	.93267	.92484	.91713
91	.99168	.98348	.97541	.96747	.95964	.95193	.94434	.93686	.92949	.92223
92	.99222	.98455	.97700	.96955	.96222	.95498	.94785	.94083	.93390	.92707
93	.99273	.98556	.97849	.97152	.96464	.95786	.95117	.94457	.93806	.93163
94	.99321	.98651	.97989	.97337	.96692	.96057	.95429	.94810	.94199	.93595
95	.99366	.98739	.98121	.97510	.96907	.96312	.95724	.95143	.94569	.94002
96	.99408	.98822	.98244	.97673	.97108	.96551	.95999	.95454	.94916	.94384
97	.99447	.98900	.98359	.97825	.97297	.96774	.96258	.95747	.95242	.94742
98	.99483	.98973	.98467	.97967	.97473	.96984	.96500	.96021	.95547	.95078
99	.99518	.99040	.98568	.98101	.97638	.97180	.96727	.96278	.95834	.95394
100	.99549	.99103	.98661	.98224	.97791	.97362	.96937	.96516	.96100	.95687
101	.99579	.99162	.98750	.98340	.97935	.97534	.97136	.96742	.96351	.95964
102	.99607	.99217	.98831	.98448	.98068	.97692	.97319	.96950	.96583	.96220
103	.99634	.99271	.98911	.98553	.98199	.97848	.97500	.97155	.96812	.96473
104	.99659	.99320	.98984	.98651	.98320	.97992	.97666	.97344	.97023	.96705
105	.99683	.99369	.99056	.98747	.98439	.98134	.97830	.97530	.97231	.96934
106	.99713	.99429	.99146	.98865	.98586	.98309	.98033	.97760	.97488	.97218
107	.99747	.99496	.99246	.98998	.98751	.98506	.98262	.98020	.97779	.97539
108	.99800	.99602	.99404	.99208	.99012	.98818	.98624	.98431	.98240	.98049
109	.99900	.99801	.99703	.99603	.99505	.99407	.99310	.99213	.99116	.99020

Table S
Based on Life Table 2000CM
Single Life Remainder Factors
Applicable On or After May 1, 2009

Interest Rate

AGE	2.2%	2.4%	2.6%	2.8%	3.0%	3.2%	3.4%	3.6%	3.8%	4.0%
0	.20365	.17830	.15648	.13767	.12144	.10741	.09528	.08476	.07564	.06772
1	.20251	.17677	.15458	.13542	.11885	.10451	.09209	.08131	.07194	.06379
2	.20656	.18060	.15817	.13877	.12197	.10740	.09476	.08376	.07420	.06586
3	.21084	.18466	.16200	.14236	.12533	.11054	.09767	.08647	.07670	.06817
4	.21527	.18888	.16600	.14613	.12887	.11385	.10076	.08935	.07938	.07066
5	.21984	.19324	.17013	.15004	.13255	.11730	.10399	.09237	.08220	.07329
6	.22454	.19773	.17440	.15408	.13636	.12089	.10736	.09553	.08515	.07605
7	.22933	.20233	.17879	.15824	.14030	.12460	.11085	.09880	.08822	.07892
8	.23425	.20705	.18330	.16254	.14436	.12844	.11447	.10221	.09142	.08193
9	.23930	.21191	.18795	.16697	.14857	.13243	.11824	.10576	.09476	.08507
10	.24446	.21689	.19273	.17153	.15292	.13655	.12214	.10945	.09824	.08835
11	.24975	.22200	.19764	.17623	.15740	.14081	.12619	.11328	.10187	.09177
12	.25515	.22724	.20268	.18107	.16202	.14521	.13037	.11724	.10563	.09533
13	.26064	.23256	.20782	.18600	.16674	.14972	.13466	.12132	.10949	.09900
14	.26620	.23796	.21303	.19101	.17154	.15430	.13903	.12547	.11344	.10273
15	.27179	.24340	.21829	.19607	.17639	.15894	.14344	.12968	.11743	.10652
16	.27742	.24887	.22358	.20117	.18128	.16361	.14790	.13391	.12145	.11034
17	.28309	.25439	.22893	.20632	.18622	.16834	.15241	.13821	.12554	.11421
18	.28881	.25997	.23434	.21154	.19123	.17314	.15699	.14258	.12969	.11815
19	.29461	.26563	.23983	.21684	.19633	.17803	.16167	.14703	.13393	.12218
20	.30050	.27139	.24543	.22226	.20156	.18304	.16646	.15161	.13829	.12633
21	.30649	.27726	.25114	.22779	.20689	.18817	.17138	.15631	.14277	.13060
22	.31259	.28323	.25697	.23344	.21235	.19342	.17642	.16114	.14739	.13500
23	.31879	.28934	.26293	.23923	.21795	.19882	.18161	.16612	.15215	.13955
24	.32515	.29559	.26904	.24519	.22372	.20440	.18699	.17128	.15710	.14429
25	.33166	.30201	.27534	.25133	.22969	.21018	.19256	.17665	.16226	.14924
26	.33833	.30861	.28182	.25767	.23586	.21616	.19835	.18224	.16764	.15440
27	.34517	.31538	.28849	.26420	.24224	.22236	.20436	.18804	.17324	.15980
28	.35217	.32233	.29535	.27093	.24882	.22877	.21058	.19407	.17907	.16542
29	.35932	.32944	.30237	.27784	.25558	.23537	.21701	.20031	.18511	.17126
30	.36661	.33670	.30956	.28492	.26253	.24216	.22362	.20674	.19135	.17730
31	.37403	.34411	.31691	.29217	.26965	.24914	.23044	.21338	.19779	.18355
32	.38160	.35167	.32442	.29960	.27697	.25631	.23745	.22022	.20445	.19002
33	.38930	.35939	.33211	.30721	.28447	.26368	.24467	.22727	.21133	.19671
34	.39713	.36724	.33993	.31497	.29213	.27123	.25207	.23451	.21839	.20360

Table S
Based on Life Table 2000CM
Single Life Remainder Factors
Applicable On or After May 1, 2009

Interest Rate

AGE	2.2%	2.4%	2.6%	2.8%	3.0%	3.2%	3.4%	3.6%	3.8%	4.0%
35	.40509	.37523	.34792	.32290	.29998	.27896	.25967	.24195	.22567	.21070
36	.41318	.38337	.35606	.33100	.30800	.28688	.26746	.24961	.23317	.21803
37	.42139	.39165	.36435	.33927	.31621	.29499	.27546	.25746	.24087	.22557
38	.42974	.40008	.37281	.34771	.32460	.30330	.28366	.26554	.24880	.23334
39	.43821	.40864	.38141	.35631	.33316	.31179	.29205	.27381	.25694	.24133
40	.44679	.41734	.39016	.36507	.34189	.32046	.30064	.28229	.26529	.24954
41	.45549	.42616	.39906	.37399	.35080	.32932	.30942	.29097	.27386	.25797
42	.46430	.43511	.40809	.38307	.35987	.33836	.31840	.29986	.28264	.26662
43	.47324	.44421	.41729	.39232	.36913	.34760	.32758	.30897	.29165	.27552
44	.48229	.45343	.42663	.40172	.37857	.35702	.33697	.31829	.30088	.28465
45	.49144	.46277	.43611	.41128	.38817	.36663	.34655	.32782	.31033	.29400
46	.50072	.47225	.44574	.42101	.39796	.37644	.35634	.33757	.32002	.30360
47	.51009	.48185	.45550	.43089	.40791	.38642	.36633	.34753	.32992	.31343
48	.51958	.49158	.46540	.44093	.41803	.39660	.37652	.35770	.34006	.32351
49	.52917	.50143	.47545	.45113	.42833	.40696	.38691	.36810	.35043	.33383
50	.53888	.51141	.48566	.46150	.43883	.41754	.39754	.37874	.36106	.34442
51	.54871	.52153	.49602	.47204	.44951	.42832	.40838	.38961	.37194	.35528
52	.55865	.53179	.50653	.48276	.46038	.43931	.41945	.40073	.38307	.36641
53	.56869	.54217	.51718	.49363	.47143	.45050	.43074	.41208	.39446	.37781
54	.57882	.55265	.52796	.50465	.48265	.46186	.44222	.42364	.40607	.38945
55	.58902	.56322	.53884	.51579	.49400	.47338	.45387	.43540	.41789	.40131
56	.59926	.57383	.54978	.52701	.50544	.48501	.46565	.44729	.42987	.41335
57	.60951	.58449	.56078	.53830	.51698	.49675	.47755	.45932	.44201	.42555
58	.61978	.59517	.57182	.54964	.52858	.50858	.48956	.47147	.45427	.43790
59	.63007	.60589	.58290	.56105	.54027	.52050	.50167	.48375	.46668	.45041
60	.64039	.61665	.59405	.57254	.55205	.53253	.51392	.49617	.47925	.46310
61	.65072	.62743	.60524	.58409	.56390	.54465	.52627	.50872	.49196	.47595
62	.66104	.63822	.61645	.59566	.57581	.55683	.53870	.52136	.50478	.48892
63	.67133	.64900	.62766	.60726	.58774	.56907	.55120	.53409	.51770	.50200
64	.68161	.65977	.63887	.61887	.59970	.58134	.56375	.54688	.53071	.51519
65	.69186	.67053	.65009	.63049	.61170	.59367	.57637	.55976	.54381	.52849
66	.70216	.68136	.66140	.64223	.62383	.60615	.58916	.57283	.55713	.54203
67	.71250	.69224	.67277	.65405	.63605	.61874	.60208	.58605	.57062	.55575
68	.72283	.70312	.68416	.66590	.64833	.63140	.61509	.59938	.58423	.56963
69	.73312	.71398	.69553	.67776	.66062	.64409	.62815	.61277	.59793	.58360
70	.74335	.72479	.70688	.68959	.67291	.65680	.64124	.62621	.61168	.59764

Table S
Based on Life Table 2000CM
Single Life Remainder Factors
Applicable On or After May 1, 2009

Interest Rate

AGE	2.2%	2.4%	2.6%	2.8%	3.0%	3.2%	3.4%	3.6%	3.8%	4.0%
71	.75353	.73556	.71819	.70141	.68519	.66951	.65434	.63968	.62549	.61176
72	.76364	.74626	.72945	.71318	.69744	.68220	.66745	.65317	.63933	.62593
73	.77365	.75686	.74061	.72487	.70962	.69484	.68051	.66662	.65315	.64009
74	.78350	.76733	.75164	.73643	.72167	.70735	.69346	.67997	.66688	.65417
75	.79318	.77761	.76249	.74781	.73355	.71971	.70625	.69318	.68048	.66813
76	.80266	.78769	.77314	.75899	.74524	.73187	.71886	.70621	.69390	.68192
77	.81194	.79756	.78358	.76997	.75672	.74382	.73127	.71904	.70713	.69553
78	.82100	.80722	.79380	.78072	.76798	.75556	.74346	.73166	.72016	.70894
79	.82984	.81664	.80378	.79124	.77900	.76706	.75542	.74405	.73296	.72213
80	.83843	.82582	.81351	.80149	.78976	.77830	.76711	.75618	.74550	.73507
81	.84678	.83474	.82298	.81148	.80025	.78927	.77853	.76803	.75777	.74773
82	.85487	.84339	.83217	.82119	.81045	.79994	.78966	.77959	.76974	.76009
83	.86269	.85177	.84107	.83060	.82035	.81030	.80047	.79083	.78139	.77214
84	.87024	.85986	.84968	.83970	.82993	.82035	.81095	.80174	.79271	.78385
85	.87751	.86765	.85798	.84849	.83919	.83005	.82110	.81230	.80368	.79521
86	.88450	.87515	.86597	.85696	.84811	.83942	.83089	.82251	.81428	.80619
87	.89119	.88234	.87363	.86508	.85668	.84843	.84031	.83234	.82450	.81679
88	.89760	.88922	.88099	.87289	.86492	.85708	.84938	.84180	.83434	.82700
89	.90372	.89580	.88801	.88034	.87280	.86537	.85806	.85087	.84378	.83681
90	.90954	.90207	.89471	.88746	.88032	.87329	.86637	.85954	.85282	.84620
91	.91508	.90803	.90109	.89424	.88750	.88085	.87429	.86783	.86146	.85518
92	.92033	.91369	.90714	.90068	.89432	.88803	.88184	.87572	.86969	.86374
93	.92530	.91904	.91287	.90678	.90078	.89484	.88899	.88321	.87751	.87188
94	.92999	.92411	.91830	.91256	.90690	.90130	.89578	.89032	.88493	.87961
95	.93442	.92889	.92342	.91802	.91269	.90741	.90220	.89706	.89197	.88694
96	.93858	.93338	.92824	.92316	.91813	.91316	.90825	.90340	.89859	.89385
97	.94248	.93759	.93276	.92798	.92325	.91857	.91395	.90937	.90484	.90036
98	.94614	.94155	.93701	.93252	.92807	.92367	.91931	.91500	.91073	.90650
99	.94959	.94528	.94101	.93679	.93260	.92846	.92436	.92030	.91628	.91229
100	.95278	.94874	.94473	.94075	.93682	.93292	.92906	.92523	.92144	.91769
101	.95581	.95201	.94824	.94451	.94081	.93715	.93352	.92992	.92635	.92281
102	.95860	.95503	.95149	.94798	.94450	.94105	.93763	.93424	.93088	.92754
103	.96136	.95802	.95470	.95142	.94816	.94492	.94171	.93853	.93538	.93224
104	.96390	.96077	.95766	.95458	.95152	.94848	.94547	.94248	.93951	.93657
105	.96640	.96347	.96057	.95769	.95483	.95199	.94917	.94637	.94359	.94083
106	.96950	.96684	.96420	.96157	.95896	.95636	.95379	.95123	.94868	.94616
107	.97301	.97064	.96829	.96595	.96362	.96131	.95901	.95672	.95445	.95219
108	.97859	.97670	.97482	.97295	.97109	.96923	.96739	.96555	.96373	.96191
109	.98924	.98828	.98733	.98638	.98544	.98450	.98356	.98263	.98170	.98077

Table S
Based on Life Table 2000CM
Single Life Remainder Factors
Applicable On or After May 1, 2009

Interest Rate

AGE	4.2%	4.4%	4.6%	4.8%	5.0%	5.2%	5.4%	5.6%	5.8%	6.0%
0	.06083	.05483	.04959	.04501	.04101	.03749	.03441	.03170	.02931	.02721
1	.05668	.05049	.04507	.04034	.03618	.03254	.02934	.02652	.02403	.02183
2	.05858	.05222	.04665	.04178	.03750	.03373	.03042	.02750	.02492	.02264
3	.06072	.05420	.04848	.04346	.03904	.03516	.03173	.02871	.02603	.02366
4	.06303	.05634	.05046	.04530	.04075	.03674	.03319	.03006	.02729	.02483
5	.06547	.05861	.05258	.04726	.04258	.03844	.03478	.03153	.02866	.02610
6	.06805	.06102	.05482	.04935	.04453	.04026	.03647	.03312	.03014	.02749
7	.07074	.06353	.05717	.05155	.04658	.04217	.03826	.03479	.03171	.02895
8	.07356	.06617	.05964	.05386	.04875	.04421	.04017	.03658	.03338	.03053
9	.07651	.06895	.06225	.05631	.05105	.04637	.04220	.03849	.03518	.03222
10	.07960	.07185	.06499	.05889	.05347	.04865	.04435	.04052	.03709	.03402
11	.08283	.07490	.06786	.06160	.05603	.05106	.04663	.04267	.03912	.03594
12	.08620	.07808	.07087	.06444	.05871	.05360	.04903	.04494	.04127	.03798
13	.08967	.08137	.07397	.06738	.06149	.05623	.05152	.04729	.04351	.04010
14	.09321	.08472	.07715	.07038	.06433	.05892	.05406	.04971	.04579	.04227
15	.09680	.08812	.08036	.07342	.06721	.06164	.05664	.05214	.04810	.04445
16	.10041	.09154	.08360	.07649	.07011	.06438	.05923	.05459	.05041	.04664
17	.10409	.09502	.08689	.07960	.07305	.06716	.06185	.05707	.05276	.04886
18	.10782	.09855	.09024	.08276	.07604	.06998	.06452	.05959	.05514	.05111
19	.11164	.10217	.09366	.08600	.07910	.07288	.06726	.06218	.05758	.05341
20	.11559	.10592	.09721	.08937	.08228	.07589	.07010	.06487	.06012	.05582
21	.11965	.10977	.10087	.09283	.08557	.07900	.07305	.06765	.06276	.05831
22	.12383	.11376	.10465	.09642	.08897	.08223	.07610	.07055	.06550	.06090
23	.12817	.11789	.10859	.10016	.09252	.08559	.07930	.07358	.06837	.06363
24	.13270	.12221	.11270	.10408	.09625	.08914	.08267	.07678	.07141	.06651
25	.13744	.12674	.11703	.10821	.10019	.09289	.08625	.08018	.07465	.06960
26	.14239	.13149	.12158	.11256	.10435	.09686	.09003	.08380	.07810	.07288
27	.14758	.13647	.12636	.11714	.10873	.10106	.09405	.08764	.08177	.07639
28	.15300	.14169	.13137	.12195	.11335	.10549	.09829	.09171	.08567	.08012
29	.15864	.14712	.13660	.12698	.11819	.11013	.10275	.09598	.08977	.08406
30	.16448	.15275	.14203	.13222	.12323	.11498	.10742	.10047	.09408	.08820
31	.17053	.15861	.14769	.13768	.12849	.12006	.11230	.10517	.09860	.09255
32	.17680	.16468	.15357	.14336	.13398	.12535	.11741	.11009	.10335	.09712
33	.18330	.17099	.15968	.14927	.13970	.13088	.12275	.11525	.10832	.10192
34	.19000	.17750	.16599	.15539	.14562	.13661	.12829	.12061	.11350	.10693

Table S
Based on Life Table 2000CM
Single Life Remainder Factors
Applicable On or After May 1, 2009

Interest Rate

AGE	4.2%	4.4%	4.6%	4.8%	5.0%	5.2%	5.4%	5.6%	5.8%	6.0%
35	.19692	.18423	.17253	.16174	.15178	.14258	.13408	.12621	.11892	.11217
36	.20407	.19119	.17931	.16833	.15818	.14879	.14009	.13204	.12457	.11764
37	.21144	.19838	.18631	.17515	.16481	.15523	.14635	.13811	.13046	.12335
38	.21904	.20582	.19357	.18222	.17170	.16193	.15287	.14444	.13661	.12932
39	.22687	.21348	.20105	.18952	.17882	.16887	.15962	.15102	.14300	.13554
40	.23493	.22137	.20878	.19707	.18619	.17606	.16663	.15784	.14965	.14201
41	.24322	.22950	.21674	.20487	.19381	.18350	.17390	.16493	.15656	.14873
42	.25173	.23786	.22494	.21290	.20168	.19120	.18141	.17227	.16372	.15572
43	.26049	.24648	.23342	.22122	.20982	.19918	.18922	.17990	.17118	.16301
44	.26950	.25535	.24214	.22979	.21824	.20742	.19730	.18781	.17892	.17057
45	.27874	.26447	.25112	.23862	.22692	.21595	.20566	.19600	.18694	.17843
46	.28824	.27385	.26038	.24774	.23589	.22476	.21431	.20450	.19527	.18659
47	.29798	.28349	.26989	.25712	.24513	.23386	.22326	.21328	.20390	.19505
48	.30797	.29338	.27967	.26678	.25466	.24325	.23250	.22238	.21283	.20383
49	.31822	.30355	.28974	.27674	.26449	.25294	.24206	.23179	.22210	.21294
50	.32876	.31401	.30011	.28701	.27465	.26298	.25196	.24156	.23172	.22242
51	.33958	.32477	.31079	.29759	.28513	.27335	.26221	.25168	.24170	.23226
52	.35068	.33582	.32178	.30851	.29595	.28407	.27282	.26216	.25206	.24249
53	.36206	.34717	.33308	.31974	.30710	.29513	.28378	.27301	.26279	.25309
54	.37371	.35880	.34467	.33127	.31857	.30651	.29507	.28420	.27388	.26406
55	.38559	.37067	.35652	.34308	.33032	.31820	.30668	.29572	.28529	.27537
56	.39765	.38275	.36859	.35512	.34232	.33014	.31855	.30751	.29699	.28697
57	.40990	.39502	.38086	.36739	.35455	.34233	.33068	.31957	.30898	.29887
58	.42231	.40747	.39333	.37985	.36700	.35474	.34304	.33188	.32121	.31103
59	.43490	.42011	.40600	.39253	.37968	.36740	.35567	.34446	.33374	.32348
60	.44768	.43296	.41890	.40546	.39261	.38033	.36858	.35733	.34656	.33625
61	.46064	.44600	.43200	.41860	.40578	.39351	.38175	.37048	.35968	.34933
62	.47373	.45920	.44527	.43194	.41915	.40690	.39514	.38387	.37305	.36267
63	.48696	.47253	.45870	.44544	.43271	.42049	.40876	.39749	.38666	.37625
64	.50030	.48601	.47229	.45911	.44645	.43428	.42258	.41133	.40051	.39010
65	.51377	.49963	.48603	.47295	.46037	.44827	.43662	.42540	.41460	.40420
66	.52750	.51352	.50007	.48711	.47464	.46262	.45103	.43987	.42911	.41872
67	.54144	.52765	.51436	.50154	.48919	.47727	.46578	.45468	.44397	.43363
68	.55554	.54196	.52885	.51619	.50398	.49218	.48079	.46978	.45915	.44887
69	.56976	.55640	.54349	.53102	.51896	.50731	.49603	.48513	.47458	.46438
70	.58407	.57095	.55826	.54598	.53410	.52260	.51147	.50069	.49025	.48013

Table S
Based on Life Table 2000CM
Single Life Remainder Factors
Applicable On or After May 1, 2009

Interest Rate

AGE	4.2%	4.4%	4.6%	4.8%	5.0%	5.2%	5.4%	5.6%	5.8%	6.0%
71	.59848	.58561	.57316	.56109	.54940	.53808	.52710	.51646	.50615	.49614
72	.61294	.60035	.58815	.57632	.56484	.55371	.54291	.53243	.52225	.51237
73	.62741	.61512	.60318	.59160	.58035	.56943	.55882	.54851	.53849	.52876
74	.64183	.62983	.61818	.60686	.59586	.58516	.57476	.56464	.55480	.54523
75	.65612	.64444	.63309	.62204	.61129	.60083	.59065	.58074	.57109	.56169
76	.67026	.65891	.64786	.63710	.62661	.61640	.60646	.59676	.58731	.57810
77	.68423	.67321	.66248	.65201	.64181	.63186	.62215	.61269	.60345	.59444
78	.69800	.68733	.67692	.66676	.65684	.64717	.63772	.62849	.61948	.61068
79	.71156	.70124	.69116	.68132	.67170	.66230	.65312	.64414	.63537	.62680
80	.72487	.71490	.70516	.69563	.68632	.67721	.66830	.65959	.65106	.64272
81	.73791	.72830	.71890	.70970	.70069	.69188	.68325	.67481	.66654	.65844
82	.75065	.74140	.73235	.72348	.71479	.70628	.69794	.68977	.68176	.67391
83	.76308	.75419	.74548	.73695	.72858	.72037	.71232	.70443	.69669	.68909
84	.77516	.76664	.75828	.75008	.74203	.73413	.72638	.71877	.71130	.70396
85	.78689	.77873	.77072	.76285	.75512	.74753	.74008	.73275	.72556	.71849
86	.79825	.79044	.78278	.77524	.76783	.76055	.75340	.74636	.73944	.73264
87	.80921	.80176	.79443	.78722	.78014	.77316	.76630	.75956	.75292	.74638
88	.81978	.81268	.80569	.79880	.79203	.78536	.77880	.77234	.76598	.75971
89	.82994	.82317	.81651	.80995	.80349	.79712	.79085	.78467	.77859	.77259
90	.83967	.83324	.82690	.82065	.81450	.80843	.80244	.79655	.79073	.78500
91	.84898	.84288	.83685	.83091	.82505	.81928	.81358	.80795	.80241	.79693
92	.85787	.85208	.84636	.84072	.83515	.82966	.82423	.81888	.81360	.80838
93	.86632	.86083	.85541	.85006	.84477	.83955	.83440	.82931	.82428	.81931
94	.87435	.86915	.86402	.85894	.85393	.84898	.84409	.83925	.83447	.82975
95	.88197	.87705	.87219	.86739	.86265	.85795	.85331	.84872	.84419	.83970
96	.88915	.88451	.87991	.87537	.87088	.86643	.86203	.85768	.85338	.84912
97	.89593	.89154	.88720	.88290	.87865	.87444	.87028	.86616	.86208	.85804
98	.90232	.89818	.89408	.89002	.88600	.88202	.87808	.87418	.87031	.86649
99	.90835	.90444	.90057	.89674	.89294	.88918	.88546	.88177	.87811	.87449
100	.91397	.91028	.90663	.90301	.89942	.89587	.89234	.88885	.88539	.88196
101	.91930	.91583	.91238	.90897	.90558	.90223	.89890	.89560	.89233	.88908
102	.92424	.92096	.91771	.91448	.91128	.90811	.90496	.90184	.89875	.89568
103	.92914	.92605	.92300	.91996	.91695	.91397	.91100	.90806	.90514	.90225
104	.93364	.93074	.92786	.92501	.92217	.91935	.91656	.91379	.91103	.90830
105	.93809	.93537	.93266	.92998	.92731	.92467	.92204	.91943	.91683	.91426
106	.94365	.94115	.93867	.93621	.93376	.93133	.92892	.92651	.92413	.92176
107	.94994	.94771	.94549	.94328	.94108	.93890	.93673	.93457	.93242	.93028
108	.96010	.95830	.95651	.95472	.95295	.95118	.94942	.94767	.94593	.94420
109	.97985	.97893	.97801	.97710	.97619	.97529	.97438	.97348	.97259	.97170

Table S
Based on Life Table 2000CM
Single Life Remainder Factors
Applicable On or After May 1, 2009

Interest Rate

AGE	6.2%	6.4%	6.6%	6.8%	7.0%	7.2%	7.4%	7.6%	7.8%	8.0%
0	.02534	.02370	.02223	.02093	.01978	.01874	.01782	.01699	.01625	.01559
1	.01989	.01817	.01664	.01528	.01406	.01298	.01202	.01115	.01037	.00967
2	.02061	.01882	.01722	.01580	.01454	.01340	.01239	.01148	.01066	.00993
3	.02156	.01969	.01802	.01654	.01521	.01403	.01297	.01201	.01115	.01038
4	.02264	.02069	.01896	.01741	.01602	.01478	.01367	.01267	.01176	.01095
5	.02383	.02180	.01999	.01838	.01693	.01563	.01446	.01341	.01246	.01161
6	.02512	.02301	.02113	.01944	.01793	.01657	.01535	.01424	.01325	.01235
7	.02650	.02430	.02234	.02058	.01900	.01758	.01630	.01514	.01410	.01315
8	.02798	.02570	.02365	.02182	.02017	.01868	.01734	.01613	.01503	.01404
9	.02957	.02720	.02507	.02316	.02143	.01988	.01848	.01721	.01606	.01502
10	.03128	.02881	.02659	.02460	.02280	.02118	.01971	.01838	.01718	.01608
11	.03309	.03053	.02823	.02615	.02428	.02258	.02105	.01966	.01839	.01725
12	.03503	.03237	.02997	.02781	.02585	.02408	.02248	.02103	.01971	.01850
13	.03704	.03428	.03179	.02954	.02750	.02565	.02398	.02246	.02108	.01982
14	.03909	.03623	.03364	.03130	.02918	.02726	.02551	.02392	.02248	.02116
15	.04117	.03820	.03551	.03308	.03087	.02886	.02704	.02538	.02387	.02249
16	.04324	.04016	.03737	.03484	.03254	.03046	.02855	.02682	.02524	.02379
17	.04533	.04214	.03924	.03661	.03422	.03205	.03007	.02826	.02661	.02509
18	.04746	.04415	.04114	.03841	.03592	.03366	.03159	.02970	.02798	.02639
19	.04963	.04620	.04309	.04025	.03766	.03530	.03315	.03117	.02937	.02772
20	.05191	.04835	.04512	.04217	.03948	.03702	.03478	.03272	.03083	.02910
21	.05427	.05058	.04723	.04416	.04137	.03881	.03647	.03432	.03235	.03054
22	.05672	.05291	.04943	.04625	.04334	.04067	.03823	.03599	.03394	.03205
23	.05930	.05535	.05174	.04844	.04542	.04265	.04010	.03777	.03562	.03364
24	.06204	.05795	.05421	.05078	.04764	.04476	.04211	.03967	.03743	.03536
25	.06497	.06074	.05687	.05331	.05005	.04705	.04429	.04174	.03940	.03724
26	.06811	.06373	.05972	.05603	.05264	.04952	.04665	.04400	.04155	.03929
27	.07146	.06694	.06278	.05895	.05543	.05219	.04920	.04644	.04389	.04153
28	.07503	.07036	.06605	.06209	.05844	.05507	.05196	.04908	.04642	.04396
29	.07881	.07398	.06953	.06542	.06163	.05814	.05490	.05191	.04913	.04656
30	.08279	.07780	.07319	.06894	.06502	.06138	.05802	.05491	.05202	.04933
31	.08697	.08182	.07707	.07267	.06860	.06483	.06134	.05810	.05509	.05229
32	.09137	.08606	.08115	.07660	.07239	.06848	.06485	.06148	.05835	.05543
33	.09601	.09053	.08546	.08075	.07639	.07234	.06858	.06508	.06182	.05878
34	.10084	.09520	.08996	.08511	.08059	.07640	.07249	.06886	.06547	.06231

Table S
Based on Life Table 2000CM
Single Life Remainder Factors
Applicable On or After May 1, 2009

Interest Rate

AGE	6.2%	6.4%	6.6%	6.8%	7.0%	7.2%	7.4%	7.6%	7.8%	8.0%
35	.10590	.10009	.09470	.08968	.08501	.08067	.07662	.07285	.06933	.06605
36	.11120	.10522	.09966	.09448	.08966	.08517	.08098	.07706	.07341	.06999
37	.11674	.11059	.10486	.09952	.09454	.08990	.08556	.08150	.07771	.07416
38	.12254	.11621	.11032	.10481	.09968	.09487	.09039	.08618	.08225	.07856
39	.12857	.12208	.11601	.11035	.10505	.10009	.09545	.09110	.08702	.08320
40	.13487	.12820	.12196	.11613	.11067	.10555	.10076	.09626	.09204	.08807
41	.14142	.13458	.12817	.12217	.11655	.11127	.10632	.10167	.09730	.09319
42	.14823	.14122	.13464	.12848	.12269	.11725	.11214	.10734	.10282	.09856
43	.15535	.14816	.14141	.13508	.12913	.12353	.11826	.11330	.10863	.10422
44	.16274	.15538	.14847	.14196	.13585	.13008	.12466	.11954	.11472	.11016
45	.17042	.16290	.15581	.14914	.14286	.13694	.13135	.12608	.12110	.11640
46	.17842	.17073	.16348	.15664	.15020	.14411	.13836	.13293	.12780	.12294
47	.18672	.17886	.17145	.16445	.15784	.15159	.14568	.14010	.13481	.12980
48	.19534	.18732	.17974	.17258	.16581	.15940	.15334	.14759	.14215	.13699
49	.20429	.19612	.18838	.18106	.17413	.16757	.16134	.15544	.14984	.14453
50	.21362	.20529	.19740	.18993	.18284	.17612	.16974	.16368	.15793	.15247
51	.22332	.21484	.20680	.19917	.19194	.18506	.17853	.17232	.16642	.16080
52	.23341	.22479	.21660	.20883	.20144	.19442	.18774	.18138	.17533	.16957
53	.24388	.23513	.22681	.21889	.21136	.20419	.19737	.19087	.18467	.17876
54	.25473	.24585	.23739	.22935	.22168	.21437	.20741	.20076	.19442	.18837
55	.26593	.25693	.24835	.24017	.23238	.22494	.21784	.21105	.20458	.19838
56	.27742	.26831	.25962	.25132	.24340	.23583	.22860	.22169	.21508	.20875
57	.28922	.28001	.27121	.26280	.25476	.24707	.23971	.23267	.22593	.21947
58	.30129	.29199	.28309	.27457	.26642	.25862	.25114	.24398	.23712	.23053
59	.31367	.30428	.29529	.28667	.27842	.27051	.26293	.25565	.24867	.24197
60	.32638	.31691	.30784	.29914	.29079	.28278	.27509	.26771	.26062	.25380
61	.33940	.32987	.32073	.31195	.30352	.29542	.28763	.28015	.27295	.26603
62	.35269	.34311	.33391	.32506	.31656	.30837	.30050	.29293	.28564	.27862
63	.36625	.35663	.34738	.33847	.32990	.32165	.31370	.30604	.29867	.29155
64	.38007	.37043	.36113	.35218	.34356	.33524	.32723	.31950	.31204	.30484
65	.39417	.38451	.37519	.36620	.35753	.34917	.34110	.33330	.32577	.31850
66	.40871	.39905	.38972	.38071	.37201	.36361	.35550	.34765	.34006	.33273
67	.42365	.41400	.40468	.39567	.38696	.37853	.37038	.36250	.35487	.34749
68	.43892	.42931	.42001	.41101	.40230	.39387	.38570	.37780	.37014	.36272
69	.45450	.44493	.43567	.42670	.41800	.40958	.40141	.39350	.38582	.37837
70	.47033	.46083	.45162	.44269	.43403	.42563	.41748	.40957	.40189	.39443

Table S
Based on Life Table 2000CM
Single Life Remainder Factors
Applicable On or After May 1, 2009

Interest Rate

AGE	6.2%	6.4%	6.6%	6.8%	7.0%	7.2%	7.4%	7.6%	7.8%	8.0%
71	.48644	.47702	.46788	.45901	.45040	.44203	.43391	.42602	.41835	.41090
72	.50278	.49347	.48441	.47562	.46707	.45877	.45069	.44284	.43520	.42776
73	.51930	.51010	.50115	.49245	.48399	.47575	.46774	.45994	.45234	.44494
74	.53591	.52684	.51802	.50943	.50106	.49291	.48497	.47724	.46970	.46235
75	.55253	.54361	.53492	.52645	.51820	.51015	.50230	.49465	.48719	.47991
76	.56912	.56036	.55182	.54349	.53536	.52742	.51968	.51213	.50475	.49754
77	.58565	.57706	.56868	.56050	.55251	.54471	.53708	.52964	.52236	.51525
78	.60209	.59369	.58549	.57747	.56963	.56197	.55448	.54715	.53999	.53298
79	.61841	.61021	.60219	.59435	.58668	.57917	.57182	.56463	.55760	.55071
80	.63456	.62657	.61875	.61109	.60359	.59625	.58906	.58202	.57512	.56836
81	.65050	.64273	.63512	.62766	.62034	.61318	.60616	.59927	.59252	.58590
82	.66621	.65867	.65127	.64401	.63690	.62992	.62308	.61636	.60977	.60330
83	.68164	.67433	.66716	.66012	.65321	.64642	.63976	.63322	.62680	.62050
84	.69676	.68969	.68275	.67593	.66923	.66265	.65618	.64983	.64358	.63745
85	.71154	.70472	.69801	.69141	.68493	.67856	.67229	.66613	.66007	.65412
86	.72595	.71937	.71290	.70654	.70028	.69412	.68806	.68210	.67623	.67046
87	.73995	.73362	.72740	.72127	.71523	.70929	.70344	.69768	.69201	.68642
88	.75354	.74746	.74148	.73558	.72978	.72406	.71842	.71287	.70739	.70200
89	.76668	.76085	.75511	.74945	.74387	.73837	.73295	.72761	.72234	.71714
90	.77934	.77377	.76827	.76284	.75749	.75222	.74701	.74188	.73681	.73181
91	.79153	.78620	.78094	.77575	.77063	.76558	.76059	.75566	.75080	.74600
92	.80323	.79814	.79312	.78816	.78326	.77843	.77365	.76894	.76428	.75967
93	.81440	.80956	.80477	.80004	.79536	.79074	.78618	.78166	.77721	.77280
94	.82508	.82047	.81591	.81140	.80694	.80253	.79817	.79387	.78961	.78539
95	.83526	.83088	.82654	.82225	.81800	.81380	.80965	.80554	.80148	.79746
96	.84491	.84074	.83662	.83254	.82850	.82450	.82055	.81663	.81276	.80892
97	.85405	.85009	.84617	.84230	.83846	.83466	.83089	.82717	.82348	.81982
98	.86270	.85895	.85523	.85155	.84791	.84430	.84072	.83718	.83367	.83019
99	.87090	.86735	.86382	.86033	.85687	.85345	.85005	.84668	.84335	.84004
100	.87856	.87519	.87185	.86854	.86526	.86201	.85878	.85559	.85242	.84927
101	.88587	.88268	.87952	.87638	.87327	.87019	.86713	.86409	.86109	.85810
102	.89263	.88961	.88662	.88364	.88069	.87777	.87487	.87199	.86913	.86629
103	.89938	.89653	.89370	.89089	.88810	.88534	.88259	.87987	.87717	.87448
104	.90558	.90289	.90021	.89756	.89492	.89231	.88971	.88713	.88456	.88202
105	.91170	.90916	.90664	.90413	.90164	.89917	.89672	.89428	.89186	.88945
106	.91940	.91706	.91474	.91242	.91013	.90784	.90558	.90332	.90108	.89885
107	.92816	.92605	.92395	.92186	.91978	.91772	.91567	.91362	.91159	.90957
108	.94247	.94075	.93904	.93734	.93565	.93396	.93229	.93062	.92895	.92730
109	.97081	.96992	.96904	.96816	.96729	.96642	.96555	.96468	.96382	.96296

Table S
Based on Life Table 2000CM
Single Life Remainder Factors
Applicable On or After May 1, 2009

Interest Rate

AGE	8.2%	8.4%	8.6%	8.8%	9.0%	9.2%	9.4%	9.6%	9.8%	10.0%
0	.01498	.01444	.01395	.01351	.01310	.01273	.01240	.01209	.01181	.01155
1	.00904	.00847	.00796	.00749	.00707	.00668	.00633	.00601	.00572	.00545
2	.00926	.00866	.00812	.00763	.00718	.00677	.00640	.00606	.00575	.00547
3	.00968	.00905	.00848	.00796	.00748	.00705	.00666	.00630	.00597	.00567
4	.01021	.00955	.00894	.00839	.00789	.00744	.00702	.00664	.00629	.00597
5	.01083	.01013	.00949	.00891	.00839	.00790	.00746	.00706	.00669	.00635
6	.01153	.01080	.01012	.00951	.00895	.00844	.00798	.00755	.00715	.00679
7	.01229	.01151	.01081	.01016	.00957	.00903	.00854	.00808	.00767	.00728
8	.01314	.01232	.01157	.01089	.01026	.00969	.00917	.00869	.00825	.00784
9	.01407	.01321	.01242	.01170	.01104	.01044	.00989	.00938	.00891	.00848
10	.01509	.01418	.01335	.01259	.01190	.01126	.01068	.01014	.00965	.00919
11	.01620	.01525	.01437	.01358	.01285	.01218	.01156	.01099	.01047	.00998
12	.01740	.01640	.01549	.01465	.01388	.01317	.01252	.01192	.01137	.01086
13	.01867	.01762	.01665	.01577	.01496	.01422	.01353	.01290	.01231	.01177
14	.01995	.01885	.01784	.01691	.01606	.01527	.01455	.01389	.01327	.01270
15	.02123	.02007	.01901	.01803	.01714	.01632	.01556	.01485	.01420	.01360
16	.02247	.02126	.02015	.01913	.01818	.01732	.01652	.01578	.01509	.01446
17	.02371	.02244	.02127	.02020	.01921	.01830	.01746	.01668	.01596	.01529
18	.02494	.02361	.02239	.02126	.02022	.01926	.01838	.01756	.01680	.01610
19	.02620	.02480	.02352	.02234	.02125	.02024	.01931	.01844	.01764	.01690
20	.02751	.02605	.02471	.02346	.02232	.02126	.02028	.01937	.01853	.01775
21	.02888	.02735	.02593	.02463	.02343	.02231	.02128	.02032	.01944	.01861
22	.03030	.02870	.02722	.02585	.02458	.02341	.02233	.02132	.02038	.01951
23	.03181	.03013	.02858	.02714	.02581	.02458	.02344	.02237	.02139	.02047
24	.03345	.03169	.03006	.02855	.02715	.02586	.02465	.02353	.02249	.02152
25	.03524	.03340	.03169	.03010	.02863	.02727	.02600	.02482	.02373	.02270
26	.03720	.03527	.03348	.03181	.03027	.02884	.02750	.02626	.02510	.02402
27	.03934	.03732	.03544	.03370	.03208	.03057	.02916	.02786	.02664	.02549
28	.04167	.03955	.03759	.03576	.03406	.03247	.03099	.02962	.02833	.02713
29	.04417	.04196	.03990	.03798	.03619	.03453	.03298	.03153	.03017	.02890
30	.04684	.04452	.04237	.04036	.03848	.03674	.03510	.03358	.03215	.03081
31	.04969	.04727	.04501	.04291	.04094	.03911	.03739	.03579	.03428	.03287
32	.05272	.05019	.04783	.04563	.04357	.04165	.03984	.03816	.03657	.03509
33	.05595	.05331	.05085	.04854	.04639	.04437	.04248	.04070	.03904	.03748
34	.05936	.05661	.05403	.05162	.04936	.04725	.04527	.04341	.04166	.04001

Table S
Based on Life Table 2000CM
Single Life Remainder Factors
Applicable On or After May 1, 2009

Interest Rate

AGE	8.2%	8.4%	8.6%	8.8%	9.0%	9.2%	9.4%	9.6%	9.8%	10.0%
35	.06297	.06010	.05741	.05489	.05253	.05032	.04824	.04629	.04445	.04272
36	.06679	.06380	.06100	.05837	.05590	.05358	.05140	.04935	.04742	.04561
37	.07083	.06771	.06479	.06204	.05947	.05704	.05476	.05261	.05059	.04868
38	.07511	.07186	.06881	.06595	.06326	.06072	.05834	.05609	.05397	.05196
39	.07961	.07623	.07306	.07007	.06726	.06462	.06212	.05977	.05754	.05544
40	.08434	.08083	.07753	.07442	.07149	.06873	.06612	.06366	.06133	.05913
41	.08932	.08568	.08225	.07901	.07596	.07308	.07035	.06778	.06534	.06304
42	.09455	.09077	.08720	.08384	.08066	.07766	.07481	.07213	.06958	.06717
43	.10007	.09615	.09245	.08895	.08564	.08251	.07955	.07674	.07408	.07156
44	.10586	.10180	.09796	.09433	.09089	.08763	.08454	.08162	.07884	.07621
45	.11195	.10774	.10376	.09999	.09642	.09303	.08982	.08677	.08387	.08112
46	.11835	.11400	.10987	.10596	.10225	.09873	.09539	.09222	.08920	.08633
47	.12505	.12055	.11629	.11224	.10839	.10474	.10126	.09796	.09482	.09182
48	.13209	.12745	.12303	.11884	.11485	.11106	.10746	.10402	.10075	.09764
49	.13948	.13469	.13013	.12579	.12167	.11774	.11400	.11043	.10703	.10379
50	.14727	.14233	.13762	.13314	.12887	.12481	.12093	.11723	.11370	.11033
51	.15546	.15037	.14551	.14089	.13648	.13228	.12826	.12443	.12077	.11726
52	.16407	.15884	.15384	.14907	.14452	.14018	.13603	.13206	.12826	.12463
53	.17312	.16774	.16260	.15769	.15300	.14852	.14423	.14012	.13620	.13243
54	.18259	.17707	.17179	.16674	.16191	.15729	.15286	.14862	.14456	.14067
55	.19247	.18680	.18139	.17620	.17123	.16648	.16192	.15755	.15335	.14933
56	.20270	.19690	.19135	.18602	.18092	.17603	.17134	.16684	.16251	.15836
57	.21329	.20736	.20167	.19622	.19099	.18596	.18114	.17650	.17205	.16777
58	.22422	.21816	.21235	.20677	.20140	.19625	.19130	.18653	.18195	.17754
59	.23553	.22935	.22341	.21770	.21221	.20693	.20185	.19696	.19225	.18772
60	.24725	.24095	.23489	.22906	.22345	.21805	.21285	.20783	.20300	.19834
61	.25937	.25296	.24679	.24084	.23511	.22959	.22427	.21914	.21419	.20941
62	.27185	.26534	.25906	.25300	.24716	.24153	.23609	.23084	.22577	.22088
63	.28469	.27808	.27169	.26553	.25959	.25384	.24830	.24294	.23776	.23275
64	.29789	.29119	.28471	.27845	.27240	.26656	.26091	.25544	.25016	.24504
65	.31148	.30468	.29812	.29177	.28563	.27969	.27394	.26837	.26299	.25777
66	.32564	.31877	.31213	.30570	.29948	.29345	.28761	.28195	.27647	.27115
67	.34034	.33341	.32671	.32021	.31391	.30780	.30188	.29614	.29057	.28517
68	.35552	.34855	.34179	.33523	.32887	.32270	.31671	.31089	.30524	.29976
69	.37115	.36414	.35734	.35073	.34432	.33809	.33204	.32616	.32045	.31489
70	.38719	.38016	.37332	.36668	.36023	.35396	.34786	.34193	.33616	.33054

Table S
Based on Life Table 2000CM
Single Life Remainder Factors
Applicable On or After May 1, 2009

Interest Rate

AGE	8.2%	8.4%	8.6%	8.8%	9.0%	9.2%	9.4%	9.6%	9.8%	10.0%
71	.40366	.39662	.38977	.38311	.37663	.37032	.36419	.35821	.35240	.34674
72	.42053	.41350	.40665	.39998	.39349	.38716	.38100	.37500	.36916	.36346
73	.43774	.43073	.42389	.41723	.41074	.40441	.39824	.39222	.38636	.38063
74	.45519	.44821	.44140	.43476	.42829	.42197	.41580	.40979	.40391	.39818
75	.47280	.46587	.45910	.45250	.44605	.43975	.43360	.42759	.42173	.41599
76	.49051	.48364	.47693	.47037	.46396	.45770	.45158	.44560	.43975	.43403
77	.50830	.50150	.49486	.48836	.48201	.47580	.46972	.46377	.45795	.45225
78	.52613	.51942	.51286	.50644	.50015	.49400	.48797	.48208	.47630	.47064
79	.54396	.53736	.53089	.52456	.51835	.51227	.50632	.50048	.49476	.48915
80	.56174	.55525	.54888	.54265	.53653	.53054	.52466	.51890	.51325	.50770
81	.57941	.57305	.56681	.56068	.55467	.54878	.54299	.53731	.53174	.52627
82	.59696	.59073	.58461	.57861	.57272	.56693	.56125	.55566	.55018	.54480
83	.61430	.60822	.60224	.59637	.59061	.58494	.57937	.57389	.56851	.56322
84	.63142	.62549	.61966	.61393	.60830	.60276	.59731	.59196	.58669	.58150
85	.64825	.64249	.63682	.63124	.62575	.62035	.61503	.60980	.60465	.59958
86	.66477	.65918	.65367	.64825	.64291	.63765	.63248	.62738	.62236	.61741
87	.68092	.67550	.67016	.66490	.65972	.65462	.64959	.64463	.63975	.63493
88	.69669	.69145	.68628	.68119	.67618	.67123	.66635	.66154	.65680	.65212
89	.71201	.70696	.70198	.69706	.69221	.68742	.68270	.67805	.67345	.66892
90	.72688	.72201	.71721	.71246	.70779	.70317	.69861	.69411	.68966	.68528
91	.74126	.73658	.73196	.72739	.72289	.71844	.71404	.70970	.70541	.70117
92	.75513	.75063	.74620	.74181	.73748	.73320	.72897	.72479	.72066	.71657
93	.76844	.76414	.75988	.75568	.75152	.74741	.74334	.73932	.73535	.73142
94	.78123	.77711	.77303	.76901	.76502	.76108	.75718	.75332	.74951	.74573
95	.79348	.78954	.78565	.78179	.77798	.77421	.77047	.76677	.76312	.75950
96	.80513	.80137	.79765	.79397	.79032	.78671	.78314	.77960	.77610	.77263
97	.81621	.81262	.80908	.80556	.80208	.79864	.79522	.79184	.78849	.78517
98	.82674	.82333	.81995	.81660	.81328	.80999	.80673	.80351	.80031	.79713
99	.83677	.83352	.83030	.82711	.82395	.82082	.81771	.81463	.81158	.80855
100	.84616	.84307	.84001	.83697	.83396	.83097	.82801	.82507	.82216	.81927
101	.85514	.85221	.84930	.84641	.84355	.84070	.83788	.83509	.83231	.82956
102	.86348	.86069	.85792	.85517	.85245	.84974	.84706	.84439	.84175	.83912
103	.87182	.86918	.86655	.86395	.86136	.85880	.85625	.85372	.85121	.84872
104	.87950	.87699	.87450	.87203	.86957	.86713	.86471	.86231	.85992	.85755
105	.88706	.88468	.88232	.87998	.87765	.87534	.87304	.87076	.86849	.86624
106	.89664	.89444	.89225	.89008	.88792	.88577	.88364	.88152	.87941	.87731
107	.90756	.90557	.90358	.90160	.89964	.89768	.89574	.89380	.89188	.88997
108	.92565	.92401	.92238	.92075	.91914	.91753	.91592	.91433	.91274	.91116
109	.96211	.96125	.96041	.95956	.95872	.95788	.95704	.95620	.95537	.95455

Table S
Based on Life Table 2000CM
Single Life Remainder Factors
Applicable On or After May 1, 2009

Interest Rate

AGE	10.2%	10.4%	10.6%	10.8%	11.0%	11.2%	11.4%	11.6%	11.8%	12.0%
0	.01132	.01110	.01089	.01071	.01053	.01037	.01022	.01008	.00995	.00983
1	.00520	.00497	.00476	.00457	.00439	.00423	.00407	.00393	.00379	.00367
2	.00521	.00496	.00474	.00454	.00435	.00417	.00401	.00385	.00371	.00358
3	.00539	.00513	.00490	.00468	.00447	.00429	.00411	.00395	.00380	.00366
4	.00567	.00540	.00515	.00492	.00470	.00450	.00432	.00414	.00398	.00383
5	.00603	.00574	.00547	.00523	.00500	.00478	.00459	.00440	.00423	.00407
6	.00646	.00615	.00587	.00560	.00536	.00513	.00492	.00472	.00453	.00436
7	.00693	.00660	.00630	.00602	.00576	.00551	.00529	.00508	.00488	.00469
8	.00747	.00712	.00680	.00650	.00622	.00596	.00572	.00549	.00528	.00509
9	.00808	.00771	.00737	.00705	.00675	.00648	.00622	.00598	.00576	.00555
10	.00877	.00838	.00801	.00767	.00736	.00707	.00679	.00654	.00630	.00608
11	.00954	.00912	.00873	.00838	.00804	.00773	.00744	.00717	.00692	.00668
12	.01038	.00994	.00953	.00915	.00880	.00847	.00816	.00788	.00761	.00735
13	.01127	.01081	.01038	.00998	.00960	.00925	.00893	.00862	.00833	.00806
14	.01217	.01168	.01122	.01080	.01040	.01003	.00969	.00937	.00906	.00878
15	.01305	.01253	.01205	.01160	.01118	.01079	.01042	.01008	.00976	.00946
16	.01387	.01333	.01282	.01234	.01190	.01149	.01110	.01074	.01040	.01009
17	.01467	.01409	.01356	.01306	.01259	.01216	.01175	.01137	.01101	.01067
18	.01544	.01484	.01427	.01374	.01325	.01279	.01236	.01195	.01157	.01122
19	.01621	.01557	.01497	.01442	.01390	.01341	.01295	.01253	.01213	.01175
20	.01702	.01634	.01571	.01512	.01457	.01406	.01357	.01312	.01270	.01230
21	.01784	.01713	.01646	.01584	.01526	.01471	.01420	.01372	.01327	.01285
22	.01870	.01794	.01724	.01658	.01596	.01539	.01485	.01434	.01386	.01342
23	.01961	.01881	.01807	.01737	.01672	.01611	.01554	.01500	.01449	.01402
24	.02062	.01977	.01899	.01825	.01756	.01691	.01630	.01573	.01520	.01469
25	.02175	.02085	.02002	.01924	.01851	.01782	.01718	.01657	.01600	.01547
26	.02301	.02207	.02119	.02036	.01958	.01886	.01817	.01753	.01692	.01635
27	.02443	.02343	.02250	.02162	.02080	.02003	.01930	.01862	.01798	.01737
28	.02600	.02495	.02396	.02303	.02216	.02134	.02057	.01985	.01916	.01852
29	.02771	.02660	.02555	.02457	.02365	.02278	.02197	.02120	.02047	.01979
30	.02956	.02838	.02728	.02624	.02526	.02434	.02348	.02266	.02189	.02116
31	.03155	.03031	.02914	.02804	.02701	.02604	.02512	.02425	.02344	.02266
32	.03370	.03239	.03115	.02999	.02890	.02787	.02690	.02598	.02511	.02429
33	.03601	.03463	.03333	.03210	.03095	.02985	.02883	.02785	.02693	.02606
34	.03847	.03701	.03564	.03434	.03312	.03197	.03088	.02985	.02887	.02795

Table S
Based on Life Table 2000CM
Single Life Remainder Factors
Applicable On or After May 1, 2009

Interest Rate

AGE	10.2%	10.4%	10.6%	10.8%	11.0%	11.2%	11.4%	11.6%	11.8%	12.0%
35	.04109	.03956	.03811	.03675	.03546	.03424	.03308	.03199	.03096	.02998
36	.04390	.04228	.04076	.03932	.03795	.03667	.03545	.03429	.03320	.03216
37	.04688	.04518	.04358	.04206	.04062	.03926	.03798	.03676	.03560	.03450
38	.05007	.04829	.04660	.04500	.04349	.04205	.04069	.03940	.03818	.03701
39	.05346	.05158	.04981	.04812	.04653	.04502	.04358	.04222	.04092	.03969
40	.05705	.05508	.05321	.05144	.04976	.04817	.04666	.04522	.04385	.04255
41	.06086	.05879	.05683	.05497	.05320	.05152	.04993	.04841	.04697	.04559
42	.06488	.06271	.06066	.05870	.05684	.05508	.05340	.05180	.05028	.04882
43	.06917	.06690	.06474	.06269	.06074	.05888	.05711	.05543	.05382	.05229
44	.07370	.07132	.06906	.06691	.06486	.06291	.06105	.05928	.05759	.05598
45	.07850	.07602	.07365	.07139	.06924	.06719	.06524	.06338	.06160	.05990
46	.08360	.08100	.07852	.07616	.07390	.07176	.06970	.06775	.06587	.06409
47	.08897	.08626	.08367	.08120	.07884	.07659	.07443	.07238	.07041	.06853
48	.09466	.09183	.08912	.08654	.08407	.08172	.07946	.07730	.07524	.07326
49	.10069	.09774	.09492	.09222	.08964	.08717	.08481	.08255	.08038	.07831
50	.10711	.10403	.10109	.09827	.09558	.09300	.09053	.08816	.08589	.08371
51	.11392	.11072	.10765	.10472	.10191	.09921	.09663	.09415	.09178	.08950
52	.12116	.11783	.11464	.11159	.10866	.10585	.10315	.10057	.09808	.09569
53	.12883	.12538	.12206	.11889	.11584	.11291	.11010	.10740	.10481	.10231
54	.13694	.13336	.12992	.12662	.12345	.12041	.11748	.11467	.11196	.10936
55	.14547	.14176	.13820	.13478	.13149	.12832	.12528	.12235	.11953	.11682
56	.15437	.15054	.14685	.14330	.13989	.13661	.13345	.13040	.12747	.12464
57	.16365	.15969	.15588	.15221	.14868	.14527	.14199	.13883	.13578	.13284
58	.17330	.16921	.16528	.16149	.15783	.15431	.15091	.14763	.14447	.14141
59	.18335	.17914	.17508	.17117	.16739	.16375	.16023	.15684	.15356	.15039
60	.19385	.18952	.18534	.18131	.17741	.17365	.17001	.16650	.16311	.15982
61	.20480	.20035	.19605	.19189	.18788	.18400	.18025	.17662	.17311	.16971
62	.21615	.21158	.20717	.20290	.19877	.19477	.19090	.18716	.18354	.18003
63	.22791	.22323	.21870	.21431	.21007	.20596	.20198	.19812	.19439	.19077
64	.24009	.23530	.23066	.22616	.22181	.21758	.21349	.20953	.20568	.20195
65	.25271	.24781	.24306	.23846	.23400	.22967	.22547	.22139	.21744	.21360
66	.26600	.26100	.25615	.25145	.24688	.24245	.23814	.23396	.22990	.22596
67	.27992	.27483	.26989	.26509	.26043	.25590	.25150	.24722	.24306	.23901
68	.29443	.28926	.28423	.27934	.27459	.26997	.26548	.26110	.25685	.25271
69	.30950	.30424	.29914	.29417	.28934	.28463	.28005	.27559	.27125	.26703
70	.32508	.31976	.31459	.30955	.30464	.29986	.29520	.29067	.28625	.28194

Table S
Based on Life Table 2000CM
Single Life Remainder Factors
Applicable On or After May 1, 2009

Interest Rate

AGE	10.2%	10.4%	10.6%	10.8%	11.0%	11.2%	11.4%	11.6%	11.8%	12.0%
71	.34122	.33585	.33062	.32552	.32054	.31570	.31097	.30637	.30187	.29749
72	.35790	.35249	.34721	.34205	.33703	.33213	.32734	.32268	.31812	.31367
73	.37505	.36960	.36428	.35909	.35403	.34908	.34425	.33953	.33492	.33042
74	.39258	.38711	.38177	.37655	.37145	.36647	.36160	.35684	.35219	.34764
75	.41039	.40491	.39956	.39432	.38921	.38420	.37931	.37452	.36983	.36525
76	.42843	.42296	.41760	.41236	.40724	.40222	.39731	.39250	.38779	.38318
77	.44668	.44122	.43588	.43065	.42552	.42050	.41559	.41077	.40605	.40143
78	.46510	.45967	.45435	.44914	.44403	.43902	.43411	.42930	.42458	.41995
79	.48365	.47826	.47298	.46780	.46271	.45773	.45284	.44804	.44333	.43871
80	.50226	.49693	.49169	.48655	.48150	.47655	.47169	.46692	.46224	.45763
81	.52090	.51562	.51044	.50536	.50036	.49546	.49064	.48590	.48125	.47668
82	.53951	.53431	.52920	.52418	.51924	.51439	.50963	.50494	.50033	.49580
83	.55802	.55291	.54788	.54294	.53808	.53329	.52859	.52396	.51941	.51493
84	.57640	.57139	.56645	.56159	.55681	.55210	.54747	.54291	.53843	.53401
85	.59459	.58968	.58484	.58008	.57539	.57077	.56623	.56175	.55733	.55298
86	.61254	.60774	.60302	.59836	.59377	.58925	.58479	.58040	.57607	.57180
87	.63019	.62551	.62090	.61635	.61187	.60745	.60309	.59880	.59456	.59038
88	.64751	.64296	.63847	.63405	.62968	.62537	.62112	.61693	.61279	.60871
89	.66444	.66003	.65567	.65137	.64712	.64293	.63880	.63471	.63068	.62670
90	.68094	.67667	.67244	.66827	.66415	.66009	.65607	.65210	.64818	.64431
91	.69699	.69285	.68877	.68473	.68074	.67680	.67291	.66906	.66526	.66150
92	.71254	.70855	.70460	.70071	.69685	.69304	.68928	.68555	.68187	.67823
93	.72753	.72369	.71989	.71613	.71242	.70874	.70510	.70150	.69794	.69442
94	.74200	.73830	.73464	.73103	.72745	.72390	.72040	.71693	.71350	.71010
95	.75591	.75236	.74885	.74538	.74194	.73853	.73516	.73182	.72851	.72524
96	.76920	.76580	.76243	.75909	.75579	.75252	.74928	.74607	.74289	.73974
97	.78188	.77863	.77540	.77220	.76904	.76590	.76279	.75971	.75665	.75363
98	.79399	.79088	.78779	.78473	.78170	.77869	.77571	.77276	.76983	.76693
99	.80555	.80257	.79962	.79670	.79380	.79092	.78807	.78525	.78244	.77966
100	.81641	.81357	.81075	.80796	.80518	.80243	.79971	.79700	.79432	.79165
101	.82683	.82412	.82144	.81877	.81612	.81350	.81089	.80831	.80574	.80320
102	.83652	.83394	.83137	.82882	.82630	.82379	.82130	.81883	.81637	.81394
103	.84624	.84379	.84135	.83892	.83652	.83413	.83176	.82941	.82707	.82475
104	.85519	.85285	.85053	.84822	.84593	.84365	.84139	.83915	.83692	.83470
105	.86400	.86178	.85957	.85737	.85519	.85302	.85087	.84873	.84660	.84449
106	.87523	.87316	.87110	.86905	.86702	.86500	.86299	.86099	.85900	.85703
107	.88806	.88617	.88429	.88242	.88055	.87870	.87686	.87502	.87320	.87139
108	.90958	.90802	.90646	.90490	.90336	.90182	.90028	.89876	.89724	.89573
109	.95372	.95290	.95208	.95126	.95045	.94964	.94883	.94803	.94723	.94643

Table S
Based on Life Table 2000CM
Single Life Remainder Factors
Applicable On or After May 1, 2009

Interest Rate

AGE	12.2%	12.4%	12.6%	12.8%	13.0%	13.2%	13.4%	13.6%	13.8%	14.0%
0	.00972	.00961	.00951	.00941	.00932	.00924	.00916	.00908	.00901	.00894
1	.00355	.00345	.00334	.00325	.00316	.00307	.00299	.00292	.00285	.00278
2	.00346	.00334	.00323	.00313	.00303	.00294	.00286	.00278	.00270	.00263
3	.00353	.00340	.00329	.00318	.00307	.00298	.00289	.00280	.00272	.00264
4	.00369	.00356	.00343	.00332	.00321	.00310	.00300	.00291	.00283	.00274
5	.00392	.00377	.00364	.00352	.00340	.00329	.00318	.00308	.00299	.00290
6	.00420	.00405	.00391	.00377	.00365	.00353	.00342	.00331	.00321	.00311
7	.00452	.00436	.00421	.00406	.00393	.00380	.00368	.00357	.00346	.00336
8	.00490	.00473	.00457	.00441	.00427	.00413	.00400	.00388	.00376	.00365
9	.00535	.00517	.00499	.00483	.00467	.00453	.00439	.00426	.00413	.00402
10	.00587	.00567	.00548	.00531	.00514	.00499	.00484	.00470	.00456	.00444
11	.00645	.00624	.00605	.00586	.00568	.00551	.00536	.00521	.00506	.00493
12	.00711	.00689	.00668	.00648	.00629	.00611	.00595	.00579	.00563	.00549
13	.00781	.00757	.00735	.00714	.00694	.00675	.00657	.00640	.00624	.00609
14	.00851	.00826	.00802	.00780	.00759	.00739	.00720	.00702	.00684	.00668
15	.00918	.00891	.00866	.00842	.00820	.00799	.00779	.00759	.00741	.00724
16	.00979	.00950	.00924	.00899	.00875	.00853	.00832	.00811	.00792	.00774
17	.01035	.01006	.00978	.00951	.00926	.00902	.00880	.00859	.00838	.00819
18	.01088	.01057	.01027	.00999	.00973	.00948	.00924	.00901	.00880	.00860
19	.01139	.01106	.01075	.01045	.01017	.00990	.00965	.00942	.00919	.00898
20	.01192	.01157	.01124	.01092	.01063	.01035	.01008	.00983	.00959	.00936
21	.01245	.01208	.01173	.01139	.01108	.01078	.01050	.01023	.00998	.00974
22	.01300	.01260	.01222	.01187	.01154	.01122	.01092	.01064	.01037	.01011
23	.01357	.01315	.01275	.01238	.01202	.01168	.01137	.01106	.01078	.01051
24	.01422	.01377	.01334	.01294	.01257	.01221	.01187	.01155	.01124	.01095
25	.01496	.01448	.01403	.01361	.01320	.01282	.01246	.01212	.01180	.01149
26	.01582	.01531	.01483	.01438	.01395	.01354	.01316	.01279	.01244	.01211
27	.01680	.01626	.01575	.01527	.01481	.01437	.01396	.01357	.01320	.01285
28	.01791	.01734	.01679	.01628	.01579	.01533	.01489	.01447	.01408	.01370
29	.01914	.01853	.01795	.01740	.01688	.01639	.01592	.01548	.01505	.01465
30	.02048	.01982	.01921	.01862	.01807	.01754	.01704	.01657	.01612	.01569
31	.02193	.02124	.02058	.01996	.01937	.01881	.01828	.01777	.01729	.01683
32	.02351	.02278	.02208	.02142	.02079	.02019	.01962	.01908	.01857	.01808
33	.02523	.02445	.02371	.02300	.02234	.02170	.02109	.02052	.01997	.01944
34	.02707	.02624	.02545	.02470	.02399	.02331	.02267	.02205	.02146	.02091

Table S
Based on Life Table 2000CM
Single Life Remainder Factors
Applicable On or After May 1, 2009

Interest Rate

AGE	12.2%	12.4%	12.6%	12.8%	13.0%	13.2%	13.4%	13.6%	13.8%	14.0%
35	.02905	.02817	.02733	.02653	.02577	.02505	.02436	.02371	.02308	.02249
36	.03117	.03024	.02935	.02850	.02769	.02693	.02619	.02550	.02483	.02419
37	.03345	.03246	.03151	.03061	.02976	.02894	.02816	.02742	.02671	.02603
38	.03590	.03485	.03385	.03289	.03198	.03112	.03029	.02950	.02874	.02802
39	.03852	.03740	.03634	.03533	.03436	.03344	.03256	.03172	.03092	.03015
40	.04131	.04013	.03900	.03793	.03690	.03593	.03499	.03410	.03324	.03242
41	.04428	.04303	.04184	.04070	.03962	.03858	.03759	.03664	.03573	.03486
42	.04744	.04612	.04486	.04366	.04250	.04140	.04035	.03934	.03838	.03745
43	.05083	.04943	.04810	.04683	.04561	.04444	.04333	.04226	.04123	.04025
44	.05443	.05296	.05155	.05021	.04892	.04768	.04650	.04537	.04428	.04324
45	.05827	.05672	.05523	.05381	.05245	.05114	.04989	.04869	.04754	.04643
46	.06237	.06074	.05917	.05767	.05623	.05485	.05352	.05225	.05103	.04986
47	.06673	.06500	.06335	.06177	.06025	.05879	.05739	.05605	.05475	.05351
48	.07137	.06955	.06781	.06614	.06454	.06300	.06152	.06010	.05874	.05742
49	.07632	.07441	.07258	.07082	.06913	.06750	.06595	.06444	.06300	.06161
50	.08162	.07962	.07769	.07584	.07407	.07236	.07071	.06913	.06760	.06614
51	.08731	.08520	.08318	.08124	.07937	.07757	.07583	.07416	.07256	.07101
52	.09340	.09119	.08907	.08703	.08507	.08317	.08135	.07959	.07790	.07627
53	.09991	.09760	.09538	.09324	.09118	.08919	.08728	.08543	.08365	.08193
54	.10685	.10443	.10211	.09987	.09771	.09562	.09361	.09167	.08980	.08799
55	.11420	.11168	.10925	.10690	.10464	.10246	.10035	.09832	.09635	.09445
56	.12191	.11928	.11675	.11430	.11193	.10965	.10745	.10531	.10325	.10126
57	.13001	.12727	.12462	.12207	.11960	.11721	.11491	.11268	.11052	.10843
58	.13846	.13561	.13286	.13020	.12762	.12513	.12273	.12040	.11814	.11595
59	.14732	.14436	.14150	.13873	.13605	.13346	.13095	.12851	.12616	.12388
60	.15665	.15358	.15060	.14772	.14494	.14224	.13962	.13709	.13463	.13225
61	.16642	.16324	.16016	.15717	.15428	.15147	.14875	.14611	.14355	.14107
62	.17663	.17333	.17014	.16704	.16404	.16113	.15830	.15556	.15290	.15031
63	.18726	.18385	.18055	.17734	.17423	.17121	.16828	.16544	.16267	.15999
64	.19833	.19481	.19140	.18809	.18487	.18175	.17871	.17576	.17289	.17010
65	.20987	.20624	.20273	.19931	.19598	.19275	.18961	.18656	.18358	.18069
66	.22213	.21840	.21478	.21125	.20783	.20449	.20125	.19809	.19501	.19202
67	.23508	.23125	.22753	.22390	.22037	.21694	.21360	.21034	.20716	.20407
68	.24868	.24476	.24094	.23722	.23359	.23006	.22662	.22327	.22000	.21681
69	.26291	.25889	.25498	.25117	.24745	.24383	.24030	.23685	.23349	.23020
70	.27773	.27364	.26964	.26574	.26194	.25823	.25461	.25107	.24762	.24425

Table S
Based on Life Table 2000CM
Single Life Remainder Factors
Applicable On or After May 1, 2009

Interest Rate

AGE	12.2%	12.4%	12.6%	12.8%	13.0%	13.2%	13.4%	13.6%	13.8%	14.0%
71	.29321	.28904	.28496	.28099	.27710	.27331	.26961	.26599	.26246	.25900
72	.30933	.30508	.30094	.29689	.29294	.28907	.28530	.28160	.27799	.27446
73	.32602	.32171	.31751	.31340	.30938	.30545	.30160	.29784	.29416	.29056
74	.34319	.33884	.33458	.33042	.32634	.32236	.31845	.31463	.31089	.30723
75	.36076	.35637	.35207	.34786	.34374	.33970	.33575	.33188	.32808	.32437
76	.37867	.37425	.36991	.36567	.36151	.35744	.35344	.34953	.34569	.34192
77	.39690	.39245	.38810	.38383	.37964	.37554	.37151	.36756	.36369	.35989
78	.41541	.41096	.40659	.40231	.39811	.39398	.38993	.38596	.38206	.37823
79	.43418	.42973	.42536	.42107	.41686	.41272	.40866	.40467	.40075	.39691
80	.45311	.44868	.44432	.44003	.43582	.43169	.42763	.42363	.41971	.41585
81	.47219	.46777	.46343	.45916	.45497	.45084	.44679	.44280	.43888	.43502
82	.49135	.48696	.48265	.47841	.47424	.47014	.46610	.46213	.45822	.45437
83	.51052	.50618	.50191	.49771	.49357	.48950	.48549	.48154	.47766	.47383
84	.52966	.52537	.52115	.51700	.51291	.50887	.50490	.50099	.49714	.49334
85	.54870	.54448	.54032	.53622	.53218	.52820	.52428	.52041	.51660	.51284
86	.56759	.56344	.55935	.55532	.55135	.54742	.54356	.53974	.53598	.53227
87	.58626	.58219	.57818	.57422	.57031	.56646	.56266	.55891	.55521	.55155
88	.60468	.60070	.59677	.59290	.58907	.58529	.58157	.57788	.57425	.57066
89	.62277	.61888	.61505	.61126	.60753	.60383	.60018	.59658	.59302	.58950
90	.64048	.63670	.63296	.62927	.62563	.62202	.61846	.61494	.61146	.60803
91	.65778	.65411	.65048	.64689	.64334	.63983	.63636	.63293	.62954	.62619
92	.67462	.67106	.66754	.66406	.66061	.65720	.65383	.65050	.64720	.64393
93	.69094	.68749	.68408	.68071	.67737	.67406	.67079	.66756	.66435	.66118
94	.70673	.70340	.70011	.69685	.69362	.69042	.68725	.68412	.68102	.67794
95	.72199	.71878	.71560	.71246	.70934	.70625	.70319	.70016	.69716	.69419
96	.73662	.73353	.73047	.72743	.72443	.72145	.71850	.71557	.71268	.70981
97	.75063	.74766	.74471	.74180	.73890	.73604	.73319	.73038	.72758	.72482
98	.76405	.76120	.75837	.75557	.75279	.75003	.74730	.74459	.74190	.73923
99	.77690	.77417	.77146	.76877	.76610	.76345	.76083	.75822	.75564	.75308
100	.78901	.78639	.78379	.78121	.77866	.77612	.77360	.77110	.76862	.76616
101	.80067	.79816	.79568	.79321	.79076	.78832	.78591	.78351	.78114	.77877
102	.81152	.80912	.80674	.80438	.80203	.79970	.79738	.79508	.79280	.79054
103	.82245	.82016	.81789	.81563	.81339	.81116	.80895	.80676	.80458	.80241
104	.83250	.83031	.82814	.82599	.82384	.82171	.81960	.81750	.81541	.81334
105	.84239	.84030	.83823	.83617	.83412	.83209	.83006	.82806	.82606	.82407
106	.85507	.85311	.85117	.84924	.84733	.84542	.84352	.84164	.83976	.83790
107	.86958	.86779	.86600	.86422	.86246	.86070	.85895	.85721	.85548	.85376
108	.89422	.89272	.89123	.88974	.88826	.88679	.88533	.88386	.88241	.88096
109	.94562	.94484	.94405	.94326	.94248	.94170	.94092	.94014	.93937	.93860

(7) ***Applicability dates.*** Paragraphs (g)(1) through (6) of this section apply on and after May 1, 2009, and before June 1, 2023.

[Redesignated at 36 FR 6480, Apr. 6, 1971, as amended by T.D. 8540, 59 FR 30102, 30105, 30116, June 10, 1994; T.D. 8819, 64 FR 23190, 23199, 23228, Apr. 30, 1999; 64 FR 33196, June 22, 1999; T.D. 8886, 65 FR 36943, June 12, 2000; T.D. 9448, 74 FR 21440, 21464, May 7, 2009; T.D. 9540, 76 FR 49612, Aug. 10, 2011; T.D. 9974, 88 FR 37429, June 7, 2023; 88 FR 37432, June 7, 2023]

ELECTION TO TREAT TRUST AS PART OF AN ESTATE

§ 1.645-1 Election by certain revocable trusts to be treated as part of estate.

(a) ***In general.*** If an election is filed for a qualified revocable trust, as defined in paragraph (b)(1) of this section, in accordance with the rules set forth in paragraph (c) of this section, the qualified revocable trust is treated and taxed for purposes of subtitle A of the Internal Revenue Code as part of its related estate, as defined in paragraph (b)(5) of this section (and not as a separate trust) during the election period, as defined in paragraph (b)(6) of this section. Rules regarding the use of taxpayer identification numbers (TINs) and the filing of a Form 1041, "U.S. Income Tax Return for Estates and Trusts," for a qualified revocable trust are in paragraph (d) of this section. Rules regarding the tax treatment of an electing trust and related estate and the general filing requirements for the combined entity during the election period are in paragraph (e)(2) of this section. Rules regarding the tax treatment of an electing trust and its filing requirements during the election period if no executor, as defined in paragraph (b)(4) of this section, is appointed for a related estate are in paragraph (e)(3) of this section. Rules for determining the duration of the section 645 election period are in paragraph (f) of this section. Rules regarding the tax effects of the termination of the election are in paragraph (h) of this section. Rules regarding the tax consequences of the appointment of an executor after a trustee has made a section 645 election believing that an executor would not be appointed for a related estate are in paragraph (g) of this section.

(b) ***Definitions.*** For purposes of this section:

(1) ***Qualified revocable trust.*** A *qualified revocable trust* (QRT) is any trust (or portion thereof) that on the date of death of the decedent was treated as owned by the decedent under section 676 by reason of a power held by the decedent (determined without regard to section 672(e)). A trust that was treated as owned by the decedent under section 676 by reason of a power that was exercisable by the decedent only with the approval or consent of a nonadverse party or with the approval or consent of the decedent's spouse is a QRT. A trust that was treated as owned by the decedent under section 676 solely by reason of a power held by a nonadverse party or by reason of a power held by the decedent's spouse is not a QRT.

(2) ***Electing trust.*** An *electing trust* is a QRT for which a valid section 645 election has been made. Once a section 645 election has been made for the trust, the trust shall be treated as an electing trust throughout the entire election period.

(3) ***Decedent.*** The *decedent* is the individual who was treated as the owner of the *QRT* under section 676 on the date of that individual's death.

(4) ***Executor.*** An *executor* is an executor, personal representative, or administrator that has obtained letters of appointment to administer the decedent's estate through formal or informal appointment procedures. Solely for purposes of this paragraph (b)(4), an executor does not include a person that has actual or constructive possession of property of the decedent unless that person is also

appointed or qualified as an executor, administrator, or personal representative of the decedent's estate. If more than one jurisdiction has appointed an executor, the executor appointed in the domiciliary or primary proceeding is the executor of the related estate for purposes of this paragraph (b)(4).

(5) ***Related estate.*** A *related estate* is the estate of the decedent who was treated as the owner of the QRT on the date of the decedent's death.

(6) ***Election period.*** The *election period* is the period of time during which an electing trust is treated and taxed as part of its related estate. The rules for determining the duration of the election period are in paragraph (f) of this section.

(c) ***The election*** —

(1) ***Filing the election if there is an executor*** —

(i) ***Time and manner for filing the election.*** If there is an executor of the related estate, the trustees of each QRT joining in the election and the executor of the related estate make an election under section 645 and this section to treat each QRT joining in the election as part of the related estate for purposes of subtitle A of the Internal Revenue Code by filing a form provided by the IRS for making the election (election form) properly completed and signed under penalties of perjury, or in any other manner prescribed after December 24, 2002 by forms provided by the Internal Revenue Service (IRS), or by other published guidance for making the election. For the election to be valid, the election form must be filed not later than the time prescribed under section 6072 for filing the Form 1041 for the first taxable year of the related estate (regardless of whether there is sufficient income to require the filing of that return). If an extension is granted for the filing of the Form 1041 for the first taxable year of the related estate, the election form will be timely filed if it is filed by the time prescribed for filing the Form 1041 including the extension granted with respect to the Form 1041.

(ii) ***Conditions to election.*** In addition to providing the information required by the election form, as a condition to a valid section 645 election, the trustee of each QRT joining in the election and the executor of the related estate agree, by signing the election form under penalties of perjury, that:

(A) With respect to a trustee—

(*1*) The trustee agrees to the election;

(*2*) The trustee is responsible for timely providing the executor of the related estate with all the trust information necessary to permit the executor to file a complete, accurate, and timely Form 1041 for the combined electing trust(s) and related estate for each taxable year during the election period;

(*3*) The trustee of each QRT joining the election and the executor of the related estate have agreed to allocate the tax burden of the combined electing trust(s) and related estate for each taxable year during the election period in a manner that reasonably reflects the tax obligations of each electing trust and the related estate; and

(*4*) The trustee is responsible for insuring that the electing trust's share of the tax obligations of the combined electing trust(s) and related estate is timely paid to the Secretary.

(B) With respect to the executor—

(*1*) The executor agrees to the election;

(*2*) The executor is responsible for filing a complete, accurate, and timely Form 1041 for the combined electing trust(s) and related estate for each taxable year during the election period;

(*3*) The executor and the trustee of each QRT joining in the election have agreed to allocate the tax burden of the combined electing trust(s) and related estate for each taxable year during the election period in a manner that reasonably reflects the tax obligations of each electing trust and the related estate;

(*4*) The executor is responsible for insuring that the related estate's share of the tax obligations of the combined electing trust(s) and related estate is timely paid to the Secretary.

(2) ***Filing the election if there is no executor*** —

(i) ***Time and manner for filing the election.*** If there is no executor for a related estate, an election to treat one or more QRTs of the decedent as an estate for purposes of subtitle A of the Internal Revenue Code is made by the trustees of each QRT joining in the election, by filing a properly completed election form, or in any other manner prescribed after December 24, 2002 by forms provided by the IRS, or by other published guidance for making the election. For the election to be valid, the election form must be filed not later than the time prescribed under section 6072 for filing the Form 1041 for the first taxable year of the trust, taking into account the trustee's election to treat the trust as an estate under section 645 (regardless of whether there is sufficient income to require the filing of that return). If an extension is granted for the filing of the Form 1041 for the first taxable year of the electing trust, the election form will be timely filed if it is filed by the time prescribed for filing the Form 1041 including the extension granted with respect to the filing of the Form 1041.

(ii) ***Conditions to election.*** In addition to providing the information required by the election form, as a condition to a valid section 645 election, the trustee of each QRT joining in the election agrees, by signing the election form under penalties of perjury, that—

(A) The trustee agrees to the election;

(B) If there is more than one QRT joining in the election, the trustees of each QRT joining in the election have appointed one trustee to be responsible for filing the Form 1041 for the combined electing trusts for each taxable year during the election period (filing trustee) and the filing trustee has agreed to accept that responsibility;

(C) If there is more than one QRT, the trustees of each QRT joining in the election have agreed to allocate the tax liability of the combined electing trusts for each taxable year during the election period in a manner that reasonably reflects the tax obligations of each electing trust;

(D) The trustee agrees to:

(*1*) Timely file a Form 1041 for the electing trust(s) for each taxable year during the election period; or

(2) If there is more than one QRT and the trustee is not the filing trustee, timely provide the filing trustee with all of the electing trust's information necessary to permit the filing trustee to file a complete, accurate, and timely Form 1041 for the combined electing trusts for each taxable year during the election period;

(3) Insure that the electing trust's share of the tax burden is timely paid to the Secretary;

(E) There is no executor and, to the knowledge and belief of the trustee, one will not be appointed; and

(F) If an executor is appointed after the filing of the election form and the executor agrees to the section 645 election, the trustee will complete and file a revised election form with the executor.

(3) ***Election for more than one QRT.*** If there is more than one QRT, the election may be made for some or all of the QRTs. If there is no executor, one trustee must be appointed by the trustees of the electing trusts to file Forms 1041 for the combined electing trusts filing as an estate during the election period.

(d) ***TIN and filing requirements for a QRT —***

(1) ***Obtaining a TIN.*** Regardless of whether there is an executor for a related estate and regardless of whether a section 645 election will be made for the QRT, a TIN must be obtained for the QRT following the death of the decedent. See § 301.6109-1(a)(3) of this chapter. The trustee must furnish this TIN to the payors of the QRT. See § 301.6109-1(a)(5) of this chapter for the definition of payor.

(2) ***Filing a Form 1041 for a QRT —***

(i) ***Option not to file a Form 1041 for a QRT for which a section 645 election will be made.*** If a section 645 election will be made for a QRT, the executor of the related estate, if any, and the trustee of the QRT may treat the QRT as an electing trust from the decedent's date of death until the due date for the section 645 election. Accordingly, the trustee of the QRT is not required to file a Form 1041 for the QRT for the short taxable year beginning with the decedent's date of death and ending December 31 of that year. However, if a QRT is treated as an electing trust under this paragraph from the decedent's date of death until the due date for the section 645 election but a valid section 645 election is not made for the QRT, the QRT will be subject to penalties and interest for failing to timely file a Form 1041 and pay the tax due thereon.

(ii) ***Requirement to file a Form 1041 for a QRT if paragraph (d)(2)(i) of this section does not apply —***

(A) ***Requirement to file Form 1041.*** If the trustee of the QRT and the executor of the related estate, if any, do not treat the QRT as an electing trust as provided under paragraph (d)(2)(i) of this section, or if the trustee of the electing trust and the executor, if any, are uncertain whether a section 645 election will be made for a QRT, the trustee of the QRT must file a Form 1041 for the short taxable year beginning with the decedent's death and ending December 31 of that year (unless the QRT is not required to file a Form 1041 under section 6012 for this period).

(B) ***Requirement to amend Form 1041 if a section 645 election is made —***

(1) ***If there is an executor.*** If there is an executor and a valid section 645 election is made for a QRT after a Form 1041 has been filed for the QRT as a trust (see paragraph (d)(2)(ii)(A) of this section), the trustee must amend the Form 1041. The QRT's items of income, deduction, and credit must be excluded from the amended Form 1041 filed under this paragraph and must be included on the Form 1041 filed for the first taxable year of the combined electing trust and related estate under paragraph (e)(2)(ii)(A) of this section.

(2) ***If there is no executor.*** If there is no executor and a valid section 645 election is made for a QRT after a Form 1041 has been filed for the QRT as a trust (see paragraph (d)(2)(ii)(A) of this section) for the short taxable year beginning with the decedent's death and ending December 31 of that year, the trustee must file an amended return for the QRT. The amended return must be filed consistent with paragraph (e)(3) of this section and must be filed by the due date of the Form 1041 for the QRT, taking into account the trustee's election under section 645.

(e) ***Tax treatment and general filing requirements of electing trust and related estate during the election period —***

(1) ***Effect of election.*** The section 645 election once made is irrevocable.

(2) ***If there is an executor —***

(i) ***Tax treatment of the combined electing trust and related estate.*** If there is an executor, the electing trust is treated, during the election period, as part of the related estate for all purposes of subtitle A of the Internal Revenue Code. Thus, for example, the electing trust is treated as part of the related estate for purposes of the set-aside deduction under section 642(c)(2), the subchapter S shareholder requirements of section 1361(b)(1), and the special offset for rental real estate activities in section 469(i)(4).

(ii) ***Filing requirements —***

(A) ***Filing the Form 1041 for the combined electing trust and related estate during the election period.*** If there is an executor, the executor files a single income tax return annually (assuming a return is required under section 6012) under the name and TIN of the related estate for the combined electing trust and the related estate. Information regarding the name and TIN of each electing trust must be provided on the Form 1041 as required by the instructions to that form. The period of limitations provided in section 6501 for assessments with respect to an electing trust and the related estate starts with the filing of the return required under this paragraph. Except as required under the separate share rules of section 663(c), for purposes of filing the Form 1041 under this paragraph and computing the tax, the items of income, deduction, and credit of the electing trust and related estate are combined. One personal exemption in the amount of $600 is permitted under section 642(b), and the tax is computed under section 1(e), taking into account section 1(h), for the combined taxable income.

(B) ***Filing a Form 1041 for the electing trust is not required.*** Except for any final Form 1041 required to be filed under paragraph (h)(2)(i)(B) of this section, if there is an executor, the trustee of the electing trust does not file a Form 1041 for the electing trust during the election period. Although the trustee is not required to file a Form 1041 for the electing trust, the trustee of the electing trust must timely provide the executor of the related estate with all the trust information necessary to permit the executor to file a complete,

accurate and timely Form 1041 for the combined electing trust and related estate. The trustee must also insure that the electing trust's share of the tax obligations of the combined electing trust and related estate is timely paid to the Secretary. In certain situations, the trustee of a QRT may be required to file a Form 1041 for the QRT's short taxable year beginning with the date of the decedent's death and ending December 31 of that year. See paragraph (d)(2) of this section.

(iii) *Application of the separate share rules* —

(A) ***Distributions to beneficiaries (other than to a share (or shares) of the combined electing trust and related estate).*** Under the separate share rules of section 663(c), the electing trust and related estate are treated as separate shares for purposes of computing distributable net income (DNI) and applying the distribution provisions of sections 661 and 662. Further, the electing trust share or the related estate share may each contain two or more shares. Thus, if during the taxable year, a distribution is made by the electing trust or the related estate, the DNI of the share making the distribution must be determined and the distribution provisions of sections 661 and 662 must be applied using the separately determined DNI applicable to the distributing share.

(B) ***Adjustments to the DNI of the separate shares for distributions between shares to which sections 661 and 662 would apply.*** A distribution from one share to another share to which sections 661 and 662 would apply if made to a beneficiary other than another share of the combined electing trust and related estate affects the computation of the DNI of the share making the distribution and the share receiving the distribution. The share making the distribution reduces its DNI by the amount of the distribution deduction that it would be entitled to under section 661 (determined without regard to section 661(c)), had the distribution been made to another beneficiary, and, solely for purposes of calculating DNI, the share receiving the distribution increases its gross income by the same amount. The distribution has the same character in the hands of the recipient share as in the hands of the distributing share. The following example illustrates the provisions of this paragraph (e)(2)(iii)(B):

> *Example.* (i) A's will provides that, after the payment of debts, expenses, and taxes, the residue of A's estate is to be distributed to Trust, an electing trust. The sole beneficiary of Trust is C. The estate share has $15,000 of gross income, $5,000 of deductions, and $10,000 of taxable income and DNI for the taxable year based on the assets held in A's estate. During the taxable year, A's estate distributes $15,000 to Trust. The distribution reduces the DNI of the estate share by $10,000.
> (ii) For the same taxable year, the trust share has $25,000 of gross income and $5,000 of deductions. None of the modifications provided for under section 643(a) apply. In calculating the DNI for the trust share, the gross income of the trust share is increased by $10,000, the amount of the reduction in the DNI of the estate share as a result of the distribution to Trust. Thus, solely for purposes of calculating DNI, the trust share has gross income of $35,000, and taxable income of $30,000. Therefore, the trust share has $30,000 of DNI for the taxable year.

(iii) During the same taxable year, Trust distributes $35,000 to C. The distribution deduction reported on the Form 1041 filed for A's estate and Trust is $30,000. As a result of the distribution by Trust to C, C must include $30,000 in gross income for the taxable year. The gross income reported on the Form 1041 filed for A's estate and Trust is $40,000.

(iv) ***Application of the governing instrument requirement of section 642(c).*** A deduction is allowed in computing the taxable income of the combined electing trust and related estate to the extent permitted under section 642(c) for—

(A) Any amount of the gross income of the related estate that is paid or set aside during the taxable year pursuant to the terms of the governing instrument of the related estate for a purpose specified in section 170(c); and

(B) Any amount of gross income of the electing trust that is paid or set aside during the taxable year pursuant to the terms of the governing instrument of the electing trust for a purpose specified in section 170(c).

(3) ***If there is no executor*** —

(i) ***Tax treatment of the electing trust.*** If there is no executor, the trustee treats the electing trust, during the election period, as an estate for all purposes of subtitle A of the Internal Revenue Code. Thus, for example, an electing trust is treated as an estate for purposes of the set-aside deduction under section 642(c)(2), the subchapter S shareholder requirements of section 1361(b)(1), and the special offset for rental real estate activities under section 469(i)(4). The trustee may also adopt a taxable year other than a calendar year.

(ii) ***Filing the Form 1041 for the electing trust.*** If there is no executor, the trustee of the electing trust must, during the election period, file a Form 1041, under the TIN obtained by the trustee under § 301.6109-1(a)(3) of this chapter upon the death of the decedent, treating the trust as an estate. If there is more than one electing trust, the Form 1041 must be filed by the filing trustee (see paragraph (c)(2)(ii)(B) of this section) under the name and TIN of the electing trust of the filing trustee. Information regarding the names and TINs of the other electing trusts must be provided on the Form 1041 as required by the instructions to that form. Any return filed in accordance with this paragraph shall be treated as a return filed for the electing trust (or trusts, if there is more than one electing trust) and not as a return filed for any subsequently discovered related estate. Accordingly, the period of limitations provided in section 6501 for assessments with respect to a subsequently discovered related estate does not start until a return is filed with respect to the related estate. See paragraph (g) of this section.

(4) ***Application of the section 6654(l)(2) to the electing trust.*** Each electing trust and related estate (if any) is treated as a separate taxpayer for all purposes of subtitle F of the Internal Revenue Code, including, without limitation, the application of section 6654. The provisions of section 6654(l)(2)(A) relating to the two year exception to an estate's obligation to make estimated tax payments, however, will apply to each electing trust for which a section 645 election has been made.

(f) ***Duration of election period*** —

(1) ***In general.*** The election period begins on the date of the decedent's death and terminates on the earlier of the day on which both the electing trust and related estate, if any, have distributed all of their assets, or the day before the applicable date. The election does not apply to successor trusts (trusts that are distributees under the trust instrument).

(2) ***Definition of applicable date*** —

(i) ***Applicable date if no Form 706 "United States Estate (and Generation Skipping Transfer) Tax Return" is required to be filed.*** If a Form 706 is not required to be filed as a result of the decedent's death, the applicable date is the day which is 2 years after the date of the decedent's death.

(ii) ***Applicable date if a Form 706 is required to be filed.*** If a Form 706 is required to be filed as a result of the decedent's death, the applicable date is the later of the day that is 2 years after the date of the decedent's death, or the day that is 6 months after the date of final determination of liability for estate tax. Solely for purposes of determining the applicable date under section 645, the date of final determination of liability is the earliest of the following—

(A) The date that is six months after the issuance by the Internal Revenue Service of an estate tax closing letter, unless a claim for refund with respect to the estate tax is filed within twelve months after the issuance of the letter;

(B) The date of a final disposition of a claim for refund, as defined in paragraph (f)(2)(iii) of this section, that resolves the liability for the estate tax, unless suit is instituted within six months after a final disposition of the claim;

(C) The date of execution of a settlement agreement with the Internal Revenue Service that determines the liability for the estate tax;

(D) The date of issuance of a decision, judgment, decree, or other order by a court of competent jurisdiction resolving the liability for the estate tax unless a notice of appeal or a petition for certiorari is filed within 90 days after the issuance of a decision, judgment, decree, or other order of a court; or

(E) The date of expiration of the period of limitations for assessment of the estate tax provided in section 6501.

(iii) ***Definition of final disposition of claim for refund.*** For purposes of paragraph (f)(2)(ii)(B) of this section, a claim for refund shall be deemed finally disposed of by the Secretary when all items have been either allowed or disallowed. If a waiver of notification with respect to disallowance is filed with respect to a claim for refund prior to disallowance of the claim, the claim for refund will be treated as disallowed on the date the waiver is filed.

(iv) ***Examples.*** The application of this paragraph (f)(2) is illustrated by the following examples:

Example 1. A died on October 20, 2002. The executor of *A*'s estate and the trustee of Trust, an electing trust, made a section 645 election. A Form 706 is not required to be filed as a result of *A*'s death. The applicable date is October 20, 2004, the day that is two years after *A*'s date of death. The last day of the election period is October 19, 2004. Beginning October 20, 2004, Trust will no longer be treated and taxed as part of *A*'s estate.

Example 2. Assume the same facts as *Example 1,* except that a Form 706 is required to be filed as the result of *A*'s death. The Internal Revenue Service issues an estate tax closing letter accepting the Form 706 as filed on March 15, 2005. The estate does not file a claim for refund by March 15, 2006, the day that is twelve months after the date of issuance of the estate tax closing letter. The date of final determination of liability is September 15, 2005, and the applicable date is March 15, 2006. The last day of the election period is March 14, 2006. Beginning March 15, 2006, Trust will no longer be treated and taxed as part of *A*'s estate.

Example 3. Assume the same facts as *Example 1,* except that a Form 706 is required to be filed as the result of *A*'s death. The Form 706 is audited, and a notice of deficiency authorized under section 6212 is mailed to the executor of *A*'s estate as a result of the audit. The executor files a petition in Tax Court. The Tax Court issues a decision resolving the liability for estate tax on December 14, 2005, and neither party appeals within 90 days after the issuance of the decision. The date of final determination of liability is December 14, 2005. The applicable date is June 14, 2006, the day that is six months after the date of final determination of liability. The last day of the election period is June 13, 2006. Beginning June 14, 2006, Trust will no longer be treated and taxed as part of *A*'s estate.

(g) ***Executor appointed after the section 645 election is made*** —

(1) ***Effect on the election.*** If an executor for the related estate is not appointed until after the trustee has made a valid section 645 election, the executor must agree to the trustee's election, and the IRS must be notified of that agreement by the filing of a revised election form (completed as required by the instructions to that form) within 90 days of the appointment of the executor, for the election period to continue past the date of appointment of the executor. If the executor does not agree to the election or a revised election form is not timely filed as required by this paragraph, the election period terminates the day before the appointment of the executor. If the IRS issues other guidance after December 24, 2002 for notifying the IRS of the executor's agreement to the election, the IRS must be notified in the manner provided in that guidance for the election period to continue.

(2) ***Continuation of election period*** —

(i) ***Correction of returns filed before executor appointed.*** If the election period continues under paragraph (g)(1) of this section, the executor of the related estate and the trustee of each electing trust must file amended Forms 1041 to correct the Forms 1041 filed by the trustee before the executor was appointed. The amended Forms 1041 must be filed under the name and TIN of the electing trust and must reflect the items of income, deduction, and credit of the related estate and the electing trust. The name and TIN of the related estate must be provided on the amended Forms 1041 as required in the instructions to that Form. The amended return for the taxable year ending immediately before the executor was appointed must indicate that this Form 1041 is a final return. If the period of limitations for making assessments has expired with respect to the electing trust for any of the Forms 1041 filed by the trustee, the executor must file Forms 1041 for any items of income, deduction, and credit of the related estate that cannot be properly included on amended forms for the electing trust. The personal exemption under section 642(b) is not permitted to be taken on these Forms 1041 filed by the executor.

(ii) ***Returns filed after the appointment of the executor.*** All returns filed by the combined electing trust and related estate after the appointment of the executor are to be filed under the name and TIN of the related estate in accordance with paragraph (e)(2) of this section. Regardless of

the change in the name and TIN under which the Forms 1041 for the combined electing trust and related estate are filed, the combined electing trust and related estate will be treated as the same entity before and after the executor is appointed.

(3) ***Termination of the election period.*** If the election period terminates under paragraph (g)(1) of this section, the executor must file Forms 1041 under the name and TIN of the estate for all taxable years of the related estate ending after the death of the decedent. The trustee of the electing trust is not required to amend any returns filed for the electing trust during the election period. Following termination of the election period, the trustee of the electing trust must obtain a new TIN. See § 301.6109-1(a)(4) of this chapter.

(h) ***Treatment of an electing trust and related estate following termination of the election*** —

(1) ***The share (or shares) comprising the electing trust is deemed to be distributed upon termination of the election period.*** On the close of the last day of the election period, the combined electing trust and related estate, if there is an executor, or the electing trust, if there is no executor, is deemed to distribute the share (or shares, as determined under section 663(c)) comprising the electing trust to a new trust in a distribution to which sections 661 and 662 apply. All items of income, including net capital gains, that are attributable to the share (or shares) comprising the electing trust are included in the calculation of the distributable net income of the electing trust and treated as distributed by the combined electing trust and related estate, if there is an executor, or by the electing trust, if there is no executor, to the new trust. The combined electing trust and related estate, if there is an executor, or the electing trust, if there is no executor, is entitled to a distribution deduction to the extent permitted under section 661 in the taxable year in which the election period terminates as a result of the deemed distribution. The new trust shall include the amount of the deemed distribution in gross income to the extent required under section 662.

(2) ***Filing of the Form 1041 upon the termination of the section 645 election*** —

(i) ***If there is an executor*** —

(A) ***Filing the Form 1041 for the year of termination.*** If there is an executor, the Form 1041 filed under the name and TIN of the related estate for the taxable year in which the election terminates includes—

(*1*) The items of income, deduction, and credit of the electing trust attributable to the period beginning with the first day of the taxable year of the combined electing trust and related estate and ending with the last day of the election period;

(*2*) The items of income, deduction, and credit, if any, of the related estate for the entire taxable year; and

(*3*) A deduction for the deemed distribution of the share (or shares) comprising the electing trust to the new trust as provided for under paragraph (h)(1) of this section.

(B) ***Requirement to file a final Form 1041 under the name and TIN of the electing trust.*** If the electing trust terminates during the election period, the trustee of the electing trust must file a Form 1041 under the name and TIN of the electing trust and indicate that the return is a final return to notify the IRS that the electing trust is no longer in existence. The items of income, deduction, and credit of the trust are not reported on this final Form 1041 but on the appropriate Form 1041 filed for the combined electing trust and related estate.

(ii) ***If there is no executor.*** If there is no executor, the taxable year of the electing trust closes on the last day of the election period. A Form 1041 is filed in the manner prescribed under paragraph (e)(3)(ii) of this section reporting the items of income, deduction, and credit of the electing trust for the short period ending with the last day of the election period. The Form 1041 filed under this paragraph includes a distribution deduction for the deemed distribution provided for under paragraph (h)(1) of this section. The Form 1041 must indicate that it is a final return.

(3) ***Use of TINs following termination of the election*** —

(i) ***If there is an executor.*** Upon termination of the section 645 election, a former electing trust may need to obtain a new TIN. See § 301.6109-1(a)(4) of this chapter. If the related estate continues after the termination of the election period, the related estate must continue to use the TIN assigned to the estate during the election period.

(ii) ***If there is no executor.*** If there is no executor, the former electing trust must obtain a new TIN if the trust will continue after the termination of the election period. See § 301.6109-1(a)(4) of this chapter.

(4) ***Taxable year of estate and trust upon termination of the election*** —

(i) ***Estate*** —Upon termination of the section 645 election period, the taxable year of the estate is the same taxable year used during the election period.

(ii) ***Trust.*** Upon termination of the section 645 election, the taxable year of the new trust is the calendar year. See section 644.

(i) [Reserved]

(j) ***Effective date.*** Paragraphs (a), (b), (c), (d), (f), and (g) of this section apply to trusts and estates of decedents dying on or after December 24, 2002. Paragraphs (e) and (h) of this section apply to taxable years ending on or after December 24, 2002.

[T.D. 9032, 67 FR 78377, Dec. 24, 2002]

TRUSTS WHICH DISTRIBUTE CURRENT INCOME ONLY

§ 1.651(a)-1 Simple trusts; deduction for distributions; in general.

Section 651 is applicable only to a trust the governing instruments of which:

(a) Requires that the trust distribute all of its income currently for the taxable year, and

(b) Does not provide that any amounts may be paid, permanently set aside, or used in the taxable year for the charitable, etc., purposes specified in section 642(c),

and does not make any distribution other than of current income. A trust to which section 651 applies is referred to in this part as a “simple” trust. Trusts subject to section 661 are referred to as “complex” trusts. A trust may be a simple trust for one year and a complex trust for another year. It should be noted that under section 651 a trust qualifies as a simple trust in a taxable year in which it is required to distribute all its income currently and makes no other distributions, whether or not distributions of current income are in fact made. On the other hand a trust is not a complex trust by reason of distributions of amounts other than income unless such distributions are in fact made during the taxable year, whether or not they are required in that year.

§ 1.651(a)-2 Income required to be distributed currently.

(a) The determination of whether trust income is required to be distributed currently depends upon the terms of the trust instrument and the applicable local law. For this purpose, if the trust instrument provides that the trustee in determining the distributable income shall first retain a reserve for depreciation or otherwise make due allowance for keeping the trust corpus intact by retaining a reasonable amount of the current income for that purpose, the retention of current income for that purpose will not disqualify the trust from being a "simple" trust. The fiduciary must be under a duty to distribute the income currently even if, as a matter of practical necessity, the income is not distributed until after the close of the trust's taxable year. For example: Under the terms of the trust instrument, all of the income is currently distributable to A. The trust reports on the calendar year basis and as a matter of practical necessity makes distribution to A of each quarter's income on the fifteenth day of the month following the close of the quarter. The distribution made by the trust on January 15, 1955, of the income for the fourth quarter of 1954 does not disqualify the trust from treatment in 1955 under section 651, since the income is required to be distributed currently. However, if the terms of a trust require that none of the income be distributed until after the year of its receipt by the trust, the income of the trust is not required to be distributed currently and the trust is not a simple trust. For definition of the term "income" see section 643(b) and § 1.643(b)-1.

(b) It is immaterial, for purposes of determining whether all the income is required to be distributed currently, that the amount of income allocated to a particular beneficiary is not specified in the instrument. For example, if the fiduciary is required to distribute all the income currently, but has discretion to "sprinkle" the income among a class of beneficiaries, or among named beneficiaries, in such amount as he may see fit, all the income is required to be distributed currently, even though the amount distributable to a particular beneficiary is unknown until the fiduciary has exercised his discretion.

(c) If in one taxable year of a trust its income for that year is required or permitted to be accumulated, and in another taxable year its income for the year is required to be distributed currently (and no other amounts are distributed), the trust is a simple trust for the latter year. For example, a trust under which income may be accumulated until a beneficiary is 21 years old, and thereafter must be distributed currently, is a simple trust for taxable years beginning after the beneficiary reaches the age of 21 years in which no other amounts are distributed.

(d) If a trust distributes property in kind as part of its requirement to distribute currently all the income as defined under section 643(b) and the applicable regulations, the trust shall be treated as having sold the property for its fair market value on the date of distribution. If no amount in excess of the amount of income as defined under section 643(b) and the applicable regulations is distributed by the trust during the year, the trust will qualify for treatment under section 651 even though property in kind was distributed as part of a distribution of all such income. This paragraph (d) applies for taxable years of trusts ending after January 2, 2004.

[T.D. 6500, 25 FR 11814, Nov. 26, 1960; 25 FR 14021, Dec. 31, 1960, as amended by T.D. 9102, 69 FR 20, Jan. 2, 2004]

§ 1.651(a)-3 Distribution of amounts other than income.

(a) A trust does not qualify for treatment under section 651 for any taxable year in which it actually distributes corpus. For example, a trust which is required to distribute all of its income currently would not qualify as a simple trust under section 651 in the year of its termination since in that year actual distributions of corpus would be made.

(b) A trust, otherwise qualifying under section 651, which may make a distribution of corpus in the discretion of the trustee, or which is required under the terms of its governing instrument to make a distribution of corpus upon the happening of a specified event, will be disqualified for treatment under section 651 only for the taxable year in which an actual distribution of corpus is made. For example: Under the terms of a trust, which is required to distribute all of its income currently, half of the corpus is to be distributed to beneficiary A when he becomes 30 years of age. The trust reports on the calendar year basis. On December 28, 1954, A becomes 30 years of age and the trustee distributes half of the corpus of the trust to him on January 3, 1955. The trust will be disqualified for treatment under section 651 only for the taxable year 1955, the year in which an actual distribution of corpus is made.

(c) See section 661 and the regulations thereunder for the treatment of trusts which distribute corpus or claim the charitable contributions deduction provided by section 642(c).

§ 1.651(a)-4 Charitable purposes.

A trust is not considered to be a trust which may pay, permanently set aside, or use any amount for charitable, etc., purposes for any taxable year for which it is not allowed a charitable, etc., deduction under section 642(c). Therefore, a trust with a remainder to a charitable organization is not disqualified for treatment as a simple trust if either (a) the remainder is subject to a contingency, so that no deduction would be allowed for capital gains or other amounts added to corpus as amounts permanently set aside for a charitable, etc., purpose under section 642 (c), or (b) the trust receives no capital gains or other income added to corpus for the taxable year for which such a deduction would be allowed.

§ 1.651(a)-5 Estates.

Subpart B has no application to an estate.

§ 1.651(b)-1 Deduction for distributions to beneficiaries.

In computing its taxable income, a simple trust is allowed a deduction for the amount of income which is required under the terms of the trust instrument to be distributed currently to beneficiaries. If the amount of income required to be distributed currently exceeds the distributable net income, the deduction allowable to the trust is limited to the amount of the distributable net income. For this purpose the amount of income required to be distributed currently, or distributable net income, whichever is applicable, does not include items of trust income (adjusted for deductions allocable thereto) which are not included in the gross income of the trust. For determination of the character of the income required to be distributed currently, see § 1.652(b)-2. Accordingly, for the purposes of determining the deduction allowable to the trust under section 651, distributable net income is computed without the modifications specified in paragraphs (5), (6), and (7) of section 643(a), relating to tax-exempt interest, foreign income, and excluded dividends. For example: Assume that the distributable net income of a trust as computed under section 643(a) amounts to $99,000 but includes nontaxable income of $9,000. Then distributable net income for the purpose of determining the deduction allowable under section 651 is $90,000 ($99,000 less $9,000 nontaxable income).

§ 1.652(a)-1 Simple trusts; inclusion of amounts in income of beneficiaries.

Subject to the rules in §§ 1.652(a)-2 and 1.652(b)-1, a beneficiary of a simple trust includes in his gross income for the taxable year the amounts of income required to be distributed to him for such year, whether or not distributed. Thus, the income of a simple trust is includible in the beneficiary's gross income for the taxable year in which the income is required to be distributed currently even though, as a matter of practical necessity, the income is not distributed until after the close of the taxable year of the trust. See § 1.642(a)(3)-2 with respect to time of receipt of

dividends. See § 1.652(c)-1 for treatment of amounts required to be distributed where a beneficiary and the trust have different taxable years. The term *income required to be distributed currently* includes income required to be distributed currently which is in fact used to discharge or satisfy any person's legal obligation as that term is used in § 1.662(a)-4.

§ 1.652(a)-2 Distributions in excess of distributable net income.

If the amount of income required to be distributed currently to beneficiaries exceeds the distributable net income of the trust (as defined in section 643(a)), each beneficiary includes in his gross income an amount equivalent to his proportionate share of such distributable net income. Thus, if beneficiary A is to receive two-thirds of the trust income and B is to receive one-third, and the income required to be distributed currently is $99,000, A will receive $66,000 and B, $33,000. However, if the distributable net income, as determined under section 643(a) is only $90,000, A will include two-thirds ($60,000) of that sum in his gross income, and B will include one-third ($30,000) in his gross income. See §§ 1.652(b)-1 and 1.652(b)-2, however, for amounts which are not includible in the gross income of a beneficiary because of their tax-exempt character.

§ 1.652(b)-1 Character of amounts.

In determining the gross income of a beneficiary, the amounts includible under § 1.652(a)-1 have the same character in the hands of the beneficiary as in the hands of the trust. For example, to the extent that the amounts specified in § 1.652(a)-1 consist of income exempt from tax under section 103, such amounts are not included in the beneficiary's gross income. Similarly, dividends distributed to a beneficiary retain their original character in the beneficiary's hands for purposes of determining the availability to the beneficiary of the dividends received credit under section 34 (for dividends received on or before December 31, 1964) and the dividend exclusion under section 116. Also, to the extent that the amounts specified in § 1.652(a)-1 consist of “earned income” in the hands of the trust under the provisions of section 1348 such amount shall be treated under section 1348 as “earned income” in the hands of the beneficiary. Similarly, to the extent such amounts consist of an amount received as a part of a lump sum distribution from a qualified plan and to which the provisions of section 72(n) would apply in the hands of the trust, such amount shall be treated as subject to such section in the hands of the beneficiary except where such amount is deemed under section 666(a) to have been distributed in a preceding taxable year of the trust and the partial tax described in section 668(a)(2) is determined under section 668(b)(1)(B). The tax treatment of amounts determined under § 1.652(a)-1 depends upon the beneficiary's status with respect to them not upon the status of the trust. Thus, if a beneficiary is deemed to have received foreign income of a foreign trust, the includibility of such income in his gross income depends upon his taxable status with respect to that income.

[T.D. 7204, 37 FR 17134, Aug. 25, 1972]

§ 1.652(b)-2 Allocation of income items.

(a) The amounts specified in § 1.652(a)-1 which are required to be included in the gross income of a beneficiary are treated as consisting of the same proportion of each class of items entering into distributable net income of the trust (as defined in section 643(a)) as the total of each class bears to such distributable net income, unless the terms of the trust specifically allocate different classes of income to different beneficiaries, or unless local law requires such an allocation. For example: Assume that under the terms of the governing instrument, beneficiary A is to receive currently one-half of the trust income and beneficiaries B and C are each to receive currently one-quarter, and the distributable net income of the trust (after allocation of expenses) consists of dividends of $10,000, taxable interest of $10,000, and tax-exempt interest of $4,000. A will be deemed to have received $5,000 of dividends, $5,000 of taxable interest, and $2,000 of tax-exempt interest; B and C will each be deemed to have received $2,500 of

dividends, $2,500 of taxable interest, and $1,000 of tax-exempt interest. However, if the terms of the trust specifically allocate different classes of income to different beneficiaries, entirely or in part, or if local law requires such an allocation, each beneficiary will be deemed to have received those items of income specifically allocated to him.

(b) The terms of the trust are considered specifically to allocate different classes of income to different beneficiaries only to the extent that the allocation is required in the trust instrument, and only to the extent that it has an economic effect independent of the income tax consequences of the allocation. For example:

(1) Allocation pursuant to a provision in a trust instrument granting the trustee discretion to allocate different classes of income to different beneficiaries is not a specific allocation by the terms of the trust.

(2) Allocation pursuant to a provision directing the trustee to pay all of one income to A, or $10,000 out of the income to A, and the balance of the income to B, but directing the trustee first to allocate a specific class of income to A's share (to the extent there is income of that class and to the extent it does not exceed A's share) is not a specific allocation by the terms of the trust.

(3) Allocation pursuant to a provision directing the trustee to pay half the class of income (whatever it may be) to A, and the balance of the income to B, is a specific allocation by the terms of the trust.

§ 1.652(b)-3 Allocation of deductions.

Items of deduction of a trust that enter into the computation of distributable net income are to be allocated among the items of income in accordance with the following principles:

(a) All deductible items directly attributable to one class of income (except dividends excluded under section 116) are allocated thereto. For example, repairs to, taxes on, and other expenses directly attributable to the maintenance of rental property or the collection of rental income are allocated to rental income. See § 1.642(e)-1 for treatment of depreciation of rental property. Similarly, all expenditures directly attributable to a business carried on by a trust are allocated to the income from such business. If the deductions directly attributable to a particular class of income exceed that income, the excess is applied against other classes of income in the manner provided in paragraph (d) of this section.

(b) The deductions which are not directly attributable to a specific class of income may be allocated to any item of income (including capital gains) included in computing distributable net income, but a portion must be allocated to nontaxable income (except dividends excluded under section 116) pursuant to section 265 and the regulations thereunder. For example, if the income of a trust is $30,000 (after direct expenses), consisting equally of $10,000 of dividends, tax-exempt interest, and rents, and income commissions amount to $3,000, one-third ($1,000) of such commissions should be allocated to tax-exempt interest, but the balance of $2,000 may be allocated to the rents or dividends in such proportions as the trustee may elect. The fact that the governing instrument or applicable local law treats certain items of deduction as attributable to corpus or to income not included in distributable net income does not affect allocation under this paragraph. For instance, if in the example set forth in this paragraph the trust also had capital gains which are allocable to corpus under the terms of the trust instrument, no part of the deductions would be allocable thereto since the capital gains are excluded from the computation of distributable net income under section 643(a)(3).

(c) Examples of expenses which are considered as not directly attributable to a specific class of income are trustee's commissions, the rental of safe deposit boxes, and State income and personal property taxes.

(d) To the extent that any items of deduction which are directly attributable to a class of income exceed that class of income, they may be allocated to any other class of income (including capital gains) included in distributable net income in the manner provided in paragraph (b) of this section, except that any excess deductions attributable to tax-exempt income (other than dividends excluded under section 116) may not be offset against any other class of income. See section 265 and the regulations thereunder. Thus, if the trust has rents, taxable interest, dividends, and tax-exempt interest, and the deductions directly attributable to the rents exceed the rental income, the excess may be allocated to the taxable interest or dividends in such proportions as the fiduciary may elect. However, if the excess deductions are attributable to the tax-exempt interest, they may not be allocated to either the rents, taxable interest, or dividends.

§ 1.652(c)-1 Different taxable years.

If a beneficiary has a different taxable year (as defined in section 441 or 442) from the taxable year of the trust, the amount he is required to include in gross income in accordance with section 652 (a) and (b) is based on the income of the trust for any taxable year or years ending with or within his taxable year. This rule applies to taxable years of normal duration as well as to so-called short taxable years. Income of the trust for its taxable year or years is determined in accordance with its method of accounting and without regard to that of the beneficiary.

§ 1.652(c)-2 Death of individual beneficiaries.

If income is required to be distributed currently to a beneficiary, by a trust for a taxable year which does not end with or within the last taxable year of a beneficiary (because of the beneficiary's death), the extent to which the income is included in the gross income of the beneficiary for his last taxable year or in the gross income of his estate is determined by the computations under section 652 for the taxable year of the trust in which his last taxable year ends. Thus, the distributable net income of the taxable year of the trust determines the extent to which the income required to be distributed currently to the beneficiary is included in his gross income for his last taxable year or in the gross income of his estate. (Section 652(c) does not apply to such amounts.) The gross income for the last taxable year of a beneficiary on the cash basis includes only income actually distributed to the beneficiary before his death. Income required to be distributed, but in fact distributed to his estate, is included in the gross income of the estate as income in respect of a decedent under section 691. See paragraph (e) of § 1.663(c)-3 with respect to separate share treatment for the periods before and after the decedent's death. If the trust does not qualify as a simple trust for the taxable year of the trust in which the last taxable year of the beneficiary ends, see section 662(c) and § 1.662(c)-2.

§ 1.652(c)-3 Termination of existence of other beneficiaries.

If the existence of a beneficiary which is not an individual terminates, the amount to be included under section 652(a) in its gross income for its last taxable year is computed with reference to §§ 1.652(c)-1 and 1.652(c)-2 as if the beneficiary were a deceased individual, except that income required to be distributed prior to the termination but actually distributed to the beneficiary's successor in interest is included in the beneficiary's income for its last taxable year.

§ 1.652(c)-4 Illustration of the provisions of sections 651 and 652.

The rules applicable to a trust required to distribute all of its income currently to its beneficiaries may be illustrated by the following example:

> *Example.* (a) Under the terms of a simple trust all of the income is to be distributed equally to

beneficiaries A and B and capital gains are to be allocated to corpus. The trust and both beneficiaries file returns on the calendar year basis. No provision is made in the governing instrument with respect to depreciation. During the taxable year 1955, the trust had the following items of income and expense:

Rents	$25,000
Dividends of domestic corporations	50,000
Tax-exempt interest on municipal bonds	25,000
Long-term capital gains	15,000
Taxes and expenses directly attributable to rents	5,000
Trustee's commissions allocable to income account	2,600
Trustee's commissions allocable to principal account	1,300
Depreciation	5,000

(b) The income of the trust for fiduciary accounting purposes is $92,400, computed as follows:

Rents		$25,000
Dividends		50,000
Tax-exempt interest		25,000
Total		100,000
Deductions:		
Expenses directly attributable to rental income	$5,000	
Trustee's commissions allocable to income account	2,600	
		7,600
Income computed under section 643(b)		92,400

One-half ($46,200) of the income of $92,400 is currently distributable to each beneficiary.

(c) The distributable net income of the trust computed under section 643(a) is $91,100, determined as follows (cents are disregarded in the computation):

Rents		$25,000
Dividends		50,000
Tax-exempt interest	$25,000	
Less: Expenses allocable thereto (25,000/100,000 × $3,900)	975	

	————	24,025
Total		99,025
Deductions:		
Expenses directly attributable to rental income	$5,000	
Trustee's commissions ($3,900 less $975 allocable to tax-exempt interest)	2,925	
	————	7,925
Distributable net income		91,100

In computing the distributable net income of $91,100, the taxable income of the trust was computed with the following modifications: No deductions were allowed for distributions to the beneficiaries and for personal exemption of the trust (section 643(a) (1) and (2)); capital gains were excluded and no deduction under section 1202 (relating to the 50-percent deduction for long-term capital gains) was taken into account (section 643(a)(3)); the tax-exempt interest (as adjusted for expenses) and the dividend exclusion of $50 were included (section 643(a) (5) and (7)). Since all of the income of the trust is required to be currently distributed, no deduction is allowable for depreciation in the absence of specific provisions in the governing instrument providing for the keeping of the trust corpus intact. See section 167(h) and the regulations thereunder.

(d) The deduction allowable to the trust under section 651(a) for distributions to the beneficiaries is $67,025, computed as follows:

Distributable net income computed under section 643(a) (see paragraph (c))		$91,100
Less:		
Tax-exempt interest as adjusted	$24,025	
Dividend exclusion	50	
	————	24,075
Distributable net income as determined under section 651(b)		67,025

Since the amount of the income ($92,400) required to be distributed currently by the trust exceeds the distributable net income ($67,025) as computed under section 651(b), the deduction allowable under section 651(a) is limited to the distributable net income of $67,025.

(e) The taxable income of the trust is $7,200 computed as follows:

Rents		$25,000
Dividends ($50,000 less $50 exclusion)		49,950
Long-term capital gains		15,000
Gross income		89,950
Deductions:		
Rental expenses	$5,000	
Trustee's commissions	2,925	
Capital gain deduction	7,500	
Distributions to beneficiaries	67,025	
Personal exemption	300	
	----	82,750
Taxable income		7,200

The trust is not allowed a deduction for the portion ($975) of the trustee's commissions allocable to tax-exempt interest in computing its taxable income.

(f) In determining the character of the amounts includible in the gross income of A and B, it is assumed that the trustee elects to allocate to rents the expenses not directly attributable to a specific item of income other than the portion ($975) of such expenses allocated to tax-exempt interest. The allocation of expenses among the items of income is shown below:

	Rents	Dividends	Tax-exempt interest	Total
Income for trust accounting purposes	$25,000	$50,000	$25,000	$100,000
Less:				
Rental expenses	5,000			5,000
Trustee's commissions	2,925		975	3,900
Total deductions	7,925	0	975	8,900
Character of amounts in the hands of the beneficiaries	17,075	50,000	24,025	[1] 91,100

[1] *Distributable net income.*

Inasmuch as the income of the trust is to be distributed equally to A and B, each is deemed to have received one-half of each item of income; that is, rents of $8,537.50, dividends of $25,000, and tax-exempt interest of $12,012.50. The dividends of $25,000 allocated to each beneficiary are to be aggregated with

> his other dividends (if any) for purposes of the dividend exclusion provided by section 116 and the dividend received credit allowed under section 34. Also, each beneficiary is allowed a deduction of $2,500 for depreciation of rental property attributable to the portion (one-half) of the income of the trust distributed to him.

[T.D. 6500, 25 FR 11814, Nov. 26, 1960, as amended by T.D. 6712, 29 FR 3655, Mar. 24, 1964]

ESTATES AND TRUSTS WHICH MAY ACCUMULATE INCOME OR WHICH DISTRIBUTE CORPUS

§ 1.661(a)-1 Estates and trusts accumulating income or distributing corpus; general.

Subpart C, part I, subchapter J, chapter 1 of the Code, is applicable to all decedents' estates and their beneficiaries, and to trusts and their beneficiaries other than trusts subject to the provisions of subpart B of such part I (relating to trusts which distribute current income only, or “simple” trusts). A trust which is required to distribute amounts other than income during the taxable year may be subject to subpart B, and not subpart C, in the absence of an actual distribution of amounts other than income during the taxable year. See §§ 1.651(a)-1 and 1.651(a)-3. A trust to which subpart C is applicable is referred to as a “complex” trust in this part. Section 661 has no application to amounts excluded under section 663(a).

§ 1.661(a)-2 Deduction for distributions to beneficiaries.

(a) In computing the taxable income of an estate or trust there is allowed under section 661(a) as a deduction for distributions to beneficiaries the sum of:

(1) The amount of income for the taxable year which is required to be distributed currently, and

(2) Any other amounts properly paid or credited or required to be distributed for such taxable year.

However, the total amount deductible under section 661(a) cannot exceed the distributable net income as computed under section 643(a) and as modified by section 661(c). See § 1.661(c)-1.

(b) The term *income required to be distributed currently* includes any amount required to be distributed which may be paid out of income or corpus (such as an annuity), to the extent it is paid out of income for the taxable year. See § 1.651(a)-2 which sets forth additional rules which are applicable in determining whether income of an estate or trust is required to be distributed currently.

(c) The term *any other amounts properly paid, credited, or required to be distributed* includes all amounts properly paid, credited, or required to be distributed by an estate or trust during the taxable year other than income required to be distributed currently. Thus, the term includes the payment of an annuity to the extent it is not paid out of income for the taxable year, and a distribution of property in kind (see paragraph (f) of this section). However, see section 663(a) and regulations thereunder for distributions which are not included. Where the income of an estate or trust may be accumulated or distributed in the discretion of the fiduciary, or where the fiduciary has a power to distribute corpus to a beneficiary, any such discretionary distribution would qualify under section 661(a)(2). The term also includes an amount applied or distributed for the support of a dependent of a grantor or of a trustee or cotrustee under the circumstances described in section 677(b) or section 678(c) out of corpus or out of other than income for the taxable year.

(d) The terms *income required to be distributed currently* and *any other amounts properly paid or credited or required to be distributed* also include any amount used to discharge or satisfy any person's legal obligation as that term is used in § 1.662(a)-4.

(e) The terms *income required to be distributed currently* and *any other amounts properly paid or credited or required to be distributed* include amounts paid, or required to be paid, during the taxable year pursuant to a court order or decree or under local law, by a decedent's estate as an allowance or award for the support of the decedent's widow or other dependent for a limited period during the administration of the estate. The term *any other amounts properly paid or credited or required to be distributed* does not include the value of any interest in real estate owned by a decedent, title to which under local law passes directly from the decedent to his heirs or devisees.

(f) Gain or loss is realized by the trust or estate (or the other beneficiaries) by reason of a distribution of property in kind if the distribution is in satisfaction of a right to receive a distribution of a specific dollar amount, of specific property other than that distributed, or of income as defined under section 643(b) and the applicable regulations, if income is required to be distributed currently. In addition, gain or loss is realized if the trustee or executor makes the election to recognize gain or loss under section 643(e). This paragraph applies for taxable years of trusts and estates ending after January 2, 2004.

[T.D. 6500, 25 FR 11814, Nov. 26, 1960; 25 FR 14021, Dec. 31, 1960, as amended by T.D. 7287, 38 FR 26912, Sept. 27, 1973; T.D. 9102, 69 FR 20, Jan. 2, 2004]

§ 1.661(b)-1 Character of amounts distributed; in general.

In the absence of specific provisions in the governing instrument for the allocation of different classes of income, or unless local law requires such an allocation, the amount deductible for distributions to beneficiaries under section 661(a) is treated as consisting of the same proportion of each class of items entering into the computation of distributable net income as the total of each class bears to the total distributable net income. For example, if a trust has distributable net income of $20,000, consisting of $10,000 each of taxable interest and royalties and distributes $10,000 to beneficiary A, the deduction of $10,000 allowable under section 661(a) is deemed to consist of $5,000 each of taxable interest and royalties, unless the trust instrument specifically provides for the distribution or accumulation of different classes of income or unless local law requires such an allocation. See also § 1.661(c)-1.

§ 1.661(b)-2 Character of amounts distributed when charitable contributions are made.

In the application of the rule stated in § 1.661(b)-1, the items of deduction which enter into the computation of distributable net income are allocated among the items of income which enter into the computation of distributable net income in accordance with the rules set forth in § 1.652(b)-3, except that, in the absence of specific provisions in the governing instrument, or unless local law requires a different apportionment, amounts paid, permanently set aside, or to be used for the charitable, etc., purposes specified in section 642(c) are first ratably apportioned among each class of items of income entering into the computation of the distributable net income of the estate or trust, in accordance with the rules set out in paragraph (b) of § 1.643(a)-5.

§ 1.661(c)-1 Limitation on deduction.

An estate or trust is not allowed a deduction under section 661(a) for any amount which is treated under section 661(b) as consisting of any item of distributable net income which is not included in the gross income of the estate or trust. For example, if in 1962, a trust, which reports on the calendar year basis, has distributable net income of $20,000, which is deemed to consist of $10,000 of dividends and $10,000 of tax-exempt interest, and distributes $10,000 to beneficiary A, the deduction allowable under section 661(a) (computed without regard to section 661(c))

would amount to $10,000 consisting of $5,000 of dividends and $5,000 of tax-exempt interest. The deduction actually allowable under section 661(a) as limited by section 661(c) is $4,975, since no deduction is allowable for the $5,000 of tax-exempt interest and the $25 deemed distributed out of the $50 of dividends excluded under section 116, items of distributable net income which are not included in the gross income of the estate or trust.

[T.D. 6777, 29 FR 17809, Dec. 16, 1964]

§ 1.661(c)-2 Illustration of the provisions of section 661.

The provisions of section 661 may be illustrated by the following example:

Example. (a) Under the terms of a trust, which reports on the calendar year basis, $10,000 a year is required to be paid out of income to a designated charity. The balance of the income may, in the trustee's discretion, be accumulated or distributed to beneficiary A. Expenses are allocable against income and the trust instrument requires a reserve for depreciation. During the taxable year 1955 the trustee contributes $10,000 to charity and in his discretion distributes $15,000 of income to A. The trust has the following items of income and expense for the taxable year 1955:

Dividends	$10,000
Partially tax-exempt interest	10,000
Fully tax-exempt interest	10,000
Rents	20,000
Rental expenses	2,000
Depreciation of rental property	3,000
Trustee's commissions	5,000

(b) The income of the trust for fiduciary accounting purposes is $40,000, computed as follows:

Dividends		$10,000
Partially tax-exempt interest		10,000
Fully tax-exempt interest		10,000
Rents		20,000
Total		50,000
Less:		
Rental expenses	$2,000	

Depreciation		3,000	
Trustee's commissions		5,000	
			10,000
Income as computed under section 643(b)			40,000

(c) The distributable net income of the trust as computed under section 643(a) is $30,000, determined as follows:

Rents			$20,000
Dividends			10,000
Partially tax-exempt interest			10,000
Fully tax-exempt interest		$10,000	
Less:			
Expenses allocable thereto (10,000/50,000 × $5,000)	$1,000		
Charitable contributions allocable thereto (10,000/50,000 × $10,000)	2,000		
		3,000	
			7,000
Total			47,000
Deductions:			
Rental expenses		2,000	
Depreciation of rental property		3,000	
Trustee's commissions ($5,000 less $1,000 allocated to tax-exempt interest)		4,000	
Charitable contributions ($10,000 less $2,000 allocated to tax-exempt interest)		8,000	
			17,000
Distributable net income (section 643(a))			30,000

(d) The character of the amounts distributed under section 661(a), determined in accordance with the rules prescribed in §§ 1.661(b)-1 and 1.661(b)-2 is shown by the following table (for the purpose of this allocation, it is assumed that the trustee elected to allocate the trustee's commissions to rental income

except for the amount required to be allocated to tax-exempt interest):

	Rental income	Taxable dividends	Excluded dividends	Partially tax-exempt interest	Tax-exempt interest	Total
Trust income	$20,000	$9,950	$50	$10,000	$10,000	$50,000
Less:						
Charitable contributions	4,000	2,000		2,000	2,000	10,000
Rental expenses	2,000					2,000
Depreciation	3,000					3,000
Trustee's commissions	4,000				1,000	5,000
Total deductions	13,000	2,000	0	2,000	3,000	20,000
Distributable net income	7,000	7,950	50	8,000	7,000	30,000
Amounts deemed distributed under section 661(a) before applying the limitation of section 661(c)	3,500	3,975	25	4,000	3,500	15,000

In the absence of specific provisions in the trust instrument for the allocation of different classes of income, the charitable contribution is deemed to consist of a pro rata portion of the gross amount of each items of income of the trust (except dividends excluded under section 116) and the trust is deemed to have distributed to A a pro rata portion (one-half) of each item of income included in distributable net income.

(e) The taxable income of the trust is $11,375 computed as follows:

Rental income		$20,000
Dividends ($10,000 less $50 exclusion)		9,950
Partially tax-exempt interest		10,000
Gross income		39,950
Deductions:		
Rental expenses	$2,000	
Depreciation of rental property	3,000	
Trustee's commissions	4,000	
Charitable contributions	8,000	
Distributions to A	11,475	
Personal exemption	100	

	28,575
Taxable income	11,375

In computing the taxable income of the trust no deduction is allowable for the portions of the charitable contributions deduction ($2,000) and trustee's commissions ($1,000) which are treated under section 661(b) as attributable to the tax-exempt interest excludable from gross income. Also, of the dividends of $4,000 deemed to have been distributed to A under section 661(a), $25 (25/50ths of $50) is deemed to have been distributed from the excluded dividends and is not an allowable deduction to the trust. Accordingly, the deduction allowable under section 661 is deemed to be composed of $3,500 rental income, $3,975 of dividends, and $4,000 partially tax-exempt interest. No deduction is allowable for the portion of tax-exempt interest or for the portion of the excluded dividends deemed to have been distributed to the beneficiary.

(f) The trust is entitled to the credit allowed by section 34 with respect to dividends of $5,975 ($9,950 less $3,975 distributed to A) included in gross income. Also, the trust is allowed the credit provided by section 35 with respect to partially tax-exempt interest of $6,000 ($10,000 less $4,000 deemed distributed to A) included in gross income.
(g) Dividends of $4,000 allocable to A are to be aggregated with his other dividends (if any) for purposes of the dividend exclusion under section 116 and the dividend received credit under section 84.

§ 1.662(a)-1 Inclusion of amounts in gross income of beneficiaries of estates and complex trusts; general.

There is included in the gross income of a beneficiary of an estate or complex trust the sum of:

(a) Amounts of income required to be distributed currently to him, and

(b) All other amounts properly paid, credited, or required to be distributed to him

by the estate or trust. The preceding sentence is subject to the rules contained in § 1.662(a)-2 (relating to currently distributable income), § 1.662(a)-3 (relating to other amounts distributed), and §§ 1.662(b)-1 and 1.662(b)-2 (relating to character of amounts). Section 662 has no application to amounts excluded under section 663(a).

§ 1.662(a)-2 Currently distributable income.

(a) There is first included in the gross income of each beneficiary under section 662(a)(1) the amount of income for the taxable year of the estate or trust required to be distributed currently to him, subject to the provisions of paragraph (b) of this section. Such amount is included in the beneficiary's gross income whether or not it is actually distributed.

(b) If the amount of income required to be distributed currently to all beneficiaries exceeds the distributable net income (as defined in section 643(a) but computed without taking into account the payment, crediting, or setting aside of an amount for which a charitable contributions deduction is allowable under

section 642(c)) of the estate or trust, then there is included in the gross income of each beneficiary an amount which bears the same ratio to distributable net income (as so computed) as the amount of income required to be distributed currently to the beneficiary bears to the amount required to be distributed currently to all beneficiaries.

(c) The phrase *the amount of income for the taxable year required to be distributed currently* includes any amount required to be paid out of income or corpus to the extent the amount is satisfied out of income for the taxable year. Thus, an annuity required to be paid in all events (either out of income or corpus) would qualify as income required to be distributed currently to the extent there is income (as defined in section 643(b)) not paid, credited, or required to be distributed to other beneficiaries for the taxable year. If an annuity or a portion of an annuity is deemed under this paragraph to be income required to be distributed currently, it is treated in all respects in the same manner as an amount of income actually required to be distributed currently. The phrase *the amount of income for the taxable year required to be distributed currently* also includes any amount required to be paid during the taxable year in all events (either out of income or corpus) pursuant to a court order or decree or under local law, by a decedent's estate as an allowance or award for the support of the decedent's widow or other dependent for a limited period during the administration of the estate to the extent there is income (as defined in section 643(b)) of the estate for the taxable year not paid, credited, or required to be distributed to other beneficiaries.

(d) If an annuity is paid, credited, or required to be distributed tax free, that is, under a provision whereby the executor or trustee will pay the income tax of the annuitant resulting from the receipt of the annuity, the payment of or for the tax by the executor or trustee will be treated as income paid, credited, or required to be distributed currently to the extent it is made out of income.

(e) The application of the rules stated in this section may be illustrated by the following examples:

> *Example 1.* (1) Assume that under the terms of the trust instrument $5,000 is to be paid to X charity out of income each year; that $20,000 of income is currently distributable to A; and that an annuity of $12,000 is to be paid to B out of income or corpus. All expenses are charges against income and capital gains are allocable to corpus. During the taxable year the trust had income of $30,000 (after the payment of expenses) derived from taxable interest and made the payments to X charity and distributions to A and B as required by the governing instrument.
> (2) The amounts treated as distributed currently under section 662(a)(1) total $25,000 ($20,000 to A and $5,000 to B). Since the charitable contribution is out of income the amount of income available for B's annuity is only $5,000. The distributable net income of the trust computed under section 643(a) without taking into consideration the charitable contributions deduction of $5,000 as provided by section 661(a)(1), is $30,000. Since the amounts treated as distributed currently of $25,000 do not exceed the distributable net income (as modified) of $30,000, A is required to include $20,000 in his gross income and B is required to include $5,000 in his gross income under section 662(a)(1).

Example 2. Assume the same facts as in paragraph (1) of example 1, except that the trust has, in addition, $10,000 of administration expenses, commissions, etc., chargeable to corpus. The amounts treated as distributed currently under section 662(a)(1) total $25,000 ($20,000 to A and $5,000 to B), since trust income under section 643(b) remains the same as in example 1. Distributable net income of the trust computed under section 643(a) but without taking into account the charitable contributions deduction of

$5,000 as provided by section 662(a)(1) is only $20,000. Since the amounts treated as distributed currently of $25,000 exceed the distributable net income (as so computed) of $20,000, A is required to include $16,000 (20,000/25,000 of $20,000) in his gross income and B is required to include $4,000 (5,000/25,000 of $20,000) in his gross income under section 662(a)(1). Because A and B are beneficiaries of amounts of income required to be distributed currently, they do not benefit from the reduction of distributable net income by the charitable contributions deduction.

[T.D. 6500, 25 FR 11814, Nov. 26, 1960; 25 FR 14021, Dec. 31, 1960, as amended by T.D. 7287, 38 FR 26912, Sept. 27, 1973]

§ 1.662(a)-3 Other amounts distributed.

(a) There is included in the gross income of a beneficiary under section 662(a)(2) any amount properly paid, credited, or required to be distributed to the beneficiary for the taxable year, other than

(1) income required to be distributed currently, as determined under § 1.662(a)-2,

(2) amounts excluded under section 663(a) and the regulations thereunder, and

(3) amounts in excess of distributable net income (see paragraph (c) of this section). An amount which is credited or required to be distributed is included in the gross income of a beneficiary whether or not it is actually distributed.

(b) Some of the payments to be included under paragraph (a) of this section are:

(1) A distribution made to a beneficiary in the discretion of the fiduciary;

(2) a distribution required by the terms of the governing instrument upon the happening of a specified event;

(3) an annuity which is required to be paid in all events but which is payable only out of corpus;

(4) a distribution of property in kind (see paragraph (f) of § 1.661(a)-2);

(5) an amount applied or distributed for the support of a dependent of a grantor or a trustee or cotrustee under the circumstances specified in section 677(b) or section 678(c) out of corpus or out of other than income for the taxable year; and

(6) an amount required to be paid during the taxable year pursuant to a court order or decree or under local law, by a decedent's estate as an allowance or award for the support of the decedent's widow or other dependent for a limited period during the administration of the estate which is payable only out of corpus of the estate under the order or decree or local law.

(c) If the sum of the amounts of income required to be distributed currently (as determined under § 1.662(a)-2) and other amounts properly paid, credited, or required to be distributed (as determined under paragraph (a) of this section) exceeds distributable net income (as defined in section 643(a)), then such other amounts properly paid, credited, or required to be distributed are included in gross income of the beneficiary but only to the extent of the excess of such distributable net income over the amounts of income required to be distributed currently. If the other amounts are paid, credited, or required to be distributed to more than one beneficiary, each beneficiary includes in gross income his proportionate share of the amount includible in gross income pursuant to the preceding sentence. The proportionate share is an amount which bears the same ratio to distributable net income (reduced by amounts of income required to be distributed currently) as the other amounts (as determined under paragraphs (a)

and (d) of this section) distributed to the beneficiary bear to the other amounts distributed to all beneficiaries. For treatment of excess distributions by trusts, see sections 665 to 668, inclusive, and the regulations thereunder.

(d) The application of the rules stated in this section may be illustrated by the following example:

Example. The terms of a trust require the distribution annually of $10,000 of income to A. If any income remains, it may be accumulated or distributed to B, C, and D in amounts in the trustee's discretion. He may also invade corpus for the benefit of A, B, C, or D. In the taxable year, the trust has $20,000 of income after the deduction of all expenses. Distributable net income is $20,000. The trustee distributes $10,000 of income to A. Of the remaining $10,000 of income, he distributes $3,000 each to B, C, and D, and also distributes an additional $5,000 to A. A includes $10,000 in income under section 662(a)(1). The "other amounts distributed" amount of $14,000, includible in the income of the recipients to the extent of $10,000, distributable net income less the income currently distributable to A. A will include an additional $3,571 (5,000/14,000 × $10,000) in income under this section, and B, C, and D will each include $2,143 (3,000/14,000 × $10,000).

[T.D. 6500, 25 FR 11814, Nov. 26, 1960; 25 FR 14021, Dec. 31, 1960, as amended by T.D. 7287, 38 FR 26913, Sept. 27, 1973]

§ 1.662(a)-4 Amounts used in discharge of a legal obligation.

Any amount which, pursuant to the terms of a will or trust instrument, is used in full or partial discharge or satisfaction of a legal obligation of any person is included in the gross income of such person under section 662(a)(1) or (2), whichever is applicable, as though directly distributed to him as a beneficiary, except in cases to which section 71 (relating to alimony payments) or section 682 (relating to income of a trust in case of divorce, etc.) applies. The term *legal obligation* includes a legal obligation to support another person if, and only if, the obligation is not affected by the adequacy of the dependent's own resources. For example, a parent has a "legal obligation" within the meaning of the preceding sentence to support his minor child if under local law property or income from property owned by the child cannot be used for his support so long as his parent is able to support him. On the other hand, if under local law a mother may use the resources of a child for the child's support in lieu of supporting him herself, no obligation of support exists within the meaning of this paragraph, whether or not income is actually used for support. Similarly, since under local law a child ordinarily is obligated to support his parent only if the parent's earnings and resources are insufficient for the purpose, no obligation exists whether or not the parent's earnings and resources are sufficient. In any event the amount of trust income which is included in the gross income of a person obligated to support a dependent is limited by the extent of his legal obligation under local law. In the case of a parent's obligation to support his child, to the extent that the parent's legal obligation of support, including education, is determined under local law by the family's station in life and by the means of the parent, it is to be determined without consideration of the trust income in question.

§ 1.662(b)-1 Character of amounts; when no charitable contributions are made.

In determining the amount includible in the gross income of a beneficiary, the amounts which are determined under section 662(a) and §§ 1.662(a)-1 through 1.662(a)-4 shall have the same character in the hands of the beneficiary as in the hands of the estate or trust. The amounts are treated as consisting of the same proportion of each class of items entering into the computation of distributable net income as the total of each class bears to the total distributable net income of the estate or trust unless the terms of the governing instrument specifically allocate different classes of income to different beneficiaries, or unless local law requires such an allocation. For this purpose, the principles contained in § 1.652(b)-1 shall apply.

§ 1.662(b)-2 Character of amounts; when charitable contributions are made.

When a charitable contribution is made, the principles contained in §§ 1.652(b)-1 and 1.662(b)-1 generally apply. However, before the allocation of other deductions among the items of distributable net income, the charitable contributions deduction allowed under section 642(c) is (in the absence of specific allocation under the terms of the governing instrument or the requirement under local law of a different allocation) allocated among the classes of income entering into the computation of estate or trust income in accordance with the rules set forth in paragraph (b) of § 1.643(a)-5. In the application of the preceding sentence, for the purpose of allocating items of income and deductions to beneficiaries to whom income is required to be distributed currently, the amount of the charitable contributions deduction is disregarded to the extent that it exceeds the income of the trust for the taxable year reduced by amounts for the taxable year required to be distributed currently. The application of this section may be illustrated by the following examples (of which example (1) is illustrative of the preceding sentence):

Example 1. (a) A trust instrument provides that $30,000 of its income must be distributed currently to A, and the balance may either be distributed to B, distributed to a designated charity, or accumulated. Accumulated income may be distributed to B and to the charity. The trust for its taxable year has $40,000 of taxable interest and $10,000 of tax-exempt income, with no expenses. The trustee distributed $30,000 to A, $50,000 to charity X, and $10,000 to B.
(b) Distributable net income for the purpose of determining the character of the distribution to A is $30,000 (the charitable contributions deduction, for this purpose, being taken into account only to the extent of $20,000, the difference between the income of the trust for the taxable year, $50,000, and the amount required to be distributed currently, $30,000).

(c) The charitable contributions deduction taken into account, $20,000, is allocated proportionately to the items of income of the trust, $16,000 to taxable interest and $4,000 to tax-exempt income.

(d) Under section 662(a)(1), the amount of income required to be distributed currently to A is $30,000, which consists of the balance of these items, $24,000 of taxable interest and $6,000 of tax-exempt income.

(e) In determining the amount to be included in the gross income of B under section 662 for the taxable year, however, the entire charitable contributions deduction is taken into account, with the result that there is no distributable net income and therefore no amount to be included in gross income.

(f) See subpart D (section 665 and following), part I, subchapter J, chapter 1 of the Code for application of the throwback provisions to the distribution made to B.

Example 2. The net income of a trust is payable to A for life, with the remainder to a charitable organization. Under the terms of the trust instrument and local law capital gains are added to corpus. During the taxable year the trust receives dividends of $10,000 and realized a long-term capital gain of $10,000, for which a long-term capital gain deduction of $5,000 is allowed under section 1202. Since under the trust instrument and local law the capital gains are allocated to the charitable organization, and since the

capital gain deduction is directly attributable to the capital gain, the charitable contributions deduction and the capital gain deduction are both allocable to the capital gain, and dividends in the amount of $10,000 are allocable to A.

§ 1.662(c)-1 Different taxable years.

If a beneficiary has a different taxable year (as defined in section 441 or 442) from the taxable year of an estate or trust, the amount he is required to include in gross income in accordance with section 662 (a) and (b) is based upon the distributable net income of the estate or trust and the amounts properly paid, credited, or required to be distributed to the beneficiary for any taxable year or years of the estate or trust ending with or within his taxable year. This rule applies as to so-called short taxable years as well as taxable years of normal duration. Income of an estate or trust for its taxable year or years is determined in accordance with its method of accounting and without regard to that of the beneficiary.

§ 1.662(c)-2 Death of individual beneficiary.

If an amount specified in section 662(a) (1) or (2) is paid, credited, or required to be distributed by an estate or trust for a taxable year which does not end with or within the last taxable year of a beneficiary (because of the beneficiary's death), the extent to which the amount is included in the gross income of the beneficiary for his last taxable year or in the gross income of his estate is determined by the computations under section 662 for the taxable year of the estate or trust in which his last taxable year ends. Thus, the distributable net income and the amounts paid, credited, or required to be distributed for the taxable year of the estate or trust, determine the extent to which the amounts paid, credited, or required to be distributed to the beneficiary are included in his gross income for his last taxable year or in the gross income of his estate. (Section 662(c) does not apply to such amounts.) The gross income for the last taxable year of a beneficiary on the cash basis includes only income actually distributed to the beneficiary before his death. Income required to be distributed, but in fact distributed to his estate, is included in the gross income of the estate as income in respect of a decedent under section 691. See paragraph (e) of § 1.663(c)-3 with respect to separate share treatment for the periods before and after the death of a trust's beneficiary.

§ 1.662(c)-3 Termination of existence of other beneficiaries.

If the existence of a beneficiary which is not an individual terminates, the amount to be included under section 662(a) in its gross income for the last taxable year is computed with reference to §§ 1.662(c)-1 and 1.662(c)-2 as if the beneficiary were a deceased individual, except that income required to be distributed prior to the termination but actually distributed to the beneficiary's successor in interest is included in the beneficiary's income for its last taxable year.

§ 1.662(c)-4 Illustration of the provisions of sections 661 and 662.

The provisions of sections 661 and 662 may be illustrated in general by the following example:

> *Example.* (a) Under the terms of a testamentary trust one-half of the trust income is to be distributed currently to W, the decedent's wife, for her life. The remaining trust income may, in the trustee's discretion, either be paid to D, the grantor's daughter, paid to designated charities, or accumulated. The trust is to terminate at the death of W and the principal will then be payable to D. No provision is made in the trust instrument with respect to depreciation of rental property. Capital gains are allocable to the principal account under the applicable local law. The trust and both beneficiaries file returns on the calendar year

basis. The records of the fiduciary show the following items of income and deduction for the taxable year 1955:

Rents	$50,000
Dividends of domestic corporations	50,000
Tax-exempt interest	20,000
Partially tax-exempt interest	10,000
Capital gains (long term)	20,000
Depreciation of rental property	10,000
Expenses attributable to rental income	15,400
Trustee's commissions allocable to income account	2,800
Trustee's commissions allocable to principal account	1,100

(b) The income for trust accounting purposes is $111,800, and the trustee distributes one-half ($55,900) to W and in his discretion makes a contribution of one-quarter ($27,950) to charity X and distributes the remaining one-quarter ($27,950) to D. The total of the distributions to beneficiaries is $83,850, consisting of (1) income required to be distributed currently to W of $55,900 and (2) other amounts properly paid or credited to D of $27,950. The income for trust accounting purposes of $111,800 is determined as follows:

Rents		$50,000
Dividends		50,000
Tax-exempt interest		20,000
Partially tax-exempt interest		10,000
Total		130,000
Less:		
Rental expenses	$15,400	
Trustee's commissions allocable to income account	2,800	
	————	18,200
Income as computed under section 643(b)	111,800	

(c) The distributable net income of the trust as computed under section 643(a) is $82,750, determined as follows:

Rents	$50,000

Dividends			50,000
Partially tax-exempt interest			10,000
Tax-exempt interest		$20,000	
Less:			
Trustee's commissions allocable thereto (20,000/130,000 of $3,900)	$600		
Charitable contributions allocable thereto (20,000/130,000 of $27,950)	4,300		
	—————	4,900	
		—————	15,100
Total			125,100
Deductions:			
Rental expenses		15,400	
Trustee's commissions ($3,900 less $600 allocated to tax-exempt interest)		3,300	
Charitable deduction ($27,950 less $4,300 attributable to tax-exempt interest)		23,650	
		—————	42,350
Distributable net income			82,750

In computing the distributable net income of $82,750, the taxable income of the trust was computed with the following modifications: No deductions were allowed for distributions to beneficiaries and for personal exemption of the trust (section 643(a) (1) and (2)); capital gains were excluded and no deduction under section 1202 (relating to the 50 percent deduction for long-term capital gains) was taken into account (section 643(a)(3)); and the tax-exempt interest (as adjusted for expenses and charitable contributions) and the dividend exclusion of $50 were included (section 643(a) (5) and (7)).

(d) Inasmuch as the distributable net income of $82,750 as determined under section 643(a) is less than the sum of the amounts distributed to W and D of $83,850, the deduction allowable to the trust under section 661(a) is such distributable net income as modified under section 661(c) to exclude therefrom the items of income not included in the gross income of the trust, as follows:

Distributable net income		$82,750
Less:		
Tax-exempt interest (as adjusted for expenses and the charitable contributions)	$15,100	
Dividend exclusion allowable under section 116	50	
	————	15,150

Deduction allowable under section 661(a)	67,600

(e) For the purpose of determining the character of the amounts deductible under section 642(c) and section 661(a), the trustee elected to offset the trustee's commissions (other than the portion required to be allocated to tax-exempt interest) against the rental income. The following table shows the determination of the character of the amounts deemed distributed to beneficiaries and contributed to charity.

	Rents	Taxable dividends	Excluded dividends	Tax exempt interest	Partially tax exempt interest	Total
Trust income	$50,000	$49,950	$50	$20,000	$10,000	$130,000
Less:						
Charitable contribution	10,750	10,750		4,300	2,150	27,950
Rental expenses	15,400					15,400
Trustee's commissions	3,300			600		3,900
Total deductions	29,450	10,750	0	4,900	2,150	47,250
Amounts distributable to beneficiaries	20,550	39,200	50	15,100	7,850	82,750

The character of the charitable contribution is determined by multiplying the total charitable contribution ($27,950) by a fraction consisting of each item of trust income, respectively, over the total trust income, except that no part of the dividends excluded from gross income are deemed included in the charitable contribution. For example, the charitable contribution is deemed to consist of rents of $10,750 (50,000/130,000 × $27,950).

(f) The taxable income of the trust is $9,900 determined as follows:

Rental income	$50,000
Dividends ($50,000 less $50 exclusion)	49,950
Partially tax-exempt interest	10,000
Capital gains	20,000
Gross income	129,950

Deductions:		
Rental expenses	15,400	
Trustee's commissions	3,300	
Charitable contributions	23,650	
Capital gain deduction	10,000	
Distributions to beneficiaries	67,600	
Personal exemption	100	
		120,050
Taxable income		9,900

(g) In computing the amount includible in W's gross income under section 662(a)(1), the $55,900 distribution to her is deemed to be composed of the following proportions of the items of income deemed to have been distributed to the beneficiaries by the trust (see paragraph (e) of this example):

Rents (20,550/82,750 × $55,900)	$13,882
Dividends (39,250/82,750 × $55,900)	26,515
Partially tax-exempt interest (7,850/ 82,750 × $55,900)	5,303
Tax-exempt interest (15,100/82,750 × $55,900)	10,200
Total	55,900

Accordingly, W will exclude $10,200 of tax-exempt interest from gross income and will receive the credits and exclusion for dividends received and for partially tax-exempt interest provided in sections 34, 116, and 35, respectively, with respect to the dividends and partially tax-exempt interest deemed to have been distributed to her, her share of the dividends being aggregated with other dividends received by her for purposes of the dividend credit and exclusion. In addition, she may deduct a share of the depreciation deduction proportionate to the trust income allocable to her; that is, one-half of the total depreciation deduction, or $5,000.

(h) Inasmuch as the sum of the amount of income required to be distributed currently to W ($55,900) and the other amounts properly paid, credited, or required to be distributed to D ($27,950) exceeds the distributable net income ($82,750) of the trust as determined under section 643(a), D is deemed to have received $26,850 ($82,750 less $55,900) for income tax purposes. The character of the amounts deemed

distributed to her is determined as follows:

Rents (20,550/82,750 × $26,850)	$6,668
Dividends (39,250/82,750 × $26,850)	12,735
Partially tax-exempt interest (7,850/ 82,750 × $26,850)	2,547
Tax-exempt interest (15,100/82,750 × $26,850)	4,900
Total	26,850

Accordingly, D will exclude $4,900 of tax-exempt interest from gross income and will receive the credits and exclusion for dividends received and for partially tax-exempt interest provided in sections 34, 116, and 35, respectively, with respect to the dividends and partially tax-exempt interest deemed to have been distributed to her, her share of the dividends being aggregated with other dividends received by her for purposes of the dividend credit and exclusion. In addition, she may deduct a share of the depreciation deduction proportionate to the trust income allocable to her; that is, one-fourth of the total depreciation deduction, or $2,500.

(i) [Reserved]
(j) The remaining $2,500 of the depreciation deduction is allocated to the amount distributed to charity X and is hence non-deductible by the trust, W, or D. (See § 1.642(e)-1.)

§ 1.663(a)-1 Special rules applicable to sections 661 and 662; exclusions; gifts, bequests, etc.

(a) ***In general.*** A gift or bequest of a specific sum of money or of specific property, which is required by the specific terms of the will or trust instrument and is properly paid or credited to a beneficiary, is not allowed as a deduction to an estate or trust under section 661 and is not included in the gross income of a beneficiary under section 662, unless under the terms of the will or trust instrument the gift or bequest is to be paid or credited to the recipient in more than three installments. Thus, in order for a gift or bequest to be excludable from the gross income of the recipient,

(1) it must qualify as a gift or bequest of a specific sum of money or of specific property (see paragraph (b) of this section), and

(2) the terms of the governing instrument must not provide for its payment in more than three installments (see paragraph (c) of this section). The date when the estate came into existence or the date when the trust was created is immaterial.

(b) ***Definition of a gift or bequest of a specific sum of money or of specific property.***

(1) In order to qualify as a gift or bequest of a specific sum of money or of specific property under section 663(a), the amount of money or the identity of the specific property must be ascertainable under the terms of a testator's will as of the date of his death, or under the terms of an inter vivos trust instrument as of the date of the inception of the trust. For example, bequests to a decedent's son of the decedent's interest in a partnership and to his daughter of a sum of money equal to the value of the partnership interest are bequests of specific property and of a specific sum of money,

respectively. On the other hand, a bequest to the decedent's spouse of money or property, to be selected by the decedent's executor, equal in value to a fraction of the decedent's "adjusted gross estate" is neither a bequest of a specific sum of money or of specific property. The identity of the property and the amount of money specified in the preceding sentence are dependent both on the exercise of the executor's discretion and on the payment of administration expenses and other charges, neither of which are facts existing on the date of the decedent's death. It is immaterial that the value of the bequest is determinable after the decedent's death before the bequest is satisfied (so that gain or loss may be realized by the estate in the transfer of property in satisfaction of it).

(2) The following amounts are not considered as gifts or bequests of a sum of money or of specific property within the meaning of this paragraph:

(i) An amount which can be paid or credited only from the income of an estate or trust, whether from the income for the year of payment or crediting, or from the income accumulated from a prior year;

(ii) An annuity, or periodic gifts of specific property in lieu of or having the effect of an annuity;

(iii) A residuary estate or the corpus of a trust; or

(iv) A gift or bequest paid in a lump sum or in not more than three installments, if the gift or bequest is required to be paid in more than three installments under the terms of the governing instrument.

(3) The provisions of subparagraphs (1) and (2) of this paragraph may be illustrated by the following examples, in which it is assumed that the gift or bequest is not required to be made in more than three installments (see paragraph (c)):

Example 1. Under the terms of a will, a legacy of $5,000 was left to A, 1,000 shares of X company stock was left to W, and the balance of the estate was to be divided equally between W and B. No provision was made in the will for the disposition of income of the estate during the period of administration. The estate had income of $25,000 during the taxable year 1954, which was accumulated and added to corpus for estate accounting purposes. During the taxable year, the executor paid the legacy of $5,000 in a lump sum to A, transferred the X company stock to W, and made no other distributions to beneficiaries. The distributions to A and W qualify for the exclusion under section 663(a)(1).

Example 2. Under the terms of a will, the testator's estate was to be distributed to A. No provision was made in the will for the distribution of the estate's income during the period of administration. The estate had income of $50,000 for the taxable year. The estate distributed to A stock with a basis of $40,000 and with a fair market value of $40,000 on the date of distribution. No other distributions were made during the year. The distribution does not qualify for the exclusion under section 663(a)(1), because it is not a specific gift to A required by the terms of the will. Accordingly, the fair market value of the property ($40,000) represents a distribution within the meaning of sections 661(a) and 662(a) (see § 1.661(a)-2(c)).

Example 3. Under the terms of a trust instrument, trust income is to be accumulated for a period of 10 years. During the eleventh year, the trustee is to distribute $10,000 to B, payable from income or corpus, and $10,000 to C, payable out of accumulated income. The trustee is to distribute the balance of the accumulated income to A. Thereafter, A is to receive all the current income until the trust terminates. Only the distribution to B would qualify for the exclusion under section 663(a)(1).

(4) A gift or bequest of a specific sum of money or of specific property is not disqualified under this paragraph solely because its payment is subject to a condition. For example, provision for a payment by a trust to beneficiary A of $10,000 when he reaches age 25, and $10,000 when he reaches age 30, with payment over to B of any amount not paid to A because of his death, is a gift to A of a specific sum of money payable in two installments, within the meaning of this paragraph, even though the exact amount payable to A cannot be ascertained with certainty under the terms of the trust instrument.

(c) ***Installment payments.***

(1) In determining whether a gift or bequest of a specific sum of money or of specific property, as defined in paragraph (b) of this section, is required to be paid or credited to a particular beneficiary in more than three installments:

(i) Gifts or bequests of articles for personal use (such as personal and household effects, automobiles, and the like) are disregarded.

(ii) Specifically devised real property, the title to which passes directly from the decedent to the devisee under local law, is not taken into account, since it would not constitute an amount paid, credited, or required to be distributed under section 661 (see paragraph (e) of § 1.661(a)-2).

(iii) All gifts and bequests under a decedent's will (which are not disregarded pursuant to subdivisions (i) and (ii) of this subparagraph) for which no time of payment or crediting is specified, and which are to be paid or credited in the ordinary course of administration of the decedent's estate, are considered as required to be paid or credited in a single installment.

(iv) All gifts and bequests (which are not disregarded pursuant to subdivisions (i) and (ii) of this subparagraph) payable at any one specified time under the terms of the governing instrument are taken into account as a single installment.

For purposes of determining the number of installments paid or credited to a particular beneficiary, a decedent's estate and a testamentary trust shall each be treated as a separate entity.

(2) The application of the rules stated in subparagraph (1) of this paragraph may be illustrated by the following examples:

> *Example (1).* (i) Under the terms of a decedent's will, $10,000 in cash, household furniture, a watch, an automobile, 100 shares of X company stock, 1,000 bushels of grain, 500 head of cattle, and a farm (title to which passed directly to A under local law) are bequeathed or devised outright to A. The will also provides for the creation of a trust for the benefit of A, under the terms of which there are required to be distributed to A, $10,000 in cash and 100 shares of Y company stock when he reaches 25 years of age, $25,000 in cash and 200 shares of Y company stock when he reaches 30 years of age, and $50,000 in cash and 300 shares of Y company stock when he reaches 35 years of age.
> (ii) The furniture, watch, automobile, and the farm are excluded in determining whether any gift or bequest is required to be paid or credited to A in more than three installments. These items qualify for the exclusion under section 663(a)(1) regardless of the treatment of the other items of property bequeathed to A.

(iii) The $10,000 in cash, the shares of X company stock, the grain, the cattle and the assets required to create the trust, to be paid or credited by the estate to A and the trust are considered as required to be paid or credited in a single installment to each, regardless of the manner of payment or distribution by the executor, since no time of payment or crediting is specified in the will. The $10,000 in cash and shares of Y company stock required to be distributed by the trust to A when he is 25 years old are considered as required to be paid or distributed as one installment under the trust. Likewise, the distributions to be made by the trust to A when he is 30 and 35 years old are each considered as one installment under the trust. Since the total number of installments to be made by the estate does not exceed three, all of the items of money and property distributed by the estate qualify for the exclusion under section 663(a)(1). Similarly, the three distributions by the trust qualify.

Example (2). Assume the same facts as in example (1), except that another distribution of a specified sum of money is required to be made by the trust to A when he becomes 40 years old. This distribution would also qualify as an installment, thus making four installments in all under the trust. None of the gifts to A under the trust would qualify for the exclusion under section 663(a)(1). The situation as to the estate, however, would not be changed.

Example (3). A trust instrument provides that A and B are each to receive $75,000 in installments of $25,000, to be paid in alternate years. The trustee distributes $25,000 to A in 1954, 1956, and 1958, and to B in 1955, 1957, and 1959. The gifts to A and B qualify for exclusion under section 663(a)(1), although a total of six payments is made. The gifts of $75,000 to each beneficiary are to be separately treated.

[T.D. 6500, 25 FR 11814, Nov. 26, 1960; 25 FR 14021, Dec. 31, 1960, as amended by T.D. 8849, 64 FR 72543, Dec. 28, 1999]

§ 1.663(a)-2 Charitable, etc., distributions.

Any amount paid, permanently set aside, or to be used for the charitable, etc., purposes specified in section 642(c) and which is allowable as a deduction under that section is not allowed as a deduction to an estate or trust under section 661 or treated as an amount distributed for purposes of determining the amounts includible in gross income of beneficiaries under section 662. Amounts paid, permanently set aside, or to be used for charitable, etc., purposes are deductible by estates or trusts only as provided in section 642(c). For purposes of this section, the deduction provided in section 642(c) is computed without regard to the provisions of section 508(d), section 681, or section 4948(c)(4) (concerning unrelated business income and private foundations).

[T.D. 6500, 25 FR 11814, Nov. 26, 1960, as amended by T.D. 7428, 41 FR 34627, Aug. 16, 1976]

§ 1.663(a)-3 Denial of double deduction.

No amount deemed to have been distributed to a beneficiary in a preceding year under section 651 or 661 is included in amounts falling within section 661(a) or 662(a). For example, assume that all of the income of a trust is required to be distributed currently to beneficiary A and both the trust and A report on the calendar year basis. For administrative convenience, the trustee distributes in January and February 1956 a portion of the income of the trust required to be distributed in 1955. The portion of the income for 1955 which was distributed by the trust in 1956 may not be claimed as a deduction by the trust for 1956 since it is deductible by the trust and includible in A's gross income for the taxable year 1955.

§ 1.663(b)-1 Distributions in first 65 days of taxable year; scope.

(a) *Taxable years beginning after December 31, 1968* —

(1) ***General rule.*** With respect to taxable years beginning after December 31, 1968, the fiduciary of a trust may elect under section (b) to 663 treat any amount or portion thereof that is properly paid or credited to a beneficiary within the first 65 days following the close of the taxable year as an amount that was properly paid or credited on the last day of such taxable year.

(2) ***Effect of election.***

(i) An election is effective only with respect to the taxable year for which the election is made. In the case of distributions made after May 8, 1972, the amount to which the election applies shall not exceed:

(*a*) The amount of income of the trust (as defined in § 1.643(b)-1) for the taxable year for which the election is made, or

(*b*) The amount of distributable net income of the trust (as defined in §§ 1.643(a)-1 through 1.643(a)-7) for such taxable year, if greater,

reduced by any amounts paid, credited, or required to be distributed in such taxable year other than those amounts considered paid or credited in a preceding taxable year by reason of section 663(b) and this section. An election shall be made for each taxable year for which the treatment is desired. The application of this paragraph may be illustrated by the following example:

Example. X Trust, a calendar year trust, has $1,000 of income (as defined in § 1.643(b)-1) and $800 of distributable net income (as defined in §§ 1.643(a)-1 through 1.643(a)-7) in 1972. The trust properly pays $550 to A, a beneficiary, on January 15, 1972, which the trustee elects to treat under section 663(b) as paid on December 31, 1971. The trust also properly pays to A $600 on July 19, 1972, and $450 on January 17, 1973. For 1972, the maximum amount that may be elected under this subdivision to be treated as properly paid or credited on the last day of 1972 is $400 ($1,000−$600). The $550 paid on January 15, 1972, does not reduce the maximum amount to which the election may apply, because that amount is treated as properly paid on December 31, 1971.

(ii) If an election is made with respect to a taxable year of a trust, this section shall apply only to those amounts which are properly paid or credited within the first 65 days following such year and which are so designated by the fiduciary in his election. Any amount considered under section 663(b) as having been distributed in the preceding taxable year shall be so treated for all purposes. For example, in determining the beneficiary's tax liability, such amount shall be considered as having been received by the beneficiary in his taxable year in which or with which the last day of the preceding taxable year of the trust ends.

(b) ***Taxable years beginning before January 1, 1969.*** With respect to taxable years of a trust beginning before January 1, 1969, the fiduciary of the trust may elect under section 663(b) to treat distributions within the first 65 days following such taxable year as amounts which were paid or credited on the last day of such taxable year, if:

(1) The trust was in existence prior to January 1, 1954;

(2) An amount in excess of the income of the immediately preceding taxable year may not (under the terms of the governing instrument) be distributed in any taxable year; and

(3) The fiduciary elects (as provided in § 1.663(b)-2) to have section 663(b) apply.

[T.D. 7204, 37 FR 17135, Aug. 25, 1972]

§ 1.663(b)-2 Election.

(a) *Manner and time of election; irrevocability* —

(1) ***When return is required to be filed.*** If a trust return is required to be filed for the taxable year of the trust for which the election is made, the election shall be made in the appropriate place on such return. The election under this subparagraph shall be made not later than the time prescribed by law for filing such return (including extensions thereof). Such election shall become irrevocable after the last day prescribed for making it.

(2) ***When no return is required to be filed.*** If no return is required to be filed for the taxable year of the trust for which the election is made, the election shall be made in a statement filed with the internal revenue office with which a return by such trust would be filed if such trust were required to file a return for such taxable year. See section 6091 and the regulations thereunder for place for filing returns. The election under this subparagraph shall be made not later than the time prescribed by law for filing a return if such trust were required to file a return for such taxable year. Such election shall become irrevocable after the last day prescribed for making it.

(b) ***Elections under prior law.*** Elections made pursuant to section 663(b) prior to its amendment by section 331(b) of the Tax Reform Act of 1969 (83 Stat. 598), which, under prior law, were irrevocable for the taxable year for which the election was made and all subsequent years, are not effective for taxable years beginning after December 31, 1968. In the case of a trust for which an election was made under prior law, the fiduciary shall make the election for each taxable year beginning after December 31, 1968, for which the treatment provided by section 663(b) is desired.

[T.D. 7204, 37 FR 17135, Aug. 25, 1972]

§ 1.663(c)-1 Separate shares treated as separate trusts or as separate estates; in general.

(a) If a single trust (or estate) has more than one beneficiary, and if different beneficiaries have substantially separate and independent shares, their shares are treated as separate trusts (or estates) for the sole purpose of determining the amount of distributable net income allocable to the respective beneficiaries under sections 661 and 662. Application of this rule will be significant in, for example, situations in which income is accumulated for beneficiary A but a distribution is made to beneficiary B of both income and corpus in an amount exceeding the share of income that would be distributable to B had there been separate trusts (or estates). In the absence of a separate share rule B would be taxed on income which is accumulated for A. The division of distributable net income into separate shares will limit the tax liability of B. Section 663(c) does not affect the principles of applicable law in situations in which a single trust (or estate) instrument creates not one but several separate trusts (or estates), as opposed to separate shares in the same trust (or estate) within the meaning of this section.

(b) The separate share rule does not permit the treatment of separate shares as separate trusts (or estates) for any purpose other than the application of distributable net income. It does not, for instance, permit the treatment of separate shares as separate trusts (or estates) for purposes of:

(1) The filing of returns and payment of tax,

(2) The deduction of personal exemption under section 642(b), and

(3) The allowance to beneficiaries succeeding to the trust (or estate) property of excess deductions and unused net operating loss and capital loss carryovers on termination of the trust (or estate) under section 642(h).

(c) The separate share rule may be applicable even though separate and independent accounts are not maintained and are not required to be maintained for each share on the books of account of the trust (or estate), and even though no physical segregation of assets is made or required.

(d) Separate share treatment is not elective. Thus, if a trust (or estate) is properly treated as having separate and independent shares, such treatment must prevail in all taxable years of the trust (or estate) unless an event occurs as a result of which the terms of the trust (or estate) instrument and the requirements of proper administration require different treatment.

[T.D. 6500, 25 FR 11814, Nov. 26, 1960; 25 FR 14021, as amended by T.D. 8849, 64 FR 72543, Dec. 28, 1999]

§ 1.663(c)-2 Rules of administration.

(a) ***When separate shares come into existence.*** A separate share comes into existence upon the earliest moment that a fiduciary may reasonably determine, based upon the known facts, that a separate economic interest exists.

(b) ***Computation of distributable net income for each separate share*** —

(1) ***General rule.*** The amount of distributable net income for any share under section 663(c) is computed as if each share constituted a separate trust or estate. Accordingly, each separate share shall calculate its distributable net income based upon its portion of gross income that is includible in distributable net income and its portion of any applicable deductions or losses.

(2) ***Section 643(b) income.*** This paragraph (b)(2) governs the allocation of the portion of gross income includible in distributable net income that is income within the meaning of section 643(b). Such gross income is allocated among the separate shares in accordance with the amount of income that each share is entitled to under the terms of the governing instrument or applicable local law.

(3) ***Income in respect of a decedent.*** This paragraph (b)(3) governs the allocation of the portion of gross income includible in distributable net income that is income in respect of a decedent within the meaning of section 691(a) and is not income within the meaning of section 643(b). Such gross income is allocated among the separate shares that could potentially be funded with these amounts irrespective of whether the share is entitled to receive any income under the terms of the governing instrument or applicable local law. The amount of such gross income allocated to each share is based on the relative value of each share that could potentially be funded with such amounts.

(4) ***Gross income not attributable to cash.*** This paragraph (b)(4) governs the allocation of the portion of gross income includible in distributable net income that is not attributable to cash received by the estate or trust (for example, original issue discount, a distributive share of partnership tax items, and the pro rata share of an S corporation's tax items). Such gross income is allocated among the separate shares in the same proportion as section 643(b) income from the same source would be allocated under the terms of the governing instrument or applicable local law.

(5) ***Deductions and losses.*** Any deduction or any loss which is applicable solely to one separate share of the trust or estate is not available to any other share of the same trust or estate.

(c) ***Computations and valuations.*** For purposes of calculating distributable net income for each separate share, the fiduciary must use a reasonable and equitable method to make the allocations, calculations, and valuations required by paragraph (b) of this section.

[T.D. 8849, 64 FR 72543, Dec. 28, 1999]

§ 1.663(c)-3 Applicability of separate share rule to certain trusts.

(a) The applicability of the separate share rule provided by section 663(c) to trusts other than qualified revocable trusts within the meaning of section 645(b)(1) will generally depend upon whether distributions of the trust are to be made in substantially the same manner as if separate trusts had been created. Thus, if an instrument directs a trustee to divide the testator's residuary estate into separate shares (which under applicable law do not constitute separate trusts) for each of the testator's children and the trustee is given discretion, with respect to each share, to distribute or accumulate income or to distribute principal or accumulated income, or to do both, separate shares will exist under section 663(c). In determining whether separate shares exist, it is immaterial whether the principal and any accumulated income of each share is ultimately distributable to the beneficiary of such share, to his descendants, to his appointees under a general or special power of appointment, or to any other beneficiaries (including a charitable organization) designated to receive his share of the trust and accumulated income upon termination of the beneficiary's interest in the share. Thus, a separate share may exist if the instrument provides that upon the death of the beneficiary of the share, the share will be added to the shares of the other beneficiaries of the trust.

(b) Separate share treatment will not be applied to a trust or portion of a trust subject to a power to:

(1) Distribute, apportion, or accumulate income, or

(2) distribute corpus to or for one or more beneficiaries within a group or class of beneficiaries, unless payment of income, accumulated income, or corpus of a share of one beneficiary cannot affect the proportionate share of income, accumulated income, or corpus of any shares of the other beneficiaries, or unless substantially proper adjustment must thereafter be made (under the governing instrument) so that substantially separate and independent shares exist.

(c) A share may be considered as separate even though more than one beneficiary has an interest in it. For example, two beneficiaries may have equal, disproportionate, or indeterminate interests in one share which is separate and independent from another share in which one or more beneficiaries have an interest. Likewise, the same person may be a beneficiary of more than one separate share.

(d) Separate share treatment may be given to a trust or portion of a trust otherwise qualifying under this section if the trust or portion of a trust is subject to a power to pay out to a beneficiary of a share (of such trust or portion) an amount of corpus in excess of his proportionate share of the corpus of the trust if the possibility of exercise of the power is remote. For example, if the trust is subject to a power to invade the entire corpus for the health, education, support, or maintenance of A, separate share treatment is applied if exercise of the power requires consideration of A's other income which is so substantial as to make the possibility of exercise of the power remote. If instead it appears that A and B have separate shares in a trust, subject to a power to invade the entire corpus for the comfort, pleasure, desire, or happiness of A, separate share treatment shall not be applied.

(e) For taxable years ending before December 31, 1978, the separate share rule may also be applicable to successive interests in point of time, as for instance in the case of a trust providing for a life estate to A and a second life estate or outright remainder to B. In such a case, in the taxable year of a trust in which a beneficiary dies items of income and deduction properly allocable under trust accounting principles to the period before a beneficiary's death are attributed to one share, and those allocable to the period after the beneficiary's death are attributed to the other share. Separate share treatment is not available to a succeeding interest, however, with respect to distributions which would otherwise be deemed distributed in a taxable year of the earlier interest under the throwback provisions of subpart D (section 665 and following), part I, subchapter J, chapter 1 of the Code. The application of this paragraph may be illustrated by the following example:

Example. A trust instrument directs that the income of a trust is to be paid to A for her life. After her death income may be distributed to B or accumulated. A dies on June 1, 1956. The trust keeps its books on the basis of the calendar year. The trust instrument permits invasions of corpus for the benefit of A and B, and an invasion of corpus was in fact made for A's benefit in 1956. In determining the distributable net income of the trust for the purpose of determining the amounts includible in A's income, income and deductions properly allocable to the period before A's death are treated as income and deductions of a separate share; and for that purpose no account is taken of income and deductions allocable to the period after A's death.

[T.D. 6500, 25 FR 11814, Nov. 26, 1960; 25 FR 14021, Dec. 31, 1960, as amended by T.D. 7633, 44 FR 57926, Oct. 9, 1979; T.D. 8849, 64 FR 72543, Dec. 28, 1999]

§ 1.663(c)-4 Applicability of separate share rule to estates and qualified revocable trusts.

(a) ***General rule.*** The applicability of the separate share rule provided by section 663(c) to estates and qualified revocable trusts within the meaning of section 645(b)(1) will generally depend upon whether the governing instrument and applicable local law create separate economic interests in one beneficiary or class of beneficiaries of such estate or trust. Ordinarily, a separate share exists if the economic interests of the beneficiary or class of beneficiaries neither affect nor are affected by the economic interests accruing to another beneficiary or class of beneficiaries. Separate shares include, for example, the income on bequeathed property if the recipient of the specific bequest is entitled to such income and a surviving spouse's elective share that under local law is entitled to income and appreciation or depreciation. Furthermore, a qualified revocable trust for which an election is made under section 645 is always a separate share of the estate and may itself contain two or more separate shares. Conversely, a gift or bequest of a specific sum of money or of property as defined in section 663(a)(1) is not a separate share.

(b) ***Special rule for certain types of beneficial interests.*** Notwithstanding the provisions of paragraph (a) of this section, a surviving spouse's elective share that under local law is determined as of the date of the decedent's death and is not entitled to income or any appreciation or depreciation is a separate share. Similarly, notwithstanding the provisions of paragraph (a) of this section, a pecuniary formula bequest that, under the terms of the governing instrument or applicable local law, is not entitled to income or to share in appreciation or depreciation constitutes a separate share if the governing instrument does not provide that it is to be paid or credited in more than three installments.

(c) ***Shares with multiple beneficiaries and beneficiaries of multiple shares.*** A share may be considered as separate even though more than one beneficiary has an interest in it. For example, two beneficiaries may have equal, disproportionate, or indeterminate interests in one share which is economically separate and independent from another share in which one or more beneficiaries have an interest. Moreover, the same person may be a beneficiary of more than one separate share.

[T.D. 8849, 64 FR 72544, Dec. 28, 1999]

§ 1.663(c)-5 Examples.

Section 663(c) may be illustrated by the following examples:

Example 1. (i) A single trust was created in 1940 for the benefit of A, B, and C, who were aged 6, 4, and 2, respectively. Under the terms of the instrument, the trust income is required to be divided into three equal shares. Each beneficiary's share of the income is to be accumulated until he becomes 21 years of age. When a beneficiary reaches the age of 21, his share of the income may thereafter be either accumulated or distributed to him in the discretion of the trustee. The trustee also has discretion to invade corpus for the benefit of any beneficiary to the extent of his share of the trust estate, and the trust instrument requires that the beneficiary's right to future income and corpus will be proportionately reduced. When each beneficiary reaches 35 years of age, his share of the trust estate shall be paid over to him. The interest in the trust estate of any beneficiary dying without issue and before he has attained the age of 35 is to be equally divided between the other beneficiaries of the trust. All expenses of the trust are allocable to income under the terms of the trust instrument.
(ii) No distributions of income or corpus were made by the trustee prior to 1955, although A became 21 years of age on June 30, 1954. During the taxable year of 1955, the trust has income from royalties of $20,000 and expenses of $5,000. The trustee in his discretion distributes $12,000 to A. Both A and the trust report on the calendar year basis.

(iii) The trust qualifies for the separate share treatment under section 663(c) and the distributable net income must be divided into three parts for the purpose of determining the amount deductible by the trust under section 661 and the amount includible in A's gross income under section 662.

(iv) The distributable net income of each share of the trust is $5,000 ($6,667 less $1,667). Since the amount ($12,000) distributed to A during 1955 exceeds the distributable net income of $5,000 allocated to his share, the trust is deemed to have distributed to him $5,000 of 1955 income and $7,000 of amounts other than 1955 income. Accordingly, the trust is allowed a deduction of $5,000 under section 661. The taxable income of the trust for 1955 is $9,900, computed as follows:

Royalties	$20,000	
Deductions:		
Expenses	$5,000	
Distribution to A	5,000	
Personal exemption	100	
		10,100

Taxable income	9,900

(v) In accordance with section 662, A must include in his gross income for 1955 an amount equal to the portion ($5,000) of the distributable net income of the trust allocated to his share. Also, the excess distribution of $7,000 made by the trust is subject to the throwback provisions of subpart D (section 665 and following), part I, subchapter J, chapter 1 of the Code, and the regulations thereunder.

Example 2. (i) *Facts.* Testator, who dies in 2000, is survived by a spouse and two children. Testator's will contains a fractional formula bequest dividing the residuary estate between the surviving spouse and a trust for the benefit of the children. Under the fractional formula, the marital bequest constitutes 60% of the estate and the children's trust constitutes 40% of the estate. During the year, the executor makes a partial proportionate distribution of $1,000,0000, ($600,000 to the surviving spouse and $400,000 to the children's trust) and makes no other distributions. The estate receives dividend income of $20,000, and pays expenses of $8,000 that are deductible on the estate's federal income tax return.
(ii) *Conclusion.* The fractional formula bequests to the surviving spouse and to the children's trust are separate shares. Because Testator's will provides for fractional formula residuary bequests, the income and any appreciation in the value of the estate assets are proportionately allocated between the marital share and the trust's share. Therefore, in determining the distributable net income of each share, the income and expenses must be allocated 60% to the marital share and 40% to the trust's share. The distributable net income is $7,200 (60% of income less 60% of expenses) for the marital share and $4,800 (40% of income less 40% of expenses) for the trust's share. Because the amount distributed in partial satisfaction of each bequest exceeds the distributable net income of each share, the estate's distribution deduction under section 661 is limited to the sum of the distributable net income for both shares. The estate is allowed a distribution deduction of $12,000 ($7,200 for the marital share and $4,800 for the trust's share). As a result, the estate has zero taxable income ($20,000 income less $8,000 expenses and $12,000 distribution deduction). Under section 662, the surviving spouse and the trust must include in gross income $7,200 and $4,800, respectively.

Example 3. The facts are the same as in *Example 2,* except that in 2000 the executor makes the payment to partially fund the children's trust but makes no payment to the surviving spouse. The fiduciary must use a reasonable and equitable method to allocate income and expenses to the trust's share. Therefore, depending on when the distribution is made to the trust, it may no longer be reasonable or equitable to determine the distributable net income for the trust's share by allocating to it 40% of the estate's income and expenses for the year. The computation of the distributable net income for the trust's share should take into consideration that after the partial distribution the relative size of the trust's separate share is reduced and the relative size of the spouse's separate share is increased.

Example 4. (i) *Facts.* Testator, who dies in 2000, is survived by a spouse and one child. Testator's will provides for a pecuniary formula bequest to be paid in not more than three installments to a

trust for the benefit of the child of the largest amount that can pass free of Federal estate tax and a bequest of the residuary to the surviving spouse. The will provides that the bequest to the child's trust is not entitled to any of the estate's income and does not participate in appreciation or depreciation in estate assets. During the 2000 taxable year, the estate receives dividend income of $200,000 and pays expenses of $15,000 that are deductible on the estate's federal income tax return. The executor partially funds the child's trust by distributing to it securities that have an adjusted basis to the estate of $350,000 and a fair market value of $380,000 on the date of distribution. As a result of this distribution, the estate realizes long-term capital gain of $30,000.
(ii) *Conclusion.* The estate has two separate shares consisting of a formula pecuniary bequest to the child's trust and a residuary bequest to the surviving spouse. Because, under the terms of the will, no estate income is allocated to the bequest to the child's trust, the distributable net income for that trust's share is zero. Therefore, with respect to the $380,000 distribution to the child's trust, the estate is allowed no deduction under section 661, and no amount is included in the trust's gross income under section 662. Because no distributions were made to the spouse, there is no need to compute the distributable net income allocable to the marital share. The taxable income of the estate for the 2000 taxable year is $214,400 ($200,000 (dividend income) plus $30,000 (capital gain) minus $15,000 (expenses) and minus $600 (personal exemption)).

Example 5. The facts are the same as in *Example 4,* except that during 2000 the estate reports on its federal income tax return a pro rata share of an S corporation's tax items and a distributive share of a partnership's tax items allocated on Form K-1s to the estate by the S corporation and by the partnership, respectively. Because, under the terms of the will, no estate income from the S corporation or the partnership would be allocated to the pecuniary bequest to child's trust, none of the tax items attributable to the S corporation stock or the partnership interest is allocated to the trust's separate share. Therefore, with respect to the $380,000 distribution to the trust, the estate is allowed no deduction under section 661, and no amount is included in the trust's gross income under section 662.

Example 6. The facts are the same as in *Example 4,* except that during 2000 the estate receives a distribution of $900,000 from the decedent's individual retirement account that is included in the estate's gross income as income in respect of a decedent under section 691(a). The entire $900,000 is allocated to corpus under applicable local law. Both the separate share for the child's trust and the separate share for the surviving spouse may potentially be funded with the proceeds from the individual retirement account. Therefore, a portion of the $900,000 gross income must be allocated to the trust's separate share. The amount allocated to the trust's share must be based upon the relative values of the two separate shares using a reasonable and equitable method. The estate is entitled to a deduction under section 661 for the portion of the $900,000 properly allocated to the trust's separate share, and the trust must include this amount in income under section 662.

Example 7. (i) *Facts.* Testator, who dies in 2000, is survived by a spouse and three adult children. Testator's will divides the residue of the estate equally among the three children. The surviving spouse files an election under the applicable state's elective share statute. Under this statute, a surviving spouse is entitled to one-third of the decedent's estate after the payment of debts and expenses. The statute also provides that the surviving spouse is not entitled to any of the estate's income and does not participate in appreciation or depreciation of the estate's assets. However,

under the statute, the surviving spouse is entitled to interest on the elective share from the date of the court order directing the payment until the executor actually makes payment. During the estate's 2001 taxable year, the estate distributes to the surviving spouse $5,000,000 in partial satisfaction of the elective share and pays $200,000 of interest on the delayed payment of the elective share. During that year, the estate receives dividend income of $3,000,000 and pays expenses of $60,000 that are deductible on the estate's federal income tax return.
(ii) *Conclusion.* The estate has four separate shares consisting of the surviving spouse's elective share and each of the three children's residuary bequests. Because the surviving spouse is not entitled to any estate income under state law, none of the estate's gross income is allocated to the spouse's separate share for purposes of determining that share's distributable net income. Therefore, with respect to the $5,000,000 distribution, the estate is allowed no deduction under section 661, and no amount is included in the spouse's gross income under section 662. The $200,000 of interest paid to the spouse must be included in the spouse's gross income under section 61. Because no distributions were made to any other beneficiaries during the year, there is no need to compute the distributable net income of the other three separate shares. Thus, the taxable income of the estate for the 2000 taxable year is $2,939,400 ($3,000,000 (dividend income) minus $60,000 (expenses) and $600 (personal exemption)). The estate's $200,000 interest payment is a nondeductible personal interest expense described in section 163(h).

Example 8. The will of Testator, who dies in 2000, directs the executor to distribute the X stock and all dividends therefrom to child A and the residue of the estate to child B. The estate has two separate shares consisting of the income on the X stock bequeathed to A and the residue of the estate bequeathed to B. The bequest of the X stock meets the definition of section 663(a)(1) and therefore is not a separate share. If any distributions, other than shares of the X stock, are made during the year to either A or B, then for purposes of determining the distributable net income for the separate shares, gross income attributable to dividends on the X stock must be allocated to A's separate share and any other income must be allocated to B's separate share.

Example 9. The will of Testator, who dies in 2000, directs the executor to divide the residue of the estate equally between Testator's two children, A and B. The will directs the executor to fund A's share first with the proceeds of Testator's individual retirement account. The date of death value of the estate after the payment of debts, expenses, and estate taxes is $9,000,000. During 2000, the $900,000 balance in Testator's individual retirement account is distributed to the estate. The entire $900,000 is allocated to corpus under applicable local law. This amount is income in respect of a decedent within the meaning of section 691(a). The estate has two separate shares, one for the benefit of A and one for the benefit of B. If any distributions are made to either A or B during the year, then, for purposes of determining the distributable net income for each separate share, the $900,000 of income in respect of a decedent must be allocated to A's share.

Example 10. The facts are the same as in *Example 9,* except that the will directs the executor to fund A's share first with X stock valued at $3,000,000, rather than with the proceeds of the individual retirement account. The estate has two separate shares, one for the benefit of A and one for the benefit of B. If any distributions are made to either A or B during the year, then, for purposes of determining the distributable net income for each separate share, the $900,000 of gross income attributable to the proceeds from the individual retirement account must be allocated between the two shares to the extent that they could

potentially be funded with those proceeds. The maximum amount of A's share that could potentially be funded with the income in respect of decedent is $1,500,000 ($4,500,000 value of share less $3,000,000 to be funded with stock) and the maximum amount of B's share that could potentially be funded with income in respect of decedent is $4,500,000. Based upon the relative values of these amounts, the gross income attributable to the proceeds of the individual retirement account is allocated $225,000 (or one-fourth) to A's share and $675,000 (or three-fourths) to B's share.

Example 11. The will of Testator, who dies in 2000, provides that after the payment of specific bequests of money, the residue of the estate is to be divided equally among the Testator's three children, A, B, and C. The will also provides that during the period of administration one-half of the income from the residue is to be paid to a designated charitable organization. After the specific bequests of money are paid, the estate initially has three equal separate shares. One share is for the benefit of the charitable organization and A, another share is for the benefit of the charitable organization and B, and the last share is for the benefit of the charitable organization and C. During the period of administration, payments of income to the charitable organization are deductible by the estate to the extent provided in section 642(c) and are not subject to the distribution provisions of sections 661 and 662.

[T.D. 6500, 25 FR 11814, Nov. 26, 1960; 25 FR 14021, Dec. 31, 1960. Redesignated and amended by T.D. 8849, 64 FR 72543, 72544, Dec. 28, 1999; 65 FR 16317, Mar. 28, 2000]

§ 1.663(c)-6 Effective dates.

Sections 1.663(c)-1 through 1.663(c)-5 are applicable for estates and qualified revocable trusts within the meaning of section 645(b)(1) with respect to decedents who die on or after December 28, 1999. However, for estates and qualified revocable trusts with respect to decedents who died after the date that section 1307 of the Tax Reform Act of 1997 became effective but before December 28, 1999, the IRS will accept any reasonable interpretation of the separate share provisions, including those provisions provided in 1999-11 I.R.B. 41 (see § 601.601(d)(2)(ii)(b) of this chapter). For trusts other than qualified revocable trusts, § 1.663(c)-2 is applicable for taxable years of such trusts beginning after December 28, 1999.

[T.D. 8849, 64 FR 72545, Dec. 28, 1999; 65 FR 16317, Mar. 28, 2000]

§ 1.664-1 Charitable remainder trusts.

(a) ***In general*** —

(1) ***Introduction*** —

(i) ***General description of a charitable remainder trust.*** Generally, a charitable remainder trust is a trust which provides for a specified distribution, at least annually, to one or more beneficiaries, at least one of which is not a charity, for life or for a term of years, with an irrevocable remainder interest to be held for the benefit of, or paid over to, charity. The specified distribution to be paid at least annually must be a sum certain which is not less than 5 percent of the initial net fair market value of all property placed in trust (in the case of a charitable remainder annuity trust) or a fixed percentage which is not less than 5 percent of the net fair market value of the trust assets, valued annually (in the case of a charitable remainder unitrust). A trust created after July 31, 1969, which is a charitable remainder trust, is exempt from all of the taxes imposed by subtitle A of the Code for any taxable year of the trust, except for a taxable year beginning before January 1, 2007, in which it has unrelated business taxable

income. For taxable years beginning after December 31, 2006, an excise tax, treated as imposed by chapter 42, is imposed on charitable remainder trusts that have unrelated business taxable income. See paragraph (c) of this section.

(ii) ***Scope.*** This section provides definitions, general rules governing the creation and administration of a charitable remainder trust, and rules governing the taxation of the trust and its beneficiaries. For the application of certain foundation rules to charitable remainder trusts, see paragraph (b) of this section. If the trust has unrelated business taxable income, see paragraph (c) of this section. For the treatment of distributions to recipients, see paragraph (d) of this section. For the treatment of distributions to charity, see paragraph (e) of this section. For the time limitations for amendment of governing instruments, see paragraph (f) of this section. For transitional rules under which particular requirements are inapplicable to certain trusts, see paragraph (g) of this section. Section 1.664-2 provides rules relating solely to a charitable remainder annuity trust. Section 1.664-3 provides rules relating solely to a charitable remainder unitrust. Section 1.664-4 provides rules governing the calculation of the fair market value of the remainder interest in a charitable remainder unitrust. For rules relating to the filing of returns for a charitable remainder trust, see paragraph (a)(6) of § 1.6012-3 and section 6034 and the regulations thereunder.

(iii) ***Definitions.*** As used in this section and §§ 1.664-2, 1.664-3, and 1.664-4:

(*a*) ***Charitable remainder trust.*** The term *charitable remainder trust* means a trust with respect to which a deduction is allowable under section 170, 2055, 2106, or 2522 and which meets the description of a charitable remainder annuity trust (as described in § 1.664-2) or a charitable remainder unitrust (as described in § 1.664-3).

(*b*) ***Annuity amount.*** The term *annuity amount* means the amount described in paragraph (a)(1) of § 1.664-2 which is payable, at least annually, to the beneficiary of a charitable remainder annuity trust.

(*c*) ***Unitrust amount.*** The term *unitrust amount* means the amount described in paragraph (a)(1) of § 1.664-3 which is payable, at least annually, to the beneficiary of a charitable remainder unitrust.

(*d*) ***Recipient.*** The term *recipient* means the beneficiary who receives the possession or beneficial enjoyment of the annuity amount or unitrust amount.

(*e*) ***Governing instrument.*** The term *governing instrument* has the same meaning as in section 508(e) and the regulations thereunder.

(2) ***Requirement that the trust must be either a charitable remainder annuity trust or a charitable remainder unitrust.*** A trust is a charitable remainder trust only if it is either a charitable remainder annuity trust in every respect or a charitable remainder unitrust in every respect. For example, a trust which provides for the payment each year to a noncharitable beneficiary of the greater of a sum certain or a fixed percentage of the annual value of the trust assets is not a charitable remainder trust inasmuch as the trust is neither a charitable remainder annuity trust (for the reason that the payment for the year may be a fixed percentage of the annual value of the trust assets which is not a “sum certain”) nor a charitable remainder unitrust (for the reason that the payment for the year may be a sum certain which is not a “fixed percentage” of the annual value of the trust assets).

(3) ***Restrictions on investments.*** A trust is not a charitable remainder trust if the provisions of the trust include a provision which restricts the trustee from investing the trust assets in a manner which could result in the annual realization of a reasonable amount of income or gain from the sale or disposition of trust assets. In the case of transactions with, or for the benefit of, a disqualified person, see section 4941(d) and the regulations thereunder for rules relating to the definition of self-dealing.

(4) ***Requirement that trust must meet definition of and function exclusively as a charitable remainder trust from its creation.*** In order for a trust to be a charitable remainder trust, it must meet the definition of and function exclusively as a charitable remainder trust from the creation of the trust. Solely for the purposes of section 664 and the regulations thereunder, the trust will be deemed to be created at the earliest time that neither the grantor nor any other person is treated as the owner of the entire trust under subpart E, part 1, subchapter J, chapter 1, subtitle A of the Code (relating to grantors and others treated as substantial owners), but in no event prior to the time property is first transferred to the trust. For purposes of the preceding sentence, neither the grantor nor his spouse shall be treated as the owner of the trust under such subpart E merely because the grantor or his spouse is named as a recipient. See examples 1 through 3 of subparagraph (6) of this paragraph for illustrations of the foregoing rule.

(5) ***Rules applicable to testamentary transfers*** —

(i) ***Deferral of annuity or unitrust amount.*** Notwithstanding subparagraph (4) of this paragraph and §§ 1.664-2 and 1.664-3, for purposes of sections 2055 and 2106 a charitable remainder trust shall be deemed created at the date of death of the decedent (even though the trust is not funded until the end of a reasonable period of administration or settlement) if the obligation to pay the annuity or unitrust amount with respect to the property passing in trust at the death of the decedent begins as of the date of death of the decedent, even though the requirement to pay such amount is deferred in accordance with the rules provided in this subparagraph. If permitted by applicable local law or authorized by the provisions of the governing instrument, the requirement to pay such amount may be deferred until the end of the taxable year of the trust in which occurs the complete funding of the trust. Within a reasonable period after such time, the trust must pay (in the case of an underpayment) or must receive from the recipient (in the case of an overpayment) the difference between:

(*a*) Any annuity or unitrust amounts actually paid, plus interest on such amounts computed at the rate of interest specified in paragraph (a)(5)(iv) of this section, compounded annually, and

(*b*) The annuity or unitrust amounts payable, plus interest on such amounts computed at the rate of interest specified in paragraph (a)(5)(iv) of this section, compounded annually.

The amounts payable shall be retroactively determined by using the taxable year, valuation method, and valuation dates which are ultimately adopted by the charitable remainder trust. See subdivision (ii) of this subparagraph for rules relating to retroactive determination of the amount payable under a charitable remainder unitrust. See paragraph (d)(4) of this section for rules relating to the year of inclusion in the case of an underpayment to a recipient and the allowance of a deduction in the case of an overpayment to a recipient.

(ii) For purposes of retroactively determining the amount under subdivision (i)(*b*) of this subparagraph, the governing instrument of a charitable remainder unitrust may provide that the amount described in subdivision (i)(*b*) of this subparagraph with respect to property passing in

trust at the death of the decedent for the period which begins on the date of death of the decedent and ends on the earlier of the date of death of the last recipient or the end of the taxable year of the trust in which occurs the complete funding of the trust shall be computed by multiplying:

(*a*) The sum of

(*1*) the value, on the earlier of the date of death of the last recipient or the last day in such taxable year, of the property held in trust which is attributable to property passing to the trust at the death of the decedent,

(*2*) any distributions in respect of unitrust amounts made by the trust or estate before such date, and

(*3*) interest on such distributions computed at the rate of interest specified in paragraph (a)(5)(iv) of this section, compounded annually, from the date of distribution to such date by:

(*b*)

(*1*) In the case of transfers made after November 30, 1983, for which the valuation date is before May 1, 1989, a factor equal to 1.000000 less the factor under the appropriate adjusted payout rate in Table D in § 1.664-4(e)(6) opposite the number of years in column 1 between the date of death of the decedent and the date of the earlier of the death of the last recipient or the last day of such taxable year.

(*2*) In the case of transfers for which the valuation date is after April 30, 1989, a factor equal to 1.000000 less the factor under the appropriate adjusted payout rate in Table D in § 1.664-4(e)(6) opposite the number of years in column 1 between the date of death of the decedent and the date of the earlier of the death of the last recipient or the last day of such taxable year. The appropriate adjusted payout rate is determined by using the appropriate Table F contained in § 1.664-4(e)(6) for the section 7520 rate for the month of the valuation date.

(*3*) If the number of years between the date of death and the date of the earlier of the death of the last recipient or the last day of such taxable year is between periods for which factors are provided, a linear interpolation must be made.

(iii) ***Treatment of distributions.*** The treatment of a distribution to a charitable remainder trust, or to a recipient in respect of an annuity or unitrust amount, paid, credited, or required to be distributed by an estate, or by a trust which is not a charitable remainder trust, shall be governed by the rules of subchapter J, chapter 1, subtitle A of the Code other than section 664. In the case of a charitable remainder trust which is partially or fully funded during the period of administration of an estate or settlement of a trust (which is not a charitable remainder trust), the treatment of any amount paid, credited, or required to be distributed by the charitable remainder trust shall be governed by the rules of section 664.

(iv) ***Rate of interest.*** The following rates of interest shall apply for purposes of paragraphs (a)(5) (i) through (ii) of this section:

(*a*) The section 7520 rate for the month in which the valuation date with respect to the transfer is (or one of the prior two months if elected under § 1.7520-2(b)) after April 30, 1989;

(*b*) 10 percent for instruments executed or amended (other than in the case of a reformation under section 2055(e)(3)) on or after August 9, 1984, and before May 1, 1989, and not subsequently amended;

(*c*) 6 percent or 10 percent for instruments executed or amended (other than in the case of a reformation under section 2055(e)(3)) after October 24, 1983, and before August 9, 1984; and

(*d*) 6 percent for instruments executed before October 25, 1983, and not subsequently amended (other than in the case of a reformation under section 2055(e)(3)).

(6) ***Examples.*** The application of the rules in paragraphs (a)(4) and (a)(5) of this section require the use of actuarial factors contained in §§ 1.664-4(e) and 1.664-4A and may be illustrated by use of the following examples:

Example 1. On September 19, 1971, H transfers property to a trust over which he retains an inter vivos power of revocation. The trust is to pay W 5 percent of the value of the trust assets, valued annually, for her life, remainder to charity. The trust would satisfy all of the requirements of section 664 if it were irrevocable. For purposes of section 664, the trust is not deemed created in 1971 because H is treated as the owner of the entire trust under subpart E. On May 26, 1975, H predeceases W at which time the trust becomes irrevocable. For purposes of section 664, the trust is deemed created on May 26, 1975, because that is the earliest date on which H is not treated as the owner of the entire trust under subpart E. The trust becomes a charitable remainder trust on May 26, 1975, because it meets the definition of a charitable remainder trust from its creation.

Example 2. The facts are the same as in *example 1,* except that H retains the inter vivos power to revoke only one-half of the trust. For purposes of section 664, the trust is deemed created on September 19, 1971, because on that date the grantor is not treated as the owner of the entire trust under subpart E. Consequently, a charitable deduction is not allowable either at the creation of the trust or at H's death because the trust does not meet the definition of a charitable remainder trust from the date of its creation. The trust does not meet the definition of a charitable remainder trust from the date of its creation because the trust is subject to a partial power to revoke on such date.

Example 3. The facts are the same as in *example 1,* except that the residue of H's estate is to be paid to the trust and the trust is required to pay H's debts. The trust is not a charitable remainder trust at H's death because it does not function exclusively as a charitable remainder trust from the date of its creation which, in this case, is the date it becomes irrevocable.

Example 4. (i) In 1971, H transfers property to Trust A over which he retains an inter vivos power of revocation. Trust A, which is not a charitable remainder trust, is to provide income or corpus to W until the death of H. Upon H's death the trust is required by its governing instrument to pay the debts and administration expenses of H's estate, and then to terminate and distribute all of the remaining assets to a separate Trust B which meets the definition of a charitable remainder annuity trust.
(ii) Trust B will be charitable remainder trust from the date of its funding because it will function exclusively as a charitable remainder trust from its creation. For purposes of section 2055, Trust B will be deemed created at H's death if the obligation to pay the

annuity amount begins on the date of H's death. For purposes of section 664, Trust B becomes a charitable remainder trust as soon as it is partially or completely funded. Consequently, unless Trust B has unrelated business taxable income, the income of the trust is exempt from all taxes imposed by subtitle A of the Code, and any distributions by the trust, even before it is completely funded, are governed by the rules of section 664. Any distributions made by Trust A, including distributions to a recipient in respect of annuity amounts, are governed by the rules of subchapter J, chapter 1, subtitle A of the Code other than section 664.

Example 5. In 1973, H dies testate leaving the net residue of his estate (after payment by the estate of all debts and administration expenses) to a trust which meets the definition of a charitable remainder unitrust. For purposes of section 2055, the trust is deemed created at H's death if the requirement to pay the unitrust amount begins on H's death and is a charitable remainder trust even though the estate is obligated to pay debts and administration expenses. For purposes of section 664, the trust becomes a charitable remainder trust as soon as it is partially or completely funded. Consequently, unless the trust has unrelated business taxable income, the income of the trust is exempt from all taxes imposed by subtitle A of the Code, and any distributions by the trust, even before it is completely funded, are governed by the rules of section 664. Any distributions made by H's estate, including distributions to a recipient in respect of unitrust amounts, are governed by the rules of subchapter J, chapter 1, subtitle A of the Code other than section 664.

Example 6. (i) On January 1, 1974, H dies testate leaving the residue of his estate to a charitable remainder unitrust. The governing instrument provides that, beginning at H's death, the trustee is to make annual payments to W, on December 31 of each year of 5 percent of the net fair market value of the trust assets, valued as of December 31 of each year, for W's life and to pay the remainder to charity at the death of W. The governing instrument also provides that the actual payment of the unitrust amount need not be made until the end of the taxable year of the trust in which occurs the complete funding of the trust. The governing instrument also provides that the amount payable with respect to the period between the date of death and the end of such taxable year shall be computed under the special method provided in subparagraph (5)(ii) of this paragraph. The governing instrument provides that, within a reasonable period after the end of the taxable year of the trust in which occurs the complete funding of the trust, the trustee shall pay (in the case of an underpayment) or shall receive from the recipient (in the case of an overpayment) the difference between the unitrust amounts paid (plus interest at 6 percentage compounded annually) and the amount computed under the special method. The trust is completely funded on September 20, 1976. No amounts were paid before June 30, 1977. The trust adopts a fiscal year of July 1 to June 30. The net fair market value of the trust assets on June 30, 1977, is $100,000.

(ii) Because no amounts were paid prior to the end of the taxable year in which the trust was completely funded, the amount payable at the end of such taxable year is equal to the net fair market value of the trust assets on the last day of such taxable year (June 30, 1977) multiplied by a factor equal to 1.0 minus the factor in Table D corresponding to the number of years in the period between the date of death and the end of such taxable year. The adjusted payout rate (determined under § 1.664-4A(c)) is 5 percent. Because the last day of the taxable year in which the trust is completely funded in June 30, 1977, there are 3 181/365 years in such period. Because there is no factor given in Table D for such a period, a linear interpolation must be made:

1.0 minus 0.814506 (factor at 5 percent for 4 years)	0.185494
1.0 minus 0.857375 (factor at 5 percent for 3 years)	.142625
Difference	.042869
$181 \div 365 = X \div 0.042869$	
$X = 0.021258$	
1.0 minus 0.857375 (factor at 5 percent for 3 years	0.142625
Plus: X	.021258
Interpolated factor	.163883

Thus, the amount payable for the period from January 1, 1974, to June 30, 1977, is $16,388.30 ($100,000 × 0.163883). Thereafter, the trust assets must be valued on December 31 of each year and 5 percent of such value paid annually to W for her life.

(7) ***Valuation of unmarketable assets*** —

(i) ***In general.*** If unmarketable assets are transferred to or held by a trust, the trust will not be a trust with respect to which a deduction is available under section 170, 2055, 2106, or 2522, or will be treated as failing to function exclusively as a charitable remainder trust unless, whenever the trust is required to value such assets, the valuation is—

(*a*) Performed exclusively by an independent trustee; or

(*b*) Determined by a current qualified appraisal from a qualified appraiser, as those terms are defined in—

(*1*) Section 1.170A-13(c)(3) and 1.170A-13(c)(5), respectively, for appraisals prepared for returns or submissions filed on or before August 17, 2006;

(*2*) Section 3 of Notice 2006-96, 2006-2 CB 902, for appraisals prepared for returns or submissions filed after August 17, 2006, if the donations are made before January 1, 2019; or

(*3*) Section 1.170A-17(a) and 1.170A-17(b), respectively, for appraisals prepared for returns or submissions for donations made on or after January 1, 2019.

(ii) ***Unmarketable assets.*** Unmarketable assets are assets that are not cash, cash equivalents, or other assets that can be readily sold or exchanged for cash or cash equivalents. For example, unmarketable assets include real property, closely-held stock, and an unregistered security for which there is no available exemption permitting public sale.

(iii) ***Independent trustee.*** An independent trustee is a person who is not the grantor of the trust, a noncharitable beneficiary, or a related or subordinate party to the grantor, the grantor's spouse, or a noncharitable beneficiary (within the meaning of section 672(c) and the applicable regulations).

(b) ***Application of certain foundation rules to charitable remainder trusts.*** See section 4947(a)(2) and section 4947(b)(3)(B) and the regulations thereunder for the application to charitable remainder trusts of certain provisions relating to private foundations. See section 508(e) for rules relating to required provisions in governing instruments prohibiting certain activities specified in section 4947(a)(2).

(c) ***Excise tax on charitable remainder trusts*** —

(1) ***In general.*** For each taxable year beginning after December 31, 2006, in which a charitable remainder annuity trust or a charitable remainder unitrust has any unrelated business taxable income, an excise tax is imposed on that trust in an amount equal to the amount of such unrelated business taxable income. For this purpose, unrelated business taxable income is as defined in section 512, determined as if part III, subchapter F, chapter 1, subtitle A of the Internal Revenue Code applied to such trust. Such excise tax is treated as imposed by chapter 42 (other than subchapter E) and is reported and payable in accordance with the appropriate forms and instructions. Such excise tax shall be allocated to corpus and, therefore, is not deductible in determining taxable income distributed to a beneficiary. (See paragraph (d)(2) of this section.) The charitable remainder trust income that is unrelated business taxable income constitutes income of the trust for purposes of determining the character of the distribution made to the beneficiary. Income of the charitable remainder trust is allocated among the charitable remainder trust income categories in paragraph (d)(1) of this section without regard to whether any part of that income constitutes unrelated business taxable income under section 512.

(2) ***Examples.*** The application of the rules in this paragraph (c) may be illustrated by the following examples:

Example 1. For 2007, a charitable remainder annuity trust with a taxable year beginning on January 1, 2007, has $60,000 of ordinary income, including $10,000 of gross income from a partnership that constitutes unrelated business taxable income to the trust. The trust has no deductions that are directly connected with that income. For that same year, the trust has administration expenses (deductible in computing taxable income) of $16,000, resulting in net ordinary income of $44,000. The amount of unrelated business taxable income is computed by taking gross income from an unrelated trade or business and deducting expenses directly connected with carrying on the trade or business, both computed with modifications under section 512(b). Section 512(b)(12) provides a specific deduction of $1,000 in computing the amount of unrelated business taxable income. Under the facts presented in this example, there are no other modifications under section 512(b). The trust, therefore, has unrelated business taxable income of $9,000 ($10,000 minus the $1,000 deduction under section 512(b)(12)). Undistributed ordinary income from prior years is $12,000 and undistributed capital gains from prior years are $50,000. Under the terms of the trust agreement, the trust is required to pay an annuity of $100,000 for year 2007 to the noncharitable beneficiary. Because the trust has unrelated business taxable income of $9,000, the excise tax imposed under section 664(c) is

equal to the amount of such unrelated business taxable income, $9,000. The character of the $100,000 distribution to the noncharitable beneficiary is as follows: $56,000 of ordinary income ($44,000 from current year plus $12,000 from prior years), and $44,000 of capital gains. The $9,000 excise tax is allocated to corpus, and does not reduce the amount in any of the categories of income under paragraph (d)(1) of this section. At the beginning of year 2008, the amount of undistributed capital gains is $6,000, and there is no undistributed ordinary income.

Example 2. During 2007, a charitable remainder annuity trust with a taxable year beginning on January 1, 2007, sells real estate generating gain of $40,000. Because the trust had obtained a loan to finance part of the purchase price of the asset, some of the income from the sale is treated as debt-financed income under section 514 and thus constitutes unrelated business taxable income under section 512. The unrelated debt-financed income computed under section 514 is $30,000. Assuming the trust receives no other income in 2007, the trust will have unrelated business taxable income under section 512 of $29,000 ($30,000 minus the $1,000 deduction under section 512(b)(12)). Except for section 512(b)(12), no other exceptions or modifications under sections 512-514 apply when calculating unrelated business taxable income based on the facts presented in this example. Because the trust has unrelated business taxable income of $29,000, the excise tax imposed under section 664(c) is equal to the amount of such unrelated business taxable income, $29,000. The $29,000 excise tax is allocated to corpus, and does not reduce the amount in any of the categories of income under paragraph (d)(1) of this section. Regardless of how the trust's income might be treated under sections 511-514, the entire $40,000 is capital gain for purposes of section 664 and is allocated accordingly to and within the second of the categories of income under paragraph (d)(1) of this section.

(3) ***Effective/applicability date.*** This paragraph (c) is applicable for taxable years beginning after December 31, 2006. The rules that apply with respect to taxable years beginning before January 1, 2007, are contained in § 1.664-1(c) as in effect prior to June 24, 2008. (See 26 CFR part 1, § 1.664-1(c)(1) revised as of April 1, 2007.)

(d) ***Treatment of annual distributions to recipients*** —

(1) ***Character of distributions*** —

(i) ***Assignment of income to categories and classes at the trust level.***

(*a*) A trust's income, including income includible in gross income and other income, is assigned to one of three categories in the year in which it is required to be taken into account by the trust. These categories are—

(*1*) Gross income, other than gains and amounts treated as gains from the sale or other disposition of capital assets (referred to as the ordinary income category);

(*2*) Gains and amounts treated as gains from the sale or other disposition of capital assets (referred to as the capital gains category); and

(*3*) Other income (including income excluded under part III, subchapter B, chapter 1, subtitle A of the Internal Revenue Code).

(*b*) Items within the ordinary income and capital gains categories are assigned to different classes based on the Federal income tax rate applicable to each type of income in that category in the year the items are required to be taken into account by the trust. For example, for a trust with a taxable year ending December 31, 2004, the ordinary income

category may include a class of qualified dividend income as defined in section 1(h)(11) and a class of all other ordinary income, and the capital gains category may include separate classes for short-term and long-term capital gains and losses, such as a short-term capital gain class, a 28-percent long-term capital gain class (gains and losses from collectibles and section 1202 gains), an unrecaptured section 1250 long-term capital gain class (long-term gains not treated as ordinary income that would be treated as ordinary income if section 1250(b)(1) included all depreciation), a qualified 5-year long-term capital gain class as defined in section 1(h)(9) prior to amendment by the Jobs and Growth Tax Relief Reconciliation Act of 2003 (JGTRRA), Public Law 108-27 (117 Stat. 752), and an all other long-term capital gain class. After items are assigned to a class, the tax rates may change so that items in two or more classes would be taxed at the same rate if distributed to the recipient during a particular year. If the changes to the tax rates are permanent, the undistributed items in those classes are combined into one class. If, however, the changes to the tax rates are only temporary (for example, the new rate for one class will sunset in a future year), the classes are kept separate.

(ii) ***Order of distributions.***

(*a*) The categories and classes of income (determined under paragraph (d)(1)(i) of this section) are used to determine the character of an annuity or unitrust distribution from the trust in the hands of the recipient irrespective of whether the trust is exempt from taxation under section 664(c) for the year of the distribution. The determination of the character of amounts distributed or deemed distributed at any time during the taxable year of the trust shall be made as of the end of that taxable year. The tax rate or rates to be used in computing the recipient's tax on the distribution shall be the tax rates that are applicable, in the year in which the distribution is required to be made, to the classes of income deemed to make up that distribution, and not the tax rates that are applicable to those classes of income in the year the income is received by the trust. The character of the distribution in the hands of the annuity or unitrust recipient is determined by treating the distribution as being made from each category in the following order:

(*1*) First, from ordinary income to the extent of the sum of the trust's ordinary income for the taxable year and its undistributed ordinary income for prior years.

(*2*) Second, from capital gain to the extent of the trust's capital gains determined under paragraph (d)(1)(iv) of this section.

(*3*) Third, from other income to the extent of the sum of the trust's other income for the taxable year and its undistributed other income for prior years.

(*4*) Finally, from trust corpus (with corpus defined for this purpose as the net fair market value of the trust assets less the total undistributed income (but not loss) in paragraphs (d)(1)(i)(*a*) (*1*) through (*3*) of this section).

(*b*) If the trust has different classes of income in the ordinary income category, the distribution from that category is treated as being made from each class, in turn, until exhaustion of the class, beginning with the class subject to the highest Federal income tax rate and ending with the class subject to the lowest Federal income tax rate. If the trust has different classes of net gain in the capital gains category, the distribution from that category is treated as being made first from the short-term capital gain class and then from each class of long-term capital gain, in turn, until exhaustion of the class, beginning

with the class subject to the highest Federal income tax rate and ending with the class subject to the lowest rate. If two or more classes within the same category are subject to the same current tax rate, but at least one of those classes will be subject to a different tax rate in a future year (for example, if the current rate sunsets), the order of that class in relation to other classes in the category with the same current tax rate is determined based on the future rate or rates applicable to those classes. Within each category, if there is more than one type of income in a class, amounts treated as distributed from that class are to be treated as consisting of the same proportion of each type of income as the total of the current and undistributed income of that type bears to the total of the current and undistributed income of all types of income included in that class. For example, if rental income and interest income are subject to the same current and future Federal income tax rate and, therefore, are in the same class, a distribution from that class will be treated as consisting of a proportional amount of rental income and interest income.

(iii) ***Treatment of losses at the trust level*** —

(*a*) ***Ordinary income category.*** A net ordinary loss for the current year is first used to reduce undistributed ordinary income for prior years that is assigned to the same class as the loss. Any excess loss is then used to reduce the current and undistributed ordinary income from other classes, in turn, beginning with the class subject to the highest Federal income tax rate and ending with the class subject to the lowest Federal income tax rate. If any of the loss exists after all the current and undistributed ordinary income from all classes has been offset, the excess is carried forward indefinitely to reduce ordinary income for future years and retains its class assignment. For purposes of this section, the amount of current income and prior years' undistributed income shall be computed without regard to the deduction for net operating losses provided by section 172 or 642(d).

(*b*) ***Other income category.*** A net loss in the other income category for the current year is used to reduce undistributed income in this category for prior years and any excess is carried forward indefinitely to reduce other income for future years.

(iv) ***Netting of capital gains and losses at the trust level.*** Capital gains of the trust are determined on a cumulative net basis under the rules of this paragraph (d)(1) without regard to the provisions of section 1212. For each taxable year, current and undistributed gains and losses within each class are netted to determine the net gain or loss for that class, and the classes of capital gains and losses are then netted against each other in the following order. First, a net loss from a class of long-term capital gain and loss (beginning with the class subject to the highest Federal income tax rate and ending with the class subject to the lowest rate) is used to offset net gain from each other class of long-term capital gain and loss, in turn, until exhaustion of the class, beginning with the class subject to the highest Federal income tax rate and ending with the class subject to the lowest rate. Second, either—

(*a*) A net loss from all the classes of long-term capital gain and loss (beginning with the class subject to the highest Federal income tax rate and ending with the class subject to the lowest rate) is used to offset any net gain from the class of short-term capital gain and loss; or

(*b*) A net loss from the class of short-term capital gain and loss is used to offset any net gain from each class of long-term capital gain and loss, in turn, until exhaustion of the class, beginning with the class subject to the highest Federal income tax rate and ending with the class subject to the lowest Federal income tax rate.

(v) ***Carry forward of net capital gain or loss by the trust.*** If, at the end of a taxable year, a trust has, after the application of paragraph (d)(1)(iv) of this section, any net loss or any net gain that is not treated as distributed under paragraph (d)(1)(ii)(*a*)(*2*) of this section, the net gain or loss is carried over to succeeding taxable years and retains its character in succeeding taxable years as gain or loss from its particular class.

(vi) ***Special transitional rules.*** To be eligible to be included in the class of qualified dividend income, dividends must meet the definition of section 1(h)(11) and must be received by the trust after December 31, 2002. Long-term capital gain or loss properly taken into account by the trust before January 1, 1997, is included in the class of all other long-term capital gains and losses. Long-term capital gain or loss properly taken into account by the trust on or after January 1, 1997, and before May 7, 1997, if not treated as distributed in 1997, is included in the class of all other long-term capital gains and losses. Long-term capital gain or loss (other than 28-percent gain (gains and losses from collectibles and section 1202 gains), unrecaptured section 1250 gain (long-term gains not treated as ordinary income that would be treated as ordinary income if section 1250(b)(1) included all depreciation), and qualified 5-year gain as defined in section 1(h)(9) prior to amendment by JGTRRA), properly taken into account by the trust before January 1, 2003, and distributed during 2003 is treated as if it were properly taken into account by the trust after May 5, 2003. Long-term capital gain or loss (other than 28-percent gain, unrecaptured section 1250 gain, and qualified 5-year gain), properly taken into account by the trust on or after January 1, 2003, and before May 6, 2003, if not treated as distributed during 2003, is included in the class of all other long-term capital gain. Qualified 5-year gain properly taken into account by the trust after December 31, 2000, and before May 6, 2003, if not treated as distributed by the trust in 2003 or a prior year, must be maintained in a separate class within the capital gains category until distributed. Qualified 5-year gain properly taken into account by the trust before January 1, 2003, and deemed distributed during 2003 is subject to the same current tax rate as deemed distributions from the class of all other long-term capital gain realized by the trust after May 5, 2003. Qualified 5-year gain properly taken into account by the trust on or after January 1, 2003, and before May 6, 2003, if treated as distributed by the trust in 2003, is subject to the tax rate in effect prior to the amendment of section 1(h)(9) by JGTRRA.

(vii) ***Application of section 643(a)(7).*** For application of the anti-abuse rule of section 643(a)(7) to distributions from charitable remainder trusts, see § 1.643(a)-8.

(viii) ***Examples.*** The following examples illustrate the rules in this paragraph (d)(1):

Example 1. (i) X, a charitable remainder annuity trust described in section 664(d)(1), is created on January 1, 2003. The annual annuity amount is $100. X's income for the 2003 tax year is as follows:

Interest income	$80

Qualified dividend income	50
Capital gains and losses	0
Tax-exempt income	0

(ii) In 2003, the year this income is received by the trust, qualified dividend income is subject to a different rate of Federal income tax than interest income and is, therefore, a separate class of income in the ordinary income category. The annuity amount is deemed to be distributed from the classes within the ordinary income category, beginning with the class subject to the highest Federal income tax rate and ending with the class subject to the lowest rate. Because during 2003 qualified dividend income is taxed at a lower rate than interest income, the interest income is deemed distributed prior to the qualified dividend income. Therefore, in the hands of the recipient, the 2003 annuity amount has the following characteristics:

Interest income	$80
Qualified dividend income	20

(iii) The remaining $30 of qualified dividend income that is not treated as distributed to the recipient in 2003 is carried forward to 2004 as undistributed qualified dividend income.

Example 2. (i) The facts are the same as in Example 1, and at the end of 2004, X has the following classes of income:

Interest income class	$5
Qualified dividend income class ($10 from 2004 and $30 carried forward from 2003)	40
Net short-term capital gain class	15
Net long-term capital loss in 28-percent class	(325)
Net long-term capital gain in unrecaptured section 1250 gain class	175
Net long-term capital gain in all other long-term capital gain class	350

(ii) In 2004, gain in the unrecaptured section 1250 gain class is subject to a 25-percent

Federal income tax rate, and gain in the all other long-term capital gain class is subject to a lower rate. The net long-term capital loss in the 28-percent gain class is used to offset the net capital gains in the other classes of long-term capital gain and loss, beginning with the class subject to the highest Federal income tax rate and ending with the class subject to the lowest rate. The $325 net loss in the 28-percent gain class reduces the $175 net gain in the unrecaptured section 1250 gain class to $0. The remaining $150 loss from the 28-percent gain class reduces the $350 gain in the all other long-term capital gain class to $200. As in Example 1, qualified dividend income is taxed at a lower rate than interest income during 2004. The annuity amount is deemed to be distributed from all the classes in the ordinary income category and then from the classes in the capital gains category, beginning with the class subject to the highest Federal income tax rate and ending with the class subject to the lowest rate. In the hands of the recipient, the 2004 annuity amount has the following characteristics:

Interest income	$ 5
Qualified dividend income	40
Net short-term capital gain	15
Net long-term capital gain in all other long-term capital gain class	40

(iii) The remaining $160 gain in the all other long-term capital gain class that is not treated as distributed to the recipient in 2004 is carried forward to 2005 as gain in that same class.

Example 3. (i) The facts are the same as in Examples 1 and 2, and at the end of 2005, X has the following classes of income:

Interest income class	$ 5
Qualified dividend income	20
Net loss in short-term capital gain class	(50)
Net long-term capital gain in 28-percent gain class	10
Net long-term capital gain in unrecaptured section 1250 gain class	135
Net long-term capital gain in all other long-term capital gain class (carried forward from 2004)	160

(ii) There are no long-term capital losses to net against the long-term capital gains. Thus, the net short-term capital loss is used to offset the net capital gains in the classes

of long-term capital gain and loss, in turn, until exhaustion of the class, beginning with the class subject to the highest Federal income tax rate and ending with the class subject to the lowest rate. The $50 net short-term loss reduces the $10 net gain in the 28-percent gain class to $0. The remaining $40 net loss reduces the $135 net gain in the unrecaptured section 1250 gain class to $95. As in Examples 1 and 2, during 2005, qualified dividend income is taxed at a lower rate than interest income; gain in the unrecaptured section 1250 gain class is taxed at 25 percent; and gain in the all other long-term capital gain class is taxed at a rate lower than 25 percent. The annuity amount is deemed to be distributed from all the classes in the ordinary income category and then from the classes in the capital gains category, beginning with the class subject to the highest Federal income tax rate and ending with the class subject to the lowest rate. Therefore, in the hands of the recipient, the 2005 annuity amount has the following characteristics:

Interest income	$ 5
Qualified dividend income	20
Unrecaptured section 1250 gain	75

(iii) The remaining $20 gain in the unrecaptured section 1250 gain class and the $160 gain in the all other long-term capital gain class that are not treated as distributed to the recipient in 2005 are carried forward to 2006 as gains in their respective classes.

Example 4. (i) The facts are the same as in Examples 1, 2 and 3, and at the end of 2006, X has the following classes of income:

Interest income class	$ 95
Qualified dividend income class	10
Net loss in short-term capital gain class	(20)
Net long-term capital loss in 28-percent gain class	(350)
Net long-term capital gain in unrecaptured section 1250 gain class (carried forward from 2005)	20
Net long-term capital gain in all other long-term capital gain class (carried forward from 2005)	160

(ii) A net long-term capital loss in one class is used to offset the net capital gains in the other classes of long-term capital gain and loss, in turn, until exhaustion of the class,

beginning with the class subject to the highest Federal income tax rate and ending with the class subject to the lowest rate. The $350 net loss in the 28-percent gain class reduces the $20 net gain in the unrecaptured section 1250 gain class to $0. The remaining $330 net loss reduces the $160 net gain in the all other long-term capital gain class to $0. As in Examples 1, 2 and 3, during 2006, qualified dividend income is taxed at a lower rate than interest income. The annuity amount is deemed to be distributed from all the classes in the ordinary income category and then from the classes in the capital gains category, beginning with the class subject to the highest Federal income tax rate and ending with the class subject to the lowest rate. In the hands of the recipient, the 2006 annuity amount has the following characteristics:

Interest income	$ 95
Qualified dividend income	5

(iii) The remaining $5 of qualified dividend income that is not treated as distributed to the recipient in 2006 is carried forward to 2007 as qualified dividend income. The $20 net loss in the short-term capital gain class and the $170 net loss in the 28-percent gain class are carried forward to 2007 as net losses in their respective classes.

Example 5. (i) X, a charitable remainder annuity trust described in section 664(d)(1), is created on January 1, 2002. The annual annuity amount is $100. Except for qualified 5-year gain of $200 realized before May 6, 2003, but not distributed, X has no other gains or losses carried over from former years. X's income for the 2007 tax year is as follows:

Interest income class	$ 10
Net gain in short-term capital gain class	5
Net long-term capital gain in 28-percent gain class	5
Net long-term capital gain in unrecaptured section 1250 gain class	10
Net long-term capital gain in all other long-term capital gain class	10

(ii) The annuity amount is deemed to be distributed from all the classes in the ordinary income category and then from the classes in the capital gains category, beginning with the class subject to the highest Federal income tax rate and ending with the class subject to the lowest rate. In 2007, gains distributed to a recipient from both the qualified 5-year gain class and the all other long-term capital gains class are taxed at a 15/5

percent tax rate. Since after December 31, 2008, gains distributed from the qualified 5-year gain class will be taxed at a lower rate than gains distributed from the other classes of long-term capital gain and loss, distributions from the qualified 5-year gain class are made after distributions from the other classes of long-term capital gain and loss. In the hands of the recipient, the 2007 annuity amount has the following characteristics:

Interest income	$10
Short-term capital gain	5
28-percent gain	5
Unrecaptured section 1250 gain	10
All other long-term capital gain	10
Qualified 5-year gain (taxed as all other long-term capital gain)	60

(iii) The remaining $140 of qualified 5-year gain that is not treated as distributed to the recipient in 2007 is carried forward to 2008 as qualified 5-year gain.

(ix) ***Effective dates.*** The rules in this paragraph (d)(1) that require long-term capital gains to be distributed in the following order: first, 28-percent gain (gains and losses from collectibles and section 1202 gains); second, unrecaptured section 1250 gain (long-term gains not treated as ordinary income that would be treated as ordinary income if section 1250(b)(1) included all depreciation); and then, all other long-term capital gains are applicable for taxable years ending on or after December 31, 1998. The rules in this paragraph (d)(1) that provide for the netting of capital gains and losses are applicable for taxable years ending on or after December 31, 1998. The rule in the second sentence of paragraph (d)(1)(vi) of this section is applicable for taxable years ending on or after December 31, 1998. The rule in the third sentence of paragraph (d)(1)(vi) of this section is applicable for distributions made in taxable years ending on or after December 31, 1998. All other provisions of this paragraph (d)(1) are applicable for taxable years ending after November 20, 2003.

(2) ***Allocation of deductions.*** Items of deduction of the trust for a taxable year of the trust which are deductible in determining taxable income (other than the deductions permitted by sections 642(b), 642(c), 661, and 1202) which are directly attributable to one or more classes of items within a category of income (determined under paragraph (d)(1)(i)(*a*) of this section) or to corpus shall be allocated to such classes of items or to corpus. All other allowable deductions for such taxable year which are not directly attributable to one or more classes of items within a category of income or to corpus (other than the deductions permitted by sections 642(b), 642(c), 661, and 1202) shall be allocated among the classes of items within the category (excluding classes of items with net losses) on the basis of the gross income of such classes for such taxable year reduced by the deductions allocated thereto under the first sentence of this subparagraph, but in no event shall the amount of expenses allocated to any class of items exceed such income of such class for the taxable year. Items of deduction which are not allocable under the above two sentences (other than the deductions permitted by sections 642(b), 642(c), 661, and 1202) may be allocated in any

manner. All taxes imposed by chapter 42 of the Code (including without limitation taxes treated under section 664(c)(2) as imposed by chapter 42) and, for taxable years beginning prior to January 1, 2007, all taxes imposed by subtitle A of the Code for which the trust is liable because it has unrelated business taxable income, shall be allocated to corpus. Any expense which is not deductible in determining taxable income and which is not allocable to any class of items described in paragraph (d)(1)(i)(*a*)(*3*) of this section shall be allocated to corpus. The deductions allowable to a trust under sections 642(b), 642(c), 661, and 1202 are not allowed in determining the amount or character of any class of items within a category of income described in paragraph (d)(1)(i)(*a*) of this section or to corpus.

(3) ***Allocation of income among recipients.*** If there are two or more recipients, each will be treated as receiving his pro rata portion of the categories of income and corpus. The application of this rule may be illustrated by the following example:

Example. X transfers $40,000 to a charitable remainder annuity trust which is to pay $3,000 per year to X and $2,000 per year to Y for a term of 5 years. During the first taxable year the trust has $3,000 of ordinary income, $500 of capital gain, and $500 of tax-exempt income after allocation of all expenses. X is treated as receiving ordinary income of $1,800 ($3,000 / $5,000 × $3,000), capital gain of $300 ($3,000 / $5,000 × $500), tax exempt income of $300 ($3,000 / $5,000 × $500), and corpus of $600 ($3,000 / $5,000 × [$5,000 − $4,000]). Y is treated as receiving ordinary income of $1,200 ($2,000 / $5,000 × $3,000), capital gain of $200 ($2,000 / $5,000 × $500), tax exempt income of $200 ($2,000 / $5,000 × $500), and corpus of $400 ($2,000 / $5,000 × [$5,000 − $4,000]).

(4) ***Year of inclusion —***

(i) ***General rule.*** To the extent required by this paragraph, the annuity or unitrust amount is includible in the recipient's gross income for the taxable year in which the annuity or unitrust amount is required to be distributed even though the annuity or unitrust amount is not distributed until after the close of the taxable year of the trust. If a recipient has a different taxable year (as defined in section 441 or 442) from the taxable year of the trust, the amount he is required to include in gross income to the extent required by this paragraph shall be included in his taxable year in which or with which ends the taxable year of the trust in which such amount is required to be distributed.

(ii) ***Payments resulting from incorrect valuations.*** Notwithstanding subdivision (i) of this subparagraph, any payments which are made or required to be distributed by a charitable remainder trust pursuant to paragraph (a)(5) of this section, under paragraph (f)(3) of this section because of an amendment to the governing instrument, or under paragraphs (a)(1) of §§ 1.664-2 and 1.664-3 because of an incorrect valuation, shall, to the extent required by this paragraph, be included in the gross income of the recipient in his taxable year in which or with which ends the taxable year of the trust in which the amount is paid, credited, or required to be distributed. For rules relating to required adjustments of underpayments and overpayments of the annuity or unitrust amounts in respect of payments made prior to the amendment of a governing instrument, see paragraph (f)(3) of this section. There is allowable to a recipient a deduction from gross income for any amounts repaid to the trust because of an overpayment during the reasonable period of administration or settlement or until the trust is fully funded, because of an amendment, or because of an incorrect valuation, to the extent such amounts

were included in his gross income. See section 1341 and the regulations thereunder for rules relating to the computation of tax where a taxpayer restores substantial amounts held under a claim of right.

(iii) ***Rules applicable to year of recipient's death.*** If the taxable year of the trust does not end with or within the last taxable year of the recipient because of the recipient's death, the extent to which the annuity or unitrust amount required to be distributed to him is included in the gross income of the recipient for his last taxable year, or in the gross income of his estate, is determined by making the computations required under this paragraph for the taxable year of the trust in which his last taxable year ends. (The last sentence of subdivision (i) of this subparagraph does not apply to such amounts.) The gross income for the last taxable year of a recipient on the cash basis includes (to the extent required by this paragraph) amounts actually distributed to the recipient before his death. Amounts required to be distributed which are distributed to his estate, are included (to the extent required by this paragraph) in the gross income of the estate as income in respect of a decedent under section 691.

(5) ***Distributions in kind.*** The annuity or unitrust amount may be paid in cash or in other property. In the case of a distribution made in other property, the amount paid, credited, or required to be distributed shall be considered as an amount realized by the trust from the sale or other disposition of property. The basis of the property in the hands of the recipient is its fair market value at the time it was paid, credited, or required to be distributed. The application of these rules may be illustrated by the following example:

Example. On January 1, 1971, X creates a charitable remainder annuity trust, whose taxable year is the calendar year, under which X is to receive $5,000 per year. During 1971, the trust receives $500 of ordinary income. On December 31, 1971, the trust distributed cash of $500 and a capital asset of the trust having a fair market value of $4,500 and a basis of $2,200. The trust is deemed to have realized a capital gain of $2,300. X treats the distribution of $5,000 as being ordinary income of $500, capital gain of $2,300 and trust corpus of $2,200. The basis of the distributed property is $4,500 in the hands of X.

(e) ***Other distributions*** —

(1) ***Character of distributions.*** An amount distributed by the trust to an organization described in section 170(c) other than the annuity or unitrust amount shall be considered as a distribution of corpus and of those categories of income specified in paragraph (d)(1)(i)(*a*) of this section in an order inverse to that prescribed in such paragraph. The character of such amount shall be determined as of the end of the taxable year of the trust in which the distribution is made after the character of the annuity or unitrust amount has been determined.

(2) ***Distributions in kind.*** In the case of a distribution of an amount to which subparagraph (1) of this paragraph applies, no gain or loss is realized by the trust by reason of a distribution in kind unless such distribution is in satisfaction of a right to receive a distribution of a specific dollar amount or in specific property other than that distributed.

(f) ***Effective date*** —

(1) ***General rule.*** The provisions of this section are effective with respect to transfers in trust made after July 31, 1969. Any trust created (within the meaning of applicable local law) prior to August 1, 1969, is not a charitable remainder trust even if it otherwise satisfies the definition of a charitable remainder trust. The provisions of paragraph § 1.664-1(a)(7)(i)(b) apply as provided in that paragraph.

(2) ***Transfers to pre-1970 trusts.*** Property transferred to a trust created (within the meaning of applicable local law) before August 1, 1969, whose governing instrument provides that an organization described in section 170(c) receives an irrevocable remainder interest in such trust, shall, for purposes of subparagraphs (1) and (3) of this paragraph, be deemed transferred to a trust created on the date of such transfer provided that the transfer occurs after July 31, 1969, and prior to October 18, 1971, and the transferred property and any undistributed income therefrom is severed and placed in a separate trust before December 31, 1972, or if later, on or before the 30th day after the date on which any judicial proceedings begun before December 31, 1972, which are required to sever such property, become final.

(3) ***Amendment of post-1969 trusts.*** A trust created (within the meaning of applicable local law) subsequent to July 31, 1969, and prior to December 31, 1972, which is not a charitable remainder trust at the date of its creation, may be treated as a charitable remainder trust from the date it would be deemed created under § 1.664-1(a) (4) and (5)(i) for all purposes: *Provided,* That all the following requirements are met:

(i) At the time of the creation of the trust, the governing instrument provides that an organization described in section 170(c) receives an irrevocable remainder interest in such trust.

(ii) The governing instrument of the trust is amended so that the trust will meet the definition of a charitable remainder trust and, if applicable, will meet the requirement of paragraph (a)(5)(i) of this section that obligation to make payment of the annuity or unitrust amount with respect to property passing at death begin as of the date of death, before December 31, 1972, or if later, on or before the 30th day after the date on which any judicial proceedings which are begun before December 31, 1972, and which are required to amend its governing instrument, become final. In the case of a trust created (within the meaning of applicable local law) subsequent to July 31, 1969, and prior to December 31, 1972, the provisions of section 508(d)(2)(A) shall not apply if the governing instrument of the trust is amended so as to comply with the requirements of section 508(e) before December 31, 1972, or if later, on or before the 30th day after the date on which any judicial proceedings which are begun before December 31, 1972, and which are required to amend its governing instrument, become final. Notwithstanding the provisions of paragraphs (a)(3) and (a)(4) of §§ 1.664-2 and 1.664-3, the governing instrument may grant to the trustee a power to amend the governing instrument for the sole purpose of complying with the requirements of this section and § 1.664-2 or § 1.664-3: *Provided,* That at the creation of the trust, the governing instrument

(*a*) provides for the payment of a unitrust amount described in § 1.664-3(a)(1)(i) or an annuity which meets the requirements of paragraph (a)(2) of § 1.664-2 or § 1.664-3,

(*b*) designates the recipients of the trust and the period for which the amount described in (*a*) of this subdivision (ii) is to be paid, and

(*c*) provides that an organization described in section 170(c) receives an irrevocable remainder interest in such trust. The mere granting of such a power is not sufficient to meet the requirements of this subparagraph that the governing instrument be amended in the manner and within the time limitations of this subparagraph.

(iii)

(*a*) Where the amount of the distributions which would have been made by the trust to a recipient if the amended provisions of such trust had been in effect from the time of creation of such trust exceeds the amount of the distributions made by the trust prior to its amendment, the trust pays an amount equal to such excess to the recipient.

(*b*) Where the amount of distributions made to the recipient prior to the amendment of the trust exceeds the amount of the distributions which would have been made by such trust if the amended provisions of such trust had been in effect from the time of creation of such trust, such excess is repaid to the trust by the recipient.

See paragraph (d)(4) of this section for rules relating to the year of inclusion in the case of an underpayment to a recipient and the allowance of a deduction in the case of an overpayment to a recipient. A deduction for a transfer to a charitable remainder trust shall not be allowed until the requirements of this paragraph are met and then only if the deduction is claimed on a timely filed return (including extensions) or on a claim for refund filed within the period of limitations prescribed by section 6511(a).

(4) ***Valuation of unmarketable assets.*** The rules contained in paragraph (a)(7) of this section are applicable for trusts created on or after December 10, 1998. A trust in existence as of December 10, 1998, whose governing instrument requires that an independent trustee value the trust's unmarketable assets may be amended or reformed to permit a valuation method that satisfies the requirements of paragraph (a)(7) of this section for taxable years beginning on or after December 10, 1998.

(g) ***Transitional effective date.*** Notwithstanding any other provision of this section, § 1.664-2 or § 1.664-3, the requirement of paragraph (a)(5)(i) of this section that interest accrue on overpayments and underpayments, the requirement of paragraph (a)(5)(ii) of this section that the unitrust amount accruing under the formula provided therein cease with the death of the last recipient, and the requirement that the governing instrument of the trust contain the provisions specified in paragraph (a)(1)(iv) of § 1.664-2 (relating to computation of the annuity amount in certain circumstances), paragraph (a)(1)(v) of § 1.664-3 (relating to computation of the unitrust amount in certain circumstances), paragraphs (b) of §§ 1.664-2 and 1.664-3 (relating to additional contributions), and paragraph (a)(1)(iii) of § 1.664-3 (relating to incorrect valuations), paragraphs (a)(6)(iv) of §§ 1.664-2 and 1.664-3 (relating to alternative remaindermen) shall not apply to:

(1) A will executed on or before December 31, 1972, if:

(i) The testator dies before December 31, 1975, without having republished the will after December 31, 1972, by codicil or otherwise.

(ii) The testator at no time after December 31, 1972, had the right to change the provisions of the will which pertain to the trust, or

(iii) The will is not republished by codicil or otherwise before December 31, 1975, and the testator is on such date and at all times thereafter under a mental disability to republish the will by codicil or otherwise, or

(2) A trust executed on or before December 31, 1972, if:

(i) The grantor dies before December 31, 1975, without having amended the trust after December 31, 1972,

(ii) The trust is irrevocable on December 31, 1972, or

(iii) The trust is not amended before December 31, 1975, and the grantor is on such date and at all times thereafter under a mental disability to change the terms of the trust.

[T.D. 7202, 37 FR 16913, Aug. 23, 1972]

Editorial Note: For FEDERAL REGISTER citations affecting § 1.664-1, see the List of CFR Sections Affected, which appears in the Finding Aids section of the printed volume and at *www.govinfo.gov.*

§ 1.664-2 Charitable remainder annuity trust.

(a) ***Description.*** A charitable remainder annuity trust is a trust which complies with the applicable provisions of § 1.664-1 and meets all of the following requirements:

(1) ***Required payment of annuity amount*** —

(i) ***Payment of sum certain at least annually.*** The governing instrument provides that the trust will pay a sum certain not less often than annually to a person or persons described in paragraph (a)(3) of this section for each taxable year of the period specified in paragraph (a)(5) of this section.

(*a*) ***General rule applicable to all trusts.*** A trust will not be deemed to have engaged in an act of self-dealing (within the meaning of section 4941), to have unrelated debt-financed income (within the meaning of section 514), to have received an additional contribution (within the meaning of paragraph (b) of this section), or to have failed to function exclusively as a charitable remainder trust (within the meaning of § 1.664-1(a)(4)) merely because the annuity amount is paid after the close of the taxable year if such payment is made within a reasonable time after the close of such taxable year and the entire annuity amount in the hands of the recipient is characterized only as income from the categories described in section 664(b)(1), (2), or (3), except to the extent it is characterized as corpus described in section 664(b)(4) because—

(*1*) The trust pays the annuity amount by distributing property (other than cash) that it owned at the close of the taxable year to pay the annuity amount, and the trustee elects to treat any income generated by the distribution as occurring on the last day of the taxable year in which the annuity amount is due;

(*2*) The trust pays the annuity amount by distributing cash that was contributed to the trust (with respect to which a deduction was allowable under section 170, 2055, 2106, or 2522); or

(*3*) The trust pays the annuity amount by distributing cash received as a return of basis in any asset that was contributed to the trust (with respect to which a deduction was allowable under section 170, 2055, 2106, or 2522), and that is sold by the trust during the year for which the annuity amount is due.

(*b*) *Special rule for trusts created before* December 10, 1998. In addition to the circumstances described in paragraph (a)(1)(i)(*a*) of this section, a trust created before December 10, 1998, will not be deemed to have engaged in an act of self-dealing (within the meaning of section 4941), to have unrelated debt-financed income (within the meaning of section 514), to have received an additional contribution (within the meaning of paragraph (b) of this section), or to have failed to function exclusively as a charitable remainder trust (within the meaning of § 1.664-1(a)(4)) merely because the annuity amount is paid after the close of the taxable year if such payment is made within a

reasonable time after the close of such taxable year and the sum certain to be paid each year as the annuity amount is 15 percent or less of the initial net fair market value of the property irrevocably passing in trust as determined for federal tax purposes.

(*c*) *Reasonable time.* For this paragraph (a)(1)(i), a reasonable time will not ordinarily extend beyond the date by which the trustee is required to file Form 5227, "Split-Interest Trust Information Return," (including extensions) for the taxable year.

(*d*) *Example.* The following example illustrates the rules in paragraph (a)(1)(i)(*a*) of this section:

> ***Example. X*** is a charitable remainder annuity trust described in section 664(d)(1) that was created after December 10, 1998. The prorated annuity amount payable from *X* for Year 1 is $100. The trustee does not pay the annuity amount to the recipient by the close of Year 1. At the end of Year 1, *X* has only $95 in the ordinary income category under section 664(b)(1) and no income in the capital gain or tax-exempt income categories under section 664(b)(2) or (3), respectively. By April 15 of Year 2, in addition to $95 in cash, the trustee distributes to the recipient of the annuity a capital asset with a $5 fair market value and a $2 adjusted basis to pay the $100 annuity amount due for Year 1. The trust owned the asset at the end of Year 1. Under § 1.664-1(d)(5), the distribution is treated as a sale by *X,* resulting in *X* recognizing a $3 capital gain. The trustee elects to treat the capital gain as occurring on the last day of Year 1. Under § 1.664-1(d)(1), the character of the annuity amount for Year 1 in the recipient's hands is $95 of ordinary income, $3 of capital gain income, and $2 of trust corpus. For Year 1, *X* satisfied paragraph (a)(1)(i)(*a*) of this section.

(*e*) *Effective date.* This paragraph (a)(1)(i) is applicable for taxable years ending after April 18, 1997. However, paragraphs (a)(1)(i)(*a*)(*2*) and (*3*) of this section apply only to distributions made on or after January 5, 2001.

(ii) ***Definition of sum certain.*** A sum certain is a stated dollar amount which is the same either as to each recipient or as to the total amount payable for each year of such period. For example, a provision for an amount which is the same every year to A until his death and concurrently an amount which is the same every year to B until his death, with the amount to each recipient to terminate at his death, would satisfy the above rule. Similarly, provisions for an amount to A and B for their joint lives and then to the survivor would satisfy the above rule. In the case of a distribution to an organization described in section 170(c) at the death of a recipient or the expiration of a term of years, the governing instrument may provide for a reduction of the stated amount payable after such a distribution: *Provided,* That:

(*a*) The reduced amount payable is the same either as to each recipient or as to the total amount payable for each year of the balance of such period, and

(*b*) The requirements of subparagraph (2)(ii) of this paragraph are met.

(iii) ***Sum certain stated as a fraction or percentage.*** The stated dollar amount may be expressed as a fraction or a percentage of the initial net fair market value of the property irrevocably passing in trust as finally determined for Federal tax purposes. If the stated dollar amount is so expressed and such market value is incorrectly determined by the fiduciary, the requirement of this subparagraph will be satisfied if the governing instrument provides that in such event the trust shall pay to the recipient (in the case of an undervaluation) or be repaid by the recipient (in the case of an overvaluation) an amount equal to the difference between the amount which the trust should have paid the recipient if the correct value were used and the amount which the

trust actually paid the recipient. Such payments or repayments must be made within a reasonable period after the final determination of such value. Any payment due to a recipient by reason of such incorrect valuation shall be considered to be a payment required to be distributed at the time of such final determination for purposes of paragraph (d)(4)(ii) of § 1.664-1. See paragraph (d)(4) of § 1.664-1 for rules relating to the year of inclusion of such payments and the allowance of a deduction for such repayments. See paragraph (b) of this section for rules relating to future contributions. For rules relating to required adjustments for underpayments or overpayments of the amount described in this paragraph in respect of payments made during a reasonable period of administration, see paragraph (a)(5) of § 1.664-1. The application of the rule permitting the stated dollar amount to be expressed as a fraction or a percentage of the initial net fair market value of the property irrevocably passing in trust as finally determined for Federal tax purposes may be illustrated by the following example:

Example. The will of X provides for the transfer of one-half of his residuary estate to a charitable remainder annuity trust which is required to pay to W for life an annuity equal to 5 percent of the initial net fair market value of the interest passing in trust as finally determined for Federal tax purposes. The annuity is to be paid on December 31 of each year computed from the date of X's death. The will also provides that if such initial net fair market value is incorrectly determined, the trust shall pay to W, in the case of an undervaluation, or be repaid by W, in the case of an overvaluation, an amount equal to the difference between the amount which the trust should have paid if the correct value were used and the amount which the trust actually paid. X dies on March 1, 1971. The executor files an estate tax return showing the value of the residuary estate as $250,000 before reduction for taxes and expenses of $50,000. The executor paid to W $4,192 ([$250,000 − $50,000] × 1/2 × 5 percent × 306/365) on December 31, 1971. On January 1, 1972, the executor transfers one-half of the residue of the estate to the trust. The trust adopts the calendar year as its taxable year. The value of the residuary estate is finally determined for Federal tax purposes to be $240,000 ($290,000 − $50,000). Accordingly, the amount which the executor should have paid to W is $5,030 ([$290,000 − $50,000] × 1/2 × 5 percent × 306 / 365). Consequently, an additional amount of $838 ($5,030 − $4,192) must be paid to W within a reasonable period after the final determination of value for Federal tax purposes.

(iv) ***Computation of annuity amount in certain circumstances*** —

(*a*) ***Short taxable years.*** The governing instrument provides that, in the case of a taxable year which is for a period of less than 12 months other than the taxable year in which occurs the end of the period specified in subparagraph (5) of this paragraph, the annuity amount determined under subdivision (i) of this subparagraph shall be the amount otherwise determined under that subdivision multiplied by a fraction the numerator of which is the number of days in the taxable year of the trust and the denominator of which is 365 (366 if February 29 is a day included in the numerator).

(*b*) ***Last taxable year of period.*** The governing instrument provides that, in the case of the taxable year in which occurs the end of the period specified in subparagraph (5) of this paragraph, the annuity amount which must be distributed under subdivision (i) of this subparagraph shall be the amount otherwise determined under that subdivision multiplied by a fraction the numerator of which is the number of days in the period beginning on the first day of such taxable year and ending on the last day of the period specified in subparagraph (5) of this paragraph and the denominator of which is 365 (366 if February 29 is

a day included in the numerator). See subparagraph (5) of this paragraph for a special rule allowing termination of payment of the annuity amount with the regular payment next preceding the termination of the period specified therein.

(2) ***Minimum annuity amount*** —(i) *General rule.* The total amount payable under subparagraph (1) of this paragraph is not less than 5 percent of the initial net fair market value of the property placed in trust as finally determined for Federal tax purposes.

(ii) ***Reduction of annuity amount in certain cases.*** A trust will not fail to meet the requirements of this subparagraph by reason of the fact that it provides for a reduction of the stated amount payable upon the death of a recipient or the expiration of a term of years provided that:

(*a*) A distribution is made to an organization described in section 170(c) at the death of such recipient or the expiration of such term of years, and

(*b*) The total amounts payable each year under subparagraph (1) of this paragraph after such distribution are not less than a stated dollar amount which bears the same ratio to 5 percent of the initial net fair market value of the trust assets as the net fair market value of the trust assets immediately after such distribution bears to the net fair market value of the trust assets immediately before such distribution.

(iii) ***Rule applicable to inter vivos trust which does not provide for payment of minimum annuity amount.*** In the case where the grantor of an inter vivos trust underestimates in good faith the initial net fair market value of the property placed in trust as finally determined for Federal tax purposes and specifies a fixed dollar amount for the annuity which is less than 5 percent of the initial net fair market value of the property placed in trust as finally determined for Federal tax purposes, the trust will be deemed to have met the 5 percent requirement if the grantor or his representative consents, by appropriate agreement with the District Director, to accept an amount equal to 20 times the annuity as the fair market value of the property placed in trust for purposes of determining the appropriate charitable contributions deduction.

(3) ***Permissible recipients*** —

(i) ***General rule.*** The amount described in subparagraph (1) of this paragraph is payable to or for the use of a named person or persons, at least one of which is not an organization described in section 170(c). If the amount described in subparagraph (1) of this paragraph is to be paid to an individual or individuals, all such individuals must be living at the time of the creation of the trust. A named person or persons may include members of a named class provided that, in the case of a class which includes any individual, all such individuals must be alive and ascertainable at the time of the creation of the trust unless the period for which the annuity amount is to be paid to such class consists solely of a term of years. For example, in the case of a testamentary trust, the testator's will may provide that an amount shall be paid to his children living at his death.

(ii) ***Power to alter amount paid to recipients.*** A trust is not a charitable remainder annuity trust if any person has the power to alter the amount to be paid to any named person other than an organization described in section 170(c) if such power would cause any person to be treated as the owner of the trust, or any portion thereof, if subpart E, part 1, subchapter J, chapter 1, subtitle A of the Code were applicable to such trust. See paragraph (a)(4) of this section for a rule permitting the retention by a grantor of a testamentary power to revoke or terminate the

interest of any recipient other than an organization described in section 170(c). For example, the governing instrument may not grant the trustee the power to allocate the annuity among members of a class unless such power falls within one of the exceptions to section 674(a).

(4) ***Other payments.*** No amount other than the amount described in subparagraph (1) of this paragraph may be paid to or for the use of any person other than an organization described in section 170(c). An amount is not paid to or for the use of any person other than an organization described in section 170(c) if the amount is transferred for full and adequate consideration. The trust may not be subject to a power to invade, alter, amend, or revoke for the beneficial use of a person other than an organization described in section 170(c). Notwithstanding the preceding sentence, the grantor may retain the power exercisable only by will to revoke or terminate the interest of any recipient other than an organization described in section 170(c). The governing instrument may provide that any amount other than the amount described in subparagraph (1) of this paragraph shall be paid (or may be paid in the discretion of the trustee) to an organization described in section 170(c) provided that in the case of distributions in kind, the adjusted basis of the property distributed is fairly representative of the adjusted basis of the property available for payment on the date of payment. For example, the governing instrument may provide that a portion of the trust assets may be distributed currently, or upon the death of one or more recipients, to an organization described in section 170(c).

(5) ***Period of payment of annuity amount*** —

(i) ***General rules.*** The period for which an amount described in subparagraph (1) of this paragraph is payable begins with the first year of the charitable remainder trust and continues either for the life or lives of a named individual or individuals or for a term of years not to exceed 20 years. Only an individual or an organization described in section 170(c) may receive an amount for the life of an individual. If an individual receives an amount for life, it must be solely for his life. Payment of the amount described in subparagraph (1) of this paragraph may terminate with the regular payment next preceding the termination of the period described in this subparagraph. The fact that the recipient may not receive such last payment shall not be taken into account for purposes of determining the present value of the remainder interest. In the case of an amount payable for a term of years, the length of the term of years shall be ascertainable with certainty at the time of the creation of the trust, except that the term may be terminated by the death of the recipient or by the grantor's exercise by will of a retained power to revoke or terminate the interest of any recipient other than an organization described in section 170(c). In any event, the period may not extend beyond either the life or lives of a named individual or individuals or a term of years not to exceed 20 years. For example, the governing instrument may not provide for the payment of an annuity amount to A for his life and then to B for a term of years because it is possible for the period to last longer than either the lives of recipients in being at the creation of the trust or a term of years not to exceed 20 years. On the other hand, the governing instrument may provide for the payment of an annuity amount to A for his life and then to B for his life or a term of years (not to exceed 20 years), whichever is shorter (but not longer), if both A and B are in being at the creation of the trust because it is not possible for the period to last longer than the lives of recipients in being at the creation of the trust.

(ii) ***Relationship to 5 percent requirement.*** The 5 percent requirement provided in subparagraph (2) of this paragraph must be met until the termination of all of the payments described in subparagraph (1) of this paragraph. For example, the following provisions would satisfy the above rules:

(*a*) An amount equal to at least 5 percent of the initial net fair market value of the property placed in trust to A and B for their joint lives and then to the survivor for his life;

(*b*) An amount equal to at least 5 percent of the initial net fair market value of the property placed in trust to A for life or for a term of years not longer than 20 years, whichever is longer (or shorter);

(*c*) An amount equal to at least 5 percent of the initial net fair market value of the property placed in trust to A for a term of years not longer than 20 years and then to B for life (provided B was living at the date of creation of the trust);

(*d*) An amount to A for his life and concurrently an amount to B for his life (the amount to each recipient to terminate at his death) if the amount given to each individual is not less than 5 percent of the initial net fair market value of the property placed in trust; or

(*e*) An amount to A for his life and concurrently an equal amount to B for his life, and at the death of the first to die, the trust to distribute one-half of the then value of its assets to an organization described in section 170(c), if the total of the amounts given to A and B is not less than 5 percent of the initial net fair market value of the property placed in trust.

(6) *Permissible remaindermen* —

(i) ***General rule.*** At the end of the period specified in subparagraph (5) of this paragraph the entire corpus of the trust is required to be irrevocably transferred, in whole or in part, to or for the use of one or more organizations described in section 170(c) or retained, in whole or in part, for such use.

(ii) ***Treatment of trust.*** If all of the trust corpus is to be retained for such use, the taxable year of the trust shall terminate at the end of the period specified in subparagraph (5) of this paragraph and the trust shall cease to be treated as a charitable remainder trust for all purposes. If all or any portion of the trust corpus is to be transferred to or for the use of such organization or organizations, the trustee shall have a reasonable time after the period specified in subparagraph (5) of this paragraph to complete the settlement of the trust. During such time, the trust shall continue to be treated as a charitable remainder trust for all purposes, such as sections 664, 4947(a)(2), and 4947(b)(3)(B). Upon the expiration of such period, the taxable year of the trust shall terminate and the trust shall cease to be treated as a charitable remainder trust for all purposes. If the trust continues in existence, it will be subject to the provisions of section 4947(a)(1) unless the trust is exempt from taxation under section 501(a). For purposes of determining whether the trust is exempt under section 501(a) as an organization described in section 501(c)(3), the trust shall be deemed to have been created at the time it ceases to be treated as a charitable remainder trust.

(iii) ***Concurrent or successive remaindermen.*** Where interests in the corpus of the trust are given to more than one organization described in section 170(c) such interests may be enjoyed by them either concurrently or successively.

(iv) ***Alternative remaindermen.*** The governing instrument shall provide that if an organization to or for the use of which the trust corpus is to be transferred or for the use of which the trust corpus is to be retained is not an organization described in section 170(c) at the time any amount is to be irrevocably transferred to or for the use of such organization, such amount shall be

transferred to or for the use of one or more alternative organizations which are described in section 170(c) at such time or retained for such use. Such alternative organization or organizations may be selected in any manner provided by the terms of the governing instrument.

(b) ***Additional contributions.*** A trust is not a charitable remainder annuity trust unless its governing instrument provides that no additional contributions may be made to the charitable remainder annuity trust after the initial contribution. For purposes of this section, all property passing to a charitable remainder annuity trust by reason of death of the grantor shall be considered one contribution.

(c) ***Calculation of the fair market value of the remainder interest of a charitable remainder annuity trust.*** For purposes of sections 170, 2055, 2106, and 2522, the fair market value of the remainder interest of a charitable remainder annuity trust (as described in this section) is the net fair market value (as of the appropriate valuation date) of the property placed in trust less the present value of the annuity. For purposes of this section, *valuation date* means, in general, the date on which the property is transferred to the trust by the donor regardless of when the trust is created. In the case of transfers to a charitable remainder annuity trust for which the valuation date is after April 30, 1999, if an election is made under section 7520 and § 1.7520-2(b) to compute the present value of the charitable interest by using the interest rate component for either of the 2 months preceding the month in which the transfer is made, the month so elected is the valuation date for purposes of determining the interest rate and mortality tables. For purposes of section 2055 or 2106, the valuation date is the date of death unless the alternate valuation date is elected in accordance with section 2032 in which event, and within the limitations set forth in section 2032 and the regulations in this part under section 2032, the valuation date is the alternate valuation date. If the decedent's estate elects the alternate valuation date under section 2032 and also elects, under section 7520 and § 1.7520-2(b), to use the interest rate component for one of the 2 months preceding the alternate valuation date, the month so elected is the valuation date for purposes of determining the interest rate and mortality tables. The present value of an annuity is computed under § 20.2031-7(d) of this chapter for transfers for which the valuation date is on or after June 1, 2023, or under § 20.2031-7A(a) through (g) of this chapter, whichever is applicable, for transfers for which the valuation date is before June 1, 2023. See, however, §§ 20.2031-7(d)(3) and 25.2512-5(d)(3) (transition rules) and 1.7520-3(b) (relating to exceptions to the use of prescribed tables under certain circumstances).

(d) ***Deduction for transfers to a charitable remainder annuity trust.*** For rules relating to a deduction for transfers to a charitable remainder annuity trust, see section 170, 2055, 2106, or 2522 and the regulations thereunder. Any claim for deduction on any return for the value of a remainder interest in a charitable remainder annuity trust must be supported by a full statement attached to the return showing the computation of the present value of such interest. The deduction allowed by section 170 is limited to the fair market value of the remainder interest of a charitable remainder annuity trust regardless of whether an organization described in section 170(c) also receives a portion of the annuity. For a special rule relating to the reduction of the amount of a charitable contribution deduction with respect to a contribution of certain ordinary income property or capital gain property, see section 170(e)(1)(A) or 170(e)(1)(B)(i) and the regulations thereunder. For rules for postponing the time for deduction of a charitable contribution of a future interest in tangible personal property, see section 170(a)(3) and the regulations thereunder.

(e) ***Applicability date.*** Paragraph (c) of this section applies on and after June 1, 2023.

[T.D. 7202, 37 FR 16918, Aug. 23, 1972, as amended by T.D. 7955, 49 FR 19983, May 11, 1984; T.D. 8540, 59 FR 30116, June 10, 1994; T.D. 8791, 63 FR 68191, Dec. 10, 1998; T.D. 8819, 64 FR 23229, Apr. 30, 1999; T.D. 8819, Mar. 9, 2000, 65 FR 12471; T.D. 8926, 66 FR 1037, Jan. 5, 2001; T.D. 9448, 74 FR 21464, May 7, 2009; T.D. 9540, 76 FR 49595, Aug. 10, 2011; T.D. 9974, 88 FR 37433, June 7, 2023]

§ 1.664-3 Charitable remainder unitrust.

(a) ***Description.*** A charitable remainder unitrust is a trust which complies with the applicable provisions of § 1.664-1 and meets all of the following requirements:

(1) ***Required payment of unitrust amount*** —

(i) ***Payment of fixed percentage at least annually*** —

(*a*) ***General rule.*** The governing instrument provides that the trust will pay not less often than annually a fixed percentage of the net fair market value of the trust assets determined annually to a person or persons described in paragraph (a)(3) of this section for each taxable year of the period specified in paragraph (a)(5) of this section. This paragraph (a)(1)(i)(*a*) is applicable for taxable years ending after April 18, 1997.

(*b*) ***Income exception.*** Instead of the amount described in (*a*) of this subdivision (i), the governing instrument may provide that the trust shall pay for any year either the amount described in (*1*) or the total of the amounts described in (*1*) and (*2*) of this subdivision (*b*).

(*1*) The amount of trust income for a taxable year to the extent that such amount is not more than the amount required to be distributed under paragraph (a)(1)(i)(*a*) of this section.

(*2*) An amount of trust income for a taxable year that is in excess of the amount required to be distributed under paragraph (a)(1)(i)(*a*) of this section for such year to the extent that (by reason of paragraph (a)(1)(i)(*b*)(*1*) of this section) the aggregate of the amounts paid in prior years was less than the aggregate of such required amounts.

(*3*) For purposes of this paragraph (a)(1)(i)(*b*), trust income generally means income as defined under section 643(b) and the applicable regulations. However, trust income may not be determined by reference to a fixed percentage of the annual fair market value of the trust property, notwithstanding any contrary provision in applicable state law. Proceeds from the sale or exchange of any assets contributed to the trust by the donor must be allocated to principal and not to trust income at least to the extent of the fair market value of those assets on the date of their contribution to the trust. Proceeds from the sale or exchange of any assets purchased by the trust must be allocated to principal and not to trust income at least to the extent of the trust's purchase price of those assets. Except as provided in the two preceding sentences, proceeds from the sale or exchange of any assets contributed to the trust by the donor or purchased by the trust may be allocated to income, pursuant to the terms of the governing instrument, if not prohibited by applicable local law. A discretionary power to make this allocation may be granted to the trustee under the terms of the governing instrument but only to the extent that the state statute permits the trustee to make adjustments between income and principal to treat beneficiaries impartially.

(*4*) The rules in paragraph (a)(1)(i)(*b*)(*1*) and (*2*) of this section are applicable for taxable years ending after April 18, 1997. The rule in the first sentence of paragraph (a)(1)(i)(*b*)(*3*) is applicable for taxable years ending after April 18, 1997. The rules in the second, fourth, and fifth sentences of paragraph (a)(1)(i)(*b*)(*3*) are applicable for taxable years ending after January 2, 2004. The rule in the third sentence of paragraph (a)(1)(i)(*b*)(*3*) is applicable for sales or exchanges that occur after April 18, 1997. The rule in the sixth sentence of paragraph (a)(1)(i)(*b*)(*3*) is applicable for trusts created after January 2, 2004.

(*c*) ***Combination of methods.*** Instead of the amount described in paragraph (a)(1)(i)(*a*) or (*b*) of this section, the governing instrument may provide that the trust will pay not less often than annually the amount described in paragraph (a)(1)(i)(*b*) of this section for an initial period and then pay the amount described in paragraph (a)(1)(i)(*a*) of this section (calculated using the same fixed percentage) for the remaining years of the trust only if the governing instrument provides that—

(*1*) The change from the method prescribed in paragraph (a)(1)(i)(*b*) of this section to the method prescribed in paragraph (a)(1)(i)(*a*) of this section is triggered on a specific date or by a single event whose occurrence is not discretionary with, or within the control of, the trustees or any other persons;

(*2*) The change from the method prescribed in paragraph (a)(1)(i)(*b*) of this section to the method prescribed in paragraph (a)(1)(i)(*a*) of this section occurs at the beginning of the taxable year that immediately follows the taxable year during which the date or event specified under paragraph (a)(1)(i)(*c*)(*1*) of this section occurs; and

(*3*) Following the trust's conversion to the method described in paragraph (a)(1)(i)(*a*) of this section, the trust will pay at least annually to the permissible recipients the amount described only in paragraph (a)(1)(i)(*a*) of this section and not any amount described in paragraph (a)(1)(i)(*b*) of this section.

(*d*) ***Triggering event.*** For purposes of paragraph (a)(1)(i)(*c*)(*1*) of this section, a triggering event based on the sale of unmarketable assets as defined in § 1.664-1(a)(7)(ii), or the marriage, divorce, death, or birth of a child with respect to any individual will not be considered discretionary with, or within the control of, the trustees or any other persons.

(*e*) ***Examples.*** The following examples illustrate the rules in paragraph (a)(1)(i)(*c*) of this section. For each example, assume that the governing instrument of charitable remainder unitrust *Y* provides that *Y* will initially pay not less often than annually the amount described in paragraph (a)(1)(i)(*b*) of this section and then pay the amount described in paragraph (a)(1)(i)(*a*) of this section (calculated using the same fixed percentage) for the remaining years of the trust and that the requirements of paragraphs (a)(1)(i)(*c*)(*2*) and (*3*) of this section are satisfied. The examples are as follows:

Example 1. Y is funded with the donor's former personal residence. The governing instrument of *Y* provides for the change in method for computing the annual unitrust amount as of the first day of the year following the year in which the trust sells the residence. *Y* provides for a combination of methods that satisfies paragraph (a)(1)(i)(*c*) of this section.

Example 2. Y is funded with cash and an unregistered security for which there is no available exemption permitting public sale under the Securities and Exchange Commission rules. The governing instrument of *Y* provides that the change in method for computing the annual unitrust amount is triggered on the earlier of the date when the stock is sold or at the time the restrictions on its public sale lapse or are otherwise lifted. *Y* provides for a combination of methods that satisfies paragraph (a)(1)(i)(*c*) of this section.

Example 3. Y is funded with cash and with a security that may be publicly traded under the Securities and Exchange Commission rules. The governing instrument of *Y* provides that the change in method for computing the annual unitrust amount is triggered when the stock is sold. *Y* does not provide for a combination of methods that satisfies the requirements of paragraph (a)(1)(i)(*c*) of this section because the sale of the publicly-traded stock is within the discretion of the trustee.

Example 4. S establishes *Y* for her granddaughter, *G,* when *G* is 10 years old. The governing instrument of *Y* provides for the change in method for computing the annual unitrust amount as of the first day of the year following the year in which *G* turns 18 years old. *Y* provides for a combination of methods that satisfies paragraph (a)(1)(i)(*c*) of this section.

Example 5. The governing instrument of *Y* provides for the change in method for computing the annual unitrust amount as of the first day of the year following the year in which the donor is married. *Y* provides for a combination of methods that satisfies paragraph (a)(1)(i)(*c*) of this section.

Example 6. The governing instrument of *Y* provides that if the donor divorces, the change in method for computing the annual unitrust amount will occur as of the first day of the year following the year of the divorce. *Y* provides for a combination of methods that satisfies paragraph (a)(1)(i)(*c*) of this section.

Example 7. The governing instrument of *Y* provides for the change in method for computing the annual unitrust amount as of the first day of the year following the year in which the noncharitable beneficiary's first child is born. *Y* provides for a combination of methods that satisfies paragraph (a)(1)(i)(*c*) of this section.

Example 8. The governing instrument of *Y* provides for the change in method for computing the annual unitrust amount as of the first day of the year following the year in which the noncharitable beneficiary's father dies. *Y* provides for a combination of methods that satisfies paragraph (a)(1)(i)(*c*) of this section.

Example 9. The governing instrument of *Y* provides for the change in method for computing the annual unitrust amount as of the first day of the year following the year in which the noncharitable beneficiary's financial advisor determines that the beneficiary should begin receiving payments under the second prescribed payment method. Because the change in methods for paying the unitrust amount is triggered by an event that is within a person's control, *Y* does not provide for a combination of methods that satisfies paragraph (a)(1)(i)(*c*) of this section.

Example 10. The governing instrument of *Y* provides for the change in method for computing the annual unitrust amount as of the first day of the year following the year in which the noncharitable beneficiary submits a request to the trustee that the

trust convert to the second prescribed payment method. Because the change in methods for paying the unitrust amount is triggered by an event that is within a person's control, *Y* does not provide for a combination of methods that satisfies paragraph (a)(1)(i)(*c*) of this section.

(*f*) ***Effective date*** —

(*1*) ***General rule.*** Paragraphs (a)(1)(i)(*c*), (*d*), and (*e*) of this section are applicable for charitable remainder trusts created on or after December 10, 1998.

(*2*) ***General rule regarding reformations of combination of method unitrusts.*** If a trust is created on or after December 10, 1998, and contains a provision allowing a change in calculating the unitrust amount that does not comply with the provisions of paragraph (a)(1)(i)(*c*) of this section, the trust will qualify as a charitable remainder unitrust only if it is amended or reformed to use the initial method for computing the unitrust amount throughout the term of the trust, or is reformed in accordance with paragraph (a)(1)(i)(*f*)(*3*) of this section. If a trust was created before December 10, 1998, and contains a provision allowing a change in calculating the unitrust amount that does not comply with the provisions of paragraph (a)(1)(i)(*c*) of this section, the trust may be reformed to use the initial method for computing the unitrust amount throughout the term of the trust without causing the trust to fail to function exclusively as a charitable remainder unitrust under § 1.664-1(a)(4), or may be reformed in accordance with paragraph (a)(1)(i)(*f*)(*3*) of this section. Except as provided in paragraph (a)(1)(i)(*f*)(*3*) of this section, a qualified charitable remainder unitrust will not continue to qualify as a charitable remainder unitrust if it is amended or reformed to add a provision allowing a change in the method for calculating the unitrust amount.

(*3*) ***Special rule for reformations of trusts that begin by June 8, 1999.*** Notwithstanding paragraph (a)(1)(i)(*f*)(*2*) of this section, if a trust either provides for payment of the unitrust amount under a combination of methods that is not permitted under paragraph (a)(1)(i)(*c*) of this section, or provides for payment of the unitrust amount under only the method prescribed in paragraph (a)(1)(i)(*b*) of this section, then the trust may be reformed to allow for a combination of methods permitted under paragraph (a)(1)(i)(*c*) of this section without causing the trust to fail to function exclusively as a charitable remainder unitrust under § 1.664-1(a)(4) or to engage in an act of self-dealing under section 4941 if the trustee begins legal proceedings to reform by June 8, 1999. The triggering event under the reformed governing instrument may not occur in a year prior to the year in which the court issues the order reforming the trust, except for situations in which the governing instrument prior to reformation already provided for payment of the unitrust amount under a combination of methods that is not permitted under paragraph (a)(1)(i)(*c*) of this section and the triggering event occurred prior to the reformation.

(*g*) ***Payment under general rule for fixed percentage trusts.*** When the unitrust amount is computed under paragraph (a)(1)(i)(*a*) of this section, a trust will not be deemed to have engaged in an act of self-dealing (within the meaning of section 4941), to have unrelated debt-financed income (within the meaning of section 514), to have received an additional contribution (within the meaning of paragraph (b) of this section), or to have failed to function exclusively as a charitable remainder trust (within the meaning of §

1.664-1(a)(4)) merely because the unitrust amount is paid after the close of the taxable year if such payment is made within a reasonable time after the close of such taxable year and the entire unitrust amount in the hands of the recipient is characterized only as income from the categories described in section 664(b)(1), (2), or (3), except to the extent it is characterized as corpus described in section 664(b)(4) because—

(*1*) The trust pays the unitrust amount by distributing property (other than cash) that it owned at the close of the taxable year, and the trustee elects to treat any income generated by the distribution as occurring on the last day of the taxable year in which the unitrust amount is due;

(*2*) The trust pays the unitrust amount by distributing cash that was contributed to the trust (with respect to which a deduction was allowable under section 170, 2055, 2106, or 2522); or

(*3*) The trust pays the unitrust amount by distributing cash received as a return of basis in any asset that was contributed to the trust (with respect to which a deduction was allowable under section 170, 2055, 2106, or 2522), and that is sold by the trust during the year for which the unitrust amount is due.

(*h*) ***Special rule for fixed percentage trusts created before December 10, 1998.*** When the unitrust amount is computed under paragraph (a)(1)(i)(*a*) of this section, a trust created before December 10, 1998, will not be deemed to have engaged in an act of self-dealing (within the meaning of section 4941), to have unrelated debt-financed income (within the meaning of section 514), to have received an additional contribution (within the meaning of paragraph (b) of this section), or to have failed to function exclusively as a charitable remainder trust (within the meaning of § 1.664-1(a)(4)) merely because the unitrust amount is paid after the close of the taxable year if such payment is made within a reasonable time after the close of such taxable year and the fixed percentage to be paid each year as the unitrust amount is 15 percent or less of the net fair market value of the trust assets as determined under paragraph (a)(1)(iv) of this section.

(*i*) ***Example.*** The following example illustrates the rules in paragraph (a)(1)(i)(*g*) of this section:

Example. X is a charitable remainder unitrust that calculates the unitrust amount under paragraph (a)(1)(i)(*a*) of this section. *X* was created after December 10, 1998. The prorated unitrust amount payable from *X* for Year 1 is $100. The trustee does not pay the unitrust amount to the recipient by the end of the Year 1. At the end of Year 1, *X* has only $95 in the ordinary income category under section 664(b)(1) and no income in the capital gain or tax-exempt income categories under section 664(b) (2) or (3), respectively. By April 15 of Year 2, in addition to $95 in cash, the trustee distributes to the unitrust recipient a capital asset with a $5 fair market value and a $2 adjusted basis to pay the $100 unitrust amount due for Year 1. The trust owned the asset at the end of Year 1. Under § 1.664-1(d)(5), the distribution is treated as a sale by *X*, resulting in *X* recognizing a $3 capital gain. The trustee elects to treat the capital gain as occurring on the last day of Year 1. Under § 1.664-1(d)(1), the character of the unitrust amount for Year 1 in the recipient's hands is $95 of ordinary income, $3 of capital gain income, and $2 of trust corpus. For Year 1, *X* satisfied paragraph (a)(1)(i)(*g*) of this section.

(*j*) ***Payment under income exception.*** When the unitrust amount is computed under paragraph (a)(1)(i)(*b*) of this section, a trust will not be deemed to have engaged in an act of self-dealing (within the meaning of section 4941), to have unrelated debt-financed income (within the meaning of section 514), to have received an additional contribution (within the meaning of paragraph (b) of this section), or to have failed to function exclusively as a charitable remainder trust (within the meaning of § 1.664-1(a)(4)) merely because payment of the unitrust amount is made after the close of the taxable year if such payment is made within a reasonable time after the close of such taxable year.

(*k*) ***Reasonable time.*** For paragraphs (a)(1)(i) (*g*), (*h*), and (*j*) of this section, a reasonable time will not ordinarily extend beyond the date by which the trustee is required to file Form 5227, "Split-Interest Trust Information Return," (including extensions) for the taxable year.

(*l*) ***Effective date.*** Paragraphs (a)(1)(i) (*g*), (*h*), (*i*), (*j*), and (*k*) of this section are applicable for taxable years ending after April 18, 1997. Paragraphs (a)(1)(i)(*g*)(*2*) and (*3*) apply only to distributions made on or after January 5, 2001.

(ii) ***Definition of fixed percentage.*** The fixed percentage may be expressed either as a fraction or as a percentage and must be payable each year in the period specified in subparagraph (5) of this paragraph. A percentage is fixed if the percentage is the same either as to each recipient or as to the total percentage payable each year of such period. For example, provision for a fixed percentage which is the same every year to A until his death and concurrently a fixed percentage which is the same every year to B until his death, the fixed percentage to each recipient to terminate at his death, would satisfy the rule. Similarly, provision for a fixed percentage to A and B for their joint lives and then to the survivor would satisfy the rule. In the case of a distribution to an organization described in section 170(c) at the death of a recipient or the expiration of a term of years, the governing instrument may provide for a reduction of the fixed percentage payable after such distribution *Provided* That:

(*a*) The reduced fixed percentage is the same either as to each recipient or as to the total amount payable for each year of the balance of such period, and

(*b*) The requirements of subparagraph (2)(ii) of this paragraph are met.

(iii) ***Rules applicable to incorrect valuations.*** The governing instrument provides that in the case where the net fair market value of the trust assets is incorrectly determined by the fiduciary, the trust shall pay to the recipient (in the case of an undervaluation) or be repaid by the recipient (in the case of an overvaluation) an amount equal to the difference between the amount which the trust should have paid the recipient if the correct value were used and the amount which the trust actually paid the recipient. Such payments or repayments must be made within a reasonable period after the final determination of such value. Any payment due to a recipient by reason of such incorrect valuation shall be considered to be a payment required to be distributed at the time of such final determination for purposes of paragraph (d)(4)(ii) of § 1.664-1. See paragraph (d)(4) of § 1.664-1 for rules relating to the year of inclusion of such payments and the allowance of a deduction for such repayments. See paragraph (b) of this section for rules relating to additional contributions.

(iv) ***Rules applicable to valuation.*** In computing the net fair market value of the trust assets there shall be taken into account all assets and liabilities without regard to whether particular items are taken into account in determining the income of the trust. The net fair market value of the trust assets may be determined on any one date during the taxable year of the trust, or by

taking the average of valuations made on more than one date during the taxable year of the trust, so long as the same valuation date or dates and valuation methods are used each year. If the governing instrument does not specify the valuation date or dates, the trustee must select such date or dates and indicate the selection on the first return on Form 5227, "Split-Interest Trust Information Return," that the trust must file. The amount described in subdivision (i)(*a*) of this subparagraph which must be paid each year must be based upon the valuation for such year.

(v) ***Computation of unitrust amount in certain circumstances—***

(a) ***Short taxable years.*** The governing instrument provides that, in the case of a taxable year which is for a period of less than 12 months other than the taxable year in which occurs the end of the period specified in subparagraph (5) of this paragraph:

(*1*) The amount determined under subdivision (i)(*a*) of this subparagraph shall be the amount otherwise determined under that subdivision multiplied by a fraction the numerator of which is the number of days in the taxable year of the trust and the denominator of which is 365 (366 if February 29 is a day included in the numerator),

(*2*) The amount determined under subdivision (i)(*b*) of this subparagraph shall be computed by using the amount determined under subdivision (*a*)(*1*) of this subdivision (v), and

(*3*) If no valuation date occurs before the end of the taxable year of the trust, the trust assets shall be valued as of the last day of the taxable year of the trust.

(*b*) ***Last taxable year of period.***

(*1*) The governing instrument provides that, in the case of the taxable year in which occurs the end of the period specified in subparagraph (5) of this paragraph:

(*i*) The unitrust amount which must be distributed under subdivision (i)(*a*) of this subparagraph shall be the amount otherwise determined under that subdivision multiplied by a fraction the numerator of which is the number of days in the period beginning on the first day of such taxable year and ending on the last day of the period specified in subparagraph (5) of this paragraph and the denominator of which is 365 (366 if February 29 is a day included in the numerator),

(*ii*) The amount determined under subdivision (i)(*b*) of this subparagraph shall be computed by using the amount determined under (*b*)(*1*)(*i*) of this subdivision (v), and

(*iii*) If no valuation date occurs before the end of such period, the trust assets shall be valued as of the last day of such period.

(*2*) See subparagraph (5) of this paragraph for a special rule allowing termination of payment of the unitrust amount with the regular payment next preceding the termination of the period specified therein.

(2) ***Minimum unitrust amount —***

(i) ***General rule.*** The fixed percentage described in subparagraph (1)(i) of this paragraph with respect to all beneficiaries taken together is not less than 5 percent.

(ii) ***Reduction of unitrust amount in certain cases.*** A trust will not fail to meet the requirements of this subparagraph by reason of the fact that it provides for a reduction of the fixed percentage payable upon the death of a recipient or the expiration of a term of years *Provided* That:

(*a*) A distribution is made to an organization described in section 170(c) at the death of such recipient or the expiration of such term of years, and

(*b*) The total of the percentage payable under subparagraph (1) of this paragraph after such distribution is not less than 5 percent.

(3) ***Permissible recipients*** —

(i) ***General rule.*** The amount described in subparagraph (1) of this paragraph is payable to or for the use of a named person or persons, at least one of which is not an organization described in section 170(c). If the amount described in subparagraph (1) of this paragraph is to be paid to an individual or individuals, all such individuals must be living at the time of creation of the trust. A named person or persons may include members of a named class except in the case of a class which includes any individual, all such individuals must be alive and ascertainable at the time of the creation of the trust unless the period for which the unitrust amount is to be paid to such class consists solely of a term of years. For example, in the case of a testamentary trust, the testator's will may provide that the required amount shall be paid to his children living at his death.

(ii) ***Power to alter amount paid to recipients.*** A trust is not a charitable remainder unitrust if any person has the power to alter the amount to be paid to any named person other than an organization described in section 170(c) if such power would cause any person to be treated as the owner of the trust, or any portion thereof, if subpart E, part 1, subchapter J, chapter 1, subtitle A of the Code were applicable to such trust. See paragraph (a)(4) of this section for a rule permitting the retention by a grantor of a testamentary power to revoke or terminate the interest of any recipient other than an organization described in section 170(c). For example, the governing instrument may not grant the trustee the power to allocate the fixed percentage among members of a class unless such power falls within one of the exceptions to section 674(a).

(4) ***Other payments.*** No amount other than the amount described in subparagraph (1) of this paragraph may be paid to or for the use of any person other than an organization described in section 170(c). An amount is not paid to or for the use of any person other than an organization described in section 170(c) if the amount is transferred for full and adequate consideration. The trust may not be subject to a power to invade, alter, amend, or revoke for the beneficial use of a person other than an organization described in section 170(c). Notwithstanding the preceding sentence, the grantor may retain the power exercisable only by will to revoke or terminate the interest of any recipient other than an organization described in section 170(c). The governing instrument may provide that any amount other than the amount described in subparagraph (1) of this paragraph shall be paid (or may be paid in the discretion of the trustee) to an organization described in section 170(c) provided that, in the case of distributions in kind, the adjusted basis of the property distributed is fairly representative of the adjusted basis of the property available for payment on the date of payment. For example, the governing instrument may provide that a portion of the trust assets may be distributed currently, or upon the death of one or more recipients, to an organization described in section 170(c).

(5) ***Period of payment of unitrust amount*** —

(i) ***General rules.*** The period for which an amount described in subparagraph (1) of this paragraph is payable begins with the first year of the charitable remainder trust and continues either for the life or lives of a named individual or individuals or for a term of years not to exceed 20 years. Only an individual or an organization described in section 170(c) may receive an amount for the life of an individual. If an individual receives an amount for life, it must be solely for his life. Payment of the amount described in subparagraph (1) of this paragraph may terminate with the regular payment next preceding the termination of the period described in this subparagraph. The fact that the recipient may not receive such last payment shall not be taken into account for purposes of determining the present value of the remainder interest. In the case of an amount payable for a term of years, the length of the term of years shall be ascertainable with certainty at the time of the creation of the trust, except that the term may be terminated by the death of the recipient or by the grantor's exercise by will of a retained power to revoke or terminate the interest of any recipient other than an organization described in section 170(c). In any event, the period may not extend beyond either the life or lives of a named individual or individuals or a term of years not to exceed 20 years. For example, the governing instrument may not provide for the payment of a unitrust amount to A for his life and then to B for a term of years because it is possible for the period to last longer than either the lives of recipients in being at the creation of the trust or a term of years not to exceed 20 years. On the other hand, the governing instrument may provide for the payment of a unitrust amount to A for his life and then to B for his life or a term of years (not to exceed 20 years), whichever is shorter (but not longer), if both A and B are in being at the creation of the trust because it is not possible for the period to last longer than the lives of recipients in being at the creation of the trust.

(ii) ***Relationship to 5 percent requirement.*** The 5 percent requirement provided in subparagraph (2) of this paragraph must be met until the termination of all of the payments described in subparagraph (1) of this paragraph. For example, the following provisions would satisfy the above rules:

(*a*) A fixed percentage of at least 5 percent to A and B for their joint lives and then to the survivor for his life;

(*b*) A fixed percentage of at least 5 percent to A for life or for a term of years not longer than 20 years, whichever is longer (or shorter);

(*c*) A fixed percentage of at least 5 percent to A for life or for a term of years not longer than 20 years and then to B for life (provided B was living at the creation of the trust);

(*d*) A fixed percentage to A for his life and concurrently a fixed percentage to B for his life (the percentage to each recipient to terminate at his death) if the percentage given to each individual is not less than 5 percent;

(*e*) A fixed percentage to A for his life and concurrently an equal percentage to B for his life, and at the death of the first to die, the trust to distribute one-half of the then value of its assets to an organization described in section 170(c) if the total of the percentages is not less than 5 percent for the entire period described in this subparagraph.

(6) ***Permissible remaindermen —***

(i) ***General rule.*** At the end of the period specified in subparagraph (5) of this paragraph, the entire corpus of the trust is required to be irrevocably transferred, in whole or in part, to or for the use of one or more organizations described in section 170(c) or retained, in whole or in part, for such use.

(ii) ***Treatment of trust.*** If all of the trust corpus is to be retained for such use, the taxable year of the trust shall terminate at the end of the period specified in subparagraph (5) of this paragraph and the trust shall cease to be treated as a charitable remainder trust for all purposes. If all or any portion of the trust corpus is to be transferred to or for the use of such organization or organizations, the trustee shall have a reasonable time after the period specified in subparagraph (5) of this paragraph to complete the settlement of the trust. During such time, the trust shall continue to be treated as a charitable remainder trust for all purposes, such as section 664, 4947(a)(2), and 4947(b)(3)(B). Upon the expiration of such period, the taxable year of the trust shall terminate and the trust shall cease to be treated as a charitable remainder trust for all purposes. If the trust continues in existence, it will be subject to the provisions of section 4947(a)(1) unless the trust is exempt from taxation under section 501(a). For purposes of determining whether the trust is exempt under section 501(a) as an organization described in section 501(c)(3), the trust shall be deemed to have been created at the time it ceases to be treated as a charitable remainder trust.

(iii) ***Concurrent or successive remaindermen.*** Where interests in the corpus of the trust are given to more than one organization described in section 170(c) such interests may be enjoyed by them either concurrently or successively.

(iv) ***Alternative remaindermen.*** The governing instrument shall provide that if an organization to or for the use of which the trust corpus is to be transferred or for the use of which the trust corpus is to be retained is not an organization described in section 170(c) at the time any amount is to be irrevocably transferred to or for the use of such organization, such amount shall be transferred to or for the use of or retained for the use of one or more alternative organizations which are described in section 170(c) at such time. Such alternative organization or organizations may be selected in any manner provided by the terms of the governing instrument.

(b) ***Additional contributions.*** A trust is not a charitable remainder annuity trust unless its governing instrument either prohibits additional contributions to the trust after the initial contribution or provides that for the taxable year of the trust in which the additional contribution is made:

(1) Where no valuation date occurs after the time of the contribution and during the taxable year in which the contribution is made, the additional property shall be valued as of the time of contribution; and

(2) The amount described in paragraph (a)(1)(i)(*a*) of this section shall be computed by multiplying the fixed percentage by the sum of

(i) the net fair market value of the trust assets (excluding the value of the additional property and any earned income from and any appreciation on such property after its contribution), and

(ii) that proportion of the value of the additional property (that was excluded under subdivision (i) of this paragraph), which the number of days in the period which begins with the date of contribution and ends with the earlier of the last day of such taxable year or the last day of the

period described in paragraph (a)(5) of this section bears to the number of days in the period which begins with the first day of such taxable year and ends with the earlier of the last day of such taxable year or the last day of the period described in paragraph (a)(5) of this section.

For purposes of this section, all property passing to a charitable remainder unitrust by reason of death of the grantor shall be considered one contribution. The application of the preceding rules may be illustrated by the following examples:

Example 1. On March 2, 1971, X makes an additional contribution of property to a charitable remainder unitrust. The taxable year of the trust is the calendar year and the regular valuation date is January 1 of each year. For purposes of computing the required payout with respect to the additional contribution for the year of contribution, the additional contribution is valued on March 2, 1971, the time of contribution. The property had a value on that date of $5,000. Income from such property in the amount of $250 was received on December 31, 1971. The required payout with respect to the additional contribution for the year of contribution is $208 (5 percent × $5,000 × 305/365). The income earned after the date of the contribution and after the regular valuation date does not enter into the computation.

Example 2. On July 1, 1971, X makes an additional contribution of $10,000 to a charitable remainder unitrust. The taxable year of the trust is the calendar year and the regular valuation date is December 31 of each year. The fixed percentage is 5 percent. Between July 1, 1971, and December 31, 1971, the additional property appreciates in value to $12,500 and earns $500 of income. Because the regular valuation date for the year of contribution occurs after the date of the additional contribution, the additional contribution including income earned by it is valued on the regular valuation date. Thus, the required payout with respect to the additional contribution is $325.87 (5 percent × [$12,500 + $500] × 183/365).

(c) ***Calculation of the fair market value of the remainder interest of a charitable remainder unitrust.*** See § 1.664-4 for rules relating to the calculation of the fair market value of the remainder interest of a charitable remainder unitrust.

(d) ***Deduction for transfers to a charitable remainder unitrust.*** For rules relating to a deduction for transfers to a charitable remainder unitrust, see section 170, 2055, 2106, or 2522 and the regulations thereunder. The deduction allowed by section 170 for transfers to charity is limited to the fair market value of the remainder interest of a charitable remainder unitrusts regardless of whether an organization described in section 170(c) also receives a portion of the amount described in § 1.664-3(a)(1). For a special rule relating to the reduction of the amount of a charitable contribution deduction with respect to a contribution of certain ordinary income property or capital gain property, see section 170(e)(1) (A) or (B)(i) and the regulations thereunder. For rules for postponing the time for deduction of a charitable contribution of a future interest in tangible personal property, see section 170(a)(3) and the regulations thereunder.

[T.D. 7202, 37 FR 16920, Aug. 23, 1972, as amended by T.D. 8791, 63 FR 68192, Dec. 10, 1998; T.D. 8926, 66 FR 1038, Jan. 5, 2001; T.D. 9102, 69 FR 20, Jan. 2, 2004]

§ 1.664-4 Calculation of the fair market value of the remainder interest in a charitable remainder unitrust.

(a) ***Rules for determining present value.*** For purposes of sections 170, 2055, 2106, and 2522, the fair market value of a remainder interest in a charitable remainder unitrust (as described in § 1.664-3) is its present value determined under paragraph (d) of this section. The present value determined under this section shall be computed on the basis of—

(1) Life contingencies determined as to each life involved, from the values of l_X set forth in Table 2010CM in § 20.2031-7(d)(7)(ii) of this chapter in the case of transfers for which the valuation date is on or after June 1, 2023; or from Table 2000CM contained in § 20.2031-7A(g)(4) of this chapter in the case of transfers for which the valuation date is on or after May 1, 2009, and before June 1, 2023. See § 20.2031-7A(a) through (f) of this chapter, whichever is applicable, for transfers for which the valuation date is before May 1, 2009;

(2) Interest at the section 7520 rate in the case of transfers for which the valuation date is after April 30, 1989, or 10 percent in the case of transfers to charitable remainder unitrusts made after November 30, 1983, for which the valuation date is before May 1, 1989. See § 20.2031-7A (a) through (c) of this chapter, whichever is applicable, for transfers for which the valuation date is before December 1, 1983; and

(3) The assumption that the amount described in § 1.664-3(a)(1)(*i*)(*a*) is distributed in accordance with the payout sequence described in the governing instrument. If the governing instrument does not prescribe when the distribution is made during the period for which the payment is made, for purposes of this section, the distribution is considered payable on the first day of the period for which the payment is made.

(b) ***Actuarial Computations by the Internal Revenue Service.*** The regulations in this and in related sections provide tables of actuarial factors and examples that illustrate the use of the tables in determining the value of remainder interests in property. Section 1.7520-1(c)(2) refers to government publications that provide additional tables of factors and examples of computations for more complex situations. If the computation requires the use of a factor that is not provided in this section, the Commissioner may supply the factor upon a request for a ruling. A request for a ruling must be accompanied by a recitation of the facts including the date of birth of each measuring life, and copies of the relevant documents. A request for a ruling must comply with the instructions for requesting a ruling published periodically in the Internal Revenue Bulletin (See § 601.601(d)(2)(ii)(*b*) of this chapter) and include payment of the required user fee. If the Commissioner furnishes the factor, a copy of the letter supplying the factor should be attached to the tax return in which the deduction is claimed. If the Commissioner does not furnish the factor, the taxpayer must furnish a factor computed in accordance with the principles set forth in this section.

(c) ***Statement supporting deduction required.*** Any claim for a deduction on any return for the value of a remainder interest in a charitable remainder unitrust must be supported by a full statement attached to the return showing the computation of the present value of such interest.

(d) ***Valuation.*** The fair market value of a remainder interest in a charitable remainder unitrust (as described in § 1.664-3) for transfers for which the valuation date is on or after June 1, 2023, is its present value determined under paragraph (e) of this section. The fair market value of a remainder interest in a charitable remainder unitrust (as described in § 1.664-3) for transfers for which the valuation date is before June 1, 2023, is its present value determined under the following sections:

TABLE 1 TO PARAGRAPH (d)

Valuation dates		Applicable regulations
After	Before	
	01-01-52	1.664-4A(a)
12-31-51	01-01-71	1.664-4A(b)
12-31-70	12-01-83	1.664-4A(c)
11-30-83	05-01-89	1.664-4A(d)
04-30-89	05-01-99	1.664-4A(e)
04-30-99	05-01-09	1.664-4A(f)
04-30-09	06-01-23	1.664-4A(g)

(e) ***Valuation of charitable remainder unitrusts having certain payout sequences for transfers for which the valuation date is on or after June 1, 2023 —***

(1) ***In general.*** Except as otherwise provided in paragraph (e)(2) of this section, in the case of transfers for which the valuation date is on or after June 1, 2023, the present value of a remainder interest is determined under paragraphs (e)(3) through (7) of this section, provided that, in a short taxable year, the trustee must prorate the unitrust amount as provided in § 1.664-3(a)(1)(v). See, however, § 1.7520-3(b) (relating to exceptions to the use of the prescribed tables under certain circumstances).

(2) ***Transitional rule for valuation of charitable remainder unitrusts.*** For purposes of section 170, 2055, 2106, 2522, or 2624, in the case of transfers to a charitable remainder unitrust for which the valuation date is after April 30, 2019, and on or before June 1, 2023, the present value of a remainder interest based on one or more measuring lives is determined under this section by using the section 7520 interest rate for the month in which the valuation date occurs (see §§ 1.7520-1(b) and 1.7520-2(a)(2)) and the appropriate actuarial factors derived from the selected mortality table, either Table 2010CM in § 20.2031-7(d)(7)(ii) of this chapter or Table 2000CM in § 20.2031-7A(g)(4) of this chapter, at the option of the donor or the decedent's executor, as the case may be. If any previously filed income tax return is amended to use the actuarial factors based on Table 2010CM, the amended return must state at the top “AMENDED PURSUANT TO TD 9974.” If any previously filed gift or estate tax return is supplemented to use the actuarial factors based on Table 2010CM, the supplemental return must state at the top “SUPPLEMENTED PURSUANT TO TD 9974.” For the convenience of taxpayers, actuarial factors based on Table 2010CM appear in the current version of Table U(1), and actuarial factors based on Table 2000CM appear in the previous version of Table U(1). Both versions of Table U(1) currently are available, at no charge, electronically via the IRS website at *https://www.irs.gov/retirement-plans/actuarial-tables* (or a corresponding URL as may be updated from time to time). The donor or decedent's executor must consistently use the same

mortality basis with respect to each interest (income, remainder, partial, etc.) in the same property, and with respect to all transfers occurring on the same valuation date. For example, gift and income tax charitable deductions with respect to the same transfer must be determined based on factors with the same mortality basis, and all assets includible in the gross estate and/or estate tax deductions claimed must be valued based on factors with the same mortality basis.

(3) ***Adjusted payout rate.*** For transfers for which the valuation date is after April 30, 1989, the adjusted payout rate is determined by using the appropriate Table F in paragraph (e)(6) of this section, for the section 7520 interest rate applicable to the transfer. If the interest rate is between 4.2 and 14 percent, see paragraph (e)(6) of this section. If the interest rate is below 4.2 percent or greater than 14 percent, see paragraph (b) of this section. The adjusted payout rate is determined by multiplying the fixed percentage described in § 1.664-3(a)(1)(i)(*a*) by the factor describing the payout sequence of the trust and the number of months by which the valuation date for the first full taxable year of the trust precedes the first payout date for such taxable year. If the governing instrument does not prescribe when the distribution or distributions shall be made during the taxable year of the trust, see paragraph (a) of this section. In the case of a trust having a payout sequence for which no figures have been provided by the appropriate table, and in the case of a trust that determines the fair market value of the trust assets by taking the average of valuations on more than one date during the taxable year, see paragraph (b) of this section.

(4) ***Period is a term of years.*** If the period described in § 1.664-3(a)(5) is a term of years, the factor that is used in determining the present value of the remainder interest for transfers for which the valuation date is after November 30, 1983, is the factor under the appropriate adjusted payout rate in Table D of paragraph (e)(6) of this section corresponding to the number of years in the term. If the adjusted payout rate is an amount that is between adjusted payout rates for which factors are provided in Table D, a linear interpolation must be made. The present value of the remainder interest is determined by multiplying the net fair market value (as of the appropriate valuation date) of the property placed in trust by the factor determined under this paragraph. For purposes of this section, the valuation date is, in the case of an inter vivos transfer, the date on which the property is transferred to the trust by the donor. However, if an election is made under section 7520 and § 1.7520-2(b) to compute the present value of the charitable interest by use of the interest rate component for either of the 2 months preceding the month in which the date of transfer falls, the month so elected is the valuation date for purposes of determining the interest rate and mortality tables. In the case of a testamentary transfer under section 2055, 2106, or 2624, the valuation date is the date of death, unless the alternate valuation date is elected under section 2032, in which event, and within the limitations set forth in section 2032 and the regulations thereunder, the valuation date is the alternate valuation date. If the decedent's estate elects the alternate valuation date under section 2032 and also elects, under section 7520 and § 1.7520-2(b), to use the interest rate component for one of the 2 months preceding the alternate valuation date, the month so elected is the valuation date for purposes of determining the interest rate and mortality tables. The application of this paragraph (e)(4) may be illustrated by the following example:

> *Example.* D transfers $100,000 to a charitable remainder unitrust on January 1. The trust instrument requires that the trust pay 8 percent of the fair market value of the trust assets as of January 1st for a term of 12 years to D in quarterly payments (March 31, June 30, September 30, and December 31). The section 7520 rate for January (the month that the transfer occurred) is 9.6 percent. Under Table F(9.6) in paragraph (e)(6) of this section, the

appropriate adjustment factor is .944628 for quarterly payments payable at the end of each quarter. The adjusted payout rate is 7.557 (8% × .944628). Based on the remainder factors in Table D in paragraph (e)(6) of this section, the present value of the remainder interest is $38,950.30, computed as follows:

Factor at 7.4 percent for 12 years	.397495
Factor at 7.6 percent for 12 years	.387314
Difference	.010181

Interpolation adjustment:

$$\frac{7.557\% - 7.4\%}{0.2\%} = \frac{x}{.010181}$$

$$x = .007992$$

Factor at 7.4 percent for 12 years	.397495
Less: Interpolation adjustment	.007992
Interpolated factor	.389503

Present value of remainder interest:
($100,000 × .389503).....$38,950.30

(5) ***Period is the life of one individual*** —

(i) ***Factor.*** If the period described in § 1.664-3(a)(5) is the life of one individual, the factor that is used in determining the present value of the remainder interest for transfers for which the valuation date is on or after June 1, 2023, is the factor obtained through the use of the formula in Figure 1 to this paragraph (e)(5)(i) to at least five decimal places. The prescribed mortality table is Table 2010CM as set forth in § 20.2031-7(d)(7)(ii) of this chapter, or for periods before June 1, 2023, the appropriate table found in § 20.2031-7A of this chapter. Table 2010CM is referenced by IRS Publication 1458, *Actuarial Values Version 4B.* The mortality tables prescribed for periods before June 1, 2023, are referenced by prior versions of IRS Publication 1458. Alternatively, the remainder factors have been determined for the convenience of taxpayers and appear in Table U(1) under the appropriate adjusted payout rate. Table U(1) currently is available, at no charge, electronically via the IRS website at *https://www.irs.gov/retirement-plans/actuarial-tables* (or a corresponding URL as may be updated from time to time). Table U(1) is referenced and explained by IRS Publication 1458, *Actuarial Valuations Version 4B,* which

will be available within a reasonable time after June 1, 2023. For purposes of the computations described in this paragraph (e)(5), the age of an individual is the age of that individual at the individual's nearest birthday. If the adjusted payout rate is an amount that is between adjusted payout rates for which factors are provided in the appropriate table, an exact method of obtaining the applicable remainder factors (such as through software using the actual adjusted payout rate and the actuarial formula in this paragraph (e)(5)) or a linear interpolation must be used, provided whichever method used is applied consistently in valuing all interests in the same property. The applicable remainder factors derived by an exact method or by interpolation must be expressed to at least five decimal places. The present value of the remainder interest is determined by multiplying the net fair market value (as of the valuation date as determined in § 1.664-4(e)(4)) of the property placed in trust by the factor determined under this paragraph (e)(5). If the adjusted payout rate is from 0.2 to 20.0 percent, inclusive, taxpayers may see the actuarial tables referenced and explained by IRS Publication 1458, *Actuarial Valuations Version 4B*. Alternatively, the Commissioner may supply a factor upon a request for a ruling. See paragraph (b) of this section.

Figure 1 to Paragraph (e)(5)(i)—Formula for Determining Unitrust Remainder Factors

$$\left(1+\frac{i}{2}\right)\sum_{t=0}^{\infty} v^{t+1}\left({}_{t+1}q_x - {}_{t}q_x\right)$$

where:

r = the adjusted payout rate;

v = 1 - r;

i = r / (1 – r)

$${}_{t}q_x = 1 - \frac{l_{x+t}}{l_x} \quad ;$$

x = the age of the measuring life (determined as age at nearest birthday); and

l_x = the number associated with age x as set forth in the prescribed mortality table, representing the number of persons alive at age x.

(ii) ***Sample factors from actuarial Table U(1).*** For purposes of the example in paragraph (e)(5)(iii) of this section, the following factors from Table U(1) and Table F(3.2) (see paragraph (e)(6)(ii) of this section) will be used:

TABLE 2 TO PARAGRAPH (e)(5)(ii)
FACTORS FROM TABLE U(1)—BASED ON TABLE 2010CM

Adjusted payout rate			
Age	**4.8%**	**5.0%**	**5.2%**
77	0.61491	0.60343	0.59223

FACTORS FROM TABLE F(3.2)

FACTORS FOR COMPUTING ADJUSTED PAYOUT RATES FOR UNITRUSTS

INTEREST AT 3.2 PERCENT

# of Months from Annual Valuation to First Payout		Adjustment Factors for Payments at End of Period	
At Least	But Less Than	Annual	Semiannual
6	7	0.984374	0.976683

(iii) ***Example of interpolation.*** After June 1, 2023, A, whose age is 76 years and 11 months, transfers $100,000 to a charitable remainder unitrust on January 1st. The trust instrument requires that the trust pay to A semiannually (on June 30 and December 31) 5 percent of the fair market value of the trust assets as of January 1st during A's life. The section 7520 rate for January is 3.2 percent. Under Table F(3.2), the appropriate adjustment factor is 0.976683 for semiannual payments payable at the end of the semiannual period. The adjusted payout rate is 4.883% (5% × 0.976683). Based on interpolating between the remainder factors in Table U(1), the present value of the remainder interest is $61,015, computed as illustrated in Figure 2 to this paragraph (e)(5)(iii).

Figure 2 to Paragraph (e)(5)(iii)—Illustration of Unitrust Interpolation Method

A.	Table U(1) Factor at 4.8 percent for age 77		0.61491
B.	Less: Table U(1) Factor at 5.0 percent for age 77	-	0.60343
C.	Difference: A - B		0.01148

D. Interpolation Adjustment:

$$\frac{4.883\% - 4.80\%}{5.0\% - 4.80\%} = \frac{z}{0.01148}$$

E.

$$\frac{4.883\% - 4.80\%}{5.0\% - 4.80\%} \cdot 0.01148 = z = 0.00476$$

F.	Table U(1) Factor at 4.8 percent for age 77		0.61491
G.	Less: Interpolation Adjustment z	-	0.00476
H.	Interpolated Factor: F - G		0.61015
I.	Amount Transferred	$	100,000
J.	Present Value of Remainder Interest: H x I	$	61,015

(6) ***Actuarial Table D and Tables F(0.2) through F(20.0) for transfers for which the valuation date is on or after May 1, 1989*** —

(i) ***Remainder factors for charitable remainder unitrusts.*** For transfers for which the valuation date is on or after May 1, 1989, the present value of a charitable remainder unitrust interest that is dependent upon a term of years is determined by using the formula in Figure 3 to this paragraph (e)(6)(i) and calculating the final result to at least six decimal places. For the convenience of taxpayers, actuarial factors have been computed by the IRS and appear in Table D. Table D can be found on the IRS website at *https://www.irs.gov/retirement-plans/actuarial-tables* (or a corresponding URL as may be updated from time to time). Table D is referenced and explained in IRS Publication 1458, *Actuarial Valuations Version 4B,* which will be available within a reasonable time after June 1, 2023. The remainder factors from Table D also can be found in paragraph (e)(6)(iii) of this section, but only for adjusted payout rates from 4.2 to 14 percent, inclusive. For transfers for which the valuation date is on or after June 1, 2023, where the present value of a charitable remainder unitrust interest is dependent on the termination of a life interest, see paragraph (e)(5) of this section. See, however, § 1.7520-3(b) (relating to exceptions to the use of prescribed tables under certain circumstances).

Figure 3 to Paragraph (e)(6)(i)—Formula for Determining Term Certain Unitrust Remainder Factors

$$(1 - r)^n$$

where:

n = the term in years or fractions of a year; and

r = the adjusted payout rate.

(ii) ***Unitrust payout rate adjustment factors.*** For transfers for which the valuation date is on or after May 1, 1989, the unitrust payout rate adjustment factors are determined by using the formula in Figure 4 to this paragraph (e)(6)(ii) and calculating the final result to at least six decimal places. For the convenience of taxpayers, actuarial factors have been computed by the IRS, for interest rates from 0.2 to 20 percent, inclusive, and appear in Tables F(0.2) through F(20.0). Tables F(0.2) through F(20.0) can be found on the IRS website at *https://www.irs.gov/retirement-plans/actuarial-tables* (or a corresponding URL as may be updated from time to time). Tables F(0.2) through F(20.0) are referenced and explained in IRS Publication 1458, *Actuarial Valuations Version 4B,* which will be available within a reasonable time after June 1, 2023. The factors from Table F also can be found in paragraph (e)(6)(iii) of this section, but only for interest rates from 4.2 to 14 percent, inclusive.

Figure 4 to Paragraph (e)(6)(ii)—Formula for Determining Unitrust Payout Rate Adjustment Factors

$$\frac{(1+i)^{(1/p)} \cdot i \cdot v^{(d/12)}}{p\,(1+i)[(1+i)^{(1/p)} - 1]}$$

where:

p = the number of payments per year;

i = the applicable interest rate under section 7520 of the Internal Revenue Code;

v = 1 / (1 + i) ; and

d = the number of months between the annual valuation date and the regular first payout date of a standard full year of the trust.

(iii) ***Table D and Tables F(4.2) through F(14.0).*** The unitrust remainder factors from Table D, for interest rates from 4.2 to 14 percent, inclusive, and the unitrust payout factors from Tables F(4.2) through F(14.0) are as follows:

Table D—Showing the Present Worth of a Remainder Interest Postponed for a Term Certain in a Charitable Remainder Unitrust [Applicable after April 30, 1989]

Years	Adjusted payout rate									
	4.2%	4.4%	4.6%	4.8%	5.0%	5.2%	5.4%	5.6%	5.8%	6.0%
1	.958000	.956000	.954000	.952000	.950000	.948000	.946000	.944000	.942000	.940000
2	.917764	.913936	.910116	.906304	.902500	.898704	.894916	.891136	.887364	.883600
3	.879218	.873723	.868251	.862801	.857375	.851971	.846591	.841232	.835897	.830584
4	.842291	.835279	.828311	.821387	.814506	.807669	.800875	.794123	.787415	.780749
5	.806915	.798527	.790209	.781960	.773781	.765670	.757627	.749652	.741745	.733904
6	.773024	.763392	.753859	.744426	.735092	.725855	.716716	.707672	.698724	.689870
7	.740557	.729802	.719182	.708694	.698337	.688111	.678013	.668042	.658198	.648478
8	.709454	.697691	.686099	.674677	.663420	.652329	.641400	.630632	.620022	.609569
9	.679657	.666993	.654539	.642292	.630249	.618408	.606765	.595317	.584061	.572995
10	.651111	.637645	.624430	.611462	.598737	.586251	.573999	.561979	.550185	.538615
11	.623764	.609589	.595706	.582112	.568800	.555766	.543003	.530508	.518275	.506298
12	.597566	.582767	.568304	.554170	.540360	.526866	.513681	.500800	.488215	.475920
13	.572469	.557125	.542162	.527570	.513342	.499469	.485942	.472755	.459898	.447365
14	.548425	.532611	.517222	.502247	.487675	.473496	.459701	.446281	.433224	.420523
15	.525391	.509177	.493430	.478139	.463291	.448875	.434878	.421289	.408097	.395292
16	.503325	.486773	.470732	.455188	.440127	.425533	.411394	.397697	.384427	.371574
17	.482185	.465355	.449079	.433339	.418120	.403405	.389179	.375426	.362131	.349280
18	.461933	.444879	.428421	.412539	.397214	.382428	.368163	.354402	.341127	.328323
19	.442532	.425304	.408714	.392737	.377354	.362542	.348282	.334555	.321342	.308624
20	.423946	.406591	.389913	.373886	.358486	.343690	.329475	.315820	.302704	.290106

Table D—Showing the Present Worth of a Remainder Interest Postponed for a Term Certain in a Charitable Remainder Unitrust [Applicable after April 30, 1989]

Years	Adjusted payout rate									
	6.2%	6.4%	6.6%	6.8%	7.0%	7.2%	7.4%	7.6%	7.8%	8.0%
1	.938000	.936000	.934000	.932000	.930000	.928000	.926000	.924000	.922000	.920000
2	.879844	.876096	.872356	.868624	.864900	.861184	.857476	.853776	.850084	.846400
3	.825294	.820026	.814781	.809558	.804357	.799179	.794023	.788889	.783777	.778688
4	.774125	.767544	.761005	.754508	.748052	.741638	.735265	.728933	.722643	.716393
5	.726130	.718421	.710779	.703201	.695688	.688240	.680855	.673535	.666277	.659082
6	.681110	.672442	.663867	.655383	.646990	.638687	.630472	.622346	.614307	.606355
7	.638881	.629406	.620052	.610817	.601701	.592701	.583817	.575048	.566391	.557847
8	.599270	.589124	.579129	.569282	.559582	.550027	.540615	.531344	.522213	.513219
9	.562115	.551420	.540906	.530571	.520411	.510425	.500609	.490962	.481480	.472161
10	.527264	.516129	.505206	.494492	.483982	.473674	.463564	.453649	.443925	.434388
11	.494574	.483097	.471863	.460866	.450104	.439570	.429260	.419171	.409298	.399637
12	.463910	.452179	.440720	.429527	.418596	.407921	.397495	.387314	.377373	.367666
13	.435148	.423239	.411632	.400320	.389295	.378550	.368081	.357879	.347938	.338253
14	.408169	.396152	.384465	.373098	.362044	.351295	.340843	.330680	.320799	.311193
15	.382862	.370798	.359090	.347727	.336701	.326002	.315620	.305548	.295777	.286297
16	.359125	.347067	.335390	.324082	.313132	.302529	.292264	.282326	.272706	.263394
17	.336859	.324855	.313254	.302044	.291213	.280747	.270637	.260870	.251435	.242322
18	.315974	.304064	.292579	.281505	.270828	.260533	.250610	.241044	.231823	.222936
19	.296383	.284604	.273269	.262363	.251870	.241775	.232065	.222724	.213741	.205101
20	.278008	.266389	.255233	.244522	.234239	.224367	.214892	.205797	.197069	.188693

Table D—Showing the Present Worth of a Remainder Interest Postponed for a Term Certain in a Charitable Remainder Unitrust [Applicable after April 30, 1989]

Years	Adjusted payout rate									
	8.2%	8.4%	8.6%	8.8%	9.0%	9.2%	9.4%	9.6%	9.8%	10.0%
1	.918000	.916000	.914000	.912000	.910000	.908000	.906000	.904000	.902000	.900000
2	.842724	.839056	.835396	.831744	.828100	.824464	.820836	.817216	.813604	.810000
3	.773621	.768575	.763552	.758551	.753571	.748613	.743677	.738763	.733871	.729000
4	.710184	.704015	.697886	.691798	.685750	.679741	.673772	.667842	.661951	.656100
5	.651949	.644878	.637868	.630920	.624032	.617205	.610437	.603729	.597080	.590490
6	.598489	.590708	.583012	.575399	.567869	.560422	.553056	.545771	.538566	.531441
7	.549413	.541089	.532873	.524764	.516761	.508863	.501069	.493377	.485787	.478297
8	.504361	.495637	.487046	.478585	.470253	.462048	.453968	.446013	.438180	.430467
9	.463003	.454004	.445160	.436469	.427930	.419539	.411295	.403196	.395238	.387420
10	.425037	.415867	.406876	.398060	.389416	.380942	.372634	.364489	.356505	.348678
11	.390184	.380934	.371885	.363031	.354369	.345895	.337606	.329498	.321567	.313811
12	.358189	.348936	.339902	.331084	.322475	.314073	.305871	.297866	.290054	.282430
13	.328817	.319625	.310671	.301949	.293453	.285178	.277119	.269271	.261628	.254187
14	.301854	.292777	.283953	.275377	.267042	.258942	.251070	.243421	.235989	.228768
15	.277102	.268184	.259533	.251144	.243008	.235119	.227469	.220053	.212862	.205891
16	.254380	.245656	.237213	.229043	.221137	.213488	.206087	.198928	.192001	.185302
17	.233521	.225021	.216813	.208887	.201235	.193847	.186715	.179830	.173185	.166772
18	.214372	.206119	.198167	.190505	.183124	.176013	.169164	.162567	.156213	.150095
19	.196794	.188805	.181125	.173741	.166643	.159820	.153262	.146960	.140904	.135085
20	.180657	.172946	.165548	.158452	.151645	.145117	.138856	.132852	.127096	.121577

Table D—Showing the Present Worth of a Remainder Interest Postponed for a Term Certain in a Charitable Remainder Unitrust [Applicable after April 30, 1989]

Years	Adjusted payout rate									
	10.2%	10.4%	10.6%	10.8%	11.0%	11.2%	11.4%	11.6%	11.8%	12.0%
1	.898000	.896000	.894000	.892000	.890000	.888000	.886000	.884000	.882000	.880000
2	.806404	.802816	.799236	.795664	.792100	.788544	.784996	.781456	.777924	.774400
3	.724151	.719323	.714517	.709732	.704969	.700227	.695506	.690807	.686129	.681472
4	.650287	.644514	.638778	.633081	.627422	.621802	.616219	.610673	.605166	.599695
5	.583958	.577484	.571068	.564708	.558406	.552160	.545970	.539835	.533756	.527732
6	.524394	.517426	.510535	.503720	.496981	.490318	.483729	.477214	.470773	.464404
7	.470906	.463613	.456418	.449318	.442313	.435402	.428584	.421858	.415222	.408676
8	.422874	.415398	.408038	.400792	.393659	.386637	.379726	.372922	.366226	.359635
9	.379741	.372196	.364786	.357506	.350356	.343334	.336437	.329663	.323011	.316478
10	.341007	.333488	.326118	.318896	.311817	.304881	.298083	.291422	.284896	.278501
11	.306224	.298805	.291550	.284455	.277517	.270734	.264102	.257617	.251278	.245081
12	.274989	.267729	.260645	.253734	.246990	.240412	.233994	.227734	.221627	.215671
13	.246941	.239886	.233017	.226331	.219821	.213486	.207319	.201317	.195475	.189791
14	.221753	.214937	.208317	.201887	.195641	.189575	.183684	.177964	.172409	.167016
15	.199134	.192584	.186236	.180083	.174121	.168343	.162744	.157320	.152065	.146974
16	.178822	.172555	.166495	.160634	.154967	.149488	.144191	.139071	.134121	.129337
17	.160582	.154609	.148846	.143286	.137921	.132746	.127754	.122939	.118295	.113817
18	.144203	.138530	.133069	.127811	.122750	.117878	.113190	.108678	.104336	.100159
19	.129494	.124123	.118963	.114007	.109247	.104676	.100286	.096071	.092024	.088140
20	.116286	.111214	.106353	.101694	.097230	.092952	.088853	.084927	.081166	.077563

Table D—Showing the Present Worth of a Remainder Interest Postponed for a Term Certain in a Charitable Remainder Unitrust [Applicable after April 30, 1989]

Years	Adjusted payout rate									
	12.2%	12.4%	12.6%	12.8%	13.0%	13.2%	13.4%	13.6%	13.8%	14.0%
1	.878000	.876000	.874000	.872000	.870000	.868000	.866000	.864000	.862000	.860000
2	.770884	.767376	.763876	.760384	.756900	.753424	.749956	.746496	.743044	.739600
3	.676836	.672221	.667628	.663055	.658503	.653972	.649462	.644973	.640504	.636056
4	.594262	.588866	.583507	.578184	.572898	.567648	.562434	.557256	.552114	.547008
5	.521762	.515847	.509985	.504176	.498421	.492718	.487068	.481469	.475923	.470427
6	.458107	.451882	.445727	.439642	.433626	.427679	.421801	.415990	.410245	.404567
7	.402218	.395848	.389565	.383368	.377255	.371226	.365279	.359415	.353631	.347928
8	.353147	.346763	.340480	.334297	.328212	.322224	.316332	.310535	.304830	.299218
9	.310063	.303764	.297579	.291507	.285544	.279690	.273944	.268302	.262764	.257327
10	.272236	.266098	.260084	.254194	.248423	.242771	.237235	.231813	.226502	.221302
11	.239023	.233102	.227314	.221657	.216128	.210725	.205446	.200286	.195245	.190319
12	.209862	.204197	.198672	.193285	.188032	.182910	.177916	.173047	.168301	.163675
13	.184259	.178877	.173640	.168544	.163588	.158766	.154075	.149513	.145076	.140760
14	.161779	.156696	.151761	.146971	.142321	.137809	.133429	.129179	.125055	.121054
15	.142042	.137266	.132639	.128158	.123819	.119618	.115550	.111611	.107798	.104106
16	.124713	.120245	.115927	.111754	.107723	.103828	.100066	.096432	.092922	.089531
17	.109498	.105334	.101320	.097450	.093719	.090123	.086657	.083317	.080098	.076997
18	.096139	.092273	.088554	.084976	.081535	.078227	.075045	.071986	.069045	.066217
19	.084410	.080831	.077396	.074099	.070936	.067901	.064989	.062196	.059517	.056947
20	.074112	.070808	.067644	.064614	.061714	.058938	.056280	.053737	.051303	.048974

Table F(4.2)—With Interest at 4.2 Percent, Showing Factors for Computation of the Adjusted Payout Rate for Certain Valuations [Applicable after April 30, 1989]

1 Number of months by which the valuation date for the first full taxable year of the trust precedes the first payout		2 Factors for payout at the end of each period			
At least	But less than	Annual period	Semiannual period	Quarterly period	Monthly period
	1	1.000000	.989820	.984755	.981389
1	2	.996577	.986432	.981385	.978030
2	3	.993166	.983056	.978026	
3	4	.989767	.979691	.974679	
4	5	.986380	.976338		
5	6	.983004	.972996		
6	7	.979639	.969666		
7	8	.976286			
8	9	.972945			
9	10	.969615			
10	11	.966296			
11	12	.962989			
12		.959693			

Table F(4.4)—With Interest at 4.4 Percent, Showing Factors for Computation of the Adjusted Payout Rate for Certain Valuations [Applicable after April 30, 1989]

1 Number of months by which the valuation date for the first full taxable year of the trust precedes the first payout		2 Factors for payout at the end of each period			
At least	But less than	Annual period	Semiannual period	Quarterly period	Monthly period
	1	1.000000	.989350	.984054	.980533
1	2	.996418	.985806	.980529	.977021

1 Number of months by which the valuation date for the first full taxable year of the trust precedes the first payout		2 Factors for payout at the end of each period			
At least	But less than	Annual period	Semiannual period	Quarterly period	Monthly period
2	3	.992849	.982275	.977017	
3	4	.989293	.978757	.973517	
4	5	.985749	.975251		
5	6	.982219	.971758		
6	7	.978700	.968277		
7	8	.975195			
8	9	.971702			
9	10	.968221			
10	11	.964753			
11	12	.961298			
12		.957854			

Table F(4.6)—With Interest at 4.6 Percent, Showing Factors for Computation of the Adjusted Payout Rate for Certain Valuations [Applicable after April 30, 1989]

1 Number of months by which the valuation date for the first full taxable year of the trust precedes the first payout		2 Factors for payout at the end of each period			
At least	But less than	Annual period	Semiannual period	Quarterly period	Monthly period
	1	1.000000	.988882	.983354	.979680
1	2	.996259	.985183	.979676	.976015
2	3	.992532	.981498	.976011	
3	4	.988820	.977826	.972360	
4	5	.985121	.974168		
5	6	.981436	.970524		
6	7	.977764	.966894		
7	8	.974107			
8	9	.970463			

1 Number of months by which the valuation date for the first full taxable year of the trust precedes the first payout		2 Factors for payout at the end of each period			
At least	But less than	Annual period	Semiannual period	Quarterly period	Monthly period
9	10	.966832			
10	11	.963216			
11	12	.959613			
12		.956023			

Table F(4.8)—With Interest at 4.8 Percent, Showing Factors for Computation of the Adjusted Payout Rate for Certain Valuations [Applicable after April 30, 1989]

1 Number of months by which the valuation date for the first full taxable year of the trust precedes the first payout		2 Factors for payout at the end of each period			
At least	But less than	Annual period	Semiannual period	Quarterly period	Monthly period
	1	1.000000	.988415	.982657	.978830
1	2	.996101	.984561	.978825	.975013
2	3	.992217	.980722	.975008	
3	4	.988348	.976898	.971206	
4	5	.984494	.973089		
5	6	.980655	.969294		
6	7	.976831	.965515		
7	8	.973022			
8	9	.969228			
9	10	.965448			
10	11	.961684			
11	12	.957934			

1 Number of months by which the valuation date for the first full taxable year of the trust precedes the first payout		2 Factors for payout at the end of each period			
At least	But less than	Annual period	Semiannual period	Quarterly period	Monthly period
12		.954198			

Table F(5.0)—With Interest at 5.0 Percent, Showing Factors for Computation of the Adjusted Payout Rate for Certain Valuations [Applicable after April 30, 1989]

1 Number of months by which the valuation date for the first full taxable year of the trust precedes the first payout		2 Factors for payout at the end of each period			
At least	But less than	Annual period	Semiannual period	Quarterly period	Monthly period
	1	1.000000	.987950	.981961	.977982
1	2	.995942	.983941	.977977	.974014
2	3	.991901	.979949	.974009	
3	4	.987877	.975973	.970057	
4	5	.983868	.972013		
5	6	.979876	.968069		
6	7	.975900	.964141		
7	8	.971940			
8	9	.967997			
9	10	.964069			
10	11	.960157			
11	12	.956261			

1 Number of months by which the valuation date for the first full taxable year of the trust precedes the first payout		2 Factors for payout at the end of each period			
At least	But less than	Annual period	Semiannual period	Quarterly period	Monthly period
12		.952381			

Table F(5.2)—With Interest at 5.2 Percent, Showing Factors for Computation of the Adjusted Payout Rate for Certain Valuations [Applicable after April 30, 1989]

1 Number of months by which the valuation date for the first full taxable year of the trust precedes the first payout		2 Factors for payout at the end of each period			
At least	But less than	Annual period	Semiannual period	Quarterly period	Monthly period
	1	1.000000	.987486	.981268	.977137
1	2	.995784	.983323	.977132	.973018
2	3	.991587	.979178	.973012	
3	4	.987407	.975050	.968911	
4	5	.983244	.970940		
5	6	.979099	.966847		
6	7	.974972	.962771		
7	8	.970862			
8	9	.966769			
9	10	.962694			
10	11	.958636			
11	12	.954594			

1 Number of months by which the valuation date for the first full taxable year of the trust precedes the first payout		2 Factors for payout at the end of each period			
At least	But less than	Annual period	Semiannual period	Quarterly period	Monthly period
12		.950570			

Table F(5.4)—With Interest at 5.4 Percent, Showing Factors for Computation of the Adjusted Payout Rate for Certain Valuations [Applicable after April 30, 1989]

1 Number of months by which the valuation date for the first full taxable year of the trust precedes the first payout		2 Factors for payout at the end of each period			
At least	But less than	Annual period	Semiannual period	Quarterly period	Monthly period
	1	1.000000	.987023	.980577	.976295
1	2	.995627	.982707	.976289	.972026
2	3	.991273	.978409	.972019	
3	4	.986938	.974131	.967769	
4	5	.982622	.969871		
5	6	.978325	.965629		
6	7	.974047	.961407		
7	8	.969787			
8	9	.965546			
9	10	.961323			
10	11	.957119			
11	12	.952934			

1 Number of months by which the valuation date for the first full taxable year of the trust precedes the first payout		2 Factors for payout at the end of each period			
At least	But less than	Annual period	Semiannual period	Quarterly period	Monthly period
12		.948767			

Table F(5.6)—With Interest at 5.6 Percent, Showing Factors for Computation of the Adjusted Payout Rate for Certain Valuations [Applicable after April 30, 1989]

1 Number of months by which the valuation date for the first full taxable year of the trust precedes the first payout		2 Factors for payout at the end of each period			
At least	But less than	Annual period	Semiannual period	Quarterly period	Monthly period
	1	1.000000	.986562	.979888	.975455
1	2	.995470	.982092	.975449	.971036
2	3	.990960	.977643	.971029	
3	4	.986470	.973214	.966630	
4	5	.982001	.968805		
5	6	.977552	.964416		
6	7	.973124	.960047		
7	8	.968715			
8	9	.964326			
9	10	.959958			
10	11	.955609			
11	12	.951279			

1 Number of months by which the valuation date for the first full taxable year of the trust precedes the first payout		2 Factors for payout at the end of each period			
At least	But less than	Annual period	Semiannual period	Quarterly period	Monthly period
12		.946970			

Table F(5.8)—With Interest at 5.8 Percent, Showing Factors for Computation of the Adjusted Payout Rate for Certain Valuations [Applicable after April 30, 1989]

1 Number of months by which the valuation date for the first full taxable year of the trust precedes the first payout		2 Factors for payout at the end of each period			
At least	But less than	Annual period	Semiannual period	Quarterly period	Monthly period
	1	1.000000	.986102	.979201	.974618
1	2	.995313	.981480	.974611	.970050
2	3	.990647	.976879	.970043	
3	4	.986004	.972300	.965496	
4	5	.981382	.967743		
5	6	.976782	.963206		
6	7	.972203	.958692		
7	8	.967646			
8	9	.963111			
9	10	.958596			
10	11	.954103			
11	12	.949631			

1 Number of months by which the valuation date for the first full taxable year of the trust precedes the first payout		2 Factors for payout at the end of each period			
At least	But less than	Annual period	Semiannual period	Quarterly period	Monthly period
12		.945180			

Table F(6.0)—With Interest at 6.0 Percent, Showing Factors for Computation of the Adjusted Payout Rate for Certain Valuations [Applicable after April 30, 1989]

1 Number of months by which the valuation date for the first full taxable year of the trust precedes the first payout		2 Factors for payout at the end of each period			
At least	But less than	Annual period	Semiannual period	Quarterly period	Monthly period
	1	1.000000	.985643	.978516	.973784
1	2	.995156	.980869	.973776	.969067
2	3	.990336	.976117	.969059	
3	4	.985538	.971389	.964365	
4	5	.980764	.966684		
5	6	.976014	.962001		
6	7	.971286	.957341		
7	8	.966581			
8	9	.961899			
9	10	.957239			
10	11	.952603			
11	12	.947988			

1 Number of months by which the valuation date for the first full taxable year of the trust precedes the first payout		2 Factors for payout at the end of each period			
At least	But less than	Annual period	Semiannual period	Quarterly period	Monthly period
12		.943396			

Table F(6.2)—With Interest at 6.2 Percent, Showing Factors for Computation of the Adjusted Payout Rate for Certain Valuations [Applicable after April 30, 1989]

1 Number of months by which the valuation date for the first full taxable year of the trust precedes the first payout		2 Factors for payout at the end of each period			
At least	But less than	Annual period	Semiannual period	Quarterly period	Monthly period
	1	1.000000	.985185	.977833	.972952
1	2	.995000	.980259	.972944	.968087
2	3	.990024	.975358	.968079	
3	4	.985074	.970481	.963238	
4	5	.980148	.965628		
5	6	.975247	.960799		
6	7	.970371	.955995		
7	8	.965519			
8	9	.960691			
9	10	.955887			
10	11	.951107			
11	12	.946352			

1 Number of months by which the valuation date for the first full taxable year of the trust precedes the first payout		2 Factors for payout at the end of each period			
At least	But less than	Annual period	Semiannual period	Quarterly period	Monthly period
12		.941620			

Table F(6.4)—With Interest at 6.4 Percent, Showing Factors for Computation of the Adjusted Payout Rate for Certain Valuations [Applicable after April 30, 1989]

1 Number of months by which the valuation date for the first full taxable year of the trust precedes the first payout		2 Factors for payout at the end of each period			
At least	But less than	Annual period	Semiannual period	Quarterly period	Monthly period
	1	1.000000	.984729	.977152	.972122
1	2	.994844	.979652	.972114	.967110
2	3	.989714	.974600	.967101	
3	4	.984611	.969575	.962115	
4	5	.979534	.964576		
5	6	.974483	.959602		
6	7	.969458	.954654		
7	8	.964460			
8	9	.959487			
9	10	.954539			
10	11	.949617			
11	12	.944721			

1 Number of months by which the valuation date for the first full taxable year of the trust precedes the first payout		2 Factors for payout at the end of each period			
At least	But less than	Annual period	Semiannual period	Quarterly period	Monthly period
12		.939850			

Table F(6.6)—With Interest at 6.6 Percent, Showing Factors for Computation of the Adjusted Payout Rate for Certain Valuations [Applicable after April 30, 1989]

1 Number of months by which the valuation date for the first full taxable year of the trust precedes the first payout		2 Factors for payout at the end of each period			
At least	But less than	Annual period	Semiannual period	Quarterly period	Monthly period
	1	1.000000	.984274	.976473	.971295
1	2	.994688	.979046	.971286	.966136
2	3	.989404	.973845	.966127	
3	4	.984149	.968672	.960995	
4	5	.978921	.963527		
5	6	.973721	.958408		
6	7	.968549	.953317		
7	8	.963404			
8	9	.958286			
9	10	.953196			
10	11	.948132			
11	12	.943096			

1 Number of months by which the valuation date for the first full taxable year of the trust precedes the first payout		2 Factors for payout at the end of each period			
At least	But less than	Annual period	Semiannual period	Quarterly period	Monthly period
12		.938086			

Table F(6.8)—With Interest at 6.8 Percent, Showing Factors for Computation of the Adjusted Payout Rate for Certain Valuations [Applicable after April 30, 1989]

1 Number of months by which the valuation date for the first full taxable year of the trust precedes the first payout		2 Factors for payout at the end of each period			
At least	But less than	Annual period	Semiannual period	Quarterly period	Monthly period
	1	1.000000	.983821	.975796	.970471
1	2	.994533	.978442	.970461	.965165
2	3	.989095	.973092	.965156	
3	4	.983688	.967772	.959879	
4	5	.978309	.962481		
5	6	.972961	.957219		
6	7	.967641	.951985		
7	8	.962351			
8	9	.957089			
9	10	.951857			
10	11	.946653			
11	12	.941477			

1 Number of months by which the valuation date for the first full taxable year of the trust precedes the first payout		2 Factors for payout at the end of each period			
At least	But less than	Annual period	Semiannual period	Quarterly period	Monthly period
12		.936330			

Table F(7.0)—With Interest at 7.0 Percent, Showing Factors for Computation of the Adjusted Payout Rate for Certain Valuations [Applicable after April 30, 1989]

1 Number of months by which the valuation date for the first full taxable year of the trust precedes the first payout		2 Factors for payout at the end of each period			
At least	But less than	Annual period	Semiannual period	Quarterly period	Monthly period
	1	1.000000	.983368	.975122	.969649
1	2	.994378	.977839	.969639	.964198
2	3	.988787	.972342	.964187	
3	4	.983228	.966875	.958766	
4	5	.977700	.961439		
5	6	.972203	.956033		
6	7	.966736	.950658		
7	8	.961301			
8	9	.955896			
9	10	.950522			
10	11	.945178			
11	12	.939864			

1 Number of months by which the valuation date for the first full taxable year of the trust precedes the first payout		2 Factors for payout at the end of each period			
At least	But less than	Annual period	Semiannual period	Quarterly period	Monthly period
12		.934579			

Table F(7.2)—With Interest at 7.2 Percent, Showing Factors for Computation of the Adjusted Payout Rate for Certain Valuations [Applicable after April 30, 1989]

1 Number of months by which the valuation date for the first full taxable year of the trust precedes the first payout		2 Factors for payout at the end of each period			
At least	But less than	Annual period	Semiannual period	Quarterly period	Monthly period
	1	1.000000	.982917	.974449	.968830
1	2	.994223	.977239	.968819	.963233
2	3	.988479	.971593	.963222	
3	4	.982769	.965980	.957658	
4	5	.977091	.960400		
5	6	.971446	.954851		
6	7	.965834	.949335		
7	8	.960255			
8	9	.954707			
9	10	.949192			
10	11	.943708			
11	12	.938256			

1 Number of months by which the valuation date for the first full taxable year of the trust precedes the first payout		2 Factors for payout at the end of each period			
At least	But less than	Annual period	Semiannual period	Quarterly period	Monthly period
12		.932836			

Table F(7.4)—With Interest at 7.4 Percent, Showing Factors for Computation of the Adjusted Payout Rate for Certain Valuations [Applicable after April 30, 1989]

1 Number of months by which the valuation date for the first full taxable year of the trust precedes the first payout		2 Factors for payout at the end of each period			
At least	But less than	Annual period	Semiannual period	Quarterly period	Monthly period
	1	1.000000	.982467	.973778	.968013
1	2	.994068	.976640	.968002	.962271
2	3	.988172	.970847	.962260	
3	4	.982311	.965088	.956552	
4	5	.976484	.959364		
5	6	.970692	.953673		
6	7	.964935	.948017		
7	8	.959211			
8	9	.953521			
9	10	.947866			
10	11	.942243			
11	12	.936654			

1 Number of months by which the valuation date for the first full taxable year of the trust precedes the first payout		2 Factors for payout at the end of each period			
At least	But less than	Annual period	Semiannual period	Quarterly period	Monthly period
12		.931099			

Table F(7.6)—With Interest at 7.6 Percent, Showing Factors for Computation of the Adjusted Payout Rate for Certain Valuations [Applicable after April 30, 1989]

1 Number of months by which the valuation date for the first full taxable year of the trust precedes the first payout		2 Factors for payout at the end of each period			
At least	But less than	Annual period	Semiannual period	Quarterly period	Monthly period
	1	1.000000	.982019	.973109	.967199
1	2	.993914	.976042	.967187	.961313
2	3	.987866	.970103	.961301	
3	4	.981854	.964199	.955451	
4	5	.975879	.958331		
5	6	.969940	.952499		
6	7	.964037	.946703		
7	8	.958171			
8	9	.952340			
9	10	.946544			
10	11	.940784			
11	12	.935058			

1 Number of months by which the valuation date for the first full taxable year of the trust precedes the first payout		2 Factors for payout at the end of each period			
At least	But less than	Annual period	Semiannual period	Quarterly period	Monthly period
12		.929368			

Table F(7.8)—With Interest at 7.8 Percent, Showing Factors for Computation of the Adjusted Payout Rate for Certain Valuations [Applicable after April 30, 1989]

1 Number of months by which the valuation date for the first full taxable year of the trust precedes the first payout		2 Factors for payout at the end of each period			
At least	But less than	Annual period	Semiannual period	Quarterly period	Monthly period
	1	1.0000000	.981571	.972442	.966387
1	2	.993761	.975447	.966374	.960357
2	3	.987560	.969361	.960345	
3	4	.981398	.963312	.954353	
4	5	.975275	.957302		
5	6	.969190	.951329		
6	7	.963143	.945393		
7	8	.957133			
8	9	.951161			
9	10	.945227			
10	11	.939329			
11	12	.933468			

1 Number of months by which the valuation date for the first full taxable year of the trust precedes the first payout		2 Factors for payout at the end of each period			
At least	But less than	Annual period	Semiannual period	Quarterly period	Monthly period
12		.927644			

Table F(8.0)—With Interest at 8.0 Percent, Showing Factors for Computation of the Adjusted Payout Rate for Certain Valuations [Applicable after April 30, 1989]

1 Number of months by which the valuation date for the first full taxable year of the trust precedes the first payout		2 Factors for payout at the end of each period			
At least	But less than	Annual period	Semiannual period	Quarterly period	Monthly period
	1	1.000000	.981125	.971777	.965578
1	2	.993607	.974853	.965564	.959405
2	3	.987255	.968621	.959392	
3	4	980944	.962429	.953258	
4	5	.974673	.956276		
5	6	.968442	.950162		
6	7	.962250	.944088		
7	8	.956099			
8	9	.949987			
9	10	.943913			
10	11	.937879			
11	12	.931883			

1 Number of months by which the valuation date for the first full taxable year of the trust precedes the first payout		2 Factors for payout at the end of each period			
At least	But less than	Annual period	Semiannual period	Quarterly period	Monthly period
12		.925926			

Table F(8.2)—With Interest at 8.2 Percent, Showing Factors for Computation of the Adjusted Payout Rate for Certain Valuations [Applicable after April 30, 1989]

1 Number of months by which the valuation date for the first full taxable year of the trust precedes the first payout		2 Factors for payout at the end of each period			
At least	But less than	Annual period	Semiannual period	Quarterly period	Monthly period
	1	1.000000	.980680	.971114	.964771
1	2	.993454	.974261	.964757	.958455
2	3	.986951	.967883	.958441	
3	4	.980490	.961547	.952167	
4	5	.974072	.955253		
5	6	.967695	.949000		
6	7	.961361	.942788		
7	8	.955068			
8	9	.948816			
9	10	.942605			
10	11	.936434			
11	12	.930304			

1 Number of months by which the valuation date for the first full taxable year of the trust precedes the first payout		2 Factors for payout at the end of each period			
At least	But less than	Annual period	Semiannual period	Quarterly period	Monthly period
12		.924214			

Table F(8.2)—With Interest at 8.2 Percent, Showing Factors for Computation of the Adjusted Payout Rate for Certain Valuations [Applicable after April 30, 1989]

1 Number of months by which the valuation date for the first full taxable year of the trust precedes the first payout		2 Factors for payout at the end of each period			
At least	But less than	Annual period	Semiannual period	Quarterly period	Monthly period
	1	1.000000	.980237	.970453	.963966
1	2	.993301	.973670	.963952	.957509
2	3	.986647	.967148	.957494	
3	4	.980037	.960669	.951080	
4	5	.973472	.954233		
5	6	.966951	.947841		
6	7	.960473	.941491		
7	8	.954039			
8	9	.947648			
9	10	.941300			
10	11	.934994			
11	12	.928731			

1 Number of months by which the valuation date for the first full taxable year of the trust precedes the first payout		2 Factors for payout at the end of each period			
At least	But less than	Annual period	Semiannual period	Quarterly period	Monthly period
12		.922509			

Table F(8.6)—With Interest at 8.6 Percent, Showing Factors for Computation of the Adjusted Payout Rate for Certain Valuations [Applicable after April 30, 1989]

1 Number of months by which the valuation date for the first full taxable year of the trust precedes the first payout		2 Factors for payout at the end of each period			
At least	But less than	Annual period	Semiannual period	Quarterly period	Monthly period
	1	1.000000	.979794	.969794	.963164
1	2	.993148	.973081	.963149	.956565
2	3	.986344	.966414	.956550	
3	4	.979586	.959793	.949996	
4	5	.972874	.953217		
5	6	.966209	.946686		
6	7	.959589	.940199		
7	8	.953014			
8	9	.946484			
9	10	.940000			
10	11	.933559			
11	12	.927163			

1 Number of months by which the valuation date for the first full taxable year of the trust precedes the first payout		2 Factors for payout at the end of each period			
At least	But less than	Annual period	Semiannual period	Quarterly period	Monthly period
12		.920810			

Table F(8.8)—With Interest at 8.8 Percent, Showing Factors for Computation of the Adjusted Payout Rate for Certain Valuations [Applicable after April 30, 1989]

1 Number of months by which the valuation date for the first full taxable year of the trust precedes the first payout		2 Factors for payout at the end of each period			
At least	But less than	Annual period	Semiannual period	Quarterly period	Monthly period
	1	1.000000	.979353	.969136	.962364
1	2	.992996	.972494	.962349	.955624
2	3	.986041	.965683	.955609	
3	4	.979135	.958919	.948916	
4	5	.972278	.952203		
5	6	.965468	.945534		
6	7	.958706	.938912		
7	8	.951992			
8	9	.945324			
9	10	.938703			
10	11	.932129			
11	12	.925600			

1 Number of months by which the valuation date for the first full taxable year of the trust precedes the first payout		2 Factors for payout at the end of each period			
At least	But less than	Annual period	Semiannual period	Quarterly period	Monthly period
12		.919118			

Table F(9.0)—With Interest at 9.0 Percent, Showing Factors for Computation of the Adjusted Payout Rate for Certain Valuations [Applicable after April 30, 1989]

1 Number of months by which the valuation date for the first full taxable year of the trust precedes the first payout		2 Factors for payout at the end of each period			
At least	But less than	Annual period	Semiannual period	Quarterly period	Monthly period
	1	1.000000	.978913	.968481	.961567
1	2	.992844	.971908	.961551	.954686
2	3	.985740	.964954	.954670	
3	4	.978686	.958049	.947839	
4	5	.971683	.951193		
5	6	.964730	.944387		
6	7	.957826	.937629		
7	8	.950972			
8	9	.944167			
9	10	.937411			
10	11	.930703			
11	12	.924043			

1 Number of months by which the valuation date for the first full taxable year of the trust precedes the first payout		2 Factors for payout at the end of each period			
At least	But less than	Annual period	Semiannual period	Quarterly period	Monthly period
12		.917431			

Table F(9.2)—With Interest at 9.2 Percent, Showing Factors for Computation of the Adjusted Payout Rate for Certain Valuations [Applicable after April 30, 1989]

1 Number of months by which the valuation date for the first full taxable year of the trust precedes the first payout		2 Factors for payout at the end of each period			
At least	But less than	Annual period	Semiannual period	Quarterly period	Monthly period
	1	1.000000	.978474	.967827	.960772
1	2	.992693	.971324	.960755	.953752
2	3	.985439	.964226	.953734	
3	4	.978238	.957180	.946765	
4	5	.971089	.950186		
5	6	.963993	.943242		
6	7	.956949	.936350		
7	8	.949956			
8	9	.943014			
9	10	.936123			
10	11	.929283			
11	12	.922492			

1 Number of months by which the valuation date for the first full taxable year of the trust precedes the first payout		2 Factors for payout at the end of each period			
At least	But less than	Annual period	Semiannual period	Quarterly period	Monthly period
12		.915751			

Table F(9.4)—With Interest at 9.4 Percent, Showing Factors for Computation of the Adjusted Payout Rate for Certain valuations [Applicable after April 30, 1989]

1 Number of months by which the valuation date for the first full taxable year of the trust precedes the first payout		2 Factors for payout at the end of each period			
At least	But less than	Annual period	Semiannual period	Quarterly period	Monthly period
	1	1.000000	.978037	.967176	.959980
1	2	.992541	.970742	.959962	.952820
2	3	.985138	.963501	.952802	
3	4	.977790	.956315	.945695	
4	5	.970497	.949182		
5	6	.963258	.942102		
6	7	.956074	.935075		
7	8	.948942			
8	9	.941865			
9	10	.934839			
10	11	.927867			
11	12	.920946			

1 Number of months by which the valuation date for the first full taxable year of the trust precedes the first payout		2 Factors for payout at the end of each period			
At least	But less than	Annual period	Semiannual period	Quarterly period	Monthly period
12		.914077			

Table F(9.6)—With Interest at 9.6 Percent, Showing Factors for Computation of the Adjusted Payout Rate for Certain valuations [Applicable after April 30, 1989]

1 Number of months by which the valuation date for the first full taxable year of the trust precedes the first payout		2 Factors for payout at the end of each period			
At least	But less than	Annual period	Semiannual period	Quarterly period	Monthly period
	1	1.000000	.977600	.966526	.959190
1	2	.992390	.970161	.959171	.951890
2	3	.984838	.962778	.951872	
3	4	.977344	.955452	.944628	
4	5	.969906	.948181		
5	6	.962526	.940965		
6	7	.955201	.933805		
7	8	.947932			
8	9	.940718			
9	10	.933560			
10	11	.926455			
11	12	.919405			

1 Number of months by which the valuation date for the first full taxable year of the trust precedes the first payout		2 Factors for payout at the end of each period			
At least	But less than	Annual period	Semiannual period	Quarterly period	Monthly period
12		.912409			

Table F(9.8)—With Interest at 9.8 Percent, Showing Factors for Computation of the Adjusted Payout Rate for Certain Valuations [Applicable after April 30, 1989]

1 Number of months by which the valuation date for the first full taxable year of the trust precedes the first payout		2 Factors for payout at the end of each period			
At least	But less than	Annual period	Semiannual period	Quarterly period	Monthly period
	1	1.000000	.977165	.965878	.958402
1	2	.992239	.969582	.958382	.950964
2	3	.984539	.962057	.950945	
3	4	.976898	.954591	.943565	
4	5	.969317	.947183		
5	6	.961795	.939832		
6	7	.954331	.932539		
7	8	.946924			
8	9	.939576			
9	10	.932284			
10	11	.925049			
11	12	.917870			

1 Number of months by which the valuation date for the first full taxable year of the trust precedes the first payout		2 Factors for payout at the end of each period			
At least	But less than	Annual period	Semiannual period	Quarterly period	Monthly period
12		.910747			

Table F(10.0)—With Interest at 10.0 Percent, Showing Factors for Computation of the Adjusted Payout Rate for Certain Valuations [Applicable after April 30, 1989]

1 Number of months by which the valuation date for the first full taxable year of the trust precedes the first payout		2 Factors for payout at the end of each period			
At least	But less than	Annual period	Semiannual period	Quarterly period	Monthly period
	1	1.000000	.976731	.965232	.957616
1	2	.992089	.969004	.957596	.950041
2	3	.984240	.961338	.950021	
3	4	.976454	.953733	.942505	
4	5	.968729	.946188		
5	6	.961066	.938703		
6	7	.953463	.931277		
7	8	.945920			
8	9	.938436			
9	10	.931012			
10	11	.923647			
11	12	.916340			

1 Number of months by which the valuation date for the first full taxable year of the trust precedes the first payout		2 Factors for payout at the end of each period			
At least	But less than	Annual period	Semiannual period	Quarterly period	Monthly period
12		.909091			

Table F(10.2)—With Interest at 10.2 Percent, Showing Factors for Computation of the Adjusted Payout Rate for Certain Valuations [Applicable after April 30, 1989]

1 Number of months by which the valuation date for the first full taxable year of the trust precedes the first payout		2 Factors for payout at the end of each period			
At least	But less than	Annual period	Semiannual period	Quarterly period	Monthly period
	1	1.000000	.976298	.964588	.956833
1	2	.991939	.968428	.956812	.949120
2	3	.983943	.960622	.949099	
3	4	.976011	.952878	.941448	
4	5	.968143	.945196		
5	6	.960338	.937577		
6	7	.952597	.930019		
7	8	.944918			
8	9	.937301			
9	10	.929745			
10	11	.922250			
11	12	.914816			

1 Number of months by which the valuation date for the first full taxable year of the trust precedes the first payout		2 Factors for payout at the end of each period			
At least	But less than	Annual period	Semiannual period	Quarterly period	Monthly period
12		.907441			

Table F(10.4)—With Interest at 10.4 Percent, Showing Factors for Computation of the Adjusted Payout Rate for Certain Valuations [Applicable after April 30, 1989]

1 Number of months by which the valuation date for the first full taxable year of the trust precedes the first payout		2 Factors for payout at the end of each period			
At least	But less than	Annual period	Semiannual period	Quarterly period	Monthly period
	1	1.000000	.975867	.963946	.956052
1	2	.991789	.967854	.956031	.948202
2	3	.983645	.959907	.948181	
3	4	.975568	.952025	.940395	
4	5	.967558	.944208		
5	6	.959613	.936455		
6	7	.951734	.928765		
7	8	.943919			
8	9	.936168			
9	10	.928481			
10	11	.920858			
11	12	.913296			

1 Number of months by which the valuation date for the first full taxable year of the trust precedes the first payout		2 Factors for payout at the end of each period			
At least	But less than	Annual period	Semiannual period	Quarterly period	Monthly period
12		.905797			

Table F(10.6)—With Interest at 10.6 Percent, Showing Factors for Computation of the Adjusted Payout Rate for Certain Valuations [Applicable after April 30, 1989]

1 Number of months by which the valuation date for the first full taxable year of the trust precedes the first payout		2 Factors for payout at the end of each period			
At least	But less than	Annual period	Semiannual period	Quarterly period	Monthly period
	1	1.000000	.975436	.963305	.955274
1	2	.991639	.967281	.955252	.947287
2	3	.983349	.959194	.947265	
3	4	.975127	.951174	.939345	
4	5	.966974	.943222		
5	6	.958890	.935336		
6	7	.950873	.927516		
7	8	.942923			
8	9	.935039			
9	10	.927222			
10	11	.919470			
11	12	.911782			

1 Number of months by which the valuation date for the first full taxable year of the trust precedes the first payout		2 Factors for payout at the end of each period			
At least	But less than	Annual period	Semiannual period	Quarterly period	Monthly period
12		.904159			

Table F(10.8)—With Interest at 10.8 Percent, Showing Factors for Computation of the Adjusted Payout Rate for Certain Valuations [Applicable after April 30, 1989]

1 Number of months by which the valuation date for the first full taxable year of the trust precedes the first payout		2 Factors for payout at the end of each period			
At least	But less than	Annual period	Semiannual period	Quarterly period	Monthly period
	1	1.000000	.975007	.962667	.954498
1	2	.991490	.966710	.954475	.946375
2	3	.983052	.958483	.946352	
3	4	.974687	.950327	.938299	
4	5	.966392	.942239		
5	6	.958168	.934221		
6	7	.950014	.926271		
7	8	.941930			
8	9	.933914			
9	10	.925966			
10	11	.918086			
11	12	.910273			

1 Number of months by which the valuation date for the first full taxable year of the trust precedes the first payout		2 Factors for payout at the end of each period			
At least	But less than	Annual period	Semiannual period	Quarterly period	Monthly period
12		.902527			

Table F(11.0)—With Interest at 11.0 Percent, Showing Factors for Computation of the Adjusted Payout Rate for Certain Valuations [Applicable after April 30, 1989]

1 Number of months by which the valuation date for the first full taxable year of the trust precedes the first payout		2 Factors for payout at the end of each period			
At least	But less than	Annual period	Semiannual period	Quarterly period	Monthly period
	1	1.000000	.974579	.962030	.953724
1	2	.991341	.966140	.953700	.945466
2	3	.982757	.957774	.945442	
3	4	.974247	.949481	.937255	
4	5	.965811	.941260		
5	6	.957449	.933109		
6	7	.949158	.925029		
7	8	.940939			
8	9	.932792			
9	10	.924715			
10	11	.916708			
11	12	.908770			

1 Number of months by which the valuation date for the first full taxable year of the trust precedes the first payout		2 Factors for payout at the end of each period			
At least	But less than	Annual period	Semiannual period	Quarterly period	Monthly period
12		.900901			

Table F(11.2)—With Interest at 11.2 Percent, Showing Factors for Computation of the Adjusted Payout Rate for Certain Valuations [Applicable after April 30, 1989]

1 Number of months by which the valuation date for the first full taxable year of the trust precedes the first payout		2 Factors for payout at the end of each period			
At least	But less than	Annual period	Semiannual period	Quarterly period	Monthly period
	1	1.000000	.974152	.961395	.952952
1	2	.991192	.965572	.952927	.944559
2	3	.982462	.957068	.944534	
3	4	.973809	.948638	.936215	
4	5	.965232	.940283		
5	6	.956731	.932001		
6	7	.948304	.923792		
7	8	.939952			
8	9	.931673			
9	10	.923467			
10	11	.915333			
11	12	.907272			

1 Number of months by which the valuation date for the first full taxable year of the trust precedes the first payout		2 Factors for payout at the end of each period			
At least	But less than	Annual period	Semiannual period	Quarterly period	Monthly period
12		.899281			

Table F(11.4)—With Interest at 11.4 Percent, Showing Factors for Computation of the Adjusted Payout Rate for Certain Valuations [Applicable after April 30, 1989]

1 Number of months by which the valuation date for the first full taxable year of the trust precedes the first payout		2 Factors for payout at the end of each period			
At least	But less than	Annual period	Semiannual period	Quarterly period	Monthly period
	1	1.000000	.973726	.960762	.952183
1	2	.991044	.965005	.952157	.943655
2	3	.982168	.956363	.943630	
3	4	.973372	.947798	.935178	
4	5	.964654	.939309		
5	6	.956015	.930896		
6	7	.947452	.922559		
7	8	.938967			
8	9	.930557			
9	10	.922223			
10	11	.913964			
11	12	.905778			

1 Number of months by which the valuation date for the first full taxable year of the trust precedes the first payout		2 Factors for payout at the end of each period			
At least	But less than	Annual period	Semiannual period	Quarterly period	Monthly period
12		.897666			

Table F(11.6)—With Interest at 11.6 Percent, Showing Factors for Computation of the Adjusted Payout Rate for Certain Valuations [Applicable after April 30, 1989]

1 Number of months by which the valuation date for the first full taxable year of the trust precedes the first payout		2 Factors for payout at the end of each period			
At least	But less than	Annual period	Semiannual period	Quarterly period	Monthly period
	1	1.000000	.973302	.960130	.951416
1	2	.990896	.964440	.951389	.942754
2	3	.981874	.955660	.942728	
3	4	.972935	.946959	.934145	
4	5	.964077	.938338		
5	6	.955300	.929795		
6	7	.946603	.921330		
7	8	.937985			
8	9	.929445			
9	10	.920984			
10	11	.912599			
11	12	.904290			

1 Number of months by which the valuation date for the first full taxable year of the trust precedes the first payout		2 Factors for payout at the end of each period			
At least	But less than	Annual period	Semiannual period	Quarterly period	Monthly period
12		.896057			

Table F(11.8)—With Interest at 11.8 Percent, Showing Factors for Computation of the Adjusted Payout Rate for Certain Valuations [Applicable after April 30, 1989]

1 Number of months by which the valuation date for the first full taxable year of the trust precedes the first payout		2 Factors for payout at the end of each period			
At least	But less than	Annual period	Semiannual period	Quarterly period	Monthly period
	1	1.000000	.972878	.959501	.950651
1	2	.990748	.963877	.950624	.941855
2	3	.981582	.954959	.941828	
3	4	.972500	.946124	.933114	
4	5	.963502	.937370		
5	6	.954588	.928698		
6	7	.945756	.920105		
7	8	.937006			
8	9	.928337			
9	10	.919748			
10	11	.911238			
11	12	.902807			

1 Number of months by which the valuation date for the first full taxable year of the trust precedes the first payout		2 Factors for payout at the end of each period			
At least	But less than	Annual period	Semiannual period	Quarterly period	Monthly period
12		.894454			

Table F(12.0)—With Interest at 12.0 Percent, Showing Factors for Computation of the Adjusted Payout Rate for Certain Valuations [Applicable after April 30, 1989]

1 Number of months by which the valuation date for the first full taxable year of the trust precedes the first payout		2 Factors for payout at the end of each period			
At least	But less than	Annual period	Semiannual period	Quarterly period	Monthly period
	1	1.000000	.972456	.958873	.949888
1	2	.990600	.963315	.949860	.940960
2	3	.981289	.954260	.940932	
3	4	.972065	.945290	.932087	
4	5	.962928	.936405		
5	6	.953877	.927603		
6	7	.944911	.918884		
7	8	.936029			
8	9	.927231			
9	10	.918515			
10	11	.909882			
11	12	.901329			

1 Number of months by which the valuation date for the first full taxable year of the trust precedes the first payout		2 Factors for payout at the end of each period			
At least	But less than	Annual period	Semiannual period	Quarterly period	Monthly period
12		.892857			

Table F(12.2)—With Interest at 12.2 Percent, Showing Factors for Computation of the Adjusted Payout Rate for Certain Valuations [Applicable after April 30, 1989]

1 Number of months by which the valuation date for the first full taxable year of the trust precedes the first payout		2 Factors for payout at the end of each period			
At least	But less than	Annual period	Semiannual period	Quarterly period	Monthly period
	1	1.000000	.972034	.958247	.949128
1	2	.990453	.962754	.949099	.940067
2	3	.980997	.953563	.940038	
3	4	.971632	.944460	.931063	
4	5	.962356	.935443		
5	6	.953168	.926512		
6	7	.944069	.917667		
7	8	.935056			
8	9	.926129			
9	10	.917287			
10	11	.908530			
11	12	.899856			

1 Number of months by which the valuation date for the first full taxable year of the trust precedes the first payout		2 Factors for payout at the end of each period			
At least	But less than	Annual period	Semiannual period	Quarterly period	Monthly period
12		.891266			

Table F(12.4)—With Interest at 12.4 Percent, Showing Factors for Computation of the Adjusted Payout Rate for Certain Valuations [Applicable after April 30, 1989]

1 Number of months by which the valuation date for the first full taxable year of the trust precedes the first payout		2 Factors for payout at the end of each period			
At least	But less than	Annual period	Semiannual period	Quarterly period	Monthly period
	1	1.000000	.971614	.957623	.948370
1	2	.990306	.962195	.948340	.939176
2	3	.980706	.952868	.939147	
3	4	.971199	.943631	.930043	
4	5	.961785	.934484		
5	6	.952461	.925425		
6	7	.943228	.916454		
7	8	.934085			
8	9	.925030			
9	10	.916063			
10	11	.907183			
11	12	.898389			

1 Number of months by which the valuation date for the first full taxable year of the trust precedes the first payout		2 Factors for payout at the end of each period			
At least	But less than	Annual period	Semiannual period	Quarterly period	Monthly period
12		.889680			

Table F(12.6)—With Interest at 12.4 Percent, Showing Factors for Computation of the Adjusted Payout Rate for Certain Valuations [Applicable after April 30, 1989]

1 Number of months by which the valuation date for the first full taxable year of the trust precedes the first payout		2 Factors for payout at the end of each period			
At least	but less than	Annual period	Semiannual period	Quarterly period	Monthly period
	1	1.000000	.971195	.957000	.947614
1	2	.990159	.961638	.947583	.938289
2	3	.980416	.952175	.938258	
3	4	.970768	.942805	.929025	
4	5	.961215	.933527		
5	6	.951756	.924341		
6	7	.942390	.915245		
7	8	.933117			
8	9	.923934			
9	10	.914842			
10	11	.905840			
11	12	.896926			

1 Number of months by which the valuation date for the first full taxable year of the trust precedes the first payout		2 Factors for payout at the end of each period			
At least	but less than	Annual period	Semiannual period	Quarterly period	Monthly period
12		.888099			

Table F(12.8)—With Interest at 12.8 Percent, Showing Factors for Computation of the Adjusted Payout Rate for Certain Valuations [Applicable after April 30, 1989]

1 Number of months by which the valuation date for the first full taxable year of the trust precedes the first payout		2 Factors for payout at the end of each period			
At least	but less than	Annual period	Semiannual period	Quarterly period	Monthly period
	1	1.000000	.970777	.956379	.946860
1	2	.990013	.961082	.946828	.937403
2	3	.980126	.951484	.937372	
3	4	.970337	.941981	.928011	
4	5	.960647	.932574		
5	6	.951053	.923260		
6	7	.941554	.914040		
7	8	.932151			
8	9	.922842			
9	10	.913625			
10	11	.904501			
11	12	.895468			

1 Number of months by which the valuation date for the first full taxable year of the trust precedes the first payout		2 Factors for payout at the end of each period			
At least	but less than	Annual period	Semiannual period	Quarterly period	Monthly period
12		.886525			

Table F(13.0)—With Interest at 13.0 Percent, Showing Factors for Computation of the Adjusted Payout Rate for Certain Valuations [Applicable after April 30, 1989]

1 Number of months by which the valuation date for the first full taxable year of the trust precedes the first payout		2 Factors for payout at the end of each period			
At least	But less than	Annual period	Semiannual period	Quarterly period	Monthly period
	1	1.000000	.970360	.955760	.946108
1	2	.989867	.960528	.946075	.936521
2	3	.979836	.950795	.936489	
3	4	.969908	.941160	.926999	
4	5	.960079	.931623		
5	6	.950351	.922183		
6	7	.940721	.912838		
7	8	.931188			
8	9	.921753			
9	10	.912412			
10	11	.903167			
11	12	.894015			

1 Number of months by which the valuation date for the first full taxable year of the trust precedes the first payout		2 Factors for payout at the end of each period			
At least	But less than	Annual period	Semiannual period	Quarterly period	Monthly period
12		.884956			

Table F(13.2)—With Interest at 13.2 Percent, Showing Factors for Computation of the Adjusted Payout Rate for Certain Valuations [Applicable after April 30, 1989]

1 Number of months by which the valuation date for the first full taxable year of the trust precedes the first payout		2 Factors for payout at the end of each period			
At least	But less than	Annual period	Semiannual period	Quarterly period	Monthly period
	1	1.000000	.969945	.955143	.945359
1	2	.989721	.959975	.945325	.935641
2	3	.979548	.950107	.935608	
3	4	.969479	.940341	.925991	
4	5	.959514	.930675		
5	6	.949651	.921109		
6	7	.939889	.911641		
7	8	.930228			
8	9	.920667			
9	10	.911203			
10	11	.901837			
11	12	.892567			

1 Number of months by which the valuation date for the first full taxable year of the trust precedes the first payout		2 Factors for payout at the end of each period			
At least	But less than	Annual period	Semiannual period	Quarterly period	Monthly period
12		.883392			

Table F(13.4)—With Interest at 13.4 Percent, Showing Factors for Computation of the Adjusted Payout Rate for Certain Valuations [Applicable after April 30, 1989]

1 Number of months by which the valuation date for the first full taxable year of the trust precedes the first payout		2 Factors for payout at the end of each period			
At least	But less than	Annual period	Semiannual period	Quarterly period	Monthly period
	1	1.000000	.969530	.954527	.944611
1	2	.989575	.959423	.944577	.934764
2	3	.979260	.949422	.934730	
3	4	.969051	.939524	.924986	
4	5	.958949	.929730		
5	6	.948953	.920038		
6	7	.939060	.910447		
7	8	.929271			
8	9	.919584			
9	10	.909998			
10	11	.900511			
11	12	.891124			

1 Number of months by which the valuation date for the first full taxable year of the trust precedes the first payout		2 Factors for payout at the end of each period			
At least	But less than	Annual period	Semiannual period	Quarterly period	Monthly period
12		.881834			

Table F(13.6)—With Interest at 13.6 Percent, Showing Factors for Computation of the Adjusted Payout Rate for Certain Valuations [Applicable after April 30, 1989]

1 Number of months by which the valuation date for the first full taxable year of the trust precedes the first payout		2 Factors for payout at the end of each period			
At least	But less than	Annual period	Semiannual period	Quarterly period	Monthly period
	1	1.000000	.969117	.953913	.943866
1	2	.989430	.958873	.943831	.933890
2	3	.978972	.948738	.933854	
3	4	.968624	.938710	.923984	
4	5	.958386	.928788		
5	6	.948256	.918971		
6	7	.938233	.909257		
7	8	.928316			
8	9	.918504			
9	10	.908796			
10	11	.899190			
11	12	.889686			

1 Number of months by which the valuation date for the first full taxable year of the trust precedes the first payout		2 Factors for payout at the end of each period			
At least	But less than	Annual period	Semiannual period	Quarterly period	Monthly period
12		.880282			

Table F(13.8)—With Interest at 13.8 Percent, Showing Factors for Computation of the Adjusted Payout Rate for Certain Valuations [Applicable after April 30, 1989]

1 Number of months by which the valuation date for the first full taxable year of the trust precedes the first payout		2 Factors for payout at the end of each period			
At least	But less than	Annual period	Semiannual period	Quarterly period	Monthly period
	1	1.000000	.968704	.953301	.943123
1	2	.989285	.958325	.943087	.933018
2	3	.978685	.948056	.932982	
3	4	.968199	.937898	.922985	
4	5	.957824	.927849		
5	6	.947561	.917907		
6	7	.937408	.908072		
7	8	.927364			
8	9	.917428			
9	10	.907598			
10	11	.897873			
11	12	.888252			

1 Number of months by which the valuation date for the first full taxable year of the trust precedes the first payout		2 Factors for payout at the end of each period			
At least	But less than	Annual period	Semiannual period	Quarterly period	Monthly period
12		.878735			

TABLE F(14.0)—WITH INTEREST AT 14.0 PERCENT, SHOWING FACTORS FOR COMPUTATION OF THE ADJUSTED PAYOUT RATE FOR CERTAIN VALUATIONS [APPLICABLE AFTER APRIL 30, 1989]

1 Number of months by which the valuation date for the first rull taxable year of the trust precedes the first payout		2 Factors for payout at the end of each period			
At least	But less than	Annual period	Semiannual period	Quarterly period	Monthly period
	1	1.000000	.968293	.952691	.942382
1	2	.989140	.957778	.942345	.932148
2	3	.978399	.947377	.932111	
3	4	.967774	.937088	.921989	
4	5	.957264	.926912		
5	6	.946868	.916846		
6	7	.936586	.906889		
7	8	.926415			
8	9	.916354			
9	10	.906403			
10	11	.896560			
11	12	.886824			
12		.877193			

(7) *Actuarial Table U(1) for transfers for which the valuation date is on or after June 1, 2023.* The present value of a remainder interest in a charitable remainder unitrust that is dependent on the termination of a life interest is determined by using the section 7520 rate, Tables F(0.2) through (20.0) (see paragraph (e)(6)(ii) of this section), and the formula in paragraph (e)(5)(i) of this section to derive a remainder factor from the appropriate mortality table to at least five decimal places. For the convenience of taxpayers, actuarial factors have been computed by the IRS and appear in Table U(1).

For transfers for which the valuation date is on or after June 1, 2023, the actuarial tables are currently available, at no charge, electronically via the IRS website at *https://www.irs.gov/retirement-plans/actuarial-tables*. These actuarial tables are referenced and explained by IRS Publication 1458, *Actuarial Valuations Version 4B* (2023). This publication will be available within a reasonable time after June 1, 2023. See, however, § 1.7520-3(b) (relating to exceptions to the use of prescribed tables under certain circumstances).

(f) ***Applicability date.*** This section applies on and after June 1, 2023.

[T.D. 8540, 59 FR 30117, June 10, 1994, as amended by T.D. 8819, 64 FR 23199, Apr. 30, 1999; T.D. 8886, 65 FR 36919, 36943, June 12, 2000; T.D. 9448, 74 FR 21465, May 7, 2009; T.D. 9540, 76 FR 49595, Aug. 10, 2011; T.D. 9974, 88 FR 37433, June 7, 2023]

TREATMENT OF EXCESS DISTRIBUTIONS OF TRUSTS APPLICABLE TO TAXABLE YEARS BEGINNING BEFORE JANUARY 1, 1969

§ 1.665(a)-0 Excess distributions by trusts; scope of subpart D.

Subpart D (section 665 and following), part I, subchapter J, chapter 1 of the Internal Revenue Code, in the case of trusts other than foreign trusts created by U.S. persons, is designed generally to prevent a shift of tax burden to a trust from a beneficiary or beneficiaries. In the case of a foreign trust created by a U.S. person, subpart D is designed to prevent certain other tax avoidance possibilities. To accomplish these ends, subpart D provides special rules for treatment of amounts paid, credited, or required to be distributed by a complex trust (subject to subpart C (section 661 and following) of such part I) in any year in excess of distributable net income for that year. Such an excess distribution is defined as an accumulation distribution, subject to the limitations in section 665 (b) or (c). An accumulation distribution, in the case of a trust other than a foreign trust created by a U.S. person, is “thrown back” to each of the 5 preceding years in inverse order. In the case of a foreign trust created by a U.S. person such an accumulation distribution is “thrown back,” in inverse order, to each of the preceding years to which the Internal Revenue Code of 1954 applies. That is, an accumulation distribution will be taxed to the beneficiaries of the trust in the year the distribution is made or required, but, in general, only to the extent of the distributable net income of those years which was not in fact distributed. However, with respect to a distribution by a trust other than a foreign trust created by a U.S. person, the resulting tax will not be greater than the aggregate of the taxes that would have been attributable to the amount thrown back to previous years had they been included in gross income of the beneficiaries in those years. In the case of a foreign trust created by a U.S. person, the resulting tax is computed under the provisions of section 669. To prevent double taxation, both in the case of a foreign trust created by a U.S. person, and a trust other than a foreign trust created by a U.S. person, the beneficiaries receive a credit for any taxes previously paid by the trust which are attributable to the excess thrown back and which are creditable under the provisions of chapter 1 of the Internal Revenue Code. Subpart D does not apply to any estate.

[T.D. 6989, 34 FR 733, Jan. 17, 1969]

§ 1.665(a)-1 Undistributed net income.

(a) The term *undistributed net income* means for any taxable year the distributable net income of the trust for that year as determined under section 643(a), less:

(1) The amount of income required to be distributed currently and any other amounts properly paid or credited or required to be distributed to beneficiaries in the taxable year as specified in paragraphs (1) and (2) of section 661(a), and

(2) The amount of taxes imposed on the trust, as defined in § 1.665(d)-1.

The application of the rule in this paragraph to the first year of a trust in which income is accumulated may be illustrated by the following example:

Example. Assume that under the terms of the trust, $10,000 of income is required to be distributed currently to A and the trustee has discretion to make additional distributions to A. During the taxable year 1954 the trust had distributable net income of $30,100 derived from royalties and the trustee made distributions of $20,000 to A. The taxable income of the trust is $10,000 on which a tax of $2,640 is paid. The undistributed net income of the trust as of the close of the taxable year 1954 is $7,460 computed as follows:

Distributable net income		$30,100
Less:		
Income currently distributable to A	$10,000	
Other amounts distributed to A	10,000	
Taxes imposed on the trust (see § 1.665(d)-1)	2,640	
		22,640
Undistributed net income		7,460

See also paragraphs (e)(1) and (f)(1) of § 1.668(b)-2 for additional illustrations of the application of the rule in this paragraph to the first year of a trust in which income is accumulated.

(b) The undistributed net income of a foreign trust created by a U.S. person for any taxable year is the distributable net income of such trust (see § 1.643(a)-6 and the examples set forth in paragraph (b) thereof), less:

(1) The amount of income required to be distributed currently and any other amounts properly paid or credited or required to be distributed to beneficiaries in the taxable year as specified in paragraphs (1) and (2) of section 661(a), and

(2) The amount of taxes imposed on such trust by chapter 1 of the Internal Revenue Code, which are attributable to items of income which are required to be included in such distributable net income. For purposes of subparagraph (2) of this paragraph, the amount of taxes imposed on the trust (for any taxable year), by chapter 1 of the Internal Revenue Code is the amount of taxes imposed pursuant to the provisions of section 871 which is properly allocable to the undistributed portion of the distributable net income. See § 1.665(d)-1. The amount of taxes imposed pursuant to the provisions of section 871 is the difference between the total tax imposed pursuant to the provisions of that section on the foreign trust created by a U.S. person for the year and the amount which would have been imposed on such trust had all the distributable net income, as determined under section 643(a), been distributed. The application of the rule in this paragraph may be illustrated by the following examples:

Example 1. A trust was created in 1952 under the laws of Country X by the transfer to a trustee in Country X of money or property by a U.S. person. The entire trust constitutes a foreign trust created by a U.S. person. The governing instrument of the trust provides that $7,000 of income is required to be distributed currently to a U.S. beneficiary and gives the trustee discretion to make additional distributions to the beneficiary. During the taxable year 1963 the trust had income of $10,000 from dividends of a U.S. corporation (on which Federal income taxes of $3,000 were imposed pursuant to the provisions of section 871 and withheld under section 1441 resulting in the receipt by the trust of cash in the amount of $7,000), $20,000 in capital gains from the sale of stock of a Country Y corporation, and $30,000 from dividends of a Country X corporation, none of the gross income of which was derived from sources within the United States. The trustee did not file a U.S. income tax return for the taxable year 1963. The distributable net income of the trust before distributions to the beneficiary for 1963 is $60,000 ($57,000 of which is cash). During 1963 the trustee made distributions to the U.S. beneficiary equaling one-half of the trust's distributable net income or $30,000. Thus, the U.S. beneficiary is treated as having had distributed to him $5,000 (composed of $3,500 as a cash distribution and $1,500 as the tax imposed pursuant to the provisions of section 871 and withheld under section 1441), representing one-half of the income from U.S. sources; $10,000 in cash, representing one-half of the capital gains from the sale of stock of the Country Y corporation; and $15,000 in cash, representing one-half of the income from Country X sources for a total of $30,000. The undistributed net income of the trust at the close of taxable year 1963 is $28,500 computed as follows:

Distributable net income		$60,000
Less:		
(1) Amounts distributed to the beneficiary—		
Income currently distributed to the beneficiary	$7,000	
Other amounts distributed to the beneficiary	21,500	
Taxes under sec. 871 deemed distributed to the beneficiary	1,500	
Total amounts distributed to the beneficiary	30,000	
(2) Amount of taxes imposed on the trust under chapter 1 of the Code (See § 1.665(d)-1)	1,500	
Total		31,500
Undistributed net income		28,500

Example 2. The facts are the same as in example 1 except that property has been transferred to the trust by a person other than a U.S. person, and during 1963 the foreign trust created by a U.S. person was 60 percent of the entire foreign trust. The trustee paid no income taxes to Country X in 1963.

(1) The undistributed net income of the foreign trust created by a U.S. person for 1963 is $17,100, computed as follows:

Distributable net income (60% of each item of gross income of entire trust):		
60% of $10,000 U.S. dividends		$6,000
60% of $20,000 Country X capital gains		12,000
60% of $30,000 Country X dividends		18,000
Total		36,000
Less:		
(i) Amounts distributed to the beneficiary—		
Income currently distributed to the beneficiary (60% of $7,000)	$4,200	
Other amounts distributed to the beneficiary (60% of $21,500)	12,900	
Taxes under sec. 871 deemed distributed to the beneficiary (60% of $1,500)	900	
Total amounts distributed to the beneficiary	18,000	
(ii) Amount of taxes imposed on the trust under chapter 1 of the Code (See § 1.665(d)-1) (60% of $1,500)	$900	
Total		$18,900
Undistributed net income		17,100

(2) The undistributed net income of the portion of the entire trust which is not a foreign trust created by a U.S. person for 1963 is $11,400, computed as follows:

Distributed net income (40% of each item of gross income of entire trust)		
40% of $10,000 U.S. dividends		$4,000
40% of $20,000 Country X capital gains		8,000
40% of Country X dividends		12,000
Total		24,000
Less:		
(i) Amounts distributed to the beneficiary—		
Income currently distributed to the beneficiary (40% of $7,000)	$2,800	
Other amounts distributed to the beneficiary (40% of $21,500)	8,600	
Taxes under sec. 871 deemed distributed to the beneficiary (40% of $1,500)	600	
Total amounts distributed to the beneficiary	12,000	
(ii) Amount of taxes imposed on the trust under chapter 1 of the Code (See § 1.665(d)-1) (40% of $1,500)	$600	
Total		$12,600

Undistributed net income	11,400

(c) However, the undistributed net income for any year to which an accumulation distribution for a later year may be thrown back may be reduced by accumulation distributions in intervening years and also by any taxes imposed on the trust which are deemed to be distributed under section 666 by reason of the accumulation distributions. On the other hand, undistributed net income for any year will not be reduced by any distributions in an intervening year which are excluded from the definition of an accumulation distribution under section 665(b), or which are excluded under section 663(a)(1), relating to gifts, bequests, etc. See paragraph (f)(5) of § 1.668(b)-2 for an illustration of the reduction of undistributed net income for any year by a subsequent accumulation distribution.

[T.D. 6989, 34 FR 733, 741, Jan. 17, 1969]

§ 1.665(b)-1 Accumulation distributions of trusts other than certain foreign trusts; in general.

(a) Subject to the limitations set forth in § 1.665(b)-2, in the case of a trust other than a foreign trust created by a U.S. person, the term *accumulation distribution* for any taxable year means an amount (if in excess of $2,000), by which the amounts properly paid, credited, or required to be distributed within the meaning of section 661(a)(2) for that year exceed the distributable net income (determined under section 643(a)) of the trust, reduced (but not below zero) by the amount of income required to be distributed currently. (In computing the amount of an accumulation distribution pursuant to the preceding sentence, there is taken into account amounts applied or distributed for the support of a dependent under the circumstances specified in section 677(b) or section 678(c) out of corpus or out of other than income for the taxable year and amounts used to discharge or satisfy any person's legal obligation as that term is used in § 1.662(a)-4.) If the distribution as so computed is $2,000 or less, it is not an accumulation distribution within the meaning of subpart D (section 665 and following), part I, subchapter J, chapter 1 of the Code. If the distribution exceeds $2,000, then the full amount is an accumulation distribution for the purposes of subpart D.

(b) Although amounts properly paid, credited, or required to be distributed under section 661(a)(2) do not exceed the income of the trust during the taxable year, an accumulation distribution may result if such amounts exceed distributable net income reduced (but not below zero) by the amount required to be distributed currently. This may result from the fact that expenses allocable to corpus are taken into account in determining taxable income and hence distributable net income. However, in the case of a trust other than a foreign trust created by a U.S. person, the provisions of subpart D will not apply unless there is undistributed net income in at least one of the five preceding taxable years. See section 666 and the regulations thereunder.

(c) The provisions of paragraphs (a) and (b) of this section may be illustrated by the following examples (it is assumed in each case that the exclusions provided in § 1.665(b)-2 do not apply):

> *Example 1.* A trustee properly makes a distribution to a beneficiary of $20,000 during the taxable year 1956, of which $10,000 is income required to be distributed currently to the beneficiary. The distributable net income of the trust is $15,000. There is an accumulation distribution of $5,000

computed as follows:

Total distribution		$20,000
Less: Income required to be distributed currently (section 661(a)(1))		10,000
Other amounts distributed (section 661(a)(2))		10,000
Distributable net income	$15,000	
Less: Income required to be distributed currently	10,000	
Balance of distributable net income		5,000
Accumulation distribution		5,000

Example 2. Under the terms of the trust instrument, an annuity of $15,000 is required to be paid to A out of income each year and the trustee may in his discretion make distributions out of income or corpus to B. During the taxable year the trust had income of $18,000, as defined in section 643(b), and expenses allocable to corpus of $5,000. Distributable net income amounted to $13,000. The trustee distributed $15,000 of income to A and in the exercise of his discretion, paid $5,000 to B. There is an accumulation distribution of $5,000 computed as follows:

Total distribution		$20,000
Less: Income required to be distributed currently to A (section 661(a)(1))		15,000
Other amounts distributed (section 661(a)(2))		5,000
Distributable net income	$13,000	
Less: Income required to be distributed currently to A	15,000	
Balance of distributable net income		0
Accumulation distribution to B		5,000

Example 3. Under the terms of a trust instrument, the trustee may either accumulate the trust income or make distributions to A and B. The trustee may also invade corpus for the benefit of A and B. During the taxable year, the trust had income as defined in section 643(b) of $22,000 and expenses of $5,000 allocable to corpus. Distributable net income amounts to $17,000. The trustee distributed $10,000 each to A and B during the taxable year. There is an accumulation distribution of $3,000 computed as follows:

Total distribution	$20,000

Less: income required to be distributed currently	0
Other amounts distributed (section 661(a)(2))	20,000
Distributable net income	17,000
Accumulation distribution	3,000

(d) There are not taken into account, in computing the accumulation distribution for any taxable year, any amounts deemed distributed in that year because of an accumulation distribution in a later year.

[T.D. 6500, 25 FR 11814, Nov. 26, 1960, as amended by T.D. 6989, 34 FR 734, Jan. 17, 1969]

§ 1.665(b)-2 Exclusions from accumulation distributions in the case of trusts (other than a foreign trust created by a U.S. person).

(a) In the case of a trust other than a foreign trust created by a U.S. person, certain amounts paid, credited, or required to be distributed to a beneficiary are excluded under section 665(b) in determining whether there is an accumulation distribution for the purposes of subpart D (section 665 and following), part I, subchapter J, chapter 1 of the Code. These exclusions are solely for the purpose of determining the amount allocable to preceding years under section 666 and in no way affect the determination under subpart C (section 661 and following) of such part I of the beneficiary's tax liability for the year of distribution. Further, amounts excluded from accumulation distributions do not reduce the amount of undistributed net income for the 5 years preceding the year of distribution.

(b) The amounts excluded from the computation of an accumulation distribution are discussed in the following subparagraphs:

(1) ***Distributions from accumulations while a beneficiary is under 21.***

(i) The first exception to the definition of an accumulation distribution is for amounts paid, credited, or required to be distributed to a beneficiary who was under 21 years of age or unborn when it was accumulated. A distribution is to be considered as so paid, credited, or required to be distributed to the extent, and only to the extent, that there is no undistributed net income for taxable years preceding the year of distribution other than undistributed net income accumulated while the beneficiary was under 21. If a distribution can be made from income accumulated either before or after a beneficiary reaches 21, it will be considered as made from the most recently accumulated income, and it will be so considered even though the governing instrument directs that distributions be charged first against the earliest accumulations.

(ii) As was indicated in paragraph (a) of this section, a distribution of an amount excepted from the definition of an accumulation distribution will not reduce undistributed net income for the purpose of determining the effect of a future accumulation distribution. Thus, a distribution to a beneficiary of income accumulated before he reached 21 would not reduce the undistributed net income includible in a future accumulation distribution to another beneficiary. However, all future distributions to the same beneficiary, or to another beneficiary to whom a distribution would be excepted under the provisions of this subparagraph, would be excepted from the definition of an accumulation distribution to the extent that they could not be paid, credited, or required to be distributed from other accumulated income.

(iii) The following examples illustrate the application of the foregoing rules of this subparagraph (in each of these examples it is assumed that the exceptions in section 665(b) (2), (3), and (4) do not apply):

(*a*) Income is to be accumulated until A reaches 21 when the corpus and accumulated income are to be distributed to him. The distribution is not an accumulation distribution.

(*b*) Income is to be accumulated until A is 21, when it is to be distributed to him but the corpus is to remain in trust. A distribution of the accumulated income to A when he reaches 21 is not an accumulation distribution.

(*c*) Income is to be accumulated and added to corpus until A reaches 21, when he is to receive one-third of the corpus (including accumulations). Thereafter all the income is to be paid to A until he is 23 when the remaining corpus (including accumulations) is to be paid to him. If A dies under that age any undistributed portion is to be paid to B. Distributions to A at 21 and 23 out of accumulations are not accumulation distributions even though they include accumulated income. However, if A died at the age of 22, when B was 23, a distribution to B would be an accumulation distribution to the extent of income accumulations since B reached 21, and the amount of undistributed net income includible in the distribution will not be reduced by the previous distribution to A.

(*d*) Income is to be accumulated and added to corpus until A is 21. After he is 21, he is entitled to all the income and, in addition, to distributions of corpus in the discretion of the trustee. When he reaches 25 he is entitled to the corpus. Distributions to A are not accumulation distributions, whether they are discretionary or upon termination of the trust.

(*e*) The facts are the same as in the preceding example, except that income is to be accumulated until A is 23. Distributions to A are accumulation distributions to the extent of income accumulated after A reached 21.

(*f*) Income may be distributed among a testator's children or accumulated and added to corpus until the youngest child is 21, when the corpus is to be distributed to the testator's then living descendants. Upon termination of the trust, the corpus is distributed to A, age 21; B, age 23; and C, the child of a deceased child, age 3. The distributions to A and C are not accumulation distributions. The distribution to B is an accumulation distribution to the extent of income accumulated after he reaches 21. (If the terms of the trust were such that it was subject to the separate share treatment under section 663(c), the distribution to B would be an accumulation distribution only to the extent of income accumulated for B's separate share since he reached 21.)

(*g*) Income may be distributed to A or accumulated and added to corpus during A's life. Upon the death of A the corpus is to be distributed to B. B is 23 at A's death. The distribution is an accumulation distribution to the extent of income accumulated since B reached 21.

(2) ***Emergency distributions.*** The second exclusion from the definition of an accumulation distribution is for amounts properly paid or credited to a beneficiary to meet his emergency needs. Whether or not a distribution falls within this exclusion depends upon the facts and circumstances causing the distribution. A distribution based upon an unforeseen or unforeseeable combination of circumstances requiring immediate help to the beneficiary would qualify for the exclusion. However, the beneficiary must be in actual need of the distribution and the fact that he had other sufficient

resources would tend to negate the conclusion that a distribution was to meet his emergency needs. Ordinary distributions for the support, maintenance, or education of the beneficiary would not qualify for the exclusion.

(3) ***Certain distributions at specified ages.*** The third exclusion from the definition of an accumulation distribution is for amounts properly paid or credited to a beneficiary upon the beneficiary's attaining a specified age or ages; provided,

(i) the total number of such distributions with respect to that beneficiary cannot exceed 4;

(ii) the period between each such distribution is 4 years or more; and

(iii) on January 1, 1954, such distributions were required by the specific terms of the governing instrument. Any discretionary invasion of corpus at other times is not excluded under this subparagraph, but does not affect the status of distributions that would otherwise be excluded. If more than four distributions are required to be made to a particular beneficiary at specified ages if he survives to receive them, none of the distributions will be excluded, even though the beneficiary dies before he receives more than four. On the other hand, a direction to make additional distributions to a remainderman will not affect the status of distributions required to be made to the primary beneficiary. For example, a trust agreement provided on January 1, 1954, that when A reached age 25 he would receive one-eighth of the corpus and accumulated income, as then constituted, and similar distributions at ages 30, 35, and 40. It also provided for similar distributions to B after A's death, and for additional discretionary distributions to both A and B. Required distributions to both A and B are excluded, regardless of whether discretionary distributions are made, but discretionary distributions are not excluded. On the other hand, if an additional distribution to A was directed when he reached 45, no distributions to him would be excluded, regardless of when he died.

(4) ***Certain final distributions.***

(i) The last exception to the definition of an accumulation distribution is for amounts properly paid or credited to a beneficiary as a final distribution of a trust if the final distribution is made more than 9 years after the date of the last transfer to such trust.

(ii) The term *last transfer to such trust* includes only transfers, whether by the original grantor or by a third person, made with a donative intent. A transfer arising out of a property right held by the trust is excluded, such as a transfer by a debtor in satisfaction of his indebtedness, or a distribution in liquidation or reorganization of a corporation. If the terms of two or more trusts include cross-remainders on the deaths of life beneficiaries, the donative transfers occurred at the time the trusts were created. The addition of the corpus of one trust to that of another when a remainder falls in is therefore not a new transfer within the meaning of section 665(b)(4).

(iii) For example, under the terms of a trust created July 1, 1950, with an original corpus of $100,000, by H for the benefit of his wife, W, the income of the trust is to be accumulated and added to corpus. Upon the expiration of a 10-year period, the trust is to terminate and its assets, including all accumulated income, are to be distributed to W. No transfers were made by H or other persons to the trust after it was created. Both the trust and W file returns on the calendar year basis. In accordance with its terms, the trust terminated on June 30, 1960, and on August 1, 1960, the trustee made a final distribution of the assets of the trust to W, consisting of investments derived from $100,000 of donated principal, accumulated income of $30,000 attributable to the period July 1, 1950, through December 31, 1959, and income of $3,000 attributable to the period the trust was in existence during 1960. Subpart D is inapplicable to

the $3,000 of income of the trust for 1960 since that amount would be deductible by the trust and includible in W's gross income for that year to the extent provided in subpart C. However, the balance of the distribution will qualify as an exclusion from the provisions of subpart D.

[T.D. 6500, 25 FR 11814, Nov. 26, 1960, as amended by T.D. 6989, 34 FR 735, Jan. 17, 1969]

§ 1.665(b)-3 Exclusions under section 663(a)(1).

Subpart D (section 665 and following), part I, subchapter J, chapter 1 of the Code, has no application to an amount which qualifies as an exclusion under section 663(a)(1), relating to gifts, bequests, etc.

§ 1.665(c)-1 Accumulation distributions of certain foreign trusts; in general.

(a) In the case of a foreign trust created by a U.S. person, the term *accumulation distribution* for any taxable year means an amount by which the amounts properly paid, credited, or required to be distributed within the meaning of section 661(a)(2) for that year exceed the distributable net income (determined under section 643(a)) of the trust, reduced (but not below zero) by the amount of income required to be distributed currently. (In computing the amount of an accumulation distribution pursuant to the preceding sentence, there is taken into account amounts applied or distributed for the support of a dependent under circumstances specified in section 677(b) and section 678(c) out of corpus or out of other than income for the taxable year and amounts used to discharge or satisfy any person's legal obligation as that term is used in § 1.662(a)-4.)

(b) Although amounts properly paid, credited, or required to be distributed under section 661(a)(2) do not exceed the income of the trust during the taxable year, an accumulation distribution may result if such amounts exceed distributable net income reduced (but not below zero) by the amount required to be distributed currently. This may result from the fact that expenses allocable to corpus are taken into account in determining taxable income and hence distributable net income. However, the provisions of subpart D will not apply unless there is undistributed net income in at least one of the preceding taxable years which began after December 31, 1953, and ended after August 16, 1954. See section 666 and the regulations thereunder.

(c) The provisions of paragraphs (a) and (b) of this section may be illustrated by the examples provided in paragraph (c) of § 1.665(b)-1.

[T.D. 6989, 34 FR 735, Jan. 17, 1969]

§ 1.665(c)-2 Indirect payments to the beneficiary.

(a) ***In general.*** Except as provided in paragraph (b) of this section, for purposes of section 665 any amount paid to a U.S. person which is from a payor who is not a U.S. person and which is derived directly or indirectly from a foreign trust created by a U.S. person shall be deemed in the year of payment to the U.S. person to have been directly paid to the U.S. person by the trust. For example, if a nonresident alien receives a distribution from a foreign trust created by a U.S. person and then pays the amount of the distribution over to a U.S. person, the payment of such amount to the U.S. person represents an accumulation distribution to the U.S. person from the trust to the extent that the amount received would have been an accumulation distribution had the trust paid the amount directly to the U.S. person in the year in which the payment was received by the U.S. person. This section also applies in a case where a nonresident alien receives indirectly an accumulation distribution from a foreign trust created by a U.S. person and then pays it over to a U.S. person. An example of such a transaction is one where the foreign

trust created by a U.S. person makes the distribution to an intervening foreign trust created by either a U.S. person or a person other than a U.S. person and the intervening trust distributes the amount received to a nonresident alien who in turn pays it over to a U.S. person. Under these circumstances, it is deemed that the payment received by the U.S. person was received directly from a foreign trust created by a U.S. person.

(b) ***Limitation.*** In the case of a distribution to a beneficiary who is a U.S. person, paragraph (a) of this section does not apply if the distribution is received by such beneficiary under circumstances indicating lack of intent on the part of the parties to circumvent the purposes for which section 7 of the Revenue Act of 1962 (76 Stat. 985) was enacted.

[T.D. 6989, 34 FR 735, Jan. 17, 1969]

§ 1.665(d)-1 Taxes imposed on the trust.

(a) For the purpose of subpart D (section 665 and following), part I, subchapter J, chapter 1 of the Code, the term *taxes imposed on the trust* means (for any taxable year) the amount of Federal income taxes which are properly allocable to the undistributed portion of the distributable net income. This amount is the difference between the total taxes of the trust for the year and the amount which would have been paid by the trust had all of the distributable net income, as determined under section 643(a), been distributed. Thus, in determining the amount of taxes imposed on the trust for the purposes of subpart D, there is excluded the portion of the taxes paid by the trust which is attributable to items of gross income which are not includible in distributable net income, such as capital gains allocable to corpus. The rule stated in this paragraph may be illustrated by the following example:

Example. (1) Under the terms of a trust which reports on the calendar year basis the income may be accumulated or distributed to A in the discretion of the trustee and capital gains are allocable to corpus. During the taxable year 1954, the trust had income of $20,000 from royalties, long-term capital gains of $10,000, and expenses of $2,000. The trustee in his discretion made a distribution of $10,000 to A. The taxes imposed on the trust for the purposes of this subpart are $2,713, determined as shown below.
(2) The distributable net income of the trust computed under section 643(a) is $18,000 (royalties of $20,000 less expenses of $2,000). The total taxes paid by the trust are $3,787, computed as follows:

Royalties		$20,000
Capital gains		10,000
Gross income		30,000
Deductions:		
Expenses	$2,000	
Distributions to A	10,000	
Capital gain deduction	5,000	
Personal exemption	100	

	17,100
Taxable income	12,900
Total income taxes	3,787

(3) The amount of taxes which would have been paid by the trust, had all of the distributable net income ($18,000) of the trust been distributed to A, is $1,074, computed as follows:

Taxable income of the trust	$12,900
Less: Undistributed portion of distributable net income ($18,000−$10,000)	8,000
Balance of taxable income	4,900
Income taxes on $4,900	1,074

(4) The amount of taxes imposed on the trust as defined in this paragraph is $2,713, computed as follows:

Total taxes	$3,787
Taxes which would have been paid by the trust had all of the distributable net income been distributed	1,074
Taxes imposed on the trust as defined in this paragraph	2,713

(b) If in any subsequent year an accumulation distribution is made by the trust which results in a throwback to the taxable year, the taxes of the taxable year allocable to the undistributed portion of distributable net income (the taxes imposed on the trust), after the close of the subsequent year, are the taxes prescribed in paragraph (a) of this section reduced by the taxes of the taxable year allowed as credits to beneficiaries on account of amounts deemed distributed on the last day of the taxable year under section 666. See paragraph (f)(4) of § 1.668(b)-2 for an illustration of the application of this paragraph.

[T.D. 6500, 25 FR 11814, Nov. 26, 1960. Redesignated by T.D. 6989, 34 FR 735, Jan. 17, 1969]

§ 1.665(e)-1 Preceding taxable year.

(a) ***Definition.*** For purposes of subpart D (section 665 and following), part I, subchapter J, chapter 1 of the Internal Revenue Code of 1954, the term *preceding taxable year* does not include any taxable year to which such part I does not apply. See section 683 and regulations thereunder. Accordingly, the provisions of such subpart D may not, in general, be applied to any taxable year which begins before 1954 or ends before August 17, 1954. For example, if a trust (reporting on the calendar year basis) makes a distribution

during the calendar year 1955 of income accumulated during prior years and the distribution exceeds the distributable net income of 1955, the excess distribution may be allocated under such subpart D to 1954, but it may not be allocated to 1953 and preceding years, since the Internal Revenue Code of 1939 applies to those years.

(b) ***Simple trusts subject to subpart D.*** An accumulation distribution may be properly allocated to a preceding taxable year in which the trust qualified as a simple trust (that is, qualified for treatment under subpart B (section 651 and following) of such part I). In such event, the trust is treated for such preceding taxable year in all respects as if it were a trust to which subpart C (section 661 and following) of such part I applies. An example of such a circumstance would be in the case of a trust (required under the trust instrument to distribute all of its income currently) which received in the preceding taxable year extraordinary dividends or taxable stock dividends which the trustee in good faith allocated to corpus, but which are subsequently determined to be currently distributable to the beneficiary. See section 643(a)(4) and § 1.643(a)-4. The trust would qualify for treatment under such subpart C for the year of distribution of the extraordinary dividends or taxable stock dividends, because the distribution is not out of income of the current taxable year and would be treated as other amounts properly paid or credited or required to be distributed for such taxable year within the meaning of section 661(a)(2). Also, in the case of a trust other than a foreign trust created by a U.S. person, the distribution would qualify as an accumulation distribution for the purposes of such subpart D if in excess of $2,000 and not excepted under section 665(b) and the regulations thereunder. In the case of a foreign trust created by a U.S. person, the distribution, regardless of the amount, would qualify as an accumulation distribution for the purposes of subpart D. For the purposes only of such subpart D, the trust would be treated as subject to the provisions of such subpart C for the preceding taxable year in which the extraordinary or taxable stock dividends were received and in computing undistributed net income for such preceding year, the extraordinary or taxable stock dividends would be included in distributable net income under section 643(a). The rule stated in the preceding sentence would also apply if the distribution in the later year were made out of corpus without regard to a determination that the extraordinary dividends or taxable stock dividends in question were currently distributable to the beneficiary.

[T.D. 6500, 25 FR 11814, Nov. 26, 1960, as amended by T.D. 6989, 34 FR 735, Jan. 17, 1969. Redesignated by T.D. 6989, 34 FR 735, Jan. 17, 1969]

§ 1.665(e)-2 Application of separate share rule.

In trusts to which the separate share rule of section 663(c) is applicable for any taxable year, subpart D (section 665 and following), part I, subchapter J, of the Code, is applied as if each share were a separate trust. Thus, “undistributed net income” and the amount of an “accumulation distribution” are computed separately for each share. The “taxes imposed on the trust” are allocated as follows:

(a) There is first allocated to each separate share that portion of the “taxes imposed on the trust”, computed before the allowance of credits under section 642(a), which bears the same relation to the total that the distributable net income of the separate share bears to the distributable net income of the trust, adjusted for this purpose as follows:

(1) There is excluded from distributable net income of the trust and of each separate share any tax-exempt interest, foreign income of a foreign trust, and excluded dividends, to the extent such amounts are included in distributable net income pursuant to section 643(a) (5), (6), and (7); and

(2) The distributable net income of the trust is reduced by any deductions allowable under section 661 for amounts paid, credited, or required to be distributed during the taxable year, and the distributable net income of each separate share is reduced by any such deduction allocable to that share.

(b) The taxes so determined for each separate share are then reduced by that portion of the credits against tax allowable to the trust under section 642(a) in computing the "taxes imposed on the trust" which bear the same relation to the total that the items of income allocable to the separate share with respect to which the credit is allowed bear to the total of such items of the trust. The amount of taxes imposed on the trust allocable to a separate share as so determined is then reduced by the amount of the taxes allowed under sections 667 and 668 as a credit to a beneficiary of the separate share on account of any accumulation distribution determined for any taxable year intervening between the year for which the determination is made and the year of an accumulation distribution with respect to which the determination is made. See paragraph (b) of § 1.665(d)-1.

[T.D. 6500, 25 FR 11814, Nov. 26, 1960, as amended by T.D. 6989, 34 FR 741, Jan. 17, 1969. Redesignated by T.D. 6989, 34 FR 736, Jan. 17, 1969]

§ 1.666(a)-1A Amount allocated.

(a) ***In general.*** In the case of a trust that is subject to subpart C of part I of subchapter J of chapter 1 of the Code (relating to estates and trusts that may accumulate income or that distribute corpus), section 666(a) prescribes rules for determining the taxable years from which an accumulation distribution will be deemed to have been made and the extent to which the accumulation distribution is considered to consist of undistributed net income. In general, an accumulation distribution made in taxable years beginning after December 31, 1969, is deemed to have been made first from the earliest preceding taxable year of the trust for which there is undistributed net income. An accumulation distribution made in a taxable year beginning before January 1, 1970, is deemed to have been made first from the most recent preceding taxable year of the trust for which there is undistributed net income. See § 1.665(e)-1A for the definition of "preceding taxable year."

(b) ***Distributions by domestic trusts*** —

(1) ***Taxable years beginning after December 31, 1973.*** An accumulation distribution made by a trust (other than a foreign trust created by a U.S. person) in any taxable year beginning after December 31, 1973, is allocated to the preceding taxable years of the trust (defined in § 1.665(e)-1A(a)(1)(ii) as those beginning after December 31, 1968) according to the amount of undistributed net income of the trust for such years. For this purpose, an accumulation distribution is first to be allocated to the earliest such preceding taxable year in which there is undistributed net income and shall then be allocated, beginning with the next earliest, to any remaining preceding taxable years of the trust. The portion of the accumulation distribution allocated to the earliest preceding taxable year is the amount of the undistributed net income for that preceding taxable year. The portion of the accumulation distribution allocated to any preceding taxable year subsequent to the earliest such preceding taxable year is the excess of the accumulation distribution over the aggregate of the undistributed net income for all earlier preceding taxable years. See paragraph (d) of this section for adjustments to undistributed net income for prior distributions. The provisions of this subparagraph may be illustrated by the following example:

Example. In 1977, a domestic trust reporting on the calendar year basis makes an accumulation distribution of $33,000. Therefore, years before 1969 are ignored. In 1969, the trust had $6,000 of undistributed net income; in 1970, $4,000; in 1971, none; in 1972, $7,000; in 1973, $5,000; in

1974, $8,000; in 1975, $6,000; and $4,000 in 1976. The accumulation distribution is deemed distributed $6,000 in 1969, $4,000 in 1970, none in 1971, $7,000 in 1972, $5,000 in 1973, $8,000 in 1974, and $3,000 in 1975.

(2) ***Taxable years beginning after December 31, 1969, and before January 1, 1974.*** If a trust (other than a foreign trust created by a U.S. person) makes an accumulation distribution in a taxable year beginning after December 31, 1969, and before January 1, 1974, the distribution will be deemed distributed in the same manner as accumulation distributions qualifying under subparagraph (1) of this paragraph, except that the first year to which the distribution may be thrown back cannot be earlier than the fifth taxable year of the trust preceding the year in which the accumulation distribution is made. Thus, for example, in the case of an accumulation distribution made in the taxable year of a domestic trust which begins on January 1, 1972, the taxable year of the trust beginning on January 1, 1967, would be the first year in which the distribution was deemed made, assuming that there was undistributed net income for 1967. See also § 1.665(e)-1A(a)(1). The provisions of this subparagraph may be illustrated by the following example:

Example. In 1973, a domestic trust, reporting on the calendar year basis, makes an accumulation distribution of $25,000. In 1968, the fifth year preceding 1973, the trust had $7,000 of undistributed net income; in 1969, none; in 1970, $12,000; in 1971, $4,000; in 1972, $4,000. The accumulation distribution is deemed distributed in the amounts of $7,000 in 1968, none in 1969, $12,000 in 1970, $4,000 in 1971, and $2,000 in 1972.

(3) ***Taxable years beginning after December 31, 1968, and before January 1, 1970.*** Accumulation distributions made in taxable years of the trust beginning after December 31, 1968, and before January 1, 1970, are allocated to prior years according to § 1.666(a)-1.

(c) ***Distributions by foreign trusts —***

(1) ***Foreign trusts created solely by U.S. persons —***

(i) ***Taxable years beginning after December 31, 1969.*** If a foreign trust created by a U.S. person makes an accumulation distribution in any taxable year beginning after December 31, 1969, the distribution is allocated to the trust's preceding taxable years (defined in § 1.665(e)-1A(a)(2) as those beginning after Dec. 31, 1953, and ending after Aug. 16, 1954) according to the amount of undistributed net income of the trust for such years. For this purpose, an accumulation distribution is first allocated to the earliest such preceding taxable year in which there is undistributed net income and shall then be allocated in turn, beginning with the next earliest, to any remaining preceding taxable years of the trust. The portion of the accumulation distribution allocated to the earliest preceding taxable year is the amount of the undistributed net income for that preceding taxable year. The portion of the accumulation distribution allocated to any preceding taxable year subsequent to the earliest such preceding taxable year is the excess of the accumulation distribution over the aggregate of the undistributed net income for all earlier preceding taxable years. See paragraph (d) of this section for adjustments to undistributed net income for prior distributions. The provisions of this subdivision may be illustrated by the following example:

Example. In 1971, a foreign trust created by a U.S. person, reporting on the calendar year basis, makes an accumulation distribution of $50,000. In 1961, the trust had $12,000 of undistributed net income; in 1962, none; in 1963, $10,000; in 1964, $8,000; in 1965, $5,000; in 1966, $14,000; in 1967, none; in 1968, $3,000; in 1969, $2,000; and in 1970, $1,000. The

accumulation distribution is deemed distributed in the amounts of $12,000 in 1961, none in 1962, $10,000 in 1963, $8,000 in 1964, $5,000 in 1965, $14,000 in 1966, none in 1967, and $1,000 in 1968.

(ii) ***Taxable years beginning after December 31, 1968, and before January 1, 1970.*** Accumulation distributions made in taxable years of the trust beginning after December 31, 1968, and before January 1, 1970, are allocated to prior years according to § 1.666(a)-1.

(2) ***Foreign trusts created partly by U.S. persons*** —

(i) ***Taxable years beginning after December 31, 1969.*** If a trust that is in part a foreign trust created by a U.S. person and in part a foreign trust created by a person other than a U.S. person makes an accumulation distribution in any year after December 31, 1969, the distribution is deemed made from the undistributed net income of the foreign trust created by a U.S. person in the proportion that the total undistributed net income for all preceding years of the foreign trust created by the U.S. person bears to the total undistributed net income for all years of the entire foreign trust. In addition, such distribution is deemed made from the undistributed net income of the foreign trust created by a person other than a U.S. person in the proportion that the total undistributed net income for all preceding years of the foreign trust created by a person other than a U.S. person bears to the total undistributed net income for all years of the entire foreign trust. Accordingly, an accumulation distribution of such a trust is composed of two portions with one portion relating to the undistributed net income of the foreign trust created by the U.S. person and the other portion relating to the undistributed net income of the foreign trust created by the person other than a U.S. person. For these purposes, each portion of an accumulation distribution made in any taxable year is first allocated to each of such preceding taxable years in turn, beginning with the earliest preceding taxable year, as defined in § 1.665(e)-1A(a), of the applicable foreign trusts, to the extent of the undistributed net income for the such trust for each of those years. Thus, each portion of an accumulation distribution is deemed to have been made from the earliest accumulated income of the applicable trust. If the foreign trust created by a U.S. person makes an accumulation distribution in any year beginning after December 31, 1969, the distribution is included in the beneficiary's income for that year to the extent of the undistributed net income of the trust for the trust's preceding taxable years which began after December 31, 1953, and ended after August 16, 1954. The provisions of this subdivision may be illustrated by the following example:

> *Example.* A trust is created in 1962 under the laws of Country X by the transfer to a trustee in Country X of property by both a U.S. person and a person other than a U.S. person. Both the trust and the only beneficiary of the trust (who is a U.S. person) report their taxable income on a calendar year basis. On March 31, 1974, the trust makes an accumulation distribution of $150,000 to the beneficiary. The distributable net income of both the portion of the trust which is a foreign trust created by a U.S. person and the portion of the trust which is a foreign trust created by a person other than a U.S. person for each year is computed in accordance with the provisions of paragraph (b)(3) of § 1.643(d)-1 and the undistributed net income for each portion of the trust for each year is computed as described in paragraph (b) of § 1.665(a)-1A. For taxable years 1962 through 1973, the portion of the trust which is a foreign trust created by a U.S. person and the portion of the trust which is a foreign trust created by a person other than a U.S.

person had the following amounts of undistributed net income:

Year	Undistributed net income-portion of the trust created by a U.S. person	Undistributed net income-portion of the trust created by a person other than a U.S. person
1962	$7,000	$4,000
1963	12,000	7,000
1964	None	None
1965	11,000	5,000
1966	8,000	3,000
1967	None	None
1968	4,000	2,000
1969	17,000	8,000
1970	16,000	9,000
1971	None	None
1972	25,000	12,000
1973	20,000	10,000
Totals	120,000	60,000

The accumulation distribution in the amount of $150,000 is deemed to have been distributed in the amount of $100,000 (120,000/180,000 × $150,000) from the portion of the trust which is a foreign trust created by a U.S. person and in the amount of $39,000, which is less than $50,000 (60,000/180,000 × $150,000), from the portion of the trust which is a foreign trust created by a person other than a U.S. person computed as follows:

Year	Throwback to preceding years of foreign trust created by a U.S. person	Throwback to preceding years of portion of the entire foreign trust which is not a foreign trust created by a U.S. person
1962	$7,000	None
1963	12,000	None
1964	None	None
1965	$11,000	None
1966	8,000	None
1967	None	None
1968	4,000	None
1969	17,000	$8,000

Year	Throwback to preceding years of foreign trust created by a U.S. person	Throwback to preceding years of portion of the entire foreign trust which is not a foreign trust created by a U.S. person
1970	16,000	9,000
1971	None	None
1972	$25,000	$12,000
1973	None	10,000
Totals	100,000	39,000

Pursuant to this paragraph, the accumulation distribution in the amount of $100,000 from the portion of the trust which is a foreign trust created by a U.S. person is included in the beneficiary's income for 1974, as the amount represents undistributed net income of the trust for the trust's preceding taxable years which began after December 31, 1953, and ended after August 16, 1954. The accumulation distribution in the amount of $50,000 from the portion of the trust which is a foreign trust created by a person other than a U.S. person is included in the beneficiary's income for 1974 to the extent of the undistributed net income of the trust for the preceding years beginning after December 31, 1968. Accordingly, with respect to the portion of the trust which is a foreign trust created by a person other than a U.S. person, only the undistributed net income for the years 1969 through 1973, which totals $39,000, is includible in the beneficiary's income for 1974. Thus, of the $150,000 distribution made in 1974, the beneficiary is required to include a total of $139,000 in his income for 1974. The balance of $11,000 is deemed to represent a distribution of corpus.

(ii) ***Taxable years beginning after December 31, 1968, and before January 1, 1970.*** Accumulation distributions made in taxable years of the trust beginning after December 31, 1968, and before January 1, 1970, are allocated to prior years according to § 1.666(a)-1.

(3) ***Foreign trusts created by non-U.S. persons.*** To the extent that a foreign trust is a foreign trust created by a person other than a U.S. person, an accumulation distribution is included in the beneficiary's income for the year paid, credited, or required to be distributed to the extent provided under paragraph (b) of this section.

(d) ***Reduction of undistributed net income for prior accumulation distributions.*** For the purposes of allocating to any preceding taxable year an accumulation distribution of the taxable year, the undistributed net income of such preceding taxable year is reduced by the amount from such year deemed distributed in any accumulation distribution of undistributed net income made in any taxable year intervening between such preceding taxable year and the taxable year. Accordingly, for example, if a trust has undistributed net income for 1974 and makes accumulation distributions during the taxable years 1978 and 1979, in determining that part of the 1979 accumulation distribution that is thrown back to 1974 the undistributed net income for 1974 is first reduced by the amount of the undistributed net income for 1974 deemed distributed in the 1978 accumulation distribution.

(e) ***Rule when no undistributed net income.*** If, before the application of the provisions of subpart D to an accumulation distribution for the taxable year, there is no undistributed net income for a preceding taxable year, then no portion of the accumulation distribution is undistributed net income deemed distributed on the last day of such preceding taxable year. Thus, if an accumulation distribution is made during the taxable year 1975 from a trust whose earliest preceding taxable year is taxable year 1970, and the trust had no undistributed net income for 1970, then no portion of the 1975 accumulation distribution is undistributed net income deemed distributed on the last day of 1970.

[T.D. 7204, 37 FR 17143, Aug. 25, 1972]

§ 1.666(b)-1A Total taxes deemed distributed.

(a) If an accumulation distribution is deemed under § 1.666(a)-1A to be distributed on the last day of a preceding taxable year and the amount is not less than the undistributed net income for such preceding taxable year, then an additional amount equal to the "taxes imposed on the trust attributable to the undistributed net income" (as defined in § 1.665(d)-1A(b)) for such preceding taxable year is also deemed distributed under section 661(a)(2). For example, a trust has undistributed net income of $8,000 for the taxable year 1974. The taxes imposed on the trust attributable to the undistributed net income are $3,032. During the taxable year 1977, an accumulation distribution of $8,000 is made to the beneficiary, which is deemed under § 1.666(a)-1A to have been distributed on the last day of 1974. The 1977 accumulation distribution is not less than the 1974 undistributed net income. Accordingly, the taxes of $3,032 imposed on the trust attributable to the undistributed net income for 1974 are also deemed to have been distributed on the last day of 1974. Thus, a total of $11,032 will be deemed to have been distributed on the last day of 1974.

(b) For the purpose of paragraph (a) of this section, the undistributed net income of any preceding taxable year and the taxes imposed on the trust for such preceding taxable year attributable to such undistributed net income are computed after taking into account any accumulation distributions of taxable years intervening between such preceding taxable year and the taxable year. See paragraph (d) of § 1.666(a)-1A.

[T.D. 7204, 37 FR 17145, Aug. 25, 1972]

§ 1.666(c)-1A Pro rata portion of taxes deemed distributed.

(a) If an accumulation distribution is deemed under § 1.666(a)-1A to be distributed on the last day of a preceding taxable year and the amount is less than the undistributed net income for such preceding taxable year, then an additional amount is also deemed distributed under section 661(a)(2). The additional amount is equal to the "taxes imposed on the trust attributable to the undistributed net income" (as defined in § 1.665(a)-1A(b)) for such preceding taxable year, multiplied by a fraction, the numerator of which is the amount of the accumulation distribution allocated to such preceding taxable year and the denominator of which is the undistributed net income for such preceding taxable year. See paragraph (b) of example 1 and paragraphs (c) and (f) of example 2 in § 1.666(c)-2A for illustrations of this paragraph.

(b) For the purpose of paragraph (a) of this section, the undistributed net income of any preceding taxable year and the taxes imposed on the trust for such preceding taxable year attributable to such undistributed net income are computed after taking into account any accumulation distributions of any taxable years intervening between such preceding taxable year and the taxable year. See paragraph (d) of § 1.666(a)-1A and paragraph (c) of example 1 and paragraphs (e) and (h) of example 2 in § 1.666(c)-2A.

[T.D. 7204, 37 FR 17145, Aug. 25, 1972]

§ 1.666(c)-2A Illustration of the provisions of section 666 (a), (b), and (c).

The application of the provisions of §§ 1.666(a)-1A, 1.666(b)-1A, and 1.666(c)-1A may be illustrated by the following examples:

Example 1. (a) A trust created on January 1, 1974, makes accumulation distributions as follows:

1979	$7,000
1980	26,000

For 1974 through 1978, the undistributed portion of distributable net income, taxes imposed on the trust attributable to the undistributed net income, and undistributed net income are as follows:

Year	Undistributed portion of distributable net income	Taxes imposed on the trust attributable to the undistributed net income	Undistributed net income
1974	$12,100	$3,400	$8,700
1975	16,100	5,200	10,900
1976	6,100	1,360	4,740
1977	None	None	None
1978	10,100	2,640	7,460

The trust has no undistributed capital gain.

(b) Since the entire amount of the accumulation distribution for 1979 ($7,000) is less than the undistributed net income for 1974 ($8,700), an additional amount of $2,736 (7,000/8,700 × $3,400) is deemed distributed under section 666(c).
(c) In allocating the accumulation distribution for 1980, the amount of undistributed net income for 1974 will reflect the accumulation distribution for 1979. The undistributed net income for 1974 will then be $1,700 and the taxes imposed on the trust for 1974 will be $664, determined as follows:

Undistributed net income as of the close of 1974	$8,700
Less: Accumulation distribution (1979)	7,000
Balance (undistributed net income as of the close of 1979)	1,700
Taxes imposed on the trust attributable to the undistributed net income as of the close of	664

1979 (1,700/8,700 × $3,400)

(d) The accumulation distribution of $26,000 for 1980 is deemed to have been made on the last day of the preceding taxable years of the trust to the extent of $24,800, the total of the undistributed net income for such years, as shown in the tabulation below. In addition, $9,864, the total taxes imposed on the trust attributable to the undistributed net income for such years is also deemed to have been distributed on the last day of such years, as shown below:

Year	Undistributed net income	Taxes imposed on the trust
1974	$1,700	$664
1975	10,900	5,200
1976	4,740	1,360
1977	None	None
1978	7,460	2,640
1979	None	None

Example 2. (a) Under the terms of a trust instrument, the trustee has discretion to accumulate or distribute the income to X and to invade corpus for the benefit of X. The entire income of the trust is from royalties. Both X and the trust report on the calendar year basis. All of the income for 1974 was accumulated. The distributable net income of the trust for the taxable year 1974 is $20,100 and the income taxes paid by the trust for 1974 attributable to the undistributed net income are $7,260. All of the income for 1975 and 1976 was distributed and in addition the trustee made accumulation distributions within the meaning of section 665(b) of $5,420 for each year.
(b) The undistributed net income of the trust determined under section 665(a) as of the close of 1974, is $12,840, computed as follows:

Distributable net income	$20,100
Less: Taxes imposed on the trust attributable to the undistributed net income	7,260
Undistributed net income as of the close of 1974	12,840

(c) The accumulation distribution of $5,420 made during the taxable year 1975 is deemed under section 666(a) to have been made on December 31, 1974. Since this accumulation distribution is less than the 1974 undistributed net income of $12,840, a portion of the taxes imposed on the trust for 1974 is also

deemed under section 666(c) to have been distributed on December 31, 1974. The total amount deemed to have been distributed to X on December 31, 1974 is $8,484, computed as follows:

Accumulation distribution	$5,420
Taxes deemed distributed (5,420/ 12,840 × $7,260)	3,064
Total	8,484

(d) After the application of the provisions of subpart D to the accumulation distribution of 1975, the undistributed net income of the trust for 1974 is $7,420, computed as follows:

Undistributed net income as of the close of 1974	$12,840
Less: 1975 accumulation distribution deemed distributed on December 31, 1974 (paragraph (c) of this example)	5,420
Undistributed net income for 1974 as of the close of 1975	7,420

(e) The taxes imposed on the trust attributable to the undistributed net income for the taxable year 1974, as adjusted to give effect to the 1975 accumulation distribution, amount to $4,196, computed as follows:

Taxes imposed on the trust attributable to undistributed net income as of the close of 1974	$7,260
Less: Taxes deemed distributed in 1974	3,064
Taxes attributable to the undistributed net income determined as of the close of 1975	4,196

(f) The accumulation distribution of $5,420 made during the taxable year 1976 is, under section 666(a), deemed a distribution to X on December 31, 1974, within the meaning of section 661(a)(2). Since the accumulation distribution is less than the 1974 adjusted undistributed net income of $7,420, the trust is deemed under section 666(c) also to have distributed on December 31, 1974, a portion of the taxes imposed on the trust for 1974. The total amount deemed to be distributed on December 31, 1974, with respect to the accumulation distribution made in 1976, is $8,484, computed as follows:

Accumulation distribution	$5,420
Taxes deemed distributed (5,420/ 7,420 × $4,196)	3,064

Total	8,484

(g) After the application of the provisions of subpart D to the accumulation distribution of 1976, the undistributed net income of the trust for 1974 is $2,000, computed as follows:

Undistributed net income for 1974 as of the close of 1975	$7,420
Less: 1976 accumulation distribution deemed distributed on December 31, 1974 (paragraph (f) of this example)	5,420
Undistributed net income for 1974 as of the close of 1976	2,000

(h) The taxes imposed on the trust attributable to the undistributed net income of the trust for the taxable year 1974, determined as of the close of the taxable year 1976, amount to $1,132 ($4,196 less $3,064).

[T.D. 7204, 37 FR 17145, Aug. 25, 1972]

§ 1.666(d)-1A Information required from trusts.

(a) ***Adequate records required.*** For all taxable years of a trust, the trustee must retain copies of the trust's income tax return as well as information pertaining to any adjustments in the tax shown as due on the return. The trustee shall also keep the records of the trust required to be retained by section 6001 and the regulations thereunder for each taxable year as to which the period of limitations on assessment of tax under section 6501 has not expired. If the trustee fails to produce such copies and records, and such failure is due to circumstances beyond the reasonable control of the trustee or any predecessor trustee, the trustee may reconstruct the amount of corpus, accumulated income, etc., from competent sources (including, to the extent permissible, Internal Revenue Service records). To the extent that an accurate reconstruction can be made for a taxable year, the requirements of this paragraph shall be deemed satisfied for such year.

(b) ***Rule when information is not available*** —

(1) ***Accumulation distributions.*** If adequate records (as required by paragraph (a) of this section) are not available to determine the proper application of subpart D to an accumulation distribution made in a taxable year by a trust, such accumulation distribution shall be deemed to consist of undistributed net income earned during the earliest preceding taxable year (as defined in § 1.665(e)-1A) of the trust in which it can be established that the trust was in existence. If adequate records are available for some years, but not for others, the accumulation distribution shall be allocated first to the earliest preceding taxable year of the trust for which there are adequate records and then to each subsequent preceding taxable year for which there are adequate records. To the extent that the distribution is not allocated in such manner to years for which adequate records are available, it will

be deemed distributed on the last day of the earliest preceding taxable year of the trust in which it is established that the trust was in existence and for which the trust has no records. The provisions of this subparagraph may be illustrated by the following example:

Example. A trust makes a distribution in 1975 of $100,000. The trustee has adequate records for 1973, 1974, and 1975. The records show that the trust is on the calendar year basis, had distributable net income in 1975 of $20,000, and undistributed net income in 1974 of $15,000, and in 1973 of $16,000. The trustee has no other records of the trust except for a copy of the trust instrument showing that the trust was established on January 1, 1965. He establishes that the loss of the records was due to circumstances beyond his control. Since the distribution is made in 1975, the earliest "preceding taxable year", as defined in § 1.665(e)-1A, is 1969. Since $80,000 of the distribution is an accumulation distribution, and $31,000 thereof is allocated to 1974 and 1973, $49,000 is deemed to have been distributed on the last day of 1969.

(2) ***Taxes.***

(i) If an amount is deemed under this paragraph to be undistributed net income allocated to a preceding taxable year for which adequate records are not available, there shall be deemed to be "taxes imposed on the trust" for such preceding taxable year an amount equal to the taxes that the trust would have paid if the deemed undistributed net income were the amount remaining when the taxes were subtracted from taxable income of the trust for such year. For example, assume that an accumulation distribution in 1975 of $100,000 is deemed to be undistributed net income from 1971, and that the taxable income required to produce $100,000 after taxes in 1971 would be $284,966. Therefore the amount deemed to be "taxes imposed on the trust" for such preceding taxable year is $184,966.

(ii) The credit allowed by section 667(b) shall not be allowed for any amount deemed under this subparagraph to be "taxes imposed on the trust."

[T.D. 7204, 37 FR 17146, Aug. 25, 1972]

§ 1.666(a)-1 Amount allocated.

(a)

(1) If a trust other than a foreign trust created by a U.S. person makes an accumulation distribution in any taxable year, the distribution is included in the beneficiary's gross income for that year to the extent of the undistributed net income of the trust for the preceding 5 years. It is therefore necessary to determine the extent to which there is undistributed net income for the preceding 5 years. For this purpose, an accumulation distribution made in any taxable year is allocated to each of the 5 preceding taxable years in turn, beginning with the most recent year, to the extent of the undistributed net income of each of those years. Thus, an accumulation distribution is deemed to have been made from the most recently accumulated income of the trust.

(2) If a foreign trust created by a U.S. person makes an accumulation distribution in any year after December 31, 1962, the distribution is included in the beneficiary's gross income for that year to the extent of the undistributed net income of the trust for the trust's preceding taxable years which began after December 31, 1953, and ended after August 16, 1954. It is therefore necessary to determine the extent to which there is undistributed net income for such preceding taxable years. For this purpose, an accumulation distribution made in any taxable year is first allocated to each of

such preceding taxable years in turn, beginning with the most recent year, to the extent of the undistributed net income of each of those years. Thus, an accumulation distribution is deemed to have been made from the most recently accumulated income of the trust.

(3) If a trust that is in part a foreign trust created by a U.S. person and in part a foreign trust created by a person other than a U.S. person makes an accumulation distribution in any year after December 31, 1962, the distribution is deemed made from the undistributed net income of the foreign trust created by a U.S. person in the proportion that the total undistributed net income for all preceding years of the foreign trust created by the U.S. person bears to the total undistributed net income for all years of the entire foreign trust. In addition, such distribution is deemed made from the undistributed net income of the foreign trust created by a person other than a U.S. person in the proportion that the total undistributed net income for all preceding years of the foreign trust created by a person other than a U.S. person bears to the total undistributed net income for all years of the entire foreign trust. Accordingly, an accumulation distribution of such a trust is composed of two portions with one portion relating to the undistributed net income of the foreign trust created by the U.S. person and the other portion relating to the undistributed net income of the foreign trust created by the person other than a U.S. person. For these purposes, each portion of an accumulation distribution made in any taxable year is first allocated to each of such preceding taxable years in turn, beginning with the most recent year, to the extent of the undistributed net income for the applicable foreign trust for each of those years. Thus, each portion of an accumulation distribution is deemed to have been made from the most recently accumulated income of the applicable trust. If the foreign trust created by a U.S. person makes an accumulation distribution in any year after December 31, 1962, the distribution is included in the beneficiary's gross income for that year to the extent of the undistributed net income of the trust for the trust's preceding taxable years which began after December 31, 1953, and ended after August 16, 1954. If the foreign trust created by a person other than a U.S. person makes an accumulation distribution in any taxable year, the distribution is included in the beneficiary's gross income for that year to the extent of the undistributed net income of the trust for the preceding 5 years.

(b) If, before the application of the provisions of subpart D (section 665 and following), part I, subchapter J, chapter 1 of the Code, to an accumulation distribution for the taxable year, there is no undistributed net income for a preceding taxable year, then no portion of the accumulation distribution is deemed distributed on the last day of such preceding taxable year. Thus, if an accumulation distribution is made during the taxable year 1960 and the trust had no undistributed net income for the taxable year 1959, then no portion of the 1960 accumulation distribution is deemed distributed on the last day of 1959. For purposes of subpart D, the term *5 preceding taxable years* includes only the 5 taxable years immediately preceding the taxable year in which the accumulation distribution is made and which are subject to part I (section 641 and following) of such subchapter J even though the trust has no undistributed net income during one or more of those years.

(c) Paragraphs (a) and (b) of this section may be illustrated by the following examples:

Example 1. In 1964, a domestic trust, reporting on the calendar year basis, makes an accumulation distribution of $25,000. In 1963, the trust had $7,000 of undistributed net income; in 1962, none; in 1961, $12,000; in 1960, $4,000; in 1959, $4,000. The accumulation distribution is deemed distributed $7,000 in 1963, none in 1962, $12,000 in 1961, $4,000 in 1960, and $2,000 in 1959.

Example 2. In 1964, a foreign trust created by a U.S. person, reporting on the calendar year basis, makes an accumulation distribution of $50,000. In 1963, the trust had $12,000 of undistributed net income; in 1962, none; in 1961, $10,000; in 1960, $8,000; in 1959, $5,000; in 1958, $14,000; in 1957, none; in

1956, $3,000; in 1955, $2,000; and in 1954, $1,000. The accumulation distribution is deemed distributed $12,000 in 1963, none in 1962, $10,000 in 1961, $8,000 in 1960, $5,000 in 1959, $14,000 in 1958, none in 1957, $1,000 in 1956.

Example 3. A trust is created in 1952 under the laws of Country X by the transfer to a trustee in Country X of money and property by both a U.S. person and a person other than a U.S. person. Both the trust and the only beneficiary of the trust (who is a U.S. person) report their taxable income on a calendar year basis. On March 31, 1964, the trust makes an accumulation distribution of $150,000 to the U.S. beneficiary. The distributable net income of both the portion of the trust which is a foreign trust created by a U.S. person and the portion of the trust which is a foreign trust created by a person other than a U.S. person for each year is computed in accordance with the provisions of paragraph (b)(3) of § 1.643(d)-1 and the undistributed net income for each portion of the trust for each year is computed as described in paragraph (b) of § 1.665(a)-1. For the taxable years 1952 through 1963, the portion of the trust which is a foreign trust created by a U.S. person and the portion of the trust which is a foreign trust created by a person other than a U.S. person had the following amounts of undistributed net income:

Year	Undistributed net income—portion of the trust created by a U.S. person	Undistributed net income—portion of the trust created by a person other than a U.S. person
1963	$20,000	$10,000
1962	25,000	12,000
1961	None	None
1960	16,000	9,000
1959	17,000	8,000
1958	4,000	2,000
1957	None	None
1956	8,000	3,000
1955	11,000	5,000
1954	None	None
1953	12,000	7,000
1952	7,000	4,000

Year	Undistributed net income—portion of the trust created by a U.S. person	Undistributed net income—portion of the trust created by a person other than a U.S. person
Totals	120,000	60,000

The accumulation distribution in the amount of $150,000 is deemed to have been distributed in the amount of $100,000 (120,000/180,000 × $150,000) from the portion of the trust which is a foreign trust created by a U.S. person, and in the amount of $50,000 (60,000/180,000 × $150,000) from the portion of the trust which is a foreign trust created by a person other than a U.S. person computed as follows:

Year	Throwback to preceding years of foreign trust created by a U.S. person	Throwback to preceding years of portion of the entire foreign trust which is not a foreign trust created by a U.S. person
1963	$20,000	$10,000
1962	25,000	12,000
1961	None	None
1960	16,000	9,000
1959	17,000	8,000
1958	4,000	2,000
1957	None	None
1956	8,000	3,000
1955	10,000	5,000
1954	None	None
1953	None	1,000
1952	None	None
Totals	100,000	50,000

Pursuant to paragraph (a)(3) of this section, the accumulation distribution in the amount of $100,000 from the portion of the trust which is a foreign trust created by a U.S. person is included in the beneficiary's gross income for 1964, as this amount represents undistributed net income of the trust for the trust's preceding taxable years which began after December 31, 1953, and ended after August 16, 1954. The accumulation distribution in the amount of $50,000 from the portion of the trust which is a foreign trust created by a person other than a U.S. person is included in the beneficiary's gross income for 1964 to the extent of the undistributed net income of the trust for the preceding 5 years. Accordingly, with respect to the portion of the trust which is a foreign trust created by a person other than a U.S. person

only the undistributed net income for the years 1959 through 1963 which totals $39,000 is includible in the beneficiary's gross income for 1964. Thus, of the $150,000 distribution made in 1964, the beneficiary is required to include a total of $139,000 in his gross income for 1964.

Example 4. Assume the same facts as in example 3 and, in addition, that by December 31, 1964, the undistributed net income for 1964 is determined to be $20,000, and that in accordance with the provisions of paragraph (b)(3) of § 1.643(d)-1 and paragraph (b) of § 1.665(a)-1, $10,000 is allocated to the portion of the trust which is a foreign trust created by a U.S. person and $10,000 is allocated to the portion of the trust which is a foreign trust created by a person other than a U.S. person. On March 31, 1965, the trust makes an accumulation distribution of $25,000 to the U.S. beneficiary. For the taxable years 1952 through 1964, the portion of the trust which is a foreign trust created by a U.S. person and the portion of the trust which is a foreign trust created by a person other than a U.S. person had the following amounts of undistributed net income:

Year	Undistributed net income—portion of the trust created by a U.S. person	Undistributed net income—portion of the trust created by a person other than a U.S. person
1964	$10,000	$10,000
1963	None	None
1962	None	None
1961	None	None
1960	None	None
1959	None	None
1958	None	None
1957	None	None
1956	None	None
1955	1,000	None
1954	None	None
1953	12,000	6,000
1952	7,000	4,000

Year	Undistributed net income—portion of the trust created by a U.S. person	Undistributed net income—portion of the trust created by a person other than a U.S. person
Totals	30,000	20,000

The accumulation distribution is deemed to have been distributed in the amount of $15,000 (30,000/50,000 × $25,000), from the portion of the trust which is a foreign trust created by a U.S. person, and in the amount of $10,000 (20,000/50,000 × $25,000) from the portion of the trust which is a foreign trust created by a person other than a U.S. person computed as follows:

Year	Throwback to preceding years of foreign trust created by U.S. person	Throwback to preceding years of portion of the entire foreign trust which is not a foreign trust created by a U.S. person
1964	$10,000	$10,000
1963	None	None
1962	None	None
1961	None	None
1960	None	None
1959	None	None
1958	None	None
1957	None	None
1956	None	None
1955	1,000	None
1954	None	None
1953	4,000	None
1952	None	None
Totals	15,000	10,000

Pursuant to paragraph (a)(3) of this section, only $11,000 of the accumulation distribution in the amount of $15,000 from the portion of the trust which is a foreign trust created by a U.S. person is includible in the beneficiary's gross income for 1965 as the $11,000 amount represents undistributed net income of the trust for the trust's preceding taxable years which began after December 31, 1953, and ended after August 16, 1954. The accumulation distribution in the amount of $10,000 from the portion of the trust which is a foreign trust created by a person other than a U.S. person is included in the beneficiary's gross income for 1965 to the extent of the undistributed net income of the trust for the preceding 5 years.

> Accordingly, the entire $10,000 (representing the undistributed net income for the year 1964) is includible in the beneficiary's gross income for 1965. Thus, of the $25,000 distribution made in 1965, the beneficiary is required to include a total of $21,000 in his gross income for 1965.

(d) For the purposes of allocating to any preceding taxable year an accumulation distribution of the taxable year, the undistributed net income of such preceding taxable year is computed without regard to the accumulation distribution of the taxable year or of taxable years following the taxable year. However, accumulation distributions of any taxable years intervening between such preceding taxable year and the taxable year are taken into account. Accordingly, if a trust has undistributed net income for the taxable year 1954 and makes an accumulation distribution during the taxable year 1955, the undistributed net income for 1954 is computed without regard to the accumulation distribution for 1955 or any subsequent year. If the trust makes a further accumulation distribution for 1956, the undistributed net income for 1954 is computed without regard to the accumulation distribution for 1956 or subsequent years; but in determining the undistributed net income for 1954 for purposes of the 1956 accumulation distribution the accumulation distribution for 1955 will be taken into account.

[T.D. 6500, 25 FR 11814, Nov. 26, 1960, as amended by T.D. 6989, 34 FR 736, Jan. 17, 1969]

§ 1.666(b)-1 Total taxes deemed distributed.

(a) If an accumulation distribution is deemed under § 1.666(a)-1 to be distributed on the last day of a preceding taxable year and the amount is not less than the undistributed net income for such preceding taxable year, then an additional amount equal to the “taxes imposed on the trust” (as defined in § 1.665(d)-1) for such preceding taxable year is likewise deemed distributed under section 661(a)(2). For example, a trust has taxable income of $11,032 (not including any capital gains) and undistributed net income of $8,000 for the taxable year 1954. The taxes imposed on the trust are $3,032. During the taxable year 1955, an accumulation distribution of $8,000 is made to the beneficiary, which is deemed under § 1.666(a)-1 to have been distributed on the last day of 1954. The taxes imposed on the trust for 1954 of $3,032 are also deemed to have been distributed on the last day of 1954 since the 1955 accumulation distribution is not less than the 1954 undistributed net income. Thus, a total of $11,032 will be deemed to have been distributed on the last day of 1954 because of the accumulation distribution of $8,000 made in 1955.

(b) For the purpose of paragraph (a) of this section, the undistributed net income of any preceding taxable year is computed without regard to the accumulation distribution of the taxable year or any taxable year following such taxable year. However, any accumulation distribution of taxable years intervening between such preceding taxable year and the taxable year are taken into account. See paragraph (d) of § 1.666(a)-1 and paragraphs (f)(5) and (g)(1) of § 1.668(b)-2.

[T.D. 6500, 25 FR 11814, Nov. 26, 1960, as amended by T.D. 6989, 34 FR 741, Jan. 17, 1969]

§ 1.666(c)-1 Pro rata portion of taxes deemed distributed.

(a) If an accumulation distribution is deemed under § 1.666(a)-1 to be distributed on the last day of a preceding taxable year and the amount is less than the undistributed net income for such preceding taxable year, then an additional amount is likewise deemed distributed under section 661(a)(2). The additional amount is equal to the taxes imposed on the trust, as defined in § 1.665(d)-1, for such

preceding taxable year, multiplied by the fraction of which the numerator is the amount of the accumulation distribution and the denominator is the undistributed net income for such preceding taxable year. See paragraph (b) of example 1 and paragraphs (c) and (f) of example 2 in § 1.666(c)-2, and paragraph (f)(2) of § 1.668(b)-2 for illustrations of this paragraph.

(b) For the purpose of paragraph (a) of this section, the undistributed net income of any preceding taxable year is computed without regard to the accumulation distribution of the taxable year or any taxable year following the taxable year. However, accumulation distributions of any taxable years intervening between such preceding taxable year and the taxable year are taken into account. See paragraph (d) of § 1.666(a)-1, paragraph (c) of example 1 and paragraphs (e) and (h) of example 2 in § 1.666(c)-2 and paragraph (f)(5)(iii) of § 1.668(b)-2.

[T.D. 6500, 25 FR 11814, Nov. 26, 1960, as amended by T.D. 6989, 34 FR 741, Jan. 17, 1969]

§ 1.666(c)-2 Illustration of the provisions of section 666.

The application of the provisions of §§ 1.666(a)-1, 1.666(b)-1, and 1.666(c)-1 may be illustrated by the following examples:

Example 1. (a) A trust makes accumulation distributions as follows:

1959	$7,000
1960	25,000

For 1954 through 1958, the undistributed portion of distributable net income taxes imposed on the trust, and undistributed net income are as follows:

Year	Undistributed portion of distributable net income	Taxes imposed on the trust	Undistributed net income
1958	$12,100	$3,400	$8,700
1957	16,100	5,200	10,900
1956	6,100	1,360	4,740
1955	None	None	None
1954	10,100	2,640	7,460

(b) Since the entire amount of the accumulation distribution for 1959 ($7,000), determined without regard to the accumulation distribution for 1960, is less than the undistributed net income for 1958 ($8,700), an additional amount of $2,736 (7,000/ 8,700 × $3,400) is likewise deemed distributed under section 666(c).

(c) In allocating the accumulation distribution for 1960, the undistributed net income for 1958 will take into account the accumulation distribution for 1959, and the additional amount of taxes imposed on the trust for 1958 deemed distributed. The undistributed net income for 1958 will then be $1,906; and the taxes imposed on the trust for 1958 will then be $458, determined as follows:

Undistributed portion of distributable net income as of the close of 1958		$12,100
Less:		
Accumulation distribution (1959)	$7,000	
Taxes deemed distributed under section 666(c) (7,000/8,700 × $3,400)	2,736	
		9,736
Balance (undistributed portion of distributable net income as of the close of 1959)		2,364
Less: Personal exemption		100
Balance		2,264
Taxes imposed on the trust (income taxes on $2,264)		458
Undistributed portion of distributable net income as of the close of 1959		2,364
Less: Income taxes attributable thereto		458
Undistributed net income for 1958 as of the close of 1959		1,906

(d) The accumulation distribution of $25,000 for 1960 is deemed to have been made on the last day of the 5 preceding taxable years of the trust to the extent of $17,546, the total of the undistributed net income for such years, as shown in the tabulation below. In addition, $7,018, the total taxes imposed on the trust for such years is also deemed to have been distributed on the last day of such years, as shown below:

Year	Undistributed net income	Taxes imposed on the trust
1959	None	None
1958	$1,906	$458
1957	10,900	5,200
1956	4,740	1,360
1955	None	None

(e) No portion of the 1960 accumulation distribution is deemed made on the last day of 1954 because, as to 1960, 1954 is the sixth preceding taxable year.

Example 2. (a) Under the terms of a trust instrument, the trustee has discretion to accumulate or distribute the income to X and to invade corpus for the benefit of X. The entire income of the trust is from royalties. Both X and the trust report on the calendar year basis. All of the income for 1954 was

accumulated. The distributable net income of the trust for the taxable year 1954 is $20,100 and the income taxes paid by the trust for 1954 with respect to its distributable net income are $7,260. All of the income for 1955 and 1956 was distributed and in addition the trustee made accumulation distributions within the meaning of section 665(b) of $6,420 for each year.

(b) The undistributed net income of the trust determined under section 665(a) as of the close of 1954, is $12,840, computed as follows:

Distributable net income	$20,100
Less: Taxes imposed on the trust	7,260
Undistributed net income as of the close of 1954	12,840

(c) The accumulation distribution of $6,420 made during the taxable year 1955 is deemed under section 666(a) to have been made on December 31, 1954. Since this accumulation distribution is less than the 1954 undistributed net income of $12,840, a portion of the taxes imposed on the trust for 1954 is also deemed under section 666(c) to have been distributed on December 31, 1954. The total amount deemed to have been distributed to X on December 31, 1954, is $10,050, computed as follows:

Accumulation distribution	$6,420
Taxes deemed distributed (6,420/ 12,840 × $7,260)	3,630
Total	10,050

(d) After the application of the provisions of subpart D (section 665 and following), part I, subchapter J, chapter 1 of the Code, to the accumulation distribution of 1955, the undistributed portion of the distributable net income of the trust for 1954, is $10,050, and the taxes imposed with respect thereto are $2,623, computed as follows:

Distributable net income as of the close of 1954	$20,100
Less: 1955 accumulation distribution and taxes deemed distributed on December 31, 1954 (paragraph (c) of this example)	10,050
Undistributed portion of the 1954 distributable net income adjusted as of the close of 1955	10,050
Less: Personal exemption	100
Balance	9,950

Income taxes on $9,950	2,623

(e) The undistributed net income of the trust for the taxable year 1954, as adjusted to give effect to the 1955 accumulation distribution, is $7,427, computed as follows:

Undistributed portion of distributable net income as of the close of 1955	$10,050
Less: Income taxes applicable thereto	2,623
Undistributed net income determined as of the close of 1955	7,427

(f) Inasmuch as all of the income of the trust for the taxable year 1955 was distributed to X, the trust had no undistributed net income for that year. Accordingly, the accumulation distribution of $6,420 made during the taxable year 1956 is, under section 666(a), deemed a distribution to X on December 31, 1954, within the meaning of section 661(a)(2). Since this accumulation distribution is less than the 1954 adjusted undistributed net income of $7,427, the trust is deemed under section 666(c) also to have distributed on December 31, 1954, a portion of the taxes imposed on the trust for 1954. The total amount deemed to be distributed on December 31, 1954, with respect to the accumulation distribution made in 1956, is $8,687, computed as follows:

Accumulation distribution	$6,420
Taxes deemed distributed (6,420/ 7,427 × $2,623)	2,267
Total	8,687

(g) After the application of the provisions of subpart D to the accumulation distribution of 1956, the undistributed portion of the distributable net income of the trust for 1954, is $1,363, and the taxes imposed on the trust with respect thereto are $253, computed as follows:

Undistributed portion of distributable net income as of the close of 1955	$10,050
Less: 1956 accumulation distribution and taxes deemed distributed on December 31, 1954 (paragraph (f) of this example)	8,687
Undistributed portion of distributable net income as of the close of 1956	1,363
Less: Personal exemption	100

Balance	1,263
Income taxes on $1,263	253

(h) The undistributed net income of the trust for the taxable year 1954, determined as of the close of the taxable year 1956, is $1,110 ($1,363 less $253).

§ 1.667-1 Denial of refund to trusts.

(a) If an amount is deemed under section 666 to be an amount paid, credited, or required to be distributed on the last day of a preceding taxable year, the trust is not allowed a refund or credit of the amount of "taxes imposed on the trust", as defined in § 1.665(d)-1, which would not have been payable for the preceding taxable year had the trust in fact made such distribution on the last day of such year. However, such taxes are allowed as a credit under section 668(b) against the tax of the beneficiaries who are treated as having received the distributions in the preceding taxable year. The amount of taxes which may not be refunded or credited to the trust under this paragraph and which are allowed as a credit under section 668(b) against the tax of the beneficiaries, is an amount equal to the excess of:

(1) The taxes imposed on the trust (as defined in section 665(d) and § 1.655(d)-1) for any preceding taxable year (computed without regard to the accumulation distribution for the taxable year) over

(2) The amount of taxes for such preceding taxable year which would be imposed on the undistributed portion of distributable net income of the trust for such preceding taxable year after the application of subpart D (section 665 and following), part I, subchapter J, chapter 1 of the Code, on account of the accumulation distribution determined for the taxable year.

It should be noted that the credit under section 667 is computed by the use of a different ratio from that used for computing the amount of taxes deemed distributed under section 666(c).

(b) Paragraph (a) of this section may be illustrated by the following examples:

Example 1. In 1954, a trust of which A is the sole beneficiary has taxable income of $20,000 (including capital gains of $5,100 allocable to corpus less a personal exemption of $100), on which a tax of $7,260 is paid. The undistributed portion of distributable net income is $15,000, to which $6,160 of the tax is allocable under section 665. The undistributed net income is therefore $8,840 ($15,000 minus $6,160). In 1955, the trust makes an accumulation distribution of $8,840. Under section 666(b), the total taxes for 1954 attributable to the undistributed net income are deemed distributed, so $15,000 is deemed distributed. The amount of the tax which may not be refunded to the trust under section 667 and the credit to which A is entitled under section 668(b) is the excess of $6,160 over zero, since after the distribution and the application of subpart D there is no remaining undistributed portion of distributable net income for 1954.

Example 2. The same trust as in example 1 of this paragraph distributes $5,000 in 1955, rather than $8,840. The amount of the tax which may not be refunded to the trust but which is available to A as a

credit is $4,044, computed as follows:

Accumulation distribution in 1955		$5,000
Taxes deemed distributed under section 666(c) (5,000/8,840 × $6,160)		3,484
Total amount deemed distributed out of the undistributed portion of distributable net income		8,484
Tax attributable to the undistributed portion of distributable net income ($15,000) before 1955 distribution (see example 1 of this paragraph)		6,160
Tax on $11,516 (taxable income of $20,000 minus $8,484, amount deemed distributed)	$3,216	
Tax on $5,000 (capital gains of $5,100, less personal exemption of $100, allocable to corpus)	1,100	
Tax attributable to undistributed portion of distributable net income after 1955 distribution		2,116
Refund disallowed to the trust and credit available to A in 1955		4,044

[T.D. 6500, 25 FR 11814, Nov. 26, 1960, as amended by T.D. 6989, 34 FR 741, Jan. 17, 1969]

§ 1.667(a)-1A [Reserved]

§ 1.667(b)-1A Authorization of credit to beneficiary for taxes imposed on the trust.

(a) ***Determination of credit*** —

(1) ***In general.*** Section 667(b) allows under certain circumstances a credit (without interest) against the tax imposed by subtitle A of the Code on the beneficiary for the taxable year in which the accumulation distribution is required to be included in income under section 668(a). In the case of an accumulation distribution consisting only of undistributed net income, the amount of such credit is the total of the taxes deemed distributed to such beneficiary under section 666 (b) and (c) as a result of such accumulation distribution for preceding taxable years of the trust on the last day of which such beneficiary was in being, less the amount of such taxes for such preceding taxable years taken into account in reducing the amount of partial tax determined under § 1.668(b)-1A. In the case of an accumulation distribution consisting only of undistributed capital gain, the amount of such credit is the total of the taxes deemed distributed as a result of the accumulation distribution to such beneficiary under section 669 (d) and (e) for preceding taxable years of the trust on the last day of which such beneficiary was in being, less the amount of such taxes for such preceding taxable years taken into account in reducing the amount of partial tax determined under § 1.669(b)-1A. In the case of an accumulation distribution consisting of both undistributed net income and undistributed capital gain, a credit will not be available unless the total taxes deemed distributed to the beneficiary for all preceding taxable years as a result of the accumulation distribution exceeds the beneficiary's partial tax determined under §§ 1.668(b)-1A and 1.669(b)-1A without reference to the taxes deemed distributed. A credit is not allowed for any taxes deemed distributed as a result of an accumulation distribution to a beneficiary by reason of sections 666 (b) and (c) or sections 669 (d) and (e) for a preceding taxable year of the trust before the beneficiary was born or created. However, if as a result of an accumulation distribution the total taxes deemed distributed under sections 668(a)(2) and 668(a)(3) in preceding taxable years before the beneficiary was born or created exceed the partial

taxes attributable to amounts deemed distributed in such years, such excess may be used to offset any liability for partial taxes attributable to amounts deemed distributed as a result of the same accumulation distribution in preceding taxable years after the beneficiary was born or created.

(2) ***Exact method.*** In the case of the tax computed under the exact method provided in §§ 1.668(b)-1A(b) and 1.669(b)-1A(b), the credit allowed by this section is computed as follows:

(i) Compute the total taxes deemed distributed under §§ 1.666(b)-1A and 1.666(c)-1A or §§ 1.669(d)-1A and 1.669(e)-1A, whichever are appropriate, for the preceding taxable years of the trust on the last day of which the beneficiary was in being.

(ii) Compute the total of the amounts of tax determined under § 1.668(b)-1A(b)(1) or § 1.669(b)-1A(b) (1), whichever is appropriate, for the prior taxable years of the beneficiary in which he was in being.

If the amount determined under subdivision (i) of this subparagraph does not exceed the amount determined under subdivision (ii) of this subparagraph, no credit is allowable. If the amount determined under subdivision (i) of this subparagraph exceeds the amount determined under subdivision (ii) of this subparagraph, the credit allowable is the lesser of the amount of such excess or the amount of taxes deemed distributed to the beneficiary for all preceding taxable years to the extent that such taxes are not used in § 1.668(b)-1A(b)(2) or § 1.669(b)-1A(b)(2) in determining the beneficiary's partial tax under section 668(a)(2) or 668(a)(3). The application of this subparagraph may be illustrated by the following example:

Example. An accumulation distribution made in 1975 is deemed distribution in 1973 and 1974, years in which the beneficiary was in being. The taxes deemed distributed in such years are $4,000 and $2,000, respectively, totaling $6,000. The amounts of tax computed under § 1.668(b)-1A(b)(1) attributable to the amounts thrown back are $3,000 and $2,000, respectively, totaling $5,000. The credit allowable under this subparagraph is therefore $1,000 ($6,000 less $5,000).

(3) ***Short-cut method.*** In the case of the tax computed under the short-cut method provided in § 1.668(b)-1A(c) or § 1.669(b)-1A(c), the credit allowed by this section is computed as follows:

(i) Compute the total taxes deemed distributed in all preceding taxable years of the trust under §§ 1.666(b)-1A and 1.666(c)-1A or §§ 1.669(d)-1A and 1.669(e)-1A, whichever are appropriate.

(ii) Compute the beneficiary's partial tax determined under either § 1.668(b)-1A(c)(1)(v) or § 1.669(b)-1A (c)(1)(v), whichever is appropriate.

If the amount determined under subdivision (i) of this subparagraph does not exceed the amount determined under subdivision (ii) of this subparagraph, no credit is allowable. If the amount determined under subdivision (i) of this subparagraph exceeds the amount determined under subdivision (ii) of this subparagraph,

(iii) Compute the total taxes deemed distributed under §§ 1.666(b)-1A and 1.666(c)-1A or §§ 1.669(d)-1A and 1.669(e)-1A, which are appropriate, for the preceding taxable years of the trust on the last day of which the beneficiary was in being.

(iv) Multiply the amount by which subdivision

(i) of this subparagraph exceeds subdivision

(ii) of this subparagraph by a fraction, the numerator of which is the amount determined under subdivision

(iii) of this subparagraph and the denominator of which is the amount determined under subdivision (i) of this subparagraph. The result is the allowable credit. The application of this subparagraph may be illustrated by the following example:

Example. An accumulation distribution that consists only of undistributed net income is made in 1975. The taxes deemed distributed in the preceding years under §§ 1.666(b)-1A and 1.666(c)-1A are $15,000. The amount determined under § 1.668(b)-1A(c)(1)(v) is $12,000. The beneficiary was in being on the last day of all but one preceding taxable year in which the accumulation distribution was deemed made, and the taxes deemed distributed in those years was $10,000. Therefore, the excess of the subdivision (i) amount over the subdivision (ii) amount is $3,000, and is multiplied by 10,000/15,000, resulting in an answer of $2,000, which is the credit allowable when computed under the short-cut method.

(b) ***Year of credit.*** The credit to which a beneficiary is entitled under this section is allowed for the taxable year in which the accumulation distribution (to which the credit relates) is required to be included in the income of the beneficiary under section 668(a). Any excess over the total tax liability of the beneficiary for such year is treated as an overpayment of tax by the beneficiary. See section 6401(b) and the regulations thereunder.

[T.D. 7204, 37 FR 17147, Aug. 25, 1972]

§ 1.668(a)-1A Amounts treated as received in prior taxable years; inclusion in gross income.

(a) Section 668(a) provides that the total of the amounts treated under sections 666 and 669 as having been distributed by the trust on the last day of a preceding taxable year of the trust shall be included in the income of the beneficiary or beneficiaries receiving them. The total of such amounts is includable in the income of each beneficiary to the extent the amounts would have been included under section 662 (a)(2) and (b) as if the total had actually been an amount properly paid by the trust under section 661 (a)(2) on the last day of such preceding taxable year. The total is included in the income of the beneficiary for the taxable year of the beneficiary in which such amounts are in fact paid, credited, or required to be distributed unless the taxable year of the beneficiary differs from the taxable year of the trust (see section 662(c) and the regulations thereunder). The character of the amounts treated as received by a beneficiary in prior taxable years, including taxes deemed distributed, in the hands of the beneficiary is determined by the rules set forth in section 662(b) and the regulations thereunder.

(b) Any deduction allowed to the trust in computing distributable net income for a preceding taxable year (such as depreciation, depletion, etc.) is not deemed allocable to a beneficiary because of amounts included in a beneficiary's gross income under this section since the deduction has already been utilized in reducing the amount included in the beneficiary's income.

(c) For purposes of applying section 668(a)(3), a trust shall be considered to be other than a “trust which is not required to distribute all of its income currently” for each taxable year prior to the first taxable year beginning after December 31, 1968, and ending after November 30, 1969, in which income is accumulated. Income will not be deemed to have been accumulated for purposes of applying section 668(a)(3) in a year if the trustee makes a determination, as evidenced by a statement on the return, to distribute all of the trust's income for such year and also makes a good faith determination as to the amount of such income and actually distributed for such year the entire amount so determined. The term

"income," as used in the preceding two sentences, is defined in §§ 1.643(b)-1 and 1.643(b)-2. Since, under such definitions, certain items may be included in distributable net income but are not, under applicable local law, "income" (as, for example, certain extraordinary dividends), a trust that has undistributed net income from such sources might still qualify as a trust that has not accumulated income. Also, for example, if a trust establishes a reserve for depreciation or depletion and applicable local law permits the deduction for such reserve in the computation of "income," amounts so added to the reserve do not constitute an accumulation of income. If a trust has separate shares, and any share accumulates income, all shares of the trust will be considered to have accumulated income for purposes of section 668(a)(3). Amounts retained by a trust or a portion of a trust that is subject to subpart E (sections 671-678) shall not be considered accumulated income.

(d) See section 1302(a)(2)(B) to the effect that amounts included in the income of a beneficiary of a trust under section 668(a) are not eligible for income averaging.

[T.D. 7204, 37 FR 17148, Aug. 25, 1972]

§ 1.668(a)-2A Allocation among beneficiaries; in general.

The portion of the total amount includible in income under § 1.668(a)-1A which is includible in the income of a particular beneficiary is based upon the ratio determined under the second sentence of section 662(a)(2) for the taxable year (and not for the preceding taxable year). This section may be illustrated by the following example:

Example. (a) Under the terms of a trust instrument, the trustee may accumulate the income or make distributions to A and B. The trustee may also invade corpus for the benefit of A and B. The distributable net income of the trust for taxable year 1975 is $10,000. The trust had undistributed net income for taxable year 1973, the first year of the trust, of $5,000, to which a tax of $1,100 was allocable. On May 1, 1975, the trustee distributes $10,000 to A, and on November 29, 1975, he distributes $5,000 to B. Thus, of the total distribution of $15,000, A received two-thirds and B receives one-third.
(b) For the purposes of determining the amounts includible in the beneficiaries' gross income for 1975, the trust is deemed to have made the following distributions:

Amount distributed out of 1975 income (distributable net income)	$10,000
Accumulation distribution deemed distributed by the trust on the last day of 1973 under section 666(a)	5,000
Taxes imposed on the trust attributable to the undistributed net income deemed distributed under section 666(b)	1,100

(c) A will include in his income for 1975 two-thirds of each item shown in paragraph (b) of this example. Thus, he will include in gross income $6,666.67 (10,000/15,000 × $10,000) of the 1975 distributable net income of the trust as provided in section 662(a)(2) (which is not an amount includable in his income under § 1.668(a)-1A(a)). He will include in his income $3,333.33 (10,000/15,000 × $5,000) of the accumulation distribution and $733.33 (10,000/15,000 × $1,100) of the taxes imposed on the trust, as

provided in section 668(a).
(d) B will include in his income for 1975 one-third of each item shown in paragraph (b) of this example, computed in the manner shown in paragraph (c) of this example.

(e) To the extent the total accumulation distribution consists of undistributed net income and undistributed capital gain, A and B shall be treated as receiving a pro rata share of each for the preceding taxable year 1973.

[T.D. 7204, 37 FR 17148, Aug. 25, 1972]

§ 1.668(a)-3A Determination of tax.

In a taxable year in which an amount is included in a beneficiary's income under § 1.668(a)-1A(a), the tax on the beneficiary for such taxable year is determined only as provided in section 668 and consists of the sum of:

(a) A partial tax computed on

(1) the beneficiary's taxable income reduced by

(2) an amount equal to the total amounts includible in his income under § 1.668(a)-1A(a), at the rate and in the manner as if section 668 had not been enacted,

(b) A partial tax determined as provided in § 1.668(b)-1A, and

(c) In the case of a beneficiary of a trust which is not required to distribute all of its income currently, a partial tax determined as provided in § 1.669(b)-1A.

[T.D. 7204, 37 FR 17148, Aug. 25, 1972]

§ 1.668(b)-1A Tax on distribution.

(a) ***In general.*** The partial tax imposed on the beneficiary by section 668(a)(2) shall be the lesser of:

(1) The tax computed under paragraph (b) of this section (the “exact” method), or

(2) The tax computed under paragraph (c) of this section (the “short-cut” method),

except as provided in § 1.668(b)-4A (relating to failure to furnish proper information) and paragraph (d) of this section (relating to disallowance of short-cut method). For purposes of this paragraph, the method used in the return shall be accepted as the method that produces the lesser tax. The beneficiary's choice of the two methods is not dependent upon the method that he uses to compute his partial tax imposed by section 668(a)(3).

(b) ***Computation of partial tax by the exact method.*** The partial tax referred to in paragraph (a)(1) of this section is computed as follows:

(1) First, compute the tax attributable to the section 666 amounts for each of the preceding taxable years. For purposes of this paragraph, the “section 666 amounts” for a preceding taxable year are the amounts deemed distributed under section 666(a) on the last day of the preceding taxable year, plus the amount of taxes deemed distributed on such day under section 666 (b) or (c). The tax attributable to such amounts in each prior taxable year of the beneficiary is the difference between

the tax for such year computed with the inclusion of the section 666 amounts in the beneficiary's gross income and the tax for such year computed without including them in such gross income. Tax computations for each such year shall reflect a taxpayer's marital, dependency, exemption, and filing status for such year. To the extent the undistributed net income of a trust deemed distributed in an accumulation distribution includes amounts received as an accumulation distribution from another trust, for purposes of this paragraph they shall be considered as amounts deemed distributed by the trust under section 666(a) on the last day of each of the preceding taxable years in which such amounts were accumulated by such other trust. For example, assume trust Z, a calendar year trust, received in its taxable year 1975 an accumulation distribution from trust Y, a calendar year trust, that included undistributed net income and taxes of trust Y for the taxable years 1972, 1973, and 1974. To the extent an accumulation distribution made by trust Z in its taxable year 1976 includes such undistributed net income and taxes, it shall be considered an accumulation distribution by trust Z in the taxable year 1976 and under section 666(a) will be deemed distributed on the last day of the preceding taxable years 1972, 1973, and 1974.

(2) From the sum of the taxes for the prior taxable years attributable to the section 666 amounts (computed in accordance with subparagraph (1) of this paragraph), subtract so much of the amount of taxes deemed distributed to the beneficiary under §§ 1.666(b)-1A and 1.666(c)-1A as does not exceed such sum. The resulting amount, if any, is the partial tax, computed under the exact method, for the taxable year in which the accumulation distribution is paid, credited, or required to be distributed to the beneficiary.

(3) The provisions of this paragraph may be illustrated by the following example:

Example. (i) Assume that in 1979 a trust makes an accumulation distribution of $15,000 to A. The accumulation distribution is allocated under section 666(a) in the amounts of $5,000 to 1971, $4,000 to 1972, and $6,000 to 1973. Under section 666 (b) and (c), taxes in the amounts of $935, $715, and $1,155 (totaling $2,805) are deemed distributed in 1971, 1972, and 1973, respectively.
(ii) A, the beneficiary, had taxable income and paid income tax in 1971-73 as follows:

Year	Taxable income	Tax
1971	$10,000	$2,190
1972	12,000	2,830
1973	14,000	3,550

(iii) Taxes attributable to the section 666 amounts (paragraph (i) of this example) are $6,979, computed as follows:

1971

Taxable income including section 666 amounts ($10,000 + $5,000 + $935)	$15,935	
Tax on $15,935		$4,305
Less: Tax paid by A in 1971		2,190
Tax attributable to 1971 section 666 amounts		2,115
1972		
Taxable income including section 666 amounts ($12,000 + $4,000 + $715)	$16,715	
Tax on $16,715		$4,620
Less: Tax paid by A in 1972		2,830
Tax attributable to 1972 section 666 amounts		1,790
1973		
Taxable income including section 666 amounts ($14,000 + $6,000 + $1,155)	$21,155	
Tax on $21,155		$6,624
Less: Tax paid by A in 1973		3,550
Tax attributable to 1973 section 666 amounts		3,074
Total tax attributable to section 666 amounts:		
1971	$2,115	
1972	1,790	
1973	3,074	
Total	6,979	

(iv) The partial tax computed under the exact method is $4,174, computed by subtracting the taxes deemed distributed ($2,805) from the tax attributable to the section 666 amounts ($6,979).

(c) ***Computation of tax by the short- cut method.***

(1) The tax referred to in paragraph (a)(2) of this section is computed as follows:

(i) First, determine the number of preceding taxable years of the trust on the last day of which an amount is deemed under section 666(a) to have been distributed. For purposes of the preceding sentence, the preceding taxable years of a trust that has received an accumulation distribution from another trust shall include the taxable years of such other trust in which an amount was deemed distributed in such accumulation distribution. For example, assume trust Z, a calendar year trust, received in its taxable year 1975 an accumulation distribution from trust Y, a calendar year trust, that included undistributed net income of trust Y for the taxable years 1972, 1973, and 1974. To the extent an accumulation distribution made by trust Z in its taxable year 1976 includes such undistributed net income, it shall be considered an accumulation distribution by trust Z in the taxable year 1976 and under section 666(a) will be deemed distributed on the last day of the preceding taxable years 1972, 1973, and 1974. For

purposes of this subparagraph, such number of preceding taxable years of the trust shall not include any preceding taxable year of the trust in which the undistributed net income deemed distributed is less than 25 percent of

(*a*) the total amounts deemed under section 666(a) to be undistributed net income from preceding taxable years divided by

(*b*) the number of such preceding taxable years of the trust on the last day of which an amount is deemed under section 666(a) to have been distributed without application of this sentence. For example, assume that an accumulation distribution of $90,000 made to a beneficiary in 1979 is deemed distributed in the amounts of $29,000 in each of the years 1972, 1973, and 1974, and $3,000 in 1975. The number of preceding taxable years on the last day of which an amount was deemed distributed without reference to the second sentence of this subparagraph is four. However, the distribution deemed made in 1975 ($3,000) is less than $5,625, which is 25 percent of (*a*) the total undistributed net income deemed distributed under section 666(a) ($90,000) divided by (*b*) the number of such preceding taxable years (4), or $22,500. Therefore, for purposes of this subparagraph the accumulation distribution is deemed distributed in only 3 preceding taxable years (1972, 1973, and 1974).

(ii) Second, divide the amount (representing the accumulation distribution and taxes deemed distributed) required under section 668(a) to be included in the income of the beneficiary for the taxable year by the number of preceding taxable years of the trust on the last day of which an amount is deemed under section 666(a) to have been distributed (determined as provided in subdivision (i) of this subparagraph). The amount determined under this subdivision, including taxes deemed distributed, consists of the same proportion of each class of income as the total of each class of income deemed distributed in the accumulation distribution bears to the total undistributed net income from such preceding taxable years deemed distributed in the accumulation distribution. For example, assume that an amount of $50,000 is deemed distributed under section 666(a) from undistributed net income of 5 preceding taxable years of the trust, and consists of $25,000 of interest, $15,000 of dividends, and $10,000 of net rental income. Taxes attributable to such amounts in the amount of $10,000 are also deemed distributed. The amount determined under this subdivision, $12,000 ($50,000 income plus $10,000 tax divided by 5 years), is deemed to consist of $6,000 in interest, $3,600 in dividends, and $2,400 in net rental income.

(iii) Third, compute the tax of the beneficiary for each of the 3 taxable years immediately preceding the year in which the accumulation distribution is paid, credited, or required to be distributed to him,

(*a*) With the inclusion in gross income of the beneficiary for each of such 3 years of the amount determined under subdivision (ii) of this subparagraph, and

(*b*) Without such inclusion.

The difference between the amount of tax computed under (*a*) of this subdivision for each year and the amount computed under (*b*) of this subdivision for that year is the additional tax resulting from the inclusion in gross income for that year of the amount determined under subdivision (ii) of this subparagraph. For example, assume that a distribution of $12,000, is includible in the income of each of the beneficiary's 3 preceding taxable years when his income (without the inclusion of the accumulation distribution) was $20,000, $30,000, and $40,000.

The inclusion of $12,000 in income would produce taxable income of $32,000, $42,000, and $52,000, and the tax attributable to such increases would be $4,000, $5,000, and $6,000, respectively.

(iv) Fourth, add the additional taxes resulting from the application of subdivision (iii) of this subparagraph and then divide this amount by 3. For example, if these additional taxes are $4,000, $5,000, and $6,000 for the 3 preceding taxable years, this amount would be $5,000 ($4,000 + $5,000 + $6,000 divided by 3).

(v) Fifth, the resulting amount is then multiplied by the number of preceding taxable years of the trust on the last day of which an amount is deemed under section 666(a) to have been distributed (previously determined under subdivision (i) of this subparagraph). For example, if an amount is deemed distributed for 5 preceding taxable years, the resulting amount would be five times the $5,000 amount.

(vi) Sixth, the resulting amount, less so much of the amount of taxes deemed distributed to the beneficiary under §§ 1.666(b)-1A and 1.666(c)-1A as does not exceed such resulting amount, is the tax under the short-cut method provided in section 668(b)(1)(B).

(2) The computation of the tax by the short-cut method may be illustrated by the following example:

Example. In 1971, X creates a trust which is to accumulate its income and pay the income to Y when Y reaches 30. Y is 19. Over the 11 years of the trust, the trust earns $1,200 of interest income annually and has expenses each year of $100 allocable to the production of income. The trust pays a total tax of $1,450 on the accumulated income. In 1981, when Y reaches 30, the $9,550 of accumulated undistributed net income and the $1,100 of current net income are distributed to Y. Y is treated as having received a total distribution of $11,000 (the $9,550 accumulation distribution plus the taxes paid by the trust which are deemed to have been distributed to Y). The income of the current year (1981) is taxed directly to Y. The computation is as follows: $11,000 (accumulation distribution plus taxes) divided by 10 (number of years out of which distribution was made) equals $1,100. The $1,100 added to the income of the beneficiary's preceding 3 years produces increases in tax as follows:

1980	$350
1979	300
1978	250
Total	900

$900 (total additional tax) divided by 3 equals $300 (average annual increase in tax). $300 (average annual increase in tax) times 10 equals $3,000, from which is deducted the amount of taxes ($1,450) paid by the trust attributable to the undistributed net income deemed distributed. The amount of tax to be paid currently under the short-cut method is therefore $1,550.

(d) ***Disallowance of short-cut method.*** If, in any prior taxable year of the beneficiary in which any part of the accumulation distribution of undistributed net income is deemed to have been distributed under section 666(a) to such beneficiary, any part of prior accumulation distributions of undistributed net income by each of two or more other trusts is deemed under section 666(a) to have been distributed to such beneficiary, then the short-cut method under paragraph (c) of this section may not be used and the partial tax imposed by section 668(a)(2) shall be computed only under the exact method under paragraph (b) of this section. For example, assume that, in 1978, trust X makes an accumulation distribution of undistributed net income to A, who is on the calendar year basis, and part of the accumulation distribution is deemed under section 666(a) to have been distributed on March 31, 1974. In 1977, A had received an accumulation distribution of undistributed net income from both trust Y and trust Z. Part of the accumulation distribution from trust Y was deemed under section 666(a) to have been distributed to A on June 30, 1974, and part of the accumulation distribution from trust Z was deemed under section 666(a) to have been distributed to A on December 31, 1974. Because there were portions of accumulation distributions of undistributed net income from two other trusts deemed distributed within the same prior taxable year of A (1974), the 1978 accumulation distribution from trust X may not be computed under the short-cut method provided in paragraph (c) of this section. Therefore the exact method under paragraph (b) of this section must be used to compute the tax imposed by section 666(a)(2).

[T.D. 7204, 37 FR 17149, Aug. 25, 1972]

§ 1.668(b)-2A Special rules applicable to section 668.

(a) ***Rule when beneficiary not in existence on the last day of a taxable year.*** If a beneficiary was not in existence on the last day of a preceding taxable year of the trust with respect to which a distribution is deemed made under section 666(a), it shall be assumed, for purposes of the computations under paragraphs (b) and (c) of § 1.668(b)-1A, that the beneficiary:

(1) Was in existence on such last day,

(2) Was a calendar year taxpayer,

(3) Had no gross income other than the amounts deemed distributed to him from such trust in his calendar year in which such last day occurred and from all other trusts from which amounts are deemed to have been distributed to him in such calendar year,

(4) If an individual, was unmarried and had no dependents,

(5) Had no deductions other than the standard deduction, if applicable, under section 141 for such calendar year, and

(6) Was entitled to the personal exemption under section 151 or 642(b).

For example, assume that part of an accumulation distribution made in 1980 is deemed under section 666(a) to have been distributed to the beneficiary, A, in 1973; $10,000 of a prior accumulation distribution was deemed distributed in 1973. A was born on October 9, 1975. It will be assumed for purposes of § 1.668(b)-1A that A was alive in 1973, was on the calendar year basis, had no income other than (i) the $10,000 from the earlier accumulation distribution deemed distributed in 1973, and (ii) the part of the 1980 distribution deemed distributed in 1973, and had no deductions other than the personal exemption provided in section 151. It should be noted that the standard deduction for 1973 will be available to A with respect to the distribution only to the extent it qualifies as “earned income” in the hands of the trust. See section 141(e) and the regulations thereunder and § 1.652(b)-1. If A were a trust or estate created after

1973, the same assumptions would apply, except that the trust or estate would not be entitled to the standard deduction and would receive the personal exemption provided under section 642(b) in the same manner as allowed under such section for A's first actual taxable year.

(b) ***Effect of other distributions.*** The income of the beneficiary, for any of his prior taxable years for which a tax is being recomputed under § 1.668(b)-1A, shall include any amounts of prior accumulation distributions (including prior capital gain distributions) deemed distributed under sections 666 and 669 in such prior taxable year. For purposes of the preceding sentence, a "prior accumulation distribution" is a distribution from the same or another trust which was paid, credited, or required to be distributed in a prior taxable year of the beneficiary. The term "prior accumulation distribution" also includes accumulation distributions of other trusts which were paid, credited, or required to be distributed to the beneficiary in the same taxable year and which the beneficiary has determined under paragraph (c) of this section to treat as having been distributed before the accumulation distribution for which tax is being computed under § 1.668(b)-1A. Any capital gain distribution from the same trust paid, credited, or required to be distributed in the same taxable year of the beneficiary shall not be considered under this paragraph to be a "prior capital gain distribution."

(c) ***Multiple distributions in the same taxable year.*** For purposes of paragraph (b) of this section, accumulation distributions made from more than one trust in the same taxable year of the beneficiary, regardless of when in the taxable year they were actually made, shall be treated as having been made consecutively, in whichever order the beneficiary may determine. However, the beneficiary must treat them as having been made in the same order for the purpose of computing the partial tax on the several accumulation distributions. The beneficiary shall indicate the order he has determined to deem the accumulation distributions to have been received by him on his return for the taxable year. A failure by him so to indicate, however, shall not affect his right to make such determination. The purpose of this rule is to assure that the tax resulting from the later (as so deemed under this paragraph) distribution is computed with the inclusion of the earlier distribution in the taxable base and that the tax resulting from the earlier (as so deemed under this paragraph) distribution is computed with the later distribution excluded from the taxable base.

(d) ***Examples.*** The provisions of paragraphs (b) and (c) of this section may be illustrated by the following examples:

Example 1. In 1978, trust X made an accumulation distribution of undistributed net income to A, a calendar year taxpayer, of which $3,000 was deemed to have been distributed in 1974. In 1980, trust X makes another accumulation distribution of undistributed net income to A, $10,000 of which is deemed under section 666 to have been distributed in 1974. Also in 1980, trust Y makes an accumulation distribution of undistributed net income to A, of which $5,000 is deemed under section 666 to have been distributed in 1974. A determines to treat the 1980 distribution from trust Y as having been made prior to the 1980 distribution from trust X. In computing the tax on the 1980 trust Y distribution, A's gross income for 1974 includes

(i) the $3,000 deemed distributed from the 1978 distribution, and

(ii) the $5,000 deemed distributed in 1974 from the 1980 trust Y accumulation distribution. To compute A's tax under the exact method for 1974 on the $10,000 from the 1980 trust X accumulation distribution deemed distributed in 1974, A's gross income for 1974 includes

(i) the $10,000,

(ii) the $3,000 previously deemed distributed in 1974 from the 1978 trust X accumulation distribution, and

(iii) the $5,000 deemed distribution in 1974 from the 1980 trust Y accumulation distribution.

Example 2. In 1978, trust T makes an accumulation distribution of undistributed net income to B, a calendar year taxpayer. Determination of the tax on the accumulation distribution under the short-cut method requires the use of B's gross income for 1975, 1976, and 1977. In 1977, B received an accumulation distribution of undistributed net income from trust U, of which $2,000 was deemed to have been distributed in 1975, and $3,000 in 1976. B's gross income for 1975, for purposes of using the short-cut method to determine the tax from the trust T accumulation distribution, will be deemed to include the $2,000 deemed distributed in 1975 by trust U, and his gross income for 1976 will be deemed to include the $3,000 deemed distributed by trust U in 1976.

[T.D. 7204, 37 FR 17151, Aug. 25, 1972]

§ 1.668(b)-3A Computation of the beneficiary's income and tax for a prior taxable year.

(a) ***Basis for computation.***

(1) The beneficiary's income and tax paid for any prior taxable year for which a recomputation is involved under either the exact method or the short-cut method shall be determined by reference to the information required to be furnished by him under § 1.668(b)-4A(a). The gross income, related deductions, and taxes paid for a prior taxable year of the beneficiary as finally determined shall be used for computation purposes. The term "as finally determined" has reference to the final status of the gross income, deductions, credits, and taxes of the taxable year after the expiration of the period of limitations or after completion of any court action regarding the tax for the taxable year.

(2) If any computations rely on the beneficiary's return for a prior taxable year for which the applicable period of limitations on assessment under section 6501 has expired, and such return shows a mathematical error on its face which resulted in the wrong amount of tax being paid for such year, the determination of both the tax for such year computed with the inclusion of the section 666 amount in the beneficiary's gross income and the tax for such year computed without including such amounts in such gross income shall be based upon the return after the correction of such mathematical errors, and the beneficiary shall be credited for the correct amount of tax that should have been properly paid.

(b) ***Effect of allocation of undistributed net income on items based on amount of income and with respect to a net operating loss, a charitable contributions carryover, or a capital loss carryover.***

(1) In computing the tax for any taxable year under either the exact method or the short-cut method, any item which depends upon the amount of gross income, adjusted gross income, or taxable income shall be recomputed to take into consideration the amount of undistributed net income allocated to such year. For example, if $1,000 of undistributed net income is allocated to 1970, adjusted gross income for 1970 is increased from $5,000 to $6,000. The allowable 50 percent charitable deduction under section 170(b)(1)(A) is then increased and the amount of the nondeductible medical expenses under section 213 (3 percent of adjusted gross income) is also increased.

(2) In computing the tax attributable to the undistributed net income deemed distributed to the beneficiary in any of his prior taxable years under either the exact method or the short-cut method, the effect of amounts of undistributed net income on a net operating loss carryback or carryover, a charitable contributions carryover, or a capital loss carryback or carryover, shall be taken into account. In determining the amount of tax attributable to such deemed distribution, a computation shall also be made for any taxable year which is affected by a net operating loss carryback or

carryover, by a charitable contributions carryover, or by a capital loss carryback or carryover determined by reference to the taxable year to which amounts are allocated under either method and which carryback or carryover is reduced or increased by such amounts so allocated. The provisions of this subparagraph may be illustrated by the following example:

Example. In 1978, a trust makes an accumulation distribution of undistributed net income to X of $50,000 that is deemed under section 666(a) to have been distributed in 1972. X had income in 1972, 1973, and 1973, and had a net operating loss in 1975 that offset his taxable income (computed as provided in § 1.172-5) for those years, as follows:

Year	Actual income (or loss)	Income after net operating loss carryback (n.o.l.c.b.)
1972	$10,000	$0
1973	50,000	0
1974	50,000	10,000
1975	(100,000)	0

As a result of the allocation of the 1973 accumulation distribution to 1972, X's income for 1972, 1973, 1974, and 1975, after taking into account the 1975 n.o.l.c.b., is deemed to be as follows:

Year	Income deemed to have been earned after consideration of n.o.l.c.b., and accumulation distribution
1972	0 ($10,000 + $50,000−$60,000 n.o.l.c.b.).
1973	$10,000 ($50,000−$40,000 balance of n.o.l.c.b.).
1974	$50,000.
1975	0.

Therefore, the tax on the 1978 accumulation distribution to X is the tax X would have paid in 1973 and 1974 had he had the above income in such years.

(c) ***Averaging.*** A beneficiary who uses the exact method may recompute his tax for a prior taxable year by using income averaging for all of his actual income for that year, plus the amount deemed distributed in that year under section 666, even though he may not have actually used section 1301 to determine his income tax for such taxable year. For purposes of such recomputation, the beneficiary's income for all other taxable years involved must include any amounts deemed distributed in such years from the current and all prior accumulation distributions. See § 1.668(b)-4A(c)(3) for additional information requirements. The beneficiary may not apply the provisions of this paragraph to a taxable year in which an amount is

deemed to be income by reason of § 1.666(d)-1A(b). The accumulation distribution itself is not eligible for income averaging in the years in which it is paid, credited, or required to be distributed. See section 1302 (a)(2)(B) and the regulations thereunder.

[T.D. 7204, 37 FR 17151, Aug. 25, 1972]

§ 1.668(b)-4A Information requirements with respect to beneficiary.

(a) ***Information to be supplied by beneficiary*** —

(1) ***In general.*** The beneficiary must supply the information required by subparagraph (3) of this paragraph for any prior taxable year for which a recomputation is required under either the exact method or the short-cut method. Such information shall be filed with the beneficiary's return for the year in which the tax under section 668(a)(2) is imposed.

(2) ***Failure to furnish.*** If the beneficiary fails to furnish the information required by this paragraph for any prior year involved in the exact method, he may not use such method and the tax computed under paragraph (c) of § 1.668(b)-1A (the short-cut method) shall be deemed to be the amount of partial tax imposed by section 668(a)(2). See, however, paragraph (b) of this section for an exception to this rule where the short-cut method is not permitted. If he cannot furnish the information required for a prior year involved in the short-cut method, such year will be recomputed on the basis of the best information available.

(3) ***Information required.*** The beneficiary shall file the following items with his income tax return for the taxable year in which the accumulation distribution is included in income:

(i) A statement showing the gross income, adjustments, deductions, credits, taxes paid, and computations for each of his taxable years for which a computation is required under the method by which he computes his partial tax imposed by section 668(a)(2). Such statement shall include such amounts for the taxable year as adjusted by any events subsequent to such year, such as any adjustment resulting from the determination of a deficiency or an overpayment, or from a court action regarding the tax.

(ii) A copy of the statement required by this subparagraph to be furnished by the beneficiary for any prior taxable year in which an accumulation distribution was received by him which was also deemed distributed in whole or in part in the prior taxable year for which the statement under subdivision (i) of this subparagraph is required.

(iii) A copy of any statements furnished the beneficiary by the trustee (such as schedules E and J of Form 1041, etc.) with regard to the current taxable year or any prior taxable year for which a statement is furnished under subdivision (i) of this subparagraph.

(b) ***Exception.*** If by reason of § 1.668(b)-1A(e) the beneficiary may not compute the partial tax on the accumulation distribution under § 1.668(b)-1A(c) (the short-cut method), the provisions of subparagraph (2) of paragraph (a) of this section shall not apply. In such case, if the beneficiary fails to provide the information required by subparagraph (3) of paragraph (a) of this section for any prior taxable year, the district director shall, by utilizing whatever information is available to him (including information supplied by the beneficiary), determine the beneficiary's income and related expenses for such prior taxable year.

(c) ***Records to be supplied by the beneficiary*** —

(1) ***Year when return was filed.*** If the beneficiary filed an income tax return for a taxable year for which a recomputation is necessary, and the period of limitations on assessment under section 6501 for such year has expired as of the filing of the return for the year in which the accumulation distribution was made, then a copy of such return, plus proof of any changes of liability for such year due to the determination of a deficiency or an overpayment, court action, etc., shall, to the extent they verify the statements required under paragraph (a) of this section, serve as proof of such statements. If the period of limitations on assessment under section 6501 for a prior taxable year has not expired as of the filing of the beneficiary's return for the year in which the accumulation distribution was received, then the records required by section 6001 to be retained by the beneficiary for such prior taxable year shall serve as the basis of proof of the statements required to be filed under paragraph (a) of this section.

(2) ***Year for which no return was filed.*** If the beneficiary did not file a return for a taxable year for which a recomputation is necessary, he shall be deemed to have had in such year, in the absence of proof to the contrary, gross income in the amount equal to the maximum amount of gross income that he could have received without having had to file a return under section 6012 for such year.

(3) ***Distributions deemed averaged.*** In order for a beneficiary to use income averaging with respect to a prior taxable year (see § 1.668(b)-3A(c)), he must furnish all the information that would support the computation under section 1301 as if the distribution were actually received and averaged in such prior taxable year, even if a portion of the information relates to years in which no amount was deemed distributed to the beneficiary.

[T.D. 7204, 37 FR 17152, Aug. 25, 1972]

§ 1.668(a)-1 Amounts treated as received in prior taxable years; inclusion in gross income.

(a) Section 668(a) provides that the total of the amounts treated under section 666 as having been distributed by the trust on the last day of a preceding taxable year of the trust shall be included in the gross income of the beneficiary or beneficiaries receiving them. The total of such amounts is includible in the gross income of each beneficiary to the extent the amounts would have been included under section 662 (a)(2) and (b) if the total had actually been paid by the trust on the last day of such preceding taxable year. The total is included in the gross income of the beneficiary for the taxable year of the beneficiary in which such amounts are in fact paid, credited, or required to be distributed unless the taxable year of the beneficiary differs from the taxable year of the trust (see section 662(c) and the regulations thereunder). The character of the amounts treated as received by a beneficiary in prior taxable years, including taxes deemed distributed, in the hands of the beneficiary is determined by the rules set forth in section 662(b) and the regulations thereunder. See paragraphs (h)(1)(ii) and (j)(1)(ii) of § 1.668(b)-2.

(b) The total of the amounts treated under section 666 as having been distributed by the trust on the last day of a preceding taxable year of the trust are included as prescribed in paragraph (a) of this section in the gross income of the beneficiary even though as of that day the beneficiary would not have been entitled to receive them had they actually been distributed on that day.

(c) Any deduction allowed to the trust in computing distributable net income for a preceding taxable year (such as depreciation, depletion, etc.) is not deemed allocable to a beneficiary because of amounts included in a beneficiary's gross income under this section since the deduction has already been utilized in reducing the amount included in the beneficiary's income.

§ 1.668(a)-2 Allocation among beneficiaries; in general.

The portion of the total amount includible in gross income under § 1.668 (a)-1 which is includible in the gross income of a particular beneficiary is based upon the ratio determined under the second sentence of section 662(a)(2) for the taxable year (and not for the preceding taxable year). This section may be illustrated by the following example:

> *Example.* (a) Under the terms of a trust instrument, the trustee may accumulate the income or make distributions to A and B. The trustee may also invade corpus for the benefit of A and B. The distributable net income of the trust for the taxable year 1955 is $10,000. The trust had undistributed net income for the taxable year 1954 of $5,000, to which a tax of $1,100 was allocable. During the taxable year 1955, the trustee distributes $10,000 to A and $5,000 to B. Thus, of the total distribution of $15,000, A received two-thirds and B received one-third.
> (b) For the purposes of determining the amounts includible in the beneficiaries' gross income for 1955, the trust is deemed to have made the following distributions:

Amount distributed out of 1955 income (distributable net income)	$10,000
Accumulation distribution deemed distributed by the trust on the last day of 1954 under section 666(a)	5,000
Taxes imposed on the trust deemed distributed under section 666(b)	1,100

> (c) A will include in his gross income for 1955 two-thirds of each item shown in paragraph (b) of this example. Thus, he will include in gross income $6,666.67 (10,000/ 15,000 × $10,000) of the 1955 distributable net income of the trust as provided in section 662(a)(2), and $3,333.33 (10,000/ 15,000 × $5,000) of the accumulation distribution and $733.33 (10,000/15,000 × $1,100) of the taxes imposed on the trust as provided in section 668(a).
> (d) B will include in his gross income for 1955 one-third of each item shown in paragraph (b) of this example, computed in the manner shown in paragraph (c) of this example.

§ 1.668(a)-3 Excluded amounts.

When a trust pays, credits, or is required to distribute to a beneficiary amounts which are excluded under section 665(b) (1), (2), (3), or (4) from the computation of an accumulation distribution, the amount includible under subpart D (section 665 and following), part I, subchapter J, chapter 1 of the Code, in the gross income of the beneficiaries pursuant to § 1.668(a)-1 is first allocated to the beneficiaries as provided in § 1.668(a)-2 and, second, the amount allocable to the beneficiary receiving amounts which are excluded under section 665(b) (1), (2), (3), or (4) is reduced by the excluded amounts. This section may be illustrated by the following examples, in which it is assumed the trusts and beneficiaries report on the calendar year basis and the income of the trusts was derived entirely from taxable interest:

> *Example 1.* (a) A trust in 1957 has income as defined in section 643(b) of $35,000 and expenses

allocable to corpus of $5,000. Its distributable net income is, therefore, $30,000 ($35,000−$5,000). The undistributed net income of the trust and the taxes imposed on the trust were $12,840 and $7,260, respectively, for each of the years 1956, 1955, and 1954. The terms of the trust instrument provide for the accumulation of income during the minority of beneficiaries A and B. However, the trustee may make discretionary distributions to either beneficiary after he becomes 21 years of age. Also, the trustee may invade corpus for the benefit of A and B. B became 21 years of age on January 1, 1957, and, as of that date, A was 25 years old. The trustee distributed $50,000 each to A and B during 1957.
(b) Since each beneficiary received one-half of the total amount distributed by the trust, each must include in gross income under section 662(a)(2) one-half ($15,000) of the distributable net income ($30,000) of the trust for 1957.

(c) The excess distribution of $35,000 ($50,000−$15,000) received by B is excluded from the determination of an accumulation distribution under section 665(b)(1) and accordingly is not includible in B's gross income under section 668(a). Nor is such amount treated as an accumulation distribution for the purpose of determining the amount includible in A's gross income under section 668(a).

(d) The accumulation distribution of the trust is $35,000, computed as follows:

Total distribution by the trust		$100,000
Less:		
Distributable net income for 1957	$30,000	
Excess distribution to B	35,000	
		65,000
Accumulation distribution to A		35,000

(e) The accumulation distribution of $35,000 will be allocated to the preceding taxable years 1956, 1955, and 1954, and the trust will be deemed to have made the following distributions to A on the last day of those years:

	1956	1955	1954	Total
Undistributed net income	$12,840	$12,840	$9,320	$35,000
Taxes imposed on the trust	7,260	7,260	5,270	19,790
Total	20,100	20,100	14,590	54,790

Thus, A will include $54,790 in his gross income for 1957 under section 668(a). A will, however, receive credit against his tax under section 668(b).

Example 2. (a) Under the terms of a trust the trustee may make discretionary distributions out of income to A during her life. The balance of the income is to be accumulated during the minority of her son, B, and is to be distributed to him when he becomes 21 years of age. Thereafter the trustee may also make discretionary payments of income to B. Also, the trustee may invade corpus for the benefit of A and B. B became 21 years of age on December 31, 1955. The distributable net income of the trust for 1955 is $30,000. It had undistributed net income of $12,840 for the preceding taxable year 1954 and the taxes imposed on the trust for such year were $7,260. The trustee distributed $15,000 to A during 1955 and on December 31, 1955, he distributed $60,000 to B, which represented income accumulated during his minority.
(b) Since B received four-fifths of the total amount ($75,000) distributed by the trust during 1955, he must include in his gross income under section 662(a)(2) four-fifths ($24,000) of the distributable net income ($30,000) of the trust for 1955. A will include in her gross income under section 662(a)(2) one-fifth ($6,000) of the distributable net income ($30,000) of the trust for 1955.

(c) The excess distribution of $36,000 ($60,000−$24,000) received by B is excluded from the determination of an accumulation distribution under section 665(b)(1) and accordingly is not includible in his gross income under section 668(a).

(d) The amount treated as an accumulation distribution for the purpose of determining the amount includible in A's gross income for 1955 under section 668(a) is $9,000, computed as follows:

Total distribution by the trust		$75,000
Less:		
Distributable net income for 1955	$30,000	
Excess distribution to B	36,000	
		66,000
Amount treated as an accumulation distribution		9,000

(e) Inasmuch as the amount of $9,000 is less than the total undistributed net income of the trust ($12,840) for the preceding taxable year 1954, a pro rata portion of the taxes imposed on the trust for that year are also deemed distributed by the trust. Thus, A will include $14,089 in her gross income for 1955 under section 668 (a) computed as follows:

1954	
Accumulation distribution	$9,000
Taxes imposed on the trust (9,000/ 12,840 × $7,260)	5,089

Total	14,089

A will, however, receive credit against her tax under section 668(b).

§ 1.668(a)-4 Tax attributable to throwback.

(a) The tax attributable to amounts deemed distributed under section 666 is imposed on the beneficiary for the taxable year of the beneficiary in which the accumulation distribution is made unless the taxable year of the beneficiary is different from that of the trust (see section 662(c) and the regulations thereunder). In the case of a trust (other than a foreign trust created by a U.S. person), the tax cannot be greater than the aggregate of the taxes attributable to those amounts had they been included, in accordance with the provisions of section 662 (a)(2) and (b), in the gross income of the beneficiary for the preceding taxable year or years in which they were deemed distributed. In the case of a foreign trust created by a U.S. person, the tax on the beneficiary shall be computed in accordance with the provisions of section 669 and the regulations thereunder. The tax liability of the beneficiary of a trust (other than a foreign trust created by a U.S. person), including the portion of an entire foreign trust which does not constitute a foreign trust created by a U.S. person (see § 1.643(d)-1), for the taxable year is computed in the following manner:

(1) First, compute the amount of tax for the taxable year attributable to the section 666 amounts which are included in the gross income of the beneficiary for the year. The tax attributable to those amounts is the difference between the tax for the taxable year computed with the inclusion of the section 666 amounts in gross income and the tax computed without including them in gross income.

(2) Next, compute the tax attributable to the section 666 amounts for each of the preceding taxable years as if they had been included in gross income for those years. The tax attributable to such amounts in each such preceding taxable year is the difference between the tax for such preceding year computed with the inclusion of the section 666 amounts in gross income and the tax for such year computed without including them in gross income. The tax computation for each preceding year shall reflect the taxpayer's marital and dependency status for that year.

(3) The total tax for the taxable year is the tax for that year computed without including the section 666 amounts, *plus:*

(i) The amount of the tax for the taxable year attributable to the section 666 amounts (computed in accordance with subparagraph (1) of this paragraph), or

(ii) The sum of the taxes for the preceding taxable years attributable to the section 666 amounts (computed in accordance with subparagraph (2) of this paragraph),

whichever is the smaller.

(b) The provisions of paragraph (a) of this section may be illustrated by the following example:

Example. (1) During the taxable year 1956, $10,000 is deemed distributed under section 666 to a beneficiary, of which $6,000 is deemed distributed by the trust on the last day of 1955 and $4,000 on the last day of 1954. The beneficiary had taxable income (after deductions) from other sources of $5,000 for

1956, $10,000 for 1955, and $10,000 for 1954. The beneficiary's tax liability for 1956 is $4,730 determined as follows:

Year 1956	
Tax on $15,000 (taxable income including section 666 amounts)	$4,730
Tax on $5,000 (taxable income excluding section 666 amounts)	1,100
Tax attributable to section 666 amounts	3,630
Year 1955	
Tax on $16,000 (taxable income including section 666 amounts)	$5,200
Tax on $10,000 (taxable income excluding section 666 amounts)	2,640
Tax attributable to section 666 amounts	2,560
Year 1954	
Tax on $14,000 (taxable income including section 666 amounts)	$4,260
Tax on $10,000 (taxable income excluding section 666 amounts)	2,640
Tax attributable to section 666 amounts	1,620

(2) Inasmuch as the tax of $3,630 attributable to the section 666 amounts as computed at 1956 rates is less than the aggregate of the taxes of $4,180 ($2,560 plus $1,620) determined for the preceding taxable years the amount of $3,630 is added to the tax ($1,100) computed for 1956 without including the section 666 amounts.

[T.D. 6500, 25 FR 11814, Nov. 26, 1960, as amended by T.D. 6989, 34 FR 737, Jan. 17, 1969]

§ 1.668(b)-1 Credit for taxes paid by the trust.

(a) The taxes imposed on a complex trust for a taxable year which would not have been payable by the trust if amounts deemed under section 666 to have been distributed in the year had in fact been distributed in the year are not allowable as a refund to the trust but are allowable as a credit against the tax of the beneficiaries to whom the amounts described in section 666(a) are distributed.

(b) The credit to which a beneficiary is entitled under section 668(b) is allowed for the taxable year in which the accumulation distribution (to which the credit relates) is required to be included in the gross income of the beneficiary. Any excess over the total tax liability of the beneficiary is treated as an overpayment of tax by the beneficiary.

(c) The beneficiary is entitled to a portion of the credit described in paragraph (a) of this section in the ratio which the amount of the accumulation distribution to him bears to the accumulation distributions to all the beneficiaries.

§ 1.668(b)-2 Illustration of the provisions of subpart D.

The provisions of subpart D (section 665 and following), part I, subchapter J, chapter 1 of the Code, other than provisions relating to a foreign trust created by a U.S. person, may be illustrated by the following example:

Example. (a) *Facts.* (1) Under the terms of a trust instrument, one-half of the trust income is required to be distributed currently to beneficiary A. The trustee may in his discretion accumulate the balance of the income of the trust or he may make distributions to B out of income or corpus. The trust is to terminate upon the death of A and the corpus is to be distributed to B. Capital gains are allocable to corpus. All of the expenses of the trust are charges against income. The trust instrument provides for a reserve for depreciation, so that depreciation is deductible in computing distributable net income. The trust and both beneficiaries report on the calendar year basis. The trust had long-term capital gains of $20,000 for 1954, and $10,000 for 1955, which were allocated to corpus. The distributable net income of the trust as determined under section 643(a) for 1954, 1955, 1956, and 1957 is deemed to consist of the following items of income:

	Dividends	Rents	Interest (taxable)	Interest (exempt)	Total
1954	$15,000	$20,000	$10,000	$5,000	$50,000
1955	10,000	15,000	10,000	5,000	40,000
1956	10,000	20,000	15,000	5,000	50,000
1957	10,000	15,000	15,000	5,000	45,000

(2) One-half ($7,500) of the dividends for 1954 was received by the trust on or before July 31, 1954, and the balance was received after that date.
(3) The following distributions were made by the trustee to A and B during the taxable years 1954 through 1957:

	A	B
1954	$25,000	None
1955	20,000	None
1956	25,000	$45,000
1957	22,500	29,550

(b) *Distributions to A.* A is deemed to have received one-half of each item of income entering into the computation of distributable net income as shown in paragraph (a)(1) of this example. See § 1.662(a)-2 for rules for the treatment of currently distributable income in the hands of the beneficiary.

(c) *Tax liability of the trust*—(1) *1954.* (i) The tax liability of the trust for the taxable year 1954 is $13,451, computed as follows:

Distributable net income under section 643(a) (paragraph (a)(1) of this example)		$50,000
Less amounts not includible in gross income:		
Tax-exempt interest	$5,000	
Dividend exclusion	50	
		5,050
Distributable net income as adjusted		44,950
Add: Capital gains (long-term)		20,000
Total		64,950
Deductions:		
Distributions to A	$22,475	
Capital gain deduction	$10,000	
Personal exemption	100	
		32,575
Taxable income		32,375
Alternative tax		13,601
Dividend received credit		150
Tax liability		13,451

(ii) See paragraph (b) of this example for character of income deemed distributed to A and section 661 for rules for computing the amount deductible by a trust for distributions to beneficiaries. Inasmuch as one-half of the dividends of the trust is deemed to be distributed to A, $25 of such distribution is deemed to be made from the dividend exclusion of $50, and the balance from dividends included in the gross income of the trust (that is, since the year 1954 is involved, $3,725 from dividends received on or before July 31, 1954, and $3,750 from dividends received after July 31, 1954). The trust is entitled to a dividend received credit attributable to the dividends of $3,750 received after July 31, 1954, which were not distributed to any beneficiary during the taxable year.

(2) *1955.* (i) The tax liability of the trust for the taxable year 1955 is $8,189, computed as follows:

Distributable net income under section 643(a) (paragraph (a)(1) of this example)		$40,000
Less amounts not includible in gross income:		
Tax-exempt interest	$5,000	
Dividend exclusion	50	
		5,050
Distributable net income as adjusted		34,950

Add: Capital gains (long-term)		10,000
Total		44,950
Deductions:		
Distributions to A	$17,475	
Capital gain deduction	5,000	
Personal exemption	100	
		22,575
Taxable income		22,375
Alternative tax		8,388
Dividend received credit		199
Tax liability		8,189

(ii) See paragraph (b) of this example for character of income deemed distributed to A and section 661 for rules for computing the amount deductible by a trust for distributions to beneficiaries. Inasmuch as one-half ($4,975) of the dividends of $9,950 ($10,000 less dividend exclusion of $50) included in the gross income of the trust is deemed distributed to A, the trust is entitled to a dividend received credit with respect to the dividends of $4,975 which were not distributed to any beneficiary during the taxable year.
(3) *1956 and 1957.* The trust had no tax liability for the taxable years 1956 and 1957 since all of its income was distributed during such years.

(d) *Accumulation distributions.* (1) Accumulation distributions of $20,000 and $7,050, as defined in section 665(b), were made to B during the years 1956 and 1957, respectively, computed as shown below:

	1956	1957
Distributable net income of the trust as computed under section 643(a)	$50,000	$45,000
Less. Income currently distributable to A	25,000	22,500
Balance of income	25,000	22,500
Other amounts distributed to B	45,000	29,550
Accumulation distributions to B	20,000	7,050

(2) B is deemed to have received one-half of each item of income entering into the computation of distributable net income (shown in paragraph (a)(1) of this example) for the years 1956 and 1957.
(3) The accumulation distribution for 1956 must first be allocated to the preceding taxable years as provided in section 666. After the application of the provisions of subpart D to the 1956 accumulation distribution and to the undistributed net incomes of the preceding taxable years, a similar allocation must be made of the 1957 accumulation distribution.

(e) *Throwback of 1956 accumulation distribution to 1955.* The accumulation distribution of $20,000 for 1956 must be allocated to the first preceding taxable year 1955, before allocation is made to the second preceding taxable year 1954.

(1) *1955 Undistributed net income.* (i) The undistributed net income of the trust for 1955, determined as of the close of 1955, is $12,885, computed as follows:

Distributable net income as computed under section 643(a) (paragraph (a)(1) of this example)		$40,000
Less:		
Distributions to A	$20,000	
Taxes imposed on the trust	7,115	
	27,115	
Undistributed net income as of the close of 1955	12,885	

(ii) The taxes imposed on the trust of $7,115 are that portion of the taxes paid by the trust for 1955 which is attributable to the undistributed portion of distributable net income included in the taxable income of the trust (the "balance" in the computation below) and is determined as follows:

Taxable income (paragraph (c)(2)(i) of this example			$22,375
Capital gains allocable to corpus		$10,000	
Less:			
Capital gain deduction	$5,000		
Personal exemption	100		
		5,100	
Portion of taxable income allocable to corpus			4,900
Balance			17,475
Total taxes paid by the trust			8,189
Taxes on income ($4,900) allocable to corpus			1,074
Taxes imposed on the trust (section 665(c))			7,115

(iii) The amount of $1,074 is the taxes which the trust would have paid for 1955 had all of the distributable net income been distributed during the year.

(2) *Allocation of 1956 accumulation distribution to the preceding taxable year 1955.* The portion of the 1956 accumulation distribution which is deemed under section 666(a) to be distributed to B on the last day of 1955 (the first preceding taxable year) is $12,885, an amount equal to the undistributed net income for 1955. An additional amount equal to the taxes imposed on the trust ($7,115) is, under section 666(b), also

deemed to be distributed to B on the last day of 1955. Thus, a total of $20,000 ($12,885 plus $7,115) is deemed to be distributed to B on December 31, 1955, by reason of the allocation of the 1956 accumulation distribution to the first preceding taxable year. See paragraph (h) of this example for the treatment of the amount of $20,000 in the hands of B.

(3) *Character of amounts deemed distributed.* Inasmuch as one-half of the 1955 distributable net income of the trust as determined under section 643(a) was currently distributable to A and the balance of such income is deemed under section 666 to be distributed to B on December 31, 1955, the distribution to B is deemed to consist of one-half of each item of income entering into the computation of the 1955 distributable net income; that is, dividends of $5,000, rents of $7,500, taxable interest of $5,000, and tax-exempt interest of $2,500.

(4) *Credit for taxes paid by the trust.* The amount of the taxes for the year 1955 which may not be refunded or credited to the trust under section 667 and which is allowed as a credit against the tax of B for 1956 under section 668(b) is $7,115. See also paragraph (h)(3) of this example.

(5) *Effect of application of provisions of subpart D to the year 1955.* After the allocation of the 1956 accumulation distribution to the preceding taxable year 1955, the undistributed portion of the distributable net income, the undistributed net income, and the taxes imposed on the trust for 1955 are zero. The portion of the 1956 accumulation distribution which is unabsorbed by the 1955 undistributed net income is $7,115, determined as follows:

1956 accumulation distribution (paragraph (d)(1) of this example)	$20,000
Less: Amount allocable to 1955	12,885
Balance allocable to second preceding taxable year 1954	7,115

(f) *Throwback of 1956 accumulation distribution to 1954.* The unabsorbed portion of the 1956 accumulation distribution of $7,115 is allocable to the second preceding taxable year 1954 and is treated under section 666 as a distribution to B on the last day of such year.
(1) *1954 Undistributed net income.* (i) The undistributed net income of the trust for 1954, determined as of the close of 1954, is $14,155, computed as follows:

Distributable net income as computed under section 643(a) (paragraph (a)(1) of this example)		$50,000
Less:		
Distributions to A	$25,000	

Taxes imposed on the trust		10,845	
			35,845
Undistributed net income as of the close of 1954			14,155

(ii) The taxes imposed on the trust of $10,845 are that portion of the taxes paid by the trust for 1954 which is attributable to the undistributed portion of distributable net income included in the taxable income of the trust (the "balance" in the computation below in this subdivision) and is determined as follows:

Taxable income (paragraph (c)(1)(i) of this example)			$32,375
Capital gains allocable to corpus		$20,000	
Less:			
Capital gain deduction	$10,000		
Personal exemption	100		
		10,100	
Portion of taxable income allocable to corpus			9,900
Balance			22,475
Total taxes paid by the trust			13,451
Taxes on income ($9,900) allocable to corpus			2,606
Taxes imposed on the trust (section 665(c))			10,845

(iii) The amount of $2,606 is the taxes which the trust would have paid for 1954 had all of the distributable net income been distributed during that year.

(2) *Allocation of 1956 accumulation distribution to the second preceding taxable year 1954.* Since the unabsorbed portion of the 1956 accumulation distribution of $7,115 is less than the 1954 undistributed net income of $14,155, the trust is deemed under section 666(c) to have also distributed an additional amount ($5,451) equal to a pro rata portion (7,115/14,155 × $10,845) of the taxes imposed on the trust for 1954. Thus, a total of $12,566 ($7,115 plus $5,451) is deemed to be distributed to B on December 31, 1954, by reason of the throwback of the 1956 accumulation distribution. See paragraph (h) of this example for the treatment of the amount of $12,566 in the hands of B.

(3) *Character of amounts deemed distributed to B.* The amount of $12,566 which, under section 666, is deemed to be distributed to B on December 31, 1954, is deemed to be composed of the following items of income of the trust: Dividends, $3,770 (15,000/50,000 × $12,566); rents, $5,026 (20,000/50,000 × $12,566); taxable interest, $2,513 (10,000/50,000 × $12,566); and tax-exempt interest, $1,257 (5,000/50,000 × $12,566). One-half of the dividends of $3,770 is considered as distributed from the dividends received by the trust on or before July 31, 1954, of which $13 (3,770/15,000 × $50) is deemed distributed from the

dividends excluded under section 116, and the other half as distributed from the dividends received after July 31, 1954. Thus, of the total of $12,566 deemed distributed to B, $11,296 is considered as made from income included in the gross income of the trust and $1,270 from non-taxable income of the trust.

(4) *Credit for taxes paid by the trust.* The amount of the taxes for the year 1954 which may not be refunded or credited to the trust under section 667 and which is allowed as a credit against the tax of B for 1956 under section 668(b), because of the allocation of the 1956 accumulation distribution to 1954, is $5,401, computed as follows:

Taxable income of the trust as of the close of 1954 (paragraph (c)(1) of this example)	$32,375
Less: Amount deemed distributed to B under section 666 from the taxable income of the trust	11,296
Taxable income adjusted as of the close of 1956	21,079
(Taxes on $21,079 (alternative tax)	$8,050
Taxes on income allocable to corpus (subparagraph (1)(ii) of this paragraph)	$2,606
Taxes imposed on the trust determined as of the close of 1956	5,444
Taxes imposed on the trust determined as of the close of 1954	$10,845
Taxes imposed on the trust determined as of the close of 1956	5,444
Amount of taxes allowed as a credit to B under section 668(b)	5,401

(5) *Effect of application of provisions of subpart D to the year 1954.* (i) The undistributed portion of the distributable net income of the trust for the year 1954, determined as of the close of 1956, is $12,434, computed as follows:

Distributable net income (section 643(a))		$50,000
Less:		
Amount currently distributable to A	$25,000	
Amount deemed distributed to B under section 666	12,566	
	————	37,566
Undistributed portion of distributable net income as of the close of 1956		12,434

(ii) The amount of $12,434 is deemed to consist of dividends of $3,730, rents of $4,974, taxable interest of

$2,487, and tax-exempt interest of $1,243, determined as follows:

	Dividends	Rents	Interest (taxable)	Interest (exempt)	Total
Trust income	$15,000	$20,000	$10,000	$5,000	[1] $50,000
Distributions:					
To A	7,500	10,000	5,000	2,500	[2] 25,000
To B	3,770	5,026	2,513	1,257	[3] 12,566
Total	11,270	15,026	7,513	3,757	37,566
Balance	3,730	4,974	2,487	1,243	12,434

[1] *See paragraph (a)(1) of this example.*

[2] *See paragraph (b) of this example.*

[3] *See paragraph (f)(3) of this example.*

(iii) The undistributed net income of the trust for 1954, determined as of the close of 1956, is $6,990, computed as follows:

Undistributed portion of distributable net income as of the close of 1956	$12,434
Less: Taxes imposed on the trust determined as of the close of 1956 (subparagraph (4) of this paragraph)	5,444
Undistributed net income as of the close of 1956	6,990

(g) *Throwback of 1957 accumulation distribution.* Inasmuch as all of the income of the trust for the first preceding taxable year 1956 was distributed during such year and the trust had no undistributed net income for the second preceding taxable year 1955 after the application of subpart D to the accumulation distribution made during 1956, the 1957 accumulation distribution of $7,050 is allocable to the third preceding taxable year 1954. See paragraph (d)(1) of this example for computation of the accumulation distribution.

(1) *Allocation of 1957 accumulation distribution to the preceding taxable year 1954.* The portion of the 1957 accumulation distribution which is deemed under section 666(a) to be distributed to B on the last day of 1954 is $6,990, an amount equal to the undistributed net income of the trust for 1954, determined as of the close of 1956. An additional amount equal to the taxes imposed on the trust ($5,444), determined as of the close of 1956, is under section 666(b) also deemed to be distributed to B on the last day of 1954. See paragraph (f) (4) and (5) of this example. Thus, a total of $12,434 ($6,990 plus $5,444) is deemed to be distributed to B on December 31, 1954, by reason of the allocation of the 1957 accumulation distribution to the taxable year 1954. See paragraph (j) of this example for the treatment of the amount of $12,434 in the hands of B.

(2) *Character of amounts deemed distributed.* Inasmuch as the balance of the 1954 distributable net income of the trust is deemed under section 666 to be distributed to B on December 31, 1954, the distribution is deemed to consist of dividends of $3,730, rents of $4,974, taxable interest of $2,487, and tax-exempt interest of $1,243. See paragraph (f)(5)(ii) of this example.

(3) *Credit for taxes paid by the trust.* The amount of taxes for the year 1954 which may not be refunded or credited to the trust under section 667 and which is allowed as a credit against the tax of B under section 668(b) is $5,444, the amount of taxes imposed on the trust determined as of the close of 1956. See paragraph (f)(4) of this example.

(4) *Effect of application of provisions of subpart D to the year 1954.* After the allocation of the 1957 accumulation distribution to the preceding taxable year 1954, the undistributed portion of the distributable net income, the undistributed net income, and the taxes imposed on the trust for 1954 are zero. The balance of $60 ($7,050 less $6,990) of the 1957 accumulation distribution remaining after the allocation of the accumulation distribution to the year 1954, may not be allocated to the year 1953 since that year is not subject to the provisions of the Internal Revenue Code of 1954.

(h) *Determination of B's tax liability; taxable year 1956*—(1) *Amount of trust income includible in gross income.* (i) Of the amount of $45,000 distributed by the trust to B during the taxable year 1956, $25,000 is treated as a distribution out of trust income for that year within the meaning of section 662(a)(2), and $20,000 as an accumulation distribution within the meaning of section 665(b) (see paragraph (d) of this example). However, $12,885 plus taxes of $7,115 is deemed distributed to B on December 31, 1955, and $7,115 plus taxes of $5,451 on December 31, 1954, under section 666 by reason of the accumulation distribution made during 1956, and these amounts are includible in B's gross income for 1956 to the extent that they would have been includible in his gross income under section 662 (a)(2) and (b) for 1955 and 1954, respectively, had they been distributed on the last day of those years.

(ii) The amounts distributed to B out of trust income for the year 1956, and the amounts deemed distributed out of income for the preceding taxable years 1955 and 1954 have the following character for the purpose of determining the amount includible in B's gross income for 1956:

Year	Dividends	Rents	Interest (taxable)	Interest (exempt)	Total
1956	$5,000	$10,000	$7,500	$2,500	[1] $25,000
1955	5,000	7,500	5,000	2,500	[2] 20,000
1954	3,770	5,026	2,513	1,257	[3] 12,566

[1] *See paragraph (d)(2) of this example.*

[2] *See paragraph (e)(3) of this example.*

[3] *See paragraph (f)(3) of this example.*

Year	Dividends	Rents	Interest (taxable)	Interest (exempt)	Total
Total	13,770	22,526	15,013	6,257	57,566

[1] *See paragraph (d)(2) of this example.*

[2] *See paragraph (e)(3) of this example.*

[3] *See paragraph (f)(3) of this example.*

Thus, B will include in gross income for 1956 dividends of $13,770 (subject to the dividend exclusion), rents of $22,526, and taxable interest of $15,013, and will exclude the tax-exempt interest of $6,257.

(2) *Computation of tax.* (i) For the purpose of computing B's tax liability, it is assumed that he was single during the taxable years 1954, 1955, and 1956, and that his taxable income (derived from salary) for each of the years 1954 and 1955 amounted to $13,400 on which a tax of $4,002 was paid for each year. It is also assumed that his income (other than distributions from the trust) for 1956 was $15,000 derived from salary, and he had allowable deductions of $10,600, which included the deduction for personal exemption. (ii) The computation of the tax for the taxable year 1956 attributable to the section 666 amounts which are included in B's gross income for such year, as provided in paragraph (a)(1) of § 1.668(a)-4, is as follows:

	(1) Section 666 amounts excluded	(2) Section 666 amounts included
Salary	$15,000	$15,000
Income from trust:		
Dividends ($50 excluded)	4,950	13,720
Rents	10,000	22,526
Taxable interest	7,500	15,013
Total	37,450	66,259
Less: Allowable deductions	10,600	10,600
Taxable income	26,850	55,659
Total tax	11,267	31,064
Less: Dividend received credit	198	475
Tax liability	$11,069	30,589
Tax on income from which section 666 amounts are excluded		11,069

	(1) Section 666 amounts excluded	(2) Section 666 amounts included
1956 tax attributable to section 666 amounts		19,520

Only that portion of the dividends received by the trust after July 31, 1954, and deemed distributed to B under section 666, on the last day of such year is included in computing the dividend received credit shown in column (2). See paragraph (f)(3) of this example.

(iii) The computation of the taxes for the preceding taxable years attributable to the section 666 amounts which are deemed distributed by the trust on the last day of these years, as provided in paragraph (a)(2) of § 1.668(a)-4, is as follows:

	Preceding taxable years	
	First 1955	Second 1954
Taxable income previously reported	$13,400	$13,400
Section 666 amounts:		
Dividends ($50 excluded)	4,950	3,720
Rents	7,500	5,026
Taxable interest	5,000	2,513
Taxable income as adjusted	30,850	24,659
Total tax	13,747	9,949
Less: Dividend received credit	198	75
Balance of tax	13,549	9,874
Tax liability	4,002	4,002
Tax attributable to section 666 amounts	9,547	5,872

Only that portion ($1,885) of the dividends received by the trust after July 31, 1954, and deemed distributed under section 666 on the last day of that year, is included in computing the dividend received credit of $75 for the year 1954. See paragraph (f)(3) of this example.

(iv) Inasmuch as the aggregate of the taxes of $15,419 ($9,547 plus $5,872) attributable to the section 666 amounts as determined for the preceding taxable years is less than the tax of $19,520 determined for the taxable year 1956, the amount of $15,419 shall be added to the tax computed for 1956 without including the section 666 amounts. Thus, B's tax liability for 1956 is $26,488 ($11,069 plus $15,419).

(3) *Credits against the tax.* B is allowed under section 668(b) a credit of $12,516 ($5,401 for 1954 and $7,115 for 1955) against his 1956 tax liability for the taxes paid by the trust for the preceding taxable years and which may not be refunded or credited to the trust under section 667. See paragraphs (e)(4) and (f)(4) of this example.

(i) [Reserved]

(j) *Taxable year 1957*—(1) *Amount of trust income includible in gross income.* (i) Of the amount of $29,550 distributed by the trust to B during the taxable year 1957, $22,500 is treated as a distribution out of trust income for that year within the meaning of section 662(a)(2), and $7,050 as an accumulation distribution within the meaning of section 665(b) (see paragraph (d) of this example). However, $6,990 plus taxes of $5,444 is deemed distributed to B on December 31, 1954, under section 666 by reason of the accumulation distribution made during 1957, and that amount is includible in B's gross income for 1957, to the extent that it would have been includible in his gross income under section 662 (a)(2) and (b) for 1954, had it been distributed on the last day of that year.

(ii) The amounts deemed distributed to B out of trust income for the year 1957 and the preceding taxable year 1954 are deemed to have the following character for the purpose of determining the amount includible in B's gross income for 1957:

Year	Dividends	Rents	Interest (taxable)	Interest (exempt)	Total
1957	$5,000	$7,500	$7,500	$2,500	[1] $22,500
1954	3,730	4,974	2,487	1,243	[2] 12,434
Total	8,730	12,474	9,987	3,743	34,934

[1] *See paragraph (d)(2) of this example.*

[2] *See paragraph (g)(2) of this example.*

Thus, B will include in gross income for the year 1957 dividends of $8,730 (subject to the dividend exclusion), rents of $12,474, and taxable interest of $9,987 and will exclude the tax-exempt interest of $3,743.

(2) *Computation of tax.* (i) For the purpose of computing B's tax liability for 1957, it is assumed that he was single for the entire year and had income (other than distributions from the trust) of $15,000 from salary. Also, he had allowable deductions of $8,100, which included the deductions for personal exemption.

(ii) The computation of the tax for the taxable year 1957 attributable to the section 666 amounts which are included in B's gross income for that year, as provided in paragraph (a)(1) of § 1.668(a)-4, is as follows:

	Section 666 amounts excluded	Section 666 amounts included
Salary	$15,000	$15,000
Trust income:		
Dividends ($50 excluded)	4,950	8,680
Rents	7,500	12,474
Taxable interest	7,500	9,987
Total	34,950	46,141
Less: Allowable deductions	8,100	8,100
Taxable income	26,850	38,041
Total tax	11,267	18,388
Less: Dividends received credit	198	275
Tax liability	11,069	18,113
Tax on income from which section 666 amounts are excluded		11,069
1957 tax attributable to section 666 amounts		7,044

See explanation following computation in paragraph (h)(2)(ii) of this example with respect to the computation of the dividend received credit on dividends received by the trust in 1954.

(iii) The amount of tax, computed at 1954 rates, attributable to the section 666 amounts which are deemed to have been distributed by the trust on the last day of 1954, is $6,939, computed as follows:

1954 taxable income as adjusted (paragraph (h)(2)(iii) of this example)		$24,659
Section 666 amounts:		
Dividends		3,730
Rents		4,974
Taxable interest		2,487
Taxable income as adjusted		35,850
Total tax		16,963
Less: Dividends received credit		150
Balance of tax		16,813
Tax liability for 1954	$4,002	
Tax attributable to 1956 accumulation distribution this example)	5,872	

	9,874
Tax attributable to the section 666 amounts distributed in 1957	6,939

Only that portion ($3,750) of the dividends received by the trust after July 31, 1954, and deemed distributed under section 666 on the last day of that year, is included in computing the dividend received credit of $150. See paragraphs (f)(3) and (g)(2) of this example.

(iv) Inasmuch as the tax of $6,939 attributable to the section 666 amounts as determined for the preceding taxable year 1954 is less than the tax of $7,044 attributable to these amounts for the year 1957, the amount of $6,939 shall be added to the tax computed for 1957 without including in gross income the section 666 amounts. Thus, B's tax liability for 1957 is $18,008 ($11,069 plus $6,939).
(3) *Credit against the tax.* B is allowed under section 668(b) a credit of $5,444 against his 1957 tax liability for the balance of the taxes paid by the trust for 1954 and which may not be refunded or credited to the trust under section 667. See paragraph (g)(3) of this example.

(Sec. 669(a) as amended by sec. 331(a), Tax Reform Act 1969 (83 Stat. 592))

[T.D. 6500, 25 FR 11814, Nov. 26, 1960, as amended by T.D. 6989, 34 FR 738, Jan. 17, 1969]

§ 1.669(a)-1 Limitation on tax.

(a) ***In general.*** Section 669 provides that, at the election of a beneficiary who is a U.S. person (as defined in section 7701(a)(30)) and who satisfies the requirements of section 669(b) (that certain information with respect to the operation and accounts of the trust be supplied), the tax attributable to the amounts treated under section 668(a) as having been received by him, from a foreign trust created by a U.S. person, on the last day of a preceding taxable year of the trust shall not be greater than the tax computed under section 669(a)(1)(A) (the computation under this provision will hereinafter be referred to as the “exact throwback” method) or under section 669(a)(1)(B) (the computation under this provision will hereinafter be referred to as the “short-cut throwback” method). This election of the beneficiary with respect to the taxable year of the beneficiary in which the distribution is made shall be made with the district director before the expiration of the period of limitations for assessment provided in section 6501 for such taxable year.

(b) ***Where no election is made.*** If the beneficiary does not make the election provided in section 669(a) in the manner required in section 669(b) and § 1.669(b)-2, or furnish the information with respect to the operation and accounts of the foreign trust created by a U.S. person required by section 669(b) and § 1.669(b)-1, the tax on an accumulation distribution treated under section 668(a) as having been received by him from such foreign trust on the last day of a preceding taxable year of the trust shall be computed without reference to section 668 or 669. In such case, the entire accumulation distribution will be included in the gross income of the beneficiary in the year in which it is paid, credited, or required to be distributed, and tax for such year will be computed on the basis of the beneficiary's total taxable income for the year after taking into account such inclusion in gross income.

(c) ***Year for which tax is payable.*** The tax, regardless of the manner in which computed, of the beneficiary which is attributable to an accumulation distribution is imposed on the beneficiary for the taxable year of the beneficiary in which the accumulation distribution is made to him unless the taxable year of the beneficiary is different from that of the trust. See section 662(c) and § 1.662(c)-1.

[T.D. 6989, 34 FR 738, Jan. 17, 1969]

§ 1.669(a)-2 Rules applicable to section 669 computations.

(a) ***In general.***

(1) Section 668(a) provides that the total of the amounts treated under section 666 as having been distributed by the foreign trust created by a U.S. person on the last day of a preceding taxable year of such trust shall be included in the gross income of the beneficiary or the beneficiaries who are U.S. persons receiving them. The total of such amounts is includible in the gross income of each beneficiary to the extent the amount would have been included in his gross income under section 662 (a)(2) and (b) if the total had actually been paid by the trust on the last day of such preceding taxable year. The total is included in the gross income of the beneficiary for the taxable year of the beneficiary in which such amounts are in fact paid, credited, or required to be distributed unless the taxable year of the beneficiary differs from the taxable year of the trust (see section 662(c) and § 1.662(c)-1). The character of the amounts treated as received by a beneficiary in prior taxable years, including taxes deemed distributed, in the hands of the beneficiary is determined by the rules contained in section 662(b) and §§ 1.662(b)-1 and 1.662(b)-2.

(2) The total of the amounts treated under section 666 as having been distributed by the trust on the last day of a preceding taxable year of the trust are included as prescribed in subparagraph (1) of this paragraph in the gross income of the beneficiary even though as of that day the beneficiary would not have been entitled to receive them had they actually been distributed on that day.

(3) Any deduction allowed to the trust in computing distributable net income for a preceding taxable year (such as depreciation, depletion, etc.) is not deemed allocable to a beneficiary because of the amounts included in a beneficiary's gross income under this section since the deduction has already been utilized in reducing the amount included in the beneficiary's income.

(b) ***Allocation among beneficiaries of a foreign trust.*** Where there is more than one beneficiary the portion of the total amount includible in gross income under paragraph (a) of this section which is includible in the gross income of a beneficiary who is a U.S. person is based upon the ratio determined under the second sentence of section 662(a)(2) for the taxable year in which distributed (and not for the preceding taxable year). This paragraph may be illustrated by the example in § 1.668(a)-2.

(c) ***Treatment of income taxes paid by the trust*** —

(1) ***Current distributions.*** The income taxes imposed by the provisions of section 871 on the income of a foreign trust created by a U.S. person shall be included in the gross income of the beneficiary, who is a U.S. person, for the taxable year in which such income is paid, credited, or required to be distributed to the beneficiary.

(2) ***Accumulation distribution.***

(i) If an accumulation distribution is deemed under § 1.666(a)-1 to be distributed on the last day of a preceding taxable year and the amount is not less than the undistributed net income for such preceding taxable year, then an additional amount equal to the taxes imposed on the trust pursuant to the provisions of section 871 for such preceding taxable year is likewise deemed distributed under section 661(a)(2).

(ii) If an accumulation distribution is deemed under § 1.666(a)-1 to be distributed on the last day of a preceding taxable year and the amount is less than the undistributed net income for such preceding taxable year, then an additional amount (representing taxes) is likewise deemed distributed under section 661(a)(2). The additional amount is equal to the taxes imposed on the trust pursuant to the provisions of section 871 for such preceding taxable year, multiplied by the fraction the numerator of which is the amount of the accumulation distribution attributable to such preceding taxable year and the denominator of which is the undistributed net income for such preceding taxable year.

(3) ***Credits under sections 32 and 668(b).*** Credit under section 32 is allowable to the beneficiary for income taxes withheld at source under subchapters A and B of chapter 3 and which are deemed distributed to him. Credit under section 668(b) is allowable to the beneficiary for income taxes imposed upon the foreign trust by section 871(b). These credits shall be allowed against the tax of the beneficiary for the taxable year of the beneficiary in which the income is paid, credited, or required to be distributed to him, or in which the accumulation distribution to which such taxes relate is made to him.

(d) ***Credit for foreign income taxes paid by the trust.*** To the extent provided in section 901, credit under section 33 is allowable to the beneficiary for the foreign taxes paid or accrued by the trust to a foreign country.

[T.D. 6989, 34 FR 738, Jan. 17, 1969]

§ 1.669(a)-3 Tax computed by the exact throwback method.

(a) ***Tax attributable to amounts treated as received in preceding taxable years.*** If a taxpayer elects to compute the tax, on amounts deemed distributed under section 666, by the exact throwback method provided in section 669(a)(1)(A), the tax liability of the beneficiary for the taxable year in which the accumulation distribution is paid, credited, or required to be distributed is computed as provided in paragraph (b) of this section. The beneficiary may not elect to use the exact throwback method of computing his tax on an accumulation distribution as provided in section 669(a)(1)(A) if he were not alive on the last day of each preceding taxable year of the foreign trust created by a U.S. person with respect to which a distribution is deemed made under section 666(a). Thus, if a portion of an amount received as an accumulation distribution was accumulated by the trust during years before the beneficiary was born, the beneficiary is not permitted to elect the exact throwback method provided in section 669(a)(1)(A). See § 1.669(a)-4 for the computation of the tax on an accumulation distribution by the short-cut throwback method provided in section 669(a)(1)(B) under these circumstances.

(b) ***Computation of tax.*** The tax referred to in paragraph (a) of this section is computed as follows:

(1) First, compute the tax attributable to the section 666 amounts for each of the preceding taxable years. To determine the section 666 amounts attributable to each of the preceding taxable years, see § 1.666(a)-1. The tax attributable to such amounts in each such preceding taxable year is the difference between the tax for such preceding taxable year computed with the inclusion of the

section 666 amounts in gross income, and the tax for such year computed without including them in gross income. Tax computations for each preceding year shall reflect the taxpayer's marital and dependency status for that year.

(2) Second, add

(i) The sum of the taxes for the preceding taxable years attributable to the section 666 amounts (computed in accordance with subparagraph (1) of this paragraph), and

(ii) The tax for the taxable year of the beneficiary in which the accumulation distribution is paid, credited, or required to be distributed to him, computed without including the section 666 amounts in gross income.

The total of these amounts is the beneficiary's tax, computed under section 669(a)(1)(A) for the taxable year in which the accumulation distribution is paid, credited, or required to be distributed to him.

(c) ***Effect of prior election.*** In computing the tax attributable to an accumulation distribution for the taxable year in which such accumulation distribution is paid, credited, or required to be distributed to him, the beneficiary in computing the tax attributable to section 666 amounts for each of the preceding taxable years, must include in his gross income for each such year the section 666 amounts deemed distributed to him in such year resulting from prior accumulation distributions made to him in taxable years prior to the current taxable year. These section 666 amounts resulting from such prior accumulation distributions must be included in the gross income for such preceding taxable year even though the tax on the accumulation distribution of such prior taxable year was computed by the short-cut throwback method provided in section 669(a)(1)(B) and § 1.669(a)-4.

[T.D. 6989, 34 FR 739, Jan. 17, 1969]

§ 1.669(a)-4 Tax attributable to short-cut throwback method.

(a) ***Manner of computing tax.*** If a beneficiary has elected under section 669(a) to compute the tax on the amounts deemed distributed under section 666 by the short-cut throwback method provided in section 669(a)(1)(B), the tax liability of the beneficiary for the taxable year is computed in the following manner:

(1) First, determine the number of preceding taxable years of the trust, on the last day of which an amount is deemed under section 666(a) to have been distributed. In any case where there has been a prior accumulation distribution with respect to which the beneficiary has elected to compute his tax either by the exact throwback method or by the short-cut throwback method, or to which the next to the last sentence of section 668(a) has applied, for purposes of an election to use the short-cut throwback method with respect to a subsequent accumulation distribution, in determining the number of preceding taxable years of the trust with respect to which an amount of the subsequent accumulation distribution is deemed distributed to a beneficiary under section 666(a), there shall be excluded any preceding taxable year during which any part of the prior accumulation distribution was deemed distributed to the beneficiary. For example, assume that an accumulation distribution of $90,000 made to a beneficiary in 1963 is deemed distributed in the amounts of $25,000 in each of the years 1962, 1961, and 1960, and in the amount of $15,000 in 1959, and a subsequent accumulation distribution of $85,000 made to the same beneficiary in 1964 is deemed distributed in the amount of $10,000 during 1959, and $25,000 during each of the years 1958, 1957, and 1956. The accumulation distribution made in 1963 is deemed distributed in 4 preceding taxable years of the trust (1962, 1961, 1960, and 1959). Inasmuch as the year 1959 was a year during which part of the

1963 accumulation distribution was deemed distributed, for purposes of determining the number of preceding taxable years in which the accumulation distribution of $85,000 made in 1964 is deemed distributed, the year 1959 is excluded and the $85,000 accumulation distribution is deemed distributed in three preceding taxable years (1958, 1957, and 1956),

(2) Second, divide the number of preceding taxable years of the trust, on the last day of which an amount is deemed under section 666(a) to have been distributed (determined as provided in subparagraph (1) of this paragraph) into the amount (representing an accumulation distribution made by a foreign trust created by a U.S. person) required to be included under section 669(a) in the gross income of the beneficiary for the taxable year,

(3) Third, compute the tax of the beneficiary for the current taxable year (the year in which the accumulation distribution is paid, credited, or required to be distributed to him) and for each of the 2 taxable years immediately preceding such year,

(i) With the inclusion in gross income of the beneficiary for each of such 3 years of the amount determined under subparagraph (2) of this paragraph, and

(ii) Without such inclusion.

The difference between the amount of tax computed under subdivision (i) of this subparagraph for each year and the amount computed under subdivision (ii) of this subparagraph for that year is the additional tax resulting from the inclusion in gross income for that year of the amount determined under subparagraph (2) of this paragraph. If the number of preceding taxable years of the trust, on the last day of which an amount is deemed under section 666(a) to have been distributed, is less than three, the taxable years of the beneficiary for which this recomputation is made shall equal the number of years in which an amount is deemed under section 666(a) to have been distributed, commencing with the taxable year of the beneficiary in which the accumulation distribution is paid, credited, or required to be distributed to him. If the beneficiary was not alive during one of the two taxable years immediately preceding the taxable year, the tax resulting from the inclusion of the amount determined in subparagraph (2) of this paragraph in the gross income of the beneficiary will be computed only for the taxable year in which the accumulation distribution was paid, credited, or required to be distributed to him and the preceding year during which the beneficiary was alive. In the event the beneficiary was not alive during either of the 2 years immediately preceding the taxable year in which the accumulation distribution was paid, credited, or required to be distributed, the tax shall be computed on the basis of the beneficiary's taxable year without regard to the inclusion in income required by section 668(a) of any amount other than pursuant to section 669(a)(1)(B). For example, assume that a foreign trust created by a U.S. person accumulates $3,000 of income in 1964 and $7,000 in 1963 and then distributes the accumulated income on January 1, 1965, to a beneficiary who is a U.S. person. The limitation on tax is determined by recomputing the beneficiary's gross income for 1964 and 1965 by adding $5,000 to his gross income for each year. If the same distribution were made to an infant who was born in 1965, the limitation on tax would be computed by adding $5,000 to his gross income for such year. In the case of the infant, the resulting increase in tax would be multiplied by two to arrive at the limitation on the increase in his tax for 1965 attributable to such distribution.

(4) Fourth, add the additional taxes resulting from the application of subparagraph (3) of this paragraph for the taxable year and the 2 taxable years (or the 1 taxable year, where applicable) immediately preceding the year in which the accumulation distribution is paid, credited, or required to be distributed and then divide this amount by three (or two, where applicable). The resulting amount is then multiplied by the number of preceding taxable years of the trust on the last day of which an

amount is deemed under section 666(a) to have been distributed (previously determined under subparagraph (1) of this paragraph). The resulting amount is the tax, under the short-cut throwback method provided in section 669(a)(1)(B), which is attributable to the amounts treated under section 668(a) as having been received by the beneficiary from a foreign trust created by a U.S. person on the last day of the preceding taxable year.

(5) Fifth, add the amount determined under subparagraph (4) of this paragraph to the beneficiary's tax for the taxable year in which the accumulation distribution was paid, credited, or required to be distributed to him, computed without inclusion of the accumulation distribution in gross income for that year. The total is the beneficiary's income tax for such year.

(b) ***Credit for tax paid by trust.*** The income taxes deemed distributed to a beneficiary in the manner described in paragraphs (c) and (d) of § 1.669(a)-2 are included in the beneficiary's gross income for purposes of the computations required by this section. To the extent provided in § 1.669(a)-2, credits for such taxes are allowable to the beneficiary. In the computations under the short-cut throwback method provided in section 669(a)(1)(B), the rules set forth in section 662(b) and § 1.662(b)-1 shall be applied in determining the character, in the hands of the beneficiary, of the amounts, including taxes includible in the distribution or deemed distributed, treated as received by a beneficiary in prior taxable years. For example, if one-fifth of such amounts represents tax-free income, then one-fifth of the amount determined under paragraph (a)(2) of this section shall be treated as tax-free income.

[T.D. 6989, 34 FR 739, Jan. 17, 1969]

§ 1.669(b)-1 Information requirements.

The election of a beneficiary who is a U.S. person to apply the limitations on tax provided in section 669(a) shall not be effective unless the beneficiary, at or before the time the election is made, supplies, in a letter addressed to the district director for the internal revenue district in which the taxpayer files his return (or the Director of International Operations where appropriate), or in a statement attached to his return, the following information with respect to the operation and accounts of the foreign trust created by a U.S. person for each of the preceding taxable years, on the last day of which an amount is deemed distributed under section 666(a):

(a) The gross income of the trust: The gross income should be separated to show the amount of each type of income received by the trust and to identify its source. For example, the beneficiary should list separately, by type (dividends, rents, capital gains, taxable interest, exempt interest, etc.) and source (name and country of payor), each item of income included in the gross income of the trust. For this purpose, the gross income of the trust includes gross income from U.S. sources which is exempt from taxation under section 894.

(b) The amount of tax withheld under section 1441 by the United States on income from sources within the United States.

(c) The amount of the tax paid to each foreign country by the trust.

(d) The expenses of the trust attributable to each type of income disclosed in paragraph (b) of this section, and the general expenses of the trust.

(e) The distributions, if any, made by the trust to the beneficiaries (including those who are not U.S. persons). These distributions should be separated into amounts of income required to be distributed currently within the meaning of section 661(a)(1), and any other amounts properly paid, credited, or required to be distributed within the meaning of section 661(a)(2).

(f) Any other information which is necessary for the computation of tax on the accumulation distribution as provided in section 669(a).

(g) If the foreign trust created by a U.S. person is less than the entire foreign trust, the information listed in paragraphs (a) through (f) of this section shall also be furnished with respect to that portion of the entire foreign trust which is not a foreign trust created by a U.S. person.

[T.D. 6989, 34 FR 740, Jan. 17, 1969]

§ 1.669(b)-2 Manner of exercising election.

(a) ***By whom election is to be made.*** Except as otherwise provided in this paragraph, a taxpayer whose tax liability is affected by the election shall make the election provided in section 669(a). In the case of a partnership, or a corporation electing under the provisions of subchapter S, chapter 1 of the Code, the election shall be exercised by the partnership or such corporation.

(b) ***Time and manner of making election.*** The election under section 669(a) may be made, or revoked, at any time before the expiration of the period provided in section 6501 for assessment of the tax. If an election is revoked, a new election may be made at any time before the expiration of such period. The election (or a revocation of an election) may be made in a letter addressed to the district director of internal revenue for the district in which the taxpayer files his tax return (or the Director of International Operations where appropriate) or may be made in a statement attached to the return. In any case where all the information described in § 1.669(b)-1 is not furnished at or before the time the beneficiary signifies his intention of making an election and by reason thereof an election has not been made, and subsequent thereto, but before the expiration of the period provided in section 6501 for the assessment of the tax, there is furnished the required information not previously furnished, the election will be considered as made at the time such additional information is furnished.

[T.D. 6989, 34 FR 740, Jan. 17, 1969]

UNITRUST ACTUARIAL TABLES APPLICABLE BEFORE JUNE 1, 2023.

§ 1.664-4A Valuation of charitable remainder interests for which the valuation date is before June 1, 2023.

(a) ***Valuation of charitable remainder interests for which the valuation date is before January 1, 1952.*** There was no provision for the qualification of a charitable remainder unitrust under section 664 until 1969. See § 20.2031-7A(a) of this chapter (Estate Tax Regulations) for the determination of the present value of a charitable interest for which the valuation date is before January 1, 1952.

(b) ***Valuation of charitable remainder interests for which the valuation date is after December 31, 1951, and before January 1, 1971.*** No charitable deduction is allowable for a transfer to a unitrust for which the valuation date is after the effective dates of the Tax Reform Act of 1969 unless the unitrust meets the requirements of section 664. See § 20.2031-7A(b) of this chapter (Estate Tax Regulations) for the determination of the present value of a charitable remainder interest for which the valuation date is after December 31, 1951, and before January 1, 1971.

(c) ***Valuation of charitable remainder unitrusts having certain payout sequences for transfers for which the valuation date is after December 31, 1970, and before December 1, 1983.*** For the determination of the present value of a charitable remainder unitrust for which the valuation date is after December 31, 1970, and before December 1, 1983, see § 20.2031-7A(c) of this chapter (Estate Tax Regulations) and former § 1.664-4(d) (as contained in the 26 CFR part 1 edition revised as of April 1, 1994).

(d) ***Valuation of charitable remainder unitrusts having certain payout sequences for transfers for which the valuation date is after November 30, 1983, and before May 1, 1989*** —

(1) ***In general.*** Except as otherwise provided in paragraph (d)(2) of this section, in the case of transfers made after November 30, 1983, for which the valuation date is before May 1, 1989, the present value of a remainder interest that is dependent on a term of years or the termination of the life of one individual is determined under paragraphs (d)(3) through (d)(6) of this section, provided that the amount of the payout as of any payout date during any taxable year of the trust is not larger than the amount that the trust could distribute on such date under § 1.664-3(a)(1)(v) if the taxable year of the trust were to end on such date. The present value of the remainder interest in the trust is determined by computing the adjusted payout rate (as defined in paragraph (d)(3) of this section) and following the procedure outlined in paragraph (d)(4) or (d)(5) of this section, whichever is applicable. The present value of a remainder interest that is dependent on a term of years is computed under paragraph (d)(4) of this section. The present value of a remainder interest that is dependent on the termination of the life of one individual is computed under paragraph (d)(5) of this section. See paragraph (d)(2) of this section for testamentary transfers for which the valuation date is after November 30, 1983, and before August 9, 1984.

(2) ***Rules for determining the present value for testamentary transfers where the decedent dies after November 30, 1983, and before August 9, 1984.*** For purposes of section 2055 or 2106, if—

(i) The decedent dies after November 30, 1983, and before August 9, 1984; or

(ii) On December 1, 1983, the decedent was mentally incompetent so that the disposition of the property could not be changed, and the decedent died after November 30, 1983, without regaining competency to dispose of the decedent's property, or died within 90 days of the date on which the decedent first regained competency, the present value determined under this section of a remainder interest is determined in accordance with paragraph (d)(1) and paragraphs (d)(3) through (d)(6) of this section, or § 1.664-4A(c), at the option of the taxpayer.

(3) ***Adjusted payout rate.*** The adjusted payout rate is determined by multiplying the fixed percentage described in paragraph (a)(1)(i)(*a*) of § 1.664-3 by the figure in column (2) of Table F(1) which describes the payout sequence of the trust opposite the number in column (1) of Table F(1) which corresponds to the number of months by which the valuation date for the first full taxable year of the trust precedes the first payout date for such taxable year. If the governing instrument does not prescribe when the distribution shall be made during the taxable year of the trust, see § 1.664-4(a). In the case of a trust having a payout sequence for which no figures have been provided by Table F (1) and in the case of a trust which determines the fair market value of the trust assets by taking the average of valuations on more than one date during the taxable year, see § 1.664-4(b).

(4) ***Period is a term of years.*** If the period described in § 1.664-3(a)(5) is a term of years, the factor which is used in determining the present value of the remainder interest is the factor under the appropriate adjusted payout rate in Table D in § 1.664-4(e)(6) that corresponds to the number of years in the term. If the adjusted payout rate is an amount which is between adjusted payout rates for which factors are provided in Table D, a linear interpolation must be made. The present value of the

remainder interest is determined by multiplying the net fair market value (as of the appropriate valuation date) of the property placed in trust by the factor determined under this paragraph (d)(4). For purposes of this section, the term *appropriate valuation date* means the date on which the property is transferred to the trust by the donor except that, for purposes of section 2055 or 2106, it means the date of death unless the alternate valuation date is elected in accordance with section 2032 and the regulations thereunder in which event it means the alternate valuation date. If the adjusted payout rate is greater than 14 percent, see § 1.664-4(b). The application of this paragraph (d)(4) may be illustrated by the following example:

Example. D transfers $100,000 to a charitable remainder unitrust on January 1, 1985. The trust instrument requires that the trust pay to D semiannually (on June 30 and December 31) 10 percent of the fair market value of the trust assets as of June 30th for a term of 15 years. The adjusted payout rate is 9.767 percent (10% × 0.976731). The present value of the remainder interest is $21,404.90, computed as follows:

Factor at 9.6 percent for 15 years	0.220053
Factor at 9.8 percent for 15 years	.212862
Difference	.007191

$$\frac{9.767\% - 9.6\%}{0.2\%} = \frac{X}{.007191}$$

9.767% − 9.6 ÷ 0.2% == ÷ .007191

X === .006004

Factor at 9.6 percent for 15 years	0.220053
Less: X	.006004
Interpolated factor	.214049

Present value of remainder interest = $100,000 × 0.214049 = $21,404.90

(5) ***Period is the life of one individual.*** If the period described in paragraph (a)(5) of § 1.664-3 is the life of one individual, the factor that is used in determining the present value of the remainder interest is the factor under the appropriate adjusted payout rate in column (2) of Table E in paragraph (d)(6) of this section opposite the number in column (1) that corresponds to the age of the individual whose life measures the period. For purposes of the computations described in this paragraph (b)(5), the age of an individual is to be taken as the age of that individual at the individual's nearest birthday. If the adjusted payout rate is an amount which is between adjusted payout rates for which factors are provided for in Table E, a linear interpolation must be made. The present value of the remainder

interest is determined by multiplying the net fair market value (as of the appropriate valuation date) of the property placed in trust by the factor determined under this paragraph (b)(5). If the adjusted payout rate is greater than 14 percent, see § 1.664-4(b). The application of this paragraph may be illustrated by the following example:

Example. A, who will be 50 years old on April 15, 1985, transfers $100,000 to a charitable remainder unitrust on January 1, 1985. The trust instrument requires that the trust pay to A at the end of each taxable year of the trust 10 percent of the fair market value of the trust assets as of the beginning of each taxable year of the trust. The adjusted payout rate is 9.091 percent (10 percent × .909091). The present value of the remainder interest is $15,259.00 computed as follows:

Factor at 9 percent at age 50	0.15472
Factor at 9.2 percent at age 50	.15003
Difference	.00469

9.091% − 9% ÷ 0.2% = X ÷ 0.00469

x = 0.00213

Factor at 9 percent at age 50	.15472
Less: X	.00213
Interpolated factor	.15259

Present value of remainder interest =
$100,000 × 0.15259 = $15,259.00

(6) ***Actuarial tables for transfers for which the valuation date is after November 30, 1983, and before May 1, 1989.*** Table D in § 1.664-4(e)(6) and the following tables shall be used in the application of the provisions of this section:

TABLE E

TABLE E—SINGLE LIFE, UNISEX—TABLE SHOWING THE PRESENT WORTH OF THE REMAINDER INTEREST IN PROPERTY TRANSFERRED TO A UNITRUST HAVING THE ADJUSTED PAYOUT RATE SHOWN—APPLICABLE FOR TRANSFERS AFTER NOVEMBER 30, 1983, AND BEFORE MAY 1, 1989

(1) Age	(2) Adjusted payout rate				
	2.2%	2.4%	2.6%	2.8%	3.0%
0	.23253	.20635	.18364	.16394	.14683

(1) Age	(2) Adjusted payout rate				
	2.2%	2.4%	2.6%	2.8%	3.0%
1	.22196	.19506	.17170	.15139	.13372
2	.22597	.19884	.17523	.15468	.13676
3	.23039	.20304	.17920	.15840	.14024
4	.23503	.20747	.18340	.16237	.14397
5	.23988	.21211	.18783	.16656	.14793
6	.24489	.21693	.19243	.17094	.15207
7	.25004	.22189	.19718	.17546	.15637
8	.25534	.22701	.20209	.18016	.16084
9	.26080	.23230	.20718	.18503	.16549
10	.26640	.23774	.21243	.19008	.17031
11	.27217	.24335	.21786	.19530	.17532
12	.27807	.24911	.22344	.20068	.18049
13	.28407	.25497	.22913	.20618	.18579
14	.29013	.26089	.23489	.21175	.19115
15	.29621	.26684	.24067	.21735	.19655
16	.30229	.27279	.24647	.22296	.20196
17	.30838	.27876	.25228	.22859	.20739
18	.31451	.28477	.25813	.23427	.21287
19	.32070	.29085	.26407	.24003	.21844
20	.32699	.29704	.27012	.24591	.22413
21	.33339	.30335	.27629	.25192	.22996
22	.33991	.30977	.28259	.25807	.23592
23	.34655	.31634	.28904	.26437	.24205
24	.35334	.32306	.29566	.27085	.24836
25	.36031	.32998	.30248	.27754	.25490
26	.36746	.33710	.30952	.28446	.26167
27	.37481	.34443	.31678	.29161	.26869
28	.38236	.35197	.32427	.29901	.27596
29	.39006	.35968	.33194	.30660	.28344
30	.39793	.36757	.33980	.31439	.29113
31	.40594	.37561	.34783	.32237	.29902
32	.41410	.38383	.35605	.33054	.30711
33	.42240	.39220	.36444	.33890	.31541
34	.43084	.40072	.37299	.34744	.32389
35	.43942	.40941	.38172	.35617	.33258
36	.44813	.41824	.39061	.36508	.34146
37	.45696	.42720	.39966	.37416	.35053
38	.46591	.43630	.40885	.38339	.35977

(1) Age	(2) Adjusted payout rate				
	2.2%	2.4%	2.6%	2.8%	3.0%
39	.47496	.44552	.41818	.39278	.36917
40	.48412	.45486	.42765	.40232	.37875
41	.49338	.46432	.43725	.41201	.38849
42	.50275	.47391	.44700	.42187	.39840
43	.51221	.48360	.45686	.43186	.40847
44	.52175	.49340	.46685	.44199	.41870
45	.53136	.50327	.47693	.45223	.42905
46	.54104	.51323	.48712	.46259	.43953
47	.55077	.52327	.49739	.47305	.45013
48	.56058	.53339	.50777	.48363	.46087
49	.57043	.54358	.51823	.49432	.47173
50	.58035	.55384	.52879	.50510	.48271
51	.59029	.56415	.53940	.51597	.49379
52	.60027	.57450	.55008	.52692	.50496
53	.61026	.58488	.56080	.53793	.51620
54	.62025	.59528	.57154	.54897	.52750
55	.63022	.60567	.58230	.56004	.53884
56	.64018	.61606	.59306	.57113	.55021
57	.65012	.62644	.60384	.58225	.56163
58	.66004	.63681	.61461	.59337	.57306
59	.66993	.64717	.62538	.60452	.58453
60	.67979	.65751	.63615	.61567	.59602
61	.68963	.66784	.64692	.62683	.60754
62	.69944	.67815	.65769	.63801	.61908
63	.70922	.68844	.66843	.64918	.63063
64	.71893	.69868	.67915	.66032	.64217
65	.72859	.70886	.68982	.67144	.65369
66	.73817	.71897	.70043	.68250	.66517
67	.74766	.72901	.71096	.69350	.67660
68	.75706	.73896	.72142	.70443	.68796
69	.76637	.74882	.73181	.71530	.69928
70	.77559	.75861	.74212	.72610	.71053
71	.78475	.76833	.75237	1.73685	1.72176
72	.79383	.77799	.76257	.74756	.73294
73	.80279	.78753	.77266	.75816	.74403
74	.81158	.79689	.78256	.76858	.75494
75	.82013	.80602	.79223	.77876	.76561
76	.82844	.81488	.80163	.78867	.77599

(1) Age	(2) Adjusted payout rate				
	2.2%	2.4%	2.6%	2.8%	3.0%
77	.83648	.82347	.81075	.79829	.78609
78	.84428	.83182	.81961	.80764	.79592
79	.85187	.83994	.82824	.81677	.80552
80	.85927	.84787	.83668	.82569	.81491
81	.86645	.85556	.84487	.83437	.82404
82	.87336	.86299	.85278	.84275	.83288
83	.88003	.87014	.86042	.85084	.84142
84	.88648	.87708	.86782	.85870	.84971
85	.89273	.88381	.87501	.86633	.85778
86	.89868	.89021	.88185	.87360	.86547
87	.90417	.89613	.88818	.88034	.87260
88	.90923	.90158	.89402	.88655	.87917
89	.91396	.90668	.89948	.89237	.88533
90	.91849	.91156	.90471	.89794	.89124
91	.92278	.91620	.90968	.90324	.89686
92	.92673	.92046	.91426	.90812	.90204
93	.93027	.92429	.91837	.91251	.90670
94	.93341	.92768	.92201	.91639	.91082
95	.93612	.93062	.92516	.91976	.91440
96	.93841	.93309	.92782	.92259	.91740
97	.94044	.93529	.93018	.92512	.92009
98	.94223	.93723	.93226	.92733	.92244
99	.94392	.93905	.93421	.92942	.92466
100	.94559	.94086	.93615	.93149	.92685
101	.94709	.94248	.93790	.93334	.92882
102	.94873	.94424	.93979	.93536	.93096
103	.95077	.94645	.94216	.93789	.93365
104	.95278	.94862	.94449	.94037	.93628
105	.95570	.95178	.94787	.94399	.94012
106	.96017	.95662	.95309	.94957	.94607
107	.96616	.96313	.96010	.95709	.95408
108	.97515	.97291	.97067	.96843	.96620

(1) Age	(2) Adjusted payout rate				
	2.2%	2.4%	2.6%	2.8%	3.0%
109	.98900	.98800	.98700	.98600	.98500

Table E

Table E—Single Life, Unisex—Table Showing the Present Worth of the Remainder Interest in Property Transferred to a Unitrust Having the Adjusted Payout Rate Shown—Applicable for Transfers After November 30, 1983, and Before May 1, 1989

(1) Years	(2) Adjusted payout rate				
	3.2%	3.4%	3.6%	3.8%	4.0%
0	.13196	.11901	.10774	.09791	.08933
1	.11834	.10493	.09324	.08303	.07410
2	.12113	.10749	.09557	.08514	.07601
3	.12437	.11050	.09835	.08770	.07837
4	.12787	.11376	.10138	.09052	.08098
5	.13159	.11725	.10465	.09357	.08382
6	.13549	.12092	.10810	.09680	.08684
7	.13956	.12476	.11171	.10019	.09002
8	.14380	.12877	.11549	.10376	.09337
9	.14822	.13296	.11946	.10751	.09691
10	.15282	.13734	.12361	.11144	.10063
11	.15761	.14190	.12795	.11556	.10454
12	.16257	.14663	.13247	.11986	.10863
13	.16764	.15149	.13711	.12428	.12283
14	.17279	.15643	.14182	.12878	.11712
15	.17798	.16140	.14657	.13331	.12143
16	.18318	.16638	.15133	.13785	.12576
17	.18840	.17138	.15611	.14241	.13010
18	.19367	.17643	.16094	.14702	.13449
19	.19903	.18157	.16586	.15172	.13897
20	.20452	.18685	.17092	.15655	.14358
21	.21014	.19226	.17612	.16153	.14833
22	.21591	.19783	.18146	.16665	.15324
23	.22185	.20356	.18698	.17195	.15832

(1) Years	(2) Adjusted payout rate				
	3.2%	3.4%	3.6%	3.8%	4.0%
24	.22798	.20949	.19270	.17746	.16361
25	.23434	.21565	.19866	.18321	.16914
26	.24094	.22207	.20489	.18922	.17494
27	.24780	.22875	.21138	.19551	.18102
28	.25492	.23570	.21814	.20208	.18739
29	.26226	.24288	.22514	.20889	.19400
30	.26982	.25029	.23239	.21596	.20088
31	.27759	.25792	.23985	.22324	.20798
32	.28557	.26577	.24755	.23078	.21533
33	.29377	.27385	.25548	.23855	.22293
34	.30217	.28214	.26364	.24656	.23077
35	.31079	.29065	.27203	.25481	.23887
36	.31961	.29939	.28065	.26330	.24721
37	.32863	.30833	.28950	.27202	.25579
38	.33784	.31747	.29855	.28096	.26460
39	.34722	.32680	.30780	.29011	.27363
40	.35679	.33633	.31727	.29948	.28290
41	.36654	.34606	.32693	.30908	.29239
42	.37648	.35599	.33683	.31890	.30213
43	.38659	.36610	.34691	.32894	.31209
44	.39687	.37640	.35720	.33918	.32227
45	.40728	.38685	.36765	.34961	.33265
46	.41785	.39746	.37828	.36023	.34323
47	.42856	.40823	.38908	.37103	.35400
48	.43941	.41917	.40006	.38202	.36499
49	.45040	.43025	.41121	.39320	.37617
50	.46153	.44149	.42252	.40457	.38756
51	.47277	.45286	.43398	.41609	.39911
52	.48412	.46435	.44558	.42776	.41084
53	.49556	.47595	.45731	.43958	.42272
54	.50707	.48763	.46913	.45151	.43473
55	.51864	.49939	.48104	.46354	.44685
56	.53026	.51121	.49303	.47567	.45908
57	.54192	.52310	.50510	.48789	.47143
58	.55363	.53503	.51723	.50019	.48387
59	.56538	.54703	.52945	.51258	.49642
60	.57717	.55909	.54173	.52506	.50906
61	.58901	.57120	.55408	.53763	.52181

(1) Years	(2) Adjusted payout rate				
	3.2%	3.4%	3.6%	3.8%	4.0%
62	.60087	.58336	.56650	.55028	.53466
63	.61277	.59556	.57898	.56300	.54760
64	.62467	.60778	.59149	.57577	.56060
65	.63655	.62000	.60402	.58857	.57365
66	.64842	.63221	.61654	.60139	.58672
67	.66023	.64439	.62905	.61420	.59980
68	.67200	.65653	.64154	.62699	.61289
69	.68373	.66865	.65400	.63978	.62598
70	.69541	.68072	.66645	.65257	.63908
71	.70708	.69279	.67890	.66538	.65222
72	.71870	.70484	.69134	.67819	.66538
73	.73025	.71682	.70372	.69095	.67850
74	.74163	.72863	.71595	.70356	.69147
75	.75275	.74019	.72792	.71593	.70421
76	.76360	.75147	.73962	.72802	.71667
77	.77415	.76246	.75102	.73981	.72883
78	.78443	.77318	.76214	.75133	.74073
79	.79448	.78365	.77303	.76261	.75238
80	.80432	.79392	.78371	.77369	.76384
81	.81390	.80393	.79413	.78450	.77504
82	.82317	.81362	.80423	.79499	.78590
83	.83214	.82301	.81402	.80517	.79645
84	.84086	.83214	.82355	.81508	.80674
85	.84935	.84104	.83284	.82476	.81679
86	.85745	.84953	.84172	.83401	.82640
87	.86496	.85741	.84996	.84260	.83533
88	.87189	.86468	.85757	.85054	.84359
89	.87838	.87150	.86471	.85799	.85135
90	.88461	.87806	.87157	.86516	.85881
91	.89055	.88430	.87812	.87200	.86594
92	.89602	.89006	.88416	.87831	.87252
93	.90094	.89524	.88959	.88400	.87846
94	.90530	.89983	.89441	.88904	.88372
95	.90908	.90381	.89359	.89341	.88828
96	.91226	.90716	.90211	.89709	.89212
97	.91510	.91015	.90525	.90038	.89555
98	.91759	.91277	.90800	.90326	.89855
99	.91993	.91524	.91058	.90596	.90137

(1) Years	(2) Adjusted payout rate				
	3.2%	3.4%	3.6%	3.8%	4.0%
100	.92225	.91768	.91315	.90865	.90417
101	.92433	.91987	.91544	.91104	.90667
102	.92659	.92225	.91793	.91364	.90938
103	.92943	.92524	.92107	.91692	.91280
104	.93221	.92816	.92413	.92012	.91614
105	.93627	.93244	.92863	.92483	.92105
106	.94257	.93909	.93562	.93217	.92872
107	.95107	.94808	.94509	.94211	.93914
108	.96396	.96173	.95950	.95728	.95505
109	.98400	.98300	.98200	.98100	.98000

Table E

Table E—Single Life, Unisex—Table Showing the Present Worth of the Remainder Interest in Property Transferred to a Unitrust Having the Adjusted Payout Rate Shown—Applicable for Transfers After November 30, 1983, and Before May 1, 1989

(1) Age	(2) Adjusted payout rate				
	4.2%	4.4%	4.6%	4.8%	5.0%
0	.08183	.07527	.06952	.06448	.06005
1	.06629	.05945	.05344	.04817	.04354
2	.06801	.06098	.05481	.04939	.04460
3	.07017	.06297	.05663	.05104	.04611
4	.07259	.06520	.05868	.05294	.04786
5	.07523	.06765	.06096	.05505	.04982
6	.07805	.07029	.06342	.05734	.05195
7	.08103	.07307	.06603	.05978	.05423
8	.08418	.07603	.06880	.06238	.05666
9	.08752	.07917	.07175	.06516	.05928
10	.09103	.08249	.07488	.06811	.06206
11	.09473	.08600	.07820	.07125	.06503
12	.09861	.08968	.08169	.07456	.06817
13	.10261	.09348	.08530	.07799	.07142
14	.10669	.09735	.08899	.08148	.07474

(1) Age	(2) Adjusted payout rate				
	4.2%	4.4%	4.6%	4.8%	5.0%
15	.11080	.10126	.09269	.08500	.07808
16	.11491	.10516	.09640	.08852	.08142
17	.11903	.10908	.10012	.09204	.08475
18	.12321	.11304	.10387	.09560	.08812
19	.12747	.11709	.10771	.09923	.09156
20	.13186	.12126	.11168	.10300	.09513
21	.13639	.12558	.11578	.10690	.09883
22	.14108	.13005	.12004	.11094	.10268
23	.14594	.13469	.12446	.11516	.10669
24	.15101	.13954	.12910	.11958	.11091
25	.15632	.14464	.13398	.12426	.11537
26	.16191	.15001	.13914	.12920	.12011
27	.16778	.15567	.14459	.13444	.12514
28	.17394	.16162	.15032	.13997	.13046
29	.18035	.16782	.15632	.14575	.13604
30	.18702	.17429	.16259	.15181	.14189
31	.19393	.18100	.16909	.15811	.14799
32	.20109	.18797	.17586	.16468	.15436
33	.20851	.19520	.18290	.17152	.16100
34	.21618	.20268	.19018	.17861	.16789
35	.22411	.21043	.19775	.18599	.17508
36	.23228	.21844	.20558	.19363	.18253
37	.24071	.22670	.21367	.20154	.19026
38	.24938	.23521	.22201	.20971	.19825
39	.25827	.24396	.23060	.21814	.20650
40	.26741	.25295	.23945	.22682	.21502
41	.27679	.26220	.24855	.23577	.22381
42	.28642	.27172	.25793	.24501	.23289
43	.29629	.28147	.26756	.25450	.24224
44	.30639	.29147	.27745	.26426	.25186
45	.31669	.30169	.28756	.27426	.26173
46	.32722	.31213	.29791	.28450	.27185
47	.33795	.32280	.30849	.29498	.28222
48	.34890	.33370	.31932	.30573	.29287
49	.36007	.34482	.33039	.31672	.30377
50	.37144	.35617	.34170	.32797	.31494
51	.38301	.36773	.35322	.33944	.32635
52	.39476	.37948	.36495	.35113	.33799

(1) Age	(2) Adjusted payout rate				
	4.2%	4.4%	4.6%	4.8%	5.0%
53	.40668	.39141	.37688	.36304	.34986
54	.41874	.40350	.38897	.37512	.36191
55	.43093	.41574	.40123	.38739	.37416
56	.44324	.42811	.41364	.39980	.38657
57	.45568	.44062	.42620	.41240	.39918
58	.46823	.45325	.43890	.42514	.41194
59	.48091	.46603	.45175	.43805	.42489
60	.49370	.47893	.46475	.45112	.43802
61	.50661	.49198	.47790	.46436	.45133
62	.51963	.50515	.49120	.47776	.46481
63	.53275	.51844	.50463	.49131	.47846
64	.54596	.53182	.51817	.50498	.49225
65	.55922	.54528	.53180	.51877	.50616
66	.57253	.55880	.54551	.53264	.52018
67	.58586	.57235	.55926	.54657	.53427
68	.59921	.58594	.57306	.56057	.54845
69	.61258	.59956	.58692	.57463	.56270
70	.62597	.61322	.60082	.58877	.57704
71	.63941	.62695	.61481	.60300	.59149
72	.65289	.64073	.62887	.61731	.60605
73	.66635	.65449	.64293	.63165	.62064
74	.67976	.66814	.65688	.64588	.63514
75	.69275	.68156	.67061	.65990	.64944
76	.70557	.69470	.68407	.67366	.66348
77	.71809	.70756	.69724	.68714	.67724
78	.73033	.72014	.71015	.70036	.69075
79	.74235	.73251	.72284	.71336	.70405
80	.75417	.74468	.73535	.72619	.71718
81	.76573	.75659	.74759	.73875	.73006
82	.77696	.76816	.75951	.75099	.74261
83	.78787	.77942	.77110	.76291	.75484
84	.79852	.79042	.78243	.77457	.76681
85	.80893	.80118	.79353	.78599	.77856
86	.81889	.81148	.80417	.79695	.78983
87	.82816	.82107	.81408	.80716	.80034
88	.83673	.82994	.82324	.81662	.81007
89	.84478	.83828	.83186	.82551	.81923
90	.85253	.84632	.84018	.83410	.82808

(1) Age	(2) Adjusted payout rate				
	4.2%	4.4%	4.6%	4.8%	5.0%
91	.85994	.85401	.84813	.84232	.83656
92	.86679	.86111	.85549	.84993	.84441
93	.87296	.86752	.86213	.85679	.85150
94	.87844	.87321	.86803	.86289	.85780
95	.88319	.87815	.87314	.86818	.86327
96	.88719	.88230	.87745	.87264	.86787
97	.89076	.88601	.88129	.87661	.87197
98	.89388	.88925	.88465	.88009	.87556
99	.89682	.89230	.88781	.88336	.87894
100	.89973	.89533	.89095	.88660	.88228
101	.90233	.89802	.89374	.88948	.88526
102	.90515	.90094	.89676	.89260	.88848
103	.90871	.90464	.90059	.89656	.89256
104	.91217	.90823	.90431	.90040	.89652
105	.91729	.91354	.90981	.90610	.90240
106	.92529	.92187	.91846	.91507	.91169
107	.93617	.93322	.93027	.92732	.92439
108	.95283	.95062	.94840	.94619	.94398
109	.97900	.97800	.97700	.97600	.97500

Table E

Table E—Single Life, Unisex—Table Showing the Present Worth of the Remainder Interest in Property Transferred to a Unitrust Having the Adjusted Payout Rate Shown—Applicable for Transfers After November 30, 1983, and Before May 1, 1989

(1) Age	(2) Adjusted payout rate				
	5.2%	5.4%	5.6%	5.8%	6.0%
0	.05615	.05272	.04969	.04701	.04464
1	.03945	.03585	.03268	.02986	.02737
2	.04039	.03667	.03337	.03046	.02787
3	.04176	.03791	.03450	.03147	.02879
4	.04336	.03938	.03585	.03272	.02993
5	.04518	.04107	.03741	.03416	.03127

(1) Age	(2) Adjusted payout rate				
	5.2%	5.4%	5.6%	5.8%	6.0%
6	.04717	.04292	.03914	.03577	.03276
7	.04929	.04490	.04099	.03750	.03438
8	.05158	.04704	.04300	.03938	.03615
9	.05404	.04936	.04518	.04143	.03808
10	.05666	.05183	.04751	.04364	.04016
11	.05947	.05449	.05003	.04602	.04242
12	.06245	.05731	.05271	.04856	.04484
13	.06554	.06025	.05549	.05121	.04735
14	.06869	.06324	.05834	.05391	.04992
15	.07186	.06625	.06119	.05662	.05250
16	.07502	.06924	.06403	.05931	.05504
17	.07817	.07223	.06685	.06199	.05757
18	.08136	.07524	.06970	.06468	.06012
19	.08462	.07832	.07261	.06743	.06272
20	.08800	.08152	.07564	.07029	.06542
21	.09151	.08485	.07879	.07327	.06824
22	.09516	.08831	.08207	.07638	.07119
23	.09897	.09193	.08551	.07964	.07428
24	.10299	.09576	.08915	.08310	.07756
25	.10725	.09982	.09302	.08679	.08108
26	.11179	.10416	.09717	.09075	.08486
27	.11661	.10878	.10160	.09500	.08892
28	.12173	.11370	.10632	.09953	.09328
29	.12710	.11888	.11130	.10432	.09788
30	.13276	.12433	.11656	.10938	.10276
31	.13865	.13002	.12205	.11469	.10787
32	.14482	.13599	.12783	.12026	.11326
33	.15126	.14223	.13387	.12612	.11892
34	.15796	.14874	.14018	.13223	.12485
35	.16494	.15553	.14678	.13864	.13107
36	.17221	.16260	.15366	.14533	.13757
37	.17975	.16996	.16082	.15231	.14435
38	.18756	.17758	.16826	.15955	.15142
39	.19563	.18547	.17597	.16708	.15875
40	.20397	.19364	.18395	.17488	.16638
41	.21259	.20209	.19223	.18298	.17430
42	.22152	.21084	.20082	.19140	.18254
43	.23071	.21988	.20969	.20010	.19107

(1) Age	(2) Adjusted payout rate				
	5.2%	5.4%	5.6%	5.8%	6.0%
44	.24019	.22920	.21885	.20910	.19991
45	.24992	.23878	.22828	.21837	.20902
46	.25991	.24864	.23799	.22793	.21842
47	.27016	.25876	.24798	.23777	.22812
48	.28070	.26918	.25826	.24792	.23812
49	.29150	.27987	.26883	.25837	.24843
50	.30258	.29084	.27970	.26911	.25905
51	.31391	.30208	.29084	.28014	.26996
52	.32548	.31358	.30224	.29144	.28115
53	.33729	.32532	.31390	.30302	.29263
54	.34931	.33728	.32579	.31482	.30434
55	.36152	.34945	.33790	.32686	.31631
56	.37392	.36181	.35022	.33912	.32850
57	.38652	.37438	.36276	.35162	.34093
58	.39929	.38715	.37550	.36432	.35359
59	.41226	.40013	.38847	.37727	.36650
60	.42542	.41331	.40165	.39044	.37965
61	.43878	.42670	.41506	.40386	.39306
62	.45233	.44029	.42869	.41750	.40671
63	.46606	.45409	.44253	.43138	.42060
64	.47994	.46805	.45656	.44545	.43471
65	.49397	.48217	.47076	.45971	.44902
66	.50811	.49642	.48510	.47413	.46350
67	.52235	.51079	.49957	.48869	.47814
68	.53668	.52525	.51416	.50339	.49293
69	.55110	.53983	.52888	.51823	.50788
70	.56563	.55453	.54373	.53322	.52299
71	.58029	.56938	.55875	.54839	.53830
72	.59507	.58436	.57392	.56374	.55380
73	.60990	.59941	.58917	.57918	.56942
74	.62465	.61439	.60437	.59458	.58502
75	.63920	.62919	.61940	.60983	.60046
76	.65351	.64375	.63419	.62484	.61568
77	.66755	.65804	.64873	.63961	.63066
78	.68133	.67209	.66303	.65414	.64542
79	.69492	.68595	.67714	.66850	.66001
80	.70834	.69965	.69111	.68272	.67448
81	.72151	.71311	.70484	.69671	.68872

(1) Age	(2) Adjusted payout rate				
	5.2%	5.4%	5.6%	5.8%	6.0%
82	.73436	.72624	.71825	.71039	.70265
83	.74689	.73906	.73135	.72376	.71627
84	.75917	.75163	.74421	.73688	.72967
85	.77122	.76398	.75685	.74980	.74286
86	.78280	.77586	.76901	.76224	.75556
87	.79359	.78693	.78036	.77386	.76744
88	.80360	.79720	.79088	.78463	.77846
89	.81302	.80688	.80081	.79480	.78886
90	.82213	.81624	.81041	.80465	.79894
91	.83086	.82522	.81963	.81410	.80862
92	.83895	.83354	.82818	.82287	.81762
93	.84626	.84106	.83591	.83081	.82575
94	.85275	.84774	.84278	.83787	.83299
95	.85839	.85355	.84876	.84400	.83929
96	.86313	.85844	.85378	.84916	.84458
97	.86737	.86280	.85826	.85377	.84930
98	.87107	.86661	.86218	.85779	.85343
99	.87455	.87019	.86586	.86157	.85730
100	.87800	.87374	.86951	.86532	.86115
101	.88106	.87689	.87275	.86863	.86455
102	.88437	.88030	.87625	.87222	.86822
103	.88858	.88463	.88070	.87679	.87290
104	.89266	.88882	.88500	.88120	.87741
105	.89872	.89506	.89141	.88778	.88417
106	.90832	.90496	.90161	.89828	.89496
107	.92146	.91854	.91562	.91271	.90981
108	.94177	.93956	.93736	.93516	.93296

(1) Age	(2) Adjusted payout rate				
	5.2%	5.4%	5.6%	5.8%	6.0%
109	.97400	.97300	.97200	.97100	.97000

Table E

Table E—Single Life, Unisex—Table Showing the Present Worth of the Remainder Interest in Property Transferred to a Unitrust Having the Adjusted Payout Rate Shown—Applicable for Transfers After November 30, 1983, and Before May 1, 1989

(1) Age	(2) Adjusted Payout Rate				
	6.2%	6.4%	6.6%	6.8%	7.0%
0	.04253	.04066	.03899	.03751	.03618
1	.02516	.02320	.02145	.01989	.01850
2	.02557	.02353	.02171	.02008	.01862
3	.02640	.02427	.02237	.02067	.01915
4	.02744	.02523	.02325	.02147	.01988
5	.02868	.02638	.02431	.02246	.02080
6	.03008	.02767	.02552	.02359	.02185
7	.03159	.02909	.02685	.02483	.02302
8	.03325	.03065	.02831	.02621	.02432
9	.03507	.03236	.02993	.02774	.02576
10	.03704	.03423	.03170	.02941	.02735
11	.03918	.03626	.03363	.03125	.02910
12	.04148	.03845	.03571	.03323	.03099
13	.04387	.04073	.03788	.03531	.03297
14	.04632	.04305	.04010	.03742	.03499
15	.04876	.04538	.04231	.03953	.03699
16	.05118	.04767	.04449	.04159	.03896
17	.05357	.04994	.04663	.04362	.04088
18	.05598	.05221	.04878	.04565	.04280
19	.05843	.05453	.05097	.04772	.04476
20	.06099	.05694	.05325	.04988	.04679
21	.06365	.05946	.05564	.05213	.04893
22	.06644	.06210	.05813	.05449	.05116
23	.06937	.06488	.06076	.05699	.05352

(1) Age	(2) Adjusted Payout Rate				
	6.2%	6.4%	6.6%	6.8%	7.0%
24	.07249	.06784	.06357	.05965	.05605
25	.07584	.07103	.06660	.06254	.05879
26	.07945	.07447	.06989	.06567	.06178
27	.08334	.07819	.07345	.06907	.06503
28	.08751	.08219	.07729	.07275	.06856
29	.09194	.08645	.98137	.07667	.07233
30	.09663	.09096	.08572	.08086	.07635
31	.10156	.09572	.09030	.08527	.08060
32	.10677	.10074	.09515	.08995	.08512
33	.11224	.10604	.10027	.09490	.08990
34	.11798	.11159	.10564	.10010	.09494
35	.12401	.11744	.11131	.10560	.10026
36	.13033	.12357	.11727	.11137	.10586
37	.13693	.12999	.12350	.11743	.11175
38	.14380	.13668	.13002	.12377	.11791
39	.15096	.14366	.13681	.13038	.12436
40	.15841	.15092	.14390	.13729	.13109
41	.16615	.15848	.15128	.14450	.13812
42	.17421	.16637	.15899	.15204	.14549
43	.18257	.17456	.16700	.15988	.15316
44	.19124	.18306	.17533	.16804	.16115
45	.20018	.19184	.18395	.17649	.16943
46	.20943	.20092	.19287	.18524	.17802
47	.21897	.21030	.20209	.19431	.18692
48	.22883	.22001	.21165	.20371	.19616
49	.23900	.23004	.22152	.21343	.20573
50	.24948	.24039	.23173	.22349	.21565
51	.26027	.25104	.24225	.23387	.22589
52	.27135	.26200	.25308	.24457	.23645
53	.28271	.27325	.26421	.25558	.24733
54	.29433	.28476	.27561	.26686	.25848
55	.30621	.29654	.28728	.27842	.26993
56	.31832	.30856	.29921	.29025	.28165
57	.33068	.32085	.31142	.30236	.29367
58	.34329	.33339	.32388	.31474	.30595
59	.35615	.34620	.33662	.32741	.31855
60	.36927	.35927	.34964	.34037	.33143
61	.38265	.37262	.36295	.35362	.34463

(1) Age	(2) Adjusted Payout Rate				
	6.2%	6.4%	6.6%	6.8%	7.0%
62	.39630	.38625	.37655	.36718	.35814
63	.41020	.40014	.39043	.38104	.37196
64	.42432	.41428	.40456	.39516	.38606
65	.43866	.42864	.41893	.40953	.40042
66	.45320	.44321	.43353	.42414	.41503
67	.46790	.45796	.44832	.43896	.42987
68	.48277	.47289	.46330	.45398	.44492
69	.49781	.48802	.47849	.46923	.46021
70	.51303	.50333	.49389	.48470	.47574
71	.52847	.51888	.50954	.50044	.49156
72	.54412	.53466	.52544	.51644	.50766
73	.55990	.55059	.54151	.52363	.52396
74	.57566	.56652	.55758	.54885	.54030
75	.59129	.58232	.57354	.56496	.55655
76	.60671	.59792	.58932	.58089	.57263
77	.62189	.61330	.60487	.59661	.58851
78	.63687	.62847	.62024	.61215	.60422
79	.65168	.64349	.63546	.62756	.61981
80	.66637	.65841	.65058	.64289	.63532
81	.68085	.67312	.66551	.65802	.65066
82	.69503	.68753	.68014	.67287	.66571
83	.70890	.70164	.69448	.68743	.68048
84	.72255	.71553	.70861	.70179	.69506
85	.73600	.72924	.72257	.71598	.70948
86	.74897	.7446	.73693	.72969	.72342
87	.76109	.75483	.74864	.74252	.73647
88	.77235	.76631	.76035	.75445	.74862
89	.78298	.77717	.77142	.76573	.76011
90	.79329	.78770	.78217	.77669	.77127
91	.80320	.79783	.79252	.78725	.78204
92	.81241	.80725	.80214	.79708	.79206
93	.82074	.81578	.81086	.80598	.80115
94	.82816	.82337	.81862	.81391	.80924
95	.83461	.82997	.82537	.82081	.81629
96	.84003	.83552	.82105	.82661	.82221
97	.84487	.84048	.83612	.82179	.82750
98	.84910	.84481	.84054	.83631	.83211
99	.85307	.84887	.84469	.84055	.83644

(1) Age	(2) Adjusted Payout Rate				
	6.2%	6.4%	6.6%	6.8%	7.0%
100	.85701	.85290	.84882	.84476	.84073
101	.86049	.85645	.85244	.84846	.84451
102	.86424	.86029	.85637	.85247	.84859
103	.86904	.86520	.86138	.85758	.85381
104	.87365	.86991	.86619	.86249	.85880
105	.88058	.87700	.87343	.86988	.86635
106	.89165	.88835	.88506	.88179	.87852
107	.90692	.90404	.90116	.89829	.89542
108	.93077	.92858	.92639	.92420	.92201
109	.96900	.96800	.96700	.96600	.96500

Table E

Table E—Single Life, Unisex—Table Showing the Present Worth of the Remainder Interest in Property Transferred to a Unitrust Having the Adjusted Payout Rate Shown—Applicable for Transfers After November 30, 1983, and Before May 1, 1989

(1) Age	(2) Adjusted payout rate				
	7.2%	7.4%	7.6%	7.8%	8.0%
0	.03499	.03392	.03296	.03209	.03130
1	.01725	.01613	.01513	.01422	.01340
2	.01732	.01615	.01509	.01414	.01329
3	.01778	.01656	.01545	.01446	.01356
4	.01846	.01717	.01601	.01497	.01402
5	.01930	.01796	.01674	.01574	.01465
6	.02029	.01888	.01761	.01645	.01541
7	.02138	.01991	.01857	.01736	.01627
8	.02261	.02106	.01966	.01839	.01724
9	.02397	.02236	.02089	.01956	.01835
10	.02548	.02379	.02225	.02086	.01959
11	.02715	.02538	.02377	.02231	.02098
12	.02895	.02710	.02542	.02389	.02250
13	.03085	.02892	.02716	.02556	.02410
14	.03278	.03076	.02893	.02725	.02572

(1) Age	(2) Adjusted payout rate				
	7.2%	7.4%	7.6%	7.8%	8.0%
15	.03469	.03259	.03067	.02892	.02732
16	.03656	.03437	.03237	.03054	.02886
17	.03938	.03610	.03401	.03210	.03035
18	.04020	.03782	.03564	.03364	.03181
19	.04204	.03956	.03729	.03520	.03328
20	.04397	.04138	.03901	.03683	.03483
21	.04599	.04329	.04081	.03853	.03644
22	.04810	.04529	.04270	.04032	.03813
23	.05033	.04740	.04470	.04222	.03992
24	.05273	.04968	.04686	.04427	.04187
25	.05534	.05216	.04922	.04651	.04400
26	.05819	.05488	.05182	.04898	.04636
27	.06130	.05785	.05466	.05170	.04896
28	.06468	.06109	.05777	.05468	.05182
29	.06830	.06457	.06110	.05789	.05490
30	.07217	.06829	.06469	.06134	.05822
31	.07627	.07224	.06849	.06500	.06174
32	.08062	.07644	.07254	.06891	.06552
33	.08524	.08090	.07686	.07308	.06955
34	.09012	.08562	.08142	.07749	.07382
35	.09528	.09062	.08626	.08218	.07836
36	.10071	.09589	.09137	.08714	.08317
37	.10643	.10144	.09676	.09237	.08825
38	.11242	.10727	.10243	.09788	.09361
39	.11869	.11337	.10837	.10366	.09923
40	.12526	.11977	.11460	.10973	.10514
41	.13212	.12646	.12113	.11609	.11135
42	.13931	.13349	.12799	.12279	.11789
43	.14681	.14082	.13515	.12980	.12473
44	.15463	.14847	.14264	.13712	.13189
45	.16274	.15642	.15042	.14474	.13935
46	.17117	.16468	.15853	.15268	.14713
47	.17991	.17326	.16694	.16094	.15523
48	.18900	.18219	.17571	.16955	.16368
49	.19841	.19145	.18481	.17850	.17248
50	.20818	.20106	.19428	.18781	.18163
51	.21827	.21101	.20407	.19745	.19113
52	.22869	.22129	.21421	.20745	.20098

(1) Age	(2) Adjusted payout rate				
	7.2%	7.4%	7.6%	7.8%	8.0%
53	.23944	.23190	.22468	.21778	.21117
54	.25047	.24280	.23545	.22841	.22167
55	.26180	.25400	.24653	.23936	.23249
56	.27341	.26550	.25790	.25061	.24361
57	.28532	.27729	.26959	.26218	.25505
58	.29751	.28938	.28157	.27405	.26681
59	.31001	.30180	.29388	.28626	.27892
60	.32282	.31452	.30652	.29880	.29136
61	.33595	.32758	.31950	.31169	.30416
62	.34941	.34097	.33282	.32494	.31733
63	.36318	.35469	.34648	.33854	.33085
64	.37725	.36872	.36046	.35246	.34472
65	.39159	.38304	.37474	.36670	.35891
66	.40620	.39763	.38931	.38124	.37340
67	.42104	.41247	.40414	.39605	.38819
68	.43611	.42755	.41923	.41113	.40326
69	.45144	.44290	.43459	.42650	.41863
70	.46702	.45852	.45025	.44218	.43432
71	.48291	.47447	.46623	.45820	.45037
72	.49909	.49072	.48255	.47458	.46679
73	.51549	.50721	.49912	.49912	.48349
74	.53195	.52377	.51578	.50796	.50031
75	.54832	.54027	.53238	.52466	.51710
76	.56454	.55661	.54884	.54123	.53377
77	.58057	.57278	.56514	.55765	.55030
78	.59644	.58879	.58129	.58393	.56670
79	.61219	.60471	.59736	.59013	.58304
80	.62788	.62057	.61338	.60632	.59936
81	.64341	.63628	.62926	.62236	.61556
82	.65866	.65172	.64488	.63815	.63151
83	.67364	.66689	.66024	.65369	.64723
84	.68843	.68189	.67544	.66907	.66279
85	.70307	.69674	.69050	.68433	.67825
86	.71723	.71112	.70508	.69912	.69323
87	.73050	.72460	.71877	.71300	.70731
88	.74285	.73715	.73151	.72593	.72042
89	.75454	.74903	.74358	.73819	.73286
90	.76591	.76060	.75534	.75014	.74499

(1) Age	(2) Adjusted payout rate				
	7.2%	7.4%	7.6%	7.8%	8.0%
91	.77688	.77176	.76670	.76169	.75672
92	.78709	.78217	.77729	.77245	.76766
93	.79635	.79160	.78690	.78223	.77761
94	.80461	.80002	.79547	.79096	.78648
95	.81180	.80735	.80394	.79856	.79421
96	.81784	.81351	.80921	.80494	.80071
97	.82324	.81901	.81481	.81065	.80651
98	.82794	.82380	.81969	.81562	.81157
99	.83235	.82830	.83427	.82028	.81631
100	.83674	.83276	.82882	.82490	.82101
101	.84058	.83668	.83280	.82895	.82512
102	.84474	.84091	.83710	.83332	.82956
103	.85006	.84633	.84262	.83893	.83526
104	.85514	.85150	.84787	.84427	.84068
105	.86284	.85934	.85585	.85239	.84893
106	.87527	.87204	.86881	.86559	.86239
107	.89257	.88972	.88688	.88404	.88121
108	.91983	.91765	.91547	.91330	.91113
109	.96400	.96300	.96200	.96100	.96000

Table E

Table E—Single Life, Unisex—Table Showing the Present Worth of the Remainder Interest in Property Transferred to a Unitrust Having the Adjusted Payout Rate Shown—Applicable for Transfers After November 30, 1983, and Before May 1, 1989

(1) Age	(2) Adjusted payout rate				
	8.2%	8.4%	8.6%	8.8%	9.0%
0	.03059	.02995	.02936	.02882	.02833
1	.01267	.01200	.01139	.01084	.01033
2	.01251	.01181	.01117	.01059	.01006
3	.01274	.01200	.01133	.01072	.01016
4	.01316	.01239	.01168	.01103	.01044
5	.01375	.01293	.01218	.01150	.01088

(1) Age	(2) Adjusted payout rate				
	8.2%	8.4%	8.6%	8.8%	9.0%
6	.01446	.01360	.01281	.01209	.01144
7	.01527	.01436	.01353	.01277	.01208
8	.01619	.01523	.01436	.01356	.01283
9	.01725	.01624	.01532	.01448	.01370
10	.01843	.01737	.01640	.01551	.01470
11	.01976	.01865	.01763	.01669	.01583
12	.02122	.02005	.01898	.01800	.01709
13	.02276	.02153	.02041	.01937	.01842
14	.02432	.02303	.02185	.02077	.01977
15	.02585	.02451	.02327	.02213	.02108
16	.02732	.02591	.02462	.02342	.02232
17	.02874	.02726	.02590	.02465	.02349
18	.03013	.02858	.02715	.02584	.02462
19	.03152	.02990	.02841	.02703	.02575
20	.03298	.03128	.02971	.02826	.02692
21	.03451	.03272	.03108	.02956	.02815
22	.03611	.03424	.03251	.03091	.02944
23	.03781	.03585	.03404	.03236	.03081
24	.03965	.03760	.03570	.03393	.03230
25	.04168	.03953	.03753	.03568	.03396
26	.04393	.04168	.03958	.03764	.03583
27	.04642	.04406	.04186	.03982	.03792
28	.04916	.04669	.04439	.04224	.04025
29	.05212	.04953	.04712	.04487	.04277
30	.05531	.05260	.05008	.04772	.04552
31	.05871	.05588	.05324	.05077	.04846
32	.06236	.05940	.05663	.05405	.05163
33	.06625	.06316	.06027	.05756	.05502
34	.07038	.06716	.06414	.06131	.05865
35	.07478	.07142	.06827	.06531	.06253
36	.07944	.07595	.07266	.06957	.06667
37	.08438	.08074	.07732	.07410	.07106
38	.08958	.08580	.08223	.07888	.07571
39	.09506	.09112	.08742	.08392	.08061
40	.10081	.09673	.09288	.08924	.08580
41	.10687	.10263	.09863	.09484	.09126
42	.11325	.10886	.10471	.10078	.09705
43	.11993	.11539	.11109	.10701	.10314

(1) Age	(2) Adjusted payout rate				
	8.2%	8.4%	8.6%	8.8%	9.0%
44	.12694	.12224	.11779	.11356	.10955
45	.13424	.12939	.12478	.12040	.11624
46	.14186	.13686	.13210	.12757	.12326
47	.14980	.14464	.13973	.13505	.13059
48	.15810	.15278	.14772	.14289	.13828
49	.16674	.16127	.15605	.15107	.14631
50	.17574	.17012	.16475	.15962	.15472
51	.18510	.17932	.17381	.16853	.16348
52	.19480	.18888	.18322	.17779	.17260
53	.20484	.19878	.19298	.18741	.18208
54	.21520	.20901	.20306	.19735	.19188
55	.22589	.21955	.21347	.20763	.20202
56	.23688	.23041	.22420	.21822	.21248
57	.24820	.24161	.23527	.22917	.22329
58	.25984	.25313	.24667	.24044	.23444
59	.27184	.26501	.25843	.25209	.24596
60	.28417	.27724	.27055	.26409	.25786
61	.29688	.28985	.28306	.27650	.27015
62	.30996	.30284	.29596	.28929	.28285
63	.32341	.31621	.30924	.30249	.29595
64	.33721	.32994	.32289	.31605	.30943
65	.35134	.34401	.33689	.32999	.32329
66	.36580	.35841	.35124	.34427	.33750
67	.38055	.37312	.36590	.35889	.35206
68	.39559	.38814	.38089	.37383	.36696
69	.41096	.40349	.39622	.38913	.38222
70	.42665	.41918	.41190	.40480	.39787
71	.44273	.43527	.42799	.42089	.41395
72	.45919	.45176	.44450	.43741	.43049
73	.47594	.46856	.46134	.45428	.44738
74	.49283	.48550	.47834	.47132	.46446
75	.50969	.50244	.49534	.48838	.48157
76	.52646	.51929	.51226	.50537	.49862
77	.54309	.53601	.52907	.52226	.51558
78	.55960	.55263	.54579	.53907	.53247
79	.57606	.56921	.56248	.55586	.54935
80	.59253	.58580	.57919	.57269	.56629
81	.60887	.60229	.59581	.58943	.58315

(1) Age	(2) Adjusted payout rate				
	8.2%	8.4%	8.6%	8.8%	9.0%
82	.62498	.61855	.61221	.60597	.59982
83	.64086	.63459	.62840	.62230	.61629
84	.65660	.65049	.64447	.63852	.63266
85	.67224	.66631	.66046	.65468	.64898
86	.68742	.68167	.67600	.67040	.66486
87	.70168	.69611	.69061	.68518	.67980
88	.71497	.70958	.70425	.69897	.69376
89	.72758	.72236	.71720	.71208	.70702
90	.73989	.73484	.72985	.72490	.72000
91	.75180	.74693	.74210	.73732	.73259
92	.76292	.75821	.75355	.74894	.74436
93	.77302	.76848	.76397	.75951	.75508
94	.78204	.77764	.77328	.76895	.76466
95	.78991	.78563	.78139	.77719	.77302
96	.79651	.79234	.78821	.78411	.78003
97	.80241	.79834	.79430	.79029	.78630
98	.80755	.80356	.79960	.79567	.79176
99	.81236	.80845	.80456	.80071	.79687
100	.81715	.81331	.80949	.80571	.80195
101	.82132	.81754	.81379	.81006	.80636
102	.82582	.82211	.81842	.81476	.81111
103	.83162	.82799	.82439	.82080	.81724
104	.83711	.83356	.83003	.82652	.82302
105	.84550	.84208	.83867	.83528	.83191
106	.85920	.85602	.85285	.84969	.84655
107	.87839	.87558	.87277	.86997	.86718
108	.90896	.90679	.90463	.90246	.90030

(1) Age	(2) Adjusted payout rate				
	8.2%	8.4%	8.6%	8.8%	9.0%
109	.95900	.95800	.95700	.95600	.95500

Table E

Table E—Single Life, Unisex—Table Showing the Present Worth of the Remainder Interest in Property Transferred to a Unitrust Having the Adjusted Payout Rate Shown—Applicable for Transfers After November 30, 1983, and Before May 1, 1989

(1) Age	(2) Adjusted payout Rate				
	9.2%	9.4%	9.6%	9.8%	10.0%
0	.02788	.02747	.02709	.02673	.02641
1	.00987	.00945	.00906	.00871	.00838
2	.00957	.00913	.00872	.00835	.00800
3	.00965	.00918	.00875	.00836	.00799
4	.00991	.00941	.00896	.00854	.00815
5	.01031	.00979	.00931	.00887	.00846
6	.01084	.01028	.00978	.00931	.00888
7	.01144	.01086	.01032	.00983	.00937
8	.01216	.01154	.01097	.01044	.00996
9	.01299	.01234	.01174	.01118	.01067
10	.01395	.01326	.01262	.01204	.01149
11	.01504	.01432	.01364	.01302	.01245
12	.01626	.01549	.01478	.01413	.01352
13	.01755	.01674	.01599	.01530	.01466
14	.01885	.01800	.01721	.01648	.01581
15	.02011	.01922	.01839	.01762	.01691
16	.02130	.02036	.01949	.01869	.01794
17	.02243	.02144	.02052	.01967	.01888
18	.02350	.02246	.02150	.02061	.01978
19	.02457	.02348	.02247	.02153	.02065
20	.02569	.02454	.02347	.02248	.02156
21	.02685	.02564	.02452	.02347	.02250
22	.02806	.02679	.02561	.02451	.02348
23	.02936	.02802	.02677	.02561	.02453

(1) Age	(2) Adjusted payout Rate				
	9.2%	9.4%	9.6%	9.8%	10.0%
24	.03078	.02937	.02805	.02683	.02569
25	.03236	.03087	.02949	.02820	.02699
26	.03415	.03258	.03112	.02975	.02848
27	.03615	.03450	.03295	.03151	.03017
28	.03838	.03664	.03502	.03350	.03208
29	.04081	.03898	.03727	.03567	.03416
30	.04346	.04154	.03973	.03804	.03646
31	.04630	.04427	.04237	.04059	.03892
32	.04936	.04723	.04523	.04335	.04159
33	.05264	.05041	.04831	.04633	.04448
34	.05615	.05381	.05160	.04952	.04757
35	.05992	.05746	.05514	.05296	.05090
36	.06393	.06135	.05892	.05663	.05447
37	.06820	.06550	.06295	.06055	.05828
38	.07272	.06990	.06723	.06471	.06233
39	.07749	.07454	.07175	.06912	.06662
40	.08254	.07946	.07655	.07379	.07117
41	.08787	.08466	.08162	.07073	.07599
42	.09352	.09018	.08700	.08399	.08112
43	.09947	.09599	.09268	.08953	.08654
44	.10573	.10211	.09866	.09539	.09227
45	.11229	.10852	.10494	.10152	.09827
46	.11916	.11525	.11153	.10798	.10459
47	.12634	.12229	.11843	.11474	.11122
48	.13388	.12969	.12568	.12186	.11820
49	.14177	.13743	.13329	.12932	.12553
50	.15003	.14555	.14126	.13716	.13322
51	.15865	.15402	.14959	.14534	.14127
52	.16763	.16286	.15828	.15390	.14969
53	.17696	.17205	.16734	.16281	.15847
54	.18662	.18157	.17672	.17206	.16758
55	.19662	.19144	.18645	.18165	.17703
56	.20695	.20163	.19651	.19157	.18682
57	.21763	.21218	.20693	.20186	.19698
58	.22865	.22307	.21769	.21250	.20749
59	.24005	.23435	.22885	.22353	.21839
60	.25183	.24601	.24038	.23494	.22969
61	.26401	.25808	.25234	.24678	.24141

(1) Age	(2) Adjusted payout Rate				
	9.2%	9.4%	9.6%	9.8%	10.0%
62	.27661	.27056	.26471	.25905	.25356
63	.28961	.28347	.27752	.27175	.26615
64	.30300	.29677	.29072	.28486	.27916
65	.31678	.31046	.30433	.29837	.29259
66	.33093	.32454	.31832	.31228	.30641
67	.34542	.33897	.33268	.32657	.32062
68	.36027	.35376	.34742	.34124	.33522
69	.37550	.36894	.36255	.35632	.35024
70	.39111	.38452	.37809	.37182	.36570
71	.40719	.40058	.39412	.38782	.38166
72	.42372	.41710	.41064	.40432	.39814
73	.44062	.43402	.42756	.42124	.41506
74	.45774	.45116	.44471	.43840	.43223
75	.47489	.46834	.46193	.45565	.44949
76	.49199	.48550	.47913	.47288	.46675
77	.50902	.50258	.49626	.49006	.48397
78	.52598	.51962	.51336	.50721	.50117
79	.54295	.53667	.53049	.52441	.51843
80	.55999	.55380	.54771	.54171	.53581
81	.57697	.57088	.56489	.55899	.55317
82	.59375	.58778	.58190	.57610	.57039
83	.61036	.60451	.59875	.59306	.58746
84	.62687	.62116	.61553	.60997	.60448
85	.64335	.63779	.63230	.62688	.62152
86	.65939	.65398	.64864	.64337	.63816
87	.67449	.66924	.66405	.65892	.65384
88	.68860	.68350	.67845	.67346	.66852
89	.70202	.69706	.69216	.68731	.68250
90	.71515	.71035	.70559	.70088	.69622
91	.72790	.72325	.71865	.71409	.70957
92	.73982	.73533	.73087	.72646	.72208
93	.75069	.74634	.74202	.73774	.73350
94	.76040	.75618	.75199	.74784	.74372
95	.76888	.76477	.76070	.75666	.75265
96	.77599	.77199	.76801	.76406	.76014
97	.78235	.77843	.77454	.77067	.76684
98	.78789	.78404	.78022	.77642	.77266
99	.79307	.78929	.78554	.78181	.77811

(1) Age	(2) Adjusted payout Rate				
	9.2%	9.4%	9.6%	9.8%	10.0%
100	.79821	.79450	.79081	.78715	.78351
101	.80268	.79902	.79539	.79178	.78819
102	.80749	.80389	.80031	.79676	.79322
103	.81370	.81018	.80668	.80319	.79973
104	.81955	.81609	.81265	.80923	.80582
105	.82855	.82520	.82187	.81856	.81526
106	.84341	.84029	.83718	.83408	.83099
107	.86439	.86162	.85884	.85608	.85332
108	.89815	.89599	.89384	.89169	.88955
109	.95400	.95300	.95200	.95100	.95000

Table E

Table E—Single Life, Unisex—Table Showing the Present Worth of the Remainder Interest in Property Transferred to a Unitrust Having the Adjusted Payout Rate Shown—Applicable for Transfers After November 30, 1983, and Before May 1, 1989

(1) Age	(2) Adjusted payout rate				
	10.2%	10.4%	10.6%	10.8%	11.0%
0	.02610	.02582	.02556	.02531	.02508
1	.00807	.00779	.00753	.00729	.00707
2	.00769	.00739	.00712	.00686	.00663
3	.00766	.00735	.00706	.00679	.00654
4	.00780	.00747	.00716	.00688	.00662
5	.00808	.00773	.00741	.00711	.00683
6	.00848	.00811	.00776	.00744	.00715
7	.00894	.00855	.00819	.00785	.00753
8	.00951	.00909	.00871	.00835	.00801
9	.01019	.00975	.00934	.00896	.00860
10	.01099	.01052	.01008	.00967	.00930
11	.01191	.01142	.01095	.01052	.01012
12	.01295	.01243	.01194	.01148	.01106
13	.01406	.01351	.01299	.01251	.01206
14	.01518	.01459	.01405	.01354	.01306

(1) Age	(2) Adjusted payout rate				
	10.2%	10.4%	10.6%	10.8%	11.0%
15	.01625	.01563	.01506	.01452	.01402
16	.01724	.01659	.01599	.01542	.01489
17	.01815	.01747	.01683	.01624	.01568
18	.01901	.01829	.01761	.01699	.01640
19	.01984	.01908	.01837	.01771	.01709
20	.02070	.01990	.01915	.01846	.01780
21	.02160	.02075	.01996	.01923	.01854
22	.02253	.02164	.02080	.02003	.01930
23	.02352	.02258	.02170	.02088	.02010
24	.02462	.02362	.02269	.02182	.02100
25	.02586	.02481	.02382	.02289	.02203
26	.02729	.02617	.02512	.02414	.02322
27	.02891	.02772	.02662	.02558	.02460
28	.03074	.02949	.02832	.02722	.02618
29	.03276	.03143	.03019	.02902	.02792
30	.03497	.03357	.03225	.03102	.02985
31	.03735	.03587	.03448	.03317	.03193
32	.03993	.03837	.03690	.03551	.03420
33	.04273	.04108	.03952	.03806	.03667
34	.04572	.04399	.04234	.04079	.03933
35	.04896	.04713	.04539	.04376	.04221
36	.05243	.05049	.04867	.04694	.04530
37	.05613	.05410	.05217	.05035	.04862
38	.06007	.05793	.05591	.05399	.05217
39	.06425	.06200	.05987	.05785	.05593
40	.06869	.06633	.06409	.06197	.05995
41	.07339	.07092	.06857	.06634	.06421
42	.07840	.07581	.07335	.07101	.06878
43	.08370	.08099	.07841	.07595	.07361
44	.08930	.08646	.08377	.08119	.07874
45	.09517	.09222	.08940	.08670	.08413
46	.10136	.09828	.09533	.09252	.08983
47	.10786	.10464	.10157	.09864	.09582
48	.11470	.11136	.10816	.10510	.10216
49	.12189	.11842	.11509	.11190	.10884
50	.12946	.12585	.12239	.11907	.11588
51	.13737	.13363	.13003	.12659	.12327
52	.14565	.14177	.13805	.13447	.13103

(1) Age	(2) Adjusted payout rate				
	10.2%	10.4%	10.6%	10.8%	11.0%
53	.15429	.15028	.14642	.14271	.13914
54	.16327	.15912	.15513	.15129	.14759
55	.17259	.16831	.16419	.16022	.15639
56	.18225	.17784	.17358	.16948	.16553
57	.19227	.18773	.18335	.17912	.17503
58	.20265	.19798	.19347	.18911	.18490
59	.21343	.20863	.20400	.19951	.19518
60	.22460	.21968	.21492	.21032	.20586
61	.23620	.23117	.22629	.22156	.21698
62	.24824	.24309	.23810	.23325	.22856
63	.26073	.25546	.25036	.24540	.24060
64	.27364	.26827	.26306	.25800	.25308
65	.28696	.28150	.27619	.27103	.26601
66	.30070	.29515	.28974	.28449	.27937
67	.31483	.30919	.30371	.29836	.29316
68	.32936	.32365	.31808	.31266	.30737
69	.34432	.33854	.33290	.32741	.32204
70	.35972	.35389	.34820	.34264	.33721
71	.37565	.36977	.36403	.35842	.35294
72	.39210	.38619	.38042	.37477	.36924
73	.40900	.40308	.39728	.39161	.38605
74	.42618	.42025	.41444	.40876	.40318
75	.44345	.43753	.43173	.42604	.42046
76	.46073	.45483	.44904	.44336	.43779
77	.47799	.47212	.46635	.46069	.45513
78	.49524	.48941	.48368	.47805	.47252
79	.51256	.50678	.50110	.49551	.49001
80	.53001	.52429	.51867	.51313	.50769
81	.54745	.54181	.53626	.53079	.52541
82	.56476	.55921	.55374	.54835	.54303
83	.58193	.57648	.57110	.56579	.56056
84	.59907	.59373	.58845	.58325	.57811
85	.61624	.61102	.60586	.60077	.59574
86	.63300	.62791	.62289	.61791	.61300
87	.64883	.64387	.63896	.63411	.62932
88	.66363	.65880	.65402	.64929	.64461
89	.67775	.67304	.66838	.66377	.65921
90	.69160	.68703	.68250	.67802	.67357

(1) Age	(2) Adjusted payout rate				
	10.2%	10.4%	10.6%	10.8%	11.0%
91	.70509	.70066	.69626	.69191	.68760
92	.71775	.71345	.70919	.70496	.70078
93	.72929	.72512	.72099	.71689	.71282
94	.73964	.73559	.73157	.72758	.72362
95	.74867	.74472	.74081	.73692	.73306
96	.75625	.75239	.74856	.74476	.74099
97	.76303	.75925	.75550	.75177	.74807
98	.76892	.76521	.76152	.75786	.75422
99	.77443	.77078	.76715	.76355	.75998
100	.77990	.77631	.77275	.76921	.76569
101	.78463	.78109	.77757	.77407	.77060
102	.78971	.78622	.78275	.77930	.77587
103	.79629	.79287	.78947	.78608	.78272
104	.80244	.79907	.79572	.79239	.78907
105	.81198	.80871	.80546	.88222	.79900
106	.82792	.82485	.82180	.81876	.81572
107	.85057	.84783	.84509	.84237	.83964
108	.88740	.88526	.88312	.88098	.87885
109	.94900	.94800	.94700	.94600	.94500

Table E

Table E—Single Life, Unisex—Table Showing the Present Worth of the Remainder Interest in Property Transferred to a Unitrust Having the Adjusted Payout Rate Shown—Applicable for Transfers After November 30, 1983, and Before May 1, 1989

(1) Age	(2) Adjusted payout rate				
	11.2%	11.4%	11.6%	11.8%	12.0%
0	.02487	.02466	.02447	.02429	.02412
1	.00686	.00666	.00648	.00631	.00615
2	.00641	.00620	.00601	.00583	.00566
3	.00631	.00609	.00589	.00570	.00552
4	.00637	.00614	.00593	.00573	.00554
5	.00657	.00633	.00610	.00588	.00568

(1) Age	(2) Adjusted payout rate				
	11.2%	11.4%	11.6%	11.8%	12.0%
6	.00687	.00661	.00637	.00614	.00593
7	.00724	.00696	.00670	.00646	.00623
8	.00770	.00740	.00713	.00687	.00663
9	.00827	.00795	.00766	.00739	.00713
10	.00894	.00861	.00830	.00800	.00773
11	.00974	.00939	.00906	.00875	.00846
12	.01066	.01029	.00993	.00961	.00929
13	.01164	.01124	.01087	.01052	.01019
14	.01262	.01220	.01181	.01144	.01109
15	.01355	.01311	.01270	.01231	.01194
16	.01440	.01394	.01350	.01309	.01271
17	.01516	.01467	.01421	.01378	.01337
18	.01585	.01534	.01485	.01440	.01397
19	.01651	.01597	.01546	.01498	.01453
20	.01719	.01662	.01608	.01557	.01510
21	.01789	.01728	.01672	.01618	.01568
22	.01861	.01797	.01737	.01680	.01627
23	.01938	.01870	.01806	.01746	.01689
24	.02023	.01951	.01883	.01819	.01759
25	.02121	.02045	.01973	.01905	.01841
26	.02236	.02155	.02078	.02006	.01938
27	.02368	.02282	.02200	.02124	.02051
28	.02521	.02429	.02342	.02261	.02183
29	.02689	.02591	.02499	.02412	.02330
30	.02875	.02772	.02674	.02581	.02494
31	.03076	.02966	.02863	.02764	.02671
32	.03297	.03180	.03070	.02965	.02866
33	.03536	.03412	.03295	.03184	.03079
34	.03794	.03663	.03539	.03421	.03309
35	.04074	.03935	.03803	.03678	.03559
36	.04375	.04228	.04089	.03956	.03830
37	.04699	.04543	.04395	.04255	.04122
38	.05044	.04879	.04723	.04575	.04433
39	.05411	.05238	.5073	.04916	.04766
40	.05802	.05620	.05445	.05279	.05121
41	.06219	.06026	.05843	.05668	.05550
42	.06665	.06462	.06269	.06084	.05908
43	.07138	.06924	.06721	.06526	.06341

(1) Age	(2) Adjusted payout rate				
	11.2%	11.4%	11.6%	11.8%	12.0%
44	.07639	.07415	.07202	.06997	.06801
45	.08168	.07933	.07708	.07493	.07287
46	.08726	.08480	.08244	.08018	.07802
47	.09313	.09056	.08809	.08572	.08345
48	.09935	.09666	.09408	.09160	.08922
49	.10591	.10309	.10039	.09780	.09531
50	.11282	.10989	.10707	.10436	.10176
51	.12009	.11703	.11409	.11127	.10855
52	.12772	.12454	.12147	.11853	.11569
53	.13571	.13340	.12922	.12615	.12319
54	.14403	.14060	.13729	.13410	.13102
55	.15270	.14914	.14571	.14240	.13920
56	.16171	.15802	.15447	.15103	.14771
57	.17109	.16728	.16360	.16004	.15660
58	.18083	.17690	.17309	.16941	.16585
59	.19098	.18692	.18299	.17919	.17551
60	.20154	.19736	.19331	.18938	.18558
61	.21254	.20824	.20407	.20003	.19610
62	.22400	.21958	.21530	.21113	.20709
63	.23593	.23139	.22699	.22272	.21856
64	.24830	.24366	.23915	.23476	.23050
65	.26113	.25638	.25176	.24727	.24290
66	.27439	.26955	.26483	.26023	.25576
67	.28808	.28314	.27833	.27364	.26906
68	.30221	.29718	.29228	.28750	.28283
69	.31681	.31170	.30672	.30185	.29710
70	.33190	.32673	.32167	.31672	.31189
71	.34758	.34234	.33721	.33220	.32731
72	.36384	35855	.35337	.34831	.34335
73	.38061	.37529	.37007	.36496	.35996
74	.39772	.39237	.38713	.38199	.37695
75	.41499	.40962	.40436	.39920	.39413
76	.43232	.42695	.42168	.41650	.41142
77	.44967	.44431	.43904	.43386	.42878
78	.46708	.46173	.45647	.45130	.44622
79	.48460	.47928	.47405	.46890	.46383
80	.50232	.49705	.49185	.48673	.48169
81	.52010	.51487	.50973	.50465	.49965

(1) Age	(2) Adjusted payout rate				
	11.2%	11.4%	11.6%	11.8%	12.0%
82	.53779	.53263	.52754	.52252	.51757
83	.55540	.55031	.54529	.54033	.53544
84	.57304	.56804	.56309	.55822	.55340
85	.59077	.58586	.58102	.57623	.57150
86	.60815	.60335	.59860	.59392	.58928
87	.62458	.61989	.61525	.61066	.60613
88	.63998	.63540	.63086	.62638	.62194
89	.65469	.65022	.64579	.64141	.63707
90	.66918	.66482	.66050	.65623	.65199
91	.68332	.67909	.67489	.67073	.66661
92	.69662	.69251	.68843	.68439	.68038
93	.70879	.70479	.70082	.69689	.69299
94	.71970	.71581	.71195	.70812	.70432
95	.72924	.72544	.72167	.71793	.71422
96	.73724	.73353	.72984	.72618	.72254
97	.74440	.74076	.73714	.73354	.72998
98	.75061	.74703	.74347	.73994	.73643
99	.75642	.75290	.74939	.74591	.74245
100	.76219	.75872	.75527	.75184	.74844
101	.76715	.76372	.76031	.75692	.75356
102	.77246	.76908	.76571	.76236	.75904
103	.77937	.77605	.77274	.76945	.76618
104	.78577	.78249	.77923	.77598	.77275
105	.79579	.79259	.78941	.78625	.78310
106	.81270	.80969	.80670	.80371	.80073
107	.83693	.83422	.83152	.82883	.82614
108	.87672	.87459	.87246	.87034	.86822

(1) Age	(2) Adjusted payout rate				
	11.2%	11.4%	11.6%	11.8%	12.0%
109	.94400	.94300	.94200	.94100	.94000

Table E

Table E—Single Life, Unisex—Table Showing the Present Worth of the Remainder Interest in Property Transferred to a Unitrust Having the Adjusted Payout Rate Shown—Applicable for Transfers After November 30, 1983, and Before May 1, 1989

(1) Age	(2) Adjusted payout rate				
	12.2%	12.4%	12.6%	12.8%	13.0%
0	.02396	.02380	.02366	.02352	.02338
1	.00600	.00585	.00572	.00559	.00547
2	.00550	.00535	.00521	.00508	.00495
3	.00536	.00520	.00505	.00491	.00478
4	.00536	.00519	.00504	.00489	.00475
5	.00549	.00532	.00515	.00499	.00484
6	.00572	.00554	.00536	.00519	.00503
7	.00602	.00582	.00563	.00545	.00528
8	.00640	.00618	.00598	.00579	.00561
9	.00688	.00665	.00644	.00623	.00604
10	.00747	.00723	.00699	.00678	.00657
11	.00818	.00792	.00767	.00744	.00722
12	.00900	.00873	.00846	.00822	.00798
13	.00988	.00959	.00931	.00905	.00880
14	.01077	.01046	.01017	.00989	.00963
15	.01160	.01127	.01097	.01067	.01040
16	.01234	.01200	.01167	.01137	.01108
17	.01299	.01263	.01229	.01197	.01166
18	.01357	.01319	.01283	.01249	.01217
19	.01410	.01370	.01332	.01297	.01263
20	.01465	.01422	.01382	.01345	.01309
21	.01520	.01475	.01433	.01393	.01355
22	.01576	.01529	.01484	.01442	.01402
23	.01636	.01586	.01538	.01493	.01450

(1) Age	(2) Adjusted payout rate				
	12.2%	12.4%	12.6%	12.8%	13.0%
24	.01703	.01649	.01599	.01551	.01505
25	.01781	.01724	.01670	.01619	.01571
26	.01874	.01813	.01756	.01701	.01650
27	.01983	.01918	.01857	.01799	.01744
28	.02111	.02042	.01976	.01915	.01856
29	.02253	.02179	.02110	.02044	.01981
30	.02411	.02333	.02259	.02188	.02121
31	.02583	.02500	.02421	.02345	.02274
32	.02772	.02683	.02599	.02519	.02443
33	.02979	.02885	.02795	.02709	.02628
34	.03203	.03102	.03006	.02915	.02829
35	.03447	.03340	.03238	.03141	.03048
36	.03710	.03597	.03488	.03385	.03286
37	.03995	.03874	.03758	.03649	.03544
38	.04299	.04170	.04048	.03931	.03820
39	.04623	.04487	.04358	.04234	.04115
40	.04970	.04826	.04689	.04558	.04432
41	.05341	.05189	.05043	.04904	.04771
42	.05739	.05578	.05424	.05277	.05136
43	.06163	.05993	.05830	.05674	.05525
44	.06614	.06435	.06263	.06099	.05941
45	.07090	.06901	.06720	.06547	.06380
46	.07595	.07396	.07206	.07023	.06847
47	.08128	.07919	.07718	.07525	.07340
48	.08693	.08474	.08263	.08061	.07866
49	.09291	.09061	.08840	.08627	.08423
50	.09925	.09684	.09452	.09229	.09014
51	.10593	.10341	.10098	.09864	.09638
52	.11296	.11032	.10778	.10534	.10297
53	.12034	.11759	.11494	.11238	.10991
54	.12805	.12519	.12243	.11976	.11718
55	.13611	.13313	.13025	.12747	.12478
56	.14451	.14141	.13841	.13551	.13271
57	.15327	.15005	.14694	.14393	.14101
58	.16240	.15906	.15583	.15270	.14967
59	.17194	.16848	.16513	.16189	.15874
60	.18189	.17831	.17485	.17148	.16822
61	.19230	.18860	.18502	.18154	.17816

(1) Age	(2) Adjusted payout rate				
	12.2%	12.4%	12.6%	12.8%	13.0%
62	.20317	.19936	.19566	.19207	.18857
63	.21453	.21060	.20679	.20308	.19947
64	.22635	.22231	.21839	.21457	.21085
65	.23864	.23450	.23046	.22653	.22271
66	.25140	.24715	.24301	.23898	.23505
67	.26461	.26026	.25602	.25188	.24785
68	.27828	.27384	.26950	.26527	.26114
69	.29246	.28793	.28350	.27918	.27496
70	.30718	.30256	.29805	.29364	.28933
71	.32251	.31783	.31324	.30876	.30437
72	.33850	.33375	.32910	.32455	.32009
73	.35506	.35026	.34555	.34094	.33642
74	.37201	.36716	.36241	.35776	.35319
75	.38916	.38429	.37950	.37481	.37020
76	.40644	.40154	.39673	.39200	.38737
77	.42378	.41887	.41404	.40930	.40464
78	.44123	.43631	.43148	.42673	.42205
79	.45885	.45394	.44911	.44436	.43969
80	.47673	.47184	.46703	.46229	.45763
81	.49473	.48987	.48509	.48037	.47573
82	.51269	.50787	.50313	.49845	.49383
83	.53062	.52586	.52116	.51653	.51195
84	.54864	.54395	.53931	.53473	.53021
85	.56683	.56221	.55765	.55314	.54869
86	.58470	.58017	.57570	.57127	.56689
87	.60164	.59720	.59281	.58847	.58417
88	.61754	.61320	.60889	.60464	.60042
89	.63277	.62851	.62430	.62013	.61600
90	.64780	.64364	.63953	.63545	.63141
91	.66252	.65848	.65446	.65049	.64655
92	.67640	.67246	.66856	.66468	.66084
93	.68912	.68528	.68148	.67770	.67396
94	.70055	.69680	.69309	.68941	.68576
95	.71054	.70689	.70326	.69966	.69609
96	.71893	.71535	.71180	.70827	.70476
97	.72643	.72292	.71943	.71596	.71252
98	.73294	.72948	.72604	.72263	.71924
99	.73902	.73561	.73222	.72886	.72551

(1) Age	(2) Adjusted payout rate				
	12.2%	12.4%	12.6%	12.8%	13.0%
100	.74506	.74170	.73836	.73504	.73174
101	.75021	.74689	.74359	.74030	.73704
102	.75573	.75244	.74918	.74593	.74270
103	.76293	.75970	.75649	.75329	.75011
104	.76954	.76634	.76316	.76000	.75685
105	.77996	.77684	.77373	.77064	.76756
106	.79777	.79481	.79187	.78894	.78602
107	.82346	.82078	.81812	.81546	.81281
108	.86610	.86398	.86187	.85976	.85765
109	.93900	.93800	.93700	.93600	.93500

Table E

Table E—Single Life, Unisex—Table Showing the Present Worth of the Remainder Interest in Property Transferred to a Unitrust Having the Adjusted Payout Rate Shown—Applicable for Transfers After November 30, 1983, and Before May 1, 1989

(1) Age	(2) Adjusted payout rate				
	13.2%	13.4%	13.6%	13.8%	14.0%
0	.02325	.02313	.02301	.02290	.02279
1	.00536	.00525	.00514	.00505	.00495
2	.00484	.00472	.00462	.00451	.00442
3	.00465	.00453	.00442	.00431	.00421
4	.00461	.00449	.00437	.00426	.00415
5	.00470	.00457	.00444	.00432	.00421
6	.00488	.00474	.00460	.00447	.00435
7	.00512	.00496	.00482	.00468	.00455
8	.00543	.00527	.00512	.00497	.00483
9	.00585	.00568	.00551	.00536	.00521
10	.00637	.00619	.00601	.00584	.00568
11	.00701	.00681	.00662	.00644	.00627
12	.00776	.00755	.00735	.00716	.00697
13	.00857	.00734	.00813	.00793	.00773
14	.00938	.00914	.00892	.00870	.00850

(1) Age	(2) Adjusted payout rate				
	13.2%	13.4%	13.6%	13.8%	14.0%
15	.01014	.00989	.00965	.00942	.00921
16	.01080	.01054	.01029	.01005	.00983
17	.01137	.01109	.01083	.01058	.01035
18	.01186	.01157	.01130	.01103	.01078
19	.01230	.01300	.01171	.01143	.01117
20	.01275	.01243	.01212	.01183	.01155
21	.01319	.01285	.01253	.01222	.01193
22	.01364	.01328	.01293	.01261	.01230
23	.01410	.01372	.01336	.01301	.01268
24	.01463	.01422	.01383	.01347	.01312
25	.01525	.01482	.01441	.01401	.01364
26	.01601	.01555	.01511	.01469	.01430
27	.01692	.01643	.01596	.01551	.01509
28	.01800	.01748	.01697	.01650	.01604
29	.01922	.01865	.01812	.01760	.01712
30	.02058	.01998	.01940	.01886	.01833
31	.02206	.02142	.02080	.02022	.01966
32	.02370	.02301	.02236	.02173	.02113
33	.02550	.02477	.02407	.02340	.02276
34	.02746	.02667	.02592	.02521	.02452
35	.02960	.02876	.02796	.02719	.02646
36	.03193	.03103	.03017	.02936	.02858
37	.03444	.03348	.03257	.03170	.03087
38	.03714	.03612	.03515	.03422	.03333
39	.04002	.03894	.03791	.03692	.03597
40	.04312	.04197	.04087	.03891	.03880
41	.04643	.04521	.04404	.04292	.04185
42	.05001	.04871	.04747	.04628	.04514
43	.05382	.05245	.05113	.04987	.04865
44	.05789	.05644	.05505	.05371	.05242
45	.06220	.06067	.05919	.05777	.05641
46	.06678	.06516	.06360	.06210	.06065
47	.07162	.06991	.06826	.06668	.06515
48	.07678	.07498	.07324	.07157	.06996
49	.08225	.08035	.07852	.07676	.07506
50	.08807	.08607	.08415	.08229	.08050
51	.09421	.09211	.09009	.08814	.08625
52	.10070	.09850	.09637	.09432	.09234

(1) Age	(2) Adjusted payout rate				
	13.2%	13.4%	13.6%	13.8%	14.0%
53	.10753	.10523	.10300	.10085	.09877
54	.11468	.11227	.10994	.10769	.10551
55	.12218	.11966	.11722	.11487	.11258
56	.12999	.12737	.12483	.12236	.11998
57	.13818	.13545	.13279	.13022	.12773
58	.14673	.14388	.14112	.13844	.13584
59	.15568	.15272	.14985	.14706	.14435
60	.16505	.16198	.15899	.15609	.15327
61	.17488	.17169	.16859	.16558	.16265
62	.18518	.18187	.17866	.17554	.17251
63	.19596	.19255	.18923	.18600	.18285
64	.20723	.20371	.20028	.19694	.19368
65	.21898	.21535	.21181	.20836	.20500
66	.23121	.22748	.22383	.22028	.21681
67	.24392	.24008	.23633	.23267	.22910
68	.25711	.25317	.24932	.24556	.24189
69	.27083	.26680	.26285	.25900	.25523
70	.28512	.28100	.27697	.27302	.26916
71	.30007	.29587	.29176	.28773	.28378
72	.31572	.31145	.30726	.30315	.29913
73	.33199	.32765	.32340	.31923	.31514
74	.34871	.34431	.34000	.33577	.33162
75	.36568	.36124	.35688	.35260	.34840
76	.38281	.37833	.37393	.36961	.36537
77	.40006	.39555	.39113	.38677	.38249
78	.41745	.41293	.40848	.40410	.39980
79	.43508	.43055	.42609	.42170	.41737
80	.45303	.44850	.44404	.43964	.43531
81	.47115	.46663	.46218	.45779	.45347
82	.48928	.48479	.48036	.47599	.47168
83	.50744	.50298	.49858	.49424	.48995
84	.52575	.52134	.51698	.51268	.50843
85	.54429	.53994	.53564	.53139	.52720
86	.56257	.55829	.55406	.54988	.54574
87	.57993	.57572	.57156	.56745	.56338
88	.59625	.59212	.58804	.58399	.57999
89	.61191	.60786	.60384	.59987	.59594
90	.62741	.62344	.61952	.61562	.61177

(1) Age	(2) Adjusted payout rate				
	13.2%	13.4%	13.6%	13.8%	14.0%
91	.64264	.63877	.63493	.63113	.62736
92	.65703	.65326	.64951	.64580	.64212
93	.67024	.66656	.66291	.65928	.65568
94	.68213	.67854	.67497	.67142	.66791
95	.69255	.68903	.68554	.68207	.67863
96	.70128	.69783	.69440	.69100	.68762
97	.70910	.70570	.70233	.69899	.69566
98	.71587	.71252	.70920	.70590	.70263
99	.72219	.71889	.71562	.71236	.70913
100	.72847	.72522	.72189	.71877	.71558
101	.73380	.73058	.72738	.72420	.72104
102	.73949	.73630	.73313	.72998	.72685
103	.74695	.74381	.74068	.73758	.73449
104	.75372	.75060	.74751	.74442	.74136
105	.76449	.76144	.75840	.75538	.75237
106	.78311	.78021	.77732	.77444	.77157
107	.81016	.80752	.80489	.80227	.79965
108	.85554	.85344	.85134	.84924	.84715
109	.93400	.93300	.93200	.93100	.93000

Table F(1)

Table F(1)—10 Percent—Table Showing Factors for Computations of the Adjusted Payout Rate for Certain Valuations and Payout Sequences—Applicable for Transfers After November 30, 1983, and Before May 1, 1989

(1) Number of months by which the valuation date precedes the first payout		(2) Factors for payout at the end of each			
At least	But less than	Annual period	Semiannual period	Quarterly period	Monthly period
	1		.976731	.965232	.957616
1	2	.992089	.969004	.957596	.950041
2	3	.984240	.961338	.950021	
3	4	.976454	.953733	.942505	

(1) Number of months by which the valuation date precedes the first payout		(2) Factors for payout at the end of each			
At least	But less than	Annual period	Semiannual period	Quarterly period	Monthly period
4	5	.968729	.946188		
5	6	.961066	.938703		
6	7	.953463	.931277		
7	8	.945920			
8	9	.938436			
9	10	.931012			
10	11	.923647			
11	12	.916340			
12		.909091			

(e) *Valuation of charitable remainder unitrusts having certain payout sequences for transfers for which the valuation date is after April 30, 1989, and before May 1, 1999 —*

(1) *In general.* Except as otherwise provided in paragraph (e)(2) of this section, in the case of transfers for which the valuation date is after April 30, 1989, and before May 1, 1999, the present value of a remainder interest is determined under paragraphs (e)(3) through (e)(6) of this section, provided that the amount of the payout as of any payout date during any taxable year of the trust is not larger than the amount that the trust could distribute on such date under § 1.664-3(a)(1)(v) if the taxable year of the trust were to end on such date. See, however, § 1.7520-3(b) (relating to exceptions to the use of the prescribed tables under certain circumstances).

(2) *Transitional rules for valuation of charitable remainder unitrusts.*

(i) If the valuation date of a transfer to a charitable remainder unitrust is after April 30, 1989, and before June 10, 1994, a transferor can rely upon Notice 89-24, 1989-1 C.B. 660, or Notice 89-60, 1989-1 C.B. 700, in valuing the transferred interest. (See § 601.601(d)(2)(ii)(*b*) of this chapter.)

(ii) For purposes of sections 2055, 2106, or 2624, if on May 1, 1989, the decedent was mentally incompetent so that the disposition of the property could not be changed, and the decedent died after April 30, 1989, without having regained competency to dispose of the decedent's property, or the decedent died within 90 days of the date that the decedent first regained competency after April 30, 1989, the present value of a remainder interest determined under this section is determined as if the valuation date with respect to the decedent's gross estate is either before May 1, 1989, or after April 30, 1989, at the option of the decedent's executor.

(3) *Adjusted payout rate.* For transfers for which the valuation date is after April 30, 1989, and before May 1, 1999, the adjusted payout rate is determined by using the appropriate Table F, contained in § 1.664-4(e)(6), for the section 7520 interest rate applicable to the transfer. If the interest rate is between 4.2 and 14 percent, see § 1.664-4(e)(6). If the interest rate is below 4.2 percent or greater than 14 percent, see § 1.664-4(b). See § 1.664-4(e) for rules applicable in determining the adjusted payout rate.

(4) ***Period is a term of years.*** If the period described in § 1.664-3(a)(5) is a term of years, the factor that is used in determining the present value of the remainder interest for transfers for which the valuation date is after April 30, 1989, and before May 1, 1999, is the factor under the appropriate adjusted payout rate in Table D in § 1.664-4(e)(6) corresponding to the number of years in the term. If the adjusted payout rate is an amount that is between adjusted payout rates for which factors are provided in Table D, a linear interpolation must be made. The present value of the remainder interest is determined by multiplying the net fair market value (as of the appropriate valuation date) of the property placed in trust by the factor determined under this paragraph. Generally, for purposes of this section, the valuation date is, in the case of an inter vivos transfer, the date on which the property is transferred to the trust by the donor, and, in the case of a testamentary transfer under sections 2055, 2106, or 2624, the valuation date is the date of death. See § 1.664-4(e)(4) for additional rules regarding the valuation date. See § 1.664-4(e)(4) for an example that illustrates the application of this paragraph (e)(4).

(5) ***Period is the life of one individual.*** If the period described in § 1.664-3(a)(5) is the life of one individual, the factor that is used in determining the present value of the remainder interest for transfers for which the valuation date is after April 30, 1989, and before May 1, 1999, is the factor in Table U(1) in paragraph (e)(6) of this section under the appropriate adjusted payout. For purposes of the computations described in this paragraph (e)(5), the age of an individual is the age of that individual at the individual's nearest birthday. If the adjusted payout rate is an amount that is between adjusted payout rates for which factors are provided in the appropriate table, a linear interpolation must be made. The rules provided in § 1.664-4(e)(5) apply for determining the present value of the remainder interest. See § 1.664-4(e)(5) for an example illustrating the application of this paragraph (e)(5)(using current actuarial tables).

(6) ***Actuarial tables for transfers for which the valuation date is after April 30, 1989, and before May 1, 1999.*** For transfers for which the valuation date is after April 30, 1989, and before May 1, 1999, the present value of a charitable remainder unitrust interest that is dependent on a term of years or the termination of a life interest is determined by using the section 7520 rate and Table D, Tables F(4.2) through F(14.0) in § 1.664-4(e)(6) and Table U(1) of this paragraph (e)(6), as applicable. See, however, § 1.7520-3(b) (relating to exceptions to the use of prescribed tables under certain circumstances). Many actuarial factors not contained in the following tables are contained in Internal Revenue Service Publication 1458, “Actuarial Values, Beta Volume,” (8-89). Publication 1458 is no longer available for purchase from the Superintendent of Documents, United States Government Printing Office, Washington, DC 20402. However, pertinent factors in this publication may be obtained by a written request to: CC:DOM:CORP:R (IRS Publication 1458), room 5226, Internal Revenue Service, POB 7604, Ben Franklin Station, Washington, DC 20044.

Table U(1)—Unitrust Single Life Remainder Factors—Based on Life Table 80CNSMT
[Applicable for Transfers After April 30, 1989, and Before May 1, 1999]

Age	Adjusted payout rate									
	4.2%	4.4%	4.6%	4.8%	5.0%	5.2%	5.4%	5.6%	5.8%	6.0%
0	.06797	.06181	.05645	.05177	.04768	.04410	.04096	.03820	.03578	.03364
1	.05881	.05243	.04686	.04199	.03773	.03400	.03072	.02784	.02531	.02308
2	.06049	.05394	.04821	.04319	.03880	.03494	.03155	.02856	.02593	.02361
3	.06252	.05579	.04990	.04473	.04020	.03621	.03270	.02961	.02688	.02446
4	.06479	.05788	.05182	.04650	.04183	.03771	.03408	.03087	.02804	.02553
5	.06724	.06016	.05393	.04845	.04363	.03937	.03562	.03230	.02936	.02675
6	.06984	.06257	.05618	.05054	.04557	.04117	.03729	.03385	.03080	.02809
7	.07259	.06513	.05856	.05276	.04764	.04310	.03909	.03552	.03236	.02954
8	.07548	.06784	.06109	.05513	.04985	.04517	.04102	.03733	.03405	.03113
9	.07854	.07071	.06378	.05765	.05221	.04738	.04310	.03928	.03588	.03285
10	.08176	.07374	.06663	.06033	.05473	.04976	.04533	.04138	.03786	.03471
11	.08517	.07695	.06966	.06319	.05743	.05230	.04772	.04364	.04000	.03673
12	.08872	.08031	.07284	.06619	.06026	.05498	.05026	.04604	.04227	.03889
13	.09238	.08378	.07612	.06929	.06320	.05776	.05289	.04853	.04463	.04113
14	.09608	.08728	.07943	.07243	.06616	.06056	.05554	.05104	.04701	.04338
15	.09981	.09081	.08276	.07557	.06914	.06337	.05820	.05356	.04938	.04563
16	.10356	.09435	.08612	.07874	.07213	.06619	.06086	.05607	.05176	.04787
17	.10733	.09792	.08949	.08192	.07513	.06902	.06353	.05858	.05413	.05010
18	.11117	.10155	.09291	.08515	.07817	.07189	.06623	.06113	.05652	.05236
19	.11509	.10526	.09642	.08847	.08130	.07484	.06901	.06375	.05899	.05469
20	.11913	.10908	.10003	.09188	.08452	.07788	.07188	.06645	.06154	.05708
21	.12326	.11300	.10375	.09539	.08784	.08101	.07483	.06923	.06416	.05955
22	.12753	.11705	.10758	.09902	.09127	.08426	.07789	.07212	.06688	.06212
23	.13195	.12125	.11156	.10279	.09484	.08763	.08109	.07514	.06973	.06481
24	.13655	.12563	.11573	.10675	.09860	.09119	.08446	.07833	.07274	.06766
25	.14136	.13022	.12010	.11091	.10255	.09495	.08802	.08171	.07595	.07069
26	.14640	.13504	.12471	.11530	.10674	.09893	.09181	.08531	.07937	.07394
27	.15169	.14011	.12956	.11994	.11117	.10316	.09584	.08915	.08302	.07742
28	.15721	.14542	.13465	.12482	.11583	.10762	.10010	.09322	.08691	.08112

Age	Adjusted payout rate									
	4.2%	4.4%	4.6%	4.8%	5.0%	5.2%	5.4%	5.6%	5.8%	6.0%
29	.16299	.15097	.13999	.12994	.12075	.11233	.10461	.09753	.09104	.08507
30	.16901	.15678	.14559	.13533	.12592	.11729	.10937	.10210	.09541	.08926
31	.17531	.16287	.15146	.14099	.13137	.12254	.11441	.10694	.10006	.09372
32	.18186	.16921	.15759	.14691	.13709	.12804	.11972	.11205	.10497	.09844
33	.18869	.17584	.16401	.15312	.14309	.13384	.12531	.11744	.11017	.10345
34	.19578	.18273	.17070	.15961	.14937	.13992	.13119	.12312	.11565	.10874
35	.20315	.18990	.17767	.16637	.15593	.14628	.13735	.12908	.12142	.11431
36	.21076	.19732	.18490	.17340	.16276	.15291	.14377	.13531	.12745	.12016
37	.21863	.20501	.19239	.18071	.16987	.15982	.15049	.14182	.13377	.12628
38	.22676	.21296	.20016	.18828	.17725	.16701	.15748	.14862	.14037	.13269
39	.23515	.22118	.20820	.19614	.18492	.17448	.16476	.15571	.14727	.13940
40	.24379	.22967	.21652	.20428	.19288	.18225	.17234	.16310	.15447	.14641
41	.25270	.23842	.22511	.21270	.20112	.19031	.18021	.17078	.16197	.15372
42	.26184	.24742	.23395	.22137	.20962	.19864	.18836	.17875	.16975	.16132
43	.27123	.25666	.24305	.23031	.21840	.20724	.19679	.18700	.17782	.16921
44	.28085	.26616	.25241	.23952	.22745	.21613	.20551	.19554	.18618	.17739
45	.29072	.27591	.26203	.24901	.23678	.22530	.21452	.20438	.19485	.18589
46	.30082	.28591	.27191	.25875	.24639	.23476	.22381	.21352	.20382	.19468
47	.31116	.29616	.28204	.26877	.25626	.24449	.23340	.22295	.21309	.20379
48	.32171	.30663	.29241	.27902	.26640	.25449	.24326	.23265	.22264	.21318
49	.33245	.31730	.30300	.28950	.27676	.26473	.25336	.24262	.23246	.22285
50	.34338	.32816	.31379	.30020	.28735	.27521	.26371	.25283	.24253	.23277
51	.35449	.33923	.32479	.31112	.29818	.28593	.27431	.26331	.25287	.24297
52	.36582	.35053	.33603	.32230	.30927	.29692	.28520	.27408	.26352	.25349
53	.37736	.36205	.34751	.33372	.32063	.30819	.29637	.28514	.27446	.26431
54	.38909	.37376	.35921	.34537	.33221	.31970	.30780	.29647	.28569	.27542
55	.40099	.38568	.37111	.35724	.34404	.33146	.31949	.30807	.29719	.28681
56	.41308	.39779	.38322	.36934	.35610	.34348	.33143	.31994	.30898	.29851
57	.42536	.41011	.39555	.38167	.36841	.35575	.34366	.33210	.32106	.31051
58	.43781	.42262	.40810	.39422	.38096	.36828	.35615	.34454	.33344	.32281
59	.45043	.43530	.42083	.40698	.39373	.38104	.36888	.35724	.34609	.33540
60	.46318	.44813	.43372	.41992	.40668	.39400	.38183	.37017	.35898	.34824
61	.47602	.46107	.44674	.43299	.41979	.40713	.39497	.38329	.37207	.36129
62	.48893	.47410	.45986	.44617	.43303	.42039	.40825	.39657	.38534	.37454
63	.50190	.48720	.47306	.45946	.44638	.43379	.42168	.41001	.39878	.38796

Age	Adjusted payout rate									
	4.2%	4.4%	4.6%	4.8%	5.0%	5.2%	5.4%	5.6%	5.8%	6.0%
64	.51494	.50038	.48636	.47286	.45986	.44733	.43526	.42362	.41240	.40158
65	.52808	.51368	.49980	.48641	.47350	.46104	.44903	.43743	.42624	.41544
66	.54134	.52711	.51338	.50013	.48733	.47496	.46302	.45148	.44033	.42956
67	.55471	.54068	.52712	.51401	.50134	.48908	.47723	.46577	.45467	.44394
68	.56820	.55437	.54100	.52805	.51552	.50339	.49165	.48027	.46925	.45858
69	.58172	.56812	.55495	.54219	.52982	.51783	.50620	.49494	.48401	.47341
70	.59526	.58190	.56894	.55637	.54417	.53234	.52086	.50971	.49889	.48838
71	.60874	.59564	.58291	.57055	.55854	.54687	.53554	.52453	.51382	.50342
72	.62218	.60934	.59685	.58471	.57291	.56143	.55026	.53939	.52882	.51854
73	.63557	.62301	.61078	.59887	.58728	.57600	.56501	.55431	.54389	.53373
74	.64896	.63669	.62472	.61307	.60171	.59064	.57985	.56932	.55906	.54906
75	.66237	.65040	.63872	.62733	.61622	.60538	.59480	.58447	.57439	.56455
76	.67581	.66416	.65279	.64168	.63083	.62023	.60988	.59977	.58989	.58023
77	.68925	.67793	.66688	.65606	.64550	.63516	.62506	.61517	.60551	.59605
78	.70263	.69166	.68093	.67044	.66016	.65010	.64026	.63062	.62119	.61195
79	.71585	.70525	.69486	.68468	.67471	.66495	.65538	.64600	.63681	.62780
80	.72885	.71860	.70856	.69872	.68906	.67959	.67031	.66120	.65227	.64350
81	.74150	.73162	.72193	.71242	.70308	.69392	.68492	.67609	.66742	.65890
82	.75376	.74425	.73490	.72572	.71671	.70785	.69915	.69059	.68219	.67393
83	.76559	.75643	.74744	.73859	.72989	.72134	.71293	.70466	.69652	.68852
84	.77700	.76821	.75955	.75104	.74266	.73441	.72629	.71831	.71044	.70270
85	.78805	.77961	.77130	.76311	.75505	.74711	.73929	.73158	.72399	.71652
86	.79866	.79056	.78258	.77472	.76697	.75933	.75180	.74438	.73707	.72985
87	.80870	.80094	.79329	.78574	.77829	.77095	.76370	.75656	.74951	.74255
88	.81825	.81081	.80348	.79623	.78908	.78202	.77506	.76818	.76139	.75469
89	.82746	.82035	.81332	.80638	.79952	.79275	.78606	.77945	.77292	.76647
90	.83643	.82963	.82291	.81627	.80971	.80322	.79681	.79047	.78420	.77801
91	.84503	.83854	.83212	.82578	.81950	.81330	.80716	.80109	.79509	.78915
92	.85308	.84689	.84076	.83470	.82870	.82276	.81689	.81107	.80532	.79963
93	.86052	.85460	.84875	.84295	.83721	.83152	.82590	.82033	.81481	.80935
94	.86729	.86163	.85602	.85046	.84496	.83951	.83412	.82877	.82348	.81823
95	.87338	.86795	.86257	.85723	.85195	.84672	.84153	.83639	.83129	.82624
96	.87877	.87354	.86836	.86323	.85814	.85309	.84809	.84313	.83822	.83334
97	.88365	.87861	.87362	.86867	.86375	.85888	.85405	.84926	.84450	.83979
98	.88805	.88318	.87835	.87356	.86880	.86409	.85941	.85477	.85016	.84559

Age	Adjusted payout rate									
	4.2%	4.4%	4.6%	4.8%	5.0%	5.2%	5.4%	5.6%	5.8%	6.0%
99	.89210	.88739	.88271	.87807	.87347	.86890	.86436	.85986	.85539	.85095
100	.89588	.89131	.88678	.88227	.87780	.87337	.86896	.86459	.86024	.85593
101	.89949	.89506	.89066	.88629	.88195	.87764	.87336	.86911	.86488	.86069
102	.90325	.89897	.89471	.89047	.88627	.88209	.87794	.87381	.86971	.86564
103	.90724	.90311	.89900	.89491	.89085	.88681	.88279	.87880	.87484	.87089
104	.91167	.90770	.90376	.89983	.89593	.89205	.88819	.88435	.88053	.87673
105	.91708	.91333	.90959	.90587	.90217	.89848	.89481	.89116	.88752	.88391
106	.92470	.92126	.91782	.91440	.91100	.90760	.90422	.90085	.89749	.89414
107	.93545	.93246	.92948	.92650	.92353	.92057	.91762	.91467	.91173	.90880
108	.95239	.95016	.94792	.94569	.94346	.94123	.93900	.93678	.93456	.93234
109	.97900	.97800	.97700	.97600	.97500	.97400	.97300	.97200	.97100	.97000

Table U(1)—Based on Life Table 80CNSMT Unitrust Single Life Remainder Factors
[Applicable After April 30, 1989]

Age	Adjusted payout rate									
	6.2%	6.4%	6.6%	6.8%	7.0%	7.2%	7.4%	7.6%	7.8%	8.0%
0	.03176	.03009	.02861	.02730	.02613	.02509	.02416	.02333	.02258	.02191
1	.02110	.01936	.01781	.01644	.01522	.01413	.01316	.01229	.01150	.01080
2	.02156	.01974	.01812	.01669	.01541	.01427	.01325	.01234	.01152	.01078
3	.02233	.02043	.01875	.01725	.01591	.01471	.01364	.01268	.01182	.01105
4	.02330	.02132	.01956	.01800	.01660	.01535	.01422	.01322	.01231	.01149
5	.02443	.02237	.02054	.01890	.01743	.01612	.01494	.01389	.01293	.01208
6	.02568	.02353	.02162	.01990	.01837	.01700	.01576	.01465	.01365	.01275
7	.02704	.02480	.02280	.02102	.01941	.01798	.01668	.01552	.01446	.01351
8	.02852	.02619	.02411	.02224	.02057	.01906	.01770	.01648	.01537	.01437
9	.03014	.02772	.02554	.02360	.02184	.02027	.01885	.01756	.01640	.01535
10	.03190	.02938	.02711	.02508	.02325	.02160	.02012	.01877	.01755	.01645
11	.03381	.03119	.02883	.02672	.02481	.02308	.02153	.02012	.01884	.01768
12	.03585	.03313	.03068	.02847	.02648	.02468	.02305	.02157	.02023	.01902
13	.03798	.03515	.03260	.03030	.02822	.02635	.02464	.02310	.02170	.02042
14	.04012	.03718	.03453	.03213	.02997	.02801	.02623	.02462	.02315	.02181
15	.04225	.03919	.03644	.03395	.03169	.02965	.02779	.02611	.02457	.02317
16	.04436	.04120	.03833	.03574	.03339	.03126	.02932	.02756	.02595	.02449
17	.04647	.04319	.04021	.03752	.03507	.03285	.03082	.02898	.02730	.02577
18	.04860	.04519	.04210	.03930	.03675	.03443	.03232	.03040	.02864	.02703
19	.05079	.04725	.04404	.04113	.03847	.03606	.03386	.03185	.03001	.02833
20	.05304	.04938	.04604	.04301	.04025	.03773	.03543	.03333	.03141	.02965
21	.05537	.05157	.04811	.04495	.04208	.03945	.03705	.03486	.03285	.03101
22	.05779	.05385	.05025	.04698	.04398	.04125	.03874	.03645	.03435	.03242
23	.06032	.05623	.05250	.04910	.04598	.04313	.04052	.03812	.03592	.03390
24	.06302	.05878	.05491	.05136	.04812	.04515	.04242	.03992	.03762	.03550
25	.06589	.06150	.05748	.05380	.05042	.04733	.04448	.04187	.03946	.03725
26	.06897	.06442	.06025	.05643	.05292	.04969	.04673	.04400	.04148	.03916
27	.07228	.06757	.06325	.05928	.05563	.05227	.04917	.04632	.04369	.04126
28	.07582	.07094	.06646	.06234	.05854	.05504	.05182	.04884	.04609	.04355
29	.07958	.07454	.06990	.06562	.06167	.05804	.05468	.05157	.04870	.04604

Age	Adjusted payout rate									
	6.2%	6.4%	6.6%	6.8%	7.0%	7.2%	7.4%	7.6%	7.8%	8.0%
30	.08360	.07838	.07357	.06913	.06504	.06125	.05775	.05452	.05152	.04874
31	.08788	.08249	.07751	.07291	.06866	.06472	.06108	.05771	.05457	.05167
32	.09242	.08685	.08170	.07694	.07252	.06844	.06465	.06113	.05786	.05483
33	.09724	.09149	.08617	.08124	.07666	.07242	.06848	.06482	.06141	.05824
34	.10234	.09641	.09091	.08581	.08107	.07667	.07257	.06876	.06521	.06191
35	.10773	.10161	.09594	.09066	.08575	.08119	.07694	.07298	.06928	.06583
36	.11338	.10708	.10122	.09577	.09070	.08597	.08156	.07744	.07360	.07001
37	.11932	.11283	.10680	.10117	.09592	.09102	.08645	.08217	.07818	.07444
38	.12554	.11887	.11265	.10685	.10142	.09636	.09162	.08719	.08304	.07915
39	.13206	.12521	.11880	.11282	.10722	.10198	.09708	.09249	.08818	.08414
40	.13888	.13184	.12526	.11909	.11332	.10791	.10284	.09808	.09361	.08942
41	.14601	.13878	.13201	.12567	.11972	.11414	.10890	.10398	.09935	.09499
42	.15342	.14601	.13906	.13254	.12641	.12066	.11525	.11016	.10537	.10086
43	.16112	.15353	.14640	.13970	.13340	.12747	.12189	.11663	.11168	.10701
44	.16913	.16136	.15406	.14718	.14070	.13460	.12885	.12342	.11830	.11347
45	.17745	.16951	.16202	.15497	.14832	.14204	.13612	.13053	.12525	.12025
46	.18608	.17796	.17030	.16308	.15625	.14981	.14372	.13796	.13251	.12735
47	.19501	.18673	.17890	.17150	.16451	.15790	.15164	.14571	.14010	.13478
48	.20425	.19579	.18780	.18024	.17308	.16630	.15987	.15378	.14800	.14252
49	.21375	.20514	.19698	.18926	.18193	.17499	.16840	.16214	.15620	.15056
50	.22352	.21476	.20644	.19856	.19107	.18396	.17721	.17080	.16470	.15890
51	.23358	.22467	.21620	.20816	.20051	.19325	.18634	.17976	.17350	.16755
52	.24396	.23490	.22628	.21809	.21030	.20288	.19581	.18908	.18267	.17655
53	.25465	.24545	.23670	.22836	.22042	.21285	.20563	.19875	.19218	.18592
54	.26563	.25631	.24742	.23895	.23086	.22315	.21579	.20876	.20204	.19562
55	.27692	.26747	.25846	.24986	.24164	.23379	.22628	.21911	.21225	.20568
56	.28850	.27895	.26982	.26109	.25275	.24476	.23712	.22981	.22281	.21611
57	.30041	.29076	.28152	.27267	.26421	.25610	.24833	.24089	.23376	.22691
58	.31263	.30288	.29355	.28460	.27602	.26780	.25991	.25234	.24508	.23811
59	.32515	.31532	.30590	.29685	.28817	.27984	.27184	.26416	.25677	.24968
60	.33793	.32803	.31853	.30940	.30062	.29219	.28409	.27630	.26880	.26159
61	.35093	.34098	.33141	.32220	.31335	.30483	.29663	.28873	.28113	.27381
62	.36414	.35414	.34451	.33524	.32631	.31771	.30942	.30144	.29374	.28631
63	.37754	.36750	.35783	.34850	.33951	.33084	.32247	.31440	.30661	.29910
64	.39115	.38108	.37137	.36200	.35296	.34422	.33579	.32765	.31978	.31217

Age	Adjusted payout rate									
	6.2%	6.4%	6.6%	6.8%	7.0%	7.2%	7.4%	7.6%	7.8%	8.0%
65	.40500	.39493	.38519	.37579	.36670	.35792	.34943	.34122	.33328	.32560
66	.41914	.40906	.39932	.38990	.38079	.37197	.36343	.35517	.34717	.33943
67	.43355	.42350	.41376	.40434	.39521	.38636	.37780	.36950	.36145	.35365
68	.44824	.43822	.42851	.41909	.40996	.40111	.39252	.38419	.37611	.36827
69	.46313	.45316	.44348	.43409	.42498	.41613	.40754	.39919	.39109	.38322
70	.47818	.46827	.45864	.44929	.44020	.43137	.42279	.41445	.40634	.39845
71	.49331	.48348	.47391	.46461	.45557	.44677	.43821	.42988	.42177	.41388
72	.50853	.49879	.48930	.48007	.47108	.46233	.45380	.44550	.43741	.42952
73	.52384	.51421	.50482	.49566	.48674	.47805	.46957	.46130	.45324	.44538
74	.53930	.52979	.52050	.51145	.50261	.49399	.48557	.47736	.46934	.46152
75	.55495	.54557	.53641	.52747	.51873	.51020	.50187	.49372	.48577	.47799
76	.57079	.56157	.55256	.54374	.53513	.52670	.51847	.51041	.50253	.49483
77	.58680	.57775	.56890	.56024	.55176	.54346	.53534	.52739	.51960	.51198
78	.60291	.59405	.58537	.57687	.56855	.56040	.55241	.54458	.53691	.52940
79	.61898	.61032	.60184	.59353	.58537	.57738	.56954	.56185	.55431	.54691
80	.63491	.62647	.61819	.61007	.60210	.59428	.58660	.57907	.57167	.56441
81	.65054	.64234	.63427	.62636	.61858	.61094	.60344	.59606	.58882	.58170
82	.66582	.65784	.65000	.64229	.63472	.62727	.61994	.61274	.60566	.59870
83	.68065	.67291	.66530	.65781	.65044	.64319	.63605	.62903	.62212	.61532
84	.69508	.68758	.68020	.67293	.66577	.65872	.65178	.64495	.63821	.63158
85	.70915	.70190	.69475	.68770	.68076	.67392	.66718	.66054	.65399	.64754
86	.72274	.71573	.70882	.70200	.69528	.68865	.68212	.67567	.66931	.66304
87	.73569	.72892	.72224	.71565	.70915	.70273	.69639	.69014	.68397	.67788
88	.74807	.74154	.73509	.72872	.72243	.71622	.71009	.70403	.69805	.69214
89	.76010	.75381	.74759	.74144	.73537	.72937	.72344	.71758	.71179	.70607
90	.77189	.76584	.75985	.75394	.74809	.74230	.73659	.73093	.72534	.71981
91	.78327	.77746	.77171	.76603	.76040	.75484	.74933	.74388	.73850	.73316
92	.79399	.78841	.78289	.77743	.77202	.76667	.76137	.75613	.75093	.74579
93	.80394	.79858	.79328	.78803	.78283	.77768	.77258	.76753	.76252	.75757
94	.81303	.80788	.80278	.79773	.79272	.78776	.78284	.77797	.77315	.76837
95	.82124	.81628	.81136	.80649	.80166	.79687	.79213	.78742	.78276	.77814
96	.82851	.82372	.81897	.81426	.80959	.80496	.80036	.79581	.79129	.78682
97	.83512	.83048	.82588	.82132	.81679	.81230	.80785	.80343	.79905	.79471
98	.84106	.83656	.83210	.82767	.82328	.81892	.81459	.81030	.80604	.80181
99	.84655	.84218	.83785	.83354	.82927	.82503	.82082	.81664	.81249	.80837

Age	Adjusted payout rate									
	6.2%	6.4%	6.6%	6.8%	7.0%	7.2%	7.4%	7.6%	7.8%	8.0%
100	.85165	.84740	.84318	.83899	.83483	.83070	.82660	.82252	.81848	.81446
101	.85652	.85238	.84827	.84419	.84013	.83611	.83210	.82813	.82418	.82026
102	.86159	.85757	.85358	.84960	.84566	.84174	.83784	.83397	.83012	.82630
103	.86697	.86307	.85920	.85535	.85152	.84771	.84392	.84016	.83642	.83270
104	.87295	.86919	.86544	.86172	.85802	.85434	.85068	.84704	.84341	.83981
105	.88030	.87672	.87315	.86959	.86605	.86253	.85903	.85554	.85207	.84861
106	.89081	.88749	.88418	.88088	.87760	.87433	.87106	.86782	.86458	.86135
107	.90588	.90296	.90005	.89715	.89425	.89137	.88849	.88561	.88275	.87989
108	.93013	.92791	.92570	.92350	.92129	.91909	.91689	.91469	.91250	.91031
109	.96900	.96800	.96700	.96600	.96500	.96400	.96300	.96200	.96100	.96000

Table U(1)—Based on Life Table 80CNSMT Unitrust Single Life Remainder Factors
[Applicable after APRIL 30, 1989]

Age	Adjusted payout rate									
	8.2%	8.4%	8.6%	8.8%	9.0%	9.2%	9.4%	9.6%	9.8%	10.0%
0	.02130	.02075	.02025	.01980	.01939	.01901	.01867	.01835	.01806	.01779
1	.01017	.00960	.00908	.00861	.00819	.00780	.00745	.00712	.00683	.00655
2	.01011	.00951	.00897	.00848	.00803	.00762	.00725	.00690	.00659	.00630
3	.01035	.00971	.00914	.00862	.00815	.00771	.00732	.00696	.00663	.00632
4	.01076	.01009	.00948	.00894	.00843	.00798	.00756	.00718	.00683	.00650
5	.01130	.01059	.00996	.00938	.00885	.00836	.00792	.00752	.00714	.00680
6	.01193	.01119	.01051	.00990	.00934	.00883	.00836	.00793	.00754	.00717
7	.01265	.01187	.01116	.01051	.00992	.00938	.00888	.00842	.00800	.00762
8	.01347	.01264	.01189	.01121	.01058	.01001	.00948	.00900	.00856	.00815
9	.01440	.01353	.01274	.01201	.01135	.01075	.01019	.00968	.00921	.00877
10	.01544	.01453	.01369	.01293	.01223	.01159	.01101	.01046	.00997	.00950
11	.01662	.01566	.01478	.01398	.01324	.01257	.01195	.01137	.01085	.01036
12	.01791	.01690	.01597	.01513	.01435	.01364	.01298	.01238	.01182	.01131
13	.01926	.01820	.01722	.01634	.01552	.01477	.01408	.01344	.01285	.01231
14	.02059	.01948	.01846	.01752	.01667	.01588	.01515	.01448	.01386	.01328
15	.02189	.02072	.01965	.01867	.01777	.01694	.01617	.01547	.01481	.01421
16	.02315	.02192	.02080	.01977	.01882	.01795	.01714	.01640	.01572	.01508
17	.02436	.02308	.02190	.02082	.01982	.01891	.01806	.01728	.01656	.01589
18	.02556	.02422	.02298	.02184	.02080	.01983	.01894	.01812	.01736	.01665
19	.02679	.02537	.02408	.02288	.02178	.02077	.01983	.01897	.01817	.01742
20	.02804	.02656	.02519	.02394	.02278	.02172	.02073	.01982	.01898	.01819
21	.02932	.02776	.02633	.02501	.02380	.02268	.02164	.02068	.01979	.01896
22	.03065	.02902	.02751	.02613	.02485	.02367	.02258	.02157	.02063	.01976
23	.03204	.03033	.02876	.02730	.02595	.02471	.02356	.02249	.02150	.02058
24	.03356	.03176	.03010	.02857	.02716	.02585	.02463	.02351	.02246	.02149
25	.03520	.03332	.03158	.02997	.02848	.02710	.02582	.02463	.02352	.02249
26	.03702	.03504	.03321	.03152	.02995	.02850	.02714	.02589	.02472	.02363
27	.03902	.03695	.03502	.03324	.03159	.03006	.02863	.02730	.02607	.02492
28	.04120	.03902	.03700	.03513	.03339	.03178	.03027	.02887	.02757	.02635
29	.04358	.04129	.03917	.03720	.03537	.03367	.03208	.03061	.02923	.02794

Age	Adjusted payout rate									
	8.2%	8.4%	8.6%	8.8%	9.0%	9.2%	9.4%	9.6%	9.8%	10.0%
30	.04616	.04376	.04154	.03947	.03754	.03575	.03408	.03251	.03106	.02969
31	.04897	.04646	.04413	.04195	.03993	.03804	.03627	.03463	.03309	.03165
32	.05200	.04938	.04693	.04465	.04252	.04053	.03867	.03693	.03531	.03378
33	.05529	.05254	.04998	.04758	.04534	.04325	.04130	.03946	.03775	.03614
34	.05883	.05595	.05326	.05075	.04840	.04620	.04414	.04221	.04040	.03870
35	.06262	.05961	.05680	.05417	.05170	.04939	.04723	.04520	.04329	.04149
36	.06665	.06351	.06057	.05781	.05523	.05280	.05053	.04839	.04638	.04449
37	.07094	.06766	.06459	.06171	.05900	.05646	.05407	.05182	.04971	.04771
38	.07550	.07208	.06888	.06586	.06303	.06037	.05786	.05550	.05327	.05118
39	.08034	.07678	.07344	.07029	.06733	.06454	.06191	.05943	.05709	.05489
40	.08547	.08177	.07828	.07499	.07190	.06898	.06623	.06363	.06118	.05886
41	.09090	.08704	.08341	.07998	.07675	.07371	.07083	.06811	.06553	.06310
42	.09661	.09260	.08882	.08525	.08188	.07870	.07569	.07284	.07015	.06760
43	.10260	.09844	.09451	.09080	.08729	.08397	.08083	.07785	.07503	.07236
44	.10891	.10459	.10051	.09666	.09300	.08954	.08626	.08316	.08021	.07741
45	.11553	.11106	.10683	.10282	.09902	.09542	.09201	.08876	.08568	.08276
46	.12247	.11784	.11346	.10930	.10536	.10161	.09806	.09468	.09146	.08841
47	.12974	.12496	.12042	.11611	.11202	.10813	.10443	.10091	.09756	.09438
48	.13732	.13238	.12769	.12323	.11899	.11495	.11111	.10745	.10397	.10065
49	.14520	.14011	.13526	.13064	.12625	.12207	.11809	.11429	.11066	.10721
50	.15338	.14812	.14312	.13836	.13381	.12948	.12535	.12141	.11765	.11405
51	.16187	.15646	.15130	.14639	.14169	.13721	.13294	.12885	.12495	.12121
52	.17072	.16516	.15985	.15478	.14993	.14531	.14088	.13665	.13261	.12873
53	.17993	.17422	.16876	.16353	.15854	.15377	.14920	.14482	.14064	.13662
54	.18949	.18362	.17801	.17264	.16750	.16258	.15787	.15335	.14902	.14486
55	.19940	.19339	.18763	.18212	.17683	.17176	.16690	.16224	.15777	.15348
56	.20968	.20353	.19762	.19196	.18654	.18132	.17632	.17152	.16691	.16247
57	.22035	.21406	.20802	.20222	.19665	.19129	.18615	.18121	.17646	.17189
58	.23142	.22499	.21881	.21287	.20717	.20168	.19640	.19132	.18643	.18172
59	.24286	.23630	.23000	.22393	.21809	.21247	.20705	.20184	.19682	.19198
60	.25465	.24797	.24154	.23534	.22938	.22363	.21808	.21274	.20759	.20262
61	.26676	.25996	.25341	.24710	.24101	.23513	.22946	.22399	.21871	.21361
62	.27916	.27225	.26559	.25916	.25295	.24695	.24117	.23557	.23017	.22495
63	.29184	.28483	.27806	.27152	.26520	.25909	.25319	.24748	.24196	.23661
64	.30483	.29772	.29085	.28421	.27779	.27157	.26555	.25973	.25409	.24863

Age	Adjusted payout rate									
	8.2%	8.4%	8.6%	8.8%	9.0%	9.2%	9.4%	9.6%	9.8%	10.0%
65	.31817	.31098	.30402	.29729	.29076	.28444	.27832	.27240	.26665	.26108
66	.33192	.32466	.31762	.31079	.30418	.29777	.29155	.28552	.27968	.27400
67	.34609	.33876	.33164	.32474	.31805	.31156	.30525	.29913	.29319	.28742
68	.36066	.35328	.34610	.33914	.33238	.32581	.31943	.31323	.30720	.30134
69	.37558	.36815	.36093	.35391	.34709	.34045	.33400	.32773	.32163	.31569
70	.39078	.38332	.37606	.36900	.36213	.35545	.34894	.34260	.33643	.33042
71	.40620	.39872	.39144	.38435	.37744	.37071	.36415	.35776	.35153	.34547
72	.42184	.41435	.40706	.39994	.39301	.38625	.37965	.37322	.36694	.36082
73	.43771	.43023	.42293	.41581	.40886	.40207	.39545	.38899	.38267	.37651
74	.45387	.44641	.43912	.43201	.42505	.41826	.41163	.40514	.39881	.39261
75	.47039	.46296	.45570	.44861	.44167	.43488	.42824	.42175	.41541	.40920
76	.48729	.47991	.47269	.46563	.45872	.45196	.44534	.43886	.43251	.42630
77	.50452	.49722	.49006	.48305	.47619	.46946	.46287	.45642	.45009	.44389
78	.52203	.51481	.50773	.50079	.49399	.48732	.48078	.47437	.46808	.46191
79	.53966	.53254	.52556	.51870	.51198	.50538	.49891	.49255	.48632	.48019
80	.55728	.55028	.54340	.53665	.53002	.52351	.51712	.51083	.50466	.49860
81	.57471	.56784	.56109	.55445	.54792	.54151	.53521	.52901	.52292	.51692
82	.59186	.58512	.57850	.57199	.56558	.55927	.55307	.54697	.54097	.53506
83	.60863	.60204	.59556	.58918	.58289	.57671	.57062	.56462	.55872	.55290
84	.62505	.61862	.61228	.60604	.59989	.59383	.58786	.58198	.57618	.57047
85	.64118	.63491	.62873	.62263	.61663	.61070	.60486	.59911	.59343	.58783
86	.65685	.65075	.64473	.63879	.63294	.62716	.62145	.61583	.61027	.60479
87	.67187	.66594	.66008	.65430	.64859	.64296	.63739	.63190	.62647	.62112
88	.68631	.68054	.67485	.66923	.66367	.65818	.65276	.64740	.64211	.63688
89	.70042	.69483	.68930	.68384	.67845	.67311	.66784	.66262	.65747	.65237
90	.71434	.70894	.70359	.69830	.69307	.68790	.68278	.67772	.67271	.66775
91	.72789	.72266	.71750	.71239	.70733	.70232	.69736	.69246	.68760	.68280
92	.74070	.73567	.73068	.72574	.72085	.71601	.71121	.70647	.70176	.69711
93	.75266	.74780	.74298	.73821	.73348	.72880	.72417	.71957	.71502	.71051
94	.76363	.75893	.75428	.74967	.74510	.74057	.73608	.73163	.72722	.72285
95	.77356	.76901	.76451	.76005	.75562	.75123	.74688	.74257	.73829	.73405
96	.78237	.77797	.77360	.76927	.76497	.76071	.75648	.75229	.74813	.74401
97	.79039	.78612	.78187	.77766	.77348	.76934	.76523	.76115	.75710	.75308
98	.79762	.79345	.78932	.78522	.78115	.77711	.77310	.76913	.76518	.76126
99	.80429	.80023	.79620	.79220	.78823	.78429	.78038	.77649	.77264	.76881

Age	Adjusted payout rate									
	8.2%	8.4%	8.6%	8.8%	9.0%	9.2%	9.4%	9.6%	9.8%	10.0%
100	.81047	.80651	.80258	.79867	.79479	.79094	.78712	.78332	.77955	.77580
101	.81636	.81249	.80865	.80483	.80104	.79727	.79352	.78981	.78611	.78244
102	.82250	.81872	.81497	.81124	.80754	.80386	.80020	.79656	.79295	.78936
103	.82900	.82532	.82167	.81804	.81442	.81083	.80726	.80371	.80018	.79667
104	.83622	.83266	.82911	.82558	.82207	.81858	.81510	.81165	.80821	.80479
105	.84517	.84174	.83833	.83494	.83156	.82819	.82485	.82151	.81820	.81489
106	.85814	.85494	.85175	.84857	.84540	.84225	.83911	.83598	.83286	.82975
107	.87704	.87420	.87136	.86853	.86571	.86290	.86009	.85729	.85450	.85171
108	.90812	.90593	.90375	.90156	.89939	.89721	.89504	.89286	.89070	.88853
109	.95900	.95800	.95700	.95600	.95500	.95400	.95300	.95200	.95100	.95000

Table U(1)—Based on Life Table 80CNSMT Unitrust Single Life Remainder Factors
[Applicable after APRIL 30, 1989]

Age	Adjusted payout rate									
	10.2%	10.4%	10.6%	10.8%	11.0%	11.2%	11.4%	11.6%	11.8%	12.0%
0	.01754	.01731	.01710	.01690	.01671	.01654	.01638	.01622	.01608	.01594
1	.00630	.00607	.00585	.00565	.00547	.00530	.00514	.00499	.00485	.00472
2	.00604	.00579	.00557	.00536	.00516	.00498	.00481	.00465	.00451	.00437
3	.00604	.00578	.00554	.00532	.00511	.00492	.00474	.00458	.00442	.00427
4	.00621	.00593	.00568	.00544	.00522	.00502	.00483	.00465	.00448	.00433
5	.00648	.00619	.00592	.00567	.00544	.00522	.00502	.00483	.00465	.00449
6	.00684	.00653	.00624	.00597	.00572	.00549	.00528	.00507	.00489	.00471
7	.00726	.00693	.00663	.00634	.00608	.00583	.00560	.00539	.00518	.00499
8	.00777	.00742	.00709	.00679	.00651	.00624	.00600	.00577	.00555	.00535
9	.00837	.00800	.00765	.00733	.00703	.00675	.00649	.00625	.00602	.00580
10	.00908	.00868	.00832	.00797	.00765	.00736	.00708	.00682	.00657	.00634
11	.00991	.00949	.00910	.00874	.00840	.00808	.00779	.00751	.00725	.00700
12	.01083	.01039	.00997	.00959	.00923	.00890	.00858	.00829	.00801	.00775
13	.01181	.01134	.01090	.01049	.01012	.00976	.00943	.00912	.00883	.00855
14	.01275	.01226	.01180	.01137	.01097	.01060	.01025	.00992	.00961	.00932
15	.01365	.01313	.01264	.01219	.01177	.01138	.01101	.01066	.01034	.01003
16	.01449	.01394	.01343	.01295	.01251	.01209	.01171	.01134	.01100	.01068
17	.01526	.01469	.01415	.01365	.01318	.01274	.01233	.01195	.01159	.01125
18	.01600	.01539	.01482	.01430	.01380	.01334	.01291	.01251	.01213	.01177
19	.01673	.01609	.01550	.01494	.01442	.01393	.01348	.01305	.01265	.01227
20	.01747	.01679	.01616	.01557	.01502	.01451	.01403	.01358	.01316	.01276
21	.01820	.01748	.01682	.01620	.01562	.01508	.01457	.01409	.01365	.01323
22	.01895	.01819	.01749	.01683	.01622	.01565	.01511	.01461	.01414	.01369
23	.01972	.01893	.01818	.01749	.01684	.01624	.01567	.01514	.01464	.01417
24	.02058	.01974	.01895	.01822	.01753	.01689	.01629	.01572	.01519	.01469
25	.02154	.02064	.01981	.01903	.01830	.01762	.01698	.01638	.01582	.01529
26	.02262	.02167	.02079	.01996	.01919	.01847	.01779	.01715	.01655	.01599
27	.02385	.02284	.02191	.02103	.02021	.01944	.01872	.01804	.01740	.01680
28	.02521	.02415	.02316	.02222	.02135	.02053	.01977	.01904	.01836	.01772
29	.02673	.02561	.02455	.02357	.02264	.02177	.02095	.02018	.01946	.01877

Age	Adjusted payout rate									
	10.2%	10.4%	10.6%	10.8%	11.0%	11.2%	11.4%	11.6%	11.8%	12.0%
30	.02842	.02723	.02611	.02506	.02407	.02315	.02227	.02146	.02068	.01996
31	.03030	.02903	.02784	.02673	.02568	.02470	.02377	.02290	.02207	.02130
32	.03235	.03101	.02976	.02857	.02746	.02641	.02543	.02450	.02362	.02279
33	.03463	.03321	.03188	.03062	.02944	.02833	.02728	.02629	.02535	.02447
34	.03711	.03561	.03419	.03286	.03161	.03043	.02931	.02826	.02726	.02632
35	.03981	.03822	.03672	.03531	.03398	.03273	.03154	.03042	.02936	.02836
36	.04271	.04103	.03945	.03796	.03655	.03522	.03396	.03277	.03164	.03057
37	.04584	.04407	.04239	.04081	.03932	.03791	.03657	.03531	.03411	.03297
38	.04920	.04733	.04556	.04389	.04231	.04082	.03940	.03806	.03679	.03558
39	.05280	.05083	.04897	.04721	.04554	.04396	.04246	.04103	.03968	.03840
40	.05667	.05459	.05263	.05077	.04901	.04733	.04575	.04424	.04280	.04144
41	.06080	.05861	.05655	.05459	.05272	.05096	.04928	.04768	.04617	.04472
42	.06518	.06289	.06071	.05864	.05668	.05482	.05305	.05136	.04975	.04822
43	.06982	.06742	.06513	.06296	.06089	.05893	.05706	.05528	.05358	.05196
44	.07475	.07223	.06983	.06754	.06537	.06330	.06133	.05945	.05766	.05595
45	.07998	.07733	.07481	.07242	.07014	.06796	.06588	.06390	.06202	.06021
46	.08550	.08273	.08010	.07758	.07519	.07290	.07072	.06864	.06665	.06474
47	.09134	.08845	.08569	.08306	.08055	.07815	.07586	.07367	.07157	.06957
48	.09748	.09446	.09158	.08882	.08619	.08368	.08128	.07898	.07678	.07467
49	.10391	.10076	.09775	.09487	.09212	.08949	.08697	.08456	.08225	.08003
50	.11062	.10734	.10420	.10120	.09832	.09557	.09293	.09041	.08798	.08566
51	.11764	.11423	.11096	.10783	.10483	.10195	.09919	.09655	.09401	.09158
52	.12503	.12148	.11807	.11481	.11168	.10868	.10581	.10304	.10039	.09784
53	.13278	.12909	.12556	.12216	.11891	.11578	.11278	.10989	.10712	.10445
54	.14088	.13706	.13339	.12986	.12648	.12322	.12009	.11709	.11419	.11141
55	.14936	.14540	.14159	.13793	.13442	.13103	.12778	.12464	.12163	.11872
56	.15821	.15412	.15018	.14639	.14274	.13923	.13584	.13258	.12944	.12642
57	.16749	.16326	.15918	.15526	.15148	.14784	.14433	.14094	.13768	.13453
58	.17719	.17282	.16862	.16456	.16065	.15688	.15324	.14973	.14634	.14306
59	.18731	.18281	.17847	.17429	.17025	.16634	.16258	.15894	.15543	.15203
60	.19782	.19319	.18872	.18440	.18023	.17621	.17231	.16855	.16491	.16139
61	.20869	.20393	.19934	.19489	.19060	.18644	.18242	.17854	.17477	.17113
62	.21990	.21502	.21029	.20573	.20131	.19703	.19289	.18887	.18499	.18123
63	.23144	.22644	.22159	.21690	.21236	.20796	.20370	.19956	.19556	.19167
64	.24335	.23823	.23326	.22845	.22379	.21927	.21489	.21063	.20651	.20250

Age	Adjusted payout rate									
	10.2%	10.4%	10.6%	10.8%	11.0%	11.2%	11.4%	11.6%	11.8%	12.0%
65	.25568	.25045	.24537	.24044	.23566	.23103	.22653	.22216	.21791	.21379
66	.26850	.26316	.25797	.25293	.24804	.24329	.23868	.23420	.22984	.22560
67	.28182	.27637	.27108	.26594	.26095	.25609	.25137	.24678	.24231	.23797
68	.29565	.29011	.28472	.27949	.27439	.26943	.26461	.25991	.25534	.25089
69	.30991	.30429	.29882	.29349	.28830	.28325	.27833	.27354	.26887	.26432
70	.32457	.31887	.31332	.30791	.30264	.29750	.29249	.28760	.28284	.27820
71	.33955	.33378	.32816	.32267	.31732	.31210	.30701	.30204	.29719	.29246
72	.35485	.34902	.34333	.33778	.33236	.32707	.32190	.31686	.31193	.30711
73	.37049	.36461	.35887	.35326	.34778	.34242	.33719	.33207	.32707	.32218
74	.38656	.38064	.37485	.36920	.36366	.35825	.35296	.34778	.34272	.33776
75	.40312	.39717	.39136	.38566	.38009	.37464	.36930	.36407	.35895	.35394
76	.42022	.41426	.40842	.40271	.39711	.39163	.38625	.38099	.37583	.37077
77	.43782	.43187	.42603	.42031	.41470	.40920	.40380	.39851	.39332	.38823
78	.45586	.44992	.44410	.43839	.43278	.42728	.42188	.41658	.41138	.40627
79	.47418	.46828	.46248	.45679	.45120	.44572	.44033	.43503	.42983	.42472
80	.49264	.48679	.48103	.47538	.46982	.46436	.45900	.45372	.44853	.44343
81	.51103	.50524	.49954	.49394	.48843	.48301	.47768	.47243	.46727	.46219
82	.52925	.52352	.51789	.51235	.50690	.50153	.49624	.49104	.48591	.48087
83	.54718	.54154	.53598	.53051	.52512	.51981	.51459	.50943	.50436	.49936
84	.56484	.55930	.55383	.54844	.54313	.53789	.53273	.52764	.52262	.51767
85	.58231	.57686	.57149	.56619	.56096	.55581	.55072	.54571	.54076	.53588
86	.59939	.59405	.58878	.58358	.57845	.57339	.56839	.56346	.55858	.55377
87	.61583	.61061	.60545	.60035	.59532	.59035	.58545	.58060	.57581	.57108
88	.63171	.62661	.62156	.61658	.61165	.60678	.60196	.59721	.59251	.58786
89	.64733	.64235	.63742	.63255	.62774	.62298	.61827	.61361	.60900	.60444
90	.66285	.65801	.65321	.64847	.64377	.63913	.63453	.62998	.62548	.62103
91	.67804	.67334	.66868	.66407	.65950	.65498	.65050	.64607	.64169	.63735
92	.69250	.68793	.68341	.67893	.67450	.67011	.66575	.66144	.65718	.65295
93	.70604	.70162	.69723	.69288	.68858	.68431	.68008	.67589	.67174	.66762
94	.71852	.71422	.70997	.70575	.70156	.69742	.69331	.68923	.68519	.68119
95	.72984	.72567	.72154	.71744	.71337	.70934	.70534	.70137	.69744	.69354
96	.73992	.73586	.73183	.72784	.72388	.71995	.71605	.71218	.70835	.70454
97	.74910	.74514	.74122	.73733	.73346	.72963	.72582	.72205	.71830	.71458
98	.75737	.75351	.74967	.74587	.74209	.73835	.73463	.73093	.72727	.72363
99	.76501	.76123	.75748	.75376	.75007	.74640	.74276	.73914	.73555	.73198

Age	Adjusted payout rate									
	10.2%	10.4%	10.6%	10.8%	11.0%	11.2%	11.4%	11.6%	11.8%	12.0%
100	.77208	.76838	.76471	.76107	.75745	.75385	.75028	.74673	.74321	.73971
101	.77879	.77517	.77157	.76800	.76444	.76092	.75741	.75392	.75046	.74702
102	.78579	.78224	.77871	.77521	.77173	.76827	.76483	.76141	.75801	.75463
103	.79318	.78971	.78626	.78283	.77942	.77604	.77266	.76931	.76598	.76267
104	.80139	.79801	.79464	.79129	.78796	.78465	.78136	.77808	.77482	.77157
105	.81161	.80834	.80508	.80184	.79861	.79540	.79220	.78902	.78585	.78270
106	.82665	.82357	.82049	.81743	.81438	.81134	.80831	.80530	.80229	.79930
107	.84893	.84616	.84340	.84064	.83789	.83515	.83241	.82969	.82696	.82425
108	.88637	.88421	.88205	.87989	.87774	.87559	.87344	.87129	.86915	.86701
109	.94900	.94800	.94700	.94600	.94500	.94400	.94300	.94200	.94100	.94000

Table U(1)—Based on Life Table 80CNSMT Unitrust Single Life Remainder Factors
[Applicable after April 30, 1989]

Age	Adjusted payout rate									
	12.2%	12.4%	12.6%	12.8%	13.0%	13.2%	13.4%	13.6%	13.8%	14.0%
0	.01581	.01569	.01557	.01546	.01536	.01526	.01516	.01507	.01499	.01490
1	.00459	.00448	.00437	.00426	.00417	.00407	.00399	.00390	.00382	.00375
2	.00424	.00412	.00400	.00389	.00379	.00369	.00360	.00352	.00343	.00335
3	.00414	.00401	.00389	.00377	.00366	.00356	.00346	.00337	.00328	.00320
4	.00418	.00404	.00391	.00379	.00368	.00357	.00347	.00337	.00327	.00319
5	.00433	.00418	.00405	.00391	.00379	.00368	.00357	.00346	.00336	.00327
6	.00454	.00439	.00424	.00410	.00397	.00384	.00372	.00361	.00351	.00341
7	.00482	.00465	.00449	.00434	.00420	.00407	.00394	.00382	.00371	.00360
8	.00516	.00498	.00481	.00465	.00450	.00436	.00422	.00410	.00397	.00386
9	.00560	.00541	.00523	.00505	.00489	.00474	.00459	.00446	.00433	.00420
10	.00613	.00592	.00573	.00555	.00537	.00521	.00505	.00491	.00477	.00463
11	.00677	.00655	.00635	.00615	.00597	.00580	.00563	.00547	.00532	.00518
12	.00751	.00728	.00706	.00685	.00666	.00647	.00629	.00613	.00597	.00581
13	.00829	.00805	.00782	.00760	.00739	.00719	.00701	.00683	.00666	.00650
14	.00905	.00879	.00854	.00831	.00809	.00789	.00769	.00750	.00732	.00715
15	.00974	.00947	.00921	.00897	.00874	.00852	.00831	.00811	.00793	.00775
16	.01037	.01009	.00982	.00956	.00932	.00909	.00887	.00866	.00846	.00827
17	.01093	.01063	.01034	.01007	.00982	.00958	.00935	.00913	.00892	.00873
18	.01143	.01112	.01082	.01053	.01027	.01001	.00977	.00954	.00933	.00912
19	.01192	.01159	.01127	.01097	.01069	.01043	.01017	.00993	.00970	.00949
20	.01239	.01204	.01170	.01139	.01109	.01081	.01055	.01029	.01005	.00983
21	.01283	.01246	.01211	.01178	.01147	.01117	.01089	.01063	.01037	.01013
22	.01328	.01288	.01251	.01216	.01183	.01152	.01122	.01094	.01067	.01042
23	.01372	.01331	.01292	.01254	.01219	.01186	.01155	.01125	.01097	.01070
24	.01422	.01378	.01336	.01297	.01260	.01225	.01191	.01160	.01130	.01101
25	.01479	.01432	.01388	.01346	.01306	.01269	.01233	.01200	.01168	.01138
26	.01545	.01495	.01448	.01404	.01362	.01322	.01284	.01248	.01214	.01182
27	.01623	.01570	.01520	.01472	.01427	.01385	.01344	.01306	.01270	.01235
28	.01712	.01655	.01601	.01551	.01503	.01457	.01414	.01373	.01334	.01298
29	.01813	.01752	.01695	.01641	.01589	.01541	.01494	.01451	.01409	.01370

Age	Adjusted payout rate									
	12.2%	12.4%	12.6%	12.8%	13.0%	13.2%	13.4%	13.6%	13.8%	14.0%
30	.01927	.01862	.01801	.01743	.01688	.01635	.01586	.01539	.01495	.01452
31	.02056	.01987	.01922	.01859	.01801	.01745	.01692	.01642	.01594	.01548
32	.02201	.02127	.02057	.01990	.01927	.01868	.01811	.01757	.01706	.01657
33	.02363	.02284	.02209	.02138	.02071	.02007	.01946	.01888	.01833	.01781
34	.02543	.02458	.02378	.02302	.02230	.02162	.02096	.02034	.01975	.01919
35	.02741	.02651	.02565	.02484	.02407	.02333	.02264	.02197	.02134	.02073
36	.02956	.02859	.02768	.02681	.02599	.02520	.02446	.02374	.02307	.02242
37	.03189	.03087	.02990	.02897	.02809	.02725	.02645	.02569	.02496	.02427
38	.03443	.03334	.03230	.03131	.03037	.02948	.02862	.02781	.02703	.02628
39	.03718	.03602	.03491	.03386	.03285	.03190	.03099	.03011	.02928	.02849
40	.04015	.03891	.03774	.03662	.03555	.03453	.03355	.03262	.03173	.03088
41	.04335	.04204	.04079	.03959	.03846	.03737	.03633	.03534	.03439	.03348
42	.04677	.04538	.04405	.04278	.04157	.04042	.03931	.03825	.03724	.03627
43	.05042	.04894	.04754	.04619	.04491	.04368	.04250	.04138	.04030	.03926
44	.05432	.05276	.05127	.04984	.04848	.04718	.04593	.04473	.04358	.04248
45	.05849	.05684	.05526	.05375	.05231	.05092	.04960	.04832	.04710	.04593
46	.06292	.06118	.05952	.05792	.05639	.05492	.05352	.05217	.05087	.04963
47	.06765	.06581	.06405	.06237	.06075	.05920	.05771	.05628	.05491	.05359
48	.07265	.07071	.06886	.06708	.06537	.06373	.06216	.06064	.05919	.05779
49	.07791	.07587	.07392	.07204	.07024	.06851	.06685	.06525	.06371	.06223
50	.08343	.08129	.07923	.07726	.07536	.07354	.07178	.07009	.06847	.06690
51	.08924	.08699	.08483	.08276	.08076	.07884	.07699	.07520	.07349	.07183
52	.09539	.09303	.09076	.08858	.08648	.08446	.08251	.08064	.07883	.07708
53	.10189	.09942	.09704	.09475	.09255	.09043	.08838	.08640	.08450	.08266
54	.10872	.10614	.10365	.10126	.09894	.09672	.09456	.09249	.09049	.08855
55	.11592	.11322	.11062	.10811	.10569	.10335	.10110	.09892	.09682	.09478
56	.12350	.12068	.11796	.11534	.11281	.11036	.10800	.10571	.10350	.10137
57	.13148	.12855	.12572	.12298	.12033	.11777	.11530	.11291	.11060	.10836
58	.13990	.13685	.13389	.13104	.12828	.12561	.12303	.12053	.11811	.11576
59	.14875	.14557	.14250	.13953	.13665	.13387	.13118	.12856	.12604	.12359
60	.15799	.15469	.15150	.14841	.14542	.14253	.13972	.13700	.13436	.13180
61	.16761	.16419	.16088	.15768	.15457	.15156	.14864	.14580	.14305	.14039
62	.17758	.17404	.17062	.16729	.16407	.16094	.15791	.15496	.15210	.14932
63	.18791	.18425	.18071	.17726	.17392	.17068	.16753	.16447	.16150	.15861
64	.19862	.19484	.19118	.18762	.18417	.18081	.17754	.17437	.17129	.16829

Age	Adjusted payout rate									
	12.2%	12.4%	12.6%	12.8%	13.0%	13.2%	13.4%	13.6%	13.8%	14.0%
65	.20979	.20590	.20212	.19845	.19487	.19140	.18802	.18474	.18154	.17843
66	.22149	.21748	.21359	.20980	.20612	.20253	.19904	.19564	.19233	.18911
67	.23374	.22962	.22562	.22172	.21792	.21423	.21062	.20712	.20370	.20037
68	.24656	.24234	.23822	.23422	.23031	.22651	.22280	.21919	.21566	.21222
69	.25988	.25556	.25134	.24724	.24323	.23932	.23551	.23179	.22816	.22461
70	.27367	.26925	.26493	.26073	.25662	.25261	.24870	.24488	.24115	.23750
71	.28784	.28333	.27892	.27462	.27042	.26631	.26230	.25839	.25456	.25082
72	.30241	.29781	.29332	.28893	.28464	.28044	.27634	.27233	.26841	.26457
73	.31740	.31272	.30815	.30368	.29930	.29502	.29084	.28674	.28273	.27880
74	.33291	.32817	.32352	.31897	.31452	.31016	.30589	.30171	.29762	.29361
75	.34903	.34422	.33951	.33490	.33038	.32595	.32161	.31735	.31318	.30909
76	.36581	.36095	.35619	.35152	.34694	.34245	.33805	.33373	.32949	.32533
77	.38324	.37835	.37354	.36883	.36420	.35966	.35520	.35083	.34654	.34232
78	.40126	.39634	.39150	.38676	.38210	.37752	.37302	.36861	.36427	.36001
79	.41970	.41476	.40992	.40515	.40047	.39587	.39135	.38690	.38253	.37823
80	.43842	.43348	.42864	.42387	.41918	.41456	.41002	.40556	.40117	.39685
81	.45719	.45228	.44744	.44267	.43799	.43337	.42883	.42436	.41996	.41562
82	.47590	.47101	.46619	.46145	.45677	.45217	.44764	.44317	.43877	.43443
83	.49443	.48957	.48478	.48007	.47542	.47084	.46632	.46187	.45748	.45315
84	.51279	.50798	.50324	.49856	.49394	.48939	.48490	.48048	.47611	.47180
85	.53106	.52630	.52161	.51698	.51241	.50790	.50345	.49906	.49473	.49045
86	.54902	.54434	.53971	.53514	.53062	.52616	.52176	.51741	.51312	.50888
87	.56640	.56178	.55722	.55271	.54826	.54386	.53951	.53521	.53097	.52677
88	.58326	.57872	.57423	.56979	.56541	.56107	.55678	.55254	.54834	.54420
89	.59994	.59548	.59107	.58671	.58240	.57813	.57391	.56973	.56560	.56152
90	.61662	.61226	.60794	.60367	.59944	.59526	.59112	.58702	.58296	.57894
91	.63305	.62879	.62457	.62040	.61627	.61217	.60812	.60411	.60013	.59619
92	.64876	.64461	.64050	.63643	.63239	.62839	.62443	.62051	.61662	.61277
93	.66355	.65950	.65550	.65153	.64759	.64369	.63983	.63600	.63220	.62843
94	.67722	.67328	.66938	.66551	.66167	.65786	.65409	.65035	.64664	.64296
95	.68967	.68583	.68203	.67825	.67451	.67079	.66711	.66345	.65983	.65623
96	.70076	.69701	.69330	.68961	.68595	.68231	.67871	.67513	.67158	.66806
97	.71089	.70722	.70359	.69998	.69640	.69284	.68931	.68581	.68234	.67888
98	.72001	.71642	.71286	.70933	.70582	.70233	.69887	.69544	.69203	.68864
99	.72844	.72492	.72143	.71796	.71452	.71110	.70770	.70433	.70098	.69765

Age	Adjusted payout rate									
	12.2%	12.4%	12.6%	12.8%	13.0%	13.2%	13.4%	13.6%	13.8%	14.0%
100	.73623	.73278	.72935	.72594	.72256	.71920	.71586	.71254	.70924	.70597
101	.74361	.74021	.73684	.73349	.73016	.72685	.72356	.72029	.71704	.71382
102	.75128	.74794	.74463	.74133	.73806	.73480	.73157	.72835	.72515	.72198
103	.75938	.75610	.75284	.74961	.74639	.74319	.74000	.73684	.73369	.73056
104	.76835	.76514	.76194	.75877	.75561	.75246	.74934	.74623	.74313	.74005
105	.77956	.77643	.77332	.77023	.76714	.76408	.76102	.75798	.75496	.75195
106	.79632	.79334	.79038	.78743	.78449	.78157	.77865	.77575	.77285	.76997
107	.82154	.81884	.81615	.81346	.81079	.80811	.80545	.80279	.80014	.79750
108	.86487	.86274	.86061	.85848	.85635	.85423	.85210	.84998	.84787	.84575
109	.93900	.93800	.93700	.93600	.93500	.93400	.93300	.93200	.93100	.93000

(f) ***Valuation of charitable remainder unitrusts having certain payout sequences for transfers for which the valuation date is after April 30, 1999, and before May 1, 2009 —***

(1) ***In general.*** Except as otherwise provided in paragraph (f)(2) of this section, in the case of transfers for which the valuation date is after April 30, 1999, and before May 1, 2009, the present value of a remainder interest is determined under paragraphs (f)(3) through (f)(6) of this section, provided that the amount of the payout as of any payout date during any taxable year of the trust is not larger than the amount that the trust could distribute on such date under § 1.664-3(a)(1)(v) if the taxable year of the trust were to end on such date. See, however, § 1.7520-3(b) (relating to exceptions to the use of the prescribed tables under certain circumstances).

(2) ***Transitional rules for valuation of charitable remainder unitrusts.***

(i) For purposes of sections 2055, 2106, or 2624, if on May 1, 1999, the decedent was mentally incompetent so that the disposition of the property could not be changed, and the decedent died after April 30, 1999, without having regained competency to dispose of the decedent's property, or the decedent died within 90 days of the date that the decedent first regained competency after April 30, 1999, the present value of a remainder interest under this section is determined as if the valuation date with respect to the decedent's gross estate is either before May 1, 1999, or after April 30, 1999, at the option of the decedent's executor.

(ii) For purposes of sections 170, 2055, 2106, 2522, or 2624, in the case of transfers to a charitable remainder unitrust for which the valuation date is after April 30, 1999, and before July 1, 1999, the present value of a remainder interest based on one or more measuring lives is determined under this section by use of the section 7520 interest rate for the month in which the valuation date occurs (see §§ 1.7520-1(b) and 1.7520-2(a)(2)) and the appropriate actuarial tables under either paragraph (e)(6) or (f)(6) of this section, at the option of the donor or the decedent's executor, as the case may be.

(iii) For purposes of paragraphs (f)(2)(i) and (f)(2)(ii) of this section, where the donor or decedent's executor is given the option to use the appropriate actuarial tables under either paragraph (e)(6) or (f)(6) of this section, the donor or decedent's executor must use the same actuarial table with respect to each individual transaction and with respect to all transfers occurring on the valuation date (for example, gift and income tax charitable deductions with respect to the same transfer must be determined based on the same tables, and all assets includible in the gross estate and/or estate tax deductions claimed must be valued based on the same tables).

(3) ***Adjusted payout rate.*** For transfers for which the valuation date is after April 30, 1999, and before May 1, 2009, the adjusted payout rate is determined by using the appropriate Table F, contained in § 1.664-4(e)(6), for the section 7520 interest rate applicable to the transfer. If the interest rate is between 4.2 and 14 percent, see § 1.664-4(e)(6). If the interest rate is below 4.2 percent or greater than 14 percent, see § 1.664-4(b). See § 1.664-4(e) for rules applicable in determining the adjusted payout rate.

(4) ***Period is a term of years.*** If the period described in § 1.664-3(a)(5) is a term of years, the factor that is used in determining the present value of the remainder interest for transfers for which the valuation date is after April 30, 1999, and before May 1, 2009, is the factor under the appropriate adjusted payout rate in Table D in § 1.664-4(e)(6) corresponding to the number of years in the term. If the adjusted payout rate is an amount that is between adjusted payout rates for which factors are provided in Table D, a linear interpolation must be made. The present value of the remainder interest is determined by multiplying the net fair market value (as of the appropriate valuation date) of the

property placed in trust by the factor determined under this paragraph. Generally, for purposes of this section, the valuation date is, in the case of an inter vivos transfer, the date on which the property is transferred to the trust by the donor, and, in the case of a testamentary transfer under sections 2055, 2106, or 2624, the valuation date is the date of death. See § 1.664-4(e)(4) for additional rules regarding the valuation date. See § 1.664-4(e)(4) for an example that illustrates the application of this paragraph (f)(4).

(5) ***Period is the life of one individual.*** If the period described in § 1.664-3(a)(5) is the life of one individual, the factor that is used in determining the present value of the remainder interest for transfers for which the valuation date is after April 30, 1999, and before May 1, 2009, is the factor in Table U(1) in paragraph (f)(6) of this section under the appropriate adjusted payout. For purposes of the computations described in this paragraph (f)(5), the age of an individual is the age of that individual at the individual's nearest birthday. If the adjusted payout rate is an amount that is between adjusted payout rates for which factors are provided in the appropriate table, a linear interpolation must be made. The rules provided in § 1.664-4(e)(5) apply for determining the present value of the remainder interest. See § 1.664-4(e)(5) for an example illustrating the application of this paragraph (f)(5) (using current actuarial tables).

(6) ***Actuarial Table U(1) for transfers for which the valuation date is after April 30, 1999, and before May 1, 2009.*** For transfers for which the valuation date is after April 30, 1999, and before May 1, 2009, the present value of a charitable remainder unitrust interest that is dependent on the termination of a life interest is determined by using the section 7520 rate, Table U(1) in this paragraph (f)(6), and Tables F(4.2) through F(14.0) in § 1.664-4(e)(6). See, however, § 1.7520-3(b) (relating to exceptions to the use of prescribed tables under certain circumstances). Many actuarial factors not contained in the following tables are contained in Internal Revenue Service Publication 1458, “Actuarial Values, Book Beth,” (7-1999). Publication 1458 is no longer available for purchase from the Superintendent of Documents, United States Government Printing Office. However, pertinent factors in this publication may be obtained by a written request to: CC:PA:LPD:PR (IRS Publication 1458), Room 5205, Internal Revenue Service, P.O.Box 7604, Ben Franklin Station, Washington, DC 20044.

Table U(1)—Based on Life Table 90CM Unitrust Single Life Remainder Factors
[Applicable After April 30, 1999, and Before May 1, 2009]

Age	Interest rate									
	4.2%	4.4%	4.6%	4.8%	5.0%	5.2%	5.4%	5.6%	.8%	6.0%
0	.06177	.05580	.05061	.04609	.04215	.03871	.03570	.03307	.03075	.02872
1	.05543	.04925	.04388	.03919	.03509	.03151	.02838	.02563	.02321	.02109
2	.05716	.05081	.04528	.04045	.03622	.03252	.02927	.02642	.02391	.02170
3	.05920	.05268	.04699	.04201	.03765	.03382	.03046	.02750	.02490	.02260
4	.06143	.05475	.04889	.04376	.03926	.03530	.03182	.02876	.02605	.02366
5	.06384	.05697	.05095	.04567	.04103	.03694	.03334	.03016	.02735	.02487
6	.06637	.05933	.05315	.04771	.04292	.03870	.03497	.03168	.02876	.02618
7	.06905	.06183	.05547	.04987	.04494	.04058	.03673	.03332	.03029	.02761
8	.07186	.06445	.05792	.05216	.04708	.04258	.03859	.03506	.03192	.02914
9	.07482	.06722	.06052	.05460	.04936	.04471	.04060	.03694	.03369	.03079
10	.07793	.07015	.06327	.05718	.05179	.04700	.04274	.03896	.03559	.03259
11	.08120	.07323	.06617	.05991	.05435	.04942	.04502	.04111	.03762	.03450
12	.08461	.07645	.06920	.06277	.05706	.05197	.04744	.04339	.03978	.03655
13	.08812	.07976	.07234	.06574	.05985	.05461	.04993	.04576	.04202	.03867
14	.09168	.08313	.07552	.06874	.06269	.05729	.05247	.04815	.04428	.04081
15	.09527	.08652	.07872	.07176	.06554	.05999	.05501	.05055	.04655	.04296
16	.09886	.08991	.08192	.07478	.06839	.06267	.05754	.05294	.04880	.04508
17	.10249	.09334	.08515	.07782	.07126	.06537	.06008	.05533	.05105	.04720
18	.10616	.09680	.08842	.08090	.07415	.06809	.06264	.05774	.05332	.04933
19	.10994	.10037	.09178	.08407	.07714	.07091	.06529	.06023	.05566	.05153
20	.11384	.10406	.09527	.08737	.08025	.07383	.06805	.06283	.05811	.05384
21	.11790	.10790	.09891	.09080	.08349	.07690	.07094	.06555	.06068	.05626
22	.12208	.11188	.10267	.09436	.08686	.08008	.07395	.06839	.06336	.05879
23	.12643	.11601	.10659	.09808	.09038	.08342	.07710	.07138	.06618	.06146
24	.13095	.12031	.11069	.10197	.09408	.08692	.08042	.07452	.06915	.06427
25	.13567	.12481	.11497	.10605	.09795	.09060	.08392	.07784	.07230	.06726
26	.14058	.12950	.11945	.11032	.10202	.09447	.08760	.08134	.07563	.07042
27	.14571	.13442	.12415	.11481	.10631	.09856	.09149	.08505	.07916	.07379
28	.15104	.13953	.12904	.11949	.11078	.10284	.09558	.08895	.08288	.07733
29	.15656	.14484	.13414	.12438	.11546	.10731	.09986	.09304	.08679	.08106

Age	Interest rate									
	4.2%	4.4%	4.6%	4.8%	5.0%	5.2%	5.4%	5.6%	.8%	6.0%
30	.16229	.15034	.13943	.12946	.12034	.11198	.10433	.09732	.09089	.08498
31	.16821	.15605	.14493	.13474	.12541	.11685	.10900	.10179	.09517	.08909
32	.17433	.16196	.15063	.14023	.13069	.12193	.11387	.10647	.09966	.09339
33	.18068	.16810	.15655	.14595	.13620	.12723	.11897	.11137	.10437	.09791
34	.18724	.17446	.16270	.15189	.14193	.13275	.12430	.11650	.10930	.10265
35	.19405	.18107	.16910	.15808	.14791	.13853	.12987	.12187	.11448	.10764
36	.20109	.18791	.17574	.16451	.15414	.14456	.13569	.12749	.11990	.11287
37	.20838	.19500	.18263	.17120	.16062	.15083	.14177	.13337	.12558	.11835
38	.21593	.20236	.18979	.17816	.16739	.15739	.14813	.13953	.13154	.12412
39	.22374	.20998	.19723	.18540	.17443	.16423	.15477	.14597	.13779	.13017
40	.23183	.21789	.20496	.19294	.18177	.17138	.16172	.15272	.14434	.13653
41	.24021	.22611	.21299	.20079	.18943	.17885	.16899	.15980	.15123	.14322
42	.24889	.23463	.22134	.20896	.19741	.18665	.17660	.16721	.15845	.15025
43	.25786	.24344	.23000	.21744	.20572	.19477	.18453	.17496	.16601	.15762
44	.26712	.25257	.23896	.22625	.21435	.20322	.19281	.18305	.17391	.16534
45	.27665	.26196	.24821	.23534	.22328	.21198	.20139	.19145	.18213	.17338
46	.28644	.27163	.25774	.24472	.23251	.22105	.21028	.20018	.19068	.18174
47	.29647	.28155	.26754	.25438	.24201	.23040	.21947	.20919	.19952	.19041
48	.30676	.29173	.27760	.26431	.25181	.24004	.22896	.21852	.20868	.19941
49	.31729	.30217	.28794	.27453	.26190	.24999	.23876	.22817	.21817	.20873
50	.32808	.31289	.29856	.28505	.27229	.26026	.24889	.23814	.22799	.21839
51	.33912	.32387	.30946	.29585	.28299	.27083	.25933	.24845	.23815	.22840
52	.35038	.33507	.32060	.30691	.29395	.28168	.27005	.25904	.24861	.23872
53	.36185	.34651	.33198	.31821	.30517	.29280	.28106	.26993	.25937	.24934
54	.37352	.35815	.34358	.32976	.31664	.30418	.29234	.28110	.27042	.26026
55	.38539	.37002	.35542	.34155	.32836	.31583	.30390	.29256	.28177	.27149
56	.39746	.38209	.36748	.35358	.34034	.32774	.31574	.30431	.29342	.28303
57	.40971	.39437	.37976	.36584	.35257	.33992	.32785	.31634	.30536	.29488
58	.42212	.40682	.39222	.37829	.36500	.35231	.34019	.32862	.31756	.30699
59	.43464	.41939	.40482	.39090	.37759	.36488	.35272	.34109	.32996	.31932
60	.44726	.43207	.41754	.40364	.39034	.37761	.36542	.35375	.34257	.33186
61	.45999	.44488	.43041	.41655	.40326	.39053	.37833	.36662	.35540	.34463
62	.47286	.45785	.44345	.42964	.41639	.40367	.39146	.37974	.36848	.35767
63	.48589	.47098	.45667	.44293	.42972	.41703	.40484	.39311	.38184	.37100
64	.49903	.48426	.47005	.45638	.44324	.43060	.41843	.40671	.39544	.38458

Age	Interest rate									
	4.2%	4.4%	4.6%	4.8%	5.0%	5.2%	5.4%	5.6%	.8%	6.0%
65	.51229	.49766	.48357	.47001	.45694	.44435	.43223	.42054	.40927	.39841
66	.52568	.51121	.49726	.48381	.47084	.45833	.44626	.43461	.42337	.41252
67	.53924	.52495	.51115	.49784	.48498	.47256	.46056	.44898	.43778	.42696
68	.55293	.53883	.52521	.51205	.49932	.48701	.47511	.46360	.45246	.44169
69	.56671	.55283	.53940	.52640	.51382	.50165	.48985	.47844	.46738	.45666
70	.58052	.56687	.55365	.54084	.52843	.51639	.50473	.49342	.48245	.47181
71	.59431	.58091	.56791	.55529	.54306	.53118	.51966	.50847	.49761	.48707
72	.60804	.59490	.58213	.56973	.55768	.54598	.53461	.52357	.51283	.50239
73	.62168	.60881	.59629	.58411	.57227	.56076	.54955	.53866	.52806	.51774
74	.63528	.62268	.61042	.59848	.58686	.57555	.56453	.55380	.54335	.53316
75	.64887	.63657	.62458	.61290	.60151	.59041	.57959	.56904	.55875	.54872
76	.66249	.65049	.63880	.62739	.61625	.60538	.59478	.58443	.57432	.56446
77	.67612	.66446	.65307	.64194	.63108	.62046	.61009	.59995	.59005	.58037
78	.68975	.67843	.66736	.65654	.64596	.63561	.62548	.61558	.60590	.59643
79	.70330	.69233	.68160	.67109	.66081	.65074	.64088	.63123	.62178	.61253
80	.71666	.70605	.69566	.68548	.67550	.66573	.65615	.64676	.63755	.62853
81	.72975	.71950	.70946	.69961	.68995	.68047	.67117	.66205	.65310	.64433
82	.74250	.73263	.72293	.71342	.70407	.69490	.68589	.67705	.66837	.65984
83	.75493	.74542	.73608	.72690	.71788	.70902	.70031	.69175	.68333	.67506
84	.76712	.75798	.74900	.74016	.73147	.72292	.71451	.70624	.69810	.69010
85	.77913	.77037	.76175	.75326	.74491	.73668	.72859	.72061	.71276	.70503
86	.79086	.78248	.77423	.76610	.75808	.75019	.74241	.73474	.72719	.71974
87	.80218	.79418	.78628	.77850	.77083	.76326	.75580	.74844	.74118	.73402
88	.81307	.80544	.79790	.79047	.78313	.77589	.76874	.76169	.75473	.74786
89	.82355	.81628	.80909	.80200	.79500	.78808	.78125	.77450	.76783	.76125
90	.83360	.82668	.81985	.81309	.80642	.79982	.79330	.78685	.78048	.77418
91	.84308	.83650	.83000	.82357	.81721	.81092	.80470	.79855	.79246	.78645
92	.85182	.84556	.83937	.83325	.82718	.82119	.81525	.80937	.80356	.79780
93	.85985	.85390	.84800	.84215	.83637	.83064	.82497	.81936	.81379	.80829
94	.86732	.86164	.85601	.85044	.84491	.83944	.83402	.82865	.82333	.81806
95	.87437	.86895	.86359	.85827	.85300	.84778	.84260	.83746	.83237	.82733
96	.88097	.87582	.87070	.86563	.86060	.85561	.85066	.84575	.84088	.83605
97	.88708	.88216	.87727	.87243	.86762	.86285	.85811	.85341	.84875	.84413
98	.89280	.88810	.88343	.87880	.87420	.86964	.86511	.86061	.85614	.85171
99	.89836	.89388	.88943	.88501	.88062	.87626	.87193	.86763	.86336	.85911

Age	Interest rate									
	4.2%	4.4%	4.6%	4.8%	5.0%	5.2%	5.4%	5.6%	.8%	6.0%
100	.90375	.89948	.89525	.89103	.88685	.88269	.87856	.87445	.87037	.86632
101	.90905	.90500	.90097	.89696	.89298	.88902	.88509	.88118	.87729	.87342
102	.91424	.91040	.90658	.90278	.89900	.89524	.89150	.88778	.88408	.88040
103	.91939	.91575	.91214	.90854	.90496	.90139	.89785	.89432	.89081	.88732
104	.92485	.92144	.91805	.91467	.91131	.90796	.90463	.90131	.89800	.89471
105	.93020	.92701	.92383	.92067	.91751	.91437	.91125	.90813	.90502	.90193
106	.93701	.93411	.93122	.92834	.92546	.92260	.91974	.91689	.91405	.91122
107	.94522	.94268	.94013	.93760	.93507	.93254	.93002	.92750	.92499	.92249
108	.95782	.95583	.95385	.95187	.94989	.94791	.94593	.94396	.94199	.94002
109	.97900	.97800	.97700	.97600	.97500	.97400	.97300	.97200	.97100	.97000

Table U(1)—Based on Life Table 90CM Unitrust Single Life Remainder Factors
[Applicable After April 30, 1999, and Before May 1, 2009]

Age	Interest rate									
	6.2%	6.4%	6.6%	6.8%	7.0%	7.2%	7.4%	7.6%	7.8%	8.0%
0	.02693	.02534	.02395	.02271	.02161	.02063	.01976	.01898	.01828	.01765
1	.01922	.01756	.01610	.01480	.01365	.01263	.01171	.01090	.01017	.00951
2	.01975	.01802	.01650	.01514	.01393	.01286	.01190	.01104	.01028	.00959
3	.02056	.01876	.01717	.01575	.01449	.01336	.01235	.01145	.01064	.00992
4	.02155	.01967	.01800	.01652	.01520	.01401	.01296	.01201	.01116	.01039
5	.02266	.02071	.01896	.01741	.01603	.01479	.01368	.01269	.01179	.01098
6	.02389	.02184	.02003	.01841	.01696	.01566	.01450	.01345	.01251	.01166
7	.02522	.02309	.02120	.01950	.01799	.01663	.01540	.01431	.01332	.01242
8	.02665	.02444	.02246	.02069	.01910	.01768	.01640	.01524	.01420	.01326
9	.02821	.02590	.02384	.02199	.02033	.01884	.01750	.01629	.01520	.01421
10	.02990	.02750	.02535	.02342	.02169	.02013	.01872	.01745	.01631	.01526
11	.03172	.02922	.02698	.02497	.02316	.02153	.02006	.01872	.01752	.01643
12	.03365	.03106	.02872	.02663	.02474	.02303	.02149	.02010	.01884	.01769
13	.03566	.03297	.03054	.02835	.02638	.02460	.02299	.02154	.02021	.01901
14	.03770	.03490	.03237	.03010	.02804	.02619	.02450	.02298	.02159	.02033
15	.03973	.03682	.03419	.03182	.02968	.02775	.02599	.02439	.02294	.02162
16	.04173	.03871	.03598	.03352	.03129	.02926	.02743	.02576	.02424	.02286
17	.04372	.04059	.03775	.03519	.03287	.03076	.02884	.02710	.02551	.02406
18	.04573	.04248	.03953	.03686	.03444	.03224	.03024	.02842	.02676	.02524
19	.04780	.04443	.04137	.03859	.03607	.03378	.03169	.02978	.02804	.02646
20	.04997	.04647	.04329	.04040	.03778	.03539	.03321	.03122	.02940	.02773
21	.05226	.04862	.04532	.04232	.03958	.03709	.03481	.03274	.03083	.02909
22	.05465	.05088	.04745	.04432	.04148	.03888	.03650	.03433	.03234	.03052
23	.05716	.05325	.04969	.04645	.04348	.04077	.03830	.03603	.03394	.03203
24	.05983	.05578	.05208	.04871	.04562	.04280	.04021	.03784	.03566	.03367
25	.06266	.05846	.05463	.05112	.04791	.04497	.04227	.03980	.03752	.03543
26	.06566	.06131	.05734	.05369	.05035	.04729	.04448	.04189	.03951	.03732
27	.06887	.06436	.06024	.05646	.05298	.04979	.04686	.04416	.04168	.03939
28	.07225	.06758	.06331	.05938	.05577	.05245	.04940	.04658	.04398	.04159
29	.07581	.07099	.06656	.06248	.05873	.05528	.05210	.04916	.04645	.04394

Age	Interest rate									
	6.2%	6.4%	6.6%	6.8%	7.0%	7.2%	7.4%	7.6%	7.8%	8.0%
30	.07956	.07457	.06998	.06575	.06186	.05827	.05495	.05189	.04906	.04644
31	.08348	.07833	.07358	.06920	.06515	.06142	.05797	.05478	.05182	.04908
32	.08761	.08228	.07736	.07282	.06863	.06475	.06116	.05783	.05475	.05189
33	.09195	.08645	.08136	.07666	.07231	.06828	.06454	.06108	.05786	.05488
34	.09651	.09082	.08557	.08070	.07619	.07200	.06812	.06452	.06117	.05805
35	.10131	.09545	.09002	.08498	.08030	.07596	.07193	.06818	.06469	.06144
36	.10635	.10031	.09470	.08949	.08465	.08015	.07596	.07206	.06842	.06503
37	.11165	.10542	.09963	.09424	.08923	.08457	.08022	.07617	.07238	.06885
38	.11722	.11081	.10484	.09927	.09409	.08926	.08475	.08054	.07661	.07293
39	.12308	.11648	.11032	.10458	.09922	.09422	.08955	.08518	.08109	.07726
40	.12925	.12246	.11612	.11020	.10466	.09949	.09465	.09011	.08587	.08189
41	.13575	.12877	.12225	.11614	.11043	.10508	.10007	.09537	.09097	.08683
42	.14259	.13542	.12871	.12243	.11654	.11101	.10583	.10097	.09640	.09210
43	.14977	.14242	.13552	.12905	.12298	.11729	.11193	.10690	.10217	.09771
44	.15731	.14976	.14269	.13604	.12979	.12391	.11838	.11318	.10828	.10367
45	.16516	.15743	.15017	.14334	.13691	.13086	.12516	.11979	.11472	.10994
46	.17334	.16544	.15800	.15099	.14438	.13816	.13228	.12674	.12150	.11656
47	.18184	.17375	.16613	.15895	.15217	.14576	.13972	.13400	.12860	.12349
48	.19066	.18240	.17461	.16724	.16029	.15371	.14749	.14161	.13604	.13077
49	.19981	.19138	.18342	.17588	.16875	.16201	.15562	.14956	.14383	.13839
50	.20931	.20072	.19259	.18489	.17759	.17067	.16412	.15790	.15199	.14639
51	.21917	.21042	.20212	.19426	.18679	.17971	.17299	.16660	.16054	.15477
52	.22933	.22043	.21198	.20395	.19633	.18909	.18220	.17566	.16943	.16350
53	.23981	.23076	.22216	.21399	.20621	.19881	.19176	.18506	.17867	.17258
54	.25060	.24141	.23267	.22434	.21642	.20886	.20166	.19480	.18826	.18201
55	.26171	.25239	.24351	.23504	.22697	.21927	.21192	.20491	.19821	.19182
56	.27313	.26369	.25468	.24608	.23787	.23003	.22254	.21538	.20854	.20199
57	.28487	.27531	.26618	.25746	.24912	.24114	.23351	.22621	.21923	.21254
58	.29688	.28722	.27798	.26914	.26067	.25257	.24481	.23738	.23025	.22343
59	.30913	.29937	.29002	.28107	.27249	.26427	.25639	.24882	.24157	.23461
60	.32159	.31175	.30231	.29325	.28457	.27623	.26823	.26055	.25317	.24608
61	.33429	.32437	.31485	.30571	.29692	.28848	.28037	.27257	.26507	.25786
62	.34728	.33730	.32770	.31847	.30960	.30106	.29285	.28495	.27734	.27001
63	.36057	.35053	.34087	.33157	.32262	.31400	.30569	.29769	.28998	.28255
64	.37412	.36404	.35433	.34498	.33596	.32726	.31887	.31078	.30298	.29545

Age	Interest rate									
	6.2%	6.4%	6.6%	6.8%	7.0%	7.2%	7.4%	7.6%	7.8%	8.0%
65	.38794	.37783	.36809	.35868	.34961	.34085	.33239	.32422	.31633	.30871
66	.40205	.39193	.38216	.37272	.36361	.35479	.34628	.33804	.33008	.32238
67	.41650	.40639	.39661	.38715	.37800	.36915	.36059	.35230	.34428	.33651
68	.43126	.42117	.41139	.40193	.39277	.38390	.37530	.36697	.35890	.35108
69	.44628	.43622	.42648	.41703	.40787	.39898	.39037	.38201	.37391	.36604
70	.46150	.45149	.44178	.43236	.42321	.41433	.40571	.39735	.38922	.38132
71	.47683	.46689	.45723	.44785	.43873	.42987	.42126	.41290	.40476	.39685
72	.49225	.48238	.47279	.46346	.45439	.44556	.43697	.42862	.42048	.41257
73	.50770	.49793	.48841	.47915	.47013	.46135	.45280	.44447	.43635	.42844
74	.52324	.51358	.50416	.49498	.48603	.47731	.46880	.46051	.45242	.44454
75	.53894	.52939	.52008	.51100	.50214	.49349	.48505	.47681	.46877	.46092
76	.55483	.54543	.53624	.52728	.51852	.50996	.50160	.49344	.48546	.47766
77	.57091	.56167	.55263	.54380	.53516	.52671	.51845	.51038	.50247	.49475
78	.58716	.57809	.56922	.56053	.55203	.54372	.53557	.52760	.51980	.51216
79	.60346	.59459	.58590	.57738	.56904	.56086	.55286	.54501	.53732	.52978
80	.61969	.61102	.60252	.59419	.58601	.57800	.57014	.56243	.55487	.54745
81	.63571	.62726	.61897	.61082	.60283	.59499	.58729	.57974	.57232	.56503
82	.65146	.64324	.63515	.62722	.61942	.61176	.60423	.59683	.58957	.58242
83	.66693	.65893	.65108	.64335	.63575	.62828	.62093	.61371	.60660	.59962
84	.68222	.67447	.66684	.65934	.65195	.64468	.63753	.63049	.62356	.61674
85	.69742	.68993	.68255	.67528	.66812	.66106	.65411	.64727	.64053	.63389
86	.71241	.70517	.69805	.69102	.68410	.67727	.67054	.66390	.65736	.65091
87	.72696	.72000	.71313	.70635	.69967	.69307	.68656	.68014	.67381	.66756
88	.74108	.73438	.72777	.72125	.71480	.70845	.70217	.69597	.68985	.68380
89	.75475	.74832	.74198	.73571	.72951	.72339	.71734	.71137	.70547	.69963
90	.76796	.76180	.75572	.74971	.74376	.73788	.73207	.72633	.72065	.71503
91	.78049	.77460	.76878	.76302	.75732	.75168	.74610	.74058	.73512	.72972
92	.79211	.78647	.78089	.77537	.76990	.76449	.75913	.75383	.74858	.74338
93	.80283	.79743	.79208	.78679	.78154	.77634	.77119	.76610	.76105	.75604
94	.81283	.80765	.80253	.79744	.79240	.78741	.78247	.77756	.77270	.76789
95	.82233	.81737	.81245	.80757	.80274	.79795	.79320	.78849	.78382	.77918
96	.83126	.82651	.82180	.81712	.81248	.80788	.80332	.79880	.79431	.78985
97	.83953	.83498	.83046	.82597	.82152	.81710	.81271	.80836	.80404	.79976
98	.84731	.84294	.83860	.83429	.83002	.82577	.82155	.81737	.81321	.80908
99	.85490	.85071	.84656	.84243	.83832	.83425	.83020	.82618	.82219	.81822

Age	Interest rate									
	6.2%	6.4%	6.6%	6.8%	7.0%	7.2%	7.4%	7.6%	7.8%	8.0%
100	.86229	.85828	.85431	.85035	.84642	.84252	.83864	.83478	.83095	.82714
101	.86958	.86575	.86195	.85818	.85442	.85069	.84698	.84329	.83962	.83597
102	.87674	.87310	.86947	.86587	.86229	.85873	.85518	.85166	.84815	.84466
103	.88384	.88038	.87694	.87351	.87010	.86671	.86334	.85998	.85663	.85331
104	.89143	.88817	.88492	.88169	.87847	.87526	.87207	.86889	.86573	.86258
105	.89885	.89578	.89272	.88967	.88664	.88361	.88060	.87760	.87461	.87163
106	.90840	.90559	.90278	.89999	.89720	.89442	.89165	.88888	.88613	.88338
107	.91999	.91750	.91501	.91253	.91005	.90758	.90511	.90265	.90019	.89774
108	.93805	.93609	.93412	.93216	.93020	.92824	.92629	.92434	.92239	.92044
109	.96900	.96800	.96700	.96600	.96500	.96400	.96300	.96200	.96100	.96000

Table U(1)—Based on Life Table 90CM Unitrust Single Life Remainder Factors
[Applicable After April 30, 1999, and Before May 1, 2009]

Age	Interest rate									
	8.2%	8.4%	8.6%	8.8%	9.0%	9.2%	9.4%	9.6%	9.8%	10.0%
0	.01709	.01658	.01612	.01570	.01532	.01497	.01466	.01437	.01410	.01386
1	.00892	.00839	.00791	.00747	.00708	.00672	.00639	.00609	.00582	.00557
2	.00896	.00840	.00790	.00744	.00702	.00664	.00629	.00598	.00569	.00542
3	.00926	.00867	.00814	.00765	.00721	.00681	.00644	.00611	.00580	.00552
4	.00970	.00908	.00851	.00800	.00753	.00711	.00672	.00636	.00604	.00574
5	.01026	.00960	.00900	.00846	.00796	.00751	.00710	.00672	.00637	.00606
6	.01089	.01019	.00956	.00899	.00846	.00799	.00755	.00715	.00678	.00644
7	.01161	.01088	.01021	.00960	.00905	.00854	.00808	.00765	.00726	.00690
8	.01241	.01163	.01093	.01029	.00970	.00917	.00867	.00822	.00781	.00743
9	.01331	.01249	.01175	.01107	.01045	.00988	.00936	.00889	.00845	.00804
10	.01432	.01346	.01268	.01196	.01131	.01071	.01016	.00965	.00918	.00875
11	.01543	.01453	.01370	.01295	.01226	.01162	.01104	.01051	.01001	.00956
12	.01664	.01569	.01482	.01403	.01330	.01263	.01202	.01145	.01093	.01045
13	.01791	.01691	.01600	.01516	.01440	.01369	.01304	.01245	.01190	.01139
14	.01918	.01813	.01717	.01629	.01548	.01474	.01406	.01343	.01285	.01231
15	.02041	.01931	.01831	.01738	.01653	.01576	.01504	.01437	.01376	.01320
16	.02160	.02044	.01938	.01841	.01752	.01670	.01595	.01525	.01460	.01401
17	.02274	.02152	.02041	.01940	.01846	.01760	.01680	.01607	.01539	.01476
18	.02386	.02258	.02142	.02035	.01936	.01846	.01762	.01685	.01613	.01547
19	.02500	.02367	.02245	.02132	.02029	.01933	.01845	.01764	.01689	.01619
20	.02621	.02481	.02353	.02235	.02126	.02025	.01933	.01847	.01768	.01694
21	.02749	.02603	.02468	.02344	.02229	.02124	.02026	.01936	.01852	.01774
22	.02884	.02730	.02589	.02458	.02338	.02227	.02124	.02029	.01940	.01859
23	.03028	.02867	.02718	.02581	.02454	.02337	.02229	.02128	.02035	.01949
24	.03183	.03013	.02857	.02713	.02580	.02456	.02342	.02236	.02138	.02047
25	.03350	.03172	.03008	.02857	.02717	.02587	.02467	.02355	.02251	.02155
26	.03530	.03344	.03172	.03013	.02865	.02729	.02602	.02484	.02375	.02273
27	.03727	.03532	.03351	.03183	.03028	.02885	.02751	.02627	.02511	.02404
28	.03937	.03732	.03543	.03367	.03204	.03052	.02911	.02780	.02658	.02545
29	.04162	.03947	.03748	.03564	.03392	.03233	.03084	.02946	.02818	.02698

Age	Interest rate									
	8.2%	8.4%	8.6%	8.8%	9.0%	9.2%	9.4%	9.6%	9.8%	10.0%
30	.04401	.04176	.03967	.03773	.03593	.03425	.03269	.03124	.02988	.02861
31	.04654	.04419	.04200	.03996	.03807	.03630	.03466	.03312	.03169	.03035
32	.04923	.04676	.04447	.04233	.04034	.03849	.03676	.03514	.03363	.03221
33	.05210	.04952	.04711	.04487	.04278	.04083	.03901	.03731	.03571	.03422
34	.05515	.05245	.04993	.04758	.04538	.04333	.04142	.03962	.03794	.03637
35	.05841	.05558	.05295	.05048	.04818	.04603	.04401	.04212	.04035	.03869
36	.06187	.05892	.05616	.05358	.05116	.04890	.04678	.04480	.04293	.04118
37	.06555	.06247	.05958	.05688	.05435	.05198	.04975	.04766	.04570	.04385
38	.06949	.06627	.06325	.06043	.05777	.05528	.05295	.05075	.04868	.04674
39	.07368	.07032	.06717	.06421	.06143	.05882	.05637	.05406	.05189	.04984
40	.07816	.07465	.07137	.06827	.06537	.06263	.06006	.05764	.05535	.05320
41	.08295	.07930	.07587	.07264	.06960	.06674	.06405	.06150	.05910	.05683
42	.08807	.08427	.08069	.07733	.07415	.07116	.06833	.06567	.06315	.06077
43	.09352	.08957	.08585	.08233	.07902	.07589	.07294	.07014	.06750	.06500
44	.09932	.09521	.09134	.08768	.08423	.08096	.07787	.07495	.07218	.06956
45	.10543	.10117	.09715	.09334	.08974	.08634	.08311	.08005	.07716	.07441
46	.11189	.10747	.10329	.09933	.09559	.09204	.08867	.08548	.08245	.07958
47	.11866	.11408	.10974	.10564	.10174	.09805	.09454	.09121	.08805	.08504
48	.12577	.12103	.11654	.11228	.10823	.10439	.10074	.09727	.09397	.09083
49	.13323	.12833	.12368	.11926	.11506	.11107	.10728	.10366	.10022	.09695
50	.14107	.13601	.13120	.12663	.12228	.11813	.11419	.11043	.10685	.10344
51	.14928	.14407	.13910	.13437	.12987	.12558	.12149	.11758	.11386	.11031
52	.15785	.15248	.14735	.14247	.13781	.13337	.12913	.12508	.12122	.11752
53	.16678	.16124	.15597	.15093	.14612	.14153	.13714	.13294	.12893	.12509
54	.17606	.17037	.16493	.15974	.15478	.15004	.14550	.14116	.13700	.13302
55	.18570	.17986	.17428	.16893	.16382	.15893	.15424	.14976	.14546	.14134
56	.19573	.18974	.18400	.17851	.17325	.16821	.16338	.15875	.15430	.15004
57	.20613	.20000	.19412	.18848	.18307	.17789	.17291	.16814	.16355	.15914
58	.21688	.21060	.20458	.19880	.19325	.18792	.18280	.17788	.17316	.16861
59	.22793	.22151	.21535	.20943	.20374	.19827	.19301	.18795	.18309	.17840
60	.23927	.23272	.22642	.22036	.21454	.20893	.20354	.19834	.19334	.18851
61	.25092	.24425	.23782	.23163	.22567	.21993	.21440	.20907	.20393	.19898
62	.26295	.25616	.24961	.24329	.23721	.23134	.22568	.22021	.21494	.20985
63	.27538	.26847	.26180	.25537	.24916	.24316	.23738	.23179	.22639	.22117
64	.28817	.28116	.27438	.26783	.26150	.25539	.24949	.24377	.23825	.23291

Age	Interest rate									
	8.2%	8.4%	8.6%	8.8%	9.0%	9.2%	9.4%	9.6%	9.8%	10.0%
65	.30134	.29423	.28735	.28069	.27426	.26803	.26201	.25618	.25054	.24508
66	.31493	.30772	.30075	.29399	.28746	.28113	.27500	.26906	.26331	.25774
67	.32899	.32170	.31464	.30780	.30118	.29475	.28852	.28248	.27663	.27095
68	.34349	.33614	.32901	.32209	.31538	.30887	.30256	.29643	.29047	.28469
69	.35841	.35100	.34381	.33683	.33005	.32346	.31707	.31085	.30481	.29894
70	.37366	.36620	.35896	.35193	.34509	.33844	.33197	.32568	.31957	.31362
71	.38916	.38167	.37440	.36732	.36043	.35372	.34720	.34084	.33466	.32864
72	.40486	.39736	.39006	.38295	.37602	.36927	.36270	.35629	.35005	.34396
73	.42074	.41323	.40591	.39878	.39182	.38504	.37843	.37198	.36568	.35955
74	.43685	.42934	.42202	.41488	.40791	.40110	.39446	.38798	.38165	.37547
75	.45326	.44577	.43846	.43132	.42435	.41754	.41088	.40438	.39802	.39181
76	.47004	.46259	.45530	.44818	.44122	.43442	.42776	.42125	.41488	.40865
77	.48718	.47979	.47255	.46547	.45853	.45175	.44511	.43861	.43225	.42601
78	.50467	.49735	.49017	.48314	.47626	.46951	.46290	.45643	.45008	.44386
79	.52239	.51515	.50806	.50110	.49427	.48758	.48102	.47459	.46828	.46209
80	.54018	.53304	.52603	.51916	.51242	.50580	.49930	.49292	.48666	.48052
81	.55788	.55085	.54396	.53718	.53053	.52399	.51757	.51126	.50507	.49898
82	.57540	.56851	.56173	.55506	.54851	.54207	.53574	.52951	.52339	.51737
83	.59274	.58598	.57933	.57279	.56635	.56001	.55378	.54765	.54161	.53567
84	.61002	.60341	.59690	.59049	.58418	.57796	.57184	.56582	.55988	.55403
85	.62734	.62090	.61454	.60828	.60211	.59603	.59004	.58414	.57832	.57258
86	.64455	.63828	.63210	.62600	.61999	.61406	.60821	.60244	.59675	.59113
87	.66139	.65531	.64930	.64337	.63752	.63175	.62605	.62043	.61488	.60939
88	.67783	.67194	.66612	.66037	.65469	.64908	.64354	.63807	.63267	.62733
89	.69387	.68817	.68254	.67698	.67148	.66605	.66068	.65537	.65012	.64493
90	.70947	.70398	.69855	.69318	.68786	.68261	.67742	.67228	.66719	.66217
91	.72437	.71908	.71385	.70867	.70354	.69847	.69345	.68848	.68357	.67870
92	.73823	.73314	.72810	.72310	.71816	.71326	.70841	.70361	.69886	.69415
93	.75109	.74618	.74132	.73650	.73173	.72700	.72232	.71768	.71308	.70852
94	.76312	.75839	.75370	.74905	.74445	.73988	.73536	.73087	.72643	.72202
95	.77459	.77004	.76552	.76104	.75660	.75220	.74783	.74350	.73920	.73494
96	.78543	.78105	.77670	.77238	.76810	.76386	.75964	.75546	.75131	.74720
97	.79550	.79128	.78709	.78293	.77880	.77470	.77063	.76659	.76258	.75860
98	.80498	.80091	.79687	.79286	.78888	.78492	.78099	.77709	.77322	.76937
99	.81428	.81036	.80647	.80261	.79877	.79496	.79117	.78741	.78367	.77995

Age	Interest rate									
	8.2%	8.4%	8.6%	8.8%	9.0%	9.2%	9.4%	9.6%	9.8%	10.0%
100	.82336	.81959	.81586	.81214	.80845	.80478	.80113	.79751	.79390	.79032
101	.83234	.82873	.82515	.82158	.81804	.81451	.81101	.80753	.80406	.80062
102	.84119	.83774	.83431	.83089	.82750	.82412	.82076	.81742	.81409	.81078
103	.84999	.84670	.84342	.84016	.83691	.83368	.83046	.82726	.82408	.82091
104	.85944	.85632	.85321	.85011	.84703	.84396	.84090	.83786	.83483	.83182
105	.86866	.86570	.86276	.85982	.85690	.85399	.85109	.84820	.84532	.84245
106	.88065	.87792	.87520	.87248	.86978	.86708	.86440	.86172	.85905	.85638
107	.89530	.89286	.89042	.88799	.88557	.88315	.88073	.87833	.87592	.87352
108	.91849	.91654	.91460	.91266	.91072	.90879	.90685	.90492	.90299	.90106
109	.95900	.95800	.95700	.95600	.95500	.95400	.95300	.95200	.95100	.95000

Table U(1)—Based on Life Table 90CM Unitrust Single Life Remainder Factors
[Applicable After April 30, 1999, and Before May 1, 2009]

Age	Interest rate									
	10.2%	10.4%	10.6%	10.8%	11.0%	11.2%	11.4%	11.6%	11.8%	12.0%
0	.01363	.01342	.01323	.01305	.01288	.01272	.01258	.01244	.01231	.01219
1	.00534	.00512	.00493	.00474	.00458	.00442	.00427	.00414	.00401	.00389
2	.00518	.00495	.00474	.00455	.00437	.00421	.00405	.00391	.00377	.00365
3	.00526	.00502	.00480	.00459	.00440	.00422	.00406	.00391	.00376	.00363
4	.00546	.00521	.00497	.00475	.00455	.00436	.00419	.00402	.00387	.00373
5	.00576	.00549	.00524	.00501	.00479	.00459	.00440	.00423	.00406	.00391
6	.00613	.00584	.00557	.00532	.00509	.00488	.00468	.00449	.00432	.00415
7	.00657	.00626	.00598	.00571	.00547	.00524	.00502	.00482	.00464	.00446
8	.00707	.00675	.00644	.00616	.00590	.00565	.00542	.00521	.00501	.00482
9	.00766	.00732	.00699	.00669	.00641	.00615	.00591	.00568	.00547	.00527
10	.00835	.00798	.00764	.00732	.00702	.00675	.00649	.00624	.00602	.00580
11	.00913	.00874	.00838	.00804	.00772	.00743	.00715	.00689	.00665	.00642
12	.01000	.00959	.00920	.00884	.00851	.00819	.00790	.00762	.00737	.00712
13	.01091	.01048	.01007	.00969	.00933	.00900	.00869	.00840	.00813	.00787
14	.01181	.01135	.01092	.01052	.01014	.00979	.00947	.00916	.00887	.00860
15	.01267	.01218	.01173	.01130	.01091	.01054	.01019	.00987	.00956	.00928
16	.01345	.01294	.01246	.01201	.01160	.01121	.01084	.01050	.01018	.00988
17	.01418	.01364	.01313	.01266	.01222	.01181	.01143	.01107	.01073	.01041
18	.01486	.01429	.01375	.01326	.01279	.01236	.01196	.01158	.01122	.01088
19	.01554	.01494	.01438	.01385	.01336	.01291	.01248	.01208	.01170	.01135
20	.01626	.01562	.01503	.01448	.01396	.01348	.01303	.01260	.01220	.01183
21	.01702	.01635	.01573	.01514	.01460	.01409	.01361	.01316	.01274	.01235
22	.01782	.01711	.01645	.01584	.01526	.01472	.01422	.01374	.01330	.01288
23	.01868	.01793	.01724	.01658	.01597	.01540	.01487	.01437	.01390	.01345
24	.01962	.01883	.01809	.01740	.01675	.01615	.01558	.01505	.01455	.01408
25	.02065	.01981	.01903	.01830	.01762	.01698	.01638	.01581	.01528	.01478
26	.02178	.02089	.02006	.01929	.01856	.01789	.01725	.01665	.01609	.01556
27	.02303	.02209	.02122	.02040	.01963	.01891	.01824	.01760	.01700	.01644
28	.02439	.02339	.02247	.02160	.02079	.02002	.01931	.01863	.01800	.01740
29	.02585	.02480	.02382	.02290	.02204	.02123	.02047	.01976	.01908	.01845

Age	Interest rate									
	10.2%	10.4%	10.6%	10.8%	11.0%	11.2%	11.4%	11.6%	11.8%	12.0%
30	.02742	.02631	.02527	.02430	.02339	.02253	.02172	.02096	.02025	.01957
31	.02910	.02793	.02683	.02579	.02482	.02391	.02306	.02225	.02149	.02077
32	.03089	.02965	.02849	.02739	.02636	.02540	.02449	.02363	.02282	.02206
33	.03282	.03151	.03028	.02912	.02803	.02701	.02604	.02513	.02427	.02346
34	.03489	.03350	.03220	.03097	.02982	.02873	.02771	.02674	.02583	.02497
35	.03713	.03567	.03429	.03299	.03177	.03061	.02953	.02850	.02753	.02661
36	.03953	.03798	.03653	.03515	.03386	.03263	.03148	.03039	.02936	.02838
37	.04211	.04048	.03894	.03748	.03611	.03481	.03359	.03243	.03134	.03030
38	.04490	.04318	.04155	.04001	.03856	.03719	.03589	.03466	.03350	.03239
39	.04791	.04609	.04437	.04274	.04120	.03975	.03837	.03707	.03583	.03466
40	.05116	.04924	.04742	.04571	.04408	.04254	.04108	.03970	.03839	.03714
41	.05469	.05267	.05075	.04894	.04722	.04559	.04405	.04258	.04119	.03987
42	.05851	.05638	.05436	.05245	.05063	.04891	.04728	.04573	.04425	.04285
43	.06263	.06039	.05827	.05625	.05433	.05252	.05079	.04915	.04759	.04610
44	.06707	.06472	.06248	.06035	.05834	.05642	.05459	.05286	.05121	.04963
45	.07180	.06933	.06698	.06474	.06262	.06059	.05867	.05684	.05509	.05342
46	.07685	.07425	.07178	.06943	.06720	.06507	.06304	.06110	.05926	.05750
47	.08218	.07946	.07687	.07440	.07205	.06981	.06768	.06564	.06369	.06183
48	.08784	.08499	.08228	.07969	.07722	.07487	.07262	.07047	.06842	.06646
49	.09382	.09085	.08801	.08530	.08271	.08024	.07788	.07562	.07346	.07140
50	.10018	.09707	.09410	.09127	.08856	.08597	.08349	.08112	.07885	.07667
51	.10691	.10367	.10057	.09761	.09477	.09206	.08946	.08697	.08459	.08231
52	.11399	.11061	.10738	.10429	.10132	.09849	.09577	.09316	.09066	.08826
53	.12142	.11791	.11454	.11132	.10823	.10526	.10242	.09969	.09707	.09456
54	.12921	.12556	.12206	.11870	.11548	.11239	.10942	.10657	.10383	.10120
55	.13738	.13359	.12995	.12646	.12311	.11989	.11679	.11382	.11096	.10820
56	.14595	.14202	.13824	.13462	.13113	.12778	.12456	.12146	.11847	.11560
57	.15491	.15084	.14693	.14317	.13955	.13607	.13272	.12949	.12638	.12338
58	.16424	.16004	.15599	.15209	.14834	.14473	.14125	.13789	.13465	.13153
59	.17390	.16955	.16537	.16134	.15746	.15371	.15010	.14662	.14325	.14001
60	.18387	.17939	.17507	.17091	.16689	.16302	.15927	.15566	.15217	.14880
61	.19420	.18958	.18513	.18084	.17669	.17268	.16881	.16506	.16145	.15795
62	.20494	.20020	.19561	.19119	.18691	.18277	.17877	.17490	.17115	.16753
63	.21613	.21126	.20654	.20199	.19758	.19331	.18918	.18518	.18131	.17757
64	.22774	.22274	.21791	.21322	.20869	.20429	.20004	.19592	.19192	.18805

Age	Interest rate									
	10.2%	10.4%	10.6%	10.8%	11.0%	11.2%	11.4%	11.6%	11.8%	12.0%
65	.23979	.23467	.22971	.22490	.22025	.21573	.21135	.20710	.20299	.19899
66	.25233	.24709	.24202	.23709	.23231	.22767	.22318	.21881	.21457	.21045
67	.26543	.26009	.25489	.24985	.24496	.24021	.23560	.23111	.22676	.22252
68	.27908	.27363	.26833	.26319	.25819	.25332	.24860	.24400	.23954	.23519
69	.29324	.28769	.28230	.27705	.27195	.26699	.26216	.25746	.25288	.24843
70	.30783	.30219	.29671	.29137	.28618	.28112	.27619	.27139	.26672	.26216
71	.32277	.31706	.31150	.30608	.30079	.29564	.29063	.28573	.28096	.27631
72	.33803	.33225	.32661	.32112	.31575	.31052	.30542	.30044	.29559	.29084
73	.35356	.34772	.34201	.33645	.33101	.32571	.32053	.31547	.31053	.30571
74	.36943	.36354	.35778	.35215	.34666	.34129	.33604	.33091	.32590	.32100
75	.38574	.37980	.37400	.36833	.36278	.35735	.35205	.34686	.34178	.33681
76	.40256	.39660	.39076	.38505	.37947	.37400	.36864	.36340	.35827	.35324
77	.41991	.41394	.40808	.40235	.39674	.39124	.38585	.38056	.37539	.37032
78	.43777	.43180	.42594	.42020	.41457	.40906	.40365	.39834	.39314	.38803
79	.45602	.45007	.44422	.43849	.43287	.42735	.42193	.41661	.41139	.40627
80	.47449	.46856	.46275	.45704	.45143	.44592	.44051	.43519	.42997	.42484
81	.49300	.48712	.48134	.47566	.47008	.46460	.45921	.45391	.44870	.44357
82	.51145	.50563	.49990	.49427	.48873	.48328	.47792	.47265	.46746	.46235
83	.52983	.52407	.51841	.51284	.50735	.50195	.49663	.49139	.48624	.48116
84	.54828	.54261	.53702	.53151	.52609	.52075	.51549	.51030	.50519	.50015
85	.56693	.56135	.55586	.55044	.54510	.53983	.53464	.52952	.52447	.51949
86	.58560	.58013	.57474	.56943	.56418	.55901	.55390	.54886	.54389	.53898
87	.60398	.59864	.59337	.58817	.58303	.57795	.57294	.56799	.56310	.55828
88	.62206	.61685	.61170	.60662	.60159	.59663	.59173	.58688	.58209	.57736
89	.63980	.63474	.62972	.62477	.61987	.61503	.61024	.60551	.60083	.59620
90	.65719	.65227	.64741	.64259	.63783	.63312	.62846	.62385	.61928	.61477
91	.67388	.66912	.66440	.65973	.65511	.65053	.64600	.64152	.63708	.63269
92	.68949	.68487	.68030	.67577	.67129	.66685	.66245	.65809	.65378	.64950
93	.70401	.69954	.69511	.69072	.68637	.68205	.67778	.67355	.66935	.66519
94	.71765	.71332	.70902	.70477	.70055	.69636	.69222	.68810	.68403	.67998
95	.73072	.72653	.72237	.71825	.71416	.71010	.70608	.70209	.69813	.69421
96	.74311	.73906	.73504	.73105	.72709	.72316	.71926	.71539	.71155	.70774
97	.75465	.75073	.74684	.74297	.73914	.73533	.73155	.72780	.72407	.72037
98	.76555	.76175	.75798	.75424	.75052	.74683	.74317	.73953	.73591	.73232
99	.77626	.77260	.76895	.76534	.76174	.75817	.75462	.75109	.74759	.74411

Age	Interest rate									
	10.2%	10.4%	10.6%	10.8%	11.0%	11.2%	11.4%	11.6%	11.8%	12.0%
100	.78676	.78323	.77971	.77622	.77274	.76929	.76586	.76245	.75906	.75569
101	.79719	.79379	.79040	.78703	.78368	.78035	.77704	.77375	.77048	.76722
102	.80749	.80422	.80096	.79772	.79450	.79130	.78811	.78494	.78178	.77864
103	.81775	.81461	.81149	.80838	.80529	.80221	.79914	.79609	.79306	.79003
104	.82881	.82582	.82284	.81988	.81693	.81399	.81106	.80815	.80525	.80236
105	.83959	.83674	.83391	.83108	.82826	.82546	.82267	.81988	.81711	.81435
106	.85373	.85108	.84844	.84581	.84319	.84058	.83797	.83537	.83278	.83020
107	.87113	.86875	.86636	.86399	.86161	.85925	.85689	.85453	.85218	.84984
108	.89913	.89721	.89529	.89337	.89145	.88953	.88762	.88571	.88380	.88189
109	.94900	.94800	.94700	.94600	.94500	.94400	.94300	.94200	.94100	.94000

Table U(1)—Based on Life Table 90CM Unitrust Single Life Remainder Factors
[Applicable After April 30, 1999, and Before May 1, 2009]

Age	Interest rate									
	12.2%	12.4%	12.6%	12.8%	13.0%	13.2%	13.4%	13.6%	13.8%	14.0%
0	.01208	.01197	.01187	.01177	.01168	.01159	.01151	.01143	.01135	.01128
1	.00378	.00367	.00358	.00348	.00340	.00331	.00323	.00316	.00309	.00302
2	.00353	.00342	.00331	.00322	.00312	.00304	.00295	.00288	.00280	.00273
3	.00350	.00339	.00327	.00317	.00307	.00298	.00289	.00281	.00273	.00265
4	.00359	.00347	.00335	.00324	.00313	.00303	.00294	.00285	.00276	.00268
5	.00377	.00363	.00351	.00339	.00327	.00317	.00306	.00297	.00288	.00279
6	.00400	.00386	.00372	.00359	.00347	.00335	.00325	.00314	.00305	.00295
7	.00430	.00414	.00400	.00386	.00373	.00360	.00349	.00338	.00327	.00317
8	.00465	.00448	.00432	.00417	.00403	.00390	.00378	.00366	.00354	.00344
9	.00508	.00490	.00473	.00457	.00442	.00428	.00414	.00402	.00389	.00378
10	.00560	.00541	.00523	.00506	.00490	.00475	.00460	.00446	.00433	.00421
11	.00620	.00600	.00581	.00563	.00546	.00529	.00514	.00499	.00485	.00472
12	.00689	.00668	.00647	.00628	.00610	.00593	.00576	.00560	.00545	.00531
13	.00763	.00740	.00718	.00698	.00678	.00660	.00642	.00626	.00610	.00595
14	.00834	.00810	.00787	.00766	.00745	.00726	.00707	.00689	.00673	.00657
15	.00901	.00875	.00851	.00828	.00807	.00786	.00767	.00748	.00730	.00714
16	.00959	.00932	.00907	.00883	.00860	.00839	.00818	.00799	.00780	.00762
17	.01011	.00983	.00956	.00930	.00907	.00884	.00862	.00842	.00822	.00804
18	.01057	.01027	.00999	.00972	.00947	.00923	.00900	.00879	.00858	.00839
19	.01101	.01070	.01040	.01012	.00985	.00960	.00936	.00914	.00892	.00871
20	.01148	.01115	.01083	.01054	.01026	.00999	.00974	.00950	.00927	.00905
21	.01197	.01162	.01129	.01098	.01068	.01040	.01014	.00988	.00964	.00941
22	.01249	.01211	.01176	.01143	.01112	.01082	.01054	.01027	.01002	.00978
23	.01304	.01264	.01227	.01192	.01159	.01127	.01098	.01069	.01042	.01017
24	.01364	.01322	.01283	.01246	.01210	.01177	.01145	.01115	.01087	.01060
25	.01431	.01387	.01345	.01306	.01268	.01233	.01199	.01168	.01137	.01109
26	.01506	.01459	.01415	.01373	.01333	.01295	.01260	.01226	.01194	.01163
27	.01591	.01541	.01494	.01449	.01407	.01367	.01329	.01293	.01259	.01226
28	.01684	.01631	.01580	.01533	.01488	.01445	.01405	.01367	.01330	.01296
29	.01785	.01728	.01675	.01624	.01577	.01531	.01488	.01447	.01408	.01372

Age	Interest rate									
	12.2%	12.4%	12.6%	12.8%	13.0%	13.2%	13.4%	13.6%	13.8%	14.0%
30	.01893	.01833	.01776	.01723	.01672	.01623	.01578	.01534	.01493	.01453
31	.02010	.01946	.01885	.01828	.01773	.01722	.01673	.01627	.01582	.01540
32	.02134	.02066	.02002	.01940	.01883	.01828	.01776	.01726	.01679	.01634
33	.02270	.02197	.02128	.02063	.02002	.01943	.01887	.01835	.01784	.01736
34	.02415	.02338	.02265	.02195	.02130	.02067	.02008	.01951	.01897	.01846
35	.02574	.02492	.02414	.02340	.02270	.02203	.02140	.02080	.02022	.01967
36	.02746	.02658	.02575	.02496	.02422	.02350	.02283	.02218	.02157	.02098
37	.02932	.02838	.02750	.02666	.02586	.02510	.02438	.02369	.02303	.02241
38	.03135	.03035	.02941	.02851	.02766	.02685	.02608	.02534	.02464	.02397
39	.03355	.03249	.03149	.03053	.02962	.02876	.02793	.02715	.02640	.02568
40	.03596	.03484	.03377	.03275	.03178	.03086	.02998	.02914	.02833	.02757
41	.03861	.03742	.03628	.03520	.03416	.03318	.03224	.03134	.03048	.02966
42	.04152	.04025	.03903	.03788	.03678	.03573	.03473	.03377	.03285	.03198
43	.04468	.04333	.04205	.04082	.03965	.03853	.03746	.03644	.03546	.03453
44	.04813	.04670	.04533	.04403	.04278	.04159	.04045	.03936	.03832	.03732
45	.05183	.05032	.04887	.04748	.04616	.04489	.04368	.04252	.04141	.04034
46	.05582	.05421	.05267	.05121	.04980	.04846	.04717	.04593	.04475	.04362
47	.06006	.05836	.05673	.05518	.05369	.05226	.05089	.04958	.04832	.04711
48	.06459	.06279	.06107	.05943	.05785	.05634	.05488	.05349	.05216	.05087
49	.06942	.06752	.06571	.06397	.06230	.06070	.05916	.05768	.05626	.05490
50	.07459	.07259	.07068	.06884	.06708	.06538	.06376	.06219	.06069	.05924
51	.08012	.07801	.07599	.07406	.07220	.07041	.06869	.06703	.06544	.06391
52	.08596	.08375	.08163	.07959	.07763	.07574	.07392	.07218	.07049	.06887
53	.09214	.08982	.08759	.08544	.08338	.08139	.07948	.07763	.07586	.07415
54	.09867	.09623	.09389	.09164	.08946	.08737	.08536	.08342	.08154	.07974
55	.10556	.10301	.10055	.09819	.09591	.09371	.09159	.08955	.08757	.08567
56	.11283	.11016	.10759	.10511	.10272	.10042	.09819	.09605	.09397	.09197
57	.12050	.11771	.11502	.11243	.10993	.10751	.10518	.10293	.10075	.09864
58	.12852	.12562	.12281	.12011	.11749	.11496	.11252	.11016	.10787	.10567
59	.13687	.13385	.13092	.12810	.12537	.12273	.12017	.11770	.11531	.11299
60	.14554	.14240	.13935	.13641	.13356	.13080	.12813	.12555	.12305	.12063
61	.15457	.15130	.14813	.14507	.14210	.13923	.13644	.13375	.13113	.12860
62	.16402	.16063	.15734	.15415	.15107	.14808	.14518	.14237	.13964	.13699
63	.17393	.17042	.16700	.16370	.16049	.15738	.15437	.15144	.14860	.14584
64	.18429	.18065	.17712	.17369	.17036	.16714	.16400	.16096	.15800	.15513

Age	Interest rate									
	12.2%	12.4%	12.6%	12.8%	13.0%	13.2%	13.4%	13.6%	13.8%	14.0%
65	.19511	.19135	.18769	.18415	.18070	.17735	.17410	.17094	.16787	.16488
66	.20645	.20257	.19880	.19513	.19157	.18810	.18473	.18146	.17827	.17517
67	.21841	.21441	.21052	.20673	.20305	.19947	.19599	.19259	.18929	.18608
68	.23096	.22685	.22284	.21895	.21515	.21146	.20786	.20436	.20094	.19762
69	.24409	.23987	.23575	.23175	.22784	.22404	.22033	.21672	.21320	.20976
70	.25772	.25339	.24918	.24507	.24106	.23715	.23333	.22961	.22598	.22244
71	.27178	.26735	.26304	.25882	.25471	.25070	.24679	.24296	.23923	.23559
72	.28622	.28170	.27729	.27298	.26877	.26467	.26065	.25673	.25290	.24915
73	.30100	.29639	.29189	.28749	.28320	.27899	.27489	.27087	.26694	.26310
74	.31621	.31152	.30694	.30246	.29807	.29378	.28959	.28548	.28146	.27753
75	.33195	.32719	.32253	.31797	.31351	.30914	.30486	.30067	.29657	.29255
76	.34832	.34350	.33877	.33415	.32961	.32517	.32082	.31656	.31238	.30828
77	.36535	.36047	.35570	.35101	.34642	.34192	.33750	.33317	.32892	.32475
78	.38302	.37811	.37329	.36856	.36392	.35937	.35490	.35051	.34621	.34198
79	.40124	.39630	.39145	.38669	.38201	.37742	.37291	.36848	.36413	.35985
80	.41980	.41485	.40998	.40520	.40050	.39588	.39134	.38688	.38249	.37818
81	.43854	.43358	.42871	.42392	.41921	.41457	.41001	.40553	.40112	.39678
82	.45733	.45238	.44752	.44273	.43802	.43338	.42881	.42431	.41989	.41553
83	.47616	.47123	.46638	.46161	.45690	.45227	.44770	.44320	.43877	.43441
84	.49519	.49030	.48548	.48073	.47604	.47143	.46688	.46239	.45797	.45361
85	.51458	.50974	.50496	.50025	.49560	.49102	.48650	.48204	.47763	.47329
86	.53413	.52935	.52463	.51998	.51538	.51084	.50636	.50194	.49758	.49327
87	.55351	.54881	.54416	.53957	.53503	.53055	.52613	.52176	.51744	.51317
88	.57268	.56806	.56349	.55898	.55451	.55010	.54574	.54144	.53718	.53296
89	.59162	.58710	.58262	.57819	.57382	.56949	.56520	.56097	.55678	.55263
90	.61030	.60588	.60151	.59718	.59290	.58866	.58447	.58032	.57621	.57214
91	.62834	.62403	.61977	.61554	.61136	.60722	.60312	.59907	.59505	.59107
92	.64527	.64107	.63692	.63280	.62872	.62468	.62068	.61672	.61279	.60890
93	.66107	.65699	.65294	.64893	.64495	.64101	.63711	.63323	.62940	.62559
94	.67597	.67200	.66806	.66415	.66027	.65643	.65262	.64884	.64509	.64138
95	.69031	.68645	.68262	.67881	.67504	.67130	.66759	.66390	.66025	.65662
96	.70396	.70021	.69648	.69279	.68912	.68548	.68186	.67828	.67471	.67118
97	.71670	.71305	.70943	.70584	.70227	.69872	.69520	.69171	.68824	.68480
98	.72875	.72521	.72169	.71819	.71472	.71127	.70784	.70444	.70106	.69770
99	.74065	.73721	.73379	.73040	.72703	.72368	.72035	.71704	.71375	.71048

Age	Interest rate									
	12.2%	12.4%	12.6%	12.8%	13.0%	13.2%	13.4%	13.6%	13.8%	14.0%
100	.75234	.74901	.74570	.74241	.73914	.73589	.73265	.72944	.72625	.72307
101	.76399	.76077	.75757	.75438	.75122	.74807	.74494	.74183	.73873	.73565
102	.77552	.77241	.76932	.76625	.76319	.76015	.75712	.75411	.75111	.74813
103	.78703	.78404	.78106	.77809	.77514	.77221	.76929	.76638	.76348	.76060
104	.79948	.79662	.79377	.79093	.78810	.78528	.78248	.77969	.77691	.77414
105	.81159	.80885	.80612	.80340	.80069	.79799	.79530	.79262	.78995	.78729
106	.82763	.82506	.82250	.81995	.81741	.81488	.81235	.80983	.80732	.80482
107	.84749	.84516	.84283	.84051	.83819	.83587	.83356	.83126	.82896	.82666
108	.87999	.87808	.87618	.87428	.87238	.87049	.86859	.86670	.86481	.86293
109	.93900	.93800	.93700	.93600	.93500	.93400	.93300	.93200	.93100	.93000

(7) ***Effective/applicability dates.*** Paragraphs (f)(1) through (f)(6) apply after April 30, 1999, and before May 1, 2009.

(g) ***Valuation of charitable remainder unitrusts having certain payout sequences for transfers for which the valuation date is on or after May 1, 2009, and before June 1, 2023*** —

(1) ***In general.*** Except as otherwise provided in paragraph (g)(2) of this section, in the case of transfers for which the valuation date is on or after May 1, 2009, and before June 1, 2023, the present value of a remainder interest is determined under paragraphs (g)(3) through (6) of this section, provided that the amount of the payout as of any payout date during any taxable year of the trust is not larger than the amount that the trust could distribute on such date under § 1.664-3(a)(1)(v) if the taxable year of the trust were to end on such date. See, however, § 1.7520-3(b) (relating to exceptions to the use of the prescribed tables under certain circumstances).

(2) ***Transitional rules for valuation of charitable remainder unitrusts.***

(i) For purposes of section 2055, 2106, or 2624, if on May 1, 2009, the decedent was under a mental disability so that the disposition of the property could not be changed, and the decedent died on or after May 1, 2009, but before June 2, 2023, without having regained the ability to dispose of the decedent's property, or if the decedent died within 90 days of the date that the decedent first regained that ability on or after May 1, 2009, but before June 2, 2023, the present value of a remainder interest under this section is determined as if the valuation date with respect to the decedent's gross estate is either before May 1, 2009, or after April 30, 2009, at the option of the decedent's executor.

(ii) For purposes of section 170, 2055, 2106, 2522, or 2624, in the case of transfers to a charitable remainder unitrust for which the valuation date is on or after May 1, 2009, and before July 1, 2009, the present value of a remainder interest based on one or more measuring lives is determined under this section by using the section 7520 interest rate for the month in which the valuation date occurs (see §§ 1.7520-1(b) and 1.7520-2(a)(2)) and the appropriate actuarial tables under either paragraph (f)(6) or (g)(6) of this section, at the option of the donor or the decedent's executor, as the case may be.

(iii) For purposes of paragraphs (g)(2)(i) and (ii) of this section, where the donor or decedent's executor is given the option to use the appropriate actuarial tables under either paragraph (f)(6) or (g)(6) of this section, the donor or decedent's executor must consistently use the same mortality basis with respect to each interest (income, remainder, partial, etc.) in the same property, and with respect to all transfers occurring on the same valuation date. For example, gift and income tax charitable deductions with respect to the same transfer must be determined based on factors with the same mortality basis, and all assets includible in the gross estate and/or estate tax deductions claimed must be valued based on factors with the same mortality basis.

(iv) In the case of transfers to a charitable remainder unitrust for which the valuation date is after April 30, 2019, and before June 1, 2023, the present value of the remainder interest under this section is determined under § 1.664(c)-4(e)(2).

(3) ***Adjusted payout rate.*** The adjusted payout rate is determined by applying the formula in § 1.664-4(e)(6)(ii) for the section 7520 interest rate applicable to the transfer to derive a factor and calculating the final result to at least six decimal places. For the convenience of taxpayers, actuarial factors have been computed by the IRS, for interest rates from 0.2 to 20 percent, inclusive, and appear in Tables F(0.2) through F(20.0). Tables F(0.2) through F(20.0) can be found on the IRS

website at *https://www.irs.gov/retirement-plans/actuarial-tables* (or a corresponding URL as may be updated from time to time). Tables F(0.2) through F(20.0) are referenced and explained in IRS Publication 1458, *Actuarial Valuations Version 3B*. The payout adjustment factors from Table F can also be found in § 1.664-4(e)(6)(iii), but only for interest rates from 4.2 to 14 percent, inclusive. Alternatively, the Commissioner may supply a factor upon a request for a ruling. See § 1.664-4(b). See § 1.664-4(e) for rules applicable in determining the adjusted payout rate.

(4) ***Period is a term of years.*** If the period described in § 1.664-3(a)(5) is a term of years, the factor that is used in determining the present value of the remainder interest is determined by applying the formula in § 1.664-4(e)(6)(i) under the appropriate adjusted payout rate corresponding to the number of years in the term and calculating the final result to at least six decimal places. For the convenience of taxpayers, actuarial factors have been computed by the IRS and appear in Table D. Table D can be found on the IRS website at *https://www.irs.gov/retirement-plans/actuarial-tables* (or a corresponding URL as may be updated from time to time). Table D is referenced and explained in IRS Publication 1458, *Actuarial Valuations Version 3B*. The remainder factors from Table D also can be found in § 1.664-4(e)(6)(iii), but only for adjusted payout rates from 4.2 to 14 percent, inclusive. If the adjusted payout rate is a percentage that is between the adjusted payout rate for which factors are provided by Table D, an exact method of obtaining the applicable remainder factors (such as through software using the actual rate of return and the actuarial formula provided in § 1.664-4(e)(6)(i)) or a linear interpolation must be used, provided whichever method used is applied consistently in valuing all interests in the same property. The applicable remainder factors derived by an exact method or by interpolation must be expressed to at least six decimal places. The present value of the remainder interest is determined by multiplying the net fair market value (as of the appropriate valuation date) of the property placed in trust by the factor determined under this paragraph (g)(4). Generally, for purposes of this section, the valuation date is, in the case of an inter vivos transfer, the date on which the property is transferred to the trust by the donor, and, in the case of a testamentary transfer under section 2055, 2106, or 2624, the valuation date is the date of death. See § 1.664-4(e)(4) for additional rules regarding the valuation date, and for an example that illustrates the application of this paragraph (g)(4).

(5) ***Period is the life of one individual.*** If the period described in § 1.664-3(a)(5) is the life of one individual, the factor that is used in determining the present value of the remainder interest for transfers for which the valuation date is on or after May 1, 2009, and before June 1, 2023, may be computed directly by using the formula in § 1.664-4(e)(5)(i) to derive a remainder factor from the appropriate mortality table and calculating the final result to at least five decimal places. For the convenience of taxpayers, actuarial factors have been computed by the IRS and appear in Table U(1). Table U(1) can be found on the IRS website at *https://www.irs.gov/retirement-plans/actuarial-tables* (or a corresponding URL as may be updated from time to time). Table U(1) is referenced and explained in IRS Publication 1458, *Actuarial Valuations Version 3B*. The remainder factors from Table U(1) also can be found in paragraph (g)(6) of this section, but only for adjusted payout rates from 4.2 to 14 percent, inclusive. For purposes of the computations described in this paragraph (g)(5), the age of an individual is the age of that individual at the individual's nearest birthday. If the adjusted payout rate is a percentage that is between the adjusted payout rate for which factors are provided by Table U(1), an exact method of obtaining the applicable factors (such as through software using the actual rate of return and the actuarial formula provided in § 1.664-4(e)(5)(i)) or a linear interpolation must be used, provided whichever method used is applied consistently in valuing all interests in the same property. The applicable remainder factors derived by an exact method or by interpolation must be

expressed to at least five decimal places. The rules provided in § 1.664-4(e)(5) apply for determining the present value of the remainder interest. See § 1.664-4(e)(5) for an example illustrating the application of this paragraph (g)(5) (using current actuarial tables).

(6) ***Actuarial Table U(1) for transfers for which the valuation date is on or after May 1, 2009, and before June 1, 2023.*** For transfers for which the valuation date is on or after May 1, 2009, and before June 1, 2023, and without regard to the headings in the tables in this paragraph (g)(6) that do not contain this termination date for the applicability of the tables, the present value of a charitable remainder unitrust interest that is dependent on the termination of a life interest is determined by using the section 7520 rate, Table U(1) in this paragraph (g)(6), and Tables F(4.2) through F(14.0) in § 1.664-4(e)(6)(iii). See, however, § 1.7520-3(b) (relating to exceptions to the use of prescribed tables under certain circumstances). Actuarial factors that do not appear in the following tables may be computed directly by using the formula in § 1.664-4(e)(5)(i) to derive remainder factors from the appropriate mortality table and calculating the result to at least five decimal places. For the convenience of taxpayers, actuarial factors have been computed by the IRS and appear in Table U(1) that is referenced and explained by IRS Publication 1458, *Actuarial Valuations Version 3B* (2009). The table is available at no charge, electronically via the IRS website at *https://www.irs.gov/retirement-plans/actuarial-tables* (or a corresponding URL as may be updated from time to time).

Table U(1) - Unitrust Single Life Remainder Factors
Based on Life Table 2000CM
Applicable On or After May 1, 2009

Adjusted Payout Rate

AGE	4.2%	4.4%	4.6%	4.8%	5.0%	5.2%	5.4%	5.6%	5.8%	6.0%
0	.05527	.04953	.04455	.04023	.03648	.03321	.03037	.02789	.02573	.02383
1	.05095	.04501	.03986	.03538	.03148	.02809	.02513	.02255	.02029	.01831
2	.05269	.04659	.04128	.03666	.03264	.02913	.02606	.02338	.02103	.01896
3	.05468	.04841	.04295	.03818	.03403	.03040	.02722	.02443	.02199	.01984
4	.05684	.05039	.04477	.03986	.03557	.03181	.02852	.02563	.02309	.02085
5	.05912	.05251	.04672	.04166	.03723	.03335	.02993	.02694	.02429	.02197
6	.06154	.05475	.04880	.04359	.03901	.03500	.03146	.02835	.02561	.02319
7	.06407	.05709	.05097	.04561	.04089	.03673	.03308	.02985	.02700	.02448
8	.06672	.05956	.05328	.04775	.04288	.03859	.03481	.03146	.02850	.02588
9	.06951	.06217	.05571	.05002	.04500	.04057	.03665	.03319	.03012	.02739
10	.07244	.06491	.05827	.05241	.04724	.04266	.03861	.03503	.03184	.02901
11	.07550	.06778	.06096	.05494	.04961	.04489	.04070	.03698	.03368	.03074
12	.07869	.07078	.06378	.05759	.05210	.04723	.04290	.03906	.03563	.03258
13	.08199	.07389	.06670	.06034	.05468	.04966	.04519	.04121	.03767	.03450
14	.08536	.07706	.06969	.06315	.05733	.05215	.04754	.04342	.03975	.03646
15	.08877	.08027	.07271	.06599	.06000	.05467	.04990	.04565	.04184	.03844
16	.09221	.08351	.07576	.06885	.06269	.05719	.05228	.04788	.04394	.04041
17	.09570	.08679	.07885	.07176	.06542	.05975	.05468	.05014	.04606	.04240
18	.09925	.09014	.08199	.07471	.06820	.06236	.05712	.05243	.04821	.04442
19	.10289	.09356	.08522	.07774	.07104	.06503	.05963	.05478	.05041	.04648
20	.10665	.09711	.08856	.08089	.07400	.06781	.06224	.05723	.05272	.04864
21	.11052	.10077	.09201	.08413	.07706	.07068	.06495	.05977	.05510	.05088
22	.11452	.10455	.09558	.08750	.08023	.07367	.06776	.06241	.05759	.05322
23	.11867	.10848	.09929	.09101	.08354	.07680	.07070	.06519	.06019	.05567
24	.12300	.11259	.10319	.09470	.08703	.08009	.07381	.06812	.06297	.05829
25	.12755	.11691	.10730	.09860	.09073	.08359	.07713	.07126	.06593	.06109
26	.13232	.12146	.11163	.10272	.09464	.08731	.08065	.07460	.06910	.06409
27	.13732	.12624	.11619	.10706	.09878	.09125	.08440	.07816	.07248	.06731
28	.14255	.13125	.12098	.11164	.10315	.09542	.08837	.08195	.07609	.07074
29	.14799	.13647	.12598	.11644	.10773	.09980	.09256	.08594	.07990	.07438
30	.15365	.14191	.13120	.12144	.11252	.10438	.09694	.09014	.08391	.07821
31	.15952	.14756	.13664	.12666	.11754	.10919	.10155	.09455	.08813	.08225
32	.16561	.15343	.14230	.13210	.12277	.11422	.10637	.09918	.09257	.08650
33	.17193	.15954	.14819	.13778	.12824	.11948	.11143	.10403	.09724	.09098
34	.17845	.16585	.15429	.14367	.13391	.12495	.11670	.10910	.10211	.09566

Table U(1) - Unitrust Single Life Remainder Factors
Based on Life Table 2000CM
Applicable On or After May 1, 2009

Adjusted Payout Rate

AGE	4.2%	4.4%	4.6%	4.8%	5.0%	5.2%	5.4%	5.6%	5.8%	6.0%
35	.18520	.17239	.16062	.14979	.13982	.13065	.12219	.11440	.10721	.10057
36	.19218	.17916	.16718	.15614	.14597	.13659	.12793	.11993	.11254	.10571
37	.19938	.18617	.17398	.16274	.15236	.14276	.13390	.12570	.11812	.11110
38	.20683	.19342	.18103	.16958	.15900	.14920	.14013	.13173	.12395	.11673
39	.21450	.20090	.18832	.17667	.16588	.15588	.14661	.13801	.13003	.12261
40	.22241	.20862	.19585	.18400	.17301	.16281	.15334	.14454	.13636	.12875
41	.23055	.21659	.20362	.19158	.18040	.17000	.16033	.15133	.14295	.13514
42	.23892	.22479	.21164	.19942	.18804	.17744	.16757	.15838	.14980	.14180
43	.24756	.23326	.21994	.20753	.19596	.18517	.17511	.16572	.15695	.14875
44	.25644	.24198	.22849	.21590	.20415	.19318	.18293	.17334	.16438	.15599
45	.26557	.25096	.23731	.22455	.21263	.20147	.19103	.18125	.17210	.16352
46	.27496	.26021	.24641	.23349	.22139	.21006	.19943	.18947	.18013	.17136
47	.28460	.26972	.25578	.24270	.23044	.21893	.20813	.19799	.18846	.17951
48	.29451	.27950	.26542	.25220	.23978	.22811	.21714	.20682	.19712	.18798
49	.30468	.28957	.27536	.26201	.24944	.23761	.22648	.21599	.20611	.19679
50	.31515	.29994	.28562	.27214	.25943	.24746	.23617	.22552	.21547	.20598
51	.32591	.31062	.29620	.28260	.26976	.25765	.24621	.23541	.22520	.21554
52	.33697	.32161	.30710	.29340	.28045	.26821	.25663	.24568	.23531	.22550
53	.34832	.33291	.31833	.30453	.29148	.27912	.26741	.25632	.24582	.23585
54	.35995	.34449	.32985	.31598	.30283	.29037	.27855	.26733	.25669	.24658
55	.37183	.35635	.34166	.32773	.31450	.30194	.29001	.27868	.26791	.25768
56	.38390	.36841	.35370	.33971	.32642	.31378	.30175	.29032	.27943	.26907
57	.39618	.38069	.36596	.35194	.33859	.32588	.31377	.30224	.29125	.28077
58	.40862	.39316	.37842	.36438	.35099	.33822	.32605	.31443	.30334	.29276
59	.42126	.40583	.39110	.37705	.36364	.35083	.33859	.32691	.31574	.30506
60	.43410	.41873	.40403	.38999	.37656	.36372	.35145	.33970	.32846	.31770
61	.44714	.43183	.41718	.40316	.38974	.37689	.36458	.35279	.34149	.33067
62	.46033	.44510	.43052	.41653	.40313	.39028	.37796	.36614	.35480	.34391
63	.47366	.45853	.44402	.43010	.41673	.40390	.39157	.37974	.36836	.35744
64	.48712	.47212	.45770	.44385	.43053	.41773	.40542	.39358	.38219	.37123
65	.50073	.48586	.47156	.45779	.44454	.43179	.41951	.40768	.39629	.38531
66	.51461	.49990	.48573	.47207	.45891	.44623	.43400	.42220	.41083	.39985
67	.52872	.51419	.50018	.48665	.47360	.46100	.44884	.43710	.42576	.41481
68	.54302	.52869	.51484	.50147	.48854	.47605	.46398	.45231	.44103	.43011
69	.55744	.54333	.52968	.51648	.50371	.49134	.47938	.46780	.45659	.44573
70	.57198	.55810	.54467	.53165	.51905	.50683	.49500	.48352	.47241	.46163

Table U(1) - Unitrust Single Life Remainder Factors
Based on Life Table 2000CM
Applicable On or After May 1, 2009

Adjusted Payout Rate

AGE	4.2%	4.4%	4.6%	4.8%	5.0%	5.2%	5.4%	5.6%	5.8%	6.0%
71	.58662	.57300	.55980	.54700	.53458	.52253	.51084	.49950	.48849	.47781
72	.60134	.58800	.57505	.56247	.55026	.53840	.52688	.51569	.50481	.49425
73	.61608	.60303	.59035	.57803	.56604	.55439	.54305	.53203	.52131	.51087
74	.63077	.61804	.60565	.59358	.58184	.57041	.55928	.54844	.53789	.52761
75	.64536	.63295	.62085	.60907	.59759	.58639	.57548	.56485	.55447	.54436
76	.65980	.64772	.63594	.62445	.61323	.60229	.59162	.58120	.57102	.56110
77	.67408	.66234	.65089	.63970	.62877	.61809	.60766	.59747	.58751	.57779
78	.68817	.67679	.66567	.65479	.64416	.63376	.62359	.61364	.60392	.59440
79	.70205	.69104	.68026	.66971	.65938	.64927	.63937	.62968	.62019	.61090
80	.71569	.70504	.69461	.68439	.67438	.66457	.65495	.64553	.63629	.62724
81	.72905	.71878	.70871	.69883	.68914	.67963	.67031	.66116	.65219	.64339
82	.74213	.73224	.72252	.71299	.70363	.69444	.68541	.67655	.66785	.65930
83	.75489	.74538	.73603	.72684	.71781	.70894	.70022	.69165	.68323	.67495
84	.76731	.75818	.74919	.74036	.73167	.72312	.71471	.70644	.69830	.69029
85	.77937	.77062	.76200	.75352	.74516	.73694	.72884	.72087	.71302	.70529
86	.79106	.78268	.77443	.76629	.75828	.75038	.74260	.73493	.72738	.71993
87	.80235	.79434	.78645	.77866	.77098	.76341	.75595	.74858	.74132	.73416
88	.81324	.80560	.79806	.79062	.78328	.77603	.76888	.76182	.75486	.74798
89	.82371	.81643	.80924	.80214	.79513	.78821	.78137	.77461	.76794	.76134
90	.83375	.82682	.81998	.81321	.80653	.79992	.79339	.78693	.78055	.77424
91	.84336	.83678	.83027	.82383	.81747	.81117	.80494	.79878	.79268	.78665
92	.85253	.84629	.84011	.83399	.82794	.82194	.81601	.81014	.80433	.79857
93	.86126	.85534	.84948	.84367	.83792	.83222	.82658	.82099	.81545	.80997
94	.86956	.86395	.85840	.85289	.84743	.84202	.83666	.83134	.82608	.82086
95	.87744	.87213	.86687	.86166	.85648	.85135	.84626	.84122	.83621	.83125
96	.88487	.87985	.87488	.86994	.86504	.86017	.85535	.85056	.84581	.84109
97	.89188	.88714	.88244	.87776	.87312	.86852	.86395	.85941	.85490	.85042
98	.89850	.89402	.88958	.88516	.88077	.87641	.87208	.86778	.86351	.85927
99	.90475	.90053	.89632	.89215	.88800	.88388	.87978	.87571	.87167	.86765
100	.91057	.90658	.90261	.89867	.89475	.89085	.88697	.88312	.87929	.87548
101	.91610	.91234	.90860	.90487	.90117	.89749	.89382	.89018	.88655	.88295
102	.92122	.91767	.91413	.91061	.90711	.90363	.90017	.89672	.89328	.88987
103	.92630	.92296	.91963	.91632	.91303	.90975	.90648	.90323	.89999	.89677
104	.93097	.92783	.92470	.92158	.91847	.91537	.91229	.90922	.90616	.90312
105	.93558	.93263	.92969	.92676	.92383	.92092	.91802	.91513	.91225	.90938
106	.94135	.93864	.93594	.93325	.93057	.92789	.92522	.92256	.91991	.91726
107	.94789	.94546	.94304	.94062	.93821	.93580	.93340	.93101	.92861	.92623
108	.95844	.95648	.95453	.95258	.95063	.94868	.94673	.94478	.94284	.94090
109	.97900	.97800	.97700	.97600	.97500	.97400	.97300	.97200	.97100	.97000

Table U(1) - Unitrust Single Life Remainder Factors
Based on Life Table 2000CM
Applicable On or After May 1, 2009

Adjusted Payout Rate

AGE	6.2%	6.4%	6.6%	6.8%	7.0%	7.2%	7.4%	7.6%	7.8%	8.0%
0	.02217	.02071	.01942	.01829	.01729	.01640	.01561	.01491	.01429	.01373
1	.01657	.01504	.01369	.01250	.01145	.01053	.00970	.00897	.00831	.00773
2	.01715	.01555	.01415	.01290	.01180	.01082	.00996	.00918	.00850	.00788
3	.01795	.01628	.01481	.01350	.01235	.01132	.01041	.00960	.00887	.00822
4	.01888	.01714	.01560	.01423	.01302	.01194	.01098	.01013	.00936	.00867
5	.01991	.01809	.01648	.01505	.01378	.01265	.01164	.01074	.00993	.00921
6	.02104	.01914	.01746	.01597	.01463	.01345	.01239	.01144	.01059	.00982
7	.02225	.02027	.01851	.01695	.01555	.01430	.01319	.01219	.01130	.01049
8	.02356	.02149	.01965	.01802	.01656	.01525	.01408	.01303	.01209	.01124
9	.02497	.02282	.02090	.01919	.01766	.01629	.01506	.01396	.01296	.01207
10	.02649	.02425	.02224	.02046	.01885	.01742	.01613	.01497	.01392	.01298
11	.02812	.02578	.02369	.02182	.02015	.01865	.01729	.01608	.01498	.01398
12	.02986	.02742	.02525	.02329	.02154	.01997	.01855	.01727	.01612	.01508
13	.03167	.02914	.02687	.02483	.02300	.02135	.01987	.01853	.01732	.01622
14	.03352	.03089	.02852	.02640	.02449	.02276	.02121	.01981	.01854	.01738
15	.03538	.03264	.03018	.02797	.02597	.02417	.02255	.02107	.01974	.01853
16	.03724	.03439	.03183	.02952	.02744	.02556	.02385	.02231	.02092	.01965
17	.03911	.03615	.03348	.03107	.02890	.02694	.02516	.02354	.02208	.02075
18	.04100	.03792	.03515	.03264	.03037	.02832	.02646	.02477	.02323	.02184
19	.04294	.03974	.03685	.03424	.03188	.02973	.02778	.02602	.02441	.02294
20	.04497	.04165	.03864	.03592	.03345	.03121	.02918	.02732	.02564	.02410
21	.04707	.04362	.04049	.03766	.03508	.03275	.03062	.02868	.02691	.02530
22	.04926	.04568	.04243	.03948	.03679	.03435	.03212	.03009	.02824	.02655
23	.05157	.04785	.04447	.04140	.03860	.03605	.03372	.03160	.02965	.02788
24	.05404	.05017	.04666	.04346	.04054	.03788	.03545	.03322	.03119	.02932
25	.05668	.05268	.04902	.04569	.04265	.03987	.03733	.03500	.03287	.03091
26	.05953	.05537	.05157	.04811	.04494	.04204	.03938	.03695	.03472	.03267
27	.06258	.05827	.05433	.05072	.04742	.04440	.04163	.03908	.03674	.03459
28	.06585	.06138	.05729	.05354	.05011	.04695	.04406	.04140	.03895	.03670
29	.06932	.06469	.06044	.05655	.05297	.04969	.04667	.04389	.04132	.03896
30	.07298	.06818	.06378	.05974	.05602	.05260	.04944	.04654	.04386	.04139
31	.07684	.07188	.06732	.06312	.05925	.05569	.05241	.04937	.04657	.04399
32	.08092	.07578	.07106	.06670	.06268	.05898	.05556	.05239	.04947	.04676
33	.08522	.07991	.07501	.07050	.06633	.06247	.05891	.05561	.05256	.04972
34	.08972	.08423	.07917	.07449	.07016	.06615	.06244	.05901	.05582	.05286

Table U(1) - Unitrust Single Life Remainder Factors
Based on Life Table 2000CM
Applicable On or After May 1, 2009

Adjusted Payout Rate

AGE	6.2%	6.4%	6.6%	6.8%	7.0%	7.2%	7.4%	7.6%	7.8%	8.0%
35	.09444	.08878	.08354	.07869	.07420	.07004	.06618	.06260	.05928	.05619
36	.09940	.09355	.08814	.08312	.07846	.07415	.07013	.06641	.06294	.05972
37	.10459	.09856	.09297	.08777	.08295	.07847	.07431	.07043	.06682	.06346
38	.11004	.10382	.09805	.09268	.08769	.08304	.07872	.07469	.07093	.06742
39	.11573	.10932	.10337	.09782	.09266	.08784	.08336	.07917	.07526	.07161
40	.12167	.11508	.10893	.10321	.09787	.09289	.08824	.08389	.07982	.07602
41	.12787	.12109	.11476	.10885	.10334	.09818	.09336	.08885	.08463	.08068
42	.13433	.12736	.12085	.11476	.10906	.10373	.09874	.09406	.08968	.08557
43	.14109	.13393	.12723	.12095	.11508	.10957	.10441	.09957	.09502	.09075
44	.14814	.14078	.13389	.12744	.12138	.11569	.11036	.10534	.10063	.09620
45	.15548	.14793	.14086	.13421	.12797	.12211	.11659	.11141	.10653	.10193
46	.16313	.15540	.14814	.14131	.13488	.12884	.12315	.11779	.11274	.10798
47	.17109	.16318	.15573	.14871	.14210	.13588	.13001	.12448	.11925	.11432
48	.17938	.17128	.16364	.15645	.14966	.14325	.13721	.13150	.12610	.12100
49	.18801	.17973	.17191	.16453	.15756	.15098	.14475	.13887	.13330	.12803
50	.19702	.18856	.18057	.17301	.16586	.15910	.15270	.14663	.14089	.13545
51	.20642	.19778	.18961	.18188	.17456	.16762	.16104	.15480	.14889	.14328
52	.21621	.20741	.19907	.19117	.18367	.17656	.16981	.16340	.15732	.15153
53	.22641	.21745	.20894	.20087	.19321	.18593	.17901	.17243	.16617	.16022
54	.23699	.22788	.21922	.21098	.20316	.19571	.18862	.18188	.17546	.16934
55	.24794	.23868	.22987	.22148	.21350	.20589	.19865	.19174	.18516	.17888
56	.25920	.24981	.24085	.23232	.22418	.21642	.20902	.20195	.19521	.18877
57	.27078	.26126	.25217	.24349	.23521	.22730	.21975	.21253	.20563	.19904
58	.28266	.27301	.26379	.25498	.24656	.23851	.23081	.22345	.21640	.20965
59	.29486	.28510	.27576	.26682	.25827	.25009	.24225	.23474	.22755	.22065
60	.30740	.29754	.28810	.27905	.27037	.26206	.25409	.24645	.23911	.23208
61	.32029	.31033	.30079	.29164	.28285	.27442	.26632	.25855	.25109	.24391
62	.33347	.32344	.31381	.30455	.29567	.28712	.27891	.27102	.26343	.25613
63	.34693	.33684	.32713	.31779	.30881	.30017	.29185	.28385	.27614	.26872
64	.36069	.35054	.34076	.33135	.32229	.31356	.30515	.29704	.28922	.28169
65	.37474	.36455	.35472	.34525	.33612	.32731	.31881	.31061	.30270	.29506
66	.38927	.37905	.36919	.35968	.35049	.34161	.33304	.32476	.31676	.30903
67	.40423	.39401	.38413	.37458	.36535	.35643	.34780	.33946	.33138	.32357
68	.41956	.40935	.39947	.38991	.38066	.37170	.36303	.35464	.34650	.33863
69	.43522	.42504	.41518	.40562	.39636	.38739	.37869	.37026	.36208	.35415
70	.45118	.44104	.43121	.42168	.41243	.40346	.39475	.38629	.37809	.37012

Table U(1) - Unitrust Single Life Remainder Factors
Based on Life Table 2000CM
Applicable On or After May 1, 2009

Adjusted Payout Rate

AGE	6.2%	6.4%	6.6%	6.8%	7.0%	7.2%	7.4%	7.6%	7.8%	8.0%
71	.46744	.45737	.44759	.43810	.42888	.41992	.41122	.40276	.39455	.38656
72	.48398	.47399	.46429	.45486	.44568	.43676	.42808	.41964	.41143	.40344
73	.50072	.49084	.48123	.47187	.46276	.45389	.44526	.43685	.42866	.42068
74	.51759	.50784	.49833	.48907	.48004	.47124	.46267	.45431	.44616	.43821
75	.53450	.52488	.51550	.50635	.49743	.48872	.48022	.47192	.46383	.45592
76	.55140	.54194	.53270	.52368	.51487	.50626	.49785	.48964	.48161	.47377
77	.56828	.55898	.54990	.54102	.53234	.52385	.51555	.50744	.49950	.49173
78	.58509	.57598	.56707	.55835	.54981	.54146	.53328	.52528	.51744	.50977
79	.60181	.59290	.58417	.57562	.56725	.55904	.55100	.54313	.53541	.52785
80	.61837	.60967	.60114	.59278	.58458	.57653	.56865	.56091	.55333	.54589
81	.63475	.62627	.61795	.60979	.60177	.59391	.58619	.57861	.57117	.56386
82	.65091	.64267	.63457	.62661	.61880	.61112	.60358	.59617	.58888	.58173
83	.66681	.65881	.65094	.64321	.63560	.62812	.62077	.61353	.60642	.59942
84	.68241	.67466	.66703	.65952	.65214	.64487	.63771	.63067	.62373	.61691
85	.69768	.69019	.68280	.67553	.66837	.66132	.65437	.64753	.64078	.63414
86	.71259	.70536	.69822	.69120	.68427	.67744	.67070	.66406	.65752	.65107
87	.72709	.72012	.71325	.70647	.69977	.69317	.68666	.68023	.67389	.66764
88	.74119	.73449	.72787	.72134	.71489	.70852	.70223	.69602	.68989	.68384
89	.75483	.74840	.74204	.73576	.72955	.72342	.71736	.71138	.70546	.69962
90	.76800	.76183	.75573	.74971	.74375	.73785	.73202	.72626	.72056	.71493
91	.78069	.77479	.76895	.76317	.75745	.75180	.74620	.74067	.73519	.72977
92	.79288	.78724	.78165	.77613	.77065	.76524	.75987	.75456	.74930	.74409
93	.80453	.79915	.79382	.78854	.78331	.77812	.77299	.76790	.76286	.75787
94	.81568	.81055	.80547	.80043	.79544	.79048	.78557	.78071	.77588	.77110
95	.82633	.82144	.81660	.81180	.80704	.80231	.79763	.79298	.78837	.78380
96	.83642	.83177	.82717	.82259	.81806	.81356	.80909	.80465	.80025	.79588
97	.84598	.84157	.83719	.83284	.82853	.82424	.81998	.81576	.81156	.80739
98	.85505	.85086	.84670	.84257	.83847	.83439	.83034	.82631	.82232	.81835
99	.86365	.85968	.85573	.85181	.84791	.84404	.84019	.83636	.83255	.82877
100	.87169	.86792	.86418	.86045	.85675	.85307	.84941	.84577	.84215	.83855
101	.87936	.87579	.87224	.86871	.86520	.86171	.85823	.85477	.85133	.84791
102	.88647	.88309	.87972	.87637	.87304	.86972	.86642	.86313	.85986	.85660
103	.89356	.89036	.88718	.88402	.88086	.87772	.87460	.87149	.86839	.86531
104	.90008	.89706	.89405	.89105	.88807	.88509	.88213	.87918	.87624	.87331
105	.90652	.90366	.90082	.89799	.89517	.89236	.88955	.88676	.88398	.88120
106	.91462	.91199	.90937	.90675	.90414	.90154	.89895	.89636	.89378	.89121
107	.92385	.92147	.91910	.91673	.91437	.91201	.90966	.90731	.90497	.90263
108	.93896	.93702	.93509	.93316	.93123	.92930	.92737	.92544	.92352	.92160
109	.96900	.96800	.96700	.96600	.96500	.96400	.96300	.96200	.96100	.96000

Table U(1) - Unitrust Single Life Remainder Factors
Based on Life Table 2000CM
Applicable On or After May 1, 2009

Adjusted Payout Rate

AGE	8.2%	8.4%	8.6%	8.8%	9.0%	9.2%	9.4%	9.6%	9.8%	10.0%
0	.01323	.01279	.01238	.01202	.01169	.01139	.01112	.01088	.01065	.01044
1	.00721	.00674	.00632	.00594	.00559	.00528	.00500	.00474	.00451	.00430
2	.00733	.00683	.00639	.00598	.00562	.00529	.00499	.00472	.00447	.00425
3	.00764	.00711	.00664	.00622	.00583	.00548	.00516	.00487	.00461	.00437
4	.00806	.00750	.00700	.00655	.00614	.00577	.00543	.00513	.00485	.00459
5	.00856	.00797	.00744	.00696	.00653	.00614	.00578	.00545	.00515	.00488
6	.00914	.00852	.00795	.00745	.00699	.00657	.00619	.00584	.00552	.00523
7	.00976	.00911	.00851	.00798	.00749	.00704	.00664	.00627	.00593	.00562
8	.01047	.00978	.00915	.00858	.00806	.00759	.00716	.00677	.00640	.00607
9	.01126	.01053	.00986	.00926	.00871	.00821	.00775	.00734	.00695	.00660
10	.01213	.01136	.01065	.01002	.00944	.00891	.00842	.00798	.00757	.00720
11	.01309	.01227	.01153	.01086	.01024	.00968	.00917	.00870	.00827	.00787
12	.01413	.01327	.01249	.01178	.01113	.01054	.00999	.00950	.00904	.00862
13	.01523	.01432	.01350	.01275	.01206	.01144	.01086	.01034	.00985	.00940
14	.01634	.01539	.01452	.01373	.01301	.01235	.01174	.01118	.01067	.01020
15	.01743	.01643	.01552	.01469	.01393	.01323	.01259	.01200	.01146	.01096
16	.01849	.01744	.01648	.01561	.01480	.01407	.01339	.01277	.01220	.01167
17	.01953	.01843	.01742	.01650	.01565	.01488	.01416	.01351	.01290	.01235
18	.02056	.01940	.01834	.01737	.01648	.01566	.01491	.01422	.01358	.01299
19	.02160	.02038	.01927	.01824	.01730	.01644	.01565	.01492	.01424	.01362
20	.02270	.02141	.02024	.01916	.01817	.01726	.01642	.01565	.01494	.01428
21	.02382	.02247	.02124	.02010	.01906	.01810	.01721	.01640	.01565	.01495
22	.02500	.02358	.02228	.02108	.01998	.01897	.01803	.01717	.01638	.01564
23	.02625	.02476	.02339	.02213	.02097	.01990	.01891	.01800	.01716	.01638
24	.02761	.02604	.02460	.02327	.02205	.02092	.01988	.01891	.01802	.01719
25	.02912	.02747	.02595	.02455	.02326	.02206	.02096	.01994	.01900	.01812
26	.03078	.02904	.02744	.02597	.02461	.02335	.02218	.02110	.02010	.01917
27	.03261	.03079	.02910	.02755	.02611	.02478	.02355	.02241	.02135	.02037
28	.03462	.03270	.03093	.02929	.02778	.02637	.02507	.02387	.02274	.02170
29	.03678	.03477	.03291	.03118	.02959	.02811	.02673	.02546	.02427	.02316
30	.03910	.03699	.03503	.03322	.03154	.02997	.02852	.02717	.02592	.02475
31	.04159	.03937	.03731	.03541	.03364	.03199	.03046	.02903	.02770	.02646
32	.04425	.04192	.03976	.03776	.03589	.03416	.03254	.03104	.02963	.02832
33	.04710	.04466	.04239	.04029	.03832	.03650	.03479	.03320	.03172	.03033
34	.05011	.04756	.04518	.04297	.04090	.03898	.03718	.03551	.03394	.03247

Table U(1) - Unitrust Single Life Remainder Factors
Based on Life Table 2000CM
Applicable On or After May 1, 2009

Adjusted Payout Rate

AGE	8.2%	8.4%	8.6%	8.8%	9.0%	9.2%	9.4%	9.6%	9.8%	10.0%
35	.05331	.05064	.04815	.04582	.04366	.04163	.03974	.03798	.03632	.03477
36	.05671	.05391	.05130	.04887	.04659	.04446	.04247	.04061	.03887	.03723
37	.06032	.05739	.05466	.05210	.04972	.04748	.04539	.04343	.04159	.03986
38	.06415	.06109	.05823	.05556	.05305	.05070	.04850	.04644	.04450	.04268
39	.06819	.06500	.06201	.05921	.05658	.05412	.05181	.04964	.04760	.04568
40	.07246	.06913	.06601	.06308	.06033	.05774	.05532	.05304	.05089	.04887
41	.07697	.07349	.07023	.06717	.06429	.06158	.05904	.05664	.05439	.05226
42	.08171	.07809	.07469	.07149	.06848	.06564	.06298	.06046	.05809	.05585
43	.08674	.08297	.07942	.07608	.07293	.06997	.06717	.06453	.06204	.05969
44	.09203	.08810	.08441	.08092	.07764	.07454	.07161	.06885	.06624	.06377
45	.09760	.09352	.08967	.08604	.08261	.07938	.07632	.07342	.07068	.06809
46	.10348	.09925	.09524	.09146	.08789	.08451	.08131	.07828	.07542	.07270
47	.10967	.10527	.10111	.09717	.09345	.08992	.08659	.08342	.08042	.07757
48	.11618	.11161	.10730	.10321	.09933	.09566	.09217	.08887	.08573	.08275
49	.12304	.11831	.11383	.10958	.10555	.10173	.09810	.09465	.09137	.08825
50	.13029	.12540	.12076	.11635	.11216	.10818	.10440	.10081	.09739	.09413
51	.13795	.13289	.12808	.12351	.11917	.11504	.11110	.10736	.10379	.10040
52	.14604	.14081	.13584	.13111	.12661	.12232	.11823	.11434	.11062	.10708
53	.15456	.14917	.14404	.13914	.13448	.13004	.12580	.12175	.11789	.11420
54	.16352	.15796	.15266	.14761	.14279	.13819	.13379	.12959	.12558	.12175
55	.17289	.16717	.16171	.15650	.15152	.14676	.14221	.13786	.13370	.12971
56	.18262	.17674	.17113	.16576	.16062	.15570	.15100	.14650	.14218	.13805
57	.19273	.18669	.18092	.17539	.17010	.16503	.16017	.15552	.15105	.14677
58	.20319	.19700	.19107	.18539	.17994	.17472	.16971	.16490	.16029	.15586
59	.21404	.20770	.20162	.19579	.19019	.18481	.17965	.17470	.16993	.16535
60	.22532	.21884	.21261	.20663	.20088	.19536	.19005	.18494	.18003	.17530
61	.23702	.23040	.22403	.21790	.21201	.20634	.20089	.19564	.19058	.18571
62	.24911	.24235	.23584	.22958	.22355	.21774	.21214	.20674	.20154	.19653
63	.26157	.25468	.24805	.24165	.23548	.22954	.22380	.21827	.21293	.20777
64	.27442	.26742	.26065	.25413	.24783	.24175	.23588	.23021	.22474	.21944
65	.28768	.28056	.27368	.26703	.26061	.25441	.24841	.24261	.23700	.23158
66	.30156	.29433	.28735	.28059	.27405	.26773	.26161	.25569	.24995	.24440
67	.31601	.30870	.30161	.29476	.28812	.28169	.27545	.26942	.26357	.25790
68	.33100	.32360	.31643	.30949	.30275	.29622	.28989	.28375	.27779	.27201
69	.34646	.33900	.33177	.32474	.31793	.31131	.30489	.29865	.29259	.28671
70	.36239	.35488	.34758	.34049	.33361	.32692	.32041	.31409	.30795	.30197

Table U(1) - Unitrust Single Life Remainder Factors
Based on Life Table 2000CM
Applicable On or After May 1, 2009

Adjusted Payout Rate

AGE	8.2%	8.4%	8.6%	8.8%	9.0%	9.2%	9.4%	9.6%	9.8%	10.0%
71	.37880	.37125	.36391	.35677	.34983	.34308	.33651	.33011	.32389	.31784
72	.39566	.38809	.38073	.37355	.36657	.35977	.35315	.34670	.34041	.33429
73	.41291	.40534	.39796	.39077	.38376	.37693	.37027	.36377	.35744	.35126
74	.43046	.42290	.41552	.40833	.40131	.39446	.38778	.38125	.37489	.36867
75	.44821	.44068	.43332	.42614	.41913	.41227	.40558	.39904	.39266	.38641
76	.46611	.45862	.45130	.44415	.43715	.43031	.42363	.41709	.41069	.40444
77	.48414	.47671	.46944	.46233	.45537	.44856	.44189	.43536	.42898	.42272
78	.50226	.49490	.48770	.48065	.47374	.46697	.46034	.45384	.44747	.44123
79	.52043	.51317	.50604	.49906	.49222	.48551	.47892	.47247	.46614	.45993
80	.53859	.53142	.52440	.51750	.51074	.50410	.49758	.49118	.48491	.47874
81	.55669	.54964	.54273	.53593	.52926	.52271	.51627	.50995	.50373	.49763
82	.57469	.56778	.56099	.55431	.54774	.54129	.53494	.52871	.52257	.51654
83	.59254	.58577	.57911	.57256	.56612	.55978	.55354	.54740	.54136	.53541
84	.61019	.60358	.59706	.59065	.58434	.57812	.57200	.56597	.56003	.55419
85	.62759	.62114	.61479	.60853	.60236	.59628	.59028	.58438	.57856	.57282
86	.64470	.63843	.63224	.62614	.62012	.61419	.60833	.60256	.59687	.59125
87	.66146	.65537	.64936	.64342	.63757	.63179	.62608	.62045	.61489	.60941
88	.67786	.67196	.66613	.66037	.65469	.64907	.64352	.63804	.63263	.62728
89	.69384	.68813	.68249	.67691	.67140	.66595	.66057	.65525	.64999	.64479
90	.70936	.70385	.69840	.69301	.68768	.68241	.67719	.67204	.66693	.66189
91	.72440	.71909	.71384	.70864	.70349	.69840	.69336	.68837	.68344	.67855
92	.73894	.73383	.72878	.72377	.71881	.71390	.70904	.70422	.69945	.69473
93	.75292	.74801	.74316	.73834	.73357	.72885	.72416	.71952	.71492	.71037
94	.76636	.76166	.75700	.75238	.74780	.74326	.73876	.73429	.72986	.72547
95	.77926	.77476	.77030	.76587	.76148	.75712	.75280	.74851	.74426	.74004
96	.79155	.78725	.78298	.77874	.77453	.77036	.76622	.76210	.75802	.75397
97	.80325	.79915	.79507	.79101	.78699	.78300	.77903	.77509	.77117	.76729
98	.81440	.81048	.80659	.80272	.79887	.79505	.79126	.78749	.78375	.78002
99	.82502	.82128	.81757	.81388	.81021	.80656	.80294	.79934	.79576	.79220
100	.83497	.83141	.82788	.82436	.82086	.81738	.81392	.81048	.80706	.80365
101	.84451	.84112	.83776	.83441	.83107	.82776	.82446	.82117	.81791	.81466
102	.85337	.85014	.84693	.84374	.84056	.83740	.83425	.83112	.82800	.82490
103	.86223	.85918	.85613	.85310	.85008	.84708	.84409	.84111	.83814	.83519
104	.87040	.86749	.86460	.86172	.85885	.85599	.85314	.85030	.84748	.84466
105	.87844	.87568	.87294	.87020	.86748	.86476	.86205	.85935	.85666	.85398
106	.88865	.88609	.88354	.88100	.87846	.87594	.87341	.87090	.86839	.86590
107	.90030	.89797	.89565	.89333	.89102	.88871	.88641	.88411	.88181	.87952
108	.91968	.91776	.91585	.91394	.91203	.91012	.90821	.90630	.90440	.90250
109	.95900	.95800	.95700	.95600	.95500	.95400	.95300	.95200	.95100	.95000

Table U(1) - Unitrust Single Life Remainder Factors
Based on Life Table 2000CM
Applicable On or After May 1, 2009

Adjusted Payout Rate

AGE	10.2%	10.4%	10.6%	10.8%	11.0%	11.2%	11.4%	11.6%	11.8%	12.0%
0	.01025	.01008	.00992	.00977	.00963	.00950	.00938	.00927	.00917	.00907
1	.00410	.00392	.00376	.00361	.00347	.00334	.00322	.00310	.00300	.00290
2	.00404	.00385	.00367	.00351	.00336	.00322	.00310	.00298	.00287	.00276
3	.00415	.00394	.00376	.00359	.00343	.00328	.00314	.00301	.00290	.00279
4	.00435	.00414	.00394	.00375	.00358	.00342	.00328	.00314	.00302	.00290
5	.00463	.00439	.00418	.00398	.00380	.00363	.00348	.00333	.00319	.00307
6	.00496	.00471	.00448	.00427	.00408	.00390	.00373	.00357	.00343	.00329
7	.00533	.00507	.00483	.00460	.00439	.00420	.00402	.00385	.00369	.00355
8	.00577	.00549	.00523	.00499	.00476	.00456	.00436	.00418	.00402	.00386
9	.00627	.00598	.00570	.00544	.00520	.00498	.00478	.00458	.00440	.00423
10	.00685	.00653	.00624	.00596	.00571	.00547	.00525	.00505	.00485	.00467
11	.00750	.00716	.00685	.00656	.00629	.00603	.00580	.00558	.00537	.00518
12	.00823	.00787	.00753	.00722	.00693	.00667	.00642	.00618	.00596	.00576
13	.00899	.00861	.00826	.00793	.00762	.00734	.00707	.00682	.00659	.00637
14	.00976	.00935	.00898	.00863	.00831	.00801	.00772	.00746	.00722	.00698
15	.01050	.01007	.00967	.00931	.00896	.00864	.00835	.00807	.00781	.00756
16	.01118	.01073	.01031	.00992	.00956	.00922	.00891	.00861	.00834	.00808
17	.01183	.01135	.01091	.01050	.01011	.00976	.00942	.00911	.00882	.00855
18	.01244	.01194	.01147	.01104	.01063	.01025	.00990	.00957	.00926	.00897
19	.01304	.01251	.01202	.01156	.01113	.01073	.01035	.01001	.00968	.00937
20	.01367	.01311	.01258	.01209	.01164	.01122	.01082	.01045	.01011	.00978
21	.01430	.01371	.01315	.01263	.01215	.01171	.01129	.01090	.01053	.01019
22	.01496	.01432	.01373	.01319	.01268	.01220	.01176	.01134	.01095	.01059
23	.01565	.01498	.01436	.01377	.01323	.01273	.01225	.01181	.01140	.01101
24	.01642	.01571	.01505	.01443	.01386	.01332	.01282	.01235	.01191	.01149
25	.01731	.01655	.01585	.01519	.01458	.01401	.01347	.01297	.01250	.01206
26	.01831	.01751	.01676	.01606	.01541	.01480	.01423	.01370	.01320	.01273
27	.01945	.01860	.01780	.01706	.01637	.01572	.01511	.01454	.01401	.01351
28	.02073	.01982	.01898	.01819	.01745	.01676	.01611	.01551	.01494	.01440
29	.02213	.02117	.02027	.01943	.01865	.01791	.01722	.01658	.01597	.01540
30	.02365	.02263	.02168	.02079	.01995	.01917	.01844	.01775	.01710	.01649
31	.02531	.02422	.02321	.02226	.02138	.02054	.01976	.01902	.01833	.01768
32	.02709	.02595	.02487	.02387	.02292	.02204	.02120	.02042	.01968	.01899
33	.02903	.02782	.02668	.02561	.02461	.02366	.02278	.02194	.02116	.02041
34	.03110	.02981	.02860	.02747	.02640	.02540	.02446	.02357	.02273	.02194

Table U(1) - Unitrust Single Life Remainder Factors
Based on Life Table 2000CM
Applicable On or After May 1, 2009

Adjusted Payout Rate

AGE	10.2%	10.4%	10.6%	10.8%	11.0%	11.2%	11.4%	11.6%	11.8%	12.0%
35	.03332	.03195	.03067	.02947	.02834	.02728	.02627	.02533	.02444	.02359
36	.03569	.03425	.03290	.03162	.03042	.02929	.02823	.02722	.02627	.02537
37	.03824	.03671	.03528	.03393	.03266	.03146	.03032	.02925	.02824	.02729
38	.04097	.03936	.03784	.03641	.03506	.03379	.03259	.03145	.03037	.02936
39	.04387	.04217	.04057	.03905	.03763	.03628	.03500	.03380	.03265	.03157
40	.04696	.04517	.04347	.04187	.04036	.03893	.03758	.03630	.03509	.03394
41	.05025	.04836	.04657	.04488	.04328	.04177	.04034	.03898	.03769	.03647
42	.05374	.05174	.04986	.04807	.04638	.04478	.04326	.04183	.04046	.03917
43	.05747	.05537	.05338	.05150	.04971	.04802	.04641	.04489	.04344	.04207
44	.06143	.05922	.05712	.05514	.05325	.05147	.04977	.04816	.04663	.04517
45	.06564	.06331	.06111	.05901	.05703	.05514	.05335	.05164	.05002	.04848
46	.07012	.06768	.06536	.06315	.06106	.05907	.05718	.05538	.05366	.05203
47	.07487	.07231	.06987	.06755	.06535	.06325	.06125	.05935	.05754	.05581
48	.07992	.07723	.07467	.07223	.06991	.06770	.06560	.06359	.06168	.05985
49	.08529	.08247	.07978	.07722	.07479	.07246	.07024	.06813	.06611	.06418
50	.09103	.08808	.08526	.08258	.08002	.07757	.07524	.07301	.07088	.06885
51	.09716	.09407	.09112	.08831	.08562	.08306	.08060	.07826	.07601	.07387
52	.10370	.10047	.09739	.09445	.09163	.08894	.08637	.08390	.08154	.07928
53	.11068	.10731	.10409	.10101	.09806	.09524	.09254	.08996	.08748	.08510
54	.11808	.11457	.11121	.10800	.10492	.10197	.09914	.09642	.09382	.09133
55	.12590	.12225	.11875	.11540	.11218	.10910	.10614	.10330	.10057	.09795
56	.13409	.13029	.12665	.12316	.11981	.11659	.11350	.11053	.10768	.10493
57	.14266	.13872	.13494	.13130	.12781	.12446	.12123	.11813	.11515	.11228
58	.15160	.14751	.14359	.13981	.13618	.13269	.12933	.12609	.12298	.11998
59	.16095	.15672	.15264	.14873	.14495	.14132	.13783	.13446	.13121	.12808
60	.17076	.16638	.16216	.15810	.15419	.15042	.14678	.14328	.13990	.13663
61	.18101	.17649	.17213	.16793	.16388	.15997	.15619	.15255	.14904	.14564
62	.19169	.18703	.18253	.17818	.17399	.16994	.16603	.16225	.15860	.15507
63	.20279	.19799	.19335	.18886	.18453	.18034	.17629	.17238	.16859	.16493
64	.21433	.20939	.20461	.19998	.19551	.19119	.18700	.18295	.17903	.17523
65	.22633	.22125	.21633	.21158	.20697	.20251	.19819	.19400	.18994	.18601
66	.23903	.23382	.22877	.22388	.21914	.21455	.21010	.20578	.20159	.19752
67	.25240	.24707	.24190	.23688	.23202	.22730	.22271	.21827	.21395	.20975
68	.26640	.26095	.25566	.25053	.24554	.24070	.23600	.23143	.22698	.22267
69	.28099	.27544	.27004	.26480	.25970	.25474	.24992	.24523	.24067	.23623
70	.29616	.29051	.28501	.27966	.27446	.26939	.26446	.25966	.25499	.25044

Table U(1) - Unitrust Single Life Remainder Factors
Based on Life Table 2000CM
Applicable On or After May 1, 2009

Adjusted Payout Rate

AGE	10.2%	10.4%	10.6%	10.8%	11.0%	11.2%	11.4%	11.6%	11.8%	12.0%
71	.31194	.30620	.30062	.29517	.28987	.28471	.27968	.27478	.27000	.26534
72	.32833	.32251	.31684	.31132	.30593	.30068	.29556	.29057	.28569	.28094
73	.34524	.33936	.33363	.32804	.32258	.31725	.31205	.30697	.30201	.29717
74	.36260	.35667	.35089	.34523	.33971	.33432	.32905	.32390	.31887	.31395
75	.38031	.37435	.36852	.36282	.35725	.35180	.34647	.34126	.33617	.33118
76	.39832	.39233	.38647	.38074	.37513	.36964	.36427	.35901	.35386	.34882
77	.41660	.41060	.40473	.39898	.39335	.38783	.38242	.37713	.37194	.36685
78	.43512	.42913	.42326	.41750	.41186	.40632	.40090	.39558	.39036	.38524
79	.45384	.44787	.44201	.43626	.43062	.42509	.41966	.41432	.40909	.40396
80	.47269	.46675	.46092	.45519	.44957	.44404	.43862	.43329	.42806	.42291
81	.49163	.48574	.47994	.47425	.46866	.46316	.45775	.45244	.44722	.44208
82	.51061	.50478	.49904	.49340	.48784	.48238	.47701	.47173	.46653	.46141
83	.52956	.52380	.51813	.51255	.50705	.50165	.49632	.49108	.48592	.48083
84	.54843	.54275	.53716	.53166	.52623	.52089	.51562	.51044	.50532	.50029
85	.56716	.56159	.55609	.55067	.54533	.54006	.53487	.52975	.52470	.51972
86	.58571	.58024	.57485	.56953	.56428	.55910	.55399	.54894	.54397	.53906
87	.60399	.59864	.59337	.58815	.58301	.57793	.57291	.56795	.56306	.55823
88	.62200	.61678	.61162	.60653	.60150	.59653	.59161	.58676	.58196	.57722
89	.63965	.63457	.62954	.62458	.61967	.61481	.61001	.60526	.60057	.59593
90	.65690	.65196	.64707	.64224	.63746	.63273	.62805	.62342	.61884	.61431
91	.67371	.66892	.66418	.65949	.65485	.65025	.64570	.64119	.63673	.63231
92	.69005	.68542	.68083	.67628	.67178	.66732	.66290	.65852	.65419	.64989
93	.70585	.70137	.69694	.69254	.68819	.68387	.67959	.67534	.67114	.66697
94	.72112	.71681	.71253	.70828	.70407	.69990	.69576	.69166	.68759	.68355
95	.73585	.73170	.72758	.72349	.71943	.71541	.71141	.70745	.70352	.69961
96	.74995	.74595	.74199	.73806	.73415	.73027	.72642	.72260	.71881	.71505
97	.76343	.75960	.75579	.75201	.74826	.74453	.74083	.73715	.73350	.72987
98	.77633	.77265	.76900	.76538	.76177	.75819	.75463	.75110	.74759	.74410
99	.78866	.78514	.78165	.77817	.77472	.77129	.76787	.76448	.76111	.75775
100	.80027	.79690	.79356	.79023	.78692	.78363	.78036	.77710	.77386	.77065
101	.81143	.80821	.80502	.80183	.79867	.79552	.79239	.78927	.78617	.78308
102	.82181	.81874	.81568	.81264	.80961	.80659	.80359	.80060	.79763	.79467
103	.83225	.82933	.82641	.82351	.82062	.81774	.81488	.81203	.80919	.80636
104	.84186	.83907	.83629	.83351	.83076	.82801	.82527	.82254	.81982	.81712
105	.85131	.84865	.84600	.84336	.84072	.83810	.83548	.83288	.83028	.82769
106	.86340	.86092	.85844	.85597	.85351	.85105	.84860	.84616	.84372	.84130
107	.87724	.87496	.87268	.87041	.86815	.86589	.86363	.86138	.85914	.85690
108	.90060	.89870	.89681	.89492	.89303	.89114	.88925	.88736	.88548	.88360
109	.94900	.94800	.94700	.94600	.94500	.94400	.94300	.94200	.94100	.94000

Table U(1) - Unitrust Single Life Remainder Factors
Based on Life Table 2000CM
Applicable On or After May 1, 2009

Adjusted Payout Rate

AGE	12.2%	12.4%	12.6%	12.8%	13.0%	13.2%	13.4%	13.6%	13.8%	14.0%
0	.00898	.00889	.00881	.00873	.00866	.00859	.00853	.00846	.00840	.00835
1	.00281	.00273	.00265	.00257	.00250	.00244	.00237	.00232	.00226	.00221
2	.00267	.00258	.00249	.00241	.00234	.00227	.00220	.00214	.00208	.00202
3	.00268	.00259	.00249	.00241	.00233	.00225	.00218	.00212	.00205	.00199
4	.00279	.00268	.00258	.00249	.00241	.00233	.00225	.00218	.00211	.00205
5	.00295	.00284	.00273	.00263	.00254	.00245	.00237	.00229	.00222	.00215
6	.00316	.00304	.00293	.00283	.00273	.00263	.00254	.00246	.00238	.00230
7	.00341	.00328	.00316	.00305	.00294	.00284	.00274	.00265	.00256	.00248
8	.00371	.00357	.00344	.00332	.00320	.00310	.00299	.00289	.00280	.00271
9	.00408	.00393	.00379	.00366	.00353	.00341	.00330	.00320	.00310	.00300
10	.00450	.00434	.00419	.00405	.00392	.00379	.00367	.00356	.00345	.00335
11	.00500	.00483	.00467	.00452	.00438	.00424	.00411	.00399	.00387	.00376
12	.00557	.00538	.00521	.00505	.00490	.00476	.00462	.00449	.00436	.00425
13	.00617	.00597	.00579	.00562	.00546	.00531	.00516	.00502	.00489	.00477
14	.00677	.00656	.00637	.00619	.00602	.00585	.00570	.00555	.00541	.00528
15	.00733	.00712	.00691	.00672	.00654	.00636	.00620	.00605	.00590	.00576
16	.00784	.00761	.00739	.00719	.00700	.00681	.00664	.00648	.00632	.00618
17	.00829	.00805	.00782	.00761	.00741	.00721	.00703	.00686	.00670	.00654
18	.00870	.00845	.00821	.00798	.00777	.00756	.00737	.00719	.00702	.00685
19	.00909	.00882	.00856	.00832	.00810	.00788	.00768	.00749	.00731	.00713
20	.00948	.00919	.00892	.00867	.00843	.00821	.00799	.00779	.00760	.00741
21	.00986	.00956	.00927	.00901	.00875	.00851	.00829	.00807	.00787	.00767
22	.01024	.00992	.00962	.00933	.00906	.00881	.00857	.00834	.00813	.00792
23	.01065	.01030	.00998	.00968	.00939	.00912	.00887	.00862	.00839	.00818
24	.01110	.01074	.01040	.01007	.00977	.00948	.00921	.00895	.00870	.00847
25	.01165	.01126	.01089	.01055	.01022	.00991	.00962	.00934	.00908	.00884
26	.01228	.01187	.01148	.01111	.01076	.01043	.01012	.00982	.00955	.00928
27	.01303	.01259	.01217	.01178	.01140	.01105	.01072	.01040	.01010	.00982
28	.01390	.01342	.01297	.01255	.01215	.01178	.01142	.01108	.01076	.01046
29	.01486	.01435	.01387	.01342	.01299	.01259	.01221	.01185	.01150	.01117
30	.01591	.01537	.01486	.01437	.01392	.01348	.01307	.01269	.01232	.01197
31	.01707	.01649	.01594	.01542	.01493	.01447	.01403	.01361	.01322	.01284
32	.01833	.01771	.01713	.01657	.01605	.01555	.01508	.01464	.01421	.01381
33	.01971	.01905	.01843	.01784	.01728	.01674	.01624	.01576	.01531	.01487
34	.02119	.02049	.01982	.01919	.01859	.01802	.01748	.01697	.01648	.01602

Table U(1) - Unitrust Single Life Remainder Factors
Based on Life Table 2000CM
Applicable On or After May 1, 2009

Adjusted Payout Rate

AGE	12.2%	12.4%	12.6%	12.8%	13.0%	13.2%	13.4%	13.6%	13.8%	14.0%
35	.02280	.02204	.02133	.02065	.02001	.01940	.01883	.01828	.01775	.01726
36	.02452	.02372	.02296	.02224	.02155	.02090	.02028	.01969	.01913	.01860
37	.02638	.02553	.02471	.02394	.02321	.02252	.02185	.02123	.02063	.02006
38	.02839	.02748	.02661	.02579	.02501	.02427	.02356	.02289	.02225	.02164
39	.03055	.02957	.02865	.02777	.02694	.02615	.02539	.02467	.02399	.02333
40	.03285	.03181	.03083	.02990	.02901	.02816	.02735	.02658	.02585	.02515
41	.03531	.03421	.03316	.03217	.03122	.03032	.02946	.02863	.02785	.02710
42	.03793	.03676	.03565	.03459	.03358	.03262	.03170	.03082	.02999	.02919
43	.04076	.03952	.03833	.03721	.03613	.03510	.03413	.03319	.03230	.03144
44	.04378	.04246	.04120	.04000	.03886	.03777	.03672	.03573	.03477	.03386
45	.04701	.04561	.04427	.04299	.04178	.04062	.03950	.03844	.03743	.03645
46	.05047	.04898	.04757	.04621	.04492	.04368	.04250	.04137	.04029	.03925
47	.05416	.05258	.05108	.04964	.04827	.04696	.04570	.04449	.04334	.04224
48	.05810	.05644	.05484	.05332	.05186	.05047	.04913	.04785	.04662	.04545
49	.06233	.06057	.05888	.05727	.05572	.05424	.05282	.05146	.05016	.04890
50	.06690	.06503	.06325	.06154	.05990	.05833	.05683	.05538	.05399	.05266
51	.07181	.06984	.06796	.06615	.06442	.06275	.06116	.05962	.05815	.05673
52	.07712	.07504	.07305	.07114	.06931	.06755	.06585	.06423	.06267	.06116
53	.08282	.08063	.07853	.07652	.07458	.07272	.07093	.06921	.06756	.06596
54	.08893	.08663	.08442	.08229	.08025	.07829	.07640	.07458	.07283	.07114
55	.09544	.09302	.09070	.08846	.08631	.08424	.08224	.08032	.07847	.07669
56	.10230	.09976	.09732	.09497	.09270	.09052	.08842	.08639	.08444	.08256
57	.10952	.10686	.10430	.10183	.09945	.09716	.09495	.09281	.09075	.08877
58	.11709	.11431	.11162	.10904	.10654	.10413	.10181	.09956	.09739	.09530
59	.12506	.12215	.11934	.11663	.11402	.11149	.10905	.10669	.10441	.10221
60	.13349	.13045	.12751	.12468	.12194	.11929	.11674	.11426	.11187	.10955
61	.14236	.13919	.13613	.13317	.13031	.12754	.12486	.12227	.11976	.11733
62	.15166	.14836	.14517	.14208	.13909	.13620	.13340	.13069	.12806	.12551
63	.16138	.15795	.15463	.15141	.14830	.14528	.14235	.13952	.13677	.13410
64	.17155	.16799	.16453	.16119	.15794	.15480	.15175	.14879	.14592	.14313
65	.18220	.17850	.17492	.17144	.16806	.16479	.16161	.15853	.15553	.15262
66	.19358	.18975	.18604	.18243	.17893	.17552	.17222	.16901	.16589	.16285
67	.20568	.20173	.19788	.19415	.19052	.18699	.18356	.18022	.17698	.17382
68	.21847	.21439	.21042	.20656	.20280	.19915	.19560	.19213	.18877	.18549
69	.23191	.22771	.22362	.21964	.21577	.21199	.20831	.20473	.20124	.19784
70	.24601	.24169	.23748	.23339	.22939	.22550	.22171	.21801	.21440	.21088

Table U(1) - Unitrust Single Life Remainder Factors
Based on Life Table 2000CM
Applicable On or After May 1, 2009

Adjusted Payout Rate

AGE	12.2%	12.4%	12.6%	12.8%	13.0%	13.2%	13.4%	13.6%	13.8%	14.0%
71	.26080	.25638	.25206	.24785	.24375	.23974	.23584	.23202	.22830	.22467
72	.27630	.27178	.26736	.26305	.25884	.25473	.25071	.24679	.24296	.23922
73	.29244	.28782	.28331	.27890	.27460	.27039	.26628	.26226	.25833	.25449
74	.30914	.30444	.29984	.29535	.29096	.28666	.28245	.27834	.27432	.27038
75	.32630	.32153	.31686	.31229	.30782	.30344	.29915	.29496	.29085	.28682
76	.34389	.33905	.33432	.32968	.32514	.32069	.31633	.31205	.30787	.30376
77	.36187	.35698	.35220	.34750	.34290	.33839	.33396	.32963	.32537	.32120
78	.38022	.37530	.37047	.36573	.36108	.35652	.35204	.34765	.34333	.33910
79	.39891	.39396	.38910	.38433	.37965	.37504	.37053	.36609	.36173	.35744
80	.41786	.41290	.40802	.40323	.39852	.39389	.38934	.38486	.38047	.37615
81	.43703	.43207	.42719	.42238	.41766	.41302	.40845	.40395	.39953	.39518
82	.45638	.45143	.44655	.44175	.43703	.43238	.42781	.42330	.41887	.41450
83	.47583	.47090	.46604	.46126	.45655	.45191	.44734	.44284	.43840	.43403
84	.49532	.49043	.48561	.48085	.47617	.47155	.46700	.46251	.45808	.45372
85	.51480	.50996	.50518	.50047	.49582	.49124	.48671	.48225	.47785	.47351
86	.53421	.52943	.52470	.52004	.51544	.51090	.50642	.50200	.49763	.49332
87	.55346	.54875	.54409	.53950	.53496	.53047	.52604	.52167	.51734	.51307
88	.57254	.56791	.56333	.55881	.55434	.54992	.54555	.54124	.53697	.53275
89	.59134	.58680	.58231	.57788	.57349	.56914	.56485	.56060	.55640	.55225
90	.60982	.60538	.60099	.59665	.59234	.58809	.58388	.57971	.57558	.57150
91	.62794	.62361	.61932	.61508	.61087	.60671	.60259	.59851	.59447	.59046
92	.64564	.64142	.63725	.63311	.62901	.62495	.62093	.61694	.61299	.60907
93	.66284	.65874	.65468	.65066	.64667	.64272	.63880	.63491	.63106	.62724
94	.67955	.67558	.67164	.66773	.66386	.66002	.65621	.65243	.64868	.64496
95	.69574	.69190	.68809	.68431	.68055	.67683	.67313	.66946	.66582	.66221
96	.71131	.70760	.70391	.70025	.69662	.69302	.68944	.68588	.68235	.67885
97	.72626	.72268	.71913	.71560	.71209	.70861	.70515	.70171	.69829	.69490
98	.74063	.73718	.73376	.73035	.72697	.72361	.72027	.71695	.71365	.71037
99	.75442	.75111	.74781	.74454	.74128	.73804	.73483	.73163	.72844	.72528
100	.76744	.76426	.76109	.75794	.75481	.75169	.74860	.74551	.74245	.73940
101	.78001	.77695	.77392	.77089	.76788	.76489	.76191	.75895	.75600	.75306
102	.79172	.78879	.78587	.78297	.78008	.77720	.77434	.77149	.76865	.76582
103	.80354	.80074	.79795	.79517	.79240	.78965	.78690	.78417	.78145	.77874
104	.81442	.81174	.80906	.80640	.80374	.80110	.79847	.79584	.79323	.79063
105	.82511	.82254	.81998	.81742	.81488	.81234	.80982	.80730	.80479	.80229
106	.83887	.83646	.83405	.83165	.82926	.82687	.82449	.82212	.81975	.81739
107	.85466	.85243	.85020	.84798	.84576	.84355	.84134	.83914	.83694	.83474
108	.88172	.87984	.87797	.87610	.87423	.87236	.87049	.86862	.86676	.86490
109	.93900	.93800	.93700	.93600	.93500	.93400	.93300	.93200	.93100	.93000

(7) ***Applicability dates.*** Paragraphs (g)(1) through (6) of this section apply on and after May 1, 2009, and before June 1, 2023.

[T.D. 8540, 59 FR 30102, 30116, 30117, 30148, June 10, 1994, as amended by T.D. 8819, 64 FR 23199, 23209, Apr. 30, 1999; T.D. 8886, 65 FR 36943, June 12, 2000; T.D. 9448, 74 FR 21465, 21482, May 7, 2009; T.D. 9540, 76 FR 49612, Aug. 10, 2011; T.D. 9974, 88 FR 37433, June 7, 2023; 88 FR 37436, June 7, 2023]

TREATMENT OF EXCESS DISTRIBUTIONS OF TRUSTS APPLICABLE TO TAXABLE YEARS BEGINNING ON OR AFTER JANUARY 1, 1969

§ 1.665(a)-0A Excess distributions by trusts; scope of subpart D.

(a) ***In general.***

(1) Subpart D (section 665 and following), part I, subchapter J, chapter 1 of the Code as amended by the Tax Reform Act of 1969, is designed to tax the beneficiary of a trust that accumulates, rather than distributes, all or part of its income currently (*i.e.*, an accumulation trust), in most cases, as if the income had been currently distributed to the beneficiary instead of accumulated by the trusts. Accordingly, subpart D provides special rules for the treatment of amounts paid, credited, or required to be distributed by a complex trust (one that is subject to subpart C (section 661 and following) of such part I) in any year in excess of "distributable net income" (as defined in section 643 (a)) for that year. Such an excess distribution is an "accumulation distribution" (as defined in section 665(b)). The special rules of subpart D are generally inapplicable to amounts paid, credited, or required to be distributed by a trust in a taxable year in which it qualifies as a simple trust (one that is subject to subpart B (section 651 and following) of such part I). However, see § 1.665(e)-1A(b) for rules relating to the treatment of a simple trust as a complex trust.

(2) An accumulation distribution is deemed to consist of, first, "undistributed net income" (as defined in section 665(a)) of the trust from preceding taxable years, and, after all the undistributed net income for all preceding taxable years has been deemed distributed, "undistributed capital gain" (as defined in section 665(f)) of the trust for all preceding taxable years commencing with the first year such amounts were accumulated. An accumulation distribution of undistributed capital gain is a "capital gain distribution" (as defined in section 665(g)). To the extent an accumulation distribution exceeds the "undistributed net income" and "undistributed capital gain" so determined, it is deemed to consist of corpus.

(3) The accumulation distribution is "thrown back" to the earliest "preceding taxable year" of the trust, which, in the case of distributions made for a taxable year beginning after December 31, 1973, from a trust (other than a foreign trust created by a U.S. person), is any taxable year beginning after December 31, 1968. Special transitional rules apply for distributions made in taxable years beginning before January 1, 1974. In the case of a foreign trust created by a U.S. person, a "preceding taxable year" is any year of the trust to which the Code applies.

(4) A distribution of undistributed net income (included in an accumulation distribution) and a capital gain distribution will be included in the income of the beneficiary in the year they are actually paid, credited, or required to be distributed to him. The tax on the distribution will be approximately the amount of tax the beneficiary would have paid with respect to the distribution had the income and capital gain been distributed to the beneficiary in the year earned by the trust. An additional amount equal to the "taxes imposed on the trust" for the preceding year is also deemed distributed. To prevent double taxation, however, the beneficiary receives a credit for such taxes.

(b) ***Effective dates.*** All regulations sections under subpart D (sections 665 through 669) which have an "A" suffix (such as § 1.665(a)A and § 1.666(b)-1A) are applicable to taxable years beginning on or after January 1, 1969, and all references therein to sections 665 through 669 are references to such sections as amended by the Tax Reform Act of 1969. Sections without the "A" suffix (such as § 1.666(b)-1) are applicable only to taxable years beginning before January 1, 1969, and all references therein to sections 665 through 669 are references to such sections before amendment by the Tax Reform Act of 1969.

(c) ***Examples.*** Where examples contained in the regulations under subpart D refer to tax rates for years after 1968, such tax rates are not necessarily the actual rates for such years, but are only used for example purposes.

(d) ***Applicability to estates.*** Subpart D does not apply to any estate.

[T.D. 7204, 37 FR 17135, Aug. 25, 1972]

§ 1.665(a)-1A Undistributed net income.

(a) ***Domestic trusts.*** The term *undistributed net income,* in the case of a trust (other than a foreign trust created by a U.S. person) means, for any taxable year beginning after December 31, 1968, the distributable net income of the trust for that year (as determined under section 643(a)), less:

(1) The amount of income required to be distributed currently and any other amounts properly paid or credited or required to be distributed to beneficiaries in the taxable year as specified in section 661(a), and

(2) The amount of taxes imposed on the trust attributable to such distributable net income, as defined in § 1.665 (d)-1A. The application of the rule in this paragraph to a taxable year of a trust in which income is accumulated may be illustrated by the following example:

> *Example.* Under the terms of the trust, $10,000 of income is required to be distributed currently to A and the trustee has discretion to make additional distributions to A. During the taxable year 1971 the trust had distributable net income of $30,100 derived from royalties and the trustee made distributions of $20,000 to A. The taxable income of the trust is $10,000 on which a tax of $2,190 is paid. The undistributed net income of the trust for the taxable year 1971 is $7,910, computed as follows:

Distributable net income	$30,100
Less:	
Income currently distributable to A	$10,000
Other amounts distributed to A	10,000
Taxes imposed on the trust attributable to the undistributed net income (see § 1.665(d)-1A)	2,190
Total	22,190

Undistributed net income	7,910

(b) ***Foreign trusts.*** The undistributed net income of a foreign trust created by a U.S. person for any taxable year is the distributable net income of such trust (see § 1.643(a)-6 and the examples set forth in paragraph (b) thereof), less:

(1) The amount of income required to be distributed currently and any other amounts properly paid or credited or required to be distributed to beneficiaries in the taxable year as specified in section 661(a), and

(2) The amount of taxes imposed on such trust by chapter 1 of the Internal Revenue Code, which are attributable to items of income which are required to be included in such distributable net income.

For purposes of subparagraph (2) of this paragraph, the amount of taxes imposed on the trust for any taxable year by chapter 1 of the Internal Revenue Code is the amount of taxes imposed pursuant to section 871 (relating to tax on non-resident alien individuals) which is properly allocable to the undistributed portion of the distributable net income. See § 1.665(d)-1A. The amount of taxes imposed pursuant to section 871 is the difference between the total tax imposed pursuant to that section on the foreign trust created by a U.S. person for the year and the amount which would have been imposed on such trust had all the distributable net income, as determined under section 643(a), been distributed. The application of the rule in this paragraph may be illustrated by the following examples:

Example 1. A trust was created in 1952 under the laws of Country X by the transfer to a trustee in Country X of property by a U.S. person. The entire trust constitutes a foreign trust created by a U.S. person. The governing instrument of the trust provides that $7,000 of income is required to be distributed currently to a U.S. beneficiary and gives the trustee discretion to make additional distributions to the beneficiary. During the taxable year 1973 the trust had income of $10,000 from dividends of a U.S. corporation (on which Federal income taxes of $3,000 were imposed pursuant to section 871 and withheld under section 1441, resulting in the receipt by the trust of cash in the amount of $7,000), $20,000 in capital gains from the sale of stock of a Country Y corporation and $30,000 from dividends of a Country X corporation, none of the gross income of which was derived from sources within the United States. No income taxes were required to be paid to Country X or Country Y in 1973. The trustee did not file a U.S. income tax return for the taxable year 1973. The distributable net income of the trust before distributions to the beneficiary for 1973 is $60,000 ($57,000 of which is cash). During 1973 the trustee made distributions to the U.S. beneficiary equaling one-half of the trust's distributable net income. Thus, the U.S. beneficiary is treated as having had distributed to him $5,000 (composed of $3,500 as a cash distribution and $1,500 as the tax imposed pursuant to section 871 and withheld under section 1441), representing one-half of the income from U.S. sources; $10,000 in cash, representing one-half of the capital gains from the sale of stock of the Country Y corporation; and $15,000 in cash, representing one-half of the income from Country X sources for a total of $30,000. The undistributed net

income of the trust at the close of taxable year 1973 is $28,500 computed as follows:

Distributable net income	$60,000
Less:	
(1) Amounts distributed to the beneficiary:	
Income currently distributed to the beneficiary	$7,000
Other amounts distributed to the beneficiary	21,500
Taxes under sec. 871 deemed distributed to the beneficiary	1,500
Total amounts distributed to the beneficiary	80,000
(2) Amount of taxes imposed on the trust under chapter 1 of the Code attributable to the undistributed net income (See § 1.665 (d)-1A) $3,000 less $1,500)	$1,500
Total	$31,500
Undistributed net income	28,500

Example 2. The facts are the same as in example 1 except that property has been transferred to the trust by a person other than a U.S. person, and during 1973 the foreign trust created by a U.S. person was 60 percent of the entire foreign trust. The trustee paid no income taxes to Country X or Country Y in 1973.

(1) The undistributed net income of the portion of the entire trust which is a foreign trust created by a U.S. person for 1973 is $17,100, computed as follows:

Distributable net income (60% of each item of gross income of entire trust):		
60% of $10,000 U.S. dividends		$6,000
60% of $20,000 Country X capital gains		12,000
60% of $30,000 Country X dividends		18,000
Total		36,000
Less:		
(i) Amounts distributed to the beneficiary—		
Income currently distributed to the beneficiary (60% of $7,000)	$4,200	
Other amounts distributed to the beneficiary (60% of $21,500)	12,900	
Taxes under sec. 871 deemed distributed to the beneficiary (60% of $1,500)	900	
Total amounts distributed to the beneficiary	18,000	
(ii) Amount of taxes imposed on the trust under chapter 1 of the Code attributable to the undistributed net income (see § 1.665 (d)-1A) (60% of $1,500)	900	
Total		18,900

Undistributed net income	17,100

(2) The undistributed net income of the portion of the entire trust which is not a foreign trust created by a U.S. person for 1973 is $11,400, computed as follows:

Distributable net income (40% of each item of gross income of entire trust)		
40% of $10,000 U.S. dividends		$4,000
40% of $20,000 Country X capital gains		8,000
40% of $30,000 Country X dividends		12,000
Total		24,000
Less:		
(i) Amounts distributed to the beneficiary—		
Income currently distributed to the beneficiary (40% of $7,000)	$2,800	
Other amounts distributed to the beneficiary (40% of $21,500)	8,600	
Taxes under sec. 871 deemed distributed to the beneficiary (40% of $1,500)	600	
Total amounts distributed to the beneficiary	12,000	
(ii) Amount of taxes imposed on the trust under chapter 1 of the Code attributable to the undistributed net income (See § 1.665 (d)-1A) (40% of $1,500)	600	
Total		12,600
Undistributed net income		11,400

(c) ***Effect of prior distributions.*** The undistributed net income for any year to which an accumulation distribution for a later year may be thrown back will be reduced by accumulation distributions in intervening years that are required to be thrown back to such year. For example, if a trust has undistributed net income for 1975, and an accumulation distribution is made in 1980, there must be taken into account the effect on undistributed net income for 1975 of any accumulation distribution made in 1976, 1977, 1978, or 1979. However, undistributed net income for any year will not be reduced by any distributions in any intervening years that are excluded under section 663(a)(1), relating to gifts, bequests, etc. See paragraph (d) of § 1.666(a)-1A for an illustration of the reduction of undistributed net income for any year by a subsequent accumulation distribution.

(d) ***Distributions made in taxable years beginning before January 1, 1974.*** For special rules relating to accumulation distributions of undistributed net income made in taxable years of the trust beginning before January 1, 1974, see § 1.665(b)-2A.

[T.D. 7204, 37 FR 17136, Aug. 25, 1972]

§ 1.665(b)-1A Accumulation distributions.

(a) ***In general.***

(1) For any taxable year of a trust the term *accumulation distribution* means an amount by which the amounts properly paid, credited, or required to be distributed within the meaning of section 661(a)(2) (*i.e.,* all amounts properly paid, credited, or required to be distributed to the beneficiary other than income required to be distributed currently within the meaning of section 661(a)(1)) for that year exceed the distributable net income (determined under section 643(a)) of the trust, reduced (but not below zero) by the amount of income required to be distributed currently. To the extent provided in section 663(b) and the regulations thereunder, distributions made within the first 65 days following a taxable year may be treated as having been distributed on the last day of such taxable year.

(2) An accumulation distribution also includes, for a taxable year of the trust, any amount to which section 661(a)(2) and the preceding paragraph are inapplicable and which is paid, credited, or required to be distributed during the taxable year of the trust by reason of the exercise of a power to appoint, distribute, consume, or withdraw corpus of the trust or income of the trust accumulated in a preceding taxable year. No accumulation distribution is deemed to be made solely because the grantor or any other person is treated as owner of a portion of the trust by reason of an unexercised power to appoint, distribute, consume, or withdraw corpus or accumulated income of the trust. Nor will an accumulation distribution be deemed to have been made by reason of the exercise of a power that may affect only taxable income previously attributed to the holders of such power under subpart E (section 671 and following). See example 4 of paragraph (d) of this section for an example of an accumulation distribution occurring as a result of the exercise of a power of withdrawal.

(3) Although amounts properly paid or credited under section 661(a) do not exceed the income of the trust during the taxable year, an accumulation distribution may result if the amounts properly paid or credited under section 661(a)(2) exceed distributable net income reduced (but not below zero) by the amount required to be distributed currently under section 661(a)(1). This may occur, for example, when expenses, interest, taxes, or other items allocable to corpus are taken into account in determining taxable income and hence causing distributable net income to be less than the trust's income.

(b) ***Payments that are accumulation distributions.*** The following are some instances in which an accumulation distribution may arise:

(1) ***One trust to another.*** A distribution from one trust to another trust is generally an accumulation distribution. See § 1.643(c)-1. This general rule will apply regardless of whether the distribution is to an existing trust or to a newly created trust and regardless of whether the trust to which the distribution is made was created by the same person who created the trust from which the distribution is made or a different person. However, a distribution made from one trust to a second trust will be deemed an accumulation distribution by the first trust to an ultimate beneficiary of the second trust if the primary purpose of the distribution to the second trust is to avoid the capital gain distribution provisions (see section 669 and the regulations thereunder). An amount passing from one separate share of a trust to another separate share of the same trust is not an accumulation distribution. See § 1.665(g)-2A. For rules relating to the computation of the beneficiary's tax under section 668 by reason of an accumulation distribution from the second trust, see paragraphs (b)(1) and (c)(1)(i) of § 1.668(b)-1A and paragraphs (b)(1) and (c)(1)(i) of § 1.669(b)-1A.

(2) ***Income accumulated during minority.*** A distribution of income accumulated during the minority of the beneficiary is generally an accumulation distribution. For example, if a trust accumulates income until the beneficiary's 21st birthday, and then distributes the income to the beneficiary, such a distribution is an accumulation distribution. However, see § 1.665(b)-2A for rules governing income accumulated in taxable years beginning before January 1, 1969.

(3) ***Amounts paid for support.*** To the extent that amounts forming all or part of an accumulation distribution are applied or distributed for the support of a dependent under the circumstances specified in section 677(b) or section 678(c) or are used to discharge or satisfy any person's legal obligation as that term is used in § 1.662(a)-4, such amounts will be considered as having been distributed directly to the person whose obligation is being satisfied.

(c) ***Payments that are not accumulation distributions*** —

(1) ***Gifts, bequests, etc., described in section 663(a)(1).*** A gift or bequest of a specific sum of money or of specific property described in section 663(a)(1) is not an accumulation distribution.

(2) ***Charitable payments.*** Any amount paid, permanently set aside, or used for the purposes specified in section 642(c) is not an accumulation distribution, even though no charitable deduction is allowed under such section with respect to such payment.

(3) ***Income required to be distributed currently.*** No accumulation distribution will arise by reason of a payment of income required to be distributed currently even though such income exceeds the distributable net income of the trust because the payment is an amount specified in section 661(a)(1).

(d) ***Examples.*** The provisions of this section may be illustrated by the following examples:

Example 1. A trustee properly makes a distribution to a beneficiary of $20,000 during the taxable year 1976, of which $10,000 is income required to be distributed currently to the beneficiary. The distributable net income of the trust is $15,000. There is an accumulation distribution of $5,000 computed as follows.

Total distribution		$20,000
Less: Income required to be distributed currently (section 661(a)(1))		10,000
Other amounts distributed (section 661(a)(2))		10,000
Distributable net income	$15,000	
Less: Income required to be distributed currently	10,000	
Balance of distributable net income		5,000
Accumulation distribution		5,000

Example 2. Under the terms of the trust instrument, an annuity of $15,000 is required to be paid to A out of income each year and the trustee may in his discretion make distributions out of income or corpus to B. During the taxable year the trust had income of $18,000, as defined in section 643(b), and expenses allocable to corpus of $5,000. Distributable net income amounted to

$13,000. The trustee distributed $15,000 of income to A and, in the exercise of his discretion, paid $5,000 to B. There is an accumulation distribution of $5,000 computed as follows:

Total distribution		$20,000
Less: Income required to be distributed currently to A (section 661(a)(1))		15,000
Other amounts distributed (section 661(a)(2))		5,000
Distributable net income	$13,000	
Less: Income required to be distributed currently to A	15,000	
Balance of distributable net income		0
Accumulation distribution to B		5,000

Example 3. Under the terms of a trust instrument, the trustee may either accumulate the trust income or make distributions to A and B. The trustee may also invade corpus for the benefit of A and B. During the taxable year, the trust had income as defined in section 643(b) of $22,000 and expenses of $5,000 allocable to corpus. Distributable net income amounts to $17,000. The trustee distributed $10,000 each to A and B during the taxable year. There is an accumulation distribution of $3,000 computed as follows:

Total distribution		$20,000
Less: Income required to be distributed currently		0
Other amounts distributed (section 661(a)(2))		20,000
Distributable net income	$17,000	
Less: Income required to be distributed currently	0	
Balance of distributable net income		17,000
Accumulation distribution		3,000

Example 4. A dies in 1974 and bequeaths one-half the residue of his estate in trust. His widow, W, is given a power, exercisable solely by her, to require the trustee to pay her each year of the trust $5,000 from corpus. W's right to exercise such power was exercisable at any time during the year but was not cumulative, so that, upon her failure to exercise it before the end of any taxable year of the trust, her right as to that year lapsed. The trust's taxable year is the calendar year. During the calendar years 1975 and 1976, W did not exercise her right and it lapsed as to those years. In the calendar years 1977 and 1978, in which years the trust had not distributable net income, she exercised her right and withdrew $4,000 in 1977 and $5,000 in 1978. No accumulation distribution was made by the trust in the calendar years 1975 and 1976. An accumulation distribution of $4,000 was made in 1977 and an accumulation distribution of $5,000 was made in 1978. The accumulation distribution for the years 1977 and 1978 is not reduced by any amount of income of the trust attributable to her under section 678 by reason of her power of withdrawal.

[T.D. 7204, 37 FR 17137, Aug. 25, 1972]

§ 1.665(b)-2A Special rules for accumulation distributions made in taxable years beginning before January 1, 1974.

(a) ***General rule.*** Section 331(d)(2)(A) of the Tax Reform Act of 1969 excludes certain accumulated income from the tax imposed by section 668(a)(2) by providing certain exceptions from the definition of an "accumulation distribution." Any amount paid, credited, or required to be distributed by a trust (other than a foreign trust created by a U.S. person) during a taxable year of the trust beginning after December 31, 1968, and before January 1, 1974, shall not be subject to the tax imposed by section 668(a)(2) to the extent of the portion of such amount that

(1) would be allocated under section 666(a) to a preceding taxable year of the trust beginning before January 1, 1969, and

(2) would not have been deemed an accumulation distribution because of the provisions of paragraphs (1), (2), (3), or (4) of section 665(b) as in effect on December 31, 1968, had the trust distributed such amounts on the last day of its last taxable year beginning before January 1, 1969. However, the $2,000 *de minimis* exception formerly in section 665(b) does not apply in the case of any distribution made in a taxable year of a trust beginning after December 31, 1968. Amounts to which this exclusion applies shall reduce the undistributed net income of the trust for the preceding taxable year or years to which such amounts would be allocated under section 666(a). However, since section 668(a)(2) does not apply to such amounts, no amount of taxes imposed on the trust allocable to such undistributed net income is deemed distributed under section 666 (b) and (c).

(b) ***Application of general rule.*** The rule expressed in paragraph (a) of this section is applied to the exceptions formerly in section 665(b) as follows:

(1) ***Distributions from amounts accumulated while beneficiary is under 21.***

(i) Paragraph (1) of section 665(b) as in effect on December 31, 1968, provided that amounts paid, credited, or required to be distributed to a beneficiary as income accumulated before the birth of such beneficiary or before such beneficiary attains the age of 21 were not to be considered to be accumulation distributions. If an accumulation distribution is made in a taxable year of the trust beginning after December 31, 1968, and before January 1, 1974, and under section 666(a) such accumulation distribution would be allocated to a preceding taxable year beginning before January 1, 1969, no tax shall be imposed under section 668(a)(2) to the extent the income earned by the trust for such preceding taxable year would be deemed under § 1.665(b)-2(b)(1) to have been accumulated before the beneficiary's birth or before his 21st birthday. The provisions of this subparagraph may be illustrated by the following example:

Example. A trust on the calendar year basis was established on January 1, 1965, to accumulate the income during the minority of B, and to pay the accumulated income over to B upon his attaining the age of 21. B's 21st birthday is January 1, 1973. On January 2, 1973, the trustee pays over to B all the accumulated income of the trust. The distribution is an accumulation distribution that may be allocated under section 666(a) to 1968, 1969, 1970, 1971, and 1972 (the 5 preceding taxable years as defined in § 1.665(e)-1A). To the extent the distribution is allocated to 1968, no tax is imposed under section 668(a)(2).

(ii) As indicated in paragraph (a) of this section, a distribution of an amount excepted from the tax otherwise imposed under section 668(a)(2) will reduce undistributed net income for the purpose of determining the effect of a future distribution. Thus, under the facts of the example in subdivision (i) of this subparagraph, the undistributed net income for the trust's taxable year 1968 would be reduced by the amount of the distribution allocated to that year under section 666(a).

(2) ***Emergency distributions.*** Paragraph (2) of section 665(b) as in effect on December 31, 1968, provided an exclusion from the definition of an accumulation distribution for amounts properly paid or credited to a beneficiary to meet his emergency needs. Therefore, if an accumulation distribution is made from a trust in a taxable year beginning before January 1, 1974, and under section 666(a) such accumulation distribution would be allocated to a preceding taxable year of the trust beginning before January 1, 1969, no tax shall be imposed under section 668(a)(2) if such distribution would have been considered an emergency distribution under § 1.665(b)-2(b)(2) had it been made in a taxable year of the trust beginning before January 1, 1969. For example, assume a trust on a calendar year basis in 1972 makes an accumulation distribution which under § 1.665(b)-2(b) (2) would be considered an emergency distribution and under section 666(a) the distribution would be allocated to the years 1967, 1968, and 1969. To the extent such amount is allocated to 1967 and 1968, no tax would be imposed under section 668(a)(2).

(3) ***Certain distributions at specified ages.*** Paragraph (3) of section 665(b) as in effect on December 31, 1968, provided an exclusion (in the case of certain trusts created before January 1, 1954) from the definition of an accumulation distribution for amounts properly paid or credited to a beneficiary upon his attaining a specified age or ages, subject to certain restrictions (see § 1.665(b)-2(b)(3)). Therefore, a distribution from a trust in a taxable year beginning after December 31, 1968, will not be subject to the tax imposed under section 668(a)(2) to the extent such distribution would be allocated to a preceding taxable year of the trust beginning before January 1, 1969, if such distribution would have qualified under the provisions of § 1.665(b)-2(b)(3) had it been made in a taxable year of the trust to which such section was applicable.

(4) ***Certain final distributions.*** Paragraph (4) of section 665(b) as in effect on December 31, 1968, provided an exclusion from the definition of an accumulation distribution for amounts properly paid or credited to a beneficiary as a final distribution of the trust if such final distribution was made more than 9 years after the date of the last transfer to such trust. Therefore, amounts properly paid or credited to a beneficiary as a final distribution of a trust in a taxable year of a trust beginning after December 31, 1968, and before January 1, 1974, will not be subject to the tax imposed under section 668(a)(2) to the extent such distribution would be allocated to a preceding taxable year of the trust beginning before January 1, 1969, if such final distribution was made more than 9 years after the date of the last transfer to such trust. The provisions of this subparagraph may be illustrated by the following example:

Example. A trust on a calendar year basis was established on January 1, 1958, and no additional transfers were made to it. On January 1, 1973, the trustee terminates the trust and on the same day he makes a final distribution to the beneficiary, B. The distribution is an accumulation distribution that may be allocated under section 666(a) to 1968, 1969, 1970, 1971, and 1972 (the 5 preceding taxable years as defined in § 1.665(e)-1A). Because more than 9 years elapsed between the date of the last transfer to the trust and the date of final distribution, the distribution is not taxed under section 668 (a) (2) to the extent it would be allocated to 1968 under section 666(a).

[T.D. 7204, 37 FR 17138, Aug. 25, 1972]

§ 1.665(c)-1A Special rule applicable to distributions by certain foreign trusts.

(a) ***In general.*** Except as provided in paragraph (b) of this section, for purposes of section 665 any amount paid to a U.S. person which is from a payor who is not a U.S. person and which is derived directly or indirectly from a foreign trust created by a U.S. person shall be deemed in the year of payment to the U.S. person to have been directly paid to the U.S. person by the trust. For example, if a nonresident alien receives a distribution from a foreign trust created by a U.S. person and then pays the amount of the distribution over to a U.S. person, the payment of such amount to the U.S. person represents an accumulation distribution to the U.S. person from the trust to the extent that the amount received would have been an accumulation distribution had the trust paid the amount directly to the U.S. person in the year in which the payment was received by the U.S. person. This section also applies in a case where a nonresident alien receives indirectly an accumulation distribution from a foreign trust created by a U.S. person and then pays it over to a U.S. person. An example of such a transaction is one where the foreign trust created by a U.S. person makes the distribution to an intervening foreign trust created by either a U.S. person or a person other than a U.S. person and the intervening trust distributes the amount received to a nonresident alien who in turn pays it over to a U.S. person. Under these circumstances, it is deemed that the payment received by the U.S. person was received directly from a foreign trust created by a U.S. person.

(b) ***Limitation.*** In the case of a distribution to a beneficiary who is a U.S. person, paragraph (a) of this section does not apply if the distribution is received by such beneficiary under circumstances indicating lack of intent on the part of the parties to circumvent the purposes for which section 7 of the Revenue Act of 1962 (76 Stat. 985) was enacted.

[T.D. 7204, 37 FR 17139 Aug. 25, 1972]

§ 1.665(d)-1A Taxes imposed on the trust.

(a) ***In general.***

(1) For purposes of subpart D, the term *taxes imposed on the trust* means the amount of Federal income taxes properly imposed for any taxable year on the trust that are attributable to the undistributed portions of distributable net income and gains in excess of losses from the sales or exchanges of capital assets. Except as provided in paragraph (c)(2) of this section, the minimum tax for tax preferences imposed by section 56 is not a tax attributable to the undistributed portions of distributable net income and gains in excess of losses from the sales or exchanges of capital assets. See section 56 and the regulations thereunder.

(2) In the case of a trust that has received an accumulation distribution from another trust, the term *taxes imposed on the trust* also includes the amount of taxes deemed distributed under §§ 1.666(b)-1A, 1.666(c)-1A, 1.669(d)-1A, and 1.669(e)-1A (whichever are applicable) as a result of such accumulation distribution, to the extent that they were taken into account under paragraphs (b)(2) or (c)(1)(vi) of § 1.668 (b)-1A and (b)(2) or (c)(1)(vi) of § 1.669(b)-1A in computing the partial tax on such accumulation distribution. For example, assume that trust A, a calendar year trust, makes an accumulation distribution in 1975 to trust B, also on the calendar year basis, in connection with which $500 of taxes are deemed under § 1.666(b)-1A to be distributed to trust B. The partial tax on the accumulation distribution is computed under paragraph (b) of § 1.668(b)-1A (the exact method) to be $600 and all of the $500 is used under paragraph (b)(2) of § 1.668(b)-1A to reduce the partial tax to $100. The taxes imposed on trust B for 1975 will, in addition to the $100 partial tax, also include the $500 used to reduce the partial tax.

(b) *Taxes imposed on the trust attributable to undistributed net income.*

(1) For the purpose of subpart D, the term *taxes imposed on the trust attributable to the undistributed net income* means the amount of Federal income taxes for the taxable year properly allocable to the undistributed portion of the distributable net income for such taxable year. This amount is (i) an amount that bears the same relationship to the total taxes of the trust for the year (other than the minimum tax for tax preferences imposed by section 56), computed after the allowance of credits under section 642(a), as (*a*) the taxable income of the trust, other than the capital gains not included in distributable net income less their share of section 1202 deduction, bears to (*b*) the total taxable income of the trust for such year or, (ii) if the alternative tax computation under section 1201(b) is used and there are no net short-term gains, an amount equal to such total taxes less the amount of the alternative tax imposed on the trust and attributable to the capital gain. Thus, for the purposes of subpart D, in determining the amount of taxes imposed on the trust attributable to the undistributed net income, that portion of the taxes paid by the trust attributable to capital gain allocable to corpus is excluded. The rule stated in this subparagraph may be illustrated by the following example, which assumes that the alternative tax computation is not used:

Example. (1) Under the terms of a trust, which reports on the calendar year basis, the income may be accumulated or distributed to A in the discretion of the trustee and capital gains are allocable to corpus. During the taxable year 1974, the trust had income of $20,000 from royalties, long-term capital gains of $10,000, and expenses of $2,000. The trustee in his discretion made a distribution of $10,000 to A. The taxes imposed on the trust for such year attributable to the undistributed net income are $2,319, determined as shown below.
(2) The distributable net income of the trust computed under section 643(a) is $18,000 (royalties of $20,000 less expenses of $2,000). The total taxes paid by the trust are $3,787, computed as follows:

Royalties		$20,000
Capital gain allocable to corpus		10,000
Gross income		30,000
Deductions:		
Expenses	$2,000	
Distributions to A	10,000	
Capital gain deduction	5,000	
Personal exemption	100	
		17,100
Taxable income		12,900
Total income taxes		3,787

(3) Taxable income other than capital gains less the section 1202 deduction is $7,900 ($12,900−($10,000−$5,000)). Therefore, the amount of taxes imposed on the trust

attributable to the undistributed net income is $2,319, computed as follows:

$3,787 (total taxes) × $7,900 (taxable income other than capital gains not included in d.n.i. less the 1202 deduction) divided by $12,900 (taxable income)	$2,319

(2) If in any taxable year an accumulation distribution of undistributed net income is made by the trust which results in a throwback to a prior year, the taxes of the prior year imposed on the trust attributable to any remaining undistributed net income of such prior year are the taxes prescribed in subparagraph (1) of this paragraph reduced by the taxes of the prior year deemed distributed under section 666 (b) or (c). The provisions of this subparagraph may be illustrated by the following example:

Example. Assume the same facts as in the example in subparagraph (1) of this paragraph. In 1975 the trust makes an accumulation distribution, of which an amount of undistributed net income is deemed distributed in 1974. Taxes imposed on the trust (in the amount of $1,000) attributable to the undistributed net income are therefore deemed distributed in such year. Consequently, the taxes imposed on the trust subsequent to the 1975 distribution attributable to the remaining undistributed net income are $1,319 ($2,319 less $1,000).

(c) ***Taxes imposed on the trust attributable to undistributed capital gain*** —

(1) ***Regular tax.*** For the purpose of subpart D the term *taxes imposed on the trust attributable to undistributed capital gain* means the amount of Federal income taxes for the taxable year properly attributable to that portion of the excess of capital gains over capital losses of the trust that is allocable to corpus for such taxable year. Such amount is the total of:

(i) The amount computed under subparagraph (2) of this paragraph (the minimum tax), plus

(ii) The amount that bears the same relationship to the total taxes of the trust for the year (other than the minimum tax), computed after the allowance of credits under section 642(a), as (*a*) the excess of capital gains over capital losses for such year that are not included in distributable net income, computed after its share of the deduction under section 1202 (relating to the deduction for capital gains) has been taken into account, bears to the greater of (*b*) the total taxable income of the trust for such year, or (*c*) the amount of capital gains computed under (*a*) of this subdivision.

However, if the alternative tax computation under section 1201(b) is used and there are no net short-term gains, the amount is the amount of the alternative tax imposed on the trust and attributable to the capital gain. The application of this subparagraph may be illustrated by the following example, which assumes that the alternative tax computation is not used:

Example. Assume the same facts as in the example in paragraph (b)(1). The capital gains not included in d.n.i. are $10,000, and the deduction under section 1202 is $5,000. The amount of taxes imposed on the trust attributable to undistributed capital gain is

$1,468, computed as follows:

$3,787 (total taxes) × $5,000 (capital gains not included in d.n.i. less section 1202 deductions) divided by $12,900 (taxable income)	$1,468

(2) ***Minimum tax.*** The term *taxes imposed on the trust attributable to the undistributed capital gain* also includes the minimum tax for tax preferences imposed on the trust by section 56 with respect to the undistributed capital gain. The amount of such minimum tax so included bears the same relation to the total amount of minimum tax imposed on the trust by section 56 for the taxable year as one-half the net capital gain (net section 1201 gain for taxable years beginning before January 1, 1977) (as defined in section 1222(11)) from such taxable year bears to the sum of the items of tax preference of the trust for such taxable year which are apportioned to the trust in accordance with § 1.58-3(a)(1).

(3) ***Reduction for prior distribution.*** If in any taxable year a capital gain distribution is made by the trust which results in a throwback to a prior year, the taxes of the prior year imposed on the trust attributable to any remaining undistributed capital gain of the prior year are the taxes prescribed in subparagraph (1) of this paragraph reduced by the taxes of the prior year deemed distributed under section 669 (d) or (e). The provisions of this subparagraph may be illustrated by the following example:

Example. Assume the same facts as in the example in subparagraph (1) of this paragraph. In 1976, the trust makes a capital gain distribution, of which an amount of undistributed capital gain is deemed distributed in 1974. Taxes imposed on the trust (in the amount of $500) attributable to the undistributed capital gain are therefore deemed distributed in such year. Consequently, the taxes imposed on the trust attributable to the remaining undistributed capital gain are $968 ($1,468 less $500).

[T.D. 7204, 37 FR 17139, Aug. 25, 1972, as amended by T.D. 7728, 45 FR 72650, Nov. 3, 1980]

§ 1.665(e)-1A Preceding taxable year.

(a) ***Definition —***

(1) ***Domestic trusts —***

(i) ***In general.*** For purposes of subpart D, in the case of a trust other than a foreign trust created by a U.S. person, the term *preceding taxable year* serves to identify and limit the taxable years of a trust to which an accumulation distribution consisting of undistributed net income or undistributed capital gain may be allocated (or "thrown back") under section 666(a) and 669(a). An accumulation distribution consisting of undistributed net income or undistributed capital gain may not be allocated or "thrown back" to a taxable year of a trust if such year is not a "preceding taxable year."

(ii) ***Accumulation distributions.*** In the case of an accumulation distribution consisting of undistributed net income made in a taxable year beginning before January 1, 1974, any taxable year of the trust that precedes by more than 5 years the taxable year of the trust in which such accumulation distribution was made is not a "preceding taxable year." Thus, for a domestic

trust on a calendar year basis, calendar year 1967 is not a "preceding taxable year" with respect to an accumulation distribution made in calendar year 1973, whereas calendar year 1968 is a "preceding taxable year." In the case of an accumulation distribution made during a taxable year beginning after December 31, 1973, any taxable year of the trust that begins before January 1, 1969, is not a "preceding taxable year." Thus, for a domestic trust on a calendar year basis, calendar year 1968 is not a "preceding taxable year" with respect to an accumulation distribution made in calendar year 1975, whereas calendar year 1969 is a "preceding taxable year."

(iii) ***Capital gain distributions.*** In the case of an accumulation distribution that is a capital gain distribution, any taxable year of the trust that (*a*) begins before January 1, 1969, or (*b*) is prior to the first year in which income is accumulated, whichever occurs later, is not a "preceding taxable year." Thus, for the purpose of capital gain distributions and section 669, only taxable years beginning after December 31, 1968, can be "preceding taxable years." See § 1.688(a)-1A(c).

(2) ***Foreign trusts created by U.S. persons.*** For purposes of subpart D, in the case of a foreign trust created by a U.S. person, the term "preceding taxable year" does not include any taxable year to which part I of subchapter J does not apply. See section 683 and regulations thereunder. Accordingly, the provisions of subpart D may not, in the case of a foreign trust created by a U.S. person, be applied to any taxable year which begins before 1954 or ends before August 17, 1954. For example, if a foreign trust created by a U.S. person (reporting on the calendar year basis) makes a distribution during the calendar year 1970 of income accumulated during prior years, the earliest year of the trust to which the accumulation distribution may be allocated under such subpart D is 1954, but it may not be allocated to 1953 and prior years, since the Internal Revenue Code of 1939 applies to those years.

(b) ***Simple trusts.*** A taxable year of a trust during which the trust was a simple trust (that is, was subject to subpart B) for the entire year shall not be considered a "preceding taxable year" unless during such year the trust received "outside income" or unless the trustee did not distribute all of the income of the trust that was required to be distributed currently for such year. In such event, undistributed net income for such year shall not exceed the greater of the "outside income" or income not distributed during such year. For purposes of this paragraph, the term *outside income* means amounts that are included in distributable net income of the trust for the year but that are not "income" of the trust as that term is defined in § 1.643(b)-1. Some examples of "outside income" are:

(1) Income taxable to the trust under section 691;

(2) Unrealized accounts receivable that were assigned to the trust; and

(3) Distributions from another trust that include distributable net income or undistributed net income of such other trust.

The term *outside income,* however, does not include amounts received as distributions from an estate, other than income specified in (1) and (2), for which the estate was allowed a deduction under section 661(a). The application of this paragraph may be illustrated by the following examples:

Example 1. By his will D creates a trust for his widow W. The terms of the trust require that the income be distributed currently (*i.e.*, it is a simple trust), and authorize the trustee to make discretionary payments of corpus to W. Upon W's death the trust corpus is to be distributed to D's then living issue. The executor of D's will makes a $10,000 distribution of corpus to the trust that carries out estate income consisting of dividends and interest to the trust under section 662(a)(2). The trust reports this income as its only

income on its income tax return for its taxable year in which ends the taxable year of the estate in which the $10,000 distribution was made, and pays a tax thereon of $2,106. Thus, the trust has undistributed net income of $7,894 ($10,000 −$2,106). Several years later the trustee makes a discretionary corpus payment of $15,000 to W. This payment is an accumulation distribution under section 665(b). However, since the trust had no "outside income" in the year of the estate distribution, such year is not a preceding taxable year. Thus, W is not treated as receiving undistributed net income of $7,894 and taxes thereon of $2,106 for the purpose of including the same in her gross income under section 668. The result would be the same if the invasion power were not exercised and the accumulation distribution occurred as a result of the distribution of the corpus to D's issue upon the death of W.

Example 2. Trust A, a simple trust on the calendar year basis, received in 1972 extraordinary dividends or taxable stock dividends that the trustee in good faith allocated to corpus, but that are determined in 1974 to have been currently distributable to the beneficiary. See section 643(a)(4) and § 1.643(a)-4. Trust A would qualify for treatment under subpart C for 1974, the year of distribution of the extraordinary dividends or taxable stock dividends, because the distribution is not out of income of the current taxable year and is treated as another amount properly paid or credited or required to be distributed for such taxable year within the meaning of section 661(a) (2). Also, the distribution in 1974 qualifies as an accumulation distribution for the purposes of subpart D. For purposes only of such subpart D, trust A would be treated as subject to the provisions of such subpart C for 1972, the preceding taxable year in which the extraordinary or taxable stock dividends were received, and, in computing undistributed net income for 1972, the extraordinary or taxable stock dividends would be included in distributable net income under section 643(a). The rule stated in the preceding sentence would also apply if the distribution in 1974 was made out of corpus without regard to a determination that the extraordinary dividends or taxable stock dividends in question were currently distributable to the beneficiary.

[T.D. 7204, 37 FR 17141, Aug. 25, 1972]

§ 1.665(f)-1A [Reserved]

§ 1.665(g)-1A [Reserved]

§ 1.665(g)-2A Application of separate share rule.

(a) ***In general.*** If the separate share rule of section 663(c) is applicable for any taxable year of a trust, subpart D is applied as if each share were a separate trust except as provided in paragraph (c) of this section and in § 1.668(a)-1A(c). Thus, the amounts of an "accumulation distribution", "undistributed net income", "undistributed capital gain", and "capital gain distribution" are computed separately for each share.

(b) ***Allocation of taxes—undistributed net income.*** The "taxes imposed on the trust attributable to the undistributed net income" are allocated as follows:

(1) There is first allocated to each separate share that portion of the "taxes imposed on the trust attributable to the undistributed net income" (as defined in § 1.665(d)-1A(b)), computed before the allowance of any credits under section 642(a), that bears the same relation to the total of such taxes that the distributable net income of the separate share bears to the distributable net income of the trust, adjusted for this purpose as follows:

(i) There is excluded from distributable net income of the trust and of each separate share any tax-exempt interest, foreign income of a foreign trust, and excluded dividends, to the extent such amounts are included in distributable net income pursuant to section 643(a) (5), (6), and (7); and

(ii) The distributable net income of the trust is reduced by any deductions allowable under section 661 for amounts paid, credited, or required to be distributed during the taxable year, and the distributable net income of each separate share is reduced by any such deduction allocable to that share.

(2) The taxes so determined for each separate share are then reduced by that portion of the credits against tax allowable to the trust under section 642(a) in computing the "taxes imposed on the trust" that bears the same relation to the total of such credits that the items of distributable net income allocable to the separate share with respect to which the credit is allowed bear to the total of such items of the trust.

(c) ***Allocation of taxes—undistributed capital gain.*** The "taxes imposed on the trust attributable to undistributed capital gain" are allocated as follows:

(1) There is first allocated to each separate share that portion of the "taxes imposed on the trust attributable to undistributed capital gain" (as defined in § 1.665(d)-1A(c)), computed before the allowance of any credits under section 642(a), that bears the same relation to the total of such taxes that the undistributed capital gain (prior to the deduction of taxes under section 665(c)(2)) of the separate share bears to the total such undistributed capital gain of the trust.

(2) The taxes so determined for each separate share are then reduced by that portion of the credits against tax allowable to the trust under section 642(a) in computing the "taxes imposed on the trust" that bears the same relation to the total of such credits that the capital gain allocable to the separate share with respect to which the credit is allowed bear to the total of such capital gain of the trust.

(d) ***Termination of a separate share.***

(1) If upon termination of a separate share, an amount is properly paid, credited, or required to be distributed by the trust under section 661(a)(2) to a beneficiary from such share, an accumulation distribution will be deemed to have been made to the extent of such amount. In determining the distributable net income of such share, only those items of income and deduction for the taxable year of the trust in which such share terminates, properly allocable to such share, shall be taken into consideration.

(2) No accumulation distribution will be deemed to have been made upon the termination of a separate share to the extent that the property constituting such share, or a portion thereof, continues to be held as a part of the same trust. The undistributed net income, undistributed capital gain, and the taxes imposed on the trust attributable to such items, if any, for all preceding taxable years (reduced by any amounts deemed distributed under sections 666(a) and 669(a) by reason of any accumulation distribution of undistributed net income or undistributed capital gain in prior years or the current taxable year), which were allocable to the terminating share, shall be treated as being applicable to the trust itself. However, no adjustment will be made to the amounts deemed distributed under sections 666 and 669 by reason of an accumulation distribution of undistributed net income or undistributed capital gain from the surviving share or shares made in years prior to the year in which the terminating share was added to such surviving share or shares.

(3) The provisions of this paragraph may be illustrated by the following example:

> *Example.* A trust was established under the will of X for the benefit of his wife and upon her death the property was to continue in the same trust for his two sons, Y and Z. The separate share rule is applicable to this trust. The trustee had discretion to pay or accumulate the income to the wife, and after her death

was to pay each son's share to him after he attained the age of 25. When the wife died, Y was 23 and Z was 28.
(1) Upon the death of X's widow, there is no accumulation distribution. The entire trust is split into two equal shares, and therefore the undistributed net income and the undistributed capital gain of the trust are split into two shares.

(2) The distribution to Z of his share after his mother's death is an accumulation distribution of his separate share of one-half of the undistributed net income and undistributed capital gain.

[T.D. 7204, 37 FR 17142, Aug. 25, 1972]

GRANTORS AND OTHERS TREATED AS SUBSTANTIAL OWNERS

§ 1.671-1 Grantors and others treated as substantial owners; scope.

(a) Subpart E (section 671 and following), part I, subchapter J, chapter 1 of the Code, contains provisions taxing income of a trust to the grantor or another person under certain circumstances even though he is not treated as a beneficiary under subparts A through D (section 641 and following) of such part I. Sections 671 and 672 contain general provisions relating to the entire subpart. Sections 673 through 677 define the circumstances under which income of a trust is taxed to a grantor. These circumstances are in general as follows:

(1) If the grantor has retained a reversionary interest in the trust, within specified time limits (section 673);

(2) If the grantor or a nonadverse party has certain powers over the beneficial interests under the trust (section 674);

(3) If certain administrative powers over the trust exist under which the grantor can or does benefit (section 675).

(4) If the grantor or a nonadverse party has a power to revoke the trust or return the corpus to the grantor (section 676); or

(5) If the grantor or a nonadverse party has the power to distribute income to or for the benefit of the grantor or the grantor's spouse (section 677).

Under section 678, income of a trust is taxed to a person other than the grantor to the extent that he has the sole power to vest corpus or income in himself.

(b) Sections 671 through 677 do not apply if the income of a trust is taxable to a grantor's spouse under section 71 or 682 (relating respectively to alimony and separate maintenance payments, and the income of an estate or trust in the case of divorce, etc.).

(c) Except as provided in such subpart E, income of a trust is not included in computing the taxable income and credits of a grantor or another person solely on the grounds of his dominion and control over the trust. However, the provisions of subpart E do not apply in situations involving an assignment of future income, whether or not the assignment is to a trust. Thus, for example, a person who assigns his right to future income under an employment contract may be taxed on that income even though the assignment is to a trust over which the assignor has retained none of the controls specified in sections 671 through

677. Similarly, a bondholder who assigns his right to interest may be taxed on interest payments even though the assignment is to an uncontrolled trust. Nor are the rules as to family partnerships affected by the provisions of subpart E, even though a partnership interest is held in trust. Likewise, these sections have no application in determining the right of a grantor to deductions for payments to a trust under a transfer and leaseback arrangement. In addition, the limitation of the last sentence of section 671 does not prevent any person from being taxed on the income of a trust when it is used to discharge his legal obligation. See § 1.662 (a)-4. He is then treated as a beneficiary under subparts A through D or treated as an owner under section 677 because the income is distributed for his benefit, and not because of his dominion or control over the trust.

(d) The provisions of subpart E are not applicable with respect to a pooled income fund as defined in paragraph (5) of section 642(c) and the regulations thereunder, a charitable remainder annuity trust as defined in paragraph (1) of section 664(d) and the regulations thereunder, or a charitable remainder unitrust as defined in paragraph (2) of section 664(d) and the regulations thereunder.

(e) For the effective date of subpart E see section 683 and the regulations thereunder.

(f) For rules relating to the treatment of liabilities resulting on the sale or other disposition of encumbered trust property due to a renunciation of powers by the grantor or other owner, see § 1.1001-2.

[T.D. 6500, 25 FR 11814, Nov. 26, 1960, as amended by T.D. 7148, 36 FR 20749, Oct. 29, 1971; T.D. 7741, 45 FR 81745, Dec. 12, 1980]

§ 1.671-2 Applicable principles.

(a) Under section 671 a grantor or another person includes in computing his taxable income and credits those items of income, deduction, and credit against tax which are attributable to or included in any portion of a trust of which he is treated as the owner. Sections 673 through 678 set forth the rules for determining when the grantor or another person is treated as the owner of any portion of a trust. The rules for determining the items of income, deduction, and credit against tax that are attributable to or included in a portion of the trust are set forth in § 1.671-3.

(b) Since the principle underlying subpart E (section 671 and following), part I, subchapter J, chapter 1 of the Code, is in general that income of a trust over which the grantor or another person has retained substantial dominion or control should be taxed to the grantor or other person rather than to the trust which receives the income or to the beneficiary to whom the income may be distributed, it is ordinarily immaterial whether the income involved constitutes income or corpus for trust accounting purposes. Accordingly, when it is stated in the regulations under subpart E that “income” is attributed to the grantor or another person, the reference, unless specifically limited, is to income determined for tax purposes and not to income for trust accounting purposes. When it is intended to emphasize that income for trust accounting purposes (determined in accordance with the provisions set forth in § 1.643(b)-1 is meant, the phrase “ordinary income” is used.

(c) An item of income, deduction, or credit included in computing the taxable income and credits of a grantor or another person under section 671 is treated as if it had been received or paid directly by the grantor or other person (whether or not an individual). For example, a charitable contribution made by a trust which is attributed to the grantor (an individual) under sections 671 through 677 will be aggregated with his other charitable contributions to determine their deductibility under the limitations of section 170(b)(1). Likewise, dividends received by a trust from sources in a particular foreign country which are attributed to

a grantor or another person under subpart E will be aggregated with his other income from sources within that country to determine whether the taxpayer is subject to the limitations of section 904 with respect to credit for the tax paid to that country.

(d) Items of income, deduction, and credit not attributed to or included in any portion of a trust of which the grantor or another person is treated as the owner under subpart E are subject to the provisions of subparts A through D (section 641 and following), of such part I.

(e)

(1) For purposes of part I of subchapter J, chapter 1 of the Internal Revenue Code, a grantor includes any person to the extent such person either creates a trust, or directly or indirectly makes a gratuitous transfer (within the meaning of paragraph (e)(2) of this section) of property to a trust. For purposes of this section, the term *property* includes cash. If a person creates or funds a trust on behalf of another person, both persons are treated as grantors of the trust. (See section 6048 for reporting requirements that apply to grantors of foreign trusts.) However, a person who creates a trust but makes no gratuitous transfers to the trust is not treated as an owner of any portion of the trust under sections 671 through 677 or 679. Also, a person who funds a trust with an amount that is directly reimbursed to such person within a reasonable period of time and who makes no other transfers to the trust that constitute gratuitous transfers is not treated as an owner of any portion of the trust under sections 671 through 677 or 679. See also § 1.672(f)-5(a).

(2)

(i) A gratuitous transfer is any transfer other than a transfer for fair market value. A transfer of property to a trust may be considered a gratuitous transfer without regard to whether the transfer is treated as a gift for gift tax purposes.

(ii) For purposes of this paragraph (e), a transfer is for fair market value only to the extent of the value of property received from the trust, services rendered by the trust, or the right to use property of the trust. For example, rents, royalties, interest, and compensation paid to a trust are transfers for fair market value only to the extent that the payments reflect an arm's length price for the use of the property of, or for the services rendered by, the trust. For purposes of this determination, an interest in the trust is not property received from the trust. In addition, a person will not be treated as making a transfer for fair market value merely because the transferor recognizes gain on the transaction. See, for example, section 684 regarding the recognition of gain on certain transfers to foreign trusts.

(iii) For purposes of this paragraph (e), a gratuitous transfer does not include a distribution to a trust with respect to an interest held by such trust in either a trust described in paragraph (e)(3) of this section or an entity other than a trust.

For example, a distribution to a trust by a corporation with respect to its stock described in section 301 is not a gratuitous transfer.

(3) A grantor includes any person who acquires an interest in a trust from a grantor of the trust if the interest acquired is an interest in certain investment trusts described in § 301.7701-4(c) of this chapter, liquidating trusts described in § 301.7701-4(d) of this chapter, or environmental remediation trusts described in § 301.7701-4(e) of this chapter.

(4) If a gratuitous transfer is made by a partnership or corporation to a trust and is for a business purpose of the partnership or corporation, the partnership or corporation will generally be treated as the grantor of the trust. For example, if a partnership makes a gratuitous transfer to a trust in order to secure a legal obligation of the partnership to a third party unrelated to the partnership, the partnership will be treated as the grantor of the trust. However, if a partnership or a corporation makes a gratuitous transfer to a trust that is not for a business purpose of the partnership or corporation but is for the personal purposes of one or more of the partners or shareholders, the gratuitous transfer will be treated as a constructive distribution to such partners or shareholders under federal tax principles and the partners or the shareholders will be treated as the grantors of the trust. For example, if a partnership makes a gratuitous transfer to a trust that is for the benefit of a child of a partner, the gratuitous transfer will be treated as a distribution to the partner under section 731 and a subsequent gratuitous transfer by the partner to the trust.

(5) If a trust makes a gratuitous transfer of property to another trust, the grantor of the transferor trust generally will be treated as the grantor of the transferee trust. However, if a person with a general power of appointment over the transferor trust exercises that power in favor of another trust, then such person will be treated as the grantor of the transferee trust, even if the grantor of the transferor trust is treated as the owner of the transferor trust under subpart E of part I, subchapter J, chapter 1 of the Internal Revenue Code.

(6) The following examples illustrate the rules of this paragraph (e). Unless otherwise indicated, all trusts are domestic trusts, and all other persons are United States persons. The examples are as follows:

Example 1. A creates and funds a trust, T, for the benefit of her children. B subsequently makes a gratuitous transfer to T. Under paragraph (e)(1) of this section, both A and B are grantors of T.

Example 2. A makes an investment in a fixed investment trust, T, that is classified as a trust under § 301.7701-4(c)(1) of this chapter. A is a grantor of T. B subsequently acquires A's entire interest in T. Under paragraph (e)(3) of this section, B is a grantor of T with respect to such interest.

Example 3. A, an attorney, creates a foreign trust, FT, on behalf of A's client, B, and transfers $100 to FT out of A's funds. A is reimbursed by B for the $100 transferred to FT. The trust instrument states that the trustee has discretion to distribute the income or corpus of FT to B and B's children. Both A and B are treated as grantors of FT under paragraph (e)(1) of this section. In addition, B is treated as the owner of the entire trust under section 677. Because A is reimbursed for the $100 transferred to FT on behalf of B, A is not treated as transferring any property to FT. Therefore, A is not an owner of any portion of FT under sections 671 through 677 regardless of whether A retained any power over or interest in FT described in sections 673 through 677. Furthermore, A is not treated as an owner of any portion of FT under section 679. Both A and B are responsible parties for purposes of the requirements in section 6048.

Example 4. A creates and funds a trust, T. A does not retain any power or interest in T that would cause A to be treated as an owner of any portion of the trust under sections 671 through 677. B holds an unrestricted power, exercisable solely by B, to withdraw certain amounts contributed to the trust before the end of the calendar year and to vest those amounts in B. B is treated as an owner of the portion of T that is subject to the withdrawal power under section 678(a)(1). However, B is not a grantor of T under paragraph (e)(1) of this section because B neither created T nor made a gratuitous transfer to T.

Example 5. A transfers cash to a trust, T, through a broker, in exchange for units in T. The units in T are not property for purposes of determining whether A has received fair market value under paragraph (e)(2)(ii) of this section. Therefore, A has made a gratuitous transfer to T, and, under paragraph (e)(1) of this section, A is a grantor of T.

Example 6. A borrows cash from T, a trust. A has not made any gratuitous transfers to T. Arm's length interest payments by A to T will not be treated as gratuitous transfers under paragraph (e)(2)(ii) of this section. Therefore, under paragraph (e)(1) of this section, A is not a grantor of T with respect to the interest payments.

Example 7. A, B's brother, creates a trust, T, for B's benefit and transfers $50,000 to T. The trustee invests the $50,000 in stock of Company X. C, B's uncle, purportedly sells property with a fair market value of $1,000,000 to T in exchange for the stock when it has appreciated to a fair market value of $100,000. Under paragraph (e)(2)(ii) of this section, the $900,000 excess value is a gratuitous transfer by C. Therefore, under paragraph (e)(1) of this section, A is a grantor with respect to the portion of the trust valued at $100,000, and C is a grantor of T with respect to the portion of the trust valued at $900,000. In addition, A or C or both will be treated as the owners of the respective portions of the trust of which each person is a grantor if A or C or both retain powers over or interests in such portions under sections 673 through 677.

Example 8. G creates and funds a trust, T1, for the benefit of G's children and grandchildren. After G's death, under authority granted to the trustees in the trust instrument, the trustees of T1 transfer a portion of the assets of T1 to another trust, T2, and retain a power to revoke T2 and revest the assets of T2 in T1. Under paragraphs (e)(1) and (5) of this section, G is the grantor of T1 and T2. In addition, because the trustees of T1 have retained a power to revest the assets of T2 in T1, T1 is treated as the owner of T2 under section 678(a).

Example 9. G creates and funds a trust, T1, for the benefit of B. G retains a power to revest the assets of T1 in G within the meaning of section 676. Under the trust agreement, B is given a general power of appointment over the assets of T1. B exercises the general power of appointment with respect to one-half of the corpus of T1 in favor of a trust, T2, that is for the benefit of C, B's child. Under paragraph (e)(1) of this section, G is the grantor of T1, and under paragraphs (e)(1) and (5) of this section, B is the grantor of T2.

(7) The rules of this section are applicable to any transfer to a trust, or transfer of an interest in a trust, on or after August 10, 1999.

[T.D. 6500, 25 FR 11814, Nov. 26, 1960; 25 FR 14021, Dec. 31, 1960, as amended by T.D. 8831, 64 FR 43274, Aug. 10, 1999; T.D. 8890, 65 FR 41333, July 5, 2000]

§ 1.671-3 Attribution or inclusion of income, deductions, and credits against tax.

(a) When a grantor or another person is treated under subpart E (section 671 and following) as the owner of any portion of a trust, there are included in computing his tax liability those items of income, deduction, and credit against tax attributable to or included in that portion. For example:

(1) If a grantor or another person is treated as the owner of an entire trust (corpus as well as ordinary income), he takes into account in computing his income tax liability all items of income, deduction, and credit (including capital gains and losses) to which he would have been entitled had the trust not been in existence during the period he is treated as owner.

(2) If the portion treated as owned consists of specific trust property and its income, all items directly related to that property are attributable to the portion. Items directly related to trust property not included in the portion treated as owned by the grantor or other person are governed by the provisions of subparts A through D (section 641 and following), part I, subchapter J, chapter 1 of the Code. Items that relate both to the portion treated as owned by the grantor and to the balance of the trust must be apportioned in a manner that is reasonable in the light of all the circumstances of each case, including the terms of the governing instrument, local law, and the practice of the trustee if it is reasonable and consistent.

(3) If the portion of a trust treated as owned by a grantor or another person consists of an undivided fractional interest in the trust, or of an interest represented by a dollar amount, a pro rata share of each item of income, deduction, and credit is normally allocated to the portion. Thus, where the portion owned consists of an interest in or a right to an amount of corpus only, a fraction of each item (including items allocated to corpus, such as capital gains) is attributed to the portion. The numerator of this fraction is the amount which is subject to the control of the grantor or other person and the denominator is normally the fair market value of the trust corpus at the beginning of the taxable year in question. The share not treated as owned by the grantor or other person is governed by the provisions of subparts A through D. See the last three sentences of paragraph (c) of this section for the principles applicable if the portion treated as owned consists of an interest in part of the ordinary income in contrast to an interest in corpus alone.

(b) If a grantor or another person is treated as the owner of a portion of a trust, that portion may or may not include both ordinary income and other income allocable to corpus. For example:

(1) Only ordinary income is included by reason of an interest in or a power over ordinary income alone. Thus, if a grantor is treated under section 673 as an owner by reason of a reversionary interest in ordinary income only, items of income allocable to corpus will not be included in the portion he is treated as owning. Similarly, if a grantor or another person is treated under sections 674-678 as an owner of a portion by reason of a power over ordinary income only, items of income allocable to corpus are not included in that portion. (See paragraph (c) of this section to determine the treatment of deductions and credits when only ordinary income is included in the portion.)

(2) Only income allocable to corpus is included by reason of an interest in or a power over corpus alone, if satisfaction of the interest or an exercise of the power will not result in an interest in or the exercise of a power over ordinary income which would itself cause that income to be included. For example, if a grantor has a reversionary interest in a trust which is not such as to require that he be treated as an owner under section 673, he may nevertheless be treated as an owner under section 677(a)(2) since any income allocable to corpus is accumulated for future distribution to him, but items of income included in determining ordinary income are not included in the portion he is treated as owning. Similarly, he may have a power over corpus which is such that he is treated as an owner under section 674 or 676 (a), but ordinary income will not be included in the portion he owns, if his power can only affect income received after a period of time such that he would not be treated as an owner of the income if the power were a reversionary interest. (See paragraph (c) of this section to determine the treatment of deductions and credits when only income allocated to corpus is included in the portion.)

(3) Both ordinary income and other income allocable to corpus are included by reason of an interest in or a power over both ordinary income and corpus, or an interest in or a power over corpus alone which does not come within the provisions of subparagraph (2) of this paragraph. For example, if a grantor is treated under section 673 as the owner of a portion of a trust by reason of a reversionary

interest in corpus, both ordinary income and other income allocable to corpus are included in the portion. Further, a grantor includes both ordinary income and other income allocable to corpus in the portion he is treated as owning if he is treated under section 674 or 676 as an owner because of a power over corpus which can affect income received within a period such that he would be treated as an owner under section 673 if the power were a reversionary interest. Similarly, a grantor or another person includes both ordinary income and other income allocable to corpus in the portion he is treated as owning if he is treated as an owner under section 675 or 678 because of a power over corpus.

(c) If only income allocable to corpus is included in computing a grantor's tax liability, he will take into account in that computation only those items of income, deductions, and credit which would not be included under subparts A through D in the computation of the tax liability of the current income beneficiaries if all distributable net income had actually been distributed to those beneficiaries. On the other hand, if the grantor or another person is treated as an owner solely because of his interest in or power over ordinary income alone, he will take into account in computing his tax liability those items which would be included in computing the tax liability of a current income beneficiary, including expenses allocable to corpus which enter into the computation of distributable net income. If the grantor or other person is treated as an owner because of his power over or right to a dollar amount of ordinary income, he will first take into account a portion of those items of income and expense entering into the computation of ordinary income under the trust instrument or local law sufficient to produce income of the dollar amount required. There will then be attributable to him a pro rata portion of other items entering into the computation of distributable net income under subparts A through D, such as expenses allocable to corpus, and a pro rata portion of credits of the trust. For examples of computations under this paragraph, see paragraph (g) of § 1.677(a)-1.

[T.D. 6500, 25 FR 11814, Nov. 26, 1960, as amended by T.D. 6989, 34 FR 742, Jan. 17, 1969]

§ 1.671-4 Method of reporting.

(a) ***Portion of trust treated as owned by the grantor or another person.*** Except as otherwise provided in paragraph (b) of this section and § 1.671-5, items of income, deduction, and credit attributable to any portion of a trust that, under the provisions of subpart E (section 671 and following), part I, subchapter J, chapter 1 of the Internal Revenue Code, is treated as owned by the grantor or another person, are not reported by the trust on Form 1041, "U.S. Income Tax Return for Estates and Trusts," but are shown on a separate statement to be attached to that form. Section 1.671-5 provides special reporting rules for widely held fixed investment trusts. Section 301.7701-4(e)(2) of this chapter provides guidance regarding the application of the reporting rules in this paragraph (a) to an environmental remediation trust.

(b) ***A trust all of which is treated as owned by one or more grantors or other persons*** —

(1) ***In general.*** In the case of a trust all of which is treated as owned by one or more grantors or other persons, and which is not described in paragraph (b)(6) or (7) of this section, the trustee may, but is not required to, report by one of the methods described in this paragraph (b) rather than by the method described in paragraph (a) of this section. A trustee may not report, however, pursuant to paragraph (b)(2)(i)(A) of this section unless the grantor or other person treated as the owner of the trust provides to the trustee a complete Form W-9 or acceptable substitute Form W-9 signed under penalties of perjury. See section 3406 and the regulations thereunder for the information to include on, and the manner of executing, the Form W-9, depending upon the type of reportable payments made.

(2) ***A trust all of which is treated as owned by one grantor or by one other person*** —

(i) ***In general.*** In the case of a trust all of which is treated as owned by one grantor or one other person, the trustee reporting under this paragraph (b) must either—

(A) Furnish the name and taxpayer identification number (TIN) of the grantor or other person treated as the owner of the trust, and the address of the trust, to all payors during the taxable year, and comply with the additional requirements described in paragraph (b)(2)(ii) of this section; or

(B) Furnish the name, TIN, and address of the trust to all payors during the taxable year, and comply with the additional requirements described in paragraph (b)(2)(iii) of this section.

(ii) ***Additional obligations of the trustee when name and TIN of the grantor or other person treated as the owner of the trust and the address of the trust are furnished to payors.***

(A) Unless the grantor or other person treated as the owner of the trust is the trustee or a co-trustee of the trust, the trustee must furnish the grantor or other person treated as the owner of the trust with a statement that—

(*1*) Shows all items of income, deduction, and credit of the trust for the taxable year;

(*2*) Identifies the payor of each item of income;

(*3*) Provides the grantor or other person treated as the owner of the trust with the information necessary to take the items into account in computing the grantor's or other person's taxable income; and

(*4*) Informs the grantor or other person treated as the owner of the trust that the items of income, deduction and credit and other information shown on the statement must be included in computing the taxable income and credits of the grantor or other person on the income tax return of the grantor or other person.

(B) The trustee is not required to file any type of return with the Internal Revenue Service.

(iii) ***Additional obligations of the trustee when name, TIN, and address of the trust are furnished to payors*** —

(A) ***Obligation to file Forms 1099.*** The trustee must file with the Internal Revenue Service the appropriate Forms 1099, reporting the income or gross proceeds paid to the trust during the taxable year, and showing the trust as the payor and the grantor or other person treated as the owner of the trust as the payee. The trustee has the same obligations for filing the appropriate Forms 1099 as would a payor making reportable payments, except that the trustee must report each type of income in the aggregate, and each item of gross proceeds separately. See paragraph (b)(5) of this section regarding the amounts required to be included on any Forms 1099 filed by the trustee.

(B) ***Obligation to furnish statement.***

(*1*) Unless the grantor or other person treated as the owner of the trust is the trustee or a co-trustee of the trust, the trustee must also furnish to the grantor or other person treated as the owner of the trust a statement that—

(*i*) Shows all items of income, deduction, and credit of the trust for the taxable year;

(*ii*) Provides the grantor or other person treated as the owner of the trust with the information necessary to take the items into account in computing the grantor's or other person's taxable income; and

(*iii*) Informs the grantor or other person treated as the owner of the trust that the items of income, deduction and credit and other information shown on the statement must be included in computing the taxable income and credits of the grantor or other person on the income tax return of the grantor or other person.

(2) By furnishing the statement, the trustee satisfies the obligation to furnish statements to recipients with respect to the Forms 1099 filed by the trustee.

(iv) ***Examples.*** The following examples illustrate the provisions of this paragraph (b)(2):

Example 1. G, a United States citizen, creates an irrevocable trust which provides that the ordinary income is to be payable to him for life and that on his death the corpus shall be distributed to B, an unrelated person. Except for the right to receive income, G retains no right or power which would cause him to be treated as an owner under sections 671 through 679. Under the applicable local law, capital gains must be added to corpus. Since G has a right to receive income, he is treated as an owner of a portion of the trust under section 677. The tax consequences of any items of capital gain of the trust are governed by the provisions of subparts A, B, C, and D (section 641 and following), part I, subchapter J, chapter 1 of the Internal Revenue Code. Because not all of the trust is treated as owned by the grantor or another person, the trustee may not report by the methods described in paragraph (b)(2) of this section.

Example 2. (i)(A) On January 2, 1996, G, a United States citizen, creates a trust all of which is treated as owned by G. The trustee of the trust is T. During the 1996 taxable year the trust has the following items of income and gross proceeds:

Interest	$2,5
Dividends	3,2
Proceeds from sale of B stock	2,0

(B) The trust has no items of deduction or credit.

(ii)(A) The payors of the interest paid to the trust are X ($2,000), Y ($300), and Z ($200). The payors of the dividends paid to the trust are A ($3,200), and D ($5). The payor of the gross proceeds paid to the trust is D, a brokerage firm, which held the B stock as the nominee for the trust. The B stock was purchased by T for $1,500 on January 3, 1996, and sold by T on November 29, 1996. T chooses to report pursuant to paragraph (b)(2)(i)(B) of this section, and therefore furnishes the name, TIN, and address of the trust to X, Y, Z, A, and D. X, Y, and Z each furnish T with a Form 1099-INT showing the trust as the payee. A furnishes T with a Form 1099-DIV

showing the trust as the payee. D does not furnish T with a Form 1099-DIV because D paid a dividend of less than $10 to T. D furnishes T with a Form 1099-B showing the trust as the payee.

(B) On or before February 28, 1997, T files a Form 1099-INT with the Internal Revenue Service on which T reports interest attributable to G, as the owner of the trust, of $2,500; a Form 1099-DIV on which T reports dividends attributable to G, as the owner of the trust, of $3,205; and a Form 1099-B on which T reports gross proceeds from the sale of B stock attributable to G, as the owner of the trust, of $2,000. On or before April 15, 1997, T furnishes a statement to G which lists the following items of income and information necessary for G to take the items into account in computing G's taxable income:

Interest	$2,5
Dividends	3,2
Gain from sale of B stock	5
Information regarding sale of B stock:	
Proceeds	$2,0
Basis	1,5
Date acquired	1/03/
Date sold	11/29/

(C) T informs G that any items of income, deduction and credit and other information shown on the statement must be included in computing the taxable income and credits of the grantor or other person on the income tax return of the grantor or other person.
(D) T has complied with T's obligations under this section.

(iii)(A) Same facts as paragraphs (i) and (ii) of this *Example 2,* except that G contributed the B stock to the trust on January 2, 1996. On or before April 15, 1997, T furnishes a statement to G which lists the following items of income and information necessary for G to take the items into account in computing G's taxable income:

Interest	$2,5

Dividends	3,2
Information regarding sale of B stock:	
Proceeds	$2,0
Date sold	11/29/

(B) T informs G that any items of income, deduction and credit and other information shown on the statement must be included in computing the taxable income and credits of the grantor or other person on the income tax return of the grantor or other person.
(C) T has complied with T's obligations under this section.

Example 3. On January 2, 1996, G, a United States citizen, creates a trust all of which is treated as owned by G. The trustee of the trust is T. The only asset of the trust is an interest in C, a common trust fund under section 584(a). T chooses to report pursuant to paragraph (b)(2)(i)(B) of this section and therefore furnishes the name, TIN, and address of the trust to C. C files a Form 1065 and a Schedule K-1 (Partner's Share of Income, Credits, Deductions, etc.) showing the name, TIN, and address of the trust with the Internal Revenue Service and furnishes a copy to T. Because the trust did not receive any amounts described in paragraph (b)(5) of this section, T does not file any type of return with the Internal Revenue Service. On or before April 15, 1997, T furnishes G with a statement that shows all items of income, deduction, and credit of the trust for the 1996 taxable year. In addition, T informs G that any items of income, deduction and credit and other information shown on the statement must be included in computing the taxable income and credits of the grantor or other person on the income tax return of the grantor or other person. T has complied with T's obligations under this section.

(3) ***A trust all of which is treated as owned by two or more grantors or other persons*** —

(i) ***In general.*** In the case of a trust all of which is treated as owned by two or more grantors or other persons, the trustee must furnish the name, TIN, and address of the trust to all payors for the taxable year, and comply with the additional requirements described in paragraph (b)(3)(ii) of this section.

(ii) ***Additional obligations of trustee*** —

(A) ***Obligation to file Forms 1099.*** The trustee must file with the Internal Revenue Service the appropriate Forms 1099, reporting the items of income paid to the trust by all payors during the taxable year attributable to the portion of the trust treated as owned by each grantor or other person, and showing the trust as the payor and each grantor or other person treated as an owner of the trust as the payee. The trustee has the same obligations for filing the appropriate Forms 1099 as would a payor making reportable payments, except that the trustee must report each type of income in the aggregate, and each item of gross proceeds separately. See paragraph (b)(5) of this section regarding the amounts required to be included on any Forms 1099 filed by the trustee.

(B) ***Obligation to furnish statement.***

(*1*) The trustee must also furnish to each grantor or other person treated as an owner of the trust a statement that—

(*i*) Shows all items of income, deduction, and credit of the trust for the taxable year attributable to the portion of the trust treated as owned by the grantor or other person;

(*ii*) Provides the grantor or other person treated as an owner of the trust with the information necessary to take the items into account in computing the grantor's or other person's taxable income; and

(*iii*) Informs the grantor or other person treated as the owner of the trust that the items of income, deduction and credit and other information shown on the statement must be included in computing the taxable income and credits of the grantor or other person on the income tax return of the grantor or other person.

(*2*) Except for the requirements pursuant to section 3406 and the regulations thereunder, by furnishing the statement, the trustee satisfies the obligation to furnish statements to recipients with respect to the Forms 1099 filed by the trustee.

(4) ***Persons treated as payors*** —

(i) ***In general.*** For purposes of this section, the term payor means any person who is required by any provision of the Internal Revenue Code and the regulations thereunder to make any type of information return (including Form 1099 or Schedule K-1) with respect to the trust for the taxable year, including persons who make payments to the trust or who collect (or otherwise act as middlemen with respect to) payments on behalf of the trust.

(ii) ***Application to brokers and customers.*** For purposes of this section, a broker, within the meaning of section 6045, is considered a payor. A customer, within the meaning of section 6045, is considered a payee.

(5) ***Amounts required to be included on Forms 1099 filed by the trustee*** —

(i) ***In general.*** The amounts that must be included on any Forms 1099 required to be filed by the trustee pursuant to this section do not include any amounts that are reportable by the payor on an information return other than Form 1099. For example, in the case of a trust which owns an interest in a partnership, the trust's distributive share of the income and gain of the partnership is not includible on any Forms 1099 filed by the trustee pursuant to this section because the distributive share is reportable by the partnership on Schedule K-1.

(ii) ***Example.*** The following example illustrates the provisions of this paragraph (b)(5):

> *Example.* (i)(A) On January 2, 1996, G, a United States citizen, creates a trust all of which is treated as owned by G. The trustee of the trust is T. The assets of the trust during the 1996 taxable year are shares of stock in X, an S corporation, a limited partnership interest in P, shares of stock in M, and shares of stock in N. T chooses to report pursuant to paragraph (b)(2)(i)(B) of this section and therefore furnishes the name, TIN, and address of the trust to X, P, M, and N. M furnishes T with a Form

1099-DIV showing the trust as the payee. N does not furnish T with a Form 1099-DIV because N paid a dividend of less than $10 to T. X and P furnish T with Schedule K-1 (Shareholder's Share of Income, Credits, Deductions, etc.) and Schedule K-1 (Partner's Share of Income, Credits, Deductions, etc.), respectively, showing the trust's name, TIN, and address.
(B) For the 1996 taxable year the trust has the following items of income and deduction:

Dividends paid by M	$
Dividends paid by N	
Administrative expense	$
Items reported by X on Schedule K-1 attributable to trust's shares of stock in X:	
Interest	$
Dividends	
Items reported by P on Schedule K-1 attributable to trust's limited partnership interest in P:	
Ordinary income	$3

(ii)(A) On or before February 28, 1997, T files with the Internal Revenue Service a Form 1099-DIV on which T reports dividends attributable to G as the owner of the trust in the amount of $18. T does not file any other returns.
(*B*) T has complied with T's obligation under paragraph (b)(2)(iii)(A) of this section to file the appropriate Forms 1099.

(6) ***Trusts that cannot report under this paragraph (b).*** The following trusts cannot use the methods of reporting described in this paragraph (b)—

(i) A common trust fund as defined in section 584(a);

(ii) A trust that has its situs or any of its assets located outside the United States;

(iii) A trust that is a qualified subchapter S trust as defined in section 1361(d)(3);

(iv) A trust all of which is treated as owned by one grantor or one other person whose taxable year is a fiscal year;

(v) A trust all of which is treated as owned by one grantor or one other person who is not a United States person; or

(vi) A trust all of which is treated as owned by two or more grantors or other persons, one of whom is not a United States person.

(7) ***Grantors or other persons who are treated as owners of the trust and are exempt recipients for information reporting purposes*** —

(i) ***Trust treated as owned by one grantor or one other person.*** The trustee of a trust all of which is treated as owned by one grantor or one other person may not report pursuant to this paragraph (b) if the grantor or other person is an exempt recipient for information reporting purposes.

(ii) ***Trust treated as owned by two or more grantors or other persons.*** The trustee of a trust, all of which is treated as owned by two or more grantors or other persons, may not report pursuant to this paragraph (b) if one or more grantors or other persons treated as owners are exempt recipients for information reporting purposes unless—

(A) At least one grantor or one other person who is treated as an owner of the trust is a person who is not an exempt recipient for information reporting purposes; and

(B) The trustee reports without regard to whether any of the grantors or other persons treated as owners of the trust are exempt recipients for information reporting purposes.

(8) ***Husband and wife who make a single return jointly.*** A trust all of which is treated as owned by a husband and wife who make a single return jointly of income taxes for the taxable year under section 6013 is considered to be owned by one grantor for purposes of this paragraph (b).

(c) ***Due date for Forms 1099 required to be filed by trustee.*** The due date for any Forms 1099 required to be filed with the Internal Revenue Service by a trustee pursuant to this section is the due date otherwise in effect for filing Forms 1099.

(d) ***Due date and other requirements with respect to statement required to be furnished by trustee*** —

(1) ***In general.*** The due date for the statement required to be furnished by a trustee to the grantor or other person treated as an owner of the trust pursuant to this section is the date specified by section 6034A(a). The trustee must maintain in its records a copy of the statement furnished to the grantor or other person treated as an owner of the trust for a period of three years from the due date for furnishing such statement specified in this paragraph (d).

(2) ***Statement for the taxable year ending with the death of the grantor or other person treated as the owner of the trust.*** If a trust ceases to be treated as owned by the grantor, or other person, by reason of the death of that grantor or other person (decedent), the due date for the statement required to be furnished for the taxable year ending with the death of the decedent shall be the date specified by section 6034A(a) as though the decedent had lived throughout the decedent's last taxable year. See paragraph (h) of this section for special reporting rules for a trust or portion of the trust that ceases to be treated as owned by the grantor or other person by reason of the death of the grantor or other person.

(e) ***Backup withholding requirements*** —

(1) ***Trustee reporting under paragraph (b)(2)(i)(A) of this section.*** In order for the trustee to be able to report pursuant to paragraph (b)(2)(i)(A) of this section and to furnish to all payors the name and TIN of the grantor or other person treated as the owner of the trust, the grantor or other person must provide a complete Form W-9 to the trustee in the manner provided in paragraph (b)(1) of this section, and the trustee must give the name and TIN shown on that Form W-9 to all payors. In

addition, if the Form W-9 indicates that the grantor or other person is subject to backup withholding, the trustee must notify all payors of reportable interest and dividend payments of the requirement to backup withhold. If the Form W-9 indicates that the grantor or other person is not subject to backup withholding, the trustee does not have to notify the payors that backup withholding is not required. The trustee should not give the Form W-9, or a copy thereof, to a payor because the Form W-9 contains the address of the grantor or other person and paragraph (b)(2)(i)(A) of this section requires the trustee to furnish the address of the trust to all payors and not the address of the grantor or other person. The trustee acts as the agent of the grantor or other person for purposes of furnishing to the payors the information required by this paragraph (e)(1). Thus, a payor may rely on the name and TIN provided to the payor by the trustee, and, if given, on the trustee's statement that the grantor is subject to backup withholding.

(2) ***Other backup withholding requirements.*** Whether a trustee is treated as a payor for purposes of backup withholding is determined pursuant to section 3406 and the regulations thereunder.

(f) ***Penalties for failure to file a correct Form 1099 or furnish a correct statement.*** A trustee who fails to file a correct Form 1099 or to furnish a correct statement to a grantor or other person treated as an owner of the trust as required by paragraph (b) of this section is subject to the penalties provided by sections 6721 and 6722 and the regulations thereunder.

(g) ***Changing reporting methods*** —

(1) ***Changing from reporting by filing Form 1041 to a method described in paragraph (b) of this section.*** If the trustee has filed a Form 1041 for any taxable year ending before January 1, 1996 (and has not filed a final Form 1041 pursuant to § 1.671-4(b)(3) (as contained in the 26 CFR part 1 edition revised as of April 1, 1995)), or files a Form 1041 for any taxable year thereafter, the trustee must file a final Form 1041 for the taxable year which ends after January 1, 1995, and which immediately precedes the first taxable year for which the trustee reports pursuant to paragraph (b) of this section, on the front of which form the trustee must write: “Pursuant to § 1.671-4(g), this is the final Form 1041 for this grantor trust.”.

(2) ***Changing from reporting by a method described in paragraph (b) of this section to the filing of a Form 1041.*** The trustee of a trust who reported pursuant to paragraph (b) of this section for a taxable year may report pursuant to paragraph (a) of this section for subsequent taxable years. If the trustee reported pursuant to paragraph (b)(2)(i)(A) of this section, and therefore furnished the name and TIN of the grantor to all payors, the trustee must furnish the name, TIN, and address of the trust to all payors for such subsequent taxable years. If the trustee reported pursuant to paragraph (b)(2)(i)(B) or (b)(3)(i) of this section, and therefore furnished the name and TIN of the trust to all payors, the trustee must indicate on each Form 1096 (Annual Summary and Transmittal of U.S. Information Returns) that it files (or appropriately on magnetic media) for the final taxable year for which the trustee so reports that it is the final return of the trust.

(3) ***Changing between methods described in paragraph (b) of this section*** —

(i) ***Changing from furnishing the TIN of the grantor to furnishing the TIN of the trust.*** The trustee of a trust who reported pursuant to paragraph (b)(2)(i)(A) of this section for a taxable year, and therefore furnished the name and TIN of the grantor to all payors, may report pursuant to paragraph (b)(2)(i)(B) of this section, and furnish the name and TIN of the trust to all payors, for subsequent taxable years.

(ii) ***Changing from furnishing the TIN of the trust to furnishing the TIN of the grantor.*** The trustee of a trust who reported pursuant to paragraph (b)(2)(i)(B) of this section for a taxable year, and therefore furnished the name and TIN of the trust to all payors, may report pursuant to paragraph (b)(2)(i)(A) of this section, and furnish the name and TIN of the grantor to all payors, for subsequent taxable years. The trustee, however, must indicate on each Form 1096 (Annual Summary and Transmittal of U.S. Information Returns) that it files (or appropriately on magnetic media) for the final taxable year for which the trustee reports pursuant to paragraph (b)(2)(i)(B) of this section that it is the final return of the trust.

(4) ***Example.*** The following example illustrates the provisions of paragraph (g) of this section:

> *Example.* (i) On January 3, 1994, G, a United States citizen, creates a trust all of which is treated as owned by G. The trustee of the trust is T. On or before April 17, 1995, T files with the Internal Revenue Service a Form 1041 with an attached statement for the 1994 taxable year showing the items of income, deduction, and credit of the trust. On or before April 15, 1996, T files with the Internal Revenue Service a Form 1041 with an attached statement for the 1995 taxable year showing the items of income, deduction, and credit of the trust. On the Form 1041, T states that "pursuant to § 1.671-4(g), this is the final Form 1041 for this grantor trust." T may report pursuant to paragraph (b) of this section for the 1996 taxable year.
> (ii) T reports pursuant to paragraph (b)(2)(i)(B) of this section, and therefore furnishes the name, TIN, and address of the trust to all payors, for the 1996 and 1997 taxable years. T chooses to report pursuant to paragraph (a) of this section for the 1998 taxable year. On each Form 1096 (Annual Summary and Transmittal of U.S. Information Returns) which T files for the 1997 taxable year (or appropriately on magnetic media), T indicates that it is the trust's final return. On or before April 15, 1999, T files with the Internal Revenue Service a Form 1041 with an attached statement showing the items of income, deduction, and credit of the trust. On the Form 1041, T uses the same TIN which T used on the Forms 1041 and Forms 1099 it filed for previous taxable years. T has complied with T's obligations under paragraph (g)(2) of this section.

(h) ***Reporting rules for a trust, or portion of a trust, that ceases to be treated as owned by a grantor or other person by reason of the death of the grantor or other person —***

(1) ***Definition of decedent.*** For purposes of this paragraph (h), the *decedent* is the grantor or other person treated as the owner of the trust, or portion of the trust, under subpart E, part I, subchapter J, chapter 1 of the Internal Revenue Code on the date of death of that person.

(2) ***In general.*** The provisions of this section apply to a trust, or portion of a trust, treated as owned by a decedent for the taxable year that ends with the decedent's death. Following the death of the decedent, the trust or portion of a trust that ceases to be treated as owned by the decedent, by reason of the death of the decedent, may no longer report under this section. A trust, all of which was treated as owned by the decedent, must obtain a new TIN upon the death of the decedent, if the trust will continue after the death of the decedent. See § 301.6109-1(a)(3)(i) of this chapter for rules regarding obtaining a TIN upon the death of the decedent.

(3) ***Special rules —***

(i) ***Trusts reporting pursuant to paragraph (a) of this section for the taxable year ending with the decedent's death.*** The due date for the filing of a return pursuant to paragraph (a) of this section for the taxable year ending with the decedent's death shall be the due date provided for under § 1.6072-1(a)(2). The return filed under this paragraph for a trust all of which was treated as owned by the decedent must indicate that it is a final return.

(ii) ***Trust reporting pursuant to paragraph (b)(2)(B) of this section for the taxable year of the decedent's death.*** A trust that reports pursuant to paragraph (b)(2)(B) of this section for the taxable year ending with the decedent's death must indicate on each Form 1096 "Annual Summary and Transmittal of the U.S. Information Returns" that it files (or appropriately on magnetic media) for the taxable year ending with the death of the decedent that it is the final return of the trust.

(iii) ***Trust reporting under paragraph (b)(3) of this section.*** If a trust has been reporting under paragraph (b)(3) of this section, the trustee may not report under that paragraph if any portion of the trust has a short taxable year by reason of the death of the decedent and the portion treated as owned by the decedent does not terminate on the death of the decedent.

(i) ***Effective date and transition rule*** —

(1) ***Effective date.*** The trustee of a trust any portion of which is treated as owned by one or more grantors or other persons must report pursuant to paragraphs (a), (b), (c), (d)(1), (e), (f), and (g) of this section for taxable years beginning on or after January 1, 1996.

(2) ***Transition rule.*** For taxable years beginning prior to January 1, 1996, the Internal Revenue Service will not challenge the manner of reporting of—

(i) A trustee of a trust all of which is treated as owned by one or more grantors or other persons who did not report in accordance with § 1.671-4(a) (as contained in the 26 CFR part 1 edition revised as of April 1, 1995) as in effect for taxable years beginning prior to January 1, 1996, but did report in a manner substantially similar to one of the reporting methods described in paragraph (b) of this section; or

(ii) A trustee of two or more trusts all of which are treated as owned by one or more grantors or other persons who filed a single Form 1041 for all of the trusts, rather than a separate Form 1041 for each trust, provided that the items of income, deduction, and credit of each trust were shown on a statement attached to the single Form 1041.

(3) ***Effective date for paragraphs (d)(2) and (h) of this section.*** Paragraphs (d)(2) and (h) of this section apply for taxable years ending on or after December 24, 2002.

(j) ***Cross-reference.*** For rules relating to employer identification numbers, and to the obligation of a payor of income or proceeds to the trust to furnish to the payee a statement to recipient, see § 301.6109-1(a)(2) of this chapter.

[T.D. 8633, 60 FR 66087, Dec. 21, 1995, as amended by T.D. 8668, 61 FR 19191, May 1, 1996; T.D. 9032, 67 FR 78381, Dec. 24, 2002; T.D. 9241, 71 FR 4009, Jan. 24, 2006]

§ 1.671-5 Reporting for widely held fixed investment trusts.

(a) ***Table of contents.*** This table of contents lists the major paragraph headings for this section.

(a) Table of contents.

(b) Definitions.

(c) Trustee's obligation to report information.

(1) In general.

(i) Calculation.

(ii) Calculation period.

(iii) Accounting method.

(iv) Gross income requirement.

(2) Information to be reported by all WHFITs.

(i) Trust identification and calculation period chosen.

(ii) Items of income, expense, and credit.

(iii) Non pro-rata partial principal payments.

(iv) Asset sales and dispositions.

(v) Redemptions and sales of WHFIT interests.

(vi) Information regarding bond premium.

(vii) Information regarding market discount.

(viii) Other information.

(3) Identifying the representative who will provide trust information.

(4) Time and manner of providing information.

(i) Time.

(ii) Manner.

(iii) Inclusion of information with respect to all calculation periods.

(5) Requesting information from a WHFIT.

(i) In general.

(ii) Manner of requesting information.

(iii) Period of time during which a requesting person may request WHFIT information.

(6) Trustee's requirement to retain records.

(d) Form 1099 requirement for trustees and middlemen.

(1) Obligation to file Form 1099 with the IRS.

(i) In general.

(ii) Forms 1099 not required for exempt recipients.

(iii) Reporting and withholding with respect to foreign persons.

(2) Information to be reported.

(i) Determining amounts to be provided on Forms 1099.

(ii) Information to be provided on Forms 1099.

(3) Time and manner of filing Forms 1099.

(i) Time and place.

(ii) Reporting trust sales proceeds, redemption asset proceeds, redemption proceeds, sales asset proceeds, sales proceeds, and non pro-rata partial principal payments.

(e) Requirement to furnish a written tax information statement to the TIH.

(1) In general.

(2) Information required.

(i) WHFIT information.

(ii) Identification of the person furnishing the statement.

(iii) Items of income, expense, and credit.

(iv) Non pro-rata partial principal payments.

(v) Asset sales and dispositions.

(vi) Redemption or sale of a trust interest.

(vii) Information regarding market discount and bond premium.

(viii) Other information.

(ix) Required statement.

(3) Due date and other requirements.

(4) Requirement to retain records.

(f) Safe harbor for providing information for certain NMWHFITs.

(1) Safe harbor for trustee reporting of NMWHFIT information.

(i) In general.

(ii) Reporting NMWHFIT income and expenses.

(iii) Reporting non pro-rata partial principal payments under the safe harbor.

(iv) Reporting sales and dispositions of NMWHFIT assets under the safe harbor.

(v) Reporting redemptions under the safe harbor.

(vi) Reporting the sale of a trust interest under the safe harbor.

(vii) Reporting OID information under the safe harbor.

(viii) Reporting market discount information under the safe harbor.

(ix) Reporting bond premium information under the safe harbor.

(x) Reporting additional information.

(2) Use of information provided by trustees under the safe harbor for NMWHFITs.

(i) In general.

(ii) Determining NMWHFIT income and expenses under the safe harbor.

(iii) Reporting non pro-rata partial principal payments under the safe harbor.

(iv) Reporting sales and dispositions of NMWHFIT assets under the safe harbor.

(v) Reporting redemptions under the safe harbor.

(vi) Reporting sales of trust interests under the safe harbor.

(vii) Reporting OID information under the safe harbor.

(viii) Reporting market discount information under the safe harbor.

(ix) Reporting bond premium information under the safe harbor.

(3) Example of the use of the safe harbor for NMWHFITs.

(i) Facts.

(ii) Trustee reporting.

(iii) Brokers' use of information provided by Trustee.

(g) Safe Harbor for certain WHMTs.

(1) Safe harbor for trustees of certain WHMTs for reporting information.

(i) In general.

(ii) Requirements.

(iii) Reporting WHMT income, expenses, non pro-rata partial principal payments, and sales and dispositions under the safe harbor.

(iv) Reporting OID information under the safe harbor.

(v) Reporting market discount information under the safe harbor.

(vi) Reporting bond premium information under the safe harbor.

(2) Use of information provided by a trustee under the safe harbor.

(i) In general.

(ii) Reporting WHMT income, expenses, non pro-rata partial principal payments, and sales and dispositions under the safe harbor.

(iii) Reporting OID information under the safe harbor.

(iv) Requirement to provide market discount information under the safe harbor.

(v) Requirement to provide bond premium information under the safe harbor.

(3) Example of safe harbor in paragraph (g)(1) of this section.

(i) Facts.

(ii) Trustee reporting.

(iii) Broker's use of the information provided by Trustee.

(h) Additional safe harbors.

(1) Temporary safe harbors.

(2) Additional safe harbors provided by other published guidance.

(i) Reserved.

(j) Requirement that middlemen furnish information to beneficial owners that are exempt recipients and non calendar year beneficial owners.

(1) In general.

(2) Time for providing information.

(3) Manner of providing information.

(4) Clearing organization.

(k) Coordination with other information reporting rules.

(l) Backup withholding requirements.

(m) Penalties for failure to comply.

(n) Effective date.

(b) ***Definitions.*** Solely for purposes of this section:

(1) An *asset* includes any real or personal, tangible or intangible property held by the trust, including an interest in a contract.

(2) An *affected expense* is an expense described in § 1.67-2T(i)(1).

(3) A *beneficial owner* is a trust interest holder (TIH) (as defined in paragraph (b)(20) of this section) that holds a beneficial interest in a widely held fixed investment trust (WHFIT) (as defined in paragraph (b)(22) of this section.)

(4) The *calculation period* is the period the trustee chooses under paragraph (c)(1)(ii) of this section for calculating the trust information required to be provided under paragraph (c) of this section.

(5) The *cash held for distribution* is the amount of cash held by the WHFIT (other than trust sales proceeds and proceeds from sales described in paragraphs (c)(2)(iv)(D)(*4*), (G), and (H) of this section) less reasonably required reserve funds as of the date that the amount of a distribution is required to be determined under the WHFIT's governing document.

(6) A *clean-up call* is the redemption of all trust interests in termination of the WHFIT when the administrative costs of the WHFIT outweigh the benefits of maintaining the WHFIT.

(7) An *exempt recipient* is—

(i) Any person described in § 1.6049-4(c)(1)(ii);

(ii) A middleman (as defined in paragraph (b)(10) of this section);

(iii) A real estate mortgage investment conduit (as defined in section 860(D)(a)) (REMIC);

(iv) A WHFIT; or

(v) A trust or an estate for which the trustee or middleman of the WHFIT is also required to file a Form 1041, "U.S. Income Tax Return for Estates and Trusts," in its capacity as a fiduciary of that trust or estate.

(8) An *in-kind redemption* is a redemption in which a beneficial owner receives a pro-rata share of each of the assets of the WHFIT that the beneficial owner is deemed to own under section 671. For example, for purposes of this paragraph (b)(8), if beneficial owner A owns a one percent interest in a WHFIT that holds 100 shares of X corporation stock, so that A is considered to own a one percent interest in each of the 100 shares, A's pro-rata share of the X corporation stock for this purpose is one share of X corporation stock.

(9) An *item* refers to an item of income, expense, or credit as well as any trust event (for example, the sale of an asset) or any characteristic or attribute of the trust that affects the income, deductions, and credits reported by a beneficial owner in any taxable year that the beneficial owner holds an interest in the trust. An item may refer to an individual item or a group of items depending on whether the item must be reported separately under paragraphs (c)(1)(i) and (e)(1) of this section.

(10) A *middleman* is any TIH, other than a qualified intermediary as defined in § 1.1031(k)-1(g), who, at any time during the calendar year, holds an interest in a WHFIT on behalf of, or for the account of, another TIH, or who otherwise acts in a capacity as an intermediary for the account of another person. A middleman includes, but is not limited to—

(i) A custodian of a person's account, such as a bank, financial institution, or brokerage firm acting as custodian of an account;

(ii) A nominee;

(iii) A joint owner of an account or instrument other than—

(A) A joint owner who is the spouse of the other owner; and

(B) A joint owner who is the beneficial owner and whose name appears on the Form 1099 filed with respect to the trust interest under paragraph (d) of this section; and

(iv) A broker (as defined in section 6045(c)(1) and § 1.6045-1(a)(1)), holding an interest for a customer in street name.

(11) A *mortgage* is an obligation that is principally secured by an interest in real property within the meaning of § 1.860G-2(a)(5), except that a mortgage does not include an interest in another WHFIT or mortgages held by another WHFIT.

(12) A *non-mortgage widely held fixed investment trust* (NMWHFIT) is a WHFIT other than a widely held mortgage trust (as defined in paragraph (b)(23) of this section).

(13) A *non pro-rata partial principal payment* is any partial payment of principal received on a debt instrument which does not retire the debt instrument and which is not a pro-rata prepayment described in § 1.1275-2(f)(2).

(14) The *redemption asset proceeds* equal the redemption proceeds (as defined in paragraph (b)(15) of this section) less the cash held for distribution with respect to the redeemed trust interest.

(15) The *redemption proceeds* equal the total amount paid to a redeeming TIH as the result of a redemption of a trust interest.

(16) A *requesting person* is—

(i) A middleman;

(ii) A beneficial owner who is a broker;

(iii) A beneficial owner who is an exempt recipient who holds a trust interest directly and not through a middleman;

(iv) A noncalendar-year beneficial owner who holds a trust interest directly and not through a middleman; or

(v) A representative or agent of a person specified in this paragraph (b)(16).

(17) The *sales asset proceeds* equal the sales proceeds (as defined in paragraph (b)(18) of this section) less the cash held for distribution with respect to the sold trust interest at the time of the sale.

(18) The *sales proceeds* equal the total amount paid to a selling TIH in consideration for the sale of a trust interest.

(19) The *start-up date* is the date on which substantially all of the assets have been deposited with the trustee of the WHFIT.

(20) A *trust interest holder* (TIH) is any person who holds a direct or indirect interest, including a beneficial interest, in a WHFIT at any time during the calendar year.

(21) ***Trust sales proceeds*** equal the amount paid to a WHFIT for the sale or disposition of an asset held by the WHFIT, including principal payments received by the WHFIT that completely retire a debt instrument (other than a final scheduled principal payment) and pro-rata partial principal prepayments described under § 1.1275-2(f)(2). Trust sales proceeds do not include amounts paid for any interest income that would be required to be reported under § 1.6045-1(d)(3). Trust sales proceeds also do not include amounts paid to a NMWHFIT as the result of pro-rata sales of trust assets to effect a redemption described in paragraph (c)(2)(iv)(G) of this section or the value of assets received as a result of a tax-free corporate reorganization as described in paragraph (c)(2)(iv)(H) of this section.

(22) A *widely held fixed investment trust* (WHFIT) is an arrangement classified as a trust under § 301.7701-4(c) of this chapter, provided that—

(i) The trust is a United States person under section 7701(a)(30)(E);

(ii) The beneficial owners of the trust are treated as owners under subpart E, part I, subchapter J, chapter 1 of the Internal Revenue Code; and

(iii) At least one interest in the trust is held by a middleman.

(23) A *widely held mortgage trust* (WHMT) is a WHFIT, the assets of which consist only of one or more of the following—

(i) Mortgages;

(ii) Regular interests in a REMIC;

(iii) Interests in another WHMT;

(iv) Reasonably required reserve funds;

(v) Amounts received on the assets described in paragraphs (b)(23)(i), (ii), (iii), and (iv) of this section pending distribution to TIHs; and

(vi) During a brief initial funding period, cash and short-term contracts for the purchase of the assets described in paragraphs (b)(23)(i), (ii), and (iii).

(c) ***Trustee's obligation to report information*** —

(1) ***In general.*** Upon the request of a requesting person (as defined in paragraph (b)(16) of this section), a trustee of a WHFIT must report the information described in paragraph (c)(2) of this section to the requesting person. The trustee must determine such information in accordance with the following rules—

(i) ***Calculation.*** WHFIT information may be calculated in any manner that enables a requesting person to determine with reasonable accuracy the WHFIT items described in paragraph (c)(2) of this section that are attributable (or, if permitted under paragraphs (c)(2)(iv)(B) or (f)(2)(iii) of this section, distributed) to a beneficial owner for the taxable year of that owner. The manner of calculation must generally conform with industry practice for calculating the WHFIT items described in paragraph (c)(2) of this section for the type of asset or assets held by the WHFIT, and must enable a requesting person to separately state any WHFIT item that, if taken into account separately by a beneficial owner, would result in an income tax liability different from that which would result if the owner did not take the item into account separately.

(ii) ***Calculation period*** —WHFIT information may be calculated on the basis of a calendar month, calendar quarter, or half or full calendar year, provided that a trustee uses the same calculation period for the life of the WHFIT and the information provided by the trustee meets the requirements of paragraph (c)(1)(i) of this section. Regardless of the calculation period chosen by the trustee, the trustee must provide information requested by a requesting person under paragraph (c)(5) on a calendar year basis. The trustee may provide additional information to requesting persons throughout the calendar year at the trustee's discretion.

(iii) ***Accounting method*** —

(A) ***General rule.*** WHFIT information must be calculated and reported using the cash receipts and disbursements method of accounting unless another method is required by the Internal Revenue Code or regulations with respect to a specific trust item. Accordingly, a trustee must provide information necessary for TIHs to comply with the rules of subtitle A,

chapter 1, subchapter P, part V, subpart A of the Internal Revenue Code, which require the inclusion of accrued amounts with respect to OID, and section 860B(b), which requires the inclusion of accrued amounts with respect to a REMIC regular interest.

(B) ***Exception for WHFITs marketed predominantly to taxpayers on the accrual method.*** If the trustee or the trust's sponsor knows or reasonably should know that a WHFIT is marketed primarily to accrual method TIHs and the WHFIT holds assets for which the timing of the recognition of income is materially affected by the use of the accrual method of accounting, the trustee must calculate and report trust information using the accrual method of accounting.

(iv) ***Gross income requirement.*** The amount of income required to be reported by the trustee is the gross income (as defined in section 61) generated by the WHFIT's assets. Thus, in the case of a WHFIT that receives a payment of income from which an expense (or expenses) has been deducted, the trustee, in calculating the income to be reported under paragraph (c)(2)(ii) of this section, must report the income earned on the trusts assets unreduced by the deducted expense or expenses and separately report the deducted expense or expenses. See paragraph (c)(2)(iv) of this section regarding reporting with respect to sales and dispositions.

(2) ***Information to be reported by all WHFITs.*** With respect to all WHFITs—

(i) ***Trust identification and calculation period chosen.*** The trustee must report information identifying the WHFIT, including—

(A) The name of the WHFIT;

(B) The employer identification number of the WHFIT;

(C) The name and address of the trustee;

(D) The Committee on Uniform Security Identification Procedure (CUSIP) number, account number, serial number, or other identifying number of the WHFIT;

(E) The classification of the WHFIT as either a WHMT or NMWHFIT; and

(F) The calculation period used by the trustee.

(ii) ***Items of income, expense, and credit.*** The trustee must report information detailing—

(A) All items of gross income (including OID, except that OID is not required to be included for a WHMT that has a start-up date (as defined in paragraph (b)(19) of this section) prior to August 13, 1998).

(B) All items of expense (including affected expenses); and

(C) All items of credit.

(iii) ***Non pro-rata partial principal payments.*** The trustee must report information detailing non pro-rata partial principal payments (as defined in paragraph (b)(13) of this section) received by the WHFIT.

(iv) ***Asset sales and dispositions.*** The trustee must report information regarding sales and dispositions of WHFIT assets as required in this paragraph (c)(2)(iv). For purposes of this paragraph (c)(2)(iv), a payment (other than a final scheduled payment) that completely retires a debt instrument (including a mortgage held by a WHMT) or a pro-rata prepayment on a debt

instrument (see § 1.1275-2(f)(2)) held by a WHFIT must be reported as a full or partial sale or disposition of the debt instrument. Pro-rata sales of trust assets to effect redemptions, as defined in paragraph (c)(2)(iv)(G) of this section, or exchanges of trust assets as the result of a corporate reorganization under paragraph (c)(2)(iv)(H) of this section, are not reported as sales or dispositions under this paragraph (c)(2)(iv).

(A) ***General rule.*** Except as provided in paragraph (c)(2)(iv)(B) (regarding the exception for certain NMWHFITs) or paragraph (c)(2)(iv)(C) (regarding the exception for certain WHMTs) of this section, the trustee must report with respect to each sale or disposition of a WHFIT asset—

(*1*) The date of each sale or disposition;

(*2*) Information that enables a requesting person to determine the amount of trust sales proceeds (as defined in paragraph (b)(21) of this section) attributable to a beneficial owner as a result of each sale or disposition; and

(*3*) Information that enables a beneficial owner to allocate, with reasonable accuracy, a portion of the owner's basis in its trust interest to each sale or disposition.

(B) ***Exception for certain NMWHFITs.*** If a NMWHFIT meets paragraph (c)(2)(iv)(D)(*1*)(regarding the general de minimis test), paragraph (c)(2)(iv)(E) (regarding the qualified NMWHFIT exception), or paragraph (c)(2)(iv)(F) (regarding the NMWHFIT final calendar year exception) of this section, the trustee is not required to report under paragraph (c)(2)(iv)(A) of this section. Instead, the trustee must report sufficient information to enable a requesting person to determine the amount of trust sales proceeds distributed to a beneficial owner during the calendar year with respect to each sale or disposition of a trust asset. The trustee also must provide requesting persons with a statement that the NMWHFIT is permitted to report under this paragraph (c)(2)(iv)(B).

(C) ***Exception for certain WHMTs.*** If a WHMT meets either the general or the special de minimis test of paragraph (c)(2)(iv)(D) of this section for the calendar year, the trustee is not required to report under paragraph (c)(2)(iv)(A) of this section. Instead, the trustee must report information to enable a requesting person to determine the amount of trust sales proceeds attributable to a beneficial owner as a result of the sale or disposition. The trustee also must provide requesting persons with a statement that the WHMT is permitted to report under this paragraph (c)(2)(iv)(C).

(D) ***De minimis tests*** —

(*1*) ***General WHFIT de minimis test.*** The general WHFIT de minimis test is satisfied if trust sales proceeds for the calendar year are not more than five percent of the net asset value of the trust (aggregate fair market value of the trust's assets less the trust's liabilities) as of the later of January 1 and the start-up date (as defined paragraph (b)(19) of this section); or, if the trustee chooses, the later of January 1 and the measuring date. The measuring date is the date of the last deposit of assets into the WHFIT (not including any deposit of assets into the WHFIT pursuant to a distribution reinvestment program), not to exceed 90 days after the date the registration statement of the WHFIT becomes effective under the Securities Act of 1933.

(2) ***Special WHMT de minimis test.*** A WHMT that meets the asset requirement of paragraph (g)(1)(ii)(E) of this section satisfies the special WHMT de minimis test in this paragraph (c)(2)(iv)(D)(*2*) if trust sales proceeds for the calendar year are not more than five percent of the aggregate outstanding principal balance of the WHMT (as defined in paragraph (g)(1)(iii)(D) of this section) as of the later of January 1 of that year or the trust's start-up date. For purposes of applying the special WHMT de minimis test in this paragraph (c)(2)(iv)(D)(*2*), amounts that result from the complete or partial payment of the outstanding principal balance of the mortgages held by the trust are not included in the amount of trust sales proceeds. The IRS and the Treasury Department may provide by revenue ruling, or by other published guidance, that the special de minimis test of this paragraph (c)(2)(iv)(D)(*2*) may be applied to WHFITs holding debt instruments other than those described in paragraph (g)(1)(ii)(E) of this section.

(3) ***Effect of clean-up call.*** If a WHFIT fails to meet either de minimis test described in this paragraph (c)(2)(iv)(D) solely as the result of a clean-up call, as defined in paragraph (b)(6) of this section, the WHFIT will be treated as having met the de minimis test.

(4) ***Exception for certain fully reported sales*** —

(*i*) ***Rule.*** If a trustee of a NMWHFIT reports the sales described in paragraph (c)(2)(iv)(D)(*4*)(*ii*) of this section as provided under paragraph (c)(2)(iv)(A) of this section (regardless of whether the general minimis test in paragraph (c)(2)(iv)(D)(*1*) of this section is satisfied for a particular calendar year) consistently throughout the life of the WHFIT, a trustee may exclude the trust sales proceeds received by the WHFIT as a result of those sales from the trust sales proceeds used to determine whether a WHFIT has satisfied the general de minimis test in paragraph (c)(2)(iv)(D)(*1*) of this section.

(*ii*) ***Applicable sales and dispositions.*** This paragraph (c)(2)(iv)(D)(*4*) applies to sales and dispositions resulting from corporate reorganizations and restructurings for which the trust receives cash, the sale of assets received by the trust in corporate reorganizations and restructurings (including conversions of closed-end investment companies to open-end investment companies), principal prepayments, bond calls, bond maturities, and the sale of securities by the trustee as required by the governing document or applicable law governing fiduciaries in order to maintain the sound investment character of the trust, and any other nonvolitional dispositions of trust assets.

(*iii*) ***Certain small sales and dispositions.*** If the amount of trust sales proceeds from a sale or disposition described in paragraph (c)(2)(iv)(D)(*4*)(*ii*) of this section is less than .01 percent of the net fair market value of the WHFIT as determined for applying the de minimis test for the calendar year, the trustee is not required to report the sale or disposition under paragraph (c)(2)(iv)(A) of this section provided the trustee includes the trust sales proceeds, received for purposes of determining whether the trust has met the general de minimis test of paragraph (c)(2)(iv)(D)(*1*) of this section.

(E) ***Qualified NMWHFIT exception.*** The qualified NMWHFIT exception is satisfied if—

(*1*) The NMWHFIT has a start-up date (as defined in paragraph (b)(19) of this section) before February 23, 2006;

(*2*) The registration statement of the NMWHFIT becomes effective under the Securities Act of 1933, as amended (15 U.S.C. 77a, *et seq.*) and trust interests are offered for sale to the public before February 23, 2006; or

(*3*) The registration statement of the NMWHFIT becomes effective under the Securities Act of 1933 and trust interests are offered for sale to the public on or after February 23, 2006, and before July 31, 2006, and the NMWHFIT is fully funded before October 1, 2006. For purposes of determining whether a NMWHFIT is fully funded under this paragraph (c)(2)(iv)(E), deposits to the NMWHFIT after October 1, 2006, that are made pursuant to a distribution reinvestment program that is consistent with the requirements of § 301.7701-4(c) of this chapter are disregarded.

(F) ***NMWHFIT final calendar year exception.*** The NMWHFIT final calendar year exception is satisfied if—

(*1*) The NMWHFIT terminates on or before December 31 of the year for which the trustee is reporting;

(*2*) Beneficial owners exchange their interests for cash or are treated as having exchanged their interests for cash upon termination of the trust; and

(*3*) The trustee makes reasonable efforts to engage in pro-rata sales of trust assets to effect redemptions.

(G) ***Pro-rata sales of trust assets to effect a redemption*** —

(1) ***Rule.*** Pro-rata sales of trust assets to effect redemptions are not required to be reported under this paragraph (c)(2)(iv).

(2) ***Definition.*** Pro-rata sales of trust assets to effect redemptions occur when—

(*i*) One or more trust interests are tendered for redemption;

(*ii*) The trustee identifies the pro-rata shares of the trust assets that are deemed to be owned by the trust interest or interests tendered for redemption (See paragraph (b)(8) of this section for a description of how pro-rata is to be applied for purposes of this paragraph (c)(2)(iv)(G)) and sells those assets as soon as practicable;

(*iii*) Proceeds from the sales of the assets identified in paragraph (c)(2)(iv)(G)(2)(*ii*) of this section are used solely to effect redemptions; and

(*iv*) The redemptions are reported as required under paragraph (c)(2)(v) of this section by the trustee.

(*3*) ***Additional rules*** —

(*i*) ***Calendar month aggregation.*** The trustee may compare the aggregate pro-rata share of the assets deemed to be owned by the trust interests tendered for redemption during the calendar month with the aggregate sales of assets to effect redemptions for the calendar month to determine the pro-rata sales of trust assets to effect redemptions for the calendar month. If the aggregate pro-

rata share of an asset deemed to be owned by the trust interests tendered for redemption for the month is a fractional amount, the trustee may round that number up to the next whole number for the purpose of determining the pro-rata sales to effect redemptions for the calendar month;

(*ii*) ***Sales of assets to effect redemptions may be combined with sales of assets for other purposes.*** Sales of assets to effect redemptions may be combined with the sales of assets to obtain cash for other purposes but the proceeds from the sales of assets to effect redemptions must be used solely to provide cash for redemptions and the sales of assets to obtain cash for other purposes must be reported as otherwise provided in this paragraph (c)(2)(iv). For example, if a trustee sells assets and the proceeds are used by the trustee to pay trust expenses, these amounts are to be included in the amounts reported under paragraph (c)(2)(iv)(A) or (B), as appropriate.

(*4*) ***Example —***

(*i*) ***January 1, 2008.*** Trust has one million trust interests and all interests have equal value and equal rights. The number of shares of stock in corporations A through J and the pro-rata share of each stock that a trust interest is deemed to own as of January 1, 2008, is as follows:

Stock	Total shares	Per trust interest
A	24,845	.024845
B	28,273	.028273
C	35,575	.035575
D	13,866	.013866
E	25,082	.025082
F	39,154	.039154
G	16,137	.016137
H	14,704	.014704
I	17,436	.017436
J	31,133	.031133

(*ii*) ***Transactions of January 2, 2008.*** On January 2, 2008, 50,000 trust interests are tendered for redemption. The deemed pro-rata ownership of stocks A through J represented by the 50,000 redeemed trust interests and the stocks sold to provide cash for the redemptions are set out in the following table:

Stock	Deemed pro-rata ownership	Shares sold
A	1,242.25	1,242

Stock	Deemed pro-rata ownership	Shares sold
B	1,413.65	1,413
C	1,778.75	1,779
D	693.30	694
E	1,254.10	1,254
F	1,957.70	1,957
G	806.85	807
H	735.20	735
I	871.80	872
J	1,556.65	1,557

(*iii*) ***Transactions on January 15 through 17, 2008.*** On January 15, 2008, 10,000 trust interests are tendered for redemption. Trustee lends money to Trust for redemptions. On January 16, B merges into C at a rate of .55 per share. On January 17, Trustee sells stock to obtain cash to be reimbursed the cash loaned to Trust to effect the redemptions. The pro-rata share of the stock deemed to be owned by the 10,000 redeemed trust interests and the stock sold by the trustee to effect the redemptions are set out in the following table:

Stock	Deemed pro-rata ownership	Shares sold
A	248.45	249
B	00	00
C	511.25	512
D	138.66	138
E	250.82	251
F	391.54	392
G	161.37	162
H	147.04	148
I	174.36	174
J	311.33	311

(*iv*) ***Transactions on January 28 and 29, 2008.*** On January 28, 2008, the value of the H stock is $30.00 per share and Trustee, pursuant to Trust's governing document, sells the H stock to preserve the financial integrity of Trust and receives $414,630. Trustee intends to report this sale under paragraph (c)(2)(iv)(A) of this section and to distribute the proceeds of the sale pro-rata to trust interest holders on Trust's next scheduled distribution date. On January 29, 2008, while trustee still holds the proceeds from the January 28 sale, 10,000

trust interests are tendered for redemption. The pro-rata share of the stock deemed to be owned by the 10,000 redeemed trust interests and the stock sold by the trustee to effect the redemptions are set out in the following table:

Stock	Deemed pro-rata ownership	Shares sold
A	248.45	248
B	0	0
C	511.25	511
D	138.66	139
E	250.82	251
F	391.54	391
G	161.37	161
H	[1] 0	0
I	174.36	175
J	311.33	312

[1] *Share of cash proceeds: $4,458.39.*

(v) ***Monthly amounts.*** To determine the pro-rata sales to effect redemptions for January, trustee compares the aggregate pro-rata share of stocks A through J (rounded to the next whole number) deemed to be owned by the trust interests tendered for redemption during the month of January with the sales of stocks A through J to effect redemptions:

Stock	Deemed pro-rata ownership	Shares sold
A	1740	1739
B	0	0
C	3579	3579
D	971	971
E	1756	1756
F	2741	2741
G	1130	1130
H	883	883
I	1221	1221

Stock	Deemed pro-rata ownership	Shares sold
J	2180	2180

(*vi*) ***Pro-rata sales to effect redemptions for the month of January.*** For the month of January, the deemed pro-rata ownership of shares of stocks A through J equal or exceed the sales of stock to effect redemptions for the month. Accordingly, all of the sales to effect redemptions during the month of January are considered to be pro-rata and are not required to be reported under this paragraph (c)(2)(iv).

(H) ***Corporate Reorganizations.*** The exchange of trust assets for other assets of equivalent value pursuant to a tax free corporate reorganization is not required to be reported as a sale or disposition under this paragraph (c)(2)(iv).

(v) ***Redemptions and sales of WHFIT interests*** —

(A) ***Redemptions*** —

(*1*) ***In general.*** Unless paragraph (c)(2)(v)(C) of this section applies, for each date on which the amount of a redemption proceeds for the redemption of a trust interest is determined, the trustee must provide information to enable a requesting person to determine—

(*i*) The redemption proceeds (as defined in paragraph (b)(15) of this section) per trust interest on that date;

(*ii*) The redemption asset proceeds (as defined in paragraph (b)(14) of this section) per trust interest on that date; and

(*iii*) The gross income that is attributable to the redeeming beneficial owner for the portion of the calendar year that the redeeming beneficial owner held its interest (including income earned by the WHFIT after the date of the last income distribution.

(*2*) ***In kind redemptions.*** The value of the assets received with respect to an in-kind redemption (as defined in paragraph (b)(8) of this section) is not required to be reported under this paragraph (c)(2)(v)(A). Information regarding the income attributable to a redeeming beneficial owner must, however, be reported under paragraph (c)(2)(v)(A)(*1*)(*iii*) of this section.

(B) ***Sale of a trust interest.*** Under paragraph (c)(2)(v)(C) of this section applies, if a secondary market for interests in the WHFIT is established, the trustee must provide, for each day of the calendar year, information to enable requesting persons to determine—

(*1*) The sale assets proceeds (as defined in paragraph (b)(17) of this section) per trust interest on that date; and

(2) The gross income that is attributable to a selling beneficial owner and to a purchasing beneficial owner for the portion of the calendar year that each held the trust interest.

(C) *Simplified Reporting for Certain NMWHFITs* —

(1) ***In general.*** The trustee of an NMWHFIT described in paragraph (c)(2)(v)(C)(2) of this section is not required to report the information described in paragraph (c)(2)(v)(A) of this section (regarding redemptions) or (c)(2)(v)(B) of this section (regarding sales). However, the trustee must report to requesting persons, for each date on which the amount of redemption proceeds to be paid for the redemption of a trust interest is determined, information that will enable requesting persons to determine the redemption proceeds per trust interest on that date. The trustee also must provide requesting persons with a statement that this paragraph applies to the NMWHFIT.

(2) ***NMWHFITs that qualify for the exception.*** This paragraph (c)(2)(v)(C) applies to a NMWHFIT if—

(*i*) Substantially all the assets of the NMWHFIT produce income that is treated as interest income (but only if these assets trade on a recognized exchange or securities market without a price component attributable to accrued interest) or produce dividend income (as defined in section 6042(b) and the regulations under that section). (Trust sales proceeds and gross proceeds from sales described in paragraphs (c)(2)(iv)(G) and (H) of this section are ignored for the purpose of determining if substantially all of a NMWHFIT's assets produce dividend or the interest income described in this paragraph); and

(*ii*) The qualified NMWHFIT exception of paragraph (c)(2)(iv)(E) of this section is satisfied, or the trustee is required by the governing document of the NMWHFIT to determine and distribute all cash held for distribution (as defined in paragraph (b)(5) of this section) no less frequently than monthly. A NMWHFIT will be considered to have satisfied this paragraph (c)(2)(v)(C)(2)(*i*) notwithstanding that the governing document of the NMWHFIT permits the trustee to forego making a required monthly or more frequent distribution, if the cash held for distribution is less than 0.1 percent of the aggregate net asset value of the trust as of the date specified in the governing document for calculating the amount of the monthly distribution.

(vi) ***Information regarding bond premium.*** The trustee generally must report information that enables a beneficial owner to determine, in any manner that is reasonably consistent with section 171, the amount of the beneficial owner's amortizable bond premium, if any, for each calendar year. However, if a NMWHFIT meets the general *de minimis* test in paragraph (c)(2)(iv)(D)(1) of this section, the qualified NMWHFIT exception of paragraph (c)(2)(iv)(E) of this section, or the NMWHFIT final calendar year exception of paragraph (c)(2)(iv)(F) of this section, the trustee of the NMWHFIT is not required to report information regarding bond premium.

(vii) ***Information regarding market discount.*** The trustee generally must report information that enables a beneficial owner to determine, in any manner reasonably consistent with section 1276 (including section 1276(a)(3)), the amount of market discount that has accrued during the

calendar year. However, if a NMWHFIT meets the general *de minimis* test in paragraph (c)(2)(iv)(D) of this section, the qualified NMWHFIT exception of paragraph (c)(2)(iv)(E) of this section, or the NMWHFIT final calendar year exception of paragraph (c)(2)(iv)(F) of this section, the trustee of such NMWHFIT is not required to provide information regarding market discount.

(viii) ***Other information.*** The trustee must provide any other information necessary for a beneficial owner of a trust interest to report, with reasonable accuracy, the items (as defined in paragraph (b)(9) of this section) attributable to the portion of the trust treated as owned by the beneficial owner under section 671.

(3) ***Identifying the representative who will provide trust information.*** The trustee must identify a representative of the WHFIT who will provide the information specified in this paragraph (c). The trustee also may identify an Internet website at which the trustee will provide the information specified in this paragraph (c). This information must be—

(i) Printed in a publication generally read by, and available to, requesting persons;

(ii) Stated in the trust's prospectus; or

(iii) Posted at the trustee's Internet website.

(4) ***Time and manner of providing information*** —

(i) ***Time*** —

(A) ***In general.*** Except as provided in paragraph (c)(4)(i)(B) of this section, a trustee must provide the information specified in this paragraph (c) to requesting persons on or before the later of—

(*1*) The 30th day after the close of the calendar year to which the request relates; or

(*2*) The day that is 14 days after the receipt of the request.

(B) ***Trusts holding interests in other WHFITs or in REMICs.*** If the WHFIT holds an interest in one or more other WHFITs or holds one or more REMIC regular interests, or holds both, a trustee must provide the information specified in this paragraph (c) to requesting persons on or before the later of—

(*1*) The 44th day after the close of the calendar year to which the request relates; or

(*2*) The day that is 28 days after the receipt of the request.

(ii) ***Manner.*** The information specified in this paragraph (c) must be provided—

(A) By written statement sent by first class mail to the address provided by the requesting person;

(B) By causing it to be printed in a publication generally read by and available to requesting persons and by notifying requesting persons in writing of the publication in which it will appear, the date on which it will appear, and, if possible, the page on which it will appear;

(C) By causing it to be posted at an Internet website, provided the trustee identifies the website under paragraph (c)(3) of this section;

(D) By electronic mail provided that the requesting person requests that the trustee furnish the information by electronic mail and the person furnishes an electronic address; or

(E) By any other method agreed to by the trustee and the requesting person.

(iii) ***Inclusion of information with respect to all calculation periods.*** If a trustee calculates WHFIT information using a calculation period other than a calendar year, the trustee must provide information for each calculation period that falls within the calendar year requested.

(5) ***Requesting information from a WHFIT*** —

(i) ***In general.*** Requesting persons may request the information specified in this paragraph (c) from a WHFIT.

(ii) ***Manner of requesting information.*** In requesting WHFIT information, a requesting person must specify the WHFIT and the calendar year for which information is requested.

(iii) ***Period of time during which a requesting person may request WHFIT information.*** For the life of the WHFIT and for five years following the date of the WHFIT's termination, a requesting person may request the information specified in this paragraph (c) for any calendar year of the WHFIT's existence beginning with the 2007 calendar year.

(6) ***Trustee's requirement to retain records.*** For the life of the WHFIT and for five years following the date of termination of the WHFIT, the trustee must maintain in its records a copy of the information required to be provided to requesting persons this paragraph (c) for each calendar year beginning with the 2007 calendar year. For a period of five years following the close of the calendar year to which the data pertains, the trustee also must maintain in its records such supplemental data as may be necessary to establish that the information provided to requesting persons is correct and meets the requirements of this paragraph (c).

(d) ***Form 1099 requirement for trustees and middlemen*** —

(1) ***Obligation to file Form 1099 with the IRS*** —

(i) ***In general.*** Except as provided in paragraphs (d)(1)(ii) and (iii) of this section—

(A) The trustee must file with the IRS the appropriate Forms 1099, reporting the information specified in paragraph (d)(2) of this section with respect to any TIH who holds an interest in the WHFIT directly and not through a middleman; and

(B) Every middleman must file with the IRS the appropriate Forms 1099, reporting the information specified in paragraph (d)(2) of this section with respect to any TIH on whose behalf or account the middleman holds an interest in the WHFIT or acts as an intermediary.

(ii) ***Forms 1099 not required for exempt recipients*** —

(A) ***In general.*** A Form 1099 is not required with respect to a TIH who is an exempt recipient (as defined in paragraph (b)(7) of this section), unless the trustee or middleman backup withholds under section 3406 on payments made to an exempt recipient (because, for example, the exempt recipient has failed to furnish a Form W-9 on request). If the trustee or middleman backup withholds, then the trustee or middleman is required to file a Form 1099 under this paragraph (d) unless the trustee or middleman refunds the amount withheld in accordance with § 31.6413(a)-3 of this chapter.

(B) ***Exempt recipients must include WHFIT information in computing taxable income.*** A beneficial owner who is an exempt recipient must obtain WHFIT information and must include the items (as defined in paragraph (b)(9) of this section) of the WHFIT in computing its taxable income on its federal income tax return. Paragraphs (c)(3) and (h) of this section provide rules for exempt recipients to obtain information from a WHFIT.

(iii) ***Reporting and withholding with respect to foreign persons.*** The items of the WHFIT attributable to a TIH who is not a United States person must be reported, and amounts must be withheld, as provided under subtitle A, chapter 3 of the Internal Revenue Code (sections 1441 through 1464) and the regulations thereunder and not reported under this paragraph (d).

(2) ***Information to be reported*** —

(i) ***Determining amounts to be provided on Forms 1099.*** The amounts reported to the IRS for a calendar year by a trustee or middleman on the appropriate Form 1099 must be consistent with the information provided by the trustee under paragraph (c) of this section and must reflect with reasonable accuracy the amount of each item required to be reported on a Form 1099 that is attributable (or if permitted under paragraphs (d)(2)(ii)(D) and (E) of this section, distributed) to the TIH. If the trustee, in providing WHFIT information, uses the safe harbors in paragraph (f)(1) or (g)(1) of this section, then the trustee or middleman must calculate the information to be provided to the IRS on the Forms 1099 in accordance with paragraph (f)(2) or (g)(2) of this section, as appropriate.

(ii) ***Information to be provided on Forms 1099.*** The trustee or middleman must include on the appropriate Forms 1099:

(A) ***Taxpayer information.*** The name, address, and taxpayer identification number of the TIH;

(B) ***Information regarding the person filing the Form 1099.*** The name, address, taxpayer identification number, and telephone number of the person required to file the Form 1099;

(C) ***Gross income.*** All items of gross income of the WHFIT attributable to the TIH for the calendar year (including OID (unless the exception for certain WHMTs applies (see paragraph (c)(2)(ii)(A) of this section)) and all amounts of income attributable to a selling, purchasing, or redeeming TIH for the portion of the calendar year that the TIH held its interest (unless paragraph (c)(2)(v)(C) of this section (regarding an exception for certain NMWHFITs) applies));

(D) ***Non pro-rata partial principal payments.*** All non pro-rata partial principal payments (as defined in paragraph (b)(13) of this section) received by the WHFIT that are attributable (or distributed, in the case of a trustee or middleman reporting under paragraph (f)(2)(iii) of this section) to the TIH;

(E) ***Trust sales proceeds.*** All trust sales proceeds (as defined in paragraph (b)(21) of this section) that are attributable to the TIH for the calendar year, if any, or, if paragraph (c)(2)(iv)(B) of this section (regarding certain NMWHFITs) applies, the amount of trust sales proceeds distributed to the TIH for the calendar year;

(F) ***Reporting Redemptions.*** All redemption asset proceeds (as defined in paragraph (b)(14) of this section) paid to the TIH for the calendar year, if any, or, if paragraph (c)(2)(v)(C) of this section (regarding an exception for certain NMWHFITs) applies, all redemption proceeds (as defined in paragraph (b)(15) of this section) paid to the TIH for the calendar year;

(G) ***Reporting sales of a trust interest on a secondary market.*** All sales asset proceeds (as defined in paragraph (b)(17) of this section) paid to the TIH for the sale of a trust interest or interests on a secondary market established for the NMWHFIT for the calendar year, if any, or, if paragraph (c)(2)(v)(C) of this section (regarding an exception for certain NMWHFITs) applies, all sales proceeds (as defined in paragraph (b)(18) of this section) paid to the TIH for the calendar year; and

(H) ***Other information.*** Any other information required by the Form 1099.

(3) ***Time and manner of filing Forms 1099*** —

(i) ***Time and place.*** The Forms 1099 required to be filed under this paragraph (d) must be filed on or before February 28 (March 31, if filed electronically) of the year following the year for which the Forms 1099 are being filed. The returns must be filed with the appropriate Internal Revenue Service Center, at the address listed in the instructions for the Forms 1099. For extensions of time for filing returns under this section, see § 1.6081-1, the instructions for the Forms 1099, and applicable revenue procedures (see § 601.601(d)(2) of this chapter). For magnetic media filing requirements, see § 301.6011-2 of this chapter.

(ii) ***Reporting trust sales proceeds, redemption asset proceeds, redemption proceeds, sale asset proceeds, sales proceeds and non pro-rata partial principal payments*** —

(A) ***Form to be used.*** Trust sales proceeds, redemption asset proceeds, redemption proceeds, sale asset proceeds, sales proceeds, and non pro-rata partial principal payments are to be reported on the same type of Form 1099 as that required for reporting gross proceeds under section 6045.

(B) ***Appropriate reporting for in-kind redemptions.*** The value of the assets distributed with respect to an in-kind redemption is not required to be reported to the IRS. Unless paragraph (c)(2)(v)(C) of this section applies, the trustee or middleman must report the gross income attributable to the redeemed trust interest for the calendar year up to the date of the redemption under paragraph (d)(2)(ii)(C) of this section.

(e) ***Requirement to furnish a written tax information statement to the TIH*** —

(1) ***In general.*** Every trustee or middleman required to file appropriate Forms 1099 under paragraph (d) of this section with respect to a TIH must furnish to that TIH (the person whose identifying number is required to be shown on the form) a written tax information statement showing the information described in paragraph (e)(2) of this section. The amount of a trust item reported to a TIH under this paragraph (e) must be consistent with the information reported to the IRS with respect to the TIH under paragraph (d) of this section. Information provided in this written statement must be determined in accordance with the rules provided in paragraph (d)(2)(i) of this section (regardless of whether the information was required to be provided on a Form 1099). Further, the trustee or middleman must separately state on the written tax information statement any items that, if taken into account separately by that TIH, would result in an income tax liability that is different from the income tax liability that would result if the items were not taken into account separately.

(2) ***Information required.*** For the calendar year, the written tax information statement must meet the following requirements:

(i) ***WHFIT information.*** The written tax information statement must include the name of the WHFIT and the identifying number of the WHFIT ;

(ii) ***Identification of the person furnishing the statement.*** The written tax information statement must include the name, address, and taxpayer identification number of the person required to furnish the statement;

(iii) ***Items of income, expense, and credit.*** The written tax information statement must include information regarding the items of income (that is, the information required to be reported to the IRS on Forms 1099), expense (including affected expenses), and credit that are attributable to the TIH for the calendar year;

(iv) ***Non pro-rata partial principal payments.*** The written tax information statement must include the information required to be reported to the IRS on Forms 1099 under paragraph (d)(2)(ii)(D) of this section (regarding the non pro-rata partial principal payments that are attributable (or distributed, in the case of a trustee or middleman reporting under paragraph (f)(2)(iii) of this section) to the TIH for the calendar year).

(v) ***Asset sales and dispositions*** —

(A) ***General rule.*** Unless paragraph (c)(2)(iv)(B) (regarding the exception for certain NMWHFITs) or (c)(2)(iv)(C) (regarding the exception for certain WHMTs) of this section applies, the written tax information statement must include, with respect to each sale or disposition of a WHFIT asset for the calendar year—

(*1*) The date of sale or disposition;

(*2*) Information regarding the trust sales proceeds that are attributable to the TIH as a result of the sale or disposition; and

(*3*) Information that will enable the TIH to allocate with reasonable accuracy a portion of the TIH's basis in the TIH's trust interest to the sale or disposition.

(B) ***Special rule for certain NMWHFITs and WHMTs.*** In the case of a NMWHFIT to which paragraph (c)(2)(iv)(B) of this section applies or in the case of a WHMT to which paragraph (c)(2)(iv)(C) of this section applies, the written tax information statement must include, with respect to asset sales and dispositions, only the information required to be reported to the IRS on Form 1099 under paragraph (d)(2)(ii)(E) of this section.

(vi) ***Redemption or sale of a trust interest.*** The written tax information statement must include the information required to be reported to the IRS on Forms 1099 under paragraphs (d)(2)(ii)(F) and (G) of this section (regarding the sales and redemptions of trust interests made by the TIH for the calendar year);

(vii) ***Information regarding market discount and bond premium.*** The written tax information statement must include the information required to be reported by the trustee under paragraphs (c)(2)(vi) and (vii) of this section (regarding bond premium and market discount);

(viii) ***Other information.*** The written tax information statement must include any other information necessary for the TIH to report, with reasonable accuracy for the calendar year, the items (as defined in paragraph (b)(9) of this section) attributable to the portion of the trust treated as owned by the TIH under section 671. The written tax information statement may include information with respect to a trust item on a per trust interest basis if the trustee has reported (or calculated) the information with respect to that item on a per trust interest basis and information with respect to that item is not required to be reported on a Form 1099; and

(ix) ***Required statement.*** The written tax information statement must inform the TIH that the items of income, deduction, and credit, and any other information shown on the statement must be taken into account in computing the taxable income and credits of the TIH on the Federal income tax return of the TIH. If the written tax information statement reports that an amount of qualified dividend income is attributable to the TIH, the written tax information statement also must inform the TIH that the TIH must meet the requirements of section 1(h)(11)(B)(iii) to treat the dividends as qualified dividends.

(3) ***Due date and other requirements.*** The written tax information statement must be furnished to the TIH on or before March 15 of the year following the calendar year for which the statement is being furnished.

(4) ***Requirement to retain records.*** For a period of no less than five years from the due date for furnishing the written tax information statement, a trustee or middleman must maintain in its records a copy of any written tax information statement furnished to a TIH, and such supplemental data as may be required to establish the correctness of the statement.

(f) ***Safe harbor for providing information for certain NMWHFITs*** —

(1) ***Safe harbor for trustee reporting of NMWHFIT information.*** The trustee of a NMWHFIT that meets the requirements of paragraph (f)(1)(i) of this section is deemed to satisfy paragraph (c)(1)(i) of this section, if the trustee calculates and provides WHFIT information in the manner described in this paragraph (f) and provides a statement to a requesting person giving notice that information has been calculated in accordance with this paragraph (f)(1).

(i) ***In general*** —

(A) ***Eligibility to report under this safe harbor.*** Only NMWHFITs that meet the requirements set forth in paragraphs (f)(1)(i)(A)(*1*) and (*2*) of this section may report under this safe harbor. For purposes of determining whether the requirements of paragraph (f)(1)(i)(A)(*1*) of this section are met, trust sales proceeds and gross proceeds from sales described in paragraphs (c)(2)(iv)(G) and (H) of this section are ignored.

(*1*) Substantially all of the NMWHFIT's income is from dividends or interest; and

(*2*) All trust interests have identical value and rights.

(B) ***Consistency requirements.*** The trustee must—

(*1*) Calculate all trust items subject to the safe harbor consistent with the safe harbor; and,

(*2*) Report under this paragraph (f)(1) for the life of the NMWHFIT; or, if the NMWHFIT has a start-up date before January 1, 2007, the NMWHFIT must begin reporting under this paragraph (f)(1) as of January 1, 2007 and must continue to report under this paragraph for the life of the NMWHFIT.

(ii) ***Reporting NMWHFIT income and expenses.*** A trustee must first determine the total amount of NMWHFIT distributions (both actual and deemed) for the calendar year and then express each income or expense item as a fraction of the total amount of NMWHFIT distributions. These fractions (hereinafter referred to as factors) must be accurate to at least four decimal places.

(A) ***Step One: Determine the total amount of NMWHFIT distributions for the calendar year.*** The trustee must determine the total amount of NMWHFIT distributions (actual and deemed) for the calendar year. If the calculation of the total amount of NMWHFIT distributions under this paragraph (f)(1)(ii)(A) results in a zero or a negative number, the trustee may not determine income and expense information under this paragraph (f)(1)(ii)(A) (but may report all other applicable items under this paragraph (f)(1)). The total amount of NMWHFIT distributions equals the amount of NMWHFIT funds paid out to all TIHs (including all trust sales proceeds, all principal receipts, and all redemption proceeds) for the calendar year—

(*1*) Increased by—

(*i*) All amounts that would have been distributed during the calendar year, but were instead reinvested pursuant to a reinvestment plan; and

(*ii*) All cash held for distribution to TIHs as of December 31 of the year for which the trustee is reporting; and

(*2*) Decreased by—

(*i*) All cash distributed during the current year that was included in a year-end cash allocation factor (see paragraph (f)(1)(ii)(C)(*1*) of this section) for a prior year;

(*ii*) All redemption asset proceeds paid for the calendar year, or if paragraph (c)(2)(v)(C) of this section applies to the NMWHFIT, all redemption proceeds paid for the calendar year;

(*iii*) All trust sales proceeds distributed during the calendar year; and

(*iv*) All non pro-rata partial principal payments distributed during the calendar year.

(*3*) For the purpose of determining the amount of all redemption asset proceeds or redemption proceeds paid for the calendar year with respect to paragraph (f)(1)(ii)(A)(*2*)(*ii*) of this section, the value of the assets (not including cash) distributed with respect to an in-kind redemption is disregarded. Any cash distributed as part of the redemption must be included in the total amount of NMWHFIT distributions.

(B) ***Step Two: Determine factors that express the ratios of NMWHFIT income and expenses to the total amount of NMWHFIT distributions.*** The trustee must determine factors that express the ratios of NMWHFIT income and expenses to the total amount of NMWHFIT distributions as follows:

(*1*) ***Income factors.*** For each item of income generated by the NMWHFIT's assets for the calendar year, the trustee must determine the ratio of the gross amount of that item of income to the total amount of NMWHFIT distributions for the calendar year; and

(*2*) ***Expense factors.*** For each item of expense paid by a NMWHFIT during the calendar year, the trustee must determine the ratio of the gross amount of that item of expense to the total amount of NMWHFIT distributions for the calendar year.

(C) ***Step Three: Determine adjustments for reconciling the total amount of NMWHFIT distributions (determined under Step One) with amounts actually paid to TIHs.*** Paragraph (f)(1)(ii)(B) of this section (Step Two) requires an item of income or expense to be

expressed as a ratio of that item to the total amount of NMWHFIT distributions as determined in paragraph (f)(1)(ii)(A) of this section (Step One). A TIH's share of the total amount of NMWHFIT distributions may differ from the amount actually paid to that TIH. A trustee, therefore, must provide information that can be used to compute a TIH's share of the total amount of NMWHFIT distributions based on the amount actually paid to the TIH. A trustee satisfies this requirement by providing a current year-end cash allocation factor, a prior year cash allocation factor, and the date on which the prior year cash was distributed to TIHs (prior year cash distribution date).

(*1*) ***The current year-end cash allocation factor.*** The current year-end cash allocation factor is the amount of cash held for distribution to TIHs by the NMWHFIT as of December 31 of the calendar year for which the trustee is reporting, divided by the number of trust interests outstanding as of that date.

(*2*) ***The prior year cash allocation factor.*** The prior year cash allocation factor is the amount of the distribution during the calendar year for which the trustee is reporting that was included in determining a year-end cash allocation factor for a prior year, divided by the number of trust interests outstanding on the date of the distribution.

(iii) ***Reporting non pro-rata partial principal payments under the safe harbor.*** The trustee must provide a list of dates on which non pro-rata partial principal payments were distributed by the trust, and the amount distributed, per trust interest.

(iv) ***Reporting sales and dispositions of NMWHFIT assets under the safe harbor*** —

(A) ***NMWHFITs that must report under the general rule*** —

(*1*) ***In general.*** If a NMWHFIT must report under the general rule of paragraph (c)(2)(iv)(A) of this section, the trustee must provide a list of dates (from earliest to latest) on which sales or dispositions of NMWHFIT assets occurred during the calendar year for which the trustee is reporting and, for each date identified, provide—

(*i*) The trust sales proceeds received by the trust, per trust interest, with respect to the sales and dispositions, on that date;

(*ii*) The trust sales proceeds distributed to TIHs, per trust interest, with respect to the sales and dispositions on that date, and the date that the trust sales proceeds were distributed to the TIHs; and

(*iii*) The ratio (expressed as a percentage) of the assets sold or disposed of on that date to all assets held by the NMWHFIT.

(*2*) ***Determination of the portion of all assets held by the NMWHFIT that the assets sold or disposed of represented*** —

(*i*) If a NMWHFIT terminates within twenty-four months of its start-up date, the ratio of the assets sold or disposed of on that date to all assets held by the NMWHFIT is based on the fair market value of the NMWHFIT's assets as of the start-up date; or

(*ii*) If a NMWHFIT terminates more than twenty-four months after its start-up date, the ratio of the assets sold or disposed of on that date to all assets held by the NMWHFIT is based on the fair market value of the NMWHFIT's assets as of the date of the sale or disposition.

(B) ***NMWHFITs excepted from the general rule.*** If paragraph (c)(2)(iv)(B) of this section applies to the NMWHFIT, the trustee must provide a list of dates on which trust sales proceeds were distributed, and the amount of trust sales proceeds, per trust interest, that were distributed on that date. The trustee also must also provide requesting persons with the statement required by paragraph (c)(2)(iv)(B) of this section.

(v) ***Reporting redemptions under the safe harbor*** —

(A) ***In general.*** The trustee must:

(*1*) Provide a list of dates on which the amount of redemption proceeds paid for the redemption of a trust interest was determined and the amount of the redemption asset proceeds determined per trust interest on that date, or if paragraph (c)(2)(v)(C) of this section applies to the NMWHFIT, the amount of redemption proceeds determined on that date; or

(*2*) Provide to each requesting person that held (either for its own behalf or for the behalf of a TIH) a trust interest that was redeemed during the calendar year, the date of the redemption and the amount of the redemption asset proceeds per trust interest determined on that date, or if paragraph (c)(2)(v)(C) of this section applies to the NMWHFIT, the amount of the redemption proceeds determined for that date; and

(B) ***Paragraph (c)(2)(v)(C) statement.*** If paragraph (c)(2)(v)(C) of this section applies to the NMWHFIT, the trustee must provide a statement to requesting persons to the effect that the trustee is providing information consistent with paragraph (c)(2)(v)(C) of this section.

(vi) ***Reporting the sale of a trust interest under the safe harbor.*** If paragraph (c)(2)(v)(C) of this section does not apply to the NMWHFIT, the trustee must provide, for each day of the calendar year, the amount of cash held for distribution, per trust interest, by the NMWHFIT on that date. If the trustee is able to identify the date on which trust interests were sold on the secondary market, the trustee alternatively may provide information for each day on which sales of trust interests occurred rather than for each day during the calendar year. If paragraph (c)(2)(v)(C) of this section applies to the NMWHFIT, the trustee is not required to provide any information under this paragraph (f)(1)(vi), other than a statement that the NMWHFIT meets the requirements to report under paragraph (c)(2)(v)(C) of this section.

(vii) ***Reporting OID information under the safe harbor.*** The trustee must provide, for each calculation period, the average aggregate daily accrual of OID per $1,000 of original principal amount.

(viii) ***Reporting market discount information under the safe harbor*** —

(A) ***In general*** —

(*1*) ***Trustee required to provide market discount information.*** If the trustee is required to provide information regarding market discount under paragraph (c)(2)(vii) of this section, the trustee must provide—

(*i*) The information required to be provided under paragraph (f)(1)(iv)(A)(*1*)(*iii*) of this section; and

(*ii*) If the NMWHFIT holds debt instruments with OID, a list of the aggregate adjusted issue prices of the debt instruments per trust interest calculated as of the start-up date or measuring date (see paragraph (c)(2)(iv)(D)(*4*) of this section) (whichever provides more accurate information) and as of January 1 for each subsequent year of the NMWHFIT.

(*2*) ***Trustee not required to provide market discount information.*** If the trustee is not required to provide market discount information under paragraph (c)(2)(vii) of this section (because the NMWHFIT meets the general de minimis test of paragraph (c)(2)(iv)(D)(*1*) of this section, the qualified NMWHFIT exception of paragraph (c)(2)(iv)(E) of this section, or the NMWHFIT final year exception of paragraph (c)(2)(iv)(F) of this section), the trustee is not required under this paragraph (f) to provide any information regarding market discount.

(B) ***Reporting market discount information under the safe harbor when the yield of the debt obligations held by the WHFIT is expected to be affected by prepayments.*** [Reserved]

(ix) ***Reporting bond premium information under the safe harbor.*** [Reserved]

(x) ***Reporting additional information.*** If a requesting person cannot use the information provided by the trustee under paragraphs (f)(1)(ii) through (ix) of this section to determine with reasonable accuracy the trust items that are attributable to a TIH, the requesting person must request, and the trustee must provide, additional information to enable the requesting person to determine the trust items that are attributable to the TIH. See, for example, paragraph (f)(2)(ii)(A)(*4*) of this section which requires a middleman to request additional information from the trustee when the total amount of WHFIT distributions attributable to a TIH equals zero or less.

(2) ***Use of information provided by trustees under the safe harbor for NMWHFITs*** —

(i) ***In general.*** If a trustee reports NMWHFIT items in accordance with paragraph (f)(1) of this section, the information provided with respect to those items on the Forms 1099 required under paragraph (d) of this section to be filed with the IRS and on the statement required under paragraph (e) of this section to be furnished to the TIH must be determined as provided in this paragraph (f)(2).

(ii) ***Determining NMWHFIT income and expense under the safe harbor.*** The trustee or middleman must determine the amount of each item of income and expense attributable to a TIH as follows—

(A) ***Step One: Determine the total amount of NMWHFIT distributions attributable to the TIH.*** To determine the total amount of NMWHFIT distributions attributable to a TIH for the calendar year, the total amount paid to, or credited to the account of, the TIH during the calendar year (including amounts paid as trust sales proceeds or partial non-pro rata principal payments, redemption proceeds, and sales proceeds) is—

(*1*) Increased by—

(*i*) All amounts that would have been distributed during the calendar year to the TIH, but that were reinvested pursuant to a reinvestment plan (unless another person (for example, the custodian of the reinvestment plan) is responsible for reporting these amounts under paragraph (d) of this section); and

(*ii*) An amount equal to the current year-end cash allocation factor (provided by the trustee in accordance with paragraph (f)(1)(ii)(C)(*1*) of this section) multiplied by the number of trust interests held by the TIH as of December 31 of the calendar year for which the trustee is reporting; and

(*2*) Decreased by—

(*i*) An amount equal to the prior year cash allocation factor (provided by the trustee in accordance with paragraph (f)(1)(ii)(C)(*2*) of this section) multiplied by the number of trust interests held by the TIH on the date of the distribution;

(*ii*) An amount equal to all redemption asset proceeds paid to the TIH for the calendar year, or if paragraph (c)(2)(v)(C) of this section applies to the NMWHFIT, an amount equal to all redemption proceeds paid to the TIH for the calendar year;

(*iii*) An amount equal to all sale asset proceeds paid to the TIH for the calendar year, or if paragraph (c)(2)(v)(C) of this section applies to the NMWHFIT, the amount of sales proceeds paid to the TIH for the calendar year;

(*iv*) In the case of a TIH that purchased a trust interest in a NMWHFIT to which paragraph (c)(2)(v)(C) of this section does not apply, an amount equal to the cash held for distribution per trust interest on the date that the TIH acquired its interest, multiplied by the trust interests acquired on that date;

(*v*) The amount of the trust sales proceeds distributed to the TIH, calculated as provided in paragraph (f)(2)(iv)(A)(*3*) of this section; and

(*vi*) The amount of non pro-rata partial principal prepayments distributed to the TIH during the calendar year, calculated as provided in paragraph (f)(2)(iii) of this section.

(*3*) ***Treatment of in-kind distributions under this paragraph (f)(2)(i).*** The value of the assets (not including cash) received with respect to an in-kind redemption is not included in the amount used in paragraph (f)(2)(ii)(A)(*2*)(*ii*) of this section. The cash distributed as part of the redemption, however, must be included in the total amount of NMWHFIT distributions paid to the TIH.

(*4*) ***The total amount of distributions attributable to a TIH calculated under this paragraph (f)(2)(i)(A) equals zero or less.*** If the total amount of distributions attributable to a TIH, calculated under this paragraph (f)(2)(i)(A), equals zero or less, the trustee or middleman may not report the income and expense attributable to the TIH under this paragraph (f)(2)(i). The trustee or middleman must request additional information from the trustee of the NMWHFIT to enable the trustee or middleman to determine with reasonable accuracy the items of income and expense that are attributable to the TIH. The trustee or middleman must report the other items subject to paragraph (f)(1) of this section in accordance with this paragraph (f)(2).

(B) ***Step Two: Apply the factors provided by the trustee to determine the items of income and expense that are attributable to the TIH.*** The amount of each item of income (other than OID) and each item of expense attributable to a TIH is determined as follows—

(*1*) ***Application of income factors.*** For each income factor, the trustee or middleman must multiply the income factor by the total amount of NMWHFIT distributions attributable to the TIH for the calendar year (as determined in paragraph (f)(2)(i)(A) of this section).

(*2*) ***Application of expense factors.*** For each expense factor, the trustee or middleman must multiply the expense factor by the total amount of NMWHFIT distributions attributable to the TIH for the calendar year (as determined in paragraph (f)(2)(i)(A) of this section).

(iii) ***Reporting non pro-rata partial principal payments under the safe harbor.*** To determine the amount of non pro-rata partial principal payments that are distributed to a TIH for the calendar year, the trustee or middleman must aggregate the amount of non pro-rata partial principal payments distributed to a TIH for each day that non pro-rata principal payments were distributed. To determine the amount of non pro-rata principal payments that are distributed to a TIH on each distribution date, the trustee or middleman must multiply the amount of non-pro rata principal payments per trust interest distributed on that date by the number of trust interests held by the TIH.

(iv) ***Reporting sales and dispositions of NMWHFIT assets under the safe harbor—***

(A) ***Reporting under the safe harbor if the general rules apply to the NMWHFIT.*** Unless paragraph (c)(2)(iv)(B) of this section applies, the trustee or middleman must comply with paragraphs (f)(2)(iv)(A)(*1*), (*2*), and (*3*) of this section.

(*1*) ***Form 1099.*** The trustee or middleman must report the amount of trust sales proceeds attributable to the TIH for the calendar year on Form 1099. To determine the amount of trust sales proceeds attributable to a TIH for the calendar year, the trustee or middleman must aggregate the total amount of trust sales proceeds attributable to the TIH for each date on which the NMWHFIT sold or disposed of an asset or assets. To determine the total amount of trust sales proceeds attributable to a TIH for each date that the NMWHFIT sold or disposed of an asset or assets, the trustee or middleman multiplies the amount of trust sales proceeds received by the NMWHFIT per trust interest on that date by the number of trust interests held by the TIH on that date.

(*2*) ***The written tax information statement furnished to the TIH.*** The written tax information statement required to be furnished to the TIH under paragraph (e) of this section must include a list of dates (in order, from earliest to latest) on which sales or dispositions of trust assets occurred during the calendar year and provide, for each date identified—

(i) The trust sales proceeds received by the trust, per trust interest, with respect to the sales or dispositions of trust assets on that date; and

(*ii*) The information provided by the trustee under paragraph (f)(1)(iv)(B)(*2*) of this section regarding the ratio of the assets sold or disposed of on that date to all the assets of the NMWHFIT held on that date, prior to such sale or disposition.

(3) ***Calculating the total amount of trust sales proceeds distributed to the TIH.*** To determine the total amount of NMWHFIT distributions attributable to a TIH, the trustee or middleman must calculate the amount of trust sales proceeds distributed to the TIH for the calendar year. (See paragraph (f)(2)(ii)(A)(*2*)(*v*) of this section.) To determine the amount of trust sales proceeds distributed to a TIH for the calendar year, the trustee or middleman must aggregate the total amount of trust sales proceeds distributed to the TIH for each date on which the NMWHFIT distributed trust sales proceeds. To determine the total amount of trust sales proceeds distributed to a TIH for each date that the NMWHFIT distributed trust sales proceeds, the trustee or middleman must multiply the amount of trust sales proceeds distributed by the NMWHFIT per trust interest on that date by the number of trust interests held by the TIH on that date.

(B) ***Reporting under the safe harbor if paragraph (c)(2)(iv)(B) of this section applies to the NMWHFIT.*** If paragraph (c)(2)(iv)(B) of this section applies, the trustee or middleman must calculate, in the manner provided in paragraph (f)(2)(iv)(A)(*3*) of this section, the amount of trust sales proceeds distributed to the TIH for the calendar year. The trustee or middleman must report this amount on the Form 1099 filed for the TIH and on the written tax information statement furnished to the TIH.

(v) ***Reporting redemptions under the safe harbor*** —

(A) Except as provided in paragraph (f)(2)(v)(B) or (C) of this section, if the trustee has provided a list of dates for which the amount of the redemption proceeds to be paid for the redemption of a trust interest was determined and the redemption asset proceeds paid for that date, the trustee or middleman must multiply the redemption asset proceeds determined per trust interest for that date by the number of trust interests redeemed by the TIH on that date.

(B) If paragraph (c)(2)(v)(C) of this section applies, and the trustee has provided a list of dates for which the amount of the redemption proceeds to be paid for the redemption of a trust interest was determined and the redemption proceeds determined per trust interest on each date, the trustee or middleman must multiply the redemption proceeds per trust interest for each date by the number of trust interests redeemed by the TIH on that date.

(C) If the trustee has provided the requesting person with information regarding the redemption asset proceeds paid for each redemption of a trust interest held by the middleman for the calendar year, or if paragraph (c)(2)(v)(C) of this section applies and the trustee has provided the amount of redemption proceeds paid for each redemption of a trust interest held by the middleman during the calendar year, the requesting person may use this information to determine the amount of the redemption asset proceeds or redemption proceeds paid to the TIH for the calendar year.

(vi) ***Reporting sales of trust interests under the safe harbor*** —

(A) Except as provided in paragraph (f)(2)(vi)(B) of this section, the trustee or middleman must subtract the amount of cash held for distribution per trust interest on the date of the sale from the sales proceeds paid to the TIH to determine the sale asset proceeds that are to be reported to the TIH for each sale of a trust interest.

(B) If paragraph (c)(2)(v)(C) of this section applies, the trustee or middleman must report the sales proceeds paid to the TIH as a result of each sale of a trust interest.

(vii) ***Reporting OID information under the safe harbor*** —The trustee or middleman must aggregate the amounts of OID that are allocable to each trust interest held by a TIH for each calculation period. The amount of OID that is allocable to a trust interest, with respect to each calculation period, is determined by multiplying—

(A) The product of the OID factor and the original principal balance of the trust interest, divided by 1,000; by

(B) The number of days during the OID calculation period in that calendar year that the TIH held the trust interest.

(viii) ***Reporting market discount information under the safe harbor*** —

(A) Except as provided in paragraph (f)(2)(viii)(B) of this section, the trustee or middleman must provide the TIH with the information provided under paragraph (f)(1)(viii) of this section.

(B) If paragraph (c)(2)(iv)(B) of this section applies, the trustee and middleman are not required under this paragraph (f)(2) to provide any information regarding market discount.

(ix) ***Reporting bond premium information under the safe harbor.*** [Reserved]

(3) ***Example of the use of the safe harbor for NMWHFITs.*** The following example illustrates the use of the factors in this paragraph (f) to calculate and provide NMWHFIT information:

> *Example.* (i) *Facts*—(A) *In general*—(*1*) Trust is a NMWHFIT that holds common stock in ten different corporations and has 100 trust interests outstanding. The start-up date for Trust is December 15, 2006, and Trust's registration statement under the Securities Act of 1933 became effective after July 31, 2006. Trust terminates on March 15, 2008. The agreement governing Trust requires Trust to distribute cash held by Trust reduced by accrued but unpaid expenses on April 15, July 15, and October 15 of the 2007 calendar year. The agreement also provides that the trust interests will be redeemed by the Trust for an amount equal to the value of the trust interest, as of the close of business, on the day the trust interest is tendered for redemption. There is no reinvestment plan. A secondary market for interests in Trust will be created by Trust's sponsor and Trust's sponsor will provide Trustee with a list of dates on which sales occurred on this secondary market.
> (*2*) As of December 31, 2006, Trust holds $12x for distribution to TIHs on the next distribution date and has no accrued but unpaid expenses. Trustee includes the $12x in determining the year-end cash allocation factor for December 31, 2006.
>
> (B) *Events occurring during the 2007 calendar year*—(*1*) As of January 1, 2007, Broker1 holds ten trust interests in Trust in street name for each of *J* and *A* and Broker2 holds ten trust interests in Trust in street name for *S. J, A*, and *S*; are individual, cash method taxpayers.
>
> (*2*) As of January 1, 2007, the fair market value of the Trust's assets equals $10,000x.

(*3*) During 2007, Trust receives $588x in dividend income. Trustee determines that $400x of the dividend income received during 2007 meets the definition of a qualified dividend in section 1(h)(11)(B)(i) and the holding period requirement in section 1(h)(11)(B)(iii) with respect to the Trust. During 2007, Trust also receives $12x in interest income from investment of Trust's funds pending distribution to TIHs, and pays $45x in expenses, all of which are affected expenses.

(*4*) On April 15, 2007, Trustee distributes $135x, which includes the $12x included in determining the year-end cash allocation factor for December 31, 2006. As a result of the distribution, Broker1 credits *J*'s account and *A*'s account for $13.50x each. Broker2 credits *S*'s account for $13.50x.

(*5*) On June 1, 2007, Trustee sells shares of stock for $1000x to preserve the soundness of the trust. The stock sold on June 1, 2007, equaled 20% of the aggregate fair market value of the assets held by Trust on the start-up date of Trust. Trustee has chosen not to report sales described in paragraph (c)(2)(iv)(*4*)(*ii*) of Trust's assets under paragraph (c)(2)(iv)(D)(*4*) of this section.

(*6*) On July 15, 2007, Trustee distributes $1,135x, which includes the $1,000x of trust sales proceeds received by Trust for the sale of assets on June 1, 2007. As a result of the distribution, Broker1 credits *J*'s account and *A*'s account for $113.50x each. Broker 2 credits *S*'s account for $113.50x.

(*7*) On September 30 2007, *J*, through Trust's sponsor, sells a trust interest to *S* for $115.35x. Trustee determines that the cash held for distribution per trust interest on September 30 is $1.35x. As a result of the sale, Broker1 credits *J*'s account for $115.35x.

(*8*) On October 15, 2007, Trustee distributes $123x. As a result of the distribution, Broker1 credits *J*'s account for $11.07x and *A*'s account for $12.30x. Broker2 credits *S*'s account for $13.53x.

(*9*) On December 10, 2007, *J* tenders a trust interest to Trustee for redemption through Broker1. Trustee determines that the amount of the redemption proceeds to be paid for a trust interest that is tendered for redemption on December 10, 2007 is $116x, of which $115x represents the redemption asset proceeds. Trustee pays this amount to Broker1 on *J*'s behalf. On December 12, 2007, trustee engages in a non pro-rata sale of shares of common stock for $115x to effect *J*'s redemption of a trust interest. The stock sold on December 12, 2007, equals 2% of the aggregate fair market value of all the assets of Trust as of the start-up date.

(*10*) On December 10, 2007, *J*, through Trust's sponsor, also sells a trust interest to *S* for $116x. Trustee determines that the cash held for distribution per trust interest on that date is $1x. As a result of the sale, Broker1 credits *J*'s account for $116x.

(*11*) As of December 31, 2007, Trust holds cash of $173x and has incurred $15x in expenses that Trust has not paid. *J* is the only TIH to redeem a trust interest during the calendar year. The sale of two trust interests in Trust by *J* to *S* are the only sales that occurred on the secondary market established by Trust's sponsor during 2007.

(ii) *Trustee reporting*—(A) *Summary of information provided by Trustee.* Trustee meets the requirements of paragraph (f)(1) of this section if Trustee provides the following information to requesting persons:

(*1*) Income and expense information:

Factor for ordinary dividend income	0.3481
Factor for qualified dividend income	0.7407
Factor for interest income	0.0222
Factor for affected expenses	0.0833
Current year-end cash allocation factor	1.5960
Prior year cash allocation factor	0.1200
Prior year cash distribution date	April 15

(*2*) Information regarding asset sales and distributions:

Date of sale	Trust sales proceeds received	Trust sales proceeds distributed and date distributed	Percent of trust sold
June 1	$10.0000x	$10.0000x (July 15)	20
December	1.1616x	0.0000x	2

Date of sale	Trust sales proceeds received	Trust sales proceeds distributed and date distributed	Percent of trust sold
12			

(*3*) Information regarding redemptions:

Date	Redemption asset proceeds
December 10	$115x

(*4*) Information regarding sales of trust interests

Date	Cash held for distribution per trust interest
September 30	$1.35x
December 10	1.00x

(B) *Trustee determines this information as follows:*
(1) *Step One: Trustee determines the total amount of NMWHFIT distributions for the calendar year.* The total amount of NMWHFIT distributions (actual and deemed) for the calendar year for purposes of determining the safe harbor factors is $540x. This amount consists of the amounts paid on each scheduled distribution date during the calendar year ($1135x, $135x, and $123x), plus the total amount paid to *J* as a result of *J*'s redemption of a trust interest ($116x) ($1,135x + $135x + $123x + $116x = $1,509x)—

(*i*) Increased by all cash held for distribution to TIHs as of December 31, 2007 ($158x), which is the cash held as of December 31, 2007 ($173x) reduced by the accrued but unpaid expenses as of December 31, 2007 ($15x), and

(*ii*) Decreased by all amounts distributed during the calendar year but included in the year-end cash allocation factor from a prior year ($12x); all redemption asset proceeds paid for the calendar year ($115x); and all trust sales proceeds distributed during the calendar year ($1,000x).

(*2*) *Step Two: Trustee determines factors that express the ratio of NMWHFIT income (other than OID) and expenses to the total amount of NMWHFIT distributions.* Trustee determines the factors for each item of income earned by Trust and each item of expense as follows:

(*i*) *Ordinary dividend income factor.* The ordinary dividend income factor is 0.3481, which represents the ratio of the gross amount of ordinary dividends ($188x) to the total amount of NMWHFIT distributions for the calendar year ($540x).

(*ii*) *Qualified dividend income factor.* The qualified dividend income factor is 0.7407 which represents the ratio of the gross amount of qualified dividend income ($400x) to the total amount of NMWHFIT distributions for the calendar year ($540x).

(*iii*) *Interest income factor.* The interest income factor is 0.0222, which represents the ratio of the gross amount of interest income ($12x) to the total amount of NMWHFIT distributions for the calendar year ($540x).

(*iv*) *Expense factor.* The affected expenses factor is 0.0833, which represents the ratio of the gross amount of affected expenses paid by Trust for the calendar year ($45x) to the total amount of NMWHFIT distributions for the calendar year ($540x).

(*3*) *Step Three: Trustee determines adjustments for reconciling the total amount of NMWHFIT distributions with amounts paid to TIHs.* To enable requesting persons to determine the total amount of NMWHFIT distributions that are attributable to a TIH based on amounts actually paid to the TIH, the trustee must provide both a current year-end cash allocation factor and a prior year cash allocation factor.

(*i*) *Current year-end cash allocation factor.* The adjustment factor for cash held by Trust at year end is 1.5960, which represents the cash held for distribution as of December 31, 2007 ($158x) (the amount of cash held by Trust on December 31, 2007 ($173x) reduced by accrued, but unpaid, expenses ($15x)), divided by the number of trust interests outstanding at year-end (99).

(*ii*) *Prior Year Cash Allocation Factor.* The adjustment factor for distributions of year-end cash from the prior year is 0.1200, which represents the amount of the distribution during the current calendar year that was included in a year-end cash allocation factor for a prior year ($12x), divided by the number of trust interests outstanding at the time of the distribution (100). The prior year cash distribution date is April 15, 2007.

(*4*) *Reporting sales and dispositions of trust assets*—(*i*) *Application of the de minimis test.* The aggregate fair market value of the assets of Trust as of January 1, 2007, was $10,000x. During the 2007 calendar year, Trust received trust sales proceeds of $1115x. The trust sales proceeds received by Trust for the 2007 calendar year equal 11.15% of Trust's fair market

value as of January 1, 2007. Accordingly, the *de minimis* test is not satisfied for the 2007 calendar year. The qualified NMWHFIT exception in paragraph (c)(2)(iv)(E) of this section and the NMWHFIT final calendar year exception in (c)(2)(iv)(F) of this section also do not apply to Trust for the 2007 calendar year.

(*ii*) *Information to be provided.* To satisfy the requirements of paragraph (f)(1) of this section with respect to sales and dispositions of Trust's assets, Trustee provides a list of dates on which trust assets were sold during the calendar year, and provides, for each date: the trust sales proceeds (per trust interest) received on that date; the trust sales proceeds distributed to TIHs (per trust interest) with respect to sales or dispositions on that date; the date those trust sales proceeds were distributed, and the ratio of the assets sold or disposed of on that day to all the assets held by Trust. Because Trust will terminate within 15 months of its start-up date, Trustee must use the fair market value of the assets as of the start-up date to determine the portion of Trust sold or disposed of on any particular date.

(*5*) *Reporting redemptions.* Because Trust is not required to make distributions at least as frequently as monthly, and Trust does not satisfy the qualified NMWHFIT exception in paragraph (c)(2)(iv)(E) of this section, the exception in paragraph (c)(2)(v)(C) does not apply to Trust. To satisfy the requirements of paragraph (f)(1) of this section, Trustee provides a list of dates for which the redemption proceeds to be paid for the redemption of a trust interest was determined for the 2007 calendar year and the redemptions asset proceeds paid for each date. During 2007, Trustee only determined the amount of redemption proceeds paid for the redemption of a trust interest once, for December 10, 2007 and the redemption asset proceeds determined for that date was $115x.

(*6*) *Reporting sales of trust interests.* Because trust is not required to make distributions at least as frequently as monthly, and Trust does not satisfy the qualified NMWHFIT exception in paragraph (c)(2)(iv)(E) of this section, the exception in paragraph (c)(2)(v)(C) of this section does not apply to Trust. Sponsor, in accordance with the trust agreement, provides Trustee with a list of dates on which sales on the secondary market occurred. To satisfy the requirements of paragraph (f)(1) of this section, Trustee provides requesting persons with a list of dates on which sales on the secondary market occurred and the amount of cash held for distribution, per trust interest, on each date. The first sale during the 2007 calendar year occurred on September 30, 2007, and the amount of cash held for distribution, per trust interest, on that date is $1.35x. The second sale occurred on December 10, 2007, and the amount of cash held for distribution, per trust interest, on that date is $1.00x.

(*iii*) *Brokers' use of information provided by Trustee.* (A) Broker1 and Broker2 use the information furnished by Trustee under the safe harbor to determine that the following items are attributable to J, A, and S—

With respect to *J*	
Ordinary Dividend Income	$17.89x
Qualified Dividend Income	38.07x
Interest Income	1.14x
Affected Expenses	4.28x
Trust sales proceeds reported on Form 1099	108.13x
Redemption asset proceeds	
For redemption on December 10	115.00x
Sale asset proceeds	
For sale on September 30	114.00x
For sale on December 10	115.00x
With respect to *A*	
Ordinary Dividend Income	18.82x
Qualified Dividend Income	40.04x
Interest Income	1.20x
Affected Expenses	4.50x
Trust sales proceeds reported on Form 1099	11.62x
With respect to *S*	
Ordinary Dividend Income	19.54x
Qualified Dividend Income	41.58x
Interest Income	1.25x
Affected Expenses	4.68x
Trust sales proceeds reported on Form 1099	113.94x

With respect to *J, A*, and *S* (regarding the sales and dispositions executed by Trust during the calendar year)

Date	Trust sales proceeds received per trust interest	Percent of trust sold
June 15	$10.0000x	20
December 12	1.1616x	2

(*B*) The brokers determine the information provided to *J*, *A*, and *S* as follows—

(*1*) *Step One: Brokers determine the total amount of NMWHFIT distributions attributable to J, A, and S.* Broker1 determines that the total amount of NMWHFIT distributions attributable to *J* is $51.39x and the total amount of NMWHFIT distributions attributable to *A* is $54.06x. Broker2 determines that the total amount of NMWHFIT distributions attributable to *S* is $56.13x.

(*i*) To calculate these amounts the brokers begin by determining the total amount paid to *J, A*, and *S* for the calendar year—

(*A*) The total amount paid to J for the calendar year equals $485.42x and includes the April 15, 2007, distribution of $13.50x, the July 15, 2007, distribution of $113.50x, the sales proceeds for the September 30, 2007, sale of $115.35x, the October 15, 2007, distribution of $11.07x, and the redemption proceeds of $116x and sales proceeds of $116x for the redemption and sale on December 10, 2007.

(*B*) The total amount paid to *A* for the calendar year equals $139.30x and includes the April 15, 2007, distribution of $13.50x, the July 15, 2007, distribution of $113.50x and the October 15, 2007, distribution of $12.30x.

(*C*) The total amount paid to *S* for the calendar year equals $140.53x and includes the April 15, 2007, distribution of $13.50x, the July 15, 2007, distribution of $113.50x and the October 15, 2007, distribution of $13.53x.

(*ii*) The brokers increase the total amount paid to *J, A*, and *S* by an amount equal to the current year-end cash allocation factor (1.5960) multiplied by the number of trust interests held by *J* (7), *A* (10), and *S* (12) as of December 31, 2007; that is for *J*, $11.17x; for *A*, $15.96x; and for *S*, $19.15x.

(*iii*) The brokers reduce the amount paid to *J, A*, and *S* as follows—

(*A*) An amount equal to the prior year cash allocation factor (0.1200), multiplied by the number of trust interests held by *J* (10), *A* (10), and *S* (10) on the date of the prior year cash distribution; that is for *J, A*, and *S*, $1.20x, each;

(*B*) An amount equal to all redemption asset proceeds paid to a TIH for the calendar year; that is, for *J*, $115x;

(*C*) An amount equal to all sales asset proceeds attributable to the TIH for the calendar year; that is for *J*, $229x (for the September 30, 2007, sale: $115.35x−1.35x (cash held for distribution per trust interest on that date)−$114x; and for the December 10, 2007, sale: $116x−1.00 (cash held for distribution per trust interest on that date) = $115x));

(*D*) In the case of a purchasing TIH, an amount equal to the amount of cash held for distribution per trust interest at the time the TIH purchased its trust interest, multiplied by the number of trust interests purchased; that is for *S*, $2.35x ($1.35x with respect to the September 30, 2007, sale and $1x with respect to the December 10, 2007, sale);

(*E*) All amounts of trust sales proceeds distributed to the TIH for the calendar year; that is for *J*, *A*, and *S*, $100. ($100 each, with respect to the June 15, 2007, sale of assets by Trust, and $0 each, with respect to the December 12, 2007, sale of assets by Trust).

(*2*) *Step two: The brokers apply the factors provided by Trustee to determine the Trust's income and expenses that are attributable to J, A, and S.* The amounts of each item of income (other than OID) and expense that are attributable to *J*, *A*, and *S* are determined by multiplying the factor for that type of income or expense by the total amount of NMWHFIT distributions attributable to *J*, *A*, and *S* as follows:

(*i*) *Application of factor for ordinary dividends.* The amount of ordinary dividend income attributable to *J* is $17.89x, to *A* is $18.82x, and to *S* is $19.54x. The brokers determine these amounts by multiplying the total amount of NMWHFIT distributions attributable to *J*, *A*, and *S* ($51.39x, $54.06x, and $56.13x, respectively) by the factor for ordinary dividends (0.3481).

(*ii*) *Application of factor for qualified dividend income.* The amount of qualified dividend income attributable to *J* is $38.07x, to *A* is $40.04x, and to *S* is $41.58x. The brokers determine these amounts by multiplying the total amount of NMWHFIT distributions attributable to *J*, *A*, and *S* ($51.39x, $54.06x, and $56.13x, respectively) by the factor for qualified dividends (0.7407).

(*iii*) *Application of factor for interest income.* The amount of interest income attributable to *J* is $1.14x, to *A* is $1.20x, and to *S* is $1.25x. The brokers determine these amounts by multiplying the total amount of NMWHFIT distributions attributable to *J*, *A*, and *S* ($51.39x, $54.06x, and $56.13x, respectively) by the factor for interest (0.0222).

(*iv*) *Application of factor for affected expenses.* The amount of affected expenses attributable to *J* is $4.28x, to *A* is $4.50x, and to *S* is $4.68x. The brokers determine these amounts by multiplying the total amount of NMWHFIT distributions attributable to *J*, *A*, and *S* ($51.39x, $54.06x, and $56.13x, respectively) by the factor for affected expenses (0.0833).

(*3*) *Brokers reporting of sales and dispositions of trust assets*—(*i*) *Determining the amount of trust sales proceeds to be reported on Form 1099 for J, A, and S.* The amount of trust sales proceeds to be reported on Form 1099 with respect to *J* is $108.13x, to *A* is $111.62x, and to *S* is $113.94x. To determine these amounts, the brokers aggregate the amount of trust sales proceeds attributable to *J*, *A*, and *S* for each date on which Trust sold or disposed of assets.

The brokers determine the amount of trust sales proceeds to be reported with respect to the June 15, 2007, asset sale by multiplying the number of trust interests held by *J* (10), *A* (10) and *S* (10) on that date by the trust sales proceeds received per trust interest on that date ($10x). The brokers determine the amount of trust sales proceeds to be reported with respect to the December 12, 2007, asset sale by multiplying the number of trust interests held by *J* (7), *A* (10) and *S* (12) on that date by the trust sales proceeds received per trust interest on that date ($1.1616x).

(*ii*) *Information provided on the tax information statements furnished to J, A, and S.* The tax information statements furnished to *J*, *A*, and *S* must include the dates of each sale or disposition (June 15, 2007, and December 12, 2007); the amount of trust sales proceeds per trust interest received on those dates ($10.00x and $1.1616x, respectively); and, the percentage of Trust sold or disposed of on that date (20% and 2%, respectively).

(*4*) *Reporting redemptions.* Broker1 reports on Form 1099 and on the written tax information statement furnished to *J* that *J* received $115x in redemption asset proceeds for the calendar year.

(*5*) *Reporting sales of trust interests on the secondary market.* Broker1 reports on *J*'s two sales of trust interests. With respect to the sale on September 30, 2007, the sale asset proceeds equals $114x ($115.35x sale proceeds—$1.35x cash held for distribution on that date) and with respect to the sale on December 10, 2007, the sale asset proceeds equal $115x ($116x sale proceeds—$1x cash held for distribution on that date). Broker1 reports these amounts on Form 1099 and on the tax information statement furnished to J.

(g) ***Safe Harbor for certain WHMTs*** —

(1) ***Safe harbor for trustee of certain WHMTs for reporting information*** —

(i) ***In general.*** The trustee of a WHMT that meets the requirements of paragraph (g)(1)(ii) of this section is deemed to satisfy paragraph (c)(1)(i) of this section, if the trustee calculates and provides WHFIT information in the manner described in this paragraph (g) and provides a statement to the requesting person giving notice that information has been calculated in accordance with this paragraph (g)(1).

(*ii*) ***Requirements.*** A WHMT must meet the following requirements—

(A) The WHMT must make monthly distributions of the income and principal payments received by the WHMT to its TIHs;

(B) All trust interests in the WHMT must represent the right to receive an equal pro-rata share of both the income and the principal payments received by the WHMT on the mortgages it holds (for example, a WHMT that holds or issues trust interests that qualify as stripped interests under section 1286 may not report under this safe harbor);

(C) The WHMT must—

(1) Report under this paragraph (g)(1)(ii) for the life of the WHMT; or

(2) If the WHMT has a start-up date before January 1, 2007, the WHMT must begin reporting under this paragraph (g)(1)(ii) as of January 1, 2007, and must continue to report under this paragraph for the life of the WHMT;

(D) The WHMT must calculate all items subject to the safe harbor consistent with the safe harbor;

(E) The assets of the WHMT must be limited to—

(1) Mortgages with uniform characteristics;

(2) Reasonably required reserve funds; and

(3) Amounts received on mortgages or reserve funds and held for distribution to TIHs; and

(F) The aggregate outstanding principal balance (as defined in paragraph (g)(1)(iii)(D) of this section) as of the WHMT's start-up date must equal the aggregate of the original face amounts of all issued trust interests.

(iii) ***Reporting WHMT income, expenses, non pro-rata partial principal payments, and sales and dispositions under the safe harbor.*** A trustee must comply with each step provided in this paragraph (g)(1)(iii).

(A) ***Step One: Determine monthly pool factors.*** The trustee must, for each month of the calendar year and for January of the following calendar year, calculate and provide the ratio (expressed as a decimal carried to at least eight places and called a *pool factor*) of—

(1) The amount of the aggregate outstanding principal balance of the WHMT as of the first business day of the month; to

(2) The amount of the aggregate outstanding principal balance of the WHMT as of the start-up date.

(B) ***Step Two: Determine monthly expense factors.*** For each month of the calendar year and for each item of expense paid by the WHMT during that month, the trustee must calculate and provide the ratio (expressed as a decimal carried to at least eight places and called an *expense factor*) of—

(1) The gross amount, for the month, of each item of expense; to

(2) The amount that represents the aggregate outstanding principal balance of the WHMT as of the start-up date, divided by 1,000.

(C) ***Step Three: Determine monthly income factors.*** For each month of the calendar year and for each item of gross income earned by the WHMT during that month, the trustee must calculate and provide the ratio (expressed as a decimal carried to at least eight places and called an *income factor*) of—

(1) The gross amount, for the month, of each item of income, to

(2) The amount that represents the aggregate outstanding principal balance of the WHMT as of the start-up date, divided by 1,000.

(D) ***Definition of aggregate outstanding principal balance.*** For purposes of this paragraph (g)(1)(iii), the amount of the aggregate outstanding principal balance of a WHMT is the aggregate of—

(*1*) The outstanding principal balance of all mortgages held by the WHMT;

(*2*) The amounts received on mortgages as principal payments and held for distribution by the WHMT; and

(*3*) The amount of the reserve fund (exclusive of undistributed income).

(iv) ***Reporting OID information under the safe harbor—***

(A) ***Reporting OID prior to the issuance of final regulations under section 1272(a)(6)(C)(iii)*** —

(*1*) For calendar years prior to the effective date of final regulations under section 1272(a)(6)(C)(iii), the trustee must provide, for each month during the calendar year, the aggregate daily accrual of OID per $1,000 of aggregate outstanding principal balance as of the start-up date (daily portion). For purposes of this paragraph (g)(1)(iv), the daily portion of OID is determined by allocating to each day of the month its ratable portion of the excess (if any) of—

(*i*) The sum of the present value (determined under section 1272(a)(6)(B)) of all remaining payments under the mortgages held by the WHMT at the close of the month, and the payments during the month of amounts included in the stated redemption price of the mortgages, over

(*ii*) The aggregate of each mortgage's adjusted issue price as of the beginning of the month.

(*2*) In calculating the daily portion of OID, the trustee must use the prepayment assumption used in pricing the original issue of trust interests. If the WHMT has a start-up date prior to January 24, 2006, and the trustee, after a good faith effort to ascertain that information, does not know the prepayment assumption used in pricing the original issue of trust interests, the trustee may use any reasonable prepayment assumption to calculate OID provided it continues to use the same prepayment assumption consistently thereafter.

(B) ***Reporting OID after the issuance of final regulations under section 1272(a)(6)(C)(iii).*** [Reserved]

(v) ***Reporting market discount information under the safe harbor—***

(A) ***Reporting market discount information prior to the issuance of final regulations under sections 1272(a)(6)(C)(iii) and 1276(b)(3).*** For calendar years prior to the effective date of final regulations under sections 1272(a)(6)(C)(iii) and 1276(b)(3), the trustee must provide—

(*1*) In the case of a WHMT holding mortgages issued with OID, the ratio (expressed as a decimal carried to at least eight places) of—

(*i*) The OID accrued during the month (calculated in accordance with paragraph (g)(1)(iv) of this section); to

(*ii*) The total remaining OID as of the beginning of the month (as determined under paragraph (g)(1)(v)(A)(*3*) of this section); or

(*2*) In the case of a WHMT holding mortgages issued without OID, the ratio (expressed as a decimal carried to at least eight places) of—

(*i*) The amount of stated interest paid to the WHMT during the month; to

(*ii*) The total amount of stated interest remaining to be paid to the WHMT as of the beginning of the month (as determined under paragraph (g)(1)(v)(A)(*3*) of this section).

(*3*) ***Computing the total amount of stated interest remaining to be paid and the total remaining OID at the beginning of the month.*** To compute the total amount of stated interest remaining to be paid to the WHMT as of the beginning of the month and the total remaining OID as of the beginning of the month, the trustee must use the prepayment assumption used in pricing the original issue of trust interests. If the WHMT has a start-up date prior to January 24, 2006, and the trustee, after a good faith effort to ascertain that information, does not know the prepayment assumption used in pricing the original issue of trust interests, the trustee may use any reasonable prepayment assumption to calculate these amounts provided it continues to use the same prepayment assumption consistently thereafter.

(vi) ***Reporting bond premium information under the safe harbor.*** [Reserved]

(2) ***Use of information provided by a trustee under the safe harbor*** —

(i) ***In general.*** If a trustee reports WHMT items in accordance with paragraph (g)(1) of this section, the information provided with respect to those items on the Forms 1099 required to be filed with the IRS under paragraph (d) of this section and on the statement required to be furnished to the TIH under paragraph (e) of this section must be determined as provided in this paragraph (g)(2).

(ii) ***Reporting WHMT income, expenses, non pro-rata partial principal payments, and sales and dispositions under the safe harbor.*** The amount of each item of income, the amount of each item of expense, and the combined amount of non pro-rata partial principal payments and trust sales proceeds that are attributable to a TIH for each month of the calendar year must be computed as follows:

(A) ***Step One: Determine the aggregate of the non pro-rata partial principal payments and trust sales proceeds that are attributable to the TIH for the calendar year.*** For each month of the calendar year that a trust interest was held on the record date—

(*1*) ***Determine the monthly amounts per trust interest.*** The trustee or middleman must determine the aggregate amount of non pro-rata partial principal payments and the trust sales proceeds that are attributable to each trust interest for each month by multiplying—

(*i*) The original face amount of the trust interest; by

(*ii*) The difference between the pool factor for the current month and the pool factor for the following month.

(2) ***Determine the amount for the calendar year.*** The trustee or middleman must multiply the monthly amount per trust interest by the number of trust interests held by the TIH on the record date of each month. The trustee or middleman then must aggregate these monthly amounts, and report the aggregate amount on the Form 1099 filed with the IRS and on the tax information statement furnished to the TIH as trust sales proceeds. No other information is required to be reported to the IRS or the TIH to satisfy the requirements of paragraphs (d) and (e) of this section under this paragraph (g) with respect to sales and dispositions and non pro-rata partial principal payments.

(B) ***Step Two: Determine the amount of each item of expense that is attributable to a TIH*** —

(1) ***Determine the monthly amounts per trust interest.*** For each month of the calendar year that a trust interest was held on the record date, the trustee or middleman must determine the amount of each item of expense that is attributable to each trust interest by multiplying—

(*i*) The original face amount of the trust interest, divided by 1000; by

(*ii*) The expense factor for that month and that item of expense.

(2) ***Determine the amount for the calendar year.*** The trustee or middleman must multiply the monthly amount of each item of expense per trust interest by the number of trust interests held by the TIH on the record date of each month. The trustee or middleman then must aggregate the monthly amounts for each item of expense to determine the total amount of each item of expense that is attributable to the TIH for the calendar year.

(C) ***Step Three: Determine the amount of each item of income that is attributable to the TIH for the calendar year*** —

(1) ***Determine the monthly amounts per trust interest.*** For each month of the calendar year that a trust interest was held on the record date, the trustee or middleman must determine the amount of each item of income that is attributable to each trust interest by multiplying—

(*i*) The original face amount of the trust interest, divided by 1,000; by

(*ii*) The income factor for that month and that item of income.

(2) ***Determine the amount for the calendar year.*** The trustee or middleman must multiply the monthly amount of each item of income per trust interest by the number of trust interests held by the TIH on the record date of each month. The trustee or middleman then must aggregate the monthly amounts for each item of income to determine the total amount of each item of income that is attributable to the TIH for the calendar year.

(D) ***Definitions for this paragraph (g)(2).*** For purposes of this paragraph (g)(2)(ii)—

(*1*) The *record date* is the date used by the WHMT to determine the owner of the trust interest for the purpose of distributing the payment for the month.

(*2*) The *original face amount of the trust interest* is the original principal amount of a trust interest on its issue date.

(iii) ***Reporting OID information under the safe harbor.*** With respect to each month, trustee or middleman must determine the amount of OID that is attributable to each trust interest held by a TIH by multiplying—

(A) The product of the OID factor multiplied by the original face amount of the trust interest, divided by 1,000; by

(B) The number of days during the month that the TIH held the trust interest.

(iv) ***Requirement to provide market discount information under the safe harbor.*** The trustee or middleman must provide the market discount information in accordance with paragraph (g)(1)(v) of this section to the TIH in, or with, the written statement required to be furnished to the TIH under paragraph (e) of this section.

(v) ***Requirement to provide bond premium information under the safe harbor.*** [Reserved]

(3) ***Example of safe harbor in paragraph (g)(1) of this section.*** The following example illustrates the use of the factors in this paragraph (g) to calculate and provide WHMT information:

Example. (i) *Facts*—(A) *In general. X* is a WHMT. *X*'s start-up date is January 1, 2007. As of that date, *X*'s assets consist of 100 15-year mortgages, each having an unpaid principal balance of $125,000 and a fixed, annual interest rate of 7.25 percent. None of the mortgages were issued with OID. *X*'s TIHs are entitled to monthly, pro-rata distributions of the principal payments received by *X*. *X*'s TIHs are also entitled to monthly, pro-rata distributions of the interest earned on the mortgages held by *X,* reduced by expenses. Trust interests are issued in increments of $5,000 with a $25,000 minimum. The prepayment assumption used in pricing the original issue of trust interests is six percent. Broker holds a trust interest in *X,* with an original face amount of $25,000, in street name, for *C* during the entire 2007 calendar year.

(B) *Trust events during the 2007 calendar year.* During the 2007 calendar year, *X* collects all interest and principal payments when due and makes all monthly distributions when due. One mortgage is repurchased from *X* in July 2007 for $122,249, the mortgage's unpaid principal balance plus accrued, but unpaid, interest at the time. During November 2007, another mortgage is prepaid in full. *X* earns $80 interest income each month from the temporary investment of X's funds pending distribution to the TIHs. All of *X*'s expenses are affected expenses. The aggregate outstanding principal balance of *X*'s mortgages, *X*'s interest income, and *X*'s expenses, for each month of the 2007 calendar year, along with the aggregate outstanding principal balance of *X* as of January 2008, are as follows:

Month	Principal balance	Income	Expenses
January	$12,500,000	$75,601	$5,288
February	12,461,413	75,368	5,273

Month	Principal balance	Income	Expenses
March	12,422,593	75,133	5,256
April	12,383,538	74,897	5,240
May	12,344,247	74,660	5,244
June	12,304,719	74,421	5,207
July	12,264,952	74,181	5,191
August	12,102,696	73,200	5,122
September	12,062,849	72,960	5,106
October	12,022,762	72,718	5,089
November	11,982,432	72,474	5,073
December	11,821,234	71,500	5,006
January	11,780,829		

(ii) *Trustee reporting.* (A) Trustee, *X*'s fiduciary, comes within the safe harbor of paragraph (g)(1)(ii) of this section by providing the following information to requesting persons:

Month	Pool factor	Income factor	Expense factor
January	1.00000000	6.04806667	0.42304000
February	0.99691304	6.02941628	0.42184000
March	0.99380744	6.01065328	0.42048000
April	0.99068304	5.99177670	0.41920000
May	0.98753976	5.97278605	0.41952000
June	0.98437752	5.95368085	0.41656000
July	0.98119616	5.93446013	0.41528000
August	0.96821564	5.85603618	0.40976000
September	0.96502792	5.83677704	0.40848000
October	0.96182096	5.81740161	0.40712000
November	0.95859459	5.79790896	0.40584000
December	0.94569875	5.71999659	0.40048000
January	0.94246631		

(B) Trustee determines this information as follows:
(*1*) *Step One: Trustee determines monthly pool factors.* Trustee calculates and provides *X*'s pool factor for each month of the 2007 calendar year. For example, for the month of January 2007 the pool factor is 1.0, which represents the ratio of —

(*i*) The amount that represents the aggregate outstanding principal balance of *X* ($12,500,000) as of the first business day of January; divided by

(*ii*) The amount that represents the aggregate outstanding principal balance of X ($12,500,000) as of the start-up day.

(*2*) *Step Two: Trustee determines monthly expense factors.* Trustee calculates and provides the expense factors for each month of the 2007 calendar year. During 2007, *X* has only affected expenses, and therefore, will have only one expense factor for each month. For example, the expense factor for the month of January 2007 is 0.42304000, which represents the ratio of—

(*i*) The gross amount of expenses paid during January by *X* ($5,288); divided by

(*ii*) The amount that represents the aggregate outstanding principal balance of *X* as of the start-up date ($12,500,000) divided by 1,000 ($12,500).

(*3*) *Step Three: Trustee determines monthly income factors.* Trustee calculates and provides the income factors for each month of the 2007 calendar year. During 2007, *X* has only interest income, and therefore, will have only one income factor for each month. For example, the income factor for the month of January 2007 is 6.04806667, which represents the ratio of—

(*i*) The gross amount of interest income earned by *X* during January ($75,601); divided by

(*ii*) The amount that represents that aggregate outstanding principal balance of X as of the start-up date ($12,500,000), divided by 1,000 ($12,500).

(*4*) *Step Four: Trustee calculates and provides monthly market discount fractions.* Trustee calculates and provides a market discount fraction for each month of the 2007 calendar year using a prepayment assumption of 6% and a stated interest rate of 7.25%.

(*iii*) *Broker's use of the information provided by Trustee.* (A) Broker uses the information provided by Trustee under paragraph (g) of this section to determine that the following trust items are attributable to *C*:

Month	Aggregate trust sales proceeds and non pro-rata partial principal payments	Affected expenses	Gross interest income
January	$77.17	$10.58	$151.20

Month	Aggregate trust sales proceeds and non pro-rata partial principal payments	Affected expenses	Gross interest income
February	77.64	10.55	150.74
March	78.11	10.51	150.27
April	78.58	10.48	149.79
May	79.06	10.49	149.32
June	79.53	10.41	148.84
July	324.51	10.38	148.36
August	79.69	10.24	146.40
September	80.17	10.21	145.92
October	80.66	10.18	145.43
November	322.40	10.15	144.95
December	80.81	10.01	143.00
Total	1438.33	124.19	1774.22

(B) Broker determines this information as follows:

(*1*) *Step One: Broker determines the amount of the non pro-rata partial principal payments and trust sales proceeds received by X that are attributable to C for the 2007 calendar year.* Broker determines the amount of the non pro-rata partial principal payments and trust sales proceeds received by *X* that are attributable to *C* for each month of the 2007 calendar year. For example, for the month of January, Broker determines that the amount of principal receipts and the amount of trust sales proceeds that are attributable to *C* is $77.17. Broker determines this by multiplying the original face amount of *C*'s trust interest ($25,000) by 0.00308696, the difference between the pool factor for January 2007 (1.00000000) and the pool factor for the following month of February 2007 (0.99691304). Broker reports the aggregate of the monthly amounts of non pro-rata partial principal payments and trust sales proceeds that are attributable to *C* for the 2007 calendar year as trust sales proceeds on the Form 1099 filed with the IRS.

(*2*) *Step Two: Broker applies the expense factors provided by Trustee to determine the amount of expenses that are attributable to C for the 2007 calendar year.* Broker determines the amount of *X*'s expenses that are attributable to *C* for each month of the calendar year. For example, for the month of January 2007, Broker determines that the amount of expenses attributable to *C* is $10.58. Broker determines this by multiplying the original face amount of *C*'s trust interest ($25,000), divided by 1,000 ($25) by the expense factor for January 2007 (0.42304000). Broker determines the expenses that are attributable to *C* for the 2007 calendar year by aggregating the monthly amounts.

(*3*) *Step Three: Broker applies the income factors provided by Trustee to determine the amount of gross interest income attributable to C for the 2007 calendar year.* Broker determines the amount of gross interest income that is attributable to *C* for each month of the calendar year. For example, for the month of January 2007, Broker determines that the amount of gross interest income attributable to *C* is $151.20. Broker determines this by multiplying the original face amount of *C*'s trust interest ($25,000), divided by 1,000 ($25), by the income factor for January 2007 (6.04806667). Broker determines the amount of the gross interest income that is attributable to *C* for the 2007 calendar year by aggregating the monthly amounts.

(*4*) *Step Four: Broker provides market discount information to C.* Broker provides *C* with the market discount fractions calculated and provided by the trustee of *X* under paragraph (g)(3)(ii)(D) of this section.

(h) ***Additional safe harbors*** —

(1) ***Temporary safe harbor for WHMTs*** —

(i) ***Application.*** Pending the issuance of additional guidance, the safe harbor in this paragraph applies to trustees and middlemen of WHMTs that are not eligible to report under the WHMT safe harbor in paragraph (g) of this section because they hold interests in another WHFIT, in a REMIC, or hold or issue stripped interests.

(ii) ***Safe harbor.*** A trustee is deemed to satisfy the requirements of paragraph (c) of this section, if the trustee calculates and provides trust information in a manner that enables a requesting person to provide trust information to a beneficial owner of a trust interest that enables the owner to reasonably accurately report the tax consequences of its ownership of a trust interest on its federal income tax return. Additionally, to be deemed to satisfy the requirements of paragraph (c) of this section, the trustee must calculate and provide trust information regarding market discount and OID by any reasonable manner consistent with section 1272(a)(6). A middleman or a trustee may satisfy its obligation to furnish information to the IRS under paragraph (d) of this section and to the trust interest holder under paragraph (e) of this section by providing information consistent with the information provided under this paragraph by the trustee.

(2) ***Additional safe harbors provided by other published guidance.*** The IRS and the Treasury Department may provide additional safe harbor reporting procedures for complying with this section or a specific paragraph of this section by other published guidance (see § 601.601(d)(2) of this chapter).

(i) [Reserved]

(j) ***Requirement that middlemen furnish information to beneficial owners that are exempt recipients and noncalendar-year beneficial owners*** —

(1) ***In general.*** A middleman that holds a trust interest on behalf of, or for the account of, either a beneficial owner that is an exempt recipient defined in paragraph (b)(7) of this section or a noncalendar-year beneficial owner, must provide to such beneficial owner, upon request, the information provided by the trustee to the middleman under paragraph (c) of this section.

(2) ***Time for providing information.*** The middleman must provide the requested information to any beneficial owner making a request under paragraph (h)(1) of this section on or before the later of the 44th day after the close of the calendar year for which the information was requested, or the day that is 28 days after the receipt of the request. A middleman must provide information with respect to a WHFIT holding an interest in another WHFIT, or a WHFIT holding an interest in a REMIC, on or before the later of the 58th day after the close of the calendar year for which the information was requested, or the 42nd day after the receipt of the request.

(3) ***Manner of providing information.*** The requested information must be provided—

(i) By written statement sent by first class mail to the address provided by the person requesting the information;

(ii) By electronic mail provided that the person requesting the information requests that the middleman furnish the information by electronic mail and the person furnishes an electronic address;

(iii) At an Internet website of the middleman or the trustee, provided that the beneficial owner requesting the information is notified that the requested information is available at the Internet website and is furnished the address of the site; or

(iv) Any other manner agreed to by the middleman and the beneficial owner requesting the information.

(4) ***Clearing organization.*** A clearing organization described in § 1.163-5(c)(2)(i)(D)(*8*) is not required to furnish information to exempt recipients or non-calendar-year TIHs under this paragraph (h).

(k) ***Coordination with other information reporting rules.*** In general, in cases in which reporting is required for a WHFIT under both this section and subpart B, part III, subchapter A, chapter 61 of the Internal Revenue Code (Sections 6041 through 6050S) (Information Reporting Sections), the reporting rules for WHFITs under this section must be applied. The provisions of the Information Reporting Sections and the regulations thereunder are incorporated into this section as applicable, but only to the extent that such provisions are not inconsistent with the provisions of this section.

(l) ***Backup withholding requirements.*** Every trustee and middleman required to file a Form 1099 under this section is a payor within the meaning of § 31.3406(a)-2, and must backup withhold as required under section 3406 and any regulations thereunder.

(m) ***Penalties for failure to comply*** —

(1) ***In general.*** Every trustee or middleman who fails to comply with the reporting obligations imposed by this section is subject to penalties under sections 6721, 6722, and any other applicable penalty provisions.

(2) ***Penalties not imposed on trustees and middlemen of certain WHMTs for failure to report OID.*** Penalties will not be imposed as a result of a failure to provide OID information for a WHMT that has a start-up date on or after August 13, 1998 and on or before January 24, 2006, if the trustee of the WHMT does not have the historic information necessary to provide this information and the trustee demonstrates that it has attempted in good faith, but without success, to obtain this information. For purposes of calculating a market discount fraction under paragraph (g)(1)(v) of this section, for a WHMT described in this paragraph, it may be assumed that the WHMT is holding mortgages that were issued without OID. A trustee availing itself of this paragraph must include a statement to that effect when providing information to requesting persons under paragraph (c) of these regulations.

(n) ***Effective date.*** These regulations are applicable January 1, 2007. Trustees must calculate and provide trust information with respect to the 2007 calendar year and all subsequent years consistent with these regulations. Information returns required to be filed with the IRS and the tax information statements required to be furnished to trust interest holders after December 31, 2007 must be consistent with these regulations.

[T.D. 9241, 71 FR 4009, Jan. 24, 2006, as amended by T.D. 9279, 71 FR 43971, Aug. 3, 2006; T.D. 9308, 71 FR 78356, Dec. 29, 2006]

§ 1.672(a)-1 Definition of adverse party.

(a) Under section 672(a) an adverse party is defined as any person having a substantial beneficial interest in a trust which would be adversely affected by the exercise or nonexercise of a power which he possesses respecting the trust. A trustee is not an adverse party merely because of his interest as trustee. A person having a general power of appointment over the trust property is deemed to have a beneficial interest in the trust. An interest is a substantial interest if its value in relation to the total value of the property subject to the power is not insignificant.

(b) Ordinarily, a beneficiary will be an adverse party, but if his right to share in the income or corpus of a trust is limited to only a part, he may be an adverse party only as to that part. Thus, if A, B, C, and D are equal income beneficiaries of a trust and the grantor can revoke with A's consent, the grantor is treated as the owner of a portion which represents three-fourths of the trust; and items of income, deduction, and credit attributable to that portion are included in determining the tax of the grantor.

(c) The interest of an ordinary income beneficiary of a trust may or may not be adverse with respect to the exercise of a power over corpus. Thus, if the income of a trust is payable to A for life, with a power (which is not a general power of appointment) in A to appoint the corpus to the grantor either during his life or by will, A's interest is adverse to the return of the corpus to the grantor during A's life, but is not adverse to a return of the corpus after A's death. In other words, A's interest is adverse as to ordinary income but is not adverse as to income allocable to corpus. Therefore, assuming no other relevant facts exist, the grantor would not be taxable on the ordinary income of the trust under section 674, 676, or 677, but would be taxable under section 677 on income allocable to corpus (such as capital gains), since it may in the discretion of a nonadverse party be accumulated for future distribution to the grantor. Similarly, the interest of a contingent income beneficiary is adverse to a return of corpus to the grantor before the termination of his interest but not to a return of corpus after the termination of his interest.

(d) The interest of a remainderman is adverse to the exercise of any power over the corpus of a trust, but not to the exercise of a power over any income interest preceding his remainder. For example, if the grantor creates a trust which provides for income to be distributed to A for 10 years and then for the corpus to go to X if he is then living, a power exercisable by X to revest corpus in the grantor is a power exercisable by an adverse party; however, a power exercisable by X to distribute part or all of the ordinary income to the grantor may be a power exercisable by a nonadverse party (which would cause the ordinary income to be taxed to the grantor).

§ 1.672(b)-1 Nonadverse party.

A *nonadverse party* is any person who is not an adverse party.

§ 1.672(c)-1 Related or subordinate party.

Section 672(c) defines the term “related or subordinate party”. The term, as used in sections 674(c) and 675(3), means any nonadverse party who is the grantor's spouse if living with the grantor; the grantor's father, mother, issue, brother or sister; an employee of the grantor; a corporation or any employee of a corporation in which the stock holdings of the grantor and the trust are significant from the viewpoint of voting control; or a subordinate employee of a corporation in which the grantor is an executive. For purposes of sections 674(c) and 675(3), these persons are presumed to be subservient to the grantor in respect of the exercise or nonexercise of the powers conferred on them unless shown not to be subservient by a preponderance of the evidence.

§ 1.672(d)-1 Power subject to condition precedent.

Section 672(d) provides that a person is considered to have a power described in subpart E (section 671 and following), part I, subchapter J, chapter 1 of the Code, even though the exercise of the power is subject to a precedent giving of notice or takes effect only after the expiration of a certain period of time. However, although a person may be considered to have such a power, the grantor will nevertheless not be treated as an owner by reason of the power if its exercise can only affect beneficial enjoyment of income received after the expiration of a period of time such that, if the power were a reversionary interest, he would not be treated as an owner under section 673. See sections 674(b)(2), 676(b), and the last sentence of section 677(a). Thus, for example, if a grantor creates a trust for the benefit of his son and retains a power to revoke which takes effect only after the expiration of 2 years from the date of exercise, he is treated as an owner from the inception of the trust. However, if the grantor retains a power to revoke, exercisable at any time, which can only affect the beneficial enjoyment of the ordinary income of a trust received after the expiration of 10 years commencing with the date of the transfer in trust, or after the death of the income beneficiary, the power does not cause him to be treated as an owner with respect to ordinary income during the first 10 years of the trust or during the income beneficiary's life, as the case may be. See section 676(b).

§ 1.672(f)-1 Foreign persons not treated as owners.

(a) *General rule* —

(1) ***Application of the general rule.*** Section 672(f)(1) provides that subpart E of part I, subchapter J, chapter 1 of the Internal Revenue Code (the grantor trust rules) shall apply only to the extent such application results in an amount (if any) being currently taken into account (directly or through one or more entities) in computing the income of a citizen or resident of the United States or a domestic corporation. Accordingly, the grantor trust rules apply to the extent that any portion of the trust, upon application of the grantor trust rules without regard to section 672(f), is treated as owned by a United States citizen or resident or domestic corporation. The grantor trust rules do not apply to any portion of the trust to the extent that, upon application of the grantor trust rules without regard to section 672(f), that portion is treated as owned by a person other than a United States citizen or resident or domestic corporation, unless the person is described in § 1.672(f)-2(a) (relating to certain foreign corporations treated as domestic corporations), or one of the exceptions set forth in § 1.672(f)-3 is met, (relating to: trusts where the grantor can revest trust assets; trusts where the only amounts distributable are to the grantor or the grantor's spouse; and compensatory trusts). Section 672(f) applies to domestic and foreign trusts. Any portion of the trust that is not treated as owned by a grantor or another person is subject to the rules of subparts A through D (section 641 and following), part I, subchapter J, chapter 1 of the Internal Revenue Code.

(2) ***Determination of portion based on application of the grantor trust rules.*** The determination of the portion of a trust treated as owned by the grantor or other person is to be made based on the terms of the trust and the application of the grantor trust rules and section 671 and the regulations thereunder.

(b) ***Example.*** The following example illustrates the rules of this section:

> *Example.* (i) A, a nonresident alien, funds an irrevocable domestic trust, DT, for the benefit of his son, B, who is a United States citizen, with stock of Corporation X. A's brother, C, who also is a United States citizen, contributes stock of Corporation Y to the trust for the benefit of B. A has a reversionary interest within the meaning of section 673 in the X stock that would cause A to be treated as the owner of the X stock upon application of the grantor trust rules without regard to section 672(f). C has a reversionary interest within the meaning of section 673 in the Y stock that would cause C to be treated as the owner of the Y stock upon application of the grantor trust rules without regard to section 672(f). The trustee has discretion to accumulate or currently distribute income of DT to B.
> (ii) Because A is a nonresident alien, application of the grantor trust rules without regard to section 672(f) would not result in the portion of the trust consisting of the X stock being treated as owned by a United States citizen or resident. None of the exceptions in § 1.672(f)-3 applies because A cannot revest the X stock in A, amounts may be distributed during A's lifetime to B, who is neither a grantor nor a spouse of a grantor, and the trust is not a compensatory trust. Therefore, pursuant to paragraph (a)(1) of this section, A is not treated as an owner under subpart E of part I, subchapter J, chapter 1 of the Internal Revenue Code, of the portion of the trust consisting of the X stock. Any distributions from such portion of the trust are subject to the rules of subparts A through D (641 and following), part I, subchapter J, chapter 1 of the Internal Revenue Code.
>
> (iii) Because C is a United States citizen, paragraph (a)(1) of this section does not prevent C from being treated under section 673 as the owner of the portion of the trust consisting of the Y stock.

(c) ***Effective date.*** The rules of this section are applicable to taxable years of a trust beginning after August 10, 1999.

[T.D. 8831, 64 FR 43275, Aug. 10, 1999]

§ 1.672(f)-2 Certain foreign corporations.

(a) ***Application of general rule in this section.*** Subject to the provisions of paragraph (b) of this section, if the owner of any portion of a trust upon application of the grantor trust rules without regard to section 672(f) is a controlled foreign corporation or a passive foreign investment company (as defined in section 1297), the corporation is treated as a domestic corporation for purposes of applying the rules of § 1.672(f)-1. For purposes of this section, a controlled foreign corporation has the meaning provided in section 957, determined without applying section 318(a)(3)(A), (B), and (C) so as to consider a United States person as owning stock which is owned by a person who is not a United States person.

(b) ***Gratuitous transfers to United States persons —***

(1) ***Transfer from trust to which corporation made a gratuitous transfer.*** If a trust (or portion of a trust) to which a controlled foreign corporation, passive foreign investment company, or foreign personal holding company has made a gratuitous transfer (within the meaning of § 1.671-2(e)(2)), makes a gratuitous transfer to a United States person, the controlled foreign corporation, passive foreign investment company, or foreign personal holding company, as the case may be, is treated as a foreign corporation for purposes of § 1.672(f)-4(c), relating to gratuitous transfers from trusts (or portions of trusts) to which a partnership or foreign corporation has made a gratuitous transfer.

(2) ***Transfer from trust over which corporation has a section 678 power.*** If a trust (or portion of a trust) that a controlled foreign corporation, passive foreign investment company, or foreign personal holding company is treated as owning under section 678 makes a gratuitous transfer to a United States person, the controlled foreign corporation, passive foreign investment company, or foreign personal holding company, as the case may be, is treated as a foreign corporation that had made a gratuitous transfer to the trust (or portion of a trust) and the rules of § 1.672(f)-4(c) apply.

(c) ***Special rules for passive foreign investment companies*** —

(1) ***Application of section 1297.*** For purposes of determining whether a foreign corporation is a passive foreign investment company as defined in section 1297, the grantor trust rules apply as if section 672(f) had not come into effect.

(2) ***References to renumbered Internal Revenue Code section.*** For taxable years of shareholders beginning on or before December 31, 1997, and taxable years of passive foreign investment companies ending with or within such taxable years of the shareholders, all references in this § 1.672(f)-2 to section 1297 are deemed to be references to section 1296.

(d) ***Examples.*** The following examples illustrate the rules of this section. In each example, FT is an irrevocable foreign trust, and CFC is a controlled foreign corporation. The examples are as follows:

Example 1. Application of general rule. CFC creates and funds FT. CFC is the grantor of FT within the meaning of § 1.671-2(e). CFC has a reversionary interest in FT within the meaning of section 673 that would cause CFC to be treated as the owner of FT upon application of the grantor trust rules without regard to section 672(f). Under paragraph (a) of this section, CFC is treated as a domestic corporation for purposes of applying the general rule of § 1.672(f)-1. Thus, § 1.672(f)-1 does not prevent CFC from being treated as the owner of FT under section 673.

Example 2. Distribution from trust to which CFC made gratuitous transfer. A, a nonresident alien, owns 40 percent of the stock of CFC. A's brother B, a resident alien, owns the other 60 percent of the stock of CFC. CFC makes a gratuitous transfer to FT. FT makes a gratuitous transfer to A's daughter, C, who is a resident alien. Under paragraph (b)(1) of this section, CFC will be treated as a foreign corporation for purposes of § 1.672(f)-4(c). For further guidance, see § 1.672(f)-4(g) *Example 2* through *Example 4.*

(e) ***Applicability dates.*** Except as provided in this paragraph (e), the rules of this section apply to taxable years of shareholders of controlled foreign corporations and passive foreign investment companies beginning after August 10, 1999, and taxable years of controlled foreign corporations and passive foreign investment companies ending with or within such taxable years of the shareholders. The provisions in paragraph (a) of this section relating to the controlled foreign corporations taken into account for purposes of this section apply to taxable years of foreign corporations ending on or after October 1, 2019, and taxable years of United States shareholders in which or with which such taxable years of foreign corporations end. For taxable years of foreign corporations ending before October 1, 2019, and taxable years of United States shareholders in which or with which such taxable years of foreign corporations

end, a taxpayer may apply such provisions to the last taxable year of a foreign corporation beginning before January 1, 2018, and each subsequent taxable year of the foreign corporation, and to taxable years of United States shareholders in which or with which such taxable years of the foreign corporation end, provided that the taxpayer and United States persons that are related (within the meaning of section 267 or 707) to the taxpayer consistently apply such provisions with respect to all foreign corporations. For taxable years of foreign corporations ending before October 1, 2019, and taxable years of United States shareholders in which or with which such taxable years of foreign corporations end, where the taxpayer does not apply the provisions of paragraph (a) of this section relating to controlled foreign corporations, see paragraph (a) of this section as in effect and contained in 26 CFR part 1, as revised April 1, 2020.

[T.D. 8831, 64 FR 43276, Aug. 10, 1999, as amended by T.D. 8890, 65 FR 41334, July 5, 2000; T.D. 9908, 85 FR 59433, Sept. 22, 2020]

§ 1.672(f)-3 Exceptions to general rule.

(a) ***Certain revocable trusts*** —

(1) ***In general.*** Subject to the provisions of paragraph (a)(2) of this section, the general rule of § 1.672(f)-1 does not apply to any portion of a trust for a taxable year of the trust if the power to revest absolutely in the grantor title to such portion is exercisable solely by the grantor (or, in the event of the grantor's incapacity, by a guardian or other person who has unrestricted authority to exercise such power on the grantor's behalf) without the approval or consent of any other person. If the grantor can exercise such power only with the approval of a related or subordinate party who is subservient to the grantor, such power is treated as exercisable solely by the grantor. For the definition of *grantor,* see § 1.671-2(e). For the definition of *related or subordinate party,* see § 1.672(c)-1. For purposes of this paragraph (a), a related or subordinate party is subservient to the grantor unless the presumption in the last sentence of § 1.672(c)-1 is rebutted by a preponderance of the evidence. A trust (or portion of a trust) that fails to qualify for the exception provided by this paragraph (a) for a particular taxable year of the trust will be subject to the general rule of § 1.672(f)-1 for that taxable year and all subsequent taxable years of the trust.

(2) ***183-day rule.*** For purposes of paragraph (a)(1) of this section, the grantor is treated as having a power to revest for a taxable year of the trust only if the grantor has such power for a total of 183 or more days during the taxable year of the trust. If the first or last taxable year of the trust (including the year of the grantor's death) is less than 183 days, the grantor is treated as having a power to revest for purposes of paragraph (a)(1) of this section if the grantor has such power for each day of the first or last taxable year, as the case may be.

(3) ***Grandfather rule for certain revocable trusts in existence on September 19, 1995.*** Subject to the rules of paragraph (d) of this section (relating to separate accounting for gratuitous transfers to the trust after September 19, 1995), the general rule of § 1.672(f)-1 does not apply to any portion of a trust that was treated as owned by the grantor under section 676 on September 19, 1995, as long as the trust would continue to be so treated thereafter. However, the preceding sentence does not apply to any portion of the trust attributable to gratuitous transfers to the trust after September 19, 1995.

(4) ***Examples.*** The following examples illustrate the rules of this paragraph (a):

Example 1. Grantor is owner. FP1, a foreign person, creates and funds a revocable trust, T, for the benefit of FP1's children, who are resident aliens. The trustee is a foreign bank, FB, that is owned and controlled by FP1 and FP2, who is FP1's brother. The power to revoke T and revest

absolutely in FP1 title to the trust property is exercisable by FP1, but only with the approval or consent of FB. The trust instrument contains no standard that FB must apply in determining whether to approve or consent to the revocation of T. There are no facts that would suggest that FB is not subservient to FP1. Therefore, the exception in paragraph (a)(1) of this section is applicable.

Example 2. Death of grantor. Assume the same facts as in Example 1, except that FP1 dies. After FP1's death, FP2 has the power to withdraw the assets of T, but only with the approval of FB. There are no facts that would suggest that FB is not subservient to FP2. However, the exception in paragraph (a)(1) of this section is no longer applicable, because FP2 is not a grantor of T within the meaning of § 1.671-2(e).

Example 3. Trustee is not related or subordinate party. Assume the same facts as in *Example 1,* except that neither FP1 nor any member of FP1's family has any substantial ownership interest or other connection with FB. FP1 can remove and replace FB at any time for any reason. Although FP1 can replace FB with a related or subordinate party if FB refuses to approve or consent to FP1's decision to revest the trust property in himself, FB is not a related or subordinate party. Therefore, the exception in paragraph (a)(1) of this section is not applicable.

Example 4. Unrelated trustee will consent to revocation. FP, a foreign person, creates and funds an irrevocable trust, T. The trustee is a foreign bank, FB, that is not a related or subordinate party within the meaning of § 1.672(c)-1. FB has the discretion to distribute trust income or corpus to beneficiaries of T, including FP. Even if FB would in fact distribute all the trust property to FP if requested to do so by FP, the exception in paragraph (a)(1) of this section is not applicable, because FP does not have the power to revoke T.

(b) ***Certain trusts that can distribute only to the grantor or the spouse of the grantor*** —

(1) ***In general.*** The general rule of § 1.672(f)-1 does not apply to any trust (or portion of a trust) if at all times during the lifetime of the grantor the only amounts distributable (whether income or corpus) from such trust (or portion thereof) are amounts distributable to the grantor or the spouse of the grantor. For purposes of this paragraph (b), payments of amounts that are not gratuitous transfers (within the meaning of § 1.671-2(e)(2)) are not amounts distributable. For the definition of *grantor,* see § 1.671-2(e).

(2) ***Amounts distributable in discharge of legal obligations*** —

(i) ***In general.*** A trust (or portion of a trust) does not fail to satisfy paragraph (b)(1) of this section solely because amounts are distributable from the trust (or portion thereof) in discharge of a legal obligation of the grantor or the spouse of the grantor. Subject to the provisions of paragraph (b)(2)(ii) of this section, an obligation is considered a legal obligation for purposes of this paragraph (b)(2)(i) if it is enforceable under the local law of the jurisdiction in which the grantor (or the spouse of the grantor) resides.

(ii) ***Related parties*** —

(A) ***In general.*** Except as provided in paragraph (b)(2)(ii)(B) of this section, an obligation to a person who is a related person for purposes of § 1.643(h)-1(e) (other than an individual who is legally separated from the grantor under a decree of divorce or of separate maintenance) is not a legal obligation for purposes of paragraph (b)(2)(i) of this section unless it was contracted bona fide and for adequate and full consideration in money or money's worth (see § 20.2043-1 of this chapter).

(B) *Exceptions* —

(*1*) ***Amounts distributable in support of certain individuals.*** Paragraph (b)(2)(ii)(A) of this section does not apply with respect to amounts that are distributable from the trust (or portion thereof) to support an individual who—

(*i*) Would be treated as a dependent of the grantor or the spouse of the grantor under section 152(a)(1) through (9), without regard to the requirement that over half of the individual's support be received from the grantor or the spouse of the grantor; and

(*ii*) Is either permanently and totally disabled (within the meaning of section 22(e)(3)), or less than 19 years old.

(*2*) ***Certain potential support obligations.*** The fact that amounts might become distributable from a trust (or portion of a trust) in discharge of a potential obligation under local law to support an individual other than an individual described in paragraph (b)(2)(ii)(B)(*1*) of this section is disregarded if such potential obligation is not reasonably expected to arise under the facts and circumstances.

(*3*) ***Reinsurance trusts.*** [Reserved]

(3) ***Grandfather rule for certain section 677 trusts in existence on September 19, 1995.*** Subject to the rules of paragraph (d) of this section (relating to separate accounting for gratuitous transfers to the trust after September 19, 1995), the general rule of § 1.672(f)-1 does not apply to any portion of a trust that was treated as owned by the grantor under section 677 (other than section 677(a)(3)) on September 19, 1995, as long as the trust would continue to be so treated thereafter. However, the preceding sentence does not apply to any portion of the trust attributable to gratuitous transfers to the trust after September 19, 1995.

(4) ***Examples.*** The following examples illustrate the rules of this paragraph (b):

Example 1. Amounts distributable only to grantor or grantor's spouse. H and his wife, W, are both nonresident aliens. H is 70 years old, and W is 65. H and W have a 30-year-old child, C, a resident alien. There is no reasonable expectation that H or W will ever have an obligation under local law to support C or any other individual. H creates and funds an irrevocable trust, FT, using only his separate property. H is the grantor of FT within the meaning of § 1.671-2(e). Under the terms of FT, the only amounts distributable (whether income or corpus) from FT as long as either H or W is alive are amounts distributable to H or W. Upon the death of both H and W, C may receive distributions from FT. During H's lifetime, the exception in paragraph (b)(1) of this section is applicable.

Example 2. Effect of grantor's death. Assume the same facts as in *Example 1.* H predeceases W. Assume that W would be treated as owning FT under section 678 if the grantor trust rules were applied without regard to section 672(f). The exception in paragraph (b)(1) of this section is no longer applicable, because W is not a grantor of FT within the meaning of § 1.671-2(e).

Example 3. Amounts temporarily distributable to person other than grantor or grantor's spouse. Assume the same facts as in *Example 1,* except that C (age 30) is a law student at the time FT is created and the trust instrument provides that, as long as C is in law school, amounts may be distributed from FT to pay C's expenses. Thereafter, the only amounts distributable from FT as long as either H or W is alive will be amounts distributable to H or W. Even assuming there is an

enforceable obligation under local law for H and W to support C while he is in school, distributions from FT in payment of C's expenses cannot qualify as distributions in discharge of a legal obligation under paragraph (b)(2) of this section, because C is neither permanently and totally disabled nor less than 19 years old. The exception in paragraph (b)(1) of this section is not applicable. After C graduates from law school, the exception in paragraph (b)(1) still will not be applicable, because amounts were distributable to C during the lifetime of H.

Example 4. Fixed investment trust. FC, a foreign corporation, invests in a domestic fixed investment trust, DT, that is classified as a trust under § 301.7701-4(c)(1) of this chapter. Under the terms of DT, the only amounts that are distributable from FC's portion of DT are amounts distributable to FC. The exception in paragraph (b)(1) of this section is applicable to FC's portion of DT.

Example 5. Reinsurance trust. A domestic insurance company, DI, reinsures a portion of its business with an unrelated foreign insurance company, FI. To satisfy state regulatory requirements, FI places the premiums in an irrevocable domestic trust, DT. The trust funds are held by a United States bank and may be used only to pay claims arising out of the reinsurance policies, which are legally enforceable under the local law of the jurisdiction in which FI resides. On the termination of DT, any assets remaining will revert to FI. Because the only amounts that are distributable from DT are distributable either to FI or in discharge of FI's legal obligations within the meaning of paragraph (b)(2)(i) of this section, the exception in paragraph (b)(1) of this section is applicable.

Example 6. Trust that provides security for loan. FC, a foreign corporation, borrows money from B, an unrelated bank, to finance the purchase of an airplane. FC creates a foreign trust, FT, to hold the airplane as security for the loan from B. The only amounts that are distributable from FT while the loan is outstanding are amounts distributable to B in the event that FC defaults on its loan from B. When FC repays the loan, the trust assets will revert to FC. The loan is a legal obligation of FC within the meaning of paragraph (b)(2)(i) of this section, because it is enforceable under the local law of the country in which FC is incorporated. Paragraph (b)(2)(ii) of this section is not applicable, because B is not a related person for purposes of § 1.643(h)-1(e). The exception in paragraph (b)(1) of this section is applicable.

(c) ***Compensatory trusts*** —

(1) ***In general.*** The general rule of § 1.672(f)-1 does not apply to any portion of—

(i) A nonexempt employees' trust described in section 402(b), including a trust created on behalf of a self-employed individual;

(ii) A trust, including a trust created on behalf of a self-employed individual, that would be a nonexempt employees' trust described in section 402(b) but for the fact that the trust's assets are not set aside from the claims of creditors of the actual or deemed transferor within the meaning of § 1.83-3(e); and

(iii) Any additional category of trust that the Commissioner may designate in revenue procedures, notices, or other guidance published in the Internal Revenue Bulletin (see § 601.601(d)(2) of this chapter).

(2) ***Exceptions.*** The Commissioner may, in revenue rulings, notices, or other guidance published in the Internal Revenue Bulletin (see § 601.601(d)(2) of this chapter), designate categories of compensatory trusts to which the general rule of paragraph (c)(1) of this section does not apply.

(d) ***Separate accounting for gratuitous transfers to grandfathered trusts after September 19, 1995.*** If a trust that was treated as owned by the grantor under section 676 or 677 (other than section 677(a)(3)) on September 19, 1995, contains both amounts held in the trust on September 19, 1995, and amounts that were gratuitously transferred to the trust after September 19, 1995, paragraphs (a)(3) and (b)(3) of this section apply only if the amounts that were gratuitously transferred to the trust after September 19, 1995, are treated as a separate portion of the trust that is accounted for under the rules of § 1.671-3(a)(2). If the amounts that were gratuitously transferred to the trust after September 19, 1995 are not so accounted for, the general rule of § 1.672(f)-1 applies to the entire trust. If such amounts are so accounted for, and without regard to whether there is physical separation of the assets, the general rule of § 1.672(f)-1 does not apply to the portion of the trust that is attributable to amounts that were held in the trust on September 19, 1995.

(e) ***Effective date.*** The rules of this section are generally applicable to taxable years of a trust beginning after August 10, 1999. The initial separate accounting required by paragraph (d) of this section must be prepared by the due date (including extensions) for the tax return of the trust for the first taxable year of the trust beginning after August 10, 1999.

[T.D. 8831, 64 FR 43276, Aug. 10, 1999, as amended by T.D. 8890, 65 FR 41334, July 5, 2000]

§ 1.672(f)-4 Recharacterization of purported gifts.

(a) ***In general*** —

(1) ***Purported gifts from partnerships.*** Except as provided in paragraphs (b), (e), and (f) of this section, and without regard to the existence of any trust, if a United States person (United States donee) directly or indirectly receives a purported gift or bequest (as defined in paragraph (d) of this section) from a partnership, the purported gift or bequest must be included in the United States donee's gross income as ordinary income.

(2) ***Purported gifts from foreign corporations.*** Except as provided in paragraphs (b), (e), and (f) of this section, and without regard to the existence of any trust, if a United States donee directly or indirectly receives a purported gift or bequest (as defined in paragraph (d) of this section) from any foreign corporation, the purported gift or bequest must be included in the United States donee's gross income as if it were a distribution from the foreign corporation. If the foreign corporation is a passive foreign investment company (within the meaning of section 1297), the rules of section 1291 apply. For purposes of section 1012, the United States donee is not treated as having basis in the stock of the foreign corporation. However, for purposes of section 1223, the United States donee is treated as having a holding period in the stock of the foreign corporation on the date of the deemed distribution equal to the weighted average of the holding periods of the actual interest holders (other than any interest holders who treat the portion of the purported gift attributable to their interest in the foreign corporation in the manner described in paragraph (b)(1) of this section). For purposes of section 902, a United States donee that is a domestic corporation is not treated as owning any voting stock of the foreign corporation.

(b) ***Exceptions*** —

(1) ***Partner or shareholder treats transfer as distribution and gift.*** Paragraph (a) of this section does not apply to the extent the United States donee can demonstrate to the satisfaction of the Commissioner that either—

(i) A United States citizen or resident alien individual who directly or indirectly holds an interest in the partnership or foreign corporation treated and reported the purported gift or bequest for United States tax purposes as a distribution to such individual and a subsequent gift or bequest to the United States donee; or

(ii) A nonresident alien individual who directly or indirectly holds an interest in the partnership or foreign corporation treated and reported the purported gift or bequest for purposes of the tax laws of the nonresident alien individual's country of residence as a distribution to such individual and a subsequent gift or bequest to the United States donee, and the United States donee timely complied with the reporting requirements of section 6039F, if applicable.

(2) ***All beneficial owners of domestic partnership are United States citizens or residents or domestic corporations.*** Paragraph (a)(1) of this section does not apply to a purported gift or bequest from a domestic partnership if the United States donee can demonstrate to the satisfaction of the Commissioner that all beneficial owners (within the meaning of § 1.1441-1(c)(6)) of the partnership are United States citizens or residents or domestic corporations.

(3) ***Contribution to capital of corporate United States donee.*** Paragraph (a) of this section does not apply to the extent a United States donee that is a corporation can establish that the purported gift or bequest was treated for United States tax purposes as a contribution to the capital of the United States donee to which section 118 applies.

(4) ***Charitable transfers.*** Paragraph (a) of this section does not apply if either—

(i) The United States donee is described in section 170(c); or

(ii) The transferor has received a ruling or determination letter, which has been neither revoked nor modified, from the Internal Revenue Service recognizing its exempt status under section 501(c)(3), and the transferor made the transfer pursuant to an exempt purpose for which the transferor was created or organized. For purposes of the preceding sentence, a ruling or determination letter recognizing exemption may not be relied upon if there is a material change, inconsistent with exemption, in the character, the purpose, or the method of operation of the organization.

(c) ***Certain transfers from trusts to which a partnership or foreign corporation has made a gratuitous transfer—***

(1) ***Generally treated as distribution from partnership or foreign corporation.*** Except as provided in paragraphs (c)(2) and (3) of this section, if a United States donee receives a gratuitous transfer (within the meaning of § 1.671-2(e)(2)) from a trust (or portion of a trust) to which a partnership or foreign corporation has made a gratuitous transfer, the United States donee must treat the transfer as a purported gift or bequest from the partnership or foreign corporation that is subject to the rules of paragraph (a) of this section (including the exceptions in paragraphs (b) and (f) of this section). This paragraph (c) applies without regard to who is treated as the grantor of the trust (or portion thereof) under § 1.671-2(e)(4).

(2) ***Alternative rule.*** Except as provided in paragraph (c)(3) of this section, if the United States tax computed under the rules of paragraphs (a) and (c)(1) of this section does not exceed the United States tax that would be due if the United States donee treated the transfer as a distribution from the trust (or portion thereof), paragraph (c)(1) of this section does not apply and the United States donee must treat the transfer as a distribution from the trust (or portion thereof) that is subject to the rules of subparts A through D (section 641 and following), part I, subchapter J, chapter 1 of the Internal

Revenue Code. For purposes of paragraph (f) of this section, the transfer is treated as a purported gift or bequest from the partnership or foreign corporation that made the gratuitous transfer to the trust (or portion thereof).

(3) ***Exception.*** Neither paragraph (c)(1) of this section nor paragraph (c)(2) of this section applies to the extent the United States donee can demonstrate to the satisfaction of the Commissioner that the transfer represents an amount that is, or has been, taken into account for United States tax purposes by a United States citizen or resident or a domestic corporation. A transfer will be deemed to be made first out of amounts that have not been taken into account for United States tax purposes by a United States citizen or resident or a domestic corporation, unless the United States donee can demonstrate to the satisfaction of the Commissioner that another ordering rule is more appropriate.

(d) ***Definition of purported gift or bequest*** —

(1) ***In general.*** Subject to the provisions of paragraphs (d)(2) and (3) of this section, *a purported gift or bequest* for purposes of this section is any transfer of property by a partnership or foreign corporation other than a transfer for fair market value (within the meaning of § 1.671-2(e)(2)(ii)) to a person who is not a partner in the partnership or a shareholder of the foreign corporation (or to a person who is a partner in the partnership or a shareholder of a foreign corporation, if the amount transferred is inconsistent with the partner's interest in the partnership or the shareholder's interest in the corporation, as the case may be). For purposes of this section, the term *property* includes cash.

(2) ***Transfers for less than fair market value*** —

(i) ***Excess treated as purported gift or bequest.*** Except as provided in paragraph (d)(2)(ii) of this section, if a transfer described in paragraph (d)(1) of this section is for less than fair market value, the excess of the fair market value of the property transferred over the value of the property received, services rendered, or the right to use property is treated as a purported gift or bequest.

(ii) ***Exception for transfers to unrelated parties.*** No portion of a transfer described in paragraph (d)(1) of this section will be treated as a purported gift or bequest for purposes of this section if the United States donee can demonstrate to the satisfaction of the Commissioner that the United States donee is not related to a partner or shareholder of the transferor within the meaning of § 1.643(h)-1(e) or does not have another relationship with a partner or shareholder of the transferor that establishes a reasonable basis for concluding that the transferor would make a gratuitous transfer to the United States donee.

(e) ***Prohibition against affirmative use of recharacterization by taxpayers.*** A taxpayer may not use the rules of this section if a principal purpose for using such rules is the avoidance of any tax imposed by the Internal Revenue Code. Thus, with respect to such taxpayer, the Commissioner may depart from the rules of this section and recharacterize (for all purposes of the Internal Revenue Code) the transfer in accordance with its form or its economic substance.

(f) ***Transfers not in excess of $10,000.*** This section does not apply if, during the taxable year of the United States donee, the aggregate amount of purported gifts or bequests that is transferred to such United States donee directly or indirectly from all partnerships or foreign corporations that are related (within the meaning of section 643(i)) does not exceed $10,000. The aggregate amount must include gifts or bequests from persons that the United States donee knows or has reason to know are related to the partnership or foreign corporation (within the meaning of section 643(i)).

(g) ***Examples.*** The following examples illustrate the rules of this section. In each example, the amount that is transferred exceeds $10,000. The examples are as follows:

Example 1. Distribution from foreign corporation. FC is a foreign corporation that is wholly owned by A, a nonresident alien who is resident in Country C. FC makes a gratuitous transfer of property directly to A's daughter, B, who is a resident alien. Under paragraph (a)(2) of this section, B generally must treat the transfer as a dividend from FC to the extent of FC's earnings and profits and as an amount received in excess of basis thereafter. If FC is a passive foreign investment company, B must treat the amount received as a distribution under section 1291. B will be treated as having the same holding period as A. However, under paragraph (b)(1)(ii) of this section, if B can establish to the satisfaction of the Commissioner that, for purposes of the tax laws of Country C, A treated (and reported, if applicable) the transfer as a distribution to himself and a subsequent gift to B, B may treat the transfer as a gift (provided B timely complied with the reporting requirements of section 6039F, if applicable).

Example 2. Distribution of corpus from trust to which foreign corporation made gratuitous transfer. FC is a foreign corporation that is wholly owned by A, a nonresident alien who is resident in Country C. FC makes a gratuitous transfer to a foreign trust, FT, that has no other assets. FT immediately makes a gratuitous transfer in the same amount to A's daughter, B, who is a resident alien. Under paragraph (c)(1) of this section, B must treat the transfer as a transfer from FC that is subject to the rules of paragraph (a)(2) of this section. Under paragraph (a)(2) of this section, B must treat the transfer as a dividend from FC unless she can establish to the satisfaction of the Commissioner that, for purposes of the tax laws of Country C, A treated (and reported, if applicable) the transfer as a distribution to himself and a subsequent gift to B and that B timely complied with the reporting requirements of section 6039F, if applicable. The alternative rule in paragraph (c)(2) of this section would not apply as long as the United States tax computed under the rules of paragraph (a)(2) of this section is equal to or greater than the United States tax that would be due if the transfer were treated as a distribution from FT.

Example 3. Accumulation distribution from trust to which foreign corporation made gratuitous transfer. FC is a foreign corporation that is wholly owned by A, a nonresident alien. FC is not a passive foreign investment company (as defined in section 1297). FC makes a gratuitous transfer of 100X to a foreign trust, FT, on January 1, 2001. FT has no other assets on January 1, 2001. Several years later, FT makes a gratuitous transfer of 1000X to A's daughter, B, who is a United States resident. Assume that the section 668 interest charge on accumulation distributions will apply if the transfer is treated as a distribution from FT. Under the alternative rule of paragraph (c)(2) of this section, B must treat the transfer as an accumulation distribution from FT, because the resulting United States tax liability is greater than the United States tax that would be due if the transfer were treated as a transfer from FC that is subject to the rules of paragraph (a) of this section.

Example 4. Transfer from trust that is treated as owned by United States citizen. Assume the same facts as in *Example 3,* except that A is a United States citizen. Assume that A treats and reports the transfer to FT as a constructive distribution to himself, followed by a gratuitous transfer to FT, and that A is properly treated as the grantor of FT within the meaning of § 1.671-2(e). A is treated as the owner of FT under section 679 and, as required by section 671 and the regulations thereunder, A includes all of FT's items of income, deductions, and credit in computing his taxable income and credits. Neither paragraph (c)(1) nor paragraph (c)(2) of this section is applicable, because the exception in paragraph (c)(3) of this section applies.

Example 5. Transfer for less than fair market value. FC is a foreign corporation that is wholly owned by A, a nonresident alien. On January 15, 2001, FC transfers property directly to A's daughter, B, a resident alien, in exchange for 90X. The Commissioner later determines that the fair market value of the property at the time of the transfer was 100X. Under paragraph (d)(2)(i) of this section, 10X will be treated as a purported gift to B on January 15, 2001.

(h) ***Effective date.*** The rules of this section are generally applicable to any transfer after August 10, 1999, by a partnership or foreign corporation, or by a trust to which a partnership or foreign corporation makes a gratuitous transfer after August 10, 1999.

[T.D. 8831, 64 FR 43278, Aug. 10, 1999, as amended by T.D. 8890, 65 FR 41334, July 5, 2000]

§ 1.672(f)-5 Special rules.

(a) ***Transfers by certain beneficiaries to foreign grantor*** —

(1) ***In general.*** If, but for section 672(f)(5), a foreign person would be treated as the owner of any portion of a trust, any United States beneficiary of the trust is treated as the grantor of a portion of the trust to the extent the United States beneficiary directly or indirectly made transfers of property to such foreign person (without regard to whether the United States beneficiary was a United States beneficiary at the time of any transfer) in excess of transfers to the United States beneficiary from the foreign person. The rule of this paragraph (a) does not apply to the extent the United States beneficiary can demonstrate to the satisfaction of the Commissioner that the transfer by the United States beneficiary to the foreign person was wholly unrelated to any transaction involving the trust. For purposes of this paragraph (a), the term property includes cash, and a transfer of property does not include a transfer that is not a gratuitous transfer (within the meaning of § 1.671-2(e)(2)). In addition, a gift is not taken into account to the extent such gift would not be characterized as a taxable gift under section 2503(b). For a definition of United States beneficiary, see section 679.

(2) ***Examples.*** The following examples illustrate the rules of this section:

Example 1. A, a nonresident alien, contributes property to FC, a foreign corporation that is wholly owned by A. FC creates a foreign trust, FT, for the benefit of A and A's children. FT is revocable by FC without the approval or consent of any other person. FC funds FT with the property received from A. A and A's family move to the United States. Under paragraph (a)(1) of this section, A is treated as a grantor of FT. (A may also be treated as an owner of FT under section 679(a)(4).)

Example 2. B, a United States citizen, makes a gratuitous transfer of $1 million to B's uncle, C, a nonresident alien. C creates a foreign trust, FT, for the benefit of B and B's children. FT is revocable by C without the approval or consent of any other person. C funds FT with the property received from B. Under paragraph (a)(1) of this section, B is treated as a grantor of FT. (B also would be treated as an owner of FT as a result of section 679.)

(b) ***Entity characterization.*** Entities generally are characterized under United States tax principles for purposes of §§ 1.672(f)-1 through 1.672(f)-5. See §§ 301.7701-1 through 301.7701-4 of this chapter. However, solely for purposes of § 1.672(f)-4, a transferor that is a wholly owned business entity is treated as a corporation, separate from its single owner.

(c) ***Effective date.*** The rules in paragraph (a) of this section are applicable to transfers to trusts on or after August 10, 1999. The rules in paragraph (b) of this section are applicable August 10, 1999.

[T.D. 8831, 64 FR 43280, Aug. 10, 1999, as amended by T.D. 8890, 65 FR 41334, July 5, 2000]

§ 1.673(a)-1 Reversionary interests; income payable to beneficiaries other than certain charitable organizations; general rule.

(a) Under section 673(a), a grantor, in general, is treated as the owner of any portion of a trust in which he has a reversionary interest in either the corpus or income if, as of the inception of that portion of the trust, the grantor's interest will or may reasonably be expected to take effect in possession or enjoyment within 10 years commencing with the date of transfer of that portion of the trust. However, the following types of reversionary interests are excepted from the general rule of the preceding sentence:

(1) A reversionary interest after the death of the income beneficiary of a trust (see paragraph (b) of this section); and

(2) Except in the case of transfers in trust made after April 22, 1969, a reversionary interest in a charitable trust meeting the requirements of section 673(b) (see § 1.673(b)-1). Even though the duration of the trust may be such that the grantor is not treated as its owner under section 673, and therefore is not taxed on the ordinary income, he may nevertheless be treated as an owner under section 677(a)(2) if he has a reversionary interest in the corpus. In the latter case, items of income, deduction, and credit allocable to corpus, such as capital gains and losses, will be included in the portion he owns. See § 1.671-3 and the regulations under section 677. See § 1.673(d)-1 with respect to a postponement of the date specified for reacquisition of a reversionary interest.

(b) Section 673(c) provides that a grantor is not treated as the owner of any portion of a trust by reason of section 673 if his reversionary interest in the portion is not to take effect in possession or enjoyment until the death of the person or persons to whom the income of the portion is regardless of the life expectancies of the income beneficiaries. If his reversionary interest is to take effect on or after the death of an income beneficiary or upon the expiration of a specific term of years, whichever is earlier, the grantor is treated as the owner if the specific term of years is less than 10 years (but not if the term is 10 years or longer).

(c) Where the grantor's reversionary interest in a portion of a trust is to take effect in possession or enjoyment by reason of some event other than the expiration of a specific term of years or the death of the income beneficiary, the grantor is treated as the owner of the portion if the event may reasonably be expected to occur within 10 years from the date of transfer of that portion, but he is not treated as the owner under section 673 if the event may not reasonably be expected to occur within 10 years from that date. For example, if the reversionary interest in any portion of a trust is to take effect on or after the death of the grantor (or any person other than the person to whom the income is payable) the grantor is treated under section 673 as the owner of the portion if the life expectancy of the grantor (or other person) is less than 10 years on the date of transfer of the portion, but not if the life expectancy is 10 years or longer. If the reversionary interest in any portion is to take effect on or after the death of the grantor (or any person other than the person to whom the income is payable) or upon the expiration of a specific term of years, whichever is earlier, the grantor is treated as the owner of the portion if on the date of transfer of the portion either the life expectancy of the grantor (or other person) or the specific term is less than 10 years; however, if both the life expectancy and the specific term are 10 years or longer the grantor is not treated as the owner of the portion under section 673. Similarly, if the grantor has a reversionary interest in any portion which will take effect at the death of the income beneficiary or the grantor, whichever is earlier, the grantor is not treated as an owner of the portion unless his life expectancy is less than 10 years.

(d) It is immaterial that a reversionary interest in corpus or income is subject to a contingency if the reversionary interest may, taking the contingency into consideration, reasonably be expected to take effect in possession or enjoyment within 10 years. For example, the grantor is taxable where the trust income is to be paid to the grantor's son for 3 years, and the corpus is then to be returned to the grantor if he survives that period, or to be paid to the grantor's son if he is already decreased.

(e) See section 671 and §§ 1.671-2 and 1.671-3 for rules for treatment of items of income, deduction, and credit when a person is treated as the owner of all or only a portion of a trust.

[T.D. 6500, 25 FR 11814, Nov. 26, 1960, as amended by T.D. 7357, 40 FR 23742, June 2, 1975]

§ 1.673(b)-1 Income payable to charitable beneficiaries before amendment by Tax Reform Act of 1969).

(a) Pursuant to section 673(b) a grantor is not treated as an owner of any portion of a trust under section 673, even though he has a reversionary interest which will take effect within 10 years, to the extent that, under the terms of the trust, the income of the portion is irrevocably payable for a period of at least 2 years (commencing with the date of the transfer) to a designated beneficiary of the type described in section 170(b)(1)(A).

(b) Income must be irrevocably payable to a designated beneficiary for at least 2 years commencing with the date of the transfer before the benefit of section 673(b) will apply. Thus, section 673(b) will not apply if income of a trust is irrevocably payable to University A for 1 year and then to University B for the next year; or if income of a trust may be allocated among two or more charitable beneficiaries in the discretion of the trustee or any other person. On the other hand, section 673(b) will apply if half the income of a trust is irrevocably payable to University A and the other half is irrevocably payable to University B for two years.

(c) Section 673(b) applies to the period of 2 years or longer during which income is paid to a designated beneficiary of the type described in section 170(b)(1)(A) (i), (ii), or (iii), even though the trust term is to extend beyond that period. However, the other provisions of section 673 apply to the part of the trust term, if any, that extends beyond that period. This paragraph may be illustrated by the following example:

Example. G transfers property in trust with the ordinary income payable to University C (which qualifies under section 170(b)(1)(A)(ii)) for 3 years, and then to his son, B, for 5 years. At the expiration of the term the trust reverts to G. G is not taxed under section 673 of the trust income payable to University C for the first 3 years because of the application of section 673(b). However, he is taxed on income for the next 5 years because he has a reversionary interest which will take effect within 10 years commencing with the date of the transfer. On the other hand, if the income were payable to University C for 3 years and then to R for 7 years so that the trust corpus would not be returned to G within 10 years, G would not be taxable under section 673 on income payable to University C and to B during any part of the term.

(d) This section does not apply to transfers in trust made after April 22, 1969.

[T.D. 6500, 25 FR 11814, Nov. 26, 1960, as amended by T.D. 6605, 27 FR 8097, Aug. 15, 1962; T.D. 7357, 40 FR 23743, June 2, 1975]

§ 1.673(c)-1 Reversionary interest after income beneficiary's death.

The subject matter of section 673(c) is covered in paragraph (b) of § 1.673(a)-1.

§ 1.673(d)-1 Postponement of date specified for reacquisition.

Any postponement of the date specified for the reacquisition of possession or enjoyment of any reversionary interest is considered a new transfer in trust commencing with the date on which the postponement is effected and terminating with the date prescribed by the postponement. However, the grantor will not be treated as the owner of any portion of a trust for any taxable year by reason of the foregoing sentence if he would not be so treated in the absence of any postponement. The rules contained in this section may be illustrated by the following example:

Example. G places property in trust for the benefit of his son B. Upon the expiration of 12 years or the earlier death of B the property is to be paid over to G or his estate. After the expiration of 9 years G extends the term of the trust for an additional 2 years. G is considered to have made a new transfer in trust for a term of 5 years (the remaining 3 years of the original transfer plus the 2-year extension). However, he is not treated as the owner of the trust under section 673 for the first 3 years of the new term because he would not be so treated if the term of the trust had not been extended. G is treated as the owner of the trust, however, for the remaining 2 years.

§ 1.674(a)-1 Power to control beneficial enjoyment; scope of section 674.

(a) Under section 674, the grantor is treated as the owner of a portion of trust if the grantor or a nonadverse party has a power, beyond specified limits, to dispose of the beneficial enjoyment of the income or corpus, whether the power is a fiduciary power, a power of appointment, or any other power. Section 674(a) states in general terms that the grantor is treated as the owner in every case in which he or a nonadverse party can affect the beneficial enjoyment of a portion of a trust, the limitations being set forth as exceptions in subsections (b), (c), and (d) of section 674. These exceptions are discussed in detail in §§ 1.674(b)-1 through 1.674(d)—1. Certain limitations applicable to section 674 (b), (c), and (d) are set forth in § 1.674(d)-2. Section 674(b) describes powers which are excepted regardless of who holds them. Section 674(c) describes additional powers of trustees which are excepted if at least half the trustees are independent, and if the grantor is not a trustee. Section 674(d) describes a further power which is excepted if it is held by trustees other than the grantor or his spouse (if living with the grantor).

(b) In general terms the grantor is treated as the owner of a portion of a trust if he or a nonadverse party or both has a power to dispose of the beneficial enjoyment of the corpus or income unless the power is one of the following:

(1) ***Miscellaneous powers over either ordinary income or corpus.***

(i) A power that can only affect the beneficial enjoyment of income (including capital gains) received after a period of time such that the grantor would not be treated as an owner under section 673 if the power were a reversionary interest (section 674(b)(2));

(ii) A testamentary power held by anyone (other than a testamentary power held by the grantor over accumulated income) (section 674(b)(3));

(iii) A power to choose between charitable beneficiaries or to affect the manner of their enjoyment of a beneficial interest (section 674(b)(4));

(iv) A power to allocate receipts and disbursements between income and corpus (section 674(b)(8)).

(2) ***Powers of distribution primarily affecting only one beneficiary.***

(i) A power to distribute corpus to or for a current income beneficiary, if the distribution must be charged against the share of corpus from which the beneficiary may receive income (section 674(b)(5)(B));

(ii) A power to distribute income to or for a current income beneficiary or to accumulate it either (*a*) if accumulated income must either be payable to the beneficiary from whom it was withheld or as described in paragraph (b)(6) of § 1.674(b)-1 (section 674(b) (6)); (*b*) if the power is to apply income to the support of a dependent of the grantor, and the income is not so applied (section 674(b)(1)); or (*c*) if the beneficiary is under 21 or under a legal disability and accumulated income is added to corpus (section 674(b)(7)).

(3) ***Powers of distribution affecting more than one beneficiary.*** A power to distribute corpus or income to or among one or more beneficiaries or to accumulate income, either

(i) if the power is held by a trustee or trustees other than the grantor, at least half of whom are independent (section 674(c)), or

(ii) if the power is limited by a reasonably definite standard in the trust instrument, and in the case of a power over income, if in addition the power is held by a trustee or trustees other than the grantor and the grantor's spouse living with the grantor (section 674(b)(5)(A) and (d)). (These powers include both powers to “sprinkle” income or corpus among current beneficiaries, and powers to shift income or corpus between current beneficiaries and remaindermen; however, certain of the powers described under subparagraph (2) of this paragraph can have the latter effect incidentally.)

(c) See section 671 and §§ 1.671-2 and 1.671-3 for rules for the treatment of income, deductions, and credits when a person is treated as the owner of all or only a portion of a trust.

§ 1.674(b)-1 Excepted powers exercisable by any person.

(a) Paragraph (b) (1) through (8) of this section sets forth a number of powers which may be exercisable by any person without causing the grantor to be treated as an owner of a trust under section 674(a). Further, with the exception of powers described in paragraph (b)(1) of this section, it is immaterial whether these powers are held in the capacity of trustee. It makes no difference under section 674(b) that the person holding the power is the grantor, or a related or subordinate party (with the qualifications noted in paragraph (b) (1) and (3) of this section).

(b) The exceptions referred to in paragraph (a) of this section are as follows (see, however, the limitations set forth in § 1.674(d)-2):

(1) ***Powers to apply income to support of a dependent.*** Section 674(b)(1) provides, in effect, that regardless of the general rule of section 674(a), the income of a trust will not be considered as taxable to the grantor merely because in the discretion of any person (other than a grantor who is not acting as a trustee or cotrustee) it may be used for the support of a beneficiary whom the grantor is legally obligated to support, except to the extent that it is in fact used for that purpose. See section 677(b) and the regulations thereunder.

(2) ***Powers affecting beneficial enjoyment only after a period.*** Section 674(b)(2) provides an exception to section 674(a) if the exercise of a power can only affect the beneficial enjoyment of the income of a trust received after a period of time which is such that a grantor would not be treated as an owner under section 673 if the power were a reversionary interest. See §§ 1.673(a)-1 and 1.673(b)-1. For example, if a trust created on January 1, 1955, provides for the payment of income to the grantor's

son, and the grantor reserves the power to substitute other beneficiaries of income or corpus in lieu of his son on or after January 1, 1965, the grantor is not treated under section 674 as the owner of the trust with respect to ordinary income received before January 1, 1965. But the grantor will be treated as an owner on and after that date unless the power is relinquished. If the beginning of the period during which the grantor may substitute beneficiaries is postponed, the rules set forth in § 1.673(d)-1 are applicable in order to determine whether the grantor should be treated as an owner during the period following the postponement.

(3) ***Testamentary powers.*** Under paragraph (3) of section 674(b) a power in any person to control beneficial enjoyment exercisable only by will does not cause a grantor to be treated as an owner under section 674(a). However, this exception does not apply to income accumulated for testamentary disposition by the grantor or to income which may be accumulated for such distribution in the discretion of the grantor or a nonadverse party, or both, without the approval or consent of any adverse party. For example, if a trust instrument provides that the income is to be accumulated during the grantor's life and that the grantor may appoint the accumulated income by will, the grantor is treated as the owner of the trust. Moreover, if a trust instrument provides that the income is payable to another person for his life, but the grantor has a testamentary power of appointment over the remainder, and under the trust instrument and local law capital gains are added to corpus, the grantor is treated as the owner of a portion of the trust and capital gains and losses are included in that portion. (See § 1.671-3.)

(4) ***Powers to determine beneficial enjoyment of charitable beneficiaries.*** Under paragraph (4) of section 674(b) a power in any person to determine the beneficial enjoyment of corpus or income which is irrevocably payable (currently or in the future) for purposes specified in section 170(c) (relating to definition of charitable contributions) will not cause the grantor to be treated as an owner under section 674(a). For example, if a grantor creates a trust, the income of which is irrevocably payable solely to educational or other organizations that qualify under section 170(c), he is not treated as an owner under section 674 although he retains the power to allocate the income among such organizations.

(5) ***Powers to distribute corpus.*** Paragraph (5) of section 674(b) provides an exception to section 674(a) for powers to distribute corpus, subject to certain limitations, as follows:

(i) If the power is limited by a reasonably definite standard which is set forth in the trust instrument, it may extend to corpus distributions to any beneficiary or beneficiaries or class of beneficiaries (whether income beneficiaries or remaindermen) without causing the grantor to be treated as an owner under section 674. See section 674(b)(5)(A). It is not required that the standard consist of the needs and circumstances of the beneficiary. A clearly measurable standard under which the holder of a power is legally accountable is deemed a reasonably definite standard for this purpose. For instance, a power to distribute corpus for the education, support, maintenance, or health of the beneficiary; for his reasonable support and comfort; or to enable him to maintain his accustomed standard of living; or to meet an emergency, would be limited by a reasonably definite standard. However, a power to distribute corpus for the pleasure, desire, or happiness of a beneficiary is not limited by a reasonably definite standard. The entire context of a provision of a trust instrument granting a power must be considered in determining whether the power is limited by a reasonably definite standard. For example, if a trust instrument provides that the determination of the trustee shall be conclusive with respect to the exercise or nonexercise of a power, the power is not limited by a reasonably definite standard. However, the fact that the governing instrument is phrased in discretionary terms is not in itself an indication that no reasonably definite standard exists.

(ii) If the power is not limited by a reasonably definite standard set forth in the trust instrument, the exception applies only if distributions of corpus may be made solely in favor of current income beneficiaries, and any corpus distribution to the current income beneficiary must be chargeable against the proportionate part of corpus held in trust for payment of income to that beneficiary as if it constituted a separate trust (whether or not physically segregated). See section 674(b)(5)(B).

(iii) This subparagraph may be illustrated by the following examples:

Example 1. A trust instrument provides for payment of the income to the grantor's two brothers for life, and for payment of the corpus to the grantor's nephews in equal shares. The grantor reserves the power to distribute corpus to pay medical expenses that may be incurred by his brothers or nephews. The grantor is not treated as an owner by reason of this power because section 674(b)(5)(A) excepts a power, exercisable by any person, to invade corpus for any beneficiary, including a remainderman, if the power is limited by a reasonably definite standard which is set forth in the trust instrument. However, if the power were also exercisable in favor of a person (for example, a sister) who was not otherwise a beneficiary of the trust, section 674(b)(5)(A) would not be applicable.

Example 2. The facts are the same as in example 1 except that the grantor reserves the power to distribute any part of the corpus to his brothers or to his nephews for their happiness. The grantor is treated as the owner of the trust. Paragraph (5)(A) of section 674(b) is inapplicable because the power is not limited by a reasonably definite standard. Paragraph (5)(B) is inapplicable because the power to distribute corpus permits a distribution of corpus to persons other than current income beneficiaries.

Example 3. A trust instrument provides for payment of the income to the grantor's two adult sons in equal shares for 10 years, after which the corpus is to be distributed to his grandchildren in equal shares. The grantor reserves the power to pay over to each son up to one-half of the corpus during the 10-year period, but any such payment shall proportionately reduce subsequent income and corpus payments made to the son receiving the corpus. Thus, if one-half of the corpus is paid to one son, all the income from the remaining half is thereafter payable to the other son. The grantor is not treated as an owner under section 674(a) by reason of this power because it qualifies under the exception of section 674(b)(5)(B).

(6) ***Powers to withhold income temporarily.***

(i) Section 674(b)(6) excepts a power which, in general, enables the holder merely to effect a postponement in the time when the ordinary income is enjoyed by a current income beneficiary. Specifically, there is excepted a power to distribute or apply ordinary income to or for a current income beneficiary or to accumulate the income, if the accumulated income must ultimately be payable either:

(*a*) To the beneficiary from whom it was withheld, his estate, or his appointees (or persons designated by name, as a class, or otherwise as alternate takers in default of appointment) under a power of appointment held by the beneficiary which does not exclude from the class of possible appointees any person other than the beneficiary, his estate, his creditors, or the creditors of his estate (section 674(b)(6)(A));

(*b*) To the beneficiary from whom it was withheld, or if he does not survive a date of distribution which could reasonably be expected to occur within his lifetime, to his appointees (or alternate takers in default of appointment) under any power of

appointment, general or special, or if he has no power of appointment to one or more designated alternate takers (other than the grantor of the grantor's estate) whose shares have been irrevocably specified in the trust instrument (section 674(b)(6)(A) and the flush material following); or

(*c*) On termination of the trust, or in conjunction with a distribution of corpus which is augmented by the accumulated income, to the current income beneficiaries in shares which have been irrevocably specified in the trust instrument, or if any beneficiary does not survive a date of distribution which would reasonably be expected to occur within his lifetime, to his appointees (or alternate takers in default of appointment) under any power of appointment, general or special, or if he has no power of appointment to one or more designated alternate takers (other than the grantor or the grantor's estate) whose shares have been irrevocably specified in the trust instrument (section 674(b)(6)(B) and the flush material following).

(In the application of (*a*) of this subdivision, if the accumulated income of a trust is ultimately payable to the estate of the current income beneficiary or is ultimately payable to his appointees or takers in default of appointment, under a power of the type described in (*a*) of this subdivision, it need not be payable to the beneficiary from whom it was withheld under any circumstances. Furthermore, if a trust otherwise qualifies for the exception in (*a*) of this subdivision the trust income will not be considered to be taxable to the grantor under section 677 by reason of the existence of the power of appointment referred to in (*a*) of this subdivision.) In general, the exception in section 674(b)(6) is not applicable if the power is in substance one to shift ordinary income from one beneficiary to another. Thus, a power will not qualify for this exception if ordinary income may be distributed to beneficiary A, or may be added to corpus which is ultimately payable to beneficiary B, a remainderman who is not a current income beneficiary. However, section 674(b)(6)(B), and (*c*) of this subdivision, permit a limited power to shift ordinary income among current income beneficiaries, as illustrated in example 1 of this subparagraph.

(ii) The application of section 674(b)(6) may be illustrated by the following examples:

Example 1. A trust instrument provides that the income shall be paid in equal shares to the grantor's two adult daughters but the grantor reserves the power to withhold from either beneficiary any part of that beneficiary's share of income and to add it to the corpus of the trust until the younger daughter reaches the age of 30 years. When the younger daughter reaches the age of 30, the trust is to terminate and the corpus is to be divided equally between the two daughters or their estates. Although exercise of this power may permit the shifting of accumulated income from one beneficiary to the other (since the corpus with the accumulations is to be divided equally) the power is excepted under section 674(b)(6)(B) and subdivision (i)(*c*) of this subparagraph.

Example 2. The facts are the same as in example 1, except that the grantor of the trust reserves the power to distribute accumulated income to the beneficiaries in such shares as he chooses. The combined powers are not excepted by section 674(b)(6)(B) since income accumulated pursuant to the first power is neither required to be payable only in conjunction with a corpus distribution nor required to be payable in shares specified in the trust instrument. See, however, section 674(c) and § 1.674(c)-1 for the effect of such a power if it is exercisable only by independent trustees.

Example 3. A trust provides for payment of income to the grantor's adult son with the grantor retaining the power to accumulate the income until the grantor's death, when all accumulations are to be paid to the son. If the son predeceases the grantor, all accumulations are, at the death of the grantor, to be paid to his daughter, or if she is not living, to alternate takers (which do not include the grantor's estate) in specified shares. The power is excepted under section 674(b)(6)(A) since the date of distribution (the date of the grantor's death) may, in the usual case, reasonably be expected to occur during the beneficiary's (the son's) lifetime. It is not necessary that the accumulations be payable to the son's estate or his appointees if he should predecease the grantor for this exception to apply.

(7) ***Power to withhold income during disability.*** Section 674(b)(7) provides an exception for a power which, in general, will permit ordinary income to be withheld during the legal disability of an income beneficiary or while he is under 21. Specifically, there is excepted a power, exercisable only during the existence of a legal disability of any current income beneficiary or the period during which any income beneficiary is under the age of 21 years, to distribute or apply ordinary income to or for that beneficiary or to accumulate the income and add it to corpus. To qualify under this exception it is not necessary that the income ultimately be payable to the income beneficiary from whom it was withheld, his estate, or his appointees; that is, the accumulated income may be added to corpus and ultimately distributed to others. For example, the grantor is not treated as an owner under section 674 if the income of a trust is payable to his son for life, remainder to his grandchildren, although he reserves the power to accumulate income and add it to corpus while his son is under 21.

(8) ***Powers to allocate between corpus and income.*** Paragraph (8) of section 674(b) provides that a power to allocate receipts and disbursements between corpus and income, even though expressed in broad language, will not cause the grantor to be treated as an owner under the general rule of section 674(a).

§ 1.674(c)-1 Excepted powers exercisable only by independent trustees.

Section 674(c) provides an exception to the general rule of section 674(a) for certain powers that are exercisable by independent trustees. This exception is in addition to those provided for under section 674(b) which may be held by any person including an independent trustee. The powers to which section 674(c) apply are powers (a) to distribute, apportion, or accumulate income to or for a beneficiary or beneficiaries, or to, for, or within a class of beneficiaries, or (b) to pay out corpus to or for a beneficiary or beneficiaries or to or for a class of beneficiaries (whether or not income beneficiaries). In order for such a power to fall within the exception of section 674(c) it must be exercisable solely (without the approval or consent of any other person) by a trustee or trustees none of whom is the grantor and no more than half of whom are related or subordinate parties who are subservient to the wishes of the grantor. (See section 672(c) for definitions of these terms.) An example of the application of section 674(c) is a trust whose income is payable to the grantor's three adult sons with power in an independent trustee to allocate without restriction the amounts of income to be paid to each son each year. Such a power does not cause the grantor to be treated as the owner of the trust. See however, the limitations set forth in § 1.674(d)-2.

§ 1.674(d)-1 Excepted powers exercisable by any trustee other than grantor or spouse.

Section 674(d) provides an additional exception to the general rule of section 674(a) for a power to distribute, apportion, or accumulate income to or for a beneficiary or beneficiaries or to, for, or within a class of beneficiaries, whether or not the conditions of section 674(b) (6) or (7) are satisfied, if the power is solely exercisable (without the approval or consent of any other person) by a trustee or trustees none of whom is the grantor or spouse living with

the grantor, and if the power is limited by a reasonably definite external standard set forth in the trust instrument (see paragraph (b)(5) of § 1.674(b)-1 with respect to what constitutes a reasonably definite standard). See, however, the limitations set forth in § 1.674(d)-2.

§ 1.674(d)-2 Limitations on exceptions in section 674 (b), (c), and (d).

(a) ***Power to remove trustee.*** A power in the grantor to remove, substitute, or add trustees (other than a power exercisable only upon limited conditions which do not exist during the taxable year, such as the death or resignation of, or breach of fiduciary duty by, an existing trustee) may prevent a trust from qualifying under section 674 (c) or (d). For example, if a grantor has an unrestricted power to remove an independent trustee and substitute any person including himself as trustee, the trust will not qualify under section 674 (c) or (d). On the other hand if the grantor's power to remove, substitute, or add trustees is limited so that its exercise could not alter the trust in a manner that would disqualify it under section 674 (c) or (d), as the case may be, the power itself does not disqualify the trust. Thus, for example, a power in the grantor to remove or discharge an independent trustee on the condition that he substitute another independent trustee will not prevent a trust from qualifying under section 674(c).

(b) ***Power to add beneficiaries.*** The exceptions described in section 674 (b) (5), (6), and (7), (c), and (d), are not applicable if any person has a power to add to the beneficiary or beneficiaries or to a class of beneficiaries designated to receive the income or corpus, except where the action is to provide for after-born or after-adopted children. This limitation does not apply to a power held by a beneficiary to substitute other beneficiaries to succeed to his interest in the trust (so that he would be an adverse party as to the exercise or nonexercise of that power). For example, the limitation does not apply to a power in a beneficiary of a nonspendthrift trust to assign his interest. Nor does the limitation apply to a power held by any person which would qualify as an exception under section 674(b)(3) (relating to testamentary powers).

§ 1.675-1 Administrative powers.

(a) ***General rule.*** Section 675 provides in effect that the grantor is treated as the owner of any portion of a trust if under the terms of the trust instrument or circumstances attendant on its operation administrative control is exercisable primarily for the benefit of the grantor rather than the beneficiaries of the trust. If a grantor retains a power to amend the administrative provisions of a trust instrument which is broad enough to permit an amendment causing the grantor to be treated as the owner of a portion of the trust under section 675, he will be treated as the owner of the portion from its inception. See section 671 and §§ 1.671-2 and 1.671-3 for rules for treatment of items of income, deduction, and credit when a person is treated as the owner of all or only a portion of a trust.

(b) ***Prohibited controls.*** The circumstances which cause administrative controls to be considered exercisable primarily for the benefit of the grantor are specifically described in paragraphs (1) through (4) of section 675 as follows:

(1) The existence of a power, exercisable by the grantor or a nonadverse party, or both, without the approval or consent of any adverse party, which enables the grantor or any other person to purchase, exchange, or otherwise deal with or dispose of the corpus or the income of the trust for less than adequate consideration in money or money's worth. Whether the existence of the power itself will constitute the holder an adverse party will depend on the particular circumstances.

(2) The existence of a power exercisable by the grantor or a nonadverse party, or both, which enables the grantor to borrow the corpus or income of the trust, directly or indirectly, without adequate interest or adequate security. However, this paragraph does not apply where a trustee (other than the

grantor acting alone) is authorized under a general lending power to make loans to any person without regard to interest or security. A general lending power in the grantor, acting alone as trustee, under which he has power to determine interest rates and the adequacy of security is not in itself an indication that the grantor has power to borrow the corpus or income without adequate interest or security.

(3) The circumstance that the grantor has directly or indirectly borrowed the corpus or income of the trust and has not completely repaid the loan, including any interest, before the beginning of the taxable year. The preceding sentence does not apply to a loan which provides for adequate interest and adequate security, if it is made by a trustee other than the grantor or a related or subordinate trustee subservient to the grantor. See section 672(c) for definition of "a related or subordinate party".

(4) The existence of certain powers of administration exercisable in a nonfiduciary capacity by any nonadverse party without the approval or consent of any person in a fiduciary capacity. The term *powers of administration* means one or more of the following powers:

(i) A power to vote or direct the voting of stock or other securities of a corporation in which the holdings of the grantor and the trust are significant from the viewpoint of voting control;

(ii) A power to control the investment of the trust funds either by directing investments or reinvestments, or by vetoing proposed investments or reinvestments, to the extent that the trust funds consist of stocks or securities of corporations in which the holdings of the grantor and the trust are significant from the viewpoint of voting control; or

(iii) A power to reacquire the trust corpus by substituting other property of an equivalent value.

If a power is exercisable by a person as trustee, it is presumed that the power is exercisable in a fiduciary capacity primarily in the interests of the beneficiaries. This presumption may be rebutted only by clear and convincing proof that the power is not exercisable primarily in the interests of the beneficiaries. If a power is not exercisable by a person as trustee, the determination of whether the power is exercisable in a fiduciary or a nonfiduciary capacity depends on all the terms of the trust and the circumstances surrounding its creation and administration.

(c) ***Authority of trustee.*** The mere fact that a power exercisable by a trustee is described in broad language does not indicate that the trustee is authorized to purchase, exchange, or otherwise deal with or dispose of the trust property or income for less than an adequate and full consideration in money or money's worth, or is authorized to lend the trust property or income to the grantor without adequate interest. On the other hand, such authority may be indicated by the actual administration of the trust.

§ 1.676(a)-1 Power to revest title to portion of trust property in grantor; general rule.

If a power to revest in the grantor title to any portion of a trust is exercisable by the grantor or a nonadverse party, or both, without the approval or consent of an adverse party, the grantor is treated as the owner of that portion, except as provided in section 676(b) (relating to powers affecting beneficial enjoyment of income only after the expiration of certain periods of time). If the title to a portion of the trust will revest in the grantor upon the exercise of a power by the grantor or a nonadverse party, or both, the grantor is treated as the owner of that portion regardless of whether the power is a power to revoke, to terminate, to alter or amend, or to appoint. See section 671 and §§ 1.671-2 and 1.671-3 for rules for treatment of items of income, deduction, and credit when a person is treated as the owner of all or only a portion of a trust.

§ 1.676(b)-1 Powers exercisable only after a period of time.

Section 676(b) provides an exception to the general rule of section 676(a) when the exercise of a power can only affect the beneficial enjoyment of the income of a trust received after the expiration of a period of time which is such that a grantor would not be treated as the owner of that portion, except as power were a reversionary interest. See §§ 1.673(a)-1 and 1.673(b)-1. Thus, for example, a grantor is excepted from the general rule of section 676(a) with respect to ordinary income if exercise of a power to revest corpus in him cannot affect the beneficial enjoyment of the income received within 10 years after the date of transfer of that portion of the trust. It is immaterial for this purpose that the power is vested at the time of the transfer. However, the grantor is subject to the general rule of section 676(a) after the expiration of the period unless the power is relinquished. Thus, in the above example, the grantor may be treated as the owner and be taxed on all income in the eleventh and succeeding years if exercise of the power can affect beneficial enjoyment of income received in those years. If the beginning of the period during which the grantor may revest is postponed, the rules set forth in § 1.673(d)-1 are applicable to determine whether the grantor should be treated as an owner during the period following the postponement.

§ 1.677(a)-1 Income for benefit of grantor; general rule.

(a)

(1) ***Scope.*** Section 677 deals with the treatment of the grantor of a trust as the owner of a portion of the trust because he has retained an interest in the income from that portion. For convenience, “grantor” and “spouse” are generally referred to in the masculine and feminine genders, respectively, but if the grantor is a woman the reference to “grantor” is to her and the reference to “spouse” is to her husband. Section 677 also deals with the treatment of the grantor of a trust as the owner of a portion of the trust because the income from property transferred in trust after October 9, 1969, is, or may be, distributed to his spouse or applied to the payment of premiums on policies of insurance on the life of his spouse. However, section 677 does not apply when the income of a trust is taxable to a grantor's spouse under section 71 (relating to alimony and separate maintenance payments) or section 682 (relating to income of an estate or trust in case of divorce, etc.). See section 671-1(b).

(2) ***Cross references.*** See section 671 and §§ 1.671-2 and 1.671-3 for rules for treatment of items of income, deduction, and credit when a person is treated as the owner of all or a portion of a trust.

(b) ***Income for benefit of grantor or his spouse; general rule*** —

(1) ***Property transferred in trust prior to October 10, 1969.*** With respect to property transferred in trust prior to October 10, 1969, the grantor is treated, under section 677, in any taxable year as the owner (whether or not he is treated as an owner under section 674) of a portion of a trust of which the income for the taxable year or for a period not within the exception described in paragraph (e) of this section is, or in the discretion of the grantor or a nonadverse party, or both (without the approval or consent of any adverse party) may be:

(i) Distributed to the grantor;

(ii) Held or accumulated for future distribution to the grantor; or

(iii) Applied to the payment of premiums on policies of insurance on the life of the grantor, except policies of insurance irrevocably payable for a charitable purpose specified in section 170(c).

(2) ***Property transferred in trust after October 9, 1969.*** With respect to property transferred in trust after October 9, 1969, the grantor is treated, under section 677, in any taxable year as the owner (whether or not he is treated as an owner under section 674) of a portion of a trust of which the income for

the taxable year or for a period not within the exception described in paragraph (e) of this section is, or in the discretion of the grantor, or his spouse, or a nonadverse party, or any combination thereof (without the approval or consent of any adverse party other than the grantor's spouse) may be:

(i) Distributed to the grantor or the grantor's spouse;

(ii) Held or accumulated for future distribution to the grantor or the grantor's spouse; or

(iii) Applied to the payment of premiums on policies of insurance on the life of the grantor or the grantor's spouse, except policies of insurance irrevocably payable for a charitable purpose specified in section 170(c).

With respect to the treatment of a grantor as the owner of a portion of a trust solely because its income is, or may be, distributed or held or accumulated for future distribution to a beneficiary who is his spouse or applied to the payment of premiums for insurance on the spouse's life, section 677(a) applies to the income of a trust solely during the period of the marriage of the grantor to a beneficiary. In the case of divorce or separation, see sections 71 and 682 and the regulations thereunder.

(c) ***Constructive distribution; cessation of interest.*** Under section 677 the grantor is treated as the owner of a portion of a trust if he has retained any interest which might, without the approval or consent of an adverse party, enable him to have the income from that portion distributed to him at some time either actually or constructively (subject to the exception described in paragraph (e) of this section). In the case of a transfer in trust after October 9, 1969, the grantor is also treated as the owner of a portion of a trust if he has granted or retained any interest which might, without the approval or consent of an adverse party (other than the grantor's spouse), enable his spouse to have the income from the portion at some time, whether or not within the grantor's lifetime, distributed to the spouse either actually or constructively. See paragraph (b)(2) of this section for additional rules relating to the income of a trust prior to the grantor's marriage to a beneficiary. Constructive distribution to the grantor or to his spouse includes payment on behalf of the grantor or his spouse to another in obedience to his or her direction and payment of premiums upon policies of insurance on the grantor's, or his spouse's, life (other than policies of insurance irrevocably payable for charitable purposes specified in section 170(c)). If the grantor (in the case of property transferred prior to Oct. 10, 1969) or the grantor and his spouse (in the case of property transferred after Oct. 9, 1969) are divested permanently and completely of every interest described in this paragraph, the grantor is not treated as an owner under section 677 after that divesting. The word “interest” as used in this paragraph does not include the possibility that the grantor or his spouse might receive back from a beneficiary an interest in a trust by inheritance. Further, with respect to transfers in trust prior to October 10, 1969, the word “interest” does not include the possibility that the grantor might receive back from a beneficiary an interest in a trust as a surviving spouse under a statutory right of election or a similar right.

(d) ***Discharge of legal obligation of grantor or his spouse.*** Under section 677 a grantor is, in general, treated as the owner of a portion of a trust whose income is, or in the discretion of the grantor or a nonadverse party, or both, may be applied in discharge of a legal obligation of the grantor (or his spouse in the case of property transferred in trust by the grantor after October 9, 1969). However, see § 1.677(b)-1 for special rules for trusts whose income may not be applied for the discharge of any legal obligation of the grantor or the grantor's spouse other than the support or maintenance of a beneficiary (other than the grantor's spouse) whom the grantor or grantor's spouse is legally obligated to support. See § 301.7701-4(e) of this chapter for rules on the classification of and application of section 677 to an environmental remediation trust.

(e) ***Exception for certain discretionary rights affecting income.*** The last sentence of section 677(a) provides that a grantor shall not be treated as the owner when a discretionary right can only affect the beneficial enjoyment of the income of a trust received after a period of time during which a grantor would not be treated as an owner under section 673 if the power were a reversionary interest. See §§ 1.673(a)-1 and 1.673(b)-1. For example, if the ordinary income of a trust is payable to B for 10 years and then in the grantor's discretion income or corpus may be paid to B or to the grantor (or his spouse in the case of property transferred in trust by the grantor after October 9, 1969), the grantor is not treated as an owner with respect to the ordinary income under section 677 during the first 10 years. He will be treated as an owner under section 677 after the expiration of the 10-year period unless the power is relinquished. If the beginning of the period during which the grantor may substitute beneficiaries is postponed, the rules set forth in § 1.673(d)-1 are applicable in determining whether the grantor should be treated as an owner during the period following the postponement.

(f) ***Accumulation of income.*** If income is accumulated in any taxable year for future distribution to the grantor (or his spouse in the case of property transferred in trust by the grantor after Oct. 9, 1969), section 677(a)(2) treats the grantor as an owner for that taxable year. The exception set forth in the last sentence of section 677(a) does not apply merely because the grantor (or his spouse in the case of property transferred in trust by the grantor after Oct. 9, 1969) must await the expiration of a period of time before he or she can receive or exercise discretion over previously accumulated income of the trust, even though the period is such that the grantor would not be treated as an owner under section 673 if a reversionary interest were involved. Thus, if income (including capital gains) of a trust is to be accumulated for 10 years and then will be, or at the discretion of the grantor, or his spouse in the case of property transferred in trust after October 9, 1969, or a nonadverse party, may be, distributed to the grantor (or his spouse in the case of property transferred in trust after Oct. 9, 1969), the grantor is treated as the owner of the trust from its inception. If income attributable to transfers after October 9, 1969 is accumulated in any taxable year during the grantor's lifetime for future distribution to his spouse, section 677(a)(2) treats the grantor as an owner for that taxable year even though his spouse may not receive or exercise discretion over such income prior to the grantor's death.

(g) ***Examples.*** The application of section 677(a) may be illustrated by the following examples:

Example 1. G creates an irrevocable trust which provides that the ordinary income is to be payable to him for life and that on his death the corpus shall be distributed to B, an unrelated person. Except for the right to receive income, G retains no right or power which would cause him to be treated as an owner under sections 671 through 677. Under the applicable local law capital gains must be applied to corpus. During the taxable year 1970 the trust has the following items of gross income and deductions: Dividends$5,000 Capital gain1,000 Expenses allocable to income200 Expenses allocable to corpus100Since G has a right to receive income he is treated as an owner of a portion of the trust under section 677. Accordingly, he should include the $5,000 of dividends, $200 income expense, and $100 corpus expense in the computation of his taxable income for 1970. He should not include the $1,000 capital gain since that is not attributable to the portion of the trust that he owns. See § 1.671-3(b). The tax consequences of the capital gain are governed by the provisions of subparts A, B, C, and D (section 641 and following), part I, subchapter J, chapter 1 of the Code. Had the trust sustained a capital loss in any amount the loss would likewise not be included in the computation of G's taxable income, but would also be governed by the provisions of such subparts.

Example 2. G creates a trust which provides that the ordinary income is payable to his adult son. Ten years and one day from the date of transfer or on the death of his son, whichever is earlier, corpus is to

revert to G. In addition, G retains a discretionary right to receive $5,000 of ordinary income each year. (Absent the exercise of this right all the ordinary income is to be distributed to his son.) G retained no other right or power which would cause him to be treated as an owner under subpart E (section 671 and following). Under the terms of the trust instrument and applicable local law capital gains must be applied to corpus. During the taxable year 1970 the trust had the following items of income and deductions:

Dividends	$10,000
Capital gain	2,000
Expenses allocable to income	400
Expenses allocable to corpus	200

Since the capital gain is held or accumulated for future distributions to G, he is treated under section 677(a)(2) as an owner of a portion of the trust to which the gain is attributable. See § 1.671-3(b).

Therefore, he must include the capital gain in the computation of his taxable income. (Had the trust sustained a capital loss in any amount, G would likewise include that loss in the computation of his taxable income.) In addition, because of G's discretionary right (whether exercised or not) he is treated as the owner of a portion of the trust which will permit a distribution of income to him of $5,000. Accordingly, G includes dividends of $5,208.33 and income expenses of $208.33 in computing his taxable income, determined in the following manner:

Total dividends	$10,000.00
Less: Expenses allocable to income	400.00
Distributable income of the trust	9,600.00
Portion of dividends attributable to G (5,000/9,600 × $10,000)	5,208.33
Portion of income expenses attributable to G (5,000/9,600 × $400)	208.33
Amount of income subject to discretionary right	5,000.00

In accordance with § 1.671-3(c), G also takes into account $104.17 (5,000/9,600 × $200) of corpus expenses in computing his tax liability. The portion of the dividends and expenses of the trust not attributable to G are governed by the provisions of subparts A through D.

[T.D. 7148, 36 FR 20749, Oct. 29, 1971, as amended by T.D. 8668, 61 FR 19191, May 1, 1996]

§ 1.677(b)-1 Trusts for support.

(a) Section 677(b) provides that a grantor is not treated as the owner of a trust merely because its income may in the discretion of any person other than the grantor (except when he is acting as trustee or cotrustee) be applied or distributed for the support or maintenance of a beneficiary (other than the grantor's spouse in the case of income from property transferred in trust after October 9, 1969), such as the child of the grantor, whom the grantor or his spouse is legally obligated to support. If income of the current year of the trust is actually so applied or distributed the grantor may be treated as the owner of any portion of the trust under section 677 to that extent, even though it might have been applied or distributed for other purposes. In the case of property transferred to a trust before October 10, 1969, for the benefit of the grantor's spouse, the grantor may be treated as the owner to the extent income of the current year is actually applied for the support or maintenance of his spouse.

(b) If any amount applied or distributed for the support of a beneficiary, including the grantor's spouse in the case of property transferred in trust before October 10, 1969, whom the grantor is legally obligated to support is paid out of corpus or out of income other than income of the current year, the grantor is treated as a beneficiary of the trust, and the amount applied or distributed is considered to be an amount paid within the meaning of section 661(a)(2), taxable to the grantor under section 662. Thus, he is subject to the other relevant portions of subparts A through D (section 641 and following), part I, subchapter J, chapter 1 of the Code. Accordingly, the grantor may be taxed on an accumulation distribution or a capital gain distribution under subpart D (section 665 and following) of such part I. Those provisions are applied on the basis that the grantor is the beneficiary.

(c) For the purpose of determining the items of income, deduction, and credit of a trust to be included under this section in computing the grantor's tax liability, the income of the trust for the taxable year of distribution will be deemed to have been first distributed. For example, in the case of a trust reporting on the calendar year basis, a distribution made on January 1, 1956, will be deemed to have been made out of ordinary income of the trust for the calendar year 1956 to the extent of the income for that year even though the trust had received no income as of January 1, 1956. Thus, if a distribution of $10,000 is made on January 1, 1956, for the support of the grantor's dependent, the grantor will be treated as the owner of the trust for 1956 to that extent. If the trust received dividends of $5,000 and incurred expenses of $1,000 during that year but subsequent to January 1, he will take into account dividends of $5,000 and expenses of $1,000 in computing his tax liability for 1956. In addition, the grantor will be treated as a beneficiary of the trust with respect to the $6,000 ($10,000 less distributable income of $4,000 (dividends of $5,000 less expenses of $1,000)) paid out of corpus or out of other than income of the current year. See paragraph (b) of this section.

(d) The exception provided in section 677(b) relates solely to the satisfaction of the grantor's legal obligation to support or maintain a beneficiary. Consequently, the general rule of section 677(a) is applicable when in the discretion of the grantor or nonadverse parties income of a trust may be applied in discharge of a grantor's obligations other than his obligation of support or maintenance falling within section 677(b). Thus, if the grantor creates a trust the income of which may in the discretion of a nonadverse party be applied in the payment of the grantor's debts, such as the payment of his rent or other household expenses, he is treated as an owner of the trust regardless of whether the income is actually so applied.

(e) The general rule of section 677(a), and not section 677(b), is applicable if discretion to apply or distribute income of a trust rests solely in the grantor, or in the grantor in conjunction with other persons, unless in either case the grantor has such discretion as trustee or cotrustee.

(f) The general rule of section 677(a), and not section 677(b), is applicable to the extent that income is required, without any discretionary determination, to be applied to the support of a beneficiary whom the grantor is legally obligated to support.

[T.D. 6500, 25 FR 11814, Nov. 26, 1960, as amended by T.D. 7148, 36 FR 20750, Oct. 29, 1971]

§ 1.678(a)-1 Person other than grantor treated as substantial owner; general rule.

(a) Where a person other than the grantor of a trust has a power exercisable solely by himself to vest the corpus or the income of any portion of a testamentary or inter vivos trust in himself, he is treated under section 678(a) as the owner of that portion, except as provided in section 678(b) (involving taxation of the grantor) and section 678(c) (involving and obligation of support). The holder of such a power also is treated as an owner of the trust even though he has partially released or otherwise modified the power so that he can no longer vest the corpus or income in himself, if he has retained such control of the trust as would, if retained by a grantor, subject the grantor to treatment as the owner under sections 671 to 677, inclusive. See section 671 and §§ 1.671-2 and 1.671-3 for rules for treatment of items of income, deduction, and credit where a person is treated as the owner of all or only a portion of a trust.

(b) Section 678(a) treats a person as an owner of a trust if he has a power exercisable solely by himself to apply the income or corpus for the satisfaction of his legal obligations, other than an obligation to support a dependent (see § 1.678(c)-1 subject to the limitation of section 678(b). Section 678 does not apply if the power is not exercisable solely by himself. However, see § 1.662(a)-4 for principles applicable to income of a trust which, pursuant to the terms of the trust instrument, is used to satisfy the obligations of a person other than the grantor.

§ 1.678(b)-1 If grantor is treated as the owner.

Section 678(a) does not apply with respect to a power over income, as originally granted or thereafter modified, if the grantor of the trust is treated as the owner under sections 671 to 677, inclusive.

§ 1.678(c)-1 Trusts for support.

(a) Section 678(a) does not apply to a power which enables the holder, in the capacity of trustee or cotrustee, to apply the income of the trust to the support or maintenance of a person whom the holder is obligated to support, except to the extent the income is so applied. See paragraphs (a), (b), and (c) of § 1.677(b)-1 for applicable principles where any amount is applied for the support or maintenance of a person whom the holder is obligated to support.

(b) The general rule in section 678(a) (and not the exception in section 678(c)) is applicable in any case in which the holder of a power exercisable solely by himself is able, in any capacity other than that of trustee or cotrustee, to apply the income in discharge of his obligation of support or maintenance.

(c) Section 678(c) is concerned with the taxability of income subject to a power described in section 678(a). It has no application to the taxability of income which is either required to be applied pursuant to the terms of the trust instrument or is applied pursuant to a power which is not described in section 678(a), the taxability of such income being governed by other provisions of the Code. See § 1.662(a)-4.

§ 1.678(d)-1 Renunciation of power.

Section 678(a) does not apply to a power which has been renounced or disclaimed within a reasonable time after the holder of the power first became aware of its existence.

§ 1.679-0 Outline of major topics.

This section lists the major paragraphs contained in §§ 1.679-1 through 1.679-7 as follows:

§ 1.679-1 U.S. transferor treated as owner of foreign trust.

(a) In general.

(b) Interaction with sections 673 through 678.

(c) Definitions.

(1) U.S. transferor.

(2) U.S. person.

(3) Foreign trust.

(4) Property.

(5) Related person.

(6) Obligation.

(d) Examples.

§ 1.679-2 Trusts treated as having a U.S. beneficiary.

(a) Existence of U.S. beneficiary.

(1) In general.

(2) Benefit to a U.S. person

(i) In general.

(ii) Certain unexpected beneficiaries.

(iii) Examples.

(3) Changes in beneficiary's status.

(i) In general.

(ii) Examples.

(4) General rules.

(i) Records and documents.

(ii) Additional factors.

(iii) Examples.

(b) Indirect U.S. beneficiaries.

(1) Certain foreign entities.

(2) Other indirect beneficiaries.

(3) Examples.

(c) Treatment of U.S. transferor upon foreign trust's acquisition or loss of U.S. beneficiary.

(1) Trusts acquiring a U.S. beneficiary.

(2) Trusts ceasing to have a U.S. beneficiary.

(3) Examples.

§ 1.679-3 Transfers.

(a) In general.

(b) Transfers by certain trusts.

(1) In general.

(2) Example.

(c) Indirect transfers.

(1) Principal purpose of tax avoidance.

(2) Principal purpose of tax avoidance deemed to exist.

(3) Effect of disregarding intermediary.

(i) In general.

(ii) Special rule.

(iii) Effect on intermediary.

(4) Related parties.

(5) Examples.

(d) Constructive transfers.

(1) In general.

(2) Examples.

(e) Guarantee of trust obligations.

(1) In general.

(2) Amount transferred.

(3) Principal repayments.

(4) Guarantee.

(5) Examples.

(f) Transfers to entities owned by a foreign trust.

(1) General rule.

(2) Examples.

§ 1.679-4 Exceptions to general rule.

(a) In general.

(b) Transfers for fair market value.

(1) In general.

(2) Special rule.

(i) Transfers for partial consideration.

(ii) Example.

(c) Certain obligations not taken into account.

(d) Qualified obligations.

(1) In general.

(2) Additional loans.

(3) Obligations that cease to be qualified.

(4) Transfers resulting from failed qualified obligations.

(5) Renegotiated loans.

(6) Principal repayments.

(7) Examples.

§ 1.679-5 Pre-immigration trusts.

(a) In general.

(b) Special rules.

(1) Change in grantor trust status.

(2) Treatment of undistributed income.

(c) Examples.

§ 1.679-6 Outbound migrations of domestic trusts.

(a) In general.

(b) Amount deemed transferred.

(c) Example.

§ 1.679-7 Effective dates.

(a) In general.

(b) Special rules.

[T.D. 8955, 66 FR 37889, July 20, 2001]

§ 1.679-1 U.S. transferor treated as owner of foreign trust.

(a) ***In general.*** A U.S. transferor who transfers property to a foreign trust is treated as the owner of the portion of the trust attributable to the property transferred if there is a U.S. beneficiary of any portion of the trust, unless an exception in § 1.679-4 applies to the transfer.

(b) ***Interaction with sections 673 through 678.*** The rules of this section apply without regard to whether the U.S. transferor retains any power or interest described in sections 673 through 677. If a U.S. transferor would be treated as the owner of a portion of a foreign trust pursuant to the rules of this section and another person would be treated as the owner of the same portion of the trust pursuant to section 678, then the U.S. transferor is treated as the owner and the other person is not treated as the owner.

(c) ***Definitions.*** The following definitions apply for purposes of this section and §§ 1.679-2 through 1.679-7:

(1) ***U.S. transferor.*** The term *U.S. transferor* means any U.S. person who makes a transfer (as defined in § 1.679-3) of property to a foreign trust.

(2) ***U.S. person.*** The term *U.S. person* means a United States person as defined in section 7701(a)(30), a nonresident alien individual who elects under section 6013(g) to be treated as a resident of the United States, and an individual who is a dual resident taxpayer within the meaning of § 301.7701(b)-7(a) of this chapter.

(3) ***Foreign trust.*** Section 7701(a)(31)(B) defines the term *foreign trust.* See also § 301.7701-7 of this chapter.

(4) ***Property.*** The term *property* means any property including cash.

(5) ***Related person.*** A person is a *related person* if, without regard to the transfer at issue, the person is—

(i) A grantor of any portion of the trust (within the meaning of § 1.671-2(e)(1));

(ii) An owner of any portion of the trust under sections 671 through 679;

(iii) A beneficiary of the trust; or

(iv) A person who is related (within the meaning of section 643(i)(2)(B)) to any grantor, owner or beneficiary of the trust.

(6) ***Obligation.*** The term *obligation* means any bond, note, debenture, certificate, bill receivable, account receivable, note receivable, open account, or other evidence of indebtedness, and, to the extent not previously described, any annuity contract.

(d) ***Examples.*** The following examples illustrate the rules of paragraph (a) of this section. In these examples, *A* is a resident alien, *B* is *A*'s son, who is a resident alien, *C* is *A*'s father, who is a resident alien, *D* is *A*'s uncle, who is a nonresident alien, and *FT* is a foreign trust. The examples are as follows:

Example 1. Interaction with section 678. A creates and funds *FT. FT* may provide for the education of *B* by paying for books, tuition, room and board. In addition, *C* has the power to vest the trust corpus or income in himself within the meaning of section 678(a)(1). Under paragraph (b) of this section, *A* is treated as the owner of the portion of *FT* attributable to the property transferred to *FT* by *A* and *C* is not treated as the owner thereof.

Example 2. U.S. person treated as owner of a portion of FT. D creates and funds *FT* for the benefit of *B. D* retains a power described in section 676 and § 1.672(f)-3(a)(1). *A* transfers property to *FT.* Under sections 676 and 672(f), *D* is treated as the owner of the portion of *FT* attributable to the property transferred by *D.* Under paragraph (a) of this section, *A* is treated as the owner of the portion of *FT* attributable to the property transferred by *A.*

[T.D. 8955, 66 FR 37889, July 20, 2001]

§ 1.679-2 Trusts treated as having a U.S. beneficiary.

(a) *Existence of U.S. beneficiary* —

(1) ***In general.*** The determination of whether a foreign trust has a U.S. beneficiary is made on an annual basis. A foreign trust is treated as having a U.S. beneficiary unless during the taxable year of the U.S. transferor—

(i) No part of the income or corpus of the trust may be paid or accumulated to or for the benefit of, directly or indirectly, a U.S. person; and

(ii) If the trust is terminated at any time during the taxable year, no part of the income or corpus of the trust could be paid to or for the benefit of, directly or indirectly, a U.S. person.

(2) *Benefit to a U.S. person* —

(i) ***In general.*** For purposes of paragraph (a)(1) of this section, income or corpus may be paid or accumulated to or for the benefit of a U.S. person during a taxable year of the U.S. transferor if during that year, directly or indirectly, income may be distributed to, or accumulated for the benefit of, a U.S. person, or corpus may be distributed to, or held for the future benefit of, a U.S. person. This determination is made without regard to whether income or corpus is actually distributed to a U.S. person during that year, and without regard to whether a U.S. person's interest in the trust income or corpus is contingent on a future event.

(ii) ***Certain unexpected beneficiaries.*** Notwithstanding paragraph (a)(2)(i) of this section, for purposes of paragraph (a)(1) of this section, a person who is not named as a beneficiary and is not a member of a class of beneficiaries as defined under the trust instrument is not taken into consideration if the U.S. transferor demonstrates to the satisfaction of the Commissioner that the person's contingent interest in the trust is so remote as to be negligible. The preceding sentence does not apply with respect to persons to whom distributions could be made pursuant to a grant of discretion to the trustee or any other person. A class of beneficiaries generally does not include heirs who will benefit from the trust under the laws of intestate succession in the event that the named beneficiaries (or members of the named class) have all deceased (whether or not stated as a named class in the trust instrument).

(iii) ***Examples.*** The following examples illustrate the rules of paragraphs (a)(1) and (2) of this section. In these examples, *A* is a resident alien, *B* is *A*'s son, who is a resident alien, *C* is *A*'s daughter, who is a nonresident alien, and *FT* is a foreign trust. The examples are as follows:

Example 1. Distribution of income to U.S. person. A transfers property to *FT.* The trust instrument provides that all trust income is to be distributed currently to *B.* Under paragraph (a)(1) of this section, *FT* is treated as having a U.S. beneficiary.

Example 2. Income accumulation for the benefit of a U.S. person. In 2001, *A* transfers property to *FT.* The trust instrument provides that from 2001 through 2010, the trustee of *FT* may distribute trust income to *C* or may accumulate the trust income. The trust instrument further provides that in 2011, the trust will terminate and the trustee may distribute the trust assets to either or both of *B* and *C,* in the trustee's discretion. If the trust terminates unexpectedly prior to 2011, all trust assets must be distributed to *C.* Because it is possible that income may be accumulated in each year, and that the accumulated income ultimately may be distributed to *B,* a U.S. person, under paragraph (a)(1) of this section *FT*

is treated as having a U.S. beneficiary during each of *A*'s tax years from 2001 through 2011. This result applies even though no U.S. person may receive distributions from the trust during the tax years 2001 through 2010.

Example 3. Corpus held for the benefit of a U.S. person. The facts are the same as in Example 2, except that from 2001 through 2011, all trust income must be distributed to *C.* In 2011, the trust will terminate and the trustee may distribute the trust corpus to either or both of *B* and *C,* in the trustee's discretion. If the trust terminates unexpectedly prior to 2011, all trust corpus must be distributed to *C.* Because during each of *A*'s tax years from 2001 through 2011 trust corpus is held for possible future distribution to *B,* a U.S. person, under paragraph (a)(1) of this section *FT* is treated as having a U.S. beneficiary during each of those years. This result applies even though no U.S. person may receive distributions from the trust during the tax years 2001 through 2010.

Example 4. Distribution upon U.S. transferor's death. A transfers property to *FT.* The trust instrument provides that all trust income must be distributed currently to *C* and, upon *A*'s death, the trust will terminate and the trustee may distribute the trust corpus to either or both of *B* and *C.* Because *B* may receive a distribution of corpus upon the termination of *FT,* and *FT* could terminate in any year, *FT* is treated as having a U.S. beneficiary in the year of the transfer and in subsequent years.

Example 5. Distribution after U.S. transferor's death. The facts are the same as in *Example 4,* except the trust instrument provides that the trust will not terminate until the year following *A*'s death. Upon termination, the trustee may distribute the trust assets to either or both of *B* and *C,* in the trustee's discretion. All trust assets are invested in the stock of *X,* a foreign corporation, and *X* makes no distributions to *FT.* Although no U.S. person may receive a distribution until the year after *A*'s death, and *FT* has no realized income during any year of its existence, during each year in which *A* is living corpus may be held for future distribution to *B,* a U.S. person. Thus, under paragraph (a)(1) of this section *FT* is treated as having a U.S. beneficiary during each of *A*'s tax years from 2001 through the year of *A*'s death.

Example 6. Constructive benefit to U.S. person. A transfers property to *FT.* The trust instrument provides that no income or corpus may be paid directly to a U.S. person. However, the trust instrument provides that trust corpus may be used to satisfy *B*'s legal obligations to a third party by making a payment directly to the third party. Under paragraphs (a)(1) and (2) of this section, *FT* is treated as having a U.S. beneficiary.

Example 7. U.S. person with negligible contingent interest. A transfers property to *FT.* The trust instrument provides that all income is to be distributed currently to *C,* and upon *C*'s death, all corpus is to be distributed to whomever of *C*'s three children is then living. All of *C*'s children are nonresident aliens. Under the laws of intestate succession that would apply to *FT,* if all of *C*'s children are deceased at the time of *C*'s death, the corpus would be distributed to *A*'s heirs. *A*'s living relatives at the time of the transfer consist solely of two brothers and two nieces, all of whom are nonresident aliens, and two first cousins, one of whom, *E,* is a U.S. citizen. Although it is possible under certain circumstances that *E* could receive a corpus distribution under the applicable laws of intestate succession, for each year the trust is in existence *A* is able to demonstrate to the satisfaction of the

Commissioner under paragraph (a)(2)(ii) of this section that *E*'s contingent interest in *FT* is so remote as to be negligible. Provided that paragraph (a)(4) of this section does not require a different result, *FT* is not treated as having a U.S. beneficiary.

Example 8. U.S. person with non-negligible contingent interest. A transfers property to *FT.* The trust instrument provides that all income is to be distributed currently to *D, A*'s uncle, who is a nonresident alien, and upon *A*'s death, the corpus is to be distributed to *D* if he is then living. Under the laws of intestate succession that would apply to *FT, B* and *C* would share equally in the trust corpus if *D* is not living at the time of *A*'s death. *A* is unable to demonstrate to the satisfaction of the Commissioner that *B*'s contingent interest in the trust is so remote as to be negligible. Under paragraph (a)(2)(ii) of this section, *FT* is treated as having a U.S. beneficiary as of the year of the transfer.

Example 9. U.S. person as member of class of beneficiaries. A transfers property to *FT.* The trust instrument provides that all income is to be distributed currently to *D, A*'s uncle, who is a nonresident alien, and upon *A*'s death, the corpus is to be distributed to *D* if he is then living. If *D* is not then living, the corpus is to be distributed to *D*'s descendants. *D*'s grandson, *E,* is a resident alien. Under paragraph (a)(2)(ii) of this section, *FT* is treated as having a U.S. beneficiary as of the year of the transfer.

Example 10. Trustee's discretion in choosing beneficiaries. A transfers property to *FT.* The trust instrument provides that the trustee may distribute income and corpus to, or accumulate income for the benefit of, any person who is pursuing the academic study of ancient Greek, in the trustee's discretion. Because it is possible that a U.S. person will receive distributions of income or corpus, or will have income accumulated for his benefit, *FT* is treated as having a U.S. beneficiary. This result applies even if, during a tax year, no distributions or accumulations are actually made to or for the benefit of a U.S. person. *A* may not invoke paragraph (a)(2)(ii) of this section because a U.S. person could benefit pursuant to a grant of discretion in the trust instrument.

Example 11. Appointment of remainder beneficiary. A transfers property to *FT.* The trust instrument provides that the trustee may distribute current income to *C,* or may accumulate income, and, upon termination of the trust, trust assets are to be distributed to *C.* However, the trust instrument further provides that *D, A*'s uncle, may appoint a different remainder beneficiary. Because it is possible that a U.S. person could be named as the remainder beneficiary, and because corpus could be held in each year for the future benefit of that U.S. person, *FT* is treated as having a U.S. beneficiary for each year.

Example 12. Trust not treated as having a U.S. beneficiary. A transfers property to *FT.* The trust instrument provides that the trustee may distribute income and corpus to, or accumulate income for the benefit of *C.* Upon termination of the trust, all income and corpus must be distributed to *C.* Assume that paragraph (a)(4) of this section is not applicable under the facts and circumstances and that *A* establishes to the satisfaction of the Commissioner under paragraph (a)(2)(ii) of this section that no U.S. persons are reasonably expected to benefit from the trust. Because no part of the income or corpus of the trust may be paid or accumulated to or for the benefit of, either directly or indirectly, a U.S. person, and if the trust is terminated no part of the income or corpus of the trust could be paid to or for the benefit of, either directly or indirectly, a U.S. person, *FT* is not treated as having a U.S. beneficiary.

Example 13. U.S. beneficiary becomes non-U.S. person. In 2001, *A* transfers property to *FT.* The trust instrument provides that, as long as *B* remains a U.S. resident, no distributions of income or corpus may be made from the trust to *B.* The trust instrument further provides that if *B* becomes a nonresident alien, distributions of income (including previously accumulated income) and corpus may be made to him. If *B* remains a U.S. resident at the time of *FT*'s termination, all accumulated income and corpus is to be distributed to *C.* In 2007, *B* becomes a nonresident alien and remains so thereafter. Because income may be accumulated during the years 2001 through 2007 for the benefit of a person who is a U.S. person during those years, *FT* is treated as having a U.S. beneficiary under paragraph (a)(1) of this section during each of those years. This result applies even though *B* cannot receive distributions from *FT* during the years he is a resident alien and even though *B* might remain a resident alien who is not entitled to any distribution from *FT.* Provided that paragraph (a)(4) of this section does not require a different result and that *A* establishes to the satisfaction of the Commissioner under paragraph (a)(2)(ii) of this section that no other U.S. persons are reasonably expected to benefit from the trust, *FT* is not treated as having a U.S. beneficiary under paragraph (a)(1) of this section during tax years after 2007.

(3) ***Changes in beneficiary's status*** —

(i) ***In general.*** For purposes of paragraph (a)(1) of this section, the possibility that a person that is not a U.S. person could become a U.S. person will not cause that person to be treated as a U.S. person for purposes of paragraph (a)(1) of this section until the tax year of the U.S. transferor in which that individual actually becomes a U.S. person. However, if a person who is not a U.S. person becomes a U.S. person for the first time more than 5 years after the date of a transfer to the foreign trust by a U.S. transferor, that person is not treated as a U.S. person for purposes of applying paragraph (a)(1) of this section with respect to that transfer.

(ii) ***Examples.*** The following examples illustrate the rules of paragraph (a)(3) of this section. In these examples, *A* is a resident alien, *B* is *A*'s son, who is a resident alien, *C* is *A*'s daughter, who is a nonresident alien, and *FT* is a foreign trust. The examples are as follows:

Example 1. Non-U.S. beneficiary becomes U.S. person. In 2001, *A* transfers property to *FT.* The trust instrument provides that all income is to be distributed currently to *C* and that, upon the termination of *FT,* all corpus is to be distributed to *C.* Assume that paragraph (a)(4) of this section is not applicable under the facts and circumstances and that A establishes to the satisfaction of the Commissioner under paragraph (a)(2)(ii) of this section that no U.S. persons are reasonably expected to benefit from the trust. Under paragraph (a)(3)(i) of this section, *FT* is not treated as having a U.S. beneficiary during the tax years of *A* in which *C* remains a nonresident alien. If *C* first becomes a resident alien in 2004, *FT* is treated as having a U.S. beneficiary commencing in that year under paragraph (a)(3) of this section. See paragraph (c) of this section regarding the treatment of *A* upon *FT*'s acquisition of a U.S. beneficiary.

Example 2. Non-U.S. beneficiary becomes U.S. person more than 5 years after transfer. The facts are the same as in *Example 1,* except *C* first becomes a resident alien in 2007. *FT* is treated as not having a U.S. beneficiary under paragraph (a)(3)(i) of this section with respect to the property transfer by *A.* However, if *C* had previously been a U.S. person during any prior period, the 5-year exception in paragraph (a)(3)(i) of this section would not apply in 2007 because it would not have been the first time *C* became a U.S. person.

(4) *General rules* —

(i) ***Records and documents.*** Even if, based on the terms of the trust instrument, a foreign trust is not treated as having a U.S. beneficiary within the meaning of paragraph (a)(1) of this section, the trust may nevertheless be treated as having a U.S. beneficiary pursuant to paragraph (a)(1) of this section based on the following—

(A) All written and oral agreements and understandings relating to the trust;

(B) Memoranda or letters of wishes;

(C) All records that relate to the actual distribution of income and corpus; and

(D) All other documents that relate to the trust, whether or not of any purported legal effect.

(ii) ***Additional factors.*** For purposes of determining whether a foreign trust is treated as having a U.S. beneficiary within the meaning of paragraph (a)(1) of this section, the following additional factors are taken into account—

(A) If the terms of the trust instrument allow the trust to be amended to benefit a U.S. person, all potential benefits that could be provided to a U.S. person pursuant to an amendment must be taken into account;

(B) If the terms of the trust instrument do not allow the trust to be amended to benefit a U.S. person, but the law applicable to a foreign trust may require payments or accumulations of income or corpus to or for the benefit of a U.S. person (by judicial reformation or otherwise), all potential benefits that could be provided to a U.S. person pursuant to the law must be taken into account, unless the U.S. transferor demonstrates to the satisfaction of the Commissioner that the law is not reasonably expected to be applied or invoked under the facts and circumstances; and

(C) If the parties to the trust ignore the terms of the trust instrument, or if it is reasonably expected that they will do so, all benefits that have been, or are reasonably expected to be, provided to a U.S. person must be taken into account.

(iii) ***Examples.*** The following examples illustrate the rules of paragraph (a)(4) of this section. In these examples, *A* is a resident alien, *B* is *A*'s son, who is a resident alien, *C* is *A*'s daughter, who is a nonresident alien, and *FT* is a foreign trust. The examples are as follows:

Example 1. Amendment pursuant to local law. A creates and funds *FT* for the benefit of *C*. The terms of *FT* (which, according to the trust instrument, cannot be amended) provide that no part of the income or corpus of *FT* may be paid or accumulated during the taxable year to or for the benefit of any U.S. person, either during the existence of *FT* or at the time of its termination. However, pursuant to the applicable foreign law, FT can be amended to provide for additional beneficiaries, and there is an oral understanding between *A* and the trustee that *B* can be added as a beneficiary. Under paragraphs (a)(1) and (a)(4)(ii)(B) of this section, *FT* is treated as having a U.S. beneficiary.

Example 2. Actions in violation of the terms of the trust. A transfers property to *FT*. The trust instrument provides that no U.S. person can receive income or corpus from *FT* during the term of the trust or at the termination of *FT*. Notwithstanding the terms of the trust instrument, a letter of wishes directs the trustee of *FT* to provide for the educational needs of *B*, who is about to begin college. The letter of wishes contains a disclaimer to the effect

that its contents are only suggestions and recommendations and that the trustee is at all times bound by the terms of the trust as set forth in the trust instrument. Under paragraphs (a)(1) and (a)(4)(ii)(C) of this section, *FT* is treated as having a U.S. beneficiary.

(b) ***Indirect U.S. beneficiaries*** —

(1) ***Certain foreign entities.*** For purposes of paragraph (a)(1) of this section, an amount is treated as paid or accumulated to or for the benefit of a U.S. person if the amount is paid to or accumulated for the benefit of—

(i) A controlled foreign corporation, as defined in section 957(a);

(ii) A foreign partnership, if a U.S. person is a partner of such partnership; or

(iii) A foreign trust or estate, if such trust or estate has a U.S. beneficiary (within the meaning of paragraph (a)(1) of this section).

(2) ***Other indirect beneficiaries.*** For purposes of paragraph (a)(1) of this section, an amount is treated as paid or accumulated to or for the benefit of a U.S. person if the amount is paid to or accumulated for the benefit of a U.S. person through an intermediary, such as an agent or nominee, or by any other means where a U.S. person may obtain an actual or constructive benefit.

(3) ***Examples.*** The following examples illustrate the rules of this paragraph (b). Unless otherwise noted, A is a resident alien. B is A's son and is a resident alien. FT is a foreign trust. The examples are as follows:

Example 1. Trust benefitting foreign corporation. A transfers property to *FT.* The beneficiary of *FT* is *FC,* a foreign corporation. *FC* has outstanding solely 100 shares of common stock. *B* owns 49 shares of the *FC* stock and *FC2,* also a foreign corporation, owns the remaining 51 shares. *FC2* has outstanding solely 100 shares of common stock. *B* owns 49 shares of *FC2* and nonresident alien individuals own the remaining 51 *FC2* shares. *FC* is a controlled foreign corporation (as defined in section 957(a), after the application of section 958(a)(2)). Under paragraphs (a)(1) and (b)(1)(i) of this section, *FT* is treated as having a U.S. beneficiary.

Example 2. Trust benefitting another trust. A transfers property to *FT.* The terms of *FT* permit current distributions of income to *B. A* transfers property to another foreign trust, *FT2.* The terms of *FT2* provide that no U.S. person can benefit either as to income or corpus, but permit current distributions of income to *FT.* Under paragraph (a)(1) of this section, *FT* is treated as having a U.S. beneficiary and, under paragraphs (a)(1) and (b)(1)(iii) of this section, *FT2* is treated as having a U.S. beneficiary.

Example 3. Trust benefitting another trust after transferor's death. A transfers property to *FT.* The terms of *FT* require that all income from *FT* be accumulated during *A*'s lifetime. In the year following *A*'s death, a share of *FT* is to be distributed to *FT2,* another foreign trust, for the benefit of *B.* Under paragraphs (a)(1) and (b)(1)(iii) of this section, *FT* is treated as having a U.S. beneficiary beginning with the year of *A*'s transfer of property to *FT.*

Example 4. Indirect benefit through use of debit card. A transfers property to FT. The trust instrument provides that no U.S. person can benefit either as to income or corpus. However, *FT* maintains an account with *FB,* a foreign bank, and *FB* issues a debit card to *B* against the account maintained by *FT* and *B* is allowed to make withdrawals. Under paragraphs (a)(1) and (b)(2) of this section, *FT* is treated as having a U.S. beneficiary.

Example 5. Other indirect benefit. A transfers property to *FT. FT* is administered by *FTC,* a foreign trust company. *FTC* forms *IBC,* an international business corporation formed under the laws of a foreign jurisdiction. *IBC* is the beneficiary of *FT. IBC* maintains an account with *FB,* a foreign bank. *FB* issues a debit card to *B* against the account maintained by *IBC* and *B* is allowed to make withdrawals. Under paragraphs (a)(1) and (b)(2) of this section, *FT* is treated as having a U.S. beneficiary.

(c) ***Treatment of U.S. transferor upon foreign trust's acquisition or loss of U.S. beneficiary*** —

(1) ***Trusts acquiring a U.S. beneficiary.*** If a foreign trust to which a U.S. transferor has transferred property is not treated as having a U.S. beneficiary (within the meaning of paragraph (a) of this section) for any taxable year of the U.S. transferor, but the trust is treated as having a U.S. beneficiary (within the meaning of paragraph (a) of this section) in any subsequent taxable year, the U.S. transferor is treated as having additional income in the first such taxable year of the U.S. transferor in which the trust is treated as having a U.S. beneficiary. The amount of the additional income is equal to the trust's undistributed net income, as defined in section 665(a), at the end of the U.S. transferor's immediately preceding taxable year and is subject to the rules of section 668, providing for an interest charge on accumulation distributions from foreign trusts.

(2) ***Trusts ceasing to have a U.S. beneficiary.*** If, for any taxable year of a U.S. transferor, a foreign trust that has received a transfer of property from the U.S. transferor ceases to be treated as having a U.S. beneficiary, the U.S. transferor ceases to be treated as the owner of the portion of the trust attributable to the transfer beginning in the first taxable year following the last taxable year of the U.S. transferor during which the trust was treated as having a U.S. beneficiary (unless the U.S. transferor is treated as an owner thereof pursuant to sections 673 through 677). The U.S. transferor is treated as making a transfer of property to the foreign trust on the first day of the first taxable year following the last taxable year of the U.S. transferor during which the trust was treated as having a U.S. beneficiary. The amount of the property deemed to be transferred to the trust is the portion of the trust attributable to the prior transfer to which paragraph (a)(1) of this section applied. For rules regarding the recognition of gain on transfers to foreign trusts, see section 684.

(3) ***Examples.*** The rules of this paragraph (c) are illustrated by the following examples. *A* is a resident alien, *B* is *A's* son, and *FT* is a foreign trust. The examples are as follows:

Example 1. Trust acquiring U.S. beneficiary. (i) In 2001, *A* transfers stock with a fair market value of $100,000 to *FT.* The stock has an adjusted basis of $50,000 at the time of the transfer. The trust instrument provides that income may be paid currently to, or accumulated for the benefit of, *B* and that, upon the termination of the trust, all income and corpus is to be distributed to *B.* At the time of the transfer, *B* is a nonresident alien. *A* is not treated as the owner of any portion of FT under sections 673 through 677. *FT* accumulates a total of $30,000 of income during the taxable years 2001 through 2003. In 2004, *B* moves to the United States and becomes a resident alien. Assume paragraph (a)(4) of this section is not applicable under the facts and circumstances.
(ii) Under paragraph (c)(1) of this section, *A* is treated as receiving an accumulation distribution in the amount of $30,000 in 2004 and immediately transferring that amount back to the trust. The accumulation distribution is subject to the rules of section 668, providing for an interest charge on accumulation distributions.

(iii) Under paragraphs (a)(1) and (3) of this section, beginning in 2005, *A* is treated as the owner of the portion of *FT* attributable to the stock transferred by *A* to *FT* in 2001 (which includes the portion attributable to the accumulated income deemed to be retransferred in 2004).

Example 2. Trust ceasing to have U.S. beneficiary. (i) The facts are the same as in *Example 1.* In 2008, B becomes a nonresident alien. On the date B becomes a nonresident alien, the stock transferred by A to *FT* in 2001 has a fair market value of $125,000 and an adjusted basis of $50,000.
(ii) Under paragraph (c)(2) of this section, beginning in 2009, *FT* is not treated as having a U.S. beneficiary, and *A* is not treated as the owner of the portion of the trust attributable to the prior transfer of stock. For rules regarding the recognition of gain on the termination of ownership status, see section 684.

[T.D. 8955, 66 FR 37889, July 20, 2001]

§ 1.679-3 Transfers.

(a) ***In general.*** A transfer means a direct, indirect, or constructive transfer.

(b) ***Transfers by certain trusts*** —

(1) ***In general.*** If any portion of a trust is treated as owned by a U.S. person, a transfer of property from that portion of the trust to a foreign trust is treated as a transfer from the owner of that portion to the foreign trust.

(2) ***Example.*** The following example illustrates this paragraph (b):

Example. In 2001, *A,* a U.S. citizen, creates and funds *DT,* a domestic trust. *A* has the power to revest absolutely in himself the title to the property in *DT* and is treated as the owner of *DT* pursuant to section 676. In 2004, *DT* transfers property to *FT,* a foreign trust. *A* is treated as having transferred the property to *FT* in 2004 for purposes of this section.

(c) ***Indirect transfers*** —

(1) ***Principal purpose of tax avoidance.*** A transfer to a foreign trust by any person (intermediary) to whom a U.S. person transfers property is treated as an indirect transfer by a U.S. person to the foreign trust if such transfer is made pursuant to a plan one of the principal purposes of which is the avoidance of United States tax.

(2) ***Principal purpose of tax avoidance deemed to exist.*** For purposes of paragraph (c)(1) of this section, a transfer is deemed to have been made pursuant to a plan one of the principal purposes of which was the avoidance of United States tax if—

(i) The U.S. person is related (within the meaning of paragraph (c)(4) of this section) to a beneficiary of the foreign trust, or has another relationship with a beneficiary of the foreign trust that establishes a reasonable basis for concluding that the U.S. transferor would make a transfer to the foreign trust; and

(ii) The U.S. person cannot demonstrate to the satisfaction of the Commissioner that—

(A) The intermediary has a relationship with a beneficiary of the foreign trust that establishes a reasonable basis for concluding that the intermediary would make a transfer to the foreign trust;

(B) The intermediary acted independently of the U.S. person;

(C) The intermediary is not an agent of the U.S. person under generally applicable United States agency principles; and

(D) The intermediary timely complied with the reporting requirements of section 6048, if applicable.

(3) ***Effect of disregarding intermediary*** —

(i) ***In general.*** Except as provided in paragraph (c)(3)(ii) of this section, if a transfer is treated as an indirect transfer pursuant to paragraph (c)(1) of this section, then the intermediary is treated as an agent of the U.S. person, and the property is treated as transferred to the foreign trust by the U.S. person in the year the property is transferred, or made available, by the intermediary to the foreign trust. The fair market value of the property transferred is determined as of the date of the transfer by the intermediary to the foreign trust.

(ii) ***Special rule.*** If the Commissioner determines, or if the taxpayer can demonstrate to the satisfaction of the Commissioner, that the intermediary is an agent of the foreign trust under generally applicable United States agency principles, the property will be treated as transferred to the foreign trust in the year the U.S. person transfers the property to the intermediary. The fair market value of the property transferred will be determined as of the date of the transfer by the U.S. person to the intermediary.

(iii) ***Effect on intermediary.*** If a transfer of property is treated as an indirect transfer under paragraph (c)(1) of this section, the intermediary is not treated as having transferred the property to the foreign trust.

(4) ***Related parties.*** For purposes of this paragraph (c), a U.S. transferor is treated as related to a U.S. beneficiary of a foreign trust if the U.S. transferor and the beneficiary are related for purposes of section 643(i)(2)(B), with the following modifications—

(i) For purposes of applying section 267 (other than section 267(f)) and section 707(b)(1), "at least 10 percent" is used instead of "more than 50 percent" each place it appears; and

(ii) The principles of section 267(b)(10), using "at least 10 percent" instead of "more than 50 percent," apply to determine whether two corporations are related.

(5) ***Examples.*** The rules of this paragraph (c) are illustrated by the following examples:

Example 1. Principal purpose of tax avoidance. A, a U.S. citizen, creates and funds *FT,* a foreign trust, for the benefit of *A*'s children, who are U.S. citizens. In 2004, *A* decides to transfer an additional 1000X to the foreign trust. Pursuant to a plan with a principal purpose of avoiding the application of section 679, A transfers 1000X to *I,* a foreign person. *I* subsequently transfers 1000X to *FT.* Under paragraph (c)(1) of this section, *A* is treated as having made a transfer of 1000X to *FT.*

Example 2. U.S. person unable to demonstrate that intermediary acted independently. A, a U.S. citizen, creates and funds *FT,* a foreign trust, for the benefit of *A*'s children, who are U.S. citizens. On July 1, 2004, *A* transfers XYZ stock to *D, A*'s uncle, who is a nonresident alien. *D* immediately sells the XYZ stock and uses the proceeds to purchase ABC stock. On January 1, 2007, *D* transfers the ABC stock to *FT. A* is unable to demonstrate to the satisfaction of the Commissioner, pursuant to paragraph (c)(2) of this section, that *D* acted independently of *A* in

making the transfer to *FT.* Under paragraph (c)(1) of this section, *A* is treated as having transferred the ABC stock to FT. Under paragraph (c)(3) of this section, *D* is treated as an agent of *A,* and the transfer is deemed to have been made on January 1, 2007.

Example 3. Indirect loan to foreign trust. A, a U.S. citizen, previously created and funded *FT,* a foreign trust, for the benefit of *A*'s children, who are U.S. citizens. On July 1, 2004, *A* deposits 500X with *FB,* a foreign bank. On January 1, 2005, *FB* loans 450X to *FT. A* is unable to demonstrate to the satisfaction of the Commissioner, pursuant to paragraph (c)(2) of this section, that *FB* has a relationship with *FT* that establishes a reasonable basis for concluding that *FB* would make a loan to *FT* or that *FB* acted independently of *A* in making the loan. Under paragraph (c)(1) of this section, *A* is deemed to have transferred 450X directly to *FT* on January 1, 2005. Under paragraph (c)(3) of this section, *FB* is treated as an agent of *A.* For possible exceptions with respect to qualified obligations of the trust, and the treatment of principal repayments with respect to obligations of the trust that are not qualified obligations, see § 1.679-4.

Example 4. Loan to foreign trust prior to deposit of funds in foreign bank. The facts are the same as in *Example 3,* except that *A* makes the 500X deposit with *FB* on January 2, 2005, the day after *FB* makes the loan to *FT.* The result is the same as in *Example 3.*

(d) ***Constructive transfers*** —

(1) ***In general.*** For purposes of paragraph (a) of this section, a constructive transfer includes any assumption or satisfaction of a foreign trust's obligation to a third party.

(2) ***Examples.*** The rules of this paragraph (d) are illustrated by the following examples. In each example, *A* is a U.S. citizen and *FT* is a foreign trust. The examples are as follows:

Example 1. Payment of debt of foreign trust. FT owes 1000X to *Y,* an unrelated foreign corporation, for the performance of services by *Y* for *FT.* In satisfaction of *FT*'s liability to *Y, A* transfers to *Y* property with a fair market value of 1000X. Under paragraph (d)(1) of this section, *A* is treated as having made a constructive transfer of the property to *FT.*

Example 2. Assumption of liability of foreign trust. FT owes 1000X to *Y,* an unrelated foreign corporation, for the performance of services by *Y* for *FT. A* assumes *FT*'s liability to pay *Y.* Under paragraph (d)(1) of this section, *A* is treated as having made a constructive transfer of property with a fair market value of 1000X to *FT.*

(e) ***Guarantee of trust obligations*** —

(1) ***In general.*** If a foreign trust borrows money or other property from any person who is not a related person (within the meaning of § 1.679-1(c)(5)) with respect to the trust (lender) and a U.S. person (U.S. guarantor) that is a related person with respect to the trust guarantees (within the meaning of paragraph (e)(4) of this section) the foreign trust's obligation, the U.S. guarantor is treated for purposes of this section as a U.S. transferor that has made a transfer to the trust on the date of the guarantee in an amount determined under paragraph (e)(2) of this section. To the extent this paragraph causes the U.S. guarantor to be treated as having made a transfer to the trust, a lender that is a U.S. person shall not be treated as having transferred that amount to the foreign trust.

(2) ***Amount transferred.*** The amount deemed transferred by a U.S. guarantor described in paragraph (e)(1) of this section is the guaranteed portion of the adjusted issue price of the obligation (within the meaning of § 1.1275-1(b)) plus any accrued but unpaid qualified stated interest (within the meaning of § 1.1273-1(c)).

(3) ***Principal repayments.*** If a U.S. person is treated under this paragraph (e) as having made a transfer by reason of the guarantee of an obligation, payments of principal to the lender by the foreign trust with respect to the obligation are taken into account on and after the date of the payment in determining the portion of the trust attributable to the property deemed transferred by the U.S. guarantor.

(4) ***Guarantee.*** For purposes of this section, the term guarantee—

(i) Includes any arrangement under which a person, directly or indirectly, assures, on a conditional or unconditional basis, the payment of another's obligation;

(ii) Encompasses any form of credit support, and includes a commitment to make a capital contribution to the debtor or otherwise maintain its financial viability; and

(iii) Includes an arrangement reflected in a comfort letter, regardless of whether the arrangement gives rise to a legally enforceable obligation. If an arrangement is contingent upon the occurrence of an event, in determining whether the arrangement is a guarantee, it is assumed that the event has occurred.

(5) ***Examples.*** The rules of this paragraph (e) are illustrated by the following examples. In all of the examples, *A* is a U.S. resident and *FT* is a foreign trust. The examples are as follows:

Example 1. Foreign lender. X, a foreign corporation, loans 1000X of cash to *FT* in exchange for *FT*'s obligation to repay the loan. *A* guarantees the repayment of 600X of *FT*'s obligation. Under paragraph (e)(2) of this section, *A* is treated as having transferred 600X to *FT.*

Example 2. Unrelated U.S. lender. The facts are the same as in *Example 1*, except *X* is a U.S. person that is not a related person within the meaning of § 1.679-1(c)(5). The result is the same as in *Example 1*.

(f) ***Transfers to entities owned by a foreign trust*** —

(1) ***General rule.*** If a U.S. person is a related person (as defined in § 1.679-1(c)(5)) with respect to a foreign trust, any transfer of property by the U.S. person to an entity in which the foreign trust holds an ownership interest is treated as a transfer of such property by the U.S. person to the foreign trust followed by a transfer of the property from the foreign trust to the entity owned by the foreign trust, unless the U.S. person demonstrates to the satisfaction of the Commissioner that the transfer to the entity is properly attributable to the U.S. person's ownership interest in the entity.

(2) ***Examples.*** The rules of this paragraph (f) are illustrated by the following examples. In all of the examples, *A* is a U.S. citizen, *FT* is a foreign trust, and *FC* is a foreign corporation. The examples are as follows:

Example 1. Transfer treated as transfer to trust. A creates and funds *FT,* which is treated as having a U.S. beneficiary under § 1.679-2. *FT* owns all of the outstanding stock of *FC. A* transfers property directly to *FC.* Because *FT* is the sole shareholder of *FC, A* is unable to demonstrate to the satisfaction of the Commissioner that the transfer is properly attributable to *A*'s ownership interest in *FC.* Accordingly, under this paragraph (f), *A* is treated as having transferred the property to *FT,* followed by a transfer of such property by *FT* to *FC.* Under § 1.679-1(a), *A* is treated as the owner of the portion of *FT* attributable to the property treated as transferred directly to *FT.* Under § 1.367(a)-1T(c)(4)(ii), the transfer of property by *FT* to *FC* is treated as a transfer of the property by *A* to *FC.*

Example 2. Transfer treated as transfer to trust. The facts are the same as in *Example 1*, except that *FT* is not treated as having a U.S. beneficiary under § 1.679-2. Under this paragraph (f), *A* is treated as having transferred the property to *FT,* followed by a transfer of such property by *FT* to *FC. A* is not treated as the owner of *FT* for purposes of § 1.679-1(a). For rules regarding the recognition of gain on the transfer, see section 684.

Example 3. Transfer not treated as transfer to trust. A creates and funds *FT. FC* has outstanding solely 100 shares of common stock. *FT* owns 50 shares of *FC* stock, and *A* owns the remaining 50 shares. On July 1, 2001, *FT* and *A* each transfer 1000X to *FC. A* is able to demonstrate to the satisfaction of the Commissioner that *A*'s transfer to *FC* is properly attributable to *A*'s ownership interest in *FC.* Accordingly, under this paragraph (f), *A*'s transfer to *FC* is not treated as a transfer to *FT.*

[T.D. 8955, 66 FR 37889, July 20, 2001]

§ 1.679-4 Exceptions to general rule.

(a) ***In general.*** Section 1.679-1 does not apply to—

(1) Any transfer of property to a foreign trust by reason of the death of the transferor;

(2) Any transfer of property to a foreign trust described in sections 402(b), 404(a)(4), or 404A;

(3) Any transfer of property to a foreign trust described in section 501(c)(3) (without regard to the requirements of section 508(a)); and

(4) Any transfer of property to a foreign trust to the extent the transfer is for fair market value.

(b) ***Transfers for fair market value*** —

(1) ***In general.*** For purposes of this section, a transfer is for fair market value only to the extent of the value of property received from the trust, services rendered by the trust, or the right to use property of the trust. For example, rents, royalties, interest, and compensation paid to a trust are transfers for fair market value only to the extent that the payments reflect an arm's length price for the use of the property of, or for the services rendered by, the trust. For purposes of this determination, an interest in the trust is not property received from the trust. For purposes of this section, a distribution to a trust with respect to an interest held by such trust in an entity other than a trust or an interest in certain investment trusts described in § 301.7701-4(c) of this chapter, liquidating trusts described in § 301.7701-4(d) of this chapter, or environmental remediation trusts described in § 301.7701-4(e) of this chapter is considered to be a transfer for fair market value.

(2) ***Special rule*** —

(i) ***Transfers for partial consideration.*** For purposes of this section, if a person transfers property to a foreign trust in exchange for property having a fair market value that is less than the fair market value of the property transferred, the exception in paragraph (a)(4) of this section applies only to the extent of the fair market value of the property received.

(ii) ***Example.*** This paragraph (b) is illustrated by the following example:

Example. A, a U.S. citizen, transfers property that has a fair market value of 1000X to *FT,* a foreign trust, in exchange for 600X of cash. Under this paragraph (b), § 1.679-1 applies with respect to the transfer of 400X (1000X less 600X) to *FT.*

(c) ***Certain obligations not taken into account.*** Solely for purposes of this section, in determining whether a transfer by a U.S. transferor that is a related person (as defined in § 1.679-1(c)(5)) with respect to the foreign trust is for fair market value, any obligation (as defined in § 1.679-1(c)(6)) of the trust or a related person (as defined in § 1.679-1(c)(5)) that is not a qualified obligation within the meaning of paragraph (d)(1) of this section shall not be taken into account.

(d) ***Qualified obligations*** —

(1) ***In general.*** For purposes of this section, an obligation is treated as a qualified obligation only if—

(i) The obligation is reduced to writing by an express written agreement;

(ii) The term of the obligation does not exceed five years (for purposes of determining the term of an obligation, the obligation's maturity date is the last possible date that the obligation can be outstanding under the terms of the obligation);

(iii) All payments on the obligation are denominated in U.S. dollars;

(iv) The yield to maturity is not less than 100 percent of the applicable Federal rate and not greater that 130 percent of the applicable Federal rate (the applicable Federal rate for an obligation is the applicable Federal rate in effect under section 1274(d) for the day on which the obligation is issued, as published in the Internal Revenue Bulletin (see § 601.601(d)(2) of this chapter));

(v) The U.S. transferor extends the period for assessment of any income or transfer tax attributable to the transfer and any consequential income tax changes for each year that the obligation is outstanding, to a date not earlier than three years after the maturity date of the obligation (this extension is not necessary if the maturity date of the obligation does not extend beyond the end of the U.S. transferor's taxable year for the year of the transfer and is paid within such period); when properly executed and filed, such an agreement is deemed to be consented to for purposes of § 301.6501(c)-1(d) of this chapter; and

(vi) The U.S. transferor reports the status of the loan, including principal and interest payments, on Form 3520 for every year that the loan is outstanding.

(2) ***Additional loans.*** If, while the original obligation is outstanding, the U.S. transferor or a person related to the trust (within the meaning of § 1.679-1(c)(5)) directly or indirectly obtains another obligation issued by the trust, or if the U.S. transferor directly or indirectly obtains another obligation issued by a person related to the trust, the original obligation is deemed to have the maturity date of any such subsequent obligation in determining whether the term of the original obligation exceeds the specified 5-year term. In addition, a series of obligations issued and repaid by the trust (or a person related to the trust) is treated as a single obligation if the transactions giving rise to the obligations are structured with a principal purpose to avoid the application of this provision.

(3) ***Obligations that cease to be qualified.*** If an obligation treated as a qualified obligation subsequently fails to be a qualified obligation (e.g., renegotiation of the terms of the obligation causes the term of the obligation to exceed five years), the U.S. transferor is treated as making a transfer to the trust in an amount equal to the original obligation's adjusted issue price (within the meaning of § 1.1275-1(b)) plus any accrued but unpaid qualified stated interest (within the meaning of § 1.1273-1(c)) as of the date of the subsequent event that causes the obligation to no longer be a qualified obligation. If the maturity date is extended beyond five years by reason of the issuance of a

subsequent obligation by the trust (or person related to the trust), the amount of the transfer will not exceed the issue price of the subsequent obligation. The subsequent obligation is separately tested to determine if it is a qualified obligation.

(4) ***Transfers resulting from failed qualified obligations.*** In general, a transfer resulting from a failed qualified obligation is deemed to occur on the date of the subsequent event that causes the obligation to no longer be a qualified obligation. However, based on all of the facts and circumstances, the Commissioner may deem a transfer to have occurred on any date on or after the issue date of the original obligation. For example, if at the time the original obligation was issued, the transferor knew or had reason to know that the obligation would not be repaid, the Commissioner could deem the transfer to have occurred on the issue date of the original obligation.

(5) ***Renegotiated loans.*** Any loan that is renegotiated, extended, or revised is treated as a new loan, and any transfer of funds to a foreign trust after such renegotiation, extension, or revision under a pre-existing loan agreement is treated as a transfer subject to this section.

(6) ***Principal repayments.*** The payment of principal with respect to any obligation that is not treated as a qualified obligation under this paragraph is taken into account on and after the date of the payment in determining the portion of the trust attributable to the property transferred.

(7) ***Examples.*** The rules of this paragraph (d) are illustrated by the following examples. In the examples, *A* and *B* are U.S. residents and *FT* is a foreign trust. The examples are as follows:

Example 1. Demand loan. A transfers 500X to *FT* in exchange for a demand note that permits *A* to require repayment by *FT* at any time. *A* is a related person (as defined in § 1.679-1(c)(5)) with respect to *FT.* Because *FT's* obligation to *A* could remain outstanding for more than five years, the obligation is not a qualified obligation within the meaning of paragraph (d) of this section and, pursuant to paragraph (c) of this section, it is not taken into account for purposes of determining whether *A*'s transfer is eligible for the fair market value exception of paragraph (a)(4) of this section. Accordingly, § 1.679-1 applies with respect to the full 500X transfer to *FT.*

Example 2. Private annuity. A transfers 4000X to *FT* in exchange for an annuity from the foreign trust that will pay *A* 100X per year for the rest of *A*'s life. *A* is a related person (as defined in § 1.679-1(c)(5)) with respect to *FT.* Because *FT*'s obligation to *A* could remain outstanding for more than five years, the obligation is not a qualified obligation within the meaning of paragraph (d)(1) of this section and, pursuant to paragraph (c) of this section, it is not taken into account for purposes of determining whether *A*'s transfer is eligible for the fair market value exception of paragraph (a)(4) of this section. Accordingly, § 1.679-1 applies with respect to the full 4000X transfer to *FT.*

Example 3. Loan to unrelated foreign trust. B transfers 1000X to *FT* in exchange for an obligation of the trust. The term of the obligation is fifteen years. *B* is not a related person (as defined in § 1.679-1(c)(5)) with respect to *FT.* Because *B* is not a related person, the fair market value of the obligation received by *B* is taken into account for purposes of determining whether *B*'s transfer is eligible for the fair market value exception of paragraph (a)(4) of this section, even though the obligation is not a qualified obligation within the meaning of paragraph (d)(1) of this section.

Example 4. Transfer for an obligation with term in excess of 5 years. A transfers property that has a fair market value of 5000X to *FT* in exchange for an obligation of the trust. The term of the obligation is ten years. *A* is a related person (as defined in § 1.679-1(c)(5)) with respect to *FT.* Because the term of the obligation is greater than five years, the obligation is not a qualified

obligation within the meaning of paragraph (d)(1) of this section and, pursuant to paragraph (c) of this section, it is not taken into account for purposes of determining whether *A*'s transfer is eligible for the fair market value exception of paragraph (a)(4) of this section. Accordingly, § 1.679-1 applies with respect to the full 5000X transfer to *FT.*

Example 5. Transfer for a qualified obligation. The facts are the same as in *Example 4,* except that the term of the obligation is 3 years. Assuming the other requirements of paragraph (d)(1) of this section are satisfied, the obligation is a qualified obligation and its adjusted issue price is taken into account for purposes of determining whether *A*'s transfer is eligible for the fair market value exception of paragraph (a)(4) of this section.

Example 6. Effect of subsequent obligation on original obligation. A transfers property that has a fair market value of 1000X to *FT* in exchange for an obligation that satisfies the requirements of paragraph (d)(1) of this section. *A* is a related person (as defined in § 1.679-1(c)(5)) with respect to *FT.* Two years later, *A* transfers an additional 2000X to *FT* and receives another obligation from *FT* that has a maturity date four years from the date that the second obligation was issued. Under paragraph (d)(2) of this section, the original obligation is deemed to have the maturity date of the second obligation. Under paragraph (a) of this section, *A* is treated as having made a transfer in an amount equal to the original obligation's adjusted issue price (within the meaning of § 1.1275-1(b)) plus any accrued but unpaid qualified stated interest (within the meaning of § 1.1273-1(c)) as of the date of issuance of the second obligation. The second obligation is tested separately to determine whether it is a qualified obligation for purposes of applying paragraph (a) of this section to the second transfer.

[T.D. 8955, 66 FR 37889, July 20, 2001]

§ 1.679-5 Pre-immigration trusts.

(a) ***In general.*** If a nonresident alien individual becomes a U.S. person and the individual has a residency starting date (as determined under section 7701(b)(2)(A)) within 5 years after directly or indirectly transferring property to a foreign trust (the original transfer), the individual is treated as having transferred to the trust on the residency starting date an amount equal to the portion of the trust attributable to the property transferred by the individual in the original transfer.

(b) ***Special rules*** —

(1) ***Change in grantor trust status.*** For purposes of paragraph (a) of this section, if a nonresident alien individual who is treated as owning any portion of a trust under the provisions of subpart E of part I of subchapter J, chapter 1 of the Internal Revenue Code, subsequently ceases to be so treated, the individual is treated as having made the original transfer to the foreign trust immediately before the trust ceases to be treated as owned by the individual.

(2) ***Treatment of undistributed income.*** For purposes of paragraph (a) of this section, the property deemed transferred to the foreign trust on the residency starting date includes undistributed net income, as defined in section 665(a), attributable to the property deemed transferred. Undistributed net income for periods before the individual's residency starting date is taken into account only for purposes of determining the amount of the property deemed transferred.

(c) ***Examples.*** The rules of this section are illustrated by the following examples:

Example 1. Nonresident alien becomes resident alien. On January 1, 2002, *A,* a nonresident alien individual, transfers property to a foreign trust, *FT.* On January 1, 2006, *A* becomes a resident of the United States within the meaning of section 7701(b)(1)(A) and has a residency starting date of January 1, 2006, within the meaning of section 7701(b)(2)(A). Under paragraph (a) of this section, *A* is treated as a U.S. transferor and is deemed to transfer the property to *FT* on January 1, 2006. Under paragraph (b)(2) of this section, the property deemed transferred to *FT* on January 1, 2006, includes the undistributed net income of the trust, as defined in section 665(a), attributable to the property originally transferred.

Example 2. Nonresident alien loses power to revest property. On January 1, 2002, *A,* a nonresident alien individual, transfers property to a foreign trust, *FT. A* has the power to revest absolutely in himself the title to such property transferred and is treated as the owner of the trust pursuant to sections 676 and 672(f). On January 1, 2008, the terms of *FT* are amended to remove *A*'s power to revest in himself title to the property transferred, and *A* ceases to be treated as the owner of *FT.* On January 1, 2010, *A* becomes a resident of the United States. Under paragraph (b)(1) of this section, for purposes of paragraph (a) of this section *A* is treated as having originally transferred the property to *FT* on January 1, 2008. Because this date is within five years of *A*'s residency starting date, *A* is deemed to have made a transfer to the foreign trust on January 1, 2010, his residency starting date. Under paragraph (b)(2) of this section, the property deemed transferred to the foreign trust on January 1, 2010, includes the undistributed net income of the trust, as defined in section 665(a), attributable to the property deemed transferred.

[T.D. 8955, 66 FR 37889, July 20, 2001]

§ 1.679-6 Outbound migrations of domestic trusts.

(a) ***In general.*** Subject to the provisions of paragraph (b) of this section, if an individual who is a U.S. person transfers property to a trust that is not a foreign trust, and such trust becomes a foreign trust while the U.S. person is alive, the U.S. individual is treated as a U.S. transferor and is deemed to transfer the property to a foreign trust on the date the domestic trust becomes a foreign trust.

(b) ***Amount deemed transferred.*** For purposes of paragraph (a) of this section, the property deemed transferred to the trust when it becomes a foreign trust includes undistributed net income, as defined in section 665(a), attributable to the property previously transferred. Undistributed net income for periods prior to the migration is taken into account only for purposes of determining the portion of the trust that is attributable to the property transferred by the U.S. person.

(c) ***Example.*** The following example illustrates the rules of this section. For purposes of the example, *A* is a resident alien, *B* is *A*'s son, who is a resident alien, and *DT* is a domestic trust. The example is as follows:

Example. Outbound migration of domestic trust. On January 1, 2002, *A* transfers property to *DT,* for the benefit of *B.* On January 1, 2003, *DT* acquires a foreign trustee who has the power to determine whether and when distributions will be made to *B.* Under section 7701(a)(30)(E) and § 301.7701-7(d)(ii)(A) of this chapter, *DT* becomes a foreign trust on January 1, 2003. Under paragraph (a) of this section, *A* is treated as transferring property to a foreign trust on January 1, 2003. Under paragraph (b) of this section, the property deemed transferred to the trust when it becomes a foreign trust includes undistributed net income, as defined in section 665(a), attributable to the property deemed transferred.

[T.D. 8955, 66 FR 37889, July 20, 2001]

§ 1.679-7 Effective dates.

(a) ***In general.*** Except as provided in paragraph (b) of this section, the rules of §§ 1.679-1, 1.679-2, 1.679-3, and 1.679-4 apply with respect to transfers after August 7, 2000.

(b) ***Special rules.***

(1) The rules of § 1.679-4(c) and (d) apply to an obligation issued after February 6, 1995, whether or not in accordance with a pre-existing arrangement or understanding. For purposes of the rules of § 1.679-4(c) and (d), if an obligation issued on or before February 6, 1995, is modified after that date, and the modification is a significant modification within the meaning of § 1.1001-3, the obligation is treated as if it were issued on the date of the modification. However, the penalty provided in section 6677 applies only to a failure to report transfers in exchange for obligations issued after August 20, 1996.

(2) The rules of § 1.679-5 apply to persons whose residency starting date is after August 7, 2000.

(3) The rules of § 1.679-6 apply to trusts that become foreign trusts after August 7, 2000.

[T.D. 8955, 66 FR 37889, July 20, 2001]

MISCELLANEOUS

§ 1.681(a)-1 Limitation on charitable contributions deductions of trusts; scope of section 681.

Under section 681, the unlimited charitable contributions deduction otherwise allowable to a trust under section 642(c) is, in general, subject to percentage limitations, corresponding to those applicable to contributions by an individual under section 170(b)(1) (A) and (B), under the following circumstances;

(a) To the extent that the deduction is allocable to “unrelated business income”;

(b) For taxable years beginning before January 1, 1970, if the trust has engaged in a prohibited transaction;

(c) For taxable years beginning before January 1, 1970, if income is accumulated for a charitable purpose and the accumulation is

(1) unreasonable,

(2) substantially diverted to a noncharitable purpose, or

(3) invested against the interests of the charitable beneficiaries.

Further, if the circumstance set forth in paragraph (a) or (c) of this section is applicable, the deduction is limited to income actually paid out for charitable purposes, and is not allowed for income only set aside or to be used for those purposes. If the circumstance set forth in paragraph (b) of this section is applicable, deductions for contributions to the trust may be disallowed. The provisions of section 681 are discussed in detail in §§ 1.681(a)-2 through 1.681(c)-1. For definition of the term “income”, see section 643(b) and § 1.643(b)-1.

[T.D. 6500, 25 FR 11814, Nov. 26, 1960, as amended by T.D. 7428, 41 FR 34627, Aug. 16, 1976]

§ 1.681(a)-2 Limitation on charitable contributions deduction of trusts with trade or business income.

(a) ***In general.*** No charitable contributions deduction is allowable to a trust under section 642(c) for any taxable year for amounts allocable to the trust's unrelated business income for the taxable year. For the purpose of section 681(a) the term *unrelated business income* of a trust means an amount which would be computed as the trust's unrelated business taxable income under section 512 and the regulations thereunder, if the trust were an organization exempt from tax under section 501(a) by reason of section 501(c)(3). For the purpose of the computation under section 512, the term *unrelated trade or business* includes a trade or business carried on by a partnership of which a trust is a member, as well as one carried on by the trust itself. While the charitable contributions deduction under section 642(c) is entirely disallowed by section 681(a) for amounts allocable to "unrelated business income", a partial deduction is nevertheless allowed for such amounts by the operation of section 512(b)(11), as illustrated in paragraphs (b) and (c) of this section. This partial deduction is subject to the percentage limitations applicable to contributions by an individual under section 170(b)(1) (A) and (B), and is not allowed for amounts set aside or to be used for charitable purposes but not actually paid out during the taxable year. Charitable contributions deductions otherwise allowable under section 170, 545(b)(2), or 642(c) for contributions to a trust are not disallowed solely because the trust has unrelated business income.

(b) ***Determination of amounts allocable to unrelated business income.*** In determining the amount for which a charitable contributions deduction would otherwise be allowable under section 642(c) which are allocable to unrelated business income, and therefore not allowable as a deduction, the following steps are taken:

(1) There is first determined the amount which would be computed as the trust's unrelated business taxable income under section 512 and the regulations thereunder if the trust were an organization exempt from tax under section 501(a) by reason of section 501(c)(3), but without taking the charitable contributions deduction allowed under section 512(b)(11).

(2) The amount for which a charitable contributions deduction would otherwise be allowable under section 642(c) is then allocated between the amount determined in subparagraph (1) of this paragraph and any other income of the trust. Unless the facts clearly indicate to the contrary, the allocation to the amount determined in subparagraph (1) of this paragraph is made on the basis of the ratio (but not in excess of 100 percent) of the amount determined in subparagraph (1) of this paragraph to the taxable income of the trust, determined without the deduction for personal exemption under section 642(b), the charitable contributions deduction under section 642(c), or the deduction for distributions to beneficiaries under section 661(a).

(3) The amount for which a charitable contributions deduction would otherwise be allowable under section 642(c) which is allocable to unrelated business income as determined in subparagraph (2) of this paragraph, and therefore not allowable as a deduction, is the amount determined in subparagraph (2) of this paragraph reduced by the charitable contributions deduction which would be allowed under section 512(b)(11) if the trust were an organization exempt from tax under section 501(a) by reason of section 501(c)(3).

(c) ***Examples.***

(1) The application of this section may be illustrated by the following examples, in which it is assumed that the Y charity is not a charitable organization qualifying under section 170(b)(1)(A) (see subparagraph (2) of this paragraph):

Example 1. The X trust has income of $50,000. There is included in this amount a net profit of $31,000 from the operation of a trade or business. The trustee is required to pay half of the trust income to A, an individual, and the balance of the trust income to the Y charity, an organization described in section 170(c)(2). The trustee pays each beneficiary $25,000. Under these facts, the unrelated business income of the trust (computed before the charitable contributions deduction which would be allowed under section 512(b)(11)) is $30,000 ($31,000 less the deduction of $1,000 allowed by section 512(b)(12)). The deduction otherwise allowable under section 642(c) is $25,000, the amount paid to the Y charity. The portion allocable to the unrelated business income (computed as prescribed in paragraph (b)(2) of this section) is $15,000, that is, an amount which bears the same ratio to $25,000 as $30,000 bears to $50,000. The portion allocable to the unrelated business income, and therefore disallowed as a deduction, is $15,000 reduced by $6,000 (20 percent of $30,000, the charitable contributions deduction which would be allowable under section 512(b)(11)), or $9,000.

Example 2. Assume the same facts as in example 1, except that the trustee has discretion as to the portion of the trust income to be paid to each beneficiary, and the trustee pays $40,000 to A and $10,000 to the Y charity. The deduction otherwise allowable under section 642(c) is $10,000. The portion allocable to the unrelated business income computed as prescribed in paragraph (b)(2) of this section is $6,000, that is, an amount which bears the same ratio to $10,000 as $30,000 bears to $50,000. Since this amount does not exceed the charitable contributions deduction which would be allowable under section 512(b)(11) ($6,000, determined as in example 1), no portion of it is disallowed as a deduction.

Example 3. Assume the same facts as in example 1, except that the terms of the trust instrument require the trustee to pay to the Y charity the trust income, if any, derived from the trade or business, and to pay to A all the trust income derived from other sources. The trustee pays $31,000 to the Y charity and $19,000 to A. The deduction otherwise allowable under section 642(c) is $31,000. Since the entire income from the trade or business is paid to Y charity, the amount allocable to the unrelated business income computed before the charitable contributions deduction under section 512(b)(11) is $30,000 ($31,000 less the deduction of $1,000 allowed by section 512(b)(12)). The amount allocable to the unrelated business income and therefore disallowed as a deduction is $24,000 ($30,000 less $6,000).

Example 4. (i) Under the terms of the trust, the trustee is required to pay half of the trust income to A, an individual, for his life, and the balance of the trust income to the Y charity, an organization described in section 170(c)(2). Capital gains are allocable to corpus and upon A's death the trust is to terminate and the corpus is to be distributed to the Y charity. The trust has taxable income of $50,000 computed without any deduction for personal exemption, charitable contributions, or distributions. The amount of $50,000 includes $10,000 capital gains, $30,000 ($31,000 less the $1,000 deduction allowed under section 512(b)(12)) unrelated business income (computed before the charitable contributions deduction which would be allowed under section 512(b)(11)) and other income of $9,000. The trustee pays each beneficiary $20,000.
(ii) The deduction otherwise allowable under section 642(c) is $30,000 ($20,000 paid to Y charity and $10,000 capital gains allocated to corpus and permanently set aside for charitable purposes). The portion allocable to the unrelated business income is $15,000,

> that is, an amount which bears the same ratio to $20,000 (the amount paid to Y charity) as $30,000 bears to $40,000 ($50,000 less $10,000 capital gains allocable to corpus). The portion allocable to the unrelated business income, and therefore disallowed as a deduction, is $15,000 reduced by $6,000 (the charitable contributions deduction which would be allowable under section 512(b)(11)), or $9,000.

(2) If, in the examples in subparagraph (1) of this paragraph, the Y charity were a charitable organization qualifying under section 170(b)(1)(A), then the deduction allowable under section 512(b)(11) would be computed at a rate of 30 percent.

[T.D. 6500, 25 FR 11814, Nov. 26, 1960, as amended by T.D. 6605, 27 FR 8097, Aug. 15, 1962]

§ 1.681(b)-1 Cross reference.

For disallowance of certain charitable, etc., deductions otherwise allowable under section 642(c), see sections 508(d) and 4948(c)(4). See also 26 CFR 1.681(b)-1 and 1.681(c)-1 (rev. as of Apr. 1, 1974) for provisions applying before January 1, 1970.

[T.D. 7428, 41 FR 34627, Aug. 16, 1976]

§ 1.682(a)-1 Income of trust in case of divorce, etc.

(a) ***In general.***

(1) Section 682(a) provides rules in certain cases for determining the taxability of income of trusts as between spouses who are divorced, or who are separated under a decree of separate maintenance or a written separation agreement. In such cases, the spouse actually entitled to receive payments from the trust is considered the beneficiary rather than the spouse in discharge of whose obligations the payments are made, except to the extent that the payments are specified to be for the support of the obligor spouse's minor children in the divorce or separate maintenance decree, the separation agreement or the governing trust instrument. For convenience, the beneficiary spouse will hereafter in this section and in § 1.682(b)-1 be referred to as the “wife” and the obligor spouse from whom she is divorced or legally separated as the “husband”. (See section 7701(a)(17).) Thus, under section 682(a) income of a trust:

(i) Which is paid, credited, or required to be distributed to the wife in a taxable year of the wife, and

(ii) Which, except for the provisions of section 682, would be includible in the gross income of her husband,

is includible in her gross income and is not includible in his gross income.

(2) Section 682(a) does not apply in any case to which section 71 applies. Although section 682(a) and section 71 seemingly cover some of the same situations, there are important differences between them. Thus, section 682(a) applies, for example, to a trust created before the divorce or separation and not in contemplation of it, while section 71 applies only if the creation of the trust or payments by a previously created trust are in discharge of an obligation imposed upon or assumed by the husband (or made specific) under the court order or decree divorcing or legally separating the husband and wife, or a written instrument incident to the divorce status or legal separation status, or a written separation agreement. If section 71 applies, it requires inclusion in the wife's income of the

full amount of periodic payments received attributable to property in trust (whether or not out of trust income), while, if section 71 does not apply, section 682(a) requires amounts paid, credited, or required to be distributed to her to be included only to the extent they are includible in the taxable income of a trust beneficiary under subparts A through D (section 641 and following), part I, subchapter J, chapter 1 of the Code.

(3) Section 682(a) is designed to produce uniformity as between cases in which, without section 682(a), the income of a so-called alimony trust would be taxable to the husband because of his continuing obligation to support his wife or former wife, and other cases in which the income of a so-called alimony trust is taxable to the wife or former wife because of the termination of the husband's obligation. Furthermore, section 682(a) taxes trust income to the wife in all cases in which the husband would otherwise be taxed not only because of the discharge of his alimony obligation but also because of his retention of control over the trust income or corpus. Section 682(a) applies whether the wife is the beneficiary under the terms of the trust instrument or is an assignee of a beneficiary.

(4) The application of section 682(a) may be illustrated by the following examples, in which it is assumed that both the husband and wife make their income tax returns on a calendar year basis:

Example 1. Upon the marriage of H and W, H irrevocably transfers property in trust to pay the income to W for her life for support, maintenance, and all other expenses. Some years later, W obtains a legal separation from H under an order of court. W, relying upon the income from the trust payable to her, does not ask for any provision for her support and the decree recites that since W is adequately provided for by the trust, no further provision is being made for her. Under these facts, section 682(a), rather than section 71, is applicable. Under the provisions of section 682(a), the income of the trust which becomes payable to W after the order of separation is includible in her income and is deductible by the trust. No part of the income is includible in H's income or deductible by him.

Example 2. H transfers property in trust for the benefit of W, retaining the power to revoke the trust at any time. H, however, promises that if he revokes the trust he will transfer to W property in the value of $100,000. The transfer in trust and the agreement were not incident to divorce, but some years later W divorces H. The court decree is silent as to alimony and the trust. After the divorce, income of the trust which becomes payable to W is taxable to her, and is not taxable to H or deductible by him. If H later terminates the trust and transfers $100,000 of property to W, the $100,000 is not income to W nor deductible by H.

(b) ***Alimony trust income designated for support of minor children.*** Section 682(a) does not require the inclusion in the wife's income of trust income which the terms of the divorce or separate maintenance decree, separation agreement, or trust instrument fix in terms of an amount of money or a portion of the income as a sum which is payable for the support of minor children of the husband. The portion of the income which is payable for the support of the minor children is includible in the husband's income. If in such a case trust income fixed in terms of an amount of money is to be paid but a lesser amount becomes payable, the trust income is considered to be payable for the support of the husband's minor children to the extent of the sum which would be payable for their support out of the originally specified amount of trust income. This rule is similar to that provided in the case of periodic payments under section 71. See § 1.71-1.

§ 1.682(b)-1 Application of trust rules to alimony payments.

(a) For the purpose of the application of subparts A through D (section 641 and following), part I, subchapter J, chapter 1 of the Code, the wife described in section 682 or section 71 who is entitled to receive payments attributable to property in trust is considered a beneficiary of the trust, whether or not the payments are made for the benefit of the husband in discharge of his obligations. A wife treated as a beneficiary of a trust under this section is also treated as the beneficiary of such trust for purposes of the tax imposed by section 56 (relating to the minimum tax for tax preferences). For rules relating to the treatment of items of tax preference with respect to a beneficiary of a trust, see § 1.58-3.

(b) A periodic payment includible in the wife's gross income under section 71 attributable to property in trust is included in full in her gross income in her taxable year in which any part is required to be included under section 652 or 662. Assume, for example, in a case in which both the wife and the trust file income tax returns on the calendar year basis, that an annuity of $5,000 is to be paid to the wife by the trustee every December 31 (out of trust income if possible and, if not, out of corpus) pursuant to the terms of a divorce decree. Of the $5,000 distributable on December 31, 1954, $4,000 is payable out of income and $1,000 out of corpus. The actual distribution is made in 1955. Although the periodic payment is received by the wife in 1955, since under section 662 the $4,000 income distributable on December 31, 1954, is to be included in the wife's income for 1954, the $1,000 payment out of corpus is also to be included in her income for 1954.

[T.D. 6500, 25 FR 11814, Nov. 26, 1960, as amended by T.D. 7564, 43 FR 40495, Sept. 12, 1978]

§ 1.682(c)-1 Definitions.

For definitions of the terms “husband” and “wife” as used in section 682, see section 7701(a)(17) and the regulations thereunder.

§ 1.683-1 Applicability of provisions; general rule.

Part I (section 641 and following), subchapter J, chapter 1 of the Code, applies to estates and trusts and to beneficiaries only with respect to taxable years which begin after December 31, 1953, and end after August 16, 1954 the date of enactment of the Internal Revenue Code of 1954. In the case of an estate or trust, the date on which a trust is created or amended or on which an estate commences, and the taxable years of beneficiaries, grantors, or decedents concerned are immaterial. This provision applies equally to taxable years of normal and of abbreviated length.

§ 1.683-2 Exceptions.

(a) In the case of any beneficiary of an estate or trust, sections 641 through 682 do not apply to any amount paid, credited, or to be distributed by an estate or trust in any taxable year of the estate or trust which begins before January 1, 1954, or which ends before August 17, 1954. Whether an amount so paid, credited, or to be distributed is to be included in the gross income of a beneficiary is determined with reference to the Internal Revenue Code of 1939. Thus, if a trust in its fiscal year ending June 30, 1954, distributed its current income to a beneficiary on June 30, 1954, the extent to which the distribution is includible in the beneficiary's gross income for his taxable year (the calendar year 1954) and the character of such income will be determined under the Internal Revenue Code of 1939. The Internal Revenue Code of 1954, however, determines the beneficiary's tax liability for a taxable year of the beneficiary to which such Code applies, with respect even to gross income of the beneficiary determined under the Internal

Revenue Code of 1939 in accordance with this paragraph. Accordingly, the beneficiary is allowed credits and deductions pursuant to the Internal Revenue Code of 1954 for a taxable year governed by the Internal Revenue Code of 1954. See subparagraph (ii) of example (1) in paragraph (c) of this section.

(b) For purposes of determining the time of receipt of dividends under sections 34 (for purposes of the credit for dividends received on or before December 31, 1964) and 116, the dividends paid, credited, or to be distributed to a beneficiary are deemed to have been received by the beneficiary ratably on the same dates that the dividends were received by the estate or trust.

(c) The application of this section may be illustrated by the following examples:

Example 1. (i) A trust, reporting on the fiscal year basis, receives in its taxable year ending November 30, 1954, dividends on December 3, 1953, and April 3, July 5, and October 4, 1954. It distributes the dividends to A, its sole beneficiary (who reports on the calendar year basis) on November 30, 1954. Since the trust has received dividends in a taxable year ending after July 31, 1954, it will receive a dividend credit under section 34 with respect to dividends received which otherwise qualify under that section, in this case dividends received on October 4, 1954 (i. e., received after July 31, 1954). See section 7851(a)(1)(C). This credit, however, is reduced to the extent the dividends are allocable to the beneficiary as a result of income being paid, credited, or required to be distributed to him. The trust will also be permitted the dividend exclusion under section 116, since it received its dividends in a taxable year ending after July 31, 1954.
(ii) A is entitled to the section 34 credit with respect to the portion of the October 4, 1954, dividends which is distributed to him even though the determination of whether the amount distributed to him is includible in his gross income is made under the Internal Revenue Code of 1939. The credit allowable to the trust is reduced proportionately to the extent A is deemed to have received the October 4 dividends. A is not entitled to a credit with respect to the dividends received by the trust on December 3, 1953, and April 3, and July 5, 1954, because, although he receives after July 31, 1954, the distribution resulting from the trust's receipt of dividends, he is deemed to have received the dividends ratably with the trust on dates prior to July 31, 1954. In determining the exclusion under section 116 to which he is entitled, all the dividends received by the trust in 1954 and distributed to him are aggregated with any other dividends received by him in 1954, since he is deemed to have received such dividends in 1954 and therefore within a taxable year ending after July 31, 1954. He is not, however, entitled to the exclusion for the dividends received by the trust in December 1953.

Example 2. (i) A simple trust reports on the basis of a fiscal year ending July 31. It receives dividends on October 3, 1953, and January 4, April 3, and July 5, 1954. It distributes the dividends to A, its sole beneficiary, on September 1, 1954. The trust, receiving dividends in a taxable year ending prior to August 17, 1954, is entitled neither to the dividend received credit under section 34 nor the dividend exclusion under section 116.
(ii) A (reporting on the calendar year basis) is not entitled to the section 34 credit, because, although he receives after July 31, 1954, the distribution resulting from the trust's receipt of dividends, he is deemed to have received the dividends ratably with the trust, that is, on October 3,

> 1953, and January 4, April 3, and July 5, 1954. He is, however, entitled to the section 116 exclusion with respect to the dividends received by the trust in 1954 (along with other dividends received by him in 1954) and distributed to him, since he is deemed to have received such dividends on January 4, April 3, and July 5, 1954, each a date in this taxable year ending after July 31, 1954. He is entitled to no exclusion for the dividends received by the trust on October 3, 1953, since he is deemed to receive the resulting distribution on the same date, which falls within a taxable year of his which ends before August 1, 1954, although he is required to include the October 1953 dividends in his 1954 income. See section 164 of the Internal Revenue Code of 1939.

Example 3. A simple trust on a fiscal year ending July 31, 1954, receives dividends August 5 and November 4, 1953. It distributes the dividends to A, its sole beneficiary (who is on a calendar year basis), on September 1, 1954. Neither the trust nor A is entitled to a credit under section 34 or an exclusion under section 116.

[T.D. 6500, 25 FR 11814, Nov. 26, 1960, as amended by T.D. 6777, 29 FR 17809, Dec. 16, 1964]

§ 1.683-3 Application of the 65-day rule of the Internal Revenue Code of 1939.

If an amount is paid, credited, or to be distributed in the first 65 days of the first taxable year of an estate or trust (heretofore subject to the provisions of the Internal Revenue Code of 1939) to which the Internal Revenue Code of 1954 applies and the amount would be treated, if the Internal Revenue Code of 1939 were applicable, as if paid, credited, or to be distributed on the last day of the preceding taxable year, sections 641 through 682 do not apply to the amount. The amount so paid, credited, or to be distributed is taken into account as provided in the Internal Revenue Code of 1939. See 26 CFR (1939) 39.162-2 (c) and (d) (Regulations 118).

§ 1.684-1 Recognition of gain on transfers to certain foreign trusts and estates.

(a) ***Immediate recognition of gain*** —

(1) ***In general.*** Any U.S. person who transfers property to a foreign trust or foreign estate shall be required to recognize gain at the time of the transfer equal to the excess of the fair market value of the property transferred over the adjusted basis (for purposes of determining gain) of such property in the hands of the U.S. transferor unless an exception applies under the provisions of § 1.684-3. The amount of gain recognized is determined on an asset-by-asset basis.

(2) ***No recognition of loss.*** Under this section a U.S. person may not recognize loss on the transfer of an asset to a foreign trust or foreign estate. A U.S. person may not offset gain realized on the transfer of an appreciated asset to a foreign trust or foreign estate by a loss realized on the transfer of a depreciated asset to the foreign trust or foreign estate.

(b) ***Definitions.*** The following definitions apply for purposes of this section:

(1) ***U.S. person.*** The term *U.S. person* means a United States person as defined in section 7701(a)(30), and includes a nonresident alien individual who elects under section 6013(g) to be treated as a resident of the United States.

(2) ***U.S. transferor.*** The term *U.S. transferor* means any U.S. person who makes a transfer (as defined in § 1.684-2) of property to a foreign trust or foreign estate.

(3) ***Foreign trust.*** Section 7701(a)(31)(B) defines foreign trust. See also § 301.7701-7 of this chapter.

(4) ***Foreign estate.*** Section 7701(a)(31)(A) defines foreign estate.

(c) ***Reporting requirements.*** A U.S. person who transfers property to a foreign trust or foreign estate must comply with the reporting requirements under section 6048.

(d) ***Examples.*** The following examples illustrate the rules of this section. In all examples, *A* is a U.S. person and *FT* is a foreign trust. The examples are as follows:

Example 1. Transfer to foreign trust. A transfers property that has a fair market value of 1000X to *FT. A*'s adjusted basis in the property is 400X. *FT* has no U.S. beneficiary within the meaning of § 1.679-2, and no person is treated as owning any portion of *FT.* Under paragraph (a)(1) of this section, *A* recognizes gain at the time of the transfer equal to 600X.

Example 2. Transfer of multiple properties. A transfers property Q, with a fair market value of 1000X, and property R, with a fair market value of 2000X, to *FT.* At the time of the transfer, *A*'s adjusted basis in property Q is 700X, and *A*'s adjusted basis in property R is 2200X. *FT* has no U.S. beneficiary within the meaning of § 1.679-2, and no person is treated as owning any portion of *FT.* Under paragraph (a)(1) of this section, *A* recognizes the 300X of gain attributable to property Q. Under paragraph (a)(2) of this section, *A* does not recognize the 200X of loss attributable to property R, and may not offset that loss against the gain attributable to property Q.

Example 3. Transfer for less than fair market value. A transfers property that has a fair market value of 1000X to *FT* in exchange for 400X of cash. *A*'s adjusted basis in the property is 200X. *FT* has no U.S. beneficiary within the meaning of § 1.679-2, and no person is treated as owning any portion of *FT.* Under paragraph (a)(1) of this section, *A* recognizes gain at the time of the transfer equal to 800X.

Example 4. Exchange of property for private annuity. A transfers property that has a fair market value of 1000X to *FT* in exchange for *FT*'s obligation to pay A 50X per year for the rest of *A*'s life. *A*'s adjusted basis in the property is 100X. *FT* has no U.S. beneficiary within the meaning of § 1.679-2, and no person is treated as owning any portion of *FT. A* is required to recognize gain equal to 900X immediately upon transfer of the property to the trust. This result applies even though *A* might otherwise have been allowed to defer recognition of gain under another provision of the Internal Revenue Code.

Example 5. Transfer of property to related foreign trust in exchange for qualified obligation. A transfers property that has a fair market value of 1000X to *FT* in exchange for *FT*'s obligation to make payments to *A* during the next four years. *FT* is related to *A* as defined in § 1.679-1(c)(5). The obligation is treated as a qualified obligation within the meaning of § 1.679-4(d), and no person is treated as owning any portion of *FT. A*'s adjusted basis in the property is 100X. *A* is required to recognize gain equal to 900X immediately upon transfer of the property to the trust. This result applies even though *A* might otherwise have been allowed to defer recognition of gain under another provision of the Internal Revenue Code. Section 1.684-3(d) provides rules relating to transfers for fair market value to unrelated foreign trusts.

[T.D. 8956, 66 FR 37899, July 20, 2001]

§ 1.684-2 Transfers.

(a) ***In general.*** A transfer means a direct, indirect, or constructive transfer.

(b) ***Indirect transfers —***

(1) ***In general.*** Section 1.679-3(c) shall apply to determine if a transfer to a foreign trust or foreign estate, by any person, is treated as an indirect transfer by a U.S. person to the foreign trust or foreign estate.

(2) ***Examples.*** The following examples illustrate the rules of this paragraph (b). In all examples, *A* is a U.S. citizen, *FT* is a foreign trust, and *I* is *A*'s uncle, who is a nonresident alien. The examples are as follows:

Example 1. Principal purpose of tax avoidance. A creates and funds *FT* for the benefit of *A*'s cousin, who is a nonresident alien. *FT* has no U.S. beneficiary within the meaning of § 1.679-2, and no person is treated as owning any portion of *FT.* In 2004, *A* decides to transfer additional property with a fair market value of 1000X and an adjusted basis of 600X to *FT.* Pursuant to a plan with a principal purpose of avoiding the application of section 684, *A* transfers the property to *I. I* subsequently transfers the property to *FT.* Under paragraph (b) of this section and § 1.679-3(c), *A* is treated as having transferred the property to *FT.*

Example 2. U.S. person unable to demonstrate that intermediary acted independently. A creates and funds *FT* for the benefit of *A*'s cousin, who is a nonresident alien. *FT* has no U.S. beneficiary within the meaning of § 1.679-2, and no person is treated as owning any portion of *FT.* On July 1, 2004, *A* transfers property with a fair market value of 1000X and an adjusted basis of 300X to *I,* a foreign person. On January 1, 2007, at a time when the fair market value of the property is 1100X, *I* transfers the property to *FT. A* is unable to demonstrate to the satisfaction of the Commissioner, under § 1.679-3(c)(2)(ii), that *I* acted independently of *A* in making the transfer to *FT.* Under paragraph (b) of this section and § 1.679-3(c), *A* is treated as having transferred the property to *FT.* Under paragraph (b) of this section and § 1.679-3(c)(3), *I* is treated as an agent of *A,* and the transfer is deemed to have been made on January 1, 2007. Under § 1.684-1(a), *A* recognizes gain equal to 800X on that date.

(c) ***Constructive transfers.*** Section 1.679-3(d) shall apply to determine if a transfer to a foreign trust or foreign estate is treated as a constructive transfer by a U.S. person to the foreign trust or foreign estate.

(d) ***Transfers by certain trusts*** —

(1) ***In general.*** If any portion of a trust is treated as owned by a U.S. person, a transfer of property from that portion of the trust to a foreign trust is treated as a transfer from the owner of that portion to the foreign trust.

(2) ***Examples.*** The following examples illustrate the rules of this paragraph (d). In all examples, *A* is a U.S. person, *DT* is a domestic trust, and *FT* is a foreign trust. The examples are as follows:

Example 1. Transfer by a domestic trust. On January 1, 2001, *A* transfers property which has a fair market value of 1000X and an adjusted basis of 200X to *DT. A* retains the power to revoke *DT.* On January 1, 2003, *DT* transfers property which has a fair market value of 500X and an adjusted basis of 100X to *FT.* At the time of the transfer, *FT* has no U.S. beneficiary as defined in § 1.679-2 and no person is treated as owning any portion of *FT. A* is treated as having transferred the property to *FT* and is required to recognize gain of 400X, under § 1.684-1, at the time of the transfer by *DT* to *FT.*

Example 2. Transfer by a foreign trust. On January 1, 2001, *A* transfers property which has a fair market value of 1000X and an adjusted basis of 200X to *FT1.* At the time of the transfer, *FT1* has a U.S. beneficiary as defined in § 1.679-2 and *A* is treated as the owner of *FT1* under section 679. On January 1, 2003, *FT1* transfers property which has a fair market value of 500X and an adjusted basis of 100X to *FT2.* At the time of the transfer, *FT2* has no U.S. beneficiary as

defined in § 1.679-2 and no person is treated as owning any portion of *FT2*. *A* is treated as having transferred the property to *FT2* and is required to recognize gain of 400X, under § 1.684-1, at the time of the transfer by *FT1* to *FT2*.

(e) ***Deemed transfers when foreign trust no longer treated as owned by a U.S. person*** —

(1) ***In general.*** If any portion of a foreign trust is treated as owned by a U.S. person under subpart E of part I of subchapter J, chapter 1 of the Internal Revenue Code, and such portion ceases to be treated as owned by that person under such subpart (other than by reason of an actual transfer of property from the trust to which § 1.684-2(d) applies), the U.S. person shall be treated as having transferred, immediately before (but on the same date that) the trust is no longer treated as owned by that U.S. person, the assets of such portion to a foreign trust.

(2) ***Examples.*** The following examples illustrate the rules of this paragraph (e). In all examples, *A* is a U.S. citizen and *FT* is a foreign trust. The examples are as follows:

> *Example 1. Loss of U.S. beneficiary.* (i) On January 1, 2001, *A* transfers property, which has a fair market value of 1000X and an adjusted basis of 400X, to *FT.* At the time of the transfer, *FT* has a U.S. beneficiary within the meaning of § 1.679-2, and *A* is treated as owning *FT* under section 679. Under § 1.684-3(a), § 1.684-1 does not cause *A* to recognize gain at the time of the transfer.
> (ii) On July 1, 2003, *FT* ceases to have a U.S. beneficiary as defined in § 1.679-2(c) and as of that date neither *A* nor any other person is treated as owning any portion of *FT.* Pursuant to § 1.679-2(c)(2), if *FT* ceases to be treated as having a U.S. beneficiary, *A* will cease to be treated as owner of *FT* beginning on the first day of the first taxable year following the last taxable year in which there was a U.S. beneficiary. Thus, on January 1, 2004, *A* ceases to be treated as owner of *FT.* On that date, the fair market value of the property is 1200X and the adjusted basis is 350X. Under paragraph (e)(1) of this section, *A* is treated as having transferred the property to *FT* on January 1, 2004, and must recognize 850X of gain at that time under § 1.684-1.

> *Example 2. Death of grantor.* (i) The initial facts are the same as in paragraph (i) of *Example 1*.
> (ii) On July 1, 2003, *A* dies, and as of that date no other person is treated as the owner of *FT.* On that date, the fair market value of the property is 1200X, and its adjusted basis equals 350X. Under paragraph (e)(1) of this section, *A* is treated as having transferred the property to *FT* immediately before his death, and generally is required to recognize 850X of gain at that time under § 1.684-1. However, an exception may apply under § 1.684-3(c).

> *Example 3. Release of a power.* (i) On January 1, 2001, *A* transfers property that has a fair market value of 500X and an adjusted basis of 200X to *FT.* At the time of the transfer, *FT* does not have a U.S. beneficiary within the meaning of § 1.679-2. However, *A* retains the power to revoke the trust. *A* is treated as the owner of the trust under section 676 and, therefore, under § 1.684-3(a), *A* is not required to recognize gain under § 1.684-1 at the time of the transfer.

(ii) On January 1, 2007, *A* releases the power to revoke the trust and, as of that date, neither *A* nor any other person is treated as owning any portion of *FT.* On that date, the fair market value of the property is 900X, and its adjusted basis is 200X. Under paragraph (e)(1) of this section, *A* is treated as having transferred the property to *FT* on January 1, 2007, and must recognize 700X of gain at that time.

(f) ***Transfers to entities owned by a foreign trust.*** Section 1.679-3(f) provides rules that apply with respect to transfers of property by a U.S. person to an entity in which a foreign trust holds an ownership interest.

[T.D. 8956, 66 FR 37899, July 20, 2001]

§ 1.684-3 Exceptions to general rule of gain recognition.

(a) ***Transfers to grantor trusts.*** The general rule of gain recognition under § 1.684-1 shall not apply to any transfer of property by a U.S. person to a foreign trust to the extent that any person is treated as the owner of the trust under section 671. Section 1.684-2(e) provides rules regarding a subsequent change in the status of the trust.

(b) ***Transfers to charitable trusts.*** The general rule of gain recognition under § 1.684-1 shall not apply to any transfer of property to a foreign trust that is described in section 501(c)(3) (without regard to the requirements of section 508(a)).

(c) ***Certain transfers at death*** —

(1) ***Section 1014 basis.*** The general rule of gain recognition under § 1.684-1 shall not apply to any transfer of property to a foreign trust or foreign estate or, in the case of a transfer of property by a U.S. transferor decedent dying in 2010, to a foreign trust, foreign estate, or a nonresident alien, by reason of death of the U.S. transferor, if the basis of the property in the hands of the transferee is determined under section 1014(a).

(2) ***Section 1022 basis election.*** For U.S. transferor decedents dying in 2010, the general rule of gain recognition under § 1.684-1 shall apply to any transfer of property by reason of death of the U.S. transferor if the basis of the property in the hands of the foreign trust, foreign estate, or the nonresident alien individual is determined under section 1022. The gain on the transfer shall be calculated as set out under § 1.684-1(a), except that adjusted basis will reflect any increases allocated to such property under section 1022.

(d) ***Transfers for fair market value to unrelated trusts.*** The general rule of gain recognition under § 1.684-1 shall not apply to any transfer of property for fair market value to a foreign trust that is not a related foreign trust as defined in § 1.679-1(c)(5). Section 1.671-2(e)(2)(ii) defines fair market value.

(e) ***Transfers to which section 1032 applies.*** The general rule of gain recognition under § 1.684-1 shall not apply to any transfer of stock (including treasury stock) by a domestic corporation to a foreign trust if the domestic corporation is not required to recognize gain on the transfer under section 1032.

(f) ***Certain distributions to trusts.*** For purposes of this section, a transfer does not include a distribution to a trust with respect to an interest held by such trust in an entity other than a trust or an interest in certain investment trusts described in § 301.7701-4(c) of this chapter, liquidating trusts described in § 301.7701-4(d) of this chapter, or environmental remediation trusts described in § 301.7701-4(e) of this chapter.

(g) ***Examples.*** The following examples illustrate the rules of this section. In all examples, *A* is a U.S. citizen and *FT* is a foreign trust. The examples are as follows:

Example 1. Transfer to owner trust. In 2001, *A* transfers property which has a fair market value of 1000X and an adjusted basis equal to 400X to *FT.* At the time of the transfer, *FT* has a U.S. beneficiary within the meaning of § 1.679-2, and *A* is treated as owning *FT* under section 679. Under paragraph (a) of this section, § 1.684-1 does not cause *A* to recognize gain at the time of the transfer. See § 1.684-2(e) for rules that may require *A* to recognize gain if the trust is no longer owned by *A.*

> *Example 2. Transfer of property at death: Basis determined under section 1014(a).* (i) The initial facts are the same as *Example 1.*
> (ii) *A* dies on July 1, 2004. The fair market value at *A*'s death of all property transferred to *FT* by *A* is 1500X. The basis in the property is 400X. *A* retained the power to revoke *FT,* thus, the value of all property owned by *FT* at *A*'s death is includible in *A*'s gross estate for U.S. estate tax purposes. Pursuant to paragraph (c) of this section, *A* is not required to recognize gain under § 1.684-1 because the basis of the property in the hands of the foreign trust is determined under section 1014(a).

> *Example 3. Transfer of property at death: Basis not determined under section 1014(a).* (i) The initial facts are the same as *Example 1.*
> (ii) *A* dies on July 1, 2004. The fair market value at *A*'s death of all property transferred to *FT* by *A* is 1500X. The basis in the property is 400X. *A* retains no power over *FT,* and *FT*'s basis in the property transferred is not determined under section 1014(a). Under § 1.684-2(e)(1), *A* is treated as having transferred the property to *FT* immediately before his death, and must recognize 1100X of gain at that time under § 1.684-1.

Example 4. Transfer of property for fair market value to an unrelated foreign trust. A sells a house with a fair market value of 1000X to *FT* in exchange for a 30-year note issued by *FT. A* is not related to *FT* as defined in § 1.679-1(c)(5). *FT* is not treated as owned by any person. Pursuant to paragraph (d) of this section, *A* is not required to recognize gain under § 1.684-1.

[T.D. 8956, 66 FR 37899, July 20, 2001, as amended by T.D. 9811, 82 FR 6239, Jan. 19, 2017]

§ 1.684-4 Outbound migrations of domestic trusts.

(a) ***In general.*** If a U.S. person transfers property to a domestic trust, and such trust becomes a foreign trust, and neither trust is treated as owned by any person under subpart E of part I of subchapter J, chapter 1 of the Internal Revenue Code, the trust shall be treated for purposes of this section as having transferred all of its assets to a foreign trust and the trust is required to recognize gain on the transfer under § 1.684-1(a). The trust must also comply with the rules of section 6048.

(b) ***Date of transfer.*** The transfer described in this section shall be deemed to occur immediately before, but on the same date that, the trust meets the definition of a foreign trust set forth in section 7701(a)(31)(B).

(c) ***Inadvertent migrations.*** In the event of an inadvertent migration, as defined in § 301.7701-7(d)(2) of this chapter, a trust may avoid the application of this section by complying with the procedures set forth in § 301.7701-7(d)(2) of this chapter.

(d) ***Examples.*** The following examples illustrate the rules of this section. In all examples, *A* is a U.S. citizen, *B* is a U.S. citizen, *C* is a nonresident alien, and *T* is a trust. The examples are as follows:

Example 1. Migration of domestic trust with U.S. beneficiaries. A transfers property which has a fair market value of 1000X and an adjusted basis equal to 400X to *T,* a domestic trust, for the benefit of *A*'s children who are also U.S. citizens. *B* is the trustee of *T.* On January 1, 2001, while *A* is still alive, *B* resigns as trustee and *C* becomes successor trustee under the terms of the trust. Pursuant to § 301.7701-7(d) of this chapter, *T* becomes a foreign trust. *T* has U.S. beneficiaries within the meaning of § 1.679-2 and *A* is, therefore, treated as owning *FT* under section 679. Pursuant to § 1.684-3(a), neither *A* nor *T* is required to recognize gain at the time of the migration. Section 1.684-2(e) provides rules that may require *A* to recognize gain upon a subsequent change in the status of the trust.

Example 2. Migration of domestic trust with no U.S. beneficiaries. A transfers property which has a fair market value of 1000X and an adjusted basis equal to 400X to *T,* a domestic trust for the benefit of *A*'s mother who is not a citizen or resident of the United States. *T* is not treated as owned by another person. *B* is the trustee of *T.* On January 1, 2001, while *A* is still alive, *B* resigns as trustee and *C* becomes successor trustee under the terms of the trust. Pursuant to § 301.7701-7(d) of this chapter, *T* becomes a foreign trust, *FT. FT* has no U.S. beneficiaries within the meaning of § 1.679-2 and no person is treated as owning any portion of *FT. T* is required to recognize gain of 600X on January 1, 2001. Paragraph (c) of this section provides rules with respect to an inadvertent migration of a domestic trust.

[T.D. 8956, 66 FR 37899, July 20, 2001]

§ 1.684-5 Effective/applicability dates.

(a) Sections 1.684-1 through 1.684-4 apply to transfers of property to foreign trusts and foreign estates after August 7, 2000, except as provided in paragraph (b) of this section.

(b) In the case a U.S. transferor decedent dying in 2010, § 1.684-3(c) applies to transfers of property to foreign trusts, foreign estates, and nonresident aliens after December 31, 2009, and before January 1, 2011.

[T.D. 9811, 82 FR 6239, Jan. 19, 2017]

INCOME IN RESPECT OF DECEDENTS

§ 1.691(a)-1 Income in respect of a decedent.

(a) ***Scope of section 691.*** In general, the regulations under section 691 cover:

(1) The provisions requiring that amounts which are not includible in gross income for the decedent's last taxable year or for a prior taxable year be included in the gross income of the estate or persons receiving such income to the extent that such amounts constitute “income in respect of a decedent”;

(2) the taxable effect of a transfer of the right to such income;

(3) the treatment of certain deductions and credit in respect of a decedent which are not allowable to the decedent for the taxable period ending with his death or for a prior taxable year;

(4) the allowance to a recipient of income in respect of a decedent of a deduction for estate taxes attributable to the inclusion of the value of the right to such income in the decedent's estate;

(5) special provisions with respect to installment obligations acquired from a decedent and with respect to the allowance of a deduction for estate taxes to a surviving annuitant under a joint and survivor annuity contract; and

(6) special provisions relating to installment obligations transmitted at death when prior law applied to the transmission.

(b) ***General definition.*** In general, the term *income in respect of a decedent* refers to those amounts to which a decedent was entitled as gross income but which were not properly includible in computing his taxable income for the taxable year ending with the date of his death or for a previous taxable year under the method of accounting employed by the decedent. See the regulations under section 451. Thus, the term includes:

(1) All accrued income of a decedent who reported his income by use of the cash receipts and disbursements method;

(2) Income accrued solely by reason of the decedent's death in case of a decedent who reports his income by use of an accrual method of accounting; and

(3) Income to which the decedent had a contingent claim at the time of his death.

See sections 736 and 753 and the regulations thereunder for “income in respect of a decedent” in the case of a deceased partner.

(c) ***Prior decedent.*** The term *income in respect of a decedent* also includes the amount of all items of gross income in respect of a prior decedent, if

(1) the right to receive such amount was acquired by the decedent by reason of the death of the prior decedent or by bequest, devise, or inheritance from the prior decedent and if

(2) the amount of gross income in respect of the prior decedent was not properly includible in computing the decedent's taxable income for the taxable year ending with the date of his death or for a previous taxable year. See example 2 of paragraph (b) of § 1.691(a)-2.

(d) ***Items excluded from gross income.*** Section 691 applies only to the amount of items of gross income in respect of a decedent, and items which are excluded from gross income under subtitle A of the Code are not within the provisions of section 691.

(e) ***Cross reference.*** For items deemed to be income in respect of a decedent for purposes of the deduction for estate taxes provided by section 691(c), see paragraph (c) of § 1.691(c)-1.

[T.D. 6500, 25 FR 11814, Nov. 26, 1960, as amended by T.D. 6808, 30 FR 3435, Mar. 16, 1965]

§ 1.691(a)-2 Inclusion in gross income by recipients.

(a) Under section 691(a)(1), income in respect of a decedent shall be included in the gross income, for the taxable year when received, of:

(1) The estate of the decedent, if the right to receive the amount is acquired by the decedent's estate from the decedent;

(2) The person who, by reason of the death of the decedent, acquires the right to receive the amount, if the right to receive the amount is not acquired by the decedent's estate from the decedent; or

(3) The person who acquires from the decedent the right to receive the amount by bequest, devise, or inheritance, if the amount is received after a distribution by the decedent's estate of such right.

These amounts are included in the income of the estate or of such persons when received by them whether or not they report income by use of the cash receipts and disbursements methods.

(b) The application of paragraph (a) of this section may be illustrated by the following examples, in each of which it is assumed that the decedent kept his books by use of the cash receipts and disbursements method.

Example 1. The decedent was entitled at the date of his death to a large salary payment to be made in equal annual installments over five years. His estate, after collecting two installments, distributed the right to the remaining installment payments to the residuary legatee of the estate. The estate must include in its gross income the two installments received by it, and the legatee must include in his gross income each of the three installments received by him.

Example 2. A widow acquired, by bequest from her husband, the right to receive renewal commissions on life insurance sold by him in his lifetime, which commissions were payable over a period of years. The widow died before having received all of such commissions, and her son inherited the right to receive the rest of the commissions. The commissions received by the widow were includible in her gross income. The commissions received by the son were not includible in the widow's gross income but must be included in the gross income of the son.

Example 3. The decedent owned a Series E United States savings bond, with his wife as co-owner or beneficiary, but died before the payment of such bond. The entire amount of interest accruing on the bond and not includible in income by the decedent, not just the amount accruing after the death of the decedent, would be treated as income to his wife when the bond is paid.

Example 4. A, prior to his death, acquired 10,000 shares of the capital stock of the X Corporation at a cost of $100 per share. During his lifetime, A had entered into an agreement with X Corporation whereby X Corporation agreed to purchase and the decedent agreed that his executor would sell the 10,000 shares of X Corporation stock owned by him at the book value of the stock at the date of A's death. Upon A's death, the shares are sold by A's executor for $500 a share pursuant to the agreement. Since the sale of stock is consummated after A's death, there is no income in respect of a decedent with respect to the appreciation in value of A's stock to the date of his death. If, in this example, A had in fact sold the stock during his lifetime but payment had not been received before his death, any gain on the sale would constitute income in respect of a decedent when the proceeds were received.

Example 5. (1) A owned and operated an apple orchard. During his lifetime, A sold and delivered 1,000 bushels of apples to X, a canning factory, but did not receive payment before his death. A also entered into negotiations to sell 3,000 bushels of apples to Y, a canning factory, but did not complete the sale before his death. After A's death, the executor received payment from X. He also completed the sale to Y and transferred to Y 1,200 bushels of apples on hand at A's death and harvested and transferred an additional 1,800 bushels. The gain from the sale of apples by A to X constitutes income in respect of a decedent when received. On the other hand, the gain from the sale of apples by the executor to Y does not.

(2) Assume that, instead of the transaction entered into with Y, A had disposed of the 1,200 bushels of harvested apples by delivering them to Z, a cooperative association, for processing and sale. Each year the association commingles the fruit received from all of its members into a pool and assigns to each member a percentage interest in the pool based on the fruit delivered by him. After the fruit is processed and the products are sold, the association distributes the net proceeds from the pool to its members in proportion to their interests in the pool. After A's death, the association made distributions to the executor with respect to A's share of the proceeds from the pool in which A had in interest. Under such circumstances, the proceeds from the disposition of the 1,200 bushels of apples constitute income in respect of a decedent.

§ 1.691(a)-3 Character of gross income.

(a) The right to receive an amount of income in respect of a decedent shall be treated in the hands of the estate, or by the person entitled to receive such amount by bequest, devise, or inheritance from the decedent or by reason of his death, as if it had been acquired in the transaction by which the decedent (or a prior decedent) acquired such right, and shall be considered as having the same character it would have had if the decedent (or a prior decedent) had lived and received such amount. The provisions of section 1014(a), relating to the basis of property acquired from a decedent, and section 1022, relating to the basis of property acquired from certain decedents who died in 2010, do not apply to these amounts in the hands of the estate and such persons. See sections 1014(c) and 1022(f).

(b) The application of paragraph (a) of this section may be illustrated by the following:

(1) If the income would have been capital gain to the decedent, if he had lived and had received it, from the sale of property, held for more than 1 year (6 months for taxable years beginning before 1977; 9 months for taxable years beginning in 1977), the income, when received, shall be treated in the hands of the estate or of such person as capital gain from the sale of the property, held for more than 1 year (6 months for taxable years beginning before 1977; 9 months for taxable years beginning in 1977), in the same manner as if such person had held the property for the period the decedent held it, and had made the sale.

(2) If the income is interest on United States obligations which were owned by the decedent, such income shall be treated as interest on United States obligations in the hands of the person receiving it, for the purpose of determining the credit provided by section 35, as if such person had owned the obligations with respect to which such interest is paid.

(3) If the amounts received would be subject to special treatment under part I (section 1301 and following), subchapter Q, chapter 1 of the Code, relating to income attributable to serveral taxable years, as in effect for taxable years beginning before January 1, 1964, if the decedent had lived and included such amounts in his gross income, such sections apply with respect to the recipient of the income.

(4) The provisions of sections 632 and 1347, relating to the tax attributable to the sale of certain oil or gas property and to certain claims against the United States, apply to any amount included in gross income, the right to which was obtained by the decedent by a sale or claim within the provisions of those sections.

(c) ***Effective/applicability dates.*** The last two sentences of paragraph (a) of this section apply on and after January 19, 2017. For rules before January 19, 2017, see § 1.691(a)-3 as contained in 26 CFR part 1 revised as of April 1, 2016.

[T.D. 6500, 25 FR 11814, Nov. 26, 1960, as amended by T.D. 6885, 31 FR 7803, June 2, 1966; T.D. 7728, 45 FR 72650, Nov. 3, 1980; T.D. 9811, 82 FR 6239, Jan. 19, 2017]

§ 1.691(a)-4 Transfer of right to income in respect of a decedent.

(a) Section 691(a)(2) provides the rules governing the treatment of income in respect of a decedent (or a prior decedent) in the event a right to receive such income is transferred by the estate or person entitled thereto by bequest, devise, or inheritance, or by reason of the death of the decedent. In general, the transferor must include in his gross income for the taxable period in which the transfer occurs the amount of the consideration, if any, received for the right or the fair market value of the right at the time of the transfer, whichever is greater. Thus, upon a sale of such right by the estate or person entitled to receive it, the fair market value of the right or the amount received upon the sale, whichever is greater, is included in the gross income of the vendor. Similarly, if such right is disposed of by gift, the fair market value of the right at the time of the gift must be included in the gross income of the donor. In the case of a satisfaction of an installment obligation at other than face value, which is likewise considered a transfer under section 691(a)(2), see § 1.691(a)-5.

(b) If the estate of a decedent or any person transmits the right to income in respect of a decedent to another who would be required by section 691(a)(1) to include such income when received in his gross income, only the transferee will include such income when received in his gross income. In this situation, a transfer within the meaning of section 691(a)(2) has not occurred. This paragraph may be illustrated by the following:

(1) If a person entitled to income in respect of a decedent dies before receiving such income, only his estate or other person entitled to such income by bequest, devise, or inheritance from the latter decedent, or by reason of the death of the latter decedent, must include such amount in gross income when received.

(2) If a right to income in respect of a decedent is transferred by an estate to a specific or residuary legatee, only the specific or residuary legatee must include such income in gross income when received.

(3) If a trust to which is bequeathed a right of a decedent to certain payments of income terminates and transfers the right to a beneficiary, only the beneficiary must include such income in gross income when received.

If the transferee described in subparagraphs (1), (2), and (3) of this paragraph transfers his right to receive the amounts in the manner described in paragraph (a) of this section, the principles contained in paragraph (a) are applied to such transfer. On the other hand, if the transferee transmits his right in the manner described in this paragraph, the principles of this paragraph are again applied to such transfer.

§ 1.691(a)-5 Installment obligations acquired from decedent.

(a) Section 691(a)(4) has reference to an installment obligation which remains uncollected by a decedent (or a prior decedent) and which was originally acquired in a transaction the income from which was properly reportable by the decedent on the installment method under section 453. Under the provisions of section 691(a)(4), an amount equal to the excess of the face value of the obligation over its basis in the hands of

the decedent (determined under section 453(d)(2) and the regulations thereunder) shall be considered an amount of income in respect of a decedent and shall be treated as such. The decedent's estate (or the person entitled to receive such income by bequest or inheritance from the decedent or by reason of the decedent's death) shall include in its gross income when received the same proportion of any payment in satisfaction of such obligations as would be returnable as income by the decedent if he had lived and received such payment. No gain on account of the transmission of such obligations by the decedent's death is required to be reported as income in the return of the decedent for the year of his death. See § 1.691(e)-1 for special provisions relating to the filing of an election to have the provisions of section 691(a)(4) apply in the case of installment obligations in respect of which section 44(d) of the Internal Revenue Code of 1939 (or corresponding provisions of prior law) would have applied but for the filing of a bond referred to therein.

(b) If an installment obligation described in paragraph (a) of this section is transferred within the meaning of section 691(a)(2) and paragraph (a) of § 1.691(a)-4, the entire installment obligation transferred shall be considered a right to income in respect of a decedent but the amount includible in the gross income of the transferor shall be reduced by an amount equal to the basis of the obligation in the hands of the decedent (determined under section 453(d)(2) and the regulations thereunder) adjusted, however, to take into account the receipt of any installment payments after the decedent's death and before such transfer. Thus, the amount includible in the gross income of the transferor shall be the fair market value of such obligation at the time of the transfer or the consideration received for the transfer of the installment obligation, whichever is greater, reduced by the basis of the obligation as described in the preceding sentence. For purposes of this paragraph, the term “transfer” in section 691(a)(2) and paragraph (a) of § 1.691(a)-4 includes the satisfaction of an installment obligation at other than face value.

(c) The application of this section may be illustrated by the following example:

Example. An heir of a decedent is entitled to collect an installment obligation with a face value of $100, a fair market value of $80, and a basis in the hands of the decedent of $60. If the heir collects the obligation at face value, the excess of the amount collected over the basis is considered income in respect of a decedent and includible in the gross income of the heir under section 691(a)(1). In this case, the amount includible would be $40 ($100 less $60). If the heir collects the obligation at $90, an amount other than face value, the entire obligation is considered a right to receive income in respect of a decedent but the amount ordinarily required to be included in the heir's gross income under section 691(a)(2) (namely, the consideration received in satisfaction of the installment obligation or its fair market value, whichever is greater) shall be reduced by the amount of the basis of the obligation in the hands of the decedent. In this case, the amount includible would be $30 ($90 less $60).

[T.D. 6500, 25 FR 11814, Nov. 26, 1960, as amended by T.D. 6808, 30 FR 3435, Mar. 16, 1965]

§ 1.691(b)-1 Allowance of deductions and credit in respect to decedents.

(a) Under section 691(b) the expenses, interest, and taxes described in sections 162, 163, 164, and 212 for which the decedent (or a prior decedent) was liable, which were not properly allowable as a deduction in his last taxable year or any prior taxable year, are allowed when paid:

(1) As a deduction by the estate; or

(2) If the estate was not liable to pay such obligation, as a deduction by the person who by bequest, devise, or inheritance from the decedent or by reason of the death of the decedent acquires, subject to such obligation, an interest in property of the decedent (or the prior decedent).

Similar treatment is given to the foreign tax credit provided by section 33. For the purposes of subparagraph (2) of this paragraph, the right to receive an amount of gross income in respect of a decedent is considered property of the decedent; on the other hand, it is not necessary for a person, otherwise within the provisions of subparagraph (2) of this paragraph, to receive the right to any income in respect of a decedent. Thus, an heir who receives a right to income in respect of a decedent (by reason of the death of the decedent) subject to any income tax imposed by a foreign country during the decedent's life, which tax must be satisfied out of such income, is entitled to the credit provided by section 33 when he pays the tax. If a decedent who reported income by use of the cash receipts and disbursements method owned real property on which accrued taxes had become a lien, and if such property passed directly to the heir of the decedent in a jurisdiction in which real property does not become a part of a decedent's estate, the heir, upon paying such taxes, may take the same deduction under section 164 that would be allowed to the decedent if, while alive, he had made such payment.

(b) The deduction for percentage depletion is allowable only to the person (described in section 691(a)(1)) who receives the income in respect of the decedent to which the deduction relates, whether or not such person receives the property from which such income is derived. Thus, an heir who (by reason of the decedent's death) receives income derived from sales of units of mineral by the decedent (who reported income by use of the cash receipts and disbursements method) shall be allowed the deduction for percentage depletion, computed on the gross income from such number of units as if the heir had the same economic interest in the property as the decedent. Such heir need not also receive any interest in the mineral property other than such income. If the decedent did not compute his deduction for depletion on the basis of percentage depletion, any deduction for depletion to which the decedent was entitled at the date of his death would be allowable in computing his taxable income for his last taxable year, and there can be no deduction in respect of the decedent by any other person for such depletion.

§ 1.691(c)-1 Deduction for estate tax attributable to income in respect of a decedent.

(a) ***In general.*** A person who is required to include in gross income for any taxable year an amount of income in respect of a decedent may deduct for the same taxable year that portion of the estate tax imposed upon the decedent's estate which is attributable to the inclusion in the decedent's estate of the right to receive such amount. The deduction is determined as follows:

(1) Ascertain the net value in the decedent's estate of the items which are included under section 691 in computing gross income. This is the excess of the value included in the gross estate on account of the items of gross income in respect of the decedent (see § 1.691(a)-1 and paragraph (c) of this section) over the deductions from the gross estate for claims which represent the deductions and credit in respect of the decedent (see § 1.691(b)-1). But see section 691(d) and paragraph (b) of § 1.691(d)-1 for computation of the special value of a survivor's annuity to be used in computing the net value for estate tax purposes in cases involving joint and survivor annuities.

(2) Ascertain the portion of the estate tax attributable to the inclusion in the gross estate of such net value. This is the excess of the estate tax over the estate tax computed without including such net value in the gross estate. In computing the estate tax without including such net value in the gross estate, any estate tax deduction (such as the marital deduction) which may be based upon the gross estate shall be recomputed so as to take into account the exclusion of such net value from the gross estate. See example 2, paragraph (e) of § 1.691(d)-1.

For purposes of this section, the term *estate tax* means the tax imposed under section 2001 or 2101 (or the corresponding provisions of the Internal Revenue Code of 1939), reduced by the credits against such tax. Each person including in gross income an amount of income in respect of a decedent may deduct as

his share of the portion of the estate tax (computed under subparagraph (2) of this paragraph) an amount which bears the same ratio to such portion as the value in the gross estate of the right to the income included by such person in gross income (or the amount included in gross income if lower) bears to the value in the gross estate of all the items of gross income in respect of the decedent.

(b) ***Prior decedent.*** If a person is required to include in gross income an amount of income in respect of a prior decedent, such person may deduct for the same taxable year that portion of the estate tax imposed upon the prior decedent's estate which is attributable to the inclusion in the prior decedent's estate of the value of the right to receive such amount. This deduction is computed in the same manner as provided in paragraph (a) of this section and is in addition to the deduction for estate tax imposed upon the decedent's estate which is attributable to the inclusion in the decedent's estate of the right to receive such amount.

(c) ***Amounts deemed to be income in respect of a decedent.*** For purposes of allowing the deduction under section 691(c), the following items are also considered to be income in respect of a decedent under section 691(a):

(1) The value for estate tax purposes of stock options in respect of which amounts are includible in gross income under section 421(b) (prior to amendment by section 221(a) of the Revenue Act of 1964), in the case of taxable years ending before January 1, 1964, or under section 422(c)(1), 423(c), or 424(c)(1), whichever is applicable, in the case of taxable years ending after December 31, 1963. See section 421(d)(6) (prior to amendment by sec. 221(a) of the Revenue Act of 1964), in the case of taxable years ending before January 1, 1964, and section 421(c)(2), in the case of taxable years ending after December 31, 1963.

(2) Amounts received by a surviving annuitant during his life expectancy period as an annuity under a joint and survivor annuity contract to the extent included in gross income under section 72. See section 691(d).

(d) ***Examples.*** Paragraphs (a) and (b) of this section may be illustrated by the following examples:

> *Example 1.* X, an attorney who kept his books by use of the cash receipts and disbursements method, was entitled at the date of his death to a fee for services rendered in a case not completed at the time of his death, which fee was valued in his estate at $1,000, and to accrued bond interest, which was valued in his estate at $500. In all, $1,500 was included in his gross estate in respect of income described in section 691(a)(1). There were deducted as claims against his estate $150 for business expenses for which his estate was liable and $50 for taxes accrued on certain property which he owned. In all, $200 was deducted for claims which represent amounts described in section 691(b) which are allowable as deductions to his estate or to the beneficiaries of his estate. His gross estate was $185,000 and, considering deductions of $15,000 and an exemption of $60,000, his taxable estate amounted to $110,000. The estate tax on this amount is $23,700 from which is subtracted a $75 credit for State death taxes leaving an estate tax liability of $23,625. In the year following the closing of X's estate, the fee in the amount of $1,200 was collected by X's son, who was the sole beneficiary of the estate. This amount was included under section 691(a)(1)(C) in the son's gross income. The son may deduct, in computing his taxable income for such year, $260 on account of the estate tax attributable to such income,

computed as follows:

(1) (i) Value of income described in section 691(a)(1) included in computing gross estate	$1,500
(ii) Deductions in computing gross estate for claims representing deductions described in section 691(b)	200
(iii) Net value of items described in section 691(a)(1)	1,300
(2) (i) Estate tax	23,625
(ii) Less: Estate tax computed without including $1,300 (item (1)(iii)) in gross estate	23,235
(iii) Portion of estate tax attributable to net value of items described in section 691(a)(1)	390
(3) (i) Value in gross estate of items described in section 691(a)(1) received in taxable year (fee)	1,000
(ii) Value in gross estate of all income items described in section 691(a)(1) (item (1)(i))	1,500
(iii) Part of estate tax deductible on account of receipt of $1,200 fee (1,000/1,500 of $390)	260

Although $1,200 was later collected as the fee, only the $1,000 actually included in the gross estate is used in the above computations. However, to avoid distortion, section 691(c) provides that if the value included in the gross estate is greater than the amount finally collected, only the amount collected shall be used in the above computations. Thus, if the amount collected as the fee were only $500, the estate tax deductible on the receipt of such amount would be 500/1,500 of $390, or $130. With respect to taxable years ending before January 1, 1964, see paragraph (d)(3) of § 1.421-5 for a similar example involving a restricted stock option. With respect to taxable years ending after December 31, 1963, see paragraph (c)(3) of § 1.421-8 for a similar example involving a stock option subject to the provisions of part II of subchapter D.

Example 2. Assume that in example 1 the fee valued at $1,000 had been earned by prior decedent Y and had been inherited by X who died before collecting it. With regard to the son, the fee would be considered income in respect of a prior decedent. Assume further that the fee was valued at $1,000 in Y's estate, that the net value in Y's estate of items described in section 691 (a)(1) was $5,000 and that the estate tax imposed on Y's estate attributable to such net value was $550. In such case, the portion of such estate tax attributable to the fee would be 1,000/5,000 of $550, or $110. When the son collects the $1,200 fee, he will receive for the same taxable year a deduction of $110 with respect to the estate tax imposed on the estate of prior decedent Y as well as the deduction of $260 (as computed in example 1) with respect to the estate tax imposed on the estate of decedent X.

[T.D. 6500, 25 FR 11814, Nov. 26, 1960, as amended by T.D. 6887, 31 FR 8812, June 24, 1966]

§ 1.691(c)-2 Estates and trusts.

(a) In the case of an estate or trust, the deduction prescribed in section 691(c) is determined in the same manner as described in § 1.691(c)-1, with the following exceptions:

(1) If any amount properly paid, credited, or required to be distributed by an estate or trust to a beneficiary consists of income in respect of a decedent received by the estate or trust during the taxable year:

(i) Such income shall be excluded in determining the income in respect of the decedent with respect to which the estate or trust is entitled to a deduction under section 691(c), and

(ii) Such income shall be considered income in respect of a decedent to such beneficiary for purposes of allowing the deduction under section 691(c) to such beneficiary.

(2) For determination of the amount of income in respect of a decedent received by the beneficiary, see sections 652 and 662, and §§ 1.652(b)-2 and 1.662(b)-2. However, for this purpose, distributable net income as defined in section 643 (a) and the regulations thereunder shall be computed without taking into account the estate tax deduction provided in section 691(c) and this section. Distributable net income as modified under the preceding sentence shall be applied for other relevant purposes of subchapter J, chapter 1 of the Code, such as the deduction provided by section 651 or 661, or subpart D, part I of subchapter J, relating to excess distributions by trusts.

(3) The rule stated in subparagraph (1) of this paragraph does not apply to income in respect of a decedent which is properly allocable to corpus by the fiduciary during the taxable year but which is distributed to a beneficiary in a subsequent year. The deduction provided by section 691(c) in such a case is allowable only to the estate or trust. If any amount properly paid, credited, or required to be distributed by a trust qualifies as a distribution under section 666, the fact that a portion thereof constitutes income in respect of a decedent shall be disregarded for the purposes of determining the deduction of the trust and of the beneficiaries under section 691(c) since the deduction for estate taxes was taken into consideration in computing the undistributed net income of the trust for the preceding taxable year.

(b) This section shall apply only to amounts properly paid, credited, or required to be distributed in taxable years of an estate or trust beginning after December 31, 1953, and ending after August 16, 1954, except as otherwise provided in paragraph (c) of this section.

(c) In the case of an estate or trust heretofore taxable under the provisions of the Internal Revenue Code of 1939, amounts paid, credited, or to be distributed during its first taxable year subject to the Internal Revenue Code of 1954 which would have been treated as paid, credited, or to be distributed on the last day of the preceding taxable year if the Internal Revenue Code of 1939 were still applicable shall not be subject to the provisions of section 691(c)(1)(B) or this section. See section 683 and the regulations thereunder.

(d) The provisions of this section may be illustrated by the following example, in which it is assumed that the estate and the beneficiary make their returns on the calendar year basis:

> *Example.* (1) The fiduciary of an estate receives taxable interest of $5,500 and income in respect of a decedent of $4,500 during the taxable year. Neither the will of the decedent nor local law requires the allocation to corpus of income in respect of a decedent. The estate tax attributable to the income in respect of a decedent is $1,500. In his discretion, the fiduciary distributes $2,000 (falling within sections

661(a) and 662(a)) to a beneficiary during that year. On these facts the fiduciary and beneficiary are respectively entitled to estate tax deductions of $1,200 and $300, computed as follows:
(2) Distributable net income computed under section 643(a) without regard to the estate tax deduction under section 691(c) is $10,000, computed as follows:

Taxable interest	$5,500
Income in respect of a decedent	4,500
Total	10,000

(3) Inasmuch as the distributable net income of $10,000 exceeds the amount of $2,000 distributed to the beneficiary, the deduction allowable to the estate under section 661(a) and the amount taxable to the beneficiary under section 662(a) is $2,000.
(4) The character of the amounts distributed to the beneficiary under section 662 (b) is shown in the following table:

	Taxable interest	Income in respect of a decedent	Total
Distributable net income	$5,500	$4,500	$10,000
Amount deemed distributed under section 662(b)	1,100	900	2,000

(5) Accordingly, the beneficiary will be entitled to an estate tax deduction of $300 (900/4,500 × $1,500) and the estate will be entitled to an estate tax deduction of $1,200 (3,600/4,500 × $1,500).
(6) The taxable income of the estate is $6,200, computed as follows:

Gross income		$10,000
Less:		
Distributions to the beneficiary	$2,000	
Estate tax deduction under section 691(c)	1,200	
Personal exemption	600	
		3,800
Taxable income		6,200

§ 1.691(d)-1 Amounts received by surviving annuitant under joint and survivor annuity contract.

(a) ***In general.*** Under section 691(d), annuity payments received by a surviving annuitant under a joint and survivor annuity contract (to the extent indicated in paragraph (b) of this section) are treated as income in respect of a decedent under section 691(a) for the purpose of allowing the deduction for estate tax provided for in section 691(c)(1)(A). This section applies only if the deceased annuitant died after December 31, 1953, and after the annuity starting date as defined in section 72(c)(4).

(b) ***Special value for surviving annuitant's payments.*** Section 691(d) provides a special value for the surviving annuitant's payments to determine the amount of the estate tax deduction provided for in section 691(c)(1)(A). This special value is determined by multiplying:

(1) The excess of the value of the annuity at the date of death of the deceased annuitant over the total amount excludable from the gross income of the surviving annuitant under section 72 during his life expectancy period (see paragraph (d)(1)(i) of this section)

by

(2) A fraction consisting of the value of the annuity for estate tax purposes over the value of the annuity at the date of death of the deceased annuitant.

This special value is used for the purpose of determining the net value for estate tax purposes (see section 691(c)(2)(B) and paragraph (a)(1) of § 1.691(c)-1) and for the purpose of determining the portion of estate tax attributable to the survivor's annuity (see paragraph (a) of § 1.691(c)-1).

(c) ***Amount of deduction.*** The portion of estate tax attributable to the survivor's annuity (see paragraph (a) of § 1.691(c)-1) is allowable as a deduction to the surviving annuitant over his life expectancy period. If the surviving annuitant continues to receive annuity payments beyond this period, there is no further deduction under section 691(d). If the surviving annuitant dies before expiration of such period, there is no compensating adjustment for the unused deduction.

(d) ***Definitions.***

(1) For purposes of section 691(d) and this section:

(i) The term *life expectancy period* means the period beginning with the first day of the first period for which an amount is received by the surviving annuitant under the contract and ending with the close of the taxable year with or in which falls the termination of the life expectancy of the surviving annuitant.

(ii) The life expectancy of the surviving annuitant shall be determined as of the date of death of the deceased annuitant, with reference to actuarial Table I set forth in § 1.72-9 (but without making any adjustment under paragraph (a)(2) of § 1.72-5).

(iii) The value of the annuity at the date of death of the deceased annuitant shall be the entire value of the survivor's annuity determined by reference to the principles set forth in section 2031 and the regulations thereunder, relating to the valuation of annuities for estate tax purposes.

(iv) The value of the annuity for estate tax purposes shall be that portion of the value determined under subdivision (iii) of this subparagraph which was includible in the deceased annuitant's gross estate.

(2) The determination of the “life expectancy period” of the survivor for purposes of section 691(d) may be illustrated by the following example:

Example. H and W file their income tax returns on the calendar year basis. H dies on July 15, 1955, on which date W is 70 years of age. On August 1, 1955, W receives a monthly payment under a joint and survivor annuity contract. W's life expectancy determined as of the date of H's death is 15 years as determined from Table I in § 1.72-9; thus her life expectancy ends on July 14, 1970. Under the provisions of section 691(d), her life expectancy period begins as of July 1, 1955, and ends as of December 31, 1970, thus giving her a life expectancy period of $15^{1}/_{2}$ years.

(e) ***Examples.*** The application of section 691(d) and this section may be illustrated by the following examples:

Example 1. (1) H and W, husband and wife, purchased a joint and survivor annuity contract for $203,800 providing for monthly payments of $1,000 starting January 28, 1954, and continuing for their joint lives and for the remaining life of the survivor. H contributed $152,850 and W contributed $50,950 to the cost of the annuity. As of the annuity starting date, January 1, 1954, H's age at his nearest birthday was 70 and W's age at her nearest birthday was 67. H dies on January 1, 1957, and beginning on January 28, 1957, W receives her monthly payments of $1,000. The value of the annuity at the date of H's death is $159,000 (see paragraph (d)(1)(iii) of this section), and the value of the annuity for estate tax purposes (see paragraph (d)(1)(iv) of this section) is $119,250 (152,850/203,800 of $159,000). As of the date of H's death, W's age is 70 and her life expectancy period is 15 years (see paragraph (d) of this section for method of computation). Both H and W reported income by use of the cash receipts and disbursements method and filed income tax returns on the calendar year basis.
(2) The following computations illustrate the application of section 72 in determining the excludable portions of the annuity payments to W during her life expectancy period:

Amount of annuity payments per year (12 × $1,000)	$12,000
Life expectancy of H and W as of the annuity starting date (see section 72(c)(3)(A) and Table II of § 1.72-9 (male, age 70; female, age 67))	19.7
Expected return as of the annuity starting date, January 1, 1954 ($12,000 × 19.7 as determined under section 72(c)(3)(A) and paragraph (b) of § 1.72-5)	$236,400
Investment in the contract as of the annuity starting date, Jan. 1, 1954 (see section 72(c)(1) and paragraph (a) of § 1.72-6)	$203,800
Exclusion ratio (203,800/236,400 as determined under section 72(b) and § 1.72-4) (percent)	86.2
Exclusion per year under section 72 ($12,000 × 86.2 percent)	$10,344
Excludable during W's life expectancy period ($10,344 × 15)	$155,160

(3) For the purpose of computing the deduction for estate tax under section 691(c), the value for estate tax purposes of the amounts includible in W's gross income and considered income in respect of a decedent by virtue of section 691(d)(1) is $2,880. This amount is arrived at in accordance with the formula

contained in section 691(d)(2), as follows:

Value of annuity at the date of H's death	$159,000
Total amount excludable from W's gross income under section 72 during W's life expectancy period (see subparagraph (2) of this example)	$155,160
Excess	$3,840
Ratio which value of annuity for estate tax purposes bears to value of annuity at date of H's death (119,250/159,000) (percent)	75
Value for estate tax purposes (75 percent of $3,840)	$2,880

This amount ($2,880) is included in the items of income under section 691(a)(1) for the purpose of determining the estate tax attributable to each item under section 691(c)(1)(A). The estate tax determined to be attributable to the item of $2,880 is then allowed as a deduction to W over her 15-year life expectancy period (see example 2 of this paragraph).

Example 2. Assume, in addition to the facts contained in example 1 of this paragraph, that H was an attorney and was entitled at the date of his death to a fee for services rendered in a case not completed at the time of his death, which fee was valued at $1,000, and to accrued bond interest, which was valued at $500. Taking into consideration the annuity payments of example 1, valued at $2,880, a total of $4,380 was included in his gross estate in respect of income described in section 691(a)(1). There were deducted as claims against his estate $280 for business expenses for which his estate was liable and $100 for taxes accrued on certain property which he owned. In all, $380 was deducted for claims which represent amounts described in section 691(b) which are allowable as deductions to his estate or to the beneficiaries of his estate. His gross estate was $404,250 and considering deductions of $15,000, a marital deduction of $119,250 (assuming the annuity to be the only qualifying gift) and an exemption of $60,000, his taxable estate amounted to $210,000. The estate tax on this amount is $53,700 from which is subtracted a $175 credit for State death taxes, leaving an estate tax liability of $53,525. W may deduct, in computing her taxable income during each year of her 15-year life expectancy period, $14.73 on account of the estate tax attributable to the value for estate tax purposes of that portion of the annuity payments considered income in respect of a decedent, computed as follows:

(1)(i) Value of income described in section 691(a)(1) included in computing gross estate	$4,380.00
(ii) Deductions in computing gross estate for claims representing deductions described in section 691(b)	380.00
(iii) Net value of items described in section 691(a) (1)	4,000.00

(2)(i) Estate tax	53,525.00
(ii) Less: estate tax computed without including $4,000 (item (1) (iii)) in gross estate and by reducing marital deduction by $2,880 (portion of item (1)(iii) allowed as a marital deduction)	53,189.00
(iii) Portion of estate tax attributable to net value of income items	336.00
(3)(i) Value in gross estate of income attributable to annuity payments	2,880.00
(ii) Value in gross estate of all income items described in section 691(a)(1) (item (1)(i))	4,380.00
(iii) Part of estate tax attributable to annuity income (2,880/4,380 of $336)	220.93
(iv) Deduction each year on account of estate tax attributable to annuity income ($220.93 ÷ 15 (life expectancy period))	14.73

§ 1.691(e)-1 Installment obligations transmitted at death when prior law applied.

(a) *In general* —

(1) ***Application of prior law.*** Under section 44(d) of the Internal Revenue Code of 1939 and corresponding provisions of prior law, gains and losses on account of the transmission of installment obligations at the death of a holder of such obligations were required to be reported in the return of the decedent for the year of his death. However, an exception to this rule was provided if there was filed with the Commissioner a bond assuring the return as income of any payment in satisfaction of these obligations in the same proportion as would have been returnable as income by the decedent had he lived and received such payments. Obligations in respect of which such bond was filed are referred to in this section as “obligations assured by bond”.

(2) ***Application of present law.*** Section 691(a)(4) of the Internal Revenue Code of 1954 (effective for taxable years beginning after December 31, 1953, and ending after August 16, 1954) in effect makes the exception which under prior law applied to obligations assured by bond the general rule for obligations transmitted at death, but contains no requirement for a bond. Section 691(e)(1) provides that if the holder of the installment obligation makes a proper election, the provisions of section 691(a)(4) shall apply in the case of obligations assured by bond. Section 691(e)(1) further provides that the estate tax deduction provided by section 691(c)(1) is not allowable for any amount included in gross income by reason of filing such an election.

(b) *Manner and scope of election* —

(1) ***In general.*** The election to have obligations assured by bond treated as obligations to which section 691(a)(4) applies shall be made by the filing of a statement with respect to each bond to be released, containing the following information:

(i) The name and address of the decedent from whom the obligations assured by bond were transmitted, the date of his death, and the internal revenue district in which the last income tax return of the decedent was filed.

(ii) A schedule of all obligations assured by the bond on which is listed—

(*a*) The name and address of the obligors, face amount, date of maturity, and manner of payment of each obligation,

(*b*) The name, identifying number (provided under section 6109 and the regulations thereunder), and address of each person holding the obligations, and

(*c*) The name, identifying number, and address, of each person who at the time of the election possesses an interest in each obligation, and a description of such interest.

(iii) The total amount of income in respect of the obligations which would have been reportable as income by the decedent if he had lived and received such payment.

(iv) The amount of income referred to in subdivision (iii) of this subparagraph which has previously been included in gross income.

(v) An unqualified statement, signed by all persons holding the obligations, that they elect to have the provisions of section 691(a)(4) apply to such obligations and that such election shall be binding upon them, all current beneficiaries, and any person to whom the obligations may be transmitted by gift, bequest, or inheritance.

(vi) A declaration that the election is made under the penalties of perjury.

(2) ***Filing of statement.*** The statement with respect to each bond to be released shall be filed in duplicate with the district director of internal revenue for the district in which the bond is maintained. The statement shall be filed not later than the time prescribed for filing the return for the first taxable year (including any extension of time for such filing) to which the election applies.

(3) ***Effect of election.*** The election referred to in subparagraph (1) of this paragraph shall be irrevocable. Once an election is made with respect to an obligation assured by bond, it shall apply to all payments made in satisfaction of such obligation which were received during the first taxable year to which the election applies and to all such payments received during each taxable year thereafter, whether the recipient is the person who made the election, a current beneficiary, or a person to whom the obligation may be transmitted by gift, bequest, or inheritance. Therefore, all payments received to which the election applies shall be treated as payments made on installment obligations to which section 691(a)(4) applies. However, the estate tax deduction provided by section 691(c) is not allowable for any such payment. The application of this subparagraph may be illustrated by the following example:

Example. A, the holder of an installment obligation, died in 1952. The installment obligation was transmitted at A's death to B who filed a bond on Form 1132 pursuant to paragraph (c) of § 39.44-5 of Regulations 118 (26 CFR part 39, 1939 ed.) for the necessary amount. On January 1, 1965, B, a calendar year taxpayer, filed an election under section 691(e) to treat the obligation assured by bond as an obligation to which section 691(a)(4) applies, and B's bond was released for 1964 and subsequent taxable years. B died on June 1, 1965, and the obligation was bequeathed to C. On January 1, 1966, C received an installment payment on the obligation which had been assured by the bond. Because B filed an election with respect to the obligation assured by bond, C is required to treat the proper proportion of the January 1, 1966, payment and all subsequent payments made in satisfaction of this obligation as income in respect of a decedent. However, no estate tax deduction is allowable to C under section 691(c)(1) for any estate tax attributable to the inclusion of the value of such obligation in the estate of either A or B.

(c) ***Release of bond.*** If an election according to the provisions of paragraph (b) of this section is filed, the liability under any bond filed under section 44(d) of the 1939 Code (or the corresponding provisions of prior law) shall be released with respect to each taxable year to which such election applies. However, the liability under any such bond for an earlier taxable year to which the election does not apply shall not be

released until the district director of internal revenue for the district in which the bond is maintained is assured that the proper portion of each installment payment received in such taxable year has been reported and the tax thereon paid.

[T.D. 6808, 30 FR 3436, Mar. 16, 1965]

§ 1.691(f)-1 Cross reference.

See section 753 and the regulations thereunder for application of section 691 to income in respect of a deceased partner.

[T.D. 6808, 30 FR 3436, Mar. 16, 1965]

§ 1.692-1 Abatement of income taxes of certain members of the Armed Forces of the United States upon death.

(a)

(1) This section applies if:

(i) An individual dies while in active service as a member of the Armed Forces of the United States, and

(ii) His death occurs while he is serving in a combat zone (as determined under section 112), or at any place as a result of wounds, disease, or injury incurred while he was serving in a combat zone.

(2) If an individuals dies as described in paragraph (a)(1), the following liabilities for tax, under subtitle A of the Internal Revenue Code of 1954 or under chapter 1 of the Internal Revenue Code of 1939, are canceled:

(i) The libaility of the deceased individual, for the last taxable year, ending on the date of his death, and for any prior taxable year ending on or after the first day he served in a combat zone in active service as a member of the U.S. Armed Forces after June 24, 1950, and

(ii) The liability of any other person to the extent the liability is attributable to an amount received after the individual's death (including income in respect of a decedent under section 691) which would have been includible in the individual's gross income for his taxable year in which the date of his death falls (determined as if he had survived).

If the tax (including interest, additions to the tax, and additional amounts) is assessed, the assessment will be abated. If the amount of the tax is collected (regardless of the date of collection), the amount so collected will be credited or refunded as an overpayment.

(3) If an individual dies as described in paragraph (a)(1), there will not be assessed any amount of tax of the indvidual for taxable years preceding the years specified in paragraph (a)(2), under subtitle A of the Internal Revenue Code of 1954, chapter 1 of the Internal Revenue Code of 1939, or corresponding provisions of prior revenue laws, remaining unpaid as of the date of death. If any such unpaid tax (including interest, additions to the tax, and additional amounts) has been assessed, the assessments will be abated. If the amount of any such unpaid tax is collected after the date of death, the amount so collected will be credited or refunded as an overpayment.

(4) As to what constitutes active service as a member of the Armed Forces, service in a combat zone, and wounds, disease, or injury incurred while serving in a combat zone, see section 112. As to who are members of the Armed Forces, see section 7701(a)(15). As to the period of time within which any claim for refund must be filed, see sections 6511(a) and 7508(a)(1)(E).

(b) If such an individual and his spouse have for any such year filed a joint return, the tax abated, credited, or refunded pursuant to the provisions of section 692 for such year shall be an amount equal to that portion of the joint tax liability which is the same percentage of such joint tax liability as a tax computed upon the separate income of such individual is of the sum of the taxes computed upon the separate income of such individual and his spouse, but with respect to taxable years ending before June 24, 1950, and with respect to taxable years ending before the first day such individual served in a combat zone, as determined under section 112, the amount so abated, credited, or refunded shall not exceed the amount unpaid at the date of death. For such purpose, the separate tax of each spouse:

(1) For taxable years beginning after December 31, 1953, and ending after August 16, 1954, shall be the tax computed under subtitle A of the Internal Revenue Code of 1954 before the application of sections 31, 32, 6401(b), and 6402, but after the application of section 33, as if such spouse were required to make a separate income tax return; and

(2) For taxable years beginning before January 1, 1954, and for taxable years beginning after December 31, 1953, and ending before August 17, 1954, shall be the tax computed under chapter 1 of the Internal Revenue Code of 1939 before the application of sections 32, 35, and 322(a), but after the application of section 31, as if such spouse were required to make a separate income tax return.

(c) If such an individual and his spouse filed a joint declaration of estimated tax for the taxable year ending with the date of his death, the estimated tax paid pursuant to such declaration may be treated as the estimated tax of either such individual or his spouse, or may be divided between them, in such manner as his legal representative and such spouse may agree. Should they agree to treat such estimated tax, or any portion thereof, as the estimated tax of such individual, the estimated tax so paid shall be credited or refunded as an overpayment for the taxable year ending with the date of his death.

(d) For the purpose of determining the tax which is unpaid at the date of death, amounts deducted and withheld under chapter 24, subtitle C of the Internal Revenue Code of 1954, or under subchapter D, chapter 9 of the Internal Revenue Code of 1939 (relating to income tax withheld at source on wages), constitute payment of tax imposed under subtitle A of the Internal Revenue Code of 1954 or under chapter 1 of the Internal Revenue Code of 1939, as the case may be.

(e) This section shall have no application whatsoever with respect to the liability of an individual as a transferee of property of a taxpayer where such liability relates to the tax imposed upon the taxpayer by subtitle A of the Internal Revenue Code of 1954 or by chapter 1 of the Internal Revenue Code of 1939.

[T.D. 6500, 25 FR 11814, Nov. 26, 1960, as amended by T.D. 7543, 43 FR 19392, May 5, 1978]

PARTNERS AND PARTNERSHIPS

Determination of Tax Liability

§ 1.701-1 Partners, not partnership, subject to tax.

Partners are liable for income tax only in their separate capacities. Partnerships as such are not subject to the income tax imposed by subtitle A but are required to make returns of income under the provisions of section 6031 and the regulations thereunder. For definition of the terms “partner” and “partnership”, see sections 761 and 7701(a)(2), and the regulations thereunder. For provisions relating to the election of certain partnerships to be taxed as domestic corporations, see section 1361 and the regulations thereunder.

§ 1.701-2 Anti-abuse rule.

(a) ***Intent of subchapter K.*** Subchapter K is intended to permit taxpayers to conduct joint business (including investment) activities through a flexible economic arrangement without incurring an entity-level tax. Implicit in the intent of subchapter K are the following requirements—

(1) The partnership must be bona fide and each partnership transaction or series of related transactions (individually or collectively, the transaction) must be entered into for a substantial business purpose.

(2) The form of each partnership transaction must be respected under substance over form principles.

(3) Except as otherwise provided in this paragraph (a)(3), the tax consequences under subchapter K to each partner of partnership operations and of transactions between the partner and the partnership must accurately reflect the partners' economic agreement and clearly reflect the partner's income (collectively, *proper reflection of income*). However, certain provisions of subchapter K and the regulations thereunder were adopted to promote administrative convenience and other policy objectives, with the recognition that the application of those provisions to a transaction could, in some circumstances, produce tax results that do not properly reflect income. Thus, the proper reflection of income requirement of this paragraph (a)(3) is treated as satisfied with respect to a transaction that satisfies paragraphs (a)(1) and (2) of this section to the extent that the application of such a provision to the transaction and the ultimate tax results, taking into account all the relevant facts and circumstances, are clearly contemplated by that provision. See, for example, paragraph (d) *Example 6* of this section (relating to the value-equals-basis rule in § 1.704-1(b)(2)(iii)(*c*)), paragraph (d) *Example 9* of this section (relating to the election under section 754 to adjust basis in partnership property), and paragraph (d) *Examples 10 and 11* of this section (relating to the basis in property distributed by a partnership under section 732). See also, for example, §§ 1.704-3(e)(1) and 1.752-2(e)(4) (providing certain de minimis exceptions).

(b) ***Application of subchapter K rules.*** The provisions of subchapter K and the regulations thereunder must be applied in a manner that is consistent with the intent of subchapter K as set forth in paragraph (a) of this section (*intent of subchapter K*). Accordingly, if a partnership is formed or availed of in connection with a transaction a principal purpose of which is to reduce substantially the present value of the partners' aggregate federal tax liability in a manner that is inconsistent with the intent of subchapter K, the Commissioner can recast the transaction for federal tax purposes, as appropriate to achieve tax results that are consistent with the intent of subchapter K, in light of the applicable statutory and regulatory provisions and the pertinent facts and circumstances. Thus, even though the transaction may fall within the literal words of a particular statutory or regulatory provision, the Commissioner can determine, based on the particular facts and circumstances, that to achieve tax results that are consistent with the intent of subchapter K—

(1) The purported partnership should be disregarded in whole or in part, and the partnership's assets and activities should be considered, in whole or in part, to be owned and conducted, respectively, by one or more of its purported partners;

(2) One or more of the purported partners of the partnership should not be treated as a partner;

(3) The methods of accounting used by the partnership or a partner should be adjusted to reflect clearly the partnership's or the partner's income;

(4) The partnership's items of income, gain, loss, deduction, or credit should be reallocated; or

(5) The claimed tax treatment should otherwise be adjusted or modified.

(c) ***Facts and circumstances analysis; factors.*** Whether a partnership was formed or availed of with a principal purpose to reduce substantially the present value of the partners' aggregate federal tax liability in a manner inconsistent with the intent of subchapter K is determined based on all of the facts and circumstances, including a comparison of the purported business purpose for a transaction and the claimed tax benefits resulting from the transaction. The factors set forth below may be indicative, but do not necessarily establish, that a partnership was used in such a manner. These factors are illustrative only, and therefore may not be the only factors taken into account in making the determination under this section. Moreover, the weight given to any factor (whether specified in this paragraph or otherwise) depends on all the facts and circumstances. The presence or absence of any factor described in this paragraph does not create a presumption that a partnership was (or was not) used in such a manner. Factors include:

(1) The present value of the partners' aggregate federal tax liability is substantially less than had the partners owned the partnership's assets and conducted the partnership's activities directly;

(2) The present value of the partners' aggregate federal tax liability is substantially less than would be the case if purportedly separate transactions that are designed to achieve a particular end result are integrated and treated as steps in a single transaction. For example, this analysis may indicate that it was contemplated that a partner who was necessary to achieve the intended tax results and whose interest in the partnership was liquidated or disposed of (in whole or in part) would be a partner only temporarily in order to provide the claimed tax benefits to the remaining partners;

(3) One or more partners who are necessary to achieve the claimed tax results either have a nominal interest in the partnership, are substantially protected from any risk of loss from the partnership's activities (through distribution preferences, indemnity or loss guaranty agreements, or other arrangements), or have little or no participation in the profits from the partnership's activities other than a preferred return that is in the nature of a payment for the use of capital;

(4) Substantially all of the partners (measured by number or interests in the partnership) are related (directly or indirectly) to one another;

(5) Partnership items are allocated in compliance with the literal language of §§ 1.704-1 and 1.704-2 but with results that are inconsistent with the purpose of section 704(b) and those regulations. In this regard, particular scrutiny will be paid to partnerships in which income or gain is specially allocated to one or more partners that may be legally or effectively exempt from federal taxation (for example, a foreign person, an exempt organization, an insolvent taxpayer, or a taxpayer with unused federal tax attributes such as net operating losses, capital losses, or foreign tax credits);

(6) The benefits and burdens of ownership of property nominally contributed to the partnership are in substantial part retained (directly or indirectly) by the contributing partner (or a related party); or

(7) The benefits and burdens of ownership of partnership property are in substantial part shifted (directly or indirectly) to the distributee partner before or after the property is actually distributed to the distributee partner (or a related party).

(d) ***Examples.*** The following examples illustrate the principles of paragraphs (a), (b), and (c) of this section. The examples set forth below do not delineate the boundaries of either permissible or impermissible types of transactions. Further, the addition of any facts or circumstances that are not specifically set forth in an example (or the deletion of any facts or circumstances) may alter the outcome of the transaction described in the example. Unless otherwise indicated, parties to the transactions are not related to one another.

> *Example 1. Choice of entity; avoidance of entity-level tax; use of partnership consistent with the intent of subchapter K.* (i) A and B form limited partnership PRS to conduct a bona fide business. A, the corporate general partner, has a 1% partnership interest. B, the individual limited partner, has a 99% interest. PRS is properly classified as a partnership under §§ 301.7701-2 and 301.7701-3. A and B chose limited partnership form as a means to provide B with limited liability without subjecting the income from the business operations to an entity-level tax.
> (ii) Subchapter K is intended to permit taxpayers to conduct joint business activity through a flexible economic arrangement without incurring an entity-level tax. See paragraph (a) of this section. Although B has retained, indirectly, substantially all of the benefits and burdens of ownership of the money or property B contributed to PRS (see paragraph (c)(6) of this section), the decision to organize and conduct business through PRS under these circumstances is consistent with this intent. In addition, on these facts, the requirements of paragraphs (a)(1), (2), and (3) of this section have been satisfied. The Commissioner therefore cannot invoke paragraph (b) of this section to recast the transaction.

> *Example 2. Choice of entity; avoidance of subchapter S shareholder requirements; use of partnership consistent with the intent of subchapter K.* (i) A and B form partnership PRS to conduct a bona fide business. A is a corporation that has elected to be treated as an S corporation under subchapter S. B is a nonresident alien. PRS is properly classified as a partnership under §§ 301.7701-2 and 301.7701-3. Because section 1361(b) prohibits B from being a shareholder in A, A and B chose partnership form, rather than admit B as a shareholder in A, as a means to retain the benefits of subchapter S treatment for A and its shareholders.
> (ii) Subchapter K is intended to permit taxpayers to conduct joint business activity through a flexible economic arrangement without incurring an entity-level tax. See paragraph (a) of this section. The decision to organize and conduct business through PRS is consistent with this intent. In addition, on these facts, the requirements of paragraphs (a)(1), (2), and (3) of this section have been satisfied. Although it may be argued that the form of the partnership transaction should not be respected because it does not reflect its substance (inasmuch as application of the substance over form doctrine arguably could result in B being treated as a shareholder of A, thereby invalidating A's subchapter S election), the facts indicate otherwise. The shareholders of A are subject to tax on their pro rata shares of A's income (see section 1361 *et seq.*), and B is subject to tax on B's distributive share of partnership income (see sections 871 and 875). Thus, the form in

which this arrangement is cast accurately reflects its substance as a separate partnership and S corporation. The Commissioner therefore cannot invoke paragraph (b) of this section to recast the transaction.

Example 3. Choice of entity; avoidance of more restrictive foreign tax credit limitation; use of partnership consistent with the intent of subchapter K. (i) X, a domestic corporation, and Y, a foreign corporation, form partnership PRS under the laws of foreign Country A to conduct a bona fide joint business. X and Y each owns a 50% interest in PRS. PRS is properly classified as a partnership under §§ 301.7701-2 and 301.7701-3. PRS pays income taxes to Country A. X and Y chose partnership form to enable X to qualify for a direct foreign tax credit under section 901, with look-through treatment under § 1.904-5(h)(1). Conversely, if PRS were a foreign corporation for U.S. tax purposes, X would be entitled only to indirect foreign tax credits under section 902 with respect to dividend distributions from PRS. The look-through rules, however, would not apply, and pursuant to section 904(d)(1)(E) and § 1.904-4(g), the dividends and associated taxes would be subject to a separate foreign tax credit limitation for dividends from PRS, a noncontrolled section 902 corporation.
(ii) Subchapter K is intended to permit taxpayers to conduct joint business activity through a flexible economic arrangement without incurring an entity-level tax. See paragraph (a) of this section. The decision to organize and conduct business through PRS in order to take advantage of the look-through rules for foreign tax credit purposes, thereby maximizing X's use of its proper share of foreign taxes paid by PRS, is consistent with this intent. In addition, on these facts, the requirements of paragraphs (a)(1), (2), and (3) of this section have been satisfied. The Commissioner therefore cannot invoke paragraph (b) of this section to recast the transaction.

Example 4. Choice of entity; avoidance of gain recognition under sections 351(e) and 357(c); use of partnership consistent with the intent of subchapter K. (i) X, ABC, and DEF form limited partnership PRS to conduct a bona fide real estate management business. PRS is properly classified as a partnership under §§ 301.7701-2 and 301.7701-3. X, the general partner, is a newly formed corporation that elects to be treated as a real estate investment trust as defined in section 856. X offers its stock to the public and contributes substantially all of the proceeds from the public offering to PRS. ABC and DEF, the limited partners, are existing partnerships with substantial real estate holdings. ABC and DEF contribute all of their real property assets to PRS, subject to liabilities that exceed their respective aggregate bases in the real property contributed, and terminate under section 708(b)(1)(A). In addition, some of the former partners of ABC and DEF each have the right, beginning two years after the formation of PRS, to require the redemption of their limited partnership interests in PRS in exchange for cash or X stock (at X's option) equal to the fair market value of their respective interests in PRS at the time of the redemption. These partners are not compelled, as a legal or practical matter, to exercise their exchange rights at any time. X, ABC, and DEF chose to form a partnership rather than have ABC and DEF invest directly in X to allow ABC and DEF to avoid recognition of gain under sections 351(e) and 357(c). Because

PRS would not be treated as an investment company within the meaning of section 351(e) if PRS were incorporated (so long as it did not elect under section 856), section 721(a) applies to the contribution of the real property to PRS. See section 721(b).
(ii) Subchapter K is intended to permit taxpayers to conduct joint business activity through a flexible economic arrangement without incurring an entity-level tax. See paragraph (a) of this section. The decision to organize and conduct business through PRS, thereby avoiding the tax consequences that would have resulted from contributing the existing partnerships' real estate assets to X (by applying the rules of sections 721, 731, and 752 in lieu of the rules of sections 351(e) and 357(c)), is consistent with this intent. In addition, on these facts, the requirements of paragraphs (a)(1), (2), and (3) of this section have been satisfied. Although it may be argued that the form of the transaction should not be respected because it does not reflect its substance (inasmuch as the present value of the partners' aggregate federal tax liability is substantially less than would be the case if the transaction were integrated and treated as a contribution of the encumbered assets by ABC and DEF directly to X, see paragraph (c)(2) of this section), the facts indicate otherwise. For example, the right of some of the former ABC and DEF partners after two years to exchange their PRS interests for cash or X stock (at X's option) equal to the fair market value of their PRS interest at that time would not require that right to be considered as exercised prior to its actual exercise. Moreover, X may make other real estate investments and other business decisions, including the decision to raise additional capital for those purposes. Thus, although it may be likely that some or all of the partners with the right to do so will, at some point, exercise their exchange rights, and thereby receive either cash or X stock, the form of the transaction as a separate partnership and real estate investment trust is respected under substance over form principles (see paragraph (a)(2) of this section). The Commissioner therefore cannot invoke paragraph (b) of this section to recast the transaction.

Example 5. Special allocations; dividends received deductions; use of partnership consistent with the intent of subchapter K. (i) Corporations X and Y contribute equal amounts to PRS, a bona fide partnership formed to make joint investments. PRS pays $100x for a share of common stock of Z, an unrelated corporation, which has historically paid an annual dividend of $6x. PRS specially allocates the dividend income on the Z stock to X to the extent of the London Inter-Bank Offered Rate (LIBOR) on the record date, applied to X's contribution of $50x, and allocates the remainder of the dividend income to Y. All other items of partnership income and loss are allocated equally between X and Y. The allocations under the partnership agreement have substantial economic effect within the meaning of § 1.704-1(b)(2). In addition to avoiding an entity-level tax, a principal purpose for the formation of the partnership was to invest in the Z common stock and to allocate the dividend income from the stock to provide X with a floating-rate return based on LIBOR, while permitting X and Y to claim the dividends received deduction under section 243 on the dividends allocated to each of them.

(ii) Subchapter K is intended to permit taxpayers to conduct joint business activity through a flexible economic arrangement without incurring an entity-level tax. See paragraph (a) of this section. The decision to organize and conduct business through PRS is consistent with this intent. In addition, on these facts, the requirements of paragraphs (a)(1), (2), and (3) of this section have been satisfied. Section 704(b) and § 1.704-1(b)(2) permit income realized by the partnership to be allocated validly to the partners separate from the partners' respective ownership of the capital to which the allocations relate, provided that the allocations satisfy both the literal requirements of the statute and regulations and the purpose of those provisions (see paragraph (c)(5) of this section). Section 704(e)(2) is not applicable to the facts of this example (otherwise, the allocations would be required to be proportionate to the partners' ownership of contributed capital). The Commissioner therefore cannot invoke paragraph (b) of this section to recast the transaction.

Example 6. Special allocations; nonrecourse financing; low-income housing credit; use of partnership consistent with the intent of subchapter K. (i) A and B, high-bracket taxpayers, and X, a corporation with net operating loss carryforwards, form general partnership PRS to own and operate a building that qualifies for the low-income housing credit provided by section 42. The project is financed with both cash contributions from the partners and nonrecourse indebtedness. The partnership agreement provides for special allocations of income and deductions, including the allocation of all depreciation deductions attributable to the building to A and B equally in a manner that is reasonably consistent with allocations that have substantial economic effect of some other significant partnership item attributable to the building. The section 42 credits are allocated to A and B in accordance with the allocation of depreciation deductions. PRS's allocations comply with all applicable regulations, including the requirements of §§ 1.704-1(b)(2)(ii) (pertaining to economic effect) and 1.704-2(e) (requirements for allocations of nonrecourse deductions). The nonrecourse indebtedness is validly allocated to the partners under the rules of § 1.752-3, thereby increasing the basis of the partners' respective partnership interests. The basis increase created by the nonrecourse indebtedness enables A and B to deduct their distributive share of losses from the partnership (subject to all other applicable limitations under the Internal Revenue Code) against their nonpartnership income and to apply the credits against their tax liability.
(ii) At a time when the depreciation deductions attributable to the building are not treated as nonrecourse deductions under § 1.704-2(c) (because there is no net increase in partnership minimum gain during the year), the special allocation of depreciation deductions to A and B has substantial economic effect because of the value-equals-basis safe harbor contained in § 1.704-1(b)(2)(iii)(*c*) and the fact that A and B would bear the economic burden of any decline in the value of the building (to the extent of the partnership's investment in the building), notwithstanding that A and B believe it is unlikely that the building will decline in value (and, accordingly, they anticipate significant timing benefits through the special allocation). Moreover, in later years, when

the depreciation deductions attributable to the building are treated as nonrecourse deductions under § 1.704-2(c), the special allocation of depreciation deductions to A and B is considered to be consistent with the partners' interests in the partnership under § 1.704-2(e).

(iii) Subchapter K is intended to permit taxpayers to conduct joint business activity through a flexible economic arrangement without incurring an entity-level tax. See paragraph (a) of this section. The decision to organize and conduct business through PRS is consistent with this intent. In addition, on these facts, the requirements of paragraphs (a) (1), (2), and (3) of this section have been satisfied. Section 704(b), § 1.704-1(b)(2), and § 1.704-2(e) allow partnership items of income, gain, loss, deduction, and credit to be allocated validly to the partners separate from the partners' respective ownership of the capital to which the allocations relate, provided that the allocations satisfy both the literal requirements of the statute and regulations and the purpose of those provisions (see paragraph (c)(5) of this section). Moreover, the application of the value-equals-basis safe harbor and the provisions of § 1.704-2(e) with respect to the allocations to A and B, and the tax results of the application of those provisions, taking into account all the facts and circumstances, are clearly contemplated. Accordingly, even if the allocations would not otherwise be considered to satisfy the proper reflection of income standard in paragraph (a)(3) of this section, that requirement will be treated as satisfied under these facts. Thus, even though the partners' aggregate federal tax liability may be substantially less than had the partners owned the partnership's assets directly (due to X's inability to use its allocable share of the partnership's losses and credits) (see paragraph (c)(1) of this section), the transaction is not inconsistent with the intent of subchapter K. The Commissioner therefore cannot invoke paragraph (b) of this section to recast the transaction.

Example 7. Partner with nominal interest; temporary partner; use of partnership not consistent with the intent of subchapter K. (i) Pursuant to a plan a principal purpose of which is to generate artificial losses and thereby shelter from federal taxation a substantial amount of income, X (a foreign corporation), Y (a domestic corporation), and Z (a promoter) form partnership PRS by contributing $9,000*x,* $990*x,* and $10*x,* respectively, for proportionate interests (90.0%, 9.9%, and 0.1%, respectively) in the capital and profits of PRS. PRS purchases offshore equipment for $10,000*x* and validly leases the equipment offshore for a term representing most of its projected useful life. Shortly thereafter, PRS sells its rights to receive income under the lease to a third party for $9,000*x,* and allocates the resulting $9,000*x* of income $8,100*x* to X, $891*x* to Y, and $9*x* to Z. PRS thereafter makes a distribution of $9,000*x* to X in complete liquidation of its interest. Under § 1.704-1(b)(2)(iv)(*f*), PRS restates the partners' capital accounts immediately before making the liquidating distribution to X to reflect its assets consisting of the offshore equipment worth $1,000*x* and $9,000*x* in cash. Thus, because the capital accounts immediately before the distribution reflect assets of $19,000*x* (that is, the initial capital contributions of $10,000*x* plus the $9,000*x* of income realized from the sale of the lease), PRS allocates a $9,000*x* book loss among the partners (for capital account purposes only), resulting in restated capital accounts for X, Y, and

Z of $9,000*x*, $990*x*, and $10*x*, respectively. Thereafter, PRS purchases real property by borrowing the $8,000*x* purchase price on a recourse basis, which increases Y's and Z's bases in their respective partnership interests from $1,881*x* and $19*x*, to $9,801*x* and $99*x*, respectively (reflecting Y's and Z's adjusted interests in the partnership of 99% and 1%, respectively). PRS subsequently sells the offshore equipment, subject to the lease, for $1,000*x* and allocates the $9,000*x* tax loss $8,910*x* to Y and $90*x* to Z. Y's and Z's bases in their partnership interests are therefore reduced to $891*x* and $9*x*, respectively.
(ii) On these facts, any purported business purpose for the transaction is insignificant in comparison to the tax benefits that would result if the transaction were respected for federal tax purposes (see paragraph (c) of this section). Accordingly, the transaction lacks a substantial business purpose (see paragraph (a)(1) of this section). In addition, factors (1), (2), (3), and (5) of paragraph (c) of this section indicate that PRS was used with a principal purpose to reduce substantially the partners' tax liability in a manner inconsistent with the intent of subchapter K. On these facts, PRS is not bona fide (see paragraph (a)(1) of this section), and the transaction is not respected under applicable substance over form principles (see paragraph (a)(2) of this section) and does not properly reflect the income of Y (see paragraph (a)(3) of this section). Thus, PRS has been formed and availed of with a principal purpose of reducing substantially the present value of the partners' aggregate federal tax liability in a manner inconsistent with the intent of subchapter K. Therefore (in addition to possibly challenging the transaction under judicial principles or the validity of the allocations under § 1.704-1(b)(2) (see paragraph (h) of this section)), the Commissioner can recast the transaction as appropriate under paragraph (b) of this section.

Example 8. Plan to duplicate losses through absence of section 754 election; use of partnership not consistent with the intent of subchapter K. (i) A owns land with a basis of $100*x* and a fair market value of $60*x*. A would like to sell the land to B. A and B devise a plan a principal purpose of which is to permit the duplication, for a substantial period of time, of the tax benefit of A's built-in loss in the land. To effect this plan, A, C (A's brother), and W (C's wife) form partnership PRS, to which A contributes the land, and C and W each contribute $30*x*. All partnership items are shared in proportion to the partners' respective contributions to PRS. PRS invests the cash in an investment asset (that is not a marketable security within the meaning of section 731(c)). PRS also leases the land to B under a three-year lease pursuant to which B has the option to purchase the land from PRS upon the expiration of the lease for an amount equal to its fair market value at that time. All lease proceeds received are immediately distributed to the partners. In year 3, at a time when the values of the partnership's assets have not materially changed, PRS agrees with A to liquidate A's interest in exchange for the investment asset held by PRS. Under section 732(b), A's basis in the asset distributed equals $100*x*, A's basis in A's partnership interest immediately before the distribution. Shortly thereafter, A sells the investment asset to X, an unrelated party, recognizing a $40*x* loss.

(ii) PRS does not make an election under section 754. Accordingly, PRS's basis in the land contributed by A remains $100*x*. At the end of year 3, pursuant to the lease option, PRS sells the land to B for $60*x* (its fair market value). Thus, PRS recognizes a $40*x* loss on the sale, which is allocated equally between C and W. C's and W's bases in their partnership interests are reduced to $10*x* each pursuant to section 705. Their respective interests are worth $30*x* each. Thus, upon liquidation of PRS (or their interests therein), each of C and W will recognize $20*x* of gain. However, PRS's continued existence defers recognition of that gain indefinitely. Thus, if this arrangement is respected, C and W duplicate for their benefit A's built-in loss in the land prior to its contribution to PRS.

(iii) On these facts, any purported business purpose for the transaction is insignificant in comparison to the tax benefits that would result if the transaction were respected for federal tax purposes (see paragraph (c) of this section). Accordingly, the transaction lacks a substantial business purpose (see paragraph (a)(1) of this section). In addition, factors (1), (2), and (4) of paragraph (c) of this section indicate that PRS was used with a principal purpose to reduce substantially the partners' tax liability in a manner inconsistent with the intent of subchapter K. On these facts, PRS is not bona fide (see paragraph (a)(1) of this section), and the transaction is not respected under applicable substance over form principles (see paragraph (a)(2) of this section). Further, the tax consequences to the partners do not properly reflect the partners' income; and Congress did not contemplate application of section 754 to partnerships such as PRS, which was formed for a principal purpose of producing a double tax benefit from a single economic loss (see paragraph (a)(3) of this section). Thus, PRS has been formed and availed of with a principal purpose of reducing substantially the present value of the partners' aggregate federal tax liability in a manner inconsistent with the intent of subchapter K. Therefore (in addition to possibly challenging the transaction under judicial principles or other statutory authorities, such as the substance over form doctrine or the disguised sale rules under section 707 (see paragraph (h) of this section)), the Commissioner can recast the transaction as appropriate under paragraph (b) of this section.

Example 9. Absence of section 754 election; use of partnership consistent with the intent of subchapter K. (i) PRS is a bona fide partnership formed to engage in investment activities with contributions of cash from each partner. Several years after joining PRS, A, a partner with a capital account balance and basis in its partnership interest of $100*x*, wishes to withdraw from PRS. The partnership agreement entitles A to receive the balance of A's capital account in cash or securities owned by PRS at the time of withdrawal, as mutually agreed to by A and the managing general partner, P. P and A agree to distribute to A $100*x* worth of non-marketable securities (see section 731(c)) in which PRS has an aggregate basis of $20*x*. Upon distribution, A's aggregate basis in the securities is $100*x* under section 732(b). PRS does not make an election to adjust the basis in its remaining assets under section 754. Thus, PRS's basis in its remaining assets is unaffected by the distribution. In contrast, if a section 754 election had been in effect for the year of the distribution, under these facts section 734(b) would have required PRS to adjust the basis in its remaining

assets downward by the amount of the untaxed appreciation in the distributed property, thus reflecting that gain in PRS's retained assets. In selecting the assets to be distributed, A and P had a principal purpose to take advantage of the facts that A's basis in the securities will be determined by reference to A's basis in its partnership interest under section 732(b), and because PRS will not make an election under section 754, the remaining partners of PRS will likely enjoy a federal tax timing advantage (*i.e.*, from the $80*x* of additional basis in its assets that would have been eliminated if the section 754 election had been made) that is inconsistent with proper reflection of income under paragraph (a)(3) of this section.
(ii) Subchapter K is intended to permit taxpayers to conduct joint business activity through a flexible economic arrangement without incurring an entity-level tax. See paragraph (a) of this section. The decision to organize and conduct business through PRS is consistent with this intent. In addition, on these facts, the requirements of paragraphs (a)(1) and (2) of this section have been satisfied. The validity of the tax treatment of this transaction is therefore dependent upon whether the transaction satisfies (or is treated as satisfying) the proper reflection of income standard under paragraph (a)(3) of this section. A's basis in the distributed securities is properly determined under section 732(b). The benefit to the remaining partners is a result of PRS not having made an election under section 754. Subchapter K is generally intended to produce tax consequences that achieve proper reflection of income. However, paragraph (a)(3) of this section provides that if the application of a provision of subchapter K produces tax results that do not properly reflect income, but application of that provision to the transaction and the ultimate tax results, taking into account all the relevant facts and circumstances, are clearly contemplated by that provision (and the transaction satisfies the requirements of paragraphs (a)(1) and (2) of this section), then the application of that provision to the transaction will be treated as satisfying the proper reflection of income standard.

(iii) In general, the adjustments that would be made if an election under section 754 were in effect are necessary to minimize distortions between the partners' bases in their partnership interests and the partnership's basis in its assets following, for example, a distribution to a partner. The electivity of section 754 is intended to provide administrative convenience for bona fide partnerships that are engaged in transactions for a substantial business purpose, by providing those partnerships the option of not adjusting their bases in their remaining assets following a distribution to a partner. Congress clearly recognized that if the section 754 election were not made, basis distortions may result. Taking into account all the facts and circumstances of the transaction, the electivity of section 754 in the context of the distribution from PRS to A, and the ultimate tax consequences that follow from the failure to make the election with respect to the transaction, are clearly contemplated by section 754. Thus, the tax consequences of this transaction will be treated as satisfying the proper reflection of income standard under paragraph (a)(3) of this section. The Commissioner therefore cannot invoke paragraph (b) of this section to recast the transaction.

Example 10. Basis adjustments under section 732; use of partnership consistent with the intent of

subchapter K. (i) A, B, and C are partners in partnership PRS, which has for several years been engaged in substantial bona fide business activities. For valid business reasons, the partners agree that A's interest in PRS, which has a value and basis of $100*x,* will be liquidated with the following assets of PRS: a nondepreciable asset with a value of $60*x* and a basis to PRS of $40*x,* and related equipment with two years of cost recovery remaining and a value and basis to PRS of $40*x.* Neither asset is described in section 751 and the transaction is not described in section 732(d). Under section 732 (b) and (c), A's $100*x* basis in A's partnership interest will be allocated between the nondepreciable asset and the equipment received in the liquidating distribution in proportion to PRS's bases in those assets, or $50*x* to the nondepreciable asset and $50*x* to the equipment. Thus, A will have a $10*x* built-in gain in the nondepreciable asset ($60*x* value less $50*x* basis) and a $10*x* built-in loss in the equipment ($50*x* basis less $40*x* value), which it expects to recover rapidly through cost recovery deductions. In selecting the assets to be distributed to A, the partners had a principal purpose to take advantage of the fact that A's basis in the assets will be determined by reference to A's basis in A's partnership interest, thus, in effect, shifting a portion of A's basis from the nondepreciable asset to the equipment, which in turn would allow A to recover that portion of its basis more rapidly. This shift provides a federal tax timing advantage to A, with no offsetting detriment to B or C.
(ii) Subchapter K is intended to permit taxpayers to conduct joint business activity through a flexible economic arrangement without incurring an entity-level tax. See paragraph (a) of this section. The decision to organize and conduct business through PRS is consistent with this intent. In addition, on these facts, the requirements of paragraphs (a)(1) and (2) of this section have been satisfied. The validity of the tax treatment of this transaction is therefore dependent upon whether the transaction satisfies (or is treated as satisfying) the proper reflection of income standard under paragraph (a)(3) of this section. Subchapter K is generally intended to produce tax consequences that achieve proper reflection of income. However, paragraph (a)(3) of this section provides that if the application of a provision of subchapter K produces tax results that do not properly reflect income, but the application of that provision to the transaction and the ultimate tax results, taking into account all the relevant facts and circumstances, are clearly contemplated by that provision (and the transaction satisfies the requirements of paragraphs (a)(1) and (2) of this section), then the application of that provision to the transaction will be treated as satisfying the proper reflection of income standard.

(iii) A's basis in the assets distributed to it was determined under section 732 (b) and (c). The transaction does not properly reflect A's income due to the basis distortions caused by the distribution and the shifting of basis from a nondepreciable to a depreciable asset. However, the basis rules under section 732, which in some situations can produce tax results that are inconsistent with the proper reflection of income standard (see paragraph (a)(3) of this section), are intended to provide simplifying administrative rules for bona fide partnerships that are engaged in transactions with a substantial business purpose. Taking into account all the facts and circumstances of the transaction, the application of the basis rules under section 732 to the distribution from PRS to A, and the ultimate tax consequences of the application of that provision of subchapter K, are clearly contemplated. Thus, the application of section 732 to this

transaction will be treated as satisfying the proper reflection of income standard under paragraph (a)(3) of this section. The Commissioner therefore cannot invoke paragraph (b) of this section to recast the transaction.

Example 11. Basis adjustments under section 732; plan or arrangement to distort basis allocations artificially; use of partnership not consistent with the intent of subchapter K. (i) Partnership PRS has for several years been engaged in the development and management of commercial real estate projects. X, an unrelated party, desires to acquire undeveloped land owned by PRS, which has a value of $95*x* and a basis of $5*x*. X expects to hold the land indefinitely after its acquisition. Pursuant to a plan a principal purpose of which is to permit X to acquire and hold the land but nevertheless to recover for tax purposes a substantial portion of the purchase price for the land, X contributes $100*x* to PRS for an interest therein. Subsequently (at a time when the value of the partnership's assets have not materially changed), PRS distributes to X in liquidation of its interest in PRS the land and another asset with a value and basis to PRS of $5*x*. The second asset is an insignificant part of the economic transaction but is important to achieve the desired tax results. Under section 732 (b) and (c), X's $100*x* basis in its partnership interest is allocated between the assets distributed to it in proportion to their bases to PRS, or $50*x* each. Thereafter, X plans to sell the second asset for its value of $5*x*, recognizing a loss of $45*x*. In this manner, X will, in effect, recover a substantial portion of the purchase price of the land almost immediately. In selecting the assets to be distributed to X, the partners had a principal purpose to take advantage of the fact that X's basis in the assets will be determined under section 732 (b) and (c), thus, in effect, shifting a portion of X's basis economically allocable to the land that X intends to retain to an inconsequential asset that X intends to dispose of quickly. This shift provides a federal tax timing advantage to X, with no offsetting detriment to any of PRS's other partners.
(ii) Although section 732 recognizes that basis distortions can occur in certain situations, which may produce tax results that do not satisfy the proper reflection of income standard of paragraph (a)(3) of this section, the provision is intended only to provide ancillary, simplifying tax results for bona fide partnership transactions that are engaged in for substantial business purposes. Section 732 is not intended to serve as the basis for plans or arrangements in which inconsequential or immaterial assets are included in the distribution with a principal purpose of obtaining substantially favorable tax results by virtue of the statute's simplifying rules. The transaction does not properly reflect X's income due to the basis distortions caused by the distribution that result in shifting a significant portion of X's basis to this inconsequential asset. Moreover, the proper reflection of income standard contained in paragraph (a)(3) of this section is not treated as satisfied, because, taking into account all the facts and circumstances, the application of section 732 to this arrangement, and the ultimate tax consequences that would thereby result, were not clearly contemplated by that provision of subchapter K. In addition, by using a partnership (if respected), the partners' aggregate federal tax liability would be substantially less than had they owned the partnership's assets directly (see paragraph (c)(1) of this section). On these facts, PRS has been formed and availed of with a principal purpose to reduce the taxpayers' aggregate federal tax liability in a manner that is inconsistent with the intent of subchapter K. Therefore (in addition to possibly challenging the

transaction under applicable judicial principles and statutory authorities, such as the disguised sale rules under section 707, see paragraph (h) of this section), the Commissioner can recast the transaction as appropriate under paragraph (b) of this section.

(e) ***Abuse of entity treatment*** —

(1) ***General rule.*** The Commissioner can treat a partnership as an aggregate of its partners in whole or in part as appropriate to carry out the purpose of any provision of the Internal Revenue Code or the regulations promulgated thereunder.

(2) ***Clearly contemplated entity treatment.*** Paragraph (e)(1) of this section does not apply to the extent that—

(i) A provision of the Internal Revenue Code or the regulations promulgated thereunder prescribes the treatment of a partnership as an entity, in whole or in part, and

(ii) That treatment and the ultimate tax results, taking into account all the relevant facts and circumstances, are clearly contemplated by that provision.

(f) ***Examples.*** The following examples illustrate the principles of paragraph (e) of this section. The examples set forth below do not delineate the boundaries of either permissible or impermissible types of transactions. Further, the addition of any facts or circumstances that are not specifically set forth in an example (or the deletion of any facts or circumstances) may alter the outcome of the transaction described in the example. Unless otherwise indicated, parties to the transactions are not related to one another.

Example 1. Aggregate treatment of partnership appropriate to carry out purpose of section 163(e)(5). (i) Corporations X and Y are partners in partnership PRS, which for several years has engaged in substantial bona fide business activities. As part of these business activities, PRS issues certain high yield discount obligations to an unrelated third party. Section 163(e)(5) defers (and in certain circumstances disallows) the interest deductions on this type of obligation if issued by a corporation. PRS, X, and Y take the position that, because PRS is a partnership and not a corporation, section 163(e)(5) is not applicable.
(ii) Section 163(e)(5) does not prescribe the treatment of a partnership as an entity for purposes of that section. The purpose of section 163(e)(5) is to limit corporate-level interest deductions on certain obligations. The treatment of PRS as an entity could result in a partnership with corporate partners issuing those obligations and thereby circumventing the purpose of section 163(e)(5), because the corporate partner would deduct its distributive share of the interest on obligations that would have been deferred until paid or disallowed had the corporation issued its share of the obligation directly. Thus, under paragraph (e)(1) of this section, PRS is properly treated as an aggregate of its partners for purposes of applying section 163(e)(5) (regardless of whether any party had a tax avoidance purpose in having PRS issue the obligation). Each partner of PRS will therefore be treated as issuing its share of the obligations for purposes of determining the deductibility of its distributive share of any interest on the obligations. See also section 163(i)(5)(B).

Example 2. Aggregate treatment of partnership appropriate to carry out purpose of section 1059. (i) Corporations X and Y are partners in partnership PRS, which for several years has engaged in substantial bona fide business activities. As part of these business activities, PRS purchases 50 shares of Corporation Z common stock. Six months later, Corporation Z announces an extraordinary dividend (within the meaning of section 1059). Section 1059(a) generally provides that if any corporation receives an extraordinary dividend with respect to any share of stock and the corporation has not held the stock for more than two years before the dividend announcement date, the basis in the stock held by the corporation is reduced by the nontaxed portion of the dividend. PRS, X, and Y take the position that section 1059(a) is not applicable because PRS is a partnership and not a corporation.
(ii) Section 1059(a) does not prescribe the treatment of a partnership as an entity for purposes of that section. The purpose of section 1059(a) is to limit the benefits of the dividends received deduction with respect to extraordinary dividends. The treatment of PRS as an entity could result in corporate partners in the partnership receiving dividends through partnerships in circumvention of the intent of section 1059. Thus, under paragraph (e)(1) of this section, PRS is properly treated as an aggregate of its partners for purposes of applying section 1059 (regardless of whether any party had a tax avoidance purpose in acquiring the Z stock through PRS). Each partner of PRS will therefore be treated as owning its share of the stock. Accordingly, PRS must make appropriate adjustments to the basis of the Corporation Z stock, and the partners must also make adjustments to the basis in their respective interests in PRS under section 705(a)(2)(B). See also section 1059(g)(1).

Example 3. Prescribed entity treatment of partnership; determination of CFC status clearly contemplated. (i) X, a domestic corporation, and Y, a foreign corporation, intend to conduct a joint venture in foreign Country A. They form PRS, a bona fide domestic general partnership in which X owns a 40% interest and Y owns a 60% interest. PRS is properly classified as a partnership under §§ 301.7701-2 and 301.7701-3. PRS holds 100% of the voting stock of Z, a Country A entity that is classified as an association taxable as a corporation for federal tax purposes under § 301.7701-2. Z conducts its business operations in Country A. By investing in Z through a domestic partnership, X seeks to obtain the benefit of the look-through rules of section 904(d)(3) and, as a result, maximize its ability to claim credits for its proper share of Country A taxes expected to be incurred by Z.
(ii) Pursuant to sections 957(c) and 7701(a)(30), PRS is a United States person. Therefore, because it owns 10% or more of the voting stock of Z, PRS satisfies the definition of a U.S. shareholder under section 951(b). Under section 957(a), Z is a controlled foreign corporation (CFC) because more than 50% of the voting power or value of its stock is owned by PRS. Consequently, under section 904(d)(3), X qualifies for look-through treatment in computing its credit for foreign taxes paid or accrued by Z. In contrast, if X and Y owned their interests in Z directly, Z would not be a CFC because only 40% of its stock would be owned by U.S. shareholders.

X's credit for foreign taxes paid or accrued by Z in that case would be subject to a separate foreign tax credit limitation for dividends from Z, a noncontrolled section 902 corporation. See section 904(d)(1)(E) and § 1.904-4(g).

(iii) Sections 957(c) and 7701(a)(30) prescribe the treatment of a domestic partnership as an entity for purposes of defining a U.S. shareholder, and thus, for purposes of determining whether a foreign corporation is a CFC. The CFC rules prevent the deferral by U.S. shareholders of U.S. taxation of certain earnings of the CFC and reduce disparities that otherwise might occur between the amount of income subject to a particular foreign tax credit limitation when a taxpayer earns income abroad directly rather than indirectly through a CFC. The application of the look-through rules for foreign tax credit purposes is appropriately tied to CFC status. See sections 904(d)(2)(E) and 904(d)(3). This analysis confirms that Congress clearly contemplated that taxpayers could use a bona fide domestic partnership to subject themselves to the CFC regime, and the resulting application of the look-through rules of section 904(d)(3). Accordingly, under paragraph (e) of this section, the Commissioner cannot treat PRS as an aggregate of its partners for purposes of determining X's foreign tax credit limitation.

(g) ***Effective date.*** Paragraphs (a), (b), (c), and (d) of this section are effective for all transactions involving a partnership that occur on or after May 12, 1994. Paragraphs (e) and (f) of this section are effective for all transactions involving a partnership that occur on or after December 29, 1994.

(h) ***Scope and application.*** This section applies solely with respect to taxes under subtitle A of the Internal Revenue Code, and for purposes of this section, any reference to a federal tax is limited to any tax imposed under subtitle A of the Internal Revenue Code.

(i) ***Application of nonstatutory principles and other statutory authorities.*** The Commissioner can continue to assert and to rely upon applicable nonstatutory principles and other statutory and regulatory authorities to challenge transactions. This section does not limit the applicability of those principles and authorities.

[T.D. 8588, 60 FR 27, Jan. 3, 1995; T.D. 8588, 60 FR 9776, 9777, Feb. 22, 1995, as amended by T.D. 8592, 60 FR 18741, Apr. 13, 1995]

§ 1.702-1 Income and credits of partner.

(a) ***General rule.*** Each partner is required to take into account separately in his return his distributive share, whether or not distributed, of each class or item of partnership income, gain, loss, deduction, or credit described in subparagraphs (1) through (9) of this paragraph. (For the taxable year in which a partner includes his distributive share of partnership taxable income, see section 706(a) and § 1.706-1(a). Such distributive share shall be determined as provided in section 704 and § 1.704-1.) Accordingly, in determining his income tax:

(1) Each partner shall take into account, as part of his gains and losses from sales or exchanges of capital assets held for not more than 1 year (6 months for taxable years beginning before 1977; 9 months for taxable years beginning in 1977), his distributive share of the combined net amount of such gains and losses of the partnership.

(2) Each partner shall take into account, as part of his gains and losses from sales or exchanges of capital assets held for more than 1 year (6 months for taxable years beginning before 1977; 9 months for taxable years beginning in 1977), his distributive share of the combined net amount of such gains and losses of the partnership. Each partner subject to section 1061 must take into account gains and losses from sales of capital assets held for more than one year as provided in section 1061 and §§ 1.1061-1 through 1.1061-6.

(3) Each partner shall take into account, as part of his gains and losses from sales or exchanges of property described in section 1231 (relating to property used in the trade or business and involuntary conversions), his distributive share of the combined net amount of such gains and losses of the partnership. The partnership shall not combine such items with items set forth in subparagraph (1) or (2) of this paragraph.

(4) Each partner shall take into account, as part of the charitable contributions paid by him, his distributive share of each class of charitable contributions paid by the partnership within the partnership's taxable year. Section 170 determines the extent to which such amount may be allowed as a deduction to the partner. For the definition of the term “charitable contribution”, see section 170(c).

(5) Each partner shall take into account, as part of the dividends received by him from domestic corporations, his distributive share of dividends received by the partnership, with respect to which the partner is entitled to a credit under section 34 (for dividends received on or before December 31, 1964), an exclusion under section 116, or a deduction under part VIII, subchapter B, chapter 1 of the Code.

(6) Each partner shall take into account, as part of his taxes described in section 901 which have been paid or accrued to foreign countries or to possessions of the United States, his distributive share of such taxes which have been paid or accrued by the partnership, according to its method of treating such taxes. A partner may elect to treat his total amount of such taxes, including his distributive share of such taxes of the partnership, as a deduction under section 164 or as a credit under section 901, subject to the provisions of sections 901 through 905.

(7) Each partner shall take into account, as part of the partially tax-exempt interest received by him on obligations of the United States or on obligations of instrumentalities of the United States, as described in section 35 or section 242, his distributive share of such partially tax-exempt interest received by the partnership. However, if the partnership elects to amortize premiums on bonds as provided in section 171, the amount received on such obligations by the partnership shall be reduced by the amortizable bond premium applicable to such obligations as provided in section 171(a)(3).

(8)

(i) Each partner shall take into account separately, as part of any class of income, gain, loss, deduction, or credit, his distributive share of the following items: Recoveries of bad debts, prior taxes, and delinquency amounts (section 111); gains and losses from wagering transactions (section 165(d)); soil and water conservation expenditures (section 175); nonbusiness expenses as described in section 212; medical, dental, etc., expenses (section 213); expenses for care of certain dependents (section 214); alimony, etc., payments (section 215); amounts representing taxes and interest paid to cooperative housing corporations (section 216); intangible drilling and developments costs (section 263(c)); pre-1970 exploration expenditures (section 615); certain mining exploration expenditures (section 617); income, gain, or loss to

the partnership under section 751(b); and any items of income, gain, loss, deduction, or credit subject to a special allocation under the partnership agreement which differs from the allocation of partnership taxable income or loss generally.

(ii) Each partner must also take into account separately the partner's distributive share of any partnership item which, if separately taken into account by any partner, would result in an income tax liability for that partner, or for any other person, different from that which would result if that partner did not take the item into account separately. Thus, if any partner is a controlled foreign corporation, as defined in section 957, items of income that would be gross subpart F income if separately taken into account by the controlled foreign corporation must be separately stated for all partners. Under section 911(a), if any partner is a bona fide resident of a foreign country who may exclude from gross income the part of the partner's distributive share which qualifies as earned income, as defined in section 911(b), the earned income of the partnership for all partners must be separately stated. Similarly, all relevant items of income or deduction of the partnership must be separately stated for all partners in determining the applicability of section 183 (relating to activities not engaged in for profit) and the recomputation of tax thereunder for any partner. This paragraph (a)(8)(ii) applies to taxable years beginning on or after July 23, 2002.

(iii) Each partner shall aggregate the amount of his separate deductions or exclusions and his distributive share of partnership deductions or exclusions separately stated in determining the amount allowable to him of any deduction or exclusion under subtitle A of the Code as to which a limitation is imposed. For example, partner A has individual domestic exploration expenditures of $300,000. He is also a member of the AB partnership which in 1971 in its first year of operation has foreign exploration expenditures of $400,000. A's distributable share of this item is $200,000. However, the total amount of his distributable share that A can deduct as exploration expenditures under section 617(a) is limited to $100,000 in view of the limitation provided in section 617(h). Therefore, the excess of $100,000 ($200,000 minus $100,000) is not deductible by A.

(9) Each partner shall also take into account separately his distributive share of the taxable income or loss of the partnership, exclusive of items requiring separate computations under subparagraphs (1) through (8) of this paragraph. For limitation on allowance of a partner's distributive share of partnership losses, see section 704(d) and paragraph (d) of § 1.704-1.

(b) ***Character of items constituting distributive share.*** The character in the hands of a partner of any item of income, gain, loss, deduction, or credit described in section 702(a)(1) through (8) shall be determined as if such item were realized directly from the source from which realized by the partnership or incurred in the same manner as incurred by the partnership. For example, a partner's distributive share of gain from the sale of depreciable property used in the trade or business of the partnership shall be considered as gain from the sale of such depreciable property in the hands of the partner. Similarly, a partner's distributive share of partnership “hobby losses” (section 270) or his distributive share of partnership charitable contributions to organizations qualifying under section 170(b)(1)(A) retains such character in the hands of the partner.

(c) ***Gross income of a partner.***

(1) Where it is necessary to determine the amount or character of the gross income of a partner, his gross income shall include the partner's distributive share of the gross income of the partnership, that is, the amount of gross income of the partnership from which was derived the partner's

distributive share of partnership taxable income or loss (including items described in section 702(a)(1) through (8)). For example, a partner is required to include his distributive share of partnership gross income:

(i) In computing his gross income for the purpose of determining the necessity of filing a return (section 6012 (a));

(ii) In determining the application of the provisions permitting the spreading of income for services rendered over a 36-month period (section 1301, as in effect for taxable years beginning before January 1, 1964);

(iii) In computing the amount of gross income received from sources within possessions of the United States (section 937).

(iv) In determining a partner's “gross income from farming” (sections 175 and 6073); and

(v) In determining whether the de minimis or full inclusion rules of section 954(b)(3) apply.

(2) In determining the applicability of the 6-year period of limitation on assessment and collection provided in section 6501(e) (relating to omission of more than 25 percent of gross income), a partner's gross income includes his distributive share of partnership gross income (as described in section 6501(e)(1)(A)(i)). In this respect, the amount of partnership gross income from which was derived the partner's distributive share of any item of partnership income, gain, loss, deduction, or credit (as included or disclosed in the partner's return) is considered as an amount of gross income stated in the partner's return for the purposes of section 6501(e). For example, A, who is entitled to one-fourth of the profits of the ABCD partnership, which has $10,000 gross income and $2,000 taxable income, reports only $300 as his distributive share of partnership profits. A should have shown $500 as his distributive share of profits, which amount was derived from $2,500 of partnership gross income. However, since A included only $300 on his return without explaining in the return the difference of $200, he is regarded as having stated in his return only $1,500 ($300/$500 of $2,500) as gross income from the partnership.

(d) ***Partners in community property States.*** If separate returns are made by a husband and wife domiciled in a community property State, and only one spouse is a member of the partnership, the part of his or her distributive share of any item or items listed in paragraph (a) (1) through (9) of this section which is community property, or which is derived from community property, should be reported by the husband and wife in equal proportions.

(e) ***Special rules on requirement to separately state meal, travel, and entertainment expenses.*** Each partner shall take into account separately his or her distributive share of meal, travel, and entertainment expenses paid or incurred after December 31, 1986, by partnerships that have taxable years beginning before January 1, 1987, and ending with or within partner's taxable years beginning on or after January 1, 1987. In addition, with respect to skybox rentals under section 274 (1) (2), each partner shall take into account separately his or her distributive share of rents paid or incurred after December 31, 1986, by partnerships that have taxable years beginning before January 1, 1989, and ending with or within partners' taxable years beginning on or after January 1, 1987.

(f) ***Cross—references.*** For special rules in accordance with the principles of section 702 applicable solely for the purpose of the tax imposed by section 56 (relating to the minimum tax for tax preferences) see § 1.58-2(a). In the case of a disposition of an oil or gas property by the partnership, see the rules contained in section 613A(c)(7)(D) and § 1.613A-3(e).

(g) ***Applicability date.*** The last sentence of paragraph (a)(2) of this section applies for the taxable years beginning on or after January 19, 2021.

[T.D. 6500, 25 FR 11814, Nov. 26, 1960]

Editorial Note: For FEDERAL REGISTER citations affecting § 1.702-1, see the List of CFR Sections Affected, which appears in the Finding Aids section of the printed volume and at *www.govinfo.gov.*

§ 1.702-2 Net operating loss deduction of partner.

For the purpose of determining a net operating loss deduction under section 172, a partner shall take into account his distributive share of items of income, gain, loss, deduction, or credit of the partnership. The character of any such item shall be determined as if such item were realized directly from the source from which realized by the partnership, or incurred in the same manner as incurred by the partnership. See section 702(b) and paragraph (b) of § 1.702-1. To the extent necessary to determine the allowance under section 172(d)(4) of the nonbusiness deductions of a partner (arising from both partnership and nonpartnership sources), the partner shall separately take into account his distributive share of the deductions of the partnership which are not attributable to a trade or business and combine such amount with his nonbusiness deductions from nonpartnership sources. Such partner shall also separately take into account his distributive share of the gross income of the partnership not derived from a trade or business and combine such amount with his nonbusiness income from nonpartnership sources. See section 172 and the regulations thereunder.

§ 1.702-3T 4-Year spread (temporary).

(a) ***Applicability.*** This section applies to a partner in a partnership if—

(1) The partnership is required by section 806 of the Tax Reform Act of 1986 (the 1986 Act), Pub. L. 99-514, 100 Stat. 2362, to change its taxable year for the first taxable year beginning after December 31, 1986 (partnership's year of change); and

(2) As a result of such change in taxable year, items from more than one taxable year of the partnership would, but for the provisions of this section, be included in the taxable year of the partner with or within which the partnership's year of change ends.

(b) ***Partner's treatment of items from the partnership's year of change*** —

(1) ***In general.*** Except as provided in paragraph (c) of this section, if a partner's share of “income items” exceeds the partner's share of “expense items,” the partner's share of each and every income and expense item shall be taken into account ratably (and retain its character) over the partner's first 4 taxable years beginning with the partner's taxable year with or within which the partnership's year of change ends.

(2) ***Definitions*** —

(i) ***Income items.*** For purposes of this section, the term *income items* means the sum of—

(A) The partner's distributive share of taxable income (exclusive of separately stated items) from the partnership's year of change,

(B) The partner's distributive share of all separately stated income or gain items from the partnership's year of change, and

(C) Any amount includible in the partner's income under section 707(c) on account of payments during the partnership's year of change.

(ii) ***Expense items.*** For purposes of this section, the term *expense items* means the sum of—

(A) The partner's distributive share of taxable loss (exclusive of separately stated items) from the partnership's year of change, and

(B) The partner's distributive share of all separately stated items of loss or deduction from the partnership's year of change.

(c) ***Electing out of 4-year spread.*** A partner may elect out of the rules of paragraph (b) of this section by meeting the requirements of § 301.9100-7T of this chapter (temporary regulations relating to elections under the Tax Reform Act of 1986).

(d) ***Special rules for a partner that is a partnership or S corporation*** —

(1) ***In general.*** Except as provided in paragraph (d)(2) of this section, a partner that is a partnership or S corporation may, if otherwise eligible, use the 4-year spread (with respect to partnership interests owned by the partner) described in this section.

(2) ***Certain partners prohibited from using 4-year spread*** —

(i) ***In general.*** Except as provided in paragraph (d)(2)(ii) of this section, a partner that is a partnership or S corporation may not use the 4-year spread (with respect to partnership interests owned by the partner) if such partner is also changing its taxable year pursuant to section 806 of the 1986 Act.

(ii) ***Exception.*** If a partner's year of change does not include any income or expense items with respect to the partnership's year of change, such partner may, if otherwise eligible, use the 4-year spread (with respect to such partnership interest) described in this section even though the partner is a partnership or S corporation. See examples 13 and 14 in paragraph (h) of this section.

(e) ***Basis of partner's interest.*** The basis of a partner's interest in a partnership shall be determined as if the partner elected not to spread the partnership items over 4 years, regardless of whether such election was in fact made. Thus, for example, if a partner is eligible for the 4-year spread and does not elect out of the 4-year spread pursuant to paragraph (c) of this section, the partner's basis in the partnership interest will be increased in the first year of the 4-year spread period by an amount equal to the excess of the income items over the expense items. However, the partner's basis will not be increased again, with respect to the unamortized income and expense items, as they are amortized over the 4-year spread period.

(f) ***Effect on other provisions of the Code.*** Except as provided in paragraph (e) of this section, determinations with respect to a partner, for purposes of other provisions of the Code, must be made with regard to the manner in which partnership items are taken into account under the rules of this section. Thus, for example, a partner who does not elect out of the 4-year spread must take into account, for purposes of determining net earnings from self-employment under section 1402(a) for a taxable year, only the ratable portion of partnership items for that taxable year.

(g) ***Treatment of dispositions*** —

(1) ***In general.*** If a partnership interest is disposed of before the last taxable year in the 4-year spread period, unamortized income and expense items that are attributable to the interest disposed of and that would be taken into account by the partner for subsequent taxable years in the 4-year spread

period shall be taken into account by the partner as determined under paragraph (g)(2) of this section. For purposes of this section, the term *disposed of* means any transfer, including (but not limited to) transfers by sale, exchange, gift, and by reason of death.

(2) ***Year unamortized items taken into account*** —

(i) ***In general.*** If, at the end of a partner's taxable year, the fraction determined under paragraph (g)(2)(ii) of this section is—

(A) Greater than $^{2}/_{3}$, the partner must continue to take the unamortized income and expense items into account ratably over the 4-year spread period;

(B) Greater than $^{1}/_{3}$ but less than or equal to $^{2}/_{3}$, the partner must, in addition to its ratable amortization, take into account in such year 50 percent of the income and expense items that would otherwise be unamortized at the end of such year (however, this paragraph (g)(2)(i)(B) is only applied once with respect to a partner's interest in a particular partnership); or

(C) Less than or equal to $^{1}/_{3}$, the partner must take into account the entire balance of unamortized income and expense items in such year.

(ii) ***Determination of fraction.*** For purposes of paragraph (g)(2)(i) of this section, the numerator of the fraction is the partner's proportionate interest in the partnership at the end of the partner's taxable year and the denominator is the partner's proportionate interest in the partnership as of the last day of the partnership's year of change.

(h) ***Examples.*** The provisions of this section may be illustrated by the following examples.

Example 1. Assume that P1, a partnership with a taxable year ending September 30, is required by the 1986 Act to change its taxable year to a calendar year. All of the partners of P1 are individual taxpayers reporting on a calendar year. P1 is required to change to a calendar year for its taxable year beginning October 1, 1987, and to file a return for the short taxable year ending December 31, 1987. Based on the above facts, the partners of P1 are required to include the items from more than one taxable year of P1 in income for their 1987 taxable year. Thus, under paragraph (b) of this section, if a partner's share of income items exceeds the partner's share of expense items, the partner's share of each and every income and expense item shall be taken into account ratably by such partner in each of the partner's first four taxable years' beginning with the partner's 1987 taxable year, unless such partner elects under paragraph (c) of this section to include all such amounts in his 1987 taxable year.

Example 2. Assume the same facts as in example 1, except P1 is a personal service corporation with all of its employee-owners reporting on a calendar year. Although P1 is required to change to a calendar year for its taxable year beginning October 1, 1987, neither P1 nor its employee-owners obtain the benefits of a 4-year spread. Pursuant to section 806(e)(2)(C) of the 1986 Act, the 4-year spread provision is only applicable to short taxable years of partnerships and S corporations required to change their taxable year under the 1986 Act.

Example 3. Assume the same facts as example 1 and that I is one of the individual partners of P1. Further assume that I's distributive share of P1's taxable income for the short taxable year ended December 31, 1987 (*i.e.,* P1's year of change), is $10,000. In addition, I has $8,000 of separately stated expense from P1's year of change. Since I's income items (*i.e.,* $10,000 of taxable income) exceed I's expense items (*i.e.,* $8,000 of separately stated expense) attributable to P1's year of change, I is eligible for

the 4-year spread provided by this section. If I does not elect out of the 4-year spread, I will recognize $2,500 of taxable income and $2,000 of separately stated expense in his 1987 calendar year return. Assuming I does not dispose of his partnership interest in P1 by December 31, 1989, the remaining $7,500 of taxable income and $6,000 of separately stated expense will be amortized (and retain its character) over I's next three taxable years (*i.e.,* 1988, 1989 and 1990).

Example 4. Assume the same facts as example 3, except that I disposes of his entire interest in P1 during 1988. Pursuant to paragraph (g) of this section, I would recognize $7,500 of taxable income and $6,000 of separately stated expense in his 1988 calendar year return.

Example 5. Assume the same facts as in example 3, except that I disposes of 50 percent of his interest in P1 during 1989. Pursuant to paragraph (g) of this section, I would recognize $3,750 of taxable income in his 1989 calendar year return ($2,500 ratable portion for 1989 plus 50 percent of the $2,500 of income items that would otherwise be unamortized at the end of 1989). I would also recognize $3,000 of separately stated expense items in 1989 ($2,000 ratable portion for 1989 plus 50 percent of the $2,000 of separately stated expense items that would otherwise be unamortized at the end of 1989).

Example 6. Assume the same facts as in example 1, except that X, a personal service corporation as defined in section 441(i), is a partner of P1. X is a calendar year taxpayer, and thus is not required to change its taxable year under the 1986 Act. The same result occurs as in example 1 (*i.e.,* unless X elects to the contrary, X is required to include one fourth of its share of income and expense items from P1's year of change in the first four taxable years of X beginning with the 1987 taxable year).

Example 7. Assume the same facts as in example 6, except that X is a fiscal year personal service corporation with a taxable year ending September 30. X is required under the 1986 Act to change to a calendar year for its taxable year beginning October 1, 1987, and to file a return for its short year ending December 31, 1987. Based on the above facts, X is not required to include the items from more than one taxable year of P1 in any one taxable year of X. Thus, the provisions of this section do not apply to X, and X is required to include the full amount of income and expense items from P1's year of change in X's taxable income for X's short year ending December 31. Under section 443 of the Code, X is required to annualize the taxable income for its short year ending December 31, 1987.

Example 8. Assume that P2 is a partnership with a taxable year ending September 30. Under the 1986 Act, P2 would have been required to change its taxable year to a calendar year, effective for the taxable year beginning October 1, 1987. However, P2 properly changed its taxable year to a calendar year for the year beginning October 1, 1986, and filed a return for the short period ending December 31, 1986. The provisions of the 1986 Act do not apply to P2 because the short year ending December 31, 1986, was not required by the amendments made by section 806 of the 1986 Act. Thus, the partners of P2 are required to take all items of income and expense for the short taxable year ending December 31, 1986, into account for the taxable year with or within which such short year ends.

Example 9. Assume that P3 is a partnership with a taxable year ending March 31 and I, a calendar year individual, is a partner in P3. Under the 1986 Act, P3 would have been required to change its taxable year to a calendar year. However, under Rev. Proc. 87-32, P3 establishes and changes to a natural business year beginning with the taxable year ending June 30, 1987. Thus, P3 is required to change its taxable year under section 806 of the 1986 Act, and I is required to include items from more than one taxable year of P3 in one of her taxable years. Furthermore, I's share of P3's income items exceeds her share of P3's expense items for the short period April 1, 1987 through June 30, 1987.

Accordingly, under this section, unless I elects to the contrary, I is required to take one fourth of her share of items of income and expense from P3's short taxable year ending June 30, 1987 into account for her taxable year ending December 31, 1987.

Example 10. Assume that P4 is a partnership with a taxable year ending March 31. Y, a C corporation, owns a 51 percent interest in the profits and capital of P4. Y reports its income on the basis of a taxable year ending March 31. P4 establishes and changes to a natural business year beginning with the taxable year ending June 30, 1987, under Rev. Proc. 87-32. Under the above facts, P4 is not required to change its taxable year because its March 31 taxable year was the taxable year of Y, the partner owning a majority of the partnership's profits and capital. Therefore, the remaining partners of P4 owning 49 percent of the profits and capital are not permitted the 4-year spread of the items of income and expense with respect to the short year, even though they may be required to include their distributive share of P4's items from more than one taxable year in one of their years.

Example 11. Assume that X and Y are C corporations with taxable years ending June 30. Each owns a 50-percent interest in the profits and capital of partnership P5. P5 has a taxable year ending March 31. Assume that P5 cannot establish a business purpose in order to retain a taxable year ending March 31, and thus P5 must change to a June 30 taxable year, the taxable year of its partners. Furthermore, assume that X's share of P5's income items exceeds its share of P5's expense items for P5's short taxable year ending June 30, 1987. Unless X elects out of the 4-year spread, the taxable year ending June 30, 1987, is the first of the four taxable years in which X must take into account its share of the items of income and expense resulting from P5's short taxable year ending June 30, 1987.

Example 12. Assume that I, an individual who reports income on the basis of the calendar year, is a partner in two partnerships, P6 and P7. Both partnerships have a taxable year ending September 30. Neither partnership can establish a business purpose for retaining its taxable year. Consequently, each partnership will change its taxable year to December 31, for the taxable year beginning October 1, 1987. The election to avoid a 4-year spread is made at the partner level; in addition, a partner may make such elections on a partnership-by-partnership basis. Thus, assuming I is eligible to obtain the 4-year spread with respect to income and expense items from partnerships P6 and P7, I may use the 4-year spread with respect to items from P6, while not using the 4-year spread with respect to items from P7.

Example 13. I, an individual taxpayer using a calendar year, owns an interest in P8, a partnership using a taxable year ending June 30. Furthermore, P8 owns an interest in P9, a partnership with a taxable year ending March 31. Under section 806 of the 1986 Act, P8 will be required to change to a taxable year ending December 31, while P9 will be required to change to a taxable year ending June 30. As a result, P8's year of change will be July 1 through December 31, 1987, while P9's year of change will be from April 1 through June 30, 1987. Since P9's year of change does not end with or within P8's year of change, paragraph (d)(2) of this section does not prevent P8 from obtaining a 4-year spread with respect to its interest in P9.

Example 14. The facts are the same as in example 13, except that P9 has a taxable year ending September 30, and under the 1986 Act P9 is required to change to a taxable year ending December 31. Therefore, P9's year of change will be from October 1, 1987 through December 31, 1987. Although P8's year of change from July 1, 1987 through December 31, 1987 includes two taxable years of P9 (*i.e.,* October 1, 1986 through September 30, 1987 and October 1, 1987 through December 31, 1987), paragraph (d)(2) of this section prohibits P8 from using the 4-year spread with respect to its interest in P9, because P9's year of change ends with or within P8's year of change.

[T.D. 8167, 52 FR 48530, Dec. 23, 1987, as amended by T.D. 8435, 57 FR 43896, Sept. 23, 1992]

§ 1.703-1 Partnership computations.

(a) ***Income and deductions.***

(1) The taxable income of a partnership shall be computed in the same manner as the taxable income of an individual, except as otherwise provided in this section. A partnership is required to state separately in its return the items described in section 702(a)(1) through (7) and, in addition, to attach to its return a statement setting forth separately those items described in section 702(a)(8) which the partner is required to take into account separately in determining his income tax. See paragraph (a)(8) of § 1.702-1. The partnership is further required to compute and to state separately in its return:

(i) As taxable income under section 702(a)(9), the total of all other items of gross income (not separately stated) over the total of all other allowable deductions (not separately stated), or

(ii) As loss under section 702(a)(9), the total of all other allowable deductions (not separately stated) over the total of all other items of gross income (not separately stated).

The taxable income or loss so computed shall be accounted for by the partners in accordance with their partnership agreement.

(2) The partnership is not allowed the following deductions:

(i) The standard deduction provided in section 141.

(ii) The deduction for personal exemptions provided in section 151.

(iii) The deduction provided in section 164(a) for taxes, described in section 901, paid or accrued to foreign countries or possessions of the United States. Each partner's distributive share of such taxes shall be accounted for separately by him as provided in section 702(a)(6).

(iv) The deduction for charitable contributions provided in section 170. Each partner is considered as having paid within his taxable year his distributive share of any contribution or gift, payment of which was actually made by the partnership within its taxable year ending within or with the partner's taxable year. This item shall be accounted for separately by the partners as provided in section 702(a)(4). See also paragraph (b) of § 1.702-1.

(v) The net operating loss deduction provided in section 172. See § 1.702-2.

(vi) The additional itemized deductions for individuals provided in part VII, subchapter B, chapter 1 of the Code, as follows: Expenses for production of income (section 212); medical, dental, etc., expenses (section 213); expenses for care of certain dependents (section 214); alimony, etc., payments (section 215); and amounts representing taxes and interest paid to cooperative housing corporation (section 216). However, see paragraph (a)(8) of § 1.702-1.

(vii) The deduction for depletion under section 611 with respect to domestic oil or gas which is produced after December 31, 1974, and to which gross income from the property is attributable after such year.

(viii) The deduction for capital gains provided by section 1202 and the deduction for capital loss carryover provided by section 1212.

(b) ***Elections of the partnership —***

(1) ***General rule.*** Any elections (other than those described in subparagraph (2) of this paragraph) affecting the computation of income derived from a partnership shall be made by the partnership. For example, elections of methods of accounting, of computing depreciation, of treating soil and water conservation expenditures, and the option to deduct as expenses intangible drilling and development costs, shall be made by the partnership and not by the partners separately. All partnership elections are applicable to all partners equally, but any election made by a partnership shall not apply to any partner's nonpartnership interests.

(2) ***Exceptions.***

(i) Each partner shall add his distributive share of taxes described in section 901 paid or accrued by the partnership to foreign countries or possessions of the United States (according to its method of treating such taxes) to any such taxes paid or accrued by him (according to his method of treating such taxes), and may elect to use the total amount either as a credit against tax or as a deduction from income.

(ii) Each partner shall add his distributive share of expenses described in section 615 or section 617 paid or accrued by the partnership to any such expenses paid or accrued by him and shall treat the total amount according to his method of treating such expenses, notwithstanding the treatment of the expenses by the partnership.

(iii) Each partner who is a nonresident alien individual or a foreign corporation shall add his distributive share of income derived by the partnership from real property located in the United States, as described in section 871(d)(1) or 882(d)(1), to any such income derived by him and may elect under § 1.871-10 to treat all such income as income which is effectively connected for the taxable year with the conduct of a trade or business in the United States.

[T.D. 6500, 25 FR 11814, Nov. 26, 1960, as amended by T.D. 7192, 37 FR 12949, June 30, 1972; T.D. 7332, 39 FR 44232, Dec. 23, 1974; T.D. 8348, 56 FR 21952, May 13, 1991]

§ 1.704-1 Partner's distributive share.

(a) ***Effect of partnership agreement.*** A partner's distributive share of any item or class of items of income, gain, loss, deduction, or credit of the partnership shall be determined by the partnership agreement, unless otherwise provided by section 704 and paragraphs (b) through (e) of this section. For definition of partnership agreement see section 761(c).

(b) ***Determination of partner's distributive share*** —(0) *Cross-references.*

TABLE 1 TO PARAGRAPH (b)(0)

Heading	Section
Cross-references	1.704-1(b)(0)
In general	1.704-1(b)(1)
Basic principles	1.704-1(b)(1)(i)
Effective dates	1.704-1(b)(1)(ii)

Heading	Section
Generally	1.704-1(b)(1)(ii)(*a*)
Foreign tax expenditures	1.704-1(b)(1)(ii)(*b*)
In general	1.704-1(b)(1)(ii)(*b*)(*1*)
Special rules for certain interbranch payments	1.704-1(b)(1)(ii)(*b*)(*3*)
Effect of other sections	1.704-1(b)(1)(iii)
Other possible tax consequences	1.704-1(b)(1)(iv)
Purported allocations	1.704-1(b)(1)(v)
Section 704(c) determinations	1.704-1(b)(1)(vi)
Bottom line allocations	1.704-1(b)(1)(vii)
Substantial economic effect	1.704-1(b)(2)
Two-part analysis	1.704-1(b)(2)(i)
Economic effect	1.704-1(b)(2)(ii)
Fundamental principles	1.704-1(b)(2)(ii)(*a*)
Three requirements	1.704-1(b)(2)(ii)(*b*)
Obligation to restore deficit	1.704-1(b)(2)(ii)(*c*)
Alternate test for economic effect	1.704-1(b)(2)(ii)(*d*)
Partial economic effect	1.704-1(b)(2)(ii)(*e*)
Reduction of obligation to restore	1.704-1(b)(2)(ii)(*f*)
Liquidation defined	1.704-1(b)(2)(ii)(*g*)
Partnership agreement defined	1.704-1(b)(2)(ii)(*h*)
Economic effect equivalence	1.704-1(b)(2)(ii)(*i*)
Substantiality	1.704-1(b)(2)(iii)
General rules	1.704-1(b)(2)(iii)(*a*)
Shifting tax consequences	1.704-1(b)(2)(iii)(*b*)
Transitory allocations	1.704-1(b)(2)(iii)(*c*)
Maintenance of capital accounts	1.704-1(b)(2)(iv)
In general	1.704-1(b)(2)(iv)(*a*)
Basic rules	1.704-1(b)(2)(iv)(*b*)
Treatment of liabilities	1.704-1(b)(2)(iv)(*c*)
Contributed property	1.704-1(b)(2)(iv)(*d*)
In general	1.704-1(b)(2)(iv)(*d*)(*1*)
Contribution of promissory notes	1.704-1(b)(2)(iv)(*d*)(*2*)
Section 704(c) considerations	1.704-1(b)(2)(*iv*)(*d*)(*3*)
Exercise of noncompensatory options	1.704-1(b)(2)(iv)(*d*)(*4*).
Distributed property	1.704-1(b)(2)(iv)(*e*)
In general	1.704-1(b)(2)(iv)(*e*)(*1*)
Distribution of promissory notes	1.704-1(b)(2)(iv)(*e*)(*2*)
Revaluations of property	1.704-1(b)(2)(iv)(*f*)
Adjustments to reflect book value	1.704-1(b)(2)(iv)(*g*)

Heading	Section
In general	1.704-1(b)(2)(iv)(*g*)(*1*)
Payables and receivables	1.704-1(b)(2)(iv)(*g*)(*2*)
Determining amount of book items	1.704-1(b)(2)(iv)(*g*)(*3*)
Determinations of fair market value	1.704-1(b)(2)(iv)(*h*)
In general	1.704-1(b)(2)(iv)(*h*)(*1*).
Adjustments for noncompensatory options	1.704-1(b)(2)(iv)(*h*)(*2*).
Section 705(a)(2)(B) expenditures	1.704-1(b)(2)(iv)(*i*)
In general	1.704-1(b)(2)(iv)(*i*)(*1*)
Expenses described in section 709	1.704-1(b)(2)(iv)(*i*)(*2*)
Disallowed losses	1.704-1(b)(2)(iv)(*i*)(*3*)
Basis adjustments to section 38 property	1.704-1(b)(2)(iv)(*j*)
Depletion of oil and gas properties	1.704-1(b)(2)(iv)(*k*)
In general	1.704-1(b)(2)(iv)(*k*)(*1*)
Simulated depletion	1.704-1(b)(2)(iv)(*k*)(*2*)
Actual depletion	1.704-1(b)(2)(iv)(*k*)(*3*)
Effect of book values	1.704-1(b)(2)(iv)(*k*)(*4*)
Transfers of partnership interests	1.704-1(b)(2)(iv)(l)
Section 754 elections	1.704-1(b)(2)(iv)(m)
In general	1.704-1(b)(2)(iv)(*m*)(*1*)
Section 743 adjustments	1.704-1(b)(2)(iv)(*m*)(*2*)
Section 732 adjustments	1.704-1(b)(2)(iv)(*m*)(*3*)
Section 734 adjustments	1.704-1(b)(2) iv)(*m*)(*4*)
Limitations on adjustments	1.704-1(b)(2) iv)(*m*)(*5*)
Partnership level characterization	1.704-1(b)(2)(iv)(*n*)
Guaranteed payments	1.704-1(b)(2)(iv)(*o*)
Minor discrepancies	1.704-1(b)(2)(iv)(*p*)
Adjustments where guidance is lacking	1.704-1(b)(2)(iv)(*q*)
Restatement of capital accounts	1.704-1(b)(2)(iv)(*r*)
Adjustments on the exercise of a noncompensatory option	1.704-1(b)(2)(iv)(*s*).
Partner's interest in the partnership	1.704-1(b)(3)
In general	1.704-1(b)(3)(i)
Factors considered	1.704-1(b)(3)(ii)
Certain determinations	1.704-1(b)(3)(iii)
Special rules	1.704-1(b)(4)
Allocations to reflect revaluations	1.704-1(b)(4)(i)
Credits	1.704-1(b)(4)(ii)
Excess percentage depletion	1.704-1(b)(4)(iii)
Allocations attributable to nonrecourse liabilities	1.704-1(b)(4)(iv)
Allocations under section 613A(c(7)(D)	1.704-1(b)(4)(v)

Heading	Section
Amendments to partnership agreement	1.704-1(b)(4)(vi)
Recapture	1.704-1(b)(4)(vii)
Allocation of creditable foreign taxes	1.704-1(b)(4)(viii)
In general	1.704-1(b)(4)(viii)(*a*)
Creditable foreign tax expenditures (CFTEs)	1.704-1(b)(4)(viii)(*b*)
Income to which CFTEs relate	1.704-1(b)(4)(viii)(*c*)
In general	1.704-1(b)(4)(viii)(*c*)(*1*)
CFTE category	1.704-1(b)(4)(viii)(*c*)(*2*)
Net income in a CFTE category	1.704-1(b)(4)(viii)(*c*)(*3*)
CFTE category share of income	1.704-1(b)(4)(viii)(*c*)(*4*)
No net income in a CFTE category	1.704-1(b)(4)(viii)(*c*)(*5*)
Allocation and apportionment of CFTEs to CFTE categories	1.704-1(b)(4)(viii)(*d*)
In general	1.704-1(b)(4)(viii)(*d*)(*1*)
Timing and base differences	1.704-1(b)(4)(viii)(*d*)(*2*)
Special rules for certain interbranch payments	1.704-1(b)(4)(viii)(*d*)(*3*)
Allocations with respect to noncompensatory options	1.704-1(b)(4)(ix).
Corrective allocations	1.704-1(b)(4)(x).
Examples	1.704-1(b)(6).

(1) ***In general*** —

(i) ***Basic principles.*** Under section 704(b) if a partnership agreement does not provide for the allocation of income, gain, loss, deduction, or credit (or item thereof) to a partner, or if the partnership agreement provides for the allocation of income, gain, loss, deduction, or credit (or item thereof) to a partner but such allocation does not have substantial economic effect, then the partner's distributive share of such income, gain, loss, deduction, or credit (or item thereof) shall be determined in accordance with such partner's interest in the partnership (taking into account all facts and circumstances). If the partnership agreement provides for the allocation of income, gain, loss, deduction, or credit (or item thereof) to a partner, there are three ways in which such allocation will be respected under section 704(b) and this paragraph. First, the allocation can have substantial economic effect in accordance with paragraph (b)(2) of this section. Second, taking into account all facts and circumstances, the allocation can be in accordance with the partner's interest in the partnership. See paragraph (b)(3) of this section. Third, the allocation can be deemed to be in accordance with the partner's interest in the partnership pursuant to one of the special rules contained in paragraph (b)(4) of this section and § 1.704-2. To the extent an allocation under the partnership agreement of income, gain, loss, deduction, or credit (or item thereof) to a partner does not have substantial economic effect, is not in accordance with the partner's interest in the partnership, and is not deemed to be in accordance with the partner's interest in the partnership, such income, gain, loss, deduction, or credit (or item thereof) will be reallocated in accordance with the partner's interest in the partnership (determined under paragraph (b)(3) of this section).

(ii) ***Effective/applicability date.***

(*a*) ***Generally.*** Except as otherwise provided in this section, the provisions of this paragraph are effective for partnership taxable years beginning after December 31, 1975. However, for partnership taxable years beginning after December 31, 1975, but before May 1, 1986, (January 1, 1987, in the case of allocations of nonrecourse deductions as defined in paragraph (b)(4)(iv)(*a*) of this section) an allocation of income, gain, loss, deduction, or credit (or item thereof) to a partner that is not respected under this paragraph nevertheless will be respected under section 704(b) if such allocation has substantial economic effect or is in accordance with the partners' interests in the partnership as those terms have been interpreted under the relevant case law, the legislative history of section 210(d) of the Tax Reform Act of 1976, and the provisions of this paragraph in effect for partnership taxable years beginning before May 1, 1986. Paragraphs (b)(2)(iii)(*a*) (last sentence), (b)(2)(iii)(*d*), (b)(2)(iii)(*e*), and (b)(5) *Example 28*, *Example 29*, and *Example 30* of this section apply to partnership taxable years beginning on or after May 19, 2008. In addition, paragraph (b)(2)(iv)(*d*)(*4*), paragraph (b)(2)(iv)(*f*)(*1*), paragraph (b)(2)(iv)(*f*)(*5*)(*iv*), paragraph (b)(2)(iv)(*h*)(*2*), paragraph (b)(2)(iv)(*s*), paragraph (b)(4)(ix), paragraph (b)(4)(x), and *Examples 31* through *35* in paragraph (b)(5) of this section apply to noncompensatory options (as defined in § 1.721-2(f)) that are issued on or after February 5, 2013. The last sentence of paragraph (b)(2)(iv)(*g*)(*3*) of this section is applicable for partnership taxable years ending on or after September 24, 2019. However, a partnership may choose to apply the last sentence in paragraph (b)(2)(iv)(*g*)(*3*) of this section for the partnership's taxable years ending on or after September 28, 2017. A partnership may rely on the last sentence in paragraph (b)(2)(iv)(g)(3) of this section in regulation project REG-104397-18 (2018-41 I.R.B. 558) (see § 601.601(d)(2)(ii)(b) of this chapter) for the partnership's taxable years ending on or after September 28, 2017, and ending before the partnership's taxable year that includes September 24, 2019. Furthermore, the last sentence of paragraph (b)(2)(ii)(*b*)(*3*) of this section and paragraphs (b)(2)(ii)(*b*)(*4*) through (*7*) and (b)(2)(ii)(*c*) of this section apply to partnership taxable years ending on or after *October 9, 2019*. However, taxpayers may apply the last sentence of paragraph (b)(2)(ii)(*b*)(*3*) of this section and paragraphs (b)(2)(ii)(*b*)(*4*) through (*7*) and (b)(2)(ii)(*c*) of this section for partnership taxable years ending on or after October 5, 2016. For partnership taxable years ending before October 9, 2019, see § 1.704-1 as contained in 26 CFR part 1 revised as of April 1, 2019.

(*b*) ***Rules relating to foreign tax expenditures.***

(*1*) ***In general.*** Except as otherwise provided in this paragraph (b)(1)(ii)(*b*)(*1*), the provisions of paragraphs (b)(3)(iv) and (b)(4)(viii) of this section (regarding the allocation of creditable foreign taxes) apply for partnership taxable years beginning on or after October 19, 2006. The rules that apply to allocations of creditable foreign taxes made in partnership taxable years beginning before October 19, 2006 are contained in § 1.704-1T(b)(1)(ii)(*b*)(*1*) and (b)(4)(xi) as in effect before October 19, 2006 (see 26 CFR part 1 revised as of April 1, 2005). However, taxpayers may rely on the provisions of paragraphs (b)(3)(iv) and (b)(4)(viii) of this section for partnership taxable years beginning on or after April 21, 2004. Except as provided in the next sentence, the provisions of paragraphs (b)(4)(viii)(*a*)(*1*), (b)(4)(viii)(*c*)(*1*), (b)(4)(viii)(*c*)(*2*)(*ii*) and (*iii*), (b)(4)(viii)(*c*)(*3*) and (*4*), and (b)(4)(viii)(*d*)(*1*) (as in effect on July 24, 2019) and in paragraphs (b)(6)(i), (ii), and (iii) of this section (*Examples 1,*

2, and *3*) apply for partnership taxable years that both begin on or after January 1, 2016, and end after February 4, 2016. For partnership taxable years beginning after December 31, 2019, paragraph (b)(4)(viii)(*d*)(*1*) of this section applies. For the rules that apply to partnership taxable years beginning on or after October 19, 2006, and before January 1, 2016, and to taxable years that both begin on or after January 1, 2016, and end on or before February 4, 2016, see § 1.704-1(b)(1)(ii)(*b*), (b)(4)(viii)(*a*)(*1*), (b)(4)(viii)(*c*)(*1*), (b)(4)(viii)(*c*)(*2*)(*ii*) and (*iii*), (b)(4)(viii)(*c*)(*3*) and (*4*), (b)(4)(viii)(*d*)(*1*), and (b)(5), *Example 25* (as contained in 26 CFR part 1 revised as of April 1, 2015).

(*2*) ***Transition rule.*** Transition relief is provided herein to partnerships whose agreements were entered into prior to April 21, 2004. In such case, if there has been no material modification to the partnership agreement on or after April 21, 2004, then the partnership may apply the provisions of paragraph (b) of this section as if the amendments made by paragraphs (b)(3)(iv) and (b)(4)(viii) of this section had not occurred. If the partnership agreement was materially modified on or after April 21, 2004, then the rules provided in paragraphs (b)(3)(iv) and (b)(4)(viii) of this section shall apply to the later of the taxable year beginning on or after October 19, 2006 or the taxable year within which the material modification occurred, and to all subsequent taxable years. If the partnership agreement was materially modified on or after April 21, 2004, and before a tax year beginning on or after October 19, 2006, see §§ 1.704-1T(b)(1)(ii)(*b*)(*1*) and 1.704-1T(b)(4)(xi) as in effect prior to October 19, 2006 (26 CFR part 1 revised as of April 1, 2005). For purposes of this paragraph (b)(1)(ii)(*b*)(*2*), any change in ownership constitutes a material modification to the partnership agreement. This transition rule does not apply to any taxable year (and all subsequent taxable years) in which persons that are related to each other (within the meaning of section 267(b) and 707(b)) collectively have the power to amend the partnership agreement without the consent of any unrelated party.

(*3*) ***Special rules for certain inter-branch payments*** —

(i) ***In general.*** The provisions of § 1.704-1(b)(4)(viii)(*d*)(*3*) apply for partnership taxable years ending after February 9, 2015. See 26 CFR 1.704-1T(b)(4)(viii)(*d*)(*3*) (revised as of April 1, 2014) for rules applicable to taxable years beginning on or after January 1, 2012, and ending on or before February 9, 2015.

(*ii*) ***Transition rule.*** Transition relief is provided by this paragraph (b)(1)(ii)(*b*)(*3*)(*ii*) to partnerships whose agreements were entered into before February 14, 2012. In such cases, if there has been no material modification to the partnership agreement on or after February 14, 2012, then, for taxable years beginning on or after January 1, 2012, and before January 1, 2016, and for taxable years that both begin on or after January 1, 2012, and end on or before February 4, 2016, these partnerships may apply the provisions of § 1.704-1(b)(4)(viii)(*c*)(*3*)(*ii*) and (b)(4)(viii)(*d*)(*3*) (see 26 CFR part 1 revised as of April 1, 2011). For taxable years that both begin on or after January 1, 2016, and end after February 4, 2016, these partnerships may apply the provisions of § 1.704-1(b)(4)(viii)(*d*)(*3*) (see 26 CFR part 1 revised as of April 1, 2011). For purposes of this paragraph (b)(1)(ii)(*b*)(*3*), any change in ownership constitutes a material modification to the partnership agreement. The transition rule in this paragraph

(b)(1)(ii)(*b*)(*3*)(*ii*) does not apply to any taxable year in which persons bearing a relationship to each other that is specified in section 267(b) or section 707(b) collectively have the power to amend the partnership agreement without the consent of any unrelated party (and all subsequent taxable years).

(*4*) ***Special rules for covered asset acquisitions.*** Paragraphs (b)(4)(viii)(*c*)(*4*)(*v*) through (*vii*) of this section apply to covered asset acquisitions (CAAs) (as defined in § 1.901(m)-1(a)(13)) occurring on or after March 23, 2020. Taxpayers may, however, choose to apply paragraphs (b)(4)(viii)(*c*)(*4*)(*v*) through (*vii*) of this section before the date paragraphs (b)(4)(viii)(*c*)(*4*)(*v*) through (*vii*) of this section are applicable provided that they (along with any persons that are related (within the meaning of section 267(b) or 707(b)) to the taxpayer)—

(*i*) Consistently apply paragraphs (b)(4)(viii)(*c*)(*4*)(*v*) through (*vii*) of this section, § 1.901(m)-1, and §§ 1.901(m)-3 through 1.901(m)-8 (excluding § 1.901(m)-4(e)) to all CAAs occurring on or after January 1, 2011, and consistently apply § 1.901(m)-2 (excluding § 1.901(m)-2(d)) to all CAAs occurring on or after December 7, 2016, on any original or amended tax return for each taxable year for which the application of the provisions listed in this paragraph (b)(1)(ii)(*b*)(*4*)(*i*) affects the tax liability and for which the statute of limitations does not preclude assessment or the filing of a claim for refund, as applicable;

(*ii*) File all tax returns described in paragraph (b)(1)(ii)(*b*)(*4*)(*i*) of this section for any taxable year ending on or before March 23, 2020, no later than March 23, 2021; and

(*iii*) Make appropriate adjustments to take into account deficiencies that would have resulted from the consistent application under paragraph (b)(1)(ii)(*b*)(*4*)(*i*) of this section for taxable years that are not open for assessment.

(iii) ***Effect of other sections.*** The determination of a partner's distributive share of income, gain, loss, deduction, or credit (or item thereof) under section 704(b) and this paragraph is not conclusive as to the tax treatment of a partner with respect to such distributive share. For example, an allocation of loss or deduction to a partner that is respected under section 704(b) and this paragraph may not be deductible by such partner if the partner lacks the requisite motive for economic gain (see, e.g., *Goldstein v. Commissioner,* 364 F.2d 734 (2d Cir. 1966)), or may be disallowed for that taxable year (and held in suspense) if the limitations of section 465 or section 704(d) are applicable. Similarly, an allocation that is respected under section 704(b) and this paragraph nevertheless may be reallocated under other provisions, such as section 482, section 704(e)(2), section 706(d) (and related assignment of income principles), and paragraph (b)(2)(ii) of § 1.751-1. If a partnership has a section 754 election in effect, a partner's distributive share of partnership income, gain, loss, or deduction may be affected as provided in § 1.743-1 (see paragraph (b)(2)(iv)(*m*)(*2*) of this section). A deduction that appears to be a nonrecourse deduction deemed to be in accordance with the partners' interests in the partnership may not be such because purported nonrecourse liabilities of the partnership in fact constitute equity rather than debt. The examples in paragraph (b)(5) of this section concern the validity of allocations under section 704(b) and this paragraph and, except as noted, do not address the effect of other sections or limitations on such allocations.

(iv) *Other possible tax consequences.* Allocations that are respected under section 704(b) and this paragraph may give rise to other tax consequences, such as those resulting from the application of section 61, section 83, section 751, section 2501, paragraph (f) of § 1.46-3, § 1.47-6, paragraph (b)(1) of § 1.721-1 (and related principles), and paragraph (e) of § 1.752-1. The examples in paragraph (b)(5) of this section concern the validity of allocations under section 704(b) and this paragraph and, except as noted, do not address other tax consequences that may result from such allocations.

(v) *Purported allocations.* Section 704(b) and this paragraph do not apply to a purported allocation if it is made to a person who is not a partner of the partnership (see section 7701(a)(2) and paragraph (d) of § 301.7701-3) or to a person who is not receiving the purported allocation in his capacity as a partner (see section 707(a) and paragraph (a) of § 1.707-1).

(vi) *Section 704(c) determinations.* **Section 704(c) and § 1.704-3 generally require that if property is contributed by a partner to a partnership, the partners' distributive shares of income, gain, loss, and deduction, as computed for tax purposes, with respect to the property are determined so as to take account of the variation between the adjusted tax basis and fair market value of the property. Although section 704(b) does not directly determine the partners' distributive shares of tax items governed by section 704(c), the partners' distributive shares of tax items may be determined under section 704(c) and § 1.704-3 (depending on the allocation method chosen by the partnership under § 1.704-3) with reference to the partners' distributive shares of the corresponding book items, as determined under section 704(b) and this paragraph. (See paragraphs (b)(2)(iv)(*d*) and (b)(4)(i) of this section.) See § 1.704-3 for methods of making allocations under section 704(c), and § 1.704-3(d)(2) for a special rule in determining the amount of book items if the remedial allocation method is chosen by the partnership. See also paragraph (b)(5) *Example (13)*** (i) of this section.

(vii) *Bottom line allocations.* Section 704(b) and this paragraph are applicable to allocations of income, gain, loss, deduction, and credit, allocations of specific items of income, gain, loss, deduction, and credit, and allocations of partnership net or “bottom line” taxable income and loss. An allocation to a partner of a share of partnership net or “bottom line” taxable income or loss shall be treated as an allocation to such partner of the same share of each item of income, gain, loss, and deduction that is taken into account in computing such net or “bottom line” taxable income or loss. See example 15(i) of paragraph (b)(5) of this section.

(2) *Substantial economic effect* —

(i) *Two-part analysis.* The determination of whether an allocation of income, gain, loss, or deduction (or item thereof) to a partner has substantial economic effect involves a two-part analysis that is made as of the end of the partnership taxable year to which the allocation relates. First, the allocation must have economic effect (within the meaning of paragraph (b)(2)(ii) of this section). Second, the economic effect of the allocation must be substantial (within the meaning of paragraph (b)(2)(iii) of this section).

(ii) *Economic effect* —

(*a*) *Fundamental principles.* In order for an allocation to have economic effect, it must be consistent with the underlying economic arrangement of the partners. This means that in the event there is an economic benefit or economic burden that corresponds to an allocation, the partner to whom the allocation is made must receive such economic benefit or bear such economic burden.

(*b*) ***Three requirements.*** Based on the principles contained in paragraph (b)(2)(ii)(*a*) of this section, and except as otherwise provided in this paragraph, an allocation of income, gain, loss, or deduction (or item thereof) to a partner will have economic effect if, and only if, throughout the full term of the partnership, the partnership agreement provides—

(*1*) For the determination and maintenance of the partners' capital accounts in accordance with the rules of paragraph (b)(2)(iv) of this section,

(*2*) Upon liquidation of the partnership (or any partner's interest in the partnership), liquidating distributions are required in all cases to be made in accordance with the positive capital account balances of the partners, as determined after taking into account all capital account adjustments for the partnership taxable year during which such liquidation occurs (other than those made pursuant to this requirement (*2*) and requirement (*3*) of this paragraph (b)(2)(ii)(*b*)), by the end of such taxable year (or, if later, within 90 days after the date of such liquidation), and

(*3*) If such partner has a deficit balance in his capital account following the liquidation of his interest in the partnership, as determined after taking into account all capital account adjustments for the partnership taxable year during which such liquidation occurs (other than those made pursuant to this requirement (*3*)), he is unconditionally obligated to restore the amount of such deficit balance to the partnership by the end of such taxable year (or, if later, within 90 days after the date of such liquidation), which amount shall, upon liquidation of the partnership, be paid to creditors of the partnership or distributed to other partners in accordance with their positive capital account balances (in accordance with requirement (*2*) of this paragraph (b)(2)(*ii*)(*b*)). Notwithstanding the partnership agreement, an obligation to restore a deficit balance in a partner's capital account, including an obligation described in paragraph (b)(2)(ii)(*c*)(*1*) of this section, will not be respected for purposes of this section to the extent the obligation is disregarded under paragraph (b)(2)(ii)(*c*)(*4*) of this section.

(*4*) For purposes of paragraphs (b)(2)(ii)(*b*)(*1*) through (*3*) of this section, a partnership taxable year shall be determined without regard to section 706(c)(2)(A).

(*5*) The requirements in paragraphs (b)(2)(ii)(*b*)(*2*) and (*3*) of this section are not violated if all or part of the partnership interest of one or more partners is purchased (other than in connection with the liquidation of the partnership) by the partnership or by one or more partners (or one or more persons related, within the meaning of section 267(b) (without modification by section 267(e)(1)) or section 707(b)(1), to a partner) pursuant to an agreement negotiated at arm's length by persons who at the time such agreement is entered into have materially adverse interests and if a principal purpose of such purchase and sale is not to avoid the principles of the second sentence of paragraph (b)(2)(ii)(*a*) of this section.

(*6*) The requirement in paragraph (b)(2)(ii)(*b*)(*2*) of this section is not violated if, upon the liquidation of the partnership, the capital accounts of the partners are increased or decreased pursuant to paragraph (b)(2)(iv)(*f*) of this section as of the date of such liquidation and the partnership makes liquidating distributions within the time set out in the requirement in paragraph (b)(2)(ii)(*b*)(*2*) of this section in the ratios of the partners' positive capital accounts, except that it does not distribute reserves reasonably required to provide for liabilities (contingent or otherwise) of the

partnership and installment obligations owed to the partnership, so long as such withheld amounts are distributed as soon as practicable and in the ratios of the partners' positive capital account balances.

(*7*) See *Examples 1.*(i) and *(ii), 4.(i), 8.(i),* and *16.(i)* of paragraph (b)(5) of this section for issues concerning paragraph (b)(2)(ii)(*b*) of this section.

(*c*) *Obligation to restore deficit* —

(*1*) ***Other arrangements treated as obligations to restore deficits***. If a partner is not expressly obligated to restore the deficit balance in such partner's capital account, such partner nevertheless will be treated as obligated to restore the deficit balance in his capital account (in accordance with the requirement in paragraph (b)(2)(ii)(*b*)(*3*) of this section and subject to paragraph (b)(2)(ii)(*c*)(*2*) of this section) to the extent of—

(*A*) The outstanding principal balance of any promissory note (of which such partner is the maker) contributed to the partnership by such partner (other than a promissory note that is readily tradable on an established securities market), and

(*B*) The amount of any unconditional obligation of such partner (whether imposed by the partnership agreement or by state or local law) to make subsequent contributions to the partnership (other than pursuant to a promissory note of which such partner is the maker).

(*2*) ***Satisfaction requirement.*** **For purposes of paragraph (b)(2)(ii)(*c*)(*1*) of this section, a promissory note or unconditional obligation is taken into account only if it is required to be satisfied at a time no later than the end of the partnership taxable year in which such partner's interest is liquidated (or, if later, within 90 days after the date of such liquidation). If a promissory note referred to in paragraph (b)(2)(ii)(*c*)(*1*) of this section is negotiable, a partner will be considered required to satisfy such note within the time period specified in this paragraph (b)(2)(ii)(*c*)(*2*) if the partnership agreement provides that, in lieu of actual satisfaction, the partnership will retain such note and such partner will contribute to the partnership the excess, if any, of the outstanding principal balance of such note over its fair market value at the time of liquidation. See paragraph (b)(2)(iv)(*d*)(*2*) of this section. See *Examples 1.(ix)*** and (*x*) of paragraph (b)(5) of this section.

(*3*) ***Related party notes.*** For purposes of paragraph (b)(2) of this section, if a partner contributes a promissory note to the partnership during a partnership taxable year beginning after December 29, 1988, and the maker of such note is a person related to such partner (within the meaning of § 1.752-4(b)(1)), then such promissory note shall be treated as a promissory note of which such partner is the maker.

(*4*) ***Obligations disregarded*** —(*A*) *General rule*. A partner in no event will be considered obligated to restore the deficit balance in his capital account to the partnership (in accordance with the requirement in paragraph (b)(2)(ii)(*b*)(*3*) of this section) to the extent such partner's obligation is a bottom dollar payment obligation that is not recognized under § 1.752-2(b)(3) or is not legally enforceable, or the facts and circumstances otherwise indicate a plan to circumvent or avoid such obligation. See paragraphs (b)(2)(ii)(*f*), (b)(2)(ii)(*h*), and (b)(4)(vi) of this section for other rules regarding such obligation. To the extent a partner is not considered obligated to

restore the deficit balance in the partner's capital account to the partnership (in accordance with the requirement in paragraph (b)(2)(ii)(*b*)(*3*) of this section), the obligation is disregarded and paragraph (b)(2) of this section and § 1.752-2 are applied as if the obligation did not exist.

(*B*) *Factors indicating plan to circumvent or avoid obligation.* In the case of an obligation to restore a deficit balance in a partner's capital account upon liquidation of a partnership, paragraphs (b)(2)(ii)(*c*)(*4*)(*B*)(*i*) through (*iv*) of this section provide a non-exclusive list of factors that may indicate a plan to circumvent or avoid the obligation. For purposes of making determinations under this paragraph (b)(2)(ii)(*c*)(*4*), the weight to be given to any particular factor depends on the particular case and the presence or absence of any particular factor is not, in itself, necessarily indicative of whether or not the obligation is respected. The following factors are taken into consideration for purposes of this paragraph (b)(2):

(*i*) The partner is not subject to commercially reasonable provisions for enforcement and collection of the obligation.

(*ii*) The partner is not required to provide (either at the time the obligation is made or periodically) commercially reasonable documentation regarding the partner's financial condition to the partnership.

(*iii*) The obligation ends or could, by its terms, be terminated before the liquidation of the partner's interest in the partnership or when the partner's capital account as provided in § 1.704-1(b)(2)(iv) is negative other than when a transferee partner assumes the obligation.

(*iv*) The terms of the obligation are not provided to all the partners in the partnership in a timely manner.

(*d*) ***Alternate test for economic effect.*** If—

(*1*) Requirements (*1*) and (*2*) of paragraph (b)(2)(ii)(*b*) of this section are satisfied, and

(*2*) The partner to whom an allocation is made is not obligated to restore the deficit balance in his capital account to the partnership (in accordance with requirement (*3*) of paragraph (b)(2)(ii)(*b*) of this section), or is obligated to restore only a limited dollar amount of such deficit balance, and

(*3*) The partnership agreement contains a “qualified income offset,”

such allocation will be considered to have economic effect under this paragraph (b)(2)(ii)(*d*) to the extent such allocation does not cause or increase a deficit balance in such partner's capital account (in excess of any limited dollar amount of such deficit balance that such partner is obligated to restore) as of the end of the partnership taxable year to which such allocation relates. In determining the extent to which the previous sentence is satisfied, such partner's capital account also shall be reduced for—

(*4*) Adjustments that, as of the end of such year, reasonably are expected to be made to such partner's capital account under paragraph (b)(2)(iv)(*k*) of this section for depletion allowances with respect to oil and gas properties of the partnership, and

(*5*) Allocations of loss and deduction that, as of the end of such year, reasonably are expected to be made to such partner pursuant to section 704(e)(2), section 706(d), and paragraph (b)(2)(ii) of § 751-1, and

(*6*) Distributions that, as of the end of such year, reasonably are expected to be made to such partner to the extent they exceed offsetting increases to such partner's capital account that reasonably are expected to occur during (or prior to) the partnership taxable years in which such distributions reasonably are expected to be made (other than increases pursuant to a minimum gain chargeback under paragraph (b)(4)(iv)(*e*) of this section or under § 1.704-2(f); however, increases to a partner's capital account pursuant to a minimum gain chargeback requirement are taken into account as an offset to distributions of nonrecourse liability proceeds that are reasonably expected to be made and that are allocable to an increase in partnership minimum gain).

For purposes of determining the amount of expected distributions and expected capital account increases described in (*6*) above, the rule set out in paragraph (b)(2)(iii)(*c*) of this section concerning the presumed value of partnership property shall apply. The partnership agreement contains a "qualified income offset" if, and only if, it provides that a partner who unexpectedly receives an adjustment, allocation, or distribution described in (*4*), (*5*), or (*6*) above, will be allocated items of income and gain (consisting of a pro rata portion of each item of partnership income, including gross income, and gain for such year) in an amount and manner sufficient to eliminate such deficit balance as quickly as possible. Allocations of items of income and gain made pursuant to the immediately preceding sentence shall be deemed to be made in accordance with the partners' interests in the partnership if requirements (*1*) and (*2*) of paragraph (b)(2)(ii)(*b*) of this section are satisfied. See examples (1)(iii), (iv), (v), (vi), (viii), (ix), and (x), (15), and (16)(ii) of paragraph (b)(5) of this section.

(*e*) ***Partial economic effect.*** If only a portion of an allocation made to a partner with respect to a partnership taxable year has economic effect, both the portion that has economic effect and the portion that is reallocated shall consist of a proportionate share of all items that made up the allocation to such partner for such year. See examples (15) (ii) and (iii) of paragraph (b)(5) of this section.

(*f*) ***Reduction of obligation to restore.*** If requirements (*1*) and (*2*) of paragraph (b)(2)(ii)(*b*) of this section are satisfied, a partner's obligation to restore the deficit balance in his capital account (or any limited dollar amount thereof) to the partnership may be eliminated or reduced as of the end of a partnership taxable year without affecting the validity of prior allocations (see paragraph (b)(4)(vi) of this section) to the extent the deficit balance (if any) in such partner's capital account, after reduction for the items described in (*4*), (*5*), and (*6*) of paragraph (b)(2)(ii)(*d*) of this section, will not exceed the partner's remaining obligation (if any) to restore the deficit balance in his capital account. See example (1)(viii) of paragraph (b)(5) of this section.

(*g*) ***Liquidation defined.*** For purposes of this paragraph, a liquidation of a partner's interest in the partnership occurs upon the earlier of

(*1*) the date upon which there is a liquidation of the partnership, or

(*2*) the date upon which there is a liquidation of the partner's interest in the partnership under paragraph (d) of § 1.761-1. For purposes of this paragraph, the liquidation of a partnership occurs upon the earlier of

(*3*) the date upon which the partnership is terminated under section 708(b)(1), or

(*4*) the date upon which the partnership ceases to be a going concern (even though it may continue in existence for the purpose of winding up its affairs, paying its debts, and distributing any remaining balance to its partners). Requirements (*2*) and (*3*) of paragraph (b)(2)(ii)(*b*) of this section will be considered unsatisfied if the liquidation of a partner's interest in the partnership is delayed after its primary business activities have been terminated (for example, by continuing to engage in a relatively minor amount of business activity, if such actions themselves do not cause the partnership to terminate pursuant to section 708(b)(1)) for a principal purpose of deferring any distribution pursuant to requirement (*2*) of paragraph (b)(2)(ii)(*b*) of this section or deferring any partner's obligations under requirement (*3*) of paragraph (b)(2)(ii)(*b*) of this section.

(*h*) ***Partnership agreement defined.*** For purposes of this paragraph, the partnership agreement includes all agreements among the partners, or between one or more partners and the partnership, concerning affairs of the partnership and responsibilities of partners, whether oral or written, and whether or not embodied in a document referred to by the partners as the partnership agreement. Thus, in determining whether distributions are required in all cases to be made in accordance with the partners' positive capital account balances (requirement (*2*) of paragraph (b)(2)(ii)(*b*) of this section), and in determining the extent to which a partner is obligated to restore a deficit balance in his capital account (requirement (*3*) of paragraph (b)(2)(ii)(*b*) of this section), all arrangements among partners, or between one or more partners and the partnership relating to the partnership, direct and indirect, including puts, options, and other buy-sell agreements, and any other “stop-loss” arrangement, are considered to be part of the partnership agreement. (Thus, for example, if one partner who assumes a liability of the partnership is indemnified by another partner for a portion of such liability, the indemnifying partner (depending upon the particular facts) may be viewed as in effect having a partial deficit makeup obligation as a result of such indemnity agreement.) In addition, the partnership agreement includes provisions of Federal, State, or local law that govern the affairs of the partnership or are considered under such law to be a part of the partnership agreement (see the last sentence of paragraph (c) of § 1.761-1). For purposes of this paragraph (b)(2)(ii)(*h*), an agreement with a partner or a partnership shall include an agreement with a person related, within the meaning of section 267(b) (without modification by section 267(e)(1)) or section 707(b)(1), to such partner or partnership. For purposes of the preceding sentence, sections 267(b) and 707(b)(1) shall be applied for partnership taxable years beginning after December 29, 1988 by

(*1*) substituting “80 percent or more” for “more than 50 percent” each place it appears in such sections,

(*2*) excluding brothers and sisters from the members of a person's family, and

(*3*) disregarding § 267(f)(1)(A).

(*i*) ***Economic effect equivalence.*** Allocations made to a partner that do not otherwise have economic effect under this paragraph (b)(2)(ii) shall nevertheless be deemed to have economic effect, provided that as of the end of each partnership taxable year a liquidation of the partnership at the end of such year or at the end of any future year would produce the same economic results to the partners as would occur if requirements (*1*), (*2*), and (*3*) of paragraph (b)(2)(ii)(*b*) of this section had been satisfied, regardless of the economic performance of the partnership. See examples (4)(ii) and (iii) of paragraph (b)(5) of this section.

(iii) ***Substantiality*** —

(*a*) ***General rules.*** Except as otherwise provided in this paragraph (b)(2)(iii), the economic effect of an allocation (or allocations) is substantial if there is a reasonable possibility that the allocation (or allocations) will affect substantially the dollar amounts to be received by the partners from the partnership, independent of tax consequences. Notwithstanding the preceding sentence, the economic effect of an allocation (or allocations) is not substantial if, at the time the allocation becomes part of the partnership agreement,

(*1*) the after-tax economic consequences of at least one partner may, in present value terms, be enhanced compared to such consequences if the allocation (or allocations) were not contained in the partnership agreement, and

(*2*) there is a strong likelihood that the after-tax economic consequences of no partner will, in present value terms, be substantially diminished compared to such consequences if the allocation (or allocations) were not contained in the partnership agreement. In determining the after-tax economic benefit or detriment to a partner, tax consequences that result from the interaction of the allocation with such partner's tax attributes that are unrelated to the partnership will be taken into account. See examples 5 and 9 of paragraph (b)(5) of this section. The economic effect of an allocation is not substantial in the two situations described in paragraphs (b)(2)(iii) (*b*) and (*c*) of this section. However, even if an allocation is not described therein, its economic effect may be insubstantial under the general rules stated in this paragraph (b)(2)(iii)(*a*). References in this paragraph (b)(2)(iii) to allocations include capital account adjustments made pursuant to paragraph (b)(2)(iv)(*k*) of this section. References in this paragraph (b)(2)(iii) to a comparison to consequences arising if an allocation (or allocations) were not contained in the partnership agreement mean that the allocation (or allocations) is determined in accordance with the partners' interests in the partnership (within the meaning of paragraph (b)(3) of this section), disregarding the allocation (or allocations) being tested under this paragraph (b)(2)(iii).

(*b*) ***Shifting tax consequences.*** The economic effect of an allocation (or allocations) in a partnership taxable year is not substantial if, at the time the allocation (or allocations) becomes part of the partnership agreement, there is a strong likelihood that—

(*1*) The net increases and decreases that will be recorded in the partners' respective capital accounts for such taxable year will not differ substantially from the net increases and decreases that would be recorded in such partners' respective capital accounts for such year if the allocations were not contained in the partnership agreement, and

(*2*) The total tax liability of the partners (for their respective taxable years in which the allocations will be taken into account) will be less than if the allocations were not contained in the partnership agreement (taking into account tax consequences that result from the interaction of the allocation (or allocations) with partner tax attributes that are unrelated to the partnership).

If, at the end of a partnership taxable year to which an allocation (or allocations) relates, the net increases and decreases that are recorded in the partners' respective capital accounts do not differ substantially from the net increases and decreases that would have been recorded in such partners' respective capital accounts had the allocation (or allocations) not been contained in the partnership agreement, and the total tax liability of the partners is (as described in (*2*) above) less than it would have been had the allocation (or allocations) not been contained in the partnership agreement, it will be presumed that, at the time the allocation (or allocations) became part of such partnership agreement, there was a strong likelihood that these results would occur. This presumption may be overcome by a showing of facts and circumstances that prove otherwise. See examples 6, 7(ii) and (iii), and (10)(ii) of paragraph (b)(5) of this section.

(*c*) ***Transitory allocations.*** If a partnership agreement provides for the possibility that one or more allocations (the “original allocation(s)”) will be largely offset by one or more other allocations (the “offsetting allocation(s)”), and, at the time the allocations become part of the partnership agreement, there is a strong likelihood that—

(*1*) The net increases and decreases that will be recorded in the partners' respective capital accounts for the taxable years to which the allocations relate will not differ substantially from the net increases and decreases that would be recorded in such partners' respective capital accounts for such years if the original allocation(s) and offsetting allocation(s) were not contained in the partnership agreement, and

(*2*) The total tax liability of the partners (for their respective taxable years in which the allocations will be taken into account) will be less than if the allocations were not contained in the partnership agreement (taking into account tax consequences that result from the interaction of the allocation (or allocations) with partner tax attributes that are unrelated to the partnership)

the economic effect of the original allocation(s) and offsetting allocation(s) will not be substantial. If, at the end of a partnership taxable year to which an offsetting allocation(s) relates, the net increases and decreases recorded in the partners' respective capital accounts do not differ substantially from the net increases and decreases that would have been recorded in such partners' respective capital accounts had the original allocation(s) and the offsetting allocation(s) not been contained in the partnership agreement, and the total tax liability of the partners is (as described in (*2*) above) less than it would have been had such allocations not been contained in the partnership agreement, it will be presumed that, at the time the allocations became part of the partnership agreement, there was a strong likelihood that these results would occur. This presumption may be overcome by a showing of facts and circumstances that prove otherwise. See examples (1)(xi), (2), (3), (7), (8)(ii), and (17) of paragraph (b)(5) of this section. Notwithstanding the foregoing, the original allocation(s) and the offsetting allocation(s) will not be insubstantial (under this paragraph (b)(2)(iii)(*c*)) and, for purposes of paragraph (b)(2)(iii)(*a*), it will be presumed that there is a reasonable possibility that the allocations will affect substantially the dollar

amounts to be received by the partners from the partnership if, at the time the allocations become part of the partnership agreement, there is a strong likelihood that the offsetting allocation(s) will not, in large part, be made within five years after the original allocation(s) is made (determined on a first-in, first-out basis). See example 2 of paragraph (b)(5) of this section. For purposes of applying the provisions of this paragraph (b)(2)(iii) (and paragraphs (b)(2)(ii)(*d*)(*6*) and (b)(3)(iii) of this section), the adjusted tax basis of partnership property (or, if partnership property is properly reflected on the books of the partnership at a book value that differs from its adjusted tax basis, the book value of such property) will be presumed to be the fair market value of such property, and adjustments to the adjusted tax basis (or book value) of such property will be presumed to be matched by corresponding changes in such property's fair market value. Thus, there cannot be a strong likelihood that the economic effect of an allocation (or allocations) will be largely offset by an allocation (or allocations) of gain or loss from the disposition of partnership property. See examples 1 (vi) and (xi) of paragraph (b)(5) of this section.

(*d*) ***Partners that are look-through entities or members of a consolidated group*** —

(*1*) ***In general.*** For purposes of applying paragraphs (b)(2)(iii)(*a*), (*b*), and (*c*) of this section to a partner that is a look-through entity, the tax consequences that result from the interaction of the allocation with the tax attributes of any person that is an owner, or in the case of a trust or estate, the beneficiary, of an interest in such a partner, whether directly or indirectly through one or more look-through entities, must be taken into account. For purposes of applying paragraphs (b)(2)(iii)(*a*), (*b*), and (*c*) of this section to a partner that is a member of a consolidated group (within the meaning of § 1.1502-1(h)), the tax consequences that result from the interaction of the allocation with the tax attributes of the consolidated group and with the tax attributes of another member with respect to a separate return year must be taken into account. See paragraph (b)(5) *Example 29* of this section.

(*2*) ***Look-through entity.*** For purposes of this paragraph (b)(2)(iii)(*d*), a *look-through entity* means—

(*i*) A partnership;

(*ii*) A subchapter S corporation;

(*iii*) A trust or an estate;

(*iv*) An entity that is disregarded for Federal tax purposes, such as a qualified subchapter S subsidiary under section 1361(b)(3), an entity that is disregarded as an entity separate from its owner under §§ 301.7701-1 through 301.7701-3 of this chapter, or a qualified REIT subsidiary within the meaning of section 856(i)(2); or

(*v*) A controlled foreign corporation if United States shareholders of the controlled foreign corporation in the aggregate own, directly or indirectly, at least 10 percent of the capital or profits of the partnership on any day during the partnership's taxable year. In such case, the controlled foreign corporation shall be treated as a look-through entity, but only with respect to allocations of income, gain, loss, or deduction (or items thereof) that enter into the computation of a United States shareholder's inclusion under section 951(a) with respect to the controlled foreign corporation, enter into any person's

income attributable to a United States shareholder's inclusion under section 951(a) with respect to the controlled foreign corporation, or would enter into the computations described in this paragraph if such items were allocated to the controlled foreign corporation. See paragraph (b)(2)(iii)(*d*)(*6*) for the definition of indirect ownership.

(*3*) ***Controlled foreign corporations.*** For purposes of this section, the term *controlled foreign corporation* means a controlled foreign corporation as defined in section 957(a) or section 953(c). In the case of a controlled foreign corporation that is a look-through entity, the tax attributes to be taken into account are those of any person that is a United States shareholder (as defined in paragraph (b)(2)(iii)(*d*)(*5*) of this section) of the controlled foreign corporation, or, if the United States shareholder is a look-through entity, a United States person that owns an interest in such shareholder directly or indirectly through one or more look-through entities.

(*4*) ***United States person.*** For purposes of this section, a *United States person* is a person described in section 7701(a)(30).

(*5*) ***United States shareholder.*** For purposes of this section, a *United States shareholder* is a person described in section 951(b) or section 953(c).

(*6*) ***Indirect ownership.*** For purposes of this section, indirect ownership of stock or another equity interest (such as an interest in a partnership) shall be determined in accordance with the principles of section 318, substituting the phrase “10 percent” for the phrase “50 percent” each time it appears.

(*e*) ***De minimis rule*** —

(*1*) ***Partnership taxable years beginning after May 19, 2008 and beginning before December 28, 2012.*** Except as provided in paragraph (b)(2)(iii)(*e*)(*2*) of this section, for purposes of applying this paragraph (b)(2)(iii), for partnership taxable years beginning after May 19, 2008 and beginning before December 28, 2012, the tax attributes of de minimis partners need not be taken into account. For purposes of this paragraph (b)(2)(iii)(*e*)(*1*), a de minimis partner is any partner, including a look-through entity that owns, directly or indirectly, less than 10 percent of the capital and profits of a partnership, and who is allocated less than 10 percent of each partnership item of income, gain, loss, deduction, and credit. See paragraph (b)(2)(iii)(*d*)(*6*) of this section for the definition of indirect ownership.

(*2*) ***Nonapplicability of de minimis rule.***

(*i*) ***Allocations that become part of the partnership agreement on or after December 28, 2012.*** Paragraph (b)(2)(iii)(*e*)(*1*) of this section does not apply to allocations that become part of the partnership agreement on or after December 28, 2012.

(*ii*) ***Retest for allocations that become part of the partnership agreement prior to December 28, 2012.*** If the de minimis partner rule of paragraph (b)(2)(iii)(*e*)(*1*) of this section was relied upon in testing the substantiality of allocations that became part of the partnership agreement before December 28, 2012, such allocations must be retested on the first day of the first partnership taxable year beginning on or after December 28, 2012, without regard to paragraph (b)(2)(iii)(*e*)(*1*) of this section.

(iv) *Maintenance of capital accounts* —

(*a*) ***In general.*** The economic effect test described in paragraph (b)(2)(ii) of this section requires an examination of the capital accounts of the partners of a partnership, as maintained under the partnership agreement. Except as otherwise provided in paragraph (b)(2)(ii)(*i*) of this section, an allocation of income, gain, loss, or deduction will not have economic effect under paragraph (b)(2)(ii) of this section, and will not be deemed to be in accordance with a partner's interest in the partnership under paragraph (b)(4) of this section, unless the capital accounts of the partners are determined and maintained throughout the full term of the partnership in accordance with the capital accounting rules of this paragraph (b)(2)(iv).

(*b*) ***Basic rules.*** Except as otherwise provided in this paragraph (b)(2)(iv), the partners' capital accounts will be considered to be determined and maintained in accordance with the rules of this paragraph (b)(2)(iv) if, and only if, each partner's capital account is increased by

(*1*) the amount of money contributed by him to the partnership,

(*2*) the fair market value of property contributed by him to the partnership (net of liabilities that the partnership is considered to assume or take subject to), and

(*3*) allocations to him of partnership income and gain (or items thereof), including income and gain exempt from tax and income and gain described in paragraph (b)(2)(iv)(*g*) of this section, but excluding income and gain described in paragraph (b)(4)(i) of this section; and is decreased by

(*4*) the amount of money distributed to him by the partnership,

(*5*) the fair market value of property distributed to him by the partnership (net of liabilities that such partner is considered to assume or take subject to),

(*6*) allocations to him of expenditures of the partnership described in section 705 (a)(2)(B), and

(*7*) allocations of partnership loss and deduction (or item thereof), including loss and deduction described in paragraph (b)(2)(iv)(*g*) of this section, but excluding items described in (*6*) above and loss or deduction described in paragraphs (b)(4)(i) or (b)(4)(iii) of this section; and is otherwise adjusted in accordance with the additional rules set forth in this paragraph (b)(2)(iv). For purposes of this paragraph, a partner who has more than one interest in a partnership shall have a single capital account that reflects all such interests, regardless of the class of interests owned by such partner (e.g., general or limited) and regardless of the time or manner in which such interests were acquired. For liabilities assumed before June 24, 2003, references to liabilities in this paragraph (b)(2)(iv)(*b*) shall include only liabilities secured by the contributed or distributed property that are taken into account under section 752(a) and (b).

(*c*) ***Treatment of liabilities.*** For purposes of this paragraph (b)(2)(iv),

(*1*) money contributed by a partner to a partnership includes the amount of any partnership liabilities that are assumed by such partner (other than liabilities described in paragraph (b)(2)(iv)(*b*)(*5*) of this section that are assumed by a distributee partner) but does not include increases in such partner's share of partnership liabilities (see section 752(a)), and

(*2*) money distributed to a partner by a partnership includes the amount of such partner's individual liabilities that are assumed by the partnership (other than liabilities described in paragraph (b)(2)(iv)(*b*)(*2*) of this section that are assumed by the partnership) but does not include decreases in such partner's share of partnership liabilities (see section 752(b)). For purposes of this paragraph (b)(2)(iv)(*c*), liabilities are considered assumed only to the extent the assuming party is thereby subjected to personal liability with respect to such obligation, the obligee is aware of the assumption and can directly enforce the assuming party's obligation, and, as between the assuming party and the party from whom the liability is assumed, the assuming party is ultimately liable.

(*d*) ***Contributed property*** —

(*1*) ***In general.*** The basic capital accounting rules contained in paragraph (b)(2)(iv)(*b*) of this section require that a partner's capital account be increased by the fair market value of property contributed to the partnership by such partner on the date of contribution. See *Example 13*(i) of paragraph (b)(5) of this section. Consistent with section 752(c), section 7701(g) does not apply in determining such fair market value.

(*2*) ***Contribution of promissory notes.*** Notwithstanding the general rule of paragraph (b)(2)(iv)(*b*)(*2*) of this section, except as provided in this paragraph (b)(2)(iv)(*d*)(*2*), if a promissory note is contributed to a partnership by a partner who is the maker of such note, such partner's capital account will be increased with respect to such note only when there is a taxable disposition of such note by the partnership or when the partner makes principal payments on such note. See example (1)(ix) of paragraph (b)(5) of this section. The first sentence of this paragraph (b)(2)(iv)(*d*)(*2*) shall not apply if the note referred to therein is readily tradable on an established securities market. See also paragraph (b)(2)(ii)(*c*) of this section. Furthermore, a partner whose interest is liquidated will be considered as satisfying his obligation to restore the deficit balance in his capital account to the extent of

(*i*) the fair market value, at the time of contribution, of any negotiable promissory note (of which such partner is the maker) that such partner contributes to the partnership on or after the date his interest is liquidated and within the time specified in paragraph (b)(2)(ii)(*b*)(*3*) of this section, and

(*ii*) the fair market value, at the time of liquidation, of the unsatisfied portion of any negotiable promissory note (of which such partner is the maker) that such partner previously contributed to the partnership. For purposes of the preceding sentence, the fair market value of a note will be no less than the outstanding principal balance of such note, provided that such note bears interest at a rate no less than the applicable federal rate at the time of valuation.

(3) *Section 704(c) considerations.* Section 704(c) and § 1.704-3 govern the determination of the partners' distributive shares of income, gain, loss, and deduction, as computed for tax purposes, with respect to property contributed to a partnership (see paragraph (b)(1)(vi) of this section). In cases where section 704(c) and § 1.704-3 apply to partnership property, the capital accounts of the partners will not be considered to be determined and maintained in accordance with the rules of this paragraph (b)(2)(iv) unless the partnership agreement requires that the partners' capital accounts be adjusted in accordance with paragraph (b)(2)(iv)(*g*) of this section for allocations to them of income, gain, loss, and deduction (including depreciation, depletion, amortization, or other cost recovery) as computed for book purposes, with respect to the property. See, however, § 1.704-3(d)(2) for a special rule in determining the amount of book items if the partnership chooses the remedial allocation method. See also *Example (13)* (i) of paragraph (b)(5) of this section. Capital accounts are not adjusted to reflect allocations under section 704(c) and § 1.704-3 (e.g., tax allocations of precontribution gain or loss).

(4) *Exercise of noncompensatory options.* Solely for purposes of paragraph (b)(2)(iv)(*b*)(*2*) of this section, the fair market value of the property contributed on the exercise of a noncompensatory option (as defined in § 1.721-2(f)) does not include the fair market value of the option privilege, but does include the consideration paid to the partnership to acquire the option and the fair market value of any property (other than the option) contributed to the partnership on the exercise of the option. With respect to convertible debt, the fair market value of the property contributed on the exercise of the option is the adjusted issue price of the debt and the accrued but unpaid qualified stated interest (as defined in § 1.1273-1(c)) on the debt immediately before the conversion, plus the fair market value of any property (other than the convertible debt) contributed to the partnership on the exercise of the option. See *Examples 31* through *35* of paragraph (b)(5) of this section.

(*e*) *Distributed property* —

(*1*) *In general.* The basic capital accounting rules contained in paragraph (b)(2)(iv) (*b*) of this section require that a partner's capital account be decreased by the fair market value of property distributed by the partnership (without regard to section 7701(g)) to such partner (whether in connection with a liquidation or otherwise). To satisfy this requirement, the capital accounts of the partners first must be adjusted to reflect the manner in which the unrealized income, gain, loss, and deduction inherent in such property (that has not been reflected in the capital accounts previously) would be allocated among the partners if there were a taxable disposition of such property for the fair market value of such property (taking section 7701(g) into account) on the date of distribution. See example (14)(v) of paragraph (b)(5) of this section.

(*2*) *Distribution of promissory notes.* Notwithstanding the general rule of paragraph (b)(2)(iv)(*b*)(*5*), except as provided in this paragraph (b)(2)(iv)(*e*)(*2*), if a promissory note is distributed to a partner by a partnership that is the maker of such note, such partner's capital account will be decreased with respect to such note only when there is a taxable disposition of such note by the partner or when the partnership makes principal payments on the note. The previous sentence shall not apply if a note

distributed to a partner by a partnership who is the maker of such note is readily tradable on an established securities market. Furthermore, the capital account of a partner whose interest in a partnership is liquidated will be reduced to the extent of

(*i*) the fair market value, at the time of distribution, of any negotiable promissory note (of which such partnership is the maker) that such partnership distributes to the partner on or after the date such partner's interest is liquidated and within the time specified in paragraph (b)(2)(ii)(*b*)(*2*) of this section, and

(*ii*) the fair market value, at the time of liquidation, of the unsatisfied portion of any negotiable promissory note (of which such partnership is the maker) that such partnership previously distributed to the partner. For purposes of the preceding sentence, the fair market value of a note will be no less than the outstanding principal balance of such note, provided that such note bears interest at a rate no less than the applicable Federal rate at time of valuation.

(*f*) ***Revaluations of property.*** A partnership agreement may, upon the occurrence of certain events, increase or decrease the capital accounts of the partners to reflect a revaluation of partnership property (including intangible assets such as goodwill) on the partnership's books. Capital accounts so adjusted will not be considered to be determined and maintained in accordance with the rules of this paragraph (b)(2)(iv) unless—

(*1*) The adjustments are based on the fair market value of partnership property (taking section 7701(g) into account) on the date of adjustment, as determined under paragraph (b)(2)(iv)(*h*) of this section. See *Example 33* of paragraph (b)(5) of this section.

(*2*) The adjustments reflect the manner in which the unrealized income, gain, loss, or deduction inherent in such property (that has not been reflected in the capital accounts previously) would be allocated among the partners if there were a taxable disposition of such property for such fair market value on that date, and

(*3*) The partnership agreement requires that the partners' capital accounts be adjusted in accordance with paragraph (b)(2)(iv)(*g*) of this section for allocations to them of depreciation, depletion, amortization, and gain or loss, as computed for book purposes, with respect to such property, and

(*4*) The partnership agreement requires that the partners' distributive shares of depreciation, depletion, amortization, and gain or loss, as computed for tax purposes, with respect to such property be determined so as to take account of the variation between the adjusted tax basis and book value of such property in the same manner as under section 704(c) (see paragraph (b)(4)(i) of this section), and

(*5*) The adjustments are made principally for a substantial non-tax business purpose—

(*i*) In connection with a contribution of money or other property (other than a *de minimis* amount) to the partnership by a new or existing partner as consideration for an interest in the partnership, or

(*ii*) In connection with the liquidation of the partnership or a distribution of money or other property (other than a *de minimis* amount) by the partnership to a retiring or continuing partner as consideration for an interest in the partnership, or

(*iii*) In connection with the grant of an interest in the partnership (other than a *de minimis* interest) on or after May 6, 2004, as consideration for the provision of services to or for the benefit of the partnership by an existing partner acting in a partner capacity, or by a new partner acting in a partner capacity or in anticipation of being a partner, or

(*iv*) In connection with the issuance by the partnership of a noncompensatory option (other than an option for a de minimis partnership interest), or

(*v*) Under generally accepted industry accounting practices, provided substantially all of the partnership's property (excluding money) consists of stock, securities, commodities, options, warrants, futures, or similar instruments that are readily tradable on an established securities market.

See examples 14 and 18 of paragraph (b)(5) of this section. If the capital accounts of the partners are not adjusted to reflect the fair market value of partnership property when an interest in the partnership is acquired from or relinquished to the partnership, paragraphs (b)(1)(iii) and (b)(1)(iv) of this section should be consulted regarding the potential tax consequences that may arise if the principles of section 704(c) are not applied to determine the partners' distributive shares of depreciation, depletion, amortization, and gain or loss as computed for tax purposes, with respect to such property.

(*6*) Notwithstanding paragraph (b)(2)(iv)(*f*)(*5*) of this section, the revaluation is required under § 1.721(c)-3(d)(1) as a condition of the application of the gain deferral method (as described in § 1.721(c)-3(b)) and is pursuant to an event described in this paragraph (b)(2)(iv)(*f*)(*6*). If an interest in a partnership is contributed to a section 721(c) partnership (as defined in § 1.721(c)-1(b)(14)), the partnership whose interest is contributed may revalue its property in accordance with this section. In this case, the revaluation by the partnership whose interest was contributed must occur immediately before the contribution. If a partnership that revalues its property pursuant to this paragraph owns an interest in another partnership, the partnership in which it owns an interest may also revalue its property in accordance with this section. When multiple partnerships revalue under this paragraph (b)(2)(iv)(f)(6), the revaluations occur in order from the lowest-tier partnership to the highest-tier partnership.

(*g*) ***Adjustments to reflect book value*** —

(*1*) ***In general.*** Under paragraphs (b)(2)(iv)(*d*) and (b)(2)(iv)(*f*) of this section, property may be properly reflected on the books of the partnership at a book value that differs from the adjusted tax basis of such property. In these circumstances, paragraphs (b)(2)(iv)(*d*)(*3*) and (b)(2)(iv)(*f*)(*3*) of this section provide that the capital accounts of the partners will not be considered to be determined and maintained in accordance with the rules of this paragraph (b)(2)(iv) unless the partnership agreement requires the partners' capital accounts to be adjusted in accordance with this paragraph

(b)(2)(iv)(*g*) for allocations to them of depreciation, depletion, amortization, and gain or loss, as computed for book purposes, with respect to such property. In determining whether the economic effect of an allocation of book items is substantial, consideration will be given to the effect of such allocation on the determination of the partners' distributive shares of corresponding tax items under section 704(c) and paragraph (b)(4)(i) of this section. See example 17 of paragraph (b)(5) of this section. If an allocation of book items under the partnership agreement does not have substantial economic effect (as determined under paragraphs (b)(2)(ii) and (b)(2)(iii) of this section), or is not otherwise respected under this paragraph, such items will be reallocated in accordance with the partners' interests in the partnership, and such reallocation will be the basis upon which the partners' distributive shares of the corresponding tax items are determined under section 704(c) and paragraph (b)(4)(i) of this section. See examples 13, 14, and 18 of paragraph (b)(5) of this section.

(*2*) ***Payables and receivables.*** References in this paragraph (b)(2)(iv) and paragraph (b)(4)(i) of this section to book and tax depreciation, depletion, amortization, and gain or loss with respect to property that has an adjusted tax basis that differs from book value include, under analogous rules and principles, the unrealized income or deduction with respect to accounts receivable, accounts payable, and other accrued but unpaid items.

(*3*) ***Determining amount of book items.*** The partners' capital accounts will not be considered adjusted in accordance with this paragraph (b)(2)(iv)(*g*) unless the amount of book depreciation, depletion, or amortization for a period with respect to an item of partnership property is the amount that bears the same relationship to the book value of such property as the depreciation (or cost recovery deduction), depletion, or amortization computed for tax purposes with respect to such property for such period bears to the adjusted tax basis of such property. If such property has a zero adjusted tax basis, the book depreciation, depletion, or amortization may be determined under any reasonable method selected by the partnership. For purposes of the preceding sentence, additional first year depreciation deduction under section 168(k) is not a reasonable method.

(*h*) ***Determinations of fair market value —***

(*1*) ***In general.*** For purposes of this paragraph (b)(2)(iv), the fair market value assigned to property contributed to a partnership, property distributed by a partnership, or property otherwise revalued by a partnership, will be regarded as correct, provided that (*1*) such value is reasonably agreed to among the partners in arm's-length negotiations, and (*2*) the partners have sufficiently adverse interests. If, however, these conditions are not satisfied and the value assigned to such property is overstated or understated (by more than an insignificant amount), the capital accounts of the partners will not be considered to be determined and maintained in accordance with the rules of this paragraph (b)(2)(iv). Valuation of property contributed to the partnership, distributed by the partnership, or otherwise revalued by the partnership shall be on a property-by-property basis, except to the extent the regulations under section 704(c) permit otherwise.

(2) ***Adjustments for noncompensatory options.*** The value of partnership property as reflected on the books of the partnership must be adjusted to account for any outstanding noncompensatory options (as defined in § 1.721-2(f)) at the time of a revaluation of partnership property under paragraph (b)(2)(iv)(*f*) or (*s*) of this section. If the fair market value of outstanding noncompensatory options (as defined in § 1.721-2(f)) as of the date of the adjustment exceeds the consideration paid to the partnership to acquire the options, then the value of partnership property as reflected on the books of the partnership must be reduced by that excess to the extent of the unrealized income or gain in partnership property (that has not been reflected in the capital accounts previously). This reduction is allocated only to properties with unrealized appreciation in proportion to their respective amounts of unrealized appreciation. If the consideration paid to the partnership to acquire the outstanding noncompensatory options (as defined in § 1.721-2(f)) exceeds the fair market value of such options as of the date of the adjustment, then the value of partnership property as reflected on the books of the partnership must be increased by that excess to the extent of the unrealized loss in partnership property (that has not been reflected in the capital accounts previously). This increase is allocated only to properties with unrealized loss in proportion to their respective amounts of unrealized loss. However, any reduction or increase shall take into account the economic arrangement of the partners with respect to the property.

(*i*) ***Section 705(a)(2)(B) expenditures—***

(1) ***In general.*** The basic capital accounting rules contained in paragraph (b)(2)(iv)(*b*) of this section require that a partner's capital account be decreased by allocations made to such partner of expenditures described in section 705(a)(2)(B). See example 11 of paragraph (b)(5) of this section. If an allocation of these expenditures under the partnership agreement does not have substantial economic effect (as determined under paragraphs (b)(2)(ii) and (b)(2)(iii) of this section), or is not otherwise respected under this paragraph, such expenditures will be reallocated in accordance with the partners' interest in the partnership.

(2) ***Expenses described in section 709.*** Except for amounts with respect to which an election is properly made under section 709(b), amounts paid or incurred to organize a partnership or to promote the sale of (or to sell) an interest in such a partnership shall, solely for purposes of this paragraph, be treated as section 705(a)(2)(B) expenditures, and upon liquidation of the partnership no further capital account adjustments will be made in respect thereof.

(3) ***Disallowed losses.*** If a deduction for a loss incurred in connection with the sale or exchange of partnership property is disallowed to the partnership under section 267(a)(1) or section 707(b), that deduction shall, solely for purposes of this paragraph, be treated as a section 705(a)(2)(B) expenditure.

(*j*) ***Basis adjustments to section 38 property.*** The capital accounts of the partners will not be considered to be determined and maintained in accordance with the rules of this paragraph (b)(2)(iv) unless such capital accounts are adjusted by the partners' shares of any upward or downward basis adjustments allocated to them under this paragraph (b)(2)(iv)(*j*). When there is a reduction in the adjusted tax basis of partnership section 38 property under section 48(q)(1) or section 48(q)(3), section 48(q)(6) provides for an

equivalent downward adjustment to the aggregate basis of partnership interests (and no additional adjustment is made under section 705(a)(2)(B)). These downward basis adjustments shall be shared among the partners in the same proportion as the adjusted tax basis or cost of (or the qualified investment in) such section 38 property is allocated among the partners under paragraph (f) of § 1.46-3 (or paragraph (a)(4)(iv) of § 1.48-8). Conversely, when there is an increase in the adjusted tax basis of partnership section 38 property under section 48(q)(2), section 48(q)(6) provides for an equivalent upward adjustment to the aggregate basis of partnership interests. These upward adjustments shall be allocated among the partners in the same proportion as the investment tax credit from such property is recaptured by the partners under § 1.47-6.

(*k*) ***Depletion of oil and gas properties*** —

(1) ***In general.*** The capital accounts of the partners will not be considered to be determined and maintained in accordance with the rules of this paragraph (b)(2)(iv) unless such capital accounts are adjusted for depletion and gain or loss with respect to the oil or gas properties of the partnership in accordance with this paragraph (b)(2)(iv)(*k*).

(2) ***Simulated depletion.*** Except as provided in paragraph (b)(2)(iv)(*k*) (*3*) of this section, a partnership shall, solely for purposes of maintaining capital accounts under this paragraph, compute simulated depletion allowances with respect to its oil and gas properties at the partnership level. These allowances shall be computed on each depletable oil or gas property of the partnership by using either the cost depletion method or the percentage depletion method (computed in accordance with section 613 at the rates specified in section 613A(c)(5) without regard to the limitations of section 613A, which theoretically could apply to any partner) for each partnership taxable year that the property is owned by the partnership and subject to depletion. The choice between the simulated cost depletion method and the simulated percentage depletion method shall be made on a property-by-property basis in the first partnership taxable year beginning after April 30, 1986, for which it is relevent for the property, and shall be binding for all partnership taxable years during which the oil or gas property is held by the partnership. The partnership shall make downward adjustments to the capital accounts of the partners for the simulated depletion allowance with respect to each oil or gas property of the partnership, in the same proportion as such partners (or their precedecessors in interest) were properly allocated the adjusted tax basis of each such property. The aggregate capital account adjustments for simulated percentage depletion allowances with respect to an oil or gas property of the partnership shall not exceed the aggregate adjusted tax basis allocated to the partners with respect to such property. Upon the taxable disposition of an oil or gas property by a partnership, such partnership's simulated gain or loss shall be determined by subtracting its simulated adjusted basis in such property from the amount realized upon such disposition. (The partnership's simulated adjusted basis in an oil or gas property is determined in the same manner as adjusted tax basis except that simulated depletion allowances are taken into account instead of actual depletion allowances.) The capital accounts of the partners shall be adjusted upward by the amount of any simulated gain in proportion to such partners' allocable shares of the portion of the total amount realized from the disposition of such property that exceeds the partnership's simulated adjusted basis

in such property. The capital accounts of such partners shall be adjusted downward by the amount of any simulated loss in proportion to such partners' allocable shares of the total amount realized from the disposition of such property that represents recovery of the partnership's simulated adjusted basis in such property. See section 613A(c)(7)(D) and the regulations thereunder and paragraph (b)(4)(v) of this section. See example (19)(iv) of paragraph (b)(5) of this section.

(*3*) ***Actual depletion.*** Pursuant to section 613A(c)(7)(D) and the regulations thereunder, the depletion allowance under section 611 with respect to the oil and gas properties of a partnership is computed separately by the partners. Accordingly, in lieu of adjusting the partner's capital accounts as provided in paragraph (b)(2)(iv)(*k*)(*2*) of this section, the partnership may make downward adjustments to the capital account of each partner equal to such partner's depletion allowance with respect to each oil or gas property of the partnership (for the partner's taxable year that ends with or within the partnership's taxable year). The aggregate adjustments to the capital account of a partner for depletion allowances with respect to an oil or gas property of the partnership shall not exceed the adjusted tax basis allocated to such partner with respect to such property. Upon the taxable disposition of an oil or gas property by a partnership, the capital account of each partner shall be adjusted upward by the amount of any excess of such partner's allocable share of the total amount realized from the disposition of such property over such partner's remaining adjusted tax basis in such property. If there is no such excess, the capital account of such partner shall be adjusted downward by the amount of any excess of such partner's remaining adjusted tax basis in such property over such partner's allocable share of the total amount realized from the disposition thereof. See section 613A(c)(7)(4)(D) and the regulations thereunder and paragraph (b)(4)(v) of this section.

(*4*) ***Effect of book values.*** If an oil or gas property of the partnership is, under paragraphs (b)(2)(iv(*d*) or (b)(2)(iv)(*f*) of this section, properly reflected on the books of the partnership at a book value that differs from the adjusted tax basis of such property, the rules contained in this paragraph (b)(2)(iv)(*k*) and paragraph (b)(4)(v) of this section shall be applied with reference to such book value. A revaluation of a partnership oil or gas property under paragraph (b)(2)(iv)(*f*) of this section may give rise to a reallocation of the adjusted tax basis of such property, or a change in the partners' relative shares of simulated depletion from such property, only to the extent permitted by section 613A(c)(7)(D) and the regulations thereunder.

(*l*) ***Transfers of partnership interests.*** The capital accounts of the partners will not be considered to be determined and maintained in accordance with the rules of this paragraph (b)(2)(iv) unless, upon the transfer of all or a part of an interest in the partnership, the capital account of the transferor that is attributable to the transferred interest carries over to the transferee partner. (See paragraph (b)(2)(iv)(*m*) of this section for rules concerning the effect of a section 754 election on the capital accounts of the partners.) If the transfer of an interest in a partnership causes a termination of the partnership under section 708(b)(1)(B), the capital account of the transferee partner and the capital accounts of the other partners of the terminated partnership carry over to the new partnership that is formed as a result of the termination of the partnership under § 1.708-1(b)(1)(iv). Moreover, the deemed contribution of assets and liabilities by the terminated partnership to a new partnership and the deemed liquidation of the terminated

partnership that occur under § 1.708-1(b)(1)(iv) are disregarded for purposes of this paragraph (b)(2)(iv). See *Example 13* of paragraph (b)(5) of this section and the example in § 1.708-1(b)(1)(iv). The previous three sentences apply to terminations of partnerships under section 708(b)(1)(B) occurring on or after May 9, 1997; however, the sentences may be applied to terminations occurring on or after May 9, 1996, provided that the partnership and its partners apply the sentences to the termination in a consistent manner.

(*m*) ***Section 754 elections*** —

(*1*) ***In general.*** The capital accounts of the partners will not be considered to be determined and maintained in accordance with the rules of this paragraph (b)(2)(iv) unless, upon adjustment to the adjusted tax basis of partnership property under section 732, 734, or 743, the capital accounts of the partners are adjusted as provided in this paragraph (b)(2)(iv)(*m*).

(*2*) ***Section 743 adjustments.*** In the case of a transfer of all or a part of an interest in a partnership that has a section 754 election in effect for the partnership taxable year in which such transfer occurs, adjustments to the adjusted tax basis of partnership property under section 743 shall not be reflected in the capital account of the transferee partner or on the books of the partnership, and subsequent capital account adjustments for distributions (see paragraph (b)(2)(iv)(e)(1) of this section) and for depreciation, depletion, amortization, and gain or loss with respect to such property will disregard the effect of such basis adjustment. The preceding sentence shall not apply to the extent such basis adjustment is allocated to the common basis of partnership property under paragraph (b)(1) of § 1.734-2; in these cases, such basis adjustment shall, except as provided in paragraph (b)(2)(iv)(*m*)(*5*) of this section, give rise to adjustments to the capital accounts of the partners in accordance with their interests in the partnership under paragraph (b)(3) of this section. See examples 13 (iii) and (iv) of paragraph (b)(5) of this section.

(*3*) ***Section 732 adjustments.*** In the case of a transfer of all or a part of an interest in a partnership that does not have a section 754 election in effect for the partnership taxable year in which such transfer occurs, adjustments to the adjusted tax basis of partnership property under section 732(d) will be treated in the capital accounts of the partners in the same manner as section 743 basis adjustments are treated under paragraph (b)(2)(iv)(*m*)(*2*) of this section.

(*4*) Section 734 adjustments. Except as provided in paragraph (b)(2)(iv)(*m*)(*5*) of this section, in the case of a distribution of property in liquidation of a partner's interest in the partnership by a partnership that has a section 754 election in effect for the partnership taxable year in which the distribution occurs, the partner who receives the distribution that gives rise to the adjustment to the adjusted tax basis of partnership property under section 734 shall have a corresponding adjustment made to his capital account. If such distribution is made other than in liquidation of a partner's interest in the partnership, however, except as provided in paragraph (b)(2)(iv)(*m*)(*5*) of this section, the capital accounts of the partners shall be adjusted by the amount of the adjustment to the adjusted tax basis of partnership property under section 734, and such capital account adjustment shall be shared among the

partners in the manner in which the unrealized income and gain that is displaced by such adjustment would have been shared if the property whose basis is adjusted were sold immediately prior to such adjustment for its recomputed adjusted tax basis.

(5) ***Limitations on adjustments.*** Adjustments may be made to the capital account of a partner (or his successor in interest) in respect of basis adjustments to partnership property under sections 732, 734, and 743 only to the extent that such basis adjustments (i) are permitted to be made to one or more items of partnership property under section 755, and (ii) result in an increase or a decrease in the amount at which such property is carried on the partnership's balance sheet, as computed for book purposes. For example, if the book value of partnership property exceeds the adjusted tax basis of such property, a basis adjustment to such property may be reflected in a partner's capital account only to the extent such adjustment exceeds the difference between the book value of such property and the adjusted tax basis of such property prior to such adjustment.

(*n*) ***Partnership level characterization.*** Except as otherwise provided in paragraph (b)(2)(iv)(k) of this section, the capital accounts of the partners will not be considered to be determined and maintained in accordance with the rules of this paragraph (b)(2)(iv) unless adjustments to such capital accounts in respect of partnership income, gain, loss, deduction, and section 705(a)(2)(B) expenditures (or item thereof) are made with reference to the Federal tax treatment of such items (and in the case of book items, with reference to the Federal tax treatment of the corresponding tax items) at the partnership level, without regard to any requisite or elective tax treatment of such items at the partner level (for example, under section 58(i)). However, a partnership that incurs mining exploration expenditures will determine the Federal tax treatment of income, gain, loss, and deduction with respect to the property to which such expenditures relate at the partnership level only after first taking into account the elections made by its partners under section 617 and section 703(b)(4).

(*o*) ***Guaranteed payments.*** Guaranteed payments to a partner under section 707(c) cause the capital account of the recipient partner to be adjusted only to the extent of such partner's distributive share of any partnership deduction, loss, or other downward capital account adjustment resulting from such payment.

(*p*) ***Minor discrepancies.*** Discrepancies between the balances in the respective capital accounts of the partners and the balances that would be in such respective capital accounts if they had been determined and maintained in accordance with this paragraph (b)(2)(iv) will not adversely affect the validity of an allocation, provided that such discrepancies are minor and are attributable to good faith error by the partnership.

(*q*) ***Adjustments where guidance is lacking.*** If the rules of this paragraph (b)(2)(iv) fail to provide guidance on how adjustments to the capital accounts of the partners should be made to reflect particular adjustments to partnership capital on the books of the partnership, such capital accounts will not be considered to be determined and maintained in accordance with those rules unless such capital account adjustments are made in a manner that

(*1*) maintains equality between the aggregate governing capital accounts of the partners and the amount of partnership capital reflected on the partnership's balance sheet, as computed for book purposes,

(*2*) is consistent with the underlying economic arrangement of the partners, and

(*3*) is based, wherever practicable, on Federal tax accounting principles.

(*r*) ***Restatement of capital accounts.*** With respect to partnerships that began operating in a taxable year beginning before May 1, 1986, the capital accounts of the partners of which have not been determined and maintained in accordance with the rules of this paragraph (b)(2)(iv) since inception, such capital accounts shall not be considered to be determined and maintained in accordance with the rules of this paragraph (b)(2)(iv) for taxable years beginning after April 30, 1986, unless either—

(*1*) Such capital accounts are adjusted, effective for the first partnership taxable year beginning after April 30, 1986, to reflect the fair market value of partnership property as of the first day of such taxable year, and in connection with such adjustment, the rules contained in paragraph (b)(2)(iv)(*f*) (*2*), (*3*), and (*4*) of this section are satisfied, or

(*2*) The differences between the balance in each partner's capital account and the balance that would be in such partner's capital account if capital accounts had been determined and maintained in accordance with this paragraph (b)(2)(iv) throughout the full term of the partnership are not significant (for example, such differences are solely attributable to a failure to provide for treatment of section 709 expenses in accordance with the rules of paragraph (b)(2)(iv)(*i*)(*2*) of this section or to a failure to follow the rules in paragraph (b)(2)(iv)(*m*) of this section), and capital accounts are adjusted to bring them into conformity with the rules of this paragraph (b)(2)(iv) no later than the end of the first partnership taxable year beginning after April 30, 1986.

(*3*) With respect to a partnership that began operating in a taxable year beginning before May 1, 1986, modifications to the partnership agreement adopted on or before November 1, 1988, to make the capital account adjustments required to comply with this paragraph, and otherwise to satisfy the requirements of this paragraph, will be treated as if such modifications were included in the partnership agreement before the end of the first partnership taxable year beginning after April 30, 1986. However, compliance with the previous sentences will have no bearing on the validity of allocations that relate to partnership taxable years beginning before May 1, 1986.

(*s*) ***Adjustments on the exercise of a noncompensatory option.*** A partnership agreement may grant a partner, on the exercise of a noncompensatory option (as defined in § 1.721-2(f)), a right to share in partnership capital that exceeds (or is less than) the sum of the consideration paid to the partnership to acquire and exercise such option. Where such an agreement exists, capital accounts will not be considered to be determined and maintained in accordance with the rules of this paragraph (b)(2)(iv) unless the following requirements are met:

(*1*) In lieu of revaluing partnership property under paragraph (b)(2)(iv)(*f*) of this section immediately before the exercise of the option, the partnership revalues partnership property in accordance with the provisions of paragraphs (b)(2)(iv)(*f*)(*1*) through (*f*)(*4*) of this section immediately after the exercise of the option.

(*2*) In determining the capital accounts of the partners (including the exercising partner) under paragraph (b)(2)(iv)(*s*)(*1*) of this section, the partnership first allocates any unrealized income, gain, or loss in partnership property (that has not been reflected in the capital accounts previously) to the exercising partner to the extent necessary to reflect that partner's right to share in partnership capital under the partnership agreement, and then allocates any remaining unrealized income, gain, or loss (that has not been reflected in the capital accounts previously) to the existing partners, to reflect the manner in which the unrealized income, gain, or loss in partnership property would be allocated among those partners if there were a taxable disposition of such property for its fair market value on that date. For purposes of the preceding sentence, if the exercising partner's initial capital account as determined under § 1.704-1(b)(2)(iv)(*b*) and (*d*)(*4*) of this section would be less than the amount that reflects the exercising partner's right to share in partnership capital under the partnership agreement, then only income or gain may be allocated to the exercising partner from partnership properties with unrealized appreciation, in proportion to their respective amounts of unrealized appreciation. If the exercising partner's initial capital account, as determined under § 1.704-1(b)(2)(iv)(*b*) and (*d*)(*4*) of this section, would be greater than the amount that reflects the exercising partner's right to share in partnership capital under the partnership agreement, then only loss may be allocated to the exercising partner from partnership properties with unrealized loss, in proportion to their respective amounts of unrealized loss. However, any allocation must take into account the economic arrangement of the partners with respect to the property.

(*3*) If, after making the allocations described in paragraph (b)(2)(iv)(*s*)(*2*) of this section, the exercising partner's capital account does not reflect that partner's right to share in partnership capital under the partnership agreement, then the partnership reallocates partnership capital between the existing partners and the exercising partner so that the exercising partner's capital account reflects the exercising partner's right to share in partnership capital under the partnership agreement (a capital account reallocation). Any increase or decrease in the capital accounts of existing partners that occurs as a result of a capital account reallocation under this paragraph (b)(2)(iv)(*s*)(*3*) must be allocated among the existing partners in accordance with the principles of this section. See *Example 32* of paragraph (b)(5) of this section.

(*4*) The partnership agreement requires corrective allocations so as to take into account all capital account reallocations made under paragraph (b)(2)(iv)(*s*)(*3*) of this section (see paragraph (b)(4)(x) of this section). See *Example 32* of paragraph (b)(5) of this section.

(3) ***Partner's interest in the partnership*** —

(i) ***In general.*** References in section 704(b) and this paragraph to a partner's interest in the partnership, or to the partners' interests in the partnership, signify the manner in which the partners have agreed to share the economic benefit or burden (if any) corresponding to the income, gain, loss, deduction, or credit (or item thereof) that is allocated. Except with respect to partnership items that cannot have economic effect (such as nonrecourse deductions of the partnership), this sharing arrangement may or may not correspond to the overall economic arrangement of the partners. Thus, a partner who has a 50 percent overall interest in the

partnership may have a 90 percent interest in a particular item of income or deduction. (For example, in the case of an unexpected downward adjustment to the capital account of a partner who does not have a deficit make-up obligation that causes such partner to have a negative capital account, it may be necessary to allocate a disproportionate amount of gross income of the partnership to such partner for such year so as to bring that partner's capital account back up to zero.) The determination of a partner's interest in a partnership shall be made by taking into account all facts and circumstances relating to the economic arrangement of the partners.

(ii) ***Factors considered.*** In determining a partner's interest in the partnership, the following factors are among those that will be considered:

(*a*) The partners' relative contributions to the partnership,

(*b*) The interests of the partners in economic profits and losses (if different than that in taxable income or loss),

(*c*) The interests of the partners in cash flow and other non-liquidating distributions, and

(*d*) The rights of the partners to distributions of capital upon liquidation.

The provisions of this subparagraph (b)(3) are illustrated by examples (1)(i) and (ii), (4)(i), (5)(i) and (ii), (6), (7), (8), (10)(ii), (16)(i), and (19)(iii) of paragraph (b)(5) of this section. See paragraph (b)(4)(i) of this section concerning rules for determining the partners' interests in the partnership with respect to certain tax items.

(iii) ***Certain determinations.*** If—

(*a*) Requirements (*1*) and (*2*) of paragraph (b)(2)(ii)(*b*) of this section are satisfied, and

(*b*) All or a portion of an allocation of income, gain, loss, or deduction made to a partner for a partnership taxable year does not have economic effect under paragraph (b)(2)(ii) of this section.

the partners' interests in the partnership with respect to the portion of the allocation that lacks economic effect will be determined by comparing the manner in which distributions (and contributions) would be made if all partnership property were sold at book value and the partnership were liquidated immediately following the end of the taxable year to which the allocation relates with the manner in which distributions (and contributions) would be made if all partnership property were sold at book value and the partnership were liquidated immediately following the end of the prior taxable year, and adjusting the result for the items described in (*4*), (*5*), and (*6*) of paragraph (b)(2)(ii)(*d*) of this section. A determination made under this paragraph (b)(3)(iii) will have no force if the economic effect of valid allocations made in the same manner is insubstantial under paragraph (b)(2)(iii) of this section. See examples 1 (iv), (v), and (vi), and 15 (ii) and (iii) of paragraph (b)(5) of this section.

(iv) ***Special rule for creditable foreign tax expenditures.*** In determining whether an allocation of a partnership item is in accordance with the partners' interests in the partnership, the allocation of the creditable foreign tax expenditure (CFTE) (as defined in paragraph (b)(4)(viii)(*b*) of this section) must be disregarded. This paragraph (b)(3)(iv) shall not apply to the extent the partners to whom such taxes are allocated reasonably expect to claim a deduction for such taxes in determining their U.S. tax liabilities.

(4) *Special rules* —

(i) ***Allocations to reflect revaluations.*** If partnership property is, under paragraphs (b)(2)(iv)(*d*) or (b)(2)(iv)(*f*) of this section, properly reflected in the capital accounts of the partners and on the books of the partnership at a book value that differs from the adjusted tax basis of such property, then depreciation, depletion, amortization, and gain or loss, as computed for book purposes, with respect to such property will be greater or less than the depreciation, depletion, amortization, and gain or loss, as computed for tax purposes, with respect to such property. In these cases the capital accounts of the partners are required to be adjusted solely for allocations of the book items to such partners (see paragraph (b)(2)(iv)(*g*) of this section), and the partners' shares of the corresponding tax items are not independently reflected by further adjustments to the partners' capital accounts. Thus, separate allocations of these tax items cannot have economic effect under paragraph (b)(2)(ii)(*b*)(*1*) of this section, and the partners' distributive shares of such tax items must (unless governed by section 704(c)) be determined in accordance with the partners' interests in the partnership. These tax items must be shared among the partners in a manner that takes account of the variation between the adjusted tax basis of such property and its book value in the same manner as variations between the adjusted tax basis and fair market value of property contributed to the partnership are taken into account in determining the partners' shares of tax items under section 704(c). See examples 14 and 18 of paragraph (b)(5) of this section.

(ii) ***Credits.*** Allocations of tax credits and tax credit recapture are not reflected by adjustments to the partners' capital accounts (except to the extent that adjustments to the adjusted tax basis of partnership section 38 property in respect of tax credits and tax credit recapture give rise to capital account adjustments under paragraph (b)(2)(iv)(*j*) of this section). Thus, such allocations cannot have economic effect under paragraph (b)(2)(ii)(*b*)(*1*) of this section, and the tax credits and tax credit recapture must be allocated in accordance with the partners' interests in the partnership as of the time the tax credit or credit recapture arises. With respect to the investment tax credit provided by section 38, allocations of cost or qualified investment made in accordance with paragraph (f) of § 1.46-3 and paragraph (a)(4)(iv) of § 1.48-8 shall be deemed to be made in accordance with the partners' interests in the partnership. With respect to other tax credits, if a partnership expenditure (whether or not deductible) that gives rise to a tax credit in a partnership taxable year also gives rise to valid allocations of partnership loss or deduction (or other downward capital account adjustments) for such year, then the partners' interests in the partnership with respect to such credit (or the cost giving rise thereto) shall be in the same proportion as such partners' respective distributive shares of such loss or deduction (and adjustments). See example 11 of paragraph (b)(5) of this section. Identical principles shall apply in determining the partners' interests in the partnership with respect to tax credits that arise from receipts of the partnership (whether or not taxable).

(iii) ***Excess percentage depletion.*** To the extent the percentage depletion in respect of an item of depletable property of the partnership exceeds the adjusted tax basis of such property, allocations of such excess percentage depletion are not reflected by adjustments to the partners' capital accounts. Thus, such allocations cannot have economic effect under paragraph (b)(2)(ii)(*b*)(*1*) of this section, and such excess percentage depletion must be allocated in accordance with the partners' interests in the partnership. The partners' interests in the partnership for a partnership taxable year with respect to such excess percentage depletion shall be in the same proportion as such partners' respective distributive shares of gross income

from the depletable property (as determined under section 613(c)) for such year. See example 12 of paragraph (b)(5) of this section. See paragraphs (b)(2)(iv)(*k*) and (b)(4)(v) of this section for special rules concerning oil and gas properties of the partnership.

(iv) ***Allocations attributable to nonrecourse liabilities.*** The rules for allocations attributable to nonrecourse liabilities are contained in § 1.704-2.

(v) ***Allocations under section 613A(c)(7)(D).*** Allocations of the adjusted tax basis of a partnership oil or gas property are controlled by section 613A(c)(7)(D) and the regulations thereunder. However, if the partnership agreement provides for an allocation of the adjusted tax basis of an oil or gas property among the partners, and such allocation is not otherwise governed under section 704(c) (or related principles under paragraph (b)(4)(i) of this section), that allocation will be recognized as being in accordance with the partners' interests in partnership capital under section 613A(c)(7)(D), provided

(*a*) such allocation does not give rise to capital account adjustments under paragraph (b)(2)(iv)(*k*) of this section, the economic effect of which is insubstantial (as determined under paragraph (b)(2)(iii) of this section), and

(*b*) all other material allocations and capital account adjustments under the partnership agreement are recognized under this paragraph (b). Otherwise, such adjusted tax basis must be allocated among the partners pursuant to section 613A(c)(7)(D) in accordance with the partners' actual interests in partnership capital or income. For purposes of section 613A(c)(7)(D) the partners' allocable shares of the amount realized upon the partnership's taxable disposition of an oil or gas property will, except to the extent governed by section 704(c) (or related principles under paragraph (b)(4)(i) of this section), be determined under this paragraph (b)(4)(v). If, pursuant to paragraph (b)(2)(iv)(*k*)(*2*) of this section, the partners' capital accounts are adjusted to reflect the simulated depletion of an oil or gas property of the partnership, the portion of the total amount realized by the partnership upon the taxable disposition of such property that represents recovery of its simulated adjusted tax basis therein will be allocated to the partners in the same proportion as the aggregate adjusted tax basis of such property was allocated to such partners (or their predecessors in interest). If, pursuant to paragraph (b)(2)(iv)(*k*)(*3*) of this section, the partners' capital accounts are adjusted to reflect the actual depletion of an oil or gas property of the partnership, the portion of the total amount realized by the partnership upon the taxable disposition of such property that equals the partners' aggregate remaining adjusted basis therein will be allocated to the partners in proportion to their respective remaining adjusted tax bases in such property. An allocation provided by the partnership agreement of the portion of the total amount realized by the partnership on its taxable disposition of an oil or gas property that exceeds the portion of the total amount realized allocated under either of the previous two sentences (whichever is applicable) shall be deemed to be made in accordance with the partners' allocable shares of such amount realized, provided

(*c*) such allocation does not give rise to capital account adjustments under paragraph (b)(2)(iv)(*k*) of this section the economic effect of which is insubstantial (as determined under paragraph (b)(2)(ii) of this section), and

(*d*) all other allocations and capital account adjustments under the partnership agreement are recognized under this paragraph. Otherwise, the partners' allocable shares of the total amount realized by the partnership on its taxable disposition of an oil or gas property shall

be determined in accordance with the partners' interests in the partnership under paragraph (b)(3) of this section. See example 19 of paragraph (b)(5) of this section. (See paragraph (b)(2)(iv)(*k*) of this section for the determination of appropriate adjustments to the partners' capital accounts relating to section 613A(c)(7)(D).)

(vi) ***Amendments to partnership agreement.*** If an allocation has substantial economic effect under paragraph (b)(2) of this section or is deemed to be made in accordance with the partners' interests in the partnership under paragraph (b)(4) of this section under the partnership agreement that is effective for the taxable year to which such allocation relates, and such partnership agreement thereafter is modified, both the tax consequences of the modification and the facts and circumstances surrounding the modification will be closely scrutinized to determine whether the purported modification was part of the original agreement. If it is determined that the purported modification was part of the original agreement, prior allocations may be reallocated in a manner consistent with the modified terms of the agreement, and subsequent allocations may be reallocated to take account of such modified terms. For example, if a partner is obligated by the partnership agreement to restore the deficit balance in his capital account (or any limited dollar amount thereof) in accordance with requirement (*3*) of paragraph (b)(2)(ii)(*b*) of this section and, thereafter, such obligation is eliminated or reduced (other than as provided in paragraph (b)(2)(ii)(*f*) of this section), or is not complied with in a timely manner, such elimination, reduction, or noncompliance may be treated as if it always were part of the partnership agreement for purposes of making any reallocations and determining the appropriate limitations period.

(vii) ***Recapture.*** For special rules applicable to the allocation of recapture income or credit, see paragraph (e) of § 1.1245-1, paragraph (f) of § 1.1250-1, paragraph (c) of § 1.1254-1, and paragraph (a) of § 1.47-6.

(viii) ***Allocation of creditable foreign taxes*** —

(*a*) ***In general.*** Allocations of creditable foreign taxes do not have substantial economic effect within the meaning of paragraph (b)(2) of this section and, accordingly, such expenditures must be allocated in accordance with the partners' interests in the partnership. See paragraph (b)(3)(iv) of this section. An allocation of a creditable foreign tax expenditure (CFTE) will be deemed to be in accordance with the partners' interests in the partnership if—

(*1*) The CFTE is allocated (whether or not pursuant to an express provision in the partnership agreement) to each partner and reported on the partnership return in proportion to the partners' CFTE category shares of income to which the CFTE relates; and

(*2*) Allocations of all other partnership items that, in the aggregate, have a material effect on the amount of CFTEs allocated to a partner pursuant to paragraph (b)(4)(viii)(*a*)(*1*) of this section are valid.

(*b*) ***Creditable foreign tax expenditures*** (*CFTEs*). For purposes of this section, a CFTE is a foreign tax paid or accrued by a partnership that is eligible for a credit under section 901(a) or an applicable U.S. income tax treaty. A foreign tax is a CFTE for these purposes without regard to whether a partner receiving an allocation of such foreign tax elects to claim a credit for such tax. Foreign taxes paid or accrued by a partner with respect to a distributive share of partnership income, and foreign taxes deemed paid under section

902 or 960 by a corporate partner with respect to stock owned, directly or indirectly, by or for a partnership, are not taxes paid or accrued by a partnership and, therefore, are not CFTEs subject to the rules of this section. See paragraphs (e) and (f) of § 1.901-2 for rules for determining when and by whom a foreign tax is paid or accrued.

(*c*) ***Income to which CFTEs relate.*** —

(*1*) ***In general.*** For purposes of paragraph (b)(4)(viii)(*a*) of this section, CFTEs are related to net income in the partnership's CFTE category or categories to which the CFTE is allocated and apportioned in accordance with the rules of paragraph (b)(4)(viii)(*d*) of this section. Paragraph (b)(4)(viii)(*c*)(*2*) of this section provides rules for determining a partnership's CFTE categories. Paragraph (b)(4)(viii)(*c*)(*3*) of this section provides rules for determining the net income in each CFTE category. Paragraph (b)(4)(viii)(*c*)(*4*) of this section provides rules for determining a partner's CFTE category share of income, including rules that require adjustments to net income in a CFTE category for purposes of determining the partners' CFTE category share of income with respect to certain CFTEs. Paragraph (b)(4)(viii)(*c*)(*5*) of this section provides a special rule for allocating CFTEs when a partnership has no net income in a CFTE category.

(*2*) ***CFTE category*** —

(*i*) ***Income from activities.*** A CFTE category is a category of net income (or loss) attributable to one or more activities of the partnership. Net income (or loss) from all the partnership's activities shall be included in a single CFTE category unless the allocation of net income (or loss) from one or more activities differs from the allocation of net income (or loss) from other activities, in which case income from each activity or group of activities that is subject to a different allocation shall be treated as net income (or loss) in a separate CFTE category.

(*ii*) ***Different allocations.*** Different allocations of net income (or loss) generally will result from provisions of the partnership agreement providing for different sharing ratios for net income (or loss) from separate activities. Different allocations of net income (or loss) from separate activities generally will also result if any partnership item is shared in a different ratio than any other partnership item. A guaranteed payment described in paragraph (b)(4)(viii)(*c*)(*4*)(*ii*) of this section, gross income allocation, or other preferential allocation will result in different allocations of net income (or loss) from separate activities only if the amount of the payment or the allocation is determined by reference to income from less than all of the partnership's activities.

(*iii*) ***Activity.*** Whether a partnership has one or more activities, and the scope of each activity, is determined in a reasonable manner taking into account all the facts and circumstances. In evaluating whether aggregating or disaggregating income from particular business or investment operations constitutes a reasonable method of determining the scope of an activity, the principal consideration is whether the proposed determination has the effect of separating CFTEs from the related foreign income. Relevant considerations include whether the partnership conducts business in more than one geographic location or through more than one entity or branch, and whether

certain types of income are exempt from foreign tax or subject to preferential foreign tax treatment. In addition, income from a divisible part of a single activity is treated as income from a separate activity if necessary to prevent separating CFTEs from the related foreign income, such as when income from divisible parts of a single activity is subject to different allocations. See, for example, paragraph (b)(4)(viii)(*c*)(*3*)(*iv*) of this section (special allocations related to disregarded payments can give rise to subdivision of an activity into divisible parts). A guaranteed payment, gross income allocation, or other preferential allocation of income that is determined by reference to all the income from a single activity generally will not result in the division of an activity into divisible parts. See *Example 22* in paragraph (b)(5)(xxii) of this section and *Example 1* in paragraph (b)(6)(i) of this section. The partnership's activities must be determined consistently from year to year absent a material change in facts and circumstances.

(*3*) ***Net income in a CFTE category*** —

(*i*) ***In general.*** A partnership computes net income in a CFTE category as follows: First, the partnership determines for U.S. Federal income tax purposes all of its partnership items, including items of gross income, gain, loss, deduction, and expense, and items allocated pursuant to section 704(c). For the purpose of this paragraph (b)(4)(viii)(*c*)(*3*)(*i*), the items of the partnership are determined without regard to any adjustments under section 743(b) that its partners may have to the basis of property of the partnership. However, if the partnership is a transferee partner that has a basis adjustment under section 743(b) in its capacity as a direct or indirect partner in a lower-tier partnership, the partnership does take such basis adjustment into account. Second, the partnership must assign those partnership items to its activities pursuant to paragraph (b)(4)(viii)(*c*)(*3*)(*ii*) of this section. Third, partnership items attributable to each activity are aggregated within the relevant CFTE category as determined under paragraph (b)(4)(viii)(*c*)(*2*) of this section in order to compute the net income in a CFTE category.

(*ii*) ***Assignment of partnership items to activities.*** The items of gross income attributable to an activity must be determined in a consistent manner under any reasonable method taking into account all the facts and circumstances. Except as otherwise provided in paragraph (b)(4)(viii)(*c*)(*3*)(*iii*) of this section, expenses, losses, or other deductions must be allocated and apportioned to gross income attributable to an activity in accordance with the rules of §§ 1.861-8 and 1.861-8T. Under the rules §§ 1.861-8 and 1.861-8T, if an expense, loss, or other deduction is allocated to gross income from more than one activity, such expense, loss, or deduction must be apportioned among each such activity using a reasonable method that reflects to a reasonably close extent the factual relationship between the deduction and the gross income from such activities. See § 1.861-8T(c). For the effect of disregarded payments in determining the amount of net income attributable to an activity, see paragraph (b)(4)(viii)(*c*)(*3*)(*iv*) of this section.

(*iii*) ***Interest expense and research and experimental expenditures.*** The partnership's interest expense and research and experimental expenditures described in section 174 may be allocated and apportioned under any reasonable method, including but not limited to the methods prescribed in §§ 1.861-9 through 1.861-13T (interest expense) and § 1.861-17 (research and experimental expenditures).

(*iv*) ***Disregarded payments.*** An item of gross income is assigned to the activity that generates the item of income that is recognized for U.S. Federal income tax purposes. Consequently, disregarded payments are not taken into account in determining the amount of net income attributable to an activity, although a special allocation of income used to make a disregarded payment may result in the subdivision of an activity into divisible parts. See paragraph (b)(4)(viii)(*c*)(*2*)(*iii*) of this section, *Example 24* in paragraph (b)(5)(xxiv) of this section, and *Examples 2* and *3* in paragraphs (b)(6)(ii) and (iii), respectively, of this section (relating to inter-branch payments).

(*4*) ***CFTE category share of income*** —

(*i*) ***In general.*** CFTE category share of income means the portion of the net income in a CFTE category, determined in accordance with paragraph (b)(4)(viii)(*c*)(*3*) of this section as modified by paragraphs (b)(4)(viii)(c)(*4*)(*ii*) through (*iv*) of this section, that is allocated to a partner. To the extent provided in paragraph (b)(4)(viii)(*c*)(*4*)(*ii*) of this section, a guaranteed payment is treated as an allocation to the recipient of the guaranteed payment for this purpose. If more than one partner receives positive income allocations (income in excess of expenses) from a CFTE category, which in the aggregate exceed the total net income in the CFTE category, then such partner's CFTE category share of income equals the partner's positive income allocation from the CFTE category, divided by the aggregate positive income allocations from the CFTE category, multiplied by the net income in the CFTE category. Paragraphs (b)(4)(viii)(*c*)(*4*)(*ii*) through (*iv*) of this section require adjustments to the net income in a CFTE category for purposes of determining the partners' CFTE category share of income if one or more foreign jurisdictions impose a tax that provides for certain exclusions or deductions from the foreign taxable base. Such adjustments apply only with respect to CFTEs attributable to the taxes that allow such exclusions or deductions. Thus, net income in a CFTE category may vary for purposes of applying paragraph (b)(4)(viii)(*a*)(*1*) of this section to different CFTEs within that CFTE category.

(*ii*) ***Guaranteed payments.*** Except as otherwise provided in this paragraph (b)(4)(viii)(*c*)(*4*)(*ii*), solely for purposes of applying the safe harbor provisions of paragraph (b)(4)(viii)(*a*)(*1*) of this section, net income in the CFTE category from which a guaranteed payment (within the meaning of section 707(c)) is made is increased by the amount of the guaranteed payment that is deductible for U.S. Federal income tax purposes, and such amount is treated as an allocation to the recipient of such guaranteed payment for purposes of determining the partners' CFTE category shares of income. If a foreign tax allows (whether in the current or in a different taxable year) a deduction from its taxable base for a guaranteed payment, then solely for purposes of applying the safe harbor

provisions of paragraph (b)(4)(viii)(*a*)(*1*) of this section to allocations of CFTEs that are attributable to that foreign tax, net income in the CFTE category is increased only to the extent that the amount of the guaranteed payment that is deductible for U.S. Federal income tax purposes exceeds the amount allowed as a deduction for purposes of the foreign tax, and such excess is treated as an allocation to the recipient of the guaranteed payment for purposes of determining the partners' CFTE category shares of income. See *Example 1* in paragraph (b)(6)(i) of this section.

(*iii*) ***Preferential allocations.*** To the extent that a foreign tax allows (whether in the current or in a different taxable year) a deduction from its taxable base for an allocation (or distribution of an allocated amount) to a partner, then solely for purposes of applying the safe harbor provisions of paragraph (b)(4)(viii)(*a*)(*1*) of this section to allocations of CFTEs that are attributable to that foreign tax, the net income in the CFTE category from which the allocation is made is reduced by the amount of the allocation, and that amount is not treated as an allocation for purposes of determining the partners' CFTE category shares of income. See *Example 1* in paragraph (b)(6)(i) of this section.

(*iv*) ***Foreign law exclusions due to status of partner.*** If a foreign tax excludes an amount from its taxable base as a result of the status of a partner, then solely for purposes of applying the safe harbor provisions of paragraph (b)(4)(viii)(*a*)(*1*) of this section to allocations of CFTEs that are attributable to that foreign tax, the net income in the relevant CFTE category is reduced by the excluded amounts that are allocable to such partners. See *Example 27* in paragraph (b)(5)(xxvii) of this section.

(*v*) ***Adjustments related to section 901(m).*** If one or more assets owned by a partnership are relevant foreign assets (or RFAs) with respect to a foreign income tax, then, solely for purposes of applying the safe harbor provisions of paragraph (b)(4)(viii)(*a*)(*1*) of this section to allocations of CFTEs with respect to that foreign income tax, the net income in a CFTE category that includes partnership items of income, deduction, gain, or loss attributable to the RFA shall be increased by the amount described in paragraph (b)(4)(viii)(*c*)(*4*)(*vi*) of this section and reduced by the amount described in paragraph (b)(4)(viii)(*c*)(*4*)(*vii*) of this section. Similarly, a partner's CFTE category share of income shall be increased by the portion of the amount described in paragraph (b)(4)(viii)(*c*)(*4*)(*vi*) of this section that is allocated to the partner under § 1.901(m)-5(d) and reduced by the portion of the amount described in paragraph (b)(4)(viii)(*c*)(*4*)(*vii*) of this section that is allocated to the partner under § 1.901(m)-5(d). The principles of this paragraph (b)(4)(viii)(*c*)(*4*)(*v*) apply similarly when a partnership owns an RFA indirectly through one or more other partnerships. For purposes of this paragraph (b)(4)(viii)(*c*)(*4*)(*v*) and paragraphs (b)(4)(viii)(*c*)(*4*)(*vi*) and (b)(4)(viii)(*c*)(*4*)(*vii*) of this section, basis difference is defined in § 1.901(m)-4, cost recovery amount is defined in § 1.901(m)-5(b)(2), disposition amount is defined in § 1.901(m)-5(c)(2), foreign income tax is defined in § 1.901(m)-1(a)(26), RFA is defined in § 1.901(m)-2(c), U.S. disposition gain is defined in § 1.901(m)-1(a)(52), and U.S. disposition loss is defined in § 1.901(m)-1(a)(53).

(*vi*) ***Adjustment amounts for RFAs with a positive basis difference.*** With respect to RFAs with a positive basis difference, the amount referenced in paragraph (b)(4)(viii)(*c*)(*4*)(*v*) of this section is the sum of any cost recovery amounts and disposition amounts attributable to U.S. disposition loss that correspond to partnership items that are included in the net income in the CFTE category and that are taken into account for the U.S. taxable year of the partnership under § 1.901(m)-5(d).

(*vii*) ***Adjustment amounts for RFAs with a negative basis difference.*** With respect to RFAs with a negative basis difference, the amount referenced in paragraph (b)(4)(viii)(*c*)(*4*)(*v*) of this section is the sum of any cost recovery amounts and disposition amounts attributable to U.S. disposition gain that correspond to partnership items that are included in the net income in the CFTE category and that are taken into account for the U.S. taxable year of the partnership under § 1.901(m)-5(d).

(*5*) ***No net income in a CFTE category.*** If a CFTE is allocated or apportioned to a CFTE category that does not have net income for the year in which the foreign tax is paid or accrued, the CFTE shall be deemed to relate to the aggregate of the net income (disregarding net losses) recognized by the partnership in that CFTE category in each of the three preceding taxable years. Accordingly, except as provided below, such CFTE must be allocated in the current taxable year in the same proportion as the allocation of the aggregate net income for the prior three-year period in order to satisfy the requirements of paragraph (b)(4)(viii)(*a*)(*1*) of this section. If the partnership does not have net income in the applicable CFTE category in either the current year or any of the previous three taxable years, the CFTE must be allocated in the same proportion that the partnership reasonably expects to allocate the aggregate net income (disregarding net losses) in the CFTE category for the succeeding three taxable years. If the partnership does not reasonably expect to have net income in the CFTE category for the succeeding three years and the partnership has net income in one or more other CFTE categories for the year in which the foreign tax is paid or accrued, the CFTE shall be deemed to relate to such other net income and must be allocated in proportion to the allocations of such other net income. If any CFTE is not allocated pursuant to the above provisions of this paragraph then the CFTE must be allocated in proportion to the partners' outstanding capital contributions.

(*d*) ***Allocation and apportionment of CFTEs to CFTE categories.*** —

(*1*) ***In general.*** CFTEs are allocated and apportioned to CFTE categories in accordance with § 1.861-20 by treating each CFTE category as a statutory grouping (with no residual grouping). See paragraphs (b)(6)(ii) and (iii) of this section (*Examples 2* and *3*), which illustrate the application of this paragraph (b)(4)(viii)(*d*)(*1*) in the case of serial disregarded payments subject to withholding tax. In addition, if as described in § 1.861-20(e), foreign law does not provide for the direct allocation or apportionment of expenses, losses or other deductions allowed under foreign law to a CFTE category of income, then such expenses, losses or other deductions must be allocated and apportioned to gross income as determined under foreign law in a

manner that is consistent with the allocation and apportionment of such items for purposes of determining the net income in the CFTE categories for Federal income tax purposes pursuant to paragraph (b)(4)(viii)(*c*)(*3*) of this section.

(*2*) ***Timing and base differences.*** A foreign tax imposed on an item that would be income under U.S. tax principles in another year (a timing difference) is allocated to the CFTE category that would include the income if the income were recognized for U.S. tax purposes in the year in which the foreign tax is imposed. A foreign tax imposed on an item that would not constitute income under U.S. tax principles in any year (a base difference) is allocated to the CFTE category that includes the partnership items attributable to the activity with respect to which the foreign tax is imposed. See paragraph (b)(5) *Example 23* of this section.

(*3*) ***Special rules for inter-branch payments.*** For rules relating to foreign tax paid or accrued in partnership taxable years beginning before January 1, 2012, in respect of certain inter-branch payments, see 26 CFR 1.704-1(b)(4)(viii)(*d*)(*3*) (revised as of April 1, 2011).

(ix) ***Allocations with respect to noncompensatory options*** —

(*a*) ***In general.*** A partnership agreement may grant to a partner that exercises a noncompensatory option (as defined in § 1.721-2(f)) a right to share in partnership capital that exceeds (or is less than) the sum of the amounts paid to the partnership to acquire and exercise the option. In such a case, allocations of income, gain, loss, and deduction to the partners while the noncompensatory option is outstanding cannot have economic effect because, if the noncompensatory option is exercised, the exercising partner, rather than the existing partners, may receive the economic benefit or bear the economic detriment associated with that income, gain, loss, or deduction. However, allocations of partnership income, gain, loss, and deduction to the partners while the noncompensatory option is outstanding will be deemed to be in accordance with the partners' interests in the partnership only if—

(*1*) The holder of the noncompensatory option is not treated as a partner under § 1.761-3;

(*2*) The partnership agreement requires that, while a noncompensatory option is outstanding, the partnership comply with the rules of paragraph (b)(2)(iv)(*f*) of this section and that, on the exercise of the noncompensatory option, the partnership comply with the rules of paragraph (b)(2)(iv)(*s*) of this section; and

(*3*) All material allocations and capital account adjustments under the partnership agreement would be respected under section 704(b) if there were no outstanding noncompensatory options issued by the partnership. See *Examples 31* through *35* of paragraph (b)(5) of this section.

(*b*) ***Substantial economic effect under sections 168(h) and 514(c)(9)(E)(i)(II).*** An allocation of partnership income, gain, loss, or deduction to the partners will be deemed to have substantial economic effect for purposes of sections 168(h) and 514(c)(9)(E)(i)(II) if—

(*1*) The allocation would meet the substantial economic effect requirements of paragraph (b)(2) of this section if there were no outstanding noncompensatory options issued by the partnership; and

(2) The partnership satisfies the requirements of paragraph (b)(4)(ix)(*a*)(*1*), (*2*), and (*3*) of this section.

(x) ***Corrective allocations*** —

(*a*) —*In general.* If partnership capital is reallocated between existing partners and a partner exercising a noncompensatory option under paragraph (b)(2)(iv)(*s*)(*3*) of this section (a capital account reallocation), then the partnership must, beginning with the taxable year of the exercise and in all succeeding taxable years until the required allocations are fully taken into account, make corrective allocations so as to take into account the capital account reallocation. A corrective allocation is an allocation (consisting of a pro rata portion of each item) for tax purposes of gross income and gain, or gross loss and deduction, that differs from the partnership's allocation of the corresponding book item. See *Example 32* of paragraph (b)(5) of this section.

(*b*) ***Timing.*** Section 706 and the regulations and principles thereunder apply in determining the items of income, gain, loss, and deduction that may be subject to corrective allocation.

(*c*) ***Allocation of gross income and gain and gross loss and deduction.*** If the capital account reallocation is from the historic partners to the exercising option holder, then the corrective allocations must first be made with gross income and gain. If an allocation of gross income and gain alone does not completely take into account the capital account reallocation in a given year, then the partnership must also make corrective allocations using a pro rata portion of items of gross loss and deduction as to further take into account the capital account reallocation. Conversely, if the capital account reallocation is from the exercising option holder to the historic partners, then the corrective allocations must first be made with gross loss and deduction. If an allocation of gross loss and deduction alone does not completely take into account the capital account reallocation in a given year, then the partnership must also make corrective allocations using a pro rata portion of items of gross income and gain as to further take into account the capital account reallocation.

(xi) ***Section 163(j) excess items.*** Allocations of section 163(j) excess items as defined in § 1.163(j)-6(b)(6) do not have substantial economic effect under paragraph (b)(2) of this section and, accordingly, such expenditures must be allocated in accordance with the partners' interests in the partnership. See paragraph (b)(3)(iv) of this section. Allocations of section 163(j) excess items will be deemed to be in accordance with the partners' interests in the partnership if such allocations are made in accordance with § 1.163(j)-6(f).

(5) ***Examples.*** The operation of the rules in this paragraph is illustrated by the following examples:

> *Example 1.* (i) A and B form a general partnership with cash contributions of $40,000 each, which cash is used to purchase depreciable personal property at a cost of $80,000. The partnership elects under section 48(q)(4) to reduce the amount of investment tax credit in lieu of adjusting the tax basis of such property. The partnership agreement provides that A and B will have equal shares of taxable income and loss (computed without regard to cost recovery deductions) and cash flow and that all cost recovery deductions on the property will be allocated to A. The agreement further provides that the partners' capital accounts will be determined and maintained in accordance with paragraph (b)(2)(iv) of the section, but that

upon liquidation of the partnership, distributions will be made equally between the partners (regardless of capital account balances) and no partner will be required to restore the deficit balance in his capital account for distribution to partners with positive capital accounts balances. In the partnership's first taxable year, it recognizes operating income equal to its operating expenses and has an additional $20,000 cost recovery deduction, which is allocated entirely to A. That A and B will be entitled to equal distributions on liquidation, even through A is allocated the entire $20,000 cost recovery deduction, indicates A will not bear the full risk of the economic loss corresponding to such deduction if such loss occurs. Under paragraph (b)(2)(ii) of this section, the allocation lacks economic effect and will be disregarded. The partners made equal contributions to the partnership, share equally in other taxable income and loss and in cash flow, and will share equally in liquidation proceeds, indicating that their actual economic arrangement is to bear the risk imposed by the potential decrease in the value of the property equally. Thus, under paragraph (b)(3) of this section the partners' interests in the partnership are equal, and the cost recovery deduction will be reallocated equally between A and B.

(ii) Assume the same facts as in (i) except that the partnership agreement provides that liquidation proceeds will be distributed in accordance with capital account balances if the partnership is liquidated during the first five years of its existence but that liquidation proceeds will be distributed equally if the partnership is liquidated thereafter. Since the partnership agreement does not provide for the requirement contained in paragraph (b)(2)(ii)(*b*)(*2*) of this section to be satisfied throughout the term of the partnership, the partnership allocations do not have economic effect. Even if the partnership agreement provided for the requirement contained in paragraph (b)(2)(ii)(*b*)(*2*) to be satisfied throughout the term of the partnership, such allocations would not have economic effect unless the requirement contained in paragraph (b)(2)(ii)(*b*)(*3*) of this section or the alternate economic effect test contained in paragraph (b)(2)(ii)(*d*) of this section were satisfied.

(iii) Assume the same facts as in (i) except that distributions in liquidation of the partnership (or any partner's interest) are to be made in accordance with the partners' positive capital account balances throughout the term of the partnership (as set forth in paragraph (b)(2)(ii)(*b*)(*2*) of this section). Assume further that the partnership agreement contains a qualified income offset (as defined in paragraph (b)(2)(ii)(*d*) of this section) and that, as of the end of each partnership taxable year, the items described in paragraphs (b)(2)(ii)(*d*)(*4*), (*5*), and (*6*) of this section are not reasonably expected to cause or increase a deficit balance in A's capital account.

	A	B
Capital account upon formation	$40,000	$40,000

	A	B
Less: year 1 cost recovery deduction	(20,000)	0
Capital account at end of year 1	$20,000	$40,000

Under the alternate economic effect test contained in paragraph (b)(2)(ii)(*d*) of this section, the allocation of the $20,000 cost recovery deduction to A has economic effect.

(iv) Assume the same facts as in (iii) and that in the partnership's second taxable year it recognizes operating income equal to its operating expenses and has a $25,000 cost recovery deduction which, under the partnership agreement, is allocated entirely to A.

	A	B
Capital account at beginning of year 2	$20,000	$40,000
Less: year 2 cost recovery deduction	(25,000)	0
Capital account at end of year 2	($5,000)	$40,000

The allocation of the $25,000 cost recovery deduction to A satisfies that alternate economic effect test contained in paragraph (b)(2)(ii)(*d*) of this section only to the extent of $20,000. Therefore, only $20,000 of such allocation has economic effect, and the remaining $5,000 must be reallocated in accordance with the partners' interests in the partnership. Under the partnership agreement, if the property were sold immediately following the end of the partnership's second taxable year for $35,000 (its adjusted tax basis), the $35,000 would be distributed to B. Thus, B, and not A, bears the economic burden corresponding to $5,000 of the $25,000 cost recovery deduction allocated to A. Under paragraph (b)(3)(iii) of this section, $5,000 of such cost recovery deduction will be reallocated to B.

(v) Assume the same facts as in (iv) except that the cost recovery deduction for the partnership's second taxable year is $20,000 instead of $25,000. The allocation of such cost recovery deduction to A has economic effect under the alternate economic effect test contained in paragraph (b)(2)(ii)(*d*) of this section. Assume further that the property is sold

for $35,000 immediately following the end of the partnership's second taxable year, resulting in a $5,000 taxable loss ($40,000 adjusted tax basis less $35,000 sales price), and the partnership is liquidated.

	A	B
Capital account at beginning of year 2	$20,000	$40,000
Less: year 2 cost recovery dedustion	(20,000)	0
Capital account at end of year 2	0	$40,000
Less: loss on sale	(2,500)	(2,500)
Capital account before liquidation	($2,500)	$37,500

Under the partnership agreement the $35,000 sales proceeds are distributed to B. Since B bears the entire economic burden corresponding to the $5,000 taxable loss from the sale of the property, the allocation of $2,500 of such loss to A does not have economic effect and must be reallocated in accordance with the partners' interests in the partnership. Under paragraph (b)(3)(iii) of this section, such $2,500 loss will be reallocated to B.

(vi) Assume the same facts as in (iv) except that the cost recovery deduction for the partnership's second taxable year is $20,000 instead of $25,000, and that as of the end of the partnership's second taxable year it is reasonably expected that during its third taxable year the partnership will (1) have operating income equal to its operating expenses (but will have no cost recovery deductions), (2) borrow $10,000 (recourse) and distribute such amount $5,000 to A and $5,000 to B, and (3) thereafter sell the partnership property, repay the $10,000 liability, and liquidate. In determining the extent to which the alternate economic effect test contained in paragraph (b)(2)(ii)(*d*) of this section is satisfied as of the end of the partnership's second taxable year, the fair market value of partnership property is presumed to be equal to its adjusted tax basis (in accordance with paragraph (b)(2)(iii)(*c*) of this section). Thus, it is presumed that the selling price of such property during the partnership's third taxable year will be its $40,000 adjusted tax basis. Accordingly, there can be no reasonable expectation that there will be increases to A's capital account in the partnership's third taxable year that will offset the expected $5,000 distribution to A. Therefore, the distribution of the loan proceeds must be taken into account in determining to what extent

the alternate economic effect test contained in paragraph (b)(2)(ii)(*d*) is satisfied.

	A	B
Capital account at beginning of year 2	$20,000	$40,000
Less: expected future distribution	(5,000)	(5,000)
Less: year 2 cost recovery deduction	(20,000)	(0)
Hypothetical capital account at end of year 2	($5,000)	$35,000

Upon sale of the partnership property, the $40,000 presumed sales proceeds would be used to repay the $10,000 liability, and the remaining $30,000 would be distributed to B. Under these circumstances the allocation of the $20,000 cost recovery deduction to A in the partnership's second taxable year satisfies the alternate economic effect test contained in paragraph (b)(2)(ii)(*d*) of this section only to the extent of $15,000. Under paragraph (b)(3)(iii) of this section, the remaining $5,000 of such deduction will be reallocated to B. The results in this example would be the same even if the partnership agreement also provided that any gain (whether ordinary income or capital gain) upon the sale of the property would be allocated to A to the extent of the prior allocations of cost recovery deductions to him, and, at end of the partnership's second taxable year, the partners were confident that the gain on the sale of the property in the partnership's third taxable year would be sufficient to offset the expected $5,000 distribution to A.

(vii) Assume the same facts as in (iv) except that the partnership agreement also provides that any partner with a deficit balance in his capital account following the liquidation of his interest must restore that deficit to the partnership (as set forth in paragraph (b)(2)(ii)(*b*)(*3*) of this section). Thus, if the property were sold for $35,000 immediately after the end of the partnership's second taxable year, the $35,000 would be distributed to B, A would contribute $5,000 (the deficit balance in his capital account) to the partnership, and that $5,000 would be distributed to B. The allocation of the entire $25,000 cost recovery deduction to A in the partnership's second taxable year has economic effect.

(viii) Assume the same facts as in (vii) except that A's obligation to restore the deficit balance in his capital account is limited to a maximum of $5,000. The allocation of the $25,000 cost recovery deduction to A in the partnership's second taxable year has economic effect under the alternate economic effect test contained in paragraph (b)(2)(ii)(*d*) of this section. At the end of such year, A makes an additional $5,000 contribution to the partnership (thereby eliminating the $5,000 deficit balance in his capital account). Under paragraph (b)(2)(ii)(*f*) of this section, A's obligation to restore up to $5,000 of the deficit balance in his capital account may be eliminated after he contributes the additional $5,000 without affecting the validity of prior allocations.

(ix) Assume the same facts as in (iv) except that upon formation of the partnership A also contributes to the partnership his negotiable promissory note with a $5,000 principal balance. The note unconditionally obligates A to pay an additional $5,000 to the partnership at the earlier of (a) the beginning of the partnership's fourth taxable year, or (b) the end of the partnership taxable year in which A's interest is liquidated. Under paragraph (b)(2)(ii)(*c*) of this section, A is considered obligated to restore up to $5,000 of the deficit balance in his capital account to the partnership. Accordingly, under the alternate economic effect test contained in paragraph (b)(2)(ii)(*d*) of this section, the allocation of the $25,000 cost recovery deduction to A in the partnership's second taxable year has economic effect. The results in this example would be the same if (1) the note A contributed to the partnership were payable only at the end of the partnership's fourth taxable year (so that A would not be required to satisfy the note upon liquidation of his interest in the partnership), and (2) the partnership agreement provided that upon liquidation of A's interest, the partnership would retain A's note, and A would contribute to the partnership the excess of the outstanding principal balance of the note over its then fair market value.

(x) Assume the same facts as in (ix) except that A's obligation to contribute an additional $5,000 to the partnership is not evidenced by a promissory note. Instead, the partnership agreement imposes upon A the obligation to make an additional $5,000 contribution to the partnership at the earlier of (a) the beginning of the partnership's fourth taxable year, or (b) the end of the partnership taxable year in which A's interest is liquidated. Under paragraph (b)(2)(ii)(*c*) of this section, as a result of A's deferred contribution requirement, A is considered obligated to restore up to $5,000 of the deficit balance in his capital account to the partnership. Accordingly, under the alternate economic effect test contained in paragraph (b)(2)(*ii*)(*d*) of this section, the allocation of the $25,000 cost recovery deduction to A in the partnership's second taxable year has economic effect.

(xi) Assume the same facts as in (vii) except that the partnership agreement also provides that any gain (whether ordinary income or capital gain) upon the sale of the property will be allocated to A to the extent of the prior allocations to A of cost recovery deductions from such property, and additional gain will be allocated equally between A and B. At the time the allocations of cost recovery deductions were made to A, the partners believed there would be gain on the sale of the property in an amount sufficient to offset the allocations of cost recovery deductions to A. Nevertheless, the existence of the gain chargeback provision will not cause the economic effect of the allocations to be insubstantial under paragraph (b)(2)(iii)(*c*) of this section, since in testing whether the economic effect of such allocations is substantial, the recovery property is presumed to decrease in value by the amount of such deductions.

Example 2. C and D form a general partnership solely to acquire and lease machinery that is 5-year recovery property under section 168. Each contributes $100,000, and the partnership obtains an $800,000 recourse loan to purchase the machinery. The partnership elects under section

48(q)(4) to reduce the amount of investment tax credit in lieu of adjusting the tax basis of such machinery. The partnership, C, and D have calendar taxable years. The partnership agreement provides that the partners' capital accounts will be determined and maintained in accordance with paragraph (b)(2)(iv) of this section, distributions in liquidation of the partnership (or any partner's interest) will be made in accordance with the partners' positive capital account balances, and any partner with a deficit balance in his capital account following the liquidation of his interest must restore that deficit to the partnership (as set forth in paragraphs (b)(2)(ii)(*b*)(*2*) and (*3*) of this section). The partnership agreement further provides that (a) partnership net taxable loss will be allocated 90 percent to C and 10 percent to D until such time as there is partnership net taxable income, and therefore C will be allocated 90 percent of such taxable income until he has been allocated partnership net taxable income equal to the partnership net taxable loss previously allocated to him, (b) all further partnership net taxable income or loss will be allocated equally between C and D, and (c) distributions of operating cash flow will be made equally between C and D. The partnership enters into a 12-year lease with a financially secure corporation under which the partnership expects to have a net taxable loss in each of its first 5 partnership taxable years due to cost recovery deductions with respect to the machinery and net taxable income in each of its following 7 partnership taxable years, in part due to the absence of such cost recovery deductions. There is a strong likelihood that the partnership's net taxable loss in partnership taxable years 1 through 5 will be $100,000, $90,000, $80,000, $70,000, and $60,000, respectively, and the partnership's net taxable income in partnership taxable years 6 through 12 will be $40,000, $50,000, $60,000, $70,000, $80,000, $90,000, and $100,000, respectively. Even though there is a strong likelihood that the allocations of net taxable loss in years 1 through 5 will be largely offset by other allocations in partnership taxable years 6 through 12, and even if it is assumed that the total tax liability of the partners in years 1 through 12 will be less than if the allocations had not been provided in the partnership agreement, the economic effect of the allocations will not be insubstantial under paragraph (b)(2)(iii)(*c*) of this section. This is because at the time such allocations became part of the partnership agreement, there was a strong likelihood that the allocations of net taxable loss in years 1 through 5 would not be largely offset by allocations of income within 5 years (determined on a first-in, first-out basis). The year 1 allocation will not be offset until years 6, 7, and 8, the year 2 allocation will not be offset until years 8 and 9, the year 3 allocation will not be offset until years 9 and 10, the year 4 allocation will not be offset until years 10 and 11, and the year 5 allocation will not be offset until years 11 and 12.

Example 3. E and F enter into a partnership agreement to develop and market experimental electronic devices. E contributes $2,500 cash and agrees to devote his full-time services to the partnership. F contributes $100,000 cash and agrees to obtain a loan for the partnership for any additional capital needs. The partnership agreement provides that all deductions for research and experimental expenditures and interest on partnership loans are to be allocated to F. In addition, F will be allocated 90 percent, and E 10 percent, of partnership taxable income or loss, computed net of the deductions for such research and experimental expenditures and interest, until F has received allocations of such taxable income equal to the sum of such research and experimental expenditures, such interest expense, and his share of such taxable loss. Thereafter, E and F will share all taxable income and loss equally. Operating cash flow will be distributed equally between E and F. The partnership agreement also provides that E's and F's capital accounts will be determined and maintained in accordance with paragraph (b)(2)(iv) of this section, distributions in liquidation of the partnership (or any partner's interest) will be made in accordance with the partners' positive capital account balances, and any partner with

a deficit balance in his capital account following the liquidation of his interest must restore that deficit to the partnership (as set forth in paragraphs (b)(2)(ii)(*b*)(*2*) and (*3*) of this section). These allocations have economic effect. In addition, in view of the nature of the partnership's activities, there is not a strong likelihood at the time the allocations become part of the partnership agreement that the economic effect of the allocations to F of deductions for research and experimental expenditures and interest on partnership loans will be largely offset by allocations to F of partnership net taxable income. The economic effect of the allocations is substantial.

Example 4. (i) G and H contribute $75,000 and $25,000, respectively, in forming a general partnership. The partnership agreement provides that all income, gain, loss, and deduction will be allocated equally between the partners, that the partners' capital accounts will be determined and maintained in accordance with paragraph (b)(2)(iv) of this section, but that all partnership distributions will, regardless of capital account balances, be made 75 percent to G and 25 percent to H. Following the liquidation of the partnership, neither partner is required to restore the deficit balance in his capital account to the partnership for distribution to partners with positive capital account balances. The allocations in the partnership agreement do not have economic effect. Since contributions were made in a 75/25 ratio and the partnership agreement indicates that all economic profits and losses of the partnership are to be shared in a 75/25 ratio, under paragraph (b)(3) of this section, partnership income, gain, loss, and deduction will be reallocated 75 percent to G and 25 percent to H.
(ii) Assume the same facts as in (i) except that the partnership maintains no capital accounts and the partnership agreement provides that all income, gain, loss, deduction, and credit will be allocated 75 percent to G and 25 percent to H. G and H are ultimately liable (under a State law right of contribution) for 75 percent and 25 percent, respectively, of any debts of the partnership. Although the allocations do not satisfy the requirements of paragraph (b)(2)(ii)(*b*) of this section, the allocations have economic effect under the economic effect equivalence test of paragraph (b)(2)(ii)(*i*) of this section.

(iii) Assume the same facts as in (i) except that the partnership agreement provides that any partner with a deficit balance in his capital account must restore that deficit to the partnership (as set forth in paragraph (b)(2)(ii)(*b*)(*2*) of this section). Although the allocations do not satisfy the requirements of paragraph (b)(2)(ii)(*b*) of this section, the allocations have economic effect under the economic effect equivalence test of paragraph (b)(2)(ii)(*i*) of this section.

Example 5. (i) Individuals I and J are the only partners of an investment partnership. The partnership owns corporate stocks, corporate debt instruments, and tax-exempt debt instruments. Over the next several years, I expects to be in the 50 percent marginal tax bracket, and J expects to be in the 15 percent marginal tax bracket. There is a strong

likelihood that in each of the next several years the partnership will realize between $450 and $550 of tax-exempt interest and between $450 and $550 of a combination of taxable interest and dividends from its investments. I and J made equal capital contributions to the partnership, and they have agreed to share equally in gains and losses from the sale of the partnership's investment securities. I and J agree, however, that rather than share interest and dividends of the partnership equally, they will allocate the partnership's tax-exempt interest 80 percent to I and 20 percent to J and will distribute cash derived from interest received on the tax-exempt bonds in the same percentages. In addition, they agree to allocate 100 percent of the partnership's taxable interest and dividends to J and to distribute cash derived from interest and dividends received on the corporate stocks and debt instruments 100 percent to J. The partnership agreement further provides that the partners' capital accounts will be determined and maintained in accordance with paragraph (b)(2)(iv) of this section, distributions in liquidation of the partnership (or any partner's interest) will be made in accordance with the partner's positive capital account balances, and any partner with a deficit balance in his capital account following the liquidation of his interest must restore that deficit to the partnership (as set forth in paragraphs (b)(2)(ii)(*b*) (*2*) and (*3*) of this section). The allocation of taxable interest and dividends and tax-exempt interest has economic effect, but that economic effect is not substantial under the general rules set forth in paragraph (b)(2)(iii) of this section. Without the allocation I would be allocated between $225 and $275 of tax-exempt interest and between $225 and $275 of a combination of taxable interest and dividends, which (net of Federal income taxes he would owe on such income) would give I between $337.50 and $412.50 after tax. With the allocation, however, I will be allocated between $360 and $440 of tax-exempt interest and no taxable interest and dividends, which (net of Federal income taxes) will give I between $360 and $440 after tax. Thus, at the time the allocations became part of the partnership agreement, I is expected to enhance his after-tax economic consequences as a result of the allocations. On the other hand, there is a strong likelihood that neither I nor J will substantially diminish his after-tax economic consequences as a result of the allocations. Under the combination of likely investment outcomes least favorable for J, the partnership would realize $550 of tax-exempt interest and $450 of taxable interest and dividends, giving J $492.50 after tax (which is more than the $466.25 after tax J would have received if each of such amounts had been allocated equally between the partners). Under the combination of likely investment outcomes least favorable for I, the partnership would realize $450 of tax-exempt interest and $550 of taxable interest and dividends, giving I $360 after tax (which is not substantially less than the $362.50 he would have received if each of such amounts had been allocated equally between the partners). Accordingly, the allocations in the partnership agreement must be reallocated in accordance with the partners' interests in the partnership under paragraph (b)(3) of

this section.

(ii) Assume the same facts as in (i). In addition, assume that in the first partnership taxable year in which the allocation arrangement described in (i) applies, the partnership realizes $450 of tax-exempt interest and $550 of taxable interest and dividends, so that, pursuant to the partnership agreement, I's capital account is credited with $360 (80 percent of the tax-exempt interest), and J's capital account is credited with $640 (20 percent of the tax-exempt interest and 100 percent of the taxable interest and dividends). The allocations of tax-exempt interest and taxable interest and dividends (which do not have substantial economic effect for the reasons stated in (i)) will be disregarded and will be reallocated. Since under the partnership agreement I will receive 36 percent (360/1,000) and J will receive 64 percent (640/1,000) of the partnership's total investment income in such year, under paragraph (b)(3) of this section the partnership's tax-exempt interest and taxable interest and dividends each will be reallocated 36 percent to I and 64 percent to J.

Example 6. K and L are equal partners in a general partnership formed to acquire and operate property described in section 1231(b). The partnership, K, and L have calendar taxable years. The partnership agreement provides that the partners' capital accounts will be determined and maintained in accordance with paragraph (b)(2)(iv) of this section, that distributions in liquidation of the partnership (or any partner's interest) will be made in accordance with the partners' positive capital account balances, and that any partner with a deficit balance in his capital account following the liquidation of his interest must restore that deficit to the partnership (as set forth in paragraphs (b)(2)(ii)(*b*) (*2*) and (*3*) of this section). For a taxable year in which the partnership expects to incur a loss on the sale of a portion of such property, the partnership agreement is amended (at the beginning of the taxable year) to allocate such loss to K, who expects to have no gains from the sale of depreciable property described in section 1231(b) in that taxable year, and to allocate an equivalent amount of partnership loss and deduction for that year of a different character to L, who expects to have such gains. Any partnership loss and deduction in excess of these allocations will be allocated equally between K and L. The amendment is effective only for that taxable year. At the time the partnership agreement is amended, there is a strong likelihood that the partnership will incur deduction or loss in the taxable year other than loss from the sale of property described in section 1231(b) in an amount that will substantially equal or exceed the expected amount of the section 1231(b) loss. The allocations in such taxable year have economic effect. However, the economic effect of the allocations is insubstantial under the test described in paragraph (b)(2)(iii) (*b*) of this section because there is a strong likelihood, at the time the allocations become part of the partnership agreement, that the net increases and decreases to K's and L's capital accounts will be the same at the end of the taxable year to which they apply with such allocations in effect as they would have been in the absence of such allocations, and that the total taxes of K and L for such year will be reduced as a result of such allocations. If in fact the partnership incurs deduction or loss, other than loss from the sale of property described in section 1231(b), in an amount at least equal to the section 1231(b) loss, the loss and deduction in such taxable year will be reallocated equally between K and L under paragraph (b)(3) of this section. If not, the

loss from the sale of property described in section 1231(b) and the items of deduction and other loss realized in such year will be reallocated between K and L in proportion to the net decreases in their capital accounts due to the allocation of such items under the partnership agreement.

Example 7. (i) M and N are partners in the MN general partnership, which is engaged in an active business. Income, gain, loss, and deduction from MN's business is allocated equally between M and N. The partnership, M, and N have calendar taxable years. Under the partnership agreement the partners' capital accounts will be determined and maintained in accordance with paragraph (b)(2)(iv) of this section, distributions in liquidation of the partnership (or any partner's interest) will be made in accordance with the partner's positive capital account balances, and any partner with a deficit balance in his capital account following the liquidation of his interest must restore that deficit to the partnership (as set forth in paragraphs (b)(2)(ii)(*b*) (*2*) and (*3*) of this section). In order to enhance the credit standing of the partnership, the partners contribute surplus funds to the partnership, which the partners agree to invest in equal dollar amounts of tax-exempt bonds and corporate stock for the partnership's first 3 taxable years. M is expected to be in a higher marginal tax bracket than N during those 3 years. At the time the decision to make these investments is made, it is agreed that, during the 3-year period of the investment, M will be allocated 90 percent and N 10 percent of the interest income from the tax-exempt bonds as well as any gain or loss from the sale thereof, and that M will be allocated 10 percent and N 90 percent of the dividend income from the corporate stock as well as any gain or loss from the sale thereof. At the time the allocations concerning the investments become part of the partnership agreement, there is not a strong likelihood that the gain or loss from the sale of the stock will be substantially equal to the gain or loss from the sale of the tax-exempt bonds, but there is a strong likelihood that the tax-exempt interest and the taxable dividends realized from these investments during the 3-year period will not differ substantially. These allocations have economic effect, and the economic effect of the allocations of the gain or loss on the sale of the tax-exempt bonds and corporate stock is substantial. The economic effect of the allocations of the tax-exempt interest and the taxable dividends, however, is not substantial under the test described in paragraph (b)(2)(iii)(*c*) of this section because there is a strong likelihood, at the time the allocations become part of the partnership agreement, that at the end of the 3-year period to which such allocations relate, the net increases and decreases to M's and N's capital accounts will be the same with such allocations as they would have been in the absence of such allocations, and that the total taxes of M and N for the taxable years to which such allocations relate will be reduced as a result of such allocations. If in fact the amounts of the tax-exempt interest and taxable dividends earned by the partnership during the 3-year period are equal, the tax-exempt interest and taxable dividends will be reallocated to the partners in

equal shares under paragraph (b)(3) of this section. If not, the tax-exempt interest and taxable dividends will be reallocated between M and N in proportion to the net increases in their capital accounts during such 3-year period due to the allocation of such items under the partnership agreement.
(ii) Assume the same facts as in (i) except that gain or loss from the sale of the tax-exempt bonds and corporate stock will be allocated equally between M and N and the partnership agreement provides that the 90/10 allocation arrangement with respect to the investment income applies only to the first $10,000 of interest income from the tax-exempt bonds and the first $10,000 of dividend income from the corporate stock, and only to the first taxable year of the partnership. There is a strong likelihood at the time the 90/10 allocation of the investment income became part of the partnership agreement that in the first taxable year of the partnership, the partnership will earn more than $10,000 of tax-exempt interest and more than $10,000 of taxable dividends. The allocations of tax-exempt interest and taxable dividends provided in the partnership agreement have economic effect, but under the test contained in paragraph (b)(2)(iii)(*b*) of this section, such economic effect is not substantial for the same reasons stated in (i) (but applied to the 1 taxable year, rather than to a 3-year period). If in fact the partnership realizes at least $10,000 of tax-exempt interest and at least $10,000 of taxable dividends in such year, the allocations of such interest income and dividend income will be reallocated equally between M and N under paragraph (b)(3) of this section. If not, the tax-exempt interest and taxable dividends will be reallocated between M and N in proportion to the net increases in their capital accounts due to the allocations of such items under the partnership agreement.

(iii) Assume the same facts as in (ii) except that at the time the 90/10 allocation of investment income becomes part of the partnership agreement, there is not a strong likelihood that (1) the partnership will earn $10,000 or more of tax-exempt interest and $10,000 or more of taxable dividends in the partnership's first taxable year, and (2) the amount of tax-exempt interest and taxable dividends earned during such year will be substantially the same. Under these facts the economic effect of the allocations generally will be substantial. (Additional facts may exist in certain cases, however, so that the allocation is insubstantial under the second sentence of paragraph (b)(2)(iii). See example 5 above.)

Example 8. (i) O and P are equal partners in the OP general partnership. The partnership, O, and P have calendar taxable years. Partner O has a net operating loss carryover from another venture that is due to expire at the end of the partnership's second taxable year. Otherwise, both partners expect to be in the 50 percent marginal tax bracket in the next several taxable years. The partnership agreement provides that the partners' capital accounts will be determined and maintained in accordance with paragraph (b)(2)(iv) of this section, distributions in liquidation of the partnership (or any

partner's interest) will be made in accordance with the partners' positive capital account balances, and any partner with a deficit balance in his capital account following the liquidation of his interest must restore that deficit to the partnership (as set forth in paragraphs (b)(2)(ii)(*b*) (*2*) and (*3*) of this section). The partnership agreement is amended (at the beginning of the partnership's second taxable year) to allocate all the partnership net taxable income for that year to O. Future partnership net taxable loss is to be allocated to O, and future partnership net taxable income to P, until the allocation of income to O in the partnership's second taxable year is offset. It is further agreed orally that in the event the partnership is liquidated prior to completion of such offset, O's capital account will be adjusted downward to the extent of one-half of the allocations of income to O in the partnership's second taxable year that have not been offset by other allocations, P's capital account will be adjusted upward by a like amount, and liquidation proceeds will be distributed in accordance with the partners' adjusted capital account balances. As a result of this oral amendment, all allocations of partnership net taxable income and net taxable loss made pursuant to the amendment executed at the beginning of the partnership's second taxable year lack economic effect and will be disregarded. Under the partnership agreement other allocations are made equally to O and P, and O and P will share equally in liquidation proceeds, indicating that the partners' interests in the partnership are equal. Thus, the disregarded allocations will be reallocated equally between the partners under paragraph (b)(3) of this section.
(ii) Assume the same facts as in (i) except that there is no agreement that O's and P's capital accounts will be adjusted downward and upward, respectively, to the extent of one-half of the partnership net taxable income allocated to O in the partnership's second taxable year that is not offset subsequently by other allocations. The income of the partnership is generated primarily by fixed interest payments received with respect to highly rated corporate bonds, which are expected to produce sufficient net taxable income prior to the end of the partnership's seventh taxable year to offset in large part the net taxable income to be allocated to O in the partnership's second taxable year. Thus, at the time the allocations are made part of the partnership agreement, there is a strong likelihood that the allocation of net taxable income to be made to O in the second taxable year will be offset in large part within 5 taxable years thereafter. These allocations have economic effect. However, the economic effect of the allocation of partnership net taxable income to O in the partnership's second taxable year, as well as the offsetting allocations to P, is not substantial under the test contained in paragraph (b)(2)(iii)(*c*) of this section because there is a strong likelihood that the net increases or decreases in O's and P's capital accounts will be the same at the end of the partnership's seventh taxable year with such allocations as they would have been in the absence of such allocations, and the total taxes of O and P for the taxable years to which such allocations relate will be reduced as a result of such allocations. If in fact the partnership, in its taxable years 3 through 7, realizes sufficient net taxable income to

> offset the amount allocated to O in the second taxable year, the allocations provided in the partnership agreement will be reallocated equally between the partners under paragraph (b)(3) of this section.

Example 9. Q and R form a limited partnership with contributions of $20,000 and $180,000, respectively. Q, the limited partner, is a corporation that has $2,000,000 of net operating loss carryforwards that will not expire for 8 years. Q does not expect to have sufficient income (apart from the income of the partnership) to absorb any of such net operating loss carryforwards. R, the general partner, is a corporation that expects to be in the 46 percent marginal tax bracket for several years. The partnership agreement provides that the partners' capital accounts will be determined and maintained in accordance with paragraph (b)(2)(iv) of this section, distributions in liquidation of the partnership (or any partner's interest) will be made in accordance with the partners' positive capital account balances, and any partner with a deficit balance in his capital account following the liquidation of his interest must restore that deficit to the partnership (as set forth in paragraphs (b)(2)(ii)(*b*) (*2*) and (*3*) of this section). The partnership's cash, together with the proceeds of an $800,000 loan, are invested in assets that are expected to produce taxable income and cash flow (before debt service) of approximately $150,000 a year for the first 8 years of the partnership's operations. In addition, it is expected that the partnership's total taxable income in its first 8 taxable years will not exceed $2,000,000. The partnership's $150,000 of cash flow in each of its first 8 years will be used to retire the $800,000 loan. The partnership agreement provides that partnership net taxable income will be allocated 90 percent to Q and 10 percent to R in the first through eighth partnership taxable years, and 90 percent to R and 10 percent to Q in all subsequent partnership taxable years. Net taxable loss will be allocated 90 percent to R and 10 percent to Q in all partnership taxable years. All distributions of cash from the partnership to partners (other than the priority distributions to Q described below) will be made 90 percent to R and 10 percent to Q. At the end of the partnership's eighth taxable year, the amount of Q's capital account in excess of one-ninth of R's capital account on such date will be designated as Q's "excess capital account." Beginning in the ninth taxable year of the partnership, the undistributed portion of Q's excess capital account will begin to bear interest (which will be paid and deducted under section 707(c) at a rate of interest below the rate that the partnership can borrow from commercial lenders, and over the next several years (following the eight year) the partnership will make priority cash distributions to Q in prearranged percentages of Q's excess capital account designed to amortize Q's excess capital account and the interest thereon over a prearranged period. In addition, the partnership's agreement prevents Q from causing his interest in the partnership from being liquidated (and thereby receiving the balance in his capital account) without R's consent until Q's excess capital account has been eliminated. The below market rate of interest and the period over which the amortization will take place are prescribed such that, as of the end of the partnership's eighth taxable year, the present value of Q's right to receive such priority distributions is approximately 46 percent of the amount of Q's excess capital account as of such date. However, because the partnership's income for its first 8 taxable years will be realized approximately ratably over that period, the present value of Q's right to receive the priority distributions with respect to its excess capital account is, as of the date the partnership agreement is entered into, less than the present value of the additional Federal income taxes for which R would be liable if, during the partnership's first 8 taxable years, all partnership income were to be allocated 90 percent to R and 10 to Q. The allocations of partnership taxable income to Q and R in the first through eighth partnership taxable years

have economic effect. However, such economic effect is not substantial under the general rules set forth in paragraph (b)(2)(iii) of this section. This is true because R may enhance his after-tax economic consequences, on a present value basis, as a result of the allocations to Q of 90 percent of partnership's income during taxable years 1 through 8, and there is a strong likelihood that neither R nor Q will substantially diminish its after-tax economic consequences, on a present value basis, as a result of such allocation. Accordingly, partnership taxable income for partnership taxable years 1 through 8 will be reallocated in accordance with the partners' interests in the partnership under paragraph (b)(3) of this section.

Example 10. (i) S and T form a general partnership to operate a travel agency. The partnership agreement provides that the partners' capital accounts will be determined and maintained in accordance with paragraph (b)(2)(iv) of this section, distributions in liquidation of the partnership (or any partner's interest) will be made in accordance with the partners' positive capital account balances, and any partner with a deficit balance in his capital account following the liquidation of his interest must restore that deficit to the partnership (as set forth in paragraphs (b)(2)(ii)(*b*) (*2*) and (*3*) of this section). The partnership agreement provides that T, a resident of a foreign country, will be allocated 90 percent, and S 10 percent, of the income, gain, loss, and deduction derived from operations conducted by T within his country, and all remaining income, gain, loss, and deduction will be allocated equally. The amount of such income, gain, loss, or deduction cannot be predicted with any reasonable certainty. The allocations provided by the partnership agreement have substantial economic effect.
(ii) Assume the same facts as in (i) except that the partnership agreement provides that all income, gain, loss, and deduction of the partnership will be shared equally, but that T will be allocated all income, gain, loss, and deduction derived from operations conducted by him within his country as a part of his equal share of partnership income, gain, loss, and deduction, upon to the amount of such share. Assume the total tax liability of S and T for each year to which these allocations relate will be reduced as a result of such allocation. These allocations have economic effect. However, such economic effect is not substantial under the test stated in paragraph (b)(2)(iii)(*b*) of this section because, at the time the allocations became part of the partnership agreement, there is a strong likelihood that the net increases and decreases to S's and T's capital accounts will be the same at the end of each partnership taxable year with such allocations as they would have been in the absence of such allocations, and that the total tax liability of S and T for each year to which such allocations relate will be reduced as a result of such allocations. Thus, all items of partnership income, gain, loss, and income, gain, loss, and deduction will be reallocated equally between S and T under paragraph (b)(3) of this section.

Example 11. (i) U and V share equally all income, gain, loss, and deduction of the UV general partnership, as well as all non-liquidating distributions made by the partnership. The partnership agreement provides that the partners' capital accounts will be determined and maintained in accordance with paragraph (b)(2)(iv) of this section,

distributions in liquidation of the partnership (or any partner's interest) will be made in accordance with the partners' positive capital account balances, and any partner with a deficit balance in his capital account following the liquidation of his interest must restore such deficit to the partnership (as set forth in paragraphs (b)(2)(ii)(*b*) (*2*) and (*3*) of this section). The agreement further provides that the partners will be allocated equal shares of any section 705(a)(2)(B) expenditures of the partnership. In the partnership's first taxable year, it pays qualified first-year wages of $6,000 and is entitled to a $3,000 targeted jobs tax credit under sections 44B and 51 of the Code. Under section 280C the partnership must reduce its deduction for wages paid by the $3,000 credit claimed (which amount constitutes a section 705(a)(2)(B) expenditure). The partnership agreement allocates the credit to U. Although the allocations of wage deductions and section 705(a)(2)(B) expenditures have substantial economic effect, the allocation of tax credit cannot have economic effect since it cannot properly be reflected in the partners' capital accounts. Furthermore, the allocation is not in accordance with the special partners' interests in the partnership rule contained in paragraph (b)(4)(ii) of this section. Under that rule, since the expenses that gave rise to the credit are shared equally by the partners, the credit will be shared equally between U and V.
(ii) Assume the same facts as in (i) and that at the beginning of the partnership's second taxable year, the partnership agreement is amended to allocate to U all wage expenses incurred in that year (including wage expenses that constitute section 705(a)(2)(B) expenditures) whether or not such wages qualify for the credit. The partnership agreement contains no offsetting allocations. That taxable year the partnership pays $8,000 in total wages to its employees. Assume that the partnership has operating income equal to its operating expenses (exclusive of expenses for wages). Assume further that $6,000 of the $8,000 wage expense constitutes qualified first-year wages. U is allocated the $3,000 deduction and the $3,000 section 705(a)(2)(B) expenditure attributable to the $6,000 of qualified first-year wages, as well as the deduction for the other $2,000 in wage expenses. The allocations of wage deductions and section 705(a)(2)(B) expenditures have substantial economic effect. Furthermore, since the wage credit is allocated in the same proportion as the expenses that gave rise to the credit, and the allocation of those expenses has substantial economic effect, the allocation of such credit to U is in accordance with the special partners' interests in the partnership rule contained in paragraph (b)(4)(ii) of this section and is recognized thereunder.

Example 12. (i) W and X form a general partnership for the purpose of mining iron ore. W makes an initial contribution of $75,000, and X makes an initial contribution of $25,000. The partnership agreement provides that non-liquidating distributions will be made 75 percent to W and 25 percent to X, and that all items of income, gain, loss, and deduction will be allocated 75 percent to W and 25 percent to X, except that all

percentage depletion deductions will be allocated to W. The agreement further provides that the partners' capital accounts will be determined and maintained in accordance with paragraphs (b)(2)(iv) of this section, distributions in liquidation of the partnership (or any partner's interest) will be made in accordance with the partners' positive capital account balances, and any partner with a deficit balance in his capital account following the liquidation of his interest must restore such deficit to the partnership (as set forth in paragraphs (b)(2)(ii)(*b*) (*2*) and (*3*) of this section). Assume that the adjusted tax basis of the partnership's only depletable iron ore property is $1,000 and that the percentage depletion deduction for the taxable year with respect to such property is $1,500. The allocation of partnership income, gain, loss, and deduction (excluding the percentage depletion deduction) as well as the allocation of $1,000 of the percentage depletion deduction have substantial economic effect. The allocation to W of the remaining $500 of the percentage depletion deduction, representing the excess of percentage depletion over adjusted tax basis of the iron ore property, cannot have economic effect since such amount cannot properly be reflected in the partners' capital accounts. Furthermore, the allocation to W of that $500 excess percentage depletion deduction is not in accordance with the special partners' interests in the partnership rule contained in paragraph (b)(4)(iii) of this section, under which such $500 excess depletion deduction (and all further percentage depletion deductions from the mine) will be reallocated 75 percent to W and 25 percent to X.

(ii) Assume the same facts as in (i) except that the partnership agreement provides that all percentage depletion deductions of the partnership will be allocated 75 percent to W and 25 percent to X. Once again, the allocation of partnership income, gain, loss, and deduction (excluding the percentage depletion deduction) as well as the allocation of $1,000 of the percentage depletion deduction have substantial economic effect. Furthermore, since the $500 portion of the percentage depletion deduction that exceeds the adjusted basis of such iron ore property is allocated in the same manner as valid allocations of the gross income from such property during the taxable year (*i.e.,* 75 percent to W and 25 percent to X), the allocation of the $500 excess percentage depletion contained in the partnership agreement is in accordance with the special partners' interests in the partnership rule contained in paragraph (b)(4)(iii) of this section.

Example 13. (i) Y and Z form a brokerage general partnership for the purpose of investing and trading in marketable securities. Y contributes cash of $10,000, and Z contributes securities of P corporation, which have an adjusted basis of $3,000 and a fair market value of $10,000. The partnership would not be an investment company under section 351(e) if it were incorporated. The partnership agreement provides that the partners' capital accounts will be determined and maintained in accordance with paragraph (b)(2)(iv) of this section, distributions in liquidation of the partnership (or any

partner's interest) will be made in accordance with the partners' positive capital account balances, and any partner with a deficit balance in his capital account following the liquidation of his interest must restore that deficit to the partnership (as set forth in paragraphs (b)(2)(ii)(*b*) (*2*) and (*3*) of this section). The partnership uses the interim closing of the books method for purposes of section 706. The initial capital accounts of Y and Z are fixed at $10,000 each. The agreement further provides that all partnership distributions, income, gain, loss, deduction, and credit will be shared equally between Y and Z, except that the taxable gain attributable to the precontribution appreciation in the value of the securities of P corporation will be allocated to Z in accordance with section 704(c). During the partnership's first taxable year, it sells the securities of P corporation for $12,000, resulting in a $2,000 book gain ($12,000 less $10,000 book value) and a $9,000 taxable gain ($12,000 less $3,000 adjusted tax basis). The partnership has no other income, gain, loss, or deductions for the taxable year. The gain from the sale of the securities is allocated as follows:

	Y		Z	
	Tax	**Book**	**Tax**	**Book**
Capital account upon formation	$10,000	$10,000	$3,000	$10,000
Plus: gain	1,000	1,000	8,000	1,000
Capital account at end of year 1	$11,000	$11,000	$11,000	$11,000

The allocation of the $2,000 book gain, $1,000 each to Y and Z, has substantial economic effect. Furthermore, under section 704(c) the partners' distributive shares of the $9,000 taxable gain are $1,000 to Y and $8,000 to Z.

(ii) Assume the same facts as in (i) and that at the beginning of the partnership's second taxable year, it invests its $22,000 of cash in securities of G Corp. The G Corp. securities increase in value to $40,000, at which time Y sells 50 percent of his partnership interest (*i.e.,* a 25 percent interest in the partnership) to LK for $10,000. The partnership does not have a section 754 election in effect for the partnership taxable year during which such sale occurs. In accordance with paragraph (b)(2)(iv)(*l*) of this section, the partnership agreement provides that LK inherits 50 percent of Y's $11,000 capital account balance. Thus, following the sale, LK and Y each have a capital account of $5,500, and Z's capital account remains at $11,000. Prior to the end of the partnership's second taxable year, the securities are sold for their $40,000 fair market value, resulting in an $18,000 taxable gain ($40,000 less $22,000 adjusted tax basis). The partnership has no other income, gain, loss, or deduction in such taxable year. Under

the partnership agreement the $18,000 taxable gain is allocated as follows:

	Y	Z	LK
Capital account before sale of securities	$5,500	$11,000	$5,500
Plus: gain	4,500	9,000	4,500
Capital account at end of year 2	$10,000	$20,000	$10,000

The allocation of the $18,000 taxable gain has substantial economic effect.

(iii) Assume the same facts as in (ii) except that the partnership has a section 754 election in effect for the partnership taxable year during which Y sells 50 percent of his interest to LK. Accordingly, under § 1.743-1 there is a $4,500 basis increase to the G Corp. securities with respect to LK. Notwithstanding this basis adjustment, as a result of the sale of the G Corp. securities, LK's capital account is, as in (ii), increased by $4,500. The fact that LK recognizes no taxable gain from such sale (due to his $4,500 section 743 basis adjustment) is irrelevant for capital accounting purposes since, in accordance with paragraph (b)(2)(iv)(*m*)(*2*) of this section, that basis adjustment is disregarded in the maintenance and computation of the partners' capital accounts.
(iv) Assume the same facts as in (iii) except that immediately following Y's sale of 50 percent of this interest to LK, the G Corp. securities decrease in value to $32,000 and are sold. The $10,000 taxable gain ($32,000 less $22,000 adjusted tax basis) is allocated as follows:

	Y	Z	LK
Capital account before sale of securities	$5,500	$11,000	$5,500
Plus: gain	2,500	5,000	2,500
Capital account at end of the year 2	$8,000	$16,000	$8,000

The fact that LK recognizes a $2,000 taxable loss from the sale of the G Corp. securities (due to his $4,500 section 743 basis adjustment) is irrelevant for capital accounting purposes since, in accordance with paragraph (b)(2)(iv)(*m*)(*2*) of this section, that basis adjustment is disregarded in the maintenance and computation of the partners' capital accounts.

(v) Assume the same facts as in (ii) except that Y sells 100 percent of his partnership interest (*i.e.,* a 50 percent interest in the partnership) to LK for $20,000. Under section

708(b)(1)(B) the partnership terminates. Under paragraph (b)(1)(iv) of § 1.708-1, there is a constructive liquidation of the partnership. Immediately preceding the constructive liquidation, the capital accounts of Z and LK equal $11,000 each (LK having inherited Y's $11,000 capital account) and the book value of the G Corp. securities is $22,000 (original purchase price of securities). Under paragraph (b)(2)(iv)(*l*) of this section, the deemed contribution of assets and liabilities by the terminated partnership to the new partnership and the deemed liquidation of the terminated partnership that occur under § 1.708-1(b)(1)(iv) in connection with the constructive liquidation of the terminated partnership are disregarded in the maintenance and computation of the partners' capital accounts. As a result, the capital accounts of Z and LK in the new partnership equal $11,000 each (their capital accounts in the terminated partnership immediately prior to the termination), and the book value of the G Corp. securities remains $22,000 (its book value immediately prior to the termination). This *Example 13*(v) applies to terminations of partnerships under section 708(b)(1)(B) occurring on or after May 9, 1997; however, this *Example 13*(v) may be applied to terminations occurring on or after May 9, 1996, provided that the partnership and its partners apply this *Example 13*(v) to the termination in a consistent manner.

Example 14. (i) MC and RW form a general partnership to which each contributes $10,000. The $20,000 is invested in securities of Ventureco (which are not readily tradable on an established securities market). In each of the partnership's taxable years, it recognizes operating income equal to its operating deductions (excluding gain or loss from the sale of securities). The partnership agreement provides that the partners' capital accounts will be determined and maintained in accordance with paragraph (b)(2)(iv) of this section, distributions in liquidation of the partnership (or any partner's interest) will be made in accordance with the partners' positive capital account balances, and any partner with a deficit balance in his capital account following the liquidation of his interest must restore that deficit to the partnership (as set forth in paragraphs (b)(2)(ii)(*b*)(*2*) and (*3*) of this section). The partnership uses the interim closing of the books method for purposes of section 706. Assume that the Ventureco securities subsequently appreciate in value to $50,000. At that time SK makes a $25,000 cash contribution to the partnership (thereby acquiring a one-third interest in the partnership), and the $25,000 is placed in a bank account. Upon SK's admission to the partnership, the capital accounts of MC and RW (which were $10,000 each prior to SK's admission) are, in accordance with paragraph (b)(2)(iv)(*f*) of this section, adjusted upward (to $25,000 each) to reflect their shares of the unrealized appreciation in the Ventureco securities that occurred before SK was admitted to the partnership. Immediately after SK's admission to the partnership, the securities are sold for their $50,000 fair market value, resulting in taxable gain of $30,000 ($50,000 less $20,000 adjusted tax basis) and no

book gain or loss. An allocation of the $30,000 taxable gain cannot have economic effect since it cannot properly be reflected in the partners' book capital accounts. Under paragraph (b)(2)(iv)(*f*) of this section and the special partners' interests in the partnership rule contained in paragraph (b)(4)(i) of this section, unless the partnership agreement provides that the $30,000 taxable gain will, in accordance with section 704(c) principles, be shared $15,000 to MC and $15,000 to RW, the partners' capital accounts will not be considered maintained in accordance with paragraph (b)(2)(iv) of this section.

	MC		RW		SK	
	Tax	Book	Tax	Book	Tax	Book
Capital account following SK's admission	$10,000	$25,000	$10,000	$25,000	$25,000	$25,000
Plus: gain	15,000	0	15,000	0	0	0
Capital account following sale	$25,000	$25,000	$25,000	$25,000	$25,000	$25,000

(ii) Assume the same facts as (i), except that after SK's admission to the partnership, the Ventureco securities appreciate in value to $74,000 and are sold, resulting in taxable gain of $54,000 ($74,000 less $20,000 adjusted tax basis) and book gain of $24,000 ($74,000 less $50,000 book value). Under the partnership agreement the $24,000 book gain (the appreciation in value occurring after SK became a partner) is allocated equally among MC, RW, and SK, and such allocations have substantial economic effect. An allocation of the $54,000 taxable gain cannot have economic effect since it cannot properly be reflected in the partners' book capital accounts. Under paragraph (b)(2)(iv)(*f*) of this section and the special partners' interests in the partnership rule contained in paragraph (b)(4)(i) of this section, unless the partnership agreement provides that the taxable gain will, in accordance with section 704(c) principles, be shared $23,000 to MC $23,000 to RW, and $8,000 to SK, the partners' capital accounts will not be considered maintained in accordance with paragraph (b)(2)(iv) of this section.

	MC		RW		SK	
	Tax	Book	Tax	Book	Tax	Book
Capital account following SK's	$10,000	$25,000	$10,000	$25,000	$25,000	$25,000

	MC		RW		SK	
	Tax	Book	Tax	Book	Tax	Book
admission						
Plus: gain	23,000	8,000	23,000	8,000	8,000	8,000
Capital account following sale	$33,000	$33,000	$33,000	$33,000	$33,000	$33,000

(iii) Assume the same facts as (i) except that after SK's admission to the partnership, the Ventureco securities depreciate in value to $44,000 and are sold, resulting in taxable gain of $24,000 ($44,000 less $20,000 adjusted tax basis) and a book loss of $6,000 ($50,000 book value less $44,000). Under the partnership agreement the $6,000 book loss is allocated equally among MC, RW, and SK, and such allocations have substantial economic effect. An allocation of the $24,000 taxable gain cannot have economic effect since it cannot properly be reflected in the partners' book capital accounts. Under paragraph (b)(2)(iv)(*f*) of this section and the special partners' interests in the partnership rule contained in paragraph (b)(4)(i) of this section, unless the partnership agreement provides that the $24,000 taxable gain will, in accordance with section 704(c) principles, be shared equally between MC and RW, the partners' capital accounts will not be considered maintained in accordance with paragraph (b)(2)(iv) of this section.

	MC		RW		SK	
	Tax	Book	Tax	Book	Tax	Book
Capital account following SK's admission	$10,000	$25,000	$10,000	$25,000	$25,000	$25,000
Plus: gain	12,000	0	12,000	0	0	0
Less: loss	0	(2,000)	0	(2,000)	0	(2,000)
Capital account following sale	$22,000	$23,000	$22,000	$23,000	$25,000	$25,000

That SK bears an economic loss of $2,000 without a corresponding taxable loss is attributable entirely to the "ceiling rule." See paragraph (c)(2) of § 1.704-1.

(iv) Assume the same facts as in (ii) except that upon the admission of SK the capital accounts of MC and RW are not each adjusted upward from $10,000 to $25,000 to reflect the appreciation in the partnership's securities that occurred before SK was

admitted to the partnership. Rather, upon SK's admission to the partnership, the partnership agreement is amended to provide that the first $30,000 of taxable gain upon the sale of such securities will be allocated equally between MC and RW, and that all other income, gain, loss, and deduction will be allocated equally between MC, RW, and SK. When the securities are sold for $74,000, the $54,000 of taxable gain is so allocated. These allocations of taxable gain have substantial economic effect. (If the agreement instead provides for all taxable gain (including the $30,000 taxable gain attributable to the appreciation in the securities prior to SK's admission to the partnership) to be allocated equally between MC, RW, and SK, the partners should consider whether, and to what extent, the provisions of paragraphs (b)(1) (iii) and (iv) of this section are applicable.)

(v) Assume the same facts as in (iv) except that instead of selling the securities, the partnership makes a distribution of the securities (which have a fair market value of $74,000). Assume the distribution does not give rise to a transaction described in section 707(a)(2)(B). In accordance with paragraph (b)(2)(iv)(e) of this section, the partners' capital accounts are adjusted immediately prior to the distribution to reflect how taxable gain ($54,000) would have been allocated had the securities been sold for their $74,000 fair market value, and capital account adjustments in respect of the distribution of the securities are made with reference to the $74,000 "booked-up" fair market value.

	MC	RW	SK
Capital account before adjustment	$10,000	$10,000	$25,000
Deemed sale adjustment	23,000	23,000	8,000
Less: distribution	(24,667)	(24,667)	(24,667)
Capital account after distribution	$8,333	$8,333	$8,333

(vi) Assume the same facts as in (i) except that the partnership does not sell the Ventureco securities. During the next 3 years the fair market value of the Ventureco securities remains at $50,000, and the partnership engages in no other investment activities. Thus, at the end of that period the balance sheet of the partnership and the partners' capital accounts are the same as they were at the beginning of such period. At the end of the 3 years, MC's interest in the partnership is liquidated for the $25,000 cash held by the partnership. Assume the distribution does not give rise to a transaction described in section 707(a)(2)(B). Assume further that the partnership has a section 754 election in effect for the taxable year during which such liquidation occurs. Under sections 734(b) and 755 the partnership increases the basis of the Ventureco securities by the $15,000 basis adjustment (the excess of $25,000 over the $10,000 adjusted tax

basis of MC's partnership interest).

	MC		RW		SK	
	Tax	Book	Tax	Book	Tax	Book
Capital account before distribution	$10,000	$25,000	$10,000	$25,000	$25,000	$25,000
Plus: basis adjustment	15,000	0	0	0	0	0
Less: distribution	(25,000)	(25,000)	0	0	0	0
Capital account account after liquidation	0	0	$10,000	$25,000	$25,000	$25,000

(vii) Assume the same facts as in (vi) except that the partnership has no section 754 election in effect for the taxable year during which such liquidation occurs.

	MC		RW		SK	
	Tax	Book	Tax	Book	Tax	Book
Capital account before distribution	$10,000	$25,000	$10,000	$25,000	$25,000	$25,000
Less: distribution	(25,000)	(25,000)	0	0	0	0
Capital account after liquidation	($15,000)	0	$10,000	$25,000	$25,000	$25,000

Following the liquidation of MC's interest in the partnership, the Ventureco securities are sold for their $50,000 fair market value, resulting in no book gain or loss but a $30,000 taxable gain. An allocation of this $30,000 taxable gain cannot have economic effect since it cannot properly be reflected in the partners' book capital accounts. Under paragraph (b)(2)(iv)(*f*) of this section and the special partners' interests in the partnership rule contained in paragraph (b)(4)(i) of this section, unless the partnership agreement provides that $15,000 of such taxable gain will, in accordance with section 704(c) principles, be included in RW's distributive share, the partners' capital accounts will not be considered maintained in accordance with paragraph (b)(2)(iv) of this section. The remaining $15,000 of such gain will, under paragraph (b)(3) of this section, be shared equally between RW and SK.

Example 15. (i) JB and DK form a limited partnership for the purpose of purchasing

residential real estate to lease. JB, the limited partner, contributes $13,500, and DK, the general partner, contributes $1,500. The partnership, which uses the cash receipts and disbursements method of accounting, purchases a building for $100,000 (on leased land), incurring a recourse mortgage of $85,000 that requires the payment of interest only for a period of 3 years. The partnership agreement provides that partnership net taxable income and loss will be allocated 90 percent to JB and 10 percent to DK, the partners' capital accounts will be determined and maintained in accordance with paragraph (b)(2)(iv) of this section, distributions in liquidation of the partnership (or any partner's interest) will be made in accordance with the partners' positive capital account balances (as set forth in paragraph (b)(2)(ii)(*b*)(*2*) of this section), and JB is not required to restore any deficit balance in his capital account, but DK is so required. The partnership agreement contains a qualified income offset (as defined in paragraph (b)(2)(ii)(*d*) of this section). As of the end of each of the partnership's first 3 taxable years, the items described in paragraphs (b)(2)(ii)(*d*)(*4*), (*5*), and (*6*) of this section are not reasonably expected to cause or increase a deficit balance in JB's capital account. In the partnership's first taxable year, it has rental income of $10,000, operating expenses of $2,000, interest expense of $8,000, and cost recovery deductions of $12,000. Under the partnership agreement JB and DK are allocated $10,800 and $1,200, respectively, of the $12,000 net taxable loss incurred in the partnership's first taxable year.

	JB	DK
Capital account upon formation	$13,500	$1,500
Less: year 1 net loss	(10,800)	(1,200)
Capital account at end of year 1	$2,700	$300

The alternate economic effect test contained in paragraph (b)(2)(ii)(*d*) of this section is satisfied as of the end of the partnership's first taxable year. Thus, the allocation made in the partnership's first taxable year has economic effect.

(ii) Assume the same facts as in (i) and that in the partnership's second taxable year it again has rental income of $10,000, operating expenses of $2,000, interest expense of $8,000, and cost recovery deductions of $12,000. Under the partnership agreement JB and DK are allocated $10,800 and $1,200, respectively, of the $12,000 net taxable loss

incurred in the partnership's second taxable year.

	JB	DK
Capital account at beginning of year 1	$2,700	$300
Less: year 2 net loss	(10,800)	(1,200)
Capital account at end of year 2	($8,100)	($900)

Only $2,700 of the $10,800 net taxable loss allocated to JB satisfies the alternate economic effect test contained in paragraph (b)(2)(ii)(*d*) of this section as of the end of the partnership's second taxable year. The allocation of such $2,700 net taxable loss to JB (consisting of $2,250 of rental income, $450 of operating expenses, $1,800 of interest expense, and $2,700 of cost recovery deductions) has economic effect. The remaining $8,100 of net taxable loss allocated by the partnership agreement to JB must be reallocated in accordance with the partners' interests in the partnership. Under paragraph (b)(3)(iii) of this section, the determination of the partners' interests in the remaining $8,100 net taxable loss is made by comparing how distributions (and contributions) would be made if the partnership sold its property at its adjusted tax basis and liquidated immediately following the end of the partnership's first taxable year with the results of such a sale and liquidation immediately following the end of the partnership's second taxable year. If the partnership's real property were sold for its $88,000 adjusted tax basis and the partnership were liquidated immediately following the end of the partnership's first taxable year, the $88,000 sales proceeds would be used to repay the $85,000 note, and there would be $3,000 remaining in the partnership, which would be used to make liquidating distributions to DK and JB of $300 and $2,700, respectively. If such property were sold for its $76,000 adjusted tax basis and the partnership were liquidated immediately following the end of the partnership's second taxable year, DK would be required to contribute $9,000 to the partnership in order for the partnership to repay the $85,000 note, and there would be no assets remaining in the partnership to distribute. A comparison of these outcomes indicates that JB bore $2,700 and DK $9,300 of the economic burden that corresponds to the $12,000 net taxable loss. Thus, in addition to the $1,200 net taxable loss allocated to DK under the partnership agreement, $8,100 of net taxable loss will be reallocated to DK under paragraph (b)(3)(iii) of this section. Similarly, for subsequent taxable years, absent an increase in JB's capital account, all net taxable loss allocated to JB under the partnership agreement will be reallocated to DK.

(iii) Assume the same facts as in (ii) and that in the partnership's third taxable year there is rental income of $35,000, operating expenses of $2,000, interest expense of

$8,000, and cost recovery deductions of $10,000. The capital accounts of the partners maintained on the books of the partnership do not take into account the reallocation to DK of the $8,100 net taxable loss in the partnership's second taxable year. Thus, an allocation of the $15,000 net taxable income $13,500 to JB and $1,500 to DK (as dictated by the partnership agreement and as reflected in the capital accounts of the partners) does not have economic effect. The partners' interests in the partnership with respect to such $15,000 taxable gain again is made in the manner described in paragraph (b) (3) (iii) of this section. If the partnership's real property were sold for its $76,000 adjusted tax basis and the partnership were liquidated immediately following the end of the partnership's second taxable year, DK would be required to contribute $9,000 to the partnership in order for the partnership to repay the $85,000 note, and there would be no assets remaining to distribute. If such property were sold for its $66,000 adjusted tax basis and the partnership were liquidated immediately following the end of the partnership's third taxable year, the $91,000 ($66,000 sales proceeds plus $25,000 cash on hand) would be used to repay the $85,000 note and there would be $6,000 remaining in the partnership, which would be used to make liquidating distributions to DK and JB of $600 and $5,400, respectively. Accordingly, under paragraph (b) (3) (iii) of this section the $15,000 net taxable income in the partnership's third taxable year will be reallocated $9,600 to DK (minus $9,000 at end of the second taxable year to positive $600 at end of the third taxable year) and $5,400 to JB (zero at end of the second taxable year to positive $5,400 at end of the third taxable year).

Example 16. (i) KG and WN form a limited partnership for the purpose of investing in improved real estate. KG, the general partner, contributes $10,000 to the partnership, and WN, the limited partner, contributes $990,000 to the partnership. The $1,000,000 is used to purchase an apartment building on leased land. The partnership agreement provides that (1) the partners' capital accounts will be determined and maintained in accordance with paragraph (b)(2)(iv) of this section; (2) cash will be distributed first to WN until such time as he has received the amount of his original capital contribution ($990,000), next to KG until such time as he has received the amount of his original capital contribution ($10,000), and thereafter equally between WN and KG; (3) partnership net taxable income will be allocated 99 percent to WN and 1 percent to KG until the cumulative net taxable income allocated for all taxable years is equal to the cumulative net taxable loss previously allocated to the partners, and thereafter equally between WN and KG; (4) partnership net taxable loss will be allocated 99 percent to WN and 1 percent to KG, unless net taxable income has previously been allocated equally between WN and KG, in which case such net taxable loss first will be allocated equally until the cumulative net taxable loss allocated for all taxable years is equal to the cumulative net taxable income previously allocated to the partners; and (5) upon liquidation, WN is not required to

restore any deficit balance in his capital account, but KG is so required. Since distributions in liquidation are not required to be made in accordance with the partners' positive capital account balances, and since WN is not required, upon the liquidation of his interest, to restore the deficit balance in his capital account to the partnership, the allocations provided by the partnership agreement do not have economic effect and will be reallocated in accordance with the partners' interests in the partnership under paragraph (b) (3) of this section.

(ii) Assume the same facts as in (i) except that the partnership agreement further provides that distributions in liquidation of the partnership (or any partner's interest) are to be made in accordance with the partners' positive capital account balances (as set forth in paragraph (b)(2)(ii)(*b*)(*2*) of this section). Assume further that the partnership agreement contains a qualified income offset (as defined in paragraph (b)(2)(ii)(*d*) of this section) and that, as of the end of each partnership taxable year, the items described in paragraphs (b)(2)(iii)(*d*) (*4*), (*5*), and (*6*) of this section are not reasonably expected to cause or increase a deficit balance in WN's capital account. The allocations provided by the partnership agreement have economic effect.

Example 17. FG and RP form a partnership with FG contributing cash of $100 and RP contributing property, with 2 years of cost recovery deductions remaining, that has an adjusted tax basis of $80 and a fair market value of $100. The partnership, FG, and RP have calendar taxable years. The partnership agreement provides that the partners' capital accounts will be determined and maintained in accordance with paragraph (b)(2)(iv) of this section, liquidation proceeds will be made in accordance with capital account balances, and each partner is liable to restore the deficit balance in his capital account to the partnership upon liquidation of his interest (as set forth in paragraphs (b)(2)(ii)(*b*) (*2*) and (*3*) of this section). FG expects to be in a substantially higher tax bracket than RP in the partnership's first taxable year. In the partnership's second taxable year, and in subsequent taxable years, it is expected that both will be in approximately equivalent tax brackets. The partnership agreement allocates all items equally except that all $50 of book depreciation is allocated to FG in the partnership's first taxable year and all $50 of book depreciation is allocated to RP in the partnership's second taxable year. If the allocation to FG of all book depreciation in the partnership's first taxable year is respected, FG would be entitled under section 704(c) to the entire cost recovery deduction ($40) for such year. Likewise, if the allocation to RP of all the book depreciation in the partnership's second taxable year is respected, RP would be entitled under section 704(c) to the entire cost recovery deduction ($40) for such year. The allocation of book depreciation to FG and RP in the partnership's first 2 taxable years has economic effect within the meaning of paragraph (b)(2)(ii) of this section. However, the economic effect of these allocations is not substantial under the test described in paragraph (b)(2)(iii)(*c*) of this section since there is a strong likelihood at the time such allocations became part of the partnership agreement that at the end of the 2-year period to which such allocations relate, the net increases and decreases to FG's and RP's capital accounts will be the same with such allocations as they would have been in the absence of such allocation, and the total tax liability of FG and RP for the taxable years to which the section 704(c) determinations relate would be reduced as a result of the allocations of book depreciation. As a result the allocations of book depreciation in the partnership agreement will be disregarded. FG and RP will be allocated such book depreciation in

accordance with the partners' interests in the partnership under paragraph (b)(3) of this section. Under these facts the book depreciation deductions will be reallocated equally between the partners, and section 704(c) will be applied with reference to such reallocation of book depreciation.

Example 18. (i) WM and JL form a general partnership by each contributing $300,000 thereto. The partnership uses the $600,000 to purchase an item of tangible personal property, which it leases out. The partnership elects under section 48 (q)(4) to reduce the amount of investment tax credit in lieu of adjusting the tax basis of such property. The partnership agreement provides that (1) the partners' capital account will be determined and maintained in accordance with paragraph (b)(2)(iv) of this section, (2) distributions in liquidation of the partnership (or any partner's interest) will be made in accordance with the partners' positive capital account balances (as set forth in paragraph (b)(2)(ii)(*b*)(*2*) of this section), (3) any partner with a deficit balance in his capital account following the liquidation of his interest must restore that deficit to the partnership (as set forth in paragraph (b)(2)(ii)(*b*)(*3*) of this section), (4) all income, gain, loss, and deduction of the partnership will be allocated equally between the partners, and (5) all non-liquidating distributions of the partnership will be made equally between the partners. Assume that in each of the partnership's taxable years, it recognizes operating income equal to its operating deductions (excluding cost recovery and depreciation deductions and gain or loss on the sale of its property). During its first 2 taxable years, the partnership has an additional $200,000 cost recovery deduction in each year. Pursuant to the partnership agreement these items are allocated equally between WM and JL.

	WM	***JL***
Capital account upon formation	$300,000	$300,000
Less: Net loss for years 1 and 2	(*200,000*)	(*200,000*)
Capital account at end of year 2	$100,000	$100,000

The allocations made in the partnership's first 2 taxable years have substantial economic effect.

(ii) Assume the same facts as in (i) and that MK is admitted to the partnership at the beginning of the partnership's third taxable year. At the time of his admission, the fair market value of the partnership property is $600,000. MK contributes $300,000 to the partnership in exchange for an equal one-third interest in the partnership, and, as permitted under paragraph (b)(2)(iv)(*g*), the capital accounts of WM and JL are adjusted

upward to $300,000 each to reflect the fair market value of partnership property. In addition, the partnership agreement is modified to provide that depreciation and gain or loss, as computed for tax purposes, with respect to the partnership property that appreciated prior to MK's admission will be shared among the partners in a manner that takes account of the variation between such property's $200,000 adjusted tax basis and its $600,000 book value in accordance with paragraph (b)(2)(iv)(*f*) and the special rule contained in paragraph (b)(4)(i) of this section. Depreciation and gain or loss, as computed for book purposes, with respect to such property will be allocated equally among the partners and, in accordance with paragraph (b)(2)(iv)(*g*) of this section, will be reflected in the partner's capital accounts, as will all other partnership income, gain, loss, and deduction. Since the requirements of (b)(2)(iv)(*g*) of this section are satisfied, the capital accounts of the partners (as adjusted) continue to be maintained in accordance with paragraph (B)(2)(iv) of this section.
(iii) Assume the same facts as in (ii) and that immediately after MK's admission to the partnership, the partnership property is sold for $600,000, resulting in a taxable gain of $400,000 ($600,000 less $200,000 adjusted tax basis) and no book gain or loss, and the partnership is liquidated. An allocation of the $400,000 taxable gain cannot have economic effect because such gain cannot properly be reflected in the partners' book capital accounts. Consistent with the special partners' interests in the partnership rule contained in paragraph (b)(4)(i) of this section, the partnership agreement provides that the $400,000 taxable gain will, in accordance with section 704(c) principles, be shared equally between WM and JL.

	WM		JL		MK	
	Tax	Book	Tax	Book	Tax	Book
Capital account at beginning of year 3	$100,000	$300,000	$100,000	$300,000	$300,000	$300,000
Plus: gain	200,000	0	200,000	0	0	0
Capital account before liquidation	$300,000	$300,000	$300,000	$300,000	$300,000	$300,000

The $900,000 of partnership cash ($600,000 sales proceeds plus $300,000 contributed by MK) is distributed equally among WM, JL, and MK in accordance with their adjusted positive capital account balances, each of which is $300,000.

(iv) Assume the same facts as in (iii) except that prior to liquidation the property appreciates and is sold for $900,000, resulting in a taxable gain of $700,000 ($900,000

less $200,000 adjusted tax basis) and a book gain of $300,000 ($900,000 less $600,000 book value). Under the partnership agreement the $300,000 of book gain is allocated equally among the partners, and such allocation has substantial economic effect.

	WM		JL		MK	
	Tax	Book	Tax	Book	Tax	Book
Capital account at beginning of year 3	$100,000	$300,000	$100,000	$300,000	$300,000	$300,000
Plus: gain	300,000	100,000	300,000	100,000	100,000	100,000
Capital account before liquidation	$400,000	$400,000	$400,000	$400,000	$400,000	$400,000

Consistent with the special partners' interests in the partnership rule contained in paragraph (b)(4)(i) of this section, the partnership agreement provides that the $700,000 taxable gain is, in accordance with section 704(c) principles, shared $300,000 to JL, $300,000 to WM, and $100,000 to MK. This ensures that (1) WM and JL share equally the $400,000 taxable gain that is attributable to appreciation in the property that occurred prior to MK's admission to the partnership in the same manner as it was reflected in their capital accounts upon MK's admission, and (2) WM, JL, and MK share equally the additional $300,000 taxable gain in the same manner as they shared the $300,000 book gain.

(v) Assume the same facts as in (ii) except that shortly after MK's admission the property depreciates and is sold for $450,000, resulting in a taxable gain of $250,000 ($450,000 less $200,000 adjusted tax basis) and a book loss of $150,000 (450,000 less $600,000 book value). Under the partnership agreement these items are allocated as follow:

	WM		JL		MK	
	Tax	Book	Tax	Book	Tax	Book
Capital account at beginning of year 3	$100,000	$300,000	$100,000	$300,000	$300,000	$300,000
Plus: gain	125,000	0	125,000	0	0	0
Less: loss	0	(50,000)	0	(50,000)	0	(50,000)

	WM		JL		MK	
	Tax	Book	Tax	Book	Tax	Book
Capital account before liquidation	$225,000	$250,000	$225,000	$250,000	$300,000	$250,000

The $150,000 book loss is allocated equally among the partners, and such allocation has substantial economic effect. Consistent with the special partners' interests in the partnership rule contained in paragraph (b)(4)(i) of this section, the partnership agreement provides that the $250,000 taxable gain is, in accordance with section 704(c) principles, shared equally between WM and JL. The fact that MK bears an economic loss of $50,000 without a corresponding taxable loss is attributable entirely to the "ceiling rule." See paragraph (c)(2) of § 1.704-1.

(vi) Assume the same facts as in (ii) except that the property depreciates and is sold for $170,000, resulting in a $30,000 taxable loss ($200,000 adjusted tax basis less $170,000) and a book loss of $430,000 ($600,000 book value less $170,000). The book loss of $430,000 is allocated equally among the partners ($143,333 each) and has substantial economic effect. Consistent with the special partners' interests in the partnership rule contained in paragraph (b)(4)(i) of this section, the partnership agreement provides that the entire $30,000 taxable loss is, in accordance with section 704(c) principles, included in MK's distributive share.

	WM		JL		MK	
	Tax	Book	Tax	Book	Tax	Book
Capital account at beginning of year 3	$100,000	$300,000	$100,000	$300,000	$300,000	$300,000
Less Loss	0	(143,333)	0	(143,333)	(30,000)	(143,333)
Capital account before liquidation	$100,000	$156,667	$100,000	$156,667	$270,000	$156,667

(vii) Assume the same facts as in (ii) and that during the partnership's third taxable year, the partnership has an additional $100,000 cost recovery deduction and $300,000 book

depreciation deduction attributable to the property purchased by the partnership in its first taxable year. The $300,000 book depreciation deduction is allocated equally among the partners, and that allocation has substantial economic effect. Consistent with the special partners' interests in the partnership rule contained in paragraph (b)(4)(i) of this section, the partnership agreement provides that the $100,000 cost recovery deduction for the partnership's third taxable year is, in accordance with section 704(c) principles, included in MK's distributive share. This is because under these facts those principles require MK to include the cost recovery deduction for such property in his distributive share up to the amount of the book depreciation deduction for such property properly allocated to him.

	WM		JL		MK	
	Tax	Book	Tax	Book	Tax	Book
Capital account at beginning of year 3	$100,000	$300,000	$100,000	$300,000	$300,000	$300,000
Less: recovery/ depreciation deduction for year 3	0	(100,000)	0	(100,000)	(100,000)	(100,000)
Capital account at end of year 3	$100,000	$200,000	$100,000	$200,000	$200,000	$200,000

(viii) Assume the same facts as in (vii) except that upon MK's admission the partnership property has an adjusted tax basis of $220,000 (instead of $200,000), and thus the cost recovery deduction for the partnership's third taxable year is $110,000. Assume further that upon MK's admission WM and JL have adjusted capital account balances of $110,000 and $100,000, respectively. Consistent with the special partners' interests in the partnership rule contained in paragraph (b)(4)(i) of this section, the partnership agreement provides that the excess $10,000 cost recovery deduction ($110,000 less $100,000 included in MK's distributive share) is, in accordance with section 704 (c) principles, shared equally between WM and JL and is so included in their respective distributive shares for the partnership's third taxable year.
(ix) Assume the same facts as in (vii) except that upon MK's admission the partnership agreement is amended to allocate the first $400,000 of book depreciation and loss on partnership property equally between WM and JL and the last $200,000 of such book

depreciation and loss to MK. Assume such allocations have substantial economic effect. Pursuant to this amendment the $300,000 book depreciation deduction in the partnership's third taxable year is allocated equally between WM and JL. Consistent with the special partners' interests in the partnership rule contained in paragraph (b)(4)(i) of this section, the partnership agreement provides that the $100,000 cost recovery deduction is, in accordance with section 704(c) principles, shared equally between WM and JL. In the partnership's fourth taxable year, it has a $60,000 cost recovery deduction and a $180,000 book depreciation deduction. Under the amendment described above, the $180,000 book depreciation deduction is allocated $50,000 to WM, $50,000 to JL, and $80,000 to MK. Consistent with the special partners' interests in the partnership rule contained in paragraph (b)(4)(i) of this section, the partnership agreement provides that the $60,000 cost recovery deduction is, in accordance with section 704(c) principles, included entirely in MK's distributive share.

	WM		JL		MK	
	Tax	Book	Tax	Book	Tax	Book
Capital account at beginning of year 3	$100,000	$300,000	$100,000	$300,000	$300,000	$300,000
Less:						
(a) recovery/ depreciation deduction for year 3	(50,000)	(150,000)	(50,000)	(150,000)	0	0
(b) recovery/ depreciation deduction for year 4	0	(50,000)	0	(50,000)	(60,000)	(80,000)
Capital account at end of year 4	$50,000	$100,000	$50,000	$100,000	$240,000	$220,000

(x) Assume the same facts as in (vii) and that at the beginning of the partnership's third taxable year, the partnership purchases a second item of tangible personal property for $300,000 and elects under section 48(q) (4) to reduce the amount of investment tax credit in lieu of adjusting the tax basis of such property. The partnership agreement is amended to allocate the first $150,000 of cost recovery deductions and loss from such property to WM and the next $150,000 of cost recovery deductions and loss from such property equally between JL and MK. Thus, in the partnership's third taxable year it has,

in addition to the items specified in (vii), a cost recovery and book depreciation deduction of $100,000 attributable to the newly acquired property, which is allocated entirely to WM.

As in (vii), the allocation of the $300,000 book depreciation attributable to the property purchased in the partnership's first taxable year equally among the partners has substantial economic effect, and consistent with the special partners' interests in the partnership rule contained in paragraph (b)(4)(i) of this section, the partnership agreement properly provides for the entire $100,000 cost recovery deduction attributable to such property to be included in MK's distributive share. Furthermore, the allocation to WM of the $100,000 cost recovery deduction attributable to the property purchased in the partnership's third taxable year has substantial economic effect.

	WM		JL		MK	
	Tax	Book	Tax	Book	Tax	Book
Capital account at beginning of year 3	$100,000	$300,000	$100,000	$300,000	$300,000	$300,000
Less:						
(a) recovery/ depreciation deduction for property bought in year 1	0	(100,000)	0	(100,000)	(100,000)	(100,000)
(b) recovery/ depreciation deduction for property bought in year 3	(100,000)	(100,000)	0	0	0	0
Capital account at end of year 3	0	$100,000	$100,000	$200,000	$200,000	$200,000

(xi) Assume the same facts as in (x) and that at the beginning of the partnership's fourth taxable year, the properties purchased in the partnership's first and third taxable years are disposed of for $90,000 and $180,000, respectively, and the partnership is liquidated. With respect to the property purchased in the first taxable year, there is a book loss of $210,000 ($300,000 book value less $90,000) and a taxable loss of $10,000 ($100,000 adjusted tax basis less $90,000). The book loss is allocated equally among

the partners, and such allocation has substantial economic effect. Consistent with the special partners' interests in the partnership rule contained in paragraph (b)(4)(i) of this section, the partnership agreement provides that the taxable loss of $10,000 will, in accordance with section 704(c) principles, be included entirely in MK's distributive share. With respect to the property purchased in the partnership's third taxable year, there is a book and taxable loss of $20,000. Pursuant to the partnership agreement this loss is allocated entirely to WM, and such allocation has substantial economic effect.

	WM		JL		MK	
	Tax	Book	Tax	Book	Tax	Book
Capital account at beginning of year 4	0	$100,000	$100,000	$200,000	$200,000	$200,000
Less:						
(a) loss on property bought in year 1	0	(70,000)	0	(70,000)	(10,000)	(70,000)
(b) loss on property bought in year 3	(20,000)	(20,000)	0	0	0	0
Capital account before liquidation	($20,000)	$10,000	$100,000	$130,000	$190,000	$130,000

Partnership liquidation proceeds ($270,000) are properly distributed in accordance with the partners' adjusted positive book capital account balances ($10,000 to WM, $130,000 to JL and $130,000 to MK).

(xii) Assume the same facts as in (x) and that in the partnership's fourth taxable year it has a cost recovery deduction of $60,000 and book depreciation deduction of $180,000 attributable to the property purchased in the partnership's first taxable year, and a cost recovery and book depreciation deduction of $100,000 attributable to the property purchased in the partnership's third taxable year. The $180,000 book depreciation deduction attributable to the property purchased in the partnership's first taxable year is allocated equally among the partners, and such allocation has substantial economic effect. Consistent with the special partners' interests in the partnership rule contained in paragraph (b)(4)(i) of this section, the partnership agreement provides that the $60,000

cost recovery deduction attributable to the property purchased in the first taxable year is, in accordance with section 704(c) principles, included entirely in MK's distributive share. Furthermore, the $100,000 cost recovery deduction attributable to the property purchased in the third taxable year is allocated $50,000 to WM, $25,000 to JL, and $25,000 to MK, and such allocation has substantial economic effect.

	WM		JL		MK	
	Tax	Book	Tax	Book	Tax	Book
Capital account at beginning of year 4	0	$100,000	$100,000	$200,000	$200,000	$200,000
Less:						
(a) recovery/ depreciation deduction for property bought in year 1	0	(60,000)	0	(60,000)	(60,000)	(60,000)
(b) recovery/ depreciation deduction for property bought in year 3	(50,000)	(50,000)	(25,000)	(25,000)	(25,000)	(25,000)
Capital account at end of year 4	($50,000)	($10,000)	$75,000	$115,000	$115,000	$115,000

At the end of the partnership's fourth taxable year the adjusted tax bases of the partnership properties acquired in its first and third taxable years are $40,000 and $100,000, respectively. If the properties are disposed of at the beginning of the partnership's fifth taxable year for their adjusted tax bases, there would be no taxable

gain or loss, a book loss of $80,000 on the property purchased in the partnership's first taxable year ($120,000 book value less $40,000), and cash available for distribution of $140,000.

	WM		JL		MK	
	Tax	Book	Tax	Book	Tax	Book
Capital account at beginning of year 5	($50,000)	($10,000)	$75,000	$115,000	$115,000	$115,000
Less: loss	0	(26,667)	0	(26,667)	0	(26,667)
Capital account before liquidation	($50,000)	($36,667)	$75,000	$88,333	$115,000	$88,333

If the partnership is then liquidated, the $140,000 of cash on hand plus the $36,667 balance that WM would be required to contribute to the partnership (the deficit balance in his book capital account) would be distributed equally between JL and MK in accordance with their adjusted positive book capital account balances.

(xiii) Assume the same facts as in (i). Any tax preferences under section 57(a)(12) attributable to the partnership's cost recovery deductions in the first 2 taxable years will be taken into account equally by WM and JL. If the partnership agreement instead provides that the partnership's cost recovery deductions in its first 2 taxable years are allocated 25 percent to WM and 75 percent to JL (and such allocations have substantial economic effect), the tax preferences attributable to such cost recovery deductions would be taken into account 25 percent by WM and 75 percent by JL. The conclusion in the previous sentence is unchanged even if the partnership's operating expenses (exclusive of cost recovery and depreciation deductions) exceed its operating income in each of the partnership's first 2 taxable years, the resulting net loss is allocated entirely to WM, and the cost recovery deductions are allocated 25 percent to WM and 75 percent to JL (provided such allocations have substantial economic effect). If the partnership agreement instead provides that all income, gain, loss, and deduction (including cost recovery and depreciations) are allocated equally between JL and WM, the tax preferences attributable to the cost recovery deductions would be taken into account equally by JL and WM. In this case, if the partnership has a $100,000 cost recovery deduction in its first taxable year and an additional net loss of $100,000 in its first taxable year (*i.e.,* its operating expenses exceed its operating income by $100,000) and purports to categorize JL's $100,000 distributive share of partnership loss as being

attributable to the cost recovery deduction and WM's $100,000 distributive share of partnership loss as being attributable to the net loss, the economic effect of such allocations is not substantial, and each partner will be allocated one-half of all partnership income, gain, loss, and deduction and will take into account one-half of the tax preferences attributable to the cost recovery deductions.

Example 19. (i) DG and JC form a general partnership for the purpose of drilling oil wells. DG contributes an oil lease, which has a fair market value and adjusted tax basis of $100,000. JC contributes $100,000 in cash, which is used to finance the drilling operations. The partnership agreement provides that DG is credited with a capital account of $100,000, and JC is credited with a capital account of $100,000. The agreement further provides that the partners' capital accounts will be determined and maintained in accordance with paragraph (b)(2)(iv) of this section, distributions in liquidation of the partnership (or any partner's interest) will be made in accordance with the partners' positive capital account balances, and any partner with a deficit balance in his capital account following the liquidation of his interest must restore such deficit to the partnership (as set forth in paragraphs (b)(2)(ii)(b) (*2*) and (*3*) of this section. The partnership chooses to adjust capital accounts on a simulated cost depletion basis and elects under section 48(q)(4) to reduce the amount of investment tax credit in lieu of adjusting the basis of its section 38 property. The agreement further provides that (1) all additional cash requirements of the partnership will be borne equally by DG and JC, (2) the deductions attributable to the property (including money) contributed by each partner will be allocated to such partner, (3) all other income, gain, loss, and deductions (and item thereof) will be allocated equally between DG and JC, and (4) all cash from operations will be distributed equally between DG and JC. In the partnership's first taxable year $80,000 of partnership intangible drilling cost deductions and $20,000 of cost recovery deductions on partnership equipment are allocated to JC, and the $100,000 basis of the lease is, for purposes of the depletion allowance under sections 611 and 613A(c)(7)(D), allocated to DG. The allocations of income, gain, loss, and deduction provided in the partnership agreement have substantial economic effect. Furthermore, since the allocation of the entire basis of the lease to DG will not result in capital account adjustments (under paragraph (b)(2)(*iv*)(*k*) of this section) the economic effect of which is insubstantial, and since all other partnership allocations are recognized under this paragraph, the allocation of the $100,000 adjusted basis of the lease to DG is, under paragraph (b)(4)(v) of this section, recognized as being in accordance with the partners' interests in partnership capital for purposes of section 613A(c)(7)(D).
(ii) Assume the same facts as in (i) except that the partnership agreement provides that (1) all additional cash requirements of the partnership for additional expenses will be funded by additional contributions from JC, (2) all cash from operations will first be

distributed to JC until the excess of such cash distributions over the amount of such additional expense equals his initial $100,000 contributions, (3) all deductions attributable to such additional operating expenses will be allocated to JC, and (4) all income will be allocated to JC until the aggregate amount of income allocated to him equals the amount of partnership operating expenses funded by his initial $100,000 contribution plus the amount of additional operating expenses paid from contributions made solely by him. The allocations of income, gain, loss, and deduction provided in partnership agreement have economic effect. In addition, the economic effect of the allocations provided in the agreement is substantial. Because the partnership's drilling activities are sufficiently speculative, there is not a strong likelihood at the time the disproportionate allocations of loss and deduction to JC are provided for by the partnership agreement that the economic effect of such allocations will be largely offset by allocations of income. In addition, since the allocation of the entire basis of the lease to DG will not result in capital account adjustments (under paragraph (b)(2)(*iv*)(*k*) of this section) the economic effect of which is insubstantial, and since all other partnership allocations are recognized under this paragraph, the allocation of the adjusted basis of the lease to DG is, under paragraph (b)(4)(v) of this section, recognized as being in accordance with the partners' interests in partnership capital under section 613A(c)(7)(D).

(iii) Assume the same facts as in (i) except that all distributions, including those made upon liquidation of the partnership, will be made equally between DG and JC, and no partner is obligated to restore the deficit balance in his capital account to the partnership following the liquidation of his interest for distribution to partners with positive capital account balances. Since liquidation proceeds will be distributed equally between DG and JC irrespective of their capital account balances, and since no partner is required to restore the deficit balance in his capital account to the partnership upon liquidation (in accordance with paragraph (b)(2)(ii)(b)(3) of this section), the allocations of income, gain, loss, and deduction provided in the partnership agreement do not have economic effect and must be reallocated in accordance with the partners' interests in the partnership under paragraph (b)(3) of this section. Under these facts all partnership income, gain, loss, and deduction (and item thereof) will be reallocated equally between JC and DG. Furthermore, the allocation of the $100,000 adjusted tax basis of the lease of DG is not, under paragraph (b)(4)(v) of this section, deemed to be in accordance with the partners' interests in partnership capital under section 613A(c)(7)(D), and such basis must be reallocated in accordance with the partners' interests in partnership capital or income as determined under section 613A(c)(7)(D). The results in this example would be the same if JC's initial cash contribution were $1,000,000 (instead of $100,000), but in such case the partners should consider whether, and to what extent, the provisions of paragraph (b)(1) of § 1.721-1, and principles related thereto, may be applicable.

(iv) Assume the same facts as in (i) and that for the partnership's first taxable year the simulated depletion deduction with respect to the lease is $10,000. Since DG properly was allocated the entire depletable basis of the lease (such allocation having been recognized as being in accordance with DG's interest in partnership capital with respect to such lease), under paragraph (b)(2)(iv)(*k*)(*1*) of this section the partnership's $10,000 simulated depletion deduction is allocated to DG and will reduce his capital account accordingly. If (prior to any additional simulated depletion deductions) the lease is sold for $100,000, paragraph (b)(4)(v) of this section requires that the first $90,000 (*i.e.,* the partnership's simulated adjusted basis in the lease) out of the $100,000 amount realized on such sale be allocated to DG (but does not directly affect his capital account). The partnership agreement allocates the remaining $10,000 amount realized equally between JC and DG (but such allocation does not directly affect their capital accounts). This allocation of the $10,000 portion of amount realized that exceeds the partnership's simulated adjusted basis in the lease will be treated as being in accordance with the partners' allocable shares of such amount realized under section 613A(c)(7)(D) because such allocation will not result in capital account adjustments (under paragraph (b)(2)(iv)(*k*) of this section) the economic effect of which is insubstantial, and all other partnership allocations are recognized under this paragraph. Under paragraph (b)(2)(iv)(*k*) of this section, the partners' capital accounts are adjusted upward by the partnership's simulated gain of $10,000 ($100,000 sales price less $90,000 simulated adjusted basis) in proportion to such partners' allocable shares of the $10,000 portion of the total amount realized that exceeds the partnership's $90,000 simulated adjusted basis ($5,000 to JC and $5,000 to DG). If the lease is sold for $50,000, under paragraph (b)(4)(v) of this section the entire $50,000 amount realized on the sale of the lease will be allocated to DG (but will not directly affect his capital account). Under paragraph (b)(2)(iv)(*k*) of this section the partners' capital accounts will be adjusted downward by the partnership's $40,000 simulated loss ($50,000 sales price less $90,000 simulated adjusted basis) in proportion to the partners' allocable shares of the total amount realized from the property that represents recovery of the partnership's simulated adjusted basis therein. Accordingly, DG's capital account will be reduced by such $40,000.

Example 20. (i) A and B form AB, an eligible entity (as defined in § 301.7701-3(a) of this chapter), treated as a partnership for U.S. tax purposes. AB operates business M in country X and earns income from passive investments in country X. Country X imposes a 40 percent tax on business M income, which tax is a CFTE, but exempts from tax income from passive investments. In 2007, AB earns $100,000 of income from business M and $30,000 from passive investments and pays or accrues $40,000 of country X taxes. For purposes of section 904(d), the income from business M is general limitation income and the income from the passive investments is passive income. Pursuant to the partnership agreement, all partnership items, including CFTEs, from business M are

allocated 60 percent to A and 40 percent to B, and all partnership items, including CFTEs, from passive investments are allocated 80 percent to A and 20 percent to B. Accordingly, A is allocated 60 percent of the business M income ($60,000) and 60 percent of the country X taxes ($24,000), and B is allocated 40 percent of the business M income ($40,000) and 40 percent of the country X taxes ($16,000). The income from the passive investments is allocated $24,000 to A and $6,000 to B. Assume that allocations of all items other than CFTEs are valid.
(ii) Because the partnership agreement provides for different allocations of the net income attributable to business M and the passive investments, the net income attributable to each is income in a separate CFTE category. See paragraph (b)(4)(viii)(*c*)(*2*) of this section. AB must determine the net income in each CFTE category and the CFTEs allocable to each CFTE category. Under paragraph (b)(4)(viii)(*c*)(*3*) of this section, the net income in the business M CFTE category is the $100,000 attributable to business M and the net income in the passive investments CFTE category is the $30,000 attributable to the passive investments. Under paragraph (b)(4)(viii)(*d*) of this section, the $40,000 of country X taxes is allocated to the business M CFTE category and no portion of the country X taxes is allocated to the passive investments CFTE category. Therefore, the $40,000 of country X taxes are related to the $100,000 of net income in the business M CFTE category. See paragraph (b)(4)(viii)(*c*)(*1*) of this section. Because AB's partnership agreement allocates the net income from the business M CFTE category 60 percent to A and 40 percent to B, and the country X taxes 60 percent to A and 40 percent to B, the allocations of the CFTEs are in proportion to the distributive shares of income to which the CFTEs relate. Because AB satisfies the requirement of paragraph (b)(4)(viii) of this section, the allocations of the country X taxes are deemed to be in accordance with the partners' interests in the partnership. Because the business M income is general limitation income, all $40,000 of taxes are attributable to the general limitation category. See § 1.904-6.

Example 21. (i) A and B form AB, an eligible entity (as defined in § 301.7701-3(a) of this chapter), treated as a partnership for U.S. tax purposes. AB operates business M in country X and business N in country Y. Country X imposes a 40 percent tax on business M income, country Y imposes a 20 percent tax on business N income, and the country X and country Y taxes are CFTEs. In 2007, AB has $100,000 of income from business M and $50,000 of income from business N. Country X imposes $40,000 of tax on the income from business M and country Y imposes $10,000 of tax on the income of business N. Pursuant to the partnership agreement, all partnership items, including CFTEs, from business M are allocated 75 percent to A and 25 percent to B, and all partnership items, including CFTEs, from business N are split evenly between A and B (50 percent each). Accordingly, A is allocated 75 percent of the income from business M ($75,000), 75 percent of the country X taxes ($30,000), 50 percent of the income from

business N ($25,000), and 50 percent of the country Y taxes ($5,000). B is allocated 25 percent of the income from business M ($25,000), 25 percent of the country X taxes ($10,000), 50 percent of the income from business N ($25,000), and 50 percent of the country Y taxes ($5,000). Assume that allocations of all items other than CFTEs are valid. The income from business M and business N is general limitation income for purposes of section 904(d).

(ii) Because the partnership agreement provides for different allocations of the net income attributable to businesses M and N, the net income attributable to each business is income in a separate CFTE category even though all of the income is in the general limitation category for section 904(d) purposes. See paragraph (b)(4)(viii)(*c*)(*2*) of this section. Under paragraph (b)(4)(viii)(*c*)(*3*) of this section, the net income in the business M CFTE category is the $100,000 attributable to business M and the net income in the business N CFTE category is $50,000 attributable to business N. Under paragraph (b)(4)(viii)(*d*) of this section, the $40,000 of country X taxes is allocated to the business M CFTE category and the $10,000 of country Y taxes is allocated to the business N CFTE category. Therefore, the $40,000 of country X taxes are related to the $100,000 of net income in the business M CFTE category and the $10,000 of country Y taxes are related to the $50,000 of net income in the business N CFTE category. See paragraph (b)(4)(viii)(*c*)(*1*) of this section. Because AB's partnership agreement allocates the $40,000 of country X taxes in the same proportion as the net income in the business M CFTE category, and the $10,000 of country Y taxes in the same proportion as the net income in the business N CFTE category, the allocations of the country X taxes and the country Y taxes are in proportion to the distributive shares of income to which the foreign taxes relate. Because AB satisfies the requirements of paragraph (b)(4)(viii) of this section, the allocations of the country X and country Y taxes are deemed to be in accordance with the partners' interests in the partnership.

Example 22. (i) The facts are the same as in *Example 21,* except that the partnership agreement provides for the following allocations. Depreciation attributable to machine X, which is used in business M, is allocated 100 percent to A. B is allocated the first $20,000 of gross income attributable to business N, which allocation does not result in a deduction under foreign law. All remaining items, except CFTEs, are allocated 50 percent to A and 50 percent to B. For 2007, assume that business M generates $120,000 of income, before taking into account depreciation attributable to machine X. The total amount of depreciation attributable to machine X is $20,000, which results in $100,000 of net income attributable to business M for U.S. and country X tax purposes. Business N generates $70,000 of gross income and has $20,000 of expenses, resulting in $50,000 of net income for U.S. and country Y tax purposes. Pursuant to the partnership agreement, A is allocated $40,000 of the net income attributable to business M ($60,000 of business M income less $20,000 of depreciation attributable to machine X), and

$15,000 of the net income attributable to business N. B is allocated $60,000 of the net income attributable to business M and $35,000 of the net income attributable to business N ($20,000 of gross income, plus $15,000 of net income).
(ii) As a result of the special allocations, the net income attributable to business M ($100,000) is allocated 40 percent to A and 60 percent to B. The net income attributable to business N ($50,000) is allocated 30 percent to A and 70 percent to B. Because the partnership agreement provides for different allocations of the net income attributable to businesses M and N, the net income from each of businesses M and N is income in a separate CFTE category. See paragraph (b)(4)(viii)(*c*)(*2*) of this section. Under paragraph (b)(4)(viii)(*c*)(*3*) of this section, the net income in the business M CFTE category is the $100,000 of net income attributable to business M and the net income in the business N CFTE category is the $50,000 of net income attributable to business N. Under paragraph (b)(4)(viii)(*d*)(*1*) of this section, the $40,000 of country X taxes is allocated to the business M CFTE category and the $10,000 of country Y taxes is allocated to the business N CFTE category. Therefore, the $40,000 of country X taxes relates to the $100,000 of net income in the business M CFTE and the $10,000 of country Y taxes relates to the $50,000 of net income in the business N CFTE category. See paragraph (b)(4)(viii)(*c*)(*1*) of this section. The allocations of the country X taxes will be in proportion to the distributive shares of income to which they relate and will be deemed to be in accordance with the partners' interests in the partnership if such taxes are allocated 40 percent to A and 60 percent to B. The allocations of the country Y taxes will be in proportion to the distributive shares of income to which they relate and will be deemed to be in accordance with the partners' interests in the partnership if such taxes are allocated 30 percent to A and 70 percent to B.

(iii) Assume that for 2008, all the facts are the same as in paragraph (i) of this *Example 22,* except that business M generates $60,000 of income before taking into account depreciation attributable to machine X and country X imposes $16,000 of tax on the $40,000 of net income attributable to business M. Pursuant to the partnership agreement, A is allocated 25 percent of the income from business M ($10,000), and B is allocated 75 percent of the income from business M ($30,000). Allocations of the country X taxes will be in proportion to the distributive shares of income to which they relate and will be deemed to be in accordance with the partners' interests in the partnership if such taxes are allocated 25 percent to A and 75 percent to B.

Example 23. (i) The facts are the same as in *Example 21,* except that AB does not actually receive the $50,000 of income accrued in 2007 with respect to business N until 2008 and AB accrues and receives an additional $100,000 with respect to business N in 2008. Also assume that A, B, and AB each report taxable income on an accrual basis for U.S. tax purposes and AB reports taxable income using the cash receipts and disbursements method of accounting for country X and country Y purposes. In 2007, AB

pays or accrues country X taxes of $40,000. In 2008, AB pays or accrues country Y taxes of $30,000. Pursuant to the partnership agreement, in 2007, A is allocated 75 percent of business M income ($75,000) and country X taxes ($30,000) and 50 percent of business N income ($25,000). B is allocated 25 percent of business M income ($25,000) and country X taxes ($10,000) and 50 percent of business N income ($25,000). In 2008, A and B are each allocated 50 percent of the business N income ($50,000) and country Y taxes ($15,000).

(ii) For 2007, the $40,000 of country X taxes paid or accrued by AB relates to the $100,000 of net income in the business M CFTE category. No portion of the country X taxes paid or accrued in 2007 relates to the $50,000 of net income in the business N CFTE category. For 2008, the net income in the business N CFTE category is the $100,000 attributable to business N. See paragraph (b)(4)(viii)(*c*)(*3*) of this section. Under paragraph (b)(4)(viii)(*d*)(*1*) of this section, $20,000 of the country Y tax paid or accrued in 2008 is allocated to the business N CFTE category. The remaining $10,000 of country Y tax is allocated to the business N CFTE category under paragraph (b)(4)(viii)(*d*)(*2*) of this section (relating to timing differences). Therefore, the $30,000 of country Y taxes paid or accrued by AB in 2008 is related to the $100,000 of net income in the business N CFTE category for 2008. See paragraph (b)(4)(viii)(*c*)(*1*) of this section. Because AB's partnership agreement allocates the $40,000 of country X taxes and the $30,000 of country Y taxes in proportion to the distributive shares of income to which the taxes relate, the allocations of the country X and country Y taxes satisfy the requirements of paragraphs (b)(4)(viii)(*a*)(*1*) and (*2*) of this section and the allocations of the country X and Y taxes are deemed to be in accordance with the partners' interests in the partnership under paragraph (b)(4)(viii) of this section.

Example 24. (i) The facts are the same as in *Example 21,* except that businesses M and N are conducted by entities (DE1 and DE2, respectively) that are corporations for country X and Y tax purposes and disregarded entities for U.S. Federal income tax purposes. Also, assume that DE1 makes payments of $75,000 during 2012 to DE2 that are deductible by DE1 for country X tax purposes and includible in income of DE2 for country Y tax purposes. As a result of such payments, DE1 has taxable income of $25,000 for country X purposes on which $10,000 of taxes are imposed and DE2 has taxable income of $125,000 for country Y purposes on which $25,000 of taxes are imposed. For U.S. Federal income tax purposes, $100,000 of AB's income is attributable to the activities of DE1 and $50,000 of AB's income is attributable to the activities of DE2. Pursuant to the partnership agreement, all partnership items from business M, excluding CFTEs paid or accrued by business M, are allocated 75% to A and 25% to B, and all partnership items from business N, excluding CFTEs paid or accrued by business N, are split evenly between A and B (50% each). Accordingly, A is allocated 75% of the income from business M ($75,000), and 50% of the income from business N ($25,000). B is allocated

25% of the income from business M ($25,000), and 50% of the income from business N ($25,000).
(ii) Because the partnership agreement provides for different allocations of the net income attributable to businesses M and N, the net income attributable to each of business M and business N is income in separate CFTE categories. See paragraph (b)(4)(viii)(*c*)(*2*) of this section. Under paragraph (b)(4)(viii)(*c*)(*3*) of this section, the $100,000 of net income attributable to business M is in the business M CFTE category and the $50,000 of net income attributable to business N is in the business N CFTE category. Under paragraph (b)(4)(viii)(*d*)(*1*) of this section, the $10,000 of country X taxes is allocated to the business M CFTE category and $10,000 of the country Y taxes is allocated to the business N CFTE category. The additional $15,000 of country Y tax imposed with respect to the inter-branch payment is assigned to the business M CFTE category because for U.S. Federal income tax purposes, the related $75,000 of income that country Y is taxing is in the business M CFTE category. Therefore, $25,000 of taxes ($10,000 of country X taxes and $15,000 of the country Y taxes) is related to the $100,000 of net income in the business M CFTE category and the other $10,000 of country Y taxes is related to the $50,000 of net income in the business N CFTE category. See paragraph (b)(4)(viii)(*c*)(*1*) of this section. The allocations of country X taxes will be in proportion to the distributive shares of income to which they relate and will be deemed to be in accordance with the partners' interests in the partnership if such taxes are allocated 75% to A and 25% to B. The allocations of country Y taxes will be in proportion to the distributive shares of income to which they relate and will be deemed to be in accordance with the partners' interests in the partnership if $15,000 of such taxes is allocated 75% to A and 25% to B and the other $10,000 of such taxes is allocated 50% to A and 50% to B. No inference is intended with respect to the application of other provisions to arrangements that involve disregarded payments.

(iii) Assume that the facts are the same as in paragraph (i) of this *Example 24,* except that in order to reflect the $75,000 payment from DE1 to DE2, the partnership agreement allocates $75,000 of the income attributable to business M equally between A and B (50% each). In order to prevent separating the CFTEs from the related foreign income, the $75,000 payment is treated as a divisible part of the business M activity and, therefore, a separate activity. See paragraph (b)(4)(viii)(*c*)(*2*)(*iii*) of this section. Because items from the disregarded payment and business N are both shared equally between A and B, the disregarded payment activity and the business N activity are treated as a single CFTE category. See paragraph (b)(4)(viii)(*c*)(*2*)(*i*) of this section. Accordingly, $25,000 of net income attributable to business M is in the business M CFTE category and $75,000 of income of business M attributable to the disregarded payment and the $50,000 of net income attributable to business N are in the business N CFTE category. Under paragraph (b)(4)(viii)(*d*)(*1*) of this section, the $10,000 of country X taxes is allocated to the business M CFTE category and all $25,000 of the country Y taxes is

allocated to the business N CFTE category. The allocations of country X taxes will be in proportion to the distributive shares of income to which they relate and will be deemed to be in accordance with the partners' interests in the partnership if such taxes are allocated 75% to A and 25% to B. The allocations of country Y taxes will be in proportion to the distributive shares of income to which they relate and will be deemed to be in accordance with the partners' interests in the partnership if such taxes are allocated 50% to A and 50% to B.

Example 25. [Reserved]. For further guidance, see § 1.704-1T(b)(5) *Example 25.*

Example 26. (i) A and B form AB, an eligible entity (as defined in § 301.7701-3(a) of this chapter), treated as a partnership for U.S. tax purposes. AB operates business M in country X and business N in country Y. A, a U.S. corporation, contributes a building with a fair market value of $200,000 and an adjusted basis of $50,000 for both U.S. and country X purposes. The building contributed by A is used in business M. B, a country X corporation, contributes $800,000 cash. The AB partnership agreement provides that AB will make allocations under section 704(c) using the traditional method under § 1.704-3(b) and that all other items, excluding creditable foreign taxes, will be allocated 20 percent to A and 80 percent to B. The partnership agreement provides that creditable foreign taxes will be allocated in proportion to the partners' distributive shares of net income in each CFTE category, which shall be determined by taking into accounts items allocated pursuant to section 704(c). Country X and Country Y impose tax at a rate of 20 percent and 40 percent, respectively, and such taxes are CFTEs. In 2007, AB sells the building contributed by A for $200,000, thereby recognizing taxable income of $150,000 for U.S. and country X purposes, and recognizes $250,000 of other income from the operation of business M. AB pays or accrues $80,000 of country X tax on such income. Also in 2007, business N recognizes $100,000 of taxable income for U.S. and country Y purposes and pays or accrues $40,000 of country Y tax. Pursuant to the partnership agreement, A is allocated $200,000 of business M income ($150,000 of taxable income in accordance with section 704(c) and $50,000 of other business M income) and $40,000 of country X tax, and 20 percent of both business N income ($20,000) and country Y tax ($8,000). B is allocated $200,000 of business M income and $40,000 of country X tax and 80 percent of both the business N income ($80,000) and country Y tax ($32,000). Assume that allocations of all items other than CFTEs are valid.
(ii) The net income attributable to business M ($400,000) is allocated 50 percent to A and 50 percent to B while the net income attributable to business N ($100,000) is allocated 20 percent to A and 80 percent to B. Because the partnership agreement provides for different allocations of the net income attributable to businesses M and N, the net income attributable to each activity is income in a separate CFTE category. See paragraph (b)(4)(viii)(*c*)(*2*) of this section. Under paragraph (b)(4)(viii)(*c*)(*3*) of this

section, the net income in the business M CFTE category is the $400,000 of net income attributable to business M and the net income in the business N CFTE category is the $100,000 of net income attributable to business N. Under paragraph (b)(4)(viii)(*d*)(*1*) of this section, the $80,000 of country X tax is allocated to the business M CFTE category and the $40,000 of country Y tax is allocated to the business N CFTE category. Therefore, the $80,000 of country X tax relates to the $400,000 of net income in the business M CFTE category and the $40,000 of country Y tax relates to the $100,000 of net income in the business N CFTE category. See paragraph (b)(4)(viii)(*c*)(*1*) of this section. Because AB's partnership agreement allocates the $80,000 of country X taxes and $40,000 of country Y taxes in proportion to the distributive shares of income to which such taxes relate, the allocations are deemed to be in accordance with the partners' interests in the partnership under paragraph (b)(4)(viii) of this section.

Example 27. (i) A, a U.S. citizen, and B, a country X citizen, form AB, a country X eligible entity (as defined in § 301.7701-3(a) of this chapter), treated as a partnership for U.S. tax purposes. AB's only activity is business M, which it operates in country X. Country X imposes a 40 percent tax on the portion of AB's business M income that is the allocable share of AB's owners that are not citizens of country X, which tax is a CFTE. The partnership agreement provides that all partnership items, excluding CFTEs, from business M are allocated 40 percent to A and 60 percent to B. CFTEs are allocated 100 percent to A. In 2007, AB earns $100,000 of net income from business M and pays or accrues $16,000 of country X taxes on A's allocable share of AB's income ($40,000). Pursuant to the partnership agreement, A is allocated 40 percent of the business M income ($40,000) and 100 percent of the country X taxes ($16,000), and B is allocated 60 percent of the business M income ($60,000) and no country X taxes. Assume that allocations of all items other than CFTEs are valid.
(ii) AB has a single CFTE category because all of AB's net income is allocated in the same ratio. See paragraph (b)(4)(viii)(*c*)(*2*). Under paragraph (b)(4)(viii)(*c*)(*3*) of this section, the $40,000 of business M income that is allocated to A is included in the single CFTE category. Under paragraph (b)(4)(viii)(*c*)(*3*)(*ii*) of this section, no portion of the $60,000 allocated to B is included in the single CFTE category. Under paragraph (b)(4)(viii)(*d*) of this section, the $16,000 of taxes is allocated to the single CFTE category.

Therefore, the $16,000 of country X taxes is related to the $40,000 of net income in the single CFTE category that is allocated to A. See paragraph (b)(4)(viii)(*c*)(*1*) of this section. Because AB's partnership agreement allocates the country X taxes in proportion to the distributive share of income to which the taxes relate, AB satisfies the requirement of paragraph (b)(4)(viii) of this section, and the allocation of the country X taxes is deemed to be in accordance with the partners' interests in the partnership.

Example 28. (i) B, a domestic corporation, and C, a controlled foreign corporation, form BC, a partnership organized under the laws of country X. B and C each contribute 50 percent of the capital of BC. B and C are wholly-owned subsidiaries of A, a domestic corporation. Substantially all of BC's income would not be subpart F income if earned directly by C. The BC partnership agreement provides that, for the first fifteen years, BC's gross income will be allocated 10 percent to B and 90 percent to C, and BC's deductions and losses will be allocated 90 percent to B and 10 percent to C. The partnership agreement also provides that, after the initial fifteen year period, BC's gross income will be allocated 90 percent to B and 10 percent to C, and BC's deductions and losses will be allocated 10 percent to B and 90 percent to C.
(ii) Apart from the application of section 704(b), the Commissioner may reallocate or otherwise not respect the allocations under other sections. See paragraph (b)(1)(iii) of this section. For example, BC's allocations of gross income, deductions, and losses may be evaluated and reallocated (or not respected), as appropriate, if it is determined that the allocations result in the evasion of tax or do not clearly reflect income under section 482.

Example 29. PRS is a partnership with three equal partners, A, B, and C. A is a corporation that is a member of a consolidated group within the meaning of § 1.1502-1(h). B is a subchapter S corporation that is wholly owned by D, an individual. C is a partnership with two partners, E, an individual, and F, a corporation that is a member of a consolidated group within the meaning of § 1.1502-1(h). For purposes of paragraph (b)(2)(iii) of this section, in determining the after-tax economic benefit or detriment of an allocation to A, the tax consequences that result from the interaction of the allocation to A with the tax attributes of the consolidated group of which A is a member must be taken into account. In determining the after-tax economic benefit or detriment of an allocation to B, the tax consequences that result from the interaction of the allocation with the tax attributes of D must be taken into account. In determining the after-tax economic benefit or detriment of an allocation to C, the tax consequences that result from the interaction of the allocation with the tax attributes of E and the consolidated group of which F is a member must be taken into account.

Example 30. (i) A, a controlled foreign corporation, and B, a foreign corporation that is not a controlled foreign corporation, form AB, a partnership organized under the laws of country X. The partnership agreement contains the provisions necessary to comply with the economic effect safe harbor of paragraph (b)(2)(ii)(*b*) of this section. A is wholly-owned by C, a domestic corporation that is not a member of a consolidated group within the meaning of § 1.1502-1(h). B is wholly owned by an individual who is a citizen and resident of country X and is not related to A. Neither A, B, nor AB, is engaged in a trade or business in the United States. A and B each contribute 50 percent of the capital of AB. There is a strong likelihood that in each of the next several years AB will realize equal amounts of gross income that would constitute subpart F income if allocated to A, and gross income that would not constitute subpart F income if allocated to A ("non-subpart

F income"). A and B agree to share bottom-line net income from AB equally; however, rather than share all items of gross income equally, A and B agree that B will be allocated all of AB's subpart F income to the extent of its 50 percent share of bottom-line net income. In year 1, AB earns $60x of income, $30x of which is subpart F income and is allocated to B, and $30x of which is non-subpart F income and is allocated to A.
(ii) Although neither A nor B is subject to U.S. tax with respect to its distributive share of the income of AB, under paragraph (b)(2)(iii)(*d*) of this section, the tax attributes of C must be taken into account with respect to A for purposes of applying the tests described in paragraphs (b)(2)(iii)(*a*), (*b*), and (*c*) of this section. The allocations in year 1 have economic effect. However, the economic effect of the allocations is not substantial under the test described in paragraph (b)(2)(iii)(*b*) of this section because there was a strong likelihood, at the time the allocations became part of the AB partnership agreement, that the net increases and decreases to A's and B's capital accounts in year 1 would not differ substantially when compared to the net increases and decreases to A's and B's capital accounts for year 1 if the allocations were not contained in the partnership agreement, and the total tax liability from the income earned by AB in year 1 (taking into account the tax attributes of the allocations to C) would be reduced as a result of such allocations. Under paragraph (b)(3) of this section, the subpart F income and non-subpart F income earned by AB in year 1 must each be reallocated 50 percent to A and 50 percent to B.

Example 31. (i) In Year 1, A and B each contribute cash of $9,000 to LLC, a newly formed limited liability company classified as a partnership for Federal tax purposes, in exchange for 100 units in LLC. Under the LLC agreement, each unit is entitled to participate equally in the profits and losses of LLC. LLC uses the cash contributions to purchase a nondepreciable property, Property A, for $18,000. Later in Year 1, at a time when Property A is valued at $20,000, LLC issues an option to C. The option allows C to buy 100 units in LLC for an exercise price of $15,000 in Year 2. C pays $1,000 to LLC to purchase the option. Assume that the LLC agreement satisfies the requirements of paragraph (b)(2) of this section and requires that, on the exercise of a noncompensatory option, LLC comply with the rules of paragraph (b)(2)(iv)(*s*) of this section. Also assume that C's option is a noncompensatory option under § 1.721-2(f), and that C is not treated as a partner with respect to the option. Under paragraph (b)(2)(iv)(*f*)(*5*)(*iv*) of this section, LLC revalues its property in connection with the issuance of the option. The $2,000 unrealized gain in Property A is allocated equally to A and B under the LLC agreement. In Year 2, C exercises the option, contributing the $15,000 exercise price to

the partnership. At the time the option is exercised, the value of Property A is $35,000.

	Basis	Value
YEAR 1 AFTER ISSUANCE OF THE OPTION		
Assets:		
Cash Premium	$1,000	$1,000
Property A	18,000	20,000
Total	19,000	21,000
Liabilities and Capital:		
Cash Premium	1,000	1,000
A	9,000	10,000
B	9,000	10,000
Total	19,000	21,000
YEAR 2 AFTER EXERCISE OF THE OPTION		
Assets:		
Property A Cash	18,000	35,000
Premium	1,000	1,000
Exercise Price	15,000	15,000
Total	34,000	51,000
Liabilities and Capital:		
A	9,000	17,000
B	9,000	17,000
C	16,000	17,000
Total	34,000	51,000

(ii) In lieu of revaluing LLC's property under paragraph (b)(2)(iv)(*f*) of this section immediately before the option is exercised, under paragraph (b)(2)(iv)(*s*)(*1*) of this section LLC must revalue its property under the principles of paragraph (b)(2)(iv)(*f*) of this section immediately after the exercise of the option. Under paragraphs (b)(2)(iv)(*b*) and (b)(2)(iv)(*d*)(*4*) of this section, C's capital account is credited with the amount paid for the option ($1,000) and the exercise price of the option ($15,000). Under the LLC agreement, however, C is entitled to LLC capital corresponding to 100 units of LLC ($^1/_3$ of LLC's capital). Immediately after the exercise of the option, LLC's properties are cash of $16,000 ($1,000 premium and $15,000 exercise price contributed by C) and Property A, which has a value of $35,000. Thus, the total value of LLC's property is $51,000. C is entitled to LLC capital equal to $^1/_3$ of this value, or $17,000. As C is entitled to $1,000 more LLC capital than C's capital contributions to LLC, the provisions of paragraph (b)(2)(iv)(*s*) of this section apply.

(iii) Under paragraph (b)(2)(iv)(*s*)(*2*) of this section, LLC must increase C's capital account from $16,000 to $17,000 by, first, revaluing LLC property in accordance with the principles of paragraph (b)(2)(iv)(*f*) of this section. The unrealized gain in LLC's property (Property A) which has not been reflected in the capital accounts previously is $15,000 ($35,000 value less $20,000 book value). Under paragraph (b)(2)(iv)(*s*)(*2*) of this section, the first $1,000 of this gain must be allocated to C, and the remaining $14,000 of this gain is allocated equally to A and B in accordance with the LLC agreement. Because the revaluation of LLC property under paragraph (b)(2)(iv)(*s*)(*2*) of this section increases C's capital account to the amount agreed on by the members, LLC is not required to make a capital account reallocation under paragraph (b)(2)(iv)(*s*)(*3*) of this section. The $17,000 of unrealized booked gain in Property A ($35,000 value less $18,000 basis) is shared $8,000 to each A and B, and $1,000 to C. Under paragraph (b)(2)(iv)(*f*)(*4*) of this section, the tax items from the revalued property must be allocated in accordance with section 704(c) principles.

	A		B		C	
	Tax	**Book**	**Tax**	**Book**	**Tax**	**Book**
Capital account after exercise	$9,000	$10,000	$9,000	$10,000	$16,000	$16,000
Revaluation amount	0	7,000	0	7,000	0	1,000
Capital account after revaluation	9,000	17,000	9,000	17,000	16,000	17,000

Example 32. (i) Assume the same facts as in *Example 31,* except that, in Year 2, before the exercise of the option, LLC sells Property A for $40,000, recognizing gain of $22,000. LLC does not distribute the sale proceeds to its partners and it has no other earnings in Year 2. With the proceeds ($40,000), LLC purchases Property B, a nondepreciable property. Also assume that C exercises the noncompensatory option at the beginning of Year 3 and that, at the time C exercises the option, the value of Property B is $41,000. In Year 3, LLC has gross income of $3,000 and deductions of $1,500.

	Basis	**Value**
YEAR 2 AFTER PURCHASE OF PROPERTY B		
Assets:		
Cash Premium	$1,000	$1,000
Property B	40,000	40,000

	Basis	Value
Total	41,000	41,000
Liabilities and Capital:		
Cash Premium	1,000	1,000
A	20,000	20,000
B	20,000	20,000
Total	41,000	41,000
YEAR 3 AFTER EXERCISE OF THE OPTION		
Assets:		
Property B	40,000	41,000
Cash	16,000	16,000
Total	56,000	57,000
Liabilities and Capital:		
A	20,000	19,000
B	20,000	19,000
C	16,000	19,000
Total	56,000	57,000

(ii) Under paragraphs (b)(2)(iv)(*b*) and (b)(2)(iv)(*d*)(*4*) of this section, C's capital account is credited with the amount paid for the option ($1,000) and the exercise price of the option ($15,000). Under the LLC agreement, however, C is entitled to LLC capital corresponding to 100 units of LLC ($^1/_3$ of LLC's capital). Immediately after the exercise of the option, LLC's properties are $16,000 cash ($1,000 option premium and $15,000 exercise price contributed by C) and Property B, which has a value of $41,000. Thus, the total value of LLC's property is $57,000. C is entitled to LLC capital equal to $^1/_3$ of this amount, or $19,000. As C is entitled to $3,000 more LLC capital than C's capital contributions to LLC, the provisions of paragraph (b)(2)(iv)(*s*) of this section apply.
(iii) In lieu of revaluing LLC's property under paragraph (b)(2)(iv)(*f*) of this section immediately before the option is exercised, under paragraph (b)(2)(iv)(*s*)(*1*) of this section LLC must revalue its property under the principles of paragraph (b)(2)(iv)(*f*) of this section immediately after the exercise of the option. Under paragraph (b)(2)(iv)(*s*) of this section, LLC must increase C's capital account from $16,000 to $19,000 by, first, revaluing LLC property in accordance with the principles of paragraph (b)(2)(iv)(*f*) of this section, and allocating all $1,000 of unrealized gain from the revaluation to C under paragraph (b)(2)(iv)(*s*)(*2*). This brings C's capital account to $17,000.

(iv) Next, under paragraph (b)(2)(iv)(*s*)(*3*) of this section, LLC must reallocate $2,000 of capital from the existing partners (A and B) to C to bring C's capital account to $19,000 (the capital account reallocation). As A and B shared equally in all items from Property A, whose sale gave rise to the need for the capital account reallocation, each member's capital account is reduced by 1/2 of the $2,000 reduction ($1,000).

(v) Under paragraph (b)(2)(iv)(*s*)(*4*) of this section, beginning in the year in which the option is exercised, LLC must make corrective allocations so as to take into account the capital account reallocation. In Year 3, LLC has gross income of $3,000 and deductions of $1,500. Under paragraph (b)(4)(x)(*c*), LLC must allocate the book gross income of $3,000 equally among A, B, and C, but for tax purposes, however, LLC must allocate all of its gross income ($3,000) to C. LLC's book and tax deductions ($1,500) will then be allocated equally among A, B, and C. The $1,000 unrealized booked gain in Property B has been allocated entirely to C. Under paragraph (b)(2)(iv)(*f*)(*4*) of this section, the tax items from Property B must be allocated in accordance with section 704(c) principles.

	A		B		C	
	Tax	Book	Tax	Book	Tax	Book
Capital account after exercise	$20,000	$20,000	$20,000	$20,000	$16,000	$16,000
Revaluation	0	0	0	0	0	1,000
Capital account after revaluation	20,000	20,000	20,000	20,000	16,000	17,000
Capital account reallocation	0	(1,000)	0	(1,000)	0	2,000
Capital account after capital account reallocation	20,000	19,000	20,000	19,000	16,000	19,000
Income allocation (Yr. 3)	0	1,000	0	1,000	3,000	1,000
Deduction allocation (Yr. 3)	(500)	(500)	(500)	(500)	(500)	(500)
Capital account at end of year 3	19,500	19,500	19,500	19,500	18,500	19,500

Example 33. (i) In Year 1, D and E each contribute cash of $10,000 to LLC, a newly formed limited liability company classified as a partnership for Federal tax purposes, in exchange for 100 units in LLC. Under the LLC agreement, each unit is entitled to participate equally in the profits and losses of LLC. LLC uses the cash contributions to purchase two nondepreciable properties, Property A and Property B, for $10,000 each.

Also in Year 1, at a time when Property A and Property B are still valued at $10,000 each, LLC issues an option to F. The option allows F to buy 100 units in LLC for an exercise price of $15,000 in Year 2. F pays $2,000 to LLC to purchase the option. Assume that the LLC agreement satisfies the requirements of paragraph (b)(2) of this section and requires that, on the exercise of a noncompensatory option, LLC comply with the rules of paragraph (b)(2)(iv)(*s*) of this section. Also assume that F's option is a noncompensatory option under § 1.721-2(f), and that F is not treated as a partner with respect to the option.

	Basis	Value
END OF YEAR 1		
Assets:		
Cash		
Premium	$2,000	$2,000
Property A	10,000	10,000
Property B	10,000	10,000
Total	22,000	22,000
Liabilities and Capital:		
Cash		
Premium	2,000	2,000
D	10,000	10,000
E	10,000	10,000
Total	22,000	22,000

(ii) In year 2, prior to the exercise of F's option, G contributes $18,000 to LLC for 100 units in LLC. At the time of G's contribution, Property A has a value of $32,000 and a basis of $10,000, Property B has a value of $5,000 and a basis of $10,000, and the fair market value of F's option is $3,000. In year 2, LLC has no item of income, gain, loss, deduction, or credit.

(iii) Upon G's admission to the partnership, the capital accounts of D and E (which were $10,000 each prior to G's admission) are, in accordance with paragraph (b)(2)(iv)(*f*) of this section, adjusted upward to reflect their shares of the unrealized appreciation in the partnership's property. Property A has $22,000 of unrealized gain and Property B has $5,000 of unrealized loss. Under paragraph (b)(2)(iv)(*f*)(*1*) of this section, the adjustments must be based on the fair market value of LLC property (taking section 7701(g) into account) on the date of the adjustment, as determined under paragraph (b)(2)(iv)(*h*) of this section. The fair market value of partnership property must be reduced by the excess of the fair market value of the option as of the date of the

adjustment over the consideration paid by F to acquire the option ($3,000 −$2,000 = $1,000) (under paragraph (b)(2)(iv)(*h*)(*2*) of this section), but only to the extent of the unrealized appreciation in LLC property that has not been reflected in the capital accounts previously ($22,000). This $1,000 reduction is allocated entirely to Property A, the only asset having unrealized appreciation not reflected in the capital accounts previously. Therefore, the book value of Property A is $31,000. Accordingly, the revaluation adjustments must reflect only $16,000 of the net appreciation in LLC's property ($21,000 of unrealized gain in Property A and $5,000 of unrealized loss in Property B). Thus, D's and E's capital accounts (which were $10,000 each prior to G's admission) must be adjusted upward (by $8,000) to $18,000 each. The $21,000 of built-in gain in Property A and the $5,000 of built-in loss in Property B must be allocated equally between D and E in accordance with section 704(c) principles.

	Basis	Value	Option adjustment	704(b) Book
Assets:				
Property A	$10,000	$32,000	($1,000)	$31,000
Property B	10,000	5,000	0	5,000
Cash	2,000	2,000	0	2,000
Subtotal	22,000	39,000	(1,000)	38,000
Cash Contributed by G	18,000	18,000	0	18,000
Total	40,000	57,000	(1,000)	56,000

	Tax	Value	704(b) Book
Liabilities and Capital:			
Cash Premium (option value)	$ 2,000	$ 3,000	$ 2,000
D	10,000	18,000	18,000
E	10,000	18,000	18,000
G	18,000	18,000	18,000
Total	40,000	57,000	56,000

(iv) In year 2, after the admission of G, when Property A still has a value of $32,000 and a basis of $10,000 and Property B still has a value of $5,000 and a basis of $10,000, F exercises the option. On the exercise of the option, F's capital account is credited with the amount paid for the option ($2,000) and the exercise price of the option ($15,000). Under the LLC agreement, however, F is entitled to LLC capital corresponding to 100

units of LLC (1/4 of LLC's capital). Immediately after the exercise of the option, LLC's properties are worth $72,000 ($15,000 contributed by F, plus the value of LLC property prior to the exercise of the option, $57,000). F is entitled to LLC capital equal to 1/4 of this value, or $18,000. As F is entitled to $1,000 more LLC capital than F's capital contributions to LLC, the provisions of paragraph (b)(2)(iv)(*s*) of this section apply.
(v) Under paragraph (b)(2)(iv)(*s*) of this section, LLC must increase F's capital account from $17,000 to $18,000 by, first, revaluing LLC property in accordance with the principles of paragraph (b)(2)(iv)(*f*) of this section and allocating the first $1,000 of unrealized gain to F. The total unrealized gain which has not been reflected in the capital accounts previously is $1,000 (the difference between the actual value of Property A, $32,000, and the book value of Property A, $31,000). The entire $1,000 of book gain is allocated to F under paragraph (b)(2)(iv)(*s*)(*2*) of this section. Because the revaluation of LLC property under paragraph (b)(2)(iv)(*s*)(*2*) of this section increases F's capital account to the amount agreed on by the members, LLC is not required to make a capital account reallocation under paragraph (b)(2)(iv)(*s*)(*3*) of this section. The ($5,000) of unrealized booked loss in Property B has been allocated ($2,500) to each D and E, and the $22,000 of unrealized booked gain in Property A has been allocated $10,500 to each D and E, and $1,000 to F. Under paragraph (b)(2)(iv)(*f*)(*4*) of this section, the tax items from Properties A and B must be allocated in accordance with section 704(c) principles.

	D		E		G		F	
	Tax	Book	Tax	Book	Tax	Book	Tax	Book
Capital account after admission of G	$10,000	$18,000	$10,000	$18,000	$18,000	$18,000	0	0
Capital account after exercise of F's option	10,000	18,000	10,000	18,000	18,000	18,000	17,000	17,000
Revaluation	0	0	0	0	0	0	0	1,000
Capital account after revaluation	10,000	18,000	10,000	18,000	18,000	18,000	17,000	18,000

Example 34. (i) On the first day of Year 1, H, I, and J form LLC, a limited liability company classified as a partnership for Federal tax purposes. H and I each contribute $10,000 cash to LLC for 100 units of common interest in LLC. J contributes $10,000 cash for a convertible preferred interest in LLC. J's convertible preferred interest entitles J to receive an annual allocation and distribution of cumulative LLC net profits in an amount equal to 10 percent of J's unreturned capital. J's convertible preferred interest also entitles J to convert, in Year 3, J's preferred interest into 100 units of common interest. If J converts, J has the right to the same share of LLC capital as J would have had if J had held the 100 units of common interest since the formation of LLC. Under the LLC agreement, each unit of common interest has an equal right to share in any LLC net profits that remain after payment of the preferred return. Assume that the LLC agreement satisfies the requirements of paragraph (b)(2) of this section and requires that, on the exercise of a noncompensatory option, LLC comply with the rules of paragraph (b)(2)(iv)(s) of this section. Also assume that J's right to convert the preferred interest into a common interest qualifies as a noncompensatory option under § 1.721-2(f), and that, prior to the exercise of the conversion right, the conversion right is not treated as a partnership interest.
(ii) LLC uses the $30,000 to purchase Property Z, a property that is depreciable on a straight-line basis over 15 years. In each of Years 1 and 2, LLC has net income of $2,500, comprised of $4,500 of gross income and $2,000 of depreciation. It allocates $1,000 of net income to J and distributes $1,000 to J in each year. LLC allocates the remaining $1,500 of net income equally to H and I in each year but makes no distributions to H and I.

	H		I		J	
	Tax	Book	Tax	Book	Tax	Book
Capital account upon formation	$10,000	$10,000	$10,000	$10,000	$10,000	$10,000
Allocation of income Years 1 and 2	1,500	1,500	1,500	1,500	2,000	2,000
Distributions Years 1 and 2	0	0	0	0	(2,000)	(2,000)
Capital account at end of Year 2	11,500	11,500	11,500	11,500	10,000	10,000

(iii) At the beginning of Year 3, when Property Z has a value of $38,000 and a basis of $26,000 ($30,000 original basis less $4,000 of depreciation) and LLC has accumulated

undistributed cash of $7,000 ($9,000 gross receipts less $2,000 distributions), J converts J's preferred interest into a common interest. Under paragraphs (b)(2)(iv)(*b*) and (b)(2)(iv)(*d*)(*4*) of this section, J's capital account after the conversion equals J's capital account before the conversion, $10,000. On the conversion of the preferred interest, however, J is entitled to LLC capital corresponding to 100 units of common interest in LLC ($^1/_3$ of LLC's capital). At the time of the conversion, the total value of LLC property is $45,000. J is entitled to LLC capital equal to $^1/_3$ of this value, or $15,000. As J is entitled to $5,000 more LLC capital than J's capital account immediately after the conversion, the provisions of paragraph (b)(2)(iv)(*s*) of this section apply.

	Basis	Value
Assets:		
Property Z	$26,000	$38,000
Undistributed Income	7,000	7,000
Total	33,000	45,000
Liabilities and Capital:		
H	11,500	15,000
I	11,500	15,000
J	10,500	15,000
Total	33,000	45,000

(iv) Under paragraph (b)(2)(iv)(*s*) of this section, LLC must increase J's capital account from $10,000 to $15,000 by, first, revaluing LLC property in accordance with the principles of paragraph (b)(2)(iv)(*f*) of this section, and allocating the first $5,000 of unrealized gain from that revaluation to J. The unrealized gain in Property Z is $12,000 ($38,000 value less $26,000 basis). The first $5,000 of this unrealized gain must be allocated to J under paragraph (b)(2)(iv)(*s*)(*2*) of this section. The remaining $7,000 of the unrealized gain must be allocated equally to H and I in accordance with the LLC agreement. Because the revaluation of LLC property under paragraph (b)(2)(iv)(*s*)(*2*) of this section increases J's capital account to the amount agreed on by the members, LLC is not required to make a capital account reallocation under paragraph (b)(2)(iv)(*s*)(*3*) of this section. The $12,000 of unrealized booked gain in Property Z has been allocated $3,500 to each H and I, and $5,000 to J. Under paragraph (b)(2)(iv)(*f*)(*4*) of this section, the tax items from the revalued property must be allocated in accordance with section

704(c) principles.

	H		I		J	
	Tax	Book	Tax	Book	Tax	Book
Capital account prior to conversion	$11,500	$11,500	$11,500	$11,500	$10,000	$10,000
Revaluation on conversion	0	3,500	0	3,500	0	5,000
Capital account after conversion	11,500	15,000	11,500	15,000	10,000	15,000

Example 35. (i) On the first day of Year 1, K and L each contribute cash of $10,000 to LLC, a newly formed limited liability company classified as a partnership for Federal tax purposes, in exchange for 100 units in LLC. Immediately after its formation, LLC borrows $10,000 from M. Under the terms of the debt instrument, interest of $1,000 is unconditionally payable at the end of each year and the $10,000 stated principal is repayable in five years. Throughout the term of the indebtedness, M has the right to convert the debt instrument into 100 units in LLC. If M converts, M has the right to the same share of LLC capital as M would have had if M had held 100 units in LLC since the formation of LLC. Under the LLC agreement, each unit participates equally in the profits and losses of LLC and has an equal right to share in LLC capital. Assume that the LLC agreement satisfies the requirements of paragraph (b)(2) of this section and requires that, on the exercise of a noncompensatory option, LLC comply with the rules of paragraph (b)(2)(iv)(*s*) of this section. Also assume that M's right to convert the debt into an interest in LLC qualifies as a noncompensatory option under § 1.721-2(f), and that, prior to the exercise of the conversion right, M is not treated as a partner with respect to the convertible debt.
(ii) LLC uses the $30,000 to purchase Property D, property that is depreciable on a straight-line basis over 15 years. In each of Years 1, 2, and 3, LLC has net income of $2,000, comprised of $5,000 of gross income, $2,000 of depreciation, and interest expense (representing payments of interest on the loan from M) of $1,000. LLC allocates this income equally to K and L but makes no distributions to either K or L.

	K		L		M	
	Tax	Book	Tax	Book	Tax	Book
Initial capital account	$10,000	$10,000	$10,000	$10,000	0	0

	K		L		M	
	Tax	Book	Tax	Book	Tax	Book
Year 1 net income	1,000	1,000	1,000	1,000	0	0
Year 2 net income	1,000	1,000	1,000	1,000	0	0
Year 3 net income	1,000	1,000	1,000	1,000	0	0
Year 4 initial capital account	13,000	13,000	13,000	13,000	0	0

(iii) At the beginning of Year 4, at a time when property D, LLC's only asset, has a value of $33,000 and basis of $24,000 ($30,000 original basis less $6,000 depreciation in Years 1 through 3), and LLC has accumulated undistributed cash of $12,000 ($15,000 gross income less $3,000 of interest payments) in LLC, M converts the debt into a $^1/_3$ interest in LLC. Under paragraphs (b)(2)(iv)(*b*) and (b)(2)(iv)(*d*)(*4*) of this section, M's capital account after the conversion is the adjusted issue price of the debt immediately before M's conversion of the debt, $10,000, plus any accrued but unpaid qualified stated interest on the debt, $0. On the conversion of the debt, however, M is entitled to receive LLC capital corresponding to 100 units of LLC ($^1/_3$ of LLC's capital). At the time of the conversion, the total value of LLC's property is $45,000. M is entitled to LLC capital equal to $^1/_3$ of this value, or $15,000. As M is entitled to $5,000 more LLC capital than M's capital contribution to LLC ($10,000), the provisions of paragraph (b)(2)(iv)(*s*) of this section apply.

	Basis	Value
Assets:		
Property D	$24,000	$33,000
Cash	$12,000	$12,000
Total	$36,000	$45,000
Liabilities and Capital:		
K	$13,000	$15,000
L	$13,000	$15,000
M	$10,000	$15,000
	$36,000	$45,000

(iv) Under paragraph (b)(2)(iv)(*s*) of this section, LLC must increase M's capital account from $10,000 to $15,000 by, first, revaluing LLC property in accordance with the principles of paragraph (b)(2)(iv)(*f*) of this section, and allocating the first $5,000 of

unrealized gain from that revaluation to M. The unrealized gain in Property D is $9,000 ($33,000 value less $24,000 basis). The first $5,000 of this unrealized gain must be allocated to M under paragraph (b)(2)(iv)(*s*)(*2*) of this section, and the remaining $4,000 of the unrealized gain must be allocated equally to K and L in accordance with the LLC agreement. Because the revaluation of LLC property under paragraph (b)(2)(iv)(*s*)(*2*) of this section increases M's capital account to the amount agreed upon by the members, LLC is not required to make a capital account reallocation under paragraph (b)(2)(iv)(*s*)(*3*) of this section. The $9,000 unrealized booked gain in property D has been allocated $2,000 to each K and L, and $5,000 to M. Under paragraph (b)(2)(iv)(*f*)(*4*) of this section, the tax items from the revalued property must be allocated in accordance with section 704(c) principles.

	K		L		M	
	Tax	**Book**	**Tax**	**Book**	**Tax**	**Book**
Year 4 capital account prior to exercise	$13,000	$13,000	$13,000	$13,000	0	0
Capital account after exercise	13,000	13,000	13,000	13,000	10,000	10,000
Revaluation	0	2,000	0	2,000	0	5,000
Capital account after revaluation	13,000	15,000	13,000	15,000	10,000	15,000

Example 36. [Reserved]. For further guidance, see § 1.704-1T(b)(5) *Example 36.*

Example 37. [Reserved]. For further guidance, see § 1.704-1T(b)(5) *Example 37.*

(6) ***Examples.***

(i) ***Example 1.***

(*a*) A contributes $750,000 and B contributes $250,000 to form AB, a country X eligible entity (as defined in § 301.7701-3(a) of this chapter) treated as a partnership for U.S. Federal income tax purposes. AB operates business M in country X. Country X imposes a 20 percent tax on the net income from business M, which tax is a CFTE. In 2016, AB earns $300,000 of gross income, has deductible expenses of $100,000, and pays or accrues $40,000 of country X tax. Pursuant to the partnership agreement, the first $100,000 of gross income each year is specially allocated to A as a preferred return on excess capital contributed by A. All remaining partnership items, including CFTEs, are split evenly between A and B (50 percent each). The gross income allocation is not deductible in determining AB's taxable income under country X law. Assume that allocations of all items other than CFTEs are valid.

(*b*) AB has a single CFTE category because all of AB's net income is allocated in the same ratio. See paragraph (b)(4)(viii)(*c*)(*2*) of this section. Under paragraph (b)(4)(viii)(*c*)(*3*) of this section, the net income in the single CFTE category is $200,000. The $40,000 of taxes is allocated to the single CFTE category and, thus, is related to the $200,000 of net income in the single CFTE category. In 2016, AB's partnership agreement results in an allocation of $150,000 or 75 percent of the net income to A ($100,000 attributable to the gross income allocation plus $50,000 of the remaining $100,000 of net income) and $50,000 or 25 percent of the net income to B. AB's partnership agreement allocates the country X taxes in accordance with the partners' shares of partnership items remaining after the $100,000 gross income allocation. Therefore, AB allocates the country X taxes 50 percent to A ($20,000) and 50 percent to B ($20,000). AB's allocations of country X taxes are not deemed to be in accordance with the partners' interests in the partnership under paragraph (b)(4)(viii) of this section because they are not in proportion to the allocations of the CFTE category shares of income to which the country X taxes relate. Accordingly, the country X taxes will be reallocated according to the partners' interests in the partnership. Assuming that the partners do not reasonably expect to claim a deduction for the CFTEs in determining their U.S. Federal income tax liabilities, a reallocation of the CFTEs under paragraph (b)(3) of this section would be 75 percent to A ($30,000) and 25 percent to B ($10,000). If the reallocation of the CFTEs causes the partners' capital accounts not to reflect their contemplated economic arrangement, the partners may need to reallocate other partnership items to ensure that the tax consequences of the partnership's allocations are consistent with their contemplated economic arrangement over the term of the partnership.

(*c*) The facts are the same as in paragraph (b)(6)(i)(*a*) of this section, except that country X allows a deduction for the $100,000 allocation of gross income and, as a result, AB pays or accrues only $20,000 of foreign tax. Under paragraph (b)(4)(viii)(*c*)(*4*)(*iii*) of this section, the net income in the single CFTE category is $100,000, determined by reducing the net income in the CFTE category by the $100,000 of gross income that is allocated to A and for which country X allows a deduction in determining AB's taxable income. Pursuant to the partnership agreement, AB allocates the country X tax 50 percent to A ($10,000) and 50 percent to B ($10,000). This allocation is in proportion to the partners' CFTE category shares of the $100,000 net income. Accordingly, AB's allocations of country X taxes are deemed to be in accordance with the partners' interests in the partnership under paragraph (b)(4)(viii)(*a*) of this section.

(*d*) The facts are the same as in paragraph (b)(6)(i)(*c*) of this section, except that, in addition to $20,000 of country X tax, AB is subject to $30,000 of country Y withholding tax with respect to the $300,000 of gross income that it earns in 2016. Country Y does not allow any deductions for purposes of determining the withholding tax. As described in paragraph (b)(6)(i)(*b*) of this section, there is a single CFTE category with respect to AB's net income. Both the $20,000 of country X tax and the $30,000 of country Y withholding tax relate to that income and are therefore allocated to the single CFTE category. Under paragraph (b)(4)(viii)(*c*)(*4*)(*iii*) of this section, however, net income in a CFTE category is reduced by the amount of an allocation for which a deduction is allowed in determining a foreign taxable base, but only for purposes of applying paragraph (b)(4)(viii)(*a*) of this section to allocations of CFTEs that are attributable to that foreign tax. Accordingly, because the $100,000 allocation of gross income is deductible for country X tax purposes but not for country Y tax purposes, the allocations of the CFTEs attributable to country X

tax and country Y tax are analyzed separately. For purposes of applying paragraph (b)(4)(viii)(*a*)(*1*) of this section to allocations of the CFTEs attributable to the $20,000 tax imposed by country X, the analysis described in paragraph (b)(6)(i)(*c*) of this section applies. For purposes of applying paragraph (b)(4)(viii)(*a*)(*1*) of this section to allocations of the CFTEs attributable to the $30,000 tax imposed by country Y, which did not allow a deduction for the $100,000 gross income allocation, the net income in the single CFTE category is $200,000. Pursuant to the partnership agreement, AB allocates the country Y tax 50 percent to A ($15,000) and 50 percent to B ($15,000). These allocations are not deemed to be in accordance with the partners' interests in the partnership under paragraph (b)(4)(viii) of this section because they are not in proportion to the partners' CFTE category shares of the $200,000 of net income in the category, which is allocated 75 percent to A and 25 percent to B under the partnership agreement. Accordingly, the country Y taxes will be reallocated according to the partners' interests in the partnership as described in paragraph (b)(6)(i)(*b*) of this section.

(*e*) If, rather than being a preferential gross income allocation, the $100,000 was a guaranteed payment to A within the meaning of section 707(c), the amount of net income in the single CFTE category of AB for purposes of applying paragraph (b)(4)(viii)(*a*)(*1*) of this section to allocations of CFTEs would be the same as in the fact patterns described in paragraphs (b)(6)(i)(*b*), (*c*), and (*d*) of this section. See paragraph (b)(4)(viii)(*c*)(*4*)(*ii*) of this section.

(ii) *Example 2.*

(*a*) A, B, and C form ABC, an eligible entity (as defined in § 301.7701-3(a) of this chapter) treated as a partnership for U.S. Federal income tax purposes. ABC owns three entities, DEX, DEY, and DEZ, which are organized in, and treated as corporations under the laws of, countries X, Y, and Z, respectively, and as disregarded entities for U.S. Federal income tax purposes. DEX operates business X in country X, DEY operates business Y in country Y, and DEZ operates business Z in country Z. Businesses X, Y, and Z relate to the licensing and sublicensing of intellectual property owned by DEZ. During 2016, DEX earns $100,000 of royalty income from unrelated payors on which it pays no withholding taxes. Country X imposes a 30 percent tax on DEX's net income. DEX makes royalty payments of $90,000 during 2016 to DEY that are deductible by DEX for country X purposes and subject to a 10 percent withholding tax imposed by country X. DEY earns no other income in 2016. Country Y does not impose income or withholding taxes. DEY makes royalty payments of $80,000 during 2016 to DEZ. DEZ earns no other income in 2016. Country Z does not impose income or withholding taxes. The royalty payments from DEX to DEY and from DEY to DEZ are disregarded for U.S. Federal income tax purposes.

(*b*) As a result of these payments, DEX has taxable income of $10,000 for country X purposes on which $3,000 of taxes are imposed, and DEY has $90,000 of income for country X withholding tax purposes on which $9,000 of withholding taxes are imposed. Pursuant to the partnership agreement, all partnership items from business X, excluding CFTEs paid or accrued by business X, are allocated 80 percent to A and 10 percent each to B and C. All partnership items from business Y, excluding CFTEs paid or accrued by business Y, are allocated 80 percent to B and 10 percent each to A and C. All partnership items from business Z, excluding CFTEs paid or accrued by business Z, are allocated 80 percent to C and 10 percent each to A and B. Because only business X has items that are regarded for U.S. Federal income tax purposes (the $100,000 of royalty income), only business X has

partnership items. Accordingly A is allocated 80 percent of the income from business X ($80,000) and B and C are each allocated 10 percent of the income from business X ($10,000 each). There are no partnership items of income from business Y or Z to allocate.

(*c*) Because the partnership agreement provides for different allocations of partnership net income attributable to businesses X, Y, and Z, the net income attributable to each of businesses X, Y, and Z is income in separate CFTE categories. See paragraph (b)(4)(viii)(*c*)(*2*) of this section. Under paragraph (b)(4)(viii)(*c*)(*3*)(*iv*) of this section, an item of gross income that is recognized for U.S. Federal income tax purposes is assigned to the activity that generated the item, and disregarded inter-branch payments are not taken into account in determining net income attributable to an activity. Consequently, all $100,000 of ABC's income is attributable to the business X activity for U.S. Federal income tax purposes, and no net income is in the business Y or Z CFTE category. Under paragraph (b)(4)(viii)(*d*)(*1*) of this section, the $3,000 of country X taxes imposed on DEX is allocated to the business X CFTE category. The additional $9,000 of country X withholding tax imposed with respect to the inter-branch payment to DEY is also allocated to the business X CFTE category because for U.S. Federal income tax purposes the related $90,000 of income on which the country X withholding tax is imposed is in the business X CFTE category. Therefore, $12,000 of taxes ($3,000 of country X income taxes and $9,000 of the country X withholding taxes) is related to the $100,000 of net income in the business X CFTE. See paragraph (b)(4)(viii)(*c*)(*1*) of this section. The allocations of country X taxes will be in proportion to the CFTE category shares of income to which they relate and will be deemed to be in accordance with the partners' interests in the partnership if such taxes are allocated 80 percent to A and 10 percent each to B and C.

(iii) ***Example 3.***

(*a*) Assume that the facts are the same as in paragraph (b)(5)(ii)(*a*) of this section, except that in order to reflect the $90,000 payment from DEX to DEY and the $80,000 payment from DEY to DEZ, the partnership agreement treats only $10,000 of the gross income as attributable to the business X activity, which the partnership agreement allocates 80 percent to A and 10 percent each to B and C. Of the remaining $90,000 of gross income, the partnership agreement treats $10,000 of the gross income as attributable to the business Y activity, which the partnership agreement allocates 80 percent to B and 10 percent each to A and C; and the partnership agreement treats $80,000 of the gross income as attributable to the business Z activity, which the partnership agreement allocates 80 percent to C and 10 percent each to A and B. In addition, the partnership agreement allocates the country X taxes among A, B, and C in accordance with which disregarded entity is considered to have paid the taxes for country X purposes. The partnership agreement allocates the $3,000 of country X income taxes 80 percent to A and 10 percent to each of B and C, and allocates the $9,000 of country X withholding taxes 80 percent to B and 10 percent to each of A and C. Thus, ABC allocates the country X taxes $3,300 to A (80 percent of $3,000 plus 10 percent of $9,000), $7,500 to B (10 percent of $3,000 plus 80 percent of $9,000), and $1,200 to C (10 percent of $3,000 plus 10 percent of $9,000).

(*b*) In order to prevent separating the CFTEs from the related foreign income, the special allocations of the $10,000 and $80,000 treated under the partnership agreement as attributable to the business Y and the business Z activities, respectively, which do not

follow the allocation ratios that otherwise apply under the partnership agreement to items of income in the business X activity, are treated as divisible parts of the business X activity and, therefore, as separate activities. See paragraph (b)(4)(viii)(*c*)(*2*)(*iii*) of this section. Because the divisible part of the business X activity attributable to the portion of the disregarded payment received by DEY and not paid on to DEZ ($10,000) and the net income from the business Y activity ($0) are both shared 80 percent to B and 10 percent each to A and C, that divisible part of the business X activity and the business Y activity are treated as a single CFTE category. Because the divisible part of the business X activity attributable to the disregarded payment paid to DEZ ($80,000) and the net income from the business Z activity ($0) are both shared 80 percent to C and 10 percent each to A and B, that divisible part of the business X activity and the business Z activity are also treated as a single CFTE category. See paragraph (b)(4)(viii)(*c*)(*2*)(*i*) of this section. Accordingly, $10,000 of net income attributable to business X is in the business X CFTE category, $10,000 of net income of business X attributable to the net disregarded payments of DEY is in the business Y CFTE category, and $80,000 of net income of business X attributable to the disregarded payment to DEZ is in the business Z CFTE category.

(*c*) Under paragraph (b)(4)(viii)(*d*)(*1*) of this section, the $3,000 of country X tax imposed on DEX's income is allocated to the business X CFTE category. Because the $90,000 on which the country X withholding tax is imposed is split between the business Y CFTE category and the business Z CFTE category, those withholding taxes are allocated on a pro rata basis, $1,000 [$9,000 x ($10,000/$90,000)] to the business Y CFTE category and $8,000 [$9,000 x ($80,000/$90,000)] to the business Z CFTE category. See paragraph (b)(4)(viii)(*d*)(*1*) of this section. To satisfy the safe harbor of paragraph (b)(4)(viii) of this section, the $3,000 of country X taxes allocated to the business X CFTE category must be allocated in proportion to the CFTE category shares of income to which they relate, and therefore would be deemed to be in accordance with the partners' interests in the partnership if such taxes were allocated 80 percent to A and 10 percent each to B and C. The allocation of the $1,000 of country X withholding taxes allocated to the business Y CFTE category would be in proportion to the CFTE category shares of income to which they relate, and therefore would be deemed to be in accordance with the partners' interests in the partnership if such taxes were allocated 80 percent to B and 10 percent each to A and C. The allocation of the $8,000 of country X withholding taxes allocated to the business Z CFTE category would be in proportion to the CFTE category shares of income to which they relate, and therefore would be deemed to be in accordance with the partners' interests in the partnership if such taxes were allocated 80 percent to C and 10 percent each to A and B. Thus, to satisfy the safe harbor, ABC must allocate the country X taxes $3,300 to A (80 percent of $3,000 plus 10 percent of $1,000 plus 10 percent of $8,000), $1,900 to B (10 percent of $3,000 plus 80 percent of $1,000 plus 10 percent of $8,000), and $6,800 to C (10 percent of $3,000 plus 10 percent of $1,000 plus 80 percent of $8,000).

(*d*) ABC's allocations of country X taxes are not deemed to be in accordance with the partners' interests in the partnership under paragraph (b)(4)(viii) of this section because they are not in proportion to the partners' CFTE category shares of income to which the country X taxes relate. Accordingly, the country X taxes will be reallocated according to the partners' interests in the partnership.

(c) ***Contributed property; cross-reference.*** See § 1.704-3 for methods of making allocations that take into account precontribution appreciation or diminution in value of property contributed by a partner to a partnership.

(d) ***Limitation on allowance of losses.***

(1) A partner's distributive share of partnership loss will be allowed only to the extent of the adjusted basis (before reduction by current year's losses) of such partner's interest in the partnership at the end of the partnership taxable year in which such loss occurred. A partner's share of loss in excess of his adjusted basis at the end of the partnership taxable year will not be allowed for that year. However, any loss so disallowed shall be allowed as a deduction at the end of the first succeeding partnership taxable year, and subsequent partnership taxable years, to the extent that the partner's adjusted basis for his partnership interest at the end of any such year exceeds zero (before reduction by such loss for such year).

(2) In computing the adjusted basis of a partner's interest for the purpose of ascertaining the extent to which a partner's distributive share of partnership loss shall be allowed as a deduction for the taxable year, the basis shall first be increased under section 705(a)(1) and decreased under section 705(a)(2), except for losses of the taxable year and losses previously disallowed. If the partner's distributive share of the aggregate of items of loss specified in section 702(a) (1), (2), (3), (8), and (9) exceeds the basis of the partner's interest computed under the preceding sentence, the limitation on losses under section 704(d) must be allocated to his distributive share of each such loss. This allocation shall be determined by taking the proportion that each loss bears to the total of all such losses. For purposes of the preceding sentence, the total losses for the taxable year shall be the sum of his distributive share of losses for the current year and his losses disallowed and carried forward from prior years.

(3) For the treatment of certain liabilities of the partner or partnership, see section 752 and § 1.752-1.

(4) The provisions of this paragraph may be illustrated by the following examples:

Example 1. At the end of the partnership taxable year 1955, partnership AB has a loss of $20,000. Partner A's distributive share of this loss is $10,000. At the end of such year, A's adjusted basis for his interest in the partnership (not taking into account his distributive share of the loss) is $6,000. Under section 704(d), A's distributive share of partnership loss is allowed to him (in his taxable year within or with which the partnership taxable year ends) only to the extent of his adjusted basis of $6,000. The $6,000 loss allowed for 1955 decreases the adjusted basis of A's interest to zero. Assume that, at the end of partnership taxable year 1956, A's share of partnership income has increased the adjusted basis of A's interest in the partnership to $3,000 (not taking into account the $4,000 loss disallowed in 1955). Of the $4,000 loss disallowed for the partnership taxable year 1955, $3,000 is allowed A for the partnership taxable year 1956, thus again decreasing the adjusted basis of his interest to zero. If, at the end of partnership taxable year 1957, A has an adjusted basis of his interest of at least $1,000 (not taking into account the disallowed loss of $1,000), he will be allowed the $1,000 loss previously disallowed.

Example 2. At the end of partnership taxable year 1955, partnership CD has a loss of $20,000. Partner C's distributive share of this loss is $10,000. The adjusted basis of his interest in the partnership (not taking into account his distributive share of such loss) is $6,000. Therefore, $4,000 of the loss is disallowed. At the end of partnership taxable year 1956, the partnership has no taxable income or loss, but owes $8,000 to a bank for money borrowed. Since C's share of this liability is $4,000, the

basis of his partnership interest is increased from zero to $4,000. (See sections 752 and 722, and §§ 1.752-1 and 1.722-1.) C is allowed the $4,000 loss, disallowed for the preceding year under section 704(d), for his taxable year within or with which partnership taxable year 1956 ends.

Example 3. At the end of partnership taxable year 1955, partner C has the following distributive share of partnership items described in section 702(a): Long-term capital loss, $4,000; short-term capital loss, $2,000; income as described in section 702(a)(9), $4,000. Partner C's adjusted basis for his partnership interest at the end of 1955, before adjustment for any of the above items, is $1,000. As adjusted under section 705(a)(1)(A), C's basis is increased from $1,000 to $5,000 at the end of the year. C's total distributive share of partnership loss is $6,000. Since without regard to losses, C has a basis of only $5,000, C is allowed only $5,000/$6,000 of each loss, that is, $3,333 of his long-term capital loss, and $1,667 of his short-term capital loss. C must carry forward to succeeding taxable years $667 as a long-term capital loss and $333 as a short-term capital loss.

(e) ***Family partnerships*** —

(1) ***In general*** —

(i) ***Introduction.*** The production of income by a partnership is attributable to the capital or services, or both, contributed by the partners. The provisions of subchapter K, chapter 1 of the Code, are to be read in the light of their relationship to section 61, which requires, inter alia, that income be taxed to the person who earns it through his own labor and skill and the utilization of his own capital.

(ii) ***Recognition of donee as partner.*** With respect to partnerships in which capital is a material income-producing factor, section 704(e)(1) provides that a person shall be recognized as a partner for income tax purposes if he owns a capital interest in such a partnership whether or not such interest is derived by purchase or gift from any other person. If a capital interest in a partnership in which capital is a material income-producing factor is created by gift, section 704(e)(2) provides that the distributive share of the donee under the partnership agreement shall be includible in his gross income, except to the extent that such distributive share is determined without allowance of reasonable compensation for services rendered to the partnership by the donor, and except to the extent that the portion of such distributive share attributable to donated capital is proportionately greater than the share of the donor attributable to the donor's capital. For rules of allocation in such cases, see subparagraph (3) of this paragraph.

(iii) ***Requirement of complete transfer to donee.*** A donee or purchaser of a capital interest in a partnership is not recognized as a partner under the principles of section 704(e)(1) unless such interest is acquired in a bona fide transaction, not a mere sham for tax avoidance or evasion purposes, and the donee or purchaser is the real owner of such interest. To be recognized, a transfer must vest dominion and control of the partnership interest in the transferee. The existence of such dominion and control in the donee is to be determined from all the facts and circumstances. A transfer is not recognized if the transferor retains such incidents of ownership that the transferee has not acquired full and complete ownership of the partnership interest. Transactions between members of a family will be closely scrutinized, and the circumstances, not only at the time of the purported transfer but also during the periods preceding and following it, will be taken into consideration in determining the bona fides or lack of bona fides of the purported gift or sale. A partnership may be recognized for income tax purposes as to some partners but not as to others.

(iv) ***Capital as a material income-producing factor.*** For purposes of section 704(e)(1), the determination as to whether capital is a material income-producing factor must be made by reference to all the facts of each case. Capital is a material income-producing factor if a substantial portion of the gross income of the business is attributable to the employment of capital in the business conducted by the partnership. In general, capital is not a material income-producing factor where the income of the business consists principally of fees, commissions, or other compensation for personal services performed by members or employees of the partnership. On the other hand, capital is ordinarily a material income-producing factor if the operation of the business requires substantial inventories or a substantial investment in plant, machinery, or other equipment.

(v) ***Capital interest in a partnership.*** For purposes of section 704(e), a capital interest in a partnership means an interest in the assets of the partnership, which is distributable to the owner of the capital interest upon his withdrawal from the partnership or upon liquidation of the partnership. The mere right to participate in the earnings and profits of a partnership is not a capital interest in the partnership.

(2) ***Basic tests as to ownership*** —

(i) ***In general.*** Whether an alleged partner who is a donee of a capital interest in a partnership is the real owner of such capital interest, and whether the donee has dominion and control over such interest, must be ascertained from all the facts and circumstances of the particular case. Isolated facts are not determinative; the reality of the donee's ownership is to be determined in the light of the transaction as a whole. The execution of legally sufficient and irrevocable deeds or other instruments of gift under State law is a factor to be taken into account but is not determinative of ownership by the donee for the purposes of section 704(e). The reality of the transfer and of the donee's ownership of the property attributed to him are to be ascertained from the conduct of the parties with respect to the alleged gift and not by any mechanical or formal test. Some of the more important factors to be considered in determining whether the donee has acquired ownership of the capital interest in a partnership are indicated in subdivisions (ii) to (x), inclusive, of this subparagraph.

(ii) ***Retained controls.*** The donor may have retained such controls of the interest which he has purported to transfer to the donee that the donor should be treated as remaining the substantial owner of the interest. Controls of particular significance include, for example, the following:

(*a*) Retention of control of the distribution of amounts of income or restrictions on the distributions of amounts of income (other than amounts retained in the partnership annually with the consent of the partners, including the donee partner, for the reasonable needs of the business). If there is a partnership agreement providing for a managing partner or partners, then amounts of income may be retained in the partnership without the acquiescence of all the partners if such amounts are retained for the reasonable needs of the business.

(*b*) Limitation of the right of the donee to liquidate or sell his interest in the partnership at his discretion without financial detriment.

(*c*) Retention of control of assets essential to the business (for example, through retention of assets leased to the alleged partnership).

(*d*) Retention of management powers inconsistent with normal relationships among partners. Retention by the donor of control of business management or of voting control, such as is common in ordinary business relationships, is not by itself to be considered as inconsistent with normal relationships among partners, provided the donee is free to liquidate his interest at his discretion without financial detriment. The donee shall not be considered free to liquidate his interest unless, considering all the facts, it is evident that the donee is independent of the donor and has such maturity and understanding of his rights as to be capable of deciding to exercise, and capable of exercising, his right to withdraw his capital interest from the partnership.

The existence of some of the indicated controls, though amounting to less than substantial ownership retained by the donor, may be considered along with other facts and circumstances as tending to show the lack of reality of the partnership interest of the donee.

(iii) ***Indirect controls.*** Controls inconsistent with ownership by the donee may be exercised indirectly as well as directly, for example, through a separate business organization, estate, trust, individual, or other partnership. Where such indirect controls exist, the reality of the donee's interest will be determined as if such controls were exercisable directly.

(iv) ***Participation in management.*** Substantial participation by the donee in the control and management of the business (including participation in the major policy decisions affecting the business) is strong evidence of a donee partner's exercise of dominion and control over his interest. Such participation presupposes sufficient maturity and experience on the part of the donee to deal with the business problems of the partnership.

(v) ***Income distributions.*** The actual distribution to a donee partner of the entire amount or a major portion of his distributive share of the business income for the sole benefit and use of the donee is substantial evidence of the reality of the donee's interest, provided the donor has not retained controls inconsistent with real ownership by the donee. Amounts distributed are not considered to be used for the donee's sole benefit if, for example, they are deposited, loaned, or invested in such manner that the donor controls or can control the use or enjoyment of such funds.

(vi) ***Conduct of partnership business.*** In determining the reality of the donee's ownership of a capital interest in a partnership, consideration shall be given to whether the donee is actually treated as a partner in the operation of the business. Whether or not the donee has been held out publicly as a partner in the conduct of the business, in relations with customers, or with creditors or other sources of financing, is of primary significance. Other factors of significance in this connection include:

(*a*) Compliance with local partnership, fictitious names, and business registration statutes.

(*b*) Control of business bank accounts.

(*c*) Recognition of the donee's rights in distributions of partnership property and profits.

(*d*) Recognition of the donee's interest in insurance policies, leases, and other business contracts and in litigation affecting business.

(*e*) The existence of written agreements, records, or memoranda, contemporaneous with the taxable year or years concerned, establishing the nature of the partnership agreement and the rights and liabilities of the respective partners.

(*f*) Filing of partnership tax returns as required by law.

However, despite formal compliance with the above factors, other circumstances may indicate that the donor has retained substantial ownership of the interest purportedly transferred to the donee.

(vii) ***Trustees as partners.*** A trustee may be recognized as a partner for income tax purposes under the principles relating to family partnerships generally as applied to the particular facts of the trust-partnership arrangement. A trustee who is unrelated to and independent of the grantor, and who participates as a partner and receives distribution of the income distributable to the trust, will ordinarily be recognized as the legal owner of the partnership interest which he holds in trust unless the grantor has retained controls inconsistent with such ownership. However, if the grantor is the trustee, or if the trustee is amenable to the will of the grantor, the provisions of the trust instrument (particularly as to whether the trustee is subject to the responsibilities of a fiduciary), the provisions of the partnership agreement, and the conduct of the parties must all be taken into account in determining whether the trustee in a fiduciary capacity has become the real owner of the partnership interest. Where the grantor (or person amenable to his will) is the trustee, the trust may be recognized as a partner only if the grantor (or such other person) in his participation in the affairs of the partnership actively represents and protects the interests of the beneficiaries in accordance with the obligations of a fiduciary and does not subordinate such interests to the interests of the grantor. Furthermore, if the grantor (or person amenable to his will) is the trustee, the following factors will be given particular consideration:

(*a*) Whether the trust is recognized as a partner in business dealings with customers and creditors, and

(*b*) Whether, if any amount of the partnership income is not properly retained for the reasonable needs of the business, the trust's share of such amount is distributed to the trust annually and paid to the beneficiaries or reinvested with regard solely to the interests of the beneficiaries.

(viii) ***Interests (not held in trust) of minor children.*** Except where a minor child is shown to be competent to manage his own property and participate in the partnership activities in accordance with his interest in the property, a minor child generally will not be recognized as a member of a partnership unless control of the property is exercised by another person as fiduciary for the sole benefit of the child, and unless there is such judicial supervision of the conduct of the fiduciary as is required by law. The use of the child's property or income for support for which a parent is legally responsible will be considered a use for the parent's benefit. “Judicial supervision of the conduct of the fiduciary” includes filing of such accountings and reports as are required by law of the fiduciary who participates in the affairs of the partnership on behalf of the minor. A minor child will be considered as competent to manage his own property if he actually has sufficient maturity and experience to be treated by disinterested persons as competent to enter business dealings and otherwise to conduct his affairs on a basis of equality with adult persons, notwithstanding legal disabilities of the minor under State law.

(ix) ***Donees as limited partners.*** The recognition of a donee's interest in a limited partnership will depend, as in the case of other donated interests, on whether the transfer of property is real and on whether the donee has acquired dominion and control over the interest purportedly transferred to him. To be recognized for Federal income tax purposes, a limited partnership must be organized and conducted in accordance with the requirements of the applicable State

limited-partnership law. The absence of services and participation in management by a donee in a limited partnership is immaterial if the limited partnership meets all the other requirements prescribed in this paragraph. If the limited partner's right to transfer or liquidate his interest is subject to substantial restrictions (for example, where the interest of the limited partner is not assignable in a real sense or where such interest may be required to be left in the business for a long term of years), or if the general partner retains any other control which substantially limits any of the rights which would ordinarily be exercisable by unrelated limited partners in normal business relationships, such restrictions on the right to transfer or liquidate, or retention of other control, will be considered strong evidence as to the lack of reality of ownership by the donee.

(x) ***Motive.*** If the reality of the transfer of interest is satisfactorily established, the motives for the transaction are generally immaterial. However, the presence or absence of a tax-avoidance motive is one of many factors to be considered in determining the reality of the ownership of a capital interest acquired by gift.

(3) ***Allocation of family partnership income*** —

(i) ***In general.***

(*a*) Where a capital interest in a partnership in which capital is a material income-producing factor is created by gift, the donee's distributive share shall be includible in his gross income, except to the extent that such share is determined without allowance of reasonable compensation for services rendered to the partnership by the donor, and except to the extent that the portion of such distributive share attributable to donated capital is proportionately greater than the distributive share attributable to the donor's capital. For the purpose of section 704, a capital interest in a partnership purchased by one member of a family from another shall be considered to be created by gift from the seller, and the fair market value of the purchased interest shall be considered to be donated capital. The “family” of any individual, for the purpose of the preceding sentence, shall include only his spouse, ancestors, and lineal descendants, and any trust for the primary benefit of such persons.

(*b*) To the extent that the partnership agreement does not allocate the partnership income in accordance with (*a*) of this subdivision, the distributive shares of the partnership income of the donor and donee shall be reallocated by making a reasonable allowance for the services of the donor and by attributing the balance of such income (other than a reasonable allowance for the services, if any, rendered by the donee) to the partnership capital of the donor and donee. The portion of income, if any, thus attributable to partnership capital for the taxable year shall be allocated between the donor and donee in accordance with their respective interests in partnership capital.

(*c*) In determining a reasonable allowance for services rendered by the partners, consideration shall be given to all the facts and circumstances of the business, including the fact that some of the partners may have greater managerial responsibility than others. There shall also be considered the amount that would ordinarily be paid in order to obtain comparable services from a person not having an interest in the partnership.

(*d*) The distributive share of partnership income, as determined under (*b*) of this subdivision, of a partner who rendered services to the partnership before entering the Armed Forces of the United States shall not be diminished because of absence due to military service.

Such distributive share shall be adjusted to reflect increases or decreases in the capital interest of the absent partner. However, the partners may by agreement allocate a smaller share to the absent partner due to his absence.

(ii) ***Special rules.***

(*a*) The provisions of subdivision (i) of this subparagraph, relating to allocation of family partnership income, are applicable where the interest in the partnership is created by gift, indirectly or directly. Where the partnership interest is created indirectly, the term *donor* may include persons other than the nominal transferor. This rule may be illustrated by the following examples:

Example 1. A father gives property to his son who shortly thereafter conveys the property to a partnership consisting of the father and the son. The partnership interest of the son may be considered created by gift and the father may be considered the donor of the son's partnership interest.

Example 2. A father, the owner of a business conducted as a sole proprietorship, transfers the business to a partnership consisting of his wife and himself. The wife subsequently conveys her interest to their son. In such case, the father, as well as the mother, may be considered the donor of the son's partnership interest.

Example 3. A father makes a gift to his son of stock in the family corporation. The corporation is subsequently liquidated. The son later contributes the property received in the liquidation of the corporation to a partnership consisting of his father and himself. In such case, for purposes of section 704, the son's partnership interest may be considered created by gift and the father may be considered the donor of his son's partnership interest.

(*b*) The allocation rules set forth in section 704(e) and subdivision (i) of this subparagraph apply in any case in which the transfer or creation of the partnership interest has any of the substantial characteristics of a gift. Thus, allocation may be required where transfer of a partnership interest is made between members of a family (including collaterals) under a purported purchase agreement, if the characteristics of a gift are ascertained from the terms of the purchase agreement, the terms of any loan or credit arrangements made to finance the purchase, or from other relevant data.

(*c*) In the case of a limited partnership, for the purpose of the allocation provisions of subdivision (i) of this subparagraph, consideration shall be given to the fact that a general partner, unlike a limited partner, risks his credit in the partnership business.

(4) ***Purchased interest*** —

(i) ***In general.*** If a purported purchase of a capital interest in a partnership does not meet the requirements of subdivision (ii) of this subparagraph, the ownership by the transferee of such capital interest will be recognized only if it qualifies under the requirements applicable to a transfer of a partnership interest by gifts. In a case not qualifying under subdivision (ii) of this subparagraph, if payment of any part of the purchase price is made out of partnership earnings, the transaction may be regarded in the same light as a purported gift subject to deferred enjoyment of income. Such a transaction may be lacking in reality either as a gift or as a bona fide purchase.

(ii) ***Tests as to reality of purchased interests.*** A purchase of a capital interest in a partnership, either directly or by means of a loan or credit extended by a member of the family, will be recognized as bona fide if:

(*a*) It can be shown that the purchase has the usual characteristics of an arm's-length transaction, considering all relevant factors, including the terms of the purchase agreement (as to price, due date of payment, rate of interest, and security, if any) and the terms of any loan or credit arrangement collateral to the purchase agreement; the credit standing of the purchaser (apart from relationship to the seller) and the capacity of the purchaser to incur a legally binding obligation; or

(*b*) It can be shown, in the absence of characteristics of an arm's-length transaction, that the purchase was genuinely intended to promote the success of the business by securing participation of the purchaser in the business or by adding his credit to that of the other participants.

However, if the alleged purchase price or loan has not been paid or the obligation otherwise discharged, the factors indicated in (*a*) and (*b*) of this subdivision shall be taken into account only as an aid in determining whether a bona fide purchase or loan obligation existed.

(f) ***Applicability dates*** —

(1) ***In general.*** Except as provided in paragraph (f)(2) of this section, paragraph (b)(2)(iv)(*f*)(*6*) of this section applies with respect to contributions occurring on or after January 18, 2017, and with respect to contributions that occurred before January 18, 2017 resulting from an entity classification election made under § 301.7701-3 of this chapter that was effective on or before January 18, 2017 but was filed on or after January 18, 2017.

(2) ***Election to apply the provisions described in paragraph (f)(1) of this section retroactively.*** Paragraph (b)(2)(iv)(*f*)(*6*) of this section may, by election, be applied with respect to a contribution that occurred on or after August 6, 2015 but before January 18, 2017, and with respect to a contribution that occurred before August 6, 2015 resulting from an entity classification election made under § 301.7701-3 of this chapter that was effective on or before August 6, 2015 but was filed on or after August 6, 2015. The election must have been made by applying paragraph (b)(2)(iv)(*f*)(*6*) of this section on a timely filed original return (including extensions) or an amended return filed no later than July 18, 2017.

[T.D. 6500, 25 FR 11814, Nov. 26, 1960]

Editorial Note: For FEDERAL REGISTER citations affecting § 1.704-1, see the List of CFR Sections Affected, which appears in the Finding Aids section of the printed volume and at *www.govinfo.gov*.

§ 1.704-1T Partner's distributive share (temporary).

(a) For further guidance, see § 1.704-1(a).

(b)

(1) For further guidance, see § 1.704-1(b)(1).

(2) For further guidance, see § 1.704-1(b)(2)(i) through (b)(2)(iv)(*f*)(*5*).

(i) through (iii) [Reserved]

(iv)

(*a*) through (*e*) [Reserved]

(*f*)

(*1*) through (*5*) [Reserved]

(*g*) For further guidance, see § 1.704-1(b)(2)(iv)(*g*) through (*s*).

(*h*) through (*s*) [Reserved]

(3) For further guidance, see § 1.704-1(b)(3) through (6).

(4) through (6) [Reserved]

(c) For further guidance, see § 1.704-1(c) through (e).

(d) through (e) [Reserved]

[T.D. 9748, 81 FR 5912, Feb. 4, 2016, as amended by T.D. 9814, 82 FR 7597, Jan. 19, 2017; T.D. 9871, 84 FR 35544, July 24, 2019; 85 FR 3838, Jan. 23, 2020; 88 FR 17725, Mar. 24, 2023]

§ 1.704-2 Allocations attributable to nonrecourse liabilities.

(a) ***Table of contents.*** This paragraph contains a listing of the major headings of this § 1.704-2.

§ 1.704-2 Allocations attributable to nonrecourse liabilities.

(a) Table of contents.

(b) General principles and definitions.

(1) Definition of and allocations of nonrecourse deductions.

(2) Definition of and allocations pursuant to a minimum gain chargeback.

(3) Definition of nonrecourse liability.

(4) Definition of partner nonrecourse debt.

(c) Amount of nonrecourse deductions.

(d) Partnership minimum gain.

(1) Amount of partnership minimum gain.

(2) Property subject to more than one liability.

(i) In general.

(ii) Allocating liabilities.

(3) Partnership minimum gain if there is a book/tax disparity.

(4) Special rule for year of revaluation.

(e) Requirements to be satisfied.

(f) Minimum gain chargeback requirement.

(1) In general.

(2) Exception for certain conversions and refinancings.

(3) Exception for certain capital contributions.

(4) Waiver for certain income allocations that fail to meet minimum gain chargeback requirement if minimum gain chargeback distorts economic arrangement.

(5) Additional exceptions.

(6) Partnership items subject to the minimum gain chargeback requirement.

(7) Examples.

(g) Shares of partnership minimum gain.

(1) Partner's share of partnership minimum gain.

(2) Partner's share of the net decrease in partnership minimum gain.

(3) Conversions of recourse or partner nonrecourse debt into nonrecourse debt.

(h) Distribution of nonrecourse liability proceeds allocable to an increase in partnership minimum gain.

(1) In general.

(2) Distribution allocable to nonrecourse liability proceeds.

(3) Option when there is an obligation to restore.

(4) Carryover to immediately succeeding taxable year.

(i) Partnership nonrecourse liabilities where a partner bears the economic risk of loss.

(1) In general.

(2) Definition of and determination of partner nonrecourse deductions.

(3) Determination of partner nonrecourse debt minimum gain.

(4) Chargeback of partner nonrecourse debt minimum gain.

(5) Partner's share of partner nonrecourse debt minimum gain.

(6) Distribution of partner nonrecourse debt proceeds allocable to an increase in partner nonrecourse debt minimum gain.

(j) Ordering rules.

(1) Treatment of partnership losses and deductions.

(i) Partner nonrecourse deductions.

(ii) Partnership nonrecourse deductions.

(iii) Carryover to succeeding taxable year.

(2) Treatment of partnership income and gains.

(i) Minimum gain chargeback.

(ii) Chargeback attributable to decrease in partner nonrecourse debt minimum gain.

(iii) Carryover to succeeding taxable year.

(k) Tiered partnerships.

(1) Increase in upper-tier partnership's minimum gain.

(2) Decrease in upper-tier partnership's minimum gain.

(3) Nonrecourse debt proceeds distributed from the lower-tier partnership to the upper-tier partnership.

(4) Nonrecourse deductions of lower-tier partnership treated as depreciation by upper-tier partnership.

(5) Coordination with partner nonrecourse debt rules.

(l) Effective dates.

(1) In general.

(i) Prospective application.

(ii) Partnerships subject to temporary regulations.

(iii) Partnerships subject to former regulations.

(2) Special rule applicable to pre-January 30, 1989, related party nonrecourse debt.

(3) Transition rule for pre-March 1, 1984, partner nonrecourse debt.

(4) Election.

(m) Examples.

(b) ***General principles and definitions*** —

(1) ***Definition of and allocations of nonrecourse deductions.*** Allocations of losses, deductions, or section 705(a)(2)(B) expenditures attributable to partnership nonrecourse liabilities ("nonrecourse deductions") cannot have economic effect because the creditor alone bears any economic burden that corresponds to those allocations. Thus, nonrecourse deductions must be allocated in accordance with the partners' interests in the partnership. Paragraph (e) of this section provides a test that deems allocations of nonrecourse deductions to be in accordance with the partners' interests in the partnership. If that test is not satisfied, the partners' distributive shares of nonrecourse deductions are determined under § 1.704-1(b)(3), according to the partners' overall economic interests in the partnership. See also paragraph (i) of this section for special rules regarding the allocation of deductions attributable to nonrecourse liabilities for which a partner bears the economic risk of loss (as described in paragraph (b)(4) of this section).

(2) ***Definition of and allocations pursuant to a minimum gain chargeback.*** To the extent a nonrecourse liability exceeds the adjusted tax basis of the partnership property it encumbers, a disposition of that property will generate gain that at least equals that excess ("partnership minimum gain"). An increase in partnership minimum gain is created by a decrease in the adjusted tax basis of property encumbered by a nonrecourse liability below the amount of that liability and by a partnership nonrecourse borrowing that exceeds the adjusted tax basis of the property encumbered by the borrowing. Partnership minimum gain decreases as reductions occur in the amount by which the nonrecourse liability exceeds the adjusted tax basis of the property encumbered by the liability. Allocations of gain attributable to a decrease in partnership minimum gain (a "minimum gain chargeback," as required under paragraph (f) of this section) cannot have economic effect because the gain merely offsets nonrecourse deductions previously claimed by the partnership. Thus, to avoid impairing the economic effect of other allocations, allocations pursuant to a minimum gain chargeback must be made to the partners that either were allocated nonrecourse deductions or received distributions of proceeds attributable to a nonrecourse borrowing. Paragraph (e) of this section provides a test that, if met, deems allocations of partnership income pursuant to a minimum gain chargeback to be in accordance with the partners' interests in the partnership. If property encumbered by a nonrecourse liability is reflected on the partnership's books at a value that differs from its adjusted tax basis, paragraph (d)(3) of this section provides that minimum gain is determined with reference to the property's book basis. See also paragraph (i)(4) of this section for special rules regarding the minimum gain chargeback requirement for partner nonrecourse debt.

(3) ***Definition of nonrecourse liability. Nonrecourse liability*** means a nonrecourse liability as defined in § 1.752-1(a)(2) or a § 1.752-7 liability (as defined in § 1.752-7(b)(3)(i)) assumed by the partnership from a partner on or after June 24, 2003.

(4) ***Definition of partner nonrecourse debt. Partner nonrecourse debt* or *partner nonrecourse liability*** means any partnership liability to the extent the liability is nonrecourse for purposes of § 1.1001-2, and a partner or related person (within the meaning of § 1.752-4(b)) bears the economic risk of loss under § 1.752-2 because, for example, the partner or related person is the creditor or a guarantor.

(c) ***Amount of nonrecourse deductions.*** The amount of nonrecourse deductions for a partnership taxable year equals the net increase in partnership minimum gain during the year (determined under paragraph (d) of this section), reduced (but not below zero) by the aggregate distributions made during the year of proceeds of a nonrecourse liability that are allocable to an increase in partnership minimum gain (determined under paragraph (h) of this section). See paragraph (m), *Examples* (1)(i) and (vi), (2), and (3) of this section. However, increases in partnership minimum gain resulting from conversions, refinancings, or other changes to a debt instrument (as described in paragraph (g)(3)) do not generate nonrecourse deductions. Generally, nonrecourse deductions consist first of certain depreciation or cost recovery deductions and then, if necessary, a pro rata portion of other partnership losses, deductions, and section 705(a)(2)(B) expenditures for that year; excess nonrecourse deductions are carried over. See paragraphs (j)(1) (ii) and (iii) of this section for more specific ordering rules. See also paragraph (m), *Example* (1)(iv) of this section.

(d) ***Partnership minimum gain*** —

(1) ***Amount of partnership minimum gain.*** The amount of partnership minimum gain is determined by first computing for each partnership nonrecourse liability any gain the partnership would realize if it disposed of the property subject to that liability for no consideration other than full satisfaction of the liability, and then aggregating the separately computed gains. The amount of partnership minimum gain includes minimum gain arising from a conversion, refinancing, or other change to a debt instrument, as described in paragraph (g)(3) of this section, only to the extent a partner is allocated a share of that minimum gain. For any partnership taxable year, the net increase or decrease in partnership minimum gain is determined by comparing the partnership minimum gain on the last day of the immediately preceding taxable year with the partnership minimum gain on the last day of the current taxable year. See paragraph (m), *Examples* (1) (i) and (iv), (2), and (3) of this section.

(2) ***Property subject to more than one liability.***

(i) ***In general.*** If property is subject to more than one liability, only the portion of the property's adjusted tax basis that is allocated to a nonrecourse liability under paragraph (d)(2)(ii) of this section is used to compute minimum gain with respect to that liability.

(ii) ***Allocating liabilities.*** If property is subject to two or more liabilities of equal priority, the property's adjusted tax basis is allocated among the liabilities in proportion to their outstanding balances. If property is subject to two or more liabilities of unequal priority, the adjusted tax basis is allocated first to the liability of the highest priority to the extent of its outstanding balance and then to each liability in descending order of priority to the extent of its outstanding balance, until fully allocated. See paragraph (m), *Example* (1) (v) of this section.

(3) ***Partnership minimum gain if there is a book/tax disparity.*** If partnership property subject to one or more nonrecourse liabilities is, under § 1.704-1(b)(2)(iv) (*d*), (*f*), or (*r*), reflected on the partnership's books at a value that differs from its adjusted tax basis, the determinations under this section are

made with reference to the property's book value. See section 704(c) and § 1.704-1(b)(4)(i) for principles that govern the treatment of a partner's share of minimum gain that is eliminated by the revaluation. See also paragraph (m), *Example* (3) of this section.

(4) ***Special rule for year of revaluation.*** If the partners' capital accounts are increased pursuant to § 1.704-1(b)(2)(iv) (*d*), (*f*), or (*r*) to reflect a revaluation of partnership property subject to a nonrecourse liability, the net increase or decrease in partnership minimum gain for the partnership taxable year of the revaluation is determined by:

(i) First calculating the net decrease or increase in partnership minimum gain using the current year's book values and the prior year's partnership minimum gain amount; and

(ii) Then adding back any decrease in minimum gain arising solely from the revaluation.

See paragraph (m), *Example* (3)(iii) of this section. If the partners' capital accounts are decreased to reflect a revaluation, the net increases or decreases in partnership minimum gain are determined in the same manner as in the year before the revaluation, but by using book values rather than adjusted tax bases. See section 7701(g) and § 1.704-1(b)(2)(iv)(*f*)(*1*) (property being revalued cannot be booked down below the amount of any nonrecourse liability to which the property is subject).

(e) ***Requirements to be satisfied.*** Allocations of nonrecourse deductions are deemed to be in accordance with the partners' interests in the partnership only if—

(1) Throughout the full term of the partnership requirements (*1*) and (*2*) of § 1.704-1(b)(2)(ii)(*b*) are satisfied (*i.e.,* capital accounts are maintained in accordance with § 1.704-1(b)(2)(iv) and liquidating distributions are required to be made in accordance with positive capital account balances), and requirement (*3*) of either § 1.704-1(b)(2)(ii)(*b*) or § 1.704-1(b)(2)(ii)(*d*) is satisfied (*i.e.,* partners with deficit capital accounts have an unconditional deficit restoration obligation or agree to a qualified income offset);

(2) Beginning in the first taxable year of the partnership in which there are nonrecourse deductions and thereafter throughout the full term of the partnership, the partnership agreement provides for allocations of nonrecourse deductions in a manner that is reasonably consistent with allocations that have substantial economic effect of some other significant partnership item attributable to the property securing the nonrecourse liabilities;

(3) Beginning in the first taxable year of the partnership that it has nonrecourse deductions or makes a distribution of proceeds of a nonrecourse liability that are allocable to an increase in partnership minimum gain, and thereafter throughout the full term of the partnership, the partnership agreement contains a provision that complies with the minimum gain chargeback requirement of paragraph (f) of this section; and

(4) All other material allocations and capital account adjustments under the partnership agreement are recognized under § 1.704-1(b) (without regard to whether allocations of adjusted tax basis and amount realized under section 613A(c)(7)(D) are recognized under § 1.704-1(b)(4)(v)).

(f) ***Minimum gain chargeback requirement*** —

(1) ***In general.*** If there is a net decrease in partnership minimum gain for a partnership taxable year, the minimum gain chargeback requirement applies and each partner must be allocated items of partnership income and gain for that year equal to that partner's share of the net decrease in partnership minimum gain (within the meaning of paragraph (g)(2)).

(2) ***Exception for certain conversions and refinancings.*** A partner is not subject to the minimum gain chargeback requirement to the extent the partner's share of the net decrease in partnership minimum gain is caused by a recharacterization of nonrecourse partnership debt as partially or wholly recourse debt or partner nonrecourse debt, and the partner bears the economic risk of loss (within the meaning of § 1.752-2) for the liability.

(3) ***Exception for certain capital contributions.*** A partner is not subject to the minimum gain chargeback requirement to the extent the partner contributes capital to the partnership that is used to repay the nonrecourse liability or is used to increase the basis of the property subject to the nonrecourse liability, and the partner's share of the net decrease in partnership minimum gain results from the repayment or the increase to the property's basis. See paragraph (m), *Example* (1)(iv) of this section.

(4) ***Waiver for certain income allocations that fail to meet minimum gain chargeback requirement if minimum gain chargeback distorts economic arrangement.*** In any taxable year that a partnership has a net decrease in partnership minimum gain, if the minimum gain chargeback requirement would cause a distortion in the economic arrangement among the partners and it is not expected that the partnership will have sufficient other income to correct that distortion, the Commissioner has the discretion, if requested by the partnership, to waive the minimum gain chargeback requirement. The following facts must be demonstrated in order for a request for a waiver to be considered:

(i) The partners have made capital contributions or received net income allocations that have restored the previous nonrecourse deductions and the distributions attributable to proceeds of a nonrecourse liability; and

(ii) The minimum gain chargeback requirement would distort the partners' economic arrangement as reflected in the partnership agreement and as evidenced over the term of the partnership by the partnership's allocations and distributions and the partners' contributions.

(5) ***Additional exceptions.*** The Commissioner may, by revenue ruling, provide additional exceptions to the minimum gain chargeback requirement.

(6) ***Partnership items subject to the minimum gain chargeback requirement.*** Any minimum gain chargeback required for a partnership taxable year consists first of a pro rata portion of certain gains recognized from the disposition of partnership property subject to one or more partnership nonrecourse liabilities and income from the discharge of indebtedness relating to one or more partnership nonrecourse liabilities to which partnership property is subject, and then, if necessary, consists of a pro rata portion of the partnership's other items of income and gain for that year. If the amount of the minimum gain chargeback requirement exceeds the partnership's income and gains for the taxable year, the excess carries over. See paragraphs (j)(2)(i) and (j)(2)(iii) of this section for more specific ordering rules.

(7) ***Examples.*** The following examples illustrate the provisions in § 1.704-2(f).

> *Example 1.* Partnership AB consists of two partners, limited partner A and general partner B. Partner A contributes $90 and Partner B contributes $10 to the partnership. The partnership agreement has a minimum gain chargeback provision and provides that, except as otherwise required by section 704(c), all losses will be allocated 90 percent to A and 10 percent to B; and that all income will be allocated first to restore previous losses and thereafter 50 percent to A and 50 percent to B. Distributions are made first to return initial capital to the partners and then 50 percent to A and 50 percent to B. Final distributions are made in accordance with

capital account balances. The partnership borrows $200 on a nonrecourse basis from an unrelated third party and purchases an asset for $300. The partnership's only tax item for each of the first three years in $100 of depreciation on the asset. A's and B's shares of minimum gain (under paragraph (g) of this section) and deficit capital account balances are $180 and $20 respectively at the end of the third year. In the fourth year, the partnership earns $400 of net operating income and allocates the first $300 to restore the previous losses (*i.e.,* $270 to A and $30 to B); the last $100 is allocated $50 each. The partnership distributes $200 of the available cash that same year; the first $100 is distributed $90 to A and $10 to B to return their capital contributions; the last $100 is distributed $50 each to reflect their ratio for sharing profits.

	A	B
Capital account on formation	$90	$10
Less: Net loss in years 1-3	($270)	($30)
Capital account at end of year 3	($180)	($20)
Allocation of operating income to restore nonrecourse deductions	$180	$20
Allocation of operating income to restore capital contributions	$90	$10
Allocation of operating income to reflect profits	$50	$50
Capital accounts after allocation of operating income	$140	$60
Distribution reflecting capital contribution	($90)	($10)
Distribution in profit-sharing ratio	($50)	($50)
Capital accounts following distribution	($0)	($0)

In the fifth year, the partnership sells the property for $300 and realizes $300 of gain. $200 of the proceeds are used to pay the nonrecourse lender. The partnership has $300 to distribute, and the partners expect to share that equally. Absent a waiver under paragraph (f)(4) of this section, the minimum gain chargeback would require the partnership to allocate the first $200 of the gain $180 to A and $20 to B, which would distort their economic arrangement. This allocation, together with the allocation of the $100 profit $50 to each partner, would result in A having a positive capital account balance of $230 and B having a positive capital account balance of $70. The allocation of income in year 4 in effect anticipated the minimum gain chargeback that did not occur until year 5. Assuming the partnership would not have sufficient other income to correct the distortion that would otherwise result, the partnership may request that the Commissioner exercise his or her discretion to waive the minimum gain chargeback requirement and recognize allocations that would allow A and B to share equally the gain on the sale of the property. These allocations would bring the partners' capital accounts to $150 each, allowing them to share the last $300 equally. The Commissioner may, in his or her discretion, permit this allocation pursuant to paragraph (f)(4) of this section

> because the minimum gain chargeback would distort the partners' economic arrangement over the term of the partnership as reflected in the partnership agreement and as evidenced by the partners' contributions and the partnership's allocations and distributions.

Example 2. A and B form a partnership, contribute $25 each to the partnership's capital, and agree to share all losses and profits 50 percent each. Neither partner has an unconditional deficit restoration obligation and all the requirements in paragraph (e) of this section are met. The partnership obtains a nonrecourse loan from an unrelated third party of $100 and purchases two assets, stock for $50 and depreciable property for $100. The nonrecourse loan is secured by the partnership's depreciable property. The partnership generates $20 of depreciation in each of the first five years as its only tax item. These deductions are properly treated as nonrecourse deductions and the allocation of these deductions 50 percent to A and 50 percent to B is deemed to be in accordance with the partners' interests in the partnership. At the end of year five, A and B each have a $25 deficit capital account and a $50 share of partnership minimum gain. In the beginning of year six, (at the lender's request), A guarantees the entire nonrecourse liability. Pursuant to paragraph (d)(1) of this section, the partnership has a net decrease in minimum gain of $100 and under paragraph (g)(2) of this section, A's and B's shares of that net decrease are $50 each. Under paragraph (f)(1) of this section (the minimum gain chargeback requirement), B is subject to a $50 minimum gain chargeback. Because the partnership has no gross income in year six, the entire $50 carries over as a minimum gain chargeback requirement to succeeding taxable years until their is enough income to cover the minimum gain chargeback requirement. Under the exception to the minimum gain chargeback in paragraph (f)(2) of this section, A is not subject to a minimum gain chargeback for A's $50 share of the net decrease because A bears the economic risk of loss for the liability. Instead, A's share of partner nonrecourse debt minimum gain is $50 pursuant to paragraph (i)(3) of this section. In year seven, the partnership earns $100 of net operating income and uses the money to repay the entire $100 nonrecourse debt (that A has guaranteed). Under paragraph (i)(3) of this section, the partnership has a net decrease in partner nonrecourse debt minimum gain of $50. B must be allocated $50 of the operating income pursuant to the carried over minimum gain chargeback requirement; pursuant to paragraph (i)(4) of this section, the other $50 of operating income must be allocated to A as a partner nonrecourse debt minimum gain chargeback.

(g) ***Shares of partnership minimum gain —***

(1) ***Partner's share of partnership minimum gain.*** Except as increased in paragraph (g) (3) of this section, a partner's share of partnership minimum gain at the end of any partnership taxable year equals:

(i) The sum of nonrecourse deductions allocated to that partner (and to that partner's predecessors in interest) up to that time and the distributions made to that partner (and to that partner's predecessors' in interest) up to that time of proceeds of a nonrecourse liability allocable to an increase in partnership minimum gain (see paragraph (h)(1) of this section); minus

(ii) The sum of that partner's (and that partner's predecessors' in interest) aggregate share of the net decreases in partnership minimum gain plus their aggregate share of decreases resulting from revaluations of partnership property subject to one or more partnership nonrecourse liabilities.

For purposes of § 1.704-1(b)(2)(ii)(*d*), a partner's share of partnership minimum gain is added to the limited dollar amount, if any, of the deficit balance in the partner's capital account that the partner is obligated to restore. See paragraph (m), *Examples* (1)(i) and (3)(i) of this section.

(2) ***Partner's share of the net decrease in partnership minimum gain.*** A partner's share of the net decrease in partnership minimum gain is the amount of the total net decrease multiplied by the partner's percentage share of the partnership's minimum gain at the end of the immediately preceding taxable year. A partner's share of any decrease in partnership minimum gain resulting from a revaluation of partnership property equals the increase in the partner's capital account attributable to the revaluation to the extent the reduction in minimum gain is caused by the revaluation. See paragraph (m), *Example* (3)(ii) of this section.

(3) ***Conversions of recourse or partner nonrecourse debt into nonrecourse debt.*** A partner's share of partnership minimum gain is increased to the extent provided in this paragraph (g)(3) if a recourse or partner nonrecourse liability becomes partially or wholly nonrecourse. If a recourse liability becomes a nonrecourse liability, a partner has a share of the partnership's minimum gain that results from the conversion equal to the partner's deficit capital account (determined under § 1.704-1(b)(2)(iv)) to the extent the partner no longer bears the economic burden for the entire deficit capital account as a result of the conversion. For purposes of the preceding sentence, the determination of the extent to which a partner bears the economic burden for a deficit capital account is made by determining the consequences to the partner in the case of a complete liquidation of the partnership immediately after the conversion applying the rules described in § 1.704-1(b)(2)(iii)(*c*) that deem the value of partnership property to equal its basis, taking into account section 7701(g) in the case of property that secures nonrecourse indebtedness. If a partner nonrecourse debt becomes a nonrecourse liability, the partner's share of partnership minimum gain is increased to the extent the partner is not subject to the minimum gain chargeback requirement under paragraph (i)(4) of this section.

(h) ***Distribution of nonrecourse liability proceeds allocable to an increase in partnership minimum gain*** —

(1) ***In general.*** If during its taxable year a partnership makes a distribution to the partners allocable to the proceeds of a nonrecourse liability, the distribution is allocable to an increase in partnership minimum gain to the extent the increase results from encumbering partnership property with aggregate nonrecourse liabilities that exceed the property's adjusted tax basis. See paragraph (m), *Example* (1)(vi) of this section. If the net increase in partnership minimum gain for a partnership taxable year is allocable to more than one nonrecourse liability, the net increase is allocated among the liabilities in proportion to the amount each liability contributed to the increase in minimum gain.

(2) ***Distribution allocable to nonrecourse liability proceeds.*** A partnership may use any reasonable method to determine whether a distribution by the partnership to one or more partners is allocable to proceeds of a nonrecourse liability. The rules prescribed under § 1.163-8T for allocating debt proceeds among expenditures (applying those rules to the partnership as if it were an individual) constitute a reasonable method for determining whether the nonrecourse liability proceeds are distributed to the partners and the partners to whom the proceeds are distributed.

(3) ***Option when there is an obligation to restore.*** A partnership may treat any distribution to a partner of the proceeds of a nonrecourse liability (that would otherwise be allocable to an increase in partnership minimum gain) as a distribution that is not allocable to an increase in partnership minimum gain to the extent the distribution does not cause or increase a deficit balance in the partner's capital account that exceeds the amount the partner is otherwise obligated to restore (within the meaning of § 1.704-1(b)(2)(ii)(*c*)) as of the end of the partnership taxable year in which the distribution occurs.

(4) ***Carryover to immediately succeeding taxable year.*** The carryover rule of this paragraph applies if the net increase in partnership minimum gain for a partnership taxable year that is allocable to a nonrecourse liability under paragraph (h)(2) of this section exceeds the distributions allocable to the proceeds of the liability ("excess allocable amount"), and all or part of the net increase in partnership minimum gain for the year is carried over as an increase in partnership minimum gain for the immediately succeeding taxable year (pursuant to paragraph (j)(1)(iii) of this section). If the carryover rule of this paragraph applies, the excess allocable amount (or the amount carried over under paragraph (j)(1)(iii) of this section, if less) is treated in the succeeding taxable year as an increase in partnership minimum gain that arose in that year as a result of incurring the nonrecourse liability to which the excess allocable amount is attributable. See paragraph (m), *Example* (1)(vi) of this section. If for a partnership taxable year there is an excess allocable amount with respect to more than one partnership nonrecourse liability, the excess allocable amount is allocated to each liability in proportion to the amount each liability contributed to the increase in minimum gain.

(i) ***Partnership nonrecourse liabilities where a partner bears the economic risk of loss*** —

(1) ***In general.*** Partnership losses, deductions, or section 705(a)(2)(B) expenditures that are attributable to a particular partner nonrecourse liability ("partner nonrecourse deductions," as defined in paragraph (i)(2) of this section) must be allocated to the partner that bears the economic risk of loss for the liability. If more than one partner bears the economic risk of loss for a partner nonrecourse liability, any partner nonrecourse deductions attributable to that liability must be allocated among the partners according to the ratio in which they bear the economic risk of loss. If partners bear the economic risk of loss for different portions of a liability, each portion is treated as a separate partner nonrecourse liability.

(2) ***Definition of and determination of partner nonrecourse deductions.*** For any partnership taxable year, the amount of partner nonrecourse deductions with respect to a partner nonrecourse debt equals the net increase during the year in minimum gain attributable to the partner nonrecourse debt ("partner nonrecourse debt minimum gain"), reduced (but not below zero) by proceeds of the liability distributed during the year to the partner bearing the economic risk of loss for the liability that are both attributable to the liability and allocable to an increase in the partner nonrecourse debt minimum gain. See paragraph (m), *Example* (1) (vii) and (viii) of this section. The determination of which partnership items constitute the partner nonrecourse deductions with respect to a partner nonrecourse debt must be made in a manner consistent with the provisions of paragraphs (c) and (j)(1) (i) and (iii) of this section.

(3) ***Determination of partner nonrecourse debt minimum gain.*** For any partnership taxable year, the determination of partner nonrecourse debt minimum gain and the net increase or decrease in partner nonrecourse debt minimum gain must be made in a manner consistent with the provisions of paragraphs (d) and (g)(3) of this section.

(4) ***Chargeback of partner nonrecourse debt minimum gain.*** If during a partnership taxable year there is a net decrease in partner nonrecourse debt minimum gain, any partner with a share of that partner nonrecourse debt minimum gain (determined under paragraph (i)(5) of this section) as of the beginning of the year must be allocated items of income and gain for the year (and, if necessary, for succeeding years) equal to that partner's share of the net decrease in the partner nonrecourse debt minimum gain. A partner's share of the net decrease in partner nonrecourse debt minimum gain is determined in a manner consistent with the provisions of paragraph (g)(2) of this section. A partner is not subject to this minimum gain chargeback, however, to the extent the net decrease in partner nonrecourse debt minimum gain arises because a partner nonrecourse liability becomes partially or

wholly a nonrecourse liability. The amount that would otherwise be subject to the partner nonrecourse debt minimum gain chargeback is added to the partner's share of partnership minimum gain under paragraph (g)(3) of this section. In addition, rules consistent with the provisions of paragraphs (f) (2), (3), (4), and (5) of this section apply with respect to partner nonrecourse debt in appropriate circumstances. The determination of which items of partnership income and gain must be allocated pursuant to this paragraph (i)(4) is made in a manner that is consistent with the provisions of paragraph (f)(6) of this section. See paragraph (j)(2) (ii) and (iii) of this section for more specific rules.

(5) ***Partner's share of partner nonrecourse debt minimum gain.*** A partner's share of partner nonrecourse debt minimum gain at the end of any partnership taxable year is determined in a manner consistent with the provisions of paragraphs (g)(1) and (g)(3) of this section with respect to each particular partner nonrecourse debt for which the partner bears the economic risk of loss. For purposes of § 1.704-1(b)(2)(ii)(*d*), a partner's share of partner nonrecourse debt minimum gain is added to the limited dollar amount, if any, of the deficit balance in the partner's capital account that the partner is obligated to restore, and the partner is not otherwise considered to have a deficit restoration obligation as a result of bearing the economic risk of loss for any partner nonrecourse debt. See paragraph (m), *Example* (1)(vii) of this section.

(6) ***Distribution of partner nonrecourse debt proceeds allocable to an increase in partner nonrecourse debt minimum gain.*** Rules consistent with the provisions of paragraph (h) of this section apply to distributions of the proceeds of partner nonrecourse debt.

(j) ***Ordering rules.*** For purposes of this section, the following ordering rules apply to partnership items. Notwithstanding any other provision in this section and § 1.704-1, allocations of partner nonrecourse deductions, nonrecourse deductions, and minimum gain chargebacks are made before any other allocations.

(1) ***Treatment of partnership losses and deductions.***

(i) ***Partner nonrecourse deductions.*** Partnership losses, deductions, and section 705(a)(2)(B) expenditures are treated as partner nonrecourse deductions in the amount determined under paragraph (i)(2) of this section (determining partner nonrecourse deductions) in the following order:

(A) First, depreciation or cost recovery deductions with respect to property that is subject to partner nonrecourse debt;

(B) Then, if necessary, a pro rata portion of the partnership's other deductions, losses, and section 705(a)(2)(B) items.

Depreciation or cost recovery deductions with respect to property that is subject to a partnership nonrecourse liability is first treated as a partnership nonrecourse deduction and any excess is treated as a partner nonrecourse deduction under this paragraph (j)(1)(i).

(ii) ***Partnership nonrecourse deductions.*** Partnership losses, deductions, and section 705(a)(2)(B) expenditures are treated as partnership nonrecourse deductions in the amount determined under paragraph (c) of this section (determining nonrecourse deductions) in the following order:

(A) First, depreciation or cost recovery deductions with respect to property that is subject to partnership nonrecourse liabilities;

(B) Then, if necessary, a pro rata portion of the partnership's other deductions, losses, and section 705(a)(2)(B) items.

Depreciation or cost recovery deductions with respect to property that is subject to partner nonrecourse debt is first treated as a partner nonrecourse deduction and any excess is treated as a partnership nonrecourse deduction under this paragraph (j)(1)(ii). Any other item that is treated as a partner nonrecourse deduction will in no event be treated as a partnership nonrecourse deduction.

(iii) ***Carryover to succeeding taxable year.*** If the amount of partner nonrecourse deductions or nonrecourse deductions exceeds the partnership's losses, deductions, and section 705(a)(2)(B) expenditures for the taxable year (determined under paragraphs (j)(1) (i) and (ii) of this section), the excess is treated as an increase in partner nonrecourse debt minimum gain or partnership minimum gain in the immediately succeeding partnership taxable year. See paragraph (m), *Example* (1)(vi) of this section.

(2) ***Treatment of partnership income and gains.***

(i) ***Minimum gain chargeback.*** Items of partnership income and gain equal to the minimum gain chargeback requirement (determined under paragraph (f) of this section) are allocated as a minimum gain chargeback in the following order:

(A) First, a pro rata portion of gain from the disposition of property subject to partnership nonrecourse liabilities and discharge of indebtedness income relating to partnership nonrecourse liabilities to which property is subject;

(B) Then, if necessary, a pro rata portion of the partnership's other items of income and gain for that year.

Gain from the disposition of property subject to partner nonrecourse debt is allocated to satisfy a minimum gain chargeback requirement for partnership nonrecourse debt only to the extent not allocated under paragraph (j)(2)(ii) of this section.

(ii) ***Chargeback attributable to decrease in partner nonrecourse debt minimum gain.*** Items of partnership income and gain equal to the partner nonrecourse debt minimum gain chargeback (determined under paragraph (i)(4) of this section) are allocated to satisfy a partner nonrecourse debt minimum gain chargeback in the following order:

(A) First, a pro rata portion of gain from the disposition of property subject to partner nonrecourse debt and discharge of indebtedness income relating to partner nonrecourse debt to which property is subject.

(B) Then, if necessary, a pro rata portion of the partnership's other items of income and gain for that year.

Gain from the disposition of property subject to a partnership nonrecourse liability is allocated to satisfy a partner nonrecourse debt minimum gain chargeback only to the extent not allocated under paragraph (j)(2)(i) of this section. An item of partnership income and gain that is allocated to satisfy a minimum gain chargeback under paragraph (f) of this section is not allocated to satisfy a minimum gain chargeback under paragraph (i)(4).

(iii) ***Carryover to succeeding taxable year.*** If a minimum gain chargeback requirement (determined under paragraphs (f) and (i)(4) of this section) exceeds the partnership's income and gains for the taxable year, the excess is treated as a minimum gain chargeback requirement in the immediately succeeding partnership taxable years until fully charged back.

(k) ***Tiered partnerships.*** For purposes of this section, the following rules determine the effect on partnership minimum gain when a partnership ("upper-tier partnership") is a partner in another partnership ("lower-tier partnership").

(1) ***Increase in upper-tier partnership's minimum gain.*** The sum of the nonrecourse deductions that the lower-tier partnership allocates to the upper-tier partnership for any taxable year of the upper-tier partnership, and the distributions made during that taxable year from the lower-tier partnership to the upper-tier partnership of proceeds of nonrecourse debt that are allocable to an increase in the lower-tier partnership's minimum gain, is treated as an increase in the upper-tier partnership's minimum gain.

(2) ***Decrease in upper-tier partnership's minimum gain.*** The upper-tier partnership's share for its taxable year of the lower-tier partnership's net decrease in its minimum gain is treated as a decrease in the upper-tier partnership's minimum gain for that taxable year.

(3) ***Nonrecourse debt proceeds distributed from the lower-tier partnership to the upper-tier partnership.*** All distributions from the lower-tier partnership to the upper-tier partnership during the upper-tier partnership's taxable year of proceeds of a nonrecourse liability allocable to an increase in the lower-tier partnership's minimum gain are treated as proceeds of a nonrecourse liability of the upper-tier partnership. The increase in the upper-tier partnership's minimum gain (under paragraph (k)(1) of this section) attributable to the receipt of those distributions is, for purposes of paragraph (h) of this section, treated as an increase in the upper-tier partnership's minimum gain arising from encumbering property of the upper-tier partnership with a nonrecourse liability of the upper-tier partnership.

(4) ***Nonrecourse deductions of lower-tier partnership treated as depreciation by upper-tier partnership.*** For purposes of paragraph (c) of this section, all nonrecourse deductions allocated by the lower-tier partnership to the upper-tier partnership for the upper-tier partnership's taxable year are treated as depreciation or cost recovery deductions with respect to property owned by the upper-tier partnership and subject to a nonrecourse liability of the upper-tier partnership with respect to which minimum gain increased during the year by the amount of the nonrecourse deductions.

(5) ***Coordination with partner nonrecourse debt rules.*** The lower-tier partnership's liabilities that are treated as the upper-tier partnership's liabilities under § 1.752-4(a) are treated as the upper-tier partnership's liabilities for purposes of applying paragraph (i) of this section. In addition, for purposes of applying paragraph (i) of this section, the upper-tier partnership is treated as bearing the economic risk of loss for the lower-tier partnership's liabilities that are treated as the upper-tier partnership's liabilities under § 1.752-4(a). Rules consistent with the provisions of paragraphs (k)(1) through (k)(4) of this section apply to determine the allocations that the upper-tier partnership must make with respect to any liability that constitutes a nonrecourse debt for which one or more partners of the upper-tier partnership bear the economic risk of loss.

(l) ***Effective/applicability dates —***

(1) ***In general —***

(i) ***Prospective application.*** Except as otherwise provided in this paragraph (l), this section applies for partnership taxable years beginning on or after December 28, 1991. For the rules applicable to taxable years beginning after December 29, 1988, and before December 28, 1991, see former § 1.704-1T(b)(4)(iv). For the rules applicable to taxable years beginning on or before December 29, 1988, see former § 1.704-1(b)(4)(iv).

(ii) ***Partnerships subject to temporary regulations.*** If a partnership agreement entered into after December 29, 1988, and before December 28, 1991, or a partnership agreement entered into on or before December 29, 1988, that elected to apply former § 1.704-1T(b)(4)(iv) (as contained in the CFR edition revised as of April 1, 1991), complied with the provisions of former § 1.704-1T(b)(4)(iv) before December 28, 1991—

(A) The provisions of former § 1.704-1T(b)(4)(iv) continue to apply to the partnership for any taxable year beginning on or after December 28, 1991, (unless the partnership makes an election under paragraph (l)(4) of this section) and ending before any subsequent material modification to the partnership agreement; and

(B) The provisions of this section do not apply to the partnership for any of those taxable years.

(iii) ***Partnerships subject to former regulations.*** If a partnership agreement entered into on or before December 29, 1988, complied with the provisions of former § 1.704-1(b)(4)(iv)(*d*) on or before that date—

(A) The provisions of former § 1.704-1(b)(4)(iv) (*a*) through (*f*) continue to apply to the partnership for any taxable year beginning after that date (unless the partnership made an election under § 1.704-1T(b)(4)(iv)(*m*)(*4*) in a partnership taxable year ending before December 28, 1991, or makes an election under paragraph (l)(4) of this section) and ending before any subsequent material modification to the partnership agreement; and

(B) The provisions of this section do not apply to the partnership for any of those taxable years.

(iv) Paragraph (f)(2), the first sentence of paragraph (g)(3), and the third sentence of paragraph (i)(4) of this section apply to liabilities incurred or assumed by a partnership on or after October 11, 2006 other than liabilities incurred or assumed by a partnership pursuant to a written binding contract in effect prior to October 11, 2006. The rules applicable to liabilities incurred or assumed (or subject to a binding contract in effect) prior to October 11, 2006 are contained in this section in effect prior to October 11, 2006. (See 26 CFR part 1 revised as of April 1, 2006.)

(v) The first sentence of paragraph (f)(6) of this section and paragraphs (j)(2)(i)(A) and (j)(2)(ii)(A) of this section apply on and after November 17, 2011.

(vi) The second sentence of paragraph (k)(5) of this section applies on or after *December 2, 2024.*

(2) ***Special rule applicable to pre-January 30, 1989, related party nonrecourse debt.*** For purposes of this section and former § 1.704-1T(b)(4)(iv), if—

(i) A partnership liability would, but for this paragraph (l)(2) of this section, constitute a partner nonrecourse debt; and

(ii) Sections 1.752-1 through 1.752-3 or former §§ 1.752-1T through -3T (whichever is applicable) do not apply to the liability;

the liability is, notwithstanding paragraphs (i) and (b)(4) of this section, treated as a nonrecourse liability of the partnership, and not as a partner nonrecourse debt, to the extent the liability would be so treated under this section (or § 1.704-1T(b)(4)(iv)) if the determination of the extent to which one or more partners bears the economic risk of loss for the liability under § 1.752-1 or former § 1.752-1T were made without regard to the economic risk of loss that any partner would otherwise be considered to bear for the liability by reason of any obligation undertaken or interest as a creditor acquired prior to January 30, 1989, by a person related to the partner (within the meaning of § 1.752-4(b) or former § 1.752-1T(h)). For purposes of the preceding sentence, if a related person undertakes an obligation or acquires an interest as a creditor on or after January 30, 1989, pursuant to a written binding contract in effect prior to January 30, 1989, and at all times thereafter, the obligation or interest as a creditor is treated as if it were undertaken or acquired prior to January 30, 1989. However, for partnership taxable years beginning on or after December 29, 1988, a pre-January 30, 1989, liability, other than a liability subject to paragraph (l)(3) of this section or former § 1.704-1T(b)(4)(iv)(*m*)(*3*) (whichever is applicable), that is treated as grandfathered under former §§ 1.752-1T through -3T (whichever is applicable) will be treated as a nonrecourse liability for purposes of this section provided that all partners in the partnership consistently treat the liability as nonrecourse for partnership taxable years beginning on or after December 29, 1988.

(3) ***Transition rule for pre-March 1, 1984, partner nonrecourse debt.*** If a partnership liability would, but for this paragraph (l)(3) or former § 1.704-1T(b)(4)(iv), constitute a partner nonrecourse debt and the liability constitutes grandfathered partner nonrecourse debt that is appropriately treated as a nonrecourse liability of the partnership under § 1.752-1 (as in effect prior to December 29, 1988)—

(i) The liability is, notwithstanding paragraphs (i) and (b)(4) of this section, former § 1.704-1T(b)(4)(iv), and former § 1.704-1(b)(4)(iv), treated as a nonrecourse liability of the partnership for purposes of this section and for purposes of former § 1.704-1T(b)(4)(iv) and former § 1.704-1(b)(4)(iv) to the extent of the amount, if any, by which the smallest outstanding balance of the liability during the period beginning at the end of the first partnership taxable year ending on or after December 31, 1986, and ending at the time of any determination under this paragraph (l)(3)(i) or former § 1.704-1T(b)(4)(iv)(*m*)(*3*)(*i*) exceeds the aggregate amount of the adjusted basis (or book value) of partnership property allocable to the liability (determined in accordance with former § 1.704-1(b)(4)(iv)(*c*) (*1*) and (*2*) at the end of the first partnership taxable year ending on or after December 31, 1986); and

(ii) In applying this section to the liability, former § 1.704-1(b)(4)(iv)(*c*) (*1*) and (*2*) is applied as if all of the adjusted basis of partnership property allocable to the liability is allocable to the portion of the liability that is treated as a partner nonrecourse debt and as if none of the adjusted basis of partnership property that is allocable to the liability is allocable to the portion of the liability that is treated as a nonrecourse liability under this paragraph (l)(3) and former § 1.704-1T (b)(4)(iv)(*m*)(*3*)(*i*).

For purposes of the preceding sentence, a grandfathered partner debt is any partnership liability that was not subject to former §§ 1.752-1T and -3T but that would have been subject to those sections under § 1.752-4T(b) if the liability had arisen (other than pursuant to a written binding contract) on or after March 1, 1984. A partnership liability is not considered to have been subject to §§ 1.752-2T and -3T solely because a portion of the liability was treated as a liability to which those sections apply under § 1.752-4(e).

(4) ***Election.*** A partnership may elect to apply the provisions of this section to the first taxable year of the partnership ending on or after December 28, 1991. An election under this paragraph (l)(4) is made by attaching a written statement to the partnership return for the first taxable year of the partnership ending on or after December 28, 1991. The written statement must include the name, address, and taxpayer identification number of the partnership making the statement and must declare that an election is made under this paragraph (l)(4).

(m) ***Examples.*** The principles of this section are illustrated by the following examples:

Example 1. Nonrecourse deductions and partnerships minimum gain. For *Example 1,* unless otherwise provided, the following facts are assumed. LP, the limited partner, and GP, the general partner, form a limited partnership to acquire and operate a commercial office building. LP contributes $180,000, and GP contributes $20,000. The partnership obtains an $800,000 nonrecourse loan and purchases the building (on leased land) for $1,000,000. The nonrecourse loan is secured only by the building, and no principal payments are due for 5 years. The partnership agreement provides that GP will be required to restore any deficit balance in GP's capital account following the liquidation of GP's interest (as set forth in § 1.704-1 (b) (2)(ii)(*b*)(*3*)), and LP will not be required to restore any deficit balance in LP's capital account following the liquidation of LP's interest. The partnership agreement contains the following provisions required by paragraph (e) of this section: a qualified income offset (as defined in § 1.704-1(b)(2)(ii)(*d*)); a minimum gain chargeback (in accordance with paragraph (f) of this section); a provision that the partners' capital accounts will be determined and maintained in accordance with § 1.704-1(b)(2)(ii)(*b*)(*1*); and a provision that distributions will be made in accordance with partners' positive capital account balances (as set forth in § 1.704-1(b)(2)(ii)(*b*)(*2*)). In addition, as of the end of each partnership taxable year discussed herein, the items described in § 1.704-1(b)(2)(ii)(*d*) (*4*), (*5*), and (*6*) are not reasonably expected to cause or increase a deficit balance in LP's capital account. The partnership agreement provides that, except as otherwise required by its qualified income offset and minimum gain chargeback provisions, all partnership items will be allocated 90 percent to LP and 10 percent to GP until the first time when the partnership has recognized items of income and gain that exceed the items of loss and deduction it has recognized over its life, and all further partnership items will be allocated equally between LP and GP. Finally, the partnership agreement provides that all distributions, other than distributions in liquidation of the partnership or of a partner's interest in the partnership, will be made 90 percent to LP and 10 percent to GP until a total of $200,000 has been distributed, and thereafter all the distributions will be made equally to LP and GP. In each of the partnership's first 2 taxable years, it generates rental income of $95,000, operating expenses (including land lease payments) of $10,000, interest expense of $80,000, and a depreciation deduction of $90,000, resulting in a net taxable loss of $85,000 in each of those years. The allocations of these losses 90 per percent to LP and 10 percent to GP have substantial economic effect.

	LP	GP
Capital account on formation	$180,000	$20,000

	LP	GP
Less: net loss in years 1 and 2	(153,000)	(17,000)
Capital account at end of year 2	$27,000	$3,000

In the partnership's third taxable year, it again generates rental income of $95,000, operating expenses of $10,000, interest expense of $80,000, and a depreciation deduction of $90,000, resulting in net taxable loss of $85,000. The partnership makes no distributions.

(i) *Calculation of nonrecourse deductions and partnership minimum gain.* If the partnership were to dispose of the building in full satisfaction of the nonrecourse liability at the end of the third year, it would realize $70,000 of gain ($800,000 amount realized less $730,000 adjusted tax basis). Because the amount of partnership minimum gain at the end of the third year (and the net increase in partnership minimum gain during the year) is $70,000, there are partnership nonrecourse deductions for that year of $70,000, consisting of depreciation deductions allowable with respect to the building of $70,000. Pursuant to the partnership agreement, all partnership items comprising the net taxable loss of $85,000, including the $70,000 nonrecourse deduction, are allocated 90 percent to LP and 10 percent to GP. The allocation of these items, other than the nonrecourse deductions, has substantial economic effect.

	LP	GP
Capital account at end of year 2	$27,000	$3,000
Less: net loss in year 3 (without nonrecourse deductions)	(13,500)	(1,500)
Less: nonrecourse deductions in year 3	(63,000)	(7,000)
Capital account at end of year 3	($49,500)	($5,500)

The allocation of the $70,000 nonrecourse deduction satisfies requirement (2) of paragraph (e) of this section because it is consistent with allocations having substantial economic effect of other significant partnership items attributable to the building. Because the remaining requirements of paragraph (e) of this section are satisfied, the allocation of nonrecourse deductions is deemed to be in accordance with the partners' interests in the partnership. At the end of the partnership's third taxable year, LP's and GP's shares of partnership minimum gain are $63,000 and $7,000, respectively. Therefore, pursuant to paragraph (g)(1) of this section, LP is treated as obligated to restore a deficit capital account balance of $63,000, so that in the succeeding year LP could be allocated up to an additional $13,500 of partnership deductions, losses, and section 705(a)(2)(B) items that are not nonrecourse deductions. Even though this allocation would increase a deficit capital account balance, it would be considered to have economic effect under the alternate economic effect test contained in § 1.704-1(b)(2)(ii)(*d*). If the partnership were

to dispose of the building in full satisfaction of the nonrecourse liability at the beginning of the partnership's fourth taxable year (and had no other economic activity in that year), the partnership minimum gain would be decreased from $70,000 to zero, and the minimum gain chargeback would require that LP and GP be allocated $63,000 and $7,000, respectively, of the gain from that disposition.

(ii) *Illustration of reasonable consistency requirement.* Assume instead that the partnership agreement provides that all nonrecourse deductions of the partnership will be allocated equally between LP and GP. Furthermore, at the time the partnership agreement is entered into, there is a reasonable likelihood that over the partnership's life it will realize amounts of income and gain significantly in excess of amounts of loss and deduction (other than nonrecourse deductions). The equal allocation of excess income and gain has substantial economic effect.

	LP	GP
Capital account on formation	$180,000	$20,000
Less: net loss in years 1 and 2	(153,000)	(17,000)
Less: net loss in year (without nonrecourse deductions)	(13,500)	(1,500)
Less: nonrecourse deductions in year 3	(35,000)	(35,000)
Capital account at end of year 3	($21,500)	($33,500)

The allocation of the $70,000 nonrecourse deduction equally between LP and GP satisfies requirement (2) of paragraph (e) of this section because the allocation is consistent with allocations, which will have substantial economic effect, of other significant partnership items attributable to the building. Because the remaining requirements of paragraph (e) of this section are satisfied, the allocation of nonrecourse deductions is deemed to be in accordance with the partners' interests in the partnership. The allocation of the nonrecourse deductions 75 percent to LP and 25 percent to GP (or in any other ratio between 90 percent to LP/10 percent to GP and 50 percent to LP/50 percent to GP) also would satisfy requirement (2) of paragraph (e) of this section.

(iii) *Allocation of nonrecourse deductions that fails reasonable consistency requirement.* Assume instead that the partnership agreement provides that LP will be allocated 99 percent, and GP 1 percent, of all nonrecourse deductions of the partnership. Allocating nonrecourse deductions this way does not satisfy requirement (2) of paragraph (e) of this section because the allocations are not reasonably consistent with allocations, having substantial economic effect, of any other significant partnership item attributable to the building. Therefore, the allocation of nonrecourse deductions will be disregarded, and the nonrecourse deductions of the partnership will be reallocated according to the partners' overall economic interests in the partnership, determined under § 1.704-1(b)(3)(ii).

(iv) *Capital contribution to pay down nonrecourse debt.* At the beginning of the partnership's fourth taxable year, LP contributes $144,000 and GP contributes $16,000 of addition capital to the partnership, which the partnership immediately uses to reduce the amount of its nonrecourse liability from $800,000 to $640,000. In addition, in the partnership's fourth taxable year, it generates rental income of $95,000, operating expenses of $10,000, interest expense of $64,000 (consistent with the debt reduction), and a depreciation deduction of $90,000, resulting in a net taxable loss of $69,000. If the partnership were to dispose of the building in full satisfaction of the nonrecourse liability at the end of that year, it would realize no gain ($640,000 amount realized less $640,000 adjusted tax basis). Therefore, the amount of partnership minimum gain at the end of the year is zero, which represents a net decrease in partnership minimum gain of $70,000 during the year. LP's and GP's shares of this net decrease are $63,000 and $7,000 respectively, so that at the end of the partnership's fourth taxable year, LP's and GP's shares of partnership minimum gain are zero. Although there has been a net decrease in partnership minimum gain, pursuant to paragraph (f)(3) of this section LP and GP are not subject to a minimum gain chargeback.

	LP	GP
Capital account at end of year 3	($49,500)	($5,500)
Plus: contribution	144,000	16,000
Less: net loss in year 4	(62,100)	(6,900)
Capital account at end of year 4	$32,400	$3,600
Minimum gain chargeback carryforward	$0	$0

(v) *Loans of unequal priority.* Assume instead that the building acquired by the partnership is secured by a $700,000 nonrecourse loan and a $100,000 recourse loan, subordinate in priority to the nonrecourse loan. Under paragraph (d)(2) of this section, $700,000 of the adjusted basis of the building at the end of the partnership's third taxable year is allocated to the nonrecourse liability (with the remaining $30,000 allocated to the recourse liability) so that if the partnership disposed of the building in full satisfaction of the nonrecourse liability at the end of that year, it would realize no gain ($700,000 amount realized less $700,000 adjusted tax basis). Therefore, there is no minimum gain (or increase in minimum gain) at the end of the partnership's third taxable year. If, however, the $700,000 nonrecourse loan were subordinate in priority to the $100,000 recourse loan, under paragraph (d)(2) of this section, the first $100,000 of adjusted tax basis in the building would be allocated to the recourse liability, leaving only $630,000 of the adjusted basis of the building to be allocated to the $700,000 nonrecourse loan. In that case, the balance of the $700,000 nonrecourse liability would exceed the adjusted tax basis of the building by $70,000, so that there would be $70,000 of minimum gain (and a $70,000 increase in partnership minimum gain) in the partnership's third taxable year.

(vi) *Nonrecourse borrowing; distribution of proceeds in subsequent year.* The partnership obtains an additional nonrecourse loan of $200,000 at the end of its fourth taxable year, secured by a second mortgage on the building, and distributes $180,000 of this cash to its partners at the beginning of its fifth

taxable year. In addition, in its fourth and fifth taxable years, the partnership again generates rental income of $95,000, operating expenses of $10,000, interest expense of $80,000 ($100,000 in the fifth taxable year reflecting the interest paid on both liabilities), and a depreciation deduction of $90,000, resulting in a net taxable loss of $85,000 ($105,000 in the fifth taxable year reflecting the interest paid on both liabilities). The partnership has distributed its $5,000 of operating cash flow in each year ($95,000 of rental income less $10,000 of operating expense and $80,000 of interest expense) to LP and GP at the end of each year. If the partnership were to dispose of the building in full satisfaction of both nonrecourse liabilities at the end of its fourth taxable year, the partnership would realize $360,000 of gain ($1,000,000 amount realized less $640,000 adjusted tax basis). Thus, the net increase in partnership minimum gain during the partnership's fourth taxable year is $290,000 ($360,000 of minimum gain at the end of the fourth year less $70,000 of minimum gain at the end of the third year). Because the partnership did not distribute any of the proceeds of the loan it obtained in its fourth year during that year, the potential amount of partnership nonrecourse deductions for that year is $290,000. Under paragraph (c) of this section, if the partnership had distributed the proceeds of that loan to its partners at the end of its fourth year, the partnership's nonrecourse deductions for that year would have been reduced by the amount of that distribution because the proceeds of that loan are allocable to an increase in partnership minimum gain under paragraph (h)(1) of this section. Because the nonrecourse deductions of $290,000 for the partnership's fourth taxable year exceed its total deductions for that year, all $180,000 of the partnership's deductions for that year are treated as nonrecourse deductions, and the $110,000 excess nonrecourse deductions are treated as an increase in partnership minimum gain in the partnership's fifth taxable year under paragraph (c) of this section.

	LP	GP
Capital account at end of year 3 (including cash flow distributions)	($63,000)	($7,000)
Plus: rental income in year 4	85,500	9,500
Less: nonrecourse deductions in year 4	(162,000)	(18,000)
Less: cash flow distributions in year 4	(4,500)	(500)
Capital account at end of year 4	($144,000)	($16,000)

At the end of the partnership's fourth taxable year, LP's and GP's shares of partnership minimum gain are $225,000 and $25,000, respectively (because the $110,000 excess of nonrecourse deductions is carried forward to the next year). If the partnership were to dispose of the building in full satisfaction of the nonrecourse liabilities at the end of its fifth taxable year, the partnership would realize $450,000 of gain ($1,000,000 amount realized less $550,000 adjusted tax basis). Therefore, the net increase in partnership minimum gain during the partnership's fifth taxable year is $200,000 ($110,000 deemed increase plus the $90,000 by which minimum gain at the end of the fifth year exceeds minimum gain at the end of the fourth year ($450,000 less $360,000)). At the beginning of its fifth year, the partnership distributes $180,000 of the loan proceeds (retaining $20,000 to pay the additional interest expense). Under paragraph (h) of this

section, the first $110,000 of this distribution (an amount equal to the deemed increase in partnership minimum gain for the year) is considered allocable to an increase in partnership minimum gain for the year. As a result, the amount of nonrecourse deductions for the partnership's fifth taxable year is $90,000 ($200,000 net increase in minimum gain less $110,000 distribution of nonrecourse liability proceeds allocable to an increase in partnership minimum gain), and the nonrecourse deductions consist solely of the $90,000 depreciation deduction allowable with respect to the building. As a result of the distributions during the partnership's fifth taxable year, the total distributions to the partners over the partnership's life equal $205,000. Therefore, the last $5,000 distributed to the partners during the fifth year will be divided equally between them under the partnership agreement. Thus, out of the $185,000 total distribution during the partnership's fifth taxable year, the first $180,000 is distributed 90 percent to LP and 10 percent to GP, and the last $5,000 is divided equally between them.

	LP	GP
Capital account at end of year 4	($144,000)	($16,000)
Less: net loss in year 5 (without nonrecourse deductions)	(13,500)	(1,500)
Less: nonrecourse deductions in year 5	(81,000)	(9,000)
Less: distribution of loan proceeds	(162,000)	(18,000)
Less: cash flow distribution in year 5	(2,500)	(2,500)
Capital account at end of year 5	($403,000)	($47,000)

At the end of the partnership's fifth taxable year, LP's share of partnership minimum gain is $405,000 ($225,000 share of minimum gain at the end of the fourth year plus $81,000 of nonrecourse deductions for the fifth year and a $99,000 distribution of nonrecourse liability proceeds that are allocable to an increase in minimum gain) and GP's share of partnership minimum gain is $45,000 ($25,000 share of minimum gain at the end of the fourth year plus $9,000 of nonrecourse deductions for the fifth year and an $11,000 distribution of nonrecourse liability proceeds that are allocable to an increase in minimum gain).

(vii) *Partner nonrecourse debt.* Assume instead that the $800,000 loan is made by LP, the limited partner. Under paragraph (b)(4) of this section, the $800,000 obligation does not constitute a nonrecourse liability of the partnership for purposes of this section because LP, a partner, bears the economic risk of loss for that loan within the meaning of § 1.752-2. Instead, the $800,000 loan constitutes a partner nonrecourse debt under paragraph (b)(4) of this section. In the partnership's third taxable year, partnership minimum gain would have increased by $70,000 if the debt were a nonrecourse liability of the partnership. Thus, under paragraph (i)(3) of this section, there is a net increase of $70,000 in the minimum gain attributable to the $800,000 partner nonrecourse debt for the partnership's third taxable year, and $70,000 of the $90,000 depreciation deduction from the building for the partnership's third taxable year constitutes a partner nonrecourse deduction with respect to the debt. See paragraph (i)(4) of this section. Under paragraph (i)(2) of this section, this partner nonrecourse deduction must be allocated to LP, the partner that bears the

economic risk of loss for that liability.
(viii) *Nonrecourse debt and partner nonrecourse debt of differing priorities.* As in *Example* 1 (vii) of this paragraph (m), the $800,000 loan is made to the partnership by LP, the limited partner, but the loan is a purchase money loan that "wraps around" a $700,000 underlying nonrecourse note (also secured by the building) issued by LP to an unrelated person in connection with LP's acquisition of the building. Under these circumstances, LP bears the economic risk of loss with respect to only $100,000 of the liability within the meaning of § 1.752-2. See § 1.752-2(f) (*Example* 6). Therefore, for purposes of paragraph (d) of this section, the $800,000 liability is treated as a $700,000 nonrecourse liability of the partnership and a $100,000 partner nonrecourse debt (inferior in priority to the $700,000 liability) of the partnership for which LP bears the economic risk of loss. Under paragraph (i)(2) of this section, $70,000 of the $90,000 depreciation deduction realized in the partnership's third taxable year constitutes a partner nonrecourse deduction that must be allocated to LP.

Example 2. Netting of increases and decreases in partnership minimum gain. For *Example* 2 unless otherwise provided, the following facts are assumed. X and Y form a general partnership to acquire and operate residential real properties. Each partner contributes $150,000 to the partnership. The partnership obtains a $1,500,000 nonrecourse loan and purchases 3 apartment buildings (on leased land) for $720,000 ("Property A"), $540,000 ("Property B"), and $540,000 ("Property C"). The nonrecourse loan is secured only by the 3 buildings, and no principal payments are due for 5 years. In each of the partnership's first 3 taxable years, it generates rental income of $225,000, operating expenses (including land lease payments) of $50,000, interest expense of $175,000, and depreciation deductions on the 3 properties of $150,000 ($60,000 on Property A and $45,000 on each of Property B and Property C), resulting in a net taxable loss of $150,000 in each of those years. The partnership makes no distributions to X or Y.
(i) *Calculation of net increases and decreases in partnership minimum gain.* If the partnership were to dispose of the 3 apartment buildings in full satisfaction of its nonrecourse liability at the end of its third taxable year, it would realize $150,000 of gain ($1,500,000 amount realized less $1,350,000 adjusted tax basis). Because the amount of partnership minimum gain at the end of that year (and the net increase in partnership minimum gain during that year) is $150,000, the amount of partnership nonrecourse deductions for that year is $150,000, consisting of depreciation deductions allowable with respect to the 3 apartment buildings of $150,000. The result would be the same if the partnership obtained 3 separate nonrecourse loans that were "cross-collateralized" (*i.e.,* if each separate loan were secured by all 3 of the apartment buildings).

(ii) *Netting of increases and decreases in partnership minimum gain when there is a disposition.* At the beginning of the partnership's fourth taxable year, the partnership (with the permission of the nonrecourse lender) disposes of Property A for $835,000 and uses a portion of the proceeds to repay $600,000 of the nonrecourse liability (the principal amount attributable to Property A), reducing the balance to $900,000. As a result of the disposition, the partnership realizes gain of $295,000 ($835,000 amount realized less $540,000 adjusted tax basis). If the disposition is viewed in isolation, the partnership has generated minimum gain of $60,000 on the sale of Property A ($600,000 of debt reduction less $540,000 adjusted tax basis). However, during the partnership's fourth taxable year it also generates rental income of $135,000,

operating expenses of $30,000, interest expense of $105,000, and depreciation deductions of $90,000 ($45,000 on each remaining building). If the partnership were to dispose of the remaining two buildings in full satisfaction of its nonrecourse liability at the end of the partnership's fourth taxable year, it would realize gain of $180,000 ($900,000 amount realized less $720,000 aggregate adjusted tax basis), which is the amount of partnership minimum gain at the end of the year. Because the partnership minimum gain increased from $150,000 to $180,000 during the partnership's fourth taxable year, the amount of partnership nonrecourse deductions for that year is $30,000, consisting of a ratable portion of depreciation deductions allowable with respect to the two remaining apartment buildings. No minimum gain chargeback is required for the taxable year, even though the partnership disposed of one of the properties subject to the nonrecourse liability during the year, because there is no net decrease in partnership minimum gain for the year. See paragraph (f)(1) of this section.

Example 3. Nonrecourse deductions and partnership minimum gain before third partner is admitted. For purposes of *Example 3,* unless otherwise provided, the following facts are assumed. Additional facts are given in each of *Examples 3* (ii), (iii), and (iv). A and B form a limited partnership to acquire and lease machinery that is 5-year recovery property. A, the limited partner, and B, the general partner, contribute $100,000 each to the partnership, which obtains an $800,000 nonrecourse loan and purchases the machinery for $1,000,000. The nonrecourse loan is secured only by the machinery. The principal amount of the loan is to be repaid $50,000 per year during each of the partnership's first 5 taxable years, with the remaining $550,000 of unpaid principal due on the first day of the partnership's sixth taxable year. The partnership agreement contains all of the provisions required by paragraph (e) of this section, and, as of the end of each partnership taxable year discussed herein, the items described in § 1.704-1(b)(2)(ii)(*d*) (*4*), (*5*), and (*6*) are not reasonably expected to cause or increase a deficit balance in A's or B's capital account. The partnership agreement provides that, except as otherwise required by its qualified income offset and minimum gain chargeback provisions, all partnership items will be allocated equally between A and B. Finally, the partnership agreement provides that all distributions, other than distributions in liquidation of the partnership or of a partner's interest in the partnership, will be made equally between A and B. In the partnership's first taxable year it generates rental income of $130,000, interest expense of $80,000, and a depreciation deduction of $150,000, resulting in a net taxable loss of $100,000. In addition, the partnership repays $50,000 of the nonrecourse liability, reducing that liability to $750,000. Allocations of these losses equally between A and B have substantial economic effect.

	A	B
Capital account on formation	$100,000	$100,000
Less: net loss in year 1	(50,000)	(50,000)

	A	B
Capital account at end of year 1	$50,000	$50,000

In the partnership's second taxable year, it generates rental income of $130,000, interest expense of $75,000, and a depreciation deduction of $220,000, resulting in a net taxable loss of $165,000. In addition, the partnership repays $50,000 of the nonrecourse liability, reducing that liability to $700,000, and distributes $2,500 of cash to each partner. If the partnership were to dispose of the machinery in full satisfaction of the nonrecourse liability at the end of that year, it would realize $70,000 of gain ($700,000 amount realized less $630,000 adjusted tax basis). Therefore, the amount of partnership minimum gain at the end of that year (and the net increase in partnership minimum gain during the year) is $70,000, and the amount of partnership nonrecourse deductions for the year is $70,000. The partnership nonrecourse deductions for its second taxable year consist of $70,000 of the depreciation deductions allowable with respect to the machinery. Pursuant to the partnership agreement, all partnership items comprising the net taxable loss of $165,000, including the $70,000 nonrecourse deduction, are allocated equally between A and B. The allocation of these items, other than the nonrecourse deductions, has substantial economic effect.

	A	B
Capital account at end of year 1	$50,000	$50,000
Less: net loss in year 2 (without nonrecourse deductions)	(47,500)	(47,500)
Less: nonrecourse deductions in year 2	(35,000)	(35,000)
Less: distribution	(2,500)	(2,500)
Capital account at end of year 2	($35,000)	($35,000)

(i) *Calculation of nonrecourse deductions and partnership minimum gain.* Because all of the requirements of paragraph (e) of this section are satisfied, the allocation of nonrecourse deductions is deemed to be made in accordance with the partners' interests in the partnership. At the end of the partnership's second taxable year, A's and B's shares of partnership minimum gain are $35,000 each. Therefore, pursuant to paragraph (g)(1) of this section, A and B are treated as obligated to restore deficit balances in their capital accounts of $35,000 each. If the partnership were to dispose of the machinery in full satisfaction of the nonrecourse liability at the beginning of the partnership's third taxable year (and had no other economic activity in that year), the partnership minimum gain would be decreased from $70,000 to zero. A's and B's shares of that net decrease would be $35,000 each. Upon that disposition, the minimum gain chargeback would require that A and B each be allocated $35,000 of that gain before any other allocation is made under section 704 (b) with respect to partnership items for the partnership's third taxable year.

(ii) *Nonrecourse deductions and restatement of capital accounts.* (a) *Additional facts.* C is admitted to the partnership at the beginning of the partnership's third taxable year. At the time of C's admission, the fair market value of the machinery is $900,000. C contributes $100,000 to the partnership (the partnership invests $95,000 of this in undeveloped land and holds the other $5,000 in cash) in exchange for an interest in the partnership. In connection with C's admission to the partnership, the partnership's machinery is revalued on the partnership's books to reflect its fair market value of $900,000. Pursuant to § 1.704-1(b)(2)(iv)(*f*), the capital accounts of A and B are adjusted upwards to $100,000 each to reflect the revaluation of the partnership's machinery. This adjustment reflects the manner in which the partnership gain of $270,000 ($900,000 fair market value minus $630,000 adjusted tax basis) would be shared if the machinery were sold for its fair market value immediately prior to C's admission to the partnership.

	A	B
Capital account before C's admission	($35,000)	($35,000)
Deemed sale adjustment	135,000	135,000
Capital account adjusted for C's admission	$100,000	$100,000

The partnership agreement is modified to provide that, except as otherwise required by its qualified income offset and minimum gain chargeback provisions, partnership income, gain, loss, and deduction, as computed for book purposes, are allocated equally among the partners, and those allocations are reflected in the partners' capital accounts. The partnership agreement also is modified to provide that depreciation and gain or loss, as computed for tax purposes, with respect to the machinery will be shared among the partners in a manner that takes account of the variation between the property's $630,000 adjusted tax basis and its $900,000 book value, in accordance with § 1.704-1(b)(2)(iv)(*f*) and the special rule contained in § 1.704-1(b)(4)(i).

(b) *Effect of revaluation.* Because the requirements of § 1.704-1(b)(2)(iv)(*g*) are satisfied, the capital accounts of the partners (as adjusted) continue to be maintained in accordance with § 1.704-1(b)(2)(iv). If the partnership were to dispose of the machinery in full satisfaction of the nonrecourse liability immediately following the revaluation of the machinery, it would realize no book gain ($700,000 amount realized less $900,000 book value). As a result of the revaluation of the machinery upward by $270,000, under part (i) of paragraph (d)(4) of this section, the partnership minimum gain is reduced from $70,000 immediately prior to the revaluation to zero; but under part (ii) of paragraph (d)(4) of this section, the partnership minimum gain is increased by the $70,000 decrease arising solely from the revaluation. Accordingly, there is no net increase or decrease solely on account of the revaluation, and so no minimum gain chargeback is triggered. All future nonrecourse deductions that occur will be the nonrecourse deductions as calculated for book purposes, and will be charged to all 3 partners in accordance with the partnership agreement. For purposes of determining the partners' shares of minimum gain under paragraph (g) of this section, A's and B's shares of the decrease resulting from the revaluation are $35,000

each. However, as illustrated below, under section 704(c) principles, the tax capital accounts of A and B will eventually be charged $35,000 each, reflecting their 50 percent shares of the decrease in partnership minimum gain that resulted from the revaluation.

(iii) *Allocation of nonrecourse deductions following restatement of capital accounts.* (a) *Additional facts.* During the partnership's third taxable year, the partnership generates rental income of $130,000, interest expense of $70,000 a tax depreciation deduction of $210,000, and a book depreciation deduction (attributable to the machinery) of $300,000. As a result, the partnership has a net taxable loss of $150,000 and a net book loss of $240,000. In addition, the partnership repays $50,000 of the nonrecourse liability (after the data of C's admission), reducing the liability to $650,000 and distributes $5,000 of cash to each partner.

(b) *Allocations.* If the partnership were to dispose of the machinery in full satisfaction of the nonrecourse liability at the end of the year, $50,000 of book gain would result ($650,000 amount realized less $600,000 book basis). Therefore, the amount of partnership minimum gain at the end of the year is $50,000, which represents a net decrease in partnership minimum gain of $20,000 during the year. (This is so even though there would be an increase in partnership minimum gain in the partnership's third taxable year if minimum gain were computed with reference to the adjusted tax basis of the machinery.) Nevertheless, pursuant to paragraph (d)(4) of this section, the amount of nonrecourse deductions of the partnership for its third taxable year is $50,000 (the net increase in partnership minimum gain during the year determined by adding back the $70,000 decrease in partnership minimum gain attributable to the revaluation of the machinery to the $20,000 net decrease in partnership minimum gain during the year). The $50,000 of partnership nonrecourse deductions for the year consist of book depreciation deductions allowable with respect to the machinery of $50,000. Pursuant to the partnership agreement, all partnership items comprising the net book loss of $240,000, including the $50,000 nonrecourse deduction, are allocated equally among the partners. The allocation of these items, other than the nonrecourse deductions, has substantial economic effect. Consistent with the special partners' interests in the partnership rule contained in § 1.704-1(b)(4)(i), the partnership agreement provides that the depreciation deduction for tax purposes of $210,000 for the partnership's third taxable year is, in accordance with section 704(c) principles, shared $55,000 to A, $55,000 to B, and $100,000 to C.

	A		B		C	
	Tax	Book	Tax	Book	Tax	Book
Capital account at beginning of year 3	($35,000)	$100,000	($35,000)	$100,0000	$100,000	$100,000
Less: nonrecourse deductions	(9,166)	(16,666)	(9,166)	(16,666)	(16,666)	(16,666)
Less: items other than nonrecourse deductions in year 3	(25,834)	(63,334)	(25,834)	(63,334)	(63,334)	(63,334)

	A		B		C	
	Tax	Book	Tax	Book	Tax	Book
Less: distribution	(5,000)	(5,000)	(5,000)	(5,000)	(5,000)	(5,000)
Capital account at end of year 3	($75,000)	$15,000	($75,000)	$15,000	$15,000	$15,000

Because the requirements of paragraph (e) of this section are satisfied, the allocation of the nonrecourse deduction is deemed to be made in accordance with the partners' interests in the partnership. At the end of the partnership's third taxable year, A's, B's, and C's shares of partnership minimum gain are $16,666 each.

(iv) *Subsequent allocation of nonrecourse deductions following restatement of capital accounts.* (a) *Additional facts.* The partners' capital accounts at the end of the second and third taxable years of the partnership are as stated in *Example* 3(iii) of this paragraph (m). In addition, during the partnership's fourth taxable year the partnership generates rental income of $130,000, interest expense of $65,000, a tax depreciation deduction of $210,000, and a book depreciation deduction (attributable to the machinery) of $300,000. As a result, the partnership has a net taxable loss of $145,000 and a net book loss of $235,000. In addition, the partnership repays $50,000 of the nonrecourse liability, reducing that liability to $600,000, and distributes $5,000 of cash to each partner.
(b) *Allocations.* If the partnership were to dispose of the machinery in full satisfaction of the nonrecourse liability at the end of the fourth year, $300,000 of book gain would result ($600,000 amount realized less $300,000 book value). Therefore, the amount of partnership minimum gain as of the end of the year is $300,000, which represents a net increase in partnership minimum gain during the year of $250,000. Thus, the amount of partnership nonrecourse deductions for that year equals $250,000, consisting of book depreciation deductions of $250,000. Pursuant to the partnership agreement, all partnership items comprising the net book loss of $235,000, including the $250,000 nonrecourse deduction, are allocated equally among the partners. That allocation of all items, other than the nonrecourse deductions, has substantial economic effect. Consistent with the special partners' interests in the partnership rule contained in § 1.704-1(b)(4)(i), the partnership agreement provides that the depreciation deduction for tax purposes of $210,000 in the partnership's fourth taxable year is, in accordance with section 704(c) principles, allocated $55,000 to A, $55,000 to B, and $100,000 to C.

	A		B		C	
	Tax	Book	Tax	Book	Tax	Book
Capital account at end year 3	($75,000)	$15,000	($75,000)	$15,000	$15,000	$15,000

	A		B		C	
	Tax	Book	Tax	Book	Tax	Book
Less: nonrecourse deductions	(45,833)	(83,333)	(45,833)	(83,333)	(83,333)	(83,333)
Plus: items other than nonrecourse deduction in year 4	12,499	5,000	12,499	5,000	5,000	5,000
Less: distribution	(5,000)	(5,000)	(5,000)	(5,000)	(5,000)	(5,000)
Capital account at end of year 4	($113,334)	($68,333)	($113,333)	($68,333)	($68,333)	($68,333)

The allocation of the $250,000 nonrecourse deduction equally among A, B, and C satisfies requirement (2) of paragraph (e) of this section. Because all of the requirements of paragraph (e) of this section are satisfied, the allocation is deemed to be in accordance with the partners' interests in the partnership. At the end of the partnership's fourth taxable year, A's, B's, and C's shares of partnership minimum gain are $100,000 each.

(v) *Disposition of partnership property following restatement of capital accounts.* (a) *Additional facts.* The partners' capital accounts at the end of the fourth taxable year of the partnership are as stated above in (iv). In addition, at the beginning of the partnership's fifth taxable year it sells the machinery for $650,000 (using $600,000 of the proceeds to repay the nonrecourse liability), resulting in a taxable gain of $440,000 ($650,000 amount realized less $210,000 adjusted tax basis) and a book gain of $350,000 ($650,000 amount realized less $300,000 book basis). The partnership has no other items of income, gain, loss, or deduction for the year.
(b) *Effect of disposition.* As a result of the sale, partnership minimum gain is reduced from $300,000 to zero, reducing A's, B's, and C's shares of partnership minimum gain to zero from $100,000 each. The minimum gain chargeback requires that A, B, and C each be allocated $100,000 of that gain (an amount equal to each partner's share of the net decrease in partnership minimum gain resulting from the sale) before any allocation is made to them under section 704(b) with respect to partnership items for the partnership's fifth taxable year. Thus, the allocation of the first $300,000 of book gain $100,000 to each of the partners is deemed to be in accordance with the partners' interests in the partnership under paragraph (e) of this section. The allocation of the remaining $50,000 of book gain equally among the partners has

substantial economic effect. Consistent with the special partners' interests in the partnership rule contained in § 1.704-1(b)(4)(i), the partnership agreement provides that the $440,000 taxable gain is, in accordance with section 704(c) principles, allocated $161,667 to A, $161,667 to B, and $116,666 to C.

	A		B		C	
	Tax	Book	Tax	Book	Tax	Book
Capital account at end of year 4	($113,334)	($68,333)	($113,334)	($68,333)	($68,333)	($68,333)
Plus: minimum gain chargeback	138,573	100,000	138,573	100,000	100,000	100,000
Plus: additional gain	23,094	16,666	23,094	16,666	16,666	16,666
Capital account before liquidation	$48,333	$48,333	$48,333	$48,333	$48,333	$48,333

Example 4. Allocations of increase in partnership minimum gain among partnership properties. For *Example* 4, unless otherwise provided, the following facts are assumed. A partnership owns 4 properties, each of which is subject to a nonrecourse liability of the partnership. During a taxable year of the partnership, the following events take place. First, the partnership generates a depreciation deduction (for both book and tax purposes) with respect to Property W of $10,000 and repays $5,000 of the nonrecourse liability secured only by that property, resulting in an increase in minimum gain with respect to that liability of $5,000. Second, the partnership generates a depreciation deduction (for both book and tax purposes) with respect to Property X of $10,000 and repays none of the nonrecourse liability secured by that property, resulting in an increase in minimum gain with respect to that liability of $10,000. Third, the partnership generates a depreciation deduction (for both book and tax purposes) of $2,000 with respect to Property Y and repays $11,000 of the nonrecourse liability secured only by that property, resulting in a decrease in minimum gain with respect to that liability of $9,000 (although at the end of that year, there remains minimum gain with respect to that liability). Finally, the partnership borrows $5,000 on a nonrecourse basis, giving as the only security for that liability Property Z, a parcel of undeveloped land with an adjusted tax basis (and book value) of $2,000, resulting in a net increase in minimum gain with respect to that liability of $3,000.

(i) *Allocation of increase in partnership minimum gain.* The net increase in partnership minimum gain during that partnership taxable year is $9,000, so that the amount of nonrecourse deductions of the partnership for that taxable year is $9,000. Those nonrecourse deductions consist of $3,000 of depreciation deductions with respect to Property W and $6,000 of depreciation deductions with respect to Property X. See paragraph (c) of this section. The amount of nonrecourse deductions consisting of depreciation deductions is determined as follows. With respect to the nonrecourse liability secured by Property Z, for which there is no depreciation deduction, the amount of depreciation deductions that constitutes nonrecourse deductions is zero. Similarly, with respect to the nonrecourse liability secured by Property Y,

for which there is no increase in minimum gain, the amount of depreciation deductions that constitutes nonrecourse deductions is zero. With respect to each of the nonrecourse liabilities secured by Properties W and X, which are secured by property for which there are depreciation deductions and for which there is an increase in minimum gain, the amount of depreciation deductions that constitutes nonrecourse deductions is determined by the following formula:

net increase in the partnership minimum gain for that taxable year X total depreciation deductions for that taxable year on the specific property securing the nonrecourse liability to the extent minimum gain increased on that liability (divided by) total depreciation deductions for that taxable year on all properties securing nonrecourse liabilities to the extent of the aggregate increase in minimum gain on all those liabilities.

Thus, for the liability secured by Property W, the amount is $9,000 times $5,000/$15,000, or $3,000. For the liability secured by Property X, the amount is $9,000 times $10,000/$15,000, or $6,000. (If one depreciable property secured two partnership nonrecourse liabilities, the amount of depreciation or book depreciation with respect to that property would be allocated among those liabilities in accordance with the method by which adjusted basis is allocated under paragraph (d)(2) of this section).

(ii) *Alternative allocation of increase in partnership minimum gain among partnership properties.* Assume instead that the loan secured by Property Z is $15,000 (rather than $5,000), resulting in a net increase in minimum gain with respect to that liability of $13,000. Thus, the net increase in partnership minimum gain is $19,000, and the amount of nonrecourse deductions of the partnership for that taxable year is $19,000. Those nonrecourse deductions consist of $5,000 of depreciation deductions with respect to Property W, $10,000 of depreciation deductions with respect to Property X, and a pro rata portion of the partnership's other items of deduction, loss, and section 705(a)(2)(B) expenditure for that year. The method for computing the amounts of depreciation deductions that constitute nonrecourse deductions is the same as in (i) of this *Example* 4 for the liabilities secured by Properties Y and Z. With respect to each of the nonrecourse liabilities secured by Properties W and X, the amount of depreciation deductions that constitutes nonrecourse deductions equals the total depreciation deductions with respect to the partnership property securing that particular liability to the extent of the increase in minimum gain with respect to that liability.

[T.D. 8385, 56 FR 66983, Dec. 27, 1991; 57 FR 6073, Feb. 20, 1992; 57 FR 8961, 8962, Mar. 13, 1992; 57 FR 11430, Apr. 3, 1992; 57 FR 28611, June 26, 1992; 57 FR 37189, Aug. 18, 1992; T.D. 9207, 70 FR 30342, May 26, 2005; T.D. 9289, 71 FR 59672, Oct. 11, 2006; T.D. 9557, 76 FR 71258, Nov. 17, 2011; T.D. 9787, 81 FR 69296, Oct. 5, 2016; T.D. 10014, 89 FR 95113, Dec. 2, 2024]

§ 1.704-3 Contributed property.

(a) ***In general*** —

(1) ***General principles.*** The purpose of section 704(c) is to prevent the shifting of tax consequences among partners with respect to precontribution gain or loss. Under section 704(c), a partnership must allocate income, gain, loss, and deduction with respect to property contributed by a partner to

the partnership so as to take into account any variation between the adjusted tax basis of the property and its fair market value at the time of contribution. Notwithstanding any other provision of this section, the allocations must be made using a reasonable method that is consistent with the purpose of section 704(c). For this purpose, an allocation method includes the application of all of the rules of this section (e.g., aggregation rules). An allocation method is not necessarily unreasonable merely because another allocation method would result in a higher aggregate tax liability. Paragraphs (b), (c), and (d) of this section describe allocation methods that are generally reasonable. Other methods may be reasonable in appropriate circumstances. Nevertheless, in the absence of specific published guidance, it is not reasonable to use an allocation method in which the basis of property contributed to the partnership is increased (or decreased) to reflect built-in gain (or loss), or a method under which the partnership creates tax allocations of income, gain, loss, or deduction independent of allocations affecting book capital accounts. See § 1.704-3(d). Paragraph (e) of this section contains special rules and exceptions. The principles of this paragraph (a)(1), together with the methods described in paragraphs (b), (c) and (d) of this section, apply only to contributions of property that are otherwise respected. See for example § 1.701-2. Accordingly, even though a partnership's allocation method may be described in the literal language of paragraphs (b), (c) or (d) of this section, based on the particular facts and circumstances, the Commissioner can recast the contribution as appropriate to avoid tax results inconsistent with the intent of subchapter K. One factor that may be considered by the Commissioner is the use of the remedial allocation method by related partners in which allocations of remedial items of income, gain, loss or deduction are made to one partner and the allocations of offsetting remedial items are made to a related partner.

(2) ***Operating rules.*** Except as provided in paragraphs (e)(2) and (e)(3) of this section, section 704(c) and this section apply on a property-by-property basis. Therefore, in determining whether there is a disparity between adjusted tax basis and fair market value, the built-in gains and built-in losses on items of contributed property cannot be aggregated. A partnership may use different methods with respect to different items of contributed property, provided that the partnership and the partners consistently apply a single reasonable method for each item of contributed property and that the overall method or combination of methods are reasonable based on the facts and circumstances and consistent with the purpose of section 704(c). It may be unreasonable to use one method for appreciated property and another method for depreciated property. Similarly, it may be unreasonable to use the traditional method for built-in gain property contributed by a partner with a high marginal tax rate while using curative allocations for built-in gain property contributed by a partner with a low marginal tax rate. A new partnership formed as the result of the termination of a partnership under section 708(b)(1)(B) is not required to use the same method as the terminated partnership with respect to section 704(c) property deemed contributed to the new partnership by the terminated partnership under § 1.708-1(b)(1)(iv). The previous sentence applies to terminations of partnerships under section 708(b)(1)(B) occurring on or after May 9, 1997; however, the sentence may be applied to terminations occurring on or after May 9, 1996, provided that the partnership and its partners apply the sentence to the termination in a consistent manner.

(3) ***Definitions*** —

(i) ***Section 704(c) property.*** Property contributed to a partnership is section 704(c) property if at the time of contribution its book value differs from the contributing partner's adjusted tax basis. For purposes of this section, book value is determined as contemplated by § 1.704-1(b). Therefore, book value is equal to fair market value at the time of contribution and is subsequently adjusted for cost recovery and other events that affect the basis of the property.

For a partnership that maintains capital accounts in accordance with § 1.704-1(b)(2)(iv), the book value of property is initially the value used in determining the contributing partner's capital account under § 1.704-1(b)(2)(iv)(*d*), and is appropriately adjusted thereafter (e.g., for book cost recovery under §§ 1.704-1(b)(2)(iv)(*g*)(*3*) and 1.704-3(d)(2) and other events that affect the basis of the property). A partnership that does not maintain capital accounts under § 1.704-1(b)(2)(iv) must comply with this section using a book capital account based on the same principles (*i.e.*, a book capital account that reflects the fair market value of property at the time of contribution and that is subsequently adjusted for cost recovery and other events that affect the basis of the property). Property deemed contributed to a new partnership as the result of the termination of a partnership under section 708(b)(1)(B) is treated as section 704(c) property in the hands of the new partnership only to the extent that the property was section 704(c) property in the hands of the terminated partnership immediately prior to the termination. See § 1.708-1(b)(1)(iv) for an example of the application of this rule. The previous two sentences apply to terminations of partnerships under section 708(b)(1)(B) occurring on or after May 9, 1997; however, the sentences may be applied to terminations occurring on or after May 9, 1996, provided that the partnership and its partners apply the sentences to the termination in a consistent manner.

(ii) ***Built-in gain and built-in loss.*** The built-in gain on section 704(c) property is the excess of the property's book value over the contributing partner's adjusted tax basis upon contribution. The built-in gain is thereafter reduced by decreases in the difference between the property's book value and adjusted tax basis. The built-in loss on section 704(c) property is the excess of the contributing partner's adjusted tax basis over the property's book value upon contribution. The built-in loss is thereafter reduced by decreases in the difference between the property's adjusted tax basis and book value. *See* § 1.460-4(k)(3)(v)(A) for a rule relating to the amount of built-in income or built-in loss attributable to a contract accounted for under a long-term contract method of accounting.

(4) ***Accounts payable and other accrued but unpaid items.*** Accounts payable and other accrued but unpaid items contributed by a partner using the cash receipts and disbursements method of accounting are treated as section 704(c) property for purposes of applying the rules of this section.

(5) ***Other provisions of the Internal Revenue Code.*** Section 704(c) and this section apply to a contribution of property to the partnership only if the contribution is governed by section 721, taking into account other provisions of the Internal Revenue Code. For example, to the extent that a transfer of property to a partnership is a sale under section 707, the transfer is not a contribution of property to which section 704(c) applies.

(6) ***Other applications of section 704(c) principles*** —

(i) ***Revaluations under section 704(b).*** The principles of this section apply to allocations with respect to property for which differences between book value and adjusted tax basis are created when a partnership revalues partnership property pursuant to § 1.704-1(b)(2)(iv)(*f*) or 1.704-1(b)(2)(iv)(*s*) (reverse section 704(c) allocations). Partnerships are not required to use the same allocation method for reverse section 704(c) allocations as for contributed property, even if at the time of revaluation the property is already subject to section 704(c) and paragraph (a) of this section. In addition, partnerships are not required to use the same allocation method for reverse section 704(c) allocations each time the partnership revalues its property. A partnership that makes allocations with respect to revalued property must use a reasonable method that is consistent with the purposes of section 704(b) and (c).

(ii) ***Basis adjustments.*** A partnership making adjustments under § 1.743-1(b) or 1.751-1(a)(2) must account for built-in gain or loss under section 704(c) in accordance with the principles of this section.

(7) ***Transfer of a partnership interest.*** If a contributing partner transfers a partnership interest, built-in gain or loss must be allocated to the transferee partner as it would have been allocated to the transferor partner. If the contributing partner transfers a portion of the partnership interest, the share of built-in gain or loss proportionate to the interest transferred must be allocated to the transferee partner. This rule does not apply to any person who acquired a partnership interest from a § 1.752-7 liability partner in a transaction to which paragraph (e)(1) of § 1.752-7 applies. See § 1.752-7(c)(1).

(8) ***Special rules*** —

(i) ***Disposition in a nonrecognition transaction.*** If a partnership disposes of section 704(c) property in a nonrecognition transaction, the substituted basis property (within the meaning of section 7701(a)(42)) is treated as section 704(c) property with the same amount of built-in gain or loss as the section 704(c) property disposed of by the partnership. If gain or loss is recognized in such a transaction, appropriate adjustments must be made. The allocation method for the substituted basis property must be consistent with the allocation method chosen for the original property. If a partnership transfers an item of section 704(c) property together with other property to a corporation under section 351, in order to preserve that item's built-in gain or loss, the basis in the stock received in exchange for the section 704(c) property is determined as if each item of section 704(c) property had been the only property transferred to the corporation by the partnership.

(ii) ***Disposition in an installment sale.*** If a partnership disposes of section 704(c) property in an installment sale as defined in section 453(b), the installment obligation received by the partnership is treated as the section 704(c) property with the same amount of built-in gain as the section 704(c) property disposed of by the partnership (with appropriate adjustments for any gain recognized on the installment sale). The allocation method for the installment obligation must be consistent with the allocation method chosen for the original property.

(iii) ***Contributed contracts.*** If a partner contributes to a partnership a contract that is section 704(c) property, and the partnership subsequently acquires property pursuant to the contract in a transaction in which less than all of the gain or loss is recognized, then the acquired property is treated as the section 704(c) property with the same amount of built-in gain or loss as the contract (with appropriate adjustments for any gain or loss recognized on the acquisition). For this purpose, the term contract includes, but is not limited to, options, forward contracts, and futures contracts. The allocation method for the acquired property must be consistent with the allocation method chosen for the contributed contract.

(iv) ***Capitalized amounts.*** To the extent that a partnership properly capitalizes all or a portion of an item as described in paragraph (a)(12) of this section, then the item or items to which such cost is properly capitalized is treated as section 704(c) property with the same amount of built-in loss as corresponds to the amount capitalized.

(9) ***Tiered partnerships.*** If a partnership contributes section 704(c) property to a second partnership (the lower-tier partnership), or if a partner that has contributed section 704(c) property to a partnership contributes that partnership interest to a second partnership (the upper-tier partnership), the upper-tier partnership must allocate its distributive share of lower-tier partnership items with respect to that section 704(c) property in a manner that takes into account the contributing partner's remaining

built-in gain or loss. Allocations made under this paragraph will be considered to be made in a manner that meets the requirements of § 1.704-1(b)(2)(iv)(*q*) (relating to capital account adjustments where guidance is lacking).

(10) ***Anti-abuse rule*** —

(i) ***In general.*** An allocation method (or combination of methods) is not reasonable if the contribution of property (or event that results in reverse section 704(c) allocations) and the corresponding allocation of tax items with respect to the property are made with a view to shifting the tax consequences of built-in gain or loss among the partners in a manner that substantially reduces the present value of the partners' aggregate tax liability. For purposes of this paragraph (a)(10), all references to the partners shall include both direct and indirect partners.

(ii) ***Definition of indirect partner.*** An *indirect partner* is any direct or indirect owner of a partnership, S corporation, or controlled foreign corporation (as defined in section 957(a) or 953(c)), or direct or indirect beneficiary of a trust or estate, that is a partner in the partnership, and any consolidated group of which the partner in the partnership is a member (within the meaning of § 1.1502-1(h)). An owner (whether directly or through tiers of entities) of a controlled foreign corporation is treated as an indirect partner only with respect to allocations of items of income, gain, loss, or deduction that enter into the computation of a United States shareholder's inclusion under section 951(a) with respect to the controlled foreign corporation, enter into any person's income attributable to a United States shareholder's inclusion under section 951(a) with respect to the controlled foreign corporation, or would enter into the computations described in this sentence if such items were allocated to the controlled foreign corporation.

(11) ***Contributing and noncontributing partners' recapture shares.*** For special rules applicable to the allocation of depreciation recapture with respect to property contributed by a partner to a partnership, see §§ 1.1245-1(e)(2) and 1.1250-1(f).

(12) ***§ 1.752-7 liabilities.*** Except as otherwise provided in § 1.752-7, § 1.752-7 liabilities (within the meaning of § 1.752-7(b)(2)) are section 704(c) property (built-in loss property that at the time of contribution has a book value that differs from the contributing partner's adjusted tax basis) for purposes of applying the rules of this section. See § 1.752-7(c). To the extent that the built-in loss associated with the § 1.752-7 liability exceeds the cost of satisfying the § 1.752-7 liability (as defined in § 1.752-7(b)(3)), the excess creates a “ceiling rule” limitation, within the meaning of § 1.704-3(b)(1), subject to the methods of allocation set forth in § 1.704-3(b), (c) and (d).

(13) Rules for tiered section 721(c) partnerships—

(i) Revaluations. If a partnership revalues its property pursuant to § 1.704-1(b)(2)(iv)(*f*)(*6*) immediately before an interest in the partnership is contributed to another partnership, or if an upper-tier partnership owns an interest in a lower-tier partnership, and both the upper-tier partnership and the lower-tier partnership revalue partnership property pursuant to § 1.704-1(b)(2)(iv)(*f*)(*6*), the principles of paragraph (a)(9) of this section will apply to any reverse section 704(c) allocations made as a result of the revaluation.

(ii) ***Basis-derivative items.*** If a lower-tier partnership that is a section 721(c) partnership applies the gain deferral method, then, for purposes of applying this section, the upper-tier partnership must treat its distributive share of lower-tier partnership items of gain, loss, amortization, depreciation, or other cost recovery with respect to the lower-tier partnership's section 721(c) property as though they were items of gain, loss, amortization, depreciation, or other cost

recovery with respect to the upper-tier partnership's interest in the lower-tier partnership. For purposes of this paragraph (a)(13)(ii), gain deferral method is defined in § 1.721(c)-1(b)(8), section 721(c) partnership is defined in § 1.721(c)-1(b)(14), and section 721(c) property is defined in § 1.721(c)-1(b)(15).

(b) *Traditional method* —

(1) ***In general.*** This paragraph (b) describes the traditional method of making section 704(c) allocations. In general, the traditional method requires that when the partnership has income, gain, loss, or deduction attributable to section 704(c) property, it must make appropriate allocations to the partners to avoid shifting the tax consequences of the built-in gain or loss. Under this rule, if the partnership sells section 704(c) property and recognizes gain or loss, built-in gain or loss on the property is allocated to the contributing partner. If the partnership sells a portion of, or an interest in, section 704(c) property, a proportionate part of the built-in gain or loss is allocated to the contributing partner. For section 704(c) property subject to amortization, depletion, depreciation, or other cost recovery, the allocation of deductions attributable to these items takes into account built-in gain or loss on the property. For example, tax allocations to the noncontributing partners of cost recovery deductions with respect to section 704(c) property generally must, to the extent possible, equal book allocations to those partners. However, the total income, gain, loss, or deduction allocated to the partners for a taxable year with respect to a property cannot exceed the total partnership income, gain, loss, or deduction with respect to that property for the taxable year (the ceiling rule). If a partnership has no property the allocations from which are limited by the ceiling rule, the traditional method is reasonable when used for all contributed property.

(2) ***Examples.*** The following examples illustrate the principles of the traditional method.

> *Example 1. Operation of the traditional method.* (i) *Calculation of built-in gain on contribution.* A and B form partnership AB and agree that each will be allocated a 50 percent share of all partnership items and that AB will make allocations under section 704(c) using the traditional method under paragraph (b) of this section. A contributes depreciable property with an adjusted tax basis of $4,000 and a book value of $10,000, and B contributes $10,000 cash. Under paragraph (a)(3) of this section, A has built-in gain of $6,000, the excess of the partnership's book value for the property ($10,000) over A's adjusted tax basis in the property at the time of contribution ($4,000).
> (ii) *Allocation of tax depreciation.* The property is depreciated using the straight-line method over a 10-year recovery period. Because the property depreciates at an annual rate of 10 percent, B would have been entitled to a depreciation deduction of $500 per year for both book and tax purposes if the adjusted tax basis of the property equalled its fair market value at the time of contribution. Although each partner is allocated $500 of book depreciation per year, the partnership is allowed a tax depreciation deduction of only $400 per year (10 percent of $4,000). The partnership can allocate only $400 of tax depreciation under the ceiling rule of paragraph (b)(1) of this section, and it must be allocated entirely to B. In AB's first year, the proceeds generated by the equipment exactly equal AB's operating expenses. At the end of that year, the book value of the property is $9,000 ($10,000 less the $1,000 book depreciation deduction), and the adjusted tax basis is $3,600 ($4,000 less the $400 tax depreciation

deduction). A's built-in gain with respect to the property decreases to $5,400 ($9,000 book value less $3,600 adjusted tax basis). Also, at the end of AB's first year, A has a $9,500 book capital account and a $4,000 tax basis in A's partnership interest. B has a $9,500 book capital account and a $9,600 adjusted tax basis in B's partnership interest.

(iii) *Sale of the property.* If AB sells the property at the beginning of AB's second year for $9,000, AB realizes tax gain of $5,400 ($9,000, the amount realized, less the adjusted tax basis of $3,600). Under paragraph (b)(1) of this section, the entire $5,400 gain must be allocated to A because the property A contributed has that much built-in gain remaining. If AB sells the property at the beginning of AB's second year for $10,000, AB realizes tax gain of $6,400 ($10,000, the amount realized, less the adjusted tax basis of $3,600). Under paragraph (b)(1) of this section, only $5,400 of gain must be allocated to A to account for A's built-in gain. The remaining $1,000 of gain is allocated equally between A and B in accordance with the partnership agreement. If AB sells the property for less than the $9,000 book value, AB realizes tax gain of less than $5,400, and the entire gain must be allocated to A.

(iv) *Termination and liquidation of partnership.* If AB sells the property at the beginning of AB's second year for $9,000, and AB engages in no other transactions that year, A will recognize a gain of $5,400, and B will recognize no income or loss. A's adjusted tax basis for A's interest in AB will then be $9,400 ($4,000, A's original tax basis, increased by the gain of $5,400). B's adjusted tax basis for B's interest in AB will be $9,600 ($10,000, B's original tax basis, less the $400 depreciation deduction in the first partnership year). If the partnership then terminates and distributes its assets ($19,000 in cash) to A and B in proportion to their capital account balances, A will recognize a capital gain of $100 ($9,500, the amount distributed to A, less $9,400, the adjusted tax basis of A's interest). B will recognize a capital loss of $100 (the excess of B's adjusted tax basis, $9,600, over the amount received, $9,500).

Example 2. Unreasonable use of the traditional method. (i) *Facts.* C and D form partnership CD and agree that each will be allocated a 50 percent share of all partnership items and that CD will make allocations under section 704(c) using the traditional method under paragraph (b) of this section. C contributes equipment with an adjusted tax basis of $1,000 and a book value of $10,000, with a view to taking advantage of the fact that the equipment has only one year remaining on its cost recovery schedule although its remaining economic life is significantly longer. At the time of contribution, C has a built-in gain of $9,000 and the equipment is section 704(c) property. D contributes $10,000 of cash, which CD uses to buy securities. D has substantial net operating loss carryforwards that D anticipates will otherwise expire unused. Under § 1.704-1(b)(2)(iv)(*g*)(3), the partnership must allocate the $10,000 of book depreciation to the partners in the first year of the partnership. Thus, there is $10,000 of book depreciation and $1,000 of tax depreciation in the partnership's first year. CD sells the equipment during the second year for $10,000 and recognizes a $10,000 gain ($10,000, the amount realized, less the adjusted tax basis of $0).

(ii) *Unreasonable use of method*—(A) At the beginning of the second year, both the book value and adjusted tax basis of the equipment are $0. Therefore, there is no remaining built-in gain. The $10,000 gain on the sale of the equipment in the second year is allocated $5,000 each to C and D. The interaction of the partnership's one-year write-off of the entire book value of the equipment and the use of the traditional method results in a shift of $4,000 of the precontribution gain in the equipment from C to D (D's $5,000 share of CD's $10,000 gain, less the $1,000 tax depreciation deduction previously allocated to D).

(B) The traditional method is not reasonable under paragraph (a)(10) of this section because the contribution of property is made, and the traditional method is used, with a view to shifting a significant amount of taxable income to a partner with a low marginal tax rate and away from a partner with a high marginal tax rate.

(C) Under these facts, if the partnership agreement in effect for the year of contribution had provided that tax gain from the sale of the property (if any) would always be allocated first to C to offset the effect of the ceiling rule limitation, the allocation method would not violate the anti-abuse rule of paragraph (a)(10) of this section. See paragraph (c)(3) of this section. Under other facts, (for example, if the partnership holds multiple section 704(c) properties and either uses multiple allocation methods or uses a single allocation method where one or more of the properties are subject to the ceiling rule) the allocation to C may not be reasonable.

(c) ***Traditional method with curative allocations*** —

(1) ***In general.*** To correct distortions created by the ceiling rule, a partnership using the traditional method under paragraph (b) of this section may make reasonable curative allocations to reduce or eliminate disparities between book and tax items of noncontributing partners. A curative allocation is an allocation of income, gain, loss, or deduction for tax purposes that differs from the partnership's allocation of the corresponding book item. For example, if a noncontributing partner is allocated less tax depreciation than book depreciation with respect to an item of section 704(c) property, the partnership may make a curative allocation to that partner of tax depreciation from another item of partnership property to make up the difference, notwithstanding that the corresponding book depreciation is allocated to the contributing partner. A partnership may limit its curative allocations to allocations of one or more particular tax items (e.g., only depreciation from a specific property or properties) even if the allocation of those available items does not offset fully the effect of the ceiling rule.

(2) ***Consistency.*** A partnership must be consistent in its application of curative allocations with respect to each item of section 704(c) property from year to year.

(3) ***Reasonable curative allocations*** —

(i) ***Amount.*** A curative allocation is not reasonable to the extent it exceeds the amount necessary to offset the effect of the ceiling rule for the current taxable year or, in the case of a curative allocation upon disposition of the property, for prior taxable years.

(ii) ***Timing.*** The period of time over which the curative allocations are made is a factor in determining whether the allocations are reasonable. Notwithstanding paragraph (c)(3)(i) of this section, a partnership may make curative allocations in a taxable year to offset the effect of the ceiling rule for a prior taxable year if those allocations are made over a reasonable period of time, such as over the property's economic life, and are provided for under the partnership agreement in effect for the year of contribution. See paragraph (c)(4) *Example 3* (ii)(C) of this section.

(iii) ***Type*** —

(A) ***In general.*** To be reasonable, a curative allocation of income, gain, loss, or deduction must be expected to have substantially the same effect on each partner's tax liability as the tax item limited by the ceiling rule. The expectation must exist at the time the section 704(c) property is obligated to be (or is) contributed to the partnership and the allocation with respect to that property becomes part of the partnership agreement. However, the expectation is tested at the time the allocation with respect to that property is actually made if the partnership agreement is not sufficiently specific as to the precise manner in which allocations are to be made with respect to that property. Under this paragraph (c), if the item limited by the ceiling rule is loss from the sale of property, a curative allocation of gain must be expected to have substantially the same effect as would an allocation to that partner of gain with respect to the sale of the property. If the item limited by the ceiling rule is depreciation or other cost recovery, a curative allocation of income to the contributing partner must be expected to have substantially the same effect as would an allocation to that partner of partnership income with respect to the contributed property. For example, if depreciation deductions with respect to leased equipment contributed by a tax-exempt partner are limited by the ceiling rule, a curative allocation of dividend or interest income to that partner generally is not reasonable, although a curative allocation of depreciation deductions from other leased equipment to the noncontributing partner is reasonable. Similarly, under this rule, if depreciation deductions apportioned to foreign source income in a particular statutory grouping under section 904(d) are limited by the ceiling rule, a curative allocation of income from another statutory grouping to the contributing partner generally is not reasonable, although a curative allocation of income from the same statutory grouping and of the same character is reasonable.

(B) ***Exception for allocation from disposition of contributed property.*** If cost recovery has been limited by the ceiling rule, the general limitation on character does not apply to income from the disposition of contributed property subject to the ceiling rule, but only if properly provided for in the partnership agreement in effect for the year of contribution or revaluation. For example, if allocations of depreciation deductions to a noncontributing partner have been limited by the ceiling rule, a curative allocation to the contributing partner of gain from the sale of that property, if properly provided for in the partnership agreement, is reasonable for purposes of paragraph (c)(3)(iii)(A) of this section even if not of the same character.

(4) ***Examples.*** The following examples illustrate the principles of this paragraph (c).

> *Example 1. Reasonable and unreasonable curative allocations.* (i) *Facts.* E and F form partnership EF and agree that each will be allocated a 50 percent share of all partnership items and that EF will make allocations under section 704(c) using the traditional method

with curative allocations under paragraph (c) of this section. E contributes equipment with an adjusted tax basis of $4,000 and a book value of $10,000. The equipment has 10 years remaining on its cost recovery schedule and is depreciable using the straight-line method. At the time of contribution, E has a built-in gain of $6,000, and therefore, the equipment is section 704(c) property. F contributes $10,000 of cash, which EF uses to buy inventory for resale. In EF's first year, the revenue generated by the equipment equals EF's operating expenses. The equipment generates $1,000 of book depreciation and $400 of tax depreciation for each of 10 years. At the end of the first year EF sells all the inventory for $10,700, recognizing $700 of income. The partners anticipate that the inventory income will have substantially the same effect on their tax liabilities as income from E's contributed equipment. Under the traditional method of paragraph (b) of this section, E and F would each be allocated $350 of income from the sale of inventory for book and tax purposes and $500 of depreciation for book purposes. The $400 of tax depreciation would all be allocated to F. Thus, at the end of the first year, E and F's book and tax capital accounts would be as follows:

E		F		
Book	**Tax**	**Book**	**Tax**	
$10,000	$4,000	$10,000	$10,000	Initial contribution.
<500>	<0>	<500>	<400>	Depreciation.
350	350	350	350	Sales income.
9,850	4,350	9,850	9,950	

(ii) *Reasonable curative allocation.* Because the ceiling rule would cause a disparity of $100 between F's book and tax capital accounts, EF may properly allocate to E under paragraph (c) of this section an additional $100 of income from the sale of inventory for tax purposes. This allocation results in capital accounts at the end of EF's first year as follows:

E		F		
Book	**Tax**	**Book**	**Tax**	
$10,000	$4,000	$10,000	$10,000	Initial contribution.
<500>	<0>	<500>	<400>	Depreciation.
350	450	350	250	Sales income.
9,850	4,450	9,850	9,850	

(iii) *Unreasonable curative allocation.* (A) The facts are the same as in paragraphs (i) and (ii)

of this *Example 1,* except that E and F choose to allocate all the income from the sale of the inventory to E for tax purposes, although they share it equally for book purposes. This allocation results in capital accounts at the end of EF's first year as follows:

E		F		
Book	**Tax**	**Book**	**Tax**	
$10,000	$4,000	$10,000	$10,000	Initial contribution.
<500>	<0>	<500>	<400>	Depreciation.
350	700	350	0	Sales income.
9,850	4,700	9,850	9,600	

(B) This curative allocation is not reasonable under paragraph (c)(3)(i) of this section because the allocation exceeds the amount necessary to offset the disparity caused by the ceiling rule.

Example 2. Curative allocations limited to depreciation. (i) *Facts.* G and H form partnership GH and agree that each will be allocated a 50 percent share of all partnership items and that GH will make allocations under section 704(c) using the traditional method with curative allocations under paragraph (c) of this section, but only to the extent that the partnership has sufficient tax depreciation deductions. G contributes property G1, with an adjusted tax basis of $3,000 and a fair market value of $10,000, and H contributes property H1, with an adjusted tax basis of $6,000 and a fair market value of $10,000. Both properties have 5 years remaining on their cost recovery schedules and are depreciable using the straight-line method. At the time of contribution, G1 has a built-in gain of $7,000 and H1 has a built-in gain of $4,000, and therefore, both properties are section 704(c) property. G1 generates $600 of tax depreciation and $2,000 of book depreciation for each of five years. H1 generates $1,200 of tax depreciation and $2,000 of book depreciation for each of 5 years. In addition, the properties each generate $500 of operating income annually. G and H are each allocated $1,000 of book depreciation for each property. Under the traditional method of paragraph (b) of this section, G would be allocated $0 of tax depreciation for G1 and $1,000 for H1, and H would be allocated $600 of tax depreciation for G1 and $200 for H1. Thus, at the end of the

first year, G and H's book and tax capital accounts would be as follows:

G		H		
Book	Tax	Book	Tax	
$10,000	$3,000	$10,000	$6,000	Initial contribution.
<1,000>	<0>	<1,000>	<600>	G1 depreciation.
<1,000>	<1,000>	<1,000>	<200>	H1 depreciation.
500	500	500	500	Operating income.
8,500	2,500	8,500	5,700	

(ii) *Curative allocations.* Under the traditional method, G is allocated more depreciation deductions than H, even though H contributed property with a smaller disparity reflected on GH's book and tax capital accounts. GH makes curative allocations to H of an additional $400 of tax depreciation each year, which reduces the disparities between G and H's book and tax capital accounts ratably each year. These allocations are reasonable provided the allocations meet the other requirements of this section. As a result of their agreement, at the end of the first year, G and H's capital accounts are as follows:

G		H		
Book	Tax	Book	Tax	
$10,000	$3,000	$10,000	$6,000	Initial contribution.
<1,000>	<0>	<1,000>	<600>	G1 depreciation.
<1,000>	<600>	<1,000>	<600>	H1 depreciation.
500	500	500	500	Operating income.
8,500	2,900	8,500	5,300	

Example 3. Unreasonable use of curative allocations. (i) *Facts.* J and K form partnership JK and agree that each will receive a 50 percent share of all partnership items and that JK will make allocations under section 704(c) using the traditional method with curative allocations under paragraph (c) of this section. J contributes equipment with an adjusted tax basis of $1,000 and a book value of $10,000, with a view to taking advantage of the fact that the equipment has only one year remaining on its cost recovery schedule although it has an estimated remaining economic life of 10 years. J has substantial net operating loss carryforwards that J anticipates will otherwise expire unused. At the time of contribution, J has a built-in gain of $9,000, and therefore, the equipment is section 704(c) property. K

contributes $10,000 of cash, which JK uses to buy inventory for resale. In JK's first year, the revenues generated by the equipment exactly equal JK's operating expenses. Under § 1.704-1(b)(2)(iv)(*g*)(*3*), the partnership must allocate the $10,000 of book depreciation to the partners in the first year of the partnership. Thus, there is $10,000 of book depreciation and $1,000 of tax depreciation in the partnership's first year. In addition, at the end of the first year JK sells all of the inventory for $18,000, recognizing $8,000 of income. The partners anticipate that the inventory income will have substantially the same effect on their tax liabilities as income from J's contributed equipment. Under the traditional method of paragraph (b) of this section, J and K's book and tax capital accounts at the end of the first year would be as follows:

J		K		
Book	**Tax**	**Book**	**Tax**	
$10,000	$1,000	$10,000	$10,000	Initial contribution.
<5,000>	<0>	<5,000>	<1,000>	Depreciation.
4,000	4,000	4,000	4,000	Sales income.
9,000	5,000	9,000	13,000	

(ii) *Unreasonable use of method.* (A) The use of curative allocations under these facts to offset immediately the full effect of the ceiling rule would result in the following book and tax capital accounts at the end of JK's first year:

J		K		
Book	**Tax**	**Book**	**Tax**	
$10,000	$1,000	$10,000	$10,000	Initial contribution.
<5,000>	<0>	<5,000>	<1,000>	Depreciation.
4,000	8,000	4,000	0	Sales income.
9,000	9,000	9,000	9,000	

(B) This curative allocation is not reasonable under paragraph (a)(10) of this section because the contribution of property is made and the curative allocation method is used with a view to shifting a significant amount of partnership taxable income to a partner with a low marginal tax rate and away from a partner with a high marginal tax rate, within a period of time significantly shorter than the economic life of the property.

(C) The property has only one year remaining on its cost recovery schedule even though its economic life is considerably longer. Under these facts, if the partnership agreement had provided for curative allocations over a reasonable period of time, such as over the property's economic life, rather than over its remaining cost recovery period, the allocations would have been reasonable. See paragraph (c)(3)(ii) of this section. Thus, in this example, JK would make a curative allocation of $400 of sales income to J in the partnership's first year (10 percent of $4,000). J and K's book and tax capital accounts at the end of the first year would be as follows:

J		K		
Book	Tax	Book	Tax	
$10,000	$1,000	$10,000	$10,000	Initial contribution.
<5,000>	<0>	<5,000>	<1,000>	Depreciation.
4,000	4,400	4,000	3,600	Sales income.
9,000	5,400	9,000	12,600	

(d) *Remedial allocation method* —

(1) ***In general.*** A partnership may adopt the remedial allocation method described in this paragraph to eliminate distortions caused by the ceiling rule. A partnership adopting the remedial allocation method eliminates those distortions by creating remedial items and allocating those items to its partners. Under the remedial allocation method, the partnership first determines the amount of book items under paragraph (d)(2) of this section and the partners' distributive shares of these items under section 704(b). The partnership then allocates the corresponding tax items recognized by the partnership, if any, using the traditional method described in paragraph (b)(1) of this section. If the ceiling rule (as defined in paragraph (b)(1) of this section) causes the book allocation of an item to a noncontributing partner to differ from the tax allocation of the same item to the noncontributing partner, the partnership creates a remedial item of income, gain, loss, or deduction equal to the full amount of the difference and allocates it to the noncontributing partner. The partnership simultaneously creates an offsetting remedial item in an identical amount and allocates it to the contributing partner.

(2) ***Determining the amount of book items.*** Under the remedial allocation method, a partnership determines the amount of book items attributable to contributed property in the following manner rather than under the rules of § 1.704-1(b)(2)(iv)(*g*)(*3*). The portion of the partnership's book basis in the property equal to the adjusted tax basis in the property at the time of contribution is recovered in the same manner as the adjusted tax basis in the property is recovered (generally, over the property's remaining recovery period under section 168(i)(7) or other applicable Internal Revenue Code section). The remainder of the partnership's book basis in the property (the amount by which book basis exceeds adjusted tax basis) is recovered using any recovery period and depreciation (or other cost recovery) method (including first-year conventions) available to the partnership for newly purchased property (of the same type as the contributed property) that is placed in service at the time of contribution. However, the additional first year depreciation deduction under section 168(k)

is not a permissible method for purposes of the preceding sentence and, if a partnership has acquired property in a taxable year for which the additional first year depreciation deduction under section 168(k) has been used of the same type as the contributed property, the portion of the contributed property's book basis that exceeds its adjusted tax basis must be recovered under a reasonable method. See § 1.168(k)-2(b)(3)(iv)(B).

(3) ***Type.*** Remedial allocations of income, gain, loss, or deduction to the noncontributing partner have the same tax attributes as the tax item limited by the ceiling rule. The tax attributes of offsetting remedial allocations of income, gain, loss, or deduction to the contributing partner are determined by reference to the item limited by the ceiling rule. Thus, for example, if the ceiling rule limited item is loss from the sale of contributed property, the offsetting remedial allocation to the contributing partner must be gain from the sale of that property. Conversely, if the ceiling rule limited item is gain from the sale of contributed property, the offsetting remedial allocation to the contributing partner must be loss from the sale of that property. If the ceiling rule limited item is depreciation or other cost recovery from the contributed property, the offsetting remedial allocation to the contributing partner must be income of the type produced (directly or indirectly) by that property. Any partner level tax attributes are determined at the partner level. For example, if the ceiling rule limited item is depreciation from property used in a rental activity, the remedial allocation to the noncontributing partner is depreciation from property used in a rental activity and the offsetting remedial allocation to the contributing partner is ordinary income from that rental activity. Each partner then applies section 469 to the allocations as appropriate.

(4) ***Effect of remedial items*** —

(i) ***Effect on partnership.*** Remedial items do not affect the partnership's computation of its taxable income under section 703 and do not affect the partnership's adjusted tax basis in partnership property.

(ii) ***Effect on partners.*** Remedial items are notional tax items created by the partnership solely for tax purposes and do not affect the partners' book capital accounts. Remedial items have the same effect as actual tax items on a partner's tax liability and on the partner's adjusted tax basis in the partnership interest.

(5) ***Limitations on use of methods involving remedial allocations*** —

(i) ***Limitation on taxpayers.*** In the absence of published guidance, the remedial allocation method described in this paragraph (d) is the only reasonable section 704(c) method permitting the creation of notional tax items.

(ii) ***Limitation on Internal Revenue Service.*** In exercising its authority under paragraph (a)(10) of this section to make adjustments if a partnership's allocation method is not reasonable, the Internal Revenue Service will not require a partnership to use the remedial allocation method described in this paragraph (d) or any other method involving the creation of notional tax items.

(iii) ***Special rules for a section 721(c) partnership and anti-churning property*** —

(A) ***In general.*** Solely in the case of a gain deferral contribution of section 721(c) property that is a section 197(f)(9) intangible that was not an amortizable section 197 intangible in the hands of the contributor, the remedial allocation method is modified with respect to allocations to a related person to the U.S. transferor pursuant to paragraphs (d)(5)(iii)(B) through (F) of this section. For purposes of this paragraph (d)(5)(iii), gain deferral contribution is defined in § 1.721(c)-1(b)(7), related person is defined in §

1.721(c)-1(b)(12), section 721(c) partnership is defined in § 1.721(c)-1(b)(14), section 721(c) property is defined in § 1.721(c)-1(b)(15), and U.S. transferor is defined in § 1.721(c)-1(b)(18). For an example applying the rules of this paragraph (d)(5)(iii), see § 1.721(c)-7(b)(6) (*Example 6*).

(B) ***Book basis recovery.*** The section 721(c) partnership must amortize the portion of the partnership's book value in the section 197(f)(9) intangible that exceeds the adjusted basis in the property upon contribution using any recovery period and amortization method available to the partnership as if the property had been newly purchased by the partnership from an unrelated party.

(C) ***Effect of ceiling rule limitations.*** If the ceiling rule causes the book allocation of the item of amortization of a section 197(f)(9) intangible under paragraph (d)(5)(iii)(B) of this section by a section 721(c) partnership to a related person with respect to the U.S. transferor to differ from the tax allocation of the same item to the related person (a ceiling rule limited related person), the partnership must not create a remedial item of deduction to allocate to the related person but instead must increase the adjusted basis of the section 197(f)(9) intangible by an amount equal to the difference solely with respect to that related person. The partnership simultaneously must create an offsetting remedial item in an amount identical to the increase in adjusted tax basis of the section 197(f)(9) intangible and allocate it to the contributing partner.

(D) ***Effect of basis adjustment*** —

(*1*) ***In general.*** The basis adjustment described in paragraph (d)(5)(iii)(C) of this section constitutes an adjustment to the adjusted basis of a section 197(f)(9) intangible with respect to the ceiling rule limited related person only. No adjustment is made to the common basis of partnership property. Thus, for purposes of calculating gain and loss, the ceiling rule limited related person will have a special basis for that section 197(f)(9) intangible. The adjustment to the basis of partnership property under this section has no effect on the partnership's computation of any item under section 703.

(*2*) ***Computation of a partner's distributive share of partnership items.*** The partnership first computes its items of gain or loss at the partnership level under section 703. The partnership then allocates the partnership items among the partners, including the ceiling rule limited related person, in accordance with section 704, and adjusts the partners' capital accounts accordingly. The partnership then adjusts the ceiling rule limited related person's distributive share of the items of partnership gain or loss, in accordance with paragraph (d)(5)(iii)(D)(*3*) of this section, to reflect the effects of that person's basis adjustment under this section. These adjustments to that person's distributive shares must be reflected on Schedules K and K-1 of the partnership's return (Form 1065) (when otherwise required to be completed) and do not affect that person's capital account.

(*3*) ***Effect of basis adjustment in determining items of income, gain, or loss.*** The amount of a ceiling rule limited related person's gain or loss from the sale or exchange of a section 197(f)(9) intangible in which that person has a tax basis adjustment is equal to that person's share of the partnership's gain or loss from the sale of the asset (including any remedial allocations under this paragraph (d)), minus the amount of that person's tax basis adjustment for the section 197(f)(9) intangible.

(E) *Subsequent transfers* —

(*1*) ***In general.*** Except as provided in paragraph (d)(5)(iii)(E)(*2*) of this section, if a ceiling rule limited related person transfers all or part of its partnership interest, the portion of the basis adjustment for a section 197(f)(9) intangible attributable to the interest transferred is eliminated. The transferor of the partnership interest remains the ceiling rule limited related person with respect to any remaining basis adjustment for the section 197(f)(9) intangible.

(*2*) ***Special rules for substituted basis transactions.*** Paragraph (d)(5)(iii)(E)(*1*) of this section does not apply to the extent a ceiling rule limited related person transfers its partnership interest in a transaction in which the transferee's basis in the partnership interest is determined in whole or in part by reference to the ceiling rule limited related person's basis in that interest. Instead, in such a case, the transferee succeeds to that portion of the transferor's basis adjustment for a section 197(f)(9) intangible attributable to the interest transferred. In such a case, the basis adjustment in a section 197(f)(9) intangible to which the transferee succeeds is taken into account for purposes of determining the transferee's share of the adjusted basis to the partnership of the partnership's property for purposes of §§ 1.743-1(b) and 1.755-1(b)(5). To the extent a transferee would be required to decrease the adjusted basis of a section 197(f)(9) intangible pursuant to §§ 1.743-1(b)(2) and 1.755-1(b)(5), the decrease first reduces the special basis adjustment described in paragraph (d)(5)(iii)(C) of this section, if any, to which the transferee succeeds.

(F) ***Non-amortization of basis adjustment.*** Neither the increase to the adjusted basis of a section 197(f)(9) intangible with respect to a ceiling rule limited related person nor the portion of the basis of any property that was determined by reference to such increase is subject to amortization, depreciation, or other cost recovery.

(6) ***Adjustments to application of method.*** The Commissioner may, by published guidance, prescribe adjustments to the remedial allocation method under this paragraph (d) as necessary or appropriate. This guidance may, for example, prescribe adjustments to the remedial allocation method to prevent the duplication or omission of items of income or deduction or to reflect more clearly the partners' income or the income of a transferee of a partner.

(7) ***Examples.*** The following examples illustrate the principles of this paragraph (d).

> *Example 1. Remedial allocation method.* (i) *Facts.* On January 1, L and M form partnership LM and agree that each will be allocated a 50 percent share of all partnership items. The partnership agreement provides that LM will make allocations under section 704(c) using the remedial allocation method under this paragraph (d) and that the straight-line method will be used to recover excess book basis. L contributes depreciable property with an adjusted tax basis of $4,000 and a fair market value of $10,000. The property is depreciated using the straight-line method with a 10-year recovery period and has 4 years remaining on its recovery period. M contributes $10,000, which the partnership uses to purchase land. Except for the depreciation deductions, LM's expenses equal its income in each year of the 10 years commencing with the year the partnership is formed.

(ii) *Years 1 through 4.* Under the remedial allocation method of this paragraph (d), LM has book depreciation for each of its first 4 years of $1,600 [$1,000 ($4,000 adjusted tax basis divided by the 4-year remaining recovery period) plus $600 ($6,000 excess of book value over tax basis, divided by the *new* 10-year recovery period)]. (For the purpose of simplifying the example, the partnership's book depreciation is determined without regard to any first-year depreciation conventions.) Under the partnership agreement, L and M are each allocated 50 percent ($800) of the book depreciation. M is allocated $800 of tax depreciation and L is allocated the remaining $200 of tax depreciation ($1,000-$800). See paragraph (d)(1) of this section. No remedial allocations are made because the ceiling rule does not result in a book allocation of depreciation to M different from the tax allocation. The allocations result in capital accounts at the end of LM's first 4 years as follows:

	L		M	
	Book	**Tax**	**Book**	**Tax**
Initial contribution	$10,000	$4,000	$10,000	$10,000
Depreciation	<3,200>	<800>	<3,200>	<3,200>
	$6,800	$3,200	$6,800	$6,800

(iii) *Subsequent years.* (A) For each of years 5 through 10, LM has $600 of book depreciation ($6,000 excess of initial book value over adjusted tax basis divided by the 10-year recovery period that commented in year 1), but no tax depreciation. Under the partnership agreement, the $600 of book depreciation is allocated equally to L and M. Because of the application of the ceiling rule in year 5, M would be allotted $300 of book depreciation, but no tax depreciation. Thus, at the end of LM's fifth year L's and M's book and tax capital accounts would be as follows:

	L		M	
	Book	**Tax**	**Book**	**Tax**
End of year 4	$6,800	$3,200	$6,800	$6,800
Depreciation	<300>		<300>	
	$6,500	$3,200	$6,500	$6,800

(B) Because the ceiling rule would cause an annual disparity of $300 between M's allocations of book and tax depreciation, LM must make remedial allocations of $300 of tax depreciation deductions to M under the remedial allocation method for each of years 5

through 10. LM must also make an offsetting remedial allocation to L of $300 of taxable income, which must be of the same type as income produced by the property. At the end of year 5, LM's capital accounts are as follows:

	L		M	
	Book	Tax	Book	Tax
End of year 4	$6,800	$3,200	$6,800	$6,800
Depreciation	<300>		<300>	
Remedial allocations		300		<300>
	$6,500	$3,500	$6,500	$6,500

(C) At the end of year 10, LM's capital accounts are as follows:

	L		M	
	Book	Tax	Book	Tax
End of year 5	$6,500	$3,500	$6,500	$6,500
Depreciation	<1,500>		<1,500>	
Remedial allocations		1,500		<1,500>
	$5,000	$5,000	$5,000	$5,000

Example 2. Remedial allocations on sale. (i) *Facts.* N and P form partnership NP and agree that each will be allocated a 50 percent share of all partnership items. The partnership agreement provides that NP will make allocations under section 704(c) using the remedial allocation method under this paragraph (d). N contributes Blackacre (land) with an adjusted tax basis of $4,000 and a fair market value of $10,000. Because N has a built-in gain of $6,000, Blackacre is section 704(c) property. P contributes Whiteacre (land) with an adjusted tax basis and fair market value of $10,000. At the end of NP's first year, NP sells Blackacre to Q for $9,000 and recognizes a capital gain of $5,000 ($9,000 amount realized less $4,000 adjusted tax basis) and a book loss of $1,000 ($9,000 amount realized less $10,000 book basis). NP has no other items of income, gain, loss, or deduction. If the ceiling rule were applied, N would be allocated the entire $5,000 of tax gain and N and P would each be allocated $500 of book loss. Thus, at the end of NP's first year N's and P's book and tax

capital accounts would be as follows:

	N		P	
	Book	Tax	Book	Tax
Initial contribution	$10,000	$4,000	$10,000	$10,000
Sale of Blackacre	<500>	5,000	<500>	
	$9,500	$9,000	$9,500	$10,000

(ii) *Remedial allocation.* Because the ceiling rule would cause a disparity of $500 between P's allocation of book and tax loss, NP must make a remedial allocation of $500 of capital loss to P and an offsetting remedial allocation to N of an additional $500 of capital gain. These allocations result in capital accounts at the end of NP's first year as follows:

	N		P	
	Book	Tax	Book	Tax
Initial contribution	$10,000	$4,000	$10,000	$10,000
Sale of Blackacre	<500>	5,000	<500>	
Remedial allocations		500		<500>
	$9,500	$9,500	$9,500	$9,500

Example 3. Remedial allocation where built-in gain property sold for book and tax loss. (i) *Facts.* The facts are the same as in Example 2, except that at the end of NP's first year, NP sells Blackacre to Q for $3,000 and recognizes a capital loss of $1,000 ($3,000 amount realized less $4,000 adjusted tax basis) and a book loss of $7,000 ($3,000 amount realized less $10,000 book basis). If the ceiling rule were applied, P would be allocated the entire $1,000 of tax loss and N and P would each be allocated $3,500 of book loss. Thus, at the end of NP's first year, N's and P's book and tax capital accounts would be as follows:

	N		P	
	Book	Tax	Book	Tax
Initial contribution	$10,000	$4,000	$10,000	$10,000
Sale of Blackacre	<3,500>	0	<3,500>	<1,000>

	N		P	
	Book	Tax	Book	Tax
	$6,500	$4,000	$6,500	$9,000

(ii) *Remedial allocation.* Because the ceiling rule would cause a disparity of $2,500 between P's allocation of book and tax loss on the sale of Blackacre, NP must make a remedial allocation of $2,500 of capital loss to P and an offsetting remedial allocation to N of $2,500 of capital gain. These allocations result in capital accounts at the end of NP's first year as follows:

	N		P	
	Book	Tax	Book	Tax
Initial contribution	$10,000	$4,000	$10,000	$10,000
Sale of Blackacre	<3,500>	0	<3,500>	<1,000>
Remedial Allocations		2,500		<2,500>
	$6,500	$6,500	$6,500	$6,500

(e) *Exceptions and special rules* —

(1) *Small disparities* —

(i) ***General rule.*** If a partner contributes one or more items of property to a partnership within a single taxable year of the partnership, and the disparity between the book value of the property and the contributing partner's adjusted tax basis in the property is a small disparity, the partnership may—

(A) Use a reasonable section 704(c) method;

(B) Disregard the application of section 704(c) to the property; or

(C) Defer the application of section 704(c) to the property until the disposition of the property.

(ii) ***Definition of small disparity.*** A disparity between book value and adjusted tax basis is a small disparity if the book value of all properties contributed by one partner during the partnership taxable year does not differ from the adjusted tax basis by more than 15 percent of the adjusted tax basis, and the total gross disparity does not exceed $20,000.

(2) ***Aggregation.*** Each of the following types of property may be aggregated for purposes of making allocations under section 704(c) and this section if contributed by one partner during the partnership taxable year.

(i) ***Depreciable property.*** All property, other than real property, that is included in the same general asset account of the contributing partner and the partnership under section 168.

(ii) ***Zero-basis property.*** All property with a basis equal to zero, other than real property.

(iii) ***Inventory.*** For partnerships that do not use a specific identification method of accounting, each item of inventory, other than qualified financial assets (as defined in paragraph (e)(3)(ii) of this section).

(3) ***Special aggregation rule for securities partnerships*** —

(i) ***General rule.*** For purposes of making reverse section 704(c) allocations, a securities partnership may aggregate gains and losses from qualified financial assets using any reasonable approach that is consistent with the purpose of section 704(c). Notwithstanding paragraphs (a)(2) and (a)(6)(i) of this section, once a partnership adopts an aggregate approach, that partnership must apply the same aggregate approach to all of its qualified financial assets for all taxable years in which the partnership qualifies as a securities partnership. Paragraphs (e)(3)(iv) and (e)(3)(v) of this section describe approaches for aggregating reverse section 704(c) gains and losses that are generally reasonable. Other approaches may be reasonable in appropriate circumstances. See, however, paragraph (a)(10) of this section, which describes the circumstances under which section 704(c) methods, including the aggregate approaches described in this paragraph (e)(3), are not reasonable. A partnership using an aggregate approach must separately account for any built-in gain or loss from contributed property.

(ii) ***Qualified financial assets*** —

(A) ***In general.*** A qualified financial asset is any personal property (including stock) that is actively traded. Actively traded means actively traded as defined in § 1.1092(d)-1 (defining actively traded property for purposes of the straddle rules).

(B) ***Management companies.*** For a management company, qualified financial assets also include the following, even if not actively traded: shares of stock in a corporation; notes, bonds, debentures, or other evidences of indebtedness; interest rate, currency, or equity notional principal contracts; evidences of an interest in, or derivative financial instruments in, any security, currency, or commodity, including any option, forward or futures contract, or short position; or any similar financial instrument.

(C) ***Partnership interests.*** An interest in a partnership is not a qualified financial asset for purposes of this paragraph (e)(3)(ii). However, for purposes of this paragraph (e)(3), a partnership (upper-tier partnership) that holds an interest in a securities partnership (lower-tier partnership) must take into account the lower-tier partnership's assets and qualified financial assets as follows:

(*1*) In determining whether the upper-tier partnership qualifies as an investment partnership, the upper-tier partnership must treat its proportionate share of the lower-tier securities partnership's assets as assets of the upper-tier partnership; and

(*2*) If the upper-tier partnership adopts an aggregate approach under this paragraph (e)(3), the upper-tier partnership must aggregate the gains and losses from its directly held qualified financial assets with its distributive share of the gains and losses from the qualified financial assets of the lower-tier securities partnership.

(iii) ***Securities partnership*** —

(A) ***In general.*** A partnership is a securities partnership if the partnership is either a management company or an investment partnership, and the partnership makes all of its book allocations in proportion to the partners' relative book capital accounts (except for reasonable special allocations to a partner that provides management services or investment advisory services to the partnership).

(B) ***Definitions*** —

(*1*) ***Management company.*** A partnership is a management company if it is registered with the Securities and Exchange Commission as a management company under the Investment Company Act of 1940, as amended (15 U.S.C. 80a).

(*2*) ***Investment partnership.*** A partnership is an investment partnership if:

(*i*) On the date of each capital account restatement, the partnership holds qualified financial assets that constitute at least 90 percent of the fair market value of the partnership's non-cash assets; and

(*ii*) The partnership reasonably expects, as of the end of the first taxable year in which the partnership adopts an aggregate approach under this paragraph (e)(3), to make revaluations at least annually.

(iv) ***Partial netting approach.*** This paragraph (e)(3)(iv) describes the partial netting approach of making reverse section 704(c) allocations. See Example 1 of paragraph (e)(3)(ix) of this section for an illustration of the partial netting approach. To use the partial netting approach, the partnership must establish appropriate accounts for each partner for the purpose of taking into account each partner's share of the book gains and losses and determining each partner's share of the tax gains and losses. Under the partial netting approach, on the date of each capital account restatement, the partnership:

(A) Nets its book gains and book losses from qualified financial assets since the last capital account restatement and allocates the net amount to its partners;

(B) Separately aggregates all tax gains and all tax losses from qualified financial assets since the last capital account restatement; and

(C) Separately allocates the aggregate tax gain and aggregate tax loss to the partners in a manner that reduces the disparity between the book capital account balances and the tax capital account balances (book-tax disparities) of the individual partners.

(v) ***Full netting approach.*** This paragraph (e)(3)(v) describes the full netting approach of making reverse section 704(c) allocations on an aggregate basis. See Example 2 of paragraph (e)(3)(ix) of this section for an illustration of the full netting approach. To use the full netting approach, the partnership must establish appropriate accounts for each partner for the purpose of taking into account each partner's share of the book gains and losses and determining each partner's share of the tax gains and losses. Under the full netting approach, on the date of each capital account restatement, the partnership:

(A) Nets its book gains and book losses from qualified financial assets since the last capital account restatement and allocates the net amount to its partners;

(B) Nets tax gains and tax losses from qualified financial assets since the last capital account restatement; and

(C) Allocates the net tax gain (or net tax loss) to the partners in a manner that reduces the book-tax disparities of the individual partners.

(vi) ***Type of tax gain or loss.*** The character and other tax attributes of gain or loss allocated to the partners under this paragraph (e)(3) must:

(A) Preserve the tax attributes of each item of gain or loss realized by the partnership;

(B) Be determined under an approach that is consistently applied;

(C) With respect to any person who directly or indirectly holds an Applicable Partnership Interest, as defined in § 1.1061-1(a)(1), take into account the application of section 1061 with respect to such interest in an appropriate manner; and

(D) Not be determined with a view to reducing substantially the present value of the partners' aggregate tax liability.

(vii) ***Disqualified securities partnerships.*** A securities partnership that adopts an aggregate approach under this paragraph (e)(3) and subsequently fails to qualify as a securities partnership must make reverse section 704(c) allocations on an asset-by-asset basis after the date of disqualification. The partnership, however, is not required to disaggregate the book gain or book loss from qualified asset revaluations before the date of disqualification when making reverse section 704(c) allocations on or after the date of disqualification.

(viii) ***Transitional rule for qualified financial assets revalued after effective date.*** A securities partnership revaluing its qualified financial assets pursuant to § 1.704-1(b)(2)(iv)(*f*) on or after the effective date of this section may use any reasonable approach to coordinate with revaluations that occurred prior to the effective date of this section.

(ix) ***Examples.*** The following examples illustrate the principles of this paragraph (e)(3).

> *Example 1. Operation of the partial netting approach.* (i) *Facts.* Two regulated investment companies, X and Y, each contribute $150,000 in cash to form PRS, a partnership that registers as a management company. The partnership agreement provides that book items will be allocated in accordance with the partners' relative book capital accounts, that book capital accounts will be adjusted to reflect daily revaluations of property pursuant to § 1.704-1(b)(2)(iv)(*f*)(*5*)(*iii*), and that reverse section 704(c) allocations will be made using the partial netting approach described in paragraph (e)(3)(iv) of this section. X and Y each have an initial book capital account of $150,000. In addition, the partnership establishes for each of X and Y a revaluation account with a beginning balance of $0. On Day 1, PRS buys Stock 1, Stock 2, and Stock 3 for $100,000 each. On Day 2, Stock 1 increases in value from $100,000 to $102,000, Stock 2 increases in value from $100,000 to $105,000, and Stock 3 declines in value from $100,000 to $98,000. At the end of Day 2, Z, a regulated investment company, joins PRS by contributing $152,500 in cash for a one-third interest in the partnership [$152,500 divided by $300,000 (initial values of stock) + $5,000 (net gain at end of Day 2) + $152,500]. PRS uses this cash to purchase Stock 4. PRS establishes a revaluation account for Z with a $0 beginning balance. As of the close of Day 3, Stock 1 increases in

value from $102,000 to $105,000, and Stocks 2, 3, and 4 decrease in value from $105,000 to $102,000, from $98,000 to $96,000, and from $152,500 to $151,500, respectively. At the end of Day 3, PRS sells Stocks 2 and 3.

(ii) *Book allocations—Day 2.* At the end of Day 2, PRS revalues the partnership's qualified financial assets and increases X's and Y's book capital accounts by each partner's 50 percent share of the $5,000 ($2,000 + $5,000 − $2,000) net increase in the value of the partnership's assets during Day 2. PRS increases X's and Y's respective revaluation account balances by $2,500 each to reflect the amount by which each partner's book capital account increased on Day 2. Z's capital account is not affected because Z did not join PRS until the end of Day 2. At the beginning of Day 3, the partnership's accounts are as follows:

	Stock 1	Stock 2	Stock 3	Stock 4
Opening Balance	$100,000	$100,000	$100,000	
Day 2 Adjustment	2,000	5,000	(2,000)	
Total	$102,000	$105,000	$98,000	$152,500

	X		
	Book	Tax	Revaluation account
Opening Balance	$150,000	$150,000	0
Day 2 Adjustment	2,500	0	$2,500
Closing Balance	$152,500	$150,000	$2,500

	Y		
	Book	Tax	Revaluation account
Opening Balance	$150,000	$150,000	0
Day 2 Adjustment	2,500	0	$2,500

	Y		
	Book	Tax	Revaluation account
Closing balance	$152,500	$150,000	$2,500

	Z		
	Book	Tax	Revaluation account
Opening Balance			
Day 2 Adjustment			
Closing Balance	$152,500	$152,500	$0

(iii) *Book and tax allocations—Day 3.* At the end of Day 3, PRS decreases the book capital accounts of X, Y, and Z by $1,000 to reflect each partner's share of the $3,000 ($3,000—$3,000—$2,000—$1,000) net decrease in the value of the partnership's qualified financial assets. PRS also reduces each partner's revaluation account balance by $1,000. Accordingly, X's and Y's revaluation account balances are reduced to $1,500 each and Z's revaluation account balance is ($1,000). PRS then separately allocates the tax gain from the sale of Stock 2 and the tax loss from the sale of Stock 3. The $2,000 of tax gain recognized on the sale of Stock 2 ($102,000—$100,000) is allocated among the partners with positive revaluation account balances in accordance with the relative balances of those revaluation accounts. X's and Y's revaluation accounts have equal positive balances; thus, PRS allocates $1,000 of the gain from the sale of Stock 2 to X and $1,000 of that gain to Y. PRS allocates none of the gain from the sale to Z because Z's revaluation account balance is negative. The $4,000 of tax loss recognized from the sale of Stock 3 ($96,000—$100,000) is allocated first to the partners with negative revaluation account balances to the extent of those balances. Because Z is the only partner with a negative revaluation account balance, the tax loss is allocated first to Z to the extent of Z's ($1,000) balance. The remaining $3,000 of tax loss is allocated among the partners in accordance with their distributive shares of the loss. Accordingly, PRS allocates $1,000 of tax loss from the sale of Stock 3 to each of X and Y. PRS also allocates an additional $1,000 of the tax loss to Z, so that Z's total share of the tax loss from the sale of Stock 3 is $2,000. PRS then reduces each partner's revaluation account balance by the amount of any tax gain allocated to that partner and increases each partner's revaluation account balance by the amount of any tax loss allocated to that

partner. At the beginning of Day 4, the partnership's accounts are as follows:

	Stock 1	Stock 2	Stock 3	Stock 4
Opening Balance	$100,000	$100,000	$100,000	$152,500
Day 2 Adjustment	2,000	5,000	(2,000)	
Day 3 Adjustment	$3,000	(3,000)	(2,000)	(1,000)
Total	$105,000	$102,000	$96,000	$151,500

	X and Y		
	Book	Tax	Revaluation account
Opening Balance	$150,000	$150,000	0
Day 2 Adjustment	2,500	0	$2,500
Day 3 Adjustment	(1,000)	0	($1,000)
Total	$151,500	$150,000	$1,500
Gain from Stock 2	0	$1,000	(1,000)
Loss from Stock 3	0	($1,000)	1,000
Closing Balance	$151,500	$150,000	$1,500

	Z		
	Book	Tax	Revaluation account
Opening Balance	$152,500	$152,500	0
Day 3 Adjustment	(1,000)	0	($1,000)
Total	$151,500	$152,500	($1,000)
Gain from Stock 2	0	0	0
Loss from Stock 3	0	(2,000)	2,000
Closing Balance	$151,500	$150,500	$1,000

Example 2. Operation of the full netting approach. (i) *Facts.* The facts are the same as in Example 1, except that the partnership agreement provides that PRS will make reverse section 704(c) allocations using the full netting approach described in paragraph (e)(3)(v) of this section.

(ii) *Book allocations—Days 2 and 3.* PRS allocates its book gains and losses in the manner described in paragraphs (ii) and (iii) of Example 1 (the partial netting approach). Thus, at the end of Day 2, PRS increases the book capital accounts of X and Y by $2,500 to reflect the appreciation in the parntership's assets from the close of Day 1 to the close of Day 2 and records that increase in the revaluation account created for each partner. At the end of Day 3, PRS decreases the book capital accounts of X, Y, and Z by $1,000 to reflect each partner's share of the decline in value of the partnership's assets from Day 2 to Day 3 and reduces each partner's revaluation account by a corresponding amount.

(iii) *Tax allocations—Day 3.* After making the book adjustments described in the previous paragraph, PRS allocates its net tax gain (or net tax loss) from its sales of qualified financial assets during Day 3. To do so, PRS first determines its net tax gain (or net tax loss) recognized from its sales of qualified financial assets for the day. There is a $2,000 net tax loss ($2,000 gain from the sale of Stock 2 less $4,000 loss from the sale of Stock 3) on the sale of PRS's qualified financial assets. Because Z is the only partner with a negative revaluation account balance, the partnership's net tax loss is allocated first to Z to the extent of Z's ($1,000) revaluation account balance. The remaining net tax loss is allocated among the partners in accoradnce with their distributive shares of loss. Thus, PRS allocates $333.33 of the $2,000 net tax loss to each of X and Y. PRS also allocates an additional $333.33 of the net tax loss to Z, so that the total net tax loss allocation to Z is $1,333.33. PRS then increases each partner's revaluation account balance by the amount of net tax loss allocated to that partner. At the beginning of Day 4, the partnership's accounts are as follows:

	Stock 1	Stock 2	Stock 3	Stock 4
Opening Balance	$100,000	$100,000	$100,000	$152,500
Day 2 Adjustment	2,000	5,000	(2,000)	
Day 3 Adjustment	3,000	(3,000)	(2,000)	($1,000)
Total	$105,000	$102,000	$96,000	$151,500

	X and Y		
	Book	Tax	Revaluation account
Opening Balance	$150,000	$150,000	0
Day 2 Adjustment	$2,500	0	$2,500
Day 3 Adjustment	(1,000)	0	(1,000)
Total	$151,500	$150,000	$1,500

	X and Y		
	Book	Tax	Revaluation account
Net Tax Loss-Stocks 2 & 3	0	(333)	333
Closing Balance	$151,500	$149,667	$1,833

	Z		
	Book	Tax	Revaluation account
Opening Balance	$152,500	$152,500	0
Day 3 Adjustment	(1,000)	0	($1,000)
Total	$151,500	$152,500	($1,000)
Net Tax Loss-Stocks 2 & 3	0	(1,333)	1,333
Closing Balance	$151,500	$151,167	$333

(4) ***Aggregation as permitted by the Commissioner.*** The Commissioner may, by published guidance or by letter ruling, permit:

(i) Aggregation of properties other than those described in paragraphs (e)(2) and (e)(3) of this section;

(ii) Partnerships and partners not described in paragraph (e)(3) of this section to aggregate gain and loss from qualified financial assets; and

(iii) Aggregation of qualified financial assets for purposes of making section 704(c) allocations in the same manner as that described in paragraph (e)(3) of this section.

(f) ***Applicability dates.*** With the exception of paragraphs (a)(1), (a)(8)(ii) and (iii), (a)(10) and (11), and (e)(3)(vi)(C) of this section, and of the last sentence of paragraph (d)(2) of this section, this section applies to properties contributed to a partnership and to revaluations pursuant to § 1.704-1(b)(2)(iv)(*f*) or (*s*) on or after December 21, 1993. Paragraph (a)(11) of this section applies to properties contributed by a partner to a partnership on or after August 20, 1997. However, partnerships may rely on paragraph (a)(11) of this section for properties contributed before August 20, 1997 and disposed of on or after August 20, 1997. Paragraph (a)(8)(ii) applies to installment obligations received by a partnership in exchange for section 704(c) property on or after November 24, 2003. Paragraph (a)(8)(iii) applies to property acquired on or after November 24, 2003, by a partnership pursuant to a contract that is section 704(c) property. Except as otherwise provided in § 1.752-7(k), paragraphs (a)(8)(iv) and (a)(12) apply to § 1.752-7 liability transfers, as defined in § 1.752-7(b)(4), occurring on or after June 24, 2003. See § 1.752-7(k). Paragraphs (a)(1) and (a)(10) of this section are applicable for taxable years beginning after June 9, 2010. The last sentence of paragraph (d)(2) of this section applies to property contributed to a partnership on or after September 24, 2019. However, a taxpayer may choose to apply the last sentence in paragraph (d)(2) of this section for property contributed to a partnership on or after September 28, 2017. A taxpayer may rely on the last sentence in paragraph (d)(2) of this section in regulation project REG-104397-18 (2018-41

I.R.B. 558) (see § 601.601(d)(2)(ii)(b) of this chapter) for property contributed to a partnership on or after September 28, 2017, and ending before September 24, 2019. Paragraph (e)(3)(vi)(C) of this section applies to taxable years beginning on or after January 19, 2021.

(g) *Applicability dates for rules for section 721(c) partnerships* —

(1) ***In general.*** Notwithstanding paragraph (f) of this section, except as provided in paragraph (g)(2) of this section, paragraphs (a)(13) and (d)(5)(iii) of this section apply with respect to contributions occurring on or after January 18, 2017, and with respect to contributions that occurred before January 18, 2017 resulting from an entity classification election made under § 301.7701-3 of this chapter that was effective on or before January 18, 2017 but was filed on or after January 18, 2017.

(2) ***Election to apply the provisions described in paragraph (g)(1) of this section retroactively.*** Paragraphs (a)(13) and (d)(5)(iii) of this section may, by election, be applied with respect to a contribution that occurred on or after August 6, 2015 but before January 18, 2017, and with respect to a contribution that occurred before August 6, 2015 resulting from an entity classification election made under § 301.7701-3 of this chapter that was effective on or before August 6, 2015 but was filed on or after August 6, 2015. The election must have been made by applying paragraph (a)(13) or (d)(5)(iii) of this section, as applicable, on a timely filed original return (including extensions) or an amended return filed no later than July 18, 2017.

[T.D. 8500, 58 FR 67679, Dec. 22, 1993]

Editorial Note: For FEDERAL REGISTER citations affecting § 1.704-3, see the List of CFR Sections Affected, which appears in the Finding Aids section of the printed volume and at *www.govinfo.gov*.

§ 1.704-4 Distribution of contributed property.

(a) *Determination of gain and loss* —

(1) ***In general.*** A partner that contributes section 704(c) property to a partnership must recognize gain or loss under section 704(c)(1)(B) and this section on the distribution of such property to another partner within five years of its contribution to the partnership in an amount equal to the gain or loss that would have been allocated to such partner under section 704(c)(1)(A) and § 1.704-3 if the distributed property had been sold by the partnership to the distributee partner for its fair market value at the time of the distribution. See § 1.704-3(a)(3)(i) for a definition of section 704(c) property.

(2) ***Transactions to which section 704(c)(1)(B) applies.*** Section 704(c)(1)(B) and this section apply only to the extent that a distribution by a partnership is a distribution to a partner acting in the capacity of a partner within the meaning of section 731.

(3) ***Fair market value of property.*** The fair market value of the distributed section 704(c) property is the price at which the property would change hands between a willing buyer and a willing seller at the time of the distribution, neither being under any compulsion to buy or sell and both having reasonable knowledge of the relevant facts. The fair market value that a partnership assigns to distributed section 704(c) property will be regarded as correct, provided that the value is reasonably agreed to among the partners in an arm's-length negotiation and the partners have sufficiently adverse interests.

(4) *Determination of five-year period* —

(i) ***General rule.*** The five-year period specified in paragraph (a)(1) of this section begins on and includes the date of contribution.

(ii) ***Section 708(b)(1)(B) terminations.*** A termination of the partnership under section 708(b)(1)(B) does not begin a new five-year period for each partner with respect to the built-in gain and built-in loss property that the terminated partnership is deemed to contribute to the new partnership under § 1.708-1(b)(1)(iv). See § 1.704-3(a)(3)(ii) for the definitions of built-in gain and built-in loss on section 704(c) property. This paragraph (a)(4)(ii) applies to terminations of partnerships under section 708(b)(1)(B) occurring on or after May 9, 1997; however, this paragraph (a)(4)(ii) may be applied to terminations occurring on or after May 9, 1996, provided that the partnership and its partners apply this paragraph (a)(4)(ii) to the termination in a consistent manner.

(5) ***Examples.*** The following examples illustrate the rules of this paragraph (a). Unless otherwise specified, partnership income equals partnership expenses (other than depreciation deductions for contributed property) for each year of the partnership, the fair market value of partnership property does not change, all distributions by the partnership are subject to section 704(c)(1)(B), and all partners are unrelated.

> *Example 1. Recognition of gain.* (i) On January 1, 1995, A, B, and C form partnership ABC as equal partners. A contributes $10,000 cash and Property A, nondepreciable real property with a fair market value of $10,000 and an adjusted tax basis of $4,000. Thus, there is a built-in gain of $6,000 on Property A at the time of contribution. B contributes $10,000 cash and Property B, nondepreciable real property with a fair market value and adjusted tax basis of $10,000. C contributes $20,000 cash.
> (ii) On December 31, 1998, Property A and Property B are distributed to C in complete liquidation of C's interest in the partnership.
>
> (iii) A would have recognized $6,000 of gain under section 704(c)(1)(A) and § 1.704-3 on the sale of Property A at the time of the distribution ($10,000 fair market value less $4,000 adjusted tax basis). As a result, A must recognize $6,000 of gain on the distribution of Property A to C. B would not have recognized any gain or loss under section 704(c)(1)(A) and § 1.704-3 on the sale of Property B at the time of distribution because Property B was not section 704(c) property. As a result, B does not recognize any gain or loss on the distribution of Property B.

> *Example 2. Effect of post-contribution depreciation deductions.* (i) On January 1, 1995, A, B, and C form partnership ABC as equal partners. A contributes Property A, depreciable property with a fair market value of $30,000 and an adjusted tax basis of $20,000. Therefore, there is a built-in gain of $10,000 on Property A. B and C each contribute $30,000 cash. ABC uses the traditional method of making section 704(c) allocations described in § 1.704-3(b) with respect to Property A.

(ii) Property A is depreciated using the straight-line method over its remaining 10-year recovery period. The partnership has book depreciation of $3,000 per year (10 percent of the $30,000 book basis), and each partner is allocated $1,000 of book depreciation per year (one-third of the total annual book depreciation of $3,000). The partnership has a tax depreciation deduction of $2,000 per year (10 percent of the $20,000 tax basis in Property A). This $2,000 tax depreciation deduction is allocated equally between B and C, the noncontributing partners with respect to Property A.

(iii) At the end of the third year, the book value of Property A is $21,000 ($30,000 initial book value less $9,000 aggregate book depreciation) and the adjusted tax basis is $14,000 ($20,000 initial tax basis less $6,000 aggregate tax depreciation). A's remaining section 704(c)(1)(A) built-in gain with respect to Property A is $7,000 ($21,000 book value less $14,000 adjusted tax basis).

(iv) On December 31, 1997, Property A is distributed to B in complete liquidation of B's interest in the partnership. If Property A had been sold for its fair market value at the time of the distribution, A would have recognized $7,000 of gain under section 704(c)(1)(A) and § 1.704-3(b). Therefore, A recognizes $7,000 of gain on the distribution of Property A to B.

Example 3. Effect of remedial method. (i) On January 1, 1995, A, B, and C form partnership ABC as equal partners. A contributes Property A1, nondepreciable real property with a fair market value of $10,000 and an adjusted tax basis of $5,000, and Property A2, nondepreciable real property with a fair market value and adjusted tax basis of $10,000. B and C each contribute $20,000 cash. ABC uses the remedial method of making section 704(c) allocations described in § 1.704-3(d) with respect to Property A1.
(ii) On December 31, 1998, when the fair market value of Property A1 has decreased to $7,000, Property A1 is distributed to C in a current distribution. If Property A1 had been sold by the partnership at the time of the distribution, ABC would have recognized the $2,000 of remaining built-in gain under section 704(c)(1)(A) on the sale (fair market value of $7,000 less $5,000 adjusted tax basis). All of this gain would have been allocated to A. ABC would also have recognized a book loss of $3,000 ($10,000 original book value less $7,000 current fair market value of the property). Book loss in the amount of $2,000 would have been allocated equally between B and C. Under the remedial method, $2,000 of tax loss would also have been allocated equally to B and C to match their share of the book loss. As a result, $2,000 of gain would also have been allocated to A as an offsetting remedial allocation. A would have recognized $4,000 of total gain under section 704(c)(1)(A) on the sale of Property A1 ($2,000 of section 704(c) recognized gain plus $2,000 remedial gain). Therefore, A recognizes $4,000 of gain on the distribution of Property A1 to C under this section.

(b) ***Character of gain or loss —***

(1) ***General rule.*** Gain or loss recognized by the contributing partner under section 704(c)(1)(B) and this section has the same character as the gain or loss that would have resulted if the distributed property had been sold by the partnership to the distributee partner at the time of the distribution.

(2) ***Example.*** The following example illustrates the rule of this paragraph (b). Unless otherwise specified, partnership income equals partnership expenses (other than depreciation deductions for contributed property) for each year of the partnership, the fair market value of partnership property does not change, all distributions by the partnership are subject to section 704(c)(1)(B), and all partners are unrelated.

> *Example. Character of gain.* (i) On January 1, 1995, A and B form partnership AB. A contributes $10,000 and Property A, nondepreciable real property with a fair market value of $10,000 and an adjusted tax basis of $4,000, in exchange for a 25 percent interest in partnership capital and profits. B contributes $60,000 cash for a 75 percent interest in partnership capital and profits.
> (ii) On December 31, 1998, Property A is distributed to B in a current distribution. Property A is used in a trade or business of B.
>
> (iii) A would have recognized $6,000 of gain under section 704(c)(1)(A) on a sale of Property A at the time of the distribution (the difference between the fair market value ($10,000) and the adjusted tax basis ($4,000) of the property at that time). Because Property A is not a capital asset in the hands of Partner B and B holds more than 50 percent of partnership capital and profits, the character of the gain on a sale of Property A to B would have been ordinary income under section 707(b)(2). Therefore, the character of the gain to A on the distribution of Property A to B is ordinary income.

(c) ***Exceptions —***

(1) ***Property contributed on or before October 3, 1989.*** Section 704(c)(1)(B) and this section do not apply to property contributed to the partnership on or before October 3, 1989.

(2) ***Certain liquidations.*** Section 704(c)(1)(B) and this section do not apply to a distribution of an interest in section 704(c) property to a partner other than the contributing partner in a liquidation of the partnership if—

(i) The contributing partner receives an interest in the section 704(c) property contributed by that partner (and no other property); and

(ii) The built-in gain or loss in the interest distributed to the contributing partner, determined immediately after the distribution, is equal to or greater than the built-in gain or loss on the property that would have been allocated to the contributing partner under section 704(c)(1)(A) and § 1.704-3 on a sale of the contributed property to an unrelated party immediately before the distribution.

(3) ***Section 708(b)(1)(B) terminations.*** Section 704(c)(1)(B) and this section do not apply to the deemed distribution of interests in a new partnership caused by the termination of a partnership under section 708(b)(1)(B). A subsequent distribution of section 704(c) property by the new partnership to a partner of the new partnership is subject to section 704(c)(1)(B) to the same extent that a

distribution by the terminated partnership would have been subject to section 704(c)(1)(B). See also § 1.737-2(a) for a similar rule in the context of section 737. This paragraph (c)(3) applies to terminations of partnerships under section 708(b)(1)(B) occurring on or after May 9, 1997; however, this paragraph (c)(3) may be applied to terminations occurring on or after May 9, 1996, provided that the partnership and its partners apply this paragraph (c)(3) to the termination in a consistent manner.

(4) ***Complete transfer to another partnership.*** Section 704(c)(1)(B) and this section do not apply to a transfer by a partnership (transferor partnership) of all of its assets and liabilities to a second partnership (transferee partnership) in an exchange described in section 721, followed by a distribution of the interest in the transferee partnership in liquidation of the transferor partnership as part of the same plan or arrangement. A subsequent distribution of section 704(c) property by the transferee partnership to a partner of the transferee partnership is subject to section 704(c)(1)(B) to the same extent that a distribution by the transferor partnership would have been subject to section 704(c)(1)(B). See § 1.737-2(b) for a similar rule in the context of section 737.

(5) ***Incorporation of a partnership.*** Section 704(c)(1)(B) and this section do not apply to an incorporation of a partnership by any method of incorporation (other than a method involving an actual distribution of partnership property to the partners followed by a contribution of that property to a corporation), provided that the partnership is liquidated as part of the incorporation transaction. See § 1.737-2(c) for a similar rule in the context of section 737.

(6) ***Undivided interests.*** Section 704(c)(1)(B) and this section do not apply to a distribution of an undivided interest in property to the extent that the undivided interest does not exceed the undivided interest, if any, contributed by the distributee partner in the same property. See § 1.737-2(d)(4) for the application of section 737 in a similar context. The portion of the undivided interest in property retained by the partnership after the distribution, if any, that is treated as contributed by the distributee partner, is reduced to the extent of the undivided interest distributed to the distributee partner.

(7) ***Example.*** The following example illustrates the rule of paragraph (c)(2) of this section. Unless otherwise specified, partnership income equals partnership expenses (other than depreciation deductions for contributed property) for each year of the partnership, the fair market value of partnership property does not change, all distributions by the partnership are subject to section 704(c)(1)(B), and all partners are unrelated.

> *Example.* (i) On January 1, 1995, A and B form partnership AB, as equal partners. A contributes Property A, nondepreciable real property with a fair market value and adjusted tax basis of $20,000. B contributes Property B, nondepreciable real property with a fair market value of $20,000 and an adjusted tax basis of $10,000. Property B therefore has a built-in gain of $10,000 at the time of contribution.
> (ii) On December 31, 1998, the partnership liquidates when the fair market value of Property A has not changed, but the fair market value of Property B has increased to $40,000.
>
> (iii) In the liquidation, A receives Property A and a 25 percent interest in Property B. This interest in Property B has a fair market value of $10,000 to A, reflecting the fact that A was entitled to 50 percent of the $20,000 post-contribution appreciation in Property B. The

partnership distributes to B a 75 percent interest in Property B with a fair market value of $30,000. B's basis in this portion of Property B is $10,000 under section 732(b). As a result, B has a built-in gain of $20,000 in this portion of Property B immediately after the distribution ($30,000 fair market value less $10,000 adjusted tax basis). This built-in gain is greater than the $10,000 of built-in gain in Property B at the time of contribution to the partnership. B therefore does not recognize any gain on the distribution of a portion of Property B to A under this section.

(d) *Special rules* —

(1) *Nonrecognition transactions, installment obligations, contributed contracts, and capitalized costs* —

(i) ***Nonrecognition transactions.*** Property received by the partnership in exchange for section 704(c) property in a nonrecognition transaction is treated as the section 704(c) property for purposes of section 704(c)(1)(B) and this section to the extent that the property received is treated as section 704(c) property under § 1.704-3(a)(8). See § 1.737-2(d)(3) for a similar rule in the context of section 737.

(ii)-(iii) [Reserved]

(iv) ***Capitalized costs.*** Property to which the cost of section 704(c) property is properly capitalized is treated as section 704(c) property for purposes of section 704(c)(1)(B) and this section to the extent that such property is treated as section 704(c) property under § 1.704-3(a)(8)(iv). See § 1.737-2(d)(3) for a similar rule in the context of section 737.

(2) ***Transfers of a partnership interest.*** The transferee of all or a portion of the partnership interest of a contributing partner is treated as the contributing partner for purposes of section 704(c)(1)(B) and this section to the extent of the share of built-in gain or loss allocated to the transferee partner. See § 1.704-3(a)(7).

(3) ***Distributions of like-kind property.*** If section 704(c) property is distributed to a partner other than the contributing partner and like-kind property (within the meaning of section 1031) is distributed to the contributing partner no later than the earlier of (i) 180 days following the date of the distribution to the non-contributing partner, or (ii) the due date (determined with regard to extensions) of the contributing partner's income tax return for the taxable year of the distribution to the noncontributing partner, the amount of gain or loss, if any, that the contributing partner would otherwise have recognized under section 704(c)(1)(B) and this section is reduced by the amount of built-in gain or loss in the distributed like-kind property in the hands of the contributing partner immediately after the distribution. The contributing partner's basis in the distributed like-kind property is determined as if the like-kind property were distributed in an unrelated distribution prior to the distribution of any other property distributed as part of the same distribution and is determined without regard to the increase in the contributing partner's adjusted tax basis in the partnership interest under section 704(c)(1)(B) and this section. See § 1.707-3 for provisions treating the distribution of the like-kind property to the contributing partner as a disguised sale in certain situations.

(4) ***Example.*** The following example illustrates the rules of this paragraph (d). Unless otherwise specified, partnership income equals partnership expenses (other than depreciation deductions for contributed property) for each year of the partnership, the fair market value of partnership property does not change, all distributions by the partnership are subject to section 704(c)(1)(B), and all partners are unrelated.

Example. Distribution of like-kind property. (i) On January 1, 1995, A, B, and C form partnership ABC as equal partners. A contributes Property A, nondepreciable real property with a fair market value of $20,000 and an adjusted tax basis of $10,000. B and C each contribute $20,000 cash. The partnership subsequently buys Property X, nondepreciable real property of a like-kind to Property A with a fair market value and adjusted tax basis of $8,000. The fair market value of Property X subsequently increases to $10,000.
(ii) On December 31, 1998, Property A is distributed to B in a current distribution. At the same time, Property X is distributed to A in a current distribution. The distribution of Property X does not result in the contribution of Property A being properly characterized as a disguised sale to the partnership under § 1.707-3. A's basis in Property X is $8,000 under section 732(a)(1). A therefore has $2,000 of built-in gain in Property X ($10,000 fair market value less $8,000 adjusted tax basis).

(iii) A would generally recognize $10,000 of gain under section 704(c)(1)(B) on the distribution of Property A, the difference between the fair market value ($20,000) of the property and its adjusted tax basis ($10,000). This gain is reduced, however, by the amount of the built-in gain of Property X in the hands of A. As a result, A recognizes only $8,000 of gain on the distribution of Property A to B under section 704(c)(1)(B) and this section.

(e) ***Basis adjustments*** —

(1) ***Contributing partner's basis in the partnership interest.*** The basis of the contributing partner's interest in the partnership is increased by the amount of the gain, or decreased by the amount of the loss, recognized by the partner under section 704(c)(1)(B) and this section. This increase or decrease is taken into account in determining

(i) the contributing partner's adjusted tax basis under section 732 for any property distributed to the partner in a distribution that is part of the same distribution as the distribution of the contributed property, other than like-kind property described in paragraph (d)(3) of this section (pertaining to the special rule for distributions of like-kind property), and

(ii) the amount of the gain recognized by the contributing partner under section 731 or section 737, if any, on a distribution of money or property to the contributing partner that is part of the same distribution as the distribution of the contributed property. For a determination of basis in a distribution subject to section 737, see § 1.737-3(a).

(2) ***Partnership's basis in partnership property.*** The partnership's adjusted tax basis in the distributed section 704(c) property is increased or decreased immediately before the distribution by the amount of gain or loss recognized by the contributing partner under section 704(c)(1)(B) and this section. Any increase or decrease in basis is therefore taken into account in determining the distributee partner's adjusted tax basis in the distributed property under section 732. For a determination of basis in a distribution subject to section 737, see § 1.737-3(b).

(3) ***Section 754 adjustments.*** The basis adjustments to partnership property made pursuant to paragraph (e)(2) of this section are not elective and must be made regardless of whether the partnership has an election in effect under section 754. Any adjustments to the bases of partnership property (including the distributed section 704(c) property) under section 734(b) pursuant to a

section 754 election must be made after (and must take into account) the adjustments to basis made under paragraph (e)(2) of this section. See § 1.737-3(c)(4) for a similar rule in the context of section 737.

(4) ***Example.*** The following example illustrates the rules of this paragraph (e). Unless otherwise specified, partnership income equals partnership expenses (other than depreciation deductions for contributed property) for each year of the partnership, the fair market value of partnership property does not change, all distributions by the partnership are subject to section 704(c)(1)(B), and all partners are unrelated.

> *Example. Basis adjustment.* On January 1, 1995, A, B, and C form partnership ABC as equal partners. A contributes $10,000 cash and Property A, nondepreciable real property with a fair market value of $10,000 and an adjusted tax basis of $4,000. B and C each contribute $20,000 cash.
> (ii) On December 31, 1998, Property A is distributed to B in a current distribution.
>
> (iii) Under paragraph (a) of this section, A recognizes $6,000 of gain on the distribution of Property A because that is the amount of gain that would have been allocated to A under section 704(c)(1)(A) and § 1.704-3 on a sale of Property A for its fair market value at the time of the distribution (fair market value of Property A ($10,000) less its adjusted tax basis at the time of distribution ($4,000)). The adjusted tax basis of A's partnership interest is increased from $14,000 to $20,000 to reflect this gain. The partnership's adjusted tax basis in Property A is increased from $4,000 to $10,000 immediately prior to its distribution to B. B's adjusted tax basis in Property A is therefore $10,000 under section 732(a)(1).

(f) ***Anti-abuse rule*** —

(1) ***In general.*** The rules of section 704(c)(1)(B) and this section must be applied in a manner consistent with the purpose of section 704(c)(1)(B). Accordingly, if a principal purpose of a transaction is to achieve a tax result that is inconsistent with the purpose of section 704(c)(1)(B), the Commissioner can recast the transaction for federal tax purposes as appropriate to achieve tax results that are consistent with the purpose of section 704(c)(1)(B) and this section. Whether a tax result is inconsistent with the purpose of section 704(c)(1)(B) and this section must be determined based on all the facts and circumstances. See § 1.737-4 for an anti-abuse rule and examples in the context of section 737.

(2) ***Examples.*** The following examples illustrate the anti-abuse rule of this paragraph (f). The examples set forth below do not delineate the boundaries of either permissible or impermissible types of transactions. Further, the addition of any facts or circumstances that are not specifically set forth in an example (or the deletion of any facts or circumstances) may alter the outcome of the transaction described in the example. Unless otherwise specified, partnership income equals partnership expenses (other than depreciation deductions for contributed property) for each year of the partnership, the fair market value of partnership property does not change, all distributions by the partnership are subject to section 704(c)(1)(B), and all partners are unrelated.

> *Example 1. Distribution in substance made within five-year period; results inconsistent with*

the purpose of section 704(c)(1)(B). (i) On January 1, 1995, A, B, and C form partnership ABC as equal partners. A contributes Property A, nondepreciable real property with a fair market value of $10,000 and an adjusted tax basis of $1,000. B and C each contributes $10,000 cash. (ii) On December 31, 1998, the partners desire to distribute Property A to B in complete liquidation of B's interest in the partnership. If Property A were distributed at that time, however, A would recognize $9,000 of gain under section 704(c)(1)(B), the difference between the $10,000 fair market value and the $1,000 adjusted tax basis of Property A, because Property A was contributed to the partnership less than five years before December 31, 1998. On becoming aware of this potential gain recognition, and with a principal purpose of avoiding such gain, the partners amend the partnership agreement on December 31, 1998, and take any other steps necessary to provide that substantially all of the economic risks and benefits of Property A are borne by B as of December 31, 1998, and that substantially all of the economic risks and benefits of all other partnership property are borne by A and C. The partnership holds Property A until January 5, 2000, at which time it is distributed to B in complete liquidation of B's interest in the partnership.

(iii) The actual distribution of Property A occurred more than five years after the contribution of the property to the partnership. The steps taken by the partnership on December 31, 1998, however, are the functional equivalent of an actual distribution of Property A to B in complete liquidation of B's interest in the partnership as of that date. Section 704(c)(1)(B) requires recognition of gain when contributed section 704(c) property is in substance distributed to another partner within five years of its contribution to the partnership. Allowing a contributing partner to avoid section 704(c)(1)(B) through arrangements such as those in this *Example 1* that have the effect of a distribution of property within five years of the date of its contribution to the partnership would effectively undermine the purpose of section 704(c)(1)(B) and this section. As a result, the steps taken by the partnership on December 31, 1998, are treated as causing a distribution of Property A to B for purposes of section 704(c)(1)(B) on that date, and A recognizes gain of $9,000 under section 704(c)(1)(B) and this section at that time.

(iv) Alternatively, if on becoming aware of the potential gain recognition to A on a distribution of Property A on December 31, 1998, the partners had instead agreed that B would continue as a partner with no changes to the partnership agreement or to B's economic interest in partnership operations, the distribution of Property A to B on January 5, 2000, would not have been inconsistent with the purpose of section 704(c)(1)(B) and this section. In that situation, Property A would not have been distributed until after the expiration of the five-year period specified in section 704(c)(1)(B) and this section. Deferring the distribution of Property A until the end of the five-year period for a principal purpose of avoiding the recognition of gain under section 704(c)(1)(B) and this section is not inconsistent with the purpose of section 704(c)(1)(B). Therefore, A would not have recognized gain on the distribution of Property A in that case.

Example 2. Suspension of five-year period in manner consistent with the purpose of section 704(c)(1)(B). (i) A, B, and C form partnership ABC on January 1, 1995, to conduct bona fide business activities. A contributes Property A, nondepreciable real property with a fair market value of $10,000 and an adjusted tax basis of $1,000, in exchange for a 49.5 percent interest in partnership capital and profits. B contributes $10,000 in cash for a 49.5 percent interest in partnership capital and profits. C contributes cash for a 1 percent interest in partnership capital and profits. A and B are wholly owned subsidiaries of the same affiliated group and continue to control the management of Property A by virtue of their controlling interests in the partnership. The partnership is formed pursuant to a plan a principal purpose of which is to minimize the period of time that A would have to remain a partner with a potential acquiror of Property A.
(ii) On December 31, 1997, D is admitted as a partner to the partnership in exchange for $10,000 cash.

(iii) On January 5, 2000, Property A is distributed to D in complete liquidation of D's interest in the partnership.

(iv) The distribution of Property A to D occurred more than five years after the contribution of the property to the partnership. On these facts, however, a principal purpose of the transaction was to minimize the period of time that A would have to remain partners with a potential acquiror of Property A, and treating the five-year period of section 704(c)(1)(B) as running during a time when Property A was still effectively owned through the partnership by members of the contributing affiliated group of which A is a member is inconsistent with the purpose of section 704(c)(1)(B). Prior to the admission of D as a partner, the pooling of assets between A and B, on the one hand, and C, on the other hand, although sufficient to constitute ABC as a valid partnership for federal income tax purposes, is not a sufficient pooling of assets for purposes of running the five-year period with respect to the distribution of Property A to D. Allowing a contributing partner to avoid section 704(c)(1)(B) through arrangements such as those in this *Example 2* would have the effect of substantially nullifying the five-year requirement of section 704(c)(1)(B) and this section and elevating the form of the transaction over its substance. As a result, with respect to the distribution of Property A to D, the five-year period of section 704(c)(1)(B) is tolled until the admission of D as a partner on December 31, 1997. Therefore, the distribution of Property A occurred before the end of the five-year period of section 704(c)(1)(B), and A recognizes gain of $9,000 under section 704(c)(1)(B) on the distribution.

(g) ***Effective dates.*** This section applies to distributions by a partnership to a partner on or after January 9, 1995, except that paragraph (d)(1)(iv) applies to distributions by a partnership to a partner on or after June 24, 2003.

[T.D. 8642, 60 FR 66730, Dec. 26, 1995, as amended by T.D. 8717, 62 FR 25500, May 9, 1997; T.D. 9193, 70 FR 14395, Mar. 22, 2005; T.D. 9207, 70 FR 30342, May 26, 2005]

§ 1.705-1 Determination of basis of partner's interest.

(a) *General rule.*

(1) Section 705 and this section provide rules for determining the adjusted basis of a partner's interest in a partnership. A partner is required to determine the adjusted basis of his interest in a partnership only when necessary for the determination of his tax liability or that of any other person. The determination of the adjusted basis of a partnership interest is ordinarily made as of the end of a partnership taxable year. Thus, for example, such year-end determination is necessary in ascertaining the extent to which a partner's distributive share of partnership losses may be allowed. See section 704(d). However, where there has been a sale or exchange of all or a part of a partnership interest or a liquidation of a partner's entire interest in a partnership, the adjusted basis of the partner's interest should be determined as of the date of sale or exchange or liquidation. The adjusted basis of a partner's interest in a partnership is determined without regard to any amount shown in the partnership books as the partner's “capital”, “equity”, or similar account. For example, A contributes property with an adjusted basis to him of $400 (and a value of $1,000) to a partnership. B contributes $1,000 cash. While under their agreement each may have a “capital account” in the partnership of $1,000, the adjusted basis of A's interest is only $400 and B's interest $1,000.

(2) The original basis of a partner's interest in a partnership shall be determined under section 722 (relating to contributions to a partnership) or section 742 (relating to transfers of partnership interests). Such basis shall be increased under section 722 by any further contributions to the partnership and by the sum of the partner's distributive share for the taxable year and prior taxable years of:

(i) Taxable income of the partnership as determined under section 703(a),

(ii) Tax-exempt receipts of the partnership, and

(iii) The excess of the deductions for depletion over the basis of the depletable property, unless the property is an oil or gas property the basis of which has been allocated to partners under section 613A(c)(7)(D).

(3) The basis shall be decreased (but not below zero) by distributions from the partnership as provided in section 733 and by the sum of the partner's distributive share for the taxable year and prior taxable years of:

(i) Partnership losses (including capital losses), and

(ii) Partnership expenditures which are not deductible in computing partnership taxable income or loss and which are not capital expenditures.

(4) The basis shall be decreased (but not below zero) by the amount of the partner's deduction for depletion allowable under section 611 for any partnership oil and gas property to the extent the deduction does not exceed the proportionate share of the adjusted basis of the property allocated to the partner under section 613A(c)(7)(D).

(5) The basis shall be adjusted (but not below zero) to reflect any gain or loss to the partner resulting from a disposition by the partnership of a domestic oil or gas property after December 31, 1974.

(6) For the effect of liabilities in determining the amount of contributions made by a partner to a partnership or the amount of distributions made by a partnership to a partner, see section 752 and § 1.752-1, relating to the treatment of certain liabilities. In determining the basis of a partnership interest on the effective date of subchapter K, chapter 1 of the Code, or any of the sections thereof, the partner's share of partnership liabilities on that date shall be included.

(7) For basis adjustments necessary to coordinate sections 705 and 1032 in certain situations in which a partnership disposes of stock or any position in stock to which section 1032 applies of a corporation that holds a direct or indirect interest in the partnership, see § 1.705-2.

(8) For basis adjustments necessary to coordinate sections 705 and 358(h), see § 1.358-7(b). For certain basis adjustments with respect to a § 1.752-7 liability assumed by a partnership from a partner, see § 1.752-7.

(9) For basis adjustments necessary to coordinate sections 705 and 362(e)(2), see § 1.362-4(e)(1).

(b) ***Alternative rule.*** In certain cases, the adjusted basis of a partner's interest in a partnership may be determined by reference to the partner's share of the adjusted basis of partnership property which would be distributable upon termination of the partnership. The alternative rule may be used to determine the adjusted basis of a partner's interest where circumstances are such that the partner cannot practicably apply the general rule set forth in section 705(a) and paragraph (a) of this section, or where, from a consideration of all the facts, it is, in the opinion of the Commissioner, reasonable to conclude that the result produced will not vary substantially from the result obtainable under the general rule. Where the alternative rule is used, adjustments may be necessary in determining the adjusted basis of a partner's interest in a partnership. Adjustments would be required, for example, in order to reflect in a partner's share of the adjusted basis of partnership property any significant discrepancies arising as a result of contributed property, transfers of partnership interests, or distributions of property to the partners. The operation of the alternative rules may be illustrated by the following examples:

Example 1. The ABC partnership, in which A, B, and C are equal partners, owns various properties with a total adjusted basis of $1,500 and has earned and retained an additional $1,500. The total adjusted basis of partnership property is thus $3,000. Each partner's share in the adjusted basis of partnership property is one-third of this amount, or $1,000. Under the alternative rule, this amount represents each partner's adjusted basis for his partnership interest.

Example 2. Assume that partner A in example 1 of this paragraph sells his partnership interest to D for $1,250 at a time when the partnership property with an adjusted basis of $1,500 had appreciated in value to $3,000, and when the partnership also had $750 in cash. The total adjusted basis of all partnership property is $2,250 and the value of such property is $3,750. D's basis for his partnership interest is his cost, $1,250. However, his one-third share of the adjusted basis of partnership property is only $750. Therefore, for the purposes of the alternative rule, D has an adjustment of $500 in determining the basis of his interest. This amount represents the difference between the cost of his partnership interest and his share of partnership basis at the time of his purchase. If the partnership subsequently earns and retains an additional $1,500, its property will have an adjusted basis of $3,750. D's adjusted basis for his interest under the alternative rule is $1,750, determined by adding $500, his basis adjustment to $1,250 (his one-third share of the $3,750 adjusted basis of partnership property). If the partnership distributes $250 to each partner in a current distribution, D's adjusted basis for his interest will be $1,500 ($1,000, his one-third share of the remaining basis of partnership property, $3,000, plus his basis adjustment of $500).

Example 3. Assume that BCD partnership in example 2 of this paragraph continues to operate. In 1960, D

proposes to sell his partnership interest and wishes to evaluate the tax consequences of such sale. It is necessary, therefore, to determine the adjusted basis of his interest in the partnership. Assume further that D cannot determine the adjusted basis of his interest under the general rule. The balance sheet of the BCD partnership is as follows:

Assets	Adjusted basis per books	Market value
Cash	$3,000	$3,000
Receivables	4,000	4,000
Depreciable property	5,000	5,000
Land held for investment	18,000	30,000
Total	30,000	42,000

Liabilities and capital	Per books
Liabilities	$6,000
Capital accounts:	
B	4,500
C	4,500
D	15,000
Total	30,000

The $15,000 representing the amount of D's capital account does not reflect the $500 basis adjustment arising from D's purchase of his interest. See example 2 of this paragraph. The adjusted basis of D's partnership interest determined under the alternative rule is as follows:

D's share of the adjusted basis of partnership property (reduced by the amount of liabilities) at time of proposed sale	$15,000
D's share of partnership liabilities (under the partnership agreement liabilities are shared equally)	2,000
D's basis adjustment from example 2	500
Adjusted basis of D's interest at the time of proposed sale, as determined under alternative rule	17,500

[T.D. 6500, 25 FR 11814, Nov. 26, 1960, 25 FR 14021, Dec. 31, 1960, as amended by T.D. 8437, 57 FR 43903, Sept. 23, 1992; T.D. 8986, 67 FR 15114, Mar. 29, 2002; T.D. 9049, 68 FR 12816, Mar. 18, 2003; T.D. 9207, 70 FR 30342, May 26, 2005; T.D. 9633, 78 FR 54168, Sept. 3, 2013; T.D. 9759, 81 FR 17083, Mar. 28, 2016]

§ 1.705-2 Basis adjustments coordinating sections 705 and 1032.

(a) ***Purpose.*** This section coordinates the application of sections 705 and 1032 and is intended to prevent inappropriate increases or decreases in the adjusted basis of a corporate partner's interest in a partnership resulting from the partnership's disposition of the corporate partner's stock. The rules under section 705 generally are intended to preserve equality between the adjusted basis of a partner's interest in a partnership (outside basis) and such partner's share of the adjusted basis in partnership assets (inside basis). However, in situations where a section 754 election was not in effect for the year in which a partner acquired its interest, the partner's inside basis and outside basis may not be equal. Similarly, in situations where a section 754 election was not in effect for the year in which a partnership distributes money or other property to another partner and that partner recognizes gain or loss on the distribution or the basis of the property distributed to that partner is adjusted, the remaining partners' inside basis and outside basis may not be equal. In these situations, gain or loss allocated to the partner upon disposition of the partnership assets that is attributable to the difference between the adjusted basis of the partnership assets absent the section 754 election and the adjusted basis of the partnership assets had a section 754 election been in effect generally will result in an adjustment to the basis of the partner's interest in the partnership under section 705(a). Such gain (or loss) therefore generally will be offset by a corresponding decrease in the gain or increase in the loss (or increase in the gain or decrease in the loss) upon the subsequent disposition by the partner of its interest in the partnership. Where such a difference exists with respect to stock of a corporate partner that is held by the partnership, gain or loss from the disposition of corporate partner stock attributable to the difference is not recognized by the corporate partner under section 1032. To adjust the basis of the corporate partner's interest in the partnership for this unrecognized gain or loss would not be appropriate because it would create an opportunity for the recognition of taxable gain or loss on a subsequent disposition of the partnership interest where no economic gain or loss has been incurred by the corporate partner and no corresponding taxable gain or loss had previously been allocated to the corporate partner by the partnership.

(b) ***Single partnership*** —

(1) ***Required adjustments relating to acquisitions of partnership interest.***

(i) This paragraph (b)(1) applies in situations where a corporation acquires an interest in a partnership that holds stock in that corporation (or the partnership subsequently acquires stock in that corporation in an exchanged basis transaction), the partnership does not have an election under section 754 in effect for the year in which the corporation acquires the interest, and the partnership later sells or exchanges the stock. In these situations, the increase (or decrease) in the corporation's adjusted basis in its partnership interest resulting from the sale or exchange of the stock equals the amount of gain (or loss) that the corporate partner would have recognized (absent the application of section 1032) if, for the year in which the corporation acquired the interest, a section 754 election had been in effect.

(ii) The provisions of this paragraph (b)(1) are illustrated by the following example:

> *Example.* (i) A, B, and C form equal partnership PRS. Each partner contributes $30,000 in exchange for its partnership interest. PRS has no liabilities. PRS purchases stock in corporation X for $30,000, which appreciates in value to $120,000. PRS also purchases inventory for $60,000, which appreciates in value to $150,000. A sells its interest in PRS to corporation X for $90,000 in a year for which an election under section 754 is not in effect. PRS later sells the X stock for $150,000. PRS realizes a gain of $120,000 on the

sale of the X stock. X's share of the gain is $40,000. Under section 1032, X does not recognize its share of the gain.
(ii) Normally, X would be entitled to a $40,000 increase in the basis of its PRS interest for its allocable share of PRS's gain from the sale of the X stock, but a special rule applies in this situation. If a section 754 election had been in effect for the year in which X acquired its interest in PRS, X would have been entitled to a basis adjustment under section 743(b) of $60,000 (the excess of X's basis for the transferred partnership interest over X's share of the adjusted basis to PRS of PRS's property). See § 1.743-1(b). Under § 1.755-1(b), the basis adjustment under section 743(b) would have been allocated $30,000 to the X stock (the amount of the gain that would have been allocated to X from the hypothetical sale of the stock), and $30,000 to the inventory (the amount of the gain that would have been allocated to X from the hypothetical sale of the inventory).

(iii) If a section 754 election had been in effect for the year in which X acquired its interest in PRS, the amount of gain that X would have recognized upon PRS's disposition of X stock (absent the application of section 1032) would be $10,000 (X's share of PRS's gain from the stock sale, $40,000, minus the amount of X's basis adjustment under section 743(b), $30,000). See § 1.743-1(j). Accordingly, the increase in the basis of X's interest in PRS is $10,000.

(2) ***Required adjustments relating to distributions.***

(i) This paragraph (b)(2) applies in situations where a corporation owns a direct or indirect interest in a partnership that owns stock in that corporation, the partnership distributes money or other property to another partner and that partner recognizes gain or loss on the distribution or the basis of the property distributed to that partner is adjusted during a year in which the partnership does not have an election under section 754 in effect, and the partnership subsequently sells or exchanges the stock. In these situations, the increase (or decrease) in the corporation's adjusted basis in its partnership interest resulting from the sale or exchange of the stock equals the amount of gain (or loss) that the corporate partner would have recognized (absent the application of section 1032) if, for the year in which the partnership made the distribution, a section 754 election had been in effect.

(ii) The provisions of this paragraph (b)(2) are illustrated by the following example:

Example. (i) A, B, and corporation C form partnership PRS. A and B each contribute $10,000 and C contributes $20,000 in exchange for a partnership interest. PRS has no liabilities. PRS purchases stock in corporation C for $10,000, which appreciates in value to $70,000. PRS distributes $25,000 to A in complete liquidation of A's interest in PRS in a year for which an election under section 754 is not in effect. PRS later sells the C stock for $70,000. PRS realizes a gain of $60,000 on the sale of the C stock. C's share of the gain is $40,000. Under section 1032, C does not recognize its share of the gain.

(ii) Normally, C would be entitled to a $40,000 increase in the basis of its PRS interest for its allocable share of PRS's gain from the sale of the C stock, but a special rule applies in this situation. If a section 754 election had been in effect for the year in which PRS made the distribution to A, PRS would have been entitled to adjust the basis of partnership property under section 734(b)(1)(A) by $15,000 (the amount of gain recognized by A with respect to the distribution to A under section 731(a)(1)). See § 1.734-1(b). Under § 1.755-1(c)(1)(ii), the basis adjustment under section 734(b) would have been allocated to the C stock, increasing its basis to $25,000 (where there is a distribution resulting in an adjustment under section 734(b)(1)(A) to the basis of undistributed partnership property, the adjustment is allocated only to capital gain property).

(iii) If a section 754 election had been in effect for the year in which PRS made the distribution to A, the amount of gain that PRS would have recognized upon PRS's disposition of C stock would be $45,000 ($70,000 minus $25,000 basis in the C stock), and the amount of gain C would have recognized upon PRS's disposition of the C stock (absent the application of section 1032) would be $30,000 (C's share of PRS's gain of $45,000 from the stock sale). Accordingly, upon PRS's sale of the C stock, the increase in the basis of C's interest in PRS is $30,000.

(c) *Tiered partnerships and other arrangements* —

(1) ***Required adjustments.*** The purpose of these regulations as set forth in paragraph (a) of this section cannot be avoided through the use of tiered partnerships or other arrangements. For example, if a corporation acquires an indirect interest in its own stock through a chain of two or more partnerships (either where the corporation acquires a direct interest in a partnership or where one of the partnerships in the chain acquires an interest in another partnership), and gain or loss from the sale or exchange of the stock is subsequently allocated to the corporation, then the bases of the interests in the partnerships included in the chain shall be adjusted in a manner that is consistent with the purpose of this section. Similarly, if a corporation owns an indirect interest in its own stock through a chain of two or more partnerships, and a partnership in the chain distributes money or other property to another partner and that partner recognizes gain or loss on the distribution or the basis of the property distributed to that partner is adjusted during a year in which the partnership does not have an election under section 754 in effect, then upon any subsequent sale or exchange of the stock, the bases of the interests in the partnerships included in the chain shall be adjusted in a manner that is consistent with the purpose of this section.

(2) ***Examples.*** The provisions of this paragraph (c) are illustrated by the following examples:

Example 1. Acquisition of upper-tier partnership interest by corporation. (i) A, B, and C form a partnership (UTP), with each partner contributing $25,000. UTP and D form a partnership (LTP). UTP contributes $75,000 in exchange for its interest in LTP, and D contributes $25,000 in exchange for D's interest in LTP. Neither UTP nor LTP has any liabilities. LTP purchases stock in corporation E for $100,000, which appreciates in value to $1,000,000. C sells its interest in UTP to corporation E for $250,000 in a year for which an

election under section 754 is not in effect for UTP or LTP. LTP later sells the E stock for $2,000,000. LTP realizes a $1,900,000 gain on the sale of the E stock. UTP's share of the gain is $1,425,000, and E's share of the gain is $475,000. Under section 1032, E does not recognize its share of the gain.
(ii) With respect to the basis of UTP's interest in LTP, if all of the gain from the sale of the E stock (including E's share) were to increase the basis of UTP's interest in LTP, UTP's basis in such interest would be $1,500,000 ($75,000 + $1,425,000). The fair market value of UTP's interest in LTP is $1,500,000. Because UTP did not have a section 754 election in effect for the taxable year in which E acquired its interest in UTP, UTP's basis in the LTP interest does not reflect the purchase price paid by E for its interest. Increasing the basis of UTP's interest in LTP by the full amount of the gain that would be recognized (in the absence of section 1032) on the sale of the E stock preserves the conformity between UTP's inside basis and outside basis with respect to LTP (*i.e.*, UTP's share of LTP's cash is equal to $1,500,000, and UTP's basis in the LTP interest is $1,500,000) and appropriately would cause UTP to recognize no gain or loss on the sale of UTP's interest in LTP immediately after the sale of the E stock. Accordingly, increasing the basis of UTP's interest in LTP by the entire amount of gain allocated to UTP (including E's share) from LTP's sale of the E stock is consistent with the purpose of this section. The $1,425,000 of gain allocated by LTP to UTP will increase the adjusted basis of UTP's interest in LTP under section 705(a)(1). The basis of UTP's interest in LTP immediately after the sale of the E stock is $1,500,000.

(iii) With respect to the basis of E's interest in UTP, if E's share of the gain allocated to UTP and then to E were to increase the basis of E's interest in UTP, E's basis in such interest would be $725,000 ($250,000 + $475,000) and the fair market value of such interest would be $500,000, so that E would recognize a loss of $225,000 if E sold its interest in UTP immediately after LTP's disposition of the E stock. It would be inappropriate for E to recognize a taxable loss of $225,000 upon a disposition of its interest in UTP because E would not incur an economic loss in the transaction, and E did not recognize a taxable gain upon LTP's disposition of the E stock that appropriately would be offset by a taxable loss on the disposition of its interest in UTP. Accordingly, increasing E's basis in its UTP interest by the entire amount of gain allocated to E from the sale of the E stock is not consistent with the purpose of this section. (Conversely, because A and B were allocated taxable gain on the disposition of the E stock, it would be appropriate to increase A's and B's bases in their respective interests in UTP by the full amount of the gain allocated to them.)

(iv) The appropriate basis adjustment for E's interest in UTP upon the disposition of the E stock by LTP can be determined as the amount of gain that E would have recognized (in the absence of section 1032) upon the sale by LTP of the E stock if both UTP and LTP had made section 754 elections for the taxable year in which E acquired the interest in UTP. If section 754 elections had been in effect for UTP and LTP for the year in which E acquired E's interest in UTP, the following would occur. E would be entitled to a $225,000 positive basis adjustment

under section 743(b) with respect to the property of UTP. The entire basis adjustment would be allocated to UTP's only asset, its interest in LTP. In addition, the sale of C's interest in UTP would be treated as a deemed sale of E's share of UTP's interest in LTP for purposes of sections 754 and 743. The deemed selling price of E's share of UTP's interest in LTP would be $250,000 (E's share of UTP's adjusted basis in LTP, $25,000, plus E's basis adjustment under section 743(b) with respect to the assets of UTP, $225,000). The deemed sale of E's share of UTP's interest in LTP would trigger a basis adjustment under section 743(b) of $225,000 with respect to the assets of LTP (the excess of E's share of UTP's adjusted basis in LTP, including E's basis adjustment ($225,000), $250,000, over E's share of the adjusted basis of LTP's property, $25,000). This $225,000 adjustment by LTP would be allocated to LTP's only asset, the E stock, and would be segregated and allocated solely to E. The amount of LTP's gain from the sale of the E stock (before considering section 743(b)) would be $1,900,000. E's share of this gain, $475,000, would be offset in part by the $225,000 basis adjustment under section 743(b), so that E would recognize gain equal to $250,000 in the absence of section 1032.

(v) If the basis of E's interest in UTP were increased by $250,000, the total basis of E's interest would equal $500,000. This would conform to E's share of UTP's basis in the LTP interest ($1,500,000 × 1/3 = $500,000) as well as E's indirect share of the cash held by LTP ((1/3 × 3/4) × $2,000,000 = $500,000). Such a basis adjustment does not create the opportunity for the recognition of an inappropriate loss by E on a subsequent disposition of E's interest in UTP and is consistent with the purpose of this section. Accordingly, under this paragraph (c), of the $475,000 gain allocated to E, only $250,000 will apply to increase the adjusted basis of E in UTP under section 705(a)(1). E's adjusted basis in its UTP interest following the sale of the E stock is $500,000.

Example 2. Acquisition of lower-tier partnership interest by upper-tier partnership. (i) A, corporation B, and C form an equal partnership (UTP), with each partner contributing $100,000. D, E, and F also form an equal partnership (LTP), with each partner contributing $30,000. LTP purchases stock in corporation B for $90,000, which appreciates in value to $900,000. LTP has no liabilities. UTP purchases D's interest in LTP for $300,000. LTP does not have an election under section 754 in effect for the taxable year of UTP's purchase. LTP later sells the B stock for $900,000. UTP's share of the gain is $270,000, and B's share of that gain is $90,000. Under section 1032, B does not recognize its share of the gain.
(ii) With respect to the basis of UTP's interest in LTP, if all of the gain from the sale of the B stock (including B's share) were to increase the basis of UTP's interest in LTP, UTP's basis in the LTP interest would be $570,000 ($300,000 + $270,000), and the fair market value of such interest would be $300,000, so that B would be allocated a loss of $90,000 (($570,000−$300,000) × 1/3) if UTP sold its interest in LTP immediately after LTP's disposition of the B stock. It would be inappropriate for B to recognize a taxable loss of $90,000 upon a disposition of UTP's interest in LTP. B would not incur an economic loss in the

transaction, and B was not allocated a taxable gain upon LTP's disposition of the B stock that appropriately would be offset by a taxable loss on the disposition of UTP's interest in LTP. Accordingly, increasing UTP's basis in its LTP interest by the gain allocated to B from the sale of the B stock is not consistent with the purpose of this section. (Conversely, because E and F were allocated taxable gain on the disposition of the B stock, it would be appropriate to increase E's and F's bases in their respective interests in LTP by the full amount of such gain.)

(iii) The appropriate basis adjustment for UTP's interest in LTP upon the disposition of the B stock by LTP can be determined as the amount of gain that UTP would have recognized (in the absence of section 1032) upon the sale by LTP of the B stock if the portion of the gain allocated to UTP that subsequently is allocated to B were determined as if LTP had made an election under section 754 for the taxable year in which UTP acquired its interest in LTP. If a section 754 election had been in effect for LTP for the year in which UTP acquired its interest in LTP, then with respect to B, the following would occur. UTP would be entitled to a $90,000 positive basis adjustment under section 743(b), allocable to B, in the property of LTP. The entire basis adjustment would be allocated to LTP's only asset, its B stock. The amount of LTP's gain from the sale of the B stock (before considering section 743(b)) would be $810,000. UTP's share of this gain, $270,000, would be offset, in part, by the basis adjustment under section 743(b), so that UTP would recognize gain equal to $180,000.

(iv) If the basis of UTP's interest in LTP were increased by $180,000, the total basis of UTP's partnership interest would equal $480,000. This would conform to the sum of UTP's share of the cash held by LTP ((1/3 × $900,000 = $300,000) and the taxable gain recognized by A and C on the disposition of the B stock that appropriately may be offset on the disposition of their interests in UTP ($90,000 + $90,000 = $180,000). Such a basis adjustment does not inappropriately create the opportunity for the allocation of a loss to B on a subsequent disposition of UTP's interest in LTP and is consistent with the purpose of this section. Accordingly, of the $270,000 gain allocated to UTP, only $180,000 will apply to increase the adjusted basis of UTP in LTP under section 705(a)(1). Such $180,000 basis increase must be segregated and allocated $90,000 each to solely A and C. UTP's adjusted basis in its LTP interest following the sale of the B stock is $480,000.

(v) With respect to B's interest in UTP, if B's share of the gain allocated to UTP and then to B were to increase the basis of B's interest in UTP, B would have a UTP partnership interest with an adjusted basis of $190,000 ($100,000 + $90,000) and a value of $100,000, so that B would recognize a loss of $90,000 if B sold its interest in UTP immediately after LTP's disposition of the B stock. It would be inappropriate for B to recognize a taxable loss of $90,000 upon a disposition of its interest in UTP because B would not incur an economic loss in the transaction, and B did not recognize a taxable gain upon LTP's disposition of the B stock that appropriately would be offset by a taxable loss on the disposition of its interest in UTP. Accordingly, increasing B's basis in its UTP interest by the gain allocated to B from the sale of

the B stock is not consistent with the purpose of this section. (Conversely, because A and C were allocated taxable gain on the disposition of the B stock that is a result of LTP not having a section 754 election in effect, it would be appropriate for A and C to recognize an offsetting taxable loss on the disposition of A's and C's interests in UTP. Accordingly, it would be appropriate to increase A's and C's bases in their respective interests in UTP by the amount of gain recognized by A and C.)

(vi) The appropriate basis adjustment for B's interest in UTP upon the disposition of the B stock by LTP can be determined as the amount of gain that B would have recognized (in the absence of section 1032) upon the sale by LTP of the B stock if the portion of the gain allocated to UTP that is subsequently allocated to B were determined as if LTP had made an election under section 754 for the taxable year in which UTP acquired its interest in LTP. If a section 754 election had been in effect for LTP for the year in which UTP acquired its interest in LTP, then with respect to B, the following would occur. UTP would be entitled to a basis adjustment under section 743(b) in the property of LTP of $90,000 with respect to B. The entire basis adjustment would be allocated to LTP's only asset, its B stock. The amount of LTP's gain from the sale of the B stock (before considering section 743(b)) would be $810,000. UTP's share of this gain, $270,000, would be offset, in part, by the $90,000 basis adjustment under section 743(b), so that UTP would recognize gain equal to $180,000. The $90,000 basis adjustment would completely offset the gain that otherwise would be allocated to B.

(vii) If no gain were allocated to B so that the basis of B's interest in UTP was not increased, the total basis of B's interest would equal $100,000. This would conform to B's share of UTP's basis in the LTP interest (($480,000−$180,000 (*i.e.*, A's and C's share of the basis that should offset taxable gain recognized as a result of LTP's failure to have a section 754 election)) × 1/3 = $100,000) as well as B's indirect share of the cash held by LTP ((1/3 × 1/3) × $900,000 = $100,000). Such a basis adjustment does not create the opportunity for the recognition of an inappropriate loss by B on a subsequent disposition of B's interest in UTP and is consistent with the purpose of this section. Accordingly, under this paragraph (c), of the $90,000 gain allocated to B, none will apply to increase the adjusted basis of B in UTP under section 705(a)(1). B's adjusted basis in its UTP interest following the sale of the B stock is $100,000.

(viii) Immediately after LTP's disposition of the B stock, UTP sells its interest in LTP for $300,000. UTP's adjusted basis in its LTP interest is $480,000, $180,000 of which must be allocated $90,000 each to A and C. Accordingly, upon UTP's sale of its interest in LTP, UTP realizes $180,000 of loss, and A and C in turn each realize $90,000 of loss.

(d) ***Positions in Stock.*** For purposes of this section, stock includes any position in stock to which section 1032 applies.

(e) ***Effective date.*** This section applies to gain or loss allocated with respect to sales or exchanges of stock occurring after December 6, 1999, except that paragraph (d) of this section is applicable with respect to sales or exchanges of stock occurring on or after March 29, 2002, and the fourth sentence of paragraph (a), paragraph (b)(2), and the third sentence of paragraph (c)(1) of this section are applicable with respect to sales or exchanges of stock occurring on or after March 18, 2003.

[T.D. 8986, 67 FR 15114, Mar. 29, 2002, as amended by T.D. 9049, 68 FR 12816, Mar. 18, 2003]

§ 1.706-0 Table of contents.

This section lists the captions contained in the regulations under section 706.

§ 1.706-1 Taxable years of partner and partnership.

(a) Year in which partnership income is includible.

(b) Taxable year.

(1) Partnership treated as taxpayer.

(2) Partnership's taxable year.

(i) Required taxable year.

(ii) Exceptions.

(3) Least aggregate deferral.

(i) Taxable year that results in the least aggregate deferral of income.

(ii) Determination of the taxable year of a partner or partnership that uses a 52-53 week taxable year.

(iii) Special de minimis rule.

(iv) Examples.

(4) Measurement of partner's profits and capital interest.

(i) In general.

(ii) Profits interest.

(A) In general.

(B) Percentage share of partnership net income.

(C) Distributive share.

(iii) Capital interest.

(5) Taxable year of a partnership with tax-exempt partners.

(i) Certain tax-exempt partners disregarded.

(ii) Example.

(iii) Effective date.

(6) Certain foreign partners disregarded.

(i) Interests of disregarded foreign partners not taken into account.

(ii) Definition of foreign partner.

(iii) Minority interest rule.

(iv) Example.

(v) Effective date.

(A) Generally.

(B) Voluntary change in taxable year.

(C) Subsequent sale or exchange of interests.

(D) Transition rule.

(7) Adoption of taxable year.

(8) Change in taxable year.

(i) Partnerships.

(A) Approval required.

(B) Short period tax return.

(C) Change in required taxable year.

(ii) Partners.

(9) Retention of taxable year.

(10) Procedures for obtaining approval or making a section 444 election.

(11) Effect on partner elections under section 444.

(i) Election taken into account.

(ii) Effective date.

(c) Closing of partnership year.

(1) General rule.

(2) Disposition of entire interest.

(i) In general.

(ii) Example.

(iii) Deemed dispositions.

(3) Disposition of less than entire interest.

(4) Determination of distributive shares.

(5) Transfer of interest by gift.

(6) Foreign taxes.

(d) Effective/applicability date.

§ 1.706-2 Certain allocable cash basis items. [Reserved]

§ 1.706-2T Temporary regulations; question and answer under the Tax Reform Act of 1984 (temporary).

§ 1.706-3 Items attributable to interest in lower-tier partnership.

(a) through (c) [Reserved]

(d) Conservation contributions.

(e) Applicability date.

§ 1.706-4 Determination of distributive share when a partner's interest varies.

(a) General rule.

(1) Variations subject to this section.

(2) Coordination with section 706(d)(2) and (3) and other Code sections.

(3) Allocation of items subject to this section.

(4) Example.

(b) Exceptions.

(1) Permissible changes among contemporaneous partners.

(2) Safe harbor for partnerships for which capital is not a material income-producing factor.

(3) Special rules for publicly traded partnerships.

(c) Conventions.

(1) In general.

(i) Calendar day convention.

(ii) Semi-monthly convention.

(iii) Monthly convention.

(2) Exceptions.

(3) Permissible conventions for each variation.

(i) Rules applicable to all partnerships.

(ii) Publicly treated partnerships.

(4) Examples.

(d)(1) Optional regular monthly or semimonthly interim closings.

(2) Example.

(e) Extraordinary items.

(1) General principles.

(2) Definition.

(3) Small item exception.

(4) Examples.

(f) Agreement of the partners.

(g) Effective/applicability date.

§ 1.706-5 Taxable year determination.

(a) In general.

(b) Effective/applicability date.

[T.D. 9728, 80 FR 45877, Aug. 3, 2015; 80 FR 68243, Nov. 4, 2015, as amended by T.D. 9999, 89 FR 54327, June 28, 2024]

§ 1.706-1 Taxable years of partner and partnership.

(a) ***Year in which partnership income is includible.***

(1) In computing taxable income for a taxable year, a partner is required to include the partner's distributive share of partnership items set forth in section 702 and the regulations thereunder for any partnership taxable year ending within or with the partner's taxable year. A partner must also include in taxable income for a taxable year guaranteed payments under section 707(c) that are deductible by the partnership under its method of accounting in the partnership taxable year ending within or with the partner's taxable year.

(2) The rules of paragraph (a)(1) of this section may be illustrated by the following example:

Example. Partner A reports income using a calendar year, while the partnership of which A is a member reports its income using a fiscal year ending May 31. The partnership reports its income and deductions under the cash method of accounting. During the partnership taxable year ending May 31, 2002, the partnership makes guaranteed payments of $120,000 to A for services and for the use of capital. Of this amount, $70,000 was paid to A between June 1 and December 31, 2001, and the remaining $50,000 was paid to A between January 1 and May 31, 2002. The entire $120,000 paid to A is includible in A's taxable income for the calendar year 2002 (together with A's distributive share of partnership items set forth in section 702 for the partnership taxable year ending May 31, 2002).

(3) If a partner receives distributions under section 731 or sells or exchanges all or part of a partnership interest, any gain or loss arising therefrom does not constitute partnership income.

(b) ***Taxable year*** —

(1) ***Partnership treated as a taxpayer.*** The taxable year of a partnership must be determined as though the partnership were a taxpayer.

(2) ***Partnership's taxable year*** —

(i) ***Required taxable year.*** Except as provided in paragraph (b)(2)(ii) of this section, the taxable year of a partnership must be—

(A) The majority interest taxable year, as defined in section 706(b)(4);

(B) If there is no majority interest taxable year, the taxable year of all of the principal partners of the partnership, as defined in 706(b)(3) (the principal partners' taxable year); or

(C) If there is no majority interest taxable year or principal partners' taxable year, the taxable year that produces the least aggregate deferral of income as determined under paragraph (b)(3) of this section.

(ii) ***Exceptions.*** A partnership may have a taxable year other than its required taxable year if it makes an election under section 444, elects to use a 52-53-week taxable year that ends with reference to its required taxable year or a taxable year elected under section 444, or establishes a business purpose for such taxable year and obtains approval of the Commissioner under section 442.

(3) ***Least aggregate deferral*** —

(i) ***Taxable year that results in the least aggregate deferral of income.*** The taxable year that results in the least aggregate deferral of income will be the taxable year of one or more of the partners in the partnership which will result in the least aggregate deferral of income to the partners. The aggregate deferral for a particular year is equal to the sum of the products determined by multiplying the month(s) of deferral for each partner that would be generated by that year and each partner's interest in partnership profits for that year. The partner's taxable year that produces the lowest sum when compared to the other partner's taxable years is the taxable year that results in the least aggregate deferral of income to the partners. If the calculation results in more than one taxable year qualifying as the taxable year with the least aggregate deferral, the partnership may select any one of those taxable years as its taxable year. However, if one of the qualifying taxable years is also the partnership's existing taxable year, the partnership must maintain its existing taxable year. The determination of the taxable year that results in the least aggregate deferral of income generally must be made as of the beginning of the partnership's current taxable year. The director, however, may determine that the first day of the current taxable year is not the appropriate testing day and require the use of some other day or period that will more accurately reflect the ownership of the partnership and thereby the actual aggregate deferral to the partners where the partners engage in a transaction that has as its principal purpose the avoidance of the principles of this section. Thus, for example the preceding sentence would apply where there is a transfer of an interest in the partnership that results in a temporary transfer of that interest principally for purposes of qualifying for a specific taxable year under the principles of this section. For purposes of this section, deferral to each partner is measured in terms of months from the end of the partnership's taxable year forward to the end of the partner's taxable year.

(ii) ***Determination of the taxable year of a partner or partnership that uses a 52-53-week taxable year.*** For purposes of the calculation described in paragraph (b)(3)(i) of this section, the taxable year of a partner or partnership that uses a 52-53-week taxable year must be the same year determined under the rules of section 441(f) and the regulations thereunder with respect to the inclusion of income by the partner or partnership.

(iii) ***Special de minimis rule.*** If the taxable year that results in the least aggregate deferral produces an aggregate deferral that is less than .5 when compared to the aggregate deferral of the current taxable year, the partnership's current taxable year will be treated as the taxable year with the least aggregate deferral. Thus, the partnership will not be permitted to change its taxable year.

(iv) ***Examples.*** The principles of this section may be illustrated by the following examples:

Example 1. Partnership P is on a fiscal year ending June 30. Partner A reports income on the fiscal year ending June 30 and Partner B reports income on the fiscal year ending July 31. A and B each have a 50 percent interest in partnership profits. For its taxable year beginning July 1, 1987, the partnership will be required to retain its taxable year since the fiscal year ending June 30 results in the least aggregate deferral of income to the partners. This determination is made as follows:

Test 6/30	Year end	Interest in partnership profits	Months of deferral for 6/30 year end	Interest × deferral
Partner A	6/30	.5	0	0
Partner B	7/31	.5	1	.5
Aggregate deferral				.5

Test 7/31	Year end	Interest in partnership profits	Months of deferral for 7/31 year end	Interest × deferral
Partner A	6/30	.5	11	5.5
Partner B	7/31	.5	0	0
Aggregate deferral				5.5

Example 2. The facts are the same as in *Example 1* except that A reports income on the calendar year and B reports on the fiscal year ending November 30. For the partnership's taxable year beginning July 1, 1987, the partnership is required to change its taxable year to a fiscal year ending November 30 because such year results in the least aggregate

deferral of income to the partners. This determination is made as follows:

Test 12/31	Year end	Interest in partnership profits	Months of deferral for 12/31 year end	Interest × deferral
Partner A	12/31	.5	0	0
Partner B	11/30	.5	11	5.5
Aggregate deferral				5.5

Test 11/30	Year end	Interest in partnership profits	Months of deferral for 11/30 year end	Interest × deferral
Partner A	12/31	.5	1	.5
Partner B	11/30	.5	0	0
Aggregate deferral				.5

Example 3. The facts are the same as in *Example 2* except that B reports income on the fiscal year ending June 30. For the partnership's taxable year beginning July 1, 1987, each partner's taxable year will result in identical aggregate deferral of income. If the partnership's current taxable year was neither a fiscal year ending June 30 nor the calendar year, the partnership would select either the fiscal year ending June 30 or the calendar year as its taxable year. However, since the partnership's current taxable year ends June 30, it must retain its current taxable year. The determination is made as follows:

Test 12/31	Year end	Interest in partnership profits	Months of deferral for 12/31 year end	Interest × deferral
Partner A	12/31	.5	0	0
Partner B	6/30	.5	6	3.0
Aggregate				3.0

Test 12/31	Year end	Interest in partnership profits	Months of deferral for 12/31 year end	Interest × deferral
deferral				

Test 6/30	Year end	Interest in partnership profits	Months of deferral for 6/30 year end	Interest × deferral
Partner A	12/31	.5	6	3.0
Partner B	6/30	.5	0	0
Aggregate deferral				3.0

Example 4. The facts are the same as in *Example 1* except that on December 31, 1987, partner A sells a 4 percent interest in the partnership to Partner C, who reports income on the fiscal year ending June 30, and a 40 percent interest in the partnership to Partner D, who also reports income on the fiscal year ending June 30. The taxable year beginning July 1, 1987, is unaffected by the sale. However, for the taxable year beginning July 31, 1988, the partnership must determine the taxable year resulting in the least aggregate deferral as of July 1, 1988. In this case, the partnership will be required to retain its taxable year since the fiscal year ending June 30 continues to be the taxable year that results in the least aggregate deferral of income to the partners.

Example 5. The facts are the same as in *Example 4* except that Partner D reports income on the fiscal year ending April 30. As in *Example 4,* the taxable year during which the sale took place is unaffected by the shifts in interests. However, for its taxable year beginning July 1, 1988, the partnership will be required to change its taxable year to the fiscal year ending April 30. This determination is made as follows:

Test 7/31	Year end	Interest in partnership profits	Months of deferral for 7/31 year end	Interest × deferral
Partner A	6/30	.06	11	.66
Partner B	7/31	.5	0	0

Test 7/31	Year end	Interest in partnership profits	Months of deferral for 7/31 year end	Interest × deferral
Partner C	6/30	.04	11	.44
Partner D	4/30	.4	9	3.60
Aggregate deferral				4.70

Test 6/30	Year end	Interest in partnership profits	Months of deferral for 6/30 year end	Interest × deferral
Partner A	6/30	.06	0	0
Partner B	7/31	.5	1	.5
Partner C	6/30	.04	0	0
Partner D	4/30	.4	10	4.0
Aggregate deferral				4.5

Test 4/30	Year end	Interest in partnership profits	Months of deferral for 4/30 year end	Interest × deferral
Partner A	6/30	.06	2	.12
Partner B	7/31	.5	3	1.50
Partner C	6/30	.04	2	.08
Partner D	4/30	.4	0	0
Aggregate deferral				1.70

§ 1.706-1(b)(3) Test	
Current taxable year (June 30)	4.5
Less: Taxable year producing the least aggregate deferral (April 30)	1.7
Additional aggregate deferral (greater than .5)	2.8

Example 6. (i) Partnership P has two partners, A who reports income on the fiscal year ending March 31, and B who reports income on the fiscal year ending July 31. A and B share profits equally. P has determined its taxable year under paragraph

(b)(3) of this section to be the fiscal year ending March 31 as follows:

Test 3/31	Year end	Interest in partnership profits	Deferral for 3/31 year end	Interest × deferral
Partner A	3/31	.5	0	0
Partner B	7/31	.5	4	2
Aggregate deferral				2

Test 7/31	Year end	Interest in partnership profits	Deferral for 7/31 year end	Interest × deferral
Partner A	3/31	.5	8	4
Partner B	7/31	.5	0	0
Aggregate deferral				4

(ii) In May 1988, Partner A sells a 45 percent interest in the partnership to C, who reports income on the fiscal year ending April 30. For the taxable period beginning April 1, 1989, the fiscal year ending April 30 is the taxable year that produces the least aggregate deferral of income to the partners. However, under paragraph (b)(3)(iii) of this section the partnership is required to retain its fiscal year ending March 31. This determination is made as follows:

Test 3/31	Year end	Interest in partnership profits	Deferral for 3/31 year end	Interest × deferral
Partner A	3/31	.05	0	0
Partner B	7/31	.5	4	2.0
Partner C	4/30	.45	1	.45

Test 3/31	Year end	Interest in partnership profits	Deferral for 3/31 year end	Interest × deferral
Aggregate deferral				2.45

Test 7/31	Year end	Interest in partnership profits	Deferral for 7/31 year end	Interest × deferral
Partner A	3/31	.05	8	.40
Partner B	7/31	.5	0	0
Partner C	4/30	.45	9	4.05
Aggregate deferral				4.45

Test 4/30	Year end	Interest in partnership profits	Deferral for 4/30 year end	Interest × deferral
Partner A	3/31	.05	11	.55
Partner B	7/31	.5	3	1.50
Partner C	4/30	.45	0	0
Aggregate deferral				2.05

§ 1.706-1(b)(3) Test	
Current taxable year (3/31)	2.45
Less: Taxable year producing the least aggregate deferral (4/30)	2.05
Additional aggregate deferral (less than .5)	.40

(4) ***Measurement of partner's profits and capital interest*** —

(i) ***In general.*** The rules of this paragraph (b)(4) apply in determining the majority interest taxable year, the principal partners' taxable year, and the least aggregate deferral taxable year.

(ii) ***Profits interest*** —

(A) ***In general.*** For purposes of section 706(b), a partner's interest in partnership profits is generally the partner's percentage share of partnership profits for the current partnership taxable year. If the partnership does not expect to have net income for the current

partnership taxable year, then a partner's interest in partnership profits instead must be the partner's percentage share of partnership net income for the first taxable year in which the partnership expects to have net income.

(B) ***Percentage share of partnership net income.*** The partner's percentage share of partnership net income for a partnership taxable year is the ratio of: the partner's distributive share of partnership net income for the taxable year, to the partnership's net income for the year. If a partner's percentage share of partnership net income for the taxable year depends on the amount or nature of partnership income for that year (due to, for example, preferred returns or special allocations of specific partnership items), then the partnership must make a reasonable estimate of the amount and nature of its income for the taxable year. This estimate must be based on all facts and circumstances known to the partnership as of the first day of the current partnership taxable year. The partnership must then use this estimate in determining the partners' interests in partnership profits for the taxable year.

(C) ***Distributive share.*** For purposes of this paragraph (b)(4)(ii), a partner's distributive share of partnership net income is determined by taking into account all rules and regulations affecting that determination, including, without limitation, sections 704(b), (c), and (e), 736, and 743.

(iii) ***Capital interest.*** Generally, a partner's interest in partnership capital is determined by reference to the assets of the partnership that the partner would be entitled to upon withdrawal from the partnership or upon liquidation of the partnership. If the partnership maintains capital accounts in accordance with § 1.704-1(b)(2)(iv), then for purposes of section 706(b), the partnership may assume that a partner's interest in partnership capital is the ratio of the partner's capital account to all partners' capital accounts as of the first day of the partnership taxable year.

(5) ***Taxable year of a partnership with tax-exempt partners*** —

(i) ***Certain tax-exempt partners disregarded.*** In determining the taxable year (the current year) of a partnership under section 706(b) and the regulations thereunder, a partner that is tax-exempt under section 501(a) shall be disregarded if such partner was not subject to tax, under chapter 1 of the Internal Revenue Code, on any income attributable to its investment in the partnership during the partnership's taxable year immediately preceding the current year. However, if a partner that is tax-exempt under section 501(a) was not a partner during the partnership's immediately preceding taxable year, such partner will be disregarded for the current year if the partnership reasonably believes that the partner will not be subject to tax, under chapter 1 of the Internal Revenue Code, on any income attributable to such partner's investment in the partnership during the current year.

(ii) ***Example.*** The provisions of paragraph (b)(5)(i) of this section may be illustrated by the following example:

Example. Assume that partnership A has historically used the calendar year as its taxable year. In addition, assume that A is owned by 5 partners, 4 calendar year individuals (each owning 10 percent of A's profits and capital) and a tax-exempt organization (owning 60 percent of A's profits and capital). The tax-exempt organization has never had unrelated business taxable income with respect to A and has historically used a June 30 fiscal year. Finally, assume that A desires to retain the calendar year for its taxable year beginning January 1, 2003. Under these facts and but for the special rule in paragraph (b)(5)(i) of this section, A would be required under section 706(b)(1)(B)(i) to change to a year ending

June 30, for its taxable year beginning January 1, 2003. However, under the special rule provided in paragraph (b)(5)(i) of this section the partner that is tax-exempt is disregarded, and A must retain the calendar year, under section 706(b)(1)(B)(i), for its taxable year beginning January 1.

(iii) ***Effective date.*** The provisions of this paragraph (b)(5) are applicable for taxable years beginning on or after July 23, 2002. For taxable years beginning before July 23, 2002, see § 1.706-3T as contained in 26 CFR part 1 revised April 1, 2002.

(6) ***Certain foreign partners disregarded*** —

(i) ***Interests of disregarded foreign partners not taken into account.*** In determining the taxable year (the current taxable year) of a partnership under section 706(b) and the regulations thereunder, any interest held by a disregarded foreign partner is not taken into account. A foreign partner is a disregarded foreign partner unless such partner is allocated any gross income of the partnership that was effectively connected (or treated as effectively connected) with the conduct of a trade or business within the United States during the partnership's taxable year immediately preceding the current taxable year (or, if such partner was not a partner during the partnership's immediately preceding taxable year, the partnership reasonably believes that the partner will be allocated any such income during the current taxable year) and taxation of that income is not otherwise precluded under any U.S. income tax treaty.

(ii) ***Definition of foreign partner.*** For purposes of this paragraph (b)(6), a foreign partner is any partner that is not a United States person (as defined in section 7701(a)(30)), except that a partner that is a controlled foreign corporation (within the meaning of section 957(a)) in which a United States shareholder (as defined in section 951(b)) owns (within the meaning of section 958(a)) stock is not treated as a foreign partner.

(iii) ***Minority interest rule.*** If each partner that is not a disregarded foreign partner under paragraph (b)(6)(i) of this section (regarded partner) holds less than a 10-percent interest, and the regarded partners, in the aggregate, hold less than a 20-percent interest in the capital and profits of the partnership, then paragraph (b)(6)(i) of this section does not apply. In determining ownership in a partnership for purposes of this paragraph (b)(6)(iii), each regarded partner is treated as owning any interest in the partnership owned by a related partner. For this purpose, partners are treated as related if they are related within the meaning of sections 267(b) or 707(b) (using the language “10 percent” instead of “50 percent” each place it appears). However, for purposes of determining if partners hold less than a 20-percent interest in the aggregate, the same interests will not be considered as being owned by more than one regarded partner.

(iv) ***Example.*** The provisions of paragraph (b)(6) of this section may be illustrated by the following example:

Example. Partnership B is owned by two partners, F, a foreign corporation that owns a 95-percent interest in the capital and profits of partnership B, and D, a domestic corporation that owns the remaining 5-percent interest in the capital and profits of partnership B. Partnership B is not engaged in the conduct of a trade or business within the United States, and, accordingly, partnership B does not earn any income that is effectively connected with a U.S. trade or business. F uses a March 31 fiscal year, and causes partnership B to maintain its books and records on a March 31 fiscal year as well. D is a calendar year taxpayer. Under paragraph (b)(6)(i) of this section, F would be disregarded

and partnership B's taxable year would be determined by reference to D. However, because D owns less than a 10-percent interest in the capital and profits of partnership B, the minority interest rule of paragraph (b)(6)(iii) of this section applies, and partnership B must adopt the March 31 fiscal year for Federal tax purposes.

(v) *Applicability dates* —

(A) ***Generally.*** The provisions of this paragraph (b)(6) (other than paragraph (b)(6)(iii) of this section and paragraph (b)(6)(ii) of this section to the extent described in the next sentence) apply to partnership taxable years, other than those of an existing partnership, that begin on or after July 23, 2002. The provisions in paragraph (b)(6)(ii) of this section relating to controlled foreign corporations apply to taxable years of foreign corporations ending on or after October 1, 2019, and taxable years of United States shareholders in which or with which such taxable years of foreign corporations end. For taxable years of foreign corporations ending before October 1, 2019, and taxable years of United States shareholders in which or with which such taxable years of foreign corporations end, a taxpayer may apply such provisions to the last taxable year of a foreign corporation beginning before January 1, 2018, and each subsequent taxable year of the foreign corporation, and to taxable years of United States shareholders in which or with which such taxable years of the foreign corporation end, provided that the taxpayer and United States persons that are related (within the meaning of section 267 or 707) to the taxpayer consistently apply such provisions with respect to all foreign corporations. For taxable years of foreign corporations ending before October 1, 2019, and taxable years of United States shareholders in which or with which such taxable years of foreign corporations end, where the taxpayer does not apply the provisions of paragraph (b)(6)(ii) of this section relating to controlled foreign corporations, see paragraph (b)(6)(ii) of this section as in effect and contained in 26 CFR part 1, as revised April 1, 2020. The provisions of paragraph (b)(6)(iii) of this section apply to partnership taxable years, other than those of an existing partnership or an interim period partnership, that begin on or after August 3, 2015. For partnership taxable years beginning on or after July 23, 2002, and before August 3, 2015, see the provisions of § 1.706-1(b)(6)(iii) as contained in the 26 CFR part 1 on July 31, 2015. For purposes of paragraph (b)(6) of this section, an existing partnership is a partnership that was formed prior to September 23, 2002, and an interim period partnership is a partnership that was formed on or after September 23, 2002, and prior to August 3, 2015.

(B) ***Voluntary change in taxable year.*** An existing partnership may change its taxable year to a year determined in accordance with this section. An existing partnership that makes such a change prior to August 3, 2015 will generally cease to be exempted from the requirements of this paragraph (b)(6) of this section, and thus will be subject to the requirements of paragraph (b)(6) of this section, except for paragraph (b)(6)(iii) of this section—instead, such partnership will be subject to the provisions of § 1.706-1(b)(6)(iii) as contained in the 26 CFR part 1 on July 31, 2015. An existing partnership that makes such a change on or after August 3, 2015 will cease to be exempted from the requirements of this paragraph (b)(6). An interim period partnership may change its taxable year to a year determined in accordance with paragraph (b)(6)(iii) of this section. An interim period partnership that makes such a change will cease to be exempted from the requirements of paragraph (b)(6)(iii) of this section.

(C) ***Subsequent sale or exchange of interests.*** If an existing partnership or an interim period partnership terminates under section 708(b)(1)(B), the resulting partnership is not an existing partnership or an interim period partnership for purposes of paragraph (b)(6)(v) of this section.

(D) ***Transition rule.*** If, in the first taxable year beginning on or after July 23, 2002, an existing partnership voluntarily changes its taxable year to a year determined in accordance with this paragraph (b)(6), then the partners of that partnership may apply the provisions of § 1.702-3T to take into account all items of income, gain, loss, deduction, and credit attributable to the partnership year of change ratably over a four-year period. If, in a partnership taxable year beginning on or after August 3, 2015, an interim period partnership voluntarily changes its taxable year to a year determined in accordance with paragraph (b)(6)(iii) of this section, then the partners of that partnership may apply the provisions of § 1.702-3T to take into account all items of income, gain, loss, deduction, and credit attributable to the partnership year of change ratably over a four-year period.

(7) ***Adoption of taxable year.*** A newly-formed partnership may adopt, in accordance with § 1.441-1(c), its required taxable year, a taxable year elected under section 444, or a 52-53-week taxable year ending with reference to its required taxable year or a taxable year elected under section 444 without securing the approval of the Commissioner. If a newly-formed partnership wants to adopt any other taxable year, it must establish a business purpose and secure the approval of the Commissioner under section 442.

(8) ***Change in taxable year*** —

(i) ***Partnerships*** —

(A) ***Approval required.*** An existing partnership may change its taxable year only by securing the approval of the Commissioner under section 442 or making an election under section 444. However, a partnership may obtain automatic approval for certain changes, including a change to its required taxable year, pursuant to administrative procedures published by the Commissioner.

(B) ***Short period tax return.*** A partnership that changes its taxable year must make its return for a short period in accordance with section 443, but must not annualize the partnership taxable income.

(C) ***Change in required taxable year.*** If a partnership is required to change to its majority interest taxable year, then no further change in the partnership's required taxable year is required for either of the two years following the year of the change. This limitation against a second change within a three-year period applies only if the first change was to the majority interest taxable year and does not apply following a change in the partnership's taxable year to the principal partners' taxable year or the least aggregate deferral taxable year.

(ii) ***Partners.*** Except as otherwise provided in the Internal Revenue Code or the regulations thereunder (e.g., section 859 regarding real estate investment trusts or § 1.442-2(c) regarding a subsidiary changing to its consolidated parent's taxable year), a partner may not change its taxable year without securing the approval of the Commissioner under section 442. However, certain partners may be eligible to obtain automatic approval to change their taxable years

pursuant to the regulations or administrative procedures published by the Commissioner. A partner that changes its taxable year must make its return for a short period in accordance with section 443.

(9) ***Retention of taxable year.*** In certain cases, a partnership will be required to change its taxable year unless it obtains the approval of the Commissioner under section 442, or makes an election under section 444, to retain its current taxable year. For example, a partnership using a taxable year that corresponds to its required taxable year must obtain the approval of the Commissioner to retain such taxable year if its required taxable year changes as a result of a change in ownership, unless the partnership previously obtained approval for its current taxable year or, if appropriate, makes an election under section 444.

(10) ***Procedures for obtaining approval or making a section 444 election.*** See § 1.442-1(b) for procedures to obtain the approval of the Commissioner (automatically or otherwise) to adopt, change, or retain a taxable year. See §§ 1.444-1T and 1.444-2T for qualifications, and § 1.444-3T for procedures, for making an election under section 444.

(11) ***Effect of partner elections under section 444—***

(i) **Election taken into account. For purposes of section 706(b)(1)(B), any section 444 election by a partner in a partnership shall be taken into account in determining the taxable year of the partnership. See § 1.7519-1T(d), *Example (4).***

(ii) ***Effective date.*** The provisions of this paragraph (b)(11) are applicable for taxable years beginning on or after July 23, 2002. For taxable years beginning before July 23, 2002, see § 1.706-3T as contained in 26 CFR part 1 revised April 1, 2002.

(c) ***Closing of partnership year*** —

(1) ***General rule.*** Section 706(c) and this paragraph provide rules governing the closing of partnership years. The closing of a partnership taxable year or a termination of a partnership for Federal income tax purposes is not necessarily governed by the “dissolution”, “liquidation”, etc., of a partnership under State or local law. The taxable year of a partnership shall not close as the result of the death of a partner, the entry of a new partner, the liquidation of a partner's entire interest in the partnership (as defined in section 761(d)), or the sale or exchange of a partner's interest in the partnership, except in the case of a termination of a partnership and except as provided in subparagraph (2) of this paragraph. In the case of termination, the partnership taxable year closes for all partners as of the date of termination. See section 708(b) and paragraph (b) of § 1.708-1.

(2) ***Disposition of entire interest*** —

(i) ***In general.*** A partnership taxable year shall close with respect to a partner who sells or exchanges his entire interest in the partnership, with respect to a partner whose entire interest in the partnership is liquidated, and with respect to a partner who dies. In the case of a death, liquidation, or sale or exchange of a partner's entire interest in the partnership, the partner shall include in his taxable income for his taxable year within or with which the partner's interest in the partnership ends the partner's distributive share of items described in section 702(a) and any guaranteed payments under section 707(c) for the partnership taxable year ending with the date of such termination. If the decedent partner's estate or other successor sells or exchanges its entire interest in the partnership, or if its entire interest is liquidated, the partnership taxable year with respect to the estate or other successor in interest shall close on the date of such

sale or exchange, or the date of the completion of the liquidation. The sale or exchange of a partnership interest does not, for the purpose of this rule, include any transfer of a partnership interest which occurs at death as a result of inheritance or any testamentary disposition.

(ii) ***Example.*** H is a partner of a partnership having a taxable year ending December 31. Both H and his wife W are on a calendar year and file joint returns. H dies on March 31, 2016. Administration of the estate is completed and the estate, including the partnership interest, is distributed to W as legatee on November 30, 2016. Such distribution by the estate is not a sale or exchange of H's partnership interest. The taxable year of the partnership will close with respect to H on March 31, 2016, and H will include in his final return for his final taxable year (January 1, 2016, through March 31, 2016) his distributive share of partnership items for that period under the rules of sections 706(d)(2), 706(d)(3), and § 1.706-4. W will include in her return for the taxable year ending December 31, 2016, her distributive share of partnership items for the period of April 1, 2016, through December 31, 2016, under the rules of sections 706(d)(2), 706(d)(3), and § 1.706-4.

(iii) ***Deemed dispositions.*** A deemed disposition of the partner's interest pursuant to § 1.1502-76(b)(2)(vi) (relating to corporate partners that become or cease to be members of a consolidated group within the meaning of §§ 1.1502-1(h)), 1.1362-3(c)(1) (relating to the termination of the subchapter S election of an S corporation partner), or 1.1377-1(b)(3)(iv) (regarding an election to terminate the taxable year of an S corporation partner), shall be treated as a disposition of the partner's entire interest in the partnership solely for purposes of section 706.

(3) ***Disposition of less than entire interest.*** If a partner sells or exchanges a part of his interest in a partnership, or if the interest of a partner is reduced, the partnership taxable year shall continue to its normal end.

(4) ***Determination of distributive shares.*** See section 706(d)(2), 706(d)(3), and § 1.706-4 for rules regarding the methods to be used in determining the distributive shares of items described in section 702(a) for partners whose interests in the partnership vary during the partnership's taxable year as a result of a disposition of a partner's entire interest in a partnership as described in paragraph (c)(2) of this section or as a result of a disposition of less than a partner's entire interest as described in paragraph (c)(3) of this section.

(5) ***Transfer of interest by gift.*** The transfer of a partnership interest by gift does not close the partnership taxable year with respect to the donor. However, the income up to the date of gift attributable to the donor's interest shall be allocated to him under section 704(e)(2).

(6) ***Foreign taxes.*** For rules relating to the treatment of foreign taxes paid or accrued by a partnership, see § 1.901-2(f)(4)(i) and (f)(4)(ii).

(d) ***Effective/applicability date.***

(1) The rules for paragraphs (a) and (b) of this section apply for partnership taxable years ending on or after May 17, 2002, except for paragraphs (b)(5) and (6) of this section, which generally apply to partnership taxable years beginning on or after July 23, 2002 (however, see paragraphs (b)(5)(iii) and (b)(6)(v) of this section for certain exceptions to and transition relief from the applicability dates of paragraphs (b)(5) and (6) of this section).

(2) The rules for paragraph (c)(1) of this section apply for partnership taxable years beginning after December 31, 1953. All other paragraphs under paragraph (c) of this section apply for partnership taxable years that begin on or after August 3, 2015.

[T.D. 6500, 25 FR 11814, Nov. 26, 1960; 25 FR 14021, Dec. 31, 1960, as amended by T.D. 7286, 38 FR 26912, Sept. 27, 1973; T.D. 8123, 52 FR 3623, Feb. 5, 1987; T.D. 8996, 67 FR 35020, May 17, 2002; T.D. 9009, 67 FR 48019, July 23, 2002; T.D. 9576, 77 FR 8124, Feb. 14, 2012; T.D. 9728, 80 FR 45877, Aug. 3, 2015; 80 FR 68243, Nov. 4, 2015; T.D. 9908, 85 FR 59434, Sept. 22, 2020]

§ 1.706-2 Certain allocable cash to as is items. [Reserved]

§ 1.706-2T Temporary regulations; question and answer under the Tax Reform Act of 1984.

Question 1: For purposes of section 706(d), how is an otherwise deductible amount that is deferred under section 267(a)(2) treated?

Answer 1: In the year the deduction is allowed, the deduction will constitute an allocable cash basis item under section 706(d)(2)(B)(iv).

(Secs. 267(f)(2)(B), 706(d)(2)(B)(iv), 1502, and 7805, Internal Revenue Code of 1954 (98 Stat. 704, 26 U.S.C. 267; 98 Stat. 589, 26 U.S.C. 706; 68A Stat. 367, 26 U.S.C. 1502; 68A Stat. 917, 26 U.S.C. 7805))

[T.D. 7991, 49 FR 47001, Nov. 30, 1984]

§ 1.706-3 Items attributable to interest in lower-tier partnership.

(a) through (c) [Reserved]

(d) ***Conservation contributions.*** For purposes of section 706(d)(3), in the case of a qualified conservation contribution (as defined in section 170(h)(1) and § 1.170A-14(a) without regard to whether such contribution is a disallowed qualified conservation contribution within the meaning of § 1.170A-14(j)(3)(vii)) by a partnership that is allocated to an upper-tier partnership, the upper-tier partnership must allocate the contribution among its partners in accordance with their interests in the qualified conservation contribution at the time of day at which the qualified conservation contribution was made, regardless of the general rule of section 706(d)(3). Pursuant to § 1.706-4(a)(2), the rules of § 1.706-4 do not apply to allocations subject to this section.

(e) ***Applicability date.*** Paragraph (d) of this section applies to qualified conservation contributions made after December 29, 2022, and in partnership taxable years ending after December 29, 2022.

[T.D. 9999, 89 FR 54327, June 28, 2024]

§ 1.706-4 Determination of distributive share when a partner's interest varies.

(a) ***General rule*** —

(1) ***Variations subject to this section.*** Except as provided in paragraph (a)(2) of this section, this section provides rules for determining the partners' distributive shares of partnership items when a partner's interest in a partnership varies during the taxable year as a result of the disposition of a partial or entire interest in a partnership as described in § 1.706-1(c)(2) and (3), or with respect to a partner whose interest in a partnership is reduced as described in § 1.706-1(c)(3), including by the entry of a new partner (collectively, a “variation”).

(2) Coordination with sections 706(d)(2) and 706(d)(3) and other Code sections. Items subject to allocation under other rules, including sections 108(e)(8) and 108(i) (which provide special allocation rules for certain items from the discharge or retirement of indebtedness section), section 704(c) (relating to allocations with respect to certain contributed property), § 1.704-3(a)(6) (relating to allocations with respect to revalued property), section 706(d)(2) (relating to the determination of partners' distributive shares of allocable cash basis items), and section 706(d)(3) (relating the determination of partners' distributive share of any item of an upper tier partnership attributable to a lower tier partnership), are not subject to the rules of this section. In addition, the rules of this section do not apply in making allocation of book items pursuant to § 1.704-1(b)(2)(iv)(*e*), (*f*), or (*s*). In all cases, all partnership items for each taxable year must be allocated among the partners, and no partnership items may be duplicated, regardless of the particular provision of section 706 (or other Code section) which applies, and regardless of the method or convention adopted by the partnership.

(3) ***Allocation of items subject to this section.*** In determining the distributive share under section 702(a) of partnership items subject to this section, the partnership shall follow the steps described in this paragraph (a)(3)(i) through (x).

(i) First, determine whether either of the exceptions in paragraph (b) of this section (regarding certain changes among contemporaneous partners and partnerships for which capital is not a material income-producing factor) applies.

(ii) Second, determine which of its items are subject to allocation under the special rules for extraordinary items in paragraph (e) of this section, and allocate those items accordingly.

(iii) Third, determine with respect to each variation whether it will apply the interim closing method or the proration method. Absent an agreement of the partners (within the meaning of paragraph (f) of this section) to use the proration method, the partnership shall use the interim closing method. The partnership may use different methods (interim closing or proration) for different variations within each partnership taxable year; however, the Commissioner may place restrictions on the ability of partnerships to use different methods during the same taxable year in guidance published in the Internal Revenue Bulletin.

(iv) Fourth, determine when each variation is deemed to have occurred under the partnership's selected convention (as described in paragraph (c) of this section).

(v) Fifth, determine whether there is an agreement of the partners (within the meaning of paragraph (f) of this section) to perform regular monthly or semi-monthly interim closings (as described in paragraph (d) of this section). If so, then the partnership will perform an interim closing of its books at the end of each month (in the case of an agreement to perform monthly closings) or at the end and middle of each month (in the case of an agreement to perform semi-monthly closings), regardless of whether any variation occurs. Absent an agreement of the partners to perform regular monthly or semi-monthly interim closings, the only interim closings during the partnership's taxable year will be at the deemed time of the occurrence of variations for which the partnership uses the interim closing method.

(vi) Sixth, determine the partnership's segments, which are specific periods of the partnership's taxable year created by interim closings of the partnership's books. The first segment shall commence with the beginning of the taxable year of the partnership and shall end at the time of the first interim closing. Any additional segment shall commence immediately after the closing of the prior segment and shall end at the time of the next interim closing. However, the last

segment of the partnership's taxable year shall end no later than the close of the last day of the partnership's taxable year. If there are no interim closings, the partnership has one segment, which corresponds to its entire taxable year.

(vii) Seventh, apportion the partnership's items for the year among its segments. The partnership shall determine the items of income, gain, loss, deduction, and credit of the partnership for each segment. In general, a partnership shall treat each segment as though the segment were a separate distributive share period. For example, a partnership may compute a capital loss for a segment of a taxable year even though the partnership has a net capital gain for the entire taxable year. For purposes of determining allocations to segments, any special limitation or requirement relating to the timing or amount of income, gain, loss, deduction, or credit applicable to the entire partnership taxable year will be applied based upon the partnership's satisfaction of the limitation or requirement as of the end of the partnership's taxable year. For example, the expenses related to the election to expense a section 179 asset must first be calculated (and limited if applicable) based on the partnership's full taxable year, and then the effect of any limitation must be apportioned among the segments in accordance with the interim closing method or the proration method using any reasonable method.

(viii) Eighth, determine the partnership's proration periods, which are specific portions of a segment created by a variation for which the partnership chooses to apply the proration method. The first proration period in each segment begins at the beginning of the segment, and ends at the first time of the first variation within the segment for which the partnership selects the proration method. The next proration period begins immediately after the close of the prior proration period and ends at the time of the next variation for which the partnership selects the proration method. However, each proration period shall end no later than the close of the segment.

(ix) Ninth, prorate the items of income, gain, loss, deduction, and credit in each segment among the proration periods within the segment.

(x) Tenth, determine the partners' distributive shares of partnership items under section 702(a) by taking into account the partners' interests in such items during each segment and proration period.

(4) ***Example.***

At the beginning of 2017, PRS, a calendar year partnership, has three equal partners, A, B, and C. On April 16, 2017, A sells 50% of its interest in PRS to new partner D. On August 6, 2017, B sells 50% of its interest in PRS to new partner E. During 2015, PRS earned $75,000 of ordinary income, incurred $33,000 of ordinary deductions, earned $12,000 of capital gain in the ordinary course of its business, and sustained $9,000 of capital loss in the ordinary course of its business. Within that year, PRS earned $60,000 of ordinary income, incurred $24,000 of ordinary deductions, earned $12,000 of capital gain, and sustained $6,000 of capital loss between January 1, 2017, and July 31, 2017, and PRS earned $15,000 of gross ordinary income, incurred $9,000 of gross ordinary deductions, and sustained $3,000 of capital loss between August 1, 2017, and December 31, 2017. None of PRS's items are extraordinary items within the meaning of paragraph (e)(2) of this section. Capital is a material income-producing factor for PRS. For 2017, PRS determines the distributive shares of A, B, C, D, and E as follows:

(i) First, PRS determines that none of the exceptions in paragraph (b) of this section apply because capital is a material-income producing factor and no variation is the result of a change in allocations among contemporaneous partners.

(ii) Second, PRS determines that none of its items are extraordinary items subject to allocation under paragraph (e) of this section.

(iii) Third, the partners of PRS agree (within the meaning of paragraph (f) of this section) to apply the proration method to the April 16, 2017, variation, and PRS accepts the default application of the interim closing method to the August 6, 2017, variation.

(iv) Fourth, PRS determines the deemed date of the variations for purposes of this section based upon PRS's selected convention. Because PRS applied the proration method to the April 16, 2017, variation, PRS must use the calendar day convention with respect to the April 16, 2017, variation pursuant to paragraph (c) of this section. Therefore, the variation that resulted from A's sale to D on April 16, 2017, is deemed to occur for purposes of this section at the end of the day on April 16, 2017. Further, the partners of PRS agree (within the meaning of paragraph (f) of this section) to apply the semi-monthly convention to the August 6, 2017, variation. Therefore, the August 6, 2017, variation is deemed to occur at the end of the day on July 31, 2017.

(v) Fifth, the partners of PRS do not agree to perform regular semi-monthly or monthly closings as described in paragraph (d) of this section. Therefore, PRS will have only one interim closing for 2017, occurring at the end of the day on July 31.

(vi) Sixth, PRS determines that it has two segments for 2017. The first segment commences January 1, 2017, and ends at the close of the day on July 31, 2017. The second segment commences at the beginning of the day on August 1, 2017, and ends at the close of the day on December 31, 2017.

(vii) Seventh, PRS determines that during the first segment of its taxable year (beginning January 1, 2017, and ending July 31, 2017), it had $60,000 of ordinary income, $24,000 of ordinary deductions, $12,000 of capital gain, and $6,000 of capital loss. PRS determines that during the second segment of its taxable year (beginning August 1, 2017, and ending December 31, 2017), it had $15,000 of gross ordinary income, $9,000 of gross ordinary deductions, and $3,000 of capital loss.

(viii) Eighth, PRS determines that it has two proration periods. The first proration period begins January 1, 2017, and ends at the close of the day on April 16, 2017; the second proration period begins April 17, 2017, and ends at the close of the day on July 31, 2017.

(ix) Ninth, PRS prorates its income from the first segment of its taxable year among the two proration periods. Because each proration period has 106 days, PRS allocates 50% of its items from the first segment to each proration period. Thus, each proration period contains $30,000 gross ordinary income, $12,000 gross ordinary deductions, $6,000 capital gain, and $3,000 capital loss.

(x) Tenth, PRS calculates each partner's distributive share. Because A, B, and C were equal partners during the first proration period, each is allocated one-third of the partnership's items attributable to that proration period. Thus, A, B, and C are each allocated $10,000 gross ordinary income, $4,000 gross ordinary deductions, $2,000 capital gain, and $1,000 capital loss for the first proration period. For the second proration period, A and D each had a one-sixth interest in PRS and B and C each had a one-third interest in PRS. Thus, A and D are each allocated $5,000

gross ordinary income, $2,000 gross ordinary deductions, $1,000 capital gain, and $500 capital loss, and B and C are each allocated $10,000 gross ordinary income, $4,000 gross ordinary deductions, $2,000 capital gain, and $1,000 capital loss for the second proration period. For the second segment of PRS's taxable year, A, B, D, and E each had a one-sixth interest in PRS and C had a one-third interest in PRS. Thus, A, B, D, and E are each allocated $2,500 gross ordinary income, $1,500 gross ordinary deductions, and $500 capital loss, and C is allocated $5,000 gross ordinary income, $3,000 gross ordinary deductions, and $1,000 capital loss for the second segment.

(b) *Exceptions* —

(1) ***Permissible changes among contemporaneous partners.*** The general rule of paragraph (a)(3) of this section, with respect to the varying interests of a partner described in § 1.706-1(c)(3), will not preclude changes in the allocations of the distributive share of items described in section 702(a) among contemporaneous partners for the entire partnership taxable year (or among contemporaneous partners for a segment if the item is entirely attributable to a segment), provided that—

(i) Any variation in a partner's interest is not attributable to a contribution of money or property by a partner to the partnership or a distribution of money or property by the partnership to a partner; and

(ii) The allocations resulting from the modification satisfy the provisions of section 704(b) and the regulations promulgated thereunder.

(2) ***Safe harbor for partnerships for which capital is not a material income-producing factor.*** Notwithstanding paragraph (a)(3) of this section, with respect to any taxable year in which there is a change in any partner's interest in a partnership for which capital is not a material income-producing factor, the partnership and such partner may choose to determine the partner's distributive share of partnership income, gain, loss, deduction, and credit using any reasonable method to account for the varying interests of the partners in the partnership during the taxable year provided that the allocations satisfy the provisions of section 704(b).

(c) *Conventions* —

(1) ***In general.*** Conventions are rules of administrative convenience that determine when each variation is deemed to occur for purposes of this section. Because the timing of each variation is necessary to determine the partnership's segments and proration periods, which are used to determine the partners' distributive shares, the convention used by the partnership with respect to a variation will generally affect the allocation of partnership items. However, see paragraph (e) of this section for special rules regarding extraordinary items, which generally must be allocated without regard to the partnership's convention. Subject to the limitations set forth in paragraphs (c)(2) and (3) of this section, partnerships may generally choose from the following three conventions:

(i) ***Calendar day convention.*** Under the calendar day convention, each variation is deemed to occur for purposes of this section at the end of the day on which the variation occurs.

(ii) ***Semi-monthly convention.*** Under the semi-monthly convention, each variation is deemed to occur for purposes of this section either:

(A) In the case of a variation occurring on the 1st through the 15th day of a calendar month, at the end of the last day of the immediately preceding calendar month; or

(B) In the case of a variation occurring on the 16th through the last day of a calendar month, at the end of the 15th calendar day of that month.

(iii) ***Monthly convention.*** Under the monthly convention, each variation is deemed to occur for purposes of this section either:

(A) In the case of a variation occurring on the 1st through the 15th day of a calendar month, at the end of the last day of the immediately preceding calendar month; or

(B) In the case of a variation occurring on the 16th through the last day of a calendar month, at the end of the last day of that calendar month.

(2) ***Exceptions.***

(i) Notwithstanding paragraph (c)(1) of this section, all variations within a taxable year shall be deemed to occur no earlier than the first day of the partnership's taxable year, and no later than the close of the final day of the partnership's taxable year. Thus, in the case of a calendar year partnership applying either the semi-monthly or monthly convention to a variation occurring on January 1st through January 15th, the variation will be deemed to occur for purposes of this section at the beginning of the day on January 1st.

(ii) In the case of a partner who becomes a partner during the partnership's taxable year as a result of a variation, and ceases to be a partner as a result of another variation, if both such variations would be deemed to occur at the same time under the rules of paragraph (c)(1) of this section, then the variations with respect to that partner's interest will instead be treated as occurring on the dates each variation actually occurred. Thus, the partnership must treat such a partner as a partner for the entire portion of its taxable year during which the partner actually owned an interest. See *Example 2* of paragraph (c)(4) of this section. However, this paragraph (c)(2)(ii) does not apply to publicly traded partnerships (as defined in section 7704(b)) that are treated as partnerships with respect to holders of publicly traded units (as described in § 1.7704-1(b) or 1.7704-1(c)(1)).

(iii) Notwithstanding paragraph (c)(1)(iii) of this section, a publicly traded partnership (as defined in section 7704(b)) that is treated as a partnership may consistently treat all variations occurring during each month as occurring at the end of the last day of that calendar month if the publicly traded partnership uses the monthly convention for those variations.

(3) ***Permissible conventions for each variation*** —

(i) ***Rules applicable to all partnerships.*** A partnership generally shall use the calendar day convention for each variation; however, for all variations during a taxable year for which the partnership uses the interim closing method, the partnership may instead use the semi-monthly or monthly convention by agreement of the partners (within the meaning of paragraph (f) of this section). The partnership must use the same convention for all variations for which the partnership uses the interim closing method.

(ii) ***Publicly traded partnerships.*** A publicly traded partnership (as defined in section 7704(b)) that is treated as a partnership may, by agreement of the partners (within the meaning of paragraph (f) of this section) use any of the calendar day, the semi-monthly, or the monthly conventions with respect to all variations during the taxable year relating to its publicly-traded units (as described in § 1.7704-1(b) or (c)(1)), regardless of whether the publicly traded partnership uses the proration method with respect to those variations. A publicly traded partnership must use the

same convention for all variations during the taxable year relating to its publicly traded units. A publicly traded partnership must use the calendar day convention with respect to all variations relating to its non-publicly traded units for which the publicly traded partnership uses the proration method.

(4) ***Examples.*** The following examples illustrate the principles in this paragraph (c).

Example 1. PRS is a calendar year partnership with four equal partners A, B, C, and D. PRS is not a publicly traded partnership. PRS has the following three variations that occur during its 2016 taxable year: on March 11, A sells its entire interest in PRS to new partner E; on June 12, PRS partially redeems B's interest in PRS with a distribution comprising a partial return of B's capital; on October 21, C sells part of C's interest in PRS to new partner E. These transfers do not result in a termination of PRS under section 708. Pursuant to paragraph (a)(3)(iii) of this section, the partners of PRS agree (within the meaning of paragraph (f) of this section) to use the interim closing method with respect to the variations occurring on March 11 and October 21 and agree to use the proration method with respect to the variation occurring on June 12. Pursuant to paragraph (c)(3) of this section, the partners of PRS may agree (within the meaning of paragraph (f) of this section) to use any of the calendar day, semi-monthly, or monthly conventions with respect to the March 11 and October 21 variations, but must use the same convention for both variations. If the partners of PRS agree to use the calendar day convention, the March 11 and October 21 variations will be deemed to occur for purposes of this section at the end of the day on March 11, 2016, and October 21, 2016, respectively. If the partners of PRS agree to use the semi-monthly convention, the March 11 and October 21 variations will be deemed to occur for purposes of this section at the end of the day on February 29, 2016, and October 15, 2016, respectively. If the partners of PRS agree to use the monthly convention, the March 11 and October 21 variations will be deemed to occur for purposes of this section at the end of the day on February 29, 2016, and October 31, 2016, respectively. Pursuant to paragraph (c)(3) of this section PRS must use the calendar day convention with respect to the June 12 variation; thus, the June 12 variation is deemed to occur for purposes of this section at the end of the day on June 12, 2016.

Example 2. PRS is a calendar year partnership that uses the interim closing method and monthly convention to account for variations during its taxable year. PRS is not a publicly traded partnership. On January 20, 2016, new partner A purchases an interest in PRS from one of PRS's existing partners. On February 14, 2016, A sells its entire interest in PRS. These transfers do not result in a termination of PRS under section 708. Under the rules of paragraph (c)(1)(iii) of this section, the January 20, 2016, variation and the February 14, 2016, variation would both be deemed to occur at the same time: the end of the day on January 31, 2016. Therefore, under the exception in paragraph (c)(2)(ii) of this section, the rules of paragraph (c)(1) of this section do not apply, and instead the January 20, 2016, variation and the February 14 variation are considered to occur on January 20, 2016, and February 14, 2016, respectively. PRS must perform a closing of the books on both January 20, 2016, and February 14, 2016, and allocate A a share of PRS's items attributable to that segment.

(d)

(1) ***Optional regular monthly or semi-monthly interim closings.*** Under the rules of this section, a partnership is not required to perform an interim closing of its books except at the time of any variation for which the partnership uses the interim closing method (taking into account the applicable convention). However, a partnership may, by agreement of the partners (within the

meaning of paragraph (f) of this section) perform regular monthly or semi-monthly interim closings of its books, regardless of whether any variation occurs. Regardless of whether the partners agree to perform these regular interim closings, the partnership must continue to apply the interim closing or proration method to its variations according to the rules of this section.

(2) ***Example.*** The following example illustrates the principles in this paragraph (d).

Example. (i) PRS is a calendar year partnership with five equal partners A, B, C, D, and E. PRS has the following two variations that occur during its 2016 taxable year: on August 29, A sells its entire interest in PRS to new partner F; on December 27, PRS completely liquidates B's interest in PRS with a distribution. These variations do not result in a termination of PRS under section 708.
(ii) The partners of PRS agree (within the meaning of paragraph (f) of this section) to use the interim closing method and the semi-monthly convention with respect to the variation occurring on August 29. Thus, the August variation is deemed to occur for purposes of this section at the end of the day on August 15, 2016. The partners of PRS agree (within the meaning of paragraph (f) of this section) to use the proration method with respect to the December 27 variation. Therefore, PRS must use the calendar day convention with respect to the December variation pursuant to paragraph (c) of this section. Thus, the December variation is deemed to occur for purposes of this section at the end of the day on December 27, 2016.

(iii) Pursuant to paragraph (d)(1) of this section, the partners of PRS agree (within the meaning of paragraph (f) of this section) to perform regular monthly interim closings. Therefore, PRS will have twelve interim closings for its 2016 taxable year, one at the end of every month and one at the end of the day on August 15. Therefore, PRS will have thirteen segments for 2016, one corresponding to each month from January through July, one segment from August 1 through August 15, one segment from August 16 through August 31, and one corresponding to each month from September through December. PRS must apportion its items among these segments under the rules of paragraph (a)(3) of this section.

(iv) PRS will have two proration periods for 2016, one from December 1 through December 27, and one from December 28 through December 31. Pursuant to the rules of paragraph (a)(3) of this section, PRS will prorate the items in its December segment among these two proration periods. Therefore, PRS will apportion 27/31 of all items in its December segment to the proration period from December 1 through December 27, and 4/31 of all items in its December segment to the proration period from December 28 through December 31.

(v) Pursuant to the rules of paragraph (a)(3)(x) of this section, PRS determines the partners' distributive shares of partnership items under section 702(a) by taking into account the partners' interests in such items during each of the thirteen segments and two proration periods. Thus, A, B, C, D, and E will each be allocated one-fifth of all items in the following

segments: January, February, March, April, May, June, July, and August 1 through August 15. B, C, D, E, and F will each be allocated one-fifth of all items in the following segments: August 16 through August 31, September, October, and November. B, C, D, E, and F will each be allocated one-fifth of all items in the proration period from December 1 through December 27. C, D, E, and F will each be allocated one-quarter of all items in the proration period from December 28 through December 31.

(e) ***Extraordinary items*** —

(1) ***General principles.*** Extraordinary items may not be prorated. The partnership must allocate extraordinary items among the partners in proportion to their interests in the partnership item at the time of day on which the extraordinary item occurred, regardless of the method (interim closing or proration method) and convention (daily, semi-monthly, or monthly) otherwise used by the partnership. These rules require the allocation of extraordinary items as an exception to the proration method, which would otherwise ratably allocate the extraordinary items across the segment, and the conventions, which could otherwise inappropriately shift extraordinary items between a transferor and transferee. However, publicly traded partnerships (as defined in section 7704(b)) that are treated as partnerships may, but are not required to, apply their selected convention in determining who held publicly traded units (as described in § 1.7704-1(b) or (c)(1)) at the time of the occurrence of an extraordinary item. Extraordinary items continue to be subject to any special limitation or requirement relating to the timing or amount of income, gain, loss, deduction, or credit applicable to the entire partnership taxable year (for example, the limitation for section 179 expenses).

(2) ***Definition.*** Except as provided in paragraph (e)(3) of this section, an extraordinary item is:

(i) Any item from the disposition or abandonment (other than in the ordinary course of business) of a capital asset as defined in section 1221 (determined without the application of any other rules of law);

(ii) Any item from the disposition or abandonment (other than in the ordinary course of business) of property used in a trade or business as defined in section 1231(b) (determined without the application of any holding period requirement);

(iii) Any item from the disposition or abandonment of an asset described in section 1221(a)(1), (a)(3), (a)(4), or (a)(5) if substantially all the assets in the same category from the same trade or business are disposed of or abandoned in one transaction (or series of related transactions);

(iv) Any item from assets disposed of in an applicable asset acquisition under section 1060(c);

(v) Any item resulting from any change in accounting method initiated by the filing of the appropriate form after a variation occurs;

(vi) Any item from the discharge or retirement of indebtedness (except items subject to section 108(e)(8) or 108(i), which are subject to special allocation rules provided in section 108(e)(8) and 108(i));

(vii) Any item from the settlement of a tort or similar third-party liability or payment of a judgment;

(viii) Any credit, to the extent it arises from activities or items that are not ratably allocated (for example, the rehabilitation credit under section 47, which is based on placement in service);

(ix) Any specified credit portion transferred pursuant to section 6418 and §§ 1.6418-1 through 1.6418-5;

(x) For all partnerships, any additional item if, the partners agree (within the meaning of paragraph (f) of this section) to consistently treat such item as an extraordinary item for that taxable year; however, this rule does not apply if treating that additional item as an extraordinary item would result in a substantial distortion of income in any partner's return; any additional extraordinary items continue to be subject to any special limitation or requirement relating to the timing or amount of income, gain, loss, deduction, or credit applicable to the entire partnership taxable year (for example, the limitation for section 179 expenses);

(xi) Any item which, in the opinion of the Commissioner, would, if ratably allocated, result in a substantial distortion of income in any return in which the item is included;

(xii) Any item identified as an additional class of extraordinary item in guidance published in the Internal Revenue Bulletin.

(xiii) Applicable for partnership taxable years ending after December 29, 2022, any qualified conservation contribution (as defined in section 170(h)(1) and § 1.170A-14(a) without regard to whether such contribution is a disallowed qualified conservation contribution within the meaning of § 1.170A-14(j)(3)(vii)) made after December 29, 2022.

(3) ***Small item exception*** —

(i) ***In general.*** A partnership may treat an item described in paragraph (e)(2) of this section (except for an item described in paragraph (e)(2)(xiii) of this section) as other than an extraordinary item for purposes of this paragraph (e) if, for the partnership's taxable year the total of all items in the particular class of extraordinary items (as enumerated in paragraphs (e)(2)(i) through (xii) of this section, for example, all tort or similar liabilities, but in no event counting an extraordinary item more than once) is less than five percent of the partnership's gross income, including tax-exempt income described in section 705(a)(1)(B), in the case of income or gain items, or gross expenses and losses, including section 705(a)(2)(B) expenditures, in the case of losses and expense items; and the total amount of the extraordinary items from all classes of extraordinary items amounting to less than five percent of the partnership's gross income, including tax-exempt income described in section 705(a)(1)(B), in the case of income or gain items, or gross expenses and losses, including section 705(a)(2)(B) expenditures, in the case of losses and expense items, does not exceed $10 million in the taxable year, determined by treating all such extraordinary items as positive amounts.

(ii) ***Applicability date.*** This paragraph (e)(3) applies to partnership taxable years ending after December 29, 2022. For partnership taxable years ending before December 30, 2022, see paragraph (e)(3) of this section contained in 26 CFR part 1, as revised April 1, 2024.

(4) ***Examples.*** The following examples illustrate the provisions of this paragraph (e).

Example 1. PRS, a calendar year partnership, uses the proration method and calendar day convention to account for varying interests of the partners. At 3:15 p.m. on December 7, 2015, PRS recognizes an extraordinary item within the meaning of paragraph (e)(2) of this section. On December 12, 2016, A, a partner in PRS, disposes of its entire interest in PRS. PRS does not experience a termination under section 708 during 2016. PRS has no other extraordinary items for the taxable year, the small item exception of paragraph (e)(3) of this section does not apply, the exceptions in paragraph (b) of this section do not apply, and PRS is not a publicly traded

partnership. Pursuant to paragraph (e)(1) of this section, the item of income, gain, loss, deduction, or credit attributable to the extraordinary item will be allocated in accordance with the partners' interests in the extraordinary item at 3:15 p.m. on December 7, 2016. The remaining partnership items of PRS that are subject to this section must be prorated across the partnership's taxable year in accordance with paragraph (a)(3) of this section.

Example 2. Assume the same facts as in Example 1, except that PRS uses the interim closing method and monthly convention to account for varying interests of the partners. Pursuant to paragraph (c)(1)(iii) of this section, the December 12 variation is deemed to have occurred for purposes of this section at the end of the day on November 30, 2016. Thus, A will not generally be allocated any items of PRS attributable to the segment between December 1, 2016, and December 31, 2016; however, pursuant to paragraph (e)(1) of this section, PRS must allocate the item of income, gain, loss, deduction, or credit attributable to the extraordinary item in accordance with the partners' interests in the extraordinary item at the time of day on which the extraordinary item occurred, regardless of the convention used by PRS. Thus, because A was a partner in PRS at 3:15 p.m. on December 7, 2016 (ignoring application of PRS's convention), A must be allocated a share of the extraordinary item.

Example 3. Assume the same facts as in *Example 2,* except that PRS is a publicly traded partnership (within the meaning of section 7704(b)) and A held a publicly traded unit (as described in § 1.7704-1(b) or 1.7704-1(c)(1)) in PRS. Under PRS's monthly convention, the December 12 variation is deemed to have occurred for purposes of this section at the end of the day on November 30, 2016. Pursuant to paragraph (e)(1) of this section, a publicly traded partnership (as defined in section 7704(b)) may choose to respect its conventions in determining who held its publicly traded units (as described in § 1.7704-1(b) or § 1.7704-1(c)(1)) at the time of the occurrence of an extraordinary item. Therefore, PRS may choose to treat A as not having been a partner in PRS for purposes of this paragraph (e) at the time the extraordinary item arose, and thus PRS may choose not to allocate A any share of the extraordinary item.

Example 4. A and B each own a 15 percent interest in PRS, a partnership that is not a publicly traded partnership and for which capital is a material income-producing factor. At 9:00 a.m. on April 25, 2016, A sells its entire interest in PRS to new partner D. At 3:00 p.m. on April 25, 2016, PRS incurs an extraordinary item (within the meaning of paragraph (e)(2) of this section). At 5:00 p.m. on April 25, 2016, B sells its entire interest in PRS to new partner E. Under paragraph (e)(1) of this section, PRS must allocate the extraordinary item in accordance with the partners' interests at 3:00 p.m. on April 25, 2016. Accordingly, a portion of the extraordinary item will be allocated to each of B and D, but no portion will be allocated to A or E.

Example 5. PRS, a calendar year partnership that is not a publicly traded partnership, has a variation in a partner's interest during 2016 and the exceptions in paragraph (b) of this section do not apply. During 2016 PRS has two extraordinary items: PRS recognizes $8 million of gross income on the sale outside the ordinary course of business of an asset described in paragraph (e)(2)(ii) of this section, and PRS also recognizes $12 million of gross income from a tort settlement as described in paragraph (e)(2)(vii) of this section. PRS's gross income (including the gross income from the extraordinary items) for the taxable year is $200 million. The gain from all items described in paragraph (e)(2)(ii) of this section is less than five percent of PRS's gross income ($8 million gross income from the asset sale divided by $200 million total gross income, or four percent) and all of the extraordinary items of PRS from classes that are less than five percent of PRS's gross income ($8 million), in the aggregate, do not exceed $10 million for the taxable year. Thus, the $8 million gain recognized on the asset sale is considered

a small item under paragraph (e)(3) of this section and is therefore excepted from the rules of paragraph (e)(1) of this section. Because the gross income attributable to the tort settlement exceeds five percent of PRS's gross income (six percent), the tort settlement gross income is not considered a small item under paragraph (e)(3) of this section. Therefore, the $12 million gross income attributable to the tort settlement must be allocated according to the rules of paragraph (e)(1) of this section in accordance with PRS's partners' interests in the item at the time of the day that the tort settlement income arose.

Example 6. Assume the same facts as Example 5, except that during the year, PRS also recognizes two additional extraordinary items: $2 million of gross income from the sale of a capital asset described in paragraph (e)(2)(i) of this section, and $1 million of gross income from discharge of indebtedness described in paragraph (e)(2)(vi) of this section. Although the gain from items described in each of paragraphs (e)(2)(i), (e)(2)(ii), and (e)(2)(vi) of this section is each less than five percent of PRS's gross income, the extraordinary items of PRS from classes that are less than five percent of PRS's gross income ($11 million), in the aggregate, exceeds $10 million for the taxable year. Thus, none of the items are considered small items under paragraph (e)(3) of this section. Therefore, the items attributable to the sale of the capital asset, the sale of the trade or business asset, the discharge of indebtedness income, and the tort settlement must each be allocated according to the rules of paragraph (e)(1) of this section in accordance with PRS's partners' interests in the items at the time of the day that the items arose.

(f) ***Agreement of the partners.*** For purposes of paragraphs (a)(3)(iii) (relating to selection of the proration method), (c)(3) (relating to selection of the semi-monthly or monthly convention), (d) (relating to performance of regular monthly or semi-monthly interim closings), and (e)(2)(ix) (relating to selection of additional extraordinary items) of this section, the term agreement of the partners means either an agreement of all the partners to select the method, convention, or extraordinary item in a dated, written statement maintained with the partnership's books and records, including, for example, a selection that is included in the partnership agreement, or a selection of the method, convention, or extraordinary item made by a person authorized to make that selection, including under a grant of general authority provided for by either state law or in the partnership agreement, if that person's selection is in a dated, written statement maintained with the partnership's books and records. In either case, the dated written agreement must be maintained with the partnership's books and records by the due date, including extension, of the partnership's tax return.

(g) ***Applicability date.***

(1) Except with respect to paragraph (c)(3) of this section, this section applies for partnership taxable years that begin on or after August 3, 2015. The rules of paragraph (c)(3) of this section apply for taxable years of partnerships other than existing publicly traded partnerships that begin on or after August 3, 2015. For purposes of the immediately preceding sentence, an existing publicly traded partnership is a partnership described in section 7704(b) that was formed prior to April 14, 2009. For purposes of this effective date provision, the termination of a publicly traded partnership under section 708(b)(1)(B) due to the sale or exchange of 50 percent or more of the total interests in partnership capital and profits is disregarded in determining whether the publicly traded partnership is an existing publicly traded partnership.

(2) Paragraph (e)(2)(ix) of this section applies to taxable years ending on or after April 30, 2024.

[T.D. 9728, 80 FR 45878, Aug. 3, 2015; 80 FR 68243, 68244, Nov. 4, 2015, as amended by T.D. 9993, 89 FR 34800, Apr. 30, 2024; T.D. 9999, 89 FR 54327, June 28, 2024]

§ 1.706-5 Taxable year determination.

(a) ***In general.*** For purposes of § 1.706-4, the taxable year of a partnership shall be determined without regard to section 706(c)(2)(A) and its regulations.

(b) ***Effective/applicability date.*** This section applies for partnership taxable years that begin on or after August 3, 2015.

[T.D. 9728, 80 FR 45883, Aug. 3, 2015]

§ 1.707-0 Table of contents.

This section lists the captions that appear in §§ 1.707-1 through 1.707-9.

§ 1.707-1 Transactions Between Partner and Partnership

(a) Partner not acting in capacity as partner.

(b) Certain sales or exchanges of property with respect to controlled partnerships.

(1) Losses disallowed.

(2) Gains treated as ordinary income.

(3) Ownership of a capital or profits interest.

(c) Guaranteed payments.

§ 1.707-2 Disguised Payments for Services. [Reserved]

§ 1.707-3 Disguised Sales of Property to Partnership; General Rule.

(a) Treatment of transfers as a sale.

(1) In general.

(2) Definition and timing of sale.

(3) Application of disguised sale rules.

(4) Deemed terminations under section 708.

(b) Transfers treated as a sale.

(1) In general.

(2) Facts and circumstances.

(c) Transfers made within two years presumed to be a sale.

(1) In general.

(2) Disclosure of transfers made within two years.

(d) Transfers made more than two years apart presumed not to be a sale.

(e) Scope.

(f) Examples.

§ 1.707-4 Disguised Sales of Property to Partnership; Special Rules Applicable to Guaranteed Payments, Preferred Returns, Operating Cash Flow Distributions, and Reimbursements of Preformation Expenditures

(a) Guaranteed payments and preferred returns.

(1) Guaranteed payment not treated as part of a sale.

(i) In general.

(ii) Reasonable guaranteed payments.

(iii) Unreasonable guaranteed payments.

(2) Presumption regarding reasonable preferred returns.

(3) Definition of reasonable preferred returns and guaranteed payments.

(i) In general.

(ii) Reasonable amount.

(4) Examples.

(b) Presumption regarding operating cash flow distributions.

(1) In general.

(2) Operating cash flow distributions.

(i) In general.

(ii) Operating cash flow safe harbor.

(iii) Tiered partnerships.

(c) Accumulation of guaranteed payments, preferred returns, and operating cash flow distributions.

(d) Exception for reimbursements of preformation expenditures.

(1) In general.

(2) Capital expenditures incurred by another person.

(3) Contribution of a partnership interest with capital expenditures property.

(4) Special rule for qualified liabilities.

(i) In general.

(ii) Anti-abuse rule.

(5) Scope of capital expenditures.

(6) Example.

(e) Other exceptions.

(f) Ordering rule cross reference.

§ 1.707-5 Disguised Sales of Property to Partnership; Special Rules Relating to Liabilities

(a) Liability assumed or taken subject to by partnership.

(1) In general.

(2) Partner's share of liability.

(i) Recourse liability.

(ii) Nonrecourse liability.

(3) Reduction of partner's share of liability.

(4) Special rule applicable to transfers of encumbered property to a partnership by more than one partner pursuant to a plan.

(5) Special rule applicable to qualified liabilities.

(6) Qualified liability of a partner defined.

(7) Liability incurred within two years of transfer presumed to be in anticipation of the transfer.

(i) In general.

(ii) Disclosure of transfers of property subject to liabilities incurred within two years of the transfer.

(8) Liability incurred by another person.

(b) Treatment of debt-financed transfers of consideration by partnerships.

(1) In general.

(2) Partner's allocable share of liability.

(i) In general.

(ii) Debt-financed transfers made pursuant to a plan.

(A) In general.

(B) Special rule.

(iii) Reduction of partner's share of liability.

(3) Ordering rule.

(c) Refinancings.

(d) Share of liability where assumption accompanied by transfer of money.

(e) Tiered partnerships and other related persons.

(f) Examples.

§ 1.707-6 Disguised Sales of Property by Partnership to Partner; General Rules

(a) In general.

(b) Special rules relating to liabilities.

(1) In general.

(2) Qualified liabilities.

(c) Disclosure rules.

(d) Examples.

§ 1.707-7 Disguised Sales of Partnership Interests. [Reserved]

§ 1.707-8 Disclosure of Certain Information

(a) In general.

(b) Method of providing disclosure.

(c) Disclosure by certain partnerships.

§ 1.707-9 Effective Dates and Transitional Rules

(a) Sections 1.707-3 through 1.707-6.

(1) In general.

(2) Transfers occurring on or before April 24, 1991.

(3) Effective date of section 73 of the Tax Reform Act of 1984.

(b) Section 1.707-8 disclosure of certain information.

[T.D. 8439, 57 FR 44978, Sept. 30, 1992, as amended by T.D. 9787, 81 FR 69296, Oct. 5, 2016]

§ 1.707-1 Transactions between partner and partnership.

(a) ***Partner not acting in capacity as partner.*** A partner who engages in a transaction with a partnership other than in his capacity as a partner shall be treated as if he were not a member of the partnership with respect to such transaction. Such transactions include, for example, loans of money or property by the partnership to the partner or by the partner to the partnership, the sale of property by the partner to the partnership, the purchase of property by the partner from the partnership, and the rendering of services by the partnership to the partner or by the partner to the partnership. Where a partner retains the ownership of property but allows the partnership to use such separately owned property for partnership purposes (for example, to obtain credit or to secure firm creditors by guaranty, pledge, or other agreement) the transaction is treated as one between a partnership and a partner not acting in his capacity as a partner. However, transfers of money or property by a partner to a partnership as contributions, or transfers of money or property by a partnership to a partner as distributions, are not transactions included within the provisions of this section. In all cases, the substance of the transaction will govern rather than its form. See paragraph (c)(3) of § 1.731-1.

(b) ***Certain sales or exchanges of property with respect to controlled partnerships*** —

(1) ***Losses disallowed.***

(i) No deduction shall be allowed for a loss on a sale or exchange of property (other than an interest in the partnership, directly or indirectly, between a partnership and a partner who owns, directly or indirectly, more than 50 percent of the capital interest or profits interest in such partnership. A loss on a sale or exchange of property, directly or indirectly, between two partnerships in which the same persons own, directly or indirectly, more than 50 percent of the capital interest or profits interest in each partnership shall not be allowed.

(ii) If a gain is realized upon the subsequent sale or exchange by a transferee of property with respect to which a loss was disallowed under the provisions of subdivision (i) of this subparagraph, section 267(d) (relating to amount of gain where loss previously disallowed) shall apply as though the loss were disallowed under section 267(a)(1).

(2) ***Gains treated as ordinary income.*** Any gain recognized upon the sale or exchange, directly or indirectly, of property which, in the hands of the transferee immediately after the transfer, is property other than a capital asset, as defined in section 1221, shall be ordinary income if the transaction is between a partnership and a partner who owns, directly or indirectly, more than 80 percent of the capital interest or profits interest in the partnership. This rule also applies where such a transaction is between partnerships in which the same persons own, directly or indirectly, more than 80 percent of the capital interest or profits interest in each partnership. The term *property other than a capital asset* includes (but is not limited to) trade accounts receivable, inventory, stock in trade, and depreciable or real property used in the trade or business.

(3) ***Ownership of a capital or profits interest.*** In determining the extent of the ownership by a partner, as defined in section 761(b), of his capital interest or profits interest in a partnership, the rules for constructive ownership of stock provided in section 267(c) (1), (2), (4), and (5) shall be applied for the purpose of section 707(b) and this paragraph. Under these rules, ownership of a capital or profits interest in a partnership may be attributed to a person who is not a partner as defined in section 761(b) in order that another partner may be considered the constructive owner of such interest under section 267(c). However, section 707(b)(1)(A) does not apply to a constructive owner of a partnership interest since he is not a partner as defined in section 761(b). For example, where trust T is a partner in the partnership ABT, and AW, A's wife, is the sole beneficiary of the trust, the ownership of a capital and profits interest in the partnership by T will be attributed to AW only for the purpose of further attributing the ownership of such interest to A. See section 267(c) (1) and (5). If A, B, and T are equal partners, then A will be considered as owning more than 50 percent of the capital and profits interest in the partnership, and losses on transactions between him and the partnership will be disallowed by section 707(b)(1)(A). However, a loss sustained by AW on a sale or exchange of property with the partnership would not be disallowed by section 707, but will be disallowed to the extent provided in paragraph (b) of § 1.267(b)-1. See section 267 (a) and (b), and the regulations thereunder.

(c) ***Guaranteed payments.*** Payments made by a partnership to a partner for services or for the use of capital are considered as made to a person who is not a partner, to the extent such payments are determined without regard to the income of the partnership. However, a partner must include such payments as ordinary income for his taxable year within or with which ends the partnership taxable year in which the partnership deducted such payments as paid or accrued under its method of accounting. See section 706(a) and paragraph (a) of § 1.706-1. Guaranteed payments are considered as made to one who is not a member of the partnership only for the purposes of section 61(a) (relating to gross income) and section 162(a) (relating to trade or business expenses). For a guaranteed payment to be a partnership deduction, it must meet the same tests under section 162(a) as it would if the payment had been made to a person who is not a member of the partnership, and the rules of section 263 (relating to capital expenditures)

must be taken into account. This rule does not affect the deductibility to the partnership of a payment described in section 736(a)(2) to a retiring partner or to a deceased partner's successor in interest. Guaranteed payments do not constitute an interest in partnership profits for purposes of sections 706(b)(3), 707(b), and 708(b). For the purposes of other provisions of the internal revenue laws, guaranteed payments are regarded as a partner's distributive share of ordinary income. Thus, a partner who receives guaranteed payments for a period during which he is absent from work because of personal injuries or sickness is not entitled to exclude such payments from his gross income under section 105(d). Similarly, a partner who receives guaranteed payments is not regarded as an employee of the partnership for the purposes of withholding of tax at source, deferred compensation plans, etc. The provisions of this paragraph may be illustrated by the following examples:

Example 1. Under the ABC partnership agreement, partner A is entitled to a fixed annual payment of $10,000 for services, without regard to the income of the partnership. His distributive share is 10 percent. After deducting the guaranteed payment, the partnership has $50,000 ordinary income. A must include $15,000 as ordinary income for his taxable year within or with which the partnership taxable year ends ($10,000 guaranteed payment plus $5,000 distributive share).

Example 2. Partner C in the CD partnership is to receive 30 percent of partnership income as determined before taking into account any guaranteed payments, but not less than $10,000. The income of the partnership is $60,000, and C is entitled to $18,000 (30 percent of $60,000) as his distributive share. No part of this amount is a guaranteed payment. However, if the partnership had income of $20,000 instead of $60,000, $6,000 (30 percent of $20,000) would be partner C's distributive share, and the remaining $4,000 payable to C would be a guaranteed payment.

Example 3. Partner X in the XY partnership is to receive a payment of $10,000 for services, plus 30 percent of the taxable income or loss of the partnership. After deducting the payment of $10,000 to partner X, the XY partnership has a loss of $9,000. Of this amount, $2,700 (30 percent of the loss) is X's distributive share of partnership loss and, subject to section 704(d), is to be taken into account by him in his return. In addition, he must report as ordinary income the guaranteed payment of $10,000 made to him by the partnership.

Example 4. Assume the same facts as in example 3 of this paragraph, except that, instead of a $9,000 loss, the partnership has $30,000 in capital gains and no other items of income or deduction except the $10,000 paid X as a guaranteed payment. Since the items of partnership income or loss must be segregated under section 702(a), the partnership has a $10,000 ordinary loss and $30,000 in capital gains. X's 30 percent distributive shares of these amounts are $3,000 ordinary loss and $9,000 capital gain. In addition, X has received a $10,000 guaranteed payment which is ordinary income to him.

[T.D. 6500, 25 FR 11814, Nov. 26, 1960, as amended by T.D. 7891, 48 FR 20049, May 4, 1983]

§ 1.707-2 Disguised payments for services. [Reserved]

§ 1.707-3 Disguised sales of property to partnership; general rules.

(a) ***Treatment of transfers as a sale*** —

(1) ***In general.*** Except as otherwise provided in this section, if a transfer of property by a partner to a partnership and one or more transfers of money or other consideration by the partnership to that partner are described in paragraph (b)(1) of this section, the transfers are treated as a sale of property, in whole or in part, to the partnership.

(2) ***Definition and timing of sale.*** For purposes of §§ 1.707-3 through 1.707-5, the use of the term sale (or any variation of that word) to refer to a transfer of property by a partner to a partnership and a transfer of consideration by a partnership to a partner means a sale or exchange of that property, in whole or in part, to the partnership by the partner acting in a capacity other than as a member of the partnership, rather than a contribution and distribution to which sections 721 and 731, respectively, apply. A transfer that is treated as a sale under paragraph (a)(1) this section is treated as a sale for all purposes of the Internal Revenue Code (e.g., sections 453, 483, 1001, 1012, 1031 and 1274). The sale is considered to take place on the date that, under general principles of Federal tax law, the partnership is considered the owner of the property. If the transfer of money or other consideration from the partnership to the partner occurs after the transfer of property to the partnership; the partner and the partnership are treated as if, on the date of the sale, the partnership transferred to the partner an obligation to transfer to the partner money or other consideration.

(3) ***Application of disguised sale rules.*** If a person purports to transfer property to a partnership in a capacity as a partner, the rules of this section apply for purposes of determining whether the property was transferred in a disguised sale, even if it is determined after the application of the rules of this section that such person is not a partner. If after the application of the rules of this section to a purported transfer of property to a partnership, it is determined that no partnership exists because the property was actually sold, or it is otherwise determined that the contributed property is not owned by the partnership for tax purposes, the transferor of the property is treated as having sold the property to the person (or persons) that acquired ownership of the property for tax purposes.

(4) ***Deemed terminations under section 708.*** In applying the rules of this section, transfers resulting from a termination of a partnership under section 708(b)(1)(B) are disregarded.

(b) ***Transfers treated as a sale*** —

(1) ***In general.*** A transfer of property (excluding money or an obligation to contribute money) by a partner to a partnership and a transfer of money or other consideration (including the assumption of or the taking subject to a liability) by the partnership to the partner constitute a sale of property, in whole or in part, by the partner to the partnership only if based on all the facts and circumstances—

(i) The transfer of money or other consideration would not have been made but for the transfer of property; and

(ii) In cases in which the transfers are not made simultaneously, the subsequent transfer is not dependent on the entrepreneurial risks of partnership operations.

(2) ***Facts and circumstances.*** The determination of whether a transfer of property by a partner to the partnership and a transfer of money or other consideration by the partnership to the partner constitute a sale, in whole or in part, under paragraph (b)(1) of this section is made based on all the facts and circumstances in each case. The weight to be given each of the facts and circumstances will depend on the particular case. Generally, the facts and circumstances existing on the date of the earliest of such transfers are the ones considered in determining whether a sale exists under paragraph (b)(1) of this section. Among the facts and circumstances that may tend to prove the existence of a sale under paragraph (b)(1) of this section are the following:

(i) That the timing and amount of a subsequent transfer are determinable with reasonable certainty at the time of an earlier transfer;

(ii) That the transferor has a legally enforceable right to the subsequent transfer;

(iii) That the partner's right to receive the transfer of money or other consideration is secured in any manner, taking into account the period during which it is secured;

(iv) That any person has made or is legally obligated to make contributions to the partnership in order to permit the partnership to make the transfer of money or other consideration;

(v) That any person has loaned or has agreed to loan the partnership the money or other consideration required to enable the partnership to make the transfer, taking into account whether any such lending obligation is subject to contingencies related to the results of partnership operations;

(vi) That a partnership has incurred or is obligated to incur debt to acquire the money or other consideration necessary to permit it to make the transfer, taking into account the likelihood that the partnership will be able to incur that debt (considering such factors as whether any person has agreed to guarantee or otherwise assume personal liability for that debt);

(vii) That the partnership holds money or other liquid assets, beyond the reasonable needs of the business, that are expected to be available to make the transfer (taking into account the income that will be earned from those assets);

(viii) That partnership distributions, allocation or control of partnership operations is designed to effect an exchange of the burdens and benefits of ownership of property;

(ix) That the transfer of money or other consideration by the partnership to the partner is disproportionately large in relationship to the partner's general and continuing interest in partnership profits; and

(x) That the partner has no obligation to return or repay the money or other consideration to the partnership, or has such an obligation but it is likely to become due at such a distant point in the future that the present value of that obligation is small in relation to the amount of money or other consideration transferred by the partnership to the partner.

(c) *Transfers made within two years presumed to be a sale* —

(1) ***In general.*** For purposes of this section, if within a two-year period a partner transfers property to a partnership and the partnership transfers money or other consideration to the partner (without regard to the order of the transfers), the transfers are presumed to be a sale of the property to the partnership unless the facts and circumstances clearly establish that the transfers do not constitute a sale.

(2) ***Disclosure of transfers made within two years.*** Disclosure to the Internal Revenue Service in accordance with § 1.707-8 is required if—

(i) A partner transfers property to a partnership and the partnership transfers money or other consideration to the partner with a two-year period (without regard to the order of the transfers);

(ii) The partner treats the transfers other than as a sale for tax purposes; and

(iii) The transfer of money or other consideration to the partner is not presumed to be a guaranteed payment for capital under § 1.707-4(a)(1)(ii), is not a reasonable preferred return within the meaning of § 1.707-4(a)(3), and is not an operating cash flow distribution within the meaning of § 1.707-4(b)(2).

(d) ***Transfers made more than two years apart presumed not to be a sale.*** For purposes of this section, if a transfer of money or other consideration to a partner by a partnership and the transfer of property to the partnership by that partner are more than two years apart, the transfers are presumed not to be a sale of the property to the partnership unless the facts and circumstances clearly establish that the transfers constitute a sale.

(e) ***Scope.*** This section and §§ 1.707-4 through 1.707-9 apply to contributions and distributions of property described in section 707(a)(2)(A) and transfers described in section 707(a)(2)(B) of the Internal Revenue Code.

(f) ***Examples.*** The following examples illustrate the application of this section.

Example 1. Treatment of simultaneous transfers as a sale. A transfers property X to partnership AB on April 9, 1992, in exchange for an interest in the partnership. At the time of the transfer, property X has a fair market value of $4,000,000 and an adjusted tax basis of $1,200,000. Immediately after the transfer, the partnership transfers $3,000,000 in cash to A. Assume that, under this section, the partnership's transfer of cash to A is treated as part of a sale of property X to the partnership. Because the amount of cash A receives on April 9, 1992, does not equal the fair market value of the property, A is considered to have sold a portion of property X with a value of $3,000,000 to the partnership in exchange for the cash. Accordingly, A must recognize $2,100,000 of gain ($3,000,000 amount realized less $900,000 adjusted tax basis ($1,200,000 multiplied by $3,000,000/$4,000,000)). Assuming A receives no other transfers that are treated as consideration for the sale of the property under this section, A is considered to have contributed to the partnership, in A's capacity as a partner, $1,000,000 of the fair market value of the property with an adjusted tax basis of $300,000.

Example 2. Treatment of transfers at different times as a sale. (i) The facts are the same as in *Example 1,* except that the $3,000,000 is transferred to A one year after A's transfer of property X to the partnership. Assume that under this section the partnership's transfer of cash to A is treated as part of a sale of property X to the partnership. Assume also that the applicable Federal short-term rate for April, 1992, is 10 percent, compounded semiannually. (ii) Under paragraph (a)(2) of this section, A and the partnership are treated as if, on April 9, 1992, A sold a portion of property X to the partnership in exchange for an obligation to transfer $3,000,000 to A one year later. Section 1274 applies to this obligation because it does not bear interest and is payable more than six months after the date of the sale. As a result, A's amount realized from the receipt of the partnership's obligation will be the imputed principal amount of the partnership's obligation to transfer $3,000,000 to A, which equals $2,721,088 (the present value on April 9, 1992, of a $3,000,000 payment due one year later, determined using a discount rate of 10 percent, compounded semiannually). Therefore, A's amount realized from the receipt of the partnership's obligation is $2,721,088 (without regard to whether the sale is reported under the installment method). A is therefore considered to have sold only $2,721,088 of the fair market value of property X. The remainder of the $3,000,000 payment ($278,912) is characterized in accordance with the provisions of section 1272. Accordingly, A must recognize $1,904,761 of gain ($2,721,088 amount realized less $816,327 adjusted tax basis ($1,200,000 multiplied by $2,721,088/$4,000,000)) on the sale of property X to the partnership. The gain is reportable under the installment method of section

453 if the sale is otherwise eligible. Assuming A receives no other transfers that are treated as consideration for the sale of property under this section, A is considered to have contributed to the partnership, in A's capacity as a partner, $1,278,912 of the fair market value of property X with an adjusted tax basis of $383,673.

Example 3. Operation of presumption for transfers within two years. (i) C transfers undeveloped land to the CD partnership in exchange for an interest in the partnership. The partnership intends to construct a building on the land. At the time the land is transferred to the partnership, it is unencumbered and has an adjusted tax basis of $500,000 and a fair market value of $1,000,000. The partnership agreement provides that upon completing construction of the building the partnership will distribute $900,000 to C.
(ii) If, within two years of C's transfer of land to the partnership, a transfer is made to C pursuant to the provision requiring a distribution upon completion of the building, the transfer is presumed to be, under paragraph (c) of this section, part of a sale of the land to the partnership. C may rebut the presumption that the transfer is part of a sale if the facts and circumstances clearly establish that—

(A) The transfer to C would have been made without regard to C's transfer of land to the partnership; or

(B) The partnership's obligation or ability to make this transfer to C depends, at the time of the transfer to the partnership, on the entrepreneurial risks of partnership operations.

(iii) For example, if the partnership will be able to fund the transfer of cash to C only to the extent that permanent loan proceeds exceed the cost of constructing the building, the fact that excess permanent loan proceeds will be available only if the cost to complete the building is significantly less than the amount projected by a reasonable budget would be evidence that the transfer to C is not part of a sale. Similarly, a condition that limits the amount of the permanent loan to the cost of constructing the building (and thereby limits the partnership's ability to make a transfer to C) unless all or a substantial portion of the building is leased would be evidence that the transfer to C is not part of a sale, if a significant risk exists that the partnership may not be able to lease the building to that extent. Another factor that may prove that the transfer of cash to C is not part of a sale would be that, at the time the land is transferred to the partnership, no lender has committed to make a permanent loan to fund the transfer of cash to C.

(iv) Facts indicating that the transfer of cash to C is not part of a sale, however, may be offset by other factors. An offsetting factor to restrictions on the permanent loan proceeds may be that the permanent loan is to be a recourse loan and certain conditions to the loan are likely to be waived by the lender because of the creditworthiness of the partners or the value of the partnership's other assets. Similarly, the factor that no lender has committed to fund the

transfer of cash to C may be offset by facts establishing that the partnership is obligated to attempt to obtain such a loan and that its ability to obtain such a loan is not significantly dependent on the value that will be added by successful completion of the building, or that the partnership reasonably anticipates that it will have (and will utilize) an alternative source to fund the transfer of cash to C if the permanent loan proceeds are inadequate.

Example 4. Operation of presumption for transfers within two years. E is a partner in the equal EF partnership. The partnership owns two parcels of unimproved real property (*parcels 1 and 2*). Parcels 1 and 2 are unencumbered. Parcel 1 has a fair market value of $500,000, and parcel 2 has a fair market value of $1,500,000. E transfers additional unencumbered, unimproved real property (*parcel 3*) with a fair market value of $1,000,000 to the partnership in exchange for an increased interest in partnership profits of $66^{2}/_{3}$ percent. Immediately after this transfer, the partnership sells parcel 1 for $500,000 in a transaction not in the ordinary course of business. The partnership transfers the proceeds of the sale $333,333 to E and $166,667 to F in accordance with their respective partnership interests. The transfer of $333,333 to E is presumed to be, in accordance with paragraph (c) of this section, a sale, in part, of parcel 3 to the partnership. However, the facts of this example clearly establish that $250,000 of the transfer to E is not part of a sale of parcel 3 to the partnership because E would have been distributed $250,000 from the sale of parcel 1 whether or not E had transferred parcel 3 to the partnership. The transfer to E exceeds by $83,333 ($333,333 minus $250,000) the amount of the distribution that would have been made to E if E had not transferred parcel 3 to the partnership. Therefore, $83,333 of the transfer is presumed to be part of a sale of a portion of parcel 3 to the partnership by E.

Example 5. Operation of presumption for transfers more than two years apart. (i) G transfers undeveloped land to the GH partnership in exchange for an interest in the partnership. At the time the land is transferred to the partnership, it is unencumbered and has an adjusted tax basis of $500,000 and a fair market value of $1,000,000. H contributes $1,000,000 in cash in exchange for an interest in the partnership. Under the partnership agreement, the partnership is obligated to construct a building on the land. The projected construction cost is $5,000,000, which the partnership plans to fund with its $1,000,000 in cash and the proceeds of a construction loan secured by the land and improvements.
(ii) Shortly before G's transfer of the land to the partnership, the partnership secures commitments from lending institutions for construction and permanent financing. To obtain the construction loan, H guarantees completion of the building for a cost of $5,000,000. The partnership is not obligated to reimburse or indemnify H if H must make payment on the completion guarantee. The permanent loan will be funded upon completion of the building, which is expected to occur two years after G's transfer of the land. The amount of the permanent loan is to equal the lesser of $5,000,000 or 80 percent of the appraised value of the improved property at the time the permanent loan is closed. Under the partnership agreement, the partnership is obligated to apply the proceeds of the permanent loan to retire the construction loan and to hold any excess proceeds for transfer to G 25 months after G's transfer of the land to the partnership. The appraised value of the improved property at the time the permanent loan is closed is expected to exceed $5,000,000 only if the partnership is

able to lease a substantial portion of the improvements by that time, and there is a significant risk that the partnership will not be able to achieve a satisfactory occupancy level. The partnership completes construction of the building for the projected cost of $5,000,000 approximately two years after G's transfer of the land. Shortly thereafter, the permanent loan is funded in the amount of $5,000,000. At the time of funding the land and building have an appraised value of $7,000,000. The partnership transfers the $1,000,000 excess permanent loan proceeds to G 25 months after G's transfer of the land to the partnership.

(iii) G's transfer of the land to the partnership and the partnership's transfer of $1,000,000 to G occurred more than two years apart. In accordance with paragraph (d) of this section, those transfers are presumed not to be a sale unless the facts and circumstances clearly establish that the transfers constitute a sale of the property, in whole or part, to the partnership. The transfer of $1,000,000 to G would not have been made but for G's transfer of the land to the partnership. In addition, at the time G transferred the land to the partnership, G had a legally enforceable right to receive a transfer from the partnership at a specified time an amount that equals the excess of the permanent loan proceeds over $4,000,000. In this case, however, there was a significant risk that the appraised value of the property would be insufficient to support a permanent loan in excess of $4,000,000 because of the risk that the partnership would not be able to achieve a sufficient occupancy level. Therefore, the facts of this example indicate that at the time G transferred the land to the partnership the subsequent transfer of $1,000,000 to G depended on the entrepreneurial risks of partnership operations. Accordingly, G's transfer of the land to the partnership is not treated as part of a sale.

Example 6. Rebuttal of presumption for transfers more than two years apart. The facts are the same as in *Example 5,* except that the partnership is able to secure a commitment for a permanent loan in the amount of $5,000,000 without regard to the appraised value of the improved property at the time the permanent loan is funded. Under these facts, at the time that G transferred the land to the partnership the subsequent transfer of $1,000,000 to G was not dependent on the entrepreneurial risks of partnership operations, because during the period before the permanent loan is funded, the permanent lender's obligation to make a loan in the amount necessary to fund the transfer is not subject to the contingencies related to the risks of partnership operations, and after the permanent loan is funded, the partnership holds liquid assets sufficient to make the transfer. Therefore, the facts and circumstances clearly establish that G's transfer of the land to the partnership is part of a sale.

Example 7. Operation of presumption for transfers more than two years apart. The facts are the same as in *Example 6,* except that H does not guarantee either that the improvements will be completed or that the cost to the partnership of completing the improvements will not exceed $5,000,000. Under these facts, if there is a significant risk that the improvements will not be completed, G's transfer of the land to the partnership will not be treated as part of a sale because the lender is required to make the permanent loan if the improvements are not completed. Similarly, the transfers will not be treated as a sale to the extent that there is a significant risk that the cost of constructing the improvements will exceed $5,000,000, because, in the absence of a guarantee of the cost of the

improvements by H, the $5,000,000 proceeds of the permanent loan might not be sufficient to retire the construction loan and fund the transfer to G. In either case, the transfer of cash to G would be dependent on the entrepreneurial risks of partnership operations.

Example 8. Rebuttal of presumption for transfers more than two years apart. (i) On February 1, 1992, I, J, and K form partnership IJK. On formation of the partnership, I transfers an unencumbered office building with a fair market value of $50,000,000 and an adjusted tax basis of $20,000,000 to the partnership, and J and K each transfer United States government securities with a fair market value and an adjusted tax basis of $25,000,000 to the partnership. Substantially all of the rentable space in the office building is leased on a long-term basis. The partnership agreement provides that all items of income, gain, loss, and deduction from the office building are to be allocated 45 percent to J, 45 percent to K, and 10 percent to I. The partnership agreement also provides that all items of income, gain, loss, and deduction from the government securities are to be allocated 90 percent to I, 5 percent to J, and 5 percent to K. The partnership agreement requires that cash flow from the office building and government securities be allocated between partners in the same manner as the items of income, gain, loss, and deduction from those properties are allocated between them. The partnership agreement complies with the requirements of § 1.704-1(b)(2)(ii)(*b*). It is not expected that the partnership will need to resort to the government securities or the cash flow therefrom to operate the office building. At the time the partnership is formed, I, J, and K contemplated that I's interest in the partnership would be liquidated sometime after January 31, 1994, in exchange for a transfer of the government securities and cash (if necessary). On March 1, 1995, the partnership transfers cash and the government securities to I in liquidation of I's interest in the partnership. The cash transferred to I represents the excess of I's share of the appreciation in the office building since the formation of the partnership over J's and K's share of the appreciation in the government securities since they are acquired by the partnership.
(ii) I's transfer of the office building to the partnership and the partnership's transfer of the government securities and cash to I occurred more than two years apart. Therefore, those transfers are presumed not to be a sale unless the facts and circumstances clearly establish that the transfers constitute a sale. Absent I's transfer of the office building to the partnership, I would not have received the government securities from the partnership. The facts including the amount and nature of partnership assets) indicate that, at the time that I transferred the office building to the partnership, the timing of the transfer of the government securities to I was anticipated and was not dependent on the entrepreneurial risks of partnership operations. Moreover, the facts indicate that the partnership allocations were designed to effect an exchange of the burdens and benefits of ownership of the government securities in anticipation of the transfer of those securities to I and those burdens and benefits were effectively shifted to I on formation of the partnership. Accordingly, the facts and circumstances clearly establish that I sold the office building to the partnership on February 1, 1992, in exchange for the partnership's obligation to transfer the government securities to I and to make certain other cash transfers to I.

[T.D. 8439, 57 FR 44978, Sept. 30, 1992]

§ 1.707-4 Disguised sales of property to partnership; special rules applicable to guaranteed payments, preferred returns, operating cash flow distributions, and reimbursements of preformation expenditures.

(a) *Guaranteed payments and preferred returns* —

(1) *Guaranteed payment not treated as part of a sale* —

(i) ***In general.*** A guaranteed payment for capital made to a partner is not treated as part of a sale of property under § 1.707-3(a) (relating to treatment of transfers as a sale). A party's characterization of a payment as a guaranteed payment for capital will not control in determining whether a payment is, in fact, a guaranteed payment for capital. The term *guaranteed payment for capital* means any payment to a partner by a partnership that is determined without regard to partnership income and is for the use of that partner's capital. See section 707(c). For this purpose, one or more payments are not made for the use of a partner's capital if the payments are designed to liquidate all or part of the partner's interest in property contributed to the partnership rather than to provide the partner with a return on an investment in the partnership.

(ii) ***Reasonable guaranteed payments.*** Notwithstanding the presumption set forth in § 1.707-3(c) (relating to transfers made within two years of each other), for purposes of section 707(a)(2) and the regulations thereunder a transfer of money to a partner that is characterized by the parties as a guaranteed payment for capital, is determined without regard to the income of the partnership and is reasonable (within the meaning of paragraph (a)(3) of this section) is presumed to be a guaranteed payment for capital unless the facts and circumstances clearly establish that the transfer is not a guaranteed payment for capital and is part of a sale.

(iii) ***Unreasonable guaranteed payments.*** A transfer of money to a partner that is characterized by the parties as a guaranteed payment for capital but that is not reasonable (within the meaning of paragraph (a)(3) of this section) is presumed not to be a guaranteed payment for capital unless the facts and circumstances clearly establish that the transfer is a guaranteed payment for capital. A transfer that is not a guaranteed payment for capital is subject to the rules of § 1.707-3.

(2) ***Presumption regarding reasonable preferred returns.*** Notwithstanding the presumption set forth in § 1.707-3(c) (relating to transfers made within two years of each other), a transfer of money to a partner that is characterized by the parties as a preferred return and that is reasonable (within the meaning of paragraph (a)(3) of this section) is presumed not to be part of a sale of property to the partnership unless the facts and circumstances (including the likelihood and expected timing of the subsequent allocation of income or gain to support the preferred return) clearly establish that the transfer is part of a sale. The term *preferred return* means a preferential distribution of partnership cash flow to a partner with respect to capital contributed to the partnership by the partner that will be matched, to the extent available, by an allocation of income or gain.

(3) *Definition of reasonable preferred returns and guaranteed payments* —

(i) ***In general.*** A transfer of money to a partner that is characterized as a preferred return or guaranteed payment for capital is reasonable only to the extent that the transfer is made to the partner pursuant to a written provision of a partnership agreement that provides for payment for the use of capital in a reasonable amount, and only to the extent that the payment is made for the use of capital after the date on which that provision is added to the partnership agreement.

(ii) ***Reasonable amount.*** A transfer of money that is made to a partner during any partnership taxable year and is characterized as a preferred return or guaranteed payment for capital is reasonable in amount if the sum of any preferred return and any guaranteed payment for capital that is payable for that year does not exceed the amount determined by multiplying either the partner's unreturned capital at the beginning of the year or, at the partner's option, the partner's weighted average capital balance for the year (with either amount appropriately adjusted, taking into account the relevant compounding periods, to reflect any unpaid preferred return or guaranteed payment for capital that is payable to the partner) by the safe harbor interest rate for that year. The safe harbor interest rate for a partnership's taxable year equals 150 percent of the highest applicable Federal rate, at the appropriate compounding period or periods, in effect at any time from the time that the right to the preferred return or guaranteed payment for capital is first established pursuant to a binding, written agreement among the partners through the end of the taxable year. A partner's unreturned capital equals the excess of the aggregate amount of money and the fair market value of other consideration (net of liabilities) contributed by the partner to the partnership over the aggregate amount of money and the fair market value of other consideration (net of liabilities) distributed by the partnership to the partner other than transfers of money that are presumed to be guaranteed payments for capital under paragraph (a)(1)(ii) of this section, transfers of money that are reasonable preferred returns within the meaning of this paragraph (a)(3), and operating cash flow distributions within the meaning of paragraph (b)(2) of this section.

(4) ***Examples.*** The following examples illustrate the application of paragraph (a) of this section:

> *Example 1. Transfer presumed to be a guaranteed payment.* (i) A transfers property with a fair market value of $100,000 to partnership AB. At the time of A's transfer, the partnership agreement is amended to provide that A is to receive a guaranteed payment for the use of A's capital of 10 percent (compounded annually) of the fair market value of the transferred property in each of the three years following the transfer. The partnership agreement provides that partnership net taxable income and loss will be allocated equally between partners A and B, and that partnership cash flow will be distributed in accordance with the allocation of partnership net taxable income and loss. The partnership would be allowed a deduction in the year paid if the transfers made to A are treated as guaranteed payments under section 707(c). Under the partnership agreement, that deduction would be allocated in the same manner as any other item of partnership deduction. The partnership agreement complies with the requirements of § 1.704-1(b)(2)(ii)(*b*). The partnership agreement does not provide for the payment of a preferred return and, other than the guaranteed payment to be paid to A, no transfer is expected to be made during the three year period following A's transfer that is not an operating cash flow distribution (within the meaning of paragraph (b)(2) of this

section). Assume that the highest applicable Federal rate in effect at the time of A's transfer is eight percent compounded annually.
(ii) The transfer of money to be made to A under the partnership agreement is characterized by the parties as a guaranteed payment for capital and is determined without regard to the income of the partnership. The transfer is also reasonable within the meaning of § 1.707-4(a)(3). The transfer, therefore, is presumed to be a guaranteed payment for capital. The presumption set forth in § 1.707-3(c) (relating to transfers made within two years of each other) thus does not apply to this transfer. The transfer will not be treated as part of a sale of property to the partnership unless the facts and circumstances clearly establish that the transfer is not a guaranteed payment for capital but is part of a sale.

(iii) The presumption that the transfer is a guaranteed payment for capital is not rebutted, because there are no facts indicating that the transfer is not a guaranteed payment for the use of capital.

Example 2. Transfers characterized as guaranteed payments treated as part of a sale. (i) C and D form partnership CD. C transfers property with a fair market value of $100,000 and an adjusted tax basis of $20,000 in exchange for a partnership interest. D is responsible for managing the day-to-day operations of the partnership and makes no capital contribution to the partnership upon its formation. The partnership agreement provides that C is to receive payments characterized as guaranteed payments and determined without regard to partnership income of $8,333 per year for the first four years of partnership operations for the use of C's capital. In addition, the partnership agreement provides that—
(A) Partnership net taxable income and loss will be allocated 75 percent to C and 25 percent to D; and

(B) All partnership cash flow (determined prior to consideration of the guaranteed payment) will be distributed 75 percent to C and 25 percent to D except that guaranteed payments that the partnership is obligated to make to C are payable solely out of D's share of the partnership's cash flow.

(ii) If D's share of the partnership's cash flow is not sufficient to make the guaranteed payment to C, then D is obligated to contribute any shortfall to the partnership, even in the event the partnership is liquidated. Thus, the effect of the guaranteed payment arrangement is that the guaranteed payment to C is funded entirely by D. The partnership agreement complies with the requirements of § 1.704-1(b)(2)(ii)(*b*). Assume that, at the time the partnership is formed, the partnership or D could borrow $25,000 pursuant to a loan requiring equal payments of principal and interest over a four-year term at the current market interest rate of approximately 12 percent (compounded annually). Assume that the highest applicable Federal rate in effect at the time the partnership is formed is 10 percent compounded annually.

(iii) The transfer of money to be made to C under the partnership agreement is characterized by the parties as a guaranteed payment for capital and is determined without regard to the income of the partnership. The transfer is also reasonable within the meaning of § 1.707-4(a)(3). The transfer, therefore, is presumed to be a guaranteed payment for capital. The presumption set forth in § 1.707-3(c) (relating to transfers made within two years of each other) thus does not apply to this transfer. The transfer will not be treated as part of a sale of property to the partnership unless the facts and circumstances clearly establish that the transfer is not a guaranteed payment for capital and is part of a sale.

(iv) For the first four years of partnership operations, the total guaranteed payments made to C under the partnership agreement will equal $33,332. If the characterization of those payments as guaranteed payments for capital within the meaning of section 707(c) were respected, C would be allocated $24,999 of the deductions that would be claimed by the partnership for those payments, thereby leaving the balance in C's capital account approximately $25,000 less than it would have been if the guaranteed payments had not been made. The guaranteed payments thus have the effect of offsetting approximately $25,000 of the credit made to C's capital account for the property transferred to the partnership by C. C's resulting capital account is approximately equivalent to the capital account C would have had if C had only contributed 75 percent of the property to the partnership. Furthermore, the effect of D's funding the guaranteed payment to C (either through reduced distributions of cash flow to D or additional contributions) is that D's capital account is approximately equivalent to the capital account D would have had if D had contributed 25 percent of the property (or contributed cash so that the partnership could purchase the 25 percent). Moreover, a $25,000 loan requiring equal payments of principal and interest over a four-year term at the current market interest rate of 12 percent (compounded annually), would have resulted in annual payments of principal and interest of $8,230.86. Consequently, the guaranteed payments effectively place the partners in the same economic position that they would have been in had D purchased a one-quarter interest in the property from C financed at the current market rate of interest, and then C and D each contributed their share of the property to the partnership. In view of the burden the guaranteed payments place on D's right to transfers of partnership cash flow and D's legal obligation to make contributions to the partnership to the extent necessary to fund the guaranteed payments, D has effectively purchased through the partnership a one-quarter interest in the property from C.

(v) Under these facts, the presumption that the transfers to C are guaranteed payments for capital is rebutted, because the facts and circumstances clearly establish that the transfers are part of a sale and not guaranteed payments for capital. Under § 1.707-3(a), C and the partnership are treated as if C sold a one-quarter interest in the property to the partnership in exchange for a promissory note evidencing the partnership's obligation to make the guaranteed payments.

(b) ***Presumption regarding operating cash flow distributions*** —

(1) ***In general.*** Notwithstanding the presumption set forth in § 1.707-3(c) (relating to transfers made within two years of each other), an operating cash flow distribution is presumed not to be part of a sale of property to the partnership unless the facts and circumstances clearly establish that the transfer is part of a sale.

(2) ***Operating cash flow distributions*** —

(i) ***In general.*** One or more transfers of money by the partnership to a partner during a taxable year of the partnership are operating cash flow distributions for purposes of paragraph (b)(1) of this section to the extent that those transfers are not presumed to be guaranteed payments for capital under paragraph (a)(1)(ii) of this section, are not reasonable preferred returns within the meaning of paragraph (a)(3) of this section, are not characterized by the parties as distributions to the partner acting in a capacity other than as a partner, and to the extent they do not exceed the product of the net cash flow of the partnership from operations for the year multiplied by the lesser of the partner's percentage interest in overall partnership profits for that year or the partner's percentage interest in overall partnership profits for the life of the partnership. For purposes of the preceding sentence, the net cash flow of the partnership from operations for a taxable year is an amount equal to the taxable income or loss of the partnership arising in the ordinary course of the partnership's business and investment activities, increased by tax exempt interest, depreciation, amortization, cost recovery allowances and other noncash charges deducted in determining such taxable income and decreased by—

(A) Principal payments made on any partnership indebtedness;

(B) Property replacement or contingency reserves actually established by the partnership;

(C) Capital expenditures when made other than from reserves or from borrowings the proceeds of which are not included in operating cash flow; and

(D) Any other cash expenditures (including preferred returns) not deducted in determining such taxable income or loss.

(ii) ***Operating cash flow safe harbor.*** For any taxable year, in determining a partner's operating cash flow distributions for the year, the partner may use the partner's smallest percentage interest under the terms of the partnership agreement in any material item of partnership income or gain that may be realized by the partnership in the three-year period beginning with such taxable year. This provision is merely intended to provide taxpayers with a safe harbor and is not intended to preclude a taxpayer from using a different percentage under the rules of paragraph (b)(2)(i) of this section.

(iii) ***Tiered partnerships.*** In the case of tiered partnerships, the upper-tier partnership must take into account its share of the net cash flow from operations of the lower-tier partnership applying principles similar to those described in paragraph (b)(2)(i) of this section, so that the amount of the upper-tier partnership's operating cash flow distributions is neither overstated nor understated.

(c) ***Accumulation of guaranteed payments, preferred returns, and operating cash flow distributions.*** Guaranteed payments for capital, preferred returns, and operating cash flow distributions presumed not to be part of a sale under the rules of paragraphs (a) and (b) of this section do not lose the benefit of the presumption by reason of being retained for distribution in a later year.

(d) *Exception for reimbursements of preformation expenditures.*

(1) ***In general.*** A transfer of money or other consideration by the partnership to a partner is not treated as part of a sale of property by the partner to the partnership under § 1.707-3(a) (relating to treatment of transfers as a sale) to the extent that the transfer to the partner by the partnership is made to reimburse the partner for, and does not exceed the amount of, capital expenditures that—

(i) Are incurred during the two-year period preceding the transfer by the partner to the partnership; and

(ii) Are incurred by the partner with respect to—

(A) Partnership organization and syndication costs described in section 709; or

(B) Property transferred to the partnership by the partner, but only to the extent the reimbursed capital expenditures do not exceed 20 percent of the fair market value of such property at the time of the transfer (the 20-percent limitation). However, the 20-percent limitation of this paragraph (d)(1)(ii)(B) does not apply if the fair market value of the transferred property does not exceed 120 percent of the partner's adjusted basis in the transferred property at the time of the transfer (the 120-percent test). This paragraph (d)(1)(ii)(B) shall be applied on a property-by-property basis, except that a partner may aggregate any of the transferred property under this paragraph (d)(1) to the extent—

(*1*) The total fair market value of such aggregated property (of which no single property's fair market value exceeds 1 percent of the total fair market value of such aggregated property) is not greater than the lesser of 10 percent of the total fair market value of all property, excluding money and marketable securities (as defined under section 731(c)), transferred by the partner to the partnership, or $1,000,000;

(*2*) The partner uses a reasonable aggregation method that is consistently applied; and

(*3*) Such aggregation of property is not part of a plan a principal purpose of which is to avoid §§ 1.707-3 through 1.707-5.

(C) [Reserved].

(2) ***Capital expenditures incurred by another person.*** For purposes of paragraph (d)(1) of this section, a partner steps in the shoes of a person (to the extent the person was not previously reimbursed under paragraph (d)(1) of this section) with respect to capital expenditures the person incurred with respect to property transferred to the partnership by the partner to the extent the partner acquired the property from the person in a nonrecognition transaction described in section 351, 381(a), 721, or 731.

(3) ***Contribution of a partnership interest with capital expenditures property.*** If a person transfers property with respect to which the person incurred capital expenditures (capital expenditures property) to a partnership (lower-tier partnership) and, within the two-year period beginning on the date upon which the person incurred the capital expenditures, transfers an interest in the lower-tier partnership to another partnership (upper-tier partnership) in a nonrecognition transaction under section 721, the upper-tier partnership steps in the shoes of the person who transferred the capital expenditures property to the lower-tier partnership with respect to the capital expenditures that are not otherwise reimbursed to the person. The upper-tier partnership may be reimbursed by the lower-tier partnership under paragraph (d)(1) of this section to the extent the person could have been reimbursed for the capital expenditures by the lower-tier partnership under paragraph (d)(1) of this

section. In addition, for purposes of paragraph (d)(1) of this section, the person is deemed to have transferred the capital expenditures property to the upper-tier partnership and may be reimbursed by the upper-tier partnership under paragraph (d)(1) of this section to the extent the person could have been reimbursed for the capital expenditures by the lower-tier partnership under paragraph (d)(1) of this section and has not otherwise been previously reimbursed. The aggregate reimbursements for capital expenditures under this paragraph (d)(3) shall not exceed the amount that the person could have been reimbursed for such capital expenditures under paragraph (d)(1) of this section.

(4) ***Special rule for qualified liabilities*** —

(i) ***In general.*** For purposes of paragraph (d)(1) of this section, if capital expenditures were funded by the proceeds of a qualified liability defined in § 1.707-5(a)(6)(i) that a partnership assumes or takes property subject to in connection with a transfer of property to the partnership by a partner, a transfer of money or other consideration by the partnership to the partner is not treated as made to reimburse the partner for such capital expenditures to the extent the transfer of money or other consideration by the partnership to the partner exceeds the partner's share of the qualified liability (as determined under § 1.707-5(a)(2), (3), and (4)). Capital expenditures are treated as funded by the proceeds of a qualified liability to the extent the proceeds are either traceable to the capital expenditures under § 1.163-8T or were actually used to fund the capital expenditures, irrespective of the tracing requirements under § 1.163-8T.

(ii) ***Anti-abuse rule.*** If capital expenditures and a qualified liability are incurred under a plan a principal purpose of which is to avoid the requirements of paragraph (d)(4)(i) of this section, the capital expenditures are deemed funded by the qualified liability.

(5) ***Scope of capital expenditures.*** For purposes of this section and § 1.707-5, the term *capital expenditures* has the same meaning as the term *capital expenditures* has under the Internal Revenue Code and applicable regulations, except that it includes capital expenditures taxpayers elect to deduct, and does not include deductible expenses taxpayers elect to treat as capital expenditures.

(6) ***Example.*** The following example illustrates the application of paragraph (d) of this section:

> *Example.* *Intangible treated as separate property.* (i) Z transfers to a partnership a business the material assets of which include a tangible asset and goodwill from the reputation of the business. At the time Z transfers the business to the partnership, the tangible asset has a fair market value of $550,000 and an adjusted basis of $450,000. The goodwill is a section 197 intangible with a fair market value of $100,000 and an adjusted basis of $0. Z incurred $130,000 of capital expenditures with respect to improvements to the tangible asset (which amount is reflected in its adjusted basis) one year preceding the transfer. Z would like to be reimbursed by the partnership for the capital expenditures with an amount that qualifies for the exception for reimbursement of preformation expenditures under paragraph (d)(1) of this section.
> (ii) Under paragraph (d)(1)(ii)(B) of this section, the 20-percent limitation on reimbursed capital expenditures applies on a property-by-property basis. The 120-percent test also applies on a property-by-property basis. Accordingly, the tangible asset and the goodwill each constitutes a separate property. Z incurred the capital expenditures with respect to the

> tangible asset only. The $550,000 fair market value of the tangible asset exceeds 120 percent of Z's $450,000 adjusted basis in the asset at the time of the transfer (120 percent × $450,000 = $540,000). Thus, the 20-percent limitation applies so that the reimbursement of Z's $130,000 of capital expenditures is limited to 20 percent of the fair market value of the tangible asset, or $110,000 (20 percent × $550,000).

(e) ***Other exceptions.*** The Commissioner may provide by guidance published in the Internal Revenue Bulletin that other payments or transfers to a partner are not treated as part of a sale for purposes of section 707(a)(2) and the regulations thereunder.

(f) ***Ordering rule cross reference.*** For payments or transfers by a partnership to a partner to which the rules under this section and § 1.707-5(b) apply, see the ordering rule under § 1.707-5(b)(3).

[T.D. 8439, 57 FR 44981, Sept. 30, 1992; 57 FR 56444, Nov. 30, 1992, as amended by T.D. 9787, 81 FR 69297, Oct. 5, 2016]

§ 1.707-5 Disguised sales of property to partnership; special rules relating to liabilities.

(a) ***Liability assumed or taken subject to by partnership*** —

(1) ***In general.*** For purposes of this section and §§ 1.707-3 and 1.707-4, if a partnership assumes or takes property subject to a qualified liability (as defined in paragraph (a)(6) of this section) of a partner, the partnership is treated as transferring consideration to the partner only to the extent provided in paragraph (a)(5) of this section. By contrast, if the partnership assumes or takes property subject to a liability of the partner other than a qualified liability, the partnership is treated as transferring consideration to the partner to the extent that the amount of the liability exceeds the partner's share of that liability immediately after the partnership assumes or takes subject to the liability as provided in paragraphs (a) (2), (3) and (4) of this section.

(2) ***Partner's share of liability.*** A partner's share of any liability of the partnership is determined under the following rules:

(i) ***Recourse liability.*** A partner's share of a recourse liability of the partnership equals the partner's share of the liability under the rules of section 752 and the regulations in this part under section 752. A partnership liability is a recourse liability to the extent that the obligation is a recourse liability under § 1.752-1(a)(1) or would be treated as a recourse liability under that section if it were treated as a partnership liability for purposes of that section.

(ii) ***Nonrecourse liability.*** A partner's share of a nonrecourse liability of the partnership is determined by applying the same percentage used to determine the partner's share of the excess nonrecourse liability under § 1.752-3(a)(3). A partnership liability is a nonrecourse liability of the partnership to the extent that the obligation is a nonrecourse liability under § 1.752-1(a)(2) or would be a nonrecourse liability of the partnership under § 1.752-1(a)(2) if it were treated as a partnership liability for purposes of that section.

(3) ***Reduction of partner's share of liability.*** For purposes of this section, a partner's share of a liability, immediately after a partnership assumes or takes property subject to the liability, is determined by taking into account a subsequent reduction in the partner's share if—

(i) At the time that the partnership assumes or takes property subject to the liability, it is anticipated that the transferring partner's share of the liability will be subsequently reduced;

(ii) The anticipated reduction is not subject to the entrepreneurial risks of partnership operations; and

(iii) The reduction of the partner's share of the liability is part of a plan that has as one of its principal purposes minimizing the extent to which the assumption of or taking property subject to the liability is treated as part of a sale under § 1.707-3.

(4) ***Special rule applicable to transfers of encumbered property to a partnership by more than one partner pursuant to a plan.*** For purposes of paragraph (a)(1) of this section, if the partnership assumes or takes property or properties subject to the liabilities of more than one partner pursuant to a plan, a partner's share of the liabilities assumed or taken subject to by the partnership pursuant to that plan immediately after the transfers equals the sum of that partner's shares of the liabilities (other than that partner's qualified liabilities, as defined in paragraph (a)(6) of this section) assumed or taken subject to by the partnership pursuant to the plan. This paragraph (a)(4) does not apply to any liability assumed or taken subject to by the partnership with a principal purpose of reducing the extent to which any other liability assumed or taken subject to by the partnership is treated as a transfer of consideration under paragraph (a)(1) of this section.

(5) ***Special rule applicable to qualified liabilities.***

(i) If a transfer of property by a partner to a partnership is not otherwise treated as part of a sale, the partnership's assumption of or taking subject to a qualified liability in connection with a transfer of property is not treated as part of a sale. If a transfer of property by a partner to the partnership is treated as part of a sale without regard to the partnership's assumption of or taking subject to a qualified liability (as defined in paragraph (a)(6) of this section) in connection with the transfer of property, the partnership's assumption of or taking subject to that liability is treated as a transfer of consideration made pursuant to a sale of such property to the partnership only to the extent of the lesser of—

(A) The amount of consideration that the partnership would be treated as transferring to the partner under paragraph (a)(1) of this section if the liability were not a qualified liability; or

(B) The amount obtained by multiplying the amount of the qualified liability by the partner's net equity percentage with respect to that property.

(ii) A partner's net equity percentage with respect to an item of property equals the percentage determined by dividing—

(A) The aggregate transfers of money or other consideration to the partner by the partnership (other than any transfer described in this paragraph (a)(5)) that are treated as proceeds realized from the sale of the transferred property; by

(B) The excess of the fair market value of the property at the time it is transferred to the partnership over any qualified liability encumbering the property or, in the case of any qualified liability described in paragraph (a)(6)(i) (C) or (D) of this section, that is properly allocable to the property.

(iii) Notwithstanding paragraph (a)(5)(i) of this section, in connection with a transfer of property by a partner to a partnership that is treated as a sale due solely to the partnership's assumption of or taking property subject to a liability other than a qualified liability, the partnership's assumption of or taking property subject to a qualified liability is not treated as a transfer of

consideration made pursuant to the sale if the total amount of all liabilities other than qualified liabilities that the partnership assumes or takes subject to is the lesser of 10 percent of the total amount of all qualified liabilities the partnership assumes or takes subject to, or $1,000,000.

(6) ***Qualified liability of a partner defined.*** A liability assumed or taken subject to by a partnership in connection with a transfer of property to the partnership by a partner is qualified liability of the partner only to the extend—

(i) The liability is—

(A) A liability that was incurred by the partner more than two years prior to the earlier of the date the partner agrees in writing to transfers the property or the date the partner transfers the property to the partnership and that has encumbered the transferred property throughout that two-year period;

(B) A liability that was not incurred in anticipation of the transfer of the property to a partnership, buy that was incurred by the partner within the two-year period prior to the earlier of the date the partner agrees in writing to transfer the property or the date the partner transfers the property to the partnership and that has encumbered the transferred property since it was incurred (see paragraph (a)(7) of this section for further rules regarding a liability incurred within two years of a property transfer or of a written agreement to transfer);

(C) A liability that is allocable under the rules of § 1.163-8T to capital expenditures (as described under § 1.707-4(d)(5)) with respect to the property;

(D) A liability that was incurred in the ordinary course of the trade or business in which property transferred to the partnership was used or held but only if all the assets related to that trade or business are transferred other than assets that are not material to a continuation of the trade or business; or

(E) A liability that was not incurred in anticipation of the transfer of the property to a partnership, but that was incurred in connection with a trade or business in which property transferred to the partnership was used or held but only if all the assets related to that trade or business are transferred other than assets that are not material to a continuation of the trade or business (see paragraph (a)(7) of this section for further rules regarding a liability incurred within two years of a transfer presumed to be in anticipation of the transfer); and

(ii) If the liability is a recourse liability, the amount of the liability does not exceed the fair market value of the transferred property (less the amount of any other liabilities that are senior in priority and that either encumber such property or are liabilities described in paragraph (a)(6)(i)(C) or (D) of this section) at the time of the transfer.

(7) ***Liability incurred within two years of transfer presumed to be in anticipation of the transfer*** —

(i) ***In general.*** For purposes of this section, if within a two-year period a partner incurs a liability (other than a liability described in paragraph (a)(6)(i) (C) or (D) of this section) and transfers property to a partnership or agrees in writing to transfer the property, and in connection with the

transfer the partnership assumes or takes the property subject to the liability, the liability is presumed to be incurred in anticipation of the transfer unless the facts and circumstances clearly establish that the liability was not incurred in anticipation of the transfer.

(ii) ***Disclosure of transfers of property subject to liabilities incurred within two years of the transfer.*** A partner that treats a liability assumed or taken subject to by a partnership in connection with a transfer of property as a qualified liability under paragraph (a)(6)(i)(B) of this section or under paragraph (a)(6)(i)(E) of this section (if the liability was incurred by the partner within the two-year period prior to the earlier of the date the partner agrees in writing to transfer the property or the date the partner transfers the property to the partnership) must disclose such treatment to the Internal Revenue Service in accordance with § 1.707-8.

(8) ***Liability incurred by another person.*** Except as provided in paragraph (e)(2) of this section, a partner steps in the shoes of a person for purposes of paragraph (a) of this section with respect to a liability the person incurred or assumed to the extent the partner assumed or took property subject to the liability from the person in a nonrecognition transaction described in section 351, 381(a), 721, or 731.

(b) ***Treatment of debt-financed transfers of consideration by partnerships*** —

(1) ***In general.*** For purposes of § 1.707-3, if a partner transfers property to a partnership, and the partnership incurs a liability and all or a portion of the proceeds of that liability are allocable under § 1.163-8T to a transfer of money or other consideration to the partner made within 90 days of incurring the liability, the transfer of money or other consideration to the partner is taken into account only to the extent that the amount of money or the fair market value of the other consideration transferred exceeds that partner's allocable share of the partnership liability. For purposes of paragraph (b) of this section, an upper-tier partnership's share of the liability of a lower-tier partnership as described under § 1.707-5(a)(2) that is treated as a liability of the upper-tier partnership under § 1.752-4(a) shall be treated as a liability of the upper-tier partnership incurred on the same day the liability was incurred by the lower-tier partnership.

(2) ***Partner's allocable share of liability*** —

(i) ***In general.*** A partner's allocable share of a partnership liability for purposes of paragraph (b)(1) of this section equals the amount obtained by multiplying the partner's share of the liability as described in paragraph (a)(2) of this section by the fraction determined by dividing—

(A) The portion of the liability that is allocable under § 1.163-8T to the money or other consideration transferred to the partner; by

(B) The total amount of the liability.

(ii) ***Debt-financed transfers made pursuant to a plan*** —

(A) ***In general.*** Except as provided in paragraph (b)(2)(iii) of this section, if a partnership transfers to more than one partner pursuant to a plan all or a portion of the proceeds of one or more partnership liabilities, paragraph (b)(1) of this section is applied by treating all of the liabilities incurred pursuant to the plan as one liability, and each partner's allocable share of those liabilities equals the amount obtained by multiplying the sum of the partner's shares of each of the respective liabilities (as defined in paragraph (a)(2) of this section) by the fraction obtained by dividing—

(1) The portion of those liabilities that is allocable under § 1.163-8T to the money or other consideration transferred to the partners pursuant to the plan; by

(2) The total amount of those liabilities.

(B) ***Special rule.*** Paragraph (b)(2)(ii)(A) of this section does not apply to any transfer of money or other property to a partner that is made with a principal purpose of reducing the extent to which any transfer is taken into account under paragraph (b)(1) of this section.

(iii) ***Reduction of partner's share of liability.*** For purposes of paragraph (b)(2) of this section, a partner's share of a liability immediately after a partnership incurs the liability is determined by taking into account a subsequent reduction in the partner's share if—

(A) At the time that the partnership incurs the liability, it is anticipated that the partner's share of the liability that is allocable to a transfer of money or other consideration to the partner will be reduced subsequent to the transfer;

(B) The anticipated reduction is not subject to the entrepreneurial risks of partnership operations; and

(C) The reduction of the partner's share of the liability is part of a plan that has as one of its principal purposes minimizing the extent to which the partnership's distribution of the proceeds of the borrowing is treated as part of a sale.

(3) ***Ordering rule.*** The treatment of a transfer of money or other consideration under paragraph (b) of this section is determined before applying the rules under § 1.707-4.

(c) ***Refinancings.*** To the extent that the proceeds of a partner or partnership liability (the *refinancing debt*) are allocable under the rules of § 1.163-8T to payments discharging all or part of any other liability of that partner or of the partnership, as the case may be, the refinancing debt is treated as the other liability for purposes of applying the rules of this section.

(d) ***Share of liability where assumption accompanied by transfer of money.*** For purposes of §§ 1.707-3 through 1.707-5, if pursuant to a plan a partner pays or contributes money to the partnership and the partnership assumes or takes subject to one or more liabilities (other than qualified liabilities) of the partner, the amount of those liabilities that the partnership is treated as assuming or taking subject to is reduced (but not below zero) by the money transferred.

(e) ***Tiered partnerships and other related persons.***

(1) If a lower-tier partnership succeeds to a liability of an upper-tier partnership, the liability in the lower-tier partnership retains the characterization as qualified or nonqualified that it had under these rules in the upper-tier partnership. A similar rule applies to other related party transactions involving liabilities to the extent provided by guidance published in the Internal Revenue Bulletin.

(2) If an interest in a partnership that has one or more liabilities (the lower-tier partnership) is transferred to another partnership (the upper-tier partnership), the upper-tier partnership's share of any liability of the lower-tier partnership that is treated as a liability of the upper-tier partnership under § 1.752-4(a) is treated as a qualified liability under paragraph (a)(6)(i) of this section to the extent the liability would be a qualified liability under paragraph (a)(6)(i) of this section had the liability been assumed or taken subject to by the upper-tier partnership in connection with a transfer of all of the lower-tier partnership's property to the upper-tier partnership by the lower-tier partnership. For purposes of determining whether the liability constitutes a qualified liability under paragraphs

(a)(6)(i)(B) and (E) of this section, a determination that the liability was not incurred in anticipation of the transfer of property to the upper-tier partnership is based on whether the partner in the lower-tier partnership anticipated transferring its interest in the lower-tier partnership to the upper-tier partnership at the time the liability was incurred by the lower-tier partnership.

(f) ***Examples.*** The following examples illustrate the application of this section.

(1) ***Example 1. Partnership's assumption of nonrecourse liability encumbering transferred property.***

(i) A and B form partnership AB, which will engage in renting office space. A transfers $500,000 in cash to the partnership, and B transfers an office building to the partnership. At the time it is transferred to the partnership, the office building has a fair market value of $1,000,000, has an adjusted basis of $400,000, and is encumbered by a $500,000 nonrecourse liability, which B incurred 12 months earlier to finance the acquisition of other property and which the partnership assumed. No facts rebut the presumption that the liability was incurred in anticipation of the transfer of the property to the partnership. Assume that this liability is a nonrecourse liability of the partnership within the meaning of section 752 and the regulations thereunder. The partnership agreement provides that partnership items will be allocated equally between A and B, including excess nonrecourse liabilities under § 1.752-3(a)(3). The partnership agreement complies with the requirements of § 1.704-1(b)(2)(ii)(*b*).

(ii) The nonrecourse liability secured by the office building is not a qualified liability within the meaning of paragraph (a)(6) of this section. B would be allocated 50 percent of the excess nonrecourse liability under the partnership agreement. Accordingly, immediately after the partnership's assumption of that liability, B's share of the liability as determined under paragraph (a)(2) of this section is $250,000 (B's 50 percent share of the partnership's excess nonrecourse liability as determined in accordance with B's share of partnership profits under § 1.752-3(a)(3)).

(iii) The partnership's assumption of the liability encumbering the office building is treated as a transfer of $250,000 of consideration to B (the amount by which the liability ($500,000) exceeds B's share of that liability immediately after the partnership's assumption of the liability ($250,000)). B is treated as having sold $250,000 of the fair market value of the office building to the partnership in exchange for the partnership's assumption of a $250,000 liability. This results in a gain of $150,000 ($250,000 minus ($250,000/$1,000,000 multiplied by $400,000)).

(2) ***Example 2. Partnership's assumption of recourse liability encumbering transferred property.***

(i) C transfers property Y to a partnership. At the time of its transfer to the partnership, property Y has a fair market value of $10,000,000 and is subject to an $8,000,000 liability that C incurred, immediately before transferring property Y to the partnership, in order to finance other expenditures. Upon the transfer of property Y to the partnership, the partnership assumed the liability encumbering that property. The partnership assumed this liability solely to acquire property Y. Under section 752 and the regulations in this part under section 752, immediately after the partnership's assumption of the liability encumbering property Y, the liability is a recourse liability of the partnership and C's share of that liability is $7,000,000.

(ii) Under the facts of paragraph (f)(2)(i) of this section (*Example 2*), the liability encumbering property Y is not a qualified liability. Accordingly, the partnership's assumption of the liability results in a transfer of consideration to C in connection with C's transfer of property Y to the

partnership in the amount of $1,000,000 (the excess of the liability assumed by the partnership ($8,000,000) over C's share of the liability immediately after the assumption ($7,000,000)). See paragraphs (a)(1) and (2) of this section.

(3) ***Example 3. Subsequent reduction of transferring partner's share of liability.***

(i) The facts are the same as in paragraph (f)(2) of this section (*Example 2*). In addition, property Y is a fully leased office building, the rental income from property Y is sufficient to meet debt service, and the remaining term of the liability is ten years. It is anticipated that, three years after the partnership's assumption of the liability, C's share of the liability under section 752 will be reduced to zero because of a shift in the allocation of partnership losses pursuant to the terms of the partnership agreement. Under the partnership agreement, this shift in the allocation of partnership losses is dependent solely on the passage of time.

(ii) Under paragraph (a)(3) of this section, if the reduction in C's share of the liability was anticipated at the time of C's transfer, was not subject to the entrepreneurial risks of partnership operations, and was part of a plan that has as one of its principal purposes minimizing the extent of sale treatment under § 1.707-3 (that is, a principal purpose of allocating a large percentage of losses to C in the first three years when losses were not likely to be realized was to minimize the extent to which C's transfer would be treated as part of a sale), C's share of the liability immediately after the assumption is treated as equal to C's reduced share.

(4) ***Example 4. Trade payables as qualified liabilities.***

(i) D and E form partnership DE which will engage in a consulting business that requires no overhead and minimal cash on hand for daily operating expenses. Previously, D and E, as individual sole proprietors, operated separate consulting businesses. D and E each transfer to the partnership sufficient cash to cover daily operating expenses together with the goodwill and trade payables related to each sole proprietorship. Due to uncertainty over the collection rate on the trade receivables related to their sole proprietorships, D and E agree that none of the trade receivables will be transferred to the partnership.

(ii) Under the facts of this example, all the assets related to the consulting business (other than the trade receivables) together with the trade payables were transferred to partnership DE. The trade receivables retained by D and E are not material to a continuation of the trade or business by the partnership because D and E contributed sufficient cash to cover daily operating expenses. Accordingly, the trade payables transferred to the partnership constitute qualified liability under paragraph (a)(6) of this section.

(5) ***Partnership's assumption of a qualified liability as sole consideration.***

(i) F purchases property Z in 2012. In 2017, F transfers property Z to a partnership. At the time of its transfer to the partnership, property Z has a fair market value of $165,000 and an adjusted tax basis of $75,000. Also, at the time of the transfer, property Z is subject to a $75,000 nonrecourse liability that F incurred more than two years before transferring property Z to the partnership. The liability has been secured by property Z since it was incurred by F. Upon the transfer of property Z to the partnership, the partnership assumed the liability encumbering that property. The partnership made no other transfers to F in consideration for the transfer of property Z to the partnership. Assume that immediately after the partnership's assumption of the liability encumbering property Z, F's share of that liability for disguised sale purposes is $25,000 in accordance with § 1.707-5(a)(2).

(ii) The $75,000 liability secured by property Z is a qualified liability of F because F incurred the liability more than two years prior to the partnership's assumption of the liability and the liability has encumbered property Z for more than two years prior to F's transfer. See paragraph (a)(6) of this section. Therefore, since no other transfer to F was made as consideration for the transfer of property Z, under paragraph (a)(5) of this section, the partnership's assumption of the qualified liability of F encumbering property Z is not treated as part of a sale.

(6) ***Example 6. Partnership's assumption of a qualified liability in addition to other consideration.***

(i) The facts are the same as in paragraph (f)(5) of this section (*Example 5)*, except that the partnership makes a transfer to F of $30,000 in money that is consideration for F's transfer of property Z to the partnership under § 1.707-3.

(ii) As in paragraph (f)(5) of this section (*Example 5*), the $75,000 liability secured by property Z is a qualified liability of F. Since the partnership transferred $30,000 to F in addition to assuming the qualified liability under paragraph (a)(5) of this section, assuming no other exception to disguised sale treatment applies to the transfer of the $30,000, the partnership's assumption of this qualified liability is treated as a transfer of additional consideration to F to the extent of the lesser of—

(A) The amount that the partnership would be treated as transferring to F if the liability were not a qualified liability ($50,000 (that is, the excess of the $75,000 qualified liability over F's $25,000 share of that liability)); or

(B) The amount obtained by multiplying the qualified liability ($75,000) by F's net equity percentage with respect to property Z (one-third).

(iii) F's net equity percentage with respect to property Z equals the fraction determined by dividing—

(A) The aggregate amount of money or other consideration (other than the qualified liability) transferred to F and treated as part of a sale of property Z under § 1.707-3(a) ($30,000 transfer of money); by

(B) F's net equity in property Z ($90,000 (that is, the excess of the $165,000 fair market value over the $75,000 qualified liability)).

(iv) Accordingly, the partnership's assumption of the qualified liability of F encumbering property Z is treated as a transfer of $25,000 (one-third of $75,000) of consideration to F pursuant to a sale. Therefore, F is treated as having sold $55,000 of the fair market value of property Z to the partnership in exchange for $30,000 in money and the partnership's assumption of $25,000 of the qualified liability. Accordingly, F must recognize $30,000 of gain on the sale (the excess of the $55,000 amount realized over $25,000 of F's adjusted basis for property Z (that is, one-third of F's adjusted basis for the property, because F is treated as having sold one-third of the property to the partnership)).

(7) ***Example 7. Partnership's assumptions of liabilities encumbering properties transferred pursuant to a plan.***

(i) Pursuant to a plan, G and H transfer property 1 and property 2, respectively, to an existing partnership in exchange for interests in the partnership. At the time the properties are transferred to the partnership, property 1 has a fair market value of $10,000 and an adjusted tax basis of $6,000, and property 2 has a fair market value of $10,000 and an adjusted tax basis of $4,000. At the time properties 1 and 2 are transferred to the partnership, a $6,000 nonrecourse

liability (liability 1) is secured by property 1 and a $7,000 recourse liability of F (liability 2) is secured by property 2. Properties 1 and 2 are transferred to the partnership, and the partnership takes subject to liability 1 and assumes liability 2. G and H incurred liabilities 1 and 2 immediately prior to transferring properties 1 and 2 to the partnership and used the proceeds for personal expenditures. The liabilities are not qualified liabilities. Assume that G and H are each allocated $2,000 of liability 1 in accordance with paragraph (a)(2)(ii) of this section (which determines a partner's share of a nonrecourse liability). Assume further that G's share of liability 2 is $3,500 and H's share is $0 in accordance with paragraph (a)(2)(i) of this section (which determines a partner's share of a recourse liability).

(ii) G and H transferred properties 1 and 2 to the partnership pursuant to a plan. Accordingly, the partnership's taking subject to liability 1 is treated as a transfer of only $500 of consideration to G (the amount by which liability 1 ($6,000) exceeds G's share of liabilities 1 and 2 ($5,500)), and the partnership's assumption of liability 2 is treated as a transfer of only $5,000 of consideration to H (the amount by which liability 2 ($7,000) exceeds H's share of liabilities 1 and 2 ($2,000)). G is treated under the rule in § 1.707-3 as having sold $500 of the fair market value of property 1 in exchange for the partnership's taking subject to liability 1 and H is treated as having sold $5,000 of the fair market value of property 2 in exchange for the assumption of liability 2.

(8) ***Example 8. Partnership's assumption of liability pursuant to a plan to avoid sale treatment of partnership assumption of another liability.***

(i) The facts are the same as in paragraph (f)(7) of this section (*Example 7*), except that—

(A) H transferred the proceeds of liability 2 to the partnership; and

(B) H incurred liability 2 in an attempt to reduce the extent to which the partnership's taking subject to liability 1 would be treated as a transfer of consideration to G (and thereby reduce the portion of G's transfer of property 1 to the partnership that would be treated as part of a sale).

(ii) Because the partnership assumed liability 2 with a principal purpose of reducing the extent to which the partnership's taking subject to liability 1 would be treated as a transfer of consideration to G, liability 2 is ignored in applying paragraph (a)(3) of this section. Accordingly, the partnership's taking subject to liability 1 is treated as a transfer of $4,000 of consideration to G (the amount by which liability 1 ($6,000) exceeds G's share of liability 1 ($2,000)). On the other hand, the partnership's assumption of liability 2 is not treated as a transfer of any consideration to H because H's share of that liability equals $7,000 as a result of H's transfer of $7,000 in money to the partnership.

(9) ***Example 9. Partnership's assumptions of qualified liabilities encumbering properties transferred pursuant to a plan in addition to other consideration.***

(i) Pursuant to a plan, I transfers property 1 and J transfers property 2 plus $10,000 in cash to partnership IJ in exchange for equal interests in the partnership. At the time the properties are transferred to the partnership, property 1 has a fair market value of $100,000, an adjusted tax basis of $5,000, and is encumbered by a qualified liability of $50,000 (*liability 1).* Property 2 has a fair market value of $100,000, an adjusted tax basis of $5,000, and is encumbered by a qualified liability of $70,000 (*liability 2).* Pursuant to the plan, the partnership transferred to I

$10,000 in cash. That amount is consideration for I's transfer of property 1 to the partnership under § 1.707-3. In accordance with § 1.707-5(a)(2), I and J are each allocated $25,000 of liability 1 and $35,000 of liability 2.

(ii) Because the partnership transferred $10,000 to I as consideration for the transfer of property, under § 1.707-5(a)(5), the partnership's assumption of liability 1 is treated as a transfer of additional consideration to I, even though liability 1 is a qualified liability, to the extent of the lesser of—

(A) The amount that the partnership would be treated as transferring to I if the liability were not a qualified liability; or

(B) The amount obtained by multiplying the qualified liability by I's net equity percentage with respect to property 1.

(iii) Because I and J transferred properties 1 and 2 to the partnership pursuant to a plan, treating I's qualified liability as a nonqualified liability under § 1.707-5(a)(5)(i)(A) enables I to apply the special rule applicable to transfers of encumbered property to a partnership by more than one partner pursuant to a plan under § 1.707-5(a)(4). Under this alternative test, the partnership's assumption of liability 1 encumbering property 1 is treated as a transfer of zero ($0) additional consideration to I pursuant to a sale. This is because the amount of liability 1 ($50,000) does not exceed the sum of I's share of liability 1 treated as a nonqualified liability ($25,000) and I's share of liability 2 ($35,000)).

(iv) The alternative under § 1.707-5(a)(5)(i)(B) is the amount obtained by multiplying the qualified liability ($50,000) by I's net equity percentage with respect to property 1. I's net equity percentage with respect to property 1 equals one-fifth, the fraction determined by dividing—

(A) The aggregate amount of money or other consideration (other than the qualified liability) transferred to I and treated as part of a sale of property 1 under § 1.707-3(a) (the $10,000 transfer of money; by

(B) I's net equity in property 1 ($50,000 *i.e.,* the excess of the $100,000 fair market value over the $50,000 qualified liability).

(v) Under this alternative test, the partnership's assumption of the qualified liability encumbering property 1 is treated as a transfer of $10,000 (one-fifth of the $50,000 qualified liability) of additional consideration to I pursuant to a sale.

(vi) Applying § 1.707-5(a)(5) to these facts, the partnership's assumption of liability 1 is treated as a transfer of additional consideration to I to the extent of the lesser of—

(A) zero; or

(B) $10,000.

(vii) Therefore, the partnership's assumption of I's qualified liability encumbering property 1 is not treated as a transfer of any additional consideration to I pursuant to a sale, and I is treated as having only received $10,000 of the fair market value of property 1 to the partnership in exchange for $10,000 in cash. Accordingly, I must recognize $9,500 of gain on the sale, that is, the excess of the $10,000 amount realized over $500 of I's adjusted tax basis for property 1 (one-tenth of I's adjusted tax basis for the property, because I is treated as having sold one-

tenth of the property to the partnership). Since no other transfer to J was made as consideration for the transfer of property 2, the partnership's assumption of the qualified liability of J encumbering property 2 is not treated as part of a sale.

(10) ***Example 10. Treatment of debt-financed transfers of consideration by partnership.***

(i) K transfers property Z to partnership KL in exchange for a 50 percent interest therein on April 9, 2017. On September 13, 2017, the partnership incurs a nonrecourse liability of $20,000. On November 17, 2017, the partnership transfers $20,000 to K, and $10,000 of this transfer is allocable under the rules of § 1.163-8T to proceeds of the partnership liability incurred on September 13, 2017. The remaining $10,000 is paid from other partnership funds. Assume that on November 17, 2017, for disguised sale purposes, K's share of the $20,000 liability incurred on September 13, 2017, is $10,000 in accordance with § 1.707-5(a)(2).

(ii) Because a portion of the transfer made to K on November 17, 2017, is allocable under § 1.163-8T to proceeds of a partnership liability that was incurred by the partnership within 90 days of that transfer, K is required to take the transfer into account in applying the rules of this section and § 1.707-3 only to the extent that the amount of the transfer exceeds K's allocable share of the liability used to fund the transfer. K's allocable share of the $20,000 liability used to fund $10,000 of the transfer to K is $5,000 (K's share of the liability ($10,000) multiplied by the fraction obtained by dividing—

(A) The amount of the liability that is allocable to the distribution to K ($10,000); by

(B) The total amount of such liability ($20,000)).

(iii) Therefore, K is required to take into account $15,000 of the $20,000 partnership transfer to K for purposes of this section and § 1.707-3. Under these facts, assuming no other exception applies and the within-two-year presumption is not rebutted, this $15,000 transfer will be treated under the rule in § 1.707-3 as part of a sale by K of property Z to the partnership.

(11) ***Example 11. Treatment of debt-financed transfers of consideration and transfers characterized as guaranteed payments by a partnership.***

(i) The facts are the same as in paragraph (f)(10) of this section (*Example 10*) except that the entire $20,000 transfer to K is allocable under the rules of § 1.163-8T to proceeds of the partnership liability incurred on September 13, 2017. In addition, the partnership agreement provides that K is to receive a guaranteed payment for the use of K's capital in the amount of $10,000 in each of the three years following the transfer of property Z. Ten thousand dollars of the transfer made to K on November 17, 2017, is pursuant to this provision of the partnership agreement. Assume that the guaranteed payment to K constitutes a reasonable guaranteed payment within the meaning of § 1.707-4(a)(3).

(ii) Under these facts, the rules under both § 1.707-4(a) and § 1.707-5(b) apply to the November 17, 2017 transfer to K by the partnership. Thus, the ordering rule in § 1.707-5(b)(3) requires that the § 1.707-5(b) debt-financed distribution rules apply first to determine the treatment of the $20,000 transfer. Because the entire transfer made to K on November 17, 2017, is allocable under § 1.163-8T to proceeds of a partnership liability that was incurred by the partnership within 90 days of that transfer, K is required to take the transfer into account in applying the rules of this section and § 1.707-3 only to the extent that the amount of the transfer exceeds

K's allocable share of the liability used to fund the transfer. K's allocable share of the $20,000 liability used to fund the transfer to K is $10,000 (K's share of the liability ($10,000) multiplied by the fraction obtained by dividing—

(A) The amount of the liability that is allocable to the distribution to K ($20,000); by

(B) The total amount of such liability ($20,000)).

(iii) The remaining $10,000 amount of the transfer to K that exceeds K's allocable share of the liability is tested to determine whether an exception under § 1.707-4 applies. Because $10,000 of the payment to K is a reasonable guaranteed payment for capital under § 1.707-4(a)(1)(ii), the $10,000 transfer will not be treated as part of a sale by K of property *Z* to the partnership under § 1.707-3.

(12) ***Example 12. Treatment of debt-financed transfers of consideration by partnership made pursuant to plan.***

(i) O transfers property X, and P transfers property Y, to partnership OP in exchange for equal interests therein on June 1, 2017. On October 1, 2017, the partnership incurs two nonrecourse liabilities: Liability 1 of $8,000 and Liability 2 of $4,000. On December 15, 2017, the partnership transfers $2,000 to each of O and P pursuant to a plan. The transfers made to O and P on December 15, 2017 are allocable under § 1.163-8T to the proceeds of either Liability 1 or Liability 2. Assume that under § 1.707-5(a)(2), O's and P's share of Liability 1 is $4,000 each and of Liability 2 is $2,000 each on December 15, 2017.

(ii) Because the partnership transferred pursuant to a plan a portion of the proceeds of the two liabilities to O and P, paragraph (b)(1) of this section is applied by treating Liability 1 and Liability 2 as a single $12,000 liability. Pursuant to paragraph (b)(2)(ii)(A) of this section, each partner's allocable share of the $12,000 liability equals the amount obtained by multiplying the sum of the partner's share of Liability 1 and Liability 2 ($6,000) ($4,000 for Liability 1 plus $2,000 for Liability 2) by the fraction obtained by dividing—

(A) The amount of the liability that is allocable to the distribution to O and P pursuant to the plan ($4,000); by

(B) The total amount of such liability ($12,000).

(iii) Therefore, O's and P's allocable share of the $12,000 liability is $2,000 each. Accordingly, because a portion of the proceeds of the $12,000 liability are allocable under § 1.163-8T to the $2,000 transfer made to each of O and P within 90 days of incurring the liability, and the $2,000 transfer does not exceed O's or P's $2,000 allocable share of that liability, each is required to take into account $0 of the $2,000 transfer for purposes of this section and § 1.707-3. Under these facts, no part of the transfers to O and P will be treated as part of a sale of property X by O or of property Y by P. (13) *Example 13. Borrowing against pool of receivables.*

(i) M generates receivables which have an adjusted basis of zero in the ordinary course of its business. For M to use receivables as security for a loan, a commercial lender requires M to transfer the receivables to a partnership in which M has a 90 percent interest. In January, 1992, M transfers to the partnership receivables with a face value of $100,000. N (who is not related to M) transfers $10,000 cash to the partnership in exchange for a 10 percent interest. The

partnership borrows $80,000, secured by the receivables, and makes a distribution of $72,000 of the proceeds to M and $8,000 of the proceeds to N within 90 days of incurring the liability. M's share of the liability under § 1.707-5(a)(2) is $72,000 (90 percent × $80,000).

(ii) Because the transfer of the loan proceeds to M is allocable under § 1.163-8T to proceeds of a partnership loan that was incurred by the partnership within 90 days of that transfer, M is required to take the transfer into account in applying the rules of this section and § 1.707-3 only to the extent that the amount of the transfer ($72,000) exceeds M's allocable share of the liability used to fund the transfer. Because the distribution was a debt-financed transfer pursuant to a plan, M's allocable share of the liability is $72,000 ($72,000 × $80,000/80,000) under § 1.707-5(b)(2)(ii). Therefore, M is not required to take into account any of the loan proceeds for purposes of this section and § 1.707-3.

(iii) When the receivables are collected, M must be allocated the gain on the contributed receivables under section 704(c). However, the lender permits the partnership to distribute cash to the partners only to the extent of the value of new receivables contributed to the partnership. In 1993, M contributes additional receivables and receives a distribution of cash. The taxable income recognized by the partnership on the receivables is taxable income of the partnership arising in the ordinary course of the partnership's activities. To the extent the distribution does not exceed 90 percent (M's percentage interest in overall partnership profits) of the partnership's operating cash flow under § 1.707-4(b), the distribution to M is presumed not to be a part of a sale of receivables by M to the partnership, and the presumption is not rebutted under these facts.

[T.D. 8439, 57 FR 44983, Sept. 30, 1992, as amended by T.D. 9788, 81 FR 69287, Oct. 5, 2016; T.D. 9787, 81 FR 69298, Oct. 5, 2016; 81 FR 80587, Nov. 16, 2016; T.D. 9876, 84 FR 54028, Oct. 9, 2019]

§ 1.707-6 Disguised sales of property by partnership to partner; general rules.

(a) ***In general.*** Rules similar to those provided in § 1.707-3 apply in determining whether a transfer of property by a partnership to a partner and one or more transfers of money or other consideration by that partner to the partnership are treated as a sale of property, in whole or in part, to the partner.

(b) ***Special rules relating to liabilities*** —

(1) ***In general.*** Rules similar to those provided in § 1.707-5 apply to determine the extent to which an assumption of or taking subject to a liability by a partner, in connection with a transfer of property by a partnership, is considered part of a sale. Accordingly, if a partner assumes or takes property subject to a qualified liability (as defined in paragraph (b)(2) of this section) of a partnership, the partner is treated as transferring consideration to the partnership only to the extent provided in paragraph (b). If the partner assumes or takes subject to a liability that is not a qualified liability, the amount treated as consideration transferred to the partnership is the amount that the liability assumed or taken subject to by the partner exceeds the partner's share of that liability (determined under the rules of § 1.707-5(a)(2)) immediately before the transfer. Similar to the rules provided in § 1.707-5(a)(4), if more than one partner assumes or takes subject to a liability pursuant to a plan, the amount that is treated as a transfer of consideration by each partner is the amount by which all of the liabilities (other than qualified liabilities) assumed or taken subject to by the partner pursuant to the plan exceed the partner's share of all of those liabilities immediately before the assumption or

taking subject to. This paragraph (b)(1) does not apply to any liability assumed or taken subject to by a partner with a principal purpose of reducing the extent to which any other liability assumed or taken subject to by a partner is treated as a transfer of consideration under this paragraph (b).

(2) ***Qualified liabilities.***

(i) If a transfer of property by a partnership to a partner is not otherwise treated as part of a sale, the partner's assumption of or taking subject to a qualified liability is not treated as part of a sale. If a transfer of property by a partnership to the partner is treated as part of a sale without regard to the partner's assumption of or taking subject to a qualified liability, the partner's assumption of or taking subject to that liability is treated as a transfer of consideration made pursuant to a sale of such property to the partner only to the extent of the lesser of—

(A) The amount of consideration that the partner would be treated as transferring to the partnership under paragraph (b) of this section if the liability were not a qualified liability; or

(B) The amount obtained by multiplying the amount of the liability at the time of its assumption or taking subject to by the partnership's net equity percentage with respect to that property.

(ii) A partnership's net equity percentage with respect to an item of property encumbered by a qualified liability equals the percentage determined by dividing—

(A) The aggregate transfers to the partnership from the partner (other than any transfer described in this paragraph (b)(2)) that are treated as the proceeds realized from the sale of the transferred property to the partner; by

(B) The excess of the fair market value of the property at the time it is transferred to the partner over any qualified liabilities of the partnership that are assumed or taken subject to by the partner at that time.

(iii) For purposes of this section, the definition of a qualified liability is that provided in § 1.707-5(a)(6) with the following exceptions—

(A) In applying the definition, the qualified liability is one that is originally an obligation of the partnership and is assumed or taken subject to by the partner in connection with a transfer of property to the partner; and

(B) If the liability was incurred by the partnership more than two years prior to the earlier of the date the partnership agrees in writing to transfer the property or the date the partnership transfers the property to the partner, that liability is a qualified liability whether or not it has encumbered the transferred property throughout the two-year period.

(c) ***Disclosure rules.*** Similar to the rules provided in §§ 1.707-3(c)(2) and 1.707-5(a)(7)(ii), a partnership is to disclose to the Internal Revenue Service, in accordance with § 1.707-8, the facts in the following circumstances:

(1) When a partnership transfers property to a partner and the partner transfers money or other consideration to the partnership within a two-year period (without regard to the order of the transfers) and the partnership treats the transfers as other than a sale for tax purposes; and

(2) When a partner assumes or takes subject to a liability of a partnership in connection with a transfer of property by the partnership to the partner, and the partnership incurred the liability within the two-year period prior to the earlier of the date the partnership agrees in writing to the transfer of property or the date the partnership transfers the property, and the partnership treats the liability as a qualified liability under rules similar to § 1.707-5(a)(6)(i)(B).

(d) ***Examples.*** The following examples illustrate the rules of this section.

Example 1. Sale of property by partnership to partner. (i) A is a member of a partnership. The partnership transfers property X to A. At the time of the transfer, property X has a fair market value of $1,000,000. One year after the transfer, A transfers $1,100,000 to the partnership. Assume that under the rules of section 1274 the imputed principal amount of an obligation to transfer $1,100,000 one year after the transfer of property X is $1,000,000 on the date of the transfer.
(ii) Since the transfer of $1,100,000 to the partnership by A is made within two years of the transfer of property X to A, under rules similar to those provided in § 1.707-3(c), the transfers are presumed to be a sale unless the facts and circumstances clearly establish otherwise. If no facts exist that would rebut this presumption, on the date that the partnership transfers property X to A, the partnership is treated as having sold property X to A in exchange for A's obligation to transfer $1,100,000 to the partnership one year later.

Example 2. Assumption of liability by partner. (i) B is a member of an existing partnership. The partnership transfers property Y to B. On the date of the transfer, property Y has a fair market value of $1,000,000 and is encumbered by a nonrecourse liability of $600,000. B takes the property subject to the liability. The partnership incurred the nonrecourse liability six months prior to the transfer of property Y to B and used the proceeds to purchase an unrelated asset. Assume that under § 1.707-5(a)(2), B's share of the nonrecourse liability immediately before the transfer of property Y was $100,000.
(ii) The liability is not allocable under the rules of § 1.163-8T to capital expenditures with respect to the property transferred to B and was not incurred in the ordinary course of the trade or business in which the property transferred to the partner was used or held. Since the partnership incurred the nonrecourse liability within two years of the transfer to B, under rules similar to those provided in § 1.707-5(a)(5), the liability is presumed to be incurred in anticipation of the transfer unless the facts and circumstances clearly establish the contrary. Assuming no facts exist to rebut this presumption, the liability taken subject to by B is not a qualified liability. The partnership is treated as having received, on the date of the transfer of property Y to B, $500,000 ($600,000 liability assumed by B less B's share of the $100,000 liability immediately prior to the transfer) as consideration for the sale of one-half ($500,000/$1,000,000) of property Y to B. The partnership is also treated as having distributed to B, in B's capacity as a partner, the other one-half of property Y.

[T.D. 8439, 57 FR 44987, Sept. 30, 1992, as amended by T.D. 9787, 81 FR 69300, Oct. 5, 2016]

§ 1.707-7 Disguised sales of partnership interests. [Reserved]

§ 1.707-8 Disclosure of certain information.

(a) ***In general.*** The disclosure referred to in § 1.707-3(c)(2) (regarding certain transfers made within two years of each other), § 1.707-5(a)(7)(ii) (regarding a liability incurred within two years prior to a transfer of property), and § 1.707-6(c) (relating to transfers of property from a partnership to a partner in situations analogous to those listed above) is to be made in accordance with paragraph (b) of this section.

(b) ***Method of providing disclosure.*** Disclosure is to be made on a completed Form 8275 or on a statement attached to the return of the transferor of property for the taxable year of the transfer that includes the following:

(1) A caption identifying the statement as disclosure under section 707;

(2) An identification of the item (or group of items) with respect to which disclosure is made;

(3) The amount of each item; and

(4) The facts affecting the potential tax treatment of the item (or items) under section 707.

(c) ***Disclosure by certain partnerships.*** If more than one partner transfers property to a partnership pursuant to a plan, the disclosure required by this section may be made by the partnership on behalf of all the transferors rather than by each transferor separately.

[T.D. 8439, 57 FR 44988, Sept. 30, 1992]

§ 1.707-9 Effective dates and transitional rules.

(a) ***Sections 1.707-3 through 1.707-6 —***

(1) ***In general.*** Except as otherwise provided in this paragraph (a), §§ 1.707-3 through 1.707-6 apply to any transaction with respect to which all transfers occur on or after October 5, 2016. For any transaction with respect to which all transfers that are part of a sale of an item of property occur after April 24, 1991, and any of such transfers occurs before October 5, 2016, §§ 1.707-3 through 1.707-6 as contained in 26 CFR part 1 revised as of April 1, 2016, apply.

(2) ***Transfers occurring on or before April 24, 1991.*** Except as otherwise provided in paragraph (a)(3) of this section, in the case of any transaction with respect to which one or more of the transfers occurs on or before April 24, 1991, the determination of whether the transaction is a disguised sale of property (including a partnership interest) under section 707(a)(2) is to be made on the basis of the statute and the guidance provided regarding that provision in the legislative history of section 73 of the Tax Reform Act of 1984 (Pub. L. 98-369, 98 Stat. 494). See H.R. Rep. No. 861, 98th Cong., 2d Sess. 859-62 (1984); S. Prt. No. 169 (Vol. I), 98th Cong., 2d Sess. 223-32 (1984); H.R. Rep. No. 432 (Pt. 2), 98th Cong., 2d Sess. 1216-21 (1984).

(3) ***Effective date of section 73 of the Tax Reform Act of 1984.*** Sections 1.707-3 through 1.707-6 do not apply to any transfer of money or other consideration to which section 73(a) of the Tax Reform Act of 1984 (Pub. L. 98-369, 98 Stat. 494) does not apply pursuant to section 73(b) of that Act.

(4) ***Applicability date of § 1.707-5(a)(2) and (f)(2), (3), (7), and (8).***

(i) Section 1.707-5(a)(2) and (f)(2), (3), (7), and (8) apply to any transaction with respect to which all transfers occur on or after October 4, 2019. However, a partnership and its partners may apply § 1.707-5(a)(2) and (f)(2), (3), (7), and (8) to any transaction with respect to which all transfers occur on or after January 3, 2017.

(ii) For any transaction with respect to which any transfers occur before January 3, 2017, § 1.707-5(a)(2) and (f), as contained in 26 CFR part 1 revised as of April 1, 2016, apply.

(iii) For any transaction with respect to which all transfers occur on or after January 3, 2017, and any of such transfers occurs before October 4, 2019, see § 1.707-9T(a)(5) as contained in 26 CFR part 1 revised as of April 1, 2019.

(b) ***Section 1.707-8 disclosure of certain information.*** The disclosure provisions described in § 1.707-8 apply to transactions with respect to which all transfers that are part of a sale of property occur after September 30, 1992.

[T.D. 8439, 57 FR 44989, Sept. 30, 1992, as amended by T.D. 9788, 81 FR 69288, Oct. 5, 2016; T.D. 9787, 81 FR 69300, Oct. 5, 2016; 83 FR 50259, Oct. 5, 2018; T.D. 9876, 84 FR 54029, Oct. 9, 2019]

§ 1.708-1 Continuation of partnership.

(a) ***General rule.*** For purposes of subchapter K, chapter 1 of the Code, an existing partnership shall be considered as continuing if it is not terminated.

(b) ***Termination*** —

(1) ***General rule.*** A partnership shall terminate when the operations of the partnership are discontinued and no part of any business, financial operation, or venture of the partnership continues to be carried on by any of its partners in a partnership. For example, on November 20, 1956, A and B, each of whom is a 20-percent partner in partnership ABC, sell their interests to C, who is a 60-percent partner. Since the business is no longer carried on by any of its partners in a partnership, the ABC partnership is terminated as of November 20, 1956. However, where partners DEF agree on April 30, 1957, to dissolve their partnership, but carry on the business through a winding up period ending September 30, 1957, when all remaining assets, consisting only of cash, are distributed to the partners, the partnership does not terminate because of cessation of business until September 30, 1957.

(i) Upon the death of one partner in a 2-member partnership, the partnership shall not be considered as terminated if the estate or other successor in interest of the deceased partner continues to share in the profits or losses of the partnership business.

(ii) For the continuation of a partnership where payments are being made under section 736 (relating to payments to a retiring partner or a deceased partner's successor in interest), see paragraph (a)(6) of § 1.736-1.

(2) A partnership shall terminate when 50 percent or more of the total interest in partnership capital and profits is sold or exchanged within a period of 12 consecutive months. Such sale or exchange includes a sale or exchange to another member of the partnership. However, a disposition of a partnership interest by gift (including assignment to a successor in interest), bequest, or inheritance, or the liquidation of a partnership interest, is not a sale or exchange for purposes of this subparagraph. Moreover, if the sale or exchange of an interest in a partnership (upper-tier partnership) that holds an interest in another partnership (lower-tier partnership) results in a termination of the upper-tier partnership, the upper-tier partnership is treated as exchanging its entire interest in the capital and profits of the lower-tier partnership. If the sale or exchange of an interest in an upper-tier partnership does not terminate the upper-tier partnership, the sale or exchange of an interest in the upper-tier partnership is not treated as a sale or exchange of a

proportionate share of the upper-tier partnership's interest in the capital and profits of the lower-tier partnership. The previous two sentences apply to terminations of partnerships under section 708(b)(1)(B) occurring on or after May 9, 1997; however, the sentences may be applied to terminations occurring on or after May 9, 1996, provided that the partnership and its partners apply the sentences to the termination in a consistent manner. Furthermore, the contribution of property to a partnership does not constitute such a sale or exchange. See, however, paragraph (c)(3) of § 1.731-1. Fifty percent or more of the total interest in partnership capital and profits means 50 percent or more of the total interest in partnership capital plus 50 percent or more of the total interest in partnership profits. Thus, the sale of a 30-percent interest in partnership capital and a 60-percent interest in partnership profits is not the sale or exchange of 50 percent or more of the total interest in partnership capital and profits. If one or more partners sell or exchange interests aggregating 50 percent or more of the total interest in partnership capital and 50 percent or more of the total interest in partnership profits within a period of 12 consecutive months, such sale or exchange is considered as being within the provisions of this subparagraph. When interests are sold or exchanged on different dates, the percentages to be added are determined as of the date of each sale. For example, with respect to the ABC partnership, the sale by A on May 12, 1956, of a 30-percent interest in capital and profits to D, and the sale by B on March 27, 1957, of a 30-percent interest in capital and profits to E, is a sale of a 50-percent or more interest. Accordingly, the partnership is terminated as of March 27, 1957. However, if, on March 27, 1957, D instead of B, sold his 30-percent interest in capital and profits to E, there would be no termination since only one 30-percent interest would have been sold or exchanged within a 12-month period.

(3) For purposes of subchapter K, chapter 1 of the Code, a partnership taxable year closes with respect to all partners on the date on which the partnership terminates. See section 706(c)(1) and paragraph (c)(1) of § 1.706-1. The date of termination is:

(i) For purposes of section 708(b)(1)(A), the date on which the winding up of the partnership affairs is completed.

(ii) For purposes of section 708(b)(1)(B), the date of the sale or exchange of a partnership interest which, of itself or together with sales or exchanges in the preceding 12 months, transfers an interest of 50 percent or more in both partnership capital and profits.

(4) If a partnership is terminated by a sale or exchange of an interest, the following is deemed to occur: The partnership contributes all of its assets and liabilities to a new partnership in exchange for an interest in the new partnership; and, immediately thereafter, the terminated partnership distributes interests in the new partnership to the purchasing partner and the other remaining partners in proportion to their respective interests in the terminated partnership in liquidation of the terminated partnership, either for the continuation of the business by the new partnership or for its dissolution and winding up. In the latter case, the new partnership terminates in accordance with (b)(1) of this section. This paragraph (b)(4) applies to terminations of partnerships under section 708(b)(1)(B) occurring on or after May 9, 1997; however, this paragraph (b)(4) may be applied to terminations occurring on or after May 9, 1996, provided that the partnership and its partners apply this paragraph (b)(4) to the termination in a consistent manner. The provisions of this paragraph (b)(4) are illustrated by the following example:

> *Example.* (i) A and B each contribute $10,000 cash to form AB, a general partnership, as equal partners. AB purchases depreciable Property X for $20,000. Property X increases in value to $30,000, at which time A sells its entire 50 percent interest to C for $15,000 in a

transfer that terminates the partnership under section 708(b)(1)(B). At the time of the sale, Property X had an adjusted tax basis of $16,000 and a book value of $16,000 (original $20,000 tax basis and book value reduced by $4,000 of depreciation). In addition, A and B each had a capital account balance of $8,000 (original $10,000 capital account reduced by $2,000 of depreciation allocations with respect to Property X).
(ii) Following the deemed contribution of assets and liabilities by the terminated AB partnership to a new partnership (new AB) and the liquidation of the terminated AB partnership, the adjusted tax basis of Property X in the hands of new AB is $16,000. See Section 723. The book value of Property X in the hands of new partnership AB is also $16,000 (the book value of Property X immediately before the termination) and B and C each have a capital account of $8,000 in new AB (the balance of their capital accounts in AB prior to the termination). See § 1.704-1(b)(2)(iv)(*l*) (providing that the deemed contribution and liquidation with regard to the terminated partnership are disregarded in determining the capital accounts of the partners and the books of the new partnership). Additionally, under § 301.6109-1(d)(2)(iii) of this chapter, new AB retains the taxpayer identification number of the terminated AB partnership.

(iii) Property X was not section 704(c) property in the hands of terminated AB and is therefore not treated as section 704(c) property in the hands of new AB, even though Property X is deemed contributed to new AB at a time when the fair market value of Property X ($30,000) was different from its adjusted tax basis ($16,000). See § 1.704-3(a)(3)(i) (providing that property contributed to a new partnership under § 1.708-1(b)(4) is treated as section 704(c) property only to the extent that the property was section 704(c) property in the hands of the terminated partnership immediately prior to the termination).

(5) If a partnership is terminated by a sale or exchange of an interest in the partnership, a section 754 election (including a section 754 election made by the terminated partnership on its final return) that is in effect for the taxable year of the terminated partnership in which the sale occurs, applies with respect to the incoming partner. Therefore, the bases of partnership assets are adjusted pursuant to sections 743 and 755 prior to their deemed contribution to the new partnership. This paragraph (b)(5) applies to terminations of partnerships under section 708(b)(1)(B) occurring on or after May 9, 1997; however, this paragraph (b)(5) may be applied to terminations occurring on or after May 9, 1996, provided that the partnership and its partners apply this paragraph (b)(5) to the termination in a consistent manner.

(6) ***Treatment of certain start-up or organizational expenses following a technical termination*** —

(i) ***In general.*** If a partnership that has elected to amortize start-up expenditures under section 195(b) or organizational expenses under section 709(b)(1) terminates in a transaction (or a series of transactions) described in section 708(b)(1)(B) or paragraph (b)(2) of this section, the new partnership must continue to amortize those expenditures over the remaining portion of the amortization period adopted by the terminating partnership. See section 195 and § 1.195-1 for rules concerning the amortization of start-up expenditures and section 709 and § 1.709-1 for rules concerning the amortization of organizational expenses.

(ii) ***Effective/applicability date.*** This paragraph (b)(6) applies to a technical termination of a partnership under section 708(b)(1)(B) that occurs on or after December 9, 2013.

(c) ***Merger or consolidation*** —

(1) ***General rule.*** If two or more partnerships merge or consolidate into one partnership, the resulting partnership shall be considered a continuation of the merging or consolidating partnership the members of which own an interest of more than 50 percent in the capital and profits of the resulting partnership. If the resulting partnership can, under the preceding sentence, be considered a continuation of more than one of the merging or consolidating partnerships, it shall, unless the Commissioner permits otherwise, be considered the continuation solely of that partnership which is credited with the contribution of assets having the greatest fair market value (net of liabilities) to the resulting partnership. Any other merging or consolidating partnerships shall be considered as terminated. If the members of none of the merging or consolidating partnerships have an interest of more than 50 percent in the capital and profits of the resulting partnership, all of the merged or consolidated partnerships are terminated, and a new partnership results.

(2) ***Tax returns.*** The taxable years of any merging or consolidating partnerships which are considered terminated shall be closed in accordance with the provisions of section 706(c) and the regulations thereunder, and such partnerships shall file their returns for a taxable year ending upon the date of termination, *i.e.,* the date of merger or consolidation. The resulting partnership shall file a return for the taxable year of the merging or consolidating partnership that is considered as continuing. The return shall state that the resulting partnership is a continuation of such merging or consolidating partnership, shall retain the employer identification number (EIN) of the partnership that is continuing, and shall include the names, addresses, and EINs of the other merged or consolidated partnerships. The respective distributive shares of the partners for the periods prior to and including the date of the merger or consolidation and subsequent to the date of merger or consolidation shall be shown as a part of the return.

(3) ***Form of a merger or consolidation*** —

(i) ***Assets-over form.*** When two or more partnerships merge or consolidate into one partnership under the applicable jurisdictional law without undertaking a form for the merger or consolidation, or undertake a form for the merger or consolidation that is not described in paragraph (c)(3)(ii) of this section, any merged or consolidated partnership that is considered terminated under paragraph (c)(1) of this section is treated as undertaking the assets-over form for Federal income tax purposes. Under the assets-over form, the merged or consolidated partnership that is considered terminated under paragraph (c)(1) of this section contributes all of its assets and liabilities to the resulting partnership in exchange for an interest in the resulting partnership, and immediately thereafter, the terminated partnership distributes interests in the resulting partnership to its partners in liquidation of the terminated partnership.

(ii) ***Assets-up form.*** Despite the partners' transitory ownership of the terminated partnership's assets, the form of a partnership merger or consolidation will be respected for Federal income tax purposes if the merged or consolidated partnership that is considered terminated under paragraph (c)(1) of this section distributes all of its assets to its partners (in a manner that causes the partners to be treated, under the laws of the applicable jurisdiction, as the owners of such assets) in liquidation of the partners' interests in the terminated partnership, and immediately thereafter, the partners in the terminated partnership contribute the distributed assets to the resulting partnership in exchange for interests in the resulting partnership.

(4) ***Sale of an interest in the merging or consolidating partnership.*** In a transaction characterized under the assets-over form, a sale of all or part of a partner's interest in the terminated partnership to the resulting partnership that occurs as part of a merger or consolidation under section 708(b)(2)(A), as described in paragraph (c)(3)(i) of this section, will be respected as a sale of a partnership interest if the merger agreement (or another document) specifies that the resulting partnership is purchasing interests from a particular partner in the merging or consolidating partnership and the consideration that is transferred for each interest sold, and if the selling partner in the terminated partnership, either prior to or contemporaneous with the transaction, consents to treat the transaction as a sale of the partnership interest. See section 741 and § 1.741-1 for determining the selling partner's gain or loss on the sale or exchange of the partnership interest.

(5) ***Examples.*** The following examples illustrate the rules in paragraphs (c)(1) through (4) of this section:

Example 1. Partnership AB, in whose capital and profits A and B each own a 50-percent interest, and partnership CD, in whose capital and profits C and D each own a 50-percent interest, merge on September 30, 1999, and form partnership ABCD. Partners A, B, C, and D are on a calendar year, and partnership AB and partnership CD also are on a calendar year. After the merger, the partners have capital and profits interests as follows: A, 30 percent; B, 30 percent; C, 20 percent; and D, 20 percent. Since A and B together own an interest of more than 50 percent in the capital and profits of partnership ABCD, such partnership shall be considered a continuation of partnership AB and shall continue to file returns on a calendar year basis. Since C and D own an interest of less than 50 percent in the capital and profits of partnership ABCD, the taxable year of partnership CD closes as of September 30, 1999, the date of the merger, and partnership CD is terminated as of that date. Partnership ABCD is required to file a return for the taxable year January 1 to December 31, 1999, indicating thereon that, until September 30, 1999, it was partnership AB. Partnership CD is required to file a return for its final taxable year, January 1 through September 30, 1999.

Example 2. (i) Partnership X, in whose capital and profits A owns a 40-percent interest and B owns a 60-percent interest, and partnership Y, in whose capital and profits B owns a 60-percent interest and C owns a 40-percent interest, merge on September 30, 1999. The fair market value of the partnership X assets (net of liabilities) is $100X, and the fair market value of the partnership Y assets (net of liabilities) is $200X. The merger is accomplished under state law by partnership Y contributing its assets and liabilities to partnership X in exchange for interests in partnership X, with partnership Y then liquidating, distributing interests in partnership X to B and C.
(ii) B, a partner in both partnerships prior to the merger, owns a greater than 50-percent interest in the resulting partnership following the merger. Accordingly, because the fair market value of partnership Y's assets (net of liabilities) was greater than that of partnership X's, under paragraph (c)(1) of this section, partnership X will be considered to terminate in the merger. As a result, even though, for state law purposes, the transaction was undertaken with partnership Y contributing its assets and liabilities to partnership X and distributing interests in partnership X to its partners, pursuant to paragraph (c)(3)(i) of this section, for Federal income tax purposes, the transaction will

be treated as if partnership X contributed its assets to partnership Y in exchange for interests in partnership Y and then liquidated, distributing interests in partnership Y to A and B.

Example 3. (i) The facts are the same as in *Example 2,* except that partnership X is engaged in a trade or business and has, as one of its assets, goodwill. In addition, the merger is accomplished under state law by having partnership X convey an undivided 40-percent interest in each of its assets to A and an undivided 60-percent interest in each of its assets to B, with A and B then contributing their interests in such assets to partnership Y. Partnership Y also assumes all of the liabilities of partnership X.
(ii) Under paragraph (c)(3)(ii) of this section, the form of the partnership merger will be respected so that partnership X will be treated as following the assets-up form for Federal income tax purposes.

Example 4. (i) Partnership X and partnership Y merge when the partners of partnership X transfer their partnership X interests to partnership Y in exchange for partnership Y interests. Immediately thereafter, partnership X liquidates into partnership Y. The resulting partnership is considered a continuation of partnership Y, and partnership X is considered terminated.
(ii) The partnerships are treated as undertaking the assets-over form described in paragraph (c)(3)(i) of this section because the partnerships undertook a form that is not the assets-up form described in paragraph (c)(3)(ii) of this section. Accordingly, for Federal income tax purposes, partnership X is deemed to contribute its assets and liabilities to partnership Y in exchange for interests in partnership Y, and, immediately thereafter, partnership X is deemed to have distributed the interests in partnership Y to its partners in liquidation of their interests in partnership X.

Example 5. (i) A, B, and C are partners in partnership X. D, E, and F are partners in Partnership Y. Partnership X and partnership Y merge, and the resulting partnership is considered a continuation of partnership Y. Partnership X is considered terminated. Under state law, partnerships X and Y undertake the assets-over form of paragraph (c)(3)(i) of this section to accomplish the partnership merger. C does not want to become a partner in partnership Y, and partnership X does not have the resources to buy C's interest before the merger. C, partnership X, and partnership Y enter into an agreement specifying that partnership Y will purchase C's interest in partnership X for $150 before the merger, and as part of the agreement, C consents to treat the transaction in a manner that is consistent with the agreement. As part of the merger, partnership X receives from partnership Y $150 that will be distributed to C immediately before the merger, and interests in partnership Y in exchange for partnership X's assets and liabilities.

(ii) Because the merger agreement satisfies the requirements of paragraph (c)(4) of this section and C provides the necessary consent, C will be treated as selling its interest in partnership X to partnership Y for $150 before the merger. See section 741 and § 1.741-1 to determine the amount and character of C's gain or loss on the sale or exchange of its interest in partnership X.

(iii) Because the merger agreement satisfies the requirements of paragraph (c)(4) of this section, partnership Y is considered to have purchased C's interest in partnership X for $150 immediately before the merger. See § 1.704-1(b)(2)(iv)(*l*) for determining partnership Y's capital account in partnership X. Partnership Y's adjusted basis of its interest in partnership X is determined under section 742 and § 1.742-1. To the extent any built-in gain or loss on section 704(c) property in partnership X would have been allocated to C (including any allocations with respect to property revaluations under section 704(b) (reverse section 704(c) allocations)), see section 704 and § 1.704-3(a)(7) for determining the built-in gain or loss or reverse section 704(c) allocations apportionable to partnership Y. Similarly, after the merger is completed, the built-in gain or loss and reverse section 704(c) allocations attributable to C's interest are apportioned to D, E, and F under section 704(c) and § 1.704-3(a)(7).

(iv) Under paragraph (c)(3)(i) of this section, partnership X contributes its assets and liabilities attributable to the interests of A and B to partnership Y in exchange for interests in partnership Y; and, immediately thereafter, partnership X distributes the interests in partnership Y to A and B in liquidation of their interests in partnership X. At the same time, partnership X distributes assets to partnership Y in liquidation of partnership Y's interest in partnership X. Partnership Y's bases in the distributed assets are determined under section 732(b).

(6) ***Prescribed form not followed in certain circumstances.***

(i) If any transactions described in paragraph (c)(3) or (4) of this section are part of a larger series of transactions, and the substance of the larger series of transactions is inconsistent with following the form prescribed in such paragraph, the Commissioner may disregard such form, and may recast the larger series of transactions in accordance with their substance.

(ii) ***Example.*** The following example illustrates the rules in paragraph (c)(6) of this section:

Example. A, B, and C are equal partners in partnership ABC. ABC holds no section 704(c) property. D and E are equal partners in partnership DE. B and C want to exchange their interests in ABC for all of the interests in DE. However, rather than exchanging partnership interests, DE merges with ABC by undertaking the assets-up form described in paragraph (c)(3)(ii) of this section, with D and E receiving title to the DE assets and then contributing the assets to ABC in exchange for interests in ABC. As part of a prearranged transaction, the assets acquired from DE are contributed to a new partnership, and the interests in the new partnership are distributed to B and C in complete liquidation of their interests in ABC. The merger and division in this example represent a series of transactions that in

substance are an exchange of interests in ABC for interests in DE. Even though paragraph (c)(3)(ii) of this section provides that the form of a merger will be respected for Federal income tax purposes if the steps prescribed under the assets-up form are followed, and paragraph (d)(3)(i) of this section provides a form that will be followed for Federal income tax purposes in the case of partnership divisions, these forms will not be respected for Federal income tax purposes under these facts, and the transactions will be recast in accordance with their substance as a taxable exchange of interests in ABC for interests in DE.

(7) ***Effective date.*** This paragraph (c) is applicable to partnership mergers occurring on or after January 4, 2001. However, a partnership may apply paragraph (c) of this section to partnership mergers occurring on or after January 11, 2000.

(d) ***Division of a partnership*** —

(1) ***General rule.*** Upon the division of a partnership into two or more partnerships, any resulting partnership (as defined in paragraph (d)(4)(iv) of this section) or resulting partnerships shall be considered a continuation of the prior partnership (as defined in paragraph (d)(4)(ii) of this section) if the members of the resulting partnership or partnerships had an interest of more than 50 percent in the capital and profits of the prior partnership. Any other resulting partnership will not be considered a continuation of the prior partnership but will be considered a new partnership. If the members of none of the resulting partnerships owned an interest of more than 50 percent in the capital and profits of the prior partnership, none of the resulting partnerships will be considered a continuation of the prior partnership, and the prior partnership will be considered to have terminated. Where members of a partnership which has been divided into two or more partnerships do not become members of a resulting partnership which is considered a continuation of the prior partnership, such members' interests shall be considered liquidated as of the date of the division.

(2) ***Tax consequences*** —

(i) ***Tax returns.*** The resulting partnership that is treated as the divided partnership (as defined in paragraph (d)(4)(i) of this section) shall file a return for the taxable year of the partnership that has been divided and retain the employer identification number (EIN) of the prior partnership. The return shall include the names, addresses, and EINs of all resulting partnerships that are regarded as continuing. The return shall also state that the partnership is a continuation of the prior partnership and shall set forth separately the respective distributive shares of the partners for the periods prior to and including the date of the division and subsequent to the date of division. All other resulting partnerships that are regarded as continuing and new partnerships shall file separate returns for the taxable year beginning on the day after the date of the division with new EINs for each partnership. The return for a resulting partnership that is regarded as continuing and that is not the divided partnership shall include the name, address, and EIN of the prior partnership.

(ii) ***Elections.*** All resulting partnerships that are regarded as continuing are subject to preexisting elections that were made by the prior partnership. A subsequent election that is made by a resulting partnership does not affect the other resulting partnerships.

(3) ***Form of a division*** —

(i) ***Assets-over form.*** When a partnership divides into two or more partnerships under applicable jurisdictional law without undertaking a form for the division, or undertakes a form that is not described in paragraph (d)(3)(ii) of this section, the transaction will be characterized under the assets-over form for Federal income tax purposes.

(A) ***Assets-over form where at least one resulting partnership is a continuation of the prior partnership.*** In a division under the assets-over form where at least one resulting partnership is a continuation of the prior partnership, the divided partnership (as defined in paragraph (d)(4)(i) of this section) contributes certain assets and liabilities to a recipient partnership (as defined in paragraph (d)(4)(iii) of this section) or recipient partnerships in exchange for interests in such recipient partnership or partnerships; and, immediately thereafter, the divided partnership distributes the interests in such recipient partnership or partnerships to some or all of its partners in partial or complete liquidation of the partners' interests in the divided partnership.

(B) ***Assets-over form where none of the resulting partnerships is a continuation of the prior partnership.*** In a division under the assets-over form where none of the resulting partnerships is a continuation of the prior partnership, the prior partnership will be treated as contributing all of its assets and liabilities to new resulting partnerships in exchange for interests in the resulting partnerships; and, immediately thereafter, the prior partnership will be treated as liquidating by distributing the interests in the new resulting partnerships to the prior partnership's partners.

(ii) ***Assets-up form*** —

(A) ***Assets-up form where the partnership distributing assets is a continuation of the prior partnership.*** Despite the partners' transitory ownership of some of the prior partnership's assets, the form of a partnership division will be respected for Federal income tax purposes if the divided partnership (which, pursuant to § 1.708-1(d)(4)(i), must be a continuing partnership) distributes certain assets (in a manner that causes the partners to be treated, under the laws of the applicable jurisdiction, as the owners of such assets) to some or all of its partners in partial or complete liquidation of the partners' interests in the divided partnership, and immediately thereafter, such partners contribute the distributed assets to a recipient partnership or partnerships in exchange for interests in such recipient partnership or partnerships. In order for such form to be respected for transfers to a particular recipient partnership, all assets held by the prior partnership that are transferred to the recipient partnership must be distributed to, and then contributed by, the partners of the recipient partnership.

(B) ***Assets-up form where none of the resulting partnerships are a continuation of the prior partnership.*** If none of the resulting partnerships are a continuation of the prior partnership, then despite the partners' transitory ownership of some or all of the prior partnership's assets, the form of a partnership division will be respected for Federal income tax purposes if the prior partnership distributes certain assets (in a manner that causes the partners to be treated, under the laws of the applicable jurisdiction, as the owners of such assets) to some or all of its partners in partial or complete liquidation of the partners' interests in the prior partnership, and immediately thereafter, such partners contribute the distributed assets to a resulting partnership or partnerships in exchange for interests in such resulting partnership or partnerships. In order for such form to be respected for transfers to a particular resulting partnership, all assets held by the prior

partnership that are transferred to the resulting partnership must be distributed to, and then contributed by, the partners of the resulting partnership. If the prior partnership does not liquidate under the applicable jurisdictional law, then with respect to the assets and liabilities that, in form, are not transferred to a new resulting partnership, the prior partnership will be treated as transferring these assets and liabilities to a new resulting partnership under the assets-over form described in paragraph (d)(3)(i)(B) of this section.

(4) ***Definitions*** —

(i) ***Divided partnership.*** For purposes of paragraph (d) of this section, the divided partnership is the continuing partnership which is treated, for Federal income tax purposes, as transferring the assets and liabilities to the recipient partnership or partnerships, either directly (under the assets-over form) or indirectly (under the assets-up form). If the resulting partnership that, in form, transferred the assets and liabilities in connection with the division is a continuation of the prior partnership, then such resulting partnership will be treated as the divided partnership. If a partnership divides into two or more partnerships and only one of the resulting partnerships is a continuation of the prior partnership, then the resulting partnership that is a continuation of the prior partnership will be treated as the divided partnership. If a partnership divides into two or more partnerships without undertaking a form for the division that is recognized under paragraph (d)(3) of this section, or if the resulting partnership that had, in form, transferred assets and liabilities is not considered a continuation of the prior partnership, and more than one resulting partnership is considered a continuation of the prior partnership, the continuing resulting partnership with the assets having the greatest fair market value (net of liabilities) will be treated as the divided partnership.

(ii) ***Prior partnership.*** For purposes of paragraph (d) of this section, the prior partnership is the partnership subject to division that exists under applicable jurisdictional law before the division.

(iii) ***Recipient partnership.*** For purposes of paragraph (d) of this section, a recipient partnership is a partnership that is treated as receiving, for Federal income tax purposes, assets and liabilities from a divided partnership, either directly (under the assets-over form) or indirectly (under the assets-up form).

(iv) ***Resulting partnership.*** For purposes of paragraph (d) of this section, a resulting partnership is a partnership resulting from the division that exists under applicable jurisdictional law after the division and that has at least two partners who were partners in the prior partnership. For example, where a prior partnership divides into two partnerships, both partnerships existing after the division are resulting partnerships.

(5) ***Examples.*** The following examples illustrate the rules in paragraphs (d)(1), (2), (3), and (4) of this section:

Example 1. Partnership ABCD is in the real estate and insurance businesses. A owns a 40-percent interest, and B, C, and D each owns a 20-percent interest, in the capital and profits of the partnership. The partnership and the partners report their income on a calendar year. On November 1, 1999, they separate the real estate and insurance businesses and form two partnerships. Partnership AB takes over the real estate business, and partnership CD takes over the insurance business. Because members of resulting partnership AB owned more than a 50-percent interest in the capital and profits of partnership ABCD (A, 40 percent, and B, 20 percent), partnership AB shall be considered a continuation of partnership ABCD. Partnership AB is required to file a return for the taxable year January 1 to December 31, 1999, indicating

thereon that until November 1, 1999, it was partnership ABCD. Partnership CD is considered a new partnership formed at the beginning of the day on November 2, 1999, and is required to file a return for the taxable year it adopts pursuant to section 706(b) and the applicable regulations.

Example 2. (i) Partnership ABCD owns properties W, X, Y, and Z, and divides into partnership AB and partnership CD. Under paragraph (d)(1) of this section, partnership AB is considered a continuation of partnership ABCD and partnership CD is considered a new partnership. Partnership ABCD distributes property Y to C and titles property Y in C's name. Partnership ABCD distributes property Z to D and titles property Z in D's name. C and D then contribute properties Y and Z, respectively, to partnership CD in exchange for interests in partnership CD. Properties W and X remain in partnership AB.
(ii) Under paragraph (d)(3)(ii) of this section, partnership ABCD will be treated as following the assets-up form for Federal income tax purposes.

Example 3. (i) The facts are the same as in *Example 2,* except partnership ABCD distributes property Y to C and titles property Y in C's name. C then contributes property Y to partnership CD. Simultaneously, partnership ABCD contributes property Z to partnership CD in exchange for an interest in partnership CD. Immediately thereafter, partnership ABCD distributes the interest in partnership CD to D in liquidation of D's interest in partnership ABCD.
(ii) Under paragraph (d)(3)(i) of this section, because partnership ABCD did not undertake the assets-up form with respect to all of the assets transferred to partnership CD, partnership ABCD will be treated as undertaking the assets-over form in transferring the assets to partnership CD. Accordingly, for Federal income tax purposes, partnership ABCD is deemed to contribute property Y and property Z to partnership CD in exchange for interests in partnership CD, and immediately thereafter, partnership ABCD is deemed to distribute the interests in partnership CD to partner C and partner D in liquidation of their interests in partnership ABCD.

Example 4. (i) Partnership ABCD owns three parcels of property: property X, with a value of $500; property Y, with a value of $300; and property Z, with a value of $200. A and B each own a 40-percent interest in the capital and profits of partnership ABCD, and C and D each own a 10 percent interest in the capital and profits of partnership ABCD. On November 1, 1999, partnership ABCD divides into three partnerships (AB1, AB2, and CD) by contributing property X to a newly formed partnership (AB1) and distributing all interests in such partnership to A and B as equal partners, and by contributing property Z to a newly formed partnership (CD) and distributing all interests in such partnership to C and D as equal partners in exchange for all of their interests in partnership ABCD. While partnership ABCD does not transfer property Y, C and D cease to be partners in the partnership. Accordingly, after the division, the partnership holding property Y is referred to as partnership AB2.

(ii) Partnerships AB1 and AB2 both are considered a continuation of partnership ABCD, while partnership CD is considered a new partnership formed at the beginning of the day on November 2, 1999. Under paragraph (d)(3)(i)(A) of this section, partnership ABCD will be treated as following the assets-over form, with partnership ABCD contributing property X to partnership AB1 and property Z to partnership CD, and distributing the interests in such partnerships to the designated partners.

Example 5. (i) The facts are the same as in *Example 4,* except that partnership ABCD divides into three partnerships by operation of state law, without undertaking a form.
(ii) Under the last sentence of paragraph (d)(4)(i) of this section, partnership AB1 will be treated as the resulting partnership that is the divided partnership. Under paragraph (d)(3)(i)(A) of this section, partnership ABCD will be treated as following the assets-over form, with partnership ABCD contributing property Y to partnership AB2 and property Z to partnership CD, and distributing the interests in such partnerships to the designated partners.

Example 6. (i) The facts are the same as in *Example 4,* except that partnership ABCD divides into three partnerships by contributing property X to newly-formed partnership AB1 and property Y to newly-formed partnership AB2 and distributing all interests in each partnership to A and B in exchange for all of their interests in partnership ABCD.
(ii) Because resulting partnership CD is not a continuation of the prior partnership (partnership ABCD), partnership CD cannot be treated, for Federal income tax purposes, as the partnership that transferred assets (*i.e.,* the divided partnership), but instead must be treated as a recipient partnership. Under the last sentence of paragraph (d)(4)(i) of this section, partnership AB1 will be treated as the resulting partnership that is the divided partnership. Under paragraph (d)(3)(i)(A) of this section, partnership ABCD will be treated as following the assets-over form, with partnership ABCD contributing property Y to partnership AB2 and property Z to partnership CD, and distributing the interests in such partnerships to the designated partners.

Example 7. (i) Partnership ABCDE owns Blackacre, Whiteacre, and Redacre, and divides into partnership AB, partnership CD, and partnership DE. Under paragraph (d)(1) of this section, partnership ABCDE is considered terminated (and, hence, none of the resulting partnerships are a continuation of the prior partnership) because none of the members of the new partnerships (partnership AB, partnership CD, and partnership DE) owned an interest of more than 50 percent in the capital and profits of partnership ABCDE.
(ii) Partnership ABCDE distributes Blackacre to A and B and titles Blackacre in the names of A and B. A and B then contribute Blackacre to partnership AB in exchange for interests in partnership AB. Partnership ABCDE will be treated as following the assets-up form described in paragraph (d)(3)(ii)(B) of this section for Federal income tax purposes.

(iii) Partnership ABCDE distributes Whiteacre to C and D and titles Whiteacre in the names of C and D. C and D then contribute Whiteacre to partnership CD in exchange for interests in partnership CD. Partnership ABCDE will be treated as following the assets-up form described in paragraph (d)(3)(ii)(B) of this section for Federal income tax purposes.

(iv) Partnership ABCDE does not liquidate under state law so that, in form, the assets in new partnership DE are not considered to have been transferred under state law. Partnership ABCDE will be treated as undertaking the assets-over form described in paragraph (d)(3)(i)(B) of this section for Federal income tax purposes with respect to the assets of partnership DE. Thus, partnership ABCDE will be treated as contributing Redacre to partnership DE in exchange for interests in partnership DE; and, immediately thereafter, partnership ABCDE will be treated as distributing interests in partnership DE to D and E in liquidation of their interests in partnership ABCDE. Partnership ABCDE then terminates.

(6) ***Prescribed form not followed in certain circumstances.*** If any transactions described in paragraph (d)(3) of this section are part of a larger series of transactions, and the substance of the larger series of transactions is inconsistent with following the form prescribed in such paragraph, the Commissioner may disregard such form, and may recast the larger series of transactions in accordance with their substance.

(7) ***Effective date.*** This paragraph (d) is applicable to partnership divisions occurring on or after January 4, 2001. However, a partnership may apply paragraph (d) of this section to partnership divisions occurring on or after January 11, 2000.

[T.D. 6500, 25 FR 11814, Nov. 26, 1960; 25 FR 14021, Dec. 31, 1960, as amended by T.D. 8717, 62 FR 25500, May 9, 1997; T.D. 8925, 65 FR 719, Jan. 4, 2001; 67 FR 57330, Sept. 10, 2002; T.D. 9681, 79 FR 42679, July 23, 2014]

§ 1.709-1 Treatment of organization and syndication costs.

(a) ***General rule.*** Except as provided in paragraph (b) of this section, no deduction shall be allowed under chapter 1 of the Code to a partnership or to any partner for any amounts paid or incurred, directly or indirectly, in partnership taxable years beginning after December 31, 1975, to organize a partnership, or to promote the sale of, or to sell, an interest in the partnership.

(b) ***Election to amortize organizational expenses*** —

(1) ***In general.*** Under section 709(b), a partnership may elect to amortize organizational expenses as defined in section 709(b)(3) and § 1.709-2(a). In the taxable year in which a partnership begins business, an electing partnership may deduct an amount equal to the lesser of the amount of the organizational expenses of the partnership, or $5,000 (reduced (but not below zero) by the amount by which the organizational expenses exceed $50,000). The remainder of the organizational expenses is deductible ratably over the 180-month period beginning with the month in which the partnership begins business. All organizational expenses of the partnership are considered in determining whether the organizational expenses exceed $50,000, including expenses incurred on or before October 22, 2004.

(2) ***Time and manner of making election.*** A partnership is deemed to have made an election under section 709(b) to amortize organizational expenses as defined in section 709(b)(3) and § 1.709-2(a) for the taxable year in which the partnership begins business. A partnership may choose to forgo the deemed election by affirmatively electing to capitalize its organizational expenses on a timely filed Federal income tax return (including extensions) for the taxable year in which the partnership begins business. The election either to amortize organizational expenses under section 709(b) or to capitalize organizational expenses is irrevocable and applies to all organizational expenses of the partnership. A change in the characterization of an item as an organizational expense is a change in method of accounting to which sections 446 and 481(a) apply if the partnership treated the item consistently for two or more taxable years. A change in the determination of the taxable year in which the partnership begins business also is treated as a change in method of accounting if the partnership amortized organizational expenses for two or more taxable years.

(3) ***Liquidation of partnership*** —

(i) ***In general.*** If there is a winding up and complete liquidation of the partnership prior to the end of the amortization period, the unamortized amount of organizational expenses is a partnership deduction in its final taxable year to the extent provided under section 165 (relating to losses). However, there is no partnership deduction with respect to its capitalized syndication expenses.

(ii) ***Technical termination of a partnership.*** If a partnership that has elected to amortize organizational costs under section 709(b) terminates in a transaction (or a series of transactions) described in section 708(b)(1)(B) or § 1.708-1(b)(2), the termination shall not be treated as resulting in a liquidation of the partnership for purposes of section 709(b)(2). See § 1.708-1(b)(6) for rules concerning the treatment of these organizational costs by the new partnership.

(4) ***Examples.*** The following examples illustrate the application of this section:

Example 1. Expenditures of $5,000 or less. Partnership X, a calendar year taxpayer, incurs $3,000 of organizational expenses after October 22, 2004, and begins business on July 1, 2011. Under paragraph (b)(2) of this section, Partnership X is deemed to have elected to amortize organizational expenses under section 709(b) in 2011. Therefore, Partnership X may deduct the entire amount of the organizational expenses in 2011, the taxable year in which Partnership X begins business.

Example 2. Expenditures of more than $5,000 but less than or equal to $50,000. The facts are the same as in *Example 1* except that Partnership X incurs organizational expenses of $41,000. Under paragraph (b)(2) of this section, Partnership X is deemed to have elected to amortize organizational expenses under section 709(b) in 2011. Therefore, Partnership X may deduct $5,000 and the portion of the remaining $36,000 that is allocable to July through December of 2011 ($36,000/180 × 6 = $1,200) in 2011, the taxable year in which Partnership X begins business. Partnership X may amortize the remaining $34,800 ($36,000 − $1,200 = $34,800) ratably over the remaining 174 months.

Example 3. Subsequent change in the characterization of an item. The facts are the same as in *Example 2* except that Partnership X realizes in 2013 that Partnership X incurred $10,000 for an additional organizational expense erroneously deducted in 2011 under section 162 as a business expense. Under paragraph (b)(2) of this section, Partnership X is deemed to have elected to amortize organizational expenses under section 709(b) in 2011, including the

additional $10,000 of organizational expenses. Partnership X is using an impermissible method of accounting for the additional $10,000 of organizational expenses and must change its method under § 1.446-1(e) and the applicable general administrative procedures in effect in 2013.

Example 4. Subsequent redetermination of year in which business begins. The facts are the same as in *Example 2* except that, in 2012, Partnership X deducted the organizational expenses allocable to January through December of 2012 ($36,000/180 × 12 = $2,400). In addition, in 2013 it is determined that Partnership X actually began business in 2012. Under paragraph (b)(2) of this section, Partnership X is deemed to have elected to amortize organizational expenses under section 709(b) in 2012. Partnership X impermissibly deducted organizational expenses in 2011, and incorrectly determined the amount of organizational expenses deducted in 2012. Therefore, Partnership X is using an impermissible method of accounting for the organizational expenses and must change its method under § 1.446-1(e) and the applicable general administrative procedures in effect in 2013.

Example 5. Expenditures of more than $50,000 but less than or equal to $55,000. The facts are the same as in *Example 1* except that Partnership X incurs organizational expenses of $54,500. Under paragraph (b)(2) of this section, Partnership X is deemed to have elected to amortize organizational expenses under section 709(b) in 2011. Therefore, Partnership X may deduct $500 ($5,000−$4,500) and the portion of the remaining $54,000 that is allocable to July through December of 2011 ($54,000/180 × 6 = $1,800) in 2011, the taxable year in which Partnership X begins business. Partnership X may amortize the remaining $52,200 ($54,000 − $1,800 = $ 52,200) ratably over the remaining 174 months.

Example 6. Expenditures of more than $55,000. The facts are the same as in *Example 1* except that Partnership X incurs organizational expenses of $450,000. Under paragraph (b)(2) of this section, Partnership X is deemed to have elected to amortize organizational expenses under section 709(b) in 2011. Therefore, Partnership X may deduct the amounts allocable to July through December of 2011 ($450,000/180 × 6 = $15,000) in 2011, the taxable year in which Partnership X begins business. Partnership X may amortize the remaining $435,000 ($450,000 − $15,000 = $435,000) ratably over the remaining 174 months.

(5) ***Effective/applicability date.*** This section applies to organizational expenses paid or incurred after August 16, 2011. However, taxpayers may apply all the provisions of this section to organizational expenses paid or incurred after October 22, 2004, provided that the period of limitations on assessment of tax for the year the election under paragraph (b)(2) of this section is deemed made has not expired. For organizational expenses paid or incurred on or before September 8, 2008, taxpayers may instead apply § 1.709-1, as in effect prior to that date (§ 1.709-1 as contained in 26 CFR part 1 edition revised as of April 1, 2008). Paragraph (b)(3)(ii) of this section applies to a technical termination of a partnership under section 708(b)(1)(B) that occurs on or after December 9, 2013.

[T.D. 7891, 48 FR 20048, May 4, 1983, as amended by T.D. 9411, 73 FR 38914, July 8, 2008; T.D. 9542, 76 FR 50890, Aug. 17, 2011; 76 FR 56973, Sept. 15, 2011; T.D. 9681, 79 FR 42679, July 23, 2014]

§ 1.709-2 Definitions.

(a) ***Organizational expenses.*** Section 709(b)(2) of the Internal Revenue Code defines organizational expenses as expenses which:

(1) Are incident to the creation of the partnership;

(2) Are chargeable to capital account; and

(3) Are of a character which, if expended incident to the creation of a partnership having an ascertainable life, would (but for section 709(a)) be amortized over such life.

An expenditure which fails to meet one or more of these three tests does not qualify as an organizational expense for purposes of section 709(b) and this section. To satisfy the statutory requirement described in paragraph (a)(1) of this section, the expense must be incurred during the period beginning at a point which is a reasonable time before the partnership begins business and ending with the date prescribed by law for filing the partnership return (determined without regard to any extensions of time) for the taxable year the partnership begins business. In addition, the expenses must be for creation of the partnership and not for operation or starting operation of the partnership trade or business. To satisfy the statutory requirement described in paragraph (a)(3) of this section, the expense must be for an item of a nature normally expected to benefit the partnership throughout the entire life of the partnership. The following are examples of organizational expenses within the meaning of section 709 and this section: Legal fees for services incident to the organization of the partnership, such as negotiation and preparation of a partnership agreement; accounting fees for services incident to the organization of the partnership; and filing fees. The following are examples of expenses that are not organizational expenses within the meaning of section 709 and this section (regardless of how the partnership characterizes them): Expenses connected with acquiring assets for the partnership or transferring assets to the partnership; expenses connected with the admission or removal of partners other than at the time the partnership is first organized; expenses connected with a contract relating to the operation of the partnership trade or business (even where the contract is between the partnership and one of its members); and syndication expenses.

(b) ***Syndication expenses.*** Syndication expenses are expenses connected with the issuing and marketing of interests in the partnership. Examples of syndication expenses are brokerage fees; registration fees; legal fees of the underwriter or placement agent and the issuer (the general partner or the partnership) for securities advice and for advice pertaining to the adequacy of tax disclosures in the prospectus or placement memorandum for securities law purposes; accounting fees for preparation of representations to be included in the offering materials; and printing costs of the prospectus, placement memorandum, and other selling and promotional material. These expenses are not subject to the election under section 709(b) and must be capitalized.

(c) ***Beginning business.*** The determination of the date a partnership begins business for purposes of section 709 presents a question of fact that must be determined in each case in light of all the circumstances of the particular case. Ordinarily, a partnership begins business when it starts the business operations for which it was organized. The mere signing of a partnership agreement is not alone sufficient to show the beginning of business.

If the activities of the partnership have advanced to the extent necessary to establish the nature of its business operations, it will be deemed to have begun business. Accordingly, the acquisition of operating assets which are necessary to the type of business contemplated may constitute beginning business for these purposes. The term *operating assets,* as used herein, means assets that are in a state of readiness to be placed in service within a reasonable period following their acquisition.

[T.D. 7891, 48 FR 20049, May 4, 1983]

Contributions, Distributions, and Transfers

CONTRIBUTIONS TO A PARTNERSHIP

§ 1.721-1 Nonrecognition of gain or loss on contribution.

(a) No gain or loss shall be recognized either to the partnership or to any of its partners upon a contribution of property, including installment obligations, to the partnership in exchange for a partnership interest. This rule applies whether the contribution is made to a partnership in the process of formation or to a partnership which is already formed and operating. Section 721 shall not apply to a transaction between a partnership and a partner not acting in his capacity as a partner since such a transaction is governed by section 707. Rather than contributing property to a partnership, a partner may sell property to the partnership or may retain the ownership of property and allow the partnership to use it. In all cases, the substance of the transaction will govern, rather than its form. See paragraph (c)(3) of § 1.731-1. Thus, if the transfer of property by the partner to the partnership results in the receipt by the partner of money or other consideration, including a promissory obligation fixed in amount and time for payment, the transaction will be treated as a sale or exchange under section 707 rather than as a contribution under section 721. For the rules governing the treatment of liabilities to which contributed property is subject, see section 752 and § 1.752-1.

(b)

(1) Normally, under local law, each partner is entitled to be repaid his contributions of money or other property to the partnership (at the value placed upon such property by the partnership at the time of the contribution) whether made at the formation of the partnership or subsequent thereto. To the extent that any of the partners gives up any part of his right to be repaid his contributions (as distinguished from a share in partnership profits) in favor of another partner as compensation for services (or in satisfaction of an obligation), section 721 does not apply. The value of an interest in such partnership capital so transferred to a partner as compensation for services constitutes income to the partner under section 61. The amount of such income is the fair market value of the interest in capital so transferred, either at the time the transfer is made for past services, or at the time the services have been rendered where the transfer is conditioned on the completion of the transferee's future services. The time when such income is realized depends on all the facts and circumstances, including any substantial restrictions or conditions on the compensated partner's right to withdraw or otherwise dispose of such interest. To the extent that an interest in capital representing compensation for services rendered by the decedent prior to his death is transferred after his death to the decedent's successor in interest, the fair market value of such interest is income in respect of a decedent under section 691.

(2) To the extent that the value of such interest is:

(i) Compensation for services rendered to the partnership, it is a guaranteed payment for services under section 707(c);

(ii) compensation for services rendered to a partner, it is not deductible by the partnership, but is deductible only by such partner to the extent allowable under this chapter.

(c) *Underwritings of partnership interests* —

(1) ***In general.*** For the purpose of section 721, if a person acquires a partnership interest from an underwriter in exchange for cash in a qualified underwriting transaction, the person who acquires the partnership interest is treated as transferring cash directly to the partnership in exchange for the partnership interest and the underwriter is disregarded. A qualified underwriting transaction is a transaction in which a partnership issues partnership interests for cash in an underwriting in which either the underwriter is an agent of the partnership or the underwriter's ownership of the partnership interests is transitory.

(2) ***Effective date.*** This paragraph (c) is effective for qualified underwriting transactions occurring on or after May 1, 1996.

(d) ***Debt-for-equity exchange*** —

(1) ***In general.*** Except as otherwise provided in section 721 and the regulations under section 721, section 721 applies to a contribution of a partnership's indebtedness by a creditor to the debtor partnership in exchange for a capital or profits interest in the partnership (debt-for-equity exchange). See § 1.108-8(a) for rules in determining the debtor partnership's discharge of indebtedness income.

(2) ***Exception.*** Section 721 does not apply to a debt-for-equity exchange to the extent the transfer of the partnership interest to the creditor is in exchange for the partnership's indebtedness for unpaid rent, royalties, or interest (including accrued original issue discount) that accrued on or after the beginning of the creditor's holding period for the indebtedness. The debtor partnership will not recognize gain or loss upon the transfer of a partnership interest to a creditor in a debt-for-equity exchange for unpaid rent, royalties, or interest (including accrued original issue discount).

(3) ***Cross reference.*** For rules in determining whether a partnership interest transferred to a creditor in a debt-for-equity exchange is treated as payment of interest or accrued original issue discount, see §§ 1.446-2 and 1.1275-2, respectively.

(4) ***Effective/applicability date.*** This paragraph (d) applies to debt-for-equity exchanges occurring on or after November 17, 2011.

[T.D. 6500, 25 FR 11814, Nov. 26, 1960; 25 FR 14021, Dec. 31, 1960, as amended by T.D. 8665, 61 FR 19189, May 1, 1996; T.D. 9557, 76 FR 71259, Nov. 17, 2011]

§ 1.721(c)-1 Overview, definitions, and rules of general application.

(a) ***Overview*** —

(1) ***In general.*** This section and §§ 1.721(c)-2 through 1.721(c)-7 (collectively, the *section 721(c) regulations*) provide rules under section 721(c). This section provides definitions and rules of general application for purposes of the section 721(c) regulations. Section 1.721(c)-2 provides the general operative rules that override section 721(a) nonrecognition of gain upon a contribution of section 721(c) property to a section 721(c) partnership. Section 1.721(c)-3 describes the gain deferral method, which may be applied in order to avoid the immediate recognition of gain upon a contribution of section 721(c) property to a section 721(c) partnership. Section 1.721(c)-4 provides rules regarding acceleration events for purposes of applying the gain deferral method. Section 1.721(c)-5 identifies exceptions to the rules regarding acceleration events provided in § 1.721(c)-4(b). Section 1.721(c)-6 provides procedural and reporting requirements. Section 1.721(c)-7 provides examples illustrating the application of the section 721(c) regulations.

(2) ***Scope.*** Paragraph (b) of this section provides definitions. Paragraph (c) of this section describes the treatment of a change in form of a partnership. Paragraph (d) of this section provides an anti-abuse rule. Paragraph (e) of this section provides the dates of applicability.

(b) ***Definitions.*** The following definitions apply for purposes of the section 721(c) regulations. Unless otherwise indicated, the definitions apply on a property-by-property basis, as applicable.

(1) ***Acceleration event.*** An acceleration event has the meaning provided in § 1.721(c)-4(b).

(2) ***Built-in gain.*** Built-in gain is, with respect to property contributed to a partnership, the excess of the book value of the property over the partnership's adjusted tax basis in the property upon the contribution, determined without regard to the application of § 1.721(c)-2(b).

(3) ***Consistent allocation method.*** The consistent allocation method is the method described in § 1.721(c)-3(c).

(4) ***Controlled partnership.*** A partnership is a controlled partnership with respect to a U.S. transferor if the U.S. transferor and related persons control the partnership. For purposes of this paragraph (b)(4), control is determined based on all the facts and circumstances, except that a partnership will be deemed to be controlled by a U.S. transferor and related persons if those persons, in the aggregate, own (directly or indirectly through one or more partnerships) more than 50 percent of the interests in the partnership capital or profits.

(5) ***Direct or indirect partner.*** A direct or indirect partner is a person (other than a partnership) that owns an interest in a partnership directly or indirectly through one or more partnerships.

(6) ***Excluded property.*** Excluded property is—

(i) A cash equivalent;

(ii) A security within the meaning of section 475(c)(2), without regard to section 475(c)(4);

(iii) Tangible property with a book value exceeding adjusted tax basis by no more than $20,000 or with an adjusted tax basis in excess of book value; and

(iv) An interest in a partnership in which 90 percent or more of the property (as measured by value) held by the partnership (directly or indirectly through interests in one or more partnerships that are not excluded property) consists of property described in paragraphs (b)(6)(i) through (iii) of this section.

(7) ***Gain deferral contribution.*** A gain deferral contribution is a contribution of section 721(c) property to a section 721(c) partnership with respect to which the recognition of gain is deferred under the gain deferral method.

(8) ***Gain deferral method.*** The gain deferral method is the method described in § 1.721(c)-3(b).

(9) ***Partial acceleration event.*** A partial acceleration event is an event described in § 1.721(c)-5(d)(2) or (3).

(10) ***Regulatory allocation.*** A regulatory allocation is—

(i) An allocation pursuant to a minimum gain chargeback, as defined in § 1.704-2(b)(2);

(ii) A partner nonrecourse deduction, as determined in § 1.704-2(i)(2);

(iii) An allocation pursuant to a partner minimum gain chargeback, as described in § 1.704-2(i)(4);

(iv) An allocation pursuant to a qualified income offset, as defined in § 1.704-1(b)(2)(ii)(*d*);

(v) An allocation with respect to the exercise of a noncompensatory option described in § 1.704-1(b)(2)(iv)(*s*); and

(vi) An allocation of partnership level ordinary income or loss described in § 1.751-1(b)(3).

(11) ***Related foreign person.*** A related foreign person is, with respect to a U.S. transferor, a related person (other than a partnership) that is not a U.S. person.

(12) ***Related person*** —

(i) ***In general.*** A related person is, with respect to a U.S. transferor, a person that is related (within the meaning of section 267(b) or 707(b)(1)) to the U.S. transferor.

(ii) ***Modification to the application of section 267(b).*** For purposes of determining if a person is a related person with respect to a U.S. transferor, section 267(b) is applied without regard to section 267(c)(3).

(13) ***Remaining built-in gain*** —

(i) ***In general.*** Remaining built-in gain is, with respect to section 721(c) property subject to the gain deferral method, the built-in gain reduced by decreases in the difference between the property's book value and adjusted tax basis, but, for purposes of this paragraph (b)(13)(i), without taking into account increases or decreases to the property's book value pursuant to § 1.704-1(b)(2)(iv)(*f*) or (*s*).

(ii) Special rule for tiered partnerships. If section 721(c) property is described in § 1.721(c)-3(d)(1)(ii), the remaining built-in gain includes the new positive reverse section 704(c) layer described in § 1.721(c)-3(d)(1)(ii), reduced by decreases in the difference between the property's book value and adjusted tax basis, but, for purposes of this paragraph (b)(13)(ii), without taking into account increases or decreases to the property's book value pursuant to § 1.704-1(b)(2)(iv)(f) or (s) that are unrelated to the revaluation described in § 1.721(c)-3(d)(1)(i).

(14) ***Section 721(c) partnership*** —

(i) ***In general.*** A partnership (domestic or foreign) is a section 721(c) partnership if there is a contribution of section 721(c) property to the partnership and, after the contribution and all transactions related to the contribution—

(A) A related foreign person with respect to the U.S. transferor is a direct or indirect partner in the partnership; and

(B) The U.S. transferor and related persons own 80 percent or more of the interests in partnership capital, profits, deductions, or losses.

(ii) ***Special rule for tiered partnerships.*** A partnership described in § 1.721(c)-3(d)(1) or (2) is deemed to be a section 721(c) partnership for purposes of the gain deferral method.

(15) ***Section 721(c) property*** —

(i) ***In general.*** Section 721(c) property is property, other than excluded property, with built-in gain that is contributed to a partnership by a U.S. transferor, including pursuant to a contribution described in § 1.721(c)-2(d) (partnership look-through rule). If the U.S. transferor is treated as contributing its share of property to a partnership pursuant to § 1.721(c)-2(d), the entire property will be section 721(c) property.

(ii) ***Special rule for tiered partnerships.*** Property described in § 1.721(c)-3(d)(1)(ii) and an interest in a partnership described in § 1.721(c)-3(d)(2)(ii) is deemed to be section 721(c) property.

(16) ***Successor event.*** A successor event is an event described in § 1.721(c)-5(c)(2), (3), (4), or (5).

(17) ***Termination event.*** A termination event is an event described in § 1.721(c)-5(b)(2), (3), (4), (5), (6), or (7).

(18) ***U.S. transferor*** —

(i) ***In general.*** A U.S. transferor is a United States person within the meaning of section 7701(a)(30) (a *U.S. person*), other than a domestic partnership.

(ii) ***Special rule for tiered partnerships.*** Solely for purposes of applying the consistent allocation method, a U.S. transferor includes a partnership that is treated as a U.S. transferor under § 1.721(c)-3(d)(1)(iii) or (d)(2)(i).

(c) ***Change in form of a partnership.*** A mere change in identity, form, or place of organization of a partnership or a recapitalization of a partnership will not cause the partnership to become a section 721(c) partnership.

(d) ***Anti-abuse rule.*** If a U.S. transferor engages in a transaction (or series of transactions) or an arrangement with a principal purpose of avoiding the application of the section 721(c) regulations, the transaction (or series of transactions) or the arrangement may be recharacterized (including by aggregating or disregarding steps or disregarding an intermediate entity) in accordance with its substance.

(e) ***Applicability dates*** —

(1) ***In general.*** Except as provided in paragraphs (e)(2) and (3) of this section, this section applies to contributions occurring on or after August 6, 2015, and to contributions that occurred before August 6, 2015 resulting from an entity classification election made under § 301.7701-3 of this chapter that was effective on or before August 6, 2015 but was filed on or after August 6, 2015.

(2) ***Certain provisions.*** Except as provided in paragraph (e)(3) of this section, paragraphs (b)(6)(iv) and (c) of this section apply to contributions occurring on or after January 18, 2017, and to contributions that occurred before January 18, 2017 resulting from an entity classification election made under § 301.7701-3 of this chapter that was effective on or before January 18, 2017 but was filed on or after January 18, 2017. Except as provided in paragraph (e)(3) of this section, paragraph (b)(14)(i)(B) of this section applies by replacing “80 percent or more” with “greater than 50 percent” with respect to contributions that occurred on or after August 6, 2015 but before January 18, 2017, and with respect to contributions that occurred before August 6, 2015 resulting from an entity classification election made under § 301.7701-3 of this chapter that was effective on or before August 6, 2015, but was filed on or after August 6, 2015 but before January 18, 2017. Except as provided in paragraph (e)(3) of this section, paragraph (b)(12)(ii) of this section applies to contributions occurring on or after January 17, 2020.

(3) ***Election to apply the provisions described in paragraph (e)(2) of this section retroactively.*** Paragraphs (b)(6)(iv) and (c) of this section and paragraph (b)(14)(i)(B) of this section, without the modification described in paragraph (e)(2) of this section, may, by election, be applied to a contribution that occurred on or after August 6, 2015 but before January 18, 2017, and to a contribution that occurred before August 6, 2015 resulting from an entity classification election made under § 301.7701-3 of this chapter that was effective on or before August 6, 2015 but was filed on or after August 6, 2015. The election described in the preceding sentence must have been made by applying paragraph (b)(6)(iv) or (c) as described in paragraph (e)(2) of this section or paragraph (b)(14)(i)(B) of this section, without the modification described in paragraph (e)(2) of this section, as applicable, to the contribution on a timely filed original return (including extensions) or an amended return filed no later than July 18, 2017. Paragraph (b)(12)(ii) of this section, may, by election, be applied to a contribution that occurred on or after August 6, 2015 but before January 17, 2020, and to a contribution that occurred before August 6, 2015 resulting from an entity classification election made under § 301.7701-3 of this chapter that was effective on or before August 6, 2015 but was filed on or after August 6, 2015. The election described in the preceding sentence must be made by applying paragraph (b)(12)(ii) of this section to the contribution on a timely filed original return (including extensions) or an amended return filed no later July 17, 2020.

[85 FR 3839, Jan. 23, 2020]

§ 1.721(c)-2 Recognition of gain on certain contributions of property to partnerships with related foreign partners.

(a) ***Scope.*** This section provides the general operative rules that override section 721(a) nonrecognition of gain upon a contribution of section 721(c) property to a section 721(c) partnership. Paragraph (b) of this section provides the general rule that nonrecognition of gain under section 721(a) does not apply to a contribution of section 721(c) property to a section 721(c) partnership. Paragraph (c) of this section provides a de minimis exception to the application of the general rule in paragraph (b) of this section. Paragraph (d) of this section provides rules for identifying a section 721(c) partnership when a partnership in which a U.S. transferor is a direct or indirect partner contributes property to another partnership. Paragraph (e) of this section provides the dates of applicability. For definitions that apply for purposes of this section, see § 1.721(c)-1(b).

(b) ***General rule for contributions of section 721(c) property.*** Except as provided in this paragraph (b), paragraph (c) of this section, and § 1.721(c)-3 (describing the gain deferral method), nonrecognition under section 721(a) will not apply to gain realized by the contributing partner upon a contribution of section 721(c) property to a section 721(c) partnership. This paragraph (b) does not apply to a direct contribution by a U.S. transferor if the U.S. transferor and related persons with respect to the U.S. transferor do not own 80 percent or more of the interests in partnership capital, profits, deductions, or losses.

(c) ***De minimis exception.*** Paragraph (b) of this section will not apply with respect to contributions to a section 721(c) partnership during a taxable year of the section 721(c) partnership for which the sum of the built-in gain with respect to all section 721(c) property contributed in that taxable year does not exceed $1 million. If, pursuant to the last sentence of paragraph (b) of this section, a direct contribution of property to the section 721(c) partnership by a U.S. transferor is not subject to paragraph (b) of this section, then such contribution is not taken into account for purposes of this paragraph (c).

(d) *Rules for identifying a section 721(c) partnership when a partnership contributes property to another partnership* —

(1) ***Partnership look-through rule.*** If a U.S. transferor is a direct or indirect partner in a partnership (upper-tier partnership) and the upper-tier partnership contributes all or a portion of its property to another partnership (lower-tier partnership), then, for purposes of determining if the lower-tier partnership is a section 721(c) partnership, the U.S. transferor is treated as contributing to the lower-tier partnership its share of the property actually contributed by the upper-tier partnership to the lower-tier partnership.

(2) ***Exception for a technical termination of a partnership.*** Paragraph (d)(1) of this section will not apply to a deemed contribution that occurs as a result of a termination of a partnership described in section 708(b)(1)(B) (technical termination). If a partnership is a section 721(c) partnership immediately before a technical termination, see § 1.721(c)-5(c)(4) (which treats technical terminations as successor events in certain circumstances).

(e) *Applicability dates* —

(1) ***In general.*** Except as provided in paragraphs (e)(2) and (3) of this section, this section applies to contributions occurring on or after August 6, 2015, and to contributions that occurred before August 6, 2015 resulting from an entity classification election made under § 301.7701-3 of this chapter that was effective on or before August 6, 2015 but was filed on or after August 6, 2015.

(2) ***Certain provisions.*** Except as provided in paragraph (e)(3) of this section, the final sentence of paragraph (b) of this section, the final sentence of paragraph (c) of this section, and paragraph (d)(2) of this section apply to contributions occurring on or after January 18, 2017, and to contributions that occurred before January 18, 2017 resulting from an entity classification election made under § 301.7701-3 of this chapter that was effective on or before January 18, 2017 but was filed on or after January 18, 2017.

(3) ***Election to apply the provisions described in paragraph (e)(2) of this section retroactively.*** The final sentence of paragraph (b) of this section, the final sentence of paragraph (c) of this section, and paragraph (d)(2) of this section may, by election, be applied to a contribution that occurred on or after August 6, 2015 but before January 18, 2017, and to a contribution that occurred before August 6, 2015 resulting from an entity classification election made under § 301.7701-3 of this chapter that was effective on or before August 6, 2015 but was filed on or after August 6, 2015. The election must have been made by applying the final sentence of paragraph (b) of this section, the final sentence of paragraph (c) of this section, or paragraph (d)(2) of this section, as applicable, to the contribution on a timely filed original return (including extensions) or an amended return filed no later than July 18, 2017.

[85 FR 3841, Jan. 23, 2020]

§ 1.721(c)-3 Gain deferral method.

(a) ***Scope.*** This section describes the gain deferral method to avoid the immediate recognition of gain upon a contribution of section 721(c) property to a section 721(c) partnership. Paragraph (b) of this section provides the requirements of the gain deferral method, including the requirement to apply the consistent allocation method. Paragraph (c) of this section describes the consistent allocation method. Paragraph (d) of this section provides rules for tiered partnerships. Paragraph (e) of this section provides the dates of applicability. For definitions that apply for purposes of this section, see § 1.721(c)-1(b).

(b) Requirements of the gain deferral method. A contribution of section 721(c) property to a section 721(c) partnership that would be subject to § 1.721(c)-2(b) will not be subject to § 1.721(c)-2(b) if the conditions in paragraphs (b)(1) through (5) of this section are satisfied with respect to that property.

(1) Either—

(i) Both—

(A) The section 721(c) partnership adopts the remedial allocation method described in § 1.704-3(d) with respect to the section 721(c) property; and

(B) The section 721(c) partnership applies the consistent allocation method provided in paragraph (c) of this section; or

(ii) For the period beginning on the date of the contribution of the section 721(c) property and ending on the date on which there is no remaining built-in gain with respect to that property, all distributive shares of income and gain with respect to the section 721(c) property for all direct and indirect partners that are related foreign persons with respect to the U.S. transferor will be subject to taxation as income effectively connected with a trade or business within the United States (under either section 871 or 882), and neither the section 721(c) partnership nor a related foreign person that is a direct or indirect partner in the section 721(c) partnership claims benefits under an income tax convention that would exempt the income or gain from tax or reduce the rate of taxation to which the income or gain is subject.

(2) Upon an acceleration event, the U.S. transferor recognizes an amount of gain equal to the remaining built-in gain with respect to the section 721(c) property or an amount of gain required to be recognized under § 1.721(c)-5(d) or (e), as applicable.

(3) The procedural and reporting requirements provided in § 1.721(c)-6(b) are satisfied.

(4) The U.S. transferor consents to extend the period of limitations on assessment of tax as required by § 1.721(c)-6(b)(5).

(5) If the section 721(c) property is a partnership interest or property described in the partnership look-through rule provided in § 1.721(c)-2(d), the applicable tiered-partnership rules provided in paragraph (d) of this section are applied.

(c) ***Consistent allocation method*** —

(1) ***In general.*** For each taxable year of a section 721(c) partnership in which there is remaining built-in gain in the section 721(c) property, the section 721(c) partnership must allocate each book item of income, gain, deduction, and loss with respect to the section 721(c) property to the U.S. transferor in the same percentage. For purposes of this paragraph (c)(1), upon a variation (as defined in § 1.706-4(a)(1)) of a U.S. transferor's interest in a section 721(c) partnership, a book item of income, gain, deduction, and loss with respect to a section 721(c) property is treated as allocated in the same percentage if the item is allocated under the interim closing method (as described in § 1.706-4), unless the variation results from a transaction undertaken with a principal purpose of avoiding the tax consequences of the gain deferral method. For exceptions to the first sentence in this paragraph (c)(1), see paragraph (c)(4) of this section.

(2) ***Determining income or gain with respect to section 721(c) property.*** For purposes of applying paragraph (c)(1) of this section, a section 721(c) partnership must attribute book income and gain to each item of section 721(c) property in a consistent manner using any reasonable method taking

into account all the facts and circumstances. All items of book income and gain attributable to an item of section 721(c) property will comprise a single class of gross income for purposes of applying paragraph (c)(3) of this section.

(3) ***Determining deduction or loss with respect to section 721(c) property.*** For purposes of applying paragraph (c)(1) of this section, a section 721(c) partnership must use the principles of §§ 1.861-8 and 1.861-8T to allocate and apportion its items of deduction, except for interest expense and research and experimental expenditures, and loss to the class of gross income with respect to each item of section 721(c) property as determined in paragraph (c)(2) of this section. Accordingly, a deduction or loss will be considered to be definitely related and therefore allocable to a class of gross income with respect to particular section 721(c) property whether or not there is any item of gross income in that class that is received or accrued during the taxable year and whether or not the amount of deduction or loss exceeds the amount of gross income in that class during the taxable year. If a deduction or loss is definitely related and therefore allocable to gross income attributable to more than one class of gross income of the section 721(c) partnership or if a deduction or loss is not definitely related to any class of gross income of the section 721(c) partnership, the section 721(c) partnership must apportion that deduction or loss among its classes of gross income using a reasonable method that reflects to a reasonably close extent the factual relationship between the deduction or loss and the classes of gross income. The section 721(c) partnership may allocate and apportion its interest expense and research and experimental expenditures under any reasonable method, including, but not limited to, the methods prescribed in §§ 1.861-9 and 1.861-9T (interest expense) and § 1.861-17 (research and experimental expenditures). For purposes of this paragraph (c)(3), the section 721(c) partnership must allocate and apportion its deductions and losses without regard to the partners' percentage interests in the partnership.

(4) ***Exceptions to the consistent allocation method*** —

(i) ***Regulatory allocations.*** A regulatory allocation (as defined in § 1.721(c)-1(b)(10)) of book income, gain, deduction, or loss with respect to section 721(c) property that otherwise would fail to satisfy paragraph (c)(1) of this section is nevertheless deemed to satisfy paragraph (c)(1) of this section if the allocation is—

(A) An allocation of income or gain to the U.S. transferor (or a member of its consolidated group as defined in § 1.1502-1(h));

(B) An allocation of deduction or loss to a partner other than the U.S. transferor (or a member of its consolidated group); or

(C) Treated as a partial acceleration event pursuant to § 1.721(c)-5(d)(2).

(ii) ***Allocation of creditable foreign tax expenditures.*** An allocation of a creditable foreign tax expenditure (as defined in § 1.704-1(b)(4)(viii)(b)) is not subject to the consistent allocation method.

(d) ***Tiered partnership rules.*** This paragraph (d) provides the tiered partnership rules referred to in paragraph (b)(5) of this section.

(1) ***Section 721(c) property is a partnership interest.*** If the section 721(c) property that is contributed to a section 721(c) partnership is an interest in a partnership (lower-tier partnership), then the lower-tier partnership, if it is a controlled partnership with respect to the U.S. transferor, and each partnership

in which an interest is owned (directly or indirectly through one or more partnerships) by the lower-tier partnership and that is a controlled partnership with respect to the U.S. transferor, must satisfy the requirements of paragraphs (d)(1)(i), (ii), and (iii) of this section.

(i) The partnership must revalue all its property under § 1.704-1(b)(2)(iv)(f)(6) if the revaluation would result in a separate positive difference between book value and adjusted tax basis in at least one property that is not excluded property.

(ii) The partnership must apply the gain deferral method for each property (other than excluded property) for which there is a separate positive difference between book value and adjusted tax basis resulting from the revaluation described in paragraph (d)(1) of this section (*new positive reverse section 704(c) layer*). If the partnership has previously adopted a section 704(c) method other than the remedial allocation method for the property, the partnership satisfies the requirement of paragraph (b)(1)(i)(A) of this section by adopting the remedial allocation method for the new positive reverse section 704(c) layer.

(iii) The partnership must treat a partner that is a partnership in which the U.S. transferor is a direct or indirect partner as if it were the U.S. transferor with respect to the section 721(c) property solely for purposes of applying the consistent allocation method.

(2) ***Section 721(c) property is indirectly contributed by a U.S. transferor under the partnership look-through rule.*** If the U.S. transferor is a direct or indirect partner in the upper-tier partnership described in § 1.721(c)-2(d)(1), and under § 1.721(c)-2(d)(1), the U.S. transferor is treated as contributing the section 721(c) property (including an interest in a partnership described in paragraph (d)(1) of this section) to a section 721(c) partnership, then the requirements of paragraphs (d)(2)(i), (ii), and (iii) of this section must be satisfied.

(i) The section 721(c) partnership must treat the upper-tier partnership as the U.S. transferor of the section 721(c) property solely for purposes of applying the consistent allocation method;

(ii) The upper-tier partnership, if it is a controlled partnership with respect to the U.S. transferor, must apply the gain deferral method to its interest in the section 721(c) partnership; and

(iii) If the U.S. transferor is an indirect partner in the upper-tier partnership through one or more partnerships, the principles of paragraphs (d)(2)(i) and (ii) of this section must be applied with respect to those partnerships that are controlled partnerships with respect to the U.S. transferor.

(e) ***Applicability dates*** —

(1) ***In general.*** Except as provided in paragraphs (e)(2) and (3) of this section, this section applies to contributions occurring on or after August 6, 2015, and to contributions that occurred before August 6, 2015 resulting from an entity classification election made under § 301.7701-3 of this chapter that was effective on or before August 6, 2015 but was filed on or after August 6, 2015.

(2) ***Certain provisions.*** Except as provided in paragraph (e)(3) of this section, paragraphs (b)(1)(ii), (c)(2) and (3), (c)(4)(i) and (ii), and (d)(1) and (2) of this section apply to contributions occurring on or after January 18, 2017, and to contributions that occurred before January 18, 2017 resulting from an entity classification election made under § 301.7701-3 of this chapter that was effective on or before January 18, 2017 but was filed on or after January 18, 2017. Except as provided in paragraph (e)(3) of this section, the second sentence of paragraph (c)(1) of this section applies to contributions occurring on or after January 17, 2020.

(3) ***Election to apply the provisions described in paragraph (e)(2) of this section retroactively.*** Paragraphs (b)(1)(ii), (c)(2) and (3), (c)(4)(i) and (ii), and (d)(1) and (2) of this section may, by election, be applied to a contribution that occurred on or after August 6, 2015 but before January 18, 2017, and to a contribution that occurred before August 6, 2015 resulting from an entity classification election made under § 301.7701-3 of this chapter that was effective on or before August 6, 2015 but was filed on or after August 6, 2015. The election described in the preceding sentence must have been made by applying paragraph (b)(1)(ii), (c)(2) or (3), (c)(4)(i) or (ii), or (d)(1) or (2) of this section, as applicable, to the contribution on a timely filed original return (including extensions) or an amended return filed no later than July 18, 2017. In order to elect to apply paragraph (c)(2) or (3) of this section to a contribution described in this paragraph (e)(3), an election must also have been made to apply paragraph (c)(3) or (2) of this section, respectively, to the contribution. The second sentence of paragraph (c)(1) of this section, may, by election, be applied to a contribution that occurred on or after August 6, 2015 but before January 17, 2020, and to a contribution that occurred before August 6, 2015 resulting from an entity classification election made under § 301.7701-3 of this chapter that was effective on or before August 6, 2015 but was filed on or after August 6, 2015. The election described in the preceding sentence must be made by applying the second sentence of paragraph (c)(1) of this section to the contribution on a timely filed original return (including extensions) or an amended return filed no later than July 17, 2020.

(4) ***Transitional rules.*** If a contribution is described in paragraph (e)(2) of this section and no election described in paragraph (e)(3) of this section is made to apply one or more of paragraphs (c)(2) and (3) and (c)(4)(i) and (ii) of this section, as applicable, to the contribution, then, for purposes of paragraph (c)(1) of this section, the section 721(c) partnership must attribute book income, gain, loss, and deduction to the section 721(c) property in a consistent manner under any reasonable method taking into account all the facts and circumstances. If a contribution is described in paragraph (e)(2) of this section and no election described in paragraph (e)(3) of this section is made to apply paragraph (d)(1) or (2) of this section, as applicable, to the contribution, then, this section must be applied in a manner consistent with the purpose of the section 721(c) regulations. Thus, for example, if a U.S. transferor is a direct or indirect partner in a partnership and that partnership contributes section 721(c) property to a lower-tier partnership, or, if a U.S. transferor contributes an interest in a partnership that owns section 721(c) property to a lower-tier partnership, then paragraph (b) of this section applies as though the U.S. transferor contributed its share of the section 721(c) property directly.

[T.D. 9891, 85 FR 3842, Jan. 23, 2020]

§ 1.721(c)-4 Acceleration events.

(a) ***Scope.*** This section provides rules regarding acceleration events for purposes of applying the gain deferral method. Paragraph (b) of this section defines an acceleration event. Paragraph (c) of this section provides the consequences of an acceleration event. Paragraph (d) of this section provides the dates of applicability. For definitions that apply for purposes of this section, see § 1.721(c)-1(b).

(b) ***Definition of an acceleration event*** —

(1) ***General rules.*** Except as provided in this paragraph (b) and § 1.721(c)-5 (acceleration event exceptions), an acceleration event with respect to section 721(c) property is any event that either would reduce the amount of remaining built-in gain that a U.S. transferor would recognize under the gain deferral method if the event had not occurred or could defer the recognition of the remaining

built-in gain. An acceleration event includes a contribution of section 721(c) property to another partnership by a section 721(c) partnership and a contribution of an interest in a section 721(c) partnership to another partnership. This paragraph (b) applies on a property-by-property basis.

(2) ***Failure to comply with a requirement of the gain deferral method*** —

(i) ***General rule***. An acceleration event with respect to section 721(c) property occurs when any party fails to comply with a condition of the gain deferral method with respect to the section 721(c) property.

(ii) Certain failures to comply with procedural and reporting requirements. Notwithstanding paragraph (b)(2)(i) of this section, an acceleration event will not occur solely as a result of a failure to comply with a requirement of § 1.721(c)-3(b)(3) that is not willful. See §§ 1.721(c)-6(f) and 1.6038B-2(h)(3).

(3) ***Lower-tier partnership allocations***. Notwithstanding paragraph (b)(1) of this section, an acceleration event will not occur because of a reduction in remaining built-in gain in an interest in a partnership that is section 721(c) property that occurs as a result of allocations of book items of deduction and loss, or tax items of income and gain.

(4) ***Deemed acceleration event***. A U.S. transferor may treat an acceleration event as having occurred with respect to section 721(c) property by both recognizing gain in an amount equal to the remaining built-in gain that would have been allocated to the U.S. transferor if the section 721(c) partnership had sold the section 721(c) property immediately before the deemed acceleration event for fair market value and satisfying the reporting required by § 1.721(c)-6(b)(3)(i)(D). In this case, see paragraph (c) of this section regarding basis adjustments.

(c) ***Consequences of an acceleration event***. Paragraphs (c)(1) and (2) of this section provide the consequences of an acceleration event with respect to section 721(c) property, a partial acceleration event with respect to section 721(c) property to the extent provided in § 1.721(c)-5(d)(1), and a transfer described in section 367 of section 721(c) property to the extent provided in § 1.721(c)-5(e).

(1) ***U.S. transferor***. The U.S. transferor must recognize gain in an amount equal to the remaining built-in gain that would have been allocated to the U.S. transferor if the section 721(c) partnership had sold the section 721(c) property immediately before the acceleration event for fair market value. The U.S. transferor will increase its basis in its partnership interest by the amount of gain recognized. If the U.S. transferor is an indirect partner in the section 721(c) partnership through one or more tiered partnerships, appropriate basis adjustments will be made to the interests in the tiered partnerships.

(2) ***Section 721(c) partnership***. The section 721(c) partnership will increase its basis in the section 721(c) property by the amount of built-in gain recognized by the U.S. transferor under paragraph (c)(1) of this section. Any tax consequences of the acceleration event will be determined taking into account the increase in the partnership's adjusted tax basis in the section 721(c) property. If the section 721(c) property remains in the partnership after the acceleration event, the increase in basis of the section 721(c) property may be recovered using any applicable recovery period and depreciation (or other cost recovery) method (including first-year conventions) available to the partnership for newly purchased property of the same type placed in service on the date of the acceleration event. The section 721(c) property will no longer be subject to the gain deferral method.

(d) ***Applicability dates.*** This section applies to contributions occurring on or after August 6, 2015, and to contributions that occurred before August 6, 2015 resulting from an entity classification election made under § 301.7701-3 of this chapter that was effective on or before August 6, 2015 but was filed on or after August 6, 2015.

[T.D. 9891, 85 FR 3844, Jan. 23, 2020]

§ 1.721(c)-5 Acceleration event exceptions.

(a) ***Scope.*** This section identifies exceptions to the acceleration events, which, like the rules regarding acceleration events provided in § 1.721(c)-4(b), apply on a property-by-property basis. Paragraph (b) of this section identifies the events that terminate the requirement to apply the gain deferral method. Paragraph (c) of this section identifies the successor events that allow for the continued application of the gain deferral method. Paragraph (d) of this section identifies the partial acceleration events. Paragraph (e) of this section provides special rules for transfers of section 721(c) property to a foreign corporation described in section 367. Paragraph (f) of this section allows for the continued application of the gain deferral method if there is a fully taxable disposition of a portion of an interest in a partnership. Paragraph (g) of this section provides the dates of applicability. For definitions that apply for purposes of this section, see § 1.721(c)-1(b).

(b) ***Termination events*** —

(1) ***In general.*** Notwithstanding § 1.721(c)-4(b)(1), a termination event with respect to section 721(c) property will not constitute an acceleration event. In these cases, the section 721(c) property will no longer be subject to the gain deferral method.

(2) ***Transfers of section 721(c) property (other than a partnership interest) to a domestic corporation described in section 351.*** A termination event occurs if a section 721(c) partnership transfers section 721(c) property (other than an interest in a partnership) to a domestic corporation in a transaction to which section 351 applies.

(3) ***Certain incorporations of a section 721(c) partnership.*** A termination event occurs upon an incorporation of a section 721(c) partnership into a domestic corporation by any method of incorporation (other than a method involving an actual distribution of partnership property to the partners, followed by a contribution of that property to a corporation), provided that the section 721(c) partnership is liquidated as part of the incorporation transaction.

(4) ***Certain distributions of section 721(c) property.*** A termination event occurs if a section 721(c) partnership distributes section 721(c) property either to the U.S. transferor or, if the U.S. transferor is a member of a consolidated group (as defined in § 1.1502-1(h)) at the time of the distribution and the distribution occurs outside the seven-year period described in section 704(c)(1)(B), to a member of the consolidated group.

(5) ***Partnership ceases to have a partner that is a related foreign person.*** A termination event occurs when a section 721(c) partnership ceases to have any direct or indirect partners that are related foreign persons with respect to the U.S. transferor, provided there is no plan for a related foreign person to subsequently become a direct or indirect partner in the partnership (or a successor). This paragraph (b)(5) does not apply to a distribution of section 721(c) property in redemption of a related foreign person's interest in a section 721(c) partnership.

(6) ***Fully taxable dispositions of section 721(c) property.*** A termination event occurs if a section 721(c) partnership disposes of section 721(c) property in a transaction in which all gain or loss, if any, is recognized.

(7) ***Fully taxable dispositions of an entire interest in a section 721(c) partnership.*** A termination event occurs if a U.S. transferor or a partnership in which a U.S. transferor is a direct or indirect partner disposes of its entire interest in a section 721(c) partnership that owns the section 721(c) property in a transaction in which all gain or loss, if any, is recognized. This paragraph (b)(7) does not apply if a U.S. transferor is a member of a consolidated group (as defined in § 1.1502-1(h)) and the interest in the section 721(c) partnership is transferred in an intercompany transaction (as defined in § 1.1502-13(b)(1)); see paragraph (c)(3) of this section for a successor event rule applicable to these intercompany transactions.

(c) ***Successor events*** —

(1) ***In general.*** Notwithstanding § 1.721(c)-4(b)(1), a successor event with respect to section 721(c) property will not constitute an acceleration event. If a portion of an interest in a partnership is transferred in a successor event described in this paragraph (c), the principles of § 1.704-3(a)(7) apply to determine the remaining built-in gain in section 721(c) property that is attributable to the portion of the interest that is transferred and the portion of the interest that is retained.

(2) ***Transfers of an interest in a section 721(c) partnership by a U.S. transferor or upper-tier partnership to a domestic corporation in certain nonrecognition transactions.*** A successor event occurs if a U.S. transferor or a partnership in which a U.S. transferor is a direct or indirect partner transfers (directly or indirectly through one or more partnerships) an interest in a section 721(c) partnership to a domestic corporation in a transaction to which section 351 or 381 applies, and the gain deferral method is continued by treating the transferee domestic corporation as the U.S. transferor for purposes of the section 721(c) regulations. If the transfer described in this paragraph (c)(2) also results in a termination under section 708(b)(1)(B) of the section 721(c) partnership, see paragraph (c)(4) of this section.

(3) ***Transfers of an interest in a section 721(c) partnership in an intercompany transaction.*** A successor event occurs if a U.S. transferor that is a member of a consolidated group (as defined in § 1.1502-1(h)) transfers (directly or indirectly through one or more partnerships) an interest in a section 721(c) partnership in an intercompany transaction (as defined in § 1.1502-13(b)(1)), and the gain deferral method is continued by treating the transferee member as the U.S. transferor for purposes of the section 721(c) regulations. If the transfer described in this paragraph (c)(3) also results in a termination under section 708(b)(1)(B) of the section 721(c) partnership, see paragraph (c)(4) of this section.

(4) ***Termination under section 708(b)(1)(B) of a section 721(c) partnership.*** A successor event occurs if there is a termination under section 708(b)(1)(B) of a section 721(c) partnership, and the gain deferral method is continued by treating the new partnership as the section 721(c) partnership for purposes of the section 721(c) regulations.

(5) ***Transactions involving tiered partnerships*** —

(i) ***Contributions of section 721(c) property to a lower-tier partnership.*** A successor event occurs if a section 721(c) partnership contributes the section 721(c) property to a partnership that is a controlled partnership with respect to the U.S. transferor (lower-tier section 721(c) partnership) and the requirements of paragraphs (c)(5)(i)(A) through (C) of this section are satisfied.

(A) The lower-tier section 721(c) partnership is a section 721(c) partnership or is treated as a section 721(c) partnership.

(B) The gain deferral method is applied with respect to the section 721(c) property in the hands of the lower-tier section 721(c) partnership.

(C) The gain deferral method is applied with respect to the section 721(c) partnership's interest in the lower-tier section 721(c) partnership. See § 1.721(c)-3(b)(5) and (d)(2).

(ii) ***Contributions of an interest in a section 721(c) partnership to an upper-tier partnership.*** A successor event occurs if a U.S. transferor or a partnership in which a U.S. transferor is a direct or indirect partner contributes (directly or indirectly through one or more partnerships) an interest in a section 721(c) partnership to a partnership that is a controlled partnership with respect to the U.S. transferor (upper-tier section 721(c) partnership) and the requirements of paragraphs (c)(5)(ii)(A) through (D) of this section are satisfied.

(A) The gain deferral method is continued with respect to the section 721(c) property in the hands of the section 721(c) partnership.

(B) The upper-tier section 721(c) partnership is, or is treated as, a section 721(c) partnership.

(C) If the upper-tier section 721(c) partnership directly owns its interest in the section 721(c) partnership, the gain deferral method is applied with respect to the upper-tier section 721(c) partnership's interest in the section 721(c) partnership. See § 1.721(c)-3(b)(5) and (d)(1).

(D) If the upper-tier section 721(c) partnership indirectly owns its interest in the section 721(c) partnership through one or more partnerships, the principles of paragraphs (c)(5)(ii)(B) and (C) of this section are applied with respect to each partnership through which the upper-tier section 721(c) partnership indirectly owns an interest in the section 721(c) partnership.

(d) ***Partial acceleration events*** —

(1) ***In general.*** Notwithstanding § 1.721(c)-4, a partial acceleration event with respect to section 721(c) property does not constitute an acceleration event. In these cases, except as provided in paragraph (d)(3) of this section, the rules in § 1.721(c)-4(c) (concerning the consequences of an acceleration event) for making basis adjustments apply to the extent that the U.S. transferor is required to recognize gain under paragraph (d)(2) or (3) of this section. Furthermore, if there is remaining built-in gain with respect to the section 721(c) property after the application of this paragraph (d), the application of the gain deferral method with respect to the section 721(c) property must be continued in the same manner.

(2) ***Regulatory allocations.*** If a regulatory allocation is described in § 1.721(c)-3(c)(4)(i) but not in § 1.721(c)-3(c)(4)(i)(A) or (B), a partial acceleration event occurs with respect to section 721(c) property if the U.S. transferor recognizes an amount of gain (but not in excess of remaining built-in gain) equal to the amount of the allocation that, under the consistent allocation method, had the regulatory allocation not occurred, would have been allocated to the U.S. transferor in the case of income or gain, or would not have been allocated to the U.S. transferor in the case of deduction or loss.

(3) ***Certain distributions of other partnership property to a partner that result in an adjustment under section 734.*** A partial acceleration event occurs with respect to section 721(c) property if there is a distribution of other property by the section 721(c) partnership that results in a positive basis adjustment to the section 721(c) property under section 734. In these cases, the U.S. transferor must recognize an amount of gain (but not in excess of the remaining built-in gain) equal to the positive basis adjustment to the section 721(c) property under section 734, reduced (but not below zero) by the amount of gain recognized by the U.S. transferor (or a member of its consolidated group (as defined in § 1.1502-1(h))) under section 731(a). In these cases, the partnership will not increase its basis under § 1.721(c)-4(c)(2) by the amount of gain recognized by the U.S. transferor.

(e) ***Transfers described in section 367 of section 721(c) property to a foreign corporation.*** If a section 721(c) partnership transfers section 721(c) property, or a U.S. transferor or a partnership in which a U.S. transferor is a direct or indirect partner transfers (directly or indirectly through one or more partnerships) all or a portion of an interest in a section 721(c) partnership that owns section 721(c) property, to a foreign corporation in a transaction described in section 367, then the property will no longer be subject to the gain deferral method. To the extent any U.S. transferor is treated as transferring the section 721(c) property to the foreign corporation for purposes of section 367, the tax consequences will be determined under section 367. In this regard, see §§ 1.367(a)-1T(c)(3)(i) and (ii), 1.367(d)-1T(d)(1), and 1.367(e)-2(b)(1)(iii) (providing for the aggregate treatment of partnerships). However, for the remaining portion of the property (if any), the U.S. transferor must recognize an amount of gain equal to the remaining built-in gain that would have been allocated to the U.S. transferor if the section 721(c) partnership had sold that portion of the section 721(c) property immediately before the transfer for fair market value. The stock in the transferee foreign corporation received will not be subject to the gain deferral method. The rules in § 1.721(c)-4(c) (concerning the consequences of an acceleration event) for making basis adjustments will apply to the extent that the U.S. transferor recognizes gain under this paragraph (e).

(f) ***Fully taxable dispositions of a portion of an interest in a partnership.*** If a U.S. transferor or a partnership in which a U.S. transferor is a direct or indirect partner disposes of (directly or indirectly through one or more partnerships) a portion of an interest in a section 721(c) partnership in a transaction in which all gain or loss, if any, is recognized, an acceleration event will not occur with respect to the portion of the interest transferred. The gain deferral method will continue to apply with respect to the section 721(c) property of the section 721(c) partnership. The principles of § 1.704-3(a)(7) will apply to determine the remaining built-in gain in section 721(c) property that is attributable to the portion of the interest in a section 721(c) partnership that is retained. This paragraph (f) will not apply to an intercompany transaction (as defined in § 1.1502-13(b)(1)).

(g) ***Applicability dates*** —

(1) ***In general.*** Except as provided in paragraph (g)(2) of this section, this section applies to contributions occurring on or after January 18, 2017, and to contributions that occurred before January 18, 2017 resulting from an entity classification election made under § 301.7701-3 of this chapter that was effective on or before January 18, 2017 but was filed on or after January 18, 2017.

(2) ***Election to apply this section retroactively.*** This section may, by election, be applied to a contribution that occurred on or after August 6, 2015 but before January 18, 2017, and to a contribution that occurred before August 6, 2015 resulting from an entity classification election made under §

301.7701-3 of this chapter that was effective on or before August 6, 2015 but was filed on or after August 6, 2015. The election must have been made by applying this section to the contribution on a timely filed original return (including extensions) or an amended return filed no later than July 18, 2017.

[T.D. 9891, 85 FR 3844, Jan. 23, 2020]

§ 1.721(c)-6 Procedural and reporting requirements.

(a) ***Scope.*** This section provides procedural and reporting requirements that must be satisfied under § 1.721(c)-3(b)(3) of the gain deferral method. Paragraph (b) of this section describes the procedural and reporting requirements of a U.S. transferor. Paragraph (c) of this section describes information required to be reported with respect to related foreign persons and partnerships. Paragraph (d) of this section describes the procedural and reporting requirements of a section 721(c) partnership with a section 6031 filing obligation. Paragraph (e) of this section provides the proper signatory for the information provided under this section. Paragraph (f) of this section provides relief for certain failures to comply that are not willful. Paragraph (g) of this section provides the dates of applicability. For definitions that apply for purposes of this section, see § 1.721(c)-1(b).

(b) ***Procedural and reporting requirements of a U.S. transferor —***

(1) ***In general.*** This paragraph (b) describes the procedural and reporting requirements that a U.S. transferor (as defined § 1.721(c)-1(b)(18)(i)) must satisfy in applying the gain deferral method. The information required under this paragraph (b) must be included with the U.S. transferor's timely filed return on (or attached to) the appropriate forms or schedules (or their successors) and must be submitted in the form and manner and to the extent prescribed by the forms and schedules (and their accompanying instructions).

(2) ***Reporting of a gain deferral contribution.*** A U.S. transferor must report the following information with respect to a gain deferral contribution:

(i) On Schedule A-1, Certain Foreign Partners, Schedule A-2, Foreign Partners of Section 721(c) Partnership, Schedule G, Statement of Application of the Gain Deferral Method Under Section 721(c), and Schedule H, Acceleration Events and Exceptions Reporting Relating to Gain Deferral Method Under Section 721(c) (for each such Schedule, with respect to Form 8865, Return of U.S. Persons With Respect to Certain Foreign Partnerships), as applicable, the following information with respect to the section 721(c) property—

(A) A description of the property and recovery period (or periods) for the property;

(B) Whether the property is an intangible described in section 197(f)(9);

(C) A calculation of the built-in gain, the basis, and fair market value on the date of the contribution, including the amount of gain recognized by the U.S. transferor, if any, on the gain deferral contribution;

(D) The name, U.S. taxpayer identification number (if any), address, and country of organization (if any) of each direct or indirect partner in the section 721(c) partnership that is a related person with respect to the U.S. transferor, and a description of each partner's interest in capital and profits immediately after the gain deferral contribution; and

(E) When the section 721(c) property is a partnership interest, the information described in paragraphs (b)(2)(i)(A) through (D) of this section with respect to each property of a lower-tier partnership to which the gain deferral method is applied under § 1.721(c)-3(d)(1);

(ii) On Form 8838-P, Consent To Extend the Time To Assess Tax Pursuant to the Gain Deferral Method (Section 721(c)), an extension of the period of limitations on the assessment of tax as described in paragraph (b)(5) of this section;

(iii) A copy of the waiver of treaty benefits described in paragraph (c)(1) of this section (if any);

(iv) On Schedule A-1, Schedule A-2, and Schedule G (for each such Schedule, with respect to Form 8865), as applicable, information relating to the section 721(c) partnership described in paragraph (c)(2) of this section (if any);

(v) On, Schedule O, Transfer of Property to a Foreign Partnership (Form 8865) with respect to any foreign partnership, (or partnership treated as foreign under paragraph (b)(4) of this section), the information required under § 1.6038B-2(c)(1) through (7); and

(vi) The information required under paragraph (b)(3) of this section.

(3) ***Annual reporting relating to gain deferral method.*** A U.S. transferor must annually report information for each gain deferral contribution. The information reported must be with respect to the partnership taxable year that ends with, or within, the taxable year of the U.S. transferor, beginning with the partnership's taxable year that includes the date of the gain deferral contribution and ending with the last taxable year in which the gain deferral method is applied to the section 721(c) property. The information reported must include:

(i) For each deferral contribution, the U.S. transferor must report the following information on Schedule G and Schedule H (for each Schedule, with respect to Form 8865), as applicable:

(A) The amount of book income, gain, deduction, and loss and tax items allocated to the U.S. transferor with respect to the section 721(c) property, including a description of any regulatory allocations;

(B) The proportion (expressed as a percentage) in which the book income, gain, deduction, and loss with respect to the section 721(c) property was allocated among the U.S. transferor and related persons that are partners in the section 721(c) partnership under the consistent allocation method;

(C) The amount of remaining built-in gain at the beginning of the taxable year, the remedial income allocated to the U.S. transferor under the remedial allocation method, the amount of built-in gain taken into account by reason of an acceleration event or partial acceleration event (if any), the partnership's adjustment to its tax basis in the section 721(c) property, and the remaining built-in gain at the end of the taxable year;

(D) A declaration stating whether an acceleration event or partial acceleration event occurred during the taxable year, the date of the event, and a description of the event (including a citation to the relevant paragraph of § 1.721(c)-5(d) in the case of a partial acceleration event, and whether the acceleration event is described in § 1.721(c)-4(b)(4));

(E) A description of a termination event or any successor event that occurred during the taxable year with a citation to the relevant paragraph of § 1.721(c)-5(b) or (c), the date of the event, and, in the case of a successor event, the name, address, and U.S. taxpayer identification number (if any) of any successor partnership, lower-tier partnership, upper-tier partnership, or U.S. corporation (as applicable);

(F) A description of all transfers of section 721(c) property to a foreign corporation described in § 1.721(c)-5(e) that occurred during the taxable year, and for each transfer, the date of the transfer, the section 721(c) property transferred, and the name, address, and U.S. taxpayer identification number (if any) of the foreign transferee corporation; and

(G) With respect to section 721(c) property for which a waiver of treaty benefits was filed under paragraph (b)(2)(iii) of this section, a declaration that, after exercising reasonable diligence, to the best of the U.S. transferor's knowledge and belief, all income from the section 721(c) property allocated to the partners during the taxable year remained subject to taxation as income effectively connected with the conduct of a trade or business within the United States (under either section 871 or 882) for all direct or indirect partners that are related foreign persons with respect to the U.S. transferor (regardless of whether any such partner was a partner at the time of the gain deferral contribution), and, that neither the partnership nor any such partner has made any claim under any income tax convention to an exemption from U.S. income tax or a reduced rate of U.S. income taxation on income derived from the use of the section 721(c) property;

(ii) On Form 8838-P, an extension of the period of limitations on the assessment of tax, in the case of a gain deferral contribution, as described in paragraph (b)(5)(ii) of this section, and, in the case of certain contributions on which gain is recognized, as described in paragraph (b)(5)(iii) of this section;

(iii) If the section 721(c) partnership is a partnership that does not have a filing obligation under section 6031, the information described in § 1.6038-3(g) (contents of information returns required of certain United States persons with respect to controlled foreign partnerships), if not already reported elsewhere, without regard to whether the section 721(c) partnership is a controlled foreign partnership within the meaning of section 6038. If the U.S. transferor is not a controlling fifty-percent partner (as defined in § 1.6038-3(a)), the U.S. transferor complies with the requirement of this paragraph (b)(3)(iii) by providing the information described in § 1.6038-3(g)(1);

(iv) On Schedule O (Form 8865), a description of all section 721(c) property contributed by the U.S. transferor to the section 721(c) partnership (including pursuant to a contribution described in § 1.721(c)-2(d)(1)) during the taxable year to which the gain deferral method is not applied; and

(v) The information required in paragraphs (c)(2) and (3) of this section for related foreign persons that are direct or indirect partners in the section 721(c) partnership and the section 721(c) partnership itself (if any).

(4) ***Domestic partnerships treated as foreign.*** Solely for purposes of this section, a U.S. transferor must treat a domestic section 721(c) partnership as a foreign partnership if the partnership was formed on or after January 18, 2017. If the section 721(c) partnership has an information return filing obligation under section 6031, that requirement is not affected by the requirement of this paragraph (b)(4) that the U.S. transferor treat the partnership as a foreign partnership.

(5) ***Extension of period of limitations on assessment of tax.*** In order to comply with the gain deferral method, a U.S. transferor must extend the period of limitations on the assessment of tax using Form 8838-P:

(i) With respect to the gain realized but not recognized on a gain deferral contribution, through the date that is 96 months after the close of the U.S. transferor's taxable year that includes the date of the gain deferral contribution;

(ii) With respect to all book and tax items with respect to the section 721(c) property allocated to the U.S. transferor in the partnership's taxable year that includes the date of the gain deferral contribution and the subsequent two years, through the date that is 72 months after the close of such taxable year with which, or within which, the partnership's taxable year ends; and

(iii) With respect to the gain recognized on a contribution of section 721(c) property to a section 721(c) partnership for which the gain deferral method is not applied, if the contribution occurs within five partnership taxable years following a partnership taxable year that includes the date of a gain deferral contribution, through the date that is 60 months after the close of the U.S. transferor's taxable year that includes the date of the contribution on which gain is recognized.

(c) ***Information with respect to section 721(c) partnerships and related foreign persons*** —

(1) ***Effectively connected income.*** If the gain deferral method is applied with respect to a contribution of section 721(c) property that satisfies the condition in § 1.721(c)-3(b)(1)(ii), the U.S. transferor must obtain a statement from the section 721(c) partnership and from each related foreign person that is a direct or indirect partner in the section 721(c) partnership, titled "Statement of Waiver of Treaty Benefits under § 1.721(c)-6," pursuant to which the partner and the partnership waive any claim under any income tax convention (whether or not currently in force at the time of the contribution) to an exemption from U.S. income tax or a reduced rate of U.S. income taxation on income derived from the use of the section 721(c) property for the period during which the section 721(c) property is subject to the gain deferral method.

(2) ***Partnerships in tiered-partnership structures applying the gain deferral method.*** If the gain deferral method is applied as a result of a transaction described in § 1.721(c)-3(d), the U.S. transferor must supply all the information that a section 721(c) partnership would be required to report under paragraph (b) of this section if the section 721(c) partnership were a U.S. transferor.

(3) ***Schedules K-1 for related foreign partners.*** If a section 721(c) partnership does not have a filing obligation under section 6031, the U.S. transferor must obtain a Schedule K-1 (Form 8865), Partner's Share of Income, Deduction, Credits, etc., for all related foreign persons that are direct or indirect partners in the section 721(c) partnership.

(d) ***Reporting and procedural requirements of a section 721(c) partnership with a section 6031 filing obligation*** —

(1) ***Waiver of treaty benefits.*** A section 721(c) partnership with a return filing obligation under section 6031 must include its waiver of treaty benefits described in paragraph (c)(1) of this section with its tax return for the taxable year that includes the date of the gain deferral contribution.

(2) ***Information on Schedule K-1.*** A section 721(c) partnership with a return filing obligation under section 6031 must provide the relevant information necessary for the U.S. transferor to comply with the requirements in paragraphs (b)(2) and (3) of this section (using the Forms and Schedules specified in paragraphs (b)(2) and (3) of this section) with the U.S. transferor's Schedule K-1 (Form 1065),

Partner's Share of Income, Deductions, Credits, etc. The partnership must also attach a Schedule K-1 (Form 1065) to its Form 1065 for each direct or indirect partner that is a related foreign person with respect to the U.S. transferor.

(e) ***Signatory.*** Any statements required in this section must be signed under penalties of perjury by an agent of the U.S. transferor, the related foreign person that is a direct or indirect partner in the section 721(c) partnership, or the section 721(c) partnership, as applicable, that is authorized to sign under a general or specific power of attorney, or by an appropriate party. For the U.S. transferor, an appropriate party is a person described in § 1.367(a)-8(e)(1). For a partnership with a section 6031 filing obligation, an appropriate party is any party authorized to sign Form 1065.

(f) ***Relief for certain failures to file or failures to comply that are not willful*** —

(1) ***In general.*** This paragraph (f)(1) provides relief from the failure to comply with the procedural and reporting requirements of the gain deferral method prescribed by § 1.721(c)-3(b)(3) and provided in paragraph (b) of this section if there is a failure to file or to include information required by this section (failure to comply). A failure to comply will be deemed not to have occurred for purposes of § 1.721(c)-3(b)(3) if the U.S. transferor demonstrates that the failure was not willful using the procedure provided in this paragraph (f). For purposes of this paragraph (f), willful is to be interpreted consistent with the meaning of that term in the context of other civil penalties, which would include a failure due to gross negligence, reckless disregard, or willful neglect. Whether a failure to comply was willful will be determined by the Director of Field Operations, Cross Border Activities Practice Area of Large Business & International (or any successor to the roles and responsibilities of such position, as appropriate) (Director) based on all the facts and circumstances. The U.S. transferor must submit a request for relief and an explanation as provided in paragraph (f)(2) of this section. A U.S. transferor whose failure to comply is determined not to be willful under this paragraph (f) will be subject to a penalty under section 6038B if it fails to satisfy the applicable reporting requirements under that section and does not demonstrate that the failure was due to reasonable cause and not willful neglect. See § 1.6038B-2(h). The determination of whether the failure to comply was willful under this section has no effect on any request for relief made under § 1.6038B-2(h).

(2) ***Procedures for establishing that a failure to comply was not willful*** —

(i) ***Time and manner of submission.*** A U.S. transferor's statement that a failure to comply was not willful will be considered only if, promptly after the U.S. transferor becomes aware of the failure, an amended return is filed for the taxable year to which the failure relates that includes the information that should have been included with the original return for such taxable year or that otherwise complies with the rules of this section as well as a written statement explaining the reasons for the failure to comply. The U.S. transferor also must file, with the amended return, a Schedule O (Form 8865) and Form 8838-P (as described in paragraph (b)(5) of this section), completed and executed as prescribed in forms and instructions, consenting to extend the period of limitations on assessment of tax with respect to the gain realized but not recognized on the gain deferral contribution to the later of the date that is 96 months after the close of the U.S. transferor's taxable year that includes the date of the gain deferral contribution (*date one*), or the date that is 36 months after the date on which the required information is provided to the Director (*date two*). However, the U.S. transferor is not required to file a Schedule O (Form 8865), with the amended return if both date one is later than date two and a consent to extend the period of limitations on assessment of tax with respect to the gain realized but not recognized on the gain deferral contribution for the U.S. transferor's taxable year that includes

the date of the contribution was previously submitted with a Schedule O (Form 8865). The amended return and either a Schedule O (Form 8865) or a copy of the previously filed Schedule O (Form 8865), as the case may be, must be filed with the Internal Revenue Service at the location where the U.S. transferor filed its original return. The U.S. transferor may submit a request for relief from the penalty under section 6038B as part of the same submission. See § 1.6038B-2(h)(3).

(ii) ***Notice requirement.*** In addition to the requirements of paragraph (f)(2)(i) of this section, the U.S. transferor must comply with the notice requirements of this paragraph (f)(2)(ii). If any taxable year of the U.S. transferor is under examination when the amended return is filed, a copy of the amended return must be delivered to the Internal Revenue Service personnel conducting the examination. If no taxable year of the U.S. transferor is under examination when the amended return is filed, a copy of the amended return must be delivered to the Director.

(g) ***Applicability dates*** —

(1) ***In general.*** Except as provided in paragraphs (g)(2) and (3) of this section, this section applies with respect to contributions occurring on or after January 18, 2017, and with respect to contributions that occurred before January 18, 2017 resulting from an entity classification election made under § 301.7701-3 of this chapter that was effective on or before January 18, 2017 but was filed on or after January 18, 2017.

(2) ***Reporting relating to effectively connected income.*** Paragraphs (b)(2)(iii), (b)(3)(i)(G), and (d)(1) of this section apply to a contribution occurring on or after August 6, 2015, and to a contribution that occurred before August 6, 2015 resulting from an entity classification election made under § 301.7701-3 of this chapter that was effective on or before August 6, 2015 but was filed on or after August 6, 2015, and, in either case, provided § 1.721(c)-3(b)(1)(ii) applies to the contribution. To the extent that a previously filed return did not comply with paragraph (b)(2)(iii), (b)(3)(i)(G), or (d)(1) of this section, an amended return complying with such paragraphs must have been filed no later than July 18, 2017.

(3) ***Transition rules*** —

(i) ***Reporting under sections 6038, 6038B, and 6046A.*** For transfers occurring on or after August 6, 2015, and for transfers that occurred before August 6, 2015 resulting from an entity classification election made under § 301.7701-3 of this chapter that was effective on or before August 6, 2015 but was filed on or after August 6, 2015, a U.S. transferor (or a domestic partnership in which a U.S. transferor is a direct or indirect partner) must fulfill any reporting requirements imposed under sections 6038, 6038B, and 6046A with respect to the contribution of the section 721(c) property to the section 721(c) partnership.

(ii) ***Reporting using statements instead of prescribed forms and schedules.*** For tax returns filed before July 17, 2020, reporting that met the requirements of § 1.721(c)-6T (see 26 CFR part 1, revised as of April 1, 2019) as in effect before January 1, 2020, will be deemed to satisfy the corresponding requirements of this section.

[T.D. 9891, 85 FR 3846, Jan. 23, 2020; 85 FR 8726, Feb. 18, 2020]

§ 1.721(c)-7 Examples.

(a) ***Presumed facts.*** For purposes of the examples in paragraph (b) of this section, assume that there are no other transactions that are related to the transactions described in the examples and that all partnership allocations have substantial economic effect under section 704(b). For definitions that apply for purposes of this section, see § 1.721(c)-1(b). Except where otherwise indicated, the following facts are presumed—

(1) USP and USX are domestic corporations that each use a calendar taxable year. USX is not a related person with respect to USP.

(2) CFC1, CFC2, FX, and FY are foreign corporations.

(3) USP wholly owns CFC1 and CFC2. Neither FX nor FY is a related person with respect to USP or with respect to each other.

(4) PRS1, PRS2, and PRS3 are foreign entities classified as partnerships for U.S. tax purposes. A partnership interest in PRS1, PRS2, and PRS3 is not described in section 475(c)(2).

(5) A taxable year is referred to, for example, as year 1.

(6) A partner in a partnership has the same percentage interest in income, gain, loss, deduction, and capital of the partnership.

(7) No property is described in section 197(f)(9) in the hands of a contributing partner.

(8) No partnership is a controlled partnership solely under the facts and circumstances test in § 1.721(c)-1(b)(4).

(b) ***Examples.*** The application of the rules stated in §§ 1.721(c)-1 through 1.721(c)-6 may be illustrated by the following examples:

(1) ***Example 1: Determining if a partnership is a section 721(c) partnership*** —

(i) ***Facts.*** In year 1, USP and CFC1 form PRS1 as equal partners. CFC1 contributes cash of $1.5 million to PRS1, and USP contributes three properties to PRS1: A patent with a book value of $1.2 million and an adjusted tax basis of zero, a security (within the meaning of section 475(c)(2)) with a book value of $100,000 and an adjusted tax basis of $20,000, and a machine with a book value of $200,000 and an adjusted tax basis of $600,000.

(ii) ***Results.***

(A) Under § 1.721(c)-1(b)(18)(i), USP is a U.S. transferor because USP is a U.S. person and not a domestic partnership. Under § 1.721(c)-1(b)(2), the patent has built-in gain of $1.2 million. The patent is not excluded property under § 1.721(c)-1(b)(6). Therefore, under § 1.721(c)-1(b)(15)(i), the patent is section 721(c) property because it is property, other than excluded property, with built-in gain that is contributed by a U.S. transferor, USP.

(B) Under § 1.721(c)-1(b)(2), the security has built-in gain of $80,000. Under § 1.721(c)-1(b)(6)(ii), the security is excluded property because it is described in section 475(c)(2). Therefore, the security is not section 721(c) property.

(C) The tax basis of the machine exceeds its book value. Under § 1.721(c)-1(b)(6)(iii), the machine is excluded property and therefore is not section 721(c) property.

(D) Under § 1.721(c)-1(b)(12), CFC1 is a related person with respect to USP, and under § 1.721(c)-1(b)(11), CFC1 is a related foreign person. Because USP and CFC1 collectively own at least 80 percent of the interests in the capital, profits, deductions, or losses of PRS1, under § 1.721(c)-1(b)(14)(i), PRS1 is a section 721(c) partnership upon the contribution by USP of the patent.

(E) The de minimis exception described in § 1.721(c)-2(c) does not apply to the contribution because during PRS1's year 1 the sum of the built-in gain with respect to all section 721(c) property contributed in year 1 to PRS1 is $1.2 million, which exceeds the de minimis threshold of $1 million. As a result, under § 1.721(c)-2(b), section 721(a) does not apply to USP's contribution of the patent to PRS1, unless the requirements of the gain deferral method are satisfied.

(2) ***Example 2: Determining if partnership interest is section 721(c) property*** —

(i) ***Facts.*** In year 1, USP and FX form PRS2. USP contributes a security (within the meaning of section 475(c)(2)) with a book value of $100,000 and an adjusted tax basis of $20,000 and a building located in country X with a book value of $30,000 and an adjusted tax basis of $8,000 in exchange for a 40-percent interest. FX contributes a machine with a book value of $195,000 and an adjusted tax basis of $250,000 in exchange for a 60-percent interest.

(ii) ***Result*** s. PRS2 is not a section 721(c) partnership because FX is not a related person with respect to USP. USP's contributions to PRS2 are not subject to § 1.721(c)-2(b).

(iii) ***Alternative facts and results.***

(A) The facts are the same as in paragraph (b)(2)(i) of this section (the facts in Example 2). In addition, USP and CFC1 form PRS1 as equal partners. CFC1 contributes cash of $130,000 to PRS1, and USP contributes its 40-percent interest in PRS2.

(B) PRS2's property consists of a security and a machine that are excluded property, and a building with built-in gain in excess of $20,000. Under § 1.721(c)-1(b)(6)(iv), because more than 90 percent of the value of the property of PRS2 consists of excluded property described in § 1.721(c)-1(b)(6)(i) through (iii) (the security and the machine), any interest in PRS2 is excluded property. Therefore, the 40-percent interest in PRS2 contributed by USP to PRS1 is not section 721(c) property. Accordingly, USP's contribution of its interest in PRS2 to PRS1 is not subject to § 1.721(c)-2(b).

(3) ***Example 3: Assets-over tiered partnerships*** —

(i) ***Facts.*** In year 1, USP and CFC1 form PRS1 as equal partners. USP contributes a patent with a book value of $300 million and an adjusted tax basis of $30 million (USP contribution). CFC1 contributes cash of $300 million. Immediately thereafter, PRS1 contributes the patent to PRS2 in exchange for a two-thirds interest (PRS1 contribution), and CFC2 contributes cash of $150 million in exchange for a one-third interest. The patent has a remaining recovery period of 5 years out of a total of 15 years. With respect to all contributions described in § 1.721(c)-2(b), the de minimis exception does not apply, and the gain deferral method is applied. Thus, the partnership agreements of PRS1 and PRS2 provide that the partnership will make allocations under section 704(c) using the remedial allocation method under § 1.704-3(d).

(ii) ***Results: USP contribution.*** PRS1 is a section 721(c) partnership as a result of the USP contribution.

(iii) ***Results: PRS1 contribution.***

(A) For purposes of determining whether PRS2 is a section 721(c) partnership as a result of the PRS1 contribution, under § 1.721(c)-2(d)(1), USP is treated as contributing to PRS2 its share of the patent that PRS1 actually contributes to PRS2. USP and CFC1 are each one-third indirect partners in PRS2. Taking into account the one-third interest in PRS2 directly owned by CFC2, USP, CFC1, and CFC2 collectively own at least 80 percent of the interests in PRS2. Thus, PRS2 is a section 721(c) partnership as a result of the PRS1 contribution.

(B) Under § 1.721(c)-2(b), section 721(a) does not apply to PRS1's contribution of the patent to PRS2, unless the requirements of the gain deferral method are satisfied. Under § 1.721(c)-3(b), the gain deferral method must be applied with respect to the patent. In addition, under § 1.721(c)-3(d)(2), because PRS1 is a controlled partnership with respect to USP, the gain deferral method must be applied with respect to PRS1's interest in PRS2, and, solely for purposes of applying the consistent allocation method, PRS2 must treat PRS1 as the U.S. transferor. As stated in paragraph (b)(3)(i) of this section (the facts in Example 3), the gain deferral method is applied. PRS2 is a controlled partnership with respect to USP. Under § 1.721(c)-5(c)(5)(i), the PRS1 contribution is a successor event with respect to the USP contribution.

(iv) ***Results: application of remedial allocation method.***

(A) Under § 1.704-3(d)(2), in year 1, PRS2 has $24 million of book amortization with respect to the patent ($6 million ($30 million of book value equal to adjusted tax basis divided by the 5-year remaining recovery period) plus $18 million ($270 million excess of book value over tax basis divided by the new 15-year recovery period)). PRS2 has $6 million of tax amortization. Under the PRS2 partnership agreement, PRS2 allocates $8 million of book amortization to CFC2 and $16 million of book amortization to PRS1. Because of the application of the ceiling rule, PRS2 allocates $6 million of tax amortization to CFC2 and $0 of tax amortization to PRS1. Because the ceiling rule would cause a disparity of $2 million between CFC2's book and tax amortization, PRS2 must make a remedial allocation of $2 million of tax amortization to CFC2 and an offsetting remedial allocation of $2 million of taxable income to PRS1.

(B) PRS1's distributive share of each of PRS2's items with respect to the patent is $16 million of book amortization, $0 of tax amortization, and $2 million of taxable income from the remedial allocation from PRS1. Under § 1.704-3(a)(9), PRS1 must allocate its distributive share of each of PRS2's items with respect to the patent in a manner that takes into account USP's remaining built-in gain in the patent. Therefore, PRS1 allocates $2 million of taxable income to USP. Under § 1.704-3(a)(13)(ii), PRS1 treats its distributive share of each of PRS2's items of amortization with respect to PRS2's patent as items of amortization with respect to PRS1's interest in PRS2. Under the PRS1 partnership agreement, PRS1 allocates $8 million of book amortization and $0 of tax amortization to CFC1, and $8 million of book amortization and $0 of tax amortization to USP. Because the ceiling rule would cause a disparity of $8 million between CFC1's book and tax amortization, PRS1 must make a remedial allocation of $8 million of tax amortization to CFC1. PRS1 must also make an offsetting remedial allocation of $8 million of taxable income to USP. USP reports $10 million of taxable income ($2 million of remedial income from PRS2 and $8 million of remedial income from PRS1).

(4) ***Example 4: Section 721(c) partnership ceases to have a related foreign person as a partner —***

(i) ***Facts***. In year 1, USP and CFC1 form PRS1. USP contributes a trademark with a built-in gain of $5 million in exchange for a 60-percent interest, and CFC1 contributes other property in exchange for the remaining 40-percent interest. With respect to all contributions described in § 1.721(c)-2(b), the de minimis exception does not apply, and the gain deferral method is applied. On day 1 of year 4, CFC1 sells its entire interest in PRS1 to FX. There is no plan for a related foreign person with respect to USP to subsequently become a partner in PRS1 (or a successor).

(ii) ***Results***.

(A) PRS1 is a section 721(c) partnership.

(B) With respect to year 4, under § 1.721(c)-5(b)(5), the sale is a termination event because, as a result of CFC1's sale of its interest, PRS1 will no longer have a partner that is a related foreign person, and there is no plan for a related foreign person to subsequently become a partner in PRS1 (or a successor). Thus, under § 1.721(c)-5(b)(1), the trademark is no longer subject to the gain deferral method.

(5) ***Example 5: Transfer described in section 367 of section 721(c) property to a foreign corporation*** —

(i) ***Facts***. In year 1, USP, CFC1, and USX form PRS1. USP contributes a patent with a built-in gain of $5 million in exchange for a 60-percent interest, CFC1 contributes other property in exchange for a 30-percent interest, and USX contributes cash in exchange for a 10-percent interest. With respect to all contributions described in § 1.721(c)-2(b), the de minimis exception does not apply, and the gain deferral method is applied. In year 3, when the patent has remaining built-in gain, PRS1 transfers the patent to FX in a transaction described in section 351.

(ii) ***Results***.

(A) PRS1 is a section 721(c) partnership.

(B) With respect to year 3, the transfer of the patent to FX is a transaction described in section 367(d). Therefore, under § 1.721(c)-5(e), the patent is no longer subject to the gain deferral method. Under §§ 1.367(d)-1T(d)(1) and 1.367(a)-1T(c)(3)(i), for purposes of section 367(d), USP and USX are treated as transferring their proportionate share of the patent actually transferred by PRS1 to FX. Under § 1.721(c)-5(e), to the extent USP and USX are treated as transferring the patent to FX, the tax consequences are determined under section 367(d) and the regulations under section 367(d). With respect to the remaining portion of the patent, if any, which is attributable to CFC1, USP must recognize an amount of gain equal to the remaining built-in gain that would have been allocated to USP if PRS1 had sold that portion of the patent immediately before the transfer for fair market value. Under § 1.721(c)-4(c)(1), USP must increase the basis in its partnership interest in PRS1 by the amount of gain recognized by USP and under § 1.721(c)-4(c)(2), immediately before the transfer, PRS1 must increase its basis in the patent by the same amount. The stock in FX received by PRS1 is not subject to the gain deferral method.

(6) ***Example 6: Limited remedial allocation method for anti-churning property with respect to related partners*** —

(i) ***Facts***. USP, CFC1, and FX form PRS1. On January 1 of year 1, USP contributes intellectual property (IP) with a book value of $600 million and an adjusted tax basis of $0 in exchange for a 60-percent interest. The IP is a section 197(f)(9) intangible (within the meaning of § 1.197-2(h)(1)(i)) that was not an amortizable section 197 intangible in USP's hands. CFC1

contributes cash of $300 million in exchange for a 30-percent interest, and FX contributes cash of $100 million in exchange for a 10-percent interest. The IP is section 721(c) property, and PRS1 is a section 721(c) partnership. The gain deferral method is applied. The partnership agreement provides that PRS1 will make allocations under section 704(c) with respect to the IP using the remedial allocation method under § 1.704-3(d)(5)(iii). All of PRS1's allocations with respect to the IP satisfy the requirements of the gain deferral method. On January 1 of year 16, PRS1 sells the IP for cash of $900 million to a person that is not a related person. During years 1 through 16, PRS1 earns no income other than gain from the sale of the IP in year 16, has no expenses or deductions other than from amortization of the IP, and makes no distributions.

(ii) ***Results: Year 1.*** Under § 1.704-3(d)(5)(iii)(B), PRS1 must recover the excess of the book value of the IP over its adjusted tax basis at the time of the contribution ($600 million) using any recovery period and amortization method that would have been available to PRS1 if the property had been newly purchased property from an unrelated party. Thus, under section 197(a), PRS1 must amortize $600 million of the IP's book value ratably over 15 years for book purposes, and PRS1 will have $40 million of book amortization per year without any tax amortization. Under the partnership agreement, in year 1, PRS1 allocates book amortization of $24 million to USP, $12 million to CFC1, and $4 million to FX. Because in year 1 the ceiling rule would cause a disparity between FX's allocations of book and tax amortization, PRS1 makes a remedial allocation of tax amortization of $4 million to FX and an offsetting remedial allocation of $4 million of taxable income to USP. In year 1, the ceiling rule would also cause a disparity between CFC1's allocations of book and tax amortization. However, § 1.197-2(h)(12)(vii)(B) precludes PRS1 from making a remedial allocation of tax amortization to CFC1. Instead, pursuant to § 1.704-3(d)(5)(iii)(C), PRS1 increases the adjusted tax basis in the IP by $12 million, and pursuant to § 1.704-3(d)(5)(iii)(D), that basis adjustment is solely with respect to CFC1. Pursuant to § 1.704-3(d)(5)(iii)(C), PRS1 also makes an offsetting remedial allocation of $12 million of taxable income to USP.

(iii) ***Results: Years 2-15.*** At the end of year 15, PRS1 has book basis and adjusted tax basis of $0 in the IP. PRS1 has amortized $600 million for book purposes by allocating total book amortization deductions of $360 million to USP, $180 million to CFC1, and $60 million to FX. For U.S. tax purposes, by the end of year 15, PRS1 has made remedial allocations of $60 million of tax amortization to FX and increased the adjusted tax basis in the IP by $180 million solely with respect to CFC1. PRS1 has also made total remedial allocations of $240 million of taxable income to USP (attributable to $60 million of remedial tax amortization to FX and $180 million of tax basis adjustments with respect to CFC1). With respect to their partnership interests in PRS1, USP has a capital account and an adjusted tax basis of $240 million, CFC1 has a capital account of $120 million and an adjusted tax basis of $300 million, and FX has a capital account and an adjusted tax basis of $40 million.

(iv) ***Results: Sale of property in year 16.*** PRS1's sale of the IP for cash of $900 million on January 1 of year 16 results in $900 million of book and tax gain ($900 million−$0). PRS1 allocates the book and tax gain 60 percent to USP ($540 million), 10 percent to FX ($90 million), and 30 percent to CFC1 ($270 million). However, under § 1.704-3(d)(5)(iii)(D)(*3*), CFC1's tax gain is $90 million, equal to its share of PRS1's gain ($270 million), minus the amount of the tax basis adjustment ($180 million). After the sale, PRS1's only property is cash of $1.3 billion. With respect to their partnership interests in PRS1, USP has a capital account and an adjusted tax basis of $780 million, CFC1 has a capital account and an adjusted tax basis of $390 million, and FX has a capital account and an adjusted tax basis of $130 million.

[T.D. 9891, 85 FR 3849, Jan. 23, 2020]

§ 1.721-2 Noncompensatory options.

(a) ***Exercise of a noncompensatory option*** —

(1) ***In general.*** Notwithstanding § 1.721-1(b)(1), section 721 applies to the exercise (as defined in paragraph (g)(4) of this section) of a noncompensatory option (as defined in paragraph (f) of this section). Except as provided in paragraph (a)(2) of this section, section 721 applies to the exercise of a noncompensatory option when the holder pays the exercise price with either property or cash, regardless of whether the terms of the option require or permit cash payment. However, if the exercise price (as defined in paragraph (g)(5) of this section) of a noncompensatory option exceeds the capital account received by the option holder on the exercise of the option, then general tax principles will apply to determine the tax consequences of the transaction.

(2) ***Exception.*** Section 721 does not apply to the exercise of a noncompensatory option to the extent that the exercise price is satisfied with the partnership's obligation to the option holder for unpaid rent, royalties, or interest (including accrued original issue discount) that accrued on or after the beginning of the option holder's holding period for the obligation. The issuing partnership will not recognize gain or loss upon the transfer of a partnership interest to an exercising option holder in satisfaction of such unpaid rent, royalties, or interest (including accrued original issue discount).

(b) ***Transfer of property or satisfaction of an obligation in exchange for a noncompensatory option*** —

(1) ***In general.*** Except as provided in paragraph (b)(2) of this section, section 721 does not apply to a transfer of property to a partnership in exchange for a noncompensatory option, or to the satisfaction of a partnership obligation with a noncompensatory option.

(2) ***Exception.*** Section 721 does apply to a transfer of property to a partnership in exchange for convertible equity (as defined in paragraph (g)(3) of this section).

(c) ***Lapse of a noncompensatory option.*** Section 721 does not apply to the lapse of a noncompensatory option.

(d) ***Cash settlement of a noncompensatory option.*** Section 721 does not apply to the settlement of a noncompensatory option in cash or property other than a partnership interest in the issuing partnership.

(e) ***Issuance of a partnership interest in satisfaction of indebtedness for interest on convertible debt.*** Section 721 does not apply to the transfer of a partnership interest to a noncompensatory option holder upon conversion of convertible debt in the partnership to the extent that the transfer is in satisfaction of the partnership's indebtedness for unpaid interest (including accrued original issue discount) on the convertible debt that accrued on or after the beginning of the convertible debt holder's holding period for the indebtedness. The debtor partnership will not, however, recognize gain or loss upon such conversion. For rules in determining whether a partnership interest transferred to a creditor is treated as payment of interest or accrued original issue discount, see §§ 1.446-2 and 1.1275-2, respectively.

(f) ***Scope.*** The provisions of this section apply only to noncompensatory options. For purposes of this section, the term *noncompensatory option* means an option (as defined in paragraph (g)(1) of this section) issued by a partnership (the issuing partnership), other than an option issued in connection with the performance of services.

(g) ***Definitions.*** The following definitions apply for the purposes of this section:

(1) ***Option*** means a contractual right to acquire an interest in the issuing partnership, including a call option, warrant, or other similar arrangement, the conversion feature of convertible debt (as defined in paragraph (g)(2) of this section), or the conversion feature of convertible equity (as defined in paragraph (g)(3) of this section). To achieve the purposes of this section, the Commissioner can treat other contractual agreements, including a futures contract, a forward contract, or a notional principal contract, as an option. A contract that otherwise constitutes an option will not fail to be treated as an option for purposes of this section merely because it may or must be settled in cash or property other than a partnership interest.

(2) ***Convertible debt*** is any indebtedness of a partnership that is convertible into an interest in the partnership that issued the debt.

(3) ***Convertible equity*** is equity in a partnership that is convertible into a different equity interest in the partnership that issued the convertible equity.

(4) ***Exercise*** means the exercise of an option in exchange for an interest in the issuing partnership or the conversion of convertible debt or convertible equity into an interest in the issuing partnership.

(5) ***Exercise price*** means, in the case of a call option, the exercise price of the call option; in the case of convertible equity, the converting partner's capital account with respect to that convertible equity, increased by the fair market value of cash or other property contributed to the partnership in connection with the conversion; and, in the case of convertible debt, the adjusted issue price (within the meaning of § 1.1275-1(b)) of the debt converted, increased by accrued but unpaid qualified stated interest on the debt and by the fair market value of cash or other property contributed to the partnership in connection with the conversion.

(h) ***Example.*** The following example illustrates the provisions of this section:

Example. In Year 1, L and M form general partnership LM with cash contributions of $5,000 each, which are used to purchase land, Property D, for $10,000. In that same year, LM issues an option to N to buy a one-third interest in LM at any time before the end of Year 3. The exercise price of the option is $5,000, payable in either cash or property. N transfers Property E with a basis of $600 and a value of $1,000 to the partnership in exchange for the option. N provides no other consideration for the option. Assume that N's option is a noncompensatory option under paragraph (f) of this section and that N is not treated as a partner with respect to the option. Under paragraph (b) of this section, section 721(a) does not apply to N's transfer of Property E to LM in exchange for the option. In accordance with § 1.1001-1, upon N's transfer of Property E to the partnership in exchange for the option, N recognizes $400 of gain. Under open transaction principles applicable to noncompensatory options, the partnership does not recognize any income for the premium (the property received in exchange for the option). The partnership has a basis of $1,000 in Property E. In Year 3, when the partnership property is valued at $16,000, N exercises the option, contributing Property F with a basis of $3,000 and a fair market value of $5,000 to the partnership. Under paragraph (a) of this section, neither the partnership nor N recognizes gain upon N's contribution of property to the partnership upon the exercise of the option. Under section 723, the partnership has a basis of $3,000 in Property F. The partnership does not recognize income for the premium (Property E) upon exercise of the option. See § 1.704-1(b)(2)(iv)(*d*)(*4*) and (*s*) for special rules applicable to capital account adjustments on the exercise of a noncompensatory option.

(i) ***Effective/applicability date.*** This section applies to noncompensatory options that are issued on or after February 5, 2013.

[T.D. 9612, 78 FR 8012, Feb. 5, 2013]

§ 1.722-1 Basis of contributing partner's interest.

The basis to a partner of a partnership interest acquired by a contribution of property, including money, to the partnership shall be the amount of money contributed plus the adjusted basis at the time of contribution of any property contributed. If the acquisition of an interest in partnership capital results in taxable income to a partner, such income shall constitute an addition to the basis of the partner's interest. See paragraph (b) of § 1.721-1. If the contributed property is subject to indebtedness or if liabilities of the partner are assumed by the partnership, the basis of the contributing partner's interest shall be reduced by the portion of the indebtedness assumed by the other partners, since the partnership's assumption of his indebtedness is treated as a distribution of money to the partner. Conversely, the assumption by the other partners of a portion of the contributor's indebtedness is treated as a contribution of money by them. See section 752 and § 1.752-1. See § 1.460-4(k)(3)(iv)(A) for rules relating to basis adjustments required where a contract accounted for under a long-term contract method of accounting is transferred in a contribution to which section 721(a) applies. The provisions of this section may be illustrated by the following examples:

Example 1. A acquired a 20-percent interest in a partnership by contributing property. At the time of A's contribution, the property had a fair market value of $10,000, an adjusted basis to A of $4,000, and was subject to a mortgage of $2,000. Payment of the mortgage was assumed by the partnership. The basis of A's interest in the partnership is $2,400, computed as follows:

Adjusted basis to A of property contributed	$4,000
Less portion of mortgage assumed by other partners which must be treated as a distribution (80 percent of $2,000)	1,600
Basis of A's interest	2,400

Example 2. If, in example 1 of this section, the property contributed by A was subject to a mortgage of $6,000, the basis of A's interest would be zero, computed as follows:

Adjusted basis to A of property contributed	$4,000
Less portion of mortgage assumed by other partners which must be treated as a distribution (80 percent of $6,000)	4,800
	(800)

Since A's basis cannot be less than zero, the $800 in excess of basis, which is considered as a distribution of money under section 752(b), is treated as capital gain from the sale or exchange or a partnership interest. See section 731(a).

[T.D. 6500, 25 FR 11814, Nov. 26, 1960; 25 FR 14021, Dec. 31, 1960, as amended by T.D. 9137, 69 FR 42558, July 16, 2004]

§ 1.723-1 Basis of property contributed to partnership.

The basis to the partnership of property contributed to it by a partner is the adjusted basis of such property to the contributing partner at the time of the contribution. Since such property has the same basis in the hands of the partnership as it had in the hands of the contributing partner, the holding period of such property for the partnership includes the period during which it was held by the partner. See section 1223(2). For elective adjustments to the basis of partnership property arising from distributions or transfers of partnership interests, see sections 732(d), 734(b), and 743(b). See § 1.460-4(k)(3)(iv)(B)(2) for rules relating to adjustments to the basis of contracts accounted for using a long-term contract method of accounting that are acquired in certain contributions to which section 721(a) applies.

[T.D. 6500, 25 FR 11814, Nov. 26, 1960; 25 FR 14021, Dec. 31, 1960, as amended by T.D. 9137, 69 FR 42558, July 16, 2004]

DISTRIBUTIONS BY A PARTNERSHIP

§ 1.731-1 Extent of recognition of gain or loss on distribution.

(a) ***Recognition of gain or loss to partner*** —

(1) ***Recognition of gain.***

(i) Where money is distributed by a partnership to a partner, no gain shall be recognized to the partner except to the extent that the amount of money distributed exceeds the adjusted basis of the partner's interest in the partnership immediately before the distribution. This rule is applicable both to current distributions (*i.e.*, distributions other than in liquidation of an entire interest) and to distributions in liquidation of a partner's entire interest in a partnership. Thus, if a partner with a basis for his interest of $10,000 receives a distribution of cash of $8,000 and property with a fair market value of $3,000, no gain is recognized to him. If $11,000 cash were distributed, gain would be recognized to the extent of $1,000. No gain shall be recognized to a distributee partner with respect to a distribution of property (other than money) until he sells or otherwise disposes of such property, except to the extent otherwise provided by section 736 (relating to payments to a retiring partner or a deceased partner's successor in interest) and section 751 (relating to unrealized receivables and inventory items). See section 731(c) and paragraph (c) of this section.

(ii) For the purposes of sections 731 and 705, advances or drawings of money or property against a partner's distributive share of income shall be treated as current distributions made on the last day of the partnership taxable year with respect to such partner.

(2) ***Recognition of loss.*** Loss is recognized to a partner only upon liquidation of his entire interest in the partnership, and only if the property distributed to him consists solely of money, unrealized receivables (as defined in section 751(c)), and inventory items (as defined in section 751(d)(2)). The term *liquidation of a partner's interest,* as defined in section 761(d), is the termination of the partner's entire interest in the partnership by means of a distribution or a series of distributions. Loss is recognized to the distributee partner in such cases to the extent of the excess of the adjusted basis of such partner's interest in the partnership at the time of the distribution over the sum of:

(i) Any money distributed to him, and

(ii) The basis to the distributee, as determined under section 732, of any unrealized receivables and inventory items that are distributed to him.

If the partner whose interest is liquidated receives any property other than money, unrealized receivables, or inventory items, then no loss will be recognized. Application of the provisions of this subparagraph may be illustrated by the following examples:

Example 1. Partner A has a partnership interest in partnership ABC with an adjusted basis to him of $10,000. He retires from the partnership and receives, as a distribution in liquidation of his entire interest, his share of partnership property. This share is $5,000 cash and inventory with a basis to him (under section 732) of $3,000. Partner A realizes a capital loss of $2,000, which is recognized under section 731(a)(2).

Example 2. Partner B has a partnership interest in partnership BCD with an adjusted basis to him of $10,000. He retires from the partnership and receives, as a distribution in liquidation of his entire interest, his share of partnership property. This share is $4,000 cash, real property (used in the trade or business) with an adjusted basis to the partnership of $2,000, and unrealized receivables having a basis to him (under section 732) of $3,000. No loss will be recognized to B on the transaction because he received property other than money, unrealized receivables, and inventory items. As determined under section 732, the basis to B for the real property received is $3,000.

(3) ***Character of gain or loss.*** Gain or loss recognized under section 731(a) on a distribution is considered gain or loss from the sale or exchange of the partnership interest of the distributee partner, that is, capital gain or loss.

(b) ***Gain or loss recognized by partnership.*** A distribution of property (including money) by a partnership to a partner does not result in recognized gain or loss to the partnership under section 731. However, recognized gain or loss may result to the partnership from certain distributions which, under section 751(b), must be treated as a sale or exchange of property between the distributee partner and the partnership.

(c) ***Exceptions.***

(1) Section 731 does not apply to the extent otherwise provided by:

(i) Section 736 (relating to payments to a retiring partner or to a deceased partner's successor in interest) and

(ii) Section 751 (relating to unrealized receivables and inventory items).

For example, payments under section 736(a), which are considered as a distributive share or guaranteed payment, are taxable as such under that section.

(2) The receipt by a partner from the partnership of money or property under an obligation to repay the amount of such money or to return such property does not constitute a distribution subject to section 731 but is a loan governed by section 707(a). To the extent that such an obligation is canceled, the obligor partner will be considered to have received a distribution of money or property at the time of cancellation.

(3) If there is a contribution of property to a partnership and within a short period:

(i) Before or after such contribution other property is distributed to the contributing partner and the contributed property is retained by the partnership, or

(ii) After such contribution the contributed property is distributed to another partner,

such distribution may not fall within the scope of section 731. Section 731 does not apply to a distribution of property, if, in fact, the distribution was made in order to effect an exchange of property between two or more of the partners or between the partnership and a partner. Such a transaction shall be treated as an exchange of property.

§ 1.731-2 Partnership distributions of marketable securities.

(a) ***Marketable securities treated as money.*** Except as otherwise provided in section 731(c) and this section, for purposes of sections 731(a)(1) and 737, the term money includes marketable securities and such securities are taken into account at their fair market value as of the date of the distribution.

(b) ***Reduction of amount treated as money*** —

(1) ***Aggregation of securities.*** For purposes of section 731(c)(3)(B) and this paragraph (b), all marketable securities held by a partnership are treated as marketable securities of the same class and issuer as the distributed security.

(2) ***Amount of reduction.*** The amount of the distribution of marketable securities that is treated as a distribution of money under section 731(c) and paragraph (a) of this section is reduced (but not below zero) by the excess, if any, of—

(i) The distributee partner's distributive share of the net gain, if any, which would be recognized if all the marketable securities held by the partnership were sold (immediately before the transaction to which the distribution relates) by the partnership for fair market value; over

(ii) The distributee partner's distributive share of the net gain, if any, which is attributable to the marketable securities held by the partnership immediately after the transaction, determined by using the same fair market value as used under paragraph (b)(2)(i) of this section.

(3) ***Distributee partner's share of net gain.*** For purposes of section 731(c)(3)(B) and paragraph (b)(2) of this section, a partner's distributive share of net gain is determined—

(i) By taking into account any basis adjustments under section 743(b) with respect to that partner;

(ii) Without taking into account any special allocations adopted with a principal purpose of avoiding the effect of section 731(c) and this section; and

(iii) Without taking into account any gain or loss attributable to a distributed security to which paragraph (d)(1) of this section applies.

(c) ***Marketable securities*** —

(1) ***In general.*** For purposes of section 731(c) and this section, the term *marketable securities* is defined in section 731(c)(2).

(2) ***Actively traded.*** For purposes of section 731(c) and this section, a financial instrument is actively traded (and thus is a marketable security) if it is of a type that is, as of the date of distribution, actively traded within the meaning of section 1092(d)(1). Thus, for example, if *XYZ* common stock is listed on a national securities exchange, particular shares of *XYZ* common stock that are distributed by a partnership are marketable securities even if those particular shares cannot be resold by the distributee partner for a designated period of time.

(3) ***Interests in an entity*** —

(i) ***Substantially all.*** For purposes of section 731(c)(2)(B)(v) and this section, substantially all of the assets of an entity consist (directly or indirectly) of marketable securities, money, or both only if 90 percent or more of the assets of the entity (by value) at the time of the distribution of an interest in the entity consist (directly or indirectly) of marketable securities, money, or both.

(ii) ***Less than substantially all.*** For purposes of section 731(c)(2)(B)(vi) and this section, an interest in an entity is a marketable security to the extent that the value of the interest is attributable (directly or indirectly) to marketable securities, money, or both, if less than 90 percent but 20 percent or more of the assets of the entity (by value) at the time of the distribution of an interest in the entity consist (directly or indirectly) of marketable securities, money, or both.

(4) ***Value of assets.*** For purposes of section 731(c) and this section, the value of the assets of an entity is determined without regard to any debt that may encumber or otherwise be allocable to those assets, other than debt that is incurred to acquire an asset with a principal purpose of avoiding or reducing the effect of section 731(c) and this section.

(d) ***Exceptions*** —

(1) ***In general.*** Except as otherwise provided in paragraph (d)(2) of this section, section 731(c) and this section do not apply to the distribution of a marketable security if—

(i) The security was contributed to the partnership by the distributee partner;

(ii) The security was acquired by the partnership in a nonrecognition transaction, and the following conditions are satisfied—

(A) The value of any marketable securities and money exchanged by the partnership in the nonrecognition transaction is less than 20 percent of the value of all the assets exchanged by the partnership in the nonrecognition transaction; and

(B) The partnership distributed the security within five years of either the date the security was acquired by the partnership or, if later, the date the security became marketable; or

(iii) The security was not a marketable security on the date acquired by the partnership, and the following conditions are satisfied—

(A) The entity that issued the security had no outstanding marketable securities at the time the security was acquired by the partnership;

(B) The security was held by the partnership for at least six months before the date the security became marketable; and

(C) The partnership distributed the security within five years of the date the security became marketable.

(2) ***Anti-stuffing rule.*** Paragraph (d)(1) of this section does not apply to the extent that 20 percent or more of the value of the distributed security is attributable to marketable securities or money contributed (directly or indirectly) by the partnership to the entity to which the distributed security relates after the security was acquired by the partnership (other than marketable securities contributed by the partnership that were originally contributed to the partnership by the distributee partner). For purposes of this paragraph (d)(2), money contributed by the distributing partnership does not include any money deemed contributed by the partnership as a result of section 752.

(3) ***Successor security.*** Section 731(c) and this section apply to the distribution of a marketable security acquired by the partnership in a nonrecognition transaction in exchange for a security the distribution of which immediately prior to the exchange would have been excepted under this paragraph (d) only to the extent that section 731(c) and this section otherwise would have applied to the exchanged security.

(e) ***Investment partnerships*** —

(1) ***In general.*** Section 731(c) and this section do not apply to the distribution of marketable securities by an investment partnership (as defined in section 731(c)(3)(C)(i)) to an eligible partner (as defined in section 731(c)(3)(C)(iii)).

(2) ***Eligible partner*** —

(i) ***Contributed services.*** For purposes of section 731(c)(3)(C)(iii) and this section, a partner is not treated as a partner other than an eligible partner solely because the partner contributed services to the partnership.

(ii) ***Contributed partnership interests.*** For purposes of determining whether a partner is an eligible partner under section 731(c)(3)(C), if the partner has contributed to the investment partnership an interest in another partnership that meets the requirements of paragraph (e)(4)(i) of this section after the contribution, the contributed interest is treated as property specified in section 731(c)(3)(C)(i).

(3) ***Trade or business activities.*** For purposes of section 731(c)(3)(C) and this section, a partnership is not treated as engaged in a trade or business by reason of—

(i) Any activity undertaken as an investor, trader, or dealer in any asset described in section 731(c)(3)(C)(i), including the receipt of commitment fees, break-up fees, guarantee fees, director's fees, or similar fees that are customary in and incidental to any activities of the partnership as an investor, trader, or dealer in such assets;

(ii) Reasonable and customary management services (including the receipt of reasonable and customary fees in exchange for such management services) provided to an investment partnership (within the meaning of section 731(c)(3)(C)(i)) in which the partnership holds a partnership interest; or

(iii) Reasonable and customary services provided by the partnership in assisting the formation, capitalization, expansion, or offering of interests in a corporation (or other entity) in which the partnership holds or acquires a significant equity interest (including the provision of advice or consulting services, bridge loans, guarantees of obligations, or service on a company's board of directors), provided that the anticipated receipt of compensation for the services, if any, does not represent a significant purpose for the partnership's investment in the entity and is incidental to the investment in the entity.

(4) ***Partnership tiers.*** For purposes of section 731(c)(3)(C)(iv) and this section, a partnership (upper-tier partnership) is not treated as engaged in a trade or business engaged in by, or as holding (instead of a partnership interest) a proportionate share of the assets of, a partnership (lower-tier partnership) in which the partnership holds a partnership interest if—

(i) The upper-tier partnership does not actively and substantially participate in the management of the lower-tier partnership; and

(ii) The interest held by the upper-tier partnership is less than 20 percent of the total profits and capital interests in the lower-tier partnership.

(f) *Basis rules* —

(1) *Partner's basis* —

(i) ***Partner's basis in distributed securities.*** The distributee partner's basis in distributed marketable securities with respect to which gain is recognized by reason of section 731(c) and this section is the basis of the security determined under section 732, increased by the amount of such gain. Any increase in the basis of the marketable securities attributable to gain recognized by reason of section 731(c) and this section is allocated to marketable securities in proportion to their respective amounts of unrealized appreciation in the hands of the partner before such increase.

(ii) ***Partner's basis in partnership interest.*** The basis of the distributee partner's interest in the partnership is determined under section 733 as if no gain were recognized by the partner on the distribution by reason of section 731(c) and this section.

(2) ***Basis of partnership property.*** No adjustment is made to the basis of partnership property under section 734 as a result of any gain recognized by a partner, or any step-up in the basis in the distributed marketable securities in the hands of the distributee partner, by reason of section 731(c) and this section.

(g) *Coordination with other sections* —

(1) *Sections 704(c)(1)(B) and 737* —

(i) ***In general.*** If a distribution results in the application of sections 731(c) and one or both of sections 704(c)(1)(B) and 737, the effect of the distribution is determined by applying section 704(c)(1)(B) first, section 731(c) second, and finally section 737.

(ii) ***Section 704(c)(1)(B).*** The basis of the distributee partner's interest in the partnership for purposes of determining the amount of gain, if any, recognized by reason of section 731(c) (and for determining the basis of the marketable securities in the hands of the distributee partner) includes the increase or decrease, if any, in the partner's basis that occurs under section 704(c)(1)(B)(iii) as a result of a distribution to another partner of property contributed by the distributee partner in a distribution that is part of the same distribution as the marketable securities.

(iii) *Section 737* —

(A) ***Marketable securities as other property.*** A distribution of marketable securities is treated as a distribution of property other than money for purposes of section 737 to the extent that the marketable securities are not treated as money under section 731(c). In addition, marketable securities contributed to the partnership are treated as property other than money in determining the contributing partner's net precontribution gain under section 737(b).

(B) ***Basis increase under section 737.*** The basis of the distributee partner's interest in the partnership for purposes of determining the amount of gain, if any, recognized by reason of section 731(c) (and for determining the basis of the marketable securities in the hands

of the distributee partner) does not include the increase, if any, in the partner's basis that occurs under section 737(c)(1) as a result of a distribution of property to the distributee partner in a distribution that is part of the same distribution as the marketable securities.

(2) ***Section 708(b)(1)(B).*** If a partnership termination occurs under section 708(b)(1)(B), the successor partnership will be treated as if there had been no termination for purposes of section 731(c) and this section. Accordingly, a section 708(b)(1)(B) termination will not affect whether a partnership qualifies for any of the exceptions in paragraphs (d) and (e) of this section. In addition, a deemed distribution that may occur as a result of a section 708(b)(1)(B) termination will not be subject to section 731(c) and this section.

(h) ***Anti-abuse rule.*** The provisions of section 731(c) and this section must be applied in a manner consistent with the purpose of section 731(c) and the substance of the transaction. Accordingly, if a principal purpose of a transaction is to achieve a tax result that is inconsistent with the purpose of section 731(c) and this section, the Commissioner can recast the transaction for Federal tax purposes as appropriate to achieve tax results that are consistent with the purpose of section 731(c) and this section. Whether a tax result is inconsistent with the purpose of section 731(c) and this section must be determined based on all the facts and circumstances. For example, under the provisions of this paragraph (h)—

(1) A change in partnership allocations or distribution rights with respect to marketable securities may be treated as a distribution of the marketable securities subject to section 731(c) if the change in allocations or distribution rights is, in substance, a distribution of the securities;

(2) A distribution of substantially all of the assets of the partnership other than marketable securities and money to some partners may also be treated as a distribution of marketable securities to the remaining partners if the distribution of the other property and the withdrawal of the other partners is, in substance, equivalent to a distribution of the securities to the remaining partners; and

(3) The distribution of multiple properties to one or more partners at different times may also be treated as part of a single distribution if the distributions are part of a single plan of distribution.

(i) [Reserved]

(j) ***Examples.*** The following examples illustrate the rules of this section. Unless otherwise specified, all securities held by a partnership are marketable securities within the meaning of section 731(c); the partnership holds no marketable securities other than the securities described in the example; all distributions by the partnership are subject to section 731(a) and are not subject to sections 704(c)(1)(B), 707(a)(2)(B), 751(b), or 737; and no securities are eligible for an exception to section 731(c). The examples are as follows:

> *Example 1. Recognition of gain.* (i) *A* and *B* form partnership *AB* as equal partners. *A* contributes property with a fair market value of $1,000 and an adjusted tax basis of $250. *B* contributes $1,000 cash. *AB* subsequently purchases Security *X* for $500 and immediately distributes the security to *A* in a current distribution. The basis in *A*'s interest in the partnership at the time of distribution is $250.
> (ii) The distribution of Security *X* is treated as a distribution of money in an amount equal to the fair market value of Security *X* on the date of distribution ($500). (The amount of the distribution that is treated as money is not reduced under section 731(c)(3)(B) and paragraph (b) of this section because, if Security *X* had been sold immediately before the distribution, there would have

been no gain recognized by *AB* and *A*'s distributive share of the gain would therefore have been zero.) As a result, *A* recognizes $250 of gain under section 731(a)(1) on the distribution ($500 distribution of money less $250 adjusted tax basis in *A*'s partnership interest).

Example 2. Reduction in amount treated as money—in general. (i) *A* and *B* form partnership *AB* as equal partners. *AB* subsequently distributes Security *X* to *A* in a current distribution. Immediately before the distribution, *AB* held securities with the following fair market values, adjusted tax bases, and unrecognized gain or loss:

	Value	Basis	Gain (Loss)
Security X	100	70	30
Security Y	100	80	20
Security Z	100	110	(10)

(ii) If *AB* had sold the securities for fair market value immediately before the distribution to *A,* the partnership would have recognized $40 of net gain ($30 gain on Security *X* plus $20 gain on Security *Y* minus $10 loss on Security *Z*). *A*'s distributive share of this gain would have been $20 (one-half of $40 net gain). If *AB* had sold the remaining securities immediately after the distribution of Security *X* to *A,* the partnership would have $10 of net gain ($20 of gain on Security *Y* minus $10 loss on Security *Z*). *A*'s distributive share of this gain would have been $5 (one-half of $10 net gain). As a result, the distribution resulted in a decrease of $15 in *A*'s distributive share of the net gain in *AB*'s securities ($20 net gain before distribution minus $5 net gain after distribution).
(iii) Under paragraph (b) of this section, the amount of the distribution of Security *X* that is treated as a distribution of money is reduced by $15. The distribution of Security *X* is therefore treated as a distribution of $85 of money to *A* ($100 fair market value of Security *X* minus $15 reduction).

Example 3. Reduction in amount treated as money—carried interest. (i) *A* and *B* form partnership *AB*. *A* contributes $1,000 and provides substantial services to the partnership in exchange for a 60 percent interest in partnership profits. *B* contributes $1,000 in exchange for a 40 percent interest in partnership profits. *AB* subsequently distributes Security *X* to *A* in a current distribution. Immediately before the distribution, *AB* held securities with the following fair market

values, adjusted tax bases, and unrecognized gain:

	Value	Basis	Gain
Security *X*	100	80	20
Security *Y*	100	90	10

(ii) If *AB* had sold the securities for fair market value immediately before the distribution to *A,* the partnership would have recognized $30 of net gain ($20 gain on Security *X* plus $10 gain on Security *Y*). *A*'s distributive share of this gain would have been $18 (60 percent of $30 net gain). If *AB* had sold the remaining securities immediately after the distribution of Security *X* to *A,* the partnership would have $10 of net gain ($10 gain on Security *Y*). *A*'s distributive share of this gain would have been $6 (60 percent of $10 net gain). As a result, the distribution resulted in a decrease of $12 in *A*'s distributive share of the net gain in *AB*'s securities ($18 net gain before distribution minus $6 net gain after distribution).
(iii) Under paragraph (b) of this section, the amount of the distribution of Security *X* that is treated as a distribution of money is reduced by $12. The distribution of Security *X* is therefore treated as a distribution of $88 of money to *A* ($100 fair market value of Security *X* minus $12 reduction).

Example 4. Reduction in amount treated as money—change in partnership allocations. (i) *A* is admitted to partnership *ABC* as a partner with a 1 percent interest in partnership profits. At the time of *A*'s admission, *ABC* held no securities. *ABC* subsequently acquires Security *X*. *A*'s interest in partnership profits is subsequently increased to 2 percent for securities acquired after the increase. *A* retains a 1 percent interest in all securities acquired before the increase. *ABC* then acquires Securities *Y* and *Z* and later distributes Security *X* to *A* in a current distribution. Immediately before the distribution, the securities held by *ABC* had the following fair market values, adjusted tax bases, and unrecognized gain or loss:

	Value	Basis	Gain (Loss)
Security *X*	1,000	500	500
Security *Y*	1,000	800	200
Security *Z*	1,000	1,100	(100)

(ii) If *ABC* had sold the securities for fair market value immediately before the distribution to *A,* the partnership would have recognized $600 of net gain ($500 gain on Security *X* plus $200 gain on Security *Y* minus $100 loss on Security *Z*). *A*'s distributive share of this gain would have been $7 (1

percent of $500 gain on Security *X* plus 2 percent of $200 gain on Security *Y* minus 2 percent of $100 loss on Security *Z*).
(iii) If *ABC* had sold the remaining securities immediately after the distribution of Security *X* to *A,* the partnership would have $100 of net gain ($200 gain on Security *Y* minus $100 loss on Security *Z*). *A*'s distributive share of this gain would have been $2 (2 percent of $200 gain on Security *Y* minus 2 percent of $100 loss on Security *Z*). As a result, the distribution resulted in a decrease of $5 in *A*'s distributive share of the net gain in *ABC*'s securities ($7 net gain before distribution minus $2 net gain after distribution).

(iv) Under paragraph (b) of this section, the amount of the distribution of Security *X* that is treated as a distribution of money is reduced by $5. The distribution of Security *X* is therefore treated as a distribution of $995 of money to *A* ($1000 fair market value of Security *X* minus $5 reduction).

Example 5. Basis consequences—distribution of marketable security. (i) *A* and *B* form partnership *AB* as equal partners. *A* contributes nondepreciable real property with a fair market value and adjusted tax basis of $100.
(ii) *AB* subsequently distributes Security *X* with a fair market value of $120 and an adjusted tax basis of $90 to *A* in a current distribution. At the time of distribution, the basis in *A*'s interest in the partnership is $100. The amount of the distribution that is treated as money is reduced under section 731(c)(3)(B) and paragraph (b)(2) of this section by $15 (one-half of $30 net gain in Security *X*). As a result, *A* recognizes $5 of gain under section 731(a) on the distribution (excess of $105 distribution of money over $100 adjusted tax basis in *A*'s partnership interest).

(iii) *A*'s adjusted tax basis in Security *X* is $95 ($90 adjusted basis of Security *X* determined under section 732(a)(1) plus $5 of gain recognized by *A* by reason of section 731(c)). The basis in *A*'s interest in the partnership is $10 as determined under section 733 ($100 pre-distribution basis minus $90 basis allocated to Security *X* under section 732).

Example 6. Basis consequences—distribution of marketable security and other property. (i) *A* and *B* form partnership *AB* as equal partners. *A* contributes nondepreciable real property, with a fair market value of $100 and an adjusted tax basis of $10.
(ii) *AB* subsequently distributes Security *X* with a fair market value and adjusted tax basis of $40 to *A* in a current distribution and, as part of the same distribution, *AB* distributes Property *Z* to *A* with an adjusted tax basis and fair market value of $40. At the time of distribution, the basis in *A*'s interest in the partnership is $10. *A* recognizes $30 of gain under section 731(a) on the distribution (excess of $40 distribution of money over $10 adjusted tax basis in *A*'s partnership interest).

(iii) *A*'s adjusted tax basis in Security *X* is $35 ($5 adjusted basis determined under section 732(a)(2) plus $30 of gain recognized by *A* by reason of section 731(c)). *A*'s basis in Property *Z* is $5, as determined under section 732(a)(2). The basis in *A*'s interest in the partnership is $0 as determined under section 733 ($10 pre-distribution basis minus $10 basis allocated between Security *X* and Property *Z* under section 732).

(iv) *AB*'s adjusted tax basis in the remaining partnership assets is unchanged unless the partnership has a section 754 election in effect. If *AB* made such an election, the aggregate basis of *AB*'s assets would be increased by $70 (the difference between the $80 combined basis of Security *X* and Property *Z* in the hands of the partnership before the distribution and the $10 combined basis of the distributed property in the hands of *A* under section 732 after the distribution). Under section 731(c)(5), no adjustment is made to partnership property under section 734 as a result of any gain recognized by *A* by reason of section 731(c) or as a result of any step-up in basis in the distributed marketable securities in the hands of *A* by reason of section 731(c).

Example 7. Coordination with section 737. (i) *A* and *B* form partnership *AB. A* contributes Property *A,* nondepreciable real property with a fair market value of $200 and an adjusted basis of $100 in exchange for a 25 percent interest in partnership capital and profits. *AB* owns marketable Security *X.*
(ii) Within five years of the contribution of Property *A, AB* subsequently distributes Security *X,* with a fair market value of $120 and an adjusted tax basis of $100, to *A* in a current distribution that is subject to section 737. As part of the same distribution, *AB* distributes Property *Y* to *A* with a fair market value of $20 and an adjusted tax basis of $0. At the time of distribution, there has been no change in the fair market value of Property *A* or the adjusted tax basis in *A*'s interest in the partnership.

(iii) If *AB* had sold Security *X* for fair market value immediately before the distribution to *A,* the partnership would have recognized $20 of gain. *A*'s distributive share of this gain would have been $5 (25 percent of $20 gain). Because *AB* has no other marketable securities, *A*'s distributive share of gain in partnership securities after the distribution would have been $0. As a result, the distribution resulted in a decrease of $5 in *A*'s share of the net gain in *AB*'s securities ($5 net gain before distribution minus $0 net gain after distribution). Under paragraph (b)(2) of this section, the amount of the distribution of Security *X* that is treated as a distribution of money is reduced by $5. The distribution of Security *X* is therefore treated as a distribution of $115 of money to *A* ($120 fair market value of Security *X* minus $5 reduction). The portion of the distribution of the marketable security that is not treated as a distribution of money ($5) is treated as other property for purposes of section 737.

(iv) *A* recognizes total gain of $40 on the distribution. *A* recognizes $15 of gain under section 731(a)(1) on the distribution of the portion of Security *X* treated as money ($115 distribution of money less $100 adjusted tax basis in *A*'s partnership interest). *A* recognizes $25 of gain under section 737 on the distribution of Property *Y* and the portion of Security *X* that is not treated as money. *A*'s section 737 gain is equal to the lesser of (i) *A*'s precontribution gain ($100) or (ii) the excess of the fair market value of property received ($20 fair market value of Property *Y* plus $5 portion of Security *X* not treated as money) over the adjusted basis in *A*'s interest in the partnership immediately before the distribution ($100) reduced (but not below zero) by the amount of money received in the distribution ($115).

(v) *A*'s adjusted tax basis in Security *X* is $115 ($100 basis of Security *X* determined under section 732(a) plus $15 of gain recognized by reason of section 731(c)). *A*'s adjusted tax basis in Property *Y* is $0 under section 732(a). The basis in *A*'s interest in the partnership is $25 ($100 basis before distribution minus $100 basis allocated to Security *X* under section 732(a) plus $25 gain recognized under section 737).

(k) ***Effective date.*** This section applies to distributions made on or after December 26, 1996. However, taxpayers may apply the rules of this section to distributions made after December 8, 1994, and before December 26, 1996.

[T.D. 8707, 61 FR 67938, Dec. 26, 1996; 62 FR 8086, Feb. 21, 1997]

§ 1.732-1 Basis of distributed property other than money.

(a) ***Distributions other than in liquidation of a partner's interest.*** The basis of property (other than money) received by a partner in a distribution from a partnership, other than in liquidation of his entire interest, shall be its adjusted basis to the partnership immediately before such distribution. However, the basis of the property to the partner shall not exceed the adjusted basis of the partner's interest in the partnership, reduced by the amount of any money distributed to him in the same transaction. The provisions of this paragraph may be illustrated by the following examples:

Example 1. Partner A, with an adjusted basis of $15,000 for his partnership interest, receives in a current distribution property having an adjusted basis of $10,000 to the partnership immediately before distribution, and $2,000 cash. The basis of the property in A's hands will be $10,000. Under sections 733 and 705, the basis of A's partnership interest will be reduced by the distribution to $3,000 ($15,000 less $2,000 cash, less $10,000, the basis of the distributed property to A).

Example 2. Partner R has an adjusted basis of $10,000 for his partnership interest. He receives a current distribution of $4,000 cash and property with an adjusted basis to the partnership of $8,000. The basis of the distributed property to partner R is limited to $6,000 ($10,000, the adjusted basis of his interest, reduced by $4,000, the cash distributed).

(b) ***Distribution in liquidation.*** Where a partnership distributes property (other than money) in liquidation of a partner's entire interest in the partnership, the basis of such property to the partner shall be an amount equal to the adjusted basis of his interest in the partnership reduced by the amount of any money distributed to him in the same transaction. Application of this rule may be illustrated by the following example:

Example. Partner B, with a partnership interest having an adjusted basis to him of $12,000, retires from the partnership and receives cash of $2,000, and real property with an adjusted basis to the partnership of $6,000 and a fair market value of $14,000. The basis of the real property to B is $10,000 (B's basis for his partnership interest, $12,000, reduced by $2,000, the cash distributed).

(c) ***Allocation of basis among properties distributed to a partner*** —

(1) ***General rule*** —

(i) ***Unrealized receivables and inventory items.*** Except as provided in paragraph (c)(1)(iii) of this section, the basis to be allocated to properties distributed to a partner under section 732(a)(2) or (b) is allocated first to any unrealized receivables (as defined in section 751(c)) and inventory items (as defined in section 751(d)(2)) in an amount equal to the adjusted basis of each such property to the partnership immediately before the distribution. If the basis to be allocated is less than the sum of the adjusted bases to the partnership of the distributed unrealized receivables and inventory items, the adjusted basis of the distributed property must be decreased in the manner provided in § 1.732-1(c)(2)(i). See § 1.460-4(k)(2)(iv)(D) for a rule determining the partnership's basis in long-term contract accounted for under a long-term contract method of accounting.

(ii) ***Other distributed property.*** Any basis not allocated to unrealized receivables or inventory items under paragraph (c)(1)(i) of this section or to stock of persons that control the corporate partner or to the corporate partner's stock under paragraph (c)(1)(iii) of this section is allocated to any other property distributed to the partner in the same transaction by assigning to each distributed property an amount equal to the adjusted basis of the property to the partnership immediately before the distribution. However, if the sum of the adjusted bases to the partnership of such other distributed property does not equal the basis to be allocated among the distributed property, any increase or decrease required to make the amounts equal is allocated among the distributed property as provided in § 1.732-1(c)(2).

(iii) ***Stock distributed to the corporate partner.*** If a partnership makes a distribution described in § 1.337(d)-3(e)(1), then for purposes of this section, the basis to be allocated to properties distributed under section 732(a)(2) or (b) is allocated first to the Stock of the Corporate Partner, as defined in § 1.337(d)-3(c)(2), before the distribution of any other property (other than cash). The amount allocated to the Stock of the Corporate Partner is as provided in § 1.337(d)-3(e)(2).

(2) ***Adjustment to basis allocation*** —

(i) ***Decrease in basis.*** Any decrease to the basis of distributed property required under paragraph (c)(1) of this section is allocated first to distributed property with unrealized depreciation in proportion to each property's respective amount of unrealized depreciation before any decrease (but only to the extent of each property's unrealized depreciation). If the required decrease exceeds the amount of unrealized depreciation in the distributed property, the excess is allocated to the distributed property in proportion to the adjusted bases of the distributed property, as adjusted pursuant to the immediately preceding sentence.

(ii) ***Increase in basis.*** Any increase to the basis of distributed property required under paragraph (c)(1)(ii) of this section is allocated first to distributed property (other than unrealized receivables and inventory items) with unrealized appreciation in proportion to each property's respective amount of unrealized appreciation before any increase (but only to the extent of each property's unrealized appreciation). If the required increase exceeds the amount of

unrealized appreciation in the distributed property, the excess is allocated to the distributed property (other than unrealized receivables or inventory items) in proportion to the fair market value of the distributed property.

(3) ***Unrealized receivables and inventory items.*** If the basis to be allocated upon a distribution in liquidation of the partner's entire interest in the partnership is greater than the adjusted basis to the partnership of the unrealized receivables and inventory items distributed to the partner, and if there is no other property distributed to which the excess can be allocated, the distributee partner sustains a capital loss under section 731(a)(2) to the extent of the unallocated basis of the partnership interest.

(4) ***Examples.*** The provisions of this paragraph (c) are illustrated by the following examples:

Example 1. A is a one-fourth partner in partnership PRS and has an adjusted basis in its partnership interest of $650. PRS distributes inventory items and Assets X and Y to A in liquidation of A's entire partnership interest. The distributed inventory items have a basis to the partnership of $100 and a fair market value of $200. Asset X has an adjusted basis to the partnership of $50 and a fair market value of $400. Asset Y has an adjusted basis to the partnership and a fair market value of $100. Neither Asset X nor Asset Y consists of inventory items or unrealized receivables. Under this paragraph (c), A's basis in its partnership interest is allocated first to the inventory items in an amount equal to their adjusted basis to the partnership. A, therefore, has an adjusted basis in the inventory items of $100. The remaining basis, $550, is allocated to the distributed property first in an amount equal to the property's adjusted basis to the partnership. Thus, Asset X is allocated $50 and Asset Y is allocated $100. Asset X is then allocated $350, the amount of unrealized appreciation in Asset X. Finally, the remaining basis, $50, is allocated to Assets X and Y in proportion to their fair market values: $40 to Asset X (400/500 × $50), and $10 to Asset Y (100/500 × $50). Therefore, after the distribution, A has an adjusted basis of $440 in Asset X and $110 in Asset Y.

Example 2. B is a one-fourth partner in partnership PRS and has an adjusted basis in its partnership interest of $200. PRS distributes Asset X and Asset Y to B in liquidation of its entire partnership interest. Asset X has an adjusted basis to the partnership and fair market value of $150. Asset Y has an adjusted basis to the partnership of $150 and a fair market value of $50. Neither of the assets consists of inventory items or unrealized receivables. Under this paragraph (c), B's basis is first assigned to the distributed property to the extent of the partnership's basis in each distributed property. Thus, Asset X and Asset Y are each assigned $150. Because the aggregate adjusted basis of the distributed property, $300, exceeds the basis to be allocated, $200, a decrease of $100 in the basis of the distributed property is required. Assets X and Y have unrealized depreciation of zero and $100, respectively. Thus, the entire decrease is allocated to Asset Y. After the distribution, B has an adjusted basis of $150 in Asset X and $50 in Asset Y.

Example 3. C, a partner in partnership PRS, receives a distribution in liquidation of its entire partnership interest of $6,000 cash, inventory items having an adjusted basis to the partnership of $6,000, and real property having an adjusted basis to the partnership of $4,000. C's basis in its partnership interest is $9,000. The cash distribution reduces C's basis to $3,000, which is allocated entirely to the inventory items. The real property has a zero basis in C's hands. The partnership bases not carried over to C for the distributed properties are lost unless an election under section 754 is in effect requiring the partnership to adjust the bases of remaining partnership properties under section 734(b).

Example 4. Assume the same facts as in *Example 3* of this paragraph except C receives a distribution in liquidation of its entire partnership interest of $1,000 cash and inventory items having a basis to the partnership of $6,000. The cash distribution reduces C's basis to $8,000, which can be allocated only to the extent of $6,000 to the inventory items. The remaining $2,000 basis, not allocable to the distributed property, constitutes a capital loss to partner C under section 731(a)(2). If the election under section 754 is in effect, see section 734(b) for adjustment of the basis of undistributed partnership property.

(5) ***Effective/applicability date*** —

(i) ***In general.*** This paragraph (c) applies to distributions of property from a partnership that occur on or after December 15, 1999.

(ii) ***Exception.*** Notwithstanding paragraph (c)(5)(i) of this section, the first sentence of each of paragraphs (c)(1)(i) and (ii) of this section, and paragraph (c)(1)(iii) of this section in its entirety, apply to distributions of Stock of the Corporate Partner, as defined in § 1.337(d)-3(c)(2), that occur on or after June 12, 2015.

(d) ***Special partnership basis to transferee under section 732(d).***

(1)

(i) A transfer of a partnership interest occurs upon a sale or exchange of an interest or upon the death of a partner. Section 732(d) provides a special rule for the determination of the basis of property distributed to a transferee partner who acquired any part of his partnership interest in a transfer with respect to which the election under section 754 (relating to the optional adjustment to basis of partnership property) was not in effect.

(ii) Where an election under section 754 is in effect, see section 743(b) and §§ 1.743-1 and 1.732-2.

(iii) If a transferee partner receives a distribution of property (other than money) from the partnership within 2 years after he acquired his interest or part thereof in the partnership by a transfer with respect to which the election under section 754 was not in effect, he may elect to treat as the adjusted partnership basis of such property the adjusted basis such property would have if the adjustment provided in section 743(b) were in effect.

(iv) If an election under section 732(d) is made upon a distribution of property to a transferee partner, the amount of the adjustment with respect to the transferee partner is not diminished by any depletion or depreciation of that portion of the basis of partnership property which arises from the special basis adjustment under section 732(d), since depletion or depreciation on such portion for the period prior to distribution is allowed or allowable only if the optional adjustment under section 743(b) is in effect.

(v) If property is distributed to a transferee partner who elects under section 732(d), and if such property is not the same property which would have had a special basis adjustment, then such special basis adjustment shall apply to any like property received in the distribution, provided that the transferee, in exchange for the property distributed, has relinquished his interest in the property with respect to which he would have had a special basis adjustment. This rule applies whether the property in which the transferee has relinquished his interest is retained or disposed or by the partnership. (For a shift of transferee's basis adjustment under section 743(b) to like property, see § 1.743-1(g).)

(vi) The provisions of this paragraph (d)(1) may be illustrated by the following example:

Example. (i) Transferee partner, T, purchased a one-fourth interest in partnership PRS for $17,000. At the time T purchased the partnership interest, the election under section 754 was not in effect and the partnership inventory had a basis to the partnership of $14,000 and a fair market value of $16,000. T's purchase price reflected $500 of this difference. Thus, $4,000 of the $17,000 paid by T for the partnership interest was attributable to T's share of partnership inventory with a basis of $3,500. Within 2 years after T acquired the partnership interest, T retired from the partnership and received in liquidation of its entire partnership interest the following property:

	Assets	
	Adjusted basis to PRS	**Fair market value**
Cash	$1,500	$1,500
Inventory	3,500	4,000
Asset X	2,000	4,000
Asset Y	4,000	5,000

(ii) The fair market value of the inventory received by T was one-fourth of the fair market value of all partnership inventory and was T's share of such property. It is immaterial whether the inventory T received was on hand when T acquired the interest. In accordance with T's election under section 732(d), the amount of T's share of partnership basis that is attributable to partnership inventory is increased by $500 (one-fourth of the $2,000 difference between the fair market value of the property, $16,000, and its $14,000 basis to the partnership at the time T purchased its interest). This adjustment under section 732(d) applies only for purposes of distributions to T, and not for purposes of partnership depreciation, depletion, or gain or loss on disposition. Thus, the amount to be allocated among the properties received by T in the liquidating distribution is $15,500 ($17,000, T's basis for the partnership interest, reduced by the amount of cash received, $1,500). This amount is allocated as follows: the basis of the inventory items received is $4,000, consisting of the $3,500 common partnership basis, plus the basis adjustment of $500 which T would have had under section 743(b). The remaining basis of $11,500 ($15,500 minus $4,000) is allocated among the remaining property distributed to T by assigning to each property the adjusted basis to the partnership of such property and adjusting that basis by any required increase or decrease. Thus, the adjusted basis to T of Asset X is $5,111 ($2,000, the adjusted basis of Asset X to the partnership, plus $2,000, the amount of unrealized appreciation in Asset X, plus $1,111 ($4,000/$9,000 multiplied by $2,500)). Similarly, the adjusted basis

> of Asset Y to T is $6,389 ($4,000, the adjusted basis of Asset Y to the partnership, plus $1,000, the amount of unrealized appreciation in Asset Y, plus, $1,389 ($5,000/$9,000 multiplied by $2,500)).

(2) A transferee partner who wishes to elect under section 732(d) shall make the election with his tax return:

(i) For the year of the distribution, if the distribution includes any property subject to the allowance for depreciation, depletion, or amortization, or

(ii) For any taxable year no later than the first taxable year in which the basis of any of the distributed property is pertinent in determining his income tax, if the distribution does not include any such property subject to the allowance for depreciation, depletion or amortization.

(3) A taxpayer making an election under section 732(d) shall submit with the return in which the election is made a schedule setting forth the following:

(i) That under section 732(d) he elects to adjust the basis of property received in a distribution; and

(ii) The computation of the special basis adjustment for the property distributed and the properties to which the adjustment has been allocated. For rules of allocation, see section 755.

(4) A partner who acquired any part of his partnership interest in a transfer to which the election provided in section 754 was not in effect, is required to apply the special basis rule contained in section 732(d) to a distribution to him, whether or not made within 2 years after the transfer, if at the time of his acquisition of the transferred interest:

(i) The fair market value of all partnership property (other than money) exceeded 110 percent of its adjusted basis to the partnership.

(ii) An allocation of basis under section 732(c) upon a liquidation of his interest immediately after the transfer of the interest would have resulted in a shift of basis from property not subject to an allowance for depreciation, depletion, or amortization, to property subject to such an allowance, and

(iii) A basis adjustment under section 743(b) would change the basis to the transferee partner of the property actually distributed.

(5) ***Required statements.*** If a transferee partner notifies a partnership that it plans to make the election under section 732(d) under paragraph (d)(3) of this section, or if a partnership makes a distribution to which paragraph (d)(4) of this section applies, the partnership must provide the transferee with such information as is necessary for the transferee properly to compute the transferee's basis adjustments under section 732(d).

(e) ***Exception.*** When a partnership distributes unrealized receivables (as defined in section 751(c)) or substantially appreciated inventory items (as defined in section 751(d)) in exchange for any part of a partner's interest in other partnership property (including money), or, conversely, partnership property (including money) other than unrealized receivables or substantially appreciated inventory items in exchange for any part of a partner's interest in the partnership's unrealized receivables or substantially appreciated inventory items, the distribution will be treated as a sale or exchange of property under the provisions of section 751(b). In such case, section 732 (including subsection(d) thereof) applies in

determining the partner's basis of the property which he is treated as having sold to or exchanged with the partnership (as constituted after the distribution). The partner is considered as having received such property in a current distribution and, immediately thereafter, as having sold or exchanged it. See section 751(b) and paragraph (b) of § 1.751-1. However, section 732 does not apply in determining the basis of that part of property actually distributed to a partner which is treated as received by him in a sale or exchange under section 751(b). Consequently, the basis of such property shall be its cost to the partner.

[T.D. 6500, 25 FR 11814, Nov. 26, 1960; 25 FR 14021, Dec. 31, 1960, as amended by T.D. 8847, 64 FR 69907, Dec. 15, 1999; T.D. 9137, 69 FR 42558, July 16, 2004; T.D. 9722, 80 FR 33411, June 12, 2015; T.D. 9833, 83 FR 26592, June 8, 2018]

§ 1.732-2 Special partnership basis of distributed property.

(a) ***Adjustments under section 734(b).*** In the case of a distribution of property to a partner, the partnership bases of the distributed properties shall reflect any increases or decreases to the basis of partnership property which have been made previously under section 734(b) (relating to the optional adjustment to basis of undistributed partnership property) in connection with previous distributions.

(b) ***Adjustments under section 743(b).*** In the case of a distribution of property to a partner who acquired any part of his interest in a transfer as to which an election under section 754 was in effect, then, for the purposes of section 732 (other than subsection (d) thereof), the adjusted partnership bases of the distributed property shall take into account, in addition to any adjustments under section 734(b), the transferee's special basis adjustment for the distributed property under section 743(b). The application of this paragraph may be illustrated by the following example:

Example. Partner D acquired his interest in partnership ABD from a previous partner. Since the partnership had made an election under section 754, a special basis adjustment with respect to D is applicable to the basis of partnership property in accordance with section 743(b). One of the assets of the partnership at the time D acquired his interest was property X, which is later distributed to D in a current distribution. Property X has an adjusted basis to the partnership of $1,000 and with respect to D it has a special basis adjustment of $500. Therefore, for purposes of section 732(a)(1), the adjusted basis of such property to the partnership with respect to D immediately before its distribution is $1,500. However, if property X is distributed to partner A, a nontransferee partner, its adjusted basis to the partnership for purposes of section 732(a)(1) is only $1,000. In such case, D's $500 special basis adjustment may shift over to other property. See § 1.743-1(g).

(c) ***Adjustments to basis of distributed inventory and unrealized receivables.*** Under section 732, the basis to be allocated to distributed properties shall be allocated first to any unrealized receivables and inventory items. If the distributee partner is a transferee of a partnership interest and has a special basis adjustment for unrealized receivables or inventory items under either section 743(b) or section 732(d), then the partnership adjusted basis immediately prior to distribution of any unrealized receivables or inventory items distributed to such partner shall be determined as follows: If the distributee partner receives his entire share of the fair market value of the inventory items or unrealized receivables of the partnership, the adjusted basis of such distributed property to the partnership, for the purposes of section 732, shall take into account the entire amount of any special basis adjustment which the distributee partner may have for such assets. If the distributee partner receives less than his entire share of the fair market value of partnership inventory items or unrealized receivables, then, for purposes of section 732, the adjusted basis of such distributed property to the partnership shall take into account the same proportion of the distributee's special basis adjustment for unrealized receivables or inventory items as the value of such items distributed to him bears to his entire share of the total value of all such items of the partnership. The provisions of this paragraph may be illustrated by the following example:

Example. Partner C acquired his 40-percent interest in partnership AC from a previous partner. Since the partnership had made an election under section 754, C has a special basis adjustment to partnership property under section 743(b). C retires from the partnership when the adjusted basis of his partnership interest is $3,000. He receives from the partnership in liquidation of his entire interest, $1,000 cash, certain capital assets, depreciable property, and certain inventory items and unrealized receivables. C has a special basis adjustment of $800 with respect to partnership inventory items and of $200 with respect to unrealized receivables. The common partnership basis for the inventory items distributed to him is $500 and for the unrealized receivables is zero. If the value of inventory items and the unrealized receivables distributed to C in his 40 percent share of the total value of all partnership inventory items and unrealized receivables, then, for purposes of section 732, the adjusted basis of such property in C's hands will be $1,300 for the inventory items ($500 plus $800) and $200 for the unrealized receivables (zero plus $200). The remaining basis of $500, which constitutes the basis of the capital assets and depreciable property distributed to C, is determined as follows: $3,000 (total basis) less $1,000 cash, or $2,000 (the amount to be allocated to the basis of all distributed property), less $1,500 ($800 and $200 special basis adjustments, plus $500 common partnership basis, the amount allocated to inventory items and unrealized receivables). However, if the value of the inventory items and unrealized receivables distributed to C consisted of only 20 percent of the total fair market value of such property (i. e., only one-half of C's 40-percent share), then only one-half of C's special basis adjustment of $800 for partnership inventory items and $200 for unrealized receivables would be taken into account. In that case, the basis of the inventory items in C's hands would be $650 ($250, the common partnership basis for inventory items distributed to him, plus $400, one-half of C's special basis adjustment for inventory items). The basis of the unrealized receivables in C's hands would be $100 (zero plus $100, one-half of C's special basis adjustment for unrealized receivables).

[T.D. 6500, 25 FR 11814, Nov. 26, 1960; 25 FR 14021, Dec. 31, 1960, as amended by T.D. 8847, 64 FR 69908, Dec. 15, 1999]

§ 1.732-3 Corresponding adjustment to basis of assets of a distributed corporation controlled by a corporate partner.

(a) ***Determination of control.*** The determination of whether a corporate partner that is a member of a consolidated group has control of a distributed corporation for purposes of section 732(f) shall be made by applying the special aggregate stock ownership rules of § 1.1502-34.

(b) ***Aggregation of basis within consolidated group.*** With respect to distributed stock of a corporation, if the following two conditions are met, then section 732(f) shall apply only to the extent that the partnership's adjusted basis in the distributed stock immediately before the distribution exceeds the aggregate basis of the distributed stock of the corporation in the hands of corporate partners that are members of the same consolidated group (as defined in § 1.1502-1(h)) immediately after the distribution:

(1) Two or more of the corporate partners receive a distribution of stock in another corporation; and

(2) The corporation, the stock of which was distributed by the partnership, is or becomes a member of the distributee partners' consolidated group following the distribution.

(c) ***Application of section 732(f) to Gain Elimination Transactions*** —

(1) ***General rule.*** In the event of a Gain Elimination Transaction, section 732(f) shall apply as though the Corporate Partner acquired control (as defined in section 732(f)(5)) of the Distributed Corporation immediately before the Gain Elimination Transaction.

(2) ***Definitions.*** The following definitions apply for purposes of this paragraph (c):

(i) ***Corporate Partner.*** The term *Corporate Partner* means a person that is classified as a corporation for federal income tax purposes and that holds or acquires an interest in a partnership.

(ii) ***Stock.*** The term *Stock* includes other equity interests, including options, warrants, and similar interests.

(iii) ***Distributed Stock.*** The term *Distributed Stock* means Stock distributed by a partnership to a Corporate Partner, or Stock the basis of which is determined by reference to the basis of such Stock. *Distributed Stock* also includes Stock owned directly or indirectly by a Distributed Corporation if the basis of such Stock has been reduced pursuant to section 732(f).

(iv) ***Distributed Corporation.*** The term *Distributed Corporation* means the issuer of Distributed Stock (or, in the case of an option, the issuer of the Stock into which the option is exercisable).

(v) ***Gain Elimination Transaction.*** The term *Gain Elimination Transaction* means a transaction in which Distributed Stock is disposed of and less than all of the gain is recognized unless—

(A) The transferor of the Distributed Stock receives in exchange Stock or a partnership interest that is exchanged basis property (as defined in section 7701(a)(44)) with respect to the Distributed Stock; or

(B) A transferee corporation holds the Distributed Stock as transferred basis property (as defined in section 7701(a)(43)) with respect to the transferor corporation's gain. A Gain Elimination Transaction includes (without limitation) a reorganization under section 368(a) in which the Corporate Partner and the Distributed Corporation combine, and a distribution of the Distributed Stock by the Corporate Partner to which section 355(c)(1) or 361(c)(1) applies.

(d) ***Tiered partnerships.*** The rules of this section shall apply to tiered partnerships in a manner that is consistent with the purposes of section 732(f).

(e) ***Applicability date.*** This section applies to transactions occurring on or after June 8, 2018.

[T.D. 9833, 83 FR 26592, June 8, 2018]

§ 1.733-1 Basis of distributee partner's interest.

In the case of a distribution by a partnership to a partner other than in liquidation of a partner's entire interest, the adjusted basis to such partner of his interest in the partnership shall be reduced (but not below zero) by the amount of any money distributed to such partner and by the amount of the basis to him of distributed property other than money as determined under section 732 and §§ 1.732-1 and 1.732-2.

§ 1.734-1 Optional adjustment to basis of undistributed partnership property.

(a) ***General rule.*** A partnership shall not adjust the basis of partnership property as the result of a distribution of property to a partner, unless the election provided in section 754 (relating to optional adjustment to basis of partnership property) is in effect.

(b) ***Method of adjustment*** —

(1) ***Increase in basis.*** Where an election under section 754 is in effect and a distribution of partnership property is made, whether or not in liquidation of the partner's entire interest in the partnership, the adjusted basis of the remaining partnership assets shall be increased by:

(i) The amount of any gain recognized under section 731(a)(1) to the distributee partner, or

(ii) The excess of the adjusted basis to the partnership immediately before the distribution of any property distributed (including adjustments under section 743(b) or section 732(d) when applied) over the basis under section 732 (including such special basis adjustments) of such property to the distributee partner.

See § 1.460-4(k)(2)(iv)(D) for a rule determining the partnership's basis in a long-term contract accounted for under a long-term contract method of accounting. The provisions of this paragraph (b)(1) are illustrated by the following examples:

Example 1. Partner A has a basis of $10,000 for his one-third interest in partnership ABC. The partnership has no liabilities and has assets consisting of cash of $11,000 and property with a partnership basis of $19,000 and a value of $22,000. A receives $11,000 in cash in liquidation of his entire interest in the partnership. He has a gain of $1,000 under section 731(a)(1). If the election under section 754 is in effect, the partnership basis for the property becomes $20,000 ($19,000 plus $1,000).

Example 2. Partner D has a basis of $10,000 for his one-third interest in partnership DEF. The partnership balance sheet before the distribution shows the following:

ASSETS

	Adjusted basis	Value
Cash	$4,000	$4,000
Property X	11,000	11,000
Property Y	15,000	18,000
Total	30,000	33,000

LIABILITIES AND CAPITAL

	Adjusted basis	Value
Liabilities	$0	$0
Capital:		
D	10,000	11,000
E	10,000	11,000

	Adjusted basis	Value
F	10,000	11,000
Total	30,000	33,000

In liquidation of his entire interest in the partnership, D received property X with a partnership basis of $11,000. D's basis for property X is $10,000 under section 732(b). Where the election under section 754 is in effect, the excess of $1,000 (the partnership basis before the distribution less D's basis for property X after distribution) is added to the basis of property Y. The basis of property Y becomes $16,000 ($15,000 plus $1,000). If the distribution is made to a transferee partner who elects under section 732(d), see § 1.734-2.

(2) ***Decrease in basis.*** Where the election provided in section 754 is in effect and a distribution is made in liquidation of a partner's entire interest, the partnership shall decrease the adjusted basis of the remaining partnership property by:

(i) The amount of loss, if any, recognized under section 731(a)(2) to the distributee partner, or

(ii) The excess of the basis of the distributed property to the distributee, as determined under section 732 (including adjustments under section 743(b) or section 732(d) when applied) over the adjusted basis of such property to the partnership (including such special basis adjustments) immediately before such distribution.

The provisions of this subparagraph may be illustrated by the following examples:

Example 1. Partner G has a basis of $11,000 for his one-third interest in partnership GHI. Partnership assets consist of cash of $10,000 and property with a basis of $23,000 and a value of $20,000. There are no partnership liabilities. In liquidation of his entire interest in the partnership, G receives $10,000 in cash. He has a loss of $1,000 under section 731(a)(2). If the election under section 754 is in effect, the partnership basis for the property becomes $22,000 ($23,000 less $1,000).

Example 2. Partner J has a basis of $11,000 for his one-third interest in partnership JKL. The partnership balance sheet before the distribution shows the following:

ASSETS

	Adjusted basis	Value
Cash	$5,000	$5,000
Property X	10,000	10,000
Property Y	18,000	15,000

	Adjusted basis	Value
Total	33,000	30,000

LIABILITIES AND CAPITAL

	Adjusted basis	Value
Liabilities	$0	$0
Capital:		
J	11,000	10,000
K	11,000	10,000
L	11,000	10,000
Total	33,000	30,000

In liquidation of his entire interest in the partnership, J receives property X with a partnership basis of $10,000. J's basis for property X under section 732(b) is $11,000. Where the election under section 754 is in effect, the excess of $1,000 ($11,000 basis of property X to J, the distributee, less its $10,000 adjusted basis to the partnership immediately before the distribution) decreases the basis of property Y in the partnership. Thus, the basis of property Y becomes $17,000 ($18,000 less $1,000). If the distribution is made to a transferee partner who elects under section 732(d), see § 1.734-2.

(c) ***Allocation of basis.*** For allocation among the partnership properties of basis adjustments under section 734(b) and paragraph (b) of this section, see section 755 and § 1.755-1.

(d) ***Returns.*** A partnership which must adjust the bases of partnership properties under section 734 shall attach a statement to the partnership return for the year of the distribution setting forth the computation of the adjustment and the partnership properties to which the adjustment has been allocated.

(e) ***Recovery of adjustments to basis of partnership property*** —

(1) ***Increases in basis.*** For purposes of section 168, if the basis of a partnership's recovery property is increased as a result of the distribution of property to a partner, then the increased portion of the basis must be taken into account as if it were newly-purchased recovery property placed in service when the distribution occurs. Consequently, any applicable recovery period and method may be used to determine the recovery allowance with respect to the increased portion of the basis. However, no change is made for purposes of determining the recovery allowance under section 168 for the portion of the basis for which there is no increase.

(2) ***Decreases in basis.*** For purposes of section 168, if the basis of a partnership's recovery property is decreased as a result of the distribution of property to a partner, then the decrease in basis must be accounted for over the remaining recovery period of the property beginning with the recovery period in which the basis is decreased.

(3) ***Effective date.*** This paragraph (e) applies to distributions of property from a partnership that occur on or after December 15, 1999.

[T.D. 6500, 25 FR 11814, Nov. 26, 1960; 25 FR 14021, Dec. 31, 1960, as amended by T.D. 8847, 64 FR 69908, Dec. 15, 1999; T.D. 9137, 69 FR 42559, July 16, 2004]

§ 1.734-2 Adjustment after distribution to transferee partner.

(a) In the case of a distribution of property by the partnership to a partner who has obtained all or part of his partnership interest by transfer, the adjustments to basis provided in section 743(b) and section 732(d) shall be taken into account in applying the rules under section 734(b). For determining the adjusted basis of distributed property to the partnership immediately before the distribution where there has been a prior transfer of a partnership interest with respect to which the election provided in section 754 or section 732(d) is in effect, see §§ 1.732-1 and 1.732-2.

(b)

(1) If a transferee partner, in liquidation of his entire partnership interest, receives a distribution of property (including money) with respect to which he has no special basis adjustment, in exchange for his interest in property with respect to which he has a special basis adjustment, and does not utilize his entire special basis adjustment in determining the basis of the distributed property to him under section 732, the unused special basis adjustment of the distributee shall be applied as an adjustment to the partnership basis of the property retained by the partnership and as to which the distributee did not use his special basis adjustment. The provisions of this subparagraph may be illustrated by the following example:

Example. Upon the death of his father, partner S acquires by inheritance a half-interest in partnership ACS. Partners A and C each have a one-quarter interest. The assets of the partnership consist of $10,000 cash and land used in farming worth $10,000 with a basis of $1,000 to the partnership. Since the partnership had made the election under section 754 at the time of transfer, partner S had a special basis adjustment of $4,500 under section 743(b) with respect to his undivided half-interest in the real estate. The basis of S's partnership interest, in accordance with section 742, is $10,000. S retires from the partnership and receives $10,000 in cash in exchange for his entire interest. Since S has received no part of the real estate, his special basis adjustment of $4,500 will be allocated to the real estate, the remaining partnership property, and will increase its basis to the partnership to $5,500.

(2) The provisions of this paragraph do not apply to the extent that certain distributions are treated as sales or exchanges under section 751(b) (relating to unrealized receivables and substantially appreciated inventory items). See section 751(b) and paragraph (b) of § 1.751-1.

§ 1.735-1 Character of gain or loss on disposition of distributed property.

(a) ***Sale or exchange of distributed property*** —

(1) ***Unrealized receivables.*** Any gain realized or loss sustained by a partner on a sale or exchange or other disposition of unrealized receivables (as defined in paragraph (c)(1) of § 1.751-1) received by him in a distribution from a partnership shall be considered gain or loss from the sale or exchange of property other than a capital asset.

(2) ***Inventory items.*** Any gain realized or loss sustained by a partner on a sale or exchange of inventory items (as defined in section 751(d)(2)) received in a distribution from a partnership shall be considered gain or loss from the sale or exchange of property other than a capital asset if such inventory items are sold or exchanged within 5 years from the date of the distribution by the partnership. The character of any gain or loss from a sale or exchange by the distributee partner of such inventory items after 5 years from the date of distribution shall be determined as of the date of such sale or exchange by reference to the character of the assets in his hands at that date (inventory items, capital assets, property used in a trade or business, etc.).

(b) ***Holding period for distributed property.*** A partner's holding period for property distributed to him by a partnership shall include the period such property was held by the partnership. The provisions of this paragraph do not apply for the purpose of determining the 5-year period described in section 735(a)(2) and paragraph (a)(2) of this section. If the property has been contributed to the partnership by a partner, then the period that the property was held by such partner shall also be included. See section 1223(2). For a partnership's holding period for contributed property, see § 1.723-1.

(c) ***Effective date.*** Section 735(a) applies to any property distributed by a partnership to a partner after March 9, 1954. See section 771(b)(2) and paragraph (b)(2) of § 1.771-1. However, see section 771(c).

[T.D. 6500, 25 FR 11814, Nov. 26, 1960, as amended by T.D. 6832, 30 FR 8574, July 7, 1965]

§ 1.736-1 Payments to a retiring partner or a deceased partner's successor in interest.

(a) ***Payments considered as distributive share or guaranteed payment.***

(1)

(i) Section 736 and this section apply only to payments made to a retiring partner or to a deceased partner's successor in interest in liquidation of such partner's entire interest in the partnership. See section 761(d). Section 736 and this section do not apply if the estate or other successor in interest of a deceased partner continues as a partner in its own right under local law. Section 736 and this section apply only to payments made by the partnership and not to transactions between the partners. Thus, a sale by partner A to partner B of his entire one-fourth interest in partnership ABCD would not come within the scope of section 736.

(ii) A partner retires when he ceases to be a partner under local law. However, for the purposes of subchapter K, chapter 1 of the Code, a retired partner or a deceased partner's successor will be treated as a partner until his interest in the partnership has been completely liquidated.

(2) When payments (including assumption of liabilities treated as a distribution of money under section 752) are made to a withdrawing partner, that is, a retiring partner or the estate or other successor in interest of a deceased partner, the amounts paid may represent several items. In part, they may represent the fair market value at the time of his death or retirement of the withdrawing partner's interest in all the assets of the partnership (including inventory) unreduced by partnership liabilities. Also, part of such payments may be attributable to his interest in unrealized receivables and part to

an arrangement among the partners in the nature of mutual insurance. When a partnership makes such payments, whether or not related to partnership income, to retire the withdrawing partner's entire interest in the partnership, the payments must be allocated between

(i) payments for the value of his interest in assets, except unrealized receivables and, under some circumstances, good will (section 736(b)), and

(ii) other payments (section 736(a)). The amounts paid for his interest in assets are treated in the same manner as a distribution in complete liquidation under sections 731, 732, and, where applicable, 751. See paragraph (b)(4)(ii) of § 1.751-1. The remaining partners are allowed no deduction for these payments since they represent either a distribution or a purchase of the withdrawing partner's capital interest by the partnership (composed of the remaining partners).

(3) Under section 736(a), the portion of the payments made to a withdrawing partner for his share of unrealized receivables, good will (in the absence of an agreement to the contrary), or otherwise not in exchange for his interest in assets under the rules contained in paragraph (b) of this section will be considered either:

(i) A distributive share of partnership income, if the amount of payment is determined with regard to income of the partnership; or

(ii) A guaranteed payment under section 707(c), if the amount of the payment is determined without regard to income of the partnership.

(4) Payments, to the extent considered as a distributive share of partnership income under section 736(a)(1), are taken into account under section 702 in the income of the withdrawing partner and thus reduce the amount of the distributive shares of the remaining partners. Payments, to the extent considered as guaranteed payments under section 736(a)(2), are deductible by the partnership under section 162(a) and are taxable as ordinary income to the recipient under section 61(a). See section 707(c).

(5) The amount of any payments under section 736(a) shall be included in the income of the recipient for his taxable year with or within which ends the partnership taxable year for which the payment is a distributive share, or in which the partnership is entitled to deduct such amount as a guaranteed payment. On the other hand, payments under section 736(b) shall be taken into account by the recipient for his taxable year in which such payments are made. See paragraph (b)(4) of this section.

(6) A retiring partner or a deceased partner's successor in interest receiving payments under section 736 is regarded as a partner until the entire interest of the retiring or deceased partner is liquidated. Therefore, if one of the members of a 2-man partnership retires under a plan whereby he is to receive payments under section 736, the partnership will not be considered terminated, nor will the partnership year close with respect to either partner, until the retiring partner's entire interest is liquidated, since the retiring partner continues to hold a partnership interest in the partnership until that time. Similarly, if a partner in a 2-man partnership dies, and his estate or other successor in interest receives payments under section 736, the partnership shall not be considered to have terminated upon the death of the partner but shall terminate as to both partners only when the entire interest of the decedent is liquidated. See section 708(b).

(b) *Payments for interest in partnership.*

(1) Payments made in liquidation of the entire interest of a retiring partner or deceased partner shall, to the extent made in exchange for such partner's interest in partnership property (except for unrealized receivables and good will as provided in subparagraphs (2) and (3) of this paragraph), be considered as a distribution by the partnership (and not as a distributive share or guaranteed payment under section 736(a)). Generally, the valuation placed by the partners upon a partner's interest in partnership property in an arm's length agreement will be regarded as correct. If such valuation reflects only the partner's net interest in the property (*i.e.*, total assets less liabilities), it must be adjusted so that both the value of the partner's interest in property and the basis for his interest take into account the partner's share of partnership liabilities. Gain or loss with respect to distributions under section 736(b) and this paragraph will be recognized to the distributee to the extent provided in section 731 and, where applicable, section 751.

(2) Payments made to a retiring partner or to the successor in interest of a deceased partner for his interest in unrealized receivables of the partnership in excess of their partnership basis, including any special basis adjustment for them to which such partner is entitled, shall not be considered as made in exchange for such partner's interest in partnership property. Such payments shall be treated as payments under section 736(a) and paragraph (a) of this section. For definition of unrealized receivables, see section 751(c).

(3) For the purposes of section 736(b) and this paragraph, payments made to a retiring partner or to a successor in interest of a deceased partner in exchange for the interest of such partner in partnership property shall not include any amount paid for the partner's share of good will of the partnership in excess of its partnership basis, including any special basis adjustments for it to which such partner is entitled, except to the extent that the partnership agreement provides for a reasonable payment with respect to such good will. Such payments shall be considered as payments under section 736(a). To the extent that the partnership agreement provides for a reasonable payment with respect to good will, such payments shall be treated under section 736(b) and this paragraph. Generally, the valuation placed upon good will by an arm's length agreement of the partners, whether specific in amount or determined by a formula, shall be regarded as correct.

(4) Payments made to a retiring partner or to a successor in interest of a deceased partner for his interest in inventory shall be considered as made in exchange for such partner's interest in partnership property for the purposes of section 736(b) and this paragraph. However, payments for an interest in substantially appreciated inventory items, as defined in section 751(d), are subject to the rules provided in section 751(b) and paragraph (b) of § 1.751-1. The partnership basis in inventory items as to a deceased partner's successor in interest does not change because of the death of the partner unless the partnership has elected the optional basis adjustment under section 754. But see paragraph (b)(3)(iii) of § 1.751-1.

(5) Where payments made under section 736 are received during the taxable year, the recipient must segregate that portion of each such payment which is determined to be in exchange for the partner's interest in partnership property and treated as a distribution under section 736(b) from that portion treated as a distributive share or guaranteed payment under section 736(a). Such allocation shall be made as follows:

(i) If a fixed amount (whether or not supplemented by any additional amounts) is to be received over a fixed number of years, the portion of each payment to be treated as a distribution under section 736(b) for the taxable year shall bear the same ratio to the total fixed agreed payments for such year (as distinguished from the amount actually received) as the total fixed agreed payments under section 736(b) bear to the total fixed agreed payments under section 736 (a)

and (b). The balance, if any, of such amount received in the same taxable year shall be treated as a distributive share or a guaranteed payment under section 736(a) (1) or (2). However, if the total amount received in any one year is less than the amount considered as a distribution under section 736(b) for that year, then any unapplied portion shall be added to the portion of the payments for the following year or years which are to be treated as a distribution under section 736(b). For example, retiring partner W who is entitled to an annual payment of $6,000 for 10 years for his interest in partnership property, receives only $3,500 in 1955. In 1956, he receives $10,000. Of this amount, $8,500 ($6,000 plus $2,500 from 1955) is treated as a distribution under section 736 (b) for 1956; $1,500, as a payment under section 736(a).

(ii) If the retiring partner or deceased partner's successor in interest receives payments which are not fixed in amount, such payments shall first be treated as payments in exchange for his interest in partnership property under section 736(b) to the extent of the value of that interest and, thereafter, as payments under section 736(a).

(iii) In lieu of the rules provided in subdivisions (i) and (ii) of this subparagraph, the allocation of each annual payment between section 736 (a) and (b) may be made in any manner to which all the remaining partners and the withdrawing partner or his successor in interest agree, provided that the total amount allocated to property under section 736(b) does not exceed the fair market value of such property at the date of death or retirement.

(6) Except to the extent section 751(b) applies, the amount of any gain or loss with respect to payments under section 736(b) for a retiring or deceased partner's interest in property for each year of payment shall be determined under section 731. However, where the total of section 736(b) payments is a fixed sum, a retiring partner or a deceased partner's successor in interest may elect (in his tax return for the first taxable year for which he receives such payments), to report and to measure the amount of any gain or loss by the difference between:

(i) The amount treated as a distribution under section 736(b) in that year, and

(ii) The portion of the adjusted basis of the partner for his partnership interest attributable to such distribution (*i.e.*, the amount which bears the same proportion to the partner's total adjusted basis for his partnership interest as the amount distributed under section 736(b) in that year bears to the total amount to be distributed under section 736(b)).

A recipient who elects under this subparagraph shall attach a statement to his tax return for the first taxable year for which he receives such payments, indicating his election and showing the computation of the gain included in gross income.

(7) The provisions of this paragraph may be illustrated by the following examples:

> *Example 1.* Partnership ABC is a personal service partnership and its balance sheet is as

follows:

ASSETS

	Adjusted basis per books	Market value
Cash	$13,000	$13,000
Unrealized receivables	0	30,000
Capital and section 1231 assets	20,000	23,000
Total	33,000	66,000

LIABILITIES AND CAPITAL

	Per books	Value
Liabilities	$3,000	$3,000
Capital:		
A	10,000	21,000
B	10,000	21,000
C	10,000	21,000
Total	33,000	66,000

Partner A retires from the partnership in accordance with an agreement whereby his share of liabilities ($1,000) is assumed. In addition he is to receive $9,000 in the year of retirement plus $10,000 in each of the two succeeding years. Thus, the total that A receives for his partnership interest is $30,000 ($29,000 in cash and $1,000 in liabilities assumed). Under the agreement terminating A's interest, the value of A's interest in section 736(b) partnership property is $12,000 (one-third of $36,000, the sum of $13,000 cash and $23,000, the fair market value of capital and section 1231 assets). A's share in unrealized receivables is not included in his interest in partnership property described in section 736(b). Since the basis of A's interest is $11,000 ($10,000 plus $1,000, his share of partnership liabilities), he will realize a capital gain of $1,000 ($12,000 minus $11,000) from the disposition of his interest in partnership property. The remaining $18,000 ($30,000 minus $12,000) will constitute payments under section 736(a)(2) which are taxable to A as guaranteed payments under section 707(c). The payment for the first year is $10,000, consisting of $9,000 in cash, plus $1,000 in liability assumed (section 752(b)). Thus, unless the partners agree otherwise under subparagraph (5)(iii) of this paragraph, each annual payment of $10,000 will be allocated as

follows: $6,000 (18,000/30,000 of $10,000) is a section 736(a)(2) payment and $4,000 (12,000/30,000 of $10,000) is a payment for an interest in section 736(b) partnership property. (The partnership may deduct the $6,000 guaranteed payment made to A in each of the 3 years.) The gain on the payments for partnership property will be determined under section 731, as provided in subparagraph (6) of this paragraph. A will treat only $4,000 of each payment as a distribution in a series in liquidation of his entire interest and, under section 731, will have a capital gain of $1,000 when the last payment is made. However, if A so elects, as provided in subparagraph (6) of this paragraph, he may treat such gain as follows: Of each $4,000 payment attributable to A's interest in partnership property, $333 is capital gain (one-third of the total capital gain of $1,000), and $3,667 is a return of capital.

Example 2. Assume the same facts as in example 1 of this subparagraph except that the agreement between the partners provides for payments to A for 3 years of a percentage of annual income instead of a fixed amount. Unless the partners agree otherwise under subparagraph (5)(iii) of this paragraph, all payments received by A up to $12,000 shall be treated under section 736(b) as payments for A's interest in partnership property. His gain of $1,000 will be taxed only after he has received his full basis under section 731. Since the payments are not fixed in amount, the election provided in subparagraph (6) of this paragraph is not available. Any payments in excess of $12,000 shall be treated as a distributive share of partnership income to A under section 736(a)(1).

Example 3. Assume the same facts as in example 1 of this subparagraph except that the partnership agreement provides that the payment for A's interest in partnership property shall include payment for his interest in the good will of the partnership. At the time of A's retirement, the partners determine the value of partnership good will to be $9,000. The value of A's interest in partnership property described in section 736(b) is thus $15,000 (one-third of $45,000, the sum of $13,000 cash, plus $23,000, the value of capital and section 1231 assets, plus $9,000 good will). From the disposition of his interest in partnership property, A will realize a capital gain of $4,000 ($15,000, minus $11,000) the basis of his interest. The remaining $15,000 ($30,000 minus $15,000) will constitute payments under section 736(a)(2) which are taxable to A as guaranteed payments under section 707(c).

Example 4. Assume the same facts as in example 1 of this subparagraph except that the capital and section 1231 assets consist of an item of section 1245 property (as defined in section 1245(a)(3)). Assume further that under paragraph (c)(4) of § 1.751-1 the section 1245 property is an unrealized receivable to the extent of $2,000. Therefore, the value of A's interest in section 736(b) partnership property is only $11,333 (one-third of $34,000, the sum of $13,000 cash and $21,000, the fair market value of section 1245 property to the extent not an unrealized receivable). From the disposition of his interest in partnership property, A will realize a capital gain of $333 ($11,333 minus $11,000, the basis of his interest). The remaining $18,667 ($30,000 minus $11,333) will constitute payments under section 736(a)(2) which are taxable to A as guaranteed payments under section 707(c).

(c) ***Cross reference.*** See section 753 for treatment of payments under section 736(a) as income in respect of a decedent under section 691.

[T.D. 6500, 25 FR 11814, Nov. 26, 1960, as amended by T.D. 6832, 30 FR 8574, July 7, 1965]

§ 1.737-1 Recognition of precontribution gain.

(a) *Determination of gain* —

(1) ***In general.*** A partner that receives a distribution of property (other than money) must recognize gain under section 737 and this section in an amount equal to the lesser of the excess distribution (as defined in paragraph (b) of this section) or the partner's net precontribution gain (as defined in paragraph (c) of this section). Gain recognized under section 737 and this section is in addition to any gain recognized under section 731.

(2) ***Transactions to which section 737 applies.*** Section 737 and this section apply only to the extent that a distribution by a partnership is a distribution to a partner acting in the capacity of a partner within the meaning of section 731, except that section 737 and this section do not apply to the extent that section 751(b) applies to the distribution.

(b) *Excess distribution* —

(1) ***Definition.*** The excess distribution is the amount (if any) by which the fair market value of the distributed property (other than money) exceeds the distributee partner's adjusted tax basis in the partner's partnership interest.

(2) ***Fair market value of property.*** The fair market value of the distributed property is the price at which the property would change hands between a willing buyer and a willing seller at the time of the distribution, neither being under any compulsion to buy or sell and both having reasonable knowledge of the relevant facts. The fair market value that a partnership assigns to distributed property will be regarded as correct, provided that the value is reasonably agreed to among the partners in an arm's-length negotiation and the partners have sufficiently adverse interests.

(3) *Distributee partner's adjusted tax basis* —

(i) ***General rule.*** In determining the amount of the excess distribution, the distributee partner's adjusted tax basis in the partnership interest includes any basis adjustment resulting from the distribution that is subject to section 737 (for example, adjustments required under section 752) and from any other distribution or transaction that is part of the same distribution, except for—

(A) The increase required under section 737(c)(1) for the gain recognized by the partner under section 737; and

(B) The decrease required under section 733(2) for any property distributed to the partner other than property previously contributed to the partnership by the distributee partner. See § 1.704-4(e)(1) for a rule in the context of section 704(c)(1)(B). See also § 1.737-3(b)(2) for a special rule for determining a partner's adjusted tax basis in distributed property previously contributed by the partner to the partnership.

(ii) ***Advances or drawings.*** The distributee partner's adjusted tax basis in the partnership interest is determined as of the last day of the partnership's taxable year if the distribution to which section 737 applies is properly characterized as an advance or drawing against the partner's distributive share of income. See § 1.731-1(a)(1)(ii).

(c) *Net precontribution gain* —

(1) ***General rule.*** The distributee partner's net precontribution gain is the net gain (if any) that would have been recognized by the distributee partner under section 704(c)(1)(B) and § 1.704-4 if all property that had been contributed to the partnership by the distributee partner within five years of the distribution and is held by the partnership immediately before the distribution had been distributed by the partnership to another partner other than a partner who owns, directly or indirectly, more than 50 percent of the capital or profits interest in the partnership. See § 1.704-4 for provisions determining a contributing partner's gain or loss under section 704(c)(1)(B) on an actual distribution of contributed section 704(c) property to another partner.

(2) ***Special rules*** —

(i) ***Property contributed on or before October 3, 1989.*** Property contributed to the partnership on or before October 3, 1989, is not taken into account in determining a partner's net precontribution gain. See § 1.704-4(c)(1) for a similar rule in the context of section 704(c)(1)(B).

(ii) ***Section 734(b)(1)(A) adjustments.*** For distributions to a distributee partner of money by a partnership with a section 754 election in effect that are part of the same distribution as the distribution of property subject to section 737, for purposes of paragraph (a) and (c)(1) of this section the distributee partner's net precontribution gain is reduced by the basis adjustments (if any) made to section 704(c) property contributed by the distributee partner under section 734(b)(1)(A). See § 1.737-3(c)(4) for rules regarding basis adjustments for partnerships with a section 754 election in effect.

(iii) ***Transfers of a partnership interest.*** The transferee of all or a portion of a contributing partner's partnership interest succeeds to the transferor's net precontribution gain, if any, in an amount proportionate to the interest transferred. See § 1.704-3(a)(7) and § 1.704-4(d)(2) for similar provisions in the context of section 704(c)(1)(A) and section 704(c)(1)(B).

(iv) ***Section 704(c)(1)(B) gain recognized in related distribution.*** A distributee partner's net precontribution gain is determined after taking into account any gain or loss recognized by the partner under section 704(c)(1)(B) and § 1.704-4 (or that would have been recognized by the partner except for the like-kind exception in section 704(c)(2) and § 1.704-4(d)(3)) on an actual distribution to another partner of section 704(c) property contributed by the distributee partner that is part of the same distribution as the distribution to the distributee partner.

(v) ***Section 704(c)(2) disregarded.*** A distributee partner's net precontribution gain is determined without regard to the provisions of section 704(c)(2) and § 1.704-4(d)(3) in situations in which the property contributed by the distributee partner is not actually distributed to another partner in a distribution related to the section 737 distribution.

(d) ***Character of gain.*** The character of the gain recognized by the distributee partner under section 737 and this section is determined by, and is proportionate to, the character of the partner's net precontribution gain. For this purpose, all gains and losses on section 704(c) property taken into account in determining the partner's net precontribution gain are netted according to their character. Character is determined at the partnership level for this purpose, and any character with a net negative amount is disregarded. The character of the partner's gain under section 737 is the same as, and in proportion to, any character with a net positive amount. Character for this purpose is determined as if the section 704(c) property had been sold by the partnership to an unrelated third party at the time of the distribution and includes any item that would have been taken into account separately by the contributing partner under section 702(a) and § 1.702-1(a).

(e) ***Examples.*** The following examples illustrate the provisions of this section. Unless otherwise specified, partnership income equals partnership expenses (other than depreciation deductions for contributed property) for each year of the partnership, the fair market value of partnership property does not change, all distributions by the partnership are subject to section 737, and all partners are unrelated.

Example 1. Calculation of excess distribution and net precontribution gain. (i) On January 1, 1995, A, B, and C form partnership ABC as equal partners. A contributes Property A, depreciable real property with a fair market value of $30,000 and an adjusted tax basis of $20,000. B contributes Property B, nondepreciable real property with a fair market value and adjusted tax basis of $30,000. C contributes $30,000 cash.
(ii) Property A has 10 years remaining on its cost recovery schedule and is depreciated using the straight-line method. The partnership uses the traditional method for allocating items under section 704(c) described in § 1.704-3(b)(1) for Property A. The partnership has book depreciation of $3,000 per year (10 percent of the $30,000 book basis in Property A) and each partner is allocated $1,000 of book depreciation per year (one-third of the total annual book depreciation of $3,000). The partnership also has tax depreciation of $2,000 per year (10 percent of the $20,000 adjusted tax basis in Property A). This $2,000 tax depreciation is allocated equally between B and C, the noncontributing partners with respect to Property A.

(iii) At the end of 1997, the book value of Property A is $21,000 ($30,000 initial book value less $9,000 aggregate book depreciation) and its adjusted tax basis is $14,000 ($20,000 initial tax basis less $6,000 aggregate tax depreciation).

(iv) On December 31, 1997, Property B is distributed to A in complete liquidation of A's partnership interest. The adjusted tax basis of A's partnership interest at that time is $20,000. The amount of the excess distribution is $10,000, the difference between the fair market value of the distributed Property B ($30,000) and A's adjusted tax basis in A's partnership interest ($20,000). A's net precontribution gain is $7,000, the difference between the book value of Property A ($21,000) and its adjusted tax basis at the time of the distribution ($14,000). A recognizes gain of $7,000 on the distribution, the lesser of the excess distribution and the net precontribution gain.

Example 2. Determination of distributee partner's basis. (i) On January 1, 1995, A, B, and C form general partnership ABC as equal partners. A contributes Property A, nondepreciable real property with a fair market value of $10,000 and an adjusted tax basis of $4,000. B and C each contributes $10,000 cash.
(ii) The partnership purchases Property B, nondepreciable real property with a fair market value of $9,000, subject to a $9,000 nonrecourse liability. This nonrecourse liability is allocated equally among the partners under section 752, increasing A's adjusted tax basis in A's partnership interest from $4,000 to $7,000.

(iii) On December 31, 1998, A receives $2,000 cash and Property B, subject to the $9,000 liability, in a current distribution.

(iv) In determining the amount of the excess distribution, the adjusted tax basis of A's partnership interest is adjusted to take into account the distribution of money and the shift in liabilities. A's adjusted tax basis is therefore increased to $11,000 for this purpose ($7,000 initial adjusted tax basis, less $2,000 distribution of money, less $3,000 (decrease in A's share of the $9,000 partnership liability), plus $9,000 (increase in A's individual liabilities)). As a result of this basis adjustment, the adjusted tax basis of A's partnership interest ($11,000) is greater than the fair market value of the distributed property ($9,000) and therefore, there is no excess distribution. A recognizes no gain under section 737.

Example 3. Net precontribution gain reduced for gain recognized under section 704(c)(1)(B). (i) On January 1, 1995, A, B, and C form partnership ABC as equal partners. A contributes Properties A1 and A2, nondepreciable real properties located in the United States each with a fair market value of $10,000 and an adjusted tax basis of $6,000. B contributes Property B, nondepreciable real property located outside the United States, with a fair market value and adjusted tax basis of $20,000. C contributes $20,000 cash.
(ii) On December 31, 1998, Property B is distributed to A in complete liquidation of A's interest and, as part of the same distribution, Property A1 is distributed to B in a current distribution.

(iii) A's net precontribution gain before the distribution is $8,000 ($20,000 fair market value of Properties A1 and A2 less $12,000 adjusted tax basis of such properties). A recognizes $4,000 of gain under section 704(c)(1)(B) and § 1.704-4 on the distribution of Property A1 to B ($10,000 fair market value of Property A1 less $6,000 adjusted tax basis of Property A1). This gain is taken into account in determining A's excess distribution and net precontribution gain. As a result, A's net precontribution gain is reduced from $8,000 to $4,000, and the adjusted tax basis in A's partnership interest is increased by $4,000 to $16,000.

(iv) A recognizes gain of $4,000 on the receipt of Property B under section 737, an amount equal to the lesser of the excess distribution of $4,000 ($20,000 fair market value of Property B less $16,000 adjusted tax basis of A's interest in the partnership) and A's remaining net precontribution gain of $4,000.

Example 4. Character of gain. (i) On January 1, 1995, A, B, and C form partnership ABC as equal partners. A contributes the following nondepreciable property to the partnership:

	Fair market value	Adjusted tax basis
Property A1	$30,000	$20,000
Property A2	30,000	38,000
Property A3	10,000	9,000

(ii) The character of gain or loss on Property A1 and Property A2 is long-term, U.S.-source capital gain or loss. The character of gain on Property A3 is long-term, foreign-source capital gain. B contributes Property B, nondepreciable real property with a fair market value and adjusted tax basis of $70,000. C contributes

$70,000 cash.
(iii) On December 31, 1998, Property B is distributed to A in complete liquidation of A's interest in the partnership. A recognizes $3,000 of gain under section 737, an amount equal to the excess distribution of $3,000 ($70,000 fair market value of Property B less $67,000 adjusted tax basis in A's partnership interest) and A's net precontribution gain of $3,000 ($70,000 aggregate fair market value of properties contributed by A less $67,000 aggregate adjusted tax basis of such properties).

(iv) In determining the character of A's gain, all gains and losses on property taken into account in determining A's net precontribution gain are netted according to their character and allocated to A's recognized gain under section 737 based on the relative proportions of the net positive amounts. U.S.-source and foreign-source gains must be netted separately because A would have been required to take such gains into account separately under section 702. As a result, A's net precontribution gain of $3,000 consists of $2,000 of net long-term, U.S.-source capital gain ($10,000 gain on Property A1 and $8,000 loss on Property A2) and $1,000 of net long-term, foreign-source capital gain ($1,000 gain on Property A3).

(v) The character of A's gain under paragraph (d) of this section is therefore $2,000 long-term, U.S.-source capital gain ($3,000 gain recognized under section 737 × $2,000 net long-term, U.S.-source capital gain/$3,000 total net precontribution gain) and $1,000 long-term, foreign-source capital gain ($3,000 gain recognized under section 737 × $1,000 net long-term, foreign-source capital gain/$3,000 total net precontribution gain).

[T.D. 8642, 60 FR 66733, Dec. 26, 1995]

§ 1.737-2 Exceptions and special rules.

(a) ***Section 708(b)(1)(B) terminations.*** Section 737 and this section do not apply to the deemed distribution of interests in a new partnership caused by the termination of a partnership under section 708(b)(1)(B). A subsequent distribution of property by the new partnership to a partner of the new partnership that was formerly a partner of the terminated partnership is subject to section 737 to the same extent that a distribution from the terminated partnership would have been subject to section 737. See also § 1.704-4(c)(3) for a similar rule in the context of section 704(c)(1)(B). This paragraph (a) applies to terminations of partnerships under section 708(b)(1)(B) occurring on or after May 9, 1997; however, this paragraph (a) may be applied to terminations occurring on or after May 9, 1996, provided that the partnership and its partners apply this paragraph (a) to the termination in a consistent manner.

(b) ***Transfers to another partnership*** —

(1) ***Complete transfer.*** Section 737 and this section do not apply to a transfer by a partnership (transferor partnership) of all of its assets and liabilities to a second partnership (transferee partnership) in an exchange described in section 721, followed by a distribution of the interest in the transferee partnership in liquidation of the transferor partnership as part of the same plan or arrangement. See § 1.704-4(c)(4) for a similar rule in the context of section 704(c)(1)(B).

(2) ***Certain divisive transactions.*** Section 737 and this section do not apply to a transfer by a partnership (transferor partnership) of all of the section 704(c) property contributed by a partner to a second partnership (transferee partnership) in an exchange described in section 721, followed by a

distribution as part of the same plan or arrangement of an interest in the transferee partnership (and no other property) in complete liquidation of the interest of the partner that originally contributed the section 704(c) property to the transferor partnership.

(3) ***Subsequent distributions.*** A subsequent distribution of property by the transferee partnership to a partner of the transferee partnership that was formerly a partner of the transferor partnership is subject to section 737 to the same extent that a distribution from the transferor partnership would have been subject to section 737.

(c) ***Incorporation of a partnership.*** Section 737 and this section do not apply to an incorporation of a partnership by any method of incorporation (other than a method involving an actual distribution of partnership property to the partners followed by a contribution of that property to a corporation), provided that the partnership is liquidated as part of the incorporation transaction. See § 1.704-4(c)(5) for a similar rule in the context of section 704(c)(1)(B).

(d) ***Distribution of previously contributed property*** —

(1) ***General rule.*** Any portion of the distributed property that consists of property previously contributed by the distributee partner (previously contributed property) is not taken into account in determining the amount of the excess distribution or the partner's net precontribution gain. The previous sentence applies on or after May 9, 1997. See § 1.737-3(b)(2) for a special rule for determining the basis of previously contributed property in the hands of a distributee partner who contributed the property to the partnership.

(2) ***Limitation for distribution of previously contributed interest in an entity.*** An interest in an entity previously contributed to the partnership is not treated as previously contributed property to the extent that the value of the interest is attributable to property contributed to the entity after the interest was contributed to the partnership. The preceding sentence does not apply to the extent that the property contributed to the entity was contributed to the partnership by the partner that also contributed the interest in the entity to the partnership.

(3) ***Nonrecognition transactions, installment sales, contributed contracts, and capitalized costs*** —

(i) ***Nonrecognition transactions.*** Property received by the partnership in exchange for contributed section 704(c) property in a nonrecognition transaction is treated as the contributed property with regard to the contributing partner for purposes of section 737 to the extent that the property received is treated as section 704(c) property under § 1.704-3(a)(8). See § 1.704-4(d)(1) for a similar rule in the context of section 704(c)(1)(B).

(ii) ***Installment sales.*** An installment obligation received by the partnership in an installment sale (as defined in section 453(b)) of section 704(c) property is treated as the contributed property with regard to the contributing partner for purposes of section 737 to the extent that the installment obligation received is treated as section 704(c) property under § 1.704-3(a)(8). See § 1.704-4(d)(1) for a similar rule in the context of section 704(c)(1)(B).

(iii) ***Contributed contracts.*** Property acquired by a partnership pursuant to a contract that is section 704(c) property is treated as the contributed property with regard to the contributing partner for purposes of section 737 to the extent that the acquired property is treated as section 704(c) property under § 1.704-3(a)(8). See § 1.704-4(d)(1) for a similar rule in the context of section 704(c)(1)(B).

(iv) ***Capitalized costs.*** Property to which the cost of section 704(c) property is properly capitalized is treated as section 704(c) property for purposes of section 737 to the extent that such property is treated as section 704(c) property under § 1.704-3(a)(8)(iv). See § 1.704-4(d)(1) for a similar rule in the context of section 704(c)(1)(B).

(4) ***Undivided interests.*** The distribution of an undivided interest in property is treated as the distribution of previously contributed property to the extent that the undivided interest does not exceed the undivided interest, if any, contributed by the distributee partner in the same property. See § 1.704-4(c)(6) for the application of section 704(c)(1)(B) in a similar context. The portion of the undivided interest in property retained by the partnership after the distribution, if any, that is treated as contributed by the distributee partner, is reduced to the extent of the undivided interest distributed to the distributee partner.

(e) ***Examples.*** The following examples illustrate the rules of this section. Unless otherwise specified, partnership income equals partnership expenses (other than depreciation deductions for contributed property) for each year of the partnership, the fair market value of partnership property does not change, all distributions by the partnership are subject to section 737, and all partners are unrelated.

Example 1. Distribution of previously contributed property. (i) On January 1, 1995, A, B, and C form partnership ABC as equal partners. A contributes the following nondepreciable real property to the partnership:

	Fair market value	Adjusted tax basis
Property A1	$20,000	$10,000
Property A2	10,000	6,000

(ii) A's total net precontribution gain on the contributed property is $14,000 ($10,000 on Property A1 plus $4,000 on Property A2). B contributes $10,000 cash and Property B, nondepreciable real property with a fair market value and adjusted tax basis of $20,000. C contributes $30,000 cash.
(iii) On December 31, 1998, Property A2 and Property B are distributed to A in complete liquidation of A's interest in the partnership. Property A2 was previously contributed by A and is therefore not taken into account in determining the amount of the excess distribution or A's net precontribution gain. The adjusted tax basis of Property A2 in the hands of A is also determined under section 732 as if that property were the only property distributed to A.

(iv) As a result of excluding Property A2 from these determinations, the amount of the excess distribution is $10,000 ($20,000 fair market value of distributed Property B less $10,000 adjusted tax basis in A's partnership interest). A's net precontribution gain is also $10,000 ($14,000 total net precontribution gain less $4,000 gain with respect to previously contributed Property A2). A therefore recognizes $10,000 of gain on the distribution, the lesser of the excess distribution and the net precontribution gain.

Example 2. Distribution of a previously contributed interest in an entity. (i) On January 1, 1995, A, B, and

C form partnership ABC as equal partners. A contributes Property A, nondepreciable real property with a fair market value of $10,000 and an adjusted tax basis of $5,000, and all of the stock of Corporation X with a fair market value and adjusted tax basis of $500. B contributes $500 cash and Property B, nondepreciable real property with a fair market value and adjusted tax basis of $10,000. Partner C contributes $10,500 cash. On December 31, 1996, ABC contributes Property B to Corporation X in a nonrecognition transaction under section 351.
(ii) On December 31, 1998, all of the stock of Corporation X is distributed to A in complete liquidation of A's interest in the partnership. The stock is treated as previously contributed property with respect to A only to the extent of the $500 fair market value of the Corporation X stock contributed by A. The fair market value of the distributed stock for purposes of determining the amount of the excess distribution is therefore $10,000 ($10,500 total fair market value of Corporation X stock less $500 portion treated as previously contributed property). The $500 fair market value and adjusted tax basis of the Corporation X stock is also not taken into account in determining the amount of the excess distribution and the net precontribution gain.

(iii) A recognizes $5,000 of gain under section 737, the amount of the excess distribution ($10,000 fair market value of distributed property less $5,000 adjusted tax basis in A's partnership interest) and A's net precontribution gain ($10,000 fair market value of Property A less $5,000 adjusted tax basis in Property A).

Example 3. Distribution of undivided interest in property. (i) On January 1, 1995, A and B form partnership AB as equal partners. A contributes $500 cash and an undivided one-half interest in Property X. B contributes $500 cash and an undivided one-half interest in Property X.
(ii) On December 31, 1998, an undivided one-half interest in Property X is distributed to A in a current distribution. The distribution of the undivided one-half interest in Property X is treated as a distribution of previously contributed property because A contributed an undivided one-half interest in Property X. As a result, A does not recognize any gain under section 737 on the distribution.

[T.D. 8642, 60 FR 66735, Dec. 26, 1995, as amended by T.D. 8717, 62 FR 25501, May 9, 1997; T.D. 9193, 70 FR 14395, Mar. 22, 2005; T.D. 9207, 70 FR 30342, May 26, 2005; T.D. 9193, 70 FR 45531, Aug. 8, 2005]

§ 1.737-3 Basis adjustments; Recovery rules.

(a) ***Distributee partner's adjusted tax basis in the partnership interest.*** The distributee partner's adjusted tax basis in the partnership interest is increased by the amount of gain recognized by the distributee partner under section 737 and this section. This increase is not taken into account in determining the amount of gain recognized by the partner under section 737(a)(1) and this section or in determining the amount of gain recognized by the partner under section 731(a) on the distribution of money in the same distribution or any related distribution. See § 1.704-4(e)(1) for a determination of the distributee partner's adjusted tax basis in a distribution subject to section 704(c)(1)(B).

(b) ***Distributee partner's adjusted tax basis in distributed property*** —

(1) ***In general.*** The distributee partner's adjusted tax basis in the distributed property is determined under section 732 (a) or (b) as applicable. The increase in the distributee partner's adjusted tax basis in the partnership interest under paragraph (a) of this section is taken into account in

determining the distributee partner's adjusted tax basis in the distributed property other than property previously contributed by the partner. See § 1.704-4(e)(2) for a determination of basis in a distribution subject to section 704(c)(1)(B).

(2) ***Previously contributed property.*** The distributee partner's adjusted tax basis in distributed property that the partner previously contributed to the partnership is determined as if it were distributed in a separate and independent distribution prior to the distribution that is subject to section 737 and § 1.737-1.

(c) ***Partnership's adjusted tax basis in partnership property*** —

(1) ***Increase in basis.*** The partnership's adjusted tax basis in eligible property is increased by the amount of gain recognized by the distributee partner under section 737.

(2) ***Eligible property.*** Eligible property is property that—

(i) Entered into the calculation of the distributee partner's net precontribution gain;

(ii) Has an adjusted tax basis to the partnership less than the property's fair market value at the time of the distribution;

(iii) Would have the same character of gain on a sale by the partnership to an unrelated party as the character of any of the gain recognized by the distributee partner under section 737; and

(iv) Was not distributed to another partner in a distribution subject to section 704(c)(1)(B) and § 1.704-4 that was part of the same distribution as the distribution subject to section 737.

(3) ***Method of adjustment.*** For the purpose of allocating the basis increase under paragraph (c)(2) of this section among the eligible property, all eligible property of the same character is treated as a single group. Character for this purpose is determined in the same manner as the character of the recognized gain is determined under § 1.737-1(d). The basis increase is allocated among the separate groups of eligible property in proportion to the character of the gain recognized under section 737. The basis increase is then allocated among property within each group in the order in which the property was contributed to the partnership by the partner, starting with the property contributed first, in an amount equal to the difference between the property's fair market value and its adjusted tax basis to the partnership at the time of the distribution. For property that has the same character and was contributed in the same (or a related) transaction, the basis increase is allocated based on the respective amounts of unrealized appreciation in such properties at the time of the distribution.

(4) ***Section 754 adjustments.*** The basis adjustments to partnership property made pursuant to paragraph (c)(1) of this section are not elective and must be made regardless of whether the partnership has an election in effect under section 754. Any adjustments to the bases of partnership property (including eligible property as defined in paragraph (c)(2) of this section) under section 734(b) pursuant to a section 754 election (other than basis adjustments under section 734(b)(1)(A) described in the following sentence) must be made after (and must take into account) the adjustments to basis made under paragraph (a) and paragraph (c)(1) of this section. Basis adjustments under section 734(b)(1)(A) that are attributable to distributions of money to the distributee partner that are part of the same distribution as the distribution of property subject to section 737 are made before the adjustments to basis under paragraph (a) and paragraph (c)(1) of

this section. See § 1.737-1(c)(2)(ii) for the effect, if any, of basis adjustments under section 734(b)(1)(A) on a partner's net precontribution gain. See also § 1.704-4(e)(3) for a similar rule regarding basis adjustments pursuant to a section 754 election in the context of section 704(c)(1)(B).

(d) ***Recovery of increase to adjusted tax basis.*** Any increase to the adjusted tax basis of partnership property under paragraph (c)(1) of this section is recovered using any applicable recovery period and depreciation (or other cost recovery) method (including first-year conventions) available to the partnership for newly purchased property (of the type adjusted) placed in service at the time of the distribution.

(e) ***Examples.*** The following examples illustrate the rules of this section. Unless otherwise specified, partnership income equals partnership expenses (other than depreciation deductions for contributed property) for each year of the partnership, the fair market value of partnership property does not change, all distributions by the partnership are subject to section 737, and all partners are unrelated.

Example 1. Partner's basis in distributed property. (i) On January 1, 1995, A, B, and C form partnership ABC as equal partners. A contributes Property A, nondepreciable real property with a fair market value of $10,000 and an adjusted tax basis of $5,000. B contributes Property B, nondepreciable real property with a fair market value and adjusted tax basis of $10,000. C contributes $10,000 cash.
(ii) On December 31, 1998, Property B is distributed to A in complete liquidation of A's interest in the partnership. A recognizes $5,000 of gain under section 737, an amount equal to the excess distribution of $5,000 ($10,000 fair market value of Property B less $5,000 adjusted tax basis in A's partnership interest) and A's net precontribution gain of $5,000 ($10,000 fair market value of Property A less $5,000 adjusted tax basis of such property).

(iii) A's adjusted tax basis in A's partnership interest is increased by the $5,000 of gain recognized under section 737. This increase is taken into account in determining A's basis in the distributed property. Therefore, A's adjusted tax basis in distributed Property B is $10,000 under section 732(b).

Example 2. Partner's basis in distributed property in connection with gain recognized under section 704(c)(1)(B). (i) On January 1, 1995, A, B, and C form partnership ABC as equal partners. A contributes the following nondepreciable real property located in the United States to the partnership:

	Fair market value	Adjusted tax basis
Property A1	$10,000	5,000
Property A2	10,000	2,000

(ii) B contributes $10,000 cash and Property B, nondepreciable real property located outside the United States, with a fair market value and adjusted tax basis of $10,000. C contributes $20,000 cash.

(iii) On December 31, 1998, Property B is distributed to A in a current distribution and Property A1 is distributed to B in a current distribution. A recognizes $5,000 of gain under section 704(c)(1)(B) and § 1.704-4 on the distribution of Property A1 to B, the difference between the fair market value of such property ($10,000) and the adjusted tax basis in distributed Property A1 ($5,000). The adjusted tax basis of A's partnership interest is increased by this $5,000 of gain under section 704(c)(1)(B) and § 1.704-4(e)(1).

(iv) The increase in the adjusted tax basis of A's partnership interest is taken into account in determining the amount of the excess distribution. As a result, there is no excess distribution because the fair market value of Property B ($10,000) is less than the adjusted tax basis of A's interest in the partnership at the time of distribution ($12,000). A therefore recognizes no gain under section 737 on the receipt of Property B. A's adjusted tax basis in Property B is $10,000 under section 732(a)(1). The adjusted tax basis of A's partnership interest is reduced from $12,000 to $2,000 under section 733. See *Example 3* of § 1.737-1(e).

Example 3. Partnership's basis in partnership property after a distribution with section 737 gain. (i) On January 31, 1995, A, B, and C form partnership ABC as equal partners. A contributes the following nondepreciable property to the partnership:

	Fair market value	Adjusted tax basis
Property A1	$1,000	$500
Property A2	4,000	1,500
Property A3	4,000	6,000
Property A4	6,000	4,000

(ii) The character of gain or loss on Properties A1, A2, and A3 is long-term, U.S.-source capital gain or loss. The character of gain on Property A4 is long-term, foreign-source capital gain. B contributes Property B, nondepreciable real property with a fair market value and adjusted tax basis of $15,000. C contributes $15,000 cash.
(iii) On December 31, 1998, Property B is distributed to A in complete liquidation of A's interest in the partnership. A recognizes gain of $3,000 under section 737, an amount equal to the excess distribution of $3,000 ($15,000 fair market value of Property B less $12,000 adjusted tax basis in A's partnership interest) and A's net precontribution gain of $3,000 ($15,000 aggregate fair market value of the property contributed by A less $12,000 aggregate adjusted tax basis of such property).

(iv) $2,000 of A's gain is long-term, foreign-source capital gain ($3,000 total gain under section 737 × $2,000 net long-term, foreign-source capital gain/$3,000 total net precontribution gain). $1,000 of A's gain is long-term, U.S.-source capital gain ($3,000 total gain under section 737 × $1,000 net long-term, U.S.-source capital gain/$3,000 total net precontribution gain).

(v) The partnership must increase the adjusted tax basis of the property contributed by A by $3,000. All property contributed by A is eligible property. Properties A1, A2, and A3 have the same character and are grouped into a single group for purposes of allocating this basis increase. Property A4 is in a separate character group.

(vi) $2,000 of the basis increase must be allocated to long-term, foreign-source capital assets because $2,000 of the gain recognized by A was long-term, foreign-source capital gain. The adjusted tax basis of Property A4 is therefore increased from $4,000 to $6,000. $1,000 of the increase must be allocated to Properties A1 and A2 because $1,000 of the gain recognized by A is long-term, U.S.-source capital gain. No basis increase is allocated to Property A3 because its fair market value is less than its adjusted tax basis. The $1,000 basis increase is allocated between Properties A1 and A2 based on the unrealized appreciation in each asset before such basis adjustment. As a result, the adjusted tax basis of Property A1 is increased by $167 ($1,000 × $500/$3,000) and the adjusted tax basis of Property A2 is increased by $833 ($1,000 × $2,500/3,000).

[T.D. 8642, 60 FR 66736, Dec. 26, 1995; 61 FR 7214, Feb. 27, 1996]

§ 1.737-4 Anti-abuse rule.

(a) ***In general.*** The rules of section 737 and §§ 1.737-1, 1.737-2, and 1.737-3 must be applied in a manner consistent with the purpose of section 737. Accordingly, if a principal purpose of a transaction is to achieve a tax result that is inconsistent with the purpose of section 737, the Commissioner can recast the transaction for federal tax purposes as appropriate to achieve tax results that are consistent with the purpose of section 737. Whether a tax result is inconsistent with the purpose of section 737 must be determined based on all the facts and circumstances. See § 1.704-4(f) for an anti-abuse rule and examples in the context of section 704(c)(1)(B). The anti-abuse rule and examples under section 704(c)(1)(B) and § 1.704-4(f) are relevant to section 737 and §§ 1.737-1, 1.737-2, and 1.737-3 to the extent that the net precontribution gain for purposes of section 737 is determined by reference to section 704(c)(1)(B).

(b) ***Examples.*** The following examples illustrate the rules of this section. The examples set forth below do not delineate the boundaries of either permissible or impermissible types of transactions. Further, the addition of any facts or circumstances that are not specifically set forth in an example (or the deletion of any facts or circumstances) may alter the outcome of the transaction described in the example. Unless otherwise specified, partnership income equals partnership expenses (other than depreciation deductions for contributed property) for each year of the partnership, the fair market value of partnership property does not change, all distributions by the partnership are subject to section 737, and all partners are unrelated.

Example 1. Increase in distributee partner's basis by temporary contribution; results inconsistent with the purpose of section 737. (i) On January 1, 1995, A, B, and C form partnership ABC as equal partners. A contributes Property A1, nondepreciable real property with a fair market value of $10,000 and an adjusted tax basis of $1,000. B contributes Property B, nondepreciable real property with a fair market value of $10,000 and an adjusted tax basis of $10,000. C contributes $10,000 cash.

(ii) On January 1, 1999, pursuant to a plan a principal purpose of which is to avoid gain under section 737, A transfers to the partnership Property A2, nondepreciable real property with a fair market value and adjusted tax basis of $9,000. A treats the transfer as a contribution to the partnership pursuant to section 721 and increases the adjusted tax basis of A's partnership interest from $1,000 to $10,000. On January 1, 1999, the partnership agreement is amended and all other necessary steps are taken so that substantially all of the economic risks and benefits of Property A2 are retained by A. On February 1, 1999, Property B is distributed to A in a current distribution. If the contribution of Property A2 is treated as a contribution to the partnership for purposes of section 737, there is no excess distribution because the fair market value of distributed Property B ($10,000) does not exceed the adjusted tax basis of A's interest in the partnership ($10,000), and therefore section 737 does not apply. A's adjusted tax basis in distributed Property B is $10,000 under section 732(a)(1) and the adjusted tax basis of A's partnership interest is reduced to zero under section 733.

(iii) On March 1, 2000, A receives Property A2 from the partnership in complete liquidation of A's interest in the partnership. A recognizes no gain on the distribution of Property A2 because the property was previously contributed property. See § 1.737-2(d).

(iv) Although A has treated the transfer of Property A2 as a contribution to the partnership that increased the adjusted tax basis of A's interest in the partnership, it would be inconsistent with the purpose of section 737 to recognize the transfer as a contribution to the partnership. Section 737 requires recognition of gain when the value of distributed property exceeds the distributee partner's adjusted tax basis in the partnership interest. Section 737 assumes that any contribution or other transaction that affects a partner's adjusted tax basis in the partnership interest is a contribution or transaction in substance and is not engaged in with a principal purpose of avoiding recognition of gain under section 737. Because the transfer of Property A2 to the partnership was not a contribution in substance and was made with a principal purpose of avoiding recognition of gain under section 737, the Commissioner can disregard the contribution of Property A2 for this purpose. As a result, A recognizes gain of $9,000 under section 737 on the receipt of Property B, an amount equal to the lesser of the excess distribution of $9,000 ($10,000 fair market value of distributed Property B less the $1,000 adjusted tax basis of A's partnership interest, determined without regard to the transitory contribution of Property A2) or A's net precontribution gain of $9,000 on Property A1.

Example 2. Increase in distributee partner's basis; section 752 liability shift; results consistent with the purpose of section 737. (i) On January 1, 1995, A and B form general partnership AB as equal partners. A contributes Property A, nondepreciable real property with a fair market value of $10,000 and an adjusted tax basis of $1,000. B contributes Property B, nondepreciable real property with a fair market value and adjusted tax basis of $10,000. The partnership also borrows $10,000 on a recourse basis and purchases Property C. The $10,000 liability is allocated equally between A and B under section 752, thereby increasing the adjusted tax basis in A's partnership interest to $6,000.

(ii) On December 31, 1998, the partners agree that A is to receive Property B in a current distribution. If A were to receive Property B at that time, A would recognize $4,000 of gain under section 737, an amount equal to the lesser of the excess distribution of $4,000 ($10,000 fair market value of Property B less $6,000 adjusted tax basis in A's partnership interest) or A's net precontribution gain of $9,000 ($10,000 fair market value of Property A less $1,000 adjusted tax basis of Property A).

(iii) With a principal purpose of avoiding such gain, A and B agree that A will be solely liable for the repayment of the $10,000 partnership liability and take the steps necessary so that the entire amount of the liability is allocated to A under section 752. The adjusted tax basis in A's partnership interest is thereby increased from $6,000 to $11,000 to reflect A's share of the $5,000 of liability previously allocated to B. As a result of this increase in A's adjusted tax basis, there is no excess distribution because the fair market value of distributed Property B ($10,000) is less than the adjusted tax basis of A's partnership interest. Recognizing A's increased adjusted tax basis as a result of the shift in liabilities is consistent with the purpose of section 737 and this section. Section 737 requires recognition of gain only when the value of the distributed property exceeds the distributee partner's adjusted tax basis in the partnership interest. The $10,000 recourse liability is a bona fide liability of the partnership that was undertaken for a substantial business purpose and A's and B's agreement that A will assume responsibility for repayment of that debt has substance. Therefore, the increase in A's adjusted tax basis in A's interest in the partnership due to the shift in partnership liabilities under section 752 is respected, and A recognizes no gain under section 737.

[T.D. 8642, 60 FR 66738, Dec. 26, 1995]

§ 1.737-5 Effective dates.

Sections 1.737-1, 1.737-2, 1.737-3, and 1.737-4 apply to distributions by a partnership to a partner on or after January 9, 1995, except that § 1.737-2(d)(3)(iv) applies to distributions by a partnership to a partner on or after June 24, 2003.

[T.D. 9207, 70 FR 30342, May 26, 2005]

TRANSFERS OF INTERESTS IN A PARTNERSHIP

§ 1.741-1 Recognition and character of gain or loss on sale or exchange.

(a) The sale or exchange of an interest in a partnership shall, except to the extent section 751(a) applies, be treated as the sale or exchange of a capital asset, resulting in capital gain or loss measured by the difference between the amount realized and the adjusted basis of the partnership interest, as determined under section 705. For treatment of selling partner's distributive share up to date of sale, see section 706(c)(2). Where the provisions of section 751 require the recognition of ordinary income or loss with respect to a portion of the amount realized from such sale or exchange, the amount realized shall be reduced by the amount attributable under section 751 to unrealized receivables and substantially appreciated inventory items, and the adjusted basis of the transferor partner's interest in the partnership shall be reduced by the portion of such basis attributable to such unrealized receivables and substantially appreciated inventory items. See section 751 and § 1.751-1.

(b) Section 741 shall apply whether the partnership interest is sold to one or more members of the partnership or to one or more persons who are not members of the partnership. Section 741 shall also apply even though the sale of the partnership interest results in a termination of the partnership under section 708(b). Thus, the provisions of section 741 shall be applicable

(1) to the transferor partner in a 2-man partnership when he sells his interest to the other partner, and

(2) to all the members of a partnership when they sell their interests to one or more persons outside the partnership.

(c) See section 351 for nonrecognition of gain or loss upon transfer of a partnership interest to a corporation controlled by the transferor.

(d) For rules relating to the treatment of liabilities on the sale or exchange of interests in a partnership see §§ 1.752-1 and 1.1001-2.

(e) For rules relating to the capital gain or loss recognized when a partner sells or exchanges an interest in a partnership that holds appreciated collectibles or section 1250 property with section 1250 capital gain, see § 1.1(h)-1. This paragraph (e) applies to transfers of interests in partnerships that occur on or after September 21, 2000.

(f) For rules relating to dividing the holding period of an interest in a partnership, see § 1.1223-3. This paragraph (f) applies to transfers of partnership interests and distributions of property from a partnership that occur on or after September 21, 2000.

[T.D. 6500, 25 FR 11814, Nov. 26, 1960; 25 FR 14021, Dec. 31, 1960, as amended by T.D. 7741, 45 FR 81745, Dec. 12, 1980; T.D. 8902, 65 FR 57099, Sept. 21, 2000]

§ 1.742-1 Basis of transferee partner's interest.

(a) ***In general.*** The basis to a transferee partner of an interest in a partnership shall be determined under the general basis rules for property provided by part II (section 1011 and following), Subchapter O, Chapter 1 of the Internal Revenue Code. Thus, the basis of a purchased interest will be its cost. Generally, the basis of a partnership interest acquired from a decedent is the fair market value of the interest at the date of his death or at the alternate valuation date, increased by his estate's or other successor's share of partnership liabilities, if any, on that date, and reduced to the extent that such value is attributable to items constituting income in respect of a decedent (see section 753 and §§ 1.706-1(c)(3)(v) and 1.753-1(b)) under section 691. See section 1014(c). However, the basis of a partnership interest acquired from a decedent is determined under section 1022 if the decedent died in 2010 and the decedent's executor elected to have section 1022 apply to the decedent's estate. For basis of contributing partner's interest, see section 722. The basis so determined is then subject to the adjustments provided in section 705.

(b) ***Effective/applicability date.*** This section applies on and after January 19, 2017. For rules before January 19, 2017, see § 1.742-1 as contained in 26 CFR part 1 revised as of April 1, 2016.

[T.D. 9811, 82 FR 6239, Jan. 19, 2017]

§ 1.743-1 Optional adjustment to basis of partnership property.

(a) ***Generally.*** The basis of partnership property is adjusted as a result of the transfer of an interest in a partnership by sale or exchange or on the death of a partner only if the election provided by section 754 (relating to optional adjustments to the basis of partnership property) is in effect with respect to the partnership. Whether or not the election provided in section 754 is in effect, the basis of partnership property is not adjusted as the result of a contribution of property, including money, to the partnership.

(b) ***Determination of adjustment.*** In the case of the transfer of an interest in a partnership, either by sale or exchange or as a result of the death of a partner, a partnership that has an election under section 754 in effect—

(1) Increases the adjusted basis of partnership property by the excess of the transferee's basis for the transferred partnership interest over the transferee's share of the adjusted basis to the partnership of the partnership's property; or

(2) Decreases the adjusted basis of partnership property by the excess of the transferee's share of the adjusted basis to the partnership of the partnership's property over the transferee's basis for the transferred partnership interest.

(c) ***Determination of transferee's basis in the transferred partnership interest.*** In the case of the transfer of a partnership interest by sale or exchange or as a result of the death of a partner, the transferee's basis in the transferred partnership interest is determined under section 742 and § 1.742-1. See also section 752 and §§ 1.752-1 through 1.752-5.

(d) ***Determination of transferee's share of the adjusted basis to the partnership of the partnership's property*** —

(1) ***Generally.*** A transferee's share of the adjusted basis to the partnership of partnership property is equal to the sum of the transferee's interest as a partner in the partnership's previously taxed capital, plus the transferee's share of partnership liabilities. Generally, a transferee's interest as a partner in the partnership's previously taxed capital is equal to—

(i) The amount of cash that the transferee would receive on a liquidation of the partnership following the hypothetical transaction, as defined in paragraph (d)(2) of this section (to the extent attributable to the acquired partnership interest); increased by

(ii) The amount of tax loss (including any remedial allocations under § 1.704-3(d)), that would be allocated to the transferee from the hypothetical transaction (to the extent attributable to the acquired partnership interest); and decreased by

(iii) The amount of tax gain (including any remedial allocations under § 1.704-3(d)), that would be allocated to the transferee from the hypothetical transaction (to the extent attributable to the acquired partnership interest).

(2) ***Hypothetical transaction defined.*** For purposes of paragraph (d)(1) of this section, the hypothetical transaction means the disposition by the partnership of all of the partnership's assets, immediately after the transfer of the partnership interest, in a fully taxable transaction for cash equal to the fair market value of the assets. See § 1.460-4(k)(3)(v)(B) for a rule relating to the computation of income or loss that would be allocated to the transferee from a contract accounted for under a long-term contract method of accounting as a result of the hypothetical transaction.

(3) ***Examples.*** The provisions of this paragraph (d) are illustrated by the following examples:

Example 1. (i) A is a member of partnership PRS in which the partners have equal interests in capital and profits. The partnership has made an election under section 754, relating to the optional adjustment to the basis of partnership property. A sells its interest to T for $22,000. The balance sheet of the partnership at the date of sale shows the following:

	Assets	
	Adjusted basis	**Fair market value**
Cash	$5,000	$5,000
Accounts receivable	10,000	10,000
Inventory	20,000	21,000
Depreciable assets	20,000	40,000
Total	55,000	76,000

	Liabilities and Capital	
	Adjusted per books	**Fair market value**
Liabilities	$10,000	$10,000
Capital:		
A	15,000	22,000
B	15,000	22,000
C	15,000	22,000
Total	55,000	76,000

(ii) The amount of the basis adjustment under section 743(b) is the difference between the basis of T's interest in the partnership and T's share of the adjusted basis to the partnership of the partnership's property. Under section 742, the basis of T's interest is $25,333 (the cash paid for A's interest, $22,000, plus $3,333, T's share of partnership liabilities). T's interest in the partnership's previously taxed capital is $15,000 ($22,000, the amount of cash T would receive if PRS liquidated immediately after the hypothetical transaction, decreased by $7,000, the amount of tax gain allocated to T from the hypothetical transaction). T's share of the adjusted basis to the partnership of the partnership's property is $18,333 ($15,000 share of previously taxed capital, plus $3,333 share of the partnership's liabilities). The amount of the basis adjustment under section 743(b) to partnership property therefore, is $7,000, the difference between $25,333 and $18,333.

Example 2. A, B, and C form partnership PRS, to which A contributes land (Asset 1) with a fair market value of $1,000 and an adjusted basis to A of $400, and B and C each contribute $1,000 cash. Each partner has $1,000 credited to it on the books of the partnership as its capital contribution. The partners share in profits equally. During the partnership's first taxable year, Asset 1 appreciates in value to $1,300. A sells its one-third interest in the partnership to T for $1,100, when an election under section 754 is in effect. The amount of tax gain that would be allocated to T from the hypothetical transaction is $700 ($600 section 704(c) built-in gain, plus one-third of the additional gain). Thus, T's interest in the partnership's previously taxed capital is $400 ($1,100, the amount of cash T would receive if PRS liquidated immediately after the hypothetical transaction, decreased by $700, T's share of gain from the hypothetical transaction). The amount of T's basis adjustment under section 743(b) to partnership property is $700 (the excess of $1,100, T's cost basis for its interest, over $400, T's share of the adjusted basis to the partnership of partnership property).

(e) ***Allocation of basis adjustment.*** For the allocation of the basis adjustment under this section among the individual items of partnership property, see section 755 and the regulations thereunder.

(f) ***Subsequent transfers.*** Where there has been more than one transfer of a partnership interest, a transferee's basis adjustment is determined without regard to any prior transferee's basis adjustment. In the case of a gift of an interest in a partnership, the donor is treated as transferring, and the donee as receiving, that portion of the basis adjustment attributable to the gifted partnership interest. The provisions of this paragraph (f) are illustrated by the following example:

Example. (i) A, B, and C form partnership PRS. A and B each contribute $1,000 cash, and C contributes land with a basis and fair market value of $1,000. When the land has appreciated in value to $1,300, A sells its interest to T1 for $1,100 (one-third of $3,300, the fair market value of the partnership property). An election under section 754 is in effect; therefore, T1 has a basis adjustment under section 743(b) of $100.
(ii) After the land has further appreciated in value to $1,600, T1 sells its interest to T2 for $1,200 (one-third of $3,600, the fair market value of the partnership property). T2 has a basis adjustment under section 743(b) of $200. This amount is determined without regard to any basis adjustment under section 743(b) that T1 may have had in the partnership assets.

(iii) During the following year, T2 makes a gift to T3 of fifty percent of T2's interest in PRS. At the time of the transfer, T2 has a $200 basis adjustment under section 743(b). T2 is treated as transferring $100 of the basis adjustment to T3 with the gift of the partnership interest.

(g) ***Distributions*** —

(1) ***Distribution of adjusted property to the transferee*** —

(i) ***Coordination with section 732.*** If a partnership distributes property to a transferee and the transferee has a basis adjustment for the property, the basis adjustment is taken into account under section 732. See § 1.732-2(b).

(ii) ***Coordination with section 734.*** For certain adjustments to the common basis of remaining partnership property after the distribution of adjusted property to a transferee, see § 1.734-2(b).

(2) ***Distribution of adjusted property to another partner*** —

(i) ***Coordination with section 732.*** If a partner receives a distribution of property with respect to which another partner has a basis adjustment, the distributee does not take the basis adjustment into account under section 732.

(ii) ***Reallocation of basis.*** A transferee with a basis adjustment in property that is distributed to another partner reallocates the basis adjustment among the remaining items of partnership property under § 1.755-1(c).

(3) ***Distributions in complete liquidation of a partner's interest.*** If a transferee receives a distribution of property (whether or not the transferee has a basis adjustment in such property) in liquidation of its interest in the partnership, the adjusted basis to the partnership of the distributed property immediately before the distribution includes the transferee's basis adjustment for the property in which the transferee relinquished an interest (either because it remained in the partnership or was distributed to another partner). Any basis adjustment for property in which the transferee is deemed to relinquish its interest is reallocated among the properties distributed to the transferee under § 1.755-1(c).

(4) ***Coordination with other provisions.*** The rules of sections 704(c)(1)(B), 731, 737, and 751 apply before the rules of this paragraph (g).

(5) ***Example.*** The provisions of this paragraph (g) are illustrated by the following example:

Example. (i) A, B, and C are equal partners in partnership PRS. Each partner originally contributed $10,000 in cash, and PRS used the contributions to purchase five nondepreciable capital assets. PRS has no liabilities. After five years, PRS's balance sheet appears as follows:

	Assets	
	Adjusted basis	**Fair market value**
Asset 1	$10,000	$10,000
Asset 2	4,000	6,000
Asset 3	6,000	6,000
Asset 4	7,000	4,000
Asset 5	3,000	13,000
Total	30,000	39,000

	Capital	
	Adjusted per books	**Fair market value**
Partner A	$10,000	$13,000
Partner B	10,000	13,000

	Capital	
	Adjusted per books	Fair market value
Partner C	10,000	13,000
Total	30,000	39,000

(ii) A sells its interest to T for $13,000 when PRS has an election in effect under section 754. T receives a basis adjustment under section 743(b) in the partnership property that is equal to $3,000 (the excess of T's basis in the partnership interest, $13,000, over T's share of the adjusted basis to the partnership of partnership property, $10,000). The basis adjustment is allocated under section 755, and the partnership's balance sheet appears as follows:

	Assets		
	Adjusted basis	Fair market value	Basis adjustment
Asset 1	$10,000	$10,000	$0.00
Asset 2	4,000	6,000	666.67
Asset 3	6,000	6,000	0.00
Asset 4	7,000	4,000	(1,000.00)
Asset 5	3,000	13,000	3,333.33
Total	30,000	39,000	3,000.00

	Capital		
	Adjusted per books	Fair market value	Special basis
Partner T	$10,000	$13,000	$3,000
Partner B	10,000	13,000	0
Partner C	10,000	13,000	0
Total	30,000	39,000	3,000

(iii) Assume that PRS distributes Asset 2 to T in partial liquidation of T's interest in the partnership. T has a basis adjustment under section 743(b) of $666.67 in Asset 2. Under paragraph (g)(1)(i) of this section, T takes the basis adjustment into account under section 732. Therefore, T will have a basis in Asset 2 of $4,666.67 following the distribution.

(iv) Assume instead that PRS distributes Asset 5 to C in complete liquidation of C's interest in PRS. T has a basis adjustment under section 743(b) of $3,333.33 in Asset 5. Under paragraph (g)(2)(i) of this section, C does not take T's basis adjustment into account under section 732. Therefore, the partnership's basis for purposes of sections 732 and 734 is $3,000. Under paragraph (g)(2)(ii) of this section, T's $3,333.33 basis adjustment is reallocated among the remaining partnership assets under § 1.755-1(c).

(v) Assume instead that PRS distributes Asset 5 to T in complete liquidation of its interest in PRS. Under paragraph (g)(3) of this section, immediately prior to the distribution of Asset 5 to T, PRS must adjust the basis of Asset 5. Therefore, immediately prior to the distribution, PRS's basis in Asset 5 is equal to $6,000, which is the sum of (A) $3,000, PRS's common basis in Asset 5, plus (B) $3,333.33, T's basis adjustment to Asset 5, plus (C) ($333.33), the sum of T's basis adjustments in Assets 2 and 4. For purposes of sections 732 and 734, therefore, PRS will be treated as having a basis in Asset 5 equal to $6,000.

(h) *Contributions of adjusted property* —

(1) ***Section 721(a) transactions.*** If, in a transaction described in section 721(a), a partnership (the upper tier) contributes to another partnership (the lower tier) property with respect to which a basis adjustment has been made, the basis adjustment is treated as contributed to the lower-tier partnership, regardless of whether the lower-tier partnership makes a section 754 election. The lower tier's basis in the contributed assets and the upper tier's basis in the partnership interest received in the transaction are determined with reference to the basis adjustment. However, that portion of the basis of the upper tier's interest in the lower tier attributable to the basis adjustment must be segregated and allocated solely to the transferee partner for whom the basis adjustment was made. Similarly, that portion of the lower tier's basis in its assets attributable to the basis adjustment must be segregated and allocated solely to the upper tier and the transferee. A partner with a basis adjustment in property held by a partnership that terminates under section 708(b)(1)(B) will continue to have the same basis adjustment with respect to property deemed contributed by the terminated partnership to the new partnership under § 1.708-1(b)(1)(iv), regardless of whether the new partnership makes a section 754 election.

(2) *Section 351 transactions* —

(i) ***Basis in transferred property.*** A corporation's adjusted tax basis in property transferred to the corporation by a partnership in a transaction described in section 351 is determined with reference to any basis adjustments to the property under section 743(b) (other than any basis adjustment that reduces a partner's gain under paragraph (h)(2)(ii) of this section).

(ii) ***Partnership gain.*** The amount of gain, if any, recognized by the partnership on a transfer of property by the partnership to a corporation in a transfer described in section 351 is determined without reference to any basis adjustment to the transferred property under section 743(b). The amount of gain, if any, recognized by the partnership on the transfer that is allocated to a partner with a basis adjustment in the transferred property is adjusted to reflect the partner's basis adjustment in the transferred property.

(iii) ***Basis in stock.*** The partnership's adjusted tax basis in stock received from a corporation in a transfer described in section 351 is determined without reference to the basis adjustment in property transferred to the corporation in the section 351 exchange. A partner with a basis adjustment in property transferred to the corporation, however, has a basis adjustment in the stock received by the partnership in the section 351 exchange in an amount equal to the partner's basis adjustment in the transferred property, reduced by any basis adjustment that reduced the partner's gain under paragraph (h)(2)(ii) of this section.

(iv) ***Example.*** The following example illustrates the principles of this paragraph (h)(2):

> *Example.* (i) A, B, and C are equal partners in partnership PRS. The partnership's only asset, Asset 1, has an adjusted tax basis of $60 and a fair market value of $120. Asset 1 is a nondepreciable capital asset and is not section 704(c) property. A has a basis in its partnership interest of $40, and a positive section 743(b) adjustment of $20 in Asset 1. In a transaction to which section 351 applies, PRS contributes Asset 1 to X, a corporation, in exchange for $15 in cash and X stock with a fair market value of $105. (ii) Under paragraph (h)(2)(ii) of this section, PRS realizes $60 of gain on the transfer of Asset 1 to X ($120, its amount realized, minus $60, its adjusted basis), but recognizes only $15 of that gain under section 351(b)(1). Of this amount, $5 is allocated to each partner. A must use $5 of its basis adjustment in Asset 1 to offset A's share of PRS's gain. Under paragraph (h)(2)(iii) of this section, PRS's basis in the stock received from X is $60. However, A has a basis adjustment in the stock received by PRS equal to $15 (its basis adjustment in Asset 1, $20, reduced by the portion of the adjustment which reduced A's gain, $5). Under paragraph (h)(2)(i) of this section, X's basis in Asset 1 equals $90 (PRS's common basis in the asset, $60, plus the gain recognized by PRS under section 351(b)(1), $15, plus A's basis adjustment under section 743(b), $20, less the portion of the adjustment which reduced A's gain, $5).

(i) [Reserved]

(j) ***Effect of basis adjustment —***

(1) ***In general.*** The basis adjustment constitutes an adjustment to the basis of partnership property with respect to the transferee only. No adjustment is made to the common basis of partnership property. Thus, for purposes of calculating income, deduction, gain, and loss, the transferee will have a special basis for those partnership properties the bases of which are adjusted under section 743(b) and this section. The adjustment to the basis of partnership property under section 743(b) has no effect on the partnership's computation of any item under section 703.

(2) ***Computation of partner's distributive share of partnership items.*** The partnership first computes its items of income, deduction, gain, or loss at the partnership level under section 703. The partnership then allocates the partnership items among the partners, including the transferee, in accordance with section 704, and adjusts the partners' capital accounts accordingly. The partnership then adjusts the transferee's distributive share of the items of partnership income, deduction, gain, or loss, in accordance with paragraphs (j)(3) and (4) of this section, to reflect the effects of the transferee's basis adjustment under section 743(b). These adjustments to the transferee's

distributive shares must be reflected on Schedules K and K-1 of the partnership's return (Form 1065). These adjustments to the transferee's distributive shares do not affect the transferee's capital account. See § 1.460-4(k)(3)(v)(B) for rules relating to the effect of a basis adjustment under section 743(b) that is allocated to a contract accounted for under a long-term contract method of accounting in determining the transferee's distributive share of income or loss from the contract.

(3) ***Effect of basis adjustment in determining items of income, gain, or loss*** —

(i) ***In general.*** The amount of a transferee's income, gain, or loss from the sale or exchange of a partnership asset in which the transferee has a basis adjustment is equal to the transferee's share of the partnership's gain or loss from the sale of the asset (including any remedial allocations under § 1.704-3(d)), minus the amount of the transferee's positive basis adjustment for the partnership asset (determined by taking into account the recovery of the basis adjustment under paragraph (j)(4)(i)(B) of this section) or plus the amount of the transferee's negative basis adjustment for the partnership asset (determined by taking into the account the recovery of the basis adjustment under paragraph (j)(4)(ii)(B) of this section).

(ii) ***Examples.*** The following examples illustrate the principles of this paragraph (j)(3):

Example 1. A and B form equal partnership PRS. A contributes nondepreciable property with a fair market value of $50 and an adjusted tax basis of $100. PRS will use the traditional allocation method under § 1.704-3(b). B contributes $50 cash. A sells its interest to T for $50. PRS has an election in effect to adjust the basis of partnership property under section 754. T receives a negative $50 basis adjustment under section 743(b) that, under section 755, is allocated to the nondepreciable property. PRS then sells the property for $60. PRS recognizes a book gain of $10 (allocated equally between T and B) and a tax loss of $40. T will receive an allocation of $40 of tax loss under the principles of section 704(c). However, because T has a negative $50 basis adjustment in the nondepreciable property, T recognizes a $10 gain from the partnership's sale of the property.

Example 2. A and B form equal partnership PRS. A contributes nondepreciable property with a fair market value of $100 and an adjusted tax basis of $50. B contributes $100 cash. PRS will use the traditional allocation method under § 1.704-3(b). A sells its interest to T for $100. PRS has an election in effect to adjust the basis of partnership property under section 754. Therefore, T receives a $50 basis adjustment under section 743(b) that, under section 755, is allocated to the nondepreciable property. PRS then sells the nondepreciable property for $90. PRS recognizes a book loss of $10 (allocated equally between T and B) and a tax gain of $40. T will receive an allocation of the entire $40 of tax gain under the principles of section 704(c). However, because T has a $50 basis adjustment in the property, T recognizes a $10 loss from the partnership's sale of the property.

Example 3. A and B form equal partnership PRS. PRS will make allocations under section 704(c) using the remedial allocation method described in § 1.704-3(d). A contributes nondepreciable property with a fair market value of $100 and an adjusted tax basis of $150. B contributes $100 cash. A sells its partnership interest to T for $100. PRS has an election in effect to adjust the basis of partnership property under section 754. T receives a negative $50 basis adjustment under section 743(b) that, under section 755, is allocated to the property. The partnership then sells the property for $120. The partnership recognizes a $20 book gain and a $30 tax loss. The book gain will be allocated equally between the partners. The entire $30 tax loss will be allocated to T under the principles of

section 704(c). To match its $10 share of book gain, B will be allocated $10 of remedial gain, and T will be allocated an offsetting $10 of remedial loss. T was allocated a total of $40 of tax loss with respect to the property. However, because T has a negative $50 basis adjustment to the property, T recognizes a $10 gain from the partnership's sale of the property.

(4) ***Effect of basis adjustment in determining items of deduction*** —

(i) ***Increases*** —

(A) ***Additional deduction.*** The amount of any positive basis adjustment that is recovered by the transferee in any year is added to the transferee's distributive share of the partnership's depreciation or amortization deductions for the year. The basis adjustment is adjusted under section 1016(a)(2) to reflect the recovery of the basis adjustment.

(B) ***Recovery period*** —

(*1*) ***In general.*** Except as provided in paragraph (j)(4)(i)(B)(*2*) of this section, for purposes of section 168, if the basis of a partnership's recovery property is increased as a result of the transfer of a partnership interest, then the increased portion of the basis is taken into account as if it were newly-purchased recovery property placed in service when the transfer occurs. Consequently, any applicable recovery period and method may be used to determine the recovery allowance with respect to the increased portion of the basis. However, no change is made for purposes of determining the recovery allowance under section 168 for the portion of the basis for which there is no increase. The partnership is allowed to deduct the additional first year depreciation under section 168(k) and § 1.168(k)-2 for an increase in the basis of qualified property, as defined in section 168(k) and § 1.168(k)-2, under section 743(b) in a class of property, as defined in § 1.168(k)-2(f)(1)(ii)(A) through (F), even if the partnership made the election under section 168(k)(7) and § 1.168(k)-2(f)(1) not to deduct the additional first year depreciation for all other qualified property of the partnership in the same class of property, as defined in § 1.168(k)-2(f)(1)(ii)(A) through (F), and placed in service in the same taxable year, provided the section 743(b) basis adjustment meets all requirements of section 168(k) and § 1.168(k)-2. Further, the partnership may make an election under section 168(k)(7) and § 1.168(k)-2(f)(1) not to deduct the additional first year depreciation for an increase in the basis of qualified property, as defined in section 168(k) and § 1.168(k)-2, under section 743(b) in a class of property, as defined in § 1.168(k)-2(f)(1)(ii)(A) through (F), and placed in service in the same taxable year, even if the partnership does not make that election for all other qualified property of the partnership in the same class of property, as defined in § 1.168(k)-2(f)(1)(ii)(A) through (F), and placed in service in the same taxable year. In this case, the section 743(b) basis adjustment must be recovered under a reasonable method.

(*2*) ***Remedial allocation method.*** If a partnership elects to use the remedial allocation method described in § 1.704-3(d) with respect to an item of the partnership's recovery property, then the portion of any increase in the basis of the item of the partnership's recovery property under section 743(b) that is attributable to section 704(c) built-in gain is recovered over the remaining recovery period for the partnership's excess book basis in the property as determined in the final sentence of § 1.704-3(d)(2). Any remaining portion of the basis increase is recovered under

paragraph (j)(4)(i)(B)(*1*) of this section. The first sentence of this paragraph (j)(4)(i)(B)(*2*) does not apply to a partnership that is not a publicly traded partnership within the meaning of section 7704(b) with respect to any basis increase under section 743(b) that is recovered using the additional first year depreciation deduction under section 168(k).

(C) ***Examples.*** The provisions of this paragraph (j)(4)(i) are illustrated by the following examples:

Example 1. (i) A, B, and C are equal partners in partnership PRS, which owns Asset 1, an item of depreciable property that has a fair market value in excess of its adjusted tax basis. C sells its interest in PRS to T while PRS has an election in effect under section 754. PRS, therefore, increases the basis of Asset 1 with respect to T.
(ii) Assume that in the year following the transfer of the partnership interest to T, T's distributive share of the partnership's common basis depreciation deductions from Asset 1 is $1,000. Also assume that, under paragraph (j)(4)(i)(B) of this section, the amount of the basis adjustment under section 743(b) that T recovers during the year is $500. The total amount of depreciation deductions from Asset 1 reported by T is equal to $1,500.

Example 2. (i) A and B form equal partnership PRS. A contributes property with an adjusted basis of $100,000 and a fair market value of $500,000. B contributes $500,000 cash. When PRS is formed, the property has five years remaining in its recovery period. The partnership's adjusted basis of $100,000 will, therefore, be recovered over the five years remaining in the property's recovery period. PRS elects to use the remedial allocation method under § 1.704-3(d) with respect to the property. If PRS had purchased the property at the time of the partnership's formation, the basis of the property would have been recovered over a 10-year period. The $400,000 of section 704(c) built-in gain will, therefore, be amortized under § 1.704-3(d) over a 10-year period beginning at the time of the partnership's formation.

(ii)(A) Except for the depreciation deductions, PRS's expenses equal its income in each year of the first two years commencing with the year the partnership is formed. After two years, A's share of the adjusted basis of partnership property is $120,000, while B's is $440,000:

	Capital accounts			
	A		B	
	Book	Tax	Book	Tax
Initial Contribution	$500,000	$100,000	$500,000	$500,000
Depreciation Year 1	(30,000)		(30,000)	(20,000)
Remedial		10,000		(10,000)
	470,000	110,000	470,000	470,000
Depreciation Year 2	(30,000)		(30,000)	(20,000)
Remedial		10,000		(10,000)
	440,000	120,000	440,000	440,000

(B) A sells its interest in PRS to T for its fair market value of $440,000. A valid election under section 754 is in effect with respect to the sale of the partnership interest. Accordingly, PRS makes an adjustment, pursuant to section 743(b), to increase the basis of partnership property. Under section 743(b), the amount of the basis adjustment is equal to $320,000. Under section 755, the entire basis adjustment is allocated to the property.
(iii) At the time of the transfer, $320,000 of section 704(c) built-in gain from the property was still reflected on the partnership's books, and all of the basis adjustment is attributable to section 704(c) built-in gain. Therefore, the basis adjustment will be recovered over the remaining recovery period for the section 704(c) built-in gain under § 1.704-3(d).

(ii) *Decreases* —

(A) ***Reduced deduction.*** The amount of any negative basis adjustment allocated to an item of depreciable or amortizable property that is recovered in any year first decreases the transferee's distributive share of the partnership's depreciation or amortization deductions from that item of property for the year. If the amount of the basis adjustment recovered in any year exceeds the transferee's distributive share of the partnership's depreciation or amortization deductions from the item of property, then the transferee's distributive share of the partnership's depreciation or amortization deductions from other items of partnership property is decreased. The transferee then recognizes ordinary income to the extent of the excess, if any, of the amount of the basis adjustment recovered in any year over the transferee's distributive share of the partnership's depreciation or amortization deductions from all items of property.

(B) ***Recovery period.*** For purposes of section 168, if the basis of an item of a partnership's recovery property is decreased as the result of the transfer of an interest in the partnership, then the decrease is recovered over the remaining useful life of the item of the partnership's recovery property. The portion of the decrease that is recovered in any year during the recovery period is equal to the product of—

(*1*) The amount of the decrease to the item's adjusted basis (determined as of the date of the transfer); multiplied by

(*2*) A fraction, the numerator of which is the portion of the adjusted basis of the item recovered by the partnership in that year, and the denominator of which is the adjusted basis of the item on the date of the transfer (determined prior to any basis adjustments).

(C) ***Examples.*** The provisions of this paragraph (j)(4)(ii) are illustrated by the following examples:

> *Example 1.* (i) A, B, and C are equal partners in partnership PRS, which owns Asset 2, an item of depreciable property that has a fair market value that is less than its adjusted tax basis. C sells its interest in PRS to T while PRS has an election in effect under section 754. PRS, therefore, decreases the basis of Asset 2 with respect to T.
> (ii) Assume that in the year following the transfer of the partnership interest to T, T's distributive share of the partnership's common basis depreciation deductions from Asset 2 is $1,000. Also assume that, under paragraph (j)(4)(ii)(B) of this section, the amount of the basis adjustment under section 743(b) that T recovers during the year is $500. The total amount of depreciation deductions from Asset 2 reported by T is equal to $500.

> *Example 2.* (i) A and B form equal partnership PRS. A contributes property with an adjusted basis of $100,000 and a fair market value of $50,000. B contributes $50,000 cash. When PRS is formed, the property has five years remaining in its recovery period. The partnership's adjusted basis of $100,000 will, therefore, be recovered over the five years remaining in the property's recovery period. PRS uses the traditional allocation method under § 1.704-3(b) with respect to the property. As a result, B will receive $5,000 of depreciation deductions from the property in each of years 1-5, and A, as the contributing partner, will receive $15,000 of depreciation deductions in each of these years.
> (ii) Except for the depreciation deductions, PRS's expenses equal its income in each of the first two years commencing with the year the partnership is formed. After two years, A's share of the adjusted basis of partnership property is $70,000, while B's is $40,000. A sells its interest in PRS to T for its fair market value of $40,000. A valid election under section 754 is in effect with respect to the sale of the partnership interest. Accordingly, PRS makes an adjustment, pursuant to section

743(b), to decrease the basis of partnership property. Under section 743(b), the amount of the adjustment is equal to ($30,000). Under section 755, the entire adjustment is allocated to the property.

(iii) The basis of the property at the time of the transfer of the partnership interest was $60,000. In each of years 3 through 5, the partnership will realize depreciation deductions of $20,000 from the property. Thus, one third of the negative basis adjustment ($10,000) will be recovered in each of years 3 through 5. Consequently, T will be allocated, for tax purposes, depreciation of $15,000 each year from the partnership and will recover $10,000 of its negative basis adjustment. Thus, T's net depreciation deduction from the partnership in each year is $5,000.

Example 3. (i) A, B, and C are equal partners in partnership PRS, which owns Asset 2, an item of depreciable property that has a fair market value that is less than its adjusted tax basis. C sells its interest in PRS to T while PRS has an election in effect under section 754. PRS, therefore, decreases the basis of Asset 2 with respect to T.
(ii) Assume that in the year following the transfer of the partnership interest to T, T's distributive share of the partnership's common basis depreciation deductions from Asset 2 is $500. PRS allocates no other depreciation to T. Also assume that, under paragraph (j)(4)(ii)(B) of this section, the amount of the negative basis adjustment that T recovers during the year is $1,000. T will report $500 of ordinary income because the amount of the negative basis adjustment recovered during the year exceeds T's distributive share of the partnership's common basis depreciation deductions from Asset 2.

(5) ***Depletion.*** Where an adjustment is made under section 743(b) to the basis of partnership property subject to depletion, any depletion allowance is determined separately for each partner, including the transferee partner, based on the partner's interest in such property. See § 1.702-1(a)(8). For partnerships that hold oil and gas properties that are depleted at the partner level under section 613A(c)(7)(D), the transferee partner (and not the partnership) must make the basis adjustments, if any, required under section 743(b) with respect to such properties. See § 1.613A-3(e)(6)(iv).

(6) ***Example.*** The provisions of paragraph (j)(5) of this section are illustrated by the following example:

Example. A, B, and C each contributes $5,000 cash to form partnership PRS, which purchases a coal property for $15,000. A, B, and C have equal interests in capital and profits. C subsequently sells its partnership interest to T for $100,000 when the election under section 754 is in effect. T has a basis adjustment under section 743(b) for the coal property of $95,000 (the difference between T's basis, $100,000, and its share of the basis of partnership property, $5,000). Assume that the depletion allowance computed under the percentage method would be $21,000 for the taxable year so that each partner would be entitled to $7,000 as its share of the deduction for depletion. However, under the cost depletion method, at an assumed rate of 10 percent, the allowance with respect to T's one-third interest which has a basis to him of

$100,000 ($5,000, plus its basis adjustment of $95,000) is $10,000, although the cost depletion allowance with respect to the one-third interest of A and B in the coal property, each of which has a basis of $5,000, is only $500. For partners A and B, the percentage depletion is greater than cost depletion and each will deduct $7,000 based on the percentage depletion method. However, as to T, the transferee partner, the cost depletion method results in a greater allowance and T will, therefore, deduct $10,000 based on cost depletion. See section 613(a).

(k) ***Returns*** —

(1) ***Statement of adjustments*** —

(i) ***In general.*** A partnership that must adjust the bases of partnership properties under section 743(b) must attach a statement to the partnership return for the year of the transfer setting forth the name and taxpayer identification number of the transferee as well as the computation of the adjustment and the partnership properties to which the adjustment has been allocated.

(ii) ***Special rule.*** Where an interest is transferred in a partnership which holds oil and gas properties that are depleted at the partner level under section 613A(c)(7)(D), the transferee must attach a statement to the transferee's return for the year of the transfer, setting forth the computation of the basis adjustment under section 743(b) which is allocable to such properties and the specific properties to which the adjustment has been allocated.

(iii) ***Example.*** The provisions of paragraph (k)(1)(ii) of this section are illustrated by the following example:

> *Example.* (i) Partnership XYZ owns a single section 613A(c)(7)(D) domestic oil and gas property (Property) and other non-depletable assets. A, a partner in XYZ with an adjusted tax basis in Property of $100 (excluding any prior adjustments under section 743(b)), sells its partnership interest to B for $800 cash. Under § 1.613A-3(e)(6)(iv), A's adjusted basis of $100 in Property carries over to B.
> (ii) Under section 755, XYZ determines that Property accounts for 50% of the fair market value of all partnership assets. The remaining 50% of B's purchase price ($400) is attributable to non-depletable property. XYZ must provide a statement to B containing the portion of B's adjusted basis attributable to non-depletable property ($400). Under this paragraph (k)(1), XYZ must report basis adjustments under section 743(b) to non-depletable property. B must report basis adjustments under section 743(b) to Property.

(2) ***Requirement that transferee notify partnership*** —

(i) ***Sale or exchange.*** A transferee that acquires, by sale or exchange, an interest in a partnership with an election under section 754 in effect for the taxable year of the transfer, must notify the partnership, in writing, within 30 days of the sale or exchange. The written notice to the partnership must be signed under penalties of perjury and must include the names and addresses of the transferee and (if ascertainable) of the transferor, the taxpayer identification numbers of the transferee and (if ascertainable) of the transferor, the relationship (if any) between the transferee and the transferor, the date of the transfer, the amount of any liabilities

assumed or taken subject to by the transferee, and the amount of any money, the fair market value of any other property delivered or to be delivered for the transferred interest in the partnership, and any other information necessary for the partnership to compute the transferee's basis.

(ii) ***Special rule.*** A transferee that acquires, on the death of a partner, an interest in a partnership with an election under section 754 in effect for the taxable year of the transfer, must notify the partnership, in writing, within one year of the death of the deceased partner. The written notice to the partnership must be signed under penalties of perjury and must include the names and addresses of the deceased partner and the transferee, the taxpayer identification numbers of the deceased partner and the transferee, the relationship (if any) between the transferee and the transferor, the deceased partner's date of death, the date on which the transferee became the owner of the partnership interest, the fair market value of the partnership interest on the applicable date of valuation set forth in section 1014 or section 1022, the manner in which the fair market value of the partnership interest was determined, and the carryover basis as adjusted under section 1022 (if applicable).

(iii) ***Nominee reporting.*** If a partnership interest is transferred to a nominee which is required to furnish the statement under section 6031(c)(1) to the partnership, the nominee may satisfy the notice requirement contained in this paragraph (k)(2) by providing the statement required under § 1.6031(c)-1T, provided that the statement satisfies all requirements of § 1.6031(c)-1T and this paragraph (k)(2).

(3) ***Reliance.*** In making the adjustments under section 743(b) and any statement or return relating to such adjustments under this section, a partnership may rely on the written notice provided by a transferee pursuant to paragraph (k)(2) of this section to determine the transferee's basis in a partnership interest. The previous sentence shall not apply if any partner who has responsibility for federal income tax reporting by the partnership has knowledge of facts indicating that the statement is clearly erroneous.

(4) ***Partnership not required to make or report adjustments under section 743(b) until it has notice of the transfer.*** A partnership is not required to make the adjustments under section 743(b) (or any statement or return relating to those adjustments) with respect to any transfer until it has been notified of the transfer. For purposes of this section, a partnership is notified of a transfer when either—

(i) The partnership receives the written notice from the transferee required under paragraph (k)(2) of this section; or

(ii) Any partner who has responsibility for federal income tax reporting by the partnership has knowledge that there has been a transfer of a partnership interest.

(5) ***Effect on partnership of the failure of the transferee to comply.*** If the transferee fails to provide the partnership with the written notice required by paragraph (k)(2) of this section, the partnership must attach a statement to its return in the year that the partnership is otherwise notified of the transfer. This statement must set forth the name and taxpayer identification number (if ascertainable) of the transferee. In addition, the following statement must be prominently displayed in capital letters on the first page of the partnership's return for such year, and on the first page of any schedule or information statement relating to such transferee's share of income, credits, deductions, etc.: "RETURN FILED PURSUANT TO § 1.743-1(k)(5)." The partnership will then be entitled to report the transferee's share of partnership items without adjustment to reflect the transferee's basis

adjustment in partnership property. If, following the filing of a return pursuant to this paragraph (k)(5), the transferee provides the applicable written notice to the partnership, the partnership must make such adjustments as are necessary to adjust the basis of partnership property (as of the date of the transfer) in any amended return otherwise to be filed by the partnership or in the next annual partnership return of income to be regularly filed by the partnership. At such time, the partnership must also provide the transferee with such information as is necessary for the transferee to amend its prior returns to properly reflect the adjustment under section 743(b).

(l) ***Effective/applicability date.*** The provisions in this section apply to transfers of partnership interests that occur on or after December 15, 1999. The provisions of this section relating to section 1022 are effective on and after January 19, 2017. The last three sentences of paragraph (j)(4)(i)(B)(*1*) of this section, and the last sentence of paragraph (j)(4)(i)(B)(*2*) of this section, apply to transfers of partnership interests that occur on or after September 24, 2019. However, a partnership may choose to apply the last three sentences in paragraph (j)(4)(i)(B)(1) of this section, and the last sentence of paragraph (j)(4)(i)(B)(2) of this section, for transfers of partnership interests that occur on or after September 28, 2017. A partnership may rely on the last three sentences in paragraph (j)(4)(i)(B)(1) of this section in regulation project REG-104397-18 (2018-41 I.R.B. 558) (see § 601.601(d)(2)(ii)(b) of this chapter) for transfers of partnership interests that occur on or after September 28, 2017, and ending before September 24, 2019.

[T.D. 8847, 64 FR 69909, Dec. 15, 1999; 65 FR 9220, Feb. 24, 2000, as amended by T.D. 9137, 69 FR 42559, July 16, 2004; T.D. 9811, 82 FR 6239, Jan. 19, 2017; T.D. 9874, 84 FR 50150, Sept. 24, 2019]

PROVISIONS COMMON TO PART II, SUBCHAPTER K, CHAPTER 1 OF THE CODE

§ 1.751-1 Unrealized receivables and inventory items.

(a) ***Sale or exchange of interest in a partnership*** —

(1) ***Character of amount realized.*** To the extent that money or property received by a partner in exchange for all or part of his partnership interest is attributable to his share of the value of partnership unrealized receivables or substantially appreciated inventory items, the money or fair market value of the property received shall be considered as an amount realized from the sale or exchange of property other than a capital asset. The remainder of the total amount realized on the sale or exchange of the partnership interest is realized from the sale or exchange of a capital asset under section 741. For definition of “unrealized receivables” and “inventory items which have appreciated substantially in value”, see section 751 (c) and (d). Unrealized receivables and substantially appreciated inventory items are hereafter in this section referred to as “section 751 property”. See paragraph (e) of this section.

(2) ***Determination of gain or loss.*** The income or loss realized by a partner upon the sale or exchange of its interest in section 751 property is the amount of income or loss from section 751 property (including any remedial allocations under § 1.704-3(d)) that would have been allocated to the partner (to the extent attributable to the partnership interest sold or exchanged) if the partnership had sold all of its property in a fully taxable transaction for cash in an amount equal to the fair market value of such property (taking into account section 7701(g)) immediately prior to the partner's transfer of the interest in the partnership. Any gain or loss recognized that is attributable to section 751 property will be ordinary gain or loss. The difference between the amount of capital gain or loss that the partner would realize in the absence of section 751 and the amount of ordinary income or loss

determined under this paragraph (a)(2) is the transferor's capital gain or loss on the sale of its partnership interest. See § 1.460-4(k)(2)(iv)(E) for rules relating to the amount of ordinary income or loss attributable to a contract accounted for under a long-term contract method of accounting.

(3) ***Statement required.*** A partner selling or exchanging any part of an interest in a partnership that has any section 751 property at the time of sale or exchange must submit with its income tax return for the taxable year in which the sale or exchange occurs a statement setting forth separately the following information—

(i) The date of the sale or exchange;

(ii) The amount of any gain or loss attributable to the section 751 property; and

(iii) The amount of any gain or loss attributable to capital gain or loss on the sale of the partnership interest.

(b) ***Certain distributions treated as sales or exchanges*** —

(1) ***In general.***

(i) Certain distributions to which section 751(b) applies are treated in part as sales or exchanges of property between the partnership and the distributee partner, and not as distributions to which sections 731 through 736 apply. A distribution treated as a sale or exchange under section 751(b) is not subject to the provisions of section 707(b). Section 751(b) applies whether or not the distribution is in liquidation of the distributee partner's entire interest in the partnership. However, section 751(b) applies only to the extent that a partner either receives section 751 property in exchange for his relinquishing any part of his interest in other property, or receives other property in exchange for his relinquishing any part of his interest in section 751 property.

(ii) Section 751(b) does not apply to a distribution to a partner which is not in exchange for his interest in other partnership property. Thus, section 751(b) does not apply to the extent that a distribution consists of the distributee partner's share of section 751 property or his share of other property. Similarly, section 751(b) does not apply to current drawings or to advances against the partner's distributive share, or to a distribution which is, in fact, a gift or payment for services or for the use of capital. In determining whether a partner has received only his share of either section 751 property or of other property, his interest in such property remaining in the partnership immediately after a distribution must be taken into account. For example, the section 751 property in partnership ABC has a fair market value of $100,000 in which partner A has an interest of 30 percent, or $30,000. If A receives $20,000 of section 751 property in a distribution, and continues to have a 30-percent interest in the $80,000 of section 751 property remaining in the partnership after the distribution, only $6,000 ($30,000 minus $24,000 (30 percent of $80,000)) of the section 751 property received by him will be considered to be his share of such property. The remaining $14,000 ($20,000 minus $6,000) received is in excess of his share.

(iii) If a distribution is, in part, a distribution of the distributee partner's share of section 751 property, or of other property (including money) and, in part, a distribution in exchange of such properties, the distribution shall be divided for the purpose of applying section 751(b). The rules of section 751(b) shall first apply to the part of the distribution treated as a sale or

exchange of such properties, and then the rules of sections 731 through 736 shall apply to the part of the distribution not treated as a sale or exchange. See paragraph (b)(4)(ii) of this section for treatment of payments under section 736(a).

(2) ***Distribution of section 751 property (unrealized receivables or substantially appreciated inventory items).***

(i) To the extent that a partner receives section 751 property in a distribution in exchange for any part of his interest in partnership property (including money) other than section 751 property, the transaction shall be treated as a sale or exchange of such properties between the distributee partner and the partnership (as constituted after the distribution).

(ii) At the time of the distribution, the partnership (as constituted after the distribution) realizes ordinary income or loss on the sale or exchange of the section 751 property. The amount of the income or loss to the partnership will be measured by the difference between the adjusted basis to the partnership of the section 751 property considered as sold to or exchanged with the partner, and the fair market value of the distributee partner's interest in other partnership property which he relinquished in the exchange. In computing the partners' distributive shares of such ordinary income or loss, the income or loss shall be allocated only to partners other than the distributee and separately taken into account under section 702(a)(8).

(iii) At the time of the distribution, the distributee partner realizes gain or loss measured by the difference between his adjusted basis for the property relinquished in the exchange (including any special basis adjustment which he may have) and the fair market value of the section 751 property received by him in exchange for his interest in other property which he has relinquished. The distributee's adjusted basis for the property relinquished is the basis such property would have had under section 732 (including subsection (d) thereof) if the distributee partner had received such property in a current distribution immediately before the actual distribution which is treated wholly or partly as a sale or exchange under section 751(b). The character of the gain or loss to the distributee partner shall be determined by the character of the property in which he relinquished his interest.

(3) ***Distribution of partnership property other than section 751 property.***

(i) To the extent that a partner receives a distribution of partnership property (including money) other than section 751 property in exchange for any part of his interest in section 751 property of the partnership, the distribution shall be treated as a sale or exchange of such properties between the distributee partner and the partnership (as constituted after the distribution).

(ii) At the time of the distribution, the partnership (as constituted after the distribution) realizes gain or loss on the sale or exchange of the property other than section 751 property. The amount of the gain to the partnership will be measured by the difference between the adjusted basis to the partnership of the distributed property considered as sold to or exchanged with the partner, and the fair market value of the distributee partner's interest in section 751 property which he relinquished in the exchange. The character of the gain or loss to the partnership is determined by the character of the distributed property treated as sold or exchanged by the partnership. In computing the partners' distributive shares of such gain or loss, the gain or loss shall be allocated only to partners other than the distributee and separately taken into account under section 702(a)(8).

(iii) At the time of the distribution, the distributee partner realizes ordinary income or loss on the sale or exchange of the section 751 property. The amount of the distributee partner's income or loss shall be measured by the difference between his adjusted basis for the section 751 property relinquished in the exchange (including any special basis adjustment which he may have), and the fair market value of other property (including money) received by him in exchange for his interest in the section 751 property which he has relinquished. The distributee partner's adjusted basis for the section 751 property relinquished is the basis such property would have had under section 732 (including subsection (d) thereof) if the distributee partner had received such property in a current distribution immediately before the actual distribution which is treated wholly or partly as a sale or exchange under section 751(b).

(4) *Exceptions.*

(i) Section 751(b) does not apply to the distribution to a partner of property which the distributee partner contributed to the partnership. The distribution of such property is governed by the rules set forth in sections 731 through 736, relating to distributions by a partnership.

(ii) Section 751(b) does not apply to payments made to a retiring partner or to a deceased partner's successor in interest to the extent that, under section 736(a), such payments constitute a distributive share of partnership income or guaranteed payments. Payments to a retiring partner or to a deceased partner's successor in interest for his interest in unrealized receivables of the partnership in excess of their partnership basis, including any special basis adjustment for them to which such partner is entitled, constitute payments under section 736(a) and, therefore, are not subject to section 751(b). However, payments under section 736(b) which are considered as made in exchange for an interest in partnership property are subject to section 751(b) to the extent that they involve an exchange of substantially appreciated inventory items for other property. Thus, payments to a retiring partner or to a deceased partner's successor in interest under section 736 must first be divided between payments under section 736(a) and section 736(b). The section 736(b) payments must then be divided, if there is an exchange of substantially appreciated inventory items for other property, between the payments treated as a sale or exchange under section 751(b) and payments treated as a distribution under sections 731 through 736. See subparagraph (1)(iii) of this paragraph, and section 736 and § 1.736-1.

(5) ***Statement required.*** A partnership which distributes section 751 property to a partner in exchange for his interest in other partnership property, or which distributes other property in exchange for any part of the partner's interest in section 751 property, shall submit with its return for the year of the distribution a statement showing the computation of any income, gain, or loss to the partnership under the provisions of section 751(b) and this paragraph. The distributee partner shall submit with his return a statement showing the computation of any income, gain, or loss to him. Such statement shall contain information similar to that required under paragraph (a)(3) of this section.

(c) *Unrealized receivables.*

(1) The term *unrealized receivables,* as used in subchapter K, chapter 1 of the Code, means any rights (contractual or otherwise) to payment for:

(i) Goods delivered or to be delivered (to the extent that such payment would be treated as received for property other than a capital asset), or

(ii) Services rendered or to be rendered,

to the extent that income arising from such rights to payment was not previously includible in income under the method of accounting employed by the partnership. Such rights must have arisen under contracts or agreements in existence at the time of sale or distribution, although the partnership may not be able to enforce payment until a later time. For example, the term includes trade accounts receivable of a cash method taxpayer, and rights to payment for work or goods begun but incomplete at the time of the sale or distribution.

(2) The basis for such unrealized receivables shall include all costs or expenses attributable thereto paid or accrued but not previously taken into account under the partnership method of accounting.

(3) In determining the amount of the sale price attributable to such unrealized receivables, or their value in a distribution treated as a sale or exchange, full account shall be taken not only of the estimated cost of completing performance of the contract or agreement, but also of the time between the sale or distribution and the time of payment.

(4)

(i) With respect to any taxable year of a partnership ending after September 12, 1966 (but only in respect of expenditures paid or incurred after that date), the term *unrealized receivables,* for purposes of this section and sections 731, 736, 741, and 751, also includes potential gain from mining property defined in section 617(f)(2). With respect to each item of partnership mining property so defined, the potential gain is the amount that would be treated as gain to which section 617(d)(1) would apply if (at the time of the transaction described in section 731, 736, 741, or 751, as the case may be) the item were sold by the partnership at its fair market value.

(ii) With respect to sales, exchanges, or other dispositions after December 31, 1975, in any taxable year of a partnership ending after that date, the term *unrealized receivables,* for purposes of this section and sections 731, 736, 741, and 751, also includes potential gain from stock in a DISC as described in section 992(a). With respect to stock in such a DISC, the potential gain is the amount that would be treated as gain to which section 995(c) would apply if (at the time of the transaction described in section 731, 736, 741, or 751, as the case may be) the stock were sold by the partnership at its fair market value.

(iii) With respect to any taxable year of a partnership beginning after December 31, 1962, the term *unrealized receivables,* for purposes of this section and sections 731, 736, 741, and 751, also includes potential gain from section 1245 property. With respect to each item of partnership section 1245 property (as defined in section 1245(a)(3)), potential gain from section 1245 property is the amount that would be treated as gain to which section 1245(a)(1) would apply if (at the time of the transaction described in section 731, 736, 741, or 751, as the case may be) the item of section 1245 property were sold by the partnership at its fair market value. See § 1.1245-1(e)(1). For example, if a partnership would recognize under section 1245(a)(1) gain of $600 upon a sale of one item of section 1245 property and gain of $300 upon a sale of its only other item of such property, the potential section 1245 income of the partnership would be $900.

(iv) With respect to transfers after October 9, 1975, and to sales, exchanges, and distributions taking place after that date, the term *unrealized receivables,* for purposes of this section and sections 731, 736, 741, and 751, also includes potential gain from stock in certain foreign corporations as described in section 1248. With respect to stock in such a foreign corporation,

the potential gain is the amount that would be treated as gain to which section 1248(a) would apply if (at the time of the transaction described in section 731, 736, 741, or 751, as the case may be) the stock were sold by the partnership at its fair market value.

(v) With respect to any taxable year of a partnership ending after December 31, 1963, the term *unrealized receivables,* for purposes of this section and sections 731, 736, 741, and 751, also includes potential gain from section 1250 property. With respect to each item of partnership section 1250 property (as defined in section 1250(c)), potential gain from section 1250 property is the amount that would be treated as gain to which section 1250(a) would apply if (at the time of the transaction described in section 731, 736, 741, or 751, as the case may be) the item of section 1250 property were sold by the partnership at its fair market value. See § 1.1250-1(f)(1).

(vi) With respect to any taxable year of a partnership beginning after December 31, 1969, the term *unrealized receivables,* for purposes of this section and sections 731, 736, 741, and 751, also includes potential gain from farm recapture property as defined in section 1251(e)(1) (as in effect before enactment of the Tax Reform Act of 1984). With respect to each item of partnership farm recapture property so defined, the potential gain is the amount which would be treated as gain to which section 1251(c) (as in effect before enactment of the Tax Reform Act of 1984) would apply if (at the time of the transaction described in section 731, 736, 741, or 751, as the case may be) the item were sold by the partnership at its fair market value.

(vii) With respect to any taxable year of a partnership beginning after December 31, 1969, the term *unrealized receivables,* for purposes of this section and sections 731, 736, 741, and 751, also includes potential gain from farm land as defined in section 1252(a)(2). With respect to each item of partnership farm land so defined, the potential gain is the amount that would be treated as gain to which section 1252(a)(1) would apply if (at the time of the transaction described in section 731, 736, 741, or 751, as the case may be) the item were sold by the partnership at its fair market value.

(viii) With respect to transactions which occur after December 31, 1976, in any taxable year of a partnership ending after that date, the term *unrealized receivables,* for purposes of this section and sections 731, 736, 741, and 751, also includes potential gain from franchises, trademarks, or trade names referred to in section 1253(a). With respect to each such item so referred to in section 1253(a), the potential gain is the amount that would be treated as gain to which section 1253(a) would apply if (at the time of the transaction described in section 731, 736, 741, or 751, as the case may be) the items were sold by the partnership at its fair market value.

(ix) With respect to any taxable year of a partnership ending after December 31, 1975, the term *unrealized receivables,* for purposes of this section and sections 731, 736, 741, and 751, also includes potential gain under section 1254(a) from natural resource recapture property as defined in § 1.1254-1(b)(2). With respect to each separate partnership natural resource recapture property so described, the potential gain is the amount that would be treated as gain to which section 1254(a) would apply if (at the time of the transaction described in section 731, 736, 741, or 751, as the case may be) the property were sold by the partnership at its fair market value.

(5) For purposes of subtitle A of the Internal Revenue Code, the basis of any potential gain described in paragraph (c)(4) of this section is zero.

(6)

(i) If (at the time of any transaction referred to in paragraph (c)(4) of this section) a partnership holds property described in paragraph (c)(4) of this section and if—

(A) A partner had a special basis adjustment under section 743(b) in respect of the property;

(B) The basis under section 732 of the property if distributed to the partner would reflect a special basis adjustment under section 732(d); or

(C) On the date a partner acquired a partnership interest by way of a sale or exchange (or upon the death of another partner) the partnership owned the property and an election under section 754 was in effect with respect to the partnership, the partner's share of any potential gain described in paragraph (c)(4) of this section is determined under paragraph (c)(6)(ii) of this section.

(ii) The partner's share of the potential gain described in paragraph (c)(4) of this section in respect of the property to which this paragraph (c)(6)(ii) applies is that amount of gain that the partner would recognize under section 617(d)(1), 995(c), 1245(a), 1248(a), 1250(a), 1251(c) (as in effect before the Tax Reform Act of 1984), 1252(a), 1253(a), or 1254(a) (as the case may be) upon a sale of the property by the partnership, except that, for purposes of this paragraph (c)(6) the partner's share of such gain is determined in a manner that is consistent with the manner in which the partner's share of partnership property is determined; and the amount of a potential special basis adjustment under section 732(d) is treated as if it were the amount of a special basis adjustment under section 743(b). For example, in determining, for purposes of this paragraph (c)(6), the amount of gain that a partner would recognize under section 1245 upon a sale of partnership property, the items allocated under § 1.1245-1(e)(3)(ii) are allocated to the partner in the same manner as the partner's share of partnership property is determined. See § 1.1250-1(f) for rules similar to those contained in § 1.1245-1(e)(3)(ii).

(d) ***Inventory items which have substantially appreciated in value*** —

(1) ***Substantial appreciation.*** Partnership inventory items shall be considered to have appreciated substantially in value if, at the time of the sale or distribution, the total fair market value of all the inventory items of the partnership exceeds 120 percent of the aggregate adjusted basis for such property in the hands of the partnership (without regard to any special basis adjustment of any partner) and, in addition, exceeds 10 percent of the fair market value of all partnership property other than money. The terms “inventory items which have appreciated substantially in value” or “substantially appreciated inventory items” refer to the aggregate of all partnership inventory items. These terms do not refer to specific partnership inventory items or to specific groups of such items. For example, any distribution of inventory items by a partnership the inventory items of which as a whole are substantially appreciated in value shall be a distribution of substantially appreciated inventory items for the purposes of section 751(b), even though the specific inventory items distributed may not be appreciated in value. Similarly, if the aggregate of partnership inventory items are not substantially appreciated in value, a distribution of specific inventory items, the value of which is more than 120 percent of their adjusted basis, will not constitute a distribution of substantially appreciated inventory items. For the purpose of this paragraph, the “fair market value” of inventory items has the same meaning as “market” value in the regulations under section 471, relating to general rule for inventories.

(2) ***Inventory items.*** The term *inventory items* as used in subchapter K, chapter 1 of the Code, includes the following types of property:

(i) Stock in trade of the partnership, or other property of a kind which would properly be included in the inventory of the partnership if on hand at the close of the taxable year, or property held by the partnership primarily for sale to customers in the ordinary course of its trade or business. See section 1221(1).

(ii) Any other property of the partnership which, on sale or exchange by the partnership, would be considered property other than a capital asset and other than property described in section 1231. Thus, accounts receivable acquired in the ordinary course of business for services or from the sale of stock in trade constitute inventory items (see section 1221(4)), as do any unrealized receivables.

(iii) Any other property retained by the partnership which, if held by the partner selling his partnership interest or receiving a distribution described in section 751(b), would be considered property described in subdivision (i) or (ii) of this subparagraph. Property actually distributed to the partner does not come within the provisions of section 751(d)(2)(C) and this subdivision.

(e) ***Section 751 property and other property.*** For the purposes of this section, *section 751 property* means unrealized receivables or substantially appreciated inventory items, and *other property* means all property (including money) except section 751 property.

(f) ***Effective date.*** Section 751 applies to gain or loss to a seller, distributee, or partnership in the case of a sale, exchange, or distribution occurring after March 9, 1954. For the purpose of applying this paragraph in the case of a taxable year beginning before January 1, 1955, a partnership or a partner may elect to treat as applicable any other section of subchapter K, chapter 1 of the Code. Any such election shall be made by a statement submitted not later than the time prescribed by law for the filing of the return for such taxable year, or August 21, 1956, whichever date is later (but not later than 6 months after the time prescribed by law for the filing of the return for such year). See section 771(b)(3) and paragraph (b)(3) of § 1.771-1. See also section 771(c) and paragraph (c) of § 1.771-1. The rules contained in paragraphs (a)(2) and (a)(3) of this section apply to transfers of partnership interests that occur on or after December 15, 1999.

(g) ***Examples.*** Application of the provisions of section 751 may be illustrated by the following examples:

Example 1. (i)(A) A and B are equal partners in personal service partnership PRS. B transfers its interest in PRS to T for $15,000 when PRS's balance sheet (reflecting a cash receipts and disbursements method of accounting) is as follows:

	Assets	
	Adjusted basis	**Fair market value**
Cash	$3,000	$3,000
Loans Receivable	10,000	10,000
Capital Assets	7,000	5,000
Unrealized Receivables	0	14,000

	Assets	
	Adjusted basis	Fair market value
Total	20,000	32,000

	Liabilities and Capital	
	Adjusted per books	Fair market value
Liabilities	$2,000	$2,000
Capital:		
A	9,000	15,000
B	9,000	15,000
Total	20,000	32,000

(B) None of the assets owned by PRS is section 704(c) property, and the capital assets are nondepreciable. The total amount realized by B is $16,000, consisting of the cash received, $15,000, plus $1,000, B's share of the partnership liabilities assumed by T. See section 752. B's undivided half-interest in the partnership property includes a half-interest in the partnership's unrealized receivables items. B's basis for its partnership interest is $10,000 ($9,000, plus $1,000, B's share of partnership liabilities). If section 751(a) did not apply to the sale, B would recognize $6,000 of capital gain from the sale of the interest in PRS. However, section 751(a) does apply to the sale.

(ii) If PRS sold all of its section 751 property in a fully taxable transaction immediately prior to the transfer of B's partnership interest to T, B would have been allocated $7,000 of ordinary income from the sale of PRS's unrealized receivables. Therefore, B will recognize $7,000 of ordinary income with respect to the unrealized receivables. The difference between the amount of capital gain or loss that the partner would realize in the absence of section 751 ($6,000) and the amount of ordinary income or loss determined under paragraph (a)(2) of this section ($7,000) is the transferor's capital gain or loss on the sale of its partnership interest. In this case, B will recognize a $1,000 capital loss.

Example 2. (a) *Facts.* Partnership ABC makes a distribution to partner C in liquidation of his entire one-third interest in the partnership. At the time of the distribution, the balance sheet of the partnership, which

uses the accrual method of accounting, is as follows:

ASSETS

	Adjusted basis per books	Market value
Cash	$15,000	$15,000
Accounts receivable	9,000	9,000
Inventory	21,000	30,000
Depreciable property	42,000	48,000
Land	9,000	9,000
Total	96,000	11,000

LIABILITIES AND CAPITAL

	Per books	Value
Current liabilities	$15,000	$15,000
Mortgage payable	21,000	21,000
Capital:		
A	20,000	25,000
B	20,000	25,000
C	20,000	25,000
Total	96,000	111,000

The distribution received by C consists of $10,000 cash and depreciable property with a fair market value of $15,000 and an adjusted basis to the partnership of $15,000.

(b) *Presence of section 751 property.* The partnership has no unrealized receivables, but the dual test provided in section 751(d)(1) must be applied to determine whether the inventory items of the partnership, in the aggregate, have appreciated substantially in value. The fair market value of all partnership inventory items, $39,000 (inventory $30,000, and accounts receivable $9,000), exceeds 120 percent of the $30,000 adjusted basis of such items to the partnership. The fair market value of the inventory items, $39,000, also exceeds 10 percent of the fair market value of all partnership property other than money (10 percent of $96,000 or $9,600). Therefore, the partnership inventory items have substantially appreciated in value.

(c) *The properties exchanged.* Since C's entire partnership interest is to be liquidated, the provisions of section 736 are applicable. No part of the payment, however, is considered as a distributive share or as a guaranteed payment under section 736(a) because the entire payment is made for C's interest in partnership property. Therefore, the entire payment is for an interest in partnership property under section 736(b), and, to the extent applicable, subject to the rules of section 751. In the distribution, C received his share of cash ($5,000) and $15,000 in depreciable property ($1,000 less than his $16,000 share). In addition, he received other partnership property ($5,000 cash and $12,000 liabilities assumed, treated as money distributed under section 752(b)) in exchange for his interest in accounts receivable ($3,000), inventory ($10,000), land ($3,000), and the balance of his interest in depreciable property ($1,000). Section 751(b) applies only to the extent of the exchange of other property for section 751 property (*i.e.*, inventory items, which include trade accounts receivable). The section 751 property exchanged has a fair market value of $13,000 ($3,000 in accounts receivable and $10,000 in inventory). Thus, $13,000 of the total amount C received is considered as received for the sale of section 751 property.

(d) *Distributee partner's tax consequences.* C's tax consequences on the distribution are as follows:

(1) *The section 751(b) sale or exchange.* C's share of the inventory items is treated as if he received them in a current distribution, and his basis for such items is $10,000 ($7,000 for inventory and $3,000 for accounts receivable) as determined under paragraph (b)(3)(iii) of this section. Then C is considered as having sold his share of inventory items to the partnership for $13,000. Thus, on the sale of his share of inventory items, C realizes $3,000 of ordinary income.

(2) *The part of the distribution not under section 751(b).* Section 751(b) does not apply to the balance of the distribution. Before the distribution, C's basis for his partnership interest was $32,000 ($20,000 plus $12,000, his share of partnership liabilities). See section 752(a). This basis is reduced by $10,000, the basis attributed to the section 751 property treated as distributed to C and sold by him to the partnership. Thus, C has a basis of $22,000 for the remainder of his partnership interest. The total distribution to C was $37,000 ($22,000 in cash and liabilities assumed, and $15,000 in depreciable property). Since C received no more than his share of the depreciable property, none of the depreciable property constitutes proceeds of the sale under section 751(b). C did receive more than his share of money. Therefore, the sale proceeds, treated separately in subparagraph (1) of this paragraph of this example, must consist of money and therefore must be deducted from the money distribution. Consequently, in liquidation of the balance of C's interest, he receives depreciable property and $9,000 in money ($22,000 less $13,000). Therefore, no gain or loss is recognized to C on the distribution. Under section 732(b), C's basis for the depreciable property is $13,000 (the remaining basis of his partnership interest, $22,000, reduced by $9,000, the money received in the distribution).

(e) *Partnership's tax consequences.* The tax consequences to the partnership on the distribution are as follows:

(1) *The section 751(b) sale or exchange.* The partnership consisting of the remaining members has no ordinary income on the distribution since it did not give up any section 751 property in the exchange. Of the $22,000 money distributed (in cash and the assumption of C's share of liabilities), $13,000 was paid to acquire C's interest in inventory ($10,000 fair market value) and in accounts receivable ($3,000). Since under section 751(b) the partnership is treated as buying these properties, it has a new cost basis for the inventory and accounts receivable acquired from C. Its basis for C's share of inventory and accounts receivable is $13,000, the amount which the partnership is considered as having paid C in the exchange. Since the partnership is treated as having distributed C's share of inventory and accounts receivable to him, the partnership must decrease its basis for inventory and accounts receivable ($30,000) by $10,000, the basis of C's share treated as distributed to him, and then increase the basis for inventory and accounts receivable by $13,000 to reflect the purchase prices of the items acquired. Thus, the basis of the partnership inventory is increased from $21,000 to $24,000 in the transaction. (Note that the basis of property acquired in a section 751(b) exchange is determined under section 1012 without regard to any elections of the partnership. See paragraph (e) of § 1.732-1.) Further, the partnership realizes no capital gain or loss on the portion of the distribution treated as a sale under section 751(b) since, to acquire C's interest in the inventory and accounts receivable, it gave up money and assumed C's share of liabilities.

(2) *The part of the distribution not under section 751(b).* In the remainder of the distribution to C which was not in exchange for C's interest in section 751 property, C received only other property as follows: $15,000 in depreciable property (with a basis to the partnership of $15,000) and $9,000 in money ($22,000 less $13,000 treated under subparagraph (1) of this paragraph of this example). Since this part of the distribution is not an exchange of section 751 property for other property, section 751(b) does not apply. Instead, the provisions which apply are sections 731 through 736, relating to distributions by a partnership. No gain or loss is recognized to the partnership on the distribution. (See section 731(b).) Further, the partnership makes no adjustment to the basis of remaining depreciable property unless an election under section 754 is in effect. (See section 734(a).) Thus, the basis of the depreciable property before the distribution, $42,000, is reduced by the basis of the depreciable property distributed, $15,000, leaving a basis for the depreciable property in the partnership of $27,000. However, if an election under section 754 is in effect, the partnership must make the adjustment required under section 734(b) as follows: Since the adjusted basis of the distributed property to the partnership had been $15,000, and is only $13,000 in C's hands (see paragraph (d)(2) of this example), the partnership will increase the basis of the depreciable property remaining in the partnership by $2,000 (the excess of the adjusted basis to the partnership of the distributed depreciable property immediately before the distribution over its basis to the distributee). Whether or not an election under section 754 is in effect, the basis for each of the remaining partner's partnership interests will be $38,000 ($20,000 original contribution, plus $12,000, each partner's original share of the liabilities, plus $6,000, the share of C's liabilities each assumed).

(f) *Partnership trial balance.* A trial balance of the AB partnership after the distribution in liquidation of C's entire interest would reflect the results set forth in the schedule below. Column I shows the amounts to be reflected in the records if an election is in effect under section 754 with respect to an optional adjustment

under section 734(b) to the basis of undistributed partnership property. Column II shows the amounts to be reflected in the records where an election under section 754 is not in effect. Note that in column II, the total bases for the partnership assets do not equal the total of the bases for the partnership interests.

Example 3. (a) *Facts.* Assume that the distribution to partner C in example 2 of this paragraph in liquidation of his entire interest in partnership ABC consists of $5,000 in cash and $20,000 worth of partnership inventory with a basis of $14,000.

	I		II	
	Sec.754, Election in effect		Sec.754, Election not in effect	
	Basis	Fair market value	Basis	Fair market value
Cash	$5,000	$5,000	$5,000	$5,000
Accounts receivable	9,000	9,000	9,000	9,000
Inventory	24,000	30,000	24,000	30,000
Depreciable property	29,000	33,000	27,000	33,000
Land	9,000	9,000	9,000	9,000
	76,000	86,000	74,000	86,000
Current liabilities	15,000	15,000	15,000	15,000
Mortgage	21,000	21,000	21,000	21,000
Capital:				
	20,000	25,000	20,000	25,000
	20,000	25,000	20,000	25,000
	76,000	86,000	76,000	86,000

(b) *Presence of section 751 property.* For the same reason as stated in paragraph (b) of example 2, the partnership inventory items have substantially appreciated in value.
(c) *The properties exchanged.* In the distribution, C received his share of cash ($5,000) and his share of appreciated inventory items ($13,000). In addition, he received appreciated inventory with a fair market value of $7,000 (and with an adjusted basis to the partnership of $4,900) and $12,000 in money (liabilities assumed). C has relinquished his interest in $16,000 of depreciable property and $3,000 of land. Although C relinquished his interest in $3,000 of accounts receivable, such accounts receivable are inventory items and, therefore, that exchange was not an exchange of section 751 property for other property. Section 751(b) applies only to the extent of the exchange of other property for section 751 property (*i.e.*, depreciable property or land for inventory items). Assume that the partners agree that the $7,000 of inventory in excess of C's share was received by him in exchange for $7,000 of depreciable property.

(d) *Distributee partner's tax consequences.* C's tax consequence on the distributions are as follows:

(1) *The section 751(b) sale or exchange.* C is treated as if he had received his 7/16ths share of the depreciable property in a current distribution. His basis for that share is $6,125 (42,000/48,000 of $7,000), as determined under paragraph (b)(2)(iii) of this section. Then C is considered as having sold his 7/16ths share of depreciable property to the partnership for $7,000, realizing a gain of $875.

(2) *The part of the distribution not under section 751(b).* Section 751(b) does not apply to the balance of the distribution. Before the distribution, C's basis for his partnership interest was $32,000 ($20,000, plus $12,000, his share of partnership liabilities). See section 752(a). This basis is reduced by $6,125, the basis of property treated as distributed to C and sold by him to the partnership. Thus, C will have a basis of $25,875 for the remainder of his partnership interest. Of the $37,000 total distribution to C, $30,000 ($17,000 in money, including liabilities assumed, and $13,000 in inventory) is not within section 751(b). Under section 732(b), C's basis for the inventory with a fair market value of $13,000 (which had an adjusted basis to the partnership of $9,100) is limited to $8,875, the amount of the remaining basis for his partnership interest, $25,875, reduced by $17,000, the money received. Thus, C's total aggregate basis for the inventory received is $15,875 ($7,000 plus $8,875), and not its $14,000 basis in the hands of the partnership.

(e) *Partnership's tax consequences.* The tax consequences to the partnership on the distribution are as follows:

(1) *The section 751(b) sale or exchange.* The partnership consisting of the remaining members has $2,100 of ordinary income on the sale of the $7,000 of inventory which had a basis to the partnership of $4,900 (21,000/30,000 of $7,000). This $7,000 of inventory was paid to acquire 7/16ths of C's interest in the depreciable property. Since, under section 751(b), the partnership is treated as buying this property from C, it has a new cost basis for such property. Its basis for the depreciable property is $42,875 ($42,000 less $6,125, the basis of the 7/16ths share considered as distributed to C, plus $7,000, the partnership purchase price for this share).

(2) *The part of the distribution not under section 751 (b).* In the remainder of the distribution to C which was not a sale or exchange of section 751 property for other property, the partnership realizes no gain or loss. See section 731(b). Further, under section 734(a), the partnership makes no adjustment to the basis of the accounts receivable or the 9/16ths interest in depreciable property which C relinquished. However, if an election under section 754 is in effect, the partnership must make the adjustment required under section 734(b) since the adjusted basis to the partnership of the inventory distributed had been $9,100, and C's basis for such inventory after distribution is only $8,875. The basis of the inventory remaining in the partnership must be increased by $225. Whether or not an election under section 754 is in effect, the basis for each of the remaining partnership interests will be $39,050 ($20,000 original contribution, plus $12,000, each partner's original share of the liabilities, plus $6,000, the share of C's liabilities now assumed, plus $1,050, each partner's share of ordinary income realized by the partnership upon that part of the distribution treated as a sale or exchange).

Example 4. (a) *Facts.* Assume the same facts as in example 3 of this paragraph, except that the partners did not identify the property which C relinquished in exchange for the $7,000 of inventory which he received in excess of his share.
(b) *Presence of section 751 property.* For the same reasons stated in paragraph (b) of example 2 of this paragraph, the partnership inventory items have substantially appreciated in value.

(c) *The properties exchanged.* The analysis stated in paragraph (c) of example 3 of this paragraph is the same in this example, except that, in the absence of a specific agreement among the partners as to the properties exchanged, C will be presumed to have sold to the partnership a proportionate amount of each property in which he relinquished an interest. Thus, in the absence of an agreement, C has received $7,000 of inventory in exchange for his release of 7/19ths of the depreciable property and 7/19ths of the land. ($7,000, fair market value of property released, over $19,000, the sum of the fair market values of C's interest in the land and C's interest in the depreciable property.)

(d) *Distributee partner's tax consequences.* C's tax consequences on the distribution are as follows:

(1) *The section 751(b) sale or exchange.* C is treated as if he had received his 7/19ths shares of the depreciable property and land in a current distribution. His basis for those shares is $6,263 (51,000/57,000 of $7,000, their fair market value), as determined under paragraph (b)(2)(iii) of this section. Then C is considered as having sold his 7/19ths shares of depreciable property and land to the partnership for $7,000, realizing a gain of $737.

(2) *The part of the distribution not under section 751(b).* Section 751(b) does not apply to the balance of the distribution. Before the distribution C's basis for his partnership interest was $32,000 ($20,000 plus $12,000, his share of partnership liabilities). See section 752(a). This basis is reduced by $6,263, the bases of C's shares of depreciable property and land treated as distributed to him and sold by him to the partnership. Thus, C will have a basis of $25,737 for the remainder of his partnership interest. Of the total $37,000 distributed to C, $30,000 ($17,000 in money, including liabilities assumed, and $13,000 in inventory) is not within section 751(b). Under section 732(b), C's basis for the inventory (with a fair market value of $13,000 and an adjusted basis to the partnership of $9,100) is limited to $8,737, the amount of the remaining basis for his partnership interest ($25,737 less $17,000, money received. Thus, C's total aggregate basis for the inventory he received is $15,737 ($7,000 plus $8,737), and not the $14,000 basis it had in the hands of the partnership.

(e) *Partnership's tax consequences.* The tax consequences to the partnership on the distribution are as follows:

(1) *The section 751(b) sale or exchange.* The partnership consisting of the remaining members has $2,100 of ordinary income on the sale of $7,000 of inventory which had a basis to the partnership of $4,900 (21,000/30,000 of $7,000). This $7,000 of inventory was paid to acquire 7/19ths of C's interest in the depreciable property and land. Since, under section 751(b), the partnership is treated as buying this

property from C, it has a new cost basis for such property. The bases of the depreciable property and land would be $42,737 and $9,000, respectively. The basis for the depreciable property is computed as follows: The common partnership basis of $42,000 is reduced by the $5,158 basis (42,000/48,000 of $5,895) for C's 7/19ths interest constructively distributed and increased by $5,895 (16,000/19,000 of $7,000), the part of the purchase price allocated to the depreciable property. The basis of the land would be computed in the same way. The $9,000 original partnership basis is reduced by $1,105 basis ($9,000/9,000 of $1,105) of land constructively distributed to C, and increased by $1,105 (3,000/19,000 of $7,000), the portion of the purchase price allocated to the land.

(2) *The part of the distribution not under section 751(b).* In the remainder of the distribution to C which was not a sale or exchange of section 751 property for other property, the partnership realizes no gain or loss. See section 731(b). Further, under section 734(a), the partnership makes no adjustment to the basis of the accounts receivable or the 12/19ths interests in depreciable property and land which C relinquished. However, if an election under section 754 is in effect, the partnership must make the adjustment required under section 734(b) since the adjusted basis to the partnership of the inventory distributed had been $9,100 and C's basis for such inventory after the distribution is only $8,737. The basis of the inventory remaining in the partnership must be increased by the difference of $363. Whether or not an election under section 754 is in effect, the basis for each of the remaining partnership interests will be $39,050 ($20,000 original contribution plus $12,000, each partner's original share of the liabilities, plus $6,000, the share of C's liabilities assumed, plus $1,050, each partner's share of ordinary income realized by the partnership upon the part of the distribution treated as a sale or exchange).

Example 5. (a) *Facts.* Assume that partner C in example 2 of this paragraph agrees to reduce his interest in capital and profits from one-third to one-fifth for a current distribution consisting of $5,000 in cash, and $7,500 of accounts receivable with a basis to the partnership of $7,500. At the same time, the total liabilities of the partnership are not reduced. Therefore, after the distribution, C's share of the partnership liabilities has been reduced by $4,800 from $12,000 (1/3 of $36,000) to $7,200 (1/5 of $36,000).
(b) *Presence of section 751 property.* For the same reasons as stated in paragraph (b) of example 2 of this paragraph, the partnership inventory items have substantially appreciated in value.

(c) *The properties exchanged.* C's interest in the fair market value of the partnership properties before and after the distribution can be illustrated by the following table:

Item	C's interest Fair Market Value		C received		C relinquished
	One-third before	One-fifth after	Distribution of share	In excess of share	
Cash	$5,000	$2,000	$3,000	$2,000	
Liabilities	(12,000)	(7,200)		4,800	

Item	C's interest Fair Market Value		C received		C relinquished
	One-third before	One-fifth after	Distribution of share	In excess of share	
assumed Inventory items:					
Accounts receivable	3,000	300	2,700	4,800	
Inventory	10,000	6,000			$4,000
Depreciable property	16,000	9,600			6,400
Land	3,000	1,800			1,200
Total	25,000	12,500	5,700	11,600	11,600

Although C relinquished his interest in $4,000 of inventory and received $4,800 of accounts receivable, both items constitute section 751 property and C has received only $800 of accounts receivable for $800 worth of depreciable property or for an $800 undivided interest in land. In the absence of an agreement identifying the properties exchanged, it is presumed C received $800 for proportionate shares of his interests in both depreciable property and land. To the extent that inventory was exchanged for accounts receivable, or to the extent cash was distributed for the release of C's interest in the balance of the depreciable property and land, the transaction does not fall within section 751(b) and is a current distribution under section 732(a). Thus, the remaining $6,700 of accounts receivable are received in a current distribution.

(d) *Distributee partner's tax consequences.* C's tax consequences on the distribution are as follows:
(1) *The section 751(b) sale or exchange.* Assuming that the partners paid $800 worth of accounts receivable for $800 worth of depreciable property, C is treated as if he received the depreciable property in a current distribution, and his basis for the $800 worth of depreciable property is $700 (42,000/48,000 of $800, its fair market value), as determined under paragraph (b)(2)(iii) of this section. Then C is considered as having sold his $800 share of depreciable property to the partnership for $800. On the sale of the depreciable property, C realizes a gain of $100. If, on the other hand, the partners had agreed that C exchanged an $800 interest in the land for $800 worth of accounts receivable, C would realize no gain or loss, because under paragraph (b)(2)(iii) of this section his basis for the land sold would be $800. In the absence of an agreement, the basis for the depreciable property and land (which C is considered as having received in a current distribution and then sold back to the partnership) would be $716 (51,000/57,000 of $800). In that case, on the sale of the balance of the $800 share of depreciable property and land, C would realize $84 of gain ($800 less $716).

(2) *The part of the distribution not under section 751(b).* Section 751(b) does not apply to the balance of the distribution. Under section 731, C does not realize either gain or loss on the balance of the distribution. The adjustments to the basis of C's interest are illustrated in the following table:

	If accounts receivable received for depreciable property	If accounts receivable received for land	If there is no agreement
Original basis for C's interest	$32,000	$32,000	$32,000
Less basis of property distributed prior to sec. 751 (b) sale or exchange	−700	−800	−716
	31,300	31,200	31,284
Less money received in distribution	−9,800	−9,800	−9,800
	21,500	21,400	21,484
Less basis of property received in a current distribution under sec. 732	−6,700	−6,700	−6,700
Resulting basis for C's interest	14,800	14,700	14,784

C's basis for the $1,500 worth of accounts receivable which he received in the distribution will be $7,500, composed of $800 for the portion purchased in the section 751(b) exchange, plus $6,700, the basis carried over under section 732(a) for the portion received in the current distribution.

(e) *Partnership's tax consequences.* The tax consequences to the partnership on the distribution are as follows:

(1) *The section 751(b) sale or exchange.* The partnership realizes no gain or loss in the section 751 sale or exchange because it had a basis of $800 for the accounts receivable for which it received $800 worth of other property. If the partnership agreed to purchase $800 worth of depreciable property, the partnership basis of depreciable property becomes $42,100 ($42,000 less $700 basis of property constructively distributed to C, plus $800, price of property purchased). If the partnership purchased land with the accounts receivable, there would be no change in the basis of the land to the partnership because the basis of land distributed was equal to its purchase price. If there were no agreement, the basis of the depreciable property and land would be $51,084 (depreciable property, $42,084 and land $9,000). The basis for the depreciable property is computed as follows: The common partnership basis of $42,000 is reduced by the $590 basis (42,000/48,000 of $674) for C's $674 interest constructively distributed, and increased by $674 (6,400/7,600 of $800), the part of the purchase price allocated to the depreciable property. The basis of the land would be computed in the same way. The $9,000 original partnership basis is reduced by $126 basis (9,000/9,000 of $126) of the land constructively distributed to C, and increased by $126 (1,200/7,600 of $800), the portion of the purchase price allocated to the land.

(2) *The part of the distribution not under section 751(b).* The partnership will realize no gain or loss in the balance of the distribution under section 731. Since the property in C's hands after the distribution will have the same basis it had in the partnership, the basis of partnership property remaining in the partnership after the distribution will not be adjusted (whether or not an election under 754 is in effect).

Example 6. (a) *Facts.* Partnership ABC distributes to partner C, in liquidation of his entire one-third interest in the partnership, a machine which is section 1245 property with a recomputed basis (as defined in section 1245(a)(2)) of $18,000. At the time of the distribution, the balance sheet of the partnership is as follows:

ASSETS

	Adjusted basis per books	Market value
Cash	$3,000	$3,000
Machine (section 1245 property)	9,000	15,000
Land	18,000	27,000
Total	30,000	45,000

LIABILITIES AND CAPITAL

	Per books	Value
Liabilities	$0	$0
Capital:		
A	10,000	15,000
B	10,000	15,000
C	10,000	15,000
Total	30,000	45,000

(b) *Presence of section 751 property.* The section 1245 property is an unrealized receivable of the partnership to the extent of the potential section 1245 income in respect of the property. Since the fair market value of the property ($15,000) is lower than its recomputed basis ($18,000), the excess of the fair market value over its adjusted basis ($9,000), or $6,000, is the potential section 1245 income of the partnership in respect of the property. The partnership has no other section 751 property.

(c) *The properties exchanged.* In the distribution C received his share of section 751 property (potential section 1245 income of $2,000, i.e., 1/3 of $6,000) and his share of section 1245 property (other than potential section 1245 income) with a fair market value of $3,000, i.e., 1/3 of ($15,000 minus $6,000), and an adjusted basis of $3,000, i.e., 1/3 of $9,000. In addition he received $4,000 of section 751 property (consisting of $4,000 ($6,000 minus $2,000) of potential section 1245 income) and section 1245 property (other than potential section 1245 income) with a fair market value of $6,000 ($9,000 minus $3,000) and an adjusted basis of $6,000 ($9,000 minus $3,000). C relinquished his interest in $1,000 of cash and $9,000 of land. Assume that the partners agree that the $4,000 of section 751 property in excess of C's share was received by him in exchange for $4,000 of land.

(d) *Distributee partner's tax consequences.* C's tax consequences on the distributions are as follows:

(1) *The section 751(b) sale or exchange.* C is treated as if he received in a current distribution 4/9ths of his share of the land with a basis of $2,667 (18,000/27,000 × $4,000). Then C is considered as having sold his 4/9ths share of the land to the partnership for $4,000, realizing a gain of $1,333. C's basis for the remainder of his partnership interest after the current distribution is $7,333, i.e., the basis of his partnership interest before the current distribution ($10,000) minus the basis of the land treated as distributed to him ($2,667).

(2) *The part of the distribution not under section 751(b).* Of the $15,000 total distribution to C, $11,000 ($2,000 of potential section 1245 income and $9,000 section 1245 property other than potential section 1245 income) is not within section 751(b). Under section 732(b) and (c), C's basis for his share of potential section 1245 income is zero (see paragraph (c)(5) of this section) and his basis for $9,000 of section 1245 property (other than potential section 1245 income) is $7,333, i.e., the amount of the remaining basis for his partnership interest ($7,333) reduced by the basis for his share of potential section 1245 income (zero). Thus C's total aggregate basis for the section 1245 property (fair market value of $15,000) distributed to him is $11,333 ($4,000 plus $7,333). For an illustration of the computation of his recomputed basis for the section 1245 property immediately after the distribution, see example 2 of paragraph (f)(3) of § 1.1245-4.

(e) *Partnership's tax consequences.* The tax consequences to the partnership on the distribution are as follows:

(1) *The section 751(b) sale or exchange.* Upon the sale of $4,000 potential section 1245 income, with a basis of zero, for 4/9ths of C's interest in the land, the partnership consisting of the remaining members has $4,000 ordinary income under sections 751(b) and 1245(a)(1). See section 1245(b)(3) and (6)(A). The partnership's new basis for the land is $19,333, i.e., $18,000, less the basis of the 4/9ths share considered as distributed to C ($2,667), plus the partnership purchase price for this share ($4,000).

(2) *The part of the distribution not under section 751(b).* The analysis under this subparagraph should be made in accordance with the principles illustrated in paragraph (e)(2) of examples 3, 4, and 5 of this paragraph.

[T.D. 6500, 25 FR 11814, Nov. 26, 1960, as amended by T.D. 6832, 30 FR 8575, July 7, 1965; T.D. 7084, 36 FR 268, Jan. 8, 1971; T.D. 8586, 60 FR 2500, Jan. 10, 1995; T.D. 8847, 64 FR 69915, Dec. 15, 1999; T.D. 9137, 69 FR 42559, July 16, 2004]

§ 1.752-0 Table of contents.

This section lists the major paragraphs that appear in §§ 1.752-1 through 1.752-7.

§ 1.752-1 Treatment of partnership liabilities.

(a) Definitions.

(1) Recourse liability defined.

(2) Nonrecourse liability defined.

(3) Related person.

(4) Liability defined.

(i) In general.

(ii) Obligation.

(iii) Other liabilities.

(iv) Effective date.

(b) Increase in partner's share of liabilities.

(c) Decrease in partner's share of liabilities.

(d) Assumption of liability.

(1) In general.

(2) Applicability date.

(e) Property subject to a liability.

(f) Netting of increases and decreases in liabilities resulting from same transaction.

(g) Example.

(h) Sale or exchange of partnership interest.

(i) Bifurcation of partnership liabilities.

§ 1.752-2 Partner's share of recourse liabilities.

(a) Partner's share of recourse liabilities.

(1) In general.

(2) Overlapping economic risk of loss.

(3) Direct economic risk of loss.

(b) Obligation to make a payment.

(1) In general.

(2) Treatment upon deemed disposition.

(3) Obligations recognized.

(i) In general.

(ii) Special rules for bottom dollar payment obligations.

(A) In general.

(B) Exception.

(C) Definition of bottom dollar payment obligation.

(*1*) In general.

(*2*) Exceptions.

(*3*) Benefited party defined.

(D) Disclosure of bottom dollar payment obligations.

(iii) Special rule for indemnities and reimbursement agreements.

(4) Contingent obligations.

(5) Reimbursement rights.

(6) Deemed satisfaction or obligation.

(c) Partner or related person as lender.

(1) In general.

(2) Wrapped debt.

(d) De minimis exceptions.

(1) Partner as lender.

(2) Partner as guarantor.

(e) Special rule for nonrecourse liability with interest guaranteed by a partner.

(1) In general.

(2) Computation of present value.

(3) Safe harbor.

(4) De minimis exception.

(f) Examples.

(g) Time-value-of-money considerations.

(1) In general.

(2) Valuation of an obligation.

(3) Satisfaction of obligation with partner's promissory note.

(4) Example.

(h) Partner providing property as security for partnership liability.

(1) Direct pledge.

(2) Indirect pledge.

(3) Valuation.

(4) Partner's promissory note.

(i) Treatment of recourse liabilities in tiered partnerships.

(1) In general.

(2) Coordination with overlapping economic risk of loss.

(3) Example.

(j) Anti-abuse rules.

(1) In general.

(2) Arrangements tantamount to a guarantee.

(i) In general.

(ii) Economic risk of loss.

(3) Plan to circumvent or avoid an obligation.

(i) General rule.

(ii) Factors indicating plan to circumvent or avoid an obligation.

(4) Example.

(k) No reasonable expectation of payment.

(1) In general.

(2) Examples.

(3) Plan to circumvent or avoid the regulations.

(4) Examples.

(l) Applicability dates.

§ 1.752-3 Partner's share of nonrecourse liabilities.

(a) In general.

(b) Examples.

§ 1.752-4 Special rules.

(a) Tiered partnerships.

(b) Related person definition.

(1) In general.

(2) Related partner exception.

(3) Person related to more than one partner.

(4) Special rule where entity structured to avoid related person status.

(i) In general.

(ii) Ownership interest.

(5) Examples.

(c) Limitation.

(d) Time of determination.

(e) Ordering rule.

(f) Example.

§ 1.752-5 Effective dates and transition rules.

(a) In general.

(b) Election.

(1) In general.

(2) Time and manner of election.

(c) Effect of section 708(b)(1)(B) termination on determining date liabilities are incurred or assumed.

§ 1.752-6 Partnership assumption of partner's section 358(h)(3) liability after October 18, 1999, and before June 24, 2003.

(a) In general.

(b) Exceptions.

(1) In general.

(2) Transactions described in Notice 2000-44.

(c) Example.

(d) Effective date.

(1) In general.

(2) Election to apply § 1.752-7.

§ 1.752-7 Partnership assumption of partner's § 1.752-7 liability on or after June 24, 2003.

(a) Purpose and structure.

(b) Definitions.

(1) Assumption.

(2) Adjusted value.

(3) § 1.752-7 liability.

(i) In general.

(ii) Amount and share of § 1.752-7 liability.

(iii) Example.

(4) § 1.752-7 liability transfer.

(i) In general.

(ii) Terminations under section 708(b)(1)(B).

(5) § 1.752-7 liability partner.

(i) In general.

(ii) Tiered partnerships.

(A) Assumption by a lower-tier partnership.

(B) Distribution of partnership interest.

(6) Remaining built-in loss associated with a § 1.752-7 liability.

(i) In general.

(ii) Partial dispositions and assumptions.

(7) § 1.752-7 liability reduction.

(i) In general.

(ii) Partial dispositions and assumptions.

(8) Satisfaction of § 1.752-7 liability.

(9) Testing date.

(10) Trade or business.

(i) In general.

(ii) Examples.

(c) Application of section 704(b) and (c) to assumed § 1.752-7 liabilities.

(1) In general.

(i) Section 704(c).

(ii) Section 704(b).

(2) Example.

(d) Special rules for transfers of partnership interests, distributions of partnership assets, and assumptions of the § 1.752-7 liability after a § 1.752-7 liability transfer.

(1) In general.

(2) Exceptions.

(i) In general.

(ii) Examples.

(e) Transfer of § 1.752-7 liability partner's partnership interest.

(1) In general.

(2) Examples.

(3) Exception for nonrecognition transactions.

(i) In general.

(ii) Examples.

(f) Distribution in liquidation of § 1.752-7 liability partner's partnership interest.

(1) In general.

(2) Example.

(g) Assumption of § 1.752-7 liability by a partner other than § 1.752-7 liability partner.

(1) In general.

(2) Consequences to § 1.752-7 liability partner.

(3) Consequences to partnership.

(4) Consequences to assuming partner.

(5) Example.

(h) Notification by the partnership (or successor) of the satisfaction of the § 1.752-7 liability.

(i) Special rule for amounts that are capitalized prior to the occurrence of an event described in paragraphs (e), (f), or (g).

(1) In general.

(2) Example.

(j) Tiered partnerships.

(1) Look-through treatment.

(2) Trade or business exception.

(3) Partnership as a § 1.752-7 liability partner.

(4) Transfer of § 1.752-7 liability by partnership to another partnership or corporation after a transaction described in paragraphs (e),(f), or (g).

(i) In general.

(ii) Subsequent transfers.

(5) Example.

(k) Effective dates.

(1) In general.

(2) Election to apply this section to assumptions of liabilities occurring after October 18, 1999 and before June 24, 2003.

(i) In general.

(ii) Manner of making election.

(iii) Filing of amended returns.

(iv) Time for making election.

[T.D. 8380, 56 FR 66350, Dec. 23, 1991, as amended by T.D. 9207, 70 FR 30342, May 26, 2005; T.D. 9877, 84 FR 54022, Oct. 9, 2019; T.D. 10014, 89 FR 95113, Dec. 2, 2024]

§ 1.752-1 Treatment of partnership liabilities.

(a) ***Definitions.*** For purposes of section 752, the following definitions apply:

(1) ***Recourse liability defined.*** A partnership liability is a recourse liability to the extent that any partner or related person bears the economic risk of loss for that liability under § 1.752-2.

(2) ***Nonrecourse liability defined.*** A partnership liability is a nonrecourse liability to the extent that no partner or related person bears the economic risk of loss for that liability under § 1.752-2.

(3) ***Related person.*** Related person means a person having a relationship to a partner that is described in § 1.752-4(b).

(4) ***Liability defined*** —

(i) ***In general.*** An obligation is a liability for purposes of section 752 and the regulations thereunder (§ 1.752-1 liability), only if, when, and to the extent that incurring the obligation—

(A) Creates or increases the basis of any of the obligor's assets (including cash);

(B) Gives rise to an immediate deduction to the obligor; or

(C) Gives rise to an expense that is not deductible in computing the obligor's taxable income and is not properly chargeable to capital.

(ii) ***Obligation.*** For purposes of this paragraph and § 1.752-7, an obligation is any fixed or contingent obligation to make payment without regard to whether the obligation is otherwise taken into account for purposes of the Internal Revenue Code. Obligations include, but are not limited to, debt obligations, environmental obligations, tort obligations, contract obligations, pension obligations, obligations under a short sale, and obligations under derivative financial instruments such as options, forward contracts, futures contracts, and swaps.

(iii) ***Other liabilities.*** For obligations that are not § 1.752-1 liabilities, see §§ 1.752-6 and 1.752-7.

(iv) ***Effective date.*** Except as otherwise provided in § 1.752-7(k), this paragraph (a)(4) applies to liabilities that are incurred or assumed by a partnership on or after June 24, 2003.

(b) ***Increase in partner's share of liabilities.*** Any increase in a partner's share of partnership liabilities, or any increase in a partner's individual liabilities by reason of the partner's assumption of partnership liabilities, is treated as a contribution of money by that partner to the partnership.

(c) ***Decrease in partner's share of liabilities.*** Any decrease in a partner's share of partnership liabilities, or any decrease in a partner's individual liabilities by reason of the partnership's assumption of the individual liabilities of the partner, is treated as a distribution of money by the partnership to that partner.

(d) ***Assumption of liability.*** -(1) *In general.* Except as otherwise provided in paragraph (e) of this section, a person is considered to assume a liability only to the extent that:

(i) The assuming person is personally obligated to pay the liability; and

(ii) If a partner or related person assumes a partnership liability, the person to whom the liability is owed knows of the assumption and can directly enforce the partner's or related person's obligation for the liability, and no other partner or person that is a related person to another partner would bear the economic risk of loss for the liability under § 1.752-2 immediately after the assumption.

(2) *Applicability date.* Paragraph (d)(1)(ii) of this section applies to liabilities incurred or assumed by a partnership on or after October 9, 2019. The rules applicable to liabilities incurred or assumed prior to October 9, 2019, are contained in § 1.752-1 in effect prior to October 9, 2019, (see 26 CFR part 1 revised as of April 1, 2019).

(e) ***Property subject to a liability.*** If property is contributed by a partner to the partnership or distributed by the partnership to a partner and the property is subject to a liability of the transferor, the transferee is treated as having assumed the liability, to the extent that the amount of the liability does not exceed the fair market value of the property at the time of the contribution or distribution.

(f) ***Netting of increases and decreases in liabilities resulting from same transaction.*** If, as a result of a single transaction, a partner incurs both an increase in the partner's share of the partnership liabilities (or the partner's individual liabilities) and a decrease in the partner's share of the partnership liabilities (or the partner's individual liabilities), only the net decrease is treated as a distribution from the partnership and only the net increase is treated as a contribution of money to the partnership. Generally, the contribution to or distribution from a partnership of property subject to a liability or the termination of the partnership under section 708(b) will require that increases and decreases in liabilities associated with the transaction be netted to determine if a partner will be deemed to have made a contribution or received a distribution as a result of the transaction. When two or more partnerships merge or consolidate under section 708(b)(2)(A), as described in § 1.708-1(c)(3)(i), increases and decreases in partnership liabilities associated with the merger or consolidation are netted by the partners in the terminating partnership and the resulting partnership to determine the effect of the merger under section 752.

(g) ***Example.*** The following example illustrates the principles of paragraphs (b), (c), (e), and (f) of this section.

Example 1. Property contributed subject to a liability; netting of increase and decrease in partner's share of liability. B contributes property with an adjusted basis of $1,000 to a general partnership in exchange for a one-third interest in the partnership. At the time of the contribution, the partnership does not have any liabilities outstanding and the property is subject to a recourse debt of $150 and has a fair market value in excess of $150. After the contribution, B remains personally liable to the creditor and none of the other partners bears any of the economic risk of loss for the liability under state law or

otherwise. Under paragraph (e) of this section, the partnership is treated as having assumed the $150 liability. As a result, B's individual liabilities decrease by $150. At the same time, however, B's share of liabilities of the partnership increases by $150. Only the net increase or decrease in B's share of the liabilities of the partnership and B's individual liabilities is taken into account in applying section 752. Because there is no net change, B is not treated as having contributed money to the partnership or as having received a distribution of money from the partnership under paragraph (b) or (c) of this section. Therefore B's basis for B's partnership interest is $1,000 (B's basis for the contributed property).

Example 2. Merger or consolidation of partnerships holding property encumbered by liabilities. (i) B owns a 70 percent interest in partnership T. Partnership T's sole asset is property X, which is encumbered by a $900 liability. Partnership T's adjusted basis in property X is $600, and the value of property X is $1,000. B's adjusted basis in its partnership T interest is $420. B also owns a 20 percent interest in partnership S. Partnership S's sole asset is property Y, which is encumbered by a $100 liability. Partnership S's adjusted basis in property Y is $200, the value of property Y is $1,000, and B's adjusted basis in its partnership S interest is $40.

(ii) Partnership T and partnership S merge under section 708(b)(2)(A). Under section 708(b)(2)(A) and § 1.708-1(c)(1), partnership T is considered terminated and the resulting partnership is considered a continuation of partnership S. Partnerships T and S undertake the form described in § 1.708-1(c)(3)(i) for the partnership merger. Under § 1.708-1(c)(3)(i), partnership T contributes property X and its $900 liability to partnership S in exchange for an interest in partnership S. Immediately thereafter, partnership T distributes the interests in partnership S to its partners in liquidation of their interests in partnership T. B owns a 25 percent interest in partnership S after partnership T distributes the interests in partnership S to B.

(iii) Under paragraph (f) of this section, B nets the increases and decreases in its share of partnership liabilities associated with the merger of partnership T and partnership S. Before the merger, B's share of partnership liabilities was $650 (B had a $630 share of partnership liabilities in partnership T and a $20 share of partnership liabilities in partnership S immediately before the merger). B's share of S's partnership liabilities after the merger is $250 (25 percent of S's total partnership liabilities of $1,000). Accordingly, B has a $400 net decrease in its share of S's partnership liabilities. Thus, B is treated as receiving a $400 distribution from partnership S under section 752(b). Because B's adjusted basis in its partnership S interest before the deemed distribution under section 752(b) is $460 ($420 + $40), B will not recognize gain under section 731. After the merger, B's adjusted basis in its partnership S interest is $60.

(h) ***Sale or exchange of a partnership interest.*** If a partnership interest is sold or exchanged, the reduction in the transferor partner's share of partnership liabilities is treated as an amount realized under section 1001 and the regulations thereunder. For example, if a partner sells an interest in a partnership for $750 cash and transfers to the purchaser the partner's share of partnership liabilities in the amount of $250, the seller realizes $1,000 on the transaction.

(i) ***Bifurcation of partnership liabilities.*** If one or more partners bears the economic risk of loss as to part, but not all, of a partnership liability represented by a single contractual obligation, that liability is treated as two or more separate liabilities for purposes of section 752. The portion of the liability as to which one or more partners bear the economic risk of loss is a recourse liability and the remainder of the liability, if any, is a nonrecourse liability.

[T.D. 8380, 56 FR 66351, Dec. 23, 1991, as amended by T.D. 8925, 66 FR 723, Jan. 4, 2001; T.D. 9207, 70 FR 30343, May 26, 2005; T.D. 9877, 84 FR 54022, Oct. 9, 2019]

§ 1.752-2 Partner's share of recourse liabilities.

(a) ***Partner's share of recourse liabilities*** —

(1) ***In general.*** A partner's share of recourse partnership liability equals the portion of that liability, if any, for which the partner or related person bears the economic risk of loss. The determination of the extent to which a partner bears the economic risk of loss for a partnership liability is made under the rules in paragraphs (b) through (k) of this section.

(2) ***Overlapping economic risk of loss.*** For purposes of determining a partner's share of a recourse partnership liability, the amount of the partnership liability is taken into account only once. If the aggregate amount of the economic risk of loss that all partners are determined to bear for a partnership liability (or portion thereof) under paragraph (a)(1) of this section (without regard to this paragraph (a)(2)) exceeds the amount of such liability (or portion thereof), then the economic risk of loss borne by each partner for such liability equals the amount determined by multiplying—

(i) The amount of such liability (or portion thereof) by

(ii) The fraction obtained by dividing the amount of the economic risk of loss that such partner is determined to bear for that liability (or portion thereof) under paragraph (a)(1) of this section, by the sum of such amounts for all partners.

(3) ***Direct economic risk of loss.*** For purposes of this section and § 1.752-4, a person directly bears the economic risk of loss for a partnership liability if that person has a payment obligation under paragraph (b) of this section (except as provided in paragraph (d)(2) of this section for certain partner guarantees), is a lender as provided in paragraph (c) of this section (except as provided in paragraph (d)(1) of this section for certain partner loans), guarantees payment of interest on a partnership nonrecourse liability as described in paragraph (e) of this section, or pledges property as a security as provided in paragraph (h) of this section.

(b) ***Obligation to make a payment*** —

(1) ***In general.*** Except as otherwise provided in this section, a partner bears the economic risk of loss for a partnership liability to the extent that, if the partnership constructively liquidated, the partner or related person would be obligated to make a payment to any person (or a contribution to the

partnership) because that liability becomes due and payable and the partner or related person would not be entitled to reimbursement from another partner or person that is a related person to another partner. Upon a constructive liquidation, all of the following events are deemed to occur simultaneously:

(i) All of the partnership's liabilities become payable in full;

(ii) With the exception of property contributed to secure a partnership liability (see § 1.752-2(h)(2)), all of the partnership's assets, including cash, have a value of zero;

(iii) The partnership disposes of all of its property in a fully taxable transaction for no consideration (except relief from liabilities for which the creditors's right to repayment is limited solely to one or more assets of the partnership);

(iv) All items of income, gain, loss, or deduction are allocated among the partners; and

(v) The partnership liquidates.

(2) ***Treatment upon deemed disposition.*** For purposes of paragraph (b)(1) of this section, gain or loss on the deemed disposition of the partnership's assets is computed in accordance with the following:

(i) If the creditor's right to repayment of a partnership liability is limited solely to one or more assets of the partnership, gain or loss is recognized in an amount equal to the difference between the amount of the liability that is extinguished by the deemed disposition and the tax basis (or book value to the extent section 704(c) or § 1.704-1(b)(4)(i) applies) in those assets.

(ii) A loss is recognized equal to the remaining tax basis (or book value to the extent section 704(c) or § 1.704-1(b)(4)(i) applies) of all the partnership's assets not taken into account in paragraph (b)(2)(i) of this section.

(3) ***Obligations recognized*** —

(i) ***In general.*** The determination of the extent to which a partner or related person has an obligation to make a payment under § 1.752-2(b)(1) is based on the facts and circumstances at the time of the determination. To the extent that the obligation of a partner or related person to make a payment with respect to a partnership liability is not recognized under this paragraph (b)(3), § 1.752-2(b) is applied as if the obligation did not exist. All statutory and contractual obligations relating to the partnership liability are taken into account for purposes of applying this section, including—

(A) Contractual obligations outside the partnership agreement such as guarantees, indemnifications, reimbursement agreements, and other obligations running directly to creditors, to other partners, or to the partnership;

(B) Obligations to the partnership that are imposed by the partnership agreement, including the obligation to make a capital contribution and to restore a deficit capital account upon liquidation of the partnership as described in § 1.704-1(b)(2)(ii)(*b*)(*3*) (taking into account § 1.704-1(b)(2)(ii)(*c*)); and

(C) Payment obligations (whether in the form of direct remittances to another partner or a contribution to the partnership) imposed by state or local law, including the governing state or local law partnership statute.

(ii) ***Special rules for bottom dollar payment obligations*** —

(A) ***In general.*** For purposes of § 1.752-2, a bottom dollar payment obligation (as defined in paragraph (b)(3)(ii)(C) of this section) is not recognized under this paragraph (b)(3).

(B) ***Exception.*** If a partner or related person has a payment obligation that would be recognized under this paragraph (b)(3) (initial payment obligation) but for the effect of an indemnity, a reimbursement agreement, or a similar arrangement, such bottom dollar payment obligation is recognized under this paragraph (b)(3) if, taking into account the indemnity, reimbursement agreement, or similar arrangement, the partner or related person is liable for at least 90 percent of the partner's or related person's initial payment obligation.

(C) ***Definition of bottom dollar payment obligation*** —

(*1*) ***In general.*** Except as provided in paragraph (b)(3)(ii)(C)(*2*) of this section, a *bottom dollar payment obligation* is a payment obligation that is the same as or similar to a payment obligation or arrangement described in this paragraph (b)(3)(ii)(C)(*1*).

(*i*) With respect to a guarantee or similar arrangement, any payment obligation other than one in which the partner or related person is or would be liable up to the full amount of such partner's or related person's payment obligation if, and to the extent that, any amount of the partnership liability is not otherwise satisfied.

(*ii*) With respect to an indemnity or similar arrangement, any payment obligation other than one in which the partner or related person is or would be liable up to the full amount of such partner's or related person's payment obligation, if, and to the extent that, any amount of the indemnitee's or benefited party's payment obligation that is recognized under this paragraph (b)(3) is satisfied.

(*iii*) With respect to an obligation to make a capital contribution or to restore a deficit capital account upon liquidation of the partnership as described in § 1.704-1(b)(2)(ii)(*b*)(*3*) (taking into account § 1.704-1(b)(2)(ii)(*c*)), any payment obligation other than one in which the partner is or would be required to make the full amount of the partner's capital contribution or to restore the full amount of the partner's deficit capital account.

(*iv*) An arrangement with respect to a partnership liability that uses tiered partnerships, intermediaries, senior and subordinate liabilities, or similar arrangements to convert what would otherwise be a single liability into multiple liabilities if, based on the facts and circumstances, the liabilities were incurred pursuant to a common plan, as part of a single transaction or arrangement, or as part of a series of related transactions or arrangements, and with a principal purpose of avoiding having at least one of such liabilities or payment obligations with respect to such liabilities being treated as a bottom dollar payment obligation as described in paragraph (b)(3)(ii)(C)(*1*)(*i*), (*ii*), or (*iii*) of this section.

(*2*) ***Exceptions.*** A payment obligation is not a bottom dollar payment obligation merely because a maximum amount is placed on the partner's or related person's payment obligation, a partner's or related person's payment obligation is stated as a fixed percentage of every dollar of the partnership liability to which such obligation relates,

or there is a right of proportionate contribution running between partners or related persons who are co-obligors with respect to a payment obligation for which each of them is jointly and severally liable.

(3) ***Benefited party defined.*** For purposes of § 1.752-2, a *benefited party* is the person to whom a partner or related person has the payment obligation.

(D) ***Disclosure of bottom dollar payment obligations.*** A partnership must disclose to the Internal Revenue Service a bottom dollar payment obligation (including a bottom dollar payment obligation that is recognized under paragraph (b)(3)(ii)(B) of this section) with respect to a partnership liability on a completed Form 8275, Disclosure Statement, or successor form, attached to the return of the partnership for the taxable year in which the bottom dollar payment obligation is undertaken or modified, that includes all of the following information:

(1) A caption identifying the statement as a disclosure of a bottom dollar payment obligation under section 752.

(2) An identification of the payment obligation with respect to which disclosure is made (including whether the obligation is a guarantee, a reimbursement, an indemnity, or an obligation to restore a deficit balance in a partner's capital account).

(3) The amount of the payment obligation.

(4) The parties to the payment obligation.

(5) A statement of whether the payment obligation is treated as recognized for purposes of this paragraph (b)(3).

(6) If the payment obligation is recognized under paragraph (b)(3)(ii)(B) of this section, the facts and circumstances that clearly establish that a partner or related person is liable for up to 90 percent of the partner's or related person's initial payment obligation and, but for an indemnity, a reimbursement agreement, or a similar arrangement, the partner's or related person's initial payment obligation would have been recognized under this paragraph (b)(3).

(iii) ***Special rule for indemnities and reimbursement agreements.*** An indemnity, a reimbursement agreement, or a similar arrangement will be recognized under this paragraph (b)(3) only if, before taking into account the indemnity, reimbursement agreement, or similar arrangement, the indemnitee's or other benefited party's payment obligation is recognized under this paragraph (b)(3), or would be recognized under this paragraph (b)(3) if such person were a partner or related person.

(4) ***Contingent obligations.*** A payment obligation is disregarded if, taking into account all the facts and circumstances, the obligation is subject to contingencies that make it unlikely that the obligation will ever be discharged. If a payment obligation would arise at a future time after the occurrence of an event that is not determinable with reasonable certainty, the obligation is ignored until the event occurs.

(5) ***Reimbursement rights.*** A partner's or related person's obligation to make a payment with respect to a partnership liability is reduced to the extent that the partner or related person is entitled to reimbursement from another partner or a person who is a related person to another partner.

(6) ***Deemed satisfaction of obligation.*** For purposes of determining the extent to which a partner or related person has a payment obligation and the economic risk of loss, it is assumed that all partners and related persons who have obligations to make payments (a payment obligor) actually perform those obligations, irrespective of their actual net worth, unless the facts and circumstances indicate—

(i) A plan to circumvent or avoid the obligation under paragraph (j) of this section, or

(ii) That there is not a commercially reasonable expectation that the payment obligor will have the ability to make the required payments under the terms of the obligation if the obligation becomes due and payable as described in paragraph (k) of this section.

(c) ***Partner or related person as lender*** —

(1) ***In general.*** A partner bears the economic risk of loss for a partnership liability to the extent that the partner or a related person makes (or acquires an interest in) a nonrecourse loan to the partnership and the economic risk of loss for the liability is not borne by another partner.

(2) ***Wrapped debt.*** If a partnership liability is owed to a partner or related person and that liability includes (*i.e.,* is "wrapped" around) a nonrecourse obligation encumbering partnership property that is owed to another person, the partnership liability will be treated as two separate liabilities. The portion of the partnership liability corresponding to the wrapped debt is treated as a liability owed to another person.

(3) [Reserved]. For further guidance, see § 1.752-2T(c)(3).

(d) ***De minimis exceptions*** —

(1) ***Partner as lender.*** The general rule contained in paragraph (c)(1) of this section does not apply if a partner or related person whose interest (directly or indirectly through one or more partnerships including the interest of any related person) in each item of partnership income, gain, loss, deduction, or credit for every taxable year that the partner is a partner in the partnership is 10 percent or less, makes a loan to the partnership which constitutes qualified nonrecourse financing within the meaning of section 465(b)(6) (determined without regard to the type of activity financed).

(2) ***Partner as guarantor.*** The general rule contained in paragraph (b)(1) of this section does not apply if a partner or related person whose interest (directly or indirectly through one or more partnerships including the interest of any related person) in each item of partnership income, gain, loss, deduction, or credit for every taxable year that the partner is a partner in the partnership is 10 percent or less, guarantees a loan that would otherwise be a nonrecourse loan of the partnership and which would constitute qualified nonrecourse financing within the meaning of section 465(b)(6) (without regard to the type of activity financed) if the guarantor had made the loan to the partnership.

(e) ***Special rule for nonrecourse liability with interest guaranteed by a partner*** —

(1) ***In general.*** For purposes of this section, if one or more partners or related persons have guaranteed the payment of more than 25 percent of the total interest that will accrue on a partnership nonrecourse liability over its remaining term, and it is reasonable to expect that the guarantor will be required to pay substantially all of the guaranteed future interest if the partnership fails to do so, then the liability is treated as two separate partnership liabilities. If this rule applies, the partner or related person that has guaranteed the payment of interest is treated as bearing the economic risk of loss for the partnership liability to the extent of the present value of the guaranteed future interest

payments. The remainder of the stated principal amount of the partnership liability constitutes a nonrecourse liability. Generally, in applying this rule, it is reasonable to expect that the guarantor will be required to pay substantially all of the guaranteed future interest if, upon a default in payment by the partnership, the lender can enforce the interest guaranty without foreclosing on the property and thereby extinguishing the underlying debt. The guarantee of interest rule continues to apply even after the point at which the amount of guaranteed interest that will accrue is less than 25 percent of the total interest that will accrue on the liability.

(2) ***Computation of present value.*** The present value of the guaranteed future interest payments is computed using a discount rate equal to either the interest rate stated in the loan documents, or if interest is imputed under either section 483 or section 1274, the applicable federal rate, compounded semi-annually. The computation takes into account any payment of interest that the partner or related person may be required to make only to the extent that the interest will accrue economically (determined in accordance with section 446 and the regulations thereunder) after the date of the interest guarantee. If the loan document contains a variable rate of interest that is an interest rate based on current values of an objective interest index, the present value is computed on the assumption that the interest determined under the objective interest index on the date of the computation will remain constant over the term of the loan. The term "objective interest index" has the meaning given to it in section 1275 and the regulations thereunder (relating to variable rate debt instruments). Examples of an objective interest index include the prime rate of a designated financial institution, LIBOR (London Interbank Offered Rate), and the applicable federal rate under section 1274(d).

(3) ***Safe harbor.*** The general rule contained in paragraph (e)(1) of this section does not apply to a partnership nonrecourse liability if the guarantee of interest by the partner or related person is for a period not in excess of the lesser of five years or one-third of the term of the liability.

(4) ***De minimis exception.*** The general rule contained in paragraph (e)(1) of this section does not apply if a partner or related person whose interest (directly or indirectly through one or more partnerships including the interest of any related person) in each item of partnership income, gain, loss, deduction, or credit for every taxable year that the partner is a partner in the partnership is 10 percent of less, guarantees the interest on a loan to that partnership which constitutes qualified nonrecourse financing within the meaning of section 465(b)(6) (determined without regard to the type of activity financed). An allocation of interest to the extent paid by the guarantor is not treated as a partnership item of deduction or loss subject to the 10 percent or less rule.

(f) ***Examples.*** The following examples illustrate the principles of paragraphs (a) through (e) of this section. Unless otherwise provided, for purposes of paragraph (f)(1) through (9) of this section (*Examples 1* through *9*), assume that any obligation of a partner or related person to make a payment is recognized under paragraph (b)(3) of this section.

(1) ***Example 1. Determining when a partner bears the economic risk of loss.*** A and B form a general partnership with each contributing $100 in cash. The partnership purchases an office building on leased land for $1,000 from an unrelated seller, paying $200 in cash and executing a note to the seller for the balance of $800. The note is a general obligation of the partnership, *i.e.,* no partner has been relieved from personal liability. The partnership agreement provides that all items are allocated equally except that tax losses are specially allocated 90% to A and 10% to B and that capital accounts will be maintained in accordance with the regulations under section 704(b), including a deficit capital account restoration obligation on liquidation. In a constructive liquidation, the $800

liability becomes due and payable. All of the partnership's assets, including the building, are deemed to be worthless. The building is deemed sold for a value of zero. Capital accounts are adjusted to reflect the loss on the hypothetical disposition, as follows:

	A	B
Initial contribution	$100	$100
Loss on hypothetical sale	(900)	(100)
	($800)	$0

Other than the partners' obligation to fund negative capital accounts on liquidation, there are no other contractual or statutory payment obligations existing between the partners, the partnership and the lender. Therefore, $800 of the partnership liability is classified as a recourse liability because one or more partners bears the economic risk of loss for non-payment. B has no share of the $800 liability since the constructive liquidation produces no payment obligation for B. A's share of the partnership liability is $800 because A would have an obligation in that amount to make a contribution to the partnership.

(2) ***Example 2. Recourse liability; deficit restoration obligation.*** C and D each contribute $500 in cash to the capital of a new general partnership, CD. CD purchases property from an unrelated seller for $1,000 in cash and a $9,000 mortgage note. The note is a general obligation of the partnership, *i.e.,* no partner has been relieved from personal liability. The partnership agreement provides that profits and losses are to be divided 40% to C and 60% to D. C and D are required to make up any deficit in their capital accounts. In a constructive liquidation, all partnership assets are deemed to become worthless and all partnership liabilities become due and payable in full. The partnership is deemed to dispose of all its assets in a fully taxable transaction for no consideration. Capital accounts are adjusted to reflect the loss on the hypothetical disposition, as follows:

	C	D
Initial contribution	$500	$500
Loss on hypothetical sale	(4,000)	(6,000)
	($3,500)	($5,500)

C's capital account reflects a deficit that C would have to make up to $3,500 and D's capital account reflects a deficit that D would have to make up of $5,500. Therefore, the $9,000 mortgage note is a recourse liability because one or more partners bear the economic risk of loss for the liability. C's share of the recourse liability is $3,500 and D's share is $5,500.

(3) ***Example 3. Guarantee by limited partner; partner deemed to satisfy obligation.*** E and F form a limited partnership. E, the general partner, contributes $2,000 and F, the limited partner, contributes $8,000 in cash to the partnership. The partnership agreement allocates losses 20% to E and 80% to F until F's capital account is reduced to zero, after which all losses are allocated to E. The partnership

purchases depreciable property for $25,000 using its $10,000 cash and a $15,000 recourse loan from a bank. F guarantees payment of the $15,000 loan to the extent the loan remains unpaid after the bank has exhausted its remedies against the partnership. In a constructive liquidation, the $15,000 liability becomes due and payable. All of the partnership's assets, including the depreciable property, are deemed to be worthless. The depreciable property is deemed sold for a value of zero. Capital accounts are adjusted to reflect the loss on the hypothetical disposition, as follows:

	E	F
Initial contribution	$2,000	$8,000
Loss on hypothetical sale	(17,000)	(8,000)
	($15,000)	$0

E, as a general partner, would be obligated by operation of law to make a net contribution to the partnership of $15,000. Because E is assumed to satisfy that obligation, it is also assumed that F would not have to satisfy F's guarantee. The $15,000 mortgage is treated as a recourse liability because one or more partners bear the economic risk of loss. E's share of the liability is $15,000, and F's share is zero. This would be so even if E's net worth at the time of the determination is less than $15,000, unless the facts and circumstances indicate a plan to circumvent or avoid E's obligation to contribute to the partnership.

(4) ***Example 4. Partner guarantee with right of subrogation.*** G, a limited partner in the GH partnership, guarantees a portion of a partnership liability. The liability is a general obligation of the partnership, *i.e.,* no partner has been relieved from personal liability. If under state law G is subrogated to the rights of the lender, G would have the right to recover the amount G paid to the recourse lender from the general partner. Therefore, G does not bear the economic risk of loss for the partnership liability.

(5) ***Example 5. Bifurcation of partnership liability; guarantee of part of nonrecourse liability.*** A partnership borrows $10,000, secured by a mortgage on real property. The mortgage note contains an exoneration clause which provides that in the event of default, the holder's only remedy is to foreclose on the property. The holder may not look to any other partnership asset or to any partner to pay the liability. However, to induce the lender to make the loan, a partner guarantees payment of $200 of the loan principal. The exoneration clause does not apply to the partner's guarantee. If the partner paid pursuant to the guarantee, the partner would be subrogated to the rights of the lender with respect to $200 of the mortgage debt, but the partner is not otherwise entitled to reimbursement from the partnership or any partner. For purposes of section 752, $200 of the $10,000 mortgage liability is treated as a recourse liability of the partnership and $9,800 is treated as a nonrecourse liability of the partnership. The partner's share of the recourse liability of the partnership is $200.

(6) ***Example 6. Wrapped debt.*** I, an individual, purchases real estate from an unrelated seller for $10,000, paying $1,000 in cash and giving a $9,000 purchase mortgage note on which I has no personal liability and as to which the seller can look only to the property for satisfaction. At a time when the property is worth $15,000, I sells the property to a partnership in which I is a general partner. The partnership pays for the property with a partnership purchase money mortgage note of $15,000 on which neither the partnership nor any partner (or person related to a partner) has personal liability.

The $15,000 mortgage note is a wrapped debt that includes the $9,000 obligation to the original seller. The liability is a recourse liability to the extent of $6,000 because I is the creditor with respect to the loan and I bears the economic risk of loss for $6,000. I's share of the recourse liability is $6,000. The remaining $9,000 is treated as a partnership nonrecourse liability that is owed to the unrelated seller.

(7) ***Example 7. Guarantee of interest by partner treated as part recourse and part nonrecourse.*** On January 1, 1992, a partnership obtains a $4,000,000 loan secured by a shopping center owned by the partnership. Neither the partnership nor any partner has any personal liability under the loan documents for repayment of the stated principal amount. Interest accrues at a 15 percent annual rate and is payable on December 31 of each year. The principal is payable in a lump sum on December 31, 2006. A partner guarantees payment of 50 percent of each interest payment required by the loan. The guarantee can be enforced without first foreclosing on the property. When the partnership obtains the loan, the present value (discounted at 15 percent, compounded annually) of the future interest payments is $3,508,422, and of the future principal payment is $491,578. If tested on that date, the loan would be treated as a partnership liability of $1,754,211 ($3,508,422 × .5) for which the guaranteeing partner bears the economic risk of loss and a partnership nonrecourse liability of $2,245,789 ($1,754,211 + $491,578).

(8) ***Example 8. Continent obligation not recognized.*** J and K form a general partnership with cash contributions of $2,500 each. J and K share partnership profits and losses equally. The partnership purchases an apartment building for its $5,000 of cash and a $20,000 nonrecourse loan from a commercial bank. The nonrecourse loan is secured by a mortgage on the building. The loan documents provide that the partnership will be liable for the outstanding balance of the loan on a recourse basis to the extent of any decrease in the value of the apartment building resulting from the partnership's failure properly to maintain the property. There are no facts that establish with reasonable certainty the existence of any liability on the part of the partnership (and its partners) for damages resulting from the partnership's failure properly to maintain the building. Therefore, no partner bears the economic risk of loss, and the liability constitutes a nonrecourse liability. Under § 1.752-3, J and K share this nonrecourse liability equally because they share all profits and losses equally.

(9) ***Example 9. Overlapping economic risk of loss.***

(i) A and B are unrelated equal members of limited liability company, AB. AB is treated as a partnership for Federal tax purposes. AB borrows $1,000 from Bank. A guarantees payment for the entire amount of AB's $1,000 liability and B guarantees payment of up to $500 of the liability, if any amount of the full $1,000 liability is not recovered by Bank. Under paragraph (b)(1) of this section, A bears $1,000 of economic risk of loss for AB's liability and B bears $500 of economic risk of loss for AB's liability. A and B have not entered into a loss-sharing agreement addressing their status as co-guarantors, and local law does not clearly establish responsibility as between them for the liability.

(ii) Because the aggregate amount of A's and B's economic risk of loss under paragraph (a)(1) of this section ($1,500) exceeds the amount of AB's liability ($1,000), the economic risk of loss borne by each of A and B is determined under paragraph (a)(2) of this section. Under paragraph (a)(2) of this section, A's economic risk of loss equals $1,000 multiplied by $1,000/$1,500, or $667, and B's economic risk of loss equals $1,000 multiplied by $500/$1,500, or $333.

(10) ***Example 10. Guarantee of first and last dollars.***

(i) A, B, and C are equal members of a limited liability company, ABC, that is treated as a partnership for federal tax purposes. ABC borrows $1,000 from Bank. A guarantees payment of up to $300 of the ABC liability if any amount of the full $1,000 liability is not recovered by Bank. B guarantees payment of up to $200, but only if the Bank otherwise recovers less than $200. Both A and B waive their rights of contribution against each other.

(ii) Because A is obligated to pay up to $300 if, and to the extent that, any amount of the $1,000 partnership liability is not recovered by Bank, A's guarantee is not a bottom dollar payment obligation under paragraph (b)(3)(ii)(C) of this section. Therefore, A's payment obligation is recognized under paragraph (b)(3) of this section. The amount of A's economic risk of loss under § 1.752-2(b)(1) is $300.

(iii) Because B is obligated to pay up to $200 only if and to the extent that the Bank otherwise recovers less than $200 of the $1,000 partnership liability, B's guarantee is a bottom dollar payment obligation under paragraph (b)(3)(ii)(C) of this section and, therefore, is not recognized under paragraph (b)(3)(ii)(A) of this section. Accordingly, B bears no economic risk of loss under § 1.752-2(b)(1) for ABC's liability.

(iv) In sum, $300 of ABC's liability is allocated to A under § 1.752-2(a), and the remaining $700 liability is allocated to A, B, and C under § 1.752-3.

(11) ***Example 11. Indemnification of guarantees.***

(i) The facts are the same as in paragraph (f)(10) of this section (*Example 10*), except that, in addition, C agrees to indemnify A up to $100 that A pays with respect to its guarantee and agrees to indemnify B fully with respect to its guarantee.

(ii) The determination of whether C's indemnity is recognized under paragraph (b)(3) of this section is made without regard to whether C's indemnity itself causes A's guarantee not to be recognized. Because A's obligation would be recognized but for the effect of C's indemnity and C is obligated to pay A up to the full amount of C's indemnity if A pays any amount on its guarantee of ABC's liability, C's indemnity of A's guarantee is not a bottom dollar payment obligation under paragraph (b)(3)(ii)(C) of this section and, therefore, is recognized under paragraph (b)(3) of this section. The amount of C's economic risk of loss under § 1.752-2(b)(1) for its indemnity of A's guarantee is $100.

(iii) Because C's indemnity is recognized under paragraph (b)(3) of this section, A is treated as liable for $200 only to the extent any amount beyond $100 of the partnership liability is not satisfied. Thus, A is not liable if, and to the extent, any amount of the partnership liability is not otherwise satisfied, and the exception in paragraph (b)(3)(ii)(B) of this section does not apply. As a result, A's guarantee is a bottom dollar payment obligation under paragraph (b)(3)(ii)(C) of this section and is not recognized under paragraph (b)(3)(ii)(A) of this section. Therefore, A bears no economic risk of loss under § 1.752-2(b)(1) for ABC's liability.

(iv) Because B's obligation is not recognized under paragraph (b)(3)(ii) of this section independent of C's indemnity of B's guarantee, C's indemnity is not recognized under paragraph (b)(3)(iii) of this section. Therefore, C bears no economic risk of loss under § 1.752-2(b)(1) for its indemnity of B's guarantee.

(v) In sum, $100 of ABC's liability is allocated to C under § 1.752-2(a) and the remaining $900 liability is allocated to A, B, and C under § 1.752-3.

(g) *Time-value-of-money considerations* —

(1) ***In general.*** The extent to which a partner or related person bears the economic risk of loss is determined by taking into account any delay in the time when a payment or contribution obligation with respect to a partnership liability is to be satisfied. If a payment obligation with respect to a partnership liability is not required to be satisfied within a reasonable time after the liability becomes due and payable, or if the obligation to make a contribution to the partnership is not required to be satisfied before the later of—

(i) The end of the year in which the partner's interest is liquidated, or

(ii) 90 days after the liquidation,

the obligation is recognized only to the extent of the value of the obligation.

(2) ***Valuation of an obligation.*** The value of a payment or contribution obligation that is not required to be satisfied within the time period specified in paragraph (g)(1) of this section equals the entire principal balance of the obligation only if the obligation bears interest equal to or greater than the applicable federal rate under section 1274(d) at the time of valuation, commencing on—

(i) In the case of a payment obligation, the date that the partnership liability to a creditor or other person to whom the obligation relates becomes due and payable, or

(ii) In the case of a contribution obligation, the date of the liquidation of the partner's interest in the partnership. If the obligation does not bear interest at a rate at least equal to the applicable federal rate at the time of valuation, the value of the obligation is discounted to the present value of all payments due from the partner or related person (*i.e.,* the imputed principal amount computed under section 1274(b)). For purposes of making this present value determination, the partnership is deemed to have constructively liquidated as of the date on which the payment obligation is valued and the payment obligation is assumed to be a debt instrument subject to the rules of section 1274 (*i.e.,* the debt instrument is treated as if it were issued for property at the time of the valuation).

(3) ***Satisfaction of obligation with partner's promissory note.*** An obligation is not satisfied by the transfer to the obligee of a promissory note by a partner or related person unless the note is readily tradeable on an established securities market.

(4) ***Example.*** The following example illustrates the principle of paragraph (g) of this section.

> *Example.* Value of obligation not required to be satisfied within specified time period. A, the general partner, and B, the limited partner, each contributes $10,000 to partnership AB. AB purchases property from an unrelated seller for $20,000 in cash and a $70,000 recourse purchase money note. The partnership agreement provides that profits and losses are to be divided equally. A and B are required to make up any deficit in their capital accounts. While A is required to restore any deficit balance in A's capital account within 90 days after the date of liquidation of the partnership, B is not required to restore any deficit for two years following the date of liquidation. The deficit in B's capital account will not bear interest during that two-year period. In a constructive liquidation, all partnership assets are deemed to become worthless and all partnership liabilities become due and payable in full. The partnership is deemed to dispose of all its assets in a fully taxable transaction for no consideration. Capital

accounts are adjusted to reflect the loss on the hypothetical disposition, as follows:

	A	B
Initial contribution	$10,000	$10,000
Loss on hypothetical sale	(45,000)	(45,000)
	(35,000)	(35,000)

A's and B's capital accounts each reflect deficits of $35,000. B's obligation to make a contribution pursuant to B's deficit restoration obligation is recognized only to the extent of the fair market value of that obligation at the time of the constructive liquidation because B is not required to satisfy that obligation by the later of the end of the partnership taxable year in which B's interest is liquidated or within 90 days after the date of the liquidation. Because B's obligation does not bear interest, the fair market value is deemed to equal the imputed principal amount under section 1274(b). Under section 1274(b), the imputed principal amount of a debt instrument equals the present value of all payments due under the debt instrument. Assume the applicable federal rate with respect to B's obligation is 10 percent compounded semiannually. Using this discount rate, the present value of the $35,000 payment that B would be required to make two years after the constructive liquidation to restore the deficit balance in B's capital account equals $28,795. To the extent that B's deficit restoration obligation is not recognized, it is assumed that B's obligation does not exist. Therefore, A, as the sole general partner, would be obligated by operation of law to contribute an additional $6,205 of capital to the partnership. Accordingly, under paragraph (g) of this section, B bears the economic risk of loss for $28,795 and A bears the economic risk of loss for $41,205 ($35,000 + $6,205).

(h) ***Partner providing property as security for partnership liability*** —

(1) ***Direct pledge.*** A partner is considered to bear the economic risk of loss for a partnership liability to the extent of the value of any the partner's or related person's separate property (other than a direct or indirect interest in the partnership) that is pledged as security for the partnership liability.

(2) ***Indirect pledge.*** A partner is considered to bear the economic risk of loss for a partnership liability to the extent of the value of any property that the partner contributes to the partnership solely for the purpose of securing a partnership liability. Contributed property is not treated as contributed solely for the purpose of securing a partnership liability unless substantially all of the items of income, gain, loss, and deduction attributable to the contributed property are allocated to the contributing partner, and this allocation is generally greater than the partner's share of other significant items of partnership income, gain, loss, or deduction.

(3) ***Valuation.*** The extent to which a partner bears the economic risk of loss for a partnership liability as a result of a direct pledge described in paragraph (h)(1) of this section or an indirect pledge described in paragraph (h)(2) of this section is limited to the net fair market value of the property

(pledged property) at the time of the pledge or contribution. If a partner provides additional pledged property, the addition is treated as a new pledge and the net fair market value of the pledged property (including but not limited to the additional property) must be determined at that time. For purposes of this paragraph (h), if pledged property is subject to one or more other obligations, those obligations must be taken into account in determining the net fair market value of pledged property at the time of the pledge or contribution.

(4) ***Partner's promissory note.*** For purposes of paragraph (h)(2) of this section, a promissory note of the partner or related person that is contributed to the partnership shall not be taken into account unless the note is readily tradeable on an established securities market.

(i) ***Treatment of recourse liabilities in tiered partnerships*** —

(1) ***In general.*** If a partnership (upper-tier partnership) owns (directly or indirectly through one or more partnerships) an interest in another partnership (lower-tier partnership), the liabilities of the lower-tier partnership are allocated to the upper-tier partnership in an amount equal to the sum of the following—

(i) The amount of liabilities with respect to which the upper-tier partnership directly bears the economic risk of loss as described in paragraph (a)(3) of this section; and

(ii) The amount of any other liabilities with respect to which a partner of the upper-tier partnership bears the economic risk of loss, provided the partner is not also a partner in the lower-tier partnership.

(2) ***Coordination with overlapping economic risk of loss.*** A lower-tier partnership takes into account paragraph (a)(2) of this section prior to the application of this paragraph (i).

(3) ***Example.***

(i) A and B (which is unrelated to A) contribute $810,000 and $90,000 to UTP, a limited liability company treated as a partnership for Federal tax purposes, in exchange for a 90 percent and 10 percent interest in UTP, respectively. UTP contributes the $900,000 to LTP, a partnership for Federal tax purposes, in exchange for a 90 percent interest in LTP and A contributes $100,000 directly to LTP in exchange for a 10 percent interest in LTP. UTP and LTP both reported losses in their initial years that reduced the partners' bases in UTP and LTP to zero. LTP borrows $10 million. UTP and LTP both had no income in the year at issue. At the request of the lender, A and B both provide their personal guaranty for the entire amount of LTP's liability.

(ii) Under paragraph (b)(1) of this section, A has $10 million of economic risk of loss for LTP's liability and B has $10 million of economic risk of loss for LTP's liability. Under paragraph (i)(2) of this section, LTP takes into account paragraph (a)(2) of this section prior to determining the amount of liabilities allocated to UTP under paragraph (i)(1) of this section. Under paragraph (a)(2) of this section, A is considered to bear $5 million (($10 million/$20 million) × $10 million) of economic risk of loss and B is considered to also bear $5 million (($10 million/$20 million) × $10 million) of economic risk of loss for LTP's liability. Pursuant to paragraph (a)(1) of this section, LTP allocates $5 million to A for A's direct interest in LTP's liability. Under paragraph (i)(1) of this section, LTP allocates $5 million to UTP ($5 million attributable to B's economic risk of loss for LTP's liability).

(iii) Pursuant to § 1.752-4(a), UTP treats its share of LTP's liability ($5 million) as a liability of UTP. Because A bears the economic risk of loss for LTP's liability and is a partner in LTP, under paragraph (i)(1)(ii) of this section, UTP's share of LTP's liability ($5 million) only includes the amount of LTP's liabilities with respect to which B bears the economic risk of loss. Therefore, under paragraph (a)(1) of this section, UTP allocates $5 million of UTP's share of LTP's liability to B and none to A.

(j) *Anti-abuse rules* —

(1) ***In general.*** An obligation of a partner or related person to make a payment may be disregarded or treated as an obligation of another person for purposes of this section if facts and circumstances indicate that a principal purpose of the arrangement between the parties is to eliminate the partner's economic risk of loss with respect to that obligation or create the appearance of the partner or related person bearing the economic risk of loss when, in fact, the substance of the arrangement is otherwise. Circumstances with respect to which a payment obligation may be disregarded include, but are not limited to, the situations described in paragraphs (j)(2) and (j)(3) of this section.

(2) *Arrangements tantamount to a guarantee* —

(i) ***In general.*** Irrespective of the form of a contractual obligation, a partner is considered to bear the economic risk of loss with respect to a partnership liability, or a portion thereof, to the extent that—

(A) The partner or related person undertakes one or more contractual obligations so that the partnership may obtain or retain a loan;

(B) The contractual obligations of the partner or related person significantly reduce the risk to the lender that the partnership will not satisfy its obligations under the loan, or a portion thereof; and

(C) With respect to the contractual obligations described in paragraphs (j)(2)(i)(A) and (B) of this section—

(*1*) One of the principal purposes of using the contractual obligations is to attempt to permit partners (other than those who are directly or indirectly liable for the obligation) to include a portion of the loan in the basis of their partnership interests; or

(*2*) Another partner, or a person related to another partner, enters into a payment obligation and a principal purpose of the arrangement is to cause the payment obligation described in paragraphs (j)(2)(i)(A) and (B) of this section to be disregarded under paragraph (b)(3) of this section.

(ii) ***Economic risk of loss.*** For purposes of this paragraph (j)(2), partners are considered to bear the economic risk of loss for a liability in accordance with their relative economic burdens for the liability pursuant to the contractual obligations. For example, a lease between a partner and a partnership that is not on commercially reasonable terms may be tantamount to a guarantee by the partner of the partnership liability.

(3) *Plan to circumvent or avoid an obligation* —

(i) ***General rule.*** An obligation of a partner or related person to make a payment is not recognized under paragraph (b) of this section if the facts and circumstances evidence a plan to circumvent or avoid the obligation.

(ii) ***Factors indicating plan to circumvent or avoid an obligation.*** In the case of a payment obligation, other than an obligation to restore a deficit capital account upon liquidation of a partnership, paragraphs (j)(3)(ii)(A) through (G) of this section provide a non-exclusive list of factors that may indicate a plan to circumvent or avoid the payment obligation. The presence or absence of a factor is based on all of the facts and circumstances at the time the partner or related person makes the payment obligation or if the obligation is modified, at the time of the modification. For purposes of making determinations under this paragraph (j)(3), the weight to be given to any particular factor depends on the particular case and the presence or absence of a factor is not necessarily indicative of whether a payment obligation is or is not recognized under paragraph (b) of this section.

(A) The partner or related person is not subject to commercially reasonable contractual restrictions that protect the likelihood of payment, including, for example, restrictions on transfers for inadequate consideration or distributions by the partner or related person to equity owners in the partner or related person.

(B) The partner or related person is not required to provide (either at the time the payment obligation is made or periodically) commercially reasonable documentation regarding the partner's or related person's financial condition to the benefited party, including, for example, balance sheets and financial statements.

(C) The term of the payment obligation ends prior to the term of the partnership liability, or the partner or related person has a right to terminate its payment obligation, if the purpose of limiting the duration of the payment obligation is to terminate such payment obligation prior to the occurrence of an event or events that increase the risk of economic loss to the guarantor or benefited party (for example, termination prior to the due date of a balloon payment or a right to terminate that can be exercised because the value of loan collateral decreases). This factor typically will not be present if the termination of the obligation occurs by reason of an event or events that decrease the risk of economic loss to the guarantor or benefited party (for example, the payment obligation terminates upon the completion of a building construction project, upon the leasing of a building, or when certain income and asset coverage ratios are satisfied for a specified number of quarters).

(D) There exists a plan or arrangement in which the primary obligor or any other obligor (or a person related to the obligor) with respect to the partnership liability directly or indirectly holds money or other liquid assets in an amount that exceeds the reasonably foreseeable needs of such obligor (but not taking into account standard commercial insurance, for example, casualty insurance).

(E) The payment obligation does not permit the creditor to promptly pursue payment following a payment default on the partnership liability, or other arrangements with respect to the partnership liability or payment obligation otherwise indicate a plan to delay collection.

(F) In the case of a guarantee or similar arrangement, the terms of the partnership liability would be substantially the same had the partner or related person not agreed to provide the guarantee.

(G) The creditor or other party benefiting from the obligation did not receive executed documents with respect to the payment obligation from the partner or related person before, or within a commercially reasonable period of time after, the creation of the obligation.

(4) ***Example.*** The following example illustrates the principles of paragraph (j) of this section.

(i) In 2020, A, B, and C form a domestic limited liability company (LLC) that is classified as a partnership for federal tax purposes. Also in 2020, LLC receives a loan from a bank. A, B, and C do not bear the economic risk of loss with respect to that partnership liability, and, as a result, the liability is treated as nonrecourse under § 1.752-1(a)(2) in 2020. In 2022, A guarantees the entire amount of the liability. The bank did not request the guarantee and the terms of the loan did not change as a result of the guarantee. A did not provide any executed documents with respect to A's guarantee to the bank. The bank also did not require any restrictions on asset transfers by A and no such restrictions exist.

(ii) Under paragraph (j)(3) of this section, A's 2022 guarantee (payment obligation) is not recognized under paragraph (b)(3) of this section if the facts and circumstances evidence a plan to circumvent or avoid the payment obligation. In this case, the following factors indicate a plan to circumvent or avoid A's payment obligation: the partner is not subject to commercially reasonable contractual restrictions that protect the likelihood of payment, such as restrictions on transfers for inadequate consideration or equity distributions; the partner is not required to provide (either at the time the payment obligation is made or periodically) commercially reasonable documentation regarding the partner's or related person's financial condition to the benefited party; in the case of a guarantee or similar arrangement, the terms of the liability are the same as they would have been without the guarantee; and the creditor did not receive executed documents with respect to the payment obligation from the partner or related person at the time the obligation was created. Absent the existence of other facts or circumstances that would weigh in favor of respecting A's guarantee, evidence of a plan to circumvent or avoid the obligation exists and, pursuant to paragraph (j)(3)(i) of this section, A's guarantee is not recognized under paragraph (b) of this section. As a result, LLC's liability continues to be treated as nonrecourse.

(k) ***No reasonable expectation of payment*** —

(1) ***In general.*** An obligation of any partner or related person to make a payment is not recognized under paragraph (b) of this section if the facts and circumstances indicate that at the time the partnership must determine a partner's share of partnership liabilities under §§ 1.705-1(a) and 1.752-4(d) there is not a commercially reasonable expectation that the payment obligor will have the ability to make the required payments under the terms of the obligation if the obligation becomes due and payable. Facts and circumstances to consider in determining a commercially reasonable expectation of payment include factors a third party creditor would take into account when determining whether to grant a loan. For purposes of this section, a payment obligor includes an entity disregarded as an entity separate from its owner under section 856(i), section 1361(b)(3), or §§ 301.7701-1 through 301.7701-3 of this chapter (a disregarded entity), and a trust to which subpart E of part I of subchapter J of chapter 1 of the Code applies.

(2) ***Examples.*** The following examples illustrate the principles of paragraph (k) of this section.

(i) ***Example 1. Undercapitalization.***

(A) In 2020, A forms a wholly owned domestic limited liability company, LLC, with a contribution of $100,000. A has no liability for LLC's debts, and LLC has no enforceable right to a contribution from A. Under § 301.7701-3(b)(1)(ii) of this chapter, LLC is treated for federal tax purposes as a disregarded entity. Also in 2020, LLC contributes $100,000 to LP, a limited partnership with a calendar year taxable year, in exchange for a general partnership interest in LP, and B and C each contributes $100,000 to LP in exchange for a limited partnership interest in LP. The partnership agreement provides that only LLC is required to restore any deficit in its capital account. On January 1, 2021, LP borrows $300,000 from a bank and uses $600,000 to purchase nondepreciable property. The $300,000 is secured by the property and is also a general obligation of LP. LP makes payments of only interest on its $300,000 debt during 2021. LP has a net taxable loss in 2021, and, under §§ 1.705-1(a) and 1.752-4(d), LP determines its partners' shares of the $300,000 debt at the end of its taxable year, December 31, 2021. As of that date, LLC holds no assets other than its interest in LP.

(B) Because LLC is a disregarded entity, A is treated as the partner in LP for federal income tax purposes. Only LLC has an obligation to make a payment on account of the $300,000 debt if LP were to constructively liquidate as described in paragraph (b)(1) of this section. Therefore, paragraph (k) of this section is applied to the LLC and not to A. LLC has no assets with which to pay if the payment obligation becomes due and payable. Because there is no commercially reasonable expectation that LLC will be able to satisfy its payment obligation, LLC's obligation to restore its deficit capital account is not recognized under paragraph (b) of this section. As a result, LP's $300,000 debt is characterized as nonrecourse under § 1.752-1(a)(2) and is allocated among A, B, and C under § 1.752-3.

(ii) ***Example 2. Disregarded entity with ability to pay.***

(A) The facts are the same as in paragraph (k)(2)(i) of this section (*Example 1*), except LLC also holds real property worth $475,000 subject to a $200,000 liability. Additionally, LLC reasonably projects to earn $20,000 of net rental income per year from such real property.

(B) Because LLC is a disregarded entity, A is treated as the partner in LP for federal income tax purposes. Only LLC has an obligation to make a payment on account of the $300,000 debt if LP were to constructively liquidate as described in paragraph (b)(1) of this section. Therefore, paragraph (k) of this section is applied to the LLC and not to A. Because there is a commercially reasonable expectation that LLC will be able to satisfy its payment obligation, LLC's obligation to restore its deficit capital account is recognized under paragraph (b) of this section. As a result, LP's $300,000 debt is characterized as recourse under § 1.752-1(a)(1) and is allocated to A under § 1.752-2.

(l) ***Applicability dates.***

(1) Paragraphs (a)(1) and (h)(3) of this section apply to liabilities incurred or assumed by a partnership on or after October 11, 2006, other than liabilities incurred or assumed by a partnership pursuant to a written binding contract in effect prior to that date. The rules applicable to liabilities incurred or assumed (or pursuant to a written binding contract in effect) prior to October 11, 2006, are contained in § 1.752-2 in effect prior to October 11, 2006, (see 26 CFR part 1 revised as of April 1, 2006). Paragraphs (b)(6), (j)(3) and (4), and (k) of this section apply to liabilities incurred or assumed by a partnership and to payment obligations imposed or undertaken with respect to a partnership liability on or after October 9, 2019, other than liabilities incurred or assumed by a partnership and payment obligations imposed or undertaken pursuant to a written binding contract in effect prior to that date.

However, taxpayers may apply paragraphs (b)(6), (j)(3) and (4), and (k) of this section to all of their liabilities as of the beginning of the first taxable year of the partnership ending on or after October 5, 2016. The rules applicable to liabilities incurred or assumed (or pursuant to a written binding contract in effect) prior to October 9, 2019, are contained in § 1.752-2 in effect prior to October 9, 2019, (see 26 CFR part 1 revised as of April 1, 2019).

(2) Paragraphs (b)(3), (f)(10) and (11), and (j)(2) of this section apply to liabilities incurred or assumed by a partnership and payment obligations imposed or undertaken with respect to a partnership liability on or after October 5, 2016, other than liabilities incurred or assumed by a partnership and payment obligations imposed or undertaken pursuant to a written binding contract in effect prior to that date. Partnerships may apply paragraphs (b)(3), (f)(10) and (11), and (j)(2) of this section to all of their liabilities as of the beginning of the first taxable year of the partnership ending on or after October 5, 2016. The rules applicable to liabilities incurred or assumed (or subject to a written binding contract in effect) prior to October 5, 2016, are contained in § 1.752-2 in effect prior to October 5, 2016, (see 26 CFR part 1 revised as of April 1, 2016).

(3) If a partner has a share of a recourse partnership liability under § 1.752-2(a)(1) as a result of bearing the economic risk of loss under § 1.752-2(b) immediately prior to October 5, 2016 (Transition Partner), and such liability is modified or refinanced, the partnership (Transition Partnership) may choose not to apply paragraphs (b)(3), (f)(10) and (11), and (j)(2)(i)(C)(2) of this section to the extent the amount of the Transition Partner's share of liabilities under § 1.752-2(a)(1) as a result of bearing the economic risk of loss under § 1.752-2(b) immediately prior to October 5, 2016, exceeds the amount of the Transition Partner's adjusted basis in its partnership interest as determined under § 1.705-1 at such time (Grandfathered Amount). See also § 1.704-2(g)(3). A liability is modified or refinanced for purposes of this paragraph (l) to the extent that the proceeds of a partnership liability (the refinancing debt) are allocable under the rules of § 1.163-8T to payments discharging all or part of any other liability (pre-modification liability) of that partnership or there is a significant modification of that liability as provided under § 1.1001-3. A Transition Partner that is a partnership, S corporation, or a business entity disregarded as an entity separate from its owner under section 856(i) or 1361(b)(3) or §§ 301.7701-1 through 301.7701-3 of this chapter ceases to qualify as a Transition Partner if the direct or indirect ownership of that Transition Partner changes by 50 percent or more. The Transition Partnership may continue to apply the rules under § 1.752-2 in effect prior to October 5, 2016, with respect to a Transition Partner for payment obligations described in § 1.752-2(b) to the extent of the Transition Partner's adjusted Grandfathered Amount for the seven-year period beginning October 5, 2016. The termination of a Transition Partnership under section 708(b)(1)(B) and applicable regulations prior to January 1, 2018, does not affect the Grandfathered Amount of a Transition Partner that remains a partner in the new partnership (as described in § 1.708-1(b)(4)), and the new partnership is treated as a continuation of the Transition Partnership for purposes of this paragraph (l)(3). However, a Transition Partner's Grandfathered Amount is reduced (not below zero), but never increased by—

(i) Upon the sale of any property by the Transition Partnership, an amount equal to the excess of any gain allocated for federal income tax purposes to the Transition Partner by the Transition Partnership (including amounts allocated under section 704(c) and applicable regulations) over the product of the total amount realized by the Transition Partnership from the property sale multiplied by the Transition Partner's percentage interest in the partnership; and

(ii) An amount equal to any decrease in the Transition Partner's share of liabilities to which the rules of this paragraph (l)(3) apply, other than by operation of paragraph (l)(3)(i) of this section.

(4) Paragraphs (a)(2) and (3), (f)(9), and (i) of this section apply to liabilities incurred or assumed by a partnership on or after December 2, 2024, other than liabilities incurred or assumed by a partnership pursuant to a written binding contract in effect prior to that date. To the extent that the proceeds of a partnership liability (refinancing debt) are allocable under the rules of § 1.163-8T to payments discharging all or part of any other liability (pre-modification liability) of that partnership, the refinancing debt will be treated as though it was incurred or assumed by the partnership prior to December 2, 2024, to the extent of the amount and duration of the pre-modification liability. A partnership may apply paragraphs (a)(2) and (3), (f)(9), and (i) of this section to all of its liabilities (including liabilities incurred or assumed by a partnership prior to December 2, 2024), for any return filed on or after December 2, 2024 provided the partnership consistently applies all the rules in paragraphs (a)(2) and (3), (f)(9), and (i) of this section and § 1.752-4(b)(1)(iv) and (v), (b)(2) and (3), (b)(5)(i) through (iv), (e), and (f) to those liabilities.

[T.D. 8380, 56 FR 66351, Dec. 23, 1991; 57 FR 4913, Feb. 10, 1992; 57 FR 5054, Feb. 12, 1992; 57 FR 5511, Feb. 14, 1992; T.D. 9289, 71 FR 59672, Oct. 11, 2006; T.D. 9788, 81 FR 69288, Oct. 5, 2016; T.D. 9790, 81 FR 72984, Oct. 21, 2016; T.D. 9877, 84 FR 54023, Oct. 9, 2019; T.D. 10014, 89 FR 95113, Dec. 2, 2024]

§ 1.752-2T Partner's share of recourse liabilities (temporary).

(a)-(b) [Reserved]

(c)

(1) through (2) [Reserved]

(3) ***Allocation of debt deemed transferred to a partner pursuant to regulations under section 385.*** For a special rule regarding the allocation of a partnership liability that is a debt instrument with respect to which there is one or more deemed transferred receivables within the meaning of § 1.385-3T(g)(8), see § 1.385-3T(f)(4)(vi).

(d) through (k) [Reserved]

(l)

(1) through (3) [Reserved]

(4) Paragraph (c)(3) of this section applies on or after January 19, 2017.

(m) ***Expiration date*** —

(1) [Reserved]

(2) Paragraphs (c)(3) and (l)(4) of this section expire on October 13, 2019.

[T.D. 9788, 81 FR 69288, Oct. 5, 2016, as amended by T.D. 9790, 81 FR 72984, Oct. 21, 2016; 82 FR 8169, Jan. 24, 2107; T.D. 9877, 84 FR 54026, Oct. 9, 2019]

§ 1.752-3 Partner's share of nonrecourse liabilities.

(a) ***In general.*** A partner's share of the nonrecourse liabilities of a partnership equals the sum of paragraphs (a)(1) through (a)(3) of this section as follows—

(1) The partner's share of partnership minimum gain determined in accordance with the rules of section 704(b) and the regulations thereunder;

(2) The amount of any taxable gain that would be allocated to the partner under section 704(c) (or in the same manner as section 704(c) in connection with a revaluation of partnership property) if the partnership disposed of (in a taxable transaction) all partnership property subject to one or more nonrecourse liabilities of the partnership in full satisfaction of the liabilities and for no other consideration; and

(3) The partner's share of the excess nonrecourse liabilities (those not allocated under paragraphs (a)(1) and (a)(2) of this section) of the partnership as determined in accordance with the partner's share of partnership profits. The partner's interest in partnership profits is determined by taking into account all facts and circumstances relating to the economic arrangement of the partners. The partnership agreement may specify the partners' interests in partnership profits for purposes of allocating excess nonrecourse liabilities provided the interests so specified are reasonably consistent with allocations (that have substantial economic effect under the section 704(b) regulations) of some other significant item of partnership income or gain (significant item method). Alternatively, excess nonrecourse liabilities may be allocated among the partners in accordance with the manner in which it is reasonably expected that the deductions attributable to those nonrecourse liabilities will be allocated (alternative method). Additionally, the partnership may first allocate an excess nonrecourse liability to a partner up to the amount of built-in gain that is allocable to the partner on section 704(c) property (as defined under § 1.704-3(a)(3)(ii)) or property for which reverse section 704(c) allocations are applicable (as described in § 1.704-3(a)(6)(i)) where such property is subject to the nonrecourse liability to the extent that such built-in gain exceeds the gain described in paragraph (a)(2) of this section with respect to such property (additional method). The significant item method, alternative method, and additional method do not apply for purposes of § 1.707-5(a)(2). This additional method does not apply for purposes of § 1.707-5(a)(2)(ii). To the extent that a partnership uses this additional method and the entire amount of the excess nonrecourse liability is not allocated to the contributing partner, the partnership must allocate the remaining amount of the excess nonrecourse liability under one of the other methods in this paragraph (a)(3). Excess nonrecourse liabilities are not required to be allocated under the same method each year.

(b) ***Allocation of a single nonrecourse liability among multiple properties*** —

(1) ***In general.*** For purposes of determining the amount of taxable gain under paragraph (a)(2) of this section, if a partnership holds multiple properties subject to a single nonrecourse liability, the partnership may allocate the liability among the multiple properties under any reasonable method. A method is not reasonable if it allocates to any item of property an amount of the liability that, when combined with any other liabilities allocated to the property, is in excess of the fair market value of the property at the time the liability is incurred. The portion of the nonrecourse liability allocated to each item of partnership property is then treated as a separate loan under paragraph (a)(2) of this section. In general, a partnership may not change the method of allocating a single nonrecourse liability under this paragraph (b) while any portion of the liability is outstanding. However, if one or more of the multiple properties subject to the liability is no longer subject to the liability, the portion of the liability allocated to that property must be reallocated among the properties still subject to the liability so that the amount of the liability allocated to any property does not exceed the fair market value of such property at the time of reallocation.

(2) ***Reductions in principal.*** For purposes of this paragraph (b), when the outstanding principal of a partnership liability is reduced, the reduction of outstanding principal is allocated among the multiple properties in the same proportion that the partnership liability originally was allocated to the properties under paragraph (b)(1) of this section.

(c) ***Examples.*** The following examples illustrate the principles of this section:

Example 1. Partner's share of nonrecourse liabilities. The AB partnership purchases depreciable property for a $1,000 purchase money note that is nonrecourse liability under the rules of this section. Assume that this is the only nonrecourse liability of the partnership, and that no principal payments are due on the purchase money note for a year. The partnership agreement provides that all items of income, gain, loss, and deduction are allocated equally. Immediately after purchasing the depreciable property, the partners share the nonrecourse liability equally because they have equal interests in partnership profits. A and B are each treated as if they contributed $500 to the partnership to reflect each partner's increase in his or her share of partnership liabilities (from $0 to $500). The minimum gain with respect to an item of partnership property subject to a nonrecourse liability equals the amount of gain that would be recognized if the partnership disposed of the property in full satisfaction of the nonrecourse liability and for no other consideration. Therefore, if the partnership claims a depreciation deduction of $200 for the depreciable property for the year it acquires that property, partnership minimum gain for the year will increase by $200 (the excess of the $1,000 nonrecourse liability over the $800 adjusted tax basis of the property). See section 704(b) and the regulations thereunder. A and B each have a $100 share of partnership minimum gain at the end of that year because the depreciation deduction is treated as a nonrecourse deduction. See section 704(b) and the regulation thereunder. Accordingly, at the end of that year, A and B are allocated $100 each of the nonrecourse liability to match their shares of partnership minimum gain. The remaining $800 of the nonrecourse liability will be allocated equally between A and B ($400 each).

Example 2. Excess nonrecourse liabilities allocated consistently with reasonably expected deductions. The facts are the same as in *Example 1* except that the partnership agreement provides that depreciation deductions will be allocated to A. The partners agree to allocate excess nonrecourse liabilities in accordance with the manner in which it is reasonably expected that the deductions attributable to those nonrecourse liabilities will be allocated. Assuming that the allocation of all of the depreciation deductions to A is valid under section 704(b), immediately after purchasing the depreciable property, A's share of the nonrecourse liability is $1,000. Accordingly, A is treated as if A contributed $1,000 to the partnership.

Example 3. Allocation of liability among multiple properties. (i) A and B are equal partners in a partnership (PRS). A contributes $70 of cash in exchange for a 50-percent interest in PRS. B contributes two items of property, X and Y, in exchange for a 50-percent interest in PRS. Property X has a fair market value (and book value) of $70 and an adjusted basis of $40, and is subject to a nonrecourse liability of $50. Property Y has a fair market value (and book value) of $120, an adjusted basis of $40, and is subject to a nonrecourse liability of $70. Immediately after the initial contributions, PRS refinances the two separate liabilities with a single $120 nonrecourse liability. All of the built-in gain attributable to Property X ($30) and Property Y ($80) is section 704(c) gain allocable to B.
(ii) The amount of the nonrecourse liability ($120) is less than the total book value of all of the properties that are subject to such liability ($70 + $120 = $190), so there is no partnership minimum gain. § 1.704-2(d). Accordingly, no portion of the liability is allocated pursuant to paragraph (a)(1) of this section.

(iii) Pursuant to paragraph (b)(1) of this section, PRS decides to allocate the nonrecourse liability evenly between the Properties X and Y. Accordingly, each of Properties X and Y are treated as being subject to a separate $60 nonrecourse liability for purposes of applying paragraph (a)(2) of this section. Under paragraph (a)(2) of this section, B will be allocated $20 of the liability for each of Properties X and Y (in each case, $60 liability minus $40 adjusted basis). As a result, a portion of the liability is allocated pursuant to paragraph (a)(2) of this section as follows:

Partner	Property	Tier 1	Tier 2
A	X	$0	$0
	Y	0	0
B	X	0	20
	Y	0	20

(iv) PRS has $80 of excess nonrecourse liability that it may allocate in any manner consistent with paragraph (a)(3) of this section. PRS determines to allocate the $80 of excess nonrecourse liabilities to the partners up to their share of the remaining section 704(c) gain on the properties, with any remaining amount of liabilities being allocated equally to A and B consistent with their equal interests in partnership profits. B has $70 of remaining section 704(c) gain ($10 on Property X and $60 on Property Y), and thus will be allocated $70 of the liability in accordance with this gain.
The remaining $10 is divided equally between A and B. Accordingly, the overall allocation of the $120 nonrecourse liability is as follows:

Partner	Tier 1	Tier 2	Tier 3	Total
A	$0	$0	$5	$5
B	0	40	75	115

(d) ***Effective/applicability dates.*** The third, fourth, fifth, and sixth sentences of paragraph (a)(3) of this section apply to liabilities that are incurred, taken subject to, or assumed by a partnership on or after October 5, 2016, other than liabilities incurred, taken subject to, or assumed by a partnership pursuant to a written binding contract in effect prior to October 5, 2016. For liabilities that are incurred, taken subject to, or assumed by a partnership before October 5, 2016, the third, fourth, fifth, and sixth sentences of paragraph (a)(3) of this section as contained in 26 CFR part 1 revised as of April 1, 2016, apply.

[T.D. 8380, 56 FR 66355, Dec. 23, 1991, as amended by T.D. 8906, 65 FR 64890, Oct. 31, 2000; T.D. 9787, 81 FR 69300, Oct. 5, 2016]

§ 1.752-4 Special rules.

(a) ***Tiered partnerships.*** An upper-tier partnership's share of the liabilities of a lower-tier partnership (other than any liability of the lower-tier partnership that is owed to the upper-tier partnership) is treated as a liability of the upper-tier partnership for purposes of applying section 752 and the regulations thereunder to the partners of the upper-tier partnership.

(b) ***Related person definition*** —

(1) ***In general.*** A person is related to a partner if the person and the partner bear a relationship to each other that is specified in section 267(b) or 707(b)(1), subject to the following modifications:

(i) Substitute “80 percent or more” for “more than 50 percent” each place it appears in those sections.

(ii) A person's family is determined by excluding brothers and sisters.

(iii) Disregard sections 267(e)(1) and 267(f)(1)(A).

(iv) Disregard section 267(c)(1) in determining whether—

(A) Stock of a corporation owned, directly or indirectly, by or for a partnership is considered as being owned proportionately by or for its partners when the corporation directly bears the economic risk of loss as described in § 1.752-2(a)(3) for a liability of the partnership; and

(B) A capital interest or a profits interest in a partnership (lower-tier partnership) owned, directly or indirectly, by or for a partnership (upper-tier partnership) is considered as being owned proportionately by or for the upper-tier partnership's partners when the lower-tier partnership directly bears the economic risk of loss as described in § 1.752-2(a)(3) for a liability of the upper-tier partnership.

(v) Disregard section 1563(e)(2) in determining whether a corporate partner and a corporation are members of the same controlled group (as defined in section 267(f)) under section 267(b)(3) when the corporation directly bears the economic risk of loss as described in § 1.752-2(a)(3) for a liability of the partnership.

(2) ***Related partner exception.*** Notwithstanding paragraph (b)(1) of this section (which defines related person), if a person who owns (directly or indirectly through one or more partnerships) an interest in a partnership directly bears the economic risk of loss as described in § 1.752-2(a)(3) for a partnership liability, or portion thereof, then other persons owning interests directly or indirectly (through one or more partnerships) in that partnership are not treated as related to that person for purposes of determining the economic risk of loss borne by each of them for such partnership liability, or portion thereof. This paragraph (b)(2) does not apply when determining a partner's interest under the de minimis rules in § 1.752-2(d) and (e).

(3) ***Person related to more than one partner.*** For purposes of determining a partner's economic risk of loss for a partnership liability, or a portion thereof, when a person who directly bears the economic risk of loss as described in § 1.752-2(a)(3) for the partnership liability is related to more than one partner under paragraph (b)(1) of this section, each partner that is related to such person is considered to bear the economic risk of loss for the partnership liability, or portion thereof, in proportion to the partner's interest in partnership profits.

(4) ***Special rule where entity structured to avoid related person status*** —

(i) ***In general.*** If—

(A) A partnership liability is owed to or guaranteed by another entity that is a partnership, an S corporation, a C corporation, or a trust;

(B) A partner or related person owns (directly or indirectly) a 20 percent or more ownership interest in the other entity; and

(C) A principal purpose of having the other entity act as a lender or guarantor of the liability was to avoid the determination that the partner that owns the interest bears the economic risk of loss for federal income tax purposes for all or part of the liability; then the partner is treated as holding the other entity's interest as a creditor or guarantor to the extent of the partner's or related person's ownership interest in the entity.

(ii) ***Ownership interest.*** For purposes of paragraph (b)(4)(i) of this section, a person's ownership interest in—

(A) A partnership equals the partner's highest percentage interest in any item of partnership loss or deduction for any taxable year;

(B) An S corporation equals the percentage of the outstanding stock in the S corporation owned by the shareholder;

(C) A C corporation equals the percentage of the fair market value of the issued and outstanding stock owned by the shareholder; and

(D) A trust equals the percentage of the actuarial interests owned by the beneficial owner of the trust.

(5) ***Examples.*** The following examples illustrate the principles of paragraph (b) of this section.

(i) ***Example 1: Person related to more than one partner.*** A, an individual, owns 100 percent of X, a corporation. X owns 100 percent of Y, a corporation. A owns a 40 percent capital and profits interest and X owns a 60 percent capital and profits interest in P, a limited liability company treated as a partnership for Federal tax purposes. P borrows $1,000 from Bank. Y guarantees payment of the entire $1,000 debt owed to Bank. A and X do not directly bear the economic risk of loss as described in § 1.752-2(a)(3) for the liability. Therefore, paragraph (b)(2) of this section does not apply for purposes of determining the economic risk of loss borne by A and X. Under paragraph (b)(1) of this section, Y is related to A and X. Therefore, under paragraph (b)(3) of this section, A bears the economic risk of loss of $400 and X bears the economic risk of loss of $600 for the $1,000 liability.

(ii) ***Example 2: Related partner exception.*** A, an individual, owns 100 percent of two corporations, X and Y. A and Y are members of P, a limited liability company treated as a partnership for Federal tax purposes. P borrows $1,000 from Bank. Each of A and X guarantees payment of the entire $1,000 debt owed to Bank. A and Y are not treated as related to each other pursuant to paragraph (b)(2) of this section because A directly bears the economic risk of loss as described in § 1.752-2(a)(3) for the $1,000 liability. Y is therefore not treated as related to X. Because A is the only partner that bears the economic risk of loss for P's $1,000 liability, A's share of the liability is $1,000 under § 1.752-2(a)(1).

(iii) ***Example 3: Related partner exception.*** A, an individual, owns 100 percent of two corporations, X and Y. X owns 79 percent of a corporation, Z, and Y owns the remaining 21 percent of Z. X and Y are members of P, a limited liability company treated as a partnership for Federal tax purposes. The partnership agreement provides that X and Y share equally in all items of income, gain, loss, deduction, and credit of P. P borrows $2,000 from Bank. Each of X and Z guarantees payment of the entire $2,000 debt owed to Bank. X directly bears the economic risk of loss as described in § 1.752-2(a)(3) for P's $2,000 liability; therefore, paragraph (b)(2) of this section applies and X and Y are not treated as related for purposes of determining the economic risk of loss borne by each of them for P's $2,000 liability. Because X and Y are not treated as related and neither owns an 80 percent or more interest in Z, neither X nor Y is treated as related to Z under paragraph (b)(1) of this section. Because X bears the economic risk of loss for P's $2,000 liability, X's share of the liability is $2,000 under § 1.752-2(a)(1).

(iv) ***Example 4: Related partner exception and person related to more than one partner.*** Same facts as in paragraph (b)(5)(iii) of this section (*Example 3*), but X guarantees payment of up to $1,200 of the debt owed to Bank if any amount of the full $2,000 is not recovered by Bank and Z guarantees payment of $2,000. Pursuant to paragraph (b)(2) of this section, X and Y are not treated as related to the extent of X's $1,200 guarantee because X directly bears the economic risk of loss as described in § 1.752-2(a)(3) for $1,200 of P's $2,000 liability. X's share of the liability is $1,200 under § 1.752-2(a)(1). In addition, because paragraph (b)(2) of this section does not apply to the remaining portion of the liability that X did not guarantee, X and Y are treated as related for purposes of the remaining $800 of the liability pursuant to paragraph (b)(1) of this section. Therefore, Z is treated as related to X and Y under paragraph (b)(1) of this section. Pursuant to paragraph (b)(3) of this section, because X and Y each has a 50 percent interest in all items of income, gain, loss, deduction, and credit of P, X and Y each bear the economic risk of loss for $400 of the remaining $800 liability, and thus each has a $400 share of the liability under § 1.752-2(a)(1). In sum, X's share of P's $2,000 liability is $1,600 ($1,200 plus $400) and Y's share of P's $2,000 liability is $400.

(v) ***Example 5: Entity structured to avoid related person status.*** A, B, and C form a general partnership, ABC. A, B, and C are equal partners, each contributing $1,000 to the partnership. A and B want to loan money to ABC and have the loan treated as nonrecourse for purposes of section 752. A and B form partnership AB to which each contributes $50,000. A and B share losses equally in partnership AB. Partnership AB loans partnership ABC $100,000 on a nonrecourse basis secured by the property ABC buys with the loan. Under these facts and circumstances, A and B bear the economic risk of loss with respect to the partnership liability equally based on their percentage interest in losses of partnership AB.

(c) ***Limitation.*** The amount of an indebtedness is taken into account only once, even though a partner (in addition to the partner's liability for the indebtedness as a partner) may be separately liable therefor in a capacity other than as a partner.

(d) ***Time of determination.*** A partner's share of partnership liabilities must be determined whenever the determination is necessary in order to determine the tax liability of the partner or any other person. See § 1.705-1(a) for rules regarding when the adjusted basis of a partner's interest in the partnership must be determined.

(e) ***Ordering rule.*** In determining a partner's share of a recourse partnership liability, the rules in paragraph (b)(2) of this section, if applicable, apply before the rules in paragraph (b)(3) of this section. The rules in paragraph (b)(3) of this section apply before the rules in § 1.752-2(a)(2).

(f) *Example.* The following example illustrates the application of paragraph (e) of this section.

(1) *Facts.* A, an individual, owns 100 percent of two corporations, X and Y. X, Y, and Z, a corporation, are members of P, a limited liability company treated as a partnership for Federal tax purposes. The partnership agreement provides that the partners share equally in all items of income, gain, loss, deduction, and credit of P. Z is not related to A, X, or Y. P borrows $1,000 from Bank. Each of A, X, and Z guarantees payment for the entire amount of P's $1,000 liability. Each of A, X, and Z has a payment obligation of $1,000 under § 1.752-2(b) for P's $1,000 liability.

(2) *Analysis.*

(i) Under paragraph (e) of this section, first apply the rules under paragraph (b)(2) of this section, then apply the rules under paragraph (b)(3) of this section, and finally apply the rules under § 1.752-2(a)(2) to determine how to allocate P's $1,000 liability among X, Y, and Z under § 1.752-2(a)(1). Under paragraph (b)(2) of this section, X and Y are not treated as related to each other with respect to X's payment obligation for the $1,000 liability because X directly bears the economic risk of loss as described in § 1.752-2(a)(3). Therefore, X is treated as bearing $1,000 of the economic risk of loss for P's liability.

(ii) Because the rules in paragraph (b)(2) of this section do not affect A's relationship to X and Y, X and Y are related to A under paragraph (b)(1) of this section. Because A is related to both X and Y, each of X and Y is considered to bear the economic risk of loss for P's liability in proportion to X's and Y's interest in P. Because they both have a one-third interest in all items of income, gain, loss, deduction, and credit of P, each of X and Y bears $500 of economic risk of loss under paragraph (b)(3) of this section with respect to A's $1,000 payment obligation for P's liability.

(iii) Z has a payment obligation with respect to the $1,000 liability under § 1.752-2(b)(1) and thus, bears $1,000 of the economic risk of loss for P's liability.

(iv) After applying paragraphs (b)(2) and (3) of this section, X is considered to bear $1,500 of the economic risk of loss for P's liability and Y is considered to bear $500 of the economic risk of loss for P's liability. Z is considered to bear $1,000 of the economic risk of loss for P's liability. Because the aggregate amount of X's, Y's, and Z's economic risk of loss ($3,000) exceeds the amount of P's liability ($1,000), the economic risk of loss borne by X, Y, and Z is determined under § 1.752-2(a)(2). Under § 1.752-2(a)(2), X's economic risk of loss is $500 (($1,500/$3,000) × $1,000), Y's economic risk of loss is $167 (($500/$3,000) × $1,000), and Z's economic risk of loss is $333 (($1,000/$3,000) × $1,000). Therefore, under § 1.752-2(a)(1), X's share of P's liability is $500, Y's share is $167, and Z's share is $333.

[T.D. 8380, 56 FR 66356, Dec. 23, 1991, as amended by T.D. 10014, 89 FR 95115, Dec. 2, 2024]

§ 1.752-5 Applicability dates and transition rules.

(a) *In general.* Except as otherwise provided in §§ 1.752-1 through 1.752-4, unless a partnership makes an election under paragraph (b)(1) of this section to apply the provisions of §§ 1.752-1 through 1.752-4 earlier, §§ 1.752-1 through 1.752-4 apply to any liability incurred or assumed by a partnership on or after December 28, 1991, other than a liability incurred or assumed by the partnership pursuant to a written binding contract in effect prior to December 28, 1991 and at all times thereafter. However, § 1.752-4(b)(1)(iv) and (v), (b)(2) and (3), (b)(5)(i) through (iv), (e), and (f) apply to any liability incurred or assumed by a partnership on or after December 2, 2024, other than a liability incurred or assumed by a partnership pursuant to a written binding contract in effect prior to that date. To the extent that the

proceeds of a partnership liability (refinancing debt) are allocable under the rules of § 1.163-8T to payments discharging all or part of any other liability (pre-modification liability) of that partnership, the refinancing debt will be treated as though it was incurred or assumed by the partnership prior to December 2, 2024, to the extent of the amount and duration of the pre-modification liability. A partnership may apply § 1.752-4(b)(1)(iv) and (v), (b)(2) and (3), (b)(5)(i) through (iv), (e), and (f) to all of its liabilities (including liabilities incurred or assumed by a partnership prior to December 2, 2024), for any return filed on or after December 2, 2024 provided the partnership consistently applies all the rules in § 1.752-2(a)(2) and (3), (f)(9), and (i) and § 1.752-4(b)(1)(iv) and (v), (b)(2) and (3), (b)(5)(i) through (iv), (e), and (f) to those liabilities. In addition, § 1.752-3(a)(3) fifth, sixth, and seventh sentences, (b), and (c) *Example 3,* do not apply to any liability incurred or assumed by a partnership prior to October 31, 2000. Nevertheless, § 1.752-3(a)(3) fifth, sixth, and seventh sentences, (b), and (c) *Example 3,* may be relied upon for any liability incurred or assumed by a partnership prior to October 31, 2000 for taxable years ending on or after October 31, 2000. In addition, § 1.752-1(f) last sentence and (g) *Example 2,* do not apply to any liability incurred or assumed by a partnership prior to January 4, 2001. Nevertheless, § 1.752-1(f) last sentence and (g) *Example 2,* may be relied on for any liability incurred or assumed by a partnership prior to January 4, 2001 and, unless the partnership makes an election under paragraph (b)(1) of this section, on or after December 28, 1991, other than a liability incurred or assumed by the partnership pursuant to a written binding contract in effect prior to December 28, 1991 and at all times thereafter. For liabilities incurred or assumed by a partnership prior to December 28, 1991 (or pursuant to a written binding contract in effect prior to December 28, 1991 and at all times thereafter), unless an election to apply these regulations has been made, see §§ 1.752-0T to 1.752-4T, set forth in 26 CFR 1.752-0T through 1.752-4T as contained in 26 CFR edition revised April 1, 1991, (TD 8237, TD 8274, and TD 8355) and § 1.752-1, set forth in 26 CFR 1.752-1 as contained in 26 CFR edition revised April 1, 1988 (TD 6175 and TD 6500).

(b) ***Election*** —

(1) ***In general.*** A partnership may elect to apply the provisions of §§ 1.752-1 through 1.752-4 to all of its liabilities to which the provisions of those sections do not otherwise apply as of the beginning of the first taxable year of the partnership ending on or after December 28, 1991.

(2) ***Time and manner of election.*** An election under this paragraph (b) is made by attaching a written statement to the partnership return for the first taxable year of the partnership ending on or after December 28, 1991. The written statement must include the name, address, and taxpayer identification number of the partnership making the statement and contain a declaration that an election is being made under this paragraph (b).

(c) ***Effect of section 708(b)(1)(B) termination on determining date liabilities are incurred or assumed.*** For purposes of applying this section, a termination of the partnership under section 708(b)(1)(B) will not cause partnership liabilities incurred or assumed prior to the termination to be treated as incurred or assumed on the date of the termination.

[T.D. 8380, 56 FR 66356, Dec. 23, 1991, as amended by T.D. 8906, 65 FR 64890, Oct. 31, 2000; T.D. 8925, 66 FR 723, Jan. 4, 2001; T.D. 9207, 70 FR 30343, May 26, 2005; T.D. 10014, 89 FR 95116, Dec. 2, 2024]

§ 1.752-6 Partnership assumption of partner's section 358(h)(3) liability after October 18, 1999, and before June 24, 2003.

(a) ***In general.*** If, in a transaction described in section 721(a), a partnership assumes a liability (defined in section 358(h)(3)) of a partner (other than a liability to which section 752(a) and (b) apply), then, after application of section 752(a) and (b), the partner's basis in the partnership is reduced (but not below the

adjusted value of such interest) by the amount (determined as of the date of the exchange) of the liability. For purposes of this section, the adjusted value of a partner's interest in a partnership is the fair market value of that interest increased by the partner's share of partnership liabilities under §§ 1.752-1 through 1.752-5.

(b) ***Exceptions*** —

(1) ***In general.*** Except as provided in paragraph (b)(2) of this section, the exceptions contained in section 358(h)(2)(A) and (B) apply to this section.

(2) ***Transactions described in Notice 2000-44.*** The exception contained in section 358(h)(2)(B) does not apply to an assumption of a liability (defined in section 358(h)(3)) by a partnership as part of a transaction described in, or a transaction that is substantially similar to the transactions described in, Notice 2000-44 (2000-2 C.B. 255). See § 601.601(d)(2) of this chapter.

(c) ***Example.*** The following example illustrates the principles of paragraph (a) of this section:

Example. In 1999, A and B form partnership PRS. A contributes property with a value and basis of $200, subject to a nonrecourse debt obligation of $50 and a fixed or contingent obligation of $100 that is not a liability to which section 752(a) and (b) applies, in exchange for a 50% interest in PRS. Assume that, after the contribution, A's share of partnership liabilities under §§ 1.752-1 through 1.752-5 is $25. Also assume that the $100 liability is not associated with a trade or business contributed by A to PRS or with assets contributed by A to PRS. After the contribution, A's basis in PRS is $175 (A's basis in the contributed land ($200) reduced by the nonrecourse debt assumed by PRS ($50), increased by A's share of partnership liabilities under §§ 1.752-1 through 1.752-5 ($25)). Because A's basis in the PRS interest is greater than the adjusted value of A's interest, $75 (the fair market value of A's interest ($50) increased by A's share of partnership liabilities ($25)), paragraph (a) of this section operates to reduce A's basis in the PRS interest (but not below the adjusted value of that interest) by the amount of liabilities described in section 358(h)(3) (other than liabilities to which section 752(a) and (b) apply) assumed by PRS. Therefore, A's basis in PRS is reduced to $75.

(d) ***Effective date*** —

(1) ***In general.*** This section applies to assumptions of liabilities occurring after October 18, 1999, and before June 24, 2003.

(2) ***Election to apply § 1.752-7.*** The partnership may elect, under § 1.752-7(k)(2), to apply the provisions referenced in § 1.752-7(k)(2)(ii) to all assumptions of liabilities by the partnership occurring after October 18, 1999, and before June 24, 2003. Section 1.752-7(k)(2) describes the manner in which the election is made.

[T.D. 9207, 70 FR 30343, May 26, 2005]

§ 1.752-7 Partnership assumption of partner's § 1.752-7 liability on or after June 24, 2003.

(a) ***Purpose and structure.*** The purpose of this section is to prevent the acceleration or duplication of loss through the assumption of obligations not described in § 1.752-1(a)(4)(i) in transactions involving partnerships. Under paragraph (c) of this section, any such obligation that is assumed by a partnership from a partner in a transaction governed by section 721(a) is treated as section 704(c) property. Paragraphs (e), (f), and (g) of this section provide rules for situations where a partnership assumes such an obligation from a partner and, subsequently, that partner transfers all or part of the partnership interest, that partner receives a distribution in liquidation of the partnership interest, or another partner

assumes part or all of that obligation from the partnership. These rules prevent the duplication of loss by prohibiting the partnership and any person other than the partner from whom the obligation was assumed from claiming a deduction, loss, or capital expense to the extent of the built-in loss associated with the obligation. These rules also prevent the acceleration of loss by deferring the partner's deduction or loss attributable to the obligation (if any) until the satisfaction of the § 1.752-7 liability (within the meaning of paragraph (b)(8) of this section). Paragraph (d) of this section provides a number of exceptions to paragraphs (e), (f), and (g) of this section, including a de minimis exception. Paragraph (i) provides a special rule for situations in which an amount paid to satisfy a § 1.752-7 liability is capitalized into other partnership property. Paragraph (j) of this section provides special rules for tiered partnership transactions.

(b) ***Definitions.*** For purposes of this section, the following definitions apply:

(1) ***Assumption.*** The principles of § 1.752-1(d) and (e) apply in determining if a § 1.752-7 liability has been assumed.

(2) ***Adjusted value.*** The adjusted value of a partner's interest in a partnership is the fair market value of that interest increased by the partner's share of partnership liabilities under §§ 1.752-1 through 1.752-5.

(3) ***§ 1.752-7 liability*** —

(i) ***In general.*** A § 1.752-7 liability is an obligation described in § 1.752-1(a)(4)(ii) to the extent that either—

(A) The obligation is not described in § 1.752-1(a)(4)(i); or

(B) The amount of the obligation (under paragraph (b)(3)(ii) of this section) exceeds the amount taken into account under § 1.752-1(a)(4)(i).

(ii) ***Amount and share of § 1.752-7 liability.*** The amount of a § 1.752-7 liability (or, for purposes of paragraph (b)(3)(i) of this section, the amount of an obligation) is the amount of cash that a willing assignor would pay to a willing assignee to assume the § 1.752-7 liability in an arm's-length transaction. If the obligation arose under a contract in exchange for rights granted to the obligor under that contract, and those contractual rights are contributed to the partnership in connection with the partnership's assumption of the contractual obligation, then the amount of the § 1.752-7 liability or obligation is the amount of cash, if any, that a willing assignor would pay to a willing assignee to assume the entire contract. A partner's share of a partnership's § 1.752-7 liability is the amount of deduction that would be allocated to the partner with respect to the § 1.752-7 liability if the partnership disposed of all of its assets, satisfied all of its liabilities (other than § 1.752-7 liabilities), and paid an unrelated person to assume all of its § 1.752-7 liabilities in a fully taxable arm's-length transaction (assuming such payment would give rise to an immediate deduction to the partnership).

(iii) ***Example.*** In 2005, A, B, and C form partnership PRS. A contributes $10,000,000 in exchange for a 25% interest in PRS and PRS's assumption of a debt obligation. The debt obligation was issued for cash and the issue price was equal to the stated redemption price at maturity ($5,000,000). The debt obligation bears interest, payable quarterly, at a fixed rate of interest, which was a market rate of interest when the debt obligation was issued. At the time of the assumption, all accrued interest has been paid. Prior to the partnership assuming the obligation, interest rates decrease, resulting in the debt

obligation bearing an above-market interest rate. Assume that, as a result of the decline in interest rates, A would have had to pay a willing assignee $6,000,000 to assume the debt obligation. The assumption of the debt obligation by PRS from A is treated as an assumption of a § 1.752-1(a)(4)(i) liability in the amount of $5,000,000 (the portion of the total amount of the debt obligation that has created basis in A's assets, that is, the $5,000,000 that was issued in exchange for the debt obligation) and an assumption of a § 1.752-7 liability in the amount of $1,000,000 (the difference between the total obligation, $6,000,000, and the § 1.752-1(a)(4)(i)liability, $5,000,000).

(4) *§ 1.752-7 liability transfer* —

(i) ***In general.*** Except as provided in paragraph (b)(4)(ii) of this section, a § 1.752-7 liability transfer is any assumption of a § 1.752-7 liability by a partnership from a partner in a transaction governed by section 721(a).

(ii) ***Terminations under section 708(b)(1)(B).*** In determining if a deemed contribution of assets and assumption of liability as a result of a technical termination is treated as a § 1.752-7 liability transfer, only § 1.752-7 liabilities that were assumed by the terminating partnership as part of an earlier § 1.752-7 liability transfer are taken into account and, then, only to the extent of the remaining built-in loss associated with that § 1.752-7 liability.

(5) *§ 1.752-7 liability partner* —

(i) ***In general.*** A § 1.752-7 liability partner is a partner from whom a partnership assumes a § 1.752-7 liability as part of a § 1.752-7 liability transfer or any person who acquires a partnership interest from the § 1.752-7 liability partner in a transaction to which paragraph (e)(3) of this section applies.

(ii) *Tiered partnerships* —

(A) ***Assumption by a lower-tier partnership.*** If, in a § 1.752-7 liability transfer, a partnership (lower-tier partnership) assumes a § 1.752-7 liability from another partnership (upper-tier partnership), then both the upper-tier partnership and the partners of the upper-tier partnership are § 1.752-7 liability partners. Therefore, paragraphs (e) and (f) of this section apply on a sale or liquidation of any partner's interest in the upper-tier partnership and on a sale or liquidation of the upper-tier partnership's interest in the lower-tier partnership. See paragraph (j)(3) of this section. If, in a § 1.752-7 liability transfer, the upper-tier partnership assumes a § 1.752-7 liability from a partner, and, subsequently, in another § 1.752-7 liability transfer, a lower-tier partnership assumes that § 1.752-7 liability from the upper-tier partnership, then the partner from whom the upper-tier partnership assumed the § 1.752-7 liability continues to be the § 1.752-7 liability partner of the lower-tier partnership with respect to the remaining built-in loss associated with that § 1.752-7 liability. Any new built-in loss associated with the § 1.752-7 liability that is created on the assumption of the § 1.752-7 liability from the upper-tier partnership by the lower-tier partnership is shared by all the partners of the upper-tier partnership in accordance with their interests in the upper-tier partnership, and each partner of the upper-tier partnership is treated as a § 1.752-7 liability partner with respect to that new built-in loss. See paragraph (e)(3)(ii), *Example 3* of this section.

(B) ***Distribution of partnership interest.*** If, in a transaction described in § 1.752-7(e)(3), an interest in a partnership (lower-tier partnership) that has assumed a § 1.752-7 liability is distributed by a partnership (upper-tier partnership) that is the § 1.752-7 liability partner with respect to that liability, then the persons receiving interests in the lower-tier partnership are § 1.752-7 liability partners with respect to the lower-tier partnership to the same extent that they were prior to the distribution.

(6) ***Remaining built-in loss associated with a § 1.752-7 liability.***

(i) ***In general.*** The remaining built-in loss associated with a § 1.752-7 liability equals the amount of the § 1.752-7 liability as of the time of the assumption of the § 1.752-7 liability by the partnership, reduced by the portion of the § 1.752-7 liability previously taken into account by the § 1.752-7 liability partner under paragraph (j)(3) of this section and adjusted as provided in paragraph (c) of this section and § 1.704-3 for—

(A) Any portion of that built-in loss associated with the § 1.752-7 liability that is satisfied by the partnership on or prior to the testing date (whether capitalized or deducted); and

(B) Any assumption of all or part of the § 1.752-7 liability by the § 1.752-7 liability partner (including any assumption that occurs on the testing date).

(ii) ***Partial dispositions and assumptions.*** In the case of a partial disposition of the § 1.752-7 liability partner's partnership interest or a partial assumption of the § 1.752-7 liability by another partner, the remaining built-in loss associated with § 1.752-7 liability is pro rated based on the portion of the interest sold or the portion of the § 1.752-7 liability assumed.

(7) ***§ 1.752-7 liability reduction*** —

(i) ***In general.*** The § 1.752-7 liability reduction is the amount by which the § 1.752-7 liability partner is required to reduce the basis in the partner's partnership interest by operation of paragraphs (e), (f), and (g) of this section. The § 1.752-7 liability reduction is the lesser of—

(A) The excess of the § 1.752-7 liability partner's basis in the partnership interest over the adjusted value of that interest (as defined in paragraph (b)(2) of this section); or

(B) The remaining built-in loss associated with the § 1.752-7 liability (as defined in paragraph (b)(6) of this section without regard to paragraph (b)(6)(ii) of this section).

(ii) ***Partial dispositions and assumptions.*** In the case of a partial disposition of the § 1.752-7 liability partner's partnership interest or a partial assumption of the § 1.752-7 liability by another partner, the § 1.752-7 liability reduction is pro rated based on the portion of the interest sold or the portion of the § 1.752-7 liability assumed.

(8) ***Satisfaction of § 1.752-7 liability*** —*In general.* A § 1.752-7 liability is treated as satisfied (in whole or in part) on the date on which the partnership (or the assuming partner) would have been allowed to take the § 1.752-7 liability into account for federal tax purposes but for this section. For example, a § 1.752-7 liability is treated as satisfied when, but for this section, the § 1.752-7 liability would give rise to—

(i) An increase in the basis of the partnership's or the assuming partner's assets (including cash);

(ii) An immediate deduction to the partnership or to the assuming partner;

(iii) An expense that is not deductible in computing the partnership's or the assuming partner's taxable income and not properly chargeable to capital account; or

(iv) An amount realized on the sale or other disposition of property subject to that liability if the property was disposed of by the partnership or the assuming partner at that time.

(9) ***Testing date.*** The testing date is—

(i) For purposes of paragraph (e) of this section, the date of the sale, exchange, or other disposition of part or all of the § 1.752-7 liability partner's partnership interest;

(ii) For purposes of paragraph (f) of this section, the date of the partnership's distribution in liquidation of the § 1.752-7 liability partner's partnership interest; and

(iii) For purposes of paragraph (g) of this section, the date of the assumption (or partial assumption) of the § 1.752-7 liability by a partner other than the § 1.752-7 liability partner.

(10) ***Trade or business*** —

(i) ***In general.*** A trade or business is a specific group of activities carried on by a person for the purpose of earning income or profit, other than a group of activities consisting of acquiring, holding, dealing in, or disposing of financial instruments, if the activities included in that group include every operation that forms a part of, or a step in, the process of earning income or profit. Such group of activities ordinarily includes the collection of income and the payment of expenses. The group of activities must constitute the carrying on of a trade or business under section 162(a) (determined as though the activities were conducted by an individual).

(ii) ***Examples.*** The following examples illustrate the provisions of this paragraph (b)(10):

Example 1. Corporation Y owns, manages, and derives rental income from an office building and also owns vacant land that may be subject to environmental liabilities. Corporation Y contributes the land subject to the environmental liabilities to PRS in a transaction governed by section 721(a). PRS plans to develop the land as a landfill. The contribution of the vacant land does not constitute the contribution of a trade or business because Corporation Y did not conduct any significant business or development activities with respect to the land prior to the contribution.

Example 2. For the past 5 years, Corporation X has owned and operated gas stations in City A, City B, and City C. Corporation X transfers all of the assets associated with the operation of the gas station in City A to PRS for interests in PRS and the assumption by PRS of the § 1.752-7 liabilities associated with that gas station. PRS continues to operate the gas station in City A after the contribution. The contribution of the gas station to PRS constitutes the contribution of a trade or business.

Example 3. For the past 7 years, Corporation Z has engaged in the manufacture and sale of household products. Throughout this period, Corporation Z has maintained a research department for use in connection with its manufacturing activities. The research department has 10 employees actively engaged in the development of new products. Corporation Z contributes the research department to PRS in exchange for a PRS interest and the assumption by PRS of pension liabilities with respect to the

employees of the research department. PRS continues the research operations on a contractual basis with several businesses, including Corporation Z. The contribution of the research operations to PRS constitutes a contribution of a trade or business.

(c) ***Application of section 704(b) and (c) to assumed § 1.752-7 liabilities —***

(1) ***In general —***

(i) ***Section 704(c).*** Except as otherwise provided in this section, sections 704(c)(1)(A) and (B), section 737, and the regulations thereunder, apply to § 1.752-7 liabilities. See § 1.704-3(a)(12). However, § 1.704-3(a)(7) does not apply to any person who acquired a partnership interest from a § 1.752-7 liability partner in a transaction to which paragraph (e)(1) of this section applies.

(ii) ***Section 704(b).*** Section 704(b) and § 1.704-1(b) apply to a post-contribution change in the value of a § 1.752-7 liability. If there is a decrease in the value of a § 1.752-7 liability that is reflected in the capital accounts of the partners under § 1.704-1(b)(2)(iv)(*f*), the amount of the decrease constitutes an item of income for purposes of section 704(b) and § 1.704-1(b). Conversely, if there is an increase in the value of a § 1.752-7 liability that is reflected in the capital accounts of the partners under § 1.704-1(b)(2)(iv)(*f*), the amount of the increase constitutes an item of loss for purposes of section 704(b) and § 1.704-1(b).

(2) ***Example.*** The following example illustrates the provisions of this paragraph (c):

Example. (i) *Facts.* In 2004, A, B, and C form partnership PRS. A contributes Property 1 with a fair market value and basis of $400X, subject to a § 1.752-7 liability of $100X, for a 25% interest in PRS. B contributes $300X cash for a 25% interest in PRS, and C contributes $600X cash for a 50% interest in PRS. Assume that the partnership complies with the substantial economic effect safe harbor of § 1.704-1(b)(2). Under § 1.704-1(b)(2)(iv)(b), A's capital account is credited with $300X (the fair market value of Property 1, $400X, less the § 1.752-7 liability assumed by PRS, $100X). In accordance with §§ 1.752-7(c)(1)(i) and 1.704-3, the partnership can use any reasonable method for section 704(c) purposes. In this case, the partnership elects the traditional method under § 1.704-3(b) and also elects to treat the deductions or losses attributable to the § 1.752-7 liability as coming first from the built-in loss. In 2005, PRS earns $200X of income and uses it to satisfy the § 1.752-7 liability which has increased in value to $200X. Assume that the cost to PRS of satisfying the § 1.752-7 liability is deductible by PRS. The $200X of partnership income is allocated according to the partnership agreement, $50X to A, $50X to B, and $100X to C.

A		B		C		
Book	Tax	Book	Tax	Book	Tax	
$300	$400	$300	$300	$600	$600	Initial Contribution
50	50	50	50	100	100	Income
(25)	(125)	(25)	(25)	(50)	(50)	Satisfaction of Liability
$325	$325	$325	$325	$650	$650	

(ii) *Analysis.* Pursuant to paragraph (c) of this section, $100X of the deduction attributable to the satisfaction of the § 1.752-7 liability is specially allocated to A, the §

1.752-7 liability partner, under section 704(c)(1)(A) and § 1.704-3. No book item corresponds to this tax allocation. The remaining $100X of deduction attributable to the satisfaction of the § 1.752-7 liability is allocated, for both book and tax purposes, according to the partnership agreement, $25X to A, $25X to B, and $50X to C. If the partnership, instead, satisfied the § 1.752-7 liability over a number of years, the first $100X of deduction with respect to the § 1.752-7 liability would be allocated to A, the § 1.752-7 liability partner, before any deduction with respect to the § 1.752-7 liability would be allocated to the other partners. For example, if PRS were to satisfy $50X of the § 1.752-7 liability, the $50X deduction with respect to the § 1.752-7 liability would be allocated to A for tax purposes only. No deduction would arise for book purposes. If PRS later paid a further $100X in satisfaction of the § 1.752-7 liability, $50X of the deduction with respect to the § 1.752-7 liability would be allocated, solely for tax purposes, to A and the remaining $50X would be allocated, for both book and tax purposes, according to the partnership agreement. Under these circumstances, the partnership's method of allocating the built-in loss associated with the § 1.752-7 liability is reasonable.

(d) ***Special rules for transfers of partnership interests, distributions of partnership assets, and assumptions of the § 1.752-7 liability after a § 1.752-7 liability transfer*** —

(1) ***In general.*** Except as provided in paragraphs (d)(2) and (i) of this section, paragraphs (e), (f), and (g) of this section apply to certain partnership transactions occurring after a § 1.752-7 liability transfer.

(2) ***Exceptions*** —

(i) ***In general.*** Paragraphs (e), (f), and (g) of this section do not apply—

(A) If the partnership assumes the § 1.752-7 liability as part of a contribution to the partnership of the trade or business with which the liability is associated, and the partnership continues to carry on that trade or business after the contribution (for the definition of a trade or business, see paragraph (b)(10) of this section); or

(B) If, immediately before the testing date, the amount of the remaining built-in loss with respect to all § 1.752-7 liabilities assumed by the partnership (other than § 1.752-7 liabilities assumed by the partnership with an associated trade or business) in one or more § 1.752-7 liability transfers is less than the lesser of 10% of the gross value of partnership assets or $1,000,000.

(ii) ***Examples.*** The following examples illustrate the principles of this paragraph (d)(2):

Example 1. For the past 5 years, Corporation X, a C corporation, has been engaged in Business A and Business B. In 2004, Corporation X contributes Business A, in a transaction governed by section 721(a), to PRS in exchange for a PRS interest and the assumption by PRS of pension liabilities with respect to the employees engaged in Business A. PRS plans to carry on Business A after the contribution. Because PRS has assumed the pension liabilities as part of a contribution to PRS of the trade or

business with which the liabilities are associated, the treatment of the pension liabilities is not affected by paragraphs (e), (f), and (g) of this section with respect to any transaction occurring after the § 1.752-7 liability transfer of the pension liabilities.

Example 2. (i) *Facts.* The facts are the same as in *Example 1,* except that PRS also assumes from Corporation X certain pension liabilities with respect to the employees of Business B. At the time of the assumption, the amount of the pension liabilities with respect to the employees of Business A is $3,000,000 (the A liabilities) and the amount of the pension liabilities associated with the employees of Business B (the B liabilities) is $2,000,000. Two years later, Corporation X sells its interest in PRS to Y for $9,000,000. At the time of the sale, the remaining built-in loss associated with the A liabilities is $2,100,000, the remaining built-in loss associated with the B liabilities is $900,000, and the gross value of PRS's assets (excluding § 1.752-7 liabilities) is $20,000,000. Assume that PRS has no § 1.752-7 liabilities other than those assumed from Corporation X.

PRS Balance Sheet at Time of X's Sale of PRS Interest
(in millions)

Assets	Liabilities	
$20		Gross Assets (including Business A)
	($2.1)	A Liabilities
	(0.9)	B Liabilities

(ii) *Analysis.* The only liabilities assumed by PRS from Corporation X that were not assumed as part of Corporation X's contribution of Business A were the B liabilities. Immediately before the testing date, the remaining built-in loss associated with the B liabilities ($900,000) was less than the lesser of 10% of the gross value of PRS's assets ($2,000,000) or $1,000,000. Therefore, paragraph (d)(2)(i)(B) of this section applies to exclude Corporation X's sale of the PRS interest to Y from the application of paragraph (e) of this section.

(e) ***Transfer of § 1.752-7 liability partner's partnership interest*** —

(1) ***In general.*** Except as provided in paragraphs (d)(2), (e)(3), and (i) of this section, immediately before the sale, exchange, or other disposition of all or a part of a § 1.752-7 liability partner's partnership interest, the § 1.752-7 liability partner's basis in the partnership interest is reduced by the § 1.752-7 liability reduction (as defined in paragraph (b)(7) of this section). No deduction, loss, or capital expense is allowed to the partnership on the satisfaction of the § 1.752-7 liability (within the meaning of paragraph (b)(8) of this section) to the extent of the remaining built-in loss associated with the § 1.752-7 liability (as defined in paragraph (b)(6) of this section). For purposes of section 705(a)(2)(B) and § 1.704-1(b)(2)(ii)(*b*) only, the remaining built-in loss associated with the § 1.752-7 liability is not treated as a nondeductible, noncapital expenditure of the partnership. Therefore, the remaining partners' capital accounts and bases

in their partnership interests are not reduced by the remaining built-in loss associated with the § 1.752-7 liability. If the partnership (or any successor) notifies the § 1.752-7 liability partner of the satisfaction of the § 1.752-7 liability, then the § 1.752-7 liability partner is entitled to a loss or deduction. The amount of that deduction or loss is, in the case of a partial satisfaction of the § 1.752-7 liability, the amount that the partnership would, but for this section, take into account on the partial satisfaction of the § 1.752-7 liability (but not, in total, more than the § 1.752-7 liability reduction) or, in the case of a complete satisfaction of the § 1.752-7 liability, the remaining § 1.752-7 liability reduction. To the extent of the amount that the partnership would, but for this section, take into account on the satisfaction of the § 1.752-7 liability, the character of that deduction or loss is determined as if the § 1.752-7 liability partner had satisfied the liability. To the extent that the § 1.752-7 liability reduction exceeds the amount that the partnership would, but for this section, take into account on the satisfaction of the § 1.752-7 liability, the character of the § 1.752-7 liability partner's loss is capital.

(2) ***Examples.*** The following examples illustrate the principles of paragraph (e)(1) of this section:

Example 1. (i) *Facts.* In 2004, A, B, and C form partnership PRS. A contributes Property 1 with a fair market value of $5,000,000 and basis of $4,000,000 subject to a § 1.752-7 liability of $2,000,000 in exchange for a 25% interest in PRS. B contributes $3,000,000 cash in exchange for a 25% interest in PRS, and C contributes $6,000,000 cash in exchange for a 50% interest in PRS. In 2006, when PRS has a section 754 election in effect, A sells A's interest in PRS to D for $3,000,000. At the time of the sale, the basis of A's PRS interest is $4,000,000, the remaining built-in loss associated with the § 1.752-7 liability is $2,000,000, and PRS has no liabilities (as defined in § 1.752-1(a)(4)). Assume that none of the exceptions of paragraph (d)(2) of this section apply and that the satisfaction of the § 1.752-7 liability would have given rise to a deductible expense to A. In 2007, PRS pays $3,000,000 to satisfy the liability.

PRS Balance Sheet (in millions)

Assets			Liabilities/Equity		
Value	Basis		Value	Basis	
$5	$4	Property 1			
$9	$9	Cash			
			$2	-	§1.752-7 Liability
					Partner's Equity:
			$3	$4	A
			$3	$3	B
			$6	$6	C

(ii) *Sale of A's PRS interest.* Immediately before the sale of the PRS interest to D, A's basis in the PRS interest is reduced (to $3,000,000) by the § 1.752-7 liability reduction, *i.e.*, the lesser of the excess of A's basis in the PRS interest ($4,000,000) over the adjusted value of that interest ($3,000,000), $1,000,000, or the remaining built-in loss associated with the § 1.752-7 liability, $2,000,000. Therefore, A neither realizes nor recognizes any gain or loss on the sale of the PRS interest to D. D's basis in the PRS interest is $3,000,000. D's share of the adjusted basis of partnership property, as determined under § 1.743-1(d), equals D's interest in the partnership's previously taxed capital of $2,000,000 (the amount of cash that D would receive on a liquidation of the

partnership, $3,000,000, increased by the amount of tax loss that would be allocated to D in the hypothetical transaction, $0, and reduced by the amount of tax gain that would be allocated to D in the hypothetical transaction, $1,000,000). Therefore, the positive basis adjustment under section 743(b) is $1,000,000.

Computation of §1.752-7 Liability Reduction (in millions)

1. Basis of A's PRS interest	$4
2. Less adjusted value of A's PRS interest	(3)
3. Difference	$1
4. Remaining built-in loss from §1.752-7 liability	2
5. §1.752-7 liability reduction (lesser of 3 or 4)	$1

Gain/Loss on Sale of A's PRS Interest (in millions)

1. Amount realized on sale	$3
2. Less basis of PRS interest	
Original	4
§1.752-7 liability reduction	1
Difference	($3)
3. Gain/Loss	0

(iii) *Satisfaction of § 1.752-7 liability.* Neither PRS nor any of its partners is entitled to a deduction, loss, or capital expense upon the satisfaction of the § 1.752-7 liability to the extent of the remaining built-in loss associated with the § 1.752-7 liability ($2,000,000). PRS is entitled to a deduction, however, for the amount by which the cost of satisfying the § 1.752-7 liability exceeds the remaining built-in loss associated with the § 1.752-7 liability. Therefore, in 2007, PRS may deduct $1,000,000 (cost to satisfy the § 1.752-7 liability, $3,000,000, less the remaining built-in loss associated with the § 1.752-7 liability, $2,000,000). If PRS notifies A of the satisfaction of the § 1.752-7 liability, then A is entitled to an ordinary deduction in 2007 of $1,000,000 (the § 1.752-7 liability reduction).

PRS's Deduction on Satisfaction of Liability (in millions)

1. Amount paid by PRS to satisfy §1.752-7 liability	$3
2. Remaining built-in loss for §1.752-7 liability	(2)
3. Difference	$1

Example 2. The facts are the same as in *Example 1* except that, at the time of A's sale of the PRS interest to D, PRS has a nonrecourse liability of $4,000,000, of which A's share is $1,000,000. A's basis in PRS is $5,000,000. At the time of the sale of the PRS interest to D, the adjusted value of A's interest is $4,000,000 (the fair market value of the interest ($3,000,000), increased by A's share of partnership liabilities ($1,000,000)). The difference between the basis of A's interest ($5,000,000) and the adjusted value of that interest ($4,000,000) is $1,000,000. Therefore, the § 1.752-7 liability reduction is $1,000,000 (the lesser of this difference or the remaining built-in loss associated with

the § 1.752-7 liability, $2,000,000). Immediately before the sale of the PRS interest to D, A's basis is reduced from $5,000,000 to $4,0000,000. A's amount realized on the sale of the PRS interest to D is $4,000,000 ($3,000,000 paid by D, increased under section 752(d) by A's share of partnership liabilities, or $1,000,000). Therefore, A neither realizes nor recognizes any gain or loss on the sale. D's basis in the PRS interest is $4,000,000. Because D's share of the adjusted basis of partnership property is $3,000,000 (D's share of the partnership's previously taxed capital, $2,000,000, plus D's share of partnership liabilities, $1,000,000), the basis adjustment under section 743(b) is $1,000,000.

PRS Balance Sheet (in millions)

Assets			Liabilities/Equity		
Value	Basis		Value	Basis	
$ 5	$ 4	Property 1			
$13	$13	Cash			
			$4	-	Nonrecourse Debt
			$2	-	§1.752-7 Liability
					Partner's Equity:
			$3	$5	A
			$3	$4	B
			$6	$8	C

Computation of §1.752-7 Liability Reduction (in millions)

1. Basis of A's PRS interest	$5
2. Less adjusted value of A's PRS interest	
Value of PRS interest	3
A's share of nonrecourse debt	1
Total	(4)
3. Difference between 1 and 2	1
4. Remaining built-in loss from §1.752-7 liability	2
5. §1.752-7 liability reduction (lesser of 3 or 4)	$1

Gain/Loss on Sale of A's PRS Interest (in millions)

1. Amount realized on sale	
Value of PRS interest	$3
A's share of nonrecourse debt	1
Total	$4
2. Less basis of PRS interest	
Original	$5
§1.752-7 liability reduction	$1
Difference	($4)
3. Gain/Loss	0

Example 3. The facts are the same as in *Example 1,* except that the satisfaction of the § 1.752-7 liability would have given rise to a capital expense to A or PRS. Neither PRS nor any of its partners are entitled to a capital expense upon the satisfaction of the § 1.752-7 liability to the extent of the remaining built-in loss associated with the § 1.752-7 liability

($2,000,000). PRS may, however, increase the basis of appropriate partnership assets by the amount by which the cost of satisfying the § 1.752-7 liability exceeds the remaining built-in loss associated with the § 1.752-7 liability. Therefore, in 2007, PRS may capitalize $1,000,000 (cost to satisfy the § 1.752-7 liability, $3,000,000, less the remaining built-in loss associated with the § 1.752-7 liability, $2,000,000) to the appropriate partnership assets. If A is notified by PRS that the § 1.752-7 liability has been satisfied, then A is entitled to a capital loss in 2007 as provided in paragraph (e)(1) of this section, the year of the satisfaction of the § 1.752-7 liability.

(3) ***Exception for nonrecognition transactions*** —

(i) ***In general.*** Paragraph (e)(1) of this section does not apply where a § 1.752-7 liability partner transfers all or part of the partner's partnership interest in a transaction in which the transferee's basis in the partnership interest is determined in whole or in part by reference to the transferor's basis in the partnership interest. In addition, paragraph (e)(1) of this section does not apply to a distribution of an interest in the partnership (lower-tier partnership) that has assumed the § 1.752-7 liability by a partnership that is the § 1.752-7 liability partner (upper-tier partnership) if the partners of the upper-tier partnership that were § 1.752-7 liability partners with respect to the lower-tier partnership prior to the distribution continue to be § 1.752-7 liability partners with respect to the lower-tier partnership after the distribution. See paragraphs (b)(4)(ii) and (j)(3) of this section for rules on the application of this section to partners of the § 1.752-7 liability partner.

(ii) ***Examples.*** The following examples illustrate the provisions of this paragraph (e)(3):

> *Example 1. Transfer of partnership interest to lower-tier partnership.* (i) *Facts.* In 2004, X contributes undeveloped land with a value and basis of $2,000,000 and subject to environmental liabilities of $1,500,000 to partnership LTP in exchange for a 50% interest in LTP. LTP develops the land as a landfill. In 2005, in a transaction governed by section 721(a), X contributes the LTP interest to UTP in exchange for a 50% interest in UTP. In 2008, X sells the UTP interest to A for $500,000. At the time of the sale, X's basis in UTP is $2,000,000, the remaining built-in loss associated with the environmental liability is $1,500,000, and the gross value of UTP's assets is $2,500,000. The environmental liabilities were not assumed by LTP as part of a contribution by X to LTP of a trade or business with which the liabilities were associated. (See paragraph (b)(10)(ii), *Example 1* of this section.)
> (ii) *Analysis.* Because UTP's basis in the LTP interest is determined by reference to X's basis in the LTP interest, X's contribution of the LTP interest to UTP is exempted from the rules of paragraph (e)(1) of this section. Under paragraph (j)(1) of this section, X's contribution of the LTP interest to UTP is treated as a contribution of X's share of the assets of LTP and UTP's assumption of X's share of the LTP liabilities (including § 1.752-7 liabilities). Therefore, X's transfer of the LTP interest to UTP is a § 1.752-7 liability transfer. The § 1.752-7 liabilities deemed transferred by X to UTP are not associated with a trade or business transferred to UTP for purposes of paragraph (d)(2)(i)(A) of this section, because they were not associated with a trade

or business transferred by X to LTP as part of the original § 1.752-7 liability transfer. See paragraph (j)(2) of this section. Because none of the exceptions described in paragraph (d)(2) of this section apply to X's taxable sale of the UTP interest to A in 2008, paragraph (e)(1) of this section applies to that sale.

Example 2. Transfer of partnership interest to corporation. The facts are the same as in *Example 1,* except that, rather than transferring the LTP interest to UTP in 2005, X contributes the LTP interest to Corporation Y in an exchange to which section 351 applies. Because Corporation Y's basis in the LTP interest is determined by reference to X's basis in that interest, X's contribution of the LTP interest is exempted from the rules of paragraph (e)(1) of this section. But see section 358(h) and § 1.358-7 for appropriate basis adjustments.

Example 3. Partnership merger. (i) *Facts.* In 2004, A, B, C, and D form equal partnership PRS1. A contributes Blackacre with a value and basis of $2,000,000 to PRS1 and PRS1 assumes from A $1,500,000 of pension liabilities unrelated to Blackacre. B, C, and D each contribute $500,000 cash to PRS1. PRS1 uses the cash contributed by B, C, and D ($1,500,000) to purchase Whiteacre. In 2006, PRS1 merges into PRS2 in an assets-over merger under § 1.708-1(c)(3). Assume that, under § 1.708-1(c), PRS2 is the surviving partnership and PRS1 is the terminating partnership. At the time of the merger, the value of Blackacre is still $2,000,000, the remaining built-in loss with respect to the pension liabilities is still $1,500,000, but the value of Whiteacre has declined to $500,000.
(ii) *Deemed assumption by PRS2 of PRS1 liabilities.* Under § 1.708-1(c)(3), the merger is treated as a contribution of the assets and liabilities of PRS1 to PRS2, followed by a distribution of the PRS2 interests by PRS1 in liquidation of PRS1. Because PRS2 assumes a § 1.752-7 liability (the pension liabilities) of PRS1, PRS1 is a § 1.752-7 liability partner of PRS2. Under paragraph (b)(5)(ii)(A) of this section, A is also § 1.752-7 liability partner of PRS2 to the extent of the remaining $1,500,000 built-in loss associated with the pension liabilities. B, C, and D are not § 1.752-7 liability partners with respect to PRS1. If the amount of the pension liabilities had increased between the date of PRS1's assumption of those liabilities from A and the date of the merger of PRS1 into PRS2, then B, C, and D would be § 1.752-7 liability partners with respect to PRS2 to the extent of their respective shares of that increase. See paragraph (b)(5)(ii) of this section.

(iii) *Deemed distribution of PRS2 interests.* Paragraph (e)(1) does not apply to PRS1's deemed distribution of the PRS2 interests, because, under paragraph (b)(5)(ii)(B) of this section, all of the partners that were § 1.752-7 liability

partners with respect to PRS2 before the distribution, i.e., A, continue to be § 1.752-7 liability partners after the distribution. After the distribution, A's share of the pension liabilities now held by PRS2 will continue to be $1,500,000.

Example 4. Partnership division; no shifting of § 1.752-7 liability. The facts are the same as in *Example 3,* except that PRS1 does not merge with PRS2, but instead contributes Blackacre to PRS2 in exchange for PRS2 interests and the assumption by PRS2 of the pension liabilities. Immediately thereafter, PRS1 distributes the PRS2 interests to A and B in liquidation of their interests in PRS1. The analysis is the same as in *Example 3.* After the assumption of the pension liabilities by PRS2, A is a § 1.752-7 liability partner with respect to PRS2. After the distribution of a PRS2 interest to A, A continues to be a § 1.752-7 liability partner with respect to PRS2, and the amount of A's built-in loss with respect to the § 1.752-7 liabilities continues to be $1,500,000. Therefore, paragraph (e)(1) of this section does not apply to the distribution of the PRS2 interests to A and B.

Example 5. Partnership division; shifting of § 1.752-7 liability. The facts are the same as in *Example 4,* except that PRS1 distributes the PRS2 interests not to A and B, but to C and D, in liquidation of their interests in PRS1. After this distribution, A does not continue to be a § 1.752-7 liability partner of PRS2, because A no longer has an interest in PRS2. Therefore, paragraph (e)(1) of this section applies to the distribution of the PRS2 interests to C and D.

(f) ***Distribution in liquidation of § 1.752-7 liability partner's partnership interest*** —

(1) ***In general.*** Except as provided in paragraphs (d)(2) and (i) of this section, immediately before a distribution in liquidation of a § 1.752-7 liability partner's partnership interest, the § 1.752-7 liability partner's basis in the partnership interest is reduced by the § 1.752-7 liability reduction (as defined in paragraph (b)(7) of this section). This rule applies before section 737. No deduction, loss, or capital expense is allowed to the partnership on the satisfaction of the § 1.752-7 liability (within the meaning of paragraph (b)(8) of this section) to the extent of the remaining built-in loss associated with the § 1.752-7 liability (as defined in paragraph (b)(6) of this section). For purposes of section 705(a)(2)(B) and § 1.704-1(b)(2)(ii)(*b*) only, the remaining built-in loss associated with the § 1.752-7 liability is not treated as a nondeductible, noncapital expenditure of the partnership. Therefore, the remaining partners' capital accounts and bases in their partnership interests are not reduced by the remaining built-in loss associated with the § 1.752-7 liability. If the partnership (or any successor) notifies the § 1.752-7 liability partner of the satisfaction of the § 1.752-7 liability, then the § 1.752-7 liability partner is entitled to a loss or deduction. The amount of that deduction or loss is, in the case of a partial satisfaction of the § 1.752-7 liability, the amount that the partnership would, but for this section, take into account on the partial satisfaction of the § 1.752-7 liability (but not, in total, more than the § 1.752-7 liability reduction) or, in the case of a complete satisfaction of the § 1.752-7 liability, the remaining § 1.752-7 liability reduction. To the extent of the amount that the partnership would, but for this section, take into account on satisfaction of the § 1.752-7 liability, the character of that deduction or loss is determined as if the § 1.752-7 liability partner had satisfied the liability. To the extent that the § 1.752-7 liability reduction exceeds the amount that the partnership would, but for this section, take into account on satisfaction of the § 1.752-7 liability, the character of the § 1.752-7 liability partner's loss is capital.

(2) ***Example.*** The following example illustrates the provision of this paragraph (f):

Example. (i) *Facts.* In 2004, A, B, and C form partnership PRS. A contributes Property 1 with a fair market value and basis of $5,000,000 subject to a § 1.752-7 liability of $2,000,000 for a 25% interest in PRS. B contributes $3,000,000 cash for a 25% interest in PRS, and C contributes $6,000,000 cash for a 50% interest in PRS. In 2012, when PRS has a section 754 election in effect, PRS distributes Property 2, which has a basis and fair market value of $3,000,000, to A in liquidation of A's PRS interest. At the time of the distribution, the fair market value of A's PRS interest is still $3,000,000, the basis of that interest is still $5,000,000, and the remaining built-in loss associated with the § 1.752-7 liability is still $2,000,000. Assume that none of the exceptions of paragraph (d)(2) of this section apply to the distribution and that the satisfaction of the § 1.752-7 liability would have given rise to a deductible expense to A. In 2013, PRS pays $1,000,000 to satisfy the entire § 1.752-7 liability.

PRS Balance Sheet (in millions)

Assets			Liabilities/Equity		
Value	Basis		Value	Basis	
$5	$5	Property 1			
$9	$9	Cash			
			$2	-	§1.752-7 Liability
					Partner's Equity:
			$3	$5	A
			$3	$3	B
			$6	$6	C

(ii) *Liquidation of A's PRS interest.* Immediately before the distribution of Property 2 to A, A's basis in the PRS interest is reduced (to $3,000,000) by the § 1.752-7 liability reduction, *i.e.*, the lesser of the excess of A's basis in the PRS interest ($5,000,000) over the adjusted value ($3,000,000) of that interest ($2,000,000) or the remaining built-in loss associated with the § 1.752-7 liability ($2,000,000). Therefore, A's basis in Property 2 under section 732(b) is $3,000,000. Because this is the same as the partnership's basis in Property 2 immediately before the distribution, the partnership's basis adjustment under section 734(b) is $0.

Computation of §1.752-7 Liability Reduction (in millions)

1. Basis of A's PRS interest	$5
2. Less adjusted value of A's PRS interest	(3)
3. Difference	$2
4. Remaining built-in loss from §1.752-7 liability	2
5. §1.752-7 liability reduction (lesser of 3 or 4)	$2

(iii) *Satisfaction of § 1.752-7 liability.* PRS is not entitled to a deduction, loss, or capital expense on the satisfaction of the § 1.752-7 liability to the extent of the remaining built-

in loss associated with the § 1.752-7 liability ($2,000,000). Because this amount exceeds the amount paid by PRS to satisfy the § 1.752-7 liability ($1,000,000), PRS is not entitled to any deduction for the § 1.752-7 liability in 2013. If, however, PRS notifies A of the satisfaction of the § 1.752-7 liability, A is entitled to an ordinary deduction in 2013 of $1,000,000 (the amount paid in satisfaction of the § 1.752-7 liability) and a capital loss of $1,000,000 (the remaining § 1.752-7 liability reduction).

PRS's Deduction on Satisfaction of Liability (in millions)

Amount paid by PRS to satisfy §1.752-7 liability	$1
Remaining built-in loss for §1.752-7 liability	(2)
Difference (but not below zero)	$0

(g) ***Assumption of § 1.752-7 liability by a partner other than § 1.752-7 liability partner*** —

(1) ***In general.*** If this paragraph (g) applies, section 704(c)(1)(B) does not apply to an assumption of a § 1.752-7 liability from a partnership by a partner other than the § 1.752-7 liability partner. The rules of paragraph (g)(2) of this section apply only if the § 1.752-7 liability partner is a partner in the partnership at the time of the assumption of the § 1.752-7 liability from the partnership. The rules of paragraphs (g)(3) and (4) of this section apply to any assumption of the § 1.752-7 liability by a partner other than the § 1.752-7 liability partner, whether or not the § 1.752-7 liability partner is a partner in the partnership at the time of the assumption from the partnership.

(2) ***Consequences to § 1.752-7 liability partner.*** If, at the time of an assumption of a § 1.752-7 liability from a partnership by a partner other than the § 1.752-7 liability partner, the § 1.752-7 liability partner remains a partner in the partnership, then the § 1.752-7 liability partner's basis in the partnership interest is reduced by the § 1.752-7 liability reduction (as defined in paragraph (b)(7) of this section). If the assuming partner (or any successor) notifies the § 1.752-7 liability partner of the satisfaction of the § 1.752-7 liability (within the meaning of paragraph (b)(8) of this section), then the § 1.752-7 liability partner is entitled to a deduction or loss. The amount of that deduction or loss is, in the case of a partial satisfaction of the § 1.752-7 liability, the amount that the assuming partner would, but for this section, take into account on the satisfaction of the § 1.752-7 liability (but not, in total, more than the § 1.752-7 liability reduction) or, in the case of a complete satisfaction of the § 1.752-7 liability, the remaining § 1.752-7 liability reduction. To the extent of the amount that the assuming partner would, but for this section, take into account on the satisfaction of the § 1.752-7 liability, the character of that deduction or loss is determined as if the § 1.752-7 liability partner had satisfied the liability. To the extent that the § 1.752-7 liability reduction exceeds the amount that the assuming partner would, but for this section, take into account on the satisfaction of the § 1.752-7 liability, the character of the § 1.752-7 liability partner's loss is capital.

(3) ***Consequences to partnership.*** Immediately after the assumption of the § 1.752-7 liability from the partnership by a partner other than the § 1.752-7 liability partner, the partnership must reduce the basis of partnership assets by the remaining built-in loss associated with the § 1.752-7 liability (as defined in paragraph (b)(6) of this section). The reduction in the basis of partnership assets must be allocated among partnership assets as if that adjustment were a basis adjustment under section 734(b).

(4) ***Consequences to assuming partner.*** No deduction, loss, or capital expense is allowed to an assuming partner (other than the § 1.752-7 liability partner) on the satisfaction of the § 1.752-7 liability assumed from a partnership to the extent of the remaining built-in loss associated with the § 1.752-7 liability. Instead, upon the satisfaction of the § 1.752-7 liability, the assuming partner must adjust the basis of the partnership interest, any assets (other than cash, accounts receivable, or inventory) distributed by the partnership to the partner, or gain or loss on the disposition of the partnership interest, as the case may be. These adjustments are determined as if the assuming partner's basis in the partnership interest at the time of the assumption were increased by the lesser of the amount paid (or to be paid) to satisfy the § 1.752-7 liability or the remaining built-in loss associated with the § 1.752-7 liability. However, the assuming partner cannot take into account any adjustments to depreciable basis, reduction in gain, or increase in loss until the satisfaction of the § 1.752-7 liability.

(5) ***Example.*** The following example illustrates the provisions of this paragraph (g):

Example. (i) *Facts.* In 2004, A, B, and C form partnership PRS. A contributes Property 1, a nondepreciable capital asset with a fair market value and basis of $5,000,000, in exchange for a 25% interest in PRS and assumption by PRS of a § 1.752-7 liability of $2,000,000. B contributes $3,000,000 cash for a 25% interest in PRS, and C contributes $6,000,000 cash for a 50% interest in PRS. PRS uses the cash contributed to purchase Property 2. In 2007, PRS distributes Property 1, subject to the § 1.752-7 liability to B in liquidation of B's interest in PRS. At the time of the distribution, A's interest in PRS still has a value of $3,000,000 and a basis of $5,000,000, and B's interest in PRS still has a value and basis of $3,000,000. Also at that time, Property 1 still has a value and basis of $5,000,000, Property 2 still has a value and basis of $9,000,000, and the remaining built-in loss associated with the § 1.752-7 liability still is $2,000,000. Assume that none of the exceptions of paragraph (d)(2)(i) of this section apply to the assumption of the § 1.752-7 liability by B and that the satisfaction of the § 1.752-7 liability by A would have given rise to a deductible expense to A. In 2010, B pays $1,000,000 to satisfy the entire § 1.752-7 liability. At that time, B still owns Property 1, which has a basis of $3,000,000.

PRS Balance Sheet (in millions)

Assets			Liabilities/Equity		
Value	Basis		Value	Basis	
$5	$5	Property 1			
$9	$9	Property 2			
			$2	-	§1.752-7 Liability
					Partner's Equity:
			$3	$5	A
			$3	$3	B
			$6	$6	C

(ii) *Assumption of § 1.752-7 liability by B.* Section 704(c)(1)(B) does not apply to the assumption of the § 1.752-7 liability by B. Instead, A's basis in the PRS interest is reduced (to $3,000,000) by the § 1.752-7 liability reduction, *i.e.*, the lesser of the excess of A's basis in the PRS interest ($5,000,000) over the adjusted value ($3,000,000) of that

interest ($2,000,000), or the remaining built-in loss associated with the § 1.752-7 liability as of the time of the assumption ($2,000,000). PRS's basis in Property 2 is reduced (to $7,000,000) by the $2,000,000 remaining built-in loss associated with the § 1.752-7 liability. B's basis in Property 1 under section 732(b) is $3,000,000 (B's basis in the PRS interest). This is $2,000,000 less than PRS's basis in Property 1 before the distribution of Property 1 to B. If PRS has a section 754 election in effect for 2007, PRS may increase the basis of Property 2 under section 734(b) by $2,000,000.

§ 1.752-7 Liability Reduction (in millions)

1. Basis of A's PRS interest	$5
2. Less adjusted value of A's PRS interest	(3)
3. Difference	$2
4. Remaining built-in loss from §1.752-7 liability	2
5. §1.752-7 liability reduction (lesser of 3 or 4)	$2

A's Basis in PRS after Assumption by B (in millions)

1. Basis before assumption	$5
2. Less §1.752-7 liability reduction	(2)
3. Basis after assumption	$3

PRS's Basis in Property 2 after Assumption by B (in millions)

1. Basis before assumption	$9
2. Less remaining built-in loss from §1.752-7 liability	(2)
3. Plus section 734(b) adjustment (if partnership has a section 754 election)	2
4. Basis after assumption	$9

(iii) *Satisfaction of § 1.752-7 liability.* B is not entitled to a deduction on the satisfaction of the § 1.752-7 liability in 2010 to the extent of the remaining built-in loss associated with the § 1.752-7 liability ($2,000,000). As this amount exceeds the amount paid by B to satisfy the § 1.752-7 liability, B is not entitled to any deduction on the satisfaction of the § 1.752-7 liability in 2010. B may, however, increase the basis of Property 1 by the lesser of the remaining built-in loss associated with the § 1.752-7 liability ($2,000,000) or the amount paid to satisfy the § 1.752-7 liability ($1,000,000). Therefore, B's basis in Property 1 is increased to $4,000,000. If B notifies A of the satisfaction of the § 1.752-7 liability, then A is entitled to an ordinary deduction in 2010 of $1,000,000 (the amount paid in satisfaction of the § 1.752-7 liability) and a capital loss of $1,000,000 (the

remaining § 1.752-7 liability reduction).

B's Basis in Property 1 After Satisfaction of Liability [In millions]

1. Basis in Property 1 after distribution	$3
2. Plus lesser of remaining built-in loss ($2) or amount paid to satisfy liability ($1)	1
3. Basis in Property 1 after satisfaction of liability	$4

(h) ***Notification by the partnership (or successor) of the satisfaction of the § 1.752-7 liability.*** For purposes of paragraphs (e), (f), and (g) of this section, notification by the partnership (or successor) of the satisfaction of the § 1.752-7 liability must be attached to the § 1.752-7 liability partner's return (whether an original or an amended return) for the year in which the loss is being claimed and must include—

(1) The amount paid in satisfaction of the § 1.752-7 liability, and whether the amounts paid were in partial or complete satisfaction of the § 1.752-7 liability;

(2) The name and address of the person satisfying the § 1.752-7 liability;

(3) The date of the payment on the § 1.752-7 liability; and

(4) The character of the loss to the § 1.752-7 liability partner with respect to the § 1.752-7 liability.

(i) ***Special rule for amounts that are capitalized prior to the occurrence of an event described in paragraphs (e), (f), or (g)*** —

(1) ***In general.*** If all or a portion of a § 1.752-7 liability is properly capitalized (capitalized basis) prior to an event described in paragraph (e), (f), or (g) of this section, then, before an event described in paragraph (e), (f), or (g) of this section, the partnership may take the capitalized basis into account for purposes of computing cost recovery and gain or loss on the sale of the asset to which the basis has been capitalized (and for any other purpose for which the basis of the asset is relevant), but after an event described in paragraph (e), (f), or (g) of this section, the partnership may not take any remaining capitalized basis into account for tax purposes.

(2) ***Example.*** The following example illustrates the provisions of this paragraph (i):

Example. (i) *Facts.* In 2004, A and B form partnership PRS. A contributes Property 1, a nondepreciable capital asset, with a fair market value and basis of $5,000,000, in exchange for a 25% interest in PRS and an assumption by PRS of a § 1.752-7 liability of $2,000,000. B contributes $9,000,000 in cash in exchange for a 75% interest in PRS. PRS uses $7,000,000 of the cash to purchase Property 2, also a nondepreciable capital asset. In 2007, when PRS's assets have not changed, PRS satisfies the § 1.752-7 liability by

paying $2,000,000. Assume that PRS is required to capitalize the cost of satisfying the § 1.752-7 liability. In 2008, A sells his interest in PRS to C for $3,000,000. At the time of the sale, the basis of A's interest is still $5,000,000.

(ii) *Analysis.* On the sale of A's interest to C, A realizes a loss of $2,000,000 on the sale of the PRS interest (the excess of $5,000,000, the basis of the partnership interest, over $3,000,000, the amount realized on sale). The remaining built-in loss associated with the § 1.752-7 liability at that time is zero because all of the § 1.752-7 liability as of the time of the assumption of the § 1.752-7 liability by the partnership was capitalized by the partnership. The partnership may not take any remaining capitalized basis into account for tax purposes.

Gain/Loss on Sale of A's PRS Interest (in millions)

1.	Amount realized on sale	$3
2.	Less basis of PRS interest	
	Original Basis	$5
	§1.752-7 liability reduction	$0
	Difference	($5)
3.	Gain/Loss	($2)

(iii) *Partial Satisfaction.* Assume that, prior to the sale of A's interest in PRS to C, PRS had paid $1,500,000 to satisfy a portion of the § 1.752-7 liability. Therefore, immediately before the sale of the PRS interest to C, A's basis in the PRS interest would be reduced (to $4,500,000) by the $500,000 remaining built-in loss associated with the § 1.752-7 liability ($2,000,000 less the $1,500,000 portion capitalized by the partnership as that time). On the sale of the PRS interest, A realizes a loss of $1,500,000 (the excess of $4,500,000, the basis of the PRS interest, over $3,000,000, the amount realized on the sale). Neither PRS nor any of its partners is entitled to a deduction, loss, or capital expense upon the satisfaction of the § 1.752-7 liability to the extent of the remaining built-in loss associated with the § 1.752-7 liability ($500,000). If PRS notifies A of the satisfaction of the remaining portion of the § 1.752-7 liability, then A is entitled to a deduction or loss of $500,000 (the remaining § 1.752-7 liability reduction). The partnership may not take any remaining capitalized basis into account for tax purposes.

Gain/Loss on Sale of A's PRS Interest (in millions)

1.	Amount realized on sale	$3
2.	Less basis of PRS interest	
	Original Basis	$5
	§1.752-7 liability reduction	($0.5)
	Difference	($4.5)
3.	Gain/Loss	($1.5)

(j) *Tiered partnerships* —

(1) ***Look-through treatment.*** For purposes of this section, a contribution by a partner of an interest in a partnership (lower-tier partnership) to another partnership (upper-tier partnership) is treated as a contribution by the partner of the partner's share of each of the lower-tier partnership's assets and an assumption by the upper-tier partnership of the partner's share of the lower-tier partnership's liabilities (including § 1.752-7 liabilities). See paragraph (e)(3)(ii) *Example 1* of this section. In addition, a partnership is treated as having its share of any § 1.752-7 liabilities of the partnerships in which it has an interest.

(2) ***Trade or business exception.*** If a partnership (upper-tier partnership) assumes a § 1.752-7 liability of a partner, and, subsequently, another partnership (lower-tier partnership) assumes that § 1.752-7 liability from the upper-tier partnership, then the § 1.752-7 liability is treated as associated only with any trade or business contributed to the upper-tier partnership by the § 1.752-7 liability partner. The same rule applies where a partnership assumes a § 1.752-7 liability of a partner, and, subsequently, the § 1.752-7 liability partner transfers that partnership interest to another partnership. See paragraph (e)(3)(ii) *Example 1* of this section.

(3) ***Partnership as a § 1.752-7 liability partner.*** If a transaction described in paragraph (e), (f), or (g) of this section occurs with respect to a partnership (upper-tier partnership) that is a § 1.752-7 liability partner of another partnership (lower-tier partnership), then such transaction will also be treated as a transaction described in paragraph (e), (f), or (g) of this section, as appropriate, with respect to the partners of the upper-tier partnership, regardless of whether the upper-tier partnership assumed the § 1.752-7 liability from those partners. (See paragraph (b)(5) of this section for rules relating to the treatment of transactions by the partners of the upper-tier partnership). In such a case, each partner's share of the § 1.752-7 liability reduction in the upper-tier partnership is equal to that partner's share of the § 1.752-7 liability. The partners of the upper-tier partnership at the time of the transaction described in paragraph (e), (f), or (g) of this section, and not the upper-tier partnership, are entitled to the deduction or loss on the satisfaction of the § 1.752-7 liability. Similar principles apply where the upper-tier partnership is itself owned by one or a series of partnerships. This paragraph does not apply to the extent that § 1.752-7(j)(4) applied to the assumption of the § 1.752-7 liability by the lower-tier partnership.

(4) ***Transfer of § 1.752-7 liability by partnership to another partnership or corporation after a transaction described in paragraph (e), (f), or (g)*** —

(i) ***In general.*** If, after a transaction described in paragraph (e), (f), or (g) of this section with respect to a § 1.752-7 liability assumed by a partnership (the upper-tier partnership), another partnership or a corporation assumes the § 1.752-7 liability from the upper-tier partnership (or the assuming partner) in a transaction in which the basis of property is determined, in whole or in part, by reference to the basis of the property in the hands of the upper-tier partnership (or assuming partner), then—

(A) The upper-tier partnership (or assuming partner) must reduce its basis in any corporate stock or partnership interest received by the remaining built-in loss associated with the § 1.752-7 liability, at the time of the transaction described in paragraph (e), (f), or (g) of this section (but the partners of the upper-tier partnership do not reduce their bases or capital accounts in the upper-tier partnership); and

(B) No deduction, loss, or capital expense is allowed to the assuming partnership or corporation on the satisfaction of the § 1.752-7 liability to the extent of the remaining built-in loss associated with the § 1.752-7 liability.

(ii) ***Subsequent transfers.*** Similar rules apply to subsequent assumptions of the § 1.752-7 liability in transactions in which the basis of property is determined, in whole or in part, by reference to the basis of the property in the hands of the transferor. If, subsequent to an assumption of the § 1.752-7 liability by a partnership in a transaction to which paragraph (j)(4)(i) of this section applies, the § 1.752-7 liability is assumed from the partnership by a partner other than the partner from whom the partnership assumed the § 1.752-7 liability, then the rules of paragraph (g) of this section apply.

(5) ***Example.*** The following example illustrates the provisions of paragraphs (j)(3) and (4) of this section:

Example. (i) *Assumption of § 1.752-7 liability by UTP and transfer of § 1.752-7 liability partner's interest in UTP.* In 2004, A, B, and C form partnership UTP. A contributes Property 1 with a fair market value and basis of $5,000,000 subject to a § 1.752-7 liability of $2,000,000 in exchange for a 25% interest in UTP. B contributes $3,000,000 cash in exchange for a 25% interest in UTP, and C contributes $6,000,000 cash in exchange for a 50% interest in UTP. UTP invests the $9,000,000 cash in Property 2. In 2006, A sells A's interest in UTP to D for $3,000,000. At the time of the sale, the basis of A's UTP interest is $5,000,000, the remaining built-in loss associated with the § 1.752-7 liability is $2,000,000, and UTP has no liabilities other than the § 1.752-7 liabilities assumed from A. Assume that none of the exceptions of paragraph (d)(2) of this section apply and that the satisfaction of the § 1.752-7 liability would give rise to a deductible expense to A and to UTP. Under paragraph (e) of this section, immediately before the sale of the UTP interest to D, A's basis in UTP is reduced to $3,000,000 by the $2,000,000 § 1.752-7 liability reduction. Therefore, A neither realizes nor recognizes any gain or loss on the sale of the UTP interest to D. D's basis in the UTP interest is $3,000,000.

UTP Balance Sheet Prior to A's Sale (in millions)

Assets			Liabilities/Equity		
Value	Basis		Value	Basis	
$5	$5	Property 1			
$9	$9	Property 2			
			$2		§1.752-7 Liability
					Partner's Equity:
			$3	$5	A (25%)
			$3	$3	B (25%)
			$6	$6	C (50%)
			$12	$14	Total Equity

Gain/Loss on Sale of A's PRS Interest to D (in millions)

1.	Amount realized on sale	$3
2.	Less basis of PRS interest	
	Original	$5
	§1.752-7 liability reduction	($2)
	Difference	($3)
3.	Gain/Loss	$0

(ii) *Assumption of § 1.752-7 liability by LTP from UTP.* In 2008, at a time when the

estimated amount of the § 1.752-7 liability has increased to $3,500,000, UTP contributes Property 1 and Property 2, subject to the § 1.752-7 liability, to LTP in exchange for a 50% interest in LTP. At the time of the contribution, Property 1 still has a value and basis of $5,000,000 and Property 2 still has a value and basis of $9,000,000. UTP's basis in LTP under section 722 is $14,000,000. Under paragraph (j)(4)(i) of this section, UTP must reduce its basis in LTP by the $2,000,000 remaining built-in loss associated with the § 1.752-7 liability (as of the time of the sale of the UTP interest by A). The partners in UTP are not required to reduce their bases in UTP by this amount. UTP is a § 1.752-7 liability partner of LTP with respect to the entire $3,500,000 § 1.752-7 liability assumed by LTP. However, as A is no longer a partner of UTP, none of the partners of UTP (as of the time of the assumption of the § 1.752-7 liability by LTP) are § 1.752-7 liability partners of LTP with respect to the $2,000,000 remaining built-in loss associated with the § 1.752-7 liability (as of the time of the sale of the UTP interest by A). The UTP partners (as of the time of the assumption of the § 1.752-7 liability by LTP) are § 1.752-7 liability partners of LTP with respect to the $1,500,000 increase in the amount of the § 1.752-7 liability of UTP since the assumption of that § 1.752-7 liability by UTP from A.

UTP Balance Sheet Immediately Before Contribution to LTP
(in millions)

Assets		Liabilities/Equity		
Value	Basis	Value	Basis	
$5	$5			Property 1
$9	$9			Property 2
				§1.752-7 Liability
		$2		Assumed from A
		$1.5		Additional
		$3.5		Total
				Partner's Equity:
		$2.625	$3	D (25%)
		$2.625	$3	B (25%)
		$5.25	$6	C (50%)
		$10.5	$12	Total Equity

UTP's Basis in LTP Immediately After Contribution (in millions)

1.	Basis in assets	$14
2.	Less remaining built-in loss at time of A's sale	($ 2)
3.	UTP's basis in LTP	$12

(iii) *Sale by UTP of LTP interest.* In 2010, UTP sells its interest in LTP to E for $10,500,000. At the time of the sale, the LTP interest still has a value of $10,500,000 and a basis of $12,000,000, and the remaining built-in loss associated with the § 1.752-7 liability is $3,500,000. Under paragraph (e) of this section, immediately before the sale, UTP must reduce its basis in the LTP interest by the § 1.752-7 liability reduction. Under paragraph (a)(4) of this section, the remaining built-in loss associated with the § 1.752-7

liability is $1,500,000 (remaining built-in loss associated with the § 1.752-7 liability, $3,500,000, reduced by the amount of the § 1.752-7 liability taken into account under paragraph (j)(4) of this section, $2,000,000). The difference between the basis of the LTP interest held by UTP ($12,000,000) and the adjusted value of that interest ($10,500,000) is also $1,500,000. Therefore, the § 1.752-7 liability reduction is $1,500,000 and UTP's basis in the LTP interest must be reduced to $10,500,000. In addition, UTP's partners must reduce their bases in their UTP interests by their proportionate shares of the § 1.752-7 liability reduction. Thus, the basis of each of B's and D's interest in UTP must be reduced by $375,000 and the basis of C's interest in UTP must be reduced by $750,000. In 2011, D sells the UTP interest to F.

Computation of §1.752-7 Liability Reduction (in millions)

1. Basis of UTP's LTP interest	$12
2. Less adjusted value of UTP's LTP interest	($10.5)
3. Difference between 1 and 2	$ 1.5
4. Remaining built-in loss from §1.752-7 liability	$ 1.5
5. §1.752-7 liability reduction (lesser of 3 or 4)	$ 1.5

Gain/Loss on Sale of UTP's PRS Interest to E (in millions)

1. Amount realized on sale	$10.5
2. Less basis of PRS interest	
Original	$12
§1.752-7 liability reduction	($ 1.5)
Difference	($10.5)
3. Gain/Loss	$ 0

Partner's Bases in UTP Interests after Sale of LTP Interest (in millions)

	B	C	D
Basis prior to sale	$3	$6	$3
Share of §1.752-7 liability Reduction	($0.375)	($0.75)	($0.375)
Basis after sale	$2.625	$5.25	$2.625

(iv) *Deduction, expense, or loss associated with the § 1.752-7 liability by LTP.* In 2012, LTP pays $3,500,000 to satisfy the § 1.752-7 liability. Under paragraphs (e) and (j)(4) of this section, LTP is not entitled to any deduction with respect to the § 1.752-7 liability. Under paragraph (j)(3) of this section, UTP also is not entitled to any deduction with respect to the § 1.752-7 liability. If LTP notifies A, B, C and D of the satisfaction of the § 1.752-7 liability, then A is entitled to a deduction in 2012 of $2,000,000, B and D are each entitled to deductions in 2012 of $375,000, and C is entitled to a deduction in 2012 of $750,000.

(k) *Effective dates —*

(1) ***In general.*** This section applies to § 1.752-7 liability transfers occurring on or after June 24, 2003. For assumptions occurring after October 18, 1999, and before June 24, 2003, see § 1.752-6. For § 1.752-7 liability transfers occurring on or after June 24, 2003 and before May 26, 2005, taxpayers may rely on the exception for trading and investment partnerships in paragraph (b)(8)(ii) of § 1.752.7 (2003-28 I.R.B. 46; 68 FR 37434).

(2) ***Election to apply this section to assumptions of liabilities occurring after October 18, 1999 and before June 24, 2003*** —

(i) ***In general.*** A partnership may elect to apply this section to all assumptions of liabilities (including § 1.752-7 liabilities) occurring after October 18, 1999, and before June 24, 2003. Such an election is binding on the partnership and all of its partners. A partnership making such an election must apply all of the provisions of § 1.752-1 and § 1.752-7, including § 1.358-5T, § 1.358-7, § 1.704-1(b)(1)(ii) and (b)(2)(iv)(*b*), § 1.704-2(b)(3), § 1.704-3(a)(7), (a)(8)(iv), and (a)(12), § 1.704-4(d)(1)(iv), § 1.705-1(a)(8), § 1.732-2(d)(3)(iv), and § 1.737-5.

(ii) ***Manner of making election.*** A partnership makes an election under this paragraph (k)(2) by attaching the following statement to its timely filed return: [Insert name and employer identification number of electing partnership] elects under § 1.752-7 of the Income Tax Regulations to be subject to the rules of § 1.358-5T, § 1.358-7, § 1.704-1(b)(1)(ii) and (b)(2)(iv)(*b*), § 1.704-2(b)(3), § 1.704-3(a)(7), (a)(8)(iv), and (a)(12), § 1.704-4(d)(1)(iv), § 1.705-1(a)(8), § 1.732-2(d)(3)(iv), and § 1.737-5 with respect to all liabilities (including § 1.752-7 liabilities) assumed by the partnership after October 18, 1999 and before June 24, 2003. In the statement, the partnership must list, with respect to each liability (including each § 1.752-7 liability) assumed by the partnership after October 18, 1999 and before June 24, 2003—

(A) The name, address, and taxpayer identification number of the partner from whom the liability was assumed;

(B) The date on which the liability was assumed by the partnership;

(C) The amount of the liability as of the time of its assumption; and

(D) A description of the liability.

(iii) ***Filing of amended returns.*** An election under this paragraph (k)(2) will be valid only if the partnership and its partners promptly amend any returns for open taxable years that would be affected by the election.

(iv) ***Time for making election.*** An election under this paragraph (k)(2) must be filed with any timely filed Federal income tax return filed by the partnership on or after September 24, 2003 and on or before December 31, 2005.

[T.D. 9207, 70 FR 30344, May 26, 2005; 70 FR 39654, July 11, 2005]

§ 1.753-1 Partner receiving income in respect of decedent.

(a) ***Income in respect of a decedent under section 736(a).*** All payments coming within the provisions of section 736(a) made by a partnership to the estate or other successor in interest of a deceased partner are considered income in respect of the decedent under section 691. The estate or other successor in

interest of a deceased partner shall be considered to have received income in respect of a decedent to the extent that amounts are paid by a third person in exchange for rights to future payments from the partnership under section 736(a). When a partner who is receiving payments under section 736(a) dies, section 753 applies to any remaining payments under section 736(a) made to his estate or other successor in interest.

(b) ***Other income in respect of a decedent.*** When a partner dies, the entire portion of the distributive share which is attributable to the period ending with the date of his death and which is taxable to his estate or other successor constitutes income in respect of a decedent under section 691. This rule applies even though that part of the distributive share for the period before death which the decedent withdrew is not included in the value of the decedent's partnership interest for estate tax purposes. See paragraph (c) (3) of § 1.706-1.

(c) ***Example.*** The provisions of this section may be illustrated by the following example:

Example. A and the decedent B were equal partners in a business having assets (other than money) worth $40,000 with an adjusted basis of $10,000. Certain partnership business was well advanced towards completion before B's death and, after B's death but before the end of the partnership year, payment of $10,000 was made to the partnership for such work. The partnership agreement provided that, upon the death of one of the partners, all partnership property, including unfinished work, would pass to the surviving partner, and that the surviving partner would pay the estate of the decedent the undrawn balance of his share of partnership earnings to the date of death, plus $10,000 in each of the three years after death. B's share of earnings to the date of his death was $4,000, of which he had withdrawn $3,000. B's distributive share of partnership income of $4,000 to the date of his death is income in respect of a decedent (although only the $1,000 undrawn at B's death will be reflected in the value of B's partnership interest on B's estate tax return). Assume that the value of B's interest in partnership property at the date of his death was $22,000, composed of the following items: B's one-half share of the assets of $40,000, plus $2,000, B's interest in partnership cash. It should be noted that B's $1,000 undrawn share of earnings to the date of his death is not a separate item but will be paid from partnership assets. Under the partnership agreement, A is to pay B's estate a total of $31,000. The difference of $9,000 between the amount to be paid by A ($31,000) and the value of B's interest in partnership property ($22,000) comes within section 736(a) and, thus, also constitutes income in respect of a decedent. (However, the $17,000 difference between the $5,000 basis for B's share of the partnership property and its $22,000 value at the date of his death does not constitute income in respect of a decedent.) If, before the close of the partnership taxable year, A pays B's estate $11,000, of which they agree to allocate $3,000 as the payment under section 736(a), B's estate will include $7,000 in its gross income (B's $4,000 distributive share plus $3,000 payment under section 736(a)). In computing the deduction under section 691(c), this $7,000 will be considered as the value for estate tax purposes of such income in respect of a decedent, even though only $4,000 ($1,000 of distributive share not withdrawn, plus $3,000, payment under section 736(a)) of this amount can be identified on the estate tax return as part of the partnership interest.

(d) ***Effective date.*** The provisions of section 753 apply only in the case of payments made with respect to decedents whose death occurred after December 31, 1954. See section 771(b)(4) and paragraph (b)(4) of § 1.771-1.

§ 1.754-1 Time and manner of making election to adjust basis of partnership property.

(a) ***In general.*** A partnership may adjust the basis of partnership property under sections 734(b) and 743(b) if it files an election in accordance with the rules set forth in paragraph (b) of this section. An election may not be filed to make the adjustments provided in either section 734(b) or section 743(b) alone, but such an election must apply to both sections. An election made under the provisions of this section shall apply to all property distributions and transfers of partnership interests taking place in the partnership taxable year for which the election is made and in all subsequent partnership taxable years unless the election is revoked pursuant to paragraph (c) of this section.

(b) ***Time and method of making election.***

(1) An election under section 754 and this section to adjust the basis of partnership property under sections 734(b) and 743(b), with respect to a distribution of property to a partner or a transfer of an interest in a partnership, shall be made in a written statement filed with the partnership return for the taxable year during which the distribution or transfer occurs. For the election to be valid, the return must be filed not later than the time prescribed by paragraph (e) of § 1.6031-1 (including extensions thereof) for filing the return for such taxable year (or before August 23, 1956, whichever is later). Notwithstanding the preceding two sentences, if a valid election has been made under section 754 and this section for a preceding taxable year and not revoked pursuant to paragraph (c) of this section, a new election is not required to be made. The statement required by this paragraph (b)(1) must set forth the name and address of the partnership making the election and contain a declaration that the partnership elects under section 754 to apply the provisions of section 734(b) and section 743(b). For rules regarding extensions of time for filing elections, see § 1.9100-1.

(2) The principles of this paragraph may be illustrated by the following example:

Example. A, a U.S. citizen, is a member of partnership ABC, which has not previously made an election under section 754 to adjust the basis of partnership property. The partnership and the partners use the calendar year as the taxable year. A sells his interest in the partnership to D on January 1, 1971. The partnership may elect under section 754 and this section to adjust the basis of partnership property under sections 734(b) and 743(b). Unless an extension of time to make the election is obtained under the provisions of § 1.9100-1, the election must be made in a written statement filed with the partnership return for 1971 and must contain the information specified in subparagraph (1) of this paragraph. Such return must be filed by April 17, 1972 (unless an extension of time for filing the return is obtained). The election will apply to all distributions of property to a partner and transfers of an interest in the partnership occurring in 1971 and subsequent years, unless revoked pursuant to paragraph (c) of this section.

(c) ***Revocation of election —***

(1) ***In general.*** A partnership having an election in effect under this section may revoke such election with the approval of the district director for the internal revenue district in which the partnership return is required to be filed. A partnership which wishes to revoke such an election shall file with the district director for the internal revenue district in which the partnership return is required to be filed an application setting forth the grounds on which the revocation is desired. The application shall be filed not later than 30 days after the close of the partnership taxable year with respect to which revocation is intended to take effect and shall be signed by any one of the partners. Examples of situations which may be considered sufficient reason for approving an application for revocation include a change in the nature of the partnership business, a substantial increase in the assets of the partnership, a change in the character of partnership assets, or an increased frequency of

retirements or shifts of partnership interests, so that an increased administrative burden would result to the partnership from the election. However, no application for revocation of an election shall be approved when the purpose of the revocation is primarily to avoid stepping down the basis of partnership assets upon a transfer or distribution.

(2) ***Revocations effective on December 15, 1999.*** Notwithstanding paragraph (c)(1) of this section, any partnership having an election in effect under this section for its taxable year that includes December 15, 1999, may revoke such election effective for transfers or distributions occurring on or after December 15, 1999, by attaching a statement to the partnership's return for such year. For the revocation to be valid, the statement must be filed not later than the time prescribed by § 1.6031(a)-1(e) (including extensions thereof) for filing the return for such taxable year, and must set forth the name and address of the partnership revoking the election, be signed by any one of the partners who is authorized to sign the partnership's federal income tax return, and contain a declaration that the partnership revokes its election under section 754 to apply the provisions of section 734(b) and 743(b). In addition, the following statement must be prominently displayed in capital letters on the first page of the partnership's return for such year: "RETURN FILED PURSUANT TO § 1.754-1(c)(2)."

(d) ***Applicability date.*** The fourth sentence of paragraph (b)(1) of this section applies to taxable years ending on or after August 5, 2022. Taxpayers may, however, apply the fourth sentence of paragraph (b)(1) of this section to taxable years ending before August 5, 2022.

[T.D. 6500, 25 FR 11814, Nov. 26, 1960, as amended by T.D. 7208, 37 FR 20686, Oct. 3, 1972; T.D. 8847, 64 FR 69916, Dec. 15, 1999; 65 FR 9220, Feb. 24, 2000; T.D. 9963, 87 FR 47932 Aug. 5, 2022]

§ 1.755-1 Rules for allocation of basis.

(a) ***In general*** —

(1) ***Scope.*** This section provides rules for allocating basis adjustments under sections 743(b) and 734(b) among partnership property. If there is a basis adjustment to which this section applies, the basis adjustment is allocated among the partnership's assets as follows. First, the partnership must determine the value of each of its assets under paragraphs (a)(2) through (5) of this section. Second, the basis adjustment is allocated between the two classes of property described in section 755(b). These classes of property consist of capital assets and section 1231(b) property (capital gain property), and any other property of the partnership (ordinary income property). For purposes of this section, properties and potential gain treated as unrealized receivables under section 751(c) and the regulations thereunder shall be treated as separate assets that are ordinary income property. Third, the portion of the basis adjustment allocated to each class is allocated among the items within the class. Basis adjustments under section 743(b) are allocated among partnership assets under paragraph (b) of this section. Basis adjustments under section 734(b) are allocated among partnership assets under paragraph (c) of this section.

(2) ***Coordination of sections 755 and 1060.*** If there is a basis adjustment to which this section applies, and the assets of the partnership constitute a trade or business (as described in § 1.1060-1(b)(2)), then the partnership is required to use the residual method to assign values to the partnership's section 197 intangibles. To do so, the partnership must, first, determine the value of partnership assets other than section 197 intangibles under paragraph (a)(3) of this section. The partnership then must determine partnership gross value under paragraph (a)(4) of this section. Last, the partnership must assign values to the partnership's section 197 intangibles under paragraph (a)(5)

of this section. For purposes of this section, the term *section 197 intangibles* includes all section 197 intangibles (as defined in section 197), as well as any goodwill or going concern value that would not qualify as a section 197 intangible under section 197.

(3) ***Values of properties other than section 197 intangibles.*** For purposes of this section, the fair market value of each item of partnership property other than section 197 intangibles shall be determined on the basis of all the facts and circumstances, taking into account section 7701(g).

(4) ***Partnership gross value*** —

(i) ***Basis adjustments under section 743(b)*** —

(A) ***In general.*** Except as provided in paragraph (a)(4)(ii) of this section, in the case of a basis adjustment under section 743(b), partnership gross value generally is equal to the amount that, if assigned to all partnership property, would result in a liquidating distribution to the partner equal to the transferee's basis in the transferred partnership interest immediately following the relevant transfer (reduced by the amount, if any, of such basis that is attributable to partnership liabilities).

(B) ***Special situations.*** In certain circumstances, such as where income or loss with respect to particular section 197 intangibles are allocated differently among partners, partnership gross value may vary depending on the values of particular section 197 intangibles held by the partnership. In these special situations, the partnership must assign value, first, among section 197 intangibles (other than goodwill and going concern value) in a reasonable manner that is consistent with the ordering rule in paragraph (a)(5) of this section and would cause the appropriate liquidating distribution under paragraph (a)(4)(i)(A) of this section. If the actual fair market values, determined on the basis of all the facts and circumstances, of all section 197 intangibles (other than goodwill and going concern value) is not sufficient to cause the appropriate liquidating distribution, then the fair market value of goodwill and going concern value shall be presumed to equal an amount that if assigned to goodwill and going concern value would cause the appropriate liquidating distribution.

(C) ***Income in respect of a decedent.*** Solely for the purpose of determining partnership gross value under this paragraph (a)(4)(i), where a partnership interest is transferred as a result of the death of a partner, the transferee's basis in its partnership interest is determined without regard to section 1014(c) or section 1022(f), and is deemed to be adjusted for that portion of the interest, if any, that is attributable to items representing income in respect of a decedent under section 691.

(ii) ***Basis adjustments under section 743(b) resulting from substituted basis transactions.*** This paragraph (a)(4)(ii) applies to basis adjustments under section 743(b) that result from exchanges in which the transferee's basis in the partnership interest is determined in whole or in part by reference to the transferor's basis in the interest or to the basis of other property held at any time by the transferee (substituted basis transactions). In the case of a substituted basis transaction, partnership gross value equals the value of the entire partnership as a going concern, increased by the amount of partnership liabilities at the time of the exchange giving rise to the basis adjustment.

(iii) ***Basis adjustments under section 734(b).*** In the case of a basis adjustment under section 734(b), partnership gross value equals the value of the entire partnership as a going concern immediately following the distribution causing the adjustment, increased by the amount of partnership liabilities immediately following the distribution.

(5) ***Determining the values of section 197 intangibles*** —

(i) ***Two classes.*** If the aggregate value of partnership property other than section 197 intangibles (as determined in paragraph (a)(3) of this section) is equal to or greater than partnership gross value (as determined in paragraph (a)(4) of this section), then all section 197 intangibles are deemed to have a value of zero for purposes of this section. In all other cases, the aggregate value of the partnership's section 197 intangibles (the residual section 197 intangibles value) is deemed to equal the excess of partnership gross value over the aggregate value of partnership property other than section 197 intangibles. The residual section 197 intangibles value must be allocated between two asset classes in the following order—

(A) Among section 197 intangibles other than goodwill and going concern value; and

(B) To goodwill and going concern value.

(ii) ***Values assigned to section 197 intangibles other than goodwill and going concern value.*** The fair market value assigned to a section 197 intangible (other than goodwill and going concern value) shall not exceed the actual fair market value (determined on the basis of all the facts and circumstances) of that asset on the date of the relevant transfer. If the residual section 197 intangibles value is less than the sum of the actual fair market values (determined on the basis of all the facts and circumstances) of all section 197 intangibles (other than goodwill and going concern value) held by the partnership, then the residual section 197 intangibles value must be allocated among the individual section 197 intangibles (other than goodwill and going concern value) as follows. The residual section 197 intangibles value is assigned first to any section 197 intangibles (other than goodwill and going concern value) having potential gain that would be treated as unrealized receivables under the flush language of section 751(c) (flush language receivables) to the extent of the basis of those section 197 intangibles and the amount of income arising from the flush language receivables that the partnership would recognize if the section 197 intangibles were sold for their actual fair market values (determined based on all the facts and circumstances) (collectively, the flush language receivables value). If the value assigned to section 197 intangibles (other than goodwill and going concern value) is less than the flush language receivables value, then the assigned value is allocated among the properties giving rise to the flush language receivables in proportion to the flush language receivables value in those properties. Any remaining residual section 197 intangibles value is allocated among the remaining portions of the section 197 intangibles (other than goodwill and going concern value) in proportion to the actual fair market values of such portions (determined based on all the facts and circumstances).

(iii) ***Value assigned to goodwill and going concern value.*** The fair market value of goodwill and going concern value is the amount, if any, by which the residual section 197 intangibles value exceeds the aggregate value of the partnership's section 197 intangibles (other than goodwill and going concern value).

(6) ***Examples.*** The provisions of paragraphs (a)(2) through (5) are illustrated by the following examples, which assume that the partnerships have an election in effect under section 754 at the time of the transfer and that the assets of each partnership constitute a trade or business (as described in §

1.1060-1(b)(2)). Except as provided, no partnership asset (other than inventory) is property described in section 751(a), and partnership liabilities are secured by all partnership assets. The examples are as follows:

Example 1. (i) A is the sole general partner in PRS, a limited partnership having three equal partners. PRS has goodwill and going concern value, two section 197 intangibles other than goodwill and going concern value (Intangible 1 and Intangible 2), and two other assets with fair market values (determined using all the facts and circumstances) as follows: inventory worth $1,000,000 and a building (a capital asset) worth $2,000,000. The fair market value of each of Intangible 1 and Intangible 2 is $50,000. PRS has one liability of $1,000,000, for which A bears the entire risk of loss under section 752 and the regulations thereunder. D purchases A's partnership interest for $650,000, resulting in a basis adjustment under section 743(b). After the purchase, D bears the entire risk of loss for PRS's liability under section 752 and the regulations thereunder. Therefore, D's basis in its interest in PRS is $1,650,000.
(ii) D's basis in the transferred partnership interest (reduced by the amount of such basis that is attributable to partnership liabilities) is $650,000 ($1,650,000—$1,000,000). Under paragraph (a)(4)(i) of this section, partnership gross value is $2,950,000 (the amount that, if assigned to all partnership property, would result in a liquidating distribution to D equal to $650,000).

(iii) Under paragraph (a)(3) of this section, the inventory has a fair market value of $1,000,000, and the building has a fair market value of $2,000,000. Thus, the aggregate value of partnership property other than section 197 intangibles, $3,000,000, is equal to or greater than partnership gross value, $2,950,000. Accordingly, under paragraphs (a)(3) and (5) of this section, the value assigned to each of the partnership's assets is as follows: inventory, $1,000,000; building, $2,000,000; Intangibles 1 and 2, $0; and goodwill and going concern value, $0. D's section 743(b) adjustment must be allocated under paragraph (b) of this section using these assigned fair market values.

Example 2. (i) Assume the same facts as in *Example 1,* except that the fair market values of Intangible 1 and Intangible 2 are each $300,000, and that D purchases A's interest in PRS for $1,000,000. After the purchase, D's basis in its interest in PRS is $2,000,000.
(ii) D's basis in the transferred partnership interest (reduced by the amount of such basis that is attributable to partnership liabilities) is $1,000,000 ($2,000,000—$1,000,000). Under paragraph (a)(4)(i) of this section, partnership gross value is $4,000,000 (the amount that, if assigned to all partnership property, would result in a liquidating distribution to D equal to $1,000,000).

(iii) Under paragraph (a)(5) of this section, the residual section 197 intangibles value is $1,000,000 (the excess of partnership gross value, $4,000,000, over the aggregate value of assets other than section 197 intangibles, $3,000,000 (the sum of the value of the inventory,

$1,000,000, and the value of the building, $2,000,000)). The partnership must determine the values of section 197 assets by allocating the residual section 197 intangibles value among the partnership's assets. The residual section 197 intangibles value is assigned first to section 197 intangibles other than goodwill and going concern value, and then to goodwill and going concern value. Thus, $300,000 is assigned to each of Intangible 1 and Intangible 2, and $400,000 is assigned to goodwill and going concern value (the amount by which the residual section 197 intangibles value, $1,000,000, exceeds the fair market value of section 197 intangibles other than goodwill and going concern value, $600,000). D's section 743(b) adjustment must be allocated under paragraph (b) of this section using these assigned fair market values.

Example 3. (i) Assume the same facts as in *Example 1,* except that the fair market values of Intangible 1 and Intangible 2 are each $300,000, and that D purchases A's interest in PRS for $750,000. After the purchase, D's basis in its interest in PRS is $1,750,000. Also assume that Intangible 1 was originally purchased for $300,000, and that its adjusted basis has been decreased to $50,000 as a result of amortization. Assume that, if PRS were to sell Intangible 1 for $300,000, it would recognize $250,000 of gain that would be treated as an unrealized receivable under the flush language in section 751(c).
(ii) D's basis in the transferred partnership interest (reduced by the amount of such basis that is attributable to partnership liabilities) is $750,000 ($1,750,000—$1,000,000). Under paragraph (a)(4)(i) of this section, partnership gross value is $3,250,000 (the amount that, if assigned to all partnership property, would result in a liquidating distribution to D equal to $750,000).

(iii) Under paragraph (a)(5) of this section, the residual section 197 intangibles value is $250,000 (the amount by which partnership gross value, $3,250,000, exceeds the aggregate value of partnership property other than section 197 intangibles, $3,000,000). Intangible 1 has potential gain that would be treated as unrealized receivables under the flush language of section 751(c). The flush language receivables value in Intangible 1 is $300,000 (the sum of PRS's basis in Intangible 1, $50,000, and the amount of ordinary income, $250,000, that the partnership would recognize if Intangible 1 were sold for its actual fair market value). Because the residual section 197 intangibles value, $250,000, is less than the flush language receivables value of Intangible 1, Intangible 1 is assigned a value of $250,000, and Intangible 2 and goodwill and going concern value are assigned a value of zero. D's section 743(b) adjustment must be allocated under paragraph (b) of this section using these assigned fair market values.

Example 4. Assume the same facts as in *Example 1,* except that the fair market values of Intangible 1 and Intangible 2 are each $300,000, and that A does not sell its interest in PRS. Instead, A contributes its interest in PRS to E, a newly formed corporation wholly-owned by A, in a transaction described in section 351. Assume that the contribution results in a basis adjustment under section 743(b) (other than zero). PRS determines that its value as a going

concern immediately following the contribution is $3,000,000. Under paragraph (a)(4)(ii) of this section, partnership gross value is $4,000,000 (the value of PRS as a going concern, $3,000,000, increased by the partnership's liability, $1,000,000, immediately after the contribution). Under paragraph (a)(5) of this section, the residual section 197 intangibles value is $1,000,000 (the amount by which partnership gross value, $4,000,000, exceeds the aggregate value of partnership property other than section 197 intangibles, $3,000,000). Of the residual section 197 intangibles value, $300,000 is assigned to each of Intangible 1 and Intangible 2, and $400,000 is assigned to goodwill and going concern value (the amount by which the residual section 197 intangibles value, $1,000,000, exceeds the fair market value of section 197 intangibles other than goodwill and going concern value, $600,000). E's section 743(b) adjustment must be allocated under paragraph (b)(5) of this section using these assigned fair market values.

Example 5. G is the sole general partner in PRS, a limited partnership having three equal partners (G, H, and I). PRS has goodwill and going concern value, two section 197 intangibles other than goodwill and going concern value (Intangible 1 and Intangible 2), and two capital assets with fair market values (determined using all the facts and circumstances) as follows: Vacant land worth $1,000,000, and a building worth $2,000,000. The fair market value of each of Intangible 1 and Intangible 2 is $300,000. PRS has one liability of $1,000,000, for which G bears the entire risk of loss under section 752 and the regulations thereunder. PRS distributes the land to H in liquidation of H's interest in PRS. Immediately prior to the distribution, PRS's basis in the land is $800,000, and H's basis in its interest in PRS is $750,000. The distribution causes the partnership to increase the basis of its remaining property by $50,000 under section 734(b)(1)(B). PRS determines that its value as a going concern immediately following the distribution is $2,000,000. Under paragraph (a)(4)(iii) of this section, partnership gross value is $3,000,000 (the value of PRS as a going concern, $2,000,000, increased by the partnership's liability, $1,000,000, immediately after the distribution). Under paragraph (a)(5) of this section, the residual section 197 intangibles value of PRS's section 197 intangibles is $1,000,000 (the amount by which partnership gross value, $3,000,000, exceeds the aggregate value of partnership property other than section 197 intangibles, $2,000,000). Of the residual section 197 intangibles value, $300,000 is assigned to each of Intangible 1 and Intangible 2, and $400,000 is assigned to goodwill and going concern value (the amount by which the residual section 197 intangibles value, $1,000,000, exceeds the fair market value of section 197 intangibles other than goodwill and going concern value, $600,000). PRS's section 734(b) adjustment must be allocated under paragraph (c) of this section using these assigned fair market values.

(b) ***Adjustments under section 743(b)*** —

(1) ***Generally.***

(i) ***Application.*** For basis adjustments under section 743(b) resulting from substituted basis transactions, paragraph (b)(5) of this section shall apply. For basis adjustments under section 743(b) resulting from all other transfers, paragraphs (b)(2) through (4) of this section shall apply. For transfers subject to section 334(b)(1)(B), see § 1.334-1(b)(3)(iii)(C)(*1*) (treating a determination of basis under § 1.334-1(b)(3) as a determination not by reference to the transferor's basis solely for purposes of applying section 755); for transfers subject to section 362(e)(1), see § 1.362-3(b)(4)(i) (treating a determination of basis under § 1.362-3 as a determination not by reference to the transferor's basis solely for purposes of applying section 755); for transfers subject to section 362(e)(2), see § 1.362-4(c)(3)(i) (treating a determination

of basis under § 1.362-4 as a determination by reference to the transferor's basis for all purposes). Except as provided in paragraph (b)(5) of this section, the portion of the basis adjustment allocated to one class of property may be an increase while the portion allocated to the other class is a decrease. This would be the case even though the total amount of the basis adjustment is zero. Except as provided in paragraph (b)(5) of this section, the portion of the basis adjustment allocated to one item of property within a class may be an increase while the portion allocated to another is a decrease. This would be the case even though the basis adjustment allocated to the class is zero.

(ii) ***Hypothetical transaction.*** For purposes of paragraphs (b)(2) through (b)(4) of this section, the allocation of the basis adjustment under section 743(b) between the classes of property and among the items of property within each class are made based on the allocations of income, gain, or loss (including remedial allocations under § 1.704-3(d)) that the transferee partner would receive (to the extent attributable to the acquired partnership interest) if, immediately after the transfer of the partnership interest, all of the partnership's property were disposed of in a fully taxable transaction for cash in an amount equal to the fair market value of such property (the hypothetical transaction). See § 1.460-4(k)(3)(v)(B) for a rule relating to the computation of income or loss that would be allocated to the transferee from a contract accounted for under a long-term contract method of accounting as a result of the hypothetical transaction.

(2) ***Allocations between classes of property*** —

(i) ***In general.*** The amount of the basis adjustment allocated to the class of ordinary income property is equal to the total amount of income, gain, or loss (including any remedial allocations under § 1.704-3(d)) that would be allocated to the transferee (to the extent attributable to the acquired partnership interest) from the sale of all ordinary income property in the hypothetical transaction. The amount of the basis adjustment to capital gain property is equal to—

(A) The total amount of the basis adjustment under section 743(b); less

(B) The amount of the basis adjustment allocated to ordinary income property under the preceding sentence; provided, however, that in no event may the amount of any decrease in basis allocated to capital gain property exceed the partnership's basis (or in the case of property subject to the remedial allocation method, the transferee's share of any remedial loss under § 1.704-3(d) from the hypothetical transaction) in capital gain property. In the event that a decrease in basis allocated to capital gain property would otherwise exceed the partnership's basis in capital gain property, the excess must be applied to reduce the basis of ordinary income property.

(ii) ***Examples.*** The provisions of this paragraph (b)(2) are illustrated by the following examples:

> *Example 1.* (i) A and B form equal partnership PRS. A contributes $50,000 and Asset 1, a nondepreciable capital asset with a fair market value of $50,000 and an adjusted tax basis of $25,000. B contributes $100,000. PRS uses the cash to purchase Assets 2, 3, and 4. After a year, A sells its interest in PRS to T for $120,000. At the time of the transfer, A's share of the partnership's basis in partnership assets is $75,000. Therefore, T receives a $45,000 basis adjustment.

(ii) Immediately after the transfer of the partnership interest to T, the adjusted basis and fair market value of PRS's assets are as follows:

	Assets	
	Adjusted basis	**Fair market value**
Capital Gain Property:		
Asset 1	$25,000	$75,000
Asset 2	100,000	117,500
Ordinary Income Property:		
Asset 3	40,000	45,000
Asset 4	10,000	2,500
Total	175,000	240,000

(iii) If PRS sold all of its assets in a fully taxable transaction at fair market value immediately after the transfer of the partnership interest to T, the total amount of capital gain that would be allocated to T is equal to $46,250 ($25,000 section 704(c) built-in gain from Asset 1, plus fifty percent of the $42,500 appreciation in capital gain property). T would also be allocated a $1,250 ordinary loss from the sale of the ordinary income property.
(iv) The amount of the basis adjustment that is allocated to ordinary income property is equal to ($1,250) (the amount of the loss allocated to T from the hypothetical sale of the ordinary income property).

(v) The amount of the basis adjustment that is allocated to capital gain property is equal to $46,250 (the amount of the basis adjustment, $45,000, less ($1,250), the amount of loss allocated to T from the hypothetical sale of the ordinary income property).

Example 2. (i) A and B form equal partnership PRS. A and B each contribute $1,000 cash which the partnership uses to purchase Assets 1, 2, 3, and 4. After a year, A sells its partnership interest to T for $1,000. T's basis adjustment under section 743(b) is zero.
(ii) Immediately after the transfer of the partnership interest to T, the adjusted basis and fair market value of PRS's assets are as follows:

	Assets	
	Adjusted basis	**Fair market value**
Capital Gain Property:		

	Assets	
	Adjusted basis	Fair market value
Asset 1	$500	$750
Asset 2	500	500
Ordinary Income Property:		
Asset 3	500	250
Asset 4	500	500
Total	2,000	2,000

(iii) If, immediately after the transfer of the partnership interest to T, PRS sold all of its assets in a fully taxable transaction at fair market value, T would be allocated a loss of $125 from the sale of the ordinary income property. Thus, the amount of the basis adjustment to ordinary income property is ($125). The amount of the basis adjustment to capital gain property is $125 (zero, the amount of the basis adjustment under section 743(b), less ($125), the amount of the basis adjustment allocated to ordinary income property).

(3) ***Allocation within the class*** —

(i) ***Ordinary income property.*** The amount of the basis adjustment to each item of property within the class of ordinary income property is equal to—

(A) The amount of income, gain, or loss (including any remedial allocations under § 1.704-3(d)) that would be allocated to the transferee (to the extent attributable to the acquired partnership interest) from the hypothetical sale of the item; reduced by

(B) The product of—

(*1*) Any decrease to the amount of the basis adjustment to ordinary income property required pursuant to the last sentence of paragraph (b)(2)(i) of this section; multiplied by

(*2*) A fraction, the numerator of which is the fair market value of the item of property to the partnership and the denominator of which is the total fair market value of all of the partnership's items of ordinary income property.

(ii) ***Capital gain property.*** The amount of the basis adjustment to each item of property within the class of capital gain property is equal to—

(A) The amount of income, gain, or loss (including any remedial allocations under § 1.704-3(d)) that would be allocated to the transferee (to the extent attributable to the acquired partnership interest) from the hypothetical sale of the item; minus

(B) The product of—

(1) The total amount of gain or loss (including any remedial allocations under § 1.704-3(d)) that would be allocated to the transferee (to the extent attributable to the acquired partnership interest) from the hypothetical sale of all items of capital gain property, minus the amount of the positive basis adjustment to all items of capital gain property or plus the amount of the negative basis adjustment to capital gain property; multiplied by

(2) A fraction, the numerator of which is the fair market value of the item of property to the partnership, and the denominator of which is the fair market value of all of the partnership's items of capital gain property.

(iii) *Special rules* —

(A) ***Assets in which partner has no interest.*** An asset with respect to which the transferee partner has no interest in income, gain, losses, or deductions shall not be taken into account in applying paragraph (b)(3)(ii)(B) of this section.

(B) ***Limitation in decrease of basis.*** In no event may the amount of any decrease in basis allocated to an item of capital gain property under paragraph (b)(3)(ii)(B) of this section exceed the partnership's adjusted basis in that item (or in the case of property subject to the remedial allocation method, the transferee's share of any remedial loss under § 1.704-3(d) from the hypothetical transaction). In the event that a decrease in basis allocated under paragraph (b)(3)(ii)(B) of this section to an item of capital gain property would otherwise exceed the partnership's adjusted basis in that item, the excess must be applied to reduce the remaining basis, if any, of other capital gain assets pro rata in proportion to the bases of such assets (as adjusted under this paragraph (b)(3)).

(iv) ***Examples.*** The provisions of this paragraph (b)(3) are illustrated by the following examples:

> *Example 1.* (i) Assume the same facts as Example 1 in paragraph (b)(2)(ii) of this section. Of the $45,000 basis adjustment, $46,250 was allocated to capital gain property. The amount allocated to ordinary income property was ($1,250).
> (ii) Asset 1 is a capital gain asset, and T would be allocated $37,500 from the sale of Asset 1 in the hypothetical transaction. Therefore, the amount of the adjustment to Asset 1 is $37,500.
>
> (iii) Asset 2 is a capital gain asset, and T would be allocated $8,750 from the sale of Asset 2 in the hypothetical transaction. Therefore, the amount of the adjustment to Asset 2 is $8,750.
>
> (iv) Asset 3 is ordinary income property, and T would be allocated $2,500 from the sale of Asset 3 in the hypothetical transaction. Therefore, the amount of the adjustment to Asset 3 is $2,500.
>
> (v) Asset 4 is ordinary income property, and T would be allocated ($3,750) from the sale of Asset 4 in the hypothetical transaction. Therefore, the amount of the adjustment to Asset 4 is ($3,750).

Example 2. (i) Assume the same facts as Example 1 in paragraph (b)(2)(ii) of this section, except that A sold its interest in PRS to T for $110,000 rather than $120,000. T, therefore, receives a basis adjustment under section 743(b) of $35,000. Of the $35,000 basis adjustment, ($1,250) is allocated to ordinary income property, and $36,250 is allocated to capital gain property.
(ii) Asset 3 is ordinary income property, and T would be allocated $2,500 from the sale of Asset 3 in the hypothetical transaction. Therefore, the amount of the adjustment to Asset 3 is $2,500.

(iii) Asset 4 is ordinary income property, and T would be allocated ($3,750) from the sale of Asset 4 in the hypothetical transaction. Therefore, the amount of the adjustment to Asset 4 is ($3,750).

(iv) Asset 1 is a capital gain asset, and T would be allocated $37,500 from the sale of Asset 1 in the hypothetical transaction. Asset 2 is a capital gain asset, and T would be allocated $8,750 from the sale of Asset 2 in the hypothetical transaction. The total amount of gain that would be allocated to T from the sale of the capital gain assets in the hypothetical transaction is $46,250, which exceeds the amount of the basis adjustment allocated to capital gain property by $10,000. The amount of the adjustment to Asset 1 is $33,604 ($37,500 minus $3,896 ($10,000 × $75,000/$192,500)). The amount of the basis adjustment to Asset 2 is $2,646 ($8,750 minus $6,104 ($10,000 × $117,500/$192,500)).

(4) ***Income in respect of a decedent*** —

(i) ***In general.*** Where a partnership interest is transferred as a result of the death of a partner, under section 1014(c) or section 1022(f), the transferee's basis in its partnership interest is not adjusted for that portion of the interest, if any, that is attributable to items representing income in respect of a decedent under section 691. See § 1.742-1. Accordingly, if a partnership interest is transferred as a result of the death of a partner, and the partnership holds assets representing income in respect of a decedent, no part of the basis adjustment under section 743(b) is allocated to these assets. See § 1.743-1(b).

(ii) The provisions of this paragraph (b)(4) are illustrated by the following example:

Example. (i) A and B are equal partners in personal service partnership PRS. In 2004, as a result of B's death, B's partnership interest is transferred to T when PRS's balance sheet (reflecting a cash receipts and disbursements method of accounting) is as follows

(based on all the facts and circumstances):

ASSETS

	Adjusted basis	Fair market value
Section 197 Intangible	$2,000	$5,000
Unrealized Receivables	0	15,000
Total	$2,000	$20,000

LIABILITIES AND CAPITAL

	Adjusted per books	Fair market value
Capital:		
A	1,000	10,000
B	1,000	10,000
Total	$2,000	$20,000

(ii) None of the assets owned by PRS is section 704(c) property, and the section 197 intangible is not amortizable. The fair market value of T's partnership interest on the applicable date of valuation set forth in section 1014 is $10,000. Of this amount, $2,500 is attributable to T's 50% share of the partnership's section 197 intangible, and $7,500 is attributable to T's 50% share of the partnership's unrealized receivables. The partnership's unrealized receivables represent income in respect of a decedent. Accordingly, under section 1014(c), T's basis in its partnership interest is not adjusted for that portion of the interest which is attributable to the unrealized receivables. Therefore, T's basis in its partnership interest is $2,500.
(iii) Under paragraph (a)(4)(i)(C) of this section, solely for purposes of determining partnership gross value, T's basis in its partnership interest is deemed to be $10,000. Under paragraph (a)(4)(i) of this section, partnership gross value is $20,000 (the amount that, if assigned to all partnership property, would result in a liquidating distribution to T equal to $10,000).

(iv) Under paragraph (a)(5) of this section, the residual section 197 intangibles value is $5,000 (the excess of partnership gross value, $20,000, over the aggregate value of assets other than section 197 intangibles, $15,000). The residual section 197 intangibles value is assigned first to section 197 intangibles other than goodwill and going concern

value, and then to goodwill and going concern value. Thus, $5,000 is assigned to the section 197 intangible, and $0 is assigned to goodwill and going concern value. T's section 743(b) adjustment must be allocated using these assigned fair market values.

(v) At the time of the transfer, B's share of the partnership's basis in partnership assets is $1,000. Accordingly, T receives a $1,500 basis adjustment under section 743(b). Under this paragraph (b)(4), the entire basis adjustment is allocated to the partnership's section 197 intangible.

(5) *Substituted basis transactions* —

(i) ***In general.*** This paragraph (b)(5) applies to basis adjustments under section 743(b) that result from exchanges in which the transferee's basis in the partnership interest is determined in whole or in part by reference to the transferor's basis in that interest. For exchanges on or after June 9, 2003, this paragraph (b)(5) also applies to basis adjustments under section 743(b) that result from exchanges in which the transferee's basis in the partnership interest is determined by reference to other property held at any time by the transferee. For example, this paragraph (b)(5) applies if a partnership interest is contributed to a corporation in a transaction to which section 351 applies, if a partnership interest is contributed to a partnership in a transaction to which section 721(a) applies, or if a partnership interest is distributed by a partnership in a transaction to which section 731(a) applies.

(ii) ***Allocations between classes of property.*** If the total amount of the basis adjustment under section 743(b) is zero, then no adjustment to the basis of partnership property will be made under this paragraph (b)(5). If there is an increase in basis to be allocated to partnership assets, such increase must be allocated to capital gain property or ordinary income property, respectively, only if the total amount of gain or loss (including any remedial allocations under § 1.704-3(d)) that would be allocated to the transferee (to the extent attributable to the acquired partnership interest) from the hypothetical sale of all such property would result in a net gain or net income, as the case may be, to the transferee. Where, under the preceding sentence, an increase in basis may be allocated to both capital gain assets and ordinary income assets, the increase shall be allocated to each class in proportion to the net gain or net income, respectively, which would be allocated to the transferee from the sale of all assets in each class. If there is a decrease in basis to be allocated to partnership assets, such decrease must be allocated to capital gain property or ordinary income property, respectively, only if the total amount of gain or loss (including any remedial allocations under § 1.704-3(d)) that would be allocated to the transferee (to the extent attributable to the acquired partnership interest) from the hypothetical sale of all such property would result in a net loss to the transferee. Where, under the preceding sentence, a decrease in basis may be allocated to both capital gain assets and ordinary income assets, the decrease shall be allocated to each class in proportion to the net loss which would be allocated to the transferee from the sale of all assets in each class.

(iii) *Allocations within the classes* —

(A) ***Increases.*** If there is an increase in basis to be allocated within a class, the increase must be allocated first to properties with unrealized appreciation in proportion to the transferee's share of the respective amounts of unrealized appreciation before such increase (but only to the extent of the transferee's share of each property's unrealized

appreciation). Any remaining increase must be allocated among the properties within the class in proportion to the transferee's share of the amount that would be realized by the partnership upon the hypothetical sale of each asset in the class.

(B) ***Decreases.*** If there is a decrease in basis to be allocated within a class, the decrease must be allocated first to properties with unrealized depreciation in proportion to the transferee's shares of the respective amounts of unrealized depreciation before such decrease (but only to the extent of the transferee's share of each property's unrealized depreciation). Any remaining decrease must be allocated among the properties within the class in proportion to the transferee's shares of their adjusted bases (as adjusted under the preceding sentence).

(C) ***Limitation in decrease of basis.*** Where, as the result of a transaction to which this paragraph (b)(5) applies, a decrease in basis must be allocated to capital gain assets, ordinary income assets, or both, and the amount of the decrease otherwise allocable to a particular class exceeds the transferee's share of the adjusted basis to the partnership of all depreciated assets in that class, the transferee's negative basis adjustment is limited to the transferee's share of the partnership's adjusted basis in all depreciated assets in that class.

(D) ***Carryover adjustment.*** Where a transferee's negative basis adjustment under section 743(b) cannot be allocated to any asset, because the adjustment exceeds the transferee's share of the adjusted basis to the partnership of all depreciated assets in a particular class, the adjustment is made when the partnership subsequently acquires property of a like character to which an adjustment can be made.

(iv) ***Examples.*** The provisions of this paragraph (b)(5) are illustrated by the following examples:

Example 1. A is a member of partnership LTP, which has made an election under section 754. The three partners in LTP have equal interests in capital and profits. Solely in exchange for a partnership interest in UTP, A contributes its interest in LTP to UTP in a transaction described in section 721. At the time of the transfer, A's basis in its partnership interest ($5,000) equals its share of inside basis (also $5,000). Under section 723, UTP's basis in its interest in LTP is $5,000. LTP's only two assets on the date of contribution are inventory with a basis of $5,000 and a fair market value of $7,500, and a nondepreciable capital asset with a basis of $10,000 and a fair market value of $7,500. The amount of the basis adjustment under section 743(b) to partnership property is $0 ($5,000, UTP's basis in its interest in LTP, minus $5,000, UTP's share of LTP's basis in partnership assets). Because UTP acquired its interest in LTP in a substituted basis transaction, and the total amount of the basis adjustment under section 743(b) is zero, UTP receives no special basis adjustments under section 743(b) with respect to the partnership property of LTP.

Example 2. (i) A purchases a partnership interest in LTP at a time when an election under section 754 is not in effect. The three partners in LTP have equal interests in capital and profits. During a later year for which LTP has an election under section 754 in effect, and in a transaction that is unrelated to A's purchase of the LTP interest, A contributes its interest in LTP to UTP in a transaction described in section 721 (solely in exchange for a partnership interest in UTP). At the time of the transfer, A's adjusted basis in its interest in LTP is $20,433. Under section 721, A

recognizes no gain or loss as a result of the contribution of its partnership interest to UTP. Under section 723, UTP's basis in its partnership interest in LTP is $20,433. The balance sheet of LTP on the date of the contribution shows the following:

	Assets	
	Adjusted basis	**Fair market value**
Cash	$5,000	$5,000
Accounts receivable	10,000	10,000
Inventory	20,000	21,000
Nondepreciable capital asset	20,000	40,000
Total	55,000	76,000

	Liabilities and Capital	
	Adjusted per books	**Fair market value**
Liabilities	$10,000	$10,000
Capital:		
A	15,000	22,000
B	15,000	22,000
C	15,000	22,000
Total	55,000	76,000

(ii) The amount of the basis adjustment under section 743(b) is the difference between the basis of UTP's interest in LTP and UTP's share of the adjusted basis to LTP of partnership property. UTP's interest in the previously taxed capital of LTP is $15,000 ($22,000, the amount of cash UTP would receive if LTP liquidated immediately after the hypothetical transaction, decreased by $7,000, the amount of tax gain allocated to UTP from the hypothetical transaction). UTP's share of the adjusted basis to LTP of partnership property is $18,333 ($15,000 share of previously taxed capital, plus $3,333 share of LTP's liabilities). The amount of the basis adjustment under section 743(b) to partnership property therefore, is $2,100 ($20,433 minus $18,333).

(iii) The total amount of gain that would be allocated to UTP from the hypothetical sale of capital gain property is $6,666.67 (one-third of the excess of the fair market value of LTP's nondepreciable capital asset, $40,000, over its basis, $20,000). The total amount of gain that would be allocated to UTP from the hypothetical sale of ordinary income property is $333.33 (one-third of the excess of the fair market

> value of LTP's inventory, $21,000, over its basis, $20,000). Under this paragraph (b)(5), LTP must allocate $2,000 ($6,666.67 divided by $7,000 times $2,100) of UTP's basis adjustment to the nondepreciable capital asset. LTP must allocate $100 ($333.33 divided by $7,000 times $2,100) of UTP's basis adjustment to the inventory.

(c) ***Adjustments under section 734(b)*** —

(1) ***Allocations between classes of property*** —

(i) ***General rule.*** Where there is a distribution of partnership property resulting in an adjustment to the basis of undistributed partnership property under section 734(b)(1)(B) or (b)(2)(B), the adjustment must be allocated to remaining partnership property of a character similar to that of the distributed property with respect to which the adjustment arose. Thus, when the partnership's adjusted basis of distributed capital gain property immediately prior to distribution exceeds the basis of the property to the distributee partner (as determined under section 732), the basis of the undistributed capital gain property remaining in the partnership is increased by an amount equal to the excess. Conversely, when the basis to the distributee partner (as determined under section 732) of distributed capital gain property exceeds the partnership's adjusted basis of such property immediately prior to the distribution, the basis of the undistributed capital gain property remaining in the partnership is decreased by an amount equal to such excess. Similarly, where there is a distribution of ordinary income property, and the basis of the property to the distributee partner (as determined under section 732) is not the same as the partnership's adjusted basis of the property immediately prior to distribution, the adjustment is made only to undistributed property of the same class remaining in the partnership.

(ii) ***Special rule.*** Where there is a distribution resulting in an adjustment under section 734(b)(1)(A) or (b)(2)(A) to the basis of undistributed partnership property, the adjustment is allocated only to capital gain property.

(2) ***Allocations within the classes*** —

(i) ***Increases.*** If there is an increase in basis to be allocated within a class, the increase must be allocated first to properties with unrealized appreciation in proportion to their respective amounts of unrealized appreciation before such increase (but only to the extent of each property's unrealized appreciation). Any remaining increase must be allocated among the properties within the class in proportion to their fair market values.

(ii) ***Decreases.*** If there is a decrease in basis to be allocated within a class, the decrease must be allocated first to properties with unrealized depreciation in proportion to their respective amounts of unrealized depreciation before such decrease (but only to the extent of each property's unrealized depreciation). Any remaining decrease must be allocated among the properties within the class in proportion to their adjusted bases (as adjusted under the preceding sentence).

(3) ***Limitation in decrease of basis.*** Where a decrease in the basis of partnership assets is required under section 734(b)(2) and the amount of the decrease exceeds the adjusted basis to the partnership of property of the required character, the basis of such property is reduced to zero (but not below zero).

(4) ***Carryover adjustment.*** Where, in the case of a distribution, an increase or a decrease in the basis of undistributed property cannot be made because the partnership owns no property of the character required to be adjusted, or because the basis of all the property of a like character has been reduced to zero, the adjustment is made when the partnership subsequently acquires property of a like character to which an adjustment can be made.

(5) ***Cross reference.*** See § 1.460-4(k)(3)(v)(B) for a rule relating to the computation of unrealized appreciation or depreciation in a contract accounted for under a long-term contract method of accounting.

(6) ***Example.*** The following example illustrates this paragraph (c):

Example. (i) A, B, and C form equal partnership PRS. A contributes $50,000 and Asset 1, nondepreciable capital gain property with a fair market value of $50,000 and an adjusted tax basis of $25,000. B and C each contributes $100,000. PRS uses the cash to purchase Assets 2, 3, 4, 5, and 6. Assets 2 and 3 are nondepreciable capital assets, and Assets 4, 5, and 6 are inventory that has not appreciated substantially in value within the meaning of section 751(b)(3). Assets 4, 5, and 6 are the only assets held by the partnership that are subject to section 751. The partnership has an election in effect under section 754. After seven years, the adjusted basis and fair market value of PRS's assets are as follows:

	Assets	
	Adjusted basis	**Fair market value**
Capital Gain Property:		
Asset 1	$ 25,000	$ 75,000
Asset 2	100,000	117,500
Asset 3	50,000	60,000
Ordinary Income Property:		
Asset 4	40,000	45,000
Asset 5	50,000	60,000
Asset 6	10,000	2,500
Total	275,000	360,000

(ii) *Allocation between classes.* Assume that PRS distributes Assets 3 and 5 to A in complete liquidation of A's interest in the partnership. A's basis in the partnership interest was $75,000. The partnership's basis in Assets 3 and 5 was $50,000 each. A's $75,000 basis in its partnership interest is allocated between Assets 3 and 5 under sections 732(b) and (c). A will, therefore, have a basis of $25,000 in Asset 3 (capital gain property), and a basis of $50,000 in Asset 5 (section 751 property). The distribution results in a $25,000 increase in the basis of capital gain property. There is no change in the basis of ordinary income property.

(iii) *Allocation within class.* The amount of the basis increase to capital gain property is $25,000 and must be allocated among the remaining capital gain assets in proportion to the difference between the fair market value and basis of each. The fair market value of Asset 1 exceeds its basis by $50,000. The fair market value of Asset 2 exceeds its basis by $17,500. Therefore, the basis of Asset 1 will be increased by $18,519 ($25,000, multiplied by $50,000, divided by $67,500), and the basis of Asset 2 will be increased by $6,481 ($25,000 multiplied by $17,500, divided by $67,500).

(d) ***Required statements. See*** § 1.743-1(k)(2) for provisions requiring the transferee of a partnership interest to provide information to the partnership relating to the transfer of an interest in the partnership. *See* § 1.743-1(k)(1) for a provision requiring the partnership to attach a statement to the partnership return showing the computation of a basis adjustment under section 743(b) and the partnership properties to which the adjustment is allocated under section 755. *See* § 1.732-1(d)(3) for a provision requiring a transferee partner to attach a statement to its return showing the computation of a basis adjustment under section 732(d) and the partnership properties to which the adjustment is allocated under section 755. *See* § 1.732-1(d)(5) for a provision requiring the partnership to provide information to a transferee partner reporting a basis adjustment under section 732(d).

(e) ***Effective/applicability dates*** —

(1) ***Generally.*** Except as provided in paragraphs (b)(5) and (e)(2) of this section, this section applies to transfers of partnership interests and distributions of property from a partnership that occur on or after December 15, 1999.

(2) ***Special rules.*** Paragraphs (a) and (b)(3)(iii) of this section apply to transfers of partnership interests and distributions of property from a partnership that occur on or after June 9, 2003. The provisions of paragraphs (a)(4)(i)(C) and (b)(4)(i) of this section relating to section 1022 are effective on and after the date January 19, 2017.

[T.D. 8847, 64 FR 69916, Dec. 15, 1999; 65 FR 9220, Feb. 24, 2000, as amended by T.D. 9059, 68 FR 34295, June 9, 2003; T.D. 9137, 69 FR 42559, July 16, 2004; T.D. 9759, 81 FR 17083, Mar. 28, 2016; T.D. 9811, 82 FR 6239, Jan. 19, 2017]

DEFINITIONS

§ 1.761-1 Terms defined.

(a) ***Partnership.*** The term *partnership* means a partnership as determined under §§ 301.7701-1, 301.7701-2, and 301.7701-3 of this chapter.

(b) ***Partner.*** The term *partner* means a member of a partnership.

(c) ***Partnership agreement.*** For the purposes of subchapter K, a partnership agreement includes the original agreement and any modifications thereof agreed to by all the partners or adopted in any other manner provided by the partnership agreement. Such agreement or modifications can be oral or written. A partnership agreement may be modified with respect to a particular taxable year subsequent to the close of such taxable year, but not later than the date (not including any extension of time) prescribed by law for the filing of the partnership return. As to any matter on which the partnership agreement, or any modification thereof, is silent, the provisions of local law shall be considered to constitute a part of the agreement.

(d) ***Liquidation of partner's interest.*** The term *liquidation of a partner's interest* means the termination of a partner's entire interest in a partnership by means of a distribution, or a series of distributions, to the partner by the partnership. A series of distributions will come within the meaning of this term whether they are made in one year or in more than one year. Where a partner's interest is to be liquidated by a series of distributions, the interest will not be considered as liquidated until the final distribution has been made. For the basis of property distributed in one liquidating distribution, or in a series of distributions in liquidation, see section 732(b). A distribution which is not in liquidation of a partner's entire interest, as defined in this paragraph, is a current distribution. Current distributions, therefore, include distributions in partial liquidation of a partner's interest, and distributions of the partner's distributive share. See paragraph (a)(1)(ii) of § 1.731-1.

(e) ***Distribution of partnership interest.*** For purposes of section 708(b)(1)(B) and § 1.708-1(b)(1)(iv), the deemed distribution of an interest in a new partnership by a partnership that terminates under section 708(b)(1)(B) is not a sale or exchange of an interest in the new partnership. However, the deemed distribution of an interest in a new partnership by a partnership that terminates under section 708(b)(1)(B) is treated as an exchange of the interest in the new partnership for purposes of section 743. This paragraph (e) applies to terminations of partnerships under section 708(b)(1)(B) occurring on or after May 9, 1997; however, this paragraph (e) may be applied to terminations occurring on or after May 9, 1996, provided that the partnership and its partners apply this paragraph (e) to the termination in a consistent manner.

[T.D. 6500, 25 FR 11814, Nov. 26, 1960, as amended by T.D. 7208, 37 FR 20686, Oct. 3, 1972; T.D. 8697, 61 FR 66588, Dec. 18, 1996; T.D. 8717, 62 FR 25501, May 9, 1997]

§ 1.761-2 Exclusion of certain unincorporated organizations from the application of all or part of subchapter K of chapter 1 of the Internal Revenue Code.

(a) ***Exclusion of eligible unincorporated organizations*** —

(1) ***In general.*** Under the conditions set forth in this section, an unincorporated organization described in paragraph (a)(2) or (3) of this section (taking into account paragraph (a)(4) of this section, as applicable) may be excluded from the application of all or a part of the provisions of subchapter K of chapter 1 of the Internal Revenue Code (subchapter K). Such organization must be availed of for investment purposes only and not for the active conduct of a business, or for the joint production, extraction, or use of property, but not for the purpose of selling services or property produced or extracted. The members of such organization must be able to compute their income without the necessity of computing partnership taxable income. Any syndicate, group, pool, or joint venture which is treated as a corporation for Federal tax purposes does not fall within the provisions in this paragraph (a)(1).

(2) ***Investing partnership.*** Where the participants in the joint purchase, retention, sale, or exchange of investment property:

(i) Own the property as co-owners;

(ii) Reserve the right separately to take or dispose of their shares of any property acquired or retained, and

(iii) Do not actively conduct business or irrevocably authorize some person or persons acting in a representative capacity to purchase, sell, or exchange such investment property, although each separate participant may delegate authority to purchase, sell, or exchange his share of any such investment property for the time being for his account, but not for a period of more than a year, then

such group may be excluded from the application of the provisions of subchapter K under the rules set forth in paragraph (b) of this section.

(3) ***Operating agreements.*** Where the participants in the joint production, extraction, or use of property:

(i) Own the property as co-owners, either in fee or under lease or other form of contract granting exclusive operating rights; and

(ii) Reserve the right separately to take in kind or dispose of their shares of any property produced, extracted, or used, and

(iii) Do not jointly sell services or the property produced or extracted, although each separate participant may delegate authority to sell his share of the property produced or extracted for the time being for his account, but not for a period of time in excess of the minimum needs of the industry, and in no event for more than 1 year, then such group may be excluded from the application of the provisions of subchapter K under the rules set forth in paragraph (b) of this section. However, the preceding sentence does not apply to any unincorporated organization one of whose principal purposes is cycling, manufacturing, or processing for persons who are not members of the organization. In addition, except as provided in paragraph (d)(2)(i) of this section, this paragraph (a)(3) does not apply to any unincorporated organization that produces natural gas under a joint operating agreement, unless all members of the unincorporated organization comply with paragraph (d) of this section.

(4) ***Modifications for certain joint ownership arrangements of applicable credit property*** —

(i) ***Scope.*** Paragraph (a)(4)(iii) of this section provides certain modifications to specified rules in paragraph (a)(3) of this section in the case of an applicable unincorporated organization meeting the requirements of paragraph (a)(4)(ii) of this section.

(ii) ***Applicable unincorporated organization.*** For purposes of this section, an *applicable unincorporated organization* is an unincorporated organization:

(A) That is owned, in whole or in part, by one or more applicable entities, as defined in section 6417(d)(1)(A) and § 1.6417-1(c);

(B) The members of which enter into a joint operating agreement in which the members reserve the right separately to take in kind or dispose of their pro rata shares of any property produced, extracted, or used, and any associated renewable energy credits or similar credits;

(C) That, pursuant to the joint operating agreement, is organized exclusively to own and operate applicable credit property (as defined in § 1.6417-1(e));

(D) For which one or more of the applicable entities will make an elective payment election under section 6417(a) for the applicable credits determined with respect to its share of the applicable credit property;

(E) The members of which are able to compute their income without the necessity of computing partnership taxable income; and

(F) Which is not a syndicate, group, pool, or joint venture which is classifiable as an association, or any group operating under an agreement which creates an organization classifiable as an association.

(iii) ***Specified modifications for applicable unincorporated organizations.*** Solely for purposes of an election under section 761(a) by an applicable unincorporated organization that meets the requirements of paragraphs (b) and (e) of this section:

(A) The requirement in paragraph (a)(3)(i) of this section is modified such that the participants are permitted to own the applicable credit property through an unincorporated organization that is an entity, other than one that is treated as a corporation for Federal tax purposes; and

(B) The requirement in paragraph (a)(3)(iii) of this section is modified such that the delegation of authority to sell the participant's share of the property produced or used may allow the delegee to enter into contracts the duration of which exceeds the minimum needs of the industry and may be for more than one year, provided that the delegation of authority to act on behalf of the participant may not be for a period of time that exceeds the minimum needs of the industry, and in no event for more than one year.

(5) ***Examples.*** The following examples are intended to illustrate the principles of this section.

(i) ***Example 1*** —

(A) ***Facts.*** G and H enter into a joint operating agreement to own and operate a facility that will produce solar energy. G, an applicable entity, is entitled under the joint operating agreement to take in kind or dispose of 40% of the energy produced by the unincorporated organization and H, which is not an applicable entity, is entitled to the remaining 60%. G and H form LLC, a limited liability company, to hold the solar energy property that G and H intend to operate pursuant to the joint operating agreement. In accordance with the joint operating agreement, G owns a 40% ownership interest in LLC and H owns the remaining 60% ownership interest. G will sell its share of energy produced by the facility in a manner designed to generate applicable credits under section 45(a) and will make an election under section 6417(a) with respect thereto. LLC makes a valid election under section 761(a) to be excluded from subchapter K.

(B) ***Analysis.*** G will be entitled to any credits under section 45(a) generated by its sale of energy produced by LLC that G has the right to take in kind or dispose of (which, under the joint operating agreement, is 40% of the energy produced by LLC). Assuming all other requirements are met, G will be able to make an elective payment election under section 6417 for the applicable credits determined with respect to its ownership share of the solar energy property.

(ii) ***Example 2*** —

(A) ***Facts.*** T is an Indian Tribal government as defined in § 1.6417-1(k) and an applicable entity. Through a limited liability company organized under T's Tribal law (TLLC), T and Y own and operate applicable credit property that will generate electricity the sale of which will generate applicable credits under section 45(a). TLLC is not treated as an association

taxable as a corporation for Federal tax purposes and no election under § 301.7701-3 of this chapter has been made to treat TLLC as such. T and Y enter into a joint operating agreement with respect to the ownership and operation of the applicable credit property in which each of T and Y reserve the right separately to take in kind or dispose of their pro rata shares of property produced, extracted, or used and any associated renewable energy credits or similar credits. TLLC is formed exclusively to own and operate an applicable credit property with respect to which section 45(a) credits will be determined. On January 1st of year 1, T and Y enter into delegation agreements with Q that delegate T's and Y's authority to Q to sell the electricity generated by T's and Y's shares of the applicable credit property. The term of the delegation agreements is one year, which does not exceed the minimum needs of the industry. On June 1st of year 1, Q enters into a power purchase agreement with Utility on T's and Y's behalf that commits T and Y to sell the electricity produced from their shares of the applicable credit property to Utility for a term of 15 years. At the end of the day on December 31st of year 1, the delegation agreements terminate.

(B) ***Analysis.*** Because T and Y did not delegate authority for a period of more than one year to sell the output from their shares of the applicable credit property, the requirements of paragraph (a)(3)(iii) of this section (as modified by paragraph (a)(4)(iii)(B) of this section) are met. Assuming that TLLC otherwise qualifies as an applicable unincorporated organization, TLLC is an organization described in paragraph (a)(4)(iii)(A) of this section and can make an election under paragraphs (b) and (e) of this section to be excluded from the application of all of subchapter K under section 761(a). As such, T can make an elective payment election for the applicable credits determined with respect to its share of the applicable credit property held by TLLC, assuming the requirements of section 6417 are otherwise met. The analysis in this example would be the same whether Y is also an Indian Tribal government, another applicable entity, or some other person.

(iii) ***Example 3*** —

(A) ***Facts.*** The facts are the same as in paragraph (a)(5)(ii)(A) of this section (*Example 2*), except that at the end of the day on December 31, T and Y each agree, in writing, to a new agent delegation agreement with Q with substantively identical terms as the agent delegation agreement in effect during year 1.

(B) ***Analysis.*** Because each of T and Y have agreed, in writing, to engage Q in an agency relationship lasting no longer than one year, the results are the same as in paragraph (a)(5)(ii)(B) of this section (*Example 2*). In contrast, if the agent delegation agreement renewed automatically, T and Y have effectively entered into an agent delegation agreement lasting longer than one year and have violated the requirements of paragraph (a)(4)(iii)(B) of this section. In that case, TLLC would not be eligible to make or maintain an election under section 761(a). As such, T could not make an elective payment election for the applicable credits determined with respect to its share of the applicable credit property held through TLLC.

(b) ***Complete exclusion from subchapter K*** —

(1) ***Time for making election for exclusion.*** Any unincorporated organization described in paragraph (a)(1) of this section and either paragraph (a)(2) or (3) of this section (taking into account paragraph (a)(4) of this section, as applicable) that wishes to be excluded from all of subchapter K must make the election provided in section 761(a) not later than the time prescribed by § 1.6031(a)-1(e)

(including extensions thereof) for filing the partnership return for the first taxable year for which exclusion from subchapter K is desired. Notwithstanding the prior sentence, such organization may be deemed to have made the election in the manner prescribed in paragraph (b)(2)(ii) of this section.

(2) ***Method of making election*** —

(i) ***In general.*** Except as provided in paragraph (b)(2)(ii) of this section, any unincorporated organization described in paragraph (a)(1) of this section and either paragraph (a)(2) or (3) of this section (taking into account paragraph (a)(4) of this section, as applicable) which wishes to be excluded from all of subchapter K must make the election provided in section 761(a) in a statement attached to, or incorporated in, a properly executed partnership return, Form 1065, *U.S. Return of Partnership Income,* which must contain the information required in this paragraph (b)(2)(i). Such return must be filed with the Internal Revenue Service Center where the partnership return, Form 1065, would be required to be filed if no election were made. To determine the appropriate Internal Revenue Service Center, the principal office or place of business of the person filing the return will be considered the principal office or place of business of the organization. The partnership return must be filed not later than the time prescribed § 1.6031(a)-1(e) (including extensions thereof) for filing the partnership return with respect to the first taxable year for which exclusion from subchapter K is desired. Such partnership return must contain, in lieu of the information required by Form 1065 and by the instructions relating thereto, only the name or other identification and the address of the organization together with information on the return, or in the statement attached to the return, showing the names, addresses, and taxpayer identification numbers of all the members of the organization; a statement that the organization qualifies under paragraph (a)(1) of this section and either paragraph (a)(2) or (3) of this section (taking into account paragraph (a)(4) of this section, as applicable); a statement that all of the members of the organization elect that it be excluded from all of subchapter K; and a statement indicating where a copy of the agreement under which the organization operates is available (or if the agreement is oral, from whom the provisions of the agreement may be obtained).

(ii) ***Deemed election rule.*** If an unincorporated organization described in paragraph (a)(1) of this section and either paragraph (a)(2) or (3) of this section (taking into account paragraph (a)(4) of this section, as applicable) does not make the election provided in section 761(a) in the manner prescribed by paragraph (b)(2)(i) of this section, it will nevertheless be deemed to have made the election if it can be shown from all the surrounding facts and circumstances that it was the intention of the members of such organization at the time of its formation to secure exclusion from all of subchapter K beginning with the first taxable year of the organization. Although the following facts are not exclusive, either one of such facts may indicate the requisite intent:

(A) At the time of the formation of the organization there is an agreement among the members that the organization be excluded from subchapter K beginning with the first taxable year of the organization; or

(B) The members of the organization owning substantially all of the capital interests report their respective shares of the items of income, deductions, and credits of the organization on their respective returns (making such elections as to individual items as may be appropriate) in a manner consistent with the exclusion of the organization from subchapter K beginning with the first taxable year of the organization.

(3) ***Effect of election*** —

(i) ***In general.*** An election under this section to be excluded will be effective unless within 90 days after the formation of the organization any member of the organization notifies the Commissioner that the member desires subchapter K to apply to such organization, and also advises the Commissioner that the member has so notified all other members of the organization by registered or certified mail. Such election is irrevocable as long as the organization remains qualified under paragraph (a)(1) of this section and either paragraph (a)(2) or (3) of this section (taking into account paragraph (a)(4) of this section, as applicable), or unless approval of revocation of the election is secured from the Commissioner.

(ii) ***Special rule.*** Notwithstanding subdivision (i) of this subparagraph, an election deemed made pursuant to subparagraph (2)(ii) of this paragraph will not be effective in the case of an organization which had a taxable year ending on or before November 30, 1972, if any member of the organization notifies the Commissioner that the member desires subchapter K to apply to such organization, and also advises the Commissioner that he has so notified all other members of the organization by registered or certified mail. Such notification to the Commissioner must be made on or before January 2, 1973 and must include the names and addresses of all of the members of the organization.

(c) ***Partial exclusion from subchapter K.*** An unincorporated organization which wishes to be excluded from only certain sections of subchapter K must submit to the Commissioner, no later than 90 days after the beginning of the first taxable year for which partial exclusion is desired, a request for permission to be excluded from certain provisions of subchapter K. The request must set forth the sections of subchapter K from which exclusion is sought and must state that such organization qualifies under paragraph (a)(1) of this section and either paragraph (a)(2) or (3) of this section (taking into account paragraph (a)(4) of this section, as applicable), and that the members of the organization elect to be excluded to the extent indicated. Such exclusion will be effective only upon approval of the election by the Commissioner and subject to the conditions the Commissioner may impose.

(d) ***Rules for gas producers that produce natural gas under joint operating agreements*** —

(1) ***Joint operating agreements and gas balancing.*** Co-owners of a property producing natural gas enter into a joint operating agreement (JOA) to define the rights and obligations of each co- producer of the gas in place. The JOA determines, among other things, each co-producer's proportionate share of the natural gas as it is produced from the reservoir, together with the associated production expenses. A gas imbalance arises when a co-producer does not take its proportionate share of current gas production under the JOA (underproducer) and another co-producer takes more than its proportionate share of current production (overproducer). The co-producers often enter into a gas balancing agreement (GBA) as an addendum to their JOA to establish their rights and obligations when a gas imbalance arises. A GBA typically allows the overproducer to take the amount of the gas imbalance (overproduced gas) and entitles the underproducer to recoup the overproduced gas either from the volume of the gas remaining in the reservoir or by a cash balancing payment.

(2) ***Permissible gas balancing methods*** —

(i) ***General requirement.*** All co-producers of natural gas operating under the same JOA must use the cumulative gas balancing method, as described in paragraph (d)(3) of this section, unless they use the annual gas balancing method described in paragraph (d)(4) of this section. A co-producer's failure to comply with the provisions of this paragraph (d)(2)(i) generally constitutes the use of an impermissible method of accounting, requiring a change to a permissible method under § 1.446-1(e)(3) with any terms and conditions as may be imposed by the Commissioner.

The co-producers' election to be excluded from all or part of subchapter K will not be revoked, unless the Commissioner determines that there was willful failure to comply with the requirements of this paragraph (d)(2)(i).

(ii) *Change in method of accounting; adoption of method of accounting* —

(A) ***In general.*** The annual gas balancing method and the cumulative gas balancing method are methods of accounting. Accordingly, a change to or from either of these methods is a change in method of accounting that requires the consent of the Commissioner. See section 446(e) and § 1.446-1(e). For purposes of this section, each JOA is treated as a separate trade or business. Paragraph (d)(2)(ii)(B) of this section provides rules for adopting either permissible method of accounting. Paragraph (d)(2)(ii)(C) of this section provides rules on the timing of required changes to either permissible method during the transitional period, and paragraph (d)(5) of this section contains the procedural provisions for making a change in method of accounting required in paragraph (d)(2)(ii)(C) of this section.

(B) ***Adoption of method of accounting.*** A co-producer must adopt a permissible method for each JOA entered into on or after the start of the co-producer's first taxable year beginning after December 31, 1994 (or, in the case of the use of the annual gas balancing method by co-producers not having the same taxable year, the start of the first taxable year beginning after December 31, 1994, of the co-producer whose taxable year begins latest in the calendar year). If a co-producer is adopting the cumulative method, the co-producer may adopt the method by using the method on its timely filed return for the taxable year of adoption. A co-producer may adopt the annual gas balancing method with the permission of the Commissioner under guidelines set forth in paragraph (d)(4)(ii) of this section.

(C) ***Required change in method of accounting for certain joint operating agreements.*** This paragraph (d)(2)(ii)(C) applies to certain JOAs entered into prior to 1996. Except in the case of a part-year change in method of accounting or in the case of the cessation of a JOA (both of which are described in this paragraph (d)(2)(ii)(C)), for each JOA entered into prior to a co-producer's first taxable year beginning after December 31, 1994, and in effect as of the beginning of that year, the co-producer must change its method of accounting for sales of gas and its treatment of certain related deductions and credits to a permissible method as of the start of its first taxable year beginning after December 31, 1994. In the case of a JOA of co-producers that do not all have the same taxable year and that choose the annual gas balancing method, if the JOA is entered into prior to the first taxable year beginning after December 31, 1994 of the co-producer whose taxable year begins latest in the calendar year and the JOA is in effect as of January 1, 1996, a change to the annual gas balancing method by each co-producer under that JOA is made as of January 1, 1996 (part-year change in method of accounting). If the co-producers would have made a part-year change to the annual gas balancing method but for the fact that their JOA ceased to be in effect before January 1, 1996 (cessation of a JOA), the co-producers do not change their method of accounting with respect to the JOA. Rather, for their taxable years in which the JOA ceases to be in effect, the co-producers use their current method of accounting with respect to that JOA.

(3) *Cumulative gas balancing method* —

(i) ***In general.*** The cumulative gas balancing method (cumulative method), solely for purposes of reporting income from gas sales and certain related deductions and credits, treats each co-producer under the same JOA as the sole owner of its percentage share of the total gas in the reservoir and disregards the ownership arrangement described in the JOA for gas as it is produced from the reservoir. Each co-producer is considered to be taking only its share of the total gas in the reservoir as long as the gas remaining in the reservoir is sufficient to satisfy the ownership rights of the co-producers in their percentage shares of the total gas in the reservoir. After a co-producer has taken its entire share of the total gas in the reservoir, any additional gas taken by that co-producer (taking co-producer) is treated as having been taken from its other co-producers' shares of the total gas in the reservoir. The effect of being treated as a taking co-producer under the cumulative method is that the taking co-producer generally may not claim an allowance for depletion and a production credit on its sales of its other co-producers' percentage shares of the total gas in the reservoir.

(ii) ***Requirements*** —

(A) ***Reporting of income from sales of gas.*** Under the cumulative method, each co-producer must include in gross income under its overall method of accounting the amount of its sales from all gas produced from the reservoir, including sales of gas taken from another co-producer's share of the gas in the reservoir.

(B) ***Reporting of deduction of taking co-producer.*** A taking co-producer deducts the amount of a payment (in cash or property, other than gas produced under the JOA) made to another co-producer for sales of that co-producer's gas, but only for the taxable year in which the payment is made. Thus, an accrual method taking co-producer is not permitted a deduction for any obligation it has to pay another co-producer for sales of that co-producer's gas until a payment is made. See paragraph (d)(3)(iii)(B) of this section for a rule requiring a reduction of the amount of the deduction described in this paragraph (d)(3)(ii)(B) if the taking co-producer had mistakenly claimed a depletion deduction relating to those sales.

(C) ***Reporting of income by other co-producers.*** Any co-producer that is entitled to receive a payment from a taking co-producer must include the amount of the payment in gross income as proceeds from the sale of its gas only for the taxable year that the payment is actually received, regardless of its overall method of accounting.

(D) ***Reporting of production expenses.*** Each co-producer deducts its proportionate share of production expenses, as provided in the JOA, under its regular method of accounting for the expenses.

(iii) ***Special rules for production credits and depletion deductions under the cumulative method*** —

(A) ***In general.*** Under the cumulative method, a co-producer's depletion allowance and production credit for a taxable year are based on its income from gas sales and production of gas from its percentage share of the total gas in the reservoir, and are not based on its current proportionate share of income and production as determined under the JOA. Thus, in general, a taking co-producer is not allowed a production credit or an allowance for depletion on its sales of gas in excess of its percentage share of the total gas in the reservoir. However, the Service will not disallow depletion deductions or production credits claimed by a taking co-producer on the gas of other co-producers if the taking co-producer had a reasonable but mistaken belief that the deductions or credits

were claimed with respect to the taking co-producer's percentage share of total gas in the reservoir and the taking co-producer makes the appropriate reductions and additions to tax required in paragraphs (d)(3)(iii)(B) and (d)(3)(iii)(C) of this section. The reasonableness of the mistaken belief is determined at the time of filing the return claiming the deductions or credits. A co-producer receiving a payment for sales of its gas from a taking co-producer claims a production credit and an allowance for depletion relating to those sales only for the taxable year in which the amount of the payment is included in its gross income.

(B) ***Reduction of taking co-producer's payment deduction for depletion claimed on another co-producer's gas.*** If a taking co-producer claims an allowance for depletion on another co-producer's gas, the taking co-producer must reduce its deduction claimed in a later year for making a payment to the other co-producer for sales of that co-producer's gas by the amount of any percentage depletion deduction allowed on the gas sales to which the payment relates. If the percentage limitation of section 613A(d)(1) applied to disallow a depletion deduction for a previous year, the taking co-producer must reduce the amount of any carried over depletion deduction allowable in the year of the payment or in a future year by the portion of the carried over depletion deduction, if any, that relates to another co-producer's gas.

(C) ***Addition to tax of taking co-producer for production credit claimed on another co-producer's gas.*** If a taking co-producer claims a production credit on another co-producer's gas, the taking co-producer must add to its tax for the taxable year that it makes a payment to the other co-producer for sales of that co-producer's gas any production credit allowed in an earlier taxable year on the gas sales to which the payment relates, but only to the extent the credit allowed actually reduced the taking co- producer's tax in any earlier year. The taking co-producer also must reduce the amount of its minimum tax credit allowable by reason of section 53(d)(1)(B)(iii) in the year of the payment or in a future year by the portion of the credit, if any, that relates to another co-producer's gas.

(iv) ***Anti-abuse rule.*** If the Commissioner determines that co-producers using the cumulative method have arranged or altered their taking of production for a taxable year with a principal purpose of shifting the income, deductions, or credits relating to that production to avoid tax, the co- producers' election to be excluded from all or part of subchapter K will be revoked for that year and for subsequent years. In determining that a principal purpose was to avoid tax, the Commissioner will examine all the facts and circumstances surrounding the use of the cumulative method by the co-producers. See *Examples 3* and *4* of paragraph (d)(6) of this section.

(4) ***Annual gas balancing method*** —

(i) ***In general.*** The annual gas balancing method (annual method) takes into account each co-producer's ownership rights and obligations, as described in the JOA, with respect to the co-producer's current proportionate share of gas as it is produced from the reservoir. Under the annual method, gas imbalances relating to a JOA must be eliminated annually through a balancing payment, which may be in the form of cash, gas produced under the same JOA, or other property. If all the co-producers under a JOA have the same taxable year, any gas imbalance remaining at the end of a taxable year must be eliminated by a balancing payment from the overproducer to the underproducer by the due date of the overproducer's tax return for that taxable year (including extensions). If all the co-producers under a JOA do not have the

same taxable year, any gas imbalance remaining at the end of a calendar year must be eliminated by a balancing payment from the overproducer to the underproducer by September 15 of the following calendar year. The annual method may be used only if the Commissioner's permission is obtained. Paragraph (d)(4)(ii) of this section provides guidelines for applying for this permission. The annual method is not available for a JOA with respect to which any co-producer made an election under paragraph (d)(5)(i)(B)(*3*) of this section (to take an aggregate section 481(a) adjustment for all JOAs of a co-producer into account in the year of change).

(ii) ***Obtaining the Commissioner's permission to use the annual method.*** A request for the Commissioner's permission to adopt the annual method for a new JOA must be in writing and must set forth the names of all the co-producers under the JOA and the respective taxable year of adoption. See paragraphs (d)(2)(ii) and (d)(5)(ii) of this section for the rules for a change in method of accounting to the annual method. In addition, the request must contain an explanation of how the co-producers will report income from gas sales, the making or receiving of a balancing payment, production expenses, depletion deductions, and production credits. Permission will be granted under appropriate conditions, including, but not limited to, an agreement in writing by all co-producers to use the annual method and to eliminate any gas imbalances annually in accordance with paragraph (d)(4)(i) of this section.

(5) ***Transitional rules for making a change in method of accounting required in paragraph (d)(2)(ii)(C) of this section —***

(i) ***Change in method of accounting to the cumulative method —***

(A) ***Automatic consent to change in method of accounting to the cumulative method.*** A co-producer changing to the cumulative method for any JOA entered into prior to its first taxable year beginning after December 31, 1994, and in effect as of the beginning of that year is granted the consent of the Commissioner to change its method of accounting with respect to each JOA to the cumulative method, provided the co-producer—

(*1*) Makes the change on its timely filed return for its first taxable year beginning after December 31, 1994;

(*2*) Attaches a completed and signed Form 3115 to the co-producer's tax return for the year of change, stating that, pursuant to § 1.761-2(d)(2)(ii) of the regulations, the co-producer is changing its method of accounting for sales of gas and its treatment of certain related deductions and credits under each JOA to the cumulative method;

(*3*) In the case of a co-producer making an election under paragraph (d)(5)(i)(B)(*3*) of this section to take the aggregate section 481(a) adjustment into account in the year of change, attaches the statement described in paragraph (d)(5)(i)(B)(*3*)(*ii*) of this section; and

(*4*) In the case of a co-producer not making an election under paragraph (d)(5)(i)(B)(*3*) of this section, attaches a list of each JOA with respect to which there is a section 481(a) adjustment computed in accordance with paragraph (d)(5)(i)(B)(*2*)(*i*) of this section.

(B) ***Section 481(a) adjustment —***

(*1*) ***Application of section 481(a).*** A change in method of accounting to the cumulative method under the automatic consent procedure in paragraph (d)(5)(i)(A) of this section is a change in method of accounting to which the provisions of section 481(a) apply. Thus, a section 481(a) adjustment must be taken into account in the manner provided by this paragraph (d)(5)(i)(B) to prevent the omission or duplication of income. Paragraph (d)(5)(i)(B)(*2*) of this section provides the general rules for computing the amount of the section 481(a) adjustment of a co-producer relating to a particular JOA and for taking the section 481(a) adjustment into account. Paragraph (d)(5)(i)(B)(*3*) of this section provides rules for electing to take a co-producer's section 481(a) adjustment computed on an aggregate basis for all JOAs into account in the year of change. Paragraph (d)(5)(i)(C) of this section provides rules to coordinate the taking of a depletion deduction or a production credit with the inclusion of a section 481(a) adjustment arising from a change in method of accounting to the cumulative method under this paragraph (d)(5)(i).

(*2*) ***Computation of the section 481(a) adjustment relating to a joint operating agreement —***

(*i*) ***In general.*** The section 481(a) adjustment of a co-producer relating to a JOA is computed as of the first day of the co-producer's year of change and is equal to the difference between the amount of income reported under the co-producer's former method of accounting for all taxable years prior to the year of change and the amount of income that would have been reported if the co-producer's new method had been used in all those taxable years.

(*ii*) ***Section 481(a) adjustment period.*** Except to the extent that paragraph (d)(5)(i)(B)(*3*) of this section applies, a co-producer's section 481(a) adjustment relating to a JOA, whether positive or negative, is taken into account in computing taxable income ratably over the 6-taxable-year period beginning with the year of change (the section 481(a) adjustment period). If the co-producer has been in existence less than 6 taxable years, the adjustment is taken into account over the number of years the co-producer has been in existence. If the co-producer ceases to engage in the trade or business that gave rise to the section 481(a) adjustment at any time during the section 481(a) adjustment period, the entire remaining balance of the section 481(a) adjustment relating to that trade or business must be taken into account in the year of the cessation. For purposes of this paragraph (d)(5)(i)(B)(*2*)(*ii*), production under each JOA is treated as a separate trade or business. The determination as to whether the co-producer ceases to engage in its trade or business is to be made under the principles of § 1.446-1(e)(3)(ii) and its underlying administrative procedures. For example, the permanent cessation of production under a co-producer's JOA constitutes the cessation of a trade or business of the co-producer. Accordingly, for the year that production under a JOA permanently ceases, the remaining balance of the section 481(a) adjustment relating to the JOA must be taken into account.

(*3*) ***Election to take aggregate section 481(a) adjustment for all joint operating agreements into account in the year of change —***

(*i*) ***In general.*** A co-producer may elect to take into account its section 481(a) adjustment, computed on an aggregate basis for all of its JOAs, whether negative or positive, in the year of change, provided the co-producer uses the cumulative method for all of its JOAs entered into prior to its first taxable year beginning after December 31, 1994, and in effect as of the beginning of that year. The aggregate section 481(a) adjustment of a co-producer is equal to the difference between the amount of income reported under the co-producer's former method of accounting for all taxable years prior to the year of change and the amount of income that would have been reported if the co-producer's new method had been used in all of those taxable years for all JOAs for which the co-producer changes its method of accounting. An election made under this paragraph (d)(5)(i)(B)(*3*) is irrevocable. If any person who, together with another person, would be treated as a single taxpayer under section 41(f)(1) (A) or (B) makes an election under this paragraph (d)(5)(i)(B)(*3*), all persons within that single taxpayer group will be treated as if they had made an election under this paragraph (d)(5)(i)(B)(*3*) and, as such, will be irrevocably bound by that election. If a co-producer does not make an election under this paragraph, each JOA entered into prior to the start of its first taxable year beginning after December 31, 1994, and in effect as of the beginning of that year must be accounted for separately in computing the section 481(a) adjustment and taxable income of the co-producer for any year to which this paragraph (d) applies.

(*ii*) ***Time and manner for making the election.*** An election under this paragraph (d)(5)(i)(B)(*3*) is made by attaching a statement to the co-producer's timely filed return for its year of change indicating that the co- producer is electing under § 1.761-2(d)(5)(i)(B)(*3*) to take its aggregate section 481(a) adjustment into account in the year of change.

(C) ***Treatment of section 481(a) adjustment as a sale for purposes of computing a production credit and as gross income from the property for purposes of depletion deductions.*** Any positive section 481(a) adjustment arising as a result of a change in method of accounting for gas imbalances under this paragraph (d)(5)(i) and taken into account in computing taxable income under paragraph (d)(5)(i)(B) of this section is considered a sale by the taxpayer for purposes of computing any production credit in the year that the adjustment is taken into account. Similarly, the positive section 481(a) adjustment is considered *gross income from the property* and *taxable income from the property* for purposes of computing depletion deductions in the year the adjustment is taken into account. Sales amounts used in computing any production credit in any year in which a negative section 481(a) adjustment is taken into account in computing taxable income under paragraph (d)(5)(i)(B) of this section must be reduced by the amount of the negative section 481(a) adjustment taken into account in that year. Similarly, gross income from the property and taxable income from the property used in computing any depletion deduction in any year in which the negative section 481(a) adjustment is taken into account must be reduced by the amount of the negative adjustment. For these purposes, any taxpayer that makes an aggregate section 481(a) adjustment election under paragraph (d)(5)(i)(B)(*3*) of this section must allocate the adjustment among its properties in any reasonable manner that prevents a duplication or omission of depletion deductions.

(ii) ***Change in method of accounting to the annual method*** —

(A) ***In general.*** A co-producer changing to the annual method in accordance with paragraph (d)(2)(ii) of this section must request a change under § 1.446-1(e)(3) and will be subject to any terms and conditions as may be imposed by the Commissioner.

(B) ***Section 481(a) adjustment.*** A change in method of accounting to the annual method is a change in method of accounting to which the provisions of section 481(a) apply. Thus, a section 481(a) adjustment must be taken into account to prevent the omission or duplication of income. If all the co-producers under a JOA have the same taxable year, the section 481(a) adjustment involved in a change to the annual method by a co-producer relating to the JOA is computed as of the first day of the co-producer's year of change. If the co-producers under a JOA do not all have the same taxable year (that is, in the case of a part-year change described in paragraph (d)(2)(ii)(C) of this section), the change in method of accounting occurs on January 1, 1996, and the section 481(a) adjustment is computed on that date.

(iii) ***Untimely change in method of accounting to comply with this section.*** Unless a co-producer required by this section to change its method of accounting complies with the provisions of this paragraph (d)(5) for its first applicable taxable year within the time prescribed by this paragraph (d)(5), the co-producer must take the section 481(a) adjustment into account under the provisions of any applicable administrative procedure that is prescribed by the Commissioner specifically for purposes of complying with this section. Absent such an administrative procedure, a co-producer must request a change under § 1.446-1(e)(3) and will be subject to any terms and conditions as may be imposed by the Commissioner.

(6) ***Examples.*** The following examples illustrate the application of the cumulative method described in paragraph (d)(3) of this section.

Example 1. Operation of the cumulative method. (i) L, a corporation using the cash receipts and disbursements method of accounting, and M, a corporation using an accrual method, file returns on a calendar year basis. On January 1, 1995, L and M enter into a JOA to produce natural gas as an unincorporated organization from a reservoir located in State Y. The JOA allocates reservoir production 60 percent to L and 40 percent to M. L and M enter into a GBA as an addendum to the JOA. L and M agree to use the cumulative method to account for gas sales from the reservoir and elect under section 761(a) and this section to exclude the organization from the application of subchapter K. Production from the reservoir is eligible for the section 29 credit for producing fuel from a nonconventional source. L and M produce and sell the following amounts of natural gas (in mmcf) until 2000 during which year production from the reservoir ceases:

	1995	1996	1997	1998	1999	2000
L	720	480	600	-0-	-0-	-0-

	1995	1996	1997	1998	1999	2000
M	240	60	120	160	80	40

(ii) By the end of 1996, neither L nor M has fully produced its percentage share of the total gas in the reservoir. In 1997, L produces a total of 600 mmcf of gas at the rate of 50 mmcf per month. Prior to filing its return for 1997, L determines that it fully produced its percentage share of gas in the reservoir as of June 30, 1997. Pursuant to the GBA executed by L and M, L pays M at the end of 2000 for the 300 mmcf of M's gas (as determined under the cumulative method) that L sold in the last half of 1997.
(iii) For 1995, L and M must include in their gross income the amounts relating to gas sales of 720 mmcf and 240 mmcf, respectively. For 1996, L and M must include the amounts relating to gas sales of 480 mmcf and 60 mmcf, respectively. For both 1995 and 1996, L and M compute an allowance for depletion and a section 29 credit based upon gas taken and sold by each from the reservoir for each taxable year.

(iv) For 1997, L and M must include in gross income the amounts relating to their gas sales of 600 mmcf and 120 mmcf, respectively. Under paragraph (d)(3)(iii)(A) of this section, L computes an allowance for depletion and the section 29 credit based only on production from L's proportionate share of gas in the reservoir (that is, based on L's production through June 30, 1997). Accordingly, for 1997, L claims depletion and the section 29 credit only with respect to 300 mmcf of gas (50 mmcf per month × 6 months). For 1997, because M has not fully produced from its percentage share of the total gas in the reservoir as of the end of 1997, M claims depletion and the section 29 credit on the 120 mmcf that M produced in 1997.

(v) In 1998 and 1999, M must include in gross income the amounts relating to M's sales of gas, that is, 160 mmcf for 1998 and 80 mmcf for 1999. For 2000, M must include in gross income the amount relating to sales of 340 mmcf of gas, which consists of its own sales of 40 mmcf plus the payment for 300 mmcf of gas that L made to M for having sold from M's share of the total gas in the reservoir during the last half of 1997. Because M produced from its percentage share of the total gas in the reservoir during 1998, 1999, and 2000, M claims a depletion deduction and a section 29 credit on its income and production for those years, that is, 160 mmcf for 1998, 80 mmcf for 1999, and 40 mmcf for 2000. Additionally, for 2000, M claims depletion and the section 29 credit relating to the payment that M received from L for the 300 mmcf of M's gas that L sold in the last half of 1997. Under paragraph (d)(3)(ii)(B) of this section, L's deduction for its payment to M for the 300 mmcf of M's gas that L sold in 1997 is allowable only for 2000.

Example 2. Adjustments under the cumulative method for depletion deductions and production credits that were claimed for sales in excess of a co-producer's percentage share of total gas in the reservoir. (i) L, a corporation using the cash receipts and disbursements method of accounting, and M, a corporation using an accrual method, file returns on a calendar year basis. On January 1, 1995, L and M enter into a JOA to produce natural gas as an unincorporated organization from a reservoir located in State Y. The JOA allocates reservoir production 60 percent to L and 40 percent to M. L and M enter into a GBA as an addendum to the JOA. L and M agree to use the cumulative method to account for gas sales from the reservoir and elect under section 761(a) and this section to exclude the organization from the application of subchapter K. Production from the reservoir is eligible for the section 29 credit for producing fuel from a nonconventional source. L and M produce and sell the following amounts of natural gas (in mmcf) until 2000 during which year production from the reservoir ceases:

	1995	1996	1997	1998	1999	2000
L	720	480	600	60	60	-0-
M	240	60	120	60	60	40

(ii) In addition, L does not realize until December 31, 1999, that L fully produced its percentage share of the total gas in the reservoir as of June 30, 1997. At the time of filing its returns for 1997 and 1998, L reasonably believes that during 1997 and 1998, respectively, it did not fully produce its percentage share of the total gas in the reservoir. Thus, L claims depletion and the section 29 credit for its total sales of 600 mmcf in 1997 and 60 mmcf in 1998. Pursuant to the GBA executed by L and M, L pays M at the end of 2000 for the 420 mmcf of M's gas (as determined under the cumulative method) that L sold (300 mmcf in the last half of 1997 (assuming that production was at a rate of 50 mmcf per month), 60 mmcf in 1998, and 60 mmcf in 1999).
(iii) In 1997 and 1998, L and M include in gross income the amounts relating to their respective sales of gas, that is, for L 600 mmcf for 1997 and 60 mmcf for 1998, and for M 120 mmcf for 1997 and 60 mmcf for 1998.

(iv) For 1999, L must include in gross income the amount of its sales of 60 mmcf, but may not claim depletion or the section 29 credit on those sales. For 1999, M must include in gross income the amount of its sales of 60 mmcf and claims depletion and the section 29 credit with respect to those 60 mmcf.

(v) For 2000, M must include in gross income the amount relating to gas sales of 460 mmcf, that is, the amount of M's own gas sales of 40 mmcf and the amount of the payment received from L for the 420 mmcf of M's gas that L sold (consisting of 300 mmcf in 1997, 60 mmcf in 1998, and 60 mmcf in 1999). Under paragraph (d)(3)(iii)(A) of this section, M computes a depletion deduction and a production credit relating to the amount of M's actual gas sales for 2000 and the payment received from L, that is, relating to a total of 460 mmcf of gas (M's sales of 40 mmcf for 2000, plus L's payment for 420 mmcf of gas). Under paragraph (d)(3)(ii)(B) of this section, L's deduction for making its payment to M for 420 mmcf of gas is allowable only for 2000. Under paragraph (d)(3)(iii)(B) of this section, L must reduce its deduction by the amount of any percentage depletion deductions allowed on its sales of M's gas, that is, relating to 360 mmcf of gas (300 mmcf for 1997 and 60 mmcf for 1998). In addition, under paragraph (d)(3)(iii)(C) of this section, L must increase its tax for 2000 by the amount of any section 29 credit L claimed on its sales of M's gas, but only to the extent that the credit claimed actually reduced L's tax in any earlier year.

Example 3. Non-abusive altering of the taking of production for a taxable year. (i) C and D enter into a JOA and a GBA on December 1, 1994, for gas production from a reservoir. The JOA allocates production at 50 percent to C and 50 percent to D. C and D agree in writing to use the cumulative method to account for gas sales. Additionally, C and D elect under section 761(a) and this section to exclude their organization from the application of subchapter K. C and D arrange to sell all their production under annually renewable contracts. In 1995, C and D each sell 480 mmcf of gas from the reservoir.
(ii) In November 1995, D is notified that its contract with its purchaser will not be renewed for 1996. D is unable to find a new purchaser for its gas for 1996. In December 1995, D notifies C that it will not be taking production from the reservoir in 1996. Pursuant to the GBA, C then contracts with its current gas purchaser to sell an additional 20 mmcf per month in 1996. Accordingly, C sells 720 mmcf in 1996 (60 mmcf per month × 12 months). Under the facts described in this example, a principal purpose of altering the taking of production is not to avoid tax. Accordingly, the co-producers' election under section 761(a) will not be revoked by reason of altering the taking of production.

Example 4. Abusive altering of the taking of production for a taxable year. The facts are the same as in *Example 3*(i). For 1996, C anticipates that C's regular tax (reduced by the credits allowable under sections 27 and 28) will not exceed C's tentative minimum tax. Accordingly, under section 29(b)(6), C's credit allowed under section 29(a) for sales of its gas will be zero. For 1997, C anticipates that its credit allowed under section 29(a) will not be limited by section 29(b)(6). On the other hand, D anticipates that any credit it may claim under section 29(a) for 1996, even including a credit based on sales of C's share of current production under the JOA, will not be limited by section 29(b)(6). However, for 1997, D anticipates that its credit under section 29(a) will be limited by section 29(b)(6). On January 1, 1996, C and D agree that D will contract with its purchaser to sell the entire 960 mmcf produced from the reservoir in 1996 and that C will contract with its purchaser to sell the entire 960 mmcf produced from the reservoir in

1997. Under these facts, a principal purpose of altering the taking of production is to avoid tax. Accordingly, the co-producers' election under section 761(a) will be revoked for 1996 and for subsequent years.

(7) ***Effective date.*** Except in the case of a part-year change to the annual method or the cessation of a JOA, both of which are described in paragraph (d)(2)(ii)(C) of this section, the provisions of this paragraph (d) apply to all taxable years beginning after December 31, 1994, of any producer that is a member of an unincorporated organization that produces natural gas under a JOA in effect on or after the start of the producer's first taxable year beginning after December 31, 1994. In the case of a part-year change, the provisions of this paragraph (d) apply on and after January 1, 1996. In the case of the cessation of a JOA, the co-producers use their current method of accounting with respect to that JOA until the JOA ceases to be in effect.

(e) ***Cross reference.*** For requirements with respect to the filing of a return on Form 1065 by a partnership, see § 1.6031(a)-1.

(f) ***Applicability date.*** Except as provided in paragraph (d) of this section, this section applies to taxable years ending on or after March 11, 2024.

[T.D. 7208, 37 FR 20687, Oct. 3, 1972; 37 FR 23161, Oct. 31, 1972, as amended by T.D. 8578, 59 FR 66183, Dec. 23, 1994; 60 FR 11028, Mar. 1, 1995; T.D. 10012, 89 FR 91561, Nov. 20, 2024; 89 FR 101880, Dec. 17, 2024]

§ 1.761-3 Certain option holders treated as partners.

(a) ***Noncompensatory option treated as a partnership interest*** —

(1) ***General rule.*** A noncompensatory option (as defined in paragraph (b)(2) of this section) is treated as a partnership interest for all Federal tax purposes if, on the date of a measurement event (as defined in paragraph (c) of this section) with respect to the option—

(i) The noncompensatory option (and any agreements associated with it) provides the option holder with rights that are substantially similar to the rights afforded a partner (as determined under paragraph (d) of this section); and

(ii) There is a strong likelihood that the failure to treat the holder of the noncompensatory option as a partner would result in a substantial reduction in the present value of the partners' and noncompensatory option holder's aggregate Federal tax liabilities (as determined under paragraph (e) of this section).

(2) ***Continuing applicability of general principles of law.*** The fact that an option is not treated as a partnership interest under this section does not prevent the option from being treated as a partnership interest under general principles of Federal tax law.

(3) ***Timing of characterization.*** If a noncompensatory option is treated under this section as a partnership interest, that treatment applies, as the case may be, upon the issuance of the option, or immediately before any other measurement event that gave rise to the characterization under paragraph (a)(1) of this section.

(4) ***Effect of characterization.*** If a noncompensatory option is treated as a partnership interest under this section or under general principles of law, the option holder will be treated as a partner with respect to the partnership interest and will receive a distributive share of the partnership's income, gain, loss, deduction, or credit (or items thereof), as determined in accordance with that partner's interest in the

partnership (taking into account all facts and circumstances) in accordance with § 1.704-1(b)(3). Once a noncompensatory option is treated as a partnership interest, in no event may it be characterized as an option thereafter.

(b) ***Definitions.*** For purposes of this section:

(1) ***Look-through entity. Look-through entity*** means an entity described in § 1.704-1(b)(2)(iii)(*d*)(*2*).

(2) ***Noncompensatory option. Noncompensatory option*** means an option (as defined in paragraph (b)(3) of this section) issued by a partnership, other than an option issued in connection with the performance of services. For purposes of applying this section, an option that would be a noncompensatory option under this paragraph if it had been issued by a partnership is a noncompensatory option if the option was issued by an eligible entity (as defined in § 301.7701-3(a)) that would become a partnership under § 301.7701-3(f)(2) if the noncompensatory option holder were treated as a partner. Also for purposes of applying this section, if a noncompensatory option is issued by such an eligible entity, then the eligible entity is treated as a partnership.

(3) ***Option.*** An *option* is a contractual right to acquire an interest in the issuing partnership, including a call option, warrant, or other similar arrangement. In addition, an option includes convertible debt (as defined in § 1.721-2(g)(2)) and convertible equity (as defined in § 1.721-2(g)(3)). To achieve the purposes of this section, the Commissioner can treat other contractual agreements, including a forward contract, a futures contract, or a notional principal contract, as an option. A contract that otherwise constitutes an option will not fail to be treated as an option for purposes of this section merely because it may or must be settled in cash or property other than a partnership interest.

(4) ***Underlying partnership interest. Underlying partnership interest*** means the interest in the issuing partnership that would be acquired by the noncompensatory option holder upon exercise of the noncompensatory option.

(c) ***Measurement event*** —

(1) ***General rule.*** Except as provided in paragraph (c)(2) of this section, a measurement event with respect to a noncompensatory option is any of the following events:

(i) Issuance of the noncompensatory option;

(ii) An adjustment of the terms (modification) of the noncompensatory option or of the underlying partnership interest (as defined in paragraph (b)(4) of this section) (including an adjustment pursuant to the terms of the noncompensatory option or the underlying partnership interest);

(iii) Transfer of the noncompensatory option if either:

(A) The option may be exercised (or settled) more than 12 months after its issuance, or

(B) The transfer is pursuant to a plan in existence at the time of the issuance or modification of the noncompensatory option that has as a principal purpose the substantial reduction of the present value of the aggregate Federal tax liabilities of the partners and the noncompensatory option holder (under paragraph (a)(1)(ii) of this section);

(2) ***Events not treated as measurement events.*** A measurement event does not include the following events:

(i) A transfer of the noncompensatory option at death, between spouses or former spouses under section 1041, or in a transaction that is disregarded for Federal tax purposes;

(ii) A modification that neither materially increases the likelihood that the noncompensatory option will be exercised (as described in paragraph (d)(2) of this section) nor provides the noncompensatory option holder with partner attributes (as described in paragraph (d)(3) of this section);

(iii) A change in the strike price of a noncompensatory option or in the interests in the issuing partnership that may be issued or transferred pursuant to the noncompensatory option, made pursuant to a bona fide, reasonable adjustment formula that has the intended effect of preventing dilution of the interests of the noncompensatory option holder;

(iv) Any other event as provided in guidance published in the Internal Revenue Bulletin.

(d) *Rights substantially similar to partner rights* —

(1) *In general.* A noncompensatory option provides the holder with rights that are substantially similar to the rights afforded to a partner if either the option is reasonably certain to be exercised or the option holder possesses partner attributes.

(2) *Reasonable certainty of exercise* —

(i) *General rule.* The determination of whether a noncompensatory option is reasonably certain to be exercised at the time of a measurement event is based on all the facts and circumstances, including—

(A) The fair market value of the partnership interest that is the subject of the noncompensatory option;

(B) The strike price of the noncompensatory option;

(C) The term of the noncompensatory option;

(D) The volatility of the value or income of the issuing partnership or the underlying partnership interest;

(E) Anticipated distributions by the partnership during the term of the noncompensatory option;

(F) Any other special option features, such as a strike price that fluctuates;

(G) The existence of related options, including reciprocal options; and

(H) Any other arrangements affecting or undertaken with a principal purpose of affecting the likelihood that the noncompensatory option will be exercised.

(ii) *Safe harbors* —

(A) *General rule.* Except as provided in paragraph (d)(2)(ii)(C) of this section, a noncompensatory option is not considered reasonably certain to be exercised if, as of the date of a measurement event with respect to the noncompensatory option—

(1) The option may be exercised no more than 24 months after the date of the measurement event and the strike price is equal to or greater than 110 percent of the fair market value of the underlying partnership interest on the date of the measurement event; or

(2) The terms of the option provide that the strike price of the option is equal to or greater than the fair market value of the underlying partnership interest on the exercise date.

(B) ***Options exercisable at fair market value.*** For purposes of paragraph (d)(2)(ii)(A) of this section, an option whose strike price is determined by a formula is considered to have a strike price equal to or greater than the fair market value of the underlying partnership interest on the exercise date if the formula is agreed upon by the parties when the option is issued in a bona fide attempt to arrive at the fair market value on the exercise date and is to be applied based on the facts and circumstances in existence on the exercise date.

(C) ***Exception.*** The safe harbors of paragraph (d)(2)(ii)(A) of this section do not apply if the parties to the noncompensatory option had a principal purpose described in paragraph (c)(1)(iii)(B) of this section with respect to a measurement event for that option (or, if multiple options were issued pursuant to a plan, a measurement event with respect to any option issued pursuant to that plan).

(D) ***Failure to satisfy safe harbor.*** Failure of an option to satisfy one of the safe harbors of paragraph (d)(2)(ii)(A) does not affect the determination of whether an option is treated as reasonably certain to be exercised.

(3) ***Partner attributes*** —

(i) ***General rule.*** The determination of whether a holder of a noncompensatory option possesses partner attributes is based on all the facts and circumstances, including whether the option holder, directly or indirectly, through the option agreement or a related agreement, is provided with voting rights or managerial rights in the partnership.

(ii) ***Certain factors that conclusively establish partner attributes.*** For purposes of this section, a noncompensatory option holder has partner attributes if, based on all the facts and circumstances—

(A) The option holder is provided with rights (through the option agreement or a related agreement) that are similar to rights ordinarily afforded to a partner to participate in partnership profits through present possessory rights to share in current operating or liquidating distributions with respect to the underlying partnership interests; or

(B) The option holder, directly or indirectly, undertakes obligations (through the option agreement or a related agreement) that are similar to obligations undertaken by a partner to bear partnership losses.

(iii) ***Special rules.*** The following rules apply for purposes of paragraphs (d)(3)(i) and (d)(3)(ii) of this section:

(A) Rights in the issuing partnership possessed by a noncompensatory option holder solely by virtue of owning an interest in the issuing partnership are not taken into account, provided that those rights are no greater than the rights granted to other partners owning substantially similar interests in the partnership and who do not hold noncompensatory options in the partnership.

(B) If all of the partners owning substantially similar interests in the issuing partnership also hold noncompensatory options in the partnership, or if none of the other partners owns substantially similar interests in the partnership, then all facts and circumstances will be considered in determining whether the rights in the partnership possessed by the option holder are possessed solely by virtue of owning a partnership interest. If those rights are possessed solely by virtue of owning a partnership interest, they are not taken into account.

(C) A noncompensatory option holder will not ordinarily be considered to possess partner attributes solely because the noncompensatory option agreement significantly controls or restricts, or the noncompensatory option holder has the ability to significantly control or restrict, a partnership decision that could substantially affect the value of the underlying partnership interest. In particular, the following abilities of the option holder will not be treated as partner attributes:

(*1*) The ability to impose reasonable restrictions on partnership distributions or dilutive issuances of partnership equity or options while the noncompensatory option is outstanding.

(2) The ability to choose the partnership's section 704(c) method for partnership properties.

(D) When the applicable measurement event is a transfer described in paragraph (c)(1) of this section, the partner attributes of the transferee, not the transferor, are taken into account.

(E) The option holder will be treated as owning all partnership interests and noncompensatory options issued by the partnership that are owned by any person related to the option holder. For purposes of the preceding sentence, a person related to the option holder is defined as any person bearing a relationship to the option holder described in section 267(b) or 707(b).

(e) ***Substantial tax reduction requirement*** —

(1) ***General rule.*** The determination of whether there is a strong likelihood that the failure to treat a noncompensatory option holder as a partner would result in a substantial reduction in the present value of the partners' and the noncompensatory option holder's aggregate Federal tax liabilities is based on all the facts and circumstances, including—

(i) The interaction of the allocations of the issuing partnership and the partners' and noncompensatory option holder's Federal tax attributes (taking into account tax consequences that result from the interaction of the allocations with the partners' and noncompensatory option holder's Federal tax attributes that are unrelated to the partnership);

(ii) The absolute amount of the Federal tax reduction;

(iii) The amount of the reduction relative to overall Federal tax liability; and

(iv) The timing of items of income and deductions.

(2) ***Special rules.*** For purposes of applying paragraph (e)(1) of this section to a partner or noncompensatory option holder that is—

(i) A look-through entity (as defined in paragraph (b)(1) of this section), the Federal tax consequences that result from the interaction of allocations of the partnership and the Federal tax attributes of any person that is an owner, or in the case of a trust or estate, the beneficiary, of an interest in such a partner or noncompensatory option holder, whether directly, or indirectly through one or more look-through entities, must be taken into account; or

(ii) A member of a consolidated group (within the meaning of § 1.1502-1(h)), the tax consequences that result from the interaction of the issuing partnership's allocations and the tax attributes of the consolidated group and the tax attributes of another member with respect to a separate return year must be taken into account.

(f) ***Example.*** The following example illustrates the provisions of this section. For purposes of the example, assume that PRS is a partnership for Federal tax purposes, none of the noncompensatory option holders or partners are related persons, and that general principles of law do not apply to treat the noncompensatory option as a partnership interest. The example reads as follows:

Example. Active trade or business. PRS is engaged in an active real estate business, the amount of income, gain, loss, and deductions from which cannot be predicted with any reasonable certainty. In exchange for a premium of $10x, PRS issues a noncompensatory option to A to acquire a 10 percent interest in PRS for $110x at any time during a 3-year period commencing on the date on which the option is issued. At the time of the issuance of the noncompensatory option, a 10 percent interest in PRS has a fair market value of $100x. Due to the nature of PRS's business, the value of a 10 percent PRS interest in 3 years is not reasonably predictable as of the time the noncompensatory option is issued. Assuming there are no other facts affecting the certainty of the option's exercise, it is not reasonably certain that A's option will be exercised. Therefore, assuming that A does not possess partner attributes as described in paragraph (d)(3) of this section, A's noncompensatory option is not treated as a partnership interest under paragraph (a)(1) of this section.

(g) ***Effective/applicability date.*** This section applies to noncompensatory options issued on or after February 5, 2013.

[T.D. 9612, 78 FR 8013, Feb. 5, 2013, as amended at 78 FR 17869, Mar. 25, 2013]

EFFECTIVE DATE FOR SUBCHAPTER K, CHAPTER 1 OF THE CODE

§ 1.771-1 Effective date.

(a) ***General rule.*** Except as provided in paragraph (b) or (c) of this section, the provisions of subchapter K, chapter 1 of the Code, shall apply to any taxable year of a partnership beginning after December 31, 1954, and to any part of a partner's taxable year falling within such partnership taxable year. The provisions of the Internal Revenue Code of 1939 relating to partnerships shall apply to any taxable year of a partnership beginning before January 1, 1955, and to any part of a partner's taxable year falling within such partnership taxable year. If a partnership and the partners are on different taxable years, subchapter K shall become effective at the same time both for the partnership and for the partners.

(b) ***Special rules.*** Certain provisions of section 771 apply after specific dates in 1954, as follows:

(1) ***Adoption of taxable year.*** Section 706(b) (relating to the adoption of taxable years by partners and partnerships), shall apply to any partnership which adopts or changes to, and any partner who changes to, a taxable year beginning on or after April 2, 1954. For the purpose of applying this subparagraph, the rules of section 708 (relating to the continuation of partnerships) shall apply. For example, if two or more partnerships merge after April 1, 1954, and the new partnership uses the taxable year of the partnership of which it is deemed to be the successor under section 708(b)(2)(A), it will not need prior approval to continue to use such taxable year even though such year may be different from the taxable years of the partners. Such a partnership is not "adopting" or "changing" its taxable year.

(2) ***Property distributed by a partnership.*** Section 735(a), relating to the character of gain or loss on disposition of property distributed by a partnership to a partner, shall apply only to property distributed after March 9, 1954. Although a partnership whose taxable year begins before January 1, 1955, generally will be subject to the provisions of the Internal Revenue Code of 1939, any unrealized receivables or inventory items distributed by any such partnership after March 9, 1954, will be subject to the provisions of section 735(a), and the gain or loss on the subsequent disposition of such property will be ordinary gain or loss rather than capital gain or loss. In the case of property distributed before March 10, 1954, section 735(a) will not apply, even though the property is disposed of by the distributee partner after that date, unless the partnership elects under paragraph (c) of this section to apply section 735.

(3) ***Unrealized receivables and inventory items.*** Section 751 (providing for the realization of ordinary income on certain transfers or distributions of unrealized receivables or substantially appreciated inventory items) shall be applicable to any such transfer or distribution occurring after March 9, 1954. For the purpose of applying section 751 in the case of a taxable year beginning before January 1, 1955, a partnership or partner may elect to treat as applicable any other section of subchapter K. See paragraph (f) of § 1.751-1.

(4) ***Partner receiving income in respect of a decedent.*** Section 753, which provides that the amount includible in the gross income of a successor in interest of a deceased partner under section 736(a) shall be considered income in respect of a decedent under section 691, shall apply only in the case of payments made with respect to decedents whose death occurred after December 31, 1954.

(c) ***Optional treatment of certain distributions.***

(1) For a partnership taxable year beginning after December 31, 1953, and before January 1, 1955, a partnership may elect to apply the rules of certain sections of subchapter K with respect to current distributions made by the partnership in such year. These sections are 731, 732 (a), (c), and (e), 733, 735, and 751 (b), (c), and (d). If an election is made, it shall apply to the partnership and all its members for all current distributions made by the partnership during the taxable year. Such distributions shall also be subject to the rules of section 705 (relating to determination of basis of a partner's interest), 752 (relating to treatment of certain liabilities), and 761(d) (relating to the definition of liquidation of a partner's interest), to the extent that such sections apply to current distributions.

(2) An election under this paragraph shall be made by a statement filed with the partnership return for the taxable year to which such election applies, or before August 23, 1956, whichever date is later. The statement shall be signed by all members of the partnership and the election once made shall be binding on the partnership and on all of its members.

INSURANCE COMPANIES

Life Insurance Companies

DEFINITION; TAX IMPOSED

§ 1.801-1 Definitions.

(a) ***Life insurance company.*** The term *life insurance company* as used in subtitle A of the Code is defined in section 801. For the purpose of determining whether a company is a "life insurance company" within the meaning of that term as used in section 801, it must first be determined whether the company is taxable as an insurance company under the Code. For the definition of an "insurance company", see paragraph (b) of this section. In determining whether an insurance company is a life insurance company, the life insurance reserves (as defined in section 803(b)) plus any unearned premiums and unpaid losses on noncancellable life, health, or accident policies, not included in "life insurance reserves" must comprise more than 50 percent of its total reserves (as defined in section 801). An insurance company writing only noncancellable life, health, or accident policies and having no "life insurance reserves" may qualify as a life insurance company if its unearned premiums and unpaid losses on such policies comprise more than 50 percent of its total reserves. A noncancellable insurance policy means a contract which the insurance company is under an obligation to renew or continue at a specified premium and with respect to which a reserve in addition to the unearned premium must be carried to cover that obligation. For the purpose of the preceding sentence, the term "unearned premium" means the amount which will cover the cost of carrying the insurance risk for the period for which the premium has been paid in advance. A burial or funeral benefit insurance company qualifying as a life insurance company engaged directly in the manufacture of funeral supplies or the performance of funeral services will be taxable under section 821 or section 831 as an insurance company other than life.

(b) ***Insurance companies.***

(1) Insurance companies include both stock and mutual companies, as well as mutual benefit insurance companies. A voluntary unincorporated association of employees formed for the purpose of relieving sick and aged members and the dependents of deceased members is an insurance company, whether the fund for such purpose is created wholly by membership dues or partly by contributions from the employer. A corporation which merely sets aside a fund for the insurance of its employees is not required to file a separate return for such fund, but the income therefrom shall be included in the return of the corporation.

(2) Though its name, charter powers, and subjection to State insurance laws are significant in determining the business which a corporation is authorized and intends to carry on, the character of the business actually done in the taxable year determines whether it is taxable as an insurance company under the Code. For example, during the year 1954 the M Corporation, incorporated under the insurance laws of the State of R, carried on the business of lending money in addition to guaranteeing the payment of principal and interest of mortgage loans. Of its total income for the year, one-third was derived from its insurance business of guaranteeing the payment of principal and interest of mortgage loans and two-thirds was derived from its noninsurance business of lending money. The M Corporation is not an insurance company for the year 1954 within the meaning of the Code and the regulations thereunder.

§ 1.801-2 Taxable years affected.

Section 1.801-1 is applicable only to taxable years beginning after December 31, 1953, and before January 1, 1955, and all references to sections of part I, subchapter L, chapter 1 of the Code are to the Internal Revenue Code of 1954, before amendments. Sections 1.801-3 through 1.801-6 are applicable only to taxable years beginning after December 31, 1957, and all references to sections of part I, subchapter L, chapter 1 of the Code are to the Internal Revenue Code of 1954, as amended by the Life Insurance Company Income Tax Act of 1959 (73 Stat. 112). Section 1.801-8 is applicable only to taxable years beginning after December 31, 1961, and all references to sections of part I, subchapter L, chapter 1 of the Code are to the Internal Revenue Code of 1954, as amended by the Life Insurance Company Income Tax Act of 1959 (73 Stat. 112) and section 3 of the Act of October 23, 1962 (76 Stat. 1134).

[T.D. 6886, 31 FR 8681, June 23, 1966, as amended by T.D. 9911, 85 FR 64392, Oct. 13, 2020]

§ 1.801-3 Definitions.

For purposes of part I, subchapter L, chapter 1 of the Code, this section defines the following terms, which are to be used in determining if a taxpayer is a life insurance company (as defined in section 801(a) and paragraph (b) of this section):

(a) ***Insurance company.***

(1) The term *insurance company* means a company whose primary and predominant business activity during the taxable year is the issuing of insurance or annuity contracts or the reinsuring of risks underwritten by insurance companies. Thus, though its name, charter powers, and subjection to State insurance laws are significant in determining the business which a company is authorized and intends to carry on, it is the character of the business actually done in the taxable year which determines whether a company is taxable as an insurance company under the Internal Revenue Code.

(2) Insurance companies include both stock and mutual companies, as well as mutual benefit insurance companies. For taxable years beginning before January 1, 1970, a voluntary unincorporated association of employees, including an association fulfilling the requirements of section 801(b)(2)(B) (as in effect for such years), formed for the purpose of relieving sick and aged members and the dependents of deceased members, is an insurance company, whether the fund for such purpose is created wholly by membership dues or partly by contributions from the employer. A corporation which merely sets aside a fund for the insurance of its employees is not an insurance company, and the income from such fund shall be included in the return of the corporation.

(b) ***Life insurance company.***

(1) The term *life insurance company,* as used in subtitle A of the Code, is defined in section 801(a). For the purpose of determining whether a company is a “life insurance company” within the meaning of that term as used in section 801(a), it must first be determined whether the company is taxable as an insurance company (as defined in paragraph (a) of this section). An insurance company shall be taxed as a life insurance company if it is engaged in the business of issuing life insurance and annuity contracts (either separately or combined with health and accident insurance), or noncancellable contracts of health and accident insurance, and its life insurance reserves (as defined in section 801(b) and § 1.801-4), plus unearned premiums, and unpaid losses (whether or not ascertained), on noncancellable life, health, or accident policies not included in life insurance reserves, comprise more than 50 percent of its total reserves (as defined in section 801(c) and §

1.801-5). For purposes of determining whether it satisfies the percentage requirements of the preceding sentence, a company shall first make any adjustments to life insurance reserves and total reserves required by section 806(a) (relating to adjustments for certain changes in reserves and assets) and then as required by section 801(d) (relating to adjustments in reserves for policy loans). For examples of the adjustments required under section 806(a), see paragraph (b)(4) of § 1.806-3. For an example of the adjustments required under section 801(d), see paragraph (c) of § 1.801-6. Furthermore, if an insurance company which computes its life insurance reserves on a preliminary term basis elects to revalue such reserves on a net level premium basis under section 818(c), such revalued basis shall be disregarded for purposes of section 801.

(2) An insurance company writing only noncancellable life, health, or accident policies and having no "life insurance reserves" may qualify as a life insurance company if its unearned premiums, and unpaid losses (whether or not ascertained), on such policies comprise more than 50 percent of its total reserves.

(3) Section 801(f) provides that a burial or funeral benefit insurance company engaged directly in the manufacture of funeral supplies or the performance of funeral services shall not be taxable under section 802 but shall be taxable under section 821 or section 831 as an insurance company other than life.

(c) ***Noncancellable life, health, or accident insurance policy.*** The term *noncancellable life, health, or accident insurance policy* means a health and accident contract, or a health and accident contract combined with a life insurance or annuity contract, which the insurance company is under an obligation to renew or continue at a specified premium and with respect to which a reserve in addition to the unearned premiums (as defined in paragraph (e) of this section) must be carried to cover that obligation. Such a health and accident contract shall be considered noncancellable even though it states a termination date at a stipulated age, if, with respect to the health and accident contract, such age termination date is 60 or over. Such a contract, however, shall not be considered to be noncancellable after the age termination date stipulated in the contract has passed. However, if the age termination date stipulated in the contract occurs during the period covered by a premium received by the life insurance company prior to such date, and the company cannot cancel or modify the contract during such period, the age termination date shall be deemed to occur at the expiration of the period for which the premium has been received.

(d) ***Guaranteed renewable life, health, and accident insurance policy.*** The term *guaranteed renewable life, health, and accident insurance policy* means a health and accident contract, or a health and accident contract combined with a life insurance or annuity contract, which is not cancellable by the company but under which the company reserves the right to adjust premium rates by classes in accordance with its experience under the type of policy involved, and with respect to which a reserve in addition to the unearned premiums (as defined in paragraph (e) of this section) must be carried to cover that obligation. Section 801(e) provides that such policies shall be treated in the same manner as noncancellable life, health, and accident insurance policies. For example, the age termination date requirements applicable to noncancellable health and accident insurance policies shall also apply to guaranteed renewable life, health, and accident insurance policies. See paragraph (c) of this section.

(e) ***Unearned premiums.*** The term *unearned premiums* means those amounts which shall cover the cost of carrying the insurance risk for the period for which the premiums have been paid in advance. Such term includes all unearned premiums, whether or not required by law.

(f) ***Life insurance reserves.*** For the definition of the term "life insurance reserves", see section 801(b) and § 1.801-4.

(g) ***Unpaid losses (whether or not ascertained).*** The term *unpaid losses (whether or not ascertained)* means a reasonable estimate of the amount of the losses (based upon the facts in each case and the company's experience with similar cases):

(1) Reported and ascertained by the end of the taxable year but where the amount of the loss has not been paid by the end of the taxable year,

(2) Reported by the end of the taxable year but where the amount thereof has not been either ascertained or paid by the end of the taxable year, or

(3) Which have occurred by the end of the taxable year but which have not been reported or paid by the end of the taxable year.

(h) ***Total reserves.*** For the definition of the term *total reserves,* see section 801(c) and § 1.801-5.

(i) ***Amount of reserves.*** For purposes of subsections (a), (b), and (c) of section 801 and this section, section 801(b)(5) provides that the amount of any reserve (or portion thereof) for any taxable year shall be the mean of such reserve (or portion thereof) at the beginning and end of the taxable year.

[T.D. 6513, 25 FR 12655, Dec. 10, 1960, as amended by T.D. 7172, 37 FR 5619, Mar. 17, 1972]

§ 1.801-4 Life insurance reserves.

(a) ***Life insurance reserves defined.*** For purposes of part I, subchapter L, chapter 1 of the Code, the term *life insurance reserves* (as defined in section 801(b)) means those amounts:

(1) Which are computed or estimated on the basis of recognized mortality or morbidity tables and assumed rates of interest;

(2) Which are set aside to mature or liquidate, either by payment or reinsurance, future unaccrued claims arising from life insurance, annuity, and noncancellable health and accident insurance contracts (including life insurance or annuity contracts combined with noncancellable health and accident insurance) involving, at the time with respect to which the reserve is computed, life, health, or accident contingencies; and

(3) Which, except as otherwise provided by section 801(b)(2) and paragraphs (b) and (c) of this section, are required by law. For the meaning of the term “reserves required by law”, see paragraph (b) of § 1.801-5.

For purposes of determining life insurance reserves, only those amounts shall be taken into account which must be reserved either by express statutory provisions or by rules and regulations of the insurance department of a State, Territory, or the District of Columbia when promulgated in the exercise of a power conferred by statute. Moreover, such amounts must actually be held by the company during the taxable year for which the reserve is claimed. However, reserves held by the company with respect to the net value of risks reinsured in other solvent companies (whether or not authorized) shall be deducted from the company's life insurance reserves. For example, if an ordinary life policy with a reserve of $100 is reinsured in another solvent company on a yearly renewable term basis, and the reserve on such yearly renewable term policy is $10, the reinsured company shall include $90 ($100 minus $10) in determining its life insurance reserves. Generally, life insurance reserves, as in the case of level premium life insurance, are held to supplement the future premium receipts when the latter, alone, are insufficient to

cover the increased risk in the later years. For examples of reserves which qualify as life insurance reserves, see paragraph (d) of this section. For examples of reserves which do not qualify as life insurance reserves, see paragraph (e) of this section.

(b) ***Certain reserves which need not be required by law.*** Section 801(b)(2) sets forth certain reserves which, though not required by law, may still qualify as life insurance reserves, provided, however, that they first satisfy the requirements of section 801(b)(1) (A) and (B) and paragraph (a) (1) and (2) of this section. Thus, reserves need not be required by law:

(1) In the case of policies covering life, health, and accident insurance combined in one policy issued on the weekly premium payment plan, continuing for life and not subject to cancellation, and

(2) For taxable years beginning before January 1, 1970, in the case of policies issued by an organization which met the requirements of section 501(c)(9) (as it existed prior to amendment by the Tax Reform Act of 1969) other than the requirement of subparagraph (B) thereof.

(c) ***Assessment companies.*** Section 801(b)(3) provides that in the case of an assessment life insurance company or association, the term *life insurance reserves* includes:

(1) Sums actually deposited by such company or association with officers of a State or Territory pursuant to law as guaranty or reserve funds, and

(2) Any funds maintained, under the charter or articles of incorporation or association of such company or association (or bylaws approved by the State insurance commissioner) of such company or association, exclusively for the payment of claims arising under certificates of membership or policies issued upon the assessment plan and not subject to any other use.

For purposes of part I, subchapter L, chapter 1 of the Code, the reserves described in this paragraph shall be included as life insurance reserves even though such reserves do not meet the requirements of section 801(b) and paragraph (a) of this section. However, for such reserves to be included as life insurance reserves, they must be deposited or maintained to liquidate future unaccrued claims arising from life insurance, annuity, or noncancellable health and accident insurance contracts (including life insurance or annuity contracts combined with noncancellable health and accident insurance) involving, at the time with respect to which the reserve is deposited or maintained, life, health, or accident contingencies. The rate of interest assumed in calculating the reserves described in this paragraph shall be 3 percent, regardless of the rate of interest (if any) specified in the contract in respect of such reserves.

(d) ***Reserves which qualify as life insurance reserves.*** The following reserves, provided they meet the requirements of section 801(b) and paragraph (a) of this section, are illustrative of reserves which shall be included as life insurance reserves:

(1) Reserves held under life insurance contracts.

(2) Reserves held under annuity contracts (including reserves held under variable annuity contracts as described in section 801(g)(1)).

(3) Reserves held under noncancellable health and accident insurance contracts (as defined in paragraph (c) of § 1.801-3) and reserves held under guaranteed renewable health and accident insurance contracts (as defined in paragraph (d) of § 1.801-3).

(4) Reserves held either separately or combined under contracts described in subparagraphs (1), (2), or (3) of this paragraph.

(5) Reserves held under deposit administration contracts. Generally, the reserves held by a life insurance company on both the active and retired lives under deposit administration contracts will meet the requirements of section 801(b) and paragraph (a) of this section.

However, reserves held by the company with respect to the net value of risks reinsured in other solvent companies (whether or not authorized) shall be deducted from the company's life insurance reserves. See paragraph (a) of this section.

(e) ***Reserves and liabilities which do not qualify as life insurance reserves.*** The following are illustrative of reserves and liabilities which do not meet the requirements of section 801(b) and paragraph (a) of this section and, accordingly, shall not be included as life insurance reserves:

(1) Liability for supplementary contracts not involving at the time with respect to which the liability is computed, life, health, or accident contingencies.

(2) In the case of cancellable health and accident policies and similar cancellable contracts, the unearned premiums and unpaid losses (whether or not ascertained).

(3) The unearned premiums, and unpaid losses (whether or not ascertained), on noncancellable life, health, or accident policies (and guaranteed renewable life, health, and accident policies) not included in life insurance reserves. (However, such amounts shall be taken into account under section 801(a)(2) for purposes of determining whether an insurance company is a life insurance company.)

(4) The deficiency reserve (as defined in section 801(b)(4)) for each individual contract, that is, that portion of the reserve for such contract equal to the amount (if any) by which:

(i) The present value of the future net premiums required for such contract, exceeds

(ii) The present value of the future actual premiums and consideration charged for such contract.

(5) Reserves required to be maintained to provide for the ordinary operating expenses of a business which must be currently paid by every company from its income if its business is to continue, such as taxes, salaries, and unpaid brokerage.

(6) Liability for premiums received in advance.

(7) Liability for premium deposit funds.

(8) Liability for annual and deferred dividends declared or apportioned.

(9) Liability for dividends left on deposit at interest.

(10) Liability for accrued but unsettled policy claims whether known or unreported.

(11) A mandatory securities valuation reserve.

(f) ***Adjustments to life insurance reserves.*** In the event it is determined on the basis of the facts of a particular case that premiums deferred and uncollected and premiums due and unpaid are not properly accruable for the taxable year under section 809 and, accordingly, are not properly includible under assets (as defined in section 805(b)(4)) for the taxable year, appropriate reduction shall be made in the life insurance reserves. This reduction shall be made when the insurance company has calculated life insurance reserves on the assumption that the premiums on all policies are paid annually or that all premiums due on or prior to the date of the annual statement have been paid.

[T.D. 6513, 25 FR 12656, Dec. 10, 1960, as amended by T.D. 7172, 37 FR 5619, Mar. 17, 1972]

§ 1.801-5 Total reserves.

(a) ***Total reserves defined.*** For purposes of section 801(a) and § 1.801-3, the term "total reserves" is defined in section 801(c) as the sum of:

(1) Life insurance reserves (as defined in section 801(b) and § 1.801-4),

(2) Unearned premiums (as defined in paragraph (e) of § 1.801-3), and unpaid losses (whether or not ascertained) (as defined in paragraph (g) of § 1.801-3), not included in life insurance reserves, and

(3) All other insurance reserves required by law.

The term "total reserves" does not, however, include deficiency reserves (within the meaning of section 801(b)(4), and paragraph (e)(4) of § 1.801-4), even though such deficiency reserves are required by State law. In determining total reserves, a company is permitted to make use of the highest aggregate reserve required by any State or Territory or the District of Columbia in which it transacts business, but the reserve must have been actually held during the taxable year for which the reserve is claimed. For example, during the taxable year 1958 a life insurance company sells life insurance and annuity contracts in States A and B. State A requires reserves of 10 against the life and 5 against the annuity business. State B requires reserves of 9 against the life and 7 against the annuity business. Assuming the company actually holds these reserves during the taxable year 1958, its highest aggregate reserve for such taxable year is the 16 required by State B. Thus, the company is not permitted to compute its highest aggregate reserve by taking State A's requirement of 10 against its life insurance business and adding it to State B's requirement of 7 against its annuity business.

(b) ***Reserves required by law defined.*** For purposes of part I, subchapter L, chapter 1 of the Code, the term *reserves required by law* means reserves which are required either by express statutory provisions or by rules and regulations of the insurance department of a State, Territory, or the District of Columbia when promulgated in the exercise of a power conferred by statute, and which are reported in the annual statement of the company and accepted by state regulatory authorities as held for the fulfillment of the claims of policyholders or beneficiaries.

(c) [Reserved]

(d) ***Illustration of principles.*** The provisions of section 801 relating to the percentage requirements for qualification as a life insurance company may be illustrated by the following example:

Example. The books of Y, an insurance company, selling life insurance, noncancellable health and accident insurance, and cancellable accident and health insurance, reflect (after adjustment under sections 806(a) and 801(d)) the following facts for the taxable year 1958:

	Jan. 1	Dec. 31	Mean of year
1. Life insurance reserves	$3,000	$5,000	$4,000

	Jan. 1	Dec. 31	Mean of year
2. Unearned premiums, and unpaid losses (whether or not ascertained), on noncancellable accident and health insurance not included in life insurance reserves	400	600	500
3. Unearned premiums, and unpaid losses (whether or not ascertained), on cancellable accident and health insurance	1,800	2,200	2,000
4. All other insurance reserves required by law	900	1,100	1,000
5. Total reserves			7,500

The rules provided by section 801 require that the sum of the mean of the year figures in items 1 and 2 comprise more than 50 percent of the mean of the year figure in item 5 for an insurance company to qualify as a life insurance company. Thus, Y would qualify as a life insurance company for the taxable year 1958 as the sum of the mean of the year figures in items 1 and 2 ($4,500) comprise 60 percent of the mean of the year figure in item 5 ($7,500).

[T.D. 6513, 25 FR 12657, Dec. 10, 1960, as amended by T.D. 9911, 85 FR 64392, Oct. 13, 2020]

§ 1.801-6 Adjustments in reserves for policy loans.

(a) ***In general.*** Section 801(d) provides that for purposes only of determining whether or not an insurance company is a life insurance company (as defined in section 801(a) and paragraph (b) of § 1.801-3), the life insurance reserves (as defined in section 801(b) and § 1.801-4), and the total reserves (as defined in section 801(c) and paragraph (a) of § 1.801-5), shall each be reduced by an amount equal to the mean of the aggregates, at the beginning and end of the taxable year, of the policy loans outstanding with respect to contracts for which life insurance reserves are maintained. Such reduction shall be made after any adjustments required under section 806(a) and § 1.806-3 have been made.

(b) ***Policy loans defined.*** The term *policy loans* includes loans made by the insurance company, by whatever name called, for which the reserve on a contract is the collateral.

(c) ***Illustration of principles.*** The provisions of section 801(d) and this section may be illustrated by the following example:

Example. The books of T, an insurance company, selling only life insurance and cancellable accident and health insurance, reflect (after adjustment under section 806 (a)) the following facts for the taxable year

1958:

	Jan. 1	Dec. 31	Mean of year
1. Life insurance reserves	$1,000	$2,000	$1,500
2. Policy loans	50	850	450
3. Life insurance reserves less policy loans			1,050
4. Unearned premiums, and unpaid losses (whether or not ascertained), on cancellable accident and health insurance	900	1,600	1,250
5. Total reserves adjusted for policy loans (item 3 plus item 4)			2,300

As the rules provided by section 801 (a) and (d) require that the figure in item 3 ($1,050) be more than 50 percent of the mean of the year figure in item 5 ($2,300) for an insurance company to qualify as a life insurance company, T would not qualify as a life insurance company for the taxable year 1958.

[T.D. 6513, 25 FR 12657, Dec. 10, 1960]

§ 1.801-7 [Reserved]

§ 1.801-8 Contracts with reserves based on segregated asset accounts.

(a) ***Definitions*** —

(1) ***Annuity contracts include variable annuity contracts.*** Section 801(g)(1)(A) provides that for purposes of part I, subchapter L, chapter 1 of the Code, an annuity contract includes a contract which provides for the payment of a variable annuity computed on the basis of recognized mortality tables and the investment experience of the company issuing such a contract. A variable annuity differs from the ordinary or fixed dollar annuity in that the annuity benefits payable under a variable annuity contract vary with the insurance company's investment experience with respect to such contracts while the annuity benefits paid under a fixed dollar annuity contract are guaranteed irrespective of the company's actual investment earnings.

(2) ***Contracts with reserves based on a segregated asset account.***

(i) For purposes of part I, section 801(g)(1)(B) defines the term *contract with reserves based on a segregated asset account* as a contract (individual or group):

(*a*) Which provides for the allocation of all or part of the amounts received under the contract to an account which, pursuant to State law or regulation, is segregated from the general asset accounts of the company,

(*b*) Which provides for the payment of annuities, and

(*c*) Under which the amounts paid in, or the amount paid as annuities, reflect the investment return and the market value of the segregated asset account.

(ii) The term *contract with reserves based on a segregated asset account* includes a contract such as a variable annuity contract, which reflects the investment return and the market value of the segregated asset account, even though such contract provides for the payment of an annuity computed on the basis of recognized mortality tables, but the term includes such contract only for the period during which it satisfies the requirements of section 801(g)(1)(B) and subdivision (i) of this subparagraph. However, such term does not include a pension contract written on the basis of the so-called new-money concept. Thus, for example, such term does not include a pension contract whereby reserves are credited on the basis of the company's new high yield investments. Furthermore, such term does not include a contract which during the taxable year contains a right to participate in the divisible surplus of the company where such right merely reflects the company's investment return. Nevertheless, the term does include a contract which meets the requirements of section 801(g)(1)(B) and of this subparagraph even if part of the amounts received are, for example, allocated to reserves under provisions of the contract which are written on the basis of the new-money concept. However, such reserves do not qualify as a segregated asset account referred to in section 801(g) and this section.

(iii) If at any time during the taxable year a contract otherwise satisfying the requirements of section 801(g)(1)(B) and subdivision (i) of this subparagraph ceases to reflect current investment return and current market value, such contract shall not be considered as meeting the requirements of section 801(g)(1)(B)(iii) and subdivision (i)(*c*) of this subparagraph after such cessation. Thus, a contract with reserves based on a segregated asset account includes a contract under which the reflection of investment return and market value terminates at the beginning of the annuity payments, but only for the period prior to such termination. For example, if the purchaser of a variable annuity contract which meets such requirements elects an option which provides for the payment of a fixed dollar annuity, then such contract shall be considered as satisfying such requirements only for the period prior to the time such contract ceases to reflect current investment return and current market value. Furthermore, a group annuity contract which satisfies the requirements of section 801(g)(1)(B) and subdivision (i) of this subparagraph shall be considered as continuing to meet such requirements even though a certificate holder under the group contract elects an option which provides for the payment of a fixed dollar annuity. However, the annuity attributable to such certificate holder shall not be considered as satisfying such requirements as of the time such annuity ceases to reflect current investment return and current market value. On the other hand, a group annuity contract which does not reflect current market value shall not be considered as satisfying such requirements even though a certificate holder under the group contract elects an option which provides for the payment of a variable annuity. However, the variable annuity attributable to such certificate holder shall be considered as satisfying such requirements as of the time such variable annuity commences to reflect current investment return and current market value.

(b) ***Life insurance reserves.*** Section 801(g)(2) provides that for purposes of section 801(b)(1)(A), the reflection of the investment return and the market value of the segregated asset account shall be considered an assumed rate of interest. Thus, the reserves held with respect to contracts described in section 801(g)(1) and paragraph (a) of this section shall qualify as life insurance reserves within the meaning of section 801(b)(1) and paragraph (a) of § 1.801-4 provided such reserves are required by law (as defined in paragraph (b) of § 1.801-5) and are set aside to mature or liquidate, either by payment or reinsurance, future unaccrued claims arising from such contracts with reserves based on segregated asset accounts involving, at the time with respect to which the reserve is computed, life, health, or accident contingencies. Accordingly, a company issuing contracts with reserves based on segregated

asset accounts shall qualify as a life insurance company for Federal income tax purposes if it satisfies the requirements of section 801(a) (relating to the definition of a life insurance company) and paragraph (b) of § 1.801-3.

(c) ***Separate accounting.***

(1) For purposes of part I, section 801(g)(3) provides that a life insurance company (as defined in section 801(a) and paragraph (b) of § 1.801-3) which issues contracts with reserves based on segregated asset accounts (as defined in section 801 (g)(1)(B) and paragraph (a)(2) of this section) shall separately account for each and every income, exclusion, deduction, asset, reserve, and other liability item which is properly attributable to such segregated asset accounts. In those cases where such items are not directly accounted for, separate accounting shall be made:

(i) According to the method regularly employed by the company, if such method is reasonable, and

(ii) In all other cases in a manner which, in the opinion of the district director, is reasonable.

A method of separate accounting for such items as are not accounted for directly will be deemed "regularly employed" by a life insurance company if the method was consistently followed in prior taxable years, or if, in the case of a company which has never before issued contracts with reserves based on segregated asset accounts, the company initiates in the first taxable year for which it issues such contracts a reasonable method of separate accounting for such items and consistently follows such method thereafter. Ordinarily, a company regularly employs a method of accounting in accordance with the statute of the State, Territory, or the District of Columbia, in which it operates.

(2) Every life insurance company issuing contracts with reserves based on segregated asset accounts shall keep such permanent records and other data relating to such contracts as is necessary to enable the district director to determine the correctness of the application of the rules prescribed in section 301(g) and this section and to ascertain the accuracy of the computations involved.

(d) ***Investment yield.***

(1) For purposes of part I, section 801(g)(4)(A) provides that the policy and other contract liability requirements (as determined under section 805), and the life insurance company's share of investment yield (as determined under sections 804(a) or 809(b)), shall be separately computed:

(i) With respect to the items separately accounted for in accordance with section 801(g)(3) and paragraph (c) of this section, and

(ii) Excluding the items taken into account under subdivision (i) of this subparagraph.

Thus, for purposes of determining both taxable investment income and gain or loss from operations, a life insurance company shall separately compute the life insurance company's share of the investment yield on the assets in its segregated asset account without regard to the policy and other contract liability requirements of, and the investment income attributable to, contracts with reserves that are not based on the segregated asset account. Such separate computations shall be made after any allocation required under section 801(g)(4)(B) and subparagraph (2) of this paragraph.

(2)

(i) Section 801(g)(4)(B) provides that if the net short-term capital gain (as defined in section 1222(5)) exceeds the net long-term capital loss (as defined in section 1222(8)), determined without regard to any separate computations under section 801(g)(4)(A) and subparagraph (1) of this paragraph, then such excess shall be allocated between section 801(g)(4)(A) (i) and (ii)

and subparagraph (1) (i) and (ii) of this paragraph. Such allocation shall be in proportion to the respective contributions to such excess of the items taken into account under each such section and subparagraph. The allocation under this subparagraph shall be made before the separate computations prescribed by section 801(g)(4)(A) and subparagraph (1) of this paragraph.

(ii) The operation of the allocation required under section 801(g)(4)(B) and subdivision (i) of this subparagraph may be illustrated by the following examples:

> ***Example 1.*** For the taxable year 1962, T, a life insurance company which issues regular life insurance and annuity contracts and contracts with reserves based on segregated asset accounts, had (without regard to section 801(g)(4)(A)) realized short-term capital gains of $10,000 and short-term capital losses of $10,000 attributable to its general asset accounts and realized short-term capital gains of $12,000 attributable to its segregated asset accounts. For the taxable year 1962, the excess of the net short-term capital gain ($10,000 + $12,000−$10,000, or $12,000) over the net long-term capital loss (0) was $12,000. Of the excess of $12,000, 100 percent was contributed by the segregated asset accounts. Applying the provisions of section 801(g)(4)(B), T would allocate the entire $12,000 to its segregated asset accounts for such taxable year.

> ***Example 2.*** The facts are the same as in example 1 except that for the taxable year 1962, T had (without regard to section 801(g)(4)(A)) realized short-term capital losses of $8,000 attributable to its general asset accounts and realized long-term capital gains of $1,000 and long-term capital losses of $5,000 attributable to its segregated asset accounts. For the taxable year 1962, the excess of the net short-term capital gain ($10,000 + $12,000−$8,000, or $14,000) over the net long-term capital loss ($5,000−$1,000, or $4,000) was $10,000. Of the excess of $10,000, the general asset accounts contributed 20 percent ($2,000 ($10,000−$8,000) ÷ $10,000) and the segregated asset accounts contributed 80 percent ($8,000 ($12,000−$4,000) ÷ $10,000). Applying the provisions of section 801(g)(4)(B), T would allocate $2,000 ($10,000 × 20 percent) to its general asset accounts and $8,000 ($10,000 × 80 percent) to its segregated asset accounts for such taxable year.

> *Example 3.* W is a life insurance company which issues regular life insurance and annuity contracts and contracts with reserves based on either of two segregated asset accounts, Separate Account C or Separate Account D. For the taxable year 1962, W had (without regard to section 801(g)(4)(A)) realized short-term capital gains of $16,000 and long-term capital losses of $15,000 attributable to its general asset accounts, long-term capital gains of $12,000 and short-term capital losses of $6,000 attributable to Separate Account C and long-term capital gains of $7,000 and short-term capital losses of $5,000 attributable to Separate Account D. For the taxable year 1962, the excess of the net short-term capital gain ($16,000−$6,000−$5,000) over the net long-term capital loss (0) was $5,000. Of the $5,000 excess, 20 percent ($16,000−$15,000 ÷ $5,000) was contributed by the general asset accounts, leaving 80 percent as the amount contributed by the segregated asset accounts. Applying the provisions of section 801(g)(4)(B) W would allocate $1,000 (20 percent of $5,000) to the general asset accounts, leaving

$4,000 (80 percent of $5,000) to be allocated among the segregated asset accounts, Separate Account C and Separate Account D. W would allocate $3,000 of the $4,000 to Separate Account C computed as follows:

$$\$3{,}000 = \frac{(\$4{,}000) \times (\$12{,}000 - \$6{,}000)}{(\$12{,}000 - \$6{,}000) + (\$7{,}000 - \$5{,}000)}$$

W would allocate $1,000 of the $4,000 to Separate Account D computed as follows:

$$\$1{,}000 = \frac{(\$4{,}000) \times (\$7{,}000 - \$5{,}000)}{(\$12{,}000 - \$6{,}000) + (\$7{,}000 - \$5{,}000)}$$

(e) [Reserved]

(f) ***Increases and decreases in reserves.***

(1) Section 801(g)(6) provides that for purposes of section 810 (a) and (b) (relating to adjustments for increases or decreases in certain reserves), the sum of the items described in section 810(c) and paragraph (b) of § 1.810-2 taken into account as of the close of the taxable year shall be adjusted:

(i) By subtracting therefrom the sum of any amounts added from time to time (for the taxable year) to the reserves separately accounted for in accordance with section 801(g)(3) and paragraph (c) of this section by reason of realized or unrealized appreciation in value of the assets held in relation thereto, and

(ii) By adding thereto the sum of any amounts subtracted from time to time (for the taxable year) from such reserves by reason of realized or unrealized depreciation in the value of such assets.

(2) The provisions of subparagraph (1) of this paragraph may be illustrated by the following example:

Example. Company M, a life insurance company issuing only contracts with reserves based on segregated asset accounts as defined in section 801(g)(1)(B) and paragraph (a)(2) of this section (other than contracts described in section 805(d)(1) (A), (B), (C), or (D)), increased its life insurance reserves held with respect to such contracts during the taxable year 1962 by $275,000. Of the total increase in the reserves, $100,000 was attributable to premium receipts, $50,000 to dividends and interest, $100,000 to unrealized appreciation in the value of the assets held in relation to such reserves, and $25,000 to realized capital gains on the sale of such assets. As of the close of the taxable year 1962, the reserves held by company M with respect to all such contracts amounted to $1,275,000. However, under section 801(g)(6) and this subparagraph, this amount must be reduced by the $100,000 unrealized asset value appreciation and the $25,000 of realized capital gains. Accordingly, for purposes of section 810(a) and (b), the amount of these reserves which is to be taken into account as of the close of the taxable year 1962 under section 810(c) is $1,150,000 ($1,275,000 less $125,000). However, for purposes of section 810 (a) and (b), the amount of these reserves which is to be taken into account as of the beginning of the taxable year 1963 under section 810(c) is $1,275,000 (the amount as of the close of the taxable year 1962 before reduction of $125,000 for unrealized appreciation and realized capital gains).

(3)

(i) Under section 801(g)(6), the deduction allowable for items described in section 809(d) (1) and (7) (relating to death benefits and assumption reinsurance, respectively) with respect to segregated asset accounts shall be reduced to the extent that the amount of such items is increased for the taxable year by appreciation (or shall be increased to the extent that the amount of such items is decreased for the taxable year by depreciation) not reflected in adjustments required to be made under subparagraph (1) of this paragraph.

(ii) The provisions of this subparagraph may be illustrated by the following example:

Example. On June 30, 1962, X, a life insurance company, reinsured a portion of its insurance contracts with reserves based on segregated asset accounts with Y, a life insurance company, under an agreement whereby Y agreed to assume and become solely liable under the contracts reinsured. The reserves on the contracts reinsured by X were $90,000, of which $10,000 was attributable to unrealized appreciation in the value of the assets held in relation to such reserves. However, no amounts had been added to the reserves by reason of the unrealized appreciation of $10,000 and consequently, the $10,000 was not reflected in adjustments to reserves under section 809(g)(6) or subparagraph (1) of this paragraph. Under the reinsurance agreement, X made a payment of $90,000 in cash to Y for assuming such contracts. Applying the provisions of section 809(d)(7), and assuming no other such reinsurance transactions by X during the taxable year, X would have an allowable deduction of $90,000 as a result of this payment on June 30, 1962. However, applying the provisions of section 801(g)(6) and this subparagraph, the actual deduction allowed would be $80,000 ($90,000 less $10,000). See section 806 (a) and § 1.806-3 for the adjustments in reserves and assets to be made by X and Y as a result of this transaction. For the treatment by Y of this $90,000 payment, see section 809(c)(1) and paragraph (a)(1)(i) of § 1.809-4.

(g) ***Basis of assets held for certain pension plan contracts.*** Section 801(g)(7) provides that in the case of contracts described in section 805(d)(1) (A), (B), (C), (D), or (E) (relating to the definition of pension plan reserves), the basis of each asset in a segregated asset account shall (in addition to all other adjustments to basis) be (i) increased by the amount of any appreciation in value, and (ii) decreased by the amount of any depreciation in value; but only to the extent that such appreciation and depreciation are reflected in the increases and decreases in reserves, or other items described in section 801(g)(6), with respect to such contracts. Thus, there shall be no capital gains tax payable by a life insurance company on appreciation realized on assets in a segregated asset account to the extent such appreciation has been reflected in reserves, or other items described in section 801(g)(6), for contracts described in section 805(d)(1) (A), (B), (C), (D), or (E) based on segregated asset accounts.

(h) ***Additional separate computation*** —

(1) ***Assets and total insurance liabilities.*** A life insurance company which issues contracts with reserves based on segregated asset accounts (as defined in section 801(g)(1)(B) and paragraph (a)(2) of this section) shall separately compute and report with its return the assets and total insurance liabilities which are properly attributable to all of such segregated asset accounts. Each foreign corporation carrying on a life insurance business which issues such contracts shall separately compute and report with its return assets held in the United States and total insurance liabilities on United States business which are properly attributable to all of such segregated asset accounts.

(2) ***Foreign life insurance companies.*** For adjustment under section 819 in the case of a foreign life insurance company which issues contracts based on segregated asset accounts under section 801(g), see § 1.819-2(b)(4).

[T.D. 6886, 31 FR 8681, June 23, 1966, as amended by T.D. 6970, 33 FR 12044, Aug. 24, 1968; T.D. 7501, 42 FR 42341, Aug. 23, 1977; T.D. 9911, 85 FR 64392, Oct. 13, 2020]

§ 1.802(b)-1 [Reserved]

§ 1.802-2 [Reserved]

§ 1.802-3 Tax imposed on life insurance companies.

(a) ***In general.*** For taxable years beginning after December 31, 1957, section 802(a)(1) imposes a tax on the life insurance company taxable income (as defined in section 802(b) of every life insurance company (including a foreign life insurance company carrying on a life insurance business within the United States if with respect to its United States business it would qualify as a life insurance company under section 801(a)). The tax imposed by section 802(a)(1) is payable upon the basis of returns rendered by the life insurance companies liable thereto. See subchapter A, chapter 61 (section 6001 and following) of the Code.

(b) ***Tax imposed.*** The tax imposed by section 802(a)(1) consists of a normal tax and a surtax computed as provided in section 11 as though the life insurance company taxable income (as defined in section 802(b)) were the taxable income referred to in section 11.

(c) ***Normal tax.*** The normal tax is computed by applying to the life insurance company taxable income the regular corporate normal tax rate (as in effect for the taxable year) provided by section 11(b).

(d) ***Surtax.*** The surtax is computed by applying the regular corporate surtax rate (as in effect for the taxable year) provided by section 11(c) to the amount by which the life insurance company taxable income exceeds the surtax exemption for the taxable year as determined under section 11(d). See sections 269 and 1551 and the regulations thereunder, for certain circumstances in which the surtax exemption may be disallowed in whole or in part.

(e) ***Special rule for 1959 and 1960.*** See section 802(a)(3) for a transitional rule applicable in certain cases in determining tax liability for the taxable years 1959 and 1960 by reason of the operation of section 802(b)(3).

(f) ***Tax imposed in case of certain capital gains*** —

(1) ***Taxable years beginning after December 31, 1958, and before January 1, 1962.*** For taxable years beginning after December 31, 1958, and before January 1, 1962, if the net long-term capital gain (as defined in section 1222(7)) of any life insurance company exceeds its net short-term capital loss (as defined in section 1222(6)), section 802(a)(2) imposes a separate tax equal to 25 percent of such excess. This separate 25 percent tax rate applies whether or not there is life insurance company taxable income, taxable investment income, or a gain or loss from operations for the taxable year. For taxable years beginning after December 31, 1958, and before January 1, 1962, only the excess (if any) of net short-term capital gain (as defined in section 1222(5)) over net long-term capital loss (as defined in section 1222(8)) shall be taken into account in computing taxable investment income and gain or loss from operations. See sections 804(b) and 809(b). Except as modified by section 817 (rules relating to certain gains and losses), the general rules of the Code relating to gains and losses (such as the rules for determining the amount, characterization, and treatment thereof) shall apply with respect to life insurance companies.

(2) ***Alternative tax in case of capital gains for taxable years beginning after December 31, 1961.*** For taxable years beginning after December 31, 1961, if the net long-term capital gain (as defined in section 1222(7)) of any life insurance company exceeds its net short-term capital loss (as defined in section 1222(6)), section 802(a)(2) imposes an alternative tax in lieu of the tax imposed by section 802(a)(1), if and only if such alternative tax is less than the tax imposed by section 802(a)(1). The alternative tax is the sum of:

(i) A partial tax, computed as provided by section 802(a)(1), on the life insurance company taxable income determined by reducing the taxable investment income, and the gain from operations, by the amount of the excess of its net long-term capital gain over its net short-term capital loss, and

(ii)

(*a*) In the case of a taxable year beginning before January 1, 1970, an amount equal to 25 percent of such excess, or

(*b*) In the case of a taxable year beginning after December 31, 1969, an amount determined as provided in section 1201(a) and paragraph (a)(3) of § 1.1201-1 on such excess.

In the computation of the partial tax, the deductions provided by sections 170 (as modified by section 809(a)(3)), 243, 244, 245 (as modified by sections 804 (a)(5) and 809(d)(8)(B)), and the limitation provided by section 809(f), shall not be recomputed as a result of the reduction of taxable investment income, and gain from operations, by the amount of such excess. Except as modified by section 817 (rules relating to certain gains and losses), the general rules of the Code relating to gains and losses (such as the rules for determining the amount, characterization and treatment thereof) shall apply with respect to life insurance companies.

(g) ***Foreign life insurance companies.*** Foreign life insurance companies not carrying on an insurance business within the United States are not taxable under section 802, but are taxable as other foreign corporations. See section 881.

(h) ***Assessment and collection of tax imposed.*** All provisions of the Internal Revenue Code and of the regulations in this part not inconsistent with the specific provisions of sections 801 to 820, inclusive, are applicable to the assessment and collection of the tax imposed by section 802(a), and life insurance companies are subject to the same penalties as are provided in the case of returns and payment of income tax by other corporations. The return shall be on Form 1120L.

(i) ***Illustration of principles.*** The provisions of section 802(a), other than paragraph (3) thereof, and this section may be illustrated by the following example:

> *Example.* For the taxable year 1959, T, a life insurance company, has life insurance company taxable income of $300,000 (including $25,000 of net short-term capital gain) and $80,000 of net long-term capital gain. The tax of T under section 802(a) for 1959 is $170,500 ($90,000 normal tax, $60,500 surtax, and $20,000 capital gains tax) computed as follows:

Computation of Normal Tax

Life insurance company taxable income	$300,000
Normal tax (30% of $300,000)	90,000
Computation of Surtax	
Life insurance company taxable income	$300,000
Less: Exemption from surtax	25,000
Excess of life insurance company taxable income subject to surtax	275,000
Surtax (22% of $275,000)	60,500
Computation of Capital Gains Tax	
Excess of net long-term capital gain over net short-term capital loss	$80,000
Capital gains tax (25% of $80,000)	20,000

(j) ***Cross reference.*** In the case of a taxable year of a life insurance company ending after December 31, 1963, for which an election under section 1562(a)(1) by a controlled group of corporations is effective, the additional tax imposed by section 1562 may apply. See section 1562 and the regulations thereunder.

[T.D. 6513, 25 FR 12658, Dec. 10, 1960, as amended by T.D. 6845, 30 FR 9740, Aug. 5, 1965; T.D. 6886, 31 FR 8685, June 23, 1966; T.D. 7337, 39 FR 44972, Dec. 30, 1974; T.D. 9849, 84 FR 9235, Mar. 14, 2019]

INVESTMENT INCOME

§ 1.804-3 Gross investment income of a life insurance company.

(a) ***Gross investment income defined.*** For purposes of part I, subchapter L, chapter 1 of the Code, section 804(b) defines the term *gross investment income* of a life insurance company as the sum of the following:

(1) The gross amount of income from:

(i) Interest (including tax-exempt interest and partially tax-exempt interest), as described in § 1.61-7. Interest shall be adjusted for amortization of premium and accrual of discount in accordance with the rules prescribed in section 818(b) and the regulations thereunder.

(ii) Dividends, as described in § 1.61-9.

(iii) Rents and royalties, as described in § 1.61-8.

(iv) The entering into of any lease, mortgage, or other instrument or agreement from which the life insurance company may derive interest, rents, or royalties.

(v) The alteration or termination of any instrument or agreement described in subdivision (iv) of this subparagraph.

For example, gross investment income includes amounts received as commitment fees, as a bonus for the entering into of a lease, or as a penalty for the early payment of a mortgage.

(2) In the case of a taxable year beginning after December 31, 1958, the amount (if any) by which the net short-term capital gain (as defined in section 1222(5)) exceeds the net long-term capital loss (as defined in section 1222(8)), and

(3) The gross income from any trade or business (other than an insurance business) carried on by the life insurance company, or by a partnership of which the life insurance company is a partner.

(b) ***No double inclusion of income.*** In computing the gross income from any trade or business (other than an insurance business) carried on by the life insurance company, or by a partnership of which the life insurance company is a partner, any item described in section 804(b)(1) and paragraph (a)(1) of this section shall not be considered as gross income arising from the conduct of such trade or business or partnership, but shall be taken into account under section 804(b)(1) and paragraph (a)(1) of this section.

(c) ***Exclusion of net long-term capital gains.*** Any net long-term capital gains from the sale or exchange of a capital asset (or any gain considered to be from the sale or exchange of a capital asset under applicable law) shall be excluded from the gross investment income of a life insurance company. However, section 804(b)(2) and paragraph (a)(2) of this section provide that the amount (if any) by which the net short-term capital gain exceeds the net long-term capital loss shall be included in the gross investment income of a life insurance company.

[T.D. 6513, 25 FR 12661, Dec. 10, 1960]

§ 1.804-4 Investment yield of a life insurance company.

(a) ***Investment yield defined.*** Section 804(c) defines the term "investment yield" of a life insurance company for purposes of part I, subchapter L, chapter 1 of the Code. Investment yield means gross investment income (as defined in section 804(b) and paragraph (a) of § 1.804-3), less the deductions provided in section 804(c) and paragraph (b) of this section for investment expenses, real estate expenses, depreciation, depletion, and trade or business (other than an insurance business) expenses. However, such expenses are deductible only to the extent that they relate to investment income and the deduction of such expenses is not disallowed by any other provision of subtitle A of the Code. For example, investment expenses are not allowable unless they are ordinary and necessary expenses within the meaning of section 162, and under section 265, no deduction is allowable for interest on indebtedness incurred or continued to purchase or carry obligations the interest on which is wholly exempt from taxation under chapter 1 of the Code. A deduction shall not be permitted with respect to the same item more than once.

(b) ***Deductions from gross investment income*** —

(1) ***Investment expenses.***

(i) Section 804(c)(1) provides for the deduction of investment expenses by a life insurance company in determining investment yield. "Investment expenses" are those expenses of the taxable year which are fairly chargeable against gross investment income. For example, investment expenses include salaries and expenses paid exclusively for work in looking after investments, and amounts expended for printing, stationery, postage, and stenographic work incident to the collection of interest. An itemized schedule of such expenses shall be attached to the return.

(ii) Any assignment of general expenses to the investment department of a life insurance company for which a deduction is claimed under section 804(c)(1) subjects the entire deduction for investment expenses to the limitation provided in that section and subdivision (iii) of this subparagraph. As used in section 804(c)(1), the term *general expenses* means any expense paid or incurred for the benefit of more than one department of the company rather than for the benefit of a particular department thereof. For example, if real estate taxes, depreciation, or

other expenses attributable to office space owned by the company and utilized by it in connection with its investment function are assigned to investment expenses, such items shall be deductible as general expenses assigned to or included in investment expenses and as such shall be subject to the limitation of section 804(c)(1) and subdivision (iii) of this subparagraph. Similarly, if an expense, such as a salary, is attributable to more than one department, including the investment department, such expense may be properly allocated among these departments. If such expenses are allocated, the amount properly allocable to the investment department shall be deductible as general expenses assigned to or included in investment expenses and as such shall be subject to the limitation of section 804(c)(1) and subdivision (iii) of this subparagraph. If general expenses are in part assigned to or included in investment expenses, the maximum allowance (as determined under section 804(c)(1)) shall not be granted unless it is shown to the satisfaction of the district director that such allowance is justified by a reasonable assignment of actual expenses. The accounting procedure employed is not conclusive as to whether any assignment has in fact been made. Investment expenses do not include Federal income and excess profits taxes, if any. In cases where the investment expenses allowable as deductions under section 804(c)(1) exceed the limitation contained therein, see section 809(d)(9).

(iii) If any general expenses are in part assigned to or included in investment expenses, the total deduction under section 804(c)(1) shall not exceed the sum of:

(*a*) One-fourth of one percent of the mean of the assets (as defined in section 805(b)(4) and paragraph (a)(4) of § 1.805-5) held at the beginning and end of the taxable year,

(*b*) The amount of the mortgage service fees for the taxable year, plus

(*c*) Whichever of the following is the greater:

(*1*) One-fourth of the amount by which the investment yield (computed without any deduction for investment expenses allowed by section 804(c)(1)) exceeds $3^{3}/_{4}$ percent of the mean of the assets (as defined in section 805(b)(4)) held at the beginning and end of the taxable year, reduced by the amount of the mortgage service fees for the taxable year, or

(*2*) One-fourth of one percent of the mean of the value of mortgages held at the beginning and end of the taxable year for which there are no mortgage service fees for the taxable year. For purposes of the preceding sentence, the term *mortgages held* refers to mortgages, and other similar liens, on real property which are held by the company as security for “mortgage loans”.

For purposes of section 804(c)(1)(B) and (C)(i) and (*b*) and (*c*)(*1*) of this subdivision, the term *mortgage service fees* includes mortgage origination fees. Such mortgage origination fees shall be amortized in accordance with the rules prescribed in section 818(b) and the regulations thereunder.

(iv) The operation of the limitation contained in section 804(c)(1) and subdivision (iii) of this subparagraph may be illustrated by the following example:

> *Example.* The books of S, a life insurance company, reflect the following items for the

taxable year 1958:

Investment expenses (including general expenses assigned to or included in investment expenses)	$125,000
Mean of the assets held at the beginning and end of the taxable year	20,000,000
Mortgage service fees	25,000
Investment yield computed without regard to investment expenses	1,200,000
Mean of the value of mortgages held at the beginning and end of the taxable year for which there are no mortgage service fees	6,000,000

In order to determine the limitation on investment expenses, S would make up the following schedule:

1. Mean of the assets held at the beginning and end of the taxable year	$20,000,000	
2. One-fourth of 1 percent of item 1 (1/4 of 1% of $20,000,000)	50,000	
3. Mortgage service fees	25,000	
4. The greater of (a) or (b):		
(a)(i) Investment yield computed without regard to investment expenses	$1,200,000	
(ii) Three and three-fourths percent of item 1 ($3^3/_4$% × $20,000,000)	750,000	
(iii) Excess of (i) over (ii) ($1,200,000 minus $750,000)	450,000	
(iv) One-fourth of (iii) (1/4 × $450,000)	112,500	
(v) Less: Mortgage service fees (item 3)	25,00	
(vi) Excess of (iv) over (v) ($112,500 minus $25,000)	87,500	
(b) One-fourth of 1 percent of the mean of the value of mortgages held at the beginning and end of the taxable year for which there are no mortgage service fees (1/4 of 1% × $6,000,000)	15,000	
5. The greater of item 4 (a) or (b)		87,500
6. Limitation on investment expenses (items 2, 3, and 4(a))		162,500

As the investment expenses (including general expenses assigned to or included in investment expenses) of S for the taxable year 1958 ($125,000) do not exceed the limitation on such expenses ($162,500), S would be entitled to deduct the entire $125,000 under section 804(c)(1).

(2) ***Real estate expenses and taxes.*** The deduction for expenses and taxes under section 804(c)(2) includes taxes (as defined in section 164) and other expenses for the taxable year exclusively on or with respect to real estate owned by the company. For example, no deduction shall be allowed under section 804(c)(2) for amounts allowed as a deduction under section 164(e) (relating to taxes of shareholders paid by a corporation). No deduction shall be allowed under section 804(c)(2) for any amount paid out for new buildings, or for permanent improvements or betterments made to increase the value of any property. An itemized schedule of such taxes and expenses shall be attached to the return. See subparagraph (4) of this paragraph for limitation of such deduction.

(3) ***Depreciation.*** The deduction allowed for depreciation is, except as provided in section 804(c)(3) and subparagraph (4) of this paragraph, identical to that allowed other corporations by section 167. Such amount allowed as a deduction from gross investment income in determining investment yield is limited to depreciation sustained on the property used, and to the extent used, for the purpose of producing the income specified in section 804(b). An election with respect to any of the methods of depreciation provided in section 167 shall not be affected in any way by the enactment of the Life Insurance Company Income Tax Act of 1959 (73 Stat. 112). However, in appropriate cases, the method of depreciation may be changed with the consent of the Commissioner. See section 167(e) and § 1.167(e)-1. See subparagraph (4) of this paragraph for limitation of such deduction. See section 809(d)(12) and the regulations thereunder for the treatment of depreciable property used in the operation of a life insurance business.

(4) ***Limitation on deductions allowable under section 804 (c)(2) and (c)(3).*** Section 804(c)(3) provides that the amount allowable as a deduction for taxes, expenses, and depreciation on or with respect to any real estate owned and occupied for insurance purposes in whole or in part by a life insurance company shall be limited to an amount which bears the same ratio to such deduction (computed without regard to this limitation) as the rental value of the space not so occupied bears to the rental value of the entire property. For example, T, a life insurance company, owns a twenty-story downtown home office building. The rental value of each floor of the building is identical. T rents nine floors to various tenants, one floor is utilized by it in operating its investment department, and the remaining ten floors are occupied by it in carrying on its insurance business. Since floor space equivalent to eleven-twentieths, or 55 percent, of the rental value of the entire property is owned and occupied for insurance purposes by the company, the deductions allowable under section 804(c)(2) and (3) for taxes, depreciation, and other real estate expenses shall be limited to nine-twentieths, or 45 percent, of the taxes, depreciation, and other real estate expenses on account of the entire property. However, the portion of such allowable deductions attributable to the operation of the investment department (one-twentieth, or 5 percent) may be deductible as general expenses assigned to or included in investment expenses and as such shall be subject to the limitations of section 804(c)(1). Where a deduction is claimed as provided in this section, the parts of the property occupied and the parts not occupied by the company in carrying on its insurance business, together with the respective rental values thereof, must be shown in a schedule accompanying the return.

(5) ***Depletion.*** The deduction for depletion (and depreciation) provided in section 804(c)(4) is identical to that allowed other corporations by section 611. The amount allowed by section 611 in the case of a life insurance company is limited to depletion (and depreciation) sustained on the property used, and to the extent used, for the purpose of producing the income specified in section 804(b). See section 611 and § 1.611-5 for special rules relating to the depreciation of improvements in the case of mines, oil and gas wells, other natural deposits, and timber.

(6) ***Trade or business deductions.***

(i) Under section 804(c)(5), the deductions allowed by subtitle A of the Code (without regard to this part) which are attributable to any trade or business (other than an insurance business) carried on by the life insurance company, or by a partnership of which the life insurance company is a partner are, subject to the limitations in subdivisions (ii), (iii), and (iv) of this subparagraph, allowable as deductions from the gross investment income of a life insurance company in determining its investment yield. Such deductions are allowable, however, only to the extent that they are attributable to the production of income which is included in the life insurance company's gross investment income by reason of section 804(b)(3). However, since any interest, dividends, rents, and royalties received by any trade or business (other than an insurance business) carried on by the life insurance company, or by a partnership of which the life insurance company is a partner, is included in the life insurance company's gross investment income by reason of section 804(b)(1) and paragraph (b) of § 1.804-3, any expenses fairly chargeable against the production of such income may be deductible under section 804(c) (1), (2), (3), or (4). The allowable deductions may exceed the gross income from such business.

(ii) In computing the deductions under section 804(c)(5), there shall be excluded losses:

(*a*) From (or considered as from) sales or exchanges of capital assets,

(*b*) From sales or exchanges of property used in the trade or business (as defined in section 1231(b)), and

(*c*) From the compulsory or involuntary conversion (as a result of destruction, in whole or in part, theft or seizure, or an exercise of the power of requisition or condemnation or the threat or imminence thereof) of property used in the trade or business (as so defined).

(iii) Any item, to the extent attributable to the carrying on of the insurance business, shall not be taken into account. For example, if a life insurance company operates a radio station primarily to advertise its own insurance services, a portion of the expenses of the radio station shall not be allowed as a deduction. The portion disallowed shall be an amount which bears the same ratio to the total expenses of the station as the value of advertising furnished to the insurance company bears to the total value of services rendered by the station.

(iv) The deduction for net operating losses provided in section 172, and the special deductions for corporations provided in part VIII, subchapter B, chapter 1 of the Code, shall not be allowed.

[T.D. 6513, 25 FR 12662, Dec. 10, 1960]

§§ 1.806-1-1.806-2 [Reserved]

§ 1.806-3 Certain changes in reserves and assets.

(a) ***In general.*** For purposes of part I, subchapter L, chapter 1 of the Code, section 806(a) provides that if there is a change in life insurance reserves (as defined in section 801(b)), during the taxable year, which is attributable to the transfer between the taxpayer and another person of liabilities under contracts taken into account in computing such life insurance reserves, then the means of such reserves, and the mean of the assets, shall be appropriately adjusted to reflect the amounts involved in such transfer. For example, the adjustments required under section 806(a) are applicable to transfers in which one life insurance company purchases or acquires a part or all of the business of another life insurance company under an arrangement whereby the purchaser or transferee becomes solely liable on the contracts transferred. This

provision shall apply in the case of assumption reinsurance but not in the case of indemnity reinsurance or reinsurance ceded. Thus, no adjustments shall be required under section 806(a) when, in the ordinary course of business, an indemnity reinsurance contract is entered into with another company (on a yearly renewable term basis, on a coinsurance basis, or otherwise) whereby there is a sharing of risks under one or more individual contracts. It will be necessary for each life insurance company participating in a transfer described in section 806(a) to make the adjustments required by such section. Such adjustments shall be made without regard to whether or not the transferor of the liabilities was the original insurer.

(b) ***Manner in which adjustments shall be made*** —

(1) ***Daily basis.*** The means of the life insurance reserves, and the mean of the assets, shall be appropriately adjusted, on a daily basis, to reflect the amounts involved in a transfer described in section 806(a) and paragraph (a) of this section. The transferor and the transferee shall be treated as having held such life insurance reserves and assets for a fraction of the year in which the transfer occurs.

(2) ***Determination of period held.*** In determining the fraction which represents the fractional year that such reserves and assets were held, the numerator shall be the number of days during the taxable year which such reserves and assets were actually held, and the denominator shall be the number of days in the calendar year of the transfer. In computing the period held for purposes of the numerator, the day on which such reserves and assets are transferred is included by the transferor and excluded by the transferee.

(3) ***Adjustments to the means of life insurance reserves and assets not transferred.*** All life insurance reserves and assets transferred during the taxable year, within the meaning of section 806(a), shall be excluded from the beginning and end of the taxable year balances of the transferor and transferee, respectively. The amount of assets to be excluded from the beginning of the taxable year balance of the transferor shall be an amount equal to the value of such reserves at the beginning of the taxable year. The amount of assets to be excluded from the end of the taxable year balance of the transferee shall be an amount equal to the value of such reserves at the end of the taxable year. The means of the life insurance reserves and assets not so transferred shall be determined in the ordinary manner, that is, the arithmetic means. There shall be added to these means an amount to appropriately adjust them, on a daily basis, for the life insurance reserves and assets that were transferred during the taxable year. This adjustment shall be determined by multiplying

(i) the mean of the transferred life insurance reserves (or assets, as the case may be) at the beginning of the taxable year (or, if acquired later, at the beginning of the period held as defined in subparagraph (2) of this paragraph) and the end of the period held as defined in subparagraph (2) of this paragraph (or at the end of the taxable year, if held at such time) by

(ii) the fraction determined under subparagraph (2) of this paragraph.

(4) ***Examples.*** The application of this paragraph may be illustrated by the following examples:

> *Example 1.* On March 14, 1958, the M Company, a life insurance company, transferred to the N Company, a life insurance company, pursuant to an assumption reinsurance agreement, all of its life insurance reserves, and related assets, on one block of policies. The reserves (and assets) for this block were held by the M Company on January 1, 1958, and totaled $60,000; on March 14, the reserves (and assets) totaled $64,000. The M Company had life insurance reserves of $1,000,000 at the beginning of 1958 (including those subsequently transferred)

and $1,040,000 at the end of 1958. The M Company had assets of $1,300,000 at the beginning of 1958 (including those subsequently transferred) and $1,380,000 at the end of 1958. The mean of M's life insurance reserves for the taxable year 1958 is computed as follows:

Reserves at 1-1-58	$1,000,000	
Exclude reserves (at beginning of year) on contracts transferred to N	60,000	
Recomputed amount at 1-1-58		$940,000
Reserves at 12-31-58		1,040,000
Sum		1,980,000
Mean		990,000
Adjustment for reserves transferred on 8-14-58:		
Reserves at 1-1-58 on contracts transferred to N	$60,000	
Reserves at 3-14-58 on such contracts	64,000	
Sum	124,000	
Mean	62,000	
Fraction taken into account	73/365	
Adjustment (73/365 × $62,000)		$12,400
Mean of M's life insurance reserves after section 806(a) adjustment		1,002,400

Example 2. Assuming the facts to be the same as in example 1, the mean of M's assets for the taxable year 1958 is computed as follows:

Assets at 1-1-58	$1,300,000	
Exclude assets (at beginning of year) on contracts transferred to N	60,000	
Recomputed amount at 1-1-58		$1,240,000
Assets at 12-31-58		1,380,000
Sum		2,620,000
Mean		1,310,000
Adjustments for assets transferred on 3-14-58:		
Assets at 1-1-58 on contracts transferred to N	$60,000	
Assets at 3-14-58 on such contracts	64,000	
Sum	124,000	
Mean	62,000	
Fraction taken into account	73/365	

Adjustment (73/365 × $62,000)−		$12,400
Mean of M's assets after section 806(a) adjustment		1,322,400

Example 3. Assume the facts are the same as in example 1. At the end of 1958, N Company had life insurance reserves (and assets) of $80,000 on the contracts transferred on March 14, 1958. The N Company had life insurance reserves of $6,000,000 at the beginning of 1958 and $6,400,000 at the end of 1958 (including those transferred). The N Company had assets of $6,800,000 at the beginning of 1958 and $7,300,000 at the end of 1958 (including those on the contracts transferred). The mean of N's life insurance reserves for the taxable year 1958 is computed as follows:

Reserves at 1-1-58		$6,000,000
Reserves at 12-31-58	$6,400,000	
Exclude reserves (at end of year) on contracts transferred from M	80,000	
Recomputed amount at 12-31-58		6,320,000
Sum		12,320,000
Mean		6,160,000
Adjustment for reserves transferred on 3-14-58:		
Reserves at 3-14-58 on contracts transferred from M	$64,000	
Reserves at 12-31-58 on such contracts	80,000	
Sum	144,000	
Mean	72,000	
Fraction taken into account	292/365	
Adjustment (292/365 × $72,000)		57,600
Mean of N's life insurance reserves after section 806(a) adjustment		6,217,600

Example 4. Assuming the facts to be the same as in example 3, the mean of N's assets for the taxable year 1958 is computed as follows:

Assets at 1-1-58		$6,800,000
Assets at 12-31-58	$7,300,000	
Exclude assets (at end of year) on contracts transferred from M	80,000	
Recomputed amount at 12-31-58		7,220,000
Sum		14,020,000

Mean		7,010,000
Adjustments for assets transferred on 3-14-58:		
Assets at 3-14-58 on contracts transferred from M	$64,000	
Assets at 12-31-58 on such contracts	80,000	
Sum	144,000	
Mean	72,000	
Fraction taken into account	292/365	
Adjustment (292/365 × $72,000)		$57,600
Mean of N's assets after section 806(a) adjustment		7,067,600

Example 5. The facts are the same as in example 1, except that on October 19, 1958, company N transfers to company P, a life insurance company, all of the life insurance reserves, and related assets, on the block of policies it had received from company M on March 14, 1958. The reserves (and assets) for this block totaled $76,000 on October 19, 1958. The means of company M's life insurance reserves and assets, as computed in examples 1 and (2), respectively, would be unchanged by the transfer of October 19, 1958. Since company N did not own this block of policies at either the beginning or end of the taxable year, it would not have to recompute its beginning or end of the taxable year reserves or assets. Company N will, however, have to adjust (or increase) the mean of its life insurance reserves and assets on account of the policies it received from company M. This adjustment will be $42,000, which is determined by multiplying the means of the life insurance reserves (or assets) on these policies as of March 15, 1958, and October 19, 1958, $70,000 ($64,000 + $76,000 = $140,000 ÷ 2) by the fraction 219/365 (the numerator of 219 is determined by excluding the day of the transfer to N, March 14, 1958, and including the day of the transfer from N to P, October 19, 1958). Company P will have to recompute its end of the year life insurance reserves and assets (in the same manner as illustrated in examples 3 and 4). Assuming the end of the year reserves (and assets) on this block of policies is $80,000, company P will have an adjustment under section 806 (a) of $15,600, which is determined by multiplying the means of the reserves on these policies as of October 20, 1958, and December 31, 1958, $78,000 ($76,000 + $80,000= $156,000 ÷ 2) by the fraction 73/365.

[T.D. 6513, 25 FR 12663, Dec. 10, 1960]

§ 1.807-1 Computation of life insurance reserves.

(a) ***Tax reserve method.*** For purposes of determining the amount of life insurance reserves for a contract under section 807(d)(1), section 807(d)(2) requires the determination of the amount of the reserve for a contract using the tax reserve method applicable to the contract. Under section 807(d)(3), the tax reserve method applicable to the contract is the Commissioners' Reserve Valuation Method (CRVM), the Commissioners' Annuities Reserve Valuation Method (CARVM), or other reserve method prescribed by the National Association of Insurance Commissioners (NAIC) that applies to the contract as of the date the reserve is determined. If the NAIC has not prescribed a reserve method that covers the contract, a reserve method that is consistent with the CRVM, the CARVM, or other NAIC-prescribed method as of the date the reserve is determined (whichever is most appropriate) must be used.

(b) ***No asset adequacy reserve.*** The life insurance reserve determined under section 807(d)(1) does not include any asset adequacy reserve.

(1) An asset adequacy reserve is—

(i) Any reserve that is established as an additional reserve based upon an analysis of the adequacy of reserves that would otherwise be established in accordance with the requirements set forth in the NAIC Valuation Manual, such as the CRVM or CARVM as applicable, or

(ii) Any similar reserve.

(2) In determining whether a reserve is a life insurance reserve, the label placed on such reserve is not determinative, provided, however, any reserve or portion of a reserve that would have been established pursuant to an asset adequacy analysis required by the NAIC's Valuation Manual 30 as it existed on December 22, 2017, the date of enactment of Public Law 115-97, is an asset adequacy reserve.

(c) ***Applicability date.*** The rules of this section apply to taxable years beginning after *October 13, 2020*.

[T.D. 9911, 85 FR 64392, Oct. 13, 2020]

§ 1.807-2 Cross-reference.

For special rules regarding the treatment of modified guaranteed contracts (as defined in section 817A and § 1.817A-1(a)(1)), *see* § 1.817A-1.

[T.D. 9058, 68 FR 24350, May 7, 2003]

§ 1.807-3 Reporting of reserves.

(a) ***Reserve reporting.*** A life insurance company subject to tax under section 801 is required to make a return on Form 1120-L, *U.S. Life Insurance Company Income Tax Return*. The Internal Revenue Service may require reporting with respect to the opening balance and closing balance of items described in section 807(c) and with respect to the method of computing such items for purposes of determining income. Such reporting may provide for the manner in which separate account items are reported. (See section 6011 and § 301.6011-1 of this chapter.)

(b) ***Applicability date.*** The rules of this section apply to taxable years beginning after *October 13, 2020*.

[T.D. 9911, 85 FR 64392, Oct. 13, 2020]

§ 1.807-4 Adjustment for change in computing reserves.

(a) ***Requirement to follow administrative procedures.*** Under section 807(f), a change in basis of computing an item referred to in section 807(c) is a change in method of accounting. Accordingly, except as provided in § 1.446-1(e), a change in basis of computing an item referred to in section 807(c) is a change in method of accounting for purposes of § 1.446-1(e). Before computing such item under a new basis, a life insurance company must obtain the consent of the Commissioner of Internal Revenue or his delegate (Commissioner) pursuant to administrative procedures prescribed by the Commissioner. Similarly, an

insurance company other than a life insurance company (a nonlife insurance company) that changes its basis of computing life insurance reserves must obtain the consent of the Commissioner pursuant to administrative procedures prescribed by the Commissioner.

(b) *Section 481 adjustment* —

(1) ***In general.*** If the basis of computing any item referred to in section 807(c) as of the close of any taxable year (the year of change) differs from the basis of computing such item at the close of the preceding taxable year, then the difference between the amount of the item at the close of the taxable year computed on the new basis and the amount of the item at the close of the taxable year computed on the old basis that is attributable to contracts issued before the taxable year, is taken into account under section 481 and §§ 1.481-1 through 1.481-5 as an adjustment attributable to a change in method of accounting.

(2) ***Loss of company status.*** If for any taxable year a taxpayer that was an insurance company for the year of change is no longer an insurance company, then the taxpayer must take into account in the preceding taxable year (that is, the last taxable year it was an insurance company) the balance of any section 481(a) adjustment determined under paragraph (b)(1) of this section. A taxpayer that was an insurance company for the year of change does not accelerate the balance of any section 481(a) adjustment determined under paragraph (b)(1) of this section merely because it changes from a life insurance company to a nonlife insurance company or because it changes from a nonlife insurance company to a life insurance company.

(c) *Effect on determining increase or decrease in reserves* —

(1) ***Effect under section 807(a) and (b).*** If there is a change in basis of computing any item referred to in section 807(c) for a taxable year, then, for purposes of section 807(a) and (b), the closing balance for such item for the year of change with respect to contracts issued before the year of change is determined on the old basis and the opening balance for such item for the next taxable year for such contracts is computed on the new basis.

(2) ***Effect under section 832.*** The following rules apply for purposes of section 832(b)(4):

(i) For the year of change, life insurance reserves at the end of the year of change with respect to contracts issued before the year of change are determined on the old basis.

(ii) For the taxable year following the year of change, life insurance reserves at the end of the preceding taxable year (that is, the year of change) with respect to contracts issued before the year of change are determined on the new basis.

(d) ***Examples.*** The principles of paragraphs (a) through (c) of this section are illustrated by the following examples. For purposes of these examples and except as otherwise provided, IC is a life insurance company within the meaning of section 816(a) that issues life insurance and annuity contracts. IC is required to determine the amount of life insurance reserves under section 807(d) and to take net increases or decreases in the reserves into account in computing life insurance company taxable income. IC's reserve for each insurance contract at issue exceeds the net surrender value for such contract and does not exceed the statutory reserve for such contract. IC is on an accrual method and uses a calendar year as its taxable year.

(1) *Example 1* —

(i) ***Facts.*** In 2021, IC changed the basis of computing the amount of life insurance reserves for a certain type of life insurance contract as described in section 807(f). Both the basis used for computing the reserves for the relevant contracts at the close of the 2020 taxable year (old basis) and the basis of computing the reserves for the relevant type of contract at the close of the 2021 taxable year (new basis) are consistent with the applicable Commissioners' Reserve Valuation Method. IC followed the administrative procedures prescribed by the Commissioner to obtain consent to change the basis of computing these reserves. IC determined that the life insurance reserves as of December 31, 2021, for the relevant contracts issued prior to 2021 were $110x if computed using the old method and $120x if computed using the new method. IC also determined that the life insurance reserves as of December 31, 2021, for the relevant contracts issued during 2021 were $15x using the new basis.

(ii) ***Analysis.*** IC must take into account under section 481 and the administrative procedures prescribed by the Commissioner the $10x difference between the reserves for the relevant contracts issued prior to 2021 computed under the old basis ($110x) and the reserves for such contracts computed under the new basis ($120x). For purposes of determining any net increase or net decrease in reserves in taxable year 2021 under section 807(a) or (b), IC's closing balance of life insurance reserves computed under section 807(d) with respect to the relevant contracts is $110x for contracts issued prior to 2021 (computed on the old basis) and $15x for contracts issued during 2021 (computed on the new basis). IC's opening balance in 2022 for life insurance reserves for the relevant contracts is $135x (computed on the new basis).

(2) ***Example 2*** —

(i) ***Facts.*** The facts are the same as in paragraph (d)(1) of this section (the facts in *Example 1*), except that IC is an insurance company that is not a life insurance company. IC is required to compute taxable income under section 832.

(ii) ***Analysis.*** IC must take into account under section 481 and the administrative procedures prescribed by the Commissioner the $10x difference between the reserves for the relevant contracts issued prior to 2021 computed under the old basis ($110x) and the reserves for such contracts computed under the new basis ($120x). For purposes of determining the premiums earned on insurance contracts during the taxable year as described in section 832(b)(4) for the year of change, the life insurance reserves at the end of the taxable year are $110x for contracts issued prior to 2021 (computed on the old basis) and $15x for contracts issued during 2021 (computed on the new basis). For purposes of determining the premiums earned on insurance contracts during the taxable year as described in section 832(b)(4) for the taxable year following the year of change, the life insurance reserves at the end of the preceding taxable year (the year of change) with respect to relevant contracts are $135x (computed on the new basis).

(e) ***Applicability date.*** The rules of this section apply to taxable years beginning after *October 13, 2020.* However, a taxpayer may choose to apply the rules of this section for a taxable year beginning after December 31, 2017, the effective date of the revision of section 807 by Public Law 115-97, and on or before *October 13, 2020,* provided the taxpayer consistently applies the rules of this section to that taxable year and all subsequent taxable years. See section 7805(b)(7).

[T.D. 9911, 85 FR 64392, Oct. 13, 2020]

GAIN AND LOSS FROM OPERATIONS

§§ 1.809-1-1.809-3 [Reserved]

§ 1.809-4 Gross amount.

(a) ***Items taken into account.*** For purposes of determining gain or loss from operations under section 809(b)(1) and (2), respectively, section 809(c) specifies three categories of items which shall be taken into account. Such items are in addition to the life insurance company's share of the investment yield (as determined under section 809(a)(1) and paragraph (c) of § 1.809-2), and the amount (if any) by which the net long-term capital gain exceeds the net short-term capital loss (such capital gains item is included in determining gain or loss from operations only for taxable years beginning after December 31, 1961). The additional three categories of items taken into account are:

(1) ***Premiums.***

(i) The gross amount of all premiums and other consideration on insurance and annuity contracts (including contracts supplementary thereto); less return premiums and premiums and other consideration arising out of reinsurance ceded. The term *gross amount of all premiums* means the premiums and other consideration provided in the insurance or annuity contract. Thus, the amount to be taken into account shall be the total of the premiums and other consideration provided in the insurance or annuity contract without any deduction for commissions, return premiums, reinsurance, dividends to policyholders, dividends left on deposit with the company, discounts on premiums paid in advance, interest applied in reduction of premiums (whether or not required to be credited in reduction of premiums under the terms of the contract), or any other item of similar nature. Such term includes advance premiums, premiums deferred and uncollected and premiums due and unpaid, deposits, fees, assessments, and consideration in respect of assuming liabilities under contracts not issued by the taxpayer (such as a payment or transfer of property in an assumption reinsurance transaction as defined in paragraph (a)(7)(ii) of § 1.809-5). The term also includes amounts a life insurance company charges itself representing premiums with respect to liability for insurance and annuity benefits for its employees (including full-time life insurance salesmen within the meaning of section 7701(a)(20)).

(ii) The term *return premiums* means amounts returned or credited which are fixed by contract and do not depend on the experience of the company or the discretion of the management. Thus, such term includes amounts refunded due to policy cancellations or erroneously computed premiums. Furthermore, amounts of premiums or other consideration returned to another life insurance company in respect of reinsurance ceded shall be included in return premiums. For the treatment of amounts which do not meet the requirements of return premiums, see section 811 (relating to dividends to policyholders).

(iii) For purposes of section 809(c)(1) and this subparagraph, the term *reinsurance ceded* means an arrangement whereby the taxpayer (the reinsured) remains solely liable to the policyholder, whether all or only a portion of the risk has been transferred to the reinsurer. Such term includes indemnity reinsurance transactions but does not include assumption reinsurance transactions. See paragraph (a)(7)(ii) of § 1.809-5 for the definition of assumption reinsurance.

(2) ***Decreases in certain reserves.*** Each net decrease in reserves which is required by section 810 (a) and (d)(1) or 811(b)(2) to be taken into account for the taxable year as a net decrease for purposes of section 809(c)(2).

(3) ***Other amounts.*** All amounts, not included in computing investment yield and not otherwise taken into account under section 809(c) (1) or (2), shall be taken into account under section 809(c)(3) to the extent that such amounts are includible in gross income under subtitle A of the Code. See section 61 (relating to gross income defined) and the regulations thereunder.

(b) ***Treatment of net long-term capital gains.*** For taxable years beginning before January 1, 1962, any net long-term capital gains (as defined in section 1222(7)) from the sale or exchange of a capital asset (or any gain considered to be from the sale or exchange of a capital asset under applicable law) shall be excluded from the determination of gain or loss from operations of a life insurance company. On the other hand, with respect to taxable years beginning after December 31, 1961, the amount (if any) by which the net long-term capital gain exceeds the net short-term capital loss (as defined in section 1222(6)) shall be taken into account in determining gain or loss from operations under section 809. However, for any taxable year beginning after December 31, 1958, the excess of net short-term capital gain (as defined in section 1222(5)) over net long-term capital loss (as defined in section 1222(8)) is included in computing investment yield (as defined in section 804(c)) and, to that extent, is taken into account in determining gain or loss from operations under section 809.

[T.D. 6535, 26 FR 527, Jan. 20, 1961, as amended by T.D. 6610, 27 FR 8718, Aug. 31, 1962, T.D. 6886, 31 FR 8687, June 23, 1966]

§ 1.809-5 Deductions.

(a) ***Deductions allowed.*** Section 809(d) provides the following deductions for purposes of determining gain or loss from operations under section 809(b) (1) and (2), respectively:

(1) ***Death benefits, etc.*** All claims and benefits accrued (less reinsurance recoverable), and all losses incurred (whether or not ascertained), during the taxable year on insurance and annuity contracts (including contracts supplementary thereto). The term *all claims and benefits accrued* includes, for example, matured endowments and amounts allowed on surrender. The term *losses incurred (whether or not ascertained)* includes a reasonable estimate of the amount of the losses (based upon the facts in each case and the company's experience with similar cases) incurred but not reported by the end of the taxable year as well as losses reported but where the amount thereof cannot be ascertained by the end of the taxable year.

(2) ***Increases in certain reserves.*** The net increase in reserves which is required by section 810 (b) and (d)(1) to be taken into account for the taxable year as a net increase for purposes of section 809(d)(2).

(3) ***Dividends to policyholders.*** The deduction for dividends to policyholders as determined under section 811(b) and § 1.811-2.

(4) ***Operations loss deduction.*** The operations loss deduction as determined under section 812.

(5) ***Certain nonparticipating contracts.***

(i) An amount equal to the greater of:

(*a*) 10 percent of the increase for the taxable year in certain life insurance reserves for nonparticipating contracts (other than group contracts); or

(*b*) 3 percent of the premiums for the taxable year attributable to nonparticipating contracts (other than group contracts) which are issued or renewed for periods of 5 years or more.

(ii) For purposes of section 809(d)(5) and this subparagraph, the term *nonparticipating contracts* means those contracts which during the taxable year contain no right to participate in the divisible surplus of the company. For example, if at any time during the taxable year for which the deduction allowed under section 809(d)(5) and this subparagraph is claimed such contracts have rights to dividends or similar distributions (as defined in section 811(a) and paragraph (a) of § 1.811-2), such contracts shall no longer be deemed nonparticipating contracts and, therefore, no deduction shall be allowed. Thus, if a class of contracts having no right to participate in the divisible surplus of the company is in force for nine years and on March 10, 1958, it is announced that such contracts shall be accorded dividend rights as of August 1, 1958, no deduction shall be allowed under section 809(d)(5) and this subparagraph for the taxable year 1958 or any succeeding taxable year, whether or not dividends are actually paid on such contracts. However, if the announcement of March 10, 1958, states that such contracts shall be accorded dividend rights as of January 1, 1959, a deduction under section 809(d)(5) and this subparagraph shall be allowed for the taxable year 1958 but not for any succeeding taxable year.

(iii) For purposes of section 809(d)(5) and this subparagraph, the term *reserves for nonparticipating contracts* means such part of the life insurance reserves (as defined in section 801(b) and § 1.801-4), other than that portion of such reserves which is allocable to annuity features, as relates to nonparticipating contracts (as defined in subdivision (ii) of this subparagraph). The amount of life insurance reserves taken into account shall be adjusted first as required by section 818(c) (relating to an election with respect to life insurance reserves computed on a preliminary term basis) and then as required by section 806(a) (relating to adjustments for certain changes in reserves and assets). In the case of the adjustments required by section 810(d) (relating to adjustment for change in computing reserves), the increase in life insurance reserves attributable to reserve strengthening shall be taken into account in accordance with the rules prescribed in section 810(d).

(iv) For purposes of section 809(d)(5) and this subparagraph, the term *premiums* means the net amount of the premiums and other consideration attributable to nonparticipating contracts (as defined in subdivision (ii) of this subparagraph) which are taken into account under section 809(c)(1). For this purpose, premiums include only such amounts attributable to such contracts which are issued or renewed for periods of 5 years or more, but does not include that portion of the premiums which is allocable to annuity features. No portion of a premium shall be deemed allocable to annuity features solely because a contract, such as an endowment contract, provides that at maturity the insured shall have an option to take an annuity. The determination of whether a contract meets the 5-year requirement shall be made as of the date the contract is issued, or as of the date it is renewed, whichever is applicable. Thus, a 20-year nonparticipating endowment policy shall qualify for the deduction under section 809(d)(5), even though the insured subsequently dies at the end of the second year, since the policy is issued for a period of 5 years or more. However, a 1-year renewable term contract shall not qualify, since as of the date it is issued (or of any renewal date) it is not issued (or renewed) for a period of 5 years or more. In like manner, a policy originally issued for a 3-year period and subsequently renewed for an additional 3-year period shall not qualify. However, if this policy is renewed for a period of 5 years or more, the policy shall qualify for the deduction under section 809(d)(5) from the date it is renewed.

(v) The provisions of section 809(d)(5) and this subparagraph may be illustrated by the following example:

Example. Assume the following facts with respect to X, a life insurance company, for the taxable year 1958:

Life insurance reserves on nonparticipating contracts without annuity features (other than group contracts) at 1-1-58	$150,000
Life insurance reserves on nonparticipating contracts without annuity features (other than group contracts) at 12-31-58	225,000
Annuity reserves on nonparticipating contracts (other than group contracts) at 1-1-58	48,000
Annuity reserves on nonparticipating contracts (other than group contracts) at 12-31-58	57,000
Premiums on nonparticipating contracts without annuity features (other than group contracts) issued or renewed for 5 years or more	85,000
Premiums on nonparticipating contracts allocable to annuity features (other than group contracts) issued or renewed for 5 years or more	14,000
Return premiums on nonparticipating contracts without annuity features (other than group contracts)	5,000

In order to determine the deduction under section 809(d)(5) (without regard to the limitation of section 809(f)), X would make up the following schedule:

(1) Life insurance reserves on nonparticipating contracts without annuity features (other than group contracts) at 12-31-58	$225,000	
(2) Life insurance reserves on nonparticipating contracts without annuity features (other than group contracts) at 1-1-58	150,000	
(3) Excess of item (1) over item (2) ($225,000 minus $150,000)	75,000	
(4) 10 percent of item (3) (10% × $75,000)		7,500
(5) Net premiums on nonparticipating contracts without annuity features issued or renewed for 5 years or more (other than group contracts) (gross premiums on such contracts ($85,000) minus return premiums ($5,000) on such contracts)	80,000	
(6) 3 percent of item (5) (3% × $80,000)		2,400
(7) The greater of item (4) or item (6)		7,500
(8) Tentative deduction under sec. 809(d)(5) (computed without regard to the limitation of sec. 809(f))		7,500

(6) ***Certain accident and health insurance and group life insurance.***

(i) For taxable years beginning before January 1, 1963, an amount equal to two percent of the premiums for the taxable year attributable to group life insurance contracts, group accident and health insurance contracts, or group accident and health insurance contracts with a life feature. For taxable years beginning after December 31, 1962, the deduction shall be an amount equal to two percent of the premiums for the taxable year attributable to group life insurance contracts, accident and health insurance contracts (other than those to which section 809(d)(5) applies), or accident and health insurance contracts with a life feature (other than those to which section 809(d)(5) applies). For purposes of section 809(d)(6) and this subparagraph, the term "premiums" means the net amount of the premiums and other consideration attributable to such contracts taken into account under section 809(c)(1). The deduction allowed by section 809(d)(6) and this subparagraph for the taxable year and all preceding taxable years shall not exceed 50 percent of the net amount of the premiums attributable to such contracts for the taxable year. For example, assume that premiums attributable to group life insurance and group accident and health insurance contracts are $103,000 for the taxable year 1962. Assume further that there are $3,000 of return premiums attributable to such contracts for the taxable year. Under the provisions of section 809(d)(6) and this subparagraph, a deduction (determined without regard to section 809(f) of $2,000 (2 percent of $100,000 ($103,000−$3,000)) is allowed. Assuming that the company continues to receive net premiums of $100,000 attributable to such contracts for 15 years, the cumulative amount of these deductions is $30,000 ($2,000 for 15 years). If, in the sixteenth year, net premiums attributable to such contracts amount to $60,000, no deduction shall be allowed under section 809(d)(6) and this subparagraph since the cumulative amount of these deductions ($30,000) equals 50 percent of the current year's premiums ($60,000) from such contracts.

(ii) In computing the deduction under section 809(d)(6), the determination as to when the 50 percent limitation on such deduction has been reached shall be based upon the amount allowed as a deduction for the taxable year and all preceding taxable years after the application of the limitation provided in section 809(f).

(iii) For purposes of determining whether the 50 percent limitation applies to any taxable year, the deduction provided by section 809(d)(6) for all preceding taxable years shall be taken into account, irrespective of whether or not the life insurance company claimed a deduction for these amounts for such preceding taxable years.

(7) ***Assumption by another person of liabilities under insurance, etc., contracts.***

(i) The consideration (other than consideration arising out of reinsurance ceded as defined in paragraph (a)(1)(iii) of § 1.809-4) in respect of the assumption by another person of liabilities under insurance and annuity contracts (including contracts supplementary thereto) of the taxpayer.

(ii) For purposes of section 809(d)(7) and this subparagraph, the term *assumption reinsurance* means an arrangement whereby another person (the reinsurer) becomes solely liable to the policyholders on the contracts transferred by the taxpayer. Such term does not include indemnity reinsurance or reinsurance ceded (as defined in paragraph (a)(1)(iii) of § 1.809-4).

(iii) The provisions of section 809(d)(7) and this subparagraph may be illustrated by the following example:

Example. During the taxable year 1958, T, a life insurance company, transferred a block of insurance policies and made a payment of $50,000 to R, a life insurance company, under an arrangement whereby R became solely liable to the policyholders on the policies transferred by T. Under the provisions of section 809(d)(7) and this subparagraph, T is allowed a deduction of $50,000 for the taxable year 1958. For the treatment by R of this $50,000 payment, see section 809(c)(1) and paragraph (a)(1)(i) of § 1.809-4. See section 806(a) and § 1.806-3 for the adjustments in reserves and assets to be made by T and R as a result of this transaction.

(8) ***Tax-exempt interest, dividends, etc.***

(i) Each of the following items:

(*a*) The life insurance company's share of interest which under section 103 is excluded from gross income;

(*b*) The deduction for partially tax-exempt interest provided by section 242 (as modified by section 804(a)(3) and paragraph (d)(2)(i) of § 1.804-2) computed with respect to the life insurance company's share of such interest; and

(*c*) The deductions for dividends received provided by sections 243, 244, and 245 (as modified by section 809(d)(8)(B) and subdivision (ii) of this subparagraph) computed with respect to the life insurance company's share of the dividends received.

(ii) The modification contained in section 809(d)(8)(B) provides the method for applying section 246(b) (relating to limitation on aggregate amount of deductions for dividends received) for purposes of section 809(d)(8)(A)(iii) and subdivision (i)(*c*) of this subparagraph. Under this method, the sum of the deductions allowed by sections 243(a)(1) (relating to dividends received by corporations), 244(a) (relating to dividends received on certain preferred stock), and 245 (relating to dividends received from certain foreign corporations) shall be limited to 85 percent of the gain from operations computed without regard to:

(*a*) The deductions provided by section 809(d) (3), (5), and (6);

(*b*) The operations loss deductions provided by section 812; and

(*c*) The deductions allowed by sections 243(a)(1), 244(a), and 245.

If a life insurance company has a loss from operations (as determined under sec. 812) for the taxable year, the limitation provided in section 809(d)(8)(B) and this subdivision shall not be applicable for such taxable year. In that event, the deductions provided by sections 243(a)(1), 244(a), and 245 shall be allowable for all tax purposes to the life insurance company for such taxable year without regard to such limitation. If the life insurance company does not have a loss from operations for the taxable year, however, the limitation shall be applicable for all tax purposes for such taxable year. In determining whether a life insurance company has a loss from operations for the taxable year under section 812, the deductions allowed by sections 243(a)(1), 244(a), and 245 shall be computed without regard to the limitation provided in section 809(d)(8)(B) and this subdivision.

(9) ***Investment expenses, etc.***

(i) The amount of investment expenses to the extent not allowed as a deduction under section 804(c)(1) in computing investment yield. For example, if a deduction in the amount of $100,000 is claimed for investment expenses, which amount includes general expenses assigned to or

included in investment expenses, and due to the operation of the limitation provided by section 804(c)(1) only $85,000 is allowed, then the excess ($15,000) shall be allowed as a deduction under section 809(d)(9) and this subparagraph.

(ii) The amount (if any) by which the sum of the deductions allowable under section 804(c) exceeds the gross investment income. For example, if gross investment income under section 804(b) equals $400,000, and the sum of the deductions allowable under section 804(c) equals $425,000, then the excess ($25,000) shall be allowed as a deduction under section 809(d)(9) and this subparagraph.

(iii) In determining the amount of the deductions allowed under subdivisions (i) and (ii) of this subparagraph, a life insurance company shall first take such deductions to the full extent allowable under section 804(c)(1), and any amount which is allowed as a deduction under section 804(c) shall not again be allowed as a deduction under section 809(d)(9).

(10) ***Small business deduction.*** The small business deduction as determined under section 804(a)(4).

(11) [Reserved]

(12) ***Other deductions.*** Except as modified by section 809(e) and § 1.809-6, all other deductions allowed under subtitle A of the Code for purposes of computing taxable income to the extent not allowed as a deduction in computing investment yield. For example, a life insurance company shall be allowed a deduction under section 809(d)(12) and this subparagraph for amounts representing premiums charged itself with respect to liability for insurance and annuity benefits for its employees (including full-time life insurance salesmen within the meaning of section 7701(a)(20)) in accordance with the rules prescribed in sections 162 and 404 and the regulations thereunder, to the extent that a deduction for such amounts is not allowed under section 804(c)(1) and paragraph (b)(1) of § 1.804-4 or section 809(d)(9) and subparagraph (9) of this paragraph.

(b) ***Denial of double deduction.*** Nothing in section 809(d) shall permit the same item to be deducted more than once in determining gain or loss from operations. For example, if an item is allowed as a deduction for the taxable year by reason of its being a loss incurred within such taxable year (whether or not ascertained) under section 809(d)(1), such item, or any portion thereof, shall not also be allowed as a deduction for such taxable year under section 809(d)(2).

[T.D. 6535, 26 FR 527, Jan. 20, 1961, as amended by T.D. 6610, 27 FR 8718, Aug. 31, 1962; T.D. 6886, 31 FR 8687, June 23, 1966; T.D. 6992, 34 FR 827, Jan. 18, 1969; 84 FR 9236, Mar. 14, 2019]

§ 1.809-6 Modifications.

Under section 809(e), the deductions allowed under section 809(d)(12) and paragraph (a)(12) of § 1.809-5 (relating to other deductions) are subject to the following modifications:

(a) ***Interest.*** No deduction shall be allowed under section 163 for interest in respect of items described in section 810(c) since such interest is taken into account in the determination of required interest under section 809.

(b) ***Bad debts.*** No deduction shall be allowed for an addition to reserves for bad debts under section 166(c). However, a deduction for specific bad debts shall be allowed to the extent that such deduction is allowed under section 166 and the regulations thereunder. In the case of a loss incurred on the sale of mortgaged or pledged property, see § 1.166-6 of this chapter.

(c) *Charitable, etc., contributions and gifts.*

(1) The deduction by a life insurance company in any taxable year for a charitable contribution (as defined in section 170(c)) shall be limited to 5 percent of the gain from operations (as determined under section 809(b)(1)), computed without regard to any deductions for:

(i) Charitable contributions under section 170;

(ii) Dividends to policyholders under section 811(b);

(iii) Certain nonparticipating contracts under section 809(d)(5);

(iv) Group life insurance contracts and group accident and health insurance contracts under section 809(d)(6);

(v) Tax-exempt interest, dividends, etc., under section 809(d)(8); and

(vi) Any operations loss carryback to the taxable year under section 812.

(2) In applying the first sentence of section 170(b)(2) as contained in section 170 or, in the case of taxable years beginning after December 31, 1969, section 170(d)(2)(B) as contained in section 170A, any excess of the charitable contributions made by a life insurance company in a taxable year over the amount deductible in such year under the limitation contained in subparagraph (1) of this paragraph, shall be reduced to the extent that such excess:

(i) Reduces life insurance company taxable income (computed without regard to section 802(b)(3)) for the purpose of determining the offsets referred to in section 812(b)(2); and

(ii) Increases an operations loss carryover under section 812 for a succeeding taxable year.

(3) The application of the rules provided in section 809(e)(3) and this paragraph may be illustrated by the following example:

Example. Assume that life insurance company P is organized on January 1, 1958, and has a loss from operations for that year in the amount of $100,000 which is an operations loss carryover to 1959. In 1959, company P has a gain from operations and tax base (computed without regard to section 802(b)(3)) of $100,000 before the allowance of a deduction for a $5,000 charitable contribution made in 1959 and before the application of the operations loss carryover from 1958. Under section 170(b)(2), the operations loss carryover from 1958 is first applied to eliminate the $100,000 gain from operations and tax base in 1959 and the $5,000 charitable contribution carryover would (except for the limitation contained in this paragraph) become a charitable contribution carryover to 1960. However, for the purpose of computing the offsets referred to in section 812(b)(2), the $5,000 charitable contribution is applied to reduce the gain from operations and tax base for 1959 to $95,000 before the application of the operations carryover from 1958. Since only $95,000 of the $100,000 loss from operations in 1958 is an offset for 1959, the remaining $5,000 becomes an operations loss carryover to 1960. Accordingly, under the limitation contained in this paragraph, the charitable contributions carryover provided under the second sentence of section 170(b)(2) is eliminated.

(d) ***Amortizable bond premium.*** No deduction shall be allowed under section 171 for the amortization of bond premiums since a special deduction for such premiums is specifically taken into account under section 818(b).

(e) ***Net operating loss deduction.*** No deduction shall be allowed under section 172 since section 812 allows an "operations loss deduction".

(f) ***Partially tax-exempt interest.*** No deduction shall be allowed under section 242 for partially tax-exempt interest since section 809(d)(8) allows a deduction for such interest.

(g) ***Dividends received.*** No deduction shall be allowed under sections 243, 244, and 245 for dividends received since section 809(d)(8) allows a deduction for such dividends.

[T.D. 6535, 26 FR 529, Jan. 20, 1961, as amended by T.D. 7207, 37 FR 20797, Oct. 5, 1972; 85 FR 64393, Oct. 13, 2020]

§ 1.810-1 [Reserved]

§ 1.810-2 Rules for certain reserves.

(a) ***Adjustment for decrease or increase in certain reserve items*** —

(1) ***Adjustment for decrease.*** Section 810(a) provides that if the sum of the items described in section 810(c) and paragraph (b) of this section at the beginning of the taxable year exceeds the sum of such items at the end of the taxable year (reduced by the amount of investment yield not included in gain or loss from operations for the taxable year by reason of section 809(a)(1)), the amount of such excess shall be taken into account as a net decrease referred to in section 809(c)(2) and paragraph (a)(2) of § 1.809-4 in determining gain or loss from operations.

(2) ***Adjustment for increase.*** Section 810(b) provides that if the sum of the items described in section 810(c) and paragraph (b) of this section at the end of the taxable year (reduced by the amount of investment yield not included in gain or loss from operations for the taxable year by reason of section 809(a)(1)) exceeds the sum of such items at the beginning of the taxable year, the amount of such excess shall be taken into account as a net increase referred to in section 809(d)(2) and paragraph (a)(2) of § 1.809-5 in determining gain or loss from operations.

(b) ***Items taken into account.*** The items described in section 810(c) and referred to in section 810 (a) and (b) and paragraph (a) of this section are:

(1) The life insurance reserves (as defined in section 801(b) and § 1.801-4);

(2) The unearned premiums and unpaid losses included in total reserves under section 801(c)(2) and § 1.801-5;

(3) The amounts (discounted at the rates of interest assumed by the company) necessary to satisfy the obligations under insurance or annuity contracts (including contracts supplementary thereto), but only if such obligations do not involve (at the time with respect to which the computation is made under this subparagraph) life, health, or accident contingencies;

(4) Dividend accumulations, and other amounts, held at interest in connection with insurance or annuity contracts (including contracts supplementary thereto); and

(5) Premiums received in advance, and liabilities for premium deposit funds.

(6) Special contingency reserves under contracts of group term life insurance or group health and accident insurance which are established and maintained for the provision of insurance on retired lives, for premium stabilization, or for a combination thereof.

For purposes of this paragraph, the same item shall be counted only once and deficiency reserves (as defined in section 801(b)(4) and paragraph (e)(4) of § 1.801-4) shall not be taken into account.

(c) ***Special rules.*** For purposes of section 810 (a) and (b) and paragraph (a) of this section, in determining whether there is a net increase or decrease in the sum of the items described in section 810(c) and paragraph (b) of this section for the taxable year, the following rules shall apply:

(1) ***Computation of net increase or decrease in reserves.*** The sum of the items described in section 810(c) and paragraph (b) of this section at the beginning of the taxable year shall be the aggregate of the sums of each of such items at the beginning of the taxable year. The sum of the items described in section 810(c) and paragraph (b) of this section at the end of the taxable year shall be the aggregate of the sums of each of such items at the end of the taxable year. However, in order to determine whether there is a net increase or decrease in such items for the taxable year, the aggregate of the sums of the items at the end of the taxable year must first be reduced by the amount of investment yield not included in gain or loss from operations for the taxable year by reason of section 809(a)(1).

(2) ***Effect of change in basis in computing reserves.*** Any increase or decrease in the sum of the items described in section 810(c) and paragraph (b) of this section for the taxable year which is attributable to a change in the basis used in computing such items during the taxable year shall not be taken into account under section 810 (a) or (b) and paragraph (a) of this section but shall be taken into account in the manner prescribed in section 810(d) and paragraph (a) of § 1.810-3.

(3) ***Effect of section 818(c) election.*** If a company which computes its life insurance reserves on a preliminary term basis elects to revalue such reserves on a net level premium basis under section 818(c), the sum of such reserves at the beginning and end of all taxable years (including the first taxable year) for which the election applies shall be the sum of such reserves computed on such net level premium basis.

(4) ***Cross references.*** For taxable years beginning before January 1, 1970, see section 810(e) (as in effect for such years) for special rules for determining the net increase or decrease in the sum of the items described in section 810(c) and paragraph (b) of this section in the case of certain voluntary employees' beneficiary associations. For similar special rules in the case of life insurance companies issuing variable annuity contracts, see section 801(g)(4) and the regulations thereunder.

(d) ***Illustration of principles.*** The provisions of section 810 (a) and (b) and this section may be illustrated by the following examples:

Example 1. Assume the following facts with respect to R, a life insurance company:

Sum of items described in section 810(c) (1) through (6) at beginning of taxable year	$940
Sum of items described in section 810(c) (1) through (6) at end of taxable year	1,060
Required interest (as defined in section 809(a)(2))	70
Investment yield (as defined in section 804(c))	100
Amount of investment yield not included in gain or loss from operations for the taxable	70

year by reason of section 809(a)(1)

In order to determine the adjustment for decrease or increase in the sum of the items described in section 810(c) for the taxable year, R must first reduce the sum of such items at the end of the taxable year ($1,060) by the amount of investment yield ($70) not included in gain or loss from operations for the taxable year by reason of section 809(a)(1). Since the adjusted sum of such items at the end of the taxable year, $990 ($1,060 minus $70), exceeds the sum of such items at the beginning of the taxable year, $940, the excess of $50 ($990 minus $940) shall be taken into account as a net increase under section 809(d)(2) and paragraph (a)(2) of § 1.809-5 in determining gain or loss from operations.

Example 2. Assume the facts are the same as in example 1, except that the sum of the items described in section 810(c) at the beginning of the taxable year is $1000. Since the sum of the items described in section 810(c) at the beginning of taxable year, $1000, exceeds the sum of such items at the end of the taxable year after adjustment for the amount of investment yield not included in gain or loss from operations for the taxable year by reason of section 809(a)(1), $990 ($1060 minus $70), the excess of $10 ($1000 minus $990) shall be taken into account as a net decrease under section 809 (c)(2) and paragraph (a)(2) of § 1.809-4 in determining gain or loss from operations.

Example 3. Assume the following facts with respect to S, a life insurance company:

Sum of items described in section 810(c) (1) through (6) at beginning of taxable year	$1,970
Sum of items described in section 810(c) (1) through (6) at the end of taxable year	2,040
Required interest (as defined in section 809(a)(2))	60
Investment yield (as defined in section 804(c))	40
Amount of investment yield not included in gain or loss from operations by reason of section 809(a)(1)	40

Under the provisions of section 809(a)(1), since the required interest ($60) exceeds the investment yield ($40), the share of each and every item of investment yield set aside for policyholders and not included in gain or loss from operations for the taxable year shall be 100 percent. Thus, applying the provisions of section 810 (a) and (b), the sum of the items described in section 810(c) at the end of the taxable year ($2,040) must first be reduced by the entire amount of the investment yield ($40) in order to determine the net increase or decrease in the sum of such items for the taxable year. Since the adjusted sum of such items at the end of the taxable year, $2,000 ($2,040 minus $40), is greater than the sum of such items at the beginning of the taxable year, $1,970, the excess of $30 ($2,000 minus $1,970) shall be taken into account as a net increase

> under section 809(d)(2) and paragraph (a)(2) of § 1.809-5 in determining gain or loss from operations. No additional deduction is allowed under section 809(d) for the amount ($20) by which the required interest exceeds the investment yield for the taxable year.

Example 4. Assume the facts are the same as in example 1, except that as a result of a change in the basis used in computing an item described in section 810(c) during the taxable year, the sum of such items at the end of the taxable year is $1,200. Under the provisions of paragraph (c)(2) of this section, any increase or decrease in the sum of the section 810(c) items for the taxable year which is attributable to a change in the basis used in computing such items during the taxable year shall not be taken into account under section 810 (a) and (b). Thus, for purposes of section 810 (a) and (b), the sum of the items described in section 810(c) at the end of the taxable year shall be $1,060 (the amount computed without regard to the change in basis) and S shall treat the $50 computed in the manner described in example 1 as a net increase under section 809(d)(2) and paragraph (a)(2) of § 1.809-5 in determining its gain or loss from operations for the taxable year. The amount of the increase in the section 810(c) items which is attributable to the change in basis during the taxable year, $140 ($1,200 minus $1,060), shall be taken into account in the manner prescribed in section 810(d) and paragraph (a) of § 1.810-3.

Example 5. The life insurance reserves of M, a life insurance company, computed with respect to contracts for which such reserves are determined on a recognized preliminary term basis amount to $100 on January 1, 1960, and $110 on December 31, 1960. For the taxable year 1960, M elects to revalue such reserves on a net level premium basis under section 818(c). Such reserves computed under section 818(c) amount to $115 on January 1, 1960, and $127 on December 31, 1960. Under the provisions of paragraph (c)(3) of this section, a company which makes the section 818(c) election must use the net level premium basis in computing the sum of its life insurance reserves at the beginning and end of all taxable years for which the election applies. Thus, for purposes of section 810 (a) and (b), in determining whether there is a net increase or decrease in the sum of the section 810(c) items for the taxable year 1960, M shall include $115 as its reserves with respect to such contracts under section 810(c)(1) at the beginning of the taxable year and $127 as its reserves with respect to such contracts under section 810(c)(1) at the end of the taxable year.

[T.D. 6535, 26 FR 531, Jan. 20, 1961, as amended by T.D. 7163, 37 FR 4189, Feb. 29, 1972; T.D. 7172, 37 FR 5619, Mar. 17, 1972; T.D. 9849, 84 FR 9236, Mar. 14, 2019]

§ 1.811-1 Taxable years affected.

Section 1.811-2, except as otherwise provided therein, is applicable only to taxable years beginning after December 31, 1957, and all references to sections of part I, subchapter L, chapter 1 of the Code are to the Internal Revenue Code of 1954, as amended by the Life Insurance Company Income Tax Act of 1959 (73 Stat. 112).

[T.D. 6535, 26 FR 534, Jan. 20, 1961]

§ 1.811-2 Dividends to policyholders.

(a) ***Dividends to policyholders defined.*** Section 811(a) defines the term *dividends to policyholders,* for purposes of part I, subchapter L, chapter 1 of the Code, to mean dividends and similar distributions to policyholders in their capacity as such. The term includes amounts returned to policyholders where the amount is not fixed in the contract but depends on the experience of the company or the discretion of the management. In general, any payment not fixed in the contract which is made with respect to a

participating contract (that is, a contract which during the taxable year contains a right to participate in the divisible surplus of the company) shall be treated as a dividend to policyholders. Similarly, any amount refunded or allowed as a rate credit with respect to either a participating or a nonparticipating contract shall be treated as a dividend to policyholders if such amount depends on the experience of the company. However, the term does not include interest paid (as defined in section 805(e) and paragraph (b) of § 1.805-8) or return premiums (as defined in section 809(c) and paragraph (a)(1)(ii) of § 1.809-4). Thus, so-called excess-interest dividends and amounts returned by one life insurance company to another in respect of reinsurance ceded shall not be treated as dividends to policyholders even though such amounts are not fixed in the contract but depend upon the experience of the company or the discretion of the management.

(b) ***Amount of deduction*** —

(1) ***In general.*** Section 811(b)(1) provides, subject to the limitation of section 809(f), that the deduction for dividends to policyholders for any taxable year shall be an amount equal to the dividends to policyholders paid during the taxable year:

(i) Increased by the excess of the amounts held as reserves for dividends to policyholders at the end of the taxable year for payment during the year following the taxable year, over the amounts held as reserves for dividends to policyholders at the end of the preceding taxable year for payment during the taxable year, or

(ii) Decreased by the excess of the amounts held as reserves for dividends to policyholders at the end of the preceding taxable year for payment during the taxable year, over the amounts held as reserves for dividends to policyholders at the end of the taxable year for payment during the year following the taxable year.

For the rule as to when dividends are considered paid, see section 561 and the regulations thereunder. For the determination of the amounts held as reserves for dividends to policyholders, see paragraph (c) of this section. For special provisions relating to the treatment of dividends to policyholders paid with respect to policies reinsured under modified coinsurance contracts, see section 820(c)(5) and the regulations thereunder.

(2) ***Certain amounts to be treated as net decreases.*** Section 811(b)(2) provides that if the amount determined under subparagraph (1)(ii) of this paragraph exceeds the dividends to policyholders paid during the taxable year, the amount of such excess shall be a net decrease referred to in section 809(c)(2).

(c) ***Reserves for dividends to policyholders defined*** —

(1) ***In general.*** The term *reserves for dividends to policyholders,* as used in section 811(b)(1) (A) and (B) and paragraph (b)(1) of this section, means only those amounts:

(i) Actually held, or set aside as provided in subparagraph (2) of this paragraph and thus treated as actually held, by the company at the end of the taxable year, and

(ii) With respect to which, at the end of the taxable year or, if set aside, within the period prescribed in subparagraph (2) of this paragraph, the company is under an obligation, which is either fixed or determined according to a formula which is fixed and not subject to change by the company, to pay such amounts as dividends to policyholders (as defined in section 811(a) and paragraph (a) of this section) during the year following the taxable year.

(2) ***Amounts set aside.***

(i) In the case of a life insurance company (as defined in section 801(a) and paragraph (b) of § 1.801-3), all amounts set aside before the 16th day of the 3d month of the year following the taxable year for payment as dividends to policyholders (as defined in section 811(a) and paragraph (a) of this section) during the year following such taxable year shall be treated as amounts actually held at the end of the taxable year.

(ii) In the case of a mutual savings bank subject to the tax imposed by section 594, all amounts set aside before the 16th day of the 4th month of the year following the taxable year for payment as dividends to policyholders (as defined in section 811(a) and paragraph (a) of this section) during the year following such taxable year shall be treated as amounts actually held at the end of the taxable year.

(3) ***1958 reserve for dividends to policyholders.*** For purposes of section 811(b) and paragraph (b) of this section, the amounts held at the end of 1957 as reserves for dividends to policyholders payable during 1958 shall be determined as if part I, subchapter L, chapter 1 of the Code (as in effect for 1958) applied for 1957. Any adjustment in the reserves for dividends to policyholders at the beginning of 1957 required as a result of an understatement or overstatement of such reserves by the company shall be made to the balance of such reserves as of the beginning of 1957. For example, if at the beginning of 1957 the reserves for dividends to policyholders are stated to be $100 and it is subsequently determined that such reserves should have been $90, the reserves at the beginning of 1957 shall be reduced by $10. Under no circumstances shall an adjustment required with regard to the beginning 1957 reserves be made to the reserves at the end of 1957.

(4) ***Information to be filed.*** Every company claiming a deduction for dividends to policyholders shall keep such permanent records as are necessary to establish the amount of dividends actually paid during the taxable year. Such company shall also keep a copy of the dividend resolution and any necessary supporting data relating to the amounts of dividends declared and to the amounts held or set aside as reserves for dividends to policyholders during the taxable year. The company shall file with its return a concise statement of the pertinent facts relating to its dividend policy for the year, the amount of dividends actually paid during the taxable year, and the amounts held or set aside as reserves for dividends to policyholders during the taxable year.

(d) ***Illustration of principles.*** The provisions of section 811(b) and this section may be illustrated by the following examples:

Example 1. On December 31, 1959, M, a life insurance company, held $200 as reserves for dividends to policyholders due and payable in 1960. On March 10, 1960, M set aside an additional $50 as reserves for dividends to policyholders due and payable in 1960. During the taxable year 1960, M paid $240 as dividends to its policyholders and at the end of the taxable year 1960, held $175 as reserves for dividends to policyholders due and payable in 1961. No additional amount was set aside before March 16, 1961, as reserves for dividends to policyholders due and payable in 1961. For the taxable year 1960, subject to the limitation of section 809(f), M's deduction for dividends to policyholders is $165, computed as follows:

(1) Dividends paid to policyholders during the taxable year 1960	$240
(2) Decreased by the excess of item (a) over item (b):	

(a) Reserves for dividends to policyholders as of 12-31-59 (including amounts set aside as provided in paragraph (c)(2) of this section)	$250	
(b) Reserves for dividends to policyholders as of 12-31-60–	175	
	-——	75
(3) Deduction for dividends to policyholders under sec. 811(b) (computed without regard to the limitation of sec. 809(f))		$165

Example 2. On December 31, 1960, S, a life insurance company, held $100 as reserves for dividends to policyholders due and payable in 1961. During the taxable year 1961, S paid $125 as dividends to its policyholders and at the end of the taxable year 1961, held $110 as reserves for dividends to policyholders due and payable in 1962. No additional amount was set aside for dividends to policyholders as provided in paragraph (c)(2) of this section before March 16, 1961, or March 16, 1962. For the taxable year 1961, subject to the limitation of section 809(f), S's deduction for dividends to policyholders is $135, computed as follows:

(1) Dividends paid to policyholders during the taxable year 1961		$125
(2) Increased by the excess of item (a) over item (b):		
(a) Reserves for dividends to policyholders as of 12-31-61	$110	
(b) Reserves for dividends to policyholders as of 12-31-60	100	
	-——	10
(3) Deduction for dividends to policyholders under sec. 811(b) (computed without regard to the limitation of sec. 809(f))		$135

Example 3. Assume the facts are the same as in example 2, except that on December 31, 1960, the amount held as reserves for dividends to policyholders due and payable in 1961 is $250. For the taxable year 1961, S's deduction for dividends to policyholders is zero, computed as follows:

(1) Dividends paid to policyholders during the taxable year 1961		$125
(2) Decreased by the excess of item (a) over item (b):		
(a) Reserves for dividends to policyholders as of 12-31-60	$250	
(b) Reserves for dividends to policyholders as of 12-31-61	110	
	-——	140
(3) Deduction for dividends to policyholders under sec. 811(b) (computed without		$0

regard to the limitation of sec. 809(f))

Under the provisions of section 811(b)(2) and paragraph (b)(2) of this section, since the decrease in the reserves for dividends to policyholders during the taxable year, $140 ($250 minus $110), exceeds the dividends to policyholders paid during the taxable year 1961, $125, S shall include $15 (the amount of such excess) as a net decrease under section 809(c)(2) and paragraph (a)(2) of § 1.809-4 in determining its gain or loss from operations for 1961.

[T.D. 6535, 26 FR 534, Jan. 20, 1961]

§ 1.811-3 Cross-reference.

For special rules regarding the treatment of modified guaranteed contracts (as defined in section 817A and § 1.817A-1(a)(1)), *see* § 1.817A-1.

[T.D. 9058, 68 FR 24350, May 7, 2003]

§ 1.812-1 Taxable years affected.

Sections 1.812-2 through 1.812-8, except as otherwise provided therein, are applicable only to taxable years beginning after December 31, 1957, and all references to sections of part I, subchapter L, chapter 1 of the Code are to the Internal Revenue Code of 1954, as amended by the Life Insurance Company Income Tax Act of 1959 (73 Stat. 112) and the Act of October 23, 1962 (76 Stat. 1134).

[T.D. 6886, 31 FR 8689, June 23, 1966]

§ 1.812-2 Operations loss deduction.

(a) ***Allowance of deduction.*** Section 812 provides that a life insurance company shall be allowed a deduction in computing gain or loss from operations for any taxable year beginning after December 31, 1957, in an amount equal to the aggregate of the operations loss carryovers and operations loss carrybacks to such taxable year. This deduction is referred to as the operations loss deduction. The loss from operations (computed under section 809), is the basis for the computation of the operations loss carryovers and operations loss carrybacks and ultimately for the operations loss deduction itself. Section 809(e)(5) provides that the net operating loss deduction provided in section 172 shall not be allowed a life insurance company since the operations loss deduction provided in section 812 and this paragraph shall be allowed in lieu thereof.

(b) ***Steps in computation of operations loss deduction.*** The three steps to be taken in the ascertainment of the operations loss deduction for any taxable year beginning after December 31, 1957, are as follows:

(1) Compute the loss from operations for any preceding or succeeding taxable year from which a loss from operations may be carried over or carried back to such taxable year.

(2) Compute the operations loss carryovers to such taxable year from such preceding taxable years and the operations loss carrybacks to such taxable year from such succeeding taxable years.

(3) Add such operations loss carryovers and carrybacks in order to determine the operations loss deduction for such taxable year.

(c) ***Statement with tax return.*** Every life insurance company claiming an operations loss deduction for any taxable year shall file with its return for such year a concise statement setting forth the amount of the operations loss deduction claimed and all material and pertinent facts relative thereto, including a detailed schedule showing the computation of the operations loss deduction.

(d) ***Ascertainment of deduction dependent upon operations loss carryback.*** If a life insurance company is entitled in computing its operations loss deduction to a carryback which it is not able to ascertain at the time its return is due, it shall compute the operations loss deduction on its return without regard to such operations loss carryback. When the life insurance company ascertains the operations loss carryback, it may within the applicable period of limitations file a claim for credit or refund of the overpayment, if any, resulting from the failure to compute the operations loss deduction for the taxable year with the inclusion of such carryback; or it may file an application under the provisions of section 6411 for a tentative carryback adjustment.

(e) ***Law applicable to computations.*** The following rules shall apply to all taxable years beginning after December 31, 1957:

(1) In determining the amount of any operations loss carryback or carryover to any taxable year, the necessary computations involving any other taxable year shall be made under the law applicable to such other taxable year.

(2) The loss from operations for any taxable year shall be determined under the law applicable to that year without regard to the year to which it is to be carried and in which, in effect, it is to be deducted as part of the operations loss deduction.

(3) The amount of the operations loss deduction which shall be allowed for any taxable year shall be determined under the law applicable for that year.

(f) ***Special rules.*** For purposes of taxable years beginning after December 31, 1954, and before January 1, 1958:

(1) The amount of any:

(i) Loss from operations;

(ii) Operations loss carryback; and

(iii) Operations loss carryover

shall be computed as if part I, subchapter L, chapter 1 of the Code (as in effect for 1958) and section 381(c)(22) applied to such taxable years.

(2) A loss from operations (determined in accordance with the provisions of section 812(b)(1)(C) and this paragraph) for such taxable years shall in no way affect the tax liability of any life insurance company for such taxable years. However, such loss may, to the extent allowed as an operations loss carryover under section 812, affect the tax liability of a life insurance company for a taxable year beginning after December 31, 1957. For example, for the taxable year 1956, X, a life insurance company, has a loss from operations (determined in accordance with the provisions of section 812(b)(1)(C) and this paragraph). Such loss shall in no way affect X's tax liability for the taxable years 1956 (the year of the loss), 1955 (a year to which such loss shall be carried back), or 1957 (a

year to which such loss shall be carried forward). However, to the extent allowed under section 812, any amount of the loss for 1956 remaining after such carryback and carryforward shall be taken into account in determining X's tax liability for taxable years beginning after December 31, 1957.

[T.D. 6535, 26 FR 536, Jan. 20, 1961]

§ 1.812-3 Computation of loss from operations.

(a) ***Modification of deductions.*** A loss from operations is sustained by a life insurance company in any taxable year, if and to the extent that, for such year, there is an excess of the sum of the deductions provided by section 809(d) over the sum of

(1) the life insurance company's share of each and every item of investment yield (including tax-exempt interest, partially tax-exempt interest, and dividends received) as determined under section 809(b)(3), and

(2) the sum of the items of gross amount taken into account under section 809(c). In determining the loss from operations for purposes of section 812:

(i) No deduction shall be allowed under section 812 for the operations loss deduction.

(ii) The 85 percent limitation on dividends received provided by section 246 (b) as modified by section 809(d)(8)(B) shall not apply to the deductions otherwise allowed under:

(*a*) Section 243(a) in respect to dividends received by corporations,

(*b*) Section 244 in respect of dividends received on certain preferred stock of public utilities, and

(*c*) Section 245 in respect of dividends received from certain foreign corporations.

(b) ***Illustration of principles.*** The application of paragraph (a) of this section may be illustrated by the following example:

Example. For the taxable year 1960, X, a life insurance company, has items taken into account under section 809(c) amounting to $150,000, its share of the investment yield amounts to $250,000, and total deductions allowed by section 809(d) of $375,000, exclusive of any operations loss deduction and exclusive of any deduction for dividends received. In 1960, X received as its share of dividends entitled to the benefits of section 243(a) the amount of $100,000. These dividends are included in X's share of the investment yield. X has no other deductions to which section 812(c) applies. On the basis of these facts, X has a loss from operations for the taxable year 1960 of $60,000, computed as follows:

Deductions for 1960	$375,000
Plus: Deduction for dividends received computed without regard to the limitation provided by sec. 246(b), as modified by sec. 809(d)(8)(B) (85% of $100,000)	85,000
Total deductions as modified by sec. 812(c)	460,000
Less: Sum of sec. 809(c) items and X's share of investment yield (including $100,000 of	400,000

dividends)	
Loss from operations for 1960	(60,000)

[T.D. 6535, 26 FR 536, Jan. 20, 1961]

§ 1.812-4 Operations loss carrybacks and operations loss carryovers.

(a) ***In general*** —

(1) ***Years to which loss may be carried.*** In order to compute the operations loss deduction of a life insurance company the company must first determine the part of any losses from operations for any preceding or succeeding taxable years which are carryovers or carrybacks to the taxable year in issue. Except as otherwise provided by this paragraph, a loss from operations for taxable years beginning after December 31, 1954, shall be carried back to each of the 3 taxable years preceding the loss year and shall be carried forward to each of the 5 taxable years succeeding the loss year. Except as limited by section 812(e)(2) and paragraph (b) of § 1.812-6, if the life insurance company is a new company (as defined in section 812(e)(1)) for the loss year, the loss from operations shall be carried back to each of the 3 taxable years preceding the loss year and shall be carried forward to each of the 8 taxable years succeeding the loss year. In determining the span of years for which a loss from operations may be carried, taxable years in which a company does not qualify as a life insurance company (as defined in section 801(a)), or is not treated as a new company, shall be taken into account.

(2) ***Special transitional rules.***

(i) A loss from operations for any taxable year beginning before January 1, 1958, shall not be carried back to any taxable year beginning before January 1, 1955. Furthermore, a loss from operations for any taxable year beginning after December 31, 1957, shall not be carried back to any taxable year beginning before January 1, 1958.

(ii) If for any taxable year a life insurance company has made an election under section 810(e) (relating to certain decreases in reserves for voluntary employees' beneficiary associations) which is effective for such taxable year, the provisions of section 812(b)(1) and subparagraph (1) of this paragraph shall not apply with respect to any loss from operations for any taxable year beginning before January 1, 1958.

(3) ***Illustration of principles.*** The provisions of section 812(b)(1) and of this paragraph may be illustrated by the following examples:

Example 1. P, a life insurance company, organized in 1940, has a loss from operations of $1,000 in 1958. This loss cannot be carried back, but shall be carried forward to each of the 5 taxable years following 1958.

Example 2. Q, a life insurance company, organized in 1940, has a loss from operations of $1,200 in 1959. This loss shall be carried back to the taxable year 1958 and then shall be carried forward to each of the 5 taxable years following 1959.

Example 3. R, a life insurance company, organized in 1940, has a loss from operations of $1,300 for the taxable year 1956. This loss shall first be carried back to the taxable year 1955 and then shall be carried forward to each of the 5 taxable years following 1956. The loss for 1956, carryback to 1955, and carryover to 1957 shall each be computed as if part I, subchapter L, chapter 1 of the Code (as in effect for 1958) applied to such taxable years.

Example 4. S, a life insurance company, organized in 1958 and meeting the provisions of section 812(e) (rules relating to new companies), has a loss from operations of $1,400 for the taxable year 1958. This loss cannot be carried back, but shall be carried forward to each of the 8 taxable years following 1958, provided, however, S is not a nonqualified corporation at any time during the loss year (1958) or any taxable year thereafter.

Example 5. T, a life insurance company, organized in 1954 and meeting the provisions of section 812(e) (rules relating to new companies), has a loss from operations of $1,500 for the taxable year 1956. This loss shall first be carried back to the taxable year 1955 and then carried forward to each of the 8 taxable years following 1956, provided, however, T is not a nonqualified corporation at any time during the loss year (1956) or any taxable year thereafter. The loss for 1956, carryback to 1955, and carryover to 1957 shall each be computed as if part I of subchapter L (as in effect for 1958) applied to such taxable years.

(4) ***Periods of less than 12 months.*** A fractional part of a year which is a taxable year under sections 441(b) and 7701(a)(23) is a preceding or a succeeding taxable year for the purpose of determining under section 812 the first, second, etc., preceding or succeeding taxable year. For the determination of the loss from operations for periods of less than 12 months, see section 818(d) and the regulations thereunder.

(5) ***Amount of loss to be carried.*** The amount which is carried back or carried over to any taxable year is the loss from operations to the extent it was not absorbed in the computation of gain from operations for other taxable years, preceding such taxable year, to which it may be carried back or carried over. For the purpose of determining the gain from operations for any such preceding taxable year, the various operations loss carryovers and carrybacks to such taxable year are considered to be applied in reduction of the gain from operations in the order of the taxable years from which such losses are carried over or carried back, beginning with the loss for the earliest taxable year.

(6) ***Corporate acquisitions.*** For the computation of the operations loss carryovers in the case of certain acquisitions of the assets of a life insurance company by another life insurance company, see section 381(c)(22) and the regulations thereunder.

(b) ***Portion of loss from operations which is a carryback or a carryover to the taxable year in issue*** —

(1) ***Manner of computation.***

(i) A loss from operations shall first be carried back to the earliest taxable year permissible under section 812(b) and paragraph (a) of this section for which such loss is allowable as a carryback or a carryover. The entire amount of the loss from operation shall be carried back to such earliest year.

(ii) Section 812(b)(2) provides that the portion of the loss from operations which shall be carried to each of the taxable years subsequent to the earliest taxable year shall be the excess (if any) of the amount of the loss from operations over the sum of the offsets (as defined in section 812(d) and paragraph (a) of § 1.812-5) for all prior taxable years to which the loss from operations may be carried.

(2) ***Illustration of principles.*** The application of this paragraph may be illustrated by the following example:

Example. T, a life insurance company (which is not a new company as defined in section 812(e)(1)), has a loss from operations for 1960. The entire amount of the loss from operations for 1960 shall first be carried back to 1958. The amount of the carryback to 1959 is the excess (if any) of the 1960 loss over the offset for 1958. The amount of the carryover to 1961 is the excess (if any) of the 1960 loss over the sum of the offsets for 1958 and 1959. The amount of the 1960 loss remaining (if any) to be carried over to 1962, 1963, or 1964 shall be computed in a like manner.

[T.D. 6535, 26 FR 537, Jan. 20, 1961]

§ 1.812-5 Offset.

(a) ***Offset defined.*** Section 812(d) defines the term "offset" for purposes of section 812(b)(2) and paragraph (b)(1)(ii) of § 1.812-4. For any taxable year the offset is only that portion of the increase in the operations loss deduction for the taxable year which is necessary to reduce the life insurance company taxable income (computed without regard to section 802(b)(3)) for such year to zero. For purposes of the preceding sentence, the offset shall be determined with the modifications prescribed in paragraph (b) of this section. Such modifications shall be made independently of, and without reference to, the modifications required by paragraph (a) of § 1.812-3 for purposes of computing the loss from operations itself.

(b) ***Modifications*** —

(1) ***Operations loss deduction*** —

(i) ***In general.*** Section 812(d)(2) provides that for purposes of section 812(d)(1) (relating to the definition of offset), the operations loss deduction for any taxable year shall be computed by taking into account only such losses from operations otherwise allowable as carryovers or as carrybacks to such taxable year as were sustained in taxable years preceding the taxable year in which the life insurance company sustained the loss from operations from which the offset is to be deducted. Thus, for such purposes the loss from operations for the loss year or for any taxable year thereafter shall not be taken into account.

(ii) ***Illustration of principles.*** The provisions of this subparagraph may be illustrated by the following example:

Example. In computing the operations loss deduction for 1960, Y, a life insurance company, has a carryover from 1958 of $9,000, a carryover from 1959 of $6,000, a carryback from 1961 of $18,000, and a carryback from 1962 of $10,000, or an aggregate of $43,000 in carryovers and carrybacks. Thus, the operations loss deduction for 1960, for purposes of determining the tax liability for 1960, is $43,000. However, in computing the offset for 1960 which is subtracted from the loss from operations for 1961 for the purpose of determining the portion of such loss which may be carried over to subsequent taxable years, the operations loss deduction for 1960 is $15,000, that is, the aggregate of the $9,000 carryover from 1958 and the $6,000 carryover from 1959. In computing the operations loss deduction for such purpose, the $18,000 carryback from 1961 and the $10,000 carryback from 1962 are disregarded. In computing the offset for 1960, however, which is subtracted from the loss from operations for 1962 for the purpose of determining the portion of such 1962 loss which may be carried over for subsequent taxable years, the operations loss deduction for 1960 is $33,000, that is, the

aggregate of the $9,000 carryover from 1958, the $6,000 carryover from 1959, and the $18,000 carryback from 1961. In computing the operations loss deduction for such purpose, the $10,000 carryback from 1962 is disregarded.

(2) ***Recomputation of deductions limited by section 809(f)*** —

(i) ***In general.*** If in any taxable year a life insurance company has deductions under section 809(d)(3), (5), and (6), as limited by section 809(f), and sustains a loss from operations in a succeeding taxable year which may be carried back as an operations loss deduction, such limitation and deductions shall be recomputed. This recomputation is required since the carryback must be taken into account for purposes of determining such limitation and deductions.

(ii) ***Illustration of principles.*** The provisions of this subparagraph may be illustrated by the following example:

(*a*) ***Facts.*** The books of P, a life insurance company, reveal the following facts:

Taxable investment income	Gain from operations	Loss from operations
1959	$9,000,000	$10,000,000
1960		($9,800,000)

The gain from operations thus shown is computed without regard to any operations loss deduction or deductions under section 809(d)(3), (5), and (6), as limited by section 809(f). Assume that for the taxable year 1959, P has (without regard to the limitation of section 809(f) or the operations loss deduction for 1959) a deduction under section 809(d)(3) of $2,500,000 for dividends to policyholders and no deductions under section 809(d)(5) or (6).

(*b*) ***Determination of section 809(f) limitation and deduction for dividends to policyholders without regard to the operations loss deduction for 1959.*** In order to determine gain or loss from operations for 1959, P must determine the deduction for dividends to policyholders for such year. Under the provisions of section 809(f), the amount of such deduction shall not exceed the sum of

(*1*) the amount (if any) by which the gain from operations for such year (determined without regard to such deduction) exceeds P's taxable investment income for such year, plus

(*2*) $250,000. Since the gain from operations as thus determined ($10,000,000) exceeds the taxable investment income ($9,000,000) by $1,000,000, the limitation on such deduction is $1,250,000 ($1,000,000 plus $250,000). Accordingly, only $1,250,000 of the $2,500,000 deduction for dividends to policyholders shall be allowed. The gain from operations for such year is $8,750,000 ($10,000,000 minus $1,250,000).

(*c*) ***Recomputation of section 809(f) limitation and deduction for dividends to policyholders after application of the operations loss deduction for 1959.*** Since P has sustained a loss from operations for 1960 which shall be carried back to 1959 as an operations loss

deduction, it must recompute the section 809(f) limitation and deduction for dividends to policyholders. Taking into account the $9,800,000 operations loss deduction for 1959 reduces gain from operations for such year to $200,000 ($10,000,000 minus $9,800,000). Since the gain from operations as thus determined ($200,000) is less than the taxable investment income ($9,000,000), the limitation on the deduction for dividends to policyholders is $250,000. Thus, only $250,000 of the $2,500,000 deduction for dividends to policyholders shall be allowed. The gain from operations for such year as thus determined is $9,750,000 ($10,000,000 minus $250,000) since for purposes of this determination the operations loss deduction for 1959 is not taken into account (see section 812(c)(1)). Accordingly, the offset for 1959 is $9,750,000 (the increase in the operations loss deduction for 1959, computed without regard to the carryback for 1960, which reduces life insurance company taxable income for 1959 to zero); thus, the portion of the 1960 loss from operations which shall be carried forward to 1961 is $50,000 (the excess of the 1960 loss ($9,800,000) over the offset for 1959 ($9,750,000)).

(3) ***Minimum limitation.*** The life insurance company taxable income, as modified under this paragraph, shall in no case be considered less than zero.

[T.D. 6535, 26 FR 537, Jan. 20, 1961]

§ 1.812-6 New company defined.

Section 812(e) provides that for purposes of part I, subchapter L, chapter 1 of the Code, a life insurance company is a “new company” for any taxable year only if such taxable year begins not more than 5 years after the first day on which it (or any predecessor if section 381(c)(22) applies or would have applied if in effect) was authorized to do business as an insurance company.

[T.D. 7326, 39 FR 35354, Oct. 1, 1974]

§ 1.812-7 Application of subtitle A and subtitle F.

Section 812(f) provides that except as modified by section 809(e) (relating to modifications of deduction items otherwise allowable under subtitle A of the Code) subtitles A and F of the Code shall apply to operations loss carrybacks and carryovers, and to the operations loss deduction, in the same manner and to the same extent that such subtitles apply in respect of net operation loss carrybacks, net operating loss carryovers, and the net operating loss deduction of corporations generally. For the computation of the operations loss carrybacks and carryovers, and of the operations loss deduction in the case of certain acquisitions of the assets of a life insurance company by another life insurance company, see section 381(c)(22) and the regulations thereunder.

[T.D. 6535, 26 FR 539, Jan. 20, 1961]

§ 1.812-8 Illustration of operations loss carrybacks and carryovers.

The application of § 1.812-4 may be illustrated by the following example:

(a) *Facts.* The books of M, a life insurance company, organized in 1940, reveal the following facts:

Taxable year	Taxable investment income	Gain from operations	Loss from operations
1958	$11,000	$15,000	
1959	23,000	30,000	
1960			($75,000)
1961	25,000	20,000	
1962			(150,000)
1963	22,000	30,000	
1964	40,000	35,000	
1965	62,000	75,000	
1966	25,000	17,000	
1967	39,000	53,000	

The gain from operations thus shown is computed without regard to any operations loss deduction. The assumption is also made that none of the other modifications prescribed in paragraph (b) of § 1.812-5 apply. There are no losses from operations for 1955, 1956, 1957, 1968, 1969, 1970.

(b) *Loss sustained in 1960.* The portions of the $75,000 loss from operations for 1960 which shall be used as carrybacks to 1958 and 1959 and as carryovers to 1961, 1962, 1963, 1964, and 1965 are computed as follows:

(1) *Carryback to 1958.* The carryback to this year is $75,000, that is, the amount of the loss from operations.

(2) *Carryback to 1959.* The carryback to this year is $60,000 (the excess of the loss for 1960 over the offset for 1958), computed as follows:

Loss from operations	$75,000
Less:	
Offset for 1958 (the $15,000 gain from operations for such year computed without the deduction of the carryback from 1960)	15,000
Carryback	60,000

(3) *Carryover to 1961.* The carryover to this year is $30,000 (the excess, if any, of the loss for 1960 over the sum of the offsets for 1958 and 1959), computed as follows:

Loss from operations	$75,000

Less:		
Offset for 1958 (the $15,000 gain from operations for such year computed without the deduction of the carryback from 1960)	$15,000	
Offset for 1959 (the $30,000 gain from operations for such year computed without the deduction of the carryback from 1960 or the carryback from 1962)	30,000	
Sum of offsets		45,000
Carryover		30,000

(4) ***Carryover to 1962.*** The carryover to this year is $10,000 (the excess, if any, of the loss for 1960 over the sum of the offsets for 1958, 1959, and 1961), computed as follows:

Loss from operations		$75,000
Less:		
Offset for 1958 (the $15,000 gain from operations for such year computed without the deduction of the carryback from 1960)	$15,000	
Offset for 1959 (the $30,000 gain from operations for such year computed without the deduction of the carryback from 1960 or the carryback from 1962)	80,000	
Offset for 1961 (the $20,000 gain from operations for such year computed without the deduction of the carryover from 1960 or the carryback from 1962)	20,000	
Sum of offsets		65,000
Carryover		10,000

(5) ***Carryover to 1963.*** The carryover to this year is $10,000 (the excess, if any, of the loss for 1960 over the sum of the offsets for 1958, 1959, 1961, and 1962), computed as follows:

Loss from operations		$75,000
Less:		
Offset for 1958 (the $15,000 gain from operations for such year computed without the deduction of the carryback from 1960)	$15,000	
Offset for 1959 (the $30,000 gain from operations for such year computed without the deduction of the carryback from 1960 or the carryback from 1962)	30,000	
Offset for 1961 (the $20,000 gain from operations for such year computed without the deduction of the carryover from 1960 or the carryback from 1962)	20,000	
Offset for 1962 (a year in which a loss from operations was sustained)	0	
Sum of offsets		65,000

Carryover		10,000

(6) ***Carryover to 1964.*** The carryover to this year is $0 (the excess, if any, of the loss from 1960 over the sum of the offsets for 1958, 1959, 1961, 1962, and 1963), computed as follows:

Loss from operations		$75,000
Less:		
Offset for 1958 (the $15,000 gain from operations for such year computed without the deduction of the carryback from 1960)	$15,000	
Offset for 1959 (the $30,000 gain from operations for such year computed without the deduction of the carryback from 1960 or the carryback from 1962)	30,000	
Offset for 1961 (the $20,000 gain from operations for such year computed without the deduction of the carryover from 1960 or the carryback from 1962)	20,000	
Offset for 1962 (a year in which a loss from operations was sustained)	0	
Offset for 1963 (the $30,000 gain from operations for such year computed without the deduction of the carryover from 1960 or the carryover from 1962)	30,000	
Sum of offsets		95,000
Carryover		0

(7) ***Carryover to 1965.*** The carryover to this year is $0 (the excess, if any, of the loss from 1960 over the sum of the offsets for 1958, 1959, 1961, 1962, 1963, and 1964), computed as follows:

Loss from operations		$75,000
Less:		
Offset for 1958 (the $15,000 gain from operations for such year computed without the deduction of the carryback from 1960)	$15,000	
Offset for 1959 (the $30,000 gain from operations for such year computed without the deduction for the carryback from 1960 or the carryback from 1962)	30,000	
Offset for 1961 (the $20,000 gain from operations for such year computed without the deduction for the carryover from 1960 or the carryback from 1962)	20,000	
Offset for 1962 (a year in which a loss from operations was sustained)	0	
Offset for 1963 (the $30,000 gain from operations for such year computed without the deduction for the carryover from 1960 or the carryover from 1962)	30,000	
Offset for 1964 (the $35,000 gain from operations for such year computed without the deduction of the carryover from 1960 or the carryover from 1962)	35,000	
Sum of offsets		130,000

Carryover	0

(c) ***Loss sustained in 1962.*** The portions of the $150,000 loss from operations for 1962 which shall be used as carrybacks to 1959, 1960, and 1961 and as carryovers to 1963, 1964, 1965, 1966, and 1967 are computed as follows:

(1) ***Carryback to 1959.*** The carryback to this year is $150,000, that is, the amount of the loss from operations.

(2) ***Carryback to 1960.*** The carryback to this year is $150,000 (the excess, if any, of the loss from 1962 over the offset for 1959), computed as follows:

Loss from operations	$150,000
Less:	
Offset for 1959 (the $30,000 gain from operations for such year reduced by the carryback to such year of $60,000 from 1960, the carryback from 1962 to 1959 not being taken into account)	0
Carryback	150,000

(3) ***Carryback to 1961.*** The carryback to this year is $150,000 (the excess, if any, of the loss from 1962 over the sum of the offsets for 1959 and 1960), computed as follows:

Loss from operations	$150,000
Less:	
Offset for 1959 (the $30,000 gain from operations for such year reduced by the carryback to such year of $60,000 from 1960, the carryback from 1962 to 1959 not being taken into account)	0
Offset for 1960 (a year in which a loss from operations was sustained)	0
Sum of offsets	0
Carryback	150,000

(4) ***Carryover to 1963.*** The carryover to this year is $150,000 (the excess, if any, of the loss from 1962 over the sum of the offsets for 1959, 1960, and 1961), computed as follows:

Loss from operations	$150,000

Less:		
Offset for 1959 (the $30,000 gain from operations for such year reduced by the carryback to such year of $60,000 from 1960, the carryback from 1962 to 1959 not being taken into account)	0	
Offset for 1960 (a year in which a loss from operations was sustained)	0	
Offset for 1961 (the $20,000 gain from operations for such year reduced by the carryover to such year of $30,000 from 1960, the carryback from 1962 to 1961 not being taken into account)	0	
Sum of offsets		0
Carryover		150,000

(5) ***Carryover to 1964.*** The carryover to this year is $130,000 (the excess, if any, of the loss from 1962 over the sum of the offsets for 1959, 1960, 1961, and 1963), computed as follows:

Loss from operations		$150,000
Less:		
Offset for 1959 (the $30,000 gain from operations for such year reduced by the carryback to such year of $60,000 from 1960, the carryback from 1962 to 1959 not being taken into account)	0	
Offset for 1960 (a year in which a loss from operations was sustained)	0	
Offset for 1961 (the $20,000 gain from operations for such year reduced by the carryover to such year of $30,000 from 1960, the carryback from 1962 to 1961 not being taken into account)	0	
Offset for 1963 (the $30,000 gain from operations for such year reduced by the carryover to such year of $10,000 from 1960, the carryover from 1962 to 1963 not being taken into account)	20,000	
Sum of offsets		20,000
Carryover		130,000

(6) ***Carryover to 1965.*** The carryover to this year is $95,000 (the excess, if any, of the loss from 1962 over the sum of the offsets for 1959, 1960, 1961, 1963, and 1964), computed as follows:

Loss from operations		$150,000
Less:		
Offset for 1959 (the $30,000 gain from operations for such year reduced by the carryback to such year of $60,000 from 1960, the carryback from 1962 to 1959 not being taken into account)	0	

Offset for 1960 (a year in which a loss from operations was sustained)	0	
Offset for 1961 (the $20,000 gain from operations for such year reduced by the carryover to such year of $30,000 from 1960 the carryback from 1962 to 1961 not being taken into account)	0	
Offset for 1963 (the $30,000 gain from operations for such year reduced by the carryover to such year of $10,000 from 1960, the carryover from 1962 to 1963 not being taken into account)	20,000	
Offset for 1964 (the $35,000 gain from operations for such year reduced by the carryover to such year of $0 from 1960, the carryover from 1962 to 1964 not being taken into account)	35,000	
Sum of offsets		55,000
Carryover		95,000

(7) ***Carryover to 1966.*** The carryover to this year is $20,000 (the excess, if any, of the loss from 1962 over the sum of the offsets for 1959, 1960, 1961, 1963, 1964, and 1965), computed as follows:

Loss from operations		$150,000
Less:		
Offset for 1959 (the $30,000 gain from operations for such year reduced by the carryback to such year of $60,000 from 1960, the carryback from 1962 to 1959 not being taken into account)	0	
Offset for 1960 (a year in which a loss from operations was sustained)	0	
Offset for 1961 (the $20,000 gain from operations for such year reduced by the carryover to such year of $30,000 from 1960, the carryback from 1962 to 1961 not being taken into account)	0	
Offset for 1963 (the $30,000 gain from operations for such year reduced by the carryover for such year of $10,000 from 1960, the carryover from 1962 to 1963 not being taken into account)	20,000	
Offset for 1964 (the $35,000 gain from operations for such year reduced by the carryover to such year of $0 from 1960, the carryover from 1962 to 1964 not being taken into account)	35,000	
Offset for 1965 (the $75,000 gain from operations for such year reduced by the carryover to such year of $0 to 1960, the carryover from 1962 to 1965 not being taken into account)	$75,000	
Sum of offsets		$130,000

Carryover		20,000

(8) ***Carryover to 1967.*** The carryover to this year is $3,000 (the excess, if any, of the loss from 1962 over the sum of the offsets for 1959, 1960, 1961, 1963, 1964, 1965, and 1966), computed as follows:

Loss from operations		$150,000
Less:		
Offset for 1959 (the $30,000 gain from operations for such year reduced by the carryback to such year of $60,000 from 1960, the carryback from 1962 to 1959 not being taken into account)	0	
Offset for 1960 (a year in which a loss from operations was sustained)	0	
Offset for 1961 (the $20,000 gain from operations for such year reduced by the carryover to such year of $30,000 from 1960, the carryback from 1962 to 1961 not being taken into account)	0	
Offset for 1963 (the $30,000 gain from operations for such year reduced by the carryover to such year of $10,000 from 1960, the carryover from 1962 to 1963 not being taken into account)	20,000	
Offset for 1964 (the $35,000 gain from operations for such year reduced by the carryover to such year of $0 from 1960, the carryover from 1962 to 1964 not being taken into account)	35,000	
Offset for 1965 (the $75,000 gain from operations for such year reduced by the carryover to such year of $0 from 1960, the carryover from 1962 to 1965 not being taken into account)	75,000	
Offset for 1966 (the $17,000 gain from operations for such year computed without the deduction of the carryover from 1962)	17,000	
Sum of offsets		147,000
Carryover		3,000

(d) ***Determination of operations loss deduction for each year.*** The carryovers and carrybacks computed under paragraphs (b) and (c) of this section are used as a basis for the computation of the operations loss deduction in the following manner:

Taxable year	Carryover		Carryback		Operations loss de- ductions
	From 1960	From 1962	From 1960	From 1962	
1958			$75,000		$75,000
1959			60,000	$150,000	210,000

Taxable year	Carryover		Carryback		Operations loss de- ductions
	From 1960	From 1962	From 1960	From 1962	
1961	$30,000			150,000	180,000
1963	10,000	$150,000			160,000
1964		130,000			130,000
1965		95,000			95,000
1966		20,000			20,000
1967		3,000			3,000

[T.D. 6535, 26 FR 539, Jan. 20, 1961]

§ 1.812-9 Cross-reference.

For special rules regarding the treatment of modified guaranteed contracts (as defined in section 817A and § 1.817A-1(a)(1)), *see* § 1.817A-1.

[T.D. 9058, 68 FR 24350, May 7, 2003]

DISTRIBUTIONS TO SHAREHOLDERS

§ 1.815-1 Taxable years affected.

Sections 1.815-2 through 1.815-6, except as otherwise provided therein, are applicable only to taxable years beginning after December 31, 1957, and all references to sections of part I, subchapter L, chapter 1 of the Code are to the Internal Revenue Code of 1954, as amended by the Life Insurance Company Income Tax Act of 1959 (73 Stat. 112), the Act of October 10, 1962 (76 Stat. 808), and the Act of October 23, 1962 (76 Stat. 1134).

[T.D. 6886, 31 FR 8689, June 23, 1966]

§ 1.815-2 Distributions to shareholders.

(a) ***In general.*** Section 815 provides that every stock life insurance company subject to the tax imposed by section 802 shall establish and maintain two special surplus accounts for Federal income tax purposes. These special accounts are the shareholders surplus account (as defined in section 815(b) and § 1.815-3) and the policyholders surplus account (as defined in section 815(c) and § 1.815-4). To the extent that a distribution to shareholders (as defined in paragraph (c) of this section) is treated as being made out of the shareholders surplus account, no tax is imposed on the company with respect to such distribution. However, to the extent that a distribution to shareholders is treated as being made out of the policyholders surplus account, the amount subtracted from the policyholders surplus account by reason of such distribution shall be taken into account in determining life insurance company taxable income under section 802(b).

(b) ***Priority system for distributions to shareholders.***

(1) For purposes of section 815 (other than subsection (e) thereof relating to certain mutualizations) and section 802(b)(3) (relating to the determination of life insurance company taxable income), any distribution made to shareholders after December 31, 1958, shall be treated in the following manner:

(i) Distributions shall be treated as first being made out of the shareholders surplus account (as defined in section 815(b) and § 1.815-3);

(ii) Once the shareholders surplus account has been reduced to zero, distributions shall then be treated as being made out of the policyholders surplus account (as defined in section 815(c) and § 1.815-4) until that account has been reduced to zero; and

(iii) Finally, any distributions in excess of the amounts in the shareholders surplus account and the policyholders surplus account shall be treated as being made out of other accounts (as defined in § 1.815-5).

(2) For purposes of subparagraph (1) of this paragraph, in order to determine whether a distribution (or any portion thereof) shall be treated as being made out of the shareholders surplus account, policyholders surplus account, or other accounts, the amount in such accounts at the end of any taxable year shall be the cumulative balance in such accounts at the end of the taxable year, computed without diminution by reason of a distribution (or any portion thereof) during the taxable year which is treated as being made out of such accounts. For example, on January 1, 1960, S, a stock life insurance company, had $1,000 in its shareholders surplus account and $3,000 in its policyholders surplus account. On November 1, 1960, S distributed $4,000 to its shareholders. Under the provisions of section 815(b)(2) and paragraph (b) of § 1.815-3, S added $5,000 to its shareholders surplus account for the taxable year 1960. Since the distributions to shareholders during the taxable year 1960, $4,000, does not exceed the cumulative balance in the shareholders surplus account at the end of the taxable year, computed without diminution by reason of distributions treated as made out of such account during the taxable year, $6,000 ($1,000 plus $5,000), the entire distribution is treated as being made out of the shareholders surplus account.

(3) Except in the case of a distribution in cash and as otherwise provided herein, the amount to be charged to the special surplus accounts referred to in subparagraph (1) of this paragraph with respect to any distributions to shareholders (as defined in section 815(a) and paragraph (c) of this section) shall be the fair market value of the property distributed, determined as of the date of distribution. However, for the amount of the adjustment to earnings and profits reflecting such distributions, see section 312 and the regulations thereunder. For a special rule relating to the determination of the amount to be charged to such special surplus accounts in the case of a distribution by a foreign life insurance company carrying on a life insurance business within the United States, see section 819(c)(1) and the regulations thereunder.

(c) ***Distributions to shareholders defined.***

(1) Except as otherwise provided in section 815(f) and subparagraph (2) of this paragraph, the term *distribution,* as used in section 815(a) and paragraph (b) of this section, means any distribution of property made by a life insurance company to its shareholders. For purposes of the preceding sentence, the term *property* means any property (including money, securities, and indebtedness to the company) other than stock, or rights to acquire stock, in the company making the distribution. Thus, for example, the term includes a distribution which is considered a dividend under section 316, but is not limited to the extent that such distribution must be made out of the accumulated or current earnings and profits of the company making the distribution. For example, except as otherwise provided in section 815(f) and subparagraph (2) of this paragraph, there is a distribution

within the meaning of this paragraph in any case in which a corporation acquires the stock of a shareholder in exchange for property in a redemption treated as a distribution in exchange for stock under section 302(a) or treated as a distribution of property under section 302(d). For special rules relating to distributions to shareholders in acquisition of stock pursuant to a plan of mutualization, see section 815(e) and paragraph (e) of § 1.815-6.

(2) The term *distribution,* as used in section 815(a) and paragraph (b) of this section, does not (except for purposes of section 815(a)(3) and (e)(2)(B)) include any distribution in redemption of stock issued prior to January 1, 1958, where such stock was at all times on and after the date of its issuance and on and before the date of its redemption limited as to the amount of dividends payable and was callable, at the option of the issuer, at a price not in excess of 105 percent of the sum of its issue price plus the amount of contribution to surplus (if any) made by the original purchaser at the time of his purchase.

[T.D. 6535, 26 FR 542, Jan. 20, 1961, as amended by T.D. 7189, 37 FR 12793, June 29, 1972]

§ 1.815-3 Shareholders surplus account.

(a) ***In general.*** Every stock life insurance company subject to the tax imposed by section 802 shall establish and maintain a shareholders surplus account. This account shall be established as of January 1, 1958, and the beginning or opening balance of the shareholders surplus account on that date shall be zero.

(b) ***Additions to shareholders surplus account.***

(1) The amount added to the shareholders surplus account for any taxable year beginning after December 31, 1957, shall be the amount by which the sum of:

(i) The life insurance company taxable income (computed without regard to section 802(b)(3)),

(ii) In the case of a taxable year beginning after December 31, 1958, the amount (if any) by which the net long-term capital gain exceeds the net short-term capital loss, reduced (in the case of a taxable year beginning after December 31, 1961) by the amount referred to in subdivision (i) of this subparagraph,

(iii) The deduction for partially tax-exempt interest provided by section 242 (as modified by section 804(a)(3)), the deductions for dividends received provided by sections 243, 244, and 245 (as modified by section 809(d)(8)(B)), and the amount of interest excluded from gross income under section 103, and

(iv) The small business deduction provided by section 809(d)(10). Exceeds the taxes imposed for the taxable year by section 802(a), computed without regard to section 802(b)(3).

(c) ***Subtractions from shareholders surplus account*** —

(1) ***In general.*** There shall be subtracted from the cumulative balance in the shareholders surplus account at the end of any taxable year, computed without diminution by reason of distributions made during the taxable year, the amount which is treated as being distributed out of such account under section 815(a) and paragraph (b) of § 1.815-2.

(2) ***Special rule; distributions in 1958.*** There shall be subtracted from the shareholders surplus account (to the extent thereof) for any taxable year beginning in 1958 the amount of the distributions to shareholders made by the company during 1958. For example, assume S, a stock life insurance company, had additions to its shareholders surplus account (as determined under section 815(b)(2)

and paragraph (b) of this section) for the taxable year 1958 of $10,000, and actually distributed as dividends to its shareholders $8,000 during the year 1958. The balance in S's shareholders surplus account as of January 1, 1959, shall be $2,000. If S had distributed $12,000 as dividends in 1958, the balance in its shareholders surplus account as of January 1, 1959, would be zero and the other accounts referred to in section 815(a)(3) and paragraph (b)(1)(iii) of § 1.815-2 would be reduced by $2,000.

(d) ***Illustration of principles.*** The application of section 815(b) and this section may be illustrated by the following example:

Example. The books of S, a stock life insurance company, reflect the following items for the taxable year 1960.

Balance in shareholders surplus account as of 1-1-60	$5,000
Life insurance company taxable income computed without regard to sec. 802(b)(3)	4,000
Excess of net long-term capital gain over net short-term capital loss	1,700
Tax-exempt interest included in gross investment income under sec. 804(b)	100
Small business deduction (determined under sec. 809(d)(10))	200
Tax liability under sec. 802(a) (1) and (2) computed without regard to sec. 802(b)(3)	1,625
Amount distributed to shareholders	9,000

For purposes of determining the amount to be subtracted from its shareholders surplus account for the taxable year, S would first make up the following schedule in order to determine the cumulative balance in the shareholders surplus account at the end of the taxable year, computed without diminution by reason of distributions made during the taxable year:

(1) Balance in shareholders surplus account as of 1-1-60		$5,000
(2) Additions to account:		
(a) Life insurance company taxable income computed without regard to sec. 802(b)(3)	$4,000	
(b) Excess of net long-term capital gain over net short-term capital loss	1,700	
(c) Tax-exempt interest included in gross investment income under sec. 804(b)	100	
(d) Small business deduction (determined under sec. 809(d)(10))	200	
Total	6,000	
Less:		
Tax liability under sec. 802(a) (1) and (2) computed without regard to sec. 802(b)(3)	1,625	
	-————	4,375
(3) Cumulative balance in shareholders surplus account as of 12-31-60 (item (1) plus item		9,375

(2))

Since the amount distributed to shareholders during the taxable year, $9,000, does not exceed the cumulative balance in the shareholders surplus account at the end of the taxable year, computed without diminution by reason of distributions made during the taxable year, $9,375, under the provisions of section 815(a), the entire distribution shall be treated as being made out of the shareholders surplus account. Thus, $9,000 shall be subtracted from the shareholders surplus account (leaving a balance of $375 in such account at the end of the taxable year) and S shall incur no additional tax liability by reason of the distribution to its shareholders during the taxable year 1960.

[T.D. 6535, 26 FR 542, Jan. 20, 1961, as amended by T.D. 7189, 37 FR 12793, June 29, 1972]

§ 1.815-4 Policyholders surplus account.

(a) ***In general.*** Every stock life insurance company subject to the tax imposed by section 802 shall establish and maintain a policyholders surplus account. This account shall be established as of January 1, 1959, and the beginning or opening balance of the policyholders surplus account on that date shall be zero.

(b) ***Additions to policyholders surplus account.*** The amount added to the policyholders surplus account for any taxable year beginning after December 31, 1958, shall be the sum of:

(1) An amount equal to 50 percent of the amount by which the gain from operations for the taxable year exceeds the taxable investment income,

(2) The deduction allowed or allowable under section 809(d)(5) (as limited by section 809(f)) for certain nonparticipating contracts, and

(3) The deduction allowed or allowable under section 809(d)(6) (as limited by section 809(f)) for taxable years beginning before January 1, 1963, for group life and group accident and health insurance contracts, and for taxable years beginning after December 31, 1962, for accident and health insurance and group life insurance contracts.

(c) ***Subtractions from policyholders surplus account*** —

(1) ***In general.*** There shall be subtracted from the cumulative balance in the policyholders surplus account at the end of any taxable year, computed without diminution by reason of distributions made during the taxable year, an amount equal to the sum of:

(i) The amount which (without regard to subdivision (ii) of this subparagraph) is treated under section 815(a) as distributed out of the policyholders surplus account for the taxable year, plus

(ii) The amount (determined without regard to section 802(a)(3)) by which the tax imposed for taxable years beginning before January 1, 1962, by section 802(a)(1), and for taxable years beginning after December 31, 1961, by section 802(a), is increased by reason of section 802(b)(3).

In addition, there shall be subtracted from the policyholders surplus account for the taxable year those amounts which, at the close of the taxable year, are subtracted or treated as subtracted from the policyholders surplus account under section 815(d) (1) and (4) and paragraphs (a) and (d) of § 1.815-6. For purposes of this paragraph, the subtractions from the policyholders surplus account shall be treated as made in the following order:

(*a*) First the amount determined under section 815(c)(3) by reason of distributions to shareholders during the taxable year which are treated as being made out of the policyholders surplus account;

(*b*) Next the amount elected to be subtracted from the policyholders surplus account for the taxable year under section 815(d)(1);

(*c*) Then the amount which is treated as a subtraction from the policyholders surplus account for the taxable year by reason of the limitation provided in section 815(d)(4); and

(*d*) Finally the amount taken into account upon termination as a life insurance company as provided in section 815(d)(2).

(2) ***Method of computing amount subtracted from policyholders surplus account*** —

(i) ***Where life insurance company taxable income, computed without regard to section 802(b)(3), exceeds $25,000.*** If the life insurance company taxable income for any taxable year computed under section 802(b), computed without regard to section 802(b)(3), exceeds $25,000, the amount subtracted from the policyholders surplus account shall be determined by multiplying the amount treated as distributed out of such account by a ratio, the numerator of which is 100 percent and the denominator of which is 100 percent minus the sum of the normal tax rate and the surtax rate for the taxable year.

(ii) ***Where life insurance company taxable income does not exceed $25,000.*** If the life insurance company taxable income for any taxable year, computed under section 802(b), does not exceed $25,000, the amount subtracted from the policyholders surplus account shall be determined by multiplying the amount treated as distributed out of such account by a ratio, the numerator of which is 100 percent and the denominator of which is 100 percent minus the normal tax rate for the taxable year.

(iii) ***Where life insurance company taxable income, computed without regard to section 802(b)(3) does not exceed $25,000, but computed with regard to section 802(b)(3) does exceed $25,000.*** If the life insurance company taxable income for any taxable year, computed without regard to section 802(b)(3) does not exceed $25,000, but computed with regard to section 802(b)(3) does exceed $25,000, the amount subtracted from the policyholders surplus account shall be determined in the following manner:

(*a*) First, determine the amount by which $25,000 exceeds the amount determined under section 802(b) (1) and (2);

(*b*) Then, multiply the amount determined under (*a*) by a ratio, the numerator of which is 100 percent minus the normal tax rate and the denominator of which is 100 percent;

(*c*) Next, determine the amount by which the amount treated as distributed out of the policyholders surplus account exceeds the amount determined under (*b*) and multiply such excess by a ratio, the numerator of which is 100 percent and the denominator of which is 100 percent minus the sum of the normal tax rate and the surtax rate; and

(*d*) Finally, add the amounts determined under (*a*) and (*c*).

(3) ***Illustration of principles.*** The application of section 815(c)(3) and subparagraph (2) of this paragraph may be illustrated by the following examples:

Example 1. The life insurance company taxable income of S, a stock life insurance company, computed without regard to section 802(b)(3), exceeds $25,000 for the taxable year 1959. Assume that of the amount distributed by S to its shareholders during the taxable year, $9,600 (as determined under section 815(a) and without regard to section 815(c)(3)(B)) is treated as distributed out of the policyholders surplus account. Since the sum of the normal tax rate (30%) and the surtax rate (22%) in effect for 1959 is 52 percent. S shall subtract $20,000 from its policyholders surplus account for the taxable year 1959, computed as follows: $9,600 × 100 / (100 − 52) = $9,600 × 100 / 48 = $20,000 Of this amount, $9,600 is due to the application of section 815(c)(3)(A) and $10,400 to the application of section 815(c)(3)(B).

Example 2. Assume that for the taxable year 1960, S, a stock life insurance company, has taxable investment income of $1,000 and a gain from operations of $2,000. Assume further that of the amount distributed by S to its shareholders during the taxable year, $3,500 (as determined under section 815(a) and without regard to section 815(c)(3)(B)) is treated as distributed out of the policyholders surplus account. Since S's life insurance company taxable income does not exceed $25,000 for the taxable year and the normal tax rate in effect for 1960 is 30 percent, S shall subtract $5,000 from its policyholders surplus account for the taxable year 1960, computed as follows: $3,500 × 100 / (100 − 30) = $3,500 × 100 / 70 = $5,000 Of this amount, $3,500 is due to the application of section 815(c)(3)(A), and $1,500 to the application of section 815(c)(3)(B).

Example 3. For the taxable year 1960, the life insurance company taxable income of S, a stock life insurance company, computed without regard to section 802(b)(3), is $10,000. Assume that of the amount distributed by S to its shareholders during the taxable year, $12,000 (as determined under section 815(a) and without regard to section 815(c)(3)(B)) is treated as distributed out of the policyholders surplus account. Since the life insurance company taxable income of S, computed with regard to section 802(b)(3), exceeds $25,000, in order to determine the amount to be subtracted from its policyholders surplus account, S would make up the following schedule:

(1) $25,000 minus life insurance company taxable income, computed without regard to sec. 802(b)(3) ($25,000 minus $10,000	$15,000
(2) Item (1) multiplied by 100 percent minus the normal tax rate as in effect for 1960, over 100 percent	
($15,000 × (100−30) ÷ 100)	10,500
(3) Amount by which the amount treated as distributed out of policyholders surplus account ($12,000) exceeds item (2) ($10,500), multiplied by 100 percent over 100 percent minus the sum of the normal tax rate and the surtax rate as in effect for 1960	
($1,500 × 100 ÷ (100−52))	3,125

(4) Item (1) plus item (3) ($15,000 plus $3,125)	18,125

For the taxable year 1960, S shall subtract $18,125 from its policyholders surplus account. Of this amount, $10,500 represents the distribution from the policyholders surplus account which is taxed at a 30 percent tax rate and $1,500 the distribution from the policyholders surplus account which is taxed at a 52 percent tax rate. Thus, of the amount subtracted from the policyholders surplus account for the taxable year 1960, $12,000 is due to the application of section 815(c)(3) (A), and $6,125 to the application of section 815(c)(3)(B).

(d) ***Illustration of principles.*** The application of section 815(c) and this section may be illustrated by the following example:

Example. The books of S, a stock life insurance company, reflect the following items for the taxable year 1960:

Taxable investment income	$25,000
Gain from operations	30,000
Tax base (sec. 802(b)(1) and (2))	27,500
Deduction for certain nonparticipating policies provided by sec. 809(d)(5) (as limited by sec. 809(f))	600
Deduction for group policies provided by sec. 809(d)(6) (as limited by sec. 809(f))	400
Amount distributed to shareholders	60,000
Cumulative balance in shareholders surplus account as of 12-31-60	36,000
Balance in policyholders surplus account as of 1-1-60	48,000

For purposes of determining the amount to be subtracted from its policyholders surplus account for the taxable year, S would first make up the following schedule in order to determine the cumulative balance in the policyholders surplus account at the end of the taxable year, computed without diminution by reason of distributions made during the taxable year:

(1) Balance in policyholders surplus account as of 1-1-60		$48,000
(2) Additions to account:		
(a) 50 percent of the amount by which the gain from operations ($30,000) exceeds the taxable investment income ($25,000) (1/2 × $5,000)	$2,500	
(b) The deduction for certain nonparticipating contracts provided by sec.	600	

809(d)(5) (as limited by sec. 809(f))		
(c) The deduction for group contracts provided by sec. 809(d)(6) (as limited by sec. 809(f))	400	
	————	3,500
(3) Cumulative balance in policyholders account as of 12-31-60 (item (1) plus item (2))		51,500

Under the provisions of section 815(a), since the amount distributed to shareholders during the taxable year, $60,000, exceeds the cumulative balance in the shareholders surplus at the end of the taxable year, computed without diminution by reason of distributions during the taxable year, $36,000, the shareholders surplus account shall first be reduced to zero. The remaining $24,000 ($60,000 minus $36,000) of the distribution shall then be treated as made out of the policyholders surplus account. Thus, since the tax base under section 802(b)(1) and (2) is in excess of $25,000, the total amount to be subtracted from the policyholders surplus account at the end of the taxable year would be $50,000 ($24,000 × 100 ÷ (100−52)). Of this amount $26,000 ($50,000 minus $24,000) represents the tax on the portion of the distribution to shareholders which is treated as being out of the policyholders surplus account.

(e) ***Special rule for 1959 and 1960.*** For a special transitional rule applicable to any increase in tax liability under section 802(b)(3) for the taxable years 1959 and 1960 which is due solely to the operation of section 815(c)(3) and this section, see section 802(a)(3).

[T.D. 6535, 26 FR 543, Jan. 20, 1961, as amended by T.D. 6886, 31 FR 8689, June 23, 1966; T.D. 9849, 84 FR 9236, Mar. 14, 2019]

§ 1.815-5 Other accounts defined.

The term *other accounts,* as used in section 815(a)(3) and paragraph (b) of § 1.815-2, means all amounts which are not specifically included in the shareholders surplus account under section 815(b) and paragraph (b) of § 1.815-3, or in the policyholders surplus account under section 815(c) and paragraph (b) of § 1.815-4. Thus, for example, other accounts includes amounts representing the increase in tax due to the operation of section 802(b)(3) which is not taken into account for the taxable years 1959 and 1960 because of the special transitional rule provided in section 802(a)(3), earnings and profits accumulated prior to January 1, 1958, paid-in surplus, capital, etc. To the extent that a distribution (or any portion thereof) is treated as being made out of other accounts, no tax is imposed on the company with respect to such distribution.

[T.D. 6535, 26 FR 544, Jan. 20, 1961, as amended by T.D. 9849, 84 FR 9236, Mar. 14, 2019]

§ 1.815-6 Special rules.

(a) ***Election to transfer amounts from policyholders surplus account to shareholders surplus account*** —

(1) ***In general.*** Section 815(d)(1) permits a life insurance company to elect, after the close of any taxable year for which it is a life insurance company, to subtract any amount (or any portion thereof) in its policyholders surplus account as of the close of the taxable year. The effect of such election is to subject the company to tax on the amounts elected to be subtracted for the taxable year for which the election applies. The amount so subtracted, less the amount of tax imposed with respect to such amount by reason of section 802(b)(3), shall be added to the shareholders surplus account as of the beginning of the taxable year following the taxable year for which the election applies and no further tax shall be imposed upon the company if the amount elected to be transferred to the shareholders surplus account is subsequently distributed to shareholders.

(2) ***Manner and effect of election.***

(i) The election provided by section 815(d)(1) and this section shall be made in a statement attached to the life insurance company's income tax return for any taxable year for which the company desires the election to apply. The statement shall include the name and address of the taxpayer, shall be signed by the taxpayer (or his duly authorized representative), and shall be filed not later than the date prescribed by law (including extensions thereof) for filing the return for such taxable year. In addition, the statement shall indicate that the company has made the election provided under section 815(d)(1) for the taxable year and the amount elected to be subtracted from the policyholders surplus account.

(ii) An election made under section 815(d)(1)(B) and subdivision (i) of this subparagraph shall be effective only with respect to the taxable year for which the election is made. Thus, the company must make a new election for each taxable year for which it desires the election to apply. Once such an election has been made for any taxable year it may not be revoked.

(3) The application of subparagraph (1) of this paragraph may be illustrated by the following example:

Example. For the taxable year 1960, the life insurance company taxable income of S, a stock life insurance company, computed without regard to section 802(b)(3), exceeds $25,000. Assume that S elects to subtract $20,000 from its policyholders surplus account under section 815(d)(1) for the taxable year. Since S is subject to a 52 percent tax rate, the tax on the amount elected to be subtracted from the policyholders surplus account (as of the close of the taxable year 1960) is $10,400 ($20,000 × 52 percent). Thus, the amount to be added to the shareholders surplus account as of January 1, 1961, is $9,600 (the amount subtracted from the policyholders surplus account by virtue of the section 815(d)(1) election, less the tax imposed upon such amount by reason of section 802(b)(3), or $20,000 minus $10,400).

(b) ***Termination as life insurance company —***

(1) ***Effect of termination.*** Except as provided in section 381(c)(22) (relating to carryovers in certain corporate readjustments), section 815(d)(2)(A) provides that if for any taxable year the taxpayer is not an insurance company (as defined in paragraph (a) of § 1.801-3), or if for any two successive taxable years the taxpayer is not a life insurance company (as defined in section 801(a) and paragraph (b) of § 1.801-3), the amount taken into account under section 802(b)(3) for the last preceding year for which the company was a life insurance company shall be increased (after the application of section 815(d)(2)(B)) by the entire balance in the policyholders surplus account at the close of such last preceding taxable year.

(2) ***Effect of certain distributions.*** If for any taxable year the taxpayer is an insurance company (as defined in paragraph (a) of § 1.801-3) but is not a life insurance company (as defined in section 801(a) and paragraph (b) of § 1.801-3), section 815(d)(2)(B) provides that any distribution to shareholders during such taxable year shall be treated as having been made on the last day of the last preceding taxable year for which the company was a life insurance company.

(3) ***Examples.*** The application of section 815(d)(2) and this paragraph may be illustrated by the following examples:

Example 1. At the end of the taxable year 1959, the balance in the policyholders surplus account of S, a life insurance company within the meaning of section 801(a) and paragraph (b) of § 1.801-3, is $12,000. If S fails to qualify as an insurance company (as defined in paragraph (a) of § 1.801-3) for the taxable year 1960, and section 381(c)(22) does not apply, under the provisions of section 815(d)(2)(A), the entire balance of $12,000 in the policyholders surplus account at the end of 1959, the last year S was a life insurance company, shall be taken into account under section 802(b)(3) for purposes of determining S's tax liability for the taxable year 1959.

Example 2. Assume the facts are the same as in example 1, except that for the taxable years 1960 and 1961, S qualifies as an insurance company (as defined in paragraph (a) of § 1.801-3) but does not qualify as a life insurance company within the meaning of section 801(a) and paragraph (b) of § 1.801-3. Assume further that as a result of a distribution by S to its shareholders in 1960, $4,800 (as determined under section 815(a) and without regard to section 815(c)(3)(B)) is treated as distributed out of the policyholders surplus account. Under the provisions of section 815(d)(2)(B), if section 381(c)(22) does not apply, any distribution to shareholders during the taxable years 1960 and 1961 shall be treated as having been made on December 31, 1959 (the last day of the last preceding taxable year for which S was a life insurance company). Thus, assuming S is subject to a 52 percent tax rate on additions to life insurance company taxable income, $10,000 ($4,800 plus $5,200, the tax on the portion of the distribution treated as made out of the policyholders surplus account) shall be treated as being subtracted from the policyholders surplus account at the end of 1959 and shall be taken into account under section 802(b)(3) for purposes of determining S's tax liability for the taxable year 1959. Under the provisions of section 815(d)(2)(A), the entire balance of $2,000 ($12,000 minus $10,000) in the policyholders surplus account at the end of 1959 (after the application of section 815(d)(2)(B)), shall also be taken into account under section 802(b)(3) for purposes of determining S's tax liability for the taxable year 1959.

(c) ***Treatment of certain indebtedness.*** Section 815(d)(3) provides that if a taxpayer makes any payment in discharge of its indebtedness and such indebtedness is attributable to a distribution by the taxpayer to its shareholders after February 9, 1959, the amount of such payment shall be treated as a distribution in cash to shareholders both for purposes of section 802(b)(3) and section 815. However, this paragraph shall only apply to the extent that the distribution of such indebtedness to shareholders was treated as being out of accounts other than the shareholders and policyholders surplus accounts at the time of distribution.

(d) ***Limitation on amount in policyholders surplus account*** —

(1) ***In general.*** Section 815(d)(4) provides a limitation on the amount that any life insurance company may accumulate in its policyholders surplus account. If the policyholders surplus account at the end of any taxable year (computed without regard to this paragraph) exceeds whichever of the following is the greatest:

(i) 15 percent of life insurance reserves (as defined in section 801(b) and paragraph (a) of § 1.801-4) at the end of the taxable year.

(ii) 25 percent of the amount by which the life insurance reserves at the end of the taxable year exceed the life insurance reserves at the end of 1958, or

(iii) 50 percent of the net amount of the premiums and other consideration taken into account for the taxable year under section 809(c)(1),

then such excess shall be treated as a subtraction from the policyholders surplus account as of the end of such taxable year. The amount so treated as subtracted, less the amount of tax imposed with respect to such amount by reason of section 802(b)(3), shall be added to the shareholders surplus account at the beginning of the succeeding taxable year.

(2) ***Example.*** The application of the limitation contained in subparagraph (1) of this paragraph may be illustrated by the following example:

Example. The books of S, a stock life insurance company, reflect the following items for the taxable year 1960:

Balance in policyholders surplus account, computed without regard to sec. 815(d)(4), as of 12-31-60	$175
Life insurance reserves (as defined in sec. 801(b)) as of 12-31-60	4,500
Life insurance reserves (as defined in sec. 801(b)) as of 12-31-58	3,900
Premiums and other consideration taken into account for the taxable year under sec. 809(c)(1)	310

In order to determine the limitations on the amount that it may accumulate in its policyholders surplus account at the end of the taxable year under section 815(d)(4), S would make up the following schedule:

(1) 15 percent of life insurance reserves at the end of the taxable year (15% × $4,500)	$675
(2) 25 percent of amount by which life insurance reserves at the end of the taxable year ($4,500) exceed life insurance reserves as of 12-31-58 ($3,900) (25% × $600)	150
(3) 50 percent of premiums and other consideration taken into account under sec. 809(c)(1) for the taxable year (50% × $310)	155
(4) Limitation on policyholders surplus account (the greatest of items (1), (2), or	675

(3))

Since the balance in the policyholders surplus account at the end of the taxable year 1960, $175, does not exceed the limitation provided by section 815(d)(4), $675, S is not required to make any further adjustment to its policyholders surplus account at the end of the taxable year.

(e) *Special rule for certain mutualizations* —

(1) ***In general.*** Section 815(e) provides a rule for determining priorities which shall operate in place of section 815(a) and paragraph (b) of § 1.815-2 where a life insurance company makes any distribution to its shareholders after December 31, 1958, in acquisition of stock pursuant to a plan of mutualization. Section 815(e)(1) provides that such a distribution shall first be treated as being made out of paid-in capital and paid-in surplus, and, to the extent thereof, no tax shall be imposed on the company with respect to such distribution. Thereafter, distributions made pursuant to such plan of mutualization shall be treated as made in two allocable parts. One part shall be treated as being made out of other accounts (as defined in § 1.815-5) and the company shall incur no tax with respect to such portion of the distribution. The other part shall be treated as a distribution to which section 815(a) and paragraph (b) of § 1.815-2 applies. Thus, such portion of the distribution shall be treated as first being made out of the shareholders surplus account (as defined in section 815(b) and § 1.815-3), to the extent thereof, and then out of the policyholders surplus account (as defined in section 815(c) and § 1.815-4), to the extent thereof. See paragraph (a) of § 1.815-2. For purposes of this paragraph, a distribution shall be considered as being made pursuant to a plan of mutualization only if the requirements of applicable State law for the adoption of such plan (as, for example, approval by the requisite majority of the board of directors, shareholders, and policyholders) have been fulfilled.

(2) ***Allocation ratio.*** Section 815(e)(2)(A) provides an allocation ratio which when applied to the amount distributed under a plan of mutualization in excess of the balance in the paid-in capital and paid-in surplus accounts determines the portion of such excess to be treated as distributed out of the shareholders surplus account, policyholders surplus account, or other accounts. The numerator of this ratio is the excess of the assets of the company (as defined in section 805(b)(4) and paragraph (a)(4) of § 1.805-5) over the total liabilities (including reserves), both determined as of December 31, 1958, and adjusted in the manner provided in subparagraph (3) of this paragraph. The denominator of this ratio is the amount included in the numerator plus the amounts in the shareholders surplus account and policyholders surplus account, all determined as of the beginning of the year of the distribution.

(3) ***Adjustment for certain distributions.*** Section 815(e)(2)(B) provides that if between 1958 and the year of distribution the taxpayer has been treated as having made a distribution (under a plan of mutualization or otherwise) which is treated as a return of paid-in capital and paid-in surplus or as out of other accounts (as defined in § 1.815-5), the aggregate amount of any such prior distributions must be subtracted from the numerator and denominator in all cases where the allocation ratio provided by subparagraph (2) of this paragraph applies.

(f) *Recomputation required as a result of a subsequent loss from operations under section 812* —

(1) ***In general.*** Any amounts added to or subtracted from the special surplus accounts referred to in section 815(a) and paragraph (b) of § 1.815-2 for any taxable year shall be adjusted to the extent necessary to properly reflect a subsequent loss from operations which under section 812 is carried back to the taxable year for which such additions or subtractions were made.

(2) ***Example.*** The application of subparagraph (1) of this paragraph may be illustrated by the following example:

Example. Assume that for the taxable years 1959 through 1961, the books of S, a stock life insurance company subject to a 30 percent tax rate for all taxable years involved, reflect the following items:

	1959	1960	1961
Taxable investment income	$40.00	$40.00	$40.00
Gain from operations	60.00	60.00	60.00
Tax base (sec. 802(b)(1) and (2))	50.00	50.00	50.00
Tax (sec. 802(b)(1) and (2) base)	15.00	15.00	15.00
Shareholders surplus account—			
At beginning of year	0	35.00	37.00
Added at beginning of year by reason of election under sec. 815(d)(1)	0	7.00	0
Added for year (without regard to election under sec. 815(d)(1))	35.00	35.00	35.00
Subtracted (distributions)	0	40.00	40.00
Policyholders surplus account—			
At beginning of year	0	0	10.00
Added for year	10.00	10.00	10.00
Subtracted (distributions)	0	0	0
Subtracted (by reason of election under sec. 815(d)(1))	10.00	0	0
Tax base (sec. 802(b)(3))	10.00	0	0
Tax (sec. 802(b)(3) base)	3.00	0	0

Assume further that S has a loss from operations for the taxable year 1962 of $25. Under the provisions of section 812, the $25 loss from operations would be carried back to the taxable year 1959 and would reduce the 1959 tax base under section 802(b)(1) and (2) to $35 ($60 minus $25). After adjustments reflecting the 1962 loss from operations, the results for the taxable years 1959 through the beginning of 1962 would be as follows:

	1959	1960	1961	1962
Taxable investment income	$40.00	$40.00	$40.00	
Gain from operations	35.00	60.00	60.00	

	1959	1960	1961	1962
Tax base (sec. 802(b)(1) and (2))	35.00	50.00	50.00	
Tax (sec. 802(b)(1) and (2) base)	10.50	15.00	15.00	
Shareholders surplus account—				
At beginning of year	0	24.50	19.50	$14.50
Added for year (without regard to election under sec. 815(d)(1))	24.50	35.00	35.00	
Added by reason of election under sec. 815(d)(1)	0	0	0	
Subtracted (distributions)	0	40.00	40.00	
Policyholders surplus account—				
At beginning of year	0	0	10.00	20.00
Added for year	0	10.00	10.00	
Subtracted (distributions)	0	0	0	
Subtracted (by reason of election under sec. 815(d)(1))	0	0	0	
Tax base (sec. 802(b)(3))	0	0	0	
Tax (sec. 802(b)(3) base)	0	0	0	

As a result of the loss from operations for 1962, the election under section 815(d)(1) for the taxable year 1959 has become inapplicable in its entirety since the balance in the policyholders surplus account at the end of 1959, as recomputed, is zero. Thus, S would be entitled to a total refund of $7.50 for the taxable year 1959. Of this amount, $4.50 is due to the recomputation of the section 802(b)(1) and (2) tax base and $3 to the amount of tax paid by reason of the election under section 815(d)(1).

[T.D. 6535, 26 FR 545, Jan. 20, 1961]

§ 1.816-1 Life insurance reserves.

(a) ***Definition of life insurance reserves.*** Except as provided in section 816(h), a reserve that meets the requirements of section 816(b)(1) and (2) will not be disqualified as a life insurance reserve solely because the method used to compute the reserve takes into account other factors, provided that the method used to compute the reserve is a tax reserve method as defined in section 807(d)(3) and that such reserve is not an asset adequacy reserve as described in § 1.807-1(b).

(b) ***Applicability date.*** The section applies to taxable years beginning after *October 13, 2020.*

However, a taxpayer may choose to apply the rules of this section for a taxable year beginning after December 31, 2017, the effective date of the revision of section 807 by Public Law 115-97, and on or before *October 13, 2020,* provided the taxpayer consistently applies the rules of this section to that taxable year and all subsequent taxable years. See section 7805(b)(7).

[T.D. 9911, 85 FR 64393, Oct. 13, 2020]

MISCELLANEOUS PROVISIONS

§ 1.817-1 Taxable years affected.

Except as otherwise provided therein, §§ 1.817-2 through 1.817-4 are applicable only to taxable years beginning after December 31, 1957, and all references to sections of part I, subchapter L, chapter 1 of the Code are to the Internal Revenue Code of 1954, as amended by the Life Insurance Company Income Tax Act of 1959 (73 Stat. 112) and section 3 of the Act of October 23, 1962 (76 Stat. 1134).

[T.D. 6886, 31 FR 8689, June 23, 1966]

§ 1.817-2 Treatment of capital gains and losses.

(a) ***In general.*** For taxable years beginning after December 31, 1958, and before January 1, 1962, if the net long-term capital gain (as defined in section 1222(7)) of any life insurance company exceeds its net short-term capital loss (as defined in section 1222(6)), section 802(a)(2) prior to its amendment by section 3 of the Act of October 23, 1962 (76 Stat. 1134), imposes a separate tax equal to 25 percent of such excess. For taxable years beginning after December 31, 1961, if the net long-term capital gain of any life insurance company exceeds its net short-term capital loss, section 802(a)(2) imposes an alternative tax in lieu of the tax imposed by section 802(a)(1), if and only if such alternative tax is less than the tax imposed by section 802(a)(1). Except as modified by section 817 (rules relating to certain gains and losses), the general rules of the Code relating to gains and losses, such as subchapter O (relating to gain or loss on disposition of property), subchapter P (relating to capital gains and losses), etc., shall apply with respect to life insurance companies.

(b) ***Modification of section 1221 and 1231.***

(1) In the case of a life insurance company, section 817(a)(1) provides that for purposes of applying section 1231(a) (relating to property used in the trade or business and involuntary conversions), the term *property used in the trade or business* shall be treated as including only:

(i) Property used in carrying on an insurance business, of a character subject to the allowance for depreciation under section 167 (even though fully depreciated), held for more than 1 year (6 months for taxable years beginning before 1977; 9 months taxable years beginning in 1977), and real property used in carrying on an insurance business, held for more than 1 year (6 months for taxable years beginning before 1977; 9 months taxable years beginning in 1977), and which is not:

(*a*) Property of a kind which would properly be includible in the inventory of the taxpayer if on hand at the close of the taxable year;

(*b*) Property held by the taxpayer primarily for sale to customers in the ordinary course of business; or

(*c*) A copyright, a literary, musical, or artistic composition, a letter or memorandum, or similar property held by a taxpayer described in section 1221(3). In the case of a letter, memorandum, or property similar to a letter or memorandum, this subdivision (*c*) applies only to sales and other dispositions occurring after July 25, 1969.

(ii) The cutting or disposal of timber, or the disposal of coal or iron ore, to the extent considered arising from a sale or exchange by reason of the provisions of section 631 and the regulations thereunder.

(2) In the case of a life insurance company, section 817(a)(2) provides that for purposes of applying section 1221(2) (relating to the exclusion of certain property from the term capital asset), the reference to property used in trade or business shall be treated as including only property used in carrying on an insurance business.

(3) Section 1231(a), as modified by section 817(a)(1) and subparagraph (1) of this paragraph, shall apply to recognized gains and losses from the following:

(i) The sale, exchange, or involuntary conversion of the following property, if held for more than 1 year (6 months for taxable years beginning before 1977; 9 months taxable years beginning in 1977):

(*a*) The home office and branch office buildings (including land) owned and occupied by the life insurance company;

(*b*) Furniture and equipment owned by the life insurance company and used in the home office and branch office buildings occupied by the life insurance company; and

(*c*) Automobiles and other depreciable personal property used in connection with the operations conducted in the home office and branch office buildings occupied by the life insurance company.

(ii) The involuntary conversion of capital assets held for more than 1 year (6 months for taxable years beginning before 1977; 9 months taxable years beginning in 1977).

(iii) The cutting or disposal of timber, or the disposal of coal or iron ore, to the extent considered arising from a sale or exchange by reason of the provisions of section 631 and the regulations thereunder.

(4) Section 1221(2), as modified by section 817(a)(2) and subparagraph (2) of this paragraph, shall include only the following property;

(i) The home office and branch office buildings (including land) owned and occupied by the life insurance company;

(ii) Furniture and equipment owned by the life insurance company and used in the home office and branch office buildings occupied by the life insurance company; and

(iii) Automobiles and other depreciable personal property used in connection with the operations conducted in the home office and branch office buildings occupied by the life insurance company.

(5) If an asset described in subparagraph (3) (i)(*a*), (*b*), or (*c*) or subparagraph (4) of this paragraph, or any portion thereof, is also an “investment asset” (an asset from which gross investment income, as defined in section 804(b), is derived), such asset, or portion thereof, shall not be treated as an asset used in carrying on an insurance business. Accordingly, the gains or losses from the sale or exchange (or considered as from the sale or exchange) of depreciable assets attributable to any trade or business, other than the insurance trade or business, carried on by the life insurance company, such as operating a radio station, housing development, or a farm, or renting various pieces of real estate shall be treated as gains or losses from the sale or exchange of a capital asset unless such asset is involuntarily converted (within the meaning of paragraph (e) of § 1.123-1).

(c) ***Illustration of principles.*** The provisions of section 817(a) and this section may be illustrated by the following examples:

Example 1. L, a life insurance company, has recognized gains and losses for the taxable year 1959 from the sale or involuntary conversion of the following items:

	Gains	*Losses*
Stocks, held for more than 6 months	$100,000	
Bonds, held for more than 6 months		$5,000
Housing development, held for more than 6 months		400,000
Branch office building owned and occupied by L, held for more than 6 months		115,000
Furniture and equipment used in the investment department, held for more than 6 months	30,000	
Radio station, held for more than 6 months	200,000	
Involuntary conversion of apartment building, held for more than 6 months	7,000	

The recognized gains and losses from the sale of the stocks, bonds, housing development, and radio station shall be treated as gains and losses from the sale of capital assets since such items are capital assets within the meaning of section 1221 (as modified by section 817(a)(2)). Accordingly, the provisions of section 1231 shall not apply to the sale of such capital assets. However, the provisions of section 1231 (as modified by section 817(a)(1)) shall apply to the sale of the branch office building and the furniture and equipment, and the apartment building involuntarily converted. Since the aggregate of the recognized losses ($115,000) exceeds the aggregate of the recognized gains ($37,000), the gains and losses are treated as ordinary gains and losses.

Example 2. Y, a life insurance company, owns a twenty-story home office building, having an adjusted basis of $15,000,000, ten floors of which it rents to various tenants, one floor of which is utilized by it in operating its investment department, and the remaining nine floors of which are occupied by it in carrying on its insurance business. If in 1960, Y sells the building for $10,000,000, Y must first apportion its basis between that portion of the building (one-half) used in carrying on an insurance business, and that portion of the building (one-half) classified as an "investment asset", before it can determine the character of the loss attributable to each portion of the building. For such purpose, the one floor utilized by Y in operating its investment department is treated as used in carrying on an insurance business. Assuming that each portion of the building bears an equal (one-half) relation to the basis of the entire building, Y (without regard to section 817(b)) would have a $2,500,000 ordinary loss on that portion used in carrying on an insurance business (assuming that Y had no gains subject to section 1231), and a $2,500,000 capital loss on that portion of the building classified as an investment asset.

[T.D. 6558, 26 FR 2782, Apr. 4, 1961, as amended by T.D. 6841, 30 FR 9308, July 27, 1965; T.D. 6886, 31 FR 8689, June 23, 1966; T.D. 7369, 40 FR 29840, July 16, 1975; T.D. 7728, 45 FR 72650, Nov. 3, 1980]

§ 1.817-3 Gain on property held on December 31, 1958, and certain substituted property acquired after 1958.

(a) ***Limitation on gain recognized on property held on December 31, 1958.***

(1) Section 817(b)(1) limits the amount of gain that shall be recognized on the sale or other disposition of property other than insurance and annuity contracts (and contracts supplementary thereto) and property described in section 1221(1) (relating to stock in trade or inventory-type property) if:

(i) The property was held (or treated as held within the meaning of paragraph (c)(1) of this section) by a life insurance company on December 31, 1958;

(ii) The taxpayer has been a life insurance company at all times on and after December 31, 1958, including the date of the sale or other disposition of the property; and

(iii) The fair market value of the property on December 31, 1958, exceeds the adjusted basis for determining gain as of such date.

The gain on the sale or other disposition of such property shall be limited to an amount (but not less than zero) equal to the amount by which the gain (determined without regard to section 817(b)(1)) exceeds the difference between fair market value of such property on December 31, 1958, and the adjusted basis for determining gain as of such date. Accordingly, the tax imposed under section 802(a) shall apply with respect to the amount of gain so limited. In addition, in the case of a stock life insurance company, the amount of such gain shall be taken into account under section 815(b)(2)(A)(ii) for purposes of determining the amount to be added to the shareholders surplus account (as defined in section 815(b) and § 1.815-3) for the taxable year. Furthermore, the amount of the gain (determined without regard to section 817(b)(1) and this paragraph) which is not taken into account under section 802(a) and under paragraph (f) of § 1.802-3 by reason of the application of section 817(b)(1) shall be included in other accounts (as defined in § 1.815-5) by such a company for the taxable year.

(2) Section 817(b)(1) and subparagraph (1) of this paragraph shall not apply for purposes of determining loss with respect to property held on December 31, 1958.

(b) ***Illustration of principles.*** The application of section 817(b)(1) and paragraph (a) of this section may be illustrated by the following examples:

Example 1. On December 31, 1958, J, a stock life insurance company, owned stock of Z Corporation and on such date the stock had an adjusted basis for determining gain of $5,000 and a fair market value of $6,000. On August 1, 1959, the company sells such stock for $8,000. Assuming J qualifies as a life insurance company for the taxable year 1959, and applying the provisions of section 817(b)(1) and paragraph (a) of this section, the gain recognized (assuming no adjustment to basis for the period since December 31, 1958) on the sale shall be limited to $2,000 (the amount by which the gain realized, $3,000, exceeds the difference, $1,000, between the fair market value, $6,000, and the adjusted basis, $5,000, for determining gain on December 31, 1958). Thus, J shall take into account $2,000 under section 815(b)(2)(A)(ii) for purposes of determining the amount to be added to its shareholders surplus account for the taxable year and shall include $1,000 in other accounts for the taxable year.

Example 2. The facts are the same as in example 1, except that the selling price is $5,800. In such case, no gain shall be recognized even though there is a realized gain of $800 since such realized gain does not exceed the difference ($1,000) between the fair market value ($6,000) and the adjusted basis

($5,000) for determining gain on December 31, 1958. Furthermore, no loss shall be realized or recognized as a result of this transaction. Thus, J shall include $800 in other accounts for the taxable year and shall not take into account any amount under section 815(b)(2)(A)(ii).

Example 3. The facts are the same as in example 1, except that the adjusted basis for determining loss is $5,000 and the selling price is $4,500. In such case, since J has sustained a loss, section 817(b)(1) does not apply.

(c) ***Certain substituted property acquired after December 31, 1958.*** Section 817(b)(2) provides that if a life insurance company acquires property after December 31, 1958, in exchange for property actually held by the company on December 31, 1958, and the property acquired has a substituted basis within the meaning of section 1016(b) and § 1.1016-10, the following rules shall apply:

(1) For purposes of section 817(b)(1), such acquired property shall be deemed as having been held continuously by the taxpayer since the beginning of the holding period thereof as determined under section 1223;

(2) The fair market value and adjusted basis referred to in section 817(b)(1) shall be that of that property for which the holding period taken into account includes December 31, 1958;

(3) Section 817(b)(1) shall apply only if the property or properties, the holding periods of which are taken into account, were held only by life insurance companies after December 31, 1958, during the holding periods so taken into account;

(4) The difference between the fair market value and adjusted basis referred to in section 817(b)(1) shall be reduced (but not below zero) by the excess of

(i) the gain that would have been recognized but for section 817(b) on all prior sales or other dispositions after December 31, 1958, of properties referred to in section 817(b)(2)(C) over

(ii) the gain that was recognized on such sales or other dispositions; and

(5) The basis of such acquired property shall be determined as if the gain which would have been recognized but for section 817(b) were recognized gain.

For purposes of section 817(b)(2) and this paragraph, the term *property* does not include insurance and annuity contracts (and contracts supplementary thereto) and property described in section 1221(1) (relating to stock in trade or inventory-type property). Furthermore, the provisions of section 817(b)(1) and paragraph (a)(1) of this section shall not apply for purposes of determining loss with respect to property described in section 817(b)(2) and this paragraph.

(d) ***Illustration of principles.*** The application of section 817(b)(2) and paragraph (c) of this section may be illustrated by the following example:

Example. Assume that W, a life insurance company, owns property B on December 31, 1958, at which time its adjusted basis was $1,000 and its fair market value was $1,800. On January 31, 1960, in a transaction to which section 1031 (relating to exchange of property held for productive use or investment) applies, W receives property H having a fair market value of $1,700 plus $300 in cash in exchange for property B. The gain realized on the transaction, without regard to section 817(b) is $1,000 (assuming no adjustments to basis for the period since December 31, 1958). Under the provisions of section 817(b)(1) the gain is limited to $200. The entire $200 shall be recognized since such amount is less than the amount

of gain ($300) which would be recognized under section 1031. Applying the provisions of section 817(b)(2) and paragraph (c) of this section, the basis of property H shall be determined as if the entire $300 of cash received is recognized gain. Thus, the basis of property H under section 1031 is $1,000 ($1,000 (the basis of property B) minus $300 (the amount of money received) plus $300 (the recognized gain of $200 plus $100 which would have been recognized but for section 817(b)). If W later sells property H for $2,200 cash, and assuming no further adjustments to its basis of $1,000, the gain realized is $1,200, but due to the application of section 817(b)(2) the amount of gain recognized is $500, computed as follows:

Selling price		$2,200
Less: Adjusted basis as of date of sale		1,000
Gain realized		1,200
Fair market value as of 12-31-58	$1,800	
Adjusted basis as of 12-31-58	1,000	
Excess of fair market value over adjusted basis	800	
Less: Excess of gain which would have been recognized on all prior dispositions but for sec. 817(b) over gain recognized on all prior dispositions ($300 minus $200)	100	
	-————	$700
Gain recognized	500	

[T.D. 6558, 26 FR 2783, Apr. 4, 1961, as amended by T.D. 6886, 31 FR 8689, June 23, 1966]

§ 1.817-4 Special rules.

(a) ***Limitation on capital loss carryovers.*** Section 817(c) provides that a net capital loss (as defined in section 1222(10)) for any taxable year beginning before January 1, 1959, shall not be taken into account. For any taxable year beginning after December 31, 1958, the provisions of part II, subchapter P, chapter 1 of the Code (relating to the treatment of capital losses) shall be applicable to life insurance companies for purposes of determining the tax imposed by section 802(a) and § 1.802-3 (relating to the imposition of tax in case of capital gains).

(b) ***Gain on transactions occurring prior to January 1, 1959.*** For purposes of part I, subchapter L, chapter 1 of the Code, section 817(d) provides that:

(1) There shall be excluded from tax any gain from the sale or exchange of a capital asset, and any gain considered as gain from sale or exchange of a capital asset, which results from sales or other dispositions of property prior to January 1, 1959; and

(2) Any gain after December 31, 1958, resulting from the sale or other disposition of property prior to January 1, 1959, which, but for this subparagraph would be taken into account under section 1231, shall not be taken into account under section 1231.

For example, if a life insurance company makes an installment sale of a capital asset prior to January 1, 1959, and payments are received after such date, any capital gain attributable to such sale shall not be taken into account for purposes of section 802(a). Furthermore, any gain referred to in subparagraphs (1) and (2) and the preceding sentence shall not be taken into account in determining the excess of the net short-term capital gain over the net long-term capital loss (and for taxable years beginning after December 31, 1961, the excess of the net long-term capital gain over the net short-term capital loss) for purposes of computing taxable investment income under section 804(a)(2) or gain or loss from operations under section 809(b).

(c) ***Certain reinsurance transactions in 1958.*** For purposes of part I, section 817(e) provides that where a life insurance company reinsures (or sells) all of its insurance contracts of a particular type, such as an entire industrial department, in either a single transaction, or in a series of related transactions, all of which occurred during 1958, and the reinsuring (or purchasing) company or companies assume all liabilities under such contracts, such reinsurance (or sale) shall be treated as the sale of a capital asset. However, such transaction shall be subject to the provisions of section 806(a) and § 1.806-3 (relating to adjustments for certain changes in reserves and assets).

(d) ***Certain other reinsurance transactions.***

(1) For any taxable year beginning after December 31, 1958, the reinsurance of all or a part of the insurance contracts of a particular type by a life insurance company, in either a single transaction, or in a series of related transactions, occurring in any such taxable year, whereby the reinsuring company or companies assume all liabilities under such contracts, shall not be treated as the sale or exchange of a capital asset but shall be subject to the provisions of section 806(a) and 809 and the regulations thereunder. However, if in connection with a transaction described in the preceding sentence the reinsured or reinsurer transfers an asset which is a capital asset within the meaning of section 1221 (as modified by section 817(a)(2)), such transfer shall be treated as the sale or exchange of a capital asset by the transferor.

(2)

(i) The consideration paid by the reinsured to the reinsurer in connection with a transaction described in subparagraph (1) of this paragraph shall be treated as an item of deduction under section 809(d)(7). However any amount received by the reinsured from the reinsurer shall be applied against and reduce (but not below zero) the amount of such consideration, and to the extent that it exceeds such consideration, shall be treated as an item of gross amount under section 809(c)(3).

(ii) In connection with an assumption reinsurance (as defined in paragraph (a)(7)(ii) of § 1.809-5) transaction, a reinsurer shall in any taxable year beginning after December 31, 1957:

(A) Treat the consideration received from the reinsured in any such taxable year as an item of gross amount under section 809(c)(1), and

(B) Treat any amount paid to the reinsured for the purchase of such contracts, to the extent such amount meets the requirements of section 162, as a deferred expense that may be amortized over the reasonably estimated life (as defined in paragraph (d)(2)(iv) of this section) of the contracts reinsured and treat the portion of the expense so amortized in each taxable year as a deduction under section 809(d)(12) irrespective of the taxable year in which such amount was paid to the reinsured.

(iii) For purposes of paragraph (d)(2)(ii) of this section where the reinsured transfers to the reinsurer in connection with the assumption reinsurance transaction a net amount which is less than the increase in the reinsurer's reserves resulting from the transaction, the reinsurer shall be treated as:

(A) Having received from the reinsured consideration in an amount equal to the net amount of the increase in the reinsurer's reserves resulting from the transaction, and

(B) Having paid the reinsured an amount for the purchase of the contracts equal to the excess of the amount of such increase in the reinsurer's reserves over the net amount received from the reinsured.

(iv) For purposes of this subparagraph, the term *reasonably estimated life* means the period during which the contract reinsured remains in force. Such period shall be based on the facts in each case (such as age, health, and sex of the insured, type of contract reinsured, etc.) and the assuming company's experience (such as mortality, lapse rate, etc.) with similar risks.

(3) The provisions of this paragraph may be illustrated by the following examples:

Example 1. On June 30, 1959, X, a life insurance company, reinsured a portion of its insurance contracts with Y, a life insurance company, under an agreement whereby Y agreed to assume and to become solely liable under the contracts reinsured. The reserves on the contracts reinsured by X were $100,000. Under the reinsurance agreement X agreed to pay Y $100,000 for assuming such contracts and Y agreed to pay X $17,000 for the right to receive future premium payments under this block of contracts. Rather than exchange payments of money, X agreed to pay Y a net amount of $83,000 in cash. Assuming that the reasonably estimated life of the contracts reinsured is 17 years, that there are no other insurance transactions by X or Y during the taxable year, and assuming that X and Y compute the reserves on the contracts reinsured on the same basis, X has income of $100,000 under section 809(c)(2) as a result of the net decrease in its reserves. X has a net deduction of $83,000 ($100,000−$17,000) under section 809(d)(7). For the taxable year 1959, Y has income of $100,000 under section 809(c)(1) as a result of the consideration received from X and a deduction of $100,000 under section 809(d)(2) for the net increase in reserves and $1,000 ($17,000 divided by 17, the reasonably estimated life of the contracts reinsured), under section 809(d)(12). The remaining $16,000 shall be amortized over the next 16 succeeding taxable years (16 × $1,000 = $16,000) under section 809(d)(12) at the rate of $1,000 for each such taxable year.

Example 2. The facts are the same as in example 1, except X agreed to pay Y a consideration of $100,000 in cash for assuming these contracts and Y paid X a bonus of $17,000 in cash and that this bonus meets the requirements of section 162. Assuming that the reasonably estimated life of the contracts reinsured is 17 years, X has income of $100,000 under section 809(c)(2) as a result of this net decrease in its reserves and a deduction of $83,000 under section 809(d)(7) for the amount of the consideration ($100,000) paid to Y for assuming these contracts, reduced by the bonus ($17,000) received from Y. For the taxable year 1959, Y has income of $100,000 under section 809(c)(1) as a result of the consideration received from X and deductions of $100,000 under section 809(d)(2) for the net increase in reserves and $1,000 (the bonus of $17,000 divided by 17, the reasonably estimated life of the contracts reinsured), under section 809(d)(12). The remaining amount of the bonus ($16,000) shall be amortized over the next 16 succeeding taxable years (16 × $1,000 = $16,000) under section 809(d)(12) at the rate of $1,000 for each such taxable year.

Example 3. The facts are the same as in Example 1, except that the reinsurance agreement does not specifically provide that X agreed to pay Y $100,000 for assuming the contracts reinsured and Y agreed to pay X $17,000 for the right to receive future premium payments under such contracts. Instead, X agreed to pay

Y a net amount of $83,000 in cash for assuming such contracts. Nevertheless, Y is treated as having received from X consideration equal to $100,000, the amount of the increase in Y's reserves, and as having paid $17,000 ($100,000 less $83,000) for the purchase of such contracts. Therefore, for the taxable year 1959, Y has income of $100,000 under section 809(c)(1). Y also has a deduction of $100,000 under section 809(d)(2) for the net increase in its reserves and an amortization deduction under section 809(d)(12) of $1,000 ($17,000 divided by 17, the reasonably estimated life of the contracts reinsured). The remaining $16,000 shall be amortized by Y over the next 16 succeeding years at the rate of $1,000 for each such year. For 1959, X has income of $100,000 under section 809(c)(2) as a result of the net decrease in its reserves and a deduction of $83,000 under section 809(d)(7) for the net amount of consideration paid to Y for assuming the contracts reinsured.

Example 4. The facts are the same as in example 1, except that X agreed to pay Y a consideration of $130,000 in cash for assuming such contracts. Based upon these facts, X has income of $100,000 under section 809(c)(2) as a result of this net decrease in its reserves and a deduction of $130,000 under section 809(d)(7) for the amount of the consideration paid to Y for assuming these contracts. Y has income of $130,000 under section 809(c)(1) as a result of the consideration received from X and a deduction of $100,000 under section 809(d)(2) for the net increase in its reserves.

Example 5. On August 1, 1960, R, a life insurance company, reinsured all of its insurance policies with S, a life insurance company, under an agreement whereby S agreed to assume and become solely liable under the contracts reinsured. The reserves on the contracts reinsured by R were $3,000,000. Under the reinsurance agreement, R agreed to pay S a consideration of $3,000,000 in stocks and bonds for assuming such contracts. Assuming no other insurance transactions by R or S during the taxable year, that R and S compute the reserves on the contracts reinsured on the same basis, and that R has a recognized gain (after the application of the limitation of section 817(b)(1)) of $20,000 due to appreciation in value of the assets transferred, the results to each company are as follows:

Company R (reinsured)	
Net decrease in reserves (sec. 809(c) (2))	$3,000,000
Capital gain (as limited by sec. 817(b) (1)) to be taxed separately under sec. 802(a)(2)	20,000
Consideration paid by R to S in respect of S's assuming liabilities under contracts issued by R (sec. 809(d)(7))	$3,000,000
Income	
Company S (reinsurer)	
Consideration received by S in respect of assuming liabilities under contracts issued by R (sec. 809(c)(1))	$3,000,000
Deductions	
Net increase in reserves (sec.809(d)(2))	$3,000,000

[T.D. 6558, 26 FR 2783, Apr. 4, 1961, as amended by T.D. 6625, 27 FR 12543, Dec. 19, 1962; T.D. 6886, 31 FR 8689, June 23, 1966; T.D. 41 FR 5100, Feb. 4, 1976]

§ 1.817-5 Diversification requirements for variable annuity, endowment, and life insurance contracts.

(a) *Consequences of nondiversification* —

(1) *In general.* Except as provided in paragraph (a)(2) of this section, for purposes of subchapter L, section 72, and section 7702(a), a variable contract (as defined in section 817(d)), other than a pension plan contract (as defined in section 818(a)), which is based on one or more segregated asset accounts shall not be treated as an annuity, endowment, or life insurance contract for any calendar quarter period for which the investments of any such account are not adequately diversified. For this purpose, a variable contract shall be treated as based on a segregated asset account for a calendar quarter period if amounts received under the contract (or earnings thereon) are allocated to the segregated asset account at any time during the period. In addition, a variable contract that is not treated as an annuity, endowment, or life insurance contract for any period by reason of this paragraph (a)(1) shall not be treated as an annuity, endowment, or life insurance contract for any subsequent period even if the investments are adequately diversified for such subsequent period. If a variable contract which is a life insurance or endowment contract under other applicable (e.g., State or foreign) law is not treated as a life insurance or endowment contract under section 7702(a), the income on the contract for any taxable year of the policyholder is treated as ordinary income received or accrued by the policyholder during such year in accordance with section 7702 (g) and (h). Likewise, if a variable contract is not treated as an annuity contract under section 72, the income on the contract for any taxable year of the policyholder shall be treated as ordinary income received or accrued by the policyholder during such year in the same manner as a life insurance or endowment contract under section 7702 (g) and (h).

(2) *Inadvertent failure to diversify.* The investments of a segregated asset account shall be treated as satisfying the requirements of paragraph (b) of this section for one or more periods, provided the following conditions are satisfied—

(i) The issuer or holder must show the Commissioner that the failure of the investments to satisfy the requirements of paragraph (b) of this section for such period or periods was inadvertent,

(ii) The investments of the account must satisfy the requirements of paragraph (b) of this section within a reasonable time after the discovery of such failure, and

(iii) The issuer or holder of the variable contract must agree to make such adjustments or pay such amounts as may be required by the Commissioner with respect to the period or periods during which the investments of the account did not satisfy the requirements of paragraph (b) of this section.

(b) *Diversification of investments* —

(1) *In general.*

(i) Except as otherwise provided in this paragraph and paragraph (c) of this section, the investments of a segregated asset account shall be considered adequately diversified for purposes of this section and section 817(h) only if—

(A) No more than 55% of the value of the total assets of the account is represented by any one investment;

(B) No more than 70% of the value of the total assets of the account is represented by any two investments;

(C) No more than 80% of the value of the total assets of the account is represented by any three investments; and

(D) No more than 90% of the value of the total assets of the account is represented by any four investments.

(ii) For purposes of this section—

(A) All securities of the same issuer, all interests in the same real property project, and all interests in the same commodity are each treated as a single investment; and

(B) In the case of government securities, each government agency or instrumentality shall be treated as a separate issuer.

(iii) See paragraph (f) of this section for circumstances in which a segregated asset account is treated as the owner of assets held indirectly through certain pass-through entities and corporations taxed under subchapter M, chapter 1 of the Code.

(2) ***Safe harbor.*** A segregated asset account will be considered adequately diversified for purposes of this section and section 817(h) if—

(i) The account meets the requirements of section 851 (b)(4) and the regulations thereunder; and

(ii) No more than 55% of the value of the total assets of the account is attributable to cash, cash items (including receivables), government securities, and securities of other regulated investment companies.

(3) ***Alternative diversification requirements for variable life insurance contracts.***

(i) A segregated asset account with respect to variable life insurance contracts will be considered adequately diversified for purposes of this section and section 817(h) if the requirements of paragraph (b)(1) or (b)(2) of this section are satisfied or if the assets of such account, other than Treasury securities, satisfy the percentage limitations prescribed in paragraph (b)(1) of this section increased by the product of

(A) .5 and

(B) the percentage of the value of the total assets of the account that is represented by Treasury securities. In determining whether the assets of an account, other than Treasury securities, satisfy the increased percentage limitations, such limitations are applied as if the Treasury securities were not included in the account (*i.e.,* the increased percentage limitations are not applied to Treasury securities and the value of the total assets of the account is reduced by the value of the Treasury securities).

(ii) The provisions of this paragraph (b)(3) may be illustrated by the following examples:

Example 1. On the last day of a quarter of a calendar year, a segregated asset account with respect to variable life insurance contracts holds assets having a total value of $100,000. The assets of the account are represented by Treasury securities having a total value of $90,000 and securities of Corporation A having a total value of $10,000. The 55% limit described in paragraph (b)(1)(i) of this section would be increased by 45% (0.5 × 90%) to 100%, and would then be applied to the assets of the account other than Treasury securities. Because no more than 100% of the value of the assets other than Treasury securities is represented by securities of Corporation A, the investments of the account will be considered adequately diversified.

Example 2. On the last day of a quarter of a calendar year, a segregated asset account with respect to variable life insurance contracts holds assets having a total value of $100,000. The assets of the account are represented by Treasury securities having a total value of $60,000, securities of Corporation A having a total value of $30,000, and securities of Corporation B having a total value of $10,000. The 55% and 70% limits described in paragraph (b)(1)(i) of this section would be increased by 30% (0.5 × 60%) to 85% and 100%, respectively, and would then be applied to the assets of the account other than Treasury securities. Securities of Corporation A represent 75%, and securities of Corporation B represent 25%, of the value of the assets of the account other than Treasury securities. Because no more than 85% of the value of the assets other than Treasury securities is represented by securities of Corporation A or B and no more than 100% of the value of the assets other than Treasury securities is represented by securities of Corporations A and B, the investments of the account will be considered adequately diversified.

(c) ***Periods for which an account is adequately diversified*** —

(1) ***In general.*** A segregated asset account that satisfies the requirements of paragraph (b) of this section on the last day of a quarter of a calendar year (*i.e.,* March 31, June 30, September 30, and December 31) or within 30 days after such last day shall be considered adequately diversified for such quarter.

(2) ***Start-up period.***

(i) Except as provided in paragraph (c)(2)(iv) of this section, a segregated asset account that is not a real property account on its first anniversary shall be considered adequately diversified until such first anniversary.

(ii) Except as provided in paragraph (c)(2)(iv) of this section, a segregated asset account that is a real property account on its first anniversary shall be considered adequately diversified until the earlier of its fifth anniversary or the anniversary on which the account ceases to be a real property account.

(iii) For purposes of paragraph (c)(2) (i) and (ii) of this section, the anniversary of a segregated asset account is the anniversary of the date on which any amount received under a life insurance or annuity contract, other than a pension plan contract (as defined in section 818 (a)), is first allocated to the account.

(iv) If more than 30 percent of the amount allocated to a segregated asset account as of the last day of a calendar quarter is attributable to contracts entered into more than one year before such date, paragraph (c)(2)(i) of this section shall not apply to the segregated asset account for any period after such date. Similarly, if more than 30 percent of the amount allocated to a segregated asset account as of the last day of a calendar quarter is attributable to contracts entered into more than 5 years before such date, paragraph (c)(2)(ii) of this section shall not apply to the segregated asset account for any period after such date. For purposes of this paragraph (c)(2), amounts transferred to the account from a diversified account (determined without regard to this paragraph (c)(2)) or as a result of an exchange pursuant to section 1035 in which the issuer of the contract received in the exchange is not related in a manner specified in section 267(b) to the issuer of the contract transferred in the exchange are not treated as—

(A) Amounts attributable to contracts entered into more than one year before such date, in the case of accounts subject to paragraph (c)(2)(i) of this section, or

(B) Amounts attributable to contracts entered into more than five years before such date, in the case of accounts subject to paragraph (c)(2)(ii) of this section.

(3) ***Liquidation period.*** A segregated asset account that satisfies the requirements of paragraph (b) of this section on the date a plan of liquidation is adopted shall be considered adequately diversified for—

(i) The one-year period beginning on the date the plan of liquidation is adopted if the account is not a real property account on such date; or

(ii) The two-year period beginning on the date the plan of liquidation is adopted if the account is a real property account on such date.

(d) ***Market fluctuations.*** A segregated asset account that satisfies the requirements of paragraph (b) of this section at the end of any calendar quarter (or within 30 days after the end of such calendar quarter) shall not be considered nondiversified in a subsequent quarter because of a discrepancy between the value of its assets and the diversification requirements unless such discrepancy exists immediately after the acquisition of any asset and such discrepancy is wholly or partly the result of such acquisition.

(e) ***Segregated asset account.*** For purposes of section 817(h) and this section, a segregated asset account shall consist of all assets the investment return and market value of each of which must be allocated in an identical manner to any variable contract invested in any of such assets. See paragraph (g) for examples illustrating the application of this paragraph (e).

(f) ***Look-through rule for assets held through certain investment companies, partnerships, or trusts*** —

(1) ***In general.*** If this paragraph (f) applies, a beneficial interest in a regulated investment company, a real estate investment trust, a partnership, or a trust that is treated under sections 671 through 679 as owned by the grantor or another person ("investment company, partnership, or trust") shall not be treated as a single investment of a segregated asset account. Instead, a pro rata portion of each asset of the investment company, partnership, or trust shall be treated, for purposes of this section, as an asset of the segregated asset account. For purposes of this section, the ratable interest of a partner in a partnership's assets shall be determined in accordance with the partner's capital interest in the partnership.

(2) ***Applicability*** —

(i) ***Certain investment companies, partnerships, and trusts.*** This paragraph (f) shall apply to an investment company, partnership, or trust if—

(A) All the beneficial interests in the investment company, partnership, or trust (other than those described in paragraph (f)(3) of this section) are held by one or more segregated asset accounts of one or more insurance companies; and

(B) Public access to such investment company, partnership, or trust is available exclusively (except as otherwise permitted in paragraph (f)(3) of this section) through the purchase of a variable contract. Solely for this purpose, the status of a contract as a variable contract will be determined without regard to section 817(h) and this section.

(ii) ***Trusts holding Treasury securities.*** This paragraph (f) shall also apply to a trust that is treated under section 671 through 679 as owned by the grantor or another person if substantially all of the assets of the trust are represented by Treasury securities.

(3) ***Interests not held by segregated asset accounts.*** Satisfaction of the requirements of paragraph (f)(2)(i) of this section shall not be prevented by reason of beneficial interests in the investment company, partnership, or trust that are—

(i) Held by the general account of a life insurance company or a corporation related in a manner specified in section 267(b) to a life insurance company, but only if the return on such interests is computed in the same manner as the return on an interest held by a segregated asset account is computed (determined without regard to expenses attributable to variable contracts), there is no intent to sell such interests to the public, and a segregated asset account of such life insurance company also holds or will hold a beneficial interest in the investment company, partnership, or trust;

(ii) Held by the manager, or a corporation related in a manner specified in section 267(b) to the manager, of the investment company, partnership, or trust, but only if the holding of the interests is in connection with the creation or management of the investment company, partnership, or trust, the return on such interest is computed in the same manner as the return on an interest held by a segregated asset account is computed (determined without regard to expenses attributable to variable contracts), and there is no intent to sell such interests to the public;

(iii) Held by the trustee of a qualified pension or retirement plan;

(iv) Held by a qualified tuition program as defined in section 529;

(v) Held by the trustee of a pension plan established and maintained outside of the United States, as defined in section 7701(a)(9), primarily for the benefit of individuals substantially all of whom are nonresident aliens, as defined in section 7701(b)(1)(B);

(vi) Held by an account which, pursuant to Puerto Rican law or regulation, is segregated from the general asset accounts of the life insurance company that owns the account, provided the requirements of section 817(d) and (h) are satisfied. Solely for purposes of this paragraph (f)(3)(vi), the requirement under section 817(d)(1) that the account be segregated pursuant to State law or regulation shall be disregarded and § 1.817-5(f)(1) shall be applied without regard to the Puerto Rican segregated asset account; or

(vii) Held by the public, or treated as owned by policyholders pursuant to Rev. Rul. 81-225, 1981-2 C.B. 12, but only if

(A) the investment company, partnership, or trust was closed to the public in accordance with Rev. Rul. 82-55, 1982-1 C.B. 12, or

(B) all the assets of the segregated asset account are attributable to premium payments made by policyholders prior to September 26, 1981, to premium payments made in connection with a qualified pension or retirement plan, or to any combination of such premium payments.

(g) ***Examples.*** The provisions of paragraphs (e) and (f) of this section may be illustrated by the following examples.

> *Example 1.* (i) The assets underlying variable contracts issued by a life insurance company consist of two groups of assets: (a) a diversified portfolio of debt securities and (b) interests in P, a partnership. All of the beneficial interests in P are held by one or more segregated asset

accounts of one or more insurance companies and public access to P is available exclusively through the purchase of a variable contract. The variable contracts provide that policyholders may specify which portion of each premium is to be invested in the debt securities and which portion is to be invested in P interests. The portfolio of debt securities and the assets of P, considered separately, each satisfy the diversification requirements of paragraph (b) of this section.
(ii) As a result of the ability of policyholders to allocate premiums among the two groups of assets, the investment return and market value of the interests in P and the debt securities may be allocated to different variable contracts in a non-identical manner. Accordingly, under paragraph (e) of this section, the interests in P are treated as part of a single segregated asset account ("Account 1") and the debt securities are treated as part of a different segregated asset account ("Account 2").

(iii) Since P is described in paragraph (f)(2)(i) of this section, interests in P will not be treated as a single investment of Account 1. Rather, Account 1 is treated as owning a pro rata portion of the assets of P.

(iv) Since Account 1 and Account 2 each satisfy the requirements of paragraph (b) of this section, variable contracts that are based on either or both accounts are treated as annuity, endowment, or life insurance contracts.

Example 2. The facts are the same as in example 1 except that some of the beneficial interests in P are held by persons not described in paragraph (f)(3) of this section. Since P is not described in paragraph (f)(2) of this section, interests in P will be treated as a single investment of Account 1. As a result, Account 1 does not satisfy the requirements of paragraph (b) of this section. Variable contracts based in whole or in part on Account 1 are not treated as annuity, endowment, or life insurance contracts. Variable contracts that are not based on Account 1 at any time during the period in which such account fails to satisfy the requirements of paragraph (b) of this section (*i.e.,* contracts based entirely on Account 2), are treated as annuity, endowment, or life insurance contracts. See paragraph (a)(1).

Example 3. The facts are the same as in example 2 except that the variable contracts do not permit policyholders to allocate premiums between or among the debt securities and interests in P. Thus, the investment return and market value of the interests in P and the debt securities must be allocated to the same variable contracts and in an identical manner. Under paragraph (e) of this section, the interests in P and the debt securities are treated as part of a single segregated asset account. If the interests in P and the debt securities, considered together, satisfy the requirements of paragraph (b) of this section, contracts based on this segregated asset account will be treated as annuity, endowment, or life insurance contracts.

(h) ***Definitions.*** The terms defined below shall, for purposes of this section, have the meanings set forth in such definitions:

(1) ***Government security*** —

(i) ***General rule.*** The term *government security* shall mean any security issued or guaranteed or insured by the United States or an instrumentality of the United States; or any certificate of deposit for any of the foregoing. Any security or certificate or deposit insured or guaranteed only in part by the United States or an instrumentality thereof is treated as issued by the United States or its instrumentality only to the extent so insured or guaranteed, and as issued by the direct obligor to the extent not so insured or guaranteed. For purposes of this paragraph (h)(1), an instrumentality of the United States shall mean any person that is treated for purposes of 15 U.S.C. 80a-2 (16), as amended, as a person controlled or supervised by and acting as an instrumentality of the Government of the United States pursuant to authority granted by the Congress of the United States.

(ii) ***Example.*** A segregated asset account purchases a certificate of deposit in the amount of $150,000 from bank A. Deposits in bank A are insured by the Federal Deposit Insurance Corporation, an instrumentality of the United States, to the extent of $100,000 per depositor. The certificate of deposit is treated as a government security to the extent of the $100,000 insured amount and is treated as a security issued by bank A to the extent of the $50,000 excess of the value of the certificate of deposit over the insured amount.

(2) ***Treasury security*** —

(i) ***General rule.*** For purposes of paragraph (b)(3) of this section and section 817(h)(3), the term *Treasury security* shall mean a security the direct obligor of which is the United States Treasury.

(ii) ***Example.*** A segregated asset account purchases put and call options on U.S. Treasury securities issued by the Options Clearing Corporation. The options are not Treasury securities for purposes of paragraph (b)(3) and section 817(h)(3) because the direct obligor of the options is not the United States Treasury.

(3) ***Real property.*** The term *real property* shall mean any property that is treated as real property under 1.856-3 (d) except that it shall not include interests in real property.

(4) ***Real property account.*** A segregated asset account is a real property account on an anniversary of the account (within the meaning of paragraph (c)(2)(iii) of this section) or on the date a plan of liquidation is adopted if not less than the applicable percentage of the total assets of the account is represented by real property or interests in real property on such anniversary or date. For this purpose, the applicable percentage is 40% for the period ending on the first anniversary of the date on which premium income is first received, 50% for the year ending on the second anniversary, 60% for the year ending on the third anniversary, 70% for the year ending on the fourth anniversary, and 80% thereafter. A segregated asset account will also be treated as a real property account on its first anniversary if on or before such first anniversary the issuer has stated in the contract or prospectus or in a submission to a regulatory agency, an intention that the assets of the account will be primarily invested in real property or interests in real property, provided that at least 40% of the total assets of the account are so invested within six months after such first anniversary.

(5) ***Commodity.*** The term *commodity* shall mean any type of personal property other than a security.

(6) ***Security.*** The term *security* shall include a cash item and any partnership interest, whether or not registered under a Federal or State law regulating the offering or sale of securities. The term shall not include any interest in real property, or any interest in a commodity.

(7) ***Interest in real property.*** The term *interest in real property* shall include the ownership and co-ownership of land or improvements thereon and leaseholds of land or improvements thereon. Such term shall not, however, include mineral, oil, or gas royalty interests, such as a retained economic interest in coal or iron ore with respect to which the special provisions of section 631(c) apply. The term "interest in real property" also shall include options to acquire land or improvements thereon, and options to acquire leaseholds of land or improvements thereon.

(8) ***Interest in a commodity.*** The term *interest in a commodity* shall include the ownership and co-ownership of any type of personal property other than a security, and any leaseholds thereof. Such term shall include mineral, oil, and gas royalty interests, including any fractional undivided interest therein. Such term also shall include any put, call, straddle, option, or privilege on any type of personal property other than a security.

(9) ***Value.*** The term *value* shall mean, with respect to investments for which market quotations are readily available, the market value of such investments; and with respect to other investments, fair value as determined in good faith by the managers of the segregated asset account.

(10) ***Terms used in section 851.*** To the extent not inconsistent with this paragraph (h) all terms used in this section shall have the same meaning as when used in section 851.

(i) ***Effective date*** —

(1) ***In general.*** This section is effective for taxable years beginning after December 31, 1983.

(2) ***Exceptions.***

(i) If, at all times after December 31, 1983, an insurance company would be considered the owner of the assets of a segregated asset account under the principles of Rev. Rul. 81-225, 1981-2 C.B. 12, this section will not apply to such account until December 15, 1986.

(ii) This section will not apply to any variable contract to which Rev. Rul. 77-85, 1977-1 C.B. 12, or Rev. Rul. 81-225, 1981-2 C.B. 12, did not apply by reason of the limited retroactive effect of such rulings.

(iii) In determining whether a segregated asset account is adequately diversified for any calendar quarter ending before July 1, 1988, debt instruments that are issued, guaranteed, or insured by the United States or an instrumentality of the United States shall not be treated as government securities if such debt instruments are secured by a mortgage on real property (other than real property owned by the United States or an instrumentality of the United States) or represent an interest in a pool of debt instruments secured by such mortgages.

(iv) This section shall not apply until January 1, 1989, with respect to a variable contract (as defined in section 817(d)) that (1) provides for the payment of an immediate annuity (as defined in section 72(u)(4)); (2) was outstanding on September 12, 1986; and (3) the segregated asset account on which it was based was, on September 12, 1986, wholly invested in deposits insured by the Federal Deposit Insurance Corporation or the Federal Savings and Loan Insurance Corporation.

(v) A segregated asset account in existence before March 1, 2005, will be considered to be adequately diversified if—

(A) As of March 1, 2005, the account was adequately diversified within the meaning of section 817(h) and this regulation as in effect prior to that date; and

(B) By December 31, 2005, the account is adequately diversified within the meaning of section 817(h) and this regulation.

[T.D. 8242, 54 FR 8730, Mar. 2, 1989; T.D. 8242, 54 FR 11866, Mar. 22, 1989; T.D. 9185, 70 FR 9872, Mar. 1, 2005; T.D. 9385, 73 FR 12265, Mar. 7, 2008]

§ 1.817A-0 Table of contents.

This section lists the captions that appear in section § 1.817A-1:

§ 1.817A-1 Certain modified guaranteed contracts.

(a) Definitions.

(1) Modified guaranteed contract.

(2) Temporary guarantee period.

(3) Equity-indexed modified guaranteed contract.

(4) Non-equity-indexed modified guaranteed contract.

(5) Current market rate for non-equity-indexed modified guaranteed contract.

(6) Current market rate for equity-indexed modified guaranteed contract. [Reserved]

(b) Applicable interest rates for non-equity-indexed modified guaranteed contracts.

(1) Tax reserves during temporary guarantee period.

(2) Required interest during temporary guarantee period.

(3) Application of section 811(d).

(4) Periods after the end of the temporary guarantee period.

(5) Examples.

(c) Applicable interest rates for equity-indexed modified guaranteed contracts. [Reserved]

(d) Effective date.

[T.D. 9058, 68 FR 24350, May 7, 2003]

§ 1.817A-1 Certain modified guaranteed contracts.

(a) ***Definitions*** —

(1) ***Modified guaranteed contract.*** The term *modified guaranteed contract* (MGC) is defined in section 817A(d) as an annuity, life insurance, or pension plan contract (other than a variable contract described in section 817) under which all or parts of the amounts received under the contract are allocated to a segregated account. Assets and reserves in this segregated account must be valued from time to time with reference to market values for annual statement purposes. Further, an MGC must provide either for a net surrender value or for a policyholder's fund (as defined in section 807(e)(1)). If only a portion of a contract is not described in section 817, such portion is treated as a separate contract for purposes of applying section 817A.

(2) ***Temporary guarantee period.*** An MGC may temporarily guarantee a return other than the permanently guaranteed crediting rate for a period specified in the contract (the *temporary guarantee period*). During the temporary guarantee period, the amount paid to the policyholder upon surrender is usually increased or decreased by a market value adjustment, which is determined by a formula set forth under the terms of the MGC.

(3) ***Equity-indexed modified guaranteed contract.*** An equity-indexed MGC is an MGC, as defined in paragraph (a)(1) of this section, that provides a return during or at the end of the temporary guarantee period based on the performance of stocks, other equity instruments, or equity-based derivatives.

(4) ***Non-equity-indexed modified guaranteed contract.*** A non-equity-indexed MGC is an MGC, as defined in paragraph (a)(1) of this section, that provides a return during or at the end of the temporary guarantee period not based on the performance of stocks, other equity instruments, or equity-based derivatives.

(b) ***Waiver of section 811(d) for certain non-equity-indexed modified guaranteed contracts.*** Section 811(d) is waived during the temporary guarantee period when applied to non-equity-indexed MGCs.

(c) ***Applicability dates.*** Paragraph (b) of this section applies to taxable years beginning after *October 13, 2020.* However, a taxpayer may choose to apply the rules of paragraph (b) of this section for a taxable year beginning after December 31, 2017, the effective date of the revision of section 807 by Public Law 115-97, and on or before *October 13, 2020,* provided the taxpayer consistently applies the rules of paragraph (b) of this section to that taxable year and all subsequent taxable years. *See* section 7805(b)(7). For taxable years beginning on or before *October 13, 2020, see* paragraph (b) of this section as contained in 26 CFR part 1 revised as of April 1, 2020.

[T.D. 9058, 68 FR 24350, May 7, 2003, as amended by T.D. 9911, 85 FR 64394, Oct. 13, 2020]

§ 1.818-1 Taxable years affected.

Sections 1.818-2 through 1.818-8, except as otherwise provided therein, are applicable only to taxable years beginning after December 31, 1957, and all references to sections of part I, subchapter L, chapter 1 of the Code are to the Internal Revenue Code of 1954, as amended by the Life Insurance Company Income Tax Act of 1959 (73 Stat. 112).

[T.D. 6558, 26 FR 2785, Apr. 4, 1961, as amended by T.D. 7469, 42 FR 12181, Mar. 3, 1977]

§ 1.818-2 Accounting provisions.

(a) ***Method of accounting.***

(1) Section 818(a)(1) provides the general rule that all computations entering into the determination of taxes imposed by part I, subchapter L, chapter 1 of the Code, shall be made under an accrual method of accounting. Thus, the over-all method of accounting for life insurance companies shall be the accrual method. Except as otherwise provided in part I, the term “accrual method” shall have the same meaning and application in section 818 as it does under section 446 (relating to general rule for methods of accounting) and the regulations thereunder. For general rules relating to the taxable year for inclusion of income and deduction of expenses under an accrual method of accounting, see sections 451 and 461 and the regulations thereunder.

(2) Section 818(a)(2) provides that, to the extent permitted under this section, a life insurance company's method of accounting may be a combination of the accrual method with any other method of accounting permitted by chapter 1 of the Internal Revenue Code of 1954, other than the cash receipts and disbursements method. Thus, section 818(a)(2) specifically prohibits the use by a life insurance company of the cash receipts and disbursements method either separately or in combination with a permissible method of accounting. The term “method of accounting” includes not only the over-all method of accounting of the taxpayer but also the accounting treatment of any item. For purposes of section 818(a)(2), a life insurance company may elect to compute its taxable income under an over-all method of accounting consisting of the accrual method combined with the special methods of accounting for particular items of income and expense provided under other sections of chapter 1 of the Internal Revenue Code of 1954, other than the cash receipts and disbursements method. These methods of accounting for special items include the accounting treatment provided for depreciation (section 167), research and experimental expenditures (section 174), soil and water conservation expenditures (section 175), organizational expenditures (section 248), etc. In addition, a life insurance company may, where applicable, use the crop method of accounting (as provided in the regulations under sections 61 and 162), and the installment method of accounting for sales of realty and casual sales of personalty (as provided in section 453(b)). To the extent not inconsistent with the provisions of the Internal Revenue Code of 1954 or the regulations thereunder and the method of accounting adopted by the taxpayer pursuant to this section, all computations entering into the determination of taxes imposed by part I shall be made in a manner consistent with the manner required for purposes of the annual statement approved by the National Association of Insurance Commissioners.

(3)

(i) An election to use any of the special methods of accounting referred to in subparagraph (2) of this paragraph which was made pursuant to any provisions of the Internal Revenue Code of 1954 or prior revenue laws for purposes of determining a company's tax liabilities for prior years, shall have the same force and effect in determining the items of gross investment income under section 804(b) and the items of deduction under section 804(c) of the Life Insurance Company Income Tax Act of 1959 (73 Stat. 112) as if such Act had not been enacted.

(ii) For purposes of determining gain or loss from operations under section 809(b), in computing the life insurance company's share of investment yield under section 809(b) (1)(A) and (2)(A), an election with respect to any of the special methods of accounting referred to in subparagraph (2) of this paragraph which was made pursuant to any provision of the Internal Revenue Code of 1954 or prior revenue laws, shall not be affected in any way by the enactment of the Life Insurance Company Income Tax Act of 1959 (73 Stat. 112).

(iii) For purposes of determining gain or loss from operations under section 809(b), in computing the items of gross amount under section 809(c) and the deduction items under section 809(d), an election to use any of the special methods of accounting referred to in subparagraph (2) of this paragraph must be made in accordance with the specific statutory provisions of the sections containing such elections and the regulations thereunder. However, where a particular election may be made only with the consent of the Commissioner (either because the time for making the election without the consent of the Commissioner has expired or because the particular section contained no provision for making an election without consent), and the time prescribed by the applicable regulations for submitting a request for permission to make such an election for the taxable year 1958 has expired, a life insurance company may make such an election for the year 1958 at the time of filing its return for that year (including extensions thereof). For example, a life insurance company may elect any of the methods of depreciation prescribed in section 167 (to the extent permitted under that section and the regulations thereunder) with respect to those assets, or any portion thereof, for which no depreciation was allowable under prior revenue laws, for example, furniture and fixtures used in the underwriting department. Similarly, a life insurance company shall be permitted to make an election under section 461(c) (relating to the accrual of real property taxes) with respect to real property for which no deduction was allowable under prior revenue laws. Any such election shall be made in the manner and form prescribed in the applicable regulations.

(iv) For purposes of subdivision (ii) of this subparagraph, the method used under section 1016(a)(3)(C) (relating to adjustments to basis) in determining the amount of exhaustion, wear and tear, obsolescence, and amortization actually sustained shall not preclude a taxpayer from electing any of the methods prescribed in section 167 in accordance with the provisions of that section and the regulations thereunder for determining the amount of such exhaustion, wear and tear, obsolescence, and amortization for the year 1958. For example, if the amount of depreciation actually sustained, under section 1016(a)(3)(C), on a life insurance company's home office building (other than that portion for which depreciation was allowable under prior revenue laws) is determined on the straight line method, the life insurance company may elect for the year 1958 to use any of the methods prescribed in section 167 for determining its depreciation allowance for 1958. However, such election shall be binding for 1958, and for all subsequent taxable years, unless consent to change such election, if required, is obtained from the Commissioner in accordance with the provisions of section 167 and the regulations thereunder.

(4)

(i) For purposes of section 805(b)(3)(B)(i) (relating to the determination of the current earnings rate for any taxable year beginning before January 1, 1958), the determination for any year of the investment yield and the assets shall be made as though the taxpayer had been on the accrual method prescribed in subparagraph (1) of this paragraph for such year, or the accrual method in combination with the other methods of accounting prescribed in subparagraph (2) of this paragraph, if these other methods of accounting are used by the taxpayer in determining the investment yield and assets for the taxable year 1958. However, where the method used for determining the deduction under section 167 for the year 1958 differs from the method used in prior years, the amount of the deduction actually allowed or allowable for such prior years for purposes of section 1016(a)(2) (relating to adjustments to basis) shall be the amount to be taken into account in determining the current earnings rate under section 805(b)(3)(B)(i).

(ii) For purposes of section 812(b)(1)(C) (relating to operations loss carrybacks and carryovers for years prior to 1958), the determination for those years of the gain or loss from operations shall be made as though the taxpayer had been on the accrual method of accounting prescribed in subparagraph (1) of this paragraph for such year, or the accrual method in combination with the other methods of accounting prescribed in subparagraph (2) of this paragraph, if these other methods of accounting are used by the taxpayer in the determination of gain or loss from operations for the taxable year 1958. However, where any adjustment to basis is required under section 1016(a)(3)(C) on account of exhaustion, wear and tear, obsolescence, amortization, and depletion sustained, the amount actually sustained as determined under section 1016(a)(3)(C) for each of the years involved shall be the amount allowed in the determination of gain or loss from operations for purposes of section 812(b)(1)(C).

(b) ***Adjustments required if accrual method of accounting was not used in 1957.*** The items of gross amount taken into account under section 809(c) and the items of deductions allowed under section 809(d) for the taxable year 1958 shall be determined as though the taxpayer had been on the accrual method of accounting prescribed in paragraph (a) of this section for all prior years. Thus, life insurance companies not on the accrual method for the year 1957 shall accrue, as of December 31, 1957, those items of gross amount which would have been properly taken into account for the year 1957 if the company had been on the accrual method described in section 818(a). Likewise, life insurance companies not on the accrual method for the year 1957 shall accrue, as of December 31, 1957, those items of deductions which would have been properly allowed for the year 1957 if the company had been on the accrual method described in section 818(a). For example, if certain premium amounts were received during the year 1958 but such amounts would have been properly taken into account for the year 1957 if the taxpayer had been on the accrual method for the year 1957, then the taxpayer will not be required to take such premium amounts into account for the year 1958. If, for example, certain claims, benefits, and losses were paid during the year 1958 but such items would have been properly taken into account for the year 1957 if the taxpayer had been on the accrual method for the year 1957, then the taxpayer will not be permitted to deduct such expense items for the year 1958. For a special transitional rule applicable with respect to changes in method of accounting required by section 818(a) and paragraph (a) of this section, see section 818(e) and § 1.818-6.

[T.D. 6558, 26 FR 2785, Apr. 4, 1961; as amended by T.D. 9911, 85 FR 64394, Oct. 13, 2020]

§ 1.818-3 Amortization of premium and accrual of discount.

(a) ***In general.*** Section 818(b) provides that the appropriate items of income, deductions, and adjustments under part I, subchapter L, chapter 1 of the Code, shall be adjusted to reflect the appropriate amortization of premium and the appropriate accrual of discount on bonds, notes, debentures, or other evidences of indebtedness held by a life insurance company. Such adjustments are limited to the amount of appropriate amortization or accrual attributable to the taxable year with respect to such securities which are not in default as to principal or interest and which are amply secured. The question of ample security will be resolved according to the rules laid down from time to time by the National Association of Insurance Commissioners. The adjustment for amortization of premium decreases the gross investment income, the exclusion and reduction for wholly tax-exempt interest, the exclusion and deduction for partially tax-exempt interest, and the basis or adjusted basis of such securities. The adjustment for accrual of discount increases the gross investment income, the exclusion and reduction for wholly tax-exempt interest, the exclusion and deduction for partially tax-exempt interest, and the basis or adjusted

basis of such securities. However, for taxable years beginning after May 31, 1960, only the accrual of discount relating to issue discount will increase the exclusion and reduction for wholly tax-exempt interest. See section 103.

(b) *Acquisitions before January 1, 1958.*

(1) In the case of any such security acquired before January 1, 1958, the premium is the excess of its acquisition value over its maturity value and the discount is the excess of its maturity value over its acquisition value. The acquisition value of any such security is its cost (including buying commissions or brokerage but excluding any amounts paid for accrued interest) if purchased for cash, or if not purchased for cash, its then fair market value. The maturity value of any such security is the amount payable thereunder either at the maturity date or an earlier call date. The earlier call date of any such security may be the earliest interest payment date if it is callable or payable at such date, the earliest date at which it is callable at par, or such other call or payment date, prior to maturity, specified in the security as may be selected by the life insurance company. A life insurance company which adjusts amortization of premium or accrual of discount with reference to a particular call or payment date must make the adjustments with reference to the value on such date and may not, after selecting such date, use a different call or payment date, or value, in the calculation of such amortization or discount with respect to such security unless the security was not in fact called or paid on such selected date.

(2) The adjustments for amortization of premium and accrual of discount will be determined:

(i) According to the method regularly employed by the company, if such method is reasonable, or

(ii) According to the method prescribed by this section.

A method of amortization of premium or accrual of discount will be deemed “regularly employed” by a life insurance company if the method was consistently followed in prior taxable years, or if, in the case of a company which has never before made such adjustments, the company initiates in the first taxable year for which the adjustments are made a reasonable method of amortization of premium or accrual of discount and consistently follows such method thereafter. Ordinarily, a company regularly employs a method in accordance with the statute of some State, Territory, or the District of Columbia, in which it operates.

(3) The method of amortization and accrual prescribed by this section is as follows:

(i) The premium (or discount) shall be determined in accordance with this section; and

(ii) The appropriate amortization of premium (or accrual of discount) attributable to the taxable year shall be an amount which bears the same ratio to the premium (or discount) as the number of months in the taxable year during which the security was owned by the life insurance company bears to the number of months between the date of acquisition of the security and its maturity or earlier call date, determined in accordance with this section. For purposes of this section, a fractional part of a month shall be disregarded unless it amounts to more than half a month, in which case it shall be considered a month.

(c) *Acquisitions after December 31, 1957.*

(1) In the case of:

(i) Any bond, as defined in section 171(d), acquired after December 31, 1957, the amount of the premium and the amortizable premium for the taxable year, shall be determined under section 171(b) and the regulations thereunder, as if the election set forth in section 171(c) had been made, and

(ii) Any bond, note, debenture, or other evidence of indebtedness not described in subdivision (i) of this subparagraph and acquired after December 31, 1957, the amount of the premium and the amortizable premium for the taxable year, shall be determined under paragraph (b) of this section.

(2) In the case of any bond, note, debenture, or other evidence of indebtedness acquired after December 31, 1957, the amount of the discount and the accrual of discount attributable to the taxable year shall be determined under paragraph (b) of this section.

(d) ***Convertible evidences of indebtedness.*** Section 818(b)(2)(B) provides that in no case shall the amount of premium on a convertible evidence of indebtedness (including any bond, note, or debenture) include any amount attributable to the conversion features of the evidence of indebtedness. This provision is the same as the one contained in section 171(b), and the rules prescribed in paragraph (c) of § 1.171-2 shall be applicable for purposes of section 818(b)(2)(B). This provision is to be applied without regard to the date upon which the evidence of indebtedness was acquired. Thus, where a convertible evidence of indebtedness was acquired before January 1, 1958, and a portion or all of the premium attributable to the conversion features of the evidence of indebtedness has been amortized for taxable years beginning before January 1, 1958, no adjustment for such amortization will be required by reason of section 818(b)(2)(B). Such amortization will, however, require an adjustment to the basis of the evidence of indebtedness under section 1016(a)(17). For taxable years beginning after December 31, 1957, no further amortization of the premium attributable to the conversion features of such an evidence of indebtedness will be taken into account.

(e) ***Adjustments to basis.*** Section 1016(a)(17) (relating to adjustments to basis) provides that in the case of any evidence of indebtedness referred to in section 818(b) and this section, the basis shall be adjusted to the extent of the adjustments required under section 818(b) (or the corresponding provisions of prior income tax laws) for the taxable year and all prior taxable years. The basis of any evidence of indebtedness shall be reduced by the amount of the adjustment required under section 818(b) (or the corresponding provision of prior income tax laws) on account of amortizable premium and shall be increased by the amount of the adjustment required under section 818(b) on account of accruable discounts.

(f) ***Denial of double inclusion.*** Any amount which is includible in gross investment income by reason of section 818(b) and paragraph (a) of this section shall not be includible in gross income under section 1232(a) (relating to the taxation of bonds and other evidences of indebtedness). See section 1232(a)(2)(C) and the regulations thereunder.

[T.D. 6558, 26 FR 2786, Apr. 4, 1961]

§ 1.818-4 [Reserved]

§ 1.818-5 Short taxable years.

(a) ***In general.*** Section 818(d) provides that if any return of a corporation made under part I, subchapter L, chapter 1 of the Code, is for a period of less than the entire calendar year, then section 443 (relating to returns for a period of less than 12 months) shall not apply. This section further provides certain rules to be used in determining the life insurance company taxable income for a period of less than the entire calendar year.

(b) ***Returns for periods of less than the entire calendar year.*** A return for a short period, that is, for a taxable year consisting of a period of less than the entire calendar year, shall be made only under the following circumstances:

(1) If a company which qualifies as a life insurance company is not in existence for the entire taxable year, a return is required for the short period during which the taxpayer was in existence. For example, a life insurance company organized on August 1, is required to file a return for the short period from August 1 to December 31, and returns for each calendar year thereafter. Similarly, if a company which qualifies as a life insurance company completely dissolves during the taxable year it is required to file a return for the short period from January 1 to the date it goes out of existence. All items entering into the computation of taxable investment income and gain or loss from operations for the short period shall be determined on a consistent basis and in the manner provided in paragraph (c) of this section.

(2) A return must be filed for a short period resulting from the termination by the district director of a taxpayer's taxable year for jeopardy. See section 6851 and the regulations thereunder.

A company which was an insurance company for the preceding taxable year (but not a life insurance company as defined in section 801(a) and paragraph (b) of § 1.801-3) and which for the current taxable year qualifies as a life insurance company shall not file a return for the short period from the time during the taxable year that it first qualifies as a life insurance company to the end of the taxable year. Similarly, an insurance company which was a life insurance company for the preceding taxable year but which for the current taxable year does not qualify as a life insurance company shall not file a return for the short period from the beginning of the taxable year to the time during the taxable year that it no longer qualifies as a life insurance company.

(c) ***Computation of life insurance company taxable income for short period.***

(1) If a return is made for a short period, section 818(d)(1) provides that the taxable investment income and the gain or loss from operations shall be determined on an annual basis by a ratable daily projection of the appropriate figures for the short period. The appropriate figures for the short period shall be determined on an annual basis by multiplying such figures by a fraction, the numerator of which is the number of days in the calendar year in which the short period occurs and the denominator of which is the number of days in the short period.

(2)

(i) In computing taxable investment income for a short period, the investment yield, the policy and other contract liability requirements, the policyholders' share of each and every item of investment yield, and the company's share of any item of investment yield shall be determined on an annual basis.

(ii) For purposes of determining the investment yield on an annual basis, each item of gross investment income under section 804(b) and each item of deduction under section 804(c) shall be annualized in the manner provided in subparagraph (1) of this paragraph. In any case in which a limitation is placed on the amount of a deduction provided under section 804(c), the limitation shall apply to the item of deduction computed on an annual basis.

(iii) The policy and other contract liability requirements shall be determined on an annual basis in the following manner:

(*a*) The interest paid (as defined in section 805(e) and § 1.805-8) for the short period shall be annualized in the manner prescribed in subparagraph (1) of this paragraph.

(*b*) The current earnings rate for the taxable year in which the short period occurs shall be determined by dividing the taxpayer's investment yield, as determined on an annual basis under subdivision (ii) of this subparagraph, by the mean of the taxpayer's assets at the beginning and end of the short period. For purposes of section 805, any reference to the current earnings rate for the taxable year in which the short period occurs means the current earnings rate as determined under this subdivision.

(*c*) The adjusted life insurance reserves shall be determined as provided in section 805(c), and the pension plan reserves shall be determined as provided in section 805(d).

(iv) The policyholders' share of each and every item of investment yield (as defined in section 804(a)) shall be that percentage obtained by dividing the policy and other contract liability requirements, determined under subdivision (iii) of this subparagraph, by the investment yield, determined under subdivision (ii) of this subparagraph.

(v) The taxable investment income for the short period shall be an amount (not less than zero) equal to the life insurance company's share of each and every item of investment yield, as determined under subdivision (ii) of this subparagraph, reduced by the items described in section 804(a)(2) (A) and (B). In determining these reductions under section 804(a)(2)(A) the amount of the respective items shall be the amount that is determined on an annual basis under subdivision (ii) of this subparagraph. The small business deduction, under section 804(a)(2)(B) shall be an amount (not to exceed $25,000) equal to 10 percent of the investment yield, determined under subdivision (ii) of this subparagraph, for the short period.

(vi) Except as provided in this paragraph, the determination of taxable investment income under subpart B, part I, subchapter L, chapter 1 of the Code, shall be made in accordance with all the provisions of that subpart.

(3)

(i) In computing gain or loss from operations for a short period, the share of each and every item of investment yield set aside for policyholders, the life insurance company's share of each and every item of investment yield, the items of gross amount, and the items of deduction shall, except as modified by this subparagraph, be determined on an annual basis in the manner provided in subparagraph (1) of this paragraph. In any case in which a limitation is placed on the amount of a deduction provided under section 809, the limitation shall apply to the item of deduction computed on an annualized basis.

(ii) For purposes of sections 809 and 810, the investment yield shall be determined in the manner provided in subparagraph (2)(ii) of this paragraph. The share of any item of investment yield set aside for policyholders shall be that percentage obtained by dividing the required interest as determined under section 809(a)(2), by the investment yield, as determined in this subparagraph, except that if the required interest exceeds the investment yield then the share of any item of investment yield set aside for policyholders shall be 100 percent.

(iii) The items of gross amount and the items of deduction, other than the operations loss deduction under section 809(d)(4), shall be determined on an annual basis. See subdivision (iv) of this subparagraph for the manner in which the net decrease or net increase in reserves under section 810 shall be annualized.

(iv) For purposes of determining either a net decrease in reserves under section 810(a) or a net increase in reserves under section 810(b), the sum of the items described in section 810(c) as of the end of the short period shall be reduced by the amount of the investment yield not included in gain or loss from operations for the short period by reason of section 809(a)(1). The amount of investment yield excluded under section 809(a)(1) has been determined upon an annualized basis while the sum of the items described in section 180(c) at the end of the short period has been determined on an actual basis. In order to place these on the same basis, the amount of investment yield not included in gain or loss from operations by reason of section 809(a)(1), determined under subdivision (ii) shall, for purposes of section 810(a) and section 810(b), be reduced to an amount which bears the same ratio to the full amount as the number of days in the short period bears to the number of days in the entire calendar year. The net decrease or the net increase of the items referred to in section 810(c) for the short period shall then be determined, as provided in section 810(a) and section 810(b), respectively, and the result annualized.

(4) The portion of the life insurance company taxable income described in section 802(b) (1) and (2) (relating to taxable investment income and gain or loss from operations) shall be determined on an annual basis by treating the amounts ascertained under subparagraph (2) of this paragraph as the taxable investment income, and the amount ascertained under subparagraph (3) of this paragraph as the gain or loss from operations, for the taxable year.

(5) The portion of the life insurance company taxable income described in section 802(b) (1) and (2) for the short period shall be the amount which bears the same ratio to the amount ascertained under section 818(d) (2) and subparagraph (4) of this paragraph as the number of days in the short period bears to the number of days in the entire year.

(d) *Special rules.*

(1) For purposes of determining the average earnings rate (as defined in section 805(b)(3)) for subsequent taxable years, the current earnings rate for the taxable year in which the short period occurs shall be the rate determined under paragraph (c)(2) of this section.

(2) For purposes of determining an operations loss deduction under section 812, the loss from operations for the short period shall be the loss from operations determined under paragraph (c)(5) of this section.

[T.D. 6558, 26 FR 2788, Apr. 4, 1961]

§ 1.818-6 Transitional rule for change in method of accounting.

(a) ***In general.*** Section 818(e) prescribes the rules to be followed in recomputing the taxes of a life insurance company for the taxable year 1957 in cases where the method of accounting required to be used in computing the company's taxes for 1958 under section 818(a) and paragraph (a) of § 1.818-2 is different from the method used in 1957.

(b) ***Recomputation of 1957 taxes.***

(1) For purposes of recomputing its taxes for 1957, a life insurance company must ascertain the net amount of those adjustments which are determined (as of the close of 1957) to be necessary solely by reason of the change to the method of accounting required by section 818(a) and paragraph (a) of § 1.818-2 in order to prevent amounts from being duplicated or omitted. Thus, for example, life insurance companies not on the accrual method of accounting for the year 1957 shall accrue, as of December 31, 1957, those items of gross investment income under section 803(b) and those items of deduction under section 803(c), as in effect for 1957, which would have been properly accruable for the year 1957 if the company had been on the accrual method of accounting.

(2) In the case of a change in the over-all method of accounting, the term “net amount of those adjustments” means the consolidation of adjustments (whether the amounts thereof represent increases or decreases in items of income or deductions) arising with respect to balances in the various accounts on December 31, 1957. In the case of a change in the treatment of a single material item, the amount of the adjustment shall be determined with reference only to the net dollar balances in that particular account.

(3)

(i) The amount of the taxpayer's tax for 1957 shall be recomputed (under the law applicable to 1957, modified as provided in section 818(e) (4) and paragraph (e) of this section) by taking into account an amount equal to one-tenth of the net amount of the adjustments determined under subparagraph (1) of this paragraph. The increase or decrease in tax attributable to the adjustments for such year is the difference between the tax for such year computed with the allocation of one-tenth of the net amount of the adjustments to such taxable year over the tax computed without the allocation of any part of the adjustments to such year.

(ii) The amount of increase or decrease (as the case may be) referred to in section 818(e) (2) or (3) and paragraphs (c) or (d) of this section, shall be the amount of the increase or decrease in tax ascertained in the manner described in subdivision (i) of this subparagraph, multiplied by 10.

(c) ***Treatment of decrease.*** Section 818(e) (2) provides that for purposes of subtitle F of the Code, if the recomputation under paragraph (b) (3) (ii) of this section results in a decrease, the amount of such decrease shall be treated as a decrease in the tax imposed for 1957; except that for purposes of computing the period of limitation on the making of refunds or the allowance of credits with respect to such overpayments, the amount of such decrease shall be treated as an overpayment of tax for 1959. No interest shall be paid, for any period before March 16, 1960, on any overpayment of the tax imposed for 1957 which is attributable to such decrease.

(d) ***Treatment of increase*** —

(1) ***In general.*** Section 818(e) (3) (A) provides that for purposes of subtitle F of the Code, other than section 6016 (relating to declarations of estimated income tax by corporations) and section 6655 (relating to failure by corporations to pay estimated income tax), if the recomputation under

paragraph (b) (3) (ii) of this section results in an increase, the amount of such increase shall be treated as a tax imposed for 1959. Such tax shall be payable in 10 equal annual installments, beginning with March 15, 1960.

(2) ***Special rules.*** Section 818(e) (3) (B) provides that for purposes of section 818(e) (3) (A) and subparagraph (1) of this paragraph:

(i) No interest shall be paid on any installment described in section 818(e) (3) (A) and subparagraph (1) of this paragraph before the time prescribed therein for the payment of such installment.

(ii) Section 6152(c) (relating to proration of deficiencies to installments) and the regulations thereunder shall apply. However, section 6152(a) (relating to the election to make installment payments) and the regulations thereunder shall not apply.

(iii) In applying section 6502(a) (1) (relating to collection after assessment) and the regulations thereunder, the assessment of any installment described in section 818(e) (3) (A) and subparagraph (1) of this paragraph shall be treated as made at the time prescribed therein for the payment of such installment.

(iv) If for any taxable year the taxpayer is not a life insurance company, the amount of the increase in tax (as determined under paragraph (b) (3) (ii) of this section), to the extent not taken into account for prior taxable years, shall be payable on the date the return for such taxable year is due (determined without regard to any extensions of time for filing such return), unless such amount is required to be taken into account by the acquiring corporation under section 381(c) (22) and the regulations thereunder.

(e) ***Modifications of 1957 tax computation.*** Section 818(e) (4) provides that in recomputing the taxpayer's tax for 1957 for purposes of section 818(e) (1) and paragraph (b) of this section:

(1) Section 804(b), as in effect for 1957 (relating to the maximum reserve and other policy liability deduction), shall not apply with respect to any amount required to be taken into account by reason of section 818(e) (1) and paragraph (b) of this section; and

(2) The amount of the deduction allowed by section 805, as in effect for 1957 (relating to the special interest deduction), shall not be reduced by reason of any amount required to be taken into account under section 818(e) (1) and paragraph (b) of this section.

(f) ***Illustration of principles.*** The application of section 818(e) and this section may be illustrated by the following examples:

Example 1. For the taxable year 1957, the life insurance taxable income of M, a life insurance company, is $200,000 computed on the cash receipts and disbursements method of accounting. The net amount of the adjustments required under section 818(e)(1) by reason of the change to the accrual method of accounting for 1958, increases M's life insurance taxable income for 1957 by $50,000. The increase in tax attributable to the change in method of accounting required by section 818(a) is $26,000, computed as

follows:

(1) Life insurance taxable income before adjustments	$200,000
(2) Adjustments required by sec. 818(e) (1) (1/10 × $50,000)	5,000
(3) Life insurance taxable income after adjustments (item (1) plus item (2))	205,000
(4) Tax liability after adjustments (52% × $205,000, minus $5,500)	101,100
(5) Tax liability before adjustments (52% × $200,000, minus $5,500)	98,500
(6) Excess of item (4) over item (5)	2,600
(7) Increase in tax for purposes of sec. 818(e) (3) (item (6) multiplied by 10)	26,000

Under the provisions of section 818(e)(3), one-tenth of the increase in tax for 1957 attributable to the change in method of accounting required by section 818(a), $2,600 (1/10 × $26,000), was due and payable on March 15, 1960, and the balance, $23,400 (9/10 × $26,000), is due and payable in equal installments on March 15th of the nine succeeding taxable years. However, if for the taxable year 1965, M is no longer a life insurance company, and section 381(c)(22) does not apply, the balance of the installments not paid in prior taxable years, $10,400 (4/10 × $26,000), shall be due and payable on March 15, 1966.

Example 2. Assume the facts are the same as in example 1, except that the net amount of the adjustments required by section 818(e)(1) decreases M's life insurance taxable income for 1957 by $25,000. The decrease in tax attributable to the change in method of accounting required by section 818(a) is $13,000, computed as follows:

(1) Life insurance taxable income before adjustments	$200,000
(2) Adjustments required by sec. 818(e) (1) (1/10 × $25,000)	2,500
(3) Life insurance taxable income after adjustments (item (1) minus item (2))	197,500
(4) Tax liability after adjustments (52% × $197,500, minus $5,500)	97,200
(5) Tax liability before adjustments (52% × $200,000, minus $5,500)	98,500
(6) Excess of item (5) over item (4)	1,300
(7) Decrease in tax for purposes of sec. 818(e)(2) (item (6) multiplied by 10)	13,000

Under the provisions of section 818(e)(2), the entire $13,000 decrease in tax for 1957 attributable to the change in method of accounting required by section 818(a) shall be treated as an overpayment of tax for the taxable year 1959.

[T.D. 6558, 26 FR 2789, Apr. 4, 1961]

§ 1.818-7 Denial of double deductions.

Section 818(f) provides that the same item may not be deducted more than once under subpart B, part I, subchapter L, chapter 1 of the Code (relating to the determination of taxable investment income), and more than once under subpart C, part I, subchapter L, chapter 1 of the Code (relating to the determination of gain or loss from operations).

[T.D. 6558, 26 FR 2790, Apr. 4, 1961]

§ 1.818-8 Special rules relating to consolidated returns and certain capital losses.

Section 818(g) provides that, in the case of a life insurance company filing or required to file a consolidated return under section 1501 for a taxable year, the computations of the policyholders' share of investment yield under subparts B and C, part I, subchapter L, chapter 1 of the Code (including all determinations and computations incident thereto) shall be made as if such company were not filing a consolidated return. Thus, for example, if X and Y are life insurance companies which are entitled to file a consolidated return for 1975 and X has paid dividends to Y during such taxable year, Y must include such dividends in the computation of gross investment income under section 804(b). For other rules relating to the filing of consolidated returns, see sections 1501 through 1504 and the regulations thereunder.

[T.D. 7469, 42 FR 12181, Mar. 3, 1977]

§ 1.819-1 Taxable years affected.

Section 1.819-2 is applicable only to taxable years beginning after December 31, 1957, and all references to sections of part I, subchapter L, chapter 1 of the Code, are to the Internal Revenue Code of 1954, as amended by the Life Insurance Company Income Tax Act of 1959 (73 Stat. 112).

[T.D. 6558, 26 FR 2791, Apr. 4, 1961]

§ 1.819-2 Foreign life insurance companies.

(a) ***Carrying on United States insurance business.*** Section 819(a) provides that a foreign life insurance company carrying on a life insurance business within the United States, if with respect to its United States business it would qualify as a life insurance company under section 801, shall be taxable on its United States business under section 802 in the same manner as a domestic life insurance company. Thus, the life insurance company taxable income of such a foreign life insurance company shall not be determined in the manner provided by part I, subchapter N, chapter 1 of the Code (relating to determination of sources of income), but shall be determined in the manner provided by part I, subchapter L, chapter 1 of the Code (relating to life insurance companies). See section 842. Accordingly, in determining its life insurance company taxable income from its United States business, such a foreign life insurance company shall take into account the appropriate items of income irrespective of whether such items of income are from sources within or without the United States. A foreign life insurance company shall take into account the appropriate items of expenses, losses, and other deductions properly allocable to such items of income from its United States business. To the extent not inconsistent with the provisions of this paragraph, section 818(a), and section 819(b), all computations entering into the determination of taxes imposed by part I shall be made in a manner consistent with the manner required for purposes of the annual statement approved by the National Association of Insurance Commissioners.

(b) ***Adjustment where surplus held in the United States is less than specified minimum*** —

(1) ***In general.*** Section 819(b)(1) provides that if the minimum figure for the taxable year determined under section 819(b)(2) and subparagraph (2)(i) of this paragraph exceeds the surplus held in the United States as of the end of the taxable year (as defined in section 819(b)(2)(B) and subparagraph (2)(ii) of this paragraph) by a foreign life insurance company carrying on a life insurance business within the United States and taxable under section 802, then:

(i) The amount of the policy and other contract liability requirements (determined under section 805 and § 1.805-4 without regard to this subparagraph), and

(ii) The amount of the required interest (determined under section 809(a)(2) and paragraph (d) of § 1.809-2 without regard to this subparagraph),

shall each be reduced by an amount determined by multiplying such excess by the current earnings rate (as defined in section 805(b)(2) and paragraph (a)(2) of § 1.805-5) of such company. Such current earnings rate shall be determined by reference to the assets held by the company in the United States.

(2) ***Definitions.*** For purposes of section 819(b)(1) and subparagraph (1) of this paragraph:

(i) The term *minimum figure,* in the case of a taxable year beginning after December 31, 1957, but before January 1, 1959, means the amount obtained by multiplying the company's total insurance liabilities on United States business by 9 percent. In the case of any taxable year beginning after December 31, 1958, such term means the amount obtained by multiplying the company's total insurance liabilities on United States business by the percentage determined and proclaimed by the Secretary as being applicable for such year.

(ii) The term *surplus held in the United States* means the excess of the assets held in the United States (as of the end of the taxable year) over the total insurance liabilities on United States business (as of the end of the taxable year).

(iii) The term *total insurance liabilities* means the sum of the total reserves (as defined in section 801(c) and paragraph (a) of § 1.801-5) as of the end of the taxable year plus (to the extent not included in total reserves) the items referred to in section 810(c) (3), (4), and (5) of paragraph (b) (3), (4), and (5) of § 1.810-2 as of the end of the taxable year; and

(iv) The term *assets* shall have the same meaning as that contained in section 805(b)(4) and paragraph (a)(4) of § 1.805-5.

(3) ***Illustration of principles.*** The provisions of section 819(b) and this paragraph may be illustrated by the following example:

Example. For the taxable year 1958, P, a foreign life insurance company carrying on a life insurance business within the United States and taxable under section 802, has total insurance liabilities on United States business (as of the end of the taxable year) of $940,000, assets held in the United States of $1,000,000 (as of the end of the taxable year), policy and other contract liability requirements in the amount of $30,000 required interest in the amount of $20,000, and a current earnings rate of 4 percent. In order to determine whether section 819(b) applies for the taxable year 1958, P must first compute its minimum figure, for if the minimum figure is less than the surplus held in the United States (as of the end of the taxable year), no section 819(b) adjustments need be made. Since the minimum figure, $84,600 ($940,000, the total insurance liabilities on United States business multiplied by 9 percent, the percentage applicable for 1958), exceeds the surplus held in the United States, $60,000 (the excess of the assets held in

the United States, $1,000,000, over the total insurance liabilities on United States business, $940,000), by $24,600, section 819(b) applies for the taxable year 1958. Thus, the amount of the policy and other contract liability requirements, $30,000, and the amount of the required interest, $20,000, shall each be reduced by $984 ($24,600, the amount of such excess, multiplied by 4 percent, the current earnings rate).

(4) ***Segregated asset accounts.*** For taxable years beginning after December 31, 1967, pursuant to the provisions of section 801(g):

(i) A foreign corporation carrying on a life insurance business which issues contracts based on segregated asset accounts shall separately compute in a manner consistent with this subparagraph the adjustment (if any) under section 819 to the amount of policy and other contract liability requirements and the amount of required interest properly attributable to each of such segregated asset accounts. The “minimum figure” used in section 819 in making the adjustment with respect to each of the segregated asset accounts shall be computed as provided in subdivision (ii) of this subparagraph in lieu of the manner provided in subparagraphs (1), (2), and (3) of this paragraph.

(ii) The minimum figure applicable to a segregated asset account referred to in subdivision (i) of this subparagraph is the amount determined by multiplying the total insurance liabilities on U.S. business attributable to such a segregated asset account, by 1 percent.

(iii) The minimum figure as computed under subdivision (ii) of this subparagraph shall be compared only with the surplus held in the United States attributable to each segregated asset account referred to in subdivision (i) of this subparagraph. Such surplus is the excess of assets held in the United States properly attributable to such segregated asset account over the total insurance liabilities on U.S. business properly attributable to such account.

(iv) If the minimum figure applicable to accounts other than segregated asset accounts exceeds the surplus held in the United States attributable to such other accounts, for purposes of section 819 and this paragraph, the amount of such excess shall not exceed the company's overall excess, as defined in this subdivision. No adjustment under section 819 or this paragraph shall be made with respect to any account if there is no such overall excess. For purposes of this subdivision and of subdivision (v) of this subparagraph, the term “overall excess” means the amount, if any, by which the aggregate minimum figures applicable to segregated asset accounts plus the minimum figure applicable to accounts other than segregated asset accounts exceeds the surplus held in the United States with respect to the company's entire U.S. life insurance business, including segregated asset accounts as well as other accounts.

(v) In the case of a company which issues contracts based on one or more than one segregated asset account, if the minimum figure applicable to a segregated asset account exceeds the surplus held in the United States attributable to such account, then for purposes of section 819 and this paragraph, the amount of such excess shall not exceed the account limitation figure, as defined in this subdivision. Therefore, no adjustment under section 819 or under this subparagraph shall be made with respect to any segregated asset account if the aggregate of the account limitation figures is zero, but nothing in this subdivision shall preclude an adjustment under section 819 with respect to accounts other than segregated asset accounts. For purposes of this subdivision, the term “account limitation figure” is a segregated assets account's proportionate share of the aggregate of the account limitation figures. Such aggregate of the account limitation figures is equal to the lesser of either the company's overall

excess as defined in subdivision (iv) of this subparagraph, or the amount, if any, by which the aggregate of the minimum figures applicable to segregated asset accounts exceeds the surplus held in the United States with respect to all such segregated asset accounts. For purposes of this subdivision, a segregated asset account's proportionate share of the aggregate of the account limitation figures is determined by multiplying the amount of such aggregate of account limitation figures by a percentage, the numerator of which is the amount by which the minimum figure applicable to such account exceeds the surplus held in the United States attributable to such account, and the denominator of which is the aggregate of the amounts by which the minimum figure applicable to each segregated asset account exceeds the surplus held in the United States attributable to such account.

(vi) Subdivisions (i), (ii), (iii), (iv), and (v) of this subparagraph may be illustrated by the following examples:

Example 1. (a) For the taxable year 1968, T, a foreign life insurance company carrying on a life insurance business within the United States and taxable under section 802, has the following assets and total insurance liabilities with respect to such U.S. business:

	Regular account	Separate account A	Separate account B
Assets	$9,300,000	$1,810,000	$515,000
Total insurance liabilities	8,000,000	1,800,000	500,000

It is further assumed that the percentage determined and proclaimed by the Secretary under section 819(a)(2)(A) for the taxable year 1968 is 15 percent.

(b) In order to determine whether any adjustment under section 819 must be made, T must compute the minimum figure applicable to its Regular Account as well as each of its Separate Accounts. The minimum figure for the Regular Account is $1,200,000 (15 percent of $8,000,000). The minimum figure applicable to Separate Account A is $18,000 (1 percent of $1,800,000). The minimum figure applicable to Separate Account B is $5,000 (1 percent of $500,000). The aggregate of the minimum figures is $1,223,000 ($1,200,000 + $18,000 + $5,000). The surplus held in the United States with respect to the Regular Account is $1,300,000 ($9,300,000−$8,000,000), with respect to Separate Account A is $10,000 ($1,810,000−$1,800,000) and with respect to Separate Account B is $15,000 ($515,000−$500,000). The surplus held in the United States with respect to T's entire U.S. life insurance business is $1,325,000 ($1,300,000 + $10,000 + $15,000).

(c) Since the aggregate of the minimum figures ($1,223,000) does not exceed the surplus held in the United States attributable to T's entire U.S. life insurance business ($1,325,000), under subdivision (iv) of this subparagraph no adjustment under section 819 shall be made with respect to the Regular Account or either of the Separate Accounts.

Example 2. (a) The facts are the same as in example 1 except that the assets held in the United States with respect to the Regular Account is $8,300,000 instead of $9,300,000. Thus, the surplus held in the United States with respect to the Regular Account is $300,000 ($8,300,000−$8,000,000), and the surplus held in the United States with respect to T's entire U.S. life insurance business is $325,000 ($300,000 + $10,000 + $15,000).
(b) Since the aggregate of the minimum figures with respect to the Separate Accounts, $23,000 ($18,000 + $5,000), does not exceed the surplus held in the United States with respect to both of such Separate Accounts, $25,000 ($10,000 + $15,000), under subdivision (v) of this subparagraph, no adjustment under section 819 must be made with respect to either of the Separate Accounts.

(c) The excess of the minimum figure for the Regular Account ($1,200,000) over the surplus held in the United States with respect to the Regular Account ($300,000) is equal to $900,000 ($1,200,000−$300,000). However, the company's overall excess as defined in subdivision (iv) of this subparagraph, is $898,000 ($1,223,000−$325,000). Under subdivision (iv) of this subparagraph the excess with respect to the Regular Account ($900,000) is limited to the amount of overall excess ($898,000). Thus, the amount of policy and other contract liability requirements with respect to T's Regular Account and the amount of required interest with respect to T's Regular Account (both computed without regard to section 819) shall each be reduced by an amount equal to the product of $898,000 and the current earnings rate computed only with respect to T's Regular Account.

(c) ***Distributions to shareholders*** —

(1) ***In general.*** In the case of a foreign life insurance company carrying on a life insurance business within the United States and taxable under section 802, section 819(c)(1) provides alternative methods for determining the amount of distributions to shareholders for purposes of section 815 (relating to distributions to shareholders) and section 802(b)(3) (relating to life insurance company taxable income). Such a foreign life insurance company may elect (in the manner provided by subparagraph (4) of this paragraph) for each taxable year whichever of the alternative methods provided by section 819(c)(1) and this subparagraph it desires, and the method elected for any one taxable year shall be effective only with respect to the taxable year for which the election is made. Such alternative methods are:

(i) The amount of the distributions to shareholders shall be the amount determined by multiplying the total amount of distributions to shareholders by the percentage which the minimum figure for the taxable year is of the excess of the assets of the company over the total insurance liabilities; or

(ii) The amount of the distributions for shareholders shall be the amount determined by multiplying the total amount of distributions for shareholders by the percentage which the total insurance liabilities on United States business for the taxable year is of the total insurance liabilities of the company.

(2) ***Definitions.*** For purposes of section 819(c)(1) and subparagraph (1) of this paragraph:

(i) The term *total amount of the distributions to shareholders* means all distributions (within the meaning of section 815 and § 1.815-2) by a foreign life insurance company to all of its shareholders whether or not in the United States;

(ii) The term *minimum figure for the taxable year* means the amount determined under section 819(b)(2)(A) and paragraph (b)(2) of this section;

(iii) The term *assets of the company* means all of the assets (as defined in section 805(b) (4) and paragraph (a) (4) of § 1.805-5) of the foreign life insurance company whether or not in the United States (as of the end of the taxable year); and

(iv) The term *total insurance liabilities of the company* means the total insurance liabilities (as defined in section 819(b)(2) and paragraph (b)(2) of this section) on all of its business whether or not in the United States (as of the end of the taxable year).

(3) ***Illustration of principles.*** The provisions of section 819(c)(1) and subparagraphs (1) and (2) of this paragraph may be illustrated by the following examples:

Example 1. For the taxable year 1958, T, a foreign life insurance company carrying on a life insurance business within the United States and taxable under section 802, has a minimum figure of $40,000, total amount of distributions to all shareholders (within the meaning of section 815) of $5,000, assets (as of the end of the year) of $500,000, total insurance liabilities (as of the end of the year) of $450,000, and total insurance liabilities on United States business (as of the end of the year) of $180,000. Based upon these facts, if T elects the method provided in section 819(c)(1)(A) and subparagraph (1)(i) of this paragraph, the amount of T's distributions to shareholders for the taxable year 1958 is $4,000, that is, $5,000 (the total amount of distributions to shareholders) multiplied by 80 percent (the percentage which the minimum figure for the taxable year, $40,000, is of $50,000, the excess of the assets of the company ($500,000) over the total insurance liabilities ($450,000)).

Example 2. The facts are the same as in example 1, except that for the taxable year 1958, T elects the method provided in section 819(c)(1)(B) and subparagraph (1)(ii) of this paragraph. Based upon these facts, the amount of T's distributions to shareholders for the taxable year 1958 is $2,000, that is, $5,000 (the total amount of distributions to shareholders) multiplied by 40 percent (the percentage which the total insurance liabilities on United States business ($180,000) is of the total insurance liabilities of the company ($450,000)).

(4) ***Manner and effect of election.***

(i) The election provided by section 819(c)(1) shall be made in a statement attached to the foreign life insurance company's income tax return for any taxable year for which the company desires the election to apply. The return and statement must be filed not later than the date prescribed by law (including extensions thereof) for filing the return for such taxable year. The statement shall indicate the method elected, the name and address of the taxpayer, and shall be signed by the taxpayer (or his duly authorized representative).

(ii) An election made under section 819(c)(1) and this paragraph shall be effective only with respect to the taxable year for which the election is made. Thus, the company must make a new election for each taxable year for which it desires the election to apply. Once such election has been made for any taxable year it may not be revoked. However, for taxable years beginning prior to April 4, 1961, a company may revoke the election provided by section 819(c)(1) without obtaining consent from the Commissioner by filing, before July 4, 1961, a statement that the company desires to revoke such election. An amended return reflecting such revocation and the selection of the other percentage must accompany the statement for all taxable years for which returns have been filed with respect to such election.

(5) ***Application of section 815.*** Once the amount of distributions to shareholders is determined under the provisions of section 819(c)(1) and this paragraph, the rules of section 815 (relating to distributions to shareholders) shall apply to the shareholders surplus account and the policyholders surplus account of a foreign stock life insurance company in the same manner as they would apply to a domestic stock life insurance company.

(d) ***Distributions pursuant to certain mutualizations.*** Section 819(c)(2) provides that for purposes of applying section 815(e) and paragraph (e) of § 1.815-6 (relating to a special rule for certain mutualizations) in the case of a foreign life insurance company subject to tax under section 802:

(1) The paid-in capital and paid-in surplus referred to in section 815(e)(1)(A) of a foreign life insurance company is the portion of such capital and surplus determined by multiplying such amounts by the percentage selected for the taxable year under section 819(c)(1) and paragraph (c)(1) of this section; and

(2) The excess referred to in section 815(e)(2)(A)(i) (without the adjustment provided by section 815(e)(2)(B)), is whichever of the following is the greater:

(i) The minimum figure for 1958 determined under section 819(b)(2)(A); or

(ii) The surplus held in the United States (as defined in section 819(b)(2)(B)) determined as of December 31, 1958.

(e) ***No United States insurance business.*** Foreign life insurance companies not carrying on an insurance business within the United States shall not be taxable under part I, subchapter L, chapter 1 of the Code, but shall be taxable as other foreign corporations. See section 881 and the regulations thereunder.

[T.D. 6558, 26 FR 2791, Apr. 4, 1961; 26 FR 3276, Apr. 18, 1961, as amended by T.D. 6970, 33 FR 12044, Aug. 24, 1968]

Editorial Note: For a determination with respect to the percentage to be used by foreign life insurance companies in computing income tax for the taxable year 1984 and the estimated tax for taxable year 1985, see 51 FR 883, Jan. 9, 1986.

MUTUAL INSURANCE COMPANIES (OTHER THAN LIFE AND CERTAIN MARINE INSURANCE COMPANIES AND OTHER THAN FIRE OR FLOOD INSURANCE COMPANIES WHICH OPERATE ON BASIS OF PERPETUAL POLICIES OR PREMIUM DEPOSITS)

§§ 1.822-1-1.822-2 [Reserved]

§ 1.822-3 Amortization of premium and accrual of discount.

Section 822(d)(2) makes provision for the appropriate amortization of premium and the appropriate accrual of discount, attributable to the taxable year, on bonds, notes, debentures or other evidences of indebtedness held by a mutual insurance company subject to the tax imposed by section 821. Such amortization and accrual is the same as that provided for life insurance companies by section 803(i), except that in determining the premium and discount of a mutual insurance company subject to the tax imposed by section 821 the basis provided in section 1012 shall be used in lieu of the acquisition value.

[T.D. 6681, 28 FR 11113, Oct. 17, 1963, as amended by T.D. 9849, 84 FR 9236, Mar. 14, 2019]

§ 1.822-4 Taxable years affected.

Section 1.822-3 is applicable only to taxable years beginning after December 31, 1953, but before January 1, 1955, and ending after August 16, 1954, and all references to sections of part II, subchapter L, chapter 1 of the Code are to the Internal Revenue Code of 1954, before amendments. Sections 1.822-5 through 1.822-7 are applicable only to taxable years beginning after December 31, 1954, but before January 1, 1963, and all references to sections of part II, subchapter L, chapter 1 of the Code are to the Internal Revenue Code of 1954, as amended by the Life Insurance Company Tax Act for 1955 (70 Stat. 36). Sections 1.822-8 through 1.822-12 are applicable only to taxable years beginning after December 31, 1962, and all references to sections of parts II and III, subchapter L, chapter 1 of the Code are to the Internal Revenue Code of 1954 as amended by section 8 of the Revenue Act of 1962 (76 Stat. 989).

[T.D. 6681, 28 FR 11113, Oct. 17, 1963, as amended by T.D. 9849, 84 FR 9236, Mar. 14, 2019]

§ 1.822-5 Mutual insurance company taxable income.

(a) ***Mutual insurance company taxable income defined.*** Section 822(a) defines the term "mutual insurance company taxable income" for purposes of part II, subchapter L, chapter 1 of the Code. Mutual insurance company taxable income means gross investment income (as defined in section 822(b) and paragraph (b) of this section), less the deductions provided in section 822(c) and paragraph (c) of this section for wholly tax-exempt interest, investment expenses, real estate expenses, depreciation, interest paid or accrued, capital losses, special deductions, trade or business (other than in insurance business) expenses, and depletion. However, such expenses are deductible only to the extent that they relate to investment income and the deduction of such expenses is not disallowed by any other provision of subtitle A of the Code. For example, investment expenses are not allowable unless they are ordinary and necessary expenses within the meaning of section 162. In addition to the limitations on deductions relating to real estate owned and occupied by a mutual insurance company subject to the tax imposed by section 821 provided in section 822(d)(1), the adjustment for amortization of premium and accrual of discount provided in section 822(d)(2), and the limitation on the deduction for investment expenses where general expenses are allocated to investment income provided in section 822(c)(2), mutual insurance companies subject to the tax imposed by section 821 are subject to the limitation on

deductions relating to wholly tax-exempt income provided in section 265. Such companies are not entitled to the net operating loss deduction provided in section 172, and a deduction shall not be permitted with respect to the same item more than once.

(b) ***Gross investment income defined.*** For purposes of part II, subchapter L, chapter 1 of the Code, section 822(b) defines the term "gross investment income" of a mutual insurance company subject to the tax imposed by section 821 as the sum of the following:

(1) The gross amount of income during the taxable year from:

(i) Interest (including tax-exempt interest and partially tax-exempt interest), as described in § 1.61-7. Interest shall be adjusted for amortization of premium and accrual of discount in accordance with the rules prescribed in section 822(d)(2) and § 1.822-7;

(ii) Dividends, as described in § 1.61-9;

(iii) Rents and royalties, as described in § 1.61-8;

(iv) The entering into of any lease, mortgage or other instrument or agreement from which the company may derive interest, rents, or royalties;

(v) The alteration or termination of any instrument or agreement described in subdivision (iv) of this subparagraph;

(vi) Gains from sales or exchanges of capital assets to the extent provided in subchapter P (section 1201 and following, relating to capital gains and losses), chapter 1 of the Code.

(2) The gross income from any trade or business (other than an insurance business) carried on by a mutual insurance company subject to the tax imposed by section 821, or by a partnership of which the insurance company is a partner.

For example, gross investment income includes amounts received as commitment fees, or as a bonus for the entering into of a lease, or as a penalty for the early payment of a mortgage. In computing the gross income from any trade or business (other than an insurance business) carried on by the insurance company, or by a partnership of which the insurance company is a partner, any item described in section 822(b)(1) and paragraph (b)(1) of this section shall not be considered as gross income arising from the conduct of such trade or business, but shall be taken into account under section 822(b)(1) and paragraph (b)(1) of this section.

(c) ***Deductions from gross investment income*** —

(1) ***Wholly tax-exempt interest.*** Interest which in the case of other taxpayers is excluded from gross income by section 103 but included in the gross investment income by section 822(b) is allowed as a deduction from gross investment income by section 822(c)(1).

(2) ***Investment expenses.***

(i) The deduction for investment expenses under section 822(c)(2) includes only those expenses of the taxable year which are fairly chargeable against gross investment income. For example, investment expenses include salaries and expenses paid exclusively for work in looking after investments, and amounts expended for printing, stationery, postage, and stenographic work incident to the collection of interest. An itemized schedule of such expenses shall be attached to the return.

(ii) Any assignment of general expenses to the investment department of a mutual insurance company subject to the tax imposed by section 821 subjects the entire deduction for investment expenses to the limitation provided in section 822(c)(2) and subdivision (iii) of this subparagraph. As used in section 822(c)(2), the term "general expenses" means any expense paid or incurred for the benefit of more than one department of the company rather than for the benefit of a particular department thereof. For example, if an expense, such as a salary, is attributable to more than one department, including the investment department, such expense may be properly allocated among these departments. If such expense is allocated, the amount properly allocable to the investment department shall be deductible as general expenses assigned to or included in investment expenses and as such shall be subject to the limitation of section 822(c)(2) and subdivision (iii) of this subparagraph. However, a company subject to the tax imposed by section 821 shall not deduct under section 822(c)(2) its real estate taxes, depreciation, or other expenses with respect to any portion of the real estate which it owns, irrespective of whether such items are properly allocable to its investment department. For the rules relating to the deductibility of these items, see section 822(c) (3) and (4) and subparagraphs (3) and (4) of this paragraph. If general expenses are in part assigned to or included in investment expenses, the maximum allowance (as determined under section 822(c)(2) shall not be granted unless it is shown to the satisfaction of the district director that such allowance is justified by a reasonable assignment of actual expenses. The accounting procedure employed is not conclusive as to whether any assignment has in fact been made. Investment expenses do not include Federal income and excess profits taxes, if any.

(iii) If any general expenses are in part assigned to or included in investment expenses, the total deduction under section 822(c)(2) shall not exceed the sum of:

(*a*) One-fourth of 1 percent of the mean of the book value of the invested assets held at the beginning and end of the taxable year, plus.

(*b*) One-fourth of the amount by which mutual insurance company taxable income (computed without any deduction for investment expenses, tax-free interest, partially tax-exempt interest, or dividends received) exceeds 33/4 percent of the book value of the mean of the invested assets held at the beginning and end of the taxable year.

For purposes of section 822(c)(2) and this paragraph, the term "invested assets" means only those assets which are owned and used, and to the extent used, for the purpose of producing the income specified in section 822(b). See paragraph (b) of this section. The term does not include real estate owned and occupied, and to the extent owned and occupied, by the company.

(3) ***Real estate expenses and taxes.*** The deduction for real estate expenses and taxes under section 822(c)(3) includes taxes (as defined in section 164) and other expenses for the taxable year exclusively on or with respect to real estate owned by the company. For example, no deduction shall be allowed under section 822(c)(3) for amounts allowed as a deduction under section 164(e) (relating to taxes of shareholders paid by a corporation). No deduction shall be allowed under section 822(c)(3) for any amount paid out for new buildings, or for permanent improvements or betterments made to increase the value of any property. An itemized schedule of such taxes and expenses shall be attached to the return. See § 1.822-6 for limitation of such deduction.

(4) ***Depreciation.*** The deduction allowed by section 822(c)(4) for depreciation is, except as provided in section 822(d)(1) and § 1.822-6, identical to that allowed other corporations by section 167. Such amount allowed as a deduction from gross investment income in determining mutual insurance company taxable income is limited to depreciation sustained on the property used, and to the extent used, for the purpose of producing the income specified in section 822(b).

(5) ***Interest paid or accrued.*** The deduction allowed by section 822(c)(5) for interest on indebtedness is the same as that allowed other corporations by section 163. See § 1.163-1.

(6) ***Capital losses.***

(i) The deduction for capital losses under section 822(c)(6) includes not only capital losses to the extent provided in subchapter P, chapter 1 of the Code but in addition thereto losses from capital assets sold or exchanged to provide funds to meet abnormal insurance losses and to provide for the payment of dividends and similar distributions to policyholders. Losses in the latter case may be deducted from ordinary income while the deduction for losses under subchapter P is limited to the gains. See section 1211.

(ii) Capital assets are considered as sold or exchanged to provide for the funds or payments specified in section 822(c)(6), to the extent that the gross receipts from the sale or exchange of such assets are not greater than the excess, if any, for the taxable year of the sum of dividends and similar distributions paid to policyholders, and losses and expenses paid over the sum of the items described in section 822(b) (other than paragraph (1)(D) thereof) and net premiums received. If, by reason of a particular sale or exchange of a capital asset, gross receipts are greater than such excess, the gross receipts and the resulting loss should be apportioned and the excess included in capital losses subject to the provisions of subchapter P. Capital losses actually used to reduce net income in any taxable year may not again be used in a succeeding taxable year as an offset against capital gains in that year and for that purpose a special rule is set forth for the application of section 1212.

(iii) The application of section 822(c)(6) may be illustrated by the following examples:

Example 1. The X Company, a mutual fire insurance company subject to the tax imposed by section 821, in the taxable year 1958 sells capital assets in order to obtain funds to meet abnormal insurance losses and to provide for the payment of dividends and similar distributions to policyholders. The gross receipts from the sale are $60,000, resulting in losses of $20,000. It pays dividends to policyholders of $150,000. It sustains losses of $25,000, and pays expenses of $25,000. It receives interest of $50,000, dividends of $5,000, royalties of $4,000, and net premiums of $66,000. The excess of the sum of dividends, losses, and expenses paid ($200,000) over the sum of the items described in section 822(b) (other than paragraph (1)(D) thereof) and net premiums received ($125,000) is $75,000. As the gross receipts from the sale of capital assets ($60,000) do not exceed such excess ($75,000), the losses of $20,000 are allowable as a deduction from gross investment income.

Example 2. If in example 1 the gross receipts were $76,000 and the last capital asset sold, for the purpose therein specified, resulted in gross receipts of $2,000 and a loss of $500, the losses allowable as a deduction from gross investment income would be $19,750. The last sale made the gross receipts of $76,000 exceed by $1,000 the excess ($75,000) of the sum of dividends, losses, and expenses paid ($200,000) over the sum of the items described in section 822(b) (other than paragraph (1)(D) thereof) and net premiums received ($125,000). The gross receipts and the resulting loss from the last sale are apportioned on the basis of the ratio of the

excess of $1,000 to the gross receipts of $2,000, or 50 percent. Fifty percent of the loss of $500 is deducted from the total loss of $20,000. The remaining gross receipts of $1,000 and the proportionate loss of $250 should be reported as capital losses under subchapter P.

Example 3. If in example 1 the X Company had mutual insurance company taxable income for purposes of the surtax of $9,750 and, under the provisions of subchapter P, chapter 1 of the Code, had capital losses of $18,000 and capital gains of $10,000, the net capital loss for the taxable year 1958, in applying section 1212 for the purposes of section 822(c)(6), would be $8,000. This is determined by subtracting from total losses of $38,000 ($18,000 capital losses under subchapter P plus $20,000 other capital losses under section 822(c)(6)) the sum of capital gains of $10,000 and losses from the sale or exchange of capital assets sold or exchanged to obtain funds to meet abnormal insurance losses and to provide for the payment of dividends and similar distributions to policyholders of $20,000. Such losses of $20,000 are added to capital gains of $10,000, since they are less than taxable income for purposes of the surtax, computed without regard to gains or losses from sales or exchanges of capital assets, of $29,750 ($9,750 taxable income for purposes of the surtax plus $20,000 other capital losses under section 822(c)(6) plus the portion of capital losses allowable under subchapter P of $10,000 minus capital gains under subchapter P of $10,000).

(7) ***Special deductions.*** Section 822(c)(7) allows a mutual insurance company the special deductions provided by part VIII (section 241 and following), except section 248, subchapter B, chapter 1 of the Code, relating to partially tax-exempt interest and to dividends received.

(8) ***Trade or business deductions.***

(i) Under section 822(c)(8), the deductions allowed by subtitle A of the Code (without regard to this part) which are attributable to any trade or business (other than an insurance business) carried on by the insurance company, or by a partnership of which the company is a partner are, subject to the limitations in subdivision (ii) of this subparagraph, allowable as deductions from gross investment income in computing mutual insurance company taxable income. Such deductions are allowable, however, only to the extent that they relate to income which is included in the company's gross investment income by reason of section 822(b) (2). Thus, a deduction shall not be allowed under section 822(c)(8) with respect to any item described in section 822(b)(1). The allowable deductions may exceed the gross income from such business.

(ii) In computing the deductions under section 822(c)(8):

(*a*) Any item, to the extent attributable to the carrying on of the insurance business, shall not be taken into account. For example, if the company operates a radio station primarily to advertise its own insurance services, a portion of the expenses of the radio station shall not be allowed as a deduction. The portion disallowed shall be an amount which bears the same ratio to the total expenses of the station as the value of advertising furnished to the insurance company bears to the total value of services rendered by the station.

(*b*) The deduction for net operating losses provided in section 172 shall not be allowed.

(9) ***Depletion.*** The deduction allowed by section 822(c)(9) for depletion is the same as that allowed life insurance companies under section 804(c)(4). See paragraph (b)(5) of § 1.804-4.

[T.D. 6610, 27 FR 8720, Aug. 31, 1962, as amended by T.D. 6631, 28 FR 219, Jan. 9, 1963]

§ 1.822-6 Real estate owned and occupied.

Section 822(d)(1) provides that the amount allowable as a deduction for taxes, expenses, and depreciation on or with respect to any real estate owned and occupied in whole or in part by a mutual insurance company subject to the tax imposed by section 821 shall be limited to an amount which bears the same ratio to such deduction (computed without regard to this limitation) as the rental value of the space not so occupied bears to the rental value of the entire property. For example, if the rental value of the space not occupied by the company is equal to one-half of the rental value of the entire property, the deduction for taxes, expenses, and depreciation is one-half of the taxes, expenses, and depreciation on account of the entire property. Where a deduction is claimed as provided in this section, the parts of the property occupied and the parts not occupied by the company, together with the respective rental values thereof, must be shown in a statement accompanying the return.

[T.D. 6610, 27 FR 8722, Aug. 31, 1962]

§ 1.822-7 Amortization of premium and accrual of discount.

Section 822(d)(2) makes provision for the appropriate amortization of premium and the appropriate accrual of discount, attributable to the taxable year, on bonds, notes, debentures, or other evidences of indebtedness held by a mutual insurance company subject to the tax imposed by section 821. Such amortization and accrual is the same as that provided for life insurance companies by section 818(b)(1), as amended by the Life Insurance Company Income Tax Act of 1959 (73 Stat. 133), and shall be determined in accordance with paragraphs (a) and (b) of § 1.818-3, except in the case of a mutual insurance company subject to the tax imposed by section 821, paragraph (b) of § 1.818-3 shall apply without regard to the date of acquisition and the basis provided in section 1012 shall be used in lieu of the acquisition value.

[T.D. 6610, 27 FR 8722, Aug. 31, 1962]

§ 1.822-8 Determination of taxable investment income.

(a) ***In general*** —

(1)

(i) ***Taxable investment income defined.*** Section 822(a)(1) defines the term "taxable investment income" for purposes of part II, subchapter L, chapter 1 of the Code as the gross investment income (as defined in section 822(b) and paragraph (b) of this section), less the deductions provided in section 822(c) and paragraph (c) of this section for wholly tax-exempt interest, investment expenses, real estate expenses, depreciation, interest paid or accrued, capital losses, special deductions, trade or business (other than an insurance business) expenses, and depletion. However, such expenses are deductible only to the extent that they relate to investment income and the deduction of such expenses is not disallowed by any other provision of subtitle A of the Code.

(ii) For example, investment expenses are not allowable unless they are ordinary and necessary expenses within the meaning of section 162. In addition to the limitations on deductions relating to real estate owned and occupied by a mutual insurance company subject to the tax imposed by section 821 provided in section 822(d)(1), the adjustment for amortization of premium and accrual of discount provided in section 822(d)(2), and the limitation on the deduction for investment expenses where general expenses are allocated to investment income provided in section 822(c)(2), mutual insurance companies subject to the tax imposed

by section 821 (a) or (c) are subject to the limitation on deductions relating to wholly tax-exempt income provided in section 265. Such companies are not entitled to the net operating loss deduction provided in section 172. See, however, section 825 for unused loss deduction allowed companies taxable under section 821(a). A deduction shall not be permitted with respect to the same item more than once.

(2) ***Investment loss defined.*** The term "investment loss" is defined by section 822(a)(2) as the amount by which the deductions allowable under section 822(c) and paragraph (c) of this section exceed the gross investment income (as defined in section 822(b) and paragraph (b) of this section).

(b) ***Gross investment income defined.*** For purposes of part II, subchapter L, chapter 1 of the Code, section 822(b) defines the term "gross investment income" of a mutual insurance company subject to the tax imposed by section 821 (a) or (c) as the sum of the following:

(1) The gross amount of income during the taxable year from:

(i) Interest (including tax-exempt interest and partially tax-exempt interest), as described in § 1.61-7. Interest shall be adjusted for amortization of premium and accrual of discount in accordance with the rules prescribed in section 822(d)(2) and § 1.822-10;

(ii) Dividends, as described in § 1.61-9;

(iii) Rents and royalties, as described in § 1.61-8;

(iv) The entering into of any lease, mortgage or other instrument or agreement from which the company may derive interest, rents, or royalties;

(v) The alteration or termination of any instrument or agreement described in subdivision (iv) of this subparagraph;

(vi) Gains from sales or exchanges of capital assets to the extent provided in subchapter P (section 1201 and following, relating to capital gains and losses) chapter 1 of the Code.

(2) The gross income from any trade or business (other than an insurance business) carried on by a mutual insurance company subject to the tax imposed by section 821 (a) or (c), or by a partnership of which the insurance company is a partner.

For example, gross investment income includes amounts received as commitment fees, or as a bonus for the entering into of a lease, or as a penalty for the early payment of a mortgage. In computing the gross income from any trade or business (other than an insurance business) carried on by the insurance company, or by a partnership of which the insurance company is a partner, any item described in section 822(b)(1) and paragraph (b)(1) of this section shall not be considered as gross income arising from the conduct of such trade or business, but shall be taken into account under section 822(b)(1) and paragraph (b)(1) of this section.

(c) ***Deductions from gross investment income*** —

(1) ***Wholly tax-exempt interest.*** Interest which in the case of other taxpayers is excluded from gross income by section 103 but included in the gross investment income by section 822(b) is allowed as a deduction from gross investment income by section 822(c)(1).

(2) ***Investment expenses.***

(i) The deduction for investment expenses under section 822(c)(2) includes only those expenses of the taxable year which are fairly chargeable against gross investment income. For example, investment expenses include salaries and expenses paid exclusively for work in looking after investments, and amounts expended for printing, stationery, postage, and stenographic work incident to the collection of interest. An itemized schedule of such expenses shall be attached to the return.

(ii) Any assignment of general expenses to the investment department of a mutual insurance company subject to the tax imposed by section 821 (a) or (c) subjects the entire deduction for investment expenses to the limitation provided in section 822(c)(2) and subdivision (iii) of this subparagraph. As used in section 822(c)(2), the term "general expenses" means any expense paid or incurred for the benefit of more than one department of the company rather than for the benefit of a particular department thereof. For example, if an expense, such as a salary, is attributable to more than one department, including the investment department, such expense may be properly allocated among these departments. If such expense is allocated, the amount properly allocable to the investment department shall be deductible as general expenses assigned to or included in investment expenses and as such shall be subject to the limitation of section 822(c)(2) and subdivision (iii) of this subparagraph. However, a company subject to the tax imposed by section 821 (a) or (c) shall not deduct under section 822(c)(2) its real estate taxes, depreciation, or other expenses with respect to any portion of the real estate which it owns, irrespective of whether such items are properly allocable to its investment department. For the rules relating to the deductibility of these items, see section 822(c) (3) and (4) and subparagraphs (3) and (4) of this paragraph. If general expenses are in part assigned to or included in investment expenses, the maximum allowance (as determined under section 822(c)(2)) shall not be granted unless it is shown to the satisfaction of the district director that such allowance is justified by a reasonable assignment of actual expenses. The accounting procedure employed is not conclusive as to whether any assignment has in fact been made. Investment expenses do not include Federal income and excess profits taxes, if any.

(iii) If any general expenses are in part assigned to or included in investment expenses, the total deduction under section 822(c)(2) shall not exceed the sum of:

(*a*) One-fourth of 1 percent of the mean of the book value of the invested assets held at the beginning and end of the taxable year, plus

(*b*) One-fourth of the amount by which taxable investment income (computed without any deduction for investment expenses, tax-free interest, partially tax-exempt interest, or dividends received) exceeds 33/4 percent of the book value of the mean of the invested assets held at the beginning and end of the taxable year.

For purposes of section 822(c)(2) and this paragraph, the term "invested assets" means only those assets which are owned and used, and to the extent used, for the purpose of producing the income specified in section 822(b). See paragraph (b) of this section. The term does not include real estate owned and occupied, and to the extent owned and occupied, by the company.

(3) ***Real estate expenses and taxes.*** The deduction for real estate expenses and taxes under section 822(c)(3) includes taxes (as defined in section 164) and other expenses for the taxable year exclusively on or with respect to real estate owned by the company. For example, no deduction shall be allowed under section 822(c)(3) for amounts allowed as a deduction under section 164(e) (relating to taxes of shareholders paid by a corporation). No deduction shall be allowed under

section 822(c)(3) for any amount paid out for new buildings, or for permanent improvements or betterments made to increase the value of any property. An itemized schedule of such taxes and expenses shall be attached to the return. See § 1.822-9 for limitation of such deduction.

(4) ***Depreciation.*** The deduction allowed by section 822(c)(4) for depreciation is, except as provided in section 822(d)(1) and § 1.822-9, identical to that allowed other corporations by section 167. Such amount allowed as a deduction from gross investment income in determining taxable investment income is limited to depreciation sustained on the property used, and to the extent used, for the purpose of producing the income specified in section 822(b).

(5) ***Interest paid or accrued.*** The deduction allowed by section 822(c)(5) for interest on indebtedness is the same as that allowed other corporations by section 163. See § 1.163-1.

(6) ***Capital losses.***

(i) The deduction for capital losses under section 822(c)(6) includes not only capital losses to the extent provided in subchapter P, chapter 1 of the Code but in addition thereto losses from capital assets sold or exchanged to provide funds to meet abnormal insurance losses and to provide for the payment of dividends and similar distributions to policyholders. Losses in the latter case may be deducted from ordinary income while the deduction for losses under subchapter P is limited to the gains. See section 1211.

(ii) Capital assets are considered as sold or exchanged to provide for the funds or payments specified in section 822(c)(6), to the extent that the gross receipts from the sale or exchange of such assets are not greater than the excess, if any, for the taxable year of the sum of dividends and similar distributions paid to policyholders, and losses and expenses paid over the sum of the items described in section 822(b) (other than paragraph (1)(D) thereof) and net premiums received. If, by reason of a particular sale or exchange of a capital asset, gross receipts are greater than such excess, the gross receipts and the resulting loss should be apportioned and the excess included in capital losses subject to the provisions of subchapter P. Capital losses actually used to reduce net income in any taxable year may not again be used in a succeeding taxable year as an offset against capital gains in that year and for that purpose a special rule is set forth for the application of section 1212.

(iii) The application of section 822(c)(6) may be illustrated by the following examples:

Example 1. The X Company, a mutual fire insurance company subject to tax under section 821, in the taxable year 1963 sells capital assets in order to obtain funds to meet abnormal insurance losses and to provide for the payment of dividends and similar distributions to policyholders. The gross receipts from the sale are $60,000, resulting in losses of $20,000. It pays dividends to policyholders of $150,000. It sustains losses of $25,000, and pays expenses of $25,000. It receives interest of $50,000, dividends of $5,000, royalties of $4,000, and net premiums of $66,000. The excess of the sum of dividends, losses, and expenses paid ($200,000) over the sum of the items described in section 822(b) (other than paragraph (1)(D) thereof) and net premiums received ($125,000) is $75,000. Since the gross receipts from the sale of capital assets ($60,000) do not exceed such excess ($75,000), the losses of $20,000 are allowable as a deduction from gross investment income in computing taxable investment income under section 822.

Example 2. If in example 1 the gross receipts were $76,000 and the last capital asset sold, for the purpose therein specified, resulted in gross receipts of $2,000 and a loss of $500, the losses allowable as a deduction from gross investment income would be $19,750. The last sale made

the gross receipts of $76,000 exceed by $1,000 the excess ($75,000) of the sum of dividends, losses, and expenses paid ($200,000) over the sum of the items described in section 822(b) (other than paragraph (1)(D) thereof) and net premiums received ($125,000). The gross receipts and the resulting loss from the last sale are apportioned on the basis of the ratio of the excess of $1,000 to the gross receipts of $2,000, or 50 percent. Fifty percent of the loss of $500 is deducted from the total loss of $20,000. The remaining gross receipts of $1,000 and the proportionate loss of $250 should be reported as capital losses under subchapter P.

Example 3. If in example 1 the X Company had taxable investment income for purposes of the surtax of $9,750 and, under the provisions of subchapter P, chapter 1 of the Code, had capital losses of $18,000 and capital gains of $10,000, the net capital loss for the taxable year 1963, in applying section 1212 for the purposes of section 822(c)(6), would be $8,000. This is determined by subtracting from total losses of $38,000 ($18,000 capital losses under subchapter P plus $20,000 other capital losses under section 822(c)(6)) the sum of capital gains of $10,000 and losses from the sale or exchange of capital assets sold or exchanged to obtain funds to meet abnormal insurance losses and to provide for the payment of dividends and similar distributions to policyholders of $20,000. Such losses of $20,000 are added to capital gains of $10,000, since they are less than taxable investment income for purposes of the surtax, computed without regard to gains or losses from sales or exchanges of capital assets, of $29,750 ($9,750 taxable investment income for purposes of the surtax plus $20,000 other capital losses under section 822(c)(6) plus the portion of capital losses allowable under subchapter P of $10,000 minus capital gains under subchapter P of $10,000).

(7) ***Special deductions.*** Section 822(c)(7) allows a mutual insurance company the special deductions provided by part VIII (section 241 and following), except section 248, subchapter B, chapter 1 of the Code, relating to partially tax-exempt interest and to dividends received. In applying section 246(b) (relating to limitation on aggregate amount of deductions for dividends received) for purposes of this subparagraph, the reference in such section to "taxable income" shall be treated as a reference to "taxable investment income".

(8) ***Trade or business deductions.***

(i) Under section 822(c)(8), the deductions allowed by subtitle A of the Code (without regard to this part) which are attributable to any trade or business (other than an insurance business) carried on by the insurance company, or by a partnership of which the company is a partner are, subject to the limitations in subdivision (ii) of this subparagraph, allowable as deductions from gross investment income in computing taxable investment income. Such deductions are allowable, however, only to the extent that they relate to income which is included in the company's gross investment income by reason of section 822(b)(2). Thus, a deduction shall not be allowed under section 822(c)(8) with respect to any item described in section 822(b)(1). The allowable deductions may exceed the gross income from such business.

(ii) In computing the deductions under section 822(c)(8):

(*a*) Any item, to the extent attributable to the carrying on of the insurance business, shall not be taken into account. For example, if the company operates a radio station primarily to advertise its own insurance services, a portion of the expenses of the radio station shall not be allowed as a deduction. The portion disallowed shall be an amount which bears the same ratio to the total expenses of the station as the value of advertising furnished to the insurance company bears to the total value of services rendered by the station.

(*b*) The deduction for net operating losses provided in section 172 shall not be allowed.

(9) ***Depletion.*** The deduction allowed by section 822(c)(9) for depletion is the same as that allowed life insurance companies under section 804(c)(4). See paragraph (b)(5) of § 1.804-4.

[T.D. 6681, 28 FR 11113, Oct. 17, 1963, as amended by T.D. 9849, 84 FR 9236, Mar. 14, 2019]

§ 1.822-9 Real estate owned and occupied.

Section 822(d)(1) provides that the amount allowable as a deduction for taxes, expenses, and depreciation on or with respect to any real estate owned and occupied in whole or in part by a mutual insurance company subject to the tax imposed by section 821 (a) or (c) shall be limited to an amount which bears the same ratio to such deduction (computed without regard to this limitation) as the rental value of the space not so occupied bears to the rental value of the entire property. For example, if the rental value of the space not occupied by the company is equal to one-half of the rental value of the entire property, the deduction for taxes, expenses, and depreciation is one-half of the taxes, expenses, and depreciation on account of the entire property. Where a deduction is claimed as provided in this section, the parts of the property occupied and the parts not occupied by the company, together with the respective rental values thereof, must be shown in a statement accompanying the return.

[T.D. 6681, 28 FR 11115, Oct. 17, 1963]

§ 1.822-10 Amortization of premium and accrual of discount.

(a) ***In general.*** In computing taxable investment income for the taxable year, the gross amount of income from interest, the deduction under section 822(c)(1) for wholly tax-exempt interest, and the deduction under section 242 for partially tax-exempt interest, are, under the provisions of section 822(d)(2), each to be decreased by the appropriate amortization of premium and increased by the appropriate accrual of discount attributable to the taxable year on bonds, notes, debentures, or other evidences of indebtedness held by a mutual insurance company subject to the tax imposed by section 821 (a) or (c). However, only the accrual of discount relating to issue discount will increase the deduction for wholly tax-exempt interest. See section 103. Such amortization and accrual is the same as that provided for life insurance companies by section 818(b)(1), as amended by the Life Insurance Company Income Tax Act of 1959 (73 Stat. 133), and shall be determined in accordance with paragraphs (a) and (b) of § 1.818-3, except as provided by paragraph (b) of this section.

(b) ***Modifications.***

(1) Paragraph (b) of § 1.818-3 shall apply to mutual casualty insurance companies subject to the tax imposed by section 821 (a) or (c) without regard to the date of acquisition of the particular securities to which the amortization of premium or accrual of discount is attributable.

(2) In computing the amount of premium or discount for purposes of section 822(d)(2) with respect to securities held by a company taxable under section 821, the basis provided by section 1012 shall be used in lieu of the acquisition value provided by paragraph (b) of § 1.818-3. In the case of a company subject to the tax imposed by section 821(c), adjustments to basis to reflect the accrual of discount and the amortization of premium shall be made in the manner provided by paragraphs (a) and (b) of § 1.818-3. However, for purposes of determining statutory underwriting income or loss for the taxable year under section 823, a company subject to the tax imposed by section 821(a) is not required to accrue discount or to amortize premium in computing its income under section 832 as if it were subject to the tax imposed by section 831. Thus, the accrual of discount and amortization of

premium required in the computation of taxable investment income by a company subject to the tax imposed by section 821(a) neither increases nor decreases the mutual insurance company taxable income of such a company and, except to the extent such a company actually accrues discount or amortizes premium for purposes of making the section 832 computation, no adjustment shall be made to the basis of obligations held by it to reflect accrual of discount or amortization of premium.

[T.D. 6681, 28 FR 11115, Oct. 17, 1963]

§ 1.822-11 Net premiums.

The term "net premiums", defined in section 822(f)(1), includes deposits and assessments, but excludes amounts returned to policyholders which are treated as dividends under section 822(f)(2). Net premiums are used in sections 822(c)(6) and 832(c)(5) in determining the limitation on certain capital losses and in the application of section 1212.

[T.D. 6681, 28 FR 11115, Oct. 17, 1963]

§ 1.822-12 Dividends to policyholders.

(a) Dividends to policyholders are used in determining the "underwriting loss" for purposes of the special transitional underwriting loss deduction provided by section 821(f), and the limitation on capital losses under section 822(c)(6); in computing statutory underwriting income or loss under section 823, and the subtractions from the protection against loss account under section 824(d). The term "dividends to policyholders" is defined in section 822(f)(2) as dividends and similar distributions paid or declared to policyholders. It includes amounts returned to policyholders where the amount is not fixed in the insurance contract but depends upon the experience of the company or the discretion of the management. Such amounts are not to be treated as return premiums under section 822(f)(1). Savings credited to the individual accounts of the subscribers of a reciprocal underwriter or interinsurer under section 823(b)(2) are not dividends paid or declared within the meaning of this paragraph. However, distributions in respect of such credits shall be considered as dividends paid. See section 823(b)(2). The term "paid or declared" is to be construed according to the method of accounting regularly employed in keeping the books of the insurance company, and such method shall be consistently followed with respect to all deductions (including dividends and similar distributions to policyholders) and all items of income.

(b) If the method of accounting so employed is the cash receipts and disbursements method, the deduction is limited to the dividends and similar distributions actually paid to policyholders in the taxable year. If, on the other hand, the method of accounting so employed is the accrual method, the deduction, or a reasonably accurate estimate thereof, for dividends and similar distributions declared to policyholders for any taxable year will, in general, be computed by adding the amount of dividends and similar distributions declared but unpaid at the end of the taxable year to dividends and similar distributions paid during the taxable year and deducting dividends and similar distributions declared but unpaid at the beginning of the taxable year. If an insurance company using the accrual method does not compute the deduction for dividends and similar distributions declared to policyholders in the manner stated, it must submit with its return a full and complete explanation of the manner in which the deduction is computed. For the rule as to when dividends are considered paid, see the regulations under section 561.

[T.D. 6681, 28 FR 11115, Oct. 17, 1963, as amended by T.D. 9849, 84 FR 9236, Mar. 14, 2019]

§ 1.826-1 Election by reciprocal underwriters and interinsurers.

(a) ***In general.*** Except as otherwise provided in section 826(c), any mutual insurance company which is an interinsurer or reciprocal underwriter taxable under section 821(a) may elect under section 826(a) to limit its deductions for amounts paid or incurred to its attorney-in-fact to the deductions of its attorney-in-fact which are allocable to income received by the attorney-in-fact from the reciprocal during the taxable year. See § 1.826-4 for rules relating to allocation of expenses. In no case may such an election increase the amount deductible by the reciprocal for amounts paid or due its attorney-in-fact for the taxable year. The election allowed by section 826(a) and this section in effect increases the income of the reciprocal by the net income of the attorney-in-fact attributable to its business with the reciprocal. A reciprocal making the election is allowed a credit for the amount of tax paid by the attorney-in-fact for the taxable year which is attributable to income received by the attorney-in-fact from the reciprocal. See section 826(e) and § 1.826-5.

(b) ***Companies eligible to elect under section 826(a).*** Any mutual insurance company which is a reciprocal underwriter or interinsurer subject to the tax imposed by section 821(a) may elect (in the manner prescribed by paragraph (c) of this section) to be subject to the limitation provided by section 826(b) and paragraph (a) of this section provided the attorney-in-fact of the electing reciprocal:

(1) Is subject to the taxes imposed by section 11 (b) and (c) and the regulations thereunder;

(2) Consents (in the manner provided by paragraph (a) of § 1.826-3) to provide the information required under paragraph (b) of § 1.826-3 during the period in which the election made under section 826(a) and this section is in effect;

(3) Reports the income received from the reciprocal and the deductions allocable thereto under the same method of accounting used by the reciprocal in reporting its deductions for amounts paid or due its attorney-in-fact; and

(4) Files its income tax return on a calendar year basis.

(c) ***Manner of making election.*** The election provided by section 826(a) and this section shall be made in a statement attached to the taxpayer's income tax return for the first taxable year for which such election is to apply. The statement shall include the name and address of the taxpayer, shall be signed by the taxpayer (or its duly authorized representative), and shall be filed not later than the time prescribed by law for filing the income tax return (including extensions thereof) for the first taxable year for which such election is to apply. For information required of an electing reciprocal, see paragraph (e) of this section.

(d) ***Scope of election.*** The election allowed by section 826(a) is binding for the taxable year for which made and all succeeding taxable years unless the Commissioner consents to a revocation of such election. Whether revocation will be permitted will depend upon the facts and circumstances of each particular case.

(e) ***Information required of an electing company.*** Every reciprocal underwriter or interinsurer making the election provided by section 826(a) and this section shall, in the manner provided by paragraph (f) of this section, furnish the following information for each taxable year during which such election is in effect:

(1) The name and address of the attorney-in-fact with respect to which the election allowed by section 826(a) and this section is in effect; the district in which such attorney-in-fact filed its return for the taxable year; and a copy of the consent required by section 826 and § 1.826-3 and the date and district in which such consent was filed;

(2) The deductible amount paid or due to such attorney-in-fact from the reciprocal computed without regard to the limitation provided by section 826(b);

(3) The total amount claimed as a deduction by the reciprocal for amounts paid to its attorney-in-fact after giving effect to the limitation provided by section 826(b);

(4) The amount of the increase (if any) in underwriting gain (as defined in section 824(a)) attributable to the election allowed by section 826(a);

(5) The amount of the increase (if any) in the deduction allowed by section 824(a) (relating to deduction to provide protection against losses) attributable to the election allowed by section 826(a);

(6) The amount of any increase or decrease in the statutory underwriting income or loss for the taxable year (as computed under section 823) attributable to the election allowed by section 826(a);

(7) The amount of any increase or decrease in the mutual insurance company taxable income or unused loss for the taxable year attributable to the election allowed by section 826(a);

(8) The amount of the increase (if any) in the tax liability of the reciprocal for the taxable year attributable to the election allowed by section 826(a) before taking into account the credit provided by section 826(e);

(9) The amount of tax attributable to income received by the attorney-in-fact from the reciprocal during the taxable year (as determined under § 1.826-5) claimed (under section 826(e) and paragraph (a) of this section) by the reciprocal as a credit for the taxable year; and

(10) The information which the attorney-in-fact is required to submit to the reciprocal under paragraphs (b) and (c) of § 1.826-3.

(f) ***Manner in which information is to be provided.*** The information required by paragraph (e) of this section shall be set forth in a statement attached to the taxpayer's income tax return for each taxable year for which such information is required. Such statement shall include the name and address of the taxpayer; and shall be filed not later than the date prescribed by law (including extensions thereof) for filing the income tax return for the taxable year with respect to which such information is being provided.

[T.D. 6681, 28 FR 11124, Oct. 17, 1963]

§ 1.826-2 Special rules applicable to electing reciprocals.

(a) ***Protection against loss account.*** Section 826(d) provides that for purposes of determining the amount to be subtracted from the protection against loss account under section 824(d)(1)(D) and the regulations thereunder (relating to amounts added to the account for the fifth preceding taxable year) for any taxable year, any amount which was added to such account by reason of the election under section 826(a) and paragraph (a) of § 1.826-1 shall be treated as having been added by reason of section 824(a)(1)(A) and the regulations thereunder (relating to amounts equal to 1 percent of losses incurred during the taxable year). Thus, no amount added to the protection against loss account by reason of an election made under section 826(a) may remain in such account beyond the end of the fifth taxable year following the taxable year with respect to which such amount was added. See section 824(d)(1)(D) and paragraph (b)(3) of § 1.824-1. The amount added to the protection against loss account by reason of an election under section 826(a) is that amount which is equal to 25 percent (plus, in the case of a reciprocal which qualifies as a concentrated risk company under section 824(a), so much of the concentrated wind-storm, etc., premium percentage as exceeds 40 percent) of the amount by which:

(1) The underwriting gain (as defined by section 824(a)(1)) computed after taking into account the limitation provided by section 826(b) and § 1.826-1, exceeds

(2) The underwriting gain computed without regard to the limitation provided by section 826(b) and § 1.826-1.

(b) ***Denial of surtax exemption.*** Section 826(f) provides that the tax imposed upon any increase in the mutual insurance company taxable income of a reciprocal which is attributable to the limitation provided by section 826(b) shall be computed without regard to the surtax exemption provided by section 821(a)(2) and the regulations thereunder. Thus, a company making the election provided under section 826(a) will be subject to surtax, as well as normal tax, on the increase in its mutual insurance company taxable income for the taxable year which is attributable to such election. Similarly, any amount which was added to the protection against loss account by reason of an election under section 826(a) and § 1.826-1, and which is subtracted from such account in accordance with section 826(d) and paragraph (a) of this section, will be subject to surtax, as well as normal tax, to the extent such amount increases mutual insurance company taxable income in the year in which the subtraction is made. Furthermore, the company will be subject to surtax on such increases notwithstanding the fact that it may have no normal tax liability for the taxable year, because its mutual insurance company taxable income (after giving effect to the election provided by section 826(a)) does not exceed $6,000.

(c) ***Adjustment for refunds.*** Section 826(g) provides that if for any taxable year an attorney-in-fact is allowed a credit or refund for taxes paid with respect to which credit or refund to the reciprocal resulted under section 826(e), the taxes of such reciprocal for such taxable year shall be properly adjusted. The reciprocal shall make the adjustment required by section 826(g) by increasing its income tax liability for its taxable year in which the credit or refund is allowed to the attorney-in-fact by the amount of such credit or refund which is attributable to taxes paid by the attorney-in-fact on income received from the reciprocal, as determined under § 1.826-6, but only to the extent that the payment of such amount by the attorney-in-fact resulted in a credit or refund to the reciprocal. However, if the refund or credit to the attorney-in-fact is the result of an error in determining its items of income or deduction for the taxable year with respect to which the refund or credit is allowed, and such error affects the amount of deductions allocable to its reciprocal for such taxable year, then, if the reciprocal's period for filing an amended return has not otherwise expired, the preceding sentence shall not apply and the reciprocal shall make the adjustment required by section 826(g) by filing an amended return for such taxable year and all subsequent taxable years for which an adjustment is required. The reciprocal's amended return or returns shall give effect to the change in the deductions of the attorney-in-fact allocable to income received from the reciprocal and the tax paid by the attorney-in-fact attributable to such income. The amount of any adjustment required by section 826(g) and this section and the computation thereof shall be set forth in a statement attached to and filed with the taxpayer's income tax return for the taxable year for which the adjustment is made. Such statement shall include the name and address of the taxpayer, and a copy of the notification received by the attorney-in-fact indicating that it has been allowed the credit or refund requiring adjustment of the reciprocal's taxes.

[T.D. 6681, 28 FR 11125, Oct. 17, 1963, as amended by T.D. 7100, 36 FR 5334, Mar. 20, 1971]

§ 1.826-3 Attorney-in-fact of electing reciprocals.

(a) ***Manner of making consent.*** Section 826(c)(2) provides that a reciprocal may not elect to be subject to the limitation provided by section 826(b) unless its attorney-in-fact consents to make certain information available. See paragraph (b) of this section. The attorney-in-fact of a reciprocal making the election

provided by section 826(a) shall signify the consent required by section 826(c) in a statement attached to its income tax return for the first taxable year for which the reciprocal's election is to apply. Such statement shall include the name and address of the consenting taxpayer; the name and address of the reciprocal with respect to which such consent is to apply; shall be signed by the taxpayer (or its duly authorized representative); and shall be filed not later than the date prescribed by law (including extensions thereof) for filing the income tax return for the first taxable year for which such consent is to apply. In addition, such statement shall specify that the taxpayer is subject to the taxes imposed by section 11 (b) and (c); the method of accounting used in reporting income received from its reciprocal and the deductions allocable thereto; and that its return is filed on the calendar year basis. Consent, once given, shall be irrevocable for the period during which the election provided for the reciprocal by section 826(a) is in effect. See paragraph (e) of § 1.826-1.

(b) ***Information required of consenting attorney-in-fact.*** Every attorney-in-fact making the consent provided by section 826(c)(2) and paragraph (a) of this section shall, in the manner prescribed by paragraph (c) of this section, furnish the following information for each taxable year during which the consent provided by section 826(c)(2) and paragraph (a) of this section is in effect:

(1) The name and address of the reciprocal with respect to which the consent required by section 826(c)(2) and paragraph (a) of this section is to apply;

(2) Gross income in total and by sources, adjusted for returns and allowances;

(3) Deductions (itemized to the same extent as on taxpayer's income tax return and accompanying schedules) allocable to each source of gross income and in total (see § 1.826-4);

(4) Method of allocation used in subparagraph (3) of this paragraph;

(5) Taxable income (if any) in total and by sources, as in subparagraph (2) of this paragraph (income by sources from subparagraph (2) of this paragraph minus expenses allocable thereto under subparagraph (3) of this paragraph);

(6) Total income tax liability (if any) for the taxable year;

(7) Taxes paid attributable (under § 1.826-5) to income earned by the taxpayer in dealing with the reciprocal;

(8) Such other information as may be required by the district director.

(c) ***Manner in which information is to be provided.***

(1) The information required by paragraph (b) of this section shall be set forth in a statement attached to the taxpayer's income tax return for each taxable year for which the consent provided by section 826(c)(2) and paragraph (a) of this section is in effect. Such statement shall include the name and address of the taxpayer, and shall be filed not later than the date prescribed by law (including extensions thereof) for filing the income tax return for each taxable year for which such information is required.

(2) A copy of the statement containing the information required by paragraph (b) of this section shall be submitted to the board of advisors (or other comparable body) of the reciprocal on whose behalf the consent provided under section 826(c)(2) is given. The copy shall be executed in the same manner as the original and shall be delivered to such board not later than 10 days before the last date prescribed by law (including extensions thereof) for filing the reciprocal's income tax return for the taxable year for which the information is required unless the attorney-in-fact establishes to the

satisfaction of the district director that the failure to furnish such copy or the failure to furnish such copy within the prescribed 10 day period was due to circumstances beyond its control. In addition, there shall be attached to and made a part of such copy, a copy of the income tax return of the attorney-in-fact (including accompanying schedules) for each taxable year for which such statement is required.

[T.D. 6681, 28 FR 11125, Oct. 17, 1963]

§ 1.826-4 Allocation of expenses.

An attorney-in-fact allocating expenses as required by section 826(b) and paragraph (b) of § 1.826-3 shall allocate each expense itemized in its income tax return (and accompanying schedules) for the taxable year to each source of gross income (as set forth pursuant to paragraph (b)(2) of § 1.826-3). However, no portion of the net operating loss deduction allowed by section 172 shall be allocated to income received or due from the reciprocal, and no expenses, other than those directly related thereto, shall be allocated to capital gains. Where the method of allocation used by the taxpayer does not reasonably reflect the expenses of the taxpayer allocable to income received or due from the reciprocal, the district director may require the taxpayer to use such other method of allocation as is reasonable under the circumstances.

[T.D. 6681, 28 FR 11126, Oct. 17, 1963]

§ 1.826-5 Attribution of tax.

(a) ***In general.*** Section 826(e) provides that a reciprocal making the election allowed by section 826(a) shall be credited with so much of the tax paid by the attorney-in-fact as is attributable to the income received by the attorney-in-fact from the reciprocal in such taxable year.

(b) ***Computation.*** For purposes of section 826(e) and paragraph (a) of this section, the amount of tax attributable to income received by the attorney-in-fact from the reciprocal in the taxable year shall be computed in the following manner:

(1) First, compute the taxable income (if any) from each source of gross income set forth in paragraph (b)(2) of § 1.826-3 by deducting from each such amount the expenses allocable thereto under § 1.826-4;

(2) Second, compute the normal tax on each amount of taxable income computed in subparagraph (1) of this paragraph at the rate provided by section 11(b) of the Code;

(3) Third, deduct from each amount determined in subparagraph (1) of this paragraph an amount which bears the same proportion to the surtax exemption provided by section 11(c) of the Code as each amount computed under subparagraph (1) of this paragraph bears to the total of the amounts computed under subparagraph (1) of this paragraph;

(4) Fourth, compute the surtax on each remainder computed in subparagraph (3) of this paragraph at the rate provided by section 11(c) of the Code;

(5) Fifth, add the normal tax computed under subparagraph (2) of this paragraph to the surtax computed under subparagraph (4) of this paragraph for each amount computed under subparagraph (1) of this paragraph;

(6) Sixth, deduct from each amount of tax computed under subparagraph (5) of this paragraph any tax credits (other than those arising from payments made with respect to the tax liability for the taxable year or other taxable years) allocable (in the same manner as provided for expenses under § 1.826-4) to such amount;

(7) Seventh, compute that amount which bears the same proportion to the tax actually paid with respect to the taxable year as each individual amount computed under subparagraph (6) of this paragraph bears to the total of the amounts computed under subparagraph (6) of this paragraph. The amount so determined with respect to each amount computed under subparagraph (6) of this paragraph is the tax paid which is attributable to the amount computed under subparagraph (1) of this paragraph.

To the extent the amounts determined under subparagraph (1) of this paragraph are attributable to amounts received from the reciprocal for the taxable year, the tax attributable to such amounts (as determined under subparagraph (7) of this paragraph) shall be the amount of tax attributable to income received by the attorney-in-fact from the reciprocal during the taxable year.

(c) ***Taxes of attorney-in-fact unaffected.*** Nothing in section 826 or the regulations thereunder shall increase or decrease the taxes imposed on the income of the attorney-in-fact.

[T.D. 6681, 28 FR 11126, Oct. 17, 1963]

§ 1.826-6 Credit or refund.

(a) ***Notification required.*** In any case where a taxpayer applies for a credit or refund of taxes paid by it in respect of a taxable year for which the taxpayer was the consenting attorney-in-fact of a reciprocal making the election provided by section 826(a), such taxpayer shall give notice to its reciprocal for such taxable year, first, upon applying for the credit or refund; and again, within 10 days from the date on which a final determination is made that such credit or refund has been allowed or denied.

(b) ***Notice form.*** The notices required by this section shall include the name and address of the taxpayer and shall be signed by the taxpayer or its duly authorized representative. In addition, there shall be attached to and made a part of each first notice a concise statement of the claim upon which the application for refund or credit is based; and there shall be attached to and made a part of each second notice:

(1) A copy of the notification (if any) received by the taxpayer indicating that the credit or refund has been allowed; and

(2) A statement setting forth the amount of such credit or refund attributable to taxes paid by the taxpayer on income received from the reciprocal, and the computation by which such amount was determined.

(c) ***Manner of apportioning refund or credit.*** The taxpayer shall determine the amount of the refund or credit attributable to taxes paid on income received from its reciprocal by reallocating its income and expense items for the taxable year, with respect to which the refund or credit is allowed, in the manner provided by §§ 1.826-3 and 1.826-4 so as to reflect the adjustments (if any) in such items which resulted in the credit or refund of tax for the taxable year. The taxpayer shall then recompute the tax attributable to income received from its reciprocal for such taxable year in the manner provided by § 1.826-5. The district director may require such additional information as may be necessary in the circumstances to verify the computations required by this paragraph.

[T.D. 6681, 28 FR 11126, Oct. 17, 1963]

§ 1.826-7 Examples.

The application of section 826 may be illustrated by the following examples:

Example 1. For the taxable year 1963, R, a reciprocal underwriter subject to the taxes imposed by section 821(a), has the following items (determined before applying any election under section 826):

Gross income under sec. 832		$578
Gross investment income		50
Deductions under sec. 832 (as modified by sec. 823(b)):		
Deduction for amounts paid by R to attorney-in-fact A	$100	
All other deductions	500	
Total deductions under sec. 832	600	
Deductions under sec. 822(c)		40
Incurred losses		400
Protection against loss deduction		4
Underwriting gain		0
Mutual insurance company taxable income		0
Unused loss		22
Credit or refund for taxes paid		0

Assume that the deductions of attorney-in-fact A allocable to the income received by A from R are 60 and the tax paid by A allocable to the income received from R is 16. If R elects to be subject to the limitation provided in section 826(b), the results for 1963 would be as follows:

Gross income under sec. 832		$578
Gross investment income		50
Deductions under sec. 832 (as modified by sec. 823(b)):		
Deduction for amounts paid by R to attorney-in-fact A	$60	
All other deductions	500	
Total deduction under sec. 832	560	
Deductions under sec. 822(c)		40
Incurred losses		400
Underwriting gain		8
Protection against loss deduction		6
Mutual insurance company taxable income		12
Unused loss		0

Credit or refund for taxes paid	16

Under the provisions of section 826(b), R's deduction for amounts paid or incurred to the attorney-in-fact in the taxable year 1963 would be limited to the deductions of A allocable to the income received by A from R. Thus, R's deductions under section 832 (as modified by section 823(b)) for 1963 would be 60 (the deductions of A which are allocable to the income received by A from R). As a result of making the election under section 826(a) for the taxable year 1963, R's underwriting gain would be 8, and its statutory underwriting income would be 2 (the underwriting gain of 8 minus the protection against loss deduction of 6—of which 4 represents the amount determined under section 824(a)(1)(A)—and 2 represents the amount determined under section 824(a)(1)(B)—or 8 minus 6). R's mutual insurance company taxable income for 1963 would be 12, consisting of taxable investment income of 10 (gross investment income minus deductions under section 822(c), or 50 minus 40) plus statutory underwriting income of 2. Since all of R's mutual insurance company taxable income of 12 is attributable to the limitation under section 826(b), the entire amount is subject to the surtax under section 821(a)(2) without regard to the $25,000 surtax exemption. The credit of 16, representing that part of the tax paid by A which is allocable to the income received by A from R, may be applied by R against its taxes with respect to its mutual insurance company taxable income of 12 for 1963, and R would be entitled to a refund of any excess of the amount of such credit over its tax liability for 1963.
Under the provisions of section 826(d), no portion of the amount added to the protection against loss account in 1963 by reason of the election under section 826(a), 2 (25 percent of the amount by which the consolidated underwriting gain exceeds 25 percent of the underwriting gain determined without regard to the election under section 826(a), or the amount by which 25 percent of 8 exceeds 25 percent of 0), may remain in such account beyond the taxable year 1968.

Example 2. For the taxable year 1963, F is a corporate attorney-in-fact subject to the taxes imposed by section 11(b) and (c) of the Code. F files its return on the calendar year basis and reports income received from its reciprocal and the deductions allocable thereto under the same method of accounting used by its reciprocal in reporting its deductions for amounts paid to R. F properly consents to provide the information required by paragraph (b) of § 1.826-3. In addition to its attorney-in-fact business, F owns real estate for investment purposes, and operates a real estate management service. For the taxable year 1963, F has gross income from these various sources as follows:

Attorney-in-fact fees	$85,000
Real estate management fees	18,000
Rental income	25,000

F allocates its expenses for the taxable year on the basis of their direct relation to each source of income. During 1963, F acquired property for use in its attorney-in-fact operations which entitled F to an investment credit of $800 under section 38. For 1963, F determines that the tax paid by it which is attributable to its reciprocal is $21,863, computed as follows:

	Attorney-in-fact fees	Real estate management	Rental income	Total
Gross income	$85,000	$18,000	$25,000	$128,000
Allocable expenses	25,000	3,000	35,000	63,000
Taxable income (loss)	60,000	15,000	(10,000)	65,000
Normal tax (30 percent)	18,000	4,500	0	19,500
Surtax exemption	20,000	5,000	0	25,000
Income subject to surtax	40,000	10,000	0	40,000
Surtax (22 percent)	8,800	2,200	0	8,800
Total tax	26,800	6,700	0	28,300
Investment credit	800	0	0	800
1963 tax liability	26,000	6,700	0	27,500
1963 tax paid				27,500
Allocation of tax paid	21,863	5,637	0	27,500

Under paragraph (b)(1) of § 1.826-5, F computes its taxable income from its attorney-in-fact fees to be $60,000 ($85,000 minus $25,000), and its taxable income from its real estate management to be $15,000 ($18,000 minus $3,000). Since F's rental operations resulted in a $10,000 loss for the taxable year ($25,000 minus $35,000), F's taxable income from its rental operations is zero. Using the 30 percent rate provided by section 11(b), F computes its normal tax to be $18,000 on its attorney-in-fact fees and $4,500 on its real estate management operations. F's normal tax on total income is $19,500. The $3,000 difference between the normal tax on F's total income and the normal taxes on F's profitable operations results from the loss on F's rental operations. Under paragraph (b)(3) of § 1.826-5, F allocates its surtax exemption as follows: $20,000 $60,000/$75,000 × $25,000) to its attorney-in-fact fees; and $5,000 $15,000/$75,000 × $25,000) to its real estate management operations. F computes its surtax on its profitable operations at the 22 percent rate provided by section 11(c) as follows: $8,800 (22 percent of $40,000) on attorney-in-fact fees; and $2,200 (22 percent of $10,000) on real estate management income. F adds its normal tax and surtax on its profitable operations and determines its total tax to be $26,800 on its attorney-in-fact operations; $6,700 on its real estate management operations; and $28,300 on its total income. F must allocate its investment credit on the same basis as it used to allocate its expenses. Thus, F's entire investment credit must be allocated to its attorney-in-fact operations. Accordingly, F's 1963 tax liability is $26,000 on its attorney-in-fact fees; $6,700 on its real estate management operations; $0 on its rental operations; and $27,500 on its

total income. Under paragraph (b)(7) of § 1.826-5, F allocates $21,863 ($26,000/$32,700 × $27,500) of its 1963 tax paid to its attorney-in-fact fees; and $5,637 ($6,700/$32,700 × $27,500) of its 1963 tax paid to its real estate management business. F's reciprocal will be allowed a credit or refund of $21,863 for taxes paid by F which are attributable to F's income received from its reciprocal.

Example 3. Assume the same facts as in example 2, and assume further that in 1966 F sustains a net operating loss on its overall operations of $5,000. In carrying the loss back to 1963 as a net operating loss deduction under section 172, F must allocate the deduction under the same method it used in allocating its 1963 deductions. Thus, if the loss was entirely attributable to F's rental operations for the taxable year 1966, F would reduce its taxable income attributable to those operations by the entire amount of the loss and would recompute the tax attributable to those operations under paragraph (b) of § 1.826-5. As recomputed in the table below, F's 1963 tax liability from attorney-in-fact fees would be $19,800 and F's total tax liability would be $24,900.

	Attorney-in-fact fees	Real estate management	Rental income	Total
Gross income	$85,000	$18,000	$25,000	$128,000
Allocable expenses	25,000	3,000	35,000	63,000
Net operating loss deduction	0	0	5,000	5,000
Taxable income (loss)	60,000	15,000	(15,000)	60,000
Normal tax (30 percent)	18,000	4,500	0	18,000
Surtax exemption	20,000	5,000	0	25,000
Income subject to surtax	40,000	10,000	0	35,000
Surtax (22 percent)	8,800	2,200	0	7,700
Total tax	26,800	6,700	0	25,700
Investment credit	800	0	0	800
1963 tax liability	26,000	6,700	0	24,900
1963 tax paid				24,900
Allocation of tax paid	19,800	5,100	0	24,900

As a result of its 1966 net operating loss, F would be entitled to a refund of $2,600 (1963 taxes paid of $27,500 minus recomputed 1963 taxes of $24,900). Under paragraph (a) of § 1.826-6, F would be required to notify its reciprocal of its claim for refund and of the amount of the refund or credit attributable to taxes paid on income received from the reciprocal. Since the 1963 tax paid by F attributable to its reciprocal (as recomputed) is less than the amount claimed in 1963 by F's reciprocal as a credit, F's reciprocal would be required, under section 826(g), to add the difference—$2,063 ($21,863 minus $19,800), to its tax liability for 1966. Thus, F's reciprocal would first compute its tax liability for 1966 without regard to section 826(g) and then would increase such liability by $2,063.

[T.D. 6681, 28 FR 11126, Oct. 17, 1963]

OTHER INSURANCE COMPANIES

§ 1.831-1 Tax on insurance companies (other than life or mutual), mutual marine insurance companies, and mutual fire insurance companies issuing perpetual policies.

(a) All insurance companies, other than life or mutual or foreign insurance companies not carrying on an insurance business within the United States, and all mutual marine insurance companies and mutual fire insurance companies exclusively issuing either perpetual policies, or policies for which the sole premium charged is a single deposit which, except for such deduction of underwriting costs as may be provided, is refundable upon cancellation or expiration of the policy, are subject to the tax imposed by section 831. As used in this section and §§ 1.832-1 and 1.832-2, the term "insurance companies" means only those companies which qualify as insurance companies under the definition provided by paragraph (b) of § 1.801-1 and which are subject to the tax imposed by section 831.

(b) All provisions of the Code and of the regulations in this part not inconsistent with the specific provisions of section 831 are applicable to the assessment and collection of the tax imposed by section 831(a), and insurance companies are subject to the same penalties as are provided in the case of returns and payment of income tax by other corporations.

(c) Since section 832 provides that the underwriting and investment exhibit of the annual statement approved by the National Convention of Insurance Commissioners shall be the basis for computing gross income and since the annual statement is rendered on the calendar year basis, the returns under section 831 shall be made on the basis of the calendar year and shall be on Form 1120. Insurance companies are entitled, in computing insurance company taxable income, to the deductions provided in part VIII (section 241 and following), subchapter B, chapter 1 of the Code.

(d) Foreign insurance companies not carrying on an insurance business within the United States are not taxable under section 831 but are taxable as other foreign corporations. See section 881.

(e) Insurance companies are subject to both normal tax and surtax. The normal tax shall be computed as provided in section 11(b) and the surtax shall be computed as provided in section 11(c). For the circumstances under which the $25,000 exemption from surtax for certain taxable years may be disallowed in whole or in part, see section 1551. For alternative tax where the net long-term capital gain for any taxable year exceeds the net short-term capital loss, see section 1201(a) and the regulations thereunder.

§ 1.831-2 Taxable years affected.

Section 1.831-1 is applicable only to taxable years beginning after December 31, 1953, but before January 1, 1963, and ending after August 16, 1954, and all references therein to sections of the Code and regulations are to sections of the Internal Revenue Code of 1954 and the regulations thereunder before amendments. Section 1.831-3 is applicable only to taxable years beginning after December 31, 1962, and all references therein to sections of the Code and regulations are to sections of the Internal Revenue Code of 1954 as amended.

[T.D. 6681, 28 FR 11128, Oct. 17, 1963, as amended by T.D. 9849, 84 FR 9236, Mar. 14, 2019]

§ 1.831-3 Tax on insurance companies (other than life or mutual), mutual marine insurance companies, mutual fire insurance companies issuing perpetual policies, and mutual fire or flood insurance companies operating on the basis of premium deposits; taxable years beginning after December 31, 1962.

(a) All insurance companies, other than life or mutual or foreign insurance companies not carrying on an insurance business within the United States, and all mutual marine insurance companies and mutual fire or flood insurance companies exclusively issuing perpetual policies or whose principal business is the issuance of policies for which the premium deposits are the same regardless of the length of the term for which the policies are written, are subject to the tax imposed by section 831 if the unabsorbed portion of such premium deposits not required for losses, expenses or reserves is returned or credited to the policyholder on cancellation or expiration of the policy. For purposes of section 831 and this section, in the case of a mutual flood insurance company, the premium deposits will be considered to be the same if the payment of a premium increases the total insurance under the policy in an amount equal to the amount of such premium and the omission of any annual premium does not result in the reduction or suspension of coverage under the policy. As used in this section and section 832 and the regulations thereunder, the term "insurance companies" means only those companies which qualify as insurance companies under the definition provided by paragraph (b) of § 1.801-1 and which are subject to the tax imposed by section 831.

(b) All provisions of the Code and of the regulations in this part not inconsistent with the specific provisions of section 831 are applicable to the assessment and collection of the tax imposed by section 831(a), and insurance companies are subject to the same penalties as are provided in the case of returns and payment of income tax by other corporations.

(c) Since section 832 provides that the underwriting and investment exhibit of the annual statement approved by the National Convention of Insurance Commissioners shall be the basis for computing gross income and since the annual statement is rendered on the calendar year basis, the returns under section 831 shall be made on the basis of the calendar year and shall be on Form 1120. Insurance companies are entitled, in computing insurance company taxable income, to the deductions provided in part VIII (section 241 and following), subchapter B, chapter 1 of the Code.

(d) Foreign insurance companies not carrying on an insurance business within the United States are not taxable under section 831 but are taxable as other foreign corporations. See section 881.

(e) Insurance companies are subject to both normal tax and surtax. The normal tax shall be computed as provided in section 11(b) and the surtax shall be computed as provided in section 11(c). For the circumstances under which the $25,000 exemption from surtax for certain taxable years may be disallowed in whole or in part, see section 1551. For alternative tax where the net long-term capital gain for any taxable year exceeds the net short-term capital loss, see section 1201(a) and the regulations thereunder.

[T.D. 6681, 28 FR 11128, Oct. 17, 1963]

§ 1.832-1 Gross income.

(a) Gross income as defined in section 832(b)(1) means the gross amount of income earned during the taxable year from interest, dividends, rents, and premium income, computed on the basis of the underwriting and investment exhibit of the annual statement approved by the National Convention of Insurance Commissioners, as well as the gain derived from the sale or other disposition of property, and

all other items constituting gross income under section 61, except that in the case of a mutual fire insurance company described in § 1.831-1 the amount of single deposit premiums received, but not assessments, shall be excluded from gross income. Gross income does not include increase in liabilities during the year on account of reinsurance treaties, remittances from the home office of a foreign insurance company to the United States branch, borrowed money, or gross increase due to adjustments in book value of capital assets. The underwriting and investment exhibit is presumed to reflect the true net income of the company, and insofar as it is not inconsistent with the provisions of the Code will be recognized and used as a basis for that purpose. All items of the exhibit, however, do not reflect an insurance company's income as defined in the Code. By reason of the definition of investment income, miscellaneous items which are intended to reflect surplus but do not properly enter into the computation of income, such as dividends declared to shareholders in their capacity as such, home office remittances and receipts, and special deposits, are ignored. Gain or loss from agency balances and bills receivable not admitted as assets on the underwriting and investment exhibit will be ignored, excepting only such agency balances and bills receivable as have been allowed as deductions for worthless debts or, having been previously so allowed, are recovered during the taxable year. In computing “premiums earned on insurance contracts during the taxable year” the amount of the unearned premiums shall include

(1) life insurance reserves as defined in section 803(b) and § 1.803-1 pertaining to the life, burial, or funeral insurance, or annuity business of an insurance company subject to the tax imposed by section 831 and not qualifying as a life insurance company under section 801, and

(2) liability for return premiums under a rate credit or retrospective rating plan based on experience, such as the “War Department Insurance Rating Plan,” and which return premiums are therefore not earned premiums. In computing “losses incurred” the determination of unpaid losses at the close of each year must represent actual unpaid losses as nearly as it is possible to ascertain them.

(b) Every insurance company to which this section applies must be prepared to establish to the satisfaction of the district director that the part of the deduction for “losses incurred” which represents unpaid losses at the close of the taxable year comprises only actual unpaid losses stated in amounts which, based upon the facts in each case and the company's experience with similar cases, can be said to represent a fair and reasonable estimate of the amount the company will be required to pay. Amounts included in, or added to, the estimates of such losses which, in the opinion of the district director are in excess of the actual liability determined as provided in the preceding sentence will be disallowed as a deduction. The district director may require any such insurance company to submit such detailed information with respect to its actual experience as is deemed necessary to establish the reasonableness of the deduction for “losses incurred.”

(c) That part of the deduction for “losses incurred” which represents an adjustment to losses paid for salvage and reinsurance recoverable shall, except as hereinafter provided, include all salvage in course of liquidation, and all reinsurance in process of collection not otherwise taken into account as a reduction of losses paid, outstanding at the end of the taxable year. Salvage in course of liquidation includes all property (other than cash), real or personal, tangible or intangible, except that which may not be included by reason of express statutory provisions (or rules and regulations of an insurance department) of any State or Territory or the District of Columbia in which the company transacts business. Such salvage in course of liquidation shall be taken into account to the extent of the value thereof at the end of the taxable year as determined from a fair and reasonable estimate based upon either the facts in each case or the company's experience with similar cases. Cash received during the taxable year with respect to items of salvage or reinsurance shall be taken into account in computing losses paid during such taxable year.

§ 1.832-2 Deductions.

(a) The deductions allowable are specified in section 832(c) and by reason of the provisions of section 832(c)(10) and (12) include in addition certain deductions provided in sections 161, and 241 and following. The deductions, however, are subject to the limitation provided in section 265, relating to expenses and interest in respect of tax-exempt income. The net operating loss deduction is computed under section 172 and the regulations thereunder. For the purposes of section 172, relating to net operating loss deduction, "gross income" shall mean gross income as defined in section 832(b)(1) and the allowable deductions shall be those allowed by section 832(c) with the exceptions and limitations set forth in section 172(d). In addition to the deduction for capital losses provided in subchapter P (section 1201 and following), chapter 1 of the Code, insurance companies are allowed a deduction for losses from capital assets sold or exchanged in order to obtain funds to meet abnormal insurance losses and to provide for the payment of dividends and similar distributions to policyholders. A special rule is provided for the application of the capital loss carryover provisions of section 1212. The deduction is the same as that allowed mutual insurance companies subject to the tax imposed by section 821; see section 822(c)(6) and the regulations thereunder. Insurance companies, other than mutual fire insurance companies described in § 1.831-1, are also allowed a deduction for dividends and similar distributions paid or declared to policyholders in their capacity as such. The deduction is otherwise the same as that allowed mutual insurance companies subject to the tax imposed by section 821; see section 823(2) and the regulations thereunder.

(b) Among the items which may not be deducted are income and profits taxes imposed by the United States, income and profits taxes imposed by any foreign country or possession of the United States (in cases where the company chooses to claim to any extent a credit for such taxes), taxes assessed against local benefits, decrease during the year due to adjustments in the book value of capital assets, decrease in liabilities during the year on account of reinsurance treaties, dividends paid to shareholders in their capacity as such, remittances to the home office of a foreign insurance company by the United States branch, and borrowed money repaid.

(c) In computing taxable income of insurance companies, losses sustained during the taxable year from the sale or other disposition of property are deductible subject to the limitation contained in section 1211. Insurance companies are entitled to the alternative taxes provided in section 1201.

[T.D. 6500, 25 FR 11814, Nov. 26, 1960, as amended by T.D. 6867, 30 FR 15094, Dec. 12, 1965]

§ 1.832-3 Taxable years affected.

Sections 1.832-1 and 1.832-2 are applicable only to taxable years beginning after December 31, 1953, and before January 1, 1963, and ending after August 16, 1954, and all references therein to sections of the Code and regulations are to sections of the Internal Revenue Code of 1954 and the regulations thereunder before amendments. Sections 1.832-4, 1.832-5, and 1.832-6 are applicable only to taxable years beginning after December 31, 1962, and all references therein to sections of the Code and regulations are to sections of the Internal Revenue Code of 1954 as amended.

[T.D. 6681, 28 FR 11129, Oct. 17, 1963]

§ 1.832-4 Gross income.

(a)

(1) Gross income as defined in section 832(b)(1) means the gross amount of income earned during the taxable year from interest, dividends, rents, and premium income, computed on the basis of the underwriting and investment exhibit of the annual statement approved by the National Convention of Insurance Commissioners, as well as the gain derived from the sale or other disposition of property, and all other items constituting gross income under section 61, except that in the case of a mutual fire insurance company described in section 831(a)(3)(A) the amount of single deposit premiums received, but not assessments, shall be excluded from gross income. Section 832(b)(1)(D) provides that in the case of a mutual fire or flood insurance company described in section 831(a)(3)(B), there shall be included in gross income an amount equal to 2 percent of the premiums earned during the taxable year on contracts described in section 831(a)(3)(B) after deduction of premium deposits returned or credited during such taxable year with respect to such contracts. Gross income does not include increase in liabilities during the year on account of reinsurance treaties, remittances from the home office of a foreign insurance company to the United States branch, borrowed money, or gross increase due to adjustments in book value of capital assets.

(2) The underwriting and investment exhibit is presumed to reflect the true net income of the company, and insofar as it is not inconsistent with the provisions of the Code will be recognized and used as a basis for that purpose. All items of the exhibit, however, do not reflect an insurance company's income as defined in the Code. By reason of the definition of investment income, miscellaneous items which are intended to reflect surplus but do not properly enter into the computation of income, such as dividends declared to shareholders in their capacity as such, home office remittances and receipts, and special deposits, are ignored. Gain or loss from agency balances and bills receivable not admitted as assets on the underwriting and investment exhibit will be ignored, excepting only such agency balances and bills receivable as have been allowed as deductions for worthless debts or, having been previously so allowed, are recovered during the taxable year.

(3) ***Premiums earned.*** The determination of premiums earned on insurance contracts during the taxable year begins with the insurance company's gross premiums written on insurance contracts during the taxable year, reduced by return premiums and premiums paid for reinsurance. Subject to the exceptions in sections 832(b)(7), 832(b)(8), and 833(a)(3), this amount is increased by 80 percent of the unearned premiums on insurance contracts at the end of the preceding taxable year, and is decreased by 80 percent of the unearned premiums on insurance contracts at the end of the current taxable year.

(4) ***Gross premiums written*** —

(i) ***In general.*** Gross premiums written are amounts payable for insurance coverage. The label placed on a payment in a contract does not determine whether an amount is a gross premium written. Gross premiums written do not include other items of income described in section 832(b)(1)(C) (for example, charges for providing loss adjustment or claims processing services under administrative services or cost-plus arrangements). Gross premiums written on an insurance contract include all amounts payable for the effective period of the insurance contract. To the extent that amounts paid or payable with respect to an arrangement are not gross premiums written, the insurance company may not treat amounts payable to customers under the applicable portion of such arrangements as losses incurred described in section 832(b)(5).

(ii) ***Items included.*** Gross premiums written include—

(A) Any additional premiums resulting from increases in risk exposure during the effective period of an insurance contract;

(B) Amounts subtracted from a premium stabilization reserve to pay for insurance coverage; and

(C) Consideration in respect of assuming insurance liabilities under insurance contracts not issued by the taxpayer (such as a payment or transfer of property in an assumption reinsurance transaction).

(5) *Method of reporting gross premiums written* —

(i) ***In general.*** Except as otherwise provided under this paragraph (a)(5), an insurance company reports gross premiums written for the earlier of the taxable year that includes the effective date of the insurance contract or the year in which the company receives all or a portion of the gross premium for the insurance contract. The effective date of the insurance contract is the date on which the insurance coverage provided by the contract commences. The effective period of an insurance contract is the period over which one or more rates for insurance coverage are guaranteed in the contract. If a new rate for insurance coverage is guaranteed after the effective date of an insurance contract, the making of such a guarantee generally is treated as the issuance of a new insurance contract with an effective period equal to the duration of the new guaranteed rate for insurance coverage.

(ii) ***Special rule for additional premiums resulting from an increase in risk exposure.*** An insurance company reports additional premiums that result from an increase in risk exposure during the effective period of an insurance contract in gross premiums written for the taxable year in which the change in risk exposure occurs. Unless the increase in risk exposure is of temporary duration (for example, an increase in risk exposure under a workers' compensation policy due to seasonal variations in the policyholder's payroll), the company reports additional premiums resulting from an increase in risk exposure based on the remainder of the effective period of the insurance contract.

(iii) ***Exception for certain advance premiums.*** If an insurance company receives a portion of the gross premium for an insurance contract prior to the first day of the taxable year that includes the effective date of the contract, the company may report the advance premium (rather than the full amount of the gross premium for the contract) in gross premiums written for the taxable year in which the advance premium is received. An insurance company may adopt this method of reporting advance premiums only if the company's deduction for premium acquisition expenses for the taxable year in which the company receives the advance premium does not exceed the limitation of paragraph (a)(5)(vii) of this section. A company that reports an advance premium in gross premiums written under this paragraph (a)(5)(iii) takes into account the remainder of the gross premium written and premium acquisition expenses for the contract in the taxable year that includes the effective date of the contract. A company that adopts this method of reporting advance premiums must use the method for all contracts with advance premiums.

(iv) ***Exception for certain cancellable accident and health insurance contracts with installment premiums.*** If an insurance company issues or proportionally reinsures a cancellable accident and health insurance contract (other than a contract with an effective period that exceeds 12 months) for which the gross premium is payable in installments over the effective period of the contract, the company may report the installment premiums (rather than the total gross premium for the contract) in gross premiums written for the earlier of the taxable year in which the installment premiums are due under the terms of the contract or the year in which the installment premiums are received. An insurance company may adopt this method of reporting

installment premiums for a cancellable accident and health insurance contract only if the company's deduction for premium acquisition expenses for the first taxable year in which an installment premium is due or received under the contract does not exceed the limitation of paragraph (a)(5)(vii) of this section. A company that adopts this method of reporting installment premiums for a cancellable accident and health contract must use the method for all of its cancellable accident and health insurance contracts with installment premiums.

(v) ***Exception for certain multi-year insurance contracts.*** If an insurance company issues or proportionally reinsures an insurance contract, other than a contract described in paragraph (a)(5)(vi) of this section, with an effective period that exceeds 12 months, for which the gross premium is payable in installments over the effective period of the contract, the company may treat the insurance coverage provided under the multi-year contract as a series of separate insurance contracts. The first contract in the series is treated as having been written for an effective period of twelve months. Each subsequent contract in the series is treated as having been written for an effective period equal to the lesser of 12 months or the remainder of the period for which the rates for insurance coverage are guaranteed in the multi-year insurance contract. An insurance company may adopt this method of reporting premiums on a multi-year contract only if the company's deduction for premium acquisition expenses for each year of the multi-year contract does not exceed the limitation of paragraph (a)(5)(vii) of this section. A company that adopts this method of reporting premiums for a multi-year contract must use the method for all multi-year contracts with installment premiums.

(vi) ***Exception for insurance contracts described in section 832(b)(7).*** If an insurance company issues or reinsures the risks related to a contract described in section 832(b)(7), the company may report gross premiums written for the contract in the manner required by sections 803 and 811(a) for life insurance companies. An insurance company may adopt this method of reporting premiums on contracts described in section 832(b)(7) only if the company also determines the deduction for premium acquisition costs for the contract in accordance with section 811(a), as adjusted by the amount required to be taken into account under section 848 in connection with the net premiums of the contract. A company that adopts this method of reporting premiums for a contract described in section 832(b)(7) must use the method for all of its contracts described in that section.

(vii) ***Limitation on deduction of premium acquisition expenses.*** An insurance company's deduction for premium acquisition expenses (for example, commissions, state premium taxes, overhead reimbursements to agents or brokers, and other similar amounts) related to an insurance contract is within the limitation of this paragraph (a)(5)(vii) if—

(A) The ratio obtained by dividing the sum of the company's deduction for premium acquisition expenses related to the insurance contract for the taxable year and previous taxable years by the total premium acquisition expenses attributable to the insurance contract; does not exceed

(B) The ratio obtained by dividing the sum of the amounts included in gross premiums written with regard to the insurance contract for the taxable year and previous taxable years by the total gross premium written for the insurance contract.

(viii) ***Change in method of reporting gross premiums.*** An insurance company that adopts a method of accounting for gross premiums written and premium acquisition expenses described in paragraph (a)(5)(iii), (iv), (v), or (vi) of this section must continue to use the method to report gross premiums written and premium acquisition expenses unless the company obtains the consent of the Commissioner to change to a different method under section 446(e) and § 1.446-1(e).

(6) ***Return premiums*** —

(i) ***In general.*** An insurance company's liability for return premiums includes amounts previously included in an insurance company's gross premiums written, which are refundable to a policyholder or ceding company, provided that the amounts are fixed by the insurance contract and do not depend on the experience of the insurance company or the discretion of its management.

(ii) ***Items included.*** Return premiums include amounts—

(A) Which were previously paid and become refundable due to policy cancellations or decreases in risk exposure during the effective period of an insurance contract;

(B) Which reflect the unearned portion of unpaid premiums for an insurance contract that is canceled or for which there is a decrease in risk exposure during its effective period; or

(C) Which are either previously paid and refundable or which reflect the unearned portion of unpaid premiums for an insurance contract, arising from the redetermination of a premium due to correction of posting or other similar errors.

(7) ***Method of reporting return premiums.*** An insurance company reports the liability for a return premium resulting from the cancellation of an insurance contract for the taxable year in which the contract is canceled. An insurance company reports the liability for a return premium attributable to a reduction in risk exposure under an insurance contract for the taxable year in which the reduction in risk exposure occurs.

(8) ***Unearned premiums*** —

(i) ***In general.*** The unearned premium for a contract, other than a contract described in section 816(b)(1)(B), generally is the portion of the gross premium written that is attributable to future insurance coverage during the effective period of the insurance contract. However, unearned premiums held by an insurance company with regard to the net value of risks reinsured with other solvent companies (whether or not authorized to conduct business under state law) are subtracted from the company's unearned premiums. Unearned premiums also do not include any additional liability established by the insurance company on its annual statement to cover premium deficiencies. Unearned premiums do not include an insurance company's estimate of its liability for amounts to be paid or credited to a customer with regard to the expired portion of a retrospectively rated contract (retro credits). An insurance company's estimate of additional amounts payable by its customers with regard to the expired portion of a retrospectively rated contract (retro debits) cannot be subtracted from unearned premiums.

(ii) ***Special rules for unearned premiums.*** For purposes of computing “premiums earned on insurance contracts during the taxable year” under section 832(b)(4), the amount of unearned premiums includes—

(A) Life insurance reserves (as defined in section 816(b), but computed in accordance with section 807(d) and sections 811(c) and (d));

(B) In the case of a mutual flood or fire insurance company described in section 832(b)(1)(D) (with respect to contracts described in that section), the amount of unabsorbed premium deposits that the company would be obligated to return to its policyholders at the close of the taxable year if all its insurance contracts were terminated at that time;

(C) In the case of an interinsurer or reciprocal underwriter that reports unearned premiums on its annual statement net of premium acquisition expenses, the unearned premiums on the company's annual statement increased by the portion of premium acquisition expenses allocable to those unearned premiums; and

(D) In the case of a title insurance company, its discounted unearned premiums (computed in accordance with section 832(b)(8)).

(9) ***Method of determining unearned premiums.*** If the risk of loss under an insurance contract does not vary significantly over the effective period of the contract, the unearned premium attributable to the unexpired portion of the effective period of the contract is determined on a pro rata basis. If the risk of loss varies significantly over the effective period of the contract, the insurance company may consider the pattern and incidence of the risk in determining the portion of the gross premium that is attributable to the unexpired portion of the effective period of the contract. An insurance company that uses a method of computing unearned premiums other than the pro rata method must maintain sufficient information to demonstrate that its method of computing unearned premiums accurately reflects the pattern and incidence of the risk for the insurance contract.

(10) ***Examples.*** The provisions of paragraphs (a)(4) through (a)(9) of this section are illustrated by the following examples:

> *Example 1.* (i) IC is a non-life insurance company which, pursuant to section 843, files its returns on a calendar year basis. IC writes a casualty insurance contract that provides insurance coverage for a one-year period beginning on July 1, 2000 and ending on June 30, 2001. IC charges a $500 premium for the insurance contract, which may be paid either in full by the effective date of the contract or in quarterly installments over the contract's one year term. The policyholder selects the installment payment option. As of December 31, 2000, IC collected $250 of installment premiums for the contract.
> (ii) The effective period of the insurance contract begins on July 1, 2000 and ends on June 30, 2001. For the taxable year ending December 31, 2000, IC includes the $500 gross premium, based on the effective period of the contract, in gross premiums written under section 832(b)(4)(A). IC's unearned premium with respect to the contract was $250 as of December 31, 2000. Pursuant to section 832(b)(4)(B), to determine its premiums earned, IC deducts $200 ($250 × .8) for the insurance contract at the end of the taxable year.

> *Example 2.* (i) The facts are the same as *Example 1*, except that the insurance contract has a stated term of 5 years. On each contract anniversary date, IC may adjust the rate charged for the insurance coverage for the succeeding 12 month period. The amount of the adjustment in the charge for insurance coverage is not substantially limited under the

insurance contract.
(ii) Under paragraph (a)(5)(i) of this section, IC is required to report gross premiums written for the insurance contract based on the effective period for the contract. The effective period of the insurance contract is the period for which a rate for insurance coverage is guaranteed in the contract. Although the insurance contract issued by IC has a stated term of 5 years, a rate for insurance coverage is guaranteed only for a period of 12 months beginning with the contract's effective date and each anniversary date thereafter. Thus, for the taxable year ending December 31, 2000, IC includes the $500 gross premium for the 12 month period beginning with the contract's effective date in gross premiums written. IC's unearned premium with respect to the contract was $250 as of December 31, 2000. Pursuant to section 832(b)(4)(B), to determine its premiums earned, IC deducts $200 ($250 × .8) for the insurance contract at the end of the taxable year.

Example 3. (i) The facts are the same as *Example 1,* except that coverage under the insurance contract begins on January 1, 2001 and ends on December 31, 2001. On December 15, 2000, IC collects the first $125 premium installment on the insurance contract. For the taxable year ended December 31, 2000, IC deducts $20 of premium acquisition expenses related to the insurance contract. IC's total premium acquisition expenses, based on the insurance contract's $500 gross premium, are $80.
(ii) Under paragraph (a)(5)(iii) of this section, IC may elect to report only the $125 advance premium (rather than the contract's $500 gross premium) in gross premiums written for the taxable year ended December 31, 2000, provided that IC's deduction for the premium acquisition expenses related to the insurance contract does not exceed the limitation in paragraph (a)(5)(vii). IC's deduction for premium acquisition expenses is within this limitation only if the ratio of the insurance contract's premium acquisition expenses deducted for the taxable year and any previous taxable year to the insurance contract's total premium acquisition expenses does not exceed the ratio of the amounts included in gross premiums written for the taxable year and any previous taxable year for the contract to the total gross premium written for the contract.

(iii) For the taxable year ended December 31, 2000, IC deducts $20 of premium acquisition expenses related to the insurance contract. This deduction represents 25% of the total premium acquisition expenses for the insurance contract ($20 / $80 = 25%). This ratio does not exceed the ratio of the $125 advance premium to the insurance contract's $500 gross premium ($125 / $500 = 25%). Therefore, under paragraph (a)(5)(iii) of this section, IC may elect to report only the $125 advance premium (rather than the $500 gross premium) in gross premiums written for the taxable year ending December 31, 2000. IC reports the balance of the gross premium for the insurance contract ($375) and deducts the remaining premium acquisition expenses ($60) for the insurance contract in the taxable year ending December 31, 2001.

Example 4. (i) The facts are the same as *Example 3,* except that for the taxable year ending December 31, 2000, IC deducts $60 of premium acquisition expenses related to the insurance contract.
(ii) For the taxable year ended December 31, 2000, IC deducted 75% of total premium acquisition expenses for the insurance contract ($60 / $80 = 75%). This ratio exceeds the ratio of the $125 advance premium to the $500 gross premium ($125 / $500 = 25%). Because IC's deduction for premium acquisition expenses allocable to the contract exceeds the limitation in paragraph (a)(5)(vii) of this section, paragraph (a)(5)(i) of this section requires IC to report the $500 gross premium in gross premiums written for the taxable year ending December 31, 2000. IC's unearned premium with respect to the contract was $500 as of December 31, 2000. Pursuant to section 832(b)(4)(B), to determine its premiums earned, IC deducts $400 ($500 × .8) for the insurance contract at the end of the taxable year.

Example 5. (i) IC is a non-life insurance company which, pursuant to section 843, files its returns on a calendar year basis. On August 1, 2000, IC issues a one-year cancellable accident and health insurance policy to X, a corporation with 80 covered employees. The gross premium written for the insurance contract is $320,000. Premiums are payable in monthly installments. As of December 31, 2000, IC has collected $150,000 of installment premiums from X. For the taxable year ended December 31, 2000, IC has paid or incurred $21,000 of premium acquisition expenses related to the insurance contract. IC's total premium acquisition expenses for the insurance contract, based on the $320,000 gross premium, are $48,000.
(ii) Under paragraph (a)(5)(iv) of this section, IC may elect to report only the $150,000 of installment premiums (rather than the $320,000 estimated gross premium) in gross premiums written for the taxable year ended December 31, 2000, provided that its deduction for premium acquisition expenses allocable to the insurance contract does not exceed the limitation in paragraph (a)(5)(vii). For the taxable year ended December 31, 2000, IC deducts $21,000 of premium acquisition expenses related to the insurance contract, or 43.75% of total premium acquisition expenses for the insurance contract ($21,000 / $48,000 = 43.75%). This ratio does not exceed the ratio of installment premiums to the gross premium for the contract ($150,000 / $320,000 = 46.9%). Therefore, under paragraph (a)(5)(iv) of this section, IC may elect to report only $150,000 of installment premiums for the insurance contract (rather than $320,000 of gross premium) in gross premiums written for the taxable year ending December 31, 2000.

Example 6. (i) IC is a non-life insurance company which, pursuant to section 843, files its returns on a calendar year basis. On July 1, 2000, IC issues a one-year workers' compensation policy to X, an employer. The gross premium for the policy is determined by applying a monthly rate of $25 to each of X's employees. This rate is guaranteed for a period of 12 months, beginning with the effective date of the contract. On July 1, 2000, X has 1,050

employees. Based on the assumption that X's payroll would remain constant during the effective period of the contract, IC determines an estimated gross premium for the contract of $315,000 (1,050 × $25 × 12 = $315,000). The estimated gross premium is payable by X in equal monthly installments. At the end of each calendar quarter, the premiums payable under the contract are adjusted based on an audit of X's actual payroll during the preceding three months of coverage.
(ii) Due to an expansion of X's business in 2000, the actual number of employees covered under the contract during each month of the period between July 1, 2000 and December 31, 2000 is 1,050 (July), 1,050 (August), 1,050 (September), 1,200 (October), 1,200 (November), and 1,200 (December). The increase in the number of employees during the year is not attributable to a temporary or seasonal variation in X's business activities and is expected to continue for the remainder of the effective period of the contract.

(iii) Under paragraph (a)(5)(i) of this section, IC is required to report gross premiums written for the insurance contract based on the effective period of the contract. The effective period of X's contract is based on the 12 month period for which IC has guaranteed rates for insurance coverage. Under paragraph (a)(5)(ii), IC must also report the additional premiums resulting from the change in risk exposure under the contract for the taxable year in which the change in such exposure occurs. Unless the change in risk exposure is of temporary duration, the additional gross premiums are included in gross premiums written for the remainder of the effective period of the contract. Thus, for the taxable year ending December 31, 2000, IC reports gross premiums written of $348,750 with respect to the workers' compensation contract issued to X, consisting of the sum of the initial gross premium for the contract ($315,000) plus the additional gross premium attributable to the 150 employees added to X's payroll who will be covered during the last nine months of the contract's effective period (150 × $25 (monthly premium) × 9 = $33,750). IC's unearned premium with respect to the contract was $180,000 as of December 31, 2000, which consists of the sum of the remaining portion of the original gross premium ($315,000 × 6 / 12 = $157,500), plus the additional premiums resulting from the change in risk exposure ($33,750 × 6 / 9 = $22,500) that are allocable to the remaining six months of the contract's effective period. Pursuant to section 832(b)(4)(B), to determine its premiums earned, IC deducts $144,000 ($180,000 × .8) for the insurance contract at the end of the taxable year.

Example 7. (i) The facts are the same as *Example 6,* except that the increase in the number of X's employees for the period ending December 31, 2000 is attributable to a seasonal variation in X's business activity.
(ii) Under paragraph (a)(5)(ii) of this section, for the taxable year ending December 31, 2000, IC reports gross premiums written of $326,500, consisting of the sum of the initial gross premium for the contract ($315,000) plus the additional premium attributable to the temporary increase in risk exposure during the taxable year (150 × $25 × 3 = $11,250). The

unearned premium that is allocable to the remaining six months of the effective period of the contract is $157,500. Pursuant to section 832(b)(4)(B), to determine its premiums earned, IC deducts $126,000 ($157,500 × .8) for the insurance contract at the end of the taxable year.

Example 8. (i) IC, a non-life insurance company, issues a noncancellable accident and health insurance contract (other than a qualified long-term care insurance contract, as defined in section 7702B(b)) to A, an individual, on July 1, 2000. The contract has an entry-age annual premium of $2,400, which is payable by A in equal monthly installments of $200 on the first day of each month of coverage. IC incurs agents' commissions, premium taxes, and other premium acquisition expenses equal to 10% of the gross premiums received for the contract. As of December 31, 2000, IC has collected $1,200 of installment premiums for the contract.
(ii) A noncancellable accident and health insurance contract is a contract described in section 832(b)(7). Thus, under paragraph (a)(5)(vi) of this section, IC may report gross premiums written in the manner required for life insurance companies under sections 803 and 811. Accordingly, for the taxable year ending December 31, 2000, IC may report gross premiums written of $1,200, based on the premiums actually received on the contract. Pursuant to section (a)(5)(vi) of this section, IC deducts a total of $28 of premium acquisition costs for the contract, based on the difference between the acquisition costs actually paid or incurred under section 811(a) ($1,200 × .10 = $120) and the amount required to be taken into account under section 848 in connection with the net premiums for the contract ($1,200 × .077 = $92).

(iii) Under paragraph (a)(8)(ii)(A) of this section, IC includes the amount of life insurance reserves (as defined in section 816(b), but computed in accordance with section 807(d) and sections 811(c) and (d)) in unearned premiums under section 832(b)(4)(B). Section 807(d)(3)(A)(iii) requires IC to use a two-year preliminary term method to compute the amount of life insurance reserves for a noncancellable accident and health insurance contract (other than a qualified long-term care contract). Under this tax reserve method, no portion of the $1,200 gross premium received by IC for A's contract is allocable to future insurance coverage. Accordingly, for the taxable year ending December 31, 2000, no life insurance reserves are included in IC's unearned premiums under section 832(b)(4)(B) with respect to the contract.

Example 9. (i) IC, a non-life insurance company, issues an insurance contract with a twelve month effective period for $1,200 on December 1, 2000. Immediately thereafter, IC reinsures 90% of its liability under the insurance contract for $900 with IC-2, an unrelated and solvent insurance company. On December 31, 2000, IC-2 has an $825 unearned premium with respect to the reinsurance contract it issued to IC. In computing its earned premiums, pursuant to section 832(b)(4)(B), IC-2 deducts $660 of unearned premiums ($825 × .8) with respect to the reinsurance contract.

(ii) Under paragraph (a)(8)(i) of this section, unearned premiums held by an insurance company with regard to the net value of the risks reinsured in other solvent companies are deducted from the ceding company's unearned premiums taken into account for purposes of section 832(b)(4)(B). If IC had not reinsured 90% of its risks, IC's unearned premium for the insurance contract would have been $1,100 ($1,200 × 11 / 12) and IC would have deducted $880 ($1,100 × .8) of unearned premiums with respect to such contract. However, because IC reinsured 90% of its risks under the contract with IC-2, as of December 31, 2000, the net value of the risks retained by IC for the remaining 11 months of the effective period of the contract is $110 ($1,100 − $990). For the taxable year ending December 31, 2000, IC includes the $1,200 gross premium in its gross premiums written and deducts the $900 reinsurance premium paid to IC-2 under section 832(b)(4)(A). Pursuant to section 832(b)(4)(B), to determine its premiums earned, IC deducts $88 ($110 × .8) for the insurance contract at the end of the taxable year.

(11) ***Change in method of accounting*** —

(i) ***In general.*** A change in the method of determining premiums earned to comply with the provisions of paragraphs (a)(3) through (a)(10) of this section is a change in method of accounting for which the consent of the Commissioner is required under section 446(e) and § 1.446-1(e).

(ii) ***Application.*** For the first taxable year beginning after December 31, 1999, a taxpayer is granted consent of the Commissioner to change its method of accounting for determining premiums earned to comply with the provisions of paragraphs (a)(3) through (a)(10) of this section. A taxpayer changing its method of accounting in accordance with this section must follow the automatic change in accounting provisions of Rev. Proc. 99-49, 1999-52 I.R.B. 725 (see § 601.601(d)(2) of this chapter), except that—

(A) The scope limitations in section 4.02 of Rev. Proc. 99-49 shall not apply;

(B) The timely duplicate filing requirement in section 6.02(2) of Rev. Proc. 99-49 shall not apply; and

(C) If the method of accounting for determining premiums earned is an issue under consideration within the meaning of section 3.09 of Rev. Proc. 99-49 as of January 5, 2000, then section 7.01 of Rev. Proc. 99-49 shall not apply.

(12) ***Effective date.*** Paragraphs (a)(3) through (a)(11) of this section are applicable with respect to the determination of premiums earned for taxable years beginning after December 31, 1999.

(13) In computing the amount of unabsorbed premium deposits which a mutual fire or flood insurance company described in section 831(a)(3)(B) would be obligated to return to its policyholders at the close of its taxable year, the company must use its own schedule of unabsorbed premium deposit returns then in effect. A copy of the applicable schedule must be filed with the company's income tax return for each taxable year for which a computation based upon such schedule is made. In addition, a taxpayer making such a computation must provide the following information for each taxable year for which the computation is made:

(i) The amount of gross premiums received during the taxable year, and the amount of premiums paid for reinsurance during the taxable year, on the policies described in section 831(a)(3)(B) and on other policies;

(ii) The amount of insurance written during the taxable year under the policies described in section 831(a)(3)(B) and under other policies, and the amount of such insurance written which was reinsured during the taxable year. The information required under this subdivision shall only be submitted upon the specific request of the district director for a statement setting forth such information, and, if required, such statement shall be filed in the manner provided by this subparagraph or in such other manner as is satisfactory to the district director;

(iii) The amount of premiums earned during the taxable year on the policies described in section 831(a)(3)(B) and on other policies and the computations by which such amounts were determined, including sufficient information to support the taxpayer's determination of the amount of unearned premiums on premium deposit plan and other policies at the beginning and end of the taxable year, and the amount of unabsorbed premium deposits at the beginning and end of the taxable year on policies described in section 831(a)(3)(B).

The information required by this subparagraph shall be set forth in a statement attached to the taxpayer's income tax return for the taxable year for which such information is being provided. Such statement shall include the name and address of the taxpayer, and shall be filed not later than the date prescribed by law (including extensions thereof) for filing the income tax return for the taxable year.

(14) In computing “losses incurred” the determination of unpaid losses at the close of each year must represent actual unpaid losses as nearly as it is possible to ascertain them.

(b) ***Losses incurred.*** Every insurance company to which this section applies must be prepared to establish to the satisfaction of the district director that the part of the deduction for “losses incurred” which represents unpaid losses at the close of the taxable year comprises only actual unpaid losses. See section 846 for rules relating to the determination of discounted unpaid losses. These losses must be stated in amounts which, based upon the facts in each case and the company's experience with similar cases, represent a fair and reasonable estimate of the amount the company will be required to pay. Amounts included in, or added to, the estimates of unpaid losses which, in the opinion of the district director, are in excess of a fair and reasonable estimate will be disallowed as a deduction. The district director may require any insurance company to submit such detailed information with respect to its actual experience as is deemed necessary to establish the reasonableness of the deduction for “losses incurred.”

(c) ***Losses incurred are reduced by salvage.*** Under section 832(b)(5)(A), losses incurred are computed by taking into account losses paid reduced by salvage and reinsurance recovered, the change in discounted unpaid losses, and the change in estimated salvage and reinsurance recoverable. For purposes of section 832(b)(5)(A)(iii), estimated salvage recoverable includes all anticipated recoveries on account of salvage, whether or not the salvage is treated, or may be treated, as an asset for state statutory accounting purposes. Estimates of salvage recoverable must be based on the facts of each case and the company's experience with similar cases. Except as otherwise provided in guidance published by the Commissioner in the Internal Revenue Bulletin, estimated salvage recoverable must be discounted either—

(1) By using the applicable discount factors published by the Commissioner for estimated salvage recoverable; or

(2) By using the loss payment pattern for a line of business as the salvage recovery pattern for that line of business and by using the applicable interest rate for calculating unpaid losses under section 846(c). For purposes of section 832(b)(5)(A) and the regulations thereunder, the term "salvage recoverable" includes anticipated recoveries on account of subrogation claims arising with respect to paid or unpaid losses.

(d) *Increase in unpaid losses shown on annual statement in certain circumstances* —

(1) *In general.* An insurance company that takes estimated salvage recoverable into account in determining the amount of its unpaid losses shown on its annual statement is allowed to increase its unpaid losses by the amount of estimated salvage recoverable taken into account if the company complies with the disclosure requirement of paragraph (d)(2) of this section. This adjustment shall not be used in determining under section 846(d) the loss payment pattern for a line of business.

(2) *Disclosure requirement.*

(i) *In general.* A company described in paragraph (d)(1) of this section is allowed to increase the unpaid losses shown on its annual statement only if the company either—

(A) Discloses on its annual statement, by line of business and accident year, the extent to which estimated salvage recoverable is taken into account in computing the unpaid losses shown on the annual statement filed by the company for the calendar year ending with or within the taxable year of the company; or

(B) Files a statement on or before the due date of its Federal income tax return (determined without regard to extensions) with the appropriate state regulatory authority of each state to which the company is required to submit an annual statement. The statement must be contained in a separate document captioned "DISCLOSURE CONCERNING LOSS RESERVES" and must disclose, by line of business and accident year, the extent to which estimated salvage recoverable is taken into account in computing the unpaid losses shown on the annual statement filed by the company for the calendar year ending with or within the taxable year of the company.

(ii) *Transitional rule.* For a taxable year ending before December 31, 1991, a taxpayer is deemed to satisfy the disclosure requirement of paragraph (d)(2)(i)(B) of this section if the taxpayer files the statement described in paragraph (d)(2)(i)(B) of this section before March 17, 1992.

(3) *Failure to disclose in a subsequent year.* If a company that claims the increase permitted by paragraph (d)(1) of this section fails in a subsequent taxable year to make the disclosure described in paragraph (d)(2) of this section, the company cannot claim an increase under paragraph (d)(1) of this section in any subsequent taxable year without the consent of the Commissioner.

(e) *Treatment of estimated salvage recoverable* —

(1) *In general.* An insurance company is required to take estimated salvage recoverable (including that which cannot be treated as an asset for state statutory accounting purposes) into account in computing the deduction for losses incurred. Except as provided in paragraph (e)(2)(iii) of this section, an insurance company must apply this method of accounting to estimated salvage recoverable for all lines of business and for all accident years.

(2) *Change in method of accounting* —

(i) If an insurance company did not take estimated salvage recoverable into account as required by paragraph (c) of this section for its last taxable year beginning before January 1, 1990, taking estimated salvage recoverable into account as required by paragraph (c) of this section is a change in method of accounting.

(ii) If a company does not claim the deduction under section 11305(c)(3) of the 1990 Act, the company must take into account 13 percent of the adjustment that would otherwise be required under section 481 for pre-1990 accident years as a result of the change in accounting method. This paragraph (e)(2)(ii) applies only to an insurance company subject to tax under section 831.

(iii) If a company claims the deduction under section 11305(c)(3) of the 1990 Act and paragraph (f) of this section, the company must implement the change in method of accounting for estimated salvage recoverable for post-1989 taxable years pursuant to a "cut-off" method.

(3) ***Rule for overestimates.*** An insurance company is required under section 11305(c)(4) of the 1990 Act to include in gross income 87 percent of any amount (adjusted for discounting) by which the section 481 adjustment is overestimated. The rule is applied by comparing the amount of the section 481 adjustment (determined without regard to paragraph (e)(2)(ii) of this section and any discounting) to the sum of the actual salvage recoveries and remaining undiscounted estimated salvage recoverable that are attributable to losses incurred in accident years beginning before 1990. For any taxable year beginning after December 31, 1989, any excess of the section 481 adjustment over this sum (reduced by amounts treated as overestimates in prior taxable years pursuant to this paragraph (e)(3)) is an overestimate. To determine the amount to be included in income, it is necessary to discount this excess and multiply the resulting amount by 87 percent.

(f) ***Special deduction*** —

(1) ***In general.*** Under section 11305(c)(3) of the 1990 Act, an insurance company may deduct an amount equal to 87 percent of the discounted amount of estimated salvage recoverable that the company took into account in determining the deduction for losses incurred under section 832(b)(5) in the last taxable year beginning before January 1, 1990. A company that claims the special deduction must establish to the satisfaction of the district director that the deduction represents only the discounted amount of estimated salvage recoverable that was actually taken into account by the company in computing losses incurred for that taxable year.

(2) ***Safe harbor.*** The requirements of paragraph (f)(1) of this section are deemed satisfied and the amount that the company reports as bona fide estimated salvage recoverable is not subject to adjustment by the district director, if—

(i) The company files with the insurance regulatory authority of the company's state of domicile, on or before September 16, 1991, a statement disclosing the extent to which losses incurred for each line of business reported on its 1989 annual statement were reduced by estimated salvage recoverable,

(ii) The company attaches a statement to its Federal income tax return filed for the first taxable year beginning after December 31, 1989, agreeing to apply the special rule for overestimates under section 11305(c)(4) of the 1990 Act to the amount of estimated salvage recoverable for which it has taken the special deduction, and

(iii) In the case of a company that is a member of a consolidated group, each insurance company subject to tax under section 831 that is included in the consolidated group complies with paragraph (f)(2)(ii) of this section with respect to its special deduction, if any.

(3) ***Limitations on special deduction*** —

(i) The special deduction under section 11305(c)(3) of the 1990 Act is available only to an insurance company subject to tax under section 831.

(ii) An insurance company that claimed the benefit of the "fresh start" with respect to estimated salvage recoverable under section 1023(e) of the Tax Reform Act of 1986 may not claim the special deduction allowed by section 11305(c)(3) of the 1990 Act to the extent of the estimated salvage recoverable for which a fresh start benefit was previously claimed.

(iii) A company that claims the special deduction is precluded from also claiming the section 481 adjustment provided in paragraph (e)(2)(ii) of this section for pre-1990 accident years.

(g) ***Effective date.*** Paragraphs (b) through (f) of this section are effective for taxable years beginning after December 31, 1989.

[T.D. 6681, 28 FR 11129, Oct. 17, 1963, as amended by T.D. 8171, 53 FR 118, Jan. 5, 1988; T.D. 8293, 55 FR 9425, Mar. 14, 1990. Redesignated and amended by T.D. 8390, 57 FR 3132, Jan. 28, 1992; 57 FR 6353, Feb. 24, 1992; T.D. 8857, 65 FR 706, Jan. 6, 2000]

§ 1.832-5 Deductions.

(a) The deductions allowable are specified in section 832(c) and by reason of the provisions of section 832(c)(10) and (12) include in addition certain deductions provided in sections 161, and 241 and following. The deductions, however, are subject to the limitation provided in section 265, relating to expenses and interest in respect of tax-exempt income. The net operating loss deduction is computed under section 172 and the regulations thereunder. For the purposes of section 172, relating to net operating loss deduction, "gross income" shall mean gross income as defined in section 832(b)(1) and the allowable deductions shall be those allowed by section 832(c) with the exceptions and limitations set forth in section 172(d). In addition to the deduction for capital losses provided in subchapter P (section 1201 and following), chapter 1 of the Code, insurance companies are allowed a deduction for losses from capital assets sold or exchanged in order to obtain funds to meet abnormal insurance losses and to provide for the payment of dividends and similar distributions to policyholders. A special rule is provided for the application of the capital loss carryover provisions of section 1212. The deduction is the same as that allowed mutual insurance companies subject to the tax imposed by section 821; see section 822(c)(6) and the regulation thereunder. Insurance companies, other than mutual fire insurance companies described in section 831(a)(3)(A) and the regulations thereunder, are also allowed a deduction for dividends and similar distributions paid or declared to policyholders in their capacity as such. Similar distributions include such payments as the so-called unabsorbed premium deposits returned to policyholders by factory mutual insurance companies. The deduction is otherwise the same as that allowed mutual insurance companies subject to the tax imposed by section 821; see section 822(f)(2) and the regulations thereunder.

(b) Among the items which may not be deducted are income and profits taxes imposed by the United States, income and profits taxes imposed by any foreign country or possession of the United States (in cases where the company chooses to claim to any extent a credit for such taxes), taxes assessed against local benefits, decrease during the year due to adjustments in the book value of capital assets, decrease in

liabilities during the year on account of reinsurance treaties, dividends paid to shareholders in their capacity as such, remittances to the home office of a foreign insurance company by the United States branch, and borrowed money repaid.

(c) In computing taxable income of insurance companies, losses sustained during the taxable year from the sale or other disposition of property are deductible subject to the limitation contained in section 1211. Insurance companies are entitled to the alternative taxes provided in section 1201.

[T.D. 6681, 28 FR 11130, Oct. 17, 1963, as amended by T.D. 6867, 30 FR 15094, Dec. 7, 1965]

§ 1.832-6 Policyholders of mutual fire or flood insurance companies operating on the basis of premium deposits.

For purposes of determining his taxable income for any taxable year, a taxpayer insured by a mutual fire or flood insurance company under a policy for which the premium deposit is the same regardless of the length of the term for which the policy is written, and who is entitled to have returned or credited to his on the cancellation or expiration of such policy the unabsorbed portion of the premium deposit not required for losses, expenses, or establishment of reserves, may, if such amount is otherwise deductible under this chapter, deduct so much of his premium deposit as was absorbed by the company during the taxpayer's taxable year. The amount of the premium deposit absorbed during the taxpayer's taxable year shall be determined in accordance with the schedule of unabsorbed premium deposit returns in effect for the company during such taxable year. If the taxpayer is unable to determine the applicable rate of absorption in effect during his taxable year, he shall compute his deduction on the basis of the rate of absorption in effect at the end of the company's taxable year which next preceded the end of the taxpayer's taxable year. In such a case, an appropriate adjustment will be made upon the final determination of the rate of absorption applicable to the taxable year.

[T.D. 6681, 28 FR 11130, Oct. 17, 1963]

§ 1.833-1 Medical loss ratio under section 833(c)(5).

(a) ***In general.*** Section 833(a)(2) and (3) do not apply to an organization unless the organization's medical loss ratio (MLR) for a taxable year is at least 85 percent. Paragraph (b) of this section provides definitions that apply for purposes of section 833(c)(5) and this section. Paragraph (c) of this section provides rules for computing an organization's MLR under section 833(c)(5). Paragraph (d) of this section addresses the treatment under section 833 of an organization that has an MLR of less than 85 percent. Paragraph (e) of this section provides the effective/applicability date.

(b) ***Definitions.*** The following definitions apply for purposes of section 833(c)(5) and this section.

(1) ***Activities that improve health care quality.*** The term *activities that improve health care quality* has the same meaning as that term has in section 300gg-18 of title 42, United States Code and the regulations issued under that section (see 45 CFR 158.150).

(2) ***Reimbursement for clinical services.*** The term *reimbursement for clinical services* has the same meaning as that term has in section 300gg-18 of title 42, United States Code and the regulations issued under that section (see 45 CFR 158.140).

(3) ***Total premium revenue.*** The term *total premium revenue* means the total amount of premium revenue (excluding federal and state taxes and licensing or regulatory fees and after accounting for payments or receipts for risk adjustment, risk corridors, and reinsurance under sections 1341, 1342,

and 1343 of the Patient Protection and Affordable Care Act, Public Law 111-148 (124 Stat. 119 (2010)) (42 U.S.C. 18061, 18062, and 18063)) as those terms are used for purposes of section 300gg 18(b) of title 42, United States Code and the regulations issued under that section (see 45 CFR part 158).

(c) *Computation of MLR under section 833(c)(5)* —

(1) ***In general.*** Starting with the first taxable year beginning after December 31, 2015, and for all succeeding taxable years, an organization's MLR with respect to a taxable year is the ratio, expressed as a percentage, of the MLR numerator, as described in paragraph (c)(1)(i) of this section, to the MLR denominator, as described in paragraph (c)(1)(ii) of this section.

(i) ***MLR numerator.*** The numerator of an organization's MLR is the total premium revenue expended on reimbursement for clinical services and activities that improve health care quality provided to enrollees under its policies for the taxable year, computed using a three-year period in the same manner as those expenses are computed for the plan year for purposes of section 300gg-18(b) of title 42, United States Code and regulations issued under that section (see 45 CFR part 158).

(ii) ***MLR denominator.*** The denominator of an organization's MLR is the organization's total premium revenue for the taxable year, computed using a three-year period in the same manner as the total premium revenue is computed for the plan year for purposes of section 300gg-18(b) of title 42, United States Code and regulations issued under that section (see 45 CFR part 158).

(2) ***Transition rules.*** The transition rules in paragraphs (c)(2)(i) and (ii) of this section apply solely for the first taxable year beginning after December 31, 2013, and the first taxable year beginning after December 31, 2014.

(i) ***First taxable year beginning after December 31, 2013.*** For the first taxable year beginning after December 31, 2013, the numerator of an organization's MLR is the total premium revenue expended on reimbursement for clinical services and activities that improve health care quality provided to enrollees under its policies for the first taxable year beginning after December 31, 2013, and the denominator of an organization's MLR is the organization's total premium revenue for the first taxable year beginning after December 31, 2013.

(ii) ***First taxable year beginning after December 31, 2014.*** For the first taxable year beginning after December 31, 2014, the numerator of an organization's MLR is the sum of the total premium revenue expended on reimbursement for clinical services and activities that improve health care quality provided to enrollees under its policies for the first taxable year beginning after December 31, 2013, and for the first taxable year beginning after December 31, 2014, and the denominator of an organization's MLR is the sum of the organization's total premium revenue for the first taxable year beginning after December 31, 2013, and for the first taxable year beginning after December 31, 2014.

(d) *Failure to qualify under section 833(c)(5)* —

(1) ***In general.*** If, for any taxable year, an organization's MLR is less than 85 percent, then beginning in that taxable year and for each subsequent taxable year for which the organization's MLR remains less than 85 percent, paragraphs (d)(1)(i) and (ii) of this section apply.

(i) ***Special deduction.*** The organization is not allowed the special deduction set forth in section 833(b).

(ii) ***Premiums earned.*** The organization must take into account 80 percent, rather than 100 percent, of its unearned premiums under section 832(b)(4) as it applies to other non-life insurance companies.

(2) ***No material change.*** An organization's loss of eligibility for the treatment provided by sections 833(a)(2) and

(3) solely by reason of section 833(c)(5) will not be treated as a material change in the operations of such organization or in its structure for purposes of section 833(c)(2)(C).

(e) ***Effective/applicability date.*** This section applies to taxable years beginning after December 31, 2016. However, taxpayers may rely on this section for taxable years beginning after December 31, 2009.

[T.D. 9772, 81 FR 40520, June 22, 2016]

§ 1.846-1 Application of discount factors.

(a) ***In general*** —

(1) ***Rules.*** A separate series of discount factors are computed for, and applied, to undiscounted unpaid losses attributable to each accident year of each line of business shown on the annual statement (as defined by section 846(e)(3)) filed by that taxpayer for the calendar year ending with or within the taxable year of the taxpayer. See § 1.832-4(b) relating to the determination of unpaid losses. Paragraph (b) of this section provides rules relating to applicable discount factors. Once a taxpayer applies a series of discount factors to unpaid losses attributable to an accident year of a line of business, that series of discount factors must be applied to discount the unpaid losses for that accident year for that line of business for all future taxable years. The discount factors cannot be changed to reflect a change in the taxpayer's loss payment pattern during a subsequent year or to reflect a different interest rate assumption.

(2) ***Increase in discounted unpaid losses shown on the annual statement.*** If the amount of unpaid losses shown on the annual statement is determined on a discounted basis, and the extent to which the unpaid losses were discounted can be determined on the basis of information disclosed on or with the annual statement, the amount of the unpaid losses to which the discount factors are applied shall be determined without regard to any reduction attributable to the discounting reflected on the annual statement.

(3) ***Increase in unpaid losses which take into account estimated salvage recoverable.*** If the amount of unpaid losses shown on the annual statement reflects a reduction for estimated salvage recoverable and the extent to which the unpaid losses were reduced by estimated salvage recoverable is appropriately disclosed as required by § 1.832-4(d)(2), the amount of unpaid losses shall be determined without regard to the reduction for salvage recoverable.

(b) ***Applicable discount factors*** —

(1) ***In general.*** Except as otherwise provided in section 846(e)(6) (relating to certain accident and health lines of business), in this paragraph (b), or in other guidance published in the Internal Revenue Bulletin, the following factors must be used—

(i) ***Discount factors published by the Service.*** If the Service has published discount factors for a line of business, a taxpayer must discount unpaid losses attributable to that line by applying those discount factors; and

(ii) ***Composite discount factors.*** If the Service has not published discount factors for a line of business, a taxpayer must discount unpaid losses attributable to that line by applying composite discount factors.

(iii) ***Annual statement changes.*** If the groupings of individual lines of business on the annual statement changes, taxpayers must discount the unpaid losses on the resulting lines of business with the discounting patterns that would have applied to those unpaid losses based on their annual statement classification prior to the change.

(2) ***Title insurance company reserves.*** A title insurance company may only take into account case reserves (relating to claims which have been reported to the insurance company). Unless the Service publishes other guidance, the reserves must be discounted using the "Miscellaneous Casualty" discount factors published by the Service. Section 832(b)(8) provides rules for determining the discounted unearned premiums of a title insurance company.

(3) ***Reinsurance business*** —

(i) ***Proportional reinsurance.*** For the 1988 accident year and subsequent accident years, unpaid losses for proportional reinsurance must be discounted using discount factors applicable to the line of business to which those unpaid losses are allocated as required on the annual statement.

(ii) ***Non-proportional reinsurance*** For the 1992 accident year and subsequent accident years, unpaid losses for non-proportional reinsurance must be discounted using the applicable discount factors published by the Service for the appropriate reinsurance line of business.

(4) ***Composite discount factors.*** For purposes of the regulations under section 846, "composite discount factors" means the series of discount factors published annually by the Service determined on the basis of the appropriate composite loss payment pattern.

(c) ***Determination of annual rate.*** The applicable interest rate is the annual rate determined by the Secretary for any calendar year on the basis of the corporate bond yield curve (as defined in section 430(h)(2)(D)(i), determined by substituting "60-month period" for "24-month period" therein). The annual rate for any calendar year is determined on the basis of a yield curve that reflects the average, for the most recent 60-month period ending before the beginning of the calendar year, of monthly yields on corporate bonds described in section 430(h)(2)(D)(i). The annual rate is the average of that yield curve's monthly spot rates with times to maturity from four and one-half years to ten years.

(d) ***Determination of loss payment pattern*** —

(1) ***In general.*** Under section 846(d)(1), the loss payment pattern determined by the Secretary for each line of business is determined by reference to the historical loss payment pattern applicable to such line of business determined in accordance with the method of determination set forth in section 846(d)(2) and the computational rules prescribed in section 846(d)(3) on the basis of the annual statement data from annual statements described in section 846(d)(2)(A) and (B). However, the Secretary may adjust the loss payment pattern for any line of business as provided in paragraph (d)(2) of this section.

(2) ***Smoothing adjustments.*** The Secretary may adjust the loss payment pattern for any line of business using a methodology described by the Secretary in other published guidance if necessary to avoid negative payment amounts and otherwise produce a stable pattern of positive discount factors less than one.

(e) ***Applicability dates.***

(1) Except as provided in paragraph (e)(2) of this section, this section applies to taxable years beginning after December 31, 1986.

(2) Paragraphs (c) and (d) of this section apply to taxable years beginning after December 31, 2017.

[T.D. 8433, 57 FR 40844, Sept. 8, 1992, as amended by T.D. 9863, 84 FR 27952, June 17, 2019]

§ 1.848-0 Outline of regulations under section 848.

This section lists the paragraphs in §§ 1.848-1 through 1.848-3.

§ 1.848-1 Definitions and special provisions.

(a) Scope and effective date.

(b) Specified insurance contract.

(1) In general.

(2) Exceptions.

(i) In general.

(ii) Reinsurance of qualified foreign contracts.

(c) Life insurance contract.

(d) Annuity contract.

(e) Noncancellable accident and health insurance contract.

(f) Guaranteed renewable accident and health insurance contract.

(g) Combination contract.

(1) Definition.

(2) Treatment of premiums on a combination contract.

(i) In general.

(ii) De minimis premiums.

(3) Example.

(h) Group life insurance contract.

(1) In general.

(2) Group affiliation requirement.

(i) In general.

(ii) Employee group.

(iii) Debtor group.

(iv) Labor union group.

(v) Association group.

(vi) Credit union group.

(vii) Multiple group.

(viii) Certain discretionary groups.

(ix) Employees treated as members.

(x) Class or classes of a group determined without regard to individual health characteristics.

(A) In general.

(B) Limitation of coverage based on certain work and age requirements permissible.

(3) Premiums determined on a group basis.

(i) In general.

(ii) Exception for substandard premium rates for certain high risk insureds.

(iii) Flexible premium contracts.

(iv) Determination of actual age.

(4) Underwriting practices used by company. [Reserved]

(5) Disqualification of group.

(i) In general.

(ii) Exception for de minimis failures.

(6) Supplemental life insurance coverage.

(7) Special rules relating to the payment of proceeds.

(i) Contracts issued to a welfare benefit fund.

(ii) Credit life insurance contracts.

(iii) “Organization or association” limited to the sponsor of the contract or the group policyholder.

(i) General deductions.

§ 1.848-2 Determination of net premiums.

(a) Net premiums.

(1) In general.

(2) Separate determination of net premiums for certain reinsurance agreements.

(b) Gross amount of premiums and other consideration.

(1) General rule.

(2) Items included.

(3) Treatment of premium deposits.

(i) In general.

(ii) Amounts irrevocably committed to the payment of premiums.

(iii) Retired lives reserves.

(4) Deferred and uncollected premiums.

(c) Policy exchanges.

(1) General rule.

(2) External exchanges.

(3) Internal exchanges resulting in fundamentally different contracts.

(i) In general.

(ii) Certain modifications treated as not changing the mortality, morbidity, interest, or expense guarantees.

(iii) Exception for contracts restructured by a court supervised rehabilitation or similar proceeding.

(4) Value of the contract.

(i) In general.

(ii) Special rule for group term life insurance contracts.

(iii) Special rule for certain policy enhancement and update programs.

(A) In general.

(B) Policy enhancement or update program defined.

(5) Example.

(d) Amounts excluded from the gross amount of premiums and other consideration.

(1) In general.

(2) Amounts received or accrued from a guaranty association.

(3) Exclusion not to apply to dividend accumulations.

(e) Return premiums.

(f) Net consideration for a reinsurance agreement.

(1) In general.

(2) Net consideration determined by a ceding company.

(i) In general.

(ii) Net negative and net positive consideration.

(3) Net consideration determined by the reinsurer.

(i) In general.

(ii) Net negative and net positive consideration.

(4) Timing consistency required.

(5) Modified coinsurance and funds-withheld reinsurance agreements.

(i) In general.

(ii) Special rule for certain funds-withheld reinsurance agreements.

(6) Treatment of retrocessions.

(7) Mixed reinsurance agreements.

(8) Treatment of policyholder loans.

(9) Examples.

(g) Reduction in the amount of net negative consideration to ensure consistency of capitalization for reinsurance agreements.

(1) In general.

(2) Application to reinsurance agreements subject to the interim rules.

(3) Amount of reduction.

(4) Capitalization shortfall.

(5) Required capitalization amount.

(i) In general.

(ii) Special rule with respect to net negative consideration.

(6) General deductions allocable to reinsurance agreements.

(7) Allocation of capitalization shortfall among reinsurance agreements.

(8) Election to determine specified policy acquisition expenses for an agreement without regard to general deductions limitation.

(i) In general.

(ii) Manner of making election.

(iii) Election statement.

(iv) Effect of election.

(9) Examples.

(h) Treatment of reinsurance agreements with parties not subject to U.S. taxation.

(1) In general.

(2) Agreements to which this paragraph (h) applies.

(i) In general.

(ii) Parties subject to U.S. taxation.

(A) In general.

(B) Effect of a closing agreement.

(3) Election to separately determine the amounts required to be capitalized for reinsurance agreements with parties not subject to U.S. taxation.

(i) In general.

(ii) Manner of making the election.

(4) Amount taken into account for purposes of determining specified policy acquisition expenses.

(5) Net foreign capitalization amount.

(i) In general.

(ii) Foreign capitalization amounts by category.

(6) Treatment of net negative foreign capitalization amount.

(i) Applies as a reduction to previously capitalized amounts.

(ii) Carryover of remaining net negative foreign capitalization amount.

(7) Reduction of net positive foreign capitalization amount by carryover amounts allowed.

(8) Examples.

(i) Carryover of excess negative capitalization amount.

(1) In general.

(2) Excess negative capitalization amount.

(3) Treatment of excess negative capitalization amount.

(4) Special rule for the treatment of an excess negative capitalization amount of an insolvent company.

(i) When applicable.

(ii) Election to forego carryover of excess negative capitalization amount.

(iii) Amount of reduction to the excess negative capitalization amount and specified policy acquisition expenses.

(iv) Manner of making election.

(v) Presumptions relating to the insolvency of an insurance company undergoing a court supervised rehabilitation or similar state proceeding.

(vi) Example.

(j) Ceding commissions with respect to reinsurance of contracts other than specified insurance contracts.

(k) Effective dates.

(1) In general.

(2) Reduction in the amount of net negative consideration to ensure consistency of capitalization for reinsurance agreements.

(3) Net consideration rules.

(4) Determination of the date on which a reinsurance agreement is entered into.

(5) Special rule for certain reinsurance agreements with parties not subject to U.S. taxation.

(6) Carryover of excess negative capitalization amount.

§ 1.848-3 Interim rules for certain reinsurance agreements.

(a) Scope and effective dates.

(b) Interim rules.

(c) Adjustments and special rules.

(1) Assumption reinsurance.

(2) Reimbursable dividends.

(3) Ceding commissions.

(i) In general.

(ii) Amount of ceding commission.

(4) Termination payments.

(5) Modified coinsurance agreements.

(d) Examples.

[T.D. 8456, 57 FR 61818, Dec. 29, 1992]

§ 1.848-1 Definitions and special provisions.

(a) ***Scope and effective date.*** The definitions and special provisions in this section apply solely for purposes of determining specified policy acquisition expenses under section 848 of the Internal Revenue Code, this section, and §§ 1.848-2 and 1.848-3. Unless otherwise specified, the rules of this section are effective for the taxable years of an insurance company beginning after November 14, 1991.

(b) ***Specified insurance contract*** —

(1) ***In general.*** A "specified insurance contract" is any life insurance contract, annuity contract, noncancellable or guaranteed renewable accident and health insurance contract, or combination contract. A reinsurance agreement that reinsures the risks under a specified insurance contract is treated in the same manner as the reinsured contract.

(2) ***Exceptions*** —

(i) ***In general.*** A "specified insurance contract" does not include any pension plan contract (as defined in section 818(a)), flight insurance or similar contract, or qualified foreign contract (as defined in section 807(e)(3)).

(ii) ***Reinsurance of qualified foreign contracts.*** The exception for qualified foreign contracts does not apply to reinsurance agreements that reinsure qualified foreign contracts.

(c) ***Life insurance contract.*** A "life insurance contract" is any contract—

(1) Issued after December 31, 1984, that qualifies as a life insurance contract under section 7702(a) (including an endowment contract as defined in 7702(h)); or

(2) Issued prior to January 1, 1985, if the premiums on the contract are reported as life insurance premiums on the insurance company's annual statement (or could be reported as life insurance premiums if the company were required to file the annual statement for life and accident and health companies).

(d) ***Annuity contract.*** An "annuity contract" is any contract (other than a life insurance contract as defined in paragraph (c) of this section) if amounts received under the contract are subject to the rules in section 72(b) or section 72(e) (determined without regard to section 72(u)). The term "annuity contract" also includes a contract that is a qualified funding asset under section 130(d).

(e) ***Noncancellable accident and health insurance contract.*** The term "noncancellable accident and health insurance contract" has the same meaning for purposes of section 848 as the term has for purposes of section 816(b).

(f) ***Guaranteed renewable accident and health insurance contract.*** The term "guaranteed renewable accident and health insurance contract" has the same meaning for purposes of section 848 as the term has for purposes of section 816(e).

(g) ***Combination contract*** —

(1) ***Definition.*** A "combination contract" is a contract (other than a contract described in section 848(e)(3)) that provides two or more types of insurance coverage, at least one of which if offered separately would be a life insurance contract, an annuity contract, or a noncancellable or guaranteed renewable accident and health insurance contract.

(2) ***Treatment of premiums on a combination contract*** —

(i) ***In general.*** If the premium allocable to each type of insurance coverage is separately stated on the insurance company's annual statement (or could be separately stated if the insurance company were required to file the annual statement for life and accident and health companies), the premium allocable to each type of insurance coverage in a combination contract is subject to the capitalization rate, if any, that would apply if that coverage was provided in a separate contract. If the premium allocable to each type of insurance coverage in a combination contract is not separately stated, the entire premium is subject to the highest capitalization percentage applicable to any of the coverages provided.

(ii) ***De minimis premiums.*** For purposes of this paragraph (g)(2)—

(A) A de minimis premium is not required to be separately stated;

(B) In determining the highest capitalization percentage applicable to a combination contract, the coverage to which a de minimis premium is allocable is disregarded;

(C) If the separate statement requirement of this paragraph (g)(2) is satisfied, a de minimis premium is treated in accordance with its characterization on the insurance company's annual statement; and

(D) Whether a premium for an insurance coverage is de minimis is determined by comparing that premium with the aggregate of the premiums for the combination contract. A premium that is not more than 2 percent of the premium for the entire contract is considered de minimis. Whether a premium that is more than 2 percent is de minimis is determined based on all the facts and circumstances.

(3) ***Example.*** The principles of this paragraph (g) are illustrated by the following example.

Example. A life insurance company (L1) issues a contract to an employer (X) which provides cancellable accident and health insurance coverage and group term life insurance coverage to X's employees. L1 charges a premium of $1,000 for the contract, $950 of which is attributable to the cancellable accident and health insurance coverage and $50 of which is attributable to

the group term life insurance coverage. On its annual statement, L1 reports the premiums attributable to the accident and health insurance coverage separately from the premiums attributable to the group term life insurance coverage. The contract issued by L1 is a combination contract as defined in paragraph (g)(1) of this section. Pursuant to paragraph (g)(2)(i) of this section, only the premiums attributable to the group term life insurance coverage ($50) are subject to the provisions of section 848. The premiums attributable to the cancellable accident and health insurance coverage ($950) are not subject to the provisions of section 848.

(h) ***Group life insurance contract*** —

(1) ***In general.*** A life insurance contract (as defined in paragraph (c) of this section) is group life insurance contract if—

(i) The contract is a group life insurance contract under the applicable law;

(ii) The coverage is provided under a master contract issued to the group policyholder, which may be a trust, trustee, or agent;

(iii) The premiums on the contract are reported either as group life insurance premiums or credit life insurance premiums on the insurance company's annual statement (or could be reported as group life insurance premiums or credit life insurance premiums if the company were required to file the annual statement for life and accident and health companies);

(iv) The group affiliation requirement of paragraph (h)(2) of this section is satisfied;

(v) The premiums on the contract are determined on a group basis within the meaning of paragraph (h)(3) of this section; and

(vi) The proceeds of the contract are not payable to or for the benefit of the insured's employer, an organization or association to which the insured belongs, or other similar person. (See paragraph (h)(7) of this section for special rules that apply in determining if this requirement is satisfied.)

(2) ***Group affiliation requirement*** —

(i) ***In general.*** The group affiliation requirement of section 848(e)(2)(A) and this paragraph (h)(2) is satisfied only if all of the individuals eligible for coverage under the contract constitute a group described in paragraphs (h)(2) (ii) through (viii) of this section.

(ii) ***Employee group.*** An employee group consists of all of the employees (including statutory employees within the meaning of section 3121(d)(3) and individuals who are treated as employed by a single employer under section 414 (b), (c), or (m)), or any class or classes thereof within the meaning of paragraph (h)(2)(x) of this section, of an employer. For this purpose, the term “employee” includes—

(A) A retired or former employee;

(B) The sole proprietor, if the employer is a sole proprietorship;

(C) A partner of the partnership, if the employer is a partnership;

(D) A director of the corporation, if the employer is a corporation; and

(E) An elected or appointed official of the public body, if the employer is a public body.

(iii) ***Debtor group.*** A debtor group consists of all of the debtors, or any class or classes thereof within the meaning of paragraph (h)(2)(x) of this section, of a creditor. For this purpose, the term "debtor" includes a borrower of money or purchaser or lessee of goods, services, or property for which payment is arranged through a credit transaction.

(iv) ***Labor union group.*** A labor union group consists of all of the members, or any class or classes thereof within the meaning of paragraph (h)(2)(x) of this section, of a labor union or similar employee organization.

(v) ***Association group.*** An association group consists of all of the members, or any class or classes thereof within the meaning of paragraph (h)(2)(x) of this section, of an association that, at the time the master contract is issued—

(A) Is organized and maintained for purposes other than obtaining insurance;

(B) Has been in active existence for at least two years (including, in the case of a merged or successor association, the years of active existence of any predecessor association); and

(C) Has at least 100 members.

(vi) ***Credit union group.*** A credit union group consists of all of the members or borrowers, or any class or classes thereof within the meaning of paragraph (h)(2)(x) of this section, of a credit union.

(vii) ***Multiple group.*** A multiple group consists of two or more groups from any single category described in paragraphs (h)(2) (ii) through (vi) of this section. A multiple group may not include two or more groups from different categories described in paragraph (h)(2) (ii) through (vi) of this section.

(viii) ***Certain discretionary groups.*** Provided that the contract otherwise satisfies the requirements of paragraph (h)(1) of this section, a contract issued to one of the following discretionary groups is treated as satisfying the group affiliation requirement of this paragraph (h)(2)—

(A) A contract issued to a group consisting of students of one or more universities or other educational institutions;

(B) A contract issued to a group consisting of members or former members of the U.S. Armed Forces;

(C) A contract issued to a group of individuals for the payment of future funeral expenses; and

(D) A contract issued to any other discretionary group as specified by the Commissioner in subsequent guidance published in the Internal Revenue Bulletin. (See § 601.601(d)(2)(ii)(*b*) of this chapter.)

(ix) ***Employees treated as members.*** In determining whether the group affiliation requirement of paragraph (h)(2) of this section is satisfied, the employees of a labor union, credit union, or association may be treated as members of a labor union group, a credit union group, or an association group, respectively.

(x) ***Class or classes of a group determined without regard to individual health characteristics*** —

(A) ***In general.*** A class or classes of a group described in paragraphs (h)(2) (ii) through (viii) of this section may be determined using any reasonable characteristics (for example, amount of insurance, location, or occupation) other than individual health characteristics. The employees of a single employer covered under a policy issued to a multi-employer trust are considered a class of a group described in paragraph (h)(2)(ii) of this section.

(B) ***Limitation of coverage based on certain work and age requirements permissible.*** A limitation of coverage under a group contract to persons who are actively at work or of a pre-retirement age (for example, age 65 or younger) is not treated as based on individual health characteristics.

(3) ***Premiums determined on a group basis*** —

(i) ***In general.*** Premiums for a contract are determined on a group basis for purposes of section 848(e)(2)(B) and this paragraph (h) only if the premium charged by the insurance company for each member of the group (or any class thereof) is determined on the basis of the same rates for the corresponding amount of coverage (for example, per $1,000 of insurance) or on the basis of rates which differ only because of the gender, smoking habits, or age of the member.

(ii) ***Exception for substandard premium rates for certain high risk insureds.*** Any difference in premium rates is disregarded for purposes of this paragraph (h)(3) if the difference is charged for an individual who was accepted for coverage at a substandard rate prior to January 1, 1993.

(iii) ***Flexible premium contracts.*** In the case of a group universal life insurance contract, the identical premium requirement is satisfied if the premium rates used by the insurance company in determining the periodic mortality charges applied to the policy account value of any member insured by the contract differ from those of other members (within the same class) only because of the gender, smoking habits, or age of the member.

(iv) ***Determination of actual age.*** For purposes of this paragraph (h)(3), determinations of actual age may be made using any reasonable method, provided that this method is applied consistently for all members of the group.

(4) ***Underwriting practices used by company.*** [Reserved]

(5) ***Disqualification of group*** —

(i) ***In general.*** Except as otherwise provided in this paragraph (h)(5), if the requirements of paragraphs (h)(1), (2), and (3) of this section are not satisfied with respect to one or more members of the group, or of a class within a group (within the meaning of paragraph (h)(2)(x) of this section), the premiums for the entire group (or class) are treated as individual life insurance premiums.

(ii) ***Exception for de minimis failures.*** If the requirements of paragraphs (h) (1), (2), or (3) of this section are not satisfied with respect to one or more members of the group (or class), but the sum of the premiums charged by the insurance company for those individuals is no more than 5 percent of the aggregate premiums for the group (or class), only the premiums charged for those individuals are treated as premiums for an individual life insurance contract.

(6) ***Supplemental life insurance coverage.*** For purposes of determining whether the requirement in paragraph (h)(3)(i) of this section is satisfied, any supplemental life insurance coverage (including optional coverage for members of the group, their spouses, or their dependent children) is (or is

treated as) a separate contract. In determining whether the group affiliation requirement of paragraph (h)(2) of this section is satisfied for the supplemental coverage, a member's spouse and dependent children are treated as members of the group if they are eligible for coverage.

(7) ***Special rules relating to the payment of proceeds.*** The following rules apply for purposes of section 848(e)(2) and paragraph (h)(1)(vi) of this section.

(i) ***Contracts issued to a welfare benefit fund.*** If a contract issued to a welfare benefit fund (as defined in section 419) provides for payment of proceeds to the welfare benefit fund, the proceeds of the contract are not considered payable to or for the benefit of the insured's employer, an organization or association to which the insured belongs, or other similar person, provided the proceeds are paid as benefits to the employee or the employee's beneficiary.

(ii) ***Credit life insurance contracts.*** If a credit life insurance contract provides for payment of proceeds to the insured's creditor, the proceeds of the contract are not treated as payable to or for the benefit of the insured's employer, an organization or association to which the insured belongs, or other similar person, provided the proceeds are applied against an outstanding indebtedness of the insured.

(iii) ***"Organization or association" limited to the sponsor of the contract or the group policyholder.*** The term "organization or association" means the organization or association that is either the sponsor of the contract or the group policyholder.

(i) ***General deductions.*** The term "general deductions" is defined in section 848(c)(2). An insurance company determines its general deductions for the taxable year without regard to amounts capitalized or amortized under section 848(a). The amount of a company's general deductions is also determined without regard to the rules of § 1.848-2(f), which apply only for purposes of determining net consideration for reinsurance agreements.

[T.D. 8456, 57 FR 61819, Dec. 29, 1992; 58 FR 9245, Feb. 19, 1993, as amended by T.D. 9911, 85 FR 64394, Oct. 13, 2020]

§ 1.848-2 Determination of net premiums.

(a) ***Net premiums*** —

(1) ***In general.*** An insurance company must use the accrual method of accounting (as prescribed by section 811(a)(1)) to determine the net premiums with respect to each category of specified insurance contracts. With respect to any category of contracts, net premiums means—

(i) The gross amount of premiums and other consideration (see paragraph (b) of this section); reduced by

(ii) The sum of—

(A) The return premiums (see paragraph (e) of this section); and

(B) The net negative consideration for a reinsurance agreement (other than an agreement described in paragraph (h)(2) of this section). See paragraphs (f) and (g) of this section for rules relating to the determination of net negative consideration.

(2) ***Separate determination of net premiums for certain reinsurance agreements.*** Net premiums with respect to reinsurance agreements for which an election under paragraph (h)(3) of this section has been made (certain reinsurance agreements with parties not subject to United States taxation) are treated separately and are subject to the rules of paragraph (h) of this section.

(b) ***Gross amount of premiums and other consideration*** —

(1) ***General rule.*** The term "gross amount of premiums and other consideration" means the sum of—

(i) All premiums and other consideration (other than amounts on reinsurance agreements); and

(ii) The net positive consideration for any reinsurance agreement (other than an agreement for which an election under paragraph (h)(3) of this section has been made).

(2) ***Items included.*** The gross amount of premiums and other consideration includes—

(i) Advance premiums;

(ii) Amounts in a premium deposit fund or similar account, to the extent provided in paragraph (b)(3) of this section;

(iii) Fees;

(iv) Assessments;

(v) Amounts that the insurance company charges itself representing premiums with respect to benefits for its employees (including full-time life insurance salesmen treated as employees under section 7701(a)(20)); and

(vi) The value of a new contract issued in an exchange described in paragraph (c)(2) or (c)(3) of this section.

(3) ***Treatment of premium deposits*** —

(i) ***In general.*** An amount in a premium deposit fund or similar account is taken into account in determining the gross amount of premiums and other consideration at the earlier of the time that the amount is applied to, or irrevocably committed to, the payment of a premium on a specified insurance contract. If an amount is irrevocably committed to the payment of a premium on a specified insurance contract, then neither that amount nor any earnings allocable to that amount are included in the gross amount of premiums and other consideration when applied to the payment of a premium on the same contract.

(ii) ***Amounts irrevocably committed to the payment of premiums.*** Except as provided in paragraph (b)(3)(iii) of this section, an amount in a premium deposit fund or similar account is irrevocably committed to the payment of premiums on a contract only if neither the amount nor any earnings allocable to that amount may be—

(A) Returned to the policyholder or any other person (other than on surrender of the contract); or

(B) Used by the policyholder to fund another contract.

(iii) ***Retired lives reserves.*** Premiums received by an insurance company under a retired lives reserve arrangement are treated as irrevocably committed to the payment of premiums on a specified insurance contract.

(4) ***Deferred and uncollected premiums.*** The gross amount of premiums and other consideration does not include deferred and uncollected premiums.

(c) ***Policy exchanges*** —

(1) ***General rule.*** Except as otherwise provided in this paragraph (c), an exchange of insurance contracts (including a change in the terms of a specified insurance contract) does not result in any amount being included in the gross amount of premiums and other consideration.

(2) ***External exchanges.*** If a contract is exchanged for a specified insurance contract issued by another insurance company, the company that issues the new contract must include the value of the new contract in the gross amount of premiums and other consideration.

(3) ***Internal exchanges resulting in fundamentally different contracts*** —

(i) ***In general.*** If a contract is exchanged for a specified insurance contract issued by the same insurance company that issued the original contract, the company must include the value of the new contract in the gross amount of premiums and other consideration if the new contract—

(A) Relates to a different category of specified insurance contract than the original contract;

(B) Does not cover the same insured as the original contract; or

(C) Changes the interest, mortality, morbidity, or expense guarantees with respect to the nonforfeiture benefits provided in the original contract.

(ii) ***Certain modifications treated as not changing the mortality, morbidity, interest, or expense guarantees.*** For purposes of paragraph (c)(3)(i)(C) of this section, the following items are not treated as changing the interest, mortality, morbidity, or expense guarantees with respect to the nonforfeiture benefits provided in the contract—

(A) A change in a temporary guarantee with respect to the amounts to be credited as interest to the policyholder's account, or charged as mortality, morbidity, or expense charges, if the new guarantee applies for a period of ten years or less;

(B) The determination of benefits on annuitization using rates which are more favorable to the policyholder than the permanently guaranteed rates; and

(C) Other items as specified by the Commissioner in subsequent guidance published in the Internal Revenue Bulletin.

(iii) ***Exception for contracts restructured by a court supervised rehabilitation or similar proceeding.*** No amount is included in the gross amount of premiums and other consideration with respect to any change made to the interest, mortality, morbidity, or expense guarantees with respect to the nonforfeiture benefits of contracts of an insurance company that is the subject of a rehabilitation, conservatorship, insolvency, or similar state proceeding. This treatment applies only if the change—

(A) Occurs as part of the rehabilitation, conservatorship, insolvency, or similar state proceeding; and

(B) Is approved by the state court, the state insurance department, or other state official with authority to act in the rehabilitation, conservatorship, insolvency, or similar state proceeding.

(4) ***Value of the contract*** —

(i) ***In general.*** For purposes of paragraph (c)(2) or (c)(3) of this section, the value of the new contract is established through the most recent sale by the company of a comparable contract. If the value of the new contract is not readily ascertainable, the value may be approximated by using the interpolated terminal reserve of the original contract as of the date of the exchange.

(ii) ***Special rule for group term life insurance contracts.*** In the case of any exchange involving a group term life insurance contract without cash value, the value of the new contract is deemed to be zero.

(iii) ***Special rule for certain policy enhancement and update programs*** —

(A) ***In general.*** If the interest, mortality, morbidity, or expense guarantees with respect to the nonforfeiture benefits of a specified insurance contract are changed pursuant to a policy enhancement or update program, the value of the contract included in the gross amount of premiums and other consideration equals 30 percent of the value determined under paragraph (c)(4) of this section.

(B) ***Policy enhancement or update program defined.*** For purposes of paragraph (c)(4)(iii)(A) of this section, a policy enhancement or update program means any offer or commitment by the insurance company to all of the policyholders holding a particular policy form to change the interest, mortality, morbidity, or expense guarantees used to determine the contract's nonforfeiture benefits.

(5) ***Example.*** The principles of this paragraph (c) are illustrated by the following example.

> *Example.* (i) An individual (A) owns a life insurance policy issued by a life insurance company (L1). On January 1, 1993, A purchases additional term insurance for $250, which is added as a rider to A's life insurance policy. The purchase of the additional term insurance does not change the interest mortality, morbidity, or expense guarantees with respect to the nonforfeiture benefits provided by A's life insurance policy.
> (ii) A's purchase of the term insurance rider is not considered to result in a fundamentally different contract under paragraph (c)(3) of this section because the addition of the rider did not change the interest, mortality, morbidity, or expense guarantees with respect to the nonforfeiture values of A's original life insurance policy. Therefore, L1 includes only the $250 received from A in the gross amount of premiums and other consideration.

(d) ***Amounts excluded from the gross amount of premiums and other consideration*** —

(1) ***In general.*** The following items are not included in the gross amount of premiums and other consideration—

(i) Items treated by section 808(e) as policyholder dividends that are paid to the policyholder and immediately returned to the insurance company as a premium on the same contract that generated the dividends, including—

(A) A policyholder dividend applied to pay a premium under the contract that generated the dividend;

(B) Excess interest accumulated within the contract;

(C) A policyholder dividend applied for additional coverage (for example, a paid-up addition, extension of the period for which insurance protection is provided, or reduction of the period for which premiums are paid) on the contract that generated the dividend;

(D) A policyholder dividend applied to reduce premiums otherwise payable on the contract that generated the dividend;

(E) An experience-rated refund applied to pay a premium on the group contract that generated the refund; and

(F) An experience-rated refund applied to a premium stabilization reserve held with respect to the group contract that generated the refund;

(ii) Premiums waived as a result of the disability of an insured or the disability or death of a premium payor;

(iii) Premiums considered to be paid on a contract as the result of a partial surrender or withdrawal from the contract, or as a result of the surrender or withdrawal of a paid-up addition previously issued with respect to the same contract; and

(iv) Amounts treated as premiums upon the selection by a policyholder or by a beneficiary of a settlement option provided in a life insurance contract.

(2) ***Amounts received or accrued from a guaranty association.*** Amounts received or accrued from a guaranty association relating to an insurance company that is subject to an insolvency, delinquency, conservatorship, rehabilitation, or similar proceeding are not included in the gross amount of premiums and other consideration.

(3) ***Exclusion not to apply to dividend accumulations.*** For purposes of section 848(d)(3) and paragraph (d)(1) of this section, amounts applied from a dividend accumulation account to pay premiums on a specified insurance contract are not amounts treated as paid to, and immediately returned by, the policyholder.

(e) ***Return premiums.*** For purposes of section 848(d)(1)(B) and this section, return premiums do not include policyholder dividends (as defined in section 808), claims or benefits payments, or amounts returned to another insurance company under a reinsurance agreement. For the treatment of amounts returned to another insurance company under a reinsurance agreement, see paragraph (f) of this section.

(f) ***Net consideration for a reinsurance agreement*** —

(1) ***In general.*** For purposes of section 848, the ceding company and the reinsurer must treat amounts arising from the reinsurance of a specified insurance contract consistently in determining their net premiums. See paragraph (g) of this section for restrictions on the amount of the net negative consideration for any reinsurance agreement that may be taken into account. See paragraph (h) of this section for special rules applicable to reinsurance agreements with parties not subject to United States taxation.

(2) ***Net consideration determined by a ceding company*** —

(i) ***In general.*** The net consideration determined by a ceding company for a reinsurance agreement equals—

(A) The gross amount incurred by the reinsurer with respect to the reinsurance agreement, including any ceding commissions, annual allowances, reimbursements of claims and benefits, modified coinsurance reserve adjustments under paragraph (f)(5) of this section, experience-rated adjustments, and termination payments; less

(B) The gross amount of premiums and other consideration incurred by the ceding company with respect to the reinsurance agreement.

(ii) ***Net negative and net positive consideration.*** If the net consideration is less than zero, the ceding company has net negative consideration for the reinsurance agreement. If the net consideration is greater than zero, the ceding company has net positive consideration for the reinsurance agreement.

(3) ***Net consideration determined by the reinsurer*** —

(i) ***In general.*** The net consideration determined by a reinsurer for a reinsurance agreement equals—

(A) The amount described in paragraph (f)(2)(i)(B) of this section; less

(B) The amount described in paragraph (f)(2)(i)(A) of this section.

(ii) ***Net negative and net positive consideration.*** If the net consideration is less than zero, the reinsurer has net negative consideration for the reinsurance agreement. If the net consideration is greater than zero, the reinsurer has net positive consideration for the reinsurance agreement.

(4) ***Timing consistency required.*** For purposes of determining the net consideration of a party for a reinsurance agreement, an income or expense item is taken into account for the first taxable year for which the item is required to be taken into account by either party. Thus, the ceding company and the reinsurer must take the item into account for the same taxable year (or for the same period if the parties have different taxable years).

(5) ***Modified coinsurance and funds-withheld reinsurance agreements*** —

(i) ***In general.*** In the case of a modified coinsurance or funds-withheld reinsurance agreement, the net consideration for the agreement includes the amount of any payments or reserve adjustments, as well as any related loan transactions between the ceding company and the reinsurer. The amount of any investment income transferred between the parties as the result of a reserve adjustment or loan transaction is treated as an item of consideration under the reinsurance agreement.

(ii) ***Special rule for certain funds-withheld reinsurance agreements.*** In the case of a funds-withheld reinsurance agreement that is entered into after November 14, 1991, but before the first day of the first taxable year beginning after December 31, 1991, and is terminated before January 1, 1995, the parties' net consideration in the year of termination must include the amount of the original reserve for any reinsured specified insurance contract that, in applying the provisions of subchapter L, was treated as premiums and other consideration incurred for reinsurance for the taxable year in which the agreement became effective.

(6) ***Treatment of retrocessions.*** For purposes of this paragraph (f), a retrocession agreement is treated as a separate reinsurance agreement. The party that is relieved of liability under a retrocession agreement is treated as the ceding company.

(7) ***Mixed reinsurance agreement.*** If a reinsurance agreement includes more than one category of specified insurance contracts (or specified insurance contracts and contracts that are not specified insurance contracts), the portion of the agreement relating to each category of reinsured specified insurance contracts is treated as a separate agreement. The portion of the agreement relating to reinsured contracts that are not specified insurance contracts is similarly treated as a separate agreement.

(8) ***Treatment of policyholder loans.*** For purposes of determining the net consideration under a reinsurance agreement, the transfer of a policyholder loan receivable is treated as an item of consideration under the agreement. The interest credited with respect to a policyholder loan receivable is treated as investment income earned directly by the party holding the receivable. The amounts taken into account as claims and benefit reimbursements under the agreement must be determined without reduction for the policyholder loan.

(9) ***Examples.*** The principles of this paragraph (f) are illustrated by the following examples.

Example 1. On July 1, 1992, a life insurance company (L1) transfers a block of individual life insurance contracts to an unrelated life insurance company (L2) under an agreement whereby L2 becomes solely liable to the policyholders under the contracts reinsured. L1 and L2 are calendar year taxpayers. Under the assumption reinsurance agreement, L1 agrees to pay L2 $100,000 for assuming the life insurance contracts, and L2 agrees to pay L1 a $17,000 ceding commission. Under paragraph (f)(2) of this section, L1 has net negative consideration of ($83,000) ($17,000 ceding commission incurred by L2—$100,000 incurred by L1 for reinsurance). Under paragraph (f)(3) of this section, L2 has net positive consideration of $83,000. Under paragraph (b)(1)(ii) of this section, L2 includes the net positive consideration in its gross amount of premiums and other consideration.

Example 2. (i) On July 1, 1992, a life insurance company (L1) transfers a block of individual life insurance contracts to an unrelated life insurance company (L2) under an agreement whereby L1 remains liable to the policyholders under the reinsured contracts. L1 and L2 are calendar year taxpayers. Under the indemnity reinsurance agreement, L1 agrees to pay L2 $100,000 for reinsuring the life insurance contracts, and L2 agrees to pay L1 a $17,000 ceding commission. L1 agrees to pay L2 an amount equal to the future premiums on the reinsured contracts. L2 agrees to indemnify L1 for claims and benefits and administrative expenses incurred by L1 while the reinsurance agreement is in effect. (ii) For the period beginning July 1, 1992, and ending December 31, 1992, the following income and expense items are determined with respect to the reinsured contracts:

Item	Income	Expense
Premiums	$25,000	
Death benefits		$10,000
Surrender benefits		8,000
Premium taxes and other expenses		2,000

Item	Income	Expense
Total		20,000

(iii) Under paragraph (f)(2) of this section, L1's net negative consideration equals ($88,000), which is determined by subtracting the $125,000 ($100,000 + $25,000) incurred by L1 from the $37,000 incurred by L2 under the reinsurance agreement ($17,000 + $10,000 + $8,000 + $2,000). L2's net positive consideration is $88,000. Under paragraph (b)(1)(ii) of this section, L2 includes the $88,000 net positive consideration in its gross amount of premiums and other consideration.

Example 3. (i) Assume that the reinsurance agreement referred to in *Example 2* is terminated on December 31, 1993. During the period from January 1, 1993 through December 31, 1993, the following income and expense items are determined with respect to the reinsured contracts:

Item	Income	Expense
Premiums	$45,000	
Death benefits		$18,000
Surrender benefits		6,000
Premium taxes and other expenses		8,000
Total		32,000

(ii) On the termination of the reinsurance agreement, L1 receives a payment of $70,000 from L2 as consideration for releasing L2 from liability with respect to the reinsured contracts.
(iii) L1's net positive consideration equals $57,000, which is the excess of the $102,000 incurred by L2 for the year ($18,000 + $6,000 + $8,000 + $70,000) over the $45,000 incurred by L1. L2's net negative consideration is ($57,000). L1 includes the net positive consideration in its gross amount of premiums and other consideration.

Example 4. (i) On January 1, 1993, an insurance company (L1) enters into a modified coinsurance agreement with another insurance company (L2), covering a block of individual life insurance contracts. Both L1 and L2 are calendar year taxpayers. Under the agreement, L2 is credited with an initial reinsurance premium equal to L1's reserves on the reinsured contracts at the inception of the agreement, any new premiums

received with respect to the reinsured contracts, any decrease in L1's reserves on the reinsured contracts, and an amount of investment income determined by reference to L1's reserves on the reinsured contracts. L2 is charged for all claims and expenses incurred with respect to the reinsured contracts plus an amount reflecting any increase in L1's reserves. The agreement further provides that cash settlements between the parties are made at the inception and termination of the agreement, as well as at the end of each calendar year while the agreement is in effect. The cash settlement is determined by netting the sum of the amounts credited to L2 against the sum of the amounts charged to L2 with respect to the reinsured policies. L1's reserves on the reinsured policies at the inception of the reinsurance agreement are $375,000.
(ii) Under the cash settlement formula, L2 is credited with an initial reinsurance premium equal to L1's reserves on the reinsured policies ($375,000), but is charged an amount reflecting L1's policy reserve requirements ($375,000).

(iii) For the period ending December 31, 1993, L2 is also credited and charged the following amounts with respect to the reinsured contracts.

Item	Income	Expense
Premiums	$100,000	
Investment income	39,000	
Death benefits		$65,000
Increase in reserves		75,000

(iv) Under paragraph (f)(5) of this section, L2's net negative consideration for the 1993 taxable year equals ($1,000) which is determined by subtracting the sum of the amounts charged to L2 ($375,000 + $65,000 + $75,000 = $515,000) from the sum of the amounts credited to L2 ($375,000 + $100,000 + $39,000 = $514,000). L1's net positive consideration for calendar year 1993 equals $1,000. Under paragraph (b)(1)(ii) of this section, L1 includes the $1,000 net positive consideration in its gross amount of premiums and other consideration.

Example 5. (i) On January 1, 1993, an insurance company (L1) enters into a coinsurance agreement with another insurance company (L2) covering a block of individual life insurance contracts. Both L1 and L2 are calendar year taxpayers. Under the agreement, L2 is credited with an initial reinsurance premium equal to L1's reserves on the effective date of the agreement, any new premiums received on the reinsured contracts, but must indemnify L1 of all claims and expenses incurred with respect to the contracts. As part of the agreement, L2 makes a loan to L1 equal to the amount of the

reserves on the reinsured contracts. L1's reserves on the reinsured contracts on the effective date of the agreement are $375,000. Thus, on the inception date of the reinsurance agreement, L1 transfers to L2 its note for $375,000 as consideration for reinsurance.
(ii) The reinsurance agreement between L1 and L2 is a funds-withheld reinsurance agreement. Under paragraph (f)(5) of this section, the amount of any loan transaction is taken into account in determining the parties' net consideration. At the inception of the reinsurance agreement, L2 is credited with a reinsurance premium equal to L1's reserves on the reinsured contracts ($375,000). L2's $375,000 loan to L1 is treated as an amount returned to L1 under the agreement.

(iii) For the period ending December 31, 1993, L2 is credited and charged the following amounts with respect to the reinsured contracts and the loan transaction with L1.

Item	Income	Expense
Premiums	$100,000	
Accrued interest	39,000	
Death benefits		$65,000
Increase in loan to L1		75,000

(iv) Under paragraph (f)(5) of this section, L2's net negative consideration for the 1993 taxable year equals ($1,000), which is determined by subtracting the sum of amounts incurred by L2 with respect to death benefits and the loan transaction ($375,000 + $65,000 + $75,000 = $515,000) from the sum of the amounts credited to L2 as reinsurance premiums and interest on the loan transaction ($375,000 + $100,000 + 39,000 = $514,000). L1's net positive consideration for calendar year 1993 equals $1,000. Under paragraph (b)(1)(ii) of this section, L1 includes the $1,000 net positive consideration in its gross amount of premiums and other consideration.

Example 6. (i) On December 31, 1993, an insurance company (L1) enters into a reinsurance agreement with another insurance company (L2) covering a block of individual life insurance contracts. Both L1 and L2 are calendar year taxpayers. Under the agreement, L2 is credited with L1's reserves on the reinsured contracts on the effective date of the agreement, plus any new premiums received on the reinsured contracts, but must indemnify L1 for all claims and expenses incurred with respect to the contracts. Under the agreement, L1 transfers cash of $325,000 to L2 plus rights to its policyholder loan receivables on the reinsured contracts ($50,000). L2 reports the reinsurance agreement by including the transferred policyholder loan receivables as an

asset on its books.
(ii) For the period beginning January 1, 1994 and ending December 31, 1994, the following income and expense items are incurred with respect to the reinsured contracts.

Item	Income	Expense
Premiums	$100,000	
Death benefits		$25,000
Surrender benefits		5,000
Premium taxes and other expenses		8,000
Total		38,000

(iii) These amounts are net of the outstanding policyholder loans held by L2 of $20,000 with respect to death benefits and $15,000 with respect to surrender benefits.
(iv) Under paragraph (f)(8) of this section, the transferred policyholder loan receivables are treated as an item of consideration under the reinsurance agreement. In determining the parties' net consideration for the agreement, the transferred policyholder loan receivables ($50,000) are treated as an item of consideration incurred by L1 under paragraph (f)(2)(i)(B) of this section. Therefore, for the 1993 taxable year, L1 has net negative consideration of ($375,000). L2 has net positive consideration of $375,000. Under paragraph (b)(1)(ii) of this section, L2 includes the $375,000 net positive consideration in its gross amount of premiums and other consideration.

(v) For the 1994 taxable year, L2 has net positive consideration for the reinsurance agreement of $62,000 before adjustment for the transferred policyholder loans. Under paragraph (f)(8) of this section, the amounts taken into account as claim and benefit payments must be adjusted by the amount of any transferred policyholder loan receivables which are netted against the reinsurer's claim and benefit reimbursements. Therefore, L2 takes into account $45,000 ($25,000 + $20,000 = $45,000) as reimbursements for death benefits, and $20,000 ($5,000 + $15,000 = $20,000) as reimbursements for surrender benefits. After adjustment for these items, L2 has net positive consideration of $27,000, which is determined by subtracting the sum of the amounts charged to L2 ($45,000 + $20,000 + $8,000 = $73,000) from the sum of the amounts credited to L2 ($100,000). L1 has net negative consideration of ($27,000) under the agreement. Under paragraph (b)(1)(ii) of this section, L2 includes the $27,000 net positive consideration in its gross amount of premiums and other consideration. The

> amount of any interest earned on the policyholder loan receivables after their transfer to L2 is treated as investment income earned directly by L2, and is not taken into account as an item of consideration under the agreement.

(g) ***Reduction in the amount of net negative consideration to ensure consistency of capitalization for reinsurance agreements*** —

(1) ***In general.*** Paragraph (g)(3) of this section provides for a reduction in the amount of net negative consideration that a party to a reinsurance agreement (other than a reinsurance agreement described in paragraph (h)(2) of this section) may take into account in determining net premiums under paragraph (a)(2)(ii) of this section if the party with net positive consideration has a capitalization shortfall (as defined in paragraph (g)(4) of this section). Unless the party with net negative consideration demonstrates that the party with net positive consideration does not have a capitalization shortfall or demonstrates the amount of the other party's capitalization shortfall which is allocable to the reinsurance agreement, the net negative consideration that may be taken into account under paragraph (a)(2)(ii) of this section is zero. However, the reduction of paragraph (g)(3) of this section does not apply to a reinsurance agreement if the parties make a joint election under paragraph (g)(8) of this section. Under the election, the party with net positive consideration capitalizes specified policy acquisition expenses with respect to the agreement without regard to the general deductions limitation of section 848(c)(1).

(2) ***Application to reinsurance agreements subject to the interim rules.*** In applying this paragraph (g) to a reinsurance agreement that is subject to the interim rules of § 1.848-3, the term “premiums and other consideration incurred for reinsurance under section 848(d)(1)(B)” is substituted for “net negative consideration,” and the term “gross amount of premiums and other consideration under section 848(d)(1)(A)” is substituted for “net positive consideration.” If an insurance company has “premiums and other consideration incurred for reinsurance under section 848(d)(1)(B)” and a “gross amount of premiums and other consideration under section 848(d)(1)(A)” for the same agreement, the net of these amounts is taken into account for purposes of this paragraph (g).

(3) ***Amount of reduction.*** The reduction required by this paragraph (g)(3) equals the amount obtained by dividing—

(i) The portion of the capitalization shortfall (as defined in paragraph (g)(4) of this section) allocated to the reinsurance agreement under paragraph (g)(7) of this section; by

(ii) The applicable percentage set forth in section 848(c)(1) for the category of specified insurance contracts reinsured by the agreement.

(4) ***Capitalization shortfall.*** A “capitalization shortfall” equals the excess of—

(i) The sum of the required capitalization amounts (as defined in paragraph (g)(5) of this section) for all reinsurance agreements (other than reinsurance agreements for which an election has been made under paragraph (h)(3) of this section); over

(ii) The general deductions allocated to those reinsurance agreements, as determined under paragraph (g)(6) of this section.

(5) ***Required capitalization amount*** —

(i) ***In general.*** The "required capitalization amount" for a reinsurance agreement (other than a reinsurance agreement for which an election has been made under paragraph (h)(3) of this section) equals the amount (either positive or negative) obtained by multiplying—

(A) The net positive or negative consideration for an agreement not described in paragraph (h)(2) of this section, and the net positive consideration for an agreement described in paragraph (h)(2) of this section, but for which an election under paragraph (h)(3) of this section has not been made; by

(B) The applicable percentage set forth in section 848(c)(1) for that category of specified insurance contracts.

(ii) ***Special rule with respect to net negative consideration.*** Solely for purposes of computing a party's required capitalization amount under this paragraph (g)(5)—

(A) If either party to the reinsurance agreement is the direct issuer of the reinsured contracts, the party computing its required capitalization amount takes into account the full amount of any net negative consideration without regard to any potential reduction under paragraph (g)(3) of this section; and

(B) If neither party to the reinsurance agreement is the direct issuer of the reinsured contracts, any net negative consideration is deemed to equal zero in computing a party's required capitalization amount except to the extent that the party with the net negative consideration establishes that the other party to that reinsurance agreement capitalizes the appropriate amount.

(6) ***General deductions allocable to reinsurance agreements.*** An insurance company's general deductions allocable to its reinsurance agreements equals the excess, if any, of—

(i) The company's general deductions (excluding additional amounts treated as general deductions under paragraph (g)(8) of this section); over

(ii) The amount determined under section 848(c)(1) on specified insurance contracts that the insurance company has issued directly (determined without regard to any reinsurance agreements).

(7) ***Allocation of capitalization shortfall among reinsurance agreements.*** The capitalization shortfall is allocated to each reinsurance agreement for which the required capitalization amount (as determined in paragraph (g)(5) of this section) is a positive amount. The portion of the capitalization shortfall allocable to each agreement equals the amount which bears the same ratio to the capitalization shortfall as the required capitalization amount for the reinsurance agreement bears to the sum of the positive required capitalization amounts.

(8) ***Election to determine specified policy acquisition expenses for an agreement without regard to general deductions limitation*** —

(i) ***In general.*** The reduction specified by paragraph (g)(3) of this section does not apply if the parties to a reinsurance agreement make an election under this paragraph (g)(8). The election requires the party with net positive consideration to capitalize specified policy acquisition expenses with respect to the reinsurance agreement without regard to the general deductions limitation of section 848(c)(1). That party must reduce its deductions under section 805 or section 832(c) by the amount, if any, of the party's capitalization shortfall allocable to the

reinsurance agreement. The additional capitalized amounts are treated as specified policy acquisition expenses attributable to premiums and other consideration on the reinsurance agreement, and are deductible in accordance with section 848(a)(2).

(ii) ***Manner of making election.*** To make an election under paragraph (g)(8) of this section, the ceding company and the reinsurer must include an election statement in the reinsurance agreement, either as part of the original terms of the agreement or by an addendum to the agreement. The parties must each attach a schedule to their federal income tax returns which identifies the reinsurance agreement for which the joint election under this paragraph (g)(8) has been made. The schedule must be attached to each of the parties' federal income tax returns filed for the later of—

(A) The first taxable year ending after the election becomes effective; or

(B) The first taxable year ending on or after December 29, 1992.

(iii) ***Election statement.*** The election statement in the reinsurance agreement must—

(A) Provide that the party with net positive consideration for the reinsurance agreement for each taxable year will capitalize specified policy acquisition expenses with respect to the reinsurance agreement without regard to the general deductions limitation of section 848(a)(1);

(B) Set forth the agreement of the parties to exchange information pertaining to the amount of net consideration under the reinsurance agreement each year to ensure consistency;

(C) Specify the first taxable year for which the election is effective; and

(D) Be signed by both parties.

(iv) ***Effect of election.*** An election under this paragraph (g)(8) is effective for the first taxable year specified in the election statement and for all subsequent taxable years for which the reinsurance agreement remains in effect. The election may not be revoked without the consent of the Commissioner.

(9) ***Example.*** The principles of this paragraph (g) are illustrated by the following examples.

> *Example 1.* (i) On December 31, 1992, a life insurance company (L1) transfers a block of individual life insurance contracts to an unrelated life insurance company (L2) under an agreement in which L2 becomes solely liable to the policyholders on the reinsured contracts. L1 transfers $105,000 to L2 as consideration for the reinsurance of the contracts.
> (ii) L1 and L2 do not make an election under paragraph (g)(8) of this section to capitalize specified policy acquisition expenses with respect to the reinsurance agreement without regard to the general deductions limitation. L2 has no other insurance business, and its general deductions for the taxable year are $3,500.
>
> (iii) Under paragraph (f)(2) of this section, L1's net negative consideration is ($105,000). Under paragraph (f)(3) of this section, L2's net positive consideration is $105,000. Pursuant to paragraph (b)(1)(ii) of this section, L2 includes the net positive consideration in its gross amount of premiums and other consideration.

(iv) The required capitalization amount under paragraph (g)(5) of this section for the reinsurance agreement is $8,085 ($105,000 × .077). L2's general deductions, all of which are allocable to the reinsurance agreement with L1, are $3,500. The $4,585 difference between the required capitalization amount ($8,085) and the general deductions allocable to the reinsurance agreement ($3,500) represents L2's capitalization shortfall under paragraph (g)(4) of this section.

(v) Since L2 has a capitalization shortfall allocable to the agreement, the rules of paragraph (g)(1) of this section apply for purposes of determining the amount by which L1 may reduce its net premiums. Under paragraph (g)(3) of this section, L1 must reduce the amount of net negative consideration that it takes into account under paragraph (a)(2)(ii) of this section by $59,545 ($4,585/.077). Thus, of the $105,000 net negative consideration under the reinsurance agreement, L1 may take into account only $45,455 as a reduction of its net premiums.

Example 2. The facts are the same as *Example 1*, except that L1 and L2 make the election under paragraph (g)(8) of this section to capitalize specified policy acquisition expenses with respect to the reinsurance agreement without regard to the general deductions limitation. Pursuant to this election, L2 must capitalize as specified policy acquisition expenses an amount equal to $8,085 ($105,000 × .077). L1 may reduce its net premiums by the $105,000 of net negative consideration.

Example 3. (i) A life insurance company (L1) is both a direct issuer and a reinsurer of life insurance and annuity contracts. For 1993, L1's net premiums under section 848 (d)(1) for directly issued individual life insurance and annuity contracts are as follows:

Category	Net premiums
Life insurance contracts	$17,000,000
Annuity contracts	8,000,000

(ii) L1's general deductions for 1993 are $1,500,000.

(iii) For 1993, L1 is a reinsurer under four separate indemnity reinsurance agreements with unrelated insurance companies (L2, L3, L4, and L5). The agreements with L2, L3, and L4 cover life insurance contracts issued by those companies. The agreement with L5 covers annuity contracts issued by L5, The parties to the reinsurance agreements have not made the election under paragraph (g)(8) of this section to capitalize specified policy acquisition expenses with respect to these agreements without regard to the general deductions limitation.

(iv) L1's net consideration for 1993 with respect to its reinsurance agreements is as follows:

Agreement	Net consideration
L2	$1,200,000
L3	(350,000)
L4	300,000
L5	600,000

(v) To determine whether a reduction under paragraph (g)(3) of this section applies with respect to these reinsurance agreements, L1 must determine the required capitalization amounts for its reinsurance agreements and the amount of its general deductions allocable to these agreements.
(vi) Pursuant to paragraph (g)(5) of this section, the required capitalization amount for each reinsurance agreement is determined as follows:

L2	$1,200,000 × .077 = $92,4
L3	($350,000) × .077 = ($26,9
L4	$300,000 × .077 = $23,1
L5	$600,000 × .0175 = $10,5

(vii) Thus, the sum of L1's required capitalization amounts on its reinsurance agreements equals $99,050.
(viii) Pursuant to paragraph (g)(6) of this section, L1 determines its general deductions allocable to its reinsurance agreements. The amount determined under section 848(c)(1) on its directly issued contracts is:

REQUIRED CAPITALIZATION AMOUNT

Category:		
Annuity contracts	$8,000,000 × .0175 =	$140,000
Life insurance contracts	$17,000,000 × .077 =	1,309,000

$1,449,000

(ix) L1's general deductions allocable to its reinsurance agreements are $51,000 ($1,500,000−$1,449,000).
(x) Pursuant to paragraph (g)(4) of this section, L1's capitalization shortfall equals $48,050, reflecting the excess of L1's required capitalization amounts for its reinsurance agreements ($99,050) over the general deductions allocable to its reinsurance agreements ($51,000).

(xi) Pursuant to paragraph (g)(7) of this section, the capitalization shortfall of $48,050 must be allocated between each of L1's reinsurance agreements with net positive consideration in proportion to their respective required capitalization amounts. The allocation of the shortfall between L1's reinsurance agreements is determined as follows:

L2 = $35,237 ($48,050 × 92,400 / 126,000)

L4 = $8,809 ($48,050 × 23,100 / 126,000)

L5 = $4,004 ($48,050 × 10,500 / 126,000)

(xii) Accordingly, the reduction under paragraph (g)(3) of this section that applies to the amount of net negative consideration that may be taken into account by L2, L4, and L5 under paragraph (a)(1)(ii)(B) of this section is determined as follows:
L2 = $457,623 ($35,237/.077)

L4 = $114,403 ($8,809/.077)

L5 = $228,800 ($4,004/.0175)

Example 4. The facts are the same as *Example 3,* except that L1 and L4 make a joint election under paragraph (g)(8) of this section to capitalize specified policy acquisition expenses with respect to the reinsurance agreement without regard to the general deductions limitation. Pursuant to this election, L1 must reduce its deductions under section 805 by an amount equal to the capitalization shortfall allocable to the reinsurance agreement with L4 ($8,809). L1 treats the additional capitalized amounts as specified policy acquisition expenses allocable to premiums and other consideration under the agreement. L4 may reduce its net premiums by the $300,000 net negative consideration. The election by L1 and L4 does not change the amount of the capitalization shortfall allocable under paragraph (g)(7) of this section to the reinsurance

agreements with L2 and L5. Thus, the reduction required by paragraph (g)(3) of this section with respect to the amount of the net negative consideration that L2 and L5 may recognize under paragraph (a)(2)(ii) of this section is $457,623 and $228,800, respectively.

(h) ***Treatment of reinsurance agreements with parties not subject to U.S. taxation*** —

(1) ***In general.*** Unless an election under paragraph (h)(3) of this section is made, an insurance company may not reduce its net premiums by the net negative consideration for the taxable year (or, with respect to a reinsurance agreement that is subject to the interim rules of § 1.848-3, by the premiums and other consideration incurred for reinsurance) under a reinsurance agreement to which this paragraph (h) applies.

(2) ***Agreements to which this paragraph (h) applies*** —

(i) ***In general.*** This paragraph (h) applies to a reinsurance agreement if, with respect to the premiums and other consideration under the agreement, one party to that agreement is subject to United States taxation and the other party is not.

(ii) ***Parties subject to U.S. taxation*** —

(A) ***In general.*** A party is subject to United States taxation for this purpose if the party is subject to United States taxation either directly under the provisions of subchapter L of chapter 1 of the Internal Revenue Code (subchapter L), or indirectly under the provisions of subpart F of part III of subchapter N of chapter 1 of the Internal Revenue Code (subpart F).

(B) ***Effect of a closing agreement.*** If a reinsurer agrees in a closing agreement with the Internal Revenue Service to be subject to tax under rules equivalent to the provisions of subchapter L on its premiums and other consideration from reinsurance agreements with parties subject to United States taxation, the reinsurer is treated as an insurance company subject to tax under subchapter L.

(3) ***Election to separately determine the amounts required to be capitalized for reinsurance agreements with parties not subject to U.S. taxation*** —

(i) ***In general.*** This paragraph (h)(3) authorizes an insurance company to make an election to separately determine the amounts required to be capitalized for the taxable year with respect to reinsurance agreements with parties that are not subject to United States taxation. If this election is made, an insurance company separately determines a net foreign capitalization amount for the taxable year for all reinsurance agreements to which this paragraph (h) applies.

(ii) ***Manner of making the election.*** An insurance company makes the election authorized by this paragraph (h)(3) by attaching an election statement to the federal income tax return (including an amended return) for the taxable year for which the election becomes effective. The election applies to that taxable year and all subsequent taxable years unless permission to revoke the election is obtained from the Commissioner.

(4) ***Amount taken into account for purposes of determining specified policy acquisition expenses.*** If for a taxable year an insurance company has a net positive foreign capitalization amount (as defined in paragraph (h)(5)(i) of this section), any portion of that amount remaining after the reduction described in paragraph (h)(7) of this section is treated as additional specified policy acquisition

expenses for the taxable year (determined without regard to amounts taken into account under this paragraph (h)). A net positive capitalization amount is treated as an amount otherwise required to be capitalized for the taxable year for purposes of the reduction under section 848(f)(1)(A).

(5) ***Net foreign capitalization amount*** —

(i) ***In general.*** An insurance company's net foreign capitalization amount equals the sum of the foreign capitalization amounts (netting positive and negative amounts) determined under paragraph (h)(5)(ii) of this section for each category of specified insurance contracts reinsured by agreements described in paragraph (h)(2) of this section. If the amount is less than zero, the company has a net negative foreign capitalization amount. If the amount is greater than zero, the company has a net positive foreign capitalization amount.

(ii) ***Foreign capitalization amounts by category.*** The foreign capitalization amount for a category of specified insurance contracts is determined by—

(A) Combining the net positive consideration and the net negative consideration for the taxable year (or, with respect to a reinsurance agreement that is subject to the interim rules of § 1.848-3, by combining the gross amount of premiums and other consideration and the premiums and other consideration incurred for reinsurance) for all agreements described in paragraph (h)(2) of this section which reinsure specified insurance contracts in that category; and

(B) Multiplying the result (either positive or negative) by the percentage for that category specified in section 848(c)(1).

(6) ***Treatment of net negative foreign capitalization amount*** —

(i) ***Applied as a reduction to previously capitalized amounts.*** If for a taxable year an insurance company has a net negative foreign capitalization amount, the negative amount reduces (but not below zero) the unamortized balances of the amounts previously capitalized (beginning with the amount capitalized for the most recent taxable year) to the extent attributable to prior years' net positive foreign capitalization amounts. The amount by which previously capitalized amounts is reduced is allowed as a deduction for the taxable year.

(ii) ***Carryover of remaining net negative foreign capitalization amount.*** The net negative foreign capitalization amount, if any, remaining after the reduction described in paragraph (h)(6)(i) of this section is carried over to reduce a future net positive capitalization amount. The remaining net negative foreign capitalization amount may only offset a net positive foreign capitalization amount in a future year, and may not be used to reduce the amounts otherwise required to be capitalized under section 848(a) for the taxable year, or to reduce the unamortized balances of specified policy acquisition expenses from preceding taxable years, with respect to directly written business or reinsurance agreements other than agreements for which the election under paragraph (h)(3) of this section has been made.

(7) ***Reduction of net positive foreign capitalization amount by carryover amounts allowed.*** If for a taxable year an insurance company has a net positive foreign capitalization amount, that amount is reduced (but not below zero) by any carryover of net negative foreign capitalization amounts from preceding taxable years. Any remaining net positive foreign capitalization amount is taken into account as provided in paragraph (h)(4) of this section.

(8) ***Examples.*** The principles of this paragraph (h) are illustrated by the following examples.

Example 1. (i) On January 1, 1993, a life insurance company (L1) enters into a reinsurance agreement with a foreign corporation (X) covering a block of annuity contracts issued to residents of the United States. X is not subject to taxation either directly under subchapter L or indirectly under subpart F on the premiums for the reinsurance agreement with L1. L1 makes the election under paragraph (h)(3) of this section to separately determine the amounts required to be capitalized for the taxable year with respect to parties not subject to United States taxation.
(ii) For the taxable year ended December 31, 1993, L1 has net negative consideration of ($25,000) under its reinsurance agreement with X. L1 has no other reinsurance agreements with parties not subject to United States taxation.

(iii) Under paragraph (h)(5) of this section, L1's net negative foreign capitalization amount for the 1993 taxable year equals ($437.50), which is determined by multiplying L1's net negative consideration on the agreement with X ($25,000) by the percentage in section 848(c)(1) for the reinsured specified insurance contracts (1.75%). Under paragraph (h)(6)(ii) of this section, L1 carries over the net negative foreign capitalization amount of $437.50) to future taxable years. The net negative foreign capitalization amount may not be used to reduce the amounts which L1 is required to capitalize on directly written business or reinsurance agreements other than those agreements described in paragraph (h)(2) of this section.

Example 2. (i) The facts are the same as *Example 1* except that L1 terminates its reinsurance agreement with X and receives $35,000 on December 31, 1994. For the 1994 taxable year, L1 has net positive consideration of $35,000 under its agreement with X. L1 has no other reinsurance agreements with parties not subject to United States taxation.
(ii) Under paragraph (h)(5) of this section, L1's net positive net foreign capitalization amount for the 1984 taxable year equals $612.50, which is determined by multiplying the net positive consideration on the agreement with X ($35,000) by the percentage in section 848(c)(1) for the reinsured specified insurance contracts (1.75%). Under paragraph (h)(4) of this section, L1 reduces the net positive foreign capitalization amount for the taxable year by the net negative foreign capitalization amount carried over from preceding taxable years ($437.50). After this reduction, L1 includes $175 ($612.50-$437.50) as specified policy acquisition expenses for the 1994 taxable year.

(i) ***Carryover of excess negative capitalization amount*** —

(1) ***In general.*** This paragraph (i) authorizes a carryover of an excess negative capitalization amount (as defined in paragraph (i)(2) of this section) to reduce amounts otherwise required to be capitalized under section 848. Paragraph (i)(4) provides special rules for the treatment of excess negative capitalization amounts of insolvent insurance companies.

(2) ***Excess negative capitalization amount.*** The excess negative capitalization amount with respect to a category of specified insurance contracts for a taxable year is equal to the excess of—

(A) The negative capitalization amount with respect to that category; over

(B) The amount that can be utilized under section 848(f)(1).

(3) ***Treatment of excess negative capitalization amount.*** The excess negative capitalization amount for a taxable year reduces the amounts that are otherwise required to be capitalized by an insurance company under section 848(c)(1) for future years.

(4) ***Special rule for the treatment of an excess negative capitalization amount of an insolvent company*** —

(i) ***When applicable.*** This paragraph (i)(4) applies only for the taxable year in which an insolvent insurance company has an excess negative capitalization amount and has net negative consideration under a reinsurance agreement. See paragraph (i)(4)(v) of this section for the definition of "insolvent."

(ii) ***Election to forego carryover of excess negative capitalization amount.*** At the joint election of the insolvent insurance company and the other party to the reinsurance agreement—

(A) The insolvent insurance company reduces the excess negative capitalization amount which would otherwise be carried over under paragraph (i)(1) of this section by the amount determined under paragraph (i)(4)(iii) of this section; and

(B) The other party reduces the amount of its specified policy acquisition expenses for the taxable year by the amount determined under paragraph (i)(4)(iii) of this section.

(iii) ***Amount of reduction to the excess negative capitalization amount and specified policy acquisition expenses.*** To determine the reduction to the carryover of an insolvent insurance company's excess negative capitalization amount and the specified policy acquisition expenses of the other party with respect to a reinsurance agreement—

(A) Multiply the net negative consideration for each reinsurance agreement of the insolvent insurer for which there is net negative consideration for the taxable year by the appropriate percentage specified in section 848(c)(1) for the category of specified insurance contracts reinsured by the agreement;

(B) Sum the results for each agreement;

(C) Calculate the ratio between the results in paragraphs (i)(4)(iii) (A) and (B) of this section for each agreement; and

(D) Multiply that result by the increase in the excess negative capitalization amount of the insolvent insurer for the taxable year.

(iv) ***Manner of making election.*** To make an election under paragraph (i)(4) of this section, each party to the reinsurance agreement must attach an election statement to its federal income tax return (including an amended return) for the taxable year for which the election is effective. The election statement must identify the reinsurance agreement for which the joint election under this paragraph (i)(4) has been made, state the amount of the reduction to the insolvent insurance company's excess negative capitalization amount that is attributable to the agreement, and be signed by both parties. An election under this paragraph (i)(4) is effective for the taxable year specified in the election statement, and may not be revoked without the consent of the Commissioner.

(v) ***Presumptions relating to the insolvency of an insurance company undergoing a court supervised rehabilitation or similar state proceeding.*** For purposes of this paragraph (i)(4), an insurance company which is undergoing a rehabilitation, conservatorship, or similar state proceeding shall be presumed to be insolvent if the state proceeding results in—

(A) An order of the state court finding that the fair market value of the insurance company's assets is less than its liabilities;

(B) The use of funds, guarantees, or reinsurance from a guaranty association;

(C) A reduction of the policyholders' available account balances; or

(D) A substantial limitation on access to funds (for example, a partial or total moratorium on policyholder withdrawals or surrenders that applies for a period of 5 years).

(vi) ***Example.*** The principles of this paragraph (i)(4) are illustrated by the following example.

> *Example.* (i) An insurance company (L1) is the subject of a rehabilitation proceeding under the supervision of a state court. The state court has made a finding that the fair market value of L1's assets is less than its liabilities. On December 31, 1993, L1 transfers a block of individual life insurance contracts to an unrelated insurance company (L2) under an assumption reinsurance agreement whereby L2 becomes solely liable to the policyholders under the contracts reinsured. Under the agreement, L1 agrees to pay L2 $2,000,000 for assuming the life insurance contracts. This negative net consideration causes L1 to incur an excess negative capitalization amount of $138,600 for the 1993 taxable year. L1 has no other reinsurance agreements for the taxable year.
> (ii) As part of the reinsurance agreement, L1 and L2 agree to make an election under paragraph (i)(4) of this section. Under the election, L1 agrees to forgo the carryover of the $138,600 excess negative capitalization amount for future taxable years. L2 must include the $2,000,000 net positive consideration for the reinsurance agreement in its gross amount of premiums and other consideration. L2 reduces its specified policy acquisition expenses for the 1993 taxable year by $138,600.

(j) ***Ceding commissions with respect to reinsurance of contracts other than specified insurance contracts.*** A ceding commission incurred with respect to the reinsurance of an insurance contract that is not a specified insurance contract is not subject to the provisions of section 848(g).

(k) ***Effective dates*** —

(1) ***In general.*** Unless otherwise specified in this paragraph, the rules of this section are effective for the taxable years of an insurance company beginning after November 14, 1991.

(2) ***Reduction in the amount of net negative consideration to ensure consistency of capitalization for reinsurance agreements.*** Section 1.848-2(g) (which provides for an adjustment to ensure consistency) is effective for—

(i) All amounts arising under any reinsurance agreement entered into after November 14, 1991; and

(ii) All amounts arising under any reinsurance agreement for taxable years beginning after December 31, 1991, without regard to the date on which the reinsurance agreement was entered into.

(3) ***Net consideration rules.*** Section 1.848-2(f) (which provides rules for determining the net consideration for a reinsurance agreement) applies to—

(i) Amounts arising in taxable years beginning after December 31, 1991, under a reinsurance agreement entered into after November 14, 1991; and

(ii) Amounts arising in taxable years beginning after December 31, 1994, under a reinsurance agreement entered into before November 15, 1991.

(4) ***Determination of the date on which a reinsurance agreement is entered into.*** A reinsurance agreement is considered entered into at the earlier of—

(i) The date of the reinsurance agreement; or

(ii) The date of a binding written agreement to enter into a reinsurance transaction if the written agreement evidences the parties' agreement on substantially all material items relating to the reinsurance transaction.

(5) ***Special rule for certain reinsurance agreements with parties not subject to U.S. taxation.*** The election and special rules in paragraph (h) of this section relating to the determination of amounts required to be capitalized on reinsurance agreements with parties not subject to United States taxation apply to taxable years ending on or after September 30, 1990.

(6) ***Carryover of excess negative capitalization amount.*** The provisions of paragraph (i) of this section, including the special rule for the treatment of excess negative capitalization amounts of insolvent insurance companies, are affected with respect to amounts arising in taxable years ending on or after September 30, 1990.

[T.D. 8456, 57 FR 61821, Dec. 29, 1992; 58 FR 7987, Feb. 11, 1993; 59 FR 947, Jan. 7, 1994]

§ 1.848-3 Interim rules for certain reinsurance agreements.

(a) ***Scope and effective dates.*** The rules of this section apply in determining net premiums for a reinsurance agreement with respect to—

(1) Amounts arising in taxable years beginning before January 1, 1992, under a reinsurance agreement entered into after November 14, 1991; and

(2) Amounts arising in taxable years beginning before January 1, 1995, under a reinsurance agreement entered into before November 15, 1991.

(b) ***Interim rules.*** In determining a company's gross amount of premiums and other consideration under section 848(d)(1)(A) and premiums and other consideration incurred for reinsurance under section 848(d)(1)(B), the general rules of subchapter L of the Internal Revenue Code apply with the adjustments and special rules set forth in paragraph (c) of this section. Except as provided in paragraph (c)(5) of this section (which applies to modified coinsurance transactions), the gross amount of premiums and other consideration is determined without any reduction for ceding commissions, annual allowances, reimbursements of claims and benefits, or other amounts incurred by a reinsurer with respect to reinsured contracts.

(c) ***Adjustment and special rules.*** This paragraph sets forth certain adjustments and special rules that apply for reinsurance agreements in determining the gross amount of premiums and other consideration under section 848(d)(1)(A) and premiums and other considerations incurred for reinsurance under section 848(d)(1)(B).

(1) ***Assumption reinsurance.*** The ceding company must treat the gross amount of consideration incurred with respect to an assumption reinsurance agreement as premiums and other consideration incurred for reinsurance under section 848(d)(1)(B). The reinsurance must include the same amount in the gross amount of premiums and other consideration under section 848(d)(1)(A). For rules relating to the determination and treatment of ceding commissions, see paragraph (c)(3) of this section.

(2) ***Reimbursable dividends.*** The reinsurer must treat the amount of policyholder dividends reimbursable to the ceding company (other than under a modified coinsurance agreement covered by paragraph (c)(5) of this section) as a return premium under section 848(d)(1)(B). The ceding company must include the same amount in the gross amount of premiums and other consideration under section 848(d)(1)(A). The amount of any experience-related refund due the ceding company is treated as a policyholder dividend reimbursable to the ceding company.

(3) ***Ceding commissions*** —

(i) ***In general.*** The reinsurer must treat ceding commissions as a general deduction. The ceding company must treat ceding commissions as non-premium related income under section 803(a)(3). The ceding company may not reduce its general deductions by the amount of the ceding commission.

(ii) ***Amount of ceding commission.*** For purposes of this section, the amount of a ceding commission equals the excess, if any, of—

(A) The increase in the reinsurer's tax reserves resulting from the reinsurance agreement (computed in accordance with section 807(d)); over

(B) The gross consideration incurred by the ceding company for the reinsurance agreement, less any amount incurred by the reinsurer as part of the reinsurance agreement.

(4) ***Termination payments.*** The reinsurer must treat the gross amount of premiums and other consideration payable as a termination payment to the ceding company (including the tax reserves on the reinsured contracts) as premiums and other consideration incurred for reinsurance under section 848(d)(1)(B). The ceding company must include the same amount in the gross amount of premiums and other consideration under section 848(d)(1)(A). This paragraph does not apply to modified coinsurance agreements.

(5) ***Modified coinsurance agreements.*** In the case of a modified coinsurance agreement, the parties must determine their net premiums on a net consideration basis as described in § 1.848-2(f)(5).

(D) *Examples.* The principles of this section are illustrated by the following examples.

Example 1. On July 1, 1991, an insurance company (L1) transfers a block of individual life insurance contracts to an unrelated insurance company (L2) under an arrangement whereby L2 becomes solely liable to the policy holder under the contracts reinsured. The tax reserves on the reinsured contracts are $100,000. Under the assumption reinsurance agreement, L1 pays L2 $83,000 for assuming the life insurance contracts. Under paragraph (c)(3) of this section, since the increase in L2's tax reserves ($100,000) exceeds the net consideration transferred by L1 ($83,000), the reinsurance agreement provides for a

ceding commission. The ceding commission equals $17,000 ($100,000-$83,000). Under paragraph (c)(3) of this section, L1 reduces its gross amount of premiums and other consideration for the 1991 taxable year under section 848(d)(1)(B) by the $100,000 premium incurred for reinsurance, and L2 includes the $100,000 premium for reinsurance in its gross amount of premiums and other consideration under section 848(d)(1)(A). L1 treats the $17,000 ceding commission as non-premium related income and section 803 (a)(3).

Example 2. On July 1, 1991, a life insurance company (L1) transfers a block of individual life insurance contracts to an unrelated insurance company (L2) under an arrangement whereby L2 becomes solely liable to the policyholder under the contracts reinsured. The tax reserves on the reinsured contracts are $100,000. Under the assumption reinsurance agreement, L1 pays L2 $100,000 for assuming the contracts, and L2 pays L1 a $17,000 ceding commission. Under paragraph (c)(1) of this section, L1 reduces its gross amount of premiums and other consideration under section 848(d)(1)(B) by $100,000. L2 includes $100,000 in its gross amount of premiums and other consideration under section 848(d)(1)(A). Under paragraph (c)(3) of this section, since the increase in L2's tax reserves ($100,000) exceeds the net consideration transferred by L1, the reinsurance agreement provides for a ceding commission. The ceding commission equals $17,000 ($100,000 increase in L2's tax reserves less $83,000 net consideration transferred by L1). L1 treats the $17,000 ceding commission as non-premium related income under section 803(a)(3).

Example 3. On July 1, 1991, a life insurance company (L1) transfers a block of individual life insurance contracts to an unrelated insurance company (L2) under an arrangement whereby L2 becomes solely liable to the policyholder under the contracts reinsured. Under the assumption reinsurance agreement, L1 transfers assets of $105,000 to L2. The tax reserves on the reinsured contracts are $100,000. Under paragraph (c)(1) of this section, L1 reduces its gross amount of premiums and other consideration under section 848(d)(1)(B) by $105,000, and L2 increases its gross amount of premiums and other consideration under section 848(d)(1)(A) by $105,000. Since the net consideration transferred by L1 exceeds the increase in L2's tax reserves, there is no ceding commission under paragraph (c)(3) of this section.

Example 4. (i) On June 30, 1991, a life insurance company (L1) reinsures 40% of certain individual life insurance contracts to be issued after that date with an unrelated insurance company (L2) under an agreement whereby L1 remains directly liable to the policyholders with respect to the contracts reinsured. The agreement provides that L2 is credited with 40% of any premiums received with respect to the reinsured contracts, but must indemnify L1 for 40% of any claims, expenses, and policyholder dividends. During the period from July 1 through December 31, 1991, L1 has the following income and expense items with respect to the reinsured policies:

Item	Income	Expense
Premiums	$8,000	
Benefits paid		$1,000
Commissions		6,000
Policyholder dividends		500

Item	Income	Expense
Total		7,500

(ii) Under paragraphs (b) and (c)(2) of this section, L1 includes $8,200 in its gross amount of premiums and other consideration under section 848(d)(1)(A) ($8,000 gross premiums on the reinsured contracts plus $200 of policyholder dividends reimbursed by L2 ($500 × 40%). L1 reduces its gross amount of premiums and other consideration by $3,200 (40% × $8,000) as premiums and other consideration incurred for reinsurance under section 848(d)(1)(B). The benefits and commissions incurred by L1 with respect to the reinsured contracts do not reduce L1's gross amount of premiums and other consideration under section 848(d)(1)(B). L2 includes $3,200 in its gross amount of premiums and other consideration (40% × $8,000) and is treated as having paid return premiums of $200 (the amount of reimbursable dividends paid to L1). L2 is also treated as having incurred the following expenses with respect to the reinsured contracts: $400 as benefits paid (40% × $1,000) and $2,400 as commissions expense (40% × $6,000). Under paragraph (b) of this section, these expenses do not reduce L2's gross amount of premiums and other consideration under section 848(d)(1)(A).

Example 5. On December 31, 1991, an insurance company (L1) terminates a reinsurance agreement with an unrelated insurance company (L2). The termination applies to a reinsurance agreement under which L1 had ceded 40% of its liability on a block of individual life insurance contracts to L2. Upon termination of the reinsurance agreement, L2 makes a final payment of $116,000 to L1 for assuming full liability under the contracts. The tax reserves attributable to L2's portion of the reinsured contracts are $120,000. Under paragraph (c)(4) of this section, L2 reduces its gross amount of premiums and other consideration under section 848(d)(1)(B) by $120,000. L1 includes $120,000 in its gross amount of premiums and other consideration under section 848(d)(1)(A).

Example 6. (i) On June 30, 1991, an insurance company (L1) reinsures 40% of its existing life insurance contracts with an unrelated life insurance company (L2) under a modified coinsurance agreement. For the period July 1, 1991 through December 31, 1991, L1 reports the following income and expense items with respect to L2's 40% share of the reinsured contracts:

Item	Income	Expense
Premiums	$10,000	
Benefits paid		$4,000
Policyholder dividends		500
Reserve adjustment		1,500

Item	Income	Expense
Total		6,000

(ii) Pursuant to paragraph (c)(5) of this section, L1 reduces its gross amount of premiums and other consideration under section 848(d)(1)(B) by the $4,000 net consideration for the modified coinsurance agreement ($10,000-$6,000). L2 includes the $4,000 net consideration in its gross amount of premiums and other consideration under section 848(d)(1)(A).

[T.D. 8456, 57 FR 61829, Dec. 29, 1992]

§§ 1.849-1.850 [Reserved]

REGULATED INVESTMENT COMPANIES AND REAL ESTATE INVESTMENT TRUSTS

§ 1.851-1 Definition of regulated investment company.

(a) ***In general.*** The term "regulated investment company" is defined to mean any domestic corporation (other than a personal holding company as defined in section 542) which meets

(1) the requirements of section 851(a) and paragraph (b) of this section, and

(2) the limitations of section 851(b) and § 1.851-2. As to the definition of the term "corporation", see section 7701(a)(3).

(b) ***Requirement.*** To qualify as a regulated investment company, a corporation must be:

(1) Registered at all times during the taxable year, under the Investment Company Act of 1940, as amended (15 U.S.C. 80a-1 to 80b-2), either as a management company or a unit investment trust, or

(2) A common trust fund or similar fund excluded by section 3(c)(3) of the Investment Company Act of 1940 (15 U.S.C. 80a-3(c)) from the definition of "investment company" and not included in the definition of "common trust fund" by section 584(a).

§ 1.851-2 Limitations.

(a) ***Election to be a regulated investment company.*** Under the provisions of section 851(b)(1), a corporation, even though it satisfies the other requirements of part I, subchapter M, chapter 1 of the Code, for the taxable year, will not be considered a regulated investment company for such year, within the meaning of such part I, unless it elects to be a regulated investment company for such taxable year, or has made such an election for a previous taxable year which began after December 31, 1941. The election shall be made by the taxpayer by computing taxable income as a regulated investment company in its return for the first taxable year for which the election is applicable. No other method of making such election is permitted. An election once made is irrevocable for such taxable year and all succeeding taxable years.

(b) ***Gross income requirement*** —

(1) ***General rule.*** A corporation will not be a regulated investment company for a taxable year unless 90 percent of its gross income for that year is income described in paragraph (b)(1)(i) or (ii) of this section. Any loss from the sale or other disposition of stock or securities is not taken into account in the gross income computation.

(i) ***Gross income amounts.*** Income is described in this paragraph (b)(1)(i) if it is gross income derived from:

(A) Dividends;

(B) Interest;

(C) Payments with respect to securities loans (as defined in section 512(a)(5));

(D) Gains from the sale or other disposition of stocks or securities (as defined in section 2(a)(36) of the Investment Company Act of 1940, as amended);

(E) Gains from the sale or other disposition of foreign currencies; or

(F) Other income (including but not limited to gains from options, futures, or forward contracts) derived with respect to the corporation's business of investing in such stock, securities, or currencies.

(ii) ***Income from a publicly traded partnership.*** Income is described in this paragraph (b)(1)(ii) if it is net income derived from an interest in a qualified publicly traded partnership (as defined in section 851(h)).

(2) ***Special rules.***

(i) For purposes of section 851(b)(2)(A) and paragraph (b)(1)(i)(A) of this section, amounts included in gross income for the taxable year under section 951(a)(1)(A) or 1293(a) are treated as dividends only to the extent that, under section 959(a)(1) or 1293(c) (as the case may be), there is a distribution out of the earnings and profits of the taxable year that are attributable to the amounts included in gross income for the taxable year under section 951(a)(1)(A) or 1293(a). For allocation of distributions to earnings and profits of foreign corporations, see § 1.959-3.

(ii) For purposes of subdivision (i) of this subparagraph, if by reason of section 959(a)(1) a distribution of a foreign corporation's earnings and profits for a taxable year described in section 959(c)(2) is not included in a shareholder's gross income, then such distribution shall be allocated proportionately between amounts attributable to amounts included under each clause of section 951(a)(1)(A). Thus, for example, M is a United States shareholder in X Corporation, a controlled foreign corporation. M and X each use the calendar year as the taxable year. For 1977, M is required by section 951(a)(1)(a) to include $3,000 in its gross income, $1,000 of which is included under clause (i) thereof. In 1977, M received a distribution described in section 959(c)(2) of $2,700 out of X's earnings and profits for 1977, which is, by reason of section 959(a)(1), excluded from M's gross income. The amount of the distribution attributable to the amount included under section 951(a)(1)(A)(i) is $900, i.e., $2,700 multiplied by ($1,000/$3,000).

(iii) If an amount is included in gross income of the corporation referred to in paragraph (b)(1) of this section under section 951(a)(1) or 1293(a) and is derived with respect to that corporation's business of investing in stock, securities, or currencies, then the amount is other income

described in section 851(b)(2)(A) and paragraph (b)(1)(i)(F) of this section. Notwithstanding paragraph (d) of this section, a taxpayer may rely on the rule in this paragraph (b)(2)(iii) for taxable years that begin after September 28, 2016.

(c) ***Diversification of investments.***

(1) Subparagraph (A) of section 851(b)(4) requires that at the close of each quarter of the taxable year at least 50 percent of the value of the total assets of the taxpayer corporation be represented by one or more of the following:

(i) Cash and cash items, including receivables;

(ii) Government securities;

(iii) Securities of other regulated investment companies; or

(iv) Securities (other than those described in subdivisions (ii) and (iii) of this subparagraph) of any one or more issuers which meet the following limitations: (*a*) The entire amount of the securities of the issuer owned by the taxpayer corporation is not greater in value than 5 percent of the value of the total assets of the taxpayer corporation, and (*b*) the entire amount of the securities of such issuer owned by the taxpayer corporation does not represent more than 10 percent of the outstanding voting securities of such issuer. For the modification of the percentage limitations applicable in the case of certain venture capital investment companies, see section 851(e) and § 1.851-6.

Assuming that at least 50 percent of the value of the total assets of the corporation satisfies the requirements specified in this subparagraph, and that the limiting provisions of subparagraph (B) of section 851(b)(4) and subparagraph (2) of this paragraph are not violated, the corporation will satisfy the requirements of section 851(b)(4), notwithstanding that the remaining assets do not satisfy the diversification requirements of subparagraph (A) of section 851(b)(4). For example, a corporation may own all the stock of another corporation, provided it otherwise meets the requirements of subparagraphs (A) and (B) of section 851(b)(4).

(2) Subparagraph (B) of section 851(b)(4) prohibits the investment at the close of each quarter of the taxable year of more than 25 percent of the value of the total assets of the corporation (including the 50 percent or more mentioned in subparagraph (A) of section 851(b)(4)) in the securities (other than Government securities or the securities of other regulated investment companies) of any one issuer, or of two or more issuers which the taxpayer company controls and which are engaged in the same or similar trades or businesses or related trades or businesses, including such issuers as are merely a part of a unit contributing to the completion and sale of a product or the rendering of a particular service. Two or more issuers are not considered as being in the same or similar trades or businesses merely because they are engaged in the broad field of manufacturing or of any other general classification of industry, but issuers shall be construed to be engaged in the same or similar trades or businesses if they are engaged in a distinct branch of business, trade, or manufacture in which they render the same kind of service or produce or deal in the same kind of product, and such service or products fulfill the same economic need. If two or more issuers produce more than one product or render more than one type of service, then the chief product or service of each shall be the basis for determining whether they are in the same trade or business.

(d) ***Applicability date.*** The rules in paragraphs (b)(1) and (b)(2)(i) and (iii) of this section apply to taxable years that begin after June 17, 2019.

[T.D. 6500, 25 FR 11910, Nov. 26, 1960, as amended by T.D. 6598, 27 FR 4090, Apr. 28, 1962; T.D. 7555, 43 FR 32753, July 28, 1978; T.D. 9851, 84 FR 9961, Mar. 19, 2019; 84 FR 17082, Apr. 24, 2019]

§ 1.851-3 Rules applicable to section 851(b)(3).

(a) ***In general.*** In determining the value of the taxpayer's investment in the securities of an issuer, for purposes of subparagraph (B) of section 851(b)(3), there shall be included its proper proportion of the investment of any other corporation, a member of a controlled group, in the securities of such issuer. *See Example 4* in § 1.851-5. For purposes of §§ 1.851-2, 1.851-4, 1.851-5, and 1.851-6, the terms "controls," "controlled group," and "value" have the meaning assigned to them by section 851(c). All other terms used in these sections have the same meaning as when used in the Investment Company Act of 1940 (15 U.S.C., chapter 2D), as amended.

(b) ***Effective/applicability dates.*** The rules of this section apply to quarters that begin on or after December 14, 2015. For purposes of applying the first sentence of section 851(d)(1) to a quarter that begins on or after March 14, 2016, the rules of this section apply in determining whether the taxpayer met the requirements of section 851(b)(3) and

(c) at the close of prior quarters.

[T.D. 9737, 80 FR 55245, Sept. 15, 2015]

§ 1.851-4 Determination of status.

With respect to the effect which certain discrepancies between the value of its various investments and the requirements of section 851(b)(4) and paragraph (c) of § 1.851-2, or the effect that the elimination of such discrepancies will have on the status of a company as a regulated investment company for purposes of part I, subchapter M, chapter 1 of the Code, see section 851(d). A company claiming to be a regulated investment company shall keep sufficient records as to investments so as to be able to show that it has complied with the provisions of section 851 during the taxable year. Such records shall be kept at all times available for inspection by any internal revenue officer or employee and shall be retained so long as the contents thereof may become material in the administration of any internal revenue law.

[T.D. 6598, 27 FR 4090, Apr. 28, 1962]

§ 1.851-5 Examples.

(a) ***Examples.*** The provisions of section 851 may be illustrated by the following examples:

> *Example 1.* (i) Investment Company W at the close of its first quarter of its taxable year has its assets invested as follows:

	Percent
Cash	5
Government securities	10

	Percent
Securities of regulated investment companies	20
Securities of Corporation A	10
Securities of Corporation B	15
Securities of Corporation C	20
Securities of various corporations (not exceeding 5 percent of its assets in any one company)	20
Total	100

(ii) Investment Company W owns all of the voting stock of Corporations A and B, 15 percent of the voting stock of Corporation C, and less than 10 percent of the voting stock of regulated investment companies and various other corporations. Neither Corporation A nor Corporation B owns:
(A) 20 percent or more of the voting stock of any other corporation;

(B) Securities issued by Corporation C; or

(C) Securities issued by any of the regulated investment companies or various corporations whose securities are owned by Investment Company W. Except for Corporation A and Corporation B, none of the corporations (including the regulated investment companies) is a member of a controlled group with Investment Company W.

(iii) Investment Company W meets the requirements under section 851(b)(3) at the end of its first quarter. It complies with subparagraph (A) of section 851(b)(3) because it has 55 percent of its assets invested as provided in that subparagraph. It complies with subparagraph (B) of section 851(b)(3) because it does not have more than 25 percent of its assets invested in the securities of any one issuer, of two or more issuers that it controls, or of one or more qualified publicly traded partnerships (as defined in section 851(h)).

Example 2. (i) Investment Company V at the close of a particular quarter of the taxable year has its assets invested as follows:

	Percent
Cash	10
Government securities	35
Securities of Corporation A	7
Securities of Corporation B	12

	Percent
Securities of Corporation C	15
Securities of Corporation D	21
Total	100

(ii) Investment Company V fails to meet the requirements of subparagraph (A) of section 851(b)(3) since its assets invested in Corporations A, B, C, and D exceed in each case 5 percent of the value of the total assets of the company at the close of the particular quarter.

Example 3. (i) Investment Company X at the close of a particular quarter of the taxable year has its assets invested as follows:

	Percent
Cash and Government securities	20
Securities of Corporation A	5
Securities of Corporation B	10
Securities of Corporation C	25
Securities of various corporations (not exceeding 5 percent of its assets in any one company)	40
Total	100

(ii) Investment Company X owns more than 20 percent of the voting power of Corporations B and C and less than 10 percent of the voting power of all of the other corporations. Corporation B manufactures radios and Corporation C acts as its distributor and also distributes radios for other companies. Investment Company X fails to meet the requirements of subparagraph (B) of section 851(b)(3) since it has 35 percent of its assets invested in the securities of two issuers which it controls and which are engaged in related trades or businesses.

Example 4. (i) Investment Company Y at the close of a particular quarter of its taxable year has its assets invested as follows:

	Percent
Cash and Government securities	15

	Percent
Securities of Corporation K (a regulated investment company)	30
Securities of Corporation A	10
Securities of Corporation B	20
Securities of various corporations (not exceeding 5 percent of its assets in any one company)	25
Total	100

(ii) Corporation K has 20 percent of its assets invested in Corporation L, and Corporation L has 40 percent of its assets invested in Corporation B. Corporation A also has 30 percent of its assets invested in Corporation B. Investment Company Y owns more than 20 percent of the voting power of Corporations A and K. Corporation K owns more than 20 percent of the voting power of Corporation L.

(iii) At the end of that quarter, Investment Company Y is disqualified under subparagraph (B)(i) of section 851(b)(3) because, after applying section 851(c)(1), more than 25 percent of the value of Investment Company Y's total assets is invested in the securities of Corporation B. This result is shown by the following calculation:

	Percent
Percentage of assets invested directly in Corporation B	20.0
Percentage invested indirectly through K and L (30% × 20% × 40%)	2.4
Percentage invested indirectly through A (10% × 30%)	3.0
Total percentage of assets of Investment Company Y invested in Corporation B	25.4

Example 5. Investment Company Z, which keeps its books and makes its returns on the basis of the calendar year, at the close of the first quarter of 2016 meets the requirements of section 851(b)(3) and has 20 percent of its assets invested in Corporation A. Later during the taxable year it makes distributions to its shareholders and because of such distributions, it finds at the close of the taxable year that it has more than 25 percent of its remaining assets invested in Corporation A. Investment Company Z does not lose its status as a regulated investment company for the taxable year 2016 because of such distributions, nor will it lose its status as a regulated investment company for any subsequent year solely as a result of such distributions. *See* section 851(d)(1).

Example 6. Investment Company Q, which keeps its books and makes its returns on the basis of the calendar year, at the close of the first quarter of 2016 meets the requirements of section 851(b)(3) and has 20 percent of its assets invested in Corporation P. At the close of the taxable year 2016, it finds that it has more than 25 percent of its assets invested in Corporation P. This situation results entirely from fluctuations in the market values of the securities in Investment Company Q's portfolio

and is not due in whole or in part to the acquisition of any security or other property. Investment Company Q does not lose its status as a regulated investment company for the taxable year 2016 because of such fluctuations in the market values of the securities in its portfolio, nor will it lose its status as a regulated investment company for any subsequent year solely as a result of such market value fluctuations. *See* section 851(d)(1).

Example 7. (i) Investment Company T at the close of a particular quarter of its taxable year has its assets invested as follows:

	Percent
Cash and Government securities	40
Securities of Corporation A	20
Securities of various qualified publicly traded partnerships (within the meaning of sections 851(b)(3) and 851(h))	15
Securities of various corporations (not exceeding 5 percent of its assets in any one company)	25
Total	100

(ii) Investment Company T owns more than 20 percent of the voting power of Corporation A and less than 10 percent of the voting power of all of the other corporations. Corporation A has 80 percent of its assets invested in qualified publicly traded partnerships.
(iii) Investment Company T is disqualified under subparagraph (B)(iii) of section 851(b)(3), because, after applying section 851(c)(1), more than 25 percent of the value of Investment Company T's total assets is invested in the securities of one or more qualified publicly traded partnerships. This result is shown by the following calculation:

	Percent
Percentage of assets invested directly in qualified publicly traded partnerships	15.0
Percentage invested in qualified publicly traded partnerships indirectly through A (20% × 80%)	16.0
Total percentage of assets of Investment Company T invested in qualified publicly traded partnerships	31.0

(b) ***Effective/applicability dates.*** The rules of this section apply to quarters that begin on or after December 14, 2015. For purposes of applying the first sentence of section 851(d)(1) to a quarter that begins on or after March 14, 2016, the rules of this section apply in determining whether the taxpayer met the requirements of section 851(b)(3) and

(c) at the close of prior quarters.

[T.D. 9737, 80 FR 55245, Sept. 15, 2015]

§ 1.851-6 Investment companies furnishing capital to development corporations.

(a) ***Qualifying requirements.***

(1) In the case of a regulated investment company which furnishes capital to development corporations, section 851 (e) provides an exception to the rule relating to the diversification of investments, made applicable to regulated investment companies by section 851(b)(4)(A). This exception (as provided in paragraph (b) of this section) is available only to registered management investment companies which the Securities and Exchange Commission determines, in accordance with regulations issued by it, and certifies to the Secretary or his delegate, not earlier than 60 days before the close of the taxable year of such investment company, to be principally engaged in the furnishing of capital to other corporations which are principally engaged in the development or exploitation of inventions, technological improvements, new processes, or products not previously generally available.

(2) For the purpose of the aforementioned determination and certification, unless the Securities and Exchange Commission determines otherwise, a corporation shall be considered to be principally engaged in the development or exploitation of inventions, technological improvements, new processes, or products not previously generally available, for at least 10 years after the date of the first acquisition of any security in such corporation or any predecessor thereof by such investment company if at the date of such acquisition the corporation or its predecessor was principally so engaged, and an investment company shall be considered at any date to be furnishing capital to any company whose securities it holds if within 10 years before such date it had acquired any of such securities, or any securities surrendered in exchange therefor, from such other company or its predecessor.

(b) ***Exception to general rule.***

(1) The registered management investment company, which for the taxable year meets the requirements of paragraph (a) of this section, may (subject to the limitations of section 851(e)(2) and paragraph (c) of this section) in the computation of 50 percent of the value of its assets under section 851(b)(4)(A) and paragraph (c)(1) of § 1.851-2 for any quarter of such taxable year, include the value of any securities of an issuer (whether or not the investment company owns more than 10 percent of the outstanding voting securities of such issuer) if at the time of the latest acquisition of any securities of such issuer the basis of all such securities in the hands of the investment company does not exceed 5 percent of the value of the total assets of the investment company at that time. The exception provided by section 851(e)(1) and this subparagraph is not applicable to the securities of an issuer if the investment company has continuously held any security of such issuer or of any predecessor company (as defined in paragraph (d) of this section) for 10 or more years preceding such quarter of the taxable year. The rule of section 851(e)(1) with respect to the relationship of the basis of the securities of an issuer to the value of the total assets of the investment company is, in substance, a qualification of the 5-percent limitation in section 851(b)(4)(A)(ii) and paragraph (c)(1)(iv) of § 1.851-2. All other provisions and requirements of section 851 and §§ 1.851-1 through 1.851-6 are applicable in determining whether such registered management investment company qualifies as a regulated investment company.

(2) The application of subparagraph (1) of this paragraph may be illustrated by the following examples:

> *Example 1.* (i) The XYZ Corporation, a regulated investment company, qualified under

section 851(e) as an investment company furnishing capital to development corporations. On June 30, 1954, the XYZ Corporation purchased 1,000 shares of the stock of the A Corporation at a cost of $30,000. On June 30, 1954, the value of the total assets of the XYZ Corporation was $1,000,000. Its investment in the stock of the A Corporation ($30,000) comprised 3 percent of the value of its total assets, and it therefore met the requirements prescribed by section 851(b)(4)(A)(ii) as modified by section 851(e)(1).

(ii) On June 30, 1955, the value of the total assets of the XYZ Corporation was $1,500,000 and the 1,000 shares of stock of the A Corporation which the XYZ Corporation owned appreciated in value so that they were then worth $60,000. On that date, the XYZ Investment Company increased its investment in the stock of the A Corporation by the purchase of an additional 500 shares of that stock at a total cost of $30,000. The securities of the A Corporation owned by the XYZ Corporation had a value of $90,000 (6 percent of the value of the total assets of the XYZ Corporation) which exceeded the limit provided by section 851(b)(4)(A)(ii). However, the investment of the XYZ Corporation in the A Corporation on June 30, 1955, qualified under section 851(b)(4)(A) as modified by section 851(e)(1), since the basis of those securities to the investment company did not exceed 5 percent of the value of its total assets as of June 30, 1955, illustrated as follows:

Basis to the XYZ Corporation of the A Corporation's stock acquired on June 30, 1954	$30,000
Basis of the 500 shares of the A Corporation's stock acquired by the XYZ Corporation on June 30, 1955	30,000
Basis of all stock of A Corporation	60,000

Basis of stock of A Corporation ($60,000)/Value of XYZ Corporation's total assets at June 30, 1955, time of the latest acquisition ($1,500,000) = 4 percent

Example 2. The same facts existed as in example 1, except that on June 30, 1955, the XYZ Corporation increased its investment in the stock of the A Corporation by the purchase of an additional 1,000 shares of that stock (instead of 500 shares) at a total cost of $60,000. No part of the investment of the XYZ Corporation in the A Corporation qualified under the 5 percent limitation provided by section 851(b)(4)(A) as modified by section 851(e)(1), illustrated as follows:

Basis to the XYZ Corporation of the 1,000 shares of the A Corporation's stock acquired on June 30, 1954	$30,000

Basis of the 1,000 shares of the A Corporation's stock acquired on June 30, 1955	60,000
Total	90,000

Basis of stock of A Corporation ($90,000)/Value of XYZ Corporation's total assets at June 30, 1955, time of the latest acquisition ($1,500,000)= 6 percent

Example 3. The same facts existed as in example 2 and on June 30, 1956, the XYZ Corporation increased its investment in the stock of the A Corporation by the purchase of an additional 100 shares of that stock at a total cost of $6,000. On June 30, 1956, the value of the total assets of the XYZ Corporation was $2,000,000 and on that date the investment in the A Corporation qualified under section 851(b)(4)(A) as modified by section 851(e)(1) illustrated as follows:

Basis to the XYZ Corporation of investments in the A Corporation's stock:	
1,000 shares acquired June 30, 1954	$30,000
1,000 shares acquired June 30, 1955	60,000
100 shares acquired June 30, 1956	6,000
Total	96,000

Basis of stock of A Corporation ($96,000)/Value of XYZ Corporation's total assets at June 30, 1956, time of the latest acquisition ($2,000,000) = 4.8 percent

(c) ***Limitation.*** Section 851(e) and this section do not apply in the quarterly computation of 50 percent of the value of the assets of an investment company under subparagraph (A) of section 851(b)(4) and paragraph (c)(1) of § 1.851-2 for any taxable year if at the close of any quarter of such taxable year more than 25 percent of the value of its total assets (including the 50 percent or more mentioned in such subparagraph (A)) is represented by securities (other than Government securities or the securities of other regulated investment companies) of issuers as to each of which such investment company

(1) holds more than 10 percent of the outstanding voting securities of such issuer, and

(2) has continuously held any security of such issuer (or any security of a predecessor of such issuer) for 10 or more years preceding such quarter, unless the value of its total assets so represented is reduced to 25 percent or less within 30 days after the close of such quarter.

(d) ***Definition of predecessor company.*** As used in section 851(e) and this section, the term “predecessor company” means any corporation the basis of whose securities in the hands of the investment company was, under the provisions of section 358 or corresponding provisions of prior law, the same in whole or in part as the basis of any of the securities of the issuer and any corporation with respect to whose

securities any of the securities of the issuer were received directly or indirectly by the investment company in a transaction or series of transactions involving nonrecognition of gain or loss in whole or in part. The other terms used in this section have the same meaning as when used in section 851(b)(4). See paragraph (c) of § 1.851-2 and § 1.851-3.

§ 1.851-7 Certain unit investment trusts.

(a) ***In general.*** For purposes of the Internal Revenue Code, a unit investment trust (as defined in paragraph (d) of this section) shall not be treated as a person (as defined in section 7701(a)(1)) except for years ending before January 1, 1969. A holder of an interest in such a trust will be treated as directly owning the assets of such trust for taxable years of such holder which end with or within any year of the trust to which section 851(f) and this section apply.

(b) ***Treatment of unit investment trust.*** A unit investment trust shall not be treated as an individual, a trust estate, partnership, association, company, or corporation for purposes of the Internal Revenue Code. Accordingly, a unit investment trust is not a taxpayer subject to taxation under the Internal Revenue Code. No gain or loss will be recognized by the unit investment trust if such trust distributes a holder's proportionate share of the trust assets in exchange for his interest in the trust. Also, no gain or loss will be recognized by the unit investment trust if such trust sells the holder's proportionate share of the trust assets and distributes the proceeds from such share to the holder in exchange for his interest in the trust.

(c) ***Treatment of holder of interest in unit investment trust.***

(1) Each holder of an interest in a unit investment trust shall be treated (to the extent of such interest) as owning a proportionate share of the assets of the trust. Accordingly, if the trust distributes to the holder of an interest in such trust his proportionate share of the trust assets in exchange for his interest in the trust, no gain or loss shall be recognized by such holder (or by any other holder of an interest in such trust). For purposes of this paragraph, each purchase of an interest in the trust by the holder will be considered a separate interest in the trust. Items of income, gain, loss, deduction, or credit received by the trust or a custodian thereof shall be taxed to the holders of interests in the trust (and not to the trust) as though they had received their proportionate share of the items directly on the date such items were received by the trust or custodian.

(2) The basis of the assets of such trust which are treated under subparagraph (1) of this paragraph as being owned by the holder of an interest in such trust shall be the same as the basis of his interest in such trust. Accordingly, the amount of the gain or loss recognized by the holder upon the sale by the unit investment trust of the holder's pro rata share of the trust assets shall be determined with reference the basis, of his interest in the trust. Also, the basis of the assets received by the holder, if the trust distributes a holder's pro rata share of the trust assets in exchange for his interest in the trust, will be the same as the basis of his interest in the trust. If the unit investment trust sells less than all of the holder's pro rata share of the trust assets and the holder retains an interest in the trust, the amount of the gain or loss recognized by the holder upon the sale shall be determined with reference to the basis of his interest in the assets sold by the trust, and the basis of his interest in the trust shall be reduced accordingly. If the trust distributes a portion of the holder's pro rata share of the trust assets in exchange for a portion of his interest in the trust, the basis of the assets received by the holder shall be determined with reference to the basis of his interest in the assets distributed by the trust, and the basis of his interest in the trust shall be reduced accordingly. For purposes of this subparagraph the basis of the holder's interest in assets sold by the trust or distributed to him shall be an amount which bears the same relationship to the basis of his total

interest in the trust that the fair market value of the assets so sold or distributed bears to the fair market value of such total interest in the trust, such fair market value to be determined on the date of such sale or distribution.

(3) The period for which the holder of an interest in such trust has held the assets of the trust which are treated under subparagraph (1) of this paragraph as being owned by him is the same as the period for which such holder has held his interest in such trust. Accordingly, the character of the gain, loss, deduction, or credit recognized by the holder upon the sale by the unit investment trust of the holder's proportionate share of the trust assets shall be determined with reference to the period for which he has held his interest in the trust. Also, the holding period of the assets received by the holder if the trust distributes the holder's proportionate share of the trust assets in exchange for his interest in the trust will include the period for which the holder has held his interest in the trust.

(4) The application of the provisions of this paragraph may be illustrated by the following example:

> *Example.* B entered a periodic payment plan of a unit investment trust (as defined in paragraph (d) of this section) with X Bank as custodian and Z as plan sponsor. Under this plan, upon B's demand, X must either redeem B's interest at a price substantially equal to the fair market value of the number of shares in Y, a management company, which are credited to B's account by X in connection with the unit investment trust, or at B's option distribute such shares of Y to B. B's plan provides for quarterly payments of $1,000. On October 1, 1969, B made his initial quarterly payment of $1,000 and X credited B's account with 110 shares of Y. On December 1, 1969, Y declared and paid a dividend of 25 cents per share, 5 cents of which was designated as a capital gain dividend pursuant to section 852(b)(3) and § 1.852-4. X credited B's account with $27.50 but did not distribute the money to B in 1969. On December 31, 1969, X charged B's account with $1 for custodial fees for calendar year 1969. On January 1, 1970, B paid X $1,000 and X credited B's account with 105 shares of Y. On April 1, 1970, B paid X $1,000 and X credited B's account with 100 shares of Y. B must include in his tax return for 1969 a dividend of $22 and a long-term capital gain of $5.50. In addition, B is entitled to deduct the annual custodial fee of $1 under section 212 of the Code.
> (a) On April 4, 1970, at B's request, X sells the shares of Y credited to B's account (315 shares) for $10 per share and distributes the proceeds ($3,150) to B together with the remaining balance of $26.50 in B's account. The receipt of the $26.50 does not result in any tax consequences to B. B recognizes a long-term capital gain of $100 and a short- term capital gain of $50, computed as follows:
>
> (1) B is treated as owning 110 shares of Y as of October 1, 1969. The basis of these shares is $1,000, and they were sold for $1,100 (110 shares at $10 per share). Therefore, B recognizes a gain from the sale or exchange of a capital asset held for more than 6 months in the amount of $100.

(2) B is treated as owning 105 shares of Y as of January 1, 1970, and 100 shares as of April 1, 1970. With respect to the shares acquired on April 1, 1970, there is no gain recognized as the shares were sold for $1,000, which is B's basis of the shares. The shares acquired on January 1, 1970, were sold for $1,050 (105 shares at $10 per share), and B's basis of these shares is $1,000. Therefore, B recognizes a gain of $50 from the sale or exchange of a capital asset held for not more than 6 months.

(b) On April 4, 1970, at B's request, X distributes to B the shares of Y credited to his account and $26.50 in cash. The receipt of the $26.50 does not result in any tax consequences to B. B does not recognize gain or loss on the distribution of the shares of Y to him. The bases and holding periods of B's interests in Y are as follows:

Number of shares	Date acquired	Basis
110	10-1-69	$9.09
105	1-1-70	9.52
100	4-1-70	10.00

(d) ***Definition.*** A unit investment trust to which this section refers is a business arrangement (other than a segregated asset account, whether or not it holds assets pursuant to a variable annuity contract, under the insurance laws or regulations of a State) which (except for taxable years ending before Jan. 1, 1969)—

(1) Is a unit investment trust (as defined in the Investment Company Act of 1940);

(2) Is registered under such Act;

(3) Issues periodic payment plan certificates (as defined in such Act) in one or more series;

(4) Possesses, as substantially all of its assets, as to all such series, securities issued by—

(i) A single management company (as defined in such Act), and securities acquired pursuant to subparagraph (5) of this paragraph, or

(ii) A single other corporation; and

(5) Has no power to invest in any other securities except securities issued by a single other management company, when permitted by such Act or the rules and regulations of the Securities and Exchange Commission.

(e) ***Investment in two single management companies.***

(1) A unit investment trust may possess securities issued by two or more separate single management companies (as defined in such Act) if—

(i) The trust issues a separate series of periodic payment plan certificates (as defined in such Act) with respect to the securities of each separate single management company which it possesses; and

(ii) None of the periodic payment plan certificates issued by the trust permits joint acquisition of an interest in each series nor the application of payments in whole or in part first to a series issued by one of the single management companies and then to any other series issued by any other single management company.

(2) If a unit investment trust possesses securities of two or more separate single management companies as described in subparagraph (1) of this paragraph and issues a separate series of periodic payment plan certificates with respect to the securities of each such management company, then the holder of an interest in a series shall be treated as the owner of the securities in the single management company represented by such interest.

(i) A holder of an interest in a series of periodic payment plan certificates of a trust who transfers or sells his interest in the series in exchange for an interest in another series of periodic payment plan certificates of the trust shall recognize the gain or loss realized from the transfer or sale as if the trust had sold the shares credited to his interests in the series at fair market value and distributed the proceeds of the sale to him.

(ii) The basis of the interests in the series so acquired by the holder shall be the fair market value of his interests in the series transferred or sold.

(iii) The period for which the holder has held his interest in the series so acquired shall be measured from the date of his acquisition of his interest in that series.

(f) ***Cross references.***

(1) For reporting requirements imposed on custodians of unit investment trusts described in this section, see §§ 1.852-4, 1.852-9, 1.853-3, 1.854-2, and 1.6042-2.

(2) For rules relating to redemptions of certain unit investment trusts not described in this section, see § 1.852-10.

[T.D. 7187, 37 FR 13254, July 6, 1972, as amended by T.D. 7187, 37 FR 20688, Oct. 3, 1972]

§ 1.852-1 Taxation of regulated investment companies.

(a) ***Requirements applicable thereto*** —

(1) ***In general.*** Section 852(a) denies the application of the provisions of part I, subchapter M, chapter 1 of the Code (other than section 852(c), relating to earnings and profits), to a regulated investment company for a taxable year beginning after February 28, 1958, unless—

(i) The deduction for dividends paid for such taxable year as defined in section 561 (computed without regard to capital gain dividends) is equal to at least 90 percent of its investment company taxable income for such taxable year (determined without regard to the provisions of section 852(b)(2)(D) and paragraph (d) of § 1.852-3); and

(ii) The company complies for such taxable year with the provisions of § 1.852-6 (relating to records required to be maintained by a regulated investment company).

See section 853(b)(1)(B) and paragraph (a) of § 1.853-2 for amounts to be added to the dividends paid deduction, and section 855 and § 1.855-1, relating to dividends paid after the close of the taxable year.

(2) ***Special rule for taxable years of regulated investment companies beginning before March 1, 1958.*** The provisions of part I of subchapter M (including section 852(c)) are not applicable to a regulated investment company for a taxable year beginning before March 1, 1958, unless such company meets the requirements of section 852(a) and subparagraph (1) (i) and (ii) of this paragraph.

(b) ***Failure to qualify.*** If a regulated investment company does not meet the requirements of section 852(a) and paragraph (a)(1) (i) and (ii) of this section for the taxable year, it will, even though it may otherwise be classified as a regulated investment company, be taxed in such year as an ordinary corporation and not as a regulated investment company. In such case, none of the provisions of part I of subchapter M (other than section 852(c) in the case of taxable years beginning after February 28, 1958) will be applicable to it. For the rules relating to the applicability of section 852(c), see § 1.852-5.

[T.D. 6598, 27 FR 4091, Apr. 28, 1962]

§ 1.852-2 Method of taxation of regulated investment companies.

(a) ***Imposition of normal tax and surtax.*** Section 852(b)(1) imposes a normal tax and surtax, computed at the rates and in the manner prescribed in section 11, on the investment company taxable income, as defined in section 852(b)(2) and § 1.852-3, for each taxable year of a regulated investment company. The tax is imposed as if the investment company taxable income were the taxable income referred to in section 11. In computing the normal tax under section 11, the regulated investment company's taxable income and the dividends paid deduction (computed without regard to the capital gains dividends) shall both be reduced by the deduction for partially tax-exempt interest provided by section 242.

(b) ***Taxation of capital gains*** —

(1) ***In general.*** Section 852(b)(3)(A) imposes

(i) in the case of a taxable year beginning before January 1, 1970, a tax of 25 percent, or

(ii) in the case of a taxable year beginning after December 31, 1969, a tax determined as provided in section 1201(a) and paragraph (a)(3) of § 1.1201-1, on the excess, if any, of the net long-term capital gain of a regulated investment company (subject to tax under part I, subchapter M, chapter 1 of the Code) over the sum of its net short-term capital loss and its deduction for dividends paid (as defined in section 561) determined with reference to capital gain dividends only. For the definition of capital gain dividend paid by a regulated investment company, see section 852(b)(3)(C) and paragraph (c) of § 1.852-4. In the case of a taxable year ending after December 31, 1969, and beginning before January 1, 1975, such deduction for dividends paid shall first be made from the amount subject to tax in accordance with section 1201(a)(1)(B), to the extent thereof, and then from the amount subject to tax in accordance with section 1201(a)(1)(A). See § 1.852-10, relating to certain distributions in redemption of interests in unit investment trusts which, for purposes of the deduction for dividends paid with reference to capital gain dividends only, are not considered preferential dividends under section 562(c). See section 855 and § 1.855-1, relating to dividends paid after the close of the taxable year.

(2) ***Undistributed capital gains*** —

(i) ***In general.*** A regulated investment company (subject to tax under part I of subchapter M) may, for taxable years beginning after December 31, 1956, designate under section 852(b)(3)(D) an amount of undistributed capital gains to each shareholder of the company. For the definition of

the term "undistributed capital gains" and for the treatment of such amounts by a shareholder, see paragraph (b)(2) of § 1.852-4. For the rules relating to the method of making such designation, the returns to be filed, and the payment of the tax in such cases, see paragraph (a) of § 1.852-9.

(ii) ***Effect on earnings and profits of a regulated investment company.*** If a regulated investment company designates an amount as undistributed capital gains for a taxable year, the earnings and profits of such regulated investment company for such taxable year shall be reduced by the total amount of the undistributed capital gains so designated. In such case, its capital account shall be increased—

(*a*) In the case of a taxable year ending before January 1, 1970, by 75 percent of the total amount designated,

(*b*) In the case of a taxable year ending after December 31, 1969, and beginning before January 1, 1975, by the total amount designated decreased by the amount of tax imposed by section 852(b)(3)(A) with respect to such amount, or

(*c*) In the case of a taxable year beginning after December 31, 1974, by 70 percent of the total amount designated. The earnings and profits of a regulated investment company shall not be reduced by the amount of tax which is imposed by section 852(b)(3)(A) on an amount designated as undistributed capital gains and which is paid by the corporation but deemed paid by the shareholder.

[T.D. 6500, 25 FR 11910, Nov. 26, 1960, as amended by T.D. 6598, 27 FR 4091, Apr. 28, 1962; T.D. 6921, 32 FR 8754, June 20, 1967; T.D. 7337, 39 FR 44972, Dec. 30, 1974]

§ 1.852-3 Investment company taxable income.

Section 852(b)(2) requires certain adjustments to be made to convert taxable income of the investment company to investment company taxable income, as follows:

(a) The excess, if any, of the net long-term capital gain over the net short-term capital loss shall be excluded;

(b) The net operating loss deduction provided in section 172 shall not be allowed;

(c) The special deductions provided in part VIII (section 241 and following, except section 248), subchapter B, chapter 1 of the Code, shall not be allowed. Those not allowed are the deduction for partially tax-exempt interest provided by section 242, the deductions for dividends received provided by sections 243, 244, and 245, and the deduction for certain dividends paid provided by section 247. However, the deduction provided by section 248 (relating to organizational expenditures), otherwise allowable in computing taxable income, shall likewise be allowed in computing the investment company taxable income. See section 852(b)(1) and paragraph (a) of § 1.852-2 for treatment of the deduction for partially tax-exempt interest (provided by section 242) for purposes of computing the normal tax under section 11;

(d) The deduction for dividends paid (as defined in section 561) shall be allowed, but shall be computed without regard to capital gains dividends (as defined in section 852(b)(3)(C) and paragraph (c) of § 1.852-4); and

(e) The taxable income shall be computed without regard to section 443(b). Thus, the taxable income for a period of less than 12 months shall not be placed on an annual basis even though such short taxable year results from a change of accounting period.

§ 1.852-4 Method of taxation of shareholders of regulated investment companies.

(a) *Ordinary income.*

(1) Except as otherwise provided in paragraph (b) of this section (relating to capital gains), a shareholder receiving dividends from a regulated investment company shall include such dividends in gross income for the taxable year in which they are received.

(2) See section 853 (b)(2) and (c) and paragraph (b) of § 1.853-2 and § 1.853-3 for the treatment by shareholders of dividends received from a regulated investment company which has made an election under section 853(a) with respect to the foreign tax credit. See section 854 and §§ 1.854-1 through 1.854-3 for limitations applicable to dividends received from regulated investment companies for the purpose of the credit under section 34 (for dividends received on or before December 31, 1964), the exclusion from gross income under section 116, and the deduction under section 243. See section 855 (b) and (d) and paragraphs (c) and (f) of § 1.855-1 for treatment by shareholders of dividends paid by a regulated investment company after the close of the taxable year in the case of an election under section 855(a).

(b) *Capital gains* —

(1) *In general.* Under section 852(b)(3)(B), shareholders of a regulated investment company who receive capital gain dividends (as defined in paragraph (c) of this section), in respect of the capital gains of an investment company for a taxable year for which it is taxable under part I, subchapter M, chapter 1 of the Code, as a regulated investment company, shall treat such capital gain dividends as gains from the sale or exchange of capital assets held for more than 1 year (6 months for taxable years beginning before 1977; 9 months for taxable years beginning in 1977) and realized in the taxable year of the shareholder in which the dividend was received. In the case of dividends with respect to any taxable year of a regulated investment company ending after December 31, 1969, and beginning before January 1, 1975, the portion of a shareholder's capital gain dividend to which section 1201(d) (1) or (2) applies is the portion so designated by the regulated investment company pursuant to paragraph (c)(2) of this section.

(2) *Undistributed capital gains.*

(i) A person who is a shareholder of a regulated investment company at the close of a taxable year of such company for which it is taxable under part I of subchapter M shall include in his gross income as a gain from the sale or exchange of a capital asset held for more than 1 year (6 months for taxable years beginning before 1977; 9 months for taxable years beginning in 1977) any amount of undistributed capital gains. The term “undistributed capital gains” means the amount designated as undistributed capital gains in accordance with paragraph (a) of § 1.852-9, but the amount so designated shall not exceed the shareholder's proportionate part of the amount subject to tax under section 852(b)(3)(A). Such amount shall be included in gross income for the taxable year of the shareholder in which falls the last day of the taxable year of the regulated investment company in respect of which the undistributed capital gains were designated. The amount of such gains designated under paragraph (a) of § 1.852-9 as gain described in section 1201(d) (1) or (2) shall be included in the shareholder's gross income as gain described in section 1201(d) (1) or (2). For certain administrative provisions relating to undistributed capital gains, see § 1.852-9.

(ii) Any shareholder required to include an amount of undistributed capital gains in gross income under section 852(b)(3)(D)(i) and subdivision (i) of this subparagraph shall be deemed to have paid for his taxable year for which such amount is so includible—

(*a*) In the case of an amount designated with respect to a taxable year of the company ending before January 1, 1970, a tax equal to 25 percent of such amount.

(*b*) In the case of a taxable year of the company ending after December 31, 1969, and beginning before January 1, 1975, a tax equal to the tax designated under paragraph (a)(1) of § 1.852-9 by the regulated investment company as his proportionate share of the capital gains tax paid with respect to such amount, or

(*c*) In the case of an amount designated with respect to a taxable year of the company beginning after December 31, 1974, a tax equal to 30 percent of such amount.

Such shareholder is entitled to a credit or refund of the tax so deemed paid in accordance with the rules provided in paragraph (c)(2) of § 1.852-9.

(iii) Any shareholder required to include an amount of undistributed capital gains in gross income under section 852(b)(3)(D)(i) and subdivision (i) of this subparagraph shall increase the adjusted basis of the shares of stock with respect to which such amount is so includible—

(*a*) In the case of an amount designated with respect to a taxable year of the company ending before January 1, 1970, by 75 percent of such amount.

(*b*) In the case of an amount designated with respect to a taxable year of the company ending after December 31, 1969, and beginning before January 1, 1975, by the amount designated under paragraph (a)(1)(iv) of § 1.852-9 by the regulated investment company, or

(*c*) In the case of an amount designated with respect to a taxable year of the company beginning after December 31, 1974, by 70 percent of such amount.

(iv) For purposes of determining whether the purchaser or seller of a share or regulated investment company stock is the shareholder at the close of such company's taxable year who is required to include an amount of undistributed capital gains in gross income, the amount of the undistributed capital gains shall be treated in the same manner as a cash dividend payable to shareholders of record at the close of the company's taxable year. Thus, if a cash dividend paid to shareholders of record as of the close of the regulated investment company's taxable year would be considered income to the purchaser, then the purchaser is also considered to be the shareholder of such company at the close of its taxable year for purposes of including an amount of undistributed capital gains in gross income. If, in such a case, notice on Form 2439 is, pursuant to paragraph (a)(1) of § 1.852-9, mailed by the regulated investment company to the seller, then the seller shall be considered the nominee of the purchaser and, as such, shall be subject to the provisions in paragraph (b) of § 1.852-9. For rules for determining whether a dividend is income to the purchaser or seller of a share of stock, see paragraph (c) of § 1.61-9.

(3) ***Partners and partnerships.*** If the shareholder required to include an amount of undistributed capital gains in gross income under section 852(b)(3)(D) and subparagraph (2) of this paragraph is a partnership, such amount shall be included in the gross income of the partnership for the taxable year of the partnership in which falls the last day of the taxable year of the regulated investment company in respect of which the undistributed capital gains were designated. The amount so

includible by the partnership shall be taken into account by the partners as distributive shares of the partnership gains and losses from sales or exchanges of capital assets held for more than 1 year (6 months for taxable years beginning before 1977; 9 months for taxable years beginning in 1977) pursuant to section 702(a)(2) and paragraph (a)(2) of § 1.702-1. The tax with respect to the undistributed capital gains is deemed paid by the partnership (under section 852(b)(3)(D)(ii) and subparagraph (2)(ii) of this paragraph), and the credit or refund of such tax shall be taken into account by the partners in accordance with section 702(a)(8) and paragraph (a)(8)(ii) of § 1.702-1 and paragraph (c)(2) of § 1.852-9. In accordance with section 705(a), the partners shall increase the basis of their partnership interests under section 705(a)(1) by the distributive shares of such gains, and shall decrease the basis of their partnership interests by the distributive shares of the amount of the tax under section 705(a)(2)(B) (relating to certain nondeductible expenditures) and paragraph (a)(3) of § 1.705-1.

(4) ***Nonresident alien individuals.*** If the shareholder required to include an amount of undistributed capital gains in gross income under section 852(b)(3)(D) and subparagraph (2) of this paragraph is a nonresident alien individual, such shareholder shall be treated, for purposes of section 871 and the regulations thereunder, as having realized a long-term capital gain in such amount on the last day of the taxable year of the regulated investment company in respect of which the undistributed capital gains were designated.

(5) ***Effect on earnings and profits of corporate shareholders of a regulated investment company.*** If a shareholder required to include an amount of undistributed capital gains in gross income under section 852(b)(3)(D) and subparagraph (2) of this paragraph is a corporation, such corporation, in computing its earnings and profits for the taxable year for which such amount is so includible, shall treat such amount as if it had actually been received and the taxes paid shall include any amount of tax liability satisfied by a credit under section 852(b)(3)(D) and subparagraph (2) of this paragraph.

(c) ***Definition of capital gain dividend*** —

(1) ***General rule.*** A capital gain dividend, as defined in section 852(b)(3)(C), is any dividend or part thereof which is designated by a regulated investment company as a capital gain dividend in a written notice mailed to its shareholders within the period specified in paragraph (c)(4) of this section. If the aggregate amount so designated with respect to the taxable year (including capital gain dividends paid after the close of the taxable year pursuant to an election under section 855) is greater than the excess of the net long-term capital gain over the net short-term capital loss of the taxable year, the portion of each distribution which shall be a capital gain dividend shall be only that proportion of the amount so designated which such excess of the net long-term capital gain over the net short-term capital loss bears to the aggregate amount so designated. For example, a regulated investment company making its return on the calendar year basis advised its shareholders by written notice mailed December 30, 1955, that of a distribution of $500,000 made December 15, 1955, $200,000 constituted a capital gain dividend, amounting to $2 per share. It was later discovered that an error had been made in determining the excess of the net long-term capital gain over the net short-term capital loss of the taxable year, and that such excess was $100,000 instead of $200,000. In such case each shareholder would have received a capital gain dividend of $1 per share instead of $2 per share.

(2) ***Shareholder of record custodian of certain unit investment trusts.*** In any case where a notice is mailed pursuant to subparagraph (1) of this paragraph by a regulated investment company with respect to a taxable year of the regulated investment company ending after December 8, 1970, to a shareholder of record who is a nominee acting as a custodian of a unit investment trust described in section

851(f)(1) and paragraph (d) of § 1.851-7, the nominee shall furnish each holder of an interest in such trust with a written notice mailed on or before the 55th day following the close of the regulated investment company's taxable year. The notice shall designate the holder's proportionate share of the capital gain dividend shown on the notice received by the nominee pursuant to subparagraph (1) of this paragraph. The notice shall include the name and address of the nominee identified as such. This subparagraph shall not apply if the regulated investment company agrees with the nominee to satisfy the notice requirements of subparagraph (1) of this paragraph with respect to each holder of an interest in the unit investment trust whose shares are being held by the nominee as custodian and, not later than 45 days following the close of the company's taxable year, files with the Internal Revenue Service office where the company's income tax return is to be filed for the taxable year, a statement that the holders of the unit investment trust with whom the agreement was made have been directly notified by the regulated investment company. Such statement shall include the name, sponsor, and custodian of each unit investment trust whose holders have been directly notified. The nominee's requirements under this paragraph shall be deemed met if the regulated investment company transmits a copy of such statement to the nominee within such 45-day period; provided however, if the regulated investment company fails or is unable to satisfy the requirements of this subparagraph with respect to the holders of interest in the unit investment trust, it shall so notify the Internal Revenue Service within 45 days following the close of its taxable year. The custodian shall, upon notice by the Internal Revenue Service that the regulated investment company has failed to comply with the agreement, satisfy the requirements of this subparagraph within 30 days of such notice. If a notice under paragraph (c)(1) of this section is mailed within the 120-day period following the date of a determination pursuant to paragraph (c)(4)(ii) of this section, the 120-day period and the 130-day period following the date of the determination shall be substituted for the 45-day period and the 55-day period following the close of the regulated investment company's taxable year prescribed by this subparagraph (2).

(3) ***Subsection (d) gain for certain taxable years.*** In the case of capital gain dividends with respect to any taxable year of a regulated investment company ending after December 31, 1969, and beginning before January 1, 1975 (including capital gain dividends paid after the close of the taxable year pursuant to an election under section 855), the company must include in its written notice under paragraph (c)(1) of this section a statement showing the shareholder's proportionate share of the capital gain dividend which is gain described in section 1201(d)(1) and his proportionate share of such dividend which is gain described in section 1201(d)(2). In determining the portion of the capital gain dividend which, in the hands of a shareholder, is gain described in section 1201(d) (1) or (2), the regulated investment company shall consider that capital gain dividends for a taxable year are first made from its long-term capital gains for such year which are not described in section 1201(d) (1) or (2), to the extent thereof, and then from its long-term capital gains for such year which are described in section 1201(d) (1) or (2). A shareholder's proportionate share of gains which are described in section 1201(d)(1) is the amount which bears the same ratio to the amount paid to him as a capital gain dividend in respect of such year as

(i) the aggregate amount of the company's gains which are described in section 1201(d)(1) and paid to all shareholders bears to

(ii) the aggregate amount of the capital gain dividend paid to all shareholders in respect of such year. A shareholder's proportionate share of gains which are described in section 1201(d)(2) shall be determined in a similar manner. Every regulated investment company shall keep a record of the proportion of each capital gain dividend (to which this paragraph applies) which is gain described in section 1201(d) (1) or (2). If, for his taxable year, a shareholder must include

in his gross income a capital gain dividend to which this paragraph applies, he shall attach to his income tax return for such taxable year a statement showing, with respect to the total of such dividends for such taxable year received from each regulated investment company, the name and address of the regulated investment company from which such dividends are received, the amount of such dividends, the portion of such dividends which was designated as gain described in section 1201(d)(1), and the portion of such dividends which was designated as gain described in section 1201(d)(2).

(4) ***Mailing of written notice to shareholders.***

(i) Except as provided in paragraph (c)(4)(ii) of this section, the written notice designating a dividend or part thereof as a capital gain dividend must be mailed to the shareholders not later than 45 days (30 days for a taxable year ending before February 26, 1964) after the close of the taxable year of the regulated investment company.

(ii) If a determination (as defined in section 860(e)) after November 6, 1978, increases the excess for the taxable year of the net capital gain over the deduction for capital gains dividends paid, then a regulated investment company may designate all or part of any dividend as a capital gain dividend in a written notice mailed to its shareholders at any time during the 120-day period immediately following the date of the determination. The aggregate amount designated during this period may not exceed this increase. A dividend may be designated if it is actually paid during the taxable year, is one paid after the close of the taxable year to which section 855 applies, or is a deficiency dividend (as defined in section 860(f)), including a deficiency dividend paid by an acquiring corporation to which section 381(c)(25) applies. The date of a determination is established under § 1.860-2(b)(1).

(d) ***Special treatment of loss on the sale or exchange of regulated investment company stock held less than 31 days*** —

(1) ***In general.*** Under section 852(b)(4), if any person, with respect to a share of regulated investment company stock acquired by such person after December 31, 1957, and held for a period of less than 31 days, is required by section 852(b)(3) (B) or (D) to include in gross income as a gain from the sale or exchange of a capital asset held for more than six months—

(i) The amount of a capital gain dividend, or

(ii) An amount of undistributed capital gains,

then such person shall, to the extent of such amount, treat any loss on the sale or exchange of such share of stock as a loss from the sale or exchange of a capital asset held for more than 1 year (6 months for taxable years beginning before 1977; 9 months for taxable years beginning in 1977). Such special treatment with respect to the sale of regulated investment company stock held for a period of less than 31 days is applicable to losses for taxable years ending after December 31, 1957.

(2) ***Determination of holding period.*** The rules contained in section 246(c)(3) (relating to the determination of holding periods for purposes of the deduction for dividends received) shall be applied in determining whether, for purposes of section 852(b)(4) and this paragraph, a share of regulated investment company stock has been held for a period of less than 31 days. In applying those rules, however, “30 days” shall be substituted for the number of days specified in subparagraph (B) of section 246(c)(3).

(3) ***Example.*** The application of section 852(b)(4) and this paragraph may be illustrated by the following example:

Example. On December 15, 1958, A purchased a share of stock in the X regulated investment company for $20. The X regulated investment company declared a capital gain dividend of $2 per share to shareholders of record on December 31, 1958. A, therefore, received a capital gain dividend of $2 which, pursuant to section 852(b)(3)(B), he must treat as a gain from the sale or exchange of a capital asset held for more than 6 months. On January 5, 1959, A sold his share of stock in the X regulated investment company for $17.50, which sale resulted in a loss of $2.50. Under section 852(b)(4) and this paragraph, A must treat $2 of such loss (an amount equal to the capital gain dividend received with respect to such share of stock) as a loss from the sale or exchange of a capital asset held for more than 6 months.

(Sec. 7805, 68A Stat. 917; 26 U.S.C. 7805; 860(e) (92 Stat. 2849, 26 U.S.C. 860(e)); sec. 860(g) (92 Stat. 2850, 26 U.S.C. 860(g)))

[T.D. 6500, 25 FR 11910, Nov. 26, 1960, as amended by T.D. 6531, 26 FR 413, Jan. 19, 1961; T.D. 6598, 27 FR 4091, Apr. 28, 1962; T.D. 6777, 29 FR 17809, Dec. 16, 1964; T.D. 6921, 32 FR 8755, June 20, 1967; T.D. 7187, 37 FR 13256, July 6, 1972; T.D. 7337, 39 FR 44972, Dec. 30, 1974; T.D. 7728, 45 FR 72650, Nov. 3, 1980; T.D. 7936, 49 FR 2106, Jan. 18, 1984]

§ 1.852-5 Earnings and profits of a regulated investment company.

(a) Any regulated investment company, whether or not such company meets the requirements of section 852(a) and paragraphs (a)(1) (i) and (ii) of § 1.852-1, shall apply paragraph (b) of this section in computing its earnings and profits for a taxable year beginning after February 28, 1958. However, for a taxable year of a regulated investment company beginning before March 1, 1958, paragraph (b) of this section shall apply only if the regulated investment company meets the requirements of section 852(a) and paragraphs (a)(1) (i) and (ii) of § 1.852-1.

(b) In the determination of the earnings and profits of a regulated investment company, section 852(c) provides that such earnings and profits for any taxable year (but not the accumulated earnings and profits) shall not be reduced by any amount which is not allowable as a deduction in computing its taxable income for the taxable year. Thus, if a corporation would have had earnings and profits of $500,000 for the taxable year except for the fact that it had a net capital loss of $100,000, which amount was not deductible in determining its taxable income, its earnings and profits for that year if it is a regulated investment company would be $500,000. If the regulated investment company had no accumulated earnings and profits at the beginning of the taxable year, in determining its accumulated earnings and profits as of the beginning of the following taxable year, the earnings and profits for the taxable year to be considered in such computation would amount to $400,000 assuming that there had been no distribution from such earnings and profits. If distributions had been made in the taxable year in the amount of the earnings and profits then available for distribution, $500,000, the corporation would have as of the beginning of the following taxable year neither accumulated earnings and profits nor a deficit in accumulated earnings and profits, and would begin such year with its paid-in capital reduced by $100,000, an amount equal to the excess of the $500,000 distributed over the $400,000 accumulated earnings and profits which would otherwise have been carried into the following taxable year.

§ 1.852-6 Records to be kept for purpose of determining whether a corporation claiming to be a regulated investment company is a personal holding company.

(a) Every regulated investment company shall maintain in the internal revenue district in which it is required to file its income tax return permanent records showing the information relative to the actual owners of its stock contained in the written statements required by this section to be demanded from the shareholders. The actual owner of stock includes the person who is required to include in gross income in his return the dividends received on the stock. Such records shall be kept at all times available for inspection by any internal revenue officer or employee, and shall be retained so long as the contents thereof may become material in the administration of any internal revenue law.

(b) For the purpose of determining whether a domestic corporation claiming to be a regulated investment company is a personal holding company as defined in section 542, the permanent records of the company shall show the maximum number of shares of the corporation (including the number and face value of securities convertible into stock of the corporation) to be considered as actually or constructively owned by each of the actual owners of any of its stock at any time during the last half of the corporation's taxable year, as provided in section 544.

(c) Statements setting forth the information (required by paragraph (b) of this section) shall be demanded not later than 30 days after the close of the corporation's taxable year as follows:

(1) In the case of a corporation having 2,000 or more record owners of its stock on any dividend record date, from each record holder of 5 percent or more of its stock; or

(2) In the case of a corporation having less than 2,000 and more than 200 record owners of its stock, on any dividend record date, from each record holder of 1 percent or more of its stock; or

(3) In the case of a corporation having 200 or less record owners of its stock, on any dividend record date, from each record holder of one-half of 1 percent or more of its stock.

When making demand for the written statements required of each shareholder by this paragraph, the company shall inform each of the shareholders of his duty to submit as a part of his income tax return the statements which are required by § 1.852-7 if he fails or refuses to comply with such demand. A list of the persons failing or refusing to comply in whole or in part with a company's demand shall be maintained as a part of its record required by this section. A company which fails to keep such records to show the actual ownership of its outstanding stock as are required by this section shall be taxable as an ordinary corporation and not as a regulated investment company.

§ 1.852-7 Additional information required in returns of shareholders.

Any person who fails or refuses to comply with the demand of a regulated investment company for the written statements which § 1.852-6 requires the company to demand from its shareholders shall submit as a part of his income tax return a statement showing, to the best of his knowledge and belief—

(a) The number of shares actually owned by him at any and all times during the period for which the return is filed in any company claiming to be a regulated investment company;

(b) The dates of acquisition of any such stock during such period and the names and addresses of persons from whom it was acquired;

(c) The dates of disposition of any such stock during such period and the names and addresses of the transferees thereof;

(d) The names and addresses of the members of his family (as defined in section 544(a)(2)); the names and addresses of his partners, if any, in any partnership; and the maximum number of shares, if any, actually owned by each in any corporation claiming to be a regulated investment company, at any time during the last half of the taxable year of such company;

(e) The names and addresses of any corporation, partnership, association, or trust in which he had a beneficial interest to the extent of at least 10 percent at any time during the period for which such return is made, and the number of shares of any corporation claiming to be a regulated investment company actually owned by each;

(f) The maximum number of shares (including the number and face value of securities convertible into stock of the corporation) in any domestic corporation claiming to be a regulated investment company to be considered as constructively owned by such individual at any time during the last half of the corporation's taxable year, as provided in section 544 and the regulations thereunder; and

(g) The amount and date of receipt of each dividend received during such period from every corporation claiming to be a regulated investment company.

§ 1.852-8 Information returns.

Nothing in §§ 1.852-6 and 1.852-7 shall be construed to relieve regulated investment companies or their shareholders from the duty of filing information returns required by regulations prescribed under the provisions of subchapter A, chapter 61 of the Code.

§ 1.852-9 Special procedural requirements applicable to designation under section 852(b)(3)(D).

(a) *Regulated investment company* —

(1) *Notice to shareholders.*

(i) A designation of undistributed capital gains under section 852(b)(3)(D) and paragraph (b)(2)(i) of § 1.852-2 shall be made by notice on Form 2439 mailed by the regulated investment company to each person who is a shareholder of record of the company at the close of the company's taxable year. The notice on Form 2439 shall show the name, address, and employer identification number of the regulated investment company; the taxable year of the company for which the designation is made; the name, address, and identifying number of the shareholder; the amount designated by the company for inclusion by the shareholder in computing his long-term capital gains; and the tax paid with respect thereto by the company which is deemed to have been paid by the shareholder.

(ii) In the case of a designation of undistributed capital gains with respect to a taxable year of the regulated investment company ending after December 31, 1969, and beginning before January 1, 1975, Form 2439 shall also show the shareholder's proportionate share of such gains which is gain described in section 1201(d)(1), his proportionate share of such gains which is gain described in section 1201(d)(2), and the amount (determined pursuant to subdivision (iv) of this subparagraph) by which the shareholder's adjusted basis in his shares shall be increased.

(iii) In determining under subdivision (ii) of this subparagraph the portion of the undistributed capital gains which, in the hands of the shareholder, is gain described in section 1201(d) (1) or (2), the company shall consider that capital gain dividends for a taxable year are made first from its long-term capital gains for such year which are not described in section 1201(d) (1) or (2), to the extent thereof, and then from its long-term capital gains for such year which are

described in section 1201(d) (1) or (2). A shareholder's proportionate share of undistributed capital gains for a taxable year which is gain described in section 1201(d)(1) is the amount which bears the same ratio to the amount included in his income as designated undistributed capital gains for such year as (*a*) the aggregate amount of the company's gains for such year which are described in section 1201(d)(1) and designated as undistributed capital gains bears to (*b*) the aggregate amount of the company's gains for such year which are designated as undistributed capital gains. A shareholder's proportionate share of gains which are described in section 1201(d)(2) shall be determined in a similar manner. Every regulated investment company shall keep a record of the proportion of undistributed capital gains (to which this subdivision applies) which is gain described in section 1201(d) (1) or (2).

(iv) In the case of a designation of undistributed capital gains for any taxable year ending after December 31, 1969, and beginning before January 1, 1975, Form 2439 shall also show with respect to the undistributed capital gains of each shareholder the amount by which such shareholder's adjusted basis in his shares shall be increased under section 852(b)(3)(D)(iii). The amount by which each shareholders' adjusted basis in his shares shall be increased is the amount includible in his gross income with respect to such shares under section 852(b)(3)(D)(i) less the tax which the shareholder is deemed to have paid with respect to such shares. The tax which each shareholder is deemed to have paid with respect to such shares is the amount which bears the same ratio to the amount of the tax imposed by section 852(b)(3)(A) for such year with respect to the aggregate amount of the designated undistributed capital gains as the amount of such gains includible in the shareholder's gross income bears to the aggregate amount of such gains so designated.

(v) Form 2439 shall be prepared in triplicate, and copies B and C of the form shall be mailed to the shareholder on or before the 45th day (30th day for a taxable year ending before February 26, 1964) following the close of the company's taxable year. Copy A of each Form 2439 must be associated with the duplicate copy of the undistributed capital gains tax return of the company (Form 2438), as provided in subparagraph (2)(ii) of this paragraph.

(2) ***Return of undistributed capital gains tax*** —

(i) ***Form 2438.*** Every regulated investment company which designates undistributed capital gains for any taxable year beginning after December 31, 1956, in accordance with subparagraph (1) of this paragraph, shall file for such taxable year an undistributed capital gains tax return on Form 2438 including on such return the total of its undistributed capital gains so designated and the tax with respect thereto. The return on Form 2438 shall be prepared in duplicate and shall set forth fully and clearly the information required to be included therein. The original of Form 2438 shall be filed on or before the 30th day after the close of the company's taxable year with the internal revenue officer designated in instructions applicable to Form 2438. The duplicate copy of form 2438 for the taxable year shall be attached to and filed with the income tax return of the company on Form 1120 for such taxable year.

(ii) ***Copies A of Form 2439.*** For each taxable year which ends on or before December 31, 1965, there shall be submitted with the company's return on Form 2438 all copies A of Form 2439 furnished by the company to its shareholders in accordance with subparagraph (1) of this paragraph. For each taxable year which ends after December 31, 1965, there shall be submitted with the duplicate copy of the company's return on Form 2438, which is attached to and filed with the income tax return of the company on Form 1120 for the taxable year, all copies A of Form 2439 furnished by the company to its shareholders in accordance with subparagraph (1)

of this paragraph. The copies A of Form 2439 shall be accompanied by lists (preferably in the form of adding machine tapes) of the amounts of undistributed capital gains and of the tax paid with respect thereto shown on such forms. The totals of the listed amounts of undistributed capital gains and of tax paid with respect thereto must agree with the corresponding entries on Form 2438.

(3) ***Payment of tax.*** The tax required to be returned on Form 2438 shall be paid by the regulated investment company on or before the 30th day after the close of the company's taxable year to the internal revenue officer with whom the return on Form 2438 is filed.

(b) ***Shareholder of record not actual owner*** —

(1) ***Notice to actual owner.*** In any case in which a notice on Form 2439 is mailed pursuant to paragraph (a)(1) of this section by a regulated investment company to a shareholder of record who is a nominee of the actual owner or owners of the shares of stock to which the notice relates, the nominee shall furnish to each such actual owner notice of the owner's proportionate share of the amounts of undistributed capital gains and tax with respect thereto, as shown on the Form 2439 received by the nominee from the regulated investment company. The nominee's notice to the actual owner shall be prepared in triplicate on Form 2439 and shall contain the information prescribed in paragraph (a)(1) of this section, except that the name and address of the nominee, identified as such, shall be entered on the form in addition to, and in the space provided for, the name and address of the regulated investment company, and the amounts of undistributed capital gains and tax with respect thereto entered on the form shall be the actual owner's proportionate share of the corresponding items shown on the nominee's notice from the regulated investment company. Copies B and C of the Form 2439 prepared by the nominee shall be mailed to the actual owner—

(i) For taxable years of regulated investment companies ending after February 25, 1964, on or before the 75th day (55th day in the case of a nominee who is acting as a custodian of a unit investment trust described in section 851(f)(1) and paragraph (d) of § 1.851-7 for taxable years of regulated investment companies ending after December 8, 1970, and 135th day if the nominee is a resident of a foreign country) following the close of the regulated investment company's taxable year, or

(ii) For taxable years of regulated investment companies ending before February 26, 1964, on or before the 60th day (120th day if the nominee is a resident of a foreign country) following the close of the regulated investment company's taxable year.

(2) ***Transmittal of Form 2439.*** The nominee shall enter the word “Nominee” in the upper right hand corner of copy B of the notice on Form 2439 received by him from the regulated investment company, and on or before the appropriate day specified in subdivision (i) or (ii) of subparagraph (1) of this paragraph shall transmit such copy B, together with all copies A of Form 2439 prepared by him pursuant to subparagraph (1) of this paragraph, to the internal revenue officer with whom his income tax return is required to be filed.

(3) ***Custodian of certain unit investment trusts.*** The requirements of this paragraph shall not apply to a nominee who is acting as a custodian of the unit investment trust described in section 851(f)(1) and paragraph (d) of § 1.851-7 provided that the regulated investment company agrees with the nominee to satisfy the notice requirements of paragraph (a) of this section with respect to each holder of an interest in the unit investment trust whose shares are being held by such nominee as custodian and on or before the 45th day following the close of the company's taxable year, files with the Internal Revenue Service office where the company's income tax return is to be filed for the taxable year, a

statement that the holders of the unit investment trust with whom the agreement was made have been directly notified by the regulated investment company. Such statement shall include the name, sponsor, and custodian of each unit investment trust whose holders have been directly notified. The nominee's requirements under this paragraph shall be deemed met if the regulated investment company transmits a copy of such statement to the nominee within such 45-day period; provided however, if the regulated investment company fails or is unable to satisfy the requirements of this paragraph with respect to the holders of interest in the unit investment trust, it shall so notify the Internal Revenue Service within 45 days following the close of its taxable year. The custodian shall, upon notice by the Internal Revenue Service that the regulated investment company has failed to comply with the agreement, satisfy the requirements of this paragraph within 30 days of such notice.

(c) *Shareholders* —

(1) *Return and Recordkeeping Requirements* —

(i) ***Return requirements for taxable years beginning before January 1, 2002.*** For taxable years beginning before January 1, 2002, the copy B of Form 2439 furnished to a shareholder by the regulated investment company or by a nominee, as provided in § 1.852-9(a) or (b) shall be attached to the income tax return of the shareholder for the taxable year in which the amount of undistributed capital gains is includible in gross income as provided in § 1.852-4(b)(2).

(ii) ***Recordkeeping requirements for taxable years beginning after December 31, 2001.*** For taxable years beginning after December 31, 2001, the shareholder shall retain a copy of Form 2439 for as long as its contents may become material in the administration of any internal revenue law.

(2) *Credit or refund* —

(i) ***In general.*** The amount of the tax paid by the regulated investment company with respect to the undistributed capital gains required under section 852(b)(3)(D) and paragraph (b)(2) of § 1.852-4 to be included by a shareholder in his computation of long-term capital gains for any taxable year is deemed paid by such shareholder under section 852(b)(3)(D)(ii) and such payment constitutes, for purposes of section 6513(a) (relating to time tax considered paid), an advance payment in like amount of the tax imposed under chapter 1 of the Code for such taxable year. In the case of an overpayment of tax within the meaning of section 6401, see section 6402 and the regulations in part 301 of this chapter (Regulations on Procedure and Administration) for rules applicable to the treatment of an overpayment of tax and section 6511 and the regulations in part 301 of this chapter (Regulations on Procedure and Administration) with respect to the limitations applicable to the credit or refund of an overpayment of tax.

(ii) ***Form to be used.*** Claim for refund or credit of the tax deemed to have been paid by a shareholder with respect to an amount of undistributed capital gains shall be made on the shareholder's income tax return for the taxable year in which such amount of undistributed capital gains is includable in gross income. In the case of a shareholder which is a partnership, claim shall be made by the partners on their income tax returns for refund or credit of their distributive shares of the tax deemed to have been paid by the partnership. In the case of a shareholder which is exempt from tax under section 501(a) and to which section 511 does not apply for the taxable year, claim for refund of the tax deemed to have been paid by such shareholder on an amount of undistributed capital gains for such year shall be made on Form 843 and copy B of Form 2439 furnished to such shareholder shall be attached to its claim. For other rules applicable to the filing of claims for credit or refund of an overpayment of tax, see §

301.6402-2 of this chapter (Regulations on Procedure and Administration), relating to claims for credit or refund, and § 301.6402-3 of this chapter, relating to special rules applicable to income tax.

(3) ***Records.*** The shareholder is required to keep copy C of the Form 2439 furnished for the regulated investment company's taxable years ending after December 31, 1969, and beginning before January 1, 1975, as part of his records to show increases in the adjusted basis of his shares in such company.

(d) ***Penalties.*** For criminal penalties for willful failure to file a return, supply information, or pay tax, and for filing a false or fraudulent return, statement, or other document, see sections 7203, 7206, and 7207.

[T.D. 6500, 25 FR 11710, Nov. 26, 1960, as amended by T.D. 6921, 32 FR 8755, June 20, 1967; T.D. 7012, 34 FR 7688, May 15, 1969; T.D. 7187, 37 FR 13256, July 6, 1972; T.D. 7332, 39 FR 44217, Dec. 23, 1974; T.D. 7337, 39 FR 44973, Dec. 30, 1974; T.D. 8989, 67 FR 20031, Apr. 24, 2002; T.D. 9040, 68 FR 4921, Jan. 31, 2003]

§ 1.852-10 Distributions in redemption of interests in unit investment trusts.

(a) ***In general.*** In computing that part of the excess of its net long-term capital gain over net short-term capital loss on which it must pay a capital gains tax, a regulated investment company is allowed under section 852(b)(3)(A)(ii) a deduction for dividends paid (as defined in section 561) determined with reference to capital gains dividends only. Section 561(b) provides that in determining the deduction for dividends paid, the rules provided in section 562 are applicable. Section 562(c) (relating to preferential dividends) provides that the amount of any distribution shall not be considered as a dividend unless such distribution is pro-rata, with no preference to any share of stock as compared with other shares of the same class except to the extent that the former is entitled to such preference.

(b) ***Redemption distributions made by unit investment trust*** —

(1) ***In general.*** Where a unit investment trust (as defined in paragraph (c) of this section) liquidates part of its portfolio represented by shares in a management company in order to make a distribution to a holder of an interest in the trust in redemption of part or all of such interest, and by so doing, the trust realizes net long-term capital gain, that portion of the distribution by the trust which is equal to the amount of the net long-term capital gain realized by the trust on the liquidation of the shares in the management company will not be considered a preferential dividend under section 562(c). For example, where the entire amount of net long-term capital gain realized by the trust on such a liquidation is distributed to the redeeming interest holder, the trust will be allowed the entire amount of net long-term capital gain so realized in determining the deduction under section 852(b)(3)(A)(ii) for dividends paid determined with reference to capital gains dividends only. This paragraph and section 852(d) shall apply only with respect to the capital gain net income (net capital gain for taxable years beginning before January 1, 1977) realized by the trust which is attributable to a redemption by a holder of an interest in such trust. Such dividend may be designated as a capital gain dividend by a written notice to the certificate holder. Such designation should clearly indicate to the holder that the holder's gain or loss on the redemption of the certificate may differ from such designated amount, depending upon the holder's basis for the redeemed certificate, and that the holder's own records are to be used in computing the holder's gain or loss on the redemption of the certificate.

(2) ***Example.*** The application of the provisions of this paragraph may be illustrated by the following example:

Example. B entered into a periodic payment plan contract with X as custodian and Z as plan sponsor under which he purchased a plan certificate of X. Under this contract, upon B's demand, X must redeem B's certificate at a price substantially equal to the value of the number of shares in Y, a management company, which are credited to B's account by X in connection with the unit investment trust. Except for a small amount of cash which X is holding to satisfy liabilities and to invest for other plan certificate holders, all of the assets held by X in connection with the trust consist of shares in Y. Pursuant to the terms of the periodic payment plan contract, 100 shares of Y are credited to B's account. Both X and Y have elected to be treated as regulated investment companies. On March 1, 1965, B notified X that he wished to have his entire interest in the unit investment trust redeemed. In order to redeem B's interest, X caused Y to redeem 100 shares of Y which X held. At the time of redemption, each share of Y had a value of $15. X then distributed the $1,500 to B. X's basis for each of the Y shares which was redeemed was $10. Therefore, X realized a long-term capital gain of $500 ($5 × 100 shares) which is attributable to the redemption by B of his interest in the trust. Under section 852(d), the $500 capital gain distributed to B will not be considered a preferential dividend. Therefore, X is allowed a deduction of $500 under section 852(b)(3)(A)(ii) for dividends paid determined with reference to capital gains dividends only, with the result that X will not pay a capital gains tax with respect to such amount.

(c) ***Definition of unit investment trust.*** A unit investment trust to which paragraph (a) of this section refers is a business arrangement which—

(1) Is registered under the Investment Company Act of 1940 as a unit investment trust;

(2) Issues periodic payment plan certificates (as defined in such Act);

(3) Possesses, as substantially all of its assets, securities issued by a management company (as defined in such Act);

(4) Qualifies as a regulated investment company under section 851; and

(5) Complies with the requirements provided for by section 852(a).

Paragraph (a) of this section does not apply to a unit investment trust described in section 851(f)(1) and paragraph (d) of § 1.851-7.

[T.D. 6921, 32 FR 8755, June 20, 1967, as amended by T.D. 7187, 37 FR 13527, July 6, 1972; T.D. 7728, 45 FR 72650, Nov. 3, 1980]

§ 1.852-11 Treatment of certain losses attributable to periods after October 31 of a taxable year.

(a) ***Outline of provisions.*** This paragraph lists the provisions of this section.

(a) Outline of provisions.

(b) Scope.

(1) In general.

(2) Limitation on application of section.

(c) Post-October capital loss defined.

(1) In general.

(2) Methodology.

(3) October 31 treated as last day of taxable year for purpose of determining taxable income under certain circumstances.

(i) In general.

(ii) Effect on gross income.

(d) Post-October currency loss defined.

(1) Post-October currency loss.

(2) Net foreign currency loss.

(3) Foreign currency gain or loss.

(e) Limitation on capital gain dividends.

(1) In general.

(2) Amount taken into account in current year.

(i) Net capital loss.

(ii) Net long-term capital loss.

(3) Amount taken into account in succeeding year.

(f) Regulated investment company may elect to defer certain losses for purposes of determining taxable income.

(1) In general.

(2) Effect of election in current year.

(3) Amount of loss taken into account in current year.

(i) If entire amount of net capital loss deferred.

(ii) If part of net capital loss deferred.

(A) In general.

(B) Character of capital loss not deferred.

(iii) If entire amount of net long-term capital loss deferred.

(iv) If part of net long-term capital loss deferred.

(v) If entire amount of post-October currency loss deferred.

(vi) If part of post-October currency loss deferred.

(4) Amount of loss taken into account in succeeding year and subsequent years.

(5) Effect on gross income.

(g) Earnings and profits.

(1) General rule.

(2) Special rule—treatment of losses that are deferred for purposes of determining taxable income.

(h) Examples.

(i) Procedure for making election.

(1) In general.

(2) When applicable instructions not available.

(j) Transition rules.

(1) In general.

(2) Retroactive election.

(i) In general.

(ii) Deadline for making election.

(3) Amended return required for succeeding year in certain circumstances.

(i) In general.

(ii) Time for filing amended return.

(4) Retroactive dividend.

(i) In general.

(ii) Method of making election.

(iii) Deduction for dividends paid.

(A) In general.

(B) Limitation on ordinary dividends.

(C) Limitation on capital gain dividends.

(D) Effect on other years.

(iv) Earnings and profits.

(v) Receipt by shareholders.

(vi) Foreign tax election.

(vii) Example.

(5) Certain distributions may be designated retroactively as capital gain dividends.

(k) Effective date.

(b) ***Scope*** —

(1) ***In general.*** This section prescribes the manner in which a regulated investment company must treat a post-October capital loss (as defined in paragraph (c) of this section) or a post-October currency loss (as defined in paragraph (d)(1) of this section) for purposes of determining its taxable income, its earnings and profits, and the amount that it may designate as capital gain dividends for the taxable year in which the loss is incurred and the succeeding taxable year (the “succeeding year”).

(2) ***Limitation on application of section.*** This section shall not apply to any post-October capital loss or post-October currency loss of a regulated investment company attributable to a taxable year for which an election is in effect under section 4982(e)(4) of the Code with respect to the company.

(c) ***Post-October capital loss defined*** —

(1) ***In general.*** For purposes of this section, the term *post-October capital loss* means—

(i) Any net capital loss attributable to the portion of a regulated investment company's taxable year after October 31; or

(ii) If there is no such net capital loss, any net long-term capital loss attributable to the portion of a regulated investment company's taxable year after October 31.

(2) ***Methodology.*** The amount of any net capital loss or any net long-term capital loss attributable to the portion of the regulated investment company's taxable year after October 31 shall be determined in accordance with general tax law principles (other than section 1212) by treating the period beginning on November 1 of the taxable year of the regulated investment company and ending on the last day of such taxable year as though it were the taxable year of the regulated investment company. For purposes of this paragraph (c)(2), any item (other than a capital loss carryover) that is required to be taken into account or any rule that must be applied, for purposes of section 4982, on October 31 as if it were the last day of the regulated investment company's taxable year must also be taken into account or applied in the same manner as required under section 4982, both on October 31 and again on the last day of the regulated investment company's taxable year.

(3) ***October 31 treated as last day of taxable year for purpose of determining taxable income under certain circumstances*** —

(i) ***In general.*** If a regulated investment company has a post-October capital loss for a taxable year, any item that must be marked to market for purposes of section 4982 on October 31 as if it were the last day of the regulated investment company's taxable year must also be marked to market on October 31 and again on the last day of the regulated investment company's taxable year for purposes of determining its taxable income. If the regulated investment company does not have a post-October capital loss for a taxable year, the regulated investment company must treat items that must be marked to market for purposes of section 4982 on October 31 as if it were the last day of the regulated investment company's taxable year as marked to market only on the last day of its taxable year for purposes of determining its taxable income.

(ii) ***Effect on gross income.*** The marking to market of any item on October 31 of a regulated investment company's taxable year for purposes of determining its taxable income under paragraph (c)(3)(i) of this section shall not affect the amount of the gross income of such company for such taxable year for purposes of section 851(b)(2) or (3).

(d) ***Post-October currency loss defined.*** For purposes of this section—

(1) ***Post-October currency loss.*** The term *post-October currency loss* means any net foreign currency loss attributable to the portion of a regulated investment company's taxable year after October 31. For purposes of the preceding sentence, principles similar to those of paragraphs (c)(2) and (c)(3) of this section shall apply.

(2) ***Net foreign currency loss.*** The term “net foreign currency loss” means the excess of foreign currency losses over foreign currency gains.

(3) ***Foreign currency gain or loss.*** The terms “foreign currency gain” and “foreign currency loss” have the same meaning as provided in section 988(b).

(e) ***Limitation on capital gain dividends*** —

(1) ***In general.*** For purposes of determining the amount a regulated investment company may designate as capital gain dividends for a taxable year, the amount of net capital gain for the taxable year shall be determined without regard to any post-October capital loss for such year.

(2) ***Amount taken into account in current year*** —

(i) ***Net capital loss.*** If the post-October capital loss referred to in paragraph (e)(1) of this section is a post-October capital loss as defined in paragraph (c)(1)(i) of this section, the net capital gain of the company for the taxable year in which the loss arose shall be determined without regard to any capital gains or losses (both long-term and short-term) taken into account in computing the post-October capital loss for the taxable year.

(ii) ***Net long-term capital loss.*** If the post-October capital loss referred to in paragraph (e)(1) of this section is a post-October capital loss as defined in paragraph (c)(1)(ii) of this section, the net capital gain of the company for the taxable year in which the loss arose shall be determined without regard to any long-term capital gain or loss taken into account in computing the post-October capital loss for the taxable year.

(3) ***Amount taken into account in succeeding year.*** If a regulated investment company has a post-October capital loss (as defined in paragraph (c)(1)(i) or (c)(1)(ii) of this section) for any taxable year, then, for purposes of determining the amount the company may designate as capital gain dividends for the succeeding year, the net capital gain for the succeeding year shall be determined by treating all gains and losses taken into account in computing the post-October capital loss as arising on the first day of the succeeding year.

(f) ***Regulated investment company may elect to defer certain losses for purposes of determining taxable income —***

(1) ***In general.*** A regulated investment company may elect, in accordance with the procedures of paragraph (i) of this section, to compute its taxable income for a taxable year without regard to part or all of any post-October capital loss or post-October currency loss for that year.

(2) ***Effect of election in current year.*** The taxable income of a regulated investment company for a taxable year to which an election under paragraph (f)(1) of this section applies shall be computed without regard to that part of any post-October capital loss or post-October currency loss to which the election applies.

(3) ***Amount of loss taken into account in current year —***

(i) ***If entire amount of net capital loss deferred.*** If a regulated investment company elects, under paragraph (f)(1) of this section, to defer the entire amount of a post-October capital loss as defined in paragraph (c)(1)(i) of this section, the taxable income of the company for the taxable year in which the loss arose shall be determined without regard to any capital gains or losses (both long-term and short-term) taken into account in computing the post-October capital loss for the taxable year.

(ii) ***If part of net capital loss deferred —***

(A) ***In general.*** If a regulated investment company elects, under paragraph (f)(1) of this section, to defer less than the entire amount of a post-October capital loss as defined in paragraph (c)(1)(i) of this section, the taxable income of the company for the taxable year in which the loss arose shall be determined by including an amount of capital loss taken into account in computing the post-October capital loss for the taxable year equal to the amount of the post-October capital loss that is not deferred. No amount of capital gain taken into account in computing the post-October capital loss for the taxable year shall be taken into account in the determination.

(B) ***Character of capital loss not deferred.*** The capital loss includible in the taxable income of the company under this paragraph (f)(3)(ii) for the taxable year in which the loss arose shall consist first of any short-term capital losses to the extent thereof, and then of any long-term capital losses, taken into account in computing the post-October capital loss for the taxable year.

(iii) ***If entire amount of net long-term capital loss deferred.*** If a regulated investment company elects, under paragraph (f)(1) of this section, to defer the entire amount of a post-October capital loss as defined in paragraph (c)(1)(ii) of this section, the taxable income of the company for the taxable year in which the loss arose shall be determined without regard to any long-term capital gains or losses taken into account in computing the post-October capital loss for the taxable year.

(iv) ***If part of net long-term capital loss deferred.*** If a regulated investment company elects, under paragraph (f)(1) of this section, to defer less than the entire amount of a post-October capital loss as defined in paragraph (c)(1)(ii) of this section, the taxable income of the company for the taxable year in which the loss arose shall be determined by including an amount of long-term capital loss taken into account in computing the post-October capital loss for the taxable year equal to the amount of the post-October capital loss that is not deferred. No amount of long term capital gain taken into account in computing the post-October capital loss for the taxable year shall be taken into account in the determination.

(v) ***If entire amount of post-October currency loss deferred.*** If a regulated investment company elects, under paragraph (f)(1) of this section, to defer the entire amount of a post-October currency loss, the taxable income of the company for the taxable year in which the loss arose shall be determined without regard to any foreign currency gains or losses taken into account in computing the post-October currency loss for the taxable year.

(vi) ***If part of post-October currency loss deferred.*** If a regulated investment company elects, under paragraph (f)(1) of this section, to defer less than the entire amount of a post-October currency loss, the taxable income of the company for the taxable year in which the loss arose shall be determined by including an amount of foreign currency loss taken into account in computing the post-October currency loss for the taxable year equal to the amount of the post-October currency loss that is not deferred. No amount of foreign currency gain taken into account in computing the post-October currency loss for the taxable year shall be taken into account in the determination.

(4) ***Amount of loss taken into account in succeeding year and subsequent years.*** If a regulated investment company has a post-October capital loss or a post-October currency loss for any taxable year and an election under paragraph (f)(1) is made for that year, then, for purposes of determining the taxable income of the company for the succeeding year and all subsequent years, all capital gains and losses taken into account in determining the post-October capital loss, and all foreign currency gains and losses taken into account in determining the post-October currency loss, that are not taken into account under the rules of paragraph (f)(3) of this section in determining the taxable income of the regulated investment company for the taxable year in which the loss arose shall be treated as arising on the first day of the succeeding year.

(5) ***Effect on gross income.*** An election by a regulated investment company to defer any post-October capital loss or any post-October currency loss for a taxable year under paragraph (f)(1) of this section shall not affect the amount of the gross income of such company for such taxable year (or the succeeding year) for purposes of section 851(b)(2) or (3).

(g) *Earnings and profits* —

(1) ***General rule.*** The earnings and profits of a regulated investment company for a taxable year are determined without regard to any post-October capital loss or post-October currency loss for that year. If a regulated investment company distributes with respect to a calendar year amounts in excess of the limitation described in the succeeding sentence, then, with respect to those excess amounts, for the taxable year with respect to which the amounts are distributed, the earnings and profits of the company are computed without regard to the preceding sentence. The limitation described in this sentence is the amount that would be the required distribution for that calendar year under section 4982 if "100 percent" were substituted for each percentage set forth in section 4982(b)(1).

(2) ***Special Rule—Treatment of losses that are deferred for purposes of determining taxable income.*** If a regulated investment company elects to defer, under paragraph (f)(1) of this section, any part of a post-October capital loss or post-October currency loss arising in a taxable year, then, for both the taxable year in which the loss arose and the succeeding year, both the earnings and profits and the accumulated earnings and profits of the company are determined as if the part of the loss so deferred had arisen on the first day of the succeeding year.

(h) ***Examples.*** The provisions of paragraphs (e), (f), and (g) of this section may be illustrated by the following examples. For each example, assume that X is a regulated investment company that computes its income on a calendar year basis, and that no election is in effect under section 4982(e)(4).

Example 1. X has a $25 net foreign currency gain, a $50 net short-term capital loss, and a $75 net long-term capital gain for the post-October period of 1988. X has no post-October currency loss and no post-October capital loss for 1988, and this section does not apply.

Example 2. X has the following capital gains and losses for the periods indicated:

	Long-term	Short-term
01/01 to 10/31/88	115	80
	(15)	(20)
	100	60
11/01 to 12/31/88	75	150
	(150)	(50)
	(75)	100
01/01 to 10/31/89	30	40
	(5)	(20)
	25	20
11/01 to 12/31/89	35	100
	(0)	(50)

	Long-term	Short-term
	35	50

X has a post-October capital loss of $75 for its 1988 taxable year due to a net long-term capital loss for the post-October period of 1988. X does not make an election under paragraph (f)(1) of this section.

(i) *Capital gain dividends.* X may designate up to $100 as a capital gain dividend for 1988 because X must disregard the $75 long-term capital gain and the $150 long-term capital loss for the post-October period of 1988 in computing its net capital gain for this purpose. In computing its net capital gain for 1989 for the purposes of determining the amount it may designate as a capital gain dividend for 1989, X must take into account the $75 long-term capital gain and the $150 long-term capital loss for the post-October period of 1988 in addition to the long-term and short-term capital gains and losses for 1989. Accordingly, X may not designate any amount as a capital gain dividend for 1989.
(ii) *Taxable income.* X must include the $75 long-term capital gain and the $150 long-term capital loss for its post-October period of 1988 in its taxable income for 1988 because it did not make an election under paragraph (f)(1) of this section for 1988. Accordingly, X's taxable income for 1988 will include a net capital gain of $25 and a net short-term capital gain of $160. X's taxable income for 1989 will include a net capital gain of $60 and a net short-term capital gain of $70.

(iii) *Earnings and profits.* X must determine its earnings and profits for 1988 without regard to the $75 long-term capital gain and the $150 long-term capital loss for the post-October period of 1988. X must, however, include the $75 long-term capital gain and $150 long-term capital loss for the post-October period of 1988 in determining its accumulated earnings and profits for 1988. Thus, X includes $260 of capital gain in its earnings and profits for 1988, includes $185 in its accumulated earnings and profits for 1988, and includes $130 of capital gain in its earnings and profits for 1989.

Example 3. Same facts as example 2, except that X elects to defer the entire $75 post-October capital loss for 1988 under paragraph (f)(1) of this section for purposes of determining its taxable income for 1988.
(i) *Capital gain dividends.* Same result as in example 2.

(ii) *Taxable income.* X must compute its taxable income for 1988 without regard to the $75 long-term capital gain and the $150 long-term capital loss for the post-October period of 1988 because it made an election to defer the entire $75 post-October capital loss for 1988

under paragraph (f)(1) of this section. Accordingly, X's taxable income for 1988 will include a net capital gain of $100 and a net short-term capital gain of $160. X must include the $75 long-term capital gain and the $150 long-term capital loss for the post-October period of 1988 in its taxable income for 1989 in addition to the long-term and short-term capital gains and losses for 1989. Accordingly, X's taxable income for 1989 will include a net long-term capital loss of $15 and a net short-term capital gain of $70.

(iii) *Earnings and profits.* For 1988, X must determine both its earnings and profits and its accumulated earnings and profits without regard to the $75 long-term capital gain and $150 long-term capital loss for the post-October period of 1988. In determining both its earnings and profits and its accumulated earnings and profits for 1989, X must include (in addition to the long-term and short-term capital gains and losses for 1989) the $75 long-term capital gain and $150 long-term capital loss for the post-October period of 1988 as if those deferred gains and losses arose on January 1, 1989. Thus, X will include $260 of capital gain in its earnings and profits for 1988 and $55 of capital gain in its earnings and profits for 1989.

Example 4. Same facts as example 2, except that X elects to defer only $50 of the post-October capital loss for 1988 under paragraph (f)(1) of this section for purposes of determining its taxable income for 1988.
(i) *Capital gain dividends.* Same results as in example 2.

(ii) *Taxable income.* X must compute its taxable income for 1988 without regard to the $75 long-term capital gain and $125 of the $150 long-term capital loss for the post-October period of 1988 because it made an election to defer $50 of the $75 post-October capital loss for 1988 under paragraph (f)(1) of this section. Accordingly, X's taxable income for 1988 will include a net capital gain of $75 and a net short-term capital gain of $160. X must include the $75 long-term capital gain and $125 of the $150 long-term capital loss for the post-October period of 1988 in its taxable income for 1989 in addition to the long-term and short-term capital gains and losses for 1989. Accordingly, X's taxable income for 1989 will include a net capital gain of $10 and a net short-term capital gain of $70.

(iii) *Earnings and profits.* X must determine its earnings and profits for 1988 without regard to the $75 long-term capital gain and the $150 long-term capital loss for the post-October period of 1988. X must include $25 of the $150 long-term capital loss for the post-October period of 1988 in determining its accumulated earnings and profits for 1988. In determining both its earnings and profits and its accumulated earnings and profits for 1989, X must include (in addition to the long-term and short-term capital gains and losses for 1989) the $75 long-term capital gain and $125 of the $150 long-term capital loss for the post-October period of 1988 as if those deferred gains and losses arose on January 1, 1989. Thus, X includes $260 of capital gain in its earnings and profits for 1988, includes $235 in its accumulated earnings and profits for 1988, and includes $80 of capital gain in its earnings and profits for 1989.

Example 5. X has the following capital gains and losses for the periods indicated:

	Long-term	Short-term
01/01 to 10/31/88	115	80
	(15)	(20)
	100	60
11/01 to 12/31/88	150	50
	(75)	(150)
	75	(100)
01/01 to 10/31/89	30	40
	(5)	(20)
	25	20
11/01 to 12/31/89	35	100
	(0)	(50)
	35	50

X has a post-October capital loss of $25 for its 1988 taxable year due to a net capital loss for the post-October period of 1988. X does not make an election under paragraph (f)(1) of this section.

(i) *Capital gain dividends.* X may designate up to $100 as a capital gain dividend for 1988 because X must disregard the $150 long-term capital gain, the $75 long-term capital loss, the $50 short-term capital gain, and the $150 short-term capital loss for the post-October period of 1988 in computing its net capital gain for this purpose. In computing its net capital gain for 1989 for purposes of determining the amount it may designate as a capital gain dividend for 1989, X must take into account the $150 long-term capital gain, the $75 long-term capital loss, the $50 short-term capital gain, and the $150 short-term capital loss for the post-October period of 1988 in addition to the long-term and short-term capital gains and losses for 1989. Accordingly, X may designate up to $105 as a capital gain dividend for 1989.
(ii) *Taxable income.* X must include the $150 long-term capital gain, the $75 long-term capital loss, the $50 short-term capital gain, and the $150 short-term capital loss for the post-October period of 1988 in its taxable income for 1988 because it did not make an election under paragraph (f)(1) of this section for 1988. Accordingly, X's taxable income for 1988 will include a net capital gain of $135 (consisting of a net long-term capital gain of $175 and a net short-term capital loss of $40). X's taxable income for 1989 will include a net capital gain of $60 and a net short-term capital gain of $70.

(iii) *Earnings and profits.* X must determine its earnings and profits for 1988 without regard to the $150 long-term capital gain, the $75 long-term capital loss, the $50 short-term capital gain, and the $150 short-term capital loss for the post-October period of 1988. X must, however, include the $150 long-term capital gain, the $75 long-term capital loss, the $50 short-term capital gain, and the $150 short-term capital loss for the post-October period of 1988 in determining its accumulated earnings and profits for 1988. Thus, X includes $160 of capital gain in its earnings and profits for 1988, includes $135 in its accumulated earnings and profits for 1988, and includes $130 of capital gain in its earnings and profits for 1989.

Example 6. Same facts as example 5, except that X elects to defer the entire $25 post-October capital loss for 1988 under paragraph (f)(1) of this section for purposes of determining its taxable income for 1988.
(i) *Capital gain dividends.* Same result as in example 5.

(ii) *Taxable income.* X must compute its taxable income for 1988 without regard to the $150 long-term capital gain, the $75 long-term capital loss, the $50 short-term capital gain, and the $150 short-term capital loss for the post-October period of 1988 because it made an election to defer the entire $25 post-October capital loss for 1988 under paragraph (f)(1) of this section. Accordingly, X's taxable income for 1988 will include a net capital gain of $100 and a net short-term capital gain of $60. X must include the $150 long-term capital gain, the $75 long-term capital loss, the $50 short-term capital gain, and the $150 short-term capital loss for the post-October period of 1988 in its taxable income for 1989 in addition to the long-term and short-term capital gains and losses for 1989. Accordingly, X's taxable income for 1989 will include a net capital gain of $105 (consisting of a net long-term capital gain of $135 and a net short-term capital loss of $30).

(iii) *Earnings and profits.* For 1988, X must determine both its earnings and profits and its accumulated earnings and profits without regard to the $150 long-term capital gain, the $75 long-term capital loss, the $50 short-term capital gain, and the $150 short-term capital loss for the post-October period of 1988. In determining both its earnings and profits and its accumulated earnings and profits for 1989, X must include (in addition to the long-term and short-term capital gains and losses for 1989) the $150 long-term capital gain, the $75 long-term capital loss, the $50 short-term capital gain, and the $150 short-term capital loss for the post-October period of 1988 as if those deferred gains and losses arose on January 1, 1989. Thus, X will include $160 of capital gain in its earnings and profits for 1988 and $105 of capital gain in its earnings and profits for 1989.

Example 7. Same facts as example 5, except that X elects to defer only $20 of the post-October capital loss for 1988 under paragraph (f)(1) of this section for purposes of determining its taxable income for 1988.
(i) *Capital gain dividends.* Same result as in example 5.

(ii) *Taxable income.* X must compute its taxable income for 1988 by including $5 of the $150 short-term capital loss for the post-October period of 1988, but without regard to the $150 long-term capital gain, the $75 long-term capital loss, the $50 short-term capital gain, and $145 of the $150 short-term capital loss for the post-October period of 1988 because it made an election to defer $20 of the $25 post-October capital loss for 1988 under paragraph (f)(1) of this section. Accordingly, X's taxable income for 1988 will include a net capital gain of $100 and a net short-term capital gain of $55. X must include the $150 long-term capital gain, the $75 long-term capital loss, the $50 short-term capital gain, and $145 of the $150 short-term capital loss for the post-October period of 1988 in its taxable income for 1989 in addition to the long-term and short-term capital gains and losses for 1989. Accordingly, X's taxable income for 1989 will include a net capital gain of $110 (consisting of a long-term capital gain of $135 and a net short-term capital loss of $25).

(iii) *Earnings and profits.* X must determine its earnings and profits for 1988 without regard to the $150 long-term capital gain, the $75 long-term capital loss, the $50 short-term capital gain, and the $150 short-term capital loss for the post-October period of 1988. In determining its accumulated earnings and profits for 1988, X must include $5 of the $150 short-term capital loss for the post-October period of 1988. In determining its accumulated earnings and profits for 1989, X must include (in addition to the long-term and short-term capital gains and losses for 1989) the $150 long-term capital gain, the $75 long-term capital loss, the $50 short-term capital gain, and $145 of the $150 short-term capital loss for the post-October period of 1988 as if those deferred gains and losses arose on January 1, 1989. Thus, X includes $160 of capital gain in its earnings and profits for 1988, includes $155 in its accumulated earnings and profits for 1988, and includes $110 of capital gain in its earnings and profits for 1989.

Example 8. X has the following capital gains and losses for the periods indicated:

	Long-term	Short-term
01/01 to 10/31/88	115	80
	(15)	(20)
	100	60
11/01 to 12/31/88	15	25
	(75)	(10)
	(60)	15
01/01 to 10/31/89	80	50
	(5)	(100)
	75	(50)

	Long-term	Short-term
11/01 to 12/31/89	85	40
	(0)	(20)
	85	20

X has a post-October capital loss of $45 for its 1988 taxable year due to a net capital loss for the post-October period of 1988. X does not make an election under paragraph (f)(1) of this section.

(i) *Capital gain dividends.* X may designate up to $100 as a capital gain dividend for 1988 because X must disregard the $15 long-term capital gain, the $75 long-term capital loss, the $25 short-term capital gain, and the $10 short-term capital loss for the post-October period of 1988 in computing its net capital gain for this purpose. In computing its net capital gain for 1989 for purposes of determining the amount it may designate as a capital gain dividend for 1989, X must take into account the $15 long-term capital gain, the $75 long-term capital loss, the $25 short-term capital gain, and the $10 short-term capital loss for the post-October period of 1988 in addition to the long-term and short-term capital gains and losses for 1989. Accordingly, X may designate up to $85 as a capital gain dividend for 1989.
(ii) *Taxable income.* X must include the $15 long-term capital gain, the $75 long-term capital loss, the $25 short-term capital gain, and the $10 short-term capital loss for the post-October period of 1988 in its taxable income for 1988 because it did not make an election under paragraph (f)(1) of this section for 1988. Accordingly, X's taxable income for 1988 will include a net capital gain of $40 and a net short-term capital gain of $75. X's taxable income for 1989 will include a net capital gain of $130 for 1989 (consisting of a net long-term capital gain of $160 and a net short-term capital loss of $30).

(iii) *Earnings and profits.* X must determine its earnings and profits for 1988 without regard to the $15 long-term capital gain, the $75 long-term capital loss, the $25 short-term capital gain, and the $10 short-term capital loss for the post-October period of 1988. X must, however, include the $15 long-term capital gain, the $75 long-term capital loss, the $25 short-term capital gain, and the $10 short-term capital loss for the post-October period of 1988 in determining its accumulated earnings and profits for 1988. Thus, X includes $160 of capital gain in its earnings and profits for 1988, includes $115 in its accumulated earnings and profits for 1988, and includes $130 of capital gain in its earnings and profits for 1989.

Example 9. Same facts as example 8, except that X elects to defer the entire $45 post-October capital loss for 1988 under paragraph (f)(1) of this section for purposes of determining its taxable income for 1988.

(i) *Capital gain dividends.* Same result as in example 8.

(ii) *Taxable income.* X must compute its taxable income for 1988 without regard to the $15 long-term capital gain, the $75 long-term capital loss, the $25 short-term capital gain, and the $10 short-term capital loss for the post-October period of 1988 because it made an election to defer the entire $45 post-October capital loss for 1988 under paragraph (f)(1) of this section. Accordingly, X's taxable income for 1988 will include a net capital gain of $100 and a net short-term capital gain of $60. X must include the $15 long-term capital gain, the $75 long-term capital loss, the $25 short-term capital gain, and the $10 short-term capital loss for the post-October period of 1988 in its taxable income for 1989 in addition to the long-term and short-term capital gains and losses for 1989. Accordingly, X's taxable income for 1989 will include a net capital gain of $85 (consisting of a net long-term capital gain of $100 and a net short-term capital loss of $15).

(iii) *Earnings and profits.* For 1988, X must determine both its earnings and profits and its accumulated earnings and profits without regard to the $15 long-term capital gain, the $75 long-term capital loss, the $25 short-term capital gain, and the $10 short-term capital loss for the post-October period of 1988. In determining both its earnings and profits and its accumulated earnings and profits for 1989, X must include (in addition to the long-term and short-term capital gains and losses for 1989) the $15 long-term capital gain, the $75 long-term capital loss, the $25 short-term capital gain, and the $10 short-term capital loss for the post-October period of 1988 as if those deferred gains and losses arose on January 1, 1989. Thus, X will include $160 of capital gain in its earnings and profits for 1988 and $85 of capital gain in its earnings and profits for 1989.

Example 10. Same facts as example 8, except that X elects to defer only $30 of the post-October capital loss for 1988 under paragraph (f)(1) of this section for purposes of determining its taxable income for 1988.
(i) *Capital gain dividends.* Same result as in example 8.

(ii) *Taxable income.* X must compute its taxable income for 1988 by including $5 of the $75 long-term capital loss and the $10 short-term capital loss for the post-October period of 1988, but without regard to the $15 long-term capital gain, $70 of the $75 long-term capital loss, and the $25 short-term capital gain for the post-October period of 1988 because it made an election to defer $30 of the $45 post-October capital loss for 1988 under paragraph (f)(1) of this section. Accordingly, X's taxable income for 1988 will include a net capital gain of $95 and a net short-term capital gain of $50. X must include the $15 long-term capital gain, $70 of the $75 long-term capital loss, and the $25 short-term capital gain for the post-October period of 1988 in its taxable income for 1989 in addition to the long-term and short-term

capital gains and losses for 1989. Accordingly, X's taxable income for 1989 will include a net capital gain of $100 (consisting of a net long-term capital gain of $105 and a net short-term capital loss of $5).

(iii) *Earnings and profits.* X must determine its earnings and profits for 1988 without regard to the $15 long-term capital gain, the $75 long-term capital loss, the $25 short-term capital gain, and the $10 short-term capital loss for the post-October period of 1988. In determining its accumulated earnings and profits for 1988, X must include $5 of the $75 long-term capital loss and the $10 short-term capital loss for the post-October period of 1988. In determining both its earnings and profits and its accumulated earnings and profits for 1989, X must include (in addition to the long-term and short-term capital gains and losses for 1989) the $15 long-term capital gain, $70 of the $75 long-term capital loss, and the $25 short-term capital gain for the post-October period of 1988 as if those deferred gains and losses arose on January 1, 1989. Thus, X includes $160 of capital gain in its earnings and profits for 1988, includes $145 in its accumulated earnings and profits for 1989, and includes $100 of capital gain in its earnings and profits for 1989 (consisting of a net long-term capital gain of $105 and a net short-term capital loss of $5).

Example 11. X has the following foreign currency gains and losses attributable to the periods indicated:

01/01 to 10/31/88	200
11/01 to 12/31/88	(100)
01/01 to 10/31/89	110
11/01 to 12/31/89	40

X has a $100 post-October currency loss for its 1988 taxable year due to a net foreign currency loss for the post-October period of 1988. X does not make an election under paragraph (f)(1) of this section.

(i) *Taxable income.* X must compute its taxable income for 1988 by including the $100 foreign currency loss for the post-October period of 1988 because it did not make an election under paragraph (f)(1) of this section. Accordingly, X's taxable income for 1988 will include a net foreign currency gain of $100. X's taxable income for 1989 will include a net foreign currency gain of $150.
(ii) *Earnings and profits.* X must determine its earnings and profits for 1988 without regard to the foreign currency loss for the post-October period of 1988. X must, however, include the $100 foreign currency loss for the post-October period 1988 in determining its accumulated earnings and profits for 1988. Thus, X includes $200 of foreign currency gain in its earnings and profits for 1988, includes $100 in its accumulated earnings and profits for 1988, and includes $150 of foreign currency gain in its earnings and profits for 1989.

Example 12. Same facts as example 11, except that X elects to defer the entire $100 post-October currency loss for 1988 under paragraph (f)(1) of this section for purposes of determining its taxable income for 1988.
(i) *Taxable income.* X must compute its taxable income for 1988 without regard to the $100 foreign currency loss for the post-October period of 1988 because it made an election to defer the entire $100 post-October currency loss for 1988 under paragraph (f)(1) of this section. Accordingly, X's taxable income for 1988 will include a net foreign currency gain of $200. X's taxable income for 1989 will include a net foreign currency gain of $50 because X must compute its taxable income for 1989 by including the $100 foreign currency loss for the post-October period of 1988 in addition to the foreign currency gains and losses for 1989.

(ii) *Earnings and profits.* For 1988, X must determine both its earnings and profits and its accumulated earnings and profits without regard to the $100 foreign currency loss for the post-October period of 1988. In determining both its earnings and profits and its accumulated earnings and profits for 1989, X must include (in addition to the foreign currency gains and losses for 1989) the $100 foreign currency loss for the post-October period 1988 as if that deferred loss arose on January 1, 1989. Thus, X will include $200 of foreign currency gain in its earnings and profits for 1988 and $50 of foreign currency gain in its earnings and profits for 1989.

Example 13. Same facts as example 11, except that X elects to defer only $75 of the post-October currency loss under paragraph (f)(1) of this section for purposes of determining its taxable income for 1988.
(i) *Taxable income.* X must compute its taxable income for 1988 by including $25 of the $100 foreign currency loss for the post-October period of 1988, but without regard to $75 of the $100 foreign currency loss for the post-October period of 1988 because it made an election to defer $75 of the $100 post-October currency loss for 1988 under paragraph (f)(1) of this section. Accordingly, X's taxable income for 1988 will include a net foreign currency gain of $175. X's taxable income will include a net foreign currency gain of $75 for 1989 because X must compute its taxable income for 1989 by including $75 of the $100 foreign currency loss for the post-October period of 1988 in addition to the foreign currency gains and losses for 1989.

(ii) *Earnings and profits.* X must determine its earnings and profits for 1988 without regard to the $100 foreign currency loss for the post-October period of 1988. X must, however, include $25 of the $100 foreign currency loss for the post-October period of 1988 in determining its accumulated earnings and profits for 1988. In determining both its earnings and profits and its accumulated earnings and profits for 1989, X must include (in addition to the foreign currency gains and losses for 1989) the $75 of the $100 foreign currency loss for the post-October period of 1988 as if that loss arose on January 1, 1989. Thus, X includes $200 of foreign currency gain in its earnings and profits for 1988, includes $175 in its accumulated earnings and profits for 1988, and includes $75 of foreign currency gain in its earnings and profits for 1989.

(i) *Procedure for making election* —

(1) ***In general.*** Except as provided in paragraph (i)(2) of this section, a regulated investment company may make an election under paragraph (f)(1) of this section for a taxable year to which this section applies by completing its income tax return (including any necessary schedules) for that taxable year in accordance with the instructions for the form that are applicable to the election.

(2) ***When applicable instructions not available.*** If the instructions for the income tax returns of regulated investment companies for a taxable year to which this section applies do not reflect the provisions of this section, a regulated investment company may make an election under paragraph (f)(1) of this section for that year by entering the appropriate amounts on its income tax return (including any necessary schedules) for that year, and by attaching a written statement to the return that states—

(i) The taxable year for which the election under this section is made;

(ii) The fact that the regulated investment company elects to defer all or a part of its post-October capital loss or post-October currency loss for that taxable year for purposes of computing its taxable income under the terms of this section;

(iii) The amount of the post-October capital loss or post-October currency loss that the regulated investment company elects to defer for that taxable year; and

(iv) The name, address, and employer identification number of the regulated investment company.

(j) *Transition rules* —

(1) ***In general.*** For a taxable year ending before March 2, 1990 in which a regulated investment company incurred a post-October capital loss or post-October currency loss, the company may use any method that is consistently applied and in accordance with reasonable business practice to determine the amounts taken into account in that taxable year for purposes of paragraphs (e)(2), (f)(3), and (g) of this section and to determine the amount taken into account in the succeeding year for purposes of paragraphs (e)(3), (f)(4), and (g) of this section. For example, for purposes of paragraph (e), a taxpayer may use a method that treats as incurred in a taxable year all capital gains taken into account in computing the post-October capital loss for that year and an amount of capital loss for such period equal to the amount of such gains and that treats the remaining amount of capital loss for such period as arising on the first day of the succeeding year.

Similarly, for purposes of paragraph (e)(3), a taxpayer may use a method that treats as arising on the first day of the succeeding year only the excess of the capital losses from sales or exchanges after October 31 over the capital gains for such period (that is, the net capital loss or net long-term capital loss for such period).

(2) *Retroactive election* —

(i) ***In general.*** A regulated investment company may make an election (a “retroactive election”) under paragraph (f)(1) for a taxable year with respect to which it has filed an income tax return on or before May 1, 1990 (a “retroactive election year”) by filing an amended return (including any necessary schedules) for the retroactive election year reflecting the appropriate amounts and by attaching a written statement to the return that complies with the requirements of paragraph (i)(2) of this section.

(ii) ***Deadline for making election.*** A retroactive election may be made no later than December 31, 1990.

(3) *Amended return required for succeeding year in certain circumstances* —

(i) ***In general.*** If, at the time a regulated investment company makes a retroactive election under this section, it has already filed an income tax return for the succeeding year, the company must file an amended return for such succeeding year reflecting the appropriate amounts.

(ii) ***Time for filing amended return.*** An amended return required under paragraph (j)(3)(i) of this section must be filed together with the amended return described in paragraph (j)(2)(i).

(4) *Retroactive dividend* —

(i) ***In general.*** A regulated investment company that makes a retroactive election under this section for a retroactive election year may elect to treat any dividend (or portion thereof) declared and paid (or treated as paid under section 852(b)(7)) by the regulated investment company after the retroactive election year and on or before December 31, 1990 as having been paid during the retroactive election year (a "retroactive dividend"). This election shall be irrevocable with respect to the retroactive dividend to which it applies.

(ii) ***Method of making election.*** The election under this paragraph (j)(4) must be made by the regulated investment company by treating the dividend (or portion thereof) to which the election applies as a dividend paid during the retroactive election year in computing its deduction for dividends paid in its tax returns for all applicable years (including the amended return(s) required to be filed under paragraphs (j)(2) and (3) of this section).

(iii) *Deduction for dividends paid* —

(A) ***In general.*** Subject to the rules of sections 561 and 562, a regulated investment company shall include the amount of any retroactive dividend in computing its deduction for dividends paid for the retroactive election year. No deduction for dividends paid shall be allowed under this paragraph (j)(4)(iii)(A) for any amount not paid (or treated as paid under section 852(b)(7)) on or before December 31, 1990.

(B) ***Limitation on ordinary dividends.*** The amount of retroactive dividends (other than retroactive dividends qualifying as capital gain dividends) paid for a retroactive election year under this section shall not exceed the increase, if any, in the investment company taxable income of the regulated investment company (determined without regard to the deduction for dividends paid (as defined in section 561)) that is attributable solely to the regulated investment company having made the retroactive election.

(C) ***Limitation on capital gain dividends.*** The amount of retroactive dividends qualifying as capital gain dividends paid for a retroactive election year under this section shall not exceed the increase, if any, in the amount of the excess described in section 852(b)(3)(A) (relating to the excess of the net capital gain over the deduction for capital gain dividends paid) that is attributable solely to the regulated investment company having made the retroactive election.

(D) ***Effect on other years.*** A retroactive dividend shall not be includible in computing the deduction for dividends paid for—

(*1*) The taxable year in which such distribution is actually paid (or treated as paid under section 852(b)(7)); or

(*2*) Under section 855(a), the taxable year preceding the retroactive election year.

(iv) ***Earnings and profits.*** A retroactive dividend shall be considered as paid out of the earnings and profits of the retroactive election year (computed with the application of sections 852(c) and 855, § 1.852-5, § 1.855-1, and this section), and not out of the earnings and profits of the taxable year in which the distribution is actually paid (or treated as paid under section 852(b)(7)).

(v) ***Receipt by shareholders.*** Except as provided in section 852(b)(7), a retroactive dividend shall be included in the gross income of the shareholders of the regulated investment company for the taxable year in which the dividend is received by them.

(vi) ***Foreign tax election.*** If a regulated investment company to which section 853 (relating to foreign taxes) is applicable for a retroactive election year elects to treat a dividend paid (or treated as paid under section 852(b)(7)) during the taxable year as a retroactive dividend, the shareholders of the regulated investment company shall consider the amounts described in section 853(b)(2) allocable to such distribution as paid or received, as the case may be, in the shareholder's taxable year in which the distribution is made.

(vii) ***Example.*** The provisions of this paragraph (j)(4) may be illustrated by the following example:

> *Example.* X is a regulated investment company that computes its income on a calendar year basis. No election is in effect under section 4982(e)(4). X has the following income for 1988:
>
> **Foreign Currency Gains and Losses**
>
> **Gains and Losses**
>
> Jan. 1-Oct. 31—100
>
> Nov. 1-Dec. 31—(75)
>
> **Capital Gains and Losses**
>
> Jan. 1-Oct. 31—short term, 100; long term, 100
>
> Nov. 1-Dec. 31—short term, 50; long term, (100)
>
> (A) X had investment company taxable income of $175 and no net capital gain for 1988 for taxable income purposes. X distributed $175 of investment company taxable income as an ordinary dividend for 1988.
> (B) If X makes a retroactive election under this section to defer the entire $75 post-October currency loss and the entire $50 post-October capital loss for the post-October period of its 1988 taxable year for purposes of computing its taxable income, that

> deferral increases X's investment company taxable income for 1988 by $25 (due to an increase in foreign currency gain of $75 and a decrease in short-term capital gain of $50) to $200 and increases the excess described in section 852(b)(3)(A) for 1988 by $100 from $0 to $100. The amount that X may treat as a retroactive ordinary dividend is limited to $25, and the amount that X may treat as a retroactive capital gain dividend is limited to $100.

(5) ***Certain distributions may be designated retroactively as capital gain dividends.*** To the extent that a regulated investment company designated as capital gain dividends for a taxable year less than the maximum amount permitted under paragraph (e) of this section for that taxable year, the regulated investment company may designate an additional amount of dividends paid (or treated as paid under sections 852(b)(7) or 855, or paragraph (j)(4) of this section) for the taxable year as capital gain dividends, notwithstanding that a written notice was not mailed to its shareholders within 60 days after the close of the taxable year in which the distribution was paid (or treated as paid under section 852(b)(7)).

(k) ***Effective date.*** the provisions of this section shall apply to taxable years ending after October 31, 1987.

[T.D. 8287, 55 FR 3213, Jan. 31, 1990; 55 FR 7891, Mar. 6, 1990; 55 FR 11110, Mar. 26, 1990. Redesignated and amended by T.D. 8320, 55 FR 50176, Dec. 5, 1990; 56 FR 2808, Jan. 24, 1991; 56 FR 8130, Feb. 27, 1991]

§ 1.852-12 Non-RIC earnings and profits.

(a) ***Applicability of section 852(a)(2)(A)*** —

(1) ***In general.*** An investment company does not satisfy section 852(a)(2)(A) unless—

(i) Part I of subchapter M applied to the company for all its taxable years ending on or after November 8, 1983; and

(ii) For each corporation to whose earnings and profits the investment company succeeded by the operation of section 381, part I of subchapter M applied for all the corporation's taxable years ending on or after November 8, 1983.

(2) ***Special rule.*** See section 1071(a)(5)(D) of the Tax Reform Act of 1984, Public Law 98-369 (98 Stat. 1051), for a special rule which treats part I of subchapter M as having applied to an investment company's first taxable year ending after November 8, 1983.

(b) ***Applicability of section 852(a)(2)(B)*** —

(1) ***In general.*** An investment company does not satisfy section 852(a)(2)(B) unless, as of the close of the taxable year, it has no earnings and profits other than earnings and profits that—

(i) Were earned by a corporation in a year for which part I of subchapter M applied to the corporation and, at all times thereafter, were the earnings and profits of a corporation to which part I of subchapter M applied;

(ii) By the operation of section 381 pursuant to a transaction that occurred before December 22, 1992, became the earnings and profits of a corporation to which part I of subchapter M applied and, at all times thereafter, were the earnings and profits of a corporation to which part I of subchapter M applied;

(iii) Were accumulated in a taxable year ending before January 1, 1984, by a corporation to which part I of subchapter M applied for any taxable year ending before November 8, 1983; or

(iv) Were accumulated in the first taxable year of an investment company that began business in 1983 and that was not a successor corporation.

(2) ***Prior law.*** For purposes of paragraph (b) of this section, a reference to part I of subchapter M includes a reference to the corresponding provisions of prior law.

(c) ***Effective date.*** This regulation is effective for taxable years ending on or after December 22, 1992.

(d) For treatment of net built-in gain assets of a C corporation that become assets of a RIC, see § 1.337(d)-5T.

[T.D. 8483, 58 FR 43798, Aug. 18, 1993; 58 FR 49352, Sept. 22, 1993; T.D. 8872, 65 FR 5777, Feb. 7, 2000]

§ 1.853-1 Foreign tax credit allowed to shareholders.

(a) ***In general.*** Under section 853, a regulated investment company, meeting the requirements set forth in section 853(a) and paragraph (b) of this section, may make an election with respect to the income, war-profits, and excess profits taxes described in section 901(b)(1) which it pays to foreign countries or possessions of the United States during the taxable year, including such taxes as are deemed paid by it under the provisions of any income tax convention to which the United States is a party. If an election is made, the shareholders of the regulated investment company shall apply their proportionate share of such foreign taxes paid, or deemed to have been paid by it pursuant to any income tax convention, as either a credit (under section 901) or as a deduction (under section 164(a)) as provided by section 853(b)(2) and paragraph (b) of § 1.853-2. The election is not applicable with respect to taxes deemed to have been paid under section 902 (relating to the credit allowed to corporate stockholders of a foreign corporation for taxes paid by such foreign corporation). In addition, the election is not applicable to any tax with respect to which the regulated investment company is not allowed a credit by reason of any provision of the Internal Revenue Code other than section 853(b)(1), including, but not limited to, section 901(j), section 901(k), or section 901(l).

(b) ***Requirements.*** To qualify for the election provided in section 853(a), a regulated investment company

(1) must have more than 50 percent of the value of its total assets, at the close of the taxable year for which the election is made, invested in stocks and securities of foreign corporations, and

(2) must also, for that year, comply with the requirements prescribed in section 852(a) and paragraph (a) of § 1.852-1. The term “value”, for purposes of the first requirement, is defined in section 851(c)(4). For the definition of foreign corporation, see section 7701(a).

(c) ***Effective/applicability date.*** The final sentence of paragraph (a) of this section is applicable for RIC taxable years ending on or after December 31, 2007.

[T.D. 6500, 25 FR 11910, Nov. 26, 1960; 25 FR 14021, Dec. 31, 1960, as amended by T.D. 9357, 72 FR 48553, Aug. 24, 2007]

§ 1.853-2 Effect of election.

(a) ***Regulated investment company.*** A regulated investment company making a valid election with respect to a taxable year under the provisions of section 853(a) is, for such year, denied both the deduction for foreign taxes provided by section 164(a) and the credit for foreign taxes provided by section 901 with respect to

all income, war-profits, and excess profits taxes (described in section 901(b)(1)) which it has paid to any foreign country or possession of the United States. See section 853(b)(1)(A). However, under section 853(b)(1)(B), the regulated investment company is permitted to add the amount of such foreign taxes paid to its dividends paid deduction for that taxable year. See paragraph (a) of § 1.852-1.

(b) ***Shareholder.*** Under section 853(b)(2), a shareholder of an investment company, which has made the election under section 853, is, in effect, placed in the same position as a person directly owning stock in foreign corporations, in that he must include in his gross income (in addition to taxable dividends actually received) his proportionate share of such foreign taxes paid and must treat such amount as foreign taxes paid by him for the purposes of the deduction under section 164(a) and the credit under section 901. For such purposes he must treat as gross income from a foreign country or possession of the United States

(1) his proportionate share of the taxes paid by the regulated investment company to such foreign country or possession and

(2) the portion of any dividend paid by the investment company which represents income derived from such sources.

(c) ***Dividends paid after the close of the taxable year.*** For additional rules applicable to certain distributions made after the close of the taxable year which may be designated as income received from sources within and taxes paid to foreign countries or possessions of the United States, see section 855(d) and paragraph (f) of § 1.855-1.

(d) ***Example.*** This section is illustrated by the following example:

> *Example.* (i) *Facts.* X Corporation, a regulated investment company with 250,000 shares of common stock outstanding, has total assets, at the close of the taxable year, of $10 million ($4 million invested in domestic corporations, $3.5 million in Foreign Country A corporations, and $2.5 million in Foreign Country B corporations). X Corporation received dividend income of $800,000 from the following sources: $300,000 from domestic corporations, $250,000 from Country A corporations, and $250,000 from Country B corporations. All dividends from Country A corporations and from Country B corporations were properly characterized as income from sources without the United States. The dividends from Country A corporations were subject to a 10 percent withholding tax ($25,000) and the dividends from Country B corporations were subject to a 20 percent withholding tax ($50,000). X Corporation's only expenses for the taxable year were $80,000 of operation and management expenses related to both its U.S. and foreign investments. In this case, Corporation X properly apportioned the $80,000 expense based on the relative amounts of its U.S. and foreign source gross income. Thus, $50,000 in expense was apportioned to foreign source income ($80,000 × $500,000 / $800,000, total expense times the fraction of foreign dividend income over total dividend income) and $30,000 in expense was apportioned to U.S. source income ($80,000 × $300,000 / $800,000, total expense times the fraction of U.S. source dividend income over total dividend income). During the taxable year, X Corporation distributed to its shareholders the entire $645,000 income that was available for distribution ($800,000, less $80,000 in expenses, less $75,000 in foreign taxes withheld).

(ii) *Section 853 election.* X Corporation meets the requirements of section 851 to be considered a RIC for the taxable year and the requirements of section 852(a) for part 1 of subchapter M to apply for the taxable year. X Corporation notifies each shareholder by mail, within the time prescribed by section 853(c), that by reason of the election the shareholders are to treat as foreign taxes paid $0.30 per share of stock ($75,000 of foreign taxes paid, divided by the 250,000 shares of stock outstanding). The shareholders must report as income $2.88 per share ($2.58 of dividends actually received plus the $0.30 representing foreign taxes paid). Of the $2.88 per share, $1.80 per share ($450,000 of foreign source taxable income divided by 250,000 shares) is to be considered as received from foreign sources. The $1.80 consists of $0.30, the foreign taxes treated as paid by the shareholder and $1.50, the portion of the dividends received by the shareholder from the RIC that represents income of the RIC treated as derived from foreign sources ($500,000 of foreign source income, less $50,000 of expense apportioned to foreign source income, less $75,000 of foreign tax withheld, which is $375,000, divided by 250,000 shares).

(e) ***Effective/applicability date.*** Paragraph (d) of this section is applicable for RIC taxable years ending on or after December 31, 2007. Notwithstanding the preceding sentence, for a taxable year that ends on or after December 31, 2007, and begins before August 24, 2007, a taxpayer may rely on this section as it was in effect on August 23, 2007.

[T.D. 6500, 25 FR 11910, Nov. 26, 1960; 25 FR 14021, Dec. 31, 1960, as amended by T.D. 9357, 72 FR 48553, Aug. 24, 2007]

§ 1.853-3 Notice to shareholders.

(a) ***General rule.*** If a regulated investment company makes an election under section 853(a), in the manner provided in § 1.853-4, the regulated investment company is required under section 853(c) to furnish its shareholders with a written notice mailed not later than 60 days after the close of its taxable year. The notice must designate the shareholder's portion of creditable foreign taxes paid to foreign countries or possessions of the United States and the portion of the dividend that represents income derived from sources within each country that is attributable to a period during which section 901(j) applies to such country, if any, and the portion of the dividend that represents income derived from other foreign countries and possessions of the United States. For purposes of section 853(b)(2) and § 1.853-2(b), the amount that a shareholder may treat as the shareholder's proportionate share of foreign taxes paid and the amount to be included as gross income derived from any foreign country that is attributable to a period during which section 901(j) applies to such country or gross income from sources within other foreign countries or possessions of the United States shall not exceed the amount so designated by the regulated investment company in such written notice. If, however, the amount designated by the regulated investment company in the notice exceeds the shareholder's proper proportionate share of foreign taxes or gross income from sources within foreign countries or possessions of the United States, the shareholder is limited to the amount correctly ascertained.

(b) ***Shareholder of record custodian of certain unit investment trusts.*** In any case where a notice is mailed pursuant to paragraph (a) of this section by a regulated investment company with respect to a taxable year of the regulated investment company ending after December 8, 1970 to a shareholder of record who is a nominee acting as a custodian of a unit investment trust described in section 851(f)(1) and paragraph (b) of § 1.851-7, the nominee shall furnish each holder of an interest in such trust with a written notice mailed on or before the 70th day following the close of the regulated investment company's taxable year.

The notice shall designate the holder's proportionate share of the amounts of creditable foreign taxes paid to foreign countries or possessions of the United States and the holder's proportionate share of the dividend that represents income derived from sources within each country that is attributable to a period during which section 901(j) applies to such country, if any, and the holder's proportionate share of the dividend that represents income derived from other foreign countries or possessions of the United States shown on the notice received by the nominee pursuant to paragraph (a) of this section. This paragraph shall not apply if the regulated investment company agrees with the nominee to satisfy the notice requirements of paragraph (a) of this section with respect to each holder of an interest in the unit investment trust whose shares are being held by the nominee as custodian and not later than 45 days following the close of the company's taxable year, files with the Internal Revenue Service office where such company's return for the taxable year is to be filed, a statement that the holders of the unit investment trust with whom the agreement was made have been directly notified by the regulated investment company. Such statement shall include the name, sponsor, and custodian of each unit investment trust whose holders have been directly notified. The nominee's requirements under this paragraph shall be deemed met if the regulated investment company transmits a copy of such statement to the nominee within such 60-day period: *Provided however,* if the regulated investment company fails or is unable to satisfy the requirements of this paragraph with respect to the holders of interest in the unit investment trust, it shall so notify the Internal Revenue Service within 60 days following the close of its taxable year. The custodian shall, upon notice by the Internal Revenue Service that the regulated investment company has failed to comply with the agreement, satisfy the requirements of this paragraph within 30 days of such notice.

(c) ***Effective/applicability date.*** This section is applicable for RIC taxable years ending on or after December 31, 2007. Notwithstanding the preceding sentence, for a taxable year that ends on or after December 31, 2007, and begins before August 24, 2007, a taxpayer may rely on this section as it was in effect on August 23, 2007.

[T.D. 7187, 37 FR 13257, July 6, 1972, as amended by T.D. 9357, 72 FR 48554, Aug. 24, 2007]

§ 1.853-4 Manner of making election.

(a) ***General rule.*** To make an election under section 853 for a taxable year, a regulated investment company must file a statement of election as part of its Federal income tax return for the taxable year. The statement of election must state that the regulated investment company elects the application of section 853 for the taxable year and agrees to provide the information required by paragraph (c) of this section.

(b) ***Irrevocability of the election.*** The election shall be made with respect to all foreign taxes described in paragraph (c)(2) of this section, and must be made not later than the time prescribed for filing the return (including extensions). This election, if made, shall be irrevocable with respect to the dividend (or portion thereof), and the foreign taxes paid with respect thereto, to which the election applies.

(c) ***Required information.*** A regulated investment company making an election under section 853 must provide the following information:

(1) The total amount of taxable income received in the taxable year from sources within foreign countries and possessions of the United States and the amount of taxable income received in the taxable year from sources within each such foreign country or possession.

(2) The total amount of income, war profits, or excess profits taxes (described in section 901(b)(1)) to which the election applies that were paid in the taxable year to such foreign countries or possessions and the amount of such taxes paid to each such foreign country or possession.

(3) The amount of income, war profits, or excess profits taxes paid during the taxable year to which the election does not apply by reason of any provision of the Internal Revenue Code other than section 853(b), including, but not limited to, section 901(j), section 901(k), or section 901(l).

(4) The date, form, and contents of the notice to its shareholders.

(5) The proportionate share of creditable foreign taxes paid to each such foreign country or possession during the taxable year and foreign income received from sources within each such foreign country or possession during the taxable year attributable to one share of stock of the regulated investment company.

(d) ***Time and manner of providing information.*** The information specified in paragraph (c) of this section must be provided at the time and in the manner prescribed by the Commissioner and, unless otherwise prescribed, must be provided on or with a modified Form 1118 "Foreign Tax Credit—Corporations" filed as part of the RIC's timely filed Federal income tax return for the taxable year.

(e) ***Effective/applicability date.*** This section is applicable for RIC taxable years ending on or after December 31, 2007. Notwithstanding the preceding sentence, for a taxable year that ends on or after December 31, 2007, and begins before August 24, 2007, a taxpayer may rely on this section as it was in effect on August 23, 2007.

[T.D. 9357, 72 FR 48554, Aug. 24, 2007]

§ 1.854-1 Limitations applicable to dividends received from regulated investment company.

(a) ***In general.*** Section 854 provides special limitations applicable to dividends received from a regulated investment company for purposes of the exclusion under section 116 for dividends received by individuals, the deduction under section 243 for dividends received by corporations, and, in the case of dividends received by individuals before January 1, 1965, the credit under section 34.

(b) ***Capital gain dividend.*** Under the provisions of section 854(a) a capital gain dividend as defined in section 852(b)(3) and paragraph (c) of § 1.852-4 shall not be considered a dividend for purposes of the exclusion under section 116, the deduction under section 243, and, in the case of taxable years ending before January 1, 1965, the credit under section 34.

(c) ***Rule for dividends other than capital gain dividends.***

(1) Section 854(b)(1) limits the amount that may be treated as a dividend (other than a capital gain dividend) by the shareholder of a regulated investment company, for the purposes of the credit, exclusion, and deduction specified in paragraph (b) of this section, where the investment company receives substantial amounts of income (such as interest, etc.) from sources other than dividends from domestic corporations, which dividends qualify for the exclusion under section 116.

(2) Where the "aggregate dividends received" (as defined in section 854(b)(3)(B) and paragraph (b) of § 1.854-3) during the taxable year by a regulated investment company (which meets the requirements of section 852(a) and paragraph (a) of § 1.852-1 for the taxable year during which it paid such dividend) are less than 75 percent of its gross income for such taxable year (as defined in section 854(b)(3)(A) and paragraph (a) of § 1.854-3), only that portion of the dividend paid by the regulated

investment company which bears the same ratio to the amount of such dividend paid as the aggregate dividends received by the regulated investment company, during the taxable year, bears to its gross income for such taxable year (computed without regard to gains from the sale or other disposition of stocks or securities) may be treated as a dividend for purposes of such credit, exclusion, and deduction.

(3) Subparagraph (2) of this paragraph may be illustrated by the following example:

Example. The XYZ regulated investment company meets the requirements of section 852(a) for the taxable year and has received income from the following sources:

Capital gains (from the sale of stock or securities)	$100,000
Dividends (from domestic sources other than dividends described in section 116(b))	70,000
Dividend (from foreign corporations)	5,000
Interest	25,000
Total	200,000
Expenses	20,000
Taxable income	180,000

The regulated investment company decides to distribute the entire $180,000. It distributes a capital gain dividend of $100,000 and a dividend of ordinary income of $80,000. The aggregate dividends received by the regulated investment company from domestic corporations ($70,000) is less than 75 percent of its gross income ($100,000) computed without regard to capital gains from sales of securities. Therefore, an apportionment is required. Since $70,000 is 70 percent of $100,000, out of every $1 dividend of ordinary income paid by the regulated investment company only 70 cents would be available for the credit, exclusion, or deduction referred to in section 854(b)(1). The capital gains dividend and the dividend received from foreign corporations are excluded from the computation.

(d) ***Dividends received from a regulated investment company during taxable years of shareholders ending after July 31, 1954, and subject to the Internal Revenue Code of 1939.*** For the application of section 854 to taxable years of shareholders of a regulated investment company ending after July 31, 1954, and subject to the Internal Revenue Code of 1939, see § 1.34-5 and § 1.116-2.

[T.D. 6500, 25 FR 11910, Nov. 26, 1960, as amended by T.D. 6921, 32 FR 8756, June 20, 1967]

§ 1.854-2 Notice to shareholders.

(a) ***General rule.*** Section 854(b)(2) provides that the amount that a shareholder may treat as a dividend for purposes of the exclusion under section 116 for dividends received by individuals, the deduction under section 243 for dividends received by corporation, and, in the case of dividends received by individuals

before January 1, 1965, the credit under section 34, shall not exceed the amount so designated by the company in a written notice to its shareholders mailed not later than 45 days (30 days for a taxable year ending before Feb. 26, 1964) after the close of the company's taxable year. If, however, the amount so designated by the company in the notice exceeds the amount which may be treated by the shareholder as a dividend for such purposes, the shareholder is limited to the amount as correctly ascertained under section 854(b)(1) and paragraph (c) of § 1.854-1.

(b) ***Shareholder of record custodian of certain unit investment trusts.*** In any case where a notice is mailed pursuant to paragraph (a) of this section by a regulated investment company with respect to a taxable year of the regulated investment company ending after December 8, 1970 to a shareholder of record who is a nominee acting as a custodian of a unit investment trust described in section 851(f)(1) and paragraph (d) of § 1.851-7, the nominee shall furnish each holder of an interest in such trust with a written notice mailed on or before the 55th day following the close of the regulated investment company's taxable year. The notice shall designate the holder's proportionate share of the amounts that may be treated as a dividend for purposes of the exclusion under section 116 for dividends received by individuals and the deduction under section 243 for dividends received by corporations shown on the notice received by the nominee pursuant to paragraph (a) of this section. This notice shall include the name and address of the nominee identified as such. This paragraph shall not apply if the regulated investment company agrees with the nominee to satisfy the notice requirements of paragraph (a) of this section with respect to each holder of an interest in the unit investment trust whose shares are being held by the nominee as custodian and not later than 45 days following the close of the company's taxable year, files with the Internal Revenue Service office where such company's return is to be filed for the taxable year, a statement that the holders of the unit investment trust with whom the agreement was made have been directly notified by the regulated investment company. Such statement shall include the name, sponsor, and custodian of each unit investment trust whose holders have been directly notified. The nominee's requirements under this paragraph shall be deemed met if the regulated investment company transmits a copy of such statement to the nominee within such 45-day period; provided however, if the regulated investment company fails or is unable to satisfy the requirements of this paragraph with respect to the holders of interest in the unit investment trust, it shall so notify the Internal Revenue Service within 45 days following the close of its taxable year. The custodian shall, upon notice by the Internal Revenue Service that the regulated investment company has failed to comply with the agreement, satisfy the requirements of this paragraph within 30 days of such notice.

[T.D. 7187, 37 FR 13257, July 6, 1972]

§ 1.854-3 Definitions.

(a) For the purpose of computing the limitation prescribed by section 854(b)(1)(B) and paragraph (c) of § 1.854-1, the term “gross income” does not include gain from the sale or other disposition of stock or securities. However, capital gains arising from the sale or other disposition of capital assets, other than stock or securities, shall not be excluded from gross income for this purpose.

(b) The term “aggregate dividends received” includes only dividends received from domestic corporations other than dividends described in section 116(b) (relating to dividends not eligible for exclusion from gross income). Accordingly, dividends received from foreign corporations will not be included in the computation of “aggregate dividends received”. In determining the amount of any dividend for purposes of this section, the rules provided in section 116(c) (relating to certain distributions) shall apply.

§ 1.855-1 Dividends paid by regulated investment company after close of taxable year.

(a) ***General rule.*** In—

(1) Determining under section 852(a) and paragraph (a) of § 1.852-1 whether the deduction for dividends paid during the taxable year (without regard to capital gain dividends) by a regulated investment company equals or exceeds 90 percent of its investment company taxable income (determined without regard to the provisions of section 852(b)(2)(D)),

(2) Computing its investment company taxable income (under section 852(b)(2) and § 1.852-3), and

(3) Determining the amount of capital gain dividends (as defined in section 852(b)(3) and paragraph (c) of § 1.852-4 paid during the taxable year, any dividend (or portion thereof) declared by the investment company either before or after the close of the taxable year but in any event before the time prescribed by law for the filing of its return for the taxable year (including the period of any extension of time granted for filing such return) shall, to the extent the company so elects in such return, be treated as having been paid during such taxable year. This rule is applicable only if the entire amount of such dividend is actually distributed to the shareholders in the 12-month period following the close of such taxable year and not later than the date of the first regular dividend payment made after such declaration.

(b) ***Election*** —

(1) ***Method of making election.*** The election must be made in the return filed by the company for the taxable year. The election shall be made by the taxpayer (the regulated investment company) by treating the dividend (or portion thereof) to which such election applies as a dividend paid during the taxable year in computing its investment company taxable income, or if the dividend (or portion thereof) to which such election applies is to be designated by the company as a capital gain dividend, in computing the amount of capital gain dividends paid during such taxable year. The election provided in section 855(a) may be made only to the extent that the earnings and profits of the taxable year (computed with the application of section 852(c) and § 1.852-5) exceed the total amount of distributions out of such earnings and profits actually made during the taxable year (not including distributions with respect to which an election has been made for a prior year under section 855(a)). The dividend or portion thereof, with respect to which the regulated investment company has made a valid election under section 855(a), shall be considered as paid out of the earnings and profits of the taxable year for which such election is made, and not out of the earnings and profits of the taxable year in which the distribution is actually made.

(2) ***Irrevocability of the election.*** After the expiration of the time for filing the return for the taxable year for which an election is made under section 855(a), such election shall be irrevocable with respect to the dividend or portion thereof to which it applies.

(c) ***Receipt by shareholders.*** Under section 855(b), the dividend or portion thereof, with respect to which a valid election has been made, will be includible in the gross income of the shareholders of the regulated investment company for the taxable year in which the dividend is received by them.

(d) ***Examples.*** The application of paragraphs (a), (b), and (c) of this section may be illustrated by the following examples:

Example 1. The X Company, a regulated investment company, had taxable income (and earnings or profits) for the calendar year 1954 of $100,000. During that year the company distributed to shareholders taxable dividends aggregating $88,000. On March 10, 1955, the company declared a dividend of

$37,000 payable to shareholders on March 20, 1955. Such dividend consisted of the first regular quarterly dividend for 1955 of $25,000 plus an additional $12,000 representing that part of the taxable income for 1954 which was not distributed in 1954. On March 15, 1955, the X Company filed its federal income tax return and elected therein to treat $12,000 of the total dividend of $37,000 to be paid to shareholders on March 20, 1955, as having been paid during the taxable year 1954. Assuming that the X Company actually distributed the entire amount of the dividend of $37,000 on March 20, 1955, an amount equal to $12,000 thereof will be treated for the purposes of section 852(a) as having been paid during the taxable year 1954. Such amount ($12,000) will be considered by the X Company as a distribution out of the earnings and profits for the taxable year 1954, and will be treated by the shareholders as a taxable dividend for the taxable year in which such distribution is received by them.

Example 2. The Y Company, a regulated investment company, had taxable income (and earnings or profits) for the calendar year 1954 of $100,000, and for 1955 taxable income (and earnings or profits) of $125,000. On January 1, 1954, the company had a deficit in its earnings and profits accumulated since February 28, 1913, of $115,000. During the year 1954 the company distributed to shareholders taxable dividends aggregating $85,000. On March 5, 1955, the company declared a dividend of $65,000 payable to shareholders on March 31, 1955. On March 15, 1955, the Y Company filed its federal income tax return in which it included $40,000 of the total dividend of $65,000 payable to shareholders on March 31, 1955, as a dividend paid by it during the taxable year 1954. On March 31, 1955, the Y Company distributed the entire amount of the dividend of $65,000 declared on March 5, 1955. The election under section 855(a) is valid only to the extent of $15,000, the amount of the undistributed earnings and profits for 1954 ($100,000 earnings and profits less $85,000 distributed during 1954). The remainder ($50,000) of the $65,000 dividend paid on March 31, 1955, could not be the subject of an election, and such amount will be regarded as a distribution by the Y Company out of earnings and profits for the taxable year 1955. Assuming that the only other distribution by the Y Company during 1955 was a distribution of $75,000 paid as a dividend on October 31, 1955, the total amount of the distribution of $65,000 paid on March 31, 1955, is to be treated by the shareholders as taxable dividends for the taxable year in which such dividend is received. The Y Company will treat the amount of $15,000 as a distribution of the earnings or profits of the company for the taxable year 1954, and the remaining $50,000 as a distribution of the earnings or profits for the year 1955. The distribution of $75,000 on October 31, 1955, is, of course, a taxable dividend out of the earnings and profits for the year 1955.

(e) ***Notice to shareholders.*** Section 855(c) provides that in the case of dividends, with respect to which a regulated investment company has made an election under section 855(a), any notice to shareholders required under subchapter M, chapter 1 of the Code, with respect to such amounts, shall be made not later than 45 days (30 days for a taxable year ending before February 26, 1964) after the close of the taxable year in which the distribution is made. Thus, the notice requirements of section 852(b)(3)(C) and paragraph (c) of § 1.852-4 with respect to capital gain dividends, section 853(c) and § 1.853-3 with respect to allowance to shareholder of foreign tax credit, and section 854(b)(2) and § 1.854-2 with respect to the amount of a distribution which may be treated as a dividend, may be satisfied with respect to amounts to which section 855(a) and this section apply if the notice relating to such amounts is mailed to the shareholders not later than 45 days (30 days for a taxable year ending before February 26, 1964) after the close of the taxable year in which the distribution is made. If the notice under section 855(c) relates to an election with respect to any capital gain dividends, such capital gain dividends shall be aggregated by the investment company with the designated capital gain dividends actually paid during the taxable year to which the election applies (not including such dividends with respect to which an election has been made for a prior year under section 855) for the purpose of determining whether the

aggregate of the designated capital gain dividends with respect to such taxable year of the company is greater than the excess of the net long-term capital gain over the net short-term capital loss of the company. See section 852(b)(3)(C) and paragraph (c) of § 1.852-4.

(f) ***Foreign tax election.*** Section 855(d) provides that in the case of an election made under section 853 (relating to foreign taxes), the shareholder of the investment company shall consider the foreign income received, and the foreign tax paid, as received and paid, respectively, in the shareholder's taxable year in which distribution is made.

[T.D. 6500, 25 FR 11910, Nov. 26, 1960, as amended by T.D. 6921, 32 FR 8757, June 20, 1967]

REAL ESTATE INVESTMENT TRUSTS

§ 1.856-0 Revenue Act of 1978 amendments not included.

The regulations under part II of subchapter M of the Code do not reflect the amendments made by the Revenue Act of 1978, other than the changes made by section 362 of the Act, relating to deficiency dividends.

(Sec. 856(d)(4) (90 Stat. 1750; 26 U.S.C. 856(d)(4)); sec. 856(e)(5) (88 Stat. 2113; 26 U.S.C. 856(e)(5)); sec. 856(f)(2) (90 Stat. 1751; 26 U.S.C. 856(f)(2)); sec. 856 (g)(2) (90 Stat. 1753; 26 U.S.C. 856(g)(2)); sec. 858(a) (74 Stat. 1008; 26 U.S.C. 858(a)); sec. 859(c) (90 Stat. 1743; 26 U.S.C. 859(c)); sec. 859(e) (90 Stat. 1744; 26 U.S.C. 859(e)); sec. 6001 (68A Stat. 731; 26 U.S.C. 6001); sec. 6011 (68A Stat. 732; 26 U.S.C. 6011); sec. 6071 (68A Stat. 749, 26 U.S.C. 6071); sec. 6091 (68A Stat. 752; 26 U.S.C. 6091); sec. 7805 (68A Stat. 917; 26 U.S.C. 7805), Internal Revenue Code of 1954; 860(e) (92 Stat. 2849, 26 U.S.C. 860(e)); sec. 860(g) (92 Stat. 2850, 26 U.S.C. 860(g)))

[T.D. 7767, 46 FR 11265, Feb. 6, 1981, as amended by T.D. 7936, 49 FR 2106, Jan. 18, 1984]

§ 1.856-1 Definition of real estate investment trust.

(a) ***In general.*** The term “real estate investment trust” means a corporation, trust, or association which

(1) meets the status conditions in section 856(a) and paragraph (b) of this section, and

(2) satisfies the gross income and asset diversification requirements under the limitations of section 856(c) and § 1.856-2. (See, however, paragraph (f) of this section, relating to the requirement that, for taxable years beginning before October 5, 1976, a real estate investment trust must be an unincorporated trust or unincorporated association).

(b) ***Qualifying conditions.*** To qualify as a “real estate investment trust”, an organization must be one—

(1) Which is managed by one or more trustees or directors,

(2) The beneficial ownership of which is evidenced by transferable shares or by transferable certificates of beneficial interest,

(3) Which would be taxable as a domestic corporation but for the provisions of part II, subchapter M, chapter 1 of the Code,

(4) Which, in the case of a taxable year beginning before October 5, 1976, does not hold any property (other than foreclosure property) primarily for sale to customers in the ordinary course of its trade or business,

(5) Which is neither

(i) a financial institution to which section 585, 586, or 593 applies, nor

(ii) an insurance company to which subchapter L applies,

(6) The beneficial ownership of which is held by 100 or more persons, and

(7) Which would not be a personal holding company (as defined in section 542) if all of its gross income constituted personal holding company income (as defined in section 543).

(c) ***Determination of status.*** The conditions described in subparagraphs (1) through (5) of paragraph (b) of this section must be met during the entire taxable year and the condition described in subparagraph (6) of paragraph (b) of this section must exist during at least 335 days of a taxable year of 12 months or during a proportionate part of a taxable year of less than 12 months. The days during which the latter condition must exist need not be consecutive. In determining the minimum number of days during which the condition described in paragraph (b)(6) of this section is required to exist in a taxable year of less than 12 months, fractional days shall be disregarded. For example, in a taxable year of 310 days, the actual number of days prescribed would be $284^{38}/_{73}$ days ($^{310}/_{365}$ of 335). The fractional day is disregarded so that the required condition in such taxable year need exist for only 284 days.

(d) ***Rules applicable to status requirements.*** For purposes of determining whether an organization meets the conditions and requirements in section 856(a), the following rules shall apply.

(1) ***Trustee.*** The term “trustee” means a person who holds legal title to the property of the real estate investment trust, and has such rights and powers as will meet the requirement of “centralization of management” under paragraph (c) of § 301.7701-2 of this chapter (Regulations on Procedure and Administration). Thus, the trustee must have continuing exclusive authority over the management of the trust, the conduct of its affairs, and (except as limited by section 856(d)(3) and § 1.856-4) the management and disposition of the trust property. For example, such authority will be considered to exist even though the trust instrument grants to the shareholders any or all of the following rights and powers: To elect or remove trustees; to terminate the trust; and to ratify amendments to the trust instrument proposed by the trustee. The existence of a mere fiduciary relationship does not, in itself, make one a trustee for purposes of section 856(a)(1). The trustee will be considered to hold legal title to the property of the trust, for purposes of this subparagraph, whether the title is held in the name of the trust itself, in the name of one or more of the trustees, or in the name of a nominee for the exclusive benefit of the trust.

(2) ***Beneficial ownership.*** Beneficial ownership shall be evidenced by transferable shares, or by transferable certificates of beneficial interest, and (subject to the provisions of paragraph (c) of this section) must be held by 100 or more persons, determined without reference to any rules of attribution. Provisions in the trust instrument or corporate charter or bylaws which permit the trustee or directors to redeem shares or to refuse to transfer shares in any case where the trustee or directors, in good faith, believe that a failure to redeem shares or that a transfer of shares would result in the loss of status as a real estate investment trust will not render the shares “nontransferable.” For purposes of the regulations under part II of subchapter M, the terms “stockholder,” “stockholders,” “shareholder,” and “shareholders” include holders of beneficial interest in a real estate investment trust, the terms “stock,” “shares,” and “shares of stock” include certificates of beneficial interest, and the term “shares” includes shares of stock.

(3) ***Unincorporated organization taxable as a domestic corporation.*** The determination of whether an unincorporated organization would be taxable as a domestic corporation, in the absence of the provisions of part II of subchapter M, shall be made in accordance with the provisions of section 7701(a) (3) and (4) and the regulations thereunder and for such purposes an otherwise qualified real estate investment trust is deemed to satisfy the "objective to carry on business" requirement of paragraph (a) of § 301.7701-2 of this chapter. (Regulations on Procedure and Administration).

(4) ***Property held for sale to customers.*** In the case of a taxable year beginning before October 5, 1976, a real estate investment trust may not hold any property (other than foreclosure property) primarily for sale to customers in the ordinary course of its trade or business. Whether property is held for sale to customers in the ordinary course of the trade or business of a real estate investment trust depends upon the facts and circumstances in each case.

(5) ***Personal holding company.*** A corporation, trust, or association, even though it may otherwise meet the requirements of part II of subchapter M, will not be a real estate investment trust if, by considering all of its gross income as personal holding company income under section 543, it would be a personal holding company as defined in section 542. Thus, if at any time during the last half of the trust's taxable year more than 50 percent in value of its outstanding stock is owned (directly or indirectly under the provisions of section 544) by or for not more than 5 individuals, the stock ownership requirement in section 542(a)(2) will be met and the trust would be a personal holding company. See § 1.857-8, relating to record requirements for purposes of determining whether the trust is a personal holding company.

(e) ***Other rules applicable.*** To the extent that other provisions of chapter 1 of the Code are not inconsistent with those under part II of subchapter M there of and the regulations thereunder, such provisions will apply with respect to both the real estate investment trust and its shareholders in the same manner that they would apply to any other organization which would be taxable as a domestic corporation. For example:

(1) Taxable income of a real estate investment trust is computed in the same manner as that of a domestic corporation;

(2) Section 301, relating to distributions of property, applies to distributions by a real estate investment trust in the same manner as it would apply to a domestic corporation;

(3) Sections 302, 303, 304, and 331 are applicable in determining whether distributions by a real estate investment trust are to be treated as in exchange for stock;

(4) Section 305 applies to distributions by a real estate investment trust of its own stock;

(5) Section 311 applies to distributions by a real estate investment trust;

(6) Except as provided in section 857(d), earnings and profits of a real estate investment trust are computed in the same manner as in the case of a domestic corporation;

(7) Section 316, relating to the definition of a dividend, applies to distributions by a real estate investment trust; and

(8) Section 341, relating to collapsible corporations, applies to gain on the sale or exchange of, or a distribution which is in exchange for, stock in a real estate investment trust in the same manner that it would apply to a domestic corporation.

(f) ***Unincorporated status required for certain taxable years.*** In the case of a taxable year beginning before October 5, 1976, a real estate investment trust must be an unincorporated trust or unincorporated association. Accordingly, in applying the regulations under part II of subchapter M of the Code with respect to such a taxable year, the term "an unincorporated trust or unincorporated association" is to be substituted for the term "a corporation, trust, or association" each place it appears, and the references to "directors" and "corporate charter or bylaws" are to be disregarded.

(Sec. 856(d)(4) (90 Stat. 1750; 26 U.S.C. 856(d)(4)); sec. 856(e)(5) (88 Stat. 2113; 26 U.S.C. 856(e)(5)); sec. 856(f)(2) (90 Stat. 1751; 26 U.S.C. 856(f)(2)); sec. 856(g)(2) (90 Stat. 1753; 26 U.S.C. 856(g)(2)); sec. 858(a) (74 Stat. 1008; 26 U.S.C. 858(a)); sec. 859(c) (90 Stat. 1743; 26 U.S.C. 859(c)); sec. 859(e) (90 Stat. 1744; 26 U.S.C. 859(e)); sec. 6001 (68A Stat. 731; 26 U.S.C. 6001); sec. 6011 (68A Stat. 732; 26 U.S.C. 6011); sec. 6071 (68A Stat. 749, 26 U.S.C. 6071); sec. 6091 (68A Stat. 752; 26 U.S.C. 6091); sec. 7805 (68A Stat. 917, 26 U.S.C. 7805), Internal Revenue Code of 1954)

[T.D. 6598, 27 FR 4082, Apr. 28, 1962, as amended by T.D. 6928, 32 FR 13221, Sept. 19, 1967; T.D. 7767, 46 FR 11265, Feb. 6, 1981]

§ 1.856-2 Limitations.

(a) ***Effective date.*** The provisions of part II, subchapter M, chapter 1 of the Code, and the regulations thereunder apply only to taxable years of a real estate investment trust beginning after December 31, 1960.

(b) ***Election.*** Under the provisions of section 856(c)(1), a trust, even though it satisfies the other requirements of part II of subchapter M for the taxable year, will not be considered a "real estate investment trust" for such year, within the meaning of such part II, unless it elects to be a real estate investment trust for such taxable year, or has made such an election for a previous taxable year which has not been terminated or revoked under section 856(g)(1) or (2). The election shall be made by the trust by computing taxable income as a real estate investment trust in its return for the first taxable year for which it desires the election to apply, even though it may have otherwise qualified as a real estate investment trust for a prior year. No other method of making such election is permitted. An election cannot be revoked with respect to a taxable year beginning before October 5, 1976. Thus, the failure of an organization to be a qualified real estate investment trust for a taxable year beginning before October 5, 1976, does not have the effect of revoking a prior election by the organization to be a real estate investment trust, even though the organization is not taxable under part II of subchapter M for such taxable year. See section 856(g) and § 1.856-8 for rules under which an election may be revoked with respect to taxable years beginning after October 4, 1976.

(c) ***Gross income requirements.*** Section 856(c) (2), (3), and (4), provides that a corporation, trust, or association is not a "real estate investment trust" for a taxable year unless it meets certain requirements with respect to the sources of its gross income for the taxable year. In determining whether the gross income of a real estate investment trust satisfies the percentage requirements of section 856(c) (2), (3), and (4), the following rules shall apply:

(1) ***Gross income.*** For purposes of both the numerator and denominator in the computation of the specified percentages, the term "gross income" has the same meaning as that term has under section 61 and the regulations thereunder. Thus, in determining the gross income requirements under section 856(c) (2), (3), and (4), a loss from the sale or other disposition of stock, securities, real property, etc. does not enter into the computation.

(2) ***Lapse of options.*** Under section 856(c)(6)(C), the term “interests in real property” includes options to acquire land or improvements thereon, and options to acquire leaseholds of land and improvements thereon. However, where a corporation, trust, or association writes an option giving the holder the right to acquire land or improvements thereon, or writes an option giving the holder the right to acquire a leasehold of land or improvements thereon, any income that the corporation, trust, or association recognizes because the option expires unexercised is not considered to be gain from the sale or other disposition of real property (including interests in real property) for purposes of section 856(c) (2)(D) and (3)(C). The rule in the preceding sentence also applies for purposes of section 856(c)(4)(C) in determining gain from the sale or other disposition of real property for the 30-percent-of-gross-income limitation.

(3) ***Commitment fees.*** For purposes of section 856(c) (2)(G) and (3)(G), if consideration is received or accrued for an agreement to make a loan secured by a mortgage covering both real property and other property, or for an agreement to purchase or lease both real property and other property, an apportionment of the consideration is required. The apportionment of consideration received or accrued for an agreement to make a loan secured by a mortgage covering both real property and other property shall be made under the principles of § 1.856-5(c), relating to the apportionment of interest income.

(4) ***Holding period of property.*** For purposes of the 30-percent limitation of section 856(c)(4), the determination of the period for which property described in such section has been held is governed by the provisions of section 1223 and the regulations thereunder.

(5) ***Rents from real property and interest.*** See §§ 1.856-4 and 1.856-5 for rules relating to rents from real property and interest.

(d) ***Diversification of investment requirements*** —

(1) ***75-percent test.*** Section 856(c)(5)(A) requires that at the close of each quarter of the taxable year at least 75 percent of the value of the total assets of the trust be represented by one or more of the following:

(i) Real estate assets;

(ii) Government securities; and

(iii) Cash and cash items (including receivables).

For purposes of this subparagraph the term “receivables” means only those receivables which arise in the ordinary course of the trust's operation and does not include receivables purchased from another person. Subject to the limitations in section 856(c)(5)(B) and subparagraph (2) of this paragraph, the character of the remaining 25 percent (or less) of the value of the total assets is not restricted.

(2) ***Limitations on certain securities.*** Under section 856(c)(5)(B), not more than 25 percent of the value of the total assets of the trust may be represented by securities other than those described in section 856(c)(5)(A). The ownership of securities under the 25-percent limitation in section 856(c)(5)(B) is further limited in respect of any one issuer to an amount not greater in value than 5 percent of the value of the total assets of the trust and to not more than 10 percent of the outstanding voting securities of such issuer. Thus, if the real estate investment trust meets the 75-percent asset diversification requirement in section 856(c)(5)(A), it will also meet the first test under section 856(c)(5)(B) since it will, of necessity, have not more than 25 percent of its total assets represented

by securities other than those described in section 856(c)(5)(A). However, the trust must also meet two additional tests under section 856(c)(5)(B), i.e. it cannot own the securities of any one issuer in an amount

(i) greater in value than 5 percent of the value of the trust's total assets, or

(ii) representing more than 10 percent of the outstanding voting securities of such issuer.

(3) ***Determination of investment status.*** The term "total assets" means the gross assets of the trust determined in accordance with generally accepted accounting principles. In order to determine the effect, if any, which an acquisition of any security or other property may have with respect to the status of a trust as a real estate investment trust, section 856(c)(5) requires a revaluation of the trust's assets at the end of the quarter in which such acquisition was made. A revaluation of assets is not required at the end of any quarter during which there has been no acquisition of a security or other property since the mere change in market value of property held by the trust does not, of itself, affect the status of the trust as a real estate investment trust. A change in the nature of "cash items", for example, the prepayment of insurance or taxes, does not constitute the acquisition of "other property" for purposes of this subparagraph. A real estate investment trust shall keep sufficient records as to investments so as to be able to show that it has complied with the provisions of section 856(c)(5) during the taxable year. Such records shall be kept at all times available for inspection by any internal revenue officer or employee and shall be retained so long as the contents thereof may become material in the administration of any internal revenue law.

(4) ***Illustrations.*** The application of section 856(c)(5) and this paragraph may be illustrated by the following examples:

Example 1. Real Estate Investment Trust M, at the close of the first quarter of its taxable year, has its assets invested as follows:

	Percent
Cash	6
Government securities	7
Real estate assets	63
Securities of various corporations (not exceeding, with respect to any one issuer, 5 percent of the value of the total assets of the trust nor 10 percent of the outstanding voting securities of such issuer)	24
Total	100

Trust M meets the requirements of section 856(c)(5) for that quarter of its taxable year.

Example 2. Real Estate Investment Trust P, at the close of the first quarter of its taxable year, has its

assets invested as follows:

	Percent
Cash	6
Government securities	7
Real estate assets	63
Securities of Corporation Z	20
Securities of Corporation X	4
Total	100

Trust P meets the requirement of section 856(c)(5)(A) since at least 75 percent of the value of the total assets is represented by cash, Government securities, and real estate assets. However, Trust P does not meet the diversification requirements of section 856(c)(5)(B) because its investment in the voting securities of Corporation Z exceeds 5 percent of the value of the trust's total assets.

Example 3. Real Estate Investment Trust G, at the close of the first quarter of its taxable year, has its assets invested as follows:

	Percent
Cash	4
Government securities	9
Real estate assets	70
Securities of Corporation S	5
Securities of Corporation L	4
Securities of Corporation U	4
Securities of Corporation M (which equals 25 percent of Corporation M's outstanding voting securities)	4
Total	100

Trust G meets the 75-percent requirement of section 856(c)(5)(A), but does not meet the requirements of section 856(c)(5)(B) because its investment in the voting securities of Corporation M exceeds 10 percent of Corporation M's outstanding voting securities.

Example 4. Real Estate Investment Trust R, at the close of the first quarter of its taxable year (i.e.

calendar year), is a qualified real estate investment trust and has its assets invested as follows:

Cash	$5,000
Government securities	4,000
Receivables	4,000
Real estate assets	68,000
Securities of Corporation P	4,000
Securities of Corporation O	5,000
Securities of Corporation U	5,000
Securities of Corporation T	5,000
Total assets	100,000

During the second calendar quarter the stock in Corporation P increases in value to $50,000 while the value of the remaining assets has not changed. If Real Estate Investment Trust R has made no acquisition of stock or other property during such second quarter it will not lose its status as a real estate investment trust merely by reason of the appreciation in the value of P's stock. If, during the third quarter, Trust R acquires stock of Corporation S worth $2,000, such acquisition will necessitate a revaluation of all of the assets of Trust R as follows:

Cash	$3,000
Government securities	4,000
Receivables	4,000
Real estate assets	68,000
Securities in Corporation P	50,000
Securities in Corporation O	5,000
Securities in Corporation U	5,000
Securities in Corporation T	5,000
Securities in Corporation S	2,000
Total assets	146,000

Because of the discrepancy between the value of its various investments and the 25-percent limitation in section 856(c)(5), resulting in part from the acquisition of the stock of Corporation S, Trust R, at the end of the third quarter, loses its status as a real estate investment trust. However, if Trust R, within 30 days after the close of such quarter, eliminates the discrepancy so that it meets the 25-percent limitation, the trust will be considered to have met the requirements of section 856(c)(5) at the close of the third quarter, even though the discrepancy between the value of its investment in Corporation P and the 5-percent limitation in section 856(c)(5) (resulting solely from appreciation) may still exist. If instead of acquiring stock of

Corporation S, Trust R had acquired additional stock of Corporation P, then because of the discrepancy between the value of its investments and both the 5-percent and the 25-percent limitations in section 856(c)(5) resulting in part from this acquisition, trust R, at the end of the third quarter, would lose its status as a real estate investment trust, unless within 30 days after the close of such quarter both of the discrepancies are eliminated.

Example 5. If, in the previous example, the stock of Corporation P appreciates only to $10,000 during the second quarter and, in the third quarter, Trust R acquires stock of Corporation S worth $1,000, the assets as of the end of the third quarter would be as follows:

Cash	$4,000
Government securities	4,000
Receivables	4,000
Real estate assets	68,000
Securities in Corporation P	10,000
Securities in Corporation O	5,000
Securities in Corporation U	5,000
Securities in Corporation T	5,000
Securities in Corporation S	1,000
Total assets	106,000

Because the discrepancy between the value of its investment in Corporation P and the 6-percent limitation in section 856(c)(5) results solely from appreciation, and because there is no discrepancy between the value of its various investments and the 25-percent limitation, Trust R, at the end of the third quarter, does not lose its status as a real estate investment trust. If, instead of acquiring stock of Corporation S, Trust R had acquired additional stock of Corporation P worth $1,000, then, because of the discrepancy between the value of its investment in Corporation P and the 5-percent limitation resulting in part from this acquisition, Trust R, at the end of the third quarter, would lose its status as a real estate investment trust, unless within 30 days after the close of such quarter this discrepancy is eliminated.

(Sec. 856(d)(4) (90 Stat. 1750; 26 U.S.C. 856(d)(4)); sec. 856(e)(5) (88 Stat. 2113; 26 U.S.C. 856(e)(5)); sec. 856(f)(2) (90 Stat. 1751; 26 U.S.C. 856(f)(2)); sec. 856(g)(2) (90 Stat. 1753; 26 U.S.C. 856(g)(2)); sec. 858(a) (74 Stat. 1008; 26 U.S.C. 858(a)); sec. 859(c) (90 Stat. 1743; 26 U.S.C. 859(c)); sec. 859(e) (90 Stat. 1744; 26 U.S.C. 859(e)); sec. 6001); (68A Stat. 731; 26 U.S.C. 6001); sec. 6011 (68A Stat. 732; 26 U.S.C. 6011); sec. 6071 (68A Stat. 749, 26 U.S.C. 6071); sec. 6091 (68A Stat. 752; 26 U.S.C. 6091); sec. 7805 (68A Stat. 917; 26 U.S.C. 7805), Internal Revenue Code of 1954)

[T.D. 6598, 27 FR 4083, Apr. 28, 1962, as amended by T.D. 7767, 46 FR 11265, Feb. 6, 1981]

§ 1.856-3 Definitions.

For purposes of the regulations under part II, subchapter M, chapter 1 of the Code, the following definitions shall apply.

(a) ***Value.*** The term "value" means, with respect to securities for which market quotations are readily available, the market value of such securities; and with respect to other securities and assets, fair value as determined in good faith by the trustees of the real estate investment trust. In the case of securities of other qualified real estate investment trusts, fair value shall not exceed market value or asset value, whichever is higher.

(b) ***Real estate assets*** —

(1) ***In general.*** The term "real estate assets" means real property, interests in mortgages on real property (including interests in mortgages on leaseholds of land or improvements thereon), and shares in other qualified real estate investment trusts. The term "mortgages on real property" includes deeds of trust on real property.

(2) ***Treatment of REMIC interests as real estate assets*** —

(i) ***In general.*** If, for any calendar quarter, at least 95 percent of a REMIC's assets (as determined in accordance with § 1.860F-4(e)(1)(ii) or § 1.6049-7(f)(3)) are real estate assets (as defined in paragraph (b)(1) of this section), then, for that calendar quarter, all the regular and residual interests in that REMIC are treated as real estate assets and, except as provided in paragraph (b)(2)(iii) of this section, any amount includible in gross income with respect to those interests is treated as interest on obligations secured by mortgages on real property. If less than 95 percent of a REMIC's assets are real estate assets, then the real estate investment trust is treated as holding directly its proportionate share of the assets and as receiving directly its proportionate share of the income of the REMIC. See §§ 1.860F-4(e)(1)(ii)(B) and 1.6049-7(f)(3) for information required to be provided to regular and residual interest holders if the 95-percent test is not met.

(ii) ***Treatment of REMIC assets for section 856 purposes*** —

(A) ***Manufactured housing treated as real estate asset.*** For purposes of paragraphs (b)(1) and (2) of this section, the term "real estate asset" includes manufactured housing treated as a single family residence under section 25(e)(10).

(B) ***Status of cash flow investments.*** For purposes of this paragraph (b)(2), cash flow investments (as defined in section 860G(a)(6) and § 1.860G-2(g)(1)) are real estate assets.

(iii) ***Certain contingent interest payment obligations held by a REIT.*** If a REIT holds a residual interest in a REMIC for a principal purpose of avoiding the limitation set out in section 856(f) (concerning interest based on mortgagor net profits) or section 856(j) (concerning shared appreciation provisions), then, even if the REMIC satisfies the 95-percent test of paragraph (b)(i) of this section, the REIT is treated as receiving directly the REMIC's items of income for purposes of section 856.

(c) ***Interests in real property.*** The term "interests in real property" includes fee ownership and co-ownership of land or improvements thereon, leaseholds of land or improvements thereon, options to acquire land or improvements thereon, and options to acquire leaseholds of land or improvements thereon. The term also

includes timeshare interests that represent an undivided fractional fee interest, or undivided leasehold interest, in real property, and that entitle the holders of the interests to the use and enjoyment of the property for a specified period of time each year. The term also includes stock held by a person as a tenant-stockholder in a cooperative housing corporation (as those terms are defined in section 216). Such term does not, however, include mineral, oil, or gas royalty interests, such as a retained economic interest in coal or iron ore with respect to which the special provisions of section 631(c) apply.

(d) ***Real property.*** See § 1.856-10 for the definition of *real property.* A regulation that adopts the definition of real property in this paragraph is to be interpreted as if it had referred to § 1.856-10.

(e) ***Securities.*** The term “securities” does not include “interests in real property” or “real estate assets” as those terms are defined in section 856 and this section.

(f) ***Qualified real estate investment trusts.*** The term “qualified real estate investment trust” means a real estate investment trust within the meaning of part II of subchapter M which is taxable under such part as a real estate investment trust. For purposes of the 75-percent requirement in section 856(c)(5)(A), the trust whose stock has been included by another trust as “real estate assets” must be a “qualified real estate investment trust” for its full taxable year in which falls the close of each quarter of the trust's taxable year for which the computation is made. For example, Real Estate Investment Trust Z for its taxable year ending December 31, 1963, holds as “real estate assets” stock in Real Estate Investment Trust Y, which is also on a calendar year. If Trust Y is not a qualified real estate investment trust for its full taxable year ending December 31, 1963, Trust Z may not include the stock of Trust Y as “real estate assets” in computing the 75-percent requirement as of the close of any quarter of its taxable year ending December 31, 1963.

(g) ***Partnership interest.*** In the case of a real estate investment trust which is a partner in a partnership, as defined in section 7701(a)(2) and the regulations thereunder, the trust will be deemed to own its proportionate share of each of the assets of the partnership and will be deemed to be entitled to the income of the partnership attributable to such share. For purposes of section 856, the interest of a partner in the partnership's assets shall be determined in accordance with his capital interest in the partnership. The character of the various assets in the hands of the partnership and items of gross income of the partnership shall retain the same character in the hands of the partners for all purposes of section 856. Thus, for example, if the trust owns a 30-percent capital interest in a partnership which owns a piece of rental property the trust will be treated as owning 30 percent of such property and as being entitled to 30 percent of the rent derived from the property by the partnership. Similarly, if the partnership holds any property primarily for sale to customers in the ordinary course of its trade or business, the trust will be treated as holding its proportionate share of such property primarily for such purpose. Also, for example, where a partnership sells real property or a trust sells its interest in a partnership which owns real property, any gross income realized from such sale, to the extent that it is attributable to the real property, shall be deemed gross income from the sale or disposition of real property held for either the period that the partnership has held the real property of the period that the trust was a member of the partnership, whichever is the shorter.

(h) ***Net capital gain.*** The term “net capital gain” means the excess of the net long-term capital gain for the taxable year over the net short-term capital loss for the taxable year.

(Sec. 856(d)(4) (90 Stat. 1750; 26 U.S.C. 856(d)(4)); sec. 856(e)(5) (88 Stat. 2113; 26 U.S.C. 856(e)(5)); sec. 856(f)(2) (90 Stat. 1751; 26 U.S.C. 856(f)(2)); sec. 856(g)(2) (90 Stat. 1753; 26 U.S.C. 856(g)(2)); sec. 858(a) (74 Stat. 1008; 26 U.S.C. 858(a)); sec. 859(c) (90 Stat. 1743; 26 U.S.C. 859(c)); sec. 859(e) (90 Stat. 1744; 26 U.S.C.

859(e)); sec. 6001 (68A Stat. 731; 26 U.S.C. 6001); sec. 6011 (68A Stat. 732; 26 U.S.C. 6011); sec. 6071 (68A Stat. 749, 26 U.S.C. 6071); sec. 6091 (68A Stat. 752; 26 U.S.C. 6091); sec. 7805 (68A Stat. 917; 26 U.S.C. 7805), Internal Revenue Code of 1954)

[T.D. 6598, 27 FR 4084, Apr. 28, 1962, as amended by T.D. 6841, 30 FR 9308, July 27, 1965; T.D. 7767, 46 FR 11266, Feb. 6, 1981; T.D. 8458, 57 FR 61298, Dec. 24, 1992; T.D. 9784, 81 FR 59860, Aug. 31, 2016]

§ 1.856-4 Rents from real property.

(a) ***In general.*** Subject to the exceptions of section 856(d) and paragraph (b) of this section, the term "rents from real property" means, generally, the gross amounts received for the use of, or the right to use, real property of the real estate investment trust.

(b) ***Amounts specifically included or excluded*** —

(1) ***Charges for customary services.*** For taxable years beginning after October 4, 1976, the term "rents from real property", for purposes of paragraphs (2) and (3) of section 856(c), includes charges for services customarily furnished or rendered in connection with the rental of real property, whether or not the charges are separately stated. Services furnished to the tenants of a particular building will be considered as customary if, in the geographic market in which the building is located, tenants in buildings which are of a similar class (such as luxury apartment buildings) are customarily provided with the service. The furnishing of water, heat, light, and air-conditioning, the cleaning of windows, public entrances, exits, and lobbies, the performance of general maintenance and of janitorial and cleaning services, the collection of trash, and the furnishing of elevator services, telephone answering services, incidental storage space, laundry equipment, watchman or guard services, parking facilities, and swimming pool facilities are examples of services which are customarily furnished to the tenants of a particular class of buildings in many geographic marketing areas. Where it is customary, in a particular geographic marketing area, to furnish electricity or other utilities to tenants in buildings of a particular class, the submetering of such utilities to tenants in such buildings will be considered a customary service. To qualify as a service customarily furnished, the service must be furnished or rendered to the tenants of the real estate investment trust or, primarily for the convenience or benefit of the tenant, to the guests, customers, or subtenants of the tenant. The service must be furnished through an independent contractor from whom the trust does not derive or receive any income. See paragraph (b)(5) of this section. For taxable years beginning before October 5, 1976, the rules in paragraph (b)(3) of 26 CFR 1.856-4 (revised as of April 1, 1977), relating to the furnishing of services, shall continue to apply.

(2) ***Amounts received with respect to certain personal property*** —

(i) ***In general.*** In the case of taxable years beginning after October 4, 1976, rent attributable to personal property that is leased under, or in connection with, the lease of real property is treated under section 856(d)(1)(C) as "rents from real property" (and thus qualified for purposes of the income source requirements) if the rent attributable to the personal property is not more than 15 percent of the total rent received or accrued under the lease for the taxable year. If, however, the rent attributable to personal property is greater than 15 percent of the total rent received or accrued under the lease for the taxable year, then the portion of the rent from the lease that is attributable to personal property will not qualify as "rents from real property".

(ii) ***Application.*** In general, the 15-percent test in section 856(d)(1)(C) is applied separately to each lease of real property. However, where the real estate investment trust rents all (or a portion of all) the units in a multiple unit project under substantially similar leases (such as the leasing of apartments in an apartment building or complex to individual tenants), the 15-percent test may be applied with respect to the aggregate rent received or accrued for the taxable year under the similar leases of the property, by using the average of the trust's aggregate adjusted bases of all of the personal property subject to such leases, and the average of the trust's aggregate adjusted bases of all real and personal property subject to such leases. A lease of a furnished apartment is not considered to be substantially similar to a lease of an unfurnished apartment (including an apartment where the trust provides only personal property, such as major appliances, that is commonly provided by a landlord in connection with the rental of unfurnished living quarters).

(iii) ***Taxable years beginning before October 5, 1976.*** In the case of taxable years beginning before October 5, 1976, any amount of rent that is attributable to personal property does not qualify as rent from real property.

(3) ***Disqualification of rent which depends on income or profits of any person.*** Except as provided in paragraph (b)(6)(ii) of this section, no amount received or accrued, directly or indirectly, with respect to any real property (or personal property leased under, or in connection with, real property) qualifies as “rents from real property” where the determination of the amount depends in whole or in part on the income or profits derived by any person from the property. However, any amount so accrued or received shall not be excluded from the term “rents from real property” solely by reason of being based on a fixed percentage or percentages of receipts or sales (whether or not receipts or sales are adjusted for returned merchandise, or Federal, State, or local sales taxes). Thus, for example, “rents from real property” would include rents where the lease provides for differing percentages or receipts or sales from different departments or from separate floors of a retail store so long as each percentage is fixed at the time of entering into the lease and a change in such percentage is not renegotiated during the term of the lease (including any renewal periods of the lease, in a manner which has the effect of basing the rent on income of profits. See paragraph (b)(6) of this section for rules relating to certain amounts received or accrued by a trust which are considered to be based on the income or profits of a sublessee of the prime tenant. The amount received or accrued as rent for the taxable year which is based on a fixed percentage or percentages of the lessee's receipts or sales reduced by escalation receipts (including those determined under a formula clause) will qualify as “rents from real property”. Escalation receipts include amounts received by a prime tenant from subtenants by reason of an agreement that rent shall be increased to reflect all or a portion of an increase in real estate taxes, property insurance, operating costs of the prime tenant, or similar items customarily included in lease escalation clauses. Where in accordance with the terms of an agreement an amount received or accrued as rent for the taxable year includes both a fixed rental and a percentage of all or a portion of the lessee's income or profits, neither the fixed rental nor the additional amount will qualify as “rents from real property”. However, where the amount received or accrued for the taxable year under such an agreement includes only the fixed rental, the determination of which does not depend in whole or in part on the income or profits derived by the lessee, such amount may qualify as “rents from real property”. An amount received or accrued as rent for the taxable year which consists, in whole or in part, of one or more percentages of the lessee's receipts or sales in excess of determinable dollar amounts may qualify as “rents from real property”, but only if two conditions exist. First, the determinable amounts must not depend in whole or in part on the income or profits of the lessee. Second, the percentages and, in the case of leases entered into after July 7, 1978, the determinable amounts, must be fixed at the time the lease is

entered into and a change in percentages and determinable amounts is not renegotiated during the term of the lease (including any renewal periods of the lease) in a manner which has the effect of basing rent on income or profits. In any event, an amount will not qualify as "rents from real property" if, considering the lease and all the surrounding circumstances, the arrangement does not conform with normal business practice but is in reality used as a means of basing the rent on income or profits. The provisions of this subparagraph may be illustrated by the following example:

Example. A real estate investment trust owns land underlying an office building. On January 1, 1975, the trust leases the land for 50 years to a prime tenant for an annual rental of $100x plus 20 percent of the prime tenant's annual gross receipts from the office building in excess of a fixed base amount of $5,000x and 10 percent of such gross receipts in excess of $10,000x. For this purpose the lease defines gross receipts as all amounts received by the prime tenant from occupancy tenants pursuant to leases of space in the office building reduced by the amount by which real estate taxes, property insurance, and operating costs related to the office building for a particular year exceed the amount of such items for 1974. The exclusion from gross receipts of increases since 1974 in real estate taxes, property insurance, and other expenses relating to the office building reflects the fact that the prime tenant passes on to occupancy tenants by way of a customary lease escalation provision the risk that such expenses might increase during the term of an occupancy lease. The exclusion from gross receipts of these expense escalation items will not cause the rental received by the real estate investment trust from the prime tenant to fail to qualify as "rents from real property" for purposes of section 856(c).

(4) ***Disqualification of amounts received from persons owned in whole or in part by the trust.*** "Rents from real property" does not include any amount received or accrued, directly or indirectly, from any person in which the real estate investment trust owns, at any time during the taxable year, the specified percentage or number of shares of stock (or interest in the assets or net profits) of that person. Any amount received from such person will not qualify as "rents from real property" if such person is a corporation and the trust owns 10 percent or more of the total combined voting power of all classes of its stock entitled to vote or 10 percent or more of the total number of shares of all classes of its outstanding stock, or if such person is not a corporation and the trust owns a 10-percent-or-more interest in its assets or net profits. For example, a trust leases an office building to a tenant for which it receives rent of $100,000 for the taxable year 1962. The lessee of the building subleases space to various subtenants for which it receives gross rent of $500,000 for the year 1962. The trust owns 15 percent of the total assets of an unincorporated subtenant. The rent paid by this subtenant for the taxable year is $50,000. Therefore, $10,000 (50,000/500,000 × $100,000) of the rent paid to the trust does not qualify as "rents from real property". Where the real estate investment trust receives, directly or indirectly, any amount of rent from any person in which it owns any proprietary interest, the trust shall submit, at the time it files its return for the taxable year (or before June 1, 1962, whichever is later), a schedule setting forth—

(i) The name and address of such person and the amount received as rent from such person; and

(ii) If such person is a corporation, the highest percentage of the total combined voting power of all classes of its stock entitled to vote, and the highest percentage of the total number of shares of all classes of its outstanding stock, owned by the trust at any time during the trust's taxable year; or

(iii) If such person is not a corporation, the highest percentage of the trust's interest in the assets or net profits of such person, owned by the trust at any time during its taxable year.

(5) ***Furnishing of services or management of property must be through an independent contractor*** —

(i) ***In general.*** No amount received or accrued, directly or indirectly, with respect to any real property (or any personal property leased under, or in connection with, the real property) qualifies as "rents from real property" if the real estate investment trust furnishes or renders services to the tenants of the property or manages or operates the property, other than through an independent contractor from whom the trust itself does not derive or receive any income. The prohibition against the trust deriving or receiving any income from the independent contractor applies regardless of the source from which the income was derived by the independent contractor. Thus, for example, the trust may not receive any dividends from the independent contractor. The requirement that the trust not receive any income from an independent contractor requires that the relationship between the two be an arm's-length relationship. The independent contractor must be adequately compensated for any services which are performed for the trust. Compensation to an independent contractor determined by reference to an unadjusted percentage of gross rents will generally be considered to be adequate where the percentage is reasonable taking into account the going rate of compensation for managing similar property in the same locality, the services rendered, and other relevant factors. The independent contractor must not be an employee of the trust (*i.e.,* the manner in which he carries out his duties as independent contractor must not be subject to the control of the trust). Although the cost of services which are customarily rendered or furnished in connection with the rental of real property may be borne by the trust, the services must be furnished or rendered through an independent contractor. Furthermore, the facilities through which the services are furnished must be maintained and operated by an independent contractor. For example, if a heating plant is located in the building, it must be maintained and operated by an independent contractor. To the extent that services (other than those customarily furnished or rendered in connection with the rental of real property) are rendered to the tenants of the property by the independent contractor, the cost of the services must be borne by the independent contractor, a separate charge must be made for the services, the amount of the separate charge must be received and retained by the independent contractor, and the independent contractor must be adequately compensated for the services.

(ii) ***Trustee or director functions.*** The trustees or directors of the real estate investment trust are not required to delegate or contract out their fiduciary duty to manage the trust itself, as distinguished from rendering or furnishing services to the tenants of its property or managing or operating the property. Thus, the trustees or directors may do all those things necessary, in their fiduciary capacities, to manage and conduct the affairs of the trust itself. For example, the trustees or directors may establish rental terms, choose tenants, enter into and renew leases, and deal with taxes, interest, and insurance, relating to the trust's property. The trustees or directors may also make capital expenditures with respect to the trust's property (as defined in section 263) and may make decisions as to repairs of the trust's property (of the type which would be deductible under section 162), the cost of which may be borne by the trust.

(iii) ***Independent contractor defined.*** The term "independent contractor" means—

(*a*) A person who does not own, directly or indirectly, at any time during the trust's taxable year more than 35 percent of the shares in the real estate investment trust, or

(*b*) A person—

(*1*) If a corporation, not more than 35 percent of the total combined voting power of whose stock (or 35 percent of the total shares of all classes of whose stock), or

(2) If not a corporation, not more than 35 percent of the interest in whose assets or net profits is owned, directly or indirectly, at any time during the trust's taxable year by one or more persons owning at any time during such taxable year 35 percent or more of the shares in the trust.

(iv) ***Information required.*** The real estate investment trust shall submit with its return for the taxable year (or before June 1, 1962, whichever is later) a statement setting forth the name and address of each independent contractor; and

(*a*) The highest percentage of the outstanding shares in the trust owned at any time during its taxable year by such independent contractor and by any person owning at any time during such taxable year any shares of stock or interest in the independent contractor.

(*b*) If the independent contractor is a corporation such statement shall set forth the highest percentage of the total combined voting power of its stock and the highest percentage of the total number of shares of all classes of its stock owned at any time during its taxable year by any person owning shares in the trust at any time during such taxable year.

(*c*) If the independent contractor is not a corporation such statement shall set forth the highest percentage of any interest in its assets or net profits owned at any time during its taxable year by any person owning shares in the trust at any time during such taxable year.

(6) ***Amounts based on income or profits of subtenants.***

(i) Except as provided in paragraph (b)(6)(ii) of this section, if a trust leases real property to a tenant under terms other than solely on a fixed sum rental (for example, a percentage of the tenant's gross receipts), and the tenant subleases all or a part of such property under an agreement which provides for a rental based in whole or in part on the income or profits of the sublessee, the entire amount of the rent received by the trust from the prime tenant with respect to such property is disqualified as “rents from real property”.

(ii) ***Exception.*** For taxable years beginning after October 4, 1976, section 856(d)(4) provides an exception to the general rule that amounts received or accrued, directly or indirectly, by a real estate investment trust do not qualify as rents from real property if the determination of the amount depends in whole or in part on the income or profits derived by any person from the property. This exception applies where the trust rents property to a tenant (the prime tenant) for a rental which is based, in whole or in part, on a fixed percentage or percentages of the receipts or sales of the prime tenant, and the rent which the trust receives or accrues from the prime tenant pursuant to the lease would not qualify as “rents from real property” solely because the prime tenant receives or accrues from subtenants (including concessionaires) rents or other amounts based on the income or profits derived by a person from the property. Under the exception, only a proportionate part of the rent received or accrued by the trust does not qualify as “rents from real property”. The proportionate part of the rent received or accrued by the trust which is non-qualified is the lesser of the following two amounts:

(A) The rent received or accrued by the trust from the prime tenant pursuant to the lease, that is based on a fixed percentage or percentages of receipts or sales, or

(B) The product determined by multiplying the total rent which the trust receives or accrues from the prime tenant pursuant to the lease by a fraction, the numerator of which is the rent or other amount received by the prime tenant that is based, in whole or in part, on the income or profits derived by any person from the property, and the denominator of which is the total rent

or other amount received by the prime tenant from the property. For example, assume that a real estate investment trust owns land underlying a shopping center. The trust rents the land to the owner of the shopping center for an annual rent of $10x plus 2 percent of the gross receipts which the prime tenant receives from subtenants who lease space in the shopping center. Assume further that, for the year in question, the prime tenant derives total rent from the shopping center of $100x and, of that amount, $25x is received from subtenants whose rent is based, in whole or in part, on the income or profits derived from the property. Accordingly, the trust will receive a total rent of $12x, of which $2x is based on a percentage of the gross receipts of the prime tenant. The portion of the rent which is disqualified is the lesser of $2x (the rent received by the trust which is based on a percentage of gross receipts), or $3x, ($12x multiplied by $25x/$100x). Accordingly, $10x of the rent received by the trust qualifies as "rents from real property" and $2x does not qualify.

(7) ***Attribution rules.*** Paragraphs (2) and (3) of section 856(d) relate to direct or indirect ownership of stock, assets, or net profits by the persons described therein. For purposes of determining such direct or indirect ownership, the rules prescribed by section 318(a) (for determining the ownership of stock) shall apply except that "10 percent" shall be substituted for "50 percent" in section 318(a)(2)(C) and (3)(C).

(Sec. 856(d)(4) (90 Stat. 1750; 26 U.S.C. 856(d)(4)); sec. 856(e)(5) (88 Stat. 2113; 26 U.S.C. 856(e)(5)); sec. 856(f)(2) (90 Stat. 1751; 26 U.S.C. (856(f)(2)); sec. 856(g)(2) (90 Stat. 1753; 26 U.S.C. 856(g)(2)); sec. 858(a) (74 Stat. 1008; 26 U.S.C. 858(a)); sec. 859(c) (90 Stat. 1743; 26 U.S.C. 859(c)); sec. 859(e) (90 Stat. 1744; 26 U.S.C. 859(e)); sec. 6001 (68A Stat. 731; 26 U.S.C. 6001); sec. 6011 (68A Stat. 732; 26 U.S.C. 6011); sec. 6071 (68A Stat. 749, 26 U.S.C. 6071); sec. 6091 (68A Stat. 752; 26 U.S.C. 6091); sec. 7805 (68A Stat. 917; 26 U.S.C. 7805), Internal Revenue Code of 1954))

[T.D. 6598, 27 FR 4085, Apr. 28, 1962, as amended by T.D. 6969, 33 FR 12000, Aug. 23, 1968; T.D. 7767, 46 FR 11266, Feb. 6, 1981]

§ 1.856-5 Interest.

(a) ***In general.*** In computing the percentage requirements in section 856(c) (2)(B) and (3)(B), the term "interest" includes only an amount which constitutes compensation for the use or forbearance of money. For example, a fee received or accrued by a lender which is in fact a charge for services performed for a borrower rather than a charge for the use of borrowed money is not includable as interest.

(b) ***Where amount depends on income or profits of any person.*** Except as provided in paragraph (d) of this section, any amount received or accrued, directly or indirectly, with respect to an obligation is not includable as interest for purposes of section 856(c) (2)(B) and (3)(B) if, under the principles set forth in paragraphs (b)(3) and (6)(i) of § 1.856-4, the determination of the amount depends in whole or in part on the income or profits of any person (whether or not derived from property secured by the obligation). Thus, for example, if in accordance with a loan agreement an amount is received or accrued by the trust with respect to an obligation which includes both a fixed amount of interest and a percentage of the borrower's income or profits, neither the fixed interest nor the amount based upon the percentage will qualify as interest for purposes of section 856(c) (2)(B) and (3)(B). This paragraph and paragraph (d) of this section apply only to amounts received or accrued in taxable years beginning after October 4, 1976, pursuant to loans made after May 27, 1976. For purposes of the preceding sentence, a loan is considered to be made before May 28, 1976, if it is made pursuant to a binding commitment entered into before May 28, 1976.

(c) ***Apportionment of interest —***

(1) ***In general.*** Where a mortgage covers both real property and other property, an apportionment of the interest income must be made for purposes of the 75-percent requirement of section 856(c)(3). For purposes of the 75-percent requirement, the apportionment shall be made as follows:

(i) If the loan value of the real property is equal to or exceeds the amount of the loan, then the entire interest income shall be apportioned to the real property.

(ii) If the amount of the loan exceeds the loan value of the real property, then the interest income apportioned to the real property is an amount equal to the interest income multiplied by a fraction, the numerator of which is the loan value of the real property, and the denominator of which is the amount of the loan. The interest income apportioned to the other property is an amount equal to the excess of the total interest income over the interest income apportioned to the real property.

(2) ***Loan value.*** For purposes of this paragraph, the loan value of the real property is the fair market value of the property, determined as of the date on which the commitment by the trust to make the loan becomes binding on the trust. In the case of a loan purchased by the trust, the loan value of the real property is the fair market value of the property, determined as of the date on which the commitment by the trust to purchase the loan becomes binding on the trust. However, in the case of a construction loan or other loan made for purposes of improving or developing real property, the loan value of the real property is the fair market value of the land plus the reasonably estimated cost of the improvements or developments (other than personal property) which will secure the loan and which are to be constructed from the proceeds of the loan. The fair market value of the land and the reasonably estimated cost of improvements or developments shall be determined as of the date on which a commitment to make the loan becomes binding on the trust. If the trust does not make the construction loan but commits itself to provide long-term financing following completion of construction, the loan value of the real property is determined by using the principles for determining the loan value for a construction loan. Moreover, if the mortgage on the real property is given as additional security (or as a substitute for other security) for the loan after the trust's commitment is binding, the real property loan value is its fair market value when it becomes security for the loan (or, if earlier, when the borrower makes a binding commitment to add or substitute the property as security).

(3) ***Amount of loan.*** For purposes of this paragraph, the amount of the loan means the highest principal amount of the loan outstanding during the taxable year.

(d) ***Exception.*** Section 856(f)(2) provides an exception to the general rule that amounts received, directly or indirectly, with respect to an obligation do not qualify as “interest” where the determination of the amounts depends in whole or in part on the income or profits of any person. The exception applies where the trust receives or accrues, with respect to the obligation of its debtor, an amount that is based in whole or in part on a fixed percentage or percentages of receipts or sales of the debtor, and the amount would not qualify as interest solely because the debtor has receipts or sale proceeds that are based on the income or profits of any person. Under this exception only a proportionate part of the amount received or accrued by the trust fails to qualify as interest for purposes of the percentage-of-income requirements of section 856(c) (2) and (3). The proportionate part of the amount received or accrued by the trust that is non-qualified is the lesser of the following two amounts:

(1) The amount received or accrued by the trust from the debtor with respect to the obligation that is based on a fixed percentage or percentages of receipts or sales, or

(2) The product determined by multiplying by a fraction the total amount received or accrued by the trust from the debtor with respect to the obligation. The numerator of the fraction is the amount of receipts or sales of the debtor that is based, in whole or in part, on the income or profits of any person and the denominator is the total amount of the receipts or sales of the debtor. For purposes of the preceding sentence, the only receipts or sales to be taken into account are those taken into account in determining the payment to the trust pursuant to the loan agreement.

(Sec. 856(d)(4) (90 Stat. 1750; 26 U.S.C. 856(d)(4)); sec. 856(e)(5) (88 Stat. 2113; 26 U.S.C. 856(e)(5)); sec. 856(f)(2) (90 Stat. 1751; 26 U.S.C. (856(f)(2)); sec. 856(g)(2) (90 Stat. 1753; 26 U.S.C. 856(g)(2)); sec. 858(a) (74 Stat. 1008; 26 U.S.C. 858(a)); sec. 859(c) (90 Stat. 1743; 26 U.S.C. 859(c)); sec. 859(e) (90 Stat. 1744; 26 U.S.C. 859(e)); sec. 6001 (68A Stat. 731; 26 U.S.C. 6001); sec. 6011 (68A Stat. 732; 26 U.S.C. 6011); sec. 6071 (68A Stat. 749, 26 U.S.C. 6071); sec. 6091 (68A Stat. 752; 26 U.S.C. 6091); sec. 7805 (68A Stat. 917; 26 U.S.C. 7805), Internal Revenue Code of 1954)

[T.D. 7767, 46 FR 11268, Feb. 6, 1981]

§ 1.856-6 Foreclosure property.

(a) ***In general.*** Under section 856(e) a real estate investment trust may make an irrevocable election to treat as "foreclosure property" certain real property (including interests in real property), and any personal property incident to the real property, acquired by the trust after December 31, 1973. This section prescribes rules relating to the election, including rules relating to property eligible for the election. This section also prescribes rules relating to extensions of the general two-year period (hereinafter the "grace period") during which property retains its status as foreclosure property, as well as rules relating to early termination of the grace period under section 856(e)(4). The election to treat property as foreclosure property does not alter the character of the income derived therefrom (other than for purposes of section 856(c)(2)(F) and (3)(F)). For example, if foreclosure property is sold, the determination of whether it is property described in section 1221(1) will not be affected by the fact that it is foreclosure property.

(b) ***Property eligible for the election*** —

(1) ***Rules relating to acquisitions.*** In general, the trust must acquire the property after December 31, 1973, as the result of having bid in the property at foreclosure, or having otherwise reduced the property to ownership or possession by agreement or process of law, after there was default (or default was imminent) on a lease of the property (where the trust was the lessor) or on an indebtedness owed to the trust which the property secured. Foreclosure property which secured an indebtedness owed to the trust is acquired for purposes of section 856(e) on the date on which the trust acquires ownership of the property for Federal income tax purposes. Foreclosure property which a trust owned and leased to another is acquired for purposes of section 856(e) on the date on which the trust acquires possession of the property from its lessee. A trust will not be considered to have acquired ownership of property for purposes of section 856(e) where it takes control of the property as a mortgagee-in-possession and cannot receive any profit or sustain any loss with respect to the property except as a creditor of the mortgagor. A trust may be considered to have acquired ownership of property for purposes of section 856(e) even through legal title to the property is held by another person. For example, where, upon foreclosure of a mortgage held by the trust, legal title to the property is acquired in the name of a nominee for the exclusive benefit of the trust and the trust is the equitable owner of the property, the trust will be considered to have acquired ownership of the property for purposes of section 856(e). Generally, the fact that under local law the mortgagor has a right of redemption after foreclosure is not relevant in determining whether the trust has

acquired ownership of the property for purposes of section 856(e). Property is not ineligible for the election solely because the property, in addition to securing an indebtedness owed to the trust, also secures debts owed to other creditors. Property eligible for the election includes a building or other improvement which has been constructed on land owned by the trust and which is acquired by the trust upon default of a lease of the land.

(2) ***Personal property.*** Personal property (including personal property not subject to a mortgage or lease of the real property) will be considered incident to a particular item of real property if the personal property is used in a trade or business conducted on the property or the use of the personal property is otherwise an ordinary and necessary corollary of the use to which the real property is put. In the case of a hotel, such items as furniture, appliances, linens, china, food, etc. would be examples of incidental personal property. Personal property incident to the real property is eligible for the election even though it is acquired after the real property is acquired or is placed in the building or other improvement in the course of the completion of construction.

(3) ***Property with respect to which default is anticipated.*** Property is not eligible for the election to be treated as foreclosure property if the loan or lease with respect to which the default occurs (or is imminent) was made or entered into (or the lease or indebtedness was acquired) by the trust with an intent to evict or foreclose, or when the trust knew or had reason to know that default would occur ("improper knowledge"). For purposes of the preceding sentence, a trust will not be considered to have improper knowledge with respect to a particular lease or loan, if the lease or loan was made pursuant to a binding commitment entered into by the trust at a time when it did not have improper knowledge. Moreover, if the trust, in an attempt to avoid default or foreclosure, advances additional amounts to the borrower in excess of amounts contemplated in the original loan commitment or modifies the lease or loan, such advance or modification will be considered not to have been made with an intent to evict or foreclose, or with improper knowledge, unless the original loan or lease was entered into with that intent or knowledge.

(c) ***Election —***

(1) ***In general.***

(i) An election to treat property as foreclosure property applies to all of the eligible real property acquired in the same taxable year by the trust upon the default (or as a result of the imminence of default) on a particular lease (where the trust is the lessor) or on a particular indebtedness owed to the trust. For example, if a loan made by a trust is secured by two separate tracts of land located in different cities, and in the same taxable year the trust acquires both tracts on foreclosure upon the default (or imminence of default) of the loan, the trust must include both tracts in the election. For a further example, the trust may choose to make a separate election for only one of the tracts if they are acquired in different taxable years or were not security for the same loan. If real property subject to the same election is acquired at different times in the same taxable year, the grace period for a particular property begins when that property is acquired.

(ii) If the trust acquires separate pieces of real property that secure the same indebtedness (or are under the same lease) in different taxable years because the trust delays acquiring one of them until a later taxable year, and the primary purpose for the delay is to include only one of them in an election, then if the trust makes an election for one piece it must also make an election for the other piece. A trust will not be considered to have delayed the acquisition of property for this purpose if there is a legitimate business reason for the delay (such as an attempt to avoid foreclosure by further negotiations with the debtor or lessee).

(iii) All of the eligible personal property incident to the real property must also be included in the election.

(2) ***Time for making election.*** The election to treat property as foreclosure property must be made on or before the due date (including extensions of time) for filing the trust's income tax return for the taxable year in which the trust acquires the property with respect to which the election is being made, or April 3, 1975, whichever is later.

(3) ***Manner of making the election.*** An election made after February 6, 1981, shall be made by a statement attached to the income tax return for the taxable year in which the trust acquired the property with respect to which the election is being made. The statement shall indicate that the election is made under section 856(e) and shall identify the property to which the election applies. The statement shall also set forth—

(i) The name, address, and taxpayer identification number of the trust,

(ii) The date the property was acquired by the trust, and

(iii) A brief description of how the real property was acquired, including the name of the person or persons from whom the real property was acquired and a description of the lease or indebtedness with respect to which default occurred or was imminent.

An election made on or before February 6, 1981 shall be filed in the manner prescribed in 26 CFR 10.1(f) (revised as of April 1, 1977) (temporary regulations relating to the election to treat property as foreclosure property) as in effect when the election is made.

(4) ***Status of taxpayer.*** In general, a taxpayer may make an election with respect to an acquisition of property only if the taxpayer is a qualified real estate investment trust for the taxable year in which the acquisition occurs. If, however, the taxpayer establishes, to the satisfaction of the district director for the internal revenue district in which the taxpayer maintains its principal place of business or principal office or agency, that its failure to be a qualified real estate investment trust for a taxable year was to due to reasonable cause and not due to willful neglect, the taxpayer may make the election with respect to property acquired in such taxable year. The principles of §§ 1.856.7(c) and 1.856.8(d) (including the principles relating to expert advice) will apply in determining whether, for purposes of this subparagraph, the failure of the taxpayer to be a qualified real estate investment trust for the taxable year in which the property is acquired was due to reasonable cause and not due to willful neglect. If a taxpayer makes a valid election to treat property as foreclosure property, the property will not lose its status as foreclosure property solely because the taxpayer is not a qualified real estate investment trust for a subsequent taxable year (including a taxable year which encompasses an extension of the grace period). However, the rules relating to the termination of foreclosure property status in section 856(e)(4) (but not the tax on income from foreclosure property imposed by section 857(b)(4)) apply to the year in which the property is acquired and all subsequent years, even though the taxpayer is not a qualified real estate investment trust for such year.

(d) ***Termination of 2-year grace period; subsequent leases*** —

(1) ***In general.*** Under section 856(e)(4)(A), all real property (and any incidental personal property) for which a particular election has been made (see paragraph (c)(1) of this section) shall cease to be foreclosure property on the first day (occurring on or after the day on which the trust acquired the property) on which the trust either—

(i) Enters into a lease with respect to any of the property which, by its terms, will give rise to income of the trust which is not described in section 856(c)(3) (other than section 856(c)(3)(F)), or

(ii) Receives or accrues, directly or indirectly, any amount which is not described in section 856(c)(3) (other than section 856(c)(3)(F)) pursuant to a lease with respect to any of the real property entered into by the trust on or after the day the trust acquired the property.

For example, assume the trust acquires, in a particular taxable year, a shopping center upon the default of an indebtedness owed to the trust. Also assume that the trust subsequently enters into a lease with respect to one of several stores in the shopping center that requires the lessee to pay rent to the trust which is not income described in section 856(c)(3) (other than section 856(c)(3)(F)). In such case, the entire shopping center will cease to be foreclosure property on the day the trust enters into the lease.

(2) ***Extensions or renewals of leases.*** Generally, the extension or renewal of a lease of foreclosure property will be treated as the entering into of a new lease only if the trust has a right to renegotiate the terms of the lease. If, however, by operation of law or by contract, the acquisition of the foreclosure property by the trust terminates a preexisting lease of the property, or gives the trust a right to terminate the lease, then for purposes of section 856(e)(4)(A), a trust, in such circumstances, will not be considered to have entered into a lease with respect to the property solely because the terms of the preexisting lease are continued in effect after foreclosure without substantial modification. The letting of rooms in a hotel or motel does not constitute the entering into a lease for purposes of section 856(e)(4)(A).

(3) ***Rent attributable to personal property.*** Solely for the purposes of section 856(e)(4)(A), if a trust enters into a lease with respect to real property on or after the day upon which the trust acquires such real property by foreclosure, and a portion of the rent from such lease is attributable to personal property which is foreclosure property incident to such real property, such rent attributable to the incidental personal property will not be considered to terminate the status of such real property (or such incidental personal property) as foreclosure property.

(e) ***Termination of 2-year grace period; completion of construction*** —

(1) ***In general.*** Under section 856(e)(4)(B), all real property (and any incidental personal property) for which a particular election has been made (see paragraph (c)(1) of this section) shall cease to be foreclosure property on the first day (occurring on or after the day on which the trust acquired the property) on which any construction takes place on the property, other than completion of a building (or completion of any other improvement) where more than 10 percent of the construction of the building (or other improvement) was completed before default became imminent. If more than one default occurred with respect to an indebtedness or lease in respect of which there is an acquisition, the more-than-10-percent test (including the rule prescribed in this paragraph relating to the test) will not be applied at the time a particular default became imminent if it is clear that the acquisition did not occur as the result of such default. For example, if the debtor fails to make four consecutive payments of principal and interest on the due dates, and the trust takes action to acquire the property securing the debt only after the fourth default becomes imminent, the 10-percent test is applied at the time the fourth default became imminent (even though the trust would not have foreclosed on the property had not all four defaults occurred).

(2) ***Determination of percentage of completion.*** The determination of whether the construction of a building or other improvement was more than 10 percent complete when default became imminent shall be made by comparing the total direct costs of construction incurred with respect to the building or other improvement as of the date default became imminent with the estimated total direct costs of construction as of such date. If the building or other improvement qualifies as more than 10 percent complete under this method, the building or other improvement shall be considered to be more than 10 percent complete. For purposes of this subparagraph, direct costs of construction include the cost of labor and materials which are directly connected with the construction of the building or improvement.

Thus, for example, direct costs of construction incurred as of the date default became imminent would include amounts paid, or for which liability has been incurred, for labor which has been performed as of such date that is directly connected with the construction of the building or other improvement and for building materials and supplies used or consumed in connection with the construction as of such date. For purposes of applying the 10-percent test the trust may also take into account the cost of building materials and supplies which have been delivered to the construction site as of the date default became imminent and which are to be used or consumed in connection with the construction. On the other hand, architect's fees, administrative costs of the developer or builder, lawyers' fees, and expenses incurred in connection with obtaining zoning approval or building permits are not considered to be direct costs of construction. Any construction by the trust as mortgagee-in-possession is considered to have taken place after default resulting in acquisition of the property became imminent. Generally, the trust's estimate of the total direct costs of completing construction as of the date the default became imminent will be accepted, provided that the estimate is reasonable, in good faith, and is based on all of the data reasonably available to the trust when the trust undertakes completion of construction of the building or other improvement. Appropriate documentation which shows that construction was more than 10 percent complete when default became imminent must be available at the principal place of business of the trust for inspection in connection with an examination of the income tax return. Construction includes the renovation of a building, such as the remodeling of apartments, or the renovation of an apartment building to convert rental units to a condominium. The renovation must be more than 10 percent complete (determined by comparing the total direct cost of the physical renovation which has been incurred when default became imminent with the estimated total direct cost of renovation as of such date) when default became imminent in order for the property not to lose its status as foreclosure property if the trust undertakes the renovation.

(3) ***Modification of a building or improvement.*** Generally, the terms “building” and “improvement” in section 856(e)(4)(B) mean the building or improvement (including any integral part thereof) as planned by the mortgagor or lessee (or other person in possession of the property, if appropriate) as of the date default became imminent. The trust, however, may estimate the total direct costs of construction and complete the construction of the building or other improvement by modifying the building or other improvement as planned as of the date default became imminent so as to reduce the estimated direct cost of construction of the building or improvement. If the trust does so modify the planned construction of the building or improvement, the 10-percent test is to be applied by comparing the direct costs of construction incurred as of the date default became imminent that are attributable to the building or improvement as modified, with the estimated total direct costs (as of such date) of construction of the building or other improvement as modified. The trust, in order to meet the 10-percent test, may not, however, modify the planned building or improvement by reducing the estimated direct cost of construction to such an extent that the building or improvement is not functional.

Also, the trust may make subsequent modifications which increase the direct cost of construction of the building or improvement if such modifications—

(i) Are required by a Federal, State, or local agency, or

(ii) Are alterations that are either required by a prospective lessee or purchaser as a condition of leasing or buying the property or are necessary for the property to be used for the purpose planned at the time default became imminent.

Subdivision (ii) of the preceding sentence applies, however, only if the building or improvement, as modified, was more than 10 percent complete when default became imminent. A building completed by the trust will not cease to be foreclosure property solely because the building is used in a manner other than that planed by the defaulting mortgagor or lessee. Thus, for example, assume a trust acquired on foreclosure a planned apartment building which was 20 percent complete when default became imminent and that the trust completes the building without modifications which increase the direct cost of construction. The property will not cease to be foreclosure property by reason of section 856(e)(4)(B) solely because the trust sells the dwelling units in the building as condominium units, rather than holding them for rent as planned by the defaulting mortgagor. (See, however, section 856(e)(4)(C) and paragraph (f)(2) of this section for rules relating to the requirement that where foreclosure property is used in a trade or business (including a trade or business of selling the foreclosure property), the trade or business must be conducted through an independent contractor after 90 days after the property is acquired.)

(4) ***Application on building-by-building basis.*** Generally the more than 10 percent test is to be applied on a building-by-building basis. Thus, for example, if a trust has foreclosed on land held by a developer building a housing subdivision, the trust may complete construction of the houses which were more than 10 percent complete when default became imminent. The trust, however, may not complete construction of houses which were only 10 percent (or less) complete, nor may the trust begin construction of other houses planned for the subdivision on which construction has not begun. The trust, however, may construct an additional building or improvement (whether or not the construction thereof has begun) which is an integral part of another building or other improvement that was more than 10 percent complete when default became imminent if the additional building or improvement and the other building or improvement, taken together as a unit, meet the more than 10 percent test. For purposes of this paragraph, an additional building or other improvement will be considered to be an integral part of another building or improvement if—

(i) It is ancillary to the other building or improvement and its principal intended use is to furnish services or facilities which either supplement the use of such other building or improvement or are necessary for such other building or improvement to be utilized in the manner or for the purpose for which it is intended, or

(ii) The buildings or improvements are intended to comprise constituent parts of an interdependent group of buildings or other improvements.

However, a building or other improvement will not be considered to be an integral part of another building or improvement unless the buildings or improvements were planned as part of the same overall construction plan or project before default became imminent. An additional building or other improvement (such as, for example, an outdoor swimming pool or a parking garage) may be considered to be an integral part of another building or improvement, even though the additional building or improvement was also intended to be used to provide facilities or services for use in connection with several other buildings or improvements which will not be completed. If the trust

chooses not to undertake the construction of an additional building or other improvement which qualifies as an integral part of another building or improvement, so much of the costs of construction (including both the direct costs of construction incurred before the default became imminent and the estimated costs of completion) as are attributable to that "integral part" shall not be taken into account in determining whether any other building or improvement was more than 10 percent complete when default became imminent. For example, assume the trust acquires on foreclosure a property on which the defaulting mortgagor has begun construction of a motel. The motel, as planned by the mortgagor, was to consist of a two-story building containing 30 units, and two detached one-story wings, each of which was to contain 20 units. At the time default became imminent, the defaulting mortgagor had completed more than 10 percent of the construction of the two-story structure but the two wings, an access road, a parking lot, and an outdoor swimming pool planned for the motel were each less than 10 percent complete. The trust may construct the two wings of the motel, the access road, the parking lot, and the swimming pool: *Provided,* That the motel and the other improvements which the trust undertakes to construct, taken together as a unit, were more than 10 percent complete when default became imminent. If, however, the trust chooses not to undertake construction of the swimming pool, the cost of construction attributable to the swimming pool, whether incurred before default became imminent or estimated as the cost of completion, shall not be taken into account in determining whether the trust can complete construction of the other buildings and improvements. For another example, assume that the trust acquires a planned shopping center on foreclosure. At the time default became imminent several large buildings intended to house shops and stores in the shopping center were more than 10 percent complete. Less than 10 percent of the construction, however, had been completed on a separate structure intended to house a bank. The bank was planned as a component of the shopping center in order to provide, in conjunction with the other shops and stores, a specific range and variety of goods and services with which to attract customers to the shopping center. The trust may complete construction of the bank: *Provided,* That the bank and the other buildings and improvements which the trust undertakes to complete, taken together as a unit, were more than 10 percent complete when default became imminent. If the trust chooses not to construct the bank, no actual or estimated construction costs attributable to the bank are to be taken into account in applying the 10-percent test with respect to the other buildings and improvements in the shopping center. For a third example, assume that a defaulting mortgagor had planned to construct two identical apartment buildings, A and B, on the same tract of land, that neither building is to provide substantial facilities or services to be used in connection with the other, and that only building A was more than 10 percent complete when default became imminent. The trust, in this case, may not complete building B. On the other hand, if the facts are the same except that pursuant to the plans of the defaulting mortgagor, one of the buildings is to contain the furnace and central air conditioning machinery for both buildings A and B, the trust may complete both buildings A and B: *Provided,* That, taken together as a unit, the two buildings meet the more-than-10-percent test.

(5) ***Repair and maintenance.*** Under this paragraph (e), "construction" does not include—

(i) The repair or maintenance of a building or other improvement (such as the replacement of worn or obsolete furniture and appliances) to offset normal wear and tear or obsolescence, and the restoration of property required because of damage from fire, storm, vandalism or other casualty,

(ii) The preparation of leased space for a new tenant which does not substantially extend the useful life of the building or other improvement or significantly increase its value, even though, in the case of commercial space, this preparation includes adapting the property to the conduct of a different business, or

(iii) The performing of repair or maintenance described in paragraph (e)(5)(i) of this section after property is acquired that was deferred by the defaulting party and that does not constitute renovation under paragraph (e)(2) of this section.

(6) ***Independent contractor required.*** If any construction takes place on the foreclosure property more than 90 days after the day on which such property was acquired by the trust, such construction must be performed by an independent contractor (as defined in section 856(d)(3) and § 1.856-4(b)(5)(iii)) from whom the trust does not derive or receive any income. Otherwise, the property will cease to be foreclosure property.

(7) ***Failure to complete construction.*** Property will not cease to be foreclosure property solely because a trust which undertakes the completion of construction of a building or other improvement on the property that was more than 10 percent complete when default became imminent does not complete the construction. Thus, for example, if a trust continues construction of a building that was 20 percent complete when default became imminent, and the trust constructs an additional 40 percent of the building and then sells the property, the property will not lose its status as foreclosure property solely because the trust fails to complete construction of the building.

(f) ***Termination of 2-year grace period; use of foreclosure property in a trade or business*** —

(1) ***In general.*** Under section 856(e)(4)(C), all real property (and any incidental personal property) for which a particular election has been made (see paragraph (c)(1) of this section) shall cease to be foreclosure property on the first day (occurring more than 90 days after the day on which the trust acquired the property) on which the property is used in a trade or business conducted by the trust, other than a trade or business conducted by the trust through an independent contractor from whom the trust itself does not derive or receive any income. (See section 856(d)(3) for the definition of independent contractor.)

(2) ***Property held primarily for sale to customers.*** For the purposes of section 856(e)(4)(C), foreclosure property held by the trust primarily for sale to customers in the ordinary course of a trade or business is considered to be property used in a trade or business conducted by the trust. Thus, if a trust holds foreclosure property (whether real property or personal property incident to real property) for sale to customers in the ordinary course of a trade or business more than 90 days after the day on which the trust acquired the real property, the trade or business of selling the property must be conducted by the trust through an independent contractor from whom the trust does not derive or receive any income. Otherwise, after such 90th day the property will cease to be foreclosure property.

(3) ***Change in use.*** Foreclosure property will not cease to be foreclosure property solely because the use of the property in a trade or business by the trust differs from the use to which the property was put by the person from whom it was acquired. Thus, for example, if a trust acquires a rental apartment building on foreclosure, the property will not cease to be foreclosure property solely because the trust converts the building to a condominium apartment building and, through an independent contractor from whom the trust derives no income, engages in the trade or business of selling the individual condominium units.

(g) ***Extension of 2-year grace period*** —

(1) ***In general.*** A real estate investment trust may apply to the district director of the internal revenue district in which is located the principal place of business (or principal office or agency) of the trust for an extension of the 2-year grace period. If the trust establishes to the satisfaction of the district director that an extension of the grace period is necessary for the orderly liquidation of the trust's interest in foreclosure property, or for an orderly renegotiation of a lease or leases of the property, the district director may extend the 2-year grace period. See section 856(e)(3) (as in effect with respect to the particular extension) for rules relating to the maximum length of an extension, and the number of extensions which may be granted. An extension of the grace period may be granted by the district director either before or after the date on which the grace period, but for the extension, would expire. The extension shall be effective as of the date on which the grace period, but for the extension, would expire.

(2) ***Showing required.*** Generally, in order to establish the necessity of an extension, the trust must demonstrate that it has made good faith efforts to renegotiate leases with respect to, or dispose of, the foreclosure property. In certain cases, however, the trust may establish the necessity of an extension even though it has not made such efforts. For example, if the trust demonstrates that, for valid business reasons, construction of the foreclosure property could not be completed before the expiration of the grace period, the necessity of the extension could be established even though the trust had made no effort to sell the property. For another example, if the trust demonstrates that due to a depressed real estate market, it could not sell the foreclosure property before the expiration of the grace period except at a distress price, the necessity of an extension could be established even though the trust had made no effort to sell the property. The fact that property was acquired as foreclosure property prior to January 3, 1975 (the date of enactment of section 856(e)), generally will be considered as a factor (but not a controlling factor) which tends to establish that an extension of the grace period is necessary.

(3) ***Time for requesting an extension of the grace period.*** A request for an extension of the grace period must be filed with the appropriate district director more than 60 days before the day on which the grace period would otherwise expire. In the case of a grace period which would otherwise expire before August 6, 1976, a request for an extension will be considered to be timely filed if filed on or before June 7, 1976.

(4) ***Information required.*** The request for an extension of the grace period shall identify the property with respect to which the request is being made and shall also include the following information:

(i) The name, address, and taxpayer identification number of the trust,

(ii) The date the property was acquired as foreclosure property by the trust,

(iii) The taxable year of the trust in which the property was acquired,

(iv) If the trust has been previously granted an extension of the grace period with respect to the property, a statement to that effect (which shall include the date on which the grace period, as extended, expires) and a copy of the information which accompanied the request for the previous extension,

(v) A statement of the reasons why the grace period should be extended,

(vi) A description of any efforts made by the trust after the acquisition of the property to dispose of the property or to renegotiate any lease with respect to the property, and

(vii) A description of any other factors which tend to establish that an extension of the grace period is necessary for the orderly liquidation of the trust's interest in the property, or for an orderly renegotiation of a lease or leases of the property.

The trust shall also furnish any additional information requested by the district director after the request for extension is filed.

(5) ***Automatic extension.*** If a real estate investment trust files a request for an extension with the district director more than 60 days before the expiration of the grace period, the grace period shall be considered to be extended until the end of the 30th day after the date on which the district director notifies the trust by certified mail sent to its last known address that the period of extension requested by the trust is not granted. For further guidance regarding the definition of last known address, see § 301.6212-2 of this chapter. In no event, however, shall the rule in the preceding sentence extend the grace period beyond the expiration of

(i) the period of extension requested by the trust, or

(ii) the 1-year period following the date that the grace period (but for the automatic extension) would expire. The date of the postmark on the sender's receipt is considered to be the date of the certified mail for purposes of this subparagraph. This subparagraph does not apply, however, if the date of the notification by certified mail described in the first sentence is more than 30 days before the date that the grace period (determined without regard to this subparagraph) expires. Moreover, this subparagraph shall not operate to allow any period of extension that is prohibited by the last sentence of section 856(e)(3) (as in effect with respect to the particular extension).

(6) ***Extension of time for filing.*** If a real estate investment trust fails to file the request for an extension of the grace period within the time provided in paragraph (g)(3) of this section, then the district director shall grant a reasonable extension of time for filing such request, provided

(i) it is established to the satisfaction of the district director that there was reasonable cause for failure to file the request within the prescribed time and

(ii) a request for such extension is filed within such time as the district director considers reasonable under the circumstances.

(7) ***Status of taxpayer.*** The reference to “real estate investment trust” or “trust” in this paragraph (g) shall be considered to include a taxpayer that is not a qualified real estate investment trust, if the taxpayer establishes to the satisfaction of the district director that its failure to be a qualified real estate investment trust for the taxable year was due to reasonable cause and not due to willful neglect. The principles of § 1.856-7(c) and § 1.856-8(d) (including the principles relating to expert advice) shall apply for determining reasonable cause (and absence of willful neglect) for this purpose.

(Sec. 856(d)(4) (90 Stat. 1750; 26 U.S.C. 856(d)(4)); sec. 856(e)(5) (88 Stat. 2113; 26 U.S.C. 856(e)(5)); sec. 856(f)(2) (90 Stat. 1751; 26 U.S.C. (856(f)(2)); sec. 856(g)(2) (90 Stat. 1753; 26 U.S.C. 856(g)(2)); sec. 858(a) (74 Stat. 1008; 26 U.S.C. 858(a)); sec. 859(c) (90 Stat. 1743; 26 U.S.C. 859(c)); sec. 859(e) (90 Stat. 1744; 26 U.S.C. 859(e)); sec. 6001 (68A Stat. 731; 26 U.S.C. 6001); sec. 6011 (68A Stat. 732; 26 U.S.C. 6011); sec. 6071 (68A Stat. 749, 26 U.S.C. 6071); sec. 6091 (68A Stat. 752; 26 U.S.C. 6091); sec. 7805 (68A Stat. 917; 26 U.S.C. 7805), Internal Revenue Code of 1954))

[T.D. 7767, 46 FR 11269, Feb. 6, 1981; 46 FR 15263, Mar. 5, 1981, as amended by T.D. 8939, 66 FR 2819, Jan. 12, 2001]

§ 1.856-7 Certain corporations, etc., that are considered to meet the gross income requirements.

(a) ***In general.*** A corporation, trust, or association which fails to meet the requirements of paragraph (2) or (3) of section 856(c), or of both such paragraphs, for any taxable year nevertheless is considered to have satisfied these requirements if the corporation, trust, or association meets the requirements of subparagraphs (A), (B), and (C) of section 856(c)(7) (relating to a schedule attached to the return, the absence of fraud, and reasonable cause).

(b) ***Contents of the schedule.*** The schedule required by subparagraph (A) of section 856(c)(7) must contain a breakdown, or listing, of the total amount of gross income falling under each of the separate subparagraphs of section 856(c) (2) and (3). Thus, for example, the real estate investment trust, for purposes of listing its income from the sources described in section 856(c)(2), would list separately the total amount of dividends, the total amount of interest, the total amount of rents from real property, etc. The listing is not required to be on a lease-by-lease, loan-by-loan, or project-by-project basis, but the real estate investment trust must maintain adequate records on such a basis with which to substantiate each total amount listed in the schedule.

(c) ***Reasonable cause*** —

(1) ***In general.*** The failure to meet the requirements of paragraph (2) or (3) of section 856(c) (or of both paragraphs) will be considered due to reasonable cause and not due to willful neglect if the real estate investment trust exercised ordinary business care and prudence in attempting to satisfy the requirements. Such care and prudence must be exercised at the time each transaction is entered into by the trust. However, even if the trust exercised ordinary business care and prudence in entering into a transaction, if the trust later determines that the transaction results in the receipt or accrual of nonqualified income and that the amounts of such nonqualified income, in the context of the trust's overall portfolio, reasonably can be expected to cause a source-of-income requirement to be failed, the trust must use ordinary business care and prudence in an effort to renegotiate the terms of the transaction, dispose of property acquired or leased in the transaction, or alter other elements of its portfolio. In any case, failure to meet an income source requirement will be considered due to willful neglect and not due to reasonable cause if the failure is willful and the trust could have avoided such failure by taking actions not inconsistent with ordinary business care and prudence. For example, if the trust enters into a lease knowing that it will produce nonqualified income which reasonably can be expected to cause a source-of-income requirement to be failed, the failure is due to willful neglect even if the trust has a legitimate business purpose for entering into the lease.

(2) ***Expert advice*** —

(i) ***In general.*** The reasonable reliance on a reasoned, written opinion as to the characterization for purposes of section 856 of gross income to be derived (or being derived) from a transaction generally constitutes “reasonable cause” if income from that transaction causes the trust to fail to meet the requirements of paragraph (2) or (3) of section 856(c) (or of both paragraphs). The absence of such a reasoned, written opinion with respect to a transaction does not, by itself, give rise to any inference that the failure to meet a percentage of income requirement was without reasonable cause. An opinion as to the character of income from a transaction includes an opinion pertaining to the use of a standard form of transaction or standard operating procedure in a case where such standard form or procedure is in fact used or followed.

(ii) If the opinion indicates that a portion of the income from a transaction will be nonqualifed income, the trust must still exercise ordinary business care and prudence with respect to the nonqualified income and determine that the amount of that income, in the context of its overall portfolio, reasonably cannot be expected to cause a source-of-income requirement to be failed. Reliance on an opinion is not reasonable if the trust has reason to believe that the opinion is incorrect (for example, because the trust withholds facts from the person rendering the opinion).

(iii) ***Reasoned written opinion.*** For purposes of this subparagraph (2), a written opinion means an opinion, in writing, rendered by a tax advisor (including house counsel) whose opinion would be relied on by a person exercising ordinary business care and prudence in the circumstances of the particular transaction. A written opinion is considered "reasoned" even if it reaches a conclusion which is subsequently determined to be incorrect, so long as the opinion is based on a full disclosure of the factual situation by the real estate investment trust and is addressed to the facts and law which the person rendering the opinion believes to be applicable. However, an opinion is not considered "reasoned" if it does nothing more than recite the facts and express a conclusion.

(d) ***Application of section 856(c)(7) to taxable years beginning before October 5, 1976.*** Pursuant to section 1608(b) of the Tax Reform Act of 1976, paragraph (7) of section 856(c) and this section apply to a taxable year of a real estate investment trust which begins before October 5, 1976, only if as the result of a determination occurring after October 4, 1976, the trust does not meet the requirements of paragraph (2) or (3) of section 856(c), or both paragraphs, as in effect for the taxable year. The requirement that the schedule described in subparagraph (A) of section 856(c)(7) be attached to the income tax return of a real estate investment trust in order for section 856(c)(7) to apply is not applicable to taxable years beginning before October 5, 1976. For purposes of section 1608(b) of the Tax Reform Act of 1976 and this paragraph, the rules relating to determinations prescribed in section 860(e) and § 1.860-2(b)(1) (other than the second, third, and last sentences of § 1.860-2(b)(1)(ii)) shall apply. However, a determination consisting of an agreement between the taxpayer and the district director (or other official to whom authority to sign the agreement is delegated) shall set forth the amount of gross income for the taxable year to which the determination applies, the amount of the 90 percent and 75 percent source-of-income requirements for the taxable year to which the determination applies, and the amount by which the real estate investment trust failed to meet either or both of the requirements. The agreement shall also set forth the amount of tax for which the trust is liable pursuant to section 857(b)(5). The agreement shall also contain a finding as to whether the failure to meet the requirements of paragraph (2) or (3) of section 856(c) (or of both paragraphs) was due to reasonable cause and not due to willful neglect.

(Sec. 856(d)(4) (90 Stat. 1750; 26 U.S.C. 856(d)(4)); sec. 856(e)(5) (88 Stat. 2113; 26 U.S.C. 856(e)(5)); sec. 856(f)(2) (90 Stat. 1751; 26 U.S.C. (856(f)(2)); sec. 856(g)(2) (90 Stat. 1753; 26 U.S.C. 856(g)(2)); sec. 858(a) (74 Stat. 1008; 26 U.S.C. 858(a)); sec. 859(c) (90 Stat. 1743; 26 U.S.C. 859(c)); sec. 859(e) (90 Stat. 1744; 26 U.S.C. 859(e)); sec. 6001 (68A Stat. 731; 26 U.S.C. 6001); sec. 6011 (68A Stat. 732; 26 U.S.C. 6011); sec. 6071 (68A Stat. 749, 26 U.S.C. 6071); sec. 6091 (68A Stat. 752; 26 U.S.C. 6091); sec. 7805 (68A Stat. 917; 26 U.S.C. 7805), Internal Revenue Code of 1954); sec. 860(e) (92 Stat. 2849, 26 U.S.C. 860(e)); sec. 860(g) (92 Stat. 2850, 26 U.S.C. 860(g)))

[T.D. 7767, 46 FR 11274, Feb. 6, 1981, as amended by T.D. 7936, 49 FR 2106, Jan. 18, 1984]

§ 1.856-8 Revocation or termination of election.

(a) ***Revocation of an election to be a real estate investment trust.*** A corporation, trust, or association that has made an election under section 856(c)(1) to be a real estate investment trust may revoke the election for any taxable year after the first taxable year for which the election is effective. The revocation must be made by filing a statement with the district director for the internal revenue district in which the taxpayer maintains its principal place of business or principal office or agency. The statement must be filed on or before the 90th day after the first day of the first taxable year for which the revocation is to be effective. The statement must be signed by an official authorized to sign the income tax return of the taxpayer and must—

(1) Contain the name, address, and taxpayer identification number of the taxpayer,

(2) Specify the taxable year for which the election was made, and

(3) Include a statement that the taxpayer, pursuant to section 856(g)(2), revokes its election under section 856(c)(1) to be a real estate investment trust.

The revocation may be made only with respect to a taxable year beginning after October 4, 1976, and is effective for the taxable year in which made and for all succeeding taxable years. A revocation with respect to a taxable year beginning after October 4, 1976, that is filed before February 6, 1981, in the time and manner prescribed in § 7.856(g)-1 of this chapter (as in effect when the revocation was filed) is considered to meet the requirements of this paragraph.

(b) ***Termination of election to be a real estate investment trust.*** An election of a corporation, trust, or association under section 856(c)(1) to be a real estate investment trust shall terminate if the corporation, trust, or association is not a qualified real estate investment trust for any taxable year (including the taxable year with respect to which the election is made) beginning after October 4, 1976. (This election terminates whether the failure to be a qualified real estate investment trust is intentional or inadvertent.) The term “taxable year” includes a taxable year of less than 12 months for which a return is made under section 443. The termination of the election is effective for the first taxable year beginning after October 4, 1976, for which the corporation, trust, or association is not a qualified real estate investment trust and for all succeeding taxable years.

(c) ***Restrictions on election after termination or revocation*** —

(1) ***General rule.*** Except as provided in paragraph (d) of this section, if a corporation, trust, or association has made an election under section 856(c)(1) to be a real estate investment trust and the election has been terminated or revoked under section 856(g)(1) or (2), the corporation, trust, or association (and any successor corporation, trust, or association) is not eligible to make a new election under section 856(c)(1) for any taxable year prior to the fifth taxable year which begins after the first taxable year for which the termination or revocation is effective.

(2) ***Successor corporation.*** The term “successor corporation, trust, or association”, as used in section 856(g)(3), means a corporation, trust, or association which meets both a continuity of ownership requirement and a continuity of assets requirement with respect to the corporation, trust, or association whose election has been terminated under section 856(g)(1) or revoked under section 856(g)(2). A corporation, trust, or association meets the continuity of ownership requirement only if at any time during the taxable year the persons who own, directly or indirectly, 50 percent or more in value of its outstanding shares owned, at any time during the first taxable year for which the

termination or revocation was effective, 50 percent or more in value of the outstanding shares of the corporation, trust, or association whose election has been terminated or revoked. A corporation, trust, or association meets the continuity of assets requirement only if either

(i) a substantial portion of its assets were assets of the corporation, trust, or association whose election has been revoked or terminated, or

(ii) it acquires a substantial portion of the assets of the corporation, trust, or association whose election has been terminated or revoked.

(3) ***Effective date.*** Section 856(g)(3) does not apply to the termination of an election that was made by a taxpayer pursuant to section 856(c)(1) on or before October 4, 1976, unless the taxpayer is a qualified real estate investment trust for a taxable year ending after October 4, 1976, for which the pre-October 5, 1976, election is in effect. For example, assume that Trust X, a calendar year taxpayer, files a timely election under section 856(c)(1) with respect to its taxable year 1974, and is a qualified real estate investment trust for calendar years 1974 and 1975. Assume further that Trust X is not a qualified real estate investment trust for 1976 and 1977 because it willfully fails to meet the asset diversification requirements of section 856(c)(5) for both years. The failure (whether or not willful) to meet these requirements in 1977 terminates the election to be a real estate investment trust made with respect to 1974. (See paragraph (b) of this section.) The termination is effective for 1977 and all succeeding taxable years. However, under section 1608(d)(3) of the Tax Reform Act of 1976, Trust X is not prohibited by section 856(g)(3) from making a new election under section 856(c)(1) with respect to 1978.

(d) ***Exceptions.*** Section 856(g)(4) provides an exception to the general rule of section 856(g)(3) that the termination of an election to be a real estate investment trust disqualifies the corporation, trust, or association from making a new election for the 4 taxable years following the first taxable year for which the termination is effective. This exception applies where the corporation, trust, or association meets the requirements of section 856(g)(4)(A), (B) and (C) (relating to the timely filing of a return, the absence of fraud, and reasonable cause, respectively) for the taxable year with respect to which the termination of election occurs. In order to meet the requirements of section 856(g)(4)(C), the corporation, trust, or association must establish, to the satisfaction of the district director for the internal revenue district in which the corporation, trust, or association maintains its principal place of business or principal office or agency, that its failure to be a qualified real estate investment trust for the taxable year in question was due to reasonable cause and not due to willful neglect. The principles of § 1.856-7(c) (including the principles relating to expert advice) will apply in determining whether, for purposes of section 856(g)(4), the failure of a corporation, trust, or association to be a qualified real estate investment trust for a taxable year was due to reasonable cause and not due to willful neglect. Thus, for example, the corporation, trust, or association must exercise ordinary business care and prudence in attempting to meet the status conditions of section 856(a) and the distribution and recordkeeping requirements of section 857(a), as well as the gross income requirements of section 856(c). The provisions of section 856(g)(4) do not apply to a taxable year in which the corporation, trust, or association makes a valid revocation, under section 856(g)(2), of an election to be a real estate investment trust.

(Sec. 856(d)(4) (90 Stat. 1750; 26 U.S.C. 856(d)(4)); sec. 856(e)(5) (88 Stat. 2113; 26 U.S.C. 856(e)(5)); sec. 856(f)(2) (90 Stat. 1751; 26 U.S.C. (856(f)(2)); sec. 856(g)(2) (90 Stat. 1753; 26 U.S.C. 856(g)(2)); sec. 858(a) (74 Stat. 1008; 26 U.S.C. 858(a)); sec. 859(c) (90 Stat. 1743; 26 U.S.C. 859(c)); sec. 859(e) (90 Stat. 1744; 26 U.S.C. 859(e)); sec. 6001 (68A Stat. 731; 26 U.S.C. 6001); sec. 6011 (68A Stat. 732; 26 U.S.C. 6011); sec. 6071 (68A Stat. 749, 26 U.S.C. 6071); sec. 6091 (68A Stat. 752; 26 U.S.C. 6091); sec. 7805 (68A Stat. 917; 26 U.S.C. 7805), Internal Revenue Code of 1954))

[T.D. 7767, 46 FR 11275, Feb. 6, 1981; 46 FR 15263, Mar. 5, 1981]

§ 1.856-9 Treatment of certain qualified REIT subsidiaries.

(a) ***In general.*** A qualified REIT subsidiary, even though it is otherwise not treated as a corporation separate from the REIT, is treated as a separate corporation for purposes of:

(1) Federal tax liabilities of the qualified REIT subsidiary with respect to any taxable period for which the qualified REIT subsidiary was treated as a separate corporation.

(2) Federal tax liabilities of any other entity for which the qualified REIT subsidiary is liable.

(3) Refunds or credits of Federal tax.

(b) ***Examples.*** The following examples illustrate the application of paragraph (a) of this section:

Example 1. X, a calendar year taxpayer, is a domestic corporation 100 percent of the stock of which is acquired by Y, a real estate investment trust, in 2002. X was not a member of a consolidated group at any time during its taxable year ending in December 2001. Consequently, X is treated as a qualified REIT subsidiary under the provisions of section 856(i) for 2002 and later periods. In 2004, the Internal Revenue Service (IRS) seeks to extend the period of limitations on assessment for X's 2001 taxable year. Because X was treated as a separate corporation for its 2001 taxable year, X is the proper party to sign the consent to extend the period of limitations.

Example 2. The facts are the same as in *Example 1*, except that upon Y's acquisition of X, Y and X jointly elect under section 856(l) to treat X as a taxable REIT subsidiary of Y. In 2003, Y and X jointly revoke that election. Consequently, X is treated as a qualified REIT subsidiary under the provisions of section 856(i) for 2003 and later periods. In 2004, the IRS determines that X miscalculated and underreported its income tax liability for 2001. Because X was treated as a separate corporation for its 2001 taxable year, the deficiency may be assessed against X and, in the event that X fails to pay the liability after notice and demand, a general tax lien will arise against all of X's property and rights to property.

Example 3. X is a qualified REIT subsidiary of Y under the provisions of section 856(i). In 2001, Z, a domestic corporation that reports its taxes on a calendar year basis, merges into X in a state law merger. Z was not a member of a consolidated group at any time during its taxable year ending in December 2000. Under the applicable state law, X is the successor to Z and is liable for all of Z's debts. In 2004, the IRS seeks to extend the period of limitations on assessment for Z's 2000 taxable year. Because X is the successor to Z and is liable for Z's 2000 taxes that remain unpaid, X is the proper party to sign the consent to extend the period of limitations.

(c) ***Effective date.*** This section applies on or after April 1, 2004.

[T.D. 9183, 70 FR 9221, Feb. 25, 2005]

§ 1.856-10 Definition of real property.

(a) ***In general.*** This section provides definitions for purposes of part II, subchapter M, chapter 1 of the Internal Revenue Code. Paragraph (b) of this section defines real property, which includes land as defined under paragraph (c) of this section and improvements to land as defined under paragraph (d) of this section. Improvements to land include inherently permanent structures as defined under paragraph (d)(2) of this section and structural components of inherently permanent structures as defined under paragraph (d)(3)

of this section. Paragraph (e) of this section provides rules for determining whether an item is a distinct asset for purposes of applying the definitions in paragraphs (b), (c), and (d) of this section. Paragraph (f) of this section identifies intangible assets that are real property or interests in real property. Paragraph (g) of this section provides examples illustrating the rules of paragraphs (b) through (f) of this section. Paragraph (h) of this section provides the effective/applicability date for this section.

(b) ***Real property.*** The term *real property* means land and improvements to land. Local law definitions are not controlling for purposes of determining the meaning of the term real property.

(c) ***Land.*** Land includes water and air space superjacent to land and natural products and deposits that are unsevered from the land. Natural products and deposits, such as crops, water, ores, and minerals, cease to be real property when they are severed, extracted, or removed from the land. The storage of severed or extracted natural products or deposits, such as crops, water, ores, and minerals, in or upon real property does not cause the stored property to be recharacterized as real property.

(d) ***Improvements to land*** —

(1) ***In general.*** The term *improvements to land* means inherently permanent structures and their structural components.

(2) ***Inherently permanent structure*** —

(i) ***In general.*** The term *inherently permanent structure* means any permanently affixed building or other permanently affixed structure. Affixation may be to land or to another inherently permanent structure and may be by weight alone. If the affixation is reasonably expected to last indefinitely based on all the facts and circumstances, the affixation is considered permanent. A distinct asset that serves an active function, such as an item of machinery or equipment, is not a building or other inherently permanent structure.

(ii) ***Building*** —

(A) ***In general.*** A building encloses a space within its walls and is covered by a roof.

(B) ***Types of buildings.*** Buildings include the following distinct assets if permanently affixed: Houses; apartments; hotels; motels; enclosed stadiums and arenas; enclosed shopping malls; factory and office buildings; warehouses; barns; enclosed garages; enclosed transportation stations and terminals; and stores.

(iii) ***Other inherently permanent structures*** —

(A) ***In general.*** Other inherently permanent structures serve a passive function, such as to contain, support, shelter, cover, protect, or provide a conduit or a route, and do not serve an active function, such as to manufacture, create, produce, convert, or transport.

(B) ***Types of other inherently permanent structures.*** Other inherently permanent structures include the following distinct assets if permanently affixed: Microwave transmission, cell, broadcast, and electrical transmission towers; telephone poles; parking facilities; bridges; tunnels; roadbeds; railroad tracks; transmission lines; pipelines; fences; in-ground swimming pools; offshore drilling platforms; storage structures such as silos and oil and gas storage tanks; and stationary wharves and docks. Other inherently permanent structures also include outdoor advertising displays for which an election has been properly made under section 1033(g)(3).

(iv) ***Facts and circumstances determination.*** If a distinct asset (within the meaning of paragraph (e) of this section) does not serve an active function as described in paragraph (d)(2)(iii)(A) of this section and is not otherwise listed in paragraph (d)(2)(ii)(B) or (d)(2)(iii)(B) of this section or in guidance published in the Internal Revenue Bulletin (see § 601.601(d)(2)(ii) of this chapter), the determination of whether that asset is an inherently permanent structure is based on all the facts and circumstances. In particular, the following factors must be taken into account:

(A) The manner in which the distinct asset is affixed to real property;

(B) Whether the distinct asset is designed to be removed or to remain in place indefinitely;

(C) The damage that removal of the distinct asset would cause to the item itself or to the real property to which it is affixed;

(D) Any circumstances that suggest the expected period of affixation is not indefinite (for example, a lease that requires or permits removal of the distinct asset upon the expiration of the lease); and

(E) The time and expense required to move the distinct asset.

(3) ***Structural components*** —

(i) ***In general.*** The term *structural component* means any distinct asset (within the meaning of paragraph (e) of this section) that is a constituent part of and integrated into an inherently permanent structure, serves the inherently permanent structure in its passive function, and, even if capable of producing income other than consideration for the use or occupancy of space, does not produce or contribute to the production of such income. If interconnected assets work together to serve an inherently permanent structure with a utility-like function (for example, systems that provide a building with electricity, heat, or water), the assets are analyzed together as one distinct asset that may be a structural component. A structural component may qualify as real property only if the real estate investment trust (REIT) holds its interest in the structural component together with a real property interest in the space in the inherently permanent structure served by the structural component. A mortgage secured by a structural component is a real estate asset only if the mortgage is also secured by a real property interest in the inherently permanent structure served by the structural component. If a distinct asset is customized in connection with the rental of space in or on an inherently permanent structure to which the asset relates, the customization does not affect whether the distinct asset is a structural component.

(ii) ***Types of structural components.*** Structural components include the following distinct assets and systems if integrated into the inherently permanent structure and held together with a real property interest in the space in the inherently permanent structure served by that distinct asset or system: Wiring; plumbing systems; central heating and air-conditioning systems; elevators or escalators; walls; floors; ceilings; permanent coverings of walls, floors, and ceilings; windows; doors; insulation; chimneys; fire suppression systems, such as sprinkler systems and fire alarms; fire escapes; central refrigeration systems; security systems; and humidity control systems.

(iii) ***Facts and circumstances determination.*** If an interest in a distinct asset (within the meaning of paragraph (e) of this section) is held together with a real property interest in the space in the inherently permanent structure served by that distinct asset and that asset is not otherwise listed in paragraph (d)(3)(ii) of this section or in guidance published in the Internal Revenue

Bulletin (see § 601.601(d)(2)(ii) of this chapter), the determination of whether that asset is a structural component is based on all the facts and circumstances. In particular, the following factors must be taken into account:

(A) The manner, time, and expense of installing and removing the distinct asset;

(B) Whether the distinct asset is designed to be moved;

(C) The damage that removal of the distinct asset would cause to the item itself or to the inherently permanent structure to which it is affixed;

(D) Whether the distinct asset serves a utility-like function with respect to the inherently permanent structure;

(E) Whether the distinct asset serves the inherently permanent structure in its passive function;

(F) Whether the distinct asset produces income from consideration for the use or occupancy of space in or upon the inherently permanent structure;

(G) Whether the distinct asset is installed during construction of the inherently permanent structure; and

(H) Whether the distinct asset will remain if the tenant vacates the premises.

(e) *Distinct asset* —

(1) ***In general.*** A distinct asset is analyzed separately from any other assets to which the asset relates to determine if the asset is real property, whether as land, an inherently permanent structure, or a structural component of an inherently permanent structure.

(2) ***Facts and circumstances.*** The determination of whether a particular separately identifiable item of property is a distinct asset is based on all the facts and circumstances. In particular, the following factors must be taken into account:

(i) Whether the item is customarily sold or acquired as a single unit rather than as a component part of a larger asset;

(ii) Whether the item can be separated from a larger asset, and if so, the cost of separating the item from the larger asset;

(iii) Whether the item is commonly viewed as serving a useful function independent of a larger asset of which it is a part; and

(iv) Whether separating the item from a larger asset of which it is a part impairs the functionality of the larger asset.

(f) *Intangible assets* —

(1) ***In general.*** To the extent that an intangible asset, including an intangible asset established under generally accepted accounting principles (GAAP) as a result of an acquisition of real property or an interest in real property, derives its value from real property or an interest in real property, is inseparable from that real property or interest in real property, and does not produce or contribute to the production of income other than consideration for the use or occupancy of space, the intangible asset is real property or an interest in real property.

(2) ***Licenses and permits.*** A license, permit, or other similar right that is solely for the use, enjoyment, or occupation of land or an inherently permanent structure and that is in the nature of a leasehold or easement generally is an interest in real property. A license or permit to engage in or operate a business is not real property or an interest in real property if the license or permit produces or contributes to the production of income other than consideration for the use or occupancy of space.

(g) ***Examples.*** The following examples demonstrate the rules of this section. *Examples 1* and *2* illustrate the definition of land as provided in paragraph (c) of this section. *Examples 3* through *10* illustrate the definition of improvements to land as provided in paragraph (d) of this section. Finally, *Examples 11* through *13* illustrate whether certain intangible assets are real property or interests in real property as provided in paragraph (f) of this section.

Example 1. Natural products of land. A is a REIT. REIT A owns land with perennial fruit-bearing plants. REIT A leases the fruit-bearing plants to a tenant and grants the tenant an easement to enter the land to cultivate the plants and to harvest the fruit. The lease and easement are long-term and REIT A provides no services to the tenant. The unsevered plants are natural products of the land and are land within the meaning of paragraph (c) of this section. The tenant annually harvests fruit from the plants. Upon severance from the land, the harvested fruit ceases to qualify as land. Storage of the harvested fruit upon or within real property does not cause the harvested fruit to be real property.

Example 2. Water space superjacent to land. REIT B leases a marina from a governmental entity. The marina is comprised of U-shaped boat slips and end ties. The U-shaped boat slips are spaces on the water that are surrounded by a dock on three sides. The end ties are spaces on the water at the end of a slip or on a long, straight dock. REIT B rents the boat slips and end ties to boat owners. The boat slips and end ties are water space superjacent to land that is land within the meaning of paragraph (c) of this section and, therefore, are real property.

Example 3. Indoor sculpture. (i) REIT C owns an office building and a large sculpture in the atrium of the building. The sculpture measures 30 feet tall by 18 feet wide and weighs five tons. The building was specifically designed to support the sculpture, which is permanently affixed to the building by supports embedded in the building's foundation. The sculpture was constructed within the building. Removal would be costly and time consuming and would destroy the sculpture. The sculpture is reasonably expected to remain in the building indefinitely. The sculpture does not manufacture, create, produce, convert, transport, or serve any similar active function.
(ii) The sculpture is not an asset listed in paragraph (d)(2)(iii)(B) of this section, and, therefore, the sculpture is an asset that must be analyzed to determine whether it is an inherently permanent structure using the factors provided in paragraph (d)(2)(iv) of this section. The sculpture—

(A) Is permanently affixed to the building by supports embedded in the building's foundation;

(B) Is not designed to be removed and is designed to remain in place indefinitely;

(C) Would be damaged if removed and would damage the building to which it is affixed;

(D) Will remain affixed to the building after any tenant vacates the premises and will remain affixed to the building indefinitely; and

(E) Would require significant time and expense to move.

(iii) The factors described in this paragraph (g) *Example 3* (ii)(A) through (E) all support the conclusion that the sculpture is an inherently permanent structure within the meaning of paragraph (d)(2) of this section and, therefore, is real property.

Example 4. *Bus shelters.* (i) REIT D owns 400 bus shelters, each of which consists of four posts, a roof, and panels enclosing two or three sides. REIT D enters into a long-term lease with a local transit authority for use of the bus shelters. Each bus shelter is prefabricated from steel and is bolted to the sidewalk. Bus shelters are disassembled and moved when bus routes change. Moving a bus shelter takes less than a day and does not significantly damage either the bus shelter or the real property to which it was affixed.
(ii) The bus shelters are not permanently affixed enclosed transportation stations or terminals and do not otherwise meet the definition of a building in paragraph (d)(2)(ii) of this section nor are they listed as types of other inherently permanent structures in paragraph (d)(2)(iii)(B) of this section. Therefore, the bus shelters must be analyzed to determine whether they are inherently permanent structures using the factors provided in paragraph (d)(2)(iv) of this section. The bus shelters—

(A) Are not permanently affixed to the land or an inherently permanent structure;

(B) Are designed to be removed and are not designed to remain in place indefinitely;

(C) Would not be damaged if removed and would not damage the sidewalks to which they are affixed;

(D) Will not remain affixed after the local transit authority vacates the site and will not remain affixed indefinitely; and

(E) Would not require significant time and expense to move.

(iii) The factors described in this paragraph (g) *Example 4* (ii)(A) through (E) all support the conclusion that the bus shelters are not inherently permanent structures within the meaning of paragraph (d)(2) of this section. Although the bus shelters serve a passive function of sheltering, the bus shelters are not permanently affixed, which means the bus shelters are not inherently permanent structures within the meaning of paragraph (d)(2) of this section and, therefore, are not real property.

Example 5. Cold storage warehouse. (i) REIT E owns a refrigerated warehouse (Cold Storage Warehouse). REIT E enters into a long-term lease with a tenant. REIT E neither operates the Cold Storage Warehouse nor provides services to its tenant. The tenant uses the Cold Storage Warehouse to store perishable products. Certain components and utility systems that are integrated into the Cold Storage Warehouse have been customized to accommodate the tenant's need for refrigerated storage space. For example, the Cold Storage Warehouse has customized freezer walls and a central refrigeration system. Freezer walls within the Cold Storage Warehouse are specifically designed to maintain the desired temperature within the Cold Storage Warehouse. The freezer walls and central refrigeration system comprise a series of interconnected assets that work together to serve a utility-like function within the Cold Storage Warehouse, were installed during construction of the building, and will remain in place when the tenant vacates the premises. The freezer walls and central refrigeration system were designed to remain permanently in place.
(ii) Walls and central refrigeration systems are listed as structural components in paragraph (d)(3)(ii) of this section and, therefore, are real property. The customization of the freezer walls does not affect their qualification as structural components of REIT E's Cold Storage Warehouse within the meaning of paragraph (d)(3) of this section. Therefore, the freezer walls and central refrigeration system are structural components of REIT E's Cold Storage Warehouse.

Example 6. Data center. (i) REIT F owns a building that it leases to a tenant under a long-term lease. REIT F neither operates the building nor provides services to its tenant. To accommodate the particular requirements for housing computer servers, certain interior components and utility systems within the building have been customized to provide a higher level of functionality than a conventional office building. These customized systems are owned by REIT F and include an electrical distribution and redundancy system (Electrical System), a central heating and air-conditioning system, a telecommunication infrastructure system, an integrated security system, a fire suppression system, and a humidity control system (each, a System). In addition, the space for computer servers in REIT F's building has been constructed with raised flooring that is integrated into the building to accommodate the Systems. Each System is comprised of a series of interconnected assets that work together to serve a utility-like function within the building. The Systems are integrated into the office building, were installed during construction of the building, and will remain in place when the tenant vacates the premises. Each of the Systems was customized to enhance the capacity of the System in connection with the rental of space within the building.
(ii) The central heating and air-conditioning system, integrated security system, fire suppression system, and humidity control system are listed as structural components in paragraph (d)(3)(ii) of this section and, therefore, are real property. The customization of

these Systems does not affect the qualification of these Systems as structural components of REIT F's building within the meaning of paragraph (d)(3) of this section. Therefore, these Systems are structural components of REIT F's building.

(iii) In addition to wiring and flooring, which are listed as structural components in paragraph (d)(3)(ii) of this section and, therefore, are real property, the Electrical System and telecommunication infrastructure system include equipment used to ensure that the tenant is provided with uninterruptable, stable power and telecommunication services. The Electrical System and telecommunication infrastructure system are not listed in paragraph (d)(3)(ii) of this section, and, therefore, they must be analyzed to determine whether they are structural components of the building using the factors provided in paragraph (d)(3)(iii) of this section. The Electrical System and telecommunication infrastructure system—

(A) Are embedded within the walls and floors of the building and would be costly to remove;

(B) Are not designed to be moved and are designed specifically for the particular building of which they are a part;

(C) Would not be significantly damaged upon removal and, although removing them would damage the walls and floors in which they are embedded, their removal would not significantly damage the building;

(D) Serve a utility-like function with respect to the building;

(E) Serve the building in its passive functions of containing, sheltering, and protecting computer servers;

(F) Produce income as consideration for the use or occupancy of space within the building;

(G) Were installed during construction of the building; and

(H) Will remain in place when the tenant vacates the premises.

(iv) The factors described in this paragraph (g) *Example 6* (iii)(A), (B), and (D) through (H) all support the conclusion that the Electrical System and telecommunication infrastructure system are structural components of REIT F's building within the meaning of paragraph (d)(3) of this section and, therefore, are real property. The factor described in this paragraph (g) *Example 6* (iii)(C) would support a conclusion that the Electrical System and telecommunication infrastructure system are not structural components. However this factor does not outweigh the factors supporting the conclusion that the Electric System and telecommunication infrastructure system are structural components.

Example 7. Partitions. (i) REIT G owns an office building that it leases to tenants under long-term leases. REIT G neither operates the office building nor provides services to its tenants. Partitions are owned by REIT G and are used to delineate space between tenants and within each tenant's space. The office building has two types of interior, non-load-bearing drywall partition systems: a conventional drywall partition system (Conventional Partition System) and a modular drywall partition system (Modular Partition System). Neither the Conventional Partition System nor the Modular Partition System was installed during construction of the office building. Conventional Partition Systems are comprised of fully integrated gypsum board partitions, studs, joint tape, and covering joint compound. Modular Partition Systems are comprised of assembled panels, studs, tracks, and exposed joints. Both the Conventional Partition System and the Modular Partition System reach from the floor to the ceiling.
(ii) Depending on the needs of a new tenant, the Conventional Partition System may remain in place when a tenant vacates the premises. The Conventional Partition System is integrated into the office building and is designed and constructed to remain in areas not subject to reconfiguration or expansion. The Conventional Partition System can be removed only by demolition, and, once removed, neither the Conventional Partition System nor its components can be reused. Removal of the Conventional Partition System causes substantial damage to the Conventional Partition System itself but does not cause substantial damage to the building.

(iii) Modular Partition Systems are typically removed when a tenant vacates the premises. Modular Partition Systems are not designed or constructed to remain permanently in place. Modular Partition Systems are designed and constructed to be movable. Each Modular Partition System can be readily removed, remains in substantially the same condition as before, and can be reused. Removal of a Modular Partition System does not cause any substantial damage to the Modular Partition System itself or to the building. The Modular Partition System may be moved to accommodate the reconfigurations of the interior space within the office building for various tenants that occupy the building.

(iv) The Conventional Partition System is comprised of walls that are integrated into an inherently permanent structure, and thus are listed as structural components in paragraph (d)(3)(ii) of this section. The Conventional Partition System, therefore, is real property.

(v) The Modular Partition System is not integrated into the building and, therefore, is not listed in paragraph (d)(3)(ii) of this section. Thus, the Modular Partition System must be analyzed to determine whether it is a structural component using the factors provided in paragraph (d)(3)(iii) of this section. The Modular Partition System—

(A) Is installed and removed quickly and with little expense;

(B) Is designed to be moved and is not designed specifically for the particular building of which it is a part;

(C) Is not damaged, and the building is not damaged, upon its removal;

(D) Does not serve a utility-like function with respect to the building;

(E) Serves the building in its passive functions of containing and protecting the tenants' assets;

(F) Produces income only as consideration for the use or occupancy of space within the building;

(G) Was not installed during construction of the building; and

(H) Will not remain in place when a tenant vacates the premises.

(vi) The factors described in this paragraph (g) *Example 7* (v)(A) through (D), (G) and (H) all support the conclusion that the Modular Partition System is not a structural component of REIT G's building within the meaning of paragraph (d)(3) of this section and, therefore, is not real property. The factors described in this paragraph (g) *Example 7* (v)(E) and (F) would support a conclusion that the Modular Partition System is a structural component. These factors, however, do not outweigh the factors supporting the conclusion that the Modular Partition System is not a structural component.

Example 8. *Solar energy site.* (i) REIT H owns a solar energy site, among the components of which are land, photovoltaic modules (PV Modules), mounts and an exit wire. REIT H enters into a long-term lease with a tenant for the solar energy site. REIT H neither operates the solar energy site nor provides services to its tenant. The mounts support the PV Modules. The racks are affixed to the land through foundations made from poured concrete. The mounts will remain in place when the tenant vacates the solar energy site. The PV Modules convert solar photons into electric energy (electricity). The exit wire is buried underground, is connected to equipment that is in turn connected to the PV Modules, and transmits the electricity produced by the PV Modules to an electrical power grid, through which the electricity is distributed for sale to third parties.
(ii) REIT H's PV Modules, mounts, and exit wire are each separately identifiable items. Separation from a mount does not affect the ability of a PV Module to convert photons to electricity. Separation from the equipment to which it is attached does not affect the ability of the exit wire to transmit electricity to the electrical power grid. The types of PV Modules and exit wire that REIT H owns are each customarily sold or acquired as single units. Removal of the PV Modules from the mounts that support them does not damage the function of the

mounts as support structures and removal is not costly. The PV Modules serve the active function of converting photons to electricity. Disconnecting the exit wire from the equipment to which it is attached does not damage the function of that equipment, and the disconnection is not costly. The PV Modules, mounts, and exit wire are each distinct assets within the meaning of paragraph (e) of this section.

(iii) The land is real property as defined in paragraph (c) of this section.

(iv) The mounts are designed and constructed to remain in place indefinitely, and they have a passive function of supporting the PV Modules. The mounts are not listed in paragraph (d)(2)(iii)(B) of this section, and, therefore, the mounts are assets that must be analyzed to determine whether they are inherently permanent structures using the factors provided in paragraph (d)(2)(iv) of this section. The mounts—

(A) Are permanently affixed to the land through the concrete foundations or molded concrete anchors (which are part of the mounts);

(B) Are not designed to be removed and are designed to remain in place indefinitely;

(C) Would be damaged if removed;

(D) Will remain affixed to the land after the tenant vacates the premises and will remain affixed to the land indefinitely; and

(E) Would require significant time and expense to move.

(v) The factors described in this paragraph (g) *Example 8* (iv)(A) through (E) all support the conclusion that the mounts are inherently permanent structures within the meaning of paragraph (d)(2) of this section and, therefore, are real property.

(vi) The PV Modules convert solar photons into electricity that is transmitted through an electrical power grid for sale to third parties. The conversion is an active function. Thus, the PV Modules are items of machinery or equipment and therefore are not inherently permanent structures within the meaning of paragraph (d)(2) of this section and, so, are not real property. The PV Modules do not serve the mounts in their passive function of providing support; instead, the PV Modules produce electricity for sale to third parties, which is income other than consideration for the use or occupancy of space. Thus, the PV Modules are not structural components of REIT H's mounts within the meaning of paragraph (d)(3) of this section and, therefore, are not real property.

(vii) The exit wire is buried under the ground and transmits the electricity produced by the PV Modules to the electrical power grid. The exit wire was installed during construction of the solar energy site and is designed to remain permanently in place. The exit wire is permanently affixed and is a transmission line, which is listed as an inherently permanent structure in paragraph (d)(2)(iii)(B) of this section. Therefore, the exit wire is real property.

Example 9. Solar-powered building. (i) REIT I owns a solar energy site similar to that described in *Example 8,* except that REIT I's solar energy site assets (Solar Energy Site Assets) are mounted on land adjacent to an office building owned by REIT I. REIT I leases the office building and the solar energy site to a single tenant. REIT I does not operate the office building or the solar energy site and does not provide services to its tenant. Although the tenant occasionally transfers excess electricity produced by the Solar Energy Site Assets to a utility company, the Solar Energy Site Assets are designed and intended to produce electricity only to serve the office building. The size and specifications of the Solar Energy Site Assets were designed to be appropriate to serve only the electricity needs of the office building. Although the Solar Energy Site Assets were not installed during construction of the office building, no facts indicate either that the Solar Energy Site Assets will not remain in place indefinitely or that they may be removed if the tenant vacates the premises.
(ii) With the exception of the occasional transfers of excess electricity to a utility company, the Solar Energy Site Assets serve the office building to which they are adjacent, and, therefore, the Solar Energy Site Assets are analyzed to determine whether they are a structural component using the factors provided in paragraph (d)(3)(iii) of this section. The Solar Energy Site Assets—

(A) Are expensive and time consuming to install and remove;

(B) Were designed with the size and specifications needed to serve only the office building;

(C) Will be damaged, but will not cause damage to the office building, upon removal;

(D) Serve a utility-like function with respect to the office building;

(E) Serve the office building in its passive functions of containing, sheltering, and protecting the tenant and the tenant's assets;

(F) Produce income from consideration for the use or occupancy of space within the office building;

(G) Were not installed during construction of the office building; and

(H) Will remain in place when the tenant vacates the premises.

(iii) The factors described in this paragraph (g) *Example 9* (ii)(A) through (C) (in part), (ii)(D) through (F), and (ii)(H) all support the conclusion that the Solar Energy Site Assets are a structural component of REIT I's office building within the meaning of paragraph (d)(3) of this section and, therefore, are real property. The factors described in this paragraph (g) *Example 9* (ii)(C) (in part) and (ii)(G) would support a conclusion that the Solar Energy Site Assets are not a structural component, but these factors do not outweigh the factors supporting the conclusion that the Solar Energy Site Assets are a structural component.

(iv) The result in this *Example 9* would not change if, instead of the Solar Energy Site Assets, solar shingles were used as the roof of REIT I's office building. Solar shingles are roofing shingles like those commonly used for residential housing, except that they contain built-in PV modules. The solar shingle installation was specifically designed and constructed to serve only the needs of REIT I's office building, and the solar shingles were installed as a structural component to provide solar energy to REIT I's office building (although REIT I's tenant occasionally transfers excess electricity produced by the solar shingles to a utility company). The analysis of the application of the factors provided in paragraph (d)(3)(ii) of this section would be similar to the analysis of the application of the factors to the Solar Energy Site Assets in this paragraph (g) *Example 9* (ii) and (iii).

Example 10. *Pipeline transmission system.* (i) REIT J owns a natural gas pipeline transmission system that provides a conduit to transport natural gas from unrelated third-party producers and gathering facilities to unrelated third-party distributors and end users. REIT J enters into a long-term lease with a tenant for the pipeline transmission system. REIT J neither operates the pipeline transmission system nor provides services to its tenant. The pipeline transmission system is comprised of underground pipelines, isolation valves and vents, pressure control and relief valves, meters, and compressors. Although the pipeline transmission system as a whole serves an active function (transporting natural gas), one or more distinct assets within the system may nevertheless be inherently permanent structures that do not themselves perform active functions. Each of these distinct assets was installed during construction of the pipeline transmission system and will remain in place when the tenant vacates the pipeline transmission system. Each of these assets was designed to remain permanently in place.
(ii) The pipelines are permanently affixed and are listed as other inherently permanent structures in paragraph (d)(2)(iii)(B) of this section. Therefore, the pipelines are real property.

(iii) Isolation valves and vents are placed at regular intervals along the pipelines to isolate and evacuate sections of the pipelines in case there is need for a shut-down or maintenance of the pipelines. Pressure control and relief valves are installed at regular intervals along the pipelines to provide overpressure protection. The isolation valves and vents and pressure control and relief valves are not listed in paragraph (d)(3)(ii) and, therefore, must be analyzed

to determine whether they are structural components using the factors provided in paragraph (d)(3)(iii) of this section. The isolation valves and vents and pressure control and relief valves—

(A) Are time consuming and expensive to install and remove from the pipelines;

(B) Are designed specifically for the particular pipelines for which they are a part;

(C) Will sustain damage and will damage the pipelines if removed;

(D) Do not serve a utility-like function with respect to the pipelines;

(E) Serve the pipelines in their passive function of providing a conduit for natural gas;

(F) Produce income only from consideration for the use or occupancy of space within the pipelines;

(G) Were installed during construction of the pipelines; and

(H) Will remain in place when the tenant vacates the premises.

(iv) The factors described in this paragraph (g) *Example 10* (iii)(A) through (C) and (iii)(E) through (H) support the conclusion that the isolation valves and vents and pressure control and relief valves are structural components of REIT J's pipelines within the meaning of paragraph (d)(3) of this section and, therefore, are real property. The factor described in this paragraph (g) *Example 10* (iii)(D) would support a conclusion that the isolation valves and vents and pressure control and relief valves are not structural components, but this factor does not outweigh the factors that support the conclusion that the isolation valves and vents and pressure control and relief valves are structural components.

(v) Meters are used to measure the natural gas passing into or out of the pipeline transmission system for purposes of determining the end users' consumption. Over long distances, pressure is lost due to friction in the pipeline transmission system. Compressors are required to add pressure to transport natural gas through the entirety of the pipeline transmission system. The meters and compressors do not serve the pipelines in their passive function of providing a conduit for the natural gas, and are used in connection with the production of income from the sale and transportation of natural gas, rather than as consideration for the use or occupancy of space within the pipelines. The meters and compressors are not structural components within the meaning of paragraph (d)(3) of this section and, therefore, are not real property.

Example 11. Above-market lease. REIT K acquires an office building from an unrelated third party subject to a long-term lease with a single tenant under which the tenant pays above-market rents. The above-market lease is an intangible asset under GAAP. Seventy percent of the value of the above-market lease asset is attributable to income from the long-term lease that qualifies as rents from real property, as defined in section 856(d)(1). The remaining thirty percent of the value of the above-market lease asset is attributable to income from the long-term lease that does not qualify as rents from real property. The portion of the value of the above-market lease asset that is attributable to rents from real property (here, seventy percent) derives its value from real property, is inseparable from that real property, does not produce or contribute to the production of income other than consideration for the use or occupancy of space, and, therefore, is an interest in real property under section 856(c)(5)(C) and a real estate asset under section 856(c)(5)(B). The remaining portion of the above-market lease asset does not derive its value from real property and, therefore, is not a real estate asset.

Example 12. Land use permit. REIT L receives a special use permit from the government to place a cell tower on Federal Government land that abuts a federal highway. Government regulations provide that the permit is not a lease of the land, but is a permit to use the land for a cell tower. Under the permit, the government reserves the right to cancel the permit and compensate REIT L if the site is needed for a higher public purpose. REIT L leases space on the tower to various cell service providers. Each cell service provider installs its equipment on a designated space on REIT L's cell tower. The permit does not produce, or contribute to the production of, any income other than REIT L's receipt of payments from the cell service providers in consideration for their being allowed to use space on the tower. The permit is in the nature of a leasehold that allows REIT L to place a cell tower in a specific location on government land. Therefore, the permit is an interest in real property.

Example 13. License to operate a business. REIT M owns a building and receives a license from State to operate a casino in the building. The license applies only to REIT M's building and cannot be transferred to another location. REIT M's building is an inherently permanent structure under paragraph (d)(2)(i) of this section and, therefore, is real property. However, REIT M's license to operate a casino is not a right for the use, enjoyment, or occupation of REIT M's building but is rather a license to engage in the business of operating a casino in the building. Therefore, the casino license is not real property.

(h) ***Effective/applicability date.*** The rules of this section apply for taxable years beginning after August 31, 2016. For purposes of applying the first sentence of the flush language of section 856(c)(4) to a quarter in a taxable year that begins after August 31, 2016, the rules of this section apply in determining whether the taxpayer met the requirements of section 856(c)(4) at the close of prior quarters. Taxpayers may rely on this section for quarters that end before the applicability date.

[T.D. 9784, 81 FR 59860, Aug. 31, 2016, as amended by 81 FR 68934, Oct. 5, 2016]

§ 1.857-1 Taxation of real estate investment trusts.

(a) ***Requirements applicable thereto.*** Section 857(a) denies the application of the provisions of part II, subchapter M, chapter 1 of the Code (other than sections 856(g), relating to the revocation or termination of an election, and 857(d), relating to earnings and profits) to a real estate investment trust for a taxable year unless—

(1) The deduction for dividends paid for the taxable year as defined in section 561 (computed without regard to capital gain dividends) equals or exceeds the amount specified in section 857(a)(1), as in effect for the taxable year; and

(2) The trust complies for such taxable year with the provisions of § 1.857-8 (relating to records required to be maintained by a real estate investment trust).

See section 858 and § 1.858-1, relating to dividends paid after the close of the taxable year.

(b) ***Failure to qualify.*** If a real estate investment trust does not meet the requirements of section 857(a) and paragraph (a) of this section for the taxable year, it will, even though it may otherwise be classified as a real estate investment trust, be taxed in such year as an ordinary corporation and not as a real estate investment trust. In such case, none of the provisions of part II of subchapter M (other than sections 856(g) and 857(d)) will be applicable to it. For the rules relating to the applicability of sections 856(g) and 857(d), see § 1.857-7.

(Sec. 856(d)(4) (90 Stat. 1750; 26 U.S.C. 856(d)(4)); sec. 856(e)(5) (88 Stat. 2113; 26 U.S.C. 856(e)(5)); sec. 856(f)(2) (90 Stat. 1751; 26 U.S.C. (856(f)(2)); sec. 856(g)(2) (90 Stat. 1753; 26 U.S.C. 856(g)(2)); sec. 858(a) (74 Stat. 1008; 26 U.S.C. 858(a)); sec. 859(c) (90 Stat. 1743; 26 U.S.C. 859(c)); sec. 859(e) (90 Stat. 1744; 26 U.S.C. 859(e)); sec. 6001 (68A Stat. 731; 26 U.S.C. 6001); sec. 6011 (68A Stat. 732; 26 U.S.C. 6011); sec. 6071 (68A Stat. 749, 26 U.S.C. 6071); sec. 6091 (68A Stat. 752; 26 U.S.C. 6091); sec. 7805 (68A Stat. 917; 26 U.S.C. 7805), Internal Revenue Code of 1954))

[T.D. 6598, 27 FR 4087, Apr. 28, 1962, as amended by T.D. 7767, 46 FR 11277, Feb. 6, 1981]

§ 1.857-2 Real estate investment trust taxable income and net capital gain.

(a) ***Real estate investment trust taxable income.*** Section 857(b)(1) imposes a nominal tax and surtax, computed at the rates and in the manner prescribed in section 11, on the "real estate investment trust taxable income", as defined in section 857(b)(2). Section 857(b)(2) requires certain adjustments to be made to convert taxable income of the real estate investment trust to "real estate investment trust taxable income". The adjustments are as follows:

(1) ***Net capital gain.*** In the case of taxable years ending before October 5, 1976, the net capital gain, if any, is excluded.

(2) ***Special deductions disallowed.*** The special deductions provided in part VIII, subchapter B, chapter 1 of the Code (except the deduction under section 248) are not allowed.

(3) ***Deduction for dividends paid*** —

(i) ***General rule.*** The deduction for dividends paid (as defined in section 561) is allowed. In the case of taxable years ending before October 5, 1976, the deduction for dividends paid is computed without regard to capital gains dividends.

(ii) ***Deduction for dividends paid if there is net income from foreclosure property.*** If for any taxable year the trust has net income from foreclosure property (as defined in section 857(b)(4)(B) and § 1.857-3), the deduction for dividends paid is an amount equal to the amount which bears the same proportion to the total dividends paid or considered as paid during the taxable year that otherwise meet the requirements for the deduction for dividends paid (as defined in section 561) as the real estate investment trust taxable income (determined without regard to the deduction for dividends paid) bears to the sum of—

(A) The real estate investment trust taxable income (determined without regard to the deduction for dividends paid), and

(B) The amount by which the net income from foreclosure property exceeds the tax imposed on such income by section 857(b)(4)(A).

For purposes of the preceding sentence, the term "total dividends paid or considered as paid during the taxable year" includes deficiency dividends paid with respect to the taxable year that are not otherwise excluded under this subdivision or section 857(b)(3)(A). The term, however, does not include either deficiency dividends paid during the taxable year with respect to a preceding taxable year ending before October 5, 1976, capital gains dividends.

(iii) ***Deduction for dividends paid for purposes of the alternative tax.*** The rules in section 857(b)(3)(A) apply in determining the amount of the deduction for dividends paid that is taken into account in computing the alternative tax. Thus, for example, if a real estate investment trust has net income from foreclosure property for a taxable year ending after October 4, 1976, then for purposes of determining the partial tax described in section 857(b)(3)(A)(i), the amount of the deduction for dividends paid is computed pursuant to paragraph (a)(3)(ii) of this section, except that capital gains dividends are excluded from the dividends paid or considered as paid during the taxable year, and the net capital gain is excluded in computing real estate investment trust taxable income.

(4) ***Section 443(b) disregarded.*** The taxable income is computed without regard to section 443(b). Thus, the taxable income for a period of less than 12 months is not placed on an annual basis even though the short taxable year results from a change of accounting period.

(5) ***Net operating loss deduction.*** In the case of a taxable year ending before October 5, 1976, the net operating loss deduction provided in section 172 is not allowed.

(6) ***Net income from foreclosure property.*** An amount equal to the net income from foreclosure property (as defined in section 857(b)(4)(B) and paragraph (a) of § 1.857-3), if any, is excluded.

(7) ***Tax imposed by section 857(b)(5).*** An amount equal to the tax (if any) imposed on the trust by section 857(b)(5) for the taxable year is excluded.

(8) ***Net income or loss from prohibited transactions.*** An amount equal to the amount of any net income derived from prohibited transactions (as defined in section 857(b)(6)(B)(i)) is excluded. On the other hand, an amount equal to amount of any net loss derived from prohibited transactions (as defined in section 857(b)(6)(B)(ii)) is included. Because the amount of the net loss derived from prohibited transactions is taken into account in computing taxable income before the adjustments required by section 857(b)(2) and this section are made, the effect of including an amount equal to the amount of the loss is to disallow a deduction for the loss.

(b) ***Net capital gain in taxable years ending October 5, 1976.*** The rules relating to the taxation of capital gains in 26 CFR 1.857-2(b) (revised as of April 1, 1977) apply to taxable years ending before October 5, 1976.

(Sec. 856(d)(4) (90 Stat. 1750; 26 U.S.C. 856(d)(4)); sec. 856(e)(5) (88 Stat. 2113; 26 U.S.C. 856(e)(5)); sec. 856(f)(2) (90 Stat. 1751; 26 U.S.C. (856(f)(2)); sec. 856(g)(2) (90 Stat. 1753; 26 U.S.C. 856(g)(2)); sec. 858(a) (74 Stat. 1008; 26 U.S.C. 858(a)); sec. 859(c) (90 Stat. 1743; 26 U.S.C. 859(c)); sec. 859(e) (90 Stat. 1744; 26 U.S.C. 859(e)); sec. 6001 (68A Stat. 731; 26 U.S.C. 6001); sec. 6011 (68A Stat. 732; 26 U.S.C. 6011); sec. 6071 (68A Stat. 749, 26 U.S.C. 6071); sec. 6091 (68A Stat. 752; 26 U.S.C. 6091); sec. 7805 (68A Stat. 917; 26 U.S.C. 7805), Internal Revenue Code of 1954))

[T.D. 7767, 46 FR 11277, Feb. 6, 1981]

§ 1.857-3 Net income from foreclosure property.

(a) ***In general.*** For purposes of section 857(b)(40(B), net income from foreclosure property means the aggregate of—

(1) All gains and losses from sales or other dispositions of foreclosure property described in section 1221(1), and,

(2) The difference (hereinafter called "net gain or loss from operations") between

(i) the gross income derived from foreclosure property (as defined in section 856(e)) to the extent such gross income is not described in subparagraph (A), (B), (C), (D), (E), or (G) of section 856(c)(3), and

(ii) the deductions allowed by chapter 1 of the Code which are directly connected with the production of such gross income.

Thus, the sum of the gains and losses from sales or other dispositions of foreclosure property described in section 1221(1) is aggregated with the net gain or loss from operations in arriving at net income from foreclosure property. For example, if for a taxable year a real estate investment trust has gain of $100 from the sale of an item of foreclosure property described in section 1221(1), a loss of $50 from the sale of an item of foreclosure property described in section 1221(1), gross income of $25 from the rental of foreclosure property that is not gross income described in subparagraph (A), (B), (C), (D), or (G) of section 856(c)(3), and deductions of $35 allowed by chapter 1 of the Code which are directly connected with the production of the rental income, the net income from foreclosure property for the taxable years is $40 (($100−$50) + ($25−$35)).

(b) ***Directly connected deductions.*** A deduction which is otherwise allowed by chapter 1 of the Code is "directly connected" with the production of gross income from the foreclosure property if it has a proximate and primary relationship to the earning of the income. Thus, in the case of gross income from real property that is foreclosure property, "directly connected" deductions would include depreciation on the property, interest paid or accrued on the indebtedness of the trust (whether or not secured by the property) to the extent attributable to the carrying of the property, real estate taxes, and fees paid to an independent contractor hired to manage the property. On the other hand, general overhead and administrative expenses of the trust are not "directly connected" deductions. Thus, salaries of officers and other administrative employees of the trust are not "directly connected" deductions. The net operating loss deduction provided by section 172 is not allowed in computing net income from foreclosure property.

(c) ***Net loss from foreclosure property.*** The tax imposed by section 857(b)(4) applies only if there is net income from foreclosure property. If there is a net loss from foreclosure property (that is, if the aggregate computed under paragraph (a) of this section results in a negative amount) the loss is taken into account in computing real estate investment trust taxable income under section 857(b)(2).

(d) ***Gross income not subject to tax on foreclosure property.*** If the gross income derived from foreclosure property consists of two classes, a deduction directly connected with the production of both classes (including interest attributable to the carrying of the property) must be apportioned between them. The two classes are:

(1) Gross income which is taken into account in computing net income from foreclosure property and

(2) Other income (such as income described in subparagraph (A), (B), (C), (D), or (G) of section 856(c)(3)).

The apportionment may be made on any reasonable basis.

(e) ***Allocation and apportionment of interest.*** For purposes of determining the amount of interest attributable to the carrying of foreclosure property under paragraph (b) of this section, the following rules apply:

(1) ***Deductible interest.*** Interest is taken into account under this paragraph (e) only if it is otherwise deductible under chapter 1 of the Code.

(2) ***Interest specifically allocated to property.*** Interest that is specifically allocated to an item of property is attributable only to the carrying of that property. Interest is specifically allocated to an item of property if

(i) the indebtedness on which the interest is paid or accrued is secured only by that property,

(ii) such indebtedness was specifically incurred for the purpose of purchasing, constructing, maintaining, or improving that property, and

(iii) the proceeds of the borrowing were applied for that purpose.

(3) ***Other interest.*** Interest which is not specifically allocated to property is apportioned between foreclosure property and other property under the principles of § 1.861-8(e)(2)(v).

(4) ***Effective date.*** The rules in this paragraph (e) are mandatory for all taxable years ending after February 6, 1981.

(Sec. 856(d)(4) (90 Stat. 1750; 26 U.S.C. 856(d)(4)); sec. 856(e)(5) (88 Stat. 2113; 26 U.S.C. 856(e)(5)); sec. 856(f)(2) (90 Stat. 1751; 26 U.S.C. (856(f)(2)); sec. 856(g)(2) (90 Stat. 1753; 26 U.S.C. 856(g)(2)); sec. 858(a) (74 Stat. 1008; 26 U.S.C. 858(a)); sec. 859(c) (90 Stat. 1743; 26 U.S.C. 859(c)); sec. 859(e) (90 Stat. 1744; 26 U.S.C. 859(e)); sec. 6001 (68A Stat. 731; 26 U.S.C. 6001); sec. 6011 (68A Stat. 732; 26 U.S.C. 6011); sec. 6071 (68A Stat. 749, 26 U.S.C. 6071); sec. 6091 (68A Stat. 752; 26 U.S.C. 6091); sec. 7805 (68A Stat. 917; 26 U.S.C. 7805), Internal Revenue Code of 1954))

[T.D. 7767, 46 FR 11277, Feb. 6, 1981]

§ 1.857-4 Tax imposed by reason of the failure to meet certain source-of-income requirements.

Section 857(b)(5) imposes a tax on a real estate investment trust that is considered, by reason of section 856(c)(7), as meeting the source-of-income requirements of paragraph (2) or (3) of section 856(c) (or both such paragraphs). The amount of the tax is determined in the manner prescribed in section 857(b)(5).

(Sec. 856(d)(4) (90 Stat. 1750; 26 U.S.C. 856(d)(4)); sec. 856(e)(5) (88 Stat. 2113; 26 U.S.C. 856(e)(5)); sec. 856(f)(2) (90 Stat. 1751; 26 U.S.C. (856(f)(2)); sec. 856(g)(2) (90 Stat. 1753; 26 U.S.C. 856(g)(2)); sec. 858(a) (74 Stat. 1008; 26 U.S.C. 858(a)); sec. 859(c) (90 Stat. 1743; 26 U.S.C. 859(c)); sec. 859(e) (90 Stat. 1744; 26 U.S.C. 859(e)); sec. 6001 (68A Stat. 731; 26 U.S.C. 6001); sec. 6011 (68A Stat. 732; 26 U.S.C. 6011); sec. 6071 (68A Stat. 749, 26 U.S.C. 6071); sec. 6091 (68A Stat. 752; 26 U.S.C. 6091); sec. 7805 (68A Stat. 917; 26 U.S.C. 7805), Internal Revenue Code of 1954))

[T.D. 7767, 46 FR 11278, Feb. 2, 1981]

§ 1.857-5 Net income and loss from prohibited transactions.

(a) ***In general.*** Section 857(b)(6) imposes, for each taxable year, a tax equal to 100 percent of the net income derived from prohibited transactions. A prohibited transaction is a sale or other disposition of property described in section 1221(1) that is not foreclosure property. The 100-percent tax is imposed to preclude a real estate investment trust from retaining any profit from ordinary retailing activities such as sales to customers of condominium units or subdivided lots in a development tract. In order to prevent a trust from receiving any tax benefit from such activities, a net loss from prohibited transactions effectively is disallowed in computing real estate investment trust taxable income. See § 1.857-2(a)(8). Such loss, however, does reduce the amount which a trust is required to distribute as dividends. For purposes of applying the provisions of the Code, other than those provisions of part II of subchapter M which relate to prohibited transactions, no inference is to be drawn from the fact that a type of transaction does not constitute a prohibited transaction.

(b) ***Special rules.*** In determining whether a particular transaction constitutes a prohibited transaction, the activities of a real estate investment trust with respect to foreclosure property and its sales of such property are disregarded. Also, if a real estate investment trust enters into a purchase and leaseback of real property with an option in the seller-lessee to repurchase the property at the end of the lease period, and the seller exercises the option pursuant to its terms, income from the sale generally will not be considered to be income from a prohibited transaction solely because the purchase and leaseback was entered into with an option in the seller to repurchase and because the option was exercised pursuant to its terms. Other facts and circumstances, however, may require a conclusion that the property is held primarily for sale to customers in the ordinary course of a trade or business. Gain from the sale or other disposition of property described in section 1221(1) (other than foreclosure property) that is included in gross income for a taxable year of a qualified real estate investment trust constitutes income from a prohibited transaction, even though the sale or other disposition from which the gain is derived occurred in a prior taxable year. For example, if a corporation that is a qualified real estate investment trust for the current taxable year elected to report the income from the sale of an item of section 1221(1) property (other than foreclosure property) on the installment method of reporting income, the gain from the sale that is taken into income by the real estate investment trust for the current taxable year is income from a prohibited transaction. This result follows even though the sale occurred in a prior taxable year for which the corporation did not qualify as a real estate investment trust. On the other hand, if the gain is taken into income in a taxable year for which the taxpayer is not a qualified real estate investment trust, the 100-percent tax does not apply.

(c) ***Net income or loss from prohibited transactions.*** Net income or net loss from prohibited transactions is determined by aggregating all gains from the sale or other disposition of property (other than foreclosure property) described in section 1221(1) with all losses from the sale or other disposition of such property. Thus, for example, if a real estate investment trust sells two items of property described in section 1221(1) (other than foreclosure property) and recognizes a gain of $100 on the sale of one item and a loss of $40 on the sale of the second item, the net income from prohibited transactions will be $60.

(Sec. 856(d)(4) (90 Stat. 1750; 26 U.S.C. 856(d)(4)); sec. 856(e)(5) (88 Stat. 2113; 26 U.S.C. 856(e)(5)); sec. 856(f)(2) (90 Stat. 1751; 26 U.S.C. (856(f)(2)); sec. 856(g)(2) (90 Stat. 1753; 26 U.S.C. 856(g)(2)); sec. 858(a) (74 Stat. 1008; 26 U.S.C. 858(a)); sec. 859(c) (90 Stat. 1743; 26 U.S.C. 859(c)); sec. 859(e) (90 Stat. 1744; 26 U.S.C. 859(e)); sec. 6001 (68A Stat. 731; 26 U.S.C. 6001); sec. 6011 (68A Stat. 732; 26 U.S.C. 6011); sec. 6071 (68A Stat. 749, 26 U.S.C. 6071); sec. 6091 (68A Stat. 752; 26 U.S.C. 6091); sec. 7805 (68A Stat. 917; 26 U.S.C. 7805), Internal Revenue Code of 1954))

[T.D. 7767, 46 FR 11278, Feb. 6, 1981]

§ 1.857-6 Method of taxation of shareholders of real estate investment trusts.

(a) ***Ordinary income.*** Except as otherwise provided in paragraph (b) of this section (relating to capital gains), a shareholder receiving dividends from a real estate investment trust shall include such dividends in gross income for the taxable year in which they are received. See section 858(b) and paragraph (c) of § 1.858-1 for treatment by shareholders of dividends paid by a real estate investment trust after the close of its taxable year in the case of an election under section 858(a).

(b) ***Capital gains.*** Under section 857(b)(3)(B), shareholders of a real estate investment trust who receive capital gain dividends (as defined in paragraph (e) of this section), in respect of the capital gains of a corporation, trust, or association for a taxable year for which it is taxable under part II of subchapter M as a real estate investment trust, shall treat such capital gain dividends as gains from the sale or exchange of capital assets held for more than 1 year (6 months for taxable years beginning before 1977; 9 months for taxable years beginning in 1977) and realized in the taxable year of the shareholder in which the dividend was received. In the case of dividends with respect to any taxable year of a real estate investment trust ending after December 31, 1969, and beginning before January 1, 1975, the portion of a shareholder's capital gain dividend which in his hands is gain to which section 1201(d) (1) or (2) applies is the portion so designated by the real estate investment trust pursuant to paragraph (e)(2) of this section.

(c) ***Special treatment of loss on the sale or exchange of real estate investment trust stock held less than 31 days —***

(1) ***In general.*** Under section 857(b)(7), if any person with respect to a share of real estate investment trust stock held for a period of less than 31 days, is required by section 857(b)(3)(B) to include in gross income as a gain from the sale or exchange of a capital asset held for more than 1 year (6 months for taxable years beginning before 1977; 9 months for taxable years beginning in 1977) the amount of a capital gains dividend, then such person shall, to the extent of such amount, treat any loss on the sale or exchange of such share as a loss from the sale or exchange of a capital asset held for more than 1 year (6 months for taxable years beginning before 1977; 9 months for taxable years beginning in 1977).

(2) ***Determination of holding period.*** The rules contained in section 246(c)(3) (relating to the determination of holding periods for purposes of the deduction for dividends received) shall be applied in determining whether, for purposes of section 857(b)(7)(B) and this paragraph, a share of real estate investment trust stock has been held for a period of less than 31 days. In applying those rules, however, “30 days” shall be substituted for the number of days specified in subparagraph (B) of such section.

(3) ***Illustration.*** The application of section 857(b)(7) and this paragraph may be illustrated by the following example:

Example. On December 15, 1961, A purchased a share of stock in the S Real Estate Investment Trust for $20. The S trust declared a capital gains dividend of $2 per share to shareholders of record on December 31, 1961. A, therefore, received a capital gain dividend of $2 which, pursuant to section 857(b)(3)(B), he must treat as a gain from the sale or exchange of a capital asset held for more than six months. On January 5, 1962, A sold his share of stock in the S trust for $17.50, which sale resulted in a loss of $2.50. Under section 857(b)(4) and this paragraph, A must treat $2 of such loss (an amount equal to the capital gain dividend received with respect to such share of stock) as a loss from the sale or exchange of a capital asset held for more than six months.

(d) ***Dividend received credit, exclusion, and deduction not allowed.*** Any dividend received from a real estate investment trust which, for the taxable year to which the dividend relates, is a qualified real estate investment trust, shall not be eligible for the dividend received credit (for dividends received on or before December 31, 1964) under section 34(a), the dividend received exclusion under section 116, or the dividend received deduction under section 243.

(e) ***Definition of capital gain dividend.***

(1)

(i) A capital gain dividend, as defined in section 857(b)(3)(C), is any dividend or part thereof which is designated by a real estate investment trust as a capital gain dividend in a written notice mailed to its shareholders within the period specified in section 857(b)(3)(C) and paragraph (f) of this section. If the aggregate amount so designated with respect to the taxable year (including capital gain dividends paid after the close of the taxable year pursuant to an election under section 858) is greater than the net capital gain of the taxable year, the portion of each distribution which shall be a capital gain dividend shall be only that proportion of the amount so designated which such excess of the net long-term capital gain over the net short-term capital loss bears to the aggregate of the amount so designated. For example, a real estate investment trust making its return on the calendar year basis advised its shareholders by written notice mailed December 30, 1961, that $200,000 of a distribution of $500,000 made December 15, 1961, constituted a capital gain dividend, amounting to $2 per share. It was later discovered that an error had been made in determining the net capital gain of the taxable year and the net capital gain was $100,000 instead of $200,000. In such case, each shareholder would have received a capital gain dividend of $1 per share instead of $2 per share.

(ii) For purposes of section 857(b)(3)(C) and this paragraph, the net capital gain for a taxable year ending after October 4, 1976, is deemed not to exceed the real estate investment trust taxable income determined by taking into account the net operating loss deduction for the taxable year but not the deduction for dividends paid. See example 2 in § 1.172-5(a)(4).

(2) In the case of capital gain dividends designated with respect to any taxable year of a real estate investment trust ending after December 31, 1969, and beginning before January 1, 1975 (including capital gain dividends paid after the close of the taxable year pursuant to an election under section 858), the real estate investment trust must include in its written notice designating the capital gain dividend a statement showing the shareholder's proportionate share of such dividend which is gain described in section 1201(d)(1) and his proportionate share of such dividend which is gain described in section 1201(d)(2). In determining the portion of the capital gain dividend which, in the hands of a shareholder, is gain described in section 1201(d) (1) or (2), the real estate investment trust shall consider that capital gain dividends for a taxable year are first made from its long-term capital gains which are not described in section 1201(d) (1) or (2), to the extent thereof, and then from its long-term capital gains for such year which are described in section 1201(d) (1) or (2). A shareholder's proportionate share of gains which are described in section 1201(d)(1) is the amount which bears the same ratio to the amount paid to him as a capital gain dividend in respect of such year as

(i) the aggregate amount of the trust's gains which are described in section 1201(d)(1) and paid to all shareholders bears to

(ii) the aggregate amount of the capital gain dividend paid to all shareholders in respect of such year. A shareholder's proportionate share of gains which are described in section 1201(d)(2) shall be determined in a similar manner. Every real estate investment trust shall keep a record of the proportion of each capital gain divided (to which this subparagraph applies) which is gain described in section 1201(d) (1) or (2).

(f) *Mailing of written notice to shareholders* —

(1) ***General rule.*** Except as provided in paragraph (f)(2) of this section, the written notice designating a dividend or part thereof as a capital gain dividend must be mailed to the shareholders not later than 30 days after the close of the taxable year of the real estate investment trust.

(2) ***Net capital gain resulting from a determination.*** If, as a result of a determination (as defined in section 860(e)), occurring after October 4, 1976, there is an increase in the amount by which the net capital gain exceeds the deduction for dividends paid (determined with reference to capital gains dividends only) for the taxable year, then a real estate investment trust may designate a dividend (or part thereof) as a capital gain dividend in a written notice mailed to its shareholders at any time during the 120-day period immediately following the date of the determination. The designation may be made with respect to a dividend (or part thereof) paid during the taxable year to which the determination applies (including a dividend considered as paid during the taxable year pursuant to section 858). A deficiency dividend (as defined in section 860(f)), or a part thereof, that is paid with respect to the taxable year also may be designated as a capital gain dividend by the real estate investment trust (or by the acquiring corporation to which section 381(c)(25) applies) before the expiration of the 120-day period immediately following the determination. However, the aggregate amount of the dividends (or parts thereof) that may be designated as capital gain dividends after the date of the determination shall not exceed the amount of the increase in the excess of the net capital gain over the deduction for dividends paid (determined with reference to capital gains dividends only) that results from the determination. The date of a determination shall be established in accordance with § 1.860-2(b)(1).

(Sec. 856(d)(4) (90 Stat. 1750; 26 U.S.C. 856(d)(4)); sec. 856(e)(5) (88 Stat. 2113; 26 U.S.C. 856(e)(5)); sec. 856(f)(2) (90 Stat. 1751; 26 U.S.C. (856(f)(2)); sec. 856(g)(2) (90 Stat. 1753; 26 U.S.C. 856(g)(2)); sec. 858(a) (74 Stat. 1008; 26 U.S.C. 858(a)); sec. 859(c) (90 Stat. 1743; 26 U.S.C. 859(c)); sec. 859(e) (90 Stat. 1744; 26 U.S.C. 859(e)); sec. 6001 (68A Stat. 731; 26 U.S.C. 6001); sec. 6011 (68A Stat. 732; 26 U.S.C. 6011); sec. 6071 (68A Stat. 749, 26 U.S.C. 6071); sec. 6091 (68A Stat. 752; 26 U.S.C. 6091); sec. 7805 (68A Stat. 917; 26 U.S.C. 7805), Internal Revenue Code of 1954); sec. 860(e) (92 Stat. 2849, 26 U.S.C. 860(e)); sec. 860(g) (92 Stat. 2850, 26 U.S.C. 860(g)))

[T.D. 6598, 27 FR 4088, Apr. 28, 1962, as amended by T.D. 6777, 29 FR 17809, Dec. 16, 1964; T.D. 7337, 39 FR 44974, Dec. 30, 1974; T.D. 7728, 45 FR 72650, Nov. 3, 1980. Redesignated and amended by T.D. 7767, 46 FR 11277, 11279, 11283, Feb. 6, 1981; T.D. 7936, 49 FR 2107, Jan. 18, 1984; T.D. 8107, 51 FR 43347, Dec. 2, 1986]

§ 1.857-7 Earnings and profits of a real estate investment trust.

(a) Any real estate investment trust whether or not such trust meets the requirements of section 857(a) and paragraph (a) of § 1.857-1 for any taxable year beginning after December 31, 1960 shall apply paragraph (b) of this section in computing its earnings and profits for such taxable year.

(b) In the determination of the earnings and profits of a real estate investment trust, section 857(d) provides that such earnings and profits for any taxable year (but not the accumulated earnings and profits) shall not be reduced by any amount which is not allowable as a deduction in computing its taxable income for the taxable year. Thus, if a trust would have had earnings and profits of $500,000 for the taxable year

except for the fact that it had a net capital loss of $100,000, which amount was not deductible in determining its taxable income, its earnings and profits for that year if it is a real estate investment trust would be $500,000. If the real estate investment trust had no accumulated earnings and profits at the beginning of the taxable year, in determining its accumulated earnings and profits as of the beginning of the following taxable year, the earnings and profits for the taxable year to be considered in such computation would amount to $400,000 assuming that there had been no distribution from such earnings and profits. If distributions had been made in the taxable year in the amount of the earnings and profits then available for distribution, $500,000, the trust would have as of the beginning of the following taxable year neither accumulated earnings and profits nor a deficit in accumulated earnings and profits, and would begin such year with its paid-in capital reduced by $100,000, an amount equal to the excess of the $500,000 distributed over the $400,000 accumulated earnings and profits which would otherwise have been carried into the following taxable year. For purposes of section 857(d) and this section, if an amount equal to any net loss derived from prohibited transactions is included in real estate investment trust taxable income pursuant to section 857(b)(2)(F), that amount shall be considered to be an amount which is not allowable as a deduction in computing taxable income for the taxable year. The earnings and profits for the taxable year (but not the accumulated earnings and profits) shall not be considered to be less than (i) in the case of a taxable year ending before October 5, 1976, the amount (if any) of the net capital gain for the taxable year, or (ii) in the case of a taxable year ending after December 31, 1973, the amount (if any), of the excess of the net income from foreclosure property for the taxable year over the tax imposed thereon by section 857(b)(4)(A).

(Sec. 856(d)(4) (90 Stat. 1750; 26 U.S.C. 856(d)(4)); sec. 856(e)(5) (88 Stat. 2113; 26 U.S.C. 856(e)(5)); sec. 856(f)(2) (90 Stat. 1751; 26 U.S.C. (856(f)(2)); sec. 856(g)(2) (90 Stat. 1753; 26 U.S.C. 856(g)(2)); sec. 858(a) (74 Stat. 1008; 26 U.S.C. 858(a)); sec. 859(c) (90 Stat. 1743; 26 U.S.C. 859(c)); sec. 859(e) (90 Stat. 1744; 26 U.S.C. 859(e)); sec. 6001 (68A Stat. 731; 26 U.S.C. 6001); sec. 6011 (68A Stat. 732; 26 U.S.C. 6011); sec. 6071 (68A Stat. 749, 26 U.S.C. 6071); sec. 6091 (68A Stat. 752; 26 U.S.C. 6091); sec. 7805 (68A Stat. 917; 26 U.S.C. 7805), Internal Revenue Code of 1954))

[T.D. 6598, 27 FR 4088, Apr. 28, 1962. Redesignated and amended by T.D. 7767, 46 FR 11277, 11279, Feb. 6, 1981]

§ 1.857-8 Records to be kept by a real estate investment trust.

(a) ***In general.*** Under section 857(a)(2) a real estate investment trust is required to keep such records as will disclose the actual ownership of its outstanding stock. Thus, every real estate investment trust shall maintain in the internal revenue district in which it is required to file its income tax return permanent records showing the information relative to the actual owners of its stock contained in the written statements required by this section to be demanded from its shareholders. Such records shall be kept at all times available for inspection by any internal revenue officer or employee, and shall be retained so long as the contents thereof may become material in the administration of any internal revenue law.

(b) ***Actual owner of stock.*** The actual owner of stock of a real estate investment trust is the person who is required to include in gross income in his return the dividends received on the stock. Generally, such person is the shareholder of record of the real estate investment trust. However, where the shareholder of record is not the actual owner of the stock, the stockholding record of the real estate investment trust may not disclose the actual ownership of such stock. Accordingly, the real estate investment trust shall demand written statements from shareholders of record disclosing the actual owners of stock as required in paragraph (d) of this section.

(c) ***Stock ownership for personal holding company determination.*** For the purpose of determining under section 856(a)(6) whether a trust, claiming to be a real estate investment trust, is a personal holding company, the permanent records of the trust shall show the maximum number of shares of the trust (including the number and face value of securities convertible into stock of the trust) to be considered as actually or constructively owned by each of the actual owners of any of its stock at any time during the last half of the trust's taxable year, as provided in section 544.

(d) ***Statements to be demanded from shareholders.*** The information required by paragraphs (b) and (c) of this section shall be set forth in written statements which shall be demanded from shareholders of record as follows:

(1) In the case of a trust having 2,000 or more shareholders of record of its stock on any dividend record date, from each record holder of 5 percent or more of its stock; or

(2) In the case of a trust having less than 2,000 and more than 200 shareholders of record of its stock on any dividend record date, from each record holder of 1 percent or more of its stock; or

(3) In the case of a trust having 200 or less shareholders of record of its stock on any dividend record date, from each record holder of one-half of 1 percent or more of its stock.

(e) ***Demands for statements.*** The written statements from shareholders of record shall be demanded by the real estate investment trust in accordance with paragraph (d) of this section within 30 days after the close of the real estate investment trust's taxable year (or before June 1, 1962, whichever is later). When making demand for such written statements, the trust shall inform each such shareholder of his duty to submit at the time he files his income tax return (or before July 1, 1962, whichever is later) the statements which are required by § 1.857-9 if he fails or refuses to comply with such demand. A list of the persons failing or refusing to comply in whole or in part with the trust's demand for statements under this section shall be maintained as a part of the trust's records required by this section. A trust which fails to keep such records to show, to the extent required by this section, the actual ownership of its outstanding stock shall be taxable as an ordinary corporation and not as a real estate investment trust.

(Sec. 856(d)(4) (90 Stat. 1750; 26 U.S.C. 856(d)(4)); sec. 856(e)(5) (88 Stat. 2113; 26 U.S.C. 856(e)(5)); sec. 856(f)(2) (90 Stat. 1751; 26 U.S.C. (856(f)(2)); sec. 856(g)(2) (90 Stat. 1753; 26 U.S.C. 856(g)(2)); sec. 858(a) (74 Stat. 1008; 26 U.S.C. 858(a)); sec. 859(c) (90 Stat. 1743; 26 U.S.C. 859(c)); sec. 859(e) (90 Stat. 1744; 26 U.S.C. 859(e)); sec. 6001 (68A Stat. 731; 26 U.S.C. 6001); sec. 6011 (68A Stat. 732; 26 U.S.C. 6011); sec. 6071 (68A Stat. 749, 26 U.S.C. 6071); sec. 6091 (68A Stat. 752; 26 U.S.C. 6091); sec. 7805 (68A Stat. 917; 26 U.S.C. 7805), Internal Revenue Code of 1954))

[T.D. 6598, 27 FR 4088, Apr. 28, 1962. Redesignated and amended by T.D. 7767, 46 FR 11277, 11279, Feb. 6, 1981]

§ 1.857-9 Information required in returns of shareholders.

(a) ***In general.*** Any person who fails or refuses to submit to a real estate investment trust the written statements required under § 1.857-8 to be demanded by such trust from its shareholders of record shall submit at the time he files his income tax return for his taxable year which ends with, or includes, the last day of the trust's taxable year (or before July 1, 1962, whichever is later) a statement setting forth the information required by this section.

(b) ***Information required*** —

(1) *Shareholder of record not actual owner.* In the case of any person holding shares of stock in any trust claiming to be a real estate investment trust who is not the actual owner of such stock, the name and address of each actual owner, the number of shares owned by each actual owner at any time during such person's taxable year, and the amount of dividends belonging to each actual owner.

(2) *Actual owner of shares.* In the case of an actual owner of shares of stock in any trust claiming to be a real estate investment trust—

(i) The name and address of each such trust, the number of shares actually owned by him at any and all times during his taxable year, and the amount of dividends from each such trust received during his taxable year;

(ii) If shares of any such trust were acquired or disposed of during such person's taxable year, the name and address of the trust, the number of shares acquired or disposed of, the dates of acquisition or disposition, and the names and addresses of the persons from whom such shares were acquired or to whom they were transferred;

(iii) If any shares of stock (including securities convertible into stock) of any such trust are also owned by any member of such person's family (as defined in section 544(a)(2)), or by any of his partners, the name and address of the trust, the names and addresses of such members of his family and his partners, and the number of shares owned by each such member of his family or partner at any and all times during such person's taxable year; and

(iv) The names and addresses of any corporation, partnership, association, or trust, in which such person had a beneficial interest of 10 percent or more at any time during his taxable year.

(Sec. 856(d)(4) (90 Stat. 1750; 26 U.S.C. 856(d)(4)); sec. 856(e)(5) (88 Stat. 2113; 26 U.S.C. 856(e)(5)); sec. 856(f)(2) (90 Stat. 1751; 26 U.S.C. (856(f)(2)); sec. 856(g)(2) (90 Stat. 1753; 26 U.S.C. 856(g)(2)); sec. 858(a) (74 Stat. 1008; 26 U.S.C. 858(a)); sec. 859(c) (90 Stat. 1743; 26 U.S.C. 859(c)); sec. 859(e) (90 Stat. 1744; 26 U.S.C. 859(e)); sec. 6001 (68A Stat. 731; 26 U.S.C. 6001); sec. 6011 (68A Stat. 732; 26 U.S.C. 6011); sec. 6071 (68A Stat. 749, 26 U.S.C. 6071); sec. 6091 (68A Stat. 752; 26 U.S.C. 6091); sec. 7805 (68A Stat. 917; 26 U.S.C. 7805), Internal Revenue Code of 1954))

[T.D. 6598, 27 FR 4089, Apr. 28, 1962, as amended by T.D. 6628, 27 FR 12794, Dec. 28, 1962. Redesignated and amended by T.D. 7767, 46 FR 11277, 11279, Feb. 6, 1981]

§ 1.857-10 Information returns.

Nothing in §§ 1.857-8 and 1.857-9 shall be construed to relieve a real estate investment trust or its shareholders from the duty of filing information returns required by regulations prescribed under the provisions of subchapter A, chapter 61 of the Code.

(Sec. 856(d)(4) (90 Stat. 1750; 26 U.S.C. 856(d)(4)); sec. 856(e)(5) (88 Stat. 2113; 26 U.S.C. 856(e)(5)); sec. 856(f)(2) (90 Stat. 1751; 26 U.S.C. (856(f)(2)); sec. 856(g)(2) (90 Stat. 1753; 26 U.S.C. 856(g)(2)); sec. 858(a) (74 Stat. 1008; 26 U.S.C. 858(a)); sec. 859(c) (90 Stat. 1743; 26 U.S.C. 859(c)); sec. 859(e) (90 Stat. 1744; 26 U.S.C. 859(e)); sec. 6001 (68A Stat. 731; 26 U.S.C. 6001); sec. 6011 (68A Stat. 732; 26 U.S.C. 6011); sec. 6071 (68A Stat. 749, 26 U.S.C. 6071); sec. 6091 (68A Stat. 752; 26 U.S.C. 6091); sec. 7805 (68A Stat. 917; 26 U.S.C. 7805), Internal Revenue Code of 1954))

[T.D. 6598, 27 FR 4089, Apr. 28, 1962. Redesignated and amended by T.D. 7767, 46 FR 11277, 11279, Feb. 6, 1981]

§ 1.857-11 Non-REIT earnings and profits.

(a) ***Applicability of section 857(a)(3)(A).*** A real estate investment trust does not satisfy section 857(a)(3)(A) unless—

(1) Part II of subchapter M applied to the trust for all its taxable years beginning after February 28, 1986; and

(2) For each corporation to whose earnings and profits the trust succeeded by the operation of section 381, part II of subchapter M applied for all the corporation's taxable years beginning after February 28, 1986.

(b) ***Applicability of section 857(a)(3)(B); in general.*** A real estate investment trust does not satisfy section 857(a)(3)(B) unless, as of the close of the taxable year, it has no earnings and profits other than earnings and profits that—

(1) Were earned by a corporation in a year for which part II of subchapter M applied to the corporation and, at all times thereafter, were the earnings and profits of a corporation to which part II of subchapter M applied; or

(2) By the operation of section 381 pursuant to a transaction that occurred before December 22, 1992, became the earnings and profits of a corporation to which part II of subchapter M applied and, at all times thereafter, were the earnings and profits of a corporation to which part II of subchapter M applied.

(c) ***Distribution procedures similar to those for regulated investment companies to apply.*** Distribution procedures similar to those in section 852(e) for regulated investment companies apply to non-REIT earnings and profits of real estate investment trusts.

(d) ***Effective date.*** This regulation is effective for taxable years ending on or after December 22, 1992.

(e) For treatment of net built-in gain assets of a C corporation that become assets of a REIT, see § 1.337(d)-5T.

[T.D. 8483, 58 FR 43798, Aug. 18, 1993, as amended by T.D. 8872, 65 FR 5777, Feb. 7, 2000]

§ 1.858-1 Dividends paid by a real estate investment trust after close of taxable year.

(a) ***General rule.*** Under section 858, a real estate investment trust may elect to treat certain dividends that are distributed within a specified period after the close of a taxable year as having been paid during the taxable year. The dividend is taken into account in determining the deduction for dividends paid for the taxable year in which it is treated as paid. The dividend may be an ordinary dividend or, subject to the requirements of sections 857(b)(3)(C) and 858(c), a capital gain dividend. The trust may make the dividend declaration required by section 858(a)(1) either before or after the close of the taxable year as long as the declaration is made before the time prescribed by law for filing its return for the taxable year (including the period of any extension of time granted for filing the return).

(b) ***Election*** —

(1) ***Method of making election.*** The election must be made in the return filed by the trust for the taxable year. The election shall be made by treating the dividend (or portion thereof) to which the election applies as a dividend paid during the taxable year of the trust in computing its real estate investment trust taxable income and, if applicable, the alternative tax imposed by section 857(b)(3)(A). (In the

case of an election with respect to a taxable year ending before October 5, 1976, if the dividend (or portion thereof) to which the election is to apply is a capital gain dividend, the trust shall treat the dividend as paid during such taxable year in computing the amount of capital gains dividends paid during the taxable year.) In the case of an election with respect to a taxable year beginning after October 4, 1976, the trust must also specify in its return (or in a statement attached to its return) the exact dollar amount that is to be treated as having been paid during the taxable year.

(2) ***Limitation based on earnings and profits.*** The election provided in section 858(a) may be made only to the extent that the earnings and profits of the taxable year (computed with the application of sections 857(d) and § 1.857-7) exceed the total amount of distributions out of such earnings and profits actually made during the taxable year. For purposes of the preceding sentence, deficiency dividends and distributions with respect to which an election has been made for a prior year under section 858(a) are disregarded in determining the total amount of distributions out of earnings and profits actually made during the taxable year. The dividend or portion thereof, with respect to which the real estate investment trust has made a valid election under section 858(a), shall be considered as paid out of the earnings and profits of the taxable year for which such election is made, and not out of the earnings and profits of the taxable year in which the distribution is actually made.

(3) ***Additional limitation based on amount specified.*** The amount treated under section 858(a) as having been paid in a taxable year beginning after October 4, 1976, cannot exceed the lesser of

(i) the dollar amount specified by the trust in its return (or a statement attached thereto) in making the election or

(ii) the amount allowable under the limitation prescribed in paragraph (b)(2) of this section.

(4) ***Irrevocability of the election.*** After the expiration of the time for filing the return for the taxable year for which an election is made under section 858(a), such election shall be irrevocable with respect to the dividend or portion thereof to which it applies.

(c) ***Receipt by shareholders.*** Under section 858(b), the dividend or portion thereof, with respect to which a valid election has been made, will be includable in the gross income of the shareholders of the real estate investment trust for the taxable year in which the dividend is received by them.

(d) ***Illustrations.*** The application of paragraphs (a), (b), and (c) of this section may be illustrated by the following examples:

Example 1. The X Trust, a real estate investment trust, had taxable income (and earnings and profits) for the calendar year 1961 of $100,000. During that year the trust distributed to shareholders taxable dividends aggregating $88,000. On March 10, 1962, the trust declared a dividend of $37,000 payable to shareholders on March 20, 1962. Such dividend consisted of the first regular quarterly dividend for 1962 of $25,000 plus an additional $12,000 representing that part of the taxable income for 1961 which was not distributed in 1961. On March 15, 1962, the X Trust filed its Federal income tax return and elected therein to treat $12,000 of the total dividend of $37,000 to be paid to shareholders on March 20, 1962, as having been paid during the taxable year 1961. Assuming that the X Trust actually distributed the entire amount of the dividend of $37,000 on March 20, 1962, an amount equal to $12,000 thereof will be treated for the purposes of section 857(a) as having been paid during the taxable year 1961. Upon distribution of such dividend the trust becomes a qualified real estate investment trust for the taxable year 1961. Such amount ($12,000) will be considered by the X Trust as a distribution out of the earnings and profits for the taxable year 1961, and will be treated by the shareholders as a taxable dividend for the taxable year in which such distribution is received by them. However, assuming that the X Trust is not a qualified real estate investment trust for the

calendar year 1962, nevertheless, the $12,000 portion of the dividend (paid on March 20, 1962) which the trust elected to relate to the calendar year 1961, will not qualify as a dividend for purposes of section 34, 116, or 243.

Example 2. The Y Trust, a real estate investment trust, had taxable income (and earnings and profits) for the calendar year 1964 of $100,000, and for 1965 taxable income (and earnings and profits) of $125,000. On January 1, 1964, the trust had a deficit in its earnings and profits accumulated since February 28, 1913, of $115,000. During the year 1964 the trust distributed to shareholders taxable dividends aggregating $85,000. On March 5, 1965, the trust declared a dividend of $65,000 payable to shareholders on March 31, 1965. On March 15, 1965, the Y Trust filed its Federal income tax return in which it included $40,000 of the total dividend of $65,000 payable to shareholders on March 31, 1965, as a dividend paid by it during the taxable year 1964. On March 31, 1965, the Y Trust distributed the entire amount of the dividend of $65,000 declared on March 5, 1965. The election under section 858(a) is valid only to the extent of $15,000, the amount of the undistributed earnings and profits for 1964 ($100,000 earnings and profits less $85,000 distributed during 1964). The remainder ($50,000) of the $65,000 dividend paid on March 31, 1965, could not be the subject of an election, and such amount will be regarded as a distribution by the Y Trust out of earnings and profits for the taxable year 1965. Assuming that the only other distribution by the Y Trust during 1965 was a distribution of $75,000 paid as a dividend on October 31, 1965, the total amount of the distribution of $65,000 paid on March 31, 1965, is to be treated by the shareholders as taxable dividends for the taxable year in which such dividend is received. The Y Trust will treat the amount of $15,000 as a distribution of the earnings or profits of the trust for the taxable year 1964, and the remaining $50,000 as a distribution of the earnings or profits for the year 1965. The distribution of $75,000 on October 31, 1966, is, of course, a taxable dividend out of the earnings and profits for the year 1965.

Example 3. Assume the facts are the same as in example 2, except that the taxable years involved are calendar years 1977 and 1978, and Y Trust specified in its Federal income tax return for 1977 that the dollar amount of $40,000 of the $65,000 distribution payable to shareholders on March 31, 1978, is to be treated as having been paid in 1977. The result will be the same as in example 2, since the amount of the undistributed earnings and profits for 1977 is less than the $40,000 amount specified by Y Trust in making its election. Accordingly, the election is valid only to the extent of $15,000. Y Trust will treat the amount of $15,000 as a distribution, in 1977, of earnings and profits of the trust for the taxable year 1977 and the remaining $50,000 as a distribution, in 1978, of the earnings and profits for 1978.

(e) ***Notice to shareholders.*** Section 858(c) provides that, in the case of dividends with respect to which a real estate investment trust has made an election under section 858(a), any notice to shareholders required under part II, subchapter M, chapter 1 of the Code, with respect to such amounts, shall be made not later than 30 days after the close of the taxable year in which the distribution is made. Thus, the notice requirement of section 857(b)(3)(C) and paragraph (f) of § 1.857-6 with respect to capital gains dividends may be satisfied with respect to amounts to which section 858(a) and this section apply if the notice relating to such amounts is mailed to the shareholders not later than 30 days after the close of the taxable year in which the distribution is made. If the notice under section 858(c) reltes to an election with respect to any capital gains dividends, such capital gains dividends shall be aggregated by the real estate investment trust with the designated capital gains dividends actually paid during the taxable year to which the election applies (not including deficiency dividends or dividends with respect to which an election has

been made for a prior taxable year under section 858) to determine whether the aggregate of the designated capital gains dividends with respect to such taxable year exceeds the net capital gain of the trust. See section 857(b)(3)(C) and paragraph (f) of § 1.857-6.

(Sec. 856(d)(4) (90 Stat. 1750; 26 U.S.C. 856(d)(4)); sec. 856(e)(5) (88 Stat. 2113; 26 U.S.C. 856(e)(5)); sec. 856(f)(2) (90 Stat. 1751; 26 U.S.C. (856(f)(2)); sec. 856(g)(2) (90 Stat. 1753; 26 U.S.C. 856(g)(2)); sec. 858(a) (74 Stat. 1008; 26 U.S.C. 858(a)); sec. 859(c) (90 Stat. 1743; 26 U.S.C. 859(c)); sec. 859(e) (90 Stat. 1744; 26 U.S.C. 859(e)); sec. 6001 (68A Stat. 731; 26 U.S.C. 6001); sec. 6011 (68A Stat. 732; 26 U.S.C. 6011); sec. 6071 (68A Stat. 749, 26 U.S.C. 6071); sec. 6091 (68A Stat. 752; 26 U.S.C. 6091); sec. 7805 (68A Stat. 917; 26 U.S.C. 7805), Internal Revenue Code of 1954))

[T.D. 6598, 27 FR 4089, Apr. 28, 1962, as amended by T.D. 7767, 46 FR 11279, Feb. 6, 1981]

§ 1.860-1 Deficiency dividends.

Section 860 allows a qualified investment entity to be relieved from the payment of a deficiency in (or to be allowed a credit or refund of) certain taxes. “Qualified investment entity” is defined in section 860(b). The taxes referred to are those imposed by sections 852(b)(1) and (3), 857(b)(1) or (3), the minimum tax on tax preferences imposed by section 56 and, if the entity fails the distribution requirements of section 852(a)(1)(A) or 857(a)(1) (as applicable), the corporate income tax imposed by section 11(a) or 1201(a). The method provided by section 860 is to allow an additional deduction for a dividend distribution (that meets the requirements of section 860 and § 1.860-2) in computing the deduction for dividends paid for the taxable year for which the deficiency is determined. A deficiency divided may be an ordinary dividend or, subject to the limitations of sections 852(b)(3)(C), 857(b)(3)(C), and 860(f)(2)(B), may be a capital gain dividend.

(Sec. 7805, 68A Stat. 917; 26 U.S.C. 7805; sec. 860(e) (92 Stat. 2849, 26 U.S.C. 860(e)); sec. 860(g) (92 Stat. 2850, 26 U.S.C. 860(g)))

[T.D. 7936, 49 FR 2107, Jan. 18, 1984]

§ 1.860-2 Requirements for deficiency dividends.

(a) ***In general*** —

(1) ***Determination, etc.*** A qualified investment entity is allowed a deduction for a deficiency dividend only if there is a determination (as defined in section 860(e) and paragraph (b)(1) of this section) that results in an adjustment (as defined in section 860(d) (1) or (2)) for the taxable year for which the deficiency dividend is paid. An adjustment does not include an increase in the excess of

(i) the taxpayer's interest income excludable from gross income under section 103(a) over

(ii) its deductions disallowed under sections 265 and 171(a)(2).

(2) ***Payment date and claim.*** The deficiency dividend must be paid on, or within 90 days after, the date of the determination and before the filing of a claim under section 860(g) and paragraph (b)(2) of this section. This claim must be filed within 120 days after the date of the determination.

(3) ***Nature and amount of distribution.***

(i) The deficiency dividend must be a distribution of property (including money) that would have been properly taken into account in computing the dividends paid deduction under section 561 for the taxable year for which tax liability resulting from the determination exists if the property

had been distributed during that year. Thus, if the distribution would have been a dividend under section 316(a) if it had been made during the taxable year for which the determination applies, and the distribution may qualify under sections 316(b)(3), 562(a), and 860(f)(1), even though the distributing corporation, trust, or association has no current or accumulated earnings and profits for the taxable year in which the distribution is actually made. The amount of the distribution is determined under section 301 as of the date of the distribution.

The amount of the deduction is subject to the applicable limitations under sections 562 and 860(f)(2). Thus, if the entity distributes to an individual shareholder property (other than money) which on the date of the distribution has a fair market value in excess of its adjusted basis in the hands of the entity, the amount of the deficiency dividend in the individual's hands for purposes of section 316(b)(3) is determined by using the property's fair market value on that date. Nevertheless, the amount of the deficiency dividend the entity may deduct is limited, under § 1.562-1(a), to the adjusted basis of the property and the amount taxable to the individual as a dividend is determined by reference to the current and accumulated earnings and profits for the year to which the determination applies.

(ii) The qualified investment entity does not have to distribute the full amount of the adjustment in order to pay a deficiency dividend. For example, assume that in 1983 a determination with respect to a calendar year regulated investment company results in an increase of $100 in investment company taxable income (computed without the dividends paid deduction) for 1981 and no other change. The regulated investment company may choose to pay a deficiency dividend of $100 or of any lesser amount and be allowed a dividends paid deduction for 1981 for the amount of that deficiency dividend.

(4) ***Status of distributor.*** The corporation, trust, or association that pays the deficiency dividend does not have to be a qualified investment entity at the time of payment.

(5) ***Certain definitions to apply.*** For purposes of sections 860(d) (defining adjustment) and (f)(2) (limitations) the definitions of the terms “investment company taxable income,” “real estate investment trust taxable income,” and “capital gains dividends” in sections 852(b)(2), 857(b)(2), 852(b)(3)(C), and 857(b)(3)(C) apply, as appropriate to the particular entity.

(b) ***Determination and claim for deduction*** —

(1) ***Determination.*** For purposes of applying section 860(e), the following rules apply:

(i) The date of determination by a decision of the United States Tax Court, the date upon which a judgment of a court becomes final, and the date of determination by a closing agreement shall be determined under the rules in § 1.547-2(b)(1) (ii), (iii), and (iv).

(ii) A determination under section 860(e)(3) may be made by an agreement signed by the district director or another official to whom authority to sign the agreement is delegated, and by or on behalf of the taxpayer. The agreement shall set forth the amount, if any, of each adjustment described in subparagraphs (A), (B), and (C) of section 860(d) (1) or (2) (as appropriate) for the taxable year and the amount of the liability for any tax imposed by section 11(a), 56(a), 852(b)(1), 852(b)(3)(A), 857(b)(1), 857(b)(3)(A), or 1201(a) for the taxable year. The agreement shall also set forth the amount of the limitation (determined under section 860(f)(2)) on the amount of deficiency dividends that can qualify as capital gain dividends and ordinary dividends, respectively, for the taxable year. An agreement under this subdivision (ii) which is signed by the district director (or other delegate) shall be sent to the taxpayer at its last known address by either registered or certified mail. For further guidance regarding the definition of

last known address, see § 301.6212-2 of this chapter. If registered mail is used, the date of registration is the date of determination. If certified mail is used, the date of the postmark on the sender's receipt is the date of determination. However, if a dividend is paid by the taxpayer before the registration or postmark date, but on or after the date the agreement is signed by the district director (or other delegate), the date of determination is the date of signing.

(2) ***Claim for deduction.*** A claim for deduction for a deficiency dividend shall be made, with the requisite declaration, on Form 976 and shall contain the following information and have the following attachments:

(i) The name, address, and taxpayer identification number of the corporation, trust, or association;

(ii) The amount of the deficiency and the taxable year or years involved;

(iii) The amount of the unpaid deficiency or, if the deficiency has been paid in whole or in part, the date of payment and the amount thereof;

(iv) A statement as to how the deficiency was established (*i.e.,* by an agreement under section 860(e)(3), by a closing agreement under section 7121, or by a decision of the Tax Court or court judgment);

(v) Any date or other information with respect to the determination that is required by Form 976;

(vi) The amount and date of payment of the dividend with respect to which the claim for the deduction for deficiency dividends is filed;

(vii) The amount claimed as a deduction for deficiency dividends;

(viii) If the amount claimed as a deduction for deficiency dividends includes any amount designated (or to be designated) as capital gain dividends, the amount of capital gain dividends for which a deficiency dividend deduction is claimed;

(ix) Any other information required by the claim form;

(x) A certified copy of the resolution of the trustees, directors, or other authority authorizing the payment of the dividend with respect to which the claim is filed; and

(xi) A copy of any court decision, judgment, agreement, or other document required by Form 976.

(3) ***Filing claim.*** The claim, together with the accompanying documents, shall be filed with the district director, or director of the internal revenue service center, with whom the income tax return for the taxable year for which the determination applies was filed. In the event that the determination is an agreement with the district director (or other delegate) described in section 860(e)(3) and paragraph (b)(1)(ii) of this section, the claim may be filed with the district director with whom (or pursuant to whose delegation) the agreement was made.

(The reporting requirements of this section were approved by the Office of Management and Budget under control number 1545-0045)

(Sec. 7805, 68A Stat. 917; 26 U.S.C. 7805; sec. 860(e) (92 Stat. 2849, 26 U.S.C. 860(e)); sec. 860(g) (92 Stat. 2850, 26 U.S.C. 860(g)))

[T.D. 7936, 49 FR 2107, Jan. 18, 1984; 49 FR 3177, Jan. 26, 1984, as amended by T.D. 8939, 66 FR 2819, Jan. 12, 2001]

§ 1.860-3 Interest and additions to tax.

(a) ***In general.*** If a qualified investment entity is allowed a deduction for deficiency dividends with respect to a taxable year, under section 860(c)(1) the tax imposed on the entity by chapter 1 of the Code (computed by taking into account the deduction) for that year is deemed to be increased by the amount of the deduction. This deemed increase in tax, however, applies solely for purposes of determining the liability of the entity for interest under subchapter A of chapter 67 of the Code and for additions to tax and additional amounts under chapter 68 of the Code. For purposes of applying subchapter A of chapter 67 and 68, the last date prescribed for payment of the deemed increase in tax is considered to be the last date prescribed for the payment of tax (determined in the manner provided in section 6601(b)) for the taxable year for which the deduction for deficiency dividends is allowed. The deemed increase in tax is considered to be paid as of the date that the claim for the deficiency dividend deduction described in section 860(g) is filed.

(b) ***Overpayments of tax.*** If a qualified investment entity is entitled to a credit or refund of an overpayment of the tax imposed by chapter 1 of the Code for the taxable year for which the deficiency dividend deduction is allowed, then, for purposes of computing interest, additions to tax, and additional amounts, the payment (or payments) that result in the overpayment and that precede the filing of the claim described in section 860(g) will be applied against and reduce the increase in tax that is deemed to occur under section 860(c)(1).

(c) ***Examples.*** This section is illustrated by the following examples:

Example 1. Corporation X is a real estate investment trust that files its income tax return on a calendar year basis. X receives an extension of time until June 15, 1978, to file its 1977 income tax return and files the return on May 15, 1978. X does not elect to pay any tax due in installments. For 1977, X reports real estate investment trust taxable income (computed without the dividends paid deduction) of $100, a dividends paid deduction of $100, and no tax liability. Following an examination of X's 1977 return, the district director and X enter into an agreement which is a determination under section 860(e)(3). The determination is dated November 1, 1979, and increases X's real estate investment trust taxable income (computed without the dividends paid deduction) by $20 to $120. Thus, taking into account the $100 of dividends paid in 1977, X has undistributed real estate investment trust taxable income of $20 as a result of the determination. X pays a dividend of $20 on November 10, 1979, files a claim for a deficiency dividend deduction of this $20 pursuant to section 860(g) on November 15, 1979, and is allowed a deficiency dividend deduction of $20 for 1977. After taking into account this deduction, X has no real estate investment trust taxable income and meets the distribution requirements of section 857(a)(1). However, for purposes of section 6601 (relating to interest on underpayment of tax), the tax imposed by chapter 1 of the Code on X for 1977 is deemed increased by this $20, and the last date prescribed for payment of the tax is March 15, 1978 (the due date of the 1977 return determined without any extension of time). The tax of $20 is deemed paid on November 15, 1979, the date the claim for the deficiency dividend deduction is filed. Thus, X is liable for interest on $20, at the rate established under section 6621, for the period from March 15, 1978, to November 15, 1979. Also, for purposes of determining whether X is liable for any addition to tax or additional amount imposed by chapter 68 of the Code (including the penalty prescribed by section 6697), the amount of tax imposed on X by chapter 1 of the Code is deemed to be increased by $20 (the amount of the deficiency dividend deduction allowed), the last date prescribed for payment of such tax is March 15, 1978, and the tax of $20 is deemed to be paid on November 15, 1979. X,

however, is not subject to interest and penalties for the amount of any tax for which it would have been liable under section 11(a), 56(a), 1201(a), or 857(b) had it not been allowed the $20 deduction for deficiency dividends.

Example 2. Assume the facts are the same as in example (1) except that the district director, upon examining X's income tax return, asserts an income tax deficiency of $4, based on an asserted increase of $10 in real estate investment trust taxable income, and no agreement is entered into between the parties. X pays the $4 on June 1, 1979, and files suit for refund in the United States District Court. The District Court, in a decision which becomes final on November 1, 1980, holds that X did fail to report $10 of real estate investment trust taxable income and is not entitled to any refund. (No other item of income or deduction is in issue.) X pays a dividend of $10 on November 10, 1980, files a claim for a deficiency dividend deduction of this $10 on November 15, 1980, and is allowed a deficiency dividend deduction of $10 for 1977. Assume further that $4 is refunded to X on December 31, 1980, as the result of the $10 deficiency dividend deduction being allowed. Also assume that any assessable penalties, additional amounts, and additions to tax (including the penalty imposed by section 6697) for which X is liable are paid within 10 days of notice and demand, so that no interest is imposed on such penalties, etc. X's liability for interest for the period March 15, 1978, to June 1, 1979, is determined with respect to $10 (the amount of the deficiency dividend deduction allowed). X's liability for interest for the period June 1, 1979, to November 15, 1980, is determined with respect to $6, *i.e.,* $10 minus the $4 payment. X is entitled to interest on the $4 overpayment for the period described in section 6611(b)(2), beginning on November 15, 1980.

(Sec. 7805, 68A Stat. 917; 26 U.S.C. 7805; sec. 860(e) (92 Stat. 2849, 26 U.S.C. 860(e)); sec. 860(g) (92 Stat. 2850, 26 U.S.C. 860(g)))

[T.D. 7936, 49 FR 2108, Jan. 18, 1984]

§ 1.860-4 Claim for credit or refund.

If the allowance of a deduction for a deficiency dividend results in an overpayment of tax, the taxpayer, in order to secure credit or refund of the overpayment, must file a claim on Form 1120X in addition to the claim for the deficiency dividend deduction required under section 860(g). The credit or refund will be allowed as if on the date of the determination (as defined in section 860(e)) two years remained before the expiration of the period of limitations on the filing of claim for refund for the taxable year to which the overpayment relates.

(The reporting requirements of this section were approved by the Office of Management and Budget under control number 1545-0045)

(Sec. 7805, 68A Stat. 917; 26 U.S.C. 7805; sec. 860(e) (92 Stat. 2849, 26 U.S.C. 860(e)); sec. 860(g) (92 Stat. 2850, 26 U.S.C. 860(g)))

[T.D. 7936, 49 FR 2109, Jan. 18, 1984]

§ 1.860-5 Effective date.

(a) ***In general.*** Section 860 and §§ 1.860-1 through 1.860-4 apply with respect to determinations after November 6, 1978.

(b) ***Prior determination of real estate investments trusts.*** Section 859 (as in effect before the enactment of the Revenue Act of 1978) applies to determinations with respect to real estate investment trusts occurring after October 4, 1976, and before November 7, 1978. In the case of such a determination, the rules in §§ 1.860-1 through 1.860-4 apply, a reference in this chapter 1 to section 860 (or to a particular provision of section 860) shall be considered to be a reference to section 859 (or to the corresponding substantive provision of section 859), as in effect before enactment of the Revenue Act of 1978, and "qualified investment entity" in §§ 1.381(c)25-1(a) and 1.860-1 through 1.860-3 means a real estate investment trust.

(Sec. 7805, 68A Stat. 917; 26 U.S.C. 7805; sec. 860(e) (92 Stat. 2849, 26 U.S.C. 860(e)); sec. 860(g) (92 Stat. 2850, 26 U.S.C. 860(g)))

[T.D. 7936, 49 FR 2109, Jan. 18, 1984]

§ 1.860A-0 Outline of REMIC provisions.

This section lists the paragraphs contained in §§ 1.860A-1 through 1.860G-3.

Section 1.860A-1 Effective dates and transition rules.

(a) In general.

(b) Exceptions.

(1) Reporting regulations.

(2) Tax avoidance rules.

(i) Transfers of certain residual interests.

(ii) Transfers to foreign holders.

(iii) Residual interests that lack significant value.

(3) Excise taxes.

(4) Rate based on current interest rate.

(i) In general.

(ii) Rate based on index.

(iii) Transition obligations.

(5) Accounting for REMIC net income of foreign persons.

(6) Exceptions for certain modified obligations.

(7) Exceptions for certain modifications of obligations that refer to certain interbank offered rates.

§ 1.860C-2 Determination of REMIC taxable income or net loss.

(a) Treatment of gain or loss.

(b) Deductions allowable to a REMIC.

(1) In general.

(2) Deduction allowable under section 163.

(3) Deduction allowable under section 166.

(4) Deduction allowable under section 212.

(5) Expenses and interest relating to tax-exempt income.

§ 1.860D-1 Definition of a REMIC.

(a) In general.

(b) Specific requirements.

(1) Interests in a REMIC.

(i) In general.

(ii) De minimis interests.

(2) Certain rights not treated as interests.

(i) Payments for services.

(ii) Stripped interests.

(iii) Reimbursement rights under credit enhancement contracts.

(iv) Rights to acquire mortgages.

(3) Asset test.

(i) In general.

(ii) Safe harbor.

(4) Arrangements test.

(5) Reasonable arrangements.

(i) Arrangements to prevent disqualified organizations from holding residual interests.

(ii) Arrangements to ensure that information will be provided.

(6) Calendar year requirement.

(c) Segregated pool of assets.

(1) Formation of REMIC.

(2) Identification of assets.

(3) Qualified entity defined.

(d) Election to be treated as a real estate mortgage investment conduit.

(1) In general.

(2) Information required to be reported in the REMIC's first taxable year.

(3) Requirement to keep sufficient records.

§ 1.860E-1 Treatment of taxable income of a residual interest holder in excess of daily accruals.

(a) Excess inclusion cannot be offset by otherwise allowable deductions.

(1) In general.

(2) Affiliated groups.

(3) Special rule for certain financial institutions.

(i) In general.

(ii) Ordering rule.

(A) In general.

(B) Example.

(iii) Significant value.

(iv) Determining anticipated weighted average life.

(A) Anticipated weighted average life of the REMIC.

(B) Regular interests that have a specified principal amount.

(C) Regular interests that have no specified principal amount or that have only a nominal principal amount, and all residual interests.

(D) Anticipated payments.

(b) Treatment of a residual interest held by REITs, RICs, common trust funds, and subchapter T cooperatives. [Reserved]

(c) Transfers of noneconomic residual interests.

(1) In general.

(2) Noneconomic residual interest.

(3) Computations.

(4) Safe harbor for establishing lack of improper knowledge.

(5) Asset test.

(6) Definitions for asset test.

(7) Formula test.

(8) Conditions and limitations on formula test.

(9) Examples.

(10) Effective dates.

(d) Transfers to foreign persons.

§ 1.860E-2 Tax on transfers of residual interest to certain organizations.

(a) Transfers to disqualified organizations.

(1) Payment of tax.

(2) Transitory ownership.

(3) Anticipated excess inclusions.

(4) Present value computation.

(5) Obligation of REMIC to furnish information.

(6) Agent.

(7) Relief from liability.

(i) Transferee furnishes information under penalties of perjury.

(ii) Amount required to be paid.

(b) Tax on pass-thru entities.

(1) Tax on excess inclusions.

(2) Record holder furnishes information under penalties of perjury.

(3) Deductibility of tax.

(4) Allocation of tax.

§ 1.860F-1 Qualified liquidations.

§ 1.860F-2 Transfers to a REMIC.

(a) Formation of a REMIC.

(1) In general.

(2) Tiered arrangements.

(i) Two or more REMICs formed pursuant to a single set of organizational documents.

(ii) A REMIC and one or more investment trusts formed pursuant to a single set of documents.

(b) Treatment of sponsor.

(1) Sponsor defined.

(2) Nonrecognition of gain or loss.

(3) Basis of contributed assets allocated among interests.

(i) In general.

(ii) Organizational expenses.

(A) Organizational expense defined.

(B) Syndication expenses.

(iii) Pricing date.

(4) Treatment of unrecognized gain or loss.

(i) Unrecognized gain on regular interests.

(ii) Unrecognized loss on regular interests.

(iii) Unrecognized gain on residual interests.

(iv) Unrecognized loss on residual interests.

(5) Additions to or reductions of the sponsor's basis.

(6) Transferred basis property.

(c) REMIC's basis in contributed assets.

§ 1.860F-4 REMIC reporting requirements and other administrative rules.

(a) In general.

(b) REMIC tax return.

(1) In general.

(2) Income tax return.

(c) Signing of REMIC return.

(1) In general.

(2) REMIC whose startup day is before November 10, 1988.

(i) In general.

(ii) Startup day.

(iii) Exception.

(d) Designation of tax matters person.

(e) Notice to holders of residual interests.

(1) Information required.

(i) In general.

(ii) Information with respect to REMIC assets.

(A) 95 percent asset test.

(B) Additional information required if the 95 percent test not met.

(C) For calendar quarters in 1987.

(D) For calendar quarters in 1988 and 1989.

(iii) Special provisions.

(2) Quarterly notice required.

(i) In general.

(ii) Special rule for 1987.

(3) Nominee reporting.

(i) In general.

(ii) Time for furnishing statement.

(4) Reports to the Internal Revenue Service.

(f) Information returns for persons engaged in a trade or business.

§ 1.860G-1 Definition of regular and residual interests.

(a) Regular interest.

(1) Designation as a regular interest.

(2) Specified portion of the interest payments on qualified mortgages.

(i) In general.

(ii) Specified portion cannot vary.

(iii) Defaulted or delinquent mortgages.

(iv) No minimum specified principal amount is required.

(v) Specified portion includes portion of interest payable on regular interest.

(vi) Examples.

(3) Variable rate.

(i) Rate based on current interest rate.

(ii) Weighted average rate.

(A) In general.

(B) Reduction in underlying rate.

(iii) Additions, subtractions, and multiplications.

(iv) Caps and floors.

(v) Funds-available caps.

(A) In general.

(B) Facts and circumstances test.

(C) Examples.

(vi) Combination of rates.

(4) Fixed terms on the startup day.

(5) Contingencies prohibited.

(b) Special rules for regular interests.

(1) Call premium.

(2) Customary prepayment penalties received with respect to qualified mortgages.

(3) Certain contingencies disregarded.

(i) Prepayments, income, and expenses.

(ii) Credit losses.

(iii) Subordinated interests.

(iv) Deferral of interest.

(v) Prepayment interest shortfalls.

(vi) Remote and incidental contingencies.

(4) Form of regular interest.

(5) Interest disproportionate to principal.

(i) In general.

(ii) Exception.

(6) Regular interest treated as a debt instrument for all Federal income tax purposes.

(c) Residual interest.

(d) Issue price of regular and residual interests.

(1) In general.

(2) The public.

(e) Transition from certain interbank offered rates.

(1) In general.

(2) Change in reference rate for a regular interest after the startup day.

(3) Contingencies of rate on a regular interest.

(4) Reasonable expenses incurred to make covered modifications.

§ 1.860G-2 Other rules.

(a) Obligations principally secured by an interest in real property.

(1) Tests for determining whether an obligation is principally secured.

(i) The 80-percent test.

(ii) Alternative test.

(2) Treatment of liens.

(3) Safe harbor.

(i) Reasonable belief that an obligation is principally secured.

(ii) Basis for reasonable belief.

(iii) Later discovery that an obligation is not principally secured.

(4) Interests in real property; real property.

(5) Obligations secured by an interest in real property.

(6) Obligations secured by other obligations; residual interests.

(7) Certain instruments that call for contingent payments are obligations.

(8) Release of a lien on an interest in real property securing a qualified mortgage; defeasance.

(9) Stripped bonds and coupons.

(b) Assumptions and modifications.

(1) Significant modifications are treated as exchanges of obligations.

(2) Significant modification defined.

(3) Exceptions.

(4) Modifications that are not significant modifications.

(5) Assumption defined.

(6) Pass-thru certificates.

(7) Test for determining whether an obligation continues to be principally secured following certain types of modifications.

(c) Treatment of certain credit enhancement contracts.

(1) In general.

(2) Credit enhancement contracts.

(3) Arrangements to make certain advances.

(i) Advances of delinquent principal and interest.

(ii) Advances of taxes, insurance payments, and expenses.

(iii) Advances to ease REMIC administration.

(4) Deferred payment under a guarantee arrangement.

(d) Treatment of certain purchase agreements with respect to convertible mortgages.

(1) In general.

(2) Treatment of amounts received under purchase agreements.

(3) Purchase agreement.

(4) Default by the person obligated to purchase a convertible mortgage.

(5) Convertible mortgage.

(e) Prepayment interest shortfalls.

(f) Defective obligations.

(1) Defective obligation defined.

(2) Effect of discovery of defect.

(g) Permitted investments.

(1) Cash flow investment.

(i) In general.

(ii) Payments received on qualified mortgages.

(iii) Temporary period.

(2) Qualified reserve funds.

(3) Qualified reserve asset.

(i) In general.

(ii) Reasonably required reserve.

(A) In general.

(B) Presumption that a reserve is reasonably required.

(C) Presumption may be rebutted.

(h) Outside reserve funds.

(i) Contractual rights coupled with regular interests in tiered arrangements.

(1) In general.

(2) Example.

(j) Clean-up call.

(1) In general.

(2) Interest rate changes.

(3) Safe harbor.

(k) Startup day.

§ 1.860G-3 Treatment of foreign persons.

(a) Transfer of a residual interest with tax avoidance potential.

(1) In general.

(2) Tax avoidance potential.

(i) Defined.

(ii) Safe harbor.

(3) Effectively connected income.

(4) Transfer by a foreign holder.

(b) Accounting for REMIC net income

(1) Allocation of partnership income to a foreign partner.

(2) Excess inclusion income allocated by certain pass-through entities to a foreign person.

[T.D. 8458, 57 FR 61299, Dec. 24, 1992; 58 FR 15089, Mar. 19, 1993, as amended by T.D. 8614, 60 FR 42787, Aug. 17, 1995; T.D. 9004, 67 FR 47453, July 19, 2002; T.D. 9128, 69 FR 26041, May 11, 2004; T.D. 9272, 71 FR 43365, Aug. 1, 2006; T.D. 9415, 73 FR 40172, July 14, 2008; T.D. 9463, 74 FR 47438, Sept. 16, 2009; T.D. 9961, 87 FR 175, Jan. 4, 2022]

§ 1.860A-1 Effective dates and transition rules.

(a) ***In general.*** Except as otherwise provided in paragraph (b) of this section, the regulations under sections 860A through 860G are effective only for a qualified entity (as defined in § 1.860D-1(c)(3)) whose startup day (as defined in section 860G(a)(9) and § 1.860G-2(k)) is on or after November 12, 1991.

(b) ***Exceptions*** —

(1) ***Reporting regulations.***

(i) Sections 1.860D-1(c) (1) and (3), and § 1.860D-1(d) (1) through (3) are effective after December 31, 1986.

(ii) Sections 1.860F-4 (a) through (e) are effective after December 31, 1986 and are applicable after that date except as follows:

(A) Section 1.860F-4(c)(1) is effective for REMICs with a startup day on or after November 10, 1988.

(B) Sections 1.860F-4(e)(1)(ii) (A) and (B) are effective for calendar quarters and calendar years beginning after December 31, 1988.

(C) Section 1.860F-4(e)(1)(ii)(C) is effective for calendar quarters and calendar years beginning after December 31, 1986 and ending before January 1, 1988.

(D) Section 1.860F-4(e)(1)(ii)(D) is effective for calendar quarters and calendar years beginning after December 31, 1987 and ending before January 1, 1990.

(2) ***Tax avoidance rules*** —

(i) ***Transfers of certain residual interests.*** Section 1.860E-1(c) (concerning transfers of noneconomic residual interests) and § 1.860G-3(a)(4) (concerning transfers by a foreign holder to a United States person) are effective for transfers of residual interests on or after September 27, 1991.

(ii) ***Transfers to foreign holders.*** Generally, § 1.860G-3(a) (concerning transfers of residual interests to foreign holders) is effective for transfers of residual interests after April 20, 1992. However, § 1.860G-3(a) does not apply to a transfer of a residual interest in a REMIC by the REMIC's sponsor (or by another transferor contemporaneously with formation of the REMIC) on or before June 30, 1992, if—

(A) The terms of the regular interests and the prices at which regular interests were offered had been fixed on or before April 20, 1992;

(B) On or before June 30, 1992, a substantial portion of the regular interests in the REMIC were transferred, with the terms and at the prices that were fixed on or before April 20, 1992, to investors who were unrelated to the REMIC's sponsor at the time of the transfer; and

(C) At the time of the transfer of the residual interest, the expected future distributions on the residual interest were equal to at least 30 percent of the anticipated excess inclusions (as defined in § 1.860E-2(a)(3)), and the transferor reasonably expected that the transferee would receive sufficient distributions from the REMIC at or after the time at which the excess inclusions accrue in an amount sufficient to satisfy the taxes on the excess inclusions.

(iii) ***Residual interests that lack significant value.*** The significant value requirement in § 1.860E-1(a)(1) and (3) (concerning excess inclusions accruing to organizations to which section 593 applies) generally is effective for residual interests acquired on or after September 27, 1991. The significant value requirement in § 1.860E-1(a)(1) and (3) does not apply, however, to residual interests acquired by an organization to which section 593 applies as a sponsor at formation of a REMIC in a transaction described in § 1.860F-2(a)(1) if more than 50 percent of the interests in the REMIC (determined by reference to issue price) were sold to unrelated investors before November 12, 1991. The exception from the significant value requirement provided by the preceding sentence applies only so long as the sponsor owns the residual interests.

(3) ***Excise taxes.*** Section 1.860E-2(a)(1) is effective for transfers of residual interests to disqualified organizations after March 31, 1988. Section 1.860E-2(b)(1) is effective for excess inclusions accruing to pass-thru entities after March 31, 1988.

(4) ***Rate based on current interest rate*** —

(i) ***In general.*** Section 1.860G-1(a)(3)(i) applies to obligations (other than transition obligations described in paragraph (b)(4)(iii) of this section) intended to qualify as regular interests that are issued on or after April 4, 1994.

(ii) ***Rate based on index.*** Section 1.860G-1(a)(3)(i) (as contained in 26 CFR part 1 revised as of April 1, 1994) applies to obligations intended to qualify as regular interests that—

(A) Are issued by a qualified entity (as defined in § 1.860D-1(c)(3)) whose startup date (as defined in section 860G(a)(9) and § 1.860G-2(k)) is on or after November 12, 1991; and

(B) Are either—

(*1*) Issued before April 4, 1994; or

(*2*) Transition obligations described in paragraph (b)(4)(iii) of this section.

(iii) ***Transition obligations.*** Obligations are described in this paragraph (b)(4)(iii) if—

(A) The terms of the obligations and the prices at which the obligations are offered are fixed before April 4, 1994; and

(B) On or before June 1, 1994, a substantial portion of the obligations are transferred, with the terms and at the prices that are fixed before April 4, 1994, to investors who are unrelated to the REMIC's sponsor at the time of the transfer.

(5) Accounting for REMIC net income of foreign persons. Section 1.860G-3(b) is applicable to REMIC net income (including excess inclusions) of a foreign person with respect to a REMIC residual interest if the first net income allocation under section 860C(a)(1) to the foreign person with respect to that interest occurs on or after August 1, 2006.

(6) ***Exceptions for certain modified obligations.*** Paragraphs (a)(8)(i), (b)(3)(v), (b)(3)(vi), and (b)(7) of § 1.860G-2 apply to modifications made to the terms of an obligation on or after September 16, 2009.

(7) ***Exceptions for certain modifications of obligations that refer to certain interbank offered rates.***

(i) Paragraphs (e)(2) and (4) of § 1.860G-1 apply with respect to a covered modification that occurs on or after March 7, 2022. However, paragraphs (e)(2) and (4) of § 1.860G-1 may be applied with respect to a covered modification that occurs before March 7, 2022. See section 7805(b)(7).

(ii) Paragraph (e)(3) of § 1.860G-1 applies to a regular interest in a REMIC issued on or after March 7, 2022. However, paragraph (e)(3) of § 1.860G-1 may be applied to a regular interest in a REMIC issued before March 7, 2022. See section 7805(b)(7).

[T.D. 8458, 57 FR 61300, Dec. 24, 1992; 58 FR 8098, Feb. 11, 1993; 58 FR 15089, Mar. 19, 1993; T.D. 8614, 60 FR 42787, Aug. 17, 1995; T.D. 9272, 71 FR 43365, Aug. 1, 2006; T.D. 9415, 73 FR 40172, July 14, 2008; T.D. 9463, 74 FR 47438, Sept. 16, 2009; T.D. 9961, 87 FR 175, Jan. 4, 2022]

§ 1.860C-1 Taxation of holders of residual interests.

(a) ***Pass-thru of income or loss.*** Any holder of a residual interest in a REMIC must take into account the holder's daily portion of the taxable income or net loss of the REMIC for each day during the taxable year on which the holder owned the residual interest.

(b) ***Adjustments to basis of residual interests*** —

(1) ***Increase in basis.*** A holder's basis in a residual interest is increased by—

(i) The daily portions of taxable income taken into account by that holder under section 860C(a) with respect to that interest; and

(ii) The amount of any contribution described in section 860G(d)(2) made by that holder.

(2) ***Decrease in basis.*** A holder's basis in a residual interest is reduced (but not below zero) by—

(i) First, the amount of any cash or the fair market value of any property distributed to that holder with respect to that interest; and

(ii) Second, the daily portions of net loss of the REMIC taken into account under section 860C(a) by that holder with respect to that interest.

(3) ***Adjustments made before disposition.*** If any person disposes of a residual interest, the adjustments to basis prescribed in paragraph (b)(1) and (2) of this section are deemed to occur immediately before the disposition.

(c) ***Counting conventions.*** For purposes of determining the daily portion of REMIC taxable income or net loss under section 860C(a)(2), any reasonable convention may be used. An example of a reasonable convention is “30 days per month/90 days per quarter/360 days per year.”

(d) For rules on the proper accounting for income from inducement fees, *see* § 1.446-6.

[T.D. 8458, 57 FR 61301, Dec. 24, 1992, as amended by T.D. 9128, 69 FR 26041, May 11, 2004]

§ 1.860C-2 Determination of REMIC taxable income or net loss.

(a) ***Treatment of gain or loss.*** For purposes of determining the taxable income or net loss of a REMIC under section 860C(b), any gain or loss from the disposition of any asset, including a qualified mortgage (as defined in section 860G(a)(3)) or a permitted investment (as defined in section 860G(a)(5) and § 1.860G-2(g)), is treated as gain or loss from the sale or exchange of property that is not a capital asset.

(b) *Deductions allowable to a REMIC* —

(1) ***In general.*** Except as otherwise provided in section 860C(b) and in paragraph (b)(2) through (5) of this section, the deductions allowable to a REMIC for purposes of determining its taxable income or net loss are those deductions that would be allowable to an individual, determined by taking into account the same limitations that apply to an individual.

(2) ***Deduction allowable under section 163.***

(i) A REMIC is allowed a deduction, determined without regard to section 163(d), for any interest expense accrued during the taxable year.

(ii) For taxable years beginning after December 31, 2017, a REMIC is allowed a deduction, determined without regard to section 163(j), for any interest expense accrued during the taxable year.

(3) ***Deduction allowable under section 166.*** For purposes of determining a REMIC's bad debt deduction under section 166, debt owed to the REMIC is not treated as nonbusiness debt under section 166(d).

(4) ***Deduction allowable under section 212.*** A REMIC is not treated as carrying on a trade or business for purposes of section 162. Ordinary and necessary operating expenses paid or incurred by the REMIC during the taxable year are deductible under section 212, without regard to section 67. Any expenses that are incurred in connection with the formation of the REMIC and that relate to the organization of the REMIC and the issuance of regular and residual interests are not treated as expenses of the REMIC for which a deduction is allowable under section 212. See § 1.860F-2(b)(3)(ii) for treatment of those expenses.

(5) ***Expenses and interest relating to tax-exempt income.*** Pursuant to section 265(a), a REMIC is not allowed a deduction for expenses and interest allocable to tax-exempt income. The portion of a REMIC's interest expense that is allocable to tax-exempt interest is determined in the manner prescribed in section 265(b)(2), without regard to section 265(b)(3).

[T.D. 8458, 57 FR 61301, Dec. 24, 1992, as amended by T.D. 9905, 85 FR 56842, Sept. 14, 2020]

§ 1.860D-1 Definition of a REMIC.

(a) ***In general.*** A real estate mortgage investment conduit (or REMIC) is a qualified entity, as defined in paragraph (c)(3) of this section, that satisfies the requirements of section 860D(a). See paragraph (d)(1) of this section for the manner of electing REMIC status.

(b) *Specific requirements* —

(1) *Interests in a REMIC* —

(i) ***In general.*** A REMIC must have one class, and only one class, of residual interests. Except as provided in paragraph (b)(1)(ii) of this section, every interest in a REMIC must be either a regular interest (as defined in section 860G(a)(1) and § 1.860G-1(a)) or a residual interest (as defined in section 860G(a)(2) and § 1.860G-1(c)).

(ii) ***De minimis interests.*** If, to facilitate the creation of an entity that elects REMIC status, an interest in the entity is created and, as of the startup day (as defined in section 860G(a)(9) and § 1.860G-2(k)), the fair market value of that interest is less than the lesser of $1,000 or 1/1,000 of one percent of the aggregate fair market value of all the regular and residual interests in the

REMIC, then, unless that interest is specifically designated as an interest in the REMIC, the interest is not treated as an interest in the REMIC for purposes of section 860D(a) (2) and (3) and paragraph (B)(1)(i) of this section.

(2) ***Certain rights not treated as interests.*** Certain rights are not treated as interests in a REMIC. Although not an exclusive list, the following rights are not interests in a REMIC.

(i) ***Payments for services.*** The right to receive from the REMIC payments that represent reasonable compensation for services provided to the REMIC in the ordinary course of its operation is not an interest in the REMIC. Payments made by the REMIC in exchange for services may be expressed as a specified percentage of interest payments due on qualified mortgages or as a specified percentage of earnings from permitted investments. For example, a mortgage servicer's right to receive reasonable compensation for servicing the mortgages owned by the REMIC is not an interest in the REMIC.

(ii) ***Stripped interests.*** Stripped bonds or stripped coupons not held by the REMIC are not interests in the REMIC even if, in a transaction preceding or contemporaneous with the formation of the REMIC, they and the REMIC's qualified mortgages were created from the same mortgage obligation. For example, the right of a mortgage servicer to receive a servicing fee in excess of reasonable compensation from payments it receives on mortgages held by a REMIC is not an interest in the REMIC. Further, if an obligation with a fixed principal amount provides for interest at a fixed or variable rate and for certain contingent payment rights (*e.g.,* a shared appreciation provision or a percentage of mortgagor profits provision), and the owner of the obligation contributes the fixed payment rights to a REMIC and retains the contingent payment rights, the retained contingent payment rights are not an interest in the REMIC.

(iii) ***Reimbursement rights under credit enhancement contracts.*** A credit enhancer's right to be reimbursed for amounts advanced to a REMIC pursuant to the terms of a credit enhancement contract (as defined in § 1.860G-2 (c)(2)) is not an interest in the REMIC even if the credit enhancer is entitled to receive interest on the amounts advanced.

(iv) ***Rights to acquire mortgages.*** The right to acquire or the obligation to purchase mortgages and other assets from a REMIC pursuant to a clean-up call (as defined in § 1.860G-2(j)) or a qualified liquidation (as defined in section 860F(a)(4)), or on conversion of a convertible mortgage (as defined in § 1.860G-2(d)(5)), is not an interest in the REMIC.

(3) ***Asset test*** —

(i) ***In general.*** For purposes of the asset test of section 860D(a)(4), substantially all of a qualified entity's assets are qualified mortgages and permitted investments if the qualified entity owns no more than a de minimis amount of other assets.

(ii) ***Safe harbor.*** The amount of assets other than qualified mortgages and permitted investments is de minimis if the aggregate of the adjusted bases of those assets is less than one percent of the aggregate of the adjusted bases of all of the REMIC's assets. Nonetheless, a qualified entity that does not meet this safe harbor may demonstrate that it owns no more than a de minimis amount of other assets.

(4) ***Arrangements test.*** Generally, a qualified entity must adopt reasonable arrangements designed to ensure that—

(i) Disqualified organizations (as defined in section 860E(e)(5)) do not hold residual interests in the qualified entity; and

(ii) If a residual interest is acquired by a disqualified organization, the qualified entity will provide to the Internal Revenue Service, and to the persons specified in section 860E(e)(3), information needed to compute the tax imposed under section 860E(e) on transfers of residual interests to disqualified organizations.

(5) ***Reasonable arrangements*** —

(i) ***Arrangements to prevent disqualified organizations from holding residual interests.*** A qualified entity is considered to have adopted reasonable arrangements to ensure that a disqualified organization (as defined in section 860E(e)(5)) will not hold a residual interest if—

(A) The residual interest is in registered form (as defined in § 5f.103-1(c) of this chapter); and

(B) The qualified entity's organizational documents clearly and expressly prohibit a disqualified organization from acquiring beneficial ownership of a residual interest, and notice of the prohibition is provided through a legend on the document that evidences ownership of the residual interest or through a conspicuous statement in a prospectus or private offering document used to offer the residual interest for sale.

(ii) ***Arrangements to ensure that information will be provided.*** A qualified entity is considered to have made reasonable arrangements to ensure that the Internal Revenue Service and persons specified in section 860E(e)(3) as liable for the tax imposed under section 860E(e) receive the information needed to compute the tax if the qualified entity's organizational documents require that it provide to the Internal Revenue Service and those persons a computation showing the present value of the total anticipated excess inclusions with respect to the residual interest for periods after the transfer. See § 1.860E-2(a)(5) for the obligation to furnish information on request.

(6) ***Calendar year requirement.*** A REMIC's taxable year is the calendar year. The first taxable year of a REMIC begins on the startup day and ends on December 31 of the same year. If the startup day is other than January 1, the REMIC has a short first taxable year.

(c) ***Segregated pool of assets*** —

(1) ***Formation of REMIC.*** A REMIC may be formed as a segregated pool of assets rather than as a separate entity. To constitute a REMIC, the assets identified as part of the segregated pool must be treated for all Federal income tax purposes as assets of the REMIC and interests in the REMIC must be based solely on assets of the REMIC.

(2) ***Identification of assets.*** Formation of the REMIC does not occur until—

(i) The sponsor identifies the assets of the REMIC, such as through execution of an indenture with respect to the assets; and

(ii) The REMIC issues the regular and residual interests in the REMIC.

(3) ***Qualified entity defined.*** For purposes of this section, the term “qualified entity” includes an entity or a segregated pool of assets within an entity.

(d) ***Election to be treated as a real estate mortgage investment conduit*** —

(1) ***In general.*** A qualified entity, as defined in paragraph (c)(3) of this section, elects to be treated as a REMIC by timely filing, for the first taxable year of its existence, a Form 1066, U.S. Real Estate Mortgage Investment Conduit Income Tax Return, signed by a person authorized to sign that return under § 1.860F-4(c). See § 1.9100-1 for rules regarding extensions of time for making elections. Once made, this election is irrevocable for that taxable year and all succeeding taxable years.

(2) ***Information required to be reported in the REMIC's first taxable year.*** For the first taxable year of the REMIC's existence, the qualified entity, as defined in paragraph (c)(3) of this section, must provide either on its return or in a separate statement attached to its return—

(i) The REMIC's employer identification number, which must not be the same as the identification number of any other entity,

(ii) Information concerning the terms and conditions of the regular interests and the residual interest of the REMIC, or a copy of the offering circular or prospectus containing such information,

(iii) A description of the prepayment and reinvestment assumptions that are made pursuant to section 1272(a)(6) and the regulations thereunder, including a statement supporting the selection of the prepayment assumption,

(iv) The form of the electing qualified entity under State law or, if an election is being made with respect to a segregated pool of assets within an entity, the form of the entity that holds the segregated pool of assets, and

(v) Any other information required by the form.

(3) ***Requirement to keep sufficient records.*** A qualified entity, as defined in paragraph (c)(3) of this section, that elects to be a REMIC must keep sufficient records concerning its investments to show that it has complied with the provisions of sections 860A through 860G and the regulations thereunder during each taxable year.

[T.D. 8366, 56 FR 49516, Sept. 30, 1991; T.D. 8458, 57 FR 61301, Dec. 24, 1992]

§ 1.860E-1 Treatment of taxable income of a residual interest holder in excess of daily accruals.

(a) ***Excess inclusion cannot be offset by otherwise allowable deductions*** —

(1) ***In general.*** Except as provided in paragraph (a)(3) of this section, the taxable income of any holder of a residual interest for any taxable year is in no event less than the sum of the excess inclusions attributable to that holder's residual interests for that taxable year. In computing the amount of a net operating loss (as defined in section 172(c)) or the amount of any net operating loss carryover (as defined in section 172(b)(2)), the amount of any excess inclusion is not included in gross income or taxable income. Thus, for example, if a residual interest holder has $100 of gross income, $25 of which is an excess inclusion, and $90 of business deductions, the holder has taxable income of $25, the amount of the excess inclusion, and a net operating loss of $15 ($75 of other income − $90 of business deductions).

(2) ***Affiliated groups.*** If a holder of a REMIC residual interest is a member of an affiliated group filing a consolidated income tax return, the taxable income of the affiliated group cannot be less than the sum of the excess inclusions attributable to all residual interests held by members of the affiliated group.

(3) *Special rule for certain financial institutions* —

(i) ***In general.*** If an organization to which section 593 applies holds a residual interest that has significant value (as defined in paragraph (a)(3)(iii) of this section), section 860E(a)(1) and paragraph (a)(1) of this section do not apply to that organization with respect to that interest. Consequently, an organization to which section 593 applies may use its allowable deductions to offset an excess inclusion attributable to a residual interest that has significant value, but, except as provided in section 860E(a)(4)(A), may not use its allowable deductions to offset an excess inclusion attributable to a residual interest held by any other member of an affiliated group, if any, of which the organization is a member. Further, a net operating loss of any other member of an affiliated group of which the organization is a member may not be used to offset an excess inclusion attributable to a residual interest held by that organization.

(ii) *Ordering rule* —

(A) ***In general.*** In computing taxable income for any year, an organization to which section 593 applies is treated as having applied its allowable deductions for the year first to offset that portion of its gross income that is not an excess inclusion and then to offset that portion of its income that is an excess inclusion.

(B) ***Example.*** The following example illustrates the provisions of paragraph (a)(3)(ii) of this section:

Example. Corp. *X,* a corporation to which section 593 applies, is a member of an affiliated group that files a consolidated return. For a particular taxable year, Corp. *X* has gross income of $1,000, and of this amount, $150 is an excess inclusion attributable to a residual interest that has significant value. Corp. *X* has $975 of allowable deductions for the taxable year. Corp. *X* must apply its allowable deductions first to offset the $850 of gross income that is not an excess inclusion, and then to offset the portion of its gross income that is an excess inclusion. Thus, Corp. *X* has $25 of taxable income ($1,000−$975), and that $25 is an excess inclusion that may not be offset by losses sustained by other members of the affiliated group.

(iii) ***Significant value.*** A residual interest has significant value if—

(A) The aggregate of the issue prices of the residual interests in the REMIC is at least 2 percent of the aggregate of the issue prices of all residual and regular interests in the REMIC; and

(B) The anticipated weighted average life of the residual interests is at least 20 percent of the anticipated weighted average life of the REMIC.

(iv) *Determining anticipated weighted average life* —

(A) ***Anticipated weighted average life of the REMIC.*** The anticipated weighted average life of a REMIC is the weighted average of the anticipated weighted average lives of all classes of interests in the REMIC. This weighted average is determined under the formula in paragraph (a)(3)(iv)(B) of this section, applied by treating all payments taken into account in computing the anticipated weighted average lives of regular and residual interests in the REMIC as principal payments on a single regular interest.

(B) ***Regular interests that have a specified principal amount.*** Generally, the anticipated weighted average life of a regular interest is determined by—

(1) Multiplying the amount of each anticipated principal payment to be made on the interest by the number of years (including fractions thereof) from the startup day (as defined in section 860G(a)(9) and § 1.860G-2(k)) to the related principal payment date;

(2) Adding the results; and

(3) Dividing the sum by the total principal paid on the regular interest.

(C) ***Regular interests that have no specified principal amount or that have only a nominal principal amount, and all residual interests.*** If a regular interest has no specified principal amount, or if the interest payments to be made on a regular interest are disproportionately high relative to its specified principal amount (as determined by reference to § 1.860G-1(b)(5)(i)), then, for purposes of computing the anticipated weighted average life of the interest, all anticipated payments on that interest, regardless of their designation as principal or interest, must be taken into account in applying the formula set out in paragraph (a)(3)(iv)(B) of this section. Moreover, for purposes of computing the weighted average life of a residual interest, all anticipated payments on that interest, regardless of their designation as principal or interest, must be taken into account in applying the formula set out in paragraph (a)(3)(iv)(B) of this section.

(D) ***Anticipated payments.*** The anticipated principal payments to be made on a regular interest subject to paragraph (a)(3)(iv)(B) of this section, and the anticipated payments to be made on a regular interest subject to paragraph (a)(3)(iv)(C) of this section or on a residual interest, must be determined based on—

(1) The prepayment and reinvestment assumptions adopted under section 1272(a)(6), or that would have been adopted had the REMIC's regular interests been issued with original issue discount; and

(2) Any required or permitted clean up calls or any required qualified liquidation provided for in the REMIC's organizational documents.

(b) ***Treatment of residual interests held by REITs, RICs, common trust funds, and subchapter T cooperatives.*** [Reserved]

(c) ***Transfers of noneconomic residual interests*** —

(1) ***In general.*** A transfer of a noneconomic residual interest is disregarded for all Federal tax purposes if a significant purpose of the transfer was to enable the transferor to impede the assessment or collection of tax. A significant purpose to impede the assessment or collection of tax exists if the transferor, at the time of the transfer, either knew or should have known (had “improper knowledge”) that the transferee would be unwilling or unable to pay taxes due on its share of the taxable income of the REMIC.

(2) ***Noneconomic residual interest.*** A residual interest is a noneconomic residual interest unless, at the time of the transfer—

(i) The present value of the expected future distributions on the residual interest at least equals the product of the present value of the anticipated excess inclusions and the highest rate of tax specified in section 11(b)(1) for the year in which the transfer occurs; and

(ii) The transferor reasonably expects that, for each anticipated excess inclusion, the transferee will receive distributions from the REMIC at or after the time at which the taxes accrue on the anticipated excess inclusion in an amount sufficient to satisfy the accrued taxes.

(3) ***Computations.*** The present value of the expected future distributions and the present value of the anticipated excess inclusions must be computed under the procedure specified in § 1.860E-2(a)(4) for determining the present value of anticipated excess inclusions in connection with the transfer of a residual interest to a disqualified organization.

(4) ***Safe harbor for establishing lack of improper knowledge.*** A transferor is presumed not to have improper knowledge if—

(i) The transferor conducted, at the time of the transfer, a reasonable investigation of the financial condition of the transferee and, as a result of the investigation, the transferor found that the transferee had historically paid its debts as they came due and found no significant evidence to indicate that the transferee will not continue to pay its debts as they come due in the future;

(ii) The transferee represents to the transferor that it understands that, as the holder of the noneconomic residual interest, the transferee may incur tax liabilities in excess of any cash flows generated by the interest and that the transferee intends to pay taxes associated with holding the residual interest as they become due;

(iii) The transferee represents that it will not cause income from the noneconomic residual interest to be attributable to a foreign permanent establishment or fixed base (within the meaning of an applicable income tax treaty) of the transferee or another U.S. taxpayer; and

(iv) The transfer satisfies either the asset test in paragraph (c)(5) of this section or the formula test in paragraph (c)(7) of this section.

(5) ***Asset test.*** The transfer satisfies the asset test if it meets the requirements of paragraphs (c)(5)(i), (ii) and (iii) of this section.

(i) At the time of the transfer, and at the close of each of the transferee's two fiscal years preceding the transferee's fiscal year of transfer, the transferee's gross assets for financial reporting purposes exceed $100 million and its net assets for financial reporting purposes exceed $10 million. For purposes of the preceding sentence, the gross assets and net assets of a transferee do not include any obligation of any related person (as defined in paragraph (c)(6)(ii) of this section) or any other asset if a principal purpose for holding or acquiring the other asset is to permit the transferee to satisfy the conditions of this paragraph (c)(5)(i).

(ii) The transferee must be an eligible corporation (defined in paragraph (c)(6)(i) of this section) and must agree in writing that any subsequent transfer of the interest will be to another eligible corporation in a transaction that satisfies paragraphs (c)(4)(i), (ii), and (iii) and this paragraph (c)(5). The direct or indirect transfer of the residual interest to a foreign permanent establishment (within the meaning of an applicable income tax treaty) of a domestic corporation is a transfer that is not a transfer to an eligible corporation. A transfer also fails to meet the requirements of this paragraph (c)(5)(ii) if the transferor knows, or has reason to know, that the transferee will not honor the restrictions on subsequent transfers of the residual interest.

(iii) A reasonable person would not conclude, based on the facts and circumstances known to the transferor on or before the date of the transfer, that the taxes associated with the residual interest will not be paid. The consideration given to the transferee to acquire the noneconomic residual interest in the REMIC is only one factor to be considered, but the transferor will be deemed to know that the transferee cannot or will not pay if the amount of consideration is so low compared to the liabilities assumed that a reasonable person would conclude that the taxes associated with holding the residual interest will not be paid. In determining whether the amount of consideration is too low, the specific terms of the formula test in paragraph (c)(7) of this section need not be used.

(6) ***Definitions for asset test.*** The following definitions apply for purposes of paragraph (c)(5) of this section:

(i) ***Eligible corporation*** means any domestic C corporation (as defined in section 1361(a)(2)) other than—

(A) A corporation which is exempt from, or is not subject to, tax under section 11;

(B) An entity described in section 851(a) or 856(a);

(C) A REMIC; or

(D) An organization to which part I of subchapter T of chapter 1 of subtitle A of the Internal Revenue Code applies.

(ii) ***Related person*** is any person that—

(A) Bears a relationship to the transferee enumerated in section 267(b) or 707(b)(1), using “20 percent” instead of “50 percent” where it appears under the provisions; or

(B) Is under common control (within the meaning of section 52(a) and (b)) with the transferee.

(7) ***Formula test.*** The transfer satisfies the formula test if the present value of the anticipated tax liabilities associated with holding the residual interest does not exceed the sum of—

(i) The present value of any consideration given to the transferee to acquire the interest;

(ii) The present value of the expected future distributions on the interest; and

(iii) The present value of the anticipated tax savings associated with holding the interest as the REMIC generates losses.

(8) ***Conditions and limitations on formula test.*** The following rules apply for purposes of the formula test in paragraph (c)(7) of this section.

(i) The transferee is assumed to pay tax at a rate equal to the highest rate of tax specified in section 11(b)(1). If the transferee has been subject to the alternative minimum tax under section 55 in the preceding two years and will compute its taxable income in the current taxable year using the alternative minimum tax rate, then the tax rate specified in section 55(b)(1)(B) may be used in lieu of the highest rate specified in section 11(b)(1).

(ii) The direct or indirect transfer of the residual interest to a foreign permanent establishment or fixed base (within the meaning of an applicable income tax treaty) of a domestic transferee is not eligible for the formula test.

(iii) Present values are computed using a discount rate equal to the Federal short-term rate prescribed by section 1274(d) for the month of the transfer and the compounding period used by the taxpayer.

(9) ***Examples.*** The following examples illustrate the rules of this section:

Example 1. Transfer to partnership. X transfers a noneconomic residual interest in a REMIC to Partnership *P* in a transaction that does not satisfy the formula test of paragraph (c)(7) of this section. *Y* and *Z* are the partners of *P*. Even if *Y* and *Z* are eligible corporations that satisfy the requirements of paragraph (c)(5)(i) of this section, the transfer fails to satisfy the asset test requirements found in paragraph (c)(5)(ii) of this section because *P* is a partnership rather than an eligible corporation within the meaning of (c)(6)(i) of this section.

Example 2. Transfer to a corporation without capacity to carry additional residual interests. During the first ten months of a year, Bank transfers five residual interests to Corporation *U* under circumstances meeting the requirements of the asset test in paragraph (c)(5) of this section. Bank is the major creditor of *U* and consequently has access to *U*'s financial records and has knowledge of *U*'s financial circumstances. During the last month of the year, Bank transfers three additional residual interests to *U* in a transaction that does not meet the formula test of paragraph (c)(7) of this section. At the time of this transfer, *U*'s financial records indicate it has retained the previously transferred residual interests. *U*'s financial circumstances, including the aggregate tax liabilities it has assumed with respect to REMIC residual interests, would cause a reasonable person to conclude that *U* will be unable to meet its tax liabilities when due. The transfers in the last month of the year fail to satisfy the investigation requirement in paragraph (c)(4)(i) of this section and the asset test requirement of paragraph (c)(5)(iii) of this section because Bank has reason to know that *U* will not be able to pay the tax due on those interests.

Example 3. Transfer to a foreign permanent establishment of an eligible corporation. R transfers a noneconomic residual interest in a REMIC to the foreign permanent establishment of Corporation *T*. Solely because of paragraph (c)(8)(ii) of this section, the transfer does not satisfy the formula test of paragraph (c)(7) of this section. In addition, even if *T* is an eligible corporation, the transfer does not satisfy the asset test because the transfer fails the requirements of paragraph (c)(5)(ii) of this section.

(10) ***Effective dates.*** Paragraphs (c)(4) through (c)(9) of this section are applicable to transfers occurring on or after February 4, 2000, except for paragraphs (c)(4)(iii) and (c)(8)(iii) of this section, which are applicable for transfers occurring on or after August 19, 2002. For the dates of applicability of paragraphs (a) through (c)(3) and (d) of this section, see § 1.860A-1.

(d) ***Transfers to foreign persons.*** Paragraph (c) of this section does not apply to transfers of residual interests to which § 1.860G-3(a)(1), concerning transfers to certain foreign persons, applies.

[T.D. 8458, 57 FR 61302, Dec. 24, 1992; 58 FR 8098, Feb. 11, 1993; T.D. 9004, 67 FR 47453, July 19, 2002]

§ 1.860E-2 Tax on transfers of residual interests to certain organizations.

(a) ***Transfers to disqualified organizations*** —

(1) ***Payment of tax.*** Any excise tax due under section 860E(e)(1) must be paid by the later of March 24, 1993, or April 15th of the year following the calendar year in which the residual interest is transferred to a disqualified organization. The Commissioner may prescribe rules for the manner and method of collecting the tax.

(2) ***Transitory ownership.*** For purposes of section 860E (e) and this section, a transfer of a residual interest to a disqualified organization in connection with the formation of a REMIC is disregarded if the disqualified organization has a binding contract to sell the interest and the sale occurs within 7 days of the startup day (as defined in section 860G(a)(9) and § 1.860G-2(k)).

(3) ***Anticipated excess inclusions.*** The anticipated excess inclusions are the excess inclusions that are expected to accrue in each calendar quarter (or portion thereof) following the transfer of the residual interest. The anticipated excess inclusions must be determined as of the date the residual interest is transferred and must be based on—

(i) Events that have occurred up to the time of the transfer;

(ii) The prepayment and reinvestment assumptions adopted under section 1272(a)(6), or that would have been adopted had the REMIC's regular interests been issued with original issue discount; and

(iii) Any required or permitted clean up calls, or required qualified liquidation provided for in the REMIC's organizational documents.

(4) ***Present value computation.*** The present value of the anticipated excess inclusions is determined by discounting the anticipated excess inclusions from the end of each remaining calendar quarter in which those excess inclusions are expected to accrue to the date the disqualified organization acquires the residual interest. The discount rate to be used for this present value computation is the applicable Federal rate (as specified in section 1274(d)(1)) that would apply to a debt instrument that was issued on the date the disqualified organization acquired the residual interest and whose term ended on the close of the last quarter in which excess inclusions were expected to accrue with respect to the residual interest.

(5) ***Obligation of REMIC to furnish information.*** A REMIC is not obligated to determine if its residual interests have been transferred to a disqualified organization. However, upon request of a person designated in section 860E(e)(3), the REMIC must furnish information sufficient to compute the present value of the anticipated excess inclusions. The information must be furnished to the requesting party and to the Internal Revenue Service within 60 days of the request. A reasonable fee charged to the requestor is not income derived from a prohibited transaction within the meaning of section 860F(a).

(6) ***Agent.*** For purposes of section 860E(e)(3), the term “agent” includes a broker (as defined in section 6045(c) and § 1.6045-1(a)(1)), nominee, or other middleman.

(7) ***Relief from liability*** —

(i) ***Transferee furnishes information under penalties of perjury.*** For purposes of section 860E(e)(4), a transferee is treated as having furnished an affidavit if the transferee furnishes—

(A) A social security number, and states under penalties of perjury that the social security number is that of the transferee; or

(B) A statement under penalties of perjury that it is not a disqualified organization.

(ii) ***Amount required to be paid.*** The amount required to be paid under section 860E(e)(7)(B) is equal to the product of the highest rate specified in section 11(b)(1) for the taxable year in which the transfer described in section 860E(e)(1) occurs and the amount of excess inclusions that accrued and were allocable to the residual interest during the period that the disqualified organization held the interest.

(b) ***Tax on pass-thru entities*** —

(1) ***Tax on excess inclusions.*** Any tax due under section 860E(e)(6) must be paid by the later of March 24, 1993, or by the fifteenth day of the fourth month following the close of the taxable year of the pass-thru entity in which the disqualified person is a record holder. The Commissioner may prescribe rules for the manner and method of collecting the tax.

(2) ***Record holder furnishes information under penalties of perjury.*** For purposes of section 860E(e)(6)(D), a record holder is treated as having furnished an affidavit if the record holder furnishes—

(i) A social security number and states, under penalties of perjury, that the social security number is that of the record holder; or

(ii) A statement under penalties of perjury that it is not a disqualified organization.

(3) ***Deductibility of tax.*** Any tax imposed on a pass-thru entity pursuant to section 860E(e)(6)(A) is deductible against the gross amount of ordinary income of the pass-thru entity. For example, in the case of a REIT, the tax is deductible in determining real estate investment trust taxable income under section 857(b)(2).

(4) ***Allocation of tax.*** Dividends paid by a RIC or by a REIT are not preferential dividends within the meaning of section 562(c) solely because the tax expense incurred by the RIC or REIT under section 860E(e)(6) is allocated solely to the shares held by disqualified organizations.

[T.D. 8458, 57 FR 61304, Dec. 24, 1992]

§ 1.860F-1 Qualified liquidations.

A plan of liquidation need not be in any special form. If a REMIC specifies the first day in the 90-day liquidation period in a statement attached to its final return, then the REMIC will be considered to have adopted a plan of liquidation on the specified date.

[T.D. 8458, 57 FR 61304, Dec. 24, 1992]

§ 1.860F-2 Transfers to a REMIC.

(a) ***Formation of a REMIC*** —

(1) ***In general.*** For Federal income tax purposes, a REMIC formation is characterized as the contribution of assets by a sponsor (as defined in paragraph (b)(1) of this section) to a REMIC in exchange for REMIC regular and residual interests. If, instead of exchanging its interest in mortgages and related assets for regular and residual interests, the sponsor arranges to have the REMIC issue some or all of the regular and residual interests for cash, after which the sponsor sells its interests in mortgages and related assets to the REMIC, the transaction is, nevertheless, viewed for Federal income tax purposes as the sponsor's exchange of mortgages and related assets for regular and residual

interests, followed by a sale of some or all of those interests. The purpose of this rule is to ensure that the tax consequences associated with the formation of a REMIC are not affected by the actual sequence of steps taken by the sponsor.

(2) *Tiered arrangements* —

(i) ***Two or more REMICs formed pursuant to a single set of organizational documents.*** Two or more REMICs can be created pursuant to a single set of organizational documents even if for state law purposes or for Federal securities law purposes those documents create only one organization. The organizational documents must, however, clearly and expressly identify the assets of, and the interests in, each REMIC, and each REMIC must satisfy all of the requirements of section 860D and the related regulations.

(ii) ***A REMIC and one or more investment trusts formed pursuant to a single set of documents.*** A REMIC (or two or more REMICs) and one or more investment trusts can be created pursuant to a single set of organizational documents and the separate existence of the REMIC(s) and the investment trust(s) will be respected for Federal income tax purposes even if for state law purposes or for Federal securities law purposes those documents create only one organization. The organizational documents for the REMIC(s) and the investment trust(s) must, however, require both the REMIC(s) and the investment trust(s) to account for items of income and ownership of assets for Federal tax purposes in a manner that respects the separate existence of the multiple entities. See § 1.860G-2(i) concerning issuance of regular interests coupled with other contractual rights for an illustration of the provisions of this paragraph.

(b) *Treatment of sponsor* —

(1) ***Sponsor defined.*** A sponsor is a person who directly or indirectly exchanges qualified mortgages and related assets for regular and residual interests in a REMIC. A person indirectly exchanges interests in qualified mortgages and related assets for regular and residual interests in a REMIC if the person transfers, other than in a nonrecognition transaction, the mortgages and related assets to another person who acquires a transitory ownership interest in those assets before exchanging them for interests in the REMIC, after which the transitory owner then transfers some or all of the interests in the REMIC to the first person.

(2) ***Nonrecognition of gain or loss.*** The sponsor does not recognize gain or loss on the direct or indirect transfer of any property to a REMIC in exchange for regular or residual interests in the REMIC. However, the sponsor, upon a subsequent sale of the REMIC regular or residual interests, may recognize gain or loss with respect to those interests.

(3) *Basis of contributed assets allocated among interests* —

(i) ***In general.*** The aggregate of the adjusted bases of the regular and residual interests received by the sponsor in the exchange described in paragraph (a) of this section is equal to the aggregate of the adjusted bases of the property transferred by the sponsor in the exchange, increased by the amount of organizational expenses (as described in paragraph (b)(3)(ii) of this section). That total is allocated among all the interests received in proportion to their fair market values on the pricing date (as defined in paragraph (b)(3)(iii) of this section) if any, or, if none, the startup day (as defined in section 860G(a)(9) and § 1.860G-2(k)).

(ii) *Organizational expenses* —

(A) ***Organizational expense defined.*** An organizational expense is an expense that is incurred by the sponsor or by the REMIC and that is directly related to the creation of the REMIC. Further, the organizational expense must be incurred during a period beginning a reasonable time before the startup day and ending before the date prescribed by law for filing the first REMIC tax return (determined without regard to any extensions of time to file). The following are examples of organizational expenses: legal fees for services related to the formation of the REMIC, such as preparation of a pooling and servicing agreement and trust indenture; accounting fees related to the formation of the REMIC; and other administrative costs related to the formation of the REMIC.

(B) ***Syndication expenses.*** Syndication expenses are not organizational expenses. Syndication expenses are those expenses incurred by the sponsor or other person to market the interests in a REMIC, and, thus, are applied to reduce the amount realized on the sale of the interests. Examples of syndication expenses are brokerage fees, registration fees, fees of an underwriter or placement agent, and printing costs of the prospectus or placement memorandum and other selling or promotional material.

(iii) ***Pricing date.*** The term "pricing date" means the date on which the terms of the regular and residual interests are fixed and the prices at which a substantial portion of the regular interests will be sold are fixed.

(4) ***Treatment of unrecognized gain or loss*** —

(i) ***Unrecognized gain on regular interests.*** For purposes of section 860F(b)(1)(C)(i), the sponsor must include in gross income the excess of the issue price of a regular interest over the sponsor's basis in the interest as if the excess were market discount (as defined in section 1278(a)(2)) on a bond and the sponsor had made an election under section 1278(b) to include this market discount currently in gross income. The sponsor is not, however, by reason of this paragraph (b)(4)(i), deemed to have made an election under section 1278(b) with respect to any other bonds.

(ii) ***Unrecognized loss on regular interests.*** For purposes of section 860F(b)(1)(D)(i), the sponsor treats the excess of the sponsor's basis in a regular interest over the issue price of the interest as if that excess were amortizable bond premium (as defined in section 171(b)) on a taxable bond and the sponsor had made an election under section 171(c). The sponsor is not, however, by reason of this paragraph (b)(4)(ii), deemed to have made an election under section 171(c) with respect to any other bonds.

(iii) ***Unrecognized gain on residual interests.*** For purposes of section 860F(b)(1)(C)(ii), the sponsor must include in gross income the excess of the issue price of a residual interest over the sponsor's basis in the interest ratably over the anticipated weighted average life of the REMIC (as defined in § 1.860E-1(a)(3)(iv)).

(iv) ***Unrecognized loss on residual interests.*** For purposes of section 860F(b)(1)(D)(ii), the sponsor deducts the excess of the sponsor's basis in a residual interest over the issue price of the interest ratably over the anticipated weighted average life of the REMIC.

(5) ***Additions to or reductions of the sponsor's basis.*** The sponsor's basis in a regular or residual interest is increased by any amount included in the sponsor's gross income under paragraph (b)(4) of this section. The sponsor's basis in a regular or residual interest is decreased by any amount allowed as a deduction and by any amount applied to reduce interest payments to the sponsor under paragraph (b)(4)(ii) of this section.

(6) ***Transferred basis property.*** For purposes of paragraph (b)(4) of this section, a transferee of a regular or residual interest is treated in the same manner as the sponsor to the extent that the basis of the transferee in the interest is determined in whole or in part by reference to the basis of the interest in the hands of the sponsor.

(c) ***REMIC's basis in contributed assets.*** For purposes of section 860F(b)(2), the aggregate of the REMIC's bases in the assets contributed by the sponsor to the REMIC in a transaction described in paragraph (a) of this section is equal to the aggregate of the issue prices (determined under section 860G(a)(10) and § 1.86G-1(d)) of all regular and residual interests in the REMIC.

[T.D. 8458, 57 FR 61304, Dec. 24, 1992; 58 FR 8098, Feb. 11, 1993]

§ 1.860F-4 REMIC reporting requirements and other administrative rules.

(a) ***In general.*** Except as provided in paragraph (c) of this section, for purposes of subtitle F of the Internal Revenue Code, a REMIC is treated as a partnership and any holder of a residual interest in the REMIC is treated as a partner. A REMIC is not subject, however, to the rules of subchapter C of chapter 63 of the Internal Revenue Code, relating to the treatment of partnership items, for a taxable year if there is at no time during the taxable year more than one holder of a residual interest in the REMIC. The identity of a holder of a residual interest in a REMIC is not treated as a partnership item with respect to the REMIC for purposes of subchapter C of chapter 63.

(b) ***REMIC tax return —***

(1) ***In general.*** To satisfy the requirement under section 6031 to make a return of income for each taxable year, a REMIC must file the return required by paragraph (b)(2) of this section. The due date and any extensions for filing the REMIC's annual return are determined as if the REMIC were a partnership.

(2) ***Income tax return.*** The REMIC must make a return, as required by section 6011(a), for each taxable year on Form 1066, U.S. Real Estate Mortgage Investment Conduit Income Tax Return. The return must include—

(i) The amount of principal outstanding on each class of regular interests as of the close of the taxable year,

(ii) The amount of the daily accruals determined under section 860E(c), and

(iii) The information specified in § 1.860D-1(d)(2) (i), (iv), and (v).

(c) ***Signing of REMIC return —***

(1) ***In general.*** Although a REMIC is generally treated as a partnership for purposes of subtitle F, for purposes of determining who is authorized to sign a REMIC's income tax return for any taxable year, the REMIC is not treated as a partnership and the holders of residual interests in the REMIC are not treated as partners. Rather, the REMIC return must be signed by a person who could sign the return of the entity absent the REMIC election. Thus, the return of a REMIC that is a corporation or trust under applicable State law must be signed by a corporate officer or a trustee, respectively. The return of a REMIC that consists of a segregated pool of assets must be signed by a person who could sign the return of the entity that owns the assets of the REMIC under applicable State law.

(2) ***REMIC whose startup day is before November 10, 1988 —***

(i) ***In general.*** The income tax return of a REMIC whose startup day is before November 10, 1988, may be signed by any person who held a residual interest during the taxable year to which the return relates, or, as provided in section 6903, by a fiduciary, as defined in section 7701(a)(6), who is acting for the REMIC and who has furnished adequate notice in the manner prescribed in § 301.6903-1(b) of this chapter.

(ii) ***Startup day.*** For purposes of paragraph (c)(2) of this section, startup day means any day selected by a REMIC that is on or before the first day on which interests in such REMIC are issued.

(iii) ***Exception.*** A REMIC whose startup day is before November 10, 1988, may elect to have paragraph (c)(1) of this section apply, instead of paragraph (c)(2) of this section, in determining who is authorized to sign the REMIC return. See section 1006(t)(18)(B) of the Technical and Miscellaneous Revenue Act of 1988 (102 Stat. 3426) and § 5h.6(a)(1) of this chapter for the time and manner for making this election.

(d) ***Designation of tax matters person.*** A REMIC may designate a tax matters person in the same manner in which a partnership may designate a tax matters partner under § 301.6231(a)(7)-1T of this chapter. For purposes of applying that section, all holders of residual interests in the REMIC are treated as general partners.

(e) ***Notice to holders of residual interests*** —

(1) ***Information required.*** As of the close of each calendar quarter, a REMIC must provide to each person who held a residual interest in the REMIC during that quarter notice on Schedule Q (Form 1066) of information specified in paragraphs (e)(1) (i) and (ii) of this section.

(i) ***In general.*** Each REMIC must provide to each of its residual interest holders the following information—

(A) That person's share of the taxable income or net loss of the REMIC for the calendar quarter;

(B) The amount of the excess inclusion (as defined in section 860E and the regulations thereunder), if any, with respect to that person's residual interest for the calendar quarter;

(C) If the holder of a residual interest is also a pass-through interest holder (as defined in § 1.67-3T(a)(2)), the allocable investment expenses (as defined in § 1.67-3T(a)(4)) for the calendar quarter, and

(D) Any other information required by Schedule Q (Form 1066).

(ii) ***Information with respect to REMIC assets*** —

(A) ***95 percent asset test.*** For calendar quarters after 1988, each REMIC must provide to each of its residual interest holders the following information—

(*1*) The percentage of REMIC assets that are qualifying real property loans under section 593,

(*2*) The percentage of REMIC assets that are assets described in section 7701(a)(19), and

(3) The percentage of REMIC assets that are real estate assets defined in section 856(c)(6)(B), computed by reference to the average adjusted basis (as defined in section 1011) of the REMIC assets during the calendar quarter (as described in paragraph (e)(1)(iii) of this section). If the percentage of REMIC assets represented by a category is at least 95 percent, then the REMIC need only specify that the percentage for that category was at least 95 percent.

(B) ***Additional information required if the 95 percent test not met.*** If, for any calendar quarter after 1988, less than 95 percent of the assets of the REMIC are real estate assets defined in section 856(c)(6)(B), then, for that calendar quarter, the REMIC must also provide to any real estate investment trust (REIT) that holds a residual interest the following information—

(1) The percentage of REMIC assets described in section 856(c)(5)(A), computed by reference to the average adjusted basis of the REMIC assets during the calendar quarter (as described in paragraph (e)(1)(iii) of this section),

(2) The percentage of REMIC gross income (other than gross income from prohibited transactions defined in section 860F(a)(2)) described in section 856(c)(3)(A) through (E), computed as of the close of the calendar quarter, and

(3) The percentage of REMIC gross income (other than gross income from prohibited transactions defined in section 860F(a)(2)) described in section 856(c)(3)(F), computed as of the close of the calendar quarter. For purposes of this paragraph (e)(1)(ii)(B)(3), the term "foreclosure property" contained in section 856(c)(3)(F) has the meaning specified in section 860G(a)(8).

In determining whether a REIT satisfies the limitations of section 856(c)(2), all REMIC gross income is deemed to be derived from a source specified in section 856(c)(2).

(C) ***For calendar quarters in 1987.*** For calendar quarters in 1987, the percentages of assets required in paragraphs (e)(1)(ii) (A) and (B) of this section may be computed by reference to the fair market value of the assets of the REMIC as of the close of the calendar quarter (as described in paragraph (e)(1)(iii) of this section), instead of by reference to the average adjusted basis during the calendar quarter.

(D) ***For calendar quarters in 1988 and 1989.*** For calendar quarters in 1988 and 1989, the percentages of assets required in paragraphs (e)(1)(ii) (A) and (B) of this section may be computed by reference to the average fair market value of the assets of the REMIC during the calendar quarter (as described in paragraph (e)(1)(iii) of this section), instead of by reference to the average adjusted basis of the assets of the REMIC during the calendar quarter.

(iii) ***Special provisions.*** For purposes of paragraph (e)(1)(ii) of this section, the percentage of REMIC assets represented by a specified category computed by reference to average adjusted basis (or fair market value) of the assets during a calendar quarter is determined by dividing the average adjusted bases (or for calendar quarters before 1990, fair market value) of the assets in the specified category by the average adjusted basis (or, for calendar quarters before 1990, fair market value) of all the assets of the REMIC as of the close of each month, week, or day during that calendar quarter. The monthly, weekly, or daily computation period must be applied uniformly during the calendar quarter to all categories of assets and may not be changed in succeeding calendar quarters without the consent of the Commissioner.

(2) *Quarterly notice required* —

(i) ***In general.*** Schedule Q must be mailed (or otherwise delivered) to each holder of a residual interest during a calendar quarter no later than the last day of the month following the close of the calendar quarter.

(ii) ***Special rule for 1987.*** Notice to any holder of a REMIC residual interest of the information required in paragraph (e)(1) of this section for any of the four calendar quarters of 1987 must be mailed (or otherwise delivered) to each holder no later than March 28, 1988.

(3) *Nominee reporting* —

(i) ***In general.*** If a REMIC is required under paragraphs (e) (1) and (2) of this section to provide notice to an interest holder who is a nominee of another person with respect to an interest in the REMIC, the nominee must furnish that notice to the person for whom it is a nominee.

(ii) ***Time for furnishing statement.*** The nominee must furnish the notice required under paragraph (e)(3)(i) of this section to the person for whom it is a nominee no later than 30 days after receiving this information.

(4) ***Reports to the Internal Revenue Service.*** For each person who was a residual interest holder at any time during a REMIC's taxable year, the REMIC must attach a copy of Schedule Q to its income tax return for that year for each quarter in which that person was a residual interest holder. Quarterly notice to the Internal Revenue Service is not required.

(f) ***Information returns for persons engaged in a trade or business.*** See § 1.6041-1(b)(2) for the treatment of a REMIC under sections 6041 and 6041A.

[T.D. 8366, 56 FR 49516, Sept. 30, 1991, as amended by T.D. 8458, 57 FR 61306, Dec. 24, 1992; 58 FR 8098, Feb. 11, 1993; T.D. 9184, 70 FR 9219, Feb. 25, 2005]

§ 1.860G-1 Definition of regular and residual interests.

(a) *Regular interest* —

(1) ***Designation as a regular interest.*** For purposes of section 860G(a)(1), a REMIC designates an interest as a regular interest by providing to the Internal Revenue Service the information specified in § 1.860D-1(d)(2)(ii) in the time and manner specified in § 1.860D-1(d)(2).

(2) *Specified portion of the interest payments on qualified mortgages* —

(i) ***In general.*** For purposes of section 860G(a)(1)(B)(ii), a specified portion of the interest payments on qualified mortgages means a portion of the interest payable on qualified mortgages, but only if the portion can be expressed as—

(A) A fixed percentage of the interest that is payable at either a fixed rate or at a variable rate described in paragraph (a)(3) of this section on some or all of the qualified mortgages;

(B) A fixed number of basis points of the interest payable on some or all of the qualified mortgages; or

(C) The interest payable at either a fixed rate or at a variable rate described in paragraph (a)(3) of this section on some or all of the qualified mortgages in excess of a fixed number of basis points or in excess of a variable rate described in paragraph (a)(3) of this section.

(ii) ***Specified portion cannot vary.*** The portion must be established as of the startup day (as defined in section 860G(a)(9) and § 1.860G-2(k)) and, except as provided in paragraph (a)(2)(iii) of this section, it cannot vary over the period that begins on the startup day and ends on the day that the interest holder is no longer entitled to receive payments.

(iii) ***Defaulted or delinquent mortgages.*** A portion is not treated as varying over time if an interest holder's entitlement to a portion of the interest on some or all of the qualified mortgages is dependent on the absence of defaults or delinquencies on those mortgages.

(iv) ***No minimum specified principal amount is required.*** If an interest in a REMIC consists of a specified portion of the interest payments on the REMIC's qualified mortgages, no minimum specified principal amount need be assigned to that interest. The specified principal amount can be zero.

(v) ***Specified portion includes portion of interest payable on regular interest.***

(A) The specified portions that meet the requirements of paragraph (a)(2)(i) of this section include a specified portion that can be expressed as a fixed percentage of the interest that is payable on some or all of the qualified mortgages where—

(*1*) Each of those qualified mortgages is a regular interest issued by another REMIC; and

(*2*) With respect to that REMIC in which it is a regular interest, each of those regular interests bears interest that can be expressed as a specified portion as described in paragraph (a)(2)(i)(A), (B), or (C) of this section.

(B) See § 1.860A-1(a) for the effective date of this paragraph (a)(2)(v).

(vi) ***Examples.*** The following examples, each of which describes a pass-thru trust that is intended to qualify as a REMIC, illustrate the provisions of this paragraph (a)(2).

> *Example 1.* (i) A sponsor transferred a pool of fixed rate mortgages to a trustee in exchange for two classes of certificates. The Class A certificate holders are entitled to all principal payments on the mortgages and to interest on outstanding principal at a variable rate based on the current value of One-Month LIBOR, subject to a lifetime cap equal to the weighted average rate payable on the mortgages. The Class B certificate holders are entitled to all interest payable on the mortgages in excess of the interest paid on the Class A certificates. The Class B certificates are subordinate to the Class A certificates so that cash flow shortfalls due to defaults or delinquencies on the mortgages will be borne first by the Class B certificate holders.
> (ii) The Class B certificate holders are entitled to all interest payable on the pooled mortgages in excess of a variable rate described in paragraph (a)(3)(vi) of this section. Moreover, the portion of the interest payable to the Class B certificate holders is not treated as varying over time solely because payments on the Class B certificates may be reduced as a result of defaults or delinquencies on the pooled mortgages. Thus, the Class B certificates provide for interest payments that consist of a specified portion of the interest payable on the pooled mortgages under paragraph (a)(2)(i)(C) of this section.

Example 2. (i) A sponsor transferred a pool of variable rate mortgages to a trustee in exchange for two classes of certificates. The mortgages call for interest payments at a variable rate based on the current value of the One-Year Constant Maturity Treasury Index (hereinafter "CMTI") plus 200 basis points, subject to a lifetime cap of 12 percent. Class C certificate holders are entitled to all principal payments on the mortgages and interest on the outstanding principal at a variable rate based on the One-Year CMTI plus 100 basis points, subject to a lifetime cap of 12 percent. The interest rate on the Class C certificates is reset at the same time the rate is reset on the pooled mortgages.
(ii) The Class D certificate holders are entitled to all interest payments on the mortgages in excess of the interest paid on the Class C certificates. So long as the One-Year CMTI is at 10 percent or lower, the Class D certificate holders are entitled to 100 basis points of interest on the pooled mortgages. If, however, the index exceeds 10 percent on a reset date, the Class D certificate holders' entitlement shrinks, and it disappears if the index is at 11 percent or higher.

(iii) The Class D certificate holders are entitled to all interest payable on the pooled mortgages in excess of a qualified variable rate described in paragraph (a)(3) of this section. Thus, the Class D certificates provide for interest payments that consist of a specified portion of the interest payable on the qualified mortgages under paragraph (a)(2)(i)(C) of this section.

Example 3. (i) A sponsor transferred a pool of fixed rate mortgages to a trustee in exchange for two classes of certificates. The fixed interest rate payable on the mortgages varies from mortgage to mortgage, but all rates are between 8 and 10 percent. The Class E certificate holders are entitled to receive all principal payments on the mortgages and interest on outstanding principal at 7 percent. The Class F certificate holders are entitled to receive all interest on the mortgages in excess of the interest paid on the Class E certificates.
(ii) The Class F certificates provide for interest payments that consist of a specified portion of the interest payable on the mortgages under paragraph (a)(2)(i) of this section. Although the portion of the interest payable to the Class F certificate holders varies from mortgage to mortgage, the interest payable can be expressed as a fixed percentage of the interest payable on each particular mortgage.

(3) ***Variable rate.*** A regular interest may bear interest at a variable rate. For purposes of section 860G(a)(1)(B)(i), a variable rate of interest is a rate described in this paragraph (a)(3).

(i) ***Rate based on current interest rate.*** A qualified floating rate as defined in § 1.1275-5(b)(1) (but without the application of paragraph (b)(2) or (3) of that section) set at a current value, as defined in § 1.1275-5(a)(4), is a variable rate. In addition, a rate equal to the highest, lowest, or average of two or more qualified floating rates is a variable rate. For example, a rate based on the average cost of funds of one or more financial institutions is a variable rate.

(ii) *Weighted average rate* —

(A) ***In general.*** A rate based on a weighted average of the interest rates on some or all of the qualified mortgages held by a REMIC is a variable rate. The qualified mortgages taken into account must, however, bear interest at a fixed rate or at a rate described in this paragraph (a)(3). Generally, a weighted average interest rate is a rate that, if applied to the aggregate outstanding principal balance of a pool of mortgage loans for an accrual period, produces an amount of interest that equals the sum of the interest payable on the pooled loans for that accrual period. Thus, for an accrual period in which a pool of mortgage loans comprises $300,000 of loans bearing a 7 percent interest rate and $700,000 of loans bearing a 9.5 percent interest rate, the weighted average rate for the pool of loans is 8.75 percent.

(B) ***Reduction in underlying rate.*** For purposes of paragraph (a)(3)(ii)(A) of this section, an interest rate is considered to be based on a weighted average rate even if, in determining that rate, the interest rate on some or all of the qualified mortgages is first subject to a cap or a floor, or is first reduced by a number of basis points or a fixed percentage. A rate determined by taking a weighted average of the interest rates on the qualified mortgage loans net of any servicing spread, credit enhancement fees, or other expenses of the REMIC is a rate based on a weighted average rate for the qualified mortgages. Further, the amount of any rate reduction described above may vary from mortgage to mortgage.

(iii) ***Additions, subtractions, and multiplications.*** A rate is a variable rate if it is—

(A) Expressed as the product of a rate described in paragraph (a)(3)(i) or (ii) of this section and a fixed multiplier;

(B) Expressed as a constant number of basis points more or less than a rate described in paragraph (a)(3)(i) or (ii) of this section; or

(C) Expressed as the product, plus or minus a constant number of basis points, of a rate described in paragraph (a)(3)(i) or (ii) of this section and a fixed multiplier (which may be either a positive or a negative number).

(iv) ***Caps and floors.*** A rate is a variable rate if it is a rate that would be described in paragraph (a)(3)(i) through (iii) of this section except that it is—

(A) Limited by a cap or ceiling that establishes either a maximum rate or a maximum number of basis points by which the rate may increase from one accrual or payment period to another or over the term of the interest; or

(B) Limited by a floor that establishes either a minimum rate or a maximum number of basis points by which the rate may decrease from one accrual or payment period to another or over the term of the interest.

(v) *Funds-available caps* —

(A) ***In general.*** A rate is a variable rate if it is a rate that would be described in paragraph (a)(3)(i) through (iv) of this section except that it is subject to a “funds-available” cap. A funds-available cap is a limit on the amount of interest to be paid on an instrument in any accrual or payment period that is based on the total amount available for the distribution, including both principal and interest received by an issuing entity on some or all of its

qualified mortgages as well as amounts held in a reserve fund. The term "funds-available cap" does not, however, include any cap or limit on interest payments used as a device to avoid the standards of paragraph (a)(3)(i) through (iv) of this section.

(B) ***Facts and circumstances test.*** In determining whether a cap or limit on interest payments is a funds-available cap within the meaning of this section and not a device used to avoid the standards of paragraph (a)(3)(i) through (iv) of this section, one must consider all of the facts and circumstances. Facts and circumstances that must be taken into consideration are—

(*1*) Whether the rate of the interest payable to the regular interest holders is below the rate payable on the REMIC's qualified mortgages on the start-up day; and

(*2*) Whether, historically, the rate of interest payable to the regular interest holders has been consistently below that payable on the qualified mortgages.

(C) ***Examples.*** The following examples, both of which describe a pass-thru trust that is intended to qualify as a REMIC, illustrate the provisions of this paragraph (a)(3)(v).

Example 1. (i) A sponsor transferred a pool of mortgages to a trustee in exchange for two classes of certificates. The pool of mortgages has an aggregate principal balance of $100*x*. Each mortgage in the pool provides for interest payments based on the eleventh district cost of funds index (hereinafter COFI) plus a margin. The initial weighted average rate for the pool is COFI plus 200 basis points. The trust issued a Class X certificate that has a principal amount of $100*x* and that provides for interest payments at a rate equal to One-Year LIBOR plus 100 basis points, subject to a cap described below. The Class R certificate, which the sponsor designated as the residual interest, entitles its holder to all funds left in the trust after the Class X certificates have been retired. The Class R certificate holder is not entitled to current distributions.
(ii) At the time the certificates were issued, COFI equaled 4.874 percent and One-Year LIBOR equaled 3.375 percent. Thus, the initial weighted average pool rate was 6.874 percent and the Class X certificate rate was 4.375 percent. Based on historical data, the sponsor does not expect the rate paid on the Class X certificate to exceed the weighted average rate on the pool.

(iii) Initially, under the terms of the trust instrument, the excess of COFI plus 200 over One-Year LIBOR plus 100 (excess interest) will be applied to pay expenses of the trust, to fund any required reserves, and then to reduce the principal balance on the Class X certificate. Consequently, although the aggregate principal balance of the mortgages initially matched the principal balance of the Class X certificate, the principal balance on the Class X certificate will pay down faster than the principal balance on the mortgages as long as the weighted average rate on the mortgages is greater than One-Year LIBOR plus 100. If, however, the rate on the Class X

certificate (One-Year LIBOR plus 100) ever exceeds the weighted average rate on the mortgages, then the Class X certificate holders will receive One-Year LIBOR plus 100 subject to a cap based on the current funds that are available for distribution.

(iv) The funds available cap here is not a device used to avoid the standards of paragraph (a)(3) (i) through (iv) of this section. First, on the date the Class X certificates were issued, a significant spread existed between the weighted average rate payable on the mortgages and the rate payable on the Class X certificate. Second, historical data suggest that the weighted average rate payable on the mortgages will continue to exceed the rate payable on the Class X certificate. Finally, because the excess interest will be applied to reduce the outstanding principal balance of the Class X certificate more rapidly than the outstanding principal balance on the mortgages is reduced, One-Year LIBOR plus 100 basis points would have to exceed the weighted average rate on the mortgages by an increasingly larger amount before the funds available cap would be triggered. Accordingly, the rate paid on the Class X certificates is a variable rate.

Example 2. (i) The facts are the same as those in *Example 1,* except that the pooled mortgages are commercial mortgages that provide for interest payments based on the gross profits of the mortgagors, and the rate on the Class X certificates is 400 percent on One-Year LIBOR (a variable rate under paragraph (a)(3)(iii) of this section), subject to a cap equal to current funds available to the trustee for distribution.
(ii) Initially, 400 percent of One-Year LIBOR exceeds the weighted average rate payable on the mortgages. Furthermore, historical data suggest that there is a significant possibility that, in the future, 400 percent of One-Year LIBOR will exceed the weighted average rate on the mortgages.

(iii) The facts and circumstances here indicate that the use of 400 percent of One-Year LIBOR with the above-described cap is a device to pass through to the Class X certificate holder contingent interest based on mortgagor profits. Consequently, the rate paid on the Class X certificate here is not a variable rate.

(vi) ***Combination of rates.*** A rate is a variable rate if it is based on—

(A) One fixed rate during one or more accrual or payment periods and a different fixed rate or rates, or a rate or rates described in paragraph (a)(3) (i) through (v) of this section, during other accrual or payment periods; or

(B) A rate described in paragraph (a)(3) (i) through (v) of this section during one or more accrual or payment periods and a fixed rate or rates, or a different rate or rates described in paragraph (a)(3) (i) through (v) of this section in other periods.

(4) ***Fixed terms on the startup day.*** For purposes of section 860G(a)(1), a regular interest in a REMIC has fixed terms on the startup day if, on the startup day, the REMIC's organizational documents irrevocably specify—

(i) The principal amount (or other similar amount) of the regular interest;

(ii) The interest rate or rates used to compute any interest payments (or other similar amounts) on the regular interest; and

(iii) The latest possible maturity date of the interest.

(5) ***Contingencies prohibited.*** Except for the contingencies specified in paragraphs (b)(3) and (e)(4) of this section, the principal amount (or other similar amount) and the latest possible maturity date of the interest must not be contingent.

(b) ***Special rules for regular interests*** —

(1) ***Call premium.*** An interest in a REMIC does not qualify as a regular interest if the terms of the interest entitle the holder of that interest to the payment of any premium that is determined with reference to the length of time that the regular interest is outstanding and is not described in paragraph (b)(2) of this section.

(2) ***Customary prepayment penalties received with respect to qualified mortgages.*** An interest in a REMIC does not fail to qualify as a regular interest solely because the REMIC's organizational documents provide that the REMIC must allocate among and pay to its regular interest holders any customary prepayment penalties that the REMIC receives with respect to its qualified mortgages. Moreover, a REMIC may allocate prepayment penalties among its classes of interests in any manner specified in the REMIC's organizational documents. For example, a REMIC could allocate all or substantially all of a prepayment penalty that it receives to holders of an interest-only class of interests because that class would be most significantly affected by prepayments.

(3) ***Certain contingencies disregarded.*** An interest in a REMIC does not fail to qualify as a regular interest solely because it is issued subject to some or all of the contingencies described in paragraph (b)(3)(i) through (vi) of this section.

(i) ***Prepayments, income, and expenses.*** An interest does not fail to qualify as a regular interest solely because—

(A) The timing of (but not the right to or amount of) principal payments (or other similar amounts) is affected by the extent of prepayments on some or all of the qualified mortgages held by the REMIC or the amount of income from permitted investments (as defined in § 1.860G-2(g)); or

(B) The timing of interest and principal payments is affected by the payment of expenses incurred by the REMIC.

(ii) ***Credit losses.*** An interest does not fail to qualify as a regular interest solely because the amount or the timing of payments of principal or interest (or other similar amounts) with respect to a regular interest is affected by defaults on qualified mortgages and permitted investments, unanticipated expenses incurred by the REMIC, or lower than expected returns on permitted investments.

(iii) ***Subordinated interests.*** An interest does not fail to qualify as a regular interest solely because that interest bears all, or a disproportionate share, of the losses stemming from cash flow shortfalls due to defaults or delinquencies on qualified mortgages or permitted investments, unanticipated expenses incurred by the REMIC, lower than expected returns on permitted investments, or prepayment interest shortfalls before other regular interests or the residual interest bear losses occasioned by those shortfalls.

(iv) ***Deferral of interest.*** An interest does not fail to qualify as a regular interest solely because that interest, by its terms, provides for deferral of interest payments.

(v) ***Prepayment interest shortfalls.*** An interest does not fail to qualify as a regular interest solely because the amount of interest payments is affected by prepayments of the underlying mortgages.

(vi) ***Remote and incidental contingencies.*** An interest does not fail to qualify as a regular interest solely because the amount or timing of payments of principal or interest (or other similar amounts) with respect to the interest is subject to a contingency if there is only a remote likelihood that the contingency will occur. For example, an interest could qualify as a regular interest even though full payment of principal and interest on that interest is contingent upon the absence of significant cash flow shortfalls due to the operation of the Soldiers and Sailors Civil Relief Act, 50 U.S.C. app. 526 (1988).

(4) ***Form of regular interest.*** A regular interest in a REMIC may be issued in the form of debt, stock, an interest in a partnership or trust, or any other form permitted by state law. If a regular interest in a REMIC is not in the form of debt, it must, except as provided in paragraph (a)(2)(iv) of this section, entitle the holder to a specified amount that would, were the interest issued in debt form, be identified as the principal amount of the debt.

(5) ***Interest disproportionate to principal*** —

(i) ***In general.*** An interest in a REMIC does not qualify as a regular interest if the amount of interest (or other similar amount) payable to the holder is disproportionately high relative to the principal amount or other specified amount described in paragraph (b)(4) of this section (specified principal amount). Interest payments (or other similar amounts) are considered disproportionately high if the issue price (as determined under paragraph (d) of this section) of the interest in the REMIC exceeds 125 percent of its specified principal amount.

(ii) ***Exception.*** A regular interest in a REMIC that entitles the holder to interest payments consisting of a specified portion of interest payments on qualified mortgages qualifies as a regular interest even if the amount of interest is disproportionately high relative to the specified principal amount.

(6) ***Regular interest treated as a debt instrument for all Federal income tax purposes.*** In determining the tax under chapter 1 of the Internal Revenue Code, a REMIC regular interest (as defined in section 860G(a)(1)) is treated as a debt instrument that is an obligation of the REMIC. Thus, sections 1271 through 1288, relating to bonds and other debt instruments, apply to a regular interest. For special rules relating to the accrual of original issue discount on regular interests, see section 1272(a)(6).

(c) ***Residual interest.*** A residual interest is an interest in a REMIC that is issued on the startup day and that is designated as a residual interest by providing the information specified in § 1.860D-1(d)(2)(ii) at the time and in the manner provided in § 1.860D-1(d)(2). A residual interest need not entitle the holder to any distributions from the REMIC.

(d) *Issue price of regular and residual interests* —

(1) ***In general.*** The issue price of any REMIC regular or residual interest is determined under section 1273(b) as if the interest were a debt instrument and, if issued for property, as if the requirements of section 1273(b)(3) were met. Thus, if a class of interests is publicly offered, then the issue price of an interest in that class is the initial offering price to the public at which a substantial amount of the class is sold. If the interest is in a class that is not publicly offered, the issue price is the price paid by the first buyer of that interest regardless of the price paid for the remainder of the class. If the interest is in a class that is retained by the sponsor, the issue price is its fair market value on the pricing date (as defined in § 1.860F-2(b)(3)(iii)), if any, or, if none, the startup day, regardless of whether the property exchanged therefor is publicly traded.

(2) ***The public.*** The term "the public" for purposes of this section does not include brokers or other middlemen, nor does it include the sponsor who acquires all of the regular and residual interests from the REMIC on the startup day in a transaction described in § 1.860F-2(a).

(e) *Transition from certain interbank offered rates* —

(1) ***In general.*** This paragraph (e) provides rules relating to the modification of the terms of a regular interest in a REMIC or the terms of an asset held by a REMIC as part of the transition away from the London Interbank Offered Rate and certain other interbank offered rates. For purposes of this paragraph (e), *covered modification* and *discontinued IBOR* have the meanings provided in § 1.1001-6(h)(1) and (4), respectively. See § 1.1001-6 for additional rules that may apply to an interest in a REMIC that provides for a rate referencing a discontinued IBOR.

(2) ***Change in reference rate for a regular interest after the startup day.*** A covered modification of a regular interest in a REMIC that occurs after the startup day is disregarded in determining whether the modified regular interest has fixed terms on the startup day under paragraph (a)(4) of this section.

(3) ***Contingencies of rate on a regular interest.*** An interest in a REMIC does not fail to qualify as a regular interest solely because it is subject to a contingency whereby a rate that references a discontinued IBOR and is a variable rate permitted under paragraph (a)(3) of this section may change to a fixed rate or a different variable rate permitted under paragraph (a)(3) of this section in anticipation of the discontinued IBOR becoming unavailable or unreliable.

(4) ***Reasonable expenses incurred to make covered modifications.*** An interest in a REMIC does not fail to qualify as a regular interest solely because it is subject to a contingency whereby the amount of payments of principal or interest (or other similar amounts) with respect to the interest in the REMIC is reduced by reasonable costs incurred to effect a covered modification. In addition, payment by a party other than the REMIC of reasonable costs incurred to effect a covered modification is not a contribution to the REMIC for purposes of section 860G(d).

[T.D. 8458, 57 FR 61306, Dec. 24, 1992; 58 FR 8098, Feb. 11, 1993; 58 FR 15089, Mar. 19, 1993; T.D. 8614, 60 FR 42787, Aug. 17, 1995; T.D. 9961, 87 FR 175, Jan. 4, 2022]

§ 1.860G-2 Other rules.

(a) *Obligations principally secured by an interest in real property* —

(1) ***Tests for determining whether an obligation is principally secured.*** For purposes of section 860G(a)(3)(A), an obligation is principally secured by an interest in real property only if it satisfies either the test set out in paragraph (a)(1)(i) or the test set out in paragraph (a)(1)(ii) of this section.

(i) ***The 80-percent test.*** An obligation is principally secured by an interest in real property if the fair market value of the interest in real property securing the obligation—

(A) Was at least equal to 80 percent of the adjusted issue price of the obligation at the time the obligation was originated (see paragraph (b)(1) of this section concerning the origination date for obligations that have been significantly modified); or

(B) Is at least equal to 80 percent of the adjusted issue price of the obligation at the time the sponsor contributes the obligation to the REMIC.

(ii) ***Alternative test.*** For purposes of section 860G(a)(3)(A), an obligation is principally secured by an interest in real property if substantially all of the proceeds of the obligation were used to acquire or to improve or protect an interest in real property that, at the origination date, is the only security for the obligation. For purposes of this test, loan guarantees made by the United States or any state (or any political subdivision, agency, or instrumentality of the United States or of any state), or other third party credit enhancement are not viewed as additional security for a loan. An obligation is not considered to be secured by property other than real property solely because the obligor is personally liable on the obligation.

(2) ***Treatment of liens.*** For purposes of paragraph (a)(1)(i) of this section, the fair market value of the real property interest must be first reduced by the amount of any lien on the real property interest that is senior to the obligation being tested, and must be further reduced by a proportionate amount of any lien that is in parity with the obligation being tested.

(3) ***Safe harbor*** —

(i) ***Reasonable belief that an obligation is principally secured.*** If, at the time the sponsor contributes an obligation to a REMIC, the sponsor reasonably believes that the obligation is principally secured by an interest in real property within the meaning of paragraph (a)(1) of this section, then the obligation is deemed to be so secured for purposes of section 860G(a)(3). A sponsor cannot avail itself of this safe harbor with respect to an obligation if the sponsor actually knows or has reason to know that the obligation fails both of the tests set out in paragraph (a)(1) of this section.

(ii) ***Basis for reasonable belief.*** For purposes of paragraph (a)(3)(i) of this section, a sponsor may base a reasonable belief concerning any obligation on—

(A) Representations and warranties made by the originator of the obligation; or

(B) Evidence indicating that the originator of the obligation typically made mortgage loans in accordance with an established set of parameters, and that any mortgage loan originated in accordance with those parameters would satisfy at least one of the tests set out in paragraph (a)(1) of this section.

(iii) ***Later discovery that an obligation is not principally secured.*** If, despite the sponsor's reasonable belief concerning an obligation at the time it contributed the obligation to the REMIC, the REMIC later discovers that the obligation is not principally secured by an interest in real property, the obligation is a defective obligation and loses its status as a qualified mortgage 90 days after the date of discovery. See paragraph (f) of this section, relating to defective obligations.

(4) ***Interests in real property; real property.*** The definition of "interests in real property" set out in § 1.856-3(c), and the definition of "real property" set out in § 1.856-3(d), apply to define those terms for purposes of section 860G(a)(3) and paragraph (a) of this section.

(5) ***Obligations secured by an interest in real property.*** Obligations secured by interests in real property include the following: mortgages, deeds of trust, and installment land contracts; mortgage pass-thru certificates guaranteed by GNMA, FNMA, FHLMC, or CMHC (Canada Mortgage and Housing Corporation); other investment trust interests that represent undivided beneficial ownership in a pool of obligations principally secured by interests in real property and related assets that would be considered to be permitted investments if the investment trust were a REMIC, and provided the investment trust is classified as a trust under § 301.7701-4(c) of this chapter; and obligations secured by manufactured housing treated as single family residences under section 25(e)(10) (without regard to the treatment of the obligations or the properties under state law).

(6) ***Obligations secured by other obligations; residual interests.*** Obligations (other than regular interests in a REMIC) that are secured by other obligations are not principally secured by interests in real property even if the underlying obligations are secured by interests in real property. Thus, for example, a collateralized mortgage obligation issued by an issuer that is not a REMIC is not an obligation principally secured by an interest in real property. A residual interest (as defined in section 860G(a)(2)) is not an obligation principally secured by an interest in real property.

(7) ***Certain instruments that call for contingent payments are obligations.*** For purposes of section 860G(a)(3) and (4), the term "obligation" includes any instrument that provides for total noncontingent principal payments that at least equal the instrument's issue price even if that instrument also provides for contingent payments. Thus, for example, an instrument that was issued for $100*x* and that provides for noncontingent principal payments of $100*x,* interest payments at a fixed rate, and contingent payments based on a percentage of the mortgagor's gross receipts, is an obligation.

(8) ***Release of a lien on an interest in real property securing a qualified mortgage; defeasance.*** If a REMIC releases its lien on an interest in real property that secures a qualified mortgage, that mortgage ceases to be a qualified mortgage on the date the lien is released unless—

(i) The REMIC releases its lien in a modification that—

(A) Either is not a significant modification as defined in paragraph (b)(2) of this section or is one of the listed exceptions set forth in paragraph (b)(3) of this section; and

(B) Following that modification, the obligation continues to be principally secured by an interest in real property as determined by paragraph (b)(7) of this section; or

(ii) The mortgage is defeased in the following manner—

(A) The mortgagor pledges substitute collateral that consists solely of government securities (as defined in section 2(a)(16) of the Investment Company Act of 1940 as amended *(15 U.S.C. 80a-1)*);

(B) The mortgage documents allow such a substitution;

(C) The lien is released to facilitate the disposition of the property or any other customary commercial transaction, and not as part of an arrangement to collateralize a REMIC offering with obligations that are not real estate mortgages; and

(D) The release is not within 2 years of the startup day.

(9) ***Stripped bonds and coupons.*** The term "qualified mortgage" includes stripped bonds and stripped coupons (as defined in section 1286(e) (2) and (3)) if the bonds (as defined in section 1286(e)(1)) from which such stripped bonds or stripped coupons arose would have been qualified mortgages.

(b) ***Assumptions and modifications*** —

(1) ***Significant modifications are treated as exchanges of obligations.*** If an obligation is significantly modified in a manner or under circumstances other than those described in paragraph (b)(3) of this section, then the modified obligation is treated as one that was newly issued in exchange for the unmodified obligation that it replaced. Consequently—

(i) If such a significant modification occurs after the obligation has been contributed to the REMIC and the modified obligation is not a qualified replacement mortgage, the modified obligation will not be a qualified mortgage and the deemed disposition of the unmodified obligation will be a prohibited transaction under section 860F(a)(2); and

(ii) If such a significant modification occurs before the obligation is contributed to the REMIC, the modified obligation will be viewed as having been originated on the date the modification occurs for purposes of the tests set out in paragraph (a)(1) of this section.

(2) ***Significant modification defined.*** For purposes of paragraph (b)(1) of this section, a "significant modification" is any change in the terms of an obligation that would be treated as an exchange of obligations under section 1001 and the related regulations.

(3) ***Exceptions.*** For purposes of paragraph (b)(1) of this section, the following changes in the terms of an obligation are not significant modifications regardless of whether they would be significant modifications under paragraph (b)(2) of this section—

(i) Changes in the terms of the obligation occasioned by default or a reasonably foreseeable default;

(ii) Assumption of the obligation;

(iii) Waiver of a due-on-sale clause or a due-on-encumbrance clause;

(iv) Conversion of an interest rate by a mortgagor pursuant to the terms of a convertible mortgage;

(v) A modification that releases, substitutes, adds, or otherwise alters a substantial amount of the collateral for, a guarantee on, or other form of credit enhancement for, a recourse or nonrecourse obligation, so long as the obligation continues to be principally secured by an interest in real property following the release, substitution, addition, or other alteration as determined by paragraph (b)(7) of this section; and

(vi) A change in the nature of the obligation from recourse (or substantially all recourse) to nonrecourse (or substantially all nonrecourse), or from nonrecourse (or substantially all nonrecourse) to recourse (or substantially all recourse), so long as the obligation continues to be principally secured by an interest in real property following such a change as determined by paragraph (b)(7) of this section.

(4) ***Modifications that are not significant modifications.*** If an obligation is modified and the modification is not a significant modification for purposes of paragraph (b)(1) of this section, then the modified obligation is not treated as one that was newly originated on the date of modification.

(5) ***Assumption defined.*** For purposes of paragraph (b)(3) of this section, a mortgage has been assumed if—

(i) The buyer of the mortgaged property acquires the property subject to the mortgage, without assuming any personal liability;

(ii) The buyer becomes liable for the debt but the seller also remains liable; or

(iii) The buyer becomes liable for the debt and the seller is released by the lender.

(6) ***Pass-thru certificates.*** If a REMIC holds as a qualified mortgage a pass-thru certificate or other investment trust interest of the type described in paragraph (a)(5) of this section, the modification of a mortgage loan that backs the pass-thru certificate or other interest is not a modification of the pass-thru certificate or other interest unless the investment trust structure was created to avoid the prohibited transaction rules of section 860F(a).

(7) ***Test for determining whether an obligation continues to be principally secured following certain types of modifications.***

(i) For purposes of paragraphs (a)(8)(i), (b)(3)(v), and (b)(3)(vi) of this section, the obligation continues to be principally secured by an interest in real property following the modification only if, as of the date of the modification, the obligation satisfies either paragraph (b)(7)(ii) or paragraph (b)(7)(iii) of this section.

(ii) The fair market value of the interest in real property securing the obligation, determined as of the date of the modification, must be at least 80 percent of the adjusted issue price of the modified obligation, determined as of the date of the modification. If, as of the date of the modification, the servicer reasonably believes that the obligation satisfies the criterion in the preceding sentence, then the obligation is deemed to do so. A reasonable belief does not exist if the servicer actually knows, or has reason to know, that the criterion is not satisfied. For purposes of this paragraph (b)(7)(ii), a servicer must base a reasonable belief on—

(A) A current appraisal performed by an independent appraiser;

(B) An appraisal that was obtained in connection with the origination of the obligation and, if appropriate, that has been updated for the passage of time and for any other changes that might affect the value of the interest in real property;

(C) The sales price of the interest in real property in the case of a substantially contemporary sale in which the buyer assumes the seller's obligations under the mortgage; or

(D) Some other commercially reasonable valuation method.

(iii) If paragraph (b)(7)(ii) of this section is not satisfied, the fair market value of the interest in real property that secures the obligation immediately after the modification must equal or exceed the fair market value of the interest in real property that secured the obligation immediately before the modification. The criterion in the preceding sentence must be established by a current appraisal, an original (and updated) appraisal, or some other commercially reasonable valuation method; and the servicer must not actually know, or have reason to know, that the criterion in the preceding sentence is not satisfied.

(iv) ***Example.*** The following example illustrates the rules of this paragraph (b)(7).

> *Example.* (i) S services mortgage loans that are held by R, a REMIC. Borrower B is the

issuer of one of the mortgage loans held by R. The original amount of B's mortgage loan was $100,000, and the loan was secured by real property X. At the time the loan was contributed to R, property X had a fair market value of $90,000. Sometime after the loan was contributed to R, B experienced financial difficulties such that it was reasonably foreseeable that B might default on the loan if the loan was not modified. Accordingly, S altered various terms of B's loan to substantially reduce the risk of default. The alterations included the release of the lien on property X and the substitution of real property Y for property X as collateral for the loan. At the time the loan was modified, its adjusted issue price was $100,000. The fair market value of property X immediately before the modification (as determined by a commercially reasonable valuation method) was $70,000, and the fair market value of property Y immediately after the modification (as determined by a commercially reasonable valuation method) was $75,000.
(ii) The alterations to B's loan are a significant modification within the meaning of § 1.1001-3(e). The modification, however, is described in paragraphs (a)(8)(i) and (b)(3) of this section. Accordingly, the modified loan continues to be a qualified mortgage if, immediately after the modification, the modified loan continues to be principally secured by an interest in real property, as determined by paragraph (b)(7) of this section.

(iii) Because the modification includes the release of the lien on property X and substitution of property Y for property X, the modified loan must satisfy paragraph (b)(7)(i) of this section (which requires satisfaction of either paragraph (b)(7)(ii) or paragraph (b)(7)(iii) of this section). The modified loan does not satisfy paragraph (b)(7)(ii) of this section because property Y is worth less than $80,000 (the amount equal to 80 percent of the adjusted issue price of the modified mortgage loan). The modified loan, however, satisfies paragraph (b)(7)(iii) of this section because the fair market value of the interest in real estate (real property Y) that secures the obligation immediately after the modification ($75,000) exceeds the fair market value of the interest in real estate (real property X) that secured the obligation immediately before the modification ($70,000). Accordingly, the modified loan satisfies paragraph (b)(7)(i) of this section and continues to be principally secured by an interest in real property.

(c) ***Treatment of certain credit enhancement contracts*** —

(1) ***In general.*** A credit enhancement contract (as defined in paragraph (c) (2) and (3) of this section) is not treated as a separate asset of the REMIC for purposes of the asset test set out in section 860D(a)(4) and § 1.860D-1(b)(3), but instead is treated as part of the mortgage or pool of mortgages to which it relates. Furthermore, any collateral supporting a credit enhancement contract is not treated as an asset of the REMIC solely because it supports the guarantee represented by that contract. See paragraph (g)(1)(ii) of this section for the treatment of payments made pursuant to credit enhancement contracts as payments received under a qualified mortgage.

(2) ***Credit enhancement contracts.*** For purposes of this section, a credit enhancement contract is any arrangement whereby a person agrees to guarantee full or partial payment of the principal or interest payable on a qualified mortgage or on a pool of such mortgages, or full or partial payment on one or more classes of regular interests or on the class of residual interests, in the event of defaults or delinquencies on qualified mortgages, unanticipated losses or expenses incurred by the REMIC, or lower than expected returns on cash flow investments. Types of credit enhancement contracts may include, but are not limited to, pool insurance contracts, certificate guarantee insurance contracts, letters of credit, guarantees, or agreements whereby the REMIC sponsor, a mortgage servicer, or other third party agrees to make advances described in paragraph (c)(3) of this section.

(3) ***Arrangements to make certain advances.*** The arrangements described in this paragraph (c)(3) are credit enhancement contracts regardless of whether, under the terms of the arrangement, the payor is obligated, or merely permitted, to advance funds to the REMIC.

(i) ***Advances of delinquent principal and interest.*** An arrangement by a REMIC sponsor, mortgage servicer, or other third party to advance to the REMIC out of its own funds an amount to make up for delinquent payments on qualified mortgages is a credit enhancement contract.

(ii) ***Advances of taxes, insurance payments, and expenses.*** An arrangement by a REMIC sponsor, mortgage servicer, or other third party to pay taxes and hazard insurance premiums on, or other expenses incurred to protect the REMIC's security interest in, property securing a qualified mortgage in the event that the mortgagor fails to pay such taxes, insurance premiums, or other expenses is a credit enhancement contract.

(iii) ***Advances to ease REMIC administration.*** An agreement by a REMIC sponsor, mortgage servicer, or other third party to advance temporarily to a REMIC amounts payable on qualified mortgages before such amounts are actually due to level out the stream of cash flows to the REMIC or to provide for orderly administration of the REMIC is a credit enhancement contract. For example, if two mortgages in a pool have payment due dates on the twentieth of the month, and all the other mortgages have payment due dates on the first of each month, an agreement by the mortgage servicer to advance to the REMIC on the fifteenth of each month the payments not yet received on the two mortgages together with the amounts received on the other mortgages is a credit enhancement contract.

(4) ***Deferred payment under a guarantee arrangement.*** A guarantee arrangement does not fail to qualify as a credit enhancement contract solely because the guarantor, in the event of a default on a qualified mortgage, has the option of immediately paying to the REMIC the full amount of mortgage principal due on acceleration of the defaulted mortgage, or paying principal and interest to the REMIC according to the original payment schedule for the defaulted mortgage, or according to some other deferred payment schedule. Any deferred payments are payments pursuant to a credit enhancement contract even if the mortgage is foreclosed upon and the guarantor, pursuant to subrogation rights set out in the guarantee arrangement, is entitled to receive immediately the proceeds of foreclosure.

(d) ***Treatment of certain purchase agreements with respect to convertible mortgages*** —

(1) ***In general.*** For purposes of sections 860D(a)(4) and 860G(a)(3), a purchase agreement (as described in paragraph (d)(3) of this section) with respect to a convertible mortgage (as described in paragraph (d)(5) of this section) is treated as incidental to the convertible mortgage to which it relates. Consequently, the purchase agreement is part of the mortgage or pool of mortgages and is not a separate asset of the REMIC.

(2) ***Treatment of amounts received under purchase agreements.*** For purposes of sections 860A through 860G and for purposes of determining the accrual of original issue discount and market discount under sections 1272(a)(6) and 1276, respectively, a payment under a purchase agreement described in paragraph (d)(3) of this section is treated as a prepayment in full of the mortgage to which it relates. Thus, for example, a payment under a purchase agreement with respect to a qualified mortgage is considered a payment received under a qualified mortgage within the meaning of section 860G(a)(6) and the transfer of the mortgage is not a disposition of the mortgage within the meaning of section 860F(a)(2)(A).

(3) ***Purchase agreement.*** A purchase agreement is a contract between the holder of a convertible mortgage and a third party under which the holder agrees to sell and the third party agrees to buy the mortgage for an amount equal to its current principal balance plus accrued but unpaid interest if and when the mortgagor elects to convert the terms of the mortgage.

(4) ***Default by the person obligated to purchase a convertible mortgage.*** If the person required to purchase a convertible mortgage defaults on its obligation to purchase the mortgage upon conversion, the REMIC may sell the mortgage in a market transaction and the proceeds of the sale will be treated as amounts paid pursuant to a purchase agreement.

(5) ***Convertible mortgage.*** A convertible mortgage is a mortgage that gives the obligor the right at one or more times during the term of the mortgage to elect to convert from one interest rate to another. The new rate of interest must be determined pursuant to the terms of the instrument and must be intended to approximate a market rate of interest for newly originated mortgages at the time of the conversion.

(e) ***Prepayment interest shortfalls.*** An agreement by a mortgage servicer or other third party to make payments to the REMIC to make up prepayment interest shortfalls is not treated as a separate asset of the REMIC and payments made pursuant to such an agreement are treated as payments on the qualified mortgages. With respect to any mortgage that prepays, the prepayment interest shortfall for the accrual period in which the mortgage prepays is an amount equal to the excess of the interest that would have accrued on the mortgage during that accrual period had it not prepaid, over the interest that accrued from the beginning of that accrual period up to the date of the prepayment.

(f) ***Defective obligations*** —

(1) ***Defective obligation defined.*** For purposes of sections 860G(a)(4)(B)(ii) and 860F(a)(2), a defective obligation is a mortgage subject to any of the following defects.

(i) The mortgage is in default, or a default with respect to the mortgage is reasonably foreseeable.

(ii) The mortgage was fraudulently procured by the mortgagor.

(iii) The mortgage was not in fact principally secured by an interest in real property within the meaning of paragraph (a)(1) of this section.

(iv) The mortgage does not conform to a customary representation or warranty given by the sponsor or prior owner of the mortgage regarding the characteristics of the mortgage, or the characteristics of the pool of mortgages of which the mortgage is a part. A representation that payments on a qualified mortgage will be received at a rate no less than a specified minimum or no greater than a specified maximum is not customary for this purpose.

(2) ***Effect of discovery of defect.*** If a REMIC discovers that an obligation is a defective obligation, and if the defect is one that, had it been discovered before the startup day, would have prevented the obligation from being a qualified mortgage, then, unless the REMIC either causes the defect to be cured or disposes of the defective obligation within 90 days of discovering the defect, the obligation ceases to be a qualified mortgage at the end of that 90 day period. Even if the defect is not cured, the defective obligation is, nevertheless, a qualified mortgage from the startup day through the end of the 90 day period. Moreover, even if the REMIC holds the defective obligation beyond the 90 day period, the REMIC may, nevertheless, exchange the defective obligation for a qualified replacement mortgage so long as the requirements of section 860G(a)(4)(B) are satisfied. If the defect is one that does not affect the status of an obligation as a qualified mortgage, then the obligation is always a qualified mortgage regardless of whether the defect is or can be cured. For example, if a sponsor represented that all mortgages transferred to a REMIC had a 10 percent interest rate, but it was later discovered that one mortgage had a 9 percent interest rate, the 9 percent mortgage is defective, but the defect does not affect the status of that obligation as a qualified mortgage.

(g) ***Permitted investments*** —

(1) ***Cash flow investment*** —

(i) ***In general.*** For purposes of section 860G(a)(6) and this section, a cash flow investment is an investment of payments received on qualified mortgages for a temporary period between receipt of those payments and the regularly scheduled date for distribution of those payments to REMIC interest holders. Cash flow investments must be passive investments earning a return in the nature of interest.

(ii) ***Payments received on qualified mortgages.*** For purposes of paragraph (g)(1) of this section, the term “payments received on qualified mortgages” includes—

(A) Payments of interest and principal on qualified mortgages, including prepayments of principal and payments under credit enhancement contracts described in paragraph (c)(2) of this section;

(B) Proceeds from the disposition of qualified mortgages;

(C) Cash flows from foreclosure property and proceeds from the disposition of such property;

(D) A payment by a sponsor or prior owner in lieu of the sponsor's or prior owner's repurchase of a defective obligation, as defined in paragraph (f) of this section, that was transferred to the REMIC in breach of a customary warranty; and

(E) Prepayment penalties required to be paid under the terms of a qualified mortgage when the mortgagor prepays the obligation.

(iii) ***Temporary period.*** For purposes of section 860G(a)(6) and this paragraph (g)(1), a temporary period generally is that period from the time a REMIC receives payments on qualified mortgages and permitted investments to the time the REMIC distributes the payments to interest holders. A temporary period may not exceed 13 months. Thus, an investment held by a REMIC for more than 13 months is not a cash flow investment. In determining the length of time that a REMIC has held an investment that is part of a commingled fund or account, the REMIC may employ any reasonable method of accounting. For example, if a REMIC holds

mortgage cash flows in a commingled account pending distribution, the first-in, first-out method of accounting is a reasonable method for determining whether all or part of the account satisfies the 13 month limitation.

(2) ***Qualified reserve funds.*** The term qualified reserve fund means any reasonably required reserve to provide for full payment of expenses of the REMIC or amounts due on regular or residual interests in the event of defaults on qualified mortgages, prepayment interest shortfalls (as defined in paragraph (e) of this section), lower than expected returns on cash flow investments, or any other contingency that could be provided for under a credit enhancement contract (as defined in paragraph (c) (2) and (3) of this section).

(3) ***Qualified reserve asset*** —

(i) ***In general.*** The term "qualified reserve asset" means any intangible property (other than a REMIC residual interest) that is held both for investment and as part of a qualified reserve fund. An asset need not generate any income to be a qualified reserve asset.

(ii) ***Reasonably required reserve*** —

(A) ***In general.*** In determining whether the amount of a reserve is reasonable, it is appropriate to consider the credit quality of the qualified mortgages, the extent and nature of any guarantees relating to either the qualified mortgages or the regular and residual interests, the expected amount of expenses of the REMIC, and the expected availability of proceeds from qualified mortgages to pay the expenses. To the extent that a reserve exceeds a reasonably required amount, the amount of the reserve must be promptly and appropriately reduced. If at any time, however, the amount of the reserve fund is less than is reasonably required, the amount of the reserve fund may be increased by the addition of payments received on qualified mortgages or by contributions from holders of residual interests.

(B) ***Presumption that a reserve is reasonably required.*** The amount of a reserve fund is presumed to be reasonable (and an excessive reserve is presumed to have been promptly and appropriately reduced) if it does not exceed the amount required by a third party insurer or guarantor, who does not own directly or indirectly (within the meaning of section 267(c)) an interest in the REMIC (as defined in § 1.860D-1(b)(1)), as a condition of providing credit enhancement.

(C) ***Presumption may be rebutted.*** The presumption in paragraph (g)(3)(ii)(B) of this section may be rebutted if the amounts required by the third party insurer are not commercially reasonable considering the factors described in paragraph (g)(3)(ii)(A) of this section.

(D) ***Applicability date.*** Paragraphs (g)(3)(ii)(B) and (g)(3)(ii)(C) of this section apply on and after July 6, 2011.

(h) ***Outside reserve funds.*** A reserve fund that is maintained to pay expenses of the REMIC, or to make payments to REMIC interest holders is an outside reserve fund and not an asset of the REMIC only if the REMIC's organizational documents clearly and expressly—

(1) Provide that the reserve fund is an outside reserve fund and not an asset of the REMIC;

(2) Identify the owner(s) of the reserve fund, either by name, or by description of the class (*e.g.*, subordinated regular interest holders) whose membership comprises the owners of the fund; and

(3) Provide that, for all Federal tax purposes, amounts transferred by the REMIC to the fund are treated as amounts distributed by the REMIC to the designated owner(s) or transferees of the designated owner(s).

(i) ***Contractual rights coupled with regular interests in tiered arrangements*** —

(1) ***In general.*** If a REMIC issues a regular interest to a trustee of an investment trust for the benefit of the trust certificate holders and the trustee also holds for the benefit of those certificate holders certain other contractual rights, those other rights are not treated as assets of the REMIC even if the investment trust and the REMIC were created contemporaneously pursuant to a single set of organizational documents. The organizational documents must, however, require that the trustee account for the contractual rights as property that the trustee holds separate and apart from the regular interest.

(2) ***Example.*** The following example, which describes a tiered arrangement involving a pass-thru trust that is intended to qualify as a REMIC and a pass-thru trust that is intended to be classified as a trust under § 301.7701-4(c) of this chapter, illustrates the provisions of paragraph (i)(1) of this section.

> *Example.* (i) A sponsor transferred a pool of mortgages to a trustee in exchange for two classes of certificates. The pool of mortgages has an aggregate principal balance of $100*x*. Each mortgage in the pool provides for interest payments based on the eleventh district cost of funds index (hereinafter COFI) plus a margin. The trust (hereinafter REMIC trust) issued a Class N bond, which the sponsor designates as a regular interest, that has a principal amount of $100*x* and that provides for interest payments at a rate equal to One-Year LIBOR plus 100 basis points, subject to a cap equal to the weighted average pool rate. The Class R interest, which the sponsor designated as the residual interest, entitles its holder to all funds left in the trust after the Class N bond has been retired. The Class R interest holder is not entitled to current distributions.
> (ii) On the same day, and under the same set of documents, the sponsor also created an investment trust. The sponsor contributed to the investment trust the Class N bond together with an interest rate cap contract. Under the interest rate cap contract, the issuer of the cap contract agrees to pay to the trustee for the benefit of the investment trust certificate holders the excess of One-Year LIBOR plus 100 basis points over the weighted average pool rate (COFI plus a margin) times the outstanding principal balance of the Class N bond in the event One-Year LIBOR plus 100 basis points ever exceeds the weighted average pool rate. The trustee (the same institution that serves as REMIC trust trustee), in exchange for the contributed assets, gave the sponsor certificates representing undivided beneficial ownership interests in the Class N bond and the interest rate cap contract. The organizational documents require the trustee to account for the regular interest and the cap contract as discrete property rights.
>
> (iii) The separate existence of the REMIC trust and the investment trust are respected for all Federal income tax purposes. Thus, the interest rate cap contract is an asset beneficially owned by the several certificate holders and is not an asset of the REMIC trust. Consequently,

> each certificate holder must allocate its purchase price for the certificate between its undivided interest in the Class N bond and its undivided interest in the interest rate cap contract in accordance with the relative fair market values of those two property rights.

(j) *Clean-up call* —

(1) ***In general.*** For purposes of section 860F(a)(5)(B), a clean-up call is the redemption of a class of regular interests when, by reason of prior payments with respect to those interests, the administrative costs associated with servicing that class outweigh the benefits of maintaining the class. Factors to consider in making this determination include—

(i) The number of holders of that class of regular interests;

(ii) The frequency of payments to holders of that class;

(iii) The effect the redemption will have on the yield of that class of regular interests;

(iv) The outstanding principal balance of that class; and

(v) The percentage of the original principal balance of that class still outstanding.

(2) ***Interest rate changes.*** The redemption of a class of regular interests undertaken to profit from a change in interest rates is not a clean-up call.

(3) ***Safe harbor.*** Although the outstanding principal balance is only one factor to consider, the redemption of a class of regular interests with an outstanding principal balance of no more than 10 percent of its original principal balance is always a clean-up call.

(k) ***Startup day.*** The term "startup day" means the day on which the REMIC issues all of its regular and residual interests. A sponsor may, however, contribute property to a REMIC in exchange for regular and residual interests over any period of 10 consecutive days and the REMIC may designate any one of those 10 days as its startup day. The day so designated is then the startup day, and all interests are treated as issued on that day.

[T.D. 8458, 57 FR 61309, Dec. 24, 1992; 58 FR 8098, Feb. 11, 1993; T.D. 9463, 74 FR 47438, Sept. 16, 2009; T.D. 9533, 76 FR 39282, July 6, 2011; T.D. 9637, 78 FR 54760, Sept. 6, 2013]

§ 1.860G-3 Treatment of foreign persons.

(a) *Transfer of a residual interest with tax avoidance potential* —

(1) ***In general.*** A transfer of a residual interest that has tax avoidance potential is disregarded for all Federal tax purposes if the transferee is a foreign person. Thus, if a residual interest with tax avoidance potential is transferred to a foreign holder at formation of the REMIC, the sponsor is liable for the tax on any excess inclusion that accrues with respect to that residual interest.

(2) *Tax avoidance potential* —

(i) ***Defined.*** A residual interest has tax avoidance potential for purposes of this section unless, at the time of the transfer, the transferor reasonably expects that, for each excess inclusion, the REMIC will distribute to the transferee residual interest holder an amount that will equal at least

30 percent of the excess inclusion, and that each such amount will be distributed at or after the time at which the excess inclusion accrues and not later than the close of the calendar year following the calendar year of accrual.

(ii) ***Safe harbor.*** For purposes of paragraph (a)(2)(i) of this section, a transferor has a reasonable expectation if the 30-percent test would be satisfied were the REMIC's qualified mortgages to prepay at each rate within a range of rates from 50 percent to 200 percent of the rate assumed under section 1272(a)(6) with respect to the qualified mortgages (or the rate that would have been assumed had the mortgages been issued with original issue discount).

(3) ***Effectively connected income.*** Paragraph (a)(1) of this section will not apply if the transferee's income from the residual interest is subject to tax under section 871(b) or section 882.

(4) ***Transfer by a foreign holder.*** If a foreign person transfers a residual interest to a United States person or a foreign holder in whose hands the income from a residual interest would be effectively connected income, and if the transfer has the effect of allowing the transferor to avoid tax on accrued excess inclusions, then the transfer is disregarded and the transferor continues to be treated as the owner of the residual interest for purposes of section 871(a), 881, 1441, or 1442.

(b) ***Accounting for REMIC net income*** —

(1) ***Allocation of partnership income to a foreign partner.*** A domestic partnership shall separately state its allocable share of REMIC taxable income or net loss in accordance with § 1.702-1(a)(8). If a domestic partnership allocates all or some portion of its allocable share of REMIC taxable income to a partner that is a foreign person, the amount allocated to the foreign partner shall be taken into account by the foreign partner for purposes of sections 871(a), 881, 1441, and 1442 as if that amount was received on the last day of the partnership's taxable year, except to the extent that some or all of the amount is required to be taken into account by the foreign partner at an earlier time under section 860G(b) as a result of a distribution by the partnership to the foreign partner or a disposition of the foreign partner's indirect interest in the REMIC residual interest. A disposition in whole or in part of the foreign partner's indirect interest in the REMIC residual interest may occur as a result of a termination of the REMIC, a disposition of the partnership's residual interest in the REMIC, a disposition of the foreign partner's interest in the partnership, or any other reduction in the foreign partner's allocable share of the portion of the REMIC net income or deduction allocated to the partnership. See § 1.871-14(d)(2) for the treatment of interest received on a regular or residual interest in a REMIC. For a partnership's withholding obligations with respect to excess inclusion amounts described in this paragraph (b)(1), see §§ 1.1441-2(b)(5), 1.1441-2(d)(4), 1.1441-5(b)(2)(i)(A), and §§ 1.1446-1 through 1.1446-7.

(2) ***Excess inclusion income allocated by certain pass-through entities to a foreign person.*** If an amount is allocated under section 860E(d)(1) to a foreign person that is a shareholder of a real estate investment trust or a regulated investment company, a participant in a common trust fund, or a patron of an organization to which part I of subchapter T applies and if the amount so allocated is governed by section 860E(d)(2) (treating it “as an excess inclusion with respect to a residual interest held by” the taxpayer), the amount shall be taken into account for purposes of sections 871(a), 881, 1441, and 1442 at the same time as the time prescribed for other income of the shareholder, participant, or patron from the trust, company, fund, or organization.

[T.D. 8458, 57 FR 61313, Dec. 24, 1992, as amended by T.D. 9272, 71 FR 43365, Aug. 1, 2006; T.D. 9415, 73 FR 40172, July 14, 2008]

TAX BASED ON INCOME FROM SOURCES WITHIN OR WITHOUT THE UNITED STATES

DETERMINATION OF SOURCES OF INCOME

§ 1.861-1 Income from sources within the United States.

(a) ***Categories of income.*** Part I (section 861 and following), subchapter N, chapter 1 of the Code, and the regulations thereunder determine the sources of income for purposes of the income tax. These sections explicitly allocate certain important sources of income to the United States or to areas outside the United States, as the case may be; and, with respect to the remaining income (particularly that derived partly from sources within and partly from sources without the United States), authorize the Secretary or his delegate to determine the income derived from sources within the United States, either by rules of separate allocation or by processes or formulas of general apportionment. The statute provides for the following three categories of income:

(1) ***Within the United States.*** The gross income from sources within the United States, consisting of the items of gross income specified in section 861(a) plus the items of gross income allocated or apportioned to such sources in accordance with section 863(a). See §§ 1.861-2 to 1.861-7, inclusive, and § 1.863-1. The taxable income from sources within the United States, in the case of such income, shall be determined by deducting therefrom, in accordance with sections 861(b) and 863(a), the expenses, losses, and other deductions properly apportioned or allocated thereto and a ratable part of any other expenses, losses, or deductions which cannot definitely be allocated to some item or class of gross income. See §§ 1.861-8 and 1.863-1.

(2) ***Without the United States.*** The gross income from sources without the United States, consisting of the items of gross income specified in section 862(a) plus the items of gross income allocated or apportioned to such sources in accordance with section 863(a). See §§ 1.862-1 and 1.863-1. The taxable income from sources without the United States, in the case of such income, shall be determined by deducting therefrom, in accordance with sections 862(b) and 863(a), the expenses, losses, and other deductions properly apportioned or allocated thereto and a ratable part of any other expenses, losses, or deductions which cannot definitely be allocated to some item or class of gross income. See §§ 1.862-1 and 1.863-1.

(3) ***Partly within and partly without the United States.*** The gross income derived from sources partly within and partly without the United States, consisting of the items specified in section 863(b)(1), (2), and (3). The taxable income allocated or apportioned to sources within the United States, in the case of such income, shall be determined in accordance with section 863 (a) or (b). See §§ 1.863-2 to 1.863-5, inclusive.

(4) ***Exceptions.*** An owner of certain aircraft or vessels first leased on or before December 28, 1980, may elect to treat income in respect of these aircraft or vessels as income from sources within the United States for purposes of sections 861(a) and 862(a). See § 1.861-9. An owner of certain aircraft, vessels, or spacecraft first leased after December 28, 1980, must treat income in respect of these craft as income from sources within the United States for purposes of sections 861(a) and 862(a). See § 1.861-9A.

(b) ***Taxable income from sources within the United States.*** The taxable income from sources within the United States shall consist of the taxable income described in paragraph (a)(1) of this section plus the taxable income allocated or apportioned to such sources, as indicated in paragraph (a)(3) of this section.

(c) ***Computation of income.*** If a taxpayer has gross income from sources within or without the United States, together with gross income derived partly from sources within and partly from sources without the United States, the amounts thereof, together with the expenses and investment applicable thereto, shall be segregated; and the taxable income from sources within the United States shall be separately computed therefrom.

[T.D. 6500, 25 FR 11910, Nov. 26, 1960, as amended by T.D. 7928, 48 FR 55845, Dec. 16, 1983]

§ 1.861-2 Interest.

(a) ***In general.***

(1) Gross income consisting of interest from the United States or any agency or instrumentality thereof (other than a possession of the United States or an agency or instrumentality of a possession), a State or any political subdivision thereof, or the District of Columbia, and interest from a resident of the United States on a bond, note, or other interest-bearing obligation issued, assumed or incurred by such person shall be treated as income from sources within the United States. Thus, for example, income from sources within the United States includes interest received on any refund of income tax imposed by the United States, a State or any political subdivision thereof, or the District of Columbia. Interest other than that described in this paragraph is not to be treated as income from sources within the United States. See paragraph (a)(7) of this section for special rules concerning substitute interest paid or accrued pursuant to a securities lending transaction.

(2) The term “resident of the United States”, as used in this paragraph, includes

(i) an individual who at the time of payment of the interest is a resident of the United States,

(ii) a domestic corporation,

(iii) a domestic partnership which at any time during its taxable year is engaged in trade or business in the United States, or

(iv) a foreign corporation or a foreign partnership, which at any time during its taxable year is engaged in trade or business in the United States.

(3) The method by which, or the place where, payment of the interest is made is immaterial in determining whether interest is derived from sources within the United States.

(4) For purposes of this section, the term “interest” includes all amounts treated as interest under section 483, and the regulations thereunder. It also includes original issue discount, as defined in section 1232(b)(1), whether or not the underlying bond, debenture, note, certificate, or other evidence of indebtedness is a capital asset in the hands of the taxpayer within the meaning of section 1221.

(5) If interest is paid on an obligation of a resident of the United States by a nonresident of the United States acting in the nonresident's capacity as a guarantor of the obligation of the resident, the interest will be treated as income from sources within the United States.

(6) In the case of interest received by a nonresident alien individual or foreign corporation this paragraph (a) applies whether or not the interest is effectively connected for the taxable year with the conduct of a trade or business in the United States by such individual or corporation.

(7) A substitute interest payment is a payment, made to the transferor of a security in a securities lending transaction or a sale-repurchase transaction, of an amount equivalent to an interest payment which the owner of the transferred security is entitled to receive during the term of the transaction. A securities lending transaction is a transfer of one or more securities that is described in section 1058(a) or a substantially similar transaction. A sale-repurchase transaction is an agreement under which a person transfers a security in exchange for cash and simultaneously agrees to receive a substantially identical securities from the transferee in the future in exchange for cash. A substitute interest payment shall be sourced in the same manner as the interest accruing on the transferred security for purposes of this section and § 1.862-1. See also §§ 1.864-5(b)(2)(iii), 1.871-7(b)(2), 1.881-2(b)(2) and for the character of such payments and § 1.894-1(c) for the application tax treaties to these transactions.

(b) ***Interest not derived from U.S. sources.*** Notwithstanding paragraph (a) of this section, interest shall be treated as income from sources without the United States to the extent provided by subparagraphs (A) through (H), of section 861(a)(1) and by the following subparagraphs of this paragraph.

(1) ***Interest on bank deposits and on similar amounts.***

(i) Interest paid or credited before January 1, 1977, to a nonresident alien individual or foreign corporation on—

(*a*) Deposits with persons, including citizens of the United States or alien individuals and foreign or domestic partnerships or corporations, carrying on the banking business in the United States,

(*b*) Deposits or withdrawable accounts with savings institutions chartered and supervised as savings and loan or similar associations under Federal or State law, or

(*c*) Amounts held by an insurance company under an agreement to pay interest thereon, shall be treated as income from sources without the United States if such interest is not effectively connected for the taxable year with the conduct of a trade or business in the United States by such nonresident alien individual or foreign corporation. If such interest is effectively connected for the taxable year with the conduct of a trade or business in the United States by such nonresident alien individual or foreign corporation, it shall be treated as income from sources within the United States under paragraph (a) of this section unless it is treated as income from sources without the United States under another subparagraph of this paragraph. For a special rule for determining whether such interest is effectively connected for the taxable year with the conduct of a trade or business in the United States, see paragraph (c)(1)(ii) or § 1.864-4.

(ii) Paragraph (b)(1)(i)(*b*) of this section applies to interest on deposits or withdrawable accounts described therein only to the extent that the interest paid or credited by the savings institution described therein is deductible under section 591 in determining the taxable income of such institution; and, for this purpose, whether an amount is deductible under section 591 shall be determined without regard to section 265, relating to deductions allocable to tax-exempt income. Thus, for example, such subdivision does not apply to amounts paid by a savings and loan or similar association on or with respect to its nonwithdrawable capital stock or on or with respect to funds held in restricted accounts which represent a proprietary interest in such

association. Paragraph (b)(1)(i)(*b*) of this section also applies to so-called dividends paid or credited on deposits or withdrawable accounts if such dividends are deductible under section 591 without reference to section 265.

(iii) For purposes of paragraph (b)(1)(i)(*c*) of this section, amounts held by an insurance company under an agreement to pay interest thereon include policyholder dividends left with the company to accumulate, prepaid insurance premiums, proceeds of policies left on deposit with the company, and overcharges of premiums. Such subdivision does not apply to

(*a*) the so-called "interest element" in the case of annuity or installment payments under life insurance or endowment contracts or

(*b*) interest paid by an insurance company to its creditors on notes, bonds, or similar evidences of indebtedness, if the debtor-creditor relationship does not arise by virtue of a contract of insurance with the insurance company.

(iv) For purposes of paragraph (b)(1)(i) of this section, interest received by a partnership shall be treated as received by each partner of such partnership to the extent of his distributive share of such item.

(2) ***Interest from a resident alien individual or domestic corporation deriving substantial income from sources without the United States.*** Interest received from a resident alien individual or a domestic corporation shall be treated as income from sources without the United States when it is shown to the satisfaction of the district director (or, if applicable, the Director of International Operations) that less than 20 percent of the gross income from all sources of such individual or corporation has been derived from sources within the United States, as determined under the provisions of sections 861 to 863, inclusive, and the regulations thereunder, for the 3-year period ending with the close of the taxable year of such individual or corporation preceding its taxable year in which such interest is paid or credited, or for such part of such period as may be applicable. If 20 percent or more of the gross income from all sources of such individual or corporation has been derived from sources within the United States, as so determined, for such 3-year period (or part thereof), the entire amount of the interest from such individual or corporation shall be treated as income from sources within the United States.

(3) ***Interest from a foreign corporation not deriving major portion of its income from a U.S. business.***

(i) Interest from a foreign corporation which, at any time during the taxable year, is engaged in trade or business in the United States shall be treated as income from sources without the United States when it is shown to the satisfaction of the district director (or, if applicable, the Director of International Operations) that

(*a*) less than 50 percent of the gross income from all sources of such foreign corporation for the 3-year period ending with the close of its taxable year preceding its taxable year in which such interest is paid or credited (or for such part of such period as the corporation has been in existence) was effectively connected with the conduct by such corporation of a trade or business in the United States, as determined under section 864(c) and § 1.864-3, or

(*b*) such foreign corporation had gross income for such 3-year period (or part thereof) but none was effectively connected with the conduct of a trade or business in the United States.

(ii) If 50 percent or more of the gross income from all sources of such foreign corporation for such 3-year period (or part thereof) was effectively connected with the conduct by such corporation of a trade or business in the United States, see section 861(a)(1)(D) and paragraph (c)(1) of this section for determining the portion of interest from such corporation which is treated as income from sources within the United States.

(iii) For purposes of this paragraph the gross income which is effectively connected with the conduct of a trade or business in the United States includes the gross income which, pursuant to section 882 (d) or (e) and the regulations thereunder, is treated as income which is effectively connected with the conduct of a trade or business in the United States.

(iv) This paragraph does not apply to interest paid or credited after December 31, 1969, by a branch in the United States of a foreign corporation if, at the time of payment or crediting, such branch is engaged in the commercial banking business in the United States; furthermore, such interest is treated under paragraph (a) of this section as income from sources within the United States unless it is treated as income from sources without the United States under paragraph (b)(1) or (4) of this section.

(4) ***Bankers' acceptances.*** Interest derived by a foreign central bank of issue from bankers' acceptances shall be treated as income from sources without the United States. For this purpose, a foreign central bank of issue is a bank which is by law or government sanction the principal authority, other than the government itself, issuing instruments intended to circulate as currency. Such a bank is generally the custodian of the banking reserves of the country under whose laws it is organized.

(5) ***Foreign banking branch of a domestic corporation or partnership.*** Interest paid or credited on deposits with a branch outside the United States (as defined in section 7701(a)(9)) of a domestic corporation or of a domestic partnership shall be treated as income from sources without the United States, if, at the time of payment or crediting, such branch is engaged in the commercial banking business. For purposes of applying this paragraph, it is immaterial

(i) whether the domestic corporation or domestic partnership is carrying on a banking business in the United States,

(ii) whether the recipient of the interest is a citizen or resident of the United States, a foreign corporation, or a foreign partnership,

(iii) whether the interest is effectively connected with the conduct of a trade or business in the United States by the recipient, or

(iv) whether the deposits with the branch located outside the United States are payable in the currency of a foreign country. Notwithstanding the provisions of § 1.863-6, interest to which this paragraph applies shall be treated as income from sources within the foreign country, possession of the United States, or other territory in which the branch is located.

(6) ***Section 4912(c) debt obligations*** —

(i) ***In general.*** Under section 861(a)(1)(G), interest on a debt obligation shall not be treated as income from sources within the United States if—

(*a*) The debt obligation was part of an issue of debt obligations with respect to which an election has been made under section 4912(c) (relating to the treatment of such debt obligations as debt obligations of a foreign obligor for purposes of the interest equalization tax),

(*b*) The debt obligation had a maturity not exceeding 15 years (within the meaning of paragraph (b)(6)(ii) of this section) on the date it is originally issued or on the date it is treated under section 4912(c)(2) as issued by reason of being assumed by a certain domestic corporation,

(*c*) The debt obligation, when originally issued, was purchased by one or more underwriters (within the meaning of paragraph (b)(6)(iii) of this section) with a view to distribution through resale (within the meaning of paragraph (b)(6)(iv) of this section), and

(*d*) The interest on the debt obligation is attributable to periods after the effective date of an election under section 4912(c) to treat such debt obligations as debt obligations of a foreign obligor for purposes of the interest equalization tax.

(ii) ***Maturity not exceeding 15 years.*** The date the debt obligation is issued or treated as issued is not included in the 15 year computation, but the date of maturity of the debt, obligation is included in such computation.

(iii) ***Purchased by one or more underwriters.*** For purposes of this paragraph, the debt obligation when originally issued will not be treated as purchased by one or more underwriters unless the underwriter purchases the debt obligation for his own account and bears the risk of gain or loss on resale. Thus, for example, a debt obligation, when originally issued, will not be treated as purchased by one or more underwriters if the underwriter acts only in the capacity of an agent of the issuer. Neither will a debt obligation, when originally issued, be treated as purchased by one or more underwriters if the agreement between the underwriter and issuer is merely for a “best efforts” underwriting, for the purchase by the underwriter of all or a portion of the debt obligations remaining unsold at the expiration of a fixed period of time, or for any other arrangement under the terms of which the debt obligations are not purchased by the underwriter with a view to distribution through resale. The fact that an underwriter is related to the issuer will not prevent the underwriter from meeting the requirements of this paragraph. In determining whether a related underwriter meets the requirements of this paragraph consideration shall be given to whether the purchase by the underwriter of the debt obligation from the issuer for resale was effected by a transaction subject to conditions similar to those which would have been imposed between independent persons.

(iv) ***With a view to distribution through resale.***

(*a*) An underwriter who purchased a debt obligation shall be deemed to have purchased it with a view to distribution through resale if the requirements of paragraph (b)(6)(iv) (*b*) or (*c*) of this section are met.

(*b*) The requirements of this paragraph (*b*) is that—

(*1*) The debt obligation is registered, approved, or listed for trading on one or more foreign securities exchanges or foreign established securities markets within 4 months after the date on which the underwriter purchases the debt obligation, or by the date of the first interest payment on the debt obligation, whichever is later, or

(*2*) The debt obligation, or any substantial portion of the issue of which the debt obligation is a part, is actually traded on one or more foreign securities markets on or within 15 calendar days after the date on which the underwriter purchases the debt obligation.

For purposes of this paragraph (b)(6)(iv), a foreign established securities market includes any foreign over-the-counter market as reflected by the existence of an inter-dealer quotation system for regularly disseminating to brokers and dealers quotations of obligations by identified brokers or dealers, other than quotations prepared and distributed by a broker or dealer in the regular course of his business and containing only quotations of such broker or dealer.

(*c*) The requirements of this paragraph (*c*) are that, except as provided in paragraph (b)(6)(iv)(*d*) of this section, the underwriter is under no written or implied restriction imposed by the issuer with respect to whom he may resell the debt obligation and either—

(*1*) Within 30 calendar days after he purchased the debt obligation the underwriter or underwriters either

(*i*) sold it or

(*ii*) sold at least 95 percent of the face amount of the issue of which the debt obligation is a part, or

(*2*)

(*i*) The debt obligation is evidenced by an instrument which, under the laws of the jurisdiction in which it is issued, is either negotiable or transferable by assignment (whether or not it is registered for trading), and

(*ii*) it appears from all the relevant facts and circumstances, including any written statements or assurances made by the purchasing underwriter or underwriters, that such debt obligation was purchased with a view to distribution through resale.

(*d*) The requirements of paragraph (b)(6)(iv)(*c*) of this paragraph may be met whether or not the underwriter is restricted from reselling the debt obligations—

(*1*) To a United States person (as defined in section 7701(a)(30)) or

(*2*) To any particular person or persons pursuant to a restriction imposed by, or required to be met in order to comply with, United States or foreign securities or other law.

(v) ***Statement with return.*** Any taxpayer who is required to file a tax return and who excludes from gross income interest of the type specified in this subparagraph must comply with the requirements of paragraph (d) of this section.

(vi) ***Effect of termination of IET.*** If the interest equalization tax expires, the provisions of section 861(a)(1)(G) and this subparagraph shall apply to interest paid on debt obligations only with respect to which a section 4912(c) election was made.

(vii) ***Definition of term underwriter.*** For purposes of section 861(a)(1)(G) and this paragraph, the term "underwriter" shall mean any underwriter as defined in section 4919(c)(1).

(c) ***Special rules*** —

(1) ***Proration of interest from a foreign corporation deriving major portion of its income from a U.S. business.*** If, after applying the first sentence of paragraph (b)(3) of this section to interest to which that paragraph applies, it is determined that the interest may not be treated as income from sources without the United States, the amount of the interest from the foreign corporation which at some

time during the taxable year is engaged in trade or business in the United States which is to be treated as income from sources within the United States shall be the amount that bears the same ratio to such interest as the gross income of such foreign corporation for the 3-year period ending with the close of its taxable year preceding its taxable year in which such interest is paid or credited (or for such part of such period as the corporation has been in existence) which was effectively connected with the conduct by such corporation of a trade or business in the United States bears to its gross income from all sources for such period.

(2) ***Payors having no gross income for period preceding taxable year of payment.*** If the resident alien individual, domestic corporation, or foreign corporation, as the case may be, paying interest has no gross income from any source for the 3-year period (or part thereof) specified in paragraph (b)(2) or (3) of this section, or paragraph (c)(1) of this section, the 20-percent test or the 50-percent test, or the apportionment formula, as the case may be, described in such paragraph shall be applied solely with respect to the taxable year of the payor in which the interest is paid or credited. This paragraph applies whether the lack of gross income for the 3-year period (or part thereof) stems from the business inactivity of the payor, from the fact that the payor is a corporation which is newly created or organized, or from any other cause.

(3) ***Transitional rule.*** For purposes of applying paragraph (b)(3) of this section, and paragraph (c)(1) of this section, the gross income of the foreign corporation for any period before the first taxable year beginning after December 31, 1966, which is from sources within the United States (determined as provided by sections 861 through 863, and the regulations thereunder, as in effect immediately before amendment by section 102 of the Foreign Investors Tax Act of 1966 (Pub. L. 89-809, 80 Stat. 1541)) shall be treated as gross income for such period which is effectively connected with the conduct of a trade or business in the United States by such foreign corporation.

(4) ***Gross income determinations.*** In making determinations under paragraph (b)(2) or (3) of this section, or paragraph (c) (1) or (3) of this section—

(i) The gross income of a domestic corporation or a resident alien individual is to be determined by excluding any items specifically excluded from gross income under chapter 1 of the Code, and

(ii) The gross income of a foreign corporation which is effectively connected with the conduct of a trade or business in the United States is to be determined under section 882(b)(2) and by excluding any items specifically excluded from gross income under chapter 1 of the Code, and

(iii) The gross income from all sources of a foreign corporation is to be determined without regard to section 882(b) and without excluding any items otherwise specifically excluded from gross income under chapter 1 of the Code.

(d) ***Statement with return.*** Any taxpayer who is required to file a return and applies any provision of this section to exclude an amount of interest from his gross income must file with his return a statement setting forth the amount so excluded, the date of its receipt, the name and address of the obligor of the interest, and, if known, the location of the records which substantiate the amount of the exclusion. A statement from the obligor setting forth such information and indicating the amount of interest to be treated as income from sources without the United States may be used for this purpose. See §§ 1.6012-1(b)(1)(i) and 1.6012-2(g)(1)(i).

(e) ***Effective dates.*** Except as otherwise provided, this section applies with respect to taxable years beginning after December 31, 1966. For corresponding rules applicable to taxable years beginning before January 1, 1967, (see 26 CFR part 1 revised April 1, 1971). Paragraph (a)(7) of this section is applicable to payments made after November 13, 1997.

[T.D. 7378, 40 FR 45429, Oct. 2, 1975; 40 FR 48508, Oct. 16, 1975, as amended by T.D. 8257, 54 FR 31819, Aug. 2, 1989; T.D. 8735, 62 FR 53500, Oct. 14, 1997]

§ 1.861-3 Dividends and income inclusions under sections 951, 951A, and 1293 and associated section 78 dividends.

(a) ***General*** —

(1) ***Dividends included in gross income.*** Gross income from sources within the United States includes a dividend described in subparagraph (2), (3), (4), or (5) of this paragraph. For purposes of subparagraphs (2), (3), and (4) of this paragraph, the term "dividend" shall have the same meaning as set forth in section 316 and the regulations thereunder. See subparagraph (5) of this paragraph for special rules with respect to certain dividends from a DISC or former DISC. See also paragraph (a)(6) of this section for special rules concerning substitute dividend payments received pursuant to a securities lending transaction.

(2) ***Dividend from a domestic corporation.*** A dividend described in this paragraph (a)(2) is a dividend from a domestic corporation other than a corporation that has an election in effect under section 936. See paragraph (a)(5) of this section for the treatment of certain dividends from a DISC or former DISC.

(3) ***Dividend from a foreign corporation*** —

(i) ***In general.***

(*a*) A dividend described in this subparagraph is a dividend from a foreign corporation (other than a dividend to which subparagraph (4) of this paragraph applies) unless less than 50 percent of the gross income from all sources of such foreign corporation for the 3-year period ending with the close of its taxable year preceding the taxable year in which occurs the declaration of such dividend (or for such part of such period as the corporation has been in existence) was effectively connected with the conduct by such corporation of a trade or business in the United States, as determined under section 864(c) and § 1.864-3. Thus, no portion of a dividend from a foreign corporation shall be treated as income from sources within the United States under section 861(a)(2)(B) if less than 50 percent of the gross income of such foreign corporation from all sources for such 3-year period (or part thereof) was effectively connected with the conduct by such corporation of a trade or business in the United States or if such foreign corporation had gross income for such 3-year period (or part thereof) but none was effectively connected with the conduct by such corporation of a trade or business in the United States.

(*b*) If 50 percent or more of the gross income from all sources of such foreign corporation for such 3-year period (or part thereof) was effectively connected with the conduct by such corporation of a trade or business in the United States, the amount of the dividend which is to be treated as income from sources within the United States under section 861(a)(2)(B) shall be the amount that bears the same ratio to such dividend as the gross income of such foreign corporation for such 3-year period (or part thereof) which was effectively connected with the conduct by such corporation of a trade or business in the United States bears to its gross income from all sources for such period.

(*c*) For purposes of this subdivision (i), the gross income which is effectively connected with the conduct of a trade or business in the United States includes the gross income which, pursuant to section 882 (d) or (e), is treated as income which is effectively connected with the conduct of a trade or business in the United States.

(ii) ***Rule applicable in applying limitation on amount of foreign tax credit.*** For purposes of determining under section 904 the limitation upon the amount of the foreign tax credit—

(*a*) So much of a dividend from a foreign corporation as exceeds (and only to the extent it so exceeds) the amount which is 100/85ths of the amount of the deduction allowable under section 245(a) in respect of such dividend, plus

(*b*) An amount which bears the same proportion to any section 78 dividend to which the dividend from the foreign corporation gives rise as the amount of the excess determined under (*a*) of this subdivision bears to the total amount of the dividend from the foreign corporation, shall, notwithstanding subdivision (i) of this subparagraph, be treated as income from sources without the United States. This subdivision applies to a dividend for which no dividends-received deduction is allowed under section 245 or for which the 85 percent dividends-received deduction is allowed under section 245(a) but does not apply to a dividend for which a deduction is allowable under section 245(b). All of a dividend for which the 100 percent dividends-received deduction is allowed under section 245(b) shall be treated as income from sources within the United States for purposes of determining under section 904 the limitation upon the amount of the foreign tax credit. If the amount of a distribution of property other than money (constituting a dividend under section 316) is determined by applying section 301(b)(1)(C), such amount must be used as the dividend for purposes of applying (*a*) of this subdivision even though the amount used for purposes of section 245(a) is determined by applying section 301(b)(1)(D). In making determinations under this subdivision, a dividend (other than a section 78 dividend referred to in (*b*) of this subdivision) shall be determined without regard to section 78.

(iii) ***Illustrations.*** The application of this subparagraph may be illustrated by the following examples:

Example 1. D, a domestic corporation, owns 80 percent of the outstanding stock of M, a foreign manufacturing corporation. M, which makes its returns on the basis of the calendar year, has earnings and profits of $200,000 for 1971 and 60 percent of its gross income for that year is effectively connected for 1971 with the conduct of a trade or business in the United States. For an uninterrupted period of 36 months ending on December 31, 1970, M has been engaged in trade or business in the United States and has received gross income effectively connected with the conduct of a trade or business in the United States amounting to 60 percent of its gross income from all sources for such period. The only distribution by M to D for 1971 is a cash dividend of $100,000; of this amount, $60,000 ($100,000 × 60%) is treated under subdivision (i) of this subparagraph as income from sources within the United States, and $40,000 ($100,000−$60,000) is treated under § 1.862-1(a)(2) as income from sources without the United States. Accordingly, under section 245(a), D is entitled to a dividends-received deduction of $51,000 ($60,000 × 85%), and under subdivision (ii) of this subparagraph $40,000 ($100,000−[$51,000 × 100/85]) is treated as income from sources without the United States for purposes of determining under section 904(a) (1) or (2) the limitation upon the amount of the foreign tax credit.

Example 2. (a) The facts are the same as in example (1) except that the distribution for

1971 consists of property which has a fair market value of $100,000 and an adjusted basis of $30,000 in M's hands immediately before the distribution. The amount of the dividend under section 316 is $58,000, determined by applying section 301(b)(1)(C) as follows:

Portion of adjusted basis of property attributable to gross income of M effectively connected for 1971 with conduct of trade or business in United States ($30,000 × 60%)	$18,000
Portion of fair market value of property attributable to gross income of M not effectively connected for 1971 with conduct of trade or business in United States ($100,000 × 40%)	40,000
Total dividend	58,000

(b) Of the total dividend, $34,800 ($58,000 × 60% (percentage applicable to 3-year period)) is treated under subdivision (i) of this subparagraph as income from sources within the United States, and $23,200 ($58,000 × 40%) is treated under § 1.862-1(a)(2) as income from sources without the United States. However, by reason of section 245(c) the adjusted basis of the property ($30,000) is used under section 245(a) in determining the dividends-received deduction. Thus, under section 245(a), D is entitled to a dividends-received deduction of $15,300 ($30,000 × 60% × 85%).
(c) Under subdivision (ii) of this subparagraph, the amount of the dividend for purposes of applying (*a*) of that subdivision is the amount ($58,000) determined by applying section 301(b)(1)(C) rather than the amount ($30,000) determined by applying section 301(b)(1)(B). Accordingly, under subdivision (ii) of this subparagraph $40,000 ($58,000−[$15,300 × 100/85]) is treated as income from sources without the United States for purposes of determining under section 904(a) (1) or (2) the limitation upon the amount of the foreign tax credit.

Example 3. (a) D, a domestic corporation which makes its returns on the basis of the calendar year, owns 100 percent of the outstanding stock of N, a foreign corporation which is not a less developed country corporation under section 902(d). N, which makes its returns on the basis of the calendar year, has total gross income for 1971 of $100,000, of which $80,000 (including $60,000 from sources within foreign country X) is effectively connected for that year with the conduct of a trade or business in the United States. For 1971 N is assumed to have paid $27,000 of income taxes to country X and to have accumulated profits of $81,000 for purposes of section 902(c)(1)(A). N's accumulated profits in excess of foreign income taxes amount to $54,000. For 1971 D receives a cash dividend of $42,000 from N, which is D's only income for that year.

(b) For 1971 D chooses the benefits of the foreign tax credit under section 901, and as a result is required under section 78 to include in gross income an amount equal to the foreign income taxes of $21,000 ($27,000 × $42,000/$54,000) it is deemed to have paid under section 902(a)(1). Thus, assuming no other deductions for the taxable year, D has gross income of $63,000 ($42,000 + $21,000) for 1971 less a dividends-received deduction under section 245(a) of $28,560 ([$42,000 × $80,000/$100,000] × 85%), or taxable income for 1971 of $34,440.

(c) Under subdivision (ii) of this subparagraph, for purposes of determining under section 904(a) (1) or (2) the limitation upon the amount of the foreign tax credit, $12,600 is treated as income from sources without the United States, determined as follows:

Excess of dividend from N over amount which is 100/85ths of amount of sec. 245(a) deduction ($42,000−[$28,560 × 100/85])	$8,400
Proportionate part of sec. 78 dividend ($21,000 × $8,400/$42,000)	4,200
Taxable income from sources without the United States	12,600

Example 4. A, an individual citizen of the United States who makes his return on the basis of the calendar year, receives in 1971 a cash dividend of $10,000 from M, a foreign corporation, which makes its return on the basis of the calendar year. For the 3-year period ending with 1970 M has been engaged in trade or business in the United States and has received gross income effectively connected with the conduct of a trade or business in the United States amounting to 80 percent of its gross income from all sources for such period. Of the total dividend, $8,000 ($10,000 × 80%) is treated under subdivision (i) of this subparagraph as income from sources within the United States and $2,000 ($10,000−$8,000) is treated under § 1.862-1(a)(2) as income from sources without the United States. Since under section 245 no dividends received-deduction is allowable to an individual, A is entitled under subdivision (ii) of this subparagraph to treat the entire dividend of $10,000 ($10,000−[$0 × 100/85]) as income from sources without the United States for purposes of determining under section 904(a) (1) or (2) the limitation upon the amount of the foreign tax credit.

(4) ***Dividend from a foreign corporation succeeding to earnings of a domestic corporation.*** A dividend described in this subparagraph is a dividend from a foreign corporation, if such dividend is received by a corporation after December 31, 1959, but only to the extent that such dividend is treated by such recipient corporation under the provisions of § 1.243-3 as a dividend from a domestic corporation subject to taxation under chapter 1 of the Code. To the extent that this subparagraph applies to a dividend received from a foreign corporation, subparagraph (3) of this paragraph shall not apply to such dividend.

(5) ***Certain dividends from a DISC or former DISC*** —

(i) ***General rule.*** A dividend described in this subparagraph is a dividend from a corporation that is a DISC or former DISC (as defined in section 992(a)) other than a dividend that—

(*a*) Is deemed paid by a DISC, for taxable years beginning before January 1, 1976, under section 995(b)(1)(D) as in effect for taxable years beginning before January 1, 1976, and for taxable years beginning after December 31, 1975, under section 995(b)(1) (D), (E), and (F) to the extent provided in subdivision (iii) of this subparagraph or

(*b*) Reduces under § 1.996-3(b)(3) accumulated DISC income (as defined in subdivision (ii)(*b*) of this subparagraph) to the extend provided in subdivision (iv) of this subparagraph.

Thus, a dividend deemed paid under section 995(b)(1) (A), (B), or (C) (relating to certain deemed distributions in qualified years) will be treated in full as gross income from sources within the United States. To the extent that a dividend from a DISC or former DISC is paid out of other earnings and profits (as defined in § 1.996-3(d)), subparagraph (2) of this paragraph shall apply. To the extent that a dividend from a DISC or former DISC is paid out of previously taxed income (as defined in § 1.996-3(c)), see section 996(a)(3) (relating to the exclusion from gross income of amounts distributed out of previously taxed income). In determining the source of income of certain dividends from a DISC or former DISC, the source of income from any transaction which gives rise to gross receipts (as defined in § 1.993-6), in the hands of the DISC or former DISC, is immaterial.

(ii) ***Definitions.*** For purposes of this subparagraph, the term—

(*a*) "Dividend from" means any amount actually distributed which is a dividend within the meaning of section 316 (including distributions to meet qualification requirements under section 992(c)) and any amount treated as a distribution taxable as a dividend pursuant to section 995(b) (relating to deemed distributions in qualified years or upon disqualification) or included in gross income as a dividend pursuant to section 995(c) (relating to gain on certain dispositions of stock in a DISC or former DISC), and

(*b*) "Accumulated DISC income" means the amount of accumulated DISC income as of the close of the taxable year immediately preceding the taxable year in which the dividend was made increased by the amount of DISC income for the taxable year in which the dividend was made (as determined under § 1.996-3(b)(2)).

(*c*) "Nonqualified export taxable income" means the taxable income of a DISC from any transaction which gives rise to gross receipts (as defined in § 1.993-6) which are not qualified export receipts (as defined in § 1.993-1) other than a transaction giving rise to gain described in section 995(b)(1) (B) or (C).

For purposes of subdivisions (i)(*b*) and (iv) of this subparagraph, if by reason of section 995(c), gain is included in the shareholder's gross income as a dividend, accumulated DISC income shall be treated as if it were reduced under § 1.996-3(b)(3).

(iii) ***Determination of source of income for deemed distributions, for taxable years beginning before January 1, 1976, under section 995(b)(1)(D) as in effect for taxable years beginning before January 1, 1976, and for taxable years beginning after December 31, 1975, under section 995(b)(1) (D), (E), and (F). (a***) If for its taxable year a DISC does not have any nonqualified export taxable income, then for such year the entire amount treated, for taxable years beginning before January 1, 1976, under section 995(b)(1)(D) as in effect for taxable years beginning before January 1, 1976, and for taxable years beginning after December 31, 1975, under section 995(b)(1) (D), (E), and (F) as a deemed distribution taxable as a dividend will be treated as gross income from sources without the United States.

(*b*) If for its taxable year a DISC has any nonqualified export taxable income, then for such year the portion of the amount treated, for taxable years beginning before January 1, 1976, under section 995(b)(1)(D) as in effect for taxable years beginning before January 1, 1976, and for taxable years beginning after December 31, 1975, under section 995(b)(1) (D), (E), and (F) as a deemed distribution taxable as a dividend that will be treated as income from sources within the United States shall be equal to the amount of such nonqualified export taxable income multiplied by the following fraction. The numerator of the fraction is the sum of the amounts treated, for taxable years beginning before January 1, 1976, under section 995(b)(1)(D) as in effect for taxable years beginning before January 1, 1976, and for taxable years beginning after December 31, 1975, under section 995(b)(1) (D), (E), and (F) as deemed distributions taxable as dividends. The denominator of the fraction is the taxable income of the DISC for the taxable year, reduced by the amounts treated under section 995(b)(1) (A), (B), and (C) as deemed distributions taxable as dividends. However, in no event shall the numerator exceed the denominator. The remainder of such dividend will be treated as gross income from sources without the United States.

(iv) ***Determination of source of income for dividends that reduce accumulated DISC income.***

(*a*) If no portion of the accumulated DISC income of a DISC or former DISC is attributable to nonqualified export taxable income from any transaction during a year for which it is (or is treated as) a DISC, then the entire amount of any dividend that reduces under § 1.996-3(b)(3) accumulated DISC income will be treated as income from sources without the United States.

(*b*) If any portion of the accumulated DISC income of a DISC or former DISC is attributable to nonqualified export taxable income from any transaction during a year for which it is (or is treated as) a DISC, then the portion of any dividend during its taxable year that reduces under § 1.996-3(b)(3) accumulated DISC income that will be treated as income from sources within the United States shall be equal to the amount of such dividend multiplied by a fraction (determined as of the close of such year) the numerator of which is the amount of accumulated DISC income attributable to nonqualified export taxable income, and the denominator of which is the total amount of accumulated DISC income. The remainder of such dividend will be treated as gross income from sources without the United States.

(v) ***Special rules.*** For purposes of subdivisions (iii) and (iv) of this subparagraph—

(*a*) Taxable income shall be determined under § 1.992-3(b)(2)(i) (relating to the computation of deficiency distribution), and

(*b*) The portion of any deemed distribution taxable as a dividend, for taxable years beginning before January 1, 1976, under section 995(b)(1)(D) as in effect for taxable years beginning before January 1, 1976, and for taxable years beginning after December 31, 1975, under section 995(b)(1)(D), (E), and (F) or amount under § 1.996-3(b)(3) (i) through (iv) that is treated as gross income from sources within the United States during the taxable year shall be considered to reduce the amount of nonqualified export taxable income as of the close of such year.

(vi) ***Illustrations.*** This subparagraph may be illustrated by the following examples:

> *Example 1.* (a) Y is a corporation which uses the calendar year as its taxable year and

which elects to be treated as a DISC beginning with 1972. X is its sole shareholder. In 1973, Y has $18,000 of taxable income from qualified export receipts (none of which are interest and gains described in section 995(b)(1)(A), (B), and (C)) and $1,000 of nonqualified export taxable income. Under these facts, X is deemed to have received a distribution under section 995(b)(1)(D) as in effect for taxable years beginning before January 1, 1976, of $9,500, *i.e.,* $19,000 X 1/2. X is treated under subdivision (iii)(*b*) of this subparagraph as having $500, *i.e.,* $1,000 X $9,500/$19,000, from sources within the United States and $9,000 from sources without the United States.
(b) For 1972, assume that Y did not have any nonqualified export taxable income. Pursuant to subdivision (v)(*b*) of this subparagraph, at the beginning of 1974, $500 of Y's accumulated DISC income is attributable to nonqualified export taxable income (iii)(*a*) of this subparagraph), i.e., $1,000—$500.

Example 2. The facts are the same as in example (1) except that in 1973, in addition to the taxable income described in such example, Y has $450 of taxable income from gross interest from producer's loans described in section 995(b)(1)(A). Under these facts, the deemed distribution of $450 under section 995(b)(1)(A) is treated in full under subdivision (i) of this subparagraph as gross income from sources within the United States. The deemed distribution under section 995(b)(1)(D) as in effect for taxable years beginning before January 1, 1976, of $9,500 will be treated in the same manner as in example (1), *i.e.,* $1,000 × $9,500 / ($19,450 − $450).

Example 3. (a) The facts are the same as in example (1) except that in 1973, in addition to the distribution described in such example, Y makes a deemed distribution taxable as a dividend of $100 under section 995(b)(1)(G) (relating to foreign investment attributable to producer's loans) and actual distributions of all of its previously taxed income and of $2,000 taxable as a dividend which reduces accumulated DISC income (as defined in subdivision (ii)(*b*) of this subparagraph). Under § 1.996-3(b)(3), accumulated DISC income is first reduced by the deemed distribution of $100 and then by the actual distribution taxable as a dividend of $2,000. As indicated in example (1), for 1972 Y did not have any nonqualified export taxable income. Assume that Y had accumulated DISC income of $12,000 at the end of 1973, $500 of which under example (1) is attributable to nonqualified export taxable income.
(b) The distribution from previously taxed income is excluded from gross income pursuant to section 996(a)(3).

(c) Of the deemed distribution of $100, X is treated under subdivision (iv)(*b*) as having $4.17, i.e., $100 × 500/12,000, from sources within the United States and $95.83, i.e., $100—$4.17, from sources without the United States.

(d) Of the actual distribution taxable as a dividend of $2,000, X is treated under subdivision (iv)(*b*) as having $83.33, i.e., $2,000 × 500/12,000, from sources within the United States and $1,916.67, i.e., $2,000—$83.33, from sources without the United States.

(e) The sum of the amounts deemed and actually distributed as dividends for 1973 that are treated as gross income from sources within the United States is as follows:

	Total dividend	Amount of dividend from sources within the United States
Deemed distribution under sec. 995(b)(1)(D) as in effect for taxable years beginning before January 1, 1976	$9,500	$500.00
Deemed distribution under section 995(b)(1)(G)	100	4.17
Actual distribution that reduces accumulated DISC income	2,000	83.33
Totals	$11,600	$587.50

Thus, pursuant to subdivision (v)(*b*) of this subparagraph, at the beginning of 1974 Y has $412.50, *i.e.,* $1,000—$587.50, of nonqualified export taxable income.

(f) The result would be the same if Y made an actual distribution taxable as a dividend of $1,500 on March 30, 1973, and another distribution of $500 on December 31, 1973.

Example 4. (a) Z is a corporation which uses the calendar year as its taxable year and which elects to be treated as a DISC beginning with 1972. W is its sole shareholder. At the end of the 1976 Z has previously taxed income of $12,000 and accumulated DISC income of $4,000, $900 of which is attributable to nonqualified export taxable income. In 1977, Z has $20,050 of taxable income from qualified export receipts, of which $550 is from gross income from producer's loans described in section 995(b)(1)(A); Z has $950 of taxable income giving rise to gross receipts which are not qualified export receipts, of which $450 is gain described in section 995(b)(1)(B). Of its total taxable income of $21,000 (which is equal to its earnings and profits for 1977), $1,000 is attributable to sales of military property. Z has an international boycott factor (determined under section 999) of .10, and made an illegal bribe (within the meaning of section 162(c)) of $1,265. The proportion which the amount of Z's adjusted base period export receipts bears to Z's export gross receipts for 1977 is .40 (see section 995(e)(1)). Z makes a

deemed distribution taxable as a dividend of $1,000 under section 995(b)(1)(G) (relating to foreign investment attributable to producer's loans) and actual distributions of $32,000.
(b) The deemed distributions of $550 under section 995(b)(1)(A) and $450 under section 995(b)(1)(B) are treated in full under subdivision (i) of this subparagraph as gross income from sources within the United States.

(c) Under these facts, Z has also made the following deemed distributions taxable as dividends to W under the following subdivisions of section 995(b)(1):

(D)	$500,	*i.e.*, $^1/_2$ × $1,000.
(E)	7,800,	*i.e.*,.40 × [$21,000 − $(550 + 450 + 500)].
(F)(i)	5,850,	*i.e.*, $^1/_2$ × [$21,000 − $550 + 450 + 500 + 7,800)].
(ii)	585,	*i.e.*, $5,850 × .10
(iii)	1,265	
Total	16,000	

(d) The portion of the total amount of these deemed distributions ($16,000 that is treated under the subdivision (iii)(*b*) as gross income from sources within the United States is computed as follows:
(1) The amount of nonqualified export taxable income is $500, i.e., taxable income giving rise to gross receipts which are not qualified export receipts ($950) minus gain described in section 995(b)(1) (B) or (C) ($450).

(2) $500 × ($16,000/$[21,000−(550 + 450)]) = $400.

The remainder of these distributions, $15,600 ($16,000 minus $400), is treated under subdivision (iii)(*b*) of this subparagraph as gross income from sources without the United States.

(e) The earnings and profits accounts of Z at the end of 1977 are computed as follows:

	Total earnings and profits	Previously taxed income	Accumulated DISC income attributable to taxable income from translations which give rise to gross receipts which—	
			Are qualified export receipts	Are not qualified export receipts
(1) Balance: January 1, 1977	$16,000	$12,000	$3,100	$900
(2) Earnings and profits for 1977, before actual and section 955(b)(1)(G) distributions	21,000	17,000	3,900	[1] 100
(3) Balance: December 31, 1977	37,000	29,000	7,000	1,000
(4) Distribution under section 995(b)(1)(G)		1,000	(875)	[2] (125)
(5) Balance	37,000	30,000	6,125	875
(6) Actual distribution	(32,000)	(30,000)	(1,750)	[3] (250)
(7) Balance: January 1, 1978	5,000		4,375	625

[1] The total of nonqualified export taxable income ($500) minus the portion of such income, under subdivision (iii)(b) of this subparagraph, deemed distributed pursuant to section 995(b)(1)(D), (E), and (F) ($400), as computed under (d)(2) of this example.

[2] Under subdivision (iv)(b) of this subparagraph, $1,000/$8,000 × $1,000.

[3] Under subdivision (iv)(b) of this subparagraph, $1,000/$8,000 × $2,000 (amount of actual distribution that reduces accumulated DISC income).

(6) ***Substitute dividend payments.*** A substitute dividend payment is a payment, made to the transferor of a security in a securities lending transaction or a sale-repurchase transaction, of an amount equivalent to a dividend distribution which the owner of the transferred security is entitled to receive during the term of the transaction. A securities lending transaction is a transfer of one or more securities that is described in section 1058(a) or a substantially similar transaction. A sale-repurchase transaction is an agreement under which a person transfers a security in exchange for cash and simultaneously agrees to receive substantially identical securities from the transferee in the future in exchange for cash. A substitute dividend payment shall be sourced in the same manner as the distributions with respect to the transferred security for purposes of this section and § 1.862-1. See also §§ 1.864-5(b)(2)(iii), 1.871-7(b)(2) and 1.881-2(b)(2) for the character of such payments and § 1.894-1(c) for the application of tax treaties to these transactions.

(b) ***Special rules*** —

(1) ***Foreign corporation having no gross income for period preceding declaration of dividend.*** If the foreign corporation has no gross income from any source for the 3-year period (or part thereof) specified in paragraph (a)(3)(i) of this section, the 50-percent test, or the apportionment formula, as the case may be, described in such paragraph shall be applied solely with respect to the taxable year of such corporation in which the declaration of the dividend occurs. This subparagraph applies whether the lack of gross income for the 3-year period (or part thereof) stems from the business inactivity of the foreign corporation, from the fact that such corporation is newly created or organized, or from any other cause.

(2) ***Transitional rule.*** For purposes of applying paragraph (a)(3)(i) of this section, the gross income of the foreign corporation for any period before the first taxable year beginning after December 31, 1966, which is from sources within the United States (determined as provided by sections 861 through 863, and the regulations thereunder, as in effect immediately before amendment by section 102 of the Foreign Investors Tax Act of 1966 (Pub. L. 89-809, 80 Stat. 1541)) shall be treated as gross income for such period which is effectively connected with the conduct of a trade or business within the United States by such foreign corporation.

(3) ***Gross income determinations.*** In making determinations under subparagraph (2) or (3) of paragraph (a) of this section, or subparagraph (2) of this paragraph—

(i) The gross income of a domestic corporation is to be determined by excluding any items specifically excluded from gross income under chapter 1 of the Code.

(ii) The gross income of a foreign corporation which is effectively connected with the conduct of a trade or business in the United States is to be determined under section 882(b)(2) and by excluding any items specifically excluded from gross income under chapter 1 of the Code, and

(iii) The gross income from all sources of a foreign corporation is to be determined without regard to section 882(b) and without excluding any items otherwise specifically excluded from gross income under chapter 1 of the Code.

(c) ***Statement with return.*** Any taxpayer who is required to file a return and applies any provision of this section to exclude any dividend from his gross income must file with his return a statement setting forth the amount so excluded, the date of its receipt, the name and address of the corporation paying the dividend, and, if known, the location of the records which substantiate the amount of the exclusion. A statement from the paying corporation setting forth such information and indicating the amount of the dividend to be treated as income from sources within the United States may be used for this purpose. See §§ 1.6012-1(b)(1)(i) and 1.6012-2 (g)(1)(i).

(d) ***Source of income inclusions under sections 951, 951A, and 1293 and associated section 78 dividends.*** For purposes of sections 861 and 862 and §§ 1.861-1 and 1.862-1, and for purposes of applying this section, the amount included in gross income of a United States person under sections 951, 951A, and 1293 and the associated section 78 dividend for the taxable year with respect to a foreign corporation are treated as dividends received directly by the United States person from the foreign corporation that generated the inclusion. See section 904(h) and § 1.904-5(m) for rules concerning the resourcing of inclusions under sections 951, 951A, and 1293.

(e) ***Applicability dates.*** Except as otherwise provided in this paragraph (e) this section applies with respect to dividends received or accrued after December 31, 1966. Paragraph (a)(5) of this section applies to certain dividends from a DISC or former DISC in taxable years ending after December 31, 1971. Paragraph (a)(6) of this section is applicable to payments made after November 13, 1997. For purposes of paragraph (a)(5) of this section, any reference to a distribution taxable as a dividend under section 995(b)(1)(F) (ii)

and (iii) for taxable years beginning after December 31, 1975, shall also constitute a reference to any distribution taxable as a dividend under section 995(b)(1)(F) (ii) and (iii) for taxable years beginning after November 30, 1975, but before January 1, 1976. For corresponding rules applicable with respect to dividends received or accrued before January 1, 1967, see 26 CFR 1.861-3 (Revised as of January 1, 1972). Paragraph (a)(2) of this section applies to taxable years ending after April 9, 2008. Paragraph (d) of this section applies to taxable years ending on or after November 2, 2020.

[T.D. 6500, 25 FR 11910, Nov. 26, 1960]

Editorial Note: For FEDERAL REGISTER citations affecting § 1.861-3, see the List of CFR Sections Affected, which appears in the Finding Aids section of the printed volume and at *www.govinfo.gov*.

§ 1.861-4 Compensation for labor or personal services.

(a) ***Compensation for labor or personal services performed wholly within the United States.***

(1) Generally, compensation for labor or personal services, including fees, commissions, fringe benefits, and similar items, performed wholly within the United States is gross income from sources within the United States.

(i) The labor or services are performed by a nonresident alien individual temporarily present in the United States for a period or periods not exceeding a total of 90 days during his taxable year,

(ii) The compensation for such labor or services does not exceed in the aggregate a gross amount of $3,000, and

(iii) The compensation is for labor or services performed as an employee of, or under any form of contract with—

(*a*) A nonresident alien individual, foreign partnership, or foreign corporation, not engaged in trade or business within the United States, or

(*b*) An individual who is a citizen or resident of the United States, a domestic partnership, or a domestic corporation, if such labor or services are performed for an office or place of business maintained in a foreign country or in a possession of the United States by such individual, partnership, or corporation.

(2) As a general rule, the term “day”, as used in subparagraph (1)(i) of this paragraph, means a calendar day during any portion of which the nonresident alien individual is physically present in the United States.

(3) Solely for purposes of applying this paragraph, the nonresident alien individual, foreign partnership, or foreign corporation for which the nonresident alien individual is performing personal services in the United States shall not be considered to be engaged in trade or business in the United States by reason of the performance of such services by such individual.

(4) In determining for purposes of subparagraph (1)(ii) of this paragraph whether compensation received by the nonresident alien individual exceeds in the aggregate a gross amount of $3,000, any amounts received by the individual from an employer as advances or reimbursements for travel expenses incurred on behalf of the employer shall be omitted from the compensation received by the individual, to the extent of expenses incurred, where he was required to account and did account to his employer for such expenses and has met the tests for such accounting provided in § 1.162-17

and paragraph (e)(4) of § 1.274-5. If advances or reimbursements exceed such expenses, the amount of the excess shall be included as compensation for personal services for purposes of such subparagraph. Pensions and retirement pay attributable to labor or personal services performed in the United States are not to be taken into account for purposes of subparagraph (1)(ii) of this paragraph.

(5) For definition of the term "United States", when used in a geographical sense, see sections 638 and 7701(a)(9).

(b) ***Compensation for labor or personal services performed partly within and partly without the United States*** —

(1) ***Compensation for labor or personal services performed by persons other than individuals*** —

(i) ***In general.*** In the case of compensation for labor or personal services performed partly within and partly without the United States by a person other than an individual, the part of that compensation that is attributable to the labor or personal services performed within the United States, and that is therefore included in gross income as income from sources within the United States, is determined on the basis that most correctly reflects the proper source of the income under the facts and circumstances of the particular case. In many cases, the facts and circumstances will be such that an apportionment on the time basis, as defined in paragraph (b)(2)(ii)(E) of this section, will be acceptable.

(ii) ***Example.*** The application of paragraph (b)(1)(i) is illustrated by the following example.

Example. Corp X, a domestic corporation, receives compensation of $150,000 under a contract for services to be performed concurrently in the United States and in several foreign countries by numerous Corp X employees. Each Corp X employee performing services under this contract performs his or her services exclusively in one jurisdiction. Although the number of employees (and hours spent by employees) performing services under the contract within the United States equals the number of employees (and hours spent by employees) performing services under the contract without the United States, the compensation paid to employees performing services under the contract within the United States is higher because of the more sophisticated nature of the services performed by the employees within the United States. Accordingly, the payroll cost for employees performing services under the contract within the United States is $20,000 out of a total contract payroll cost of $30,000. Under these facts and circumstances, a determination based upon relative payroll costs would be the basis that most correctly reflects the proper source of the income received under the contract. Thus, of the $150,000 of compensation included in Corp X's gross income, $100,000 ($150,000 × $20,000/$30,000) is attributable to the labor or personal services performed within the United States and $50,000 ($150,000 × $10,000/$30,000) is attributable to the labor or personal services performed without the United States.

(2) ***Compensation for labor or personal services performed by an individual*** —

(i) ***In general.*** Except as provided in paragraph (b)(2)(ii) of this section, in the case of compensation for labor or personal services performed partly within and partly without the United States by an individual, the part of such compensation that is attributable to the labor or personal services performed within the United States, and that is therefore included in gross income as income from sources within the United States, is determined on the basis that most

correctly reflects the proper source of that income under the facts and circumstances of the particular case. In many cases, the facts and circumstances will be such that an apportionment on a time basis, as defined in paragraph (b)(2)(ii)(E) of this section, will be acceptable.

(ii) ***Employee compensation*** —

(A) ***In general.*** Except as provided in paragraph (b)(2)(ii)(B) or (C) of this section, in the case of compensation for labor or personal services performed partly within and partly without the United States by an individual as an employee, the part of such compensation that is attributable to the labor or personal services performed within the United States, and that is therefore included in gross income as income from sources within the United States, is determined on a time basis, as defined in paragraph (b)(2)(ii)(E) of this section.

(B) ***Certain fringe benefits sourced on a geographical basis.*** Except as provided in paragraph (b)(2)(ii)(C) of this section, items of compensation of an individual as an employee for labor or personal services performed partly within and partly without the United States that are described in paragraphs (b)(2)(ii)(D)(*1*) through (*6*) of this section are sourced on a geographical basis in accordance with those paragraphs.

(C) ***Exceptions and special rules*** —

(*1*) ***Alternative basis*** —

(*i*) ***Individual as an employee generally.*** An individual may determine the source of his or her compensation as an employee for labor or personal services performed partly within and partly without the United States under an alternative basis if the individual establishes to the satisfaction of the Commissioner that, under the facts and circumstances of the particular case, the alternative basis more properly determines the source of the compensation than a basis described in paragraph (b)(2)(ii)(A) or (B), whichever is applicable, of this section. An individual that uses an alternative basis must retain in his or her records documentation setting forth why the alternative basis more properly determines the source of the compensation. In addition, the individual must provide the information related to the alternative basis required by applicable Federal tax forms and accompanying instructions.

(*ii*) ***Determination by Commissioner.*** The Commissioner may, under the facts and circumstances of the particular case, determine the source of compensation that is received by an individual as an employee for labor or personal services performed partly within and partly without the United States under an alternative basis other than a basis described in paragraph (b)(2)(ii)(A) or (B) of this section if such compensation either is not for a specific time period or constitutes in substance a fringe benefit described in paragraph (b)(2)(ii)(D) of this section notwithstanding a failure to meet any requirement of paragraph (b)(2)(ii)(D) of this section. The Commissioner may make this determination only if such alternative basis determines the source of compensation in a more reasonable manner than the basis used by the individual pursuant to paragraph (b)(2)(ii)(A) or (B) of this section.

(*2*) ***Ruling or other administrative pronouncement with respect to groups of taxpayers.*** The Commissioner may, by ruling or other administrative pronouncement applying to similarly situated taxpayers generally, permit individuals to determine the source of

their compensation as an employee for labor or personal services performed partly within and partly without the United States under an alternative basis. Any such individual shall be treated as having met the requirement to establish such alternative basis to the satisfaction of the Commissioner under the facts and circumstances of the particular case, provided that the individual meets the other requirements of paragraph (b)(2)(ii)(C)(*1*)(*i*) of this section. The Commissioner also may, by ruling or other administrative pronouncement, indicate the circumstances in which he will require individuals to determine the source of certain compensation as an employee for labor or personal services performed partly within and partly without the United States under an alternative basis pursuant to the authority under paragraph (b)(2)(ii)(C)(*1*)(*ii*) of this section.

(*3*) ***Artists and athletes.*** [Reserved]

(D) ***Fringe benefits sourced on a geographical basis.*** Except as provided in paragraph (b)(2)(ii)(C) of this section, compensation of an individual as an employee for labor or personal services performed partly within and partly without the United States in the form of the following fringe benefits is sourced on a geographical basis as indicated in this paragraph (b)(2)(ii)(D). The amount of the compensation in the form of the fringe benefit must be reasonable, and the individual must substantiate such amounts by adequate records or by sufficient evidence under rules similar to those set forth in § 1.274-5T(c) or (h) or § 1.132-5. For purposes of this paragraph (b)(2)(ii)(D), the term *principal place of work* has the same meaning that it has for purposes of section 217 and § 1.217-2(c)(3).

(*1*) ***Housing fringe benefit.*** The source of compensation in the form of a housing fringe benefit is determined based on the location of the individual's principal place of work. For purposes of this paragraph (b)(2)(ii)(D)(*1*), a housing fringe benefit includes payments to or on behalf of an individual (and the individual's family if the family resides with the individual) only for rent, utilities (other than telephone charges), real and personal property insurance, occupancy taxes not deductible under section 164 or 216(a), nonrefundable fees paid for securing a leasehold, rental of furniture and accessories, household repairs, residential parking, and the fair rental value of housing provided in kind by the individual's employer. A housing fringe benefit does not include payments for expenses or items set forth in § 1.911-4(b)(2).

(*2*) ***Education fringe benefit.*** The source of compensation in the form of an education fringe benefit for the education expenses of the individual's dependents is determined based on the location of the individual's principal place of work. For purposes of this paragraph (b)(2)(ii)(D)(*2*), an education fringe benefit includes payments only for qualified tuition and expenses of the type described in section 530(b)(4)(A)(i) (regardless of whether incurred in connection with enrollment or attendance at a school) and expenditures for room and board and uniforms as described in section 530(b)(4)(A)(ii) with respect to education at an elementary or secondary educational institution.

(*3*) ***Local transportation fringe benefit.*** The source of compensation in the form of a local transportation fringe benefit is determined based on the location of the individual's principal place of work. For purposes of this paragraph (b)(2)(ii)(D)(*3*), an individual's local transportation fringe benefit is the amount that the individual receives as compensation for local transportation of the individual or the individual's spouse or

dependents at the location of the individual's principal place of work. The amount treated as a local transportation fringe benefit is limited to the actual expenses incurred for local transportation and the fair rental value of any vehicle provided by the employer and used predominantly by the individual or the individual's spouse or dependents for local transportation. For this purpose, actual expenses incurred for local transportation do not include the cost (including interest) of the purchase by the individual, or on behalf of the individual, of an automobile or other vehicle.

(*4*) ***Tax reimbursement fringe benefit.*** The source of compensation in the form of a foreign tax reimbursement fringe benefit is determined based on the location of the jurisdiction that imposed the tax for which the individual is reimbursed.

(*5*) ***Hazardous or hardship duty pay fringe benefit.*** The source of compensation in the form of a hazardous or hardship duty pay fringe benefit is determined based on the location of the hazardous or hardship duty zone for which the hazardous or hardship duty pay fringe benefit is paid. For purposes of this paragraph (b)(2)(ii)(D)(*5*), a hazardous or hardship duty zone is any place in a foreign country which is either designated by the Secretary of State as a place where living conditions are extraordinarily difficult, notably unhealthy, or where excessive physical hardships exist, and for which a post differential of 15 percent or more would be provided under section 5925(b) of title 5 of the U.S. Code to any officer or employee of the U.S. Government present at that place, or where a civil insurrection, civil war, terrorism, or wartime conditions threatens physical harm or imminent danger to the health and well-being of the individual. Compensation provided an employee during the period that the employee performs labor or personal services in a hazardous or hardship duty zone may be treated as a hazardous or hardship duty pay fringe benefit only if the employer provides the hazardous or hardship duty pay fringe benefit only to employees performing labor or personal services in a hazardous or hardship duty zone. The amount of compensation treated as a hazardous or hardship duty pay fringe benefit may not exceed the maximum amount that the U.S. government would allow its officers or employees present at that location.

(*6*) ***Moving expense reimbursement fringe benefit.*** Except as otherwise provided in this paragraph (b)(2)(ii)(D)(*6*), the source of compensation in the form of a moving expense reimbursement is determined based on the location of the employee's new principal place of work. The source of such compensation is determined based on the location of the employee's former principal place of work, however, if the individual provides sufficient evidence that such determination of source is more appropriate under the facts and circumstances of the particular case. For purposes of this paragraph (b)(2)(ii)(D)(*6*), sufficient evidence generally requires an agreement, between the employer and the employee, or a written statement of company policy, which is reduced to writing before the move and which is entered into or established to induce the employee or employees to move to another country. Such written statement or agreement must state that the employer will reimburse the employee for moving expenses that the employee incurs to return to the employee's former principal place of work regardless of whether he or she continues to work for the employer after returning to that location. The writing may contain certain conditions upon which the right to reimbursement is determined as long as those conditions set

forth standards that are definitely ascertainable and can only be fulfilled prior to, or through completion of, the employee's return move to the employee's former principal place of work.

(E) ***Time basis.*** The amount of compensation for labor or personal services performed within the United States determined on a time basis is the amount that bears the same relation to the individual's total compensation as the number of days of performance of the labor or personal services by the individual within the United States bears to his or her total number of days of performance of labor or personal services. A unit of time less than a day may be appropriate for purposes of this calculation. The time period for which the compensation for labor or personal services is made is presumed to be the calendar year in which the labor or personal services are performed, unless the taxpayer establishes to the satisfaction of the Commissioner, or the Commissioner determines, that another distinct, separate, and continuous period of time is more appropriate. For example, a transfer during a year from a position in the United States to a foreign posting that lasted through the end of that year would generally establish two separate time periods within that taxable year. The first of these time periods would be the portion of the year preceding the start of the foreign posting, and the second of these time periods would be the portion of the year following the start of the foreign posting. However, in the case of a foreign posting that requires short-term returns to the United States to perform services for the employer, such short-term returns would not be sufficient to establish distinct, separate, and continuous time periods within the foreign posting time period but would be relevant to the allocation of compensation relating to the overall time period. In each case, the source of the compensation on a time basis is based upon the number of days (or unit of time less than a day, if appropriate) in that separate time period.

(F) ***Multi-year compensation arrangements.*** The source of multi-year compensation is determined generally on a time basis, as defined in paragraph (b)(2)(ii)(E) of this section, over the period to which such compensation is attributable. For purposes of this paragraph (b)(2)(ii)(F), *multi-year compensation* means compensation that is included in the income of an individual in one taxable year but that is attributable to a period that includes two or more taxable years. The determination of the period to which such compensation is attributable, for purposes of determining its source, is based upon the facts and circumstances of the particular case. For example, an amount of compensation that specifically relates to a period of time that includes several calendar years is attributable to the entirety of that multi-year period. The amount of such compensation that is treated as from sources within the United States is the amount that bears the same relationship to the total multi-year compensation as the number of days (or unit of time less than a day, if appropriate) that labor or personal services were performed within the United States in connection with the project bears to the total number of days (or unit of time less than a day, if appropriate) that labor or personal services were performed in connection with the project. In the case of stock options, the facts and circumstances generally will be such that the applicable period to which the compensation is attributable is the period between the grant of an option and the date on which all employment-related conditions for its exercise have been satisfied (the vesting of the option).

(G) ***Examples.*** The following examples illustrate the application of this paragraph (b)(2)(ii):

Example 1. B, a nonresident alien individual, was employed by Corp M, a domestic corporation, from March 1 to December 25 of the taxable year, a total of 300 days, for which B received compensation in the amount of $80,000. Under B's employment contract with Corp M, B was subject to call at all times by Corp M and was in a payment status on a 7-day week basis. Pursuant to that contract, B performed services (or was available to perform services) within the United States for 180 days and performed services (or was available to perform services) without the United States for 120 days. None of B's $80,000 compensation was for fringe benefits as identified in paragraph (b)(2)(ii)(D) of this section. B determined the amount of compensation that is attributable to his labor or personal services performed within the United States on a time basis under paragraph (b)(2)(ii)(A) and (E) of this section. B did not assert, pursuant to paragraph (b)(2)(ii)(C)(*1*)(*i*) of this section, that, under the particular facts and circumstances, an alternative basis more properly determines the source of that compensation than the time basis. Therefore, B must include in income from sources within the United States $48,000 ($80,000 × 180/300) of his compensation from Corporation M.

Example 2. (i) Same facts as in *Example 1* except that Corp M had a company-wide arrangement with its employees, including B, that they would receive an education fringe benefit, as described in paragraph (b)(2)(ii)(D)(*2*) of this section, while working in the United States. During the taxable year, B incurred education expenses for his dependent daughter that qualified for the education fringe benefit in the amount of $10,000, for which B received a reimbursement from Corp M. B did not maintain adequate records or sufficient evidence of this fringe benefit as required by paragraph (b)(2)(ii)(D) of this section. When B filed his Federal income tax return for the taxable year, B did not apply paragraphs (b)(2)(ii)(B) and (D)(*2*) of this section to treat the compensation in the form of the education fringe benefit as income from sources within the United States, the location of his principal place of work during the 300-day period. Rather, B combined the $10,000 reimbursement with his base compensation of $80,000 and applied the time basis of paragraph (b)(2)(ii)(A) of this section to determine the source of his gross income.

(ii) On audit, B argues that because he failed to substantiate the education fringe benefit in accordance with paragraph (b)(2)(ii)(D) of this section, his entire employment compensation from Corp M is sourced on a time basis pursuant to paragraph (b)(2)(ii)(A) of this section. The Commissioner, after reviewing Corp M's fringe benefit arrangement, determines, pursuant to paragraph (b)(2)(ii)(C)(*1*)(*ii*) of this section, that the $10,000 educational expense reimbursement constitutes in substance a fringe benefit described in paragraph (b)(2)(ii)(D)(*2*) of this section, notwithstanding a failure to meet all of the requirements of paragraph (b)(2)(ii)(D) of this section, and that an

alternative geographic source basis, under the facts and circumstances of this particular case, is a more reasonable manner to determine the source of the compensation than the time basis used by B.

Example 3. (i) A, a United States citizen, is employed by Corp N, a domestic corporation. A's principal place of work is in the United States. A earns an annual salary of $100,000. During the first quarter of the calendar year (which is also A's taxable year), A performed services entirely within the United States. At the beginning of the second quarter of the calendar year, A was transferred to Country X for the remainder of the year and received, in addition to her annual salary, $30,000 in fringe benefits that are attributable to her new principal place of work in Country X. Corp N paid these fringe benefits separately from A's annual salary. Corp N supplied A with a statement detailing that $25,000 of the fringe benefit was paid for housing, as defined in paragraph (b)(2)(ii)(D)(*1*) of this section, and $5,000 of the fringe benefit was paid for local transportation, as defined in paragraph (b)(2)(ii)(D)(*3*) of this section. None of the local transportation fringe benefit is excluded from the employee's gross income as a qualified transportation fringe benefit under section 132(a)(5). Under A's employment contract, A was required to work on a 5-day week basis, Monday through Friday. During the last three quarters of the year, A performed services 30 days in the United States and 150 days in Country X and other foreign countries.
(ii) A determined the source of all of her compensation from Corp N pursuant to paragraphs (b)(2)(ii)(A), (B), and (D)(*1*) and (*3*) of this section. A did not assert, pursuant to paragraph (b)(2)(ii)(C)(*1*)(i) of this section, that, under the particular facts and circumstances, an alternative basis more properly determines the source of that compensation than the bases set forth in paragraphs (b)(2)(ii)(A), (B), and (D)(*1*) and (*3*) of this section. However, in applying the time basis set forth in paragraph (b)(2)(ii)(E) of this section, A establishes to the satisfaction of the Commissioner that the first quarter of the calendar year and the last three quarters of the calendar year are two separate, distinct, and continuous periods of time. Accordingly, $25,000 of A's annual salary is attributable to the first quarter of the year (25 percent of $100,000). This amount is entirely compensation that was attributable to the labor or personal services performed within the United States and is, therefore, included in gross income as income from sources within the United States. The balance of A's compensation as an employee of Corp N, $105,000 (which includes the $30,000 in fringe benefits that are attributable to the location of A's principal place of work in Country X), is compensation attributable to the final three quarters of her taxable year. During those three quarters, A's

periodic performance of services in the United States does not result in distinct, separate, and continuous periods of time. Of the $75,000 paid for annual salary, $12,500 (30/180 × $75,000) is compensation that was attributable to the labor or personal services performed within the United States and $62,500 (150/180 × $75,000) is compensation that was attributable to the labor or personal services performed outside the United States. Pursuant to paragraphs (b)(2)(ii)(B) and (D)(*1*) and (*3*) of this section, A sourced the $25,000 received for the housing fringe benefit and the $5,000 received for the local transportation fringe benefit based on the location of her principal place of work, Country X. Accordingly, A included the $30,000 in fringe benefits in her gross income as income from sources without the United States.

Example 4. Same facts as in *Example 3.* Of the 150 days during which A performed services in Country X and in other foreign countries (during the final three quarters of A's taxable year), she performed 30 days of those services in Country Y. Country Y is a country designated by the Secretary of State as a place where living conditions are extremely difficult, notably unhealthy, or where excessive physical hardships exist and for which a post differential of 15 percent or more would be provided under section 5925(b) of title 5 of the U.S. Code to any officer or employee of the U.S. government present at that place. Corp N has a policy of paying its employees a $65 premium per day for each day worked in countries so designated. The $65 premium per day does not exceed the maximum amount that the U. S. government would pay its officers or employees stationed in Country Y. Because A performed services in Country Y for 30 days, she earned additional compensation of $1,950. The $1,950 is considered a hazardous duty or hardship pay fringe benefit and is sourced under paragraphs (b)(2)(ii)(B) and (D)(*5*) of this section based on the location of the hazardous or hardship duty zone, Country Y. Accordingly, A included the amount of the hazardous duty or hardship pay fringe benefit ($1,950) in her gross income as income from sources without the United States.

Example 5. (i) During 2006 and 2007, Corp P, a domestic corporation, employed four United States citizens, E, F, G, and H to work in its manufacturing plant in Country V. As part of his or her compensation package, each employee arranged for local transportation unrelated to Corp P's business needs. None of the local transportation fringe benefit is excluded from the employee's gross income as a qualified transportation fringe benefit under section 132(a)(5) and (f).
(ii) Under the terms of the compensation package that E negotiated with Corp P, Corp P permitted E to use an automobile owned by Corp P. In addition, Corp P agreed to reimburse E for all expenses incurred by E in maintaining and operating the automobile, including gas and parking. Provided that the local transportation fringe benefit meets the requirements of paragraph

(b)(2)(ii)(D)(*3*) of this section, E's compensation with respect to the fair rental value of the automobile and reimbursement for the expenses E incurred is sourced under paragraphs (b)(2)(ii)(B) and (D)(*3*) of this section based on E's principal place of work in Country V. Thus, the local transportation fringe benefit will be included in E's gross income as income from sources without the United States.

(iii) Under the terms of the compensation package that F negotiated with Corp P, Corp P let F use an automobile owned by Corp P. However, Corp P did not agree to reimburse F for any expenses incurred by F in maintaining and operating the automobile. Provided that the local transportation fringe benefit meets the requirements of paragraph (b)(2)(ii)(D)(*3*) of this section, F's compensation with respect to the fair rental value of the automobile is sourced under paragraphs (b)(2)(ii)(B) and (D)(*3*) of this section based on F's principal place of work in Country V. Thus, the local transportation fringe benefit will be included in F's gross income as income from sources without the United States.

(iv) Under the terms of the compensation package that G negotiated with Corp P, Corp P agreed to reimburse G for the purchase price of an automobile that G purchased in Country V. Corp P did not agree to reimburse G for any expenses incurred by G in maintaining and operating the automobile. Because the cost to purchase an automobile is not a local transportation fringe benefit as defined in paragraph (b)(2)(ii)(D)(*3*) of this section, the source of the compensation to G will be determined pursuant to paragraph (b)(2)(ii)(A) or (C) of this section.

(v) Under the terms of the compensation package that H negotiated with Corp P, Corp P agreed to reimburse H for the expenses that H incurred in maintaining and operating an automobile, including gas and parking, which H purchased in Country V. Provided that the local transportation fringe benefit meets the requirements of paragraph (b)(2)(ii)(D)(*3*) of this section, H's compensation with respect to the reimbursement for the expenses H incurred is sourced under paragraphs (b)(2)(ii)(B) and (D)(*3*) of this section based on H's principal place of work in Country V. Thus, the local transportation fringe benefit will be included in H's gross income as income from sources without the United States.

Example 6. (i) On January 1, 2006, Company Q compensates employee J with a grant of options to which section 421 does not apply that do not have a readily ascertainable fair market value when granted. The stock options permit

J to purchase 100 shares of Company Q stock for $5 per share. The stock options do not become exercisable unless and until J performs services for Company Q (or a related company) for 5 years. J works for Company Q for the 5 years required by the stock option grant. In years 2006-08, J performs all of his services for Company Q within the United States. In 2009, J performs $^{1}/_{2}$ of his services for Company Q within the United States and $^{1}/_{2}$ of his services for Company Q without the United States. In year 2010, J performs his services entirely without the United States. On December 31, 2012, J exercises the options when the stock is worth $10 per share. J recognizes $500 in taxable compensation (($10−$5) × 100) in 2012.
(ii) Under the facts and circumstances, the applicable period is the 5-year period between the date of grant (January 1, 2006) and the date the stock options become exercisable (December 31, 2010). On the date the stock options become exercisable, J performs all services necessary to obtain the compensation from Company Q. Accordingly, the services performed after the date the stock options become exercisable are not taken into account in sourcing the compensation from the stock options. Therefore, pursuant to paragraph (b)(2)(ii)(A), since J performs $3^{1}/_{2}$ years of services for Company Q within the United States and $1^{1}/_{2}$ years of services for Company Q without the United States during the 5-year period, $^{7}/_{10}$ of the $500 of compensation (or $350) recognized in 2012 is income from sources within the United States and the remaining $^{3}/_{10}$ of the compensation (or $150) is income from sources without the United States.

(c) ***Coastwise travel.*** Except as to income excluded by paragraph (a) of this section, wages received for services rendered inside the territorial limits of the United States and wages of an alien seaman earned on a coastwise vessel are to be regarded as from sources within the United States.

(d) ***Effective date.*** This section applies with respect to taxable years beginning after December 31, 1966. For corresponding rules applicable to taxable years beginning before January 1, 1967, see 26 CFR 1.861-4 (Revised as of January 1, 1972). Paragraph (b) and the first sentence of paragraph (a)(1) of this section apply to taxable years beginning on or after July 14, 2005.

[T.D. 6500, 25 FR 11910, Nov. 26, 1960; 25 FR 14021, Dec. 31, 1960, as amended by T.D. 7378, 40 FR 45433, Oct. 2, 1975; 40 FR 48508, Oct. 16, 1975; T.D. 9212, 70 FR 40665, July 14, 2005]

§ 1.861-5 Rentals and royalties.

Gross income from sources within the United States includes rentals or royalties from property located in the United States or from any interest in such property, including rentals or royalties for the use of, or for the privilege of using, in the United States, patents, copyrights, secret processes and formulas, good will, trademarks, trade brands, franchises, and other like property. The income arising from the rental of property, whether tangible or intangible,

located within the United States, or from the use of property, whether tangible or intangible, within the United States, is from sources within the United States. For taxable years beginning after December 31, 1966, gains described in section 871(a)(1)(D) and section 881(a)(4) from the sale or exchange after October 4, 1966, of patents, copyrights, and other like property shall be treated, as provided in section 871(e)(2), as rentals or royalties for the use of, or privilege of using, property or an interest in property. See paragraph (e) of § 1.871-11.

[T.D. 7378, 40 FR 45434, Oct. 2, 1975]

§ 1.861-6 Sale of real property.

Gross income from sources within the United States includes gain, computed under the provisions of section 1001 and the regulations thereunder, derived from the sale or other disposition of real property located in the United States. For the treatment of capital gains and losses, see subchapter P (section 1201 and following), chapter 1 of the Code, and the regulations thereunder.

§ 1.861-7 Sale of personal property.

(a) ***General.*** Gains, profits, and income derived from the purchase and sale of personal property shall be treated as derived entirely from the country in which the property is sold. Thus, gross income from sources within the United States includes gains, profits, and income derived from the purchase of personal property without the United States and its sale within the United States.

(b) ***Purchase within a possession.*** Notwithstanding paragraph (a) of this section, income derived from the purchase of personal property within a possession of the United States and its sale within the United States shall be treated as derived partly from sources within and partly from sources without the United States. See section 863(b)(3) and § 1.863-2.

(c) ***Country in which sold.*** For purposes of part I (section 861 and following), subchapter N, chapter 1 of the Code, and the regulations thereunder, a sale of personal property is consummated at the time when, and the place where, the rights, title, and interest of the seller in the property are transferred to the buyer. Where bare legal title is retained by the seller, the sale shall be deemed to have occurred at the time and place of passage to the buyer of beneficial ownership and the risk of loss. However, in any case in which the sales transaction is arranged in a particular manner for the primary purpose of tax avoidance, the foregoing rules will not be applied. In such cases, all factors of the transaction, such as negotiations, the execution of the agreement, the location of the property, and the place of payment, will be considered, and the sale will be treated as having been consummated at the place where the substance of the sale occurred. For determining the place of sale of copyrighted articles transferred through an electronic medium, see § 1.861-18(f)(2)(ii).

(d) ***Production and sale.*** For provisions respecting the source of income derived from the sale of personal property produced by the taxpayer, see section 863(b)(2) and paragraphs (b) of §§ 1.863-1 and 1.863-2.

(e) ***Section 306 stock.*** For determining the source of gain on the disposition of section 306 stock, see section 306(f) and the regulations thereunder.

[T.D. 6500, 25 FR 11910, Nov. 26, 1960; 25 FR 14021, Dec. 31, 1960, as amended by T.D. 10022, 90 FR 2988, Jan. 14, 2025]

§ 1.861-8 Computation of taxable income from sources within the United States and from other sources and activities.

(a) *In general* —

(1) ***Scope.*** Sections 861(b) and 863(a) state in general terms how to determine taxable income of a taxpayer from sources within the United States after gross income from sources within the United States has been determined. Sections 862(b) and 863(a) state in general terms how to determine taxable income of a taxpayer from sources without the United States after gross income from sources without the United States has been determined. This section provides specific guidance for applying the cited Code sections by prescribing rules for the allocation and apportionment of expenses, losses, and other deductions (referred to collectively in this section as "deductions") of the taxpayer. The rules contained in this section apply in determining taxable income of the taxpayer from specific sources and activities under other sections of the Code, referred to in this section as operative sections. See paragraph (f)(1) of this section for a list and description of operative sections. The term *section 861 regulations* means this section and §§ 1.861-8T, 1.861-9, 1.861-9T, 1.861-10, 1.861-10T, 1.861-11, 1.861-11T, 1.861-12, 1.861-12T, 1.861-13, 1.861-14, 1.861-14T, 1.861-17, and 1.861-20.

(2) ***Allocation and apportionment of deductions in general.*** A taxpayer to which this section applies is required to allocate deductions to a class of gross income and, then, if necessary to make the determination required by the operative section of the Code, to apportion deductions within the class of gross income between the statutory grouping of gross income (or among the statutory groupings) and the residual grouping of gross income. Except for deductions, if any, which are not definitely related to gross income (see paragraphs (c)(3) and (e)(9) of this section) and which, therefore, are ratably apportioned to all gross income, all deductions of the taxpayer (except the deductions for personal exemptions enumerated in paragraph (e)(11) of this section) must be so allocated and apportioned. As further detailed below, allocations and apportionments are made on the basis of the factual relationship of deductions to gross income.

(3) ***Class of gross income.*** For purposes of this section, the gross income to which a specific deduction is definitely related is referred to as a "class of gross income" and may consist of one or more items (or subdivisions of these items) of gross income enumerated in section 61, namely:

(i) Compensation for services, including fees, commissions, and similar items;

(ii) Gross income derived from business;

(iii) Gains derived from dealings in property;

(iv) Interest;

(v) Rents;

(vi) Royalties;

(vii) Dividends;

(viii) Alimony and separate maintenance payments;

(ix) Annuities;

(x) Income from life insurance and endowment contracts;

(xi) Pensions;

(xii) Income from discharge of indebtedness;

(xiii) Distributive share of partnership gross income;

(xiv) Income in respect of a decedent;

(xv) Income from an interest in an estate or trust.

(4) ***Statutory grouping of gross income and residual grouping of gross income.*** For purposes of this section, the term "statutory grouping of gross income" or "statutory grouping" means the gross income from a specific source or activity which must first be determined in order to arrive at "taxable income" from which specific source or activity under an operative section. (See paragraph (f)(1) of this section.) Gross income from other sources or activities is referred to as the "residual grouping of gross income" or "residual grouping." In some instances, where the operative section so requires, the statutory grouping or the residual grouping may include, or consist entirely of, excluded income. See paragraph (d)(2) of this section with respect to the allocation and apportionment of deductions to excluded income.

(b) ***Allocation*** —

(1) ***In general.*** For purposes of this section, the gross income to which a specific deduction is definitely related is referred to as a "class of gross income" and may consist of one or more items of gross income. The rules emphasize the factual relationship between the deduction and a class of gross income. See paragraph (d)(1) of this section which provides that in a taxable year there may be no item of gross income in a class or less gross income than deductions allocated to the class, and paragraph (d)(2) of this section which provides that a class of gross income may include excluded income. Allocation is accomplished by determining, with respect to each deduction, the class of gross income to which the deduction is definitely related and then allocating the deduction to such class of gross income (without regard to the taxpayable year in which such gross income is received or accrued or is expected to be received or accrued). The classes of gross income are not predetermined but must be determined on the basis of the deductions to be allocated. Although most deductions will be definitely related to some class of a taxpayer's total gross income, some deductions are related to all gross income. In addition, some deductions are treated as not definitely related to any gross income and are ratably apportioned to all gross income. (See paragraph (e)(9) of this section.) In allocating deductions it is not necessary to differentiate between deductions related to one item of gross income and deductions related to another item of gross income where both items of gross income are exclusively within the same statutory grouping or exclusively within the residual grouping.

(2) ***Relationship to activity or property.*** A deduction shall be considered definitely related to a class of gross income and therefore allocable to such class if it is incurred as a result of, or incident to, an activity or in connection with property from which such class of gross income is derived. Where a deduction is incurred as a result of, or incident to, an activity or in connection with property, which activity or property generates, has generated, or could reasonably have been expected to generate gross income, such deduction shall be considered definitely related to such gross income as a class whether or not there is any item of gross income in such class which is received or accrued during the taxable year and whether or not the amount of deductions exceeds the amount of the gross income in such class. See paragraph (d)(1) of this section with respect to cases in which there is an excess of deductions. In some cases, it will be found that this subparagraph can most readily be applied by determining, with respect to a deduction, the categories of gross income to which it is not related and concluding that it is definitely related to a class consisting of all other gross income.

(3) ***Supportive functions.*** Deductions which are supportive in nature (such as overhead, general and administrative, and supervisory expenses) may relate to other deductions which can more readily be allocated to gross income. In such instance, such supportive deductions may be allocated and apportioned along with the deductions to which they relate. On the other hand, it would be equally acceptable to attribute supportive deductions on some reasonable basis directly to activities or property which generate, have generated or could reasonably be expected to generate gross income. This would ordinarily be accomplished by allocating the supportive expenses to all gross income or to another broad class of gross income and apportioning the expenses in accordance with paragraph (c)(1) of this section. For this purpose, reasonable departmental overhead rates may be utilized. For examples of the application of the principles of this paragraph (b)(3) to expenses other than expenses attributable to stewardship activities, *see Examples 19* through *21* of paragraph (g) of this section. *See* paragraph (e)(4)(ii) of this section for the allocation and apportionment of deductions attributable to stewardship expenses. However, supportive deductions that are described in § 1.861-14T(e)(3) shall be allocated and apportioned in accordance with the rules of § 1.861-14T and shall not be allocated and apportioned by reference only to the gross income of a single member of an affiliated group of corporations as defined in § 1.861-14T(d).

(4) ***Deductions related to a class of gross income.*** See paragraph (e) of this section for rules relating to the allocation and apportionment of certain specific deductions definitely related to a class of gross income. See paragraph (c)(1) of this section for rules relating to the apportionment of deductions.

(5) ***Deductions related to all gross income.*** If a deduction does not bear a definite relationship to a class of gross income constituting less than all of gross income, it shall ordinarily be treated as definitely related and allocable to all of the taxpayer's gross income except where provided to the contrary under paragraph (e) of this section. Paragraph (e)(9) of this section lists various deductions which generally are not definitely related to any gross income and are ratably apportioned to all gross income.

(c) ***Apportionment of deductions*** —

(1) ***Deductions definitely related to a class of gross income.*** [Reserved]. For guidance, see § 1.861-8T(c)(1).

(2) ***Apportionment based on assets.*** Certain taxpayers are required by paragraph (e)(2) of this section and § 1.861-9T to apportion interest expense on the basis of assets. A taxpayer may apportion other deductions based on the comparative value of assets that generate income within each grouping, provided that this method reflects the factual relationship between the deduction and the groupings of income and is applied in accordance with the rules of § 1.861-9T(g). In general, such apportionments must be made either on the basis of the tax book value of those assets or, except in the case of interest expense, on the basis of their fair market value. *See* § 1.861-9(h). Taxpayers using the fair market value method for their last taxable year beginning before January 1, 2018, must change to the tax book value method (or the alternative tax book value method) for purposes of apportioning interest expense for their first taxable year beginning after December 31, 2017. The Commissioner's approval is not required for this change. In the case of any corporate taxpayer that both uses tax book value or alternative tax book value, and owns directly or indirectly (within the meaning of § 1.861-12T(c)(2)(ii)(B)) 10 percent or more of the total combined voting power of all classes of stock entitled to vote in any other corporation (domestic or foreign) that is not a member of the affiliated group (as defined in section 864(e)(5)), the taxpayer must adjust its basis in that stock in the manner described in § 1.861-12(c)(2). For the definition of related persons formerly contained in § 1.861-8T(c)(2), see paragraph (c)(4) of this section.

(3) ***Deductions not definitely related to any gross income.*** If a deduction is not definitely related to any gross income (see paragraph (e)(9) of this section), the deduction must be apportioned ratably between the statutory grouping (or among the statutory groupings) of gross income and the residual grouping. Thus, the amount apportioned to each statutory grouping shall be equal to the same proportion of the deduction which the amount of gross income in the statutory grouping bears to the total amount of gross income. The amount apportioned to the residual grouping shall be equal to the same proportion of the deduction which the amount of the gross income in the residual grouping bears to the total amount of gross income.

(4) ***Cross-referenced definition of related persons.*** The term related persons means two or more persons in a relationship described in section 267(b). In determining whether two or more corporations are members of the same controlled group under section 267(b)(3), a person is considered to own stock owned directly by such person, stock owned by application of section 1563(e)(1), and stock owned by application of section 267(c). In determining whether a corporation is related to a partnership under section 267(b)(10), a person is considered to own the partnership interest owned directly by such person and the partnership interest owned by application of section 267(e)(3).

(d) ***Excess of deductions and excluded and eliminated income*** —

(1) ***Excess of deductions.*** Each deduction which bears a definite relationship to a class of gross income shall be allocated to that class in accordance with paragraph (b)(1) of this section even though, for the taxable year, no gross income in such class is received or accrued or the amount of the deduction exceeds the amount of such class of gross income. In apportioning deductions, it may be that, for the taxable year, there is no gross income in the statutory grouping (or residual grouping), or that deductions exceed the amount of gross income in the statutory grouping (or residual grouping). If there is no gross income in a statutory grouping or the amount of deductions allocated and apportioned to a statutory grouping exceeds the amount of gross income in the statutory grouping, the effects are determined under the operative section. If the taxpayer is a member of a group filing a consolidated return, such excess of deductions allocated or apportioned to a statutory grouping of income of such member is taken into account in determining the consolidated taxable income from such statutory grouping, and such excess of deductions allocated or apportioned to the residual grouping of income is taken into account in determining the consolidated taxable income from the residual grouping. See § 1.1502-12.

(2) ***Allocation and apportionment to exempt, excluded, or eliminated income*** —

(i) ***In general.*** For further guidance, see § 1.861-8T(d)(2)(i).

(ii) ***Exempt income and exempt asset defined*** —

(A) ***In general.*** For purposes of this section, the term *exempt income* means any gross income to the extent that it is exempt, excluded, or eliminated for Federal income tax purposes. The term *exempt asset* means any asset to the extent income from the asset is (or is treated as under paragraph (d)(2)(ii)(B) or (C) of this section) exempt, excluded, or eliminated for Federal income tax purposes.

(B) ***Certain stock and dividends.*** The term *exempt income* includes the portion of the dividends that are deductible under section 243(a)(1) or (2) (relating to the dividends received deduction) or section 245(a) (relating to the dividends received deduction for dividends from certain foreign corporations). Thus, for purposes of apportioning deductions using a gross income method, gross income does not include a dividend to the extent that it gives rise to a dividends-received deduction under either section 243(a)(1), section 243(a)(2), or

section 245(a). In addition, for purposes of apportioning deductions using an asset method, assets do not include that portion of the value of the stock (determined in accordance with § 1.861-9(g), and, as relevant, §§ 1.861-12 and 1.861-13) equal to the portion of dividends that would be offset by a deduction under either section 243(a)(1), section 243(a)(2), or section 245(a), to the extent the stock generates, has generated, or can reasonably be expected to generate such dividends. For example, in the case of stock for which all dividends would be allowed a deduction of 50 percent under section 243(a)(1), 50 percent of the value of the stock is treated as an exempt asset. In the case of stock which generates, has generated, or can reasonably be expected to generate qualifying dividends deductible under section 243(a)(3), such stock does not constitute an exempt asset. However, such stock and the qualifying dividends thereon are eliminated from consideration in the apportionment of interest expense under the affiliated group rule set forth in § 1.861-11T(c), and in the apportionment of other expenses under the affiliated group rules set forth in § 1.861-14T.

(C) ***Foreign-derived intangible income and inclusions under section 951A(a)*** —

(*1*) ***Exempt income.*** The term "exempt income" includes an amount of a domestic corporation's gross income included in gross foreign-derived deduction eligible income (or gross FDDEI), and also includes an amount of a domestic corporation's gross income from an inclusion under section 951A(a) and the gross up under section 78 attributable to such an inclusion, in each case equal to the amount of the deduction allowed under section 250(a) for such gross income (taking into account the reduction under section 250(a)(2)(B), if any). Therefore, for purposes of apportioning deductions using a gross income method, gross income does not include gross income included in gross FDDEI, an inclusion under section 951A(a), or the gross up under section 78 attributable to an inclusion under section 951A(a), in an amount equal to the amount of the deduction allowed under section 250(a)(1)(A), (B)(i), or (B)(ii), respectively (taking into account the reduction under section 250(a)(2)(B), if any). The term *gross foreign-derived deduction eligible income,* or *gross FDDEI,* has the meaning provided in § 1.250(b)-1(c)(16).

(*2*) ***Exempt assets*** —

(*i*) ***Assets that produce foreign-derived intangible income.*** The term "exempt asset" includes the portion of a domestic corporation's assets that produce gross FDDEI equal to the amount of such assets multiplied by the fraction that equals the amount of the domestic corporation's deduction allowed under section 250(a)(1)(A) (taking into account the reduction under section 250(a)(2)(B)(i), if any) divided by its gross FDDEI. No portion of the value of stock in a foreign corporation is treated as an exempt asset by reason of this paragraph (d)(2)(ii)(C)(*2*)(*i*), including by reason of a transfer of intangible property to a foreign corporation subject to section 367(d) that gives rise to gross FDDEI.

(*ii*) ***Controlled foreign corporation stock that gives rise to inclusions under section 951A(a).*** The term "exempt asset" includes a portion of the value of a United States shareholder's stock in a controlled foreign corporation if the United States shareholder is a domestic corporation that is eligible for a deduction under section 250(a) with respect to income described in section 250(a)(1)(B)(i) and all or a portion of the domestic corporation's stock in the controlled foreign

corporation is characterized as GILTI inclusion stock. The portion of foreign corporation stock that is treated as an exempt asset for a taxable year equals the portion of the value of such foreign corporation stock (determined in accordance with §§ 1.861-9(g), 1.861-12, and 1.861-13) that is characterized as GILTI inclusion stock multiplied by a fraction that equals the amount of the domestic corporation's deduction allowed under section 250(a)(1)(B)(i) (taking into account the reduction under section 250(a)(2)(B)(ii), if any) divided by its GILTI inclusion amount (as defined in § 1.951A-1(c)(1) or, in the case of a member of a consolidated group, § 1.1502-51(b)) for such taxable year. The portion of controlled foreign corporation stock treated as an exempt asset under this paragraph (d)(2)(ii)(C)(*2*)(*ii*) is treated as attributable to the relevant categories of GILTI inclusion stock described in each of paragraphs (d)(2)(ii)(C)(*3*)(*i*) through (*v*) of this section based on the relative value of the portion of the stock in each such category.

(*3*) ***GILTI inclusion stock.*** For purposes of paragraph (d)(2)(ii)(C)(*2*)(*ii*) of this section, the term *GILTI inclusion stock* means the aggregate of the portions of the value of controlled foreign corporation stock that are—

(*i*) Assigned to the section 951A category under § 1.861-13(a)(2);

(*ii*) Assigned to a particular treaty category under § 1.861-13(a)(3)(i) (relating to resourced gross tested income stock);

(*iii*) Assigned under § 1.861-13(a)(1) to the gross tested income statutory grouping within the foreign source passive category less the amount described in § 1.861-13(a)(5)(iii)(A);

(*iv*) Assigned under § 1.861-13(a)(1) to the gross tested income statutory grouping within the U.S. source general category less the amount described in § 1.861-13(a)(5)(iv)(A); and

(*v*) Assigned under § 1.861-13(a)(1) to the gross tested income statutory grouping within the U.S. source passive category less the amount described in § 1.861-13(a)(5)(iv)(B).

(*4*) ***Non-applicability to section 250(b).*** Paragraphs (d)(2)(ii)(C)(*1*) through (*3*) of this section do not apply when apportioning deductions for purposes of determining deduction eligible income or foreign-derived deduction eligible income under the operative section of section 250(b).

(*5*) ***Example.*** The following example illustrates the application of the rules in this paragraph (d)(2)(ii)(C).

(*i*) ***Facts.*** USP, a domestic corporation, directly owns all of the stock of CFC1 and CFC2, both of which are controlled foreign corporations. The tax book value of CFC1 and CFC2's stock is $10,000x and $9,000x, respectively. Pursuant to § 1.861-13(a), $6,100x of the stock of CFC1 is assigned to the section 951A category under § 1.861-13(a)(2) ("section 951A category stock") and the remaining $3,900x of the stock of CFC1 is assigned to the general category ("general category stock"). Additionally, $4,880x of the stock of CFC2 is section 951A category stock and the remaining $4,120x of the stock of CFC2 is general

category stock. Under section 951A and the section 951A regulations (as defined in § 1.951A-1(a)(1)), USP's GILTI inclusion amount is $610x. The portion of USP's deduction under section 250 described in section 250(a)(1)(B)(i) is $305x. No portion of USP's deduction is reduced by reason of section 250(a)(2)(B)(ii).

(*ii*) ***Analysis.*** For purposes of apportioning deductions where section 904 is the operative section, under paragraph (d)(2)(ii)(C)(*1*) of this section, $305x of USP's gross income attributable to its GILTI inclusion amount is exempt income. Under paragraph (d)(2)(ii)(C)(*3*) of this section, the GILTI inclusion stock of CFC1 is the $6,100x of stock that is section 951A category stock and the GILTI inclusion stock of CFC2 is the $4,880x of stock that is section 951A category stock. Under paragraph (d)(2)(ii)(C)(*2*) of this section, the portion of the value of the stock of CFC1 and CFC2 that is treated as an exempt asset equals the portion of the value of the stock of CFC1 and CFC2 that is GILTI inclusion stock multiplied by 50% ($305x/$610x). Accordingly, the exempt portion of the stock of CFC1 is $3,050x (50% × $6,100x) and the exempt portion of CFC2's stock is $2,440x (50% × $4,880x). Therefore, the stock of CFC1 taken into account for purposes of apportioning deductions is $3,050x of non-exempt section 951A category stock and $3,900x of general category stock. The stock of CFC2 taken into account for purposes of apportioning deductions is $2,440x of non-exempt section 951A category stock and $4,120x of general category stock.

(iii) ***Income that is not considered tax exempt.*** For further guidance, see § 1.861-8T(d)(2)(iii).

(A) For further guidance, see § 1.861-8T(d)(2)(iii)(A) and (B).

(B) [Reserved]

(C) Dividends for which a deduction is allowed under section 245A;

(D) Foreign earned income as defined in section 911 (however, the rules of § 1.911-6 do not require the allocation and apportionment of certain deductions, including home mortgage interest, to foreign earned income for purposes of determining the deductions disallowed under section 911(d)(6)); and

(E) Inclusions for which a deduction is allowed under section 965(c). *See* § 1.965-6(c).

(iv) ***Value of stock attributable to previously taxed earnings and profits.*** No portion of the value of stock in a controlled foreign corporation is treated as an exempt asset by reason of the controlled foreign corporation having previously taxed earnings and profits. For example, no portion of the value of stock in a controlled foreign corporation is treated as an exempt asset by reason of the adjustment under § 1.861-12(c)(2) in respect of previously taxed earnings and profits described in section 959(c)(1) or (c)(2) (including earnings and profits described in section 959(c)(2) by reason of section 951A(f)(1) and § 1.951A-6(b)(1)). *See also* § 1.965-6(c).

(v) ***Dividends-received deduction and tax-exempt interest of insurance companies*** —

(A) ***In general.*** For purposes of characterizing gross income or assets as exempt or not exempt under this section, the following rules apply on a company wide basis pursuant to the rules in paragraphs (d)(2)(v)(A)(*1*) and (*2*) of this section.

(*1*) In the case of an insurance company taxable under section 801, the term *exempt income* includes the portion of dividends received that satisfy the requirements of deductibility under sections 243(a)(1) and (2) and 245(a) but without regard to any disallowance under section 805(a)(4)(A)(ii) of the policyholder's share of the dividends or any similar disallowance under section 805(a)(4)(D), and also includes tax-exempt interest but without reduction for the policyholder's share of tax-exempt interest that reduces the closing balance of items described in section 807(c), as provided under section 807(a)(2)(B) and 807(b)(1)(B). The term *exempt assets* includes the corresponding portion of assets that generates, has generated, or can reasonably be expected to generate exempt income described in the preceding sentence. See § 1.861-8(e)(16) for a special rule concerning the allocation of reserve expenses to dividends received by a life insurance company.

(*2*) In the case of an insurance company taxable under section 831, the term *exempt income* includes the portion of interest and dividends deductible under sections 832(c)(7) and (12) or sections 834(c)(1) and (7). Exempt income also includes the amounts reducing the losses incurred under section 832(b)(5) to the extent such amounts are not already taken into account in the preceding sentence. The term *exempt assets* includes the corresponding portion of assets that give rise to exempt income described in the preceding two sentences.

(B) ***Examples.*** The following examples illustrate the application of paragraph (d)(2)(v)(A) of this section.

(*1*) ***Example 1*** —

(*i*) ***Facts.*** U.S.C. is a domestic life insurance company that has $300x; of gross income, consisting of $100x of foreign source general category income and $200x of U.S. source passive category interest income, $100x; of the latter of which is tax-exempt interest income from municipal bonds under section 103. U.S.C.'s opening balance of its section 807(c) reserves is $50,000x; and USP's closing balance of its section 807(c) reserves is $50,130x. Under section 807(b)(1)(B), USP's closing balance of its section 807(c) reserves, $50,130x, is reduced by the amount of the policyholder's share of tax-exempt interest. The policyholder's share of tax-exempt interest under section 812(b) is equal to 30 percent of the $100x of tax-exempt interest ($30x). Therefore, under sections 803(a)(2) and 807(b), USP's reserve deduction is $100x ($50,130x of reserve deduction minus $30x (30 percent of $100x of tax-exempt interest), minus $50,000x). U.S.C. has no other income or deductions.

(*ii*) ***Analysis—allocation.*** Under section 818(f)(1), U.S.C.'s reserve deduction is treated as an item that cannot be definitely allocated to an item or class of gross income. Accordingly, under paragraph (b)(5) of this section, U.S.C.'s reserve deduction is allocable to all of U.S.C.'s gross income as a class.

(*iii*) ***Analysis—apportionment.*** Under paragraph (c)(3) of this section, the reserve deduction is ratably apportioned between the statutory grouping (foreign source general category income) and the residual grouping (U.S. source income) on the basis of the relative amounts of gross income in each grouping. For purposes of apportioning deductions under § 1.861-8T(d)(2)(i)(B), exempt income is not taken into account. Under paragraph (d)(2)(v)(A)(*1*) of this section, in the case

of an insurance company taxable under section 801, exempt income includes tax-exempt interest without regard to any reduction for the policyholder's share. U.S.C. has U.S. source income of $200x of which $100x is tax-exempt without regard to the reduction for the policyholder's share of tax-exempt interest that reduces the closing balance of items described in section 807(c). Thus, the gross income taken into account in apportioning U.S.C.'s reserve deduction is $100x of foreign source general category gross income and $100x of U.S. source gross income. Of U.S.C.'s $100x reserve deduction, $50x ($100 × $100x;/$200x) is apportioned to foreign source general category gross income and $50x ($100x × $100x/$200x) is apportioned to U.S. source gross income.

(*2*) ***Example 2*** —

(*i*) ***Facts.*** U.S.C. is a domestic life insurance company that has $300x of gross income consisting of $10x of foreign source general category income and $200x of U.S. source general category dividend income eligible for the 50% dividends received deduction (DRD) under section 243(a)(1). Under section 805(a)(4)(A)(ii), U.S.C. is allowed a 50% DRD on the company's share of the dividend received. Under section 812(a), the company's share of the dividend is equal to 70% of the dividend income eligible for the DRD under section 243(a)(1), which results in a DRD of $70x (50% × 70% × $200), and under section 812(b), the policyholder's share of the dividend is equal to 30% of the dividend income eligible for the DRD under section 243(a)(1), which would result in a DRD of $30x (50% × 30% × $200x). U.S.C. is entitled to a $130x deduction for an increase in its life insurance reserves under sections 803(a)(2) and 807(b). Unlike for tax-exempt interest income, there is no adjustment under section 807(b)(1)(B) to the reserve deduction for the policyholder's share of dividends that would be offset by the DRD under section 243(a)(1). U.S.C. has no other income or deductions.

(*ii*) ***Analysis—allocation.*** Under section 818(f)(1), U.S.C.'s reserve deduction is treated as an item that cannot be definitely allocated to an item or class of gross income except that, under § 1.861-8(e)(16), an amount of reserve expenses of a life insurance company equal to the DRD that is disallowed because it is attributable to the policyholder's share of dividends is treated as definitely related to such dividends. Thus, U.S.C. has a life insurance reserve deduction of $130x, of which $30 (equal to the policyholder's share of the DRD that would have been allowed under section 243(a)(1)) is directly allocated and apportioned to U.S. source dividend income. Under paragraph (b)(5) of this section, the remaining portion of U.S.C.'s reserve deduction ($100x) is allocable to all of U.S.C.'s gross income as a class.

(*iii*) ***Analysis—apportionment.*** Under paragraph (c)(3) of this section, the deduction is ratably apportioned between the statutory grouping (foreign source general category income) and the residual grouping (U.S. source income) on the basis of the relative amounts of gross income in each grouping. For purposes of apportioning deductions under § 1.861-8T(d)(2)(i)(B), exempt income is not taken into account. Under paragraph (d)(2)(v)(A)(*1*) of this section, in the case of an insurance company taxable under section 801, exempt income includes dividends deductible under section 805(a)(4) without regard to any reduction to

the DRD for the policyholder's share in section 804(a)(4)(A)(ii). Thus, the gross income taken into account in apportioning $100x of U.S.C.'s remaining reserve deduction is $100x of foreign source general category gross income and $100x of U.S. source gross income. Of U.S.C.'s $100x remaining reserve deduction, $50x ($100x × $100x /$200x) is apportioned to foreign source general category gross income and $50x ($100x × $100x/$200x) is apportioned to U.S. source gross income.

(e) ***Allocation and apportionment of certain deductions*** —

(1) ***In general.*** Paragraphs (e)(2) and (e)(3) of this section contain rules with respect to the allocation and apportionment of interest expense and research and development expenditures, respectively. Paragraphs (e)(4) through (e)(8) of this section contain rules with respect to the allocation of certain other deductions. Paragraph (e)(9) of this section lists those deductions which are ordinarily considered as not being definitely related to any class of gross income. Paragraph (e)(10) of this section lists special deductions of corporations which must be allocated and apportioned. Paragraph (e)(11) of this section lists personal exemptions which are neither allocated nor apportioned. Paragraph (e)(12) of this section contains rules with respect to the allocation and apportionment of deductions for charitable contributions. Paragraphs (e)(13) and (14) of this section contain rules with respect to the allocation and apportionment of the deduction allowed under section 250(a). Paragraph (e)(15) of this section contains rules with respect to the allocation and apportionment of a taxpayer's distributive share of a partnership's deductions. Examples of allocation and apportionment are contained in paragraph (g) of this section.

(2) ***Interest.*** [Reserved]. For guidance, see § 1.861-8T(e)(2).

(3) ***Research and experimental expenditures.*** For rules regarding the allocation and apportionment of research and experimental expenditures, see § 1.861-17.

(4) ***Stewardship and controlled services*** —

(i) ***Expenses attributable to controlled services.*** If a taxpayer performs a controlled services transaction (as defined in § 1.482-9(l)(1)), which includes any activity by one member of a group of controlled taxpayers (the renderer) that results in a benefit to a controlled taxpayer (the recipient), and the renderer charges the recipient for such services, section 482 and § 1.482-1 provide for an allocation where the charge is not consistent with an arm's length result. The deductions for expenses incurred by the renderer in performing such services are considered definitely related to the amounts so charged and are to be allocated to such amounts.

(ii) ***Stewardship expenses*** —

(A) ***In general.*** Stewardship expenses are those expenses resulting from “duplicative activities” (as defined in § 1.482-9(l)(3)(iii)) or “shareholder activities” (as defined in § 1.482-9(l)(3)(iv)) that are undertaken for a person's own benefit as an investor in a related entity, which for purposes of this paragraph (e)(4)(ii) includes a business entity as described in § 301.7701-2(a) of this chapter that is classified for Federal income tax purposes as either a corporation or a partnership, or is disregarded as an entity separate from its owner (“disregarded entity”). Thus, for example, stewardship expenses include expenses of an activity the sole effect of which is to protect the investor's capital investment in the entity or to facilitate compliance by the investor with reporting, legal, or regulatory requirements applicable specifically to the investor. If an investor has a foreign

or international department which exercises oversight functions with respect to related entities and, in addition, the department performs other functions that generate other foreign-source income (such as fees for services rendered outside of the United States for the benefit of foreign related corporations or foreign-source royalties), some part of the deductions with respect to that department are considered definitely related to the other foreign-source income. In some instances, the operations of a foreign or international department will also generate U.S. source income (such as fees for services performed in the United States). Stewardship expenses are allocated and apportioned on a separate entity basis without regard to the affiliated group rules in § 1.861-14. See § 1.861-14(e)(1)(i).

(B) ***Allocation.*** In the case of stewardship expenses incurred to oversee a corporation, the expenses are considered definitely related and allocable to dividends received or amounts included, or to be received or included, under sections 78, 301, 951, 951A, 1291, 1293, and 1296, from the corporation. In the case of stewardship expenses incurred to oversee a partnership, the expenses are considered definitely related and allocable to a partner's distributive share of partnership income. In the case of stewardship expenses incurred to oversee a disregarded entity, the expenses are considered definitely related and allocable to all gross income attributable to the disregarded entity. Stewardship expenses are allocated to income from a particular entity (or entities) related to the taxpayer if the expense is definitely related to the oversight of that entity or entities as provided in § 1.861-8(b)(1) under all the facts and circumstances.

(C) ***Apportionment.*** Stewardship expenses must be apportioned between the statutory and residual groupings based on the relative values of the entity or entities in each grouping that are owned by the investor taxpayer, and without regard to the relative amounts of gross income in the statutory and residual groupings to which the stewardship expense is allocated. In the case of stewardship expenses incurred to oversee a lower-tier entity owned indirectly by the taxpayer, the stewardship expenses must be apportioned based on the relative values of the owner or owners of the lower-tier entity that are owned directly by the taxpayer. In the case of stewardship expenses incurred to oversee a corporation, the corporation's value is the value of its stock as determined and characterized under the asset method in § 1.861-9 (and, as relevant, §§ 1.861-12 and 1.861-13) for purposes of allocating and apportioning the taxpayer's interest expense. For purposes of the preceding sentence, if the corporation is a member of the same affiliated group as the investor, the value of the corporation's stock is determined under the asset method in § 1.861-9 and is characterized by the investor in proportion to how the corporation's assets are characterized for purposes of apportioning the group's interest expense. In the case of stewardship expenses incurred to oversee a partnership, the partnership's value is determined and characterized under the asset method in § 1.861-9 (taking into account any adjustments under sections 734(b) and 743(b)). In the case of stewardship expenses incurred to oversee a disregarded entity, the disregarded entity's character and value is determined using the principles of the asset method in § 1.861-9 as if the disregarded entity were treated as a corporation for Federal income tax purposes. For purposes of determining the tax book value of assets under this paragraph (e)(4)(ii)(C), section 864(e)(3) and § 1.861-8(d)(2) do not apply.

(5) ***Legal and accounting fees and expenses; damages awards, prejudgment interest, and settlement payments —***

(i) ***Legal and accounting fees and expenses.*** Fees and other expenses for legal and accounting services are ordinarily definitely related and allocable to specific classes of gross income or to all the taxpayer's gross income, depending on the nature of the services rendered (and are apportioned as provided in paragraph (c)(1) of this section). For example, accounting fees for the preparation of a study of the costs involved in manufacturing a specific product will ordinarily be definitely related to the class of gross income derived from (or which could reasonably have been expected to be derived from) that specific product. The taxpayer is not relieved from his responsibility to make a proper allocation and apportionment of fees on the grounds that the statement of services rendered does not identify the services performed beyond a generalized designation such as "professional," or does not provide any type of allocation, or does not properly allocate the fees involved.

(ii) ***Product liability and other claims for damages.*** Except as otherwise provided in this paragraph (e)(5), awards for litigation or arbitral damages, prejudgment interest, and payments in settlement of or in anticipation of claims for damages, including punitive damages, arising from claims relating to sales, licenses, or leases of products or the provision of services, are definitely related and allocable to the class of gross income of the type produced by the specific sales or leases of the products or provision of services that gave rise to the claims for damage or injury. Such damages and payments may include, but are not limited to, product liability or patent infringement claims. The deductions are apportioned among the statutory and residual groupings on the basis of the relative amounts of gross income in the relevant class in each grouping in the year in which the deductions are allowed. If the claims arise from an event incident to the production or sale of products or provision of services (such as an industrial accident), the payments are definitely related and allocable to the class of gross income ordinarily produced by the assets that are involved in the event. The deductions are apportioned among the statutory and residual groupings on the basis of the relative values (as determined under the asset method in § 1.861-9 for purposes of allocating and apportioning the taxpayer's interest expense) of the assets that were involved in the event or (if the taxpayer no longer owns the assets involved in the event) the assets that are used to produce or sell products or services in the relevant class in each grouping; such values are determined in the year the deductions are allowed.

(iii) ***Investor lawsuits.*** If the claims are made by investors in a corporation and arise from negligence, fraud, or other malfeasance of the corporation (or its representatives), then the damages, prejudgment interest, and settlement payments paid by the corporation are definitely related and allocable to all income of the corporation and are apportioned among the statutory and residual groupings based on the relative value of the corporation's assets in each grouping (as determined under the asset method in § 1.861-9 for purposes of allocating and apportioning the taxpayer's interest expense) in the year the deductions are allowed.

(6) ***Income taxes*** —

(i) ***In general.*** The deduction for foreign income, war profits, and excess profits taxes allowed by section 164 is allocated and apportioned among the applicable statutory and residual groupings under § 1.861-20. The deduction for state and local taxes (*state income taxes*) allowed by section 164 is considered definitely related and allocable to the gross income with respect to which such state income taxes are imposed. For example, if a domestic corporation is subject to state income taxation and the state income tax is imposed in part on an amount of foreign source income, then that part of the taxpayer's deduction for state income tax that is attributable to foreign source income is definitely related and allocable to foreign source

income. In allocating and apportioning the deduction for state income tax for purposes including (but not limited to) the computation of the foreign tax credit limitation under section 904 of the Code and the consolidated foreign tax credit under § 1.1502-4 of the regulations, the income upon which the state income tax is imposed is determined by reference to the law of the jurisdiction imposing the tax. Thus, if a state attributes taxable income to a corporate taxpayer by applying an apportionment formula that takes into consideration the income and factors of one or more corporations related by ownership to the corporate taxpayer and engaging in activities related to the business of the corporate taxpayer, then the income so attributed is the income upon which the state income tax is imposed. If the income so attributed to the corporate taxpayer includes foreign source income, then, in computing the taxpayer's foreign tax credit limitation under section 904, for example, the taxpayer's deduction for state income tax will be considered definitely related and allocable to a class of gross income that includes the statutory grouping of foreign source income. When the law of the state includes dividends that are treated under section 862(a)(2) as income from sources without the United States in taxable income apportionable to the state, but does not include factors of the corporation paying such dividends in the apportionment formula used to determine state taxable income, an appropriate portion of the deduction for state income tax will be considered definitely related and allocable to a class of gross income consisting solely of foreign source dividend income. A deduction for state income tax will not be considered definitely related to a hypothetical amount of income calculated under federal tax principles when the jurisdiction imposing the tax computes taxable income under different principles. A corporate taxpayer's deduction for a state franchise tax that is computed on the basis of income attributable to business activities conducted within the state must be allocated and apportioned in the same manner as the deduction for state income taxes. In determining, for example, both the foreign tax credit under section 904 of the Code and the consolidated foreign tax credit limitation under § 1.1502-4 of the regulations, the deduction for state income tax may be allocable and apportionable to foreign source income in a statutory grouping described in section 904(d) in a taxable year in which the taxpayer has no foreign source income in such statutory grouping. Alternatively, such an allocation or apportionment may be appropriate if a taxpayer corporation has no foreign source income in a statutory grouping, but its deduction is attributable to foreign source income in such grouping that is attributed to the taxpayer corporation under the law of a state which attributes taxable income to a corporation by applying an apportionment formula that takes into consideration the income and factors of one or more corporations related by ownership to the taxpayer corporation and engaging in activities related to the business of the taxpayer corporation. Example 30 of paragraph (g) of this section illustrates the application of this last rule.

(ii) ***Methods of allocation and apportionment*** —

(A) ***In general.*** A taxpayer's deduction for a state income tax is to be allocated (and then apportioned, if necessary, subject to the rules of § 1.861-8(d)) by reference to the taxable income that the law of the taxing jurisdiction attributes to the taxpayer (“state taxable income”).

(B) ***Effect of subsequent recomputations of state income tax.*** [Reserved]

(C) ***Illustrations*** —

(1) ***In general.*** Examples 25 through 32 of paragraph (g) of § 1.861-8 illustrate, in the given factual situations, the application of this paragraph (e)(6) and the general rule of paragraph (b)(1) of this section that a deduction must be allocated to the class of gross income to which the deduction is factually related. In general, these examples employ a presumption that state income taxes are allocable to a class of gross income that includes the statutory grouping of income from sources without the United States when the total amount of taxable income determined under state law exceeds the amount of taxable income determined under the Code (without taking into account the deduction for state income taxes) in the residual grouping of income from sources within the United States. A taxpayer that allocates and apportions the deduction for state income tax in accordance with the methodology of Example 25 of paragraph (g) of this section must also apply the modifications illustrated in Examples 26 and 27 of paragraph (g) of this section, when applicable. The modification illustrated in *Example 26* is applicable when the deduction for state income tax is attributable in part to taxes imposed by a state which factually excludes foreign source income (as determined for federal income tax purposes) from state taxable income. The modification illustrated in *Example 27* is applicable when the taxpayer has income-producing activities in a state which does not impose a corporate income tax. The specific allocation of state income tax illustrated in Example 28 follows the rule in paragraph (e)(6)(i) of this section, and must be applied whenever a taxpayer's state taxable income includes dividends apportioned to the state under a formula that does not take into account the factors of the corporations paying those dividends, regardless of whether the taxpayer uses the methodology of Example 25 with respect to the remainder of the deduction for state income taxes.

(2) ***Modifications.*** Before applying a method of allocation and apportionment illustrated in the examples, the computation of state taxable income under state law may be modified, subject to the approval of the District Director, to reflect more accurately the income with respect to which the state income tax is imposed. Any modification to the state law computation of state taxable income must yield an allocation and apportionment of the deduction for state income taxes that is consistent with the rules contained in this paragraph (e)(6), and that accurately reflects the factual relationship between the state income tax and the income on which that tax is imposed. For example, a modification to the computation of taxable income under state law might be appropriate to compensate for differences between the state law definition of taxable income and the federal definition of taxable income, due to a difference in the rate of allowable depreciation or the amount of another deduction that is allowable under both systems. This rule is illustrated in Example 31 of paragraph (g) of this section. However, a modification to the computation of taxable income under state law will not be appropriate, and will not more accurately reflect the factual relationship between the state tax and the income on which the tax is imposed, to the extent such modification reflects the fact that the state does not follow federal tax principles in attributing income to the taxpayer's activities in the state. This rule is illustrated in Example 32 of paragraph (g) of this section. A taxpayer may not modify the methods illustrated in the examples, or use an alternative method of allocation and apportionment of the deduction for state income taxes, if the modification or alternative method would be inconsistent with

the rules of paragraph (e)(6)(i) of this section. A taxpayer that uses a method of allocation and apportionment other than one illustrated in Example 25 (as modified by Examples 26 and 27), or 29 with respect to a factual situation similar to those of the examples, must describe the alternative method on an attachment to its federal income tax return and establish to the satisfaction of the District Director, upon examination, that the result of the alternative method more accurately reflects the factual relationship between the state income tax and the income on which the tax is imposed.

(D) ***Elective safe harbor methods*** —

(*1*) ***In general.*** In lieu of applying the rules set forth in paragraphs (e)(6)(ii)(A) through (C) of this section, a taxpayer may elect to allocate and apportion the deduction for state income tax in accordance with one of the two safe harbor methods described in paragraph (e)(6)(ii)(D)(*2*) and (*3*) of this section. A taxpayer shall make this election for a taxable year by filing a timely tax return for that year that reflects an allocation and apportionment of the deduction for state income tax under one of the safe harbor methods and attaching to such return a statement that the taxpayer has elected to use the safe harbor method provided in either paragraph (e)(6)(ii)(D)(*2*) or (*3*) of this section, as appropriate. Once made, this election is effective for the taxable year for which made and all subsequent taxable years, and may be revoked only with the consent of the Commissioner. Example 33 of paragraph (g) of this section illustrates the application of these safe harbor methods.

(*2*) ***Method One*** —

(*i*) ***Step One—Specific allocation to foreign source portfolio dividends and other income.*** If any portion of the deduction for state income tax is attributable to tax imposed by a state which includes in a corporate taxpayer's taxable income apportionable to the state, portfolio dividends (as defined in paragraph (i) of Example 28 of paragraph (g) of this section) that are treated under section 862(a)(2) as income from sources without the United States, but does not include factors of the corporations paying the portfolio dividends in the apportionment formula used to determine state taxable income, the taxpayer shall allocate an appropriate portion of the deduction to a class of gross income consisting solely of foreign source portfolio dividends. The portion of the deduction so allocated, and the amount of foreign source portfolio dividends included in such class, shall be determined in accordance with the methodology illustrated in paragraph (ii) of Example 28 of paragraph (g). If a state income tax is determined based upon formulary apportionment of the total taxable income attributable to the taxpayer's unitary business, the taxpayer must also apply the methodology illustrated in paragraph (ii)(C) through (G) of Example 29 of paragraph (g) of this section to make specific allocations of appropriate portions of the deduction for state income tax on the basis of income that, under separate accounting, would have been attributed to other members of the unitary group. The taxpayer shall reduce its aggregate state taxable income by the amount of foreign source portfolio dividends and other income to which a specific allocation is made (the reduced amount being referred to hereinafter as “adjusted state taxable income”).

(*ii*) ***Step Two—Adjustment of U.S. source federal taxable income.*** If the taxpayer has significant income-producing activities in a state which does not impose a corporate income tax or other state tax measured by income derived from business activities in the state, the taxpayer shall reduce its U.S. source federal taxable income (solely for purposes of this safe harbor method) by the amount of federal taxable income attributable to its activities in such state. This amount shall be determined in accordance with the methodology illustrated in paragraph (ii) of Example 27 of paragraph (g) of this section, provided that the taxpayer shall be required to use the rules of the Uniform Division of Income for Tax Purposes Act to attribute income to the relevant state. The taxpayer's U.S. source federal taxable income, as so reduced, is referred to hereinafter as "adjusted U.S. source federal taxable income."

(*iii*) ***Step Three—Allocation.*** The taxpayer shall allocate the remainder of the deduction for state income tax (after reduction by the portion allocated to foreign source portfolio dividends and other income under Step One) in accordance with the methodology illustrated in paragraph (ii) of Example 25 of paragraph (g) of this section. However, the taxpayer shall substitute for the comparison of aggregate state taxable income to U.S. source federal taxable income, illustrated in paragraph (ii) of Example 25 of paragraph (g) of this section, a comparison of its adjusted state taxable income to an amount equal to 110% of its adjusted U.S. source federal taxable income.

(*iv*) ***Step Four—Apportionment.*** In the event that apportionment of the remainder of the deduction for state income tax is required, the taxpayer shall apportion that remaining deduction to U.S. source income in accordance with the methodology illustrated in paragraph (iii) of Example 25 of paragraph (g) of this section, substituting for domestic source income in that paragraph an amount equal to 110% of the taxpayer's adjusted U.S. source federal taxable income. The remaining portion of the deduction shall be apportioned to the statutory groupings of foreign source income described in section 904(d) of the Code in accordance with the proportion of the income in each statutory grouping of foreign source income described in section 904(d) to the taxpayer's total foreign source federal taxable income (after reduction by the amount of foreign source portfolio dividends to which tax has been specifically allocated under Step One, above).

(*3*) ***Method Two*** —

(*i*) ***Step One—Specific allocation to foreign source portfolio dividends and other income.*** Step One of this method is the same as Step One of Method One (as described in paragraph (e)(6)(ii)(D)(*2*)(*i*) of this section).

(*ii*) ***Step Two—Adjustment of U.S. source federal taxable income.*** Step Two of this method is the same as Step Two of Method One (as described in paragraph (e)(6)(ii)(D)(*2*)(*ii*) of this section).

(*iii*) ***Step Three—Allocation.*** The taxpayer shall allocate the remainder of the deduction for state income tax (after reduction by the portion allocated to foreign source portfolio dividends and other income under Step One) in accordance with the methodology illustrated in paragraph (ii) of Example 25 of

paragraph (g) of this section. However, the taxpayer shall substitute for the comparison of aggregate state taxable income to U.S. source federal taxable income, illustrated in paragraph (ii) of Example 25 of paragraph (g) of this section, a comparison of its adjusted state taxable income to its adjusted U.S. source federal taxable income.

(*iv*) ***Step Four—Apportionment.*** In the event that apportionment of the deduction is required, the taxpayer shall apportion to U.S. source income that portion of the deduction that is attributable to state income taxes imposed upon an amount of state taxable income equal to adjusted U.S. source federal taxable income. The taxpayer shall apportion the remaining amount of the deduction to U.S. and foreign source income in the same proportions that the taxpayer's adjusted U.S. source federal taxable income and foreign source federal taxable income (after reduction by the amount of foreign source portfolio dividends to which tax has been specifically allocated under Step One, above) bear to its total federal taxable income (taking into account the adjustment of U.S. source federal taxable income under Step Two and after reduction by the amount of foreign source portfolio dividends to which tax has been specifically allocated under Step One). The portion of the deduction apportioned to foreign source income shall be apportioned among the statutory groupings described in section 904(d) of the Code in accordance with the proportions of the taxpayer's total foreign source federal taxable income (after reduction by the amount of foreign source portfolio dividends to which tax has been specifically allocated under Step One, above) in each grouping.

(7) ***Losses on the sale, exchange, or other disposition of property.*** See §§ 1.865-1 and 1.865-2 for rules regarding the allocation and apportionment of certain losses.

(8) ***Net operating loss deduction*** —

(i) ***Components of net operating loss.*** A net operating loss is separated into components that are assigned to statutory or residual groupings by reference to the losses in each such statutory or residual grouping that are not allocated to reduce income in other groupings in the taxable year of the loss. For example, for purposes of applying this paragraph (e)(8)(i) with respect to section 904 as the operative section, the source and separate category components of a net operating loss are determined by reference to the amounts of separate limitation loss and U.S. source loss (determined without regard to adjustments required under section 904(b)) that are not allocated to reduce U.S. source income or income in other separate categories under the rules of sections 904(f) and 904(g) for the taxable year in which the net operating loss arose. See § 1.904(g)-3(d)(2). See § 1.1502-4 for rules applicable in computing the foreign tax credit limitation and determining the source and separate category of a net operating loss of a consolidated group. Similarly, for purposes of applying this paragraph (e)(8)(i) with respect to another operative section (as described in § 1.861-8(f)(1)), a net operating loss is divided into component parts based on the amounts of the deductions that are assigned to the relevant statutory and residual groupings and that are not absorbed in the taxable year in which the loss is incurred under the rules of that operative section. Deductions that are considered absorbed for purposes of an operative section may differ from the deductions that are considered absorbed for purposes of another provision of the Code that requires determining the components of a net operating loss.

(ii) ***Allocation and apportionment of section 172 deduction.*** A net operating loss taken as a deduction in computing taxable income for a particular taxable year as allowed under section 172 is allocated and apportioned to statutory and residual groupings by reference to the statutory and residual groupings of the components of the net operating loss (as determined under paragraph (e)(8)(i) of this section) that is deducted in the taxable year. Except as provided under the rules for an operative section, if the full net operating loss carryover is not taken as a deduction in a taxable year, the partial net operating loss deduction is treated as ratably comprising the components of a net operating loss. See, for example, § 1.904(g)-3, which is an exception to the general rule described in the previous sentence and provides rules for determining the source and separate category of a partial net operating loss deduction for purposes of section 904 as the operative section.

(9) ***Deductions which are not definitely related.*** Deductions which shall generally be considered as not definitely related to any gross income, and therefore are ratably apportioned as provided in paragraph (c)(3) of this section, are—

(i) The deduction allowed by section 163 for interest described in subparagraph (2)(iii) of this paragraph (e);

(ii) The deduction allowed by section 164 for real estate taxes on a personal residence or for sales tax on the purchase of items for personal use;

(iii) The deduction for medical expenses allowed by section 213; and

(iv) The deduction for alimony payments allowed by section 215.

(10) [Reserved]

(11) ***Personal exemptions.*** The deductions for the personal exemptions allowed by section 151, 642(b), or 873(b)(3) shall not be taken into account for purpose of allocation and apportionment under this section.

(12) ***Deductions for certain charitable contributions*** —

(i) ***In general.*** The deduction for charitable contributions that is allowed under sections 170, 873(b)(2), and 882(c)(1)(B) is definitely related and allocable to all of the taxpayer's gross income. The deduction allocated under this paragraph (e)(12)(i) shall be apportioned between the statutory grouping (or among the statutory groupings) of gross income and the residual grouping on the basis of the relative amounts of gross income from sources in the United States in each grouping.

(ii) ***Treaty provisions.*** If a deduction for charitable contributions not otherwise permitted by sections 170, 873(b)(2), and 882(c)(1)(B) is allowed under a U.S. income tax treaty, and such treaty limits the amount of the deduction based on a percentage of income arising from sources within the treaty partner, the deduction is definitely related and allocable to all of the taxpayer's gross income. The deduction allocated under this paragraph (e)(12)(ii) shall be apportioned between the statutory grouping (or among the statutory groupings) of gross income and the residual grouping on the basis of the relative amounts of gross income from sources within the treaty partner within each grouping.

(iii) ***Coordination with §§ 1.861-14 and 1.861-14T.*** A deduction for a charitable contribution by a member of an affiliated group shall be allocated and apportioned under the rules of this section, § 1.861-14(e)(6), and § 1.861-14T(c)(1).

(13) ***Foreign-derived intangible income.*** The portion of the deduction that is allowed for foreign-derived intangible income under section 250(a)(1)(A) (taking into account the reduction under section 250(a)(2)(B)(i), if any) is considered definitely related and allocable to the class of gross income included in the taxpayer's foreign-derived deduction eligible income (as defined in section 250(b)(4)). If necessary, the portion of the deduction is apportioned within the class ratably between the statutory grouping (or among the statutory groupings) of gross income and the residual grouping of gross income based on the relative amounts of foreign-derived deduction eligible income in each grouping.

(14) ***Global intangible low-taxed income and related section 78 gross up.*** The portion of the deduction (taking into account the reduction under section 250(a)(2)(B)(ii), if any) that is allowed for the global intangible low-taxed income amount described in section 250(a)(1)(B)(i), and that is allowed for the section 78 gross up under section 250(a)(1)(B)(ii), is considered definitely related and allocable to the class of gross income included under section 951A(a) and section 78, respectively. If necessary (for example, because a portion of the inclusion under section 951A(a) is passive category income or U.S. source income), the portion of the deduction is apportioned within the class ratably between the statutory grouping (or among the statutory groupings) of gross income and the residual grouping of gross income based on the relative amounts of gross income in each grouping.

(15) ***Distributive share of partnership deductions.*** In general, if deductions are incurred by a partnership in which the taxpayer is a partner, the taxpayer's deductions that are allocated and apportioned include the taxpayer's distributive share of the partnership's deductions. See §§ 1.861-9(e), 1.861-17(f), and 1.904-4(n)(1)(ii) for special rules for apportioning a partner's distributive share of deductions of a partnership.

(16) ***Special rule for the allocation and apportionment of reserve expenses of a life insurance company.*** An amount of reserve expenses of a life insurance company equal to the dividends received deduction that is disallowed because it is attributable to the policyholders' share of dividends received is treated as definitely related to such dividends. See paragraph (d)(2)(v)(B)(*2*) of this section (*Example 2*).

(f) ***Miscellaneous matters —***

(1) ***Operative sections.*** The operative sections of the Code which require the determination of taxable income of the taxpayer from specific sources or activities and which give rise to statutory groupings to which this section is applicable include the sections described below.

(i) [Reserved]

(ii) ***Separate foreign tax credit limitations.*** Section 904(d)(1) and other sections described in § 1.904-4(m) require that a separate foreign tax credit limitation be determined with respect to each separate category of income specified in those sections. Accordingly, the foreign source income within each separate category described in § 1.904-5(a)(4)(v) constitutes a separate statutory grouping of income. U.S. source income is treated as income in the residual grouping for purposes of determining the limitation on the foreign tax credit.

(iii) ***DISC and FSC taxable income.*** Sections 925 and 994 provide rules for determining the taxable income of a FSC and DISC, respectively, with respect to qualified sales and leases of export property and qualified services. The combined taxable income method available for determining a DISC's taxable income provides, without consideration of export promotion expenses, that the taxable income of the DISC shall be 50 percent of the combined taxable income of the DISC and the related supplier derived from sales and leases of export property

and from services. In the FSC context, the taxable income of the FSC equals 23 percent of the combined taxable income of the FSC and the related supplier. Pursuant to regulations under section 925 and 994, this section provides rules for determining the deductions to be taken into account in determining combined taxable income, except to the extent modified by the marginal costing rules set forth in the regulations under sections 925(b)(2) and 994(b)(2) if used by the taxpayer. See *Examples* (22) and (23) of paragraph (g) of this section. In addition, the computation of combined taxable income is necessary to determine the applicability of the section 925(d) limitation and the "no loss" rules of the regulations under sections 925 and 994.

(iv) ***Effectively connected taxable income.*** Nonresident alien individuals and foreign corporations engaged in trade or business within the United States, under sections 871(b)(1) and 882(a)(1), on taxable income which is effectively connected with the conduct of a trade or business within the United States. Such taxable income is determined in most instances by initially determining, under section 864(c), the amount of gross income which is effectively connected with the conduct of a trade or business within the United States. Pursuant to sections 873 and 882(c), this section is applicable for purposes of determining the deductions from such gross income (other than the deduction for interest expense allowed to foreign corporations (see § 1.882-5)) which are to be taken into account in determining taxable income. See example 21 of paragraph (g) of this section.

(v) ***Foreign base company income.*** Section 954 defines the term "foreign base company income" with respect to controlled foreign corporations. Section 954(b)(5) provides that in determining foreign base company income the gross income shall be reduced by the deductions of the controlled foreign corporation "properly allocable to such income". This section provides rules for identifying which deductions are properly allocable to foreign base company income.

(vi) ***Other operative sections.*** The rules provided in this section also apply in determining—

(A) The amount of foreign source items of tax preference under section 58(g) determined for purposes of the minimum tax;

(B) The amount of foreign mineral income under section 901(e);

(C) [Reserved]

(D) The amount of foreign oil and gas extraction income and the amount of foreign oil related income under section 907;

(E) The tax base for individuals entitled to the benefits of section 931 and the section 936 tax credit of a domestic corporation that has an election in effect under section 936;

(F) The exclusion for income from Puerto Rico for bona fide residents of Puerto Rico under section 933;

(G) The limitation under section 934 on the maximum reduction in income tax liability incurred to the Virgin Islands;

(H) The income derived from the U.S. Virgin Islands or from a section 935 possession (as defined in § 1.935-1(a)(3)(i)).

(I) The special deduction granted to China Trade Act corporations under section 941;

(J) The amount of certain U.S. source income excluded from the subpart F income of a controlled foreign corporation under section 952(b);

(K) The amount of income from the insurance of U.S. risks under section 953(b)(5);

(L) The international boycott factor and the specifically attributable taxes and income under section 999; and

(M) The taxable income attributable to the operation of an agreement vessel under section 607 of the Merchant Marine Act of 1936, as amended, and the Capital Construction Fund Regulations thereunder (26 CFR, part 3). See 26 CFR 3.2(b)(3).

(N) Deduction eligible income and foreign-derived deduction eligible income under section 250(b).

(2) ***Application to more than one operative section.***

(i) Where more than one operative section applies, it may be necessary for the taxpayer to apply this section separately for each applicable operative section. In such a case, the taxpayer is required to use the same method of allocation and the same principles of apportionment for all operative sections.

(ii) When expenses, losses, and other deductions that have been properly allocated and apportioned between combined gross income of a related supplier and a DISC or former DISC and residual gross income, regardless of which of the administrative pricing methods of section 994 has been applied, such deductions are not also allocated and apportioned to gross income consisting of distributions from the DISC or former DISC attributable to income of the DISC or former DISC as determined under the administrative pricing methods with respect to DISC or former DISC taxable years beginning after December 31, 1986. Accordingly, *Example* (22) of paragraph (g) of this section does not apply to distributions from a DISC or former DISC with respect to DISC or former DISC taxable years beginning after December 31, 1986. This rule does not apply to the extent that the taxable income of the DISC or former DISC is determined under the section 994(a)(3) transfer pricing method. In addition, for taxable years beginning after December 31, 1986, in the case of expenses, losses, and other deductions that have been properly allocated and apportioned between combined gross income of a related supplier and a FSC and residual gross income, regardless of which of the administrative pricing methods of section 925 has been applied, such deductions are not also allocated and apportioned to gross income consisting of distributions from the FSC or former FSC which are attributable to the foreign trade income of the FSC or former FSC as determined under the administrative pricing methods. This rule does not apply to the extent that the foreign trade income of the FSC or former FSC is determined under the section 925(a)(3) transfer pricing method. See *Example* (23) of paragraph (g) of this section.

(3) ***Special rules of section 863(b)*** —

(i) ***In general.*** Special rules under section 863(b) provide for the application of rules of general apportionment provided in §§ 1.863-3 to 1.863-5, to worldwide taxable income in order to attribute part of such worldwide taxable income to U.S. sources and the remainder of such worldwide taxable income to foreign sources. The activities specified in section 863(b) are—

(A) Transportation or other services rendered partly within and partly without the United States,

(B) Sales of personal property produced by the taxpayer within and sold without the United States, or produced by the taxpayer without and sold within the United States, and

(C) Sales within the United States of personal property purchased within a possession of the United States.

In the instances provided in §§ 1.863-3 and 1.863-4 with respect to the activities described in (A), (B), and (C) of this subdivision, this section is applicable only in determining worldwide taxable income attributable to these activities.

(ii) ***Relationship of sections 861, 862, 863(a), and 863(b).*** Sections 861, 862, 863(a), and 863(b) are the four provisions applicable in determining taxable income from specific sources. Each of these four provisions applies independently. Where a deduction has been allocated and apportioned to income under one of these four provisions, the deduction shall not again be allocated and apportioned to gross income under any of the other three provisions. However, two or more of these provisions may have to be applied at the same time to determine the proper allocation and apportionment of a deduction. The special rules under section 863(b) take precedence over the general rules of Code sections 861, 862 and 863(a). For example, where a deduction is allocable in whole or in part to gross income to which section 863(b) applies, such deduction or part thereof shall not otherwise be allocated under section 861, 862, or 863(a). However, where the gross income to which the deduction is allocable includes both gross income to which section 863(b) applies and gross income to which section 861, 862, or 863(a) applies, more than one section must be applied at the same time in order to determine the proper allocation and apportionment of the deduction.

(4) ***Adjustments made under other provisions of the Code*** —

(i) ***In general.*** If an adjustment which affects the taxpayer is made under section 482 or any other provision of the Code, it may be necessary to recompute the allocations and apportionments required by this section in order to reflect changes resulting from the adjustment. The recomputation made by the Commissioner shall be made using the same method of allocation and apportionment as was originally used by the taxpayer, provided such method as originally used conformed with paragraph (a)(2) of this section and, in light of the adjustment, such method does not result in a material distortion. In addition to adjustments which would be made aside from this section, adjustments to the taxpayer's income and deductions which would not otherwise be made may be required before applying this section in order to prevent a distortion in determining taxable income from a particular source of activity. For example, if an item included as a part of the cost of goods sold has been improperly attributed to specific sales, and, as a result, gross income under one of the operative sections referred to in paragraph (f)(1) of this section is improperly determined, it may be necessary for the Commissioner to make an adjustment to the cost of goods sold, consistent with the principles of this section, before applying this section. Similarly, if a domestic corporation transfers the stock in its foreign subsidiaries to a domestic subsidiary and the parent corporation continues to incur expenses in connection with protecting its capital investment in the foreign subsidiaries (*see* paragraph (e)(4) of this section), it may be necessary for the Commissioner to make an allocation under section 482 with respect to such expenses before making allocations and apportionments required by this section, even though the section 482 allocation might not otherwise be made.

(ii) ***Example*** —

(A) ***Facts.*** USP, a domestic corporation, purchases and sells consumer items in the United States and foreign markets. Its sales in foreign markets are made to related foreign subsidiaries. USP reported $1,500,000x as sales during the taxable year of which

$1,000,000x was domestic sales and $500,000x was foreign sales. USP took a deduction for expenses incurred by its marketing department during the taxable year in the amount of $150,000x. These expenses were determined to be allocable to both domestic and foreign sales and are apportionable between such sales. On audit of USP's return for the taxable year, the IRS adjusted, under section 482, USP's sales to related foreign subsidiaries by increasing the sales price by a total of $100,000x, thereby increasing USP's foreign sales and total sales by the same amount. Before the audit, USP allocated and apportioned the marketing department deduction as follows:

TABLE 1 TO PARAGRAPH (f)(4)(ii)(A)

To gross income from domestic sales: $150,000x × ($1,000,000x/$1,500,000x)	$100,000x
To gross income from foreign sales: $150,000x × ($500,000x/$1,500,000x)	50,000x
Total	150,000x

(B) ***Analysis.*** As a result of the section 482 adjustment, the apportionment of the deduction for the marketing department expenses is redetermined as follows:

TABLE 2 TO PARAGRAPH (f)(4)(ii)(B)

To gross income from domestic sales: $150,000x × ($1,000,000x/$1,600,000x)	$93,750x
To gross income from foreign sales: $150,000x × ($600,000x/$1,600,000x)	56,250x
Total	150,000x

(5) ***Verification of allocations and apportionments.*** Since, under this section, allocations and apportionments are made on the basis of the factual relationship between deductions and gross income, the taxpayer is required to furnish, at the request of the District Director, information from which such factual relationships can be determined. In reviewing the overall limitation to the foreign tax credit of a domestic corporation, for example, the District Director should consider information which would enable him to determine the extent to which deductions attributable to functions performed in the United States are related to earning foreign source income, United States source income, or income from both sources. In addition to functions with a specific international purpose, consideration should be given to the functions of management, the direction and results of an acquisition program, the functions of operating units and personnel located at the head office, the functions of support units (including but not limited to engineering, legal, budget, accounting, and industrial relations), the functions of selling and advertising units and personnel, the direction and uses of research and development and the direction and uses of services furnished by independent contractors. Thus, for example when requested by the District Director, the taxpayer shall make

available any of its organization charts, manuals, and other writings which relate to the manner in which its gross income arises and to the functions of organizational units, employees, and assets of the taxpayer and arrange for the interview of such of its employees as the District Director deems desirable in order to determine the gross income to which deductions relate. See section 7602 and the regulations thereunder which generally provide for the examination of books and witnesses. See also section 905(b) and the regulations thereunder which require proof of foreign tax credits to the satisfaction of the Secretary or his delegate.

(g) ***Examples.*** The following examples illustrate the principles of the rules in this section. In each example, unless otherwise specified, section 904 is the operative section. In addition, in each example, where a method of allocation or apportionment is illustrated as an acceptable method, it is assumed that such method is used by the taxpayers on a consistent basis from year to year. Further, it is assumed that each party named in each example operates on a calendar year accounting basis and, where the party is a U.S. taxpayer, files returns on a calendar year basis.

(1)-(14) [Reserved]

(15) ***Example 15: Payment in settlement of claim for damages allocated to specific class of gross income*** —

(i) ***Facts.*** USP, a domestic corporation, sells Product A in the United States. USP also owns and operates a disregarded entity (FDE) in Country X. FDE, which constitutes a foreign branch of USP within the meaning of § 1.904-4(f)(3)(vii), sells Product A inventory in Country X. FDE's functional currency is the U.S. dollar. In each of its taxable years from 2018 through 2020, USP earns $2,000x of U.S. source gross income from sales of Product A to customers in the United States. USP also sells Product A to FDE for an arm's length price and FDE sells Product A to customers in Country X. After the application of section 862(a)(6), § 1.861-7(c), and the disregarded payment rules of § 1.904-4(f)(2)(vi), the sales of Product A in Country X result in $1,500x of general category foreign source gross income and $500x of foreign branch category foreign source gross income in each of 2018 and 2019 and $2,500x of general category foreign source gross income and $500x of foreign branch category foreign source gross income in 2020. FDE is sued for damages in 2019 after Product A harms a customer in Country X in 2018. In 2020, FDE makes a deductible payment of $60x to the Country X customer in settlement of the legal claims for damages.

(ii) ***Analysis.*** Under paragraph (e)(5)(ii) of this section, the deductible settlement payment is definitely related and allocable to the class of gross income of the type produced by the specific sales of property that gave rise to the damages claims, that is USP's gross income from sales of Product A in Country X. Claims that might arise from damages caused by Product A to customers in the United States are irrelevant in allocating the deduction for the settlement payments made to the customer in Country X. For purposes of determining USP's foreign tax credit limitation under section 904(d), because in 2020 that class of gross income consists of both foreign source foreign branch category income and foreign source general category income, the settlement payment of $60x is apportioned between gross income in the two categories in proportion to the relative amounts of gross income in each category in 2020, the year the deduction is allowed. Therefore, $10x ($60x × $500x/$3,000x) is apportioned to foreign source foreign branch category income, and the remaining $50x ($60x × $2,500x/$3,000x) is apportioned to foreign source general category income.

(16) ***Example 16: Legal damages payment arising from event incident to production and sale*** —

(i) ***Facts.*** The facts are the same as in paragraph (g)(15) of this section (the facts in *Example 15*) except that instead of a product liability lawsuit relating to a 2018 event, in 2019 there is a disaster at a warehouse owned by USP in the United States arising from the negligence of an employee. The warehouse is used to store Product A inventory intended for sale both by USP in the United States and by FDE in Country X. In 2020, the warehouse asset is characterized under § 1.861-9T(g)(3)(ii) as a multiple category asset that is assigned 10% to the foreign source foreign branch category, 50% to the foreign source general category, and 40% to the residual grouping of U.S. source income. The inventory of Product A in the warehouse is destroyed and USP employees as well as residents in the vicinity of the warehouse are injured. USP's reputation in the United States suffers such that USP expects to subsequently lose market share in the United States. In 2020, USP makes deductible damages payments totaling $50x to injured employees and the nearby residents, all of whom are in the United States.

(ii) ***Analysis.*** USP's warehouse in the United States is used in connection with sales of Product A to customers in both the United States and Country X. Thus, under paragraph (e)(5)(ii) of this section, the $50x damages payment arises from an event incident to the sales of Product A and is therefore definitely related and allocable to the class of gross income ordinarily produced by the asset (the warehouse) that is involved in the event—that is, the gross income from sales of Product A by USP in the United States and by FDE in Country X. Under paragraph (e)(5)(ii) of this section, the $50x deduction for the damages payment is apportioned for purposes of applying section 904(d) on the basis of the relative value in each grouping (as determined under § 1.861-9(g) for purposes of allocating and apportioning USP's interest expense) of USP's warehouse, the asset involved in the event, in 2020, the year the deduction is allowed. USP's warehouse is a multiple category asset as described in § 1.861-9T(g)(3)(ii) and 10% of the value of USP's warehouse is properly characterized as an asset generating foreign source foreign branch category in 2020. Accordingly, $5x (10% × $50x) of the deduction is apportioned to foreign source foreign branch category income. Additionally, 50% of the value of USP's warehouse is properly characterized as an asset generating foreign source general category income in 2020 and, accordingly, $25x (50% × $50x) is apportioned to such grouping. The remaining $20x (40% × $50x) is apportioned to U.S. source income.

(17) ***Example 17: Payment following a change in law*** —

(i) ***Facts.*** The facts are the same as in paragraph (g)(16) of this section (the facts in *Example 16*), except that the disaster at USP's warehouse occurred not in 2019 but in 2016 and thus before the enactment of the section 904(d) separate category for foreign branch category income. The deductible damages payments are made in 2020.

(ii) ***Analysis.*** USP's U.S. warehouse was used in connection with making sales of Product A in both the United States and Country X. Under paragraph (e)(5)(ii) of this section, the 2020 damages payment arises from an event incident to the sales of Product A and is therefore definitely related and allocable to the class of gross income ordinarily produced by the asset (the warehouse) that is involved in the event, that is the gross income from sales of Product A by USP in the United States and by FDE in Country X. Under the law in effect in 2016, the income earned from the Product A sales in Country X was solely general category income. Under paragraph (e)(5)(ii) of this section, the damages payment is definitely related and allocable to the class of gross income consisting of sales of Product A by USP in the United States and by FDE in Country X, and apportioned to the statutory and residual groupings based on the relative value in each grouping (as determined under § 1.861-9(g) for purposes of allocating and apportioning USP's interest expense) of USP's warehouse, the asset involved in the event, in

2020, the year in which the deduction is allowed. Accordingly, for purposes of determining USP's foreign tax credit limitation under section 904(d), the 2020 deductible damages payment of $50x is allocated and apportioned in the same manner as in paragraph (g)(16)(ii) of this section (the analysis in *Example 16*).

(18) ***Example 18: Stewardship and supportive expenses*** —

(i) ***Facts*** —

(A) ***Overview.*** USP, a domestic corporation, manufactures and sells Product A in the United States. USP directly owns 100% of the stock of USSub, a domestic corporation, and each of CFC1, CFC2, and CFC3, which are all controlled foreign corporations. USP and USSub file separate returns for U.S. Federal income tax purposes but are members of the same affiliated group as defined in section 243(b)(2). USSub, CFC1, CFC2, and CFC3 perform similar functions in the United States and in the foreign countries T, U, and V, respectively. USP's tax book value in the stock of USSub is $15,000x. USP's tax book value in the stock of each of CFC1, CFC2, and CFC3 is, respectively, $5,000x, $10,000x, and $15,000x.

(B) ***USP Department expenses.*** USP's supervision department (the Department) incurs expenses of $1,500x. The Department is responsible for the supervision of its four subsidiaries and for rendering certain services to the subsidiaries, and the Department provides all the supportive functions necessary for USP's foreign activities. The Department performs three types of activities. First, the Department performs services that cost $900x outside the United States for the direct benefit of CFC2 for which a marked-up fee is paid by CFC2 to USP. Second, the Department provides services at a cost of $60x related to license agreements that USP maintains with subsidiaries CFC1 and CFC2 and which give rise to foreign source general category income to USP. Third, the Department performs activities described in § 1.482-9(l)(3)(iii) that are in the nature of shareholder oversight, that duplicate functions performed by all four of the subsidiaries' own employees, and that do not provide an additional benefit to the subsidiaries. For example, a team of auditors from USP's accounting department periodically audits the subsidiaries' books and prepares internal reports for use by USP's management. Similarly, USP's treasurer periodically reviews the subsidiaries' financial policies for the board of directors of USP. These activities do not provide an additional benefit to the related corporations. The Department's oversight activities are related to all the subsidiaries. The cost of the duplicative activities is $540x.

(C) ***USP's income.*** USP earns the following items of income: First, under section 951(a), USP has $2,000x of subpart F income that is passive category income. Second, USP has a GILTI inclusion amount of $2,000x. Third, USP earns $1,000x of royalties, paid by CFC1 and CFC2, that are foreign source general category income. Finally, USP receives a fee of $1,000x from CFC2 that is foreign source general category income.

(ii) ***Analysis*** —

(A) ***Character of USP Department services.*** The first and second activities (the services rendered for the benefit of CFC2, and the provision of services related to license agreements with CFC1 and CFC2) are not properly characterized as stewardship expenses because they are not incurred solely to protect the corporation's capital investment in the related corporation or to facilitate compliance by the corporation with reporting, legal, or regulatory requirements applicable specifically to the corporation. The third activity

described is in the nature of shareholder oversight and is characterized as stewardship as described in paragraph (e)(4)(ii)(A) of this section because the expense is related to duplicative activities.

(B) ***Allocation.*** First, the deduction of $900x for expenses related to services rendered for the benefit of CFC2 is definitely related (and therefore allocable) to the fees for services that USP receives from CFC2. Second, the $60x of deductions attributable to USP's license agreements with CFC1 and CFC2 are definitely related (and therefore allocable) solely to royalties received from CFC1 and CFC2. Third, based on the relevant facts and circumstances and the Department's oversight activities, the stewardship deduction of $540x is related to the oversight of all of USP's subsidiaries and therefore is definitely related (and therefore allocable) to dividends and inclusions received or included from all the subsidiaries.

(C) ***Apportionment.***

(*1*) No apportionment of USP's deduction of $900x for expenses related to the services performed for CFC2 is necessary because the class of gross income to which the deduction is allocated consists entirely of a single statutory grouping, foreign source general category income.

(*2*) No apportionment of USP's deduction of $60x attributable to the services related to license agreements is necessary because the class of gross income to which the deduction is allocated consists entirely of a single statutory grouping, foreign source general category income.

(*3*) For purposes of apportioning USP's $540x stewardship expenses in determining the foreign tax credit limitation, the statutory groupings are foreign source general category income, foreign source passive category income, and foreign source section 951A category income. The residual grouping is U.S. source income.

(*4*) USP's deduction of $540x for the Department's stewardship expenses which are allocable to dividends and amounts included from the subsidiaries are apportioned using the same value of USP's stock in USSub, CFC1, CFC2, and CFC3 that is used for purposes of allocating and apportioning USP's interest expense. Pursuant to paragraph (e)(4)(ii)(A) of this section and § 1.861-14(e)(1)(i), the value of USP's stock in USSub is included for purposes of apportioning USP's stewardship expense. The value of USSub's stock is $15,000x, and USSub only owns assets that generate income in the residual grouping of gross income from U.S. sources. Therefore, for purposes of apportioning USP's stewardship expense, all of the $15,000x value of the USSub stock is characterized as an asset generating U.S. source income. Although USSub stock would be eliminated from consideration as an asset under paragraph (d)(2)(ii)(B) of this section, for purposes of apportioning USP's stewardship expense section 864(e)(3) and paragraph (d)(2) of this section do not apply. USP uses the asset method described in § 1.861-12T(c)(3)(ii) to characterize the stock in its CFCs. After application of § 1.861-13(a), USP determines that with respect to its three CFCs in the aggregate it has $15,000x of section 951A category stock in the non-section 245A subgroup, $6,000x of general category stock in the section 245A subgroup, and $9,000x of passive category stock in the non-section 245A subgroup. Although under paragraph (d)(2)(ii)(C)(*2*) of this section $7,500x of the stock that is section 951A category stock is an exempt asset, for purposes of apportioning USP's stewardship

expense section 864(e)(3) and paragraph (d)(2) of this section do not apply. Finally, even though USP may be allowed a section 245A deduction with respect to dividends from the CFCs, no portion of the value of the stock of the CFCs is eliminated, because the section 245A deduction does not create exempt income or result in the stock being treated as an exempt asset. See section 864(e)(3) and paragraph (d)(2)(iii)(C) of this section.

(5) Taking into account the characterization of USP's stock in USSub, CFC1, CFC2, and CFC3 with a total value of $45,000x ($15,000x + $6,000x + $9,000x + $15,000x), the $540x of Department expenses is apportioned as follows: $180x ($540x × $15,000x/$45,000x) to section 951A category income, $72x ($540x × $6,000x/$45,000x) to general category income, $108x ($540x × $9,000x/$45,000x) to passive category income, and $180x ($540x × $15,000x/$45,000x) to the residual grouping of U.S. source income. Section 904(b)(4)(B)(i) and § 1.904(b)-3 apply to $72x of the stewardship expense apportioned to the CFCs' stock that is characterized as being in the section 245A subgroup in the general category.

(19) *Example 19: Supportive expense* —

(i) *Facts* —

(A) USP, a domestic corporation, purchases and sells products both in the United States and in foreign countries. USP has no foreign subsidiary and no international department. During the taxable year, USP incurs the following expenses with respect to its worldwide activities:

TABLE 3 TO PARAGRAPH (g)(19)(i)(A)

Personnel department expenses	$50,000x
Training department expenses	35,000x
General and administrative expenses	55,000x
President's salary	40,000x
Sales manager's salary	20,000x
Total	200,000x

(B) USP has domestic gross receipts from sales of $750,000x and foreign gross receipts from sales of $500,000x and has gross income from such sales in the same ratio, namely $300,000x from domestic sources and $200,000x from foreign sources that is general category income.

(ii) *Analysis* —

(A) ***Allocation.*** The above expenses are definitely related and allocable to all of USP's gross income derived from both domestic and foreign markets.

(B) ***Apportionment.*** For purposes of applying the foreign tax credit limitation, the statutory grouping is gross income from sources outside the United States in general category income and the residual grouping is gross income from sources within the United States. USP's deductions for its worldwide sales activities must be apportioned between these groupings. USP does not have a separate international division which performs essentially all of the functions required to manage and oversee its foreign activities. The president and sales manager do not maintain time records. The division of their time between domestic and foreign activities varies from day to day and cannot be estimated on an annual basis with any reasonable degree of accuracy. Similarly, there are no facts which would justify a method of apportionment of their salaries or of one of the other listed deductions based on more specific factors than gross receipts or gross income. An acceptable method of apportionment would be on the basis of gross receipts. The apportionment of the $200,000x deduction is as follows:

TABLE 4 TO PARAGRAPH (g)(19)(ii)(B)

Apportionment of the $200,000x expense to the statutory grouping of gross income: $200,000x × [$500,000x/($500,000x + $750,000x)]	$80,000x
Apportionment of the $200,000x expense to the residual grouping of gross income: $200,000x × [$750,000x/($500,000x + $750,000x)]	120,000x
Total apportioned supportive expense	200,000x

(20) ***Example 20: Supportive expense*** —

(i) ***Facts.*** Assume the same facts as in paragraph (g)(19)(i) of this section (the facts in *Example 19*), except that USP's president devotes only 5% of his time to the foreign operations and 95% of his time to the domestic operations and that USP's sales manager devotes approximately 10% of her time to foreign sales and 90% of her time to domestic sales.

(ii) ***Analysis*** —

(A) ***Allocation.*** The expenses incurred by USP with respect to its worldwide activities are definitely related, and therefore allocable to USP's gross income from both its foreign and domestic markets.

(B) ***Apportionment.*** On the basis of the additional facts it is not acceptable to apportion the salaries of the president and the sales manager on the basis of gross receipts. It is acceptable to apportion such salaries between the statutory grouping (gross income from sources without the United States) and residual grouping (gross income from sources

within the United States) on the basis of time devoted to each sales activity. Remaining expenses may still be apportioned on the basis of gross receipts. The apportionment is as follows:

TABLE 5 TO PARAGRAPH (g)(20)(ii)(B)

Apportionment of the $200,000x expense to the statutory grouping of gross income:	
President's salary: $40,000x × 5%	$2,000x
Sales manager's salary: $20,000x × 10%	2,000x
Remaining expenses: $140,000x × [$500,000x/($500,000x + $750,000x)]	56,000x
Subtotal: Apportionment of expense to statutory grouping	60,000x
Apportionment of the $200,000x expense to the residual grouping of gross income:	
President's salary: $40,000x × 95%	38,000x
Sales manager's salary: $20,000x × 90%	18,000x
Remaining expenses: $140,000x × [$750,000x/($500,000x + $750,000x)]	84,000x
Subtotal: Apportionment of expense to residual grouping	140,000x
Total: Apportioned supportive expense	200,000x

(21) ***Example 21: Supportive expense*** —

(i) ***Facts.*** FC, a foreign corporation doing business in the United States, is a manufacturer of metal stamping machines. FC has no U.S. subsidiaries and no separate division to manage and oversee its business in the United States. FC manufactures and sells these machines in the United States and in foreign countries A and B and has a separate manufacturing facility in each country. Sales of these machines are FC's only source of income. In Year 1, FC incurs general and administrative expenses related to both its U.S. and foreign operations of $100,000x. It has machine sales of $500,000x, $1,000,000x, and $1,000,000x on which it earns gross income of $200,000x, $400,000x, and $400,000x in the United States, Country A, and Country B, respectively. The income from the manufacture and sale of the machines in countries A and B is not effectively connected with FC's business in the United States.

(ii) ***Analysis*** —

(A) ***Allocation.*** The $100,000x of general and administrative expense is definitely related to the income to which it gives rise, namely a part of the gross income from sales of machines in the United States, in Country A, and in Country B. The expenses are allocable to this class of income, even though FC's gross income from sources outside the United States is excluded income since it is not effectively connected with a U.S. trade or business.

(B) ***Apportionment.*** Since FC is a foreign corporation, the statutory grouping is gross income effectively connected with FC's trade of business in the United States, namely gross income from sources within the United States, and the residual grouping is gross income not effectively connected with a trade or business in the United States, namely gross income from countries A and B. Since there are no facts that would require a method of

apportionment other than on the basis of sales or gross income, the amount may be apportioned between the two groupings on the basis of amounts of gross income as follows:

TABLE 6 TO PARAGRAPH (g)(21)(ii)(B)

Apportionment of general and administrative expense to the statutory grouping, gross income from sources within the United States: $100,000x × [$200,000x/($200,000x + $400,000x + $400,000x)]	$20,000x
Apportionment of general and administrative expense to the residual grouping, gross income from sources without the United States: $100,000x × [($400,000x + $400,000x)/($200,000x + $400,000x + $400,000x)]	80,000x
Total apportioned general and administrative expense	100,000x

(22)-(24) [Reserved]

(25) ***Example 25: Income taxes*** —

(i) ***Facts.*** USP, a domestic corporation, is a manufacturer and distributor of electronic equipment with operations in states A, B, and C. USP also has a foreign branch, as defined in section 904(d)(1)(B) and § 1.904-4(f), in Country Y which manufactures and distributes the same type of electronic equipment. In Year 1, USP has taxable income from these activities, as described under the Code (without taking into account the deduction for state income taxes), of $1,000,000x, of which $200,000x is foreign source foreign branch category income and $800,000x is domestic source income. States A, B, and C each determine USP's income subject to tax within their state by making adjustments to USP's taxable income as determined under the Code, and then apportioning the adjusted taxable income on the basis of the relative amounts of USP's payroll, property, and sales within each state as compared to USP's worldwide payroll, property, and sales. The adjustments made by states A, B, and C all involve adding and subtracting enumerated items from taxable income as determined under the Code. However, in making these adjustments to taxable income, none of the states specifically exempts foreign source income as determined under the Code. On this basis, it is determined that USP has taxable income of $550,000x, $200,000x, and $200,000x in states A, B, and C, respectively. The corporate tax rates in states A, B, and C are 10%, 5%, and 2%, respectively, and USP has total state income tax liabilities of $69,000x ($55,000x + $10,000x + $4,000x), which it deducts as an expense for Federal income tax purposes.

(ii) ***Analysis*** —

(A) ***Allocation.*** USP's deduction of $69,000x for state income taxes is definitely related and thus allocable to the gross income with respect to which the taxes are imposed. Since the statutes of states A, B, and C do not specifically exempt foreign source income (as determined under the Code) from taxation and since, in the aggregate, states A, B, and C tax $950,000x of USP's income while only $800,000x is domestic source income under the

Code, it is presumed that state income taxes are imposed on $150,000x of foreign source income. The deduction for state income taxes is therefore related and allocable to both USP's foreign source and domestic source income.

(B) ***Apportionment.*** For purposes of computing the foreign tax credit limitation, USP's income is comprised of one statutory grouping, foreign source foreign branch category gross income, and one residual grouping, gross income from sources within the United States. The state income tax deduction of $69,000x must be apportioned between these two groupings. Corporation USP calculates the apportionment on the basis of the relative amounts of foreign source foreign branch category taxable income and U.S. source taxable income subject to state taxation. In this case, state income taxes are presumed to be imposed on $800,000x of domestic source income and $150,000x of foreign source general category income.

TABLE 7 TO PARAGRAPH (g)(25)(ii)(B)

State income tax deduction apportioned to foreign source foreign branch category income (statutory grouping): $69,000x × ($150,000x/$950,000x)	$10,895x
State income tax deduction apportioned to income from sources within the United States (residual grouping): $69,000x × ($800,000x/$950,000x)	58,105x
Total apportioned state income tax deduction	69,000x

(26) ***Example 26: Income taxes*** —

(i) ***Facts.*** Assume the same facts as in paragraph (g)(25)(i) of this section (the facts in *Example 25*), except that the language of state A's statute and the statute's operation exempt from taxation all foreign source income, as determined under the Code, so that foreign source income is not included in adjusted taxable income subject to apportionment in state A (and factors relating to USP's Country Y branch are not taken into account in computing the state A apportionment fraction).

(ii) ***Analysis*** —

(A) ***Allocation.*** USP's deduction of $69,000x for state income taxes is definitely related and thus allocable to the gross income with respect to which the taxes are imposed. Since state A exempts all foreign source income by statute, state A is presumed to impose tax on $550,000x of USP's $800,000x of domestic source income. USP's state A tax of $55,000x is allocable, therefore, solely to domestic source income. Since the statutes of states B and C do not specifically exclude all foreign source income as determined under the Code, and since states B and C impose tax on $400,000x ($200,000x + $200,000x) of USP's income of which only $250,000x ($800,000x−$550,000x) is presumed to be domestic source, the deduction for the $14,000x of income taxes imposed by states B and C is related and allocable to both foreign source and domestic source income.

(B) ***Apportionment.***

(*1*) For purposes of computing the foreign tax credit limitation, USP's income is comprised of one statutory grouping, foreign source foreign branch category gross income, and one residual grouping, gross income from sources within the United States. The deduction of $14,000x for income taxes of states B and C must be apportioned between these two groupings.

(*2*) Corporation USP calculates the apportionment on the basis of the relative amounts of foreign source foreign branch category income and U.S. source income subject to state taxation.

TABLE 8 TO PARAGRAPH (g)(26)(ii)(B)(*2*)

States B and C income tax deduction apportioned to foreign source foreign branch category income (statutory grouping): $14,000x × ($150,000x/$400,000x)	$5,250x
States B and C income tax deduction apportioned to income from sources within the United States (residual grouping): $14,000x × ($250,000x/$400,000x)	8,750x
Total apportioned state income tax deduction	14,000x

(*3*) Of USP's total income taxes of $69,000x, the amount allocated and apportioned to foreign source foreign branch category income equals $5,250x. The total amount of state income taxes allocated and apportioned to U.S. source income equals $63,750x ($55,000x + $8,750x).

(27) ***Example 27: Income tax*** —

(i) ***Facts.*** Assume the same facts as in paragraph (g)(25)(i) of this section (the facts in *Example 25*), except that state A, in which USP has significant income-producing activities, does not impose a corporate income tax or other state tax computed on the basis of income derived from business activities conducted in state A. USP therefore has a total state income tax liability in Year 1 of $14,000x ($10,000x paid to state B plus $4,000x paid to state C), all of which is subject to allocation and apportionment under paragraph (b) of this section.

(ii) ***Analysis*** —

(A) ***Allocation.***

(*1*) USP's deduction of $14,000x for state income taxes is definitely related and allocable to the gross income with respect to which the taxes are imposed. However, in these facts, an adjustment is necessary before the aggregate state taxable incomes can be compared with U.S. source income on the Federal income tax return in the manner described in paragraphs (g)(25)(ii) and (g)(26)(ii) of this section (the analysis in *Examples 25* and *26*). Unlike the facts in paragraphs (g)(25)(i) and (g)(26)(i) of this section (the facts in *Examples 25* and *26*), state A imposes no income tax and does not define taxable income attributable to activities in state A. The total amount of USP's income subject to state taxation is, therefore, $400,000x ($200,000x in state B and $200,000x in state C). This total presumptively does not include any income

attributable to activities performed in state A and therefore cannot properly be compared to total U.S. source taxable income reported by USP for Federal income tax purposes, which does include income attributable to state A activities.

(*2*)

(*i*) Accordingly, before applying the method used in paragraphs (g)(25)(ii) and (g)(26)(ii) of this section (the analysis in *Examples 25* and *26*) to the facts of the example in this paragraph (g)(27), it is necessary first to estimate the amount of taxable income that state A could reasonably attribute to USP's activities in state A, and then to reduce federal taxable income by that amount.

(*ii*) Any reasonable method may be used to attribute taxable income to USP's activities in state A. For example, the rules of the Uniform Division of Income for Tax Purposes Act ("UDITPA") attribute income to a state on the basis of the average of three ratios that are based upon the taxpayer's facts—property within the state over total property, payroll within the state over total payroll, and sales within the state over total sales—and, with adjustments, provide a reasonable method for this purpose. When applying the rules of UDITPA to estimate U.S. source income derived from state A activities, the taxpayer's UDITPA factors must be adjusted to eliminate both taxable income and factors attributable to a foreign branch. Therefore, in the example in this paragraph (g)(27) all taxable income as well as UDITPA apportionment factors (property, payroll, and sales) attributable to USP's Country Y branch must be eliminated.

(*3*)

(*i*) Since it is presumed that, if state A had had an income tax, state A would not attempt to tax the income derived by USP's Country Y branch, any reasonable estimate of the income that would be taxed by state A must exclude any foreign source income.

(*ii*) When using the rules of UDITPA to estimate the income that would have been taxable by state A in these facts, foreign source income is excluded by starting with federally defined taxable income (before deduction for state income taxes) and subtracting any income derived by USP's Country Y branch. The hypothetical state A taxable income is then determined by multiplying the resulting difference by the average of USP's state A property, payroll, and sales ratios, determined using the principles of UDITPA (after adjustment by eliminating the Country Y branch factors). The resulting product is presumed to be exclusively U.S. source income, and the allocation and apportionment method described in paragraph (g)(26) of this section (*Example 26*) must then be applied.

(*iii*) If, for example, state A taxable income were determined to equal $550,000x, then $550,000x of U.S. source income for Federal income tax purposes would be presumed to constitute state A taxable income. Under paragraph (g)(26) of this section (*Example 26*), the remaining $250,000x ($800,000x−$550,000x) of U.S. source income for Federal income tax purposes would be presumed to be subject to tax in states B and C. Since states B and C impose tax on $400,000x, the application of Example 25 would result in a presumption that $150,000x is

foreign source income and $250,000x is domestic source income. The deduction for the $14,000x of income taxes of states B and C would therefore be related and allocable to both foreign source and domestic source income and would be subject to apportionment.

(B) ***Apportionment.*** The deduction of $14,000x for income taxes of states B and C is apportioned in the same manner as in paragraph (g)(26) of this section (*Example 26*). As a result, $5,250x of the $14,000x of state B and state C income taxes is apportioned to foreign source foreign branch category income ($14,000x × $150,000x/$400,000x), and $8,750x ($14,000x × $250,000x/$400,000x) of the $14,000x of state B and state C income taxes is apportioned to U.S. source income.

(h) ***Applicability date.***

(1) Except as provided in this paragraph (h), this section applies to taxable years that both begin after December 31, 2017, and end on or after December 4, 2018.

(2) Paragraphs (d)(2)(ii)(B), (d)(2)(v), (e)(4) and (5), (e)(6)(i), (e)(8) and (16), and (g)(15) through (18) of this section apply to taxable years that begin after December 31, 2019. For taxable years that both begin after December 31, 2017, and end on or after December 4, 2018, and also begin on or before December 31, 2019, see § 1.861-8(d)(2)(ii)(B), (e)(4) and (5), (e)(6)(i), and (e)(8) as in effect on December 17, 2019.

(3) The last sentence of paragraph (d)(2)(ii)(C)(*1*) of this section and paragraph (f)(1)(vi)(N) of this section apply to taxable years beginning on or after January 1, 2021.

(4) Paragraph (e)(4)(i) of this section applies to taxable years ending on or after November 2, 2020.

[T.D. 7456, 42 FR 1195, Jan. 6, 1977]

Editorial Note: For FEDERAL REGISTER citations affecting § 1.861-8, see the List of CFR Sections Affected, which appears in the Finding Aids section of the printed volume and at *www.govinfo.gov.*

§ 1.861-8T Computation of taxable income from sources within the United States and from other sources and activities (temporary).

(a) ***In general.***

(1) [Reserved]

(2) ***Allocation and apportionment of deductions in general.*** If an affiliated group of corporations joins in filing a consolidated return under section 1501, the provisions of this section are to be applied separately to each member in that affiliated group for purposes of determining such member's taxable income, except to the extent that expenses, losses, and other deductions are allocated and apportioned as if all domestic members of an affiliated group were a single corporation under section 864(e) and the regulations thereunder. See § 1.861-9T through § 1.861-11T for rules regarding the affiliated group allocation and apportionment of interest expense, and § 1.861-14T for rules regarding the affiliated group allocation and apportionment of expenses other than interest.

(a) (3) -

(b) [Reserved] For further guidance, *see* § 1.861-8(a)(3) through (b).

(c) *Apportionment of deductions* —

(1) ***Deductions definitely related to a class of gross income.*** Where a deduction has been allocated in accordance with paragraph (b) of this section to a class of gross income which is included in one statutory grouping and the residual grouping, the deduction must be apportioned between the statutory grouping and the residual grouping. Where a deduction has been allocated to a class of gross income which is included in more than one statutory grouping, such deduction must be apportioned among the statutory groupings and, where necessary, the residual grouping. Thus, in determining the separate limitations on the foreign tax credit imposed by section 904(d)(1) or by section 907, the income within a separate limitation category constitutes a statutory grouping of income and all other income not within that separate limitation category (whether domestic or within a different separate limitation category) constitutes the residual grouping. In this regard, the same method of apportionment must be used in apportioning a deduction to each separate limitation category. Also, see paragraph (f)(1)(iii) of this section with respect to the apportionment of deductions among the statutory groupings designated in section 904(d)(1). If the class of gross income to which a deduction has been allocated consists entirely of a single statutory grouping or the residual grouping, there is no need to apportion that deduction. If a deduction is not definitely related to any gross income, it must be apportioned ratably as provided in paragraph (c)(3) of this section. A deduction is apportioned by attributing the deduction to gross income (within the class to which the deduction has been allocated) which is in one or more statutory groupings and to gross income (within the class) which is in the residual grouping. Such attribution must be accomplished in a manner which reflects to a reasonably close extent the factual relationship between the deduction and the grouping of gross income. In apportioning deductions, it may be that for the taxable year there is no gross income in the statutory grouping or that deductions will exceed the amount of gross income in the statutory grouping. See paragraph (d)(1) of this section with respect to cases in which deductions exceed gross income. In determining the method of apportionment for a specific deduction, examples of bases and factors which should be considered include, but are not limited to—

(i) Comparison of units sold,

(ii) Comparison of the amount of gross sales or receipts,

(iii) Comparison of costs of goods sold,

(iv) Comparison of profit contribution,

(v) Comparison of expenses incurred, assets used, salaries paid, space utilized, and time spent which are attributable to the activities or properties giving rise to the class of gross income, and

(iv) Comparison of the amount of gross income.

Paragraph (e) (2) through (8) of this section provides the applicable rules for allocation and apportionment of deductions for interest, research and development expenses, and certain other deductions. The effects on tax liability of the apportionment of deductions and the burden of maintaining records not otherwise maintained and making computations not otherwise made shall be taken into consideration in determining whether a method of apportionment and its application are sufficiently precise. A method of apportionment described in this paragraph (c)(1) may not be used when it does not reflect, to a reasonably close extent, the factual relationship between the deduction and the groupings of income. Furthermore, certain methods of apportionment described in this

paragraph (c)(1) may not be used in connection with any deduction for which another method is prescribed. The principles set forth above are applicable in apportioning both deductions definitely related to a class which constitutes less than all of the taxpayer's gross income and to deductions related to all of the taxpayer's gross income. If a deduction is not related to any class of gross income, it must be apportioned ratably as provided in paragraph (c)(3) of this section.

(2) ***Apportionment based on assets.*** For further guidance, see § 1.861-8(c)(2).

(3) [Reserved]

(d) ***Excess of deductions and excluded and eliminated items of income.***

(1) [Reserved]

(2) ***Allocation and apportionment to exempt, excluded or eliminated income*** —

(i) ***In general.*** In the case of taxable years beginning after December 31, 1986, except to the extent otherwise permitted by § 1.861-13T, the following rules shall apply to take account of income that is exempt or excluded, or assets generating such income, with respect to allocation and apportionment of deductions.

(A) ***Allocation of deductions.*** In allocating deductions that are definitely related to one or more classes of gross income, exempt income (as defined in paragraph (d)(2)(ii) of this section) shall be taken into account.

(B) ***Apportionment of deductions.*** In apportioning deductions that are definitely related either to a class of gross income consisting of multiple groupings of income (whether statutory or residual) or to all gross income, exempt income and exempt assets (as defined in paragraph (d)(2)(ii) of this section) shall not be taken into account.

For purposes of apportioning deductions which are not taken into account under § 1.1502-13 in determining gain or loss from intercompany transactions, as defined in § 1.1502-13, income from such transactions shall be taken into account in the year such income is ultimately included in gross income.

(ii) ***Exempt income and exempt asset defined*** —

(A) ***In general.*** For further guidance, see § 1.861-8(d)(2)(ii)(A).

(B) ***Certain stock and dividends.*** For further guidance, see § 1.861-8(d)(2)(ii)(B).

(C) ***Foreign-derived intangible income and inclusions under section 951A(a).*** For further guidance, see § 1.861-8(d)(2)(ii)(C).

(iii) ***Income that is not considered tax exempt.*** The following items are not considered to be exempt, eliminated, or excluded income and, thus, may have expenses, losses, or other deductions allocated and apportioned to them:

(A) In the case of a foreign taxpayer (including a foreign sales corporation (FSC)) computing its effectively connected income, gross income (whether domestic or foreign source) which is not effectively connected to the conduct of a United States trade or business;

(B) In computing the combined taxable income of a DISC or FSC and its related supplier, the gross income of a DISC or a FSC; and

(C) For further guidance, see § 1.861-8(d)(2)(iii)(C) through (E).

(D)-(E) [Reserved]

(iv) ***Value of stock attributable to previously taxed earnings and profits.*** For further guidance, see § 1.861-8(d)(2)(iv).

(e) ***Allocation and apportionment of certain deductions.***

(1) [Reserved]. For further guidance, see § 1.861-8(e)(1).

(2) ***Interest.*** The rules concerning the allocation and apportionment of interest expense and certain interest equivalents are set forth in §§ 1.861-9T through § 1.861-13T.

(3) ***Research and experimental expenditures.*** For further guidance, see § 1.861-8(e)(3) through (15).

(4)-(15) [Reserved]

(f) ***Miscellaneous matters.*** For further guidance, see § 1.861-8(f) through (g).

(g) [Reserved]

(h) ***Effective/applicability date.***

(1) Paragraphs (f)(1)(vi)(E), (f)(1)(vi)(F), and (f)(1)(vi)(G) of this section apply to taxable years ending after April 9, 2008.

(2) Paragraph (e)(4), the last sentence of paragraph (f)(4)(i), and paragraph (g), *Examples 17*, *18*, and *30* of this section apply to taxable years beginning after July 31, 2009.

(3) Also, *see* paragraph (e)(12)(iv) of this section and 1.861-14(e)(6) for rules concerning the allocation and apportionment of deductions for charitable contributions.

[T.D. 8228, 53 FR 35474, Sept. 14, 1988]

Editorial Note: For FEDERAL REGISTER citations affecting § 1.861-8T, see the List of CFR Sections Affected, which appears in the Finding Aids section of the printed volume and at *www.govinfo.gov*.

§ 1.861-9 Allocation and apportionment of interest expense and rules for asset-based apportionment.

(a) ***In general.*** For further guidance, see § 1.861-9T(a).

(b) ***Interest equivalent —***

(1) ***Certain expenses and losses —***

(i) ***General rule.*** Any expense or loss (to the extent deductible) incurred in a transaction or series of integrated or related transactions in which the taxpayer secures the use of funds for a period of time is subject to allocation and apportionment under the rules of this section and § 1.861-9T(b) if such expense or loss is substantially incurred in consideration of the time value of money. However, the allocation and apportionment of a loss under this paragraph (b) and § 1.861-9T(b) does not affect the characterization of such loss as capital or ordinary for any purpose other than for purposes of the section 861 regulations (as defined in § 1.861-8(a)(1)).

(ii) ***Examples.*** For further guidance, see § 1.861-9T(b)(1)(ii).

(2) ***Certain foreign currency borrowings.*** For further guidance, see § 1.861-9T(b)(2) through (7).

(3)-(7) [Reserved]

(8) ***Guaranteed payments.*** Any deductions for guaranteed payments for the use of capital under section 707(c) are allocated and apportioned in the same manner as interest expense.

(c) ***Allowable deductions.*** For further guidance, see § 1.861-9T(c) introductory text.

(1) ***Disallowed deductions.*** For further guidance, see § 1.861-9T(c)(1) through (4).

(2)-(4) [Reserved]

(5) ***Section 163(j).*** If a taxpayer is subject to section 163(j), the taxpayer's deduction for business interest expense is limited to the sum of the taxpayer's business interest income, 30 percent of the taxpayer's adjusted taxable income for the taxable year, and the taxpayer's floor plan financing interest expense. In the taxable year that any deduction is permitted for business interest expense with respect to a disallowed business interest carryforward, that business interest expense is apportioned for purposes of this section under rules set forth in paragraph (d), (e), or (f) of this section (as applicable) as though it were incurred in the taxable year in which the expense is deducted.

(d) ***Apportionment rules for individuals, estates, and certain trusts.*** For further guidance, see § 1.861-9T(d).

(e) ***Partnerships*** —

(1) ***In general—aggregate rule.*** For further guidance, see § 1.861-9T(e)(1).

(2) ***Corporate partners whose interest in the partnership is 10 percent or more.*** A corporate partner shall apportion its interest expense, including the partner's distributive share of partnership interest expense, by reference to the partner's assets, including the partner's pro rata share of partnership assets, under the rules of paragraph (f) of this section if the corporate partner's direct and indirect interest in the partnership (as determined under the attribution rules of section 318) is 10 percent or more. A corporation using the tax book value method or alternative tax book value method of apportionment shall use the partnership's inside basis in its assets, including adjustments under sections 734(b) and 743(b), if any, and adjusted to the extent required under § 1.861-10T(d)(2).

(3) ***Individual partners who are general partners or who are limited partners with an interest in the partnership of 10 percent or more.*** An individual partner is subject to the rules of this paragraph (e)(3) if either the individual is a general partner or the individual's direct and indirect interest (as determined under the attribution rules of section 318) in the partnership is 10 percent or more. The individual shall first classify his or her distributive share of partnership interest expense as interest incurred in the active conduct of a trade or business, as passive activity interest, or as investment interest under regulations issued under sections 163 and 469. The individual must then apportion his or her interest expense, including the partner's distributive share of partnership interest expense, under the rules of paragraph (d) of this section. Each such individual partner shall take into account his or her distributive share of the partnership gross income or pro rata share of the partnership assets in applying such rules. An individual using the tax book value or alternative tax book value method of apportionment shall use the partnership's inside basis in its assets, including adjustments under sections 734(b) and 743(b), if any, and adjusted to the extent required under § 1.861-10T(d)(2).

(4) ***Entity rule for less than 10 percent limited partners*** —

(i) ***Partnership interest expense.*** A limited partner (whether individual or corporate), whose ownership, together with ownership by persons that bear a relationship to the partner described in section 267(b) or section 707, of the capital and profits interests of the partnership is less than 10 percent directly allocates its distributive share of partnership interest expense to its distributive share of partnership gross income. Under § 1.904-4(n)(1)(ii), such a partner's distributive share of foreign source income of the partnership is treated as passive income (subject to the high-taxed income exception of section 904(d)(2)(B)(iii)(II)), except in the case of income from a partnership interest held in the ordinary course of the partner's active trade or business, as defined in § 1.904-4(n)(1)(ii)(B). A partner's distributive share of partnership interest expense (other than partnership interest expense that is directly allocated to identified property under § 1.861-10T) is apportioned in accordance with the partner's relative distributive share of gross foreign source income in each separate category and of gross domestic source income from the partnership. To the extent that partnership interest expense is directly allocated under § 1.861-10T, a comparable portion of the income to which such interest expense is allocated is disregarded in determining the partner's relative distributive share of gross foreign source income in each separate category and domestic source income. The partner's distributive share of the interest expense of the partnership that is directly allocable under § 1.861-10T is allocated according to the treatment, after application of § 1.904-4(n)(1), of the partner's distributive share of the income to which the expense is allocated.

(ii) ***Other interest expense of the partner.*** For further guidance, see § 1.861-9T(e)(4)(ii).

(5) ***Tiered partnerships.*** For further guidance, see § 1.861-9T(e)(5) through (7).

(6)-(7) [Reserved]

(8) ***Special rule for downstream partnership loans*** —

(i) ***In general.*** For purposes of apportioning interest expense that is not directly allocable under paragraph (e)(4) of this section or § 1.861-10T, the disregarded portion of a downstream partnership loan is not considered an asset of a downstream partnership loan lender (DPL lender). The disregarded portion of a downstream partnership loan is the portion of the value of the loan (as determined under paragraph (h)(4)(i) of this section) that bears the same proportion to the total value of the loan as the matching income amount that is included by the DPL lender for a taxable year with respect to the loan bears to the total amount of downstream partnership loan interest income (DPL interest income) that is included directly or indirectly in gross income by the DPL lender with respect to the loan during that taxable year.

(ii) ***Treatment of interest expense and interest income attributable to a downstream partnership loan.*** If a DPL lender (or any other person in the same affiliated group as the DPL lender) takes into account a distributive share of downstream partnership loan interest expense (DPL interest expense), the DPL lender must assign an amount of DPL interest income corresponding to the matching income amount for the taxable year that is attributable to the same loan to the same statutory and residual groupings as the statutory and residual groupings of gross income from which the DPL interest expense is deducted (or would be deducted, without regard to any limitations on the deductibility of interest, such as section 163(j)) by the DPL lender (or any other person in the same affiliated group as the DPL lender).

(iii) ***Anti-avoidance rule for third party back-to-back loans.*** If, with a principal purpose of avoiding the rules in this paragraph (e)(8), a person makes a loan to a person that is not related (within the meaning of section 267(b) or 707) to the lender, the unrelated person makes a loan to a

partnership, and the first loan would constitute a downstream partnership loan if made directly to the partnership, then the rules of this paragraph (e)(8) apply as if the first loan was made directly to the partnership and the interest expense paid by the partnership is treated as made with respect to the first loan. Such a series of loans will be subject to this recharacterization rule without regard to whether there was a principal purpose of avoiding the rules in this paragraph (e)(8) if the loan to the unrelated person would not have been made or maintained on substantially the same terms but for the loan of funds by the unrelated person to the partnership. The principles of this paragraph (e)(8)(iii) also apply to similar transactions that involve more than two loans and regardless of the order in which the loans are made.

(iv) ***Anti-avoidance rule for loans held by CFCs.*** A loan receivable held by a controlled foreign corporation with respect to a loan to a partnership in which a United States shareholder (as defined in § 1.904-5(a)(4)(vi)) of the controlled foreign corporation owns an interest, directly or indirectly through one or more other partnerships or other pass-through entities (as defined in § 1.904-5(a)(4)(iv)), is recharacterized as a loan receivable held directly by the United States shareholder with respect to the loan to such partnership for purposes of this paragraph (e)(8) if the loan was made or transferred with a principal purpose of avoiding the rules in this paragraph (e)(8). An appropriate amount of income derived by the United States shareholder (or any other person in the same affiliated group as the United States shareholder) from the controlled foreign corporation is treated as DPL interest income. Appropriate adjustments must be made to the value and characterization of the stock of the controlled foreign corporation under §§ 1.861-9 and 1.861-12 in order to reflect the portion of the downstream partnership loan held by the controlled foreign corporation that is disregarded under paragraph (e)(8)(i) of this section.

(v) ***Interest equivalents.*** The principles of this paragraph (e)(8) apply in the case of a partner, or any person in the same affiliated group as the partner, that takes into account a distributive share of an expense or loss (to the extent deductible) that is allocated and apportioned in the same manner as interest expense under §§ 1.861-9(b) and 1.861-9T(b) and has a matching income amount (treating such interest equivalent as interest income or expense for purposes of paragraph (e)(8)(vi)(B) of this section) with respect to the transaction that gives rise to that expense or loss.

(vi) ***Definitions.*** For purposes of this paragraph (e)(8), the following definitions apply.

(A) ***Affiliated group.*** The term *affiliated group* has the meaning provided in § 1.861-11(d)(1).

(B) ***Matching income amount.*** The term *matching income amount* means the lesser of the total amount of the DPL interest income included directly or indirectly in gross income by the DPL lender for the taxable year with respect to a downstream partnership loan or the total amount of the distributive shares of the DPL interest expense of the DPL lender (or any other person in the same affiliated group as the DPL lender) with respect to the loan.

(C) ***Downstream partnership loan.*** The term *downstream partnership loan* means a loan to a partnership for which the loan receivable is held, directly or indirectly through one or more other partnerships or other pass-through entities (as defined in § 1.904-5(a)(4)), by a person (or any person in the same affiliated group as such person) that owns an interest, directly or indirectly through one or more other partnerships or other pass-through entities, in the partnership.

(D) ***Downstream partnership loan interest expense (DPL interest expense).*** The term *downstream partnership loan interest expense,* or *DPL interest expense,* means an item of interest expense paid or accrued with respect to a downstream partnership loan, without regard to whether the expense was currently deductible (for example, by reason of section 163(j) or the election to waive deductions pursuant to § 1.59A-3(c)(6)).

(E) ***Downstream partnership loan interest income (DPL interest income).*** The term *downstream partnership loan interest income,* or *DPL interest income,* means an item of gross interest income received or accrued with respect to a downstream partnership loan.

(F) ***Downstream partnership loan lender (DPL lender).*** The term *downstream partnership loan lender,* or *DPL lender,* means the person that holds the receivable with respect to a downstream partnership loan. If a partnership holds the receivable, then any partner in the partnership (other than a partner described in paragraph (e)(4)(i) of this section) is also considered a DPL lender.

(vii) ***Examples.*** The following examples illustrate the application of the rules in this paragraph (e)(8).

(A) ***Example 1*** —

(*1*) ***Facts.*** US1, a domestic corporation, directly owns 60% of PRS, a foreign partnership that is not engaged in a U.S. trade or business. The remaining 40% of PRS is directly owned by US2, a domestic corporation that is unrelated to US1. US1, US2, and PRS all use the calendar year as their taxable year. In Year 1, US1 loans $1,000x to PRS. For Year 1, US1 has $100x of interest income with respect to the loan and PRS has $100x of interest expense with respect to the loan. US1's distributive share of the interest expense is $60x. Under paragraph (e)(2) of this section, $45x of US1's distributive share of the interest expense is apportioned to U.S. source income and $15x is apportioned to foreign source foreign branch category income. Under paragraph (h)(4)(i) of this section, the total value of the loan between US1 and PRS is $1,000x.

(*2*) ***Analysis.*** The loan by US1 to PRS is a downstream partnership loan and US1 is a DPL lender. Under paragraph (e)(8)(vi)(B) of this section, the matching income amount is $60x, the lesser of the DPL interest income included by US1 with respect to the loan for the taxable year ($100x) and US1's distributive share of the DPL interest expense ($60x). Under paragraph (e)(8)(ii) of this section, US1 assigns $45x of the DPL interest income to U.S. source income and $15x of the DPL interest income to foreign source foreign branch category income. The source and separate category of the remaining $40x of US1's DPL interest income is determined under the generally applicable rules. Under paragraph (e)(8)(i) of this section, the disregarded portion of the downstream partnership loan is $600x ($1,000x × $60x/$100x).

(B) ***Example 2*** —

(*1*) ***Facts.*** The facts are the same as in paragraph (e)(8)(vii)(A)(*1*) of this section (the facts in *Example 1*), except that US1 and US2 are part of the same affiliated group, US2's distributive share of the interest expense is $40x, and under paragraph (e)(2) of this section, $30x of US2's distributive share of the interest expense is apportioned to U.S. source income and $10x is apportioned to foreign source foreign branch category income.

(2) ***Analysis.*** The loan by US1 to PRS is a downstream partnership loan and US1 is a DPL lender. Under paragraph (e)(8)(vi)(B) of this section, the matching income amount is $100x, the lesser of the DPL interest income included by US1 with respect to the loan for the taxable year ($100x) and the total amount of US1 and US2's distributive shares of the DPL interest expense ($100x). Under paragraph (e)(8)(ii) of this section, US1 assigns $75x of the DPL interest income to U.S. source income and $25x of the DPL interest income to foreign source foreign branch category income. Under paragraph (e)(8)(i) of this section, the disregarded portion of the downstream partnership loan is $1,000x ($1,000x × $100x/$100x).

(C) ***Example 3*** —

(1) ***Facts.*** US1, a domestic corporation, owns 80% of PRS, a foreign partnership that is not engaged in a U.S. trade or business. The remaining 20% of PRS is owned by US2, a domestic corporation that is unrelated to US1. US1, US2, and PRS all use the calendar year as their taxable year. In Year 1, US1 loans $3,000x to Bank and Bank loans $3,000x to PRS. US1 makes the loan to Bank with a principal purpose of avoiding the rules in this paragraph (e)(8). For Year 1, US1 has $150x of interest income with respect to the loan to Bank and PRS has $175x of interest expense with respect to the loan from Bank. US1's distributive share of the interest expense is $140x. Under paragraph (e)(2) of this section, $126x of US1's distributive share of the interest expense is apportioned to U.S. source income and $14x is apportioned to foreign source foreign branch category income. Under paragraph (h)(4)(i) of this section, the total value of the loan between US1 and PRS is $3,000x.

(2) ***Analysis.*** Under paragraph (e)(8)(iii) of this section, because the loan from US1 to Bank is made with a principal purpose of avoiding the rules of this paragraph (e)(8), the rules of this paragraph (e)(8) apply as if the loan by US1 to Bank was made directly to PRS. Accordingly, the loan by US1 to Bank is a downstream partnership loan and US1 is a DPL lender. Under paragraph (e)(8)(vi)(B) of this section, the matching income amount is $140x, the lesser of the DPL interest income included by US1 with respect to the loan for the taxable year ($150x) and US1's distributive share of the DPL interest expense ($140x). Under paragraph (e)(8)(ii) of this section, US1 assigns $126x of the DPL interest income to U.S. source income and $14x of the DPL interest income to foreign source foreign branch category income. The source and separate category of the remaining $10x of US1's DPL interest income is determined under the generally applicable rules. Under paragraph (e)(8)(i) of this section, the disregarded portion of the downstream partnership loan is $2,800x ($3,000x × $140x/$150x).

(D) ***Example 4*** —

(1) ***Facts.*** US1, a domestic corporation, directly owns all of the outstanding stock of CFC, a controlled foreign corporation, and 90% of PRS, a foreign partnership that is not engaged in a U.S. trade or business. The remaining 10% of PRS is owned by US2, a domestic corporation that is unrelated to US1 and CFC. US1, US2, and PRS all use the calendar year as their taxable year. In Year 1, US1 loans $900x to CFC and CFC loans $900x to PRS. CFC makes the loan with a principal purpose of avoiding the rules in this paragraph (e)(8). For Year 1, CFC has $90x of interest income and $90x of interest expense with respect to the loan to PRS, and US1 has $90x of interest

income with respect to the loan to CFC. PRS has $90x of interest expense with respect to the loan, and US1's distributive share of the interest expense is $81x. Under paragraph (e)(2) of this section, $54x of US1's distributive share of the interest expense is apportioned to U.S. source income and $27x is apportioned to foreign source foreign branch category income. Under paragraph (h)(4)(i) of this section, the total value of the loan between CFC and PRS is $900x.

(2) ***Analysis.*** Under paragraph (e)(8)(iv) of this section, because the loan from CFC to PRS is made with a principal purpose of avoiding the rules of this paragraph (e)(8), the loan from CFC to PRS is recharacterized as a loan receivable held directly by US1, and an appropriate amount of income derived by US1, in this case, the $90x of interest income from the loan to CFC, is treated as DPL interest income. Accordingly, the loan from CFC to PRS is a downstream partnership loan and US1 is a DPL lender. Under paragraph (e)(8)(vi)(B) of this section, the matching income amount is $81x, the lesser of the DPL interest income included by US1 ($90x) and US1's distributive share of the DPL interest expense ($81x). Under paragraph (e)(8)(ii) of this section, US1 assigns $54x of the DPL interest income to U.S. source income and $27x of the DPL interest income to foreign source foreign branch category income. The source and separate category of the remaining $9x of US1's interest income is determined under the generally applicable rules. Under paragraph (e)(8)(i) of this section, the disregarded portion of the downstream partnership loan is $810x ($900x x $81x/$90x). Appropriate adjustments are made to the value and characterization of the stock of CFC under §§ 1.861-9 and 1.861-12 in order to reflect the $810x disregarded portion of the downstream partnership loan.

(9) ***Special rule for upstream partnership loans*** —

(i) ***In general.*** For purposes of apportioning interest expense that is not directly allocable under paragraph (e)(4) of this section or § 1.861-10T, an upstream partnership loan debtor's (UPL debtor) pro rata share of the value of the upstream partnership loan (as determined under paragraph (h)(4)(i) of this section) is not considered an asset of the UPL debtor taken into account as described in paragraphs (e)(2) and (3) of this section.

(ii) ***Treatment of interest expense and interest income attributable to an upstream partnership loan.*** If a UPL debtor (or any other person in the same affiliated group as the UPL debtor) takes into account a distributive share of upstream partnership loan interest income (UPL interest income), the UPL debtor (or any other person in the same affiliated group as the UPL debtor) assigns an amount of its distributive share of the UPL interest income equal to the matching expense amount for the taxable year that is attributable to the same loan to the same statutory and residual groupings using the same ratios as the statutory and residual groupings of gross income from which the upstream partnership loan interest expense (UPL interest expense) is deducted by the UPL debtor (or any other person in the same affiliated group as the UPL debtor). Therefore, the amount of the distributive share of UPL interest income that is assigned to each statutory and residual grouping is the amount that bears the same proportion to the matching expense amount as the UPL interest expense in that statutory or residual grouping bears to the total UPL interest expense of the UPL debtor (or any other person in the same affiliated group as the UPL debtor).

(iii) ***Anti-avoidance rule for third party back-to-back loans.*** If, with a principal purpose of avoiding the rules in this paragraph (e)(9), a partnership makes a loan to a person that is not related (within the meaning of section 267(b) or 707) to the lender, the unrelated person makes a loan to a direct or indirect partner in the partnership (or any person in the same affiliated group as a direct or indirect partner), and the first loan would constitute an upstream partnership loan if made directly to the direct or indirect partner (or person in the same affiliated group as a direct or indirect partner), then the rules of this paragraph (e)(9) apply as if the first loan was made directly by the partnership to the partner (or affiliate of the partner), and the interest expense paid by the partner is treated as made with respect to the first loan. Such a series of loans will be subject to the recharacterization rule in this paragraph (e)(9)(iii) without regard to whether there was a principal purpose of avoiding the rules in this paragraph (e)(9) if the loan to the unrelated person would not have been made or maintained on substantially the same terms but for the loan of funds by the unrelated person to the direct or indirect partner (or affiliate of the partner). The principles of this paragraph (e)(9)(iii) also apply to similar transactions that involve more than two loans and regardless of the order in which the loans are made.

(iv) ***Interest equivalents.*** The principles of this paragraph (e)(9) apply in the case of a partner, or any person in the same affiliated group as the partner, that takes into account a distributive share of income and has a matching expense amount (treating any interest equivalent described in paragraph (b) of this section and § 1.861-9T(b) as interest income or expense for purposes of paragraph (e)(9)(v)(B) of this section) that is allocated and apportioned in the same manner as interest expense under paragraph (b) of this section and § 1.861-9T(b).

(v) ***Definitions.*** For purposes of this paragraph (e)(9), the following definitions apply.

(A) ***Affiliated group.*** The term *affiliated group* has the meaning provided in § 1.861-11(d)(1).

(B) ***Matching expense amount.*** The term *matching expense amount* means the lesser of the total amount of the UPL interest expense taken into account directly or indirectly by the UPL debtor for the taxable year with respect to an upstream partnership loan or the total amount of the distributive shares of the UPL interest income of the UPL debtor (or any other person in the same affiliated group as the UPL debtor) with respect to the loan.

(C) ***Upstream partnership loan.*** The term *upstream partnership loan* means a loan by a partnership to a person (or any person in the same affiliated group as such person) that owns an interest, directly or indirectly through one or more other partnerships or other pass-through entities (as defined in § 1.904-5(a)(4)(iv)), in the partnership.

(D) ***Upstream partnership loan debtor (UPL debtor).*** The term *upstream partnership loan debtor,* or *UPL debtor,* means the person that has the payable with respect to an upstream partnership loan. If a partnership has the payable, then any partner in the partnership (other than a partner described in paragraph (e)(4)(i) of this section) is also considered a UPL debtor.

(E) ***Upstream partnership loan interest expense (UPL interest expense).*** The term *upstream partnership loan interest expense,* or *UPL interest expense,* means an item of interest expense paid or accrued with respect to an upstream partnership loan, without regard to whether the expense was currently deductible (for example, by reason of section 163(j) or the election to waive deductions pursuant to § 1.59A-3(c)(6)).

(F) ***Upstream partnership loan interest income (UPL interest income).*** The term *upstream partnership loan interest income,* or *UPL interest income,* means an item of gross interest income received or accrued with respect to an upstream partnership loan.

(vi) ***Examples.*** The following examples illustrate the application of this paragraph (e)(9).

(A) ***Example 1*** —

(*1*) ***Facts.*** US1, a domestic corporation, directly owns 60% of PRS, a foreign partnership that is not engaged in a U.S. trade or business. The remaining 40% of PRS is directly owned by US2, a domestic corporation that is unrelated to US1. US1, US2, and PRS all use the calendar year as their taxable year. In Year 1, PRS loans $1,000x to US1. For Year 1, US1 has $100x of interest expense with respect to the loan and PRS has $100x of interest income with respect to the loan. US1's distributive share of the interest income is $60x. Under paragraph (e)(2) of this section, $75x of US1's interest expense with respect to the loan is allocated and apportioned to U.S. source income and $25x is allocated and apportioned to foreign source foreign branch category income. Under paragraph (h)(4)(i) of this section, US1's share of the total value of the loan between US1 and PRS is $600x.

(*2*) ***Analysis.*** The loan by PRS to US1 is an upstream partnership loan and US1 is an UPL debtor. Under paragraph (e)(9)(iv)(B) of this section, the matching expense amount is $60x, the lesser of the UPL interest expense taken into account by US1 with respect to the loan for the taxable year ($100x) and US1's distributive share of the UPL interest income ($60x). Under paragraph (e)(9)(ii) of this section, US1 assigns $45x of the UPL interest income to U.S. source income ($60x × $75x/$100x) and $15x of the UPL interest income to foreign source foreign branch category income ($60x × $25x/$100x). Under paragraph (e)(9)(i) of this section, the disregarded portion of the upstream partnership loan is $600x, and is not taken into account as described in paragraphs (e)(2) and (3) of this section.

(B) ***Example 2*** —

(*1*) ***Facts.*** The facts are the same as in paragraph (e)(9)(vi)(A)(*1*) of this section (the facts in *Example 1*), except that US1 and US2 are part of the same affiliated group with the same ratio of U.S. and foreign assets that US1 had in paragraph (e)(9)(vi)(A)(*1*), US2's distributive share of the interest income is $40x, and under paragraph (h)(4)(i) of this section US2's share of the total value of the loan between US1 and PRS is $400x.

(*2*) ***Analysis.*** The loan by PRS to US1 is an upstream partnership loan and US1 is an UPL debtor. Under paragraph (e)(9)(iv)(B) of this section, the matching expense amount is $100x, the lesser of the UPL interest expense taken into account by US1 with respect to the loan for the taxable year ($100x) and the total amount of US1 and US2's distributive shares of the UPL interest income ($100x). Under paragraph (e)(9)(ii) of this section, US1 and US2 assign $75x of their total UPL interest income to U.S. source income ($100x × $75x/$100x) and $25x of their total UPL interest income to foreign source foreign branch category income ($100x × $25x/$100x). Under paragraph (e)(9)(i) of this section, the disregarded portion of the upstream

partnership loan is $1,000x, the total amount of US1 and US2's share of the loan between US1 and PRS, and is not taken into account as described in paragraphs (e)(2) and (3) of this section.

(10) ***Characterizing certain partnership assets as foreign branch category assets.*** For purposes of applying this paragraph (e) to section 904 as the operative section, a partner that is a United States person that has a distributive share of partnership income that is treated as foreign branch category income under § 1.904-4(f)(1)(i)(B) characterizes its pro rata share of the partnership assets that give rise to such income as assets in the foreign branch category.

(f) ***Corporations*** —

(1) ***Domestic corporations.*** For further guidance, see § 1.861-9T(f)(1).

(2) ***Section 987 QBUs of domestic corporations*** —

(i) ***In general.*** In the application of the asset method described in paragraph (g) of this section, a domestic corporation—

(A) Takes into account the assets of any section 987 QBU (as defined in § 1.987-1(b)(2)), translated according to the rules set forth in paragraph (g) of this section; and

(B) Combines with its own interest expense any deductible interest expense incurred by a section 987 QBU, translated according to the rules under section 987.

(ii) ***Coordination with section 987(3).*** For purposes of computing foreign currency gain or loss under section 987(3) (including section 987 gain or loss recognized under § 1.987-5), the rules of this paragraph (f)(2) do not apply. *See* § 1.987-4.

(iii) ***Example.*** The following example illustrates the application of the rules in this paragraph (f)(2).

(A) ***Facts.*** X is a domestic corporation that operates B, a branch doing business in a foreign country. B is a section 987 QBU (as defined in § 1.987-1(b)(2)) as well as a foreign branch (as defined in § 1.904-4(f)(3)(iii)). In 2020, without regard to B, X has gross domestic source income of $1,000x and gross foreign source general category income of $500x and incurs $200 of interest expense. Using the tax book value method of apportionment, X, without regard to B, determines the value of its assets that generate domestic source income to be $6,000x and the value of its assets that generate foreign source general category income to be $1,000x. Applying the translation rules of section 987, X (through B) earned $500 of gross foreign source foreign branch category income and incurred $100x of interest expense. B incurred no other expenses. For 2020, the average functional currency book value of B's assets that generate foreign source foreign branch category income translated at the year-end rate for 2020 is $3,000x.

(B) ***Analysis.*** The combined assets of X and B for 2020 (averaged under § 1.861-9T(g)(3)) consist 60% ($6,000x/$10,000x) of assets generating domestic source income, 30% ($3,000x/$10,000x) of assets generating foreign source foreign branch category income, and 10% ($1,000x/$10,000x) of assets generating foreign source general category income. The combined interest expense of X and B is $300x. Thus, $180x ($300x x 60%) of the combined interest expense is apportioned to domestic source income, $90x ($300x × 30%) is apportioned to foreign source foreign branch category income, and $30x ($300x

× 10%) is apportioned to foreign source general category income, yielding net U.S. source income of $820 ($1,000x−$180x), net foreign source foreign branch category income of $410 ($500x−$90x), and net foreign source general category income of $470x ($500x−$30x).

(3) ***Controlled foreign corporations*** —

(i) ***In general.*** For purposes of computing subpart F income and tested income and computing earnings and profits for all Federal income tax purposes, the interest expense of a controlled foreign corporation may be apportioned using either the asset method described in paragraph (g) of this section or the modified gross income method described in paragraph (j) of this section, subject to the rules of paragraphs (f)(3)(ii) and (iii) of this section.

(ii) ***Manner of election.*** The election shall be made by filing the statement and providing the written notice described in § 1.964-1(c)(3)(ii) and (iii), respectively, at the time and in the manner described therein. For further guidance, *see* § 1.861-9T(f)(3)(ii).

(f)(3)(iii)-(iv) [Reserved] For further guidance, *see* § 1.861-9T(f)(3)(iii) and (iv).

(4) ***Noncontrolled 10-percent owned foreign corporations.*** —

(i) ***In general.*** For purposes of computing earnings and profits of a noncontrolled 10-percent owned foreign corporations (as defined in section 904(d)(2)(E)) for Federal tax purposes, the interest expense of a noncontrolled 10-percent owned foreign corporations may be apportioned using either the asset method described in § 1.861-9T(g) or the modified gross income method described in § 1.861-9T(j). A noncontrolled 10-percent owned foreign corporations that is not a controlled foreign corporation may elect to use a different method of apportionment than that elected by one or more of its shareholders. A noncontrolled 10-percent owned foreign corporations must use the same method of apportionment with respect to all its domestic corporate shareholders.

(ii) ***Manner of election.*** The election to use the asset method described in § 1.861-9T(g) or the modified gross income method described in § 1.861-9T(j) may be made either by the noncontrolled 10-percent owned foreign corporations or by the majority domestic corporate shareholders (as defined in § 1.964-1(c)(5)(ii)) on behalf of the noncontrolled 10-percent owned foreign corporations. The election shall be made by filing the statement and providing the written notice described in § 1.964-1(c)(3)(ii) and (iii), respectively, at the time and in the manner described therein.

(iii) ***Stock characterization.*** The stock of a noncontrolled 10-percent owned foreign corporation is characterized under the rules in § 1.861-12(c)(4).

(5) ***Other relevant provisions.*** For further guidance, see § 1.861-9T(f)(5).

(g) ***Asset method*** —

(1) ***In general.***

(i) For further guidance, see § 1.861-9T(g)(1)(i).

(ii) A taxpayer may elect to determine the value of its assets on the basis of either the tax book value or the fair market value of its assets. However, for taxable years beginning after December 31, 2017, the fair market value method is not allowed with respect to allocations and apportionments of interest expense. *See* section 864(e)(2). For rules concerning the application

of an alternative method of valuing assets for purposes of the tax book value method, see paragraph (i) of this section. For rules concerning the application of the fair market value method, see paragraph (h) of this section.

(iii) [Reserved]

(iv) For rules relating to earnings and profits adjustments by taxpayers using the tax book value method for the stock in certain 10 percent owned corporations, see § 1.861-12(c)(2).

(v) [Reserved]

(2) ***Asset values*** —

(i) ***General rule*** —

(A) ***Average of values.*** For purposes of determining the value of assets under this section, an average of values (book or market) within each statutory grouping and the residual grouping is computed for the year on the basis of values of assets at the beginning and end of the year. For the first taxable year beginning after December 31, 2017 (*post-2017 year*), a taxpayer that determined the value of its assets on the basis of the fair market value method for purposes of apportioning interest expense in its prior taxable year may choose to determine asset values under the tax book value method (or the alternative tax book value method) by treating the value of its assets as of the beginning of the post-2017 year as equal to the value of its assets at the end of the first quarter of the post-2017 year, provided that each member of the affiliated group (as defined in § 1.861-11T(d)) determines its asset values on the same basis. Where a substantial distortion of asset values would result from averaging beginning-of-year and end-of-year values, as might be the case in the event of a major corporate acquisition or disposition, the taxpayer must use a different method of asset valuation that more clearly reflects the average value of assets weighted to reflect the time such assets are held by the taxpayer during the taxable year.

(B) ***Tax book value method.*** Under the tax book value method, the value of an asset is determined based on the adjusted basis of the asset. For purposes of determining the value of stock in a 10 percent owned corporation at the beginning and end of the year under the tax book value method, the tax book value is determined without regard to any adjustments under section 961(a) or 1293(d), see § 1.861-12(c)(2)(i)(B)(*1*), and before the adjustment required by § 1.861-12(c)(2)(i)(A) to the basis of stock in the 10 percent owned corporation. The average of the tax book value of the stock at the beginning and end of the year is then adjusted with respect to earnings and profits as described in § 1.861-12(c)(2)(i).

(ii) ***Special rule for qualified business units of domestic corporations with functional currency other than the U.S. dollar*** —

(A) ***Tax book value method.*** In the case of taxpayers using the tax book value method of apportionment, the following rules apply to determine the value of the assets of a qualified business unit (QBU) (as defined in section 989(a)) of a domestic corporation with a functional currency other than the dollar.

(*1*) ***Section 987 QBU.*** In the case of a section 987 QBU (as defined in § 1.987-1(b)(3)), the tax book value is determined by applying the rules of paragraph (g)(2)(i) of this section and § 1.861-9T(g)(3) to the beginning-of-year and end-of-year owner functional currency amount of assets. The beginning-of-year owner functional currency amount of assets is determined by reference to the owner functional currency amount of assets computed under § 1.987-4(d)(1)(i)(B) and (e) on the last day of the preceding taxable year. The end-of-year owner functional currency amount of assets is determined by reference to the owner functional currency amount of assets computed under § 1.987-4(d)(1)(i)(A) and (e) on the last day of the current taxable year. The beginning-of-year and end-of-year owner functional currency amount of assets, as so determined within each grouping, are then averaged as provided in paragraph (g)(2)(i) of this section.

(*2*) ***U.S. dollar approximate separate transactions method.*** In the case of a branch to which the U.S. dollar approximate separate transactions method of accounting described in § 1.985-3 applies, the beginning-of-year dollar amount of the assets is determined by reference to the end-of-year balance sheet of the branch for the immediately preceding taxable year, adjusted for U.S. generally accepted accounting principles and Federal income tax accounting principles, and translated into U.S. dollars as provided in § 1.985-3(c). The end-of-year dollar amount of the assets of the branch is determined in the same manner by reference to the end-of-year balance sheet for the current taxable year. The beginning-of-year and end-of-year dollar tax book value of assets, as so determined, within each grouping is then averaged as provided in paragraph (g)(2)(i) of this section.

(B) ***Fair market value method.*** In the case of taxpayers using the fair market value method of apportionment, the beginning-of-year and end-of-year fair market values of branch assets within each grouping are computed in dollars and averaged as provided in this paragraph (g)(2) and § 1.861-9T(g)(2).

(iii) ***Adjustment for directly allocated interest.*** For further guidance, see § 1.861-9T(g)(2)(iii).

(iv) ***Assets in intercompany transactions.*** For further guidance, see § 1.861-9T(g)(2)(iv).

(v) ***Applicability date.*** Generally, paragraph (g)(2)(ii)(A)(*1*) of this section applies to taxable years beginning after December 31, 2024. However, if pursuant to § 1.987-15(b), a taxpayer chooses to apply §§ 1.987-1 through 1.987-15 to a taxable year before the first taxable year described in § 1.987-15(a)(1), then paragraph (g)(2)(ii)(A)(*1*) of this section applies to that taxable year and subsequent years.

(3) ***Characterization of assets.*** For further guidance, see § 1.861-9T(g)(3). In applying § 1.861-9T(g)(3), for purposes of applying section 904 as the operative section, the statutory or residual grouping of income that assets generate, have generated, or may reasonably be expected to generate is determined after taking into account any reallocation of income required under § 1.904-4(f)(2)(vi).

(4) ***Characterization of lower tier entities at the level of a CFC.*** In the case of a controlled foreign corporation that is applying the asset method, see for example § 1.861-12T(c)(3)(ii) (requiring the application of § 1.861-9T(g) at the level of the controlled foreign corporation) or paragraph (f)(3)(i) of this section, the controlled foreign corporation (and any lower-tier controlled foreign corporations) must characterize stock of a lower-tier 10 percent owned corporation by applying § 1.861-12 and treating the controlled foreign corporation as the relevant taxpayer for such purposes. In the case of

a controlled foreign corporation that owns stock in one or more lower-tier corporations, in applying the asset method, the first-tier controlled foreign corporation must take into account the stock in the lower-tier corporations. Therefore, the controlled foreign corporation (and any lower-tier controlled foreign corporations) must make basis adjustments in lower-tier 10 percent owned corporations under § 1.861-12(c)(2) for purposes of valuing and characterizing the assets of such controlled foreign corporation. For purposes of this paragraph (g)(4), the stock of each such lower-tier corporation is characterized by reference to the assets owned during the lower-tier corporation's taxable year that ends during the first-tier controlled foreign corporation's taxable year. The analysis of assets under this paragraph (g)(4) and § 1.861-12 of a controlled foreign corporation that is in a chain of 10 percent owned corporations must begin at the lowest-tier 10 percent owned corporation and proceed up the chain to the first-tier controlled foreign corporation. *See also* § 1.861-12T(c)(3)(ii).

(h) ***Fair market value method.*** An affiliated group (as defined in § 1.861-11T(d)) or other taxpayer (the *taxpayer*) that elects to use the fair market value method of apportionment values its assets according to the methodology described in this paragraph (h). Effective for taxable years beginning after December 31, 2017, the fair market value method is not allowed for purposes of apportioning interest expense. *See* section 864(e)(2). However, a taxpayer may continue to apportion deductions other than interest expense that are properly apportioned based on fair market value according to the methodology described in this paragraph (h). *See* § 1.861-8(c)(2).

(1) ***Determination of values.*** For further guidance, see § 1.861-9T(h)(1) through (3).

(2)-(3) [Reserved]

(4) ***Valuing related party debt and stock in related persons*** —

(i) ***Related party debt.*** For purposes of this section, the value of a debt obligation of a related person held by the taxpayer or another person related to the taxpayer equals the amount of the liability of the obligor related person.

(ii) ***Stock in related persons.*** The value of stock in a related person held by the taxpayer or by another person related to the taxpayer equals the sum of the following amounts reduced by the taxpayer's pro rata share of liabilities of such related person:

(A) The portion of the value of intangible assets of the taxpayer and related persons that is apportioned to such related person under § 1.861-9T(h)(2);

(B) The taxpayer's pro rata share of tangible assets held by the related person (as determined under § 1.861-9T(h)(1)(ii));

(C) The taxpayer's pro rata share of debt obligations of any related person held by the related person (as valued under paragraph (h)(4)(i) of this section); and

(D) The total value of stock in all related persons held by the related person as determined under this paragraph (h)(4).

(iii) ***Example*** —

(A) ***Facts.*** USP, a domestic corporation, wholly owns CFC1 and owns 80% of CFC2, both foreign corporations. The aggregate trading value of USP's stock traded on established securities markets at the end of Year 1 is $700 and the amount of USP's liabilities to unrelated persons at the end of Year 1 is $400. Neither CFC1 nor CFC2 has liabilities to

unrelated persons at the end of Year 1. USP owns plant and equipment valued at $500, CFC1 owns plant and equipment valued at $400, and CFC2 owns plant and equipment valued at $250. The value of these assets has been determined using generally accepted valuation techniques, as required by § 1.861-9T(h)(1)(ii). There is an outstanding loan from CFC2 to CFC1 in an amount of $100. There is also an outstanding loan from USP to CFC1 in an amount of $200.

(B) ***Valuation of group assets.*** Pursuant to § 1.861-9T(h)(1)(i), the aggregate value of USP's assets is $1100 (the $700 trading value of USP's stock increased by $400 of USP's liabilities to unrelated persons).

(C) ***Valuation of tangible assets.*** Pursuant to § 1.861-9T(h)(1)(ii), the value of USP's tangible assets and pro rata share of assets held by CFC1 and CFC2 is $1100 (the plant and equipment held directly by USP, valued at $500, plus USP's 100% pro rata share of the plant and equipment held by CFC1 valued at $400 and USP's 80% pro rata share of the plant and equipment held by CFC 2 valued at $200 (80% of $250)).

(D) ***Computation of intangible asset value.*** Pursuant to § 1.861-9T(h)(1)(iii), the value of the intangible assets of USP, CFC1, and CFC2 is $0 (total aggregate group asset value ($1100) determined in paragraph (B) less total tangible asset value ($1100) determined in paragraph (C)). Because the intangible asset value is zero, the provisions of § 1.861-9T(h)(2) and (3) relating to the apportionment and characterization of intangible assets do not apply.

(E) ***Valuing related party debt obligations.*** Pursuant to § 1.861-9(h)(4)(i), the value of the debt obligation of CFC1 held by CFC2 is equal to the amount of the liability, $100. The value of the debt obligation of CFC1 held by USP is equal to the amount of the liability, $200.

(F) ***Valuing the stock of CFC1 and CFC2.*** Pursuant to § 1.861-9(h)(4)(ii), the value of the stock of CFC2 held by USP is $280 (USP's 80% pro rata share of tangible assets of CFC2 included in paragraph (C) ($200) plus USP's 80% pro rata share of the debt obligation of CFC1 held by CFC2 valued in paragraph (E) ($80). The value of the stock of CFC1 held by USP is $100 (USP's 100% pro rata share of tangible assets of CFC1 included in paragraph (C) ($400) less USP's 100% pro rata share of the liabilities of CFC1 to USP and CFC2 ($300)).

(5) ***Characterizing stock in related persons.*** Stock in a related person held by the taxpayer or by another related person shall be characterized on the basis of the fair market value of the taxpayer's pro rata share of assets held by the related person attributed to each statutory grouping and the residual grouping under the stock characterization rules of § 1.861-12T(c)(3)(ii), except that the portion of the value of intangible assets of the taxpayer and related persons that is apportioned to the related person under § 1.861-9T(h)(2) shall be characterized on the basis of the net income before interest expense of the related person within each statutory grouping or residual grouping (excluding income that is passive under § 1.904-4(b)).

(6) [Reserved]. For further guidance, see § 1.861-9T(h)(6).

(i) ***Alternative tax book value method*** —

(1) ***Alternative value for certain tangible property.*** A taxpayer may elect to determine the tax book value of its tangible property that is depreciated under section 168 (section 168 property) using the rules provided in this paragraph (i)(1) (the alternative tax book value method). The alternative tax book

value method applies solely for purposes of apportioning expenses (including the calculation of the alternative minimum tax foreign tax credit pursuant to section 59(a)) under the asset method described in paragraph (g) of this section.

(i) The tax book value of section 168 property placed in service during or after the first taxable year to which the election to use the alternative tax book value method applies shall be determined as though such property were subject to the alternative depreciation system set forth in section 168(g) (or a successor provision) for the entire period that such property has been in service.

(ii) In the case of section 168 property placed in service prior to the first taxable year to which the election to use the alternative tax book value method applies, the tax book value of such property shall be determined under the depreciation method, convention, and recovery period provided for under section 168(g) for the first taxable year to which the election applies.

(iii) If a taxpayer revokes an election to use the alternative tax book value method (the prior election) and later makes another election to use the alternative tax book value method (the subsequent election) that is effective for a taxable year that begins within 3 years of the end of the last taxable year to which the prior election applied, the taxpayer shall determine the tax book value of its section 168 property as though the prior election has remained in effect.

(iv) The tax book value of section 168 property shall be determined without regard to the election to expense certain depreciable assets under section 179.

(v) ***Examples.*** The provisions of this paragraph (i)(1) are illustrated in the following examples:

Example 1. In 2000, a taxpayer purchases and places in service section 168 property used solely in the United States. In 2005, the taxpayer elects to use the alternative tax book value method, effective for the current taxable year. For purposes of determining the tax book value of its section 168 property, the taxpayer's depreciation deduction is determined by applying the method, convention, and recovery period rules of the alternative depreciation system under section 168(g)(2) as in effect in 2005 to the taxpayer's original cost basis in such property. In 2006, the taxpayer acquires and places in service in the United States new section 168 property. The tax book value of this section 168 property is determined under the rules of section 168(g)(2) applicable to property placed in service in 2006.

Example 2. Assume the same facts as in *Example 1*, except that the taxpayer revokes the alternative tax book value method election effective for taxable year 2010. Additionally, in 2011, the taxpayer acquires new section 168 property and places it in service in the United States. If the taxpayer elects to use the alternative tax book value method effective for taxable year 2012, the taxpayer must determine the tax book value of its section 168 property as though the prior election still applied. Thus, the tax book value of property placed in service prior to 2005 would be determined by applying the method, convention, and recovery period rules of the alternative depreciation system under section 168(g)(2) applicable to property placed in service in 2005. The tax book value of section 168 property placed in service during any taxable year after 2004 would be determined by applying the method, convention, and recovery period rules of the alternative depreciation system under section 168(g)(2) applicable to property placed in service in such taxable year.

(2) ***Timing and scope of election.***

(i) Except as provided in this paragraph (i)(2)(i), a taxpayer may elect to use the alternative tax book value method. For the taxpayer's first taxable year beginning after December 31, 2017, the Commissioner's approval is not required to switch from the fair market value method to the alternative tax book value method for purposes of apportioning interest expense. Any election made pursuant to this paragraph (i)(2)(i) shall apply to all members of an affiliated group of corporations as defined in §§ 1.861-11(d) and 1.861-11T(d). Any election made pursuant to this paragraph (i)(2)(i) shall apply to all subsequent taxable years of the taxpayer unless revoked by the taxpayer. Revocation of such an election, other than in conjunction with an election to use the fair market value method, for a taxable year prior to the sixth taxable year for which the election applies requires the consent of the Commissioner.

(ii) ***Example.*** The provisions of this paragraph (i)(2) are illustrated in the following example:

Example. Corporation X, a calendar year taxpayer, elects on its original, timely filed tax return for the taxable year ending December 31, 2007, to use the alternative tax book value method for its 2007 year. The alternative tax book value method applies to Corporation X's 2007 year and all subsequent taxable years. Corporation X may not, without the consent of the Commissioner, revoke its election and determine tax book value using a method other than the alternative tax book value method with respect to any taxable year beginning before January 1, 2012. However, Corporation X may automatically elect to change from the alternative tax book value method to the fair market value method for any open year.

(3) ***Certain other adjustments.*** [Reserved]

(j) ***Modified gross income method.*** For further guidance, see § 1.861-9T(j) introductory text.

(1) For further guidance, see § 1.861-9T(j)(1).

(2) For further guidance, see § 1.861-9T(j)(2) introductory text.

(i) ***Step 1.*** For further guidance, see § 1.861-9T(j)(2)(i).

(ii) ***Step 2.*** Moving to the next higher-tier controlled foreign corporation, combine the gross income of such corporation within each grouping with its pro rata share (as determined under principles similar to section 951(a)(2)) of the gross income net of interest expense of all lower-tier controlled foreign corporations held by such higher-tier corporation within the same grouping adjusted as follows:

(A) Exclude from the gross income of the higher-tier corporation any dividends or other payments received from the lower-tier corporation other than interest income received from the lower-tier corporation;

(B) Exclude from the gross income net of interest expense of any lower-tier corporation any gross subpart F income, net of interest expense apportioned to such income;

(C) Then apportion the interest expense of the higher-tier controlled foreign corporation based on the adjusted combined gross income amounts; and

(D) Repeat paragraphs (j)(2)(ii)(A) through (C) of this section for each next higher-tier controlled foreign corporation in the chain.

(k) ***Applicability dates.***

(1) Except as provided in paragraphs (k)(2) and (3) of this section, this section applies to taxable years that both begin after December 31, 2017, and end on or after December 4, 2018.

(2) Paragraphs (b)(1)(i), (b)(8), and (e)(9) of this section apply to taxable years that end on or after December 16, 2019. For taxable years that both begin after December 31, 2017, and end on or after December 4, 2018, and also end before December 16, 2019, see § 1.861-9T(b)(1)(i) as contained in 26 CFR part 1 revised as of April 1, 2019.

(3) The last sentence of paragraph (g)(3) of this section applies to taxable years beginning on or after December 28, 2021.

[T.D. 8916, 66 FR 272, Jan. 3, 2001, as amended by T.D. 9120, 69 FR 15675, Mar. 26, 2004; T.D. 9247, 71 FR 4814, Jan. 30, 2006; T.D. 9452, 74 FR 27873, June 11, 2009; T.D. 9456, 74 FR 46346, Sept. 9, 2009; T.D. 9676, 79 FR 41425, July 16, 2014; T.D. 9676, 79 FR 49683, Aug. 22, 2014; T.D. 9882, 84 FR 69064, Dec. 17, 2019; T.D. 9922, 85 FR 72038, Nov. 12, 2020; T.D. 9959, 87 FR 326, Jan. 4, 2022; T.D. 10016, 89 FR 100164, Dec. 11, 2024]

§ 1.861-9T Allocation and apportionment of interest expense (temporary).

(a) ***In general.*** Any expense that is deductible under section 163 (including original issue discount) constitutes interest expense for purposes of this section, as well as for purposes of §§ 1.861-10T, 1.861-11T, 1.861-12T, and 1.861-13T. The term interest refers to the gross amount of interest expense incurred by a taxpayer in a given tax year. The method of allocation and apportionment for interest set forth in this section is based on the approach that, in general, money is fungible and that interest expense is attributable to all activities and property regardless of any specific purpose for incurring an obligation on which interest is paid. Exceptions to the fungibility rule are set forth in § 1.861-10T. The fungibility approach recognizes that all activities and property require funds and that management has a great deal of flexibility as to the source and use of funds. When borrowing will generally free other funds for other purposes, and it is reasonable under this approach to attribute part of the cost of borrowing to such other purposes. Consistent with the principles of fungibility, except as otherwise provided, the aggregate of deductions for interest in all cases shall be considered related to all income producing activities and assets of the taxpayer and, thus, allocable to all the gross income which the assets of the taxpayer generate, have generated, or could reasonably have been expected to generate. In the case of the interest expense of members of an affiliated group, interest expense shall be considered to be allocable to all gross income of the members of the group under § 1.861-11T. That section requires the members of an affiliated group to allocate and apportion the interest expense of each member of the group as if all members of such group were a single corporation. For the method of determining the interest deduction allowed to foreign corporations under section 882(c), see § 1.882-5.

(b) ***Interest equivalents—***

(1) ***Certain expenses and losses—***

(i) ***General rule.*** For further guidance, see § 1.861-9(b)(1)(i).

(ii) ***Examples.*** The rule of this paragraph (b)(1) may be illustrated by the following examples.

Example 1. W, a domestic corporation, borrows from X two ounces of gold at a time when the spot price for gold is $500 per ounce. W agrees to return the two ounces of gold in six months. W sells the two ounces of gold to Y for $1000. W then enters into a contract with Z to purchase two ounces of gold six months in the future for $1,050. In exchange for the

use of $1,000 in cash, W has sustained a loss of $50 on related transactions. This loss is subject to allocation and apportionment under the rules of this section in the same manner as interest expense.

Example 2. X, a domestic corporation with a dollar functional currency, borrows 100 pounds on January 1, 1987 for a three-year term at an interest rate greater than the applicable federal rate for dollar loans. At this time, the interest rate on the pound was approximately equal to the interest rate on dollar borrowings and the forward price on the pound, vis-a-vis the dollar, was approximately equal to the spot price. On January 1, 1987, X converted 100 pounds into dollars and entered into a currency swap that substantially hedged X's foreign currency exposure on the pound borrowing, both with respect to interest and principal. The borrowing, coupled with the swap, represents a series of related transactions in which the taxpayer secures the use of funds in its functional currency. Any net foreign currency loss on this series of transactions constitutes a loss incurred substantially in consideration of the time value of money and shall be apportioned in the same manner as interest expense. Thus, if the pound depreciates against the dollar, such that when the first payment on the pound borrowing is due the taxpayer has a currency loss on the swap payment hedging its first interest payment, such loss shall, even if the transaction is not integrated under section 988(d), be allocated and apportioned in the same manner as interest expense under the authority of this paragraph (b)(1).

Example 3. On January 1, 1987, X, a domestic corporation with a dollar functional currency, enters into a dollar interest rate swap contract with Y, a domestic counterparty. Under the terms of this agreement, X agrees to pay Y floating rate interest with respect to a notional principal amount of $100 for five years. In return, Y agrees to pay X fixed rate interest at 10 percent with respect to a notional principal amount of $100 for five years. On the same day, Y prepays the fixed leg of the swap by making a lump sum payment of $37 to X. This lump sum payment represents the present value of five $10 swap payments. Because X secures the use of $37 in this transaction, any net swap expense arising from the transaction represents an expense incurred substantially in consideration of the time value of money. Assuming this lump sum payment is not otherwise characterized as a loan from Y to X, and that X must amortize the $37 lump sum payment under the principles of Notice 89-21, any net swap expense incurred by X with respect to this transaction (*i.e.,* the excess, if any, of X's annual swap payment to Y over the annual amortization of the $37 lump sum payment that is taken into income by X) represents an expense equivalent to interest expense. The result would be the same if X sold the fixed leg to a third party for $37. While this example presents the case of a lump sum payment, the rules of paragraph (b)(1) would also apply to any transaction in which the swap payments are not substantially contemporaneous if the pricing of the transaction is materially affected by the time value of money. Thus, expenses and losses will be subject to apportionment under the rules of this section to the extent that such expenses or losses were incurred in consideration of the time value of money.

(2) ***Certain foreign currency borrowings*** —

(i) ***Rule.*** If a taxpayer borrows in a nonfunctional currency at a rate of interest that is less than the applicable federal rate (or its equivalent in functional currency if the functional currency is not the dollar), any swap, forward, future, option, or similar financial arrangement (or any combination thereof) entered into by the taxpayer or by a related person (as defined in § 1.861-8T(c)(2)) that exists during the term of the borrowing and that substantially diminishes

currency risk with respect to the borrowing or interest expense thereon will be presumed to constitute a hedge of such borrowing, unless the taxpayer can demonstrate on the basis of facts and circumstances that the two transactions are in fact unrelated. Under this presumption, the currency loss incurred on the borrowing during taxable years beginning after December 31, 1988, in connection with hedged nonfunctional currency borrowings, reduced or increased by the gain or loss on the hedge, will be apportioned in the same manner as interest expense. This presumption can be rebutted by a showing that the financial arrangement was entered into in connection with hedging currency exposure arising in the ordinary course of a trade or business (other than with respect to the borrowing).

(ii) ***Examples.*** The principles of this paragraph (b)(2) may be illustrated by the following examples.

Example 1. Taxpayer has a dollar functional currency and does not have any qualified business units with a functional currency other than the dollar. On January 1, 1989, when the unit of foreign currency is worth $1, taxpayer borrows 100 units of foreign currency for a three-year period bearing interest at the annual rate of 3 percent and immediately converts the proceeds of the borrowing into dollars for use in its business. In the ordinary course of its business, taxpayer has no foreign currency exposure in this currency. In March 1989, taxpayer enters into a three-year swap agreement that covers most, but not all, of the payment of interest and principal. Because the swap substantially diminishes currency risk with respect to the borrowing, it is presumed to hedge the loan. Since taxpayer cannot demonstrate that it was hedging currency exposure arising in the ordinary course of its business (other than currency exposure with respect to the borrowing), the net currency loss on the borrowing adjusted for any gain or loss on the swap must be apportioned in the same manner as interest expense.

Example 2. Assume the same facts as in Example 1, except that the taxpayer borrows in two separate foreign currencies on terms described in Example 1 and enters into a swap agreement in a single currency that substantially diminishes the taxpayer's aggregate foreign currency risk. The net currency loss on the borrowings adjusted for any gain or loss on the swap must be apportioned in the same manner as interest expense.

(3) ***Losses on sale of certain receivables*** —(1) *General rule.* Any loss on the sale of a trade receivable (as defined in § 1.954-2(h)) shall be allocated and apportioned, solely for purposes of this section and §§ 1.861-10T, 1.861-11T, 1.861-12T, and 1.861-13T, in the same manner as interest expense, unless at the time of sale of the receivable, it bears interest at a rate which is at least 120 percent of the short term applicable federal rate (as determined under section 1274(d) of the Code), or its equivalent in foreign currency in the case of receivables denominated in foreign currency, determined at the time the receivable arises. This treatment shall not affect the characterization of such expense as interest for other purposes of the Internal Revenue Code.

(ii)

(A) ***Exceptions.*** To the extent that a loss on the sale of a trade receivable exceeds the discount on the receivable that would be computed applying to the amount received on the sale of the receivable 120 percent of the applicable federal rate (or its equivalent in foreign currency in the case of receivables denominated in foreign currency) for the period commencing with the date on which the receivable is sold and ending with the earlier of the date on which the receivable begins to bear interest at such rate or the anticipated payment date of the receivable, such excess shall not be allocated and apportioned in the same manner as interest expense but rather shall be allocated and apportioned to the

gross income generated by the receivable. In cases of transfers of receivables to a domestic international sales corporation described § 1.994-1(c)(6)(v), the rule of this paragraph (b)(3) shall not apply for purposes of computing combined taxable income.

(B) ***Example.*** On October 1, X sells a widget to Y for $100 payable in 30 days, after which the receivable will bear stated interest at 13 percent. On October 4, X sells Y's obligation to Z for $98. Assume that the applicable federal rate for the month of October is 10 percent. Applying 120 percent of the applicable federal rate to the $98 received on the sale of the receivable, the obligation is discounted at a 12 percent rate for a period of 27 days. At this discount rate, the obligation would have sold for $99.22. Thus, 88 cents of the $2 loss on the sale is apportioned in the same manner as interest expense, and $1.22 of the $2 loss on the sale is directly allocated to the income generated on the widget sale.

(4) ***Rent in certain leasing transactions.*** [Reserved]

(5) ***Treatment of bond premium*** —

(i) ***Treatment by the issuer.*** If a bond or other debt obligation is issued at a premium, an amount of interest expense incurred by the issuer on that bond or other debt obligation equal to the amortized portion of that premium that is included in gross income for the year shall be allocated and apportioned solely to the amortized portion of premium derived by the issuer for the year.

(ii) ***Treatment by the holder.*** If a bond or debt obligation is purchased at a premium, the portion of that premium amortized during the year by the holder under section 171 and the regulations thereunder shall be allocated and apportioned solely to interest income derived from the bond by the holder for the year.

(6) ***Financial products that alter effective cost of borrowing*** —

(i) ***In general.*** Various derivative financial products can be part of transactions or series of transactions described in paragraph (b)(1) of this section. Such derivative financial products, including interest rate swaps, options, forwards, caps, and collars, potentially alter a taxpayer's effective cost of borrowing with respect to an actual liability of the taxpayer. For example, a taxpayer that is obligated to pay interest at a fixed rate may, in effect, pay interest at a floating rate by entering into an interest rate swap. Similarly, a taxpayer that is obligated to pay interest at a floating rate may, in effect, limit its exposure to rising interest rates by purchasing a cap. Such a taxpayer may have gains or losses associated with such derivative financial products. This paragraph (b)(6) provides rules for the treatment of gains and losses from such derivative financial products ("financial products") that are part of transactions described in paragraph (b)(1) of this section and that are used by the taxpayer to alter its effective cost of borrowing with respect to an actual liability. This paragraph (b)(6) shall only apply where the hedge and the borrowing are in the same currency and shall not apply to the extent otherwise provided in section 988 and the regulations thereunder. The allocation and apportionment of a loss under this paragraph (b) shall not affect the characterization of such loss as capital or ordinary for other purposes of the Code and the regulations thereunder.

(ii) ***Definition of gain and loss.*** For purposes of this paragraph (b)(6), the term "gain" refers to the excess of the amounts properly taken into income under a financial product that alters the effective cost of borrowing over the amounts properly allowed as a deduction thereunder within

a given taxable year. See. *e.g.,* Notice 89-21. The term "loss" refers to the excess of the amounts properly allowed as a deduction under such a financial product over the amounts properly taken into income thereunder within a given taxable year.

(iii) ***Treatment of gain or loss on the disposition of a financial product.*** [Reserved]

(iv) ***Entities that are not financial services entities.*** An entity that does not constitute a financial services entity within the meaning of § 1.904-4(e)(3) shall treat gains and losses on financial products described in paragraph (b)(6)(i) of this section as follows.

(A) ***Losses.*** Losses on any financial product described in paragraph (b)(6)(i) of this section shall be apportioned in the same manner as interest expense whether or not such financial product is identified by the taxpayer under paragraph (b)(6)(iv)(C) of this section as a liability hedge.

(B) ***Gains.*** Gains on any financial product described in paragraph (b)(6)(i) of this section shall reduce the taxpayer's total interest expense that is subject to apportionment, but only if such financial product is identified by the taxpayer under paragraph (b)(6)(iv)(C) of this section as a liability hedge. Such reduction is accomplished by directly allocating interest expense to the income derived from such a financial product.

(C) ***Identification of financial products.*** A taxpayer can identify a financial product described in paragraph (b)(6)(i) of this section as hedging a particular interest-bearing liability (or any group of such liabilities) by clearly identifying on its books and records on the same day that it becomes a party to such arrangement that such arrangement hedges a given liability (or group of liabilities). In the case of a partial hedge, such identification shall apply to only that part of the liability that is hedged. If the taxpayer clearly identifies on its books and records a financial product as a hedge of an interest-bearing asset (or any group of such assets), it will create a rebuttable presumption that such financial product is not described in paragraph (b)(6)(i) of this section. A taxpayer may identify a hedge as relating to an anticipated liability, provided that such liability is in fact incurred within 120 days following the date of such identification. Gains and losses on such an anticipatory arrangement accruing prior to the time at which the liability is incurred shall constitute an adjustment to interest expense.

(v) ***Financial services entities.*** [Reserved]

(vi) ***Dealers.*** The rule of paragraph (b)(6)(iv) of this section shall not apply to a person acting in its capacity as a regular dealer in the financial products described in paragraph (b)(6)(i) of this section. Instead, losses sustained by a regular dealer in connection with such financial products shall be allocated to the class of gross income from such arrangements. Gains of a regular dealer in notional principal contracts are governed by the rules of § 1.863-7T(b). Amounts received or accrued by any person from any financial product that is integrated as specified in Notice 89-90 with an asset shall not be treated as amounts received or accrued by a person acting in its capacity as a regular dealer in financial products.

(vii) ***Examples.*** The principles of this paragraph (b)(6) may be illustrated by the following examples.

Example 1. X is not a financial services entity or regular dealer in the financial products described in paragraph (b)(6)(i) of this section and has a dollar functional currency. In 1990, X incurred a total of $200 of interest expense. On January 1, 1990, X entered into an interest rate swap agreement with Y, in order to hedge its interest rate exposure with

respect to a pre-existing floating rate liability. On the same day, X properly identified the agreement as a hedge of such liability. Under the agreement, X is required to pay Y an amount equal to a fixed rate of 10 percent on a notional principal amount of $1,000. Y is required to pay X an amount equal to a floating rate of interest on the same notional principal amount. Under the agreement, X received from Y during 1990 a net payment of $25. Because X identified the swap agreement as a liability hedge under the rules of paragraph (b)(6)(iv)(C), X may effectively reduce its total allocable interest expense for 1990 to $175 by directly allocating $25 of interest expense to the swap income. Had X not properly identified the swap as a liability hedge, this swap payment would have been treated as domestic source income in accordance with the rule of § 1.863-7T(b).

Example 2. Assume the same facts as Example (1), except that X did not properly identify the agreement as a liability hedge on January 1, 1990. In 1990, X made a net payment of $25 to Y under the swap agreement. This swap payment is allocated and apportioned in the same manner as interest expense under the rules of paragraph (b)(6)(iv)(A).

(7) ***Foreign currency gain or loss.*** In addition to the rules of paragraph (b)(1), (b)(2), and (b)(6) of this section, any foreign currency loss that is treated as an adjustment to interest expense under regulations issued under section 988 shall be allocated and apportioned in the same manner as interest expense. Any foreign currency gain that is treated as an adjustment to interest expense under regulations issued under section 988 shall offset apportionable interest expense.

(8) ***Guaranteed payments.*** For further guidance, see § 1.861-9(b)(8).

(c) ***Allowable deductions.*** In order for an interest expense to be allocated and apportioned, it must first be determined that the interest expense is currently deductible. A number of provisions in the Code disallow or suspend deductions of interest expense or require the capitalization thereof.

(1) ***Disallowed deductions.*** A taxpayer does not allocate and apportion interest expense under this section that is permanently disallowed as a deduction by operation of section 163(h), section 265, or any other provision or rule that permanently disallows the deduction of interest expense.

(2) ***Section 263A.*** Section 263A requires the capitalization of interest expense that is allocable to designated types of property. Any interest expense that is capitalized under section 263A does not constitute deductible interest expense for purposes of this section. Furthermore, interest expense capitalized in inventory or depreciable property is not separately allocated and apportioned when the inventory is sold or depreciation is allowed. Capitalized interest expense is effectively allocated and apportioned as part of, and in the same manner as, the cost of goods sold, amortization, or depreciation deduction.

(3) ***Section 163(d).*** Section 163(d) suspends the deduction for interest expense to the extent that it exceeds net investment income. In the year that suspended investment interest expense becomes allowable under the rules of section 163(d), that interest expense is apportioned under rules set forth in paragraph (d)(1) of this section as though it were incurred in the taxable year in which the expense is deducted.

(4) ***Section 469*** —

(i) ***General rule.*** Section 469 suspends the deduction of passive activity losses to the extent that they exceed passive activity income for the year. Passive activity losses may consist in part of interest expense properly allocable to passive activity. In the year that suspended interest

expense becomes allowable as a deduction under the rules of section 469, that interest expense is apportioned under rules set forth in paragraph (d)(1) of this section as though it were incurred in the taxable year in which the expense is deducted.

(ii) ***Identification of the interest component of a suspended passive loss.*** A suspended passive loss may consist of a variety of items of expense other than interest expense. Suspended interest expense for any taxable year is computed by multiplying the total suspended passive loss for the year by a fraction, the numerator of which is passive interest expense for the year (determined under regulations issued under section 163) and the denominator of which is total passive expenses for the year. The amount of the suspended interest expense that is considered to be deductible in a subsequent taxable year is computed by multiplying the amount of any cumulative suspended interest expense (reduced by suspended interest expense allowed as a deduction in prior taxable years) times a fraction, the numerator of which is the portion of cumulative suspended passive losses that become deductible in the taxable year and the denominator of which is the cumulative suspended passive losses for prior taxable years (reduced by suspended passive losses allowed as deductions in prior taxable years).

(iii) ***Example.*** The rules of this paragraph (c)(4) may be illustrated by the following example.

Example. On January 1, 1987, A, a United States citizen, invested in a passive activity. In 1987, the passive activity generated no passive income and $100 in passive losses, all of which were suspended by operation of section 469. The suspended loss included $10 of suspended interest expense. In 1988, the passive activity generated $50 in passive income and $150 in passive expenses which included $30 of interest expense. The entire $100 passive loss was suspended in 1988 and included $20 of interest expense ($100 suspended passive loss × $30 passive interest expense/$150 total passive expenses). Thus, at the end of 1988, A had total suspended passive losses of $200, including $30 of suspended interest expense. In 1989, the passive activity generated $100 in passive income and no passive expenses. Thus, $100 of A's cumulative suspended passive loss was therefore allowed in 1989. The $100 of deductible passive loss includes $15 of suspended interest expense ($30 cumulative suspended interest expense × $100 of cumulative suspended passive losses allowable in 1989/$200 of total cumulative suspended passive losses). The $15 of interest expense is apportioned under the rules of paragraph (d) of this section as though it were incurred in 1989.

(5) ***Section 163(j).*** For further guidance, see § 1.861-9(c)(5).

(d) ***Apportionment rules for individuals, estates, and certain trusts*** —

(1) ***United States individuals.*** In the case of taxable years beginning after December 31, 1986, individuals generally shall apportion interest expense under different rules according to the type of interest expense incurred. The interest expense of individuals shall be characterized under the regulations issued under section 163. However, in the case of an individual whose foreign source income (including income that is excluded under section 911) does not exceed a gross amount of $5,000, the apportionment of interest expense under this section is not required. Such an individual's interest expense may be allocated entirely to domestic source income.

(i) ***Interest incurred in the conduct of a trade or business.*** An individual who incurs business interest described in section 163(h)(2)(A) shall apportion such interest expense using an asset method by reference to the individual's business assets.

(ii) ***Investment interest.*** An individual who incurs investment interest described in section 163(h)(2)(B) shall apportion that interest expense on the basis of the individual's investment assets.

(iii) ***Interest incurred in a passive activity.*** An individual who incurs passive activity interest described in section 163(h)(2)(C) shall apportion that interest expense on the basis of the individual's passive activity assets. Individuals who receive a distributive share of interest expense incurred in a partnership are subject to special rules set forth in paragraph (e) of this section.

(iv) ***Qualified residence and deductible personal interest.*** Individuals who incur qualified residence interest described in section 163(h)(2)(D) shall apportion that interest expense under a gross income method, taking into account all income (including business, passive activity, and investment income) but excluding income that is exempt under section 911. For purposes of this section, any qualified residence that is rented shall be considered to be a business asset for the period in which it is rented, with the result that the interest on such a residence is not apportioned under this subdivision (iv) but instead under subdivisions (i) or (iii) of this paragraph (d)(1). To the extent that personal interest described in section 163(h)(2) remains deductible under transitional rules, individuals shall apportion such interest expense in the same manner as qualified residence interest.

(v) ***Example.*** The following example illustrates the principles of this section.

> *Example.* (i) *Facts.* A is a resident individual taxpayer engaged in the active conduct of a trade or business, which A operates as a sole proprietor. A's business generates only domestic source income. A's investment portfolio consists of several less than 10 percent stock investments. Certain stocks in which A's adjusted basis is $40,000 generate domestic source income and other stocks in which A's adjusted basis is $60,000 generate foreign source passive income. In addition, A owns his personal residence, which is subject to a mortgage in the amount of $100,000. All interest expense incurred with respect to A's mortgage is qualified residence interest for purposes of section 163(h)(2)(D). A's other indebtedness consists of a bank loan in the amount of $40,000. Under the regulations issued under section 163(h), it is determined that the proceeds of the $40,000 loan were divided equally between A's business and his investment portfolio. In 1987, the gross income of A's business, before the apportionment of interest expense, was $50,000. A's investment portfolio generated $4,000 in domestic source income and $6,000 in foreign source passive income. All of A's debt obligations bear interest at the annual rate of 10 percent.
> (ii) *Analysis of business interest.* Under section 163(h) of the Code, $2,000 of A's interest expense is attributable to his business. Under the rules of paragraph (d)(1)(i), such interest must be apportioned on the basis of the business assets. Applying the asset method described in paragraph (g) of this section, it is determined that all of A's business assets generate domestic income and, therefore, constitute domestic assets. Thus, the $2,000 in interest expense on the business loan is allocable to domestic source income.

(iii) *Analysis of investment interest.* Under section 163(h) of the Code, $2,000 of A's interest expense is investment interest. Under the rules of paragraph (d)(1)(ii) of this section, such interest must be apportioned on the basis of investment assets. Applying the asset method, A's investment assets consist of stock generating domestic source income with an adjusted basis of $40,000 and stock generating foreign source passive income with an adjusted basis of $60,000. Thus, 40 percent ($800) of A's investment interest is apportioned to domestic source income and 60 percent ($1,200) of A's investment interest is apportioned to foreign source passive income for purposes of section 904.

(iv) *Analysis of qualified residence interest.* The $10,000 of qualified residence interest expense is apportioned under the rules of paragraph (d)(1)(iv) of this section on the basis of all of A's gross income. A's gross income consists of $60,000, $54,000 of which is domestic source and $6,000 of which is foreign source passive income. Thus, $9,000 of A's qualified residence interest is apportioned to domestic source income and $1,000 of A's qualified residence interest is apportioned to foreign source passive income.

(2) ***Nonresident aliens*** —

(i) ***General rule.*** For taxable years beginning on or after January 1, 1988, interest expense incurred by a nonresident alien shall be considered to be connected with income effectively connected with a United States trade or business only to the extent that interest expense is incurred with respect to liabilities that—

(A) Are entered on the books and records of the United States trade or business when incurred, or

(B) Are secured by assets that generate such effectively connected income.

(ii) ***Limitations*** —

(A) ***Maximum debt capitalization.*** Interest expense incurred by a nonresident alien is not considered to be connected with effectively connected income to the extent that it is incurred with respect to liabilities that exceed 80 percent of the gross assets of the United States trade or business.

(B) ***Collateralization by other assets.*** Interest expense on indebtedness that is secured by specific assets (not including the general credit of the nonresident alien) other than the assets of the United States trade or business shall not be considered to be connected with effectively connected income.

(3) ***Estates and trusts.*** Estates shall be treated in the same manner as individuals. In the case of a trust that is beneficially owned by individuals and is a complex trust, the trust shall be treated in the same manner as individuals under the rules of paragraph (d) of this section, except that no de minimis amount shall apply. In the case of a trust that is beneficially owned by one or more corporations, the trust shall be treated either as a partnership or as a corporation depending on how the trust is characterized under the rules of section 7701 and the regulations thereunder.

(e) ***Partnerships*** —

(1) ***In general—aggregate rule.*** A partner's distributive share of the interest expense of a partnership that is directly allocable under § 1.861-10T to income from specific partnership property shall be treated as directly allocable to the income generated by such partnership property. Subject to the exceptions set forth in paragraph (e)(4), a partner's distributive share of the interest expense of a partnership that is not directly allocable under § 1.861-10T generally is considered related to all income producing activities and assets of the partner and shall be subject to apportionment under the rules described in this paragraph. For purposes of this section, a partner's percentage interest in a partnership shall be determined by reference to the partner's interest in partnership income for the year. Similarly, a partner's pro rata share of partnership assets shall be determined by reference to the partner's interest in partnership income for the year.

(2)-(3) [Reserved]. For further guidance see § 1.861-9(e)(2) through (e)(3).

(4) ***Less than 10 percent limited partners and less than 10 percent corporate general partners—entity rule —***

(i) ***Partnership interest expense.*** For further guidance, see § 1.861-9(e)(4)(i).

(ii) ***Other interest expense of the partner.*** For purposes of apportioning other interest expense of the partner on an asset basis, the partner's interest in the partnership, and not the partner's pro rata share of partnership assets, is considered to be the relevant asset. The value of this asset for apportionment purposes is either the tax book value or fair market value of the partner's partnership interest, depending on the method of apportionment used by the taxpayer. This amount of a partner's interest in the partnership is allocated among various limitation categories in the same manner as partnership interest expense (that is not directly allocable under § 1.861-10T) is apportioned in subdivision (i) of this paragraph (e)(4). If the partner uses the tax book value method of apportionment, the partner's interest in the partnership must be reduced, for this purpose, to the extent that the partner's basis consists of liabilities that are taken into account under section 752. Under either the tax book value or fair market value method of apportionment, for purposes of this section only, the value of the partner's interest in the partnership must be reduced by the principal amount of any indebtedness of the partner the interest on which is directly allocated to its partnership interest under § 1.861-10T.

(5) ***Tiered partnerships.*** If a partnership is a partner in another partnership, the distributive share of interest expense of a lower-tier partnership that is subject to the rules of paragraph (e)(4) shall not be reapportioned in the hands of any higher-tier partner. However, the distributive share of interest expense of lower-tier partnership that is subject to the rules of paragraph (e) (2) or (3) shall be apportioned by the partner of the higher-tier partnership or by any higher-tier partnership to which the rules of paragraph (e)(4) apply, taking into account the partner's indirect pro rata share of the lower-tier partnership's income or assets.

(6) ***Example —***

(i) ***Facts.*** A, B, and C are partners in a limited partnership. A is a corporate general partner, owns a 5 percent interest in the partnership, and has an adjusted basis in its partnership interest, determined without regard to section 752 of the Code, of $5. A's investment in the partnership is not held in the ordinary course of the taxpayer's active trade or business, as defined in § 1.904-7(i)(2). B, a corporate limited partner, owns a 70 percent interest in the partnership, and has an adjusted basis in its partnership interest, determined without regard to section 752 of the Code, of $70. C is an individual limited partner, owns a 25 percent interest in the partnership, and has an adjusted basis in the partnership interest, determined without regard to

section 752 of the Code, of $25. The partners' interests in the profits and losses of the partnership conform to their respective interests. None of the interest expense incurred directly by any of the partners is directly allocable to their partnership interest under § 1.861-10T. The ABC partnership's sole assets are two apartment buildings, one domestic and the other foreign. The domestic building has an adjusted inside basis of $600 and the foreign building has an adjusted inside basis of $500. Each of the buildings is subject to a nonrecourse liability in the amount of $500. The ABC partnership's total interest expense for the taxable year is $120, both nonrecourse liabilities bearing interest at the rate of 12 percent. The indebtedness on the domestic building qualifies for direct allocation under the rules of § 1.861-10T. The indebtedness on the foreign building does not so qualify. The partnership incurred no foreign taxes. The partnership's gross income for the taxable year is $360, consisting of $100 in foreign source income and $260 in domestic source income. Under § 1.752-1(e), the nonrecourse liabilities of the partnership are allocated among the partners according to their share of the partnership profits. Accordingly, the adjusted basis of A, B, and C in their respective partnership interests (for other than apportionment purposes) is, respectively, $55, $770, and $275.

(ii) ***Determination of the amount of partnership interest expense that is subject to allocation and apportionment.*** Interest on the nonrecourse loan on the domestic building is, under § 1.861-10T, directly allocable to income from that investment. The interest expense is therefore directly allocable to domestic income. Interest on the nonrecourse loan on the foreign building is not directly allocable. The interest expense is therefore subject to allocation and apportionment. Thus, $60 of interest expense is directly allocable to domestic income and $60 of interest expense is subject to allocation and apportionment.

(iii) ***Analysis for Partner A.*** A's distributive share of the partnership's gross income is $18, which consists of $5 in foreign source income and $13 in domestic source income. A's distributive share of the ABC interest expense is $6, $3 of which is directly allocable to domestic income and $3 of which is subject to apportionment. After direct allocation of qualifying interest expense, A's distributive share of the partnership's gross income consists of $5 in foreign source income and $10 in domestic source income. Because A is a less than 10 percent corporate partner, A's distributive share of any foreign source partnership income is considered to be passive income. Accordingly, in apportioning the $3 of partnership interest expense that is subject to apportionment on a gross income method, one-third ($1) is apportioned to foreign source passive income and two-thirds ($2) is apportioned to domestic source income. In apportioning its other interest expense, A uses the tax book value method. A's adjusted basis in A's partnership interest ($55) includes A's share of the partnership's liabilities ($50), which are included in basis under section 752. For purposes of apportioning other interest expense, A's adjusted basis in the partnership must be reduced to the extent of such liabilities. Thus, A's adjusted basis in the partnership, for purposes of apportionment, is $5. For the purpose of apportioning A's other interest expense, this $5 in basis is characterized one-third as a foreign passive asset and two-thirds as a domestic asset, which is the ratio determined in paragraph (e)(4)(i).

(iv) ***Analysis for Partner B.*** B's distributive share of the ABC interest expense is $84, $42 of which is directly allocable to domestic income and $42 of which is subject to apportionment. As a corporate limited partner whose interest in the partnership is 10 percent or more, B is subject to the rules of paragraph (e)(2) and paragraph (f) of this section. These rules require that a corporate partner apportion its distributive share of partnership interest expense at the partner

level on the asset method described in paragraph (g) of this section by reference to its corporate assets, which include, for this purpose, 70 percent of the partnership's assets, adjusted in the manner described in § 1.861-10T(e) to reflect directly allocable interest expense.

(v) ***Analysis for Partner C.*** C's distributive share of the ABC interest expense is $30, $15 of which is directly allocable to domestic income and $15 of which is subject to apportionment. As an individual limited partner whose interest in the partnership is 10 percent or more, C is subject to the rules of paragraph (e)(3) of this section. These rules require that an individual's share of partnership interest expense be classified under regulations issued under section 163(h) and then apportioned under the rules applicable to individuals, which are set forth in paragraph (d) of this section.

(7) ***Foreign partners.*** The distributive share of partnership interest expense of a nonresident alien who is a partner in a partnership shall be considered to be connected with effectively connected income based on the percentage of the assets of the partnership that generate effectively connected income. No interest expense directly incurred by the partner may be allocated and apportioned to effectively connected income derived by the partnership.

(8) ***Special rule for downstream partnership loans.*** For further guidance, see § 1.861-9(e)(8) through (10).

(9)-(10) [Reserved]

(f) ***Corporations*** —

(1) ***Domestic corporations.*** Domestic corporations shall apportion interest expense using the asset method described in paragraph (g) of this section and the applicable rules of §§ 1.861-10T through 1.861-13T.

(2) ***Section 987 QBUs of domestic corporations.*** For further guidance, see § 1.861-9(f)(2) through (f)(3)(i).

(3)

(i) [Reserved]

(ii) ***Manner of election.*** The election to use the asset method described in paragraph (g) of this section or the modified gross income method described in paragraph (j) of this section may be made either by the controlled foreign corporation or by the controlling United States shareholders on behalf of the controlled foreign corporation. The term “controlling United States shareholders” means those United States shareholders (as defined in section 951(b)) who, in aggregate, own (within the meaning of section 958(a)) greater than 50 percent of the total combined voting power of all classes of stock of the foreign corporation entitled to vote. In the case of a controlled foreign corporation in which the United States shareholders own stock representing more than 50 percent of the value of the stock in such corporation, but less than 50 percent of the combined voting power of all classes of stock in such corporation, the term “controlling United States shareholders” means all the United States shareholders (as defined in section 951(b)) who own (within the meaning of section 958(a)) stock of the controlled foreign corporation. All United States shareholders are bound by the election of either the controlled foreign corporation or the controlling United States shareholders. For guidance relating to the time and manner of this election, *see* § 1.861-9(f)(3)(ii).

(iii) ***Consistency requirement.*** The same method of apportionment must be employed by all controlled foreign corporations in which a United States taxpayer and the members of its affiliated group (as defined in § 1.861-11T(d)) constitute controlling United States shareholders. A controlled foreign corporation that is required by this paragraph (f)(3)(iii) to utilize a particular method of apportionment must do so with respect to all United States shareholders.

(iv) ***Stock characterization.*** Pursuant to § 1.861-12T(c)(2), the stock of a controlled foreign corporation shall be characterized in the hands of any United States shareholder using the same method that the controlled foreign corporation uses to apportion its interest expense.

(4) ***Noncontrolled 10-percent owned foreign corporations.*** For further guidance, see § 1.861-9(f)(4).

(5) ***Other relevant provisions.*** Affiliated groups of corporations are subject to special rules set forth in § 1.861-11T. Section 1.861-12T sets forth rules relating to basis adjustments for stock in nonaffiliated 10 percent owned corporations, special rules relating to the consideration and characterization of certain assets in the apportionment of interest expense, and to other special rules pertaining to the apportionment of interest expense. Section 1.861-13T contains transition rules limiting the application of the rules of §§ 1.861-8T through 1.861-12T, which are otherwise applicable to taxable years beginning after 1986. In the case of an affiliated group of corporations as defined in § 1.861-11T(d), any reference in §§ 1.861-8T through 1.861-13T to the "taxpayer" with respect to the allocation and apportionment of interest expense generally denotes the entire affiliated group of corporations and not the separate members thereof, unless the context otherwise requires.

(g) ***Asset method*** —

(1) ***In general.***

(i) Under the asset method, the taxpayer apportions interest expense to the various statutory groupings based on the average total value of assets within each such grouping for the taxable year, as determined under the asset valuation rules of this paragraph (g)(1) and paragraph (g)(2) of this section and the asset characterization rules of paragraph (g)(3) of this section and § 1.861-12T. Except to the extent otherwise provided (*see, e.g.,* paragraph (d)(1)(iv) of this section), taxpayers must apportion interest expense only on the basis of asset values and may not apportion any interest deduction on the basis of gross income.

(ii) For further guidance, see § 1.861-9(g)(1)(ii) through (g)(2)(i).

(iii)-(v) [Reserved]

(2)

(i)-(ii) [Reserved]

(iii) ***Adjustment for directly allocated interest.*** Prior to averaging, the year-end value of any asset to which interest expense is directly allocated during the current taxable year under the rules of § 1.861-10T (b) or (c) shall be reduced (but not below zero) by the percentage of the principal amount of indebtedness outstanding at year-end equal to the percentage of all interest on the debt for the taxable year that is directly allocated.

(iv) ***Assets in intercompany transactions.*** In the application of the asset method described in this paragraph (g), the tax book value of assets transferred between affiliated corporations in intercompany transactions shall be determined without regard to the gain or loss that is deferred under the regulations issued under section 1502.

(v) [Reserved]

(3) ***Characterization of assets.*** Assets are characterized for purposes of this section according to the source and type of the income that they generate, have generated, or may reasonably be expected to generate. The physical location of assets is not relevant to this determination. Subject to the special rules of paragraph (h) concerning the application of the fair market value method of apportionment, the value of assets within each statutory grouping and the residual grouping at the beginning and end of each year shall be determined by dividing the taxpayer's assets into three types—

(i) ***Single category assets.*** Assets that generate income that is exclusively within a single statutory grouping or the residual grouping;

(ii) ***Multiple category assets.*** Assets that generate income within more than one grouping of income (statutory or residual); and

(iii) ***Assets without directly identifiable yield.*** Assets that produce no directly identifiable income yield or that contribute equally to the generation of all the income of the taxpayer (such as assets used in general and administrative functions).

Single category assets are directly attributable to the relevant statutory or residual grouping of income. In order to attribute multiple category assets to the relevant groupings of income, the income yield of each such asset for the taxable year must be analyzed to determine the proportion of gross income generated by it within each relevant grouping. The value of each asset is then prorated among the relevant groupings of income according to their respective proportions of gross income. The value of each asset without directly identifiable income yield must be identified. However, because prorating the value of such assets cannot alter the ratio of assets within the various groupings of income (as determined by reference to the single and multiple category assets), they are not taken into account in determining that ratio. Special asset characterization rules that are set forth in § 1.861-12T. An example demonstrating the application of the asset method is set forth in § 1.861-12T(d).

(h) ***Fair market value method.*** For further guidance, see § 1.861-9(h).

(1) ***Determination of values*** —

(i) ***Valuation of group assets.*** The taxpayer shall first determine the aggregate value of the assets of the taxpayer on the last day of its taxable year without excluding the value of stock in foreign subsidiaries or any other asset. In the case of a publicly traded corporation, this determination shall be equal to the aggregate trading value of the taxpayer's stock traded on established securities markets at year-end increased by the taxpayer's year-end liabilities to unrelated persons and its pro rata share of year-end liabilities of all related persons owed to unrelated persons. In determining whether persons are related, § 1.861-8T(c)(2) shall apply. In the case of a corporation that is not publicly traded, this determination shall be made by reference to the capitalization of corporate earnings, in accordance with the rules of Rev. Rul. 68-609. In either case, control premium shall not be taken into account.

(ii) ***Valuation of tangible assets.*** The taxpayer shall determine the value of all assets held by the taxpayer and its pro rata share of assets held by other related persons on the last day of its taxable year, excluding stock or indebtedness in such persons, any intangible property as defined in section 936(h)(3)(B), or goodwill or going concern value intangibles. Such valuations shall be made using generally accepted valuation techniques. For this purpose, assets may be combined into reasonable groupings. Statistical methods of valuation may only be used in connection with fungible property, such as commodities. The value of stock in any corporation that is not a related person shall be determined under the rules of paragraph (h)(1)(i) of this section, except that no liabilities shall be taken into account.

(iii) ***Computation of intangible asset value.*** The value of the intangible assets of the taxpayer and of intangible assets of all related persons attributable to the taxpayer's ownership in related persons is equal to the amount obtained by subtracting the amount determined under paragraph (h)(1)(ii) of this section from the amount determined under paragraph (h)(1)(i) of this section.

(2) ***Apportionment of intangible asset value.*** The value of the intangible assets determined under paragraph (h)(1)(iii) of this section is apportioned among the taxpayer and all related persons in proportion to the net income before interest expense of the taxpayer and the taxpayer's pro rata share of the net income before interest expense of each related person held by the taxpayer, excluding income that is passive under § 1.904-4(b). For this purpose, net income is determined before reduction for income taxes. Net income of the taxpayer and of related persons shall be computed without regard to dividends or interest received from any person that is related to the taxpayer.

(3) ***Characterization of affiliated group's portion of intangible asset value.*** The portion of the value of intangible assets of the taxpayer and related persons that is apportioned to the taxpayer under paragraph (h)(2) of this section is characterized on the basis of net income before interest expense, as determined under paragraph (h)(2) of this section, of the taxpayer within each statutory or residual grouping of income.

(4) [Reserved]. For further guidance see § 1.861-9(h)(4).

(5) [Reserved]. For further guidance, see § 1.861-9(h)(5).

(6) ***Adjustments for apportioning related person expenses.*** For purposes of apportioning expenses of a related person, the value of stock in a second related person as otherwise determined under paragraph (h)(4) of this section (which is determined on the basis of the taxpayer's percentage ownership interest in the second related person) shall be increased to reflect the first related person's percentage ownership interest in the second related person to the extent it is larger.

Example. Assume that a taxpayer owns 80 percent of CFC1, which owns 100 percent of CFC2. The value of CFC1 is determined generally under paragraph (h)(4) on the basis of the taxpayer's 80 percent indirect interest in CFC2. For purposes of apportioning expenses of CFC1, 100 percent of the stock of CFC1 must be taken into account. Therefore, the value of CFC2 stock in the hands of CFC1 shall equal the value of CFC2 stock in the hands of CFC1 as determined under paragraph (h)(4) of this section, increased by 25 percent of such amount to reflect the fact that CFC1 owns 100 percent and not 80 percent of CFC2.

(i) [Reserved]. For further guidance, see § 1.861-9(i).

(j) ***Modified gross income method.*** Subject to rules set forth in paragraph (f)(3) of this section, the interest expense of a controlled foreign corporation may be allocated according to the following rules.

(1) ***Single-tier controlled foreign corporation.*** In the case of a controlled foreign corporation that does not hold stock in any lower-tier controlled foreign corporation, the interest expense of the controlled foreign corporation shall be apportioned based on its gross income.

(2) ***Multiple vertically owned controlled foreign corporations.*** In the case of a controlled foreign corporation that holds stock in any lower-tier controlled foreign corporation, the interest expense of that controlled foreign corporation and such upper-tier controlled foreign corporation shall be apportioned based on the following methodology:

(i) ***Step 1.*** Commencing with the lowest-tier controlled foreign corporation in the chain, allocate and apportion its interest expense based on its gross income as provided in paragraph (j)(1) of this section, yielding gross income in each grouping net of interest expense.

(ii) ***Step 2.*** For further guidance, see § 1.861-9(j)(2)(ii).

(k) ***Effective/applicability dates.*** In general, the rules of this section apply for taxable years beginning after December 31, 1986. Paragraphs (b)(2) (concerning the treatment of certain foreign currency) and (d)(2) (concerning the treatment of interest incurred by nonresident aliens) of this section are applicable for taxable years commencing after December 31, 1988. Taxpayers may also apply paragraph (b)(6) of this section to any gain that was realized on any transaction described in paragraph (b)(6)(i) of this section that was entered into after September 14, 1988, and on or before August 11, 1989, if the taxpayer can demonstrate to the satisfaction of the Commissioner that substantially all of the arrangements described in paragraph (b)(6)(i) of this section to which the taxpayer became a party during that interim period were identified on the taxpayer's books and records with the liabilities of the taxpayer in a substantially contemporaneous manner and that all losses and expenses that are subject to the rules of paragraph (b)(6) of this section were treated in the same manner as interest expense. For this purpose, arrangements that were identified in a substantially contemporaneous manner with the taxpayer's assets shall be ignored. For further guidance, *see* § 1.861-9(k).

[T.D. 8228, 53 FR 35477, Sept. 14, 1988]

Editorial Note: For FEDERAL REGISTER citations affecting § 1.861-9T, see the List of CFR Sections Affected, which appears in the Finding Aids section of the printed volume and at *www.govinfo.gov.*

§ 1.861-10 Special allocations of interest expense.

(a) ***In general.*** This section applies to all taxpayers and provides exceptions to the rules of § 1.861-9 that require the allocation and apportionment of interest expense based on all assets of all members of the affiliated group. Section 1.861-10T(b) provides rules for the direct allocation of interest expense to the income generated by certain assets that are subject to qualified nonrecourse indebtedness. Section 1.861-10T(c) provides rules for the direct allocation of interest expense to income generated by certain assets that are acquired in an integrated financial transaction. Section 1.861-10T(d) provides special rules that apply to all transactions described in § 1.861-10T(b) and (c). Paragraph (e) of this section requires the direct allocation of third-party interest expense of an affiliated group to such group's investments in related controlled foreign corporations in cases involving excess related person indebtedness (as defined

therein). See also § 1.861-9T(b)(5), which requires the direct allocation of amortizable bond premium. Paragraph (f) of this section provides a special rule for certain regulated utility companies. Paragraph (g) of this section is reserved. Paragraph (h) of this section sets forth applicability dates.

(b)-(d) [Reserved]

(e) ***Treatment of certain related group indebtedness*** —

(1) ***In general.*** If, for any taxable year beginning after December 31, 1991, a U.S. shareholder (as defined in paragraph (e)(5)(i) of this section) has both—

(i) Excess related group indebtedness (as determined under Step One in paragraph (e)(2) of this section) and

(ii) Excess U.S. shareholder indebtedness (as determined under Step Two in paragraph (e)(3) of this section), the U.S. shareholder shall allocate, to its gross income in the various separate limitation categories described in section 904(d)(1), a portion of its interest expense paid or accrued to any obligee who is not a member of the affiliated group (as defined in § 1.861-11T(d)) of the U.S. shareholder ("third party interest expense"), excluding amounts allocated under paragraphs (b) and (c) of § 1.861-10T. The amount of third party interest expense so allocated shall equal the total amount of interest income derived by the U.S. shareholder during the year from related group indebtedness, multiplied by the ratio of the lesser of the foregoing two amounts of excess indebtedness for the year to related group indebtedness for the year. This amount of third party interest expense is allocated as described in Step Three in paragraph (e)(4) of this section.

(2) ***Step One: Excess related group indebtedness.***

(i) The excess related group indebtedness of a U.S. shareholder for the year equals the amount by which its related group indebtedness for the year exceeds its allowable related group indebtedness for the year.

(ii) The "related group indebtedness" of the U.S. shareholder is the average of the aggregate amounts at the beginning and end of the year of indebtedness owed to the U.S. shareholder by each controlled foreign corporation which is a related person (as defined in paragraph (e)(5)(ii) of this section) with respect to the U.S. shareholder.

(iii) The "allowable related group indebtedness" of a U.S. shareholder for the year equals—

(A) The average of the aggregate values at the beginning and end of the year of the assets (including stock holdings in and obligations of related persons, other than related controlled foreign corporations) of each related controlled foreign corporation, multiplied by

(B) The foreign base period ratio of the U.S. shareholder for the year.

(iv) The "foreign base period ratio" of the U.S. shareholder for the year is the average of the related group debt-to-asset ratios of the U.S. shareholder for each taxable year comprising the foreign base period for the current year (each a "base year"). For this purpose, however, the related group debt-to-asset ratio of the U.S. shareholder for any base year may not exceed 110 percent of the foreign base period ratio for that base year. This limitation shall not apply with respect to

any of the five taxable years chosen as initial base years by the U.S. shareholder under paragraph (e)(2)(v) of this section or with respect to any base year for which the related group debt-to-asset ratio does not exceed 0.10.

(v)

(A) The foreign base period for any current taxable year (except as described in paragraphs (e)(2)(v) (B) and (C) of this section) shall consist of the five taxable years immediately preceding the current year.

(B) The U.S. shareholder may choose as foreign base periods for all of its first five taxable years for which this paragraph (e) is effective the following alternative base periods:

(*1*) For the first effective taxable year, the 1982, 1983, 1984, 1985 and 1986 taxable years;

(*2*) For the second effective taxable year, the 1983, 1984, 1985 and 1986 taxable years and the first effective taxable year;

(*3*) For the third effective taxable year, the 1984, 1985 and 1986 taxable years and the first and second effective taxable years;

(*4*) For the fourth effective taxable year, the 1985 and 1986 taxable years and the first, second and third effective taxable years; and

(*5*) For the fifth effective taxable year, the 1986 taxable year and the first, second, third and fourth effective taxable years.

(C) If, however, the U.S. shareholder does not choose, under paragraph (e)(10)(ii) of this section, to apply this paragraph (e) to one or more taxable years beginning before January 1, 1992, the U.S. shareholder may not include within any foreign base period the taxable year immediately preceding the first effective taxable year. Thus, for example, a U.S. shareholder for which the first effective taxable year is the taxable year beginning on October 1, 1992, may not include the taxable year beginning on October 1, 1991, in any foreign base period. Assuming that the U.S. shareholder does not elect the alternative base periods described in paragraph (e)(2)(v)(B) of this section, the initial foreign base period for the U.S. shareholder will consist of the taxable years beginning on October 1 of 1986, 1987, 1988, 1989, and 1990. The foreign base period for the U.S. shareholder for the following taxable year, beginning on October 1, 1993, will consist of the taxable years beginning on October 1 of 1987, 1988, 1989, 1990, and 1992.

(D) If the U.S. shareholder chooses the base periods described in paragraph (e)(2)(v)(B) of this section as foreign base periods, it must make a similar election under paragraph (e)(3)(v)(B) of this section with respect to its U.S. base periods.

(vi) The “related group debt-to-asset ratio” of a U.S. shareholder for a year is the ratio between—

(A) The related group indebtedness of the U.S. shareholder for the year (as determined under paragraph (e)(2)(ii) of this section); and

(B) The average of the aggregate values at the beginning and end of the year of the assets (including stock holdings in and obligations of related persons, other than related controlled foreign corporations) of each related controlled foreign corporation.

(vii) Notwithstanding paragraph (e)(2)(i) of this section, a U.S. shareholder is considered to have no excess related group indebtedness for the year if—

(A) Its related group indebtedness for the year does not exceed its allowable related group indebtedness for the immediately preceding year (as determined under paragraph (e)(2)(iii) of this section); or

(B) Its related group debt-to-asset ratio (as determined under paragraph (e)(2)(vi) of this section) for the year does not exceed 0.10.

(3) *Step Two: Excess U.S. shareholder indebtedness.*

(i) The excess indebtedness of a U.S. shareholder for the year equals the amount by which its unaffiliated indebtedness for the year exceeds its allowable indebtedness for the year.

(ii) The "unaffiliated indebtedness" of the U.S. shareholder is the average of the aggregate amounts at the beginning and end of the year of indebtedness owed by the U.S. shareholder to any obligee, other than a member of the affiliated group (as defined in § 1.861-11T(d)) of the U.S shareholder.

(iii) The "allowable indebtedness" of a U.S. shareholder for the year equals—

(A) The average of the aggregate values at the beginning and end of the year of the assets of the U.S. shareholder (including stock holdings in and obligations of related controlled foreign corporations, but excluding stock holdings in and obligations of members of the affiliated group (as defined in § 1.861-11T(d)) of the U.S. shareholder), reduced by the amount of the excess related group indebtedness of the U.S. shareholder for the year (as determined under Step One in paragraph (e)(2) of this section), multiplied by

(B) The U.S. base period ratio of the U.S. shareholder for the year.

(iv) The "U.S. base period ratio" of the U.S. shareholder for the year is the average of the debt-to-asset ratios of the U.S. shareholder for each taxable year comprising the U.S. base period for the current year (each a "base year"). For this purpose, however, the debt-to-asset ratio of the U.S. shareholder for any base year may not exceed 110 percent of the U.S. base period ratio for that base year. This limitation shall not apply with respect to any of the five taxable years chosen as initial base years by the U.S. shareholder under paragraph (e)(3)(v) of this section or with respect to any base year for which of the debt-to-asset ratio does not exceed 0.10.

(v)

(A) The U.S. base period for any current taxable year (except as described in paragraphs (e)(3)(v) (B) and (C) of this section) shall consist of the five taxable years immediately preceding the current year.

(B) The U.S. shareholder may choose as U.S. base periods for all of its first five taxable years for which this paragraph (e) is effective the following alternative base periods:

(*1*) For the first effective taxable year, the 1982, 1983, 1984, 1985 and 1986 taxable years;

(*2*) For the second effective taxable year, the 1983, 1984, 1985 and 1986 taxable years and the first effective taxable year;

(3) For the third effective taxable year, the 1984, 1985 and 1986 taxable years and the first and second effective taxable years;

(4) For the fourth effective taxable year, the 1985 and 1986 taxable years and the first, second and third effective taxable years; and

(5) For the fifth effective taxable year, the 1986 taxable year and the first, second, third and fourth effective taxable years.

(C) If, however, the U.S. shareholder does not choose, under paragraph (e)(10)(ii) of this section, to apply this paragraph (e) to one or more taxable years beginning before January 1, 1992, the U.S. shareholder may not include within any U.S. base period the taxable year immediately preceding the first effective taxable year. Thus, for example, a U.S. shareholder for which the first effective taxable year is the taxable year beginning on October 1, 1992, may not include the taxable year beginning on October 1, 1991, in any U.S. base period. Assuming that the U.S. shareholder does not elect the alternative base periods described in paragraph (e)(3)(v)(B) of this section, the initial U.S. base period for the U.S. shareholder will consist of the taxable years beginning on October 1, of 1986, 1987, 1988, 1989, and 1990. The U.S. base period for the U.S. shareholder for the following taxable year, beginning on October 1, 1993, will consist of the taxable years beginning on October 1, 1987, 1988, 1989, 1990, and 1992.

(D) If the U.S. shareholder chooses the base periods described in paragraph (e)(3)(v)(B) of this section as U.S. base periods, it must make a similar election under paragraph (e)(2)(v)(B) of this section with respect to its foreign base periods.

(vi) The "debt-to-asset ratio" of a U.S. shareholder for a year is the ratio between—

(A) The unaffiliated indebtedness of the U.S. shareholder for the year (as determined under paragraph (e)(3)(ii) of this section); and

(B) The average of the aggregate values at the beginning and end of the year of the assets of the U.S. shareholder. For this purpose, the assets of the U.S. shareholder include stock holdings in and obligations of related controlled foreign corporations but do not include stock holdings in and obligations of members of the affiliated group (as defined in § 1.861-11T(d)).

(vii) A U.S. shareholder is considered to have no excess indebtedness for the year if its debt-to-asset ratio (as determined under paragraph (e)(3)(vi) of this section) for the year does not exceed 0.10.

(4) ***Step Three: Allocation of third party interest expense.***

(i) A U.S. shareholder shall allocate to its gross income in the various separate limitation categories described in section 904(d)(1) a portion of its third party interest expense incurred during the year equal in amount to the interest income derived by the U.S. shareholder during the year from allocable related group indebtedness.

(ii) The "allocable related group indebtedness" of a U.S. shareholder for any year is an amount of related group indebtedness equal to the lesser of—

(A) The excess related group indebtedness of the U.S. shareholder for the year (determined under Step One in paragraph (e)(2) of this section); or

(B) The excess U.S. shareholder indebtedness for the year (determined under Step Two in paragraph (e)(3) of this section).

(iii) The amount of interest income derived by a U.S. shareholder from allocable related group indebtedness during the year equals the total amount of interest income derived by the U.S. shareholder during the year with respect to related group indebtedness, multiplied by the ratio of allocable related group indebtedness for the year to the aggregate amount of related group indebtedness for the year.

(iv) The portion of third party interest expense described in paragraph (e)(4)(i) of this section shall be allocated in proportion to the relative average amounts of related group indebtedness held by the U.S. shareholder in each separate limitation category during the year. The remaining portion of third party interest expense of the U.S. shareholder for the year shall be apportioned as provided in §§ 1.861-8T through 1.861-13T, excluding paragraph (e) of § 1.861-10T and this paragraph (e).

(v) The average amount of related group indebtedness held by the U.S. shareholder in each separate limitation category during the year equals the average of the aggregate amounts of such indebtedness in each separate limitation category at the beginning and end of the year. Solely for purposes of this paragraph (e)(4), each debt obligation of a related controlled foreign corporation held by the U.S. shareholder at the beginning or end of the year is attributed to separate limitation categories in the same manner as the stock of the obligor would be attributed under the rules of § 1.861-12T(c)(3), whether or not such stock is held directly by the U.S. shareholder.

(vi) The amount of third party interest expense of a U.S. shareholder allocated pursuant to this paragraph (e)(4) shall not exceed the total amount of the third party interest expense of the U.S. shareholder for the year (excluding any third party interest expense allocated under paragraphs (b) and (c) of § 1.861-10T).

(5) ***Definitions.*** For purposes of this paragraph (e), the following terms shall have the following meanings.

(i) ***U.S. shareholder.*** The term "U.S. shareholder" has the same meaning as the term "United States shareholder" when used in section 957, except that, in the case of a United States shareholder that is a member of an affiliated group (as defined in § 1.861-11T(d)), the entire affiliated group is considered to constitute a single U.S. shareholder.

(ii) ***Related person.*** For the definition of the term "related person", see § 1.861-8T(c)(2). A controlled foreign corporation is considered "related" to a U.S. shareholder if it is a related person with respect to the U.S. shareholder.

(6) ***Determination of asset values.*** A U.S. shareholder shall determine the values of the assets of each related controlled foreign corporation (for purposes of Step One in paragraph (e)(2) of this section) and the assets of the U.S. shareholder (for purposes of Step Two in paragraph (e)(3) of this section) for any year in accordance with the valuation method (tax book value or fair market value) elected for that year pursuant to § 1.861-9T(g). However, solely for purposes of this paragraph (e), a U.S. shareholder may instead choose to determine the values of the assets of all related controlled foreign corporations by reference to their values as reflected on Forms 5471 (the annual information return with respect to each related controlled foreign corporation), subject to the translation rules of paragraph (e)(8)(i) of this section. This method of valuation may be used only if the taxable years of each of the related controlled foreign corporations begin with, or no more than one month earlier

than, the taxable year of the U.S. shareholder. Once chosen for a taxable year, this method of valuation must be used in each subsequent taxable year and may be changed only with the consent of the Commissioner.

(7) ***Adjustments to asset value.*** For purposes of apportioning remaining interest expense under § 1.861-9T, a U.S. shareholder shall reduce (but not below zero) the value of its assets for the year (as determined under § 1.861-9T (g) (3) or (h)) by an amount equal to the allocable related group indebtedness of the U.S. shareholder for the year (as determined under Step Three in paragraph (e)(4)(ii) of this section). This reduction is allocated among assets in each separate limitation category in proportion to the average amount of related group indebtedness held by the U.S. shareholder in each separate limitation category during the year (as determined under Step Three in paragraph (e)(4)(v) of this section).

(8) ***Special rules*** —

(i) ***Exchange rates.*** All indebtedness amounts and asset values (including current year and base year amounts and values) denominated in a foreign currency shall be translated into U.S. dollars at the exchange rate for the current year. The exchange rate for the current year may be determined under any reasonable method (*e.g.,* average of month-end exchange rates for each month in the current year) if it is consistently applied to the current year and all base years. Once chosen for a taxable year, a method for determining an exchange rate must be used in each subsequent taxable year and will be treated as a method of accounting for purposes of section 446. A taxpayer may apply a different translation rule only with the prior consent of the Commissioner. In this regard, the Commissioner will be guided by the extent to which a different rule would reduce the comparability of dollar amounts of indebtedness and dollar asset values for the base years and the current year.

(ii) ***Exempt assets.*** Solely for purposes of this paragraph (e), any exempt assets otherwise excluded under section 864(e)(3) and § 1.861-8T(d) shall be included as assets of the U.S. shareholder or related controlled foreign corporation.

(iii) ***Exclusion of certain directly allocated indebtedness and assets.*** Qualified nonrecourse indebtedness (as defined in § 1.861-10T(b)(2)) and indebtedness incurred in connection with an integrated financial transaction (as defined in § 1.861-10T(c)(2)) shall be excluded from U.S. shareholder indebtedness and related group indebtedness. In addition, assets which are the subject of qualified nonrecourse indebtedness or integrated financial transactions shall be excluded from the assets of the U.S. shareholder and each related controlled foreign corporation.

(iv) ***Exclusion of certain receivables.*** Receivables between related controlled foreign corporations (or between members of the affiliated group constituting the U.S. shareholder) shall be excluded from the assets of the related controlled foreign corporation (or affiliated group member) holding such receivables. See also § 1.861-11T(e)(1).

(v) ***Classification of loans between controlled foreign corporations.*** In determining the amount of related group indebtedness for any taxable year, loans outstanding from one controlled foreign corporation to a related controlled foreign corporation are not treated as related group indebtedness. For purposes of determining the foreign base period ratio under paragraph (e)(2)(iv) of this section for a taxable year that ends on or after November 2, 2020, the rules of

this paragraph (e)(8)(v) apply to determine the related group debt-to-asset ratio in each taxable year included in the foreign base period, including in taxable years that end before November 2, 2020.

(vi) ***Classification of hybrid stock.*** In determining the amount of its related group indebtedness for any taxable year, a U.S. shareholder must not treat stock in a related controlled foreign corporation as related group indebtedness, regardless of whether the related controlled foreign corporation claims a deduction for interest under foreign law for distributions on such stock. For purposes of determining the foreign base period ratio under paragraph (e)(2)(iv) of this section for a taxable year that ends on or after December 4, 2018, the rules of this paragraph (e)(8)(vi) apply to determine the related group debt-to-asset ratio in each taxable year included in the foreign base period, including in taxable years that end before December 4, 2018.

(9) ***Corporate events*** —

(i) ***Initial acquisition of a controlled foreign corporation.*** If the foreign base period of the U.S. shareholder for any year includes a base year in which the U.S. shareholder did not hold stock in any related controlled foreign corporation, then, in computing the foreign base period ratio, the related group debt-to-asset ratio of the U.S. shareholder for any such base year shall be deemed to be 0.10.

(ii) ***Incorporation of U.S. shareholder*** —

(A) ***Nonapplication.*** This paragraph (e) does not apply to the first taxable year of the U.S. shareholder. However, this paragraph (e) does apply to all following years, including years in which later members of the affiliated group may be incorporated.

(B) ***Foreign and U.S. base period ratios.*** In computing the foreign and U.S. base period ratios, the foreign and U.S. base periods of the U.S. shareholder shall be considered to be only the period prior to the current year that the U.S. shareholder was in existence if this prior period is less than five taxable years.

(iii) ***Acquisition of additional corporations.***

(A) If a U.S. shareholder acquires (directly or indirectly) stock of a foreign or domestic corporation which, by reason of the acquisition, then becomes a related controlled foreign corporation or a member of the affiliated group, then in determining excess related group indebtedness or excess U.S. shareholder indebtedness, the indebtedness and assets of the acquired corporation shall be taken into account only at the end of the acquisition year and in following years. Thus, amounts of indebtedness and assets and the various debt-to-asset ratios of the U.S. shareholder existing at the beginning of the acquisition year or relating to preceding years are not recalculated to take account of indebtedness and assets of the acquired corporation existing as of dates before the end of the year. If, however, a major acquisition is made within the last three months of the year and a substantial distortion of values for the year would otherwise result, the taxpaper must take into account the average values of the acquired indebtedness and assets weighted to reflect the time such indebtedness is owed and such assets are held by the taxpayer during the year.

(B) In the case of a reverse acquisition subject to this paragraph (e)(9), the rules of § 1.1502-75(d)(3) apply in determining which corporations are the acquiring and acquired corporations. For this purpose, whether corporations are affiliated is determined under § 1.861-11T(d).

(C) If the stock of a U.S. shareholder is acquired by (and, by reason of such acquisition, the U.S. shareholder becomes affiliated with) a corporation described below, then such U.S. shareholder shall be considered to have acquired such corporation for purposes of the application of the rules of this paragraph (e). A corporation to which this paragraph (e)(9)(iii)(C) applies is—

(*1*) A corporation which is not affiliated with any other corporation (other than other similarly described corporation); and

(*2*) Substantially all of the assets of which consist of cash, securities and stock.

(iv) ***Election to compute base period ratios by including acquired corporations.*** A U.S. shareholder may choose, solely for purposes of paragraph (e)(9) (i) and (iii) of this section, to compute its foreign and U.S. base period ratios for the acquisition year and all subsequent years by taking into account the indebtedness and asset values of the acquired corporation or corporations (including related group indebtedness owed to a former U.S. shareholder) at the beginning of the acquisition year and in each of the five base years preceding the acquisition year. This election, if made for an acquisition, must be made for all other acquisitions occurring during the same taxable year or initiated in that year and concluded in the following year.

(v) ***Dispositions.*** If a U.S. shareholder disposes of stock of a foreign or domestic corporation which, by reason of the disposition, then ceases to be a related controlled foreign corporation or a member of the affiliated group (unless liquidated or merged into a related corporation), in determining excess related group indebtedness or excess U.S. shareholder indebtedness, the indebtedness and assets of the divested corporation shall be taken into account only at the beginning of the disposition year and for the relevant preceding years. Thus, amounts of indebtedness and assets and the various debt-to-asset ratios of the U.S. shareholder existing at the end of the year or relating to following years are not affected by indebtedness and assets of the divested corporation existing as of dates after the beginning of the year. If, however, a major disposition is made within the first three months of the year and a substantial distortion of values for the year would otherwise result, the taxpayer must take into account the average values of the divested indebtedness and assets weighted to reflect the time such indebtedness is owed and such assets are held by the taxpayer during the year.

(vi) ***Election to compute base period ratios by excluding divested corporations.*** A U.S. shareholder may choose, solely for purposes of paragraph (e) (9) (v) and (vii) of this section, to compute its foreign and U.S. base period ratios for the disposition year and all subsequent years without taking into account the indebtedness and asset values of the divested corporation or corporations at the beginning of the disposition year and in each of the five base years preceding the disposition year. This election, if made for a disposition, must be made for all other dispositions occurring during the same taxable year or initiated in that year and concluded in the following year.

(vii) ***Section 355 transactions.*** A U.S. corporation which becomes a separate U.S. shareholder as a result of a distribution of its stock to which section 355 applies shall be considered—

(A) As disposed of by the U.S. shareholder of the affiliated group of which the distributing corporation is a member, with this disposition subject to the rules of paragraphs (e) (9) (v) and (vi) of this section; and

(B) As having the same related group debt-to-asset ratio and debt-to-asset ratio as the distributing U.S. shareholder in each year preceding the year of distribution for purposes of applying this paragraph (e) to the year of distribution and subsequent years of the distributed corporation.

(10) [Reserved]

(11) The following example illustrates the provisions of this paragraph (e):

Example. (i) *Facts.* X, a domestic corporation, elects to apply this paragraph (e) to its 1990 tax year. X has a calendar taxable year and apportions its interest expense on the basis of the tax book value of its assets. In 1990, X incurred deductible third-party interest expense of $24,960 on an average amount of indebtedness (determined on the basis of beginning-of-year and end-of-year amounts) of $249,600. X manufactures widgets, all of which are sold in the United States. X owns all of the stock of Y, a controlled foreign corporation that also has a calendar taxable year and is also engaged in the manufacture and sale of widgets. Y has no earnings and profits or deficit of earnings and profits attributable to taxable years prior to 1987. X's total assets and their average tax book values (determined on the basis of beginning-of-year and end-of-year tax book values) for 1990 are:

Asset	Average tax book value
Plant and equipment	$315,000
Corporate headquarters	60,000
Y stock	75,000
Y note	50,000
Total	500,000

Y had $25,000 of income before the deduction of any interest expense. Of this total, $5,000 is high withholding tax interest income. The remaining $20,000 is derived from widget sales, and constitutes foreign source general limitation income. Assume that Y has no deductions from gross income other than interest expense. During 1990, Y paid $5,000 of interest expense to X on the Y note and $10,000 of interest expense to third parties, giving Y total interest expense of $15,000. X elects pursuant to § 1.861-9T to apportion Y's interest expense under the gross income method prescribed in section 1.861-9T (j).

(ii) *Step 1:* Using a beginning and end of year average, X (the U.S. shareholder) held the following average amounts of indebtedness of Y and Y had the following average asset values:

	1985	1986-88	1989	1990
(A) Related group indebtedness	$11,000	24,000	26,000	50,000
(B) Average Value of Assets of Related CFC	100,000	200,000	200,000	250,000
(C) Related Group Debt-to-Asset Ratio	.11	.12	.13	.20

(*1*) X's "foreign base period ratio" for 1990, an average of its ratios of related group indebtedness to related group assets for 1985 through 1989, is:
(.11 + .12 + .12 + .12 + .13) / 5 = .12

(*2*) X's "allowable related group indebtedness" for 1990 is:
$250,000 × .12 = $30,000.

(*3*) X's "excess related group indebtedness" for 1990 is:
$50,000 − $30,000 = $20,000

X's related group indebtedness of $50,000 for 1990 is greater than its allowable related group indebtedness of $24,000 for 1989 (assuming a foreign base period ratio in 1989 of .12), and X's related group debt-to-asset ratio for 1990 is .20, which is greater than the ratio of .10 described in paragraph (e)(2)(vii)(B) of this section. Therefore, X's excess related group indebtedness for 1990 remains at $20,000.
(iii) *Step 2:* Using a beginning and end of year average, X has the following average amounts of U.S. and foreign indebtedness and average asset values:

	1985	1986	1987	1988	1989	1990
(1)	$231,400	225,000	225,000	225,000	220,800	249,600
(2)	445,000	450,000	450,000	450,000	460,000	480,000
						(a)
(3)	.52	.50	.50	.50	.48	.52

(1) U.S. and foreign indebtedness
(2) Average value of assets of U.S. shareholder

(3) Debt-to-Asset ratio of U.S. shareholder

(a) [500,000-20,000 (excess related group indebtedness determined in Step 1)]

X's "U.S. base period ratio" for 1990 is:

(.52 + .50 + .50 + .50 + .48) / 5 = .50

X's "allowable indebtedness" for 1990 is:
$480,000 × .50 = $240,000

X's "excess U.S. shareholder indebtedness" for 1990 is:
$249,000 − $240,000 = $9,600

X's debt-to-asset ratio for 1990 is .52, which is greater than the ratio of .10 described in paragraph (e)(3)(vii) of this section. Therefore, X's excess U.S. shareholder indebtedness for 1990 remains at $9,600.
(iv) *Step 3:* (a) Since X's excess U.S. shareholder indebtedness of $9,600 is less than its excess related group indebtedness of $20,000, X's allocable related group indebtedness for 1990 is $9,600. The amount of interest received by X during 1990 on allocable related group indebtedness is:

$5,000 × $9,600 / $50,000 = $960

(b) Therefore, $960 of X's third party interest expense ($24,960) shall be allocated among various separate limitation categories in proportion to the relative average amounts of Y obligations held by X in each such category. The amount of Y obligations in each limitation category is determined in the same manner as the stock of Y would be attributed under the rules of § 1.861-12T(c)(3). Since Y's interest expense is apportioned under the gross income method prescribed in § 1.861-9T (j), the Y stock must be characterized under the gross income method described in § 1.861-12T(c)(3)(iii). Y's gross income net of interest expense is determined as follows:
Foreign source high withholding tax interest income

= $5,000 − [($15,000) multiplied by ($5,000)/($5,000 + $20,000)]

= $2,000

and

Foreign source general limitation income

= $20,000 − [($15,000) multiplied by ($20,000)/($5,000 + $20,000)]

= $8,000.

(c) Therefore, $192 [($960 × $2,000/($2,000 + $8,000)] of X's third party interest expense is allocated to foreign source high withholding tax interest income and $768 [$960 × $8,000/($2,000 + $8,000)] is allocated to foreign source general limitation income.

(v) As a result of these direct allocations, for purposes of apportioning X's remaining interest expense under § 1.861-9T, the value of X's assets generating foreign source general limitation income is reduced by the principal amount of indebtedness the interest on which is directly allocated to foreign source general limitation income ($7,680), and the value of X's assets generating foreign source high withholding tax interest income is reduced by the principal amount of indebtedness the interest on which is directly allocated to foreign source high withholding tax interest income ($1,920), determined as follows:

Reduction of X's assets generating foreign source general limitation income:

$$\text{X's allocable related group indebtedness} \times \frac{\text{Y's Foreign source general limitation income}}{\text{Y's Foreign source income}}$$

$$\$9{,}600 \times \$8{,}000/(\$8{,}000 + \$2{,}000) = \$7{,}680$$

Reduction of X's assets generating foreign source high withholding tax interest income:

$$\text{X's allocable related group indebtedness} \times \frac{\text{Y's Foreign source high withholding tax interest income}}{\text{Y's Foreign source income}}$$

$$\$9{,}600 \times \$2{,}000/(\$8{,}000 + \$2{,}000) = \$1{,}920$$

(f) ***Indebtedness of certain regulated utilities.*** If an automatically excepted regulated utility trade or business (as defined in § 1.163(j)-1(b)(15)(i)(A)) has qualified nonrecourse indebtedness within the meaning of the second sentence in § 1.163(j)-10(d)(2), interest expense from the indebtedness is directly allocated to the taxpayer's assets in the manner and to the extent provided in § 1.861-10T(b).

(g) [Reserved]

(h) ***Applicability dates.*** Except as provided in this paragraph (h), this section applies to taxable years ending on or after December 4, 2018. Paragraph (e)(8)(v) of this section applies to taxable years ending on or after November 2, 2020, and paragraph (f) of this section applies to taxable years beginning on or after December 28, 2021.

[T.D. 8410, 57 FR 13022, Apr. 15, 1992; 57 FR 28012, June 23, 1992, as amended by T.D. 9882, 84 FR 69068, Dec. 17, 2019; T.D. 9959, 87 FR 326, Jan. 4, 2022]

§ 1.861-10T Special allocations of interest expense (temporary).

(a) ***In general.*** This section applies to all taxpayers and provides three exceptions to the rules of § 1.861-9T that require the allocation and apportionment of interest expense on the basis of all assets of all members of the affiliated group. Paragraph (b) of this section describes the direct allocation of interest expense to the income generated by certain assets that are subject to qualified nonrecourse indebtedness. Paragraph (c) of this section describes the direct allocation of interest expense to income generated by certain assets that are acquired in integrated financial transaction. Paragraph (d) of this section provides special rules that are applicable to all transactions described in paragraphs (b) and (c) of this section. Paragraph (e) of this section requires the direct allocation of third party interest of an affiliated group to such group's investment in related controlled foreign corporations in cases involving excess related person indebtedness (as defined therein). See also § 1.861-9T(b)(5), which requires direct allocation of amortizable bond premium.

(b) ***Qualified nonrecourse indebtedness*** —

(1) ***In general.*** In the case of qualified nonrecourse indebtedness (as defined in paragraph (b)(2) of this section), the deduction for interest shall be considered directly allocable solely to the gross income which the property acquired, constructed, or improved with the proceeds of the indebtedness generates, has generated, or could reasonably be expected to generate.

(2) ***Qualified nonrecourse indebtedness defined.*** The term "qualified nonrecourse indebtedness" means any borrowing that is not excluded by paragraph (b)(4) of this section if:

(i) The borrowing is specifically incurred for the purpose of purchasing, constructing, or improving identified property that is either depreciable tangible personal property or real property with a useful life of more than one year or for the purpose of purchasing amortizable intangible personal property with a useful life of more than one year;

(ii) The proceeds are actually applied to purchase, construct, or improve the identified property;

(iii) Except as provided in paragraph (b)(7)(ii) (relating to certain third party guarantees in leveraged lease transactions), the creditor can look only to the identified property (or any lease or other interest therein) as security for payment of the principal and interest on the loan and, thus, cannot look to any other property, the borrower, or any third party with respect to repayment of principal or interest on the loan;

(iv) The cash flow from the property, as defined in paragraph (b)(3) of this section, is reasonably expected to be sufficient in the first year of ownership as well as in each subsequent year of ownership to fulfill the terms and conditions of the loan agreement with respect to the amount and timing of payments of interest and original issue discount and periodic payments of principal in each such year; and

(v) There are restrictions in the loan agreement on the disposal or use of the property consistent with the assumptions described in subdivisions (iii) and (iv) of this paragraph (b)(2).

(3) ***Cash flow defined*** —

(i) ***In general.*** The term "cash flow from the property" as used in paragraph (b)(2)(iv) of this section means a stream of revenue (as computed under paragraph (b)(3)(ii) of this section) substantially all of which derives directly from the property. The phrase "cash flow from the property" does not include revenue if a significant portion thereof is derived from activities such as sales, labor, services, or the use of other property. Thus, revenue derived from the sale or

lease of inventory or of similar property does not constitute cash flow from the property, including plant or equipment used in the manufacture and sale or lease, or purchase and sale or lease, of such inventory or similar property. In addition, revenue derived in part from the performance of services that are not ancillary and subsidiary to the use of property does not constitute cash flow from the property.

(ii) ***Self-constructed assets.*** The activities associated with self-construction of assets shall be considered to constitute labor or services for purposes of paragraph (b)(3)(i) only if the self-constructed asset—

(A) Is constructed for the purpose of resale, or

(B) Without regard to purpose, is sold to an unrelated person within one year from the date that the property is placed in service for purposes of section 167.

(iii) ***Computation of cash flow.*** Cash flow is computed by subtracting cash disbursements excluding debt service from cash receipts.

(iv) ***Analysis of operating costs.*** [Reserved]

(v) ***Examples.*** The principles of this paragraph may be demonstrated by the following examples.

Example 1. In 1987, X borrows $100,000 in order to purchase an apartment building, which X then purchases. The loan is secured only by the building and the leases thereon. Annual debt service on the loan is $12,000. Annual gross rents from the building are $20,000. Annual taxes on the building are $2,000. Other expenses deductible under section 162 are $2,000. Rents are reasonably expected to remain stable or increase in subsequent years, and taxes and expenses are reasonably expected to remain proportional to gross rents in subsequent years. X provides security, maintenance, and utilities to the tenants of the building. Based on facts and circumstances, it is determined that, although services are provided to tenants, these services are ancillary and subsidiary to the occupancy of the apartments. Accordingly, the case flow of $16,000 is considered to constitute a return from the property. Furthermore, such cash flow is sufficient to fulfill the terms and conditions of the loan agreement as required by paragraph (b)(2)(iii).

Example 2. In 1987, X borrows funds in order to purchase a hotel, which X then purchases and operates. The loan is secured only by the hotel. Based on facts and circumstances, it is determined that the operation of the hotel involves services the value of which is significant in relation to amounts paid to occupy the rooms. Thus, a significant portion of the cash flow is derived from the performance of services incidental to the occupancy of hotel rooms. Accordingly, the cash flow from the hotel is considered not to constitute a return on or from the property.

Example 3. In 1987, X borrows funds in order to build a factory, which X then builds and operates. The loan is secured only by the factory and the equipment therein. Based on the facts and circumstances, it is determined that the operation of the factory involves significant expenditures for labor and raw materials. Thus, a significant portion of the cash flow is derived from labor and the processing of raw materials. Accordingly, the cash flow from the factory is considered not to constitute a return on or from the property.

(4) ***Exclusions.*** The term “qualified nonrecourse indebtedness” shall not include any transaction that—

(i) Lacks economic significance within the meaning of paragraph (b)(5) of this section;

(ii) Involves cross collateralization within the meaning of paragraph (b)(6) of this section;

(iii) Except in the case of a leveraged lease described in paragraph (b)(7)(ii) of this section, involves credit enhancement within the meaning of paragraph (b)(7) of this section or, with respect to loans made on or after October 14, 1988, does not under the terms of the loan documents, prohibit the acquisition by the holder of bond insurance or similar forms of credit enhancement;

(iv) Involves the purchase of inventory;

(v) Involves the purchase of any financial asset, including stock in a corporation, an interest in a partnership or a trust, or the debt obligation of any obligor (although interest incurred in order to purchase certain financial instruments may qualify for direct allocation under paragraph (c) of this section);

(vi) Involves interest expense that constitutes qualified residence interest as defined in section 163(h)(3); or

(vii) [Reserved]

(5) ***Economic significance.*** Indebtedness that otherwise qualifies under paragraph (b)(2) shall nonetheless be subject to apportionment under § 1.861-9T if, taking into account all the facts and circumstances, the transaction (including the security arrangement) lacks economic significance.

(6) ***Cross collateralization.*** The term “cross collateralization” refers to the pledge as security for a loan of—

(i) Any asset of the borrower other than the identified property described in paragraph (b)(2) of this section, or

(ii) Any asset belonging to any related person, as defined in § 1.861-8T(c)(2).

(7) ***Credit enhancement*** —

(i) ***In general.*** Except as provided in paragraph (b)(7)(ii) of this section, the term “credit enhancement” refers to any device, including a contract, letter of credit, or guaranty, that expands the creditor's rights, directly or indirectly, beyond the identified property purchased, constructed, or improved with the funds advanced and, thus effectively provides as security for a loan the assets of any person other than the borrower. The acquisition of bond insurance or any other contract of suretyship by an initial or subsequent holder of an obligation shall constitute credit enhancement.

(ii) ***Special rule for leveraged leases.*** For purposes of this paragraph (b), the term “credit enhancement” shall not include any device under which any person that is not a related person within the meaning of § 1.861-8T(c)(2) agrees to guarantee, without recourse to the lessor or any person related to the lessor, a lessor's payment of principal and interest on indebtedness that was incurred in order to purchase or improve an asset that is depreciable tangible personal property or depreciable tangible real property (and the land on which such real property is situated) that is leased to a lessee that is not a related person in a transaction that constitutes a lease for federal income tax purposes.

(iii) ***Syndication of credit risk and sale of loan participations.*** The term “syndication of credit risk” refers to an arrangement in which one primary lender secures the promise of a secondary lender to bear a portion of the primary lender's credit risk on a loan. The term “sale of loan participations” refers to an arrangement in which one primary lender divides a loan into several

portions, sells and assigns all rights with respect to one or more portions to participating secondary lenders, and does not remain at risk in any manner with respect to the portion assigned. For purposes of this paragraph (b), the syndication of credit risk shall constitute credit enhancement because the primary lender can look to secondary lenders for payment of the loan, notwithstanding limitations on the amount of the secondary lender's liability. Conversely, the sale of loan participations does not constitute credit enhancement, because the holder of each portion of the loan can look solely to the asset securing the loan and not to the credit or other assets of any person.

(8) ***Other arrangements that do not constitute cross collateralization or credit enhancement.*** For purposes of paragraphs (b)(6) and (7) of this section, the following arrangements do not constitute cross collateralization or credit enhancement:

(i) ***Integrated projects.*** A taxpayer's pledge of multiple assets of an integrated project, provided that the integrated project. An integrated project consists of functionally related and geographically contiguous assets that, as to the taxpayer, are used in the same trade or business.

(ii) Insurance. A taxpayer's purchase of third-party casualty and liability insurance on the collateral or, by contract, bearing the risk of loss associated with destruction of the collateral or with respect to the attachment of third party liability claims.

(iii) ***After-acquired property.*** Extension of a creditor's security interest to improvements made to the collateral, provided that the extension does not constitute excess collateralization under paragraph (b)(6), determined by taking into account the value of improvements at the time the improvements are made and the value of the original property at the time the loan was made.

(iv) ***Warranties of completion and maintenance.*** A taxpayer's warranty to a creditor that it will complete construction or manufacture of the collateral or that it will maintain the collateral in good condition.

(v) ***Substitution of collateral.*** A taxpayer's right to substitute collateral under any loan contract. However, after the right is exercised, the loan shall no longer constitute qualified nonrecourse indebtedness.

(9) ***Refinancings.*** If a taxpayer refinances qualified nonrecourse indebtedness (as defined in paragraph (b)(2) of this section) with new indebtedness, such new indebtedness shall continue to qualify only if—

(i) The principal amount of the new indebtedness does not exceed by more than five percent the remaining principal amount of the original indebtedness,

(ii) The term of the new indebtedness does not exceed by more than six months the remaining term of the original indebtedness, and

(iii) The requirements of this paragraph (other than those of paragraph (b)(2) (i) and (ii) of this section) are satisfied at the time of the refinancing, and the exclusions contained in this paragraph (b)(4) do not apply.

(10) ***Post-construction permanent financing.*** Financing that is obtained after the completion of constructed property will be deemed to satisfy the requirements of paragraph (b)(2) (i) and (ii) of this section if—

(i) The financing is obtained within one year after the constructed property or substantially all of a constructed integrated project (as defined in paragraph (b)(9)(i) of this section) is placed in service for purposes of section 167; and

(ii) The financing does not exceed the cost of construction (including construction period interest).

(11) ***Assumptions of pre-existing qualified nonrecourse indebtedness.*** If a transferee of property that is subject to qualified nonrecourse indebtedness assumes such indebtedness, the indebtedness shall continue to constitute qualified nonrecourse indebtedness, provided that the assumption in no way alters the qualified status of the debt.

(12) ***Excess collateralization.*** [Reserved]

(c) ***Direct allocations in the case of certain integrated financial transactions*** —

(1) ***General rule.*** Interest expense incurred on funds borrowed in connection with an integrated financial transaction (as defined in paragraph (c)(2) of this section) shall be directly allocated to the income generated by the investment funded with the borrowed amounts.

(2) ***Definition.*** The term "integrated financial transaction" refers to any transaction in which—

(i) The taxpayer—

(A) Incurs indebtedness for the purpose of making an identified term investment,

(B) Identifies the indebtedness as incurred for such purpose at the time the indebtedness is incurred, and

(C) Makes the identified term investment within ten business days after incurring the indebtedness;

(ii) The return on the investment is reasonably expected to be sufficient throughout the term of the investment to fulfill the terms and conditions of the loan agreement with respect to the amount and timing of payments of principal and interest or original issue discount;

(iii) The income constitutes interest or original issue discount or would constitute income equivalent to interest if earned by a controlled foreign corporation (as described in § 1.954-2T(h));

(iv) The debt incurred and the investment mature within ten business days of each other;

(v) The investment does not relate in any way to the operation of, and is not made in the normal course of, the trade or business of the taxpayer or any related person, including the financing of the sale of goods or the performance of services by the taxpayer or any related person, or the compensation of the taxpayer's employees (including any contribution or loan to an employee stock ownership plan (as defined in section 4975(e)(7)) or other plan that is qualified under section 401(a)); and

(vi) The borrower does not constitute a financial services entity (as defined in section 904 and the regulations thereunder).

(3) ***Rollovers.*** In the event that a taxpayer sells of otherwise liquidates an investment described in paragraph (c)(2) of this section, the interest expense incurred on the borrowing shall, subsequent to that liquidation, no longer qualify for direct allocation under this paragraph (c).

(4) ***Examples.*** The principles of this paragraph (c) may be demonstrated by the following examples.

Example 1. X is a manufacturer and does not constitute a financial services entity as defined in the regulations under section 904. On January 1, 1988, X borrows $100 for 6 months at an annual interest rate of 10 percent. X identifies on its books and records by the close of that day that the indebtedness is being incurred for the purpose of making an investment that is intended to qualify as an integrated financial transaction. On January 5, 1988, X uses the proceeds to purchase a portfolio of stock that approximates the composition of the Standard & Poor's 500 Index. On that day, X also enters into a forward sale contract that requires X to sell the stock on June 1, 1988 for $110. X identifies on its books and records by the close of January 5, 1988, that the portfolio stock purchases and the forward sale contract constitute part of the integrated financial transaction with respect to which the identified borrowing was incurred. Under § 1.954-2T(h), the income derived from the transaction would constitute income equivalent to interest. Assuming that the return on the investment to be derived on June 1, 1988, will be sufficient to pay the interest due on June 1, 1988, the interest on the borrowing is directly allocated to the gain from the investment.

Example 2. X does not constitute a financial services entity as defined in the regulations under section 904. X is in the business of, among other things, issuing credit cards to consumers and purchasing from merchants who accept the X card the receivables of consumers who make purchases with the X card. X borrows from Y in order to purchase X credit card receivables from Z, a merchant. Assuming that the Y borrowing satisfies the other requirements of paragraph (c)(2) of this section, the transaction nonetheless cannot constitute an integrated financial transaction because the purchase relates to the operation of X's trade or business.

Example 3. Assume the same facts as in Example 2, except that X borrows in order to purchase the receivables of A, a merchant who does not accept the X card and is not otherwise engaged directly or indirectly in any business transaction with X. Because the borrowing is not related to the operation of X's trade or business, the borrowing may qualify as an integrated financial transaction if the other requirements of paragraph (c)(2) of this section are satisfied.

(d) ***Special rules.*** In applying paragraphs (b) and (c) of this section, the following special rules shall apply.

(1) ***Related person transactions.*** The rules of this section shall not apply to the extent that any transaction—

(i) Involves either indebtedness between related persons (as defined in section § 1.861-8T(c)(2)) or indebtedness incurred from unrelated persons for the purpose of purchasing property from a related person; or

(ii) Involves the purchase of property that is leased to a related person (as defined in § 1.861-8T(c)(2)) in a transaction described in paragraph (b) of this section. If a taxpayer purchases property and leases such property in whole or in part to a related person, a portion of the interest incurred in connection with such an acquisition, based on the ratio that the value of the property leased to the related person bears to the total value of the property, shall not qualify for direct allocation under this section.

(2) ***Consideration of assets or income to which interest is directly allocated in apportioning other interest expense.*** In apportioning interest expense under § 1.861-9T, the year-end value of any asset to which interest expense is directly allocated under this section during the current taxable year shall be reduced to the extent provided in § 1.861-9T(g)(2)(iii) to reflect the portion of the principal amount of the indebtedness outstanding at year-end relating to the interest which is directly allocated. A similar adjustment shall be made to the end-of-year value of assets for the prior year for purposes of

determining the beginning-of-year value of assets for the current year. These adjustments shall be made prior to averaging beginning-of-year and end-of-year values pursuant to § 1.861-9T(g)(2). In apportioning interest expense under the modified gross income method, gross income shall be reduced by the amount of income to which interest expense is directly allocated under this section.

(e) ***Treatment of certain related group indebtedness.*** For further guidance, see § 1.861-10(e).

(f) ***Effective/applicability date.***

(1) In general, the rules of this section apply for taxable years beginning after December 31, 1986.

(2) Paragraphs (b)(3)(ii) (providing an operating costs test for purposes of the nonrecourse indebtedness exception) and (b)(6) (concerning excess collaterization of nonrecourse borrowings) of this section are applicable for taxable years commencing after December 31, 1988.

(3) Paragraph (e) (concerning the treatment of related controlled foreign corporation indebtedness) of this section is applicable for taxable years commencing after December 31, 1987. For rules for taxable years beginning before January 1, 1987, and for later years to the extent permitted by § 1.861-13T, *see* § 1.861-8 (revised as of April 1, 1986).

[T.D. 8228, 53 FR 35485, Sept. 14, 1988, as amended by T.D. 9456, 74 FR 38875, Aug. 4, 2009; T.D. 9882, 84 FR 69068, Dec. 17, 2019]

§ 1.861-11 Special rules for allocating and apportioning interest expense of an affiliated group of corporations.

(a) ***In general.*** For further guidance, see § 1.861-11T(a).

(b) ***Scope of application*** —

(1) ***Application of section 864(e)(1) and (5) (concerning the definition and treatment of affiliated groups).*** Section 864(e)(1) and (5) and the portions of this section implementing section 864(e)(1) and (5) apply to the computation of foreign source taxable income for purposes of section 904 (relating to various limitations on the foreign tax credit). Section 864(e)(1) and (5) and the portions of this section implementing section 864(e)(1) and (5) also apply in connection with section 907 to determine reductions in the amount allowed as a foreign tax credit under section 901. Section 864(e)(1) and (5) and the portions of this section implementing section 864(e)(1) and (5) also apply to the computation of the combined taxable income of the related supplier and a foreign sales corporation (FSC) (under sections 921 through 927) as well as the combined taxable income of the related supplier and a domestic international sales corporation (DISC) (under sections 991 through 997).

(2) ***Nonapplication of section 864(e)(1) and (5) (concerning the definition and treatment of affiliated groups).*** For further guidance, see § 1.861-11T(b)(2).

(c) ***General rule for affiliated corporations.*** For further guidance, see § 1.861-11T(c).

(d) ***Definition of affiliated group*** —

(1) ***General rule.*** For purposes of this section, in general, the term *affiliated group* has the same meaning as is given that term by section 1504. Section 1504(a) defines an affiliated group as one or more chains of includible corporations connected through 80-percent stock ownership with a common parent corporation which is an includible corporation (as defined in section 1504(b)). In the case of a

corporation that either becomes or ceases to be a member of the group during the course of the corporation's taxable year, only the interest expense incurred by the group member during the period of membership shall be allocated and apportioned as if all members of the group were a single corporation. In this regard, assets held during the period of membership shall be taken into account. Other interest expense incurred by the group member during its taxable year but not during the period of membership shall be allocated and apportioned without regard to the other members of the group.

(2) [Reserved]

(d)(3)-(6)(i) [Reserved]. For further guidance see § 1.861-11T(d)(3) through (6)(i).

(ii) Any foreign corporation if more than 50 percent of the gross income of such foreign corporation for the taxable year is effectively connected with the conduct of a trade or business within the United States and at least 80 percent of either the vote or value of all outstanding stock of such foreign corporation is owned directly or indirectly by members of the affiliated group (determined with regard to this sentence). This paragraph (d)(6)(ii) applies to taxable years beginning on or after *July 16, 2014.* See 26 CFR 1.861-11T(d)(6)(ii) (revised as of April 1, 2014) for rules applicable to taxable years beginning after August 10, 2010, and before *July 16, 2014.* See 26 CFR 1.861-11T(d)(6)(ii) (revised as of April 1, 2010) for rules applicable to taxable years beginning on or before August 10, 2010.

(7) ***Special rules for the application of § 1.861-11T(d)(6).*** The attribution rules of section 1563(e) and the regulations under that section shall apply in determining indirect ownership under § 1.861-11T(d)(6). The Commissioner shall have the authority to disregard trusts, partnerships, and pass-through entities that break affiliated status. Corporations described in § 1.861-11T(d)(6) shall be considered to constitute members of an affiliated group that does not file a consolidated return and shall therefore be subject to the limitations imposed under § 1.861-11T(g). The affiliated group filing a consolidated return shall be considered to constitute a single corporation for purposes of applying the rules of § 1.861-11T(g). For taxable years beginning after December 31, 1989, § 1.861-11T(d)(6)(i) shall not apply in determining foreign source alternative minimum taxable income within each separate category and the alternative minimum tax foreign tax credit pursuant to section 59(a) to the extent that such application would result in the inclusion of a section 936 corporation within the affiliated group. This paragraph (d)(7) applies to taxable years beginning after December 31, 1986.

(e)-(g) [Reserved]. For further guidance, see § 1.861-11T(e) through (g).

(h) ***Applicability dates.*** This section applies to taxable years that both begin after December 31, 2017, and end on or after December 4, 2018.

[T.D. 8916, 66 FR 273, Jan. 3, 2001, as amended by T.D. 9676, 79 FR 41426, July 16, 2014; T.D. 9882, 84 FR 69068, Dec. 17, 2019]

§ 1.861-11T Special rules for allocating and apportioning interest expense of an affiliated group of corporations (temporary).

(a) ***In general.*** Sections 1.861-9T, 1.861-10T, 1.861-12T, and 1.861-13T provide rules that are generally applicable in apportioning interest expense. The rules of this section relate to affiliated groups of corporations and implement section 864(e) (1) and (5), which requires affiliated group allocation and apportionment of interest expense. The rules of this section apply to taxable years beginning after December 31, 1986, except as otherwise provided in § 1.861-13T. Paragraph (b) of this section describes

the scope of the application of the rule for the allocation and apportionment of interest expense of affiliated groups of corporations, which is contained in paragraph (c) of this section. Paragraph (d) of this section sets forth the definition of the term "affiliated group" for purposes of this section. Paragraph (e) describes the treatment of loans between members of an affiliated group. Paragraph (f) of this section provides rules concerning the affiliated group allocation and apportionment of interest expense in computing the combined taxable income of a FSC or DISC and its related supplier. Paragraph (g) of this section describes the treatment of losses caused by apportionment of interest expense in the case of an affiliated group that does not file a consolidated return.

(b) *Scope of application* —

(1) ***Application of section 864(e)(1) and (5) (concerning the definition and treatment of affiliated groups).*** For further guidance, see § 1.861-11(b)(1).

(2) ***Nonapplication of section 864(e) (1) and (5) (concerning the definition and treatment of affiliated groups).*** Section 864(e) (1) and (5) and the portions of this section implementing section 864(e) (1) and (5) do not apply to the computation of subpart F income of controlled foreign corporations (under sections 951 through 964), the computation of combined taxable income of a possessions corporation and its affiliates (under section 936), or the computation of effectively connected taxable income of foreign corporations. For the rules with respect to the allocation and apportionment of interest expenses of foreign corporations other than controlled foreign corporations, see §§ 1.882-4 and 1.882-5.

(c) ***General rule for affiliated corporations.*** Except as otherwise provided in this section, the taxable income of each member of an affiliated group within each statutory grouping shall be determined by allocating and apportioning the interest expense of each member according to apportionment fractions which are computed as if all members of such group were a single corporation. For purposes of determining these apportionment fractions, stock in corporations within the affiliated group (as defined in section 864(e)(5) and the rules of this section) shall not be taken into account. In the case of an affiliated group of corporations that files a consolidated return, consolidated foreign tax credit limitations are computed for the group in accordance with the rules of § 1.1502-4. Except as otherwise provided, all the interest expense of all members of the group will be treated as definitely related and therefore allocable to all the gross income of the members of the group and all the assets of all the members of the group shall be taken into account in apportioning this interest expense. For purposes of this section, the term "taxpayer" refers to the affiliated group (regardless of whether the group files a consolidated return), rather than to the separate members thereof.

(d)

(1)-(2) [Reserved]. For further guidance, see § 1.861-11(d)(1) and (2).

(3) *Treatment of life insurance companies subject to taxation under section 801* —

(i) ***General rule.*** A life insurance company that is subject to taxation under section 801 shall be considered to constitute a member of the affiliated group composed of companies not taxable under section 801 only if a parent corporation so elects under section 1504(c)(2)(A) of the Code. If a parent does not so elect, no adjustments shall be required with respect to such an insurance company under paragraph (g) of this section.

(ii) ***Treatment of stock.*** Stock of a life insurance company that is subject to taxation under section 801 that is not included in an affiliated group shall be disregarded in the allocation and apportionment of the interest expense of such affiliated group.

(4) *Treatment of certain financial corporations* —

(i) ***In general.*** In the case of an affiliated group (as defined in paragraph (d)(1) of this section), any member that constitutes financial corporations as defined in paragraph (d)(4)(ii) of this section shall be treated as a separate affiliated group consisting of financial corporations (the "financial group"). The members of the group that do not constitute financial corporations shall be treated as members of a separate affiliated group consisting of nonfinancial corporations ("the nonfinancial group").

(ii) ***Financial corporation defined.*** The term "financial corporation" means any corporation which meets all of the following conditions:

(A) It is described in section 581 (relating to the definition of a bank) or section 591 (relating to the deduction for dividends paid on deposits by mutual savings banks, cooperative banks, domestic building and loan associations, and other savings institutions chartered and supervised as savings and loan or similar associations);

(B) Its business is predominantly with persons other than related persons (within the meaning of section 864(d)(4) and the regulations thereunder) or their customers; and

(C) It is required by state or Federal law to be operated separately from any other entity which is not such an institution.

(iii) ***Treatment of bank holding companies.*** The total aggregate interest expense of any member of an affiliated group that constitutes a bank holding company subject to regulation under the Bank Holding Company Act of 1956 shall be prorated between the financial group and the nonfinancial group on the basis of the assets in the financial and nonfinancial groups. For purposes of making this proration, the assets of each member of each group, and not the stock basis in each member, shall be taken into account. Any direct or indirect subsidiary of a bank holding company that is predominantly engaged in the active conduct of a banking, financing, or similar business shall be considered to be a financial corporation for purposes of this paragraph (d)(4). The interest expense of the bank holding company must be further apportioned in accordance with § 1.861-9T(f) to the various section 904(d) categories of income contained in both the financial group and the nonfinancial group on the basis of the assets owned by each group. For purposes of computing the apportionment fractions for each group, the assets owned directly by a bank holding company within each limitation category described in section 904(d)(1) (other than stock in affiliates or assets described in § 1.861-9T(f)) shall be treated as owned pro rata by the nonfinancial group and the financial group based on the relative amounts of investments of the bank holding company in the nonfinancial group and financial group.

(iv) ***Consideration of stock of the members of one group held by members of the other group.*** In apportioning interest expense, the nonfinancial group shall not take into account the stock of any lower-tier corporation that is treated as a member of the financial group under paragraph (d)(4)(i) of this section. Conversely, in apportioning interest expense, the financial group shall not take into account the stock of any lower-tier corporation that is treated as a member of the nonfinancial group under paragraph (d)(4)(i) of this section. For the treatment of loans between members of the financial group and members of the nonfinancial group, see paragraph (e)(1) of this section.

(5) *Example.*

(i) *Facts.* X, a domestic corporation which is not a bank holding company, is the parent of domestic corporations Y and Z. Z owns 100 percent of the stock Z1, which is also a domestic corporation. X, Y, Z, and Z1 were organized after January 1, 1987, and constitute an affiliated group within the meaning of paragraph (d)(1) of this section. Y and Z are financial corporations described in paragraph (d)(4) of this section. X also owns 25 percent of the stock of A, a domestic corporation. Y owns 25 percent of the voting stock of B, a foreign corporation that is not a controlled foreign corporation. Z owns less than 10 percent of the voting stock of C, another foreign corporation. The foreign source income generated by Y's or Z's direct assets is exclusively financial services income. The foreign source income generated by X's or Z1's direct assets is exclusively general limitation income. X and Z1 are not financial corporations described in paragraph (d)(4)(ii) of this section. Y and Z, therefore, constitute a separate affiliated group apart from X and Z1 for purposes of section 864(e). The combined interest expense of Y and Z of $100,000 ($50,000 each) is apportioned separately on the basis of their assets. The combined interest expense of X and Z1 of $50,000 ($25,000 each) is allocated on the basis of the assets of the XZ1 group.

Analysis of the YZ group assets	
Adjusted basis of assets of the YZ group that generate foreign source financial services income (excluding stock of foreign subsidiaries not included in the YZ affiliated group)	$200,000
Z's basis in the C stock (not adjusted by the allocable amount of C's earnings and profits because Z owns less than 10 percent of the stock) which would be considered to generate passive income in the hands of a nonfinancial services entity but is considered to generate financial services income when in the hands of Z, a financial services entity	$100,000
Y's basis in the B stock (adjusted by the allocable amount of B's earnings and profits) which generates dividends subject to a separate limitation for B dividends	$100,000
Adjusted basis of assets of the YZ group that generate U.S. source income	$600,000
Total assets	$1,000,000
Analysis of the XZ1 group assets	
Adjusted basis of assets of the XZ1 group that generate foreign source general limitation income	$500,000
Adjusted basis of assets of the XZ1 group other than A stock that generate domestic source income	$1,900,000
X's basis in the A stock adjusted by the allocable amount of A's earnings and profits	$100,000
Total domestic assets	$2,000,000
Total assets	$2,500,000

(ii) *Allocation.* No portion of the $50,000 deduction of the YZ group is definitely related solely to specific property within the meaning of § 1.861-10T. Thus, the YZ group's deduction for interest is related to all its activities and properties. Similarly, no portion of the $50,000 deduction of the XZ1 group is definitely related solely to specific property within the meaning of § 1.861-10T. Thus, the XZ1 group's deduction for interest is related to all its activities and properties.

(iii) ***Apportionment.*** The YZ group would apportion its interest expense as follows:

To gross financial services income from sources outside the United States:

$$\$50,000 \times \frac{\$300,000}{\$1,000,000} \ldots\ldots \$15,000$$

To gross income subject to a separate limitation for dividends from B:

$$\$50,000 \times \frac{\$100,000}{\$1,000,000} \ldots\ldots \$5,000$$

To gross income from sources inside the United States:

$$\$50,000 \times \frac{\$600,000}{\$1,000,000} \ldots\ldots \$30,000$$

The XZ1 group would apportion its interest expense as follows:

To gross general limitation income from sources outside the United States:

$$\$50,000 \times \frac{\$500,000}{\$2,500,000} \ldots\ldots \$10,000$$

To gross income from sources inside the United States:

$$\$50,000 \times \frac{\$2,000,000}{\$2,500,000} \ldots\ldots \$40,000$$

(6) ***Certain unaffiliated corporations.*** Certain corporations that are not described in paragraph (d)(1) of this section will nonetheless be considered to constitute affiliated corporations for purposes of §§ 1.861-9T through 1.861-13T. These corporations include:

(i) Any includible corporation (as defined in section 1504(b) without regard to section 1504(b)(4)) if 80 percent of either the vote or value of all outstanding stock of such corporation is owned directly or indirectly by an includible corporation or by members of an affiliated group, and

(ii) [Reserved]. For further guidance see § 1.861-11(d)(6)(ii).

(7) ***Special rules for the application of § 1.861-11T(d)(6).*** [Reserved]. For special rules for the application of § 1.861-11T(d)(6), see § 1.861-11(d)(7).

(e) ***Loans between members of an affiliated group*** —

(1) ***General rule.*** In the case of loans (including any receivable) between members of an affiliated group, as defined in paragraph (d) of this section, for purposes of apportioning interest expense, the indebtedness of the member borrower shall not be considered an asset of the member lender. However, in the case of members of separate financial and nonfinancial groups under paragraph (d)(4) of this section, the indebtedness of the member borrower shall be considered an asset of the member lender and such asset shall be characterized by reference to the member lender's income from the asset as determined under paragraph (e)(2)(ii) of this section. For purposes of this

paragraph (e), the terms "related person interest income" and "related person interest payment" refer to interest paid and received by members of the same affiliated group as defined in paragraph (d) of this section.

(2) ***Treatment of interest expense within the affiliated group*** —

(i) ***General rule.*** A member borrower shall deduct related person interest payments in the same manner as unrelated person interest expense using group apportionment fractions computed under § 1.861-9T(f). A member lender shall include related person interest income in the same class of gross income as the class of gross income from which the member borrower deducts the related person interest payment.

(ii) ***Special rule for loans between financial and nonfinancial affiliated corporations.*** In the case of a loan between two affiliated corporations only one of which constitutes a financial corporation under paragraph (d)(4) of this section, the member borrower shall allocate and apportion related person interest payments in the same manner as unrelated person interest expense using group apportionment fractions computed under § 1.861-9T(f). The source of the related person interest income to the member lender shall be determined under section 861(a)(1).

(iii) ***Special rule for high withholding tax interest.*** In the case of an affiliated corporation that pays interest that is high withholding tax interest under § 1.904-5(f)(1) to another affiliated corporation, the interest expense of the payor shall be allocated to high withholding tax interest.

(3) ***Back-to-back loans.*** If a member of the affiliated group makes a loan to a nonmember who makes a loan to a member borrower, the rule of paragraphs (e) (1) and (2) of this section shall apply, in the Commissioner's discretion, as if the member lender made the loan directly to the member borrower, provided that the loans constitute a back-to-back loan transaction. Such loans will constitute a back-to-back loan for purposes of this paragraph (e) if the loan by the nonmember would not have been made or maintained on substantially the same terms irrespective of the loan of funds by the lending member to the nonmember or other intermediary party.

(4) ***Examples.*** The rules of this paragraph (e) may be illustrated by the following examples.

Example 1. X, a domestic corporation, is the parent of Y, a domestic corporation. X and Y were organized after January 1, 1987, and constitute an affiliated group within the meaning of paragraph (d)(1) of this section. Among X's assets is the note of Y for the amount of $100,000. Because X and Y are members of an affiliated group, Y's note does not constitute an asset for purposes of apportionment. The apportionment fractions for the relevant tax year of the XY group are 50 percent domestic, 40 percent foreign general, and 10 percent foreign passive. Y deducts its related person interest payment using those apportionment fractions. Of the $10,000 in related person interest income received by X, $5,000 consists of domestic source income, $4,000 consists of foreign general limitation income, and $1,000 consists of foreign passive income.

Example 2. X is a domestic corporation organized after January 1, 1987. X owns all the stock of Y, a domestic corporation. On June 1, 1987, X loans $100,000 to Z, an unrelated person. On June 2, 1987, Z makes a loan to Y with terms substantially similar to those of the loan from X to Z. Based on the facts and circumstances of the transaction, it is determined that Z would not have made the loan to Y on the same terms if X had not made the loan to Z. Because the transaction

constitutes a back-to-back loan, as defined in paragraph (e)(3) of this section, the Commissioner may require, in his discretion, that neither the note of Y nor the note of Z may be considered an asset of X for purposes of this section.

(f) ***Computations of combined taxable income.*** In the computation of the combined taxable income of any FSC or DISC and its related supplier which is a member of an affiliated group under the pricing rules of sections 925 or 994, the combined taxable income of such FSC or DISC and its related supplier shall be reduced by the portion of the total interest expense of the affiliated group that is incurred in connection with those assets of the group used in connection with export sales involving that FSC or DISC. This amount shall be computed by multiplying the total interest expense of the affiliated group and interest expense of the FSC or DISC by a fraction the numerator of which is the assets of the affiliated group and of the FSC or DISC generating foreign trade income or gross income attributable to qualified export receipts, as the case may be, and the denominator of which is the total assets of the affiliated group and the FSC or DISC. Under this rule, interest of other group members may be attributed to the combined taxable income of a FSC or DISC and its related supplier without affecting the amount of interest otherwise deductible by the FSC or DISC, the related supplier or other member of the affiliated group. The FSC or DISC is entitled to only the statutory portion of the combined taxable income, net of any deemed interest expense, which determines the commission paid to the FSC or DISC or the transfer price of qualifying export property sold to the FSC or DISC.

(g) ***Losses created through apportionment*** —

(1) ***General rules.*** In the case of an affiliated group that is eligible to file, but does not file, a consolidated return and in the case of any corporation described in paragraph (d)(6) of this section, the foreign tax credits in any separate limitation category are limited to the credits computed under the rules of this paragraph (g). As a consequence of the affiliated group allocation and apportionment of interest expense required by section 864(e)(1) and this section, interest expense of a group member may be apportioned for section 904 purposes to a limitation category in which that member has no gross income, resulting in a loss in that limitation category. The same is true in connection with any expense other than interest that is subject to apportionment under the rules of section 864(e)(6) of the Code. Any reference to “interest expense” in this paragraph (g) shall be treated as including such expenses. For purposes of this paragraph, the term “limitation category” includes domestic source income, as well as the types of income described in section 904(d)(1) (A) through (I). A loss of one affiliate in a limitation category will reduce the income of another member in the same limitation category if a consolidated return is filed. (See § 1.1502-4.) If a consolidated return is not filed, this netting does not occur. Accordingly, in such a case, the following adjustments among members are required in order to give effect to the group allocation of interest expense:

(i) Losses created through group apportionment of interest expense in one or more limitation categories within a given member must be eliminated; and

(ii) A corresponding amount of income of other members in the same limitation category must be recharacterized.

Such adjustments shall be accomplished, in accordance with paragraph (g)(2) of this section, without changing the total taxable income of any member and before the application of section 904(f). Section 904(f) (including section 904(f)(5)) does not apply to a loss created through the apportionment of interest expense to the extent that the loss is eliminated pursuant to paragraph (g)(2)(ii) of this section. For purposes of this section, the terms “limitation adjustment” and “recharacterization” mean the recharacterization of income in one limitation category as income in another limitation category.

(2) *Mechanics of computation* —

(i) ***Step 1: Computation of consolidated taxable income.*** The members of an affiliated group must first allocate and apportion all other deductible expenses other than interest. The members must then deduct from their respective gross incomes within each limitation category interest expense apportioned under the rules of § 1.861-9T(f). The taxable income of the entire affiliated group within each limitation category is then totalled.

(ii) ***Step 2: Loss offset adjustments.*** If, after step 1, a member has losses in a given limitation category or limitation categories created through apportionment of interest expense, any such loss (*i.e.,* the portion of such loss equal to interest expense) shall be eliminated by offsetting that loss against taxable income in other limitation categories of that member to the extent of the taxable income of other members within the same limitation category as the loss. If the member has taxable income in more than one limitation category, then the loss shall offset taxable income in all such limitation categories on a pro rata basis. If there is insufficient domestic income of the member to offset the net losses in all foreign limitation categories caused by the apportionment of interest expense, the losses in each limitation category shall be recharacterized as domestic losses to the extent of the taxable income of other members in the same respective limitation categories. After these adjustments are made, the income of the entire affiliated group within each limitation category is totalled again.

(iii) ***Step 3: Determination of amount subject to recharacterization.*** In order to determine the amount of income to be recharacterized in step 4, the income totals computed under step 1 in each limitation category shall be subtracted from the income totals computed under step 2 in each limitation category.

(iv) ***Step 4: Recharacterization.*** Because any differences determined under step 3 represent deviations from the consolidated totals computed under Step 1, such differences (in any limitation category) must be eliminated.

(A) ***Limitation categories to be reduced.*** In the case of any limitation category in which there is a positive change, the income of group members with income in that limitation category must be reduced on a pro rata basis (by reference to net income figures as determined under Step 2) to the extent of such positive change ("limitation reductions"). Each member shall separately compute the sum of the limitation reductions.

(B) ***Limitation categories to be increased.*** In any case in which only one limitation category has a negative change in Step 3, the sum of the limitation reductions within each member is added to that limitation category. In the case in which multiple limitation categories have negative changes in Step 3, the sum of the limitation reductions within each member is prorated among the negative change limitation categories based on the ratio that the negative change for the entire group in each limitation category bears to the total of all negative changes for the entire group in all limitation categories.

(3) ***Examples.*** The following examples illustrate the principles of this paragraph.

> *Example 1.* (i) *Facts.* X, a domestic corporation, is the parent of domestic corporations Y and Z. X, Y, and Z were organized after January 1, 1987, constitute an affiliated group within the meaning of paragraph (d)(1) of this section, but do not file a consolidated return. The XYZ group apportions its interest expense on the basis of the fair market value of its assets. X, Y,

and Z have the following assets, interest expense, and taxable income before apportioning interest expense:

Assets	X	Y	Z	Total
Domestic	2,000.00	0	1,000.00	3,000.00
Foreign Passive	0	50.00	50.00	100.00
Foreign General	0	700.00	200.00	900.00
Interest expense	48.00	12.00	80.00	140.00
Taxable Income (pre-interest):				
Domestic	100.00	0	63.00	163.00
Foreign Passive	0	5.00	5.00	10.00
Foreign General	0	60.00	35.00	95.00

(ii) *Step 1: Computation of consolidated taxable income.* Each member of the XYZ group apportions its interest expense according to group apportionment ratios determined under the asset method described in § 1.861-9T(f), yielding the following results:

Apportioned interest expense	X	Y	Z	Total
Domestic	36.00	9.00	60.00	105.00
Foreign Passive	1.20	0.30	2.00	3.50
Foreign General	10.80	2.70	18.00	31.50
Total	48.00	12.00	80.00	140.00

The members of the group then compute taxable income within each category by deducting the apportioned interest expense from the amounts of pre-interest taxable income specified in the facts in paragraph (i), yielding the following results:

Taxable income	X	Y	Z	Total
Domestic	64.00	9.00	3.00	58.00
Foreign Passive	−1.20	4.70	3.00	6.50
Foreign General	−10.80	57.30	17.00	63.50

Taxable income	X	Y	Z	Total
Total	52.00	53.00	23.00	128.00

(iii) *Step 2: Loss offset adjustments.* Because X and Y have losses created through apportionment, these losses must be eliminated by reducing taxable income of the member in other limitation categories. Because X has a total of $12 in apportionment losses and because it has only one limitation category with income (*i.e.,* domestic), domestic income must be reduced by $12, thus eliminating its apportionment losses. Because Y has a total of $9 in apportionment losses and because it has two limitation categories with income (*i.e.,* foreign passive and foreign general limitation), the income in these two limitation categories must be reduced on a pro rata basis in order to eliminate its apportionment losses. In summary, the following adjustments are required:

Loss offset adjustments	X	Y	Z	Total
Domestic	−12.00	+ 9.00	0	−3.00
Foreign Passive	+ 1.20	−0.68	0	+ 0.52
Foreign General	+ 10.80	−8.32	0	+ 2.48

These adjustments yield the following adjusted taxable income figures:

Adjusted taxable income	X	Y	Z	Total
Domestic	52.00	0	3.00	55.00
Foreign Passive	0	4.02	3.00	7.02
Foreign General	0	48.98	17.00	65.98
Total	52.00	53.00	23.00	128.00

(iv) *Step 3: Determination of amount subject to recharacterization.* The adjustments performed under Step 2 led to a change in the group's taxable income within each limitation category. The total loss offset adjustments column shown in paragraph (iii) above shows the net deviations between Step 1 and 2.

(v) *Step 4: Recharacterization.* The loss offset adjustments yield a positive change in the foreign passive and the foreign general limitation categories. Y and Z both have income in these limitation categories. Accordingly, the income of Y and Z in each of these limitation

categories must be reduced on a pro rata basis (by reference to the adjusted taxable income figures) to the extent of the positive change in each limitation category. The total positive change in the foreign passive limitation category is $0.52. The adjusted taxable income of Y in the foreign passive limitation category is $4.02 and the adjusted taxable income of Z in the foreign passive limitation category is $3. Therefore, $0.30 is drawn from Y and $0.22 is drawn from Z. The total positive change in the foreign general limitation category is $2.48. The adjusted taxable income of Y in the foreign general limitation category is $48.98, and the adjusted taxable income of Z in the foreign general limitation category is $17. Therefore, $1.84 is drawn from Y and $.64 is drawn from Z.

The members must then separately compute the sum of the limitation reductions. Y has limitation reductions of $0.30 in the foreign passive limitation category and $1.84 in the foreign general limitation category, yielding total limitation reduction of $2.14. Under these facts, domestic income is the only limitation category requiring a positive adjustment. Accordingly, Y's domestic income is increased by $2.14. Z has limitation reductions of $0.22 in the foreign passive limitation category and $0.64 in the foreign general limitation category, yielding total limitation reductions of $0.86. Under these facts, domestic income is the only limitation category of Z requiring a positive adjustment. Accordingly, Z's domestic income is increased by $0.86.

Recharacterization adjustments	X	Y	Z	Total
Domestic	0	+ 2.14	+ 0.86	+ 3.00
Foreign Passive	0	−0.30	−0.22	−0.52
Foreign General	0	−1.84	−0.64	−2.48

These recharacterization adjustments yield the following final taxable income figures:

Final taxable income	X	Y	Z	Total
Domestic	52.00	2.14	3.86	58.00
Foreign Passive	0	3.72	2.78	6.50
Foreign General	0	47.14	16.36	63.50
Total	52.00	53.00	23.00	128.00

Example 2. (i) *Facts.* X, a domestic corporation, is the parent of domestic corporations Y and Z. X, Y, and Z were organized after January 1, 1987, constitute an affiliated group within the meaning of paragraph (d)(1) of this section, but do not file a consolidated return. Moreover, X

has served as the sole borrower in the group and, as a result, has sustained an overall loss. The XYZ group apportions its interest expense on the basis of the fair market value of its assets. X, Y, and Z have the following assets, interest expense, and taxable income before interest expense:

Assets	X	Y	Z	Total
Domestic	2,000	0	1,000	3,000
Foreign Passive	0	50	50	100
Foreign General	0	700	200	900
Interest Expense	140	0	0	140
Taxable Income (pre-interest):				
Domestic	100	0	100	200
Foreign Passive	0	5	5	10
Foreign General	0	70	35	105

(ii) *Step 1: Computation of consolidated taxable income.* Each member of the XYZ group apportions its interest expense according to group apportionment ratios determined under the asset method described in § 1.861-9T(g), yielding the following results:

Apportioned interest expense	X	Y	Z	Total
Domestic	105.00	0	0	105.00
Foreign Passive	3.50	0	0	3.50
Foreign General	31.50	0	0	31.50
Total	140.00	0	0	140.00

The members of the group then compute taxable income within each category by deducting the apportioned interest expense from the amounts of pre-interest taxable income specified in the facts in paragraph (i), yielding the following results:

Taxable income	X	Y	Z	Total
Domestic	−5.00	0	100.00	95.00
Foreign Passive	−3.50	5.00	5.00	6.50
Foreign General	−31.50	70.00	35.00	73.50

Taxable income	X	Y	Z	Total
Total	−40.00	75.00	140.00	175.00

(iii) *Step 2: Loss offset adjustment.* Because X has insufficient domestic income to offset the sum of the losses in the foreign limitation categories caused by apportionment, the amount of apportionment losses in each limitation category shall be recharacterized as domestic losses to the extent of taxable income of other members in the same limitation category. This is accomplished by adding to each foreign limitation categories an amount equal to the loss therein and by subtracting the sum of such foreign losses from domestic income, as follows:

Loss offset adjustments	X	Y	Z	Total
Domestic	−35.00	0	0	−35.00
Foreign Passive	+ 3.50	0	0	+ 3.50
Foreign General	+ 31.50	0	0	+ 31.50

These adjustments yield the following adjusted taxable income figures:

Adjusted taxable income	X	Y	Z	Total
Domestic	−40	0	100	60
Foreign Passive	0	5	5	10
Foreign General	0	70	35	105
Total	−40	75	140	175

(iv) *Step 3: Determination of amount subject to recharacterization.* The adjustments performed under Step 2 led to a change in the group's taxable income within each limitation category. The total loss offset adjustment column shown in paragraph (iii) above shows the net deviations between Steps 1 and 2.

(v) *Step 4: Recharacterization.* The loss offset adjustments yield a positive change in the foreign passive and the foreign general limitation categories. Y and Z both have income in these limitation categories. Accordingly, the income of Y and Z in each of these limitation categories must be reduced on a pro rata basis (by reference to the adjusted taxable income figures) to the extent of the positive change in each limitation category. The total positive change in the foreign passive limitation category is $3.50. The adjusted taxable income of Y

in the foreign passive limitation category is $5, and the adjusted taxable income of Z in the foreign passive limitation category is $5. Therefore, $1.75 is drawn from Y and $1.75 is drawn from Z. The total positive change in the foreign general limitation category is $31.50. The adjusted taxable income of Y in the foreign general limitation category is $70, and the adjusted taxable income of Z in the foreign general limitation category is $35. Therefore, $21 is drawn from Y and $10.50 is drawn from Z.

The members must then separately compute the sum of the limitation reductions. Y has limitation reductions of $1.75 in the foreign passive limitation category and $21 in the foreign general limitation category, yielding total limitation reductions of $22.75. Under these facts, domestic income is the only limitation category requiring a positive adjustment. Accordingly, Y's domestic income is increased by $22.75. Z has limitation reductions of $1.75 in the foreign passive limitation category and $10.50 in the foreign general limitation category, yielding total limitation reductions of $12.25. Under these facts, domestic income is the only limitation category requiring a positive adjustment. Accordingly, Z's domestic income is increased by $12.25.

Recharacterization adjustments	X	Y	Z	Total
Domestic	0	+ 22.75	+ 12.25	+ 35.00
Foreign Passive	0	−1.75	−1.75	−3.50
Foreign General	0	−21.00	−10.50	−31.50

These recharacterization adjustments yield the following final taxable income figures:

Final taxable income	X	Y	Z	Total
Domestic	−40.00	22.75	112.25	95.00
Foreign Passive	0	3.25	3.25	6.50
Foreign General	0	49.00	24.50	73.50
Total	−40.00	75.00	140.00	175.00

(h) ***Effective/applicability date.*** In general, the rules of this section apply for taxable years beginning after December 31, 1986.

[T.D. 8228, 53 FR 35490, Sept. 14, 1988, as amended by T.D. 8916, 65 FR 274, Jan. 3, 2001; T.D. 9456, 74 FR 38875, Aug. 4, 2009; T.D. 9571, 77 FR 2227, Jan. 17, 2012; 77 FR 9844, Feb. 21, 2012; T.D. 9676, 79 FR 41426, July 16, 2014; T.D. 9882, 84 FR 69069, Dec. 17, 2019]

§ 1.861-12 Characterization rules and adjustments for certain assets.

(a) ***In general.*** The rules in this section apply to taxpayers apportioning expenses under an asset method to income in the various separate categories described in § 1.904-5(a)(4)(v), and supplement other rules provided in §§ 1.861-9 through 1.861-11T. The principles of the rules in this section also apply in apportioning expenses among statutory and residual groupings for any other operative section. See also § 1.861-8(f)(2)(i) for a rule requiring conformity of allocation methods and apportionment principles for all operative sections. Paragraph (b) of this section describes the treatment of inventories. Paragraph (c)(1) of this section concerns the treatment of various stock assets. Paragraph (c)(2) of this section describes a basis adjustment for stock in 10 percent owned corporations. Paragraph (c)(3) of this section sets forth rules for characterizing the stock in controlled foreign corporations. Paragraph (c)(4) of this section describes the treatment of stock of noncontrolled 10-percent owned foreign corporations. Paragraph (d)(1) of this section concerns the treatment of notes. Paragraph (d)(2) of this section concerns the treatment of notes of controlled foreign corporations. Paragraph (e) of this section describes the treatment of certain portfolio securities that constitute inventory or generate income primarily in the form of gains. Paragraph (f) of this section describes the treatment of assets that are funded by interest that is capitalized, deferred, or disallowed. Paragraph (g) of this section concerns the treatment of FSC stock and of assets of the related supplier generating foreign trade income. Paragraph (h) of this section concerns the treatment of DISC stock and of assets of the related supplier generating qualified export receipts.

(b) ***Inventories.*** For further guidance, see § 1.861-12T(b).

(c) ***Treatment of stock —***

(1) ***In general.*** For further guidance, see § 1.861-12T(c)(1).

(2) ***Basis adjustment for stock in 10 percent owned corporations —***

(i) ***Taxpayers using the tax book value method —***

(A) ***General rule.*** For purposes of apportioning expenses on the basis of the tax book value of assets, the adjusted basis of any stock in a 10 percent owned corporation owned by the taxpayer either directly or indirectly through a partnership or other pass-through entity (after taking into account the adjustments described in paragraph (c)(2)(i)(B)(*1*) of this section) shall be—

(*1*) Increased by the amount of the earnings and profits of such corporation (and of lower-tier 10 percent owned corporations) attributable to such stock and accumulated during the period the taxpayer or other members of its affiliated group held 10 percent or more of such stock; or

(*2*) Reduced by any deficit in earnings and profits of such corporation (and of lower-tier 10 percent owned corporations) attributable to such stock for such period; or

(*3*) Zero, if after application of paragraphs (c)(2)(i)(A)(*1*) and (*2*) of this section, the adjusted basis of the stock is less than zero.

(B) ***Computational rules —***

(*1*) ***Adjustments to basis —***

(*i*) ***Application of section 961 or 1293(d).*** For purposes of this section, a taxpayer's adjusted basis in the stock of a foreign corporation does not include any amount included in basis under section 961 or 1293(d) of the Code.

(*ii*) ***Application of section 965(b).*** For purposes of this section, if a taxpayer owned the stock of a specified foreign corporation (as defined in § 1.965-1(f)(45)) as of the close of the last taxable year of the specified foreign corporation that began before January 1, 2018, the taxpayer's adjusted basis in the stock of the specified foreign corporation for that taxable year and any subsequent taxable year is determined as if the taxpayer did not make the election described in § 1.965-2(f)(2)(i) (regardless of whether the election was actually made) and is further adjusted as described in this paragraph (c)(2)(i)(B)(*1*)(*ii*). If § 1.965-2(f)(2)(ii)(B) applied (or would have applied if the election had been made) with respect to the stock of a specified foreign corporation, the taxpayer's adjusted basis in the stock of the specified foreign corporation is reduced by the amount described in § 1.965-2(f)(2)(ii)(B)(*1*) (without regard to the rule for limited basis adjustments in § 1.965-2(f)(2)(ii)(B)(*2*) and the limitation in § 1.965-2(f)(2)(ii)(C), and without regard to the rules regarding the netting of basis adjustments in § 1.965-2(h)(2)). The reduction in the taxpayer's adjusted basis in the stock may reduce the taxpayer's adjusted basis in the stock below zero prior to the application of paragraphs (c)(2)(i)(A)(*1*) and (*2*) of this section. No adjustment is made in the taxpayer's adjusted basis in the stock of a specified foreign corporation for an amount described in § 1.965-2(f)(2)(ii)(A). To the extent that, in an exchange described in section 351, 354, or 356, a taxpayer receives stock of a foreign corporation in exchange for stock of a specified foreign corporation described in this paragraph (c)(2)(i)(B)(*1*)(*ii*), this paragraph (c)(2)(i)(B)(*1*)(*ii*) applies to such stock received.

(*2*) ***Amount of earnings and profits.*** For purposes of this paragraph (c)(2), earnings and profits (or deficits) are computed under the rules of section 312 and, in the case of a foreign corporation, sections 964(a) and 986 for taxable years of the 10 percent owned corporation ending on or before the close of the taxable year of the taxpayer. Accordingly, the earnings and profits of a controlled foreign corporation include all earnings and profits described in section 959(c). The amount of the earnings and profits with respect to stock of a foreign corporation held by the taxpayer is determined according to the attribution principles of section 1248 and the regulations under section 1248. The attribution principles of section 1248 apply without regard to the requirements of section 1248 that are not relevant to the determination of a shareholder's pro rata portion of earnings and profits, such as whether earnings and profits (or deficits) were derived (or incurred) during taxable years beginning before or after December 31, 1962.

(*3*) ***Annual noncumulative adjustment.*** The adjustment required by paragraph (c)(2)(i)(A) of this section is made annually and is noncumulative. Thus, the adjusted basis of the stock (determined without regard to prior years' adjustments under paragraph (c)(2)(i)(A) of this section) is adjusted annually by the amount of accumulated earnings and profits (or deficits) attributable to the stock as of the end of each year.

(*4*) ***Translation of non-dollar functional currency earnings and profits.*** Earnings and profits (or deficits) of a qualified business unit that has a functional currency other than the dollar must be computed under this paragraph (c)(2) in functional currency and translated into dollars using the exchange rate at the end of the taxpayer's current taxable year (and not the exchange rates for the years in which the earnings and profits or deficits were derived or incurred).

(C) ***Examples.*** The following examples illustrate the application of paragraph (c)(2)(i) of this section.

(*1*) ***Example 1: No election described in § 1.965-2(f)(2)(i)*** —

(*i*) ***Facts.*** USP, a domestic corporation, owns all of the stock of CFC1 and CFC2, both controlled foreign corporations. USP, CFC1, and CFC2 all use the calendar year as their U.S. taxable year. USP owned CFC1 and CFC2 as of December 31, 2017, and CFC1 and CFC2 were specified foreign corporations with respect to USP. USP's basis in each share of stock of each of CFC1 and CFC2 is identical. USP did not make the election described in § 1.965-2(f)(2)(i), but if USP had made the election, § 1.965-2(f)(2)(ii)(B) would have applied to the stock of CFC2 and the amount described in § 1.965-2(f)(2)(ii)(B)(*1*) (without regard to the rule for limited basis adjustments in § 1.965-2(f)(2)(ii)(B)(*2*) and without regard to the rules regarding the netting of basis adjustments in § 1.965-2(h)(2)) with respect to the stock of CFC2, in aggregate, is $75x. For purposes of determining the value of the stock of CFC1 and CFC2 at the beginning of the 2019 taxable year, without regard to amounts included in basis under section 961 or 1293(d), USP's adjusted basis in the stock of CFC1 is $100x and its adjusted basis in the stock of CFC2 is $350x (before the application of paragraph (c)(2)(i)(B) of this section).

(*ii*) ***Analysis.*** Under paragraph (c)(2)(i)(B)(*1*)(*ii*) of this section, USP's adjusted basis in the stock of CFC1 is determined as if USP did not make the election described in § 1.965-2(f)(2)(i). USP's adjusted basis in the stock of CFC2 is then reduced by $75x, the amount described in § 1.965-2(f)(2)(ii)(B)(*1*), without regard to the rule for limited basis adjustments in § 1.965-2(f)(2)(ii)(B)(*2*) and without regard to the rules regarding the netting of basis adjustments in § 1.965-2(h)(2). No adjustment is made to USP's adjusted basis in the stock in CFC1. Accordingly, for purposes of determining the value of stock of CFC1 and CFC2 at the beginning of the 2019 taxable year, USP's adjusted basis in the stock of CFC1 is $100x and USP's adjusted basis in the stock of CFC2 is $275x ($350x−$75x).

(*2*) ***Example 2: Election described in § 1.965-2(f)(2)(i)*** —

(*i*) ***Facts.*** USP, a domestic corporation, owns all of the stock of CFC1, which owns all of the stock of CFC2, both controlled foreign corporations. USP, CFC1, and CFC2 all use the calendar year as their U.S. taxable year. USP owned CFC1, and CFC1 owned CFC2 as of December 31, 2017, and CFC1 and CFC2 were specified foreign corporations with respect to USP. USP's basis in each share of stock of CFC1 is identical. USP made the election described in § 1.965-2(f)(2)(i). As a result of the election, USP was required to increase its basis in the stock of CFC1 by $90x under § 1.965-2(f)(2)(ii)(A)(*1*), and to

decrease its basis in the stock of CFC1 by $90x under § 1.965-2(f)(2)(ii)(B)(*1*). Pursuant to § 1.965-2(h)(2), USP netted the increase of $90x against the decrease of $90x and made no net adjustment to the basis in the stock of CFC1. For purposes of determining the value of the stock of CFC1 at the beginning of the 2019 taxable year, without regard to amounts included in basis under section 961 or 1293(d), USP's adjusted basis in the stock of CFC1 is $600x (before the application of paragraph (c)(2)(i)(B) of this section).

(*ii*) ***Analysis.*** Under paragraph (c)(2)(i)(B)(*1*)(*ii*) of this section, USP's adjusted basis in the stock of CFC1 is determined as if USP did not make the election described in § 1.965-2(f)(2)(i). While USP made the election, no adjustment was made to the stock of CFC1 as a result of the election. However, USP's adjusted basis in the stock of CFC1 is then reduced by $90x, the amount described in § 1.965-2(f)(2)(ii)(B)(*1*), without regard to the rules regarding the netting of basis described in § 1.965-2(h)(2). No adjustment is made to USP's basis in the stock of CFC1 for the amount described in § 1.965-2(f)(2)(ii)(A)(*1*). Accordingly, for purposes of determining the value of stock of CFC1 at the beginning of the 2019 taxable year, USP's adjusted basis in the stock of CFC1 is $510x ($600x−$90x).

(*3*) ***Example 3: Adjusted basis below zero*** —

(*i*) ***Facts.*** The facts are the same as in paragraph (c)(2)(i)(C)(*1*)(*i*) of this section (the facts in *Example 1*), except that for purposes of determining the value of the stock of CFC2 at the beginning of the 2019 taxable year, without regard to amounts included in basis under section 961 or 1293(d), USP's adjusted basis in the stock of CFC2 is $0 (before the application of paragraph (c)(2)(i)(B) of this section). Additionally, the adjusted basis of USP in the stock of CFC1 and CFC2 at the end of the 2019 taxable year is the same as at the beginning of that year, and as of the end of the 2019 taxable year, CFC1 has earnings and profits of $25x and CFC2 has earnings and profits of $50x that are attributable to the stock owned by USP and accumulated during the period that USP held the stock of CFC1 and CFC2.

(*ii*) ***Analysis.*** The analysis is the same as in paragraph (c)(2)(i)(C)(*1*)(*ii*) of this section (the analysis in *Example 1*) except that for purposes of determining the value of stock of CFC1 and CFC2 at the beginning of the 2019 taxable year, USP's adjusted basis in the stock of CFC2 is −$75x ($0−$75x). Because USP's basis in the stock of CFC1 and CFC2 is the same at the end of the 2019 taxable year, prior to the application of the adjustments in paragraphs (c)(2)(i)(A)(*1*) and (*2*) of this section, USP's adjusted basis in the stock of CFC1 is $100x and USP's adjusted basis in the stock of CFC2 is −$75x. Under paragraph (c)(2)(i)(A)(*1*) of this section, for purposes of apportioning expenses on the basis of the tax book value of assets, USP's adjusted basis in the stock of CFC1 is $125x ($100x + $25x). Under paragraph (c)(2)(i)(A)(*3*) of this section, for purposes of apportioning expenses on the basis of the tax book value of assets, USP's adjusted basis in the stock of CFC2 is $0 because after applying paragraph (c)(2)(i)(A)(*1*) of this section, USP's adjusted basis in the stock of CFC2 is less than zero (−$75x + $50x).

(*4*) ***Example 4: Election described in § 1.965-2(f)(2)(i) and adjusted basis below zero*** —(*i*) *Facts.* The facts are the same as in paragraph (c)(2)(i)(C)(*3*)(*i*) of this section (the facts in *Example 3*), except that USP made the election described in § 1.965-2(f)(2)(i) and, as result, recognized $75x of gain under § 1.965-2(h)(3).

(*ii*) ***Analysis.*** The analysis is the same as in paragraph (c)(2)(i)(C)(*3*)(*ii*) of this section (the analysis in *Example 3*).

(2) (ii)-(vi) [Reserved]. For further guidance, see § 1.861-12T(c)(2)(ii) through (c)(2)(vi).

(3) ***Characterization of stock of controlled foreign corporations*** —

(i) ***Operative sections*** —

(A) ***Operative sections other than section 904.*** For purposes of applying this section to an operative section other than section 904, stock in a controlled foreign corporation (as defined in section 957) is characterized as an asset in the relevant groupings on the basis of the asset method described in paragraph (c)(3)(ii) of this section, or the modified gross income method described in paragraph (c)(3)(iii) of this section. Stock in a controlled foreign corporation whose interest expense is apportioned on the basis of assets is characterized in the hands of its United States shareholders under the asset method described in paragraph (c)(3)(ii) of this section. Stock in a controlled foreign corporation whose interest expense is apportioned on the basis of modified gross income is characterized in the hands of its United States shareholders under the modified gross income method described in paragraph (c)(3)(iii) of this section.

(B) ***Section 904 as operative section.*** For purposes of applying this section to section 904 as the operative section, § 1.861-13 applies to characterize the stock of a controlled foreign corporation as an asset producing foreign source income in the separate categories described in § 1.904-5(a)(4)(v), or as an asset producing U.S. source income in the residual grouping, in the hands of the United States shareholder, and to determine the portion of the stock that gives rise to an inclusion under section 951A(a) that is treated as an exempt asset under § 1.861-8(d)(2)(ii)(C). Section 1.861-13 also provides rules for subdividing the stock in the various separate categories and the residual grouping into a section 245A subgroup and a non-section 245A subgroup in order to determine the amount of the adjustments required by section 904(b)(4) and § 1.904(b)-3(c) with respect to the section 245A subgroup, and provides rules for determining the portion of the stock that gives rise to a dividend eligible for a deduction under section 245(a)(5) that is treated as an exempt asset under § 1.861-8(d)(2)(ii)(B).

(ii) ***Asset method.*** For further guidance, see § 1.861-12T(c)(3)(ii).

(iii) ***Modified gross income method.*** Under the modified gross income method, the taxpayer characterizes the tax book value of the stock of the first-tier controlled foreign corporation based on the gross income, net of interest expense, of the controlled foreign corporation (as computed under § 1.861-9T(j) to include certain gross income, net of interest expense, of lower-tier controlled foreign corporations) within each relevant category for the taxable year of the controlled foreign corporation ending with or within the taxable year of the taxpayer. For purposes of this paragraph (c)(3)(iii), however, the gross income, net of interest expense, of the first-tier controlled foreign corporation includes the total amount of gross subpart F income, net of interest expense, of any lower-tier controlled foreign corporation that was excluded under the rules of § 1.861-9(j)(2)(ii)(B).

(4) ***Characterization of stock of noncontrolled 10-percent owned foreign corporations*** —

(i) ***In general.*** Except in the case of a nonqualifying shareholder described in paragraph (c)(4)(ii) of this section, the principles of § 1.861-12(c)(3), including the relevant rules of § 1.861-13 when section 904 is the operative section, apply to characterize stock in a noncontrolled 10-percent owned foreign corporation (as defined in section 904(d)(2)(E)). Accordingly, stock in a noncontrolled 10-percent owned foreign corporation is characterized as an asset in the various separate categories on the basis of either the asset method described in § 1.861-12T(c)(3)(ii) or the modified gross income method described in § 1.861-12(c)(3)(iii). Stock in a noncontrolled 10-percent owned foreign corporation the interest expense of which is apportioned on the basis of assets is characterized in the hands of its shareholders under the asset method described in § 1.861-12T(c)(3)(ii). Stock in a noncontrolled 10-percent owned foreign corporation the interest expense of which is apportioned on the basis of gross income is characterized in the hands of its shareholders under the modified gross income method described in § 1.861-12(c)(3)(iii).

(ii) ***Nonqualifying shareholders.*** Stock in a noncontrolled 10-percent owned foreign corporation is characterized as a passive category asset in the hands of a shareholder that either is not a domestic corporation or is not a United States shareholder with respect to the noncontrolled 10-percent owned foreign corporation for the taxable year. Stock in a noncontrolled 10-percent owned foreign corporation is characterized as in the separate category described in section 904(d)(4)(C)(ii) in the hands of any shareholder with respect to whom look-through treatment is not substantiated. *See also* § 1.904-5(c)(4)(iii)(B). In the case of a noncontrolled 10-percent owned foreign corporation that is a passive foreign investment company with respect to a shareholder, stock in the noncontrolled 10-percent owned foreign corporation is characterized as a passive category asset in the hands of the shareholder if such shareholder does not meet the ownership requirements described in section 904(d)(2)(E)(i)(II).

(d) ***Treatment of notes*** —

(1) ***General rule.*** For further guidance, see § 1.861-12T(d)(1).

(2) ***Characterization of related controlled foreign corporation notes.*** The debt of a controlled foreign corporation is characterized in the same manner as the interest income derived from that debt obligation. See §§ 1.904-4 and 1.904-5(c)(2) for rules treating interest income as income in a separate category.

(e) ***Portfolio securities that constitute inventory or generate primarily gains.*** For further guidance, see § 1.861-12T(e).

(f) ***Assets connected with capitalized, deferred, or disallowed interest*** —

(1) ***In general.*** In the case of any asset in connection with which interest expense accruing during a taxable year is capitalized, deferred, or disallowed under any provision of the Code, the value of the asset for allocation and apportionment purposes is reduced by the principal amount of indebtedness the interest on which is so capitalized, deferred, or disallowed. Assets are connected with debt (the interest on which is capitalized, deferred, or disallowed) only if using the debt proceeds to acquire or produce the asset causes the interest to be capitalized, deferred, or disallowed.

(2) ***Examples.*** The following examples illustrate the application of paragraph (f)(1) of this section.

(i) *Example 1: Capitalized interest under section 263A* —

(A) *Facts.* X is a domestic corporation that uses the tax book value method of apportionment. X has $1,000x of indebtedness and incurs $100x of interest expense. Using $800x of the $1,000x debt proceeds to produce tangible property, X capitalizes $80x of interest expense under the rules of section 263A. X deducts the remaining $20x of interest expense.

(B) *Analysis.* Because interest on $800x of debt is capitalized under section 263A by reason of the use of debt proceeds to produce the tangible property, $800x of the principal amount of X's debt is connected to the tangible property under paragraph (f)(1) of this section. Therefore, for purposes of apportioning the remaining $20x of X's interest expense, the adjusted basis of the tangible property is reduced by $800x.

(ii) *Example 2: Disallowed interest under section 163(l)* —

(A) *Facts.* X, a domestic corporation, owns 100% of the stock of Y, a domestic corporation. X and Y file a consolidated return and use the tax book value method of apportionment. In Year 1, X makes a loan of $1,000x to Y (Loan A) and Y then uses the Loan A proceeds to acquire in a cash purchase all the stock of a foreign corporation, Z. Interest on Loan A is payable in U.S. dollars or, at the option of Y, in stock of Z.

(B) *Analysis.* Under section 163(l), Loan A is a disqualified debt instrument because interest on Loan A is payable at the option of Y in stock of a related party to Y. Because Loan A is a disqualified debt instrument, section 163(l)(1) disallows Y's interest deduction for interest payable on Loan A. However, the value of the Z stock is not reduced under paragraph (f)(1) of this section because the use of the Loan A proceeds to acquire the stock of Z is not the cause of Y's interest deduction being disallowed. Rather, the Loan A terms allowing interest to be paid in stock of Z is the cause of Y's interest deduction being disallowed under section 163(l). Therefore, no adjustment is made to Y's adjusted basis in the stock of Z for purposes of allocating the interest expense of X and Y.

(g) *Special rules for FSCs.* For further guidance, see § 1.861-12T(g) through (j).

(h)-(j) [Reserved]

(k) *Applicability date.*

(1) Except as provided in paragraph (k)(2) of this section, this section applies to taxable years that both begin after December 31, 2017, and end on or after December 4, 2018.

(2) Paragraph (f) of this section applies to taxable years that end on or after December 16, 2019. For taxable years that both begin after December 31, 2017, and end on or after December 4, 2018, and before December 16, 2019, see § 1.861-12T(f) as contained in 26 CFR part 1 revised as of April 1, 2019.

[T.D. 9452, 74 FR 27874, June 11, 2009, as amended by T.D. 9866, 84 FR 29335, June 21, 2019; T.D. 9882, 84 FR 69069, Dec. 17, 2019; T.D. 9922, 85 FR 72040, Nov. 12, 2020]

§ 1.861-12T Characterization rules and adjustments for certain assets (temporary).

(a) *In general.* For further guidance, see § 1.861-12(a).

(b) ***Inventories.*** Inventory must be characterized by reference to the source and character of sales income, or sales receipts in the case of LIFO inventory, from that inventory during the taxable year. If a taxpayer maintains separate inventories for any federal tax purpose, including the rules for establishing pools of inventory items under sections 472 and 474 of the Code, each separate inventory shall be separately characterized in accordance with the previous sentence.

(c) ***Treatment of stock*** —

(1) ***In general.*** Subject to the adjustment and special rules of paragraphs (c) and (e) of this section, stock in a corporation is taken into account in the application of the asset method described in § 1.861-9T(g). However, an affiliated group (as defined in § 1.861-11T(d)) does not take into account the stock of any member in the application of the asset method.

(2) ***Basis adjustment for stock in nonaffiliated 10 percent owned corporations*** —

(i)

(A)-(C) [Reserved]. For further guidance, see § 1.861-12(c)(2)(i)(A) through (c)(2)(i)(C).

(ii) ***10 percent owned corporation defined*** —

(A) ***In general.*** The term "10 percent owned corporation" means any corporation (domestic or foreign)—

(*1*) Which is not included within the taxpayer's affiliated group as defined in § 1.861-11T(d) (1) or (6).

(*2*) In which the members of the taxpayer's affiliated group own directly or indirectly 10 percent or more of the total combined voting power of all classes of the stock entitled to vote, and

(*3*) Which is taken into account for purposes of apportionment.

(B) ***Rule of attribution.*** Stock that is owned by a corporation, partnership, or trust shall be treated as being indirectly owned proportionately by its shareholders, partners, or beneficiaries. For this purpose, a partner's interest in stock held by a partnership shall be determined by reference to the partner's distributive share of partnership income.

(iii) ***Earnings and profits of lower-tier corporations taken into account.*** For purposes of the adjustment to the basis of the stock of the 10 percent owned corporation owned by the taxpayer under paragraph (c)(2)(i) of this section, the earnings and profits of that corporation shall include its pro rata share of the earnings and profits (or any deficit therein) of each succeeding lower-tier 10 percent owned corporation. Thus, a first-tier 10 percent owned corporation shall combine with its own earnings and profits its pro rata share of the earnings and profits of all such lower-tier corporations. The affiliated group shall then adjust its basis in the stock of the first-tier corporation by its pro rata share of the total combined earnings and profits of the first-tier and the lower-tier corporations. In the case of a 10 percent owned corporation whose tax year does not conform to that of the taxpayer, the taxpayer shall include the annual earnings and profits of such 10 percent owned corporation for the tax year ending within the tax year of the taxpayer, whether or not such 10 percent owned corporation is owned directly by the taxpayer.

(iv) ***Special rules for foreign corporations in pre-effective date tax years.*** Solely for purposes of determining the adjustment required under paragraph (c)(2)(i) of this section, for tax years beginning after 1912 and before 1987, financial earnings (or losses) of a foreign corporation computed using United States generally accepted accounting principles may be substituted for earnings and profits in making the adjustment required by paragraph (c)(2)(i) of this section. A taxpayer is not required to isolate the financial earnings of a foreign corporation derived or incurred during its period of 10 percent ownership or during the post-1912 taxable years and determine earnings and profits (or deficits) attributable under section 1248 principles to the taxpayer's stock in a 10 percent owned corporation. Instead, the taxpayer may include all historic financial earnings for purposes of this adjustment. If the affiliated group elects to use financial earnings with respect to any foreign corporation, financial earnings must be used by that group with respect to all foreign corporations, except that earnings and profits may in any event be used for controlled foreign corporations for taxable years beginning after 1962 and before 1987. However, if the affiliated group elects to use earnings and profits with respect to any single controlled foreign corporation for the 1963 through 1986 period, such election shall apply with respect to all its controlled foreign corporations.

(v) ***Taxpayers using the fair market value method.*** Because the fair market value of any asset which is stock will reflect retained earnings and profits, taxpayers who use the fair market value method shall not adjust stock basis by the amount of retained earnings and profits, as otherwise required by paragraph (c)(2)(i) of this section.

(3) ***Characterization of stock of controlled foreign corporations*** —

(i) ***Operative sections.*** For further guidance, see § 1.861-12(c)(3)(i).

(ii) ***Asset method.*** Under the asset method, the taxpayer characterizes the tax book value or fair market value of the stock of a controlled foreign corporation based on an analysis of the assets owned by the controlled foreign corporation during the foreign corporation's taxable year that ends with or within the taxpayer's taxable year. This process is based on the application of § 1.861-9T(g) at the level of the controlled foreign corporation. In the case of a controlled foreign corporation that owns stock in one or more lower-tier controlled foreign corporations in which the United States taxpayer is a United States shareholder, the characterization of the tax book value of the fair market value of the stock of the first-tier controlled foreign corporation to the various separate limitation categories of the affiliated group must take into account the stock in lower-tier corporations. For this purpose, the stock of each such lower-tier corporation shall be characterized by reference to the assets owned during the lower-tier corporation's taxable year that ends during the taxpayer's taxable year. The analysis of assets within a chain of controlled foreign corporations must begin at the lowest-tier controlled foreign corporation and proceed up the chain to the first-tier controlled foreign corporation. For purposes of this paragraph (c), the value of any passive asset to which related person interest is allocated under § 1.904-5(c)(2)(ii) must be reduced by the principal amount of indebtedness on which such interest is incurred. Furthermore, the value of any asset to which interest expense is directly allocated under § 1.861-10T must be reduced as provided in § 1.861-9T(g)(2)(iii). See § 1.861-9T(h)(5) for further guidance concerning characterization of stock in a related person under the fair market value method.

(iii) ***Modified gross income method.*** For further guidance, see § 1.861-12(c)(3)(iii).

(4) [Reserved] For further guidance, *see* § 1.861-12(c)(4).

(d) *Treatment of notes* —

(1) ***General rule.*** Subject to the adjustments and special rules of this paragraph (d) and paragraph (e) of this section, all notes held by a taxpayer are taken into account in the application of the asset method described in § 1.861-9T(g). However, the notes of an affiliated corporation are subject to special rules set forth in § 1.861-11T(e). For purposes of this section, the term "notes" means all interest bearing debt, including debt bearing original issue discount.

(2) ***Characterization of related controlled foreign corporation notes.*** For further guidance, see § 1.861-12(d)(2).

(e) ***Portfolio securities that constitute inventory or generate primarily gains.*** Because gain on the sale of securities is sourced by reference to the residence of the seller, a resident of the United States will generally receive domestic source income (and a foreign resident will generally receive foreign source income) upon sale or disposition of securities that otherwise generate foreign source dividends and interest (or domestic source dividends and interest in the case of a foreign resident). Although under paragraphs (c) and (d) of this section securities are characterized by reference to the source and character of dividends and interest, the source and character of income on gain or disposition must also be taken into account for purposes of characterizing portfolio securities if:

(1) The securities constitute inventory in the hands of the holder, or

(2) 80 percent or more of the gross income generated by a taxpayer's entire portfolio of such securities during a taxable year consists of gains.

For this purpose, a portfolio security is a security in any entity other than a controlled foreign corporation with respect to which the taxpayer is a United States shareholder under section 957, a noncontrolled section 902 corporation with respect to the taxpayer, or a 10 percent owned corporation as defined in § 1.861-12(c)(2)(ii). In taking gains into account, a taxpayer must treat all portfolio securities generating foreign source dividends and interest as a single asset and all portfolio securities generating domestic source dividends as a single asset and shall characterize the total value of that asset based on the source of all income and gain generated by those securities in the taxable year.

(f) ***Assets connected with capitalized, deferred, or disallowed interest.*** For further guidance, see § 1.861-12(f).

(g) *Special rules for FSCs* —

(1) ***Treatment of FSC stock.*** No interest expense shall be allocated or apportioned to stock of a foreign sales corporation ("FSC") to the extent that the FSC stock is attributable to the separate limitation for certain FSC distributions described in section 904(d)(1)(H). FSC stock is considered to be attributable solely to the separate limitation category described in section 904(d)(1)(H) unless the taxpayer can demonstrate that more than 20 percent of the FSC's gross income for the taxable year consists of income other than foreign trading income.

(2) ***Treatment of assets that generate foreign trade income.*** Assets of the related supplier that generate foreign trade income must be prorated between assets attributable to foreign source general limitation income and assets attributable to domestic source income in proportion to foreign source general limitation income and domestic source income derived from transactions generating foreign trade income.

(i) ***Value of assets attributable to foreign source income.*** The value of assets attributable to foreign source general limitation income is computed by multiplying the value of assets for the taxable year generating foreign trading gross receipts by a fraction:

(A) The numerator of which is foreign source general limitation income for the taxable year derived from transactions giving rise to foreign trading gross receipts, after the application of the limitation provided in section 927(e)(1), and

(B) The denominator of which is total income for the taxable year derived from the transaction giving rise to foreign trading gross receipts.

(ii) ***Value of assets attributable to domestic source income.*** The value of assets attributable to domestic source income is computed by subtracting from the total value of assets for the taxable year generating foreign trading gross receipts the value of assets attributable to foreign source general limitation income as computed under paragraph (g)(2)(i) of this section.

(h) *Special rules for DISCs* —

(1) ***Treatment of DISC stock.*** No interest shall be allocated or apportioned to stock in a DISC (or stock in a former DISC to the extent that the stock in the former DISC is attributable to the separate limitation category described in section 904(d)(1)(F)).

(2) ***Treatment of assets that generate qualified export receipts.*** Assets of the related supplier that generate qualified export receipts must be prorated between assets attributable to foreign source general limitation income and assets attributable to domestic source income in proportion to foreign source general limitation income and domestic source income derived from transactions during the taxable year from transactions generating qualified export receipts.

(i)-(j) [Reserved]

(k) ***Effective/applicability date.*** The rules of this section apply for taxable years beginning after December 31, 1986.

[T.D. 8228, 53 FR 35495, Sept. 14, 1988, as amended by T.D. 9260, 71 FR 24526, Apr. 25, 2006, T.D. 9452, 74 FR 27875, June 11, 2009; T.D. 9456, 74 FR 38875, Aug. 4, 2009; T.D. 9866, 84 FR 29336, June 21, 2019; T.D. 9882, 84 FR 69070, Dec. 17, 2019; T.D. 9922, 85 FR 72041, Nov. 12, 2020]

§ 1.861-13 Special rules for characterization of controlled foreign corporation stock.

(a) ***Methodology.*** For purposes of allocating and apportioning deductions for purposes of section 904 as the operative section, stock in a controlled foreign corporation owned directly or indirectly through a partnership or other pass-through entity by a United States shareholder is characterized by the United States shareholder under the rules described in this section. In general, paragraphs (a)(1) through (5) of this section characterize the stock of the controlled foreign corporation as an asset in the various statutory groupings and residual grouping based on the type of income that the stock of the controlled foreign corporation generates, has generated, or may reasonably be expected to generate when the income is included by the United States shareholder.

(1) *Step 1: Characterize stock as generating income in statutory groupings under the asset or modified gross income method* —

(i) ***Asset method.*** A United States shareholder of a controlled foreign corporation that apportions its interest expense on the basis of assets must characterize stock of the controlled foreign corporation using the asset method described in § 1.861-12T(c)(3)(ii) to assign the assets of the controlled foreign corporation to the statutory groupings described in paragraphs (a)(1)(i)(A)(*1*) through (*10*) and (a)(1)(i)(B) of this section. If the controlled foreign corporation

owns stock in a lower-tier noncontrolled 10-percent owned foreign corporation, the assets of the lower-tier noncontrolled 10-percent owned foreign corporation are assigned to a gross subpart F income grouping to the extent such assets generate income that, if distributed to the controlled foreign corporation, would be gross subpart F income of the controlled foreign corporation. *See also* § 1.861-12(c)(4).

(A) ***General and passive categories.*** Within each of the controlled foreign corporation's general category and passive category, each of the following subgroups within each category is a separate statutory grouping—

(*1*) Foreign source gross tested income;

(*2*) For each applicable treaty, U.S. source gross tested income that, when taken into account by a United States shareholder under section 951A, is resourced in the hands of the United States shareholder (*resourced gross tested income*);

(*3*) U.S. source gross tested income not described in paragraph (a)(1)(i)(A)(*2*) of this section;

(*4*) Foreign source gross subpart F income;

(*5*) For each applicable treaty, U.S. source gross subpart F income that, when included by a United States shareholder under section 951(a)(1), is resourced in the hands of the United States shareholder (*resourced gross subpart F income*);

(*6*) U.S. source gross subpart F income not described in paragraph (a)(1)(i)(A)(*5*) of this section;

(*7*) Foreign source gross section 245(a)(5) income;

(*8*) U.S. source gross section 245(a)(5) income;

(*9*) Any other foreign source gross income (*specified foreign source general category gross income* or *specified foreign source passive category gross income,* as the case may be); and

(*10*) Any other U.S. source gross income (*specified U.S. source general category gross income* or *specified U.S. source passive category gross income,* as the case may be).

(B) ***Section 901(j) income.*** For each country described in section 901(j), all gross income from sources in that country.

(ii) ***Modified gross income method.*** A United States shareholder of a controlled foreign corporation that apportions its interest expense on the basis of modified gross income must characterize stock of the controlled foreign corporation using the modified gross income method under § 1.861-12(c)(3)(iii) to assign the modified gross income of the controlled foreign corporation to the statutory groupings described in paragraphs (a)(1)(i)(A)(*1*) through (*10*) and (a)(1)(i)(B) of this section. For purposes of this paragraph (a)(1)(ii), the rules described in §§ 1.861-12(c)(3)(iii) and 1.861-9T(j)(2) apply to combine gross income in a statutory grouping that is earned by the controlled foreign corporation with gross income of lower-tier controlled foreign corporations that is in the same statutory grouping. For example, foreign source general category gross tested income (net of interest expense) earned by the controlled foreign corporation is combined with its pro rata share of the foreign source general category gross tested income (net of interest expense) of lower-tier controlled foreign corporations. If the

controlled foreign corporation owns stock in a lower-tier noncontrolled 10-percent owned foreign corporation, gross income of the lower-tier noncontrolled 10-percent owned foreign corporation is assigned to a gross subpart F income grouping to the extent that the income, if distributed to the upper-tier controlled foreign corporation, would be gross subpart F income of the upper-tier controlled foreign corporation. *See also* § 1.861-12(c)(4).

(2) ***Step 2: Assign stock to the section 951A category.*** A controlled foreign corporation is not treated as earning section 951A category income. The portion of the value of the stock of the controlled foreign corporation that is assigned to the section 951A category (as defined in § 1.904-4(g)) equals the value of the portion of the stock of the controlled foreign corporation that is assigned to the foreign source gross tested income statutory groupings within the general category (*general category gross tested income stock*) multiplied by the United States shareholder's inclusion percentage. Under § 1.861-8(d)(2)(ii)(C)(2)(*ii*), a portion of the value of stock assigned to the section 951A category may be treated as an exempt asset. The portion of the general category gross tested income stock that is not characterized as a section 951A category asset remains a general category asset and may result in expenses being disregarded under section 904(b)(4). *See* paragraph (a)(5)(ii) of this section and § 1.904(b)-3. No portion of the passive category gross tested income stock or U.S. source gross tested income stock is assigned to the section 951A category.

(3) ***Step 3: Assign stock to a treaty category*** —

(i) ***Inclusions under section 951A(a).*** The portion of the value of the stock of the controlled foreign corporation that is assigned to a particular treaty category due to an inclusion of U.S. source income under section 951A(a) that was resourced under a particular treaty equals the value of the portion of the stock of the controlled foreign corporation that is assigned to the resourced gross tested income statutory grouping within each of the controlled foreign corporation's general or passive categories (*resourced gross tested income stock*) multiplied by the United States shareholder's inclusion percentage. Under § 1.861-8(d)(2)(ii)(C)(2)(*ii*), a portion of the value of stock assigned to a particular treaty category by reason of this paragraph (a)(3)(i) may be treated as an exempt asset. The portion of the resourced gross tested income stock that is not characterized as a treaty category asset remains a U.S. source general or passive category asset, as the case may be, that is in the residual grouping and may result in expenses being disregarded under section 904(b)(4) for purposes of determining entire taxable income under section 904(a). *See* paragraph (a)(5)(iv) of this section and § 1.904(b)-3.

(ii) ***Inclusions under section 951(a)(1).*** The portion of the value of the stock of the controlled foreign corporation that is assigned to a particular treaty category due to an inclusion of U.S. source income under section 951(a)(1) that was resourced under a treaty equals the value of the portion of the stock of the controlled foreign corporation that is assigned to the resourced gross subpart F income statutory grouping within each of the controlled foreign corporation's general category or passive category.

(4) ***Step 4: Aggregate stock within each separate category and assign stock to the residual grouping.*** The portions of the value of stock of the controlled foreign corporation assigned to foreign source statutory groupings that were not specifically assigned to the section 951A category under paragraph (a)(2) of this section (Step 2) are aggregated within the general category and the passive category to characterize the stock as general category stock and passive category stock, respectively. The portions of the value of stock of the controlled foreign corporation assigned to U.S. source statutory groupings that were not specifically assigned to a particular treaty category under

paragraph (a)(3) of this section (Step 3) are aggregated to characterize the stock as U.S. source category stock, which is in the residual grouping. Stock assigned to the separate category for income described in section 901(j)(1) remains in that category.

(5) ***Step 5: Determine section 245A and non-section 245A subgroups for each separate category and U.S. source category*** —

(i) ***In general.*** In the case of stock of a controlled foreign corporation that is held directly or indirectly through a partnership or other pass-through entity by a United States shareholder that is a domestic corporation, stock of the controlled foreign corporation that is general category stock, passive category stock, and U.S. source category stock is subdivided between a section 245A subgroup and a non-section 245A subgroup under paragraphs (a)(5)(ii) through (v) of this section for purposes of applying section 904(b)(4) and § 1.904(b)-3(c). Each subgroup is treated as a statutory grouping under § 1.861-8(a)(4) for purposes of allocating and apportioning deductions under §§ 1.861-8 through 1.861-14T and 1.861-17 in applying section 904 as the operative section. Deductions apportioned to each section 245A subgroup are disregarded under section 904(b)(4). *See* § 1.904(b)-3. Deductions apportioned to the statutory groupings for gross section 245(a)(5) income are not disregarded under section 904(b)(4); however, a portion of the stock assigned to those groupings is treated as exempt under § 1.861-8T(d)(2)(ii)(B).

(ii) ***Section 245A subgroup of general category stock.*** The portion of the general category stock of the controlled foreign corporation that is assigned to the section 245A subgroup of the general category equals the value of the general category gross tested income stock of the controlled foreign corporation that is not assigned to the section 951A category under paragraph (a)(2) of this section (Step 2), plus the value of the portion of the stock of the controlled foreign corporation that is assigned to the specified foreign source general category gross income statutory grouping.

(iii) ***Section 245A subgroup of passive category stock.*** The portion of passive category stock of the controlled foreign corporation that is assigned to the section 245A subcategory of the passive category equals the sum of—

(A) The value of the portion of the stock of the controlled foreign corporation that is assigned to the gross tested income statutory grouping within foreign source passive category income multiplied by a percentage equal to 100 percent minus the United States shareholder's inclusion percentage for passive category gross tested income; and

(B) The value of the portion of the stock of the controlled foreign corporation that was assigned to the specified foreign source passive category gross income statutory grouping.

(iv) ***Section 245A subgroup of U.S. source category stock.*** The portion of U.S. source category stock of the controlled foreign corporation that is assigned to the section 245A subgroup of the U.S. source category equals the sum of—

(A) The value of the portion of the stock of the controlled foreign corporation that is assigned to the U.S. source general category gross tested income statutory grouping multiplied by a percentage equal to 100 percent minus the United States shareholder's inclusion percentage for the general category;

(B) The value of the portion of the stock of the controlled foreign corporation that is assigned to the U.S. source passive category gross tested income statutory grouping multiplied by a percentage equal to 100 percent minus the United States shareholder's inclusion percentage for the passive category;

(C) The value of the resourced gross tested income stock of the controlled foreign corporation that is not assigned to a particular treaty category under paragraph (a)(3)(i) of this section (Step 3);

(D) The value of the portion of the stock of the controlled foreign corporation that is assigned to the specified U.S. source general category gross income statutory grouping; and

(E) The value of the portion of the stock of the controlled foreign corporation that is assigned to the specified U.S. source passive category gross income statutory grouping.

(v) ***Non-section 245A subgroup.*** The value of stock of a controlled foreign corporation that is not assigned to the section 245A subgroup within the general or passive category or the residual grouping is assigned to the non-section 245A subgroup within such category or grouping. The value of stock of a controlled foreign corporation that is assigned to the section 951A category, the separate category for income described in section 901(j)(1), or a particular treaty category is always assigned to a non-section 245A subgroup.

(b) ***Definitions.*** This paragraph (b) provides definitions that apply for purposes of this section.

(1) ***Gross section 245(a)(5) income.*** The term *gross section 245(a)(5) income* means all items of gross income described in section 245(a)(5)(A) and (B).

(2) ***Gross subpart F income.*** The term *gross subpart F income* means all items of gross income that are taken into account by a controlled foreign corporation in determining its subpart F income under section 952, except for items of gross income described in section 952(a)(5).

(3) ***Gross tested income.*** The term *gross tested income* has the meaning provided in § 1.951A-2(c)(1).

(4) ***Inclusion percentage.*** The term *inclusion percentage* has the meaning provided in § 1.960-2(c)(2).

(5) ***Separate category.*** The term *separate category* has the meaning provided in § 1.904-5(a)(4)(v).

(6) ***Treaty category.*** The term *treaty category* means a category of income earned by a controlled foreign corporation for which section 904(a), (b), and (c) are applied separately as a result of income being resourced under a treaty. See, for example, section 245(a)(10), 865(h), or 904(h)(10). A United States shareholder may have multiple treaty categories for amounts of income resourced by the United States shareholder under a treaty. *See* § 1.904-5(m)(7).

(7) ***U.S. source category.*** The term *U.S. source category* means the aggregate of U.S. source income in each separate category listed in section 904(d)(1).

(c) ***Examples.*** The following examples illustrate the application of the rules in this section.

(1) ***Example 1: Asset method*** —

(i) ***Facts*** —

(A) USP, a domestic corporation, directly owns all of the stock of a controlled foreign corporation, CFC1. The tax book value of CFC1's stock is $20,000x. USP uses the asset method described in § 1.861-12T(c)(3)(ii) to characterize the stock of CFC1. USP's inclusion percentage is 70%.

(B) CFC1 owns the following assets with the following values as determined under §§ 1.861-9(g)(2) and 1.861-9T(g)(3): Assets that generate income described in the foreign source gross tested income statutory grouping within the general category ($4,000x), assets that generate income described in the foreign source gross subpart F income statutory grouping within the general category ($1,000x), assets that generate specified foreign source general category gross income ($3,000x), and assets that generate income described in the foreign source gross subpart F income statutory grouping within the passive category ($2,000x).

(C) CFC1 also owns all of the stock of CFC2, a controlled foreign corporation. The tax book value of CFC1's stock in CFC2 is $6,000x. CFC2 owns the following assets with the following values as determined under §§ 1.861-9(g)(2) and 1.861-9T(g)(3): Assets that generate income described in the foreign source gross subpart F income statutory grouping within the general category ($2,250x) and assets that generate specified foreign source general category gross income ($750x).

(ii) ***Analysis*** —

(A) ***Step 1*** —

(*1*) ***Characterization of CFC2 stock.*** CFC2 has total assets of $3,000x, $2,250x of which are in the foreign source gross subpart F income statutory grouping within the general category and $750x of which are in the specified foreign source general category gross income statutory grouping. Accordingly, CFC2's stock is characterized as $4,500x ($2,250x/$3,000x × $6,000x) in the foreign source gross subpart F income statutory grouping within the general category and $1,500x ($750x/$3,000x × $6,000x) in the specified foreign source general category gross income statutory grouping.

(*2*) ***Characterization of CFC1 stock.*** CFC1 has total assets of $16,000x, $4,000x of which are in the foreign source gross tested income statutory grouping within the general category, $5,500x of which are in the foreign source gross subpart F income statutory grouping within the general category (including the portion of CFC2 stock assigned to that statutory grouping), $4,500x of which are in the specified foreign source gross general category income statutory grouping (including the portion of CFC2 stock assigned to that statutory grouping), and $2,000x of which are in the foreign source gross subpart F income statutory grouping within the passive category. Accordingly, CFC1's stock is characterized as $5,000x ($4,000x/$16,000x × $20,000x) in the foreign source gross tested income statutory grouping within the general category, $6,875x ($5,500x/$16,000x × $20,000x) in the foreign source gross subpart F income statutory grouping within the general category, $5,625x ($4,500x/$16,000x × $20,000x) in the specified foreign source gross general category income statutory grouping, and $2,500x ($2,000x/$16,000x × $20,000x) in the foreign source gross subpart F income statutory grouping within the passive category.

(B) *Step 2.* The value of the portion of the stock of CFC1 that is general category gross tested income stock is $5,000x. USP's inclusion percentage is 70%. Accordingly, under paragraph (a)(2) of this section, $3,500x of the stock of CFC1 is assigned to the section 951A category and a portion thereof may be treated as an exempt asset under § 1.861-8(d)(2)(ii)(C)(*2*)(*ii*). The remainder, $1,500x, remains a general category asset.

(C) *Step 3.* No portion of the stock of CFC1 is resourced gross tested income stock or assigned to the resourced gross subpart F income statutory grouping in any treaty category. Accordingly, no portion of the stock of CFC1 is assigned to a treaty category under paragraph (a)(3) of this section.

(D) *Step 4* —

(*1*) ***General category stock.*** The total value of the portion of the stock of CFC1 that is general category stock is $14,000x, which is equal to $1,500x (the value of the portion of the general category stock of CFC1 that was not assigned to the section 951A category in paragraph (c)(1)(ii)(B) of this section (Step 2)) plus $6,875x (the value of the portion of the stock of CFC1 assigned to the foreign source gross subpart F income statutory grouping within the general category) plus $5,625x (the value of the portion of the stock of CFC1 assigned to the specified foreign source gross income statutory grouping within the general category).

(*2*) ***Passive category stock.*** The total value of the portion of the stock of CFC1 that is passive category stock is $2,500x.

(*3*) ***U.S source category stock.*** No value of the portion of the stock of CFC1 is U.S. source category stock.

(E) *Step 5* —

(*1*) ***General category stock.*** Under paragraph (a)(5)(ii) of this section, the value of the portion of the stock of CFC1 assigned to the section 245A subgroup of general category stock is $7,125x, which is equal to $1,500x (the value of the portion of the general category stock of CFC1 that was not assigned to the section 951A category in paragraph (c)(1)(ii)(B) of this section (Step 2)) plus $5,625x (the value of the portion of the stock of CFC1 assigned to the specified foreign source general category gross income statutory grouping). Under paragraph (a)(5)(v) of this section, the remainder of the general category stock of CFC1, $6,875x, is assigned to the non-section 245A subgroup of general category stock.

(*2*) ***Passive category stock.*** No portion of the passive category stock of CFC1 is in the foreign source gross tested income statutory grouping or the specified foreign source passive category gross income statutory grouping. Accordingly, under paragraph (a)(5)(iii) of this section, no value of the portion of the stock of CFC1 is assigned to the section 245A subgroup of passive category stock. Under paragraph (a)(5)(v) of this section, the passive category stock of CFC1, $2,500x is assigned to the non-section 245A subgroup of passive category stock.

(*3*) ***Section 951A category stock.*** Under paragraph (a)(5)(v) of this section, all of the section 951A category stock, $3,500x, is assigned to the non-section 245A subgroup of section 951A category stock.

(F) ***Summary.*** For purpose of the allocation and apportionment of expenses, $14,000x of the stock of CFC1 is characterized as general category stock, $7,125x of which is in the section 245A subgroup and $6,875x of which is in the non-section 245A subgroup; $2,500x of the stock of CFC1 is characterized as passive category stock, all of which is in the non-section 245A subgroup; and $3,500x of the stock of CFC1 is characterized as section 951A category stock, all of which is in the non-section 245A subgroup.

(2) ***Example 2: Asset method with noncontrolled 10-percent owned foreign corporation*** —

(i) ***Facts.*** The facts are the same as in paragraph (c)(1)(i) of this section (the facts in *Example 1*), except that CFC1 does not own CFC2 and instead owns 20% of the stock of FC2, a foreign corporation that is a noncontrolled 10-percent owned foreign corporation. The tax book value of CFC1's stock in FC2 is $6,000x. FC2 owns assets with the following values as determined under §§ 1.861-9(g)(2) and 1.861-9T(g)(3): Assets that generate specified foreign source general category gross income ($3,000x). All of the assets of FC2 generate income that, if distributed to CFC1 as a dividend, would be foreign source gross subpart F income in the general category to CFC1.

(ii) ***Analysis*** —

(A) ***Step 1*** —

(*1*) ***Characterization of FC2 stock.*** All of the assets of FC2 generate income that, if distributed to CFC1, would be foreign source gross subpart F income in the general category to CFC1. Accordingly, under paragraph (a)(1)(i) of this section, all of CFC1's stock in FC2 ($6,000x) is characterized as in the foreign source gross subpart F income statutory grouping within the general category.

(2) ***Characterization of CFC1 stock.*** CFC1 has total assets of $16,000x, $4,000x of which are in the foreign source gross tested income statutory grouping within the general category, $7,000x of which are in the foreign source gross subpart F income statutory grouping within the general category (including the FC2 stock assigned to that statutory grouping), $3,000x of which are in the specified foreign source general category gross income statutory grouping, and $2,000x of which are in the foreign source gross subpart F income statutory grouping within the passive category. Accordingly, CFC1's stock is characterized as $5,000x ($4,000x/$16,000x × $20,000x) in the foreign source gross tested income statutory grouping within the general category, $8,750x ($7,000x/$16,000x × $20,000x) in the foreign source gross subpart F income statutory grouping within the general category, $3,750x ($3,000x/$16,000x × $20,000x) in the specified foreign source general category gross income statutory grouping, and $2,500x ($2,000x/$16,000x × $20,000x) in the foreign source gross subpart F income statutory grouping within the passive category.

(B) ***Step 2.*** The analysis is the same as in paragraph (c)(1)(ii)(B) of this section (the analysis of Step 2 in *Example 1*).

(C) ***Step 3.*** The analysis is the same as in paragraph (c)(1)(ii)(C) of this section (the analysis of Step 3 in *Example 1*).

(D) ***Step 4*** —

(1) ***General category stock.*** The total value of the portion of the stock of CFC1 that is general category stock is $14,000x, which is equal to $1,500x (the value of the portion of the general category stock of CFC1 that was not assigned to the section 951A category in paragraph (c)(2)(ii)(B) of this section (Step 2)) plus $3,750x (the value of the portion of the stock of CFC1 assigned to the specified foreign source gross income statutory grouping within the general category general category) plus $8,750x (the value of the portion of the stock of CFC1 assigned to the foreign source gross subpart F income statutory grouping within the general category).

(2) ***Passive category stock.*** The analysis is the same as in paragraph (c)(1)(ii)(D)(*2*) of this section (the analysis of Step 4 in *Example 1*).

(E) ***Step 5*** —

(1) ***General category stock.*** Under paragraph (a)(5)(ii) of this section, the value of the stock of CFC1 assigned to the section 245A subgroup of general category stock is $5,250x, which is equal to $1,500x (the value of the portion of the general category stock of CFC1 that was not assigned to the section 951A category in paragraph (c)(2)(ii)(B) of this section (Step 2)) plus $3,750x (the value of the portion of the stock of CFC1 assigned to the specified foreign source general category gross income statutory grouping). Under paragraph (a)(5)(v) of this section, the remainder of the general category stock of CFC1, $8,750x, is assigned to the non-section 245A subgroup of general category stock.

(2) ***Passive category stock.*** The analysis is the same as in paragraph (c)(1)(ii)(E)(*2*) of this section (the analysis of Step 5 in *Example 1*).

(3) ***Section 951A category stock.*** The analysis is the same as in paragraph (c)(1)(ii)(E)(*3*) of this section (the analysis of Step 5 in *Example 1*).

(F) ***Summary.*** For purpose of the allocation and apportionment of expenses, $14,000x of the stock of CFC1 is characterized as general category stock, $5,250x of which is in the section 245A subgroup and $8,750x of which is in the non-section 245A subgroup; $2,500x of the stock of CFC1 is characterized as passive category stock, all of which is in the non-section 245A subgroup; and $3,500x of the stock of CFC1 is characterized as section 951A category stock, all of which is in the non-section 245A subgroup.

(3) ***Example 3: Modified gross income method*** —

(i) ***Facts*** —

(A) USP, a domestic corporation, directly owns all of the stock of a controlled foreign corporation, CFC1. The tax book value of CFC1's stock is $100,000x. CFC1 owns all of the stock of CFC2, a controlled foreign corporation. USP uses the modified gross income method described in § 1.861-12(c)(3)(iii) to characterize the stock in CFC1. USP's inclusion percentage is 100%.

(B) CFC1 earns $1,500x of foreign source gross tested income within the general category and $500x of foreign source gross subpart F income within the passive category. CFC1 incurs $1,000x of interest expense.

(C) CFC2 earns $3,000x of foreign source gross tested income within the general category, $2,000x of foreign source gross subpart F income within the general category, and $1,000x of specified foreign source general category gross income. CFC2 incurs $3,000x of interest expense.

(ii) *Analysis* —

(A) *Step 1* —

(*1*) ***Determination of CFC2 gross income (net of interest expense).*** CFC2 has total gross income of $6,000x. CFC2's $3,000x of interest expense is apportioned among the statutory groupings of gross income based on the gross income of CFC2 to determine the gross income (net of interest expense) of CFC2 in each statutory grouping. As a result, $1,500x ($3,000x/$6,000x × $3,000x) of interest expense is apportioned to foreign source gross tested income within the general category, $1,000x ($2,000x/$6,000x × $3,000x) of interest expense is apportioned to foreign source gross subpart F income within the general category, and $500x ($1,000x/$6,000x × $3,000x) of interest expense is apportioned to specified foreign source general category gross income. Accordingly, CFC2 has the following amounts of gross income (net of interest expense): $1,500x ($3,000x − $1,500x) of foreign source gross tested income within the general category, $1,000x ($2,000x − $1,000x) of foreign source gross subpart F income within the general category, and $500x ($1,000x − $500x) of specified foreign source general category gross income.

(*2*) ***Determination of CFC1 gross income (net of interest expense).*** Before including the gross income consisting of subpart F income (net of interest expense) of CFC2, CFC1 has total gross income of $4,000x, including $1500x of CFC2's foreign source gross tested income within the general category and $500x of CFC2's specified foreign source general category gross income which are combined with CFC1's items of gross income under § 1.861-9(j)(2)(ii). CFC1's $1,000x of interest expense is apportioned among the statutory groupings of gross income of CFC1 to determine the gross income (net of interest expense) of CFC1 in each statutory grouping. As a result, $750x ($3,000x/$4,000x × $1,000x) of interest expense is apportioned to foreign source gross tested income within the general category, $125x ($500x/$4,000 × $1,000x) to foreign source gross subpart F income within the passive category, and $125x ($500x/$4,000x × $1,000x) to specified foreign source general category gross income. Accordingly, CFC1 has the following amounts of gross income (net of interest expense) before including the gross income consisting of subpart F income (net of interest expense) of CFC2: $2,250x ($3,000x − $750x) of foreign source gross tested income within the general category, $375x ($500x − $125x) of foreign source gross subpart F income within the passive category, and $375x ($500 − $125x) of specified foreign source general category gross income. After including the gross income consisting of subpart F income (net of interest expense) of CFC2, CFC1 has the following amounts of gross income (net of interest expense): $2,250x of foreign source gross tested income within the general category, $1,000x of foreign source gross subpart F income within the general category, $375x of specified foreign source general category gross income, and $375x of foreign source gross subpart F income within the passive category.

(3) ***Characterization of CFC1 stock.*** CFC1 is considered to have a total of $4,000x of gross income (net of interest expense) for purposes of characterizing the stock of CFC1. Accordingly, CFC1's stock is characterized as $56,250x ($2,250x/$4,000x × $100,000x) in the foreign source gross tested income statutory grouping within the general category, $25,000x ($1,000x/$4,000x × $100,000x) in the foreign source gross subpart F income statutory grouping within the general category, $9,375x ($375x/$4,000x × $100,000x) in the specified foreign source general category gross income statutory grouping, and $9,375x ($375x/$4,000x × $100,000x) in the foreign source gross subpart F income statutory grouping within the passive category.

(B) ***Step 2.*** The value of the portion of the stock of CFC1 that is general category gross tested income stock is $56,250x. USP's inclusion percentage is 100%. Accordingly, under paragraph (a)(2) of this section, all of the $56,250x of the stock of CFC1 is assigned to the section 951A category and a portion thereof may be treated as an exempt asset under § 1.861-8(d)(2)(ii)(C)(*2*)(*ii*).

(C) ***Step 3.*** No portion of the stock of CFC1 is resourced gross tested income or assigned to the resourced gross subpart F income statutory group in any treaty category. Accordingly, no portion of the stock of CFC1 is assigned to a treaty category under paragraph (a)(3) of this section.

(D) ***Step 4*** —

(1) ***General category stock.*** The total value of the portion of the stock of CFC1 that is general category stock is $34,375x, which is equal to $25,000x (the value of the portion of the stock of CFC1 assigned to the subpart F income statutory grouping within the general category income statutory grouping) plus $9,375x (the value of the portion of the stock of CFC1 assigned to the specified foreign source general category gross income statutory grouping).

(2) ***Passive category stock.*** The total value of the portion of the stock of CFC1 that is passive category stock is $9,375x.

(3) ***U.S. source category stock.*** No value of the portion of the stock of CFC1 is U.S. source category stock.

(E) ***Step 5*** —

(1) ***General category stock.*** All of the value of the general category gross tested income stock of CFC1 was assigned to the section 951A category in paragraph (c)(3)(ii)(B) of this section (Step 2). Accordingly, under paragraph (a)(5)(ii) of this section, the value of the stock of CFC1 assigned to the section 245A subgroup of general category stock is $9,375x, which is equal to the value of the portion assigned to the specified foreign source general category gross income statutory grouping. Under paragraph (a)(5)(v) of this section, the remainder of the general category stock of CFC1, $25,000x, is assigned to the non-section 245A subgroup of general category stock.

(2) ***Passive category stock.*** No portion of the passive category stock of CFC1 is in the foreign source gross tested income statutory grouping or the specified foreign source passive category gross income statutory grouping. Accordingly, under paragraph (a)(5)(iii) of this section, no value of the portion of the stock of CFC1 is

assigned to the section 245A subgroup. Under paragraph (a)(5)(v) of this section, the passive category stock of CFC1, $9,375x, is assigned to the non-section 245A subgroup of passive category stock.

(3) ***Section 951A category stock.*** Under paragraph (a)(5)(v) of this section, all of the section 951A category stock, $56,250x, is assigned to the non-section 245A subgroup of section 951A category stock.

(F) ***Summary.*** For purposes of the allocation and apportionment of expenses, $56,250x of the stock of CFC1 is characterized as section 951A category stock, all of which is in the non-section 245A subgroup; $34,375x of the stock of CFC1 is characterized as general category stock, $9,375x of which is in the section 245A subgroup and $25,000x of which is in the non-section 245A subgroup; and $9,375x of the stock of CFC1 is characterized as passive category stock, all of which is in the non-section 245A subgroup.

(d) ***Applicability dates.*** This section applies for taxable years that both begin after December 31, 2017, and end on or after December 4, 2018.

[T.D. 9882, 84 FR 69070, Dec. 17, 2019]

§ 1.861-14 Special rules for allocating and apportioning certain expenses (other than interest expense) of an affiliated group of corporations.

(a)-(c) [Reserved]. For further guidance, see § 1.861-14T(a) through (c).

(d) ***Definition of affiliated group*** —

(1) ***General rule.*** For purposes of this section, the term *affiliated group* has the same meaning as is given that term by section 1504. Section 1504(a) defines an affiliated group as one or more chains of includible corporations connected through 80-percent stock ownership with a common parent corporation which is an includible corporation (as defined in section 1504(b)). In the case of a corporation that either becomes or ceases to be a member of the group during the course of the corporation's taxable year, only the expenses incurred by the group member during the period of membership shall be allocated and apportioned as if all members of the group were a single corporation. In this regard, the apportionment factor chosen shall relate only to the period of membership. For example, if apportionment on the basis of assets is chosen, the average amount of assets (tax book value or fair market value) for the taxable year shall be multiplied by a fraction, the numerator of which is the number of months of the corporation's taxable year during which the corporation was a member of the affiliated group, and the denominator of which is the number of months within the corporation's taxable year. If apportionment on the basis of gross income is chosen, only gross income generated during the period of membership shall be taken into account. If apportionment on the basis of units sold or sales receipts is chosen, only units sold or sales receipts during the period of membership shall be taken into account. Expenses incurred by the group member during its taxable year, but not during the period of membership, shall be allocated and apportioned without regard to other members of the group.

(2) [Reserved]

(3) ***Inclusion of financial corporations.*** For further guidance, see § 1.861-14T(d)(3) through (4).

(4) [Reserved]

(e) *Expenses to be allocated and apportioned under this section —*

(1) *Expenses not directly allocable to specific income-producing activities or property.*

(i) The expenses that are required to be allocated and apportioned under the rules of this section are expenses that are not directly allocable to specific income-producing activities or property solely of the member of the affiliated group that incurred the expense, including (but not limited to) certain expenses related to research and experimental expenses, supportive functions, deductions under section 250, legal and accounting expenses, and litigation damages awards, prejudgment interest, and settlement payments. Interest expense of members of an affiliated group of corporations is allocated and apportioned under § 1.861-11T and not under the rules of this section. Expenses that are included in inventory costs or that are capitalized are not subject to allocation and apportionment under the rules of this section. In addition, stewardship expenses are not subject to allocation and apportionment under the rules of this section; instead, stewardship expenses of a taxpayer are allocated and apportioned on a separate entity basis without treating members of the affiliated group as a single taxpayer. See § 1.861-8(e)(4)(ii)(A).

(ii) For further guidance, see § 1.861-14T(e)(1)(ii).

(2) ***Research and experimental expenditures.*** R&E expenditures (as defined in § 1.861-17(a)) in the case of an affiliated group are allocated and apportioned under the rules of § 1.861-17 as if all members of the affiliated group were a single taxpayer. Thus, R&E expenditures are allocated to all gross intangible income of all members of the affiliated group reasonably connected with the relevant broad SIC code category. If fewer than all members of the affiliated group derive gross intangible income reasonably connected with that relevant broad SIC code category, then such expenditures are apportioned under the rules of this paragraph (e)(2) only among those members, as if those members were a single taxpayer.

(3) ***Expenses related to supportive functions.*** For further guidance, see § 1.861-14T(e)(3).

(4) ***Section 250 deduction.*** Except as provided in this paragraph (e)(4), the deduction allowed under section 250(a) (the section 250 deduction) to a member of an affiliated group is allocated and apportioned on a separate entity basis under the rules of § 1.861-8(e)(13) and (14). However, the section 250 deduction of a member of a consolidated group is not directly allocable to specific income-producing activities or property solely of the member of the affiliated group that is allowed the deduction. See § 1.1502-50 for rules on applying section 250 and §§ 1.250-1 through 1.250(b)-6 to a member of a consolidated group. In such case, the section 250 deduction is allocated and apportioned as if all members of the consolidated group are treated as a single corporation.

(5) ***Legal and accounting fees and expenses; damages awards, prejudgment interest, and settlement payments.*** Legal and accounting fees and expenses, as well as litigation or arbitral damages awards, prejudgment interest, and settlement payments, are allocated and apportioned under the rules of § 1.861-8(e)(5). To the extent that under § 1.861-14T(c)(2) and (e)(1)(ii) such expenses are not directly allocable to specific income-producing activities or property of one or more members of the affiliated group, such expenses must be allocated and apportioned as if all members of the affiliated group were a single corporation. Specifically, such expenses must be allocated to a class of gross income that takes into account the gross income which is generated, has been generated, or is reasonably expected to be generated by the other members of the affiliated group. If the expenses relate to the gross income of fewer than all members of the affiliated group as determined under § 1.861-14T(c)(2), then those expenses must be apportioned under the rules of § 1.861-14T(c)(2), as if

those fewer members were a single corporation. Such expenses must be apportioned taking into account the apportionment factors contributed by the members of the group that are treated as a single corporation.

(6) ***Charitable contribution expenses.*** A deduction for a charitable contribution by a member of an affiliated group shall be allocated and apportioned under the rules of §§ 1.861-8(e)(12) and 1.861-14T(c)(1).

(f) ***Computation of FSC or DISC combined taxable income.*** For further guidance, see § 1.861-14T(f) and (g).

(g) [Reserved]

(h) ***Special rule for the allocation and apportionment of section 818(f)(1) items of a life insurance company —***

(1) ***In general.*** Except as provided in paragraph (h)(2) of this section, life insurance company items specified in section 818(f)(1) ("section 818(f)(1) items") are allocated and apportioned as if all members of the life subgroup (as defined in § 1.1502-47(b)(8)) were a single corporation ("life subgroup method"). See also § 1.861-8(e)(16) for rules on the allocation of reserve expenses with respect to dividends received by a life insurance company.

(2) ***Alternative separate entity treatment.*** A consolidated group may choose not to apply the life subgroup method and may instead allocate and apportion section 818(f)(1) items solely among items of the life insurance company that generated the section 818(f)(1) items ("separate entity method"). A consolidated group indicates its choice to apply the separate entity method by applying this paragraph (h)(2) for purposes of the allocation and apportionment of section 818(f)(1) items on its Federal income tax return filed for its first taxable year to which this section applies. A consolidated group's use of the separate entity method constitutes a binding choice to use the method chosen for that year for all members of the consolidated group and all taxable years of such members thereafter. The choice to use the separate entity method may not be revoked without the prior consent of the Commissioner.

(i)-(j) [Reserved]

(k) ***Applicability dates.*** Except as provided in this paragraph (k), this section applies to taxable years beginning after December 31, 2019. Paragraph (h) of this section applies to taxable years beginning on or after December 28, 2021.

[T.D. 8916, 66 FR 274, Jan. 3, 2001, as amended by T.D. 9211, 70 FR 40663, July 14, 2005; T.D. 9882, 84 FR 69074, Dec. 17, 2019; T.D. 9922, 85 FR 72041, Nov. 12, 2020; T.D. 9959, 87 FR 326, Jan. 4, 2022]

§ 1.861-14T Special rules for allocating and apportioning certain expenses (other than interest expense) of an affiliated group of corporations (temporary).

(a) ***In general.*** Section 1.861-11T provides special rules for allocating and apportioning interest expense of an affiliated group of corporations. The rules of this § 1.861-14T also relate to affiliated groups of corporations and implement section 864(e)(6), which requires affiliated group allocation and apportionment of expenses other than interest which are not directly allocable and apportionable to any specific income producing activity or property. In general, the rules of this section apply to taxable years beginning after December 31, 1986. Paragraph (b) of this section describes the scope of the application of the rule for the allocation and apportionment of such expenses of affiliated groups of corporations. Such rule is then set forth in paragraph (c) of this section. Paragraph (d) of this section contains the definition of the term "affiliated group" for purposes of this section. Paragraph (e) of this section

describes the expenses subject to allocation and apportionment under the rules of this section. Paragraph (f) of this section provides rules concerning the affiliated group allocation and apportionment of such expenses in computing the combined taxable income of a FSC or DISC and its related supplier. Paragraph (g) of this section describes the treatment of losses caused by apportionment of such expenses in the case of an affiliated group that does not file a consolidated return. Paragraph (h) of this section provides rules concerning the treatment of the reserve expenses of a life insurance company. Paragraph (j) of this section provides examples illustrating the application of this section.

(b) *Scope* —

(1) ***Application of section 864(e)(6).*** Section 864(e)(6) and this section apply to the computation of taxable income for purposes of computing separate limitations on the foreign tax credit under section 904. Section 864(e)(6) and this section also apply in connection with section 907 to determine reductions in the amount allowed as a foreign tax credit under section 901. Section 864(e)(6) and this section also apply to the computation of the combined taxable income of the related supplier and a foreign sales corporation (FSC) (under sections 921 through 927) as well as the combined taxable income of the related supplier and a domestic international sales corporation (DISC) (under sections 991 through 997).

(2) ***Nonapplication of section 864(e)(6).*** Section 864(e)(6) and this section do not apply to the computation of subpart F income of controlled foreign corporations (under sections 951 through 964) or the computation of effectively connected taxable income of foreign corporations.

(3) ***Application of section 864(e)(6) to the computation of combined taxable income of a possessions corporation and its affiliates.*** [Reserved]

(c) *General rule for affiliated corporations* —

(1) ***General rule.***

(i) Except as otherwise provided in paragraph (c)(2) of this section, the taxable income of each member of an affiliated group within each statutory grouping shall be determined by allocating and apportioning the expenses described in paragraph (e) of this section of each member according to apportionment fractions which are computed as if all members of such group were a single corporation. For purposes of determining these apportionment fractions, any interaffiliate transactions or property that are duplicative with respect to the measure of apportionment chosen shall be eliminated. For example, in the application of an asset method of apportionment, stock in affiliated corporations shall not be taken into account, and loans between members of an affiliated group shall be treated in accordance with the rules of § 1.861-11T(e). Similarly, in the application of a gross income method of apportionment, interaffiliate dividends and interest, gross income from sales or services, and other interaffiliate gross income shall be eliminated. Likewise, in the application of a method of apportionment based on units sold or sales receipts, interaffiliate sales shall be eliminated.

(ii) Except as otherwise provided in this section, the rules of § 1.861-8T apply to the allocation and apportionment of the expenses described in paragraph (e) of this section. Thus, allocation under this paragraph (c) is accomplished by determining, with respect to each expense described in paragraph (e), the class of gross income to which the expense is definitely related and then allocating the deduction to such class of gross income. For this purpose, the gross income of all members of the affiliated group must be taken in account. Then, the expense is apportioned by attributing the expense to gross income (within the class to which the expense has been allocated) which is in the statutory grouping and to gross income (within the class)

which is in the residual grouping. Section 1.861-8T(c)(1) identifies a number of factors upon which apportionment may be based, such as comparison of units sold, gross sales or receipts, assets used, or gross income. The apportionment method chosen must be applied consistently by each member of the affiliated group in apportioning the expense when more than one member incurred the expense or when members incurred separate portions of the expense. The apportionment fraction must take into account the apportionment factors contributed by all members of the affiliated group. In the case of an affiliated group of corporations that files a consolidated return, consolidated foreign tax credit limitations are computed for the group in accordance with the rules of § 1.1502-4. For purposes of this section the term "taxpayer" refers to the affiliated group (regardless of whether the group files a consolidated return), rather than to the separate members thereof.

(2) ***Expenses relating to fewer than all members.*** An expense relates to fewer than all members of an affiliated group if the expense is allocable under paragraph (e)(1) of this section to gross income of at least one member other than the member that incurred the expense but fewer than all members of the affiliated group. The taxable income of the member that incurred the expense shall be determined by apportioning that expense under the rules of paragraph (c)(1) of this section as if the members of the affiliated group that derive gross income to which such expense is allocable under paragraph (e)(1) were treated as a single corporation.

(3) ***Prior application of section 482.*** The rules of this section do not supersede the application of section 482 and the regulations thereunder. Section 482 may be applied effectively to deny a deduction for an expense to one member of an affiliated group and to allow a deduction for that expense to another member of the affiliated group. In cases to which section 482 is applied, expenses shall be reallocated and reapportioned under section 864(e)(6) and this section after taking into account the application of section 482.

(d)

(1)-(2) [Reserved]. For further guidance, see § 1.861-14(d)(1) and (2).

(e) ***Expenses to be allocated and apportioned under this section.***

(1) ***Expenses not directly traceable to specific income producing activities or property.***

(i) For further guidance, see § 1.861-14(e)(1)(i).

(ii) An item of expense is not considered to be directly allocable to specific income producing activities or property solely of the member incurring the expense if, were all members of the affiliated group treated as a single corporation, the expense would not be considered definitely related, within the meaning of § 1.861-8T(b)(2), only to a class of gross income derived solely by the member which actually incurred the expense. Furthermore, the expense is presumed not to be definitely related only to a class of gross income derived solely by the member incurring the expense (and is, therefore, presumed not to be directly allocable to specific income producing activities or property of that member) unless the taxpayer is able affirmatively to establish otherwise. As provided in paragraph (c)(1) of this section, expenses described in this paragraph (e)(1) generally shall be apportioned by the member incurring the expense according to apportionment fractions computed as if all members of the affiliated group were a single corporation. Under paragraph (c)(2) of this section, however, an expense shall be apportioned according to apportionment fractions computed as if only some (but fewer than all) members of the affiliated group were a single corporation, if the expense is considered allocable to gross income of at least one member other than the member incurring the expense but fewer than all

members of the affiliated group. An item of expense shall be considered to be allocable to gross income of fewer than all members of the group if, were all members of the affiliated group treated as a single corporation, the expense would not be considered definitely related within the meaning of § 1.861-8T(b)(2) to gross income derived by all members of the group. In such case, the expense shall be considered allocable, for purposes of paragraph (c)(2) of this section, to gross income of those members of the group that generated (or could reasonably be expected to generate) the gross income to which the expense would be considered definitely related if the group were treated as a single corporation.

(2) ***Research and experimental expenses.***

(i) For further guidance, see § 1.861-14(e)(2)(i) and (ii).

(ii) [Reserved]

(3) ***Expenses related to supportive functions.*** Expenses which are supportive in nature (such as overhead, general and administrative, supervisory expenses, advertising, marketing, and other sales expenses) are to be allocated and apportioned in accordance with the rules of § 1.861-8T(b)(3). To the extent that such expenses are not directly allocable under paragraph (e)(1)(ii) of this section to specific income producing activities or property of the member of the affiliated group that incurred the expense, such expenses must be allocated and apportioned as if all members of the affiliated group were a single corporation in accordance with the rules of paragraph (c) of this section. Specifically, such expenses must be allocated to a class of gross income that take into account gross income that is generated, has been generated, or could reasonably have been expected to have been generated by the members of the affiliated group. If the expenses relate to the gross income of fewer than all members of the affiliated group as determined under paragraph (c)(2) of this section, then those expenses must be apportioned under the rules of paragraph (c)(2) of this section, as if those fewer members were a single corporation. See *Example* (3) of paragraph (j) of this section. Such expenses must be apportioned between statutory and residual groupings of income within the appropriate class of gross income by reference to the apportionment factors contributed by the members of the affiliated group that are treated as a single corporation.

(4) ***Section 250 deduction.*** For further guidance, see § 1.861-14(e)(4).

(5) ***Legal and accounting fees and expenses; damages awards, prejudgment interest, and settlement payments.*** For further guidance, see § 1.861-14(e)(5).

(f) ***Computation of FSC or DISC combined taxable income.*** In the computation under the pricing rules of sections 925 and 994 of the combined taxable income of any FSC or DISC and its related supplier which are members of an affiliated group, the combined taxable income of such FSC or DISC and its related supplier shall be reduced by the portion of the expenses of the affiliated group described in paragraph (e) of this section that is incurred in connection with export sales involving that FSC or DISC. In order to determine the portion of the expenses of the affiliated group that is incurred in connection with export sales by or through a FSC or DISC, the portion of the total of the apportionment factor chosen that relates to the generation of that export income must be determined. Thus, if gross income is the apportionment factor chosen, the portion of total gross income of the affiliated group that consists of combined gross income derived from transactions involving the FSC or DISC and related supplier must be determined. Similarly, if units sold or sales receipts is the apportionment factor chosen, the portion of total units sold or sales receipts that generated export income of the FSC or DISC and related supplier must be determined. The amount of the expense shall then be multiplied by a fraction, the numerator of which is the export related apportionment factor as determined above, and the denominator of which is the total

apportionment factor. Thus, if gross income is the apportionment factor chosen, apportionment is based on a fraction, the numerator of which is export related combined gross income of the FSC or DISC and related supplier and the denominator of which is the total gross income of the affiliated group. Similarly, if units sold or sales receipts is the apportionment factor chosen, the fraction is the units sold or sales receipts that generated export income of the FSC or DISC and related supplier over the total units sold or sales receipts of the affiliated group. Under this rule, expenses of other group members may be attributed to the combined gross income of a FSC of DISC and its related supplier without affecting the amount of expenses (other than any commission payable by the related supplier to the FSC or DISC) otherwise deductible by the FSC or DISC, the related supplier, or other members of the affiliated group. The FSC or DISC must calculate combined taxable income, taking into account any reduction by expenses attributed from other members of the affiliated group to determine the commission derived by the FSC or DISC or the transfer price of qualifying export property sold to the FSC or DISC.

(g) ***Losses created through apportionment.*** In the case of an affiliated group that does not file a consolidated return, the taxable income in any separate limitation category must be adjusted under this paragraph (g) for purposes of computing the separate foreign tax credit limitations under section 904(d). As a consequence of the affiliated group allocation and apportionment of expenses required by section 864(e)(6) and this section, expenses of a group member may be apportioned for section 904 purposes to a limitation category with a consequent loss in that limitation category. For purposes of this paragraph, the term “limitation category” includes domestic source income, as well as the types of income described in section 904(d)(1) (A) through (I). A loss of one affiliate in a limitation category will reduce the income of another member in the same limitation category if a consolidated return is filed. (*See* § 1.1502-4.) If a consolidated return is not filed, this netting does not occur. Accordingly, in such a case, the following adjustments among members are required, in order to give effect to the group allocation of expense:

(1) Losses created through group apportionment of expense in one or more limitation categories within a given member must be eliminated; and

(2) A corresponding amount of income of other members in the same limitation category must be recharacterized.

Such adjustments shall be accomplished in accordance with the rules of § 1.861-11T(g).

(h) ***Special rule for allocation of reserve expenses of life insurance companies.*** For further guidance, see § 1.861-14(h).

(i) [Reserved]

(j) ***Examples.*** The rules of this section may be illustrated by the following examples. All of these examples assume that section 482 has not been applied by the Commissioner.

[1] Examples 1 and 4 of this paragraph (j) apply to taxable years beginning before January 1, 2018.

> *Example 1:* (i) *Facts.* P owns all of the stock of X and all of the stock of Y. P, X and Y are domestic corporations. P is a holding company for the stock of X and Y. Both X and Y manufacture and sell a product which is included in a broad product category listed in § 1.861-8(e)(3)(i). During 1988, X incurred $100,000 on research connected with that product. All of the research was performed in the United States. In 1988, the domestic sales by X of the product totalled $400,000 and the foreign sales of the product totalled $200,000; Y's domestic sales of the product totalled $200,000 and Y's foreign sales of the product totalled $200,000. In 1988, X's gross income is $300,000, of

which $200,000 is from domestic sales and $100,000 is from foreign sales; Y's gross income is $200,000 of which $100,000 is from domestic sales and $100,000 is from foreign sales.
(ii) P, X and Y are affiliated corporations within the meaning of section 864(e)(5) and this section. The research expenses incurred by X are allocable to all income connected with the relevant broad category listed in § 1.861-8T(e)(3)(i). Both X and Y have gross income includible within the class of gross income related to that product category. Accordingly, the research and experimental expenses incurred by X are to be allocated and apportioned as if X and Y were a single corporation. The apportionment for 1988 is as follows:

Tentative Apportionment on the Basis of Sales

Research expenses to be apportioned	$100,0
Exclusive apportionment to United States source gross income	$30,0
Research expense to be apportioned on the basis of sales	$70,0

Apportionment of research expense to foreign source general limitation income:

$$\$70,000 \times \frac{\$200,000 + \$200,000}{\$600,000 + \$400,000} = \$28,000$$

Apportionment of research expense to United States source gross income:

$$\$70,000 \times \frac{\$400,000 + \$200,000}{\$600,000 + \$400,000} = \$42,000$$

Total apportioned deduction for research	$100,0
Of which—	
Apportioned to foreign source gross income	$28,0
Apportioned to U.S. source gross income ($30,000 + $42,000)	$72,0

Tentative Apportionment on the Basis of Gross Income

Research expense apportioned to foreign source gross income:

$$\$100,000 \times \frac{\$100,000 + \$100,000}{\$300,000 + \$200,000} = \$40,000$$

Research expense apportioned to United States income:

$$\$100,000 \times \frac{\$200,000 + \$100,000}{\$300,000 + \$200,000} = \$60,000$$

Example 2: (i) *Facts.* P owns all of the stock of X, which owns all of the stock of Y. P, X and Y are all domestic corporations. P has incurred general training program expenses of $100,000 in 1987. Employees of P, X and Y participate in the training program. In 1987, P had United States source gross income of $200,000 and foreign source general limitation income of $200,000; X had U.S. source gross income of $100,000 and foreign source general limitation income of $100,000; and Y had U.S. source gross income of $300,000 and foreign source general limitation income of $100,000.
(ii) *Analysis.* P, X and Y are an affiliated group of corporations within the meaning of section 864(e)(5). The training expenses incurred by P are not definitely related solely to specific income producing activities or property of P. The employees of X and Y also participate in the training program. Thus, this expense relates to gross income generated by P, X and Y. This expense is definitely related and allocable to all of the gross income from foreign and domestic sources of P, X and Y. It is assumed that apportionment on the basis of gross income is reasonable. The apportionment of the expense is as follows:

Apportionment of $100,000 expense to foreign source general limitation income:

$$\$100,000 \times \frac{\$200,000 + \$100,000 + \$100,000}{\$400,000 + \$200,000 + \$400,000} = \$40,000$$

Apportionment of $100,000 expense to United States source gross income:

$$\$100,000 \times \frac{\$200,000 + \$100,000 + \$300,000}{\$400,000 + \$200,000 + \$400,000} = \$60,000$$

Total apportioned expense $100,0

Example 3: (i) *Facts.* The facts are the same as in *Example* (2) above, except that only employees of P and X participate in the training program.

(ii) *Analysis.* Because only the employees of P and X participate in the training program and they perform no services for Y, the expense relates only to gross income generated by P and X. Accordingly, the $100,000 expense must be allocated and apportioned as if P and X were a single corporation. The apportionment of the $100,000 expense is as follows:

Apportionment of $100,000 expense to foreign source general limitation income:

$$\$100,000 \times \frac{\$200,000 + \$100,000}{\$400,000 + \$200,000} = \$50,000$$

Apportionment of $100,000 expense to U.S. source gross income:

$$\$100,000 \times \frac{\$200,000 + \$100,000}{\$400,000 + \$200,000} = \$50,000$$

Example 4: (i) *Facts.* P owns all of the stock of X which owns all of the stock of Y. P and X are domestic corporations; Y is a foreign corporation. In 1987 P incurred $10,000 of stewardship expenses relating to an audit of Y.
(ii) *Analysis.* The stewardship expenses incurred by P are not directly allocable to specific income producing activities or property of P. The expense is definitely related and allocable to dividends received or to be received by X. Accordingly, the expense of P is allocated and apportioned as if P and X were a single corporation. The expense is definitely related to dividends received or to be received by X from Y, a foreign corporation. Such dividends are foreign source general limitation income. Thus, the entire amount of the expense must be allocated to foreign source dividend income.

Example 5: (i) *Facts.* P owns all of the stock of X which owns all of the stock of Y. P, X and Y are all domestic corporations. In 1987, P incurred $10,000 legal expense relating to the testimony of certain employees of P in connection with litigation to which Y is a party. This expense is not allocable to specific income of Y. In 1987, Y had $100,000 foreign source general limitation income and $300,000 U.S. source gross income.
(ii) *Analysis.* The legal expenses incurred by P are not definitely related solely to specific income producing activities or property of P. The expense is definitely related and allocable to the class of gross income which includes only gross income generated by Y. Accordingly, the expense of P is allocated and apportioned as if Y were the only member of the affiliated group, as follows:

Apportionment of legal expenses to foreign source general limitation income:

$$\$10,000 \times \frac{\$100,000}{\$400,000} \ldots\ldots \$2,500$$

Apportionment of legal expenses to U.S. source gross income:

$$\$10,000 \times \frac{\$300,000}{\$400,000} \ldots\ldots \$7,500$$

Example 6: (i) *Facts.* P owns all of the stock of R, which owns all of the stock of F. P and R are domestic corporations, and F is a foreign sales corporation under section 922 of the Code. R and F have entered into an agreement whereby F is paid a commission with respect to sales of product A. In 1987, P had gross receipts of $1,000,000 from domestic sales of product A, and gross receipts of $1,000,000 from foreign sales of product A. R had gross receipts of $1,000,000 from domestic sales of product A, and $1,000,000 from export sales of product A. R's cost of goods sold attributable to export sales is $500,000. R has deductible expenses of $100,000 directly related to its export sales, and F has such deductible expenses of $100,000. During 1987, P incurred an expense of $100,000 for marketing studies involving the worldwide market for product A.

(ii) *Analysis.* P and R are an affiliated group of corporations within the meaning of section 864(e)(5) and this section. The expense incurred by P for marketing studies regarding the worldwide market for product A is an expense that is not directly related solely to the activities of P, but also to the activities of R. This expense must be allocated and apportioned under the rules of paragraph (c)(1) of this section, as if P and R were a single corporation. The expense is allocable to the class of gross income that includes all gross income generated by sales of product A. Apportionment on the basis of gross receipts is reasonable under these facts. F, a foreign corporation, is not a member of the affiliated group. However, for purposes of determining F's commission on its sales, the combined gross income of F and R must be reduced by the portion of the marketing studies expense of P that is incurred in connection with export sales involving F under the rules of paragraph (f) of this section. The computation of the combined taxable income of R and F is as follows:

Combined Taxable Income of R and F

R's gross receipts from export sales	$1,000,000
R's cost of goods sold	$500,000
Combined Gross Income	$500,000
Less:	
R's other deductible expenses	$100,000
F's other deductible expenses	100,000

Apportionment of P's expense:

$$\$100,000 \times \frac{\$1,000,000}{\$200,000 + \$2,000,000} \ldots\ldots \$25,000$$

Total	$225,000
Combined Taxable Income	$275,000

(k) ***Effective/applicability date.*** The rules of this section apply for taxable years beginning after December 31, 1986.

[T.D. 8228, 53 FR 35501, Sept. 14, 1988, as amended by T.D. 8916, 65 FR 274, Jan. 3, 2001; T.D. 9143, 69 FR 44932, July 28, 2004; T.D. 9211, 70 FR 40663, July 14, 2005; T.D. 9456, 74 FR 38875, Aug. 4, 2009; T.D. 9922, 85 FR 72042, Nov. 12, 2020]

§ 1.861-15 Income from certain aircraft or vessels first leased on or before December 28, 1980.

(a) ***General rule.*** A taxpayer who owns an aircraft or vessel described in paragraph (b) of this section and who leases the aircraft or vessel to a United States person (other than a member of the same controlled group of corporations (as defined in section 1563) as the taxpayer) may elect under paragraph (f) of this section to treat all amounts includible in gross income with respect to the aircraft or vessel as income from sources within the United States for any taxable year ending after the commencement of the lease. This paragraph (a) applies only with respect to taxable years ending after August 15, 1971, and only with respect to leases entered into after that date of aircraft or vessels first leased by the taxpayer on or before December 28, 1980. An election once made applies to the taxable year for which made and to all subsequent taxable years unless it is revoked or terminated in accordance with paragraph (g) of this section. A taxpayer need not be a United States person to be eligible to make the election under this section, unless otherwise required by a provision of law not contained in the Internal Revenue Code of 1954. In addition, the taxpayer need not be a bank or other financial institution to be eligible to make this election. The term “United States person” as used in this section has the meaning assigned to it by section 7701(a)(30).

(b) ***Property to which the election applies*** —

(1) ***Section 38 property.*** An election made under this section may be made only if the aircraft or vessel is section 38 property, or property which would be section 38 property but for section 48(a)(5) (relating to property used by governmental units), at the time the election is made and for all taxable years to which the election applies. The aircraft or vessel must be property which qualifies for the investment credit under section 38 unless the property does not qualify because it is described in section 48(a)(5). If an aircraft is used predominantly outside the United States (determined under § 1.48-1(g)(1)), it must qualify under the provisions of section 48(a)(2)(B)(i) and § 1.48-1(g)(2)(i). If a vessel is used predominantly outside the United States, it must qualify under the provisions of

section 48(a)(2)(B)(iii) and § 1.48-1(g)(2)(iii). The aircraft or vessel may not be suspension or termination period property described in section 48(h) or section 49(a) (as in effect before the enactment of the Revenue Act of 1978). See paragraph (g) (3) and (4) of this section for rules which apply if the property ceases to be section 38 property.

(2) ***United States manufacture or construction.*** An election under this section may be made only if the aircraft or vessel is manufactured or constructed in the United States. The aircraft or vessel will be considered to be manufactured or constructed in the United States if 50 percent or more of the basis of the aircraft or vessel is attributable to value added within the United States.

(3) ***Exclusion of certain property used outside the United States.*** The term "aircraft or vessel" as used in this paragraph (b) does not include any property which is used predominantly outside the United States and which qualifies as section 38 property under—

(i) Section 48(a)(2)(B)(v), relating to containers used in the transportation of property to and from the United States,

(ii) Section 48(a)(2)(B)(vi), relating to certain property used for the purpose of exploring for, developing, removing, or transporting resources from the Outer Continental Shelf, or

(iii) Section 48(a)(2)(B)(x), relating to certain property used in international or territorial waters.

(c) ***Leases or subleases to which the election applies.*** At the time the election under this section is made and for all taxable years for which the election applies, the lessee of the aircraft or vessel must be a United States person. In addition, the aircraft or vessel may not be subleased to a person who is not a United States person unless the sublease is a short-term sublease. For purposes of this section, a short-term sublease is a sublease for a period of time (including any period for which the sublease may be renewed or extended) which is less than 30 percent of the asset guideline period of the aircraft or vessel leased (determined under section 167(m)). See paragraphs (g) (3) and (4) of this section for rules which apply if the requirements of this paragraph (c) are not met.

(d) ***Income to which the election applies.*** An election under this section applies to all amounts derived by the taxpayer with respect to the aircraft or vessel which is subject to the election. The election applies to all amounts which are includible in the taxpayer's gross income whether or not includible during or after the period of a lease to which the election applies. Amounts derived by the taxpayer with respect to the aircraft or vessel include any gain from the sale, exchange, or other disposition of the aircraft or vessel. If by reason of the allowance of expenses and other deductions, there is a loss with respect to an aircraft or vessel, the election applies to treat the loss as having a source within the United States. Similarly, if the sale, exchange or other disposition of the aircraft or vessel which is subject to an election results in a loss, it is treated as having a source within the United States. See paragraph (e)(2) of this section for the application of an election under this section to the income of certain transferees or distributees.

(e) ***Effect of election*** —

(1) ***In general.*** An election under this section applies to the taxable year for which it is made and to all subsequent taxable years for which amounts in respect of the aircraft or vessel to which the election relates are includible in gross income. However, the election may be revoked under paragraph (g) (1) or (2) of this section or terminated under paragraph (g)(3) of this section.

(2) ***Certain transfers involving carryover of basis.***

(i) If an electing taxpayer transfers or distributes an aircraft or vessel which is subject to the election under this section, the transferee or distributee will be treated as having made an election under this section with respect to the aircraft or vessel if the basis of the aircraft or vessel in the hands of the transferee or distributee is determined by reference to its basis in the hands of the transferor or distributor. This paragraph (e)(2)(i) applies even though the transferor or distributor recognizes an amount of gain which increases basis in the hands of the transferee or distributee and even though the transferee of distributee is a nonresident alien individual or foreign corporation. For example, if a corporation distributes a vessel which is subject to an election under this section to its parent corporation in a complete liquidation described in section 332(b), the parent corporation will be required to treat all amounts includible in its gross income with respect to the vessel as income from source within the United States if, unless the election is revoked or terminated under paragraph (g) of this section, the basis of the property in the hands of the parent is determined under section 334(b)(1) (relating to the general rule on carryover of basis). In further illustration, if a corporation distributes a vessel (subject to an election) in a distribution to which section 301(a) applies, the distributee will be treated as having made the election with respect to the vessel if its basis is determined under section 301(d)(2) (relating to basis of corporate distributees) even though the basis is the fair market value of the vessel under section 301(d)(2)(A).

(ii) If a member of an affiliated group which files a consolidated return transfers an aircraft or vessel subject to an election to another member of that group, the transferee will be treated as having made the election with respect to the aircraft or vessel. In addition, if a partnership distributes an aircraft or vessel subject to an election to a partner, the partner will be treated as having made the election with respect to the aircraft or vessel.

(iii) If paragraph (e)(2) (i) and (ii) of this section do not apply, the election under this section with respect to an aircraft or vessel will not be considered as made by a transferee or distributee.

(f) *Election* —

(1) ***Time for making the election.*** The election under this section must be made before the expiration of the period prescribed by section 6511(a) (or section 6511(c) if the period is extended by agreement) for making a claim for credit or refund of the tax imposed by chapter 1 for the first taxable year for which the election is to apply. The period for that first taxable year is determined without regard to the special periods prescribed by section 6511(d).

(2) ***Manner of making the election.*** An election under this section must be made by filing with the income tax return (or an amended return) for the first taxable year for which the election is to apply a statement, signed by the taxpayer, to the effect that the election under section 861(e) is being made. The statement must—

(i) Set forth sufficient facts to identify the aircraft or vessel which is the subject of the election,

(ii) State that the aircraft or vessel was manufactured or constructed in the United States,

(iii) State that the aircraft or vessel is section 38 property described in § 1.861-9(b) which was leased to a United States person (as defined in section 7701(a)(30) of the Code) pursuant to a lease entered into after August 15, 1971,

(iv) State that the electing taxpayer is the owner of the aircraft or vessel,

(v) State the lessee of the aircraft or vessel is not a member of a controlled group of corporations (as defined in section 1563) of which the taxpayer is a member,

(vi) Give the name and taxpayer identification number of the lessee of the aircraft or vessel, and

(vii) State that the aircraft or vessel is not subject to a sublease (other than a short-term sublease) to any person who is not a United States person.

(3) ***Election by partnership.*** Any election under this section with respect to an aircraft or vessel owned by a partnership shall be made by the partnership. Any partnership election is applicable to each partner's partnership interest in the aircraft or vessel. However, an election made by a partner before August 8, 1979 will be recognized where the partnership made no election and the election can no longer be revoked without the consent of the Commissioner under paragraph (g)(1) of this section.

(g) ***Termination of election*** —

(1) ***Revocation without consent.*** A taxpayer may revoke an election within the time prescribed in paragraph (f)(1) of this section without the consent of the Commissioner. In such a case, the taxpayer must file an amended income tax return for any taxable year to which the election applied.

(2) ***Revocation with consent.*** Except as provided in paragraph (g) (1) or (3) of this section, an election made under this section is binding unless consent to revoke is obtained from the Commissioner. A request to revoke the election must be made in writing and addressed to the Assistant Commissioner of Internal Revenue (Technical), Attention: T:C:C:3, Washington, DC 20224. The request must include the name and address of the taxpayer and be signed by the taxpayer or his duly authorized representative. It must specify the taxable year or years for which the revocation is to be effective and must be filed at least 90 days prior to the time (not including extensions) prescribed by law for filing the income tax return for the first taxable year for which the revocation of the election is to be effective or by November 6, 1979 whichever is later. The request must specify the grounds which are considered to justify the revocation. The Commissioner may require such additional information as may be necessary in order to determine whether the proposed revocation will be permitted. Consent will generally not be given to revoke an election where the revocation would result in treating gross income with respect to the aircraft or vessel (including any gain from the sale, exchange, or other disposition of such aircraft or vessel) as income from sources without the United States where, during the period the election was in effect, there were losses from sources within the United States. A copy of the consent of the Commissioner to revoke must be attached to the taxpayer's income tax return (or amended return) for each taxable year affected by the revocation.

(3) ***Automatic termination.*** If an aircraft or vessel subject to an election under section 861(e) ceases to be section 38 property, ceases to be leased by its owner directly to a United States person, or is subleased (other than a short-term sublease) to a person who is not a United States person, within the period set forth in section 6511(a) (or section 6511(c) if the period is extended by agreement) for making a claim for credit or refund of the tax imposed by chapter 1 for the first taxable year for which the election applied, then the election with respect to such aircraft or vessel will automatically terminate. If the election terminates, the taxpayer who made the election must file an amended tax return or claim for credit or refund, as the case may be, for any taxable year to which the election applied.

(4) ***Factors not causing revocation or termination.*** The fact that an aircraft or vessel ceases to be section 38 property, ceases to be leased by its owner directly to a United States person, or is leased or subleased for any period of time to a person who is not a United States person, after expiration of the period set forth in section 6511(a) (or section 6511(c) if the period is extended by agreement) for

making a claim for credit or refund of the tax imposed by chapter 1 for the first taxable year for which the election applied, will not cause a termination of the election made under this section with respect to the aircraft or vessel. For example, the electing taxpayer is not relieved from any of the consequences of making the election merely because the aircraft or vessel is subleased to a person who is not a United States person for a period in excess of that allowed for short-term subleases under paragraph (c) of this section after expiration of the later of 3 years from the time the return was filed for the first taxable year to which the election applied or 2 years from the time the tax was paid for that year where the period set forth in section 6511(a) has not been extended by agreement.

(5) ***Effect of revocation or termination.*** If an election is revoked or terminated under this paragraph (g), the taxpayer is required to recompute the tax for the appropriate taxable years without reference to section 861(e)(1).

(6) ***Revocation or termination after December 28, 1980.*** The rules in paragraph (g)(1) through (g)(5) continue to apply with respect to any election made pursuant to this section even though the revocation or termination may occur after December 28, 1980.

[T.D. 7635, 44 FR 46457, Aug. 8, 1979, as amended by T.D. 7928, 48 FR 55846, Dec. 16, 1983. Redesignated at 53 FR 35477, Sept. 14, 1988]

§ 1.861-16 Income from certain craft first leased after December 28, 1980.

(a) ***General rule.*** If a taxpayer—

(1) Owns a qualified craft (as defined in paragraph (b) of this section).

(2) Leases such qualified craft after December 28, 1980, to a United States person that is not a member of the same controlled group of corporations as the taxpayer, and

(3) The lease is the taxpayer's first lease of the craft and the taxpayer is not considered to have made an election with respect to the craft under § 1.861-9(e)(2),

then the taxpayer shall treat all amounts includible in gross income with respect to the qualified craft as income from sources within the United States for each taxable year ending after commencement of the lease. If this section applies to income with respect to a craft, it applies to all such amounts that are includible in the taxpayer's gross income, whether or not includible during or after the period of a lease to a United States person. Amounts derived by the taxpayer with respect to the qualified craft include any gain from the sale, exchange, or other disposition of the qualified craft. If this section applies to income with respect to a craft and there is a loss with respect to that craft (either due to the allowance of expenses and other deductions or due to a sale, exchange, or other disposition of the qualified craft), such loss is treated as allocable or apportionable to sources within the United States. The fact that a craft ceases to be section 38 property, ceases to be leased by the taxpayer to a United States person, or is leased or subleased for any period of time to a person who is not a United States person will not terminate the application of this section.

(b) ***Qualified craft*** —

(1) ***In general.*** A qualified craft is a vessel, aircraft, or spacecraft that—

(i) Is section 38 property (or would be section 38 property but for section 48(a)(5), relating to use by governmental units), and

(ii) Is manufactured or constructed in the United States.

(2) ***Vessel.*** The term "vessel" includes every type of watercraft capable of being used as a means of transportation on water, and any items of property that are affixed in a permanent fashion or are integral to the vessel. A vessel that is used predominately outside the United States must be described in section 48(a)(2)(B)(iii) and § 1.48-1(g)(2)(iii), relating to vessels documented for use in the foreign or domestic commerce of the United States, to be a qualified craft.

(3) ***Aircraft.*** An aircraft used predominantly outside the United States must be described in section 48(a)(2)(B)(i) and § 1.48-1(g)(2)(i), relating to aircraft registered by the Administrator of the Federal Aviation Agency, and operated to and from the United States or operated under contract with the United States, to be a qualified craft.

(4) ***Spacecraft.*** A spacecraft must be described in section 48(a)(2)(B)(viii) and § 1.48-1(g)(2)(viii), relating to communications satellites, or any interest therein, of a United States person, to be a qualified craft.

(5) ***United States manufacture or construction.*** A craft will be considered to be manufactured or constructed in the United States if 50 percent or more of the basis of the craft on the date of the lease to a United States person is attributable to value added within the United States.

(c) ***United States person.*** For purposes of this section, the term "United States person" includes those persons described in section 7701(a)(30) and individuals with respect to whom an election under section 6013 (g) or (h) (relating to nonresident alien individuals married to United States citizens or residents) is in effect.

(d) ***Controlled group.*** For purposes of paragraph (a)(2) of this section, whether a taxpayer and a United States person are members of the same controlled group of corporations is determined under section 1563. Solely for purposes of this section, if at least 80% of the capital interest, or the profits interest, in a partnership is owned, directly or indirectly, by a member or members of a controlled group of corporations, then the partnership shall be considered a member of that controlled group of corporations. In addition, if at least 80% of the capital interest, or the profits interest, in a partnership is owned, directly or indirectly, by a corporation, then the partnership and that corporation shall be considered members of a controlled group of corporations.

(e) ***Certain transfers and distributions*** —

(1) ***Transfers and distributions involving carryover of basis.*** If—

(i) The income with respect to a craft is subject to this section,

(ii) The taxpayer transfers or distributes such craft, and

(iii) The basis of such craft in the hands of the transferee or distributee is determined by reference to its basis in the hands of the transferor or distributor,

then this section will apply to the income with respect to the craft includible in the gross income of the transferee or distributee. This paragraph (e)(1) applies even though the transferor or distributor recognizes an amount of gain that increases basis in the hands of the transferee or distributee and even though the transferee or distributee is a nonresident alien or foreign corporation. For example, if a corporation distributes a craft the income of which is subject to this section to its parent corporation in a complete liquidation described in section 332(b), the parent corporation will be treated as if it satisfied the requirements of paragraph (a) of this section with respect to such craft if the basis of the property in the hands of the parent corporation is determined under section 334(b) (relating to the general rule on carryover of basis in liquidations). In further illustration, if a corporation distributes a craft the income of which is subject to this section, in a distribution to

which section 301(a) applies, the distributee will be treated as if it satisfied the requirements of paragraph (a) of this section with respect to such craft if its basis is determined under section 301(d)(2) (relating to basis of corporate distributees) even though the basis may be the fair market value of the craft under section 301(d)(2)(A).

(2) ***Partnerships.*** If a partnership satisfies the requirements of paragraph (a)(1), (2), and (3) of this section, each partner shall treat all amounts includible in gross income with respect to the craft as income from sources within the United States for any taxable year of the partnership ending after commencement of the lease. In addition, if a partnership distributes a craft the income of which is subject to this section, to a partner, the partner will be treated as if he or she satisfied the requirements of paragraph (a) of this section with respect to such craft.

(3) ***Affiliated groups.*** If a member of a group of corporations that files a consolidated return transfers a craft, the income of which is subject to this section, to another member of that same group, the transferee will be treated as if it satisfied the requirements of paragraph (a) of this section with respect to the craft.

[T.D. 7928, 48 FR 55846, Dec. 16, 1983. Redesignated by T.D. 8228, 53 FR 35477, Sept. 14, 1988]

§ 1.861-17 Allocation and apportionment of research and experimental expenditures.

(a) ***Scope.*** This section provides rules for the allocation and apportionment of research and experimental expenditures that a taxpayer deducts, or amortizes and deducts, in a taxable year under section 174 or section 59(e) (applicable to expenditures that are allowable as a deduction under section 174(a)) (*R&E expenditures*). R&E expenditures do not include any expenditures that are not deductible expenses by reason of the second sentence under § 1.482-7(j)(3)(i) (relating to CST Payments (as defined in § 1.482-7(b)(1)) owed to a controlled participant in a cost sharing arrangement).

(b) ***Allocation*** —

(1) ***In general.*** The method of allocation and apportionment of R&E expenditures set forth in this section recognizes that research and experimentation is an inherently speculative activity, that findings may contribute unexpected benefits, and that the gross income derived from successful research and experimentation must bear the cost of unsuccessful research and experimentation. In addition, the method set forth in this section recognizes that successful R&E expenditures ultimately result in the creation of intangible property that will be used to generate income. Therefore, R&E expenditures ordinarily are considered deductions that are definitely related to gross intangible income (as defined in paragraph (b)(2) of this section) reasonably connected with the relevant SIC code category (or categories) of the taxpayer and therefore allocable to gross intangible income as a class related to the SIC code category (or categories) and apportioned under the rules in this section. For purposes of the allocation under this paragraph (b)(1), a taxpayer's SIC code category (or categories) are determined in accordance with the provisions of paragraph (b)(3) of this section. For purposes of this section, the term *intangible property* means intangible property (as defined in section 367(d)(4)), including intangible property either created or acquired by the taxpayer, that is derived from R&E expenditures.

(2) ***Definition of gross intangible income.*** The term *gross intangible income* means all gross income earned by a taxpayer that is attributable to a sale or license of intangible property (including income from platform contribution transactions described in § 1.482-7(b)(1)(ii), royalty income from the licensing of intangible property, or amounts taken into account under section 367(d) by reason of a

transfer of intangible property), and the full amount of gross income from sales or leases of products or services if the income is derived directly or indirectly (in whole or in part) from intangible property. Gross intangible income also includes a distributive share of any amounts described in the previous sentence, but does not include dividends or any amounts included in income under section 951, 951A, or 1293. See § 1.904-4(f)(2)(vi) for rules addressing the assignment of gross income, including gross intangible income, to a separate category by reason of certain disregarded payments to or from a taxpayer's foreign branch.

(3) *SIC code categories* —

(i) ***Allocation based on SIC code categories.*** Ordinarily, a taxpayer's R&E expenditures are incurred to produce gross intangible income that is reasonably connected with one or more relevant SIC code categories. Except as provided in paragraph (b)(3)(iv) of this section, where research and experimentation is conducted with respect to more than one SIC code category, the taxpayer may aggregate the categories for purposes of allocation and apportionment, provided the categories are in the same Major Group. However, the taxpayer may not subdivide any categories. Where research and experimentation is not clearly related to any SIC code category (or categories), it will be considered conducted with respect to all of the taxpayer's SIC code categories.

(ii) ***Use of three digit standard industrial classification codes.*** A taxpayer determines the relevant Major Groups and SIC code categories by reference to the two digit and three digit classification, respectively, of the Standard Industrial Classification Manual (SIC code). The SIC Manual is available at *https://www.osha.gov/pls/imis/sic_manual.html*.

(iii) ***Consistency.*** Once a taxpayer selects a SIC code category or Major Group for the first taxable year for which this section applies to the taxpayer, it must continue to use that category in following years unless the taxpayer establishes to the satisfaction of the Commissioner that, due to changes in the relevant facts, a change in the category is appropriate. Therefore, once a taxpayer elects a permissible aggregation of three digit SIC code categories into a two digit Major Group, it must continue to use that two digit category in following years unless the taxpayer establishes to the satisfaction of the Commissioner that, due to changes in the relevant facts, a change is appropriate.

(iv) ***Wholesale trade and retail trade categories.*** A taxpayer must use a SIC code category within the divisions of “wholesale trade” or “retail trade” if it is engaged solely in sales-related activities with respect to a particular category of products. In the case of a taxpayer that conducts material non-sales-related activities with respect to a particular category of products, all R&E expenditures related to sales of the products must be allocated and apportioned as if the expenditures were reasonably connected to the most closely related three digit SIC code category other than those within the wholesale and retail trade divisions. For example, if a taxpayer engages in both the manufacturing and assembling of cars and trucks (SIC code 371) and in a wholesaling activity related to motor vehicles and motor vehicle parts and supplies (SIC code 501), the taxpayer must allocate and apportion all R&E expenditures related to both activities as if they relate solely to the manufacturing SIC code 371. By contrast, if the taxpayer engages only in the wholesaling activity related to motor vehicles and motor vehicle parts and supplies, the taxpayer must allocate and apportion all R&E expenditures to the wholesaling SIC code 501.

(c) ***Exclusive apportionment.*** Solely for purposes of applying this section to section 904 as the operative section, an amount equal to fifty percent of a taxpayer's R&E expenditures in a SIC code category (or categories) is apportioned exclusively to the residual grouping of U.S. source gross intangible income if research and experimentation that accounts for at least fifty percent of such R&E expenditures was performed in the United States. Similarly, an amount equal to fifty percent of a taxpayer's R&E expenditures in a SIC code category (or categories) is apportioned exclusively to the statutory grouping (or groupings) of foreign source gross intangible income in that SIC code category if research and experimentation that accounts for more than fifty percent of such R&E expenditures was performed outside the United States. If there are multiple separate categories with foreign source gross intangible income in the SIC code category, the fifty percent of R&E expenditures apportioned under the previous sentence is apportioned ratably to foreign source gross intangible income based on the relative amounts of gross receipts from gross intangible income in the SIC code category in each separate category, as determined under paragraph (d) of this section. Solely for purposes of determining whether fifty percent or more of R&E expenditures in a year are performed within or without the United States under this paragraph (c), a taxpayer's R&E expenditures with respect to a taxable year are determined by taking into account only the R&E expenditures incurred in such taxable year (without regard to whether such expenditures are capitalized under section 59(e) or any other provision in the Code), and do not include amounts that were capitalized in a prior taxable year and are deducted in such taxable year.

(d) ***Apportionment based on gross receipts from sales of products or services*** —

(1) ***In general.*** A taxpayer's R&E expenditures not apportioned under paragraph (c) of this section are apportioned between the statutory grouping (or among the statutory groupings) within the class of gross intangible income and the residual grouping within such class according to the rules in paragraphs (d)(1)(i) through (iv) of this section. See paragraph (b) of this section for defining the class of gross intangible income in relation to SIC code categories.

(i) A taxpayer's R&E expenditures not apportioned under paragraph (c) of this section are apportioned in the same proportions that:

(A) The amounts of the taxpayer's gross receipts from sales and leases of products (as measured by gross receipts without regard to cost of goods sold) or services that are related to gross intangible income within the statutory grouping (or statutory groupings) and in the residual grouping bear, respectively; to

(B) The total amount of such gross receipts in the class.

(ii) For purposes of this paragraph (d), gross receipts from sales and leases of products are related to gross intangible income if intangible property is embedded or used in connection with the manufacture or sale of such products, and gross income from services is related to gross intangible income if intangible property is incorporated in or directly or indirectly benefits such services. See paragraph (g)(7) of this section (*Example 7*). The amount of the gross receipts used to apportion R&E expenditures also includes gross receipts from sales and leases of products or services of any controlled or uncontrolled party to the extent described in paragraphs (d)(3) and (4) of this section. A royalty or other amount paid to the taxpayer for intangible property constitutes gross intangible income, but is not considered part of gross receipts arising from the sale or lease of a product or service, and so is not taken into account in apportioning the taxpayer's R&E expenditures to its gross intangible income.

(iii) The statutory grouping (or groupings) or residual grouping to which the gross receipts are assigned is the grouping to which the gross intangible income related to the sale, lease, or service is assigned. In cases where the gross intangible income of the taxpayer is income not described in paragraph (d)(3) or (4) of this section, the grouping to which the taxpayer's gross receipts and the gross intangible income are assigned is the same. In cases where the taxpayer's gross intangible income is related to sales, leases, or services described in paragraph (d)(3) or (4) of this section, the gross receipts that will be used for purposes of this paragraph (d) are the gross receipts of the controlled and uncontrolled parties that are taken into account under paragraphs (d)(3) and (4) of this section. The grouping to which the controlled or uncontrolled parties' gross receipts are assigned is determined based on the grouping of the taxpayer's gross intangible income attributable to the license, sale, or other transfer of intangible property to such controlled or uncontrolled party as described in paragraph (d)(3)(i) or (d)(4)(i) of this section, and not the grouping to which the gross receipts would be assigned if the assignment were based on the income earned by the controlled or uncontrolled party. See paragraph (g)(1) of this section (*Example 1*). For purposes of applying this paragraph (d)(1)(iii) to section 250 or section 904 as the operative section, the assignment of gross receipts to the general and foreign branch categories is made after taking into account the assignment of gross intangible income to those categories as adjusted by reason of disregarded payments under the rules of § 1.904-4(f)(2)(vi), and by making similar adjustments to gross receipts under the principles of § 1.904-4(f)(2)(vi).

(iv) For purposes of applying this section to section 904 as the operative section, because a United States person's gross intangible income cannot include income assigned to the section 951A category, no R&E expenditures of a United States person are apportioned to foreign source income in the section 951A category.

(2) ***Apportionment in excess of gross income.*** Amounts apportioned under this section may exceed the amount of gross income related to the SIC code category within the statutory or residual grouping. In such case, the excess is applied against other gross income within the statutory or residual grouping. See § 1.861-8(d)(1) for applicable rules where the apportionment results in an excess of deductions over gross income within the statutory or residual grouping.

(3) ***Sales or services of uncontrolled parties*** —

(i) ***In general.*** For purposes of the apportionment within a class under paragraph (d)(1) of this section, if a taxpayer reasonably expects an uncontrolled party to (through a license, purchase, or transfer): Acquire intangible property that would arise from the taxpayer's current R&E expenditures; acquire products in which such intangible property is embedded or used in connection with the manufacture or sale of such products; or receive services that incorporate or directly or indirectly benefit from such intangible property, then the gross receipts of the uncontrolled party from sales, licenses, leases, or services of the particular products or services in which the taxpayer's intangible property is embedded or incorporated or which the taxpayer's intangible property directly or indirectly benefitted are taken into account. If the taxpayer has previously licensed, sold, or transferred intangible property related to a SIC code category to an uncontrolled party, the taxpayer is presumed to expect to license, sell, or transfer to that uncontrolled party all future intangible property related to the same SIC code category. The presumption described in the preceding sentence may be rebutted by the taxpayer with facts that demonstrate that the taxpayer reasonably expects not to license, sell, or transfer future intangible property to the uncontrolled party.

(ii) ***Definition of uncontrolled party.*** For purposes of this paragraph (d)(3), the term *uncontrolled party* means a person that is not a controlled party as defined in paragraph (d)(4)(ii) of this section.

(iii) ***Sales of components.*** In the case of a sale or lease of a product by an uncontrolled party that is derived from the taxpayer's intangible property but is incorporated as a component of a larger product (for example, where the product incorporating the intangible property is a component of a large machine), only the portion of the gross receipts from the larger product that are attributable to the component derived from the intangible property is included. For purposes of the preceding sentence, a reasonable estimate based on the principles of section 482 must be made. See paragraph (g)(4)(ii)(B)(*3*) of this section (*Example 4*).

(iv) ***Reasonable estimates of gross receipts.*** If the amount of gross receipts of an uncontrolled party is unknown, a reasonable estimate of gross receipts must be made annually. Appropriate economic analyses, based on the principles of section 482, must be used to estimate gross receipts. See paragraph (g)(5)(ii)(B)(*3*)(*ii*) of this section (*Example 5*).

(4) ***Sales or services of controlled parties*** —

(i) ***In general.*** For purposes of the apportionment within a class under paragraph (d)(1) of this section, if the controlled party is reasonably expected to (through a license, sale, or transfer): Acquire intangible property that would arise from the taxpayer's current R&E expenditures; acquire products in which such intangible property is embedded or used in connection with the manufacture or sale of such products; or receive services that incorporate or directly or indirectly benefit from such intangible property, then the gross receipts of the controlled party from all of its sales, licenses, leases, or services are taken into account. Except to the extent provided in paragraph (d)(4)(iv) of this section, if the taxpayer has previously licensed, sold, or transferred intangible property related to a SIC code category to a controlled party, the taxpayer is presumed to expect to license, sell, or transfer to that controlled party all future intangible property related to the same SIC code category. The presumption described in the preceding sentence may be rebutted by the taxpayer with facts that demonstrate that the taxpayer will not license, sell, or transfer future intangible property to the controlled party.

(ii) ***Definition of a controlled party.*** For purposes of this paragraph (d)(4), the term *controlled party* means any person that has a relationship to the taxpayer specified in section 267(b) or 707(b), or is a member of a controlled group of corporations (within the meaning of section 267(f)) to which the taxpayer belongs. Because an affiliated group is treated as a single taxpayer, a member of an affiliated group is not a controlled party. See paragraph (e) of this section.

(iii) ***Gross receipts not to be taken into account more than once.*** Sales, licenses, leases, or services among the taxpayer, controlled parties, and uncontrolled parties are not taken into account more than once; in such a situation, the amount of gross receipts of the selling person must be subtracted from the gross receipts of the buying person. Therefore, the gross receipts taken into account under paragraph (d)(4)(i) of this section generally reflect the gross receipts from sales made to end users.

(iv) ***Effect of cost sharing arrangements.*** If the controlled party has entered into a cost sharing arrangement, in accordance with the provisions of § 1.482-7, with the taxpayer for the purpose of developing intangible property, then ordinarily the controlled party is not reasonably expected to acquire rights in intangible property that would arise from the taxpayer's share of the R&E expenditures with respect to the cost shared intangibles as defined in § 1.482-7(j)(1)(i); acquire

products in which such intangible property is embedded or used in connection with the manufacture or sale of such products; or receive services that incorporate or directly or indirectly benefit from such intangible property. Therefore, solely for purposes of apportioning a taxpayer's R&E expenditures (which do not include the amount of CST Payments received by the taxpayer; see paragraph (a) of this section) that are intangible development costs (as defined in § 1.482-7(d)) with respect to a cost sharing arrangement, the controlled party's gross receipts are not taken into account for purposes of paragraphs (d)(1) and (d)(4)(i) of this section. However, the rule in this paragraph (d)(4)(iv) does not apply, and the controlled party's sales are taken into account, to the extent the taxpayer licenses, or has licensed, to the controlled party intangible property resulting from a cost sharing arrangement with the controlled party.

(5) ***Application of section 864(e)(3).*** Section 864(e)(3) and § 1.861-8(d)(2) do not apply for purposes of this section.

(e) ***Affiliated groups.*** See § 1.861-14(e)(2) for rules on allocating and apportioning R&E expenditures of an affiliated group (as defined in § 1.861-14(d)).

(f) ***Special rules for partnerships*** —

(1) ***R&E expenditures.*** For purposes of applying this section, if R&E expenditures are incurred by a partnership in which the taxpayer is a partner, the taxpayer's R&E expenditures include the taxpayer's distributive share of the partnership's R&E expenditures.

(2) ***Purpose and location of expenditures.*** In applying exclusive apportionment under paragraph (c) of this section, a partner's distributive share of R&E expenditures incurred by a partnership is treated as incurred by the partner for the same purpose and in the same location as incurred by the partnership.

(3) ***Apportionment based on gross receipts.*** In applying the remaining apportionment under paragraph (d) of this section, if a taxpayer is a partner in a partnership that incurs R&E expenditures described in paragraph (f)(1) of this section and the taxpayer is not reasonably expected to license, sell, or transfer to the partnership (directly or indirectly) intangible property that would arise from the taxpayer's current R&E expenditures, in the manner described in paragraph (d)(3)(i) or (d)(4)(i) of this section, then the taxpayer's gross receipts in a SIC code category include only the taxpayer's share of any gross receipts in the SIC code category of the partnership. For purposes of the preceding sentence, the taxpayer's share of gross receipts is proportionate to the taxpayer's distributive share of the partnership's gross income in the product category. However, if the taxpayer is reasonably expected to license, sell, or transfer to the partnership (directly or indirectly) intangible property that would arise from the taxpayer current R&E expenditures, in the manner described in paragraph (d)(3)(i) or (d)(4)(i) of this section, then the taxpayer's gross receipts in a SIC code category include the full amount of any gross receipts in the SIC code category of the partnership as provided in paragraph (d)(3)(i) or (d)(4)(i) of this section.

(g) ***Examples.*** The following examples illustrate the application of the rules in this section.

(1) ***Example 1: Controlled party and single product*** —

(i) ***Facts.*** X, a domestic corporation, is a manufacturer and distributor of small gasoline engines for lawnmowers. Gasoline engines are a product within the category, Engines and Turbines (SIC Industry Group 351). Y, a wholly owned foreign subsidiary of X, also manufactures and sells these engines abroad. X owns no other foreign subsidiaries. During Year 1, X incurred R&E

expenditures of $60,000x, which it deducts under section 174 as a current expense, to invent and patent a new and improved gasoline engine. All of the research and experimentation was performed in the United States. Also in Year 1, the domestic gross receipts of X from sales of gasoline engines total $500,000x and foreign gross receipts of Y from sales of gasoline engines total $300,000x. X provides technology for the manufacture of engines to Y through a license that requires the payment of an arm's length royalty. Because X has licensed its intangible property to Y related to the SIC code, it is presumed to reasonably expect to license the intangible property that would be developed from the current research and experimentation. In Year 1, X's gross income is $210,000x, of which $140,000x is U.S. source income from domestic sales of gasoline engines, $40,000x is income included under section 951A, all of which relates to Y's foreign source income from sales of gasoline engines, $20,000x is foreign source royalties from Y, and $10,000x is U.S. source interest income. None of the foreign source royalties are allocable to passive category income of Y, and therefore, under §§ 1.904-4(d) and 1.904-5(c)(3), the foreign source royalties are general category income to X.

(ii) *Analysis* —

(A) ***Allocation.*** The R&E expenditures were incurred in connection with developing intangible property related to small gasoline engines and they are definitely related to X's items of gross intangible income related to the SIC code category 351, namely gross income from the sale of small gasoline engines in the United States and royalties received from subsidiary Y, a foreign manufacturer of gasoline engines. Accordingly, under paragraph (b) of this section, the R&E expenditures are allocable to the class of gross intangible income related to SIC code category 351, all of which is general category income of X. X's U.S. source interest income and income included under section 951A are not within this class of gross intangible income and, therefore, no portion of the R&E expenditures are allocated to the U.S. source interest income or foreign source income in the section 951A category.

(B) *Apportionment* —

(*1*) ***In general.*** For purposes of applying this section to section 904 as the operative section, the statutory grouping of gross intangible income is foreign source general category income and the residual grouping of gross intangible income is U.S. source income.

(*2*) ***Exclusive apportionment.*** Under paragraph (c) of this section, because at least 50% of X's research and experimental activity was performed in the United States, 50% of the R&E expenditures, or $30,000x ($60,000x × 50%), is apportioned exclusively to the residual grouping of U.S. source gross intangible income. The remaining 50% of the R&E expenditures is then apportioned between the statutory and residual groupings on the basis of the relative amounts of gross receipts from sales of small gasoline engines by X and Y that are related to the U.S. source sales income and foreign source royalty income, respectively.

(*3*) ***Apportionment based on gross receipts.*** After taking into account exclusive apportionment, X has $30,000x ($60,000x−$30,000x) of R&E expenditures that must be apportioned between the statutory and residual groupings. Under paragraph (d)(4) of this section, Y's gross receipts within the SIC code are taken into account in apportioning X's R&E expenditures. Although X has gross intangible income of $140,000x from domestic sales and $20,000x in royalties from Y, X's R&E

expenditures are apportioned to that gross intangible income on the basis of the relative amounts of gross receipts arising from the sale of products by X and Y (and not the relative amounts of X's gross intangible income) in the statutory and residual groupings. Therefore, under paragraphs (d)(1) and (4) of this section $11,250x ($30,000x × $300,000x/($500,000x + $300,000x)) is apportioned to the statutory grouping of X's gross intangible income attributable to its license of intangible property to Y, or foreign source general category income. No portion of the gross receipts by X or Y are disregarded under section 864(e)(3), regardless of whether the income related to those sales is eligible for a deduction under section 250(a)(1)(A). The remaining $18,750x ($30,000x × $500,000x/($500,000x + $300,000x)) is apportioned to the residual grouping of gross intangible income, or U.S. source income.

(4) ***Summary.*** Accordingly, for purposes of the foreign tax credit limitation, $11,250x of X's R&E expenditures are apportioned to foreign source general category income, and $48,750x ($30,000x + $18,750x) of X's R&E expenditures are apportioned to U.S. source income.

(2) ***Example 2: Controlled party and two products in same SIC code category*** —

(i) ***Facts.*** The facts are the same as in paragraph (g)(1)(i) of this section (the facts in *Example 1*), except that X also spends $30,000x in Year 1 for research on steam turbines, all of which is performed in the United States, and X has steam turbine gross receipts in the United States of $400,000x. X's foreign subsidiary Y neither manufactures nor sells steam turbines. The steam turbine research is in addition to the $60,000x in R&E expenditures incurred by X on gasoline engines for lawnmowers. X thus has $90,000x of R&E expenditures. X's gross income is $260,000x, of which $140,000x is U.S. source income from domestic sales of gasoline engines, $50,000x is U.S. source income from domestic sales of steam turbines, $40,000x is income included under section 951A all of which relates to foreign source income derived from Y's sales of gasoline engines, $20,000x is foreign source royalties from Y, and $10,000x is U.S. source interest income.

(ii) ***Analysis*** —

(A) ***Allocation.*** X's R&E expenditures generate gross intangible income from sales of small gasoline engines and steam turbines. Both of these products are in the same three digit SIC code category, Engines and Turbines (SIC Industry Group 351). Therefore, under paragraph (a) of this section, X's R&E expenditures are definitely related to all items of gross intangible income attributable to SIC code category 351. These items of X's gross intangible income are gross income from the sale of small gasoline engines and steam turbines in the United States and royalties from foreign subsidiary Y, a foreign manufacturer and seller of small gasoline engines. X's U.S. source interest income and income included under section 951A is not within this class of gross intangible income and, therefore, no portion of X's R&E expenditures are allocated to the U.S. source interest income or income in the section 951A category.

(B) ***Apportionment*** —

(1) ***In general.*** For purposes of applying this section to section 904 as the operative section, the statutory grouping of gross intangible income is foreign source general category income and the residual grouping of gross intangible income is U.S. source income.

(2) ***Exclusive apportionment.*** Under paragraph (c) of this section, because at least 50% of X's research and experimental activity was performed in the United States, 50% of the R&E expenditures, or $45,000x ($90,000x × 50%), are apportioned exclusively to the residual grouping of U.S. source gross intangible income. The remaining 50% of the R&E expenditures is then apportioned between the statutory and residual groupings on the basis of the relative amounts of gross receipts of small gasoline engines and steam turbines by X and Y with respect to which gross intangible income is foreign source general category income and U.S. source income.

(3) ***Apportionment based on gross receipts.*** After taking into account exclusive apportionment, X has $45,000x ($90,000x−$45,000x) of R&E expenditures that must be apportioned between the statutory and residual groupings. Although X has gross intangible income of $190,000x from domestic sales and $20,000x in royalties from Y, X's R&E expenditures are apportioned to that gross intangible income on the basis of the relative amounts of gross receipts arising from the sale of products by X and Y (and not the relative amounts of X's gross intangible income) in the statutory and residual groupings. Even though a portion of the R&E expenditures that must be apportioned are attributable to research performed with respect to steam turbines, and Y does not sell steam turbines, because Y is reasonably expected to license all intangible property related to SIC code category 351 from X, including intangible property related to steam turbines, under paragraphs (d)(1) and (4) of this section $11,250x ($45,000x × $300,000x/($500,000x + $400,000x + $300,000x)) is apportioned to the statutory grouping of gross intangible income, or foreign source general category income attributable to the royalty income to which the gross receipts of Y are related. The remaining $33,750x ($45,000x × ($500,000x + $400,000x)/($500,000x + $400,000x + $300,000x)) is apportioned to the residual grouping of gross intangible income, or U.S. source gross income.

(4) ***Summary.*** Accordingly, for purposes of the foreign tax credit limitation, $11,250x of X's R&E expenditures are apportioned to foreign source general category income and $78,750x ($45,000x + $33,750x) of X's R&E expenditures are apportioned to U.S. source income.

(3) ***Example 3: Cost sharing arrangement*** —

(i) ***Facts*** —

(A) ***Acquisitions and transfers by X.*** The facts are the same as in paragraph (g)(1)(i) of this section (the facts in *Example 1*) except that, in Year 2, X and Y terminate the license for the manufacture of engines that was in place in Year 1 and enter into a cost sharing arrangement, in accordance with the provisions of § 1.482-7, to share the costs and risks of developing the intangible property related to the engines. Pursuant to the cost sharing arrangement, X has the exclusive rights to exploit the cost shared intangibles within the United States, and Y has the exclusive rights to exploit the cost shared intangibles outside the United States. X's and Y's shares of the reasonably anticipated benefits from the cost

shared intangibles are 70% and 30%, respectively. In Year 2, Y makes a PCT Payment (as defined in § 1.482-7(b)(1)(ii)) of $50,000x that is characterized and sourced as a royalty for a license of small gasoline engine technology.

(B) ***Gross receipts and R&E expenditures.*** In Year 2, X and Y continue to sell gasoline engines, with gross receipts of $600,000x in the United States by X and $400,000x abroad by Y. X incurs intangible development costs associated with the cost shared intangibles of $100,000x in Year 2, which consist exclusively of research activities conducted in the United States. Y also makes a $30,000x CST Payment (as defined in § 1.482-7(b)(1)(i)) under the cost sharing arrangement. X is entitled to deduct $70,000x of its intangible development costs ($100,000x less the $30,000x CST Payment by Y) by reason of the second sentence under § 1.482-7(j)(3)(i) (relating to CST Payments).

(C) ***Gross income of X.*** In Year 2, X's gross income is $360,000x, of which $200,000x is U.S. source income from domestic sales of small gasoline engines, $50,000x is foreign source general category income attributable to the PCT Payment, $100,000x is income included under section 951A (all of which relates to foreign source income derived from engine sales by Y), and $10,000x is U.S. source interest income.

(ii) ***Analysis*** —

(A) ***Allocation.*** The $70,000x of R&E expenditures incurred in Year 2 by X in connection with small gasoline engines are definitely related to the items of gross intangible income related to the SIC code category, namely gross income from the sale of small gasoline engines in the United States and PCT Payments from Y. Accordingly, under paragraph (a) of this section, the R&E expenditures are allocable to this class of gross intangible income. X's U.S. source interest income and income included under section 951A are not within this class of gross intangible income and, therefore, no portion of X's R&E expenditures is allocated to X's U.S. source interest income or section 951A category income.

(B) ***Apportionment*** —

(*1*) ***In general.*** For purposes of applying this section to section 904 as the operative section, the statutory grouping of gross intangible income is foreign source general category income, and the residual grouping of gross intangible income is U.S. source income.

(*2*) ***Exclusive apportionment.*** Under paragraph (c) of this section, because at least 50% of X's research and experimentation in Year 2 was performed in the United States, 50% of the R&E expenditures, or $35,000x ($70,000x × 50%), is apportioned exclusively to the residual grouping of gross intangible income, U.S. source income.

(*3*) ***Apportionment based on gross receipts.*** Although X has gross intangible income of $200,000x from domestic sales and $50,000x as a PCT Payment from Y, X's R&E expenditures are apportioned to its gross intangible income on the basis of the relative amounts of gross receipts arising from the sale of products by X (and not the relative amounts of X's gross intangible income) in the statutory and residual groupings. Under paragraph (d)(4)(iv) of this section, because of the cost sharing arrangement, Y's gross receipts from sales are not taken into account in apportioning X's R&E expenditures that are intangible development costs with respect to the cost sharing arrangement. Because all of the gross receipts from sales that are taken into

account under paragraph (d)(1) of this section relate to gross intangible income that is included in the residual grouping, $35,000x is apportioned to the residual grouping of gross intangible income, or U.S. source income.

(4) ***Summary.*** Accordingly, for purposes of the foreign tax credit limitation, $70,000x of X's R&E expenditures are apportioned to U.S. source income.

(4) ***Example 4: Uncontrolled party*** —

(i) ***Facts*** —

(A) ***X's R&E expenditures.*** X, a domestic corporation, is engaged in continuous research and experimentation to improve the quality of the products that it manufactures and sells, which are floodlights, flashlights, fuse boxes, and solderless connectors. All of these products are in the same three digit SIC code category, Electric Lighting and Wiring Equipment (SIC Industry Group 364). X incurs $100,000x of R&E expenditures in Year 1 that is performed exclusively in the United States. As a result of this research activity, X acquires patents that it uses in its own manufacturing activity.

(B) ***License to Y and Z.*** In Year 1, X licenses its floodlight patent to Y and Z, uncontrolled parties, for use in their own territories, Countries Y and Z, respectively. Y pays X a royalty of $3,000x plus $0.20x for each unit sold. Gross receipts from sales of floodlights by Y for the taxable year are $135,000x (30,000 units at $4.50x per unit), and the royalty is $9,000x ($3,000x + $0.20x/unit × 30,000 units). Y has sales of other products of $500,000x. Z pays X a royalty of $3,000x plus $0.30x for each unit sold. Z manufactures 30,000 floodlights in the taxable year, and the royalty is $12,000x ($3,000x + $0.30x/unit × 30,000 units). The dollar value of Z's gross receipts from floodlight sales is not known to X because, in this case, the floodlights are not sold separately by Z but are instead used as a component in Z's manufacture of lighting equipment for theaters. However, a reasonable estimate of Z's gross receipts attributable to the floodlights, based on the principles of section 482, is $120,000x. The gross receipts from sales of all Z's products, including the lighting equipment for theaters, are $1,000,000x. Because X has licensed its intangible property to Y and Z related to the SIC code, it is presumed to reasonably expect to license the intangible property that would be developed from the current research and experimentation.

(C) ***X's gross receipts and gross income.*** X's gross receipts from sales of floodlights for the taxable year are $500,000x and its sales of its other products (flashlights, fuse boxes, and solderless connectors) are $400,000x. X has gross income of $500,000x, consisting of U.S. source gross income from domestic sales of floodlights, flashlights, fuse boxes, and solderless connectors of $479,000x, and foreign source gross income from royalties of $9,000x and $12,000x from foreign corporations Y and Z, respectively. The royalty income is general category income to X under § 1.904-4(b)(2)(ii).

(ii) ***Analysis*** —

(A) ***Allocation.*** X's R&E expenditures are definitely related to all of the gross intangible income from the products that it produces, which are floodlights, flashlights, fuse boxes, and solderless connectors. All of these products are in SIC code category 364. Therefore, under paragraph (b) of this section, X's R&E expenditures are definitely related to the class of gross intangible income related to SIC code category 364 and to all items of gross

intangible income attributable to the class. These items of X's gross intangible income are gross income from the sale of floodlights, flashlights, fuse boxes, and solderless connectors in the United States and royalties from Corporations Y and Z.

(B) *Apportionment* —

(1) ***In general.*** For purposes of applying this section to section 904 as the operative section, the statutory grouping of gross intangible income is foreign source general category income, and the residual grouping of gross intangible income is U.S. source income.

(2) ***Exclusive apportionment.*** Under paragraph (c) of this section, because at least 50% of X's research and experimentation was performed in the United States, 50% of the R&E expenditures, or $50,000x ($100,000x × 50%), is apportioned exclusively to the residual grouping of U.S. source gross intangible income.

(3) ***Apportionment based on gross receipts.*** After taking into account exclusive apportionment, X has $50,000x ($100,000x−$50,000x) of R&E expenditures that must be apportioned between the statutory and residual groupings. Under paragraph (d)(3)(i) of this section, gross receipts from sales of Y and Z are taken into account in apportioning X's R&E expenditures. Although X has gross intangible income of $479,000x from domestic sales and $21,000x in royalties from Y and Z, X's R&E expenditures are apportioned to its gross intangible income on the basis of the relative amounts of gross receipts arising from the sale of products by X, Y and Z (and not the relative amounts of X's gross intangible income) in the statutory and residual groupings. In addition, under paragraph (d)(3)(iii) of this section only the portion of Z's gross receipts that are attributable to the floodlights that incorporate the intangible property licensed from X, rather than Z's total gross receipts, are used for purposes of apportionment. All of X's gross receipts from sales in the entire SIC code category are included for purposes of apportionment on the basis of gross intangible income attributable to those sales. Under paragraph (d)(1) of this section, $11,039x ($50,000x × ($135,000x + $120,000x)/($900,000x + $135,000x + $120,000x)) is apportioned to the statutory grouping of gross intangible income, or foreign source general category income. The remaining $38,961x ($50,000x × $900,000x/($900,000x + $135,000x + $120,000x)) is apportioned to the residual grouping of gross intangible income, or U.S. source income.

(4) ***Summary.*** Accordingly, for purposes of the foreign tax credit limitation, $11,039x of X's R&E expenditures are apportioned to foreign source general category income and $88,961x ($50,000x + $38,961x) of X's R&E expenditures are apportioned to U.S. source income.

(5) *Example 5: Uncontrolled party and sublicense* —

(i) ***Facts.*** X, a domestic corporation, is a cloud storage service provider. Cloud storage services are a service within the category, Computer Programming, Data Processing, and other Computer Related Services (SIC Industry Group 737). During Year 1, X incurs R&E expenditures of $50,000x to invent and copyright new storage monitoring and management software. All of the research and experimentation is performed in the United States. X uses this software in its own business to provide services to customers. X also licenses a version of the software that can be used by other businesses that provide cloud storage services. X licenses the software to

uncontrolled party U, which sub-licenses the software to other businesses that provide cloud storage services to customers. U does not use the software except to sublicense it. As a part of the licensing agreement with U, U and its sub-licensees are only permitted to use the software in certain countries outside of the United States. Under the contract with U, U pays X a royalty of 50% on the amount it receives from its sub-licensees that use the software to provide services to customers. Because X has licensed its intangible property to U related to the SIC code and U has sublicensed it to other businesses, it is presumed that X is reasonably expected to license the intangible property that would be developed from its current research and experimentation to U and that U would sublicense it to other businesses. In Year 1, X earns $300,000x of gross receipts from providing cloud storage services within the United States. Further, in Year 1 U receives $10,000x of royalty income from its sub-licensees and pays a royalty of $5,000x to X. Thus, X earns $300,000x of U.S. source general category gross income and also earns $5,000x of foreign source general category royalty income from licensing its software to U for use outside of the United States.

(ii) *Analysis* —

(A) ***Allocation.*** The R&E expenditures were incurred in connection with the development of cloud computing software and they are definitely related to the items of gross intangible income related to the SIC Code category, namely gross income from the storage monitoring and management software in the United States and royalties received from U. Accordingly, under paragraph (b) of this section, the R&E expenditures are allocable to this class of gross intangible income.

(B) *Apportionment* —

(*1*) ***In general.*** For purposes of applying this section to section 904 as the operative section, the statutory grouping of gross intangible income is foreign source general category income, and the residual grouping of gross intangible income is U.S. source income.

(*2*) ***Exclusive apportionment.*** Under paragraph (c) of this section, because at least 50% of X's research and experimental activity was performed in the United States, 50% of the R&E expenditures, or $25,000x ($50,000x × 50%), is apportioned exclusively to the residual grouping of U.S. source gross intangible income.

(*3*) *Apportionment based on gross receipts* —

(*i*) ***In general.*** After taking into account exclusive apportionment, X has $25,000x ($50,000x−$25,000x) of R&E expenditures that must be apportioned between the statutory and residual groupings. Because X has licensed its intangible property related to the SIC code to U and U has licensed it to the sub-licensees, under paragraph (d)(3)(i) of this section, gross receipts from sales of U's sublicensees are taken into account in apportioning X's R&E expenditures. Although X has gross intangible income of $300,000x from domestic sales of services and $5,000x in royalties from U, X's R&E expenditures are apportioned to its gross intangible income on the basis of the relative amounts of gross receipts arising from the sale of services by X and U's sub-licensees (and not the relative amounts of X's gross intangible income) in the statutory and residual groupings.

(*ii*) ***Determination of U's sub-licensee's gross receipts.*** Under paragraph (d)(3)(iv) of this section, X can make a reasonable estimate of the gross receipts of U's sub-licensees from services incorporating the intangible property licensed by X by estimating, after an appropriate economic analysis, that U would charge a royalty of 5% of the sub-licensee's sales. U received a royalty of $10,000x from the sub-licensees. X then determines U's sub-licensees' foreign sales by dividing the total royalty payments received by U by the royalty estimated rate ($10,000x/.05 = $200,000x).

(*iii*) ***Results of apportionment based on gross receipts.*** Therefore, under paragraphs (d)(1) and (3) of this section, $10,000x ($25,000x × $200,000x/($300,000x + $200,000x)) is apportioned to the statutory grouping of gross intangible income, or foreign source general category income. The remaining $15,000x ($25,000x × $300,000x/($300,000x + $200,000x)) is apportioned to the residual grouping of gross intangible income, or U.S. source income.

(*4*) ***Summary.*** Accordingly, for purposes of the foreign tax credit limitation, $10,000x of X's R&E expenditures are apportioned to foreign source general category income and $40,000x ($25,000x + $15,000x) of X's R&E expenditures are apportioned to U.S. source income.

(6) ***Example 6: Foreign branch*** —

(i) ***Facts*** —

(A) ***Overview for X.*** X, a domestic corporation, owns FDE, a disregarded entity that is a foreign branch within the meaning of § 1.904-4(f)(3)(vii). FDE conducts activities solely in Country Y. FDE's functional currency is the U.S. dollar. X is a manufacturer and distributor of small gasoline engines for lawnmowers in the United States. Gasoline engines are a product within the category, Engines and Turbines (SIC Industry Group 351). FDE also manufactures and distributes small gasoline engines but only in Country Y. During Year 1, X incurred R&E expenditures of $60,000x, which it deducts under section 174 as a current expense, to invent and patent a new and improved gasoline engine. All of the research and experimentation was performed in the United States. Also in Year 1, the domestic gross receipts of X from gasoline engines total $500,000x. X provides technology for the manufacture of engines to FDE through a license. FDE compensates X for the technology with an arm's length royalty payment of $10,000x, which is disregarded for Federal income tax purposes.

(B) ***Overview for FDE.*** FDE accrues and records on its books and records $100,000x of gross income from sales of gasoline engines to unrelated persons. FDE's gross income is non-passive category income and is foreign source income. In Year 1, the foreign gross receipts of FDE from sales of gasoline engines total $300,000x. The disregarded royalty payment from FDE to X is not recorded on FDE's separate books and records (as adjusted to conform to Federal income tax principles) within the meaning of paragraph § 1.904-4(f)(2)(i) because it is disregarded for Federal income tax purposes. However, the $10,000x disregarded royalty payment would be allocable to foreign source gross income attributable to FDE under § 1.904-4(f)(2)(vi)(B)(*1*)(*ii*). Therefore, under § 1.904-4(f)(2)(vi)(A) the amount of foreign source gross income attributable to FDE is adjusted downwards and the amount of foreign source gross income attributable to X is adjusted upward to take the $10,000x disregarded royalty payment into account.

(C) ***Assignment of X's gross income to separate categories.*** In Year 1, X has U.S. source general category gross income of $140,000x from domestic sales of gasoline engines. After application of § 1.904-4(f)(2)(vi)(A) to the disregarded payment made by FDE, X has $10,000x of foreign source general category gross income and X also has $90,000x of foreign source foreign branch category gross income.

(ii) ***Analysis*** —

(A) ***Allocation.*** The R&E expenditures were incurred in connection with developing intangible property related to small gasoline engines and are definitely related to the items of gross intangible income related to the SIC code category 351, namely gross income from the sale of small gasoline engines in both the United States and Country Y.

(B) ***Apportionment*** —

(*1*) ***In general.*** For purposes of applying this section to section 904 as the operative section, the statutory groupings of gross intangible income are foreign source general category income and foreign source foreign branch category income, and the residual grouping of gross intangible income is U.S. source income.

(*2*) ***Exclusive apportionment.*** Under paragraph (c) of this section, because at least 50% of X's research and experimental activity was performed in the United States, 50% of the R&E expenditures, or $30,000 ($60,000x × 50%), is apportioned exclusively to the residual grouping of U.S. source gross intangible income. The remaining 50% of the R&E expenditures is then apportioned between the statutory and residual groupings on the basis of the relative amounts of gross receipts from sales of small gasoline engines that are related to U.S. source income, foreign source general category income, and foreign source foreign branch category income.

(*3*) ***Apportionment based on gross receipts.*** After taking into account exclusive apportionment, X has $30,000x ($60,000x−$30,000x) of R&E expenditures that must be apportioned between the statutory and residual groupings. Because X's gross intangible income is not described in paragraph (d)(3) or (4) of this section (that is, there is no gross intangible income related to sales, leases or services from controlled or uncontrolled parties that are incorporating intangible property that was licensed, sold, or transferred to controlled or uncontrolled parties), the groupings to which the taxpayer's gross receipts and gross intangible income are assigned is the same. However, because the assignment of X's gross income to the foreign branch and general categories is made by taking into account disregarded payments under § 1.904-4(f)(2)(vi), the assignment of gross receipts between the general category and foreign branch category must be determined by making similar adjustments to X's gross receipts under the principles of § 1.904-4(f)(2)(vi). See paragraph (d)(1)(iii) of this section. Foreign gross receipts of FDE from gasoline engines total $300,000x. However, those gross receipts are adjusted under the principles of § 1.904-4(f)(2)(vi) for purposes of apportioning the remaining R&E expenditures by reducing the gross receipts initially assigned to the foreign branch category by an amount equal to the ratio of the royalty income to FDE's gross income that is initially assigned to the foreign branch category. Accordingly, since the disregarded royalty payment of $10,000x caused an adjustment equal to 10% of FDE's initial gross income of $100,000x, 10% of the gross receipts or $30,000x (10% × $300,000x) are similarly assigned to the grouping of foreign source general category income, and the

remaining $270,000x of gross receipts are assigned to the grouping of foreign source foreign branch category income. Therefore, under paragraph (d)(1) of this section, $1,125x ($30,000x × $30,000x/($500,000x + $270,000x + $30,000x)) is apportioned to the statutory grouping of X's gross intangible income attributable to foreign source general category income. $10,125x ($30,000x × $270,000x/($500,000x + $270,000x + $30,000x)) is apportioned to the statutory grouping of X's foreign source foreign branch category income. The remaining $18,750x ($30,000x × $500,000x/($500,000x + $270,000x + $30,000x)) is apportioned to the residual grouping of gross intangible income or U.S. source income.

(7) *Example 7: Indirectly derived gross intangible income* —

(i) ***Facts.*** P, a domestic corporation, develops and publishes an internet website that persons use (referred to as “users” and collectively referred to as “user base”) without a fee. P incurs R&E expenditures to update software code and write new software code to maintain the website and develop new products that are incorporated into the website. P's activities consist of services that fall within SIC code category 737 (computer programming, data processing, and other computer related services). P sells space on its website for businesses to advertise to its user base in exchange for a fee. P's technology allows it to collect data on users and to use that data to effectively target advertisements. P does not grant rights to the technology or other intangible property to the businesses advertising on its website. In Year 1, P incurs R&E expenditures of $60,000x, which it deducts under section 174. All the research and experimentation is performed in the United States. Also in Year 1, P earns gross receipts of $200,000x from the sale of advertisements, all of which gives rise to U.S. source gross income.

(ii) *Analysis* —

(A) ***Allocation.*** The R&E expenditures were incurred in connection with developing intangible property used for P's website. Accordingly, they are definitely related and allocable to gross intangible income derived directly or indirectly (in whole or in part) from that intangible property. Because P's advertising sales are dependent on the users attracted to its website, P's gross income from advertising is indirectly derived from intangible property and is included in gross intangible income. Accordingly, under paragraph (b) of this section, the R&E expenditures are allocable to the class of gross intangible income related to SIC code category 737, which consists of U.S. source income.

(B) ***Apportionment.*** Because all gross receipts from services that the intangible property directly or indirectly benefits result in U.S. source income, no apportionment is required.

(h) ***Applicability date.*** This section applies to taxable years beginning after December 31, 2019. However, taxpayers may choose to apply this section to taxable years beginning on or after January 1, 2018, and before January 1, 2020, provided they apply this section in its entirety and for any subsequent year beginning before January 1, 2020.

[T.D. 9922, 85 FR 72042, Nov. 12, 2020; 86 FR 54367, Oct. 1, 2021]

§ 1.861-18 Classification of, and source of gross income from, digital content transactions.

(a) *General* —

(1) ***Scope.*** This section provides rules for classifying digital content transactions (as defined in paragraph (b)(1) of this section) for purposes of subchapter N of chapter 1 of the Internal Revenue Code, sections 59A, 245A, 250, 267A, 367, 404A, 482, 679, 1059A, chapters 3 and 4, sections 842 and 845 (to the extent involving a foreign person), and transfers to foreign trusts not covered by section 679.

(2) ***Digital content*** —

(i) ***Digital content defined.*** For purposes of this section, digital content means a computer program or any other content, such as books, movies, and music, in digital format that is—

(A) Protected by copyright law; or

(B) Not protected by copyright law solely—

(*1*) Due to the passage of time; or

(*2*) Because the creator dedicated the content to the public domain.

(ii) ***Computer program defined.*** For purposes of this section, a computer program is a set of statements or instructions to be used directly or indirectly in a computer in order to bring about a certain result and includes any media, user manuals, documentation, data base, or similar item if the media, user manuals, documentation, data base, or other similar item is incidental to the operation of the computer program.

(b) ***Categories of transactions*** —

(1) ***General.*** A transaction that constitutes a transfer of digital content, or the provision of services or of know-how with respect to digital content (each a digital content transaction), is treated as being solely one of the following—

(i) A transfer of a copyright right in the digital content;

(ii) A transfer of a copy of the digital content (a copyrighted article);

(iii) The provision of services for the development or modification of the digital content; or

(iv) The provision of know-how relating to development of digital content.

(2) ***Transaction with multiple elements.*** Taking into account the overall transaction and the surrounding facts and circumstances, a transaction that has multiple elements, one or more of which would be a digital content transaction if considered separately, is classified in its entirety as a digital content transaction under one of the categories described in paragraph (b)(1) of this section if the predominant character of the transaction is described in one of the categories in that paragraph.

(3) ***Determination of predominant character*** —

(i) ***General rule.*** For purposes of paragraph (b)(2) of this section and § 1.861-19(c)(2), the predominant character of a transaction is determined by ascertaining the primary benefit or value received by the customer in the transaction.

(ii) ***Special rule.*** If the primary benefit or value received by the customer in the transaction is not reasonably ascertainable, the predominant character of a transaction is instead determined by ascertaining the primary benefit or value received by a typical customer in a substantially similar transaction as determined under paragraphs (b)(3)(ii)(A) and (B) of this section.

(A) The primary benefit or value received by a typical customer is determined by data on how a typical customer uses or accesses the digital content. See paragraph (h)(17) of this section (*Example 17*).

(B) If data described in paragraph (b)(3)(ii)(A) of this section is not available, then the predominant character of a transaction subject to the special rule in paragraph (b)(3)(ii) of this section is determined by examining other factors that are indicative of the primary benefit or value received by a typical customer, including the following—

(*1*) How the transferor or provider markets the transaction;

(*2*) The relative development costs to the transferor or provider of each element of the transaction; and

(*3*) The relative price paid in an uncontrolled transaction for one or more elements compared to the total contract price of the transaction in question.

(iii) ***Identification and development of data.*** A transferor or provider must use reasonable efforts to identify the data specified in paragraphs (b)(3)(i) and (ii)(A) of this section, or if necessary, to apply the factors relevant to paragraph (b)(3)(ii)(B) of this section. However, a transferor or provider is not required to develop any of the data specified in those paragraphs that it does not develop in the course of business.

(c) ***Transfers involving copyright rights and copyrighted articles*** —

(1) ***Transfers involving transfers of copyright rights.*** A digital content transaction involves a transfer of a copyright right if, as a result of the transaction, a person acquires one or more of the rights described in paragraphs (c)(2)(i) through (iv) of this section.

(2) ***Copyright rights.*** The copyright rights referred to in paragraph (c)(1) of this section are as follows—

(i) The right to make copies of the digital content for purposes of distribution to the public by sale or other transfer of ownership, or by rental, lease or lending;

(ii) The right to prepare derivative digital content based upon the digital content;

(iii) The right to make a public performance of digital content, other than a right to publicly perform digital content for the purpose of advertising the sale of the digital content performed; or

(iv) The right to publicly display digital content, other than a right to publicly display digital content for the purpose of advertising the sale of the digital content displayed.

(3) ***Copyrighted articles.*** A copyrighted article includes a copy of digital content from which the work can be perceived, reproduced, or otherwise communicated, either directly or with the aid of a machine or device. The copy of the digital content may be fixed in any medium.

(d) ***Provision of services.*** The determination of whether a transaction involving newly developed or modified digital content involves the provision of services described in paragraph (b)(1) of this section is based on all the facts and circumstances of the transaction, including, as appropriate, the intent of the parties (as evidenced by their agreement and conduct) as to which party is to own the copyright rights in the digital content and how the risks of loss are allocated between the parties. See paragraph (h)(15) of this section (*Example 15*).

(e) ***Provision of know-how.*** The provision of information with respect to digital content involves the provision of know-how for purposes of this section only if the information is—

(1) Information relating to the development of digital content;

(2) Furnished under conditions preventing unauthorized disclosure, specifically contracted for between the parties; and

(3) Considered property subject to trade secret protection.

(f) ***Further classification of transfers involving copyright rights and copyrighted articles*** —

(1) ***Transfers of copyright rights.*** The determination of whether a transfer of a copyright right is a sale or exchange of property is made on the basis of whether, taking into account all facts and circumstances, there has been a transfer of all substantial rights in the copyright. A transfer of a copyright right that does not constitute a sale or exchange because not all substantial rights have been transferred will be classified as a license. For this purpose, the principles of sections 1222 and 1235 apply. Income derived from the sale or exchange of a copyright right will be sourced under section 865(a), (c), (d), (e), or (h), as appropriate. Income derived from the licensing of a copyright right will be sourced under section 861(a)(4) or 862(a)(4), as appropriate.

(2) ***Transfers of copyrighted articles*** —

(i) ***Classification.*** The determination of whether a transfer of a copyrighted article is a sale or exchange is made on the basis of whether, taking into account all facts and circumstances, the benefits and burdens of ownership have been transferred. A transfer of a copyrighted article that does not constitute a sale or exchange because insufficient benefits and burdens of ownership of the copyrighted article have been transferred, such that a person other than the transferee is properly treated as the owner of the copyrighted article, will be classified as a lease.

(ii) ***Source.*** Income from transactions that are classified as sales or exchanges of copyrighted articles will be sourced under section 861(a)(6), 862(a)(6), 863, or 865(a), (b), (c), or (e), as appropriate. When a copyrighted article is sold and transferred through an electronic medium, the sale is deemed to have occurred at the location of the billing address of the purchaser for purposes of § 1.861-7(c). However, in any case in which the sales transaction is arranged in a particular manner for a principal purpose of tax avoidance, the foregoing rules will not be applied. In such a case, all of the facts and circumstances relevant to the transaction, such as the place where the copyrighted article will be used, the place where negotiations and the execution of the agreement occurred, and the terms of the agreement, will be considered, and the sale will be treated as having occurred where the substance of the sale occurred. Income derived from leasing a copyrighted article will be sourced under section 861(a)(4) or 862(a)(4), as appropriate.

(3) ***Special circumstances of digital content.*** In connection with determinations under this paragraph (f), consideration must be given as appropriate to the special characteristics of digital content in transactions that take advantage of these characteristics (such as the ability to make perfect copies at minimal cost). For example, a transaction in which a person acquires a copy of digital content on a disk subject to a requirement that the disk be destroyed after a specified period is generally the equivalent of a transaction subject to a requirement that the disk be returned after such period. Similarly, a transaction in which the digital content deactivates itself after a specified period is generally the equivalent of a transaction subject to a requirement that the disk be returned after a specified period.

(g) ***Rules of operation*** —

(1) ***Term applied to transaction by parties.*** Neither the form adopted by the parties to a transaction, nor the classification of the transaction under copyright law, shall be determinative. Therefore, for example, if there is a transfer of a computer program on a single disk for a one-time payment with restrictions on transfer and reverse engineering, which the parties characterize as a license (including, but not limited to, agreements commonly referred to as shrink-wrap licenses), application of the rules of paragraphs (c) and (f) of this section may nevertheless result in the transaction being classified as the sale of a copyrighted article.

(2) ***Means of transfer not to be taken into account.*** The rules of this section shall be applied irrespective of the physical or electronic or other medium used to effectuate a digital content transaction.

(3) ***To the public*** —

(i) ***In general.*** For purposes of paragraph (c)(2)(i) of this section, a transferee of digital content shall not be considered to have the right to distribute copies of the digital content to the public if it is permitted to distribute copies of the digital content to only either a related person, or to identified persons who may be identified by either name or by legal relationship to the original transferee. For purposes of this subparagraph, a related person is a person who bears a relationship to the transferee specified in section 267(b)(3), (10), (11), or (12), or section 707(b)(1)(B). In applying section 267(b), 267(f), 707(b)(1)(B), or 1563(a), "10 percent" shall be substituted for "50 percent."

(ii) ***Use by individuals.*** The number of employees of a transferee of digital content who are permitted to use the digital content in connection with their employment is not relevant for purposes of this paragraph (g)(3). In addition, the number of individuals with a contractual agreement to provide services to the transferee of digital content who are permitted to use the digital content in connection with the performance of those services is not relevant for purposes of this paragraph (g)(3).

(h) ***Examples.*** The examples in this paragraph (h) illustrate the provisions of this section. Unless otherwise specified, assume that Corp A is a domestic corporation, the digital content described in each example does not contain any online functionality, and all facts in each example occur as part of a single transaction.

(1) ***Example 1: Sale of a computer program on a disk*** —

(i) ***Facts.*** Corp A owns the copyright in a computer program, Program X. It copies Program X onto disks. The disks are placed in boxes covered with a wrapper on which is printed what is generally referred to as a shrink-wrap license. The license is stated to be perpetual. Under the license no reverse engineering, decompilation, or disassembly of the computer program is permitted. The transferee receives, first, the right to use the program on two of its own computers (for example, a laptop and a desktop) provided that only one copy is in use at any one time, and second, the right to make one copy of the program on each machine as an essential step in the utilization of the program. The transferee is permitted by the shrink-wrap license to sell the copy so long as it destroys any other copies it has made and imposes the same terms and conditions of the license on the purchaser of its copy. These disks are made available for sale to the general public in Country Z. In return for valuable consideration, P, a Country Z resident, receives one such disk.

(ii) ***Analysis.***

(A) Under paragraph (b)(1) of this section, the transfer of a disk containing a copy of Program X from Corp A to P is a digital content transaction with one element, which is the transfer of a copy of Program X. Therefore, the transaction is treated solely as a transfer of a copyrighted article under paragraph (b)(1)(ii) of this section. Under paragraph (g)(1) of this section, the label license is not determinative.

(B) Taking into account all of the facts and circumstances, P is properly treated as the owner of a copyrighted article. Therefore, under paragraph (f)(2) of this section, there has been a sale of a copyrighted article rather than the grant of a lease.

(2) ***Example 2: Sale of a computer program via download from the internet*** —

(i) ***Facts.*** The facts are the same as those in paragraph (h)(1) of this section (*Example 1*), except that instead of selling disks, Corp A decides to make Program X available, for a fee, on a World Wide Web home page on the internet. P, the Country Z resident, in return for payment made to Corp A, downloads Program X (via modem) onto the hard drive of his computer. As part of the electronic communication, P signifies his assent to a license agreement with terms identical to those in *Example 1,* except that in this case P may make a back-up copy of the program on to a disk.

(ii) ***Analysis.***

(A) Under paragraph (b)(1) of this section, the digital transfer of a copy of Program X from Corp A to P is a digital content transaction with one element, which is the transfer of a copy of Program X. Therefore, the transaction is treated solely as a transfer of a copyrighted article under paragraph (b)(1)(ii) of this section. Although P did not buy a physical copy of the disk with the program on it, paragraph (g)(2) of this section provides that the means of transferring the program is irrelevant.

(B) As in paragraph (h)(1) of this section (*Example 1*), P is properly treated as the owner of a copyrighted article. Therefore, under paragraph (f)(2) of this section, there has been a sale of a copyrighted article rather than the grant of a lease.

(3) ***Example 3: Lease of a computer program with requirement to return disk*** —

(i) ***Facts.*** The facts are the same as those in paragraph (h)(1) of this section (*Example 1*), except that Corp A only allows P, the Country Z resident, to use Program X for one week. At the end of that week, P must return the disk with Program X on it to Corp A. P must also destroy any copies made of Program X. If P wishes to use Program X for a further period he must enter into a new agreement to use the program for an additional charge.

(ii) ***Analysis.***

(A) Under paragraph (b)(1) of this section, the transfer of a disk with a copy of Program X from Corp A to P is a digital content transaction with one element, which is the transfer of a copy of Program X. Therefore, the transaction is treated solely as a transfer of a copyrighted article under paragraph (b)(1)(ii) of this section.

(B) Taking into account all of the facts and circumstances, P is not properly treated as the owner of a copyrighted article. Therefore, under paragraph (f)(2) of this section, there has been a lease of a copyrighted article rather than a sale. Taking into account the special characteristics of digital content as provided in paragraph (f)(3) of this section, the result

would be the same if P were required to destroy the disk at the end of the one-week period instead of returning it since Corp A can make additional copies of the program at minimal cost.

(4) ***Example 4: Lease of a computer program with electronic lock*** —

(i) ***Facts.*** * * *

(ii) ***Analysis.***

(A) Under paragraph (b)(1) of this section, the digital transfer of a copy of Program X from Corp A to P is a digital content transaction with one element, which is the transfer of a copy of Program X. Therefore, the transaction is treated solely as a transfer of a copyrighted article under paragraph (b)(1)(ii) of this section.

(B) As in paragraph (h)(3) of this section (*Example 3*), P is not properly treated as the owner of a copyrighted article. Therefore, under paragraph (f)(2) of this section, there has been a lease of a copyrighted article rather than a sale. While P does retain Program X on its computer at the end of the one-week period, as a legal matter P no longer has the right to use the program (without further payment) and, indeed, cannot use the program without the electronic key. Functionally, Program X is no longer on the hard drive of P's computer. Instead, the hard drive contains only a series of numbers which no longer perform the function of Program X. Although in *Example 3,* P was required to physically return the disk, taking into account the special characteristics of digital content as provided in paragraph (f)(3) of this section, the result in this paragraph (h)(4) (*Example 4*) is the same as in *Example 3*.

(5) ***Example 5: Sale of copyright rights to a computer program*** —

(i) ***Facts.*** Corp A transfers a disk containing Program X to Corp B, a Country Z corporation, and grants Corp B an exclusive license for the remaining term of the copyright to copy and distribute an unlimited number of copies of Program X in the geographic area of Country Z, prepare derivative works based upon Program X, make public performances of Program X, and publicly display Program X. Corp B will pay Corp A a royalty of $y a year for three years, which is the expected period during which Program X will have commercially exploitable value (a period shorter than the copyright term). Corp A has ascertained that the primary benefit or value from the transaction to Corp B is derived from the four legal rights obtained in Program X from Corp A and not from the receipt of a copy of Program X. The transfer of a copy of Program X is merely the means by which Corp A provides Corp B access to Program X in order to exercise its copyright rights.

(ii) ***Analysis.***

(A) The transaction between Corp A and Corp B has multiple elements. One element is the transfer of a disk with a copy of Program X, which would be a digital content transaction described under paragraph (b)(1)(ii) of this section (transfer of a copyrighted article) if considered separately. Another element is the grant of the right to make an unlimited number of copies of Program X and distribute those copies to the public, the right to prepare derivative works based upon Program X, the right to make public performances of Program X, and the right to publicly display Program X, which would be described under paragraphs (b)(1)(i) and (c)(2) of this section (transfer of a copyright right) if considered separately.

(B) Because the transaction has multiple elements, one or more of which would be a digital content transaction if considered separately, paragraph (b)(2) of this section provides that the transaction is classified within a single category under paragraph (b)(1) of this section if its predominant character is described in that paragraph. Pursuant to paragraph (b)(3)(i) of this section, the predominant character of the transaction is based on the primary benefit or value of the transaction to the customer, if it is reasonably ascertainable. The predominant character of this transaction is therefore the transfer of copyright rights because the primary benefit or value received by Corp B from the transaction is the ability to exercise the copyright rights described in paragraph (c)(2) of this section. Therefore, this transaction is classified solely as a transfer of copyright rights described in paragraph (b)(1)(i) of this section.

(C) Applying the all substantial rights test under paragraph (f)(1) of this section, Corp A will be treated as having sold copyright rights to Corp B. Corp B has acquired all of the copyright rights in Program X, has received the right to use them exclusively within Country Z, and has received the rights for the remaining life of the copyright in Program X. The fact the payments cease before the copyright term expires is not controlling. Under paragraph (g)(1) of this section, the fact that the agreement is labelled a license is not controlling nor is the fact that Corp A receives a sum labelled a royalty. (The result in this case would be the same if the copy of Program X to be used for the purposes of reproduction were transmitted electronically to Corp B, as a result of the application of the rule of paragraph (g)(2) of this section.)

(6) ***Example 6: License of copyright right to make copies of a computer program and distribute to the public*** —

(i) ***Facts.*** Corp A transfers a disk containing Program X to Corp B, a Country Z corporation, and grants Corp B the non-exclusive right to reproduce and distribute for sale to the public an unlimited number of disks containing Program X at its factory in Country Z in return for a payment related to the number of disks copied and sold. The term of the agreement is two years, which is less than the remaining life of the copyright. Corp A has ascertained that the primary benefit or value from the transaction to Corp B is derived from the right to reproduce and distribute Program X and not from the receipt of a copy of Program X. The transfer of a copy of Program X is merely the means by which Corp A provides Corp B access to Program X in order to exercise its copyright rights.

(ii) ***Analysis.***

(A) The transaction between Corp A and Corp B has multiple elements. One element is the transfer of a disk with a copy of Program X, which would be described under paragraph (b)(1)(ii) of this section (transfer of a copyrighted article) if considered separately. Another element is the grant of the right to reproduce and distribute for sale to the public an unlimited number of disks containing Program X, which would be described under paragraphs (b)(1)(i) and (c)(2)(i) of this section (transfer of a copyright right) if considered separately.

(B) Because the transaction has multiple elements, one or more of which would be a digital content transaction if considered separately, paragraph (b)(2) of this section provides that the transaction is classified within a single category under paragraph (b)(1) of this section if its predominant character is described in that paragraph. Pursuant to paragraph (b)(3) of this section, the predominant character of the transaction is based on the primary

benefit or value of the transaction to the customer, if it is reasonably ascertainable. The predominant character of this transaction is therefore the transfer of a copyright right because the primary benefit or value received by Corp B is the right to reproduce and distribute for sale to the public copies of Program X. Therefore, this transaction is classified solely as a transfer of copyright rights described in paragraph (b)(1)(i) of this section.

(C) Taking into account all of the facts and circumstances, there has been a license of Program X to Corp B. Under paragraph (f)(1) of this section, there has not been a transfer of all substantial rights in the copyright to Program X because Corp A has the right to enter into other licenses with respect to the copyright of Program X, including licenses in Country Z (or even to sell that copyright, subject to Corp B's interest). Corp B has acquired no right itself to license the copyright rights in Program X. Finally, the term of the license is for less than the remaining life of the copyright in Program X.

(7) ***Example 7: Sale of disks containing copies of a computer program to a distributor*** —

(i) ***Facts.*** Corp C, a distributor, enters into an agreement with Corp A to purchase as many copies of Program X on disk as it may from time-to-time request. Corp C will then sell these disks to retailers. The disks are shipped in boxes covered by shrink-wrap licenses (identical to the license described in paragraph (h)(1) of this section (*Example 1*)).

(ii) ***Analysis.***

(A) Under paragraph (b)(1) of this section, the transfers of disks with copies of Program X from Corp A to Corp C are digital content transactions with one element, which is the transfer of copies of Program X. Therefore, the transactions are classified solely as the transfer of copyrighted articles under paragraph (b)(1)(ii) of this section. The use of the term license is not dispositive under paragraph (g)(1) of this section.

(B) Taking into account all of the facts and circumstances, Corp C is properly treated as the owner of copyrighted articles. Therefore, under paragraph (f)(2) of this section, there has been a sale of copyrighted articles.

(8) ***Example 8: License to a computer manufacturer of copyright rights to make and load copies of a computer program onto the hard drive of computers*** —

(i) ***Facts.*** Corp A transfers a disk containing Program X to Corp D, a foreign corporation engaged in the manufacture and sale of personal computers in Country Z. Corp A grants Corp D the non-exclusive right to copy Program X onto the hard drive of an unlimited number of computers, which Corp D manufactures, and to distribute those copies (on the hard drive) to the public. The term of the agreement is two years, which is less than the remaining life of the copyright in Program X. Corp D pays Corp A an amount based on the number of copies of Program X it loads on to computers. Corp A has ascertained that the primary benefit or value from the transaction to Corp D is the ability to copy and distribute Program X onto computers manufactured by Corp D, not from the receipt of a copy of Program X. The transfer of a copy of Program X is merely the means by which Corp A provides Corp D access to Program X in order to exercise its right to make and distribute copies.

(ii) ***Analysis.***

(A) The transaction between Corp A and Corp D has multiple elements. One element is the transfer of a disk with a copy of Program X, which would be described in paragraph (b)(1)(ii) of this section (transfer of a copyrighted article) if considered separately. Another element is the grant of the non-exclusive right to copy Program X onto the hard drive of an unlimited number of computers and distribute those copies (on the hard drive) to the public, which would be described in paragraphs (b)(1)(i) and (c)(2)(i) of this section (transfer of a copyright right) if considered separately.

(B) Because the transaction has multiple elements, one or more of which would be a digital content transaction if considered separately, paragraph (b)(2) of this section provides that the transaction is classified within a single category under paragraph (b)(1) of this section if its predominant character is described in that paragraph. Pursuant to paragraph (b)(3) of this section, the predominant character of the transaction is based on the primary benefit or value of the transaction to the customer, if it is reasonably ascertainable. The predominant character of this transaction is therefore the transfer of copyright rights because the primary benefit or value received by Corp D is the right to copy Program X onto the hard drive of an unlimited number of computers and sell those copies (on the hard drive) to the public. Therefore, this transaction is classified solely as a transfer of copyright rights described in paragraph (b)(1)(i) of this section.

(C) Taking into account all of the facts and circumstances, there has been a license of Program X to Corp D. Under paragraph (f)(1) of this section, there has not been a transfer of all substantial rights in the copyright to Program X because Corp A has the right to enter into other licenses with respect to the copyright of Program X, including licenses in Country Z (or even to sell that copyright, subject to Corp D's interest). Corp D has acquired no right itself to license the copyright rights in Program X. Finally, the term of the license is for less than the remaining life of the copyright in Program X. The result would be the same if Corp D included with the computers it sells a copy of Program X on a disk.

(9) ***Example 9: Sale of disks containing a copy of computer program to a computer manufacturer*** —

(i) ***Facts.*** The facts are the same as those in paragraph (h)(8) of this section (*Example 8*), except that Corp D, the Country Z corporation, receives physical disks. The disks are shipped in boxes covered by shrink-wrap licenses (identical to the licenses described in paragraph (h)(1) of this section (*Example 1*)). The terms of these licenses do not permit Corp D to make additional copies of Program X. Corp D uses each individual disk only once to load a single copy of Program X onto each separate computer. Corp D transfers the disk with the computer when it is sold.

(ii) ***Analysis.***

(A) Under paragraph (b)(1) of this section, the transfers of disks with copies of Program X from Corp A to Corp D are digital content transactions with one element, which is the transfer of copies of Program X. Therefore, the transaction is classified solely as the transfer of copyrighted articles under paragraph (b)(1)(ii) of this section. Corp D acquires the disks without the right to reproduce and distribute publicly further copies of Program X.

(B) Taking into account all of the facts and circumstances, Corp D is properly treated as the owner of copyrighted articles. Therefore, under paragraph (f)(2) of this section, the transaction is classified as the sale of a copyrighted article. The result would be the same

if Corp D used a single physical disk to copy Program X onto each computer, and transferred an unopened box containing Program X with each computer, if Corp D were not permitted to copy Program X onto more computers than the number of individual copies purchased.

(10) *Example 10: Sale of a computer program with right to load onto multiple employee workstations* —

(i) ***Facts.*** Corp A transfers a disk containing Program X to Corp E and grants Corp E the right to load Program X onto 50 individual workstations for use only by Corp E employees at one location in return for a one-time per-user fee (generally referred to as a site license or enterprise license). If additional workstations are subsequently introduced, Program X may be loaded onto those machines for additional one-time per-user fees. The license which grants the rights to operate Program X on 50 workstations also prohibits Corp E from selling the disk (or any of the 50 copies) or reverse engineering the program. The term of the license is stated to be perpetual.

(ii) ***Analysis.***

(A) It must be determined whether the transfer from Corp A to Corp E of a disk containing a copy of Program X and the right to load Program X onto 50 individual workstations is a transaction with multiple elements. There is at least one element, which is the transfer of a disk containing a copy of Program X, which either is a digital content transaction under paragraph (b)(1) of this section or would be a digital content transaction if considered separately. If there is no additional element, then the transaction is classified as a transfer of a copyrighted article pursuant to paragraph (b)(1)(ii) of this section. If there is a second element, then paragraph (b)(2) of this section applies and the transaction is classified within a single category under paragraph (b)(1) of this section if its predominant character is described in that paragraph. The grant of a right to copy, unaccompanied by the right to distribute those copies to the public, is not the transfer of a copyright right described in paragraph (c)(2) of this section. Therefore, there is no second element in this transaction and it is classified solely as the transfer of copyrighted articles (50 copies of Program X).

(B) Taking into account all of the facts and circumstances, Corp E is properly treated as the owner of copyrighted articles. Therefore, under paragraph (f)(2) of this section, there has been a sale of copyrighted articles rather than the grant of a lease. Notwithstanding the restriction on sale, other factors such as, for example, the risk of loss and the right to use the copies in perpetuity outweigh, in this case, the restrictions placed on the right of alienation.

(C) The result would be the same if Corp E were permitted to copy Program X onto an unlimited number of workstations used by employees of either Corp E or other persons that had a relationship to Corp E specified in paragraph (g)(3) of this section.

(11) *Example 11: Sale of a computer program with right to make available to multiple employees via local area network* —

(i) ***Facts.*** The facts are the same as those in paragraph (h)(10) of this section (*Example 10*), except that Corp E, the Country Z corporation, acquires the right to make Program X available to workstation users who are Corp E employees by way of a local area network (LAN). The number of users that can use Program X on the LAN at any one time is limited to 50. Corp E pays a one-time fee for the right to have up to 50 employees use the program at the same time.

(ii) ***Analysis.*** Under paragraph (g)(2) of this section the mode of utilization is irrelevant. Therefore, as in paragraph (h)(10) of this section (*Example 10*), this is a digital content transaction with a single element that is classified as the transfer of a copyrighted article pursuant to paragraph (b)(1)(ii) of this section. Under the benefits and burdens test of paragraph (f)(2) of this section, this transaction is a sale of copyrighted articles. The result would be the same if an unlimited number of Corp E employees were permitted to use Program X on the LAN or if Corp E were permitted to copy Program X onto LANs maintained by persons that had a relationship to Corp E specified in paragraph (g)(3) of this section.

(12) ***Example 12: Lease of a computer program with right to receive upgrades and technical support services*** —

(i) ***Facts.*** The facts are the same as in paragraph (h)(11) of this section (*Example 11*), except that instead of paying a one-time fee, Corp E pays a monthly fee to Corp A calculated with reference to the permitted maximum number of users (which can be changed) and the computing power of Corp E's server. In return for this monthly fee, Corp E receives the right to receive upgrades of Program X when they become available. The agreement may be terminated by either party at the end of any month. When the disk containing the upgrade is received, Corp E must return the disk containing the earlier version of Program X to Corp A. If the contract is terminated, Corp E must delete (or otherwise destroy) all copies made of the current version of Program X. The agreement also requires Corp A to provide technical support in the form of troubleshooting and configuration assistance to Corp E, but the agreement does not allocate the monthly fee between the right to use Program X, the right to receive upgrades of Program X, and the technical support services. The amount of technical support that Corp A will provide to Corp E is not foreseeable when the contract is entered into but is expected to be minimal. Corp A has ascertained that the primary benefit or value to Corp E from the transaction is the right to use Program X on the LAN (without the ability to exercise any of the rights described in paragraphs (c)(2)(i) through (iv) of this section), not the receipt of technical support services with respect to Program X.

(ii) ***Analysis.***

(A) The transaction between Corp A and Corp E has multiple elements. One element is the transfer of a disk with a copy of Program X, which would be described in paragraph (b)(1)(ii) of this section (transfer of a copyrighted article) if considered separately. Another element is the provision of technical support services, which are not services for the development or modification of Program X described in paragraph (d) of this section because Corp E has received no copyright rights with respect to Program X. Thus, the technical support services would not be described in any of the categories in paragraph (b)(1) of this section if considered separately.

(B) Because the transaction has multiple elements, one or more of which would be a digital content transaction if considered separately, paragraph (b)(2) of this section provides that the transaction is classified within a single category under paragraph (b)(1) of this section if its predominant character is described in that paragraph. Pursuant to paragraph (b)(3) of this section, the predominant character of the transaction is based on the primary benefit or value of the transaction to the customer. The predominant character of this transaction is therefore the transfer of a copyrighted article because the primary benefit or

value received by Corp E is the right to use Program X. Accordingly, this transaction is classified solely as a transfer of a copyrighted article described in paragraph (b)(1)(ii) of this section.

(C) Taking into account all facts and circumstances, under the benefits and burdens test Corp E is not properly treated as the owner of the copyrighted article. Corp E does not receive the right to use Program X in perpetuity, but only for so long as it continues to make payments. Corp E does not have the right to purchase Program X on advantageous (or, indeed, any) terms once a certain amount of money has been paid to Corp A or a certain period has elapsed (which might indicate a sale). Once the agreement is terminated, Corp E will no longer possess any copies of Program X, current or superseded. Therefore, under paragraph (f)(2) of this section there has been a lease of a copyrighted article.

(13) ***Example 13: Sale of a computer program along with right to receive upgrades*** —

(i) ***Facts.*** The facts are the same as those in paragraph (h)(12) of this section (*Example 12*), except that, while Corp E must return copies of Program X as new upgrades are received, if the agreement terminates, Corp E may keep the latest version of Program X (although Corp E is still prohibited from selling or otherwise transferring any copy of Program X).

(ii) ***Analysis.*** For the reasons stated in paragraph (h)(10)(ii)(B) of this section (*Example 10*), the transfer of the program will be treated as a sale of a copyrighted article rather than as a lease.

(14) ***Example 14: Sale of a modified computer program*** —

(i) ***Facts.*** Corp G enters into a contract with Corp A for Corp A to modify Program X so that it can be used at Corp G's facility in Country Z. Under the contract, Corp G is to acquire one copy of the program on a disk and the right to use the program on 5,000 workstations. The contract requires Corp A to rewrite elements of Program X so that it will conform to Country Z accounting standards and states that Corp A retains all copyright rights in the modified Program X. The agreement between Corp A and Corp G is otherwise identical as to rights and payment terms as the agreement described in paragraph (h)(10) of this section (*Example 10*).

(ii) ***Analysis.***

(A) It must be determined whether the transfer of disks with modified copies of Program X from Corp A to Corp G is a transaction with multiple elements. There is at least one element, the transfer of copies of Program X, which either is a digital content transaction under paragraph (b)(1) of this section or would be a digital content transaction if considered separately. If there is no additional element, then the transaction is classified as a transfer of a copyrighted article pursuant to paragraph (b)(1)(ii) of this section. If there is a second element, then paragraph (b)(2) of this section applies and the transaction is classified within a single category under paragraph (b)(1) of this section if its predominant character is described in that paragraph. Pursuant to paragraph (d) of this section, the modifications made by Corp A before transferring Program X to Corp G do not constitute the provision of services for the development or modification of digital content because Corp A retains all copyright rights with respect to the modified software. Therefore, there is no second element in this transaction and it is classified solely as the transfer of copyrighted articles.

(B) Taking into account all facts and circumstances, Corp G is properly treated as the owner of copyrighted articles. Therefore, under paragraph (f)(2) of this section, there has been the sale of a copyrighted article rather than the grant of a lease.

(15) *Example 15: Provision of services for development of a computer program* —

(i) ***Facts.*** Corp H enters into a license agreement for a new computer program. Program Q is to be written by Corp A. Corp A and Corp H agree that Corp A is writing Program Q for Corp H and that, when Program Q is completed, the copyright in Program Q will belong to Corp H. Corp H gives instructions to Corp A programmers regarding program specifications. Corp H agrees to pay Corp A a fixed monthly sum during development of the program. If Corp H is dissatisfied with the development of the program, it may cancel the contract at the end of any month. In the event of termination, Corp A will retain all payments, while any procedures, techniques or copyrightable interests will be the property of Corp H. All of the payments are labelled royalties. There is no provision in the agreement for any continuing relationship between Corp A and Corp H, such as the furnishing of updates of the program, after completion of the modification work.

(ii) ***Analysis.*** Under paragraph (b)(1) of this section, the provision of computer program development services by Corp A to Corp H is a digital content transaction with one element, which is the provision of services for the development or modification of digital content. Under paragraph (d) of this section, the transaction between Corp A and Corp H involves the provision of services for the development of a computer program because Corp H bears all of the risks of loss associated with the development of Program Q and is the owner of all copyright rights in Program Q. Taking into account all of the facts and circumstances, Corp A is treated as providing services to Corp H described in paragraph (b)(1)(iii) of this section. Under paragraph (g)(1) of this section, the fact that the agreement is labelled a license is not controlling (nor is the fact that Corp A receives a sum labelled a royalty).

(16) *Example 16: Provision of know-how by computer programmers* —

(i) ***Facts.*** Corp A and Corp I, a Country Z corporation, agree that a development engineer employed by Corp A will travel to Country Z to provide know-how relating to certain techniques not generally known to computer programmers, which will enable Corp I to more efficiently create computer programs. These techniques represent the product of experience gained by Corp A from working on many computer programming projects, and are furnished to Corp I under nondisclosure conditions. Such information is property subject to trade secret protection.

(ii) ***Analysis.*** The provision of know-how with respect to computer programming techniques by Corp A's development engineer to Corp I is described in paragraph (e) of this section. Therefore, the transaction is a digital content transaction with one element, which is the provision of know-how. The transaction is classified solely as the provision of know-how pursuant to paragraph (b)(1)(iv) of this section.

(17) *Example 17: Sale of development program in transaction with multiple elements* —

(i) ***Facts.*** Corp A transfers a disk containing Program Y to Corp E in exchange for a single fixed payment. Program Y is a computer program development program, which is used to create other computer programs, consisting of several components, including libraries of reusable software components that serve as general building blocks in new software applications. Because a computer program created with the use of Program Y will not operate unless the libraries are also present, the license agreement between Corp A and Corp E grants Corp E the right to distribute copies of the libraries with any program developed using Program Y. The

license agreement is otherwise identical to the license agreement in paragraph (h)(1) of this section (*Example 1*). Corp A cannot reasonably ascertain the primary benefit or value of the transaction to Corp E. A customer like Corp E derives two benefits from this or a substantially similar transaction, the first of which is the ability to use Program Y to develop new software and the second of which is the right to utilize the libraries and reusable software components in Program Y in distributed programs. Corp A possesses data arising from market research and customer surveys indicating that customers utilize Program Y primarily for its computer program development features and do not make significant use of the libraries of reusable software components. The libraries and reusable software components are not significant components of any overall new program created by using Program Y.

(ii) ***Analysis.***

(A) The transaction between Corp A and Corp E has multiple elements. One element is the transfer of a disk with a copy of Program Y, which would be described in paragraph (b)(1)(ii) of this section (transfer of a copyrighted article) if considered separately. Another element is the grant of the right to distribute copies of the libraries of reusable software components with any program developed using Program Y, which would be described in paragraphs (b)(1)(i) and (c)(2)(i) of this section (transfer of a copyright right) if considered separately.

(B) Because the transaction has multiple elements, one or more of which would be a digital content transaction if considered separately, paragraph (b)(2) of this section provides that the transaction is classified within a single category under paragraph (b)(1) of this section if its predominant character is described in that paragraph. Pursuant to paragraph (b)(3)(i) of this section, the predominant character of a transaction is generally based on the primary benefit or value of the transaction to the customer. If the primary benefit or value is not reasonably ascertainable, paragraph (b)(3)(ii) of this section provides that the predominant character of a transaction may be determined based on the primary benefit or value to a typical customer of a substantially similar transaction. This primary benefit or value to a typical customer can be identified through actual data about use or access pursuant to paragraph (b)(3)(ii)(A) of this section, or if that data is not available, by other evidence indicative of the primary benefit or value to a typical customer pursuant to paragraph (b)(3)(ii)(B) of this section. Although there are two benefits in this type of transaction, Corp A possesses data indicating that a typical customer primarily uses Program Y because of its computer program development features, rather than the right to distribute reusable components. This is reinforced by the fact that programs created using Program Y do not contain libraries of reusable software components as significant components. These facts indicate that the primary benefit or value to a typical customer arises from the ability to use Program Y, rather than the right to distribute reusable components. Therefore, the predominant character of this transaction is the transfer of a copy of Program Y, and this transaction is thus classified solely as the transfer of a copyrighted article described in paragraph (b)(1)(ii) of this section.

(C) Taking into account all the facts and circumstances, Corp E is properly treated as the owner of a copyrighted article. Therefore, under paragraph (f)(2) of this section, there has been the sale of a copyrighted article rather than the grant of a lease.

(18) ***Example 18: Sale of a computer program with right to make modifications —***

(i) ***Facts.*** Corp A transfers a disk containing Program X to Corp E. The disk contains both the object code and the source code to Program X, and the license agreement grants Corp E the right to modify the source code to correct minor errors and make minor adaptations to Program X so it will function on Corp E's computer; as well as the right to recompile the modified source code. The license does not grant Corp E the right to distribute the modified Program X to the public. The license is otherwise identical to the license agreement in paragraph (h)(1) of this section (*Example 1*). Corp A has ascertained that the primary benefit or value received by Corp E from the transaction is the core functionality of Program X rather than the limited rights to modify the source code.

(ii) ***Analysis.***

(A) The transaction between Corp A and Corp E has multiple elements. One element is the transfer of a disk with a copy of Program X, which would be described in paragraph (b)(1)(ii) of this section (transfer of a copyrighted article) if considered separately. Another element is the grant of the right to modify the source code to Program X and recompile the modified source code to create new code to correct minor errors, and to make minor adaptations to Program X, which would be described in paragraphs (b)(1)(i) and (c)(2)(ii) of this section (transfer of a copyright right) if considered separately.

(B) Because the transaction has multiple elements, one or more of which would be a digital content transaction if considered separately, paragraph (b)(2) of this section provides that the transaction is classified within a single category under the categories described under paragraph (b)(1) of this section if its predominant character is described in that paragraph. Pursuant to paragraph (b)(3) of this section, the predominant character of the transaction is based on the primary benefit or value of the transaction to the customer, if it is reasonably ascertainable. Since the primary benefit or value received by Corp E is the core functionality of Program X, rather than the limited rights to modify the source code, the predominant character of this transaction is the transfer of a copyrighted article. Therefore, this transaction is classified solely as a transfer of a copyrighted article under paragraph (b)(1)(ii) of this section.

(C) Taking into account all the facts and circumstances, Corp E is properly treated as the owner of a copyrighted article. Therefore, under paragraph (f)(2) of this section, there has been the sale of a copyrighted article rather than the grant of a lease.

(19) ***Example 19: License to website operator to make and sell copies of electronic books via download*** —

(i) ***Facts.*** Corp A operates a website that offers electronic books for download onto customers' computers or other electronic devices. The books offered are protected by copyright law. In a transaction between Corp A and a content owner, Corp A receives from the content owner a digital master copy of a book, which Corp A downloads onto its server. Corp A receives the non-exclusive right to reproduce an unlimited number of copies of the book for purposes of distribution and sale to the public. Corp A pays the content owner a specified amount for each copy sold to a customer. Corp A may not transfer any of the rights it receives from the content owner. The term of the agreement Corp A has with the content owner is shorter than the remaining life of the copyright. The content owner has ascertained that the primary benefit or value Corp A receives in the transaction is the right to reproduce and distribute an unlimited number of copies of the book and not the transfer of a copy of the book. In a separate transaction, Corp A charges a customer a fixed fee for each book purchased. When purchasing a book from Corp A on Corp A's website, the customer must acknowledge the terms of a

license agreement with the content owner that states that the customer may download and view the electronic book in perpetuity but may not reproduce, distribute, or sell copies of it. Once the customer downloads the book from Corp A's server onto a device, the customer may access and view the book from that device, which does not need to be connected to the internet for the customer to view the book. The customer owes no additional payment to Corp A for the ability to view the book in the future.

(ii) ***Analysis.***

(A) Notwithstanding the license agreement between each customer and the content owner granting the customer rights to use the book, the relevant transactions are the transfer of a master copy of the book along with the grant from the content owners to Corp A of the right to reproduce and sell to the public copies of the books, and the transfers of copies of the books by Corp A to customers. Although the content owner is identified as a party to the license agreement memorializing the customer's rights with respect to the book, each customer obtains those rights directly from Corp A, not from the content owner. Under paragraph (b)(1) of this section, the download of a copy of a book by a customer is a digital content transaction with one element, which is the transfer of a digital copy of a book. Therefore, the transaction is treated solely as a transfer of a copyrighted article under paragraph (b)(1)(ii) of this section. Under the benefits and burdens test of paragraph (f)(2) of this section, the transaction is classified as a sale and not a lease, because the customer receives the right to view the book in perpetuity on its device.

(B) The transaction between the content owner and Corp A has multiple elements. One element is the transfer of a master copy of the book, which would be described in paragraph (b)(1)(ii) of this section (transfer of a copyrighted article) if considered separately. Another element is the grant of the right to reproduce and sell an unlimited number of copies to customers, which would be described in paragraphs (b)(1)(i) and (c)(2)(i) of this section (transfer of a copyright right) if considered separately. Because the transaction has multiple elements, one or more of which would be a digital content transaction if considered separately, paragraph (b)(2) of this section provides that the transaction is classified within a single category under the categories described under paragraph (b)(1) of this section if its predominant character is described in that paragraph. Pursuant to paragraph (b)(3) of this section, the predominant character of the transaction is based on the primary benefit or value of the transaction to the customer, if it is reasonably ascertainable. Since the primary benefit or value Corp A receives in the transaction is the right to reproduce and distribute an unlimited number of copies, the predominant character of this transaction is the transfer of a copyright right. Therefore, this transaction is classified solely as a transfer of copyright rights described in paragraph (b)(1)(i) of this section.

(C) Taking into account all of the facts and circumstances, there has been a license of books to Corp A. Under paragraph (f)(1) of this section, there has not been a transfer of all substantial rights in the copyright rights to the books because each content owner has the right to enter into other licenses with respect to the copyright of their book. Corp A has acquired no right itself to license the copyrights in the books. Finally, the terms of the licenses are for less than the remaining lives of the copyrights in the books.

(20) ***Example 20: Internet platform operator as agent for application developers*** —

(i) *Facts.* Corp A operates a platform on the internet that offers applications for download onto a customer's mobile phone. Under general tax principles, Corp A and an application developer establish an agency relationship whereby Corp A acts as the agent to offer the application for sale to customers on behalf of the application developer. The applications are protected by copyright law. Under the agreement between Corp A and the application developer, Corp A agrees to provide the application developer with platform and agency services to facilitate the sale of the application to customers. Corp A also provides the application developer with hosting services to host the application on Corp A's servers for download by the customers. Corp A receives a digital master copy of the application along with a non-exclusive right to make copies of the application and allow customers to download copies of the application from Corp A's platform. Corp A has ascertained that the primary benefit or value from the transaction received by the application developer is the platform and agency services that Corp A provides. Corp A receives the right to make copies of the application merely to perform its activities as an agent on behalf of the application developer. When purchasing an application on Corp A's platform, the customer must acknowledge the terms of a license agreement with the application developer that states that the customer may use the application but may not reproduce or distribute copies of it. In addition, the agreement provides that the customer may download the application onto only one mobile phone at a time. A customer does not need to be connected to the internet to access the application. The customer owes no additional payment to Corp A or the application developer for the ability to use the application in perpetuity. Corp A retains a fixed percentage of each purchase price of the application and remits the remaining balance to the application developer.

(ii) *Analysis.*

(A) The transaction between Corp A and the application developer has multiple elements. One element is the transfer of a master copy of an application by the application developer to Corp A, which would be described in paragraph (b)(1)(ii) of this section (transfer of a copyrighted article) if considered separately. Another element is the transfer of the right to make and distribute copies of the application by the application developer to Corp A, which would be described in paragraphs (b)(1)(i) and (c)(2) of this section (transfer of a copyright right) if considered separately. A third element is the platform and agency services provided by Corp A to the application developer, which would not be described in this section if considered separately. A fourth element is the hosting services provided by Corp A to the application developer, which would be described in § 1.861-19 if considered separately. Under the facts and circumstances, although Corp A receives a copy of the application and the right to make and distribute copies of the application, Corp A receives this copy and right merely to facilitate the sale of applications on behalf of the application developer.

(B) Because the transaction has multiple elements, one or more of which would be a digital content transaction if considered separately, paragraph (b)(2) of this section provides that the transaction is classified within a single category under the categories described under paragraph (b)(1) of this section if its predominant character is described in that paragraph. Pursuant to paragraph (b)(3) of this section, the predominant character of the transaction is based on the primary benefit or value of the transaction to the customer, if it is reasonably ascertainable. Since the primary benefit or value the application developer

receives in the transaction is the platform and agency services, the predominant character of this transaction is the platform and agency services and not a digital content transaction nor a cloud transaction.

(C) The transfer of a copy of an application from the application developer to a customer is a digital content transaction with one element, which is the transfer of a copy of a digital program. Therefore, the transaction is treated solely as a transfer of a copyrighted article under paragraph (b)(1)(ii) of this section. Under the benefits and burdens test of paragraph (f)(2) of this section, this transaction is a sale of a copyrighted article because a customer has the right to use the application in perpetuity.

(21) *Example 21: Movies and TV shows available for stream, rent, or purchase* —

(i) ***Facts.*** Corp A offers a catalog of movies and TV shows, all of which are subject to copyright protection. Corp A gives customers several options for viewing the content, each of which has a separate price. A “streaming” option allows a customer to view the video, which is hosted on Corp A's servers, while connected to the internet for as many times as the customer wants during a limited period. A “rent” option allows a customer to download the video to its computer or other electronic device (which does not need to be connected to the internet for viewing) and watch the video as many times as the customer wants for a limited period, after which an electronic lock is activated and the customer may no longer view the content. A “purchase” option allows a customer to download the video and view it as many times as the customer chooses with no end date. Under all three options, the customer may view the video but may not reproduce or distribute copies of it, prepare derivative works based on it, or publicly display it.

(ii) ***Analysis.***

(A) With respect to the “rent” option, under paragraph (b)(1) of this section the download of a video by a customer is a digital content transaction with one element, which is the transfer of a copy of the video. Therefore, the transaction is treated solely as the transfer of a copyrighted article under paragraph (b)(1)(ii) of this section. Although a customer will retain a copy of the content at the end of the payment term, the customer cannot access the content after the electronic lock is activated. The activation of the electronic lock is the equivalent of having to return the copy. Therefore, the transaction is classified as a lease of a copyrighted article under paragraph (f)(2) of this section because the customer's right to view the videos is for a limited period.

(B) With respect to the “purchase” option, under paragraph (b)(1) of this section the download of a video by a customer is a digital content transaction with one element, which is the transfer of a copy of the video. Therefore, the transaction is treated solely as the transfer of a copyrighted article under paragraph (b)(1)(ii) of this section. The transaction is classified as a sale of a copyrighted article under paragraph (f)(2) of this section because the customer receives the right to view the videos in perpetuity.

(C) With respect to the “streaming” option, the transaction is Corp A's grant of the right to its customers to view the movies or shows while connected to the internet for a limited period. There is no transfer of any copyright rights described in paragraph (c)(2) of this section. There is also no transfer of a copyrighted article because the content is not downloaded by a customer, but rather, is accessed through an on-demand network. The transaction also does not constitute the provision of services for the development of

digital content or the provision of know-how under paragraph (b)(1) of this section. Therefore, the transaction is not a digital content transaction described in paragraph (b)(1) of this section. Instead, the transaction is a cloud transaction that is classified under § 1.861-19. See § 1.861-19(b).

(22) *Example 22: Website offering third-party videos via stream* —

(i) ***Facts.*** Corp A operates a website that allows customers to stream videos that third-party content creators upload to Corp A's website. Corp A has advertising contracts with third-party advertisers pursuant to which Corp A earns advertising revenue when a customer views a video. Customers can either stream videos for free with advertisements or can pay a subscription fee to stream videos without advertisements. Under the contract between Corp A and content creators, content creators retain all ownership rights in their videos and must own or have the necessary rights to publish their videos. The contract also states that content creators grant Corp A a non-exclusive license to use, reproduce, distribute, and display their videos in connection with Corp A's website, and grant customers a non-exclusive license to view the videos. These licenses terminate within a commercially reasonable time after a content creator removes or deletes a video from Corp A's website. Content creators have ascertained that the primary benefit or value Corp A receives from transactions with content creators is the right to use, reproduce, distribute, and display their videos. Corp A pays content creators a percentage of advertising revenue generated from the videos and a percentage of subscription fees.

(ii) ***Analysis.***

(A) The transaction between Corp A and the content creators has multiple elements. One element is the uploading of a video by a content creator, which would be described in paragraph (b)(1)(ii) of this section (transfer of a copyrighted article) if considered separately. Another element is the grant by content creators to Corp A of the right to use, reproduce, distribute, and display their videos, which would be described in paragraph (b)(1)(i) of this section (transfer of a copyright right) if considered separately. Content creators are not providing content development services to Corp A under paragraph (d) of this section because content creators own the copyright rights in the videos.

(B) Because the transaction has multiple elements, one or more of which would be a digital content transaction if considered separately, paragraph (b)(2) of this section provides that the transaction is classified within a single category under the categories described under paragraph (b)(1) of this section if its predominant character is described in that paragraph. Pursuant to paragraph (b)(3) of this section, the predominant character of the transaction is based on the primary benefit or value of the transaction to the customer. The predominant character of the transaction is therefore the transfer of copyright rights because the primary benefit or value received by Corp A is the right to use, reproduce, distribute, and display videos. Accordingly, this transaction is characterized solely as a transfer of a copyright right as described in paragraphs (b)(1)(i) of this section.

(C) Taking into account all of the facts and circumstances, there has been a license of videos to Corp A. Under paragraph (f)(1) of this section, there has not been a transfer of all substantial rights in the copyright rights to the videos because each content owner has the right to enter into other licenses with respect to the copyright of their videos. Corp A has acquired no right itself to license the copyrights in the videos. Finally, the terms of the licenses are for less than the remaining lives of the copyrights in the videos.

(D) For both the free streaming and subscription streaming transactions between Corp A and customers, there is no transfer of any copyright rights described in paragraph (c)(2) of this section. There is also no transfer of a copyrighted article, because the content is not downloaded by a customer, but rather is accessed through an on-demand network. The transactions also do not constitute the provision of services for the development of digital content or the provision of know-how under paragraph (b)(1) of this section. Therefore, paragraph (b)(1) of this section does not apply to such transactions. Instead, both transactions are cloud transactions that are classified under § 1.861-19. See § 1.861-19(b).

(23) *Example 23: Sale of computer programs electronically through a reseller* —

(i) ***Facts.*** Corp A owns the copyright to software (Program S). Corp A hosts Program S on its servers. Corp A grants Corp B, a foreign corporation wholly owned by Corp A, the right to distribute copies of Program S (without the right to reproduce copies of Program S) to Corp B's customers that are located in Corp B's country. Under the agreement between Corp A and Corp B, Corp B pays Corp A a fixed fee for each copy of Program S that Corp A delivers to a customer. In separate transactions, customers pay Corp B for the right to receive digital copies of Program S that they may then use in perpetuity without further payment. Corp B is responsible for managing the purchase/sale interaction with Corp B's customers, including invoicing and collections. Corp A is responsible for creating and delivering the digital copies of Program S to Corp B's customers from Corp A's servers. Corp B does not perform any functions to provide access to Program S.

(ii) ***Analysis.***

(A) Although there is a single contract between Corp A and Corp B that grants a legal right to Corp B with respect to Program S, that right (the right to distribute) is not a copyright right described in paragraphs (b)(1)(i) and (c)(2) of this section. Instead, the transactions between Corp A and Corp B and then Corp B and its customers are functionally and economically equivalent to back-to-back transfers of copyrighted articles. The transfers are only superficially different from those described in paragraph (h)(24) of this section (*Example 24*) where the reseller acquires product keys and sells them on to customers. Therefore, each sale of a copy of Program S by Corp B to a customer should be viewed as a transfer of a copyrighted article from Corp A to Corp B and then from Corp B to the customer.

(B) The transaction between Corp A and Corp B is a digital content transaction with a single element that is classified as a transfer of a copyrighted article described in paragraph (b)(1)(ii) of this section. There are no additional elements because Corp B's receipt of the right to distribute copies of Program S (without the right to make copies) is not a copyright right described in paragraph (c)(2) of this section. Under the benefits and burdens test of paragraph (f)(2) of this section, the transfer is classified as the sale of a copyrighted article.

(C) The transaction between Corp B and a customer is a digital content transaction with a single element that is classified as a transfer of a copyrighted article described in paragraph (b)(1)(ii) of this section. Under the benefits and burdens test of paragraph (f)(2) of this section, this transaction is a sale of a copyrighted article because the customer has the right to use the application in perpetuity.

(24) *Example 24: Sale of video games with online and offline functionality through retailers using digital keys* —

(i) ***Facts.*** Corp A owns the copyright in a computer program (Program Y). Corp A creates digital keys that allow for the download of one copy of Program Y from Corp A's website. Corp A sells these digital keys to retailers for a one-time fee per key, and the retailers do not use Program Y, but instead sell them in separate transactions to customers for a one-time fee per key. Corp A ascertains that the primary benefit or value to retailers from the purchase of digital keys from Corp A is the right to further transfer the digital keys to customers. The retailers cannot reasonably ascertain the primary benefit or value that their specific customers derive from Program Y, nor is there data available to the retailers about how their customers typically use Program Y. Program Y is a video game that contains online and offline features, both of which can be played without paying an additional game-specific cost after paying the one-time fee to purchase a key. The offline feature is comprised of a single-player story that does not require any internet connection to play. The online feature is comprised of the ability to play competitive matches against other players that are hosted on servers owned by Corp A. The competitive matches require an ongoing connection to the internet to play. Neither the customers nor the retailer receives any copyright rights described in paragraph (c)(2) of this section with respect to Program Y. Customers can use Program Y in perpetuity. Program Y is primarily marketed as a single-player game in television and online advertising, with only brief mentions of the multiplayer mode in print advertising. The development cost for Program Y was allocated 40% to developing the single-player content, 20% to developing the multiplayer content, and 40% to developing content that is used by both types of content (*e.g.,* cost of developing the game engine).

(ii) ***Analysis.***

(A) The transaction between Corp A and a retailer has multiple elements. One element is the transfer of a key with the right to download a copy of Program Y for use to play the offline story, which would be a digital content transaction described in paragraph (b)(1)(ii) of this section (transfer of a copyrighted article) if considered separately. Another element is the transfer of the same key with a copy of Program Y providing on-demand network access to digital content in the form of competitive multiplayer functionality, which would be a cloud transaction described in § 1.861-19(b) if considered separately.

(B) Because the transaction has multiple elements, one of which would be a digital content transaction if considered separately and one of which would be a cloud transaction if considered separately, paragraph (b)(2) of this section provides that the transaction is classified within a single category under paragraph (b)(1) of this section if its predominant character is described in that paragraph, or the transaction is classified solely as a cloud transaction if its predominant character is a cloud transaction pursuant to § 1.861-19(c)(2). Pursuant to paragraph (b)(3)(i) of this section, the predominant character of the transaction is based on the primary benefit or value of the transaction to the customer, if it is reasonably ascertainable. The predominant character of this transaction is therefore the transfer of copyrighted articles because the primary benefit or value received by a retailer is the right to further transfer the same copyrighted articles to customers in the form of digital keys. The retailers do not have any intent to utilize the cloud functionality of the digital keys, although they do have the right to do so. Therefore, this transaction is classified solely as a transfer of copyrighted articles described in paragraph (b)(1)(ii) of this section.

(C) Under the benefits and burdens test of paragraph (f)(2) of this section, the transfer between Corp A and a retailer is classified as the sale of a copyrighted article because the retailer has the right to use, or sell, Program Y in perpetuity without further payment.

(D) The transfer of a key (with the right to download a copy of Program Y) by a retailer to a customer also contains the same two elements as each transaction between Corp A and a retailer. However, a retailer cannot reasonably ascertain the primary benefit or value derived by a specific customer from Program Y. In such situations, paragraph (b)(3)(ii) of this section provides that the predominant character of a transaction may be determined based on the primary benefit or value to a typical customer of a substantially similar transaction. This primary benefit or value to a typical customer can be identified through actual data about use or access pursuant to paragraph (b)(3)(ii)(A) of this section, or if that data is not available, by using other evidence indicative of the primary benefit or value to a typical customer pursuant to paragraph (b)(3)(ii)(B) of this section. Because the retailers do not have available data about how customers use Program Y, they may use the marketing with respect to Program Y to determine that its predominant character is that of a transfer of a copyrighted article described in paragraph (b)(1)(ii) of this section. The relative development costs of the offline and online components of the game could also be used if they are known to a retailer. Therefore, the transfer between a retailer and a customer of a digital key containing the right to download a copy of Program Y is classified solely as a transfer of a copyrighted article.

(E) Under the benefits and burdens test of paragraph (f)(2) of this section, the transfer between a retailer and a customer is classified as the sale of a copyrighted article because the customer has the right to use Program Y in perpetuity without further payment.

(25) *Example 25: Source of income from the sale of a copyrighted article transferred through an electronic medium* —

(i) ***Facts.*** Corp A is the parent company of a world-wide group of affiliated companies. Corp B is a foreign corporation wholly owned by Corp A. In the ordinary course of business, Corp B acts as a procurement hub for Corp A's affiliated companies. In this role, Corp B regularly purchases products that will be distributed amongst Corp A's affiliated companies to be used by them in their respective businesses. Corp B purchases digital copies of a computer program (Program Y) from Corp C, an unrelated company. Corp B may use Program Y in perpetuity without further payment. Corp B receives no copyright rights in Program Y. Corp B does not use Program Y, and instead distributes all of its copies of Program Y to various affiliates. Corp C sources income from the sale of Program Y using sections 861(a)(6) and 862(a)(6).

(ii) ***Analysis.***

(A) Under paragraph (b)(1) of this section, the transfer of Program Y from Corp C to Corp B is a digital content transaction with one element, which is the transfer of a copy of Program Y. Therefore, the transaction is treated solely as transfers of a copyrighted articles under paragraph (b)(1)(ii) of this section. Taking into account all of the facts and circumstances, there have been sales of copies of Program Y to Corp B under paragraph (f)(2) of this section.

(B) Income from the sale of Program Y by Corp C is sourced pursuant to sections 861(a)(6) and 862(a)(6) to the place where the sale occurred. Pursuant to paragraph (f)(2)(ii) of this section, a transfer of a copyrighted article through an electronic medium is treated as occurring at the billing address of the purchaser, in this case Corp B, unless the sales transaction is arranged for a principal purpose of tax avoidance. In this case, the sale is treated as occurring at the billing address of Corp B, and Corp C's income is foreign source, even though Corp B will not use Program Y, because Corp B regularly purchases products that will be distributed amongst its affiliates to be used in their respective businesses, and therefore there is no evidence that Corp B was used by Corp A to purchase Program Y with a principal purpose of tax avoidance.

(26) *Example 26: Application of anti-abuse rule for sale of a copyrighted article transferred through an electronic medium* —

(i) ***Facts.*** Corp A is the parent company of a world-wide group of affiliated companies. Corp B is a foreign affiliate of Corp A. In the ordinary course of business, Corp B does not act as a procurement hub regularly purchasing products for use by Corp A's affiliated companies. Corp A negotiates an agreement with Corp C, an unrelated company, to purchase digital copies of a computer program (Program Y) for use in Corp A's business. The agreement grants Corp A the right to use Program Y in perpetuity for a one-time payment. Corp C requests that Corp B be the purchaser of the copies of Program Y even though Corp B will not use Program Y and is not otherwise involved in the transaction between Corp A and Corp C for a principal purpose of tax avoidance. Corp A agrees, and Corp B purchases the copies of Program Y and subsequently distributes them to Corp A. Corp C sources income from the sale of Program Y using sections 861(a)(6) and 862(a)(6).

(ii) ***Analysis.***

(A) Under paragraph (b)(1) of this section, the transfer of Program Y from Corp C to Corp B is a digital content transaction with one element, which is the transfer of a copy of Program Y. Therefore, the transaction is classified solely as a transfer of a copyrighted article under paragraph (b)(1)(ii) of this section. Taking into account all of the facts and circumstances, there have been sales of copies of Program Y to Corp B under paragraph (f)(2) of this section.

(B) Income from the sale of Program Y by Corp C is sourced pursuant to sections 861(a)(6) and 862(a)(6) to the place where the sale occurred. Pursuant to paragraph (f)(2)(ii) of this section, a transfer of a copyrighted article through an electronic medium is treated as occurring at the billing address of the purchaser, in this case Corp B, unless the sales transaction is arranged for a principal purpose of tax avoidance. In this case, Corp B does not regularly purchase products that will be used by other companies within Corp A's group of affiliated companies, and Corp B was instead used as the purchaser of Program Y on behalf of Corp A with a principal purpose of tax avoidance. Therefore, the place where the sale occurred must be determined based on all relevant facts and circumstances. Corp A negotiated the purchase, and the software will be used by Corp A in its business. As a result, under paragraph (f)(2)(ii) of this section, the sale is treated as occurring at the location of Corp A and the income derived by Corp C from the sale is U.S. source.

(C) The same result would apply if, instead of using Corp B for the purchase, Corp A made the purchase but rented a P.O. Box outside the United States to serve as the billing address for the transaction with a principal purpose of tax avoidance.

(i) ***Applicability date*** —

(1) ***In general.*** This section applies to taxable years beginning on or after January 14, 2025.

(2) ***Early application.*** A taxpayer can apply this section to taxable years beginning on or after August 14, 2019 and all subsequent taxable years not described in paragraph (i)(1) of this section (early application years) if—

(i) The taxpayer also applies § 1.861-19 to the early application years;

(ii) This section and § 1.861-19 are applied to the early application years by all persons related to the taxpayer (within the meaning of sections 267(b) and 707(b));

(iii) The period of limitations on assessment for each early application year of the taxpayer and all related parties (within the meaning of sections 267(b) and 707(b)) is open under section 6501; and

(iv) The taxpayer would not be required under this section to change its method of accounting as a result of such election.

(j) ***Change in method of accounting required by this section.*** In order to comply with this section, a taxpayer may be required to change its method of accounting. If so required, the taxpayer must secure the consent of the Commissioner in accordance with the requirements of § 1.446-1(e) and the applicable administrative procedures for obtaining the Commissioner's consent under section 446(e) for voluntary changes in methods of accounting.

[T.D. 8785, 63 FR 52977, Oct. 2, 1998; 63 FR 64868, Nov. 24, 1998, as amended by T.D. 9870, 84 FR 33692, July 15, 2019; T.D. 10022, 90 FR 2988, Jan. 14, 2025]

§ 1.861-19 Classification of cloud transactions.

(a) ***In general.*** This section provides rules for classifying cloud transactions (as defined in paragraph (b) of this section). The rules of this section apply for purposes of Internal Revenue Code sections 59A, 245A, 250, 267A, 367, 404A, 482, 679, and 1059A; subchapter N of chapter 1; chapters 3 and 4; and sections 842 and 845 (to the extent involving a foreign person), and apply with respect to transfers to foreign trusts not covered by section 679.

(b) ***Cloud transaction defined.*** A cloud transaction is a transaction through which a person obtains on-demand network access to computer hardware, digital content (as defined in § 1.861-18(a)(2)), or other similar resources. A cloud transaction does not include network access to download digital content for storage and use on a person's computer or other electronic device.

(c) ***Classification of cloud transactions*** —

(1) ***In general.*** A cloud transaction is classified as the provision of services.

(2) ***Transaction with multiple elements.*** Taking into account the overall transaction and the surrounding facts and circumstances, a transaction that has multiple elements, one or more of which would be a cloud transaction if considered separately, is classified in its entirety as a cloud transaction if the predominant character of the transaction as determined under § 1.861-18(b)(3) is a cloud transaction.

(d) ***Examples.*** The examples in this paragraph (d) illustrate the provisions of this section. Unless otherwise specified, assume that Corp A is a domestic corporation, no rights described in § 1.861-18(c)(2) (copyright rights) are transferred as part of the transactions described, and all facts in each example occur as part of a single transaction.

(1) ***Example 1: Computing capacity*** —

(i) ***Facts.*** Corp A operates data centers on its premises in various locations. Corp A provides Corp B computing capacity on Corp A's servers in exchange for a monthly fee based on the amount of computing power made available to Corp B. Corp B provides its own software to run on Corp A's servers.

(ii) ***Analysis.*** The provision of on-demand network computing capacity by Corp A to Corp B is a cloud transaction with one element. Therefore, the transaction is treated solely as a cloud transaction under paragraph (b) of this section and is classified as the provision of services under paragraph (c)(1) of this section.

(2) ***Example 2: Computing capacity on dedicated on-premises servers*** —

(i) ***Facts.*** The facts are the same as in paragraph (d)(1)(i) of this section (the facts in *Example 1*), except that, in order to offer more security to Corp B, Corp A provides Corp B computing capacity exclusively through designated servers, which are owned and operated by Corp A and located at Corp B's facilities. Corp A agrees not to use the designated server for any other customer for the duration of its arrangement with Corp B. Although the server is located at Corp B's facilities, Corp B accesses the server through Corp A's network and the monthly fee is based on the amount of computing power made available to Corp B.

(ii) ***Analysis.*** As in paragraph (d)(1) of this section (*Example 1*), the transaction between Corp A and Corp B is the provision of on-demand network computing capacity and is therefore a cloud transaction with one element. Therefore, the transaction is treated solely as a cloud transaction under paragraph (b) of this section and is classified as the provision of services under paragraph (c)(1) of this section. If the transaction between Corp A and Corp B involved only the provision of a server by Corp A for use by Corp B, and not on-demand network access to computing capacity, the transaction would not be a cloud transaction and this section would not apply.

(3) ***Example 3: Access to software development platform and website hosting*** —

(i) ***Facts.*** Corp A provides Corp B a software platform that Corp B uses to develop and deploy websites with a range of features, including blogs, message boards, and other collaborative knowledge bases. The software development platform consists of an operating system, web server software, scripting languages, libraries, tools, and back-end relational database software and allows Corp B to use in its websites certain visual elements subject to copyrights held by Corp A. The software development platform is hosted on servers owned by Corp A and located at Corp A's facilities. Corp B's finished websites are also hosted on Corp A's servers. Corp B accesses the software development platform via a standard web browser. Corp B has no ability

to alter the software code. A small amount of copyrighted scripting code is downloaded onto Corp B's computers to facilitate secure logins and access to the software development platform. All other functions of the software development platform execute on Corp A's servers, and no portion of the core software code is ever downloaded by Corp B or Corp B's customers. Corp A has ascertained that the primary benefit or value to Corp B from the transaction is the right to use the software development platform. Corp B pays Corp A a monthly fee for the platform and website hosting.

(ii) ***Analysis.***

(A) There is one transaction with multiple elements between Corp A and Corp B. One element is Corp A's provision to Corp B of on-demand network access to the software platform, which would be a cloud transaction described in paragraph (b) of this section if considered separately. Another element is Corp A's hosting of Corp B's finished websites, which would be a cloud transaction described in paragraph (b) of this section if considered separately. A third element is the grant by Corp A to Corp B of the right to use in Corp B's websites certain visual elements subject to copyrights held by Corp A, which would be a transfer of copyright rights under § 1.861-18(b)(1)(i) if considered separately. A fourth element is the download of scripting code by Corp B, which would be a transfer of a copyrighted article under § 1.861-18(b)(1)(ii) if considered separately.

(B) Because the transaction has multiple elements, one or more of which would be a cloud transaction if considered separately, paragraph (c)(2) of this section provides that the transaction is classified as a cloud transaction if its predominant character is a cloud transaction. Pursuant to § 1.861-18(b)(3), the predominant character of the transaction is based on the primary benefit or value of the transaction to the customer, if it is reasonably ascertainable. The predominant character of this transaction is therefore a cloud transaction because the primary benefit or value received by Corp B is the right to use the software development platform. Accordingly, this transaction is classified solely as a cloud transaction described in paragraph (b) of this section and is classified as the provision of services under paragraph (c)(1) of this section.

(4) ***Example 4: Access to online software via an application*** —

(i) ***Facts.*** Corp A provides Corp B word processing, spreadsheet, and presentation software and allows employees of Corp B to access the software over the internet through a web browser or an application (“app”) that can be downloaded from Corp A's servers onto a computer or mobile device. Corp B's employees usually download Corp A's app onto their mobile devices. To access the full functionality of the app, the device must be connected to the internet. Only a limited number of features on the app are available without an internet connection. Corp B has no ability to alter the software code. The software is hosted on servers owned by Corp A and located at Corp A's facilities and is used concurrently by other Corp A customers in addition to Corp B. Corp B pays a monthly fee based on the number of employees with access to the software. Users have the option to save files either online using the storage provided by Corp B, or offline on their own hard drives. Corp B's employees can also download updates to the app as part of the monthly fee arrangement. Upon termination of the arrangement, Corp A activates an electronic lock preventing Corp B's employees from further utilizing the app, and Corp B's

employees are no longer able to access the software via a web browser. Corp A has ascertained that the primary benefit or value to Corp B from the transaction is the right to access Corp A's software over the internet, whether via web browser or after downloading the app.

(ii) ***Analysis.***

(A) There is one transaction with multiple elements between Corp A and Corp B. One element is Corp A's provision to Corp B of on-demand network access to Corp A's computer hardware and software resources for the purpose of fully utilizing Corp A's software, which would be a cloud transaction described in paragraph (b) of this section if considered separately. Another element is the download of Corp A's app by Corp B employees, which would be a transfer of a copyrighted article under § 1.861-18(b)(1)(ii) if considered separately.

(B) Because the transaction has multiple elements, one or more of which would be a cloud transaction if considered separately, paragraph (c)(2) of this section provides that the transaction is classified as a cloud transaction if its predominant character is a cloud transaction. Pursuant to § 1.861-18(b)(3), the predominant character of the transaction is based on the primary benefit or value of the transaction to the customer, if it is reasonably ascertainable. The predominant character of this transaction is therefore a cloud transaction because the primary benefit or value received by Corp B is the right to access Corp A's software over the internet. Accordingly, this transaction is classified solely as a cloud transaction described in paragraph (b) of this section and is classified as the provision of services under paragraph (c)(1) of this section.

(5) ***Example 5: Access to offline software with limited online functions*** —

(i) ***Facts.*** Corp A provides Corp B word processing, spreadsheet, and presentation software that is functionally similar to the software in paragraph (d)(4) of this section (*Example 4*). The software is made available for access over the internet but only to download the software from servers owned by Corp A onto a computer or mobile device in the form of an app. The downloaded software contains all the core functions of the software. Employees of Corp B can use the software on their computers or mobile devices regardless of whether their computer or mobile device is online. When online, the software provides a few ancillary functions that are not available offline, such as access to document templates and data collection for diagnosing problems with the software. Whether working online or offline, Corp B employees can store their files only on their own computer or mobile device, and not on Corp A's data storage servers. Corp B's employees can also download updates to the software as part of the monthly fee arrangement. Upon termination of the arrangement, an electronic lock is activated so that the software can no longer be accessed. Corp A has ascertained that the primary benefit or value to Corp B from the transaction is the right to download and use Corp A's software offline.

(ii) ***Analysis.***

(A) The transaction between Corp A and Corp B contains multiple elements. One element is the transfer of a copy of Corp A's software via download, which would be a transfer of a copyrighted article described under § 1.861-18(b)(1)(ii) if considered separately. Another element is the provision of online ancillary functionality of the software, which would be a cloud transaction described in paragraph (b) of this section if considered separately.

(B) Because the transaction has multiple elements, one or more of which would be a cloud transaction if considered separately, paragraph (c)(2) of this section provides that the transaction is classified as a cloud transaction if its predominant character is a cloud transaction. Pursuant to § 1.861-18(b)(3), the predominant character of the transaction is based on the primary benefit or value of the transaction to the customer, if it is reasonably ascertainable. The predominant character of this transaction is therefore the transfer of a copyrighted article because the primary benefit or value received by Corp B is the right to download and use Corp A's software offline. Accordingly, this transaction is classified solely as a transfer of a copyrighted article described in § 1.861-18(b)(1)(ii). The provision of the software constitutes a lease of a copyrighted article under § 1.861-18 because access to the app is terminated when the monthly fee is no longer paid, even though Corp B employees retain the locked files on their devices. See § 1.861-18(h)(4).

(6) ***Example 6: Data storage, separate from access to offline software*** —

(i) ***Facts.*** The facts are the same as in paragraph (d)(5)(i) of this section (the facts in *Example 5*), except that Corp A also provides on-demand network data storage to Corp B on Corp A's servers in exchange for a monthly fee based on the amount of data storage used by Corp B. Under the data storage terms, Corp B employees may store files created by Corp B employees using Corp A's software or other software. Although Corp A's word processing software is compatible with Corp A's data storage systems, the core functionality of Corp A's software is not dependent on Corp B's purchase of the storage plan. Corp A's provision of software and data storage capacity constitute separate transactions.

(ii) ***Analysis.***

(A) As explained in paragraph (d)(5)(ii) of this section, Corp B's download of fully functional software, along with on-demand network access to certain limited online features, does not constitute a cloud transaction, but rather constitutes a lease of a copyrighted article under § 1.861-18.

(B) The provision of on-demand network data storage by Corp A to Corp B is a cloud transaction with one element. Therefore, the transaction is treated solely as a cloud transaction under paragraph (b) of this section and is classified as the provision of services under paragraph (c)(1) of this section.

(7) ***Example 7: Streaming and temporary download of digital content using third-party servers*** —

(i) ***Facts.*** Corp A offers via stream or temporary download digital content in the form of videos and music to customers from servers located in data centers owned and operated by Data Center Operator. Each customer uses a computer or other electronic device to access unlimited streaming or temporary downloads of video and music in exchange for payment of a flat monthly fee to Corp A. The customer may select from among the available content the particular video or song to be streamed or downloaded. Corp A continually updates its content catalog, replacing content with higher quality versions and adding new content at no additional charge to the customer. It also provides additional functionality such as various methods of filtering and sorting the library, a watchlist, and recommendations based on a customer's preferences. Content that is streamed to the customer is not stored locally on the customer's computer or other electronic device and therefore can be played only while the customer's computer or other electronic device is connected to the internet. Content that is temporarily downloaded is stored on the customer's computer or other electronic device for 1 week and

therefore can be played while the customer's computer or other electronic device is not connected to the internet. Corp A cannot reasonably ascertain the primary benefit or value that its specific customers derive from accessing Corp A's catalog of digital content. Data collected by Corp A indicates that the vast majority of customers stream digital content rather than temporarily download the content. Corp A pays Data Center Operator a fee based on the amount of data storage used and computing power made available in connection with Corp A's content offerings.

(ii) ***Analysis.***

(A) The provision of data storage and computing power by Data Center Operator to Corp A is a cloud transaction with one element. Therefore, the transaction is treated solely as a cloud transaction under paragraph (b) of this section, and is classified as the provision of services under paragraph (c)(1) of this section.

(B) A transaction between Corp A and a customer has two elements. One element is streaming access to a curated and routinely updated library of digital content, which would be a cloud transaction described in paragraph (b) of this section if considered separately. Another element is the transfer of a copy of digital content via temporary download, which would be a transfer of a copyrighted article under § 1.861-18(b)(1)(ii) if considered separately.

(C) Because the transaction has multiple elements, one or more of which would be a cloud transaction if considered separately, paragraph (c)(2) of this section provides that the transaction is classified as a cloud transaction if its predominant character is a cloud transaction. Pursuant to § 1.861-18(b)(3), the predominant character of the transaction is based on the primary benefit or value of the transaction to the customer if it is reasonably ascertainable. However, Corp A cannot reasonably ascertain the primary benefit or value derived by a specific customer from Corp A's offering. In such situations, § 1.861-18(b)(3)(ii) provides that the predominant character of a transaction may be determined based on the primary benefit or value to a typical customer of a substantially similar transaction. This primary benefit or value to a typical customer can be identified through actual data about use or access pursuant to § 1.861-18(b)(3)(ii)(A), or if that data is not available, by using other evidence indicative of the primary benefit or value to a typical customer pursuant to § 1.861-18(b)(3)(ii)(B). Because Corp A has data that shows the typical customer streams digital content rather than temporarily downloading it, the primary benefit or value received by a typical customer is streaming access to digital content. Therefore, the predominant character of the transaction is a cloud transaction. Under paragraph (c)(1) of this section, the cloud transaction is classified as the provision of services.

(8) ***Example 8: Access to online database*** —

(i) ***Facts.*** Corp A offers an online database of industry-specific materials. Customers access the materials through Corp A's website, which aggregates and organizes information topically and hosts a proprietary search engine. Corp A hosts the website and database on its own servers and provides multiple customers access to the website and database concurrently. Most materials in Corp A's database are publicly available by other means, but Corp A's website offers an efficient way to locate and obtain the information on demand. Certain materials in Corp A's database constitute digital content within the meaning of § 1.861-18(a)(2), and Corp A pays the copyright owners a license fee for using them. Each customer may download any of

the materials to its own computer and keep such materials without further payment. The customer pays Corp A a fee based on the number of searches or the amount of time spent on the website, and such fee is not dependent on the amount of materials the customer downloads. The fee that the customer pays is substantially higher than the stand-alone charge for accessing the same digital content outside of Corp A's system. Corp A cannot reasonably ascertain the primary benefit or value that a specific customer derives from accessing Corp A's database. Corp A does not have data indicating whether the typical customer downloads materials from the database. Corp A markets its website and online database as user-friendly and an efficient way to find relevant materials because of its proprietary search engine. Developing the proprietary search engine was the largest cost Corp A incurred in creating its website and online database.

(ii) ***Analysis.***

(A) The transaction between Corp A and a customer has multiple elements. One element is Corp A's provision to a customer of access to Corp A's website and online database, which is a cloud transaction described in paragraph (b) of this section if considered separately. Another element is the transfer of digital content via download, which is the transfer of a copyrighted article under § 1.861-18 if considered separately.

(B) Because the transaction has multiple elements, one or more of which would be a cloud transaction if considered separately, paragraph (c)(2) of this section provides that the transaction is classified as a cloud transaction if its predominant character is a cloud transaction. Pursuant to § 1.861-18(b)(3), the predominant character of the transaction is based on the primary benefit or value of the transaction to the customer, if it is reasonably ascertainable. However, Corp A cannot reasonably ascertain the primary benefit or value derived by a specific customer from access to Corp A's database. In such situations, § 1.861-18(b)(3)(ii) provides that the predominant character of a transaction may be determined based on the primary benefit or value to a typical customer of a substantially similar transaction. This primary benefit or value to a typical customer can be identified through actual data about use or access pursuant to § 1.861-18(b)(3)(ii)(A), or if that data is not available, by using other evidence indicative of the primary benefit or value to a typical customer pursuant to § 1.861-18(b)(3)(ii)(B). That Corp A focuses on its proprietary search engine when marketing its website and database, as well as the facts that the search engine was the most expensive cost incurred by Corp A in creating its website and database, and that customers pay a substantially higher fee to access Corp A's system than they would otherwise pay to access the content outside of Corp A's system, indicates that the primary benefit or value received by a typical customer is the right to use the search engine. Therefore, under paragraph (c)(2) of this section, the predominant character of the transaction between Corp A and a customer is a cloud transaction. Under paragraph (c)(1) of this section the cloud transaction is classified as the provision of services.

(9) ***Example 9: Temporary or perpetual access to a single movie via stream or download*** —

(i) ***Facts.*** Corp A hosts movies on its website and allows customers to view a single movie for a limited period or perpetually for a one-time fee, with perpetual viewing rights costing a higher fee. Corp A does not charge customers a separate fee for access to the website. In addition, Corp A's website provides recommendations for movies based on a customer's search for a particular title and/or the customer's purchase history. Customers have no ability to alter the

servers, website, or movies available on the website. The movies in Corp A's database constitute digital content within the meaning of § 1.861-18(a)(2), and Corp A pays the copyright owners a license fee for using them. Corp A allows customers to view the movies by either streaming the movies from Corp A's servers, or by downloading the movies onto the customer's computer or other electronic device. The file size of movies offered by Corp A is generally large and so customers may be expected to download movies only in certain situations such as when traveling without internet access. Upon the expiration of the rental period, customers will no longer have access to stream the movies, and any movie that was downloaded onto a customer's computer or other electronic device will auto-delete from the customer's computer or other electronic device. Whether a customer chooses to view the movie via stream or download, Corp A charges the same one-time fee. Corp A cannot reasonably ascertain the primary benefit or value that a specific customer derives from accessing Corp A's website. Corp A maintains aggregate data on whether a given movie is viewed via stream or download, and this data shows that most movies are viewed by streaming, even in the case where a customer pays for the right to view a movie in perpetuity.

(ii) ***Analysis.***

(A) A transaction between Corp A and a customer contains multiple elements. One element is Corp A's provision to a customer of access to Corp A's website in order to view a movie via stream, which is a cloud transaction described in paragraph (b) of this section if considered separately. Another element is Corp A's provision to a customer of access to Corp A's website in order to download a movie, which is the transfer of a copyrighted article under § 1.861-18 if considered separately.

(B) Because the transaction has multiple elements, one or more of which would be a cloud transaction if considered separately, paragraph (c)(2) of this section provides that the transaction is classified as a cloud transaction if its predominant character is a cloud transaction. Pursuant to § 1.861-18(b)(3), the predominant character of the transaction is based on the primary benefit or value of the transaction to the customer, if it is reasonably ascertainable. However, Corp A cannot reasonably ascertain the primary benefit or value derived by a specific customer from access to Corp A's database. In such situations, § 1.861-18(b)(3)(ii) provides that the predominant character of a transaction may be determined based on the primary benefit or value to a typical customer of a substantially similar transaction. This primary benefit or value to a typical customer can be identified through actual data about use or access pursuant to § 1.861-18(b)(3)(ii)(A), or if that data is not available, by using other evidence indicative of the primary benefit or value to a typical customer pursuant to § 1.861-18(b)(3)(ii)(B). Corp A has data that shows that the typical customer views movies by streaming rather than download. Accordingly, under paragraph (c)(2) of this section, the predominant character of the transaction is a cloud transaction because the primary benefit or value a typical customer receives is access to stream movies on Corp A's website. Under paragraph (c)(1) of this section, the cloud transaction is classified as the provision of services.

(10) ***Example 10: Reseller of software as a service*** —

(i) ***Facts.*** Corp A owns the copyright to software (Program S). Corp A hosts Program S on its servers. Customers access Program S only through an internet connection. Corp A grants Corp B, a foreign corporation wholly owned by Corp A, the right to sell access to Program S to Corp B's customers that are located in Corp B's country. Corp B is responsible for managing the

purchase/sale interaction with Corp B's customers, including invoicing and collections. Corp A is responsible for providing customers with access to Program S. Corp B does not perform any functions to provide access to Program S.

(ii) ***Analysis.***

(A) The transaction between Corp A and Corp B is treated as Corp A providing on-demand access to Program S to Corp B even though Corp B resells that access. This transaction is a cloud transaction with one element. Under paragraph (c)(1) of this section, the cloud transaction is classified as the provision of services. The transaction does not involve the transfer of any copyright rights described in § 1.861-18(c)(2), and therefore is governed solely by this section.

(B) The transaction between Corp B and its customers is the provision of on-demand access to Program S by Corp B, which is a cloud transaction with one element. Under paragraph (c)(1) of this section, the cloud transaction is classified as the provision of services. The transaction does not involve the transfer of any copyright rights described in § 1.861-18(c)(2), and therefore is governed solely by this section.

(11) ***Example 11: Computer game with online functionality and in-game purchases*** —

(i) ***Facts.*** Corp A owns the copyright to a computer game (Game X). Customers can purchase Game X for a one-time fee and download it onto their computers. A customer may play certain aspects of Game X while not connected to the internet, but most of the core functionality of Game X is available only when the customer is connected to the internet, including the ability to play with other customers. In order to access the additional online functionality specific to Game X, customers must pay a monthly fee to Corp A. The additional functionality of Game X is hosted on servers owned by Corp A. Customers may also pay a one-time fee to access an in-game item that can be utilized only when playing Game X online.

(ii) ***Analysis.***

(A) There are three transactions between Corp A and a customer. The first transaction is the transfer of a copy of Game X, which is a digital content transaction with one element because a customer receives from Corp A access only to offline content in exchange for purchasing a copy of the game. Therefore, this transaction is treated solely as a transfer of a copyrighted article under § 1.861-18.

(B) The second transaction between Corp A and a customer is the payment of a monthly fee to play Game X online on Corp A's servers, which is a cloud transaction with one element. Therefore, this transaction is treated solely as a cloud transaction, and is classified as the provision of services under paragraph (c)(1) of this section.

(C) The third transaction between Corp A and a customer is the payment of a one-time fee in exchange for an in-game item. Because a customer can utilize the item only when playing Game X through an internet connection, the transaction is a cloud transaction with one element. Therefore, this transaction is treated solely as a cloud transaction, and is classified as the provision of services under paragraph (c)(1) of this section.

(e) ***Applicability date*** —

(1) ***In general.*** This section applies to taxable years beginning on or after January 14, 2025.

(2) ***Early application.*** A taxpayer can apply this section to taxable years beginning on or after August 14, 2019 and all subsequent taxable years not described in paragraph (e)(1) (early application years) if—

(i) The taxpayer also applies § 1.861-18 to the early application years;

(ii) This section and § 1.861-18 are applied to the early application years by all persons related to the taxpayer (within the meaning of sections 267(b) and 707(b));

(iii) The period of limitations on assessment for each early application year of the taxpayer and all related parties (within the meaning of sections 267(b) and 707(b)) is open under section 6501; and

(iv) The taxpayer would not be required under this section to change its method of accounting as a result of such election.

(f) ***Change in method of accounting required by this section.*** In order to comply with this section, a taxpayer may be required to change its method of accounting. If so required, the taxpayer must secure the consent of the Commissioner in accordance with the requirements of § 1.446-1(e) and the applicable administrative procedures for obtaining the Commissioner's consent under section 446(e) for voluntary changes in methods of accounting.

[T.D. 10022, 90 FR 2999, Jan. 14, 2025]

§ 1.861-20 Allocation and apportionment of foreign income taxes.

(a) ***Scope.*** This section provides rules for the allocation and apportionment of foreign income taxes, including allocating and apportioning foreign income taxes to separate categories for purposes of the foreign tax credit. The rules of this section apply except as modified under the rules for an operative section (as described in § 1.861-8(f)(1)). See, for example, §§ 1.704-1(b)(4)(viii)(*d*)(*1*), 1.904-6, 1.960-1(d)(3)(ii), and 1.965-5(b)(2). Paragraph (b) of this section provides definitions for the purposes of this section. Paragraph (c) of this section provides the general rule for allocation and apportionment of foreign income taxes. Paragraph (d) of this section provides rules for assigning foreign gross income to statutory and residual groupings. Paragraph (e) of this section provides rules for allocating and apportioning foreign law deductions to foreign gross income in the statutory and residual groupings. Paragraph (f) of this section provides rules for apportioning foreign income taxes among statutory and residual groupings. Paragraph (g) of this section provides examples that illustrate the application of this section. Paragraph (h) of this section provides the applicability date for this section.

(b) ***Definitions.*** The following definitions apply for purposes of this section.

(1) ***Corporation.*** The term *corporation* has the same meaning as set forth in § 301.7701-2(b) of this chapter, and so includes a reverse hybrid.

(2) ***Corresponding U.S. item.*** The term *corresponding U.S. item* means the item of U.S. gross income or U.S. loss, if any, that arises from the same transaction or other realization event from which an item of foreign gross income also arises. An item of U.S. gross income or U.S. loss is a corresponding U.S. item even if the item of foreign gross income that arises from the same transaction or realization event differs in amount from the item of U.S. gross income or U.S. loss. A corresponding U.S. item does not include an item of gross income that is exempt, excluded, or eliminated from U.S. gross income, nor does it include an item of U.S. gross income or U.S. loss that is not realized, recognized or taken into account by the taxpayer in the U.S. taxable year in which the taxpayer paid or accrued the foreign income tax, except as provided in the next sentence. If a taxpayer pays or

accrues a foreign income tax that is imposed on foreign taxable income that includes an item of foreign gross income by reason of a transaction or other realization event that also gave rise to an item of U.S. gross income or U.S. loss, but the U.S. and foreign taxable years end on different dates and the event occurred in the last U.S. taxable year that ends before the end of the foreign taxable year, then the item of U.S. gross income or U.S. loss is a corresponding U.S. item.

(3) ***Disregarded entity.*** The term *disregarded entity* means an entity described in § 301.7701-2(c)(2) of this chapter that is disregarded as an entity separate from its owner for Federal income tax purposes.

(4) ***Foreign capital gain amount.*** The term *foreign capital gain amount* means the portion of a distribution that under foreign law gives rise to gross income of a type described in section 301(c)(3)(A) or section 731(a).

(5) ***Foreign dividend amount.*** The term *foreign dividend amount* means the portion of a distribution that is taxable as a dividend under foreign law.

(6) ***Foreign gross income.*** The term *foreign gross income* means the items of gross income included in the base upon which a foreign income tax is imposed. This includes all items of foreign gross income included in the foreign tax base, even if the foreign taxable year begins in the U.S. taxable year that precedes the U.S. taxable year in which the taxpayer pays or accrues the foreign income tax.

(7) ***Foreign income tax.*** The term *foreign income tax* has the meaning provided in § 1.901-2(a).

(8) ***Foreign law CFC.*** The term *foreign law CFC* means an entity that is a body corporate under foreign law, certain of the earnings of which are taxable to its shareholder under a foreign law inclusion regime.

(9) ***Foreign law disposition.*** The term *foreign law disposition* means an event that foreign law treats as a taxable disposition or deemed disposition of property but that Federal income tax law does not treat as a disposition causing the recognition of gain or loss (for example, marking property to market under foreign law).

(10) ***Foreign law distribution.*** The term *foreign law distribution* means an event that foreign law treats as a taxable distribution (other than by reason of a foreign law inclusion regime) but that Federal income tax law does not treat as a distribution of property within the meaning of section 317(a) (for example, a stock dividend described in section 305 or a foreign law consent dividend).

(11) ***Foreign law inclusion regime.*** A *foreign law inclusion regime* is a foreign law tax regime similar to the subpart F or GILTI regime described in sections 951 through 959, or the PFIC regime described in sections 1293 through 1295 (relating to qualified electing funds), that imposes a tax on a shareholder of an entity based on an inclusion in the shareholder's taxable income of certain of the entity's current earnings, whether or not the foreign law deems the entity's earnings to be distributed.

(12) ***Foreign law inclusion regime income.*** The term *foreign law inclusion regime income* means the items of foreign gross income included by a taxpayer with respect to a foreign law CFC by reason of a foreign law inclusion regime.

(13) ***Foreign law pass-through income.*** The term *foreign law pass-through income* means the items of a reverse hybrid, computed under foreign law, that give rise to an inclusion in a taxpayer's foreign gross income under the laws of a foreign country imposing tax by reason of the taxpayer's ownership of the reverse hybrid.

(14) ***Foreign taxable income.*** The term *foreign taxable income* means foreign gross income reduced by the deductions that are allowed under foreign law.

(15) ***Foreign taxable year.*** The term *foreign taxable year* has the meaning set forth in section 7701(a)(23), applied by substituting "under foreign law" for the phrase "under subtitle A."

(16) ***Partnership.*** The term *partnership* has the same meaning as set forth in § 301.7701-2(c)(1) of this chapter.

(17) ***Previously taxed earnings and profits.*** The term *previously taxed earnings and profits* has the meaning provided in § 1.960-1(b).

(18) ***Reverse hybrid.*** The term *reverse hybrid* means a corporation that is a fiscally transparent entity (under the principles of § 1.894-1(d)(3)) or a branch under the laws of a foreign country imposing tax on the income of the entity.

(19) ***Taxpayer.*** The term *taxpayer* has the meaning described in § 1.901-2(f)(1).

(20) ***U.S. capital gain amount.*** The term *U.S. capital gain amount* means gain recognized by a taxpayer on the sale, exchange, or other disposition of stock or an interest in a partnership or, in the case of a distribution with respect to stock or a partnership interest, the portion of the distribution to which section 301(c)(3)(A) or 731(a)(1), respectively, applies. A U.S. capital gain amount includes gain that is subject to section 751 and § 1.751-1, but does not include the portion of any gain recognized by a taxpayer that is included in gross income as a dividend under section 964(e) or 1248.

(21) ***U.S. dividend amount.*** The term *U.S. dividend amount* means the portion of a distribution that is made out of earnings and profits under Federal income tax law, including distributions out of previously taxed earnings and profits described in section 959(a) or (b). It also includes amounts included in gross income as a dividend by reason of section 1248 or section 964(e).

(22) ***U.S. equity hybrid instrument.*** The term *U.S. equity hybrid instrument* means an instrument that is treated as stock or a partnership interest for Federal income tax purposes but for foreign income tax purposes is treated as indebtedness or otherwise gives rise to the accrual of income to the holder with respect to such instrument that is not characterized as a dividend or distributive share of partnership income for foreign tax law purposes.

(23) ***U.S. gross income.*** The term *U.S. gross income* means the items of gross income that a taxpayer recognizes and includes in taxable income under Federal income tax law for its U.S. taxable year.

(24) ***U.S. loss.*** The term *U.S. loss* means the item of loss that a taxpayer recognizes and includes in taxable income under Federal income tax law for its U.S. taxable year.

(25) ***U.S. return of capital amount.*** The term *U.S. return of capital amount* means, in the case of the sale, exchange, or other disposition of stock, the taxpayer's adjusted basis of the stock, or in the case of a distribution with respect to stock, the portion of the distribution to which section 301(c)(2) applies.

(26) ***U.S. taxable year.*** The term *U.S. taxable year* has the same meaning as that of the term *taxable year* set forth in section 7701(a)(23).

(c) ***General rule.*** A foreign income tax (other than certain in lieu of taxes described in paragraph (h) of this section) is allocated and apportioned to the statutory and residual groupings that include the items of foreign gross income included in the base on which the tax is imposed. Each such foreign income tax

(that is, each separate levy) is allocated and apportioned separately under the rules in paragraphs (c) through (f) of this section. A foreign income tax is allocated and apportioned to or among the statutory and residual groupings under the following steps:

(1) First, by assigning the items of foreign gross income to the groupings under the rules of paragraph (d) of this section;

(2) Second, by allocating and apportioning the deductions that are allowed under foreign law to the foreign gross income in the groupings under the rules of paragraph (e) of this section; and

(3) Third, by allocating and apportioning the foreign income tax by reference to the foreign taxable income in the groupings under the rules of paragraph (f) of this section.

(d) ***Assigning items of foreign gross income to the statutory and residual groupings*** —

(1) ***In general.*** Each item of foreign gross income is assigned to a statutory or residual grouping. The amount of the item is determined under foreign law. However, Federal income tax law applies to characterize the item and the transaction or other realization event from which the item arose, and to assign it to a grouping. Except as provided in paragraph (d)(3) of this section, if a taxpayer pays or accrues a foreign income tax that is imposed on foreign taxable income that includes an item of foreign gross income with respect to which the taxpayer also realizes, recognizes, or takes into account a corresponding U.S. item, then the item of foreign gross income is assigned to the grouping to which the corresponding U.S. item is assigned. See paragraph (g)(2) of this section (*Example 1*). If the corresponding U.S. item is a U.S. loss (or zero), the foreign gross income is assigned to the grouping to which a gain would be assigned had the transaction or other realization event given rise to a gain, rather than a U.S. loss (or zero), for Federal income tax purposes, and not (if different) to the grouping to which the U.S. loss is allocated and apportioned in computing U.S. taxable income. Paragraph (d)(3) of this section provides special rules regarding the assignment of the item of foreign gross income in particular circumstances.

(2) ***Items of foreign gross income with no corresponding U.S. item*** —

(i) ***In general.*** The rules in paragraphs (d)(2)(ii) and (iii) of this section apply for purposes of characterizing an item of foreign gross income and assigning it to a grouping if the taxpayer does not realize, recognize, or take into account a corresponding U.S. item. But see paragraphs (d)(3)(i)(C) and (d)(3)(iii) of this section for special rules with respect to items of foreign gross income attributable to foreign law pass-through income and foreign law inclusion regime income.

(ii) ***Foreign gross income from U.S. nonrecognition event, or U.S. recognition event that falls in a different U.S. taxable year*** —

(A) ***In general.*** If a taxpayer recognizes an item of foreign gross income arising from a transaction or other foreign realization event that does not result in the recognition of gross income or loss under Federal income tax law in the same U.S. taxable year in which the foreign income tax is paid or accrued or (in the circumstance described in the last sentence of paragraph (b)(2) of this section) in the immediately preceding U.S. taxable year, then the item of foreign gross income is characterized and assigned to the grouping to which the corresponding U.S. item (or the items described in paragraph (d)(3) of this section that are used to assign certain items of foreign gross income to the statutory and

residual groupings) would be assigned if the event giving rise to the foreign gross income resulted in the recognition of gross income or loss under Federal income tax law in the U.S. taxable year in which the foreign income tax is paid or accrued.

(B) ***Foreign law distributions.*** An item of foreign gross income that a taxpayer includes as a result of a foreign law distribution with respect to either stock or a partnership interest is assigned to the same statutory or residual groupings to which the foreign gross income would be assigned if a distribution of property in the amount of the taxable distribution under foreign law were made for Federal income tax purposes on the date on which the foreign law distribution occurred. See paragraph (g)(6) of this section (*Example 5*). See paragraph (d)(3)(i)(B) of this section for rules regarding the assignment of foreign gross income arising from a distribution with respect to stock. For purposes of applying paragraph (d)(3)(i)(B) of this section to a foreign law distribution, the U.S. dividend amount, U.S. capital gain amount, and U.S. return of capital amount are computed as if the distribution occurred on the date the distribution occurs for foreign law purposes. See § 1.960-1(d)(3)(ii) for rules for assigning foreign gross income arising from a foreign law distribution to income groups or PTEP groups for purposes of section 960 as the operative section, and paragraph (d)(3)(ii)(B) of this section for rules regarding the assignment of foreign gross income arising from a distribution by a partnership.

(C) ***Foreign law dispositions.*** A foreign gross income item of gain that a taxpayer includes as a result of a foreign law disposition of property is assigned to the grouping to which a corresponding U.S. item of gain or loss would be assigned on a taxable disposition of the property under Federal income tax law in exchange for an amount equal to the gross receipts or other value used under foreign law to determine the amount of the items of foreign gross income arising from the foreign law disposition in the U.S. taxable year in which the taxpayer paid or accrued the foreign income tax. For example, an item of foreign gross income that results from a deemed disposition of stock under a foreign law mark-to-market regime is assigned under the rules of this paragraph (d)(2)(ii)(C) as though a taxable disposition of the stock occurred under Federal income tax law for an amount equal to the fair market value determined under foreign law for purposes of marking the stock to market. See paragraph (g)(3) of this section (*Example 2*).

(D) ***Foreign law transfers between taxable units.*** This paragraph (d)(2)(ii) applies to an item of foreign gross income arising from an event that foreign law treats as a transfer of property, or as giving rise to an item of accrued income, gain, deduction, or loss with respect to a transaction, between taxable units (as defined in paragraph (d)(3)(v)(E) of this section) of the same taxpayer, and that would be treated as a disregarded payment (as defined in paragraph (d)(3)(v)(E) of this section) if the transfer of property occurred, or the item accrued, for Federal income tax purposes in the same U.S. taxable year in which the foreign income tax is paid or accrued. An item of foreign gross income to which this paragraph (d)(2)(ii) applies is characterized and assigned to the grouping to which a disregarded payment in the amount of the item of foreign gross income (or the gross receipts giving rise to the item of foreign gross income) would be assigned under the rules of paragraph (d)(3)(v) of this section if the event giving rise to the foreign gross income resulted in a disregarded payment in the U.S. taxable year in which the foreign income tax is paid or accrued. For example, an item of foreign gross income that a taxpayer recognizes by reason of a foreign law distribution (such as a stock dividend or a consent dividend) from a disregarded entity is assigned to the same statutory or residual

groupings to which the foreign gross income would be assigned if a distribution of property in the amount of the taxable distribution under foreign law were made for Federal income tax purposes on the date on which the foreign law distribution occurred.

(iii) ***Foreign gross income of a type that is recognized but excluded from U.S. gross income*** —

(A) ***In general.*** If a taxpayer recognizes an item of foreign gross income that is a type of recognized gross income that Federal income tax law excludes from U.S. gross income, then the item of foreign gross income is assigned to the grouping to which the item of gross income would be assigned if it were included in U.S. gross income. See paragraph (g)(4) of this section (*Example 3*). Notwithstanding the first sentence of this paragraph (d)(2)(iii)(A), foreign gross income that is attributable to a base difference is assigned under paragraph (d)(2)(iii)(B) of this section.

(B) ***Base differences.*** If a taxpayer recognizes an item of foreign gross income that is attributable to a base difference, then the item of foreign gross income is assigned to the residual grouping. But see § 1.904-6(b)(1) (assigning foreign gross income attributable to a base difference to foreign source income in the separate category described in section 904(d)(2)(H)(i)) for purposes of applying section 904 as the operative section). An item of foreign gross income is attributable to a base difference under this paragraph (d)(2)(iii)(B) only if the item results from the receipt of one of the following items:

(*1*) Death benefits described in section 101;

(*2*) Gifts and inheritances described in section 102;

(*3*) Contributions to capital described in section 118;

(*4*) Money or other property in exchange for stock described in section 1032 (including by reason of a transfer described in section 351(a)); or

(*5*) Money or other property in exchange for a partnership interest described in section 721.

(3) ***Special rules for assigning certain items of foreign gross income to a statutory or residual grouping*** —

(i) ***Items of foreign gross income that a taxpayer includes by reason of its ownership of an interest in a corporation*** —

(A) ***Scope.*** The rules of this paragraph (d)(3)(i) apply to characterize and assign to a statutory or residual grouping an item of foreign gross income that a taxpayer includes in foreign taxable income as a result of its ownership of an interest in a corporation with respect to which there is a distribution under both foreign law and Federal income tax law, an inclusion of foreign law pass-through income, or a disposition under both foreign law and Federal income tax law.

(B) ***Foreign gross income items arising from a distribution with respect to a corporation*** —

(*1*) ***In general.*** If there is a distribution by a corporation that is treated as a distribution of property for both foreign law and Federal income tax purposes, a taxpayer first applies the rules of paragraph (d)(3)(i)(B)(*2*) of this section, and then (if necessary) applies the rules of paragraph (d)(3)(i)(B)(*3*) of this section to characterize and assign to the statutory and residual groupings the items of foreign gross income that constitute the foreign dividend amount and the foreign capital gain amount, if any,

that arise from the distribution. See paragraph (g)(5) of this section (*Example 4*). For purposes of this paragraph (d)(3)(i)(B), the U.S. dividend amount, U.S. capital gain amount, and U.S. return of capital amount that result from a distribution (including a distribution that occurs on the same date, but in different taxable years, for foreign law purposes and Federal income tax purposes) are computed on the date the distribution occurred for Federal income tax purposes. See paragraph (d)(2)(ii)(B) of this section for rules for assigning foreign gross income arising from any portion of a distribution that is a foreign law distribution. See § 1.960-1(d)(3)(ii) for rules for assigning foreign gross income arising from a distribution described in this paragraph (d)(3)(i)(B) to income groups or PTEP groups for purposes of section 960 as the operative section.

(*2*) ***Foreign dividend amounts.*** The foreign dividend amount is, to the extent of the U.S. dividend amount, assigned to the same statutory and residual grouping (or ratably to the groupings) to which a distribution of the U.S. dividend amount is assigned under Federal income tax law. If the foreign dividend amount exceeds the U.S. dividend amount, the excess foreign dividend amount is an item of foreign gross income that is, to the extent of the U.S. return of capital amount, assigned to the same statutory and residual grouping (or ratably to the groupings) to which earnings of the distributing corporation would be assigned if they were recognized for Federal income tax purposes in the U.S. taxable year in which the distribution is made. These earnings are deemed to arise in the statutory and residual groupings in the same proportions as the proportions in which the tax book value of the stock of the distributing corporation is (or would be if the taxpayer were a United States person) assigned to the groupings under the asset method in § 1.861-9 in the U.S. taxable year in which the distribution is made. Any additional excess of the foreign dividend amount over the sum of the U.S. dividend amount and the U.S. return of capital amount is an item of foreign gross income that is assigned to the statutory or residual grouping (or ratably to the groupings) to which the U.S. capital gain amount is assigned.

(*3*) ***Foreign capital gain amounts.*** The foreign capital gain amount is, to the extent of the U.S. capital gain amount, assigned to the statutory and residual groupings to which the U.S. capital gain amount is assigned under Federal income tax law. If the foreign capital gain amount exceeds the U.S. capital gain amount, the excess is, to the extent of the U.S. return of capital amount, assigned to the statutory and residual groupings to which earnings equal to the U.S. return of capital amount would be assigned if they were recognized in the U.S. taxable year in which the distribution is made. These earnings are deemed to arise in the statutory and residual groupings in the same proportions as the proportions in which the tax book value of the stock of the distributing corporation is (or would be if the taxpayer were a United States person) assigned under the asset method in § 1.861-9 in the U.S. taxable year in which the distribution is made. Any excess of the foreign capital gain amount over the sum of the U.S. capital gain amount and the U.S. return of capital amount is assigned ratably to the statutory and residual groupings to which the U.S. dividend amount is assigned.

(C) ***Foreign law pass-through income from a reverse hybrid.*** An item of foreign law pass-through income that a taxpayer includes in its foreign taxable income as a result of its direct or indirect ownership of a reverse hybrid is assigned to a statutory or residual grouping by treating the taxpayer's items of foreign law pass-through income as the foreign gross income of the reverse hybrid, and applying the rules in this paragraph (d) by treating the reverse hybrid as the taxpayer in the reverse hybrid's U.S. taxable year with or within which its foreign taxable year (under the law of the foreign jurisdiction imposing the owner-level tax) ends. See § 1.904-6(f) for special rules that apply for purposes of section 904 with respect to items of foreign gross income that under this paragraph (d)(3)(iii) would be assigned to a separate category that includes income that gives rise to inclusions under section 951A.

(D) ***Foreign gross income items arising from a disposition of stock.*** An item of foreign gross income that arises from a transaction that is treated as a sale, exchange, or other disposition for both foreign law and Federal income tax purposes of an interest that is stock in a corporation for Federal income tax purposes is assigned first, to the extent of any U.S. dividend amount that results from the disposition, to the same statutory or residual grouping (or ratably to the groupings) to which the U.S. dividend amount is assigned under Federal income tax law. If the foreign gross income item exceeds the U.S. dividend amount, the foreign gross income item is next assigned, to the extent of the U.S. capital gain amount, to the statutory or residual grouping (or ratably to the groupings) to which the U.S. capital gain amount is assigned under Federal income tax law. Any excess of the foreign gross income item over the sum of the U.S. dividend amount and the U.S. capital gain amount is assigned to the same statutory or residual grouping (or ratably to the groupings) to which earnings equal to such excess amount would be assigned if they were recognized for Federal income tax purposes in the U.S. taxable year in which the disposition occurred. These earnings are deemed to arise in the statutory and residual groupings in the same proportions as the proportions in which the tax book value of the stock is (or would be if the taxpayer were a United States person) assigned to the groupings under the asset method in § 1.861-9 in the U.S. taxable year in which the disposition occurs. See paragraph (g)(10) of this section (*Example 9*).

(ii) ***Items of foreign gross income included by a taxpayer by reason of its ownership of an interest in a partnership*** —

(A) ***Scope.*** The rules of this paragraph (d)(3)(ii) apply to assign to a statutory or residual grouping certain items of foreign gross income that a taxpayer includes in foreign taxable income by reason of its ownership of an interest in a partnership. See paragraphs (d)(1) and (2) of this section for rules that apply in characterizing items of foreign gross income that are attributable to a partner's distributive share of income of a partnership. See paragraph (d)(3)(iii) of this section for rules that apply in characterizing items of foreign gross income that are attributable to an inclusion under a foreign law inclusion regime.

(B) ***Foreign gross income items arising from a distribution with respect to an interest in a partnership.*** If a partnership makes a distribution that is treated as a distribution of property for both foreign law and Federal income tax purposes, any foreign gross income item arising from the distribution (including foreign gross income attributable to a distribution from a partnership that foreign law classifies as a dividend from a corporation) is, to the extent of the U.S. capital gain amount arising from the distribution, assigned to the statutory and residual groupings to which the U.S. capital gain amount is

assigned under Federal income tax law. If the foreign gross income item arising from the distribution exceeds the U.S. capital gain amount, such excess amount is assigned to the statutory and residual groupings to which a distributive share of income of the partnership in the amount of such excess would be assigned if such income were recognized for Federal income tax purposes in the U.S. taxable year in which the distribution is made. The items constituting this distributive share of income are deemed to arise in the statutory and residual groupings in the same proportions as the proportions in which the tax book value of the partnership interest or the partner's pro rata share of the partnership assets, as applicable, is assigned (or would be assigned if the partner were a United States person) for purposes of apportioning the partner's interest expense under § 1.861-9(e) in the U.S. taxable year in which the distribution is made.

(C) ***Foreign gross income items arising from the disposition of an interest in a partnership.*** An item of foreign gross income arising from a transaction that is treated as a sale, exchange, or other disposition for both foreign law and Federal income tax purposes of an interest that is an interest in a partnership for Federal income tax purposes is assigned first, to the extent of the U.S. capital gain amount arising from the disposition, to the statutory or residual grouping (or ratably to the groupings) to which the U.S. capital gain amount is assigned. If the foreign gross income item arising from the disposition exceeds the U.S. capital gain amount, such excess amount is assigned to the statutory and residual grouping (or ratably to the groupings) to which a distributive share of income of the partnership in the amount of such excess would be assigned if such income were recognized for Federal income tax purposes in the U.S. taxable year in which the disposition occurred. The items constituting this distributive share of income are deemed to arise in the statutory and residual groupings in the same proportions as the proportions in which the tax book value of the partnership interest, or the partner's pro rata share of the partnership assets, as applicable, is assigned (or would be assigned if the partner were a United States person) for purposes of apportioning the partner's interest expense under § 1.861-9(e) in the U.S. taxable year in which the disposition occurred.

(iii) ***Foreign law inclusion regime income.*** A gross item of foreign law inclusion regime income that a taxpayer includes in its capacity as a shareholder under foreign law of a foreign law CFC under a foreign law inclusion regime is assigned to the same statutory and residual groupings as the item of foreign gross income of the foreign law CFC that gives rise to the item of foreign law inclusion regime income of the taxpayer. The assignment is made by treating the gross items of foreign law inclusion regime income of the taxpayer as the items of foreign gross income of the foreign law CFC and applying the rules in this paragraph (d) by treating the foreign law CFC as the taxpayer in its U.S. taxable year with or within which its foreign taxable year (under the law of the foreign jurisdiction imposing the shareholder-level tax) ends. See paragraphs (g)(7) and (8) of this section (*Examples 6* and *7*). See § 1.904-6(f) for special rules with respect to items of foreign gross income relating to items of the foreign law CFC that give rise to inclusions under section 951A for purposes of applying section 904 as the operative section.

(iv) ***Gain on sale of disregarded entity.*** An item of foreign gross income arising from gain recognized on the sale, exchange, or other disposition of a disregarded entity that is characterized as a disposition of assets for Federal income tax purposes is assigned to statutory and residual groupings in the same proportion as the gain that would be treated as foreign gross income in each grouping if the transaction were treated as a disposition of assets for foreign tax law purposes. See paragraph (g)(9) of this section (*Example 8*).

(v) *Disregarded payments* —

(A) ***In general.*** This paragraph (d)(3)(v) applies to assign to a statutory or residual grouping a foreign gross income item that a taxpayer includes by reason of the receipt of a disregarded payment. In the case of a taxpayer that is an individual or a domestic corporation, this paragraph (d)(3)(v) applies to a disregarded payment made between a taxable unit that is a foreign branch, a foreign branch owner, or a non-branch taxable unit, and another such taxable unit of the same taxpayer. In the case of a taxpayer that is a foreign corporation, this paragraph (d)(3)(v) applies to a disregarded payment made between taxable units that are tested units of the same taxpayer. For purposes of this paragraph (d)(3)(v), an individual or corporation is treated as the taxpayer with respect to its distributive share of foreign income taxes paid or accrued by a partnership, estate, trust or other pass-through entity. The rules of paragraph (d)(3)(v)(B) of this section apply to attribute U.S. gross income comprising the portion of a disregarded payment that is a reattribution payment to a taxable unit, and to associate the foreign gross income item arising from the receipt of the reattribution payment with the statutory and residual groupings to which that U.S. gross income is assigned. The rules of paragraph (d)(3)(v)(C) of this section apply to assign to statutory and residual groupings items of foreign gross income arising from the receipt of the portion of a disregarded payment that is a remittance or a contribution. The rules of paragraph (d)(3)(v)(D) of this section apply to assign to statutory and residual groupings items of foreign gross income arising from disregarded payments, other than the portions of disregarded payments that are reattribution payments, in connection with disregarded sales or exchanges of property. Paragraph (d)(3)(v)(E) of this section provides definitions that apply for purposes of this paragraph (d)(3)(v) and paragraph (g) of this section.

(B) *Reattribution payments* —

(*1*) ***In general.*** This paragraph (d)(3)(v)(B) assigns to a statutory or residual grouping a foreign gross income item that a taxpayer includes by reason of the receipt by a taxable unit of the portion of a disregarded payment that is a reattribution payment. The foreign gross income item is assigned to the statutory or residual groupings to which one or more reattribution amounts that constitute the reattribution payment are assigned upon receipt by the taxable unit. If a reattribution payment comprises multiple reattribution amounts and the amount of the foreign gross income item that is attributable to the reattribution payment differs from the amount of the reattribution payment, foreign gross income is apportioned among the statutory and residual groupings in proportion to the reattribution amounts in each statutory and residual grouping. The statutory or residual grouping of a reattribution amount received by a taxable unit is the grouping that includes the U.S. gross income attributed to the taxable unit by reason of its receipt of the gross reattribution amount, regardless of whether, after taking into account disregarded payments made by the taxable unit, the taxable unit has an attribution item as a result of its receipt of the reattribution amount. See paragraph (g)(13) of this section (*Example 12*).

(*2*) ***Attribution of U.S. gross income to a taxable unit.*** This paragraph (d)(3)(v)(B)(*2*) provides attribution rules to determine the reattribution amounts received by a taxable unit in the statutory and residual groupings in order to apply paragraph (d)(3)(v)(B)(*1*) of this section to assign foreign gross income items arising from a reattribution payment to the groupings. In the case of a taxpayer that is an individual

or a domestic corporation, the attribution rules in § 1.904-4(f)(2) apply to determine the reattribution amounts received by a taxable unit in the separate categories (as defined in § 1.904-5(a)(4)(v)) in order to apply paragraph (d)(3)(v)(B)(*1*) of this section for purposes of § 1.904-6(b)(2)(i). In the case of a taxpayer that is a foreign corporation, the attribution rules in § 1.951A-2(c)(7)(ii)(B) apply to determine the reattribution amounts received by a taxable unit in the statutory and residual groupings in order to apply paragraph (d)(3)(v)(B)(*1*) of this section for purposes of §§ 1.951A-2(c)(3), 1.951A-2(c)(7), and 1.960-1(d)(3)(ii). For purposes of other operative sections (as described in § 1.861-8(f)(1)), the principles of § 1.904-4(f)(2)(vi) or § 1.951A-2(c)(7)(ii)(B), as applicable, apply to determine the reattribution amounts received by a taxable unit in the statutory and residual groupings. The rules and principles of § 1.904-4(f)(2)(vi) or § 1.951A-2(c)(7)(ii)(B), as applicable, apply to determine the extent to which a disregarded payment made by the taxable unit is a reattribution payment and the reattribution amounts that constitute a reattribution payment, and to adjust the U.S. gross income initially attributed to each taxable unit to reflect the reattribution payments that the taxable unit makes and receives. The rules in this paragraph (d)(3)(v)(B)(*2*) limit the amount of a disregarded payment that is a reattribution payment to the U.S. gross income of the payor taxable unit that is recognized in the U.S. taxable year in which the disregarded payment is made.

(*3*) ***Effect of reattribution payment on foreign gross income items of payor taxable unit.*** The statutory or residual grouping to which an item of foreign gross income of a taxable unit is assigned is determined without regard to reattribution payments made by the taxable unit, and without regard to whether the taxable unit has one or more attribution items after taking into account such reattribution payments. No portion of the foreign gross income of the payor taxable unit is treated as foreign gross income of the payee taxable unit by reason of the reattribution payment, notwithstanding that U.S. gross income of the payor taxable unit that is used to assign foreign gross income of the payor taxable unit to statutory and residual groupings is reattributed to the payee taxable unit under paragraph (d)(3)(v)(B)(*1*) of this section by reason of the reattribution payment. See paragraph (e) of this section for rules reducing the amount of a foreign gross income item of a taxable unit by deductions allowed under foreign law, including deductions by reason of disregarded payments made by a taxable unit that are included in the foreign gross income of the payee taxable unit.

(C) ***Remittances and contributions*** —

(*1*) ***Remittances*** —

(*i*) ***In general.*** An item of foreign gross income that a taxpayer includes by reason of the receipt of a remittance by a taxable unit is assigned to the statutory or residual groupings of the recipient taxable unit that correspond to the groupings out of which the payor taxable unit made the remittance under the rules of this paragraph (d)(3)(v)(C)(*1*)(*i*). A remittance paid by a taxable unit is considered to be made ratably out of all of the accumulated after-tax income of the taxable unit. The accumulated after-tax income of the taxable unit that pays the remittance is deemed to have arisen in the statutory and residual groupings in the same proportions as the proportions in which the tax book value of the assets of the taxable unit are (or would be if the owner of the taxable unit were

a United States person) assigned for purposes of apportioning interest expense under the asset method in § 1.861-9 in the taxable year in which the remittance is made. See paragraph (g)(11) and (12) of this section (*Examples 10* and *11*). If the payor taxable unit is determined to have no assets under paragraph (d)(3)(v)(C)(*1*)(*ii*) of this section, then the foreign gross income that is included by reason of the receipt of the remittance is assigned to the residual grouping.

(*ii*) ***Assets of a taxable unit.*** The assets of a taxable unit are determined in accordance with § 1.987-6(b), except that for purposes of applying § 1.987-6(b)(2) under this paragraph (d)(3)(v)(C)(*1*)(*ii*), a taxable unit is deemed to be a section 987 QBU (within the meaning of § 1.987-1(b)(2)) and assets of the taxable unit include stock held by the taxable unit, the portion of the tax book value of a reattribution asset that is assigned to the taxable unit, and the taxable unit's pro rata share of the assets of another taxable unit (other than a corporation or a partnership), including the portion of any reattribution assets assigned to the other taxable unit, in which it owns an interest. If a taxable unit owns an interest in a taxable unit that is a partnership, the assets of the taxable unit that is the owner include its interest in the partnership or its pro rata share of the partnership assets, as applicable, determined under the principles of § 1.861-9(e). The portion of the tax book value of a reattribution asset that is assigned to a taxable unit is an amount that bears the same ratio to the total tax book value of the reattribution asset as the sum of the attribution items of that taxable unit arising from gross income produced by the reattribution asset bears to the total gross income produced by the reattribution asset. The portion of a reattribution asset that is assigned to a taxable unit under this paragraph (d)(3)(v)(C)(*1*)(*ii*) is not treated as an asset of the taxable unit making the reattribution payment for purposes of applying paragraph (d)(3)(v)(C)(*1*)(*i*) of this section.

(*2*) ***Contributions.*** An item of foreign gross income that a taxpayer includes by reason of the receipt of a contribution by a taxable unit is assigned to the residual grouping. See, however, § 1.904-6(b)(2)(ii) (assigning certain items of foreign gross income to the foreign branch category for purposes of applying section 904 as the operative section).

(*3*) ***Disregarded payment that comprises both a reattribution payment and a remittance or contribution.*** If both a reattribution payment and either a remittance or a contribution result from a single disregarded payment, the foreign gross income is first attributed to the portion of the disregarded payment that is a reattribution payment to the extent of the amount of the reattribution payment, and any excess of the foreign gross income item over the amount of the reattribution payment is then to attributed to the portion of the disregarded payment that is a remittance or contribution.

(D) ***Disregarded payments in connection with disregarded sales or exchanges of property.*** An item of foreign gross income that is attributable to gain recognized under foreign law by reason of a disregarded payment, other than the portion of the disregarded payment that is a reattribution payment, received in exchange for property is characterized and assigned under the rules of paragraph (d)(2) of this section. See paragraph (d)(3)(v)(B) of

this section for rules for assigning an item of foreign gross income attributable to the portion of a disregarded payment that is a reattribution payment, including a reattribution payment received in exchange for property.

(E) ***Definitions.*** The following definitions apply for purposes of this paragraph (d)(3)(v) and paragraph (g) of this section.

(*1*) ***Attribution item.*** The term *attribution item* means the portion of an item of gross income, computed under Federal income tax law, that is attributed to a taxable unit after taking into account all reattribution payments made and received by the taxable unit.

(*2*) ***Contribution.*** The term *contribution* means the excess amount of a disregarded payment, other than a disregarded payment received in exchange for property, made by a taxable unit to another taxable unit that the first taxable unit owns over the portion of the disregarded payment, if any, that is a reattribution payment.

(*3*) ***Disregarded entity.*** The term *disregarded entity* means an entity described in § 301.7701-2(c)(2) of this chapter that is disregarded as an entity separate from its owner for Federal income tax purposes.

(*4*) ***Disregarded payment.*** The term *disregarded payment* means an amount of property (within the meaning of section 317(a)) that is transferred to or from a taxable unit, including a transfer of property that would be a contribution to capital described in section 118 or a transfer described in section 351 if the taxable unit were a corporation under Federal income tax law, a transfer of property that would be a distribution by a corporation to a shareholder with respect to its stock if the taxable unit were a corporation under Federal income tax law, or a payment in exchange for property or in satisfaction of an account payable, in connection with a transaction that is disregarded for Federal income tax purposes and that is reflected on the separate set of books and records of the taxable unit. A disregarded payment also includes any other amount that is reflected on the separate set of books and records of a taxable unit in connection with a transaction that is disregarded for Federal income tax purposes and that would constitute an item of accrued income, gain, deduction, or loss of the taxable unit if the transaction to which the amount is attributable were regarded for Federal income tax purposes.

(*5*) ***Reattribution amount.*** The term *reattribution amount* means an amount of gross income, computed under Federal income tax law, that is initially assigned to a single statutory or residual grouping that includes gross income of a taxable unit but that is, by reason of a disregarded payment made by that taxable unit, attributed to another taxable unit under paragraph (d)(3)(v)(B)(*2*) of this section.

(*6*) ***Reattribution asset.*** The term *reattribution asset* means an asset that produces one or more items of gross income, computed under Federal income tax law, to which a disregarded payment is allocated under the rules of paragraph (d)(3)(v)(B)(*2*) of this section.

(*7*) ***Reattribution payment.*** The term *reattribution payment* means the portion of a disregarded payment equal to the sum of all reattribution amounts that are attributed to the recipient of the disregarded payment.

(8) ***Remittance.*** The term *remittance* means the excess amount, other than an amount that is treated as a contribution under paragraph (d)(3)(v)(E)(2) of this section, of a disregarded payment, other than a disregarded payment received in exchange for property, made by a taxable unit to a second taxable unit (including a second taxable unit that shares the same owner as the payor taxable unit) over the portion of the disregarded payment, if any, that is a reattribution payment.

(9) ***Taxable unit.*** In the case of a taxpayer that is an individual or a domestic corporation, the term *taxable unit* means a foreign branch, a foreign branch owner, or a non-branch taxable unit, as defined in § 1.904-6(b)(2)(i)(B). In the case of a taxpayer that is a foreign corporation, the term *taxable unit* means a tested unit, as defined in § 1.951A-2(c)(7)(iv)(A).

(vi) ***Foreign gross income included by reason of U.S. equity hybrid instrument ownership*** —

(A) ***Foreign gross income included by reason of an accrual.*** Foreign gross income included by reason of an accrual under foreign law with respect to a U.S. equity hybrid instrument is considered to arise from the same transaction or realization event as a distribution of property described in paragraph (d)(3)(i) or (ii) of this section and is assigned to the statutory and residual groupings by treating each amount accrued as a foreign law distribution made on the date of the accrual under foreign law.

(B) ***Foreign gross income included by reason of a payment.*** Foreign gross income included by reason of a payment of interest under foreign law with respect to a U.S. equity hybrid instrument is considered to arise from the same transaction or realization event as a distribution of property described in paragraph (d)(3)(i) or (ii) of this section and is assigned to the statutory and residual groupings by treating each payment as a distribution made on the date of the payment.

(e) ***Allocating and apportioning deductions (allowed under foreign law) to foreign gross income in a grouping*** —

(1) ***Application of foreign law expense allocation rules.*** In order to determine foreign taxable income in each statutory grouping, or the residual grouping, foreign gross income in each grouping is reduced by deducting any expenses, losses, or other amounts that are deductible under foreign law that are specifically allocable to the items of foreign gross income in the grouping under the laws of that foreign country. If expenses are not specifically allocated under foreign law, then the expenses are allocated and apportioned among the groupings under the principles of foreign law. Thus, for example, if foreign law provides that expenses will be apportioned on a gross income basis, the foreign law deductions are apportioned on the basis of the relative amounts of foreign gross income assigned to each grouping.

(2) ***Application of U.S. expense allocation rules in the absence of foreign law rules.*** If foreign law does not provide rules for the allocation or apportionment of expenses, losses or other deductions to particular items of foreign gross income, then the principles of the section 861 regulations (as defined in § 1.861-8(a)(1)) apply in allocating and apportioning such expenses, losses, or other deductions to foreign gross income. For example, in the absence of foreign law expense allocation rules, the principles of the section 861 regulations apply to allocate definitely related expenses to particular categories of foreign gross income and provide the methods for apportioning foreign law expenses that are definitely related to more than one statutory grouping or that are not definitely related to any statutory grouping. For purposes of this paragraph (e)(2), the apportionment of expenses required to be made under the principles of the section 861 regulations need not be made

on other than a separate company basis. If the taxpayer applies the principles of the section 861 regulations for purposes of allocating foreign law deductions under this paragraph (e), the taxpayer must apply the principles in the same manner as the taxpayer applies such principles in determining the income or earnings and profits for Federal income tax purposes of the taxpayer (or of the foreign branch, controlled foreign corporation, or other entity that paid or accrued the foreign taxes, as the case may be). For example, a taxpayer must use the modified gross income method under § 1.861-9T when applying the principles of that section for purposes of this paragraph (e) to determine the amount of foreign taxable income in each grouping if the taxpayer applies the modified gross income method in determining the income and earnings and profits of a controlled foreign corporation for Federal income tax purposes.

(f) ***Allocation and apportionment of foreign income tax.*** Foreign income tax is allocated to the statutory or residual grouping or groupings to which the items of foreign gross income are assigned under the rules of paragraph (d) of this section. If foreign gross income is assigned to more than one grouping, then the foreign income tax is apportioned among the statutory and residual groupings by multiplying the foreign income tax by a fraction, the numerator of which is the foreign taxable income in a grouping and the denominator of which is all foreign taxable income on which the foreign income tax is imposed. If foreign law, including by reason of an income tax convention, exempts certain types of income from tax, or if foreign taxable income is reduced to or below zero by foreign law deductions, then no foreign income tax is allocated and apportioned to that income. A withholding tax (as defined in section 901(k)(1)(B)) is allocated and apportioned to the foreign gross income from which it is withheld. If foreign law, including by reason of an income tax convention, provides for a specific rate of tax with respect to certain types of income (for example, capital gains), or allows credits only against tax on particular items or types of income (for example, credit for foreign withholding taxes), then such provisions are taken into account in determining the amount of foreign tax imposed on such foreign taxable income.

(g) ***Examples.*** The following examples illustrate the application of this section and § 1.904-6.

(1) ***Presumed facts.*** Except as otherwise provided in this paragraph (g), the following facts are assumed for purposes of the examples in paragraphs (g)(2) through (9) of this section:

(i) USP and US2 are domestic corporations, which are unrelated;

(ii) USP elects to claim a foreign tax credit under section 901;

(iii) CFC, CFC1, and CFC2 are controlled foreign corporations organized in Country A, and are not reverse hybrids;

(iv) All parties have a U.S. dollar functional currency and a U.S. taxable year and foreign taxable year that correspond to the calendar year;

(v) No party has expenses for Country A tax purposes or expenses for U.S. tax purposes (other than foreign income tax expense); and

(vi) Section 904 is the operative section, and terms have the meaning provided in this section or §§ 1.904-4 and 1.904-5.

(2) ***Example 1: Corresponding U.S. item —***

(i) ***Facts.*** USP conducts business in Country A that gives rise to a foreign branch (as defined in § 1.904-4(f)(3)). In Year 1, in a transaction that is a sale for purposes of the laws of Country A and Federal income tax law, the foreign branch transfers Asset X to US2 for $1,000x. For Country A

tax purposes, USP earns $600x of gross income from the sale of Asset X and incurs foreign income tax of $80x. For Federal income tax purposes, USP earns $800x of foreign branch category income from the sale of Asset X.

(ii) ***Analysis.*** For purposes of allocating and apportioning the $80x of Country A foreign income tax, the $600x of Country A gross income from the sale of Asset X is first assigned to separate categories. The $800x of foreign branch category income from the sale of Asset X is the corresponding U.S. item to the Country A item of gross income. Under paragraph (d)(1) of this section, because USP recognizes a corresponding U.S. item with respect to the Country A item of gross income in the same U.S. taxable year, the $600x of Country A gross income is assigned to the same separate category as the corresponding U.S. item. This is the case even though the amount of gross income recognized for Federal income tax purposes differs from the amount recognized for Country A tax purposes. Accordingly, the $600x of Country A gross income is assigned to the foreign branch category. Additionally, because all of the Country A taxable income is assigned to a single separate category, the $80x of Country A tax is also allocated to the foreign branch category. No apportionment of the $80x is necessary because the class of gross income to which the tax is allocated consists entirely of a single statutory grouping, foreign branch category income.

(3) ***Example 2: Foreign law disposition*** —

(i) ***Facts.*** USP owns all of the outstanding stock of CFC, which conducts business in Country A. CFC sells Asset X for $1,000x. For Country A tax purposes, CFC's basis in Asset X is $600x, the sale of Asset X occurs in Year 1, and CFC recognizes $400x of foreign gross income and incurs $80x of foreign income tax. For Federal income tax purposes, CFC's basis in Asset X is $500x, the sale of Asset X occurs in Year 2, and CFC recognizes $500x of general category income.

(ii) ***Analysis.*** For purposes of allocating and apportioning the $80x of Country A foreign income tax in Year 1, the $400x of Country A gross income from the sale of Asset X is first assigned to separate categories. There is no corresponding U.S. item because the sale occurs on a different date and in a different U.S. taxable year for U.S. and foreign tax purposes. Under paragraph (d)(2)(ii)(C) of this section, the item of foreign gross income (the $400x from the sale of Asset X) is characterized and assigned to the groupings to which the corresponding U.S. item would be assigned if for Federal income tax purposes Asset X were sold for $1,000x in Year 1, the same U.S. taxable year in which the foreign income tax accrued. This is the case even though the amount of gross income that would be recognized for Federal income tax purposes differs from the amount recognized for Country A tax purposes. Accordingly, the $400x of Country A gross income is assigned to the general category. Additionally, because all of the Country A taxable income is assigned to a single separate category, the $80x of Country A tax is also allocated to the general category. No apportionment of the $80x is necessary because the class of gross income to which the deduction is allocated consists entirely of a single statutory grouping, general category income.

(4) ***Example 3: Foreign gross income excluded from U.S. gross income*** —

(i) ***Facts.*** USP conducts business in Country A. In Year 1, USP earns $200x of interest income on a State or local bond. For Country A tax purposes, the $200x of income is included in gross income and incurs $10x of foreign income tax. For Federal income tax purposes, the $200x is excluded from gross income under section 103.

(ii) ***Analysis.*** For purposes of allocating and apportioning the $10x of Country A foreign income tax, the $200x of Country A gross income is first assigned to separate categories. There is no corresponding U.S. item because the interest income is excluded from U.S. gross income. Thus, the rules of paragraph (d)(2) of this section apply to characterize and assign the foreign gross income to the groupings to which a corresponding U.S. item would be assigned if it were recognized under Federal income tax law in that U.S. taxable year. The interest income is excluded from U.S. gross income but is otherwise described or identified by section 103. Accordingly, under paragraph (d)(2)(iii)(A) of this section, the $200x of Country A gross income is assigned to the separate category to which the interest income would be assigned under Federal income tax law if the income were included in gross income. Under section 904(d)(2)(B)(i), the interest income would be passive category income. Accordingly, the $200x of Country A gross income is assigned to the passive category. Additionally, because all of the Country A taxable income is assigned to a single separate category, the $10x of Country A tax is also allocated to the passive category (subject to the rules in § 1.904-4(c)). No apportionment of the $10x is necessary because the class of gross income to which the deduction is allocated consists entirely of a single statutory grouping, passive category income.

(5) ***Example 4: Actual distribution*** —(1) *Facts.* USP owns all of the outstanding stock of CFC1, which in turn owns all of the outstanding stock of CFC2. CFC1 and CFC2 conduct business in Country A. In Year 1, CFC2 distributes $300x to CFC1. For Country A tax purposes, $100x of the distribution is the foreign dividend amount, $160x is treated as a nontaxable return of capital, and the remaining $40x is the foreign capital gain amount. CFC1 incurs $20x of foreign income tax with respect to the foreign dividend amount and $4x of foreign income tax with respect to the foreign capital gain amount. The $20x and $4x of foreign income tax are each a separate levy within the meaning of § 1.901-2(d). For Federal income tax purposes, $150x of the distribution is the U.S. dividend amount, $100x is the U.S. return of capital amount, and the remaining $50x is the U.S. capital gain amount. Under section 904(d)(3)(D) and §§ 1.904-4(d) and 1.904-5(c)(4), the $150x of U.S. dividend amount consists solely of general category income in the hands of CFC1. Under section 904(d)(2)(B)(i) and § 1.904-4(b)(2)(i)(A), the $50x of U.S. capital gain amount is passive category income to CFC1.

(ii) ***Analysis*** —

(A) ***In general.*** Because the $20x of Country A foreign income tax and the $4x of Country A foreign income tax are separate levies, the taxes are allocated and apportioned separately. For purposes of allocating and apportioning each foreign income tax, the relevant item of Country A gross income (the foreign dividend amount or foreign capital gain amount) is first assigned to separate categories. The U.S. dividend amount and U.S. capital gain amount are corresponding U.S. items. However, paragraph (d)(3)(i)(B) of this section (and not paragraph (d)(1) of this section) applies to assign the items of foreign gross income arising from the distribution.

(B) ***Foreign dividend amount.*** Under paragraph (d)(3)(i)(B)(2) of this section, the foreign dividend amount ($100x) is, to the extent of the U.S. dividend amount ($150x), assigned to the same separate category from which the distribution of the U.S. dividend amount is made under Federal income tax law. Thus, $100x of foreign gross income that is the foreign dividend amount is assigned to the general category. Additionally, because all of the Country A taxable income included in the base on which the $20x of foreign income tax is imposed is assigned to a single separate category, the $20x of Country A tax on the foreign dividend amount is also allocated to the general category. No apportionment of the $20x is necessary because the class of gross income to which the deduction for

foreign income tax is allocated consists entirely of a single statutory grouping, general category income. See also section 245A(d) for rules that may apply to disallow a credit or deduction for certain foreign taxes.

(C) ***Foreign capital gain amount.*** Under paragraph (d)(3)(i)(B)(*3*) of this section, the foreign capital gain amount ($40x) is, to the extent of the U.S. capital gain amount ($50x), assigned to the same separate category to which the U.S. capital gain is assigned under Federal income tax law. Thus, the $40x of foreign gross income that is the foreign capital gain amount is assigned to the passive category. Additionally, because all of the Country A taxable income in the base on which the $4x of foreign income tax is imposed is assigned to a single separate category, the $4x of Country A tax on the foreign dividend amount is also allocated to the passive category. No apportionment of the $4x is necessary because the class of gross income to which the deduction is allocated consists entirely of a single statutory grouping, passive category income.

(6) ***Example 5: Foreign law distribution*** —

(i) ***Facts.*** USP owns all of the outstanding stock of CFC. In Year 1, for Country A tax purposes, CFC distributes $1,000x of its stock that is treated entirely as a dividend to USP, and Country A imposes a withholding tax on USP of $150x with respect to the $1,000x of foreign gross income. For Federal income tax purposes, the distribution is treated as a stock dividend described in section 305(a) and USP recognizes no U.S. gross income. At the time of the distribution, CFC has $800x of section 965(a) PTEP (as defined in § 1.960-3(c)(2)(vi)) in a single annual PTEP account (as defined in § 1.960-3(c)(1)), and $500x of earnings and profits described in section 959(c)(3). Section 965(g) is the operative section for purposes of this paragraph (g)(6). See § 1.965-5(b)(2). Section 904 is also a relevant operative section, but is not addressed in this paragraph (g)(6).

(ii) ***Analysis.*** For purposes of allocating and apportioning the $150x of Country A foreign income tax, the $1,000x of Country A gross income is first assigned to the relevant statutory and residual groupings for purposes of applying section 965(g) as the operative section. Under § 1.965-5(b)(2), the statutory grouping is the portion of the distribution that is attributable to section 965(a) previously taxed earnings and profits and the residual grouping is the portion of the distribution attributable to other earnings and profits. There is no corresponding U.S. item because under section 305(a) USP recognizes no U.S. gross income with respect to the distribution. Under paragraph (d)(2)(ii)(B) of this section, the item of foreign gross income (the $1,000x distribution) is assigned under the rules of paragraph (d)(3)(i)(B) of this section to the same statutory or residual groupings to which the foreign gross income would be assigned if a distribution of the same amount were made for Federal income tax purposes in Year 1 on the date the distribution occurs for foreign law purposes. If recognized for Federal income tax purposes, a $1,000x distribution in Year 1 would result in a U.S. dividend amount of $1,000x. Under paragraph (d)(3)(i)(B)(*2*) of this section, the foreign dividend amount ($1,000x) is, to the extent of the U.S. dividend amount ($1,000x), assigned to the same statutory or residual groupings from which a distribution of the U.S. dividend amount would be made under Federal income tax law. Thus, $800x of foreign gross income related to the foreign dividend amount is assigned to the statutory grouping for the portion of the distribution attributable to section 965(a) previously taxed earnings and profits and $200x of foreign gross income is assigned to the residual grouping. Under paragraph (f) of this section, $120x ($150x × $800x/$1,000x) of the Country A foreign income tax is apportioned to the statutory grouping and $30x ($150x ×

$200x/$1,000x) of the Country A foreign income tax is apportioned to the residual grouping. See section 965(g)(2) and § 1.965-5(b) for application of the applicable percentage (as defined in § 1.965-5(d)) to the foreign income tax allocated and apportioned to the statutory grouping.

(7) ***Example 6: Foreign law inclusion regime, CFC shareholder*** —

(i) ***Facts.*** USP owns all of the outstanding stock of CFC1, which in turn owns all of the outstanding stock of CFC2. CFC2 is organized and conducts business in Country B. Country A has a foreign law inclusion regime that imposes a tax on CFC1 for certain earnings of CFC2, a foreign law CFC. In Year 1, CFC2 earns $400x of interest income and $200x of royalty income. CFC2 incurs no foreign income tax. For Country A tax purposes, the $400x of interest income and $200x of royalty income are each an item of foreign law inclusion regime income of CFC2 that are included in the gross income of CFC1. CFC1 incurs $150x of Country A foreign income tax with respect to the foreign law inclusion regime income. For Federal income tax purposes, with respect to CFC2, the $400x of interest income is passive category income under section 904(d)(2)(B)(i) and the $200x of royalty income is general category income under § 1.904-4(b)(2)(iii).

(ii) ***Analysis.*** For purposes of allocating and apportioning CFC1's $150x of Country A foreign income tax, the $600x of Country A gross income is first assigned to separate categories. The $600x of foreign gross income is not included in the U.S. gross income of CFC1, and thus, there is no corresponding U.S. item. Under paragraph (d)(3)(iii) of this section, each item of foreign law inclusion regime income that is included in CFC1's foreign gross income is assigned to the same separate category as the items of foreign gross income of CFC2 that give rise to the foreign law inclusion regime income of CFC1. With respect to CFC2, the $400x of interest income and the $200x of royalty income would be corresponding U.S. items if CFC2 were the taxpayer. Accordingly, $400x of CFC1's foreign gross income is assigned to the passive category and $200x of CFC1's foreign gross income is assigned to the general category. Under paragraph (f) of this section, $100x ($150x × $400x/$600x) of the Country A foreign income tax is apportioned to the passive category and $50x ($150x × $200x/$600x) of the Country A foreign income tax is apportioned to the general category.

(8) ***Example 7: Foreign law inclusion regime, U.S. shareholder*** —

(i) ***Facts.*** The facts are the same as in paragraph (g)(7)(i) of this section (the facts in *Example 6*), except that both CFC1 and CFC2 are organized and conduct business in Country B, all of the outstanding stock of CFC1 is owned by Individual X, a U.S. citizen resident in Country A, and Country A imposes tax of $150x on foreign gross income of $600x under its foreign law inclusion regime on Individual X, rather than on CFC1. For Federal income tax purposes, in the hands of CFC2, the $400x of interest income is passive category subpart F income and the $200x of royalty income is general category tested income (as defined in § 1.951A-2(b)(1)). CFC2's $400x of interest income gives rise to a passive category subpart F inclusion under section 951(a)(1)(A), and its $200x of tested income gives rise to a GILTI inclusion amount (as defined in § 1.951A-1(c)(1)) of $200x, with respect to Individual X.

(ii) ***Analysis.*** The analysis is the same as in paragraph (g)(7)(ii) of this section (the analysis in *Example 6*) except that under § 1.904-6(f), because $50x of the Country A foreign income tax is allocated and apportioned under paragraph (d)(3)(iii) of this section to CFC2's general category tested income group to which Individual X's inclusion under section 951A is attributable, the $50x of Country A foreign income tax is allocated and apportioned in the hands of Individual X to the section 951A category.

(9) *Example 8: Sale of disregarded entity* —

(i) ***Facts.*** USP sells FDE, a disregarded entity that is organized and operates a trade or business in Country A, for $500x. FDE owns Asset X and Asset Y in Country A, each having a fair market value of $250x. For Country A tax purposes, FDE has a basis in Asset X of $100x and a basis in Asset Y of $200x, USP's basis in FDE is $100x, and the sale is treated as a sale of stock. Country A imposes foreign income tax of $40x on USP on the Country A gross income of $400x resulting from the sale of FDE, based on its rules for taxing capital gains of nonresidents selling stock of companies operating a trade or business in Country A. For Federal income tax purposes, USP has a basis of $150x in each of Assets X and Y, and so the sale of FDE results in $100x of passive category income with respect to the sale of Asset X and $100x of general category income with respect to the sale of Asset Y.

(ii) ***Analysis.*** For purposes of allocating and apportioning USP's $40x of Country A foreign income tax, the $400x of Country A gross income resulting from the sale of FDE is first assigned to separate categories. Under paragraph (d)(3)(iv) of this section, USP's $400x of Country A gross income is assigned among the statutory groupings in the same percentages as the foreign gross income in each grouping that would have resulted if the sale of FDE were treated as an asset sale for Country A tax purposes. Because for Country A tax purposes Asset X had a built-in gain of $150x and Asset Y had a built-in gain of $50x, $300x ($400x × $150x/$200x) of the Country A gross income is assigned to the passive category and $100x ($400x × $50x/$200x) is assigned to the general category. Under paragraph (f) of this section, $30x ($40x × $300x/$400x) of the Country A foreign income tax is apportioned to the passive category, and $10x ($40x × $100x/$400x) of the Country A foreign income tax is apportioned to the general category.

(10) *Example 9: Gain on disposition of stock* —

(i) ***Facts.*** USP owns all of the outstanding stock of CFC, which conducts business in Country A. In Year 1, USP sells all of the stock of CFC to US2 for $1,000x. For Country A tax purposes, USP's basis in the stock of CFC is $200x. Accordingly, USP recognizes $800x of gain on which Country A imposes $80x of foreign income tax based on its rules for taxing capital gains of nonresidents, which satisfy the requirement in § 1.901-2(b)(5)(i)(C). For Federal income tax purposes, USP's basis in the stock of CFC is $400x. Accordingly, USP recognizes $600x of gain on the sale of the stock of CFC, of which $150x is included in the gross income of USP as a dividend under section 1248(a) that, as provided in section 1248(j), is treated as a dividend eligible for the deduction under section 245A(a). Under paragraphs (b)(20) and (21) of this section, respectively, the sale of CFC stock by USP gives rise to a $450x U.S. capital gain amount and a $150x U.S. dividend amount. Under §§ 1.904-4(d) and 1.904-5(c)(4), the $150x U.S. dividend amount is general category section 245A subgroup income, and the $450x U.S. capital gain amount is passive category income to USP. For purposes of allocating and apportioning its interest expense under §§ 1.861-9(g)(2)(i)(B) and 1.861-13, USP's stock in CFC is characterized as general category stock in the section 245A subgroup.

(ii) ***Analysis.*** For purposes of allocating and apportioning the $80x of Country A foreign income tax, the $800x of Country A gross income from the sale of the stock of CFC is first assigned to separate categories. Under paragraph (d)(3)(i)(D) of this section, the $800x of Country A gross income is first assigned to the separate category to which the $150x U.S. dividend amount is assigned, to the extent thereof, and is next assigned to the separate category to which the $450x U.S. capital gain amount is assigned, to the extent thereof. Accordingly, $150x of

Country A gross income is assigned to the general category in the section 245A subgroup, and $450x of Country A gross income is assigned to the passive category. Under paragraph (d)(3)(i)(D) of this section, the remaining $200x of Country A gross income is assigned to the statutory and residual groupings to which earnings of CFC in that amount would be assigned if they were recognized for Federal income tax purposes in the U.S. taxable year in which the disposition occurred. These earnings are all deemed to arise in the section 245A subgroup of the general category, based on USP's characterization of its stock in CFC. Thus, under paragraph (d)(3)(i)(D) of this section the $800x of foreign gross income, and therefore the foreign taxable income, is characterized as $350x ($150x + $200x) of income in the general category section 245A subgroup and $450x of income in the passive category. This is the result even though for Country A tax purposes all $800x of Country A gross income is characterized as gain from the sale of stock, which would be passive category income under section 904(d)(2)(B)(i), because the income is assigned to a separate category based on the characterization of the gain under Federal income tax law. Under paragraph (f) of this section, the $80x of Country A tax is ratably apportioned between the general category section 245A subgroup and the passive category based on the relative amounts of foreign taxable income in each grouping. Accordingly, $35x ($80x × $350x/$800x) of the Country A tax is apportioned to the general category section 245A subgroup, and $45x ($80x × $450x/$800x) of the Country A tax is apportioned to the passive category. See also § 1.245A(d)-1 for rules that may disallow a credit or deduction for the $35x of Country A tax apportioned to the general category section 245A subgroup.

(11) ***Example 10: Disregarded transfer of built-in gain property*** —

(i) ***Facts.*** USP owns FDE, a disregarded entity that is treated for Federal income tax purposes as a foreign branch operating in Country A. FDE transfers Asset F, equipment used in FDE's trade or business in Country A, for no consideration to USP in a transaction that is a remittance described in paragraph (d)(3)(v)(E) of this section for Federal income tax purposes but is treated as a distribution of Asset F from a corporation to its shareholder, USP, for Country A tax purposes. At the time of the transfer, Asset F has a fair market value of $250x and an adjusted basis of $100x for both Federal and Country A income tax purposes. Country A imposes $30x of tax on FDE with respect to the $150x of built-in gain on a deemed sale of Asset F, which is recognized for Country A tax purposes by reason of the transfer to USP. If FDE had sold Asset F for $250x in a transaction that was regarded for Federal income tax purposes, FDE would also have recognized gain of $150x for Federal income tax purposes, and that gain would have been characterized as foreign branch category income under § 1.904-4(f). Country A also imposes $25x of withholding tax, a separate levy, on USP by reason of the distribution of Asset F to USP.

(ii) ***Analysis*** —

(A) ***Net income tax on built-in gain.*** For purposes of allocating and apportioning the $30x of Country A foreign income tax imposed on FDE by reason of the transfer of Asset F to USP for Country A tax purposes, under paragraph (c)(1) of this section the $150x of Country A gross income is first assigned to a separate category. Because the transfer does not result in a deemed sale for Federal income tax purposes, there is no corresponding U.S. item. However, FDE would have recognized gain of $150x, which would have been the corresponding U.S. item, if the deemed sale had been recognized for Federal income tax purposes. Therefore, under paragraph (d)(2)(ii) of this section, the $150x item of foreign gross income is characterized and assigned to the grouping to which such corresponding U.S. item would have been assigned if the deemed sale were recognized under Federal

income tax law. Because the sale of Asset F in a regarded transaction would have resulted in foreign branch category income, the foreign gross income is characterized as foreign branch category income. Under paragraph (f) of this section, the $30x of Country A tax is also allocated to the foreign branch category, the statutory grouping to which the $150x of Country A gross income is assigned. No apportionment of the $30x of Country A tax is necessary because the class of gross income to which the foreign gross income is allocated consists entirely of a single statutory grouping.

(B) ***Withholding tax on distribution.*** For purposes of allocating and apportioning the $25x of Country A withholding tax imposed on USP by reason of the transfer of Asset F, under paragraph (c)(1) of this section the $250x of Country A gross income arising from the transfer of Asset F is first assigned to a separate category. For Federal income tax purposes, the transfer of Asset F is a remittance from FDE to USP, and thus there is no corresponding U.S. item. Under paragraph (d)(3)(v)(C)(*1*)(*i*) of this section, the item of foreign gross income is assigned to the groupings to which the income out of which the payment is made is assigned; the payment is considered to be made ratably out of all of the accumulated after-tax income of FDE, as computed for Federal income tax purposes; and the accumulated after-tax income of FDE is deemed to have arisen in the statutory and residual groupings in the same proportions as those in which the tax book value of FDE's assets in the groupings, determined in accordance with paragraph (d)(3)(v)(C)(*1*)(*ii*) of this section, are assigned for purposes of apportioning USP's interest expense. Because all of FDE's assets produce foreign branch category income, under paragraph (d)(3)(v)(C)(*1*) of this section the foreign gross income is characterized as foreign branch category income. Under paragraph (f) of this section, the $25x of Country A withholding tax is also allocated entirely to the foreign branch category, the statutory grouping to which the $250x of Country A gross income is assigned. No apportionment of the $25x is necessary because the class of gross income to which the foreign gross income is allocated consists entirely of a single statutory grouping.

(12) ***Example 11: Disregarded payment that is a remittance*** —

(i) ***Facts.*** USP wholly owns CFC1, which is a tested unit within the meaning of § 1.951A-2(c)(7)(iv)(A) (the “CFC1 tested unit”). CFC1 wholly owns FDE, a disregarded entity that is organized in Country B, which is a tested unit within the meaning of § 1.951A-2(c)(7)(iv)(A) (the “FDE tested unit”). The sole assets of FDE (determined in accordance with paragraph (d)(3)(v)(C)(*1*)(*ii*) of this section) are all the outstanding stock of CFC3, a controlled foreign corporation organized in Country B. In Year 1, CFC3 pays a $400x dividend to FDE that is excluded from CFC1's foreign personal holding company income (“FPHCI”) by reason of section 954(c)(6). FDE makes no payments to CFC1 and pays no Country B tax in Year 1. In Year 2, FDE makes a $400x remittance to CFC1 as defined in paragraph (d)(3)(v)(E) of this section. Under the laws of Country B, the remittance gives rise to a $400x dividend. Country B imposes a 5% ($20x) withholding tax (which is an eligible current year tax as defined in § 1.960-1(b)) on CFC1 on the dividend. In Year 2, CFC3 pays no dividends to FDE, and FDE earns no income. For Federal income tax purposes, the $400x payment from FDE to CFC1 is a disregarded payment and results in no income to CFC1. For purposes of this paragraph (g)(12) (*Example 11*), section 960(a) is the operative section and the income groups described in § 1.960-1(d)(2) are the statutory and residual groupings. See § 1.960-1(d)(3)(ii)(A) (applying § 1.960-1 to allocate and apportion current year taxes to income groups). For Federal income tax purposes, in Year 2 the stock of CFC3 owned by FDE has a tax book value of $1,000x, $750x of

which is assigned under the asset method in § 1.861-9 (as applied by treating CFC1 as a United States person) to the general category tested income group described in § 1.960-1(d)(2)(ii)(C), and $250x of which is assigned to a passive category FPHCI group described in § 1.960-1(d)(2)(ii)(B)(*2*)(*i*).

(ii) ***Analysis.***

(A) The $20x Country B withholding tax on the Year 2 remittance from FDE is imposed on a $400x item of foreign gross income that CFC1 includes in foreign gross income by reason of its receipt of a disregarded payment. In order to allocate and apportion the $20x of Country B withholding tax under paragraph (c) of this section for purposes of § 1.960-1(d)(3)(ii)(A), paragraph (d)(3)(v) of this section applies to assign the $400x item of foreign gross dividend income to a statutory or residual grouping. Under paragraph (d)(3)(v)(C)(*1*) of this section, the $400x item of foreign gross income is assigned to the statutory or residual groupings of the CFC1 tested unit that correspond to the statutory and residual groupings out of which FDE made the remittance.

(B) Under paragraph (d)(3)(v)(C)(*1*)(*i*) of this section, FDE is considered to have made the remittance ratably out of all of its accumulated after-tax income, which is deemed to have arisen in the statutory and residual groupings in the same proportions as the proportions in which the tax book value of FDE's assets would be assigned (if CFC1 were a United States person) for purposes of apportioning interest expense under the asset method in Year 2, the taxable year in which FDE made the remittance. Accordingly, $300x ($400x × $750x/$1,000x) of the remittance is deemed made out of the general category tested income of the FDE tested unit, and $100x ($400x × $250x/$1,000x) of the remittance is deemed made out of the passive category FPHCI of the FDE tested unit.

(C) Under paragraph (d)(3)(v)(C)(*1*)(*i*) of this section, $300x of the $400x item of foreign gross income from the remittance, and therefore an equal amount of foreign taxable income, is assigned to the income group that includes general category tested income attributable to the CFC1 tested unit, and $100x of this foreign gross income item, and therefore an equal amount of foreign taxable income, is assigned to the income group that includes passive category FPHCI attributable to the CFC1 tested unit. Under paragraph (f) of this section, the $20x of Country B withholding tax is ratably apportioned between the income groups based on the relative amounts of foreign taxable income in each grouping. Accordingly, $15x ($20x × $300x/$400x) of the Country B withholding tax is apportioned to the CFC1 tested unit's general category tested income group, and $5x ($20x × $100x/$400x) of the Country B withholding tax is apportioned to the CFC1 tested unit's passive category FPHCI income group. See § 1.960-2 for rules on determining the amount of such taxes that may be deemed paid under section 960(a) and (d).

(13) ***Example 12: Disregarded payment that is a reattribution payment*** —

(i) ***Facts.***

(A) USP wholly owns CFC1, a tested unit within the meaning of § 1.951A-2(c)(7)(iv)(A)(*1*) (the "CFC1 tested unit"). CFC1 wholly owns FDE1, a disregarded entity organized in Country B, that is a tested unit within the meaning of § 1.951A-2(c)(7)(iv)(A)(*2*) (the "FDE1 tested unit"). Country B imposes a 20 percent net income tax on its residents. CFC1 also wholly owns FDE2, a disregarded entity organized in Country C, that is a tested unit within the meaning of § 1.951A-2(c)(7)(iv)(A)(*2*) (the "FDE2 tested unit"). Country C imposes a 15

percent net income tax on its residents. The net income tax imposed by each of Country B and Country C on their tax residents is a foreign income tax within the meaning of § 1.901-2(a) and a separate levy within the meaning of § 1.901-2(d). For purposes of this paragraph (g)(13) (*Example 12*), the operative section is the high-tax exclusion of section 951A(c)(2)(A)(i)(III) and § 1.951A-2(c)(7), and the statutory groupings are the tested income groups of each tested unit, as defined in § 1.951A-2(c)(7)(iv)(A).

(B) FDE2 owns Asset A, which is intangible property with a tax book value of $12,000x that is properly reflected on the separate set of books and records of FDE2. In Year 1, pursuant to a license agreement between FDE1 and FDE2 for the use of Asset A, FDE1 makes a disregarded royalty payment to FDE2 of $1,000x that would be deductible if regarded for Federal income tax purposes. Because it is disregarded for Federal income tax purposes, the $1,000x disregarded royalty payment by FDE1 to FDE2 results in no income to CFC1 for Federal income tax purposes. Also, in Year 1, pursuant to a sub-license agreement between FDE1 and an unrelated third party for the use of Asset A, FDE1 earns $1,200x of royalty income for Federal income tax purposes (the "U.S. gross royalty") for the use of Asset A. The $1,200 of royalty income received by FDE1 from the unrelated third party is excluded from CFC1's foreign personal holding company income by reason of the active business exception in section 954(c)(2) because CFC1 satisfies the requirements of § 1.954-2(d)(1). As a result, the $1,200x of royalty income that FDE1 earns from the sub-license agreement is gross tested income (as defined in § 1.951A-2(c)(1)), which is properly reflected on the separate set of books and records of FDE1.

(C) Under the laws of Country B, the transaction that gives rise to the $1,200x item of U.S. gross royalty income causes FDE1 to include a $1,200x item of gross royalty income in its Country B taxable income (the "Country B gross royalty"). In addition, FDE1 deducts its $1,000x disregarded royalty payment to FDE2 for Country B tax purposes. For Country B tax purposes, FDE1 therefore has $200x ($1,200x−$1,000x) of taxable income on which Country B imposes $40x (20% × $200x) of net income tax.

(D) Under the laws of Country C, the $1,000x disregarded royalty payment from FDE1 to FDE2 causes FDE2 to include a $1,000x item of gross royalty income in its Country C taxable income (the "Country C gross royalty"). FDE2 therefore has $1,000x of taxable income for Country C tax purposes, on which Country C imposes $150x (15% × $1,000x) of net income tax.

(ii) *Analysis* —

(A) ***Country B net income tax.***

(*1*) The Country B net income tax is imposed on foreign taxable income of FDE1 that consists of a $1,200x item of Country B gross royalty income and a $1,000x item of royalty expense. For Federal income tax purposes, the FDE1 tested unit has a $1,200x item of U.S. gross royalty income that is initially attributable to it under paragraph (d)(3)(v)(B)(*2*) of this section and § 1.951A-2(c)(7)(ii)(B). The transaction that produced the $1,200x item of U.S. gross royalty income also produced the $1,200x item of Country B gross royalty income. Under paragraph (b)(2) of this section, the $1,200x item of U.S. gross royalty income is therefore the corresponding U.S. item for the $1,200x item of Country B gross royalty income of FDE1.

(2) The $1,000x disregarded royalty payment from FDE1 to FDE2 is allocated under paragraph (d)(3)(v)(B)(2) of this section and § 1.951A-2(c)(7)(ii)(B) to the $1,200x of U.S. gross income of the FDE1 tested unit to the extent of that gross income. As a result, the $1,000x disregarded royalty payment causes $1,000x of the $1,200x item of U.S. gross royalty income to be reattributed from the FDE1 tested unit to the FDE2 tested unit, and results in a $1,000x reattribution amount that is also a reattribution payment.

(3) The $1,200x Country B gross royalty item that is included in the Country B taxable income of FDE1 is assigned under paragraph (d)(1) of this section to the statutory or residual grouping to which the $1,200x corresponding U.S. item is initially assigned under § 1.951A-2(c)(7)(ii), namely, the FDE1 income group. This assignment is made without regard to the $1,000x reattribution payment from the FDE1 tested unit to the FDE2 tested unit; none of the FDE1 tested unit's $1,200x Country B gross royalty income is reattributed to the FDE2 tested unit for this purpose. See paragraph (d)(3)(v)(B)(3) of this section. Under paragraph (f) of this section, all of the $40x of Country B net income tax on the $200x of Country B taxable income is allocated to the FDE1 income group, the statutory grouping to which the $1,200x item of Country B gross royalty income of FDE1 is assigned. No apportionment of the $40x is necessary because the class of gross income to which the foreign gross income is allocated consists entirely of a single statutory grouping.

(B) ***Country C net income tax.*** The Country C net income tax is imposed on foreign taxable income of FDE2 that consists of a $1,000x item of Country C gross royalty income. For Federal income tax purposes, under paragraph (d)(3)(v)(B)(2) of this section and § 1.951A-2(c)(7)(ii)(B), the FDE2 tested unit has a reattribution amount of $1,000x of U.S. gross royalty income by reason of its receipt of the $1,000x reattribution payment from FDE1. The $1,000x item of U.S. gross royalty income that is included in the taxable income of the FDE2 tested unit by reason of the $1,000x reattribution payment is assigned under paragraph (d)(3)(v)(B)(1) of this section to the statutory or residual grouping to which the $1,000x reattribution amount of U.S. gross royalty income that constitutes the reattribution payment is assigned upon receipt by the FDE2 tested unit under § 1.951A-2(c)(7)(ii), namely, the FDE2 income group. Under paragraph (d)(3)(v)(B)(1) of this section, the $1,000x item of Country C gross royalty income is assigned to the statutory grouping to which the $1,000x corresponding U.S. item is assigned. Accordingly, under paragraph (f) of this section, all of the $150x of Country C net income tax is allocated to the FDE2 income group, the statutory grouping to which the $1,000x item of Country C gross royalty income of FDE2 is assigned. No apportionment of the $150x is necessary because the class of gross income to which the foreign gross income is allocated consists entirely of a single statutory grouping.

(14) ***Example 13: Assets of a taxable unit that owns an interest in a lower-tier taxable unit*** —

(i) ***Facts.*** USP wholly owns CFC1, a tested unit within the meaning of § 1.951A-2(c)(7)(iv)(A) (the "CFC1 tested unit"). CFC1 wholly owns FDE1, a disregarded entity that is organized in Country A, and FDE2, a disregarded entity that is organized in Country B. CFC1's interests in FDE1 and FDE2 are each tested units within the meaning of § 1.951A-2(c)(7)(iv)(A) (the "FDE1 tested unit" and "FDE2 tested unit," respectively). The FDE1 tested unit and FDE2 tested unit each own 50% of the interests in FDE3, a disregarded entity that is organized in Country C. CFC1's indirect interests in FDE3 are also a tested unit within the meaning of § 1.951A-2(c)(7)(iv)(A) (the "FDE3

tested unit"). The FDE2 tested unit owns Asset A with a tax book value of $10,000x, and makes a reattribution payment to FDE3 that causes $5,000x of the tax book value of Asset A to be assigned to FDE3 under paragraph (d)(3)(v)(C)(*1*)(*ii*) of this section. FDE3 owns Asset B, which has a tax book value of $5,000x.

(ii) *Analysis* —

(A) ***Assets of the FDE3 tested unit.*** The assets of the FDE3 tested unit consist of the portion of Asset A that is assigned to it under paragraph (d)(3)(v)(C)(*1*)(*ii*) of this section and any other assets determined in accordance with § 1.987-6(b). The assets of the FDE3 tested unit thus consist of $5,000x of the tax book value of Asset A and all $5,000x of the tax book value of Asset B.

(B) ***Assets of the FDE2 tested unit.*** The assets of the FDE2 tested unit consist of the tax book value of any assets that it owns directly plus its pro rata share of the assets of the FDE3 tested unit, including the portion of reattribution assets assigned to the FDE3 tested unit. Asset A is a reattribution asset under paragraphs (d)(3)(v)(C)(*1*)(*ii*) and (d)(3)(v)(E) of this section. The assets of the FDE2 tested unit therefore consist of the portion of Asset A that it owns directly and that was not assigned to the FDE3 tested unit (or $5,000x) plus its pro rata share of the portion of Asset A that was assigned to the FDE3 tested unit, or $2,500x (50% of $5,000x). In addition, the assets of the FDE2 tested unit include its pro rata share of the tax book value of Asset B, or $2,500x (50% of $5,000x).

(C) ***Assets of the FDE1 tested unit.*** The assets of the FDE1 tested unit consist of its pro rata share of the assets of the FDE3 tested unit, including the portion of reattribution assets assigned to the FDE3 tested unit. Asset A is a reattribution asset under paragraphs (d)(3)(v)(C)(*1*)(*ii*) and (d)(3)(v)(E) of this section. The assets of the FDE1 tested unit therefore consist of its pro rata share of the portion of Asset A that was reattributed to the FDE3 tested unit, or $2,500x (50% of $5,000x), plus its pro rata share of the tax book value of Asset B, or $2,500x (50% of $5,000x).

(h) ***Allocation and apportionment of certain foreign in lieu of taxes described in section 903.*** A tax that is a foreign income tax by reason of § 1.903-1(c)(1) is allocated and apportioned to statutory and residual groupings in the same proportions as the foreign taxable income that comprises the excluded income (as defined in § 1.903-1(c)(1)). See paragraph (f) of this section for rules on allocating and apportioning certain withholding taxes described in § 1.903-1(c)(2).

(i) ***Applicability dates.*** Except as provided in this paragraph (i), this section applies to taxable years beginning after December 31, 2019. Paragraphs (b)(19) and (23) and (d)(3)(i), (ii), and (v) of this section apply to taxable years that begin after December 31, 2019, and end on or after November 2, 2020. Paragraph (h) of this section applies to taxable years beginning after December 28, 2021.

[T.D. 9922, 85 FR 72049, Nov. 12, 2020; 86 FR 54367, Oct. 1, 2021, as amended by T.D. 9959, 87 FR 327, Jan. 4, 2022; 87 FR 45019, July 27, 2022]

§ 1.862-1 Income specifically from sources without the United States.

(a) *Gross income.*

(1) The following items of gross income shall be treated as income from sources without the United States:

(i) Interest other than that specified in section 861(a)(1) and § 1.861-2 as being derived from sources within the United States;

(ii) Dividends other than those derived from sources within the United States as provided in section 861(a)(2) and § 1.861-3;

(iii) Compensation for labor or personal services performed without the United States;

(iv) Rentals or royalties from property located without the United States or from any interest in such property, including rentals or royalties for the use of, or for the privilege of using, without the United States, patents, copyrights, secret processes and formulas, goodwill, trademarks, trade brands, franchises, and other like property;

(v) Gains, profits, and income from the sale of real property located without the United States; and

(vi) Gains, profits, and income derived from the purchase of personal property within the United States and its sale without the United States.

(2) In applying subparagraph (1)(iv) of this paragraph for taxable years beginning after December 31, 1966, gains described in section 871(a)(1)(D) and section 881(a)(4) from the sale or exchange after October 4, 1966, of patents, copyrights, and other like property shall be treated, as provided in section 871(e)(2), as rentals or royalties for the use of, or privilege of using, property or an interest in property. See paragraph (e) of § 1.871-11.

(3) For determining the time and place of sale of personal property for purposes of subparagraph (1)(vi) of this paragraph, see paragraph (c) of § 1.861-7.

(4) Income derived from the purchase of personal property within the United States and its sale within a possession of the United States shall be treated as derived entirely from within that possession.

(5) If interest is paid on an obligation of a nonresident of the United States by a resident of the United States acting in the resident's capacity as a guarantor of the obligation of the nonresident, the interest will be treated as income from sources without the United States.

(6) For rules treating certain interest as income from sources without the United States, see paragraph (b) of § 1.861-2.

(7) For the treatment of compensation for labor or personal services performed partly within the United States and partly without the United States, see paragraph (b) of § 1.861-4.

(b) ***Taxable income.*** The taxable income from sources without the United States, in the case of the items of gross income specified in paragraph (a) of this section, shall be determined on the same basis as that used in § 1.861-8 for determining the taxable income from sources within the United States.

(c) ***Income from certain property.*** For provisions permitting a taxpayer to elect to treat amounts of gross income attributable to certain aircraft or vessels first leased on or before December 28, 1980, as income from sources within the United States which would otherwise be treated as income from sources without the United States under paragraph (a) of this section, see § 1.861-9. For provisions requiring amounts of gross income attributable to certain aircraft, vessels, or spacecraft first leased by the taxpayer after December 28, 1980, to be treated as income from sources within the United States which would otherwise be treated as income from sources without the United States under paragraph (a) of this section, see § 1.861-9A.

[T.D. 6500, 25 FR 11910, Nov. 26, 1960; 25 FR 14021, Dec. 31, 1960, as amended by T.D. 7378, 40 FR 45434, Oct. 2, 1975; 40 FR 48508, Oct. 16, 1975; T.D. 7928, 48 FR 55847, Dec. 16, 1983]

§ 1.863-0 Table of contents.

This section lists captions contained in §§ 1.863-1 through 1.863-10.

§ 1.863-1 Allocation of gross income under section 863(a).

(a) In general.

(b) Natural resources.

(1) In general.

(2) Additional production activities.

(3) Definitions.

(i) Production activity.

(ii) Additional production activities.

(4) Determination of fair market value.

(5) Determination of gross income.

(6) Tax return disclosure.

(7) Examples.

(i) Example 1. No additional production, foreign source gross receipts.

(ii) Example 2. No additional production, U.S. source gross receipts.

(iii) Example 3. Production in United States, foreign sales.

(iv) Example 4. Production and sales in United States.

(v) Example 5. Additional production.

(c) Determination of taxable income.

(d) Scholarships, fellowship grants, grants, prizes, and awards.

(1) In general.

(2) Source of income.

(i) United States source income.

(ii) Foreign source income.

(iii) Certain activities conducted outside the United States.

(3) Definitions.

(4) Effective dates.

(i) Scholarships and fellowship grants.

(ii) Grants, prizes and awards.

(e) Residual interest in a REMIC.

(1) REMIC inducement fees.

(2) Excess inclusion income and net losses.

(f) Applicability date.

§ 1.863-2 Allocation and apportionment of taxable income.

(a) Determination of taxable income.

(b) Determination of source of taxable income.

(c) Applicability date.

§ 1.863-3 Allocation and apportionment of income from certain sales of inventory.

(a) In general.

(1) Scope.

(2) Cross references.

(b) Sourcing based solely on production activities.

(c) Determination of the source of gross income from production activity.

(1) Production only within the United States or only within foreign countries.

(i) Source of income.

(ii) Definition of production assets.

(iii) Location of production assets.

(2) Production both within and without the United States.

(i) Source of income.

(ii) Adjusted basis of production assets.

(A) In general.

(B) Production assets used to produce other property.

(3) Anti-abuse rule.

(4) Examples.

(i) Example1. Source of gross income.

(ii) Example 2. Location of intangible property.

(iii) Example 3. Anti-abuse rule.

(d) Determination of source of taxable income.

(e) Income partly from sources within a possession of the United States.

(1) In general.

(2) Allocation or apportionment for Possession Production Sales.

(3) Allocation or apportionment for Possession Purchase Sales.

(i) Determination of source of gross income from Possession Purchase Sales.

(ii) Determination of source of gross income from business activity.

(A) Source of gross income.

(B) Business activity.

(C) Location of business activity.

(*1*) Sales activity.

(2) Cost of goods sold.

(3) Expenses.

(4) Examples.

(i) Example 1: Purchase of goods manufactured in possession.

(ii) Example 2: Purchase of goods manufactured outside possession.

(5) Special rules for partnerships.

(f) Special rules for partnerships.

(1) General rule.

(2) Exceptions.

(i) In general.

(ii) Attribution of production assets to or from a partnership.

(iii) Basis.

(3) Examples.

(i) Example 1. Distributive share of partnership income.

(ii) Example 2. Distribution in kind.

(g) Applicability dates.

§ 1.863-4 Certain transportation services.

(a) General.

(b) Gross income.

(c) Allocation of costs or expenses.

(d) Items not included as costs or expenses.

(1) Taxes and interest.

(2) Other business activity and general expenses.

(3) Personal exemptions and special deductions.

(e) Property used while within the United States.

(1) General.

(2) Average property.

(3) Current assets.

(f) Taxable income.

(1) General.

(2) Interest and taxes.

(3) General expenses.

(4) Personal exemptions.

(5) Special deductions.

(g) Allocation based on books of account.

§ 1.863-6 Income from sources within a foreign country.

§ 1.863-7 Allocation of income attributable to certain notional principal contracts under section 863(a).

(a) Scope.

(1) Introduction.

(2) Effective/applicability date.

(b) Source of notional principal contract income.

(1) General rule.

(2) Qualified business unit exception.

(3) Effectively connected notional principal contract income.

(c) Election.

(1) Eligibility and effect.

(2) Time for making election.

(3) Manner of making election.

(d) Example.

(e) Cross references.

§ 1.863-8 Source of income derived from space and ocean activity under section 863(d).

(a) In general.

(b) Source of gross income from space and ocean activity.

(1) Space and ocean income derived by a United States person.

(2) Space and ocean income derived by a foreign person.

(i) In general.

(ii) Space and ocean income derived by a controlled foreign corporation.

(iii) Space and ocean income derived by foreign persons engaged in a trade or business within the United States.

(3) Source rules for income from certain sales of property.

(i) Sales of purchased property.

(ii) Sales of property produced by the taxpayer.

(A) General.

(B) Production only in space or international water, or only outside space and international water.

(C) Production both in space or international water and outside space and international water.

(4) Special rule for determining the source of gross income from services.

(5) Special rule for determining source of income from communications activity (other than income from international communications activity).

(c) Taxable income.

(d) Space and ocean activity.

(1) Definition.

(i) Space activity.

(ii) Ocean activity.

(2) Determining a space or ocean activity.

(i) Production of property in space or international water.

(ii) Special rule for performance of services.

(A) General.

(B) Exception to the general rule.

(3) Exceptions to space or ocean activity.

(e) Treatment of partnerships.

(f) Examples.

(1) Example 1. Space activity—activity occurring on land and in space.

(2) Example 2. Space activity.

(3) Example 3. Services as space activity—de minimis value attributable to performance occurring in space.

(4) Example 4. Space activity.

(5) Example 5. Space activity.

(6) Example 6. Space activity—treatment of land activity.

(7) Example 7. Use of intangible property in space.

(8) Example 8. Performance of services.

(9) Example 9. Separate transactions.

(10) Example 10. Sale of property in international water.

(11) Example 11. Sale of property in space.

(12) Example 12. Sale of property in space.

(13) Example 13. Source of income of a foreign person.

(14) Example 14. Source of income of a foreign person.

(g) Reporting and documentation requirements.

(1) In general.

(2) Required documentation.

(3) Access to software.

(4) Use of allocation methodology.

(h) Applicability date.

§ 1.863-9 Source of income derived from communications activity under section 863(a), (d), and (e).

(a) In general.

(b) Source of international communications income.

(1) International communications income derived by a United States person.

(2) International communications income derived by foreign persons.

(i) In general.

(ii) International communications income derived by a controlled foreign corporation.

(iii) International communications income derived by foreign persons with a fixed place of business in the United States.

(iv) International communications income derived by foreign persons engaged in a trade or business within the United States.

(c) Source of U.S. communications income.

(d) Source of foreign communications income.

(e) Source of space/ocean communications income.

(f) Source of communications income when taxpayer cannot establish the two points between which the taxpayer is paid to transmit the communication.

(g) Taxable income.

(h) Communications activity and income derived from communications activity.

(1) Communications activity.

(i) General rule.

(ii) Separate transaction.

(2) Income derived from communications activity.

(3) Determining the type of communications activity.

(i) In general.

(ii) Income derived from international communications activity.

(iii) Income derived from U.S. communications activity.

(iv) Income derived from foreign communications activity.

(v) Income derived from space/ocean communications activity.

(i) Treatment of partnerships.

(j) Examples.

(k) Reporting and documentation requirements.

(1) In general.

(2) Required documentation.

(3) Access to software.

(4) Use of allocation methodology.

(l) Effective date.

§ 1.863-10 Source of income from a qualified fails charge.

(a) In general.

(b) Qualified business unit exception.

(c) Effectively connected income exception.

(d) Qualified fails charge.

(e) Designated security.

(g) Effective/applicability date.

[T.D. 9921, 85 FR 79843, Dec. 11, 2020]

§ 1.863-0A Table of contents.

This section lists captions contained in §§ 1.863-3A and 1.863-3AT.

§ 1.863-3A Income from the sale of personal property derived partly from within and partly from without the United States.

(a) General.

(1) Classes of income.

(2) Definition.

(b) Income partly from sources within a foreign country.

(1) General.

(2) Allocation or apportionment.

(c) Income partly from sources within a possession of the United States.

(1) General.

(2) Allocation or apportionment.

(3) Personal property produced and sold.

(4) Personal property purchased and sold.

§ 1.863-3AT Income from the sale of personal property derived partly from within and partly from without the United States (temporary).

(a) [Reserved].

(b) Income partly from sources within a foreign country.

(1) [Reserved].

(2) Allocation or apportionment.

(c)(1) through (4) [Reserved].

[T.D. 9921, 85 FR 79845, Dec. 11, 2020]

§ 1.863-1 Allocation of gross income under section 863(a).

(a) ***In general.*** Items of gross income other than those specified in section 861(a) and section 862(a) will generally be separately allocated to sources within or without the United States. See § 1.863-2 for alternate methods to determine the income from sources within or without the United States in the case of items specified in § 1.863-2(a). See also section 865(b) for rules for sourcing income from the sale of inventory property, within the meaning of section 865(i)(1) (inventory), generally, and section 865(e)(2) and § 1.865-3 for sourcing income from the sale of personal property (including inventory) by a nonresident that is attributable to the nonresident's office or other fixed place of business in the United States. In the case of sales of property involving partners and partnerships, the rules of § 1.863-3(f) apply.

(b) ***Natural resources*** —

(1) ***In general.*** Notwithstanding any other provision of this part, except to the extent provided in paragraph (b)(2) of this section or § 1.865-3, gross receipts from the sale outside the United States of products derived from the ownership or operation of any farm, mine, oil or gas well, other natural deposit, or uncut timber within the United States shall be treated as from sources within the United States, and gross receipts from the sale within the United States of products derived from the ownership or operation of any farm, mine, oil or gas well, other natural deposit, or uncut timber outside the United States shall be treated as from sources without the United States.

(2) ***Additional production activities.*** Notwithstanding any other provision of this section, gross receipts from the sale of products derived by a taxpayer who performs additional production activities as defined in paragraph (b)(3)(ii) of this section are allocated between sources within and without the United States based on the fair market value of the product immediately prior to the additional production activities. The source of gross receipts equal to the fair market value of the product immediately prior to the additional production activities will be from sources where the farm, mine, oil or gas well, other natural deposit, or uncut timber is located. The source of gross receipts from the sale of the product in excess of the fair market value immediately prior to the additional production activities must be determined under § 1.863-3. For purposes of applying § 1.863-3, only production assets used in the additional production activities are taken into account.

(3) ***Definitions*** —

(i) ***Production activity.*** For purposes of this section, production activity means an activity that creates, fabricates, manufactures, extracts, processes, cures, or ages inventory. See § 1.864-1. Except as otherwise provided in § 1.1502-13 or 1.863-3(f)(2), only production activities conducted directly by the taxpayer are taken into account.

(ii) ***Additional production activities.*** For purposes of this section, additional production activities are substantial production activities performed directly by the taxpayer in addition to activities from the ownership or operation of any farm, mine, oil or gas well, other natural deposit, or uncut timber. Whether a taxpayer's activities constitute additional production activities will be determined under the principles of § 1.954-3(a)(4) (except for § 1.954-3(a)(4)(iv)). However, in no case will activities that prepare the natural resource itself for export, including those that are designed to facilitate the transportation of the natural resource, be considered additional production activities for purposes of this section.

(4) ***Determination of fair market value.*** For purposes of this section, fair market value depends on all of the facts and circumstances as they exist relative to a party in any particular case. Where the products are sold to a related party in a transaction subject to section 482, the determination of fair market value under this section must be consistent with the arm's length price determined under section 482.

(5) ***Determination of gross income.*** To determine the amount of a taxpayer's gross income from sources within or without the United States, the taxpayer's gross receipts from sources within or without the United States determined under this paragraph (b) must be reduced by the cost of goods sold properly attributable to gross receipts from sources within or without the United States.

(6) ***Tax return disclosure.*** A taxpayer that determines the source of its income under paragraph (b)(2) of this section shall attach a statement to its return explaining the methodology used to determine fair market value under paragraph (b)(4) of this section, and explaining any additional production activities (as defined in paragraph (b)(3)(ii) of this section) performed by the taxpayer. In addition, the taxpayer must provide such other information as is required by § 1.863-3.

(7) ***Examples.*** The following examples illustrate the rules of this paragraph (b):

(i) ***Example 1. No additional production, foreign source gross receipts.*** U.S. Mines, a domestic corporation, operates a copper mine and mill in Country X. U.S. Mines extracts copper-bearing rocks from the ground and transports the rocks to the mill where the rocks are ground and processed to produce copper-bearing concentrate. The concentrate is transported to a port where it is dried in preparation for export, stored, and then shipped to purchasers in the United States. Because, under the facts and circumstances, none of U.S. Mines' activities constitute additional production activities, within the meaning of paragraph (b)(3)(ii) of this section, paragraph (b)(2) of this section does not apply, and under paragraph (b)(1) of this section, gross receipts from the sale of the concentrate will be treated as from sources without the United States.

(ii) ***Example 2. No additional production, U.S. source gross receipts.*** U.S. Gas, a domestic corporation, extracts natural gas within the United States, and transports the natural gas to a Country X port where it is liquefied in preparation for shipment. The liquefied natural gas is then transported via freighter and sold without additional production activities in a foreign country. Under paragraph (b)(3)(ii) of this section, liquefaction of natural gas is not an additional production activity because liquefaction prepares the natural gas for transportation. Therefore, under paragraph (b)(1) of this section, gross receipts from the sale of the liquefied natural gas will be treated as from sources within the United States.

(iii) ***Example 3. Production in United States, foreign sales.*** U.S. Gold, a domestic corporation, mines gold in Country X, produces gold jewelry using production assets located in the United States, and sells the jewelry in Country Y. Assume that the fair market value of the gold before the additional production activities in the United States is $40x and that U.S. Gold ultimately sells the gold jewelry in Country Y for $100x. Under paragraph (b)(2) of this section, $40x of U.S. Gold's gross receipts will be treated as from sources without the United States, and the remaining $60x of gross receipts will be treated as from sources within the United States under § 1.863-3.

(iv) ***Example 4. Production and sales in United States.*** U.S. Oil, a domestic corporation, extracts oil in Country X, transports the oil via a pipeline to the United States, refines the oil using production assets located in the United States, and sells the refined product in the United States to

unrelated persons. Assume that the fair market value of the oil before refinement in the United States is $80x and U.S. Oil ultimately sells the refined product for $100x. Under paragraph (b)(2) of this section, $80x of gross receipts will be treated as from sources without the United States, and the remaining $20x of gross receipts will be treated as from sources within the United States under § 1.863-3.

(v) ***Example 5. Additional production.*** The facts are the same as in paragraph (b)(7)(i) of this section (the facts in *Example 1*), except that U.S. Mines also operates a smelter in Country X. The concentrate output from the mill is transported to the smelter where it is transformed into smelted copper. The smelted copper is exported to purchasers in the United States. Under the facts and circumstances, all the processes applied to make copper concentrate are considered mining. Therefore, under paragraph (b)(2) of this section, gross receipts equal to the fair market value of the concentrate at the smelter will be treated as from sources without the United States. Under the facts and circumstances, the conversion of the concentrate into smelted copper is an additional production activity in a foreign country within the meaning of paragraph (b)(3)(ii) of this section. Therefore, the source of U.S. Mines's excess gross receipts will be determined under § 1.863-3, pursuant to paragraph (b)(2) of this section.

(c) ***Determination of taxable income.*** The taxpayer's taxable income from sources within or without the United States will be determined under the rules of §§ 1.861-8 through 1.861-14T for determining taxable income from sources within the United States.

(d) ***Scholarships, fellowship grants, grants, prizes and awards*** —

(1) ***In general.*** This paragraph (d) applies to scholarships, fellowship grants, grants, prizes and awards. The provisions of this paragraph (d) do not apply to amounts paid as salary or other compensation for services.

(2) ***Source of income.*** The source of income from scholarships, fellowship grants, grants, prizes and awards is determined as follows:

(i) ***United States source income.*** Except as provided in paragraph (d)(2)(iii) of this section, scholarships, fellowship grants, grants, prizes and awards made by a U.S. citizen or resident, a domestic partnership, a domestic corporation, an estate or trust (other than a foreign estate or trust within the meaning of section 7701(a)(31)), the United States (or an instrumentality or agency thereof), a State (or any political subdivision thereof), or the District of Columbia shall be treated as income from sources within the United States.

(ii) ***Foreign source income.*** Scholarships, fellowship grants, grants, prizes and awards made by a foreign government (or an instrumentality, agency, or any political subdivision thereof), an international organization (as defined in section 7701(a)(18)), or a person other than a U.S. person (as defined in section 7701(a)(30)) shall be treated as income from sources without the United States.

(iii) ***Certain activities conducted outside the United States.*** Scholarships, fellowship grants, targeted grants, and achievement awards received by a person other than a U.S. person (as defined in section 7701(a)(30)) with respect to activities previously conducted (in the case of achievement awards) or to be conducted (in the case of scholarships, fellowships grants, and targeted grants) outside the United States shall be treated as income from sources without the United States.

(3) ***Definitions.*** The following definitions apply for purposes of this paragraph (d):

(i) ***Scholarships*** are defined in section 117 and the regulations thereunder.

(ii) ***Fellowship grants*** are defined in section 117 and the regulations thereunder.

(iii) ***Prizes and awards*** are defined in section 74 and the regulations thereunder.

(iv) ***Grants*** are amounts described in subparagraph (3) of section 4945(g) and the regulations thereunder, and are not amounts otherwise described in paragraphs (d)(3) (i), (ii), or (iii) of this section. For purposes of this paragraph (d), the reference to section 4945(g)(3) is applied without regard to the identity of the payor or recipient and without the application of the objective and nondiscriminatory basis test and the requirement of a procedure approved in advance.

(v) ***Targeted grants*** are grants—

(A) Issued by an organization described in section 501(c)(3), the United States (or an instrumentality or agency thereof), a State (or any political subdivision thereof), or the District of Columbia; and

(B) For an activity undertaken in the public interest and not primarily for the private financial benefit of a specific person or persons or organization.

(vi) ***Achievement awards*** are awards—

(A) Issued by an organization described in section 501(c)(3), the United States (or an instrumentality or agency thereof), a State (or political subdivision thereof), or the District of Columbia; and

(B) For a past activity undertaken in the public interest and not primarily for the private financial benefit of a specific person or persons or organization.

(4) ***Effective dates.*** The following are the effective dates concerning this paragraph (d):

(i) ***Scholarships and fellowship grants.*** This paragraph (d) is effective for scholarship and fellowship grant payments made after December 31, 1986. However, for scholarship and fellowship grant payments made after May 14, 1989, and before June 16, 1993, the residence of the payor rule of paragraph (d)(2) (i) and (ii) of this section may be applied without applying paragraph (d)(2)(iii) of this section.

(ii) ***Grants, prizes and awards.*** This paragraph (d) is effective for payments made for grants, prizes and awards, targeted grants, and achievement awards after September 25, 1995. However, the taxpayer may elect to apply the provisions of this paragraph (d) to payments made for grants, prizes and awards, targeted grants, and achievement awards after December 31, 1986, and before September 26, 1995.

(e) ***Residual interest in a REMIC*** —

(1) ***REMIC inducement fees.*** An inducement fee (as defined in § 1.446-6(b)(2)) shall be treated as income from sources within the United States.

(2) ***Excess inclusion income and net losses.*** An excess inclusion (as defined in section 860E(c)) shall be treated as income from sources within the United States. To the extent of excess inclusion income previously taken into account with respect to a residual interest (reduced by net losses previously taken into account under this paragraph), a net loss (described in section 860C(b)(2)) with respect to

the residual interest shall be allocated to the class of gross income and apportioned to the statutory grouping(s) or residual grouping of gross income to which the excess inclusion income was assigned.

(f) ***Applicability date.*** Paragraph (b) of this section applies to taxable years ending on or after December 23, 2019. However, a taxpayer may apply paragraph (b) of this section in its entirety for taxable years beginning after December 31, 2017, and ending before December 23, 2019, provided that the taxpayer and all persons related to the taxpayer (within the meaning of section 267 or 707) apply paragraph (b) of this section and §§ 1.863-2(b), 1.863-3, 1.863-8(b)(3)(ii), 1.864-5(a) and (b), 1.864-6(c)(2), and 1.865-3 in their entirety for the taxable year, and once applied, the taxpayer and all persons related to the taxpayer (within the meaning of section 267 or 707) continue to apply these regulations in their entirety for all subsequent taxable years. For regulations generally applicable to taxable years ending before December 23, 2019, see § 1.863-1 as contained in 26 CFR part 1 revised as of April 1, 2020. Paragraph (e)(2) of this section applies for taxable years ending after August 1, 2006.

[T.D. 6500, 25 FR 11910, Nov. 26, 1960, as amended by T.D. 8615, 60 FR 44275, Aug. 25, 1995; T.D. 8687, 61 FR 60545, Nov. 29, 1996; 61 FR 65323, Dec. 12, 1996; T.D. 9128, 69 FR 26041, May 11, 2004; T.D. 9272, 71 FR 43366, Aug. 1, 2006; T.D. 9415, 73 FR 40172, July 14, 2008; T.D. 9921, 85 FR 79845, Dec. 11, 2020]

§ 1.863-2 Allocation and apportionment of taxable income.

(a) ***Determination of taxable income.*** Section 863(b) provides an alternate method for determining taxable income from sources within the United States in the case of gross income derived from sources partly within and partly without the United States. Under this method, taxable income is determined by deducting from such gross income the expenses, losses, or other deductions properly apportioned or allocated thereto and a ratable part of any other expenses, losses, or deductions that cannot definitely be allocated to some item or class of gross income. The income to which this section applies will consist of gains, profits, and income:

(1) From certain transportation or other services rendered partly within and partly without the United States to the extent not within the scope of section 863(c) or other specific provisions of this title;

(2) From the sale of inventory property (within the meaning of section 865(i)) produced (in whole or in part) by the taxpayer in the United States and sold outside the United States or produced (in whole or in part) by the taxpayer outside the United States and sold in the United States; or

(3) Derived from the purchase of personal property within a possession of the United States and its sale within the United States, to the extent not excluded from the scope of these regulations under § 1.936-6(a)(5), Q&A 7.

(b) ***Determination of source of taxable income.*** Income treated as derived from sources partly within and partly without the United States under paragraph (a) of this section may be allocated or apportioned to sources within and without the United States pursuant to §§ 1.863-1, 1.863-3, 1.863-4, 1.863-8, and 1.863-9. To determine the source of certain types of income described in paragraph (a)(1) of this section, see § 1.863-4. To determine the source of gross income described in paragraph (a)(2) of this section, see § 1.863-1 for natural resources, § 1.863-3 for other sales of inventory property, and § 1.863-8 for source of gross income from space and ocean activity. Section 1.865-3 may apply instead of the provisions in this section to source gross income from sales of personal property (including inventory property) by nonresidents attributable to an office or other fixed place of business in the United States. To determine the source of income partly from sources within a possession of the United States, including income described in paragraph (a)(3) of this section, see § 1.863-3(e).

(c) ***Applicability date.*** Except as provided in this paragraph (c), this section applies to taxable years beginning after December 30, 1996. Paragraph (b) of this section applies to taxable years ending on or after December 23, 2019. However, a taxpayer may apply paragraph (b) of this section in its entirety for taxable years beginning after December 31, 2017, and ending before December 23, 2019, provided that the taxpayer and all persons related to the taxpayer (within the meaning of section 267 or 707) apply paragraph (b) of this section and §§ 1.863-1(b), 1.863-3, 1.863-8(b)(3)(ii), 1.864-5(a) and (b), 1.864-6(c)(2), and 1.865-3 in their entirety for the taxable year, and once applied, the taxpayer and all persons related to the taxpayer (within the meaning of section 267 or 707) continue to apply these regulations in their entirety for all subsequent taxable years. For regulations generally applicable to taxable years ending before December 23, 2019, see § 1.863-2 as contained in 26 CFR part 1 revised as of April 1, 2020.

[T.D. 8687, 61 FR 60546, Nov. 29, 1996; 61 FR 65323, Dec. 12, 1996, as amended by T.D. 9921, 85 FR 79846, Dec. 11, 2020]

§ 1.863-3 Allocation and apportionment of income from certain sales of inventory.

(a) ***In general*** —

(1) ***Scope.*** Subject to the rules of § 1.865-3, paragraphs (a) through (d) of this section apply to determine the source of income derived from the sale of inventory property (inventory) that a taxpayer produces (in whole or in part) within the United States and sells without the United States, or that a taxpayer produces (in whole or in part) without the United States and sells within the United States (collectively, Section 863(b)(2) Sales). See section 865(i)(1) for the definition of inventory. Paragraph (b) of this section provides that the source of gross income from Section 863(b)(2) Sales is based solely on the production activities with respect to the inventory. Paragraph (c) of this section describes how to determine source based on production activity, including when inventory is produced partly within the United States and partly without the United States. Paragraph (d) of this section determines taxable income from Section 863(b)(2) Sales. Paragraph (e) of this section applies to determine the source of certain income derived from a possession of the United States. Paragraph (f) of this section provides special rules for partnerships for all sales subject to §§ 1.863-1 through 1.863-3. Paragraph (g) of this section provides applicability dates for the rules in this section.

(2) ***Cross references.*** To determine the source of income derived from the sale of personal property (including inventory) by a nonresident that is attributable to the nonresident's office or other fixed place of business in the United States under section 865(e)(2) and § 1.865-3(c), the rules of § 1.865-3 apply, and the rules of this section do not apply except to the extent provided in § 1.865-3. To determine the source of income from sales of property produced by the taxpayer, when the property is either produced in whole or in part in space, as defined in § 1.863-8(d)(1)(i), or international water, as defined in § 1.863-8(d)(1)(ii), or is sold in space or international water, the rules of § 1.863-8 apply, and the rules of this section do not apply except to the extent provided in § 1.863-8.

(b) ***Sourcing based solely on production activities.*** Subject to the rules of § 1.865-3, all income, gain, or loss derived from Section 863(b)(2) Sales is allocated and apportioned solely on the basis of the production activities with respect to the inventory.

(c) ***Determination of the source of gross income from production activity*** —

(1) ***Production only within the United States or only within foreign countries*** —

(i) ***Source of income.*** For purposes of this section, production activity means an activity that creates, fabricates, manufactures, extracts, processes, cures, or ages inventory. See § 1.864-1. Whether a taxpayer's activities constitute production activity is determined under the principles of § 1.954-3(a)(4) (except for § 1.954-3(a)(4)(iv)). Subject to the provisions in § 1.1502-13 or paragraph (f)(2)(ii) of this section, the only production activities that are taken into account for purposes of §§ 1.863-1, 1.863-2, and this section are those conducted directly by the taxpayer. Where the taxpayer's production assets are located only within the United States or only outside the United States, gross income is sourced where the taxpayer's production assets are located. For rules regarding the source of income when production assets are located both within the United States and without the United States, see paragraph (c)(2) of this section. For rules regarding the source of income when production takes place, in whole or in part, in space or international water, the rules of § 1.863-8 apply, and the rules of this section do not apply except to the extent provided in § 1.863-8.

(ii) ***Definition of production assets.*** Subject to the provisions of § 1.1502-13 and paragraph (f)(2)(ii) of this section, production assets include only tangible and intangible assets owned directly by the taxpayer that are directly used by the taxpayer to produce inventory described in paragraph (a) of this section. Production assets do not include assets that are not directly used to produce inventory described in paragraph (a) of this section. Thus, production assets do not include such assets as accounts receivables, intangibles not related to production of inventory (*e.g.,* marketing intangibles, including trademarks and customer lists), transportation assets, warehouses, the inventory itself, raw materials, or work-in-process. In addition, production assets do not include cash or other liquid assets (including working capital), investment assets, prepaid expenses, or stock of a subsidiary.

(iii) ***Location of production assets.*** For purposes of this section, a tangible production asset will be considered located where the asset is physically located. An intangible production asset will be considered located where the tangible production assets owned by the taxpayer to which it relates are located.

(2) ***Production both within and without the United States*** —

(i) ***Source of income.*** Where the taxpayer's production assets are located both within and without the United States, income from sources without the United States will be determined by multiplying the gross income by a fraction, the numerator of which is the average adjusted basis of production assets that are located outside the United States and the denominator of which is the average adjusted basis of all production assets within and without the United States. The remaining income is treated as from sources within the United States.

(ii) ***Adjusted basis of production assets*** —

(A) ***In general.*** For purposes of paragraph (c)(2)(i) of this section, the adjusted basis of an asset is determined by using the alternative depreciation system under section 168(g)(2). The adjusted basis of all production assets for purposes of paragraph (c)(2)(i) of this section is determined as though the production assets were subject to the alternative depreciation system set forth in section 168(g)(2) for the entire period that such property has been in service. The adjusted basis of the production assets is determined without regard to the election to expense certain depreciable assets under section 179 and without regard to any additional first-year depreciation provision (for example, section 168(k), (l), and (m), and former sections 1400L(b) and 1400N(d)). The average adjusted basis of assets is computed by averaging the adjusted basis at the beginning and end of

the taxable year, unless by reason of changes during the taxable year, as might be the case in the event of a major acquisition or disposition of assets, the average would materially distort the calculation in paragraph (c)(2)(i) of this section. In this event, the average adjusted basis is determined upon a more appropriate basis that is weighted to reasonably reflect the period for which the assets are held by the taxpayer during the taxable year.

(B) ***Production assets used to produce other property.*** If a production asset is used to produce inventory sold in Section 863(b)(2) Sales and also used to produce other property during the taxable year, the portion of its adjusted basis that is included in the fraction described in paragraph (c)(2)(i) of this section will be determined under any method that reasonably reflects the portion of the asset that produces inventory sold in Section 863(b)(2) Sales. For example, the portion of such an asset that is included in the formula may be determined by multiplying the asset's average adjusted basis by a fraction, the numerator of which is the gross receipts from sales of inventory from Section 863(b)(2) Sales produced by the asset, and the denominator of which is the gross receipts from all property produced by that asset.

(3) ***Anti-abuse rule.*** The purpose of paragraph (b) of this section and this paragraph (c) is to attribute the source of the taxpayer's gross income from certain sales of inventory property to the location of the taxpayer's production activity. Therefore, if the taxpayer has entered into or structured one or more transactions with a principal purpose of reducing its U.S. tax liability in a manner inconsistent with the purpose of paragraph (b) of this section or this paragraph (c), the Commissioner may make appropriate adjustments so that the source of the taxpayer's gross income more clearly reflects the location of production activity. For example, a taxpayer may be subject to the rule in this paragraph (c)(3) if domestic production assets are acquired by a related partnership (or a subsidiary of a related partnership) with a principal purpose of reducing its U.S. tax liability by claiming that the taxpayer's income from sales of inventory is subject to section 862(a)(6) rather than section 863(b).

(4) ***Examples.*** The following examples illustrate the rules of this paragraph (c):

(i) ***Example 1. Source of gross income —***

(A) ***Facts.*** A, a U.S. corporation, produces widgets that are sold both within the United States and within a foreign country. The initial manufacture of all widgets occurs in the United States. The second stage of production of widgets that are sold within a foreign country is completed within the country of sale. A's U.S. plant and machinery which is involved in the initial manufacture of the widgets has an average adjusted basis of $200, as determined using the alternative depreciation system under section 168(g)(2). A also owns warehouses used to store work-in-process. A owns foreign equipment with an average adjusted basis of $25. A's gross receipts from all sales of widgets is $100, and its gross receipts from export sales of widgets is $25. Assume that apportioning average adjusted basis using gross receipts is reasonable. Assume A's cost of goods sold from the sale of widgets in the foreign countries is $13 and thus, its gross income from widgets sold in foreign countries is $12.

(B) ***Analysis.*** A determines its gross income from sources without the United States by multiplying A's $12 of gross income from sales of widgets in foreign countries by a fraction, the numerator of which is all relevant foreign production assets, or $25, and the denominator of which is all relevant production assets, or $75 ($25 foreign assets + ($200

U.S. assets × $25 gross receipts from export sales/$100 gross receipts from all sales)). Therefore, A's gross income from sources without the United States is $4 ($12 × ($25/$75)).

(ii) ***Example 2. Location of intangible property.*** Assume the same facts as in paragraph (c)(4)(i)(A) of this section (the facts in *Example 1*), except that A employs a patented process that applies only to the initial production of widgets. In computing the formula used to determine the source of gross income, A's patent, if it has an average adjusted basis, would be located in the United States.

(iii) ***Example 3. Anti-abuse rule*** —

(A) ***Facts.*** Assume the same facts as in paragraph (c)(4)(i)(A) of this section (the facts in *Example 1*). A sells its U.S. assets to B, an unrelated U.S. corporation, with a principal purpose of reducing its U.S. tax liability by manipulating the property fraction. A then leases these assets from B. After this transaction, under the general rule of paragraph (c)(2) of this section, all of A's gross income would be considered from sources without the United States, because all of A's relevant production assets are located within a foreign country. Since the leased property is not owned by the taxpayer, it is not included in the fraction.

(B) ***Analysis.*** Because A has entered into a transaction with a principal purpose of reducing its U.S. tax liability by manipulating the formula described in paragraph (c)(2)(i) of this section, A's income must be adjusted to more clearly reflect the source of that income. In this case, the Commissioner may redetermine the source of A's gross income by ignoring the sale-leaseback transactions.

(d) ***Determination of source of taxable income.*** Once the source of gross income has been determined under paragraph (c) of this section, the taxpayer must properly allocate and apportion its expenses, losses, and other deductions to its respective amounts of gross income from sources within and without the United States from its Section 863(b)(2) Sales. See §§ 1.861-8 through 1.861-14T and 1.861-17.

(e) ***Income partly from sources within a possession of the United States*** —

(1) ***In general.*** This paragraph (e) relates to certain sales that give rise to income, gain, or loss that is treated as derived partly from sources within the United States and partly from sources within a possession of the United States (Section 863 Possession Sales). This paragraph (e) applies to determine the source of income derived from the sale of inventory produced (in whole or in part) by a taxpayer within the United States and sold within a possession of the United States, or produced (in whole or in part) by a taxpayer in a possession of the United States and sold within the United States (collectively, Possession Production Sales). It also applies to determine the source of income derived from the purchase of personal property within a possession of the United States and its sale within the United States (Possession Purchase Sales). A taxpayer subject to this paragraph (e) must apportion gross income from Section 863 Possession Sales under paragraph (e)(2) of this section (in the case of Possession Production Sales) or under paragraph (e)(3) of this section (in the case of Possession Purchase Sales). The source of taxable income from Section 863 Possession Sales is determined under paragraph (d) of this section.

(2) ***Allocation or apportionment for Possession Production Sales.*** The source of gross income from Possession Production Sales is determined under the rules of paragraph (c) of this section, except that the term *possession of the United States* is substituted for *foreign country* wherever it appears.

(3) *Allocation or apportionment for Possession Purchase Sales* —

(i) ***Determination of source of gross income from Possession Purchase Sales.*** Gross income from Possession Purchase Sales is allocated in its entirety to the taxpayer's business activity, and is then apportioned between sources within the United States and sources within a possession of the United States under paragraph (e)(3)(ii) of this section.

(ii) *Determination of source of gross income from business activity* —

(A) ***Source of gross income.*** Gross income from the taxpayer's business activity is sourced in the possession in the same proportion that the amount of the taxpayer's business activity for the taxable year within the possession bears to the amount of the taxpayer's business activity for the taxable year both within the possession and outside the possession, with respect to Possession Purchase Sales. The remaining income is sourced in the United States.

(B) ***Business activity.*** For purposes of this paragraph (e)(3)(ii), the taxpayer's business activity is equal to the sum of—

(*1*) The amounts for the taxable period paid for wages, salaries, and other compensation of employees, and other expenses attributable to Possession Purchase Sales (other than amounts that are nondeductible under section 263A, interest, and research and development);

(*2*) Cost of goods sold attributable to Possession Purchase Sales during the taxable period; and

(*3*) Possession Purchase Sales for the taxable period.

(C) ***Location of business activity.*** For purposes of determining the location of the taxpayer's business activity within a possession, the following rules apply:

(*1*) ***Sales activity.*** Receipts from gross sales will be attributed to a possession in accordance with the principles of § 1.861-7(c).

(*2*) ***Cost of goods sold.*** Payments for cost of goods sold will be properly attributable to gross receipts from sources within the possession only to the extent that the property purchased was manufactured, produced, grown, or extracted in the possession (within the meaning of section 954(d)(1)(A)).

(*3*) ***Expenses.*** Expenses will be attributed to a possession under the rules of §§ 1.861-8 through 1.861-14T.

(*4*) ***Examples.*** The following examples illustrate the rules of paragraph (e)(3)(ii) of this section relating to the determination of source of gross income from business activity:

(i) *Example 1. Purchase of goods manufactured in possession* —

(A) ***Facts.*** U.S. Co. purchases in a possession product X for $80 from A. A manufactures X in the possession. Without further production, U.S. Co. sells X in the United States for $100. Assume U.S. Co. has sales and administrative expenses in the possession of $10.

(B) ***Analysis.*** To determine the source of U.S. Co.'s gross income, the $100 gross income from sales of X is allocated entirely to U.S. Co.'s business activity. Forty-seven dollars of U.S. Co.'s gross income is sourced in the possession. [Possession expenses ($10) plus possession purchases (*i.e.,* cost of goods sold) ($80) plus possessions sales ($0), divided by total expenses ($10) plus total purchases ($80) plus total sales ($100).] The remaining $53 is sourced in the United States.

(ii) ***Example 2. Purchase of goods manufactured outside possession*** —

(A) ***Facts.*** Assume the same facts as in paragraph (e)(4)(i)(A) of this section (the facts in *Example 1*), except that A manufactures X outside the possession.

(B) ***Analysis.*** To determine the source of U.S. Co.'s gross income, the $100 gross income is allocated entirely to U.S. Co.'s business activity. Five dollars of U.S. Co.'s gross income is sourced in the possession. [Possession expenses ($10) plus possession purchases ($0) plus possession sales ($0), divided by total expenses ($10) plus total purchases ($80) plus total sales ($100).] The $80 purchase is not included in the numerator used to determine U.S. Co.'s business activity in the possession, since product X was not manufactured in the possession. The remaining $95 is sourced in the United States.

(5) ***Special rules for partnerships.*** In applying the rules of this paragraph (e) to transactions involving partners and partnerships, the rules of paragraph (f) of this section apply.

(f) ***Special rules for partnerships*** —

(1) ***General rule.*** For purposes of § 1.863-1 and this section, a taxpayer's production activity does not include production activities conducted by a partnership of which the taxpayer is a partner either directly or through one or more partnerships, except as otherwise provided in paragraphs (c)(3) or (f)(2) of this section.

(2) ***Exceptions*** —

(i) ***In general.*** For purposes of determining the source of the partner's distributive share of partnership income or determining the source of the partner's income from the sale of inventory property which the partnership distributes to the partner in kind, the partner's production activity includes an activity conducted by the partnership. In addition, the production activity of a partnership includes the production activity of a taxpayer that is a partner either directly or through one or more partnerships, to the extent that the partner's production activity is related to inventory that the partner contributes to the partnership in a transaction described under section 721.

(ii) ***Attribution of production assets to or from a partnership.*** A partner will be treated as owning its proportionate share of the partnership's production assets only to the extent that, under paragraph (f)(2)(i) of this section, the partner's activity includes production activity conducted through a partnership. A partner's share of partnership assets will be determined by reference to the partner's distributive share of partnership income for the year attributable to such production assets. Similarly, to the extent a partnership's activities include the production

activities of a partner, the partnership will be treated as owning the partner's production assets related to the inventory that is contributed in kind to the partnership. See paragraph (c)(2)(ii) of this section for rules apportioning the basis of assets to Section 863 Sales.

(iii) ***Basis.*** For purposes of this section, in those cases where the partner is treated as owning its proportionate share of the partnership's production assets, the partner's basis in production assets held through a partnership shall be determined by reference to the partnership's adjusted basis in its assets (including a partner's special basis adjustment, if any, under section 743). Similarly, a partnership's basis in a partner's production assets is determined with reference to the partner's adjusted basis in its assets.

(3) ***Examples.*** The following examples illustrate the rules of this paragraph (f):

(i) ***Example 1. Distributive share of partnership income.*** A, a U.S. corporation, forms a partnership in the United States with B, a country X corporation. A and B each have a 50 percent interest in the income, gains, losses, deductions and credits of the partnership. The partnership is engaged in the manufacture and sale of widgets. The widgets are manufactured in the partnership's plant located in the United States and are sold by the partnership outside the United States. The partnership owns the manufacturing facility and all other production assets used to produce the widgets. A's distributive share of partnership income includes 50 percent of the sales income from these sales. In applying the rules of section 863 to determine the source of its distributive share of partnership income from the export sales of widgets, A is treated as carrying on the activity of the partnership related to production of these widgets and as owning a proportionate share of the partnership's assets related to production of the widgets, based upon its distributive share of partnership income.

(ii) ***Example 2. Distribution in kind.*** Assume the same facts as in paragraph (f)(3)(i) of this section (the facts in *Example 1*) except that the partnership, instead of selling the widgets, distributes the widgets to A and B. A then further processes the widgets and then sells them outside the United States. In determining the source of the income earned by A on the sales outside the United States, A is treated as conducting the activities of the partnership related to production of the distributed widgets. Thus, the source of gross income on the sale of the widgets is determined under section 863 and this section. In applying paragraph (c) of this section, A is treated as owning its proportionate share of the partnership's production assets based upon its distributive share of partnership income.

(g) ***Applicability dates.*** This section applies to taxable years ending on or after December 23, 2019. However, a taxpayer may apply this section in its entirety for taxable years beginning after December 31, 2017, and ending before December 23, 2019, provided that the taxpayer and all persons related to the taxpayer (within the meaning of section 267 or 707) apply this section and §§ 1.863-1(b), 1.863-2(b), 1.863-8(b)(3)(ii), 1.864-5(a) and (b), 1.864-6(c)(2), and 1.865-3 in their entirety for the taxable year, and once applied, the taxpayer and all persons related to the taxpayer (within the meaning of section 267 or 707) continue to apply these regulations in their entirety for all subsequent taxable years. For regulations generally applicable to taxable years ending before December 23, 2019, see § 1.863-3 as contained in 26 CFR part 1 revised as of April 1, 2020.

[T.D. 9921, 85 FR 79846, Dec. 11, 2020]

REGULATIONS APPLICABLE TO TAXABLE YEARS PRIOR TO DECEMBER 30, 1996

§ 1.863-3A Income from the sale of personal property derived partly from within and partly from without the United States.

(a) *General* —

(1) ***Classes of income.*** Income from the sale of property to which paragraph (b)(2) and (3) of § 1.863-2 applies is divided into two classes for purposes of this section, namely, income which is treated as derived partly from sources within the United States and partly from sources within a foreign country, and income which is treated as derived partly from sources within the United States and partly from sources within a possession of the United States.

(2) ***Definition.*** For purposes of this section, the word "produced" includes created, fabricated, manufactured, extracted, processed, cured, or aged. For determining the time and place of sale of personal property for purposes of this section, see paragraph (c) of § 1.861-7.

(b) *Income partly from sources within a foreign country* —

(1) ***General.*** This paragraph relates to gains, profits, and income derived from the sale of personal property produced (in whole or in part) by the taxpayer within the United States and sold within a foreign country, or produced (in whole or in part) by the taxpayer within a foreign country and sold within the United States. Pursuant to section 863(b) such items shall be treated as derived partly from sources within the United States and partly from sources within a foreign country.

(2) ***Allocation or apportionment.*** The taxable income from sources within the United States, in the case of the items to which this paragraph applies, shall be determined according to the examples set forth in this subparagraph. For such purposes, the deductions for the personal exemptions shall not be taken into account, but the special deductions described in paragraph (c) of § 1.861-8 shall be taken into account.

Example 1. Where the manufacturer or producer regularly sells part of his output to wholly independent distributors or other selling concerns in such a way as to establish fairly an independent factory or production price—or shows to the satisfaction of the district director (or, if applicable, the Director of International Operations) that such an independent factory or production price has been otherwise established—unaffected by considerations of tax liability and the selling or distributing branch or department of the business is located in a different country from that in which the factory is located or the production carried on, the taxable income attributable to sources within the United States shall be computed by an accounting which treats the products as sold by the factory or productive department of the business to the distributing or selling department at the independent factory price so established. In all such cases the basis of the accounting shall be fully explained in a statement attached to the return for the taxable year.

> *Example 2.* (i)-(ii) [Reserved]. For guidance, see § 863-3T(b)(2) *Example* (2)(i) and (ii).
> (iii) The term "gross sales", as used in this example, refers only to the sales of personal property produced (in whole or in part) by the taxpayer within the United States and sold within a foreign country or produced (in whole or in part) by the taxpayer within a foreign country and sold within the United States.

(iv) The term "property", as used in this example, includes only the property held or used to produce income which is derived from such sales. Such property should be taken at its actual value, which in the case of property valued or appraised for purposes of inventory, depreciation, depletion, or other purposes of taxation shall be the highest amount at which so valued or appraised, and which in other cases shall be deemed to be its book value in the absence of affirmative evidence showing such value to be greater or less than the actual value. The average value during the taxable year or period shall be employed. The average value of property as above prescribed at the beginning and end of the taxable year or period ordinarily may be used, unless by reason of material changes during the taxable year or period such average does not fairly represent the average for such year or period, in which event the average shall be determined upon a monthly or daily basis.

(v) Bills and accounts receivable shall (unless satisfactory reason for a different treatment is shown) be assigned or allocated to the United States when the debtor resides in the United States, unless the taxpayer has no office, branch, or agent in the United States.

Example 3. Application for permission to base the return upon the taxpayer's books of account will be considered by the district director (or, if applicable, the Director of International Operations) in the case of any taxpayer who, in good faith and unaffected by considerations of tax liability, regularly employs in his books of account a detailed allocation of receipts and expenditures which reflects more clearly than the processes or formulas herein prescribed the taxable income derived from sources within the United States.

(c) ***Income partly from sources within a possession of the United States*** —

(1) ***General.*** This paragraph relates to gains, profits, and income which, pursuant to section 863(b), are treated as derived partly from sources within the United States and partly from sources within a possession of the United States. The items so treated are described in subparagraphs (3) and (4) of this paragraph.

(2) ***Allocation or apportionment.*** The taxable income from sources within the United States, in the case of the items to which this paragraph applies, shall be determined according to the examples set forth in subparagraphs (3) and (4) of this paragraph. For such purposes, the deductions for the personal exemptions shall not be taken into account, but the special deductions described in paragraph (c) of § 1.861-8 shall be taken into account.

(3) ***Personal property produced and sold.*** This subparagraph relates to gross income derived from the sale of personal property produced (in whole or in part) by the taxpayer within the United States and sold within a possession of the United States, or produced (in whole or in part) by the taxpayer within a possession of the United States and sold within the United States.

Example 1. Same as example 1 under paragraph (b)(2) of this section.

Example 2. (i) Where an independent factory or production price has not been established as provided under example 1, the taxable income shall first be computed by deducting from the gross income derived from the sale of personal property produced (in whole or in part) by the taxpayer within the United States and sold within a

possession of the United States, or produced (in whole or in part) by the taxpayer within a possession of the United States and sold within the United States, the expenses, losses, or other deductions properly allocated and apportioned thereto in accordance with the rules set forth in § 1.861-8.
(ii) Of the amount of taxable income so determined, one-half shall be apportioned in accordance with the value of the taxpayer's property within the United States and within the possession of the United States, the portion attributable to sources within the United States being determined by multiplying such one-half by a fraction the numerator of which consists of the value of the taxpayer's property within the United States, and the denominator of which consists of the value of the taxpayer's property both within the United States and within the possession of the United States. The remaining one-half of such taxable income shall be apportioned in accordance with the total business of the taxpayer within the United States and within the possession of the United States, the portion attributable to sources within the United States being determined by multiplying such one-half by a fraction the numerator of which consists of the amount of the taxpayer's business for the taxable year or period within the United States, and the denominator of which consists of the amount of the taxpayer's business for the taxable year or period both within the United States and within the possession of the United States.

(iii) "The business of the taxpayer", as used in this example, shall be measured by the amounts which the taxpayer paid out during the taxable year or period for wages, salaries, and other compensation of employees and for the purchase of goods, materials, and supplies consumed in the regular course of business, plus the amounts received during the taxable year or period from gross sales, such expenses, purchases, and gross sales being limited to those attributable to the production (in whole or in part) of personal property within the United States and its sale within a possession of the United States or to the production (in whole or in part) of personal property within a possession of the United States and its sale within the United States. The term "property", as used in this example, includes only the property held or used to produce income which is derived from such sales.

Example 3. Same as example 3 under paragraph (b)(2) of this section.

(4) ***Personal property purchased and sold.*** This subparagraph relates to gross income derived from the purchase of personal property within a possession of the United States and its sale within the United States.

Example 1. (i) The taxable income shall first be computed by deducting from such gross income the expenses, losses, or other deductions properly allocated or apportioned thereto in accordance with the rules set forth in § 1.861-8.

(ii) The amount of taxable income so determined shall be apportioned in accordance with the total business of the taxpayer within the United States and within the possession of the United States, the portion attributable to sources within the United States being that percentage of such taxable income which the amount of the taxpayer's business for the taxable year or period within the United States bears to the amount of the taxpayer's business for the taxable year or period both within the United States and within the possession of the United States.

(iii) The "business of the taxpayer", as that term is used in this example, shall be measured by the amounts which the taxpayer paid out during the taxable year or period for wages, salaries, and other compensation of employees and for the purchase of goods, materials, and supplies sold or consumed in the regular course of business, plus the amount received during the taxable year or period from gross sales, such expenses, purchases, and gross sales being limited to those attributable to the purchase of personal property within a possession of the United States and its sale within the United States.

Example 2. Same as example 3 under paragraph (b)(2) of this section.

[T.D. 6500, 25 FR 11910, Nov. 26, 1960, as amended by T.D. 7456, 42 FR 1214, Jan. 6, 1977; T.D. 8228, 53 FR 35506, Sept. 14, 1988. Redesignated by T.D. 8687, 61 FR 60545, Nov. 29, 1996]

§ 1.863-3AT Income from the sale of personal property derived partly from within and partly from without the United States (temporary regulations).

(a) [Reserved]

(b) *Income partly from sources within a foreign country.* (1) [Reserved]

(2) *Allocation or apportionment.*

Example 1. [Reserved]

Example 2. (i) Where an independent factory or production price has not been established as provided under *Example* (1), the gross income derived from the sale of personal property produced (in whole or in part) by the taxpayer within the United States and sold within a foreign country or produced (in whole or in part) by the taxpayer within a foreign country and sold within the United States shall be computed.
(ii) Of this gross amount, one-half shall be apportioned in accordance with the value of the taxpayer's property within the United States and within the foreign country, the portion attributable to sources within the United States being determined by multiplying such one-half by a fraction, the numerator of which consists of the value of the taxpayer's property within the United States and the denominator of which consists of the value of the taxpayer's property both within the United States and within the foreign country. The remaining one-half of such gross income shall be apportioned in accordance with the gross sales of the taxpayer within the United States and

> within the foreign country, the portion attributable to sources within the United States being determined by multiplying such one-half by a fraction the numerator of which consists of the taxpayer's gross sales for the taxable year or period within the United States, and the denominator of which consists of the taxpayer's gross sales for the taxable year or period both within the United States and within the foreign country. Deductions from gross income that are allocable and apportionable to gross income described in paragraph (i) of this *Example* 2 shall be apportioned between the United States and foreign source portions of such income, as determined under this paragraph (ii), on a pro rata basis, without regard to whether the deduction relates primarily or exclusively to the production of property or to the sale of property.

(b) (2) *Example* (2)(iii) through (c)(4) [Reserved]

[T.D. 8228, 53 FR 35506, Sept. 14, 1988. Redesignated by T.D. 8687, 61 FR 60545, Nov. 29, 1996]

§ 1.863-4 Certain transportation services.

(a) ***General.*** A taxpayer carrying on the business of transportation service (other than an activity giving rise to transportation income described in section 863(c) or to income subject to other specific provisions of this title) between points in the United States and points outside the United States derives income partly from sources within and partly from sources without the United States.

(b) ***Gross income.*** The gross income from sources within the United States derived from such services shall be determined by taking such a portion of the total gross revenues therefrom as

(1) the sum of the costs or expenses of such transportation business carried on by the taxpayer within the United States and a reasonable return upon the property used in its transportation business while within the United States bears to

(2) the sum of the total costs or expenses of such transportation business carried on by the taxpayer and a reasonable return upon the total property used in such transportation business. Revenues from operations incidental to transportation services, such as the sale of money orders, shall be apportioned on the same basis as direct revenues from transportation services.

(c) ***Allocation of costs or expenses.*** In allocating the total costs or expenses incurred in such transportation business, costs or expenses incurred in connection with that part of the services which was wholly rendered in the United States shall be assigned to the cost of transportation business within the United States. For example, expenses of loading and unloading in the United States, rentals, office expenses, salaries, and wages wholly incurred for services rendered to the taxpayer in the United States belong to this class. Costs and expenses incurred in connection with services rendered partly within and partly without the United States may be prorated on a reasonable basis between such services. For example, ship wages, charter money, insurance, and supplies chargeable to voyage expenses shall ordinarily be prorated for each voyage on the basis of the proportion which the number of days the ship was within the territorial limits of the United States bears to the total number of days on the voyage; and fuel consumed on each voyage may be prorated on the basis of the proportion which the number of miles sailed within the territorial limits of the United States bears to the total number of miles sailed on the voyage. For other expenses entering into the cost of services, only such expenses as are allowable deductions under the internal revenue laws shall be taken into account.

(d) ***Items not included as costs or expenses*** —

(1) ***Taxes and interest.*** Income, war profits, and excess profits taxes shall not be regarded as costs or expenses for the purpose of determining the proportion of gross income from sources within the United States; and, for such purpose, interest and other expenses for the use of borrowed capital shall not be taken into the cost of services rendered, for the reason that the return upon the property used measures the extent to which such borrowed capital is the source of the income. See paragraph (f)(2) of this section.

(2) ***Other business activity and general expenses.*** If a taxpayer subject to this section is also engaged in a business other than that of providing transportation service between points in the United States and points outside the United States, the costs and expenses, including taxes, properly apportioned or allocated to such other business shall be excluded both from the deductions and from the apportionment process prescribed in paragraph (c) of this section; but, for the purpose of determining taxable income, a ratable part of any general expenses, losses, or deductions, which cannot definitely be allocated to some item or class of gross income, may be deducted from the gross income from sources within the United States after the amount of such gross income has been determined. Such ratable part shall ordinarily be based upon the ratio of gross income from sources within the United States to the total gross income. See paragraph (f)(3) of this section.

(3) ***Personal exemptions and special deductions.*** The deductions for the personal exemptions, and the special deductions described in paragraph (c) of § 1.861-8, shall not be taken into account for purposes of paragraph (c) of this section.

(e) ***Property used while within the United States*** —

(1) ***General.*** The value of the property used shall be determined upon the basis of cost less depreciation. Eight percent may ordinarily be taken as a reasonable rate of return to apply to such property. The property taken shall be the average property employed in the transportation service between points in the United States and points outside the United States during the taxable year.

(2) ***Average property.*** For ships, the average shall be determined upon a daily basis for each ship, and the amount to be apportioned for each ship as assets employed within the United States shall be computed upon the proportion which the number of days the ship was within the territorial limits of the United States bears to the total number of days the ship was in service during the taxable period. For other assets employed in the transportation business, the average of the assets at the beginning and end of the taxable period ordinarily may be taken, but if the average so obtained does not, by reason of material changes during the taxable year, fairly represent the average for such year either for the assets employed in the transportation business in the United States or in total, the average must be determined upon a monthly or daily basis.

(3) ***Current assets.*** Current assets shall be decreased by current liabilities and allocated to services between the United States and foreign countries and to other services. The part allocated to services between the United States and foreign countries shall be based on the proportion which the gross receipts from such services bear to the gross receipts from all services. The amount so allocated to services between the United States and foreign countries shall be further allocated to services rendered within the United States and to services rendered without the United States. The portion allocable to services rendered within the United States shall be based on the proportion which the expenses incurred within the territorial limits of the United States bear to the total expenses incurred in services between the United States and foreign countries.

(f) ***Taxable income*** —

(1) ***General.*** In computing taxable income from sources within the United States there shall be allowed as deductions from the gross income from such sources, determined in accordance with paragraph (b) of this section, (i) the expenses of the transportation business carried on within the United States (as determined under paragraphs (c) and (d) of this section) and (ii) the expenses and deductions determined in accordance with this paragraph.

(2) ***Interest and taxes.*** Interest and income, war-profits, and excess profits taxes shall be excluded from the apportionment process, as indicated in paragraph (d) of this section; but, for the purpose of computing taxable income there may be deducted from the gross income from sources within the United States, after the amount of such gross income has been determined, a ratable part of all interest deductible under section 163 and of all income, war-profits, and excess profits taxes deductible under section 164, paid or accrued in respect of the business of transportation service between points in the United States and points outside the United States. The ratable part shall ordinarily be based upon the ratio of gross income from sources within the United States to the total gross income, from such transportation service.

(3) ***General expenses.*** General expenses, losses, or deductions shall be deducted under this paragraph to the extent indicated in paragraph (d)(2) of this section.

(4) ***Personal exemptions.*** The deductions for the personal exemptions shall be allowed under this paragraph to the same extent as provided by paragraph (b) of § 1.861-8.

(5) ***Special deductions.*** The special deductions allowed in the case of a corporation by sections 241, 922, and 941 shall be allowed under this paragraph to the same extent as provided by paragraph (c) of § 1.861-8.

(g) ***Allocation based on books of account.*** Application for permission to base the return upon the taxpayer's books of account will be considered by the district director (or, if applicable, the Director of International Operations) in the case of any taxpayer subject to this section, who, in good faith and unaffected by considerations of tax liability, regularly employs in his books of account a detailed allocation of receipts and expenditures which more clearly reflects the income derived from sources within the United States than does the process prescribed by paragraphs (b) to (f), inclusive, of this section.

[T.D. 6500, 25 FR 11910, Nov. 26, 1960, as amended by T.D. 8687, 61 FR 60550, Nov. 29, 1996]

§ 1.863-6 Income from sources within a foreign country.

The principles applied in sections 861 through 863 and section 865 and the regulations thereunder for determining the gross and the taxable income from sources within and without the United States shall generally be applied in determining the gross and the taxable income from sources within and without a particular foreign country when such a determination must be made under any provision of Subtitle A of the Internal Revenue Code, including section 952(a)(5). This section shall not apply, however, to the extent it is determined by applying § 1.863-3 that a portion of the taxable income is from sources within the United States and the balance of the taxable income is from sources within a foreign country. In the application of this section, the name of the particular foreign country shall be used instead of the term *United States*, and the term *domestic* shall be construed to mean created or organized in such foreign country. In applying section 861 and the regulations thereunder for purposes of this section, references to sections 243 and 245 shall be excluded, and the exception in section 861(a)(3) shall not apply. In the case of any item of income, the income from sources within a foreign country shall not exceed the

amount which, by applying any provision of sections 861 through 863 and section 865 and the regulations thereunder without reference to this section, is treated as income from sources without the United States. See § 1.937-2T for rules for determining income from sources within a possession of the United States.

[T.D. 9194, 70 FR 18928, Apr. 11, 2005]

§ 1.863-7 Allocation of income attributable to certain notional principal contracts under section 863(a).

(a) ***Scope*** —

(1) ***Introduction.*** This section provides rules relating to the source and, in certain cases, the character of notional principal contract income. However, this section does not apply to income from a section 988 transaction within the meaning of section 988 and the regulations thereunder, relating to the treatment of certain nonfunctional currency transactions. Further, this section does not apply to a dividend equivalent described in section 871(m) and the regulations thereunder. Notional principal contract income is income attributable to a notional principal contract as defined in § 1.446-3(c). An agreement between a taxpayer and a qualified business unit (as defined in section 989(a)) of the taxpayer, or among qualified business units of the same taxpayer, is not a notional principal contract, because a taxpayer cannot enter into a contract with itself.

(2) ***Effective/applicability date.*** This section applies to notional principal contract income includible in income on or after February 13, 1991. However, any taxpayer desiring to apply paragraph (b)(2)(iv) of this section to notional principal contract income includible in income prior to February 13, 1991, in lieu of temporary Income Tax Regulations § 1.863-7T(b)(2)(iv) may (on a consistent basis) so choose. See paragraph (c) of this section for an election to apply the rules of this section to notional principal contract income includible in income before December 24, 1986. With respect to a dividend equivalent described in section 871(m) and the regulations thereunder, this section applies to payments made on or after January 23, 2012.

(b) ***Source of notional principal contract income*** —

(1) ***General rule.*** Unless paragraph (b)(2) or (3) of this section applies, the source of notional principal contract income shall be determined by reference to the residence of the taxpayer as determined under section 988(a)(3)(B)(i).

(2) ***Qualified business unit exception.*** The source of notional principal contract income shall be determined by reference to the residence of a qualified business unit of a taxpayer if—

(i) The taxpayer's residence, determined under section 988(a)(3)(B)(i), is the United States;

(ii) The qualified business unit's residence, determined under section 988(a)(3)(B)(ii), is outside the United States;

(iii) The qualified business unit is engaged in the conduct of a trade or business where it is a resident as determined under section 988(a)(3)(B)(ii); and

(iv) The notional principal contract is properly reflected on the books of the qualified business unit. Whether a notional principal contract is properly reflected on the books of such qualified business unit is a question of fact. The degree of participation in the negotiation and acquisition of a notional principal contract shall be considered in this determination.

Participation in connection with the negotiation or acquisition of a notional principal contract may be disregarded if the district director determines that a purpose for such participation was to affect the source of notional principal contract income.

(3) ***Effectively connected notional principal contract income.*** Notional principal contract income that under principles similar to those set forth in § 1.864-4(c) arises from the conduct of a United States trade or business shall be sourced in the United States and such income shall be treated as effectively connected to the conduct of a United States trade or business for purposes of sections 871(b) and 882(a)(1).

(c) ***Election*** —

(1) ***Eligibility and effect.*** A taxpayer described in paragraph (b)(2)(i) of this section may make an election to apply the rules of this section to all, but not part, of the taxpayer's income attributable to notional principal contracts for all taxable years (or portion thereof) beginning before December 24, 1986, for which the period of limitations for filing a claim for refund under section 6511(a) has not expired. A taxpayer not described in paragraph (b)(2)(i) of this section that is engaged in trade or business within the United States may make an election to apply the rules of this section to all, but not part, of the taxpayer's income described in paragraph (b)(3) of this section for all taxable years (or portion thereof) beginning before December 24, 1986, for which the period of limitations for filing a claim for refund under section 6511(a) has not expired. If a taxpayer makes an election pursuant to this paragraph (c)(1) in the time and manner provided in paragraph (c) (2) and (3) of this section, then, with respect to such taxable years (or portion thereof), no tax shall be deducted or withheld under sections 1441 and 1442 with respect to payments made by the taxpayer pursuant to a notional principal contract the income attributable to which is subject to such election. The election may be revoked only with the consent of the Commissioner.

(2) ***Time for making election.*** The election specified in paragraph (c)(1) of this section shall be made by May 14, 1991.

(3) ***Manner of making election.*** The election described in paragraph (c)(1) of this section shall be made by attaching a statement to the tax return or an amended tax return for each taxable year beginning before December 24, 1986, in which the taxpayer accrued or received notional principal contract income. The statement shall—

(i) Contain the name, address, and taxpayer identifying number of the electing taxpayer;

(ii) Identify the election as a “Notional Principal Contract Election under § 1.863-7”; and

(iii) Specify each taxable year described in paragraph (c)(1) of this section in which payments were made.

(d) ***Example.*** The operation of this section is illustrated by the following example:

> *Example.* (1) On January 1, 1990, X, a calendar year domestic corporation, entered into an interest rate swap contract with FZ, an unrelated foreign corporation. X does not have a qualified business unit outside the United States. Under the contract, X is required to pay FZ fixed rate dollar amounts, and FZ is required to pay X floating rate dollar amounts, each determined solely by reference to a notional dollar denominated principal amount specified under the contract. The contract is a notional principal contract under § 1.863-7(a) because the contract provides for the

payment of amounts at specified intervals calculated by reference to a specified index upon a notional principal amount in exchange for a promise to pay similar amounts.
(2) Assume that during 1990 X had notional principal contract income of $100 in connection with the notional principal contract described in (1) above. Also assume that the contract provides that payments more than 30 days late give rise to a $5 fee, and that X receives such a fee in 1990. Under paragraph (b)(1) of this section, the source of X's $100 of income attributable to the swap agreement is domestic. The $5 fee is not notional principal contract income.

(e) ***Cross references.*** See § 1.861-9T(b) for the allocation of expense to certain notional principal contracts. For rules relating to the source of income from nonfunctional currency notional principal contracts, see § 1.9 88-4T. For rules relating to the taxable amount of notional principal contract income allocable under this section to sources inside or outside the United States, see § 1.863-1(c).

[T.D. 8330, 56 FR 1362, Jan. 14, 1991, as amended by T.D. 9572, 77 FR 3109, Jan. 23, 2012; T.D. 9648, 78 FR 73080, Dec. 5, 2013]

§ 1.863-8 Source of income derived from space and ocean activity under section 863(d).

(a) ***In general.*** Income of a United States or a foreign person derived from space and ocean activity (space and ocean income) is sourced under the rules of this section, notwithstanding any other provision, including sections 861, 862, 863, and 865. A taxpayer will not be considered to derive income from space or ocean activity, as defined in paragraph (d) of this section, if such activity is performed by another person, subject to the rules for the treatment of consolidated groups in § 1.1502-13.

(b) ***Source of gross income from space and ocean activity*** —

(1) ***Space and ocean income derived by a United States person.*** Space and ocean income derived by a United States person is income from sources within the United States. However, space and ocean income derived by a United States person is income from sources without the United States to the extent the income, based on all the facts and circumstances, is attributable to functions performed, resources employed, or risks assumed in a foreign country or countries.

(2) ***Space and ocean income derived by a foreign person*** —

(i) ***In general.*** Space and ocean income derived by a person other than a United States person is income from sources without the United States, except as otherwise provided in this paragraph (b)(2).

(ii) ***Space and ocean income derived by a controlled foreign corporation.*** Space and ocean income derived by a controlled foreign corporation (CFC) is income from sources within the United States. However, space and ocean income derived by a CFC is income from sources without the United States to the extent the income, based on all the facts and circumstances, is attributable to functions performed, resources employed, or risks assumed in a foreign country or countries. For purposes of this section, a CFC has the meaning provided in section 957, determined without applying section 318(a)(3)(A), (B), and (C) so as to consider a United States person as owning stock which is owned by a person who is not a United States person.

(iii) ***Space and ocean income derived by foreign persons engaged in a trade or business within the United States.*** Space and ocean income derived by a foreign person (other than a CFC) engaged in a trade or business within the United States is income from sources within the United States to the extent the income, based on all the facts and circumstances, is attributable to functions performed, resources employed, or risks assumed within the United States.

(3) ***Source rules for income from certain sales of property*** —

(i) ***Sales of purchased property.*** When a taxpayer sells purchased property in space or international water, the source of gross income from the sale generally will be determined under paragraph (b)(1) or (2) of this section, as applicable. However, if such property is inventory property within the meaning of section 1221(a)(1) (inventory property) and is sold for use, consumption, or disposition outside space and international water, the source of income from the sale will be determined under § 1.861-7(c).

(ii) ***Sales of property produced by the taxpayer*** —

(A) ***General.*** If the taxpayer both produces property and sells such property and either the production (in whole or in part) or the sale takes place in space or international water, the taxpayer must allocate and apportion all income, gain, or loss derived from sales of such property solely on the basis of the production activities with respect to such property, and the source of that income will be determined under paragraph (b)(3)(ii)(B) or (C) of this section. To determine the source of income derived from the sale of personal property (including inventory) by a nonresident that is attributable to the nonresident's office or other fixed place of business in the United States under section 865(e)(2), the rules of § 1.865-3 apply, and the rules of this section do not apply.

(B) ***Production only in space or international water, or only outside space and international water.*** When production occurs only in space or international water, gross income is sourced under paragraph (b)(1) or (2) of this section, as applicable. When production occurs only outside space and international water, gross income is sourced under § 1.863-3(c).

(C) ***Production both in space or international water and outside space and international water.*** When property is produced both in space or international water and outside space and international water, gross income must be allocated to production occurring in space or international water and production occurring outside space and international water. Such gross income is allocated to production activity occurring in space or international water to the extent the income, based on all the facts and circumstances, is attributable to functions performed, resources employed, or risks assumed in space or international water. The balance of such gross income is allocated to production activity occurring outside space and international water. The source of gross income in space or international water is determined under paragraph (b)(1) or (2) of this section, as applicable. The source of gross income occurring outside space and international water is determined under § 1.863-3(c).

(4) ***Special rule for determining the source of gross income from services.*** To the extent a transaction characterized as the performance of a service constitutes a space or ocean activity, as determined under paragraph (d)(2)(ii) of this section, the source of gross income derived from such transaction is determined under paragraph (b)(1) or (2) of this section.

(5) ***Special rule for determining source of income from communications activity (other than income from international communications activity).*** Space and ocean activity, as defined in paragraph (d) of this section, includes activity that occurs in space or international water that is characterized as a communications activity as defined in § 1.863-9(h)(1) (other than international communications activity). The source of space and ocean income that is also communications income as defined in § 1.863-9(h)(2) (but not space/ocean communications income as defined in § 1.863-9(h)(3)(v)) is determined under the rules of § 1.863-9(c), (d), and (f), as applicable, rather than under paragraph (b) of this section. The source of space and ocean income that is also space/ocean communications income as defined in § 1.863-9(h)(3)(v) is determined under the rules of paragraph (b) of this section. See § 1.863-9(e).

(c) ***Taxable income.*** When a taxpayer allocates gross income under paragraph (b)(1), (b)(2), (b)(3)(ii), or (b)(4) of this section, the taxpayer must allocate expenses, losses, and other deductions as prescribed in §§ 1.861-8 through 1.861-14T to the class or classes of gross income that include the income so allocated in each case. A taxpayer must then apply the rules of §§ 1.861-8 through 1.861-14T to apportion properly amounts of expenses, losses, and other deductions so allocated to such gross income between gross income from sources within the United States and gross income from sources without the United States.

(d) ***Space and ocean activity*** —

(1) ***Definition*** —

(i) ***Space activity.*** In general, space activity is any activity conducted in space. For purposes of this section, space means any area not within the jurisdiction (as recognized by the United States) of a foreign country, possession of the United States, or the United States, and not in international water. For purposes of determining space activity, the Commissioner may separate parts of a single transaction into separate transactions or combine separate transactions as part of a single transaction. Paragraph (d)(3) of this section lists specific exceptions to the general definition of space activity. Activities that constitute space activity include but are not limited to—

(A) Performance and provision of services in space, as defined in paragraph (d)(2)(ii) of this section;

(B) Leasing of equipment located in space, including spacecraft (for example, satellites) or transponders located in space;

(C) Licensing of technology or other intangibles for use in space;

(D) Production, processing, or creation of property in space, as defined in paragraph (d)(2)(i) of this section;

(E) Activity occurring in space that is characterized as communications activity (other than international communications activity) under § 1.863-9(h)(1);

(F) Underwriting income from the insurance of risks on activities that produce space income; and

(G) Sales of property in space (see § 1.861-7(c)).

(ii) ***Ocean activity.*** In general, ocean activity is any activity conducted on or under water not within the jurisdiction (as recognized by the United States) of a foreign country, possession of the United States, or the United States (collectively, in international water). For purposes of

determining ocean activity, the Commissioner may separate parts of a single transaction into separate transactions or combine separate transactions as part of a single transaction. Paragraph (d)(3) of this section lists specific exceptions to the general definition of ocean activity. Activities that constitute ocean activity include but are not limited to—

(A) Performance and provision of services in international water, as defined in paragraph (d)(2)(ii) of this section;

(B) Leasing of equipment located in international water, including underwater cables;

(C) Licensing of technology or other intangibles for use in international water;

(D) Production, processing, or creation of property in international water, as defined in paragraph (d)(2)(i) of this section;

(E) Activity occurring in international water that is characterized as communications activity (other than international communications activity) under § 1.863-9(h)(1);

(F) Underwriting income from the insurance of risks on activities that produce ocean income;

(G) Sales of property in international water (see § 1.861-7(c));

(H) Any activity performed in Antarctica;

(I) The leasing of a vessel that does not transport cargo or persons for hire between ports-of-call (for example, the leasing of a vessel to engage in research activities in international water); and

(J) The leasing of drilling rigs, extraction of minerals, and performance and provision of services related thereto, except as provided in paragraph (d)(3)(ii) of this section.

(2) *Determining a space or ocean activity* —

(i) ***Production of property in space or international water.*** For purposes of this section, production activity means an activity that creates, fabricates, manufactures, extracts, processes, cures, or ages property within the meaning of section 864(a) and § 1.864-1.

(ii) *Special rule for performance of services* —

(A) ***General.*** Except as provided in paragraph (d)(2)(ii)(B) of this section, if a transaction is characterized as the performance of a service, then such service will be treated as a space or ocean activity in its entirety when any part of the service is performed in space or international water. Services are performed in space or international water if functions are performed, resources are employed, or risks are assumed in space or international water, regardless of whether performed by personnel, equipment, or otherwise.

(B) ***Exception to the general rule.*** If the taxpayer can demonstrate the value of the service attributable to performance occurring in space or international water, and the value of the service attributable to performance occurring outside space and international water, then such service will be treated as space or ocean activity only to the extent of the activity performed in space or international water. The value of the service is attributable to performance occurring in space or international water to the extent the performance of the service, based on all the facts and circumstances, is attributable to functions performed, resources employed, or risks assumed in space or international water. In

addition, if the taxpayer can demonstrate, based on all the facts and circumstances, that the value of the service attributable to performance in space and international water is de minimis, such service will not be treated as space or ocean activity.

(3) ***Exceptions to space or ocean activity.*** Space or ocean activity does not include the following types of activities:

(i) Any activity giving rise to transportation income as defined in section 863(c).

(ii) Any activity with respect to mines, oil and gas wells, or other natural deposits, to the extent the mines, wells, or natural deposits are located within the jurisdiction (as recognized by the United States) of any country, including the United States and its possessions.

(iii) Any activity giving rise to international communications income as defined in § 1.863-9(h)(3)(ii).

(e) ***Treatment of partnerships.*** This section is applied at the partner level.

(f) ***Examples.*** The following examples illustrate the rules of this section:

(1) ***Example 1. Space activity—activity occurring on land and in space—***

(i) ***Facts.*** S, a United States person, owns satellites in orbit. S leases one of its satellites to A. S, as lessor, will not operate the satellite. Part of S's performance as lessor in this transaction occurs on land. Assume that the combination of S's activities is characterized as the lease of equipment.

(ii) ***Analysis.*** Because the leased equipment is located in space, the transaction is defined in its entirety as space activity under paragraph (d)(1)(i) of this section. Income derived from the lease will be sourced under paragraph (b)(1) of this section. Under paragraph (b)(1) of this section, S's space income is sourced outside the United States to the extent the income, based on all the facts and circumstances, is attributable to functions performed, resources employed, or risks assumed in a foreign country or countries.

(2) ***Example 2. Space activity—***

(i) ***Facts.*** X is an Internet service provider. X offers a service that permits a customer (C) to connect to the Internet via a telephone call, initiated by the modem of C's personal computer, to a control center. X transmits information requested by C to C's personal computer, in part using satellite capacity leased by X from S. X performs the uplink and downlink functions. X charges its customers a flat monthly fee. Assume that neither X nor S derive international communications income within the meaning of § 1.863-9(h)(3)(ii). In addition, assume that X is able to demonstrate, pursuant to paragraph (d)(2)(ii)(B) of this section, the extent to which the value of the service is attributable to functions performed, resources employed, and risks assumed in space.

(ii) ***Analysis.*** Under paragraph (d)(2)(ii) of this section, the service performed by X constitutes space activity to the extent the value of the service is attributable to functions performed, resources employed, and risks assumed in space. To the extent the service performed by X constitutes space activity, the source of X's income from the service transaction is determined under paragraph (b) of this section. To the extent the service performed by X does not constitute space or ocean activity, the source of X's income from the service is determined under sections 861, 862, and 863, as applicable. To the extent that X derives space and ocean income that is also communications income within the meaning of § 1.863-9(h)(2), the source

of X's income is determined under paragraph (b) of this section and § 1.863-9(c), (d), and (f), as applicable, as provided in paragraph (b)(5) of this section. S derives space and ocean income that is also communications income within the meaning of § 1.863-9(h)(2), and the source of S's income is therefore determined under paragraph (b) of this section and § 1.863-9(c), (d), and (f), as applicable, as provided in paragraph (b)(5) of this section.

(3) *Example 3. Services as space activity—de minimis value attributable to performance occurring in space—*

(i) ***Facts.*** R owns a retail outlet in the United States. R engages S to provide a security system for R's premises. S operates its security system by transmitting images from R's premises directly to a satellite, and from the satellite to a group of S employees located in Country B, who monitor the premises by viewing the transmitted images. The satellite is used as a medium of delivery and not as a method of surveillance. O provides S with transponder capacity on O's satellite, which S uses to transmit those images. Assume that S's transaction with R is characterized as the performance of a service. Assume that O's provision of transponder capacity is also viewed as the provision of a service. Assume also that S is able to demonstrate, pursuant to § 1.863-9(h)(1), that the value of the transaction with R attributable to communications activities is de minimis.

(ii) ***Analysis.*** S derives income from providing monitoring services. S can demonstrate, pursuant to paragraph (d)(2)(ii) of this section, that based on all the facts and circumstances, the value of S's service transaction attributable to performance in space is de minimis. Thus, S is not treated as engaged in a space activity, and none of S's income from the service transaction is space income. In addition, because S demonstrates that the value of the transaction with R attributable to communications activities is de minimis, S is not required under § 1.863-9(h)(1)(ii) to treat the transaction as separate communications and non-communications transactions, and none of S's gross income from the transaction is treated as communications income within the meaning of § 1.863-9(h)(2). O's provision of transponder capacity is viewed as the provision of a service. Based on all the facts and circumstances, the value of O's service transaction attributable to performance in space is not de minimis. Thus, O's activity will be considered space activity, pursuant to paragraph (d)(2)(ii) of this section, to the extent the value of the services transaction is attributable to performance in space (unless O's activity in space is international communications activity). To the extent that O derives communications income, the source of such income is determined under paragraph (b) of this section and § 1.863-9(b), (c), (d), and (f), as applicable, as provided in paragraph (b)(5) of this section. R does not derive any income from space activity.

(4) *Example 4. Space activity—*

(i) ***Facts.*** L, a domestic corporation, offers programming and certain other services to customers located both in the United States and in foreign countries. Assume that L's provision of programming and other services in paragraph (f)(4)(i) (*Example 4*) is characterized as the provision of a service, and that no part of the service transaction occurs in space or international water. Assume that the delivery of the programming constitutes a separate transaction also characterized as the performance of a service. L uses satellite capacity acquired from S to deliver the programming service directly to customers' television sets. L performs the uplink and downlink functions, so that part of the value of the delivery transaction derives from functions performed and resources employed in space. Assume that these contributions to the value of the delivery transaction occurring in space are not considered de

minimis under paragraph (d)(2)(ii)(B) of this section. Customer C pays L to provide and deliver programming to C's residence in the United States. Assume S's provision of satellite capacity in paragraph (f)(4)(i) (*Example 4*) is viewed as the provision of a service, and also that S does not derive international communications income within the meaning of § 1.863-9(h)(3)(ii).

(ii) ***Analysis.*** S's activity will be considered space activity. To the extent that S derives space and ocean income that is also communications income under § 1.863-9(h)(2), the source of S's income is determined under paragraph (b) of this section and § 1.863-9(c), (d), and (f), as applicable, as provided in paragraph (b)(5) of this section. On these facts, L's activities are treated as two separate service transactions: the provision of programming (and other services), and the delivery of programming. L's income derived from provision of programming and other services is not income derived from space activity. L's delivery of programming and other services is considered space activity, pursuant to paragraph (d)(2)(ii) of this section, to the extent the value of the delivery transaction is attributable to performance in space. To the extent that the delivery of programming is treated as a space activity, the source of L's income derived from the delivery transaction is determined under paragraph (b)(1) of this section, as provided in paragraph (b)(4) of this section. To the extent that L derives space and ocean income that is also communications income within the meaning of § 1.863-9(h)(2), the source of such income is determined under paragraph (b) of this section and § 1.863-9(b), (c), (d), (e), and (f), as applicable, as provided in paragraph (b)(5) of this section.

(5) ***Example 5. Space activity—***

(i) ***Facts.*** The facts are the same as in paragraph (f)(4)(i) of this section (the facts in *Example 4*), except that L does not deliver the programming service directly but instead engages R, a domestic corporation specializing in content delivery, to deliver by transmission its programming. For all portions of a transmission which require satellite capacity, R, in turn, contracts out such functions to S. S performs the uplink and downlink functions, so that part of the value of the delivery transaction derives from functions performed and resources employed in space.

(ii) ***Analysis.*** L's activity will not be considered space activity because none of L's activity occurs in space. Thus, L does not derive any space and ocean income. L does, however, derive communications income within the meaning of § 1.863-9(h)(2). This is the case even though L does not perform the transmission function because L is paid by Customer C to transmit, and bears the risk of transmitting, the communications or data. To the extent that L's activity consists in part of non-de minimis communications and non-de minimis non-communications activity, each part of the transaction must be treated as a separate transaction and gross income is allocated accordingly under § 1.863-9(h)(1)(ii). In addition, L must also allocate expenses, losses, and other deductions, for example, payments to R, to the class or classes of gross income that include the income so allocated. R's activity will not be considered space activity. Since R contracts out all of the functions involving satellite capacity to S, no part of R's activity occurs in space. Thus, R does not derive any space and ocean income. R does, however, derive communications income within the meaning of § 1.863-9(h)(2). This is the case even though R does not perform the transmission function because R is paid by L to transmit, and bears the risk of transmitting, the communications or data. S's activity will be considered space activity. To the extent that S derives space and ocean income that is also communications income within the meaning of § 1.863-9(h)(2), the source of such income is determined under paragraph (b) of this section and § 1.863-9(b), (c), (d), (e), and (f), as applicable, as provided in paragraph (b)(5) of this section.

(6) *Example 6. Space activity—treatment of land activity—*

(i) ***Facts.*** S, a United States person, offers remote imaging products and services to its customers. In year 1, S uses its satellite's remote sensors to gather data on certain geographical terrain. In year 3, C, a construction development company, contracts with S to obtain a satellite image of an area for site development work. S pulls data from its archives and transfers to C the images gathered in year 1, in a transaction that is characterized as a sale of the data. S's rights, title, and interest in the data pass to C in the United States. Before transferring the images to C, S uses computer software in its land-based office to enhance the images so that the images can be used.

(ii) ***Analysis.*** The collection of data and creation of images in space is characterized as the creation of property in space. Because S both produces and sells the data, the source of the gross income from the sale of the data is determined under paragraph (b)(3)(ii) of this section solely on the basis of the production activities. The source of S's gross income is determined under paragraph (b)(3)(ii)(C) of this section because production activities occur both in space and on land.

(7) *Example 7. Use of intangible property in space—*

(i) ***Facts.*** X acquires a license to use a particular satellite slot or orbit, which X sublicenses to C. C pays X a royalty.

(ii) ***Analysis.*** Because the royalty is paid for the right to use intangible property in space, the source of the royalty paid by C to X is determined under paragraph (b) of this section.

(8) *Example 8. Performance of services—*

(i) ***Facts.*** E, a domestic corporation, operates satellites with sensing equipment that can determine how much heat and light particular plants emit and reflect. Based on the data, E will provide F, a U.S. farmer, a report analyzing the data, which F will use in growing crops. E analyzes the data from offices located in the United States. Assume that E's combined activities are characterized as the performance of services.

(ii) ***Analysis.*** Based on all the facts and circumstances, the value of E's service transaction attributable to performance in space is not de minimis. Thus, E's activities will be considered space activities, pursuant to paragraph (d)(2)(ii) of this section, to the extent the value of E's service transaction is attributable to performance in space. To the extent E's service transaction constitutes a space activity, the source of E's income derived from the service transaction will be determined under paragraph (b)(4) of this section, by reference to paragraph (b)(1) of this section. To the extent that E's service transaction does not constitute a space or ocean activity, the source of E's income derived from the service transaction is determined under sections 861, 862, and 863, as applicable.

(9) *Example 9. Separate transactions—*

(i) ***Facts.*** The same facts as in paragraph (f)(8)(i) of this section (the facts in *Example 8*), except that E provides the raw data to F in a transaction characterized as a sale of a copyrighted article. In addition, E provides an analysis in the form of a report to F. The price F pays E for the raw data is separately stated.

(ii) ***Analysis.*** To the extent that the provision of raw data and the analysis of the data are each treated as separate transactions, the source of income from the production and sale of data is determined under paragraph (b)(3)(ii) of this section. The provision of services would be analyzed in the same manner as in paragraph (f)(8)(ii) of this section (the analysis in *Example 8*).

(10) ***Example 10. Sale of property in international water—***

(i) ***Facts.*** T purchased and owns transatlantic cable that lies in international water. T sells the cable to B, with T's rights, title, and interest in the cable passing to B in international water. Assume that the transatlantic cable is not inventory property within the meaning of section 1221(a)(1).

(ii) ***Analysis.*** Because T's rights, title, and interest in the property pass to B in international water, the sale takes place in international water under § 1.861-7(c), and the sale transaction is ocean activity under paragraph (d)(1)(ii) of this section. The source of T's sales income is determined under paragraph (b)(3)(i) of this section, by reference to paragraph (b)(1) or (2) of this section.

(11) ***Example 11. Sale of property in space—***

(i) ***Facts.*** S, a United States person, manufactures a satellite in the United States and sells it to a customer who is not a United States person. S's rights, title, and interest in the satellite pass to the customer in space.

(ii) ***Analysis.*** Because S's rights, title, and interest in the satellite pass to the customer in space, the sale takes place in space under § 1.861-7(c), and the sale transaction is space activity under paragraph (d)(1)(i) of this section. The source of income derived from the sale of the satellite manufactured in the United States and sold in space is determined under paragraph (b)(3)(ii) of this section solely on the basis of the production activities with respect to the satellite.

(12) ***Example 12. Sale of property in space—***

(i) ***Facts.*** S has a right to operate from a particular position (satellite slot or orbit) in space. S sells the right to operate from that position to P. Assume that the sale of the satellite slot is characterized as a sale of property and that S's rights, title, and interest in the satellite slot pass to P in space.

(ii) ***Analysis.*** The sale of the satellite slot takes place in space under § 1.861-7(c) because S's rights, title, and interest in the satellite slot pass to P in space. The sale of the satellite slot is space activity under paragraph (d)(1)(i) of this section, and income or gain from the sale is sourced under paragraph (b)(3)(i) of this section, by reference to paragraph (b)(1) or (2) of this section.

(13) ***Example 13. Source of income of a foreign person—***

(i) ***Facts.*** FP, a foreign corporation that is not a CFC, derives income from the operation of satellites. FP operates ground stations in the United States and in foreign Country FC. Assume that FP is considered engaged in a trade or business within the United States based on FP's operation of the ground station in the United States.

(ii) ***Analysis.*** Under paragraph (b)(2)(iii) of this section, FP's space income is sourced in the United States to the extent the income, based on all the facts and circumstances, is attributable to functions performed, resources employed, or risks assumed within the United States.

(14) *Example 14. Source of income of a foreign person—*

(i) ***Facts.*** FP, a foreign corporation that is not a CFC, operates remote sensing satellites in space to collect data and images for its customers. FP uses an independent agent, A, in the United States who provides marketing, order-taking, and other customer service functions. Assume that FP is considered engaged in a trade or business within the United States based on A's activities on FP's behalf in the United States.

(ii) ***Analysis.*** Under paragraph (b)(2)(iii) of this section, FP's space income is sourced in the United States to the extent the income, based on all the facts and circumstances, is attributable to functions performed, resources employed, or risks assumed within the United States.

(g) *Reporting and documentation requirements* —

(1) ***In general.*** A taxpayer making an allocation of gross income under paragraph (b)(1), (b)(2), (b)(3)(ii), or (b)(4) of this section must satisfy the requirements in paragraphs (g)(2), (3), and (4) of this section.

(2) ***Required documentation.*** In all cases, a taxpayer must prepare and maintain documentation in existence when its return is filed regarding the allocation of gross income and allocation and apportionment of expenses, losses, and other deductions, the methodologies used, and the circumstances justifying use of those methodologies. The taxpayer must make available such documentation within 30 days upon request.

(3) ***Access to software.*** If the taxpayer or any third party used any computer software, within the meaning of section 7612(d), to allocate gross income, or to allocate or apportion expenses, losses, and other deductions, the taxpayer must make available upon request—

(i) Any computer software executable code, within the meaning of section 7612(d), used for such purposes, including an executable copy of the version of the software used in the preparation of the taxpayer's return (including any plug-ins, supplements, etc.) and a copy of all related electronic data files. Thus, if software subsequently is upgraded or supplemented, a separate executable copy of the version used in preparing the taxpayer's return must be retained;

(ii) Any related computer software source code, within the meaning of section 7612(d), acquired or developed by the taxpayer or a related person, or primarily for internal use by the taxpayer or such person rather than for commercial distribution; and

(iii) In the case of any spreadsheet software or similar software, any formulae or links to supporting worksheets.

(4) ***Use of allocation methodology.*** In general, when a taxpayer allocates gross income under paragraph (b)(1), (b)(2), (b)(3)(ii), or (b)(4) of this section, it does so by making the allocation on a timely filed original return (including extensions). However, a taxpayer will be permitted to make changes to such allocations made on its original return with respect to any taxable year for which the statute of limitations has not closed as follows:

(i) In the case of a taxpayer that has made a change to such allocations prior to the opening conference for the audit of the taxable year to which the allocation relates or who makes such a change within 90 days of such opening conference, if the IRS issues a written information document request asking the taxpayer to provide the documents and such other information described in paragraphs (g)(2) and (3) of this section with respect to the changed allocations and the taxpayer complies with such request within 30 days of the request, then the IRS will

complete its examination, if any, with respect to the allocations for that year as part of the current examination cycle. If the taxpayer does not provide the documents and information described in paragraphs (g)(2) and (3) of this section within 30 days of the request, then the procedures described in paragraph (g)(4)(ii) of this section shall apply.

(ii) If the taxpayer changes such allocations more than 90 days after the opening conference for the audit of the taxable year to which the allocations relate or the taxpayer does not provide the documents and information with respect to the changed allocations as requested in accordance with paragraphs (g)(2) and (3) of this section, then the IRS will, in a separate cycle, determine whether an examination of the taxpayer's allocations is warranted and complete any such examination. The separate cycle will be worked as resources are available and may not have the same estimated completion date as the other issues under examination for the taxable year. The IRS may ask the taxpayer to extend the statute of limitations on assessment and collection for the taxable year to permit examination of the taxpayer's method of allocation, including an extension limited, where appropriate, to the taxpayer's method of allocation.

(h) ***Applicability dates.*** Except as provided in this paragraph (h), this section applies to taxable years beginning on or after December 27, 2006. The provisions in paragraph (b)(2)(ii) of this section relating to the meaning of a CFC apply to taxable years of foreign corporations ending on or after October 1, 2019. For taxable years of foreign corporations ending before October 1, 2019, a taxpayer may apply such provisions to the last taxable year of a foreign corporation beginning before January 1, 2018, and each subsequent taxable year of the foreign corporation, provided that the taxpayer and United States persons that are related (within the meaning of section 267 or 707) to the taxpayer consistently apply such provisions with respect to all foreign corporations. For taxable years of foreign corporations ending before October 1, 2019, where the taxpayer does not apply the provisions of paragraph (b)(2)(ii) of this section relating to the meaning of a CFC, see paragraph (b)(2)(ii) of this section as in effect and contained in 26 CFR part 1, as revised April 1, 2020. Paragraph (b)(3)(ii) of this section applies to taxable years ending on or after December 23, 2019. However, a taxpayer may apply paragraph (b)(3)(ii) of this section in its entirety for taxable years beginning after December 31, 2017, and ending before December 23, 2019, provided that the taxpayer and all persons related to the taxpayer (within the meaning of section 267 or 707) apply paragraph (b)(3)(ii) of this section and §§ 1.863-1(b), 1.863-2(b), 1.863-3, 1.864-5(a) and (b), 1.864-6(c)(2), and 1.865-3 in their entirety for the taxable year, and once applied, the taxpayer and all persons related to the taxpayer (within the meaning of section 267 or 707) continue to apply these regulations in their entirety for all subsequent taxable years. For regulations generally applicable to taxable years ending before December 23, 2019, see § 1.863-8 as contained in 26 CFR part 1 revised as of April 1, 2020.

[T.D. 9305, 71 FR 77603, Dec. 27, 2006, as amended by T.D. 9908, 85 FR 59434, Sept. 22, 2020; T.D. 9921, 85 FR 79849, Dec. 11, 2020]

§ 1.863-9 Source of income derived from communications activity under section 863(a), (d), and (e).

(a) ***In general.*** Income of a United States or a foreign person derived from each type of communications activity, as defined in paragraph (h)(3) of this section, is sourced under the rules of this section, notwithstanding any other provision including sections 861, 862, 863, and 865. Notwithstanding that a communications activity would qualify as space or ocean activity under section 863(d) and the

regulations thereunder, the source of income derived from such communications activity is determined under this section, and not under section 863(d) and the regulations thereunder, except to the extent provided in § 1.863-8(b)(5).

(b) ***Source of international communications income*** —

(1) ***International communications income derived by a United States person.*** Income derived from international communications activity (international communications income) by a United States person is one-half from sources within the United States and one-half from sources without the United States.

(2) ***International communications income derived by foreign persons*** —

(i) ***In general.*** International communications income derived by a person other than a United States person is, except as otherwise provided in this paragraph (b)(2), wholly from sources without the United States.

(ii) ***International communications income derived by a controlled foreign corporation.*** International communications income derived by a controlled foreign corporation (CFC) is one-half from sources within the United States and one-half from sources without the United States. For purposes of this section, a CFC has the meaning provided in section 957, determined without applying section 318(a)(3)(A), (B), and (C) so as to consider a United States person as owning stock which is owned by a person who is not a United States person.

(iii) ***International communications income derived by foreign persons with a fixed place of business in the United States.*** International communications income derived by a foreign person, other than a CFC, that is attributable to an office or other fixed place of business of the foreign person in the United States is from sources within the United States. The principles of section 864(c)(5) apply in determining whether a foreign person has an office or fixed place of business in the United States. See § 1.864-7. International communications income is attributable to an office or other fixed place of business to the extent of functions performed, resources employed, or risks assumed by the office or other fixed place of business.

(iv) ***International communications income derived by foreign persons engaged in a trade or business within the United States.*** International communications income derived by a foreign person (other than a CFC) engaged in a trade or business within the United States is income from sources within the United States to the extent the income, based on all the facts and circumstances, is attributable to functions performed, resources employed, or risks assumed within the United States.

(c) ***Source of U.S. communications income.*** Income derived by a United States or foreign person from U.S. communications activity is from sources within the United States.

(d) ***Source of foreign communications income.*** Income derived by a United States or foreign person from foreign communications activity is from sources without the United States.

(e) ***Source of space/ocean communications income.*** The source of income derived by a United States or foreign person from space/ocean communications activity is determined under section 863(d) and the regulations thereunder.

(f) ***Source of communications income when taxpayer cannot establish the two points between which the taxpayer is paid to transmit the communication.*** Income derived by a United States or foreign person from communications activity, when the taxpayer cannot establish the two points between which the taxpayer is paid to transmit the communication as required in paragraph (h)(3)(i) of this section, is from sources within the United States.

(g) ***Taxable income.*** When a taxpayer allocates gross income under paragraph (b)(2)(iii), (b)(2)(iv), or (h)(1)(ii) of this section, the taxpayer must allocate expenses, losses, and other deductions as prescribed in §§ 1.861-8 through 1.861-14T to the class or classes of gross income that include the income so allocated in each case. A taxpayer must then apply the rules of §§ 1.861-8 through 1.861-14T properly to apportion amounts of expenses, losses, and other deductions so allocated to such gross income between gross income from sources within the United States and gross income from sources without the United States. For amounts of expenses, losses, and other deductions allocated to gross income derived from international communications activity, when the source of income is determined under the 50/50 method of paragraph (b)(1) or (b)(2)(ii) of this section, taxpayers generally must apportion expenses, losses, and other deductions between sources within the United States and sources without the United States pro rata based on the relative amounts of gross income from sources within the United States and gross income from sources without the United States. However, the preceding sentence shall not apply to research and experimental expenditures qualifying under § 1.861-17, which are to be allocated and apportioned under the rules of that section.

(h) ***Communications activity and income derived from communications activity*** —

(1) ***Communications activity*** —

(i) ***General rule.*** For purposes of this part, *communications activity* consists solely of the delivery by transmission of communications or data (communications). Delivery of communications other than by transmission (for example, by delivery of physical packages and letters) is not communications activity within the meaning of this section. Communications activity also includes the provision of capacity to transmit communications. Provision of content or any other additional service provided along with, or in connection with, a non-de minimis communications activity must be treated as a separate non-communications activity unless de minimis. Communications activity or non-communications activity will be treated as de minimis to the extent, based on the facts and circumstances, the value attributable to such activity is de minimis.

(ii) ***Separate transaction.*** To the extent that a taxpayer's transaction consists in part of non-de minimis communications activity and in part of non-de minimis non-communications activity, each such part of the transaction must be treated as a separate transaction. Gross income is allocated to each such communications activity transaction and non-communications activity transaction to the extent the income, based on all the facts and circumstances, is attributable to functions performed, resources employed, or risks assumed in each such activity.

(2) ***Income derived from communications activity. Income derived from communications activity*** (communications income) is income derived from the delivery by transmission of communications, including income derived from the provision of capacity to transmit communications. Income may be considered derived from a communications activity even if the taxpayer itself does not perform the transmission function, but in all cases, the taxpayer derives communications income only if the taxpayer is paid to transmit, and bears the risk of transmitting, the communications.

(3) ***Determining the type of communications activity*** —

(i) ***In general.*** Whether income is derived from international communications activity, U.S. communications activity, foreign communications activity, or space/ocean communications activity is determined by identifying the two points between which the taxpayer is paid to transmit the communication. The taxpayer must establish the two points between which the taxpayer is paid to transmit, and bears the risk of transmitting, the communication. Whether the taxpayer contracts out part or all of the transmission function is not relevant. A taxpayer may satisfy the requirement that the taxpayer establish the two points between which the taxpayer is paid to transmit, and bears the risk of transmitting, the communication by using any consistently applied reasonable method to establish one or both endpoints. In evaluating the reasonableness of such method, consideration will be given to all the facts and circumstances, including whether the endpoints would otherwise be identifiable absent this reasonable method provision and the reliability of the data. Depending on the facts and circumstances, methods based on, for example, records of port or transport charges, customer billing records, a satellite footprint, or records of termination fees made pursuant to an international settlement agreement may be reasonable. In addition, practices used by taxpayers to classify or categorize certain communications activity in connection with preparation of statements and analyses for the use of management, creditors, minority shareholders, joint ventures, or other parties or governmental agencies in interest may be reliable indicators of the reasonableness of the method chosen, but need not be accorded conclusive weight by the Commissioner. In all cases, the method chosen to establish the two points between which the taxpayer is paid to transmit, and bears the risk of transmitting, the communication must be supported by sufficient documentation to permit verification by the Commissioner.

(ii) ***Income derived from international communications activity. Income derived by a taxpayer from international communications activity*** (international communications income) is income derived from communications activity, as defined in paragraph (h)(2) of this section, when the taxpayer is paid to transmit—

(A) Between a point in the United States and a point in a foreign country (or a possession of the United States); or

(B) Foreign-originating communications (communications with a beginning point in a foreign country or a possession of the United States) from a point in space or international water to a point in the United States.

(iii) ***Income derived from U.S. communications activity.*** Income derived by a taxpayer from U.S. communications activity (U.S. communications income) is income derived from communications activity, as defined in paragraph (h)(2) of this section, when the taxpayer is paid to transmit—

(A) Between two points in the United States; or

(B) Between the United States and a point in space or international water, except as provided in paragraph (h)(3)(ii)(B) of this section.

(iv) ***Income derived from foreign communications activity. Income derived by a taxpayer from foreign communications activity*** (foreign communications income) is income derived from communications activity, as defined in paragraph (h)(2) of this section, when the taxpayer is paid to transmit—

(A) Between two points in a foreign country or countries (or a possession or possessions of the United States);

(B) Between a foreign country and a possession of the United States; or

(C) Between a foreign country (or a possession of the United States) and a point in space or international water.

(v) ***Income derived from space/ocean communications activity. Income derived by a taxpayer from space/ocean communications activity*** (space/ocean communications income) is income derived from communications activity, as defined in paragraph (h)(2) of this section, when the taxpayer is paid to transmit between a point in space or international water and another point in space or international water.

(i) ***Treatment of partnerships.*** This section is applied at the partner level.

(j) ***Examples.*** The following examples illustrate the rules of this section:

Example 1. Income derived from non-communications activity—remote data base access. (i) *Facts.* D provides its customers in various foreign countries with access to its data base, which contains information on certain individuals' health care insurance coverage. Customer C obtains access to D's data base by placing a call to D's telephone number. Assume that C's telephone service, used to access D's data base, is provided by a third party, and that D assumes no responsibility for the transmission of the information via telephone.
(ii) *Analysis.* D is not paid to transmit communications and does not derive income from communications activity within the meaning of paragraph (h)(2) of this section. Rather, D derives income from provision of content or provision of services to its customers. Therefore, the rules of this section do not apply to determine the source of D's income.

Example 2. Income derived from U.S. communications activity—U.S. portion of international communication. (i) *Facts.* TC, a local telephone company, receives an access fee from an international carrier for picking up a call from a local telephone customer and delivering the call to a U.S. point of presence (POP) of the international carrier. The international carrier picks up the call from its U.S. POP and delivers the call to a foreign country.
(ii) *Analysis.* TC is not paid to carry the transmission between the United States and a foreign country. TC is paid to transmit a communication between two points in the United States. TC derives U.S. communications income as defined in paragraph (h)(3)(iii) of this section, which is sourced under paragraph (c) of this section as U.S. source income.

Example 3. Income derived from international communications activity—underwater cable. (i) *Facts.* TC, a domestic corporation, owns an underwater fiber optic cable. Pursuant to contracts, TC makes available to its customers capacity to transmit communications via the cable. TC's customers then solicit telephone customers and arrange to transmit the telephone customers' calls. The cable runs in part through U.S. waters, in part through international waters, and in part through foreign country waters.

(ii) Analysis. TC derives international communications income as defined in paragraph (h)(3)(ii) of this section because TC is paid to make available capacity to transmit communications between the United States and a foreign country. Because TC is a United States person, TC's international communications income is sourced under paragraph (b)(1) of this section as one-half from sources within the United States and one-half from sources without the United States.

Example 4. Income derived from international communications activity—satellite. (i) *Facts.* S, a United States person, owns satellites in orbit and uplink facilities in Country X, a foreign country. B, a resident of Country X, pays S to deliver B's programming from S's uplink facility, located in Country X, to a downlink facility in the United States owned by C, a customer of B.
(ii) *Analysis.* S derives international communications income under paragraph (h)(3)(ii) of this section because S is paid to transmit the communications between a beginning point in a foreign country and an endpoint in the United States. Because S is a United States person, the source of S's international communications income is determined under paragraph (b)(1) of this section as one-half from sources within the United States and one-half from sources without the United States.

Example 5. The paid-to-do rule—foreign communications via domestic route. (i) *Facts.* TC is paid to transmit communications from Toronto, Canada, to Paris, France. TC transmits the communications from Toronto to New York. TC pays another communications company, IC, to transmit the communications from New York to Paris.
(ii) *Analysis.* Under the *paid-to-do* rule of paragraph (h)(3)(i) of this section, TC derives foreign communications income under paragraph (h)(3)(iv) of this section because TC is paid to transmit communications between two points in foreign countries, Toronto and Paris. Under paragraph (h)(3)(i) of this section, the character of TC's communications activity is determined without regard to the fact that TC pays IC to transmit the communications for some portion of the delivery path. IC has international communications income under paragraph (h)(3)(ii) of this section because IC is paid to transmit the communications between a point in the United States and a point in a foreign country.

Example 6. The paid-to-do rule—domestic communication via foreign route. (i) *Facts.* TC is paid to transmit a call between two points in the United States, but routes the call through Canada.
(ii) *Analysis.* Under paragraph (h)(3)(i) of this section, the character of income derived from communications activity is determined by the two points between which the taxpayer is paid to transmit, and bears the risk of transmitting, the communications, without regard to the path of the transmission between those two points. Thus, under paragraph (h)(3)(iii) of this section, TC derives income from U.S. communications activity because it is paid to transmit the communications between two U.S. points.

Example 7. The paid-to-do rule—foreign-originating communications. (i) *Facts.* Under an international settlement agreement, G, a Country X international carrier, pays T to receive all calls

originating in Country X that are bound for the United States and to terminate such calls in the United States. Due to Country X legal restrictions, the international settlement agreement specifies that G carries the transmission to a point outside the territory of Country X and that T carries the foreign-originating transmission from such point to the destined point in the United States. T, in turn, contracts out with another communications company, S, to transmit the U.S. portion of the communications. Tracing and identifying the endpoints of each transmission is not possible or practical. T does, however, keep records of termination fees received from G for terminating the foreign-originating calls.
(ii) *Analysis.* T derives communications income as defined in paragraph (h)(2) of this section. Based on all the facts and circumstances, T can establish that T is paid to transmit, and bears the risk of transmitting, foreign-originating calls from a point in space or international water to a point in the United States using a reasonable method to establish the endpoints, assuming that this method is consistently applied. In this case, T can reasonably establish that T is paid to receive foreign-originating calls and terminate such calls in the United States based on the records of termination fees pursuant to an international settlement agreement. Under paragraph (h)(3)(ii)(B) of this section, a taxpayer derives income from international communications activity when the taxpayer is paid to transmit foreign-originating communications from space or international water to the United States. Thus, under paragraph (h)(3)(ii)(B) of this section, T derives income from international communications. If, based on all the facts and circumstances, T could reasonably trace and identify the endpoints, then T would have to directly establish that each call originated in a foreign country. Assuming T is able to do so, the rest of the analysis in this *Example 7* remains the same. Under paragraph (h)(3)(iii) of this section, S derives income from U.S. communications activity because S is paid to transmit the communications between two U.S. points.

Example 8. Indeterminate endpoints—prepaid telephone calling cards. (i) *Facts.* S purchases capacity from TC to transmit telephone calls. S sells prepaid telephone calling cards that give customers access to TC's telephone lines for a certain number of minutes. Assume that S cannot establish the endpoints of its customers' telephone calls, even under the reasonable method rule of paragraph (h)(3) of this section.
(ii) *Analysis.* S derives communications income as defined in paragraph (h)(2) of this section because S makes capacity to transmit communications available to its customers. In this case, S cannot establish the two points between which the communications are transmitted. Therefore, S's communications income is U.S. source income, as provided by paragraph (f) of this section.

Example 9. Reasonable methods—minutes of use data on long distance calling plans. (i)*Facts.* B provides both domestic and international long distance services in a calling plan for a limited number of minutes for a set amount each month. Tracing and identifying the endpoints of each transmission is not possible or practical. B is, however, able to establish that the calling plan generated $10,000 of revenue for 25,000 minutes based on reports derived from customer billing records. Based on minutes of use data in these reports, B is able to establish that of the total

25,000 minutes, 60 percent or 15,000 minutes were for U.S. long distance calls and 40 percent or 10,000 minutes were for international calls.
(ii) *Analysis.* B derives communications income as defined in paragraph (h)(2) of this section. Based on all the facts and circumstances, B can establish the two points between which B is paid to transmit, and bears the risk of transmitting, the communications using a reasonable method to establish the endpoints, assuming that this method is consistently applied. In this case, B can reasonably establish that 60 percent of the income derived from the long distance calling plan is U.S. communications income and 40 percent is international communications income based on the minutes of use data derived from customer billing records to establish the endpoints of the communications. If, based on all the facts and circumstances, B could reasonably trace and identify the endpoints, then B would have to directly identify the endpoints between which B is paid to transmit the communications.

Example 10. Reasonable methods—system design. (i) *Facts.* D operates satellites which are designed to transmit signals through two separate ranges of signal frequencies (bands). Due to technological limitations, requirements, and practicalities, one band is designed to only transmit signals within the United States. The other band is designed to transmit signals between foreign countries and the United States. D cannot trace and identify the endpoints of each individual transmission. D does, however, track the total transmission through each band and the total income derived from transmitting signals through each band.
(ii) *Analysis.* D derives communications income as defined in paragraph (h)(2) of this section. Based on all the facts and circumstances, D can establish the two points between which D is paid to transmit, and bears the risk of transmitting, the communications using a reasonable method to establish endpoints, assuming that this method is consistently applied. In this case, D can reasonably establish that income derived from transmissions through the first band is U.S. communications income and income derived from transmissions through the second band is international communications income based on the design of the bands to establish the endpoints of the communications.

Example 11. Reasonable methods—port locations. (i) *Facts.* X provides its customer, C, with a virtual private network (VPN) so that C's U.S. headquarter office can connect and communicate with offices in the United States, Country X, Country Y, and Country Z. Assume that the VPN is only for communications with the U.S. headquarter office. X cannot trace and identify the endpoints of each transmission. C pays X a set amount each month for the entire service, regardless of the magnitude of the usage or the geographic points between which C uses the service.
(ii) *Analysis.* X derives communications income as defined in paragraph (h)(2) of this section. Based on the facts and circumstances, X can establish the two points between which X is paid to transmit, and bears the risk of transmitting, the communications using a reasonable method to establish endpoints, assuming that this method is consistently applied. In this case, X can reasonably establish that one-fourth of the

income derived from the VPN service is U.S. communications income and three-fourths is international communications income based on the location of the VPN ports to establish the endpoints of the communications.

Example 12. Indeterminate endpoints—Internet access. (i) *Facts.* B, a domestic corporation, is an Internet service provider. B charges its customer, C, a monthly lump sum for Internet access. C accesses the Internet via a telephone call, initiated by the modem of C's personal computer, to one of B's control centers, which serves as C's portal to the Internet. B transmits data sent by C from B's control center in France to a recipient in England, over the Internet. B does not maintain records as to the beginning and endpoints of the transmission.
(ii) *Analysis.* B derives communications income as defined in paragraph (h)(2) of this section. The source of B's communications income is determined under paragraph (f) of this section as income from sources within the United States because B cannot establish the two points between which it is paid to transmit the communications.

Example 13. De minimis non-communications activity. (i) *Facts.* The same facts as in Example 12. Assume in addition that B replicates frequently requested sites on B's own servers, solely to speed up response time. Assume that B's replication of frequently requested sites would be considered a de minimis non-communications activity under this section.

(ii) *Analysis.* On these facts, because B's replication of frequently requested sites would be considered a *de minimis* non-communications activity, B is not required to treat the replication activity as a separate non-communications activity transaction under paragraph (h)(1) of this section. B derives communications income under paragraph (h)(2) of this section. The character and source of B's communications income are determined by demonstrating the points between which B is paid to transmit the communications, under paragraph (h)(3)(i) of this section.

Example 14. Income derived from communications and non-communications activity—bundled services. (i) *Facts.* A, a domestic corporation, offers customers local and long distance phone service, video, and Internet services. Customers pay a flat monthly fee plus 10 cents a minute for all long-distance calls, including international calls.
(ii) *Analysis.* Under paragraph (h)(1)(ii) of this section, to the extent that A's transaction with its customer consists in part of non-de minimis communications activity and in part of non-de minimis non-communications activity, each such part of the transaction must be treated as a separate transaction. A's gross income from the transaction is allocated to each such communications activity transaction and non-communications activity transaction in accordance with paragraph (h)(1)(ii) of this section. To the extent A can establish that it derives international communications income as defined in paragraph (h)(3)(ii) of this section, A would determine the source of such income under paragraph (b)(1) of this section. If A cannot establish the points between which it is paid to transmit communications, as required by paragraph (h)(3)(i) of this section, A's communications income is from sources within the United States, as provided by paragraph (f) of this section.

Example 15. Income derived from communications and non-communications activity. (i) *Facts.* B, a domestic corporation, is paid by D, a cable system operator in Foreign Country, to provide television programs and to transmit the television programs to Foreign Country. Using its own satellite transponder, B transmits the television programs from the United States to downlink facilities owned by D in Foreign Country. D receives the transmission, unscrambles the signals, and distributes the broadcast to D's customers in Foreign Country. Assume that B's provision of television programs is a non-de minimis non-communications activity, and that B's transmission of television programs is a non-de minimis communications activity.
(ii) *Analysis.* Under paragraph (h)(1)(ii) of this section, B must treat its communications and non-communications activities as separate transactions. B's gross income is allocated to each such separate communications and non-communications activity transaction in accordance with paragraph (h)(1)(ii) of this section. Income derived by B from the transmission of television programs to D's Foreign Country downlink facility is international communications income as defined in paragraph (h)(3)(ii) of this section because B is paid to transmit communications from the United States to a foreign country.

Example 16. Income derived from foreign communications activity. (i) *Facts.* STS provides satellite capacity to B, a broadcaster located in Australia. B beams programming from Australia to the satellite. S's satellite picks the communications up in space and beams the programming over a footprint covering Southeast Asia.
(ii) *Analysis.* S derives communications income as defined in paragraph (h)(2) of this section. S's income is characterized as foreign communications income under paragraph (h)(3)(iv) of this section because S picks up the communication in space, and beams it to a footprint entirely covering a foreign area. Under paragraph (d) of this section, S's foreign communications income is from sources without the United States. If S were beaming the programming over a satellite footprint that covered area both in the United States and outside the United States, S would be required to allocate the income derived from the different types of communications activity.

(k) ***Reporting and documentation requirements*** —

(1) ***In general.*** A taxpayer making an allocation of gross income under paragraph (b)(2)(iii), (b)(2)(iv), or (h)(1)(ii) of this section must satisfy the requirements in paragraphs (k)(2), (3), and (4) of this section.

(2) ***Required documentation.*** In all cases, a taxpayer must prepare and maintain documentation in existence when its return is filed regarding the allocation of gross income, and allocation and apportionment of expenses, losses, and other deductions, the methodologies used, and the circumstances justifying use of those methodologies. The taxpayer must make available such documentation within 30 days upon request.

(3) ***Access to software.*** If the taxpayer or any third party used any computer software, within the meaning of section 7612(d), to allocate gross income, or to allocate or apportion expenses, losses, and other deductions, the taxpayer must make available upon request—

(i) Any computer software executable code, within the meaning of section 7612(d), used for such purposes, including an executable copy of the version of the software used in the preparation of the taxpayer's return (including any plug-ins, supplements, etc.) and a copy of all related electronic data files. Thus, if software subsequently is upgraded or supplemented, a separate executable copy of the version used in preparing the taxpayer's return must be retained;

(ii) Any related computer software source code, within the meaning of section 7612(d), acquired or developed by the taxpayer or a related person, or primarily for internal use by the taxpayer or such person rather than for commercial distribution; and

(iii) In the case of any spreadsheet software or similar software, any formulae or links to supporting worksheets.

(4) ***Use of allocation methodology.*** In general, when a taxpayer allocates gross income under paragraph (b)(2)(iii), (b)(2)(iv), or (h)(1)(ii) of this section, it does so by making the allocation on a timely filed original return (including extensions). However, a taxpayer will be permitted to make changes to such allocations made on its original return with respect to any taxable year for which the statute of limitations has not closed as follows:

(i) In the case of a taxpayer that has made a change to such allocations prior to the opening conference for the audit of the taxable year to which the allocation relates or who makes such a change within 90 days of such opening conference, if the IRS issues a written information document request asking the taxpayer to provide the documents and such other information described in paragraphs (k)(2) and (3) of this section with respect to the changed allocations and the taxpayer complies with such request within 30 days of the request, then the IRS will complete its examination, if any, with respect to the allocations for that year as part of the current examination cycle. If the taxpayer does not provide the documents and information described in paragraphs (k)(2) and (3) of this section within 30 days of the request, then the procedures described in paragraph (k)(4)(ii) of this section shall apply.

(ii) If the taxpayer changes such allocations more than 90 days after the opening conference for the audit of the taxable year to which the allocations relate or the taxpayer does not provide the documents and information with respect to the changed allocations as requested in accordance with paragraphs (k)(2) and (3) of this section, then the IRS will, in a separate cycle, determine whether an examination of the taxpayer's allocations is warranted and complete any such examination. The separate cycle will be worked as resources are available and may not have the same estimated completion date as the other issues under examination for the taxable year. The IRS may ask the taxpayer to extend the statute of limitations on assessment and collection for the taxable year to permit examination of the taxpayer's method of allocation, including an extension limited, where appropriate, to the taxpayer's method of allocation.

(l) ***Applicability dates.*** Except as otherwise provided in this paragraph (l), this section applies to taxable years beginning on or after December 27, 2006. The provisions in paragraph (b)(2)(ii) of this section relating to the meaning of a CFC apply to taxable years of foreign corporations ending on or after October 1, 2019. For taxable years of foreign corporations ending before October 1, 2019, a taxpayer may apply such provisions to the last taxable year of a foreign corporation beginning before January 1, 2018, and each subsequent taxable year of the foreign corporation, provided that the taxpayer and United States persons that are related (within the meaning of section 267 or 707) to the taxpayer consistently apply such provisions with respect to all foreign corporations. For taxable years of foreign corporations ending before

October 1, 2019, where the taxpayer does not apply the provisions of paragraph (b)(2)(ii) of this section relating to the meaning of a CFC, see paragraph (b)(2)(ii) of this section as in effect and contained in 26 CFR part 1, as revised April 1, 2020.

[T.D. 9305, 71 FR 77603, Dec. 27, 2006; 72 FR 3490, Jan. 25, 2007, as amended by T.D. 9908, 85 FR 59434, Sept. 22, 2020]

§ 1.863-10 Source of income from a qualified fails charge.

(a) ***In general.*** Except as provided in paragraphs (b) and (c) of this section, the source of income from a qualified fails charge shall be determined by reference to the residence of the taxpayer as determined under section 988(a)(3)(B)(i).

(b) ***Qualified business unit exception.*** The source of income from a qualified fails charge shall be determined by reference to the residence of a qualified business unit (as defined in section 989) of a taxpayer if—

(1) The taxpayer's residence, determined under section 988(a)(3)(B)(i), is the United States;

(2) The qualified business unit's residence, determined under section 988(a)(3)(B)(ii), is outside the United States;

(3) The qualified business unit is engaged in the conduct of a trade or business in the country where it is a resident; and

(4) The transaction to which the qualified fails charge relates is attributable to the qualified business unit. A transaction will be treated as attributable to a qualified business unit if it satisfies the principles of § 1.864-4(c)(5)(iii) (substituting “qualified business unit” for “U.S. office”).

(c) ***Effectively connected income exception.*** Qualified fails charge income that arises from a transaction any income from which is (or would be if the transaction produced income) effectively connected with a United States trade or business pursuant to § 1.864-4(c) is treated as from sources within the United States, and the income from the qualified fails charge is treated as effectively connected to the conduct of a United States trade or business.

(d) ***Qualified fails charge.*** For purposes of this section, a qualified fails charge is a payment that—

(1) Compensates a party to a transaction that provides for delivery of a designated security (as defined in paragraph (e) of this section) in exchange for the payment of cash (delivery-versus-payment settlement) for another party's failure to deliver the specified designated security on the settlement date specified in the relevant agreement; and

(2) Is made pursuant to—

(i) A trading practice or similar guidance approved or adopted by either an agency of the United States government or the Treasury Market Practices Group, or

(ii) Any trading practice, program, policy or procedure approved by the Commissioner in guidance published in the Internal Revenue Bulletin.

(e) ***Designated security.*** For purposes of this section, a *designated security* means any—

(i) Debt instrument (as defined in § 1.1275-1(d)) issued by the United States Treasury Department, the Federal National Mortgage Association, the Federal Home Loan Mortgage Corporation, or any Federal Home Loan Bank; or

(ii) Pass-through mortgage-backed security guaranteed by the Federal National Mortgage Association, the Federal Home Loan Mortgage Corporation, or the Government National Mortgage Association.

(g) ***Effective/applicability date.*** This section is effective on February 21, 2012. This section applies to a qualified fails charge paid or accrued on or after December 8, 2010.

[T.D. 9579, 77 FR 9847, Feb. 21, 2012]

§ 1.864-1 Meaning of sale, etc.

For purposes of §§ 1.861 through 1.864-7, the word "sale" includes "exchange"; the word "sold" includes "exchanged"; the word "produced" includes "created", "fabricated", "manufactured", "extracted", "processed", "cured", and "aged".

[T.D. 6948, 33 FR 5090, Mar. 28, 1968]

§ 1.864-2 Trade or business within the United States.

(a) ***In general.*** As used in part I (section 861 and following) and part II (section 871 and following), subchapter N, chapter 1 of the Code, and chapter 3 (section 1441 and following) of the Code, and the regulations thereunder, the term "engaged in trade or business within the United States" does not include the activities described in paragraphs (c) and (d) of this section, but includes the performance of personal services within the United States at any time within the taxable year except to the extent otherwise provided in this section.

(b) ***Performance of personal services for foreign employer*** —

(1) ***Excepted services.*** For purposes of paragraph (a) of this section, the term "engaged in trade or business within the United States" does not include the performance of personal services—

(i) For a nonresident alien individual, foreign partnership, or foreign corporation, not engaged in trade or business within the United States at any time during the taxable year, or

(ii) For an office or place of business maintained in a foreign country or in a possession of the United States by an individual who is a citizen or resident of the United States or by a domestic partnership or a domestic corporation, by a nonresident alien individual who is temporarily present in the United States for a period or periods not exceeding a total of 90 days during the taxable year and whose compensation for such services does not exceed in the aggregate gross amount of $3,000.

(2) ***Rules of application.***

(i) As a general rule, the term "day", as used in subparagraph (1) of this paragraph, means a calendar day during any portion of which the nonresident alien individual is physically present in the United States.

(ii) Solely for purposes of applying this paragraph, the nonresident alien individual, foreign partnership, or foreign corporation for which the nonresident alien individual is performing personal services in the United States shall not be considered to be engaged in trade or business in the United States by reason of the performance of such services by such individual.

(iii) In applying subparagraph (1) of this paragraph it is immaterial whether the services performed by the nonresident alien individual are performed as an employee for his employer or under any form of contract with the person for whom the services are performed.

(iv) In determining for purposes of subparagraph (1) of this paragraph whether compensation received by the nonresident alien individual exceeds in the aggregate a gross amount of $3,000, any amounts received by the individual from an employer as advances or reimbursements for travel expenses incurred on behalf of the employer shall be omitted from the compensation received by the individual, to the extent of expenses incurred, where he was required to account and did account to his employer for such expenses and has met the tests for such accounting provided in § 1.162-17 and paragraph (e)(4) of § 1.274-5. If advances or reimbursements exceed such expenses, the amount of the excess shall be included as compensation for personal services for purposes of such subparagraph. Pensions and retirement pay attributable to personal services performed in the United States are not to be taken into account for purposes of subparagraph (1) of this paragraph.

(v) See section 7701(a)(5) and § 301.7701-5 of this chapter (Procedure and Administration Regulations) for the meaning of "foreign" when applied to a corporation or partnership.

(vi) As to the source of compensation for personal services, see §§ 1.861-4 and 1.862-1.

(3) ***Illustrations.*** The application of this paragraph may be illustrated by the following examples:

Example 1. During 1967, A, a nonresident alien individual, is employed by the London office of a domestic partnership. A, who uses the calendar year as his taxable year, is temporarily present in the United States during 1967 for 60 days performing personal service in the United States for the London office of the partnership and is paid by that office a total gross salary of $2,600 for such services. During 1967, A is not engaged in trade or business in the United States solely by reason of his performing such personal services for the London office of the domestic partnership.

Example 2. The facts are the same as in example 1, except that A's total gross salary for the services performed in the United States during 1967 amounts to $3,500, of which $2,625 is received in 1967 and $875 is received in 1968. During 1967, is engaged in trade or business in the United States by reason of his performance of personal services in the United States.

(c) ***Trading in stocks or securities.*** For purposes of paragraph (a) of this section—

(1) ***In general.*** The term "engaged in trade or business within the United States" does not include the effecting of transactions in the United States in stocks or securities through a resident broker, commission agent, custodian, or other independent agent. This subparagraph shall apply to any taxpayer, including a broker or dealer in stocks or securities, except that it shall not apply if at any time during the taxable year the taxpayer has an office or other fixed place of business in the United States through which, or by the direction of which, the transactions in stocks or securities are effected. The volume of stock or security transactions effected during the taxable year shall not be taken into account in determining under this subparagraph whether the taxpayer is engaged in trade or business within the United States.

(2) ***Trading for taxpayer's own account*** —

(i) ***In general.*** The term "engaged in trade or business within the United States" does not include the effecting of transactions in the United States in stocks or securities for the taxpayer's own account, irrespective of whether such transactions are effected by or through—

(*a*) The taxpayer himself while present in the United States,

(*b*) Employees of the taxpayer, whether or not such employees are present in the United States while effecting the transactions, or

(*c*) A broker, commission agent, custodian, or other agent of the taxpayer, whether or not such agent while effecting the transactions is

(*1*) dependent or independent, or

(*2*) resident, nonresident, or present, in the United States, and irrespective of whether any such employee or agent has discretionary authority to make decisions in effecting such transactions. For purposes of this paragraph, the term “securities” means any note, bond, debenture, or other evidence of indebtedness, or any evidence of an interest in or right to subscribe to or purchase any of the foregoing; and the effecting of transactions in stocks or securities includes buying, selling (whether or not by entering into short sales), or trading in stocks, securities, or contracts or options to buy or sell stocks or securities, on margin or otherwise, for the account and risk of the taxpayer, and any other activity closely related thereto (such as obtaining credit for the purpose of effectuating such buying, selling, or trading). The volume of stock of security transactions effected during the taxable year shall not be taken into account in determining under this subparagraph whether the taxpayer is engaged in trade or business within the United States. The application of this subdivision may be illustrated by the following example:

Example. A, a nonresident alien individual who is not a dealer in stocks or securities, authorizes B, an individual resident of the United States, as his agent to effect transactions in the United States in stocks and securities for the account of A. B is empowered with complete authority to trade in stocks and securities for the account of A and to use his own discretion as to when to buy or sell for A's account. This grant of discretionary authority from A to B is also communicated in writing by A to various domestic brokerage firms through which A ordinarily effects transactions in the United States in stocks or securities. Under the agency arrangement B has the authority to place orders with the brokers, and all confirmations are to be made by the brokers to B, subject to his approval. The brokers are authorized by A to make payments to B and to charge such payments to the account of A. In addition, B is authorized to obtain and advance the necessary funds, if any, to maintain credits with the brokerage firms. Pursuant to his authority B carries on extensive trading transactions in the United States during the taxable year through the various brokerage firms for the account of A. During the taxable year A makes several visits to the United States in order to discuss with B various aspects of his trading activities and to make necessary changes in his trading policy. A is not engaged in trade or business within the United States during the taxable year solely because of the effecting by B of transactions in the United States in stocks or securities during such year for the account of A.

(ii) ***Partnerships.*** A nonresident alien individual, foreign partnership, foreign estate, foreign trust, or foreign corporation shall not be considered to be engaged in trade or business within the United States solely because such person is a member of a partnership (whether domestic or foreign) which, pursuant to discretionary authority granted to such partnership by such person, effects transactions in the United States in stocks or securities for the partnership's own account or solely because an employee of such partnership, or a broker, commission agent, custodian, or

other agent, pursuant to discretionary authority granted by such partnership, effects transactions in the United States in stocks or securities for the account of such partnership. This subdivision shall not apply, however, to any member of

(*a*) a partnership which is a dealer in stocks or securities or

(*b*) a partnership (other than a partnership in which, at any time during the last half of its taxable year, more than 50 percent of either the capital interest or the profits interest is owned, directly or indirectly, by five or fewer partners who are individuals) the principal business of which is trading in stocks or securities for its own account, if the principal office of such partnership is in the United States at any time during the taxable year. The principles of subdivision (iii) of this subparagraph for determining whether a foreign corporation has its principal office in the United States shall apply in determining under this subdivision whether a partnership has its principal office in the United States. See section 707(b)(3) and paragraph (b)(3) of § 1.707-1 for rules for determining the extent of the ownership by a partner of a capital interest or profits interest in a partnership. The application of this subdivision may be illustrated by the following examples:

Example 1. B, a nonresident alien individual, is a member of partnership X, the members of which are U.S. citizens, nonresident alien individuals, and foreign corporations. The principal business of partnership X is trading in stocks or securities for its own account. Pursuant to discretionary authority granted by B, partnership X effects transactions in the United States in stocks or securities for its own account. Partnership X is not a dealer in stocks or securities, and more than 50 percent of either the capital interest or the profits interest in partnership X is owned throughout its taxable year by five or fewer partners who are individuals. B is not engaged in trade or business within the United States solely by reason of such effecting of transactions in the United States in stocks or securities by partnership X for its own account.

Example 2. The facts are the same as in example 1, except that not more than 50 percent of either the capital interest or the profits interest in partnership X is owned throughout the taxable year by five or fewer partners who are individuals. However, partnership X does not maintain its principal office in the United States at any time during the taxable year. B is not engaged in trade or business within the United States solely by reason of the trading in stocks or securities by partnership X for its own account.

Example 3. The facts are the same as in example 1, except that, pursuant to discretionary authority granted by partnership X, domestic broker D effects transactions in the United States in stocks or securities for the account of partnership X. B is not engaged in trade or business in the United States solely by reason of such trading in stocks or securities for the account of partnership X.

(iii) ***Dealers in stocks or securities and certain foreign corporations.*** This subparagraph shall not apply to the effecting of transactions in the United States for the account of

(*a*) a dealer in stocks or securities or

(*b*) a foreign corporation (other than a corporation which is, or but for section 542(c)(7) or 543(b)(1)(C) would be, a personal holding company) the principal business of which is trading in stocks or securities for its own account, if the principal office of such corporation is in the United States at any time during the taxable year. Whether a foreign corporation's principal office is in the United States for this purpose is to be determined by

comparing the activities (other than trading in stocks or securities) which the corporation conducts from its office or other fixed place of business located in the United States with the activities it conducts from its offices or other fixed places of business located outside the United States. For purposes of this subdivision, a foreign corporation is considered to have only one principal office, and an office of such corporation will not be considered to be its principal office merely because it is a statutory office of such corporation. For example, a foreign corporation which carries on most or all of its investment activities in the United States but maintains a general business office or offices outside the United States in which its management is located will not be considered as having its principal office in the United States if all or a substantial portion of the following functions is carried on at or from an office or offices located outside the United States:

(*1*) Communicating with its shareholders (including the furnishing of financial reports),

(*2*) Communicating with the general public,

(*3*) Soliciting sales of its own stock,

(*4*) Accepting the subscriptions of new stockholders,

(*5*) Maintaining its principal corporate records and books of account,

(*6*) Auditing its books of account,

(*7*) Disbursing payments of dividends, legal fees, accounting fees, and officers' and directors' salaries,

(*8*) Publishing or furnishing the offering and redemption price of the shares of stock issued by it,

(*9*) Conducting meetings of its shareholders and board of directors, and

(*10*) Making redemptions of its own stock.

The application of this subdivision may be illustrated by the following examples:

> *Example 1.* (a) Foreign corporation X (not a corporation which is, or but for section 542(c)(7) or 543(b)(1)(C) would be, a personal holding company) was organized to sell its shares to nonresident alien individuals and foreign corporations and to invest the proceeds from the sale of such shares in stocks or securities in the United States. Foreign corporation X is engaged primarily in the business of investing, reinvesting, and trading in stocks or securities for its own account.
> (b) For a period of three years, foreign corporation X irrevocably authorizes domestic corporation Y to exercise its discretion in effecting transactions in the United States in stocks or securities for the account and risk of foreign corporation X. Foreign corporation X issues a prospectus in which it is stated that its funds will be invested pursuant to an investment advisory contract with domestic corporation Y and otherwise advertises its services. Shares of foreign corporation X are sold to nonresident aliens and foreign corporations

who are customers of the United States brokerage firms unrelated to domestic corporation Y or foreign corporation X. The principal functions performed for foreign corporation X by domestic corporation Y are the rendering of investment advice and the effecting of transactions in the United States in stocks or securities for the account of foreign corporation X. Moreover, domestic corporation Y occasionally communicates with prospective foreign investors in foreign corporation X (through speaking engagements abroad by management of domestic corporation Y, and otherwise) for the purpose of explaining the investment techniques and policies used by domestic corporation Y in investing the funds of foreign corporation X. However, domestic corporation Y does not participate in the day-to-day conduct of other business activities of foreign corporation X.

(c) Foreign corporation X maintains a general business office or offices outside the United States in which its management is permanently located and from which it carries on, except to the extent noted heretofore, the functions enumerated in (*b*)(*1*) through (*10*) of this subdivision. The management of foreign corporation X at all times retains the independent power to cancel the investment advisory contract with domestic corporation Y subject to the contractual limitations contained therein and is in all other respects independent of the management of domestic corporation Y. The managing personnel of foreign corporation X communicate on a regular basis with domestic corporation Y, and periodically visit the offices of domestic corporation Y, in connection with the business activities of foreign corporation X.

(d) The principal office of foreign corporation X will not be considered to be in the United States; and, therefore, foreign corporation X is not engaged in trade or business within the United States solely by reason of its relationship with domestic corporation Y.

Example 2. The facts are the same as in example 1 except that, in lieu of having the investment advisory contract with domestic corporation Y, foreign corporation X has an office in the United States in which its employees perform the same functions as are performed by domestic corporation Y in example 1. Foreign corporation X is not engaged in trade or business within the United States during the taxable year solely because the employees located in its United States office effect transactions in the United States in stocks or securities for the account of that corporation.

(iv) ***Definition of dealer in stocks or securities*** —

(*a*) ***In general.*** For purposes of this subparagraph, a dealer in stocks or securities is a merchant of stocks or securities, with an established place of business, regularly engaged as a merchant in purchasing stocks or securities and selling them to customers with a

view to the gains and profits that may be derived therefrom. Persons who buy and sell, or hold, stocks or securities for investment or speculation, irrespective of whether such buying or selling constitutes the carrying on of a trade or business, and officers of corporations, members of partnerships, or fiduciaries, who in their individual capacities buy and sell, or hold, stocks or securities for investment or speculation are not dealers in stocks or securities within the meaning of this subparagraph solely by reason of that activity. In determining under this subdivision whether a person is a dealer in stocks or securities such person's transactions in stocks or securities effected both in and outside the United States shall be taken into account.

(*b*) ***Underwriting syndicates and dealers trading for others.*** A foreign person who otherwise may be considered a dealer in stocks or securities under (a) of this subdivision shall not be considered a dealer in stocks or securities for purposes of this subparagraph—

(*1*) Solely because he acts as an underwriter, or as a selling group member, for the purpose of making a distribution of stocks or securities of a domestic issuer to foreign purchasers of such stocks or securities, irrespective of whether other members of the selling group distribute the stocks or securities of the domestic issuer to domestic purchasers, or

(*2*) Solely because of transactions effected in the United States in stocks or securities pursuant to his grant of discretionary authority to make decisions in effecting those transactions, if he can demonstrate to the satisfaction of the Commissioner that the broker, commission agent, custodian, or other agent through whom the transactions were effected acted pursuant to his written representation that the funds in respect of which such discretion was granted were the funds of a customer who is neither a dealer in stocks or securities, a partnership described in subdivision (ii)(*b*) of this subparagraph, or a foreign corporation described in subdivision (iii)(*b*) of this subparagraph.

For purposes of this (*b*), a foreign person includes a nonresident alien individual, a foreign corporation, or a partnership any member of which is a nonresident alien individual or a foreign corporation. This (*b*) shall apply only if the foreign person at no time during the taxable year has an office or other fixed place of business in the United States through which, or by the direction of which, the transactions in stocks or securities are effected.

(*c*) ***Illustrations.*** The application of this subdivision may be illustrated by the following examples:

Example 1. Foreign corporation X is a member of an underwriting syndicate organized to distribute stock issued by domestic corporation Y. Foreign corporation X distributes the stock of domestic corporation Y to foreign purchasers only. Domestic corporation M is syndicate manager of the underwriting syndicate and, pursuant to the terms of the underwriting agreement, reserves the right to sell certain quantities of the underwritten stock on behalf of all the members of the syndicate so as to engage in stabilizing transactions and to take certain other actions which may result in the realization of profit by all members of the underwriting syndicate. Foreign corporation X is not engaged in trade or business within the United States solely by reason of its participation as a member of such underwriting syndicate for the purpose of distributing the stock of domestic corporation Y to foreign purchasers or by reason of the exercise by M corporation of its discretionary authority as manager of such syndicate.

Example 2. Foreign corporation Y, a calendar year taxpayer, is a bank which trades in stocks or securities both for its own account and for the account of others. During 1967 foreign corporation Y authorizes domestic corporation M, a broker, to exercise its discretion in effecting transactions in the United States in stocks or securities for the account of B, a nonresident alien individual who has a trading account with foreign corporation Y. Foreign corporation Y furnishes a written representation to domestic corporation M to the effect that the funds in respect of which foreign corporation Y has authorized domestic corporation M to use its discretion in trading in the United States in stocks or securities are not funds in respect of which foreign corporation Y is trading for its own account but are the funds of one of its customers who is neither a dealer in stocks or securities, a partnership described in subdivision (ii)(*b*) of this subparagraph, or a foreign corporation described in subdivision (iii)(*b*) of this subparagraph. Pursuant to the discretionary authority so granted, domestic corporation M effects transactions in the United States during 1967 in stocks or securities for the account of the customer of foreign corporation Y. At no time during 1967 does foreign corporation Y have an office or other fixed place of business in the United States through which, or by the direction of which, such transactions in stocks or securities are effected by domestic corporation M. During 1967 foreign corporation Y is not engaged in trade or business within the United States solely by reason of such trading in stocks or securities during such year by domestic corporation M for the account of the customer of foreign corporation Y. Copies of the written representations furnished to domestic corporation M should be retained by foreign corporation Y for inspection by the Commissioner, if inspection is requested.

(d) ***Trading in commodities.*** For purposes of paragraph (a) of this section—

(1) ***In general.*** The term "engaged in trade or business within the United States" does not include the effecting of transactions in the United States in commodities (including hedging transactions) through a resident broker, commission agent, custodian, or other independent agent if

(i) the commodities are of a kind customarily dealt in on an organized commodity exchange, such as a grain futures or a cotton futures market,

(ii) the transaction is of a kind customarily consummated at such place, and

(iii) the taxpayer at no time during the taxable year has an office or other fixed place of business in the United States through which, or by the direction of which, the transactions in commodities are effected. The volume of commodity transactions effected during the taxable year shall not be taken into account in determining under this subparagraph whether the taxpayer is engaged in trade or business in the United States.

(2) ***Trading for taxpayer's own account*** —

(i) ***In general.*** The term "engaged in trade or business within the United States" does not include the effecting of transactions in the United States in commodities (including hedging transactions) for the taxpayer's own account if the commodities are of a kind customarily dealt in on an organized commodity exchange and if the transaction is of a kind customarily consummated at such place. This rule shall apply irrespective of whether such transactions are effected by or through—

(*a*) The taxpayer himself while present in the United States,

(*b*) Employees of the taxpayer, whether or not such employees are present in the United States while effecting the transactions, or

(c) A broker, commission, agent, custodian, or other agent of the taxpayer, whether or not such agent while effecting the transactions is

(1) dependent or independent, or

(2) resident, nonresident, or present, in the United States, and irrespective of whether any such employee or agent has discretionary authority to make decisions in effecting such transactions. The volume of commodity transactions effected during the taxable year shall not be taken into account in determining under this subparagraph whether the taxpayer is engaged in trade or business within the United States. This subparagraph shall not apply to the effecting of transactions in the United States for the account of a dealer in commodities.

(ii) ***Partnerships.*** A nonresident alien individual, foreign partnership, foreign estate, foreign trust, or foreign corporation shall not be considered to be engaged in trade or business within the United States solely because such person is a member of a partnership (whether domestic or foreign) which, pursuant to discretionary authority granted to such partnership by such person, effects transactions in the United States in commodities for the partnership's account or solely because an employee of such partnership, or a broker, commission agent, custodian, or other agent, pursuant to discretionary authority granted by such partnership, effects transactions in the United States in commodities for the account of such partnership. This subdivision shall not apply to any member of a partnership which is a dealer in commodities.

(iii) ***Illustration.*** The application of this subparagraph may be illustrated by the following example:

Example. Foreign corporation X, a calendar year taxpayer, is engaged as a merchant in the business of purchasing grain in South America and selling such cash grain outside the United States under long-term contracts for delivery in foreign countries. Foreign corporation X consummates a sale of 100,000 bushels of cash grain in February 1967 for July delivery to Sweden. Because foreign corporation X does not actually own such grain at the time of the sales transaction, such corporation buys as a hedge a July “futures contract” for delivery of 100,000 bushels of grain, in order to protect itself from loss by reason of a possible rise in the price of grain between February and July. The “futures contract” is ordered through domestic corporation Y, a futures commission merchant registered under the Commodity Exchange Act. Foreign corporation X is not engaged in trade or business within the United States during 1967 solely by reason of its effecting of such futures contract for its own account through domestic corporation Y.

(3) ***Definition of commodity.*** For purposes of section 864(b)(2)(B) and this paragraph the term “commodities” does not include goods or merchandise in the ordinary channels of commerce.

(e) ***Other rules.*** The fact that a person is not determined by reason of this section to be not engaged in trade or business with the United States is not to be considered a determination that such person is engaged in trade or business within the United States. Whether or not such person is engaged in trade or business within the United States shall be determined on the basis of the facts and circumstances in each case. For other rules relating to the determination of whether a taxpayer is engaged in trade or business in the United States see section 875 and the regulations thereunder.

(f) ***Effective date.*** The provisions of this section shall apply only in the case of taxable years beginning after December 31, 1966.

[T.D. 6948, 33 FR 5090, Mar. 28, 1968, as amended by T.D. 7378, 40 FR 45435, Oct. 2, 1975]

§ 1.864-3 Rules for determining income effectively connected with U.S. business of nonresident aliens or foreign corporations.

(a) ***In general.*** For purposes of the Internal Revenue Code, in the case of a nonresident alien individual or a foreign corporation that is engaged in a trade or business in the United States at any time during the taxable year, the rules set forth in §§ 1.864-4 through 1.864-7 and this section shall apply in determining whether income, gain, or loss shall be treated as effectively connected for a taxable year beginning after December 31, 1966, with the conduct of a trade or business in the United States. Except as provided in sections 871 (c) and (d) and 882 (d) and (e), and the regulations thereunder, in the case of a nonresident alien individual or a foreign corporation that is at no time during the taxable year engaged in a trade or business in the United States, no income, gain, or loss shall be treated as effectively connected for the taxable year with the conduct of a trade or business in the United States. The general rule prescribed by the preceding sentence shall apply even though the income, gain, or loss would have been treated as effectively connected with the conduct of a trade or business in the United States if such income or gain had been received or accrued, or such loss had been sustained, in an earlier taxable year when the taxpayer was engaged in a trade or business in the United States. In applying §§ 1.864-4 through 1.864-7 and this section, the determination whether an item of income, gain, or loss is effectively connected with the conduct of a trade or business in the United States shall not be controlled by any administrative, judicial, or other interpretation made under the laws of any foreign country.

(b) ***Illustrations.*** The application of this section may be illustrated by the following examples:

Example 1. During 1967 foreign corporation N, which uses the calendar year as the taxable year, is engaged in the business of purchasing and selling household equipment on the installment plan. During 1967 N is engaged in business in the United States by reason of the sales activities it carries on in the United States for the purpose of selling therein some of the equipment which it has purchased. During 1967 N receives installment payments of $800,000 on sales it makes that year in the United States, and the income from sources within the United States for 1967 attributable to such payments is $200,000. By reason of section 864(c)(3) and paragraph (b) of § 1.864-4 this income of $200,000 is effectively connected for 1967 with the conduct of a trade or business in the United States by N. In December of 1967, N discontinues its efforts to make any further sales of household equipment in the United States, and at no time during 1968 is N engaged in a trade or business in the United States. During 1968 N receives installment payments of $500,000 on the sales it made in the United States during 1967, and the income from sources within the United States for 1968 attributable to such payments is $125,000. By reason of section 864(c)(1)(B) and this section, this income of $125,000 is not effectively connected for 1968 with the conduct of a trade or business in the United States by N, even though such amount, if it had been received by N during 1967, would have been effectively connected for 1967 with the conduct of a trade or business in the United States by that corporation.

Example 2. R, a foreign holding company, owns all of the voting stock in five corporations, two of which are domestic corporations. All of the subsidiary corporations are engaged in the active conduct of a trade or business. R has an office in the United States where its chief executive officer, who is also the chief executive officer of one of the domestic corporations, spends a substantial portion of the taxable year supervising R's investment in its operating subsidiaries and performing his function as chief executive officer of the domestic operating subsidiary. R is not considered to be engaged in a trade or business in the United States during the taxable year by reason of the activities carried on in the United States by its chief executive officer in the supervision of its investment in its operating subsidiary corporations.

Accordingly, the dividends from sources within the United States received by R during the taxable year from its domestic subsidiary corporations are not effectively connected for that year with the conduct of a trade or business in the United States by R.

Example 3. During the months of June through December 1971, B, a nonresident alien individual who uses the calendar year as the taxable year and the cash receipts and disbursements method of accounting, is employed in the United States by domestic corporation M for a salary of $2,000 per month, payable semimonthly. During 1971, B receives from M salary payments totaling $13,000, all of which income by reason of section 864(c)(2) and paragraph (c)(6)(ii) of § 1.864-4, is effectively connected for 1971 with the conduct of a trade or business in the United States by B. On December 31, 1971, B terminates his employment with M and departs from the United States. At no time during 1972 is B engaged in a trade or business in the United States. In January of 1972, B receives from M salary of $1,000 for the last half of December 1971, and a bonus of $1,000 in consideration of the services B performed in the United States during 1971 for that corporation. By reason of section 864(c)(1)(B) and this section, the $2,000 received by B during 1972 from sources within the United States is not effectively connected for that year with the conduct of a trade or business in the United States, even though such amount, if it had been received by B during 1971, would have been effectively connected for 1971 with the conduct of a trade or business in the United States by B.

[T.D. 7216, 37 FR 23424, Nov. 3, 1972]

§ 1.864-4 U.S. source income effectively connected with U.S. business.

(a) ***In general.*** This section applies only to a nonresident alien individual or a foreign corporation that is engaged in a trade or business in the United States at some time during a taxable year beginning after December 31, 1966, and to the income, gain, or loss of such person from sources within the United States. If the income, gain, or loss of such person for the taxable year from sources within the United States consists of

(1) gain or loss from the sale or exchange of capital assets or

(2) fixed or determinable annual or periodical gains, profits, and income or certain other gains described in section 871(a)(1) or 881(a), certain factors must be taken into account, as prescribed by section 864(c)(2) and paragraph (c) of this section, in order to determine whether the income, gain, or loss is effectively connected for the taxable year with the conduct of a trade or business in the United States by that person. All other income, gain, or loss of such person for the taxable year from sources within the United States shall be treated as effectively connected for the taxable year with the conduct of a trade or business in the United States by that person, as prescribed by section 864(c)(3) and paragraph (b) of this section.

(b) ***Income other than fixed or determinable income and capital gains.*** All income, gain, or loss for the taxable year derived by a nonresident alien individual or foreign corporation engaged in a trade or business in the United States from sources within the United States which does not consist of income, gain, or loss described in section 871(a)(1) or 881(a), or of gain or loss from the sale or exchange of capital assets, shall, for purposes of paragraph (a) of this section, be treated as effectively connected for the taxable year with the conduct of a trade or business in the United States. This income, gain, or loss shall be treated as effectively connected for the taxable year with the conduct of a trade or business in the United States, whether or not the income, gain, or loss is derived from the trade or business being carried on in the United States during the taxable year. The application of this paragraph may be illustrated by the following examples:

Example 1. M, a foreign corporation which uses the calendar year as the taxable year, is engaged in the business of manufacturing machine tools in a foreign country. It establishes a branch office in the United States during 1968 which solicits orders from customers in the United States for the machine tools manufactured by that corporation. All negotiations with respect to such sales are carried on in the United States. By reason of its activity in the United States M is engaged in business in the United States during 1968. The income or loss from sources within the United States from such sales during 1968 is treated as effectively connected for that year with the conduct of a business in the United States by M. Occasionally, during 1968 the customers in the United States write directly to the home office of M, and the home office makes sales directly to such customers without routing the transactions through its branch office in the United States. The income or loss from sources within the United States for 1968 from these occasional direct sales by the home office is also treated as effectively connected for that year with the conduct of a business in the United States by M.

Example 2. The facts are the same as in example 1 except that during 1967 M was also engaged in the business of purchasing and selling office machines and that it used the installment method of accounting for the sales made in this separate business. During 1967 M was engaged in business in the United States by reason of the sales activities it carried on in the United States for the purpose of selling therein a number of the office machines which it had purchased. Although M discontinued this business activity in the United States in December of 1967, it received in 1968 some installment payments on the sales which it had made in the United States during 1967. The income of M for 1968 from sources within the United States which is attributable to such installment payments is effectively connected for 1968 with the conduct of a business in the United States, even though such income is not connected with the business carried on in the United States during 1968 through its sales office located in the United States for the solicitation of orders for the machine tools it manufactures.

Example 3. Foreign corporation S, which uses the calendar year as the taxable year, is engaged in the business of purchasing and selling electronic equipment. The home office of such corporation is also engaged in the business of purchasing and selling vintage wines. During 1968, S establishes a branch office in the United States to sell electronic equipment to customers, some of whom are located in the United States and the balance, in foreign countries. This branch office is not equipped to sell, and does not participate in sales of, wine purchased by the home office. Negotiations for the sales of the electronic equipment take place in the United States. By reason of the activity of its branch office in the United States, S is engaged in business in the United States during 1968. As a result of advertisements which the home office of S places in periodicals sold in the United States, customers in the United States frequently place orders for the purchase of wines with the home office in the foreign country, and the home office makes sales of wine in 1968 directly to such customers without routing the transactions through its branch office in the United States. The income or loss from sources within the United States for 1968 from sales of electronic equipment by the branch office, together with the income or loss from sources within the United States for that year from sales of wine by the home office, is treated as effectively connected for that year with the conduct of a business in the United States by S.

(c) ***Fixed or determinable income and capital gains —***

(1) ***Principal factors to be taken into account —***

(i) ***In general.*** In determining for purposes of paragraph (a) of this section whether any income for the taxable year from sources within the United States which is described in section 871(a)(1) or 881(a), relating to fixed or determinable annual or periodical gains, profits, and income and certain other gains, or whether gain or loss from sources within the United States for the taxable year from the sale or exchange of capital assets, is effectively connected for the taxable year with the conduct of a trade or business in the United States, the principal tests to be applied are (a) the asset-use test, that is, whether the income, gain, or loss is derived from assets used in, or held for use in, the conduct of the trade or business in the United States, and (b) the business-activities test, that is, whether the activities of the trade or business conducted in the United States were a material factor in the realization of the income, gain, or loss.

(ii) ***Special rule relating to interest on certain deposits.*** For purposes of determining under section 861(a)(1)(A) (relating to interest on deposits with banks, savings and loan associations, and insurance companies paid or credited before January 1, 1976) whether the interest described therein is effectively connected for the taxable year with the conduct of a trade or business in the United States, such interest shall be treated as income from sources within the United States for purposes of applying this paragraph and § 1.864-5. If by reason of the application of this paragraph such interest is determined to be income which is not effectively connected for the taxable year with the conduct of a trade or business in the United States, it shall then be treated as interest from sources without the United States which is not subject to the application of § 1.864-5.

(2) ***Application of the asset-use test*** —

(i) ***In general.*** For purposes of subparagraph (1) of this paragraph, the asset-use test ordinarily shall apply in making a determination with respect to income, gain, or loss of a passive type where the trade or business activities as such do not give rise directly to the realization of the income, gain, or loss. However, even in the case of such income, gain, or loss, any activities of the trade or business which materially contribute to the realization of such income, gain, or loss shall also be taken into account as a factor in determining whether the income, gain, or loss is effectively connected with the conduct of a trade or business in the United States. The asset-use test is of primary significance where, for example, interest income is derived from sources within the United States by a nonresident alien individual or foreign corporation that is engaged in the business of manufacturing or selling goods in the United States. See also subparagraph (5) of this paragraph for rules applicable to taxpayers conducting a banking, financing, or similar business in the United States.

(ii) ***Cases where applicable.*** Ordinarily, an asset shall be treated as used in, or held for use in, the conduct of a trade or business in the United States if the asset is—

(*a*) Held for the principal purpose of promoting the present conduct of the trade or business in the United States; or

(*b*) Acquired and held in the ordinary course of the trade or business conducted in the United States, as, for example, in the case of an account or note receivable arising from that trade or business; or

(*c*) Otherwise held in a direct relationship to the trade or business conducted in the United States, as determined under paragraph (c)(2)(iv) of this section.

(iii) ***Application of asset-use test to stock*** —(*a*) *In general.* Except as provided in paragraph (c)(2)(iii)(*b*) of this section, stock of a corporation (whether domestic or foreign) shall not be treated as an asset used in, or held for use in, the conduct of a trade or business in the United States.

(*b*) *Stock held by foreign insurance companies.* This paragraph (c)(2)(iii) shall not apply to stock of a corporation (whether domestic or foreign) held by a foreign insurance company unless the foreign insurance company owns 10 percent or more of the total voting power or value of all classes of stock of such corporation. For purposes of this section, section 318(a) shall be applied in determining ownership, except that in applying section 318(a)(2)(C), the phrase "10 percent" is used instead of the phrase "50 percent."

(iv) ***Direct relationship between holding of asset and trade or business*** —(*a*) *In general.* In determining whether an asset is held in a direct relationship to the trade or business conducted in the United States, principal consideration shall be given to whether the asset is needed in that trade or business. An asset shall be considered needed in a trade or business, for this purpose, only if the asset is held to meet the present needs of that trade or business and not its anticipated future needs. An asset shall be considered as needed in the trade or business conducted in the United States if, for example, the asset is held to meet the operating expenses of that trade or business. Conversely, an asset shall be considered as not needed in the trade or business conducted in the United States if, for example, the asset is held for the purpose of providing for (*1*) future diversification into a new trade or business, (*2*) expansion of trade or business activities conducted outside of the United States, (*3*) future plant replacement, or (*4*) future business contingencies.

(*b*) Presumption of direct relationship. Generally, an asset will be treated as held in a direct relationship to the trade or business if (*1*) the asset was acquired with funds generated by that trade or business, (*2*) the income from the asset is retained or reinvested in that trade or business, and (*3*) personnel who are present in the United States and actively involved in the conduct of that trade or business exercise significant management and control over the investment of such asset.

(v) ***Illustration.*** The application of paragraph (iv) may be illustrated by the following examples:

Example 1. M, a foreign corporation which uses the calendar year as the taxable year, is engaged in industrial manufacturing in a foreign country. M maintains a branch in the United States which acts as importer and distributor of the merchandise it manufactures abroad; by reason of these branch activities. M is engaged in business in the United States during 1968. The branch in the United States is required to hold a large current cash balance for business purposes, but the amount of the cash balance so required varies because of the fluctuating seasonal nature of the branch's business. During 1968 at a time when large cash balances are not required the branch invests the surplus amount in U.S. Treasury bills. Since these Treasury bills are held to meet the present needs of the business conducted in the United States they are held in a direct relationship to that business, and the interest for 1968 on these bills is effectively connected for that year with the conduct of the business in the United States by M.

Example 2. Foreign corporation M, which uses the calendar year as the taxable year, has a branch office in the United States where it sells to customers located in the United States various products which are manufactured by that corporation in a foreign country. By reason of this activity M is engaged in business in the United States during 1997. The U.S. branch establishes in 1997 a fund to which are periodically credited various amounts which are derived from the

business carried on at such branch. The amounts in this fund are invested in various securities issued by domestic corporations by the managing officers of the U.S. branch, who have the responsibility for maintaining proper investment diversification and investment of the fund. During 1997, the branch office derives from sources within the United States interest on these securities, and gains and losses resulting from the sale or exchange of such securities. Since the securities were acquired with amounts generated by the business conducted in the United States, the interest is retained in that business, and the portfolio is managed by personnel actively involved in the conduct of that business, the securities are presumed under paragraph (c)(2)(iv)(*b*) of this section to be held in a direct relationship to that business. However, M is able to rebut this presumption by demonstrating that the fund was established to carry out a program of future expansion and not to meet the present needs of the business conducted in the United States. Consequently, the income, gains, and losses from the securities for 1997 are not effectively connected for that year with the conduct of a trade or business in the United States by M.

(3) ***Application of the business-activities test*** —

(i) ***In general.*** For purposes of subparagraph (1) of this paragraph, the business-activities test shall ordinarily apply in making a determination with respect to income, gain, or loss which, even though generally of the passive type, arises directly from the active conduct of the taxpayer's trade or business in the United States. The business-activities test is of primary significance, for example, where (*a*) dividends or interest are derived by a dealer in stocks or securities, (*b*) gain or loss is derived from the sale or exchange of capital assets in the active conduct of a trade or business by an investment company, (*c*) royalties are derived in the active conduct of a business consisting of the licensing of patents or similar intangible property, or (*d*) service fees are derived in the active conduct of a servicing business. In applying the business-activities test, activities relating to the management of investment portfolios shall not be treated as activities of the trade or business conducted in the United States unless the maintenance of the investments constitutes the principal activity of that trade or business. See also subparagraph (5) of this paragraph for rules applicable to taxpayers conducting a banking, financing, or similar business in the United States.

(ii) ***Illustrations.*** The application of this subparagraph may be illustrated by the following examples:

Example 1. Foreign corporation S is a foreign investment company organized for the purpose of investing in stocks and securities. S is not a personal holding company or a corporation which would be a personal holding company but for section 542(c)(7) or 543(b)(1)(C). Its investment portfolios consist of common stocks issued by both foreign and domestic corporations and a substantial amount of high grade bonds. The business activity of S consists of the management of its portfolios for the purpose of investing, reinvesting, or trading in stocks and securities. During the taxable year 1968, S has its principal office in the United States within the meaning of paragraph (c)(2)(iii) of § 1.864-2 and, by reason of its trading in the United States in stocks and securities, is engaged in business in the United States. The dividends and interest derived by S during 1968 from sources within the United States, and the gains and losses from sources within the United States for such year from the sale of stocks and securities from its investment portfolios, are effectively connected for 1968 with the conduct of the business in the United States by that corporation, since its activities in connection with the management of its investment portfolios are activities of that business and such activities are a material factor in the realization of such income, gains, and losses.

Example 2. N, a foreign corporation which uses the calendar year as the taxable year, has a branch in the United States which acts as an importer and distributor of merchandise; by reason of the activities of that branch, N is engaged in business in the United States during 1968. N also carries on a business in which it licenses patents to unrelated persons in the United States for use in the United States. The businesses of the licensees in which these patents are used have no direct relationship to the business carried on in N's branch in the United States, although the merchandise marketed by the branch is similar in type to that manufactured under the patents. The negotiations and other activities leading up to the consummation of these licenses are conducted by employees of N who are not connected with the U.S. branch of that corporation, and the U.S. branch does not otherwise participate in arranging for the licenses. Royalties received by N during 1968 from these licenses are not effectively connected for that year with the conduct of its business in the United States because the activities of that business are not a material factor in the realization of such income.

(4) ***Method of accounting as a factor.*** In applying the asset-use test or the business-activities test described in subparagraph (1) of this paragraph, due regard shall be given to whether or not the asset, or the income, gain, or loss, is accounted for through the trade or business conducted in the United States, that is, whether or not the asset, or the income, gain, or loss, is carried on books of account separately kept for that trade or business, but this accounting test shall not by itself be controlling. In applying this subparagraph, consideration shall be given to whether the accounting treatment of an item reflects the consistent application of generally accepted accounting principles in a particular trade or business in accordance with accepted conditions or practices in that trade or business and whether there is a consistent accounting treatment of that item from year to year by the taxpayer.

(5) ***Special rules relating to banking, financing, or similar business activity*** —

(i) ***Definition of banking, financing, or similar business.*** A nonresident alien individual or a foreign corporation shall be considered for purposes of this section and paragraph (b)(2) of § 1.864-5 to be engaged in the active conduct of a banking, financing, or similar business in the United States if at some time during the taxable year the taxpayer is engaged in business in the United States and the activities of such business consist of any one or more of the following activities carried on, in whole or in part, in the United States in transactions with persons situated within or without the United States:

(*a*) Receiving deposits of funds from the public,

(*b*) Making personal, mortgage, industrial, or other loans to the public,

(*c*) Purchasing, selling, discounting, or negotiating for the public on a regular basis, notes, drafts, checks, bills of exchange, acceptances, or other evidences of indebtedness,

(*d*) Issuing letters of credit to the public and negotiating drafts drawn thereunder,

(*e*) Providing trust services for the public, or

(*f*) Financing foreign exchange transactions for the public.

Although the fact that the taxpayer is subjected to the banking and credit laws of a foreign country shall be taken into account in determining whether he is engaged in the active conduct of a banking, financing, or similar business, the character of the business actually carried on during the taxable year in the United States shall determine whether the taxpayer is actively conducting a banking, financing, or similar business in the

United States. A foreign corporation which acts merely as a financing vehicle for borrowing funds for its parent corporation or any other person who would be a related person within the meaning of section 954(d)(3) if such foreign corporation were a controlled foreign corporation shall not be considered to be engaged in the active conduct of a banking, financing, or similar business in the United States.

(ii) *Effective connection of income from stocks or securities with active conduct of a banking, financing, or similar business.* Notwithstanding the rules in subparagraphs (2) and (3) of this paragraph with respect to the asset-use test and the business-activities test, any dividends or interest from stocks or securities, or any gain or loss from the sale or exchange of stocks or securities which are capital assets, which is from sources within the United States and derived by a nonresident alien individual or a foreign corporation in the active conduct during the taxable year of a banking, financing, or similar business in the United States shall be treated as effectively connected for such year with the conduct of that business only if the stocks or securities giving rise to such income, gain, or loss are attributable to the U.S. office through which such business is carried on and—

(*a*) Were acquired—

(*1*) As a result of, or in the course of making loans to the public,

(*2*) In the course of distributing such stocks or securities to the public, or

(*3*) For the purpose of being used to satisfy the reserve requirements, or other requirements similar to reserve requirements, established by a duly constituted banking authority in the United States, or

(*b*) Consist of securities (as defined in subdivision (v) of this subparagraph) which are—

(*1*) Payable on demand or at a fixed maturity date not exceeding 1 year from the date of acquisition,

(*2*) Issued by the United States, or any agency or instrumentality thereof, or

(*3*) Not described in (*a*) or in (*1*) or (*2*) of this (*b*).

However, the amount of interest from securities described in (*b*)(*3*) of this subdivision (ii) which shall be treated as effectively connected for the taxable year with the active conduct of a banking, financing, or similar business in the United States shall be an amount (but not in excess of the entire interest for the taxable year from sources within the United States from such securities) determined by multiplying the entire interest for the taxable year from sources within the United States from such securities by a fraction the numerator of which is 10 percent and the denominator of which is the same percentage, determined on the basis of a monthly average for the taxable year, as the book value of the total of such securities held by the U.S. office through which such business is carried on bears to the book value of the total assets of such office. The amount of gain or loss, if any, for the taxable year from the sale or exchange of such securities which shall be treated as effectively connected for the taxable year with the active conduct of a banking, financing, or similar business in the United States shall be an amount (but not in excess of the entire gain or loss for the taxable year from sources within the United States from the sale or exchange of such securities) determined by multiplying the entire gain or loss for the taxable year from sources within the United States from the sale or exchange of such securities by the fraction described in the immediately preceding sentence. The percentage of the denominator of the limiting fraction for such purposes shall be the percentage obtained by separately adding the book value of such securities and such total assets held at the close of each month in the taxable year, dividing each such sum by 12, and then dividing the amount of securities so obtained by the amount of assets so obtained. This subdivision does not apply to dividends from stock owned by a foreign corporation in a domestic corporation of which more than 50 percent of the total combined voting power of all classes of stock

entitled to vote is owned by such foreign corporation and which is engaged in the active conduct of a banking business in the United States. The application of this subdivision may be illustrated by the following example:

> ***Example.*** Foreign corporation M, created under the laws of foreign country Y, has in the United States a branch, B, which during the taxable year is engaged in the active conduct of the banking business in the United States within the meaning of subdivision

(i) of this subparagraph. During the taxable year M derives from sources within the United States through the activities carried on through B, $7,500,000 interest from securities described in subdivision (*b*)(*3*) of this subdivision

(ii) and $7,500,000 gain from the sale or exchange of such securities. The monthly average, determined as of the last day of each month in the taxable year, of such securities held by B divided by the monthly average, as so determined, of the total assets held by B equals 15 percent. Under this subdivision, the amount of interest income from such securities that shall be treated as effectively connected for the taxable year with the active conduct by M of a banking business in the United States is $5 million ($7,500,000 interest × 10% / 15%), and the amount of gain from the sale or exchange of such securities that shall be treated as effectively connected for such year with the active conduct of such business is $5 million ($7,500,000 gain × 10% / 15%).

(iii) ***Stocks or securities attributable to U.S. office*** —

(*a*) ***In general.*** For purposes of paragraph (c)(5)(ii) of this section, a stock or security shall be deemed to be attributable to a U.S. office only if such office actively and materially participated in soliciting, negotiating, or performing other activities required to arrange the acquisition of the stock or security. The U.S. office need not have been the only active participant in arranging the acquisition of the stock or security.

(*b*) *Exceptions.* A stock or security shall not be deemed to be attributable to a U.S. office merely because such office conducts one or more of the following activities:

(*1*) Collects or accounts for the dividends, interest, gain, or loss from such stock or security,

(*2*) Exercises general supervision over the activities of the persons directly responsible for carrying on the activities described in paragraph (c)(5)(iii)(*a*) of this section,

(*3*) Performs merely clerical functions incident to the acquisition of such stock or security,

(*4*) Exercises final approval over the execution of the acquisition of such stock or security, or

(*5*) Holds such stock or security in the United States or records such stock or security on its books or records as having been acquired by such office or for its account.

(*c*) *Effective date.* This paragraph (c)(5)(iii) shall be effective for income includible in taxable years beginning on or after June 18, 1984, except that 26 CFR 1.864-4 (c)(5)(iii) as it appeared in the Code of Federal Regulations revised as of April 1, 1983, shall apply to income received or accrued under a loan made by the taxpayer on or before May 18, 1984, or pursuant to a written binding commitment entered into on or before May 18, 1984.

(iv) ***Acquisitions in course of making loans to the public.*** For purposes of subdivision (ii) of this subparagraph—

(*a*) A stock or security shall be considered to have been acquired in the course of making a loan to the public where, for example, such stock or security was acquired as additional consideration for the making of the loan,

(*b*) A stock or security shall be considered to have been acquired as a result of making a loan to the public if, for example, such stock or security was acquired by foreclosure upon a bona fide default of the loan and is held as an ordinary and necessary incident to the active conduct of the banking, financing, or similar business in the United States, and

(*c*) A stock or security acquired on a stock exchange or organized over-the-counter market shall be considered not to have been acquired as a result of, or in the course of, making loans to the public.

(v) ***Security defined.*** For purposes of this subparagraph, a security is any bill, note, bond, debenture, or other evidence of indebtedness, or any evidence of an interest in, or right to subscribe to or purchase, any of the foregoing items.

(vi) ***Limitations on application of subparagraph—***

(a) ***Other business activity.*** This subparagraph provides rules for determining when certain income from stocks or securities is effectively connected with the active conduct of a banking, financing, or similar business in the United States. Any dividends, interest, gain, or loss from sources within the United States which by reason of the application of subdivision (ii) of this subparagraph is not effectively connected with the active conduct by a nonresident alien individual or a foreign corporation of a banking, financing, or similar business in the United States may be effectively connected for the taxable year, under subparagraph (2) or (3) of this paragraph with the conduct by such taxpayer of another trade or business in the United States, such as, for example, the business of selling or manufacturing goods or merchandise or of trading in stocks or securities for the taxpayer's own account.

(*b*) ***Other income.*** For rules relating to income, gain, or loss from sources within the United States (other than dividends or interest from, or gain or loss from the sale or exchange of, stocks or securities referred to in subdivision (ii) of this subparagraph) derived in the active conduct of a banking, financing, or similar business in the United States, see subparagraphs (2) and (3) of this paragraph and paragraph (b) of this section.

(vii) ***Illustrations.*** The application of this subparagraph may be illustrated by the following examples:

Example 1. Foreign corporation F, which is created under the laws of foreign country X and engaged in the active conduct of the banking business in country X and a number of other foreign countries, has in the United States a branch, B, which during the taxable year is engaged in the active conduct of the banking business in the United States within the meaning of subdivision

(i) of this subparagraph. In the course of its banking business in foreign countries, F receives at its branches located in country X and other foreign countries substantial deposits in U.S. dollars which are transferred to the accounts of B in the United States. During the taxable year, B actively participates in negotiating loans to residents of the United States, such as call loans to U.S. brokers, which are financed from the U.S. dollar deposits transferred to B by F. In addition, B actively participates in purchasing on the New York Stock Exchange and over-the-counter markets long-term bonds and notes issued by the U.S. Government, U.S. Treasury bills, and long-term interest-bearing bonds issued by domestic corporations and having a maturity date of less than 1 year from the date of acquisition, all of which are purchased from the deposits transferred to B by F. All of the securities so acquired are held by B and recorded on its books in the United States. Pursuant to subdivision (ii) of this subparagraph, the interest received by F during the taxable year on these loans, bonds, notes, and bills is effectively connected for such year with the active conduct by F of a banking business in the United States.

Example 2. The facts are the same as in example 1 except that B also actively participates in using part of the U.S. dollar deposits, which are transferred to it by F, to purchase on the New York Stock Exchange shares of common stock issued by various domestic corporations. All of the shares so purchased are considered to be capital assets within the meaning of section 1221 and are recorded on B's books in the United States. None of the shares so purchased were acquired for the purpose of meeting reserve or other similar requirements. During the taxable year some of the shares are sold by B on the stock exchange. Pursuant to subdivision (ii) of this subparagraph, the dividends and gains received by F during the taxable year on these shares of stock are not effectively connected with the active conduct by F of a banking, financing, or similar business in the United States.

Example 3. The facts are the same as in example 1 except that B also uses part of the U.S. dollar deposits, which are transferred to it by F, to make a loan to domestic corporation M. As part of the consideration for the loan, M gives to B a number of shares of common stock issued by M. All of these shares of stock are considered to be capital assets within the meaning of section 1221 and are recorded on B's books in the United States. During the taxable year one-half of these shares of stock is sold by B on the New York Stock Exchange. Pursuant to subdivision (ii) of this subparagraph, the dividends and gains received by F during the taxable year on these shares of stock are effectively connected for such year with the active conduct by F of a banking business in the United States.

Example 4. The facts are the same as in example 1 except that during the taxable year the home office of F in country X actively participates in negotiating loans to residents of the United States, such as call loans to U.S. brokers, which are financed by the U.S. dollar deposits received at the home office and are recorded on the books of the home office. B does not participate in negotiating these loans. Pursuant to subdivision (ii) of this subparagraph the interest received by F during the taxable year on these loans made by the home office in country X is not effectively connected with the active conduct by F of a banking, financing, or similar business in the United States.

Example 5. Foreign corporation *Y,* which is created under the laws of foreign country X and is engaged in the active conduct of a banking business in country X and other foreign countries, has a branch, *C,* in the United States that is engaged in the active conduct of a banking business in the United States, within the meaning of paragraph (c)(5)(i) of this section, during the taxable year. *C* handles the negotiation and acquisition of securities involved in loans made by *Y* to U.S.

persons. *C* also presents interest coupons with respect to such securities for payment, presents all such securities for payment at maturity, and maintains compete photocopy files with respect to such securities. The activities of the office of *Y* in country X with respect to these securities consist of giving pro forma approval of the loans, storing the original securities, and recording the securities on the books of the country X office. Pursuant to paragraphs (c)(5)(ii) and (c)(5)(iii) of this section, the U.S. source interest income received by *Y* during the taxable year on these securities is effectively connected for such year with the active conduct by *Y* of a banking business in the United States.

(6) ***Income related to personal services of an individual*** —

(i) ***Income, gain, or loss from assets.*** Income or gains from sources within the United States described in section 871(a)(1) and derived from an asset, and gain or loss from sources within the United States from the sale or exchange of capital assets, realized by a nonresident alien individual engaged in a trade or business in the United States during the taxable year solely by reason of his performing personal services in the United States shall not be treated as income, gain, or loss which is effectively connected for the taxable year with the conduct of a trade or business in the United States, unless there is a direct economic relationship between his holding of the asset from which the income, gain, or loss results and his trade or business of performing the personal services.

(ii) ***Wages, salaries, and pensions.*** Wages, salaries, fees, compensations, emoluments, or other remunerations, including bonuses, received by a nonresident alien individual for performing personal services in the United States which, under paragraph (a) of § 1.864-2, constitute engaging in a trade or business in the United States, and pensions and retirement pay attributable to such personal services, constitute income which is effectively connected for the taxable year with the conduct of a trade or business in the United States by that individual if he is engaged in a trade or business in the United States at some time during the taxable year in which such income is received.

(7) ***Effective date.*** Paragraphs (c)(2) and (c)(6)(i) of this section are effective for taxable years beginning on or after June 6, 1996.

[T.D. 7216, 37 FR 23425, Nov. 3, 1972, as amended by T.D. 7332, 39 FR 44232, Dec. 23, 1974; T.D. 79-58, 49 FR 21052, May 18, 1984; T.D. 8657, 61 FR 9337, Mar. 8, 1996; T.D. 9226, 70 FR 57510, Oct. 3, 2005]

§ 1.864-5 Foreign source income effectively connected with U.S. business.

(a) ***In general.*** This section applies only to a nonresident alien individual or a foreign corporation that is engaged in a trade or business in the United States at some time during a taxable year beginning after December 31, 1966, and to the income, gain, or loss of such person from sources without the United States. The income, gain, or loss of such person for the taxable year from sources without the United States which is specified in paragraph (b) of this section shall be treated as effectively connected for the taxable year with the conduct of a trade or business in the United States, only if he also has in the United States at some time during the taxable year, but not necessarily at the time the income, gain, or loss is realized, an office or other fixed place of business, as defined in § 1.864-7, to which such income, gain, or loss is attributable in accordance with § 1.864-6. The income of such person for the taxable year from sources without the United States which is specified in paragraph (c) of this section shall be treated as effectively connected for the taxable year with the conduct of a trade or business in the United States when derived by a foreign corporation carrying on a life insurance business in the United States. Except as

provided in paragraphs (b) and (c) of this section, no income, gain, or loss of a nonresident alien individual or a foreign corporation for the taxable year from sources without the United States shall be treated as effectively connected for the taxable year with the conduct of a trade or business in the United States by that person. Any income, gain, or loss described in paragraph (b) or (c) of this section which, if it were derived by the taxpayer from sources within the United States for the taxable year, would not be treated under § 1.864-4 as effectively connected for the taxable year with the conduct of a trade or business in the United States shall not be treated under this section as effectively connected for the taxable year with the conduct of a trade or business in the United States. To determine the source of income, gain or loss from the sale of personal property (including inventory property) attributable to an office or other fixed place of business in the United States by nonresidents, as defined in section 865(g)(1)(B), see § 1.865-3.

(b) ***Income other than income attributable to U.S. life insurance business.*** Income, gain, or loss from sources without the United States other than income described in paragraph (c) of this section or income from section 865(e)(2) sales, as defined in § 1.865-3(c), shall be taken into account pursuant to paragraph (a) of this section in applying §§ 1.864-6 and 1.864-7 only if it consists of—

(1) ***Rents, royalties, or gains on sales of intangible property.***

(i) Rents or royalties for the use of, or for the privilege of using, intangible personal property located outside the United States or from any interest in such property, including rents or royalties for the use, or for the privilege of using, outside the United States, patents, copyrights, secret processes and formulas, good will, trademarks, trade brands, franchises, and other like properties, if such rents or royalties are derived in the active conduct of the trade or business in the United States.

(ii) Gains or losses on the sale or exchange of intangible personal property located outside the United States or from any interest in such property, including gains or losses on the sale or exchange of the privilege of using, outside the United States, patents, copyrights, secret processes and formulas, good will, trademarks, trade brands, franchises, and other like properties, if such gains or losses are derived in the active conduct of the trade or business in the United States.

(iii) Whether or not such an item of income, gain, or loss is derived in the active conduct of a trade or business in the United States shall be determined from the facts and circumstances of each case. The frequency with which a nonresident alien individual or a foreign corporation enters into transactions of the type from which the income, gain, or loss is derived shall not of itself determine that the income, gain, or loss is derived in the active conduct of a trade or business.

(iv) This subparagraph shall not apply to rents or royalties for the use of, or for the privilege of using, real property or tangible personal property, or to gain or loss from the sale or exchange of such property.

(2) ***Dividends or interest, or gains or loss from sales of stocks or securities*** —

(i) ***In general.*** Dividends or interests from any transaction, or gains or losses on the sale or exchange of stocks or securities, realized by (*a*) a nonresident alien individual or a foreign corporation in the active conduct of a banking, financing, or similar business in the United States or (*b*) a foreign corporation engaged in business in the United States whose principal business is trading in stocks or securities for its own account. Whether the taxpayer is engaged in the active conduct of a banking, financing, or similar business in the United States for purposes of this subparagraph shall be determined in accordance with the principles of paragraph (c)(5)(i) of § 1.864-4.

(ii) ***Substitute payments.*** For purposes of this paragraph (b)92), a substitute interest payment (as defined in § 1.861-2(a)(7)) received by a foreign person subject to tax under this paragraph (b) pursuant to a securities lending transaction or a sale-repurchase transaction (as defined in § 1.861-2(a)(7)) with respect to a security (as defined in § 1.864-6(b)(2)(ii)(c)) shall have the same character as interest income paid or accrued with respect to the terms of the transferred security. Similarly, for purposes of this paragraph (b)(2), a substitute dividend payment (as defined in § 1.861-3(a)(6)) received by a foreign person pursuant to a securities lending transaction or a sale-repurchase transaction (as defined in § 1.861-3(a)(6)) with respect to a stock shall have the same character as a distribution with respect to the transferred security. This paragraph (b)(2)(ii) is applicable to payments made after November 13, 1997.

(iii) ***Incidental investment activity.*** This subparagraph shall not apply to income, gain, or loss realized by a nonresident alien individual or foreign corporation on stocks or securities held, sold, or exchanged in connection with incidental investment activities carried on by that person. Thus, a foreign corporation which is primarily a holding company owning significant percentages of the stocks or securities issued by other corporations shall not be treated under this subparagraph as a corporation the principal business of which is trading in stocks or securities for its own account, solely because it engages in sporadic purchases or sales of stocks or securities to adjust its portfolio. The application of this subdivision may be illustrated by the following example:

Example. F, a foreign corporation, owns voting stock in foreign corporations M, N, and P, its holdings in such corporations constituting 15, 20, and 100 percent, respectively, of all classes of their outstanding voting stock. Each of such stock holdings by F represents approximately 20 percent of its total assets. The remaining 40 percent of F's assets consist of other investments, 20 percent being invested in securities issued by foreign governments and in stocks and bonds issued by other corporations in which F does not own a significant percentage of their outstanding voting stock, and 20 percent being invested in bonds issued by N. None of the assets of F are held primarily for sale; but if the officers of that corporation were to decide that other investments would be preferable to its holding of such assets, F would sell the stocks and securities and reinvest the proceeds therefrom in other holdings. Any income, gain, or loss which F may derive from this investment activity is not considered to be realized by a foreign corporation described in subdivision (i) of this subparagraph.

(3) ***Sale of goods or merchandise through U.S. office.***

(i) Income, gain, or loss from the sale of inventory items or of property held primarily for sale to customers in the ordinary course of business, as described in section 1221(1), where the sale is outside the United States but through the office or other fixed place of business which the nonresident alien or foreign corporation has in the United States, irrespective of the destination to which such property is sent for use, consumption, or disposition.

(ii) This subparagraph shall not apply to income, gain, or loss resulting from a sales contract entered into on or before February 24, 1966. See section 102(e)(1) of the Foreign Investors Tax Act of 1966 (80 Stat. 1547). Thus, for example, the sales office in the United States of a foreign corporation enters into negotiations for the sale of 500,000 industrial bearings which the corporation produces in a foreign country for consumption in the Western Hemisphere. These negotiations culminate in a binding agreement entered into on January 1, 1966. By its terms delivery under the contract is to be made over a period of 3 years beginning in March of 1966.

Payment is due upon delivery. The income from sources without the United States resulting from this sale negotiated by the U.S. sales office of the foreign corporation shall not be taken into account under this subparagraph for any taxable year.

(iii) This subparagraph shall not apply to gains or losses on the sale or exchange of intangible personal property to which subparagraph (1) of this paragraph applies or of stocks or securities to which subparagraph (2) of this paragraph applies.

(c) ***Income attributable to U.S. life insurance business.***

(1) All of the income for the taxable year of a foreign corporation described in subparagraph (2) of this paragraph from sources without the United States, which is attributable to its U.S. life insurance business, shall be treated as effectively connected for the taxable year with the conduct of a trade or business in the United States by that corporation. Thus, in determining its life insurance company taxable income from its U.S. business for purposes of section 802, the foreign corporation shall include all of its items of income from sources without the United States which would appropriately be taken into account in determining the life insurance company taxable income of a domestic corporation. The income to which this subparagraph applies shall be taken into account for purposes of paragraph (a) of this section without reference to §§ 1.864-6 and 1.864-7.

(2) A foreign corporation to which subparagraph (1) of this paragraph applies is a foreign corporation carrying on an insurance business in the United States during the taxable year which—

(i) Without taking into account its income not effectively connected for that year with the conduct of any trade or business in the United States, would qualify as a life insurance company under part I (section 801 and following) of subchapter L, chapter 1 of the Code, if it were a domestic corporation, and

(ii) By reason of section 842 is taxable under that part on its income which is effectively connected for that year with its conduct of any trade or business in the United States.

(d) ***Excluded foreign source income.*** Notwithstanding paragraphs (b) and (c) of this section, no income from sources without the United States shall be treated as effectively connected for any taxable year with the conduct of a trade or business in the United States by a nonresident alien individual or a foreign corporation if the income consists of—

(1) ***Dividends, interest, or royalties paid by a related foreign corporation.*** Dividends, interest, or royalties paid by a foreign corporation in which the nonresident alien individual or the foreign corporation described in paragraph (a) of this section owns, within the meaning of section 958(a), or is considered as owning, by applying the ownership rules of section 958(b), at the time such items are paid more than 50 percent of the total combined voting power of all classes of stock entitled to vote.

(2) ***Subpart F income of a controlled foreign corporation.*** Any income of the foreign corporation described in paragraph (a) of this section which is subpart F income for the taxable year, as determined under section 952(a), even though part of the income is attributable to amounts which, if distributed by the foreign corporation, would be distributed with respect to its stock which is owned by shareholders who are not U.S. shareholders within the meaning of section 951(b). This subparagraph shall not apply to any income of the foreign corporation which is excluded in determining its subpart F income for the taxable year for purposes of section 952(a). Thus, for example, this subparagraph shall not apply to—

(i) Foreign base company shipping income which is excluded under section 954(b)(2),

(ii) Foreign base company income amounting to less than 10 percent (30 percent in the case of taxable years of foreign corporations ending before January 1, 1976) of gross income which by reason of section 954(b)(3)(A) does not become subpart F income for the taxable year,

(iii) Any income excluded from foreign base company income under section 954(b)(4), relating to exception for foreign corporations not availed of to reduce taxes,

(iv) Any income derived in the active conduct of a trade or business which is excluded under section 954(c)(3), or

(v) Any income received from related persons which is excluded under section 954(c)(4).

This subparagraph shall apply to the foreign corporation's entire subpart F income for the taxable year determined under section 952(a), even though no amount is included in the gross income of a U.S. shareholder under section 951(a) with respect to that subpart F income because of the minimum distribution provisions of section 963(a) or because of the reduction under section 970(a) with respect to an export trade corporation. This subparagraph shall apply only to a foreign corporation which is a controlled foreign corporation within the meaning of section 957 and the regulations thereunder. The application of this subparagraph may be illustrated by the following examples:

Example 1. Controlled foreign corporation M, incorporated under the laws of foreign country X, is engaged in the business of purchasing and selling merchandise manufactured in foreign country Y by an unrelated person. M negotiates sales, through its sales office in the United States, of its merchandise for use outside of country X. These sales are made outside the United States, and the merchandise is sold for use outside the United States. No office maintained by M outside the United States participates materially in the sales made through its U.S. sales office. These activities constitute the only activities of M. During the taxable year M derives $100,000 income from these sales made through its U.S. sales office, and all of such income is foreign base company sales income by reason of section 954(d)(2) and paragraph (b) of § 1.954-3. The entire $100,000 is also subpart F income, determined under section 952(a). In addition, all of this income would, without reference to section 864(c)(4)(D)(ii) and this subparagraph, be treated as effectively connected for the taxable year with the conduct of a trade or business in the United States by M. Through its entire taxable year 60 percent of the one class of stock of M is owned within the meaning of section 958(a) by U.S. shareholders, as defined in section 951(b), and 40 percent of its one class of stock is owned within the meaning of section 958(a) by persons who are not U.S. shareholders, as defined in section 951(b). Although only $60,000 of the subpart F income of M for the taxable year is includible in the income of the U.S. shareholders under section 951(a), the entire subpart F income of $100,000 constitutes income which, by reason of section 864(c)(4)(D)(ii) and this subparagraph, is not effectively connected for the taxable year with the conduct of a trade or business in the United States by M.

Example 2. The facts are the same as in example 1 except that the foreign base company sales income amounts to $150,000 determined in accordance with paragraph (d)(3)(i) of § 1.954-1, and that M also has gross income from sources without the United States of $50,000 from sales, through its sales office in the United States, of merchandise for use in country X. These sales are made outside the United States. All of this income would, without reference to section 864(c)(4)(D)(ii) and this subparagraph, be treated as effectively connected for the taxable year with the conduct of a trade or business in the United States by M. Since the foreign base company income of $150,000 amounts to 75 percent of the entire gross income of $200,000,

determined as provided in paragraph (d)(3)(ii) of § 1.954-1, the entire $200,000 constitutes foreign base company income under section 954(b)(3)(B). Assuming that M has no amounts to be taken into account under paragraphs (1), (2), (4), and (5) of section 954(b), the $200,000 is also subpart F income, determined under section 952(a). This subpart F income of $200,000 constitutes income which, by reason of section 864(c)(4)(D)(ii) and this subparagraph, is not effectively connected for the taxable year with the conduct of a trade or business in the United States by M.

(3) ***Interest on certain deposits.*** Interest which, by reason of section 861(a)(1)(A) (relating to interest on deposits with banks, savings and loan associations, and insurance companies paid or credited before January 1, 1976) and paragraph (c) of § 1.864-4, is determined to be income from sources without the United States because it is not effectively connected for the taxable year with the conduct of a trade or business in the United States by the nonresident alien individual or foreign corporation.

(e) ***Applicability dates.*** Paragraphs (a) and (b) of this section apply to taxable years ending on or after December 23, 2019. However, a taxpayer may apply paragraphs (a) and (b) of this section in their entirety for taxable years beginning after December 31, 2017, and ending before December 23, 2019, provided that the taxpayer and all persons related to the taxpayer (within the meaning of section 267 or 707) apply paragraphs (a) and (b) of this section and §§ 1.863-1(b), 1.863-2(b), 1.863-3, 1.863-8(b)(3)(ii), 1.864-6(c)(2), and 1.865-3 in their entirety for the taxable year, and once applied, the taxpayer and all persons related to the taxpayer (within the meaning of section 267 or 707) continue to apply these regulations in their entirety for all subsequent taxable years. For regulations generally applicable to taxable years ending before December 23, 2019, see § 1.864-5 as contained in 26 CFR part 1 revised as of April 1, 2020.

[T.D. 7216, 37 FR 23429, Nov. 3, 1972, as amended by T.D. 7893, 48 FR 22507, May 19, 1983; T.D. 8735, 62 FR 53501, Oct. 14, 1997; T.D. 9921, 85 FR 79850, Dec. 11, 2020]

§ 1.864-6 Income, gain, or loss attributable to an office or other fixed place of business in the United States.

(a) ***In general.*** Income, gain, or loss from sources without the United States which is specified in paragraph (b) of § 1.864-5 and received by a nonresident alien individual or a foreign corporation engaged in a trade or business in the United States at some time during a taxable year beginning after December 31, 1966, shall be treated as effectively connected for the taxable year with the conduct of a trade or business in the United States only if the income, gain, or loss is attributable under paragraphs (b) and (c) of this section to an office or other fixed place of business, as defined in § 1.864-7, which the taxpayer has in the United States at some time during the taxable year.

(b) ***Material factor test*** —

(1) ***In general.*** For purposes of paragraph (a) of this section, income, gain, or loss is attributable to an office or other fixed place of business which a nonresident alien individual or a foreign corporation has in the United States only if such office or other fixed place of business is a material factor in the realization of the income, gain, or loss, and if the income, gain, or loss is realized in the ordinary course of the trade or business carried on through that office or other fixed place of business. For this purpose, the activities of the office or other fixed place of business shall not be considered to be a material factor in the realization of the income, gain, or loss unless they provide a significant contribution to, by being an essential economic element in, the realization of the income, gain, or

loss. Thus, for example, meetings in the United States of the board of directors of a foreign corporation do not of themselves constitute a material factor in the realization of income, gain, or loss. It is not necessary that the activities of the office or other fixed place of business in the United States be a major factor in the realization of the income, gain, or loss. An office or other fixed place of business located in the United States at some time during a taxable year may be a material factor in the realization of an item of income, gain, or loss for that year even though the office or other fixed place of business is not present in the United States when the income, gain, or loss is realized.

(2) ***Application of material factor test to specific classes of income.*** For purposes of paragraph (a) of this section, an office or other fixed place of business which a nonresident alien individual or a foreign corporation, engaged in a trade or business in the United States at some time during the taxable year, had in the United States, shall be considered a material factor in the realization of income, gain, or loss consisting of—

(i) ***Rents, royalties, or gains on sales of intangible property.*** Rents, royalties, or gains or losses, from intangible personal property specified in paragraph (b)(1) of § 1.864-5, if the office or other fixed place of business either actively participates in soliciting, negotiating, or performing other activities required to arrange, the lease, license, sale, or exchange from which such income, gain, or loss is derived or performs significant services incident to such lease, license, sale, or exchange. An office or other fixed place of business in the United States shall not be considered to be a material factor in the realization of income, gain, or loss for purposes of this subdivision merely because the office or other fixed place of business conducts one or more of the following activities:

(*a*) Develops, creates, produces, or acquires and adds substantial value to, the property which is leased, licensed, or sold, or exchanged,

(*b*) collects or accounts for the rents, royalties, gains, or losses,

(*c*) exercises general supervision over the activities of the persons directly responsible for carrying on the activities or services described in the immediately preceding sentence,

(*d*) performs merely clerical functions incident to the lease, license, sale, or exchange or

(*e*) exercises final approval over the execution of the lease, license, sale, or exchange. The application of this subdivision may be illustrated by the following examples:

Example 1. F, a foreign corporation, is engaged in the active conduct of the business of licensing patents which it has either purchased or developed in the United States. F has a business office in the United States. Licenses for the use of such patents outside the United States are negotiated by offices of F located outside the United States, subject to approval by an officer of such corporation located in the U.S. office. All services which are rendered to F's foreign licensees are performed by employees of F's offices located outside the United States. None of the income, gain, or loss resulting from the foreign licenses so negotiated by F is attributable to its business office in the United States.

Example 2. N, a foreign corporation, is engaged in the active conduct of the business of distributing motion picture films and television programs. N does not distribute such films or programs in the United States. The foreign distribution rights to these films and programs are acquired by N's U.S. business office from the U.S. owners of these films and programs. Employees of N's offices located in various foreign countries carry on in such countries all the solicitations and negotiations for the licensing of these films and

programs to licensees located in such countries and provide the necessary incidental services to the licensees. N's U.S. office collects the rentals from the foreign licensees and maintains the necessary records of income and expense. Officers of N located in the United States also maintain general supervision over the employees of the foreign offices, but the foreign employees conduct the day to day business of N outside the United States of soliciting, negotiating, or performing other activities required to arrange the foreign licenses. None of the income, gain, or loss resulting from the foreign licenses so negotiated by N is attributable to N's U.S. office.

(ii) ***Dividends or interest, or gains or losses from sales of stock or securities—***

(a) ***In general.*** Dividends or interest from any transaction, or gains or losses on the sale or exchange of stocks or securities, specified in paragraph (b)(2) of § 1.864-5, if the office or other fixed place of business either actively participates in soliciting, negotiating, or performing other activities required to arrange, the issue, acquisition, sale, or exchange, of the asset from which such income, gain, or loss is derived or performs significant services incident to such issue, acquisition, sale, or exchange. An office or other fixed place of business in the United States shall not be considered to be a material factor in the realization of income, gain, or loss for purposes of this subdivision merely because the office or other fixed place of business conducts one or more of the following activities:

(*1*) Collects or accounts for the dividends, interest, gains, or losses,

(*2*) exercises general supervision over the activities of the persons directly responsible for carrying on the activities or services described in the immediately preceding sentence,

(*3*) performs merely clerical functions incident to the issue, acquisition, sale, or exchange, or

(*4*) exercises final approval over the execution of the issue, acquisition, sale, or exchange.

(*b*) ***Effective connection of income from stocks or securities with active conduct of a banking, financing, or similar business.*** Notwithstanding (*a*) of this subdivision (ii), the determination as to whether any dividends or interest from stocks or securities, or gain or loss from the sale or exchange of stocks or securities which are capital assets, which is from sources without the United States and derived by a nonresident alien individual or a foreign corporation in the active conduct during the taxable year of a banking, financing, or similar business in the United States, shall be treated as effectively connected for such year with the active conduct of that business shall be made by applying the principles of paragraph (c)(5)(ii) of § 1.864-4 for determining whether income, gain, or loss of such type from sources within the United States is effectively connected for such year with the active conduct of that business.

(*c*) ***Security defined.*** For purposes of this subdivision (ii), a security is any bill, note, bond, debenture, or other evidence of indebtedness, or any evidence of an interest in, or right to subscribe or to purchase, any of the foregoing items.

(*d*) ***Limitations on application of rules on banking, financing, or similar business —***

(1) ***Trading for taxpayer's own account.*** The provisions of (*b*) of this subdivision (ii) apply for purposes of determining when certain income, gain, or loss from stocks or securities is effectively connected with the active conduct of a banking, financing, or similar business in the United States. Any dividends, interest, gain, or loss from sources without the United States which by reason of the application of (*b*) of this subdivision (ii) is not effectively connected with the active conduct by a foreign corporation of a banking, financing, or similar business in the United States may be effectively connected for the taxable year, under (*a*) of this subdivision (ii), with the conduct by such taxpayer of a trade or business in the United States which consists of trading in stocks or securities for the taxpayer's own account.

(2) ***Other income.*** For rules relating to dividends or interest from sources without the United States (other than dividends or interest from, or gain or loss from the sale or exchange of, stocks or securities referred to in (*b*) of this subdivision (ii)) derived in the active conduct of a banking, financing, or similar business in the United States, see (*a*) of this subdivision (ii).

(iii) ***Sale of goods or merchandise through U.S. office.*** Income, gain, or loss from sales of goods or merchandise specified in paragraph (b)(3) of § 1.864-5, if the office or other fixed place of business actively participates in soliciting the order, negotiating the contract of sale, or performing other significant services necessary for the consummation of the sale which are not the subject of a separate agreement between the seller and the buyer. The office or other fixed place of business in the United States shall be considered a material factor in the realization of income, gain, or loss from a sale made as a result of a sales order received in such office or other fixed place of business except where the sales order is received unsolicited and that office or other fixed place of business is not held out to potential customers as the place to which such sales orders should be sent. The income, gain, or loss must be realized in the ordinary course of the trade or business carried on through the office or other fixed place of business in the United States. Thus, if a foreign corporation is engaged solely in a manufacturing business in the United States, the income derived by its office in the United States as a result of an occasional sale outside the United States is not attributable to the U.S. office if the sales office of the manufacturing business is located outside the United States. On the other hand, if a foreign corporation establishes a sales office in the United States to sell for consumption in the Western Hemisphere merchandise which the corporation produces in Africa, the income derived by the sales office in the United States as a result of an occasional sale made by it in Europe shall be attributable to the U.S. sales office. An office or other fixed place of business in the United States shall not be considered to be a material factor in the realization of income, gain, or loss for purposes of this subdivision merely because of one or more of the following activities:

(*a*) The sale is made subject to the final approval of such office or other fixed place of business,

(*b*) the property sold is held in, and distributed from, such office or other fixed place of business,

(*c*) samples of the property sold are displayed (but not otherwise promoted or sold) in such office or other fixed place of business, or

(*d*) such office or other fixed place of business performs merely clerical functions incident to the sale. Activities carried on by employees of an office or other fixed place of business constitute activities of that office or other fixed place of business.

(3) ***Limitation where foreign office is a material factor in realization of income*** —

(i) ***Goods or merchandise destined for foreign use, consumption, or disposition.*** Notwithstanding subparagraphs (1) and (2) of this paragraph, an office or other fixed place of business which a nonresident alien individual or a foreign corporation has in the United States shall not be considered, for purposes of paragraph (a) of this section, to be a material factor in the realization of income, gain, or loss from sales of goods or merchandise specified in paragraph (b)(3) of § 1.864-5 if the property is sold for use, consumption, or disposition outside the United States and an office or other fixed place of business, as defined in § 1.864-7, which such nonresident alien individual or foreign corporation has outside the United States participates materially in the sale. For this purpose an office or other fixed place of business which the taxpayer has outside the United States shall be considered to have participated materially in a sale made through the office or other fixed place of business in the United States if the office or other fixed place of business outside the United States actively participates in soliciting the order resulting in the sale, negotiating the contract of sale, or performing other significant services necessary for the consummation of the sale which are not the subject of a separate agreement between the seller and buyer. An office or other fixed place of business which the taxpayer has outside the United States shall not be considered to have participated materially in a sale merely because of one or more of the following activities:

(*a*) The sale is made subject to the final approval of such office or other fixed place of business,

(*b*) the property sold is held in, and distributed from, such office or other fixed place of business,

(*c*) samples of the property sold are displayed (but not otherwise promoted or sold) in such office or other fixed place of business,

(*d*) such office or other fixed place of business is used for purposes of having title to the property pass outside the United States, or

(*e*) such office or other fixed place of business performs merely clerical functions incident to the sale.

(ii) ***Rules for determining country of use, consumption, or disposition—***

(a) ***In general.*** As a general rule, personal property which is sold to an unrelated person shall be presumed for purposes of this subparagraph to have been sold for use, consumption, or disposition in the country of destination of the property sold; for such purpose, the occurrence in a country of a temporary interruption in shipment of property shall not cause that country to be considered the country of destination. However, if at the time of a sale of personal property to an unrelated person the taxpayer knew, or should have known from the facts and circumstances surrounding the transaction, that the property probably would not be used, consumed, or disposed of in the country of destination, the taxpayer must determine the country of ultimate use, consumption, or disposition of the property or the property shall be presumed to have been sold for use, consumption, or disposition in the United States. A taxpayer who sells personal property to a related person shall be

presumed to have sold the property for use, consumption, or disposition in the United States unless the taxpayer establishes the use made of the property by the related person; once he has established that the related person has disposed of the property, the rules in the two immediately preceding sentences relating to sales to an unrelated person shall apply at the first stage in the chain of distribution at which a sale is made by a related person to an unrelated person. Notwithstanding the preceding provisions of this subdivision (*a*), a taxpayer who sells personal property to any person whose principal business consists of selling from inventory to retail customers at retail outlets outside the United States may assume at the time of the sale to that person that the property will be used, consumed, or disposed of outside the United States. For purposes of this (*a*), a person is related to another person if either person owns or controls directly or indirectly the other, or if any third person or persons own or control directly or indirectly both. For this purpose, the term "control" includes any kind of control, whether or not legally enforceable, and however, exercised or exercisable. For illustrations of the principles of this subdivision, see paragraph (a)(3)(iv) of § 1.954-3.

(*b*) ***Fungible goods.*** For purposes of this subparagraph, a taxpayer who sells to a purchaser personal property which because of its fungible nature cannot reasonably be specifically traced to other purchasers and to the countries of ultimate use, consumption, or disposition shall, unless the taxpayer establishes a different disposition as being proper, treat that property as being sold, for ultimate use, consumption, or disposition in those countries, and to those other purchasers, in the same proportions in which property from the fungible mass of the first purchaser is sold in the ordinary course of business by such first purchaser. No apportionment is required to be made, however, on the basis of sporadic sales by the first purchaser. This (*b*) shall apply only in a case where the taxpayer knew, or should have known from the facts and circumstances surrounding the transaction, the manner in which the first purchaser disposes of property from the fungible mass.

(iii) ***Illustration.*** The application of this subparagraph may be illustrated by the following example:

Example. Foreign corporation M has a sales office in the United States during the taxable year through which it sells outside the United States for use in foreign countries industrial electrical generators which such corporation manufactures in a foreign country. M is not a controlled foreign corporation within the meaning of section 957 and the regulations thereunder, and, by reason of its activities in the United States, is engaged in business in the United States during the taxable year. The generators require specialized installation and continuous adjustment and maintenance services. M has an office in foreign country X which is the only organization qualified to perform these installation, adjustment, and maintenance services. During the taxable year M sells several generators through its U.S. office for use in foreign country Y under sales contracts which also provide for installation, adjustment, and maintenance by its office in country X. The generators are installed in country Y by employees of M's office in country X, who also are responsible for the servicing of the equipment. Since the office of M in country X performs significant services incident to these sales which are necessary for their consummation and are not the subject of a separate agreement between M and the purchaser, the U.S. office of M is not considered to be a material factor in the realization of the income from the sales and, for purposes of paragraph (a) of this section, such income is not attributable to the U.S. office of that corporation.

(c) ***Amount of income, gain, or loss allocable to U.S. office —***

(1) ***In general.*** If, in accordance with paragraph (b) of this section, an office or other fixed place of business which a nonresident alien individual or a foreign corporation has in the United States at some time during the taxable year is a material factor in the realization for that year of an item of income, gain, or loss specified in paragraph (b) of § 1.864-5, such item of income, gain, or loss shall be considered to be allocable in its entirety to that office or other fixed place of business. In no case may any income, gain, or loss for the taxable year from sources without the United States, or part thereof, be allocable under this paragraph to an office or other fixed place of business which a nonresident alien individual or a foreign corporation has in the United States if the taxpayer is at no time during the taxable year engaged in a trade or business in the United States.

(2) ***Special limitation in case of sales of goods or merchandise through U.S. office.*** Notwithstanding paragraph (c)(1) of this section, the special rules described in this paragraph (c)(2) apply with respect to a sale of goods or merchandise specified in § 1.864-5(b)(3), to which paragraph (b)(3)(i) of this section does not apply. In the case of a nonresident alien with a tax home within the United States, as defined in section 911(d)(3), the amount of income from the sale of goods or merchandise that is properly allocable to the individual's U.S. office is determined under § 1.865-3(d).

(3) ***Examples.*** The application of this paragraph (c) may be illustrated by the following examples—

(i) ***Example 1. Sales of produced inventory through a U.S. sales office.*** Individual A, who is a nonresident alien within the meaning of section 7701(b)(1)(B) and has a tax home in the United States, manufactures machinery in a foreign country and sells the machinery outside the United States through A's sales office in the United States for use in foreign countries. A is not a nonresident within the meaning of section 865(g)(1)(B). Therefore, § 1.865-3 does not apply to A's sale of the machinery, except to the extent provided in paragraph (c)(2) of this section. Title to the property sold is transferred to the foreign purchaser outside the United States, but no office or other fixed place of business of A in a foreign country materially participates in the sale made through A's U.S. office. By reason of its sales activities in the United States, A is engaged in business in the United States during the taxable year. During the taxable year, A derives a total income of $250,000x from these sales. Under paragraph (c)(2) of this section, the amount of income that is allocable to A's U.S. office is determined under § 1.865-3(d)(2). The taxpayer does not allocate income from the sale under the books and records method described in § 1.865-3(d)(2)(ii). Thus, 50 percent of A's foreign source income of $250,000x, plus any additional income allocable based on the location of production activities under §§ 1.865-3(d)(2)(i) and 1.863-3 (in this case, $0x), is effectively connected for the taxable year with the conduct of A's U.S. trade or business, or $125,000x.

(ii) ***Example 2. Sales of inventory purchased and resold through a U.S. sales office by a nonresident alien with a tax home in the United States.*** Individual B, who is a nonresident alien within the meaning of section 7701(b)(1)(B) and has a tax home in the United States, has an office in a foreign country that purchases merchandise and sells it through B's sales office in the United States for use in various foreign countries, with title to the property passing outside the United States. B is not a nonresident within the meaning of section 865(g)(1)(B). Therefore, § 1.865-3 does not apply to B's sale of the merchandise, except to the extent provided in paragraph (c)(2) of this section. No other office of B materially participates in these sales made through its U.S. office. By reason of its sales activities in the United States, B is engaged in business in the United States during the taxable year. During the taxable year, B derives income of $300,000x from these sales made through its U.S. sales office. All of B's income from these sales is foreign source as B purchases the merchandise outside the United States and title to the

merchandise also passes outside the United States. The amount of income properly allocable to B's U.S. office determined under § 1.865-3(d)(3) is $300,000x, and thus $300,000x is effectively connected for the taxable year with the conduct of B's U.S. trade or business.

(iii) ***Example 3. Foreign sales office also materially participates in sale.*** The facts are the same as in paragraph (c)(3)(ii) of this section (the facts in *Example 2*), except that B also has an office in a foreign country that is a material factor in the realization of income from the sales made through B's U.S. office. No income from the sale of merchandise is allocable to B's U.S. sales office for the taxable year, by reason of paragraph (b)(3)(i) of this section, and thus none of the $300,000x is effectively connected for the taxable year with the conduct of B's U.S. trade or business.

(iv) ***Example 4. Sales of inventory purchased and resold through a U.S. sales office by a foreign corporation.*** The facts are the same as in paragraph (c)(3)(ii) of this section (the facts in *Example 2*), except that B is a foreign corporation. B is a nonresident within the meaning of section 865(g)(1)(B). The income from such sales will be sourced in accordance with § 1.865-3(a) and (d)(3).

(4) ***Applicability date.*** Paragraph (c)(2) of this section applies to taxable years ending on or after December 23, 2019. However, a taxpayer may apply paragraph (c)(2) of this section in its entirety for taxable years beginning after December 31, 2017, and ending before December 23, 2019, provided that the taxpayer and all persons related to the taxpayer (within the meaning of section 267 or 707) apply paragraph (c)(2) of this section and §§ 1.863-1(b), 1.863-2(b), 1.863-3, 1.863-8(b)(3)(ii), 1.864-5(a) and (b), and 1.865-3 in their entirety for the taxable year, and once applied, the taxpayer and all persons related to the taxpayer (within the meaning of section 267 or 707) continue to apply these regulations in their entirety for all subsequent taxable years. For regulations generally applicable to taxable years ending before December 23, 2019, see § 1.864-6 as contained in 26 CFR part 1 revised as of April 1, 2020.

[T.D. 7216, 37 FR 23431, Nov. 3, 1972, as amended by T.D. 9921, 85 FR 79850, Dec. 11, 2020]

§ 1.864-7 Definition of office or other fixed place of business.

(a) ***In general.***

(1) This section applies for purposes of determining whether a nonresident alien individual or a foreign corporation that is engaged in a trade or business in the United States at some time during a taxable year beginning after December 31, 1966, has an office or other fixed place of business in the United States for purposes of applying section 864(c)(4)(B) and § 1.864-6 to income, gain, or loss specified in paragraph (b) of § 1.864-5 from sources without the United States or has an office or other fixed place of business outside the United States for purposes of applying section 864(c)(4)(B)(iii) and paragraph (b)(3)(i) of § 1.864-6 to sales of goods or merchandise for use, consumption, or disposition outside the United States.

(2) In making a determination under this section due regard shall be given to the facts and circumstances of each case, particularly to the nature of the taxpayer's trade or business and the physical facilities actually required by the taxpayer in the ordinary course of the conduct of his trade or business.

(3) The law of a foreign country shall not be controlling in determining whether a nonresident alien individual or a foreign corporation has an office or other fixed place of business.

(b) *Fixed facilities* —

(1) ***In general.*** As a general rule, an office or other fixed place of business is a fixed facility, that is, a place, site, structure, or other similar facility, through which a nonresident alien individual or a foreign corporation engages in a trade or business. For this purpose an office or other fixed place of business shall include, but shall not be limited to, a factory; a store or other sales outlet; a workshop; or a mine, quarry, or other place of extraction of natural resources. A fixed facility may be considered an office or other fixed place of business whether or not the facility is continuously used by a nonresident alien individual or foreign corporation.

(2) ***Use of another person's office or other fixed place of business.*** A nonresident alien individual or a foreign corporation shall not be considered to have an office or other fixed place of business merely because such alien individual or foreign corporation uses another person's office or other fixed place of business, whether or not the office or place of business of a related person, through which to transact a trade or business, if the trade or business activities of the alien individual or foreign corporation in that office or other fixed place of business are relatively sporadic or infrequent, taking into account the overall needs and conduct of that trade or business.

(c) ***Management activity.*** A foreign corporation shall not be considered to have an office or other fixed place of business merely because a person controlling that corporation has an office or other fixed place of business from which general supervision and control over the policies of the foreign corporation are exercised. The fact that top management decisions affecting the foreign corporation are made in a country shall not of itself mean that the foreign corporation has an office or other fixed place of business in that country. For example, a foreign sales corporation which is a wholly owned subsidiary of a domestic corporation shall not be considered to have an office or other fixed place of business in the United States merely because of the presence in the United States of officers of the domestic parent corporation who are generally responsible only for the policy decisions affecting the foreign sales corporation, provided that the foreign corporation has a chief executive officer, whether or not he is also an officer of the domestic parent corporation, who conducts the day-to-day trade or business of the foreign corporation from a foreign office. The result in this example would be the same even if the executive officer should

(1) regularly confer with the officers of the domestic parent corporation,

(2) occasionally visit the U.S. office of the domestic parent corporation, and

(3) during such visits to the United States temporarily conduct the business of the foreign subsidiary corporation out of the domestic parent corporation's office in the United States.

(d) *Agent activity* —

(1) *Dependent agents* —

(i) ***In general.*** In determining whether a nonresident alien individual or a foreign corporation has an office or other fixed place of business, the office or other fixed place of business of an agent who is not an independent agent, as defined in subparagraph (3) of this paragraph, shall be disregarded unless such agent (*a*) has the authority to negotiate and conclude contracts in the name of the nonresident alien individual or foreign corporation, and regularly exercises that authority, or (*b*) has a stock of merchandise belonging to the nonresident alien individual or foreign corporation from which orders are regularly filed on behalf of such alien individual or foreign corporation. A person who purchases goods from a nonresident alien individual or a foreign corporation shall not be considered to be an agent for such alien individual or foreign corporation for purposes of this paragraph where such person is carrying on such purchasing

activities in the ordinary course of its own business, even though such person is related in some manner to the nonresident alien individual or foreign corporation. For example, a wholly owned domestic subsidiary corporation of a foreign corporation shall not be treated as an agent of the foreign parent corporation merely because the subsidiary corporation purchases goods from the foreign parent corporation and resells them in its own name. However, if the domestic subsidiary corporation regularly negotiates and concludes contracts in the name of its foreign parent corporation or maintains a stock of merchandise from which it regularly fills orders on behalf of the foreign parent corporation, the office or other fixed place of business of the domestic subsidiary corporation shall be treated as the office or other fixed place of business of the foreign parent corporation unless the domestic subsidiary corporation is an independent agent within the meaning of subparagraph (3) of this paragraph.

(ii) ***Authority to conclude contracts or fill orders.*** For purposes of subdivision (i) of this subparagraph, an agent shall be considered regularly to exercise authority to negotiate and conclude contracts or regularly to fill orders on behalf of his foreign principal only if the authority is exercised, or the orders are filled, with some frequency over a continuous period of time. This determination shall be made on the basis of the facts and circumstances in each case, taking into account the nature of the business of the principal; but, in all cases, the frequency and continuity tests are to be applied conjunctively. Regularity shall not be evidenced by occasional or incidental activity. An agent shall not be considered regularly to negotiate and conclude contracts on behalf of his foreign principal if the agent's authority to negotiate and conclude contracts is limited only to unusual cases or such authority must be separately secured by the agent from his principal with respect to each transaction effected.

(2) ***Independent agents.*** The office or other fixed place of business of an independent agent, as defined in subparagraph (3) of this paragraph, shall not be treated as the office or other fixed place of business of his principal who is a nonresident alien individual or a foreign corporation, irrespective of whether such agent has authority to negotiate and conclude contracts in the name of his principal, and regularly exercises that authority, or maintains a stock of goods from which he regularly fills orders on behalf of his principal.

(3) ***Definition of independent agent*** —

(i) ***In general.*** For purposes of this paragraph, the term “independent agent” means a general commission agent, broker, or other agent of an independent status acting in the ordinary course of his business in that capacity. Thus, for example, an agent who, in pursuance of his usual trade or business, and for compensation, sells goods or merchandise consigned or entrusted to his possession, management, and control for that purpose by or for the owner of such goods or merchandise is an independent agent.

(ii) ***Related persons.*** The determination of whether an agent is an independent agent for purposes of this paragraph shall be made without regard to facts indicating that either the agent or the principal owns or controls directly or indirectly the other or that a third person or persons own or control directly or indirectly both. For example, a wholly owned domestic subsidiary corporation of a foreign corporation which acts as an agent for the foreign parent corporation may be treated as acting in the capacity of independent agent for the foreign parent corporation. The facts and circumstances of a specific case shall determine whether the agent, while acting for his principal, is acting in pursuance of his usual trade or business and in such manner as to constitute him an independent agent in his relations with the nonresident alien individual or foreign corporation.

(iii) ***Exclusive agents.*** Where an agent who is otherwise an independent agent within the meaning of subdivision (i) of this subparagraph acts in such capacity exclusively, or almost exclusively, for one principal who is a nonresident alien individual or a foreign corporation, the facts and circumstances of a particular case shall be taken into account in determining whether the agent, while acting in that capacity, may be classified as an independent agent.

(e) ***Employee activity.*** Ordinarily, an employee of a nonresident alien individual or a foreign corporation shall be treated as a dependent agent to whom the rules of paragraph (d)(1) of this section apply if such employer does not in and of itself have a fixed facility (as defined in paragraph (b) of this section) in the United States or outside the United States, as the case may be. However, where the employee, in the ordinary course of his duties, carries on the trade or business of his employer in or through a fixed facility of such employer which is regularly used by the employee in the course of carrying out such duties, such fixed facility shall be considered the office or other fixed place of business of the employer, irrespective of the rules of paragraph (d)(1) of this section. The application of this paragraph may be illustrated by the following example:

Example. M, a foreign corporation, opens a showroom office in the United States for the purpose of promoting its sales of merchandise which it purchases in foreign country X. The employees of the U.S. office, consisting of salesmen and general clerks, are empowered only to run the office, to arrange for the appointment of distributing agents for the merchandise offered by M, and to solicit orders generally. These employees do not have the authority to negotiate and conclude contracts in the name of M, nor do they have a stock of merchandise from which to fill orders on behalf of M. Any negotiations entered into by these employees are under M's instructions and subject to its approval as to any decision reached. The only independent authority which the employees have is in the appointment of distributors to whom M is to sell merchandise, but even this authority is subject to the right of M to approve or disapprove these buyers on receipt of information as to their business standing. Under the circumstances, this office used by a group of salesmen for sales promotion is a fixed place of business which M has in the United States.

(f) ***Office or other fixed place of business of a related person.*** The fact that a nonresident alien individual or a foreign corporation is related in some manner to another person who has an office or other fixed place of business shall not of itself mean that such office or other fixed place of business of the other person is the office or other fixed place of business of the nonresident alien individual or foreign corporation. Thus, for example, the U.S. office of foreign corporation M, a wholly owned subsidiary corporation of foreign corporation N, shall not be considered the office or other fixed place of business of N unless the facts and circumstances show that N is engaged in trade or business in the United States through that office or other fixed place of business. However, see paragraph (b)(2) of this section.

(g) ***Illustrations.*** The application of this section may be illustrated by the following examples:

Example 1. S, a foreign corporation, is engaged in the business of buying and selling tangible personal property. S is a wholly owned subsidiary of P, a domestic corporation engaged in the business of buying and selling similar property, which has an office in the United States. Officers of P are generally responsible for the policies followed by S and are directors of S, but S has an independent group of officers, none of whom are regularly employed in the United States. In addition to this group of officers, S has a chief executive officer, D, who is also an officer of P but who is permanently stationed outside the United States. The day-to-day conduct of S's business is handled by D and the other officers of such corporation, but they regularly confer with the officers of P and on occasion temporarily visit P's offices in the United States, at which time they continue to conduct the business of S. S does not have an office or other fixed place of business in the United States for purposes of this section.

Example 2. The facts are the same as in example 1 except that, on rare occasions, an employee of P receives an order which he, after consultation with officials of S and because P cannot fill the order, accepts on behalf of S rather than on behalf of P. P does not hold itself out as a person which those wishing to do business with S should contact. Assuming that orders for S are seldom handled in this manner and that they do not constitute a significant part of that corporation's business, S shall not be considered to have an office or other fixed place of business in the United States because of these activities of an employee of P.

Example 3. The facts are the same as in example 1 except that all orders received by S are subject to review by an officer of P before acceptance. S has a business office in the United States.

Example 4. S, a foreign corporation organized under the laws of Puerto Rico, is engaged in the business of manufacturing dresses in Puerto Rico and is entitled to an income tax exemption under the Puerto Rico Industrial Incentive Act of 1963. S is a wholly owned subsidiary of P, a domestic corporation engaged in the business of buying and selling dresses to customers in the United States. S sells most of the dresses it produces to P, the assumption being made that the income from these sales is derived from sources without the United States. P in turn sells these dresses in the United States in its name and through the efforts of its own employees and of distributors appointed by it. S does not have a fixed facility in the United States, and none of its employees are stationed in the United States. On occasion, employees of S visit the office of P in the United States, and executives of P visit the office of S in Puerto Rico, to discuss with one another matters of mutual business interest involving both corporations, including the strategy for marketing the dresses produced by S. These matters are also regularly discussed by such persons by telephone calls between the United States and Puerto Rico. S's employees do not otherwise participate in P's marketing activities. Officers of P are generally responsible for the policies followed by S and are directors of S, but S has a chief executive officer in Puerto Rico who, from its office therein, handles the day-to-day conduct of S's business. Based upon the facts presented, and assuming there are no other facts which would lead to a different determination, S shall not be considered to have an office or other fixed place of business in the United States for purposes of this section.

Example 5. The facts are the same as in example 4 except that the dresses are manufactured by S in styles and designs furnished by P and out of goods and raw materials purchased by P and sold to S. Based upon the facts presented, and assuming there are no other facts which would lead to a different determination, S shall not be considered to have an office or other fixed place of business in the United States for purposes of this section.

Example 6. The facts are the same as in example 5 except that, pursuant to the instructions of P, the dresses sold by P are shipped by S directly to P's customers in the United States. Based upon the facts presented, and assuming there are no other facts which would lead to a different determination, S shall not be considered to have an office or other fixed place of business in the United States for purposes of this section.

[T.D. 7216, 37 FR 23433, Nov. 3, 1972]

§ 1.864-8T Treatment of related person factoring income (temporary).

(a) ***Applicability*** —

(1) ***General rule.*** This section applies for purposes of determining the treatment of income derived by a person from a trade or service receivable acquired from a related person. Except as provided in paragraph (d) of this section, if a person acquires (directly or indirectly) a trade or service receivable from a related person, any income (including any stated interest, discount or service fee) derived

from the trade or service receivable shall be treated as if it were interest received on a loan to the obligor under the receivable. The characterization of income as interest pursuant to this section shall apply only for purposes of sections 551-558 (relating to foreign personal holding companies), sections 951-964 (relating to controlled foreign corporations), and section 904 (relating to the limitation on the foreign tax credit) of the Code and the regulations thereunder. The principles of sections 861 through 863 and the regulations thereunder shall be applied to determine the source of such interest income for purposes of section 904.

(2) ***Override.*** With respect to income characterized as interest under this section, the special rules of section 864(d) and this section override any conflicting provisions of the Code and regulations relating to foreign personal holding companies, controlled foreign corporations, and the foreign tax credit limitation. Thus, for example, pursuant to section 864(d)(5) and paragraph (e) of this section, stated interest derived from a factored trade or service receivable is not eligible for the subpart F de minimis rule of section 954(b)(3), the same country exception of section 954(c)(3)(A)(i), or the special rules for export financing interest of sections 904(d)(2) and 954(c)(2)(B), even if in the absence of this section the treatment of such stated interest would be governed by those sections.

(3) ***Limitation.*** Section 864(d) and this section apply only with respect to the tax treatment of income derived from a trade or service receivable acquired from a related person. Therefore, neither section 864(d) nor this section affects the characterization of an expense or loss of either the seller of a receivable or the obligor under a receivable. Accordingly, the obligor under a trade or service receivable shall not be allowed to treat any part of the purchase price of property or services as interest (other than amounts treated as interest under provisions other than section 864(d)).

(b) ***Definitions.*** The following definitions apply for purposes of this section and § 1.956-3T.

(1) ***Trade or service receivable.*** The term “trade or service receivable” means any account receivable or evidence of indebtedness, whether or not issued at a discount and whether or not bearing stated interest, arising out of the disposition by a related person of property described in section 1221(l) (hereinafter referred to as “inventory property”) or the performance of services by a related person.

(2) ***Related person.*** A “related person” is:

(i) A person who is a related person within the meaning of section 267(b) and the regulations thereunder;

(ii) A United States shareholder (as defined in section 951(b)); or

(iii) A person who is related (within the meaning of section 267(b) and the regulations thereunder) to a United States shareholder.

(c) ***Acquisition of a trade or service receivable*** —

(1) ***General rule.*** A trade or service receivable is considered to be acquired by a person at the time when that person is entitled to receive all or a portion of the income from the trade or service receivable. A person who acquires a trade or service receivable (hereinafter referred to as the “factor”) is considered to have acquired a trade or service receivable regardless of whether:

(i) The acquisition is characterized for federal income tax purposes as a sale, a pledge of collateral for a loan, an assignment, a capital contribution, or otherwise;

(ii) The factor takes title to or obtains physical possession of the trade or service receivable;

(iii) The related person assigns the trade or service receivable with or without recourse:

(iv) The factor or some other person is obligated to collect the payments due under the trade or service receivable;

(v) The factor is liable for all property, excise, sales, or similar taxes due upon collection of the receivable;

(vi) The factor advances the entire face amount of the trade or service receivable transferred;

(vii) All trade or service receivables assigned by the related person are assigned to one factor; and

(viii) The obligor under the trade or service receivable is notified of the assignment.

(2) ***Example.*** The following example illustrates the application of paragraphs (a), (b), and (c)(1) of this section.

Example. P, a domestic corporation, owns all of the outstanding stock of FS, a controlled foreign corporation. P manufactures and sells paper products to customers, including X, an unrelated domestic corporation. As part of a sales transaction, P takes back a trade receivable from X and sells the receivable to FS. Because FS has acquired a trade or service receivable from a related person, the income derived by FS from P's receivable is interest income described in paragraph (a)(1) of this section.

(3) ***Indirect acquisitions*** —

(i) ***Acquisition through unrelated person.*** A trade or service receivable will be considered to be acquired from a related person if it is acquired from an unrelated person who acquired (directly or indirectly) such receivable from a person who is a related person to the factor. The following example illustrates the application of this paragraph (c)(3)(i).

Example. A, a United States citizen, owns all of the outstanding stock of FPHC, a foreign personal holding company. A performs engineering services within and without the United States for customers, including X, an unrelated corporation. A performs engineering services for X and takes back a service receivable. A sells the receivable to Y, an unrelated corporation engaged in the factoring business. Y resells the receivable to FPHC. Because FPHC has indirectly acquired a service receivable from a related person, the income derived by FPHC from A's receivable is interest income described in paragraph (a)(1) of this section.

(ii) ***Acquisition by nominee or pass-through entity.*** A factor will be considered to have acquired a trade or service receivable held on its behalf by a nominee or by a partnership, simple trust, S corporation or other pass-through entity to the extent the factor owns (directly or indirectly) a beneficial interest in such partnership or other pass-through entity. The rule of this paragraph (c)(3)(ii) does not limit the application of paragraph (c)(3)(iii) of this section regarding the characterization of trade or service receivables of unrelated persons acquired pursuant to certain swap or pooling arrangements. The following example illustrates the application of this paragraph (c)(3)(ii).

Example. FS1, a controlled foreign corporation, acquires a 20 percent limited partnership interest in PS, a partnership. PS purchases trade or service receivables resulting from the sale of inventory property by FS1's domestic parent, P. PS does not purchase receivables of any person who is related to any other partner in PS. FS1 is considered to have acquired a 20

percent interest in the receivables acquired by PS. Thus, FS1's distributive share of the income derived by PS from the receivables of P is considered to be interest income described in paragraph (a)(1) of this section.

(iii) ***Swap or pooling arrangements.*** A trade or service receivable of a person unrelated to the factor will be considered to be a trade or service receivable acquired from a related person and subject to the rules of this section if it is acquired in accordance with an arrangement that involves two or more groups of related persons that are unrelated to each other and the effect of the arrangement is that one or more related persons in each group acquire (directly or indirectly) trade or service receivables of one or more unrelated persons who are also parties to the arrangement, in exchange for reciprocal purchases of the first group's receivables. The following example illustrates the application of this paragraph (c)(3)(iii).

Example. Controlled foreign corporations A, B, C, and D are wholly-owned subsidiaries of domestic corporations M, N, O, and P, respectively. M, N, O, and P are not related persons. According to a prearranged plan, A, B, C, and D each acquire trade or service receivables of M, N, O, and/or P, except that neither A, B, C nor D acquires receivables of its own parent corporation. Because the effect of this arrangement is that the unrelated groups acquire each other's trade or service receivables pursuant to the arrangement, income derived by A, B, C, and D from the receivables acquired from M, N, O, and P is interest income described in paragraph (a)(1) of this section.

(iv) ***Financing arrangements.*** If a controlled foreign corporation (as defined in section 957(a)) participates (directly or indirectly) in a lending transaction that results in a loan to the purchaser of inventory property, services, or trade or service receivables of a related person (or a loan to a person who is related to the purchaser), and if the loan would not have been made or maintained on the same terms but for the corresponding purchase, then the controlled foreign corporation shall be considered to have indirectly acquired a trade or service receivable, and income derived by the controlled foreign corporation from such a loan shall be considered to be income described in paragraph (a)(1) of this section. For purposes of this paragraph (c)(3)(iv), it is immaterial that the sums lent are not, in fact, the sums used to finance the purchase of a related person's inventory property, services, or trade or service receivables. The amount of income derived by the controlled foreign corporation to be taken into account shall be the total amount of income derived from a lending transaction described in this paragraph (c)(3)(iv), if the amount lent is less than or equal to the purchase price of the inventory property, services, or trade or service receivables. If the amount lent is greater than the purchase price of the inventory property, services or receivables, the amount to be taken into account shall be the proportion of the interest charge (including original issue discount) that the purchase price bears to the total amount lent pursuant to the lending transaction. The following examples illustrate the application of this paragraph (c)(3)(iv).

Example 1. P, a domestic corporation, owns all of the outstanding stock of FS1, a controlled foreign corporation engaged in the financing business in Country X. P manufactures and sells toys, including sales to C, an unrelated corporation. Prior to P's sale of toys to C for $2,000, D, a wholly-owned Country X subsidiary of C, borrows $3,000 from FS1. The loan from FS1 to D would not have been made or maintained on the same terms but for C's purchase of toys from P. Two-thirds of the income derived by FS1 from the loan to D is interest income described in paragraph (a)(1) of this section.

Example 2. P, a domestic corporation, owns all of the outstanding stock of FS1, a controlled foreign corporation organized under the laws of Country X. FS1 has accumulated cash reserves. P has uncollected trade and service receivables of foreign obligors. FS1 makes a $1,000 loan to U, a foreign corporation that is unrelated to P or FS1. U purchases P's trade and service receivables for $2,000. The loan would not have been made or maintained on the same terms but for U's purchase of P's receivables. The income derived by U from the receivables is not interest income within the meaning of paragraph (a) of this section. However, the interest paid by U to FS1 is interest income described in paragraph (a)(1) of this section.

Example 3. The facts are the same as in Example (2), except that U is a wholly-owned Country Y subsidiary of FS1. Because U is related to P within the meaning of paragraph (b)(2) of this section, under paragraph (c)(1) of this section, income derived by U from P's receivables is interest income described in paragraph (a)(1) of this section. In addition, the income derived by FS1 from the loan to U is interest income described in paragraph (a)(1) of this section.

(d) ***Same country exception*** —

(1) ***Income from trade or service receivables.*** Income derived from a trade or service receivable acquired from a related person shall not be treated as interest income described in paragraph (a)(1) of this section if:

(i) The person acquiring the trade or service receivable and the related person are created or organized under the laws of the same foreign country;

(ii) The related person has a substantial part of its assets used in its trade or business located in such foreign country; and

(iii) The related person would not have derived foreign base company income, as defined in section 954(a) and the regulations thereunder, or income effectively connected with a United States trade or business from such receivable if the related person had collected the receivable.

For purposes of paragraph (d)(1)(ii) of this section, the standards contained in § 1.954-2(e) shall apply in determining the location of a substantial part of the assets of a related person. For purposes of paragraph (d)(1)(iii) of this section, a determination of whether the related person would have derived foreign base company income shall be made without regard to the de minimis test described in section 954(b)(3)(A). The following examples illustrate the application of this paragraph (d)(1).

Example 1. FS1, a controlled foreign corporation incorporated under the laws of Country X, owns all of the outstanding stock of FS2, which is also incorporated under the laws of Country X. FS1 has a substantial part of its assets used in its business in Country X. FS1 manufactures and sells toys for use in Country Y. The toys sold are considered to be manufactured in Country X under § 1.954-3(a)(2). FS1 is not considered to have a branch or similar establishment in Country Y that is treated as a separate corporation under section 954(d)(2) and § 1.954-3(b). Thus, gross income derived by FS1 from the toy sales is not foreign base company sales income. FS1 takes back receivables without stated interest from its customers. FS1 assigns those receivables to FS2. The income derived by FS2 from the receivables of FS1 is not interest income described in paragraph (a)(1) of this section, because it satisfies the same country exception under paragraph (d)(1) of this section.

Example 2. The facts are the same as in Example 1, except that the toys sold by FS1 are purchased from FS1's U.S. parent and are sold for use outside of Country X. Thus, any income derived by FS1 from the sale of the toys would be foreign base company sales income. Therefore, income derived by FS2 from the receivables of FS1 is interest income described in paragraph (a)(1) of this section. FS2 is considered to derive interest income from the receivable even if, solely by reason of the de minimis rule of section 954(b)(3)(A), FS1 would not have derived foreign base company income if FS1 had collected the receivable.

(2) ***Income from financing arrangements.*** Income derived by a controlled foreign corporation from a loan to a person that purchases inventory property or services of a person that is related to the controlled foreign corporation, or from other loans described in paragraph (c)(3)(iv) of this section, shall not be treated as interest income described in paragraph (a)(1) of this section if:

(i) The person providing the financing and the related person are created or organized under the laws of the same foreign country;

(ii) The related person has a substantial part of its assets used in its trade or business located in such foreign country; and

(iii) The related person would not have derived foreign base company income or income effectively connected with a United States trade or business:

(A) From the sale of inventory property or services to the borrower or from financing the borrower's purchase of inventory property or services, in the case of a loan to the purchaser of inventory property or services of a related person; or

(B) From collecting amounts due under the receivable or from financing the purchase of the receivable, in the case of a loan to the purchaser of a trade or service receivable of a related person.

For purposes of paragraph (d)(2)(ii) of this section, the standards contained in § 1.954-2(e) shall apply in determining the location of a substantial part of the assets of a related person. For purposes of paragraph (d)(2)(iii) of this section, a determination of whether the related person would have derived foreign base company income shall be made without regard to the de minimis test described in section 954(b)(3)(A). The following examples illustrate the application of this paragraph (d)(2).

Example 1. FS1, a controlled foreign corporation incorporated under the laws of Country X, owns all of the outstanding stock of FS2, which is also incorporated under the laws of Country X. FS1, which has a substantial part of its assets used in its business located in Country X, manufactures and sells toys for use in Country Y. The toys sold are considered to be manufactured in Country X under § 1.954-3(a)(2). FS1 is not considered to have a branch or similar establishment in Country Y that is treated as a separate corporation under section 954(d)(2) and § 1.954-3(b). Thus, the gross income derived by FS1 from the toy sales is not foreign base company sales income. FS2 makes a loan to FS3, a wholly-owned subsidiary of FS1 which is also incorporated under the laws of Country X, in connection with FS3's purchase of toys from FS1. FS3 does not earn any subpart F gross income. Thus, FS1 would not have derived foreign personal holding company interest income if FS1 had made the loan to FS3, because the interest would be covered by the same country exception of section 954(c)(3). Therefore, the income derived by FS2 from its loan to FS3 is not treated as interest income described in paragraph (a)(1) of this section, because it satisfies the same country

exception under paragraph (d)(2) of this section. Such income is also not treated as foreign personal holding company income described in section 954(c)(1)(A) because the same country exception of section 954(c)(3) also applies to the interest actually derived by FS2 from its loan to FS3.

Example 2. FS1, a controlled foreign corporation incorporated under the laws of Country X, owns all of the outstanding stock of FS2, which is also incorporated under the laws of Country X. FS1 purchases toys from its U.S. parent and resells them for use outside of Country X. As part of a sales transaction, FS1 takes back trade receivables. FS2 makes a loan to U, an unrelated corporation, to finance U's purchase of FS1's trade receivables. Because FS1 would have derived foreign base company income if FS1 had collected the receivables or made the loan itself, the same country exception of paragraph (d)(2) of this section does not apply. Accordingly, under paragraph (c)(3)(iv) of this section, the income derived by FS2 from its loan to U is treated as interest income described in paragraph (a)(1) of this section.

(e) ***Special rules*** —

(1) ***Foreign personal holding companies and controlled foreign corporations.*** For purposes of sections 551-558 (relating to foreign personal holding companies), the exclusion provided by section 552(c) for interest described in section 954(c)(3)(A) shall not apply to income described in paragraph (a)(1) of this section. For purposes of the sections 951-964 (relating to controlled foreign corporations), income described in paragraph (a)(1) of this section shall be included in a United States shareholder's pro rata share of a controlled foreign corporation's subpart F income without regard to the de minimis rule under section 954(b)(3)(A). However, income described in paragraph (a)(1) of this section shall be included in the computation of a controlled foreign corporation's foreign base company income for purposes of applying the de minimis rule under section 954(b)(3)(A) and the more than 70 percent of gross income test under section 954(b)(3)(B). In addition, income described in paragraph (a)(1) of this section shall be considered to be subpart F income without regard to the exclusions from foreign base company income provided by section 954(c)(2)(B) (relating to export financing interest derived in the conduct of a banking business) and section 954(c)(3)(A)(i) (relating to certain interest income received from related persons).

(2) ***Foreign tax credit.*** Income described in paragraph (a)(1) of this section shall be considered to be interest income for purposes of the section 904 foreign tax credit limitation and is not eligible for the exceptions for export financing interest provided in section 904(d)(2) (A)(iii)(II), (B)(ii), and (C)(iii). In addition, such income will be subject to the look-through rule for subpart F income set forth in section 904(d)(3) without regard to the de minimis exception provided in section 904(d)(3)(E).

(3) ***Possessions corporations*** —

(i) ***Limitation on credit.*** Income described in paragraph (a)(1) of this section shall not be treated as income described in section 936(a)(1) (A) or (B) unless the income is considered under the principles of § 1.863-6 to be derived from sources within the possessions. Thus, the credit provided by section 936 is not available for income described in paragraph (a)(1) of this section unless the obligor under the receivable is a resident of a possession. In the case of a loan described in section 864(d)(6), the credit provided by section 936 is not available for income described in paragraph (a)(1) of this section unless the purchaser of the inventory property or services is a resident of a possession.

(ii) ***Eligibility determination.*** Notwithstanding the limitation on the availability of the section 936 credit for income described in paragraph (a)(1) of this section, if income treated as interest income under paragraph (a)(1) of this section is derived from sources within a possession

(determined without regard to this section), such income shall be eligible for inclusion in a corporation's gross income for purposes of section 936(a)(2)(A). If such income is derived from the active conduct of a trade or business within a possession (determined without regard to this section), such income shall be eligible for inclusion in a corporation's gross income for purposes of section 936(a)(2)(B). (These rules apply for purposes of determining whether a corporation is eligible to elect the credit provided under section 936(a).)

(iii) ***Example.*** The following example illustrates the application of paragraph (e)(3) of this section.

Example. Corporation X is operating in a possession as a possessions corporation. In 1985, X earned $50,000 from the active conduct of a business in the possession, including $5,000 from trade or service receivables acquired from a related party. Obligors under the receivables acquired by X are not residents of the possession. Corporation X also earned $20,000 from activities other than its active conduct of business in the possession. The $5,000 derived by X from the receivables is not eligible for the section 936 credit. However, the $5,000 may be used by X to meet the percentage tests under section 936(a)(2) to the extent that such income is considered to be derived from sources within the possession (for purposes of section 936(a)(2)(A)) or is considered to be derived from the active conduct of a trade or business in the possession (for purposes of section 936(a)(2)(B)), in either case determined without regard to the characterization of such income under this section.

(f) ***Effective date.*** The provisions of this section shall apply with respect to accounts receivable and evidences of indebtedness transferred after March 1, 1984 and are effective June 14, 1988.

[T.D. 8209, 53 FR 22166, June 14, 1988]

§ 1.864(c)(8)-1 Gain or loss by foreign persons on the disposition of certain partnership interests.

(a) ***Overview.*** This section provides rules and definitions under section 864(c)(8). Paragraph (b) of this section provides the general rule treating gain or loss recognized by a nonresident alien individual or foreign corporation from the sale or exchange of a partnership interest as effectively connected gain or effectively connected loss. Paragraph (c) of this section provides rules for determining the limitations on the amount of effectively connected gain or effectively connected loss under section 864(c)(8) and paragraph (b) of this section. Paragraph (d) of this section provides rules regarding coordination with section 897. Paragraph (e) of this section provides rules regarding certain tiered partnerships. Paragraph (f) of this section provides rules regarding U.S. income tax treaties. Paragraph (g) of this section provides definitions. Paragraph (h) of this section provides a rule regarding certain contributions of property to a partnership. Paragraph (i) of this section contains examples illustrating the rules set forth in this section. Paragraph (j) of this section provides the applicability date.

(b) ***Gain or loss treated as effectively connected gain or loss —***

(1) ***In general.*** Notwithstanding any other provision of subtitle A of the Internal Revenue Code, if a foreign transferor owns, directly or indirectly, an interest in a partnership that is engaged in the conduct of a trade or business within the United States, outside capital gain, outside capital loss, outside ordinary gain, or outside ordinary loss (each as defined in paragraph (b)(2) of this section) recognized by the foreign transferor on the transfer of all (or any portion) of the interest is treated as effectively connected gain or effectively connected loss, subject to the limitations described in

paragraph (b)(3) of this section. Except as provided in paragraph (d) of this section, this section does not apply to prevent any portion of the gain or loss that is otherwise treated as effectively connected gain or effectively connected loss under provisions of the Internal Revenue Code other than section 864(c)(8) from being so treated.

(2) ***Determination of outside gain and loss*** —

(i) ***In general.*** The amount of gain or loss recognized by the foreign transferor in connection with the transfer of its partnership interest is determined under all relevant provisions of the Internal Revenue Code and the regulations thereunder. See, *e.g.,* §§ 1.741-1(a) and 1.751-1(a)(2). For purposes of this section, the amount of gain or loss that is treated as capital gain or capital loss under sections 741 and 751 is referred to as *outside capital gain* or *outside capital loss,* respectively. The amount of gain or loss that is treated as ordinary gain or ordinary loss under sections 741 and 751 is referred to as *outside ordinary gain* or *outside ordinary loss,* respectively.

(ii) ***Nonrecognition provisions.*** A foreign transferor's gain or loss recognized in connection with the transfer of its partnership interest does not include gain or loss to the extent that the gain or loss is not recognized by reason of one or more nonrecognition provisions of the Internal Revenue Code.

(3) ***Limitations.*** For purposes of applying this section, this paragraph (b)(3) limits the amount of gain or loss recognized by a foreign transferor that may be treated as effectively connected gain or effectively connected loss.

(i) ***Capital gain limitation.*** Outside capital gain recognized by a foreign transferor is treated as effectively connected gain to the extent it does not exceed aggregate deemed sale EC capital gain determined under paragraph (c)(3)(ii)(B) of this section.

(ii) ***Capital loss limitation.*** Outside capital loss recognized by a foreign transferor is treated as effectively connected loss to the extent it does not exceed aggregate deemed sale EC capital loss determined under paragraph (c)(3)(ii)(B) of this section.

(iii) ***Ordinary gain limitation.*** Outside ordinary gain recognized by a foreign transferor is treated as effectively connected gain to the extent it does not exceed aggregate deemed sale EC ordinary gain determined under paragraph (c)(3)(ii)(A) of this section.

(iv) ***Ordinary loss limitation.*** Outside ordinary loss recognized by a foreign transferor is treated as effectively connected loss to the extent it does not exceed aggregate deemed sale EC ordinary loss determined under paragraph (c)(3)(ii)(A) of this section.

(c) ***Amount treated as effectively connected with the conduct of a trade or business within the United States.*** This paragraph (c) describes the steps to be followed in computing the limitations described in paragraph (b)(3) of this section.

(1) ***Step 1: Determine deemed sale gain and loss.*** Determine the amount of gain or loss that the partnership would recognize with respect to each of its assets (other than interests in partnerships described in paragraph (e) of this section) upon a deemed sale of all of the partnership's assets on the date of the transfer of the partnership interest described in paragraph (b)(1) of this section (deemed sale). For this purpose, a deemed sale is treated as a sale by the partnership to an unrelated person of each of its assets (tangible and intangible) in a fully taxable transaction for cash

in an amount equal to the fair market value of each asset (taking into account section 7701(g)) immediately before the partner's transfer of the interest in the partnership. For rules concerning the deemed sale of certain partnership interests, see paragraph (e) of this section.

(2) ***Step 2: Determine deemed sale EC gain and loss*** —

(i) ***In general*** —

(A) ***Effectively connected determination.*** With respect to each asset deemed sold in paragraph (c)(1) of this section, determine the amount of gain or loss from the deemed sale that would be treated as effectively connected gain or effectively connected loss (including by reason of section 897). Gain described in this paragraph (c)(2) is referred to as *deemed sale EC gain,* and loss described in this paragraph (c)(2) is referred to as *deemed sale EC loss.* Section 864 and the regulations thereunder apply for purposes of determining whether deemed sale gain or loss would be treated as effectively connected gain or loss. See paragraph (c)(2)(ii) of this section for sourcing rules that apply for purposes of determining deemed sale EC gain and deemed sale EC loss.

(B) ***10-year exception.*** For purposes of applying paragraph (c)(2)(i)(A) of this section, gain or loss from the deemed sale of an asset (other than a United States real property interest within the meaning of section 897(c)) will not be treated as deemed sale EC gain or deemed sale EC loss if—

(*1*) No income or gain produced by the asset was taxable as income that was effectively connected with the conduct of a trade or business within the United States by the partnership (or the foreign transferor, a predecessor of the foreign transferor, or a predecessor of the partnership) during the lesser of the ten-year period ending on the date of the transfer or the period for which the partnership (and, if applicable, the foreign transferor, a predecessor of the foreign transferor, and a predecessor of the partnership) held the asset; and

(*2*) The asset has not been used, or held for use, in the conduct of a trade or business within the United States by the partnership (or the foreign transferor, a predecessor of the foreign transferor, or a predecessor of the partnership) during that same period.

(ii) ***Sourcing rules for determining deemed sale EC gain and deemed sale EC loss*** —

(A) ***In general.*** For purposes of applying section 865(e)(2)(A) in connection with the determination of deemed sale EC gain and deemed sale EC loss under this paragraph (c)(2)(ii)(A), except to the extent provided in paragraphs (c)(2)(ii)(B) through (E) of this section, the deemed sale of an asset will be treated as attributable to an office or other fixed place of business maintained by the partnership in the United States. However, if the partnership does not maintain an office or other fixed place of business in the United States (within the meaning of section 864(c)(5)(A) and § 1.864-7), neither the office attribution described in this paragraph (c)(2)(ii)(A), nor the rules of paragraphs (c)(2)(ii)(B) through (E) of this section, will apply.

(B) ***Look-back rule for sale of inventory property.*** The deemed sale of inventory property (as defined in section 865(i)(1)) will not be treated as attributable to an office or other fixed place of business maintained by the partnership in the United States to the extent of *foreign source inventory gain or loss.* Foreign source inventory gain or loss is determined

by multiplying the deemed sale gain or deemed sale loss attributable to inventory property by the foreign source inventory ratio. The foreign source inventory ratio cannot exceed one. If the amount in paragraph (c)(2)(ii)(B)(*1*) of this section is not positive, the foreign source inventory ratio is zero. If the amount in paragraph (c)(2)(ii)(B)(*1*) of this section is positive, but the amount in paragraph (c)(2)(ii)(B)(*2*) of this section is not positive, the foreign source inventory ratio is one. The foreign source inventory ratio is—

(*1*) The gross income of the partnership from sources without the United States (as determined under sections 865(b) and 865(e)(2)) that was attributable to inventory property sold during the lesser of—

(*i*) The period comprised of the partnership's three taxable years immediately preceding the date of the deemed sale, or

(*ii*) The period beginning on the date the partnership (or any of its predecessors) was formed and ending on the last day of the partnership's taxable year immediately preceding the date of the deemed sale; over

(*2*) The total gross income of the partnership that was attributable to inventory property sold during that same period.

(C) ***Look-back rule for intangibles.*** The deemed sale of an intangible (as defined in section 865(d)(2), including going concern value) will not be treated as attributable to an office or other fixed place of business maintained by the partnership in the United States to the extent of *foreign source intangible gain or loss.* Foreign source intangible gain or loss is determined by multiplying the deemed sale gain or deemed sale loss from an intangible, without regard to any gain described in section 865(d)(4)(A), by the foreign source intangible ratio. The foreign source intangible ratio cannot exceed one. If the amount in paragraph (c)(2)(ii)(C)(*1*) of this section is not positive, the foreign source intangible ratio is zero. If the amount in paragraph (c)(2)(ii)(C)(*1*) of this section is positive, but the amount in paragraph (c)(2)(ii)(C)(*2*) of this section is not positive, the foreign source inventory ratio is one. The foreign source intangible ratio is—

(*1*) The gross ordinary income (other than from dispositions of depreciable or amortizable property) of the partnership from sources without the United States that was not effectively connected with the conduct of a trade or business within the United States, during the lesser of—

(*i*) The period comprised of the partnership's three taxable years immediately preceding the date of the deemed sale, or

(*ii*) The period beginning on the date the partnership (or any of its predecessors) is formed and ending on the last day of the partnership's taxable year immediately preceding the year in which the deemed sale occurs; over

(*2*) The total gross ordinary income (other than from dispositions of depreciable or amortizable property) of the partnership during that period.

(D) ***Depreciable personal property*** —

(*1*) ***Depreciation recapture.*** The deemed sale of depreciable personal property (as defined in section 865(c)(4)(A)), including from the sale of an amortizable intangible (as defined in section 865(d)(2)), will not be treated as attributable to an office or

other fixed place of business maintained by the partnership in the United States to the extent the deemed sale gain would be treated as from sources outside the United States after applying section 865(c)(1) at the time of the deemed sale.

(2) ***Gain in excess of depreciation or loss with respect to depreciable personal property.*** For purposes of this section, if the deemed sale of depreciable personal property (other than an amortizable intangible) results in deemed sale gain in excess of the property's depreciation adjustments (as defined in section 865(c)(4)(B)), or results in deemed sale loss, attribution to an office or other fixed place of business maintained by the partnership in the United States with respect to the excess deemed sale gain, or deemed sale loss, will be determined based on where the property is located: If the property is located outside the United States, the excess deemed sale gain, or the deemed sale loss, will not be treated as attributable to an office or other fixed place of business maintained by the partnership in the United States; if the property is located within the United States, the excess deemed sale gain, or the deemed sale loss, will be treated as attributable to an office or other fixed place of business maintained by the partnership in the United States.

(E) ***Material change in circumstances rule.*** If a material change in circumstances occurred that causes the applicable rule provided in paragraph (c)(2)(ii)(B) or (C) of this section to provide a sourcing result that is materially different from the sourcing result that would occur if the applicable period described in paragraph (c)(2)(ii)(B)(*1*) or (c)(2)(ii)(C)(*1*) of this section began on the date on which the material change in circumstance occurred and ended on the last day of the partnership's taxable year immediately preceding the year in which the deemed sale occurs (the *modified look-back period*), the applicable rule provided in paragraph (c)(2)(ii)(B) or (C) of this section may be applied by reference to the modified look-back period. The difference between the sourcing results is determined by comparing the foreign source inventory ratio (as described in paragraph (c)(2)(ii)(B) of this section) or the foreign source intangible ratio (as described in paragraph (c)(2)(ii)(C) of this section), as applicable, with the foreign source inventory ratio or foreign source intangible ratio, as applicable, if that ratio were determined by reference to the modified look-back period. For purposes of this paragraph (c)(2)(ii)(E), the sourcing results will not be materially different unless the percentage point difference between the ratios described in the preceding sentence is at least 30 percentage points.

(iii) ***Examples.*** This paragraph (c)(2)(iii) provides examples that illustrate the rules of paragraph (c)(2)(ii) of this section. Except as otherwise provided, the following facts apply for purposes of this paragraph (c)(2)(iii). FP is a foreign corporation and a partner in PRS, a partnership that is engaged in the conduct of a trade or business within the United States (the U.S. Business) and a business in Country A (the Country A Business). Both businesses purchase inventory property and sell the purchased inventory property to unrelated customers; this is the only income-generating activity carried on by the businesses. PRS maintains an office or fixed place of business within the U.S. (within the meaning of section 864(c)(5)(A) and § 1.864-7) and, for its U.S. business, PRS sells its inventory property through its U.S. office. For the Country A business, PRS sells its inventory property through its Country A office for consumption in Country A; PRS's Country A office materially participates in each sale. The gain or loss from the inventory sold through PRS's Country A office is treated as from sources without the United States and is not effectively connected with PRS's U.S. Business. In year 4, FP sells its entire interest in PRS, thereby triggering the deemed sale described in paragraph (c)(1) of this section.

In the deemed sale, PRS recognizes $10x of gain on the sale of its inventory property (the only asset PRS holds other than goodwill and going concern value). The 10-year exception provided in paragraph (c)(2)(i)(B) of this section does not apply.

(A) ***Example 1: Determining foreign source inventory gain*** —

(*1*) ***Facts.*** Based on PRS's sales records for the three taxable years immediately preceding the date of the deemed sale, PRS's gross income from sources without the United States that is attributable to sales of inventory property is $12x and PRS's total gross income attributable to sales of inventory property during that period is $30x.

(*2*) ***Analysis.*** To determine foreign source inventory gain or loss described in paragraph (c)(2)(ii)(B) of this section, the $10x deemed sale gain attributable to inventory property is multiplied by PRS's foreign source inventory ratio. PRS's foreign source inventory ratio is PRS's gross income from sources without the United States that are attributable to sales of inventory property within PRS's three taxable years preceding the date of the deemed sale, over PRS's total gross income attributable to sales of inventory property during the same period. Thus, based on PRS's sales records from the three taxable years preceding the date of the deemed sale, the foreign source inventory gain for PRS's inventory is $4x (the $10x deemed sale gain attributable to inventory multiplied by the foreign source inventory ratio of $12x over $30x).

(B) ***Example 2: Determining deemed sale EC gain attributable to inventory property under the material change in circumstances rule*** —

(*1*) ***Facts.*** The facts are the same as in paragraph (c)(2)(iii)(A)(*1*) of this section (the facts of *Example 1* in this paragraph (c)(2)(iii)), except that at the beginning of year 3 (PRS's taxable year immediately preceding the date of the deemed sale), PRS started a new business in Country B (the Country B Business) to take advantage of favorable market prospects for its products in Country B. For the Country B Business, PRS sells its inventory property through its Country B office for consumption in Country B; PRS's Country B office materially participates in each such sale. The gain or loss from the inventory sold through PRS's Country B office is foreign source gain or loss. Also, at the beginning of year 3, PRS substantially reduced its U.S. Business as a result of market factors. As a result of these changes in year 3, 95% of PRS's inventory property is sold in its Country A Business and Country B Business (collectively, the Foreign Businesses) beginning on the date in which these changes occurred; accordingly, 5% of PRS' inventory property is sold in its U.S. Business after these changes. Based on PRS's sales records for the three taxable years preceding the date of the deemed sale, PRS's gross income from sources without the United States that are attributable to sales of inventory property is $15x and PRS's total gross income attributable to sales of inventory property during that period is $30x; for year 3, PRS's gross income from sources without the United States that are attributable to sales of inventory property is $9.5x, and PRS's total gross income attributable to sales of inventory property in Year 3 is $10x.

(*2*) ***Analysis.*** The material change in circumstances rule described in paragraph (c)(2)(ii)(E) of this section applies if due to a material change in circumstances, the sourcing rule provided in paragraph (c)(2)(ii)(B) of this section provides a sourcing result that is materially different from the sourcing result that would occur if that

sourcing rule was applied by reference to the modified look-back period; that is, the period beginning on the date in which a material chance in circumstances occurred and ending on the last day of the PRS's taxable year immediately preceding the date of the deemed sale. For this purpose, the reduction in PRS's U.S. business in year 3, coupled with the creation of the Country B Business in the same year, qualifies as a material change in circumstances. Thus, the modified look-back period consists of year 3; that is, the period starting at the beginning of year 3, the date in which the material change in circumstances occurred, and ending of the last day of year 3, the last day of PRS's taxable year immediately preceding the date of the deemed sale. Based on PRS's sales records for the three taxable years preceding the deemed sale, the foreign source inventory ratio, expressed as a percentage, is 50% ($15x attributable to PRS's gross income from sources without the United States with respect to sales of its inventory property, over $30x attributable to PRS's total gross income with respect to sales of its inventory property). Due to the material change in circumstances, however, 95% of PRS's inventory property is sold in its Foreign Businesses. ($9.5x attributable to PRS's gross income from sources without the United States with respect to sales of its inventory property, over $10x attributable to PRS's total gross income with respect to sales of its inventory property.) Accordingly, if PRS applied the sourcing rule provided in paragraph (c)(2)(ii)(B) of this section by reference to the modified look-back period, 95% ($9.5x/$10x), or $9.5x, of the gain would be attributable to sales for PRS's Foreign Businesses (gain from sources without the United States), and only 5% ($.5x/$10x), or $0.5x, of the gain would be attributable to sales for PRS's U.S. Business (gain from United States sources). The excess of the foreign source inventory ratio determined by reference to the modified look-back period (expressed as a percentage), over the foreign source inventory ratio (also expressed as a percentage) is 45%; that is 95% (as determined under the modified look-back period) minus 50% (as determined under the foreign source inventory ratio). Accordingly, the sourcing results are materially different because the 45 percentage point difference is greater than the 30 percentage point threshold provided in paragraph (c)(2)(ii)(E) of this section. Thus, the material change in circumstances rule of paragraph (c)(2)(ii)(E) of this section applies and the foreign source inventory gain determined under paragraph (c)(2)(ii)(B) of this section, determined by reference to the modified look-back period, is $9.5x; that is, the deemed sale gain attributable to inventory property ($10x), multiplied by the foreign source inventory ratio determined by reference to the modified look-back period ($9.5x/$10x).

(3) ***Step 3: Determine the foreign transferor's distributive share of deemed sale EC gain or deemed sale EC loss —***

(i) ***In general.*** A foreign transferor's distributive share of deemed sale EC gain or deemed sale EC loss with respect to each asset is the amount of the deemed sale EC gain and deemed sale EC loss determined under paragraph (c)(2) of this section that would have been allocated to the foreign transferor by the partnership under all applicable Internal Revenue Code sections (including section 704) upon the deemed sale described in paragraph (c)(1) of this section, taking into account allocations of tax items applying the principles of section 704(c), including any remedial allocations (see § 1.704-3(d)), and any section 743(b) basis adjustments (see § 1.743-1(j)(3)). For this purpose, a foreign transferor's distributive share of deemed sale EC gain or deemed sale EC loss does not include any amount that is excluded from the foreign

transferor's gross income or otherwise exempt from U.S. Federal income tax by reason of an applicable provision of the Internal Revenue Code (including, for example, by reason of section 864(b)(2), 872(b), or 883). Similarly, a foreign transferor's distributive share of deemed sale EC gain or deemed sale EC loss does not include any amount to which an exception under section 897 applies, such as section 897(k) or section 897(l), if that amount is not otherwise treated as effectively connected under a provision of the Code. For rules regarding the determination of a foreign transferor's distributive share of deemed sale EC gain and deemed sale EC loss under an applicable U.S. income tax treaty, see paragraph (f) of this section.

(ii) ***Aggregate deemed sale EC items*** —

(A) ***Ordinary gain or loss.*** A foreign transferor's *aggregate deemed sale EC ordinary gain* (if the net aggregate of the foreign transferor's distributive share of the deemed sale EC ordinary gain and loss is a gain) or *aggregate deemed sale EC ordinary loss* (if the net aggregate of the foreign transferor's distributive share of the deemed sale EC ordinary gain and loss is a loss) is determined by taking into account—

(*1*) The portion of the foreign transferor's distributive share of deemed sale EC gain and deemed sale EC loss that is attributable to the deemed sale of the partnership's assets that are section 751(a) property; and

(*2*) Deemed sale EC gain and deemed sale EC loss from the deemed sale of assets that are section 751(a) property that would be allocated to the foreign transferor with respect to interests in partnerships that are engaged in the conduct of a trade or business within the United States under paragraph (e)(1)(ii) of this section upon the deemed asset sales described in paragraph (e)(1)(i) of this section.

(B) ***Capital gain or loss.*** A foreign transferor's *aggregate deemed sale EC capital gain* (if the net aggregate of the foreign transferor's distributive share of the deemed sale EC capital gain and loss is a gain) or *aggregate deemed sale EC capital loss* (if the net aggregate of the foreign transferor's distributive share of the deemed sale EC capital gain and loss is a loss) is determined by taking into account—

(*1*) The portion of the foreign transferor's distributive share of deemed sale EC gain and deemed sale EC loss that is attributable to the deemed sale of assets that are not section 751(a) property; and

(*2*) Deemed sale EC gain and deemed sale EC loss from the sale of assets that are not section 751(a) property and that would be allocated to the foreign transferor with respect to all interests in partnerships that are engaged in the conduct of a trade or business within the United States under paragraph (e)(1)(ii) of this section upon the deemed asset sales described in paragraph (e)(1)(i) of this section.

(iii) ***Partial transfers.*** If a foreign transferor transfers less than all of its interest in a partnership, then for purposes of paragraph (c)(3)(i) of this section, the foreign transferor's distributive share of deemed sale EC gain and deemed sale EC loss is determined by reference to the amount of deemed sale EC gain or deemed sale EC loss determined under paragraph (c)(3)(i) of this section that is attributable to the portion of the foreign transferor's partnership interest that was transferred.

(d) ***Coordination with section 897.*** If a foreign transferor transfers an interest in a partnership in a transfer that is subject to section 864(c)(8) and the partnership owns one or more United States real property interests (as defined in section 897(c)), then the foreign transferor determines its effectively connected gain and effectively connected loss under this section, and not pursuant to section 897(g). Accordingly, with respect to a transfer that is subject to section 864(c)(8), section 864(c)(8)(C) does not reduce the amount of gain or loss treated as effectively connected gain or loss under this section. For rules regarding a transfer not subject to section 864(c)(8) of an interest in a partnership that owns one or more United States real property interests, see section 897(g) and the regulations thereunder. If a foreign transferor transfers an interest in a partnership in the manner described in paragraph (b)(2)(ii) of this section, the transfer is treated as not subject to section 864(c)(8) to the extent of the gain or loss that is not recognized; instead, if the partnership owns one or more United States real property interests at the time of transfer, the rules of section 897(g) and the regulations thereunder apply to the unrecognized gain or loss.

(e) ***Tiered partnerships*** —

(1) ***Transfers of upper-tier partnerships.*** Assets sold in a deemed sale described in paragraph (c)(1) of this section do not include interests in partnerships that are engaged in the conduct of a trade or business within the United States or interests in partnerships that hold, directly or indirectly, partnerships that are engaged in the conduct of a trade or business within the United States. Rather, if a foreign transferor transfers an interest in a partnership (upper-tier partnership) that owns, directly or indirectly, an interest in one or more partnerships that are engaged in the conduct of a trade or business within the United States, then—

(i) Beginning with the lowest-tier partnership that is engaged in the conduct of a trade or business within the United States in a chain of partnerships and going up the chain, each partnership that is engaged in the conduct of a trade or business within the United States is treated as selling its assets in a deemed sale in accordance with the principles of paragraph (c)(1) of this section; and

(ii) Each partnership must determine its deemed sale EC gain and deemed sale EC loss in accordance with the principles of paragraph (c)(2) of this section, and determine the distributive share of deemed sale EC gain and deemed sale EC loss for each partner that is either a partnership (in which the foreign transferor is a direct or indirect partner) or a foreign transferor, in accordance with the principles of paragraph (c)(3)(i) of this section.

(2) ***Transfers by upper-tier partnerships.*** If a foreign transferor is a direct or indirect partner in an upper-tier partnership and the upper-tier partnership transfers an interest in a partnership that is engaged in the conduct of a trade or business within the United States (including a partnership held indirectly through one or more partnerships), then the principles of this section (including paragraph (e)(1) of this section) apply with respect to the gain or loss on the transfer that is allocated to the foreign transferor by the upper-tier partnership.

(3) ***Coordination with section 897.*** For purposes of this paragraph (e), a lower-tier partnership that holds one or more United States real property interests is treated as engaged in the conduct of a trade or business within the United States.

(f) ***Treaty coordination.*** This paragraph (f) describes how paragraph (c)(3) of this section applies in the case of a transfer of an interest in a partnership by a foreign transferor that is eligible for benefits under an applicable U.S. income tax treaty. As a general matter, a foreign transferor must satisfy the requirements of the limitation on benefits article, if any, in the treaty between the jurisdiction in which the transferor is

resident and the United States to be eligible for treaty benefits. In the case of a foreign transferor that is entitled to treaty benefits, in determining the foreign transferor's distributive share of deemed sale EC gain and deemed sale EC loss, gain or loss derived by the foreign transferor attributable to assets deemed sold that would be exempt from tax under an applicable U.S. income tax treaty if disposed of by the partnership are not taken into account under paragraph (c)(3) of this section. In general, gain or loss on the alienation of a partnership interest will be treated as effectively connected gain or loss under section 864(c)(8) to the extent that the gain or loss is either attributable to assets forming part of a U.S. permanent establishment or fixed place of business, or taxable under a provision governing the disposition of United States real property interests. Gain or loss from the alienation of a partnership interest will be considered gain or loss attributable to the alienation of assets forming part of a permanent establishment or fixed place of business in the United States to the extent the assets deemed sold under section 864(c)(8) form a part of the U.S. permanent establishment or fixed place of business of the partnership. If, however, after applying treaty benefits in paragraph (c)(3) of this section, the only gains or losses that would be taken into account are gains or losses attributable to United States real property interests, the foreign transferor determines its effectively connected gain and effectively connected loss pursuant to section 897 and not under this section.

(g) ***Definitions.*** The following definitions apply for purposes of this section.

(1) ***Effectively connected gain.*** The term *effectively connected gain* means gain that is treated as effectively connected with the conduct of a trade or business within the United States.

(2) ***Effectively connected loss.*** The term *effectively connected loss* means loss treated as effectively connected with the conduct of a trade or business within the United States.

(3) ***Foreign transferor.*** The term *foreign transferor* means a nonresident alien individual or foreign corporation.

(4) ***Section 751(a) property.*** The term *section 751(a) property* means unrealized receivables described in section 751(c) and inventory items described in section 751(d).

(5) ***Transfer.*** The term *transfer* means a sale, exchange, or other disposition, and includes a distribution from a partnership to a partner to the extent that gain or loss is recognized on the distribution, as well as a transfer treated as a sale or exchange under section 707(a)(2)(B).

(h) ***Anti-stuffing rule.*** If a foreign transferor (or a person that is related to a foreign transferor within the meaning of section 267(b) or 707(b)) transfers property (including another partnership interest) to a partnership in a transaction with a principal purpose of reducing the amount of gain treated as effectively connected gain, or increasing the amount of loss treated as effectively connected loss, under section 864(c)(8) or section 897, the transfer is disregarded for purposes of section 864(c)(8) or section 897, as appropriate.

(i) ***Examples.*** This paragraph (i) provides examples that illustrate the rules of this section. Except as otherwise provided, the following facts are presumed for purposes of this paragraph (i). FP is a foreign corporation. USP is a domestic corporation. PRS is a partnership that was formed on January 1, 2018, when FP and USP each contributed $100x in cash. PRS has made no distributions and received no contributions other than those described in the preceding sentence. FP's adjusted basis in its interest in PRS is $100x. X is a foreign corporation that is unrelated to FP, USP, or PRS. Upon the formation of PRS, FP and USP entered into an agreement providing that all income, gain, loss, and deduction of PRS will be allocated equally between FP and USP. PRS is engaged in the conduct of a trade or business within the United States (the U.S. Business) and an unrelated business in Country A (the Country A Business). In a deemed sale described in paragraph (c)(1) of this section, gain or loss on assets of the U.S. Business

would be treated as effectively connected gain or effectively connected loss, and gain or loss on assets of the Country A Business would not be so treated (including by reason of paragraph (c)(2)(i)(B) of this section). PRS has no liabilities.

(1) *Example 1. Deemed sale limitation* —

(i) ***Facts.*** On January 1, 2019, FP sells its entire interest in PRS to X for $105x. FP does not qualify for the benefits of an income tax treaty between the United States and another country. Immediately before the sale, PRS's balance sheet appears as follows:

	Adjusted basis	Fair market value
U.S. Business section 1231 asset	$100x	$104x
Country A Business capital asset	100x	106x
Total	200x	210x

(ii) *Analysis* —

(A) ***Outside gain or loss.*** FP is a foreign transferor (within the meaning of paragraph (g)(3) of this section) and transfers (within the meaning of paragraph (g)(5) of this section) its interest in PRS to X. For purposes of this example, for simplicity, PRS is assumed to hold no section 751(a) property and depreciation recapture is assumed to be zero. FP recognizes a $5x capital gain under section 741, which is an outside capital gain within the meaning of paragraph (b)(2)(i) of this section. Under paragraph (b)(1) of this section, FP's $5x capital gain is treated as effectively connected gain to the extent that it does not exceed the limitation described in paragraph (b)(3)(i) of this section, which is FP's aggregate deemed sale EC capital gain.

(B) ***Deemed sale.*** FP's aggregate deemed sale EC capital gain is determined according to the three-step process set forth in paragraph (c) of this section. First, the amount of gain or loss that PRS would recognize with respect to each of its assets upon a deemed sale described in paragraph (c)(1) of this section is a $4x gain with respect to the U.S. Business section 1231 asset and a $6x gain with respect to the Country A Business capital asset. Second, under paragraph (c)(2) of this section, PRS's deemed sale EC gain is $4x. Third, under paragraph (c)(3)(ii)(B) of this section, FP's aggregate deemed sale EC capital gain is $2x (that is, the aggregate of its distributive share of deemed sale EC gain attributable to the deemed sale of assets that are not section 751(a) property, which is 50% of $4x).

(C) ***Limitation.*** Under paragraph (b)(3)(i) of this section, the $5x outside capital gain recognized by FP is treated as effectively connected gain to the extent that it does not exceed FP's $2x aggregate deemed sale EC capital gain. Accordingly, FP recognizes $2x of capital gain that is treated as effectively connected gain.

(2) *Example 2. Outside gain limitation* —

(i) ***Facts.*** On January 1, 2019, FP sells its entire interest in PRS to X for $110x. FP does not qualify for the benefits of an income tax treaty between the United States and another country. Immediately before the sale, PRS's balance sheet appears as follows:

	Adjusted basis	Fair market value
U.S. Business section 1231 asset	$100x	$150x
Country A Business capital asset	100x	70x
Total	200x	220x

(ii) ***Analysis*** —

(A) ***Outside gain or loss.*** FP is a foreign transferor (within the meaning of paragraph (g)(3) of this section) and transfers (within the meaning of paragraph (g)(5) of this section) its interest in PRS to X. For purposes of this example, for simplicity, PRS is assumed to hold no section 751(a) property and depreciation recapture is assumed to be zero. FP recognizes a $10x capital gain under section 741, which is an outside capital gain within the meaning of paragraph (b)(2)(i) of this section. Under paragraph (b)(1) of this section, FP's $10x capital gain is treated as effectively connected gain to the extent that it does not exceed the limitation described in paragraph (b)(3)(i) of this section, which is FP's aggregate deemed sale EC capital gain.

(B) ***Deemed sale.*** FP's aggregate deemed sale EC capital gain is determined according to the three-step process set forth in paragraph (c) of this section. First, the amount of gain or loss that PRS would recognize with respect to each of its assets upon a deemed sale described in paragraph (c)(1) of this section is a $50x gain with respect to the U.S. Business section 1231 asset and a $30x loss with respect to the Country A Business capital asset. Second, under paragraph (c)(2) of this section, PRS's deemed sale EC gain is $50x. Third, under paragraph (c)(3)(ii)(B) of this section, FP's aggregate deemed sale EC capital gain is $25x (that is, the aggregate of its distributive share of deemed sale EC gain attributable to the deemed sale of assets that are not section 751(a) property, which is 50% of $50x).

(C) ***Limitation.*** Under paragraph (b)(3)(i) of this section, the $10x outside capital gain recognized by FP is treated as effectively connected gain to the extent that it does not exceed FP's $25x aggregate deemed sale EC capital gain. Accordingly, FP recognizes $10x of capital gain that is treated as effectively connected gain.

(3) ***Example 3. Interaction with section 751(a)*** —

(i) ***Facts.*** On January 1, 2019, FP sells its entire interest in PRS to X for $95x. FP does not qualify for the benefits of an income tax treaty between the United States and another country. Through both its U.S. Business and its Country A Business, PRS holds inventory items and receivables that are section 751 property (as defined in § 1.751-1(a)). Immediately before the sale, PRS's balance sheet appears as follows:

	Adjusted basis	Fair market value
U.S. Business section 1231 asset	$20x	$50x
U.S. Business inventory and receivables	30x	50x
Country A Business capital asset	100x	80x
Country A Business inventory	50x	10x
Total	200x	190x

(ii) ***Analysis —***

(A) ***Outside gain or loss.*** FP is a foreign transferor (within the meaning of paragraph (g)(3) of this section) and transfers (within the meaning of paragraph (g)(5) of this section) its interest in PRS to X. Under sections 741 and 751, FP recognizes a $10x ordinary loss and a $5x capital gain. See § 1.751-1(a). Under paragraph (b)(2)(i) of this section, FP has outside ordinary loss equal to $10x and outside capital gain equal to $5x. Under paragraph (b)(1) of this section, FP's outside ordinary loss and outside capital gain are treated as effectively connected loss and effectively connected gain to the extent that each does not exceed the applicable limitation described in paragraph (b)(3) of this section. In the case of FP's outside ordinary loss, the applicable limitation is FP's aggregate deemed sale EC ordinary loss. In the case of FP's outside capital gain, the applicable limitation is FP's aggregate deemed sale EC capital gain.

(B) ***Deemed sale.*** FP's aggregate deemed sale EC ordinary loss and aggregate deemed sale EC capital gain are determined according to the three-step process set forth in paragraph (c) of this section.

(*1*) ***Step 1.*** The amount of gain or loss that PRS would recognize with respect to each of its assets upon a deemed sale described in paragraph (c)(1) of this section is as follows:

Asset	Gain/(loss)
U.S. Business section 1231 asset	$30x
U.S. Business inventory and receivables	20x
Country A Business capital asset	(20x)

Asset	Gain/(loss)
Country A Business inventory	(40x)

(2) ***Step 2.*** Under paragraph (c)(2) of this section, PRS's deemed sale EC gain and deemed sale EC loss must be determined with respect to each asset. The amounts determined under paragraph (c)(2) of this section are as follows:

Asset	Deemed sale EC gain/(loss)
U.S. Business section 1231 asset	$30x
U.S. Business inventory and receivables	20x
Country A Business capital asset	0
Country A Business inventory	0

(3) ***Step 3.*** Under paragraph (c)(3)(ii)(B) of this section, FP's aggregate deemed sale EC capital gain is $15x (that is, the aggregate of its distributive share of deemed sale EC gain that is attributable to the deemed sale of assets that are not section 751(a) property, which is 50% of $30x) and FP's aggregate deemed sale EC ordinary loss is $0 (that is, the aggregate of its distributive share of deemed sale EC loss that is attributable to the deemed sale of assets that are section 751(a) property).

(C) ***Limitation*** —(i) *Capital gain.* Under paragraph (b)(3)(i) of this section, the $5x outside capital gain recognized by FP is treated as effectively connected gain to the extent that it does not exceed FP's $15x aggregate deemed sale EC capital gain. Accordingly, the amount of FP's capital gain that is treated as effectively connected gain is $5x.

(ii) ***Ordinary loss.*** Under paragraph (b)(3)(iv) of this section, the $10x outside ordinary loss recognized by FP is treated as effectively connected loss to the extent that it does not exceed FP's $0 aggregate deemed sale EC ordinary loss. Accordingly, the amount of FP's ordinary loss that is treated as effectively connected loss is $0.

(4) ***Example 4. Coordination with income tax treaties*** —

(i) ***Facts*** —

(A) ***Sale of interest.*** On January 1, 2019, FP sells its entire interest in PRS to X for $105x. Immediately before the sale, PRS's balance sheet appears as follows:

	Adjusted basis	Fair market value
U.S. Business section 1231 asset	$100x	$104x
Country A Business capital asset	100x	106x
Total	200x	210x

(B) ***Treaty benefits.*** FP is a qualified resident of Country A under a U.S. income tax treaty between the United States and Country A that is similar or identical in all material respects to the 2006 U.S. Model Income Tax Convention (the Treaty). PRS is treated as fiscally transparent for purposes of Country A tax law. PRS does not carry on its U.S. Business through a U.S. permanent establishment (PE).

(ii) ***Analysis*** —

(A) ***Outside gain or loss.*** FP is a foreign transferor (within the meaning of paragraph (g)(3) of this section) and transfers (within the meaning of paragraph (g)(5) of this section) its interest in PRS to X. For purposes of this example, for simplicity, PRS is assumed to hold no section 751(a) property and depreciation recapture is assumed to be zero. FP recognizes a $5x capital gain under section 741, which is an outside capital gain within the meaning of paragraph (b)(2)(i) of this section. Under paragraph (b)(1) of this section, FP's $5x capital gain is treated as effectively connected gain to the extent that it does not exceed the limitation described in paragraph (b)(3)(i) of this section, which is FP's aggregate deemed sale EC capital gain.

(B) ***Deemed sale.*** FP's aggregate deemed sale EC capital gain is determined according to the three-step process set forth in paragraph (c) of this section by taking into account the treaty coordination rule under paragraph (f) of this section.

(*1*) ***Step 1.*** The amount of gain or loss that PRS would recognize with respect to each of its assets upon a deemed sale described in paragraph (c)(1) of this section is as follows:

Asset	Gain/(loss)
U.S. Business section 1231 asset	$4x

Asset	Gain/(loss)
Country A Business capital asset	6x

(2) ***Step 2.*** Under paragraph (c)(2) of this section, PRS's deemed sale EC gain is as follows:

Asset	Gain/(loss)
U.S. Business section 1231 asset	$4x
Country A Business capital asset	0x

(3) ***Step 3.*** FP is eligible for benefits under the Treaty and derives the gain on the deemed sale of U.S. Business section 1231 asset. Under paragraph (c)(3)(i) and paragraph (f) of this section, because gain from the disposition of the U.S. Business section 1231 asset does not form part of a U.S. PE, the gain is exempt from U.S. tax under the Treaty, and is not taken into account in determining FP's distributive share of deemed sale EC gain under paragraphs (c)(3)(i) and paragraph (f) of this section. Therefore, FP's aggregate deemed sale EC capital gain is $0x under paragraph (c)(3)(ii)(B) of this section.

(C) ***Limitation.*** Under paragraph (b)(3)(i) of this section, the $5x outside capital gain recognized by FP is not treated as effectively connected gain since all of it would exceed FP's $0x aggregate deemed sale EC capital gain.

(j) ***Applicability date.*** This section applies to transfers occurring on or after December 26, 2018, and to amounts received on or after December 26, 2018, pursuant to an installment sale (as defined in section 453(b)) occurring on or after November 27, 2017.

[T.D. 9919, 85 FR 70965, Nov. 6, 2020]

§ 1.864(c)(8)-2 Notification and reporting requirements.

(a) ***Notification by foreign transferor*** —

(1) ***In general.*** Except as provided in paragraph (a)(2) of this section, a notifying transferor that transfers an interest in a specified partnership must notify the partnership of the transfer in writing within 30 days after the transfer. The notification must include—

(i) The names and addresses of the notifying transferor and the transferee or transferees;

(ii) The U.S. taxpayer identification number (TIN) of the notifying transferor and, if known, of the transferee or transferees; and

(iii) The date of the transfer.

(2) *Exceptions* —

(i) ***Certain interests in publicly traded partnerships.*** Paragraph (a)(1) of this section does not apply to a notifying transferor that transfers an interest in a publicly traded partnership if the interest is publicly traded on an established securities market or is readily tradable on a secondary market (or the substantial equivalent thereof).

(ii) ***Certain distributions.*** Paragraph (a)(1) of this section does not apply to a notifying transferor that is treated as transferring an interest in a specified partnership because it received a distribution from that specified partnership.

(3) ***Section 6050K.*** The notification described in paragraph (a)(1) of this section may be combined with or provided at the same time as the notification described in § 1.6050K-1(d), provided that it satisfies the requirements of both sections.

(4) ***Other guidance.*** The notification described in paragraph (a)(1) of this section must also include any information prescribed by the Commissioner in forms or instructions or in publications or guidance published in the Internal Revenue Bulletin (see §§ 601.601(d)(2) and 601.602 of this chapter).

(b) *Reporting by specified partnerships with notifying transferor* —

(1) *In general* —

(i) ***Requirement to provide statement.*** A specified partnership must provide to a notifying transferor the statement described in paragraph (b)(2) of this section if—

(A) The partnership receives the notice described in paragraph (a) of this section, or otherwise has actual knowledge that there has been a transfer of an interest in the partnership by a notifying transferor; and

(B) At the time of the transfer, the notifying transferor would have had a distributive share of deemed sale EC gain or deemed sale EC loss within the meaning of § 1.864(c)(8)-1(c).

(ii) ***Distributions.*** For purposes of paragraph (b)(1)(i)(B) of this section, a specified partnership that is a transferee because it makes a distribution is treated as having actual knowledge of that transfer.

(2) ***Contents of statement.*** The statement required to be furnished by the specified partnership under paragraph (b)(1) of this section must include—

(i) The items described in § 1.864(c)(8)-1(c)(3)(ii) (foreign transferor's aggregate deemed sale EC items, which includes items derived from lower-tier partnerships);

(ii) Whether the items described in paragraph (b)(2)(i) of this section were determined (in whole or in part) under § 1.864(c)(8)-1(c)(2)(ii)(E) (material change in circumstances rule for determining deemed sale EC gain or deemed sale EC loss from a deemed sale of the partnership's inventory property or intangibles); and

(iii) Any other information as may be prescribed by the Commissioner in forms, instructions, publications, or guidance published in the Internal Revenue Bulletin (see §§ 601.601(d)(2) and 601.602 of this chapter).

(3) ***Time for furnishing statement.*** The specified partnership must furnish the required information on or before the due date (with extensions) for issuing Schedule K-1 (Form 1065), *Partner's Share of Income, Deductions, Credits, etc.,* or other statement required to be furnished under § 1.6031(b)-1T, to the notifying transferor for the year of the transfer. *See* § 1.6031(b)-1T(b).

(4) ***Manner of furnishing statement.*** The statement required to be furnished under paragraph (b)(1) of this section must be provided on Schedule K-1 (Form 1065), *Partner's Share of Income, Deductions, Credits, etc.,* or other statement required to be furnished under § 1.6031(b)-1T.

(5) ***Partnership notifying transferor.*** For purposes of this paragraph (b), a specified partnership must treat a notifying transferor that is a partnership as a nonresident alien individual.

(c) ***Statement may be provided to agent.*** A specified partnership may provide a statement required under paragraph (b)(2) of this section to a person other than the notifying transferor if the person is described in § 1.6031(b)-1T(c).

(d) ***Definitions.*** The following definitions apply for purposes of this section.

(1) ***Notifying transferor.*** The term *notifying transferor* means any foreign person, any domestic partnership that has a foreign person as a direct partner, and any domestic partnership that has actual knowledge that a foreign person indirectly holds, through one or more partnerships, an interest in the domestic partnership.

(2) ***Specified partnership.*** The term *specified partnership* means a partnership that is engaged in a trade or business within the United States or that owns (directly or indirectly) an interest in a partnership that is engaged in a trade or business within the United States.

(3) ***Transfer.*** The term *transfer* has the meaning provided in § 1.864(c)(8)-1(g)(5).

(e) ***Applicability dates.*** Paragraph (a) of this section applies to transfers that occur on or after November 30, 2020. Paragraphs (b) and (c) of this section apply to returns filed on or after November 30, 2020. Paragraph (d) of this section applies beginning on November 30, 2020.

[T.D. 9926, 85 FR 76931, Nov. 30, 2020]

§ 1.865-1 Loss with respect to personal property other than stock.

(a) ***General rules for allocation of loss —***

(1) ***Allocation against gain.*** Except as otherwise provided in § 1.865-2 and paragraph (c) of this section, loss recognized with respect to personal property shall be allocated to the class of gross income and, if necessary, apportioned between the statutory grouping of gross income (or among the statutory groupings) and the residual grouping of gross income, with respect to which gain from a sale of such property would give rise in the hands of the seller. For purposes of this section, loss includes bad debt deductions under section 166 and loss on property that is marked-to-market (such as under section 475) and subject to the rules of this section. Thus, for example, loss recognized by a United States resident on the sale or worthlessness of a bond generally is allocated to reduce United States source income.

(2) ***Loss attributable to foreign office.*** Except as otherwise provided in § 1.865-2 and paragraph (c) of this section, and except with respect to loss subject to paragraph (b) of this section, in the case of loss recognized by a United States resident with respect to property that is attributable to an office or other fixed place of business in a foreign country within the meaning of section 865(e)(3), the loss

shall be allocated to reduce foreign source income if a gain on the sale of the property would have been taxable by the foreign country and the highest marginal rate of tax imposed on such gains in the foreign country is at least 10 percent. However, paragraph (a)(1) of this section and not this paragraph (a)(2) will apply if gain on the sale of such property would be sourced under section 865(c), (d)(1)(B), or (d)(3).

(3) ***Loss recognized by United States citizen or resident alien with foreign tax home.*** Except as otherwise provided in § 1.865-2 and paragraph (c) of this section, and except with respect to loss subject to paragraph (b) of this section, in the case of loss with respect to property recognized by a United States citizen or resident alien that has a tax home (as defined in section 911(d)(3)) in a foreign country, the loss shall be allocated to reduce foreign source income if a gain on the sale of such property would have been taxable by a foreign country and the highest marginal rate of tax imposed on such gains in the foreign country is at least 10 percent.

(4) ***Allocation for purposes of section 904.*** For purposes of section 904, loss recognized with respect to property that is allocated to foreign source income under this paragraph (a) shall be allocated to the separate category under section 904(d) to which gain on the sale of the property would have been assigned (without regard to section 904(d)(2)(A)(iii)(III)). For purposes of § 1.904-4(c)(2)(ii)(A), any such loss allocated to passive income shall be allocated (prior to the application of § 1.904-4(c)(2)(ii)(B)) to the group of passive income to which gain on a sale of the property would have been assigned had a sale of the property resulted in the recognition of a gain under the law of the relevant foreign jurisdiction or jurisdictions.

(5) ***Loss recognized by partnership.*** A partner's distributive share of loss recognized by a partnership with respect to personal property shall be allocated and apportioned in accordance with this section as if the partner had recognized the loss. If loss is attributable to an office or other fixed place of business of the partnership within the meaning of section 865(e)(3), such office or fixed place of business shall be considered to be an office of the partner for purposes of this section.

(b) ***Special rules of application —***

(1) ***Depreciable property.*** In the case of a loss recognized with respect to depreciable personal property, the gain referred to in paragraph (a)(1) of this section is the gain that would be sourced under section 865(c)(1) (depreciation recapture).

(2) ***Contingent payment debt instrument.*** Loss described in the last sentence of § 1.1275-4(b)(9)(iv)(A) that is recognized with respect to a contingent payment debt instrument to which § 1.1275-4(b) applies (instruments issued for money or publicly traded property) shall be allocated to the class of gross income and, if necessary, apportioned between the statutory grouping of gross income (or among the statutory groupings) and the residual grouping of gross income, with respect to which interest income from the instrument (in the amount of the loss subject to this paragraph (b)(2)) would give rise.

(c) ***Exceptions —***

(1) ***Foreign currency and certain financial instruments.*** This section does not apply to loss governed by section 988 and loss recognized with respect to options contracts or derivative financial instruments, including futures contracts, forward contracts, notional principal contracts, or evidence of an interest in any of the foregoing.

(2) ***Inventory.*** This section does not apply to loss recognized with respect to property described in section 1221(a)(1).

(3) ***Interest equivalents and trade receivables.*** Loss subject to § 1.861-9T(b) (loss equivalent to interest expense and loss on trade receivables) shall be allocated and apportioned under the rules of § 1.861-9T and not under the rules of this section.

(4) ***Unamortized bond premium.*** If a taxpayer recognizing loss with respect to a bond (within the meaning of § 1.171-1(b)) did not amortize bond premium to the full extent permitted by section 171 and the regulations thereunder, then, to the extent of the amount of bond premium that could have been, but was not, amortized by the taxpayer, loss recognized with respect to the bond shall be allocated to the class of gross income and, if necessary, apportioned between the statutory grouping of gross income (or among the statutory groupings) and the residual grouping of gross income, with respect to which interest income from the bond was assigned.

(5) ***Accrued interest.*** Loss attributable to accrued but unpaid interest on a debt obligation shall be allocated to the class of gross income and, if necessary, apportioned between the statutory grouping of gross income (or among the statutory groupings) and the residual grouping of gross income, with respect to which interest income from the obligation was assigned. For purposes of this section, whether loss is attributable to accrued but unpaid interest (rather than to principal) shall be determined under the principles of §§ 1.61-7(d) and 1.446-2(e).

(6) ***Anti-abuse rules*** —

(i) ***Transactions involving built-in losses.*** If one of the principal purposes of a transaction is to change the allocation of a built-in loss with respect to personal property by transferring the property to another person, qualified business unit, office or other fixed place of business, or branch that subsequently recognizes the loss, the loss shall be allocated by the transferee as if it were recognized by the transferor immediately prior to the transaction. If one of the principal purposes of a change of residence is to change the allocation of a built-in loss with respect to personal property, the loss shall be allocated as if the change of residence had not occurred. If one of the principal purposes of a transaction is to change the allocation of a built-in loss on the disposition of personal property by converting the original property into other property and subsequently recognizing loss with respect to such other property, the loss shall be allocated as if it were recognized with respect to the original property immediately prior to the transaction. Transactions subject to this paragraph shall include, without limitation, reorganizations within the meaning of section 368(a), liquidations under section 332, transfers to a corporation under section 351, transfers to a partnership under section 721, transfers to a trust, distributions by a partnership, distributions by a trust, transfers to or from a qualified business unit, office or other fixed place of business, or branch, or exchanges under section 1031. A person may have a principal purpose of affecting loss allocation even though this purpose is outweighed by other purposes (taken together or separately).

(ii) ***Offsetting positions.*** If a taxpayer recognizes loss with respect to personal property and the taxpayer (or any person described in section 267(b) (after application of section 267(c)), 267(e), 318 or 482 with respect to the taxpayer) holds (or held) offsetting positions with respect to such property with a principal purpose of recognizing foreign source income and United States source loss, the loss shall be allocated and apportioned against such foreign source income. For purposes of this paragraph (c)(6)(ii), positions are offsetting if the risk of loss of holding one or more positions is substantially diminished by holding one or more other positions.

(iii) ***Matching rule.*** If a taxpayer (or a person described in section 1059(c)(3)(C) with respect to the taxpayer) engages in a transaction or series of transactions with a principal purpose of recognizing foreign source income that results in the creation of a corresponding loss with respect to personal property (as a consequence of the rules regarding the timing of recognition of income, for example), the loss shall be allocated and apportioned against such income to the extent of the recognized foreign source income. For an example illustrating a similar rule with respect to stock loss, see § 1.865-2(b)(4)(iv) *Example 3.*

(d) ***Definitions —***

(1) ***Contingent payment debt instrument.*** A contingent payment debt instrument is any debt instrument that is subject to § 1.1275-4.

(2) ***Depreciable personal property.*** Depreciable personal property is any property described in section 865(c)(4)(A).

(3) ***Terms defined in § 1.861-8.*** See § 1.861-8 for the meaning of *class of gross income, statutory grouping of gross income,* and *residual grouping of gross income.*

(e) ***Examples.*** The application of this section may be illustrated by the following examples:

Example 1. On January 1, 2000, *A,* a domestic corporation, purchases for $1,000 a machine that produces widgets, which *A* sells in the United States and throughout the world. Throughout *A*'s holding period, the machine is located and used in Country *X.* During *A*'s holding period, *A* incurs depreciation deductions of $400 with respect to the machine. Under § 1.861-8, *A* allocates and apportions depreciation deductions of $250 against foreign source general limitation income and $150 against U.S. source income. On December 12, 2002, A sells the machine for $100 and recognizes a loss of $500. Because the machine was used predominantly outside the United States, under sections 865(c)(1)(B) and 865(c)(3)(B)(ii) gain on the disposition of the machine would be foreign source general limitation income to the extent of the depreciation adjustments. Therefore, under paragraph (b)(1) of this section, the entire $500 loss is allocated against foreign source general limitation income.

Example 2. On January 1, 2002, *A,* a domestic corporation, loans $2,000 to *N,* its wholly-owned controlled foreign corporation, in exchange for a contingent payment debt instrument subject to § 1.1275-4(b). During 2002 through 2004, *A* accrues and receives interest income of $630, $150 of which is foreign source general limitation income and $480 of which is foreign source passive income under section 904(d)(3). Assume there are no positive or negative adjustments pursuant to § 1.1275-4(b)(6) in 2002 through 2004. On January 1, 2005, *A* disposes of the debt instrument and recognizes a $770 loss. Under § 1.1275-4(b)(8)(ii), $630 of the loss is treated as ordinary loss and $140 is treated as capital loss. Assume that $140 of interest income earned in 2005 with respect to the debt instrument would be foreign source passive income under section 904(d)(3). Under § 1.1275-4(b)(9)(iv), $150 of the ordinary loss is allocated against foreign source general limitation income and $480 of the ordinary loss is allocated against foreign source passive income. Under paragraph (b)(2) of this section, the $140 capital loss is allocated against foreign source passive income.

> *Example 3.* (i) On January 1, 2003, *A,* a domestic corporation, purchases for $1,200 a taxable bond maturing on December 31, 2008, with a stated principal amount of $1,000, payable at maturity. The bond provides for unconditional payments of interest of $100,

payable December 31 of each year. The issuer of the bond is a foreign corporation and interest on the bond is thus foreign source. Interest payments for 2003 and 2004 are timely made. *A* does not elect to amortize its bond premium under section 171 and the regulations thereunder, which would have permitted *A* to offset the $100 of interest income by $28.72 of bond premium in 2003, and by $30.42 in 2004. On January 1, 2005, *A* sells the bond and recognizes a $100 loss. Under paragraph (c)(4) of this section, $59.14 of the loss is allocated against foreign source income. Under paragraph (a)(1) of this section, the remaining $40.86 of the loss is allocated against U.S. source income.

(ii) The facts are the same as in paragraph (i) of this *Example 3,* except that *A* made the election to amortize its bond premium effective for taxable year 2004 (see § 1.171-4(c)). Under paragraph (c)(4) of this section, $28.72 of the loss is allocated against foreign source income. Under paragraph (a)(1) of this section, the remaining $71.28 of the loss is allocated against U.S. source income.

Example 4. On January 1, 2002, *A,* a domestic corporation, purchases for $1,000 a bond maturing December 31, 2014, with a stated principal amount of $1,000, payable at maturity. The bond provides for unconditional payments of interest of $100, payable December 31 of each year. The issuer of the bond is a foreign corporation and interest on the bond is thus foreign source. Between 2002 and 2006, *A* accrues and receives foreign source interest income of $500 with respect to the bond. On January 1, 2007, *A* sells the bond and recognizes a $500 loss. Under paragraph (a)(1) of this section, the $500 loss is allocated against U.S. source income.

Example 5. On January 1, 2002, *A,* a domestic corporation on the accrual method of accounting, purchases for $1,000 a bond maturing December 31, 2012, with a stated principal amount of $1,000, payable at maturity. The bond provides for unconditional payments of interest of $100, payable December 31 of each year. The issuer of the bond is a foreign corporation and interest on the bond is thus foreign source. On June 10, 2002, after *A* has accrued $44 of interest income, but before any interest has been paid, the issuer suddenly becomes insolvent and declares bankruptcy. *A* sells the bond (including the accrued interest) for $20. Assuming that *A* properly accrued $44 of interest income, *A* treats the $20 proceeds from the sale of the bond as payment of interest previously accrued and recognizes a $1,000 loss with respect to the bond principal and a $24 loss with respect to the accrued interest. See § 1.61-7(d). Under paragraph (a)(1) of this section, the $1,000 loss with respect to the principal is allocated against U.S. source income. Under paragraph (c)(5) of this section, the $24 loss with respect to accrued but unpaid interest is allocated against foreign source interest income.

(f) ***Effective date*** —

(1) ***In general.*** Except as provided in paragraph (f)(2) of this section, this section is applicable to loss recognized on or after January 8, 2002. For purposes of this paragraph (f), loss that is recognized but deferred (for example, under section 267 or 1092) shall be treated as recognized at the time the loss is taken into account.

(2) ***Application to prior periods.*** A taxpayer may apply the rules of this section to losses recognized in any taxable year beginning on or after January 1, 1987, and all subsequent years, provided that—

(i) The taxpayer's tax liability as shown on an original or amended tax return is consistent with the rules of this section for each such year for which the statute of limitations does not preclude the filing of an amended return on June 30, 2002; and

(ii) The taxpayer makes appropriate adjustments to eliminate any double benefit arising from the application of this section to years that are not open for assessment.

(3) ***Examples.*** See § 1.865-2(e)(3) for examples illustrating an applicability date provision similar to the applicability date provided in this paragraph (f).

[T.D. 8973, 66 FR 67083, Dec. 28, 2001]

§ 1.865-2 Loss with respect to stock.

(a) ***General rules for allocation of loss with respect to stock*** —

(1) ***Allocation against gain.*** Except as otherwise provided in paragraph (b) of this section, loss recognized with respect to stock shall be allocated to the class of gross income and, if necessary, apportioned between the statutory grouping of gross income (or among the statutory groupings) and the residual grouping of gross income, with respect to which gain (other than gain treated as a dividend under section 964(e)(1) or 1248) from a sale of such stock would give rise in the hands of the seller (without regard to section 865(f)). For purposes of this section, loss includes loss on property that is marked-to-market (such as under section 475) and subject to the rules of this section. Thus, for example, loss recognized by a United States resident on the sale of stock generally is allocated to reduce United States source income.

(2) ***Stock attributable to foreign office.*** Except as otherwise provided in paragraph (b) of this section, in the case of loss recognized by a United States resident with respect to stock that is attributable to an office or other fixed place of business in a foreign country within the meaning of section 865(e)(3), the loss shall be allocated to reduce foreign source income if a gain on the sale of the stock would have been taxable by the foreign country and the highest marginal rate of tax imposed on such gains in the foreign country is at least 10 percent.

(3) ***Loss recognized by United States citizen or resident alien with foreign tax home*** —

(i) ***In general.*** Except as otherwise provided in paragraph (b) of this section, in the case of loss with respect to stock that is recognized by a United States citizen or resident alien that has a tax home (as defined in section 911(d)(3)) in a foreign country, the loss shall be allocated to reduce foreign source income if a gain on the sale of the stock would have been taxable by a foreign country and the highest marginal rate of tax imposed on such gains in the foreign country is at least 10 percent.

(ii) ***Bona fide residents of Puerto Rico.*** Except as otherwise provided in paragraph (b) of this section, in the case of loss with respect to stock in a corporation described in section 865(g)(3) recognized by a United States citizen or resident alien that is a bona fide resident of Puerto Rico during the entire taxable year, the loss shall be allocated to reduce foreign source income. If gain from a sale of such stock would give rise to income exempt from tax under section 933, the loss with respect to such stock shall be allocated to amounts that are excluded from gross income under section 933(1) and therefore shall not be allowed as a deduction from gross income. See section 933(1) and § 1.933-1(c).

(4) ***Stock constituting a United States real property interest.*** Loss recognized by a nonresident alien individual or a foreign corporation with respect to stock that constitutes a United States real property interest shall be allocated to reduce United States source income. For additional rules governing the treatment of such loss, see section 897 and the regulations thereunder.

(5) ***Allocation for purposes of section 904.*** For purposes of section 904, loss recognized with respect to stock that is allocated to foreign source income under this paragraph (a) shall be allocated to the separate category under section 904(d) to which gain on a sale of the stock would have been assigned (without regard to section 904(d)(2)(A)(iii)(III)). For purposes of § 1.904-4(c)(2)(ii)(A), any such loss allocated to passive income shall be allocated (prior to the application of § 1.904-4(c)(2)(ii)(B)) to the group of passive income to which gain on a sale of the stock would have been assigned had a sale of the stock resulted in the recognition of a gain under the law of the relevant foreign jurisdiction or jurisdictions.

(b) ***Exceptions*** —

(1) ***Dividend recapture exception*** —

(i) ***In general.*** If a taxpayer recognizes a loss with respect to shares of stock, and the taxpayer (or a person described in section 1059(c)(3)(C) with respect to such shares) included in income a dividend recapture amount (or amounts) with respect to such shares at any time during the recapture period, then, to the extent of the dividend recapture amount (or amounts), the loss shall be allocated and apportioned on a proportionate basis to the class or classes of gross income or the statutory or residual grouping or groupings of gross income to which the dividend recapture amount was assigned.

(ii) ***Exception for de minimis amounts.*** Paragraph (b)(1)(i) of this section shall not apply to a loss recognized by a taxpayer on the disposition of stock if the sum of all dividend recapture amounts (other than dividend recapture amounts eligible for the exception described in paragraph (b)(1)(iii) of this section (passive limitation dividends)) included in income by the taxpayer (or a person described in section 1059(c)(3)(C)) with respect to such stock during the recapture period is less than 10 percent of the recognized loss.

(iii) ***Exception for passive limitation dividends.*** Paragraph (b)(1)(i) of this section shall not apply to the extent of a dividend recapture amount that is treated as income in the separate category for passive income described in section 904(d)(2)(A) (without regard to section 904(d)(2)(A)(iii)(III)). The exception provided for in this paragraph (b)(1)(iii) shall not apply to any dividend recapture amount that is treated as income in the separate category for financial services income described in section 904(d)(2)(C).

(iv) ***Examples.*** The application of this paragraph (b)(1) may be illustrated by the following examples:

> *Example 1.* (i) *P,* a domestic corporation, is a United States shareholder of *N,* a controlled foreign corporation. *N* has never had any subpart F income and all of its earnings and profits are described in section 959(c)(3). On May 5, 1998, *N* distributes a dividend to *P* in the amount of $100. The dividend gives rise to a $5 foreign withholding tax, and *P* is deemed to have paid an additional $45 of foreign income tax with respect to the dividend under section 902. Under the look-through rules of section 904(d)(3) the dividend is general limitation income described in section 904(d)(1)(I).

(ii) On February 6, 2000, *P* sells its shares of *N* and recognizes a $110 loss. In 2000, *P* has the following taxable income, excluding the loss on the sale of *N*:

(A) $1,000 of foreign source income that is general limitation income described in section 904(d)(1)(I);

(B) $1,000 of foreign source capital gain from the sale of stock in a foreign affiliate that is sourced under section 865(f) and is passive income described in section 904(d)(1)(A); and

(C) $1,000 of U.S. source income.

(iii) The $100 dividend paid in 1998 is a dividend recapture amount that was included in *P*'s income within the recapture period preceding the disposition of the *N* stock. The *de minimis* exception of paragraph (b)(1)(ii) of this section does not apply because the $100 dividend recapture amount exceeds 10 percent of the $110 loss. Therefore, to the extent of the $100 dividend recapture amount, the loss must be allocated under paragraph (b)(1)(i) of this section to the separate limitation category to which the dividend was assigned (general limitation income).

(iv) *P*'s remaining $10 loss on the disposition of the *N* stock is allocated to U.S. source income under paragraph (a)(1) of this section.

(v) After allocation of the stock loss, *P*'s foreign source taxable income in 2000 consists of $900 of foreign source general limitation income and $1,000 of foreign source passive income.

Example 2. (i) *P,* a domestic corporation, owns all of the stock of *N1,* which owns all of the stock of *N2,* which owns all of the stock of *N3. N1, N2,* and *N3* are controlled foreign corporations. All of the corporations use the calendar year as their taxable year. On February 5, 1997, *N3* distributes a dividend to *N2.* The dividend is foreign personal holding company income of *N2* under section 954(c)(1)(A) that results in an inclusion of $100 in *P*'s income under section 951(a)(1)(A)(i) as of December 31, 1997. Under section 904(d)(3)(B) the inclusion is general limitation income described in section 904(d)(1)(I). The income inclusion to *P* results in a corresponding increase in *P*'s basis in the stock of *N1* under section 961(a).
(ii) On March 5, 1999, *P* sells its shares of *N1* and recognizes a $110 loss. The $100 1997 subpart F inclusion is a dividend recapture amount that was included in *P*'s income within the recapture period preceding the disposition of the *N1* stock. The de minimis exception of paragraph (b)(1)(ii) of this section does not apply because the $100 dividend recapture amount exceeds 10 percent of the $110 loss. Therefore, to the extent

of the $100 dividend recapture amount, the loss must be allocated under paragraph (b)(1)(i) of this section to the separate limitation category to which the dividend recapture amount was assigned (general limitation income). The remaining $10 loss is allocated to U.S. source income under paragraph (a)(1) of this section.

Example 3. (i) *P,* a domestic corporation, owns all of the stock of *N1,* which owns all of the stock of *N2. N1* and *N2* are controlled foreign corporations. All the corporations use the calendar year as their taxable year and the U.S. dollar as their functional currency. On May 5, 1998, *N2* pays a dividend of $100 to *N1* out of general limitation earnings and profits.
(ii) On February 5, 2000, *N1* sells its *N2* stock to an unrelated purchaser. The sale results in a loss to *N1* of $110 for U.S. tax purposes. In 2000, *N1* has the following current earnings and profits, excluding the loss on the sale of *N2*:

(A) $1,000 of non-subpart F foreign source general limitation earnings and profits described in section 904(d)(1)(I);

(B) $1,000 of foreign source gain from the sale of stock that is taken into account in determining foreign personal holding company income under section 954(c)(1)(B)(i) and which is passive limitation earnings and profits described in section 904(d)(1)(A);

(C) $1,000 of foreign source interest income received from an unrelated person that is foreign personal holding company income under section 954(c)(1)(A) and which is passive limitation earnings and profits described in section 904(d)(1)(A).

(iii) The $100 dividend paid in 1998 is a dividend recapture amount that was included in *N1*'s income within the recapture period preceding the disposition of the *N2* stock. The *de minimis* exception of paragraph (b)(1)(ii) of this section does not apply because the $100 dividend recapture amount exceeds 10 percent of the $110 loss. Therefore, to the extent of the $100 dividend recapture amount, the loss must be allocated under paragraph (b)(1)(i) of this section to the separate limitation category to which the dividend was assigned (general limitation earnings and profits).

(iv) *N1*'s remaining $10 loss on the disposition of the *N2* stock is allocated to foreign source passive limitation earnings and profits under paragraph (a)(1) of this section.

(v) After allocation of the stock loss, *N1*'s current earnings and profits for 1998 consist of $900 of foreign source general limitation earnings and profits and $1,990 of foreign source passive limitation earnings and profits.

(vi) After allocation of the stock loss, *N1*'s subpart F income for 2000 consists of $1,000 of foreign source interest income that is foreign personal holding company income under section 954(c)(1)(A) and $890 of foreign source net gain that is foreign personal holding company income under section 954(c)(1)(B)(i). *P* includes $1,890 in income under section 951(a)(1)(A)(i) as passive income under sections 904(d)(1)(A) and 904(d)(3)(B).

Example 4. P, a foreign corporation, has two wholly-owned subsidiaries, *S,* a domestic corporation, and *B,* a foreign corporation. On January 1, 2000, *S* purchases a one-percent interest in *N,* a foreign corporation, for $100. On January 2, 2000, *N* distributes a $20 dividend to *S.* The $20 dividend is foreign source financial services income. On January 3, 2000, *S* sells its *N* stock to *B* for $80 and recognizes a $20 loss that is deferred under section 267(f). On June 10, 2008, *B* sells its *N* stock to an unrelated person for $55. Under section 267(f) and § 1.267(f)-1(c)(1), *S*'s $20 loss is deferred until 2008. Under this paragraph (b)(1), the $20 loss is allocated to reduce foreign source financial services income in 2008 because the loss was recognized (albeit deferred) within the 24-month recapture period following the receipt of the dividend. See §§ 1.267(f)-1(a)(2)(i)(B) and 1.267(f)-1(c)(2).

Example 5. The facts are the same as in *Example 4,* except *P, S,* and *B* are domestic corporations and members of the *P* consolidated group. Under the matching rule of § 1.1502-13(c)(1), the separate entity attributes of *S*'s intercompany items and *B*'s corresponding items are redetermined to the extent necessary to produce the same effect on consolidated taxable income as if *S* and *B* were divisions of a single corporation and the intercompany transaction was a transaction between divisions. If *S* and *B* were divisions of a single corporation, the transfer of *N* stock on January 3, 2000 would be ignored for tax purposes, and the corporation would be treated as selling that stock only in 2008. Thus, the corporation's entire $45 loss would have been allocated against U.S. source income under paragraph (a)(1) of this section because a dividend recapture amount was not received during the corporation's recapture period. Accordingly, *S*'s $20 loss and *B*'s $25 loss are allocated to reduce U.S. source income.

Example 6. (i) On January 1, 1998, *P,* a domestic corporation, purchases *N,* a foreign corporation, for $1,000. On March 1, 1998, *P* causes *N* to sell its operating assets, distribute a $400 general limitation dividend to *P,* and invest its remaining $600 in short-term government securities. *P* converted the *N* assets into low-risk investments with a principal purpose of holding the *N* stock without significant risk of loss until the recapture period expired. *N* earns interest income from the securities. The income constitutes subpart F income that is included in *P*'s income under section 951, increasing *P*'s basis in the *N* stock under section 961(a). On March 1, 2002, *P* sells *N* and recognizes a $400 loss.
(ii) Pursuant to paragraph (d)(3) of this section, the recapture period is increased by the period in which *N*'s assets were held as low-risk investments because *P* caused *N*'s assets to be converted into and held as low-risk investments with a principal

> purpose of enabling *P* to hold the *N* stock without significant risk of loss. Accordingly, under paragraph (b)(1)(i) of this section the $400 loss is allocated against foreign source general limitation income.

(2) ***Exception for inventory.*** This section does not apply to loss recognized with respect to stock described in section 1221(1).

(3) ***Exception for stock in an S corporation.*** This section does not apply to loss recognized with respect to stock in an S corporation (as defined in section 1361).

(4) ***Anti-abuse rules*** —

(i) ***Transactions involving built-in losses.*** If one of the principal purposes of a transaction is to change the allocation of a built-in loss with respect to stock by transferring the stock to another person, qualified business unit (within the meaning of section 989(a)), office or other fixed place of business, or branch that subsequently recognizes the loss, the loss shall be allocated by the transferee as if it were recognized with respect to the stock by the transferor immediately prior to the transaction. If one of the principal purposes of a change of residence is to change the allocation of a built-in loss with respect to stock, the loss shall be allocated as if the change of residence had not occurred. If one of the principal purposes of a transaction is to change the allocation of a built-in loss with respect to stock (or other personal property) by converting the original property into other property and subsequently recognizing loss with respect to such other property, the loss shall be allocated as if it were recognized with respect to the original property immediately prior to the transaction. Transactions subject to this paragraph shall include, without limitation, reorganizations within the meaning of section 368(a), liquidations under section 332, transfers to a corporation under section 351, transfers to a partnership under section 721, transfers to a trust, distributions by a partnership, distributions by a trust, or transfers to or from a qualified business unit, office or other fixed place of business. A person may have a principal purpose of affecting loss allocation even though this purpose is outweighed by other purposes (taken together or separately).

(ii) ***Offsetting positions.*** If a taxpayer recognizes loss with respect to stock and the taxpayer (or any person described in section 267(b) (after application of section 267(c)), 267(e), 318 or 482 with respect to the taxpayer) holds (or held) offsetting positions with respect to such stock with a principal purpose of recognizing foreign source income and United States source loss, the loss will be allocated and apportioned against such foreign source income. For purposes of this paragraph (b)(4)(ii), positions are offsetting if the risk of loss of holding one or more positions is substantially diminished by holding one or more other positions.

(iii) ***Matching rule.*** If a taxpayer (or a person described in section 1059(c)(3)(C) with respect to the taxpayer) engages in a transaction or series of transactions with a principal purpose of recognizing foreign source income that results in the creation of a corresponding loss with respect to stock (as a consequence of the rules regarding the timing of recognition of income, for example), the loss shall be allocated and apportioned against such income to the extent of the recognized foreign source income. This paragraph (b)(4)(iii) applies to any portion of a loss that is not allocated under paragraph (b)(1)(i) of this section (dividend recapture rule), including a loss in excess of the dividend recapture amount and a loss that is related to a dividend recapture amount described in paragraph (b)(1)(ii) (de minimis exception) or (b)(1)(iii) (passive dividend exception) of this section.

(iv) ***Examples.*** The application of this paragraph (b)(4) may be illustrated by the following examples. No inference is intended regarding the application of any other Internal Revenue Code section or judicial doctrine that may apply to disallow or defer the recognition of loss. The examples are as follows:

> *Example 1.* (i) *Facts.* On January 1, 2000, *P,* a domestic corporation, owns all of the stock of *N1,* a controlled foreign corporation, which owns all of the stock of *N2,* a controlled foreign corporation. *N1*'s basis in the stock of *N2* exceeds its fair market value, and any loss recognized by *N1* on the sale of *N2* would be allocated under paragraph (a)(1) of this section to reduce foreign source passive limitation earnings and profits of *N1.* In contemplation of the sale of *N2* to an unrelated purchaser, *P* causes *N1* to liquidate with principal purposes of recognizing the loss on the *N2* stock and allocating the loss against U.S. source income. *P* sells the *N2* stock and *P* recognizes a loss.
> (ii) *Loss allocation.* Because one of the principal purposes of the liquidation was to transfer the stock to *P* in order to change the allocation of the built-in loss on the *N2* stock, under paragraph (b)(4)(i) of this section the loss is allocated against *P*'s foreign source passive limitation income.

> *Example 2.* (i) *Facts.* On January 1, 2000, *P,* a domestic corporation, forms *N* and *F,* foreign corporations, and contributes $1,000 to the capital of each. *N* and *F* enter into offsetting positions in financial instruments that produce financial services income. Holding the *N* stock substantially diminishes *P*'s risk of loss with respect to the *F* stock (and vice versa). *P* holds *N* and *F* with a principal purpose of recognizing foreign source income and U.S. source loss. On March 31, 2000, when the financial instrument held by *N* is worth $1,200 and the financial instrument held by *F* is worth $800, *P* sells its *F* stock and recognizes a $200 loss.
> (ii) *Loss allocation.* Because *P* held an offsetting position with respect to the *F* stock with a principal purpose of recognizing foreign source income and U.S. source loss, the $200 loss is allocated against foreign source financial services income under paragraph (b)(4)(ii) of this section.

> *Example 3.* (i) *Facts.* On January 1, 2002, *P* and *Q,* domestic corporations, form *R,* a domestic partnership. The corporations and partnership use the calendar year as their taxable year. *P* contributes $900 to *R* in exchange for a 90-percent partnership interest and *Q* contributes $100 to *R* in exchange for a 10-percent partnership interest. *R* purchases a dance studio in Country *X* for $1,000. On January 2, 2002, *R* enters into contracts to provide dance lessons in Country *X* for a 5-year period beginning January 1, 2003. These contracts are prepaid by the dance studio customers on December 31, 2002, and *R* recognizes foreign source taxable income of $500 from the prepayments (*R*'s only income in 2002). *P* takes into income its $450 distributive share of partnership

taxable income. On January 1, 2003, *P*'s basis in its partnership interest is $1,350 ($900 from its contribution under section 722, increased by its $450 distributive share of partnership income under section 705). On September 22, 2003, *P* contributes its *R* partnership interest to *S,* a newly-formed domestic corporation, in exchange for all the stock of *S.* Under section 358, *P*'s basis in *S* is $1,350. On December 1, 2003, *P* sells *S* to an unrelated party for $1050 and recognizes a $300 loss.
(ii) *Loss allocation. P* recognized foreign source income for tax purposes before the income had economically accrued, and the accelerated recognition of income increased *P*'s basis in *R* without increasing its value by a corresponding amount, which resulted in the creation of a built-in loss with respect to the *S* stock. Under paragraph (b)(4)(iii) of this section the $300 loss is allocated against foreign source income if *P* had a principal purpose of recognizing foreign source income and corresponding loss.

(c) ***Loss recognized by partnership.*** A partner's distributive share of loss recognized by a partnership shall be allocated and apportioned in accordance with this section as if the partner had recognized the loss. If loss is attributable to an office or other fixed place of business of the partnership within the meaning of section 865(e)(3), such office or fixed place of business shall be considered to be an office of the partner for purposes of this section.

(d) ***Definitions*** —

(1) ***Terms defined in § 1.861-8.*** See § 1.861-8 for the meaning of *class of gross income, statutory grouping of gross income,* and *residual grouping of gross income.*

(2) ***Dividend recapture amount.*** A dividend recapture amount is a dividend (except for an amount treated as a dividend under section 78), an inclusion described in section 951(a)(1)(A)(i) (but only to the extent attributable to a dividend (including a dividend under section 964(e)(1)) included in the earnings of a controlled foreign corporation (held directly or indirectly by the person recognizing the loss) that is included in foreign personal holding company income under section 954(c)(1)(A)) and an inclusion described in section 951(a)(1)(B).

(3) ***Recapture period.*** A recapture period is the 24-month period ending on the date on which a taxpayer recognized a loss with respect to stock. For example, if a taxpayer recognizes a loss on March 15, 2002, the recapture period begins on and includes March 16, 2000, and ends on and includes March 15, 2002. A recapture period is increased by any period of time in which the taxpayer has diminished its risk of loss in a manner described in section 246(c)(4) and the regulations thereunder and by any period in which the assets of the corporation are hedged against risk of loss (or are converted into and held as low-risk investments) with a principal purpose of enabling the taxpayer to hold the stock without significant risk of loss until the recapture period has expired. In the case of a loss recognized after a dividend is declared but before such dividend is paid, the recapture period is extended through the date on which the dividend is paid.

(4) ***United States resident.*** See section 865(g) and the regulations thereunder for the definition of United States resident.

(e) ***Effective date*** —

(1) ***In general.*** This section is applicable to loss recognized on or after January 11, 1999, except that paragraphs (a)(3)(ii), (b)(1)(iv) *Example 6,* (b)(4)(iii), (b)(4)(iv) *Example 3,* and (d)(3) of this section are applicable to loss recognized on or after January 8, 2002. For purposes of this paragraph (e), loss that is recognized but deferred (for example, under section 267 or 1092) shall be treated as recognized at the time the loss is taken into account.

(2) ***Application to prior periods.*** A taxpayer may apply the rules of this section to losses recognized in any taxable year beginning on or after January 1, 1987, and all subsequent years, provided that—

(i) The taxpayer's tax liability as shown on an original or amended tax return is consistent with the rules of this section for each such year for which the statute of limitations does not preclude the filing of an amended return on June 30, 2002; and

(ii) The taxpayer makes appropriate adjustments to eliminate any double benefit arising from the application of this section to years that are not open for assessment.

(3) ***Examples.*** The rules of this paragraph (e) may be illustrated by the following examples:

> *Example 1.* (i) *P,* a domestic corporation, has a calendar taxable year. On March 10, 1985, *P* recognizes a $100 capital loss on the sale of *N,* a foreign corporation. Pursuant to sections 1211(a) and 1212(a), the loss is not allowed in 1985 and is carried over to the 1990 taxable year. The loss is allocated against foreign source income under § 1.861-8(e)(7). In 1999, *P* chooses to apply this section to all losses recognized in its 1987 taxable year and in all subsequent years.
> (ii) Allocation of the loss on the sale of *N* is not affected by the rules of this section because the loss was recognized in a taxable year that did not begin after December 31, 1986.

> *Example 2.* (i) *P,* a domestic corporation, has a calendar taxable year. On March 10, 1988, *P* recognizes a $100 capital loss on the sale of *N,* a foreign corporation. Pursuant to sections 1211(a) and 1212(a), the loss is not allowed in 1988 and is carried back to the 1985 taxable year. The loss is allocated against foreign source income under § 1.861-8(e)(7) on *P*'s federal income tax return for 1985 and increases an overall foreign loss account under § 1.904(f)-1.
> (ii) In 1999, *P* chooses to apply this section to all losses recognized in its 1987 taxable year and in all subsequent years. Consequently, the loss on the sale of *N* is allocated against U.S. source income under paragraph (a)(1) of this section. Allocation of the loss against U.S. source income reduces *P's* overall foreign loss account and increases *P's* tax liability in 2 years: 1990, a year that will not be open for assessment on June 30, 1999, and 1997, a year that will be open for assessment on June 30, 1999. Pursuant to paragraph (e)(2)(i) of this section, *P* must file an amended federal income tax return that reflects the rules of this section for 1997, but not for 1990.

> *Example 3.* (i) *P,* a domestic corporation, has a calendar taxable year. On March 10, 1989, *P* recognizes a $100 capital loss on the sale of *N,* a foreign corporation. The loss is allocated against foreign source income under § 1.861-8(e)(7) on *P's* federal income tax return for 1989 and results in excess foreign tax credits for that year. The excess credit is carried back to 1988, pursuant to section 904(c). In 1999, *P* chooses to apply this section to all losses recognized in its 1989 taxable year and in all subsequent years. On June 30, 1999, *P's* 1988 taxable year is closed for assessment, but *P's* 1989 taxable year is open with

> respect to claims for refund.
> (ii) Because *P* chooses to apply this section to its 1989 taxable year, the loss on the sale of *N* is allocated against U.S. source income under paragraph (a)(1) of this section. Allocation of the loss against U.S. source income would have permitted the foreign tax credit to be used in 1989, reducing *P's* tax liability in 1989. Nevertheless, under paragraph (e)(2)(ii) of this section, because the credit was carried back to 1988, *P* may not claim the foreign tax credit in 1989.

[T.D. 8805, 64 FR 1511, Jan. 11, 1999, as amended by T.D. 8973, 66 FR 67085, Dec. 28, 2001; 67 FR 3812, Jan. 28, 2002]

§ 1.865-3 Source of gross income from sales of personal property (including inventory property) by a nonresident attributable to an office or other fixed place of business in the United States.

(a) ***In general.*** Notwithstanding any provision of section 861 through 865 or other regulations in this part, this section provides the sole sourcing rules for gross income, gain, or loss from section 865(e)(2) sales. Gross income, gain, or loss from a section 865(e)(2) sale is U.S. source income to the extent that the gross income, gain, or loss is properly allocable to an office or other fixed place of business in the United States under paragraph (d) of this section.

(b) ***Exception for certain inventory sales for use, disposition or consumption outside the United States.*** A section 865(e)(2) sale does not include any sale of inventory property that is sold for use, disposition, or consumption outside the United States if an office or other fixed place of business of the nonresident in a foreign country materially participates in the sale. See § 1.864-6(b)(3) to determine whether a foreign office materially participates in the sale and whether the property was destined for foreign use.

(c) ***Section 865(e)(2) sales.*** For purposes of this section, a "section 865(e)(2) sale" is a sale of personal property by a nonresident, including inventory property, other than a sale described in paragraph (b) of this section, that is attributable to an office or other fixed place of business in the United States under the principles of section 864(c)(5)(B) as prescribed in § 1.864-6(b)(1) and (2). In determining whether a nonresident maintains an office or other fixed place of business in the United States, the principles of section 864(c)(5)(A) as prescribed in § 1.864-7 apply, including the rules of paragraph (d) of that section regarding the office or other fixed place of business of a dependent agent of the nonresident. For purposes of this section, "inventory property" has the meaning provided in section 865(i)(1), and "nonresident" has the meaning provided in section 865(g)(1)(B).

(d) ***Amount of gross income, gain, or loss on sale of personal property properly allocable to a U.S. office*** —

(1) ***In general.*** Except as otherwise provided in paragraphs (d)(2) through (4) of this section, the amount of gross income, gain, or loss from a section 865(e)(2) sale that is properly allocable to an office or other fixed place of business in the United States is determined under the principles of § 1.864-6(c)(1).

(2) ***Produced inventory property.*** Gross income, gain, or loss from a section 865(e)(2) sale of inventory property that is produced by the nonresident seller is properly allocable to an office or other fixed place of business in the United States or to production activities in accordance with the "50/50 method" described in paragraph (d)(2)(i) of this section. However, in lieu of the 50/50 method, the nonresident seller may elect to allocate the gross income, gain, or loss under the "books and records method" described in paragraph (d)(2)(ii)(A) of this section, provided that the nonresident satisfies all of the requirements described in paragraph (d)(2)(ii)(B) of this section to the satisfaction of the Commissioner. Gross income allocable to production activities under this paragraph (d)(2) is

sourced in accordance with § 1.863-3. For purposes of this paragraph (d)(2), the term "produced" includes created, fabricated, manufactured, extracted, processed, cured, and aged, as determined under the principles of § 1.954-3(a)(4) (except for § 1.954-3(a)(4)(iv)). See section 864(a) and § 1.864-1.

(i) ***The 50/50 method.*** Fifty percent of the gross income, gain, or loss from a section 865(e)(2) sale of inventory property that is produced by the nonresident seller is properly allocable to an office or other fixed place of business in the United States, and the remaining 50 percent of the gross income, gain, or loss is properly allocable to production activities (the "50/50 method").

(ii) ***Books and records method*** —

(A) ***Method.*** Subject to paragraph (d)(2)(ii)(B) of this section, a nonresident may elect to determine the amount of its gross income, gain, or loss from the sale of inventory property produced by the nonresident seller that is properly allocable to production activities and sales activities for the taxable year based upon its books of account (the "books and records method"). The gross income, gain, or loss allocable to sales activities under this method is treated as properly allocable to an office or other fixed place of business in the United States and the remaining gross income, gain, or loss is treated as properly allocable to production activities.

(B) ***Election and reporting rules*** —

(*1*) ***In general.*** A nonresident may not make the election described in paragraph (d)(2)(ii)(A) of this section unless the requirements of paragraphs (d)(2)(ii)(B)(*2*) through (*4*) of this section are satisfied. Once the election is made, the nonresident must continue to satisfy the requirements of paragraphs (d)(2)(ii)(B)(*2*) through (*4*) of this section until the election is revoked. If the nonresident fails to satisfy the requirements in paragraphs (d)(2)(ii)(B)(*2*) through (*4*) of this section to the satisfaction of the Commissioner, the Commissioner may, in its sole discretion, apply the 50/50 method described in paragraph (d)(2)(i) of this section.

(*2*) ***Books of account.*** The nonresident must establish that it, in good faith and unaffected by considerations of tax liability, regularly employs in its books of account a detailed allocation of receipts and expenditures that, under the principles of section 482, clearly reflects both the amount of the nonresident's gross income, gain, or loss from its inventory sales that are attributable to its sales activities, and the amount of its gross income, gain, or loss from its inventory sales that are attributable to its production activities. For purposes of this paragraph (d)(2)(ii)(B)(*2*), section 482 principles apply as if the office or other fixed place of business in the United States were a separate organization, trade, or business (and, thus, a separate controlled taxpayer) from the nonresident (whether or not payments are made between the United States office or other fixed place of business and the nonresident's other offices, and whether or not the nonresident itself would otherwise constitute an organization, trade, or business).

(*3*) ***Required records.*** The nonresident must prepare and maintain the records described in paragraph (d)(2)(ii)(B)(*2*) of this section, which must be in existence when its return is filed. The nonresident must also prepare an explanation of how the allocation clearly reflects the nonresident's gross income, gain, or loss from production and sales activities under the principles of section 482. The nonresident

must make available the explanation and records of the nonresident (including for the office or other fixed place of business in the United States and the offices or branches that perform the production activities) upon request of the Commissioner, within 30 days, unless some other period is agreed upon between the Commissioner and the nonresident.

(4) ***Making and revoking the books and records method election; disclosure of election.*** Except as otherwise provided in publications, forms, instructions, or other guidance, a nonresident makes or revokes the election to apply the books and records method by attaching a statement to its original timely filed Federal income tax return (including extensions) providing that it elects, or revokes the election, to apply the books and records method described in paragraph (d)(2)(ii)(A) of this section. For nonresidents making the election, the statement must provide that the nonresident has prepared the records described in paragraph (d)(2)(ii)(B)(*2*) and (*3*) of this section.

(5) ***Limitation on revoking the books and records method election.*** Once made, the books and records method election continues until revoked. An election cannot be revoked, without the consent of the Commissioner, for any taxable year beginning within 48 months of the last day of the taxable year for which the election was made.

(3) ***Purchased inventory property.*** All gross income, gain, or loss from a section 865(e)(2) sale of inventory property that is both purchased and sold by a nonresident is properly allocable to an office or other fixed place of business in the United States.

(4) ***Depreciable personal property.*** Gain from a section 865(e)(2) sale of depreciable personal property (as defined in section 865(c)(4)) is allocated under paragraphs (d)(4)(i) and (ii) of this section.

(i) The gain not in excess of the depreciation adjustments, if any, is properly allocable to an office or other fixed place of business in the United States to the same extent that the gain would be allocated to sources within the United States under the rules of section 865(c)(1). The remaining gain not in excess of the depreciation adjustments, if any, is allocated to sources without the United States in accordance with section 865(c)(1). However, notwithstanding the preceding sentences, if the property was predominantly used in the United States, within the meaning of section 865(c)(3)(B)(i), for a particular taxable year, all of the gain not in excess of depreciation for that year is properly allocable to the office or other fixed place of business in the United States.

(ii) The gain in excess of the depreciation adjustments, if any, is treated as if such gain was from the sale of inventory and the amount allocable to an office or fixed place of business in the United States is determined under paragraph (d)(2) or (3) of this section, as applicable.

(e) ***Determination of source of taxable income.*** For rules allocating and apportioning expenses to gross income effectively connected with the conduct of a trade or business of a foreign corporation in the United States (including gross income, gain, or loss sourced under this section), see section 882(c)(1). For rules allocating and apportioning expenses to gross income, gain, or loss effectively connected with the conduct of a trade or business of a nonresident alien in the United States (including gross income, gain, or loss sourced under this section), see section 873(a).

(f) ***Export trade corporations.*** This section does not apply for purposes of defining an export trade corporation under section 971(a).

(g) ***Applicability date.*** This section applies to taxable years ending on or after December 23, 2019. However, a nonresident may apply this section in its entirety for taxable years beginning after December 31, 2017, and ending before December 23, 2019, provided that the nonresident and all persons related to the nonresident (within the meaning of section 267 or 707) apply this section and §§ 1.863-1(b), 1.863-2(b), 1.863-3, 1.863-8(b)(3)(ii), 1.864-5(a) and (b), and 1.864-6(c)(2) in their entirety for the taxable year, and once applied, the nonresident and all persons related to the nonresident (within the meaning of section 267 or 707) continue to apply these regulations in their entirety for all subsequent taxable years.

[T.D. 9921, 85 FR 79851, Dec. 11, 2020]

Nonresident Aliens and Foreign Corporations

NONRESIDENT ALIEN INDIVIDUALS

§ 1.871-1 Classification and manner of taxing alien individuals.

(a) ***Classes of aliens.*** For purposes of the income tax, alien individuals are divided generally into two classes, namely, resident aliens and nonresident aliens. Resident alien individuals are, in general, taxable the same as citizens of the United States; that is, a resident alien is taxable on income derived from all sources, including sources without the United States. See § 1.1-1(b). Nonresident alien individuals are taxable only on certain income from sources within the United States and on the income described in section 864(c)(4) from sources without the United States which is effectively connected for the taxable year with the conduct of a trade or business in the United States. However, nonresident alien individuals may elect, under section 6013 (g) or (h), to be treated as U.S. residents for purposes of determining their income tax liability under Chapters 1 and 24 of the code. Accordingly, any reference in §§ 1.1-1 through 1.1388-1 to non-resident alien individuals does not include those with respect to whom an election under section 6013 (g) or (h) is in effect, unless otherwise specifically provided. Similarly, any reference to resident aliens or U.S. residents includes those with respect to whom an election is in effect, unless otherwise specifically provided.

(b) ***Classes of nonresident aliens*** —

(1) ***In general.*** For purposes of the income tax, nonresident alien individuals are divided into the following three classes:

(i) Nonresident alien individuals who at no time during the taxable year are engaged in a trade or business in the United States,

(ii) Nonresident alien individuals who at any time during the taxable year are, or are deemed under § 1.871-9 to be, engaged in a trade or business in the United States, and

(iii) Nonresident alien individuals who are bona fide residents of a section 931 possession (as defined in § 1.931-1(c)(1) of this chapter) or Puerto Rico during the entire taxable year. An individual described in paragraph (b)(1)(i) or (ii) of this section is subject to tax pursuant to the provisions of subpart A (section 871 and following), part II, subchapter N, chapter 1 of the Code, and the regulations under those provisions. The provisions of subpart A do not apply to individuals described in this paragraph (b)(1)(iii), but such individuals, except as provided in section 931 or 933, are subject to the tax imposed by section 1 or 55. See § 1.876-1.

(2) ***Treaty income.*** If the gross income of a nonresident alien individual described in subparagraph (1) (i) or (ii) of this paragraph includes income on which the tax is limited by tax convention, see § 1.871-12.

(3) ***Exclusions from gross income.*** For rules relating to the exclusion of certain items from the gross income of a nonresident alien individual, including annuities excluded under section 871(f), see §§ 1.872-2 and 1.894-1.

(4) ***Expatriation to avoid tax.*** For special rules applicable in determining the tax of a nonresident alien individual who has lost U.S. citizenship with a principal purpose of avoiding certain taxes, see section 877.

(5) ***Adjustment of tax of certain nonresident aliens.*** For the application of pre-1967 income tax provisions to residents of a foreign country which imposes a more burdensome income tax than the United States, and for the adjustment of the income tax of a national or resident of a foreign country which imposes a discriminatory income tax on the income of citizens of the United States or domestic corporations, see section 896.

(6) ***Conduit financing arrangements.*** For rules regarding conduit financing arrangements, see §§ 1.881-3 and 1.881-4.

(c) ***Effective/applicability date.*** This section shall apply for taxable years beginning after December 31, 1966. For corresponding rules applicable to taxable years beginning before January 1, 1967, see 26 CFR 1.871-1 and 1.871-7(a) (Revised as of January 1, 1971). Paragraph (b)(1)(iii) of this section applies to taxable years ending after April 9, 2008.

[T.D. 7332, 39 FR 44218, Dec. 23, 1974, as amended by T.D. 7670, 45 FR 6928, Jan. 31, 1980; T.D. 8611, 60 FR 41004, Aug. 11, 1995; T.D. 9194, 70 FR 18928, Apr. 11, 2005; T.D. 9391, 73 FR 19358, Apr. 9, 2008; T.D. 9849, 84 FR 9236, Mar. 14, 2019]

§ 1.871-2 Determining residence of alien individuals.

(a) ***General.*** The term *nonresident alien individual* means an individual whose residence is not within the United States, and who is not a citizen of the United States. The term includes a nonresident alien fiduciary. For such purpose the term fiduciary shall have the meaning assigned to it by section 7701(a)(6) and the regulations in part 301 of this chapter (Regulations on Procedure and Administration). For presumption as to an alien's nonresidence, see paragraph (b) of § 1.871-4.

(b) ***Residence defined.*** An alien actually present in the United States who is not a mere transient or sojourner is a resident of the United States for purposes of the income tax. Whether he is a transient is determined by his intentions with regard to the length and nature of his stay. A mere floating intention, indefinite as to time, to return to another country is not sufficient to constitute him a transient. If he lives in the United States and has no definite intention as to his stay, he is a resident. One who comes to the United States for a definite purpose which in its nature may be promptly accomplished is a transient; but, if his purpose is of such a nature that an extended stay may be necessary for its accomplishment, and to that end the alien makes his home temporarily in the United States, he becomes a resident, though it may be his intention at all times to return to his domicile abroad when the purpose for which he came has been consummated or abandoned. An alien whose stay in the United States is limited to a definite period by the immigration laws is not a resident of the United States within the meaning of this section, in the absence of exceptional circumstances.

(c) ***Application and effective dates.*** Unless the context indicates otherwise, §§ 1.871-2 through 1.871-5 apply to determine the residence of aliens for taxable years beginning before January 1, 1985. To determine the residence of aliens for taxable years beginning after December 31, 1984, see section 7701(b) and §§ 301.7701(b)-1 through 301.7701(b)-9 of this chapter. However, for purposes of determining whether an individual is a qualified individual under section 911(d)(1)(A), the rules of §§ 1.871-2 and 1.871-5 shall continue to apply for taxable years beginning after December 31, 1984. For purposes of determining whether an individual is a resident of the United States for estate and gift tax purposes, see § 20.0-1(b)(1) and (2) and § 25.2501-1(b) of this chapter, respectively.

[T.D. 6500, 25 FR 11910, Nov. 26, 1960; 25 FR 14021, Dec. 31, 1960, as amended by T.D. 8411, 57 FR 15241, Apr. 27, 1992]

§ 1.871-3 Residence of alien seamen.

In order to determine whether an alien seaman is a resident of the United States for purposes of the income tax, it is necessary to decide whether the presumption of nonresidence (as prescribed by paragraph (b) of § 1.871-4) is overcome by facts showing that he has established a residence in the United States. Residence may be established on a vessel regularly engaged in coastwise trade, but the mere fact that a sailor makes his home on a vessel which is flying the United States flag and is engaged in foreign trade is not sufficient to establish residence in the United States, even though the vessel, while carrying on foreign trade, touches at American ports. An alien seaman may acquire an actual residence in the United States within the rules laid down in § 1.871-4, although the nature of his calling requires him to be absent for a long period from the place where his residence is established. An alien seaman may acquire such a residence at a sailors' boarding house or hotel, but such a claim should be carefully scrutinized in order to make sure that such residence is bona fide. The filing of Form 1078 or taking out first citizenship papers is proof of residence in the United States from the time the form is filed or the papers taken out, unless rebutted by other evidence showing an intention to be a transient.

§ 1.871-4 Proof of residence of aliens.

(a) ***Rules of evidence.*** The following rules of evidence shall govern in determining whether or not an alien within the United States has acquired residence therein for purposes of the income tax.

(b) ***Nonresidence presumed.*** An alien by reason of his alienage, is presumed to be a nonresident alien.

(c) ***Presumption rebutted*** —

(1) ***Departing alien.*** In the case of an alien who presents himself for determination of tax liability before departure from the United States, the presumption as to the alien's nonresidence may be overcome by proof—

(i) That the alien, at least six months before the date he so presents himself, has filed a declaration of his intention to become a citizen of the United States under the naturalization laws; or

(ii) That the alien, at least six months before the date he so presents himself, has filed Form 1078 or its equivalent; or

(iii) Of acts and statements of the alien showing a definite intention to acquire residence in the United States or showing that his stay in the United States has been of such an extended nature as to constitute him a resident.

(2) ***Other aliens.*** In the case of other aliens, the presumption as to the alien's nonresidence may be overcome by proof—

(i) That the alien has filed a declaration of his intention to become a citizen of the United States under the naturalization laws; or

(ii) That the alien has filed Form 1078 or its equivalent; or

(iii) Of acts and statements of the alien showing a definite intention to acquire residence in the United States or showing that his stay in the United States has been of such an extended nature as to constitute him a resident.

(d) ***Certificate.*** If, in the application of paragraph (c)(1)(iii) or (2)(iii) of this section, the internal revenue officer or employee who examines the alien is in doubt as to the facts, such officer or employee may, to assist him in determining the facts, require a certificate or certificates setting forth the facts relied upon by the alien seeking to overcome the presumption. Each such certificate, which shall contain, or be verified by, a written declaration that it is made under the penalties of perjury, shall be executed by some credible person or persons, other than the alien and members of his family, who have known the alien at least six months before the date of execution of the certificate or certificates.

§ 1.871-5 Loss of residence by an alien.

An alien who has acquired residence in the United States retains his status as a resident until he abandons the same and actually departs from the United States. An intention to change his residence does not change his status as a resident alien to that of a nonresident alien. Thus, an alien who has acquired a residence in the United States is taxable as a resident for the remainder of his stay in the United States.

§ 1.871-6 Duty of withholding agent to determine status of alien payees.

For the obligation of a withholding agent to withhold the tax imposed by this section, see chapter 3 of the Internal Revenue Code and the regulations thereunder.

[T.D. 8734, 62 FR 53416, Oct. 14, 1997]

§ 1.871-7 Taxation of nonresident alien individuals not engaged in U.S. business.

(a) ***Imposition of tax.***

(1) This section applies for purposes of determining the tax of a nonresident alien individual who at no time during the taxable year is engaged in trade or business in the United States. However, see also § 1.871-8 where such individual is a student or trainee deemed to be engaged in trade or business in the United States or where he has an election in effect for the taxable year in respect to real property income. Except as otherwise provided in § 1.871-12, a nonresident alien individual to whom this section applies is not subject to the tax imposed by section 1 or section 1201(b) but, pursuant to the provision of section 871(a), is liable to a flat tax of 30 percent upon the aggregate of the amounts determined under paragraphs (b), (c), and (d) of this section which are received during the taxable year from sources within the United States. Except as specifically provided in such paragraphs, such amounts do not include gains from the sale or exchange of property. To determine the source of such amounts, see sections 861 through 863, and the regulations thereunder.

(2) The tax of 30 percent is imposed by section 871(a) upon an amount only to the extent the amount constitutes gross income. Thus, for example, the amount of an annuity which is subject to such tax shall be determined in accordance with section 72.

(3) Deductions shall not be allowed in determining the amount subject to tax under this section except that losses from sales or exchanges of capital assets shall be allowed to the extent provided in section 871(a)(2) and paragraph (d) of this section.

(4) Except as provided in §§ 1.871-9 and 1.871-10, a nonresident alien individual not engaged in trade or business in the United States during the taxable year has no income, gain, or loss for the taxable year which is effectively connected for the taxable year with the conduct of a trade or business in the United States. See section 864(c)(1)(B) and § 1.864-3.

(5) Gains and losses which, by reason of section 871(d) and § 1.871-10, are treated as gains or losses which are effectively connected for the taxable year with the conduct of a trade or business in the United States by the nonresident alien individual shall not be taken into account in determining the tax under this section. See, for example, paragraph (c)(2) of § 1.871-10.

(6) For special rules applicable in determining the tax of certain nonresident alien individuals, see paragraph (b) of § 1.871-1.

(b) *Fixed or determinable annual or periodical income* —

(1) ***General rule.*** The tax of 30 percent imposed by section 871(a)(1) applies to the gross amount received from sources within the United States as fixed or determinable annual or periodical gains, profits, or income. Specific items of fixed or determinable annual or periodical income are enumerated in section 871(a)(1)(A) as interest, dividends, rents, salaries, wages, premiums, annuities, compensations, remunerations, and emoluments, but other items of fixed or determinable annual or periodical gains, profits, or income are also subject to the tax, as, for instance, royalties, including royalties for the use of patents, copyrights, secret processes and formulas, and other like property. As to the determination of fixed or determinable annual or periodical income see § 1.1441-2(b). For special rules treating gain on the disposition of section 306 stock as fixed or determinable annual or periodical income for purposes of section 871(a), see section 306(f) and paragraph (h) of § 1.306-3.

(2) ***Substitute payments.*** For purposes of this section, a substitute interest payment (as defined in § 1.861-2(a)(7)) received by a foreign person pursuant to a securities lending transaction or a sale-repurchase transaction (as defined in § 1.861-2(a)(7)) shall have the same character as interest income paid or accrued with respect to the terms of the transferred security. Similarly, for purposes of this section, a substitute dividend payment (as defined in § 1.861-3(a)(6)) received by a foreign person pursuant to a securities lending transaction or a sale-repurchase transaction (as defined in § 1.861-3(a)(6)) shall have the same character as a distribution received with respect to the transferred security. Where, pursuant to a securities lending transaction or a sale-repurchase transaction, a foreign person transfers to another person a security the interest on which would qualify as portfolio interest under section 871(h) in the hands of the lender, substitute interest payments made with respect to the transferred security will be treated as portfolio interest, provided that in the case of interest on an obligation in registered form (as defined in § 1.871-14(c)(1)(i)), the transferor complies with the documentation requirement described in § 1.871-14(c)(1)(ii)(C) with respect to the payment of the substitute interest and none of the exceptions to the portfolio interest exemption in sections 871(h) (3) and (4) apply. See also §§ 1.861-2(b)(2) and 1.894-1(c).

(c) *Other income and gains* —

(1) ***Items subject to tax.*** The tax of 30 percent imposed by section 871(a)(1) also applies to the following gains received during the taxable year from sources within the United States:

(i) Gains described in section 402(a)(2), relating to the treatment of total distributions from certain employees' trusts; section 403(a)(2), relating to treatment of certain payments under certain employee annuity plans; and section 631 (b) or (c), relating to treatment of gain on the disposal of timber, coal, or iron ore with a retained economic interest;

(ii) [Reserved]

(iii) Gains on transfers described in section 1235, relating to certain transfers of patent rights, made on or before October 4, 1966; and

(iv) Gains from the sale or exchange after October 4, 1966, of patents, copyrights, secret processes and formulas, good will, trademarks, trade brands, franchises, or other like property, or of any interest in any such property, to the extent the gains are from payments (whether in a lump sum or in installments) which are contingent on the productivity, use or disposition of the property or interest sold or exchanged, or from payments which are treated under section 871(e) and § 1.871-11 as being so contingent.

(2) ***Nonapplication of 183-day rule.*** The provisions of section 871(a)(2), relating to gains from the sale or exchange of capital assets, and paragraph (d)(2) of this section do not apply to the gains described in this paragraph; as a consequence, the taxpayer receiving gains described in subparagraph (1) of this paragraph during a taxable year is subject to the tax of 30 percent thereon without regard to the 183-day rule contained in such provisions.

(3) ***Determination of amount of gain.*** The tax of 30 percent imposed upon the gains described in subparagraph (1) of this paragraph applies to the full amount of the gains and is determined

(i) without regard to the alternative tax imposed by section 1201(b) upon the excess of the net long-term capital gain over the net short-term capital loss;

(ii) without regard to the deduction allowed by section 1202 in respect of capital gains;

(iii) without regard to section 1231, relating to property used in the trade or business and involuntary conversions; and (iv), except in the case of gains described in subparagraph (1)(ii) of this paragraph, whether or not the gains are considered to be gains from the sale or exchange of property which is a capital asset.

(d) ***Gains from sale or exchange of capital assets*** —

(1) ***Gains subject to tax.*** The tax of 30 percent imposed by section 871(a)(2) applies to the excess of gains derived from sources within the United States over losses allocable to sources within the United States, which are derived from the sale or exchange of capital assets, determined in accordance with the provisions of subparagraphs (2) through (4) of this paragraph.

(2) ***Presence in the United States 183 days or more.***

(i) If the nonresident alien individual has been present in the United States for a period or periods aggregating 183 days or more during the taxable year, he is liable to a tax of 30 percent upon the amount by which his gains, derived from sources within the United States, from sales or exchanges of capital assets effected at any time during the year exceed his losses, allocable to sources within the United States, from sales or exchanges of capital assets effected at any time during that year. Gains and losses from sales or exchanges effected at any time during such taxable year are to be taken into account for this purpose even though the nonresident alien individual is not present in the United States at the time the sales or exchanges are

effected. In addition, if the nonresident alien individual has been present in the United States for a period or periods aggregating 183 days or more during the taxable year, gains and losses for such taxable year from sales or exchanges of capital assets effected during a previous taxable year beginning after December 31, 1966, are to be taken into account, but only if he was also present in the United States during such previous taxable year for a period or periods aggregating 183 days or more.

(ii) If the nonresident alien individual has not been present in the United States during the taxable year, or if he has been present in the United States for a period or periods aggregating less than 183 days during the taxable year, gains and losses from sales or exchanges of capital assets effected during the year are not to be taken into account, except as required by paragraph (c) of this section, in determining the tax of such individual even though the sales or exchanges are effected during his presence in the United States. Moreover, gains and losses for such taxable year from sales or exchanges of capital assets effected during a previous taxable year beginning after December 31, 1966, are not to be taken into account, even though the nonresident alien individual was present in the United States during such previous year for a period or periods aggregating 183 days or more.

(iii) For purposes of this subparagraph, a nonresident alien individual is not considered to be present in the United States by reason of the presence in the United States of a person who is an agent or partner of such individual or who is a fiduciary of an estate or trust of which such individual is a beneficiary or a grantor-owner to whom section 671 applies.

(iv) The application of this subparagraph may be illustrated by the following examples:

Example 1. B, a nonresident alien individual not engaged in trade or business in the United States and using the calendar year as the taxable year, is present in the United States from May 1, 1971, to November 15, 1971, a period of more than 182 days. While present in the United States, B effects for his own account on various dates a number of transactions in stocks and securities on the stock exchange, as a result of which he has recognized capital gains of $10,000. During the period from January 1, 1971, to April 30, 1971, he carries out similar transactions through an agent in the United States, as a result of which B has recognized capital gains of $5,000. On December 15, 1971, through an agent in the United States B sells a capital asset on the installment plan, no payments being made by the purchaser in 1971. During 1972, B receives installment payments of $50,000 on the installment sale made in 1971, and the capital gain from sources within the United States for 1972 attributable to such payments is $12,500. In addition, during the period from January 1, 1972, to May 31, 1972, B effects for his own account, through an agent in the United States, a number of transactions in stocks and securities on the stock exchange, as a result of which B has recognized capital gains of $20,000. At no time during 1972 is B present in the United States or engaged in trade or business in the United States. Accordingly, for 1971, B is subject to tax under section 871(a)(2) on his capital gains of $15,000 from the transactions in that year on the stock exchange. For 1972, B is not subject to tax on the capital gain of $12,500 from the installment sale in 1971 or on the capital gains of $20,000 from the transactions in 1972 on the stock exchange.

Example 2. The facts are the same as in example 1 except that B is present in the United States from June 15, 1972, to December 31, 1972, a period of more than 182 days. Accordingly, B is subject to tax under section 871(a)(2) for 1971 on his capital gains of $15,000 from the transactions in

that year on the stock exchange. He is also subject to tax under section 871(a)(2) for 1972 on his capital gains of $32,500 ($12,500 from the installment sale in 1971 plus $20,000 from the transactions in 1972 on the stock exchange).

Example 3. D, a nonresident alien individual not engaged in trade or business in the United States and using the calendar year as the taxable year, is present in the United States from April 1, 1971, to August 31, 1971, a period of less than 183 days. While present in the United States, D effects for his own account on various dates a number of transactions in stocks and securities on the stock exchange, as a result of which he has recognized capital gains of $15,000. During the period from January 1, 1971, to March 31, 1971, he carries out similar transactions through an agent in the United States, as a result of which D has recognized capital gains of $8,000. On December 20, 1971, through an agent in the United States D sells a capital asset on the installment plan, no payments being made by the purchaser in 1971. During 1972, D receives installment payments of $200,000 on the installment sale made in 1971, and the capital gain from sources within the United States for 1972 attributable to such payments is $50,000. In addition, during the period from February 1, 1972, to August 15, 1972, a period of more than 182 days. D effects for his own account, through an agent in the United States, a number of transactions in stocks and securities on the stock exchange, as a result of which D has recognized capital gains of $25,000. At no time during 1972 is D present in the United States or engaged in trade or business in the United States. Accordingly, D is not subject to tax for 1971 or 1972 on any of his recognized capital gains.

Example 4. The facts are the same as in example 3 except that D is present in the United States from February 1, 1972, to August 15, 1972, a period of more than 182 days. Accordingly, D is not subject to tax for 1971 on his capital gains of $23,000 from the transactions in that year on the stock exchange. For 1972 he is subject to tax under section 871(a)(2) on his capital gains of $25,000 from the transactions in that year on the stock exchange, but he is not subject to the tax on the capital gain of $50,000 from the installment sale in 1971.

(3) ***Determination of 183-day period*** —

(i) ***In general.*** In determining the total period of presence in the United States for a taxable year for purposes of subparagraph (2) of this paragraph, all separate periods of presence in the United States during the taxable year are to be aggregated. If the nonresident alien individual has not previously established a taxable year, as defined in section 441(b), he shall be treated as having a taxable year which is the calendar year, as defined in section 441(d). Subsequent adoption by such individual of a fiscal year as the taxable year will be treated as a change in the taxpayer's annual accounting period to which section 442 applies, and the change must be authorized under this part (Income Tax Regulations) or prior approval must be obtained by filing an application on Form 1128 in accordance with paragraph (b) of § 1.442-1. If in the course of his taxable year the nonresident alien individual changes his status from that of a citizen or resident of the United States to that of a nonresident alien individual, or vice versa, the determination of whether the individual has been present in the United States for 183 days or more during the taxable year shall be made by taking into account the entire taxable year, and not just that part of the taxable year during which he has the status of a nonresident alien individual.

(ii) ***Definition of "day".*** The term "day", as used in subparagraph (2) of this paragraph, means a calendar day during any portion of which the nonresident alien individual is physically present in the United States (within the meaning of sections 7701(a)(9) and 638) except that, in the

case of an individual who is a resident of Canada or Mexico and, in the normal course of his employment in transportation service touching points within both Canada or Mexico and the United States, performs personal services in both the foreign country and the United States, the following rules shall apply:

(*a*) The performance of labor or personal services during 8 hours or more in any 1 day within the United States shall be considered as 1 day in the United States, except that if a period of more or less than 8 hours is considered a full workday in the transportation job involved, such period shall be considered as 1 day within the United States.

(*b*) The performance of labor or personal services during less than 8 hours in any day in the United States shall, except as provided in (*a*) of this subdivision, be considered as a fractional part of a day in the United States. The total number of hours during which such services are performed in the United States during the taxable year, when divided by eight, shall be the number of days during which such individual shall be considered present in the United States during the taxable year.

(*c*) The aggregate number of days determined under (*a*) and (*b*) of this subdivision shall be considered the total number of days during which such individual is present in the United States during the taxable year.

(4) ***Determination of amount of excess gains*** —

(i) ***In general.*** For the purpose of determining the excess of gains over losses subject to tax under this paragraph, gains and losses shall be taken into account only if, and to the extent that, they would be recognized and taken into account if the nonresident alien individual were engaged in trade or business in the United States during the taxable year and such gains and losses were effectively connected for such year with the conduct of a trade or business in the United States by such individual. However, in determining such excess of gains over losses no deduction may be taken under section 1202, relating to the deduction for capital gains, or section 1212, relating to the capital loss carryover. Thus, for example, in determining such excess gains all amounts considered under chapter 1 of the Code as gains or losses from the sale or exchange of capital assets shall be taken into account, except those gains which are described in section 871(a)(1) (B) or (D) and taken into account under paragraph (c) of this section and are considered to be gains from the sale or exchange of capital assets. Also, for example, a loss described in section 631 (b) or (c) which is considered to be a loss from the sale of a capital asset shall be taken into account in determining the excess gains which are subject to tax under this paragraph. In further illustration, in determining such excess gains no deduction shall be allowed, pursuant to the provisions of section 267, for losses from sales or exchanges of property between related taxpayers. Any gains which are taken into account under section 871(a)(1) and paragraph (c) of this section shall not be taken into account in applying section 1231 for purposes of this paragraph. Gains and losses are to be taken into account under this paragraph whether they are short-term or long-term capital gains or losses within the meaning of section 1222.

(ii) ***Gains not included.*** The provisions of this paragraph do not apply to any gains described in section 871(a)(1) (B) or (D), and in subdivision (i), (iii), or (iv) of paragraph (c)(1) of this section, which are considered to be gains from the sale or exchange of capital assets.

(iii) *Allowance of losses.* In determining the excess of gains over losses subject to tax under this paragraph losses shall be allowed only to the extent provided by section 165(c). Losses from sales or exchanges of capital assets in excess of gains from sales or exchanges of capital assets shall not be taken into account.

(e) *Credits against tax.* The credits allowed by section 31 (relating to tax withheld on wages), by section 32 (relating to tax withheld at source on nonresident aliens), by section 39 (relating to certain uses of gasoline and lubricating oil), and by section 6402 (relating to overpayments of tax) shall be allowed against the tax of a nonresident alien individual determined in accordance with this section.

(f) *Effective date.* Except as otherwise provided in this paragraph, this section shall apply for taxable years beginning after December 31, 1966. Paragraph (b)(2) of this section is applicable to payments made after November 13, 1997. For corresponding rules applicable to taxable years beginning before January 1, 1967, see 26 CFR 1.871-7 (b) and (c) (Revised as of January 1, 1971).

[T.D. 7332, 39 FR 44219, Dec. 23, 1974, as amended by T.D. 8734, 62 FR 53416, Oct. 14, 1997; T.D. 8735, 62 FR 53501, Oct. 14, 1997]

§ 1.871-8 Taxation of nonresident alien individuals engaged in U.S. business or treated as having effectively connected income.

(a) *Segregation of income.* This section applies for purposes of determining the tax of a nonresident alien individual who at any time during the taxable year is engaged in trade or business in the United States. It also applies for purposes of determining the tax of a nonresident alien student or trainee who is deemed under section 871(c) and § 1.871-9 to be engaged in trade or business in the United States or of a nonresident alien individual who at no time during the taxable year is engaged in trade or business in the United States but has an election in effect for the taxable year under section 871(d) and § 1.871-10 in respect to real property income. A nonresident alien individual to whom this section applies must segregate his gross income for the taxable year into two categories, namely

(1) the income which is effectively connected for the taxable year with the conduct of a trade or business in the United States by that individual, and

(2) the income which is not effectively connected for the taxable year with the conduct of a trade or business in the United States by that individual. A separate tax shall then be determined upon each such category of income, as provided in paragraph (b) of this section. The determination of whether income or gain is or is not effectively connected for the taxable year with the conduct of a trade or business in the United States by the nonresident alien individual shall be made in accordance with section 864(c) and §§ 1.864-3 through 1.864-7. For purposes of this section income which is effectively connected for the taxable year with the conduct of a trade or business in the United States includes all income which is treated under section 871 (c) or (d) and § 1.871-9 or § 1.871-10 as income which is effectively connected for such year with the conduct of a trade or business in the United States by the nonresident alien individual.

(b) *Imposition of tax* —

(1) *Income not effectively connected with the conduct of a trade or business in the United States.* If a nonresident alien individual who is engaged in trade or business in the United States at any time during the taxable year derives during such year from sources within the United States income or gains described in section 871(a)(1), and paragraph (b) or (c) of § 1.871-7 or gains from the sale or exchange of capital assets determined as provided in section 871(a)(2) and paragraph (d) of §

1.871-7, which are not effectively connected for the taxable year with the conduct of a trade or business in the United States by that individual, such income or gains shall be subject to a flat tax of 30 percent of the aggregate amount of such items. This tax shall be determined in the manner, and subject to the same conditions, set forth in § 1.871-7 as though the income or gains were derived by a nonresident alien individual not engaged in trade or business in the United States during the taxable year, except that

(i) the rule in paragraph (d)(3) of such section for treating the calendar year as the taxable year shall not apply and

(ii) in applying paragraph (c) and (d)(4) of such section, there shall not be taken into account any gains or losses which are taken into account in determining the tax under section 871(b) and subparagraph (2) of this paragraph. A nonresident alien individual who has an election in effect for the taxable year under section 871(d) and § 1.871-10 and who at no time during the taxable year is engaged in trade or business in the United States must determine his tax under § 1.871-7 on his income which is not treated as effectively connected with the conduct of a trade or business in the United States, subject to the exception contained in subdivision (ii) of this subparagraph.

(2) ***Income effectively connected with the conduct of a trade or business in the United States*** —

(i) ***In general.*** If a nonresident alien to whom this section applies derives income or gains which are effectively connected for the taxable year with the conduct of a trade or business in the United States by that individual, the taxable income or gains shall, except as provided in § 1.871-12, be taxed in accordance with section 1 or, in the alternative, section 1201(b). See section 871(b)(1). Any income of the nonresident alien individual which is not effectively connected for the taxable year with the conduct of a trade or business in the United States by that individual shall not be taken into account in determining either the rate or amount of such tax. See paragraph (b) of § 1.872-1.

(ii) ***Determination of taxable income.*** The taxable income for any taxable year for purposes of this subparagraph consists only of the nonresident alien individual's taxable income which is effectively connected for the taxable year with the conduct of a trade or business in the United States by that individual; and, for this purpose, it is immaterial that the trade or business with which that income is effectively connected is not the same as the trade or business carried on in the United States by that individual during the taxable year. See example 2 in § 1.864-4(b). In determining such taxable income all amounts constituting, or considered to be, gains or losses for the taxable year from the sale or exchange of capital assets shall be taken into account if such gains or losses are effectively connected for the taxable year with the conduct of a trade or business in the United States by that individual, and, for such purpose, the 183-day rule set forth in section 871(a)(2) and paragraph (d)(2) of § 1.871-7 shall not apply. Losses which are not effectively connected for the taxable year with the conduct of a trade or business in the United States by that individual shall not be taken into account in determining taxable income under this subdivision, except as provided in section 873(b)(1).

(iii) ***Cross references.*** For rules for determining the gross income and deductions for the taxable year, see sections 872 and 873, and the regulations thereunder.

(c) ***Change in trade or business status*** —

(1) ***In general.*** The determination as to whether a nonresident alien individual is engaged in trade or business within the United States during the taxable year is to be made for each taxable year. If at any time during the taxable year he is engaged in a trade or business in the United States, he is considered to be engaged in trade or business within the United States during the taxable year for purposes of sections 864(c)(1) and 871(b), and the regulations thereunder. Income, gain, or loss of a nonresident alien individual is not treated as being effectively connected for the taxable year with the conduct of a trade or business in the United States if he is not engaged in trade or business within the United States during such year, even though such income, gain, or loss may have been effectively connected for a previous taxable year with the conduct of a trade or business in the United States. See § 1.864-3. However, income, gain, or loss which is treated as effectively connected for the taxable year with the conduct of a trade or business in the United States by a nonresident alien individual will generally be treated as effectively connected for a subsequent taxable year if he is engaged in a trade or business in the United States during such subsequent year, even though such income, gain, or loss is not effectively connected with the conduct of the trade or business carried on in the United States during such subsequent year. This subparagraph does not apply to income described in section 871 (c) or (d). It may not apply to a nonresident alien individual who for the taxable year uses an accrual method of accounting or to income which is constructively received in the taxable year within the meaning of § 1.451-2.

(2) ***Illustrations.*** The application of this paragraph may be illustrated by the following examples:

Example 1. B, a nonresident alien individual using the calendar year as the taxable year and the cash receipts and disbursements method of accounting, is engaged in business (business R) in the United States from January 1, 1971, to August 31, 1971. During the period of September 1, 1971, to December 31, 1971, B receives installment payments of $30,000 on sales made in the United States by business R during that year, and the income from sources within the United States for that year attributable to such payments is $7,509. On September 15, 1971, another business (business S), which is carried on by B only in a foreign country sells to U.S. customers on the installment plan several pieces of equipment from inventory. During the period of September 16, 1971, to December 31, 1971, B receives installment payments of $50,000 on these sales by business S, and the income from sources within the United States for that year attributable to such payments is $10,000. Under section 864(c)(3) and paragraph (b) of § 1.864-4 the entire income of $17,500 is effectively connected for 1971 with the conduct of a business in the United States by B. Accordingly, such income is taxable to B under paragraph (b)(2) of this section.

Example 2. Assume the same facts as in example 1, except that during 1972 B receives installment payments of $20,000 from the sales made during 1971 in the United States by business R, and of $80,000 from the sales made in 1971 to U.S. customers by business S, the total income from sources within the United States for 1972 attributable to such payments being $13,000. At no time during 1972 is B engaged in a trade or business in the United States. Under section 864(c)(1)(B) the income of $13,000 for 1972 is not effectively connected with the conduct of a trade or business in the United States by B. Moreover, such income is not fixed or determinable annual or periodical income. Accordingly, no amount of such income is taxable to B under section 871.

Example 3. Assume the same facts as in example 2, except that during 1972 B is engaged in a new business (business T) in the United States from July 1, 1972, to December 31, 1972. Under section 864(c)(3) and paragraph (b) of § 1.864-4, the income of $13,000 is effectively connected for 1972 with the conduct of a business in the United States by B. Accordingly, such income is taxable to B under paragraph (b)(2) of this section.

Example 4. Assume the same facts as in example 2, except that the installment payments of $20,000 from the sales made during 1971 in the United States by business R and not received by B until 1972 could have been received by B in 1971 if he had so desired. Under § 1.451-2, B is deemed to have constructively received the payments of $20,000 in 1971. Accordingly, the income attributable to such payments is effectively connected for 1971 with the conduct of a business in the United States by B and is taxable to B in 1971 under paragraph (b)(2) of this section.

(d) ***Credits against tax.*** The credits allowed by section 31 (relating to tax withheld on wages), section 32 (relating to tax withheld at source on nonresident aliens), section 33 (relating to the foreign tax credit), section 35 (relating to partially tax-exempt interest), section 38 (relating to investment in certain depreciable property), section 39 (relating to certain uses of gasoline and lubricating oil), section 40 (relating to expenses of work incentive programs), and section 6402 (relating to overpayments of tax) shall be allowed against the tax determined in accordance with this section. However, the credits allowed by sections 33, 38, and 40 shall not be allowed against the flat tax of 30 percent imposed by section 871(a) and paragraph (b)(1) of this section. Moreover, no credit shall be allowed under section 35 to a non- resident alien individual with respect to whom a tax is imposed for the taxable year under section 871(a) and paragraph (b)(1) of this section, even though such individual has income for such year upon which tax is imposed under section 871(b) and paragraph (b)(2) of this section. For special rules applicable in determining the foreign tax credit, see section 906(b) and the regulations thereunder. For the disallowance of certain credits where a return is not filed for the taxable year, see section 874 and § 1.874-1.

(e) ***Effective date.*** This section shall apply for taxable years beginning after December 31, 1966. For corresponding rules applicable to taxable years beginning before January 1, 1967, see 26 CFR 1.871-7(d) (Revised as of January 1, 1971).

[T.D. 7332, 39 FR 44221, Dec. 23, 1974]

§ 1.871-9 Nonresident alien students or trainees deemed to be engaged in U.S. business.

(a) ***Participants in certain exchange or training programs.*** For purposes of §§ 1.871-7 and 1.871-8 a nonresident alien individual who is temporarily present in the United States during the taxable year as a nonimmigrant under subparagraph (F) (relating to the admission of students into the United States) or subparagraph (J) (relating to the admission of teachers, trainees, specialists, etc., into the United States) of section 101(a)(15) of the Immigration and Nationality Act (8 U.S.C. 1101(a)(15) (F) or (J)), and who without regard to this paragraph is not engaged in trade or business in the United States during such year, shall be deemed to be engaged in trade or business in the United States during the taxable year. For purposes of determining whether an alien who is present in the United States on an F visa or a J visa is a resident of the United States, see §§ 301.7701(b)-1 through 301.7701(b)-9 of this chapter.

(b) ***Income treated as effectively connected with U.S. business.*** Any income described in paragraph (1) (relating to the nonexcluded portion of certain scholarship or fellowship grants) or paragraph (2) (relating to certain nonexcluded expenses incident to such grants) of section 1441(b) which is received during the taxable year from sources within the United States by a nonresident alien individual described in paragraph (a) of this section is to be treated for purposes of §§ 1.871-7, 1.871-8, 1.872-1, and 1.873-1 as income which is effectively connected for the taxable year with the conduct of a trade or business in the United States by that individual. However, such income is not to be treated as effectively connected for

the taxable year with the conduct of a trade or business in the United States for purposes of section 1441(c)(1) and paragraph (a) of § 1.1441-4. For exclusion relating to compensation paid to such individual by a foreign employer, see paragraph (b) of § 1.872-2.

(c) ***Exchange visitors.*** For purposes of paragraph (a) of this section a nonresident alien individual who is temporarily present in the United States during the taxable year as a nonimmigrant under subparagraph (J) of section 101(a)(15) of the Immigration and Nationality Act includes a nonresident alien individual admitted to the United States as an "exchange visitor" under section 201 of the U.S. Information and Educational Exchange Act of 1948 (22 U.S.C. 1446), which section was repealed by section 111 of the Mutual Educational and Cultural Exchange Act of 1961 (75 Stat. 538).

(d) ***Mandatory application of rule.*** The application of this section is mandatory and not subject to an election by the taxpayer.

(e) ***Effective date.*** This section shall apply for taxable years beginning after December 31, 1966. For corresponding rules applicable to taxable years beginning before January 1, 1967, see 26 CFR 1.871-7(a)(3) (Revised as of January 1, 1971).

[T.D. 7332, 39 FR 44222, Dec. 23, 1974, as amended by T.D. 8411, 57 FR 15241, Apr. 27, 1992]

§ 1.871-10 Election to treat real property income as effectively connected with U.S. business.

(a) ***When election may be made.*** A nonresident alien individual or foreign corporation which during the taxable year derives any income from real property which is located in the United States and, in the case of a nonresident alien individual, held for the production of income, or derives income from any interest in any such property, may elect, pursuant to section 871(d) or 882(d) and this section, to treat all such income as income which is effectively connected for the taxable year with the conduct of a trade or business in the United States by that taxpayer. The election may be made whether or not the taxpayer is engaged in trade or business in the United States during the taxable year for which the election is made or whether or not the taxpayer has income from real property which for the taxable year is effectively connected with the conduct of a trade or business in the United States, but it may be made only with respect to that income from sources within the United States which, without regard to this section, is not effectively connected for the taxable year with the conduct of a trade or business in the United States by the taxpayer. If for the taxable year the taxpayer has no income from real property located in the United States, or from any interest in such property, which is subject to the tax imposed by section 871(a) or 881(a), the election may not be made. But if an election has been properly made under this section for a taxable year, the election remains in effect, unless properly revoked, for subsequent taxable years even though during any such subsequent taxable year there is no income from the real property, or interest therein, in respect of which the election applies.

(b) ***Income to which the election applies*** —

(1) ***Included income.*** An election under this section shall apply to all income from real property which is located in the United States and, in the case of a nonresident alien individual, held for the production of income, and to all income derived from any interest in such property, including

(i) gains from the sale or exchange of such property or an interest therein,

(ii) rents or royalties from mines, oil or gas wells, or other natural resources, and

(iii) gains described in section 631 (b) or (c), relating to treatment of gain on the disposal of timber, coal, or iron ore with a retained economic interest. The election may not be made with respect to only one class of such income. For purposes of the election, income from real property, or from any interest in real property, includes any amount included under section 652 or 662 in the gross income of a nonresident alien individual or foreign corporation that is the beneficiary of an estate or trust if, by reason of the application of section 652(b) or 662(b), and the regulations thereunder, such amount has the character in the hands of that beneficiary of income from real property, or from any interest in real property. It is immaterial that no tax would be imposed on the income by section 871(a) and paragraph (a) of § 1.871-7, or by section 881(a) and paragraph (a) of § 1.881-2, if the election were not in effect. Thus, for example, if an election under this section has been made by a nonresident alien individual not engaged in trade or business in the United States during the taxable year, the tax imposed by section 871(b)(1) and paragraph (b)(2) of § 1.871-8 applies to his gains derived from the sale of real property located in the United States and held for the production of income, even though such income would not be subject to tax under section 871(a) if the election had not been made. In further illustration, assume that a nonresident alien individual not engaged in trade or business, or present, in the United States during the taxable year has income from sources within the United States consisting of oil royalties, rentals from a former personal residence, and capital gain from the sale of another residence held for the production of income. If he makes an election under this section, it will apply with respect to his royalties, rentals, and capital gain, even though such capital gain would not be subject to tax under section 871(a) if the election had not been made.

(2) ***Income not included.*** For purposes of subparagraph (1) of this paragraph, income from real property, or from any interest in real property, does not include

(i) interest on a debt obligation secured by a mortgage of real property,

(ii) any portion of a dividend, within the meaning of section 316, which is paid by a corporation or a trust, such as a real estate investment trust described in section 857, which derives income from real property,

(iii) in the case of a nonresident alien individual, income from real property, such as a personal residence, which is not held for the production of income or from any transaction in such property which was not entered into for profit,

(iv) rentals from personal property, or royalties from intangible personal property, within the meaning of subparagraph (3) of this paragraph, or

(v) income which, without regard to section 871(d) or 882(d) and this section, is treated as income which is effectively connected for the taxable year with the conduct of a trade or business in the United States.

(3) ***Rules applicable to personal property.*** For purposes of subparagraph (2) of this paragraph, in the case of a sales agreement, or rental or royalty agreement, affecting both real and personal property, the income from the transaction is to be allocated between the real property and the personal property in proportion to their respective fair market values unless the agreement specifically provides otherwise. In the case of such a rental or royalty agreement, the respective fair market values are to be determined as of the time the agreement is signed. In making determinations of this subparagraph, the principles of paragraph (c) of § 1.48-1, relating to the definition of "section 38

property," apply for purposes of determining whether property is tangible or intangible personal property and of paragraph (a)(5) of § 1.1245-1 apply for purposes of making the allocation of income between real and personal property.

(c) *Effect of the election* —

(1) ***Determination of tax.*** The income to which, in accordance with paragraph (b) of this section, an election under this section applies shall be subject to tax in the manner, and subject to the same conditions, provided by section 871(b)(1) and paragraph (b)(2) of § 1.871-8, or by section 882(a)(1) and paragraph (b)(2) of § 1.882-1. For purposes of determining such tax for the taxable year, income to which the election applies shall be aggregated with all other income of the nonresident alien individual or foreign corporation which is effectively connected for the taxable year with the conduct of a trade or business in the United States by that taxpayer. To the extent that deductions are connected with income from real property to which the election applies, they shall be treated for purposes of section 873(a) or section 882(c)(1) as connected with income which is effectively connected for the taxable year with the conduct of a trade or business in the United States by the nonresident alien individual or foreign corporation. An election under this section does not cause a nonresident alien individual or foreign corporation, which is not engaged in trade or business in the United States during the taxable year, to be treated as though such taxpayer were engaged in trade or business in the United States during the taxable year. Thus, for example, the compensation received during the taxable year for services performed in the United States in a previous taxable year by a nonresident alien individual, who has an election in effect for the taxable year under this section but is engaged in trade or business in the United States at no time during the taxable year, is not effectively connected for the taxable year with the conduct of a trade or business in the United States. In further illustration, gain for the taxable year from the casual sale of personal property described in section 1221(l) derived by a nonresident alien individual who is not engaged in trade or business in the United States during the taxable year but has an election in effect for such year under this section is not effectively connected with the conduct of a trade or business in the United States. See § 1.864-3. If an election under this section is in effect for the taxable year, the income to which the election applies shall be treated, for purposes of section 871(b)(1) or section 882(a)(1), section 1441(c)(1), and paragraph (a) of § 1.1441-4, as income which is effectively connected for the taxable year with the conduct of a trade or business in the United States by the taxpayer.

(2) ***Treatment of property to which election applies.*** Any real property, or interest in real property, with respect to which an election under this section applies shall be treated as a capital asset which, if depreciable, is subject to the allowance for depreciation provided in section 167 and the regulations thereunder. Such property, or interest in property, shall be treated as property not used in a trade or business for purposes of applying any provisions of the Code, such as section 172(d)(4)(A), relating to gain or loss attributable to a trade or business for purposes of determining a net operating loss; section 1221(2), relating to property not constituting a capital asset; or section 1231(b), relating to special rules for treatment of gains and losses. For example, if a nonresident alien individual makes the election under this section and, while the election is in effect, sells unimproved land which is located in the United States and held for investment purposes, any gain or loss from the sale shall be considered gain or loss from the sale of a capital asset and shall be treated, for purposes of determining the tax under section 871(b)(1) and paragraph (b)(2) of § 1.871-8, as a gain or loss which is effectively connected for the taxable year with the conduct of a trade or business in the United States.

(d) *Manner of making or revoking an election* —

(1) ***Election, or revocation, without consent of Commissioner*** —

(i) ***In general.*** A nonresident alien individual or foreign corporation may, for the first taxable year for which the election under this section is to apply, make the initial election at any time before the expiration of the period prescribed by section 6511(a), or by section 6511(c) if the period for assessment is extended by agreement, for filing a claim for credit or refund of the tax imposed by chapter 1 of the Code for such taxable year. This election may be made without the consent of the Commissioner. Having made the initial election, the taxpayer may, within the time prescribed for making the election for such taxable year, revoke the election without the consent of the Commissioner. If the revocation is timely and properly made, the taxpayer may make his initial election under this section for a later taxable year without the consent of the Commissioner. If the taxpayer revokes the initial election without the consent of the Commissioner he must file amended income tax returns, or claims for credit or refund, where applicable, for the taxable years to which the revocation applies.

(ii) ***Statement to be filed with return.*** An election made under this section without the consent of the Commissioner shall be made for a taxable year by filing with the income tax return required under section 6012 and the regulations thereunder for such taxable year a statement to the effect that the election is being made. This statement shall include (*a*) a complete schedule of all real property, or any interest in real property, of which the taxpayer is titular or beneficial owner, which is located in the United States, (*b*) an indication of the extent to which the taxpayer has direct or beneficial ownership in each such item of real property, or interest in real property, (*c*) the location of the real property or interest therein, (*d*) a description of any substantial improvements on any such property, and (*e*) an identification of any taxable year or years in respect of which a revocation or new election under this section has previously occurred. This statement may not be filed with any return under section 6851 and the regulations thereunder.

(iii) ***Exemption from withholding of tax.*** For statement to be filed with a withholding agent at the beginning of a taxable year in respect of which an election under this section is to be made, see paragraph (a) of § 1.1441-4.

(2) ***Revocation, or election, with consent of Commissioner*** —

(i) ***In general.*** If the nonresident alien individual or foreign corporation makes the initial election under this section for any taxable year and the period prescribed by subparagraph (1)(i) of this paragraph for making the election for such taxable year has expired, the election shall remain in effect for all subsequent taxable years, including taxable years for which the taxpayer realizes no income from real property, or from any interest therein, or for which he is not required under section 6012 and the regulations thereunder to file an income tax return. However, the election may be revoked in accordance with subdivision (iii) of this subparagraph for any subsequent taxable year with the consent of the Commissioner. If the election for any such taxable year is revoked with the consent of the Commissioner, the taxpayer may not make a new election before his fifth taxable year which begins after the first taxable year for which the revocation is effective unless consent is given to such new election by the Commissioner in accordance with subdivision (iii) of this subparagraph.

(ii) ***Effect of new election.*** A new election made for the fifth taxable year, or taxable year thereafter, without the consent of the Commissioner, and a new election made with the consent of the Commissioner, shall be treated as an initial election to which subparagraph (1) of this paragraph applies.

(iii) ***Written request required.*** A request to revoke an election made under this section when such revocation requires the consent of the Commissioner, or to make a new election when such election requires the consent of the Commissioner, shall be made in writing and shall be addressed to the Director of International Operations, Internal Revenue Service, Washington, DC 20225. The request shall include the name and address of the taxpayer and shall be signed by the taxpayer or his duly authorized representative. It must specify the taxable year for which the revocation or new election is to be effective and shall be filed within 75 days after the close of the first taxable year for which it is desired to make the change. The request must specify the grounds which are considered to justify the revocation or new election. The Director of International Operations may require such other information as may be necessary in order to determine whether the proposed change will be permitted. A copy of the consent by the Director of International Operations shall be attached to the taxpayer's return required under section 6012 and the regulations thereunder for the taxable year for which the revocation or new election is effective. A copy of such consent may not be filed with any return under section 6851 and the regulations thereunder.

(3) ***Election by partnership.*** If a non-resident alien individual or foreign corporation is a member of a partnership which has income described in paragraph (b)(1) of this section from real property, any election to be made under this section in respect of such income shall be made by the partners and not by the partnership. A nonresident alien or foreign corporation that makes an election generally must provide the partnership a Form W-8ECI, “Certificate of Foreign Person's Claim for Exemption from Withholding on Income Effectively Connected with the Conduct of a Trade or Business in the United States,” and attach to such form a copy of the election (or a statement that indicates that the nonresident alien or foreign corporation will make the election). However, if the nonresident alien or foreign corporation has already submitted a valid form to the partnership that establishes such partner's foreign status, the partner shall furnish the partnership a copy of the election (or a statement that indicates that the nonresident alien or foreign corporation will make the election). To the extent the partnership has income to which the election pertains, the partnership shall treat such income as effectively connected income subject to withholding under section 1446. See also § 1.1446-2.

(e) ***Effective dates.*** This section shall apply for taxable years beginning after December 31, 1966, except the last four sentences of paragraph (d)(3) of this section shall apply to partnership taxable years beginning after May 18, 2005, or such earlier time as the regulations under §§ 1.1446-1 through 1.1446-5 apply by reason of an election under § 1.1446-7. There are no corresponding rules in this part for taxable years beginning before January 1, 1967.

[T.D. 7332, 39 FR 44222, Dec. 23, 1974, as amended by T.D. 9200, 70 FR 28717, May 18, 2005]

§ 1.871-11 Gains from sale or exchange of patents, copyrights, or similar property.

(a) ***Contingent payment defined.*** For purposes of section 871(a)(1)(D), section 881(a)(4), § 1.871-7(c)(1)(iv), § 1.881-2(c)(1)(iii), and this section, payments which are contingent on the productivity, use, or disposition of property or of an interest therein include continuing payments measured by a percentage of the selling price of the products marketed, or based on the number of units manufactured or sold, or based in a similar manner upon production, sale or use, or disposition of the property or interest transferred. A payment which is certain as to the amount to be received, but contingent as to the time of payment, or an

installment payment of a principal sum agreed upon in a transfer agreement, shall not be treated as a contingent payment for purposes of this paragraph. For the inapplication of section 1253 to certain amounts described in this paragraph, see paragraph (a) of § 1.1253-1.

(b) ***Payments treated as contingent on use.*** Pursuant to section 871(e), if more than 50 percent of the gain of a nonresident alien individual or foreign corporation for any taxable year from the sale or exchange after October 4, 1966, of any patent, copyright, secret process or formula, goodwill, trademark, trade brand, franchise, or other like property, or of any interest in any such property, is from payments which are contingent on the productivity, use, or disposition of such property or interest, all of the gain of such individual or corporation for the taxable year from the sale or exchange of such property or interest are, for purposes of section 871(a)(1)(D), section 881(a)(4), section 1441(b), or section 1442(a), and the regulations thereunder, to be treated as being from payments which are contingent on the productivity, use, or disposition of such property or interest. This paragraph does not apply for purposes of determining under section 871(b)(1) or 882(a)(1) the tax of a nonresident alien individual or foreign corporation on income which is effectively connected for the taxable year with the conduct of a trade or business in the United States.

(c) ***Sale or exchange.*** A sale or exchange for purposes of this section includes, but is not limited to, a transfer by an individual which by reason of section 1235, relating to the sale or exchange of patents, is considered the sale or exchange of a capital asset. The provisions of section 1253, relating to transfers of franchises, trademarks, and trade names, do not apply in determining whether a transfer is a sale or exchange for purposes of this section.

(d) ***Recovery of adjusted basis.*** For purposes of determining for any taxable year the amount of gains which are subject to tax under section 871(a)(1)(D) or 881(a)(4), payments received by the nonresident alien individual or foreign corporation during such year must be reduced by amounts representing recovery of the taxpayer's adjusted basis of the property or interest which is sold or exchanged. Where the taxpayer receives in the same taxable year payments which, without reference to section 871(e) and this section, are not contingent on the productivity, use, or disposition of the property or interest which is sold or exchanged and payments which are contingent on the productivity, use, or disposition of the property or interest which is sold or exchanged, the taxpayer's unrecovered adjusted basis in the property or interest which is sold or exchanged must be allocated for the taxable year between such payments on the basis of the gross amount of each such type of payments. Where the taxpayer receives in the taxable year only payments which are not so contingent or only payments which are so contingent, the taxpayer's unrecovered basis must be allocated in its entirety to such payments for the taxable year.

(e) ***Source rule.*** In determining whether gains described in section 871(a)(1)(D) or 881(a)(4) and paragraph (b) of this section are received from sources within the United States, such gains shall be treated, for purposes of section 871(a)(1)(D), section 881(a)(4), section 1441(b), and section 1442(a), as rentals or royalties for the use of, or privilege of using, property or an interest in property. See section 861(a)(4), § 1.861-5, and paragraph (a) of § 1.862-1.

(f) ***Illustrations.*** The application of this section may be illustrated by the following examples:

> *Example 1.* (a) A, a nonresident alien individual who uses the cash receipts and disbursements method of accounting and the calendar year as the taxable year, holds a U.S. patent which he developed through his own effort. On December 15, 1967, A enters into an agreement of sale with M Corporation, a domestic corporation, whereby A assigns to M Corporation all of his U.S. rights in the patent. In consideration of the sale, M Corporation is obligated to pay a fixed sum of $60,000,

$20,000 being payable on execution of the contract and the balance payable in four annual installments of $10,000 each. As additional consideration, M Corporation agrees to pay to A a royalty in the amount of 2 percent of the gross sales of the products manufactured by M Corporation under the patent. A is not engaged in trade or business in the United States at any time during 1967 and 1968. His adjusted basis in the patent at the time of sale is $28,800.
(b) In 1967, A receives only the $20,000 paid by M Corporation on the execution of the contract of sale. No gain is realized by A upon receipt of this amount, and his unrecovered adjusted basis in the patent is reduced to $8,800 ($28,800 less $20,000).

(c) In 1968, M Corporation has gross sales of $600,000 from products manufactured under the patent. Consequently, for 1968, M Corporation pays $22,000 to A, $10,000 being the annual installment on the fixed payment and $12,000 being payments under the terms of the royalty provision. A's recognized gain for 1968 is $13,200 ($22,000 reduced by the unrecovered adjusted basis of $8,800). Of the total gain of $13,200, gain in the amount of $6,000 ($10,000− [$8,800 × $10,000/$22,000]) is considered to be from the fixed installment payment and of $7,200 ($12,000−[$8,800 × $12,000/$22,000]) is considered to be from the royalty payment. Since 54.5 percent ($7,200/$13,200) of the gain recognized in 1968 from the sale of the patent is from payments which are contingent on the productivity, use, or disposition of the patent, all of the $13,200 gain recognized in 1968 is treated, for purposes of section 871(a)(1)(D) and section 1441(b), as being from payments which are contingent on the productivity, use, or disposition of the patent.

Example 2. (a) F, a foreign corporation using the calendar year as the taxable year and not engaged in trade or business in the United States, holds a U.S. patent on certain property which it developed through its own efforts. Corporation F uses the cash receipts and disbursements method of accounting. On December 1, 1966, F Corporation enters into an agreement of sale with D Corporation, a domestic corporation, whereby D Corporation purchases the exclusive right and license, and the right to sublicense to others, to manufacture, use, and/or sell certain devices under the patent in the United States during the term of the patent. The agreement grants D Corporation the right to dispose, anywhere in the world, of machinery manufactured in the United States and equipped with such devices. Corporation D is granted the right, at its own expense, to prosecute infringers in its own name or in the name of F Corporation, or both, and to retain any damages recovered.
(b) Corporation D agrees to pay to F Corporation annually $5 for each device manufactured under the patent during the year but in no case less than $5,000 per year. In 1967, D Corporation manufactures 2,500 devices under the patent; and, in 1968, 1,500 devices. Under the terms of the contract D Corporation pays to F Corporation in 1967 $12,500 with respect to production in that year and $7,500 in 1968 with respect to production in that year. F Corporation's basis in the patent at the time of the sale is $17,000.

(c) With respect to the payments received by F Corporation in 1967, no gain is realized by that corporation and its unrecovered adjusted basis in the patent is reduced to $4,500 ($17,000 less $12,500).

(d) With respect to the payments received by F Corporation in 1968, such corporation has recognized gain of $3,000 ($7,500 reduced by unrecovered adjusted basis of $4,500). Of the total gain of $3,000, gain in the amount of $2,000 ($5,000− [$4,500 × $5,000/$7,500]) is considered to be from the fixed installment payment and of $1,000 ($2,500−[$4,500 × $2,500/$7,500]) is considered to be from payments which are contingent on the productivity, use, or disposition of the patent. Since 33.3 percent ($1,000/$3,000) of the gain recognized in 1968 from the sale of the patent is from payments which are contingent on the productivity, use, or disposition of the patent, only $1,000 of the $3,000 gain for that year constitutes gains which, for purposes of section 881(a)(4) and section 1442(a), are from payments which are contingent on the productivity, use, or disposition of the patent. The balance of $2,000 is gain from the sale of property and is not subject to tax under section 881(a).

(g) ***Effective date.*** This section shall apply for taxable years beginning after December 31, 1966, but only in respect of gains from sales or exchanges occurring after October 4, 1966. There are no corresponding rules in this part for taxable years beginning before January 1, 1967.

[T.D. 7332, 39 FR 44224, Dec. 23, 1974]

§ 1.871-12 Determination of tax on treaty income.

(a) ***In general.*** This section applies for purposes of determining under § 1.871-7 or § 1.871-8 the tax of a nonresident alien individual, or under § 1.881-2 or § 1.882-1 the tax of a foreign corporation, which for the taxable year has income described in section 872(a) or 882(b) upon which the tax is limited by an income tax convention to which the United States is a party. Income for such purposes does not include income of any kind which is exempt from tax under the provisions of an income tax convention to which the United States is a party. See §§ 1.872-2(c) and 1.883-1(b). This section shall not apply to a nonresident alien individual who is a bona fide resident of Puerto Rico during the entire taxable year.

(b) ***Definition of treaty and nontreaty income —***

(1) ***In general.***

(i) For purposes of this section the term “treaty income” shall be construed to mean the gross income of a nonresident alien individual or foreign corporation, as the case may be, the tax on which is limited by a tax convention. The term “non-treaty income” shall be construed, for such purposes, to mean the gross income of the nonresident alien individual or foreign corporation other than the treaty income. Neither term includes income of any kind which is exempt from the tax imposed by chapter 1 of the Code.

(ii) In determining either the treaty or nontreaty income the gross income shall be determined in accordance with §§ 1.872-1 and 1.872-2, or with §§ 1.882-3 and 1.883-1, except that in determining the treaty income the exclusion granted by section 116(a) for dividends shall not be taken into account. Thus, for example, treaty income includes the total amount of dividends

paid by a domestic corporation not disqualified by section 116(b) and received from sources within the United States if, in accordance with a tax convention, the dividends are subject to the income tax at a rate not to exceed 15 percent but does not include interest which, in accordance with a tax convention, is exempt from the income tax. In further illustration, neither the treaty nor the nontreaty income includes interest on certain governmental obligations which by reason of section 103 is excluded from gross income, or interest which by reason of a tax convention is exempt from the tax imposed by chapter 1 of the Code.

(iii) For purposes of applying any income tax convention to which the United States is a party, original issue discount which is subject to tax under section 871(a)(1)(C) or 881(a)(3) is to be treated as interest, and gains which are subject to tax under section 871(a)(1)(D) or 881(a)(4) are to be treated as royalty income. This subdivision shall not apply, however, where its application would be contrary to any treaty obligation of the United States.

(2) ***Application of permanent establishment rule of treaties.*** In applying this section with respect to income which is not effectively connected for the taxable year with the conduct of a trade or business in the United States by a nonresident alien individual or foreign corporation, see section 894(b), which provides that with respect to such income the nonresident alien individual or foreign corporation shall be deemed not to have a permanent establishment in the United States at any time during the taxable year for purposes of applying any exemption from, or reduction in rate of, tax provided by any tax convention.

(c) ***Determination of tax —***

(1) ***In general.*** If the gross income of a nonresident alien individual or foreign corporation, as the case may be, consists of both treaty and nontreaty income, the tax liability for the taxable year shall be the sum of the amounts determined in accordance with subparagraphs (2) and (3) of this paragraph. In no case, however, may the tax liability so determined exceed the tax liability (tax reduced by allowable credits) with respect to the taxpayer's entire income, determined in accordance with § 1.871-7 or § 1.871-8, or with § 1.881-2 or § 1.882-1, as though the tax convention had not come into effect and without reference to the provisions of this section. Determinations under this paragraph shall be made without taking into account any credits allowed by sections 31, 32, 39, and 6402, but such credits shall be allowed against the tax liability determined in accordance with this subparagraph.

(2) ***Tax on nontreaty income.*** For purposes of subparagraph (1) of this paragraph, compute a partial tax (determined without the allowance of any credit) upon only the nontreaty income in accordance with § 1.871-7 or § 1.871-8, or with § 1.881-2 or § 1.882-1, whichever applies, as though the tax convention had not come into effect. To the extent allowed by paragraph (d) of § 1.871-8, or paragraph (c) of § 1.882-1, the credits allowed by sections 33, 35, 38, and 40 shall then be allowed, without taking into account any item included in the treaty income, against the tax determined under this subparagraph.

(3) ***Tax on treaty income.*** For purposes of subparagraph (1) of this paragraph, compute a tax upon the gross amount, determined without the allowance of any deduction, of each separate item of treaty income at the reduced rate applicable to that item under the tax convention. No credits shall be allowed against the tax determined under this subparagraph.

(d) ***Illustration.*** The application of this section may be illustrated by the following example:

> *Example.* (a) A nonresident alien individual who is a resident of a foreign country with which the

United States has entered into a tax convention receives during the taxable year 1967 from sources within the United States total gross income of $22,000, consisting of the following items:

Compensation for personal services the tax on which is not limited by the tax convention (effectively connected income under § 1.864-4(c)(6)(ii))	$20,000
Oil royalties the tax on which is limited by the tax convention to 15 percent of the gross amount thereof (effectively connected income by reason of election under § 1.871-10)	2,000
Total gross income	22,000

(b) The taxpayer is engaged in business in the United States during the taxable year but does not have a permanent establishment therein. There are no allowable deductions, other than the deductions allowed by sections 613 and 873(b)(3).
(c) The tax liability for the taxable year is $6,100, determined as follows:

Nontreaty gross income	$20,000
Less: Deduction for personal exemption	600
Nontreaty taxable income	19,400
Tax under section 1 of the Code on nontreaty taxable income ($5,170 plus 45 percent of $1,400)	5,800
Plus: Tax on treaty income (Gross oil royalties) ($2,000 × 15 percent)	300
Total tax (determined as provided in paragraph (c) (2) and (3) of this section)	6,100

(d) If the tax had been determined under paragraph (b)(2) of § 1.871-8 as though the tax liability would have been $6,478, determined as follows and by taking into account the election under § 1.871-10:

Total gross income		$22,000
Less: Deduction under section 613 for percentage depletion ($2000 × $27^1/_2$ percent)	$550	
Deduction for personal exemption	600	1,150
Taxable income	20,850	

Tax under section 1 of the Code on taxable income ($6,070 plus 48 percent of $850)	6,478

(e) ***Effective date.*** This section shall apply for taxable years beginning after December 31, 1966. For corresponding rules applicable to taxable years beginning before January 1, 1967, see 26 CFR 1.871-7(e) (Revised as of January 1, 1971).

[T.D. 7332, 39 FR 44225, Dec. 23, 1974, as amended at T.D. 8657, 61 FR 9338, Mar. 8, 1996]

§ 1.871-13 Taxation of individuals for taxable year of change of U.S. citizenship or residence.

(a) ***In general.***

(1) An individual who is a citizen or resident of the United States at the beginning of the taxable year but a nonresident alien at the end of the taxable year, or a nonresident alien at the beginning of the taxable year but a citizen or resident of the United States at the end of the taxable year, is taxable for such year as though his taxable year were comprised of two separate periods, one consisting of the time during which he is a citizen or resident of the United States and the other consisting of the time during which he is not a citizen or resident of the United States. Thus, for example, the income tax liability of an alien individual under chapter 1 of the Code for the taxable year in which he changes his residence will be computed under two different sets of rules, one relating to resident aliens for the period of residence and the other relating to nonresident aliens for the period of nonresidence. However, in determining the taxable income for such year which is subject to the graduated rate of tax imposed by section 1 or 1201 of the Code, all income for the period of U.S. citizenship or residence must be aggregated with the income for the period of nonresidence which is effectively connected for such year with the conduct of a trade or business in the United States. This section does not apply to alien individuals treated as residents for the entire taxable year under section 6013 (g) or (h). These individuals are taxed under the rules in § 1.1-1(b).

(2) For purposes of this section, an individual is deemed to be a citizen or resident of the United States for the day on which he becomes a citizen or resident of the United States, a nonresident of the United States for the day on which he abandons his U.S. residence, and an alien for the day on which he gives up his U.S. citizenship.

(b) ***Acquisition of U.S. citizenship or residence.*** Income from sources without the United States which is not effectively connected with the conduct by the taxpayer of a trade or business in the United States is not taxable if received by an alien individual while he is not a resident of the United States even though he becomes a citizen or resident of the United States after its receipt and before the close of the taxable year. However, income from sources without the United States which is not effectively connected with the conduct by the taxpayer of a trade or business in the United States is taxable if received by an individual while he is a citizen or resident of the United States, even though he earns the income earlier in the taxable year while he is neither a citizen nor resident of the United States.

(c) ***Abandonment of U.S. citizenship or residence.*** Income from sources without the United States which is not effectively connected with the conduct by the taxpayer of a trade or business in the United States is not taxable if received by an alien individual while he is not a resident of the United States, even though he earns the income earlier in the taxable year while he is a citizen or resident of the United States. However, income from sources without the United States which is not effectively connected with the conduct by the

taxpayer of a trade or business in the United States is taxable if received by an individual while he is a citizen or resident of the United States, even though he abandons his U.S. citizenship or residence after its receipt and before the close of the taxable year.

(d) ***Special rules*** —

(1) ***Method of accounting.*** Paragraphs (b) and (c) of this section may not apply to an individual who for the taxable year uses an accrual method of accounting.

(2) ***Deductions for personal exemptions.*** An alien individual to whom this section applies is entitled to deduct one personal exemption for the taxable year under section 151. In addition, he is entitled to such additional exemptions as are allowed as a deduction under section 151 but only to the extent the amount of such additional exemptions do not exceed his taxable income (determined without regard to any deduction for personal exemptions) for the period in the taxable year during which he is a citizen or resident of the United States. This subparagraph does not apply to the extent it is inconsistent with section 873, and the regulations thereunder, or with the provisions of an income tax convention to which the United States is a party.

(3) ***Exclusion of dividends received.*** In determining the $100 exclusion for the taxable year provided by section 116 in respect of certain dividends, only those dividends for the period during which the individual is neither a citizen nor resident of the United States may be taken into account as are effectively connected for the taxable year with the conduct of a trade or business in the United States. See § 1.116-1(e)(1).

(e) ***Illustrations.*** The application of this section may be illustrated by the following examples:

Example 1. A, a married alien individual who uses the calendar year as the taxable year and the cash receipts and disbursements method of accounting, becomes a resident of the United States on June 1, 1971. During the period of nonresidence from January 1, 1971, to May 31, 1971, inclusive, A receives $15,000 income from sources without the United States which is not effectively connected with the conduct of a trade or business in the United States. During the period of residence from June 1, 1971, to December 31, 1971, A receives wages of $10,000, dividends of $200 from a foreign corporation, and dividends of $75 from a domestic corporation qualifying under section 116(a). Of the amount of wages so received, $2,000 is for services performed by A outside the United States during the period of nonresidence. Total allowable deductions (other than for personal exemptions) amount to $700, none of which are deductible under section 62 in computing adjusted gross income. For 1971 A's spouse has no gross income and is not the dependent of another taxpayer. For 1971, A's taxable income is $8,200, all of which is subject to tax under section 1, as follows:

Wages	$10,000
Dividends from foreign corporation	200
Dividends from domestic corporation ($75 less $75 exclusion)	0
Adjusted gross income	10,200

Less deductions:		
Personal exemptions (2 × $650)	$1,300	
Other allowable deductions	700	2,000
Taxable income		8,200

Example 2. The facts are the same as in example 1 except that during the period of nonresidence from January 1, 1971, to May 31, 1971, A receives from sources within the United States income of $1,850 which is effectively connected with the conduct by A of a business in the United States and $350 in dividends from domestic corporations qualifying under section 116(a). Only $50 of these dividends are effectively connected with the conduct by A of a business in the United States. The assumption is made that there are no allowable deductions connected with such effectively connected income. For 1971, A has taxable income of $10,075 subject to tax under section 1 and $300 income subject to tax under section 871(a)(1)(A), as follows:

Wages		$10,000
Business income		1,850
Dividends from foreign corporation		200
Dividends from domestic corporation ($125 less $100 exclusion)		25
Adjusted gross income		12,075
Less deductions:		
Personal exemptions (2 × $650)	$1,300	
Other allowable deductions	700	2,000
Taxable income subject to tax under section 1		10,075
Income subject to tax under section 871(a)(1)(A)		300

Example 3. A, a married alien individual with three children, uses the calendar year as the taxable year and the cash receipts and disbursements method of accounting. On October 1, 1971, A and his family become residents of the United States. During the period of nonresidence from January 1, 1971, to September 30, 1971, A receives income of $18,000 from sources without the United States which is not effectively connected with the conduct of a trade or business in the United States and of $2,500 from sources within the United States which is effectively connected with the conduct of a business in the United States. It is assumed there are no allowable deductions connected with such effectively connected income. During the period of residence from October 1, 1971, to December 31, 1971, A receives wages of $2,000, of which $400 is for services performed outside the United States during the period of nonresidence. Total allowable deductions (other

than for personal exemptions) amount to $250, none of which are deductible under section 62 in computing adjusted gross income. Neither the spouse nor any of the children has any gross income for 1971, and the spouse is not the dependent of another taxpayer for such year. For 1971, A's taxable income is $1,850, all of which is subject to tax under section 1, as follows:

Wages (residence period)	$2,000	
Less: Allowable deductions	250	
Taxable income (without deduction for personal exemptions) (residence period)		$1,750
Business income (nonresidence period)		2,500
Total taxable income (without deduction for personal exemptions)		4,250
Less deduction for personal exemptions:		
Taxpayer	650	
Wife and 3 children (4 × $650, but not to exceed $1,750)	1,750	2,400
Taxable income		1,850

(f) ***Effective date.*** This section shall apply for taxable years beginning after December 31, 1966. There are no corresponding rules in this part for taxable years beginning before January 1, 1967.

[T.D. 7332, 39 FR 44226, Dec. 23, 1974, as amended by T.D. 7670, 45 FR 6928, Jan. 31, 1980]

§ 1.871-14 Rules relating to repeal of tax on interest of nonresident alien individuals and foreign corporations received from certain portfolio debt investments.

(a) ***General rule.*** No tax shall be imposed under section 871(a)(1)(A), 871(a)(1)(C), 881(a)(1) or 881(a)(3) on any portfolio interest as defined in sections 871(h)(2) and 881(c)(2) received by a foreign person. But see section 871(b) or 882(a) if such interest is effectively connected with the conduct of a trade or business within the United States.

(b) ***Rules concerning obligations in bearer form before March 19, 2012*** —

(1) ***In general.*** Interest (including original issue discount) with respect to an obligation in bearer form is portfolio interest within the meaning of section 871(h)(2)(A) or 881(c)(2)(A) only if it is paid with respect to an obligation issued after July 18, 1984, and issued before March 19, 2012, that is described in section 163(f)(2)(B), as in effect before the amendment by section 502 of the Hiring Incentives to Restore Employment Act of 2010 (HIRE Act), Public Law 111-147, and the regulations under that section and an exception under section 871(h) or 881(c) does not apply. Any obligation that is not in registered form as defined in paragraph (c)(1)(i) of this section is an obligation in bearer form.

(2) ***Coordination with withholding and reporting rules.*** For an exemption from withholding under section 1441 with respect to obligations described in this paragraph (b), see § 1.1441-1(b)(4)(i). See § 1.1471-2 for rules relating to withholding under chapter 4 of the Code that may apply to withholdable payments (as defined in § 1.1471-4(b)(145)) made on or after July 1, 2014, with respect to an agreement or instrument that is not treated as an obligation outstanding before March 19, 2012. For

purposes of the preceding sentence, the terms *obligation* and *outstanding* are described in § 1.1471-2(b)). See also § 1.1471-4(d)(6) for the reporting requirements of participating foreign financial institutions (as defined in § 1.1471-1(b)(91)) with respect to accounts held by recalcitrant account holders (as defined in § 1.1471-5(g)). For rules relating to an exemption from Form 1099 reporting and backup withholding under section 3406, see section 6049 and § 1.6049-5(b)(8) for the payment of interest and § 1.6045-1(g)(1)(ii) for the redemption, retirement, or sale of an obligation in bearer form.

(c) ***Rules concerning obligations in registered form*** —

(1) ***In general*** —

(i) ***Obligation in registered form.*** For purposes of this section, an obligation is in registered form only as provided in this paragraph (c)(1)(i). The conditions for an obligation to be considered in registered form are identical to the conditions described in § 5f.103-1 of this chapter. Therefore, an obligation that would be an obligation in registered form except for the fact that it can be converted at any time in the future into an obligation that is not in registered form shall not be an obligation in registered form. An obligation that is not in registered form by reason of the preceding sentence may nevertheless be in registered form, but only after the possibility of conversion is terminated. An obligation that is not in registered form and can be converted into an obligation that would meet the requirements of this paragraph (c)(1)(i) for being in registered form shall be considered in registered form only after the conversion is effected. For purposes of this section, an obligation is convertible if the obligation can be transferred by any means not described in § 5f.103-1(c) of this chapter. An obligation is treated as an obligation in registered form if—

(A) The obligation is registered as to both principal and any stated interest with the issuer (or its agent) and transfer of the obligation may be effected only by surrender of the old instrument, and either the reissuance by the issuer of the old instrument to the new holder or the issuance by the issuer of a new instrument to the new holder;

(B) The right to the principal of, and stated interest on, the obligation may be transferred only through a book entry system maintained by the issuer (or its agent) described in this paragraph (c)(1)(i)(B). An obligation shall be considered transferable through a book entry system if the ownership of an interest in the obligation, is required to be reflected in a book entry, whether or not physical securities are issued. A book entry is a record of ownership that identifies the owner of an interest in the obligation; or

(C) It is registered as to both principal and any stated interest with the issuer (or its agent) and may be transferred by way of either of the methods described in paragraph (c)(1)(i) (A) or (B) of this section.

(ii) ***Requirements for portfolio interest qualification in the case of an obligation in registered form.*** Interest (including original issue discount) received on an obligation that is in registered form qualifies as portfolio interest only if—

(A) The interest is paid on an obligation issued after July 18, 1984;

(B) The interest would be subject to tax under section 871(a)(1)(A), 871(a)(1)(C), 881(a)(1) or 881(a)(3) but for section 871(h) or 881(c);

(C) A United States (U.S.) person otherwise required to deduct and withhold tax under chapter 3 of the Internal Revenue Code (Code) receives a statement that meets the requirements of section 871(h)(5) that the beneficial owner of the obligation is not a U.S. person; and

(D) An exception under section 871(h) or 881(c) does not apply.

(2) ***Required statement.*** For purposes of paragraph (c)(1)(ii)(C) of this section, a U.S. person will be considered to have received a statement that meets the requirements of section 871(h)(5) if either it complies with one of the procedures described in this paragraph (c)(2) and does not have actual knowledge or reason to know that the beneficial owner is a U.S. person or it complies with the procedures described in paragraph (d) or (e) of this section (to the extent applicable).

(i) The U.S. person (or its authorized agent described in § 1.1441-7(c)(2)) can reliably associate the payment with documentation upon which it can rely to treat the payment as made to a foreign beneficial owner in accordance with § 1.1441-1(e)(1)(ii). See § 1.1441-1(b)(2)(vii) for rules regarding reliable association with documentation.

(ii) The U.S. person (or its authorized agent described in § 1.1441-7(c)(2)) can reliably associate the payment with a withholding certificate described in § 1.1441-5(c)(2)(iv) from a person claiming to be a withholding foreign partnership or § 1.1441-5(e)(v) for a person claiming to be a withholding foreign trust.

(iii) The U.S. person (or its authorized agent described in § 1.1441-7(c)(2)) can reliably associate the payment with a withholding certificate described in § 1.1441-1(e)(3)(ii) from a person representing to be a qualified intermediary that has assumed primary withholding responsibility for the payment in accordance with § 1.1441-1(e)(5)(iv) or a qualified intermediary that has provided a withholding statement that meets the requirements of § 1.1441-1(e)(5)(v)(C) or that includes the payment in a withholding rate pool for payments excepted from withholding.

(iv) The U.S. person (or its authorized agent described in § 1.1441-7(c)(2)) can reliably associate the payment with a withholding certificate described in § 1.1441-1(e)(3)(v) from a person claiming to be a U.S. branch of a foreign bank or of a foreign insurance company that is described in § 1.1441-1(b)(2)(iv)(A) or a U.S. branch designated in accordance with § 1.1441-1(b)(2)(iv)(E).

(v) The U.S. person receives a statement from a securities clearing organization, a bank, or another financial institution that holds customers' securities in the ordinary course of its trade or business. In such case the statement must be signed under penalties of perjury by an authorized representative of the financial institution and must state that the institution has received from the beneficial owner a withholding certificate described in § 1.1441-1(e)(2)(i) (a Form W-8 or an acceptable substitute form as defined § 1.1441-1(e)(4)(vi)) or that it has received from another financial institution a similar statement that it, or another financial institution acting on behalf of the beneficial owner, has received the Form W-8 from the beneficial owner. In the case of multiple financial institutions between the beneficial owner and the U.S. person, this statement must be given by each financial institution to the one above it in the chain. No particular form is required for the statement provided by the financial institutions. However, the statement must provide the name and address of the beneficial owner, and a copy of the Form W-8 provided by the beneficial owner must be attached. The statement is subject to the same rules described in § 1.1441-1(e)(4) that apply to intermediary Forms W-8 described in § 1.1441-1(e)(3)(iii). If the information on the Form W-8 changes, the beneficial owner must so notify the financial institution acting on its behalf within 30 days of such changes, and the

financial institution must promptly so inform the U.S. person. This notice also must be given if the financial institution has actual knowledge that the information has changed but has not been so informed by the beneficial owner. In the case of multiple financial institutions between the beneficial owner and the U.S. person, this notice must be given by each financial institution to the institution above it in the chain.

(vi) The U.S. person complies with procedures that the U.S. competent authority may agree to with the competent authority of a country with which the United States has an income tax treaty in effect.

(3) *Time for providing certificate or documentary evidence* —

(i) ***General rule.*** Interest on a registered obligation shall qualify as portfolio interest if the withholding certificate or documentary evidence that must be provided is furnished before expiration of the beneficial owner's period of limitation for claiming a refund of tax with respect to such interest. See, however, § 1.1441-1(b)(7) for consequences to a withholding agent that makes a payment without withholding even though it cannot reliably associate the payment with the documentation prior to the payment. If a withholding agent withholds an amount under chapter 3 of the Code because it cannot reliably associate the payment with the documentation for the beneficial owner on the date of payment, the beneficial owner may nevertheless claim the benefit of an exemption from tax under this section by claiming a refund or credit for the amount withheld based upon the procedures described in §§ 1.1464-1 and 301.6402-3(e) of this chapter. See §§ 1.1474-5 and 301.6402-3(e) of this chapter for the allowance and requirements for a refund with respect to an amount (including a payment of interest) that was withheld upon under chapter 4 of the Code. In the alternative, adjustments to any amount of overwithheld tax may be made under the procedures described in § 1.1461-2(a) for a payment withheld upon under chapter 3 of the Code or in § 1.1474-2 for a payment withheld upon under chapter 4 of the Code.

(ii) ***Example.*** The following example illustrates the rules of this paragraph (c)(3) and their coordination with § 1.1441-1(b)(7):

Example. A is a withholding agent who, on October 12, 2001, pays interest on a registered obligation to B, a foreign corporation. B is a calendar year taxpayer, engaged in the conduct of a trade or business in the United States, and is, therefore, required to file an annual income tax return on Form 1120F. The interest, however, is not effectively connected with B's U.S. trade or business. On the date of payment, B has not furnished, and A cannot associate the payment with documentation for B. However, A does not withhold under section 1442, even though, under § 1.1441-1(b)(3)(iii)(A), A should presume that B is a foreign person, because A's communications with B are mailed to an address in a foreign country. Assuming that B files a return for its taxable year ending December 31, 2001, and that its statute of limitations period with regard to that year expires on June 15, 2005, the interest paid on October 12, 2001, may qualify as portfolio interest only if B provides appropriate documentation to A on or before June 15, 2005. If B does not provide the documentation on or before June 15, 2005, and does not pay the tax, A is liable for the tax under section 1463, even if B provides the documentation to A after June 15, 2005. Therefore, the provisions in § 1.1441-1(b)(7), regarding late-received documentation would not help A avoid liability for tax under section 1463 even if the documentation is furnished within the statute of limitations period of A. This is because, in a case involving interest, the documentation received within the limitations period of the

beneficial owner serves as a condition for the interest to qualify as portfolio interest. When documentation is received after the expiration of the beneficial owner's limitations period, the interest can no longer qualify as portfolio interest. On the other hand, A could rely on documentation that it receives after the expiration of B's limitations period to establish B's right to a reduced rate of withholding under an applicable income tax treaty (since, in such a case, a claim of treaty benefits is not conditioned upon providing documentation prior to the expiration of the beneficial owner's limitations period).

(4) ***Coordination with withholding and reporting rules.*** For an exemption from withholding under section 1441 with respect to obligations described in this paragraph (c)(4), see § 1.1441-1(b)(4)(i). For rules applicable to withholding certificates, see § 1.1441-1(e)(4). For rules regarding documentary evidence, see § 1.6049-5(c)(1). For application of presumptions when the U.S. person cannot reliably associate the payment with documentation, see § 1.1441-1(b)(3). For standards of knowledge applicable to withholding agents, see § 1.1441-7(b). For rules relating to reporting on Forms 1042 and 1042-S, see § 1.1461-1(b) and (c). For rules relating to an exemption from Form 1099 reporting and backup withholding under section 3406, see section 6049 and § 1.6049-5(b)(8) for the payment of interest and § 1.6045-1(g)(1)(i) for the redemption, retirement, or sale of an obligation in registered form. For rules relating to withholding under sections 1471 and 1472 that may apply notwithstanding the exemption for payments of portfolio interest under section 1441, see §§ 1.1471-2(a), 1.1471-4(b), and 1.1472-1(b).

(d) ***Application of repeal of 30-percent withholding to pass-through certificates*** —

(1) ***In general.*** Interest received on a pass-through certificate qualifies as portfolio interest under section 871(h)(2) or 881(c)(2) if the interest satisfies the conditions described in paragraph (b)(1), (c)(1), or (e) of this section without regard to whether any obligation held by the fund or trust to which the pass-through certificate relates is described in paragraph (b)(1), (c)(1)(ii), or (e) of this section. This paragraph (d)(1) applies only to payments made to the holder of the pass-through certificate from the trustee of the pass-through trust and does not apply to payments made to the trustee of the pass-through trust. For example, a mortgage pass-through certificate in bearer form must meet the requirements set forth in paragraph (b)(1) of this section, but the obligations held by the fund or trust to which the mortgage pass-through certificate relates need not meet the requirements set forth in paragraph (b)(1), (c)(1)(ii), or (e) of this section. However, for purposes of paragraphs (b)(1), (c)(1)(ii), and (e) of this section and section 127 of the Tax Reform Act of 1984, a pass-through certificate will be considered as issued after July 18, 1984, only to the extent that the obligations held by the fund or trust to which the pass-through certificate relates are issued after July 18, 1984.

(2) ***Interest in REMICs.*** Interest received on a regular or residual interest in a REMIC qualifies as portfolio interest under section 871(h)(2) or 881(c)(2) if the interest satisfies the conditions described in paragraph (b)(1), (c)(1)(ii), or (e) of this section. For purposes of paragraph (b)(1), (c)(1)(ii), or (e) of this section, interest on a regular interest in a REMIC is not considered interest on any mortgage obligations held by the REMIC. The foregoing rule, however, applies only to payments made to the holder of the regular interest from the REMIC and does not apply to payments made to the REMIC. For purposes of paragraph (b)(1), (c)(1)(ii), or (e) of this section, interest on a residual interest in a REMIC is considered to be interest on or with respect to the obligations held by the REMIC, and not on or with respect to the residual interest. For purposes of paragraphs (b)(1), (c)(1)(ii), and (e) of this section and section 127 of the Tax Reform Act of 1984, a residual interest in a REMIC will be considered as issued after July 18, 1984, only to the extent that the obligations held by the REMIC

are issued after July 18, 1984, but a regular interest in a REMIC will be considered as issued after July 18, 1984, if the regular interest was issued after July 18, 1984, without regard to the date on which the mortgage obligations held by the REMIC were issued.

(3) ***Date of issuance.*** In general, a mortgage pass-through certificate will be considered to have been issued after July 18, 1984, if all of the mortgages held by the fund or trust were issued after July 18, 1984. If some of the mortgages held by the fund or trust were issued before July 19, 1984, then the portion of any interest payment which represents interest on those mortgages shall not be considered to be portfolio interest. The preceding sentence shall not apply, however, if all of the following conditions are satisfied:

(i) The mortgage pass-through certificate is issued after December 31, 1986;

(ii) Payment of the mortgage pass-through certificate is guaranteed by, and a guarantee commitment has been issued by, an entity that is independent from the issuer of the underlying obligation;

(iii) The guarantee commitment with respect to the mortgage pass-through certificate cannot have been issued more than 14 months prior to the date on which the mortgage pass-through certificate is issued; and

(iv) The fund or trust to which the mortgage pass-through certificate relates cannot contain mortgage obligations on which the first scheduled monthly payment of principal and interest was made more than twelve months before the date on which the guarantee commitment was made.

(e) ***Foreign-targeted registered obligations*** —

(1) ***General rule.*** The statement described in paragraph (c)(1)(ii) of this section is not required with respect to interest paid on an obligation issued before January 1, 2016, that is a registered obligation targeting foreign markets in accordance with the provisions of paragraph (e)(2) of this section if the interest is paid by a U.S. person, a withholding foreign partnership, or a U.S. branch described in § 1.1441-1(b)(2)(iv)(A) or (E) to a registered owner at an address outside the United States, provided that the registered owner is a financial institution described in section 871(h)(5)(B). In that case, the U.S. person otherwise required to deduct and withhold tax may treat the interest as portfolio interest if it does not have actual knowledge that the beneficial owner is a United States person and if it receives the certificate described in paragraph (e)(3)(i) of this section from a financial institution or member of a clearing organization, which member is the beneficial owner of the obligation, or the documentary evidence or statement described in paragraph (e)(3)(ii) of this section from the beneficial owner, in accordance with the procedures described in paragraph (e)(4) of this section.

(2) ***Definition of a foreign-targeted registered obligation.*** An obligation is considered to be targeted to foreign markets for purposes of paragraph (e)(1) of this section if it is sold (or resold in connection with its original issuance) only to foreign persons (or to foreign branches of United States financial institutions described in section 871(h)(5)(B)) in accordance with procedures similar to those prescribed in § 1.163-5(c)(2)(i) (A), (B), or (D). However, the provisions of that section that require an obligation to be offered for sale or resale in connection with its original issuance only outside the United States do not apply with respect to registered obligations offered for sale through a public auction. Similarly, the provisions of that section that require delivery to be made outside the United States do not apply to registered obligations offered for sale through a public auction if the obligations are considered to be in registered form by virtue of the fact that they may be transferred

only through a book entry system. The obligation, if evidenced by a physical document other than a confirmation receipt, must contain on its face a legend indicating that it has been sold (or resold in connection with its original issuance) in accordance with those procedures.

(3) ***Documentation.*** A certificate described in paragraph (e)(3)(i) of this section is required if the United States person otherwise required to deduct and withhold tax (the withholding agent) pays interest to a financial institution described in section 871(h)(5)(B) or to a member of a clearing organization, which member is the beneficial owner of the obligation. The documentation described in paragraph (e)(3)(ii) of this section is required if a withholding agent pays interest to a beneficial owner that is neither a financial institution described in section 871(h)(5)(B) nor a member of a clearing organization.

(i) ***Interest paid to a financial institution or a member of a clearing organization*** —

(A) ***Requirement of a certificate.***

(*1*) If the withholding agent pays interest to a financial institution described in section 871(h)(5)(B) or to a member of a clearing organization, which member is the beneficial owner of the obligation, the withholding agent must receive a certificate which states that, beginning at the time the last preceding certificate under this paragraph (e)(3)(i) was provided and while the financial institution or clearing organization member has held the obligation, with respect to each foreign-targeted registered obligation which has been held by the person providing the certificate at any time since the provision of such last preceding certificate, either—

(*i*) The beneficial owner of the obligation has not been a United States person on each interest payment date; or

(*ii*) If the person providing the certificate is a financial institution which is holding or has held an obligation on behalf of the beneficial owner, the beneficial owner of the obligation has been a United States person on one or more interest payment dates (identifying such date or dates), and the person making the certification has forwarded or will forward the appropriate United States beneficial ownership notification to the withholding agent in accordance with the provisions of paragraph (e)(4) of this section.

(*2*) The person providing the certificate need not state the foregoing where no previous certificate has been required to be provided by the payee to the withholding agent under this paragraph (e)(3)(i).

(B) ***Additional representations.*** Whether or not a previous certificate has been required to be provided with respect to the obligation, each certificate furnished pursuant to the provisions in this paragraph (e)(3)(i) must further state that, for each foreign-targeted registered obligation held and every other such obligation to be acquired and held by the person providing the certificate during the period beginning on the date of the certificate and ending on the date the next certificate is required to be provided, the beneficial owner of the obligation will not be a United States person on each interest payment date while the financial institution or clearing organization member holds the obligation and that, if the person providing the certificate is a financial institution which is holding or will be holding the obligation on behalf of a beneficial owner, such person will provide a United States beneficial ownership notification to the withholding agent (and a clearing organization that is not a withholding agent where a member organization is required by

this paragraph (e)(3) to furnish the clearing organization with a statement) in accordance with paragraph (e)(4) of this section in the event such certificate (or statement in the case of a statement provided by a member organization to a clearing organization that is not a withholding agent) is or becomes untrue with respect to any obligation. A clearing organization is an entity which is in the business of holding obligations for member organizations and transferring obligations among such members by credit or debit to the account of a member without the necessity of physical delivery of the obligation.

(C) ***Obligation must be identified.*** The certificate described in paragraph (e)(3)(ii)(A) of this section must identify the obligation or obligations with respect to which it is given, except where the certification is given with respect to an obligation that has not been acquired at the time the certification is made. An obligation is identified if it or the larger issuance of which it is a part is described on a list (e.g., $5 million principal amount of 12% debentures of ABC Savings and Loan Association due February 25, 1995, $3 million principal amount of 10% U.S. Treasury notes due May 28, 1990) of all registered obligations targeted to foreign markets held by or on behalf of the person providing the certificate and the list is attached to, and incorporated by reference into, the certificate. The certificate must identify and provide the address of the person furnishing the certificate.

(D) ***Payment to a depository of a clearing organization.*** If the withholding agent pays interest to a depository of a clearing organization, then the clearing organization must provide the certificate described in this paragraph (e)(3)(i) to the withholding agent. Any certificate that is provided by a clearing organization must state that the clearing organization has received a statement from each member which complies with the provisions of this paragraph (e)(3)(i) and of paragraph (e)(4) of this section (as if the clearing organization were the withholding agent and regardless of whether the member is a financial institution described in section 871(h)(5)(B)).

(E) ***Statement in lieu of Form W-8.*** Subject to the requirements set out in paragraph (e)(4) of this section, a certificate or statement in the form described in this paragraph (e)(3)(i), in conjunction with the next annual certificate or statement, will serve as the certificate that may be provided in lieu of a Form W-8 with respect to interest on all foreign-targeted registered obligations held by the person making the certification or statement and which is paid to such person within the period beginning on the date of the certificate and ending on the date the next certificate is required to be provided.

(F) ***Electronic transmission.*** The certificate described in this paragraph (e)(3)(i) may be provided electronically under the terms and conditions of § 1.163-5(c)(2)(i)(D)(*3*)(*ii*).

(ii) ***Payment to a person other than a financial institution or member of a clearing organization.*** If the withholding agent pays interest to the beneficial owner of an obligation that is neither a financial institution described in section 871(h)(5)(B) nor a member of a clearing organization, then such owner must provide the withholding agent a statement described in paragraph (c)(1)(ii)(C) of this section.

(4) ***Applicable procedures regarding documentation —***

(i) ***Procedures applicable to certificates required under paragraph (e)(3)(i) of this section —***

(A) ***Time for providing certificate.*** Where no previous certificate for foreign-targeted registered obligations has been provided to the withholding agent by the person providing the certificate under paragraph (e)(3)(i) of this section, such certificate must be provided

within the period beginning 90 days prior to the first interest payment date on which the person holds a foreign-targeted registered obligation. The withholding agent may, in its discretion, withhold under section 1441(a), 1442(a), or 1443 if the certificate is not received by the date 30 days prior to the interest payment. Thereafter the certificate must be filed within the period beginning on January 15 and ending January 31 of each year. If a certificate provided pursuant to the first sentence of this paragraph (e)(4)(i)(A) is provided during the period beginning on January 15 and ending on January 31 of any year, then no other certificate need be provided during such period in such year.

(B) ***Change of status notification on Form W-9.*** If, on any interest payment date after the obligation was acquired by the person making the certification, the beneficial owner of the obligation is a U.S. person, then the person to whom the withholding agent pays interest must furnish the withholding agent with a U.S. beneficial ownership notification within 30 days after such interest payment date. A U.S. beneficial ownership notification must include a statement that the beneficial owner of the obligation has been a U.S. person on an interest payment date (identifying such date), that such owner has provided to the person providing the notification a Form W-9 (or a substitute form that is substantially similar to Form W-9 and completed under penalties of perjury), and that the person providing the notification has been and will be complying with the information reporting requirements of section 6049, if applicable.

(C) ***Alternative notification statement.*** Where the person providing the notification described in paragraph (e)(4)(i)(B) of this section is neither a controlled foreign corporation within the meaning of section 957(a), nor a foreign corporation 50-percent or more of the gross income of which from all sources for the three-year period ending with the close of the taxable year preceding the date of the statement was effectively connected with the conduct of trade or business in the United States, such person must attach to the notification a copy of the Form W-9 (or substitute form that is substantially similar to Form W-9 and completed under penalties of perjury) provided by the beneficial owner. When a person that provides the U.S. beneficial ownership notification does not attach to it a copy of such Form W-9 (or substitute form that is substantially similar to Form W-9 and completed under penalties of perjury), such person must state that it is either a controlled foreign corporation within the meaning of section 957(a), or a foreign corporation 50-percent or more of the gross income of which from all sources for the three-year period ending with the close of its taxable year preceding the date of the statement was effectively connected with the conduct of a trade or business in the United States. A withholding agent that receives a Form W-9 (or a substitute form that is substantially similar to Form W-9 and completed under penalties of perjury) must send a copy of such form to the IRS, at such address as the IRS shall indicate, within 30 days after receiving it and must attach a statement that the Form W-9 or substitute form was provided pursuant to this paragraph (e)(4) with respect to a U.S. person that has owned a foreign-targeted registered obligation on one or more interest payment dates.

(D) ***Failure to provide notification.*** If either a Form W-9 (or a substitute form that is substantially similar to a Form W-9 and completed under penalties of perjury) or the statement described in paragraph (e)(4)(i)(C) of this section is not attached to the U.S. beneficial ownership notification provided pursuant to paragraph (e)(4)(i)(B) of this section, the withholding agent is required to withhold under section 1441, 1442, or 1443 on a payment of interest made after the withholding agent has received the notification

unless such form or statement (or a statement that the beneficial owner of the obligation is no longer a U.S. person) is received before the interest payment date from the person who provided the notification (or transferee). If, during the period beginning on the next January 15 and ending on the next January 31, such person certifies as set out in paragraph (e)(3)(i) of this section (subject to paragraph (e)(3)(i)(A)(2) of this section) then the withholding agent is not required to withhold during the year following such certification (unless such person again provides a U.S. beneficial ownership notification without attaching a Form W-9 or substitute form that is substantially similar to Form W-9 and completed under penalties of perjury or the statement described in paragraph (e)(4)(i)(C) of this section).

(E) ***Procedures for clearing organizations.*** Within the period beginning 10 days before the end of the calendar quarter and ending on the last day of each calendar quarter, any clearing organization (including a clearing organization that is a withholding agent) relying on annual certificates or statements from its member organizations, as set forth in paragraph (e)(3)(i) of this section, must send each member organization having submitted such certificate or statement a reminder that the member organization must give the clearing organization a U.S. beneficial ownership notification in the circumstances described in paragraph (e)(4)(i)(B) of this section.

(F) ***Retention of certificates.*** The certificate described in paragraph (e)(3)(i) of this section must be retained in the records of the withholding agent for four years from the end of the calendar year in which it was received. The statement described in paragraph (e)(3)(i) of this section that is received by a clearing organization from a member organization must be retained in the records of the clearing organization for four years from the end of the calendar year in which it was received.

(G) ***No reporting requirement.*** The withholding agent who receives the certificate described in paragraph (e)(3)(i) of this section is not required to file Form 1042S to report payments under § 1.1461-1 (b) or (c) of interest that are made with respect to foreign-targeted registered obligations held by the person providing the certificate and are made within the period beginning with the certificate date and ending on the last date for filing the next certificate.

(ii) ***Procedures regarding certificates required under paragraph (e)(3)(ii) of this section*** —

(A) ***Time for providing certificate.*** The statement described in paragraph (e)(3)(ii) of this section must be provided to the withholding agent within the period beginning 90 days prior to and ending on the first interest payment date on which the withholding agent pays interest to the beneficial owner. The withholding agent may, in its discretion, withhold under section 1441(a), 1442(a), or 1443 if the statement is not received by the date 30 days prior to the interest payment. The beneficial owner must confirm to the withholding agent the continuing validity of the documentary evidence within the period beginning 90 days prior to the first day of the third calendar year following the provision of such evidence and during the same period every three years thereafter while the owner still owns the obligation. The withholding agent who receives the statement described in paragraph (e)(3)(ii) of this section is not required to report payments of interest under § 1.1461-1(b) or (c) if the payments are made with respect to foreign-targeted registered obligations held by the person who provides the statement and are made within the period beginning with the date on which the statement is provided and ending on the last date for

confirming the validity of the statement. The statement received for purposes of paragraph (e)(3)(ii) of this section is subject to the applicable procedures set forth in § 1.1441-1(e)(4).

(B) ***Change of status notification on Form W-9.*** If on any interest payment date after the obligation was acquired by the person providing the statement described in paragraph (e)(3)(ii) of this section, the beneficial owner of the obligation is a U.S. person, then the beneficial owner must so inform the withholding agent within 30 days after such interest payment date and must provide a Form W-9 (or substitute form that is substantially similar completed under penalties of perjury) to the withholding agent. However, the beneficial owner is not required to provide another Form W-9 (or substitute form that is substantially similar and completed under penalties of perjury) if such person has already provided it to the withholding agent within the same calendar year.

(iii) ***Disqualification of documentation.*** In accordance with the provisions of section 871(h)(4), the Secretary may make a determination in appropriate cases that a certificate or statement by any person, or class of persons, does not satisfy the requirements of that section. Should that determination be made, all payments of interest that otherwise qualify as portfolio interest to that person would become subject to 30-percent withholding under section 1441(a), 1442(a), or 1443.

(5) ***Information reporting.*** See § 1.6049-5(b)(7) for special information reporting rules applicable to interest on foreign-targeted registered obligations. See § 1.6045-1(g)(1)(ii) for information reporting rules applicable to the redemption, retirement, or sale of foreign-targeted registered obligations.

(f) ***Securities lending transactions.*** For applicable rules regarding substitute interest payments received pursuant to a securities lending transaction or a sale-repurchase transaction, see §§ 1.871-7(b)(2) and 1.881-2(b)(2).

(g) ***Portfolio interest not to include interest received by 10-percent shareholders*** —

(1) ***In general.*** For purposes of section 871(h), the term *portfolio interest* shall not include any interest received by a 10-percent shareholder.

(2) ***Ten-percent shareholder*** —

(i) ***In general.*** The term *10-percent shareholder* means—

(A) In the case of an obligation issued by a corporation, any person who owns 10-percent or more of the total combined voting power of all classes of stock of such corporation entitled to vote; or

(B) In the case of an obligation issued by a partnership, any person who owns 10-percent or more of the capital or profits interest in such partnership.

(ii) ***Ownership*** —

(A) ***Stock ownership.*** For purposes of paragraph (g)(2)(i)(A) of this section, *stock owned* means stock directly or indirectly owned and stock owned by reason of the attribution rules of section 318(a), as modified by section 871(h)(3)(C).

(B) ***Ownership of partnership interest.*** For purposes of paragraph (g)(2)(i)(B) of this section, rules similar to the rules in paragraph (g)(2)(ii)(A) of this section shall be applied in determining the ownership of a capital or profits interest in a partnership.

(3) ***Application of 10-percent shareholder test to partners receiving interest through a partnership*** —

(i) ***Partner level test.*** Whether interest paid to a partnership and included in the distributive share of a partner that is a nonresident alien individual or foreign corporation is received by a 10 percent shareholder shall be determined by applying the rules of this paragraph (g) only at the partner level.

(ii) ***Time at which 10-percent shareholder test is applied.*** The determination of whether a nonresident alien individual or foreign corporation that is a partner in a partnership is a 10-percent shareholder under the rules of section 871(h)(3), section 881(c)(3), and this paragraph (g) with respect to interest paid to such partnership shall be made at the time that the withholding agent, absent the provisions of section 871(h), 881(c) and the rules of this paragraph, would otherwise be required to withhold under sections 1441 and 1442 with respect to such interest. For example, in the case of U.S. source interest paid by a domestic corporation to a domestic partnership or withholding foreign partnership (as defined in § 1.1441-5(c)(2)), the 10-percent shareholder test is applied when any distributions that include the interest are made to a foreign partner and, to the extent that a foreign partner's distributive share of the interest has not actually been distributed, on the earlier of the date that the statement required under section 6031(b) is mailed or otherwise provided to such partner, or the due date for furnishing such statement. See § 1.1441-5(b)(2) and (c)(2)(iii).

(4) ***Application of 10-percent shareholder test to interest paid to a simple trust or grantor trust.*** Whether interest paid to a simple trust or grantor trust and distributed to or included in the gross income of a nonresident alien individual or foreign corporation that is a beneficiary or owner of such trust, as the case may be, is received by a 10-percent shareholder shall be determined by applying the rules of this paragraph (g) only at the beneficiary or owner level. The 10-percent shareholder test is applied with respect to a nonresident alien individual or foreign corporation that is a beneficiary of a simple trust or an owner of a grantor trust at the time that a withholding agent, absent any exceptions, would otherwise be required to withhold under sections 1441 and 1442 with respect to such interest.

(h) ***Portfolio interest not to include certain contingent interest*** —

(1) ***Dividend equivalents.*** Contingent interest does not qualify as portfolio interest to the extent that the interest is a dividend equivalent within the meaning of section 871(m).

(2) ***Amount of dividend equivalent that is not portfolio interest.*** The amount that does not qualify as portfolio interest because it is a dividend equivalent equals the amount of the dividend equivalent determined pursuant to § 1.871-15(j). Unless otherwise excluded pursuant to section 871(h), any other interest paid on an obligation that is not a dividend equivalent may qualify as portfolio interest.

(i) ***Definitions.*** For purposes of this section, the terms *U.S. person* and *foreign person* have the meaning set forth in § 1.1441-1(c)(2), the term *beneficial owner* has the meaning set forth in § 1.1441-1(c)(6), the term *withholding agent* has the meaning set forth in § 1.1441-7(a); the term *payee* has the meaning set forth in § 1.1441-1(b)(2); and the term *payment* has the meaning set forth in § 1.1441-2(e).

(j) ***Effective/applicability date*** —

(1) ***In general.*** Except as otherwise provided in paragraph (j)(2) and (3) of this section, this section applies to payments of interest made on or after January 6, 2017. (For the rules that apply after June 30, 2014, and before January 6, 2017, see this section as in effect and contained in 26 CFR part 1, as revised April 1, 2016. For payments of interest made after December 31, 2000, and before July 1, 2014, see this section as in effect and contained in 26 CFR part 1, as revised April 1, 2013.)

(2) ***Portfolio interest not to include interest received by 10-percent shareholders.*** Paragraph (g) applies to interest paid after April 12, 2007. Taxpayers may choose to apply the rules of paragraph (g) to interest paid in any taxable year not closed by the period of limitations as of April 12, 2007, provided they do so consistently for all relevant partnerships during such years.

(3) ***Portfolio interest not to include certain contingent interest.*** The rules of paragraph (h) of this section apply beginning September 18, 2015.

[T.D. 8734, 62 FR 53416, Oct. 14, 1997, as amended by T.D. 8804, 63 FR 72184, 72187, Dec. 31, 1998; T.D. 8856, 64 FR 73409, 73412, Dec. 30, 1999; T.D. 9323, 72 FR 18387, Apr. 12, 2007; 72 FR 26543, May 10, 2007. T.D. 9658, 79 FR 12746, Mar. 6, 2013; 79 FR 37182, July 1, 2014; T.D. 9734, 80 FR 56879, Sept. 18, 2015; T.D. 9808, 82 FR 2055, Jan. 6, 2017]

§ 1.871-15 Treatment of dividend equivalents.

(a) ***Definitions.*** For purposes of this section, the following terms have the meanings described in this paragraph (a).

(1) ***Broker.*** A *broker* is a broker within the meaning provided in section 6045(c), except that the term does not include any corporation that is a broker solely because it regularly redeems its own shares.

(2) ***Dealer.*** A *dealer* is a dealer in securities within the meaning of section 475(c)(1).

(3) ***Dividend.*** A *dividend* is a dividend as described in section 316 (even if there is no actual distribution of cash or property).

(4) ***Equity-linked instrument.*** An *equity-linked instrument* (*ELI*) is a financial transaction, other than a securities lending or sale-repurchase transaction or an NPC, that references the value of one or more underlying securities. For example, a futures contract, forward contract, option, debt instrument, or other contractual arrangement that references the value of one or more underlying securities is an ELI.

(5) ***Initial hedge.*** An *initial hedge* is the number of underlying security shares that a short party would need to fully hedge an NPC or ELI (whether the NPC or ELI is a complex contract or a simple contract benchmark (within the meaning of paragraph (h)(2) of this section), as appropriate) with respect to an underlying security at the calculation time for the NPC or ELI, even if the short party does not in fact fully hedge the NPC or ELI.

(6) ***Issue.*** An NPC or ELI is treated as issued at inception, original issuance, or at the time of an issuance as a result of a deemed exchange pursuant to section 1001.

(7) ***Notional principal contract.*** A *notional principal contract* (*NPC*) is a notional principal contract as defined in § 1.446-3(c).

(8) ***Option.*** An *option* includes an option embedded in any debt instrument, forward contract, NPC, or other potential section 871(m) transaction.

(9) ***Parties to the transaction*** —

(i) ***Long party.*** A *long party* is the party to a potential section 871(m) transaction with respect to an underlying security that would be entitled to receive a payment of a dividend equivalent (within the meaning of paragraph (i) of this section) described in paragraph (c) of this section.

(ii) ***Short party.*** A *short party* is the party to a potential section 871(m) transaction with respect to an underlying security that would be obligated to make a payment of a dividend equivalent (within the meaning of paragraph (i) of this section) described in paragraph (c) of this section.

(iii) ***Party to the transaction.*** A *party to the transaction* is any person that is a long party or a short party to a potential section 871(m) transaction, any agent acting on behalf of the long party or short party, or any person acting as an intermediary with respect to the potential section 871(m) transaction.

(iv) ***Party to the transaction that is both a long party and a short party*** —

(A) ***In general.*** If a potential section 871(m) transaction references more than one underlying security, the long party and short party are determined separately with respect to each underlying security. A party to a potential section 871(m) transaction is both a long party and a short party when the party is entitled to a payment that references a dividend payment on an underlying security and the same party is obligated to make a payment that references a dividend payment on another underlying security pursuant to the potential section 871(m) transaction.

(B) ***Example.*** The following example illustrates the definitions in paragraph (a)(9) of this section:

> *Example.* (i) Stock X and Stock Y are underlying securities. A and B enter into an NPC that entitles A to receive payments from B based on any appreciation in the value of Stock X and dividends paid on Stock X during the term of the contract and obligates A to make payments to B based on any depreciation in the value of Stock X during the term of the contract. In return, the NPC entitles B to receive payments from A based on any appreciation in the value of Stock Y and dividends paid on Stock Y during the term of the contract and obligates B to make payments to A based on any depreciation in the value of Stock Y during the term of the contract. (ii) A is the long party with respect to Stock X, and the short party with respect to Stock Y. B is the long party with respect to Stock Y, and the short party with respect to Stock X.

(10) ***Payment.*** A *payment* has the meaning provided in paragraph (i) of this section.

(11) ***Reference.*** To *reference* means to be contingent upon or determined by reference to, directly or indirectly, whether in whole or in part.

(12) ***Section 871(m) transaction and potential section 871(m) transaction.*** A *section 871(m) transaction* is any securities lending or sale-repurchase transaction, specified NPC, or specified ELI. A *potential section 871(m) transaction* is any securities lending or sale-repurchase transaction, NPC, or ELI that references one or more underlying securities.

(13) ***Securities lending or sale-repurchase transaction.*** A *securities lending or sale-repurchase transaction* is any securities lending transaction, sale-repurchase transaction, or substantially similar transaction that references an underlying security. *Securities lending transaction* and *sale-repurchase transaction* have the same meaning as provided in § 1.861-3(a)(6).

(14) ***Simple contracts and complex contracts*** —

(i) ***Simple contract.*** A *simple contract* is an NPC or ELI for which, with respect to each underlying security, all amounts to be paid or received on maturity, exercise, or any other payment determination date are calculated by reference to a single, fixed number of shares (as determined in paragraph (j)(3) of this section) of the underlying security, provided that the number of shares can be ascertained at the calculation time for the contract, and there is a single maturity or exercise date with respect to which all amounts (other than any upfront payment or any periodic payments) are required to be calculated with respect to the underlying security. For purposes of this section, a contract that provides an adjustment to the number of shares of the underlying security for a merger, stock split, cash dividend, or similar corporate action that affects all holders of the underlying securities proportionately will not cease to be treated as referencing a single, fixed number of shares solely as a result of that provision. A contract has a single exercise date even though it may be exercised by the holder at any time on or before the stated expiration of the contract. An NPC or ELI that includes a term that discontinuously increases or decreases the amount paid or received (such as a digital option), or that accelerates or extends the maturity is not a simple contract. A simple contract that is an NPC is a *simple NPC.* A simple contract that is an ELI is a *simple ELI.*

(ii) ***Complex contract*** —

(A) ***In general.*** A *complex contract* is any NPC or ELI that is not a simple contract. A complex contract that is an NPC is a *complex NPC.* A complex contract that is an ELI is a *complex ELI.*

(B) ***Example.*** An ELI entitles the long party to a return equal to 200 percent of the appreciation on 100 shares of Stock X, and obligates the long party to pay an amount equal to the actual depreciation on 100 shares of Stock X. Pursuant to paragraph (j)(3) of the section, the ELI references 200 shares when Stock X appreciates, but only 100 shares when Stock X depreciates. Because the ELI does not provide the long party with an amount that is calculated by reference to a single, fixed number of shares of Stock X on the maturity date that can be ascertained at the calculation time, it is not a simple ELI. More specifically, upon maturity the ELI will either entitle the long party to receive a payment that is, in substance, measured by reference to 200 shares of stock or obligate the long party to make a payment measured by reference to 100 shares of stock. The ELI is a complex ELI because it is not a simple ELI.

(15) ***Underlying security.*** An *underlying security* is any interest in an entity if that interest could give rise to a U.S. source dividend pursuant to § 1.861-3, where applicable taking into account paragraph (m) of this section. Except as provided in paragraph (l) of this section, if a potential section 871(m) transaction references an interest in more than one entity described in the preceding sentence or different interests in the same entity, each referenced interest is a separate underlying security for purposes of applying the rules of this section.

(b) ***Source of a dividend equivalent.*** A dividend equivalent is treated as a dividend from sources within the United States for purposes of sections 871(a), 881, 892, 894, and 4948(a), and chapters 3 and 4 of subtitle A of the Internal Revenue Code.

(c) ***Dividend equivalent*** —

(1) ***In general.*** Except as provided in paragraph (c)(2) of this section, *dividend equivalent* means—

(i) Any payment that references a dividend from an underlying security pursuant to a securities lending or sale-repurchase transaction;

(ii) Any payment that references a dividend from an underlying security pursuant to a specified NPC described in paragraph (d) of this section;

(iii) Any payment that references a dividend from an underlying security pursuant to a specified ELI described in paragraph (e) of this section; and

(iv) Any other substantially similar payment as described in paragraph (f) of this section.

(2) *Exceptions* —

(i) ***Not a dividend.*** A payment that references a distribution with respect to an underlying security is not a dividend equivalent to the extent that the distribution would not be subject to tax pursuant to section 871(a) or section 881 if the long party owned the underlying security. For example, if an NPC references stock in a regulated investment company that pays a dividend that includes a capital gains dividend described in section 852(b)(3)(C) that would not be subject to tax under section 871(a) or section 881 if paid directly to the long party, then an NPC payment is not a dividend equivalent to the extent that it is determined by reference to the capital gains dividend.

(ii) ***Section 305 coordination.*** A dividend equivalent received by a long party, who is a shareholder as defined in § 1.305-1(d) of an instrument that gives rise to a dividend pursuant to sections 305(b) and (c) (including a debt instrument that is convertible into shares of stock and stock that is convertible into shares of another class of stock) that is also a section 871(m) transaction, is reduced by any amount treated as a dividend by sections 305(b) and (c) to the long party. For other section 871(m) transactions that reference an underlying security that is an instrument treated as paying a dividend pursuant to sections 305(b) and (c) and for which the long party is not a shareholder as defined in § 1.305-1(d), the dividend equivalent received by the long party with respect to the section 871(m) transaction includes (and is not reduced by) any amount treated as a dividend pursuant to sections 305(b) and (c).

(iii) ***Due bills.*** A dividend equivalent does not include a payment made pursuant to a due bill arising from the actions of a securities exchange that apply to all transactions in the stock with respect to the dividend. For purposes of this section, a stock will be considered to trade with a due bill only when the relevant securities exchange has set an ex-dividend date with respect to a dividend that occurs after the record date.

(iv) ***Payments made pursuant to annuity, endowment, and life insurance contracts*** —

(A) ***Insurance contracts issued by domestic insurance companies.*** A payment made pursuant to a contract that is an annuity, endowment, or life insurance contract issued by a domestic corporation (including its foreign or U.S. possession branch) that is a life insurance company described in section 816(a) does not include a dividend equivalent if the payment is subject to tax under section 871(a) or section 881.

(B) ***Insurance contracts issued by foreign insurance companies.*** A payment does not include a dividend equivalent if it is made pursuant to a contract that is an annuity, endowment, or life insurance contract issued by a foreign corporation that would be subject to tax under subchapter L if it were a domestic corporation.

(C) ***Insurance contracts held by foreign insurance companies.*** A payment made pursuant to a policy of insurance (including a policy of reinsurance) does not include a dividend equivalent if it is made to a foreign corporation that would be subject to tax under subchapter L if it were a domestic corporation.

(v) ***Certain payments pursuant to employee compensation arrangements.*** A dividend equivalent does not include the portion of equity-based compensation for personal services of a nonresident alien individual that is—

(A) Wages subject to withholding under section 3402 and the regulations under that section;

(B) Excluded from the definition of wages under § 31.3401(a)(6)-1; or

(C) Exempt from withholding under § 1.1441-4(b).

(d) ***Specified NPCs*** —

(1) ***Specified NPCs entered into before January 1, 2017*** —

(i) ***In general.*** For payments made after March 18, 2012, and before January 1, 2017, a specified NPC is any NPC if—

(A) In connection with entering into the contract, any long party to the contract transfers the underlying security to any short party to the contract;

(B) In connection with the termination of the contract, any short party to the contract transfers the underlying security to any long party to the contract;

(C) The underlying security is not readily tradable on an established securities market; or

(D) In connection with entering into the contract, the underlying security is posted as collateral by any short party to the contract with any long party to the contract.

(ii) ***Specified NPC status as of January 1, 2017.*** An NPC that is treated as a specified NPC pursuant to paragraph (d)(1)(i) of this section will remain a specified NPC on or after January 1, 2017.

(2) ***Specified NPCs on or after January 1, 2017*** —

(i) ***Simple NPCs.*** A simple NPC that has a delta of 0.8 or greater with respect to an underlying security at the calculation time for the NPC is a specified NPC.

(ii) ***Complex NPCs.*** A complex NPC that meets the substantial equivalence test described in paragraph (h) of this section with respect to an underlying security at the calculation time for the NPC is a specified NPC.

(e) ***Specified ELIs*** —

(1) ***Simple ELIs.*** A simple ELI that has a delta of 0.8 or greater with respect to an underlying security at the calculation time for the ELI is a specified ELI.

(2) ***Complex ELIs.*** A complex ELI that meets the substantial equivalence test described in paragraph (h) of this section with respect to an underlying security at the calculation time for the ELI is a specified ELI.

(f) ***Other substantially similar payments.*** For purposes of this section, any payment made in satisfaction of a tax liability of the long party with respect to a dividend equivalent by a withholding agent is a dividend equivalent received by the long party. The amount of that dividend equivalent constitutes additional income to the payee to the extent provided in § 1.1441-3(f)(1).

(g) ***Delta*** —

(1) ***In general.*** Delta is the ratio of the change in the fair market value of an NPC or ELI to a small change in the fair market value of the number of shares of the underlying security (as determined under paragraph (j)(3) of this section) referenced by the NPC or ELI. If an NPC or ELI contains more than one reference to a single underlying security, all references to that underlying security are taken into account in determining the delta with respect to that underlying security. If an NPC or ELI references more than one underlying security or other property, the delta with respect to each underlying security must be determined without taking into account any other underlying security or property. The delta of an equity derivative that is embedded in a debt instrument or other derivative is determined without taking into account changes in the market value of the debt instrument or other derivative that are not directly related to the equity element of the instrument. Thus, for example, the delta of an option embedded in a convertible note is determined without regard to the debt component of the convertible note. For purposes of this section, delta must be determined in a commercially reasonable manner. If a taxpayer calculates delta for non-tax business purposes, that delta ordinarily is the delta used for purposes of this section.

(2) ***Time for determining delta*** —

(i) ***In general.*** Except as provided in paragraph (g)(4) of this section, the delta of a potential section 871(m) transaction is determined at the calculation time for the potential section 871(m) transaction.

(ii) ***Calculation time.*** The calculation time for a potential section 871(m) transaction is the earlier of when the potential section 871(m) transaction is priced and when the potential section 871(m) transaction is issued. Notwithstanding the preceding sentence, if the pricing time is more than 14 calendar days before the potential section 871(m) transaction is issued, the calculation time is when the potential section 871(m) transaction is issued.

(iii) ***Pricing time.*** A potential section 871(m) transaction is priced when all material economic terms for the transaction have been agreed upon, including the price at which the transaction is sold.

(3) ***Simplified delta calculation for certain simple contracts that reference multiple underlying securities.*** If an NPC or ELI references 10 or more underlying securities and an exchange-traded security (for example, an exchange-traded fund) is available that would fully hedge the NPC or ELI at the calculation time, the delta of the NPC or ELI may be calculated by determining the ratio of the change in the fair market value of the simple contract to a small change in the fair market value of the exchange-traded security. A delta determined under this paragraph (g)(3) must be used as the delta for each underlying security for purposes of calculating the amount of a dividend equivalent as provided in paragraph (j)(1)(ii) of this section.

(4) ***Delta calculation for listed options*** —

(i) ***In general.*** The delta of an option contract that is listed on a regulated exchange described in paragraph (g)(4)(ii) of this section is the delta of that option at the close of business on the business day before the date of issuance. On the date an option contract is listed for the first

time, the delta is the delta of that option at the close of business on the date of issuance. Notwithstanding the preceding two sentences, the delta of a listed option that is also a customized option is determined under the rules of paragraphs (g)(2) and (g)(3) of this section.

(ii) ***Regulated exchange.*** For purposes of paragraph (g)(4)(i) of this section, a regulated exchange is any exchange that is either:

(A) Described in paragraph (l)(3)(vii) of this section; or

(B) ***Foreign securities exchange*** —

(*1*) ***In general.*** A foreign securities exchange that:

(*i*) Is regulated or supervised by a governmental authority of the country in which the market is located;

(*ii*) Has trading volume, listing, financial disclosure, surveillance, and other requirements designed to prevent fraudulent and manipulative acts and practices, to remove impediments to and perfect the mechanism of a free and open, fair and orderly market, and to protect investors, and the laws of the country in which the exchange is located and the rules of the exchange ensure that those requirements are actually enforced;

(*iii*) Has rules that effectively promote active trading of listed options on the exchange; and

(*iv*) Has an average daily trading volume on the exchange exceeding $10 billion notional amount during the immediately preceding calendar year.

(*2*) ***Application to an exchange with more than one tier or market.*** If an exchange in a foreign country has more than one tier or market level on which listed options may be separately listed or traded, each tier or market level is treated as a separate exchange.

(5) ***Examples.*** The following examples illustrate the rules of this paragraph (g). For purposes of these examples, Stock X and Stock Y are common stock of domestic corporations X and Y. LP is the long party to the transaction.

Example 1. Delta calculation for an NPC. The terms of an NPC require LP to pay the short party an amount equal to all of the depreciation in the value of 100 shares of Stock X and an interest-rate based return. In return, the NPC requires the short party to pay LP an amount equal to all of the appreciation in the value of 100 shares of Stock X and any dividends paid by X on those shares. The value of the NPC will change by $1 for each $0.01 change in the price of a share of Stock X. When LP entered into the NPC, Stock X had a fair market value of $50 per share. The NPC therefore has a delta of 1.0 ($1.00/($0.01 × 100)).

Example 2. Delta calculation for an option. LP purchases a call option that references 100 shares of Stock Y. At the time LP purchases the call option, the value of the option is expected to change by $0.30 for a $0.01 change in the price of a share of Stock Y. When LP purchases the option, Stock Y has a fair market value of $100 per share. The call option has a delta of 0.3 ($0.30/($0.01 × 100)).

(h) ***Substantial equivalence test*** —

(1) ***In general.*** The substantial equivalence test described in this paragraph (h) applies to determine whether a complex contract is a section 871(m) transaction. The substantial equivalence test assesses whether a complex contract substantially replicates the economic performance of the underlying security by comparing, at various testing prices for the underlying security, the differences between the expected changes in value of that complex contract and its initial hedge with the differences between the expected changes in value of a simple contract benchmark (as described in paragraph (h)(2) of this section) and its initial hedge. If the complex contract contains more than one reference to a single underlying security, all references to that underlying security are taken into account for purposes of applying the substantial equivalence test with respect to that underlying security. With respect to an equity derivative that is embedded in a debt instrument or other derivative, the substantial equivalence test is applied to the complex contract without taking into account changes in the market value of the debt instrument or other derivative that are not directly related to the equity element of the instrument. The complex contract is a section 871(m) transaction with respect to an underlying security if, for that underlying security, the expected change in value of the complex contract and its initial hedge is equal to or less than the expected change in value of the simple contract benchmark and its initial hedge when the substantial equivalence test described in this paragraph (h) is calculated at the calculation time for the complex contract. To the extent that the steps of the substantial equivalence test set out in this paragraph (h) cannot be applied to a particular complex contract, a taxpayer must use the principles of the substantial equivalence test to reasonably determine whether the complex contract is a section 871(m) transaction with respect to each underlying security. For purposes of this section, the test must be applied and the inputs must be determined in a commercially reasonable manner. The term of the simple contract benchmark must be, and the inputs must use, a reasonable time period, consistently applied (for example, in determining the standard deviation and probability). If a taxpayer calculates any relevant input for non-tax business purposes, that input ordinarily is the input used for purposes of this section.

(2) ***Simple contract benchmark.*** The simple contract benchmark is an actual or hypothetical simple contract that, at the calculation time for the complex contract, has a delta of 0.8, references the applicable underlying security referenced by the complex contract, and has terms that are consistent with all the material terms of the complex contract, including the maturity date. If an actual simple contract does not exist, the taxpayer must create a hypothetical simple contract. Depending on the complex contract, the simple contract benchmark might be, for example, a call option, a put option, or a collar.

(3) ***Substantial equivalence.*** A complex contract is a section 871(m) transaction with respect to an underlying security if the complex contract calculation described in paragraph (h)(4) of this section results in an amount that is equal to or less than the amount of the benchmark calculation described in paragraph (h)(5) of this section.

(4) ***Complex contract calculation*** —

(i) ***In general.*** The complex contract calculation for each underlying security referenced by a potential section 871(m) transaction that is a complex contract is computed by:

(A) Determining the change in value (as described in paragraph (h)(4)(ii) of this section) of the complex contract with respect to the underlying security at each testing price (as described in paragraph (h)(4)(iii) of this section);

(B) Determining the change in value of the initial hedge for the complex contract at each testing price;

(C) Determining the absolute value of the difference between the change in value of the complex contract determined in paragraph (h)(4)(i)(A) of this section and the change in value of the initial hedge determined in paragraph (h)(4)(i)(B) of this section at each testing price;

(D) Determining the probability (as described in paragraph (h)(4)(iv) of this section) associated with each testing price;

(E) Multiplying the absolute value for each testing price determined in paragraph (h)(4)(i)(C) of this section by the corresponding probability for that testing price determined in paragraph (h)(4)(i)(D) of this section;

(F) Adding the product of each calculation determined in paragraph (h)(4)(i)(E) of this section; and

(G) Dividing the sum determined in paragraph (h)(4)(i)(F) of this section by the initial hedge for the complex contract.

(ii) ***Determining the change in value.*** The change in value of a complex contract is the difference between the value of the complex contract with respect to the underlying security at the calculation time for the complex contract and the value of the complex contract with respect to the underlying security if the price of the underlying security were equal to the testing price at the calculation time for the complex contract. The change in value of the initial hedge of a complex contract with respect to the underlying security is the difference between the value of the initial hedge at the calculation time for the complex contract and the value of the initial hedge if the price of the underlying security were equal to the testing price at the calculation time for the complex contract.

(iii) ***Testing price.*** The testing prices must include the prices of the underlying security if the price of the underlying security at the calculation time for the complex contract were alternatively increased by one standard deviation and decreased by one standard deviation, each of which is a separate testing price. In circumstances where using only two testing prices is reasonably likely to provide an inaccurate measure of substantial equivalence, a taxpayer must use additional testing prices as necessary to determine whether a complex contract satisfies the substantial equivalence test. If additional testing prices are used for the substantial equivalence test, the probabilities as described in paragraph (h)(4)(iv) of this section must be adjusted accordingly.

(iv) ***Probability.*** For purposes of paragraphs (h)(4)(i)(D) and (E) of this section, the probability of an increase by one standard deviation is the measure of the likelihood that the price of the underlying security will increase by any amount from its price at the calculation time for the complex contract. For purposes of paragraphs (h)(4)(i)(D) and (E) of this section, the probability of a decrease by one standard deviation is the measure of the likelihood that the price of the underlying security will decrease by any amount from its price at the calculation time for the complex contract.

(5) ***Benchmark calculation.*** The benchmark calculation with respect to each underlying security referenced by the potential section 871(m) transaction is determined by using the computation methodology described in paragraph (h)(4) of this section with respect to a simple contract benchmark for the underlying security.

(6) ***Substantial equivalence calculation for certain complex contracts that reference multiple underlying securities.*** If a complex contract references 10 or more underlying securities and an exchange-traded security (for example, an exchange-traded fund) is available that would fully hedge the complex contract at its calculation time, the substantial equivalence calculations for the complex contract may be calculated by treating the exchange-traded security as the underlying security. When the exchange-traded security is used for the substantial equivalence calculation pursuant to this paragraph (h)(6), the initial hedge is the number of shares of the exchange-traded security for purposes of calculating the amount of a dividend equivalent as provided in paragraph (j)(1)(iii) of this section.

(7) ***Example.*** The following example illustrates the rules of paragraph (h) of this section. For purposes of this example, Stock X is common stock of domestic corporation X. FI is the financial institution that structures the transaction described in the example, and is the short party to the transaction. Investor is a nonresident alien individual.

> *Example. Complex contract that is not substantially equivalent.* (i) FI issues an investment contract (the Contract) that has a stated maturity of one year, and Investor purchases the Contract from FI at issuance for $10,000. At maturity, the Contract entitles Investor to a return of $10,000 (i) plus 200 percent of any appreciation in Stock X above $100 per share, capped at $110, on 100 shares or (ii) minus 100 percent of any depreciation in Stock X below $90 on 100 shares. At the calculation time for the Contract, the price of Stock X is $100 per share. Thus, for example, Investor will receive $11,000 if the price of Stock X is $105 per share at maturity of the Contract, but Investor will receive $9,000 if the price of Stock X is $80 per share when the Contract matures. At issuance, FI acquires 64 shares of Stock X to fully hedge the Contract issued to Investor. The calculation time for this example is the issuance.
> (ii) The Contract references an underlying security and is not an NPC, so it is classified as an ELI under paragraph (a)(4) of this section. At the calculation time for the Contract, the Contract does not provide for an amount paid at maturity that is calculated by reference to a single, fixed number of shares of Stock X. When the Contract matures, the amount paid is effectively calculated based on either 200 shares of Stock X (if the price of Stock X has appreciated up to $110) or 100 shares of Stock X (if the price of Stock X has declined below $90). Consequently, the Contract is a complex contract described in paragraph (a)(14) of this section.
>
> (iii) Because it is a complex ELI, FI applies the substantial equivalence test described in paragraph (h) of this section to determine whether the Contract is a specified ELI. FI determines that the price of Stock X would be $120 if the price of Stock X were increased by one standard deviation, and $79 if the price of Stock X were decreased by one standard deviation. Based on these results, FI next determines the change in value of the Contract to be $2000 at the testing price that represents an increase by one standard deviation ($12,000 testing price minus $10,000 issue price) and a negative $1,100 at the testing price that represents a decrease by one standard deviation ($10,000 issue price minus $8,900 testing price). FI performs the same calculations for the 64 shares of Stock X that constitute the

initial hedge, determining that the change in value of the initial hedge is $1,280 at the testing price that represents an increase by one standard deviation ($6,400 at issuance compared to $7,680 at the testing price) and negative $1,344 at the testing price that represents a decrease by one standard deviation ($6,400 at issuance compared to $5,056 at the testing price).

(iv) FI then determines the absolute value of the difference between the change in value of the initial hedge and the Contract at the testing price that represents an increase by one standard deviation and a decrease by one standard deviation. Increased by one standard deviation, the absolute value of the difference is $720 ($2,000-$1,280); decreased by one standard deviation, the absolute value of the difference is $244 (negative $1,100 minus negative $1,344). FI determines that there is a 52% chance that the price of Stock X will have increased in value when the Contract matures and a 48% chance that the price of Stock X will have decreased in value at that time. FI multiplies the absolute value of the difference between the change in value of the initial hedge and the Contract at the testing price that represents an increase by one standard deviation by 52%, which equals $374.40. FI multiplies the absolute value of the difference between the change in value of the initial hedge and the Contract at the testing price that represents a decrease by one standard deviation by 48%, which equals $117.12. FI adds these two numbers and divides by the number of shares that constitute the initial hedge to determine that the transaction calculation is 7.68 ((374.40 plus 117.12) divided by 64).

(v) FI then performs the same calculation with respect to the simple contract benchmark, which is a one-year call option that references one share of Stock X, settles on the same date as the Contract, and has a delta of 0.8. The one-year call option has a strike price of $79 and has a cost (the purchase premium) of $22. The initial hedge for the one-year call option is 0.8 shares of Stock X.

(vi) FI first determines that the change in value of the simple contract benchmark is $19.05 if the testing price is increased by one standard deviation ($22.00 at issuance to $41.05 at the testing price) and negative $20.95 if the testing price is decreased by one standard deviation ($22.00 at issuance to $1.05 at the testing price). Second, FI determines that the change in value of the initial hedge is $16.00 at the testing price that represents an increase by one standard deviation ($80 at issuance to $96 at the testing price) and negative $16.80 at the testing price that represents a decrease by one standard deviation ($80.00 at issuance to $63.20 at the testing price).

(vii) FI determines the absolute value of the difference between the change in value of the initial hedge and the one-year call option at the testing price that represents an increase by one standard deviation is $3.05 ($16.00 minus $19.05). FI next determines the absolute value of the difference between the change in value of the initial hedge and the option at the testing

price that represents a decrease by one standard deviation is $4.15 (negative $16.80 minus negative $20.95). FI multiplies the absolute value of the difference between the change in value of the initial hedge and the option at the testing price that represents an increase by one standard deviation by 52%, which equals $1.586. FI multiplies the absolute value of the difference between the change in value of the initial hedge and the option at the testing price that represents a decrease by one standard deviation by 48%, which equals $1.992. FI adds these two numbers and divides by the number of shares that constitute the initial hedge to determine that the benchmark calculation is 4.473 ((1.586 plus 1.992) divided by .8).

(viii) FI concludes that the Contract is not a section 871(m) transaction because the transaction calculation of 7.68 exceeds the benchmark calculation of 4.473.

(i) ***Payment of a dividend equivalent*** —

(1) ***Payments determined on gross basis.*** For purposes of this section, a payment includes any gross amount that references a dividend and that is used in computing any net amount transferred to or from the long party even if the long party makes a net payment to the short party or no amount is paid because the net amount is zero.

(2) ***Actual and estimated dividends*** —

(i) ***In general.*** A payment includes any amount that references an actual or estimated dividend, whether the reference is explicit or implicit. If a potential section 871(m) transaction provides for a payment based on an estimated dividend that adjusts to account for the amount of an actual dividend paid, the payment is treated as referencing the actual dividend amount and not an estimated dividend amount.

(ii) ***Implicit dividends.*** A payment includes an actual or estimated dividend that is implicitly taken into account in computing one or more of the terms of a potential section 871(m) transaction, including interest rate, notional amount, purchase price, premium, upfront payment, strike price, or any other amount paid or received pursuant to the potential section 871(m) transaction.

(iii) ***Actual dividend presumption.*** A short party to a section 871(m) transaction is treated as paying a per-share dividend amount equal to the actual dividend amount unless the short party to the section 871(m) transaction identifies a reasonable estimated dividend amount in writing at the calculation time. For this purpose, a reasonable estimated dividend amount stated in an offering document or the documents governing the terms at the calculation time will establish the estimated dividend amount. To qualify as an estimated dividend amount, the written estimated dividend amount must separately state the amount estimated for each anticipated dividend or state a formula that allows each dividend to be determined. If an underlying security is not expected to have a dividend, a reasonable estimate of the dividend amount may be zero.

(iv) ***Additions to estimated payments.*** If a section 871(m) transaction provides for any payment in addition to an estimated dividend and that additional payment is determined by reference to a dividend (for example, a special dividend), both the estimated dividend and the additional payment are used to determine the per-share dividend amount.

(3) ***Dividends for certain baskets*** —

(i) ***In general.*** If a section 871(m) transaction references long positions in more than 25 underlying securities, the short party may treat the dividends with respect to the referenced underlying securities as paid at the end of the applicable calendar quarter to compute the per-share dividend amount.

(ii) ***Publicly available dividend amount.*** For purposes of paragraph (i)(3)(i) of this section, if a section 871(m) transaction references the same underlying securities as a security (for example, stock in an exchange-traded fund) or index for which there is a publicly available quarterly dividend amount, the publicly available dividend amount may be used to determine the per-share dividend amount for the section 871(m) transaction with any adjustment for special dividends.

(iii) ***Dividend amount for a section 871(m) transaction using the simplified delta calculation.*** When the delta of a section 871(m) transaction is determined under paragraph (g)(3) of this section, the per-share dividend amount for that section 871(m) transaction must be determined using the dividend amount for the exchange-traded security that would fully hedge the section 871(m) transaction (whether or not the exchange-traded security is actually acquired).

(4) ***Examples.*** The following examples illustrate the rules of this paragraph (i). For purposes of these examples, Stock X is common stock of Corporation X, a domestic corporation, that historically pays quarterly dividends on Stock X. The parties anticipate that Corporation X will continue to pay quarterly dividends.

> *Example 1.* *Forward contract to purchase domestic stock.* (i) When Stock X is trading at $50 per share, Foreign Investor enters into a forward contract to purchase 100 shares of Stock X in one year. Reasonable estimates of the quarterly dividend are specified in the transaction documents. The price in the forward contract is determined by multiplying the number of shares referenced in the contract by the current price of the shares and an interest rate, and subtracting the value of any dividends expected to be paid during the term of the contract. Assuming that the forward contract is priced using an interest rate of 4 percent and total estimated dividends with a future value of $1 per share during the term of the forward contract, the purchase price set in the forward contract is $5,100 (100 shares × $50 per share × 1.04 − ($1 × 100)).
> (ii) Subject to paragraph (i)(2)(iv) of this section, the estimated dividend amounts are the per-share dividend amounts because the estimates are reasonable and specified in accordance with paragraph (i)(2)(iii) of this section. The estimated per-share dividend amounts are dividend equivalents for purposes of this section.

> *Example 2.* *Price return only swap contract.* (i) Foreign Investor enters into a price return swap contract that entitles Foreign Investor to receive payments based on the appreciation in the value of 100 shares of Stock X and requires Foreign Investor to pay an amount based on LIBOR plus any depreciation in the value of Stock X. The swap contract neither explicitly entitles Foreign Investor to payments based on dividends paid on Stock X during the term of the contract nor references an estimated dividend amount. The LIBOR rate in the swap contract, however, is reduced to reflect expected annual dividends on Stock X.

(ii) Because the LIBOR leg of the swap contract is reduced to reflect estimated dividends and the estimated dividend amounts are not specified, Foreign Investor is treated as receiving the actual dividend amounts are in accordance with paragraph (i)(2) of this section. The actual per-share dividend amounts are dividend equivalents for purposes of this section.

(j) *Amount of dividend equivalent* —

(1) ***Calculation of the amount of a dividend equivalent.*** The long party is liable for tax on any dividend equivalents required to be determined pursuant to paragraph (j)(2) of this section only with respect to dividend equivalents that arise while the long party is a party to the transaction. The amount of any dividend equivalent is determined as follows:

(i) ***Securities lending or sale-repurchase transactions.*** For a securities lending or sale-repurchase transaction, the amount of the dividend equivalent for each dividend on an underlying security equals the amount of the actual per-share dividend paid on the underlying security multiplied by the number of shares of the underlying security.

(ii) ***Simple contracts.*** For a simple contract that is a section 871(m) transaction, the amount of the dividend equivalent for each dividend on an underlying security equals:

(A) The per-share dividend amount (as determined under either paragraph (i)(2) or (i)(3) of this section) with respect to the underlying security multiplied by;

(B) The number of shares of the underlying security multiplied by;

(C) The delta of the section 871(m) transaction with respect to the underlying security.

(iii) ***Complex contracts.*** For a complex contract that is a section 871(m) transaction, the amount of the dividend equivalent for each dividend on an underlying security equals:

(A) The per-share dividend amount (as determined under paragraph (i)(2) or (i)(3) of this section) with respect to the underlying security multiplied by;

(B) The initial hedge for the underlying security.

(iv) ***Other substantially similar payments.*** In addition to any amount determined pursuant to paragraph (j)(1)(i), (ii), or (iii), the amount of a dividend equivalent includes the amount of any payment described in paragraph (f) of this section.

(2) ***Time for determining the amount of a dividend equivalent.*** The amount of a dividend equivalent is determined on the earlier of the date that is the record date of the dividend and the day prior to the ex-dividend date with respect to the dividend. For example, if a specified NPC provides for a payment at settlement that takes into account an earlier dividend payment, the amount of the dividend equivalent is determined on the earlier of the record date or the day prior to the ex-dividend date for that dividend.

(3) ***Number of shares.*** The number of shares of an underlying security generally is the number of shares of the underlying security stated in the contract. If the transaction modifies that number by a factor or fraction or otherwise alters the amount of any payment, the number of shares is adjusted to take into account the factor, fraction, or other modification. For example, in a transaction in which the long party receives or makes payments based on 200 percent of the appreciation or depreciation (as applicable) of 100 shares of stock, the number of shares of the underlying security is 200 shares of the stock.

(4) ***Taxable year of a dividend equivalent.*** A long party is liable for tax on a dividend equivalent in the year the dividend equivalent is subject to withholding pursuant to § 1.1441-2(e)(7). Notwithstanding the preceding sentence, a long party that is a qualified derivatives dealer is liable for tax on a dividend equivalent when the applicable dividend on the underlying security would be subject to withholding pursuant to § 1.1441-2(e)(4). The amount of the long party's tax liability, however, is determined by reference to the amount that would have been due at the time the dividend equivalent amount is determined pursuant to paragraph (j)(2) of this section based on the beneficial owners at that time (for example, based on the tax rate at that time, whether the long party qualified for a treaty benefit at that time, and in the case of a partnership, based on the partners at that time).

(k) ***Limitation on the treatment of certain corporate acquisitions as section 871(m) transactions.*** A potential section 871(m) transaction is not a section 871(m) transaction with respect to an underlying security if the transaction obligates the long party to acquire ownership of the underlying security as part of a plan pursuant to which one or more persons (including the long party) are obligated to acquire underlying securities representing more than 50 percent of the value of the entity issuing the underlying securities.

(l) ***Rules relating to indices*** —

(1) ***Purpose.*** The purpose of this paragraph (l) is to provide a safe harbor for potential section 871(m) transactions that reference certain passive indices that are based on a diverse basket of publicly-traded securities and that are widely used by numerous market participants. Notwithstanding any other provision in this paragraph (l), an index is not a qualified index if treating the index as a qualified index would be contrary to the purpose described in this paragraph (l)(1).

(2) ***Qualified index not treated as an underlying security*** —

(i) ***In general.*** For purposes of this section, a qualified index is treated as a single security that is not an underlying security. The determination of whether an index referenced in a potential section 871(m) transaction is a qualified index is made at the calculation time for the transaction based on whether the index is a qualified index on the first business day of the calendar year containing the calculation time.

(ii) ***Rule for the first year of an index.*** In the case of an index that was not in existence on the first business day of the calendar year containing the calculation time for the transaction, paragraph (l)(2) of this section is applied by testing the index on the first business day it is created, and the dividend yield calculation required by paragraph (l)(3)(vi) of this section is determined by using the dividend yield that the index would have had in the immediately preceding year if it had the same components throughout that year that it has on the day it is created.

(3) ***Qualified index.*** A *qualified index* means an index that—

(i) References 25 or more component securities (whether or not the security is an underlying security);

(ii) Except as provided in paragraph (l)(6)(ii) of this section, references only long positions in component securities;

(iii) References no component underlying security that represents more than 15 percent of the weighting of the component securities in the index;

(iv) References no five or fewer component underlying securities that together represent more than 40 percent of the weighting of the component securities in the index;

(v) Is modified or rebalanced only according to publicly stated, predefined criteria, which may require interpretation by the index provider or a board or committee responsible for maintaining the index;

(vi) Did not provide an annual dividend yield in the immediately preceding calendar year from component underlying securities that is greater than 1.5 times the annual dividend yield of the S&P 500 Index as reported for the immediately preceding calendar year; and

(vii) Is traded through futures contracts or option contracts (regardless of whether the contracts provide price only or total return exposure to the index or provide for dividend reinvestment in the index) on—

(A) A national securities exchange that is registered with the Securities and Exchange Commission or a domestic board of trade designated as a contract market by the Commodity Futures Trading Commission; or

(B) A foreign exchange or board of trade that is a qualified board or exchange as determined by the Secretary pursuant to section 1256(g)(7)(C) or that has a staff no action letter from the CFTC permitting direct access from the United States that is effective on the applicable testing date, provided that the referenced component underlying securities, in the aggregate, comprise less than 50 percent of the weighting of the component securities in the index.

(4) ***Safe harbor for certain indices that reference assets other than underlying securities.*** Notwithstanding paragraph (l)(3) of this section, an index is a qualified index if the index is widely traded, the referenced component underlying securities in the aggregate comprise 10 percent or less of the weighting of the component securities in the index, and the index was not formed or availed of with a principal purpose of avoiding U.S. withholding tax.

(5) ***Weighting of component securities.*** For purposes of this paragraph (l), the weighting of a component security of an index is the percentage of the index's value represented, or accounted for, by the component security.

(6) ***Transactions that reference a qualified index and one or more component securities or indices*** —

(i) ***In general.*** When a potential section 871(m) transaction references a qualified index and one or more component securities or other indices, the qualified index remains a qualified index only if the potential section 871(m) transaction does not reference a short position in any referenced component security of the qualified index, other than a short position with respect to the entire qualified index (for example, a cap or floor) or a de minimis short position described in paragraph (l)(6)(ii) of this section. If, in connection with a potential section 871(m) transaction that references a qualified index, a taxpayer (or a related person within the meaning of section 267(b) or section 707(b)) enters into one or more transactions that reduce exposure to any referenced component security of the index, other than transactions that reduce exposure to the entire index, then the potential section 871(m) transaction is not treated as referencing a qualified index.

(ii) ***Safe harbor for de minimis short positions.*** Notwithstanding paragraphs (l)(3)(ii) and (l)(6)(i) of this section, an index may be a qualified index if the short position (whether part of the index or entered into separately by the taxpayer or related person within the meaning of section 267(b)

or section 707(b)) reduces exposure to referenced component securities of a qualified index (excluding any short positions with respect to the entire qualified index) by five percent or less of the value of the long positions in component securities in the qualified index.

(7) ***Transactions that indirectly reference a qualified index.*** If a potential section 871(m) transaction references an exchange-traded fund that tracks a qualified index, the potential section 871(m) transaction will be treated as referencing a qualified index.

(m) ***Rules relating to derivatives that reference partnerships*** —

(1) ***In general.*** When a potential section 871(m) transaction references a partnership interest, the assets of the partnership will be treated as referenced by the potential section 871(m) transaction only if the partnership carries on a trade or business of dealing or trading in securities, holds significant investments in securities (either of which is a covered partnership), or directly or indirectly holds an interest in a lower-tier partnership that is a covered partnership. For purposes of this section, if a covered partnership directly or indirectly holds assets that are underlying securities or potential section 871(m) transactions, any potential section 871(m) transaction that references an interest in the covered partnership is treated as referencing the shares of the underlying securities, including underlying securities of potential section 871(m) transactions, directly or indirectly allocable to that partnership interest. For purposes of this paragraph (m), a security is defined in section 475(c).

(2) ***Significant investments in securities*** —

(i) ***In general.*** For purposes of this paragraph (m), a partnership holds significant investments in securities if either—

(A) 25 percent or more of the value of the partnership's assets consist of underlying securities or potential section 871(m) transactions; or

(B) The value of the underlying securities or potential section 871(m) transactions equals or exceeds $25 million.

(ii) ***Determining the value of the partnership's assets.*** For purposes of this paragraph (m)(2)(i) of this section, the value of a partnership's assets is determined at the calculation time for the potential section 871(m) transaction referencing that partnership interest based on the value of the assets held by the partnership on the last day of the partnership's prior taxable year unless the long party or the short party has actual knowledge that a subsequent transaction has caused the partnership to cross either of the thresholds described in paragraph (m)(2)(i). The value of a partnership's assets is equal to their fair market value, except that the value of any NPC, futures contract, forward contract, option, and any similar financial instrument held by the partnership is deemed to be the value of the notional securities referenced by the transaction.

(n) ***Combined transactions*** —

(1) ***In general.*** For purposes of determining whether a potential section 871(m) transaction is a section 871(m) transaction, two or more potential section 871(m) transactions are treated as a single transaction with respect to an underlying security when—

(i) A person (or a related person within the meaning of section 267(b) or section 707(b)) is the long party with respect to the underlying security for each potential section 871(m) transaction;

(ii) The potential section 871(m) transactions reference the same underlying security;

(iii) The potential section 871(m) transactions, when combined, replicate the economics of a transaction that would be a section 871(m) transaction if the transactions had been entered into as a single transaction; and

(iv) The potential section 871(m) transactions are entered into in connection with each other (regardless of whether the transactions are entered into simultaneously or with the same counterparty).

(2) ***Section 871(m) transactions.*** If a potential section 871(m) transaction is a section 871(m) transaction, either by itself or as a result of a combination with one or more other potential section 871(m) transactions, it does not cease to be a section 871(m) transaction as a result of applying paragraph (n) of this section or disposing of one or more of the potential section 871(m) transaction with which it is combined.

(3) ***Short party presumptions regarding combined transactions*** —

(i) ***In general.*** If a short party relies on the presumption provided in paragraph (n)(3)(ii) of this section or in paragraph (n)(3)(iii) of this section, the short party is not required to treat those potential section 871(m) transactions as part of a single transaction pursuant to paragraph (n)(1) of this section.

(ii) ***Transactions in separate accounts.*** A short party that is a broker may presume that transactions are not entered into in connection with each other for purposes of paragraph (n)(1) of this section if a long party holds or reflects the transactions in separate accounts maintained by the short party, unless the short party has actual knowledge that the transactions held or reflected in separate accounts by the long party were entered into in connection with each other or that separate accounts were created or used to avoid section 871(m).

(iii) ***Transactions separated by at least two business days.*** A short party that is a broker may presume that transactions entered into two or more business days apart are not entered into in connection with each other for purposes of paragraph (n)(1) of this section unless the short party has actual knowledge that the transactions were entered into in connection with each other.

(4) ***Presumptions Commissioner will apply to long party*** —

(i) ***Transactions in separate trading books.*** The Commissioner will presume that a long party did not enter into two or more transactions in connection with each other for purposes of paragraph (n)(1) of this section if the long party properly reflected those transactions on separate trading books. The Commissioner may rebut this presumption with facts and circumstances showing that transactions reflected on separate trading books were entered into in connection with each other or that separate trading books were created or used to avoid section 871(m).

(ii) ***Transactions separated by at least two days.*** The Commissioner will presume that a long party did not enter into two or more transactions in connection with each other for purposes of paragraph (n)(1) of this section if the long party entered into the transactions two or more business days apart. The Commissioner may rebut this presumption with facts and circumstances showing that the transactions entered into two or more business days apart were entered into in connection with each other.

(iii) ***Transactions separated by fewer than two days and reflected in the same trading book.*** The Commissioner will presume that transactions that are entered into fewer than two business days apart and reflected on the same trading book are entered into in connection with each other. A long party can rebut this presumption with facts and circumstances showing that the transactions were not entered into in connection with each other.

(5) ***Rules of application*** —

(i) ***Two business days rule.*** For the purpose of determining the number of business days between transactions, the short party may, and the Commissioner will, assume that all transactions are entered into at 4:00 p.m. on the date the transaction becomes effective in the jurisdiction of the long party.

(ii) ***No long party presumptions.*** Notwithstanding the presumptions described in paragraphs (n)(3) and (n)(4) of this section, the long party must treat two or more transactions as combined transactions if the transactions are described in paragraph (n)(1) of section.

(6) ***Ordering rule for transactions entered into in connection with each other.*** If a long party enters into more than two potential section 871(m) transactions that could be combined under this paragraph (n), a short party is required to apply paragraph (n)(1) of this section by combining transactions in a manner that results in the most transactions with a delta of 0.8 or higher with respect to the referenced underlying security. Thus, for example, if a taxpayer has sold one at-the-money put and purchased two at-the-money calls, each with respect to 100 shares of the same underlying security, the put and one call are combined. Similarly, a purchased call on 100 shares and a sold put on 200 shares of the same underlying security can be combined for 100 shares with 100 shares of the put remaining separate. The two calls are not combined because they do not provide the long party with economic exposure to depreciation in the underlying security. Similarly, if a long party enters into more than two potential section 871(m) transactions that could be combined under this paragraph (n), but have not been combined by a short party, the long party is required to apply paragraph (n)(1) of this section by combining transactions in a manner that results in the most transactions with a delta of 0.8 or higher with respect to the referenced underlying security.

(7) ***More than one underlying security referenced.*** If potential section 871(m) transactions reference more than one underlying security, paragraph (n)(1) of this section applies separately with respect to each underlying security.

(o) ***Anti-abuse rule.*** If a taxpayer (directly or through the use of a related person within the meaning of section 267(b) or section 707(b)) acquires (whether by entering into, purchasing, accepting by transfer, by exchange, or by conversion, or otherwise acquiring) or disposes of (whether by sale, offset, exercise, termination, expiration, maturity, or other means) a transaction or transactions with a principal purpose of avoiding the application of this section, the Commissioner may treat any payment (as described in paragraph (i) of this section) made with respect to that transaction or transactions as a dividend equivalent to the extent necessary to prevent the avoidance of this section. Therefore, notwithstanding any other provision of this section, the Commissioner may, for example, adjust the delta of a transaction, change the number of shares, adjust an estimated dividend amount, change the maturity, adjust the timing of payments, treat a transaction that references a partnership interest as referencing the assets of the partnership, combine, separate, or disregard transactions, indices, or components of indices to reflect the substance of the transaction or transactions, or otherwise depart from the rules of this section as necessary to determine whether the transaction includes a dividend equivalent or the amount or timing of a dividend equivalent. A purpose may be a principal purpose even though it is outweighed by other purposes (taken together or separately). When a withholding agent knows that the taxpayer acquired or

disposed of a transaction or transactions with a principal purpose of avoiding the application of this section and the Commissioner treats a payment made with respect to any transaction as a dividend equivalent, the withholding agent may be liable for any tax pursuant to section 1461.

(p) ***Information required to be reported regarding a potential section 871(m) transaction*** —

(1) ***Responsible party*** —

(i) ***In general.*** If a broker or dealer is a party to a potential section 871(m) transaction with a counterparty or customer that is not a broker or dealer, the broker or dealer is required to determine whether the potential section 871(m) transaction is a section 871(m) transaction. If both parties to a potential section 871(m) transaction are brokers or dealers, or neither party to a potential section 871(m) transaction is a broker or dealer, the short party must determine whether the potential section 871(m) transaction is a section 871(m) transaction.

(ii) ***Transactions with multiple brokers.*** For a potential section 871(m) transaction in which both the short party and an agent or intermediary acting on behalf of the short party are a broker or dealer, the short party must determine whether the potential section 871(m) transaction is a section 871(m) transaction. For a potential section 871(m) transaction in which the short party is not a broker or dealer and more than one agent or intermediary acting on behalf of the short party is a broker or dealer, the broker or dealer that is a party to the transaction and closest to the short party in the payment chain must determine whether the potential section 871(m) transaction is a section 871(m) transaction. For a potential section 871(m) transaction in which neither the short party nor any agent or intermediary acting on behalf of the short party is a broker or dealer, and the long party and an agent or intermediary acting on behalf of the long party are a broker or dealer, or more than one agent or intermediary acting on behalf of the long party is a broker or dealer, the broker or dealer that is a party to the transaction and closest to the long party in the payment chain must determine whether the potential section 871(m) transaction is a section 871(m) transaction.

(iii) ***Responsible party for transactions traded on an exchange and cleared by a clearing organization.*** Except as provided in paragraph (p)(1)(iv) of this section, for a potential section 871(m) transaction that is traded on an exchange and cleared by a clearing organization, and for which more than one broker-dealer acts as an agent or intermediary between the short party and a foreign payee, the broker or dealer that has an ongoing customer relationship with the foreign payee with respect to that transaction (generally the clearing firm) must determine whether the potential section 871(m) transaction is a section 871(m) transaction.

(iv) ***Responsible party for certain structured notes, warrants, and convertible instruments.*** When a potential section 871(m) transaction is a structured note, warrant, convertible stock, or convertible debt, the issuer is the party responsible for determining whether a potential section 871(m) transaction is a section 871(m) transaction.

(v) ***Obligations of the responsible party.*** The party to the transaction that is required to determine whether a transaction is a section 871(m) transaction must also determine and report to the counterparty or customer the timing and amount of any dividend equivalent (as described in paragraphs (i) and (j) of this section). Except as otherwise provided in paragraph (n)(3) of this section, the party required to make the determinations described in this paragraph is required to exercise reasonable diligence to determine whether a transaction is a section 871(m) transaction, the amount of any dividend equivalents, and any other information necessary to apply the rules of this section. The information must be provided in the manner prescribed in

paragraphs (p)(2) and (p)(3) of this section. The determinations required by paragraph (p) of this section are binding on the parties to the potential section 871(m) transaction and on any person who is a withholding agent with respect to the potential section 871(m) transaction unless the person knows or has reason to know that the information received is incorrect. The determinations are not binding on the Commissioner.

(2) ***Reporting requirements.*** For rules regarding the reporting requirements of withholding agents with respect to dividend equivalents described in this section, see §§ 1.1461-1(b) and (c) and 1.1474-1(c) and (d).

(3) ***Additional information available to a party to a potential section 871(m) transaction*** —

(i) ***In general.*** Upon request by any person described in paragraph (p)(3)(ii) of this section, the party required to report information pursuant to paragraph (p)(1) of this section must provide the requester with information regarding the amount of each dividend equivalent, the delta of the potential section 871(m) transaction, the amount of any tax withheld and deposited, the estimated dividend amount if specified in accordance with paragraph (i)(2)(iii) of this section, the identity of any transactions combined pursuant to paragraph (n) of this section, and any other information necessary to apply the rules of this section. The information requested must be provided within a reasonable time, not to exceed 10 business days, and communicated in one or more of the following ways:

(A) By telephone, and confirmed in writing;

(B) By written statement sent by first class mail to the address provided by the requesting party;

(C) By electronic publication available to all persons entitled to request information; or

(D) By any other method agreed to by the parties, and confirmed in writing.

(ii) ***Persons entitled to request information.*** Any party to the transaction described in paragraph (a)(9) of this section may request the information specified in paragraph (p) of this section with respect to a potential section 871(m) transaction from the party required by paragraph (p)(3)(i) of this section to provide the information.

(iii) ***Reliance on information received.*** A person described in paragraph (p)(1) or (p)(3)(ii) of this section that receives information described in paragraph (p)(1) or (p)(3)(i) of this section may rely on that information to provide information to any other person unless the recipient knows or has reason to know that the information received is incorrect. When the recipient knows or has reason to know that the information received is incorrect, the recipient must make a reasonable effort to determine and provide the information described in paragraph (p)(1) or (p)(3)(i) of this section to any person described in paragraph (p)(1) or (p)(3)(ii) of this section that requests information from the recipient.

(4) ***Recordkeeping rules*** —

(i) ***In general.*** For rules regarding recordkeeping requirements sufficient to establish whether a transaction is a section 871(m) transaction and whether a payment is a dividend equivalent and the amount of gross income treated as a dividend equivalent, see § 1.6001-1.

(ii) ***Records sufficient to establish whether a transaction is a section 871(m) transaction and any dividend equivalent amount.*** Any person required to retain records must keep sufficient information to establish whether a transaction is a section 871(m) transaction and the amount of a dividend equivalent (if any), including documentation and work papers supporting the delta calculation or the substantial equivalence test (including the number of shares of the initial hedge), as applicable, and written estimated dividends (if any). The records and documentation must be created substantially contemporaneously. A record will be considered to have been created substantially contemporaneously if it was created within 10 business days of the date containing the calculation time for the potential section 871(m) transaction.

(iii) ***Recordkeeping required for certain options.*** With respect to any option to which paragraph (g)(4) of this section applies, contemporaneous documentation is not required to be retained provided that there is a pre-existing documented methodology that is sufficient to permit the delta for the transaction to be verified at a later time.

(5) ***Example.*** The following example illustrates the rules of paragraph (p) of this section.

(i) ***Example 1: Responsible party for a transaction with multiple broker-dealers.***

(A) ***Facts.*** CO is a domestic clearing organization and is not a broker as defined in paragraph (a)(1) of this section. CO serves as a central counterparty clearing and settlement service provider for derivatives exchanges in the United States. EB and CB are brokers organized in the United States and members of CO. FC, a foreign corporation, instructs EB to execute the purchase of a call option that is a specified ELI (as described in paragraph (e) of this section). EB effects the trade for FC on the exchange and then, as instructed by FC, transfers the option to CB to be cleared with CO. The exchange matches FC's order with an order for a written call option with the same terms and then sends the matched trade to CO, which clears the trade. CB and the clearing member representing the person who sold the call option settle the trade with CO. Upon receiving the matched trade, the option contracts are novated and CO becomes the counterparty to CB and the counterparty to the clearing member representing the person who sold the call option.

(B) ***Analysis.*** Both EB and CB are broker-dealers acting on behalf of FC for a potential section 871(m) transaction. Under paragraph (p)(1)(iii) of this section, however, only CB is required to make the determinations described in paragraph (p) of this section because CB has the ongoing customer relationship with FC with respect to the call option.

(ii) [Reserved]

(q) ***Dividend and dividend equivalent payments to a qualified derivatives dealer*** —

(1) ***In general.*** Except as otherwise provided in this paragraph (q), a qualified derivatives dealer described in § 1.1441-1(e)(6) that receives a payment (within the meaning of paragraph (i) of this section) of a dividend equivalent in its equity derivatives dealer capacity will not be liable for tax under section 881 on that dividend equivalent, provided that the qualified derivatives dealer complies with its obligations under the qualified intermediary withholding agreement described in §§ 1.1441-1(e)(5) and 1.1441-1(e)(6). A qualified derivatives dealer is liable for tax under section 881(a)(1) on its section 871(m) amount for each dividend on each underlying security. This tax liability is reduced (but not below zero) by the amount of tax paid by the qualified derivatives dealer under section 881(a)(1) on dividends it receives with respect to that underlying security on that same dividend in its capacity as an equity derivatives dealer. In addition, a qualified derivatives dealer is liable for tax under section 881(a)(1) for all dividend equivalents it receives that are not

received in its equity derivatives dealer capacity. A qualified derivatives dealer also is liable for tax under section 881(a)(1) for all dividends it receives, other than dividends received in 2017 in its equity derivatives dealer capacity. This paragraph does not apply for a qualified derivatives dealer that is a foreign branch of a United States financial institution (within the meaning of § 1.1471-5(e)).

(2) ***Transactions on the books of an equity derivatives dealer.*** Transactions properly reflected in a qualified derivatives dealer's equity derivatives dealer book are presumed to be held by the dealer in its equity derivatives dealer capacity for purposes of determining the qualified derivatives dealer's tax liability. For purposes of determining whether a dealer is acting in its equity derivatives dealer capacity, only the dealer's activities as an equity derivatives dealer are taken into account. Accordingly, for purposes of this paragraph (q), a dividend or dividend equivalent is treated as received by a qualified derivatives dealer acting in its non-equity derivatives dealer capacity if the dividend or dividend equivalent is received by a qualified derivatives dealer acting as a proprietary trader.

(3) ***Section 871(m) amount.*** For each dividend on each underlying security, the section 871(m) amount is the product of:

(i) The qualified derivatives dealer's net delta exposure to the underlying security for the applicable dividend, multiplied by;

(ii) The applicable dividend amount per share.

(4) ***Net delta exposure.*** The net delta exposure to an underlying security is the amount (measured in number of shares) by which (A) the aggregate number of shares of an underlying security that the qualified derivatives dealer has exposure to as a result of positions in the underlying security (including as a result of owning the underlying security) with values that move in the same direction as the underlying security (the long positions) exceeds (B) the aggregate number of shares of an underlying security that the qualified derivatives dealer has exposure to as a result of positions in the underlying security with values that move in the opposite direction from the underlying security (the short positions). The net delta exposure calculation only includes long positions and short positions that the qualified derivatives dealer holds in its equity derivatives dealer capacity (as described in paragraph (q)(2) of this section). Any long positions or short positions that are treated as effectively connected with the qualified derivatives dealer's conduct of a trade or business in the United States for U.S. federal income tax purposes are excluded from the net delta exposure computation. The net delta exposure to an underlying security is determined at the end of the day on the date provided in § 1.871-15(j)(2) for the applicable dividend. For purposes of this calculation, net delta must be determined in a commercially reasonable manner. If a qualified derivatives dealer calculates net delta for non-tax business purposes, the net delta ordinarily will be the delta used for that purpose, subject to the modifications required by this definition. Each qualified derivatives dealer must determine its net delta exposure separately only taking into account transactions that are recognized and are attributable to that qualified derivatives dealer for U.S. federal income tax purposes.

(5) ***Examples.*** The following examples illustrate the rules of this paragraph (q):

> *Example 1. Forward contract entered into by a foreign equity derivatives dealer.* (i) *Facts.* FB is a foreign bank that is a qualified intermediary that acts as a qualified derivatives dealer. On April 1, Year 1, FB enters into a cash settled forward contract initiated by a foreign customer (Customer) that entitles Customer to receive from FB all of the appreciation and dividends on

100 shares of Stock X, and obligates Customer to pay FB any depreciation on 100 shares of Stock X, at the end of three years. FB hedges the forward contract by entering into a total return swap contract with a domestic broker (U.S. Broker) and maintains the swap contract as a hedge for the duration of the forward contract. The swap contract entitles FB to receive an amount equal to all of the dividends on 100 shares of Stock X and obligates FB to pay an amount referenced to a floating interest rate each quarter, and also entitles FB to receive from or pay to U.S. Broker, as the case may be, the difference between the value of 100 shares of Stock X at the inception of the swap and the value of 100 shares of Stock X at the end of 3 years. Stock X pays a quarterly dividend of $0.25 per share. At the end of the day on the date provided in paragraph (j)(2) of this section for the dividend, FB owns the forward contract and total return swap; FB does not own any shares of Stock X or any other transactions that reference Stock X. FB provides valid documentation to U.S. Broker that FB will receive payments under the swap contract in its capacity as a qualified derivatives dealer, and FB contemporaneously enters both the swap contract with U.S. Broker and the forward contract with Customer on its equity derivatives dealer books.
(ii) *Application of rules.* At the end of the day on the date provided in paragraph (j)(2) of this section for the dividend, FB is a long party on a delta one contract (the total return swap) and a short party on a delta one contract (the forward contract with Customer). Pursuant to § 1.1441-1(b)(4)(xxii), U.S. Broker is not obligated to withhold on the dividend equivalent payments to FB on the swap contract that are referenced to Stock X dividends because U.S. Broker has received valid documentation that it may rely upon to treat the payment as made to FB acting as a qualified derivatives dealer. Pursuant to paragraph (q)(1) of this section, FB is not liable for tax under sections 871(m) and 881 on the payments it receives from U.S. Broker referenced to Stock X dividends because FB's net delta exposure with respect to 100 shares of Stock X is zero at the end of the day on the date provided in paragraph (j)(2) of this section for the dividend. The net delta exposure is zero because the taxpayer has 100 shares of Stock X long position exposure as a result of the total return swap that is reduced by 100 shares of Stock X short position exposure as a result of the forward contract. FB is required to withhold on dividend equivalent payments to Customer on the forward contract in accordance with § 1.1441-2(e)(7).

Example 2. At-the-money option contract entered into by a foreign equity derivatives dealer. (i) *Facts.* The facts are the same as Example 1, but Customer purchases from FB an at-the-money call option on 100 shares of Stock X with a term of one year. The call option has a delta of 0.5, and FB hedges the call option by entering into a total return swap that references 50 shares of Stock X with U.S. Broker. At the end of the day on the date provided in paragraph (j)(2) of this section for the dividend, the call option has a delta of 0.6, FB hedges the call option with a total return swap that references 60 shares of Stock X with U.S. Broker, and FB has no shares of Stock X or other transactions that reference Stock X.

(ii) *Application of rules.* At the end of the day on the date provided in paragraph (j)(2) of this section for the dividend, FB is a long party on 60 shares of Stock X through the total return swap and a short party on an option. Because the option has a delta of less than 0.8 at the calculation time, it is not a section 871(m) transaction. Therefore, there will be no dividend equivalent payments made by FB to Customer that are subject to withholding. Pursuant to § 1.1441-1(b)(4)(xxii), U.S. Broker is not obligated to withhold on the dividend equivalents with respect to Stock X paid to FB because U.S. Broker has received valid documentation that it may rely upon to treat the dividend equivalents as paid to FB acting as a qualified derivatives dealer. The net delta exposure is zero at the end of the day on the date provided in paragraph (j)(2) of this section for the dividend because FB has a long position of 60 shares as a result of the total return swap, which is reduced by FB's short position of 60 shares as a result of the option.

Example 3. In-the-money option contract entered into by a foreign equity derivatives dealer. (i) *Facts.* The facts are the same as Example 2, but Customer purchases from FB an in-the-money call option on 100 shares of Stock X with a term of one year. The call option has a delta of 0.8 and FB hedges the call option by purchasing 80 shares of Stock X, which are held in an account with U.S. Broker, who also acts as paying agent. The price of Stock X declines substantially and the option lapses unexercised. At the end of the day on the date provided in paragraph (j)(2) of this section for the dividend, the call option has a delta of 0.48 and FB has reduced its hedge to 50 shares of Stock X with U.S. Broker. In addition, on that date, FB owns no other shares of Stock X or any other transactions that reference Stock X in its equity derivatives dealer capacity.
(ii) *Application of rules.* At the end of the day on the date provided in paragraph (j)(2) of this section for the dividend, FB is a long party on 50 shares of Stock X and a short party on an option. Because the option has a delta of 0.8 at the calculation time, it is a section 871(m) transaction. Therefore, FB is required to withhold on dividend equivalent payments to Customer on the option contract in accordance with § 1.1441-2(e)(7). U.S. Broker is required to withhold on the Stock X dividends paid to FB. Assuming that FB is a qualified resident of a country with a treaty that provides withholding on dividends at a 15 percent rate, U.S. Broker is required withhold on the dividends with respect to the 50 shares of stock held by FB. FB's net delta exposure is two shares of Stock X at the end of the day on the date provided in paragraph (j)(2) of this section because FB has a long position of 50 shares, reduced by FB's short position of 48 shares as a result of the option. FB's section 881 tax on the $0.50 (two shares multiplied by a dividend of $0.25 per share) is reduced (but not below zero) by the section 881 tax amount paid by the qualified derivatives dealer on the 50 shares. Therefore, FB's section 871(m) amount is zero.

(r) ***Effective/applicability date*** —

(1) ***In general.*** This section applies to payments made on or after January 19, 2017 except as provided in paragraphs (r)(2) and (3) of this section.

(2) ***Effective/applicability date for paragraphs (d)(2) and (e).*** Paragraphs (d)(2) and (e) of this section apply to any payment made on or after January 1, 2017, with respect to any transaction with a delta of one issued on or after January 1, 2017. Paragraphs (d)(2) and (e) of this section apply to any payment made on or after January 1, 2018, with respect to any other transaction issued on or after January 1, 2018. Notwithstanding the prior sentence, paragraphs (d)(2) and (e) of this section will apply to any payments made on or after January 1, 2020, with respect to the exchange-traded notes issued on or after January 1, 2017, that are identified in a separate notice, and not payments made before January 1, 2020, with respect to those notes. Notwithstanding the first sentence of this paragraph (r)(3), paragraphs (d)(2) and (e) of this section do not apply to payments made in 2017 to a qualified derivatives dealer in its equity derivatives dealer capacity to hedge transactions that have a delta of less than one.

(3) ***Effective/applicability date for paragraphs (g)(4)(ii)(B), (p)(1)(ii) through (iv), and (p)(5) of this section.*** Paragraphs (c)(2)(iv), (h), and (q) of this section apply to payments made on or after January 1, 2017.

[T.D. 9648, 78 FR 73080, Dec. 5, 2013, as amended by T.D. 9734, 80 FR 56879, Sept. 18, 2015; 80 FR 75946, Dec. 7, 2015; T.D. 9815, 82 FR 8155, 8160, Jan. 24, 2017; T.D. 9815, 82 FR 49508, Oct. 26, 2017; T.D. 9887, 84 FR 68793, Dec. 17, 2019]

§ 1.872-1 Gross income of nonresident alien individuals.

(a) ***In general*** —

(1) ***Inclusions.*** The gross income of a nonresident alien individual for any taxable year includes only

(i) the gross income which is derived from sources within the United States and which is not effectively connected for the taxable year with the conduct of a trade or business in the United States by that individual and

(ii) the gross income, irrespective of whether such income is derived from sources within or without the United States, which is effectively connected for the taxable year with the conduct of a trade or business in the United States by that individual. For the determination of the sources of income, see sections 861 through 863 and the regulations thereunder. For the determination of whether income from sources within or without the United States is effectively connected for the taxable year with the conduct of a trade or business in the United States, see sections 864(c) and 871 (c) and (d), §§ 1.864-3 through 1.864-7, and §§ 1.871-9 and 1.871-10. For special rules for determining the income of an alien individual who changes his residence during the taxable year, see § 1.871-13.

(2) ***Exchange transactions.*** Even though a nonresident alien individual who effects certain transactions in the United States in stocks, securities, or commodities during the taxable year may not, by reason of section 864(b)(2) and paragraph (c) or (d) of § 1.864-2, be engaged in trade or business in the United States during the taxable year through the effecting of such transactions, nevertheless he shall be required to include in gross income for the taxable year the gains and profits from those transactions to the extent required by § 1.871-7 or § 1.871-8.

(3) ***Exclusions.*** For exclusions from gross income, see § 1.872-2.

(b) ***Individuals not engaged in U.S. business.*** In the case of a nonresident alien individual who at no time during the taxable year is engaged in trade or business in the United States, the gross income shall include only

(1) the gross income from sources within the United States which is described in section 871(a) and paragraphs (b), (c), and (d) of § 1.871-7, and

(2) the gross income from sources within the United States which, by reason of section 871 (c) or (d) and § 1.871-9 or § 1.871-10, is treated as effectively connected for the taxable year with the conduct of a trade or business in the United States by that individual.

(c) ***Individuals engaged in U.S. business.*** In the case of a nonresident alien individual who is engaged in trade or business in the United States at any time during the taxable year, the gross income shall include

(1) the gross income from sources within and without the United States which is effectively connected for the taxable year with the conduct of a trade or business in the United States by that individual,

(2) the gross income from sources within the United States which, by reason of the election provided in section 871(d) and § 1.871-10, is treated as effectively connected for the taxable year with the conduct of a trade or business in the United States by that individual, and

(3) the gross income from sources within the United States which is described in section 871(a) and paragraphs (b), (c), and (d) of § 1.871-7 and is not effectively connected for the taxable year with the conduct of a trade or business in the United States by that individual.

(d) ***Special rules applicable to certain expatriates.*** For special rules for determining the gross income of a nonresident alien individual who has lost U.S. citizenship with a principal purpose of avoiding certain taxes, see section 877(b)(1).

(e) ***Alien resident of Puerto Rico.*** This section shall not apply in the case of a nonresident alien individual who is a bona fide resident of Puerto Rico during the entire taxable year. See section 876 and § 1.876-1.

(f) ***Effective date.*** This section shall apply for taxable years beginning after December 31, 1966. For corresponding rules applicable to taxable years beginning before January 1, 1967, see 26 CFR 1.872-1 (Revised as of January 1, 1971).

[T.D. 6500, 25 FR 11910, Nov. 26, 1960, as amended by T.D. 7332, 39 FR 44228, Dec. 23, 1974]

§ 1.872-2 Exclusions from gross income of nonresident alien individuals.

(a) ***Earnings of foreign ships or aircraft*** —

(1) ***Basic rule.*** So much of the income from sources within the United States of a nonresident alien individual as consists of earnings derived from the operation of a ship or ships documented, or of aircraft registered, under the laws of a foreign country which grants an equivalent exemption to citizens of the United States nonresident in that foreign country and to corporations organized in the United States shall not be included in gross income.

(2) ***Equivalent exemption*** —

(i) ***Ships.*** A foreign country which either imposes no income tax, or, in imposing an income tax, exempts from taxation so much of the income of a citizen of the U.S. nonresident in that foreign country and of a corporation organized in the United States as consists of earnings derived from the operation of a ship or ships documented under the laws of the United States is considered as granting an equivalent exemption for purposes of the exclusion from gross income of the earnings of a foreign ship or ships.

(ii) ***Aircraft.*** A foreign country which either imposes no income tax, or, in imposing an income tax, exempts from taxation so much of the income of a citizen of the U.S. nonresident in that foreign country and of a corporation organized in the United States as consists of earnings derived from the operation of aircraft registered under the laws of the United States is considered as granting an equivalent exemption for purposes of the exclusion from gross income of the earnings of foreign aircraft.

(3) ***Definition of earnings.*** For purposes of subparagraphs (1) and (2) of this paragraph, compensation for personal services performed by an individual aboard a ship or aircraft does not constitute earnings derived by such individual from the operation of ships or aircraft.

(b) ***Compensation paid by foreign employer to participants in certain exchange or training programs*** —

(1) ***Exclusion from income.*** Compensation paid to a nonresident alien individual for the period that the nonresident alien individual is temporarily present in the United States as a nonimmigrant under subparagraph (F) (relating to the admission of students into the United States) or subparagraph (J) (relating to the admission of teachers, trainees, specialists, etc., into the United States) of section 101(a)(15) of the Immigration and Nationality Act (8 U.S.C. 1101(a)(15) (F) or (J)) shall be excluded from gross income if the compensation is paid to such alien by his foreign employer. Compensation paid to a nonresident alien individual by the U.S. office of a domestic bank which is acting as paymaster on behalf of a foreign employer constitutes compensation paid by a foreign employer for purposes of this paragraph if the domestic bank is reimbursed by the foreign employer for such payment. A nonresident alien individual who is temporarily present in the United States as a nonimmigrant under such subparagraph (J) includes a nonresident alien individual admitted to the United States as an “exchange visitor” under section 201 of the U.S. Information and Educational Exchange Act of 1948 (22 U.S.C. 1446), which section was repealed by section 111 of the Mutual Education and Cultural Exchange Act of 1961 (75 Stat. 538).

(2) ***Definition of foreign employer.*** For purposes of this paragraph, the term “foreign employer” means a nonresident alien individual, a foreign partnership, a foreign corporation, or an office or place of business maintained in a foreign country or in a possession of the United States by a domestic corporation, a domestic partnership, or an individual who is a citizen or resident of the United States. The term does not include a foreign government. However, see section 893 and § 1.893-1. Thus, if a French citizen employed in the Paris branch of a banking company incorporated in the State of New York were admitted to the United States under section 101(a)(15)(J) of the Immigration and Nationality Act to study monetary theory and continued to receive a salary from such foreign branch while studying in the United States, such salary would not be includable in his gross income.

(c) ***Tax convention.*** Income of any kind which is exempt from tax under the provisions of a tax convention or treaty to which the United States is a party shall not be included in the gross income of a nonresident alien individual. Income on which the tax is limited by tax convention shall be included in the gross income of a nonresident alien individual if it is not otherwise excluded from gross income. See §§ 1.871-12 and 1.894-1.

(d) ***Certain bond income of residents of the Ryukyu Islands or the Trust Territory of the Pacific Islands.*** Income derived by a nonresident alien individual from a series E or series H U.S. savings bond shall not be included in gross income if such individual acquired the bond while he was a resident of the Ryukyu Islands or the Trust Territory of the Pacific Islands. It is not necessary that the individual continue to be a resident of such Islands or Trust Territory for the period when, without regard to section 872(b)(4) and this paragraph, the income from the bond would otherwise be includible in his gross income under the provisions of section 446 or 454.

(e) ***Certain annuities received under qualified plans.*** Pursuant to section 871(f), income received by a nonresident alien individual as an annuity under a qualified annuity plan described in section 403(a)(1) (relating to taxation of employee annuities), or from a qualified trust described in section 401(a) (relating to qualified pension, profit-sharing, and stock bonus plans) which is exempt from tax under section 501(a) (relating to exemption from tax on corporations, certain trusts, etc.), shall not be included in gross income, and shall be exempt from tax, for purposes of section 871 and §§ 1.871-7 and 1.871-8, if—

(1) All of the personal services by reason of which the annuity is payable were either—

(i) Personal services performed outside the United States by an individual (whether or not the annuitant) who, at the time of performance of the services, was a nonresident alien individual, or

(ii) Personal services performed in the United States by a nonresident alien individual (whether or not the annuitant) which, by reason of section 864(b)(1) (or corresponding provision of any prior law), were not personal services causing such individual to be engaged in trade or business in the United States during the taxable year, and

(2) At the time the first amount is paid (even though paid in a taxable year beginning before January 1, 1967) as such annuity under such annuity plan, or by such trust, to

(i) the individual described in subparagraph (1) of this paragraph, or

(ii) his nonresident alien beneficiary if such beneficiary is entitled to receive such first amount, 90 percent or more of the employees or annuitants for whom contributions or benefits are provided under the annuity plan, or under the plan or plans of which the trust is a part, are citizens or residents of the United States.

This paragraph shall apply whether or not the taxpayer is engaged in trade or business in the United States at any time during the taxable year in which the annuity is received. This paragraph shall not apply to distributions by an employees' trust or from an annuity plan which give rise to gains described in section 402(a)(2) or 403(a)(2), whichever applies. See section 871(a)(1)(B) and paragraph (c)(1)(i) of § 1.871-7. For exemption from withholding of tax at source on an annuity which is exempt from tax under section 871(f) and this paragraph, see paragraph (g) of § 1.1441-4.

(f) ***Other exclusions.*** Income which is from sources without the United States, as determined under the provisions of sections 861 through 863, and the regulations thereunder, is not included in the gross income of a nonresident alien individual unless such income is effectively connected for the taxable year with the conduct of a trade or business in the United States by that individual. To determine specific exclusions in the case of other items which are from sources within the United States, see the applicable sections of the Code. For special rules under a tax convention for determining the sources of income and for excluding, from gross income, income from sources without the United States which is effectively connected with the conduct of a trade or business in the United States, see the applicable tax convention. For determining which income from sources without the United States is effectively connected with the conduct of a trade or business in the United States, see section 864(c)(4) and § 1.864-5.

(g) ***Effective date.*** This section shall apply for taxable years beginning after December 31, 1966. For corresponding rules applicable to taxable years beginning before January 4, 1967 see 26 CFR 1.872-2 (Revised as of January 1, 1971).

[T.D. 7332, 39 FR 44228, Dec. 23, 1974]

§ 1.873-1 Deductions allowed nonresident alien individuals.

(a) *General provisions* —

(1) ***Allocation of deductions.*** In computing the taxable income of a nonresident alien individual the deductions otherwise allowable shall be allowed only if, and to the extent that, they are connected with income from sources within the United States. No deduction shall be allowed in respect of any item, or portion thereof, which is not connected with income from such sources. For this purpose, the proper apportionment and allocation of the deductions with respect to sources of income within and without the United States shall be determined as provided in part I (section 861 and following), subchapter N, chapter 1 of the Code, and the regulations thereunder, except as may otherwise be provided by tax convention. Thus, from the items of gross income specifically from sources within the United States and from the items allocated thereto under the provisions of section 863(a), there shall be deducted

(i) the expenses, losses, and other deductions which are connected with those items of income and are properly apportioned or allocated thereto, and

(ii) a ratable part of any other expenses, losses, or deductions which are connected with those items of income but cannot definitely be allocated to some item or class of gross income. The ratable part shall be based upon the ratio of gross income from sources within the United States to the total gross income. See §§ 1.861-8 and 1.863-1. In the case of income partly from within and partly from without the United States the expenses, losses, and other deductions connected with income from sources within the United States shall also be deducted in the manner prescribed by §§ 1.863-2 through 1.863-5 in order to ascertain under section 863 the portion of the taxable income attributable to sources within the United States.

(2) ***Personal exemptions.*** The deductions for the personal exemptions allowed by section 151 or 642(b) shall not be taken into account for purposes of subparagraph (1) of this paragraph but shall be allowed to the extent provided by paragraphs (b) and (c) of this section.

(3) ***Adjusted gross income.*** The adjusted gross income of a nonresident alien individual shall be the gross income from sources within the United States, determined in accordance with § 1.871-7, minus the deductions prescribed by section 62 to the extent such deductions are allowed under this section in computing taxable income.

(4) ***Standard deduction.*** The standard deduction shall not be allowed in computing the taxable income of a nonresident alien individual. See section 142(b)(1) and the regulations thereunder.

(5) ***Exempt income.*** No deduction shall be allowed under this section for the amount of any item or part thereof allocable to a class or classes of exempt income, including income exempt by tax convention. See section 265 and the regulations thereunder.

(b) *No United States business* —

(1) *Income of not more than $15,400* —

(i) ***Deduction for losses only.*** A nonresident alien individual within class 1 shall not be allowed any deductions other than the deduction for losses from sales or exchanges of capital assets determined in the manner prescribed by paragraph (b)(4)(vii) of § 1.871-7. Thus, an individual within this class shall not be allowed any deductions for the personal exemptions otherwise allowed by section 151 or 642(b).

(ii) ***Source of losses.*** Notwithstanding the provisions of section 873(b)(1), losses from sales or exchanges of capital assets shall be allowed under this subparagraph only if allocable to sources within the United States. See paragraph (b)(4)(i) of § 1.871-7.

(2) ***Aggregate more than $15,400*** —

(i) ***Deductions allowed.*** In computing the income subject to tax under section 1 or section 1201(b), a nonresident alien individual within class 2 shall be allowed deductions to the extent prescribed by paragraph (c)(3) of § 1.871-7, but subject to the limitations of this section. For this purpose, the deduction for the personal exemptions shall be allowed in accordance with subdivision (iii) of this subparagraph.

(ii) ***Deductions disallowed.*** In computing the minimum tax prescribed by section 871(b)(3), that individual shall not be allowed any deductions other than the deduction for losses from sales or exchanges of capital assets determined in the manner prescribed by paragraph (b)(4)(vii) of § 1.871-7. For this purpose, the deductions for the personal exemptions shall not be allowed. See paragraph (c)(4) of § 1.871-7.

(iii) ***Personal exemptions.*** When the deductions for personal exemptions are allowed under this subparagraph, only one exemption under section 151 shall be allowed in the case of an individual who is not a resident of Canada or Mexico. A resident of either of those countries shall be allowed all the exemptions granted by section 151 to the extent prescribed therein. An estate or trust, whether or not a resident of Canada or Mexico, shall determine its deduction for the personal exemption in accordance with section 642(b) and the regulations thereunder.

(iv) ***Source of losses.*** Notwithstanding the provisions of section 873(b), losses from sales or exchanges of capital assets shall be allowed under this subparagraph only if allocable to sources within the United States. See paragraph (c)(3)(i) of § 1.871-7.

(3) ***Election to be taxed on a net basis.*** Notwithstanding the other provisions of this paragraph, a nonresident alien individual within class 1 or 2 shall be allowed the deductions allowed by paragraph (c) of this section, if pursuant to a tax convention he is entitled, and does elect, to be subject to United States tax on a net basis as though he were engaged in trade or business within the United States through a permanent establishment situated therein.

(c) ***United States business*** —

(1) ***Deductions in general.*** For purposes of computing the income subject to tax, a nonresident alien individual within class 3 shall be allowed deductions to the extent prescribed by paragraph (d) of § 1.871-7, but subject to the limitations of this section. For this purpose, the deductions for the personal exemptions shall be allowed in accordance with subparagraph (3) of this paragraph.

(2) ***Special deductions.*** Notwithstanding the rule of source prescribed in paragraph (a) of this section, an individual within class 3 shall be allowed the following deductions whether or not they are connected with income from sources within the United States:

(i) ***Losses on transactions for profit.*** Any loss sustained during the taxable year and not compensated for by insurance or otherwise, if incurred in any transaction entered into for profit, though not connected with a trade or business, shall be allowed to the extent allowed by section 165(c)(2), but only if and to the extent that the profit, if the transaction had resulted in a profit, would be taxable to such individual. Losses allowed under this subdivision shall be deducted in full, as provided in §§ 1.861-8 and 1.863-1, when the profit from the transaction, if it

had resulted in a profit, would, under the provisions of section 861(a) or 863(a), have been taxable in full as income from sources within the United States; but shall be deducted under the provisions of § 1.863-3 when the profit from the transaction, if it had resulted in profit, would have been taxable only in part.

(ii) ***Casualty losses.*** Any loss of property not connected with a trade or business, sustained during the taxable year and not compensated for by insurance or otherwise, if the loss arises from fire, storm, shipwreck, or other casualty, or from theft, shall be allowed to the extent allowed by section 165(c)(3), but only if the loss is of property within the United States. Losses allowed under this subdivision shall be deducted in full, as provided in §§ 1.861-8 and 1.863-1, from the items of gross income specified under sections 861(a) and 863(a) as being derived in full from sources within the United States; but, if greater than the sum of those items, the unabsorbed loss shall be deducted from the income apportioned under the provisions of § 1.863-3 to sources within the United States.

(iii) ***Charitable contributions.*** The deduction for charitable contributions and gifts, to the extent allowed by section 170, shall be allowed under this subparagraph, but only as to contributions or gifts made to domestic corporations, or to community chests, funds, or foundations, created in the United States.

(3) ***Personal exemptions.*** Only one exemption under section 151 shall be allowed in the case of an individual who is not a resident of Canada or Mexico. A resident of either of those countries shall be allowed all the exemptions granted by section 151 to the extent prescribed therein. An estate or trust, whether or not a resident of Canada or Mexico, shall determine its deduction for the personal exemption in accordance with section 642(b) and the regulations thereunder.

§ 1.874-1 Allowance of deductions and credits to nonresident alien individuals.

(a) ***Return required.*** A nonresident alien individual shall receive the benefit of the deductions and credits otherwise allowable with respect to the income tax, only if the nonresident alien individual timely files or causes to be filed with the Philadelphia Service Center, in the manner prescribed in subtitle F, a true and accurate return of the income which is effectively connected, or treated as effectively connected, with the conduct of a trade or business within the United States by the nonresident alien individual. No provision of this section (other than paragraph (c)(2)) shall be construed, however, to deny the credits provided by sections 31, 32, 33, 34 and 852(b)(3)(D)(ii). In addition, notwithstanding the requirement that a nonresident alien must file a timely return in order to receive the benefit of the deductions and credits otherwise allowable with respect to the income tax, the nonresident alien individual may, for purposes of determining the amount of tax to be withheld under section 1441 from remuneration paid for labor or personal services performed within the United States, receive the benefit of the deduction for personal exemptions provided in section 151, to the extent allowable under section 873(b)(3) and paragraph (c)(3) of § 1.873-1, or in any applicable tax convention, by filing a claim therefore with the withholding agent. The amount of the deduction for the personal exemptions and the amount of the tax to be withheld under those circumstances shall be determined in accordance with paragraph (e)(2) of § 1.1441-3. The deductions and credits allowed such a nonresident alien individual electing under a tax convention to be subject to tax on a net basis may be obtained by filing a return of income in the manner prescribed in the regulations (if any) under the tax convention or under any other guidance issued by the Commissioner.

(b) ***Filing deadline for return —***

(1) ***General rule.*** As provided in paragraph (a) of this section, for purposes of computing the nonresident alien individual's taxable income for any taxable year, otherwise allowable deductions and credits will be allowed only if a true and accurate return for that taxable year is filed by the nonresident alien individual on a timely basis. For taxable years of a nonresident alien individual ending after July 31, 1990, whether a return for the current taxable year has been filed on a timely basis is dependent upon whether the nonresident alien individual filed a return for the taxable year immediately preceding the current taxable year. If a return was filed for that immediately preceding taxable year, or if the current taxable year is the first taxable year of the nonresident alien individual for which a return is required to be filed, the required return for the current taxable year must be filed within 16 months of the due date, as set forth in section 6072 and the regulations under that section, for filing the return for the current taxable year. If no return for the taxable year immediately preceding the current taxable year has been filed, the required return for the current taxable year (other than the first taxable year of the nonresident alien individual for which a return is required to be filed) must have been filed no later than the earlier of the date which is 16 months after the due date, as set forth in section 6072, for filing the return for the current taxable year or the date the Internal Revenue Service mails a notice to the nonresident alien individual advising the nonresident alien individual that the current year tax return has not been filed and that no deductions or credits (other than those provided in sections 31, 32, 33, 34 and 852(b)(3)(D)(ii)) may be claimed by the nonresident alien individual.

(2) ***Waiver.*** The filing deadlines set forth in paragraph (b)(1) of this section may be waived if the nonresident alien individual establishes to the satisfaction of the Commissioner or his or her delegate that the individual, based on the facts and circumstances, acted reasonably and in good faith in failing to file a U.S. income tax return (including a protective return (as described in paragraph (b)(6) of this section)). For this purpose, a nonresident alien individual shall not be considered to have acted reasonably and in good faith if the individual knew that he or she was required to file the return and chose not to do so. In addition, a nonresident alien individual shall not be granted a waiver unless the individual cooperates in determining his or her U.S. income tax liability for the taxable year for which the return was not filed. The Commissioner or his or her delegate shall consider the following factors in determining whether the nonresident alien individual, based on the facts and circumstances, acted reasonably and in good faith in failing to file a U.S. income tax return—

(i) Whether the individual voluntarily identifies himself or herself to the Internal Revenue Service as having failed to file a U.S. income tax return before the Internal Revenue Service discovers the failure to file;

(ii) Whether the individual did not become aware of his or her ability to file a protective return (as described in paragraph (b)(6) of this section) by the deadline for filing the protective return;

(iii) Whether the individual had not previously filed a U.S. income tax return;

(iv) Whether the individual failed to file a U.S. income tax return because, after exercising reasonable diligence (taking into account his or her relevant experience and level of sophistication), the individual was unaware of the necessity for filing the return;

(v) Whether the individual failed to file a U.S. income tax return because of intervening events beyond the individual's control; and

(vi) Whether other mitigating or exacerbating factors existed.

(3) ***Examples.*** The following examples illustrate the provisions of paragraph (b). In all examples, A is a nonresident alien individual and uses the calendar year as A's taxable year. The examples are as follows:

Example 1. Nonresident alien individual discloses own failure to file. In Year 1, A became a limited partner with a passive investment in a U.S. limited partnership that was engaged in a U.S. trade or business. During Year 1 through Year 4, A incurred losses with respect to A's U.S. partnership interest. A's foreign tax advisor incorrectly concluded that because A was a limited partner and had only losses from A's partnership interest, A was not required to file a U.S. income tax return. A was aware neither of A's obligation to file a U.S. income tax return for those years nor of A's ability to file a protective return for those years. A had never filed a U.S. income tax return before. In Year 5, A began realizing a profit rather than a loss with respect to the partnership interest and, for this reason, engaged a U.S. tax advisor to handle A's responsibility to file U.S. income tax returns. In preparing A's U.S. income tax return for Year 5, A's U.S. tax advisor discovered that returns were not filed for Year 1 through Year 4. Therefore, with respect to those years for which applicable filing deadlines in paragraph (b)(1) of this section were not met, A would be barred by paragraph (a) of this section from claiming any deductions that otherwise would have given rise to net operating losses on returns for these years, and that would have been available as loss carryforwards in subsequent years. At A's direction, A's U.S. tax advisor promptly contacted the appropriate examining personnel and cooperated with the Internal Revenue Service in determining A's income tax liability, for example, by preparing and filing the appropriate income tax returns for Year 1 through Year 4 and by making A's books and records available to an Internal Revenue Service examiner. A has met the standard described in paragraph (b)(2) of this section for waiver of any applicable filing deadlines in paragraph (b)(1) of this section.

Example 2. Nonresident alien individual refuses to cooperate. Same facts as in *Example 1,* except that while A's U.S. tax advisor contacted the appropriate examining personnel and filed the appropriate income tax returns for Year 1 through Year 4, A refused all requests by the Internal Revenue Service to provide supporting information (for example, books and records) with respect to those returns. Because A did not cooperate in determining A's U.S. tax liability for the taxable years for which an income tax return was not timely filed, A is not granted a waiver as described in paragraph (b)(2) of this section of any applicable filing deadlines in paragraph (b)(1) of this section.

Example 3. Nonresident alien individual fails to file a protective return. Same facts as in *Example 1,* except that in Year 1 through Year 4, A also consulted a U.S. tax advisor, who advised A that it was uncertain whether U.S. income tax returns were necessary for those years and that A could protect A's right subsequently to claim the loss carryforwards by filing protective returns under paragraph (b)(6) of this section. A did not file U.S. income tax returns or protective returns for those years. A did not present evidence that intervening events beyond A's control prevented A from filing an income tax return, and there were no other mitigating factors. A has not met the standard described in paragraph (b)(2) of this section for waiver of any applicable filing deadlines in paragraph (b)(1) of this section.

Example 4. Nonresident alien with effectively connected income. In Year 1, A, a computer programmer, opened an office in the United States to market and sell a software program that A had developed outside the United States. A had minimal business or tax experience internationally, and no such experience in the United States. Through A's personal efforts, U.S. sales of the software produced income effectively connected with a U.S. trade or business. A, however, did

not file U.S. income tax returns for Year 1 or Year 2. A was aware neither of A's obligation to file a U.S. income tax return for those years, nor of A's ability to file a protective return for those years. A had never filed a U.S. income tax return before. In November of Year 3, A engaged U.S. counsel in connection with licensing software to an unrelated U.S. company. U.S. counsel reviewed A's U.S. activities and advised A that A should have filed U.S. income tax returns for Year 1 and Year 2. A immediately engaged a U.S. tax advisor who, at A's direction, promptly contacted the appropriate examining personnel and cooperated with the Internal Revenue Service in determining A's income tax liability, for example, by preparing and filing the appropriate income tax returns for Year 1 and Year 2 and by making A's books and records available to an Internal Revenue Service examiner. A has met the standard described in paragraph (b)(2) of this section for waiver of any applicable filing deadlines in paragraph (b)(1) of this section.

Example 5. IRS discovers nonresident alien's failure to file. In Year 1, A, a computer programmer, opened an office in the United States to market and sell a software program that A had developed outside the United States. Through A's personal efforts, U.S. sales of the software produced income effectively connected with a U.S. trade or business. A had extensive experience conducting similar business activities in other countries, including making the appropriate tax filings. A, however, was aware neither of A's obligation to file a U.S. income tax return for those years, nor of A's ability to file a protective return for those years. A had never filed a U.S. income tax return before. Despite A's extensive experience conducting similar business activities in other countries, A made no effort to seek advice in connection with A's U.S. tax obligations. A failed to file either U.S. income tax returns or protective returns for Year 1 and Year 2. In November of Year 3, an Internal Revenue Service examiner asked A for an explanation of A's failure to file U.S. income tax returns. A immediately engaged a U.S. tax advisor, and cooperated with the Internal Revenue Service in determining A's income tax liability, for example, by preparing and filing the appropriate income tax returns for Year 1 and Year 2 and by making A's books and records available to the examiner. A did not present evidence that intervening events beyond A's control prevented A from filing a return, and there were no other mitigating factors. A has not met the standard described in paragraph (b)(2) of this section for waiver of any applicable filing deadlines in paragraph (b)(1) of this section.

Example 6. Nonresident alien with prior filing history. A began a U.S. trade or business in Year 1 as a sole proprietorship. A's tax advisor filed the appropriate U.S. income tax returns for Year 1 through Year 6, reporting income effectively connected with A's U.S. trade or business. In Year 7, A replaced this tax advisor with a tax advisor unfamiliar with U.S. tax law. A did not file a U.S. income tax return for any year from Year 7 through Year 10, although A had effectively connected income for those years. A was aware of A's ability to file a protective return for those years. In Year 11, an Internal Revenue Service examiner contacted A and asked for an explanation of A's failure to file income tax returns after Year 6. A immediately engaged a U.S. tax advisor and cooperated with the Internal Revenue Service in determining A's income tax liability, for example, by preparing and filing the appropriate income tax returns for Year 7 through Year 10 and by making A's books and records available to the examiner. A did not present evidence that intervening events beyond A's control prevented A from filing a return, and there were no other mitigating factors. A has not met the standard described in paragraph (b)(2) of this section for waiver of any applicable filing deadlines in paragraph (b)(1) of this section.

(4) ***Effective date.*** Paragraphs (b)(2) and (3) of this section are applicable to open years for which a request for a waiver is filed on or after January 29, 2002.

(5) ***Income tax treaties.*** A nonresident alien individual who has a permanent establishment or fixed base, as defined in an income tax treaty between the United States and the country of residence of the nonresident alien individual, in the United States is subject to the filing deadlines as set forth in paragraph (b)(1) of this section.

(6) ***Protective return.*** If a nonresident alien individual conducts limited activities in the United States in a taxable year which the nonresident alien individual determines does not give rise to gross income which is effectively connected with the conduct of a trade or business within the United States as defined in sections 871(b) and 864 (b) and (c) and the regulations under those sections, the nonresident alien individual may nonetheless file a return for that taxable year on a timely basis under paragraph (b)(1) of this section and thereby protect the right to receive the benefit of the deductions and credits attributable to that gross income if it is later determined, after the return was filed, that the original determination was incorrect. On that timely filed return, the nonresident alien individual is not required to report any gross income as effectively connected with a United States trade or business or any deductions or credits but should attach a statement indicating that the return is being filed for the reason set forth in this paragraph (b)(4). If the nonresident alien individual determines that part of the activities which he or she conducts in the United States in a taxable year gives rise to gross income which is effectively connected with the conduct of a trade or business and part does not, the nonresident alien individual must timely file a return for that taxable year to report the gross income determined to be effectively connected, or treated as effectively connected, with the conduct of that trade or business within the United States and the deductions and credits attributable to the gross income. In addition, the nonresident alien individual should attach to that return the statement described in this paragraph (b)(4) with regard to the other activities. The nonresident alien individual may follow the same procedure if the nonresident alien individual determines initially that he or she has no United States tax liability under the provisions of an applicable income tax treaty. In the event the nonresident alien individual relies on the provisions of an income tax treaty to reduce or eliminate the income subject to taxation, or to reduce the rate of tax to which that income is subject, disclosure may be required pursuant to section 6114.

(c) ***Allowed deductions and credits —***

(1) ***In general.*** Except for losses of property located within the United States, charitable contributions and personal exemptions (see section 873(b)), deductions are allowed to a nonresident alien individual only to the extent they are connected with gross income which is effectively connected, or treated as effectively connected, with the conduct of the nonresident alien individual's trade or business in the United States. Other than credits allowed by sections 31, 32, 33, 34, and 852(b)(3)(D)(ii), the nonresident alien individual is entitled to credits only if they are attributable to effectively connected income. See paragraph (a) of this section for the requirement that a return be timely filed. Except as provided by section 906, a nonresident alien individual shall not be allowed the credit against the tax for taxes of foreign countries and possessions of the United States allowed by section 901.

(2) ***Verification.*** At the request of the Internal Revenue Service, a nonresident alien individual claiming deductions from gross income which is effectively connected or treated as effectively connected, with the conduct of a trade or business in the United States and credits attributable to that income must furnish at the place designated pursuant to § 301.7605-1(a) information sufficient to establish that the nonresident alien individual is entitled to the deductions and credits in the amounts claimed.

All information must be furnished in a form suitable to permit verification of the claimed deductions and credits. The Internal Revenue Service may require, as appropriate, that an English translation be provided with any information in a foreign language. If a nonresident alien individual fails to furnish sufficient information, the Internal Revenue Service may in its discretion disallow any claimed deductions and credits in full or in part.

(d) ***Return by Internal Revenue Service.*** If a nonresident alien individual has various sources of income within the United States, so that from any one source, or from all sources combined, the amount of income shall call for the assessment of a tax greater than that withheld at the source in the case of that individual, and a return of income has not been filed in the manner prescribed by subtitle F, including the filing deadlines set forth in paragraph (b)(1) of this section, the Internal Revenue Service shall:

(1) Cause a return of income to be made,

(2) Include on the return the income described in § 1.871-7 or § 1.871-8 of that individual from all sources concerning which it has information, and

(3) ***Assess the tax.*** If the nonresident alien individual is not engaged in, or does not receive income that is treated as being effectively connected with, a United States trade or business and § 1.871-7 is applicable, the tax shall be assessed on the basis of gross income without allowance for deductions or credits (other than the credits provided by sections 31, 32, 33, 34 and 852(b)(3)(D)(ii)) and collected from one or more sources of income within the United States. If the nonresident alien individual is engaged in a United States trade or business or is treated as having effectively connected income and § 1.871-8 applies, the tax on the income of the nonresident alien individual that is not effectively connected, or treated as effectively connected with the conduct of a United States trade or business shall be assessed on the basis of gross income, determined in accordance with the rules of § 1.871-7, without allowance for deductions or credits (other than the credits provided by sections 31, 32, 33, 34 and 852(b)(3)(D)(ii)) and collected from one or more of the sources of income within the United States. Tax on income that is effectively connected, or treated as effectively connected, with the conduct of a United States trade or business shall be assessed in accordance with either section 1, 55 or 402(e)(1) without allowance for deductions or credits (other than the credits provided by sections 31, 32, 33, 34 and 852(b)(3)(D)(ii)) and collected from one or more of the sources of income within the United States.

(e) ***Alien resident of Puerto Rico, Guam, American Samoa, or the Commonwealth of the Northern Mariana Islands.*** This section shall not apply to a nonresident alien individual who is a bona fide resident of Puerto Rico, Guam, American Samoa, or the Commonwealth of the Northern Mariana Islands during the entire taxable year. *See* section 876 and § 1.876-1.

[T.D. 8322, 55 FR 50828, Dec. 11, 1990; 56 FR 1361, Jan. 14, 1991, as amended by T.D. 8981, 67 FR 4174, Jan. 29, 2002; T.D. 9043, 68 FR 11313, Mar. 10, 2003]

§ 1.875-1 Partnerships.

Whether a nonresident alien individual who is a member of a partnership is taxable in accordance with subsection (a), (b), or (c) of section 871 may depend on the status of the partnership. A nonresident alien individual who is a member of a partnership which is not engaged in trade or business within the United States is subject to the provisions of section 871 (a) or (b), as the case may be, depending on whether or not he receives during the taxable year an aggregate of more than $15,400 gross income described in section 871(a), if he is not otherwise engaged in trade or business within the United States. A nonresident alien individual who is a member of a partnership which at

any time within the taxable year is engaged in trade or business within the United States is considered as being engaged in trade or business within the United States and is therefore taxable under section 871(c). For definition of what the term "partnership" includes, see section 7701(a)(2) and the regulations in part 301 of this chapter (Regulations on Procedure and Administration). The test of whether a partnership is engaged in trade or business within the United States is the same as in the case of a nonresident alien individual. See § 1.871-8.

§ 1.875-2 Beneficiaries of estates or trusts.

(a) [Reserved]

(b) ***Exception for certain taxable years.*** Notwithstanding paragraph (a) of this section, for any taxable year beginning before January 1, 1975, the grantor of a trust, whether revocable or irrevocable, is not deemed to be engaged in trade or business within the United States merely because the trustee is engaged in trade or business within the United States.

(c) [Reserved]

[T.D. 7332, 39 FR 44233, Dec. 23, 1974]

§ 1.876-1 Alien residents of Puerto Rico, Guam, American Samoa, or the Northern Mariana Islands.

(a) ***Scope.*** Section 876 and this section apply to any nonresident alien individual who is a bona fide resident of Puerto Rico or of a section 931 possession during the entire taxable year.

(b) ***In general.*** An individual to whom this section applies is, in accordance with the provisions of section 876, subject to tax under sections 1 and 55 in generally the same manner as an alien resident of the United States. See §§ 1.1-1(b) and 1.871-1. The tax generally is imposed upon the taxable income of such individual, determined in accordance with section 63(a) and the regulations under that section, from sources both within and without the United States, except for amounts excluded from gross income under the provisions of section 931 or 933. For determining the form of return to be used by such an individual, see section 6012 and the regulations under that section.

(c) ***Exceptions.*** Though subject to the tax imposed by section 1, an individual to whom this section applies will nevertheless be treated as a nonresident alien individual for the purpose of many provisions of the Internal Revenue Code (Code) relating to nonresident alien individuals. Thus, for example, such an individual is not allowed the standard deduction (section 63(c)(6)); is subject to withholding of tax at source under chapter 3 of the Code (for example, section 1441(e)); is generally excepted from the collection of income tax at source on wages for services performed in the possession (section 3401(a)(6)); is not allowed to make a joint return (section 6013(a)(1)); and, if described in section 6072(c), must pay his first installment of estimated income tax on or before the 15th day of the 6th month of the taxable year (section 6654(j) and (k)) and must pay his income tax on or before the 15th day of the 6th month following the close of the taxable year (sections 6072(c) and 6151(a)). In addition, under section 152(b)(3), an individual is not allowed a deduction for a dependent who is a resident of the relevant possession unless the dependent is a citizen or national of the United States.

(d) ***Credits against tax.***

(1) Certain credits under the Internal Revenue Code are available to any taxpayer subject to the tax imposed by section 1, including individuals to whom this section applies. For example, except as otherwise provided under section 931 or 933, the credits provided by the following sections are allowable to the extent provided under such sections against the tax determined in accordance with this section—

(i) Section 23 (relating to the credit for adoption expenses);

(ii) Section 31 (relating to the credit for tax withheld on wages);

(iii) Section 33 (relating to the credit for tax withheld at source on nonresident aliens); and

(iv) Section 34 (relating to the credit for certain uses of gasoline and special fuels).

(2) Certain credits under the Internal Revenue Code are not available to nonresident aliens or are subject to limitations based on such factors as principal place of abode in the United States. For example, the credits provided by the following sections are not allowable against the tax determined in accordance with this section except to the extent otherwise provided under such sections—

(i) Section 22 (relating to the credit for the elderly and disabled);

(ii) Section 25A (relating to the Hope Scholarship and Lifetime Learning Credits); and

(iii) Section 32 (relating to the earned income credit).

(e) ***Definitions.*** For purposes of this section—

(1) "Bona fide resident" is defined in § 1.937-1; and

(2) "Section 931 possession" is defined in § 1.931-1(c)(1).

(f) ***Effective/applicability date.*** This section applies to taxable years ending after April 9, 2008.

[T.D. 9391, 73 FR 19358, Apr. 9, 2008]

§ 1.879-1 Treatment of community income.

(a) ***Treatment of community income*** —

(1) ***In general.*** For taxable years beginning after December 31, 1976, community income of a citizen or resident of the United States who is married to a nonresident alien individual, and the deductions properly allocable to that income, shall be divided between the U.S. citizen or resident spouse in accordance with the rules in section 879 and paragraph (a)(2) through (a)(6) of this section. This section does not apply for any taxable year with respect to which an election under section 6013 (g) or (h) is in effect. Community income for this purpose includes all gross income, whether derived from sources within or without the United States, which is treated as community income of the spouses under the community property laws of the State, foreign country, or possession of the United States in which the recipient of the income is domiciled. Income from real property also may be community income if so treated under the laws of the jurisdiction in which the real property is located.

(2) ***Earned income.*** Wages, salaries, or professional fees, and other amounts received as compensation for personal services actually performed, which are community income for the taxable year, shall be treated as the income of the spouse who actually performed the personal services. This paragraph (a)(2) does not apply, however, to the following items of community income:

(i) Community income derived from any trade or business carried on by the husband or the wife.

(ii) Community income attributable to a spouse's distributive share of the income of a partnership to which paragraph (a)(4) of this section applies.

(iii) Community income consisting of compensation for personal services rendered to a corporation which represents a distribution of the earnings and profits of the corporation rather than a reasonable allowance as compensation for the personal services actually performed, but not including any income that would be treated as earned income under the second sentence of section 911(b).

(iv) Community income derived from property which is acquired as consideration for personal services performed.

These items of community income are divided in accordance with the rules in paragraph (a)(3) through (a)(6) of this section.

(3) ***Trade or business income.*** If any income derived from a trade or business carried on by the husband or wife is community income for the taxable year, all of the gross income, and the deductions attributable to that income, shall be treated as the gross income and deductions of the husband. However, if the wife exercises substantially all of the management and control of the trade or business, all of the gross income and deductions shall be treated as the gross income and deductions of the wife. This paragraph (a)(3) does not apply to any income derived from a trade or business carried on by a partnership of which both or one of the spouses is a member (see paragraph (a)(4) of this section). For purposes of this paragraph (a)(3), income derived from a trade or business includes any income derived from a trade or business in which both personal services and capital are material income producing factors. The term “management and control” means management and control in fact, not the management and control imputed to the husband under the community property laws of a State, foreign country or possession of the United States. For example, a wife who operates a pharmacy without any appreciable collaboration on the part of a husband is considered as having substantially all of the management and control of the business despite the provisions of any community property laws of a State, foreign country, or possession of the United States, vesting in the husband the right of management and control of community property. The income and deductions attributable to the operation of the pharmacy are considered the income and deductions of the wife.

(4) ***Partnership income.*** If any portion of a spouse's distributive share of the income of a partnership, of which the spouse is a member, is community income for the taxable year, all of that distributive share shall be treated as the income of that spouse and shall not be taken into account in determining the income of the other spouse. If both spouses are members of the same partnership, the distributive share of the income of each spouse which is community income shall be treated as the income of that spouse. A spouse's distributive share of the income of a partnership that is community income shall be determined as provided in section 704 and the regulations thereunder.

(5) ***Income from separate property.*** Any community income for the taxable year, other than income described in section 879(a) (1) or (2) and paragraph (a)(2), (3), or (4) of this section, which is derived from the separate property of one of the spouses shall be treated as the income of that spouse. The determination of what property is separate property for this purpose shall be made in accordance with the laws of the State, foreign country, or possession of the United States in which, in accordance with paragraph (a)(1) of this section, the recipient of the income is domiciled or, in the case of income from real property, in which the real property is located.

(6) ***Other community income.*** Any community income for the taxable year, other than income described in section 879(a) (1), (2), or (3), and paragraph (a)(2), (3), (4), or (5) of this section, shall be treated as income of that spouse who has a proprietary vested interest in that income under the laws of the state, foreign country, or possession of the United States in which, in accordance with paragraph (a)(1) of this section, the recipient of the income is domiciled or, in the case of income from real property, in which the real property is located. Thus, for example, this paragraph (a)(6) applies to community income not described in paragraph (a)(2), (3), (4), or (5) of this section which consists of dividends, interest, rents, royalties, or gains, from community property or of the earnings of unemancipated minor children.

(7) ***Illustrations.*** The application of this paragraph may be illustrated by the following examples:

Example 1. H, a U.S. citizen, and W, a nonresident alien individual, each of whose taxable years is the calendar year, were married throughout 1977. H and W were residents of, and domiciled in, foreign country Z during the entire taxable year. No election under section 6013 (g) or (h) is in effect for 1977. During 1977, H earned $10,000 from the performance of personal services as an employee. H also received $500 in dividend income from stock which under the community property laws of country Z is considered to be the separate property of H. W had no separate income for 1977. Under the community property laws of country Z all income earned by either spouse is considered to be community income, and one-half of this income is considered to belong to the other spouse. In addition, the laws of country Z provide that all income derived from property held separately by either spouse is to be treated as community income and treated as belonging one-half to each spouse. Thus, under the community property laws of country Z, H and W are both considered to have realized income of $5,250 during 1977, even though Z's laws recognize the stock as the separate property of H. Under the rules of paragraph (a)(2) and (5) of this section all of the income of $10,500 derived during 1977 is treated, for U.S. income tax purposes, as the income of H.

> *Example 2.* (a) The facts are the same as in example 1, except that H is the sole proprietor of a retail merchandising company, which has a $10,000 profit during 1977. W exercises no management and control over the business. In addition, H is a partner in a wholesale distributing company, and his distributive share of the partnership profit is $5,000. Both of these amounts of income are treated as community income under the community property laws of country Z, and under these laws both H and W are treated as realizing $7,500 of the income. Under the rule of paragraph (a)(3) and (4) of this section all $15,000 of the income is treated as the income of H for U.S. income tax purposes.
> (b) If W exercises substantially all of the management and control over the retail merchandising company, then for U.S. income tax purposes the $10,000 profit is treated as the income of W.

Example 3. The facts are the same as in example 1, except that H also received $1,000 in dividends on stock held separately in his name. Under the community property laws of country Z the stock is considered to be community property, the dividends to be community income, and one-half of the income to be the income of each spouse. Under the rule of paragraph (a)(6) of this section, $500 of the dividend income is treated, for U.S. income tax purposes, as the income of each spouse.

(b) ***Definitions and other special rules*** —

(1) ***Spouses with different taxable years.*** A special rule applies if the nonresident alien and the United States citizen or resident spouse of the alien do not have the same taxable years, as defined in section 441(b) and the regulations thereunder. The special rule is as follows. With respect to the U.S. citizen or resident spouse, section 879 and this section shall apply to each taxable year of the U.S. citizen or resident spouse for which no election under section 6013 (g) or (h) is in effect. With respect to the nonresident alien spouse, section 879 and this section apply to each period falling within the consecutive taxable years of the nonresident alien spouse which coincides with a taxable year of the U.S. citizen or resident spouse to which section 879 and this section apply.

(2) ***Determination of marital status.*** For purposes of this section, marital status shall be determined under section 143(a).

[T.D. 7670, 45 FR 6928, Jan. 31, 1980]

FOREIGN CORPORATIONS

§ 1.881-0 Table of contents.

This section lists the major headings for §§ 1.881-1 through 1.881-4.

§ 1.881-1 Manner of Taxing Foreign Corporations

(a) Classes of foreign corporations.

(b) Manner of taxing.

(1) Foreign corporations not engaged in U.S. business.

(2) Foreign corporations engaged in U.S. business.

(c) Meaning of terms.

(d) Rules applicable to foreign insurance companies.

(1) Corporations qualifying under subchapter L.

(2) Corporations not qualifying under subchapter L.

(e) Other provisions applicable to foreign corporations.

(1) Accumulated earnings tax.

(2) Personal holding company tax.

(3) Foreign personal holding companies.

(4) Controlled foreign corporations.

(i) Subpart F income and increase of earnings invested in U.S. property.

(ii) Certain accumulations of earnings and profits.

(5) Changes in tax rate.

(6) Consolidated returns.

(7) Adjustment of tax of certain foreign corporations.

(f) Effective date.

§ 1.881-2 Taxation of Foreign Corporations Not Engaged in U.S. Business

(a) Imposition of tax.

(b) Fixed or determinable annual or periodical income.

(c) Other income and gains.

(1) Items subject to tax.

(2) Determination of amount of gain.

(d) Credits against tax.

(e) Effective date.

§ 1.881-3 Conduit Financing Arrangements

(a) General rules and definitions.

(1) Purpose and scope.

(2) Definitions.

(i) Financing arrangement.

(A) In general.

(B) Special rule for related parties.

(ii) Financing transaction.

(A) In general.

(B) Limitation on inclusion of stock or similar interests.

(iii) Conduit entity.

(iv) Conduit financing arrangement.

(v) Related.

(3) Disregard of participation of conduit entity.

(i) Authority of district director.

(ii) Effect of disregarding conduit entity.

(A) In general.

(B) Character of payments made by the financed entity.

(C) Effect of income tax treaties.

(D) Effect on withholding tax.

(E) Special rule for a financing entity that is unrelated to both intermediate entity and financed entity.

(iii) Limitation on taxpayer's use of this section.

(4) Standard for treatment as a conduit entity.

(i) In general.

(ii) Multiple intermediate entities.

(A) In general.

(B) Special rule for related persons.

(b) Determination of whether participation of intermediate entity is pursuant to a tax avoidance plan.

(1) In general.

(2) Factors taken into account in determining the presence or absence of a tax avoidance purpose.

(i) Significant reduction in tax.

(ii) Ability to make the advance.

(iii) Time period between financing transactions.

(iv) Financing transactions in the ordinary course of business.

(3) Presumption if significant financing activities performed by a related intermediate entity.

(i) General rule.

(ii) Significant financing activities.

(A) Active rents or royalties.

(B) Active risk management.

(c) Determination of whether an unrelated intermediate entity would not have participated in financing arrangement on substantially same terms.

(1) In general.

(2) Effect of guarantee.

(i) In general.

(ii) Definition of guarantee.

(d) Determination of amount of tax liability.

(1) Amount of payment subject to recharacterization.

(i) In general.

(ii) Determination of principal amount.

(A) In general.

(B) Debt instruments and certain stock.

(C) Partnership and trust interests.

(D) Leases and licenses.

(2) Rate of tax.

(e) Examples.

(f) Effective date.

§ 1.881-4 Recordkeeping Requirements Concerning Conduit Financing Arrangements

(a) Scope.

(b) Recordkeeping requirements.

(1) In general.

(2) Application of sections 6038 and 6038A.

(c) Records to be maintained.

(1) In general.

(2) Additional documents.

(3) Effect of record maintenance requirement.

(d) Effective date.

[T.D. 8611, 60 FR 41005, Aug. 11, 1995]

§ 1.881-1 Manner of taxing foreign corporations.

(a) ***Classes of foreign corporations.*** For purposes of the income tax, foreign corporations are divided into two classes, namely, foreign corporations which at no time during the taxable year are engaged in trade or business in the United States and foreign corporations which, at any time during the taxable year, are engaged in trade or business in the United States.

(b) ***Manner of taxing*** —

(1) ***Foreign corporations not engaged in U.S. business.*** A foreign corporation which at no time during the taxable year is engaged in trade or business in the United States is taxable, as provided in § 1.881-2, on all income received from sources within the United States which is fixed or determinable annual or periodical income and on other items of income enumerated under section 881(a). Such a foreign corporation is also taxable on certain income from sources within the United States which, pursuant to § 1.882-2, is treated as effectively connected for the taxable year with the conduct of a trade or business in the United States.

(2) ***Foreign corporations engaged in U.S. business.*** A foreign corporation which at any time during the taxable year is engaged in trade or business in the United States is taxable, as provided in § 1.882-1, on all income from whatever source derived, whether or not fixed or determinable annual or periodical income, which is effectively connected for the taxable year with the conduct of a trade or business in the United States. Such a foreign corporation is also taxable, as provided in § 1.882-1, on income received from sources within the United States which is not effectively connected for the taxable year with the conduct of a trade or business in the United States and consists of

(i) fixed or determinable annual or periodical income, or

(ii) other items of income enumerated in section 881(a). A foreign corporation which at any time during the taxable year is engaged in trade or business in the United States is also taxable on certain income from sources within the United States which, pursuant to § 1.882-2, is treated as effectively connected for the taxable year with the conduct of a trade or business in the United States.

(c) ***Meaning of terms.*** For the meaning of the term "engaged in trade or business within the United States", as used in section 881 and this section, see section 864(b) and the regulations thereunder. For determining when income, gain, or loss of a foreign corporation for a taxable year is effectively connected for that year with the conduct of a trade or business in the United States, see section 864(c), the regulations thereunder, and § 1.882-2. The term *foreign corporation* has the meaning assigned to it by section 7701(a)(3) and (5) and the regulations thereunder. However, for special rules relating to possessions of the United States, see § 1.881-5.

(d) ***Rules applicable to foreign insurance companies*** —

(1) ***Corporations qualifying under subchapter L.*** A foreign corporation carrying on an insurance business in the United States at any time during the taxable year, which, without taking into account its income not effectively connected for the taxable year with the conduct of a trade or business in the United States, would qualify for the taxable year under part I, II, or III of subchapter L if it were a domestic corporation, shall be taxable for such year under that part on its entire taxable income (whether derived from sources within or without the United States) which is, or which pursuant to section 882 (d) or (e) and § 1.882-2 is treated as, effectively connected for the taxable year with the conduct of a trade or business (whether or not its insurance business) in the United States. Any income derived by that foreign corporation from sources within the United States which is not effectively connected for the taxable year with the conduct of a trade or business in the United States is taxable as provided in section 881(a) and § 1.882-1. See sections 842 and 861 through 864, and the regulations thereunder.

(2) ***Corporations not qualifying under subchapter L.*** A foreign corporation which carries on an insurance business in the United States at any time during the taxable year, and which, without taking into account its income not effectively connected for the taxable year with the conduct of a trade or business in the United States, would not qualify for the taxable year under part I, II, or III of subchapter L if it were a domestic corporation, and a foreign insurance company which does not carry on an insurance business in the United States at any time during the taxable year, shall be taxable—

(i) Under section 881(a) and § 1.881-2 or § 1.882-1 on its income from sources within the United States which is not effectively connected for the taxable year with the conduct of a trade or business in the United States,

(ii) Under section 882(a)(1) and § 1.882-1 on its income (whether derived from sources within or without the United States) which is effectively connected for the taxable year with the conduct of a trade or business in the United States, and

(iii) Under section 882(a)(1) and § 1.882-1 on its income from sources within the United States which pursuant to section 882 (d) or (e) and § 1.882-2, is treated as effectively connected for the taxable year with the conduct of a trade or business in the United States.

(e) ***Other provisions applicable to foreign corporations*** —

(1) ***Accumulated earnings tax.*** For the imposition of the accumulated earnings tax upon the accumulated taxable income of a foreign corporation formed or availed of for tax avoidance purposes, whether or not such corporation is engaged in trade or business in the United States, see section 532 and the regulations thereunder.

(2) ***Personal holding company tax.*** For the imposition of the personal holding company tax upon the undistributed personal holding company income of a foreign corporation which is a personal holding company, whether or not such corporation is engaged in trade or business in the United States, see sections 541 through 547, and the regulations thereunder. Except in the case of a foreign corporation having personal service contract income to which section 543(a)(7) applies, a foreign corporation is not a personal holding company if all of its stock outstanding during the last half of the taxable year is owned by nonresident alien individuals, whether directly or indirectly through foreign estates, foreign trusts, foreign partnerships, or other foreign corporations. See section 542(c)(7).

(3) ***Foreign personal holding companies.*** For the mandatory inclusion in the gross income of the United States shareholders of the undistributed foreign personal holding company income of a foreign personal holding company, see section 551 and the regulations thereunder.

(4) ***Controlled foreign corporations*** —

(i) ***Subpart F income and increase of earnings invested in U.S. Property.*** For the mandatory inclusion in the gross income of the U.S. shareholders of the subpart F income, of the previously excluded subpart F income withdrawn from investment in less developed countries, of the previously excluded subpart F income withdrawn from investment in foreign base company shipping operations, and of the increase in earnings invested in U.S. property, of a controlled foreign corporation, see sections 951 through 964, and the regulations thereunder.

(ii) ***Certain accumulations of earnings and profits.*** For the inclusion in the gross income of U.S. persons as a dividend of the gain recognized on certain sales or exchanges of stock in a foreign corporation, to the extent of certain earnings and profits attributable to the stock which were accumulated while the corporation was a controlled foreign corporation, see section 1248 and the regulations thereunder.

(5) ***Changes in tax rate.*** For provisions respecting the effect of any change in rate of tax during the taxable year on the income of a foreign corporation, see section 21 and the regulations thereunder.

(6) ***Consolidated returns.*** Except in the case of certain corporations organized under the laws of Canada or Mexico and maintained solely for the purpose of complying with the laws of that country as to title and operation of property, a foreign corporation is not an includible corporation for purposes of the privilege of making a consolidated return by an affiliated group of corporations. See section 1504 and the regulations thereunder.

(7) ***Adjustment of tax of certain foreign corporations.*** For the application of pre-1967 income tax provisions to corporations of a foreign country which imposes a more burdensome income tax than the United States, and for the adjustment of the income tax of a corporation of a foreign country which imposes a discriminatory income tax on the income of citizens of the United States or domestic corporations, see section 896.

(f) ***Effective/applicability date.*** This section applies for taxable years beginning after December 31, 1966. For corresponding rules applicable to taxable years beginning before January 1, 1967, see 26 CFR 1.881-1 (Revised as of January 1, 1971).

(Secs. 7805 (68A Stat. 917; 26 U.S.C. 7805) and 7654(e) (86 Stat. 1496; 26 U.S.C. 7654(e)) of the Internal Revenue Code of 1954)

[T.D. 7293, 38 FR 32795, Nov. 28, 1973, as amended by T.D. 7385, 40 FR 50260, Oct. 29, 1975; T.D. 7893, 48 FR 22507, May 19, 1983; T.D. 9194, 70 FR 18929, Apr. 11, 2005; T.D. 9391, 73 FR 19359, Apr. 9, 2008]

§ 1.881-2 Taxation of foreign corporations not engaged in U.S. business.

(a) ***Imposition of tax.***

(1) This section applies for purposes of determining the tax of a foreign corporation which at no time during the taxable year is engaged in trade or business in the United States. However, see also § 1.882-2 where such corporation has an election in effect for the taxable year in respect to real property income or receives interest on obligations of the United States. Except as otherwise provided in § 1.871-12, a foreign corporation to which this section applies is not subject to the tax imposed by section 11 or section 1201(a) but, pursuant to the provisions of section 881(a), is liable to a flat tax of 30 percent upon the aggregate of the amounts determined under paragraphs (b) and (c) of this section which are received during the taxable year from sources within the United States. Except as specifically provided in such paragraphs, such amounts do not include gains from the sale or exchange of property. To determine the source of such amounts, see sections 861 through 863, and the regulations thereunder.

(2) The tax of 30 percent is imposed by section 881(a) upon an amount only to the extent the amount constitutes gross income.

(3) Deductions shall not be allowed in determining the amount subject to tax under this section.

(4) Except as provided in § 1.882-2, a foreign corporation which at no time during the taxable year is engaged in trade or business in the United States has no income, gain, or loss for the taxable year which is effectively connected for the taxable year with the conduct of a trade or business in the United States. See section 864(c)(1)(B) and § 1.864-3.

(5) Gains and losses which, by reason of section 882(d) and § 1.882-2, are treated as gains or losses which are effectively connected for the taxable year with the conduct of a trade or business in the United States by such a foreign corporation shall not be taken into account in determining the tax under this section. See, for example, paragraph (c)(2) of § 1.871-10.

(6) Interest received by a foreign corporation pursuant to certain portfolio debt instruments is not subject to the flat tax of 30 percent described in paragraph (a)(1) of this section. For rules applicable to a foreign corporation's receipt of interest on certain portfolio debt instruments, see sections 871(h), 881(c), and § 1.871-14.

(b) ***Fixed or determinable annual or periodical income*** —

(1) ***General rule.*** The tax of 30 percent imposed by section 881(a) applies to the gross amount received from sources within the United States as fixed or determinable annual or periodical gains, profits, or income. Specific items of fixed or determinable annual or periodical income are enumerated in section 881(a)(1) as interest, dividends, rents, salaries, wages, premiums, annuities, compensations, remunerations, and emoluments, but other items of fixed or determinable annual or periodical gains, profits, or income are also subject to the tax as, for instance, royalties, including royalties for the use of patents, copyrights, secret processes and formulas, and other like property. As to the

determination of fixed or determinable annual or periodical income, see paragraph (a) of § 1.1441-2. For special rules treating gain on the disposition of section 306 stock as fixed or determinable annual or periodical income for purposes of section 881(a), see section 306(f) and paragraph (h) of § 1.306-3.

(2) ***Substitute payments.*** For purposes of this section, a substitute interest payment (as defined in § 1.861-2(a)(7)) received by a foreign person pursuant to a securities lending transaction or a sale-repurchase transaction (as defined in § 1.861-2(a)(7)) shall have the same character as interest income received pursuant to the terms of the transferred security. Similarly, for purposes of this section, a substitute dividend payment (as defined in § 1.861-3(a)(6)) received by a foreign person pursuant to a securities lending transaction or a sale-repurchase transaction (as defined in § 1.861-2(a)(7)) shall have the same character as a distribution received with respect to the transferred security. Where, pursuant to a securities lending transaction or a sale-repurchase transaction, a foreign person transfers to another person a security in the interest on which would qualify as portfolio interest under section 881(c) in the hands of the lender, substitute interest payments made with respect to the transferred security will be treated as portfolio interest, provided that in the case of interest on an obligation in registered form (as defined in § 1.871-14(c)(1)(i)), the transferor complies with the documentation requirement described in § 1.871-14(c)(1)(ii)(C) with respect to the payment of substitute interest and none of the exceptions to the portfolio interest exemption in sections 881(c) (3) and (4) apply. See also §§ 1.871-7(b)(2) and 1.894-1(c).

(3) ***Dividend Equivalents.*** For rules applicable to a foreign corporation's receipt of a dividend equivalent, see section 871(m) and the regulations thereunder.

(c) ***Other income and gains —***

(1) ***Items subject to tax.*** The tax of 30 percent imposed by section 881(a) also applies to the following gains received during the taxable year from sources within the United States:

(i) Gains described in section 631 (b) or (c), relating to the treatment of gain on the disposal of timber, coal, or iron ore with a retained economic interest;

(ii) [Reserved]

(iii) Gains from the sale or exchange after October 4, 1966, of patents, copyrights, secret processes and formulas, goodwill, trademarks, trade brands, franchises, or other like property, or of any interest in any such property, to the extent the gains are from payments (whether in a lump sum or in installments) which are contingent on the productivity, use, or disposition of the property or interest sold or exchanged, or from payments which are treated under section 871(e) and § 1.871-11 as being so contingent.

(2) ***Determination of amount of gain.*** The tax of 30 percent imposed upon the gains described in subparagraph (1) of this paragraph applies to the full amount of the gains and is determined

(i) without regard to the alternative tax imposed by section 1201(a) upon the excess of net long-term capital gain over the net short-term capital loss;

(ii) without regard to section 1231, relating to property used in the trade or business and involuntary conversions; and

(iii) except in the case of gains described in subparagraph (1)(ii) of this paragraph, whether or not the gains are considered to be gains from the sale or exchange of property which is a capital asset.

(d) ***Credits against tax.*** The credits allowed by section 32 (relating to tax withheld at source on foreign corporations), by section 39 (relating to certain uses of gasoline and lubricating oil), and by section 6402 (relating to overpayments of tax) shall be allowed against the tax of a foreign corporation determined in accordance with this section.

(e) ***Effective/applicability date.*** Except as otherwise provided in this paragraph, this section applies for taxable years beginning after December 31, 1966. Paragraph (b)(2) of this section is applicable to payments made after November 13, 1997. For corresponding rules applicable to taxable years beginning before January 1, 1967, see 26 CFR 1.881-2 (Revised as of January 1, 1971). Paragraph (b)(3) of this section applies to payments made on or after January 23, 2012.

[T.D. 7293, 38 FR 32796, Nov. 28, 1973, as amended by T.D. 8735, 62 FR 53502, Oct. 14, 1997; T.D. 9323, 72 FR 18388, Apr. 12, 2007; T.D. 9572, 77 FR 3109, Jan. 23, 2012; T.D. 9648, 78 FR 73080, Dec. 5, 2013]

§ 1.881-3 Conduit financing arrangements.

(a) ***General rules and definitions*** —

(1) ***Purpose and scope.*** Pursuant to the authority of section 7701(l), this section provides rules that permit the director of field operations to disregard, for purposes of section 881, the participation of one or more intermediate entities in a financing arrangement where such entities are acting as conduit entities. For purposes of this section, any reference to tax imposed under section 881 includes, except as otherwise provided and as the context may require, a reference to tax imposed under sections 871 or 884(f)(1)(A) or required to be withheld under section 1441 or 1442. See § 1.881-4 for recordkeeping requirements concerning financing arrangements. See §§ 1.1441-3(g) and 1.1441-7(f) for withholding rules applicable to conduit financing arrangements. See § 1.1471-3(e)(5) for withholding rules applicable to conduit financing arrangements for purposes of sections 1471 and 1472. See also §§ 1.267A-1 and 1.267A-4 (disallowing a deduction for certain interest or royalty payments to the extent the income attributable to the payment is offset by a hybrid deduction).

(2) ***Definitions.*** The following definitions apply for purposes of this section and §§ 1.881-4, 1.1441-3(g) and 1.1441-7(f).

(i) ***Financing arrangement*** —

(A) ***In general.*** Financing arrangement means a series of transactions by which one person (the financing entity) advances money or other property, or grants rights to use property, and another person (the financed entity) receives money or other property, or rights to use property, if the advance and receipt are effected through one or more other persons (intermediate entities) and, except in cases to which paragraph (a)(2)(i)(B) of this section applies, there are financing transactions linking the financing entity, each of the intermediate entities, and the financed entity. A transfer of money or other property in satisfaction of a repayment obligation is not an advance of money or other property. A financing arrangement exists regardless of the order in which the transactions are entered into, but only for the period during which all of the financing transactions coexist. See paragraphs (e)(1) through (5) of this section (*Examples 1* through *5*) for illustrations of the term financing arrangement.

(B) ***Special rule for related parties.*** If two (or more) financing transactions involving two (or more) related persons would form part of a financing arrangement but for the absence of a financing transaction between the related persons, the director of field operations may

treat the related persons as a single intermediate entity if he determines that one of the principal purposes for the structure of the financing transactions is to prevent the characterization of such arrangement as a financing arrangement. This determination shall be based upon all of the facts and circumstances, including, without limitation, the factors set forth in paragraph (b)(2) of this section. See paragraphs (e)(6) and (7) of this section (*Examples 6* and *7*) for illustrations of this paragraph (a)(2)(i)(B).

(C) ***Treatment of disregarded entities.*** For purposes of this section, the term *person* includes a business entity that is disregarded as an entity separate from its single member owner under §§ 301.7701-1 through 301.7701-3 of this chapter and, therefore, such entity may, for example, be treated as a party to a financing transaction with its owner. See paragraph (e)(3) of this section (*Example 3*).

(ii) ***Financing transaction*** —

(A) ***In general.*** Financing transaction means—

(*1*) Debt;

(*2*) Stock in a corporation (or a similar interest in a partnership, trust, or other person) that meets the requirements of paragraph (a)(2)(ii)(B) of this section;

(*3*) Any lease or license; or

(*4*) Any other transaction (including an interest in a trust described in sections 671 through 679) pursuant to which a person makes an advance of money or other property or grants rights to use property to a transferee who is obligated to repay or return a substantial portion of the money or other property advanced, or the equivalent in value. This paragraph (a)(2)(ii)(A)(*4*) shall not apply to the posting of collateral unless the collateral consists of cash or the person holding the collateral is permitted to reduce the collateral to cash (through a transfer, grant of a security interest or similar transaction) prior to default on the financing transaction secured by the collateral.

(B) ***Limitation on inclusion of stock or similar interests*** —

(*1*) ***In general.*** Stock in a corporation (or a similar interest in a partnership, trust, or other person) will constitute a financing transaction only if one or more of the following conditions is satisfied—

(*i*) The issuer is required to redeem the stock or similar interest at a specified time or the holder has the right to require the issuer to redeem the stock or similar interest or to make any other payment with respect to the stock or similar interest;

(*ii*) The issuer has the right to redeem the stock or similar interest, but only if, based on all of the facts and circumstances as of the issue date, redemption pursuant to that right is more likely than not to occur;

(*iii*) The owner of the stock or similar interest has the right to require a person related to the issuer (or any other person who is acting pursuant to a plan or arrangement with the issuer) to acquire the stock or similar interest or make a payment with respect to the stock or similar interest; or

(*iv*) The stock or similar interest is treated as debt under the tax law of the issuer's country of residence or, if the issuer is not a tax resident of any country, such as a partnership, the tax law of the country in which the issuer is created, organized, or otherwise established.

(*v*) [Reserved]

(2) ***Rules of special application*** —

(*i*) ***Existence of a right.*** For purposes of this paragraph (a)(2)(ii)(B), a person will be considered to have a right to cause a redemption or payment if the person has the right (other than rights arising, in the ordinary course, between the date that a payment is declared and the date that a payment is made) to enforce the payment through a legal proceeding or to cause the issuer to be liquidated if it fails to redeem the interest or to make a payment. A person will not be considered to have a right to force a redemption or a payment if the right is derived solely from ownership of a controlling interest in the issuer in cases where the control does not arise from a default or similar contingency under the instrument. The person is considered to have such a right if the person has the right as of the issue date or, as of the issue date, it is more likely than not that the person will receive such a right, whether through the occurrence of a contingency or otherwise.

(*ii*) ***Restrictions on payment.*** The fact that the issuer does not have the legally available funds to redeem the stock or similar interest, or that the payments are to be made in a blocked currency, will not affect the determinations made pursuant to this paragraph (a)(2)(ii)(B).

(*iii*) ***Conduit entity*** means an intermediate entity whose participation in the financing arrangement may be disregarded in whole or in part pursuant to this section, whether or not the director of field operations has made a determination that the intermediate entity should be disregarded under paragraph (a)(3)(i) of this section.

(*iv*) ***Conduit financing arrangement*** means a financing arrangement that is effected through one or more conduit entities.

(*v*) ***Related*** means related within the meaning of sections 267(b) or 707(b)(1), or controlled within the meaning of section 482, and the regulations under those sections. For purposes of determining whether a person is related to another person, the constructive ownership rules of section 318 shall apply, and the attribution rules of section 267(c) also shall apply to the extent they attribute ownership to persons to whom section 318 does not attribute ownership.

(3) ***Disregard of participation of conduit entity*** —

(i) ***Authority of director of field operations.*** The director of field operations may determine that the participation of a conduit entity in a conduit financing arrangement should be disregarded for purposes of section 881. For this purpose, an intermediate entity will constitute a conduit entity if it meets the standards of paragraph (a)(4) of this section. The director of field operations has discretion to determine the manner in which the standards of paragraph (a)(4) of this section apply, including the financing transactions and parties composing the financing arrangement.

(ii) *Effect of disregarding conduit entity* —

(A) ***In general.*** If the director of field operations determines that the participation of a conduit entity in a financing arrangement should be disregarded, the financing arrangement is recharacterized as a transaction directly between the remaining parties to the financing arrangement (in most cases, the financed entity and the financing entity) for purposes of section 881. To the extent that a disregarded conduit entity actually receives or makes payments pursuant to a conduit financing arrangement, it is treated as an agent of the financing entity. Except as otherwise provided, the recharacterization of the conduit financing arrangement also applies for purposes of sections 871, 884(f)(1)(A), 1441, and 1442 and other procedural provisions relating to those sections. This recharacterization will not otherwise affect a taxpayer's Federal income tax liability under any substantive provisions of the Internal Revenue Code. Thus, for example, the recharacterization generally applies for purposes of section 1461, in order to impose liability on a withholding agent who fails to withhold as required under § 1.1441-3(g), but not for purposes of § 1.882-5.

(B) ***Character of payments made by the financed entity.*** If the participation of a conduit financing arrangement is disregarded under this paragraph (a)(3), payments made by the financed entity generally shall be characterized by reference to the character (e.g., interest or rent) of the payments made to the financing entity. However, if the financing transaction to which the financing entity is a party is a transaction described in paragraph (a)(2)(ii)(A)(*2*) or (*4*) of this section that gives rise to payments that would not be deductible if paid by the financed entity, the character of the payments made by the financed entity will not be affected by the disregard of the participation of a conduit entity. The characterization provided by this paragraph (a)(3)(ii)(B) does not, however, extend to qualification of a payment for any exemption from withholding tax under the Internal Revenue Code or a provision of any applicable tax treaty if such qualification depends on the terms of, or other similar facts or circumstances relating to, the financing transaction to which the financing entity is a party that do not apply to the financing transaction to which the financed entity is a party. Thus, for example, payments made by a financed entity that is not a bank cannot qualify for the exemption provided by section 881(i) of the Code even if the loan between the financing entity and the conduit entity is a bank deposit.

(C) ***Effect of income tax treaties.*** Where the participation of a conduit entity in a conduit financing arrangement is disregarded pursuant to this section, it is disregarded for all purposes of section 881, including for purposes of applying any relevant income tax treaties. Accordingly, the conduit entity may not claim the benefits of a tax treaty between its country of residence and the United States to reduce the amount of tax due under section 881 with respect to payments made pursuant to the conduit financing arrangement. The financing entity may, however, claim the benefits of any income tax treaty under which it is entitled to benefits in order to reduce the rate of tax on payments made pursuant to the conduit financing arrangement that are recharacterized in accordance with paragraph (a)(3)(ii)(B) of this section.

(D) ***Effect on withholding tax.*** For the effect of recharacterization on withholding obligations, see §§ 1.1441-3(g) and 1.1441-7(f).

(E) *Special rule for a financing entity that is unrelated to both intermediate entity and financed entity* —

(1) ***Liability of financing entity.*** Notwithstanding the fact that a financing arrangement is a conduit financing arrangement, a financing entity that is unrelated to the financed entity and the conduit entity (or entities) shall not itself be liable for tax under section 881 unless the financing entity knows or has reason to know that the financing arrangement is a conduit financing arrangement. But see § 1.1441-3(g) for the withholding agent's withholding obligations.

(2) ***Financing entity's knowledge*** —

(*i*) ***In general.*** A financing entity knows or has reason to know that the financing arrangement is a conduit financing arrangement only if the financing entity knows or has reason to know of facts sufficient to establish that the financing arrangement is a conduit financing arrangement, including facts sufficient to establish that the participation of the intermediate entity in the financing arrangement is pursuant to a tax avoidance plan. A person that knows only of the financing transactions that comprise the financing arrangement will not be considered to know or have reason to know of facts sufficient to establish that the financing arrangement is a conduit financing arrangement.

(*ii*) ***Presumption regarding financing entity's knowledge.*** It shall be presumed that the financing entity does not know or have reason to know that the financing arrangement is a conduit financing arrangement if the financing entity is unrelated to all other parties to the financing arrangement and the financing entity establishes that the intermediate entity who is a party to the financing transaction with the financing entity is actively engaged in a substantial trade or business. An intermediate entity will not be considered to be engaged in a trade or business if its business is making or managing investments, unless the intermediate entity is actively engaged in a banking, insurance, financing or similar trade or business and such business consists predominantly of transactions with customers who are not related persons. An intermediate entity's trade or business is substantial if it is reasonable for the financing entity to expect that the intermediate entity will be able to make payments under the financing transaction out of the cash flow of that trade or business. This presumption may be rebutted if the director of field operations establishes that the financing entity knew or had reason to know that the financing arrangement is a conduit financing arrangement. See paragraph (e)(8) of this section (*Example 8*) for an illustration of the rules of this paragraph (a)(3)(ii)(E).

(iii) ***Limitation on taxpayer's use of this section.*** A taxpayer may not apply this section to reduce the amount of its Federal income tax liability by disregarding the form of its financing transactions for Federal income tax purposes or by compelling the director of field operations to do so. See, however, paragraph (b)(2)(i) of this section for rules regarding the taxpayer's ability to show that the participation of one or more intermediate entities results in no significant reduction in tax.

(4) ***Standard for treatment as a conduit entity*** —

(i) ***In general.*** An intermediate entity is a conduit entity with respect to a financing arrangement if—

(A) The participation of the intermediate entity (or entities) in the financing arrangement reduces the tax imposed by section 881 (determined by comparing the aggregate tax imposed under section 881 on payments made on financing transactions making up the financing arrangement with the tax that would have been imposed under paragraph (d) of this section);

(B) The participation of the intermediate entity in the financing arrangement is pursuant to a tax avoidance plan; and

(C) Either—

(*1*) The intermediate entity is related to the financing entity or the financed entity; or

(*2*) The intermediate entity would not have participated in the financing arrangement on substantially the same terms but for the fact that the financing entity engaged in the financing transaction with the intermediate entity.

(ii) ***Multiple intermediate entities*** —

(A) ***In general.*** If a financing arrangement involves multiple intermediate entities, the director of field operations will determine whether each of the intermediate entities is a conduit entity. The director of field operations will make the determination by applying the special rules for multiple intermediate entities provided in this section or, if no special rules are provided, applying principles consistent with those of paragraph (a)(4)(i) of this section to each of the intermediate entities in the financing arrangement.

(B) ***Special rule for related persons.*** The director of field operations may treat related intermediate entities as a single intermediate entity if he determines that one of the principal purposes for the involvement of multiple intermediate entities in the financing arrangement is to prevent the characterization of an intermediate entity as a conduit entity, to reduce the portion of a payment that is subject to withholding tax or otherwise to circumvent the provisions of this section. This determination shall be based upon all of the facts and circumstances, including, but not limited to, the factors set forth in paragraph (b)(2) of this section. If a director of field operations determines that related persons are to be treated as a single intermediate entity, financing transactions between such related parties that are part of the conduit financing arrangement shall be disregarded for purposes of applying this section. See paragraphs (e)(9) and (10) of this section (*Examples 9* and *10*) for illustrations of the rules of this paragraph (a)(4)(ii).

(b) ***Determination of whether participation of intermediate entity is pursuant to a tax avoidance plan*** —

(1) ***In general.*** A tax avoidance plan is a plan one of the principal purposes of which is the avoidance of tax imposed by section 881. Avoidance of the tax imposed by section 881 may be one of the principal purposes for such a plan even though it is outweighed by other purposes (taken together or separately). In this regard, the only relevant purposes are those pertaining to the participation of the intermediate entity in the financing arrangement and not those pertaining to the existence of a financing arrangement as a whole. The plan may be formal or informal, written or oral, and may involve any one or more of the parties to the financing arrangement. The plan must be in existence no later than the last date that any of the financing transactions comprising the financing arrangement is entered into. The director of field operations may infer the existence of a tax avoidance plan from the facts and circumstances. In determining whether there is a tax avoidance

plan, the director of field operations will weigh all relevant evidence regarding the purposes for the intermediate entity's participation in the financing arrangement. See paragraphs (e)(13) and (14) of this section (*Examples 13* and *14*) for illustrations of the rule of this paragraph (b)(1).

(2) ***Factors taken into account in determining the presence or absence of a tax avoidance purpose.*** The factors described in paragraphs (b)(2)(i) through (iv) of this section are among the facts and circumstances taken into account in determining whether the participation of an intermediate entity in a financing arrangement has as one of its principal purposes the avoidance of tax imposed by section 881.

(i) ***Significant reduction in tax.*** The director of field operations will consider whether the participation of the intermediate entity (or entities) in the financing arrangement significantly reduces the tax that otherwise would have been imposed under section 881. The fact that an intermediate entity is a resident of a country that has an income tax treaty with the United States that significantly reduces the tax that otherwise would have been imposed under section 881 is not sufficient, by itself, to establish the existence of a tax avoidance plan. The determination of whether the participation of an intermediate entity significantly reduces the tax generally is made by comparing the aggregate tax imposed under section 881 on payments made on financing transactions making up the financing arrangement with the tax that would be imposed under paragraph (d) of this section. However, the taxpayer is not barred from presenting evidence that the financing entity, as determined by the director of field operations, was itself an intermediate entity and another entity should be treated as the financing entity for purposes of applying this test. A reduction in the absolute amount of tax may be significant even if the reduction in rate is not. A reduction in the amount of tax may be significant if the reduction is large in absolute terms or in relative terms. See paragraphs (e)(15) through (17) of this section (*Examples 15* through *17*) for illustrations of this factor.

(ii) ***Ability to make the advance.*** The director of field operations will consider whether the intermediate entity had sufficient available money or other property of its own to have made the advance to the financed entity without the advance of money or other property to it by the financing entity (or in the case of multiple intermediate entities, whether each of the intermediate entities had sufficient available money or other property of its own to have made the advance to either the financed entity or another intermediate entity without the advance of money or other property to it by either the financing entity or another intermediate entity).

(iii) ***Time period between financing transactions.*** The director of field operations will consider the length of the period of time that separates the advances of money or other property, or the grants of rights to use property, by the financing entity to the intermediate entity (in the case of multiple intermediate entities, from one intermediate entity to another), and ultimately by the intermediate entity to the financed entity. A short period of time is evidence of the existence of a tax avoidance plan while a long period of time is evidence that there is not a tax avoidance plan. See paragraph (e)(18) of this section (*Example 18*) for an illustration of this factor.

(iv) ***Financing transactions in the ordinary course of business.*** If the parties to the financing transaction are related, the director of field operations will consider whether the financing transaction occurs in the ordinary course of the active conduct of complementary or integrated trades or businesses engaged in by these entities. The fact that a financing transaction is described in this paragraph (b)(2)(iv) is evidence that the participation of the parties to that transaction in the financing arrangement is not pursuant to a tax avoidance plan. A loan will not be considered to occur in the ordinary course of the active conduct of complementary or

integrated trades or businesses unless the loan is a trade receivable or the parties to the transaction are actively engaged in a banking, insurance, financing or similar trade or business and such business consists predominantly of transactions with customers who are not related persons. See paragraph (e)(19) of this section (*Example 19*) for an illustration of this factor.

(3) ***Presumption if significant financing activities performed by a related intermediate entity*** —

(i) ***General rule.*** It shall be presumed that the participation of an intermediate entity (or entities) in a financing arrangement is not pursuant to a tax avoidance plan if the intermediate entity is related to either or both the financing entity or the financed entity and the intermediate entity performs significant financing activities with respect to the financing transactions forming part of the financing arrangement to which it is a party. This presumption may be rebutted if the director of field operations establishes that the participation of the intermediate entity in the financing arrangement is pursuant to a tax avoidance plan. See paragraphs (e)(23) through (25) of this section (*Examples 23* through *25*) for illustrations of this presumption.

(ii) ***Significant financing activities.*** For purposes of this paragraph (b)(3), an intermediate entity performs significant financing activities with respect to such financing transactions only if the financing transactions satisfy the requirements of either paragraph (b)(3)(ii)(A) or (B) of this section.

(A) ***Active rents or royalties.*** An intermediate entity performs significant financing activities with respect to leases or licenses if rents or royalties earned with respect to such leases or licenses are derived in the active conduct of a trade or business within the meaning of section 954(c)(2)(A), to be applied by substituting the term *intermediate* entity for the term *controlled foreign corporation.*

(B) ***Active risk management*** —

(*1*) ***In general.*** An intermediate entity is considered to perform significant financing activities with respect to financing transactions only if officers and employees of the intermediate entity participate actively and materially in arranging the intermediate entity's participation in such financing transactions (other than financing transactions described in paragraph (b)(3)(ii)(*B*)(*3*) of this section) and perform the business activity and risk management activities described in paragraph (b)(3)(ii)(*B*)(*2*) of this section with respect to such financing transactions, and the participation of the intermediate entity in the financing transactions produces (or reasonably can be expected to produce) efficiency savings by reducing transaction costs and overhead and other fixed costs.

(*2*) ***Business activity and risk management requirements.*** An intermediate entity will be considered to perform significant financing activities only if, within the country in which the intermediate entity is organized (or, if different, within the country with respect to which the intermediate entity is claiming the benefits of a tax treaty), its officers and employees—

(*i*) Exercise management over, and actively conduct, the day-to-day operations of the intermediate entity. Such operations must consist of a substantial trade or business or the supervision, administration and financing for a substantial group of related persons; and

(*ii*) Actively manage, on an ongoing basis, material market risks arising from such financing transactions as an integral part of the management of the intermediate entity's financial and capital requirements (including management of risks of currency and interest rate fluctuations) and management of the intermediate entity's short-term investments of working capital by entering into transactions with unrelated persons.

(*3*) ***Special rule for trade receivables and payables entered into in the ordinary course of business.*** If the activities of the intermediate entity consist in whole or in part of cash management for a controlled group of which the intermediate entity is a member, then employees of the intermediate entity need not have participated in arranging any such financing transactions that arise in the ordinary course of a substantial trade or business of either the financed entity or the financing entity. Officers or employees of the financing entity or financed entity, however, must have participated actively and materially in arranging the transaction that gave rise to the trade receivable or trade payable. Cash management includes the operation of a sweep account whereby the intermediate entity nets intercompany trade payables and receivables arising from transactions among the other members of the controlled group and between members of the controlled group and unrelated persons.

(*4*) ***Activities of officers and employees of related persons.*** Except as provided in paragraph (b)(3)(ii)(B)(*3*) of this section, in applying this paragraph (b)(3)(ii)(B), the activities of an officer or employee of an intermediate entity will not constitute significant financing activities if any officer or employee of a related person participated materially in any of the activities described in this paragraph, other than to approve any guarantee of a financing transaction or to exercise general supervision and control over the policies of the intermediate entity.

(c) ***Determination of whether an unrelated intermediate entity would not have participated in financing arrangement on substantially the same terms —***

(1) ***In general.*** The determination of whether an intermediate entity would not have participated in a financing arrangement on substantially the same terms but for the financing transaction between the financing entity and the intermediate entity shall be based upon all of the facts and circumstances.

(2) ***Effect of guarantee —***

(i) ***In general.*** The director of field operations may presume that the intermediate entity would not have participated in the financing arrangement on substantially the same terms if there is a guarantee of the financed entity's liability to the intermediate entity (or in the case of multiple intermediate entities, a guarantee of the intermediate entity's liability to the intermediate entity that advanced money or property, or granted rights to use other property). However, a guarantee that was neither in existence nor contemplated on the last date that any of the financing transactions comprising the financing arrangement is entered into does not give rise to this presumption. A taxpayer may rebut this presumption by producing clear and convincing evidence that the intermediate entity would have participated in the financing transaction with the financed entity on substantially the same terms even if the financing entity had not entered into a financing transaction with the intermediate entity.

(ii) ***Definition of guarantee.*** For the purposes of this paragraph (c)(2), a guarantee is any arrangement under which a person, directly or indirectly, assures, on a conditional or unconditional basis, the payment of another person's obligation with respect to a financing transaction. The term shall be interpreted in accordance with the definition of the term in section 163(j)(6)(D)(iii) (as in effect for taxable years beginning before January 1, 2018).

(d) ***Determination of amount of tax liability*** —

(1) ***Amount of payment subject to recharacterization*** —

(i) ***In general.*** If a financing arrangement is a conduit financing arrangement, a portion of each payment made by the financed entity with respect to the financing transactions that comprise the conduit financing arrangement shall be recharacterized as a transaction directly between the financed entity and the financing entity. If the aggregate principal amount of the financing transaction(s) to which the financed entity is a party is less than or equal to the aggregate principal amount of the financing transaction(s) linking any of the parties to the financing arrangement, the entire amount of the payment shall be so recharacterized. If the aggregate principal amount of the financing transaction(s) to which the financed entity is a party is greater than the aggregate principal amount of the financing transaction(s) linking any of the parties to the financing arrangement, then the recharacterized portion shall be determined by multiplying the payment by a fraction the numerator of which is equal to the lowest aggregate principal amount of the financing transaction(s) linking any of the parties to the financing arrangement (other than financing transactions that are disregarded pursuant to paragraphs (a)(2)(i)(B) and (a)(4)(ii)(B) of this section) and the denominator of which is the aggregate principal amount of the financing transaction(s) to which the financed entity is a party. In the case of financing transactions the principal amount of which is subject to adjustment, the fraction shall be determined using the average outstanding principal amounts for the period to which the payment relates. The average principal amount may be computed using any method applied consistently that reflects with reasonable accuracy the amount outstanding for the period. See paragraph (e)(26) of this section (*Example 26*) for an illustration of the calculation of the amount of tax liability.

(ii) ***Determination of principal amount*** —

(A) ***In general.*** Unless otherwise provided in this paragraph (d)(1)(ii), the principal amount equals the amount of money advanced, or the fair market value of other property advanced or subject to a lease or license, in the financing transaction. In general, fair market value is calculated in U.S. dollars as of the close of business on the day on which the financing transaction is entered into. However, if the property advanced, or the right to use property granted, by the financing entity is the same as the property or rights received by the financed entity, the fair market value of the property or right shall be determined as of the close of business on the last date that any of the financing transactions comprising the financing arrangement is entered into. In the case of fungible property, property of the same type shall be considered to be the same property. See paragraph (e)(27) of this section (*Example 27*) for an illustration of the calculation of the principal amount in the case of financing transactions involving fungible property. The principal amount of a financing transaction shall be subject to adjustments, as set forth in this paragraph (d)(1)(ii).

(B) ***Debt instruments and certain stock.*** In the case of a debt instrument or of stock that is subject to the current inclusion rules of sections 305(c)(3) or (e), the principal amount generally will be equal to the issue price. However, if the fair market value on the issue date differs materially from the issue price, the fair market value of the debt instrument shall be used in lieu of the instrument's issue price. Appropriate adjustments will be made for accruals of original issue discount and repayments of principal (including accrued original issue discount).

(C) ***Partnership and trust interests.*** In the case of a partnership interest or an interest in a trust, the principal amount is equal to the fair market value of the money or property contributed to the partnership or trust in return for that partnership or trust interest.

(D) ***Leases or licenses.*** In the case of a lease or license, the principal amount is equal to the fair market value of the property subject to the lease or license on the date on which the lease or license is entered into. The principal amount shall be adjusted for depreciation or amortization, calculated on a basis that accurately reflects the anticipated decline in the value of the property over its life.

(iii) [Reserved]

(2) ***Rate of tax.*** The rate at which tax is imposed under section 881 on the portion of the payment that is recharacterized pursuant to paragraph (d)(1) of this section is determined by reference to the nature of the recharacterized transaction, as determined under paragraphs (a)(3)(ii)(B) and (C) of this section.

(e) ***Examples.*** The following examples illustrate this section. For purposes of these examples, unless otherwise indicated, it is assumed that FP, a corporation organized in country N, owns all of the stock of FS, a corporation organized in country T, and DS, a corporation organized in the United States. Country T, but not country N, has an income tax treaty with the United States. The treaty exempts interest, rents and royalties paid by a resident of one state (the source state) to a resident of the other state from tax in the source state. For purposes of the examples in this paragraph (e), unless otherwise indicated, it is assumed that no stock is of the type described in paragraph (a)(2)(ii)(B)(*1*)(*iv*) of this section.

(1) ***Example 1. Financing arrangement.***

(i) On January 1, 1996, BK, a bank organized in country T, lends $1,000,000 to DS in exchange for a note issued by DS. FP guarantees to BK that DS will satisfy its repayment obligation on the loan. There are no other transactions between FP and BK.

(ii) BK's loan to DS is a financing transaction within the meaning of paragraph (a)(2)(ii)(A)(*1*) of this section. FP's guarantee of DS's repayment obligation is not a financing transaction as described in paragraphs (a)(2)(ii)(A)(*1*) through (*4*) of this section. Therefore, these transactions do not constitute a financing arrangement as defined in paragraph (a)(2)(i) of this section.

(2) ***Example 2. Financing arrangement.***

(i) On January 1, 1996, FP lends $1,000,000 to DS in exchange for a note issued by DS. On January 1, 1997, FP assigns the DS note to FS in exchange for a note issued by FS. After receiving notice of the assignment, DS remits payments due under its note to FS.

(ii) The DS note held by FS and the FS note held by FP are financing transactions within the meaning of paragraph (a)(2)(ii)(A)(*1*) of this section, and together constitute a financing arrangement within the meaning of paragraph (a)(2)(i) of this section.

(3) ***Example 3. Participation of a disregarded intermediate entity.*** The facts are the same as in paragraph (e)(2) of this section (the facts in *Example 2*), except that FS is an entity that is disregarded as an entity separate from its owner, FP, under § 301.7701-3 of this chapter. Under paragraph (a)(2)(i)(C) of this section, FS is a person and, therefore, may itself be an intermediate entity that is linked by financing transactions to other persons in a financing arrangement. The DS note held by FS and the FS note held by FP are financing transactions within the meaning of paragraph (a)(2)(ii) of this section, and together constitute a financing arrangement within the meaning of paragraph (a)(2)(i) of this section.

(4) ***Example 4. Hybrid instrument as financing arrangement.*** The facts are the same as in paragraph (e)(2) of this section (the facts in *Example 2*), except that FP assigns the DS note to FS in exchange for stock issued by FS. The stock issued by FS is in form convertible debt with a 49-year term that is treated as debt under the tax law of Country T. The FS stock is not subject to any of the redemption, acquisition, or payment rights or requirements specified in paragraphs (a)(2)(ii)(B)(*1*)(*i*) through (*iii*) of this section. However, because the FS stock is treated as debt under the tax law of Country T, the FS stock is a financing transaction under paragraph (a)(2)(ii)(B)(*1*)(*iv*) of this section. Therefore, the DS note held by FS and the FS stock held by FP are financing transactions within the meaning of paragraphs (a)(2)(ii)(A)(*1*) and (*2*) of this section, respectively, and together constitute a financing arrangement within the meaning of paragraph (a)(2)(i) of this section. See also § 1.267A-4 for rules applicable to disqualified imported mismatch amounts.

(5) ***Example 5. Financing arrangement.***

(i) On December 1, 1994 FP creates a special purposes subsidiary, FS. On that date FP capitalizes FS with $1,000,000 in cash and $10,000,000 in debt from BK, a Country N bank. On January 1, 1995, C, a U.S. person, purchases an automobile from DS in return for an installment note. On August 1, 1995, DS sells a number of installment notes, including C's, to FS in exchange for $10,000,000. DS continues to service the installment notes for FS.

(ii) The C installment note now held by FS (as well as all of the other installment notes now held by FS) and the FS note held by BK are financing transactions within the meaning of paragraph (a)(2)(ii)(A)(*1*) of this section, and together constitute a financing arrangement within the meaning of paragraph (a)(2)(i) of this section.

(6) ***Example 6. Related persons treated as a single intermediate entity.***

(i) On January 1, 1996, FP deposits $1,000,000 with BK, a bank that is organized in country N and is unrelated to FP and its subsidiaries. M, a corporation also organized in country N, is wholly-owned by the sole shareholder of BK but is not a bank within the meaning of section 881(c)(3)(A). On July 1, 1996, M lends $1,000,000 to DS in exchange for a note maturing on July 1, 2006. The note is in registered form within the meaning of section 881(c)(2)(B)(i) and DS has received from M the statement required by section 881(c)(2)(B)(ii). One of the principal purposes for the absence of a financing transaction between BK and M is the avoidance of the application of this section.

(ii) The transactions described above would form a financing arrangement but for the absence of a financing transaction between BK and M. However, because one of the principal purposes for the structuring of these financing transactions is to prevent characterization of such

arrangement as a financing arrangement, the director of field operations may treat the financing transactions between FP and BK, and between M and DS as a financing arrangement under paragraphs (a)(2)(i)(B) of this section. In such a case, BK and M would be considered a single intermediate entity for purposes of this section. See also paragraph (a)(4)(ii)(B) of this section for the authority to treat BK and M as a single intermediate entity.

(7) ***Example 7. Related persons treated as a single intermediate entity.***

(i) On January 1, 1995, FP lends $10,000,000 to FS in exchange for a 10-year note that pays interest annually at a rate of 8 percent per annum. On January 2, 1995, FS contributes $10,000,000 to FS2, a wholly-owned subsidiary of FS organized in country T, in exchange for common stock of FS2. On January 1, 1996, FS2 lends $10,000,000 to DS in exchange for an 8-year note that pays interest annually at a rate of 10 percent per annum. FS is a holding company whose most significant asset is the stock of FS2. Throughout the period that the FP-FS loan is outstanding, FS causes FS2 to make distributions to FS, most of which are used to make interest and principal payments on the FP-FS loan. Without the distributions from FS2, FS would not have had the funds with which to make payments on the FP-FS loan. One of the principal purposes for the absence of a financing transaction between FS and FS2 is the avoidance of the application of this section.

(ii) The conditions of paragraph (a)(4)(i)(A) of this section would be satisfied with respect to the financing transactions between FP, FS, FS2 and DS but for the absence of a financing transaction between FS and FS2. However, because one of the principal purposes for the structuring of these financing transactions is to prevent characterization of an entity as a conduit, the director of field operations may treat the financing transactions between FP and FS, and between FS2 and DS as a financing arrangement. See paragraph (a)(4)(ii)(B) of this section. In such a case, FS and FS2 would be considered a single intermediate entity for purposes of this section. See also paragraph (a)(2)(i)(B) of this section for the authority to treat FS and FS2 as a single intermediate entity.

(8) ***Example 8. Presumption with respect to unrelated financing entity.***

(i) FP is a corporation organized in country T that is actively engaged in a substantial manufacturing business. FP has a revolving credit facility with a syndicate of banks, none of which is related to FP and FP's subsidiaries, which provides that FP may borrow up to a maximum of $100,000,000 at a time. The revolving credit facility provides that DS and certain other subsidiaries of FP may borrow directly from the syndicate at the same interest rates as FP, but each subsidiary is required to indemnify the syndicate banks for any withholding taxes imposed on interest payments by the country in which the subsidiary is organized. BK, a bank that is organized in country N, is the agent for the syndicate. Some of the syndicate banks are organized in country N, but others are residents of country O, a country that has an income tax treaty with the United States which allows the United States to impose a tax on interest at a maximum rate of 10 percent. It is reasonable for BK and the syndicate banks to have determined that FP will be able to meet its payment obligations on a maximum principal amount of $100,000,000 out of the cash flow of its manufacturing business. At various times throughout 1995, FP borrows under the revolving credit facility until the outstanding principal amount reaches the maximum amount of $100,000,000. On December 31, 1995, FP receives $100,000,000 from a public offering of its equity. On January 1, 1996, FP pays BK $90,000,000 to reduce the outstanding principal amount under the revolving credit facility and lends $10,000,000 to DS. FP would have repaid the entire principal amount, and DS would have

borrowed directly from the syndicate, but for the fact that DS did not want to incur the U.S. withholding tax that would have applied to payments made directly by DS to the syndicate banks.

(ii) Pursuant to paragraph (a)(3)(ii)(E)(*1*) of this section, even though the financing arrangement is a conduit financing arrangement (because the financing arrangement meets the standards for recharacterization in paragraph (a)(4)(i) of this section), BK and the other syndicate banks have no section 881 liability unless they know or have reason to know that the financing arrangement is a conduit financing arrangement. Moreover, pursuant to paragraph (a)(3)(ii)(E)(*2*)(*ii*) of this section, BK and the syndicate banks are presumed not to know that the financing arrangement is a conduit financing arrangement. The syndicate banks are unrelated to both FP and DS, and FP is actively engaged in a substantial trade or business—that is, the cash flow from FP's manufacturing business is sufficient for the banks to expect that FP will be able to make the payments required under the financing transaction. See § 1.1441-3(g) for the withholding obligations of the withholding agents.

(9) ***Example 9. Multiple intermediate entities—special rule for related persons.***

(i) On January 1, 1995, FP lends $10,000,000 to FS in exchange for a 10-year note that pays interest annually at a rate of 8 percent per annum. On January 2, 1995, FS contributes $9,900,000 to FS2, a wholly-owned subsidiary of FS organized in country T, in exchange for common stock and lends $100,000 to FS2. On January 1, 1996, FS2 lends $10,000,000 to DS in exchange for an 8-year note that pays interest annually at a rate of 10 percent per annum. FS is a holding company that has no significant assets other than the stock of FS2. Throughout the period that the FP-FS loan is outstanding, FS causes FS2 to make distributions to FS, most of which are used to make interest and principal payments on the FP-FS loan. Without the distributions from FS2, FS would not have had the funds with which to make payments on the FP-FS loan. One of the principal purposes for structuring the transactions between FS and FS2 as primarily a contribution of capital is to reduce the amount of the payment that would be recharacterized under paragraph (d) of this section.

(ii) Pursuant to paragraph (a)(4)(ii)(B) of this section, the director of field operations may treat FS and FS2 as a single intermediate entity for purposes of this section since one of the principal purposes for the participation of multiple intermediate entities is to reduce the amount of the tax liability on any recharacterized payment by inserting a financing transaction with a low principal amount.

(10) ***Example 10. Multiple intermediate entities.***

(i) On January 1, 1995, FP deposits $1,000,000 with BK, a bank that is organized in country T and is unrelated to FP and its subsidiaries, FS and DS. On January 1, 1996, at a time when the FP-BK deposit is still outstanding, BK lends $500,000 to BK2, a bank that is wholly-owned by BK and is organized in country T. On the same date, BK2 lends $500,000 to FS. On July 1, 1996, FS lends $500,000 to DS. FP pledges its deposit with BK to BK2 in support of FS' obligation to repay the BK2 loan. FS', BK's and BK2's participation in the financing arrangement is pursuant to a tax avoidance plan.

(ii) The conditions of paragraphs (a)(4)(i)(A) and (B) of this section are satisfied because the participation of BK, BK2 and FS in the financing arrangement reduces the tax imposed by section 881, and FS', BK's and BK2's participation in the financing arrangement is pursuant to a tax avoidance plan. However, since BK and BK2 are unrelated to FP and DS, under paragraph

(a)(4)(i)(C)(*2*) of this section, BK and BK2 will be treated as conduit entities only if BK and BK2 would not have participated in the financing arrangement on substantially the same terms but for the financing transaction between FP and BK.

(iii) It is presumed that BK2 would not have participated in the financing arrangement on substantially the same terms but for the BK-BK2 financing transaction because FP's pledge of an asset in support of FS' obligation to repay the BK2 loan is a guarantee within the meaning of paragraph (c)(2)(ii) of this section. If the taxpayer does not rebut this presumption by clear and convincing evidence, then BK2 will be a conduit entity.

(iv) Because BK and BK2 are related intermediate entities, the director of field operations must determine whether one of the principal purposes for the involvement of multiple intermediate entities was to prevent characterization of an entity as a conduit entity. In making this determination, the director of field operations may consider the fact that the involvement of two related intermediate entities prevents the presumption regarding guarantees from applying to BK. In the absence of evidence showing a business purpose for the involvement of both BK and BK2, the director of field operations may treat BK and BK2 as a single intermediate entity for purposes of determining whether they would have participated in the financing arrangement on substantially the same terms but for the financing transaction between FP and BK. The presumption that applies to BK2 therefore will apply to BK. If the taxpayer does not rebut this presumption by clear and convincing evidence, then BK will be a conduit entity.

(11) ***Example 11. Reduction of tax.***

(i) On February 1, 1995, FP issues debt to the public that would satisfy the requirements of section 871(h)(2)(A) (relating to obligations that are not in registered form) if issued by a U.S. person. FP lends the proceeds of the debt offering to DS in exchange for a note.

(ii) The debt issued by FP and the DS note are financing transactions within the meaning of paragraph (a)(2)(ii)(A)(*1*) of this section and together constitute a financing arrangement within the meaning of paragraph (a)(2)(i) of this section. The holders of the FP debt are the financing entities, FP is the intermediate entity and DS is the financed entity. Because interest payments on the debt issued by FP would not have been subject to withholding tax if the debt had been issued by DS, there is no reduction in tax under paragraph (a)(4)(i)(A) of this section. Accordingly, FP is not a conduit entity.

(12) ***Example 12. Reduction of tax.***

(i) On January 1, 1995, FP licenses to FS the rights to use a patent in the United States to manufacture product A. FS agrees to pay FP a fixed amount in royalties each year under the license. On January 1, 1996, FS sublicenses to DS the rights to use the patent in the United States. Under the sublicense, DS agrees to pay FS royalties based upon the units of product A manufactured by DS each year. Although the formula for computing the amount of royalties paid by DS to FS differs from the formula for computing the amount of royalties paid by FS to FP, each represents an arm's length rate.

(ii) Although the royalties paid by DS to FS are exempt from U.S. withholding tax, the royalty payments between FS and FP are income from U.S. sources under section 861(a)(4) subject to the 30 percent gross tax imposed by § 1.881-2(b) and subject to withholding under § 1.1441-2(a). Because the rate of tax imposed on royalties paid by FS to FP is the same as the

rate that would have been imposed on royalties paid by DS to FP, the participation of FS in the FP-FS-DS financing arrangement does not reduce the tax imposed by section 881 within the meaning of paragraph (a)(4)(i)(A) of this section. Accordingly, FP is not a conduit entity.

(13) ***Example 13. A principal purpose.***

(i) On January 1, 1995, FS lends $10,000,000 to DS in exchange for a 10-year note that pays interest annually at a rate of 8 percent per annum. As was intended at the time of the loan from FS to DS, on July 1, 1995, FP makes an interest-free demand loan of $10,000,000 to FS. A principal purpose for FS' participation in the FP-FS-DS financing arrangement is that FS generally coordinates the financing for all of FP's subsidiaries (although FS does not engage in significant financing activities with respect to such financing transactions). However, another principal purpose for FS' participation is to allow the parties to benefit from the lower withholding tax rate provided under the income tax treaty between country T and the United States.

(ii) The financing arrangement satisfies the tax avoidance purpose requirement of paragraph (a)(4)(i)(B) of this section because FS participated in the financing arrangement pursuant to a plan one of the principal purposes of which is to allow the parties to benefit from the country T-U.S. treaty.

(14) ***Example 14. A principal purpose.***

(i) DX is a U.S. corporation that intends to purchase property to use in its manufacturing business. FX is a partnership organized in country N that is owned in equal parts by LC1 and LC2, leasing companies that are unrelated to DX. BK, a bank organized in country N and unrelated to DX, LC1 and LC2, lends $100,000,000 to FX to enable FX to purchase the property. On the same day, FX purchases the property and engages in a transaction with DX which is treated as a lease of the property for country N tax purposes but a loan for U.S. tax purposes. Accordingly, DX is treated as the owner of the property for U.S. tax purposes. The parties comply with the requirements of section 881(c) with respect to the debt obligation of DX to FX. FX and DX structured these transactions in this manner so that LC1 and LC2 would be entitled to accelerated depreciation deductions with respect to the property in country N and DX would be entitled to accelerated depreciation deductions in the United States. None of the parties would have participated in the transaction if the payments made by DX were subject to U.S. withholding tax.

(ii) The loan from BK to FX and from FX to DX are financing transactions and, together constitute a financing arrangement. The participation of FX in the financing arrangement reduces the tax imposed by section 881 because payments made to FX, but not BK, qualify for the portfolio interest exemption of section 881(c) because BK is a bank making an extension of credit in the ordinary course of its trade or business within the meaning of section 881(c)(3)(A). Moreover, because DX borrowed the money from FX instead of borrowing the money directly from BK to avoid the tax imposed by section 881, one of the principal purposes of the participation of FX was to avoid that tax (even though another principal purpose of the participation of FX was to allow LC1 and LC2 to take advantage of accelerated depreciation deductions in country N). Assuming that FX would not have participated in the financing arrangement on substantially the same terms but for the fact that BK loaned it $100,000,000, FX is a conduit entity and the financing arrangement is a conduit financing arrangement.

(15) ***Example 15. Significant reduction of tax.***

(i) FS owns all of the stock of FS1, which also is a resident of country T. FS1 owns all of the stock of DS. On January 1, 1995, FP contributes $10,000,000 to the capital of FS in return for perpetual preferred stock. On July 1, 1995, FS lends $10,000,000 to FS1. On January 1, 1996, FS1 lends $10,000,000 to DS. Under the terms of the country T-U.S. income tax treaty, a country T resident is not entitled to the reduced withholding rate on interest income provided by the treaty if the resident is entitled to specified tax benefits under country T law. Although FS1 may deduct interest paid on the loan from FS, these deductions are not pursuant to any special tax benefits provided by country T law. However, FS qualifies for one of the enumerated tax benefits pursuant to which it may deduct dividends paid with respect to the stock held by FP. Therefore, if FS had made a loan directly to DS, FS would not have been entitled to the benefits of the country T-U.S. tax treaty with respect to payments it received from DS, and such payments would have been subject to tax under section 881 at a 30 percent rate.

(ii) The FS-FS1 loan and the FS1-DS loan are financing transactions within the meaning of paragraph (a)(2)(ii)(A)(*1*) of this section and together constitute a financing arrangement within the meaning of paragraph (a)(2)(i) of this section. Pursuant to paragraph (b)(2)(i) of this section, the significant reduction in tax resulting from the participation of FS1 in the financing arrangement is evidence that the participation of FS1 in the financing arrangement is pursuant to a tax avoidance plan. However, other facts relevant to the presence of such a plan must also be taken into account.

(16) ***Example 16. Significant reduction of tax.***

(i) FP owns 90 percent of the voting stock of FX, an unlimited liability company organized in country T. The other 10 percent of the common stock of FX is owned by FP1, a subsidiary of FP that is organized in country N. Although FX is a partnership for U.S. tax purposes, FX is entitled to the benefits of the U.S.-country T income tax treaty because FX is subject to tax in country T as a resident corporation. On January 1, 1996, FP contributes $10,000,000 to FX in exchange for an instrument denominated as preferred stock that pays a dividend of 7 percent and that must be redeemed by FX in seven years. For U.S. tax purposes, the preferred stock is a partnership interest. On July 1, 1996, FX makes a loan of $10,000,000 to DS in exchange for a 7-year note paying interest at 6 percent.

(ii) Because FX is required to redeem the partnership interest at a specified time, the partnership interest constitutes a financing transaction within the meaning of paragraph (a)(2)(ii)(A)(*2*) of this section. Moreover, because the FX-DS note is a financing transaction within the meaning of paragraph (a)(2)(ii)(A)(*1*) of this section, together the transactions constitute a financing arrangement within the meaning of (a)(2)(i) of this section. Payments of interest made directly by DS to FP and FP1 would not be eligible for the portfolio interest exemption and would not be entitled to a reduction in withholding tax pursuant to a tax treaty. Therefore, there is a significant reduction in tax resulting from the participation of FX in the financing arrangement, which is evidence that the participation of FX in the financing arrangement is pursuant to a tax avoidance plan. However, other facts relevant to the existence of such a plan must also be taken into account.

(17) ***Example 17. Significant reduction of tax.***

(i) FP owns a 10 percent interest in the profits and capital of FX, a partnership organized in country N. The other 90 percent interest in FX is owned by G, an unrelated corporation that is organized in country T. FX is not engaged in business in the United States. On January 1, 1996, FP contributes $10,000,000 to FX in exchange for an instrument documented as perpetual

subordinated debt that provides for quarterly interest payments at 9 percent per annum. Under the terms of the instrument, payments on the perpetual subordinated debt do not otherwise affect the allocation of income between the partners. FP has the right to require the liquidation of FX if FX fails to make an interest payment. For U.S. tax purposes, the perpetual subordinated debt is treated as a partnership interest in FX and the payments on the perpetual subordinated debt constitute guaranteed payments within the meaning of section 707(c). On July 1, 1996, FX makes a loan of $10,000,000 to DS in exchange for a 7-year note paying interest at 8 percent per annum.

(ii) Because FP has the effective right to force payment of the "interest" on the perpetual subordinated debt, the instrument constitutes a financing transaction within the meaning of paragraph (a)(2)(ii)(A)(*2*) of this section. Moreover, because the note between FX and DS is a financing transaction within the meaning of paragraph (a)(2)(ii)(A)(*1*) of this section, together the transactions are a financing arrangement within the meaning of (a)(2)(i) of this section. Without regard to this section, 90 percent of each interest payment received by FX would be treated as exempt from U.S. withholding tax because it is beneficially owned by G, while 10 percent would be subject to a 30 percent withholding tax because beneficially owned by FP. If FP held directly the note issued by DS, 100 percent of the interest payments on the note would have been subject to the 30 percent withholding tax. The significant reduction in the tax imposed by section 881 resulting from the participation of FX in the financing arrangement is evidence that the participation of FX in the financing arrangement is pursuant to a tax avoidance plan. However, other facts relevant to the presence of such a plan must also be taken into account.

(18) ***Example 18. Time period between transactions.***

(i) On January 1, 1995, FP lends $10,000,000 to FS in exchange for a 10-year note that pays no interest annually. When the note matures, FS is obligated to pay $24,000,000 to FP. On January 1, 1996, FS lends $10,000,000 to DS in exchange for a 10-year note that pays interest annually at a rate of 10 percent per annum.

(ii) The FS note held by FP and the DS note held by FS are financing transactions within the meaning of paragraph (a)(2)(ii)(A)(*1*) of this section and together constitute a financing arrangement within the meaning of (a)(2)(i) of this section. Pursuant to paragraph (b)(2)(iii) of this section, the short period of time (twelve months) between the loan by FP to FS and the loan by FS to DS is evidence that the participation of FS in the financing arrangement is pursuant to a tax avoidance plan. However, other facts relevant to the presence of such a plan must also be taken into account.

(19) ***Example 19. Financing transactions in the ordinary course of business.***

(i) FP is a holding company. FS is actively engaged in country T in the business of manufacturing and selling product A. DS manufactures product B, a principal component in which is product A. FS' business activity is substantial. On January 1, 1995, FP lends $100,000,000 to FS to finance FS' business operations. On January 1, 1996, FS ships $30,000,000 of product A to DS. In return, FS creates an interest-bearing account receivable on its books. FS' shipment is in the ordinary course of the active conduct of its trade or business (which is complementary to DS' trade or business.)

(ii) The loan from FP to FS and the accounts receivable opened by FS for a payment owed by DS are financing transactions within the meaning of paragraph (a)(2)(ii)(A)(*1*) of this section and together constitute a financing arrangement within the meaning of paragraph (a)(2)(i) of this section. Pursuant to paragraph (b)(2)(iv) of this section, the fact that DS' liability to FS is created in the ordinary course of the active conduct of DS' trade or business that is complementary to a business actively engaged in by DS is evidence that the participation of FS in the financing arrangement is not pursuant to a tax avoidance plan. However, other facts relevant to the presence of such a plan must also be taken into account.

(20) ***Example 20. Tax avoidance plan—other factors.***

(i) On February 1, 1995, FP issues debt in Country N that is in registered form within the meaning of section 881(c)(3)(A). The FP debt would satisfy the requirements of section 881(c) if the debt were issued by a U.S. person and the withholding agent received the certification required by section 871(h)(2)(B)(ii). The purchasers of the debt are financial institutions and there is no reason to believe that they would not furnish Forms W-8. On March 1, 1995, FP lends a portion of the proceeds of the offering to DS.

(ii) The FP debt and the loan to DS are financing transactions within the meaning of paragraph (a)(2)(ii)(A)(*1*) of this section and together constitute a financing arrangement within the meaning of paragraph (a)(2)(i) of this section. The owners of the FP debt are the financing entities, FP is the intermediate entity and DS is the financed entity. Interest payments on the debt issued by FP would be subject to withholding tax if the debt were issued by DS, unless DS received all necessary Forms W-8. Therefore, the participation of FP in the financing arrangement potentially reduces the tax imposed by section 881(a). However, because it is reasonable to assume that the purchasers of the FP debt would have provided certifications in order to avoid the withholding tax imposed by section 881, there is not a tax avoidance plan. Accordingly, FP is not a conduit entity.

(21) ***Example 21. Tax avoidance plan—other factors.***

(i) Over a period of years, FP has maintained a deposit with BK, a bank organized in the United States, that is unrelated to FP and its subsidiaries. FP often sells goods and purchases raw materials in the United States. FP opened the bank account with BK in order to facilitate this business and the amounts it maintains in the account are reasonably related to its dollar-denominated working capital needs. On January 1, 1995, BK lends $5,000,000 to DS. After the loan is made, the balance in FP's bank account remains within a range appropriate to meet FP's working capital needs.

(ii) FP's deposit with BK and BK's loan to DS are financing transactions within the meaning of paragraph (a)(2)(ii)(A)(*1*) of this section and together constitute a financing arrangement within the meaning of paragraph (a)(2)(i) of this section. Pursuant to section 881(i), interest paid by BK to FP with respect to the bank deposit is exempt from withholding tax. Interest paid directly by DS to FP would not be exempt from withholding tax under section 881(i) and therefore would be subject to a 30% withholding tax. Accordingly, there is a significant reduction in the tax imposed by section 881, which is evidence of the existence of a tax avoidance plan. See paragraph (b)(2)(i) of this section. However, the director of field operations also will consider the fact that FP historically has maintained an account with BK to meet its working capital needs and that, prior to and after BK's loan to DS, the balance within the account remains within

a range appropriate to meet those business needs as evidence that the participation of BK in the FP-BK-DS financing arrangement is not pursuant to a tax avoidance plan. In determining the presence or absence of a tax avoidance plan, all relevant facts will be taken into account.

(22) ***Example 22. Tax avoidance plan—other factors.***

(i) Assume the same facts as in paragraph (e)(21) of this section (the facts in *Example 21*), except that on January 1, 2000, FP's deposit with BK substantially exceeds FP's expected working capital needs and on January 2, 2000, BK lends additional funds to DS. Assume also that BK's loan to DS provides BK with a right of offset against FP's deposit. Finally, assume that FP would have lent the funds to DS directly but for the imposition of the withholding tax on payments made directly to FP by DS.

(ii) As in paragraph (e)(20) of this section (*Example 20*), the transactions in paragraph (e)(22)(i) of this section (this *Example 22*) are a financing arrangement within the meaning of paragraph (a)(2)(i) and the participation of the BK reduces the section 881 tax. In this case, the presence of funds substantially in excess of FP's working capital needs and the fact that FP would have been willing to lend funds directly to DS if not for the withholding tax are evidence that the participation of BK in the FP-BK-FS financing arrangement is pursuant to a tax avoidance plan. However, other facts relevant to the presence of such a plan must also be taken into account. Even if the director of field operations determines that the participation of BK in the financing arrangement is pursuant to a tax avoidance plan, BK may not be treated as a conduit entity unless BK would not have participated in the financing arrangement on substantially the same terms in the absence of FP's deposit with BK. BK's right of offset against FP's deposit (a form of guarantee of BK's loan to DS) creates a presumption that BK would not have made the loan to DS on substantially the same terms in the absence of FP's deposit with BK. If the taxpayer overcomes the presumption by clear and convincing evidence, BK will not be a conduit entity.

(23) ***Example 23. Significant financing activities.***

(i) FS is responsible for coordinating the financing of all of the subsidiaries of FP, which are engaged in substantial trades or businesses and are located in country T, country N, and the United States. FS maintains a centralized cash management accounting system for FP and its subsidiaries in which it records all intercompany payables and receivables; these payables and receivables ultimately are reduced to a single balance either due from or owing to FS and each of FP's subsidiaries. FS is responsible for disbursing or receiving any cash payments required by transactions between its affiliates and unrelated parties. FS must borrow any cash necessary to meet those external obligations and invests any excess cash for the benefit of the FP group. FS enters into interest rate and foreign exchange contracts as necessary to manage the risks arising from mismatches in incoming and outgoing cash flows. The activities of FS are intended (and reasonably can be expected) to reduce transaction costs and overhead and other fixed costs. FS has 50 employees, including clerical and other back office personnel, located in country T. At the request of DS, on January 1, 1995, FS pays a supplier $1,000,000 for materials delivered to DS and charges DS an open account receivable for this amount. On February 3, 1995, FS reverses the account receivable from DS to FS when DS delivers to FP goods with a value of $1,000,000.

(ii) The accounts payable from DS to FS and from FS to other subsidiaries of FP constitute financing transactions within the meaning of paragraph (a)(2)(ii)(A)(*1*) of this section, and the transactions together constitute a financing arrangement within the meaning of paragraph (a)(2)(i) of this section. FS's activities constitute significant financing activities with respect to

the financing transactions even though FS did not actively and materially participate in arranging the financing transactions because the financing transactions consisted of trade receivables and trade payables that were ordinary and necessary to carry on the trades or businesses of DS and the other subsidiaries of FP. Accordingly, pursuant to paragraph (b)(3)(i) of this section, FS' participation in the financing arrangement is presumed not to be pursuant to a tax avoidance plan.

(24) ***Example 24. Significant financing activities—active risk management.***

(i) The facts are the same as in paragraph (e)(23) of this section (the facts in *Example 23*), except that, in addition to its short-term funding needs, DS needs long-term financing to fund an acquisition of another U.S. company; the acquisition is scheduled to close on January 15, 1995. FS has a revolving credit agreement with a syndicate of banks located in Country N. On January 14, 1995, FS borrows ¥10 billion for 10 years under the revolving credit agreement, paying yen LIBOR plus 50 basis points on a quarterly basis. FS enters into a currency swap with BK, an unrelated bank that is not a member of the syndicate, under which FS will pay BK ¥10 billion and will receive $100 million on January 15, 1995; these payments will be reversed on January 15, 2004. FS will pay BK U.S. dollar LIBOR plus 50 basis points on a notional principal amount of $100 million semi-annually and will receive yen LIBOR plus 50 basis points on a notional principal amount of ¥10 billion quarterly. Upon the closing of the acquisition on January 15, 1995, DS borrows $100 million from FS for 10 years, paying U.S. dollar LIBOR plus 50 basis points semiannually.

(ii) Although FS performs significant financing activities with respect to certain financing transactions to which it is a party, FS does not perform significant financing activities with respect to the financing transactions between FS and the syndicate of banks and between FS and DS because FS has eliminated all material market risks arising from those financing transactions through its currency swap with BK. Accordingly, the financing arrangement does not benefit from the presumption of paragraph (b)(3)(i) of this section and the director of field operations must determine whether the participation of FS in the financing arrangement is pursuant to a tax avoidance plan on the basis of all the facts and circumstances. However, if additional facts indicated that FS reviews its currency swaps daily to determine whether they are the most cost efficient way of managing their currency risk and, as a result, frequently terminates swaps in favor of entering into more cost efficient hedging arrangements with unrelated parties, FS would be considered to perform significant financing activities and FS' participation in the financing arrangements would not be pursuant to a tax avoidance plan.

(25) ***Example 25. Significant financing activities—presumption rebutted.***

(i) The facts are the same as in paragraph (e)(23) of this section (the facts in *Example 23*), except that, on January 1, 1995, FP lends to FS DM 15,000,000 (worth $10,000,000) in exchange for a 10 year note that pays interest annually at a rate of 5 percent per annum. Also, on March 15, 1995, FS lends $10,000,000 to DS in exchange for a 10-year note that pays interest annually at a rate of 8 percent per annum. FS would not have had sufficient funds to make the loan to DS without the loan from FP. FS does not enter into any long-term hedging transaction with respect to these financing transactions, but manages the interest rate and currency risk arising from the transactions on a daily, weekly or quarterly basis by entering into forward currency contracts.

(ii) Because FS performs significant financing activities with respect to the financing transactions between FS, DS and FP, the participation of FS in the financing arrangement is presumed not to be pursuant to a tax avoidance plan. The director of field operations may rebut this presumption by establishing that the participation of FS is pursuant to a tax avoidance plan, based on all the facts and circumstances. The mere fact that FS is a resident of country T is not sufficient to establish the existence of a tax avoidance plan. However, the existence of a plan can be inferred from other factors in addition to the fact that FS is a resident of country T. For example, the loans are made within a short time period and FS would not have been able to make the loan to DS without the loan from FP.

(26) ***Example 26. Determination of amount of tax liability.***

(i) On January 1, 1996, FP makes two three-year installment loans of $250,000 each to FS that pay interest at a rate of 9 percent per annum. The loans are self-amortizing with payments on each loan of $7,950 per month. On the same date, FS lends $1,000,000 to DS in exchange for a two-year note that pays interest semi-annually at a rate of 10 percent per annum, beginning on June 30, 1996. The FS-DS loan is not self-amortizing. Assume that for the period of January 1, 1996 through June 30, 1996, the average principal amount of the financing transactions between FP and FS that comprise the financing arrangement is $469,319. Further, assume that for the period of July 1, 1996 through December 31, 1996, the average principal amount of the financing transactions between FP and FS is $393,632. The average principal amount of the financing transaction between FS and DS for the same periods is $1,000,000. The director of field operations determines that the financing transactions between FP and FS, and FS and DS, are a conduit financing arrangement.

(ii) Pursuant to paragraph (d)(1)(i) of this section, the portion of the $50,000 interest payment made by DS to FS on June 30, 1996, that is recharacterized as a payment to FP is $23,450 computed as follows: ($50,000 × $469,319/$1,000,000) = $23,450. The portion of the interest payment made on December 31, 1996 that is recharacterized as a payment to FP is $19,650, computed as follows: ($50,000 × $393,632/$1,000,000) = $19,650. Furthermore, under § 1.1441-3(g), DS is liable for withholding tax at a 30 percent rate on the portion of the $50,000 payment to FS that is recharacterized as a payment to FP, i.e., $7,035 with respect to the June 30, 1996 payment and $5,895 with respect to the December 31, 1996 payment.

(27) ***Example 27. Determination of principal amount.***

(i) FP lends DM 5,000,000 to FS in exchange for a ten year note that pays interest semi-annually at a rate of 8 percent per annum. Six months later, pursuant to a tax avoidance plan, FS lends DM 10,000,000 to DS in exchange for a 10 year note that pays interest semi-annually at a rate of 10 percent per annum. At the time FP make its loan to FS, the exchange rate is DM 1.5/$1. At the time FS makes its loan to DS the exchange rate is DM 1.4/$1.

(ii) FP's loan to FS and FS' loan to DS are financing transactions and together constitute a financing arrangement. Furthermore, because the participation of FS reduces the tax imposed under section 881 and FS' participation is pursuant to a tax avoidance plan, the financing arrangement is a conduit financing arrangement.

(iii) Pursuant to paragraph (d)(1)(i) of this section, the amount subject to recharacterization is a fraction the numerator of which is the lowest aggregate principal amount advanced and the denominator of which is the principal amount advanced from FS to DS. Because the property advanced in these financing transactions is the same type of fungible property, under

paragraph (d)(1)(ii)(A) of this section, both are valued on the date of the last financing transaction. Accordingly, the portion of the payments of interest that is recharacterized is ((DM 5,000,000 × DM 1.4/$1)/(DM 10,000,000 × DM 1.4/$1) or 0.5.

(f) ***Applicability date.*** This section is effective for payments made by financed entities on or after September 11, 1995. This section shall not apply to interest payments covered by section 127(g)(3) of the Tax Reform Act of 1984, and to interest payments with respect to other debt obligations issued prior to October 15, 1984 (whether or not such debt was issued by a Netherlands Antilles corporation). Paragraphs (a)(2)(i)(C) and (e)(3) (*Example 3*) of this section apply to payments made on or after December 9, 2011. Paragraph (a)(2)(ii)(B)(*1*)(*iv*) of this section applies to payments made on or after November 12, 2020.

[T.D. 8611, 60 FR 41005, Aug. 11, 1995; 60 FR 55312, Oct. 31, 1995; 63 FR 67578, Dec. 8, 1998; T.D. 9562, 76 FR 76896, Dec. 9, 2011; 77 FR 22480, Apr. 16, 2012; T.D. 9922, 85 FR 72055, Nov. 12, 2020; 86 FR 54367, Oct. 1, 2021]

§ 1.881-4 Recordkeeping requirements concerning conduit financing arrangements.

(a) ***Scope.*** This section provides rules for the maintenance of records concerning certain financing arrangements to which the provisions of § 1.881-3 apply.

(b) ***Recordkeeping requirements*** —

(1) ***In general.*** Any person subject to the general recordkeeping requirements of section 6001 must keep the permanent books of account or records, as required by section 6001, that may be relevant to determining whether that person is a party to a financing arrangement and whether that financing arrangement is a conduit financing arrangement.

(2) ***Application of Sections 6038 and 6038A.*** A financed entity that is a reporting corporation within the meaning of section 6038A(a) and the regulations under that section, and any other person that is subject to the recordkeeping requirements of § 1.6038A-3, must comply with those recordkeeping requirements with respect to records that may be relevant to determining whether the financed entity is a party to a financing arrangement and whether that financing arrangement is a conduit financing arrangement. Such records, including records that a person is required to maintain pursuant to paragraph (c) of this section, shall be considered records that are required to be maintained pursuant to section 6038 or 6038A. Accordingly, the provisions of sections 6038 and 6038A (including, without limitation, the penalty provisions thereof), and the regulations under those sections, shall apply to any records required to be maintained pursuant to this section.

(c) ***Records to be maintained*** —

(1) ***In general.*** An entity described in paragraph (b) of this section shall be required to retain any records containing the following information concerning each financing transaction that the entity knows or has reason to know comprises the financing arrangement—

(i) The nature (e.g., loan, stock, lease, license) of each financing transaction;

(ii) The name, address, taxpayer identification number (if any) and country of residence of—

(A) Each person that advanced money or other property, or granted rights to use property;

(B) Each person that was the recipient of the advance or rights; and

(C) Each person to whom a payment was made pursuant to the financing transaction (to the extent that person is a different person than the person who made the advance or granted the rights);

(iii) The date and amount of—

(A) Each advance of money or other property or grant of rights; and

(B) Each payment made in return for the advance or grant of rights;

(iv) The terms of any guarantee provided in conjunction with a financing transaction, including the name of the guarantor; and

(v) In cases where one or both of the parties to a financing transaction are related to each other or another entity in the financing arrangement, the manner in which these persons are related.

(2) ***Additional documents.*** An entity described in paragraph (b) of this section must also retain all records relating to the circumstances surrounding its participation in the financing transactions and financing arrangements. Such documents may include, but are not limited to—

(i) Minutes of board of directors meetings;

(ii) Board resolutions or other authorizations for the financing transactions;

(iii) Private letter rulings;

(iv) Financial reports (audited or unaudited);

(v) Notes to financial statements;

(vi) Bank statements;

(vii) Copies of wire transfers;

(viii) Offering documents;

(ix) Materials from investment advisors, bankers and tax advisors; and

(x) Evidences of indebtedness.

(3) ***Effect of record maintenance requirement.*** Record maintenance in accordance with paragraph (b) of this section generally does not require the original creation of records that are ordinarily not created by affected entities. If, however, a document that is actually created is described in this paragraph (c), it is to be retained even if the document is not of a type ordinarily created by the affected entity.

(d) ***Effective date.*** This section is effective September 11, 1995. This section shall not apply to interest payments covered by section 127(g)(3) of the Tax Reform Act of 1984, and to interest payments with respect to other debt obligations issued prior to October 15, 1984 (whether or not such debt was issued by a Netherlands Antilles corporation).

[T.D. 8611, 60 FR 41014, Aug. 11, 1995]

§ 1.881-5 Exception for certain possessions corporations.

(a) ***Scope.*** Section 881(b) and this section provide special rules for the application of sections 881 and 884 to certain corporations created or organized in possessions of the United States. Paragraph (g) of this section provides special rules for the application of sections 881 and 884 to corporations created or

organized in the United States for purposes of determining tax liability incurred to certain possessions that administer income tax laws that are identical (except for the substitution of the name of the possession for the term "United States" where appropriate) to those in force in the United States. See § 1.884-0(b) for special rules relating to the application of section 884 with respect to possessions of the United States.

(b) ***Operative rules.***

(1) Corporations described in paragraphs (c) and (d) of this section are not treated as foreign corporations for purposes of section 881. Accordingly, they are exempt from the tax imposed by section 881(a).

(2) For corporations described in paragraph (e) of this section, the rate of tax imposed by section 881(a) on U.S. source dividends received is 10 percent (rather than the generally applicable 30 percent).

(c) ***U.S. Virgin Islands and section 931 possessions.*** A corporation created or organized in, or under the law of, the U.S. Virgin Islands or a section 931 possession is described in this paragraph (c) for a taxable year when the following conditions are satisfied—

(1) At all times during such taxable year, less than 25 percent in value of the stock of such corporation is beneficially owned (directly or indirectly) by foreign persons;

(2) At least 65 percent of the gross income of such corporation is shown to the satisfaction of the Commissioner upon examination to be effectively connected with the conduct of a trade or business in such a possession or the United States for the 3-year period ending with the close of the taxable year of such corporation (or for such part of such period as the corporation or any predecessor has been in existence); and

(3) No substantial part of the income of such corporation for the taxable year is used (directly or indirectly) to satisfy obligations to persons who are not bona fide residents of such a possession or the United States.

(d) ***Section 935 possessions.*** A corporation created or organized in, or under the law of, a section 935 possession is described in this paragraph (d) for a taxable year when the following conditions are satisfied—

(1) At all times during such taxable year, less than 25 percent in value of the stock of such corporation is owned (directly or indirectly) by foreign persons; and

(2) At least 20 percent of the gross income of such corporation is shown to the satisfaction of the Commissioner upon examination to have been derived from sources within such possession for the 3-year period ending with the close of the preceding taxable year of such corporation (or for such part of such period as the corporation has been in existence).

(e) ***Puerto Rico.*** A corporation created or organized in, or under the law of, Puerto Rico is described in this paragraph (e) for a taxable year when the conditions of paragraphs (c)(1) through (c)(3) of this section are satisfied (using the language "Puerto Rico" instead of "such a possession").

(f) ***Definitions and other rules.*** For purposes of this section—

(1) "Section 931 possession" is defined in § 1.931-1(c)(1);and

(2) "Section 935 possession" is defined in § 1.935-1(a)(3)(i).

(3) ***Foreign person*** means any person other than—

(i) A United States person (as defined in section 7701(a)(30) and the regulations under that section); or

(ii) A person who would be a United States person if references to the United States in section 7701 included references to a possession of the United States.

(4) ***Bona fide resident*** —

(i) With respect to a particular possession, means—

(A) An individual who is a bona fide resident of the possession as defined in § 1.937-1; or

(B) A business entity organized under the laws of the possession and taxable as a corporation in the possession; and

(ii) With respect to the United States, means—

(A) An individual who is a citizen or resident of the United States (as defined under section 7701(b)(1)(A)); or

(B) A business entity organized under the laws of the United States or any State that is classified as a corporation for Federal tax purposes under § 301.7701-2(b) of this chapter.

(5) ***Source.*** The rules of § 1.937-2 will apply for determining whether income is from sources within a possession.

(6) ***Effectively connected income.*** The rules of § 1.937-3 (other than paragraph (c) of that section) will apply for determining whether income is effectively connected with the conduct of a trade or business in a possession.

(7) ***Indirect ownership.*** The rules of section 318(a)(2) will apply except that the language "5 percent" will be used instead of "50 percent" in section 318(a)(2)(C).

(g) ***Mirror code jurisdictions.*** For purposes of applying mirrored section 881 to determine tax liability incurred to a section 935 possession or the U.S. Virgin Islands—

(1) The rules of paragraphs (b) through (d) of this section will not apply; and

(2) A corporation created or organized in, or under the law of, such possession or the United States will not be considered a foreign corporation.

(h) ***Example.*** The principles of this section are illustrated by the following example:

Example. X is a corporation organized under the law of the U.S. Virgin Islands with a branch located in State F. At least 65 percent of the gross income of X is effectively connected with the conduct of a trade or business in the U.S. Virgin Islands and no substantial part of the income of X for the taxable year is used to satisfy obligations to persons who are not bona fide residents of the United States or the U.S. Virgin Islands. Seventy-four percent of the stock of X is owned by unrelated individuals who are residents of the United States or the U.S. Virgin Islands. Y, a corporation organized under the law of State D, and Z, a partnership organized under the law of State F, each own 13 percent of the stock of X. A, an unrelated foreign individual, owns 100 percent of the stock of corporation Y. B and C, unrelated foreign individuals, each own a 50 percent interest in partnership Z. Thus, the condition of paragraph (c)(1) of this section is not satisfied, because 26 percent of X is owned indirectly by foreign persons (A, B, and C). Accordingly, X is treated as a foreign corporation for purposes of section 881.

(i) ***Effective/applicability dates.*** Except as otherwise provided in this paragraph (i), this section applies to payments made in taxable years ending after April 9, 2008. If, on or after April 9, 2008, there takes effect an increase in the Commonwealth of Puerto Rico's withholding tax generally applicable to dividends paid to United States corporations not engaged in a trade or business in the Commonwealth to a rate greater than 10 percent, the rules of paragraphs (b)(2) and (e) of this section will not apply to dividends received on or after the effective date of the increase. Paragraph (f)(4) of this section applies to payments made after January 31, 2006. Taxpayers may choose to apply paragraph (f)(4) of this section to payments made after October 22, 2004.

[T.D. 9248, 71 FR 5001, Jan. 31, 2006, as amended by T.D. 9391, 73 FR 19359, Apr. 9, 2008; 73 FR 27728, May 14, 2008]

§ 1.882-0 Table of contents.

This section lists captions contained in §§ 1.882-1, 1.882-2, 1.882-3, 1.882-4 and 1.882-5.

§ 1.882-1 Taxation of foreign corporations engaged in U.S. business or of foreign corporations treated as having effectively connected income.

(a) Segregation of income.

(b) Imposition of tax.

(1) Income not effectively connected with the conduct of a trade or business in the United States.

(2) Income effectively connected with the conduct of a trade or business in the United States.

(i) In general.

(ii) Determination of taxable income.

(iii) Cross references.

(c) Change in trade or business status.

(d) Credits against tax.

(e) Payment of estimated tax.

(f) Effective date.

§ 1.882-2 Income of foreign corporation treated as effectively connected with U.S. business.

(a) Election as to real property income.

(b) Interest on U.S. obligations received by banks organized in possessions.

(c) Treatment of income.

(d) Effective date.

§ 1.882-3 Gross income of a foreign corporation.

(a) In general.

(1) Inclusions.

(2) Exchange transactions.

(3) Exclusions.

(b) Foreign corporations not engaged in U.S. business.

(c) Foreign corporations engaged in U.S. business.

(d) Effective date.

§ 1.882-4 Allowance of deductions and credits to foreign corporations.

(a) Foreign corporations.

(1) In general.

(2) Return necessary.

(3) Filing deadline for return.

(4) Return by Internal Revenue Service.

(b) Allowed deductions and credits.

(1) In general.

(2) Verification.

§ 1.882-5 Determination of interest deduction.

(a)(1) Overview.

(i) In general.

(ii) Direct allocations.

(A) In general.

(B) Partnership interests.

(2) Coordination with tax treaties.

(3) Limitation on interest expense.

(4) Translation convention for foreign currency.

(5) Coordination with other sections.

(6) Special rule for foreign governments.

(7) Elections under § 1.882-5.

(i) In general.

(ii) Failure to make the proper election.

(iii) Step 2 special election for banks.

(8) Examples.

(b) Step 1: Determination of total value of U.S. assets for the taxable year.

(1) Classification of an asset as a U.S. asset.

(i) General rule.

(ii) Items excluded from the definition of U.S. asset.

(iii) Items included in the definition of U.S. asset.

(iv) Interbranch transactions.

(v) Assets acquired to increase U.S. assets artificially.

(2) Determination of the value of a U.S. asset.

(i) General rule.

(ii) Fair-market value election.

(A) In general.

(B) Adjustment to partnership basis.

(iii) Reduction of total value of U.S. assets by amount of bad debt reserves under section 585.

(A) In general.

(B) Example.

(3) Computation of total value of U.S. assets.

(i) General rule.

(ii) Adjustment to basis of financial instruments.

(c) Step 2: Determination of total amount of U.S.-connected liabilities for the taxable year.

(1) General rule.

(2) Computation of the actual ratio.

(i) In general.

(ii) Classification of items.

(iii) Determination of amount of worldwide liabilities.

(iv) Determination of value of worldwide assets.

(v) Hedging transactions.

(vi) Treatment of partnership interests and liabilities.

(vii) Computation of actual ratio of insurance companies.

(viii) Interbranch transactions.

(ix) Amounts must be expressed in a single currency.

(3) Adjustments.

(4) Elective fixed ratio method of determining U.S. liabilities.

(5) Examples.

(d) Step 3: Determination of amount of interest expense allocable to ECI under the adjusted U.S. booked liabilities method.

(1) General rule.

(2) U.S. booked liabilities.

(i) In general.

(ii) Properly reflected on the books of the U.S. trade or business of a foreign corporation that is not a bank.

(A) In general.

(B) Identified liabilities not properly reflected.

(iii) Properly reflected on the books of the U.S. trade or business of a foreign corporation that is a bank.

(A) In general.

(B) Inadvertent error.

(iv) Liabilities of insurance companies.

(v) Liabilities used to increase artificially interest expense on U.S. booked liabilities.

(vi) Hedging transactions.

(vii) Amount of U.S. booked liabilities of a partner.

(viii) Interbranch transactions.

(3) Average total amount of U.S. booked liabilities.

(4) Interest expense where U.S. booked liabilities equal or exceed U.S. liabilities.

(i) In general.

(ii) Scaling ratio.

(iii) Special rules for insurance companies.

(5) U.S.-connected interest rate where U.S. booked liabilities are less than U.S.-connected liabilities.

(i) In general.

(ii) Interest rate on excess U.S.-connected liabilities.

(A) General rule.

(B) Annual published rate election.

(6) Examples.

(e) Separate currency pools method.

(1) General rule.

(i) Determine the value of U.S. assets in each currency pool.

(ii) Determine the U.S.-connected liabilities in each currency pool.

(iii) Determine the interest expense attributable to each currency pool.

(2) Prescribed interest rate.

(3) Hedging transactions.

(4) Election not available if excessive hyperinflationary assets.

(5) Examples.

(f) Effective date.

(1) General rule.

(2) Special rules for financial products.

[T.D. 8658, 61 FR 9329, Mar. 8, 1996; 61 FR 15891, Apr. 10, 1996, as amended by T.D. 9281, 71 FR 47448, Aug. 17, 2006; T.D. 9465, 74 FR 49317, Sept. 28, 2009]

§ 1.882-1 Taxation of foreign corporations engaged in U.S. business or of foreign corporations treated as having effectively connected income.

(a) ***Segregation of income.*** This section applies for purposes of determining the tax of a foreign corporation which at any time during the taxable year is engaged in trade or business in the United States. It also applies for purposes of determining the tax of a foreign corporation which at no time during the taxable year is engaged in trade or business in the United States but has for the taxable year real property income or interest on obligations of the United States which, by reason of section 882 (d) or (e) and § 1.882-2, is treated as effectively connected for the taxable year with the conduct of a trade or business in the United States by that corporation. A foreign corporation to which this section applies must segregate its gross income for the taxable year into two categories, namely, the income which is effectively connected for the taxable year with the conduct of a trade or business in the United States by that corporation and the income which is not effectively connected for the taxable year with the conduct of a trade or business in the United States by that corporation. A separate tax shall then be determined upon each such category of income, as provided in paragraph (b) of this section. The determination of whether income or gain is or is not effectively connected for the taxable year with the conduct of a trade or business in the United States by the foreign corporation shall be made in accordance with section 864(c) and §§ 1.864-3 through 1.864-7. For purposes of this section income which is effectively connected for the taxable year

with the conduct of a trade or business in the United States includes all income which is treated under section 882 (d) or (e) and § 1.882-2 as income which is effectively connected for the taxable year with the conduct of a trade or business in the United States by the foreign corporation.

(b) *Imposition of tax* —

(1) ***Income not effectively connected with the conduct of a trade or business in the United States.*** If a foreign corporation to which this section applies derives during the taxable year from sources within the United States income or gains described in section 881(a) and paragraph (b) or (c) of § 1.881-2 which are not effectively connected for the taxable year with the conduct of a trade or business in the United States by that corporation, such income or gains shall be subject to a flat tax of 30 percent of the aggregate amount of such items. This tax shall be determined in the manner, and subject to the same conditions, set forth in § 1.881-2 as though the income or gains were derived by a foreign corporation not engaged in trade or business in the United States during the taxable year, except that in applying paragraph (c) of such section there shall not be taken into account any gains which are taken into account in determining the tax under section 882(a)(1) and subparagraph (2) of this paragraph.

(2) ***Income effectively connected with the conduct of a trade or business in the United States*** —

(i) ***In general.*** If a foreign corporation to which this section applies derives income or gains which are effectively connected for the taxable year with the conduct of a trade or business in the United States by that corporation, the taxable income or gains shall, except as provided in § 1.871-12, be taxed in accordance with section 11 or, in the alternative, section 1201(a). See sections 11(f) and 882(a)(1). Any income of the foreign corporation which is not effectively connected for the taxable year with the conduct of a trade or business in the United States by that corporation shall not be taken into account in determining either the rate or amount of such tax.

(ii) ***Determination of taxable income.*** The taxable income for any taxable year for purposes of this subparagraph consists only of the foreign corporation's taxable income which is effectively connected for the taxable year with the conduct of a trade or business in the United States by that corporation; and, for this purpose, it is immaterial that the trade or business with which that income is effectively connected is not the same as the trade or business carried on in the United States by that corporation during the taxable year. See example 2 in § 1.864-4(b). In determining such taxable income all amounts constituting, or considered to be, gains or losses for the taxable year from the sale or exchange of capital assets shall be taken into account if such gains or losses are effectively connected for the taxable year with the conduct of a trade or business in the United States by that corporation.

(iii) ***Cross references.*** For rules for determining the gross income and deductions for the taxable year, see section 882 (b) and (c)(1) and the regulations thereunder.

(c) ***Change in trade or business status.*** The principles of paragraph (c) of § 1.871-8 shall apply to cases where there has been a change in the trade or business status of a foreign corporation.

(d) ***Credits against tax.*** The credits allowed by section 32 (relating to tax withheld at source on foreign corporations), section 33 (relating to the foreign tax credit), section 38 (relating to investment in certain depreciable property), section 39 (relating to certain uses of gasoline and lubricating oil), section 40 (relating to expenses of work incentive programs), and section 6042 (relating to overpayments of a tax) shall be allowed against the tax determined in accordance with this section. However, the credits allowed by sections 33, 38, and 40 shall not be allowed against the flat tax of 30 percent imposed by section

881(a) and paragraph (b)(1) of this section. For special rules applicable in determining the foreign tax credit, see section 906(b) and the regulations thereunder. For the disallowance of certain credits where a return is not filed for the taxable year see section 882(c)(2) and the regulations thereunder.

(e) ***Payment of estimated tax.*** Every foreign corporation which for the taxable year is subject to tax under section 11 or 1201(a) and this section must make payment of its estimated tax in accordance with section 6154 and the regulations thereunder. In determining the amount of the estimated tax the foreign corporation must treat the tax imposed by section 881(a) and paragraph (b)(1) of this section as though it were a tax imposed by section 11.

(f) ***Effective date.*** This section applies for taxable years beginning after December 31, 1966. For corresponding rules applicable to taxable years beginning before January 1, 1967, see 26 CFR 1.882-1 (Revised as of January 1, 1971).

[T.D. 7293, 38 FR 32797, Nov. 28, 1973]

§ 1.882-2 Income of foreign corporations treated as effectively connected with U.S. business.

(a) ***Election as to real property income.*** A foreign corporation which during the taxable year derives any income from real property which is located in the United States, or derives income from any interest in any such real property, may elect, pursuant to section 882(d) and § 1.871-10, to treat all such income as income which is effectively connected for the taxable year with the conduct of a trade or business in the United States by that corporation. The election may be made whether or not the foreign corporation is engaged in trade or business in the United States during the taxable year for which the election is made or whether or not the corporation has income from real property which for the taxable year is effectively connected with the conduct of a trade or business in the United States, but it may be made only with respect to income from sources within the United States which, without regard to section 882(d) and § 1.871-10, is not effectively connected for the taxable year with the conduct of a trade or business in the United States by that corporation. The income to which the election applies shall be determined as provided in paragraph (b) of § 1.871-10 and shall be subject to tax in the manner, and subject to the same conditions, provided by section 882(a)(1) and paragraph (b)(2) of § 1.882-1. Section 871(d) (2) and (3) and the provisions of § 1.871-10 thereunder shall apply in respect of an election under section 882(d) in the same manner and to the same extent as they apply in respect of elections under section 871(d).

(b) ***Interest on U.S. obligations received by banks organized in possessions.*** Interest received from sources within the United States during the taxable year on obligations of the United States by a foreign corporation created or organized in, or under the law of, a possession of the United States and carrying on the banking business in a possession of the United States during the taxable year shall be treated, pursuant to section 882(e) and this paragraph, as income which is effectively connected for the taxable year with the conduct of a trade or business in the United States by that corporation. This paragraph applies whether or not the foreign corporation is engaged in trade or business in the United States at any time during the taxable year but only with respect to income which, without regard to this paragraph, is not effectively connected for the taxable year with the conduct of a trade or business in the United States by that corporation. Any interest to which this paragraph applies shall be subject to tax in the manner, and subject to the same conditions, provided by section 882(a)(1) and paragraph (b)(2) of § 1.882-1. To the extent that deductions are connected with interest to which this paragraph applies, they shall be treated for purposes of section 882(c)(1) and the regulations thereunder as connected with income which is effectively connected for the taxable year with the conduct of a trade or business in the United States by the foreign corporation. An election by the taxpayer is not required in respect of the income to which this

paragraph applies. For purposes of this paragraph the term "possession of the United States" includes Guam, the Midway Islands, the Panama Canal Zone, the Commonwealth of Puerto Rico, American Samoa, the Virgin Islands, and Wake Island.

(c) ***Treatment of income.*** Any income in respect of which an election described in paragraph (a) of this section is in effect, and any interest to which paragraph (b) of this section applies, shall be treated, for purposes of paragraph (b)(2) of § 1.882-1 and paragraph (a) of § 1.1441-4, as income which is effectively connected for the taxable year with the conduct of a trade or business in the United States by the foreign corporation. A foreign corporation shall not be treated as being engaged in trade or business in the United States merely by reason of having such income for the taxable year.

(d) ***Effective date.*** This section applies for taxable years beginning after December 31, 1966. There are no corresponding rules in this part for taxable years beginning before January 1, 1967.

[T.D. 7293, 38 FR 32798, Nov. 28, 1973]

§ 1.882-3 Gross income of a foreign corporation.

(a) ***In general*** —

(1) ***Inclusions.*** The gross income of a foreign corporation for any taxable year includes only

(i) the gross income which is derived from sources within the United States and which is not effectively connected for the taxable year with the conduct of a trade or business in the United States by that corporation and

(ii) the gross income, irrespective of whether such income is derived from sources within or without the United States, which is effectively connected for the taxable year with the conduct of a trade or business in the United States by that corporation. For the determination of the sources of income, see sections 861 through 863, and the regulations thereunder. For the determination of whether income from sources within or without the United States is effectively connected for the taxable year with the conduct of a trade or business in the United States, see sections 864(c) and 882 (d) and (e), §§ 1.864-3 through 1.864-7, and § 1.882-2.

(2) ***Exchange transactions.*** Even though a foreign corporation which effects certain transactions in the United States in stocks, securities, or commodities during the taxable year may not, by reason of section 864(b)(2) and paragraph (c) or (d) of § 1.864-2, be engaged in trade or business in the United States during the taxable year through the effecting of such transactions, nevertheless it shall be required to include in gross income for the taxable year the gains and profits from those transactions to the extent required by paragraph (c) of § 1.881-2 or by paragraph (a) of § 1.882-1.

(3) ***Exclusions.*** For exclusions from gross income of a foreign corporation, see § 1.883-1.

(b) ***Foreign corporations not engaged in U.S. business.*** In the case of a foreign corporation which at no time during the taxable year is engaged in trade or business in the United States the gross income shall include only

(1) the gross income from sources within the United States which is described in section 881(a) and paragraphs (b) and (c) of § 1.881-2, and

(2) the gross income from sources within the United States which, by reason of section 882 (d) or (e) and § 1.882-2, is treated as effectively connected for the taxable year with the conduct of a trade or business in the United States by that corporation.

(c) ***Foreign corporations engaged in U.S. business.*** In the case of a foreign corporation which is engaged in trade or business in the United States at any time during the taxable year, the gross income shall include

(1) the gross income from sources within and without the United States which is effectively connected for the taxable year with the conduct of a trade or business in the United States by that corporation,

(2) the gross income from sources within the United States which, by reason of section 882 (d) or (e) and § 1.882-2, is treated as effectively connected for the taxable year with the conduct of a trade or business in the United States by that corporation, and

(3) the gross income from sources within the United States which is described in section 881(a) and paragraphs (b) and (c) of § 1.881-2 and is not effectively connected for the taxable year with the conduct of a trade or business in the United States by that corporation.

(d) ***Effective date.*** This section applies for taxable years beginning after December 31, 1966. For corresponding rules applicable to taxable years beginning before January 1, 1967, see 26 CFR 1.882-2 (Revised as of January 1, 1971).

[T.D. 7293, 38 FR 32799, Nov. 28, 1973]

§ 1.882-4 Allowance of deductions and credits to foreign corporations.

(a) ***Foreign corporations*** —

(1) ***In general.*** A foreign corporation that is engaged in, or receives income treated as effectively connected with, a trade or business within the United States is allowed the deductions which are properly allocated and apportioned to the foreign corporation's gross income which is effectively connected, or treated as effectively connected, with its conduct of a trade or business within the United States. The foreign corporation is entitled to credits which are attributable to that effectively connected income. No provision of this section (other than paragraph (b)(2)) shall be construed to deny the credits provided by sections 33, 34 and 852(b)(3)(D)(ii) or the deduction allowed by section 170.

(2) ***Return necessary.*** A foreign corporation shall receive the benefit of the deductions and credits otherwise allowed to it with respect to the income tax, only if it timely files or causes to be filed with the Philadelphia Service Center, in the manner prescribed in subtitle F, a true and accurate return of its taxable income which is effectively connected, or treated as effectively connected, for the taxable year with the conduct of a trade or business in the United States by that corporation. The deductions and credits allowed such a corporation electing under a tax convention to be subject to tax on a net basis may be obtained by filing a return of income in the manner prescribed in the regulations (if any) under the tax convention or under any other guidance issued by the Commissioner.

(3) ***Filing deadline for return.***

(i) As provided in paragraph (a)(2) of this section, for purposes of computing the foreign corporation's taxable income for any taxable year, otherwise allowable deductions (other than that allowed by section 170) and credits (other than those allowed by sections 33, 34 and 852(b)(3)(D)(ii)) will be allowed only if a return for that taxable year is filed by the foreign corporation on a timely basis. For taxable years of a foreign corporation ending after July 31, 1990, whether a return for the current taxable year has been filed on a timely basis is dependent upon whether the foreign corporation filed a return for the taxable year immediately preceding the current taxable year. If a return was filed for that immediately preceding taxable year, or if

the current taxable year is the first taxable year of the foreign corporation for which a return is required to be filed, the required return for the current taxable year must be filed within 18 months of the due date as set forth in section 6072 and the regulations under that section, for filing the return for the current taxable year. If no return for the taxable year immediately preceding the current taxable year has been filed, the required return for the current taxable year (other than the first taxable year of the foreign corporation for which a return is required to be filed) must have been filed no later than the earlier of the date which is 18 months after the due date, as set forth in section 6072, for filing the return for the current taxable year or the date the Internal Revenue Service mails a notice to the foreign corporation advising the corporation that the current year tax return has not been filed and that no deductions (other than that allowed under section 170) or credits (other than those allowed under sections 33, 34 and 852(b)(3)(D)(ii)) may be claimed by the taxpayer.

(ii) The filing deadlines set forth in paragraph (a)(3)(i) of this section may be waived if the foreign corporation establishes to the satisfaction of the Commissioner or his or her delegate that the corporation, based on the facts and circumstances, acted reasonably and in good faith in failing to file a U.S. income tax return (including a protective return (as described in paragraph (a)(3)(vi) of this section)). For this purpose, a foreign corporation shall not be considered to have acted reasonably and in good faith if it knew that it was required to file the return and chose not to do so. In addition, a foreign corporation shall not be granted a waiver unless it cooperates in the process of determining its income tax liability for the taxable year for which the return was not filed. The Commissioner or his or her delegate shall consider the following factors in determining whether the foreign corporation, based on the facts and circumstances, acted reasonably and in good faith in failing to file a U.S. income tax return—

(A) Whether the corporation voluntarily identifies itself to the Internal Revenue Service as having failed to file a U.S. income tax return before the Internal Revenue Service discovers the failure to file;

(B) Whether the corporation did not become aware of its ability to file a protective return (as described in paragraph (a)(3)(vi) of this section) by the deadline for filing a protective return;

(C) Whether the corporation had not previously filed a U.S. income tax return;

(D) Whether the corporation failed to file a U.S. income tax return because, after exercising reasonable diligence (taking into account its relevant experience and level of sophistication), the corporation was unaware of the necessity for filing the return;

(E) Whether the corporation failed to file a U.S. income tax return because of intervening events beyond its control; and

(F) Whether other mitigating or exacerbating factors existed.

(iii) The following examples illustrate the provisions of this section. In all examples, FC is a foreign corporation and uses the calendar year as its taxable year. The examples are as follows:

Example 1. Foreign corporation discloses own failure to file. In Year 1, FC became a limited partner with a passive investment in a U.S. limited partnership that was engaged in a U.S. trade or business. During Year 1 through Year 4, FC incurred losses with respect to its U.S. partnership interest. FC's foreign tax director incorrectly concluded that because it was a limited partner and had only losses from its partnership interest, FC was not required to

file a U.S. income tax return. FC's management was aware neither of FC's obligation to file a U.S. income tax return for those years, nor of its ability to file a protective return for those years. FC had never filed a U.S. income tax return before. In Year 5, FC began realizing a profit rather than a loss with respect to its partnership interest and, for this reason, engaged a U.S. tax advisor to handle its responsibility to file U.S. income tax returns. In preparing FC's income tax return for Year 5, FC's U.S. tax advisor discovered that returns were not filed for Year 1 through Year 4. Therefore, with respect to those years for which applicable filing deadlines in paragraph (a)(3)(i) of this section were not met, FC would be barred by paragraph (a)(2) of this section from claiming any deductions that otherwise would have given rise to net operating losses on returns for those years, and that would have been available as loss carryforwards in subsequent years. At FC's direction, its U.S. tax advisor promptly contacted the appropriate examining personnel and cooperated with the Internal Revenue Service in determining FC's income tax liability, for example, by preparing and filing the appropriate income tax returns for Year 1 through Year 4 and by making FC's books and records available to an Internal Revenue Service examiner. FC has met the standard described in paragraph (a)(3)(ii) of this section for waiver of any applicable filing deadlines in paragraph (a)(3)(i) of this section.

Example 2. Foreign corporation refuses to cooperate. Same facts as in *Example 1,* except that while FC's U.S. tax advisor contacted the appropriate examining personnel and filed the appropriate income tax returns for Year 1 through Year 4, FC refused all requests by the Internal Revenue Service to provide supporting information (for example, books and records) with respect to those returns. Because FC did not cooperate in determining its U.S. tax liability for the taxable years for which an income tax return was not timely filed, FC is not granted a waiver as described in paragraph (a)(3)(ii) of this section of any applicable filing deadlines in paragraph (a)(3)(i) of this section.

Example 3. Foreign corporation fails to file a protective return. Same facts as in *Example 1,* except that in Year 1 through Year 4, FC's tax director also consulted a U.S. tax advisor, who advised FC's tax director that it was uncertain whether U.S. income tax returns were necessary for those years and that FC could protect its right subsequently to claim the loss carryforwards by filing protective returns under paragraph (a)(3)(vi) of this section. FC did not file U.S. income tax returns or protective returns for those years. FC did not present evidence that intervening events beyond FC's control prevented it from filing an income tax return, and there were no other mitigating factors. FC has not met the standard described in paragraph (a)(3)(ii) of this section for waiver of any applicable filing deadlines in paragraph (a)(3)(i) of this section.

Example 4. Foreign corporation with effectively connected income. In Year 1, FC, a technology company, opened an office in the United States to market and sell a software program that FC had developed outside the United States. FC had minimal business or tax experience internationally, and no such experience in the United States. Through FC's direct efforts, U.S. sales of the software produced income effectively connected with a U.S. trade or business. FC, however, did not file U.S. income tax returns for Year 1 or Year 2. FC's management was aware neither of FC's obligation to file a U.S. income tax return for those years, nor of its ability to file a protective return for those years. FC had never filed a U.S. income tax return before. In January of Year 4, FC engaged U.S. counsel in connection with licensing software to an unrelated U.S. company. U.S. counsel reviewed FC's U.S. activities and advised FC that it should have filed U.S. income tax returns for Year 1 and

Year 2. FC immediately engaged a U.S. tax advisor who, at FC's direction, promptly contacted the appropriate examining personnel and cooperated with the Internal Revenue Service in determining FC's income tax liability, for example, by preparing and filing the appropriate income tax returns for Year 1 and Year 2 and by making FC's books and records available to an Internal Revenue Service examiner. FC has met the standard described in paragraph (a)(3)(ii) of this section for waiver of any applicable filing deadlines in paragraph (a)(3)(i) of this section.

Example 5. IRS discovers foreign corporation's failure to file. In Year 1, FC, a technology company, opened an office in the United States to market and sell a software program that FC had developed outside the United States. Through FC's direct efforts, U.S. sales of the software produced income effectively connected with a U.S. trade or business. FC had extensive experience conducting similar business activities in other countries, including making the appropriate tax filings. However, FC's management was aware neither of FC's obligation to file a U.S. income tax return for those years, nor of its ability to file a protective return for those years. FC had never filed a U.S. income tax return before. Despite FC's extensive experience conducting similar business activities in other countries, it made no effort to seek advice in connection with its U.S. tax obligations. FC failed to file either U.S. income tax returns or protective returns for Year 1 and Year 2. In January of Year 4, an Internal Revenue Service examiner asked FC for an explanation of FC's failure to file U.S. income tax returns. FC immediately engaged a U.S. tax advisor, and cooperated with the Internal Revenue Service in determining FC's income tax liability, for example, by preparing and filing the appropriate income tax returns for Year 1 and Year 2 and by making FC's books and records available to the examiner. FC did not present evidence that intervening events beyond its control prevented it from filing a return, and there were no other mitigating factors. FC has not met the standard described in paragraph (a)(3)(ii) of this section for waiver of any applicable filing deadlines in paragraph (a)(3)(i) of this section.

Example 6. Foreign corporation with prior filing history. FC began a U.S. trade or business in Year 1. FC's tax advisor filed the appropriate U.S. income tax returns for Year 1 through Year 6, reporting income effectively connected with FC's U.S. trade or business. In Year 7, FC replaced its tax advisor with a tax advisor unfamiliar with U.S. tax law. FC did not file a U.S. income tax return for any year from Year 7 through Year 10, although it had effectively connected income for those years. FC's management was aware of FC's ability to file a protective return for those years. In Year 11, an Internal Revenue Service examiner contacted FC and asked its chief financial officer for an explanation of FC's failure to file U.S. income tax returns after Year 6. FC immediately engaged a U.S. tax advisor and cooperated with the Internal Revenue Service in determining FC's income tax liability, for example, by preparing and filing the appropriate income tax returns for Year 7 through Year 10 and by making FC's books and records available to the examiner. FC did not present evidence that intervening events beyond its control prevented it from filing a return, and there were no other mitigating factors. FC has not met the standard described in paragraph (a)(3)(ii) of this section for waiver of any applicable filing deadlines in paragraph (a)(3)(i) of this section.

(iv) Paragraphs (a)(3)(ii) and (iii) of this section are applicable to open years for which a request for a waiver is filed on or after January 29, 2002.

(v) A foreign corporation which has a permanent establishment, as defined in an income tax treaty between the United States and the foreign corporation's country of residence, in the United States is subject to the filing deadlines set forth in paragraph (a)(3)(i) of this section.

(vi) If a foreign corporation conducts limited activities in the United States in a taxable year which the foreign corporation determines does not give rise to gross income which is effectively connected with the conduct of a trade or business within the United States as defined in sections 882(b) and 864 (b) and (c) and the regulations under those sections, the foreign corporation may nonetheless file a return for that taxable year on a timely basis under paragraph (a)(3)(i) of this section and thereby protect the right to receive the benefit of the deductions and credits attributable to that gross income if it is later determined, after the return was filed, that the original determination was incorrect. On that timely filed return, the foreign corporation is not required to report any gross income as effectively connected with a United States trade or business or any deductions or credits but should attach a statement indicating that the return is being filed for the reason set forth in this paragraph (a)(3). If the foreign corporation determines that part of the activities which it conducts in the United States in a taxable year gives rise to gross income which is effectively connected with the conduct of a trade or business and part does not, the foreign corporation must timely file a return for that taxable year to report the gross income determined to be effectively connected, or treated as effectively connected, with the conduct of the trade or business within the United States and the deductions and credits attributable to the gross income. In addition, the foreign corporation should attach to that return the statement described in this paragraph (b)(3) with regard to the other activities. The foreign corporation may follow the same procedure if it determines initially that it has no United States tax liability under the provisions of an applicable income tax treaty. In the event the foreign corporation relies on the provisions of an income tax treaty to reduce or eliminate the income subject to taxation, or to reduce the rate of tax, disclosure may be required pursuant to section 6114.

(vii) In order to be eligible for any deductions and credits for purposes of computing the accumulated earnings tax of section 531, a foreign corporation must file a true and accurate return; on a timely basis, in the manner as set forth in paragraph (a)(2) and (3) of this section.

(4) ***Return by Internal Revenue Service.*** If a foreign corporation has various sources of income within the United States and a return of income has not been filed, in the manner prescribed by subtitle F, including the filing deadlines set forth in paragraph (a)(3) of this section, the Internal Revenue Service shall:

(i) Cause a return of income to be made,

(ii) Include on the return the income described in § 1.882-1 of that corporation from all sources concerning which it has information, and

(iii) Assess the tax and collect it from one or more of those sources of income within the United States, without allowance for any deductions (other than that allowed by section 170) or credits (other than those allowed by sections 33, 34 and 852(b)(3)(D)(ii)).

If the income of the corporation is not effectively connected with, or if the corporation did not receive income that is treated as being effectively connected with, the conduct of a United States trade or business, the tax will be assessed under § 1.882-1(b)(1) on a gross basis, without allowance for any deduction (other than that allowed by section 170) or credit (other than the credits allowed by sections 33, 34 and 852(b)(3)(D)(ii)). If the income is effectively

connected, or treated as effectively connected, with the conduct of a United States trade on business, tax will be assessed in accordance with either section 11, 55 or 1201(a) without allowance for any deduction (other than that allowed by section 170) or credit (other than the credits allowed by sections 33, 34 and 852(b)(3)(D)(ii)).

(b) *Allowed deductions and credits* —

(1) ***In general.*** Except for the deduction allowed under section 170 for charitable contributions and gifts (see section 882(c)(1)(B)), deductions are allowed to a foreign corporation only to the extent they are connected with gross income which is effectively connected, or treated as effectively connected, with the conduct of a trade or business in the United States. Deductible expenses (other than interest expense) are properly allocated and apportioned to effectively connected gross income in accordance with the rules of § 1.861-8. For the method of determining the interest deduction allowed to a foreign corporation, see § 1.882-5. Other than the credits allowed by sections 33, 34 and 852(b)(3)(D)(ii), the foreign corporation is entitled to credits only if they are attributable to effectively connected income. See paragraph (a)(2) of this section for the requirement that a return be filed. Except as provided by section 906, a foreign corporation shall not be allowed the credit against the tax for taxes of foreign countries and possessions of the United States allowed by section 901.

(2) ***Verification.*** At the request of the Internal Revenue Service, a foreign corporation claiming deductions from gross income which is effectively connected, or treated as effectively connected, with the conduct of a trade or business in the United States or credits which are attributable to that income must furnish at the place designated pursuant to § 301.7605-1(a) information sufficient to establish that the corporation is entitled to the deductions and credits in the amounts claimed. All information must be furnished in a form suitable to permit verification of claimed deductions and credits. The Internal Revenue Service may require, as appropriate, that an English translation be provided with any information in a foreign language. If a foreign corporation fails to furnish sufficient information, the Internal Revenue Service may in its discretion disallow any claimed deductions and credits in full or in part. For additional filing requirements and for penalties for failure to provide information, see also section 6038A.

[T.D. 8322, 55 FR 50830, Dec. 11, 1990, as amended by T.D. 8981, 67 FR 4175, Jan. 29, 2002; T.D. 9043, 68 FR 11314, Mar. 10, 2003]

§ 1.882-5 Determination of interest deduction.

(a)

(1) *Overview* —

(i) ***In general.*** The amount of interest expense of a foreign corporation that is allocable under section 882(c) to income which is (or is treated as) effectively connected with the conduct of a trade or business within the United States (ECI) is the sum of the interest allocable by the foreign corporation under the three-step process set forth in paragraphs (b), (c), and (d) of this section and the specially allocated interest expense determined under paragraph (a)(1)(ii) of this section. The provisions of this section provide the exclusive rules for allocating interest expense to the ECI of a foreign corporation under section 882(c). Under the three-step process, the total value of the U.S. assets of a foreign corporation is first determined under paragraph (b) of this section (Step 1). Next, the amount of U.S.-connected liabilities is determined under paragraph (c) of this section (Step 2). Finally, the amount of interest paid or accrued on U.S.-

booked liabilities, as determined under paragraph (d)(2) of this section, is adjusted for interest expense attributable to the difference between U.S.-connected liabilities and U.S.-booked liabilities (Step 3). Alternatively, a foreign corporation may elect to determine its interest rate on U.S.-connected liabilities by reference to its U.S. assets, using the separate currency pools method described in paragraph (e) of this section.

(ii) ***Direct allocations*** —

(A) ***In general.*** A foreign corporation that has a U.S. asset and indebtedness that meet the requirements of § 1.861-10T (b) or (c), as limited by § 1.861-10T(d)(1), shall directly allocate interest expense from such indebtedness to income from such asset in the manner and to the extent provided in § 1.861-10T. For purposes of paragraph (b)(1) or (c)(2) of this section, a foreign corporation that allocates its interest expense under the direct allocation rule of this paragraph (a)(1)(ii)(A) shall reduce the basis of the asset that meets the requirements of § 1.861-10T (b) or (c) by the principal amount of the indebtedness that meets the requirements of § 1.861- 10T (b) or (c). The foreign corporation shall also disregard any indebtedness that meets the requirements of § 1.861-10T (b) or (c) in determining the amount of the foreign corporation's liabilities under paragraphs (c)(2) and (d)(2) of this section and shall not take into account any interest expense paid or accrued with respect to such a liability for purposes of paragraph (d) or (e) of this section.

(B) ***Partnership interest.*** A foreign corporation that is a partner in a partnership that has a U.S. asset and indebtedness that meet the requirements of § 1.861-10T (b) or (c), as limited by § 1.861-10T(d)(1), shall directly allocate its distributive share of interest expense from that indebtedness to its distributive share of income from that asset in the manner and to the extent provided in § 1.861-10T. A foreign corporation that allocates its distributive share of interest expense under the direct allocation rule of this paragraph (a)(1)(ii)(B) shall disregard any partnership indebtedness that meets the requirements of § 1.861-10T (b) or (c) in determining the amount of its distributive share of partnership liabilities for purposes of paragraphs (b)(1), (c)(2)(vi), and (d)(2)(vii) or (e)(1)(ii) of this section, and shall not take into account any partnership interest expense paid or accrued with respect to such a liability for purposes of paragraph (d) or (e) of this section. For purposes of paragraph (b)(1) of this section, a foreign corporation that directly allocates its distributive share of interest expense under this paragraph (a)(1)(ii)(B) shall—

(*1*) Reduce the partnership's basis in such asset by the amount of such indebtedness in allocating its basis in the partnership under § 1.884-1(d)(3)(ii); or

(*2*) Reduce the partnership's income from such asset by the partnership's interest expense from such indebtedness under § 1.884-1(d)(3)(iii).

(2) ***Coordination with tax treaties.*** Except as expressly provided by or pursuant to a U.S. income tax treaty or accompanying documents (such as an exchange of notes), the provisions of this section provide the exclusive rules for determining the interest expense attributable to the business profits of a permanent establishment under a U.S. income tax treaty.

(3) ***Limitation on interest expense.*** In no event may the amount of interest expense computed under this section exceed the amount of interest on indebtedness paid or accrued by the taxpayer within the taxable year (translated into U.S. dollars at the weighted average exchange rate for each currency prescribed by § 1.989(b)-1 for the taxable year).

(4) ***Translation convention for foreign currency.*** For each computation required by this section, the taxpayer shall translate values and amounts into the relevant currency at a spot rate or a weighted average exchange rate consistent with the method such taxpayer uses for financial reporting purposes, provided such method is applied consistently from year to year. Interest expense paid or accrued, however, shall be translated under the rules of § 1.988-2. The director of field operations or the Assistant Commissioner (International) may require that any or all computations required by this section be made in U.S. dollars if the functional currency of the taxpayer's home office is a hyperinflationary currency, as defined in § 1.985-1, and the computation in U.S. dollars is necessary to prevent distortions.

(5) ***Coordination with other sections.*** Any provision that disallows, defers, or capitalizes interest expense applies after determining the amount of interest expense allocated to ECI under this section. For example, in determining the amount of interest expense that is disallowed as a deduction under section 265 or 163(j), deferred under section 163(e)(3) or 267(a)(3), or capitalized under section 263A with respect to a United States trade or business, a taxpayer takes into account only the amount of interest expense allocable to ECI under this section.

(6) ***Special rule for foreign governments.*** The amount of interest expense of a foreign government, as defined in § 1.892-2T(a), that is allocable to ECI is the total amount of interest paid or accrued within the taxable year by the United States trade or business on U.S. booked liabilities (as defined in paragraph (d)(2) of this section). Interest expense of a foreign government, however, is not allocable to ECI to the extent that it is incurred with respect to U.S. booked liabilities that exceed 80 percent of the total value of U.S. assets for the taxable year (determined under paragraph (b) of this section). This paragraph (a)(6) does not apply to controlled commercial entities within the meaning of § 1.892-5.

(7) ***Elections under § 1.882-5*** —

(i) ***In general.*** A corporation must make each election provided in this section on the corporation's original timely filed Federal income tax return for the first taxable year it is subject to the rules of this section. An amended return does not qualify for this purpose, nor shall the provisions of § 301.9100-1 of this chapter and any guidance promulgated thereunder apply. Except as provided elsewhere in this section, each election under this section, whether an election for the first taxable year or a subsequent change of election, shall be made by indicating the method used on Schedule I (Form 1120-F) attached to the corporation's timely filed return. An elected method (other than the fair market value method under paragraph (b)(2)(ii) of this section, or the published rate election in paragraph (d)(5)(ii) of this section) must be used for a minimum period of five years before the taxpayer may elect a different method. To change an election before the end of the requisite five-year period, a taxpayer must obtain the consent of the Commissioner or his delegate. The Commissioner or his delegate will generally consent to a taxpayer's request to change its election only in rare and unusual circumstances. After the five-year minimum period, an elected method may be changed for any subsequent year on the foreign corporation's original timely filed tax return for the first year to which the changed election applies.

(ii) ***Failure to make the proper election.*** If a taxpayer, for any reason, fails to make an election provided in this section in a timely fashion, the Director of Field Operations may make any or all of the elections provided in this section on behalf of the taxpayer, and such elections shall be binding as if made by the taxpayer.

(iii) ***Step 2 special election for banks.*** For the first taxable year for which an original income tax return is due (including extensions) after August 17, 2006, in which a taxpayer that is a bank as described in paragraph (c)(4) of this section is subject to the requirements of this section, a taxpayer may make a new election to use the fixed ratio on an original timely filed return. A new fixed ratio election may be made in any subsequent year subject to the timely filing and five-year minimum period requirements of paragraph (a)(7)(i) of this section. A new fixed ratio election under this paragraph (a)(7)(iii) is subject to the adjusted basis or fair market value conforming election requirements of paragraph (b)(2)(ii)(A)(*2*) of this section and may not be made if a taxpayer elects or maintains a fair market value election for purposes of paragraph (b) of this section. Taxpayers that already use the fixed ratio method under an existing election may continue to use the new fixed ratio at the higher percentage without having to make a new five-year election in the first year that the higher percentage is effective.

(8) ***Examples.*** The following examples illustrate the application of paragraph (a) of this section:

> *Example 1. Direct allocations.* (i) *Facts: FC* is a foreign corporation that conducts business through a branch, *B,* in the United States. Among *B*'s U.S. assets is an interest in a partnership, *P,* that is engaged in airplane leasing solely in the U.S. *FC* contributes 200 × to *P* in exchange for its partnership interest. *P* incurs qualified nonrecourse indebtedness within the meaning of § 1.861-10T to purchase an airplane. *FC*'s share of the liability of *P,* as determined under section 752, is 800 ×.
> (ii) *Analysis:* Pursuant to paragraph (a)(1)(ii)(B) of this section, *FC* is permitted to directly allocate its distributive share of the interest incurred with respect to the qualified nonrecourse indebtedness to *FC*'s distributive share of the rental income generated by the airplane. A liability the interest on which is allocated directly to the income from a particular asset under paragraph (a)(1)(ii)(B) of this section is disregarded for purposes of paragraphs (b)(1), (c)(2)(vi), and (d)(2)(vii) or (e)(1)(ii) of this section. Consequently, for purposes of determining the value of *FC*'s assets under paragraphs (b)(1) and (c)(2)(vi) of this section, *FC*'s basis in *P* is reduced by the 800 × liability as determined under section 752, but is not increased by the 800 × liability that is directly allocated under paragraph (a)(1)(ii)(B) of this section. Similarly, pursuant to paragraph (a)(1)(ii)(B) of this section, the 800 × liability is disregarded for purposes of determining *FC*'s liabilities under paragraphs (c)(2)(vi) and (d)(2)(vii) of this section.

> *Example 2. Limitation on interest expense.* (i) *FC* is a foreign corporation that conducts a real estate business in the United States. In its 1997 tax year, *FC* has no outstanding indebtedness, and therefore incurs no interest expense. *FC* elects to use the 50% fixed ratio under paragraph (c)(4) of this section.
> (ii) Under paragraph (a)(3) of this section, *FC* is not allowed to deduct any interest expense that exceeds the amount of interest on indebtedness paid or accrued in that taxable year. Since *FC* incurred no interest expense in taxable year 1997, *FC* will not be entitled to any interest deduction for that year under § 1.882-5, notwithstanding the fact that *FC* has elected to use the 50% fixed ratio.

Example 3. Coordination with other sections. (i) *FC* is a foreign corporation that is a bank under section 585(a)(2) and a financial institution under section 265(b)(5). *FC* is a calendar year taxpayer, and operates a U.S. branch, *B.* Throughout its taxable year 1997, *B* holds only two assets that are U.S. assets within the meaning of paragraph (b)(1) of this section. *FC* does not make a fair-market value election under paragraph (b)(2)(ii) of this section, and, therefore, values its U.S. assets according to their bases under paragraph (b)(2)(i) of this section. The first asset is a taxable security with an adjusted basis of $100. The second asset is an obligation the interest on which is exempt from federal taxation under section 103, with an adjusted basis of $50. The tax-exempt obligation is not a qualified tax-exempt obligation as defined by section 265(b)(3)(B).
(ii) *FC* calculates its interest expense under § 1.882-5 to be $12. Under paragraph (a)(5) of this section, however, a portion of the interest expense that is allocated to *FC*'s effectively connected income under § 1.882-5 is disallowed in accordance with the provisions of section 265(b). Using the methodology prescribed under section 265, the amount of disallowed interest expense is $4, calculated as follows:

$$\$12 \times \frac{\$50 \text{ Tax-exempt U.S. assets}}{\$150 \text{ Total U.S. assets}} = \$4$$

(iii) Therefore, *FC* deducts a total of $8 ($12-$4) of interest expense attributable to its effectively connected income in 1997.

Example 4. Treaty exempt asset. (i) *FC* is a foreign corporation, resident in Country X, that is actively engaged in the banking business in the United States through a permanent establishment, *B.* The income tax treaty in effect between Country X and the United States provides that *FC* is not taxable on foreign source income earned by its U.S. permanent establishment. In its 1997 tax year, *B* earns $90 of U.S. source income from U.S. assets with an adjusted tax basis of $900, and $12 of foreign source interest income from U.S. assets with an adjusted tax basis of $100. *FC*'s U.S. interest expense deduction, computed in accordance with § 1.882-5, is $500.
(ii) Under paragraph (a)(5) of this section, *FC* is required to apply any provision that disallows, defers, or capitalizes interest expense after determining the interest expense allocated to ECI under § 1.882-5. Section 265(a)(2) disallows interest expense that is allocable to one or more classes of income that are wholly exempt from taxation under subtitle A of the Internal Revenue Code. Section 1.265-1(b) provides that income wholly exempt from taxes includes both income excluded from tax under any provision of subtitle A and income wholly exempt from taxes under any other law. Section 894 specifies that the provisions of subtitle A are applied with due regard to any relevant treaty obligation of the United States. Because the treaty between the United States and Country X exempts foreign source income earned by B from U.S. tax, *FC* has assets that produce income wholly exempt from taxes under subtitle A,

and must therefore allocate a portion of its § 1.882-5 interest expense to its exempt income. Using the methodology prescribed under section 265, the amount of disallowed interest expense is $50, calculated as follows:

$$\$500 \times \frac{\$100 \text{ Treaty-exempt U.S. assets}}{\$1000 \text{ Total U.S. assets}} = \$50$$

(iii) Therefore, *FC* deducts a total of $450 ($500-$50) of interest expense attributable to its effectively connected income in 1997.

(b) ***Step 1: Determination of total value of U.S. assets for the taxable year*** —

(1) ***Classification of an asset as a U.S. asset*** —

(i) ***General rule.*** Except as otherwise provided in this paragraph (b)(1), an asset is a U.S. asset for purposes of this section to the extent that it is a U.S. asset under § 1.884-1(d). For purposes of this section, the term *determination date,* as used in § 1.884-1(d), means each day for which the total value of U.S. assets is computed under paragraph (b)(3) of this section.

(ii) ***Items excluded from the definition of U.S. asset.*** For purposes of this section, the term *U.S. asset* excludes an asset to the extent it produces income or gain described in sections 883 (a)(3) and (b).

(iii) ***Items included in the definition of U.S. asset.*** For purposes of this section, the term *U.S. asset* includes—

(A) U.S. real property held in a wholly-owned domestic subsidiary of a foreign corporation that qualifies as a bank under section 585(a)(2)(B) (without regard to the second sentence thereof), provided that the real property would qualify as used in the foreign corporation's trade or business within the meaning of § 1.864-4(c) (2) or (3) if held directly by the foreign corporation and either was initially acquired through foreclosure or similar proceedings or is U.S. real property occupied by the foreign corporation (the value of which shall be adjusted by the amount of any indebtedness that is reflected in the value of the property);

(B) An asset that produces income treated as ECI under section 921(d) or 926(b) (relating to certain income of a FSC and certain dividends paid by a FSC to a foreign corporation);

(C) An asset that produces income treated as ECI under section 953(c)(3)(C) (relating to certain income of a captive insurance company that a corporation elects to treat as ECI) that is not otherwise ECI; and

(D) An asset that produces income treated as ECI under section 882(e) (relating to certain interest income of possessions banks).

(iv) ***Interbranch transactions.*** A transaction of any type between separate offices or branches of the same taxpayer does not create a U.S. asset.

(v) ***Assets acquired to increase U.S. assets artificially.*** An asset shall not be treated as a U.S. asset if one of the principal purposes for acquiring or using that asset is to increase artificially the U.S. assets of a foreign corporation on the determination date. Whether an asset is acquired or

used for such purpose will depend upon all the facts and circumstances of each case. Factors to be considered in determining whether one of the principal purposes in acquiring or using an asset is to increase artificially the U.S. assets of a foreign corporation include the length of time during which the asset was used in a U.S. trade or business, whether the asset was acquired from a related person, and whether the aggregate value of the U.S. assets of the foreign corporation increased temporarily on or around the determination date. A purpose may be a principal purpose even though it is outweighed by other purposes (taken together or separately).

(2) ***Determination of the value of a U.S. asset*** —

(i) ***General rule.*** The value of a U.S. asset is the adjusted basis of the asset for determining gain or loss from the sale or other disposition of that item, further adjusted as provided in paragraph (b)(2)(iii) of this section.

(ii) ***Fair-market value election*** —

(A) ***In general*** —(*1*) *Fair market value conformity requirement.* A taxpayer may elect to value all of its U.S. assets on the basis of fair market value, subject to the requirements of § 1.861-9T(g)(1)(iii), and provided the taxpayer is eligible and uses the actual ratio method under paragraph (c)(2) of this section and the methodology prescribed in § 1.861-9T(h). Once elected, the fair market value must be used by the taxpayer for both Step 1 and Step 2 described in paragraphs (b) and (c) of this section, and must be used in all subsequent taxable years unless the Commissioner or his delegate consents to a change.

(*2*) *Conforming election requirement.* Taxpayers that as of the effective date of this paragraph (b)(2)(ii)(A)(*2*) have elected and currently use both the fair market value method for purposes of paragraph (b) of this section and a fixed ratio for purposes of paragraph (c)(4) of this section must conform either the adjusted basis or fair market value methods in Step 1 and Step 2 of the allocation formula by making an adjusted basis election for paragraph (b) of this section purposes while continuing the fixed ratio for Step 2, or by making an actual ratio election under paragraph (c)(2) of this section while remaining on the fair market value method under paragraph (b) of this section. Taxpayers who elect to conform Step 1 and Step 2 of the formula to the adjusted basis method must remain on both methods for the minimum five-year period in accordance with the provisions of paragraph (a)(7) of this section. Taxpayers that elect to conform Step 1 and Step 2 of the formula to the fair market value method must remain on the actual ratio method until the consent of the Commissioner or his delegate is obtained to switch to the adjusted basis method. If consent to use the adjusted basis method in Step 1 is granted in a later year, the taxpayer must remain on the actual ratio method for the minimum five-year period unless consent to use the fixed ratio is independently obtained under the requirements of paragraph (a)(7) of this section. For the first taxable year for which an original income tax return is due (including extensions) after August 17, 2006, taxpayers that are required to make a conforming election under this paragraph (b)(2)(ii)(A)(*2*), may do so on an original timely filed return. If a conforming election is not made within the timeframe provided in this paragraph, the Director of Field Operations or his delegate may make the conforming elections in accordance with the provisions of paragraph (a)(7)(ii) of this section.

(B) ***Adjustment to partnership basis.*** If a partner makes a fair market value election under paragraph (b)(2)(ii) of this section, the value of the partner's interest in a partnership that is treated as an asset shall be the fair market value of his partnership interest, increased by the fair market value of the partner's share of the liabilities determined under paragraph (c)(2)(vi) of this section. See § 1.884-1(d)(3).

(iii) ***Reduction of total value of U.S. assets by amount of bad debt reserves under section 585*** —

(A) ***In general.*** The total value of loans that qualify as U.S. assets shall be reduced by the amount of any reserve for bad debts additions to which are allowed as deductions under section 585.

(B) ***Example.*** The following example illustrates the provisions of paragraph (b)(2)(iii)(A) of this section:

Example. Foreign banks; bad debt reserves. FC is a foreign corporation that qualifies as a bank under section 585(a)(2)(B) (without regard to the second sentence thereof), but is not a large bank as defined in section 585(c)(2). *FC* conducts business through a branch, *B,* in the United States. Among *B*'s U.S. assets are a portfolio of loans with an adjusted basis of $500. *FC* accounts for its bad debts for U.S. federal income tax purposes under the reserve method, and *B* maintains a deductible reserve for bad debts of $50. Under paragraph (b)(2)(iii) of this section, the total value of *FC*'s portfolio of loans is $450 ($500−$50).

(3) ***Computation of total value of U.S. assets*** —

(i) ***General rule.*** The total value of U.S. assets for the taxable year is the average of the sums of the values (determined under paragraph (b)(2) of this section) of U.S. assets. For each U.S. asset, value shall be computed at the most frequent regular intervals for which data are reasonably available. In no event shall the value of any U.S. asset be computed less frequently than monthly (beginning of taxable year and monthly thereafter) by a large bank (as defined in section 585(c)(2)) or a dealer in securities (within the meaning of section 475) and semi-annually (beginning, middle and end of taxable year) by any other taxpayer.

(ii) ***Adjustment to basis of financial instruments.*** For purposes of determining the total average value of U.S. assets in this paragraph (b)(3), the value of a security or contract that is marked to market pursuant to section 475 or section 1256 shall be determined as if each determination date is the most frequent regular interval for which data are reasonably available that reflects the taxpayer's consistent business practices for reflecting mark-to-market valuations on its books and records.

(c) ***Step 2: Determination of total amount of U.S.-connected liabilities for the taxable year*** —

(1) ***General rule.*** The amount of U.S.-connected liabilities for the taxable year equals the total value of U.S. assets for the taxable year (as determined under paragraph (b)(3) of this section) multiplied by the actual ratio for the taxable year (as determined under paragraph (c)(2) of this section) or, if the taxpayer has made an election in accordance with paragraph (c)(4) of this section, by the fixed ratio.

(2) ***Computation of the actual ratio*** —

(i) ***In general.*** A taxpayer's actual ratio for the taxable year is the total amount of its worldwide liabilities for the taxable year divided by the total value of its worldwide assets for the taxable year. The total amount of worldwide liabilities and the total value of worldwide assets for the

taxable year is the average of the sums of the amounts of the taxpayer's worldwide liabilities and the values of its worldwide assets (determined under paragraphs (c)(2) (iii) and (iv) of this section). In each case, the sums must be computed semi-annually (beginning, middle and end of taxable year) by a large bank (as defined in section 585(c)(2)) and annually (beginning and end of taxable year) by any other taxpayer.

(ii) ***Classification of items.*** The classification of an item as a liability or an asset must be consistent from year to year and in accordance with U.S. tax principles.

(iii) ***Determination of amount of worldwide liabilities.*** The amount of a liability must be determined consistently from year to year and must be substantially in accordance with U.S. tax principles. To be substantially in accordance with U.S. tax principles, the principles used to determine the amount of a liability must not differ from U.S. tax principles to a degree that will materially affect the value of taxpayer's worldwide liabilities or the taxpayer's actual ratio.

(iv) ***Determination of value of worldwide assets.*** The value of an asset must be determined consistently from year to year and must be substantially in accordance with U.S. tax principles. To be substantially in accordance with U.S. tax principles, the principles used to determine the value of an asset must not differ from U.S. tax principles to a degree that will materially affect the value of the taxpayer's worldwide assets or the taxpayer's actual ratio. The value of an asset is the adjusted basis of that asset for determining the gain or loss from the sale or other disposition of that asset, adjusted in the same manner as the basis of U.S. assets are adjusted under paragraphs (b)(2) (ii) through (iv) of this section. The rules of paragraph (b)(3) of this section apply in determining the total value of applicable worldwide assets for the taxable year, except that the minimum number of determination dates are those stated in paragraph (c)(2)(i) of this section.

(v) ***Hedging transactions.*** [Reserved]

(vi) ***Treatment of partnership interests and liabilities.*** For purposes of computing the actual ratio, the value of a partner's interest in a partnership that will be treated as an asset is the partner's adjusted basis in its partnership interest, reduced by the partner's share of liabilities of the partnership as determined under section 752 and increased by the partner's share of liabilities determined under this paragraph (c)(2)(vi). If the partner has made a fair market value election under paragraph (b)(2)(ii) of this section, the value of its interest in the partnership shall be increased by the fair market value of the partner's share of the liabilities determined under this paragraph (c)(2)(vi). For purposes of this section a partner shares in any liability of a partnership in the same proportion that it shares, for income tax purposes, in the expense attributable to that liability for the taxable year. A partner's adjusted basis in a partnership interest cannot be less than zero.

(vii) ***Computation of actual ratio of insurance companies.*** [Reserved]

(viii) ***Interbranch transactions.*** A transaction of any type between separate offices or branches of the same taxpayer does not create an asset or a liability.

(ix) ***Amounts must be expressed in a single currency.*** The actual ratio must be computed in either U.S. dollars or the functional currency of the home office of the taxpayer, and that currency must be used consistently from year to year. For example, a taxpayer that determines the actual ratio annually using British pounds converted at the spot rate for financial reporting purposes must translate the U.S. dollar values of assets and amounts of liabilities of the U.S. trade or business into pounds using the spot rate on the last day of its taxable year. The director of field

operations or the Assistant Commissioner (International) may require that the actual ratio be computed in dollars if the functional currency of the taxpayer's home office is a hyperinflationary currency, as defined in § 1.985-1, that materially distorts the actual ratio.

(3) ***Adjustments.*** The director of field operations or the Assistant Commissioner (International) may make appropriate adjustments to prevent a foreign corporation from intentionally and artificially increasing its actual ratio. For example, the director of field operations or the Assistant Commissioner (International) may offset a loan made from or to one person with a loan made to or from another person if any of the parties to the loans are related persons, within the meaning of section 267(b) or 707(b)(1), and one of the principal purposes for entering into the loans was to increase artificially the actual ratio of a foreign corporation. A purpose may be a principal purpose even though it is outweighed by other purposes (taken together or separately).

(4) ***Elective fixed ratio method of determining U.S. liabilities.*** A taxpayer that is a bank as defined in section 585(a)(2)(B) (without regard to the second sentence thereof or whether any such activities are effectively connected with a trade or business within the United States) may elect to use a fixed ratio of 95 percent in lieu of the actual ratio. A taxpayer that is neither a bank nor an insurance company may elect to use a fixed ratio of 50 percent in lieu of the actual ratio.

(5) ***Examples.*** The following examples illustrate the application of paragraph (c) of this section:

Example 1. Classification of item not in accordance with U.S. tax principles. Bank *Z,* a resident of country *X,* has a branch in the United States through which it conducts its banking business. In preparing its financial statements in country *X, Z* treats an instrument documented as perpetual subordinated debt as a liability. Under U.S. tax principles, however, this instrument is treated as equity. Consequently, the classification of this instrument as a liability for purposes of paragraph (c)(2)(iii) of this section is not in accordance with U.S. tax principles.

Example 2. Valuation of item not substantially in accordance with U.S. tax principles. Bank *Z,* a resident of country *X,* has a branch in the United States through which it conducts its banking business. Bank *Z* is a large bank as defined in section 585(c)(2). The tax rules of country *X* allow Bank *Z* to take deductions for additions to certain reserves. Bank *Z* decreases the value of the assets on its financial statements by the amounts of the reserves. The additions to the reserves under country *X* tax rules cause the value of Bank *Z*'s assets to differ from the value of those assets determined under U.S. tax principles to a degree that materially affects the value of taxpayer's worldwide assets. Consequently, the valuation of Bank *Z*'s worldwide assets under country *X* tax principles is not substantially in accordance with U.S. tax principles. Bank *Z* must increase the value of its worldwide assets under paragraph (c)(2)(iii) of this section by the amount of its country *X* reserves.

Example 3. Valuation of item substantially in accordance with U.S. tax principles. Bank *Z,* a resident of country *X,* has a branch in the United States through which it conducts its banking business. In determining the value of its worldwide assets, Bank *Z* computes the adjusted basis of certain non-U.S. assets according to the depreciation methodology provided under country *X* tax laws, which is different than the depreciation methodology provided under U.S. tax law. If the depreciation methodology provided under country *X* tax laws does not differ from U.S. tax principles to a degree that materially affects the value of Bank *Z*'s worldwide assets or Bank *Z*'s actual ratio as computed under paragraph (c)(2) of this section, then the valuation of Bank *Z*'s worldwide assets under paragraph (c)(2)(iv) of this section is substantially in accordance with U.S. tax principles.

Example 4. [Reserved]

Example 5. Adjustments. FC is a foreign corporation engaged in the active conduct of a banking business through a branch, *B,* in the United States. *P,* an unrelated foreign corporation, deposits $100,000 in the home office of *FC.* Shortly thereafter, in a transaction arranged by the home office of *FC, B* lends $80,000 bearing interest at an arm's length rate to *S,* a wholly owned U.S. subsidiary of *P.* The director of field operations or the Assistant Commissioner (International) determines that one of the principal purposes for making and incurring such loans is to increase *FC*'s actual ratio. For purposes of this section, therefore, *P* is treated as having directly lent $80,000 to S. Thus, for purposes of paragraph (c) of this section (Step 2), the director of field operations or the Assistant Commissioner (International) may offset *FC*'s liability and asset arising from this transaction, resulting in a net liability of $20,000 that is not a booked liability of *B.* Because the loan to *S* from *B* was initiated and arranged by the home office of *FC,* with no material participation by *B,* the loan to *S* will not be treated as a U.S. asset.

(d) ***Step 3: Determination of amount of interest expense allocable to ECI under the adjusted U.S. booked liabilities method*** —

(1) ***General rule.*** The adjustment to the amount of interest expense paid or accrued on U.S. booked liabilities is determined by comparing the amount of U.S.-connected liabilities for the taxable year, as determined under paragraph (c) of this section, with the average total amount of U.S. booked liabilities, as determined under paragraphs (d)(2) and (3) of this section. If the average total amount of U.S. booked liabilities equals or exceeds the amount of U.S.-connected liabilities, the adjustment to the interest expense on U.S. booked liabilities is determined under paragraph (d)(4) of this section. If the amount of U.S.-connected liabilities exceeds the average total amount of U.S. booked liabilities, the adjustment to the amount of interest expense paid or accrued on U.S. booked liabilities is determined under paragraph (d)(5) of this section.

(2) ***U.S. booked liabilities*** —

(i) ***In general.*** A liability is a *U.S. booked liability* if it is properly reflected on the books of the U.S. trade or business, within the meaning of paragraph (d)(2)(ii) or (iii) of this section.

(ii) ***Properly reflected on the books of the U.S. trade or business of a foreign corporation that is not a bank*** —

(A) ***In general.*** A liability, whether interest bearing or non-interest bearing, is properly reflected on the books of the U.S. trade or business of a foreign corporation that is not a bank as described in section 585(a)(2)(B) (without regard to the second sentence thereof) if—

(*1*) The liability is secured predominantly by a U.S. asset of the foreign corporation;

(*2*) The foreign corporation enters the liability on a set of books reasonably contemporaneously with the time at which the liability is incurred and the liability relates to an activity that produces ECI.

(*3*) The foreign corporation maintains a set of books and records relating to an activity that produces ECI and the Director of Field Operations determines that there is a direct connection or relationship between the liability and that activity. Whether there is a direct connection between the liability and an activity that produces ECI depends on the facts and circumstances of each case.

(B) ***Identified liabilities not properly reflected.*** A liability is not properly reflected on the books of the U.S. trade or business merely because a foreign corporation identifies the liability pursuant to § 1.884-4(b)(1)(ii) and (b)(3).

(iii) ***Properly reflected on the books of the U.S. trade or business of a foreign corporation that is a bank*** —

(A) ***In general.*** A liability, whether interest bearing or non-interest bearing, is properly reflected on the books of the U.S. trade or business of a foreign corporation that is a bank as described in section 585(a)(2)(B) (without regard to the second sentence thereof) if—

(*1*) The bank enters the liability on a set of books before the close of the day on which the liability is incurred, and the liability relates to an activity that produces ECI; and

(*2*) There is a direct connection or relationship between the liability and that activity. Whether there is a direct connection between the liability and an activity that produces ECI depends on the facts and circumstances of each case. For example, a liability that is used to fund an interbranch or other asset that produces non-ECI may have a direct connection to an ECI producing activity and may constitute a U.S.-booked liability if both the interbranch or non-ECI activity is the same type of activity in which ECI assets are also reflected on the set of books (for example, lending or money market interbank placements), and such ECI activities are not de minimis. Such U.S. booked liabilities may still be subject to paragraph (d)(2)(v) of this section.

(B) ***Inadvertent error.*** If a bank fails to enter a liability in the books of the activity that produces ECI before the close of the day on which the liability was incurred, the liability may be treated as a U.S. booked liability only if, under the facts and circumstances, the taxpayer demonstrates a direct connection or relationship between the liability and the activity that produces ECI and the failure to enter the liability in those books was due to inadvertent error.

(iv) ***Liabilities of insurance companies.*** [Reserved]

(v) ***Liabilities used to increase artificially interest expense on U.S. booked liabilities.*** U.S. booked liabilities shall not include a liability if one of the principal purposes for incurring or holding the liability is to increase artificially the interest expense on the U.S. booked liabilities of a foreign corporation. Whether a liability is incurred or held for the purpose of artificially increasing interest expense will depend upon all the facts and circumstances of each case. Factors to be considered in determining whether one of the principal purposes for incurring or holding a liability is to increase artificially the interest expense on U.S. booked liabilities of a foreign corporation include whether the interest expense on the liability is excessive when compared to other liabilities of the foreign corporation denominated in the same currency and whether the currency denomination of the liabilities of the U.S. branch substantially matches the currency denomination of the U.S. branch's assets. A purpose may be a principal purpose even though it is outweighed by other purposes (taken together or separately).

(vi) ***Hedging transactions.*** [Reserved]

(vii) ***Amount of U.S. booked liabilities of a partner.*** A partner's share of liabilities of a partnership is considered a booked liability of the partner provided that it is properly reflected on the books (within the meaning of paragraph (d)(2)(ii) of this section) of the U.S. trade or business of the partnership.

(viii) ***Interbranch transactions.*** A transaction of any type between separate offices or branches of the same taxpayer does not result in the creation of a liability.

(3) ***Average total amount of U.S. booked liabilities.*** The *average total amount* of U.S. booked liabilities for the taxable year is the average of the sums of the amounts (determined under paragraph (d)(2) of this section) of U.S. booked liabilities. The amount of U.S. booked liabilities shall be computed at the most frequent, regular intervals for which data are reasonably available. In no event shall the amount of U.S. booked liabilities be computed less frequently than monthly by a large bank (as defined in section 585(c)(2)) and semi-annually by any other taxpayer.

(4) ***Interest expense where U.S. booked liabilities equal or exceed U.S. liabilities*** —

(i) ***In general.*** If the average total amount of U.S. booked liabilities (as determined in paragraphs (d)(2) and (3) of this section) exceeds the amount of U.S.-connected liabilities (as determined under paragraph (c) of this section (Step 2)), the interest expense allocable to ECI is the product of the total amount of interest paid or accrued within the taxable year by the U.S. trade or business on U.S. booked liabilities and the scaling ratio set out in paragraph (d)(4)(ii) of this section. For purposes of this section, the reduction resulting from the application of the scaling ratio is applied pro-rata to all interest expense paid or accrued by the foreign corporation. A similar reduction in income, expense, gain, or loss from a hedging transaction (as described in paragraph (d)(2)(vi) of this section) must also be determined by multiplying such income, expense, gain, or loss by the scaling ratio. If the average total amount of U.S. booked liabilities (as determined in paragraph (d)(3) of this section) equals the amount of U.S.-connected liabilities (as determined under *Step 2*), the interest expense allocable to ECI is the total amount of interest paid or accrued within the taxable year by the U.S. trade or business on U.S. booked liabilities.

(ii) ***Scaling ratio.*** For purposes of this section, the scaling ratio is a fraction the numerator of which is the amount of U.S.-connected liabilities and the denominator of which is the average total amount of U.S. booked liabilities.

(iii) ***Special rules for insurance companies.*** [Reserved]

(5) ***U.S.-connected interest rate where U.S. booked liabilities are less than U.S.-connected liabilities*** —

(i) ***In general.*** If the amount of U.S.-connected liabilities (as determined under paragraph (c) of this section (Step 2)) exceeds the average total amount of U.S. booked liabilities, the interest expense allocable to ECI is the total amount of interest paid or accrued within the taxable year by the U.S. trade or business on U.S. booked liabilities, plus the excess of the amount of U.S.-connected liabilities over the average total amount of U.S. booked liabilities multiplied by the interest rate determined under paragraph (d)(5)(ii) of this section.

(ii) ***Interest rate on excess U.S.-connected liabilities*** —

(A) ***General rule.*** The applicable interest rate on excess U.S.-connected liabilities is determined by dividing the total interest expense paid or accrued for the taxable year on U.S.-dollar liabilities that are not U.S.-booked liabilities (as defined in paragraph (d)(2) of this section) and that are shown on the books of the offices or branches of the foreign corporation outside the United States by the average U.S.-dollar denominated liabilities (whether interest-bearing or not) that are not U.S.-booked liabilities and that are shown on the books of the offices or branches of the foreign corporation outside the United States for the taxable year.

(B) ***Annual published rate election*** —(*1*) *In general.* For each taxable year in which a taxpayer is a bank within the meaning of section 585(a)(2)(B) (without regard to the second sentence of section 585(a)(2)(B) or whether any such activities are effectively connected with a trade or business within the United States), the taxpayer may elect to compute the interest expense attributable to excess U.S.-connected liabilities by using the average published one-month Term Secured Overnight Financing Rate published by the Chicago Mercantile Exchange Group Benchmark Administration, Ltd. (or any successor administrator) ("Term SOFR") for the taxable year, plus a static spread adjustment of 0.11448%, rather than the interest rate provided in paragraph (d)(5)(ii)(A) of this section. A taxpayer may elect to apply the rate provided in this paragraph (d)(5)(ii)(B) on an annual basis and does not require the consent of the Commissioner to change this election in a subsequent taxable year. If a taxpayer that is eligible to make the published rate election either does not file a timely return or files a calculation with no excess U.S.-connected liabilities and it is later determined by the Director of Field Operations that the taxpayer has excess U.S.-connected liabilities, then the Director of Field Operations will apply the interest rate provided under this paragraph (d)(5)(ii)(B) to the taxpayer's excess U.S.-connected liabilities in determining interest expense.

(*2*) *Transitional rule for taxable years including June 30, 2023.* For a taxable year that includes June 30, 2023, a taxpayer that makes the annual published rate election must compute the interest expense attributable to excess U.S.-connected liabilities by ratably using the average 30-day U.S. dollar London Interbank Offered Rate for the portion of its taxable year ending on June 30, 2023, and the average one-month Term SOFR, plus a static spread adjustment of 0.11448%, for the portion of its taxable year beginning on July 1, 2023.

(6) ***Examples.*** The following examples illustrate the rules of this section:

Example 1. Computation of interest expense; actual ratio. (i) *Facts.* (A) *FC* is a foreign corporation that is not a bank and that actively conducts a real estate business through a branch, *B,* in the United States. For the taxable year, *FC*'s balance sheet and income statement is as follows (assume amounts are in U.S. dollars and computed in accordance with paragraphs (b)(2) and (b)(3) of this section):

	Value	
Asset 1	$2,000	
Asset 2	2,500	
Asset 3	5,500	
	Amount	Interest Expense
Liability 1	$800	56
Liability 2	3,200	256

	Value	
Capital	6,000	0

(B) Asset 1 is the stock of *FC*'s wholly-owned domestic subsidiary that is also actively engaged in the real estate business. Asset 2 is a building in the United States producing rental income that is entirely ECI to *FC.* Asset 3 is a building in the home country of *FC* that produces rental income. Liabilities 1 and 2 are loans that bear interest at the rates of 7% and 8%, respectively. Liability 1 is a booked liability of B, and Liability 2 is booked in *FC*'s home country. Assume that *FC* has not elected to use the fixed ratio in Step 2.
(ii) *Step 1.* Under paragraph (b)(1) of this section, Assets 1 and 3 are not U.S. assets, while Asset 2 qualifies as a U.S. asset. Thus, under paragraph (b)(3) of this section, the total value of U.S. assets for the taxable year is $2,500, the value of Asset 2.

(iii) *Step 2.* Under paragraph (c)(1) of this section, the amount of *FC*'s U.S.-connected liabilities for the taxable year is determined by multiplying $2,500 (the value of U.S. assets determined under Step 1) by the actual ratio for the taxable year. The actual ratio is the average amount of *FC*'s worldwide liabilities divided by the average value of *FC*'s worldwide assets. The amount of Liability 1 is $800, and the amount of Liability 2 is $3,200. Thus, the numerator of the actual ratio is $4,000. The average value of worldwide assets is $10,000 (Asset 1 + Asset 2 + Asset 3). The actual ratio, therefore, is 40% ($4,000/$10,000), and the amount of U.S.-connected liabilities for the taxable year is $1,000 ($2,500 U.S. assets × 40%).

(iv) *Step 3.* Because the amount of *FC*'s U.S.-connected liabilities ($1,000) exceeds the average total amount of U.S. booked liabilities of *B* ($800), *FC* determines its interest expense in accordance with paragraph (d)(5) of this section by adding the interest paid or accrued on U.S. booked liabilities, and the interest expense associated with the excess of its U.S.-connected liabilities over its average total amount of U.S. booked liabilities. Under paragraph (d)(5)(ii) of this section, *FC* determines the interest rate attributable to its excess U.S.-connected liabilities by dividing the interest expense paid or accrued by the average amount of U.S.-dollar denominated liabilities, which produces an interest rate of 8% ($256/$3200). Therefore, *FC*'s allocable interest expense is $72 ($56 of interest expense from U.S. booked liabilities plus $16 ($200 × 8%) of interest expense attributable to its excess U.S.-connected liabilities).

Example 2. Computation of interest expense; fixed ratio. (i) The facts are the same as in *Example 1*, except that *FC* makes a fixed ratio election under paragraph (c)(4) of this section. The conclusions under Step 1 are the same as in *Example 1*.

(ii) *Step 2.* Under paragraph (c)(1) of this section, the amount of U.S.-connected liabilities for the taxable year is determined by multiplying $2,500 (the value of U.S. assets determined under Step 1) by the fixed ratio for the taxable year, which, under paragraph (c)(4) of this section is 50 percent. Thus, the amount of U.S.-connected liabilities for the taxable year is $1,250 ($2,500 U.S. assets × 50%).

(iii) *Step 3.* As in *Example 1,* the amount of *FC*'s U.S.-connected liabilities exceed the average total amount of U.S. booked liabilities of *B,* requiring *FC* to determine its interest expense under paragraph (d)(5) of this section. In this case, however, *FC* has excess U.S.-connected liabilities of $450 ($1,250 of U.S.-connected liabilities—$800 U.S. booked liabilities). *FC* therefore has allocable interest expense of $92 ($56 of interest expense from U.S. booked liabilities plus $36 ($450 × 8%) of interest expense attributable to its excess U.S.-connected liabilities).

Example 3. Scaling ratio. (i) *Facts.* Bank *Z,* a resident of country *X,* has a branch in the United States through which it conducts its banking business. For the taxable year, *Z* has U.S.-connected liabilities, determined under paragraph (c) of this section, equal to $300. *Z,* however, has U.S. booked liabilities of $300 and *U*500. Therefore, assuming an exchange rate of the *U* to the U.S. dollar of 5:1, *Z* has U.S. booked liabilities of $400 ($300 + (*U*500 ÷ 5)).
(ii) *U.S.-connected liabilities.* Because *Z*'s U.S. booked liabilities of $400 exceed its U.S.-connected liabilities by $100, all of *Z*'s interest expense allocable to its U.S. trade or business must be scaled back pro-rata. To determine the scaling ratio, *Z* divides its U.S.-connected liabilities by its U.S. booked liabilities, as required by paragraph (d)(4) of this section. *Z*'s interest expense is scaled back pro rata by the resulting ratio of $^{3}/_{4}$ ($300 ÷ $400). *Z*'s income, expense, gain or loss from hedging transactions described in paragraph (d)(2)(vi) of this section must be similarly reduced.

Example 4. [Reserved]

Example 5. U.S. booked liabilities—direct relationship. (i) *Facts.* Bank A, a resident of Country X maintains a banking office in the U.S. that records transactions on three sets of books for State A, an International Banking Facility (IBF) for its bank regulatory approved international transactions, and a shell branch licensed operation in Country C. Bank A records substantial ECI assets from its bank lending and placement activities and a mix of interbranch and non-ECI producing assets from the same or similar activities on the books of State A branch and on its IBF. Bank A's Country C branch borrows substantially from third parties, as well as from its home office, and lends all of its funding to its State A branch and IBF to fund the mix of ECI, interbranch and non-ECI activities on those two books. The consolidated books of State A branch and IBF indicate that a substantial amount of the total book assets constitute U.S. assets under paragraph (b) of this section. Some of the third-

party borrowings on the books of the State A branch are used to lend directly to Bank A's home office in Country X. These borrowings reflect the average borrowing rate of the State A branch, IBF and Country C branches as a whole. All third-party borrowings reflected on the books of State A branch, the IBF and Country C branch were recorded on such books before the close of business on the day the liabilities were acquired by Bank A.

(ii) *U.S. booked liabilities.* The facts demonstrate that the separate State A branch, IBF and Country C branch books taken together, constitute a set of books within the meaning of paragraph (d)(2)(iii)(A)(*1*) of this section. Such set of books as a whole has a direct relationship to an ECI activity under paragraph (d)(2)(iii)(A)(*2*) of this section even though the Country C branch books standing alone would not. The third-party liabilities recorded on the books of Country C constitute U.S. booked liabilities because they were timely recorded and the overall set of books on which they were reflected has a direct relationship to a bank lending and interbank placement ECI producing activity. The third-party liabilities that were recorded on the books of State A branch that were used to lend funds to Bank A's home office also constitute U.S. booked liabilities because the interbranch activity the funds were used for is a lending activity of a type that also gives rise to a substantial amount of ECI that is properly reflected on the same set of books as the interbranch loans. Accordingly, the liabilities are not traced to their specific interbranch use but to the overall activity of bank lending and interbank placements which gives rise to substantial ECI. The facts show that the liabilities were not acquired to increase artificially the interest expense of Bank A's U.S. booked liabilities as a whole under paragraph (d)(2)(v) of this section. The third-party liabilities also constitute U.S. booked liabilities for purposes of determining Bank A's branch interest under § 1.884-4(b)(1)(i)(A) regardless of whether Bank A uses the Adjusted U.S. booked liability method, or the Separate Currency Pool method to allocate its interest expense under paragraph 5(e) of this section.

(e) ***Separate currency pools method*** —

(1) ***General rule.*** If a foreign corporation elects to use the method in this paragraph, its total interest expense allocable to ECI is the sum of the separate interest deductions for each of the currencies in which the foreign corporation has U.S. assets. The separate interest deductions are determined under the following three-step process.

(i) ***Determine the value of U.S. assets in each currency pool.*** First, the foreign corporation must determine the amount of its U.S. assets, using the methodology in paragraph (b) of this section, in each currency pool. The foreign corporation may convert into U.S. dollars any currency pool in which the foreign corporation holds less than 3% of its U.S. assets. A transaction (or transactions) that hedges a U.S. asset shall be taken into account for purposes of determining the currency denomination and the value of the U.S. asset.

(ii) ***Determine the U.S.-connected liabilities in each currency pool.*** Second, the foreign corporation must determine the amount of its U.S.-connected liabilities in each currency pool by multiplying the amount of U.S. assets (as determined under paragraph (b)(3) of this section) in the

currency pool by the foreign corporation's actual ratio (as determined under paragraph (c)(2) of this section) for the taxable year or, if the taxpayer has made an election in accordance with paragraph (c)(4) of this section, by the fixed ratio.

(iii) ***Determine the interest expense attributable to each currency pool.*** Third, the foreign corporation must determine the interest expense attributable to each currency pool by multiplying the U.S.-connected liabilities in each currency pool by the prescribed interest rate as defined in paragraph (e)(2) of this section.

(2) ***Prescribed interest rate.*** For each currency pool, the prescribed interest rate is determined by dividing the total interest expense that is paid or accrued for the taxable year with respect to the foreign corporation's worldwide liabilities denominated in that currency, by the foreign corporation's average worldwide liabilities (whether interest bearing or not) denominated in that currency. The interest expense and liabilities are to be stated in that currency.

(3) ***Hedging transactions.*** [Reserved]

(4) ***Election not available if excessive hyperinflationary assets.*** The election to use the separate currency pools method of this paragraph (e) is not available if the value of the foreign corporation's U.S. assets denominated in a hyperinflationary currency, as defined in § 1.985-1, exceeds ten percent of the value of the foreign corporation's total U.S. assets. If a foreign corporation made a valid election to use the separate currency pools method in a prior year but no longer qualifies to use such method pursuant to this paragraph (e)(4), the taxpayer must use the method provided by paragraphs (b) through (d) of this section.

(5) ***Examples.*** The separate currency pools method of this paragraph (e) is illustrated by the following examples:

Example 1. Separate currency pools method—(i) *Facts.* (A) Bank *Z,* a resident of country *X,* has a branch in the United States through which it conducts its banking business. For its 1997 taxable year, *Z* has U.S. assets, as defined in paragraph (b) of this section, that are denominated in U.S. dollars and in *U,* the country *X* currency. Accordingly, *Z*'s U.S. assets are as follows:

	Average value
U.S. Dollar Assets	$20,000
U Assets	*U* 5,000

(B) *Z*'s worldwide liabilities are also denominated in U.S. Dollars and in *U.* The average interest rates on *Z*'s worldwide liabilities, including those in the United States, are 6% on its U.S. dollar liabilities, and 12% on its liabilities denominated in *U.* Assume that *Z* has properly elected to use its actual ratio of 95% to determine its U.S.-connected liabilities in Step 2, and has also properly elected to use the separate currency pools method provided in paragraph (e) of this section.

(ii) *Determination of interest expense. Z* determines the interest expense attributable to its U.S.-connected liabilities according to the steps described below.

(A) First, *Z* separates its U.S. assets into two currency pools, one denominated in U.S. dollars ($20,000) and the other denominated in *U* (*U*5,000).

(B) Second, *Z* multiplies each pool of assets by the applicable ratio of worldwide liabilities to assets, which in this case is 95%. Thus, Z has U.S.-connected liabilities of $19,000 ($20,000 × 95%), and *U*4750 (*U*5000 × 95%).

(C) Third, *Z* calculates its interest expense by multiplying each pool of its U.S.-connected liabilities by the relevant interest rates. Accordingly, *Z*'s allocable interest expense for the year is $1140 ($19,000 × 6%), the sum of the expense associated with its U.S. dollar liabilities, plus *U*570 (*U*4750 × 12%), the interest expense associated with its liabilities denominated in *U*. *Z* must translate its interest expense denominated in *U* in accordance with the rules provided in section 988, and then must determine whether it is subject to any other provision of the Code that would disallow or defer any portion of its interest expense so determined.

Example 2. [Reserved]

(f) ***Applicability date*** —

(1) ***General rule.*** Except as provided in paragraph (f)(3) of this section, this section is applicable for tax years ending on or after August 15, 2009. A taxpayer, however, may choose to apply § 1.882-5T, rather than applying the regulations in this section, for any taxable year beginning on or after August 16, 2008, but before August 15, 2009.

(2) [Reserved]

(3) ***Applicability date for published rate election.*** Paragraphs (a)(7)(i) and (d)(5)(ii)(B) of this section apply to taxable years ending after June 30, 2023. For taxable years ending before July 1, 2023, see § 1.882-5(d)(5)(ii)(B) (as contained in 26 CFR part 1, revised as of April 1, 2023).

[T.D. 8658, 61 FR 9329, Mar. 8, 1996; 61 FR 15891, Apr. 10, 1996, as amended by T.D. 9281, 71 FR 47448, Aug. 17, 2006; 71 FR 56868, Sept. 28, 2006; T.D. 9465, 74 FR 49320, Sept. 28, 2009; 74 FR 57252, Nov. 5, 2009; T.D. 9976, 88 FR 42234, June 30, 2023; T.D. 10042, 90 FR 57915, Dec. 15, 2025]

§ 1.883-0 Outline of major topics.

This section lists the major paragraphs contained in §§ 1.883-1 through 1.883-5.

§ 1.883-1 Exclusion of income from the international operation of ships or aircraft.

(a) General rule.

(b) Qualified income.

(c) Qualified foreign corporation.

(1) General rule.

(2) Stock ownership test.

(3) Substantiation and reporting requirements.

(i) General rule.

(ii) Further documentation.

(A) General rule.

(B) Names and permanent addresses of certain shareholders.

(4) Commissioner's discretion to cure defects in documentation.

(d) Qualified foreign country.

(e) Operation of ships or aircraft.

(1) General rule.

(2) Pool, partnership, strategic alliance, joint operating agreement, code-sharing arrangement or other joint venture.

(3) Activities not considered operation of ships or aircraft.

(4) Examples.

(5) Definitions.

(i) Bareboat charter.

(ii) Code-sharing arrangement.

(iii) Dry lease.

(iv) Entity.

(v) Fiscally transparent entity under the income tax laws of the United States.

(vi) Full charter.

(vii) Nonvessel operating common carrier.

(viii) Space or slot charter.

(ix) Time charter.

(x) Voyage charter.

(xi) Wet lease.

(f) International operation of ships or aircraft.

(1) General rule.

(2) Determining whether income is derived from international operation of ships or aircraft.

(i) International carriage of passengers.

(A) General rule.

(B) Round trip travel on ships.

(ii) International carriage of cargo.

(iii) Bareboat charter of ships or dry lease of aircraft used in international operation of ships or aircraft.

(iv) Charter of ships or aircraft for hire.

(g) Activities incidental to the international operation of ships or aircraft.

(1) General rule.

(2) Activities not considered incidental to the international operation of ships or aircraft.

(3) Other Services. [Reserved]

(4) Activities involved in a pool, partnership, strategic alliance, joint operating agreement, code-sharing arrangement or other joint venture.

(h) Equivalent exemption.

(1) General rule.

(2) Determining equivalent exemptions for each category of income.

(3) Special rules with respect to income tax conventions.

(i) Countries with only an income tax convention.

(ii) Countries with both an income tax convention and an equivalent exemption.

(A) General rule.

(B) Special rule for claiming simultaneous benefits under section 883 and an income tax convention.

(iii) Participation in certain joint ventures.

(iv) Independent interpretation of income tax conventions.

(4) Exemptions not qualifying as equivalent exemptions.

(i) General rule.

(ii) Reduced tax rate or time limited exemption.

(iii) Inbound or outbound freight tax.

(iv) Exemptions for limited types of cargo.

(v) Territorial tax systems.

(vi) Countries that tax on a residence basis.

(vii) Exemptions within categories of income.

(i) Treatment of possessions.

(j) Expenses related to qualified income.

§ 1.883-2 Treatment of publicly-traded corporations.

(a) General rule.

(b) Established securities market.

(1) General rule.

(2) Exchanges with multiple tiers.

(3) Computation of dollar value of stock traded.

(4) Over-the-counter market.

(5) Discretion to determine that an exchange does not qualify as an established securities market.

(c) Primarily traded.

(d) Regularly traded.

(1) General rule.

(2) Classes of stock traded on a domestic established securities market treated as meeting trading requirements.

(3) Closely-held classes of stock not treated as meeting trading requirements.

(i) General rule.

(ii) Exception.

(iii) Five-percent shareholders.

(A) Related persons.

(B) Investment companies.

(4) Anti-abuse rule.

(5) Example.

(e) Substantiation that a foreign corporation is publicly traded.

(1) General rule.

(2) Availability and retention of documents for inspection.

(f) Reporting requirements.

§ 1.883-3 Treatment of controlled foreign corporations.

(a) General rule.

(b) Qualified U.S. person ownership test.

(1) General rule.

(2) Qualified U.S. person.

(3) Treatment of bearer shares.

(4) Ownership attribution through certain domestic entities.

(5) Examples.

(c) Substantiation of CFC stock ownership.

(1) In general.

(2) Ownership statements from qualified U.S. persons.

(3) Ownership statements from intermediaries.

(4) Three-year period of validity.

(5) Availability and retention of documents for inspection.

(d) Reporting requirements.

§ 1.883-4 Qualified shareholder stock ownership test.

(a) General rule.

(b) Qualified shareholder.

(1) General rule.

(2) Residence of individual shareholders.

(i) General rule.

(ii) Tax home.

(3) Certain income tax convention restrictions applied to shareholders.

(4) Not-for-profit organizations.

(5) Pension funds.

(i) Pension fund defined.

(ii) Government pension funds.

(iii) Nongovernment pension funds.

(iv) Beneficiary of a pension fund.

(c) Rules for determining constructive ownership.

(1) General rules for attribution.

(2) Partnerships.

(i) General rule.

(ii) Partners resident in the same country.

(iii) Examples.

(3) Trusts and estates.

(i) Beneficiaries.

(ii) Grantor trusts.

(4) Corporations that issue stock.

(5) Taxable nonstock corporations.

(6) Mutual insurance companies and similar entities.

(7) Computation of beneficial interests in nongovernment pension funds.

(d) Substantiation of stock ownership.

(1) General rule.

(2) Application of general rule.

(i) Ownership statements.

(ii) Three-year period of validity.

(3) Special rules.

(i) Substantiating residence of certain shareholders.

(ii) Special rule for registered shareholders owning less than one percent of widely-held corporations.

(iii) Special rule for beneficiaries of pension funds.

(A) Government pension fund.

(B) Nongovernment pension fund.

(iv) Special rule for stock owned by publicly-traded corporations.

(v) Special rule for not-for-profit organizations.

(vi) Special rule for a foreign airline covered by an air services agreement.

(vii) Special rule for taxable nonstock corporations.

(viii) Special rule for closely-held corporations traded in the United States.

(4) Ownership statements from shareholders.

(i) Ownership statements from individuals.

(ii) Ownership statements from foreign governments.

(iii) Ownership statements from publicly-traded corporate shareholders.

(iv) Ownership statements from not-for-profit organizations.

(v) Ownership statements from intermediaries.

(A) General rule.

(B) Ownership statements from widely-held intermediaries with registered shareholders owning less than one percent of such widely-held intermediary.

(C) Ownership statements from pension funds.

(*1*) Ownership statements from government pension funds.

(*2*) Ownership statements from nongovernment pension funds.

(*3*) Time for making determinations.

(D) Ownership statements from taxable nonstock corporations.

(5) Availability and retention of documents for inspection.

(e) Reporting requirements.

§ 1.883-5 Effective dates.

(a) General rule.

(b) Election for retroactive application.

(c) Transitional information reporting rule.

(d) Effective/applicability dates.

[T.D. 9087, 68 FR 51399, Aug. 26, 2003, as amended by T.D. 9332, 72 FR 34604, June 25, 2007; T.D. 9502, 75 FR 56861, Sept. 17, 2010]

§ 1.883-1 Exclusion of income from the international operation of ships or aircraft.

(a) ***General rule.*** Qualified income derived by a qualified foreign corporation from its international operation of ships or aircraft is excluded from gross income and exempt from United States Federal income tax. Paragraph (b) of this section defines the term *qualified income.* Paragraph (c) of this section defines the term *qualified foreign corporation.* Paragraph (f) of this section defines the term *international operation of ships or aircraft.*

(b) ***Qualified income.*** Qualified income is income derived from the international operation of ships or aircraft that—

(1) Is properly includible in any of the income categories described in paragraph (h)(2) of this section; and

(2) Is the subject of an equivalent exemption, as defined in paragraph (h) of this section, granted by the qualified foreign country, as defined in paragraph (d) of this section, in which the foreign corporation seeking qualified foreign corporation status is organized.

(c) ***Qualified foreign corporation*** —

(1) ***General rule.*** A qualified foreign corporation is a corporation that is organized in a qualified foreign country and considered engaged in the international operation of ships or aircraft. The term *corporation* is defined in section 7701(a)(3) and the regulations thereunder. Paragraph (d) of this section defines the term *qualified foreign country.* Paragraph (e) of this section defines the term *operation of ships or aircraft,* and paragraph (f) of this section defines the term *international operation of ships or aircraft.* To be a qualified foreign corporation, the corporation must satisfy the stock ownership test of paragraph (c)(2) of this section and satisfy the substantiation and reporting requirements described in paragraph (c)(3) of this section. A corporation may be a qualified foreign corporation with respect to one category of qualified income but not with respect to another such category. See paragraph (h)(2) of this section for a discussion of the categories of qualified income.

(2) ***Stock ownership test.*** To be a qualified foreign corporation, a foreign corporation must satisfy the publicly-traded test of § 1.883-2(a), the CFC stock ownership test of § 1.883-3(a), or the qualified shareholder stock ownership test of § 1.883-4(a).

(3) ***Substantiation and reporting requirements*** —

(i) ***General rule.*** To be a qualified foreign corporation, a foreign corporation must include the following information in its Form 1120-F, "U.S. Income Tax Return of a Foreign Corporation," in the manner prescribed by such form and its accompanying instructions—

(A) The corporation's name and address (including mailing code);

(B) The corporation's U.S. taxpayer identification number;

(C) The foreign country in which the corporation is organized;

(D) The applicable authority for an equivalent exemption, for example, the citation of a statute in the country where the corporation is organized, a diplomatic note between the United States and such country, or an income tax convention between the United States and such country in the case of a corporation described in paragraphs (h)(3)(i), (ii) and (iii) of this section;

(E) The category or categories of qualified income for which an exemption is being claimed;

(F) A reasonable estimate of the gross amount of income in each category of qualified income for which the exemption is claimed, to the extent such amounts are readily determinable;

(G) A statement as to whether any shares of the foreign corporation or of any intermediary corporation that are relied on to satisfy any stock ownership test described in paragraph (c)(2) of this section are issued in bearer form and whether the bearer shares are maintained in a dematerialized book-entry system in which the bearer shares are represented only by book entries and no physical certificates are issued or transferred, or in an immobilized book-entry system in which evidence of ownership is maintained on the books and records of the corporate issuer or by a broker or financial institution;

(H) Any other information required under § 1.883-2(f), § 1.883-3(d), or § 1.883-4(e), as applicable; and

(I) Any other relevant information specified in Form 1120-F, "U.S. Income Tax Return of a Foreign Corporation," and its accompanying instructions.

(ii) ***Further documentation*** —

(A) ***General rule.*** Except as provided in paragraph (c)(3)(ii)(B) of this section, if the Commissioner requests in writing that the foreign corporation provide documentation or substantiate any representations made under paragraph (c)(3)(i) of this section, or under § 1.883-2(f), § 1.883-3(d), or § 1.883-4(e), as applicable, the foreign corporation must provide the requested documentation or substantiation within 60 days of receiving the written request. If the foreign corporation does not provide the requested documentation or substantiation within the 60-day period, but demonstrates that the failure was due to reasonable cause and not willful neglect, the Commissioner may grant the foreign corporation a 30-day extension to provide the requested documentation or substantiation. Whether a failure to provide the documentation or substantiation in a timely manner was due to reasonable cause and not willful neglect shall be determined by the Commissioner based on all the facts and circumstances.

(B) ***Names and permanent addresses of certain shareholders.*** If the Commissioner requests the names and permanent addresses of individual qualified shareholders of a foreign corporation, as represented on each individual's ownership statement, to substantiate the requirements of the exception to the closely-held test in the publicly-traded test in § 1.883-2(e), the qualified shareholder stock ownership test in § 1.883-4(a), or the qualified U.S. person ownership test in § 1.883-3(b), the foreign corporation must provide the requested information within 30 days of receiving the written request. If the foreign corporation does not provide the requested information within the 30-day period, but demonstrates that the failure was due to reasonable cause and not willful neglect, the Commissioner may grant the foreign corporation a 30-day extension to provide the

requested information. Whether a failure to provide the requested information was due to reasonable cause and not willful neglect shall be determined by the Commissioner based on all the facts and circumstances.

(d) ***Qualified foreign country.*** A qualified foreign country is a foreign country that grants to corporations organized in the United States an equivalent exemption, as described in paragraph (h) of this section, for the category of qualified income, as described in paragraph (h)(2) of this section, derived by the foreign corporation seeking qualified foreign corporation status. A foreign country may be a qualified foreign country with respect to one category of qualified income but not with respect to another such category.

(e) ***Operation of ships or aircraft*** —

(1) ***General rule.*** Except as provided in paragraph (e)(2) of this section, a foreign corporation is considered engaged in the operation of ships or aircraft only during the time it is an owner or lessee of one or more entire ships or aircraft and uses such ships or aircraft in one or more of the following activities—

(i) Carriage of passengers or cargo for hire;

(ii) In the case of a ship, the leasing out of the ship under a time or voyage charter (full charter), space or slot charter, or bareboat charter, as those terms are defined in paragraph (e)(5) of this section, provided the ship is used to carry passengers or cargo for hire; and

(iii) In the case of aircraft, the leasing out of the aircraft under a wet lease (full charter), space, slot, or block-seat charter, or dry lease, as those terms are defined in paragraph (e)(5) of this section, provided the aircraft is used to carry passengers or cargo for hire.

(2) ***Pool, partnership, strategic alliance, joint operating agreement, code-sharing arrangement or other joint venture.*** A foreign corporation is considered engaged in the operation of ships or aircraft within the meaning of paragraph (e)(1) of this section with respect to its participation in a pool, partnership, strategic alliance, joint operating agreement, code-sharing arrangement or other joint venture if it directly, or indirectly through one or more fiscally transparent entities under the income tax laws of the United States, as defined in paragraph (e)(5)(v) of this section—

(i) Owns an interest in a partnership, disregarded entity, or other fiscally transparent entity under the income tax laws of the United States that itself would be considered engaged in the operation of ships or aircraft under paragraph (e)(1) of this section if it were a foreign corporation; or

(ii) Participates in a pool, strategic alliance, joint operating agreement, code-sharing arrangement, or other joint venture that is not an entity, as defined in paragraph (e)(5)(iv) of this section, involving one or more activities described in paragraphs (e)(1)(i) through (iii) of this section, but only if—

(A) In the case of a direct interest, the foreign corporation is otherwise engaged in the operation of ships or aircraft under paragraph (e)(1) of this section; or

(B) In the case of an indirect interest, either the foreign corporation is otherwise engaged, or one of the fiscally transparent entities would be considered engaged if it were a foreign corporation, in the operation of ships or aircraft under paragraph (e)(1) of this section.

(3) ***Activities not considered operation of ships or aircraft.*** Activities that do not constitute operation of ships or aircraft include, but are not limited to—

(i) The activities of a nonvessel operating common carrier, as defined in paragraph (e)(5)(vii) of this section;

(ii) Ship or aircraft management;

(iii) Obtaining crews for ships or aircraft operated by another party;

(iv) Acting as a ship's agent;

(v) Ship or aircraft brokering;

(vi) Freight forwarding;

(vii) The activities of travel agents and tour operators;

(viii) Rental by a container leasing company of containers and related equipment; and

(ix) The activities of a concessionaire.

(4) ***Examples.*** The rules of paragraphs (e)(1) through (3) of this section are illustrated by the following examples:

> *Example 1.* Three tiers of charters—(i) *Facts.* A, B, and C are foreign corporations. A purchases a ship. A and B enter into a bareboat charter of the ship for a term of 20 years, and B, in turn, enters into a time charter of the ship with C for a term of 5 years. Under the time charter, B is responsible for the complete operation of the ship, including providing the crew and maintenance. C uses the ship during the term of the time charter to carry its customers' freight between U.S. and foreign ports. C owns no ships.
> (ii) *Analysis.* Because A is the owner of the entire ship and leases out the ship under a bareboat charter to B, and because the sublessor, C, uses the ship to carry cargo for hire, A is considered engaged in the operation of a ship under paragraph (e)(1) of this section during the term of the time charter. B leases in the entire ship from A and leases out the ship under a time charter to C, who uses the ship to carry cargo for hire. Therefore, B is considered engaged in the operation of a ship under paragraph (e)(1) of this section during the term of the time charter. C time charters the entire ship from B and uses the ship to carry its customers' freight during the term of the charter. Therefore, C is also engaged in the operation of a ship under paragraph (e)(1) of this section during the term of the time charter.

> *Example 2.* Partnership with contributed shipping assets—(i) *Facts.* X, Y, and Z, each a foreign corporation, enter into a partnership, P. P is a fiscally transparent entity under the income tax laws of the United States, as defined in paragraph (e)(5)(v) of this section. Under the terms of the partnership agreement, each partner contributes all of the ships in its fleet to P in exchange for interests in the partnership and shares in the P profits from the international carriage of cargo. The partners share in the overall management of P, but each partner, acting in its capacity as partner, continues to crew and manage all ships previously in its fleet.

(ii) *Analysis.* P owns the ships contributed by the partners and uses these ships to carry cargo for hire. Therefore, if P were a foreign corporation, it would be considered engaged in the operation of ships within the meaning of paragraph (e)(1) of this section. Accordingly, because P is a fiscally transparent entity under the income tax laws of the United States, as defined in paragraph (e)(5)(v) of this section, X, Y, and Z are each considered engaged in the operation of ships through P, within the meaning of paragraph (e)(2)(i) of this section, with respect to their distributive share of income from P's international carriage of cargo.

Example 3. Joint venture with chartered in ships—(i) *Facts.* Foreign corporation A owns a number of foreign subsidiaries involved in various aspects of the shipping business, including S1, S2, S3, and S4. S4 is a foreign corporation that provides cruises but does not own any ships. S1, S2, and S3 are foreign corporations that own cruise ships. S1, S2, S3, and S4 form joint venture JV, in which they are all interest holders, to conduct cruises. JV is a fiscally transparent entity under the income tax laws of the United States, as defined in paragraph (e)(5)(v) of this section. Under the terms of the joint venture, S1, S2, and S3 each enter into time charter agreements with JV, pursuant to which S1, S2, and S3 retain control of the navigation and management of the individual ships, and JV will use the ships to carry passengers for hire. The overall management of the cruise line will be provided by S4.
(ii) *Analysis.* S1, S2, and S3 each owns ships and time charters those ships to JV, which uses the ships to carry passengers for hire. Accordingly, S1, S2, and S3 are each considered engaged in the operation of ships under paragraph (e)(1) of this section. JV leases in entire ships by means of the time charters, and JV uses those ships to carry passengers on cruises. Thus, JV would be engaged in the operation of ships within the meaning of paragraph (e)(1) of this section if it were a foreign corporation. Therefore, although S4 does not directly own or lease in a ship, S4 also is engaged in the operation of ships, within the meaning of paragraph (e)(2)(i) of this section, with respect to its participation in JV.

Example 4. Tiered partnerships—(i) *Facts.* Foreign corporations A, B, and C enter into a partnership, P1. P1 is one of several shareholders of Poolco, a foreign limited liability company that makes an election pursuant to § 301.7701-3 of this chapter to be treated as a partnership for U.S. tax purposes. P1 acquires several ships and time charters them out to Poolco. Poolco slot or voyage charters such ships out to third parties for use in the carriage of cargo for hire. P1 and Poolco are fiscally transparent entities under the income tax laws of the United States, as defined in paragraph (e)(5)(v) of this section.
(ii) *Analysis.* A, B, and C are considered engaged in the operation of ships under paragraph (e)(2)(i) of this section with respect to their direct interest in P1 and with respect to their indirect interest in Poolco because both P1 and Poolco are fiscally transparent entities under the income tax laws of the United States and would be considered engaged in the operation of ships under paragraph (e)(1) of this section if they were foreign corporations. The result would be the same if Poolco were a single-member disregarded entity owned solely by P1.

(5) *Definitions* —

(i) ***Bareboat charter.*** A bareboat charter is a contract for the use of a ship or aircraft whereby the lessee is in complete possession, control, and command of the ship or aircraft. For example, in a bareboat charter, the lessee is responsible for the navigation and management of the ship or aircraft, the crew, supplies, repairs and maintenance, fees, insurance, charges, commissions and other expenses connected with the use of the ship or aircraft. The lessor of the ship bears none of the expense or responsibility of operation of the ship or aircraft.

(ii) ***Code-sharing arrangement.*** A code-sharing arrangement is an arrangement in which one air carrier puts its identification code on the flight of another carrier. This arrangement allows the first carrier to hold itself out as providing service in markets where it does not otherwise operate or where it operates infrequently. Code-sharing arrangements can range from a very limited agreement between two carriers involving only one market to agreements involving multiple markets and alliances between or among international carriers which also include joint marketing, baggage handling, one-stop check-in service, sharing of frequent flyer awards, and other services. For rules involving the sale of code-sharing tickets, see paragraph (g)(1)(vi) of this section.

(iii) ***Dry lease.*** A dry lease is the bareboat charter of an aircraft.

(iv) ***Entity.*** For purposes of this paragraph (e), an entity is any person that is treated by the United States as other than an individual for U.S. Federal income tax purposes. The term includes disregarded entities.

(v) ***Fiscally transparent entity under the income tax laws of the United States.*** For purposes of this paragraph (e), an entity is fiscally transparent under the income tax laws of the United States if the entity would be considered fiscally transparent under the income tax laws of the United States under the principles of § 1.894-1(d)(3).

(vi) ***Full charter.*** Full charter (or full rental) means a time charter or a voyage charter of a ship or a wet lease of an aircraft but during which the full crew and management are provided by the lessor.

(vii) ***Nonvessel operating common carrier.*** A nonvessel operating common carrier is an entity that does not exercise control over any part of a vessel, but holds itself out to the public as providing transportation for hire, issues bills of lading, assumes responsibility or is liable by law as a common carrier for safe transportation of shipments, and arranges in its own name with other common carriers, including those engaged in the operation of ships, for the performance of such transportation.

(viii) ***Space or slot charter.*** A space or slot charter is a contract for use of a certain amount of space (but less than all of the space) on a ship or aircraft, and may be on a time or voyage basis. When used in connection with passenger aircraft this sort of charter may be referred to as the sale of block seats.

(ix) ***Time charter.*** A time charter is a contract for the use of a ship or aircraft for a specific period of time, during which the lessor of the ship or aircraft retains control of the navigation and management of the ship or aircraft (*i.e.,* the lessor continues to be responsible for the crew, supplies, repairs and maintenance, fees and insurance, charges, commissions and other expenses connected with the use of the ship or aircraft).

(x) ***Voyage charter.*** A voyage charter is a contract similar to a time charter except that the ship or aircraft is chartered for a specific voyage or flight rather than for a specific period of time.

(xi) ***Wet lease.*** A wet lease is the time or voyage charter of an aircraft.

(f) ***International operation of ships or aircraft*** —

(1) ***General rule.*** The term *international operation of ships or aircraft* means the operation of ships or aircraft, as defined in paragraph (e) of this section, with respect to the carriage of passengers or cargo on voyages or flights that begin or end in the United States, as determined under paragraph (f)(2) of this section. The term does not include the carriage of passengers or cargo on a voyage or flight that begins and ends in the United States, even if the voyage or flight contains a segment extending beyond the territorial limits of the United States, unless the passenger disembarks or the cargo is unloaded outside the United States. Operation of ships or aircraft beyond the territorial limits of the United States does not constitute in itself international operation of ships or aircraft.

(2) ***Determining whether income is derived from international operation of ships or aircraft.*** Whether income is derived from international operation of ships or aircraft is determined on a passenger by passenger basis (as provided in paragraph (f)(2)(i) of this section) and on an item-of-cargo by item-of-cargo basis (as provided in paragraph (f)(2)(ii) of this section). In the case of the bareboat charter of a ship or the dry lease of an aircraft, whether the charter income for a particular period is derived from international operation of ships or aircraft is determined by reference to how the ship or aircraft is used by the lowest-tier lessee in the chain of lessees (as provided in paragraph (f)(2)(iii) of this section).

(i) ***International carriage of passengers*** —

(A) ***General rule.*** Except in the case of a round trip described in paragraph (f)(2)(i)(B) of this section, income derived from the carriage of a passenger will be income from international operation of ships or aircraft if the passenger is carried between a beginning point in the United States and an ending point outside the United States, or vice versa. Carriage of a passenger will be treated as ending at the passenger's final destination even if, en route to the passenger's final destination, a stop is made at an intermediate point for refueling, maintenance, or other business reasons, provided the passenger does not change ships or aircraft at the intermediate point. Similarly, carriage of a passenger will be treated as beginning at the passenger's point of origin even if, en route to the passenger's final destination, a stop is made at an intermediate point, provided the passenger does not change ships or aircraft at the intermediate point. Carriage of a passenger will be treated as beginning or ending at a U.S. or foreign intermediate point if the passenger changes ships or aircraft at that intermediate point. Income derived from the sale of a ticket for international carriage of a passenger will be treated as income derived from international operation of ships or aircraft even if the passenger does not begin or complete an international journey because of unanticipated circumstances.

(B) ***Round trip travel on ships.*** In the case of income from the carriage of a passenger on a ship that begins its voyage in the United States, calls on one or more foreign intermediate ports, and returns to the same or another U.S. port, such income from carriage of a passenger on the entire voyage will be treated as income derived from international operation of ships or aircraft under paragraph (f)(2)(i)(A) of this section. This result obtains even if such carriage includes one or more intermediate stops at a U.S. port or ports and even if the passenger does not disembark at the foreign intermediate point.

(ii) ***International carriage of cargo.*** Income from the carriage of cargo will be income derived from international operation of ships or aircraft if the cargo is carried between a beginning point in the United States and an ending point outside the United States, or vice versa. Carriage of cargo will be treated as ending at the final destination of the cargo even if, en route to that final destination, a stop is made at a U.S. intermediate point, provided the cargo is transported to its ultimate destination on the same ship or aircraft. If the cargo is transferred to another ship or aircraft, the carriage of the cargo may nevertheless be treated as ending at its final destination, if the same taxpayer transports the cargo to and from the U.S. intermediate point and the cargo does not pass through customs at the U.S. intermediate point. Similarly, carriage of cargo will be treated as beginning at the cargo's point of origin, even if en route to its final destination a stop is made at a U.S. intermediate point, provided the cargo is transported to its ultimate destination on the same ship or aircraft. If the cargo is transferred to another ship or aircraft at the U.S. intermediate point, the carriage of the cargo may nevertheless be treated as beginning at the point of origin, if the same taxpayer transports the cargo to and from the U.S. intermediate point and the cargo does not pass through customs at the U.S. intermediate point. Repackaging, recontainerization, or any other activity involving the unloading of the cargo at the U.S. intermediate point does not change these results, provided the same taxpayer transports the cargo to and from the U.S. intermediate point and the cargo does not pass through customs at the U.S. intermediate point. A lighter vessel that carries cargo to, or picks up cargo from, a vessel located beyond the territorial limits of the United States and correspondingly loads or unloads that cargo at a U.S. port, carries cargo between a point in the United States and a point outside the United States. However, a lighter vessel that carries cargo to, or picks up cargo from, a vessel located within the territorial limits of the United States, and correspondingly loads or unloads that cargo at a U.S. port, is not engaged in international operation of ships or aircraft. Income from the carriage of military cargo on a voyage that begins in the United States, stops at a foreign intermediate port or a military prepositioning location, and returns to the same or another U.S. port without unloading its cargo at the foreign intermediate point, will nevertheless be treated as derived from international operation of ships or aircraft.

(iii) ***Bareboat charter of ships or dry lease of aircraft used in international operation of ships or aircraft.*** If a qualified foreign corporation bareboat charters a ship or dry leases an aircraft to a lessee, and the lowest tier lessee in the chain of ownership uses such ship or aircraft for the international carriage of passengers or cargo for hire, as described in paragraphs (f)(2)(i) and (ii) of this section, then the amount of charter income attributable to the period the ship or aircraft is used by the lowest tier lessee is income from international operation of ships or aircraft. The foreign corporation generally must determine the amount of the charter income that is attributable to such international operation of ships or aircraft by multiplying the amount of charter income by a fraction, the numerator of which is the total number of days of uninterrupted travel on voyages or flights of such ship or aircraft between the United States and the farthest point or points where cargo or passengers are loaded en route to, or discharged en route from, the United States during the smaller of the taxable year or the particular charter period, and the denominator of which is the total number of days in the smaller of the taxable year or the particular charter period. For this purpose, the number of days during which the ship or aircraft is not generating transportation income, within the meaning of section 863(c)(2), are not included in the numerator or denominator of the fraction. However, the foreign corporation

may adopt an alternative method for determining the amount of the charter income that is attributable to the international operation of ships or aircraft if it can establish that the alternative method more accurately reflects the amount of such income.

(iv) ***Charter of ships or aircraft for hire.*** For purposes of this section, if a foreign corporation time, voyage, or bareboat charters out a ship or aircraft, and the lowest-tier lessee uses the ship or aircraft to carry passengers or cargo on a fee basis, the ship or aircraft is considered used to carry passengers or cargo for hire, regardless of whether the ship or aircraft may be empty during a portion of the charter period due to a backhaul voyage or flight or for purposes of repositioning. If a foreign corporation time, voyage, or bareboat charters out a ship or aircraft, and the lowest-tier lessee uses the ship or aircraft for the carriage of proprietary goods, including an empty backhaul voyage or flight or repositioning related to such carriage of proprietary goods, the ship or aircraft similarly will be treated as used to carry cargo for hire.

(g) ***Activities incidental to the international operation of ships or aircraft*** —

(1) ***General rule.*** Certain activities of a foreign corporation engaged in the international operation of ships or aircraft are so closely related to the international operation of ships or aircraft that they are considered incidental to such operation, and income derived by the foreign corporation from its performance of these incidental activities is deemed to be income derived from the international operation of ships or aircraft. Examples of such activities include—

(i) Temporary investment of working capital funds to be used in the international operation of ships or aircraft by the foreign corporation;

(ii) Sale of tickets by the foreign corporation engaged in the international operation of ships for the international carriage of passengers by ship on behalf of another corporation engaged in the international operation of ships;

(iii) Sale of tickets by the foreign corporation engaged in the international operation of aircraft for the international carriage of passengers by air on behalf of another corporation engaged in the international operation of aircraft;

(iv) Contracting with concessionaires for performance of services onboard during the international operation of the foreign corporation's ships or aircraft;

(v) Providing (either by subcontracting or otherwise) for the carriage of cargo preceding or following the international carriage of cargo under a through bill of lading, airway bill or similar document through a related corporation or through an unrelated person (and the rules of section 267(b) shall apply for purposes of determining whether a corporation or other person is related to the foreign corporation);

(vi) To the extent not described in paragraph (g)(1)(iii) of this section, the sale or issuance by the foreign corporation engaged in the international operation of aircraft of intraline, interline, or code-sharing tickets for the carriage of persons by air between a U.S. gateway and another U.S. city preceding or following international carriage of passengers, provided that all such flight segments are provided pursuant to the passenger's original invoice, ticket or itinerary and in the case of intraline tickets are a part of uninterrupted international air transportation (within the meaning of section 4262(c)(3));

(vii) Arranging for port city hotel accommodations within the United States for a passenger for the one night before or after the international carriage of that passenger by the foreign corporation engaged in the international operation of ships;

(viii) Bareboat charter of ships or dry lease of aircraft normally used by the foreign corporation in international operation of ships or aircraft but currently not needed, if the ship or aircraft is used by the lessee for international carriage of cargo or passengers;

(ix) Arranging by means of a space or slot charter for the carriage of cargo listed on a bill of lading or airway bill or similar document issued by the foreign corporation on the ship or aircraft of another corporation engaged in the international operation of ships or aircraft;

(x) The provision of containers and related equipment by the foreign corporation in connection with the international carriage of cargo for use by its customers, including short-term use within the United States immediately preceding or following the international carriage of cargo (for this purpose, a period of five days or less shall be presumed to be short-term); and

(xi) The provision of goods and services by engineers, ground and equipment maintenance staff, cargo handlers, catering staff, and customer services personnel, and the provision of facilities such as passenger lounges, counter space, ground handling equipment, and hangars.

(2) ***Activities not considered incidental to the international operation of ships or aircraft.*** Examples of activities that are not considered incidental to the international operation of ships or aircraft include—

(i) The sale of or arranging for train travel, bus transfers, single day shore excursions, or land tour packages;

(ii) Arranging for hotel accommodations within the United States other than as provided in paragraph (g)(1)(vii) of this section;

(iii) The sale of airline tickets or cruise tickets other than as provided in paragraph (g)(1)(ii), (iii), or (vi) of this section;

(iv) The sale or rental of real property;

(v) Treasury activities involving the investment of excess funds or funds awaiting repatriation, even if derived from the international operation of ships or aircraft;

(vi) The carriage of passengers or cargo on ships or aircraft on domestic legs of transportation not treated as either international operation of ships or aircraft under paragraph (f) of this section or as an activity that is incidental to such operation under paragraph (g)(1) of this section;

(vii) The carriage of cargo by bus, truck or rail by a foreign corporation between a U.S. inland point and a U.S. gateway port or airport preceding or following the international carriage of such cargo by the foreign corporation; and

(viii) The provision of containers or other related equipment by the foreign corporation within the United States other than as provided in paragraph (g)(1)(x) of this section, including warehousing.

(3) ***Other services.*** [Reserved]

(4) ***Activities involved in a pool, partnership, strategic alliance, joint operating agreement, code-sharing arrangement or other joint venture.*** Notwithstanding paragraph (g)(1) of this section, an activity is considered incidental to the international operation of ships or aircraft by a foreign corporation, and income derived by the foreign corporation with respect to such activity is deemed to be income derived from the international operation of ships or aircraft, if the activity is performed by or pursuant to a pool, partnership, strategic alliance, joint operating agreement, code-sharing arrangement or other joint venture in which such foreign corporation participates directly, or indirectly through a fiscally transparent entity under the income tax laws of the United States, provided that—

(i) Such activity is incidental to the international operation of ships or aircraft by the pool, partnership, strategic alliance, joint operating agreement, code-sharing arrangement or other joint venture, and provided that it is described in paragraph (e)(2)(i) of this section; or

(ii) Such activity would be incidental to the international operation of ships or aircraft by the foreign corporation, or fiscally transparent entity if it performed such activity itself, and provided the foreign corporation is engaged or the fiscally transparent entity would be considered engaged if it were a foreign corporation in the operation of ships or aircraft under paragraph (e)(1) of this section.

(h) ***Equivalent exemption*** —(1) *General rule.* A foreign country grants an equivalent exemption when it exempts from taxation income from the international operation of ships or aircraft derived by corporations organized in the United States. Whether a foreign country provides an equivalent exemption must be determined separately with respect to each category of income, as provided in paragraph (h)(2) of this section. An equivalent exemption may be available for income derived from the international operation of ships even though income derived from the international operation of aircraft may not be exempt, and vice versa. For rules regarding foreign corporations organized in countries that provide exemptions only through an income tax convention, see paragraph (h)(3) of this section. An equivalent exemption may exist where the foreign country—

(i) Generally imposes no tax on income, including income from the international operation of ships or aircraft;

(ii) Provides an exemption from tax for income derived from the international operation of ships or aircraft, either by statute, decree, income tax convention, or otherwise; or

(iii) Exchanges diplomatic notes with the United States, or enters into an agreement with the United States, that provides for a reciprocal exemption for purposes of section 883.

(2) ***Determining equivalent exemptions for each category of income.*** Whether a foreign country grants an equivalent exemption must be determined separately with respect to income from the international operation of ships and income from the international operation of aircraft for each category of income listed in paragraphs (h)(2)(i) through (v), (vii), and (viii) of this section. If an exemption is unavailable in the foreign country for a particular category of income, the foreign country is not considered to grant an equivalent exemption with respect to that category of income. Income in that category is not considered to be the subject of an equivalent exemption and, thus, is not eligible for exemption from income tax in the United States, even though the foreign country may grant an equivalent exemption for other categories of income. With respect to paragraph (h)(2)(vi) of this section, a foreign country may be considered to grant an equivalent exemption for one or more types

of income described in paragraph (g)(1) of this section. The following categories of income derived from the international operation of ships or aircraft may be exempt from United States income tax if an equivalent exemption is available—

(i) Income from the carriage of passengers and cargo;

(ii) Time or voyage (full) charter income of a ship or wet lease income of an aircraft;

(iii) Bareboat charter income of a ship or dry charter income of an aircraft;

(iv) Incidental bareboat charter income or incidental dry lease income;

(v) Incidental container-related income;

(vi) Income incidental to the international operation of ships or aircraft other than incidental income described in paragraphs (h)(2)(iv) and (v) of this section;

(vii) Capital gains derived by a qualified foreign corporation engaged in the international operation of ships or aircraft from the sale, exchange or other disposition of a ship, aircraft, container or related equipment or other moveable property used by that qualified foreign corporation in the international operation of ships or aircraft; and

(viii) Income from participation in a pool, partnership, strategic alliance, joint operating agreement, code-sharing arrangement, international operating agency, or other joint venture described in paragraph (e)(2) of this section.

(3) ***Special rules with respect to income tax conventions*** —

(i) ***Countries with only an income tax convention.*** If a foreign country grants an exemption from tax for profits from the international operation of ships or aircraft only under an income tax convention with the United States, that exemption shall constitute an equivalent exemption with respect to a foreign corporation organized in that country only if—

(A) The foreign corporation satisfies the conditions for claiming benefits with respect to such profits under the income tax convention; and

(B) The profits that are exempt from tax pursuant to the shipping and air transport or gains article of the income tax convention and are described within a category of income included in paragraphs (h)(2)(i) through (viii) of this section.

(ii) ***Countries with both an income tax convention and an equivalent exemption*** —

(A) ***General rule.*** If a foreign country grants an exemption from tax for profits from the international operation of ships or aircraft under the shipping and air transport or gains article of an income tax convention with the United States and also by some other means (for example, by diplomatic note or domestic law of the foreign country), a foreign corporation may elect annually whether to claim an exemption from tax under section 883 or the income tax convention. Except as provided in paragraph (h)(3)(ii)(B) of this section, the foreign corporation must apply the elected exemption (section 883 or the income tax convention) to all categories of income described in paragraph (h)(2) of this section. If the foreign corporation elects to claim the exemption under section 883, it must satisfy all of the requirements for claiming the exemption under section 883. If the foreign corporation elects to claim the exemption under the income tax convention, it must satisfy all of the requirements and conditions for claiming benefits under the income tax convention. *See* §

1.883-4(b)(3) for rules concerning relying on shareholders resident in a foreign country that grants an equivalent exemption under an income tax convention to satisfy the stock ownership test of paragraph (c)(2) of this section.

(B) ***Special rule for claiming simultaneous benefits under section 883 and an income tax convention.*** If a foreign corporation that is organized in a country that grants an exemption from tax under an income tax convention and also by some other means (such as by diplomatic note or domestic law of the foreign country) with respect to a specific category of income described in paragraph (h)(2) of this section, and the foreign corporation elects to claim the exemption under the income tax convention, the foreign corporation may nonetheless simultaneously claim an exemption under section 883 with respect to a category of income exempt from tax by such other means if the foreign corporation—

(*1*) Satisfies the requirements of paragraphs (h)(3)(i)(A) and (B) of this section for each category of income;

(*2*) Satisfies one of the stock ownership tests of paragraph (c)(2) of this section; and

(*3*) Complies with the substantiation and reporting requirements in paragraph (c)(3) of this section.

(iii) ***Participation in certain joint ventures.*** If a foreign country grants an exemption for a category of income only through an income tax convention, a foreign corporation that is organized in that country and that derives income, directly or indirectly, through a participation in a pool, partnership, strategic alliance, joint operating agreement, code-sharing arrangement, or other joint venture described in paragraph (e)(2) of this section, may treat that exemption as an equivalent exemption even if the foreign corporation would not be eligible to claim benefits under the income tax convention for that category of income solely because the joint venture was not fiscally transparent, within the meaning of § 1.894-1(d)(3)(iii)(A), with respect to that category of income under the income tax laws of the foreign corporation's country of residence.

(iv) ***Independent interpretation of income tax conventions.*** Nothing in this section nor §§ 1.883-2 through 1.883-5 affects the rights or obligations under any income tax convention between the United States and a foreign country. The definitions provided in this section and §§ 1.883-2 through 1.883-5 shall not give meaning to similar or identical terms used in an income tax convention, or provide guidance regarding the scope of any exemption provided by such convention, unless the income tax convention entered into force after August 26, 2003, and it, or its legislative history, explicitly refers to section 883 and guidance promulgated under that section for its meaning.

(4) ***Exemptions not qualifying as equivalent exemptions*** —

(i) ***General rule.*** Certain types of exemptions provided to corporations organized in the United States by foreign countries do not satisfy the equivalent exemption requirements of this section. Paragraphs (h)(4)(ii) through (vii) of this section provide descriptions of some of the types of exemptions that do not qualify as equivalent exemptions for purposes of this section.

(ii) ***Reduced tax rate or time limited exemption.*** The exemption granted by the foreign country's law or income tax convention must be a complete exemption. The exemption may not constitute merely a reduction to a nonzero rate of tax levied against the income of corporations organized in the United States derived from the international operation of ships or aircraft or a temporary reduction to a zero rate of tax, such as in the case of a tax holiday.

(iii) ***Inbound or outbound freight tax.*** With respect to the carriage of cargo, the foreign country must provide an exemption from tax for income from transporting freight both inbound and outbound. For example, a foreign country that imposes tax only on outbound freight will not be treated as granting an equivalent exemption for income from transporting freight inbound into that country.

(iv) ***Exemptions for limited types of cargo.*** A foreign country must provide an exemption from tax for income from transporting all types of cargo. For example, if a foreign country were generally to impose tax on income from the international carriage of cargo but were to provide a statutory exemption for income from transporting agricultural products, the foreign country would not be considered to grant an equivalent exemption with respect to income from the international carriage of cargo, including agricultural products.

(v) ***Territorial tax systems.*** A foreign country with a territorial tax system will be treated as granting an equivalent exemption if it treats all income derived from the international operation of ships or aircraft derived by a U.S. corporation as entirely foreign source and therefore not subject to tax, including income derived from a voyage or flight that begins or ends in that foreign country.

(vi) ***Countries that tax on a residence basis.*** A foreign country that provides an equivalent exemption to corporations organized in the United States but also imposes a residence-based tax on certain corporations organized in the United States may nevertheless be considered to grant an equivalent exemption if the residence-based tax is imposed only on a corporation organized in the United States that maintains its center of management and control or other comparable attributes in that foreign country. If the residence-based tax is imposed on corporations organized in the United States and engaged in the international operation of ships or aircraft that are not managed and controlled in that foreign country, the foreign country shall not be treated as a qualified foreign country and shall not be considered to grant an equivalent exemption for purposes of this section.

(vii) ***Exemptions within categories of income.*** With respect to paragraphs (h)(2)(i) through (v), (vii), and (viii) of this section, a foreign country must provide an exemption from tax for all income in a category of income, as defined in paragraph (h)(2) of this section. For example, a country that exempts income from the bareboat charter of passenger aircraft but not the bareboat charter of cargo aircraft does not provide an equivalent exemption. However, an equivalent exemption may be available for income derived from the international operation of ships even though income derived from the international operation of aircraft may not be exempt, and vice versa. With respect to paragraph (h)(2)(vi) of this section, a foreign country may be considered to grant an equivalent exemption for one or more types of income described in paragraph (g)(1) of this section.

(i) ***Treatment of possessions.*** For purposes of this section, a possession of the United States will be treated as a foreign country. A possession of the United States will be considered to grant an equivalent exemption and will be treated as a qualified foreign country if it applies a mirror system of taxation. If a possession does not apply a mirror system of taxation, the possession may nevertheless be a qualified foreign country if, for example, it provides for an equivalent exemption through its internal law. A possession applies the mirror system of taxation if the U.S. Internal Revenue Code of 1986, as amended, applies in the possession with the name of the possession used instead of “United States” where appropriate.

(j) ***Expenses related to qualified income.*** If a qualified foreign corporation derives qualified income from the international operation of ships or aircraft as well as income that is not qualified income, and the nonqualified income is effectively connected with the conduct of a trade or business within the United States, the foreign corporation may not deduct from such nonqualified income any amount otherwise allowable as a deduction from qualified income, if that qualified income is excluded under this section. See section 265(a)(1).

[T.D. 9087, 68 FR 51400, Aug. 26, 2003; 69 FR 7995, Feb. 20, 2004, as amended by T.D. 9332, 72 FR 34605, June 25, 2007; 72 FR 45159, Aug. 13, 2007; T.D. 9502, 75 FR 56861, Sept. 17, 2010]

§ 1.883-2 Treatment of publicly-traded corporations.

(a) ***General rule.*** A foreign corporation satisfies the stock ownership test of § 1.883-1(c)(2) if it is considered a publicly-traded corporation and satisfies the substantiation and reporting requirements of paragraphs (e) and (f) of this section. To be considered a publicly-traded corporation, the stock of the foreign corporation must be primarily traded and regularly traded, as defined in paragraphs (c) and (d) of this section, respectively, on one or more established securities markets, as defined in paragraph (b) of this section, in either the United States or any qualified foreign country.

(b) ***Established securities market*** —

(1) ***General rule.*** For purposes of this section, the term *established securities market* means, for any taxable year—

(i) A foreign securities exchange that is officially recognized, sanctioned, or supervised by a governmental authority of the qualified foreign country in which the market is located, and has an annual value of shares traded on the exchange exceeding $1 billion during each of the three calendar years immediately preceding the beginning of the taxable year;

(ii) A national securities exchange that is registered under section 6 of the Securities Act of 1934 (15 U.S.C. 78f);

(iii) A United States over-the-counter market, as defined in paragraph (b)(4) of this section;

(iv) Any exchange designated under a Limitation on Benefits article in a United States income tax convention; and

(v) Any other exchange that the Secretary may designate by regulation or otherwise.

(2) ***Exchanges with multiple tiers.*** If an exchange in a foreign country has more than one tier or market level on which stock may be separately listed or traded, each such tier shall be treated as a separate exchange.

(3) ***Computation of dollar value of stock traded.*** For purposes of paragraph (b)(1)(i) of this section, the value in U.S. dollars of shares traded during a calendar year shall be determined on the basis of the dollar value of such shares traded as reported by the International Federation of Stock Exchanges located in Paris, or, if not so reported, then by converting into U.S. dollars the aggregate value in local currency of the shares traded using an exchange rate equal to the average of the spot rates on the last day of each month of the calendar year.

(4) ***Over-the-counter market.*** An over-the-counter market is any market reflected by the existence of an interdealer quotation system. An interdealer quotation system is any system of general circulation to brokers and dealers that regularly disseminates quotations of stocks and securities by identified brokers or dealers, other than by quotation sheets that are prepared and distributed by a broker or dealer in the regular course of business and that contain only quotations of such broker or dealer.

(5) ***Discretion to determine that an exchange does not qualify as an established securities market.*** The Commissioner may determine that a securities exchange that otherwise meets the requirements of paragraph (b) of this section does not qualify as an established securities market, if—

(i) The exchange does not have adequate listing, financial disclosure, or trading requirements (or does not adequately enforce such requirements); or

(ii) There is not clear and convincing evidence that the exchange ensures the active trading of listed stocks.

(c) ***Primarily traded.*** For purposes of this section, stock of a corporation is primarily traded in a country on one or more established securities markets, as defined in paragraph (b) of this section, if, with respect to each class of stock described in paragraph (d)(1)(i) of this section (relating to classes of stock relied on to meet the regularly traded test)—

(1) The number of shares in each such class that are traded during the taxable year on all established securities markets in that country exceeds

(2) The number of shares in each such class that are traded during that year on established securities markets in any other single country.

(d) ***Regularly traded*** —

(1) ***General rule.*** For purposes of this section, stock of a corporation is regularly traded on one or more established securities markets, as defined in paragraph (b) of this section, if—

(i) One or more classes of stock of the corporation that, in the aggregate, represent more than 50 percent of the total combined voting power of all classes of stock of such corporation entitled to vote and of the total value of the stock of such corporation are listed on such market or markets during the taxable year; and

(ii) With respect to each class relied on to meet the more than 50 percent requirement of paragraph (d)(1)(i) of this section—

(A) Trades in each such class are effected, other than in *de minimis* quantities, on such market or markets on at least 60 days during the taxable year (or $^{1}/_{6}$ of the number of days in a short taxable year); and

(B) The aggregate number of shares in each such class that are traded on such market or markets during the taxable year are at least 10 percent of the average number of shares outstanding in that class during the taxable year (or, in the case of a short taxable year, a percentage that equals at least 10 percent of the average number of shares outstanding in that class during the taxable year multiplied by the number of days in the short taxable year, divided by 365).

(2) ***Classes of stock traded on a domestic established securities market treated as meeting trading requirements.*** A class of stock that is traded during the taxable year on an established securities market located in the United States shall be considered to meet the trading requirements of

paragraph (d)(1)(ii) of this section if the stock is regularly quoted by dealers making a market in the stock. A dealer makes a market in a stock only if the dealer regularly and actively offers to, and in fact does, purchase the stock from, and sell the stock to, customers who are not related persons (as defined in section 954(d)(3)) with respect to the dealer in the ordinary course of a trade or business.

(3) ***Closely-held classes of stock not treated as meeting trading requirements*** —

(i) ***General rule.*** Except as provided in paragraph (d)(3)(ii) of this section, a class of stock of a foreign corporation that otherwise meets the requirements of paragraph (d)(1) or (2) of this section shall not be treated as meeting such requirements for a taxable year if, for more than half the number of days during the taxable year, one or more persons who own at least 5 percent of the vote and value of the outstanding shares of the class of stock, as determined under paragraph (d)(3)(iii) of this section (each a 5-percent shareholder), own, in the aggregate, 50 percent or more of the vote and value of the outstanding shares of the class of stock. If one or more 5-percent shareholders own, in the aggregate, 50 percent or more of the vote and value of the outstanding shares of the class of stock, such shares held by the 5-percent shareholders will constitute a closely-held block of stock.

(ii) ***Exception.*** Paragraph (d)(3)(i) of this section shall not apply to a class of stock if the foreign corporation can establish that qualified shareholders, as defined in § 1.883-4(b), applying the attribution rules of § 1.883-4(c), own sufficient shares in the closely-held block of stock to preclude nonqualified shareholders in the closely-held block of stock from owning 50 percent or more of the total value of the class of stock of which the closely-held block is a part for more than half the number of days during the taxable year. Any shares that are owned, after application of the attribution rules in § 1.883-4(c), by a qualified shareholder shall not also be treated as owned by a nonqualified shareholder in the chain of ownership for purposes of the preceding sentence. A foreign corporation must obtain the documentation described in § 1.883-4(d) from the qualified shareholders relied upon to satisfy this exception. However, no person otherwise treated as a qualified shareholder under § 1.883-4(b) may be treated for purposes of this paragraph (d)(3) as a qualified shareholder if such person's interest in the foreign corporation, or in any intermediary corporation, is held through bearer shares that are not maintained during the relevant period in a dematerialized or immobilized book-entry system, as described in § 1.883-1(c)(3)(i)(G).

(iii) ***Five-percent shareholders*** —

(A) ***Related persons.*** Solely for purposes of determining whether a person is a 5-percent shareholder, persons related within the meaning of section 267(b) shall be treated as one person. In determining whether two or more corporations are members of the same controlled group under section 267(b)(3), a person is considered to own stock owned directly by such person, stock owned through the application of section 1563(e)(1), and stock owned through the application of section 267(c). In determining whether a corporation is related to a partnership under section 267(b)(10), a person is considered to own the partnership interest owned directly by such person and the partnership interest owned through the application of section 267(e)(3).

(B) ***Investment companies.*** For purposes of this paragraph (d)(3), an investment company registered under the Investment Company Act of 1940, as amended (54 Stat. 789), shall not be treated as a 5-percent shareholder.

(4) ***Anti-abuse rule.*** Trades between or among related persons described in section 267(b), as modified by paragraph (d)(3)(iii) of this section, and trades conducted in order to meet the requirements of paragraph (d)(1) of this section shall be disregarded. A class of stock shall not be treated as meeting the trading requirements of paragraph (d)(1) of this section if there is a pattern of trades conducted to meet the requirements of that paragraph. For example, trades between two persons that occur several times during the taxable year may be treated as an arrangement or a pattern of trades conducted to meet the trading requirements of paragraph (d)(1)(ii) of this section.

(5) ***Example.*** The closely-held test in paragraph (d)(3) of this section is illustrated by the following example:

> *Example. Closely-held exception.* (i) *Facts.* X is a foreign corporation organized in a qualified foreign country and engaged in the international operation of ships. X has one class of stock, which is primarily traded on an established securities market in the qualified foreign country. The stock of X meets the regularly traded requirements of paragraph (d)(1)(ii) of this section without regard to paragraph (d)(3)(i) of this section. A, B, C and D are four members of the corporation's founding family who each own, during the entire taxable year, 25 percent of the stock of Hold Co, a company that issues registered shares. Hold Co, in turn, owns 60 percent of the stock of X during the entire taxable year. The remaining 40 percent of the stock of X is not owned by any 5-percent shareholder, as determined under paragraph (d)(3)(iii) of this section. A, B, and C are not residents of a qualified foreign country, but D is a resident of a qualified foreign country.
> (ii) *Analysis.* Because Hold Co owns 60 percent of the stock of X for more than half the number of days during the taxable year, Hold Co is a 5-percent shareholder that owns 50 percent or more of the value of the stock of X. Thus, the shares owned by Hold Co constitute a closely-held block of stock. Under paragraph (d)(3)(i) of this section, the stock of X will not be regularly traded within the meaning of paragraph (d)(1) of this section unless X can establish, under paragraph (d)(3)(ii) of this section, that qualified shareholders within the closely-held block of stock own sufficient shares in the closely-held block of stock to preclude nonqualified shareholders in the closely-held block of stock from owning 50 percent or more of the value of the outstanding shares in the class of stock for more than half the number of days during the taxable year. A, B, and C are not qualified shareholders within the meaning of § 1.883-4(b) because they are not residents of a qualified foreign country, but D is a resident of a qualified foreign country and therefore is a qualified shareholder. D owns 15 percent of the outstanding shares of X through Hold Co (25 percent × 60 percent = 15 percent) while A, B, and C in the aggregate own 45 percent of the outstanding shares of X through Hold Co. D, therefore, owns sufficient shares in the closely-held block of stock to preclude the nonqualified shareholders in the closely-held block of stock, A, B and C, from owning 50 percent or more of the value of the class of stock (60 percent−15 percent = 45 percent) of which the closely-held block is a part. Provided that X obtains from D the documentation

described in § 1.883-4(d), X's sole class of stock meets the exception in paragraph (d)(3)(ii) of this section and will not be disqualified from the regularly traded test by virtue of paragraph (d)(3)(i) of this section.

(e) ***Substantiation that a foreign corporation is publicly traded*** —

(1) ***General rule.*** A foreign corporation that relies on the publicly traded test of this section to meet the stock ownership test of § 1.883-1(c)(2) must substantiate that the stock of the foreign corporation is primarily and regularly traded on one or more established securities markets, as that term is defined in paragraph (b) of this section. If one of the classes of stock on which the foreign corporation relies to meet this test is closely-held within the meaning of paragraph (d)(3)(i) of this section, the foreign corporation must obtain an ownership statement described in § 1.883-4(d) from each qualified shareholder and intermediary that it relies upon to satisfy the exception to the closely-held test, but only to the extent such statement would be required if the foreign corporation were relying on the qualified shareholder stock ownership test of § 1.883-4 with respect to those shares of stock. The foreign corporation must also maintain and provide to the Commissioner upon request a list of its shareholders of record and any other relevant information known to the foreign corporation supporting its entitlement to an exemption under this section.

(2) ***Availability and retention of documents for inspection.*** A foreign corporation seeking qualified foreign corporation status must retain the documentation described in paragraph (e)(1) of this section until the expiration of the statute of limitations for its taxable year to which the documentation relates. The foreign corporation must make such documentation available for inspection at such time and such place as the Commissioner requests in writing under § 1.883-1(c)(3)(ii)(A) or (B).

(f) ***Reporting requirements.*** A foreign corporation relying on this section to satisfy the stock ownership test of § 1.883-1(c)(2) must provide the following information in addition to the information required in § 1.883-1(c)(3) to be included in its Form 1120-F, "U.S. Income Tax Return of a Foreign Corporation," for the taxable year. The information must be current as of the end of the corporation's taxable year and must include the following—

(1) The name of the country in which the stock is primarily traded;

(2) The name of the established securities market or markets on which the stock is listed;

(3) A description of each class of stock relied upon to meet the requirements of paragraph (d) of this section, including whether the class is issued in registered or bearer form and whether any such bearer shares are maintained in a dematerialized or immobilized book-entry system, as described in § 1.883-1(c)(3)(i)(G), the number of shares issued and outstanding in that class as of the close of the taxable year, and the relative value of each class in relation to the total value of all shares of stock of the corporation that are outstanding as of the close of the taxable year;

(4) For each class of stock relied upon to meet the requirements of paragraph (d) of this section, if one or more 5-percent shareholders, as defined in paragraph (d)(3)(i) of this section, own in the aggregate 50 percent or more of the vote and value of the outstanding shares of that class of stock for more than half the number of days during the taxable year—

(i) The days during the taxable year of the corporation in which the stock was closely-held without regard to the exception in paragraph (d)(3)(ii) of this section and the percentage of the vote and value of the class of stock that is owned by 5-percent shareholders during such days;

(ii) With respect to all qualified shareholders that own directly, or by application of the attribution rules in § 1.883-4(c), shares of the closely-held block of stock and that the foreign corporation relies on to satisfy the exception provided by paragraph (d)(3)(ii) of this section—

(A) The number of such qualified shareholders;

(B) The total percentage of the value of the shares owned, directly or indirectly, by such qualified shareholders by country of residence, determined under § 1.883-4(b)(2) (residence of individual shareholders) or § 1.883-4(d)(3) (special rules for residence of certain shareholders); and

(C) The number of days during the taxable year of the foreign corporation that such qualified shareholders owned, directly or indirectly, their shares in the closely held block of stock.

(5) Any other relevant information specified by Form 1120-F and its accompanying instructions.

[T.D. 9087, 68 FR 51406, Aug. 26, 2003, as amended by T.D. 9332, 72 FR 34606, June 25, 2007; T.D. 9502, 75 FR 56862, Sept. 17, 2010; 75 FR 63380, Oct. 15, 2010]

§ 1.883-3 Treatment of controlled foreign corporations.

(a) ***General rule.*** A foreign corporation satisfies the stock ownership test of § 1.883-1(c)(2) if it satisfies the qualified U.S. person ownership test in paragraph (b) of this section and the substantiation and reporting requirements of paragraphs (c) and (d) of this section, respectively. A foreign corporation that fails the qualified U.S. person ownership test of paragraph (b) of this section can satisfy the stock ownership test of § 1.883-1(c)(2) if it meets either the publicly-traded test of § 1.883-2(a) or the qualified shareholder stock ownership test of § 1.883-4(a).

(b) ***Qualified U.S. person ownership test*** —

(1) ***General rule.*** A foreign corporation satisfies the qualified U.S. person ownership test only if the following two conditions are satisfied concurrently during more than half the days in its taxable year:

(i) The foreign corporation is a controlled foreign corporation (within the meaning of section 957(a)).

(ii) One or more qualified U.S. persons own more than 50 percent of the total value of all the outstanding stock of the foreign corporation (within the meaning of section 958(a) and paragraph (b)(4) of this section).

(2) ***Qualified U.S. person.*** For purposes of this section, a *qualified U.S. person* is a United States citizen or resident alien, a domestic corporation, or a domestic trust described in section 501(a), but only if the person provides the controlled foreign corporation an ownership statement described in paragraph (c)(2) of this section, and the controlled foreign corporation meets the reporting requirements of paragraph (d) of this section with respect to that person.

(3) ***Treatment of bearer shares.*** For purposes of paragraph (b)(1)(ii) of this section, any shares of the foreign corporation or of any intermediary corporation that are issued in bearer form, shall be treated as not owned by qualified U.S. persons if the bearer shares are not maintained in a dematerialized or immobilized book-entry system, as described in § 1.883-1(c)(3)(i)(G).

(4) ***Ownership attribution through certain domestic entities.*** For purposes of paragraph (b)(1)(ii) of this section, stock owned, directly or indirectly, by or for a domestic partnership, a domestic trust not described in section 501(a), or a domestic estate, shall be treated as owned proportionately by the partners, beneficiaries, grantors, or other interest holders, respectively, under the rules of section 958(a), which shall be applied by treating each domestic entity as a foreign entity. Stock that is considered owned by a person under this paragraph (b)(4) shall, for purposes of applying this paragraph (b)(4) to such person, be treated as actually owned by such person.

(5) ***Examples.*** The following examples illustrate the qualified U.S. person ownership test of paragraph (b)(1) of this section:

Example 1. Ship Co is a controlled foreign corporation (within the meaning of section 957(a)) for more than half the days of its taxable year and is organized in a qualified foreign country. A domestic partnership owns all of the outstanding stock of Ship Co for the entire taxable year. All of the partners in the domestic partnership are residents of foreign countries and not citizens of the United States. Ship Co does not satisfy the qualified U.S. person ownership test of paragraph (b)(1) of this section because qualified U.S. persons do not own shares of Ship Co stock with a value that is greater than 50 percent of the total value of the outstanding stock of the corporation for at least half the days of Ship Co's taxable year. Therefore, to satisfy the stock ownership test of § 1.883-1(c)(2) and constitute a qualified foreign corporation, Ship Co must meet the qualified shareholder stock ownership test of § 1.883-4(a).

Example 2. Ship Co is a controlled foreign corporation (within the meaning of section 957(a)) for more than half the days of its taxable year and is organized in a qualified foreign country. Ship Co has a single class of stock outstanding. For Ship Co's entire taxable year, a foreign corporation (Corp A), that is wholly owned by a resident of a foreign country who is not a U.S. citizen, owns 40 percent of the outstanding Ship Co stock. During that same period, a domestic partnership owns the remaining 60 percent of the outstanding Ship Co stock. The domestic partnership is wholly owned by 20 United States citizens, each of whom owns a 5-percent partnership interest for Ship Co's entire taxable year. Ship Co meets the qualified U.S. person ownership test of paragraph (b)(1) of this section because during more than half the days in its taxable year it was a controlled foreign corporation within the meaning of section 957(a), and, applying the ownership attribution rules of paragraph (b)(4) of this section, qualified U.S. persons (the partners in the domestic partnership) owned Ship Co stock with a value that is greater than 50 percent of the total value of all the outstanding Ship Co shares. Therefore, Ship Co will meet the stock ownership test of § 1.883-1(c)(2) if it satisfies the substantiation and reporting requirements of paragraphs (c) and (d) of this section with respect to the partners in the domestic partnership. Alternatively, if four or more partners in the domestic partnership were not qualified U.S. persons, Ship Co would not meet the qualified U.S. person ownership test of paragraph (b)(1) of this section because, even though during more than half the days in its taxable year it would have been a controlled foreign corporation within the meaning of section 957(a), qualified U.S. persons would not have owned Ship Co stock with a value that is greater than 50 percent of the total value of all the outstanding Ship Co shares during that period.

Example 3. Ship Co is a controlled foreign corporation (within the meaning of section 957(a)) and is organized in a qualified foreign country. Ship Co has two classes of stock outstanding, Class A representing 60 percent of the vote and value and Class B representing the remaining 40 percent of the vote and value of all the shares outstanding of Ship Co. The Class A stock is issued in bearer form and is maintained in a dematerialized book-entry system, as described in § 1.883-1(c)(3)(i)(G). The Class B stock is also issued in bearer form, but is not maintained in a

dematerialized or immobilized book-entry system. For Ship Co's entire taxable year, a United States citizen A holds all the Class A stock and nonresident alien individual B owns all the Class B stock. Although the Class A stock is issued in bearer form, Ship Co will satisfy the qualified U.S. person ownership test of paragraph (b)(1) of this section because the Class A stock is maintained in a dematerialized book-entry system on behalf of A. The Class B stock is not owned by a qualified U.S. person but is taken into account in determining the total value of Ship Co's outstanding stock. Alternatively, if the Class B stock were owned by a qualified U.S. person, the results would be similar. Class B stock would not be taken into account in determining if the qualified U.S. person ownership test were satisfied, but would be taken into account in determining the total value of Ship Co's outstanding stock.

(c) ***Substantiation of CFC stock ownership*** —

(1) ***In general.*** A controlled foreign corporation must establish all of the facts necessary to demonstrate to the Commissioner that it satisfies the qualified U.S. person ownership test of paragraph (b)(1) of this section by obtaining a written ownership statement (described in paragraph (c)(2) or (3) of this section, as applicable), signed under penalties of perjury by an individual authorized to sign that person's Federal tax or information return, from—

(i) Each qualified U.S. person whose ownership of stock of the controlled foreign corporation is taken into account for purposes of meeting the qualified U.S. person ownership test; and

(ii) Each domestic intermediary described in paragraph (b)(4) of this section, each foreign intermediary (including a foreign corporation, partnership, trust, or estate), and mere legal owners or record holders acting as nominees in the chain of ownership between each such qualified U.S. person and the controlled foreign corporation, if any.

(2) ***Ownership statements from qualified U.S. persons.*** An ownership statement from a qualified U.S. person must include—

(i) The qualified U.S. person's name, permanent address, and taxpayer identification number;

(ii) If the qualified U.S. person directly owns shares in the controlled foreign corporation, the number of shares of each class of stock of the controlled foreign corporation owned by the qualified U.S. person, whether any shares are issued in bearer form, whether any bearer shares are maintained in a dematerialized or immobilized book-entry system, as described in § 1.883-1(c)(3)(i)(G), and the period (or periods) in the taxable year of the controlled foreign corporation during which the qualified U.S. person owned the shares;

(iii) If the qualified U.S. person indirectly owns shares in the controlled foreign corporation through a foreign or domestic intermediary described in paragraph (c)(1)(ii) of this section, the name of each intermediary, the amount and nature of the qualified U.S. person's interest in each intermediary, the period (or periods) in the taxable year of the controlled foreign corporation during which the qualified U.S. person held such interest, and, with respect to any intermediary foreign corporation, whether any shares are issued in bearer form and whether any such bearer shares are maintained in a dematerialized or immobilized book-entry system, as described in § 1.883-1(c)(3)(i)(G); and

(iv) Any other information specified in published guidance by the Internal Revenue Service (see § 601.601(d)(2) of this chapter).

(3) ***Ownership statements from intermediaries.*** An ownership statement from a domestic or foreign intermediary must include:

(i) The intermediary's name, permanent address, and taxpayer identification number, if any.

(ii) If the intermediary directly owns stock in the controlled foreign corporation, the number of shares of each class of stock of the controlled foreign corporation owned by the intermediary, whether such shares are issued in bearer form and maintained in a dematerialized or immobilized book-entry system, as described in § 1.883-1(c)(3)(i)(G), and the period (or periods) in the taxable year of the controlled foreign corporation during which the intermediary owned the shares.

(iii) If the intermediary indirectly owns the stock of the controlled foreign corporation, the name and address of each intermediary in the chain of ownership between it and the controlled foreign corporation, the period (or periods) in the taxable year of the controlled foreign corporation during which the intermediary owned the shares, the percentage of its indirect ownership interest in the controlled foreign corporation, and, if any intermediary in the chain of ownership is a foreign corporation, whether any shares of such intermediary are issued in bearer form and if any such bearer shares are maintained in a dematerialized or immobilized book- entry system, as described in § 1.883-1(c)(3)(i)(G).

(iv) Any other information specified in published guidance by the Internal Revenue Service (see § 601.601(d)(2) of this chapter).

(4) ***Three-year period of validity.*** The rules of § 1.883-4(d)(2)(ii) shall apply for determining the validity of the ownership statements required under paragraph (c)(2) of this section.

(5) ***Availability and retention of documents for inspection.*** The foreign corporation seeking qualified foreign corporation status must retain the ownership statements described in this paragraph (c) until the expiration of the statute of limitations for its taxable year to which the ownership statements relate. The ownership statements must be made available for inspection at such time and place as the Commissioner may request in writing in accordance with § 1.883-1(c)(3)(ii).

(d) ***Reporting requirements.*** A controlled foreign corporation that relies on this section to satisfy the stock ownership test of § 1.883-1(c)(2) must include the following information (in addition to the information required by § 1.883-1(c)(3)) with its Form 1120-F, "U.S. Income Tax Return of a Foreign Corporation", filed for its taxable year. This information must be consistent with the ownership statements obtained by the controlled foreign corporation pursuant to paragraph (c) of this section and must be current as of the end of the corporation's taxable year—

(1) The relative value of the shares of the controlled foreign corporation that are owned (directly, and indirectly applying the rules of paragraph (b)(4) of this section) by all qualified U.S. persons identified in paragraph (c)(2) of this section as compared to the value of all outstanding shares of the corporation;

(2) The period (or periods) in the taxable year during which such qualified U.S. persons held such shares;

(3) The period (or periods) in the taxable year during which the foreign corporation was a controlled foreign corporation;

(4) A statement as to whether the controlled foreign corporation or any intermediary corporation had bearer shares outstanding during the taxable year, and whether any such bearer shares taken into account for purposes of satisfying the qualified U.S. person ownership test are maintained in a dematerialized or immobilized book-entry system, as described in § 1.883-1(c)(3)(i)(G); and

(5) Any other information specified by Form 1120-F, and its accompanying instructions, or in published guidance by the Internal Revenue Service (*see* § 601.601(d)(2) of this chapter).

[T.D. 9502, 75 FR 56863, Sept. 17, 2010]

§ 1.883-4 Qualified shareholder stock ownership test.

(a) ***General rule.*** A foreign corporation satisfies the stock ownership test of § 1.883-1(c)(2) if more than 50 percent of the value of its outstanding shares is owned, or treated as owned by applying the attribution rules of paragraph (c) of this section, for at least half of the number of days in the foreign corporation's taxable year by one or more qualified shareholders, as defined in paragraph (b) of this section. A shareholder may be a qualified shareholder with respect to one category of income while not being a qualified shareholder with respect to another. A foreign corporation will not be considered to satisfy the stock ownership test of § 1.883-1(c)(2) pursuant to this section unless the foreign corporation meets the substantiation and reporting requirements of paragraphs (d) and (e) of this section.

(b) ***Qualified shareholder*** —

(1) ***General rule.*** A shareholder is a qualified shareholder only if the shareholder—

(i) With respect to the category of income for which the foreign corporation is seeking an exemption, is—

(A) An individual who is a resident, as described in paragraph (b)(2) of this section, of a qualified foreign country;

(B) The government of a qualified foreign country (or a political subdivision or local authority of such country);

(C) A foreign corporation that is organized in a qualified foreign country and meets the publicly traded test of § 1.883-2(a);

(D) A not-for-profit organization described in paragraph (b)(4) of this section that is not a pension fund as defined in paragraph (b)(5) of this section and that is organized in a qualified foreign country;

(E) An individual beneficiary of a pension fund (as defined in paragraph (b)(5)(iv) of this section) that is administered in or by a qualified foreign country, who is treated as a resident under paragraph (d)(3)(iii) of this section, of a qualified foreign country; or

(F) A shareholder of a foreign corporation that is an airline covered by a bilateral Air Services Agreement in force between the United States and the qualified foreign country in which the airline is organized, provided the United States has not waived the ownership requirement in the Air Services Agreement, or that the ownership requirement has not otherwise been made ineffective;

(ii) Does not own its interest in the foreign corporation through bearer shares, either directly or by applying the attribution rules of paragraph (c) of this section, unless such bearer shares are maintained in a dematerialized or immobilized book-entry system, as described in § 1.883-1(c)(3)(i)(G); and

(iii) Provides to the foreign corporation the documentation required in paragraph (d) of this section and the foreign corporation meets the reporting requirements of paragraph (e) of this section with respect to such shareholder.

(2) ***Residence of individual shareholders*** —

(i) ***General rule.*** An individual described in paragraph (b)(1)(i)(A) of this section is a resident of a qualified foreign country only if the individual is fully liable to tax as a resident in such country (e.g., an individual who is liable to tax on a remittance basis in a foreign country will not be treated as a resident of that country unless all residents of that country are taxed on a remittance basis only) and, in addition—

(A) The individual has a tax home, within the meaning of paragraph (b)(2)(ii) of this section, in that qualified foreign country for 183 days or more of the taxable year; or

(B) The individual is treated as a resident of a qualified foreign country based on special rules pursuant to paragraph (d)(3) of this section.

(ii) ***Tax home.*** For purposes of this section, an individual's tax home is considered to be located at the individual's regular or principal (if more than one regular) place of business. If the individual has no regular or principal place of business because of the nature of his business (or lack of a business), then the individual's tax home is located at his regular place of abode in a real and substantial sense. If an individual has no regular or principal place of business and no regular place of abode in a real and substantial sense in a qualified foreign country for 183 days or more of the taxable year, that individual does not have a tax home for purposes of this section. A foreign estate or trust, as defined in section 7701(a)(31), does not have a tax home for purposes of this section. See paragraph (c)(3) of this section for alternative rules in the case of trusts or estates.

(3) ***Certain income tax convention restrictions applied to shareholders.*** For purposes of paragraph (b)(1) of this section, a shareholder described in paragraph (b)(1) of this section may be considered a resident of, or organized in, a qualified foreign country if that foreign country provides an exemption by means of an income tax convention with the United States, but only if the shareholder demonstrates that it is treated as a resident of that country under the convention and qualifies for benefits under any Limitation on Benefits article, and that the convention provides an exemption for the relevant category of income. If the convention has a requirement in the shipping and air transport article other than residence, such as place of registration or documentation of the ship or aircraft, the shareholder is not required to demonstrate that the corporation seeking qualified foreign corporation status could satisfy any such additional requirement.

(4) ***Not-for-profit organizations.*** The term *not-for-profit organization* means an organization that meets the following requirements—

(i) It is a corporation, association taxable as a corporation, trust, fund, foundation, league or other entity operated exclusively for religious, charitable, educational, or recreational purposes, and not organized for profit;

(ii) It is generally exempt from tax in its country of organization by virtue of its not-for-profit status; and

(iii) Either—

(A) More than 50 percent of its annual support is expended on behalf of individuals described in paragraph (b)(1)(i)(A) of this section (see paragraph (d)(3)(v) of this section for special rules to substantiate the residence of individual beneficiaries of not-for-profit organizations) and on behalf of U.S. exempt organizations that have received determination letters under section 501(c)(3); or

(B) More than 50 percent of its annual support is derived from individuals described in paragraph (b)(1)(i)(A) of this section (see paragraph (d)(3)(v) of this section for special rules to substantiate the residence of individual supporters of not-for-profit organizations).

(5) *Pension funds* —

(i) ***Pension fund defined.*** The term *pension fund* shall mean a government pension fund or a nongovernment pension fund, as those terms are defined, respectively, in paragraphs (b)(5)(ii) and (iii) of this section, that is a trust, fund, foundation, or other entity that is established exclusively for the benefit of employees or former employees of one or more employers, the principal purpose of which is to provide retirement, disability, and death benefits to beneficiaries of such entity and persons designated by such beneficiaries in consideration for prior services rendered.

(ii) ***Government pension funds.*** A government pension fund is a pension fund that is a controlled entity of a foreign sovereign within the principles of § 1.892-2T(c)(1) (relating to pension funds established for the benefit of employees or former employees of a foreign government).

(iii) ***Nongovernment pension funds.*** A nongovernment pension fund is a pension fund that—

(A) Is administered in a foreign country and is subject to supervision or regulation by a governmental authority (or other authority delegated to perform such supervision or regulation by a governmental authority) in such country;

(B) Is generally exempt from income taxation in its country of administration;

(C) Has 100 or more beneficiaries; and

(D) The trustees, directors or other administrators of which pension fund provide the documentation required in paragraph (d) of this section.

(iv) ***Beneficiary of a pension fund.*** The term *beneficiary of a pension fund* shall mean any person who has made contributions to a pension fund, as that term is defined in paragraph (b)(5)(i) of this section, or on whose behalf contributions have been made, and who is currently receiving retirement, disability, or death benefits from the pension fund or can reasonably be expected to receive such benefits in the future, whether or not the person's right to receive benefits from the fund has vested. See paragraph (c)(7) of this section for rules regarding the computation of stock ownership through nongovernment pension funds.

(c) ***Rules for determining constructive ownership***

(1) ***General rules for attribution.*** For purposes of applying paragraph (a) of this section and the exception to the closely-held test in § 1.883-1(d)(3)(ii), stock owned by or for a corporation, partnership, trust, estate, or mutual insurance company or similar entity shall be treated as owned proportionately by its shareholders, partners, beneficiaries, grantors, or other interest holders, as provided in paragraphs (c)(2) through (7) of this section. The proportionate interest rules of this paragraph (c) shall apply successively upward through the chain of ownership, and a person's proportionate interest shall be computed for the relevant days or period taken into account in determining whether a foreign corporation satisfies the requirements of paragraph (a) of this section. Stock treated as owned by a person by reason of this paragraph (c) shall be treated as actually owned by such person for purposes of this section. An owner of an interest in an association taxable as a corporation shall be treated as a shareholder of such association for purposes of this paragraph (c). Stock issued in bearer form will not be treated as owned proportionately by its shareholders unless the shares are maintained in a dematerialized or immobilized book-entry system, as described in § 1.883-1(c)(3)(i)(G).

(2) ***Partnerships*** —

(i) ***General rule.*** A partner shall be treated as having an interest in stock of a foreign corporation owned by a partnership in proportion to the least of—

(A) The partner's percentage distributive share of the partnership's dividend income from the stock;

(B) The partner's percentage distributive share of gain from disposition of the stock by the partnership; or

(C) The partner's percentage distributive share of the stock (or proceeds from the disposition of the stock) upon liquidation of the partnership.

(ii) ***Partners resident in the same country.*** For purposes of this paragraph, all qualified shareholders that are partners in a partnership and that are residents of, or organized in, the same qualified foreign country shall be treated as one partner. Thus, the percentage distributive shares of dividend income, gain and liquidation rights of all qualified shareholders that are partners in a partnership and that are residents of, or organized in, the same qualified foreign country are aggregated prior to determining the least of the three percentages set out in paragraph (c)(2)(i) of this section. For the meaning of the term *resident,* see paragraph (b)(2) of this section.

(iii) ***Examples.*** The rules of paragraph (c)(2)(ii) of this section are illustrated by the following examples:

Example 1. Stock held solely by qualified shareholders through a partnership. Country X grants an equivalent exemption. A and B are individual residents of Country X and are qualified shareholders within the meaning of paragraph (b)(1) of this section. A and B are the sole partners of Partnership P. P's only asset is the stock of Corporation Z, a Country X corporation seeking a reciprocal exemption under this section. A's distributive share of P's income and gain on the disposition of P's assets is 80 percent, but A's distributive share of P's assets (or the proceeds therefrom) on P's liquidation is 20 percent. B's distributive share of P's income and gain is 20 percent and B is entitled to 80 percent of the assets (or proceeds therefrom) on P's liquidation. Under the attribution rules of paragraph (c)(2)(ii) of this section, A and B will be treated as a single partner owning in the aggregate 100 percent of the stock of Z owned by P.

Example 2. Stock held by both qualified and nonqualified shareholders through a partnership.

Assume the same facts as in *Example 1* except that C, an individual who is not a resident of a qualified foreign country, is also a partner in P and that C's distributive share of P's income is 60 percent. The distributive shares of A and B are the same as in *Example 1,* except that A's distributive share of income is 20 percent. Under the attribution rules of paragraph (c)(2)(ii) of this section, qualified shareholders A and B will be treated as a single partner owning in the aggregate 40 percent of the stock of Z owned by P (i.e., the lowest aggregate percentage of A and B's distributive shares of dividend income (40 percent), gain (100 percent), and liquidation rights (100 percent) with respect to the Z stock). Thus, only 40 percent of the Z stock is treated as owned by qualified shareholders.

Example 3. Stock held through tiered partnerships. Country X grants an equivalent exemption. A and B are individual residents of Country X and are qualified shareholders within the meaning of paragraph (b)(1) of this section. A and B are the sole partners of Partnership P. P is a partner in Partnership P1, which owns the stock of Corporation Z, a Country X corporation seeking a reciprocal exemption under this section. Assume that P's distributive share of the dividend income, gain and liquidation rights with respect to the Z stock held by P1 is 40 percent. Assume that of the remaining partners of P1 only D is a qualified shareholder. D's distributive share of P1's dividend income and gain is 15 percent; D's distributive share of P1's assets on liquidation is 25 percent. Under the attribution rules of paragraph (c)(2)(ii) of this section, A and B, treated as a single partner, will own 40 percent of the Z stock owned by P1 (100 percent × 40 percent) and D will be treated as owning 15 percent of the Z stock owned by P1 (the least of D's dividend income (15 percent), gain (15 percent), and liquidation rights (25 percent) with respect to the Z stock). Thus, 55 percent of the Z stock owned by P1 is treated as owned by qualified shareholders.

(3) ***Trusts and estates*** —

(i) ***Beneficiaries.*** In general, an individual shall be treated as having an interest in stock of a foreign corporation owned by a trust or estate in proportion to the individual's actuarial interest in the trust or estate, as provided in section 318(a)(2)(B)(i), except that an income beneficiary's actuarial interest in the trust will be determined as if the trust's only asset were the stock. The interest of a remainder beneficiary in stock will be equal to 100 percent minus the sum of the percentages of any interest in the stock held by income beneficiaries. The ownership of an interest in stock owned by a trust shall not be attributed to any beneficiary whose interest cannot be determined under the preceding sentence, and any such interest, to the extent not attributed by reason of this paragraph (c)(3)(i), shall not be considered owned by a beneficiary unless all potential beneficiaries with respect to the stock are qualified shareholders. In addition, a beneficiary's actuarial interest will be treated as zero to the extent that someone other than the beneficiary is treated as owning the stock under paragraph (c)(3)(ii) of this section. A substantially separate and independent share of a trust, within the meaning of section 663(c), shall be treated as a separate trust for purposes of this paragraph (c)(3)(i), provided that payment of income, accumulated income or corpus of a share of one beneficiary (or group of beneficiaries) cannot affect the proportionate share of income, accumulated income or corpus of another beneficiary (or group of beneficiaries).

(ii) *Grantor trusts.* A person is treated as the owner of stock of a foreign corporation owned by a trust to the extent that the stock is included in the portion of the trust that is treated as owned by the person under sections 671 through 679 (relating to grantors and others treated as substantial owners).

(4) *Corporations that issue stock.* A shareholder of a corporation that issues stock shall be treated as owning stock of a foreign corporation that is owned by such corporation on any day in a proportion that equals the value of the stock owned by such shareholder to the value of all stock of such corporation. If, however, there is an agreement, express or implied, that a shareholder of a corporation will not receive distributions from the earnings of stock owned by the corporation, the shareholder will not be treated as owning that stock owned by the corporation.

(5) *Taxable nonstock corporations.* A taxable nonstock corporation that is entitled in its country of organization to deduct from its taxable income amounts distributed for charitable purposes may deem a recipient of such charitable distributions to be a shareholder of such taxable nonstock corporation in the same proportion as the amount that such beneficiary receives in the taxable year bears to the total income of such taxable nonstock corporation in the taxable year. Whether each such recipient is a qualified shareholder may then be determined under paragraph (b) of this section or under the special rules of paragraph (d)(3)(vii) of this section.

(6) *Mutual insurance companies and similar entities.* Stock held by a mutual insurance company, mutual savings bank, or similar entity (including an association taxable as a corporation that does not issue stock interests) shall be considered owned proportionately by the policyholders, depositors, or other owners in the same proportion that such persons share in the surplus of such entity upon liquidation or dissolution.

(7) *Computation of beneficial interests in nongovernment pension funds.* Stock held by a pension fund shall be considered owned by the beneficiaries of the fund equally on a pro-rata basis if—

(i) The pension fund meets the requirements of paragraph (b)(5)(iii) of this section;

(ii) The trustees, directors or other administrators of the pension fund have no knowledge, and no reason to know, that a pro-rata allocation of interests of the fund to all beneficiaries would differ significantly from an actuarial allocation of interests in the fund (or, if the beneficiaries' actuarial interest in the stock held directly or indirectly by the pension fund differs from the beneficiaries' actuarial interest in the pension fund, the actuarial interests computed by reference to the beneficiaries' actuarial interest in the stock);

(iii) Either—

(A) Any overfunding of the pension fund would be payable, pursuant to the governing instrument or the laws of the foreign country in which the pension fund is administered, only to, or for the benefit of, one or more corporations that are organized in the country in which the pension fund is administered, individual beneficiaries of the pension fund or their designated beneficiaries, or social or charitable causes (the reduction of the obligation of the sponsoring company or companies to make future contributions to the pension fund by reason of overfunding shall not itself result in such overfunding being deemed to be payable to or for the benefit of such company or companies); or

(B) The foreign country in which the pension fund is administered has laws that are designed to prevent overfunding of a pension fund and the funding of the pension fund is within the guidelines of such laws; or

(C) The pension fund is maintained to provide benefits to employees in a particular industry, profession, or group of industries or professions and employees of at least 10 companies (other than companies that are owned or controlled, directly or indirectly, by the same interests) contribute to the pension fund or receive benefits from the pension fund; and

(iv) The trustees, directors or other administrators provide the relevant documentation as required in paragraph (d) of this section.

(d) *Substantiation of stock ownership* —

(1) *General rule.* A foreign corporation that relies on this section to satisfy the stock ownership test of § 1.883-1(c)(2), must establish all the facts necessary to satisfy the Commissioner that more than 50 percent of the value of its shares is owned, or treated as owned applying paragraph (c) of this section, by qualified shareholders for the relevant period. If a foreign corporation relies upon bearer shares in the chain of ownership to satisfy one of the stock ownership tests, the foreign corporation must also establish all of the facts necessary to satisfy the Commissioner that such shares are maintained in a dematerialized book-entry system, as described in § 1.883-1(c)(3)(i)(G), for the benefit of the relevant shareholder.

(2) *Application of general rule* —

(i) *Ownership statements.* Except as provided in paragraph (d)(3) of this section, a person shall only be treated as a qualified shareholder of a foreign corporation if—

(A) For the relevant period, the person completes an ownership statement described in paragraph (d)(4) of this section or has a valid ownership statement in effect under paragraph (d)(2)(ii) of this section;

(B) In the case of a person owning stock in the foreign corporation indirectly through one or more intermediaries (including mere legal owners or recordholders acting as nominees), each intermediary in the chain of ownership between that person and the foreign corporation seeking qualified foreign corporation status completes an intermediary ownership statement described in paragraph (d)(4)(v) of this section or has a valid intermediary ownership statement in effect under paragraph (d)(2)(ii) of this section; and

(C) The foreign corporation seeking qualified foreign corporation status obtains the statements described in paragraphs (d)(2)(i)(A) and (B) of this section.

(ii) *Three-year period of validity.* The ownership statements required in paragraph (d)(2)(i) of this section shall remain valid until the earlier of the last day of the third calendar year following the year in which the ownership statement is signed, or the day that a change of circumstance occurs that makes any information on the ownership statement incorrect. For example, an ownership statement signed on September 30, 2000, remains valid through December 31, 2003, unless a change of circumstance occurs that makes any information on the ownership statement incorrect.

(3) *Special rules* —

(i) *Substantiating residence of certain shareholders.* A foreign corporation seeking qualified foreign corporation status or an intermediary that is a direct or indirect shareholder of such foreign corporation may substantiate the residence of certain shareholders, for purposes of paragraph

(b)(2)(i)(B) of this section, under one of the following special rules in paragraphs (d)(3)(ii) through (viii) of this section, in lieu of obtaining the ownership statements required in paragraph (d)(2)(i) of this section from such shareholders.

(ii) ***Special rule for registered shareholders owning less than one percent of widely-held corporations.*** A foreign corporation with at least 250 registered shareholders, that is not a publicly-traded corporation, as described in § 1.883-2 (a widely-held corporation), is not required to obtain an ownership statement from an individual shareholder owning less than one percent of the widely-held corporation at all times during the taxable year if the requirements of paragraphs (d)(3)(ii)(A) and (B) of this section are satisfied. If the widely-held foreign corporation is the foreign corporation seeking qualified foreign corporation status, or an intermediary that meets the documentation requirements of paragraphs (d)(4)(v)(A) and (B) of this section, the widely-held foreign corporation may treat the address of record in its ownership records as the residence of any less than one percent individual shareholder if—

(A) The individual's address of record is a specific street address and not a nonresidential address, such as a post office box or in care of a financial intermediary or stock transfer agent; and

(B) The officers and directors of the widely-held corporation neither know nor have reason to know that the individual does not reside at that address.

(iii) ***Special rule for beneficiaries of pension funds*** —

(A) ***Government pension fund.*** An individual who is a beneficiary of a government pension fund, as defined in paragraph (b)(5)(ii) of this section, may be treated as a resident of the country in which the pension fund is administered if the pension fund satisfies the documentation requirements of paragraphs (d)(4)(v)(A) and (C)(*1*) of this section.

(B) ***Nongovernment pension fund.*** An individual who is a beneficiary of a nongovernment pension fund, as described in paragraph (b)(5)(iii) of this section, may be treated as a resident of the country of the beneficiary's address as it appears on the records of the fund, provided it is not a nonresidential address, such as a post office box or an address in care of a financial intermediary, and provided none of the trustees, directors or other administrators of the pension fund know, or have reason to know, that the beneficiary is not an individual resident of such foreign country. The rules of this paragraph (d)(3)(iii)(B) shall apply only if the nongovernment pension fund satisfies the documentation requirements of paragraphs (d)(4)(v)(A) and (C)(*2*) of this section.

(iv) ***Special rule for stock owned by publicly-traded corporations.*** Any stock in a foreign corporation seeking qualified foreign corporation status that is owned by a publicly-traded corporation will be treated as owned by an individual resident in the country where the publicly-traded corporation is organized if the foreign corporation receives the statement described in paragraph (d)(4)(iii) of this section from the publicly-traded corporation and copies of any relevant ownership statements from shareholders of the publicly-traded corporation relied on to satisfy the exception to the closely-held test of § 1.883-2(d)(3)(ii), as required in paragraph (d)(2)(i) of this section.

(v) ***Special rule for not-for-profit organizations.*** For purposes of meeting the ownership requirements of paragraph (a) of this section, a not-for-profit organization may rely on the addresses of record of its individual beneficiaries and supporters to determine the residence of an individual beneficiary or supporter, within the meaning of paragraph (b)(2)(i)(B) of this section, to the extent required under paragraph (b)(4) of this section, provided that—

(A) The addresses of record are not nonresidential addresses such as a post office box or in care of a financial intermediary;

(B) The officers, directors or administrators of the organization do not know or have reason to know that the individual beneficiaries or supporters do not reside at that address; and

(C) The foreign corporation seeking qualified foreign corporation status receives the statement required in paragraph (d)(4)(iv) of this section from the not-for-profit organization.

(vi) ***Special rule for a foreign airline covered by an air services agreement.*** A foreign airline that is covered by a bilateral Air Services Agreement in force between the United States and the qualified foreign country in which the airline is organized may rely exclusively on the Air Services Agreement currently in effect and will not have to otherwise substantiate its ownership under this section, provided that the United States has not waived the ownership requirements in the agreement or that the ownership requirements have not otherwise been made ineffective. Such an airline will be treated as owned by qualified shareholders resident in the country where the foreign airline is organized.

(vii) ***Special rule for taxable nonstock corporations.*** Any stock in a foreign corporation seeking qualified foreign corporation status that is owned by a taxable nonstock corporation will be treated as owned, in any taxable year, by the recipients of distributions made during that taxable year, as set out in paragraph (c)(5) of this section. The taxable nonstock corporation may treat the address of record in its distribution records as the residence of any recipient if—

(A) An individual recipient's address is in a qualified foreign country and is a specific street address and not a nonresidential address, such as a post office box or in care of a financial intermediary or stock transfer agent;

(B) The address of a nonindividual recipient's principal place of business is in a qualified foreign country;

(C) The officers and directors of the taxable nonstock corporation neither know nor have reason to know that the recipients do not reside or have their principal place of business at such addresses; and

(D) The foreign corporation receives the statement described in paragraph (d)(4)(v)(D) of this section from the taxable nonstock corporation intermediary.

(viii) ***Special rule for closely-held corporations traded in the United States.*** To demonstrate that a class of stock is not closely-held for purposes of § 1.883-2(d)(3)(i), a foreign corporation whose stock is traded on an established securities market in the United States may rely on current Schedule 13D and Schedule 13G filings with the Securities and Exchange Commission to identify its 5-percent shareholders in each class of stock relied upon to meet the regularly traded test, without having to make any independent investigation to determine the identity of the 5-percent shareholder. However, if any class of stock is determined to be closely-held within

the meaning of § 1.883-2(d)(3)(i), the publicly traded corporation cannot satisfy the requirements of § 1.883-2(e) unless it obtains sufficient documentation described in this paragraph (d) to demonstrate that the requirements of § 1.883-2(d)(3)(ii) are met with respect to the 5-percent shareholders.

(4) *Ownership statements from shareholders* —

(i) ***Ownership statements from individuals.*** An ownership statement from an individual is a written statement signed by the individual under penalties of perjury stating—

(A) The individual's name, permanent address, and country where the individual is fully liable to tax as a resident, if any;

(B) If the individual was not a resident of the country for the entire taxable year of the foreign corporation seeking qualified foreign corporation status, each of the foreign countries in which the individual resided and the dates of such residence during the taxable year of such foreign corporation;

(C) If the individual directly owns shares of stock in the corporation seeking qualified foreign corporation status, the name of the corporation, the number of shares in each class of stock of the corporation owned by the individual, whether any such shares are issued in bearer form and maintained in a dematerialized or immobilized book-entry system, as described in § 1.883-1(c)(3)(i)(G), and the period (or periods) in the taxable year of the foreign corporation during which the individual owned the shares;

(D) If the individual directly owns an interest in a corporation, partnership, trust, estate, or other intermediary that directly or indirectly owns stock in the corporation seeking qualified foreign corporation status, the name of the intermediary, the number and class of shares or the amount and nature of the interest that the individual holds in such intermediary, and, if the intermediary is a corporation, whether any such shares are issued in bearer form and maintained in a dematerialized or immobilized book-entry system, as described in § 1.883-1(c)(3)(i)(G), and the period (or periods) in the taxable year of the foreign corporation seeking qualified foreign corporation status during which the individual held such interest;

(E) To the extent known by the individual, a description of the chain of ownership through which the individual owns stock in the corporation seeking qualified foreign corporation status, including the name and address of each intermediary standing between the intermediary described in paragraph (d)(4)(i)(D) of this section and the foreign corporation and whether this interest is owned either directly or indirectly through bearer shares; and

(F) Any other information as specified in guidance published by the Internal Revenue Service (see § 601.601(d)(2) of this chapter).

(ii) ***Ownership statements from foreign governments.*** An ownership statement from a foreign government that is a qualified shareholder is a written statement—

(A) Signed by any one of the following—

(*1*) An official of the governmental authority, agency or office who has supervisory authority with respect to the government's ownership interest and who is authorized to sign such a statement on behalf of the authority, agency or office; or

(2) The competent authority of the foreign country (as defined in the income tax convention between the United States and the foreign country); or

(3) An income tax return preparer that, for purposes of this paragraph (d)(4)(ii) only, shall mean a firm of licensed or certified public accountants, a law firm whose principals or members are admitted to practice in one or more states, territories or possessions of the United States or the country of such government, or a bank or other financial institution licensed to do business in such foreign country and having assets at least equivalent to 50 million U.S. dollars and who is authorized to represent the government or governmental authority; and

(B) That provides—

(1) The title of the official or other person signing the statement;

(2) The name and address of the government authority, agency or office that has supervisory authority and, if applicable, the income tax preparer which has prepared such ownership statement;

(3) The information described in paragraphs (d)(4)(i)(C) through (E) of this section (as if the language applied "government" instead of "individual") with respect to the government's direct or indirect ownership of stock in the corporation seeking qualified resident status;

(4) In the case of an ownership statement prepared by an income tax return preparer, a statement under penalties of perjury identifying the documentation relied upon in the conduct of due diligence for the taxable year to determine the aggregate government investment in the stock of the shipping or aircraft company in preparation of such ownership statement attached to a valid power of attorney to represent the taxpayer for the taxable year; and

(5) Any other information as specified in guidance published by the Internal Revenue Service (see § 601.601(d)(2) of this chapter).

(iii) ***Ownership statements from publicly-traded corporate shareholders.*** An ownership statement from a publicly-traded corporation that is a direct or indirect owner of the corporation seeking qualified foreign corporation status is a written statement, signed under penalties of perjury by a person that would be authorized to sign a tax return on behalf of the shareholder corporation containing the following information—

(A) The name of the country in which the stock is primarily traded;

(B) The name of the established securities market or markets on which the stock is listed;

(C) A description of each class of stock relied upon to meet the requirements of § 1.883-2(d)(1), including the number of shares issued and outstanding as of the close of the taxable year;

(D) For each class of stock relied upon to meet the requirements of § 1.883-2(d)(1), if one or more 5-percent shareholders, as defined in § 1.883-2(d)(3)(i), own in the aggregate 50 percent or more of the vote and value of the outstanding shares of that class of stock for more than half the number of days during the taxable year—

(*1*) The days during the taxable year of the corporation in which the stock was closely-held without regard to the exception in paragraph (d)(3)(ii) of this section and the percentage of the vote and value of the class of stock that is owned by 5-percent shareholders during such days;

(*2*) For each qualified shareholder who owns or is treated as owning stock in the closely-held block upon whom the corporation intends to rely to satisfy the exception to the closely-held test of § 1.883-2(d)(3)(ii)—

(*i*) The name of each such shareholder;

(*ii*) The percentage of the total value of the class of stock held by each such shareholder and the days during which the stock was held;

(*iii*) The address of record of each such shareholder; and

(*iv*) The country of residence of each such shareholder, determined under paragraph (b)(2) or (d)(3) of this section;

(E) The information described in paragraphs (d)(4)(i)(C) through (E) of this section (as if the language applied "publicly-traded corporation" instead of "individual") with respect to the publicly-traded corporation's direct or indirect ownership of stock in the corporation seeking qualified resident status; and

(F) Any other information as specified in guidance published by the Internal Revenue Service (see § 601.601(d)(2) of this chapter).

(iv) ***Ownership statements from not-for-profit organizations.*** An ownership statement from a not-for-profit organization (other than a pension fund as defined in paragraph (b)(5) of this section) is a written statement signed by a person authorized to sign a tax return on behalf of the organization under penalties of perjury stating—

(A) The name, permanent address, and principal location of the activities of the organization (if different from its permanent address);

(B) The information described in paragraphs (d)(4)(i)(C) through (E) of this section (as if the language applied "not-for-profit organization" instead of "individual");

(C) A representation that the not-for-profit organization satisfies the requirements of paragraph (b)(4) of this section; and

(D) Any other information as specified in guidance published by the Internal Revenue Service (see § 601.601(d)(2) of this chapter).

(v) ***Ownership statements from intermediaries*** —

(A) ***General rule.*** The foreign corporation seeking qualified foreign corporation status under the shareholder stock ownership test must obtain an intermediary ownership statement from each intermediary standing in the chain of ownership between it and the qualified shareholders on whom it relies to meet this test. An intermediary ownership statement is a written statement signed under penalties of perjury by the intermediary (if the intermediary is an individual) or a person who would be authorized to sign a tax return on behalf of the intermediary (if the intermediary is not an individual) containing the following information—

(*1*) The name, address, country of residence, and principal place of business (in the case of a corporation or partnership) of the intermediary, and, if the intermediary is a trust or estate, the name and permanent address of all trustees or executors (or equivalent under foreign law), or if the intermediary is a pension fund, the name and permanent address of place of administration of the intermediary;

(*2*) The information described in paragraphs (d)(4)(i)(C) through (E) of this section (as if the language applied "intermediary" instead of "individual");

(*3*) If the intermediary is a nominee for a shareholder or another intermediary, the name and permanent address of the shareholder, or the name and principal place of business of such other intermediary;

(*4*) If the intermediary is not a nominee for a shareholder or another intermediary, the name and country of residence (within the meaning of paragraph (b)(2) of this section) and the proportionate interest in the intermediary of each direct shareholder, partner, beneficiary, grantor, or other interest holder (or if the direct holder is a nominee, of its beneficial shareholder, partner, beneficiary, grantor, or other interest holder), on which the foreign corporation seeking qualified foreign corporation status intends to rely to satisfy the requirements of paragraph (a) of this section. In addition, such intermediary must obtain from all such persons an ownership statement that includes the period of time during the taxable year for which the interest in the intermediary was owned by the shareholder, partner, beneficiary, grantor or other interest holder. For purposes of this paragraph (d)(4)(v)(A), the proportionate interest of a person in an intermediary is the percentage interest (by value) held by such person, determined using the principles for attributing ownership in paragraph (c) of this section;

(*5*) If the intermediary is a widely-held corporation with registered shareholders owning less than one percent of the stock of such widely-held corporation, the statement set out in paragraph (d)(4)(v)(B) of this section, relating to ownership statements from widely-held intermediaries with registered shareholders owning less than one percent of such widely-held intermediaries;

(*6*) If the intermediary is a pension fund, within the meaning of paragraph (b)(5) of this section, the statement set out in paragraph (d)(4)(v)(C) of this section, relating to ownership statements from pension funds;

(*7*) If the intermediary is a taxable nonstock corporation, within the meaning of paragraph (c)(5) of this section, the statement set out in paragraph (d)(4)(v)(D) of this section, relating to ownership statements from intermediaries that are taxable nonstock corporations; and

(*8*) Any other information as specified in guidance published by the Internal Revenue Service (see § 601.601(d)(2) of this chapter).

(B) ***Ownership statements from widely-held intermediaries with registered shareholders owning less than one percent of such widely-held intermediary.*** An ownership statement from an intermediary that is a corporation with at least 250 registered shareholders, but that is not a publicly-traded corporation within the meaning of § 1.883-2, and that relies on paragraph

(d)(3)(ii) of this section, relating to the special rule for registered shareholders owning less than one percent of widely-held corporations, must provide the following information in addition to the information required in paragraph (d)(4)(v)(A) of this section—

(*1*) The aggregate proportionate interest by country of residence in the widely-held corporation of such registered shareholders or other interest holders whose address of record is a specific street address and not a nonresidential address, such as a post office box or in care of a financial intermediary or stock transfer agent; and

(*2*) A representation that the officers and directors of the widely-held intermediary neither know nor have reason to know that the individual shareholder does not reside at his or her address of record in the corporate records; and

(*3*) Any other information as specified in guidance published by the Internal Revenue Service (see § 601.601(d)(2) of this chapter).

(C) ***Ownership statements from pension funds*** —

(*1*) ***Ownership statements from government pension funds.*** A government pension fund (as defined in paragraph (b)(5)(ii) of this section) that relies on paragraph (d)(3)(iii) of this section (relating to the special rules for pension funds) generally must provide the documentation required in paragraph (d)(4)(v)(A) of this section, and, in addition, the government pension fund must also provide the following information—

(*i*) The name of the country in which the plan is administered;

(*ii*) A representation that the fund is established exclusively for the benefit of employees or former employees of a foreign government, or employees or former employees of a foreign government and nongovernmental employees or former employees that perform or performed governmental or social services;

(*iii*) A representation that the funds that comprise the trust are managed by trustees who are employees of, or persons appointed by, the foreign government;

(*iv*) A representation that the trust forming part of the pension plan provides for retirement, disability, or death benefits in consideration for prior services rendered;

(*v*) A representation that the income of the trust satisfies the obligations of the foreign government to the participants under the plan, rather than inuring to the benefit of a private person; and

(*vi*) Any other information as specified in guidance published by the Internal Revenue Service (see § 601.601(d)(2) of this chapter).

(*2*) ***Ownership statements from nongovernment pension funds.*** The trustees, directors, or other administrators of the nongovernment pension fund, as defined in paragraph (b)(5)(iii) of this section, that rely on paragraph (d)(3)(iii) of this section, relating to the special rules for pension funds, generally must provide the pension fund's intermediary ownership statement described in paragraph (d)(4)(v)(A) of this section. In addition, the nongovernment pension fund must also provide the following information—

(*i*) The name of the country in which the pension fund is administered;

(*ii*) A representation that the pension fund is subject to supervision or regulation by a governmental authority (or other authority delegated to perform such supervision or regulation by a governmental authority) in such country, and, if so, the name of the governmental authority (or other authority delegated to perform such supervision or regulation);

(*iii*) A representation that the pension fund is generally exempt from income taxation in its country of administration;

(*iv*) The number of beneficiaries in the pension plan;

(*v*) The aggregate percentage interest of beneficiaries by country of residence based on addresses shown on the books and records of the fund, provided the addresses are not nonresidential addresses, such as a post office box or an address in care of a financial intermediary, and provided none of the trustees, directors or other administrators of the pension fund know, or have reason to know, that the beneficiary is not a resident of such foreign country;

(*vi*) A representation that the pension fund meets the requirements of paragraph (b)(5)(iii) of this section;

(*vii*) A representation that the trustees, directors or other administrators of the pension fund have no knowledge, and no reason to know, that a pro-rata allocation of interests of the fund to all beneficiaries would differ significantly from an actuarial allocation of interests in the fund (or, if the beneficiaries' actuarial interest in the stock held directly or indirectly by the pension fund differs from the beneficiaries' actuarial interest in the pension fund, the actuarial interests computed by reference to the beneficiaries' actuarial interest in the stock);

(*viii*) A representation that any overfunding of the pension fund would be payable, pursuant to the governing instrument or the laws of the foreign country in which the pension fund is administered, only to, or for the benefit of, one or more corporations that are organized in the country in which the pension fund is administered, individual beneficiaries of the pension fund or their designated beneficiaries, or social or charitable causes (the reduction of the obligation of the sponsoring company or companies to make future contributions to the pension fund by reason of overfunding shall not itself result in such overfunding being deemed to be payable to or for the benefit of such company or companies); or that the foreign country in which the pension fund is administered has laws that are designed to prevent overfunding of a pension fund and the funding of the pension fund is within the guidelines of such laws; or that the pension fund is maintained to provide benefits to employees in a particular industry, profession, or group of industries or professions, and that employees of at least 10 companies (other than companies that are owned or controlled, directly or indirectly, by the same interests) contribute to the pension fund or receive benefits from the pension fund; and

(*ix*) Any other information as specified in guidance published by the Internal Revenue Service (see § 601.601(d)(2) of this chapter).

(3) ***Time for making determinations.*** The determinations required to be made under this paragraph (d)(4)(v)(C) shall be made using information shown on the records of the pension fund for a date during the foreign corporation's taxable year to which the determination is relevant.

(D) ***Ownership statements from taxable nonstock corporations.*** An ownership statement from an intermediary that is a taxable nonstock corporation must provide the following information in addition to the information required in paragraph (d)(4)(v)(A) of this section—

(1) With respect to paragraph (d)(4)(v)(A)(7) of this section, for each beneficiary that is treated as a qualified shareholder, the name, address of residence (in the case of an individual beneficiary, the address must be a specific street address and not a nonresidential address, such as a post office box or in care of a financial intermediary; in the case of a nonindividual beneficiary, the address of the principal place of business) and percentage that is the same proportion as the amount that the beneficiary receives in the tax year bears to the total net income of the taxable nonstock corporation in the tax year;

(2) A representation that the officers and directors of the taxable nonstock corporation neither know nor have reason to know that the individual beneficiaries do not reside at the address listed in paragraph (d)(4)(v)(D)(1) of this section or that any other nonindividual beneficiary does not conduct its primary activities at such address or in such country of residence; and

(3) Any other information as specified in guidance published by the Internal Revenue Service (see § 601.601(d)(2) of this chapter).

(5) ***Availability and retention of documents for inspection.*** The documentation described in paragraphs (d)(3) and (4) of this section must be retained by the corporation seeking qualified foreign corporation status (the foreign corporation) until the expiration of the statute of limitations for the taxable year of the foreign corporation to which the documentation relates. Such documentation must be made available for inspection by the Commissioner at such time and place as the Commissioner may request in writing.

(e) ***Reporting requirements.*** A foreign corporation relying on the qualified shareholder stock ownership test of this section to meet the stock ownership test of § 1.883-1(c)(2) must provide the following information in addition to the information required in § 1.883-1(c)(3) to be included in its Form 1120-F, "U.S. Income Tax Return of a Foreign Corporation," for each taxable year. The information should be current as of the end of the corporation's taxable year. The information must include the following—

(1) A representation that more than 50 percent of the value of the outstanding shares of the corporation is owned (or treated as owned by reason of paragraph (c) of this section) by qualified shareholders for each category of income for which the exemption is claimed;

(2) With respect to all qualified shareholders relied upon to satisfy the 50 percent ownership test of paragraph (a) of this section, the total number of such qualified shareholders as defined in paragraph (b)(1) of this section; the total percentage of the value of the outstanding shares owned, applying the attribution rules of paragraph (c) of this section, by such qualified shareholders by country of residence or organization, whichever is applicable; and the period during the taxable year of the foreign corporation that such stock was held by qualified shareholders; and

(3) Any other relevant information specified by the Form 1120-F, "U.S. Income Tax Return of a Foreign Corporation," and its accompanying instructions, or in published guidance by the Internal Revenue Service (see § 601.601(d)(2) of this chapter).

[T.D. 9087, 68 FR 51406, Aug. 26, 2003; 69 FR 7995, Feb. 20, 2004, as amended by T.D. 9332, 72 FR 34608, June 25, 2007; T.D. 9502, 75 FR 56865, Sept. 17, 2010]

§ 1.883-5 Effective/applicability dates.

(a) ***General rule.*** Sections 1.883-1 through 1.883-4 apply to taxable years of a foreign corporation seeking qualified foreign corporation status beginning after September 24, 2004.

(b) ***Election for retroactive application.*** Taxpayers may elect to apply §§ 1.883-1 through 1.883-4 for any open taxable year of the foreign corporation beginning after December 31, 1986, except that the substantiation and reporting requirements of § 1.883-1(c)(3) (relating to the substantiation and reporting required to be treated as a qualified foreign corporation) or §§ 1.883-2(f), 1.883-3(d) and 1.883-4(e) (relating to additional information to be included in the return to demonstrate whether the foreign corporation satisfies the stock ownership test) will not apply to any year beginning before September 25, 2004. Such election shall apply to the taxable year of the election and to all subsequent taxable years beginning before September 25, 2004.

(c) ***Transitional information reporting rule.*** For taxable years of the foreign corporation beginning after September 24, 2004, and until such time as the Form 1120-F, "U.S. Income Tax Return of a Foreign Corporation," or its instructions are revised to provide otherwise, the information required in § 1.883-1(c)(3) and § 1.883-2(f), § 1.883-3(d) or § 1.883-4(e), as applicable, must be included on a written statement attached to the Form 1120-F and file with the return.

(d) ***Effective/applicability dates.*** Except as otherwise provided in this paragraph (d), §§ 1.883-1, 1.883-2, 1.883-3, and 1.883-4 apply to taxable years of the foreign corporation beginning after June 25, 2007, and may be applied to any open taxable years of the foreign corporation beginning on or after December 31, 2004. The portion of any provision concerning bearer shares maintained in a dematerialized or immobilized book-entry system, as described in § 1.883-1(c)(3)(i)(G), applies to taxable years of a foreign corporation beginning on or after September 17, 2010.

[T.D. 9218, 70 FR 45530, Aug. 8, 2005, as amended by T.D. 9332, 72 FR 34609, June 25, 2007; T.D. 9502, 75 FR 56865, Sept. 17, 2010; 75 FR 63380, Oct. 15, 2010]

§ 1.884-0 Overview of regulation provisions for section 884.

(a) ***Introduction.*** Section 884 consists of three main parts: a branch profits tax on certain earnings of a foreign corporation's U.S. trade or business; a branch-level interest tax on interest paid, or deemed paid, by a foreign corporation's U.S. trade or business; and an anti-treaty shopping rule. A foreign corporation is subject to section 884 by virtue of owning an interest in a partnership, trust, or estate that is engaged in a U.S. trade or business or has income treated as effectively connected with the conduct of a trade or business in the United States. An international organization (as defined in section 7701(a)(18)) is not subject to the branch profits tax by reason of section 884(e)(5). A foreign government treated as a corporate resident of its country of residence under section 892(a)(3) shall be treated as a corporation for purposes of section 884. The preceding sentence shall be effective for taxable years ending on or after September 11, 1992, except that, for the first taxable year ending on or after that date, the branch profits tax shall not apply to effectively connected earnings and profits of the foreign government earned prior to

that date nor to decreases in the U.S. net equity of a foreign government occurring after the close of the preceding taxable year and before that date. Similarly, § 1.884-4 shall apply, in the case of branch interest, only with respect to amounts of interest accrued and paid by a foreign government on or after that date, or, in the case of excess interest, only with respect to amounts attributable to interest accrued by a foreign government on or after that date and apportioned to ECI, as defined in § 1.884-1(d)(1)(iii). Except as otherwise provided, for purposes of the regulations under section 884, the term "U.S. trade or business" includes all the U.S. trades or businesses of a foreign corporation.

(1) ***The branch profits tax.*** Section 1.884-1 provides rules for computing the branch profits tax and defines various terms that affect the computation of the tax. In general, section 884(a) imposes a 30-percent branch profits tax on the after-tax earnings of a foreign corporation's U.S. trade or business that are not reinvested in a U.S. trade or business by the close of the taxable year, or are disinvested in a later taxable year. Changes in the value of the equity of the foreign corporation's U.S. trade or business are used as the measure of whether earnings have been reinvested in, or disinvested form, a U.S. trade or business. An increase in the equity during the taxable year is generally treated as a reinvestment of the earnings for the current taxable year; a decrease in the equity during the taxable year is generally treated as a disinvestment of prior years' earnings that have not previously been subject to the branch profits tax. The amount subject to the branch profits tax for the taxable year is the dividend equivalent amount. Section 1.884-2T contains special rules relating to the effect on the branch profits tax of the termination or incorporation of a U.S. trade or business or the liquidation or reorganization of a foreign corporation or its domestic subsidiary.

(2) ***The branch-level interest tax.*** Section 1.884-4 provides rules for computing the branch-level interest tax. In general, interest paid by a U.S. trade or business of a foreign corporation ("branch interest", as defined in § 1.884-4(b)) is treated as if it were paid by a domestic corporation and may be subject to tax under section 871(a) or 881, and to withholding under section 1441 or 1442. In addition, if the interest apportioned to ECI exceeds branch interest, the excess is treated as interest paid to the foreign corporation by a wholly-owned domestic corporation and is subject to tax under section 881(a).

(3) ***Qualified resident.*** Section 1.884-5 provides rules for determining whether a foreign corporation is a qualified resident of a foreign country. In general, a foreign corporation must be a qualified resident of a foreign country with which the United States has an income tax treaty in order to claim an exemption or rate reduction with respect to the branch profits tax, the branch-level interest tax, and the tax on dividends paid by the foreign corporation.

(b) ***Special rules for U.S. possessions.***

(1) Section 884 does not apply to a corporation created or organized in, or under the law of, American Samoa, Guam, the Northern Mariana Islands, or the U.S. Virgin Islands, provided that the conditions of § 1.881-5(c)(1) through (c)(3) are satisfied with respect to such corporation. The preceding sentence applies for taxable years ending after April 9, 2008.

(2) Section 884 does not apply for purposes of determining tax liability incurred to a section 935 possession or the U.S. Virgin Islands by a corporation created or organized in, or under the law of, such possession or the United States. The preceding sentence applies for taxable years ending after April 9, 2008.

(c) ***Outline of major topics in §§ 1.884-1 through 1.884-5.***

§ 1.884-1 Branch profits tax.

(a) General rule.

(b) Dividend equivalent amount.

(1) Definition.

(2) Adjustment for increase in U.S. net equity.

(3) Adjustment for decrease in U.S. net equity.

(4) Examples.

(c) U.S. net equity.

(1) Definition.

(2) Definition of amount of a U.S. asset.

(3) Definition of determination date.

(d) U.S. assets.

(1) Definition of a U.S. asset.

(2) Special rules for certain assets.

(3) Interest in a partnership.

(4) Interest in a trust or estate.

(5) Property that is not a U.S. asset.

(6) E&P basis of a U.S. asset.

(e) U.S. liabilities.

(1) Liabilities based on § 1.882-5.

(2) Insurance reserves.

(3) Election to reduce liabilities.

(4) Artificial decrease in U.S. liabilities.

(5) Examples.

(f) Effectively connected earnings and profits.

(1) In general.

(2) Income that does not produce ECEP.

(3) Allocation of deductions attributable to income that does not produce ECEP.

(4) Examples.

(g) Corporations resident in countries with which the United States has an income tax treaty.

(1) General rule.

(2) Special rules for foreign corporations that are qualified residents on the basis of their ownership.

(3) Exemptions for foreign corporations resident in certain countries with income tax treaties in effect on January 1, 1987.

(4) Modifications with respect to other income tax treaties.

(5) Benefits under treaties other than income tax treaties.

(h) Stapled entities.

(i) Effective date.

(1) General rule.

(2) Election to reduce liabilities.

(3) Separate election for installment obligations.

(4) Special rule for certain U.S. assets and liabilities.

(j) Transition rules.

(1) General rule.

(2) Installment obligations.

§ 1.884-2T Special rules for termination or incorporation of a U.S. trade or business or liquidation or reorganization of a foreign corporation or its domestic subsidiary (temporary).

(a) Complete termination of a U.S. trade or business.

(1) General rule.

(2) Operating rules.

(3) Complete termination in the case of a section 338 election.

(4) Complete termination in the case of a foreign corporation with income under section 864(c)(6) or 864(c)(7).

(5) Special rule if a foreign corporation terminates an interest in a trust. [Reserved]

(6) Coordination with second-level withholding tax.

(b) Election to remain engaged in a U.S. trade or business.

(1) General rule.

(2) Marketable security.

(3) Identification requirements.

(4) Treatment of income from deemed U.S. assets.

(5) Method of election.

(6) Effective date.

(c) Liquidation, reorganization, etc., of a foreign corporation.

(1) Inapplicability of paragraph (a)(1) to section 381 (a) transactions.

(2) Transferor's dividend equivalent amount for the taxable year in which a section 381 (a) transaction occurs.

(3) Transferor's dividend equivalent amount for any taxable year succeeding the taxable year in which the section 381 (a) transaction occurs.

(4) Earnings and profits of the transferor carried over to the transferee pursuant to the section 381 (a) transaction.

(5) Determination of U.S. net equity of a transferee that is a foreign corporation.

(6) Special rules in the case of the disposition of stock or securities in a domestic transferee or in the transferor.

(d) Incorporation under section 351.

(1) In general.

(2) Inapplicability of paragraph (a)(1) of this section to section 351 transactions.

(3) Transferor's dividend equivalent amount for the taxable year in which a section 351 transaction occurs.

(4) Election to increase earnings and profits.

(5) Dispositions of stock or securities of the transferee by the transferor.

(6) Example.

(e) Certain transactions with respect to a domestic subsidiary.

(f) Effective date.

§ 1.884-3T Coordination of branch profits tax with second-tier withholding (temporary). [Reserved]

§ 1.884-4 Branch-level interest tax.

(a) General rule.

(1) Tax on branch interest.

(2) Tax on excess interest.

(3) Original issue discount.

(4) Examples.

(b) Branch interest.

(1) Definition of branch interest.

(2) [Reserved]

(3) Requirements relating to specifically identified liabilities.

(4) [Reserved]

(5) Increase in branch interest where U.S. assets constitute 80 percent or more of a foreign corporation's assets.

(6) Special rule where branch interest exceeds interest apportioned to ECI of a foreign corporation.

(7) Effect of election under paragraph (c)(1) of this section to treat interest as if paid in year of accrual.

(8) Effect of treaties.

(c) Rules relating to excess interest.

(1) Election to compute excess interest by treating branch interest that is paid and accrued in different years as if paid in year of accrual.

(2) Interest paid by a partnership.

(3) Effect of treaties.

(4) Examples.

(d) Stapled entities.

(e) Effective dates.

(1) General rule.

(2) Special rule.

(f) Transition rules.

(1) Election under paragraph (c)(1) of this section.

(2) Waiver of notification requirement for non-banks under Notice 89-80.

(3) Waiver of legending requirement for certain debt issued prior to January 3, 1989.

§ 1.884-5 Qualified resident.

(a) Definition of qualified resident.

(b) Stock ownership requirement.

(1) General rule.

(2) Rules for determining constructive ownership.

(3) Required documentation.

(4) Ownership statements from qualifying shareholders.

(5) Certificate of residency.

(6) Intermediary ownership statement.

(7) Intermediary verification statement.

(8) Special rules for pension funds.

(9) Availability of documents for inspection.

(10) Examples.

(c) Base erosion.

(d) Publicly-traded corporations.

(1) General rule.

(2) Established securities market.

(3) Primary traded.

(4) Regularly traded.

(5) Burden of proof for publicly-traded corporations.

(e) Active trade or business.

(1) General rule.

(2) Active conduct of a trade or business.

(3) Substantial presence test.

(4) Integral part of an active trade or business in the foreign corporation's country of residence.

(f) Qualified resident ruling.

(1) Basis for ruling.

(2) Factors.

(3) Procedural requirements.

(g) Effective dates.

(h) Transition rule.

[T.D. 8432, 57 FR 41649, Sept. 11, 1992; 57 FR 49117, Oct. 29, 1992; 57 FR 60126, Dec. 18, 1992, as amended by T.D. 8657, 61 FR 9338, Mar. 8, 1996; T.D. 9194, 70 FR 18930, Apr. 11, 2005; T.D. 9391, 73 FR 19360, Apr. 9, 2008; 73 FR 27728, May 14, 2008]

§ 1.884-1 Branch profits tax.

(a) ***General rule.*** A foreign corporation shall be liable for a branch profits tax in an amount equal to 30 percent of the foreign corporation's dividend equivalent amount for the taxable year. The branch profits tax shall be in addition to the tax imposed by section 882 and shall be reported on a foreign corporation's income tax return for the taxable year. The tax shall be due and payable as provided in section 6151 and such other provisions of Subtitle F of the Internal Revenue Code as apply to the income tax liability of corporations. However, no estimated tax payments shall be due with respect to a foreign corporation's liability for the branch profits tax. See paragraph (g) of this section for the application of the branch profits tax to corporations that are residents of countries with which the United States has an income tax treaty, and § 1.884-2T for the effect on the branch profits tax of the termination or incorporation of a U.S. trade or business, or the liquidation or reorganization of a foreign corporation or its domestic subsidiary.

(b) ***Dividend equivalent amount*** —

(1) ***Definition.*** The term "dividend equivalent amount" means a foreign corporation's effectively connected earnings and profits ("ECEP", as defined in paragraph (f)(1) of this section) for the taxable year, adjusted pursuant to paragraph (b)(2) or (3) of this section, as applicable. The dividend equivalent amount cannot be less than zero.

(2) ***Adjustment for increase in U.S. net equity.*** If a foreign corporation's U.S. net equity (as defined in paragraph (c) of this section) as of the close of the taxable year exceeds the foreign corporation's U.S. net equity as of the close of the preceding taxable year, then, for purposes of computing the foreign corporation's dividend equivalent amount for the taxable year, the foreign corporation's ECEP for the taxable year shall be reduced (but not below zero) by the amount of such excess.

(3) ***Adjustment for decrease in U.S. net equity*** —

(i) ***In general.*** Except as provided in paragraph (b)(3)(ii) of this section, if a foreign corporation's U.S. net equity as of the close of the taxable year is less than the foreign corporation's U.S. net equity as of the close of the preceding taxable year, then, for purposes of computing the foreign corporation's dividend equivalent amount for the taxable year, the foreign corporation's ECEP for the taxable year shall be increased by the amount of such difference.

(ii) ***Limitation based on accumulated ECEP.*** The increase of a foreign corporation's ECEP under paragraph (b)(3)(i) of this section shall not exceed the accumulated ECEP of the foreign corporation as of the beginning of the taxable year. The term "accumulated ECEP" means the aggregate amount of ECEP of a foreign corporation for preceding taxable years beginning after December 31, 1986, minus the aggregate dividend equivalent amounts for such preceding taxable years. Accumulated ECEP may be less than zero.

(4) ***Examples.*** The principles of paragraph (b)(2) and (3) of this section are illustrated by the following examples.

Example 1. Reinvestment of all ECEP. Foreign corporation A, a calendar year taxpayer, had $1,000 U.S. net equity as of the close of 1986 and $100 of ECEP for 1987. A acquires $100 of additional U.S. assets during 1987 and its U.S. net equity as of the close of 1987 is $1,100. In computing A's dividend equivalent amount for 1987, A's ECEP of $100 is reduced under paragraph (b)(2) of this section by the $100 increase in U.S. net equity between the close of 1986 and the close of 1987. A has no dividend equivalent amount for 1987.

Example 2. Partial reinvestment of ECEP. Assume the same facts as in *Example 1* except that A acquires $40 (rather than $100) of U.S. assets during 1987 and its U.S. net equity as of the close of 1987 is $1,040. In computing A's dividend equivalent amount for 1987, A's ECEP of $100 is reduced under paragraph (b)(2) of this section by the $40 increase in U.S. net equity between the close of 1986 and the close of 1987. A has a dividend equivalent amount of $60 for 1987.

Example 3. Disinvestment of prior year's ECEP. Assume the same facts as in *Example 1* for 1987. A has no ECEP for 1988. A's U.S. net equity decreases by $40 (to $1,060) as of the close of 1988. A has a dividend equivalent amount of $40 for 1988, even though it has no ECEP for 1988. A's ECEP of $0 for 1988 is increased under paragraph (b)(3)(i) of this section by the $40 reduction in U.S. net equity (subject to the limitation in paragraph (b)(3)(ii) of this section of $100 of accumulated ECEP).

Example 4. Accumulated ECEP limitation. Assume the same facts as in *Example 2* for 1987. For 1988, A has $125 of ECEP and its U.S. net equity decreases by $50. A's U.S. net equity as of the close of 1988 is $990 ($1,040-$50). In computing A's dividend equivalent amount for 1988, the $125 of ECEP for 1988 is not increased under paragraph (b)(3)(i) of this section by the full amount of the $50 decrease in U.S. net equity during 1988. Rather, the increase in ECEP resulting from the decrease in U.S. net equity is limited to A's accumulated ECEP as of the beginning of 1988. A had $100 of ECEP for 1987 and a dividend equivalent amount of $60 for that year, so A had $40 of accumulated ECEP as of the beginning of 1988. The increase in ECEP resulting from a decrease in U.S. net equity is thus limited to $40, and the dividend equivalent amount for 1988 is $165 ($125 ECEP + $40 decrease in U.S. net equity).

Example 5. Effect of deficits in ECEP. Foreign corporation A, a calendar year taxpayer, has $150 of accumulated ECEP as of the beginning of 1991 ($200 aggregate ECEP less $50 aggregate dividend equivalent amounts for years preceding 1991). A has U.S. net equity of $450 as of the close of 1990, U.S. net equity of $350 as of the close of 1991 (i.e., a $100 decrease in U.S. net equity) and a $90 deficit in ECEP for 1991. A's dividend equivalent amount is $10 for 1991, i.e., A's deficit of $90 in ECEP for 1991 increased by $100, the decrease in A's U.S. net equity during 1991. A portion of the reduction in U.S. net equity in 1991 ($90) is attributable to A's deficit in ECEP for that year. The reduction in U.S. net equity in 1991 ($100) triggers a dividend equivalent amount only to the extent it exceeds the $90 current year deficit in ECEP for 1991. As of the beginning of 1992, A has $50 of accumulated ECEP (i.e., $110 aggregate ECEP less $60 aggregate dividend equivalent amounts for years preceding 1992).

Example 6. Nimble dividend equivalent amount. Foreign corporation A, a calendar year taxpayer, had a deficit in ECEP of $100 for 1987 and $100 for 1988, and has $90 of ECEP for 1989. A had $2,000 U.S. net equity as of the close of 1988 and has $2,000 U.S. net equity as of the close of 1989. A has a dividend equivalent amount of $90 for 1989, its ECEP for the year, even though it has a net deficit of $110 in ECEP for the period 1987-1989.

(c) ***U.S. net equity*** —

(1) ***Definition.*** The term "U.S. net equity" means the aggregate amount of the U.S. assets (as defined in paragraphs (c)(2) and (d)(1) of this section) of a foreign corporation as of the determination date (as defined in paragraph (c)(3) of this section), reduced (including below zero) by the U.S. liabilities (as defined in paragraph (e) of this section) of the foreign corporation as of the determination date.

(2) ***Definition of the amount of a U.S. asset*** —

(i) ***In general.*** For purposes of this section, the term "amount of a U.S. asset" means the U.S. asset's adjusted basis for purposes of computing earnings and profits ("E&P basis") multiplied by the proportion of the asset that is treated as a U.S. asset under paragraphs (d) (1) through (4) of this section. The amount of a U.S. asset that is money shall be its face value. See paragraph (d)(6) of this section for rules concerning the computation of the E&P basis of a U.S. asset.

(ii) ***Bad debt reserves.*** A bank described in section 585(a)(2)(B) (without regard to the second sentence thereof) that uses the reserve method of accounting for bad debts for U.S. federal income tax purposes shall decrease the amount of loans that qualify as U.S. assets by any reserve that is permitted under section 585.

(3) ***Definition of determination date.*** For purposes of this section, the term "determination date" means the close of the day on which the amount of U.S. net equity is required to be determined. Unless otherwise provided, the U.S. net equity of a foreign corporation is required to be determined as of the close of the foreign corporation's taxable year.

(d) ***U.S. assets*** —

(1) ***Definition of a U.S. asset*** —

(i) ***General rule.*** Except as provided in paragraph (d)(5) of this section, the term "U.S. asset" means an asset of a foreign corporation (other than an interest in a partnership, trust, or estate) that is held by the corporation as of the determination date if—

(A) All income produced by the asset on the determination date is ECI (as defined in paragraph (d)(1)(iii) of this section) (or would be ECI if the asset produced income on that date); and

(B) All gain from the disposition of the asset would be ECI if the asset were disposed of on that date and the disposition produced gain.

For purposes of determining whether income or gain from an asset would be ECI under this paragraph (d)(1)(i), it is immaterial whether the asset is of a type that is unlikely to, or cannot, produce income or gain. For example, money may be a U.S. asset although it does not produce income or gain. In the case of an asset that does not produce income, however, the determination of whether income from the asset would be ECI shall be made under the principles of section 864 and the regulations thereunder, but without regard to § 1.864-4(c)(2)(iii)(*b*). For purposes of determining whether an asset is a U.S. asset under this paragraph (d)(1), a foreign corporation may presume, unless it has reason to know otherwise, that gain from the sale of personal property (including inventory property) would be U.S. source if gain from the sale of that type of property would ordinarily be attributable to an office or other fixed place of business of the foreign corporation within the United States (within the meaning of section 865(e)(2)).

(ii) ***Special rules for assets not described in paragraph (d)(1)(i) of this section.*** An asset of a foreign corporation that is held by the corporation as of the determination date and is not described in paragraph (d)(1)(i) of this section shall be treated as a U.S. asset to the extent provided in paragraph (d)(2) of this section (relating to special rules for certain assets, including assets that produce income or gain at least a portion of which is ECI), and in paragraphs (d) (3) and (4) of this section (relating to special rules for interests in a partnership, trust, and estate).

(iii) ***Definition of ECI.*** For purposes of the regulations under section 884, the term "ECI" means income that is effectively connected with the conduct of a trade or business in the United States and income that is treated as effectively connected with the conduct of a trade or business in the United States under any provision of the Code. The term "ECI" also includes all income that is or is treated as effectively connected with the conduct of a U.S. trade or business whether or not the income is included in gross income (for example, interest income earned with respect to tax-exempt bonds).

(2) ***Special rules for certain assets*** —

(i) ***Depreciable and amortizable property.*** An item of depreciable personal property or an item of amortizable intangible property shall be treated as a U.S. asset of a foreign corporation in the same proportion that the amount of the depreciation or amortization with respect to the item of property that is allowable as a deduction, or is includible in cost of goods sold, for the taxable year in computing the effectively connected taxable income of the foreign corporation bears to the total amount of depreciation or amortization computed for the taxable year with respect to the item of property.

(ii) ***Inventory.*** An item or pool of inventory property (as defined in section 865(i)(1)) shall be treated as a U.S. asset in the same proportion as the amount of gross receipts from the sale or exchange of such property for the three preceding taxable years (or for such part of the three-year period as the corporation has been in existence) that is effectively connected with the conduct of a U.S. trade or business bears to the total amount of gross receipts from the sale or exchange of such property during such period (or part thereof). If a foreign corporation has not sold or exchanged such property during such three-year period (or part thereof), then the property shall be treated as a U.S. asset in the same proportion that the anticipated amount of gross receipts from the sale or exchange of the property that is reasonably anticipated to be ECI bears to the anticipated total amount of gross receipts from the sale or exchange of the property.

(iii) ***Installment obligations.*** An installment obligation received in connection with an installment sale (as defined in section 453(b)) for which an election under section 453(d) has not been made shall be treated as a U.S. asset to the extent that it is received in connection with the sale of a U.S. asset. If an obligation is received in connection with the sale of an asset that is wholly a U.S. asset, it shall be treated as a U.S. asset in its entirety. If a single obligation is received in connection with the sale of an asset that is in part a U.S. asset under the rules of paragraphs (d) (2) through (4) of this section, or in connection with the sale of several assets including one or more non-U.S. assets, the obligation shall be treated as a U.S. asset in the same proportion as—

(A) The sum of the amount of gain from the installment sale that would be ECI if the obligation were satisfied in full on the determination date and the adjusted basis of the obligation on such date (as determined under section 453B) attributable to the amount of gain that would be ECI bears to

(B) The sum of the total amount of gain from the sale if the obligation were satisfied in full and the adjusted basis of the obligation on such date (as determined under section 453B).

However, the obligation will only be treated as a U.S. asset if the interest income or original issue discount with respect to the obligation is ECI or the foreign corporation elects to treat the interest or original issue discount as ECI in the same proportion that the obligation is treated as

a U.S. asset. A foreign corporation may elect to treat interest income or original issue discount as ECI by reporting such interest income or original issue discount as ECI on its income tax return or an amended return for the taxable year. See paragraph (d)(6)(ii) of this section to determine the E&P basis of an installment obligation for purposes of this paragraph (d)(2)(iii).

(iv) ***Receivables*** —

(A) ***Receivables arising from the sale or exchange of inventory property.*** An account or note receivable (whether or not bearing stated interest) with a maturity not exceeding six months that arises from the sale or exchange of inventory property (as defined in section 865(i)(1)) shall be treated as a U.S. asset in the proportion determined under paragraph (d)(2)(iii) of this section as if the receivable were an installment obligation.

(B) ***Receivables arising from the performance of services or leasing of property.*** An account or note receivable (whether or not bearing stated interest) with a maturity not exceeding six months that arises from the performance of services or the leasing of property in the ordinary course of a foreign corporation's trade or business shall be treated as a U.S. asset in the same proportion that the amount of gross income represented by the receivable that is ECI bears to the total amount of gross income represented by the receivable. For purposes of this paragraph (d)(2)(iv)(B), the amount of income represented by a receivable shall not include interest income or original issue discount.

(v) ***Bank and other deposits.*** A deposit or credit balance with a person described in section 871(i)(3) or a Federal Reserve Bank that is interest-bearing shall be treated as a U.S. asset if all income derived by the foreign corporation with respect to the deposit or credit balance during the taxable year is ECI. Any other deposit or credit balance shall only be treated as a U.S. asset if the deposit or credit balance is needed in a U.S. trade or business within the meaning of § 1.864-4(c)(2)(iii)(*a*).

(vi) ***Debt instruments.*** A debt instrument, as defined in section 1275(a)(1) (other than an asset treated as a U.S. asset under any other subdivision of this paragraph (d)) shall be treated as a U.S. asset, notwithstanding the fact that gain from the sale or exchange of the obligation on the determination date would not be ECI, if—

(A) All income derived by the foreign corporation from such obligation during the taxable year is ECI; and

(B) The yield for the period that the instrument was held during the taxable year equals or exceeds the Applicable Federal Rate for instruments of similar type and maturity.

Shares in a regulated investment company that purchases solely instruments that, under this paragraph (d)(2)(vi), would be U.S. assets if held directly by the foreign corporation shall also be treated as a U.S. asset.

(vii) ***Securities held by a foreign corporation engaged in a banking, financing or similar business.*** Securities described in § 1.864-4(c)(5)(ii)(*b*)(*3*) held by a foreign corporation engaged in the active conduct of a banking, financing, or similar business in the United States during the taxable year shall be treated as U.S. assets in the same proportion that income, gain, or loss from such securities is ECI for the taxable year under § 1.864-4(c)(5)(ii).

(viii) ***Federal income taxes.*** An overpayment of Federal income taxes shall be treated as a U.S. asset to the extent that the tax would reduce a foreign corporation's ECEP for the taxable year but for the fact that the tax does not accrue during the taxable year.

(ix) ***Losses involving U.S. assets.*** A foreign corporation that sustains, with respect to a U.S. asset, a loss for which a deduction is not allowed under section 165 (in whole or in part) because there exists a reasonable prospect of recovering compensation for the loss shall be treated as having a U.S. asset ("loss property") from the date of the loss in the same proportion that the asset was treated as a U.S. asset immediately before the loss. See paragraph (d)(6)(iv) of this section to determine the E&P basis of the loss property.

(x) ***Ruling for involuntary conversion.*** If property that is a U.S. asset of a foreign corporation is compulsorily or involuntarily converted into property not similar or related in service or use (within the meaning of section 1033), the foreign corporation may apply to the Commissioner for a ruling to determine its U.S. assets for the taxable year of the involuntary conversion.

(xi) ***Examples.*** The principles of paragraphs (c) and (d) (1) and (2) of this section are illustrated by the following examples.

Example 1. Depreciable property. Foreign corporation A, a calendar year taxpayer, is engaged in a trade or business in the United States. A owns equipment that is used in its manufacturing business in country X and in the United States. Under § 1.861-8, A's depreciation deduction with respect to the equipment is allocated to sales income and is apportioned 70 percent to ECI and 30 percent to income that is not ECI. Under paragraph (d)(2)(ii) of this section, the equipment is 70 percent a U.S. asset. The equipment has an E&P basis of $100 at the beginning of 1993. A's depreciation deduction (for purposes of computing earnings and profits) with respect to the equipment is $10 for 1993. To determine the amount of A's U.S. asset at the close of 1993, the equipment's $90 E&P basis at the close of 1993 is multiplied by 70 percent (the proportion of the asset that is a U.S. asset). The amount of the U.S. asset as of the close of 1993 is $63.

Example 2. U.S. real property interest connected to a U.S. business. FC is a foreign corporation that is a bank, within the meaning of section 585(a)(2)(B) (without regard to the second sentence thereof), and is engaged in the business of taking deposits and making loans through its branch in the United States. In 1996, FC makes a loan in the ordinary course of its lending business in the United States, securing the loan with a mortgage on the U.S. real property being financed by the borrower. In 1997, after the borrower has defaulted on the loan, FC takes title to the real property that secures the loan. On December 31, 1997, FC continues to hold the property, classifying it on its financial statement as *Other Real Estate Owned.* Because all income and gain from the property would be ECI to FC under the principles of section 864(c)(2), the U.S. real property constitutes a U.S. asset within the meaning of paragraph (d) of this section.

Example 3. U.S. real property interest not connected to a U.S. business. Foreign corporation A owns a condominium apartment in the United States. Assume that holding the apartment does not constitute a U.S. trade or business and the foreign corporation has not made an election under section 882(d) to treat income with respect to the property as ECI. The condominium apartment is not a U.S. asset of A because the income, if any, from the asset would not be ECI. However, the disposition by A of the condominium apartment at a gain will give rise to ECEP.

Example 4. Stock in a domestically-controlled REIT. As an investment, foreign corporation A owns stock in a domestically-controlled REIT, within the meaning of section 897(h)(4)(B). Under section 897(h)(2), gain on disposition of stock in the REIT is not treated as ECI. For this reason the stock does not qualify as a U.S. asset under paragraph (d)(1) of this section even if dividend distributions from the REIT are treated as ECI. Thus, A will have a dividend equivalent amount based on the ECEP attributable to a distribution of ECI from the REIT, even if A invests the proceeds from the dividend in additional stock of the REIT. (Stock in a REIT that is not a domestically-controlled REIT is also not a U.S. asset. See § 1.884-1(d)(5)).

Example 5. Section 864(c)(7) property. Foreign corporation A is engaged in the equipment leasing business in the United States and Canada. A transfers the equipment leased by its U.S. trade or business to its Canadian business after the equipment is fully depreciated in the United States. The Canadian business sells the equipment two years later. Section 864(c)(7) would treat the gain on the disposition of the equipment by A as taxable under section 882 as if the sale occurred immediately before the equipment was transferred to the Canadian business. The equipment would not be treated as a U.S. asset even if the gain was ECI because the income from the equipment in the year of the sale in Canada would not be ECI.

(3) ***Interest in a partnership*** —

(i) ***In general.*** A foreign corporation that is a partner in a partnership must take into account its interest in the partnership (and not the partnership assets) in determining its U.S. assets. For purposes of determining the proportion of the partnership interest that is a U.S. asset, a foreign corporation may elect to use either the asset method described in paragraph (d)(3)(ii) of this section or the income method described in paragraph (d)(3)(iii) of this section.

(ii) ***Asset method*** —

(A) ***In general.*** A partner's interest in a partnership shall be treated as a U.S. asset in the same proportion that the sum of the partner's proportionate share of the adjusted bases of all partnership assets as of the determination date, to the extent that the assets would be treated as U.S. assets if the partnership were a foreign corporation, bears to the sum of the partner's proportionate share of the adjusted bases of all partnership assets as of the determination date. Generally a partner's proportionate share of a partnership asset is the same as its proportionate share of all items of income, gain, loss, and deduction that may be generated by the asset.

(B) ***Non-uniform proportionate shares.*** If a partner's proportionate share of all items of income, gain, loss, and deduction that may be generated by a single asset of the partnership throughout the period that includes the taxable year of the partner is not uniform, then, for purposes of determining the partner's proportionate share of the adjusted basis of that asset, a partner must take into account the portion of the adjusted basis of the asset that reflects the partner's economic interest in that asset. A partner's economic interest in an asset of the partnership must be determined by applying the following presumptions. These presumptions may, however, be rebutted if the partner or the Internal Revenue Service shows that the presumption is inconsistent with the partner's true economic interest in the asset during the corporation's taxable year.

(*1*) If a partnership asset ordinarily generates directly identifiable income, a partner's economic interest in the asset is determined by reference to its proportionate share of income that may be generated by the asset for the partnership's taxable year ending with or within the partner's taxable year.

(*2*) If a partnership asset ordinarily generates current deductions and ordinarily generates no directly identifiable income, for example because the asset contributes equally to the generation of all the income of the partnership (such as an asset used in general and administrative functions), a partner's economic interest in the asset is determined by reference to its proportionate share of the total deductions that may be generated by the asset for the partnership's taxable year ending with or within the partner's taxable year.

(*3*) For other partnership assets not described in paragraph (d)(3)(ii)(B) (*1*) or (*2*) of this section, a partner's economic interest in the asset is determined by reference to its proportionate share of the total gain or loss to which it would be entitled if the asset were sold at a gain or loss in the partnership's taxable year ending with or within the partner's taxable year.

(C) ***Partnership election under section 754.*** If a partnership files an election in accordance with section 754, then for purposes of this paragraph (d)(3)(ii), the basis of partnership property shall reflect adjustments made pursuant to sections 734 (relating to distributions of property to a partner) and 743 (relating to the transfer of an interest in a partnership). However, adjustments made pursuant to section 743 may be made with respect to a transferee partner only.

(iii) ***Income method.*** Under the income method, a partner's interest in a partnership shall be treated as a U.S. asset in the same proportion that its distributive share of partnership ECI for the partnership's taxable year that ends with or within the partner's taxable year bears to its distributive share of all partnership income for that taxable year.

(iv) ***Manner of election*** —

(A) ***In general.*** In determining the proportion of a foreign corporation's interest in a partnership that is a U.S. asset, a foreign corporation must elect one of the methods described in paragraph (d)(3) of this section on a timely filed return for the first taxable year beginning on or after the effective date of this section. An amended return does not qualify for this purpose, nor shall the provisions of § 301.9100-1 of this chapter and any guidance promulgated thereunder apply. An election shall be made by the foreign corporation calculating its U.S. assets in accordance with the method elected. An elected method must be used for a minimum period of five years before the foreign corporation may elect a different method. To change an election before the end of the requisite five-year period, a foreign corporation must obtain the consent of the Commissioner or her delegate. The Commissioner or her delegate will generally consent to a foreign corporation's request to change its election only in rare and unusual circumstances. A foreign corporation that is a partner in more than one partnership is not required to elect to use the same method for each partnership interest.

(B) ***Elections with tiered partnerships.*** If a foreign corporation elects to use the asset method with respect to an interest in a partnership, and that partnership is a partner in a lower-tier partnership, the foreign corporation may apply either the asset method or the income method to determine the proportion of the upper-tier partnership's interest in the lower-tier partnership that is a U.S. asset.

(v) ***Failure to make proper election.*** If a foreign corporation, for any reason, fails to make an election to use one of the methods required by paragraph (d)(3) of this section in a timely fashion, the director of field operations or the Assistant Commissioner (International) may make the election on behalf of the foreign corporation and such election shall be binding as if made by that corporation.

(vi) ***Special rule for determining a partner's adjusted basis in a partnership interest.*** For purposes of paragraphs (d)(3) and (6) of this section, a partner's adjusted basis in a partnership interest shall be the partner's basis in such interest (determined under section 705) reduced by the partner's share of the liabilities of the partnership determined under section 752 and increased by a proportionate share of each liability of the partnership equal to the partner's proportionate share of the expense, for income tax purposes, attributable to such liability for the taxable year. A partner's adjusted basis in a partnership interest cannot be less than zero.

(vii) ***E&P basis of a partnership interest.*** See paragraph (d)(6)(iii) of this section for special rules governing the calculation of a foreign corporation's E&P basis in a partnership interest.

(viii) The application of this paragraph (d)(3) is illustrated by the following examples:

> *Example 1. General rule.* (i) *Facts.* Foreign corporation, FC, is a partner in partnership ABC, which is engaged in a trade or business within the United States. FC and ABC are both calendar year taxpayers. ABC owns and manages two office buildings located in the United States, each with an adjusted basis of $50. ABC also owns a non-U.S. asset with an adjusted basis of $100. ABC has no liabilities. Under the partnership agreement, FC has a 50 percent interest in the capital of ABC and a 50 percent interest in all items of income, gain, loss, and deduction that may be generated by the partnership's assets. FC's adjusted basis in ABC is $100. In determining the proportion of its interest in ABC that is a U.S. asset, FC elects to use the asset method described in paragraph (d)(3)(ii) of this section.
> (ii) *Analysis.* FC's interest in ABC is treated as a U.S. asset in the same proportion that the sum of FC's proportionate share of the adjusted bases of all ABC's U.S. assets (50% of $100), bears to the sum of FC's proportionate share of the adjusted bases of all of ABC's assets (50% of $200). Under the asset method, the amount of FC's interest in ABC that is a U.S. asset is $50 ($100 × $50/$100).

> *Example 2. Special allocation of gain with respect to real property.* (i) *Facts.* The facts are the same as in *Example 1,* except that under the partnership agreement, FC is allocated 20 percent of the income from the partnership property but 80 percent of the gain on disposition of the partnership property.

(ii) *Analysis.* Assuming that the buildings ordinarily generate directly identifiable income, there is a rebuttable presumption under paragraph (d)(3)(ii)(B)(*1*) of this section that FC's proportionate share of the adjusted basis of the buildings is FC's proportionate share of the income generated by the buildings (20%) rather than the total gain that it would be entitled to under the partnership agreement (80%) if the buildings were sold at a gain on the determination date. Thus, the sum of FC's proportionate share of the adjusted bases in ABC's U.S. assets (the buildings) is presumed to be $20 [(20% of $50) + (20% of $50)]. Assuming that the non-U.S. asset is not income-producing and does not generate current deductions, there is a rebuttable presumption under paragraph (d)(3)(ii)(B)(*3*) of this section that FC's proportionate share of the adjusted basis of that asset is FC's interest in the gain on the disposition of the asset (80%) rather than its proportionate share of the income that may be generated by the asset (20%). Thus, FC's proportionate share of the adjusted basis of ABC's non-U.S. asset is presumed to be $80 (80% of $100). FC's proportionate share of the adjusted bases of all of the assets of ABC is $100 ($20 + $80). The amount of FC's interest in ABC that is a U.S. asset is $20 ($100 × $20/$100).

Example 3. Tiered partnerships (asset method). (i) *Facts.* The facts are the same as in *Example 1*, except that FC's adjusted basis in ABC is $175 and ABC also has a 50 percent interest in the capital of partnership DEF. DEF owns and operates a commercial shopping center in the United States with an adjusted basis of $200 and also owns non-U.S. assets with an adjusted basis of $100. DEF has no liabilities. ABC's adjusted basis in its interest in DEF is $150 and ABC has a 50 percent interest in all the items of income, gain, loss and deduction that may be generated by the assets of DEF.
(ii) *Analysis.* Because FC has elected to use the asset method described in paragraph (d)(3)(ii) of this section, it must determine what proportion of ABC's partnership interest in DEF is a U.S. asset. As permitted by paragraph (d)(3)(iv)(B) of this section, FC also elects to use the asset method with respect to ABC's interest in DEF. ABC's interest in DEF is treated as a U.S. asset in the same proportion that the sum of ABC's proportionate share of the adjusted bases of all DEF's U.S. assets (50% of $200), bears to the sum of ABC's proportionate share of the adjusted bases of all of DEF's assets (50% of $300). Thus, the amount of ABC's interest in DEF that is a U.S. asset is $100 ($150 × $100/$150). FC must then apply the rules of paragraph (d)(3)(ii) of this section to all the assets of ABC, including ABC's interest in DEF that is treated in part as a U.S. asset ($100) and in part as a non-U.S. asset ($50). FC's interest in ABC is treated as a U.S. asset in the same proportion that the sum of FC's proportionate share of the adjusted bases of the U.S. assets of ABC (including ABC's interest in DEF), bears to the sum of FC's proportionate share of the adjusted bases of all ABC's assets (including ABC's interest in DEF). Thus, the amount of FC's interest in ABC that is a U.S. asset is

$100 (FC's adjusted basis in ABC ($175) multiplied by FC's proportionate share of the sum of the adjusted bases of ABC's U.S. assets ($100)) over FC's proportionate share of the sum of the adjusted bases of ABC's assets ($175)).

Example 4. Tiered partnerships (income method). (i) *Facts.* The facts are the same as in *Example 3,* except that FC has elected to use the income method described in paragraph (d)(3)(iii) of this section to determine the proportion of its interest in ABC that is a U.S. asset. The two office buildings located in the United States generate $60 of income that is ECI for the taxable year. The non-U.S. asset is not-income producing. In addition ABC's distributive share of income from DEF consists of $40 of income that is ECI and $140 of income that is not ECI.
(ii) *Analysis.* Because FC has elected to use the income method it does need to determine what proportion of ABC's partnership interest in DEF is a U.S. asset. FC's interest in ABC is treated as a U.S. asset in the same proportion that its distributive share of ABC's income for the taxable year that is ECI ($50) ($30 earned directly by ABC + $20 distributive share from DEF) bears to its distributive share of all ABC's income for the taxable year ($55) ($30 earned directly by ABC + $25 distributive share from DEF). Thus, FC's interest in ABC that is a U.S. asset is $159 ($175 × $50/$55).

(4) ***Interest in a trust or estate*** —

(i) ***Estates and non-grantor trusts.*** A foreign corporation that is a beneficiary of a trust or estate shall not be treated as having a U.S. asset by virtue of its interest in the trust or estate.

(ii) ***Grantor trusts.*** If, under sections 671 through 678, a foreign corporation is treated as owning a portion of a trust that includes all the income and gain that may be generated by a trust asset (or pro rata portion of a trust asset), the foreign corporation will be treated as owning the trust asset (or pro rata portion thereof) for purposes of determining its U.S. assets under this section.

(5) ***Property that is not a U.S. asset*** —

(i) ***Property that does not give rise to ECEP.*** Property described in paragraphs (d) (1) through (4) of this section shall not be treated as a U.S. asset of a foreign corporation if, on the determination date, income from the use of the property, or gain or loss from the disposition of the property, would be described in paragraph (f)(2) of this section (relating to certain income that does not produce ECEP).

(ii) ***Assets acquired to increase U.S. net equity artificially.*** U.S. assets shall not include assets acquired or used by a foreign corporation if one of the principal purposes of such acquisition or use is to increase artificially the U.S. assets of a foreign corporation on the determination date. Whether assets are acquired or used for such purpose will depend upon all the facts and circumstances of each case. Factors to be considered in determining whether one of the principal purposes in acquiring or using an asset is to increase artificially the U.S. assets of a foreign corporation include the length of time during which the asset was used in a U.S. trade or business, whether the asset was acquired from, or disposed of to, a related person, and

whether the aggregate value of the U.S. assets of the foreign corporation increased temporarily on the determination date. For purposes of this paragraph (d)(5)(ii), to be one of the principal purposes, a purpose must be important, but it is not necessary that it be the primary purpose.

(iii) ***Interbranch transactions.*** A transaction of any type between separate offices or branches of the same taxpayer does not create a U.S. asset.

(6) ***E&P basis of a U.S. asset*** —

(i) ***General rule.*** The E&P basis of a U.S. asset for purposes of this section is its adjusted basis for purposes of computing the foreign corporation's earnings and profits. In determining the E&P basis of a U.S. asset, the adjusted basis of the asset (for purposes of computing taxable income) must be increased or decreased to take into account inclusions of income or gain, and deductions or similar charges, that affect the basis of the asset where such items are taken into account in a different manner for purposes of computing earnings and profits than for purposes of computing taxable income. For example, if section 312 (k) requires that depreciation with respect to a U.S. asset be determined using the straight line method for purposes of computing earnings and profits, but depreciation with respect to the asset is determined using a different method for purposes of computing taxable income, the E&P basis of the property for purposes of this section must be computed using the straight line method of depreciation.

(ii) ***Installment obligations*** —

(A) ***Sales in taxable year beginning on or after January 1, 1987.*** For purposes of this section, the E&P basis of an installment obligation described in paragraph (d)(2)(iii) of this section that arises in connection with an installment sale occurring in a taxable year beginning on or after January 1, 1987, shall equal the sum of the total amount of gain from the sale if the obligation were satisfied in full and the adjusted basis of the property sold as of the date of sale, reduced by payments received with respect to the obligation that are not interest or original issue discount. See paragraph (j)(2)(ii) of this section, however, for a special E&P basis rule for an installment obligation arising in connection with a sale of a U.S. asset by a foreign corporation described in section 312(k)(4), where such sale occurs in a taxable year beginning in 1987.

(B) ***Sales in taxable year prior to January 1, 1987.*** For purposes of this section, the E&P basis of an installment obligation described in paragraph (d)(2)(iii) of this section that arises in connection with an installment sale occurring in a taxable year beginning before January 1, 1987, shall equal zero.

(iii) ***Computation of E&P basis in a partnership.*** For purposes of this section, a foreign corporation's E&P basis in a partnership interest shall be the foreign corporation's adjusted basis in such interest (as determined under paragraph (d)(3)(vi) of this section), further adjusted to take into account any differences between the foreign corporation's distributive share of items of partnership income, gain, loss, and deduction for purposes of computing the taxable income of the foreign corporation and the foreign corporation's distributive share of items of partnership income, gain, loss, and deductions for purposes of computing the earnings and profits of the foreign corporation.

(iv) ***Computation of E&P basis of a loss property.*** The E&P basis of a loss property (as defined in paragraph (d)(2)(ix) of this section) shall equal the E&P basis, immediately before the loss, of the U.S. asset with respect to which the loss was sustained, reduced (but not below zero) by—

(A) The amount of any deduction claimed under section 165 by the foreign corporation with respect to the loss for earnings and profits purposes; and

(B) Any compensation received with respect to the loss.

(v) ***Computation of E&P basis of financial instruments.*** [Reserved]

(vi) ***Example.*** The application of paragraph (d)(6)(ii) of this section is illustrated by the following example.

Example. Sale in taxable year beginning on or after January 1, 1987. Foreign corporation A, a calendar year taxpayer, sells a U.S. asset on the installment method in 1993. Under the terms of the sale, A is to receive $100, payable in ten annual installments of $10 beginning in 1994, plus an arm's-length rate of interest on the unpaid balance of the sales price. A's adjusted basis in the property sold is $70. The obligation received in connection with the installment sale is treated as a U.S. asset with an E&P basis of $100 ($30 (the amount of gain from the sale if the obligation were satisfied in full) + $70 (the adjusted basis of the property sold)). If A receives a payment of $10 (not including interest) in 1994 with respect to the obligation, the obligation is treated as a U.S. asset with an E&P basis of $90 ($100−$10) as of the close of 1994.

(e) ***U.S. liabilities.*** The term *U.S. liabilities* means the amount of liabilities determined under paragraph (e)(1) of this section decreased by the amount of liabilities determined under paragraph (e)(3) of this section, and increased by the amount of liabilities determined under paragraph (e)(2) of this section.

(1) ***Liabilities based on § 1.882-5.*** The amount of liabilities determined under this paragraph (e)(1) is the amount of U.S.-connected liabilities of a foreign corporation under § 1.882-5 if the U.S.-connected liabilities were computed using the assets and liabilities of the foreign corporation as of the determination date (rather than the average of such assets and liabilities for the taxable year) and without regard to paragraph (e)(3) of this section.

(2) ***Additional liabilities*** —

(i) ***Insurance reserves.*** The amount of liabilities determined under this paragraph (e)(2)(i) is the amount (as of the determination date) of the total insurance liabilities on United States business (within the meaning of section 842(b)(2)(B)) of a foreign corporation described in section 842(a) (relating to foreign corporations carrying on an insurance business in the United States) to the extent that such liabilities are not otherwise treated as U.S. liabilities by reason of paragraph (e)(1) of this section.

(ii) ***Liabilities described in § 1.882-5(a)(1)(ii).*** The amount of liabilities determined under this paragraph (e)(2)(ii) is the amount (as of the determination date) of liabilities described in § 1.882-5(a)(1)(ii) (relating to liabilities giving rise to interest expense that is directly allocated to income from a U.S. asset).

(3) ***Election to reduce liabilities*** —

(i) ***General rule.*** The amount of liabilities determined under this paragraph (e)(3) is the amount by which a foreign corporation elects to reduce its liabilities under paragraph (e)(1) of this section.

(ii) ***Limitation.*** For any taxable year, a foreign corporation may elect to reduce the amount of its liabilities determined under paragraph (e)(1) of this section by an amount that does not exceed the lesser of the amount of U.S. liabilities as of the determination date, or the amount of U.S. liability reduction needed to reduce a dividend equivalent amount as of the determination date to zero.

(iii) ***Effect of election on interest deduction and branch-level interest tax.*** A foreign corporation that elects to reduce its liabilities under this paragraph (e)(3) must, for purposes of computing the amount of its interest apportioned to ECI under § 1.882-5, reduce its U.S.-connected liabilities for the taxable year of the election by the amount of the reduction in liabilities under this paragraph (e)(3). The reduction of its U.S.-connected liabilities will also require a corresponding decrease in the amount of its interest apportioned to ECI under § 1.882-5 for purposes of § 1.884-4(a) and for all other Code sections for which the amount of interest apportioned under § 1.882-5 is relevant.

(iv) ***Method of election.*** A foreign corporation that elects the benefits of this paragraph (e)(3) for a taxable year shall attach a statement to its return for the taxable year that it has elected to reduce its liabilities for the taxable year under this paragraph (e)(3) and that it has reduced the amount of its U.S.-connected liabilities as provided in paragraph (e)(3)(iii) of this section and shall indicate the amount of such reductions on such attachment. The cumulative amount of all U.S. liability reductions is shown on Schedule I (Form 1120-F) in addition to the separate elections attached to the timely filed return. An election under this paragraph (e)(3) must be made before the due date (including extensions) for the foreign corporation's income tax return for the taxable year.

(v) ***Effect of election on complete termination.*** If a foreign corporation completely terminates its U.S. trade or business (within the meaning of § 1.884-2T (a)(2)), notwithstanding § 1.884-2T(a), the foreign corporation will be subject to tax on a dividend equivalent amount that equals the lesser of—

(A) The foreign corporation's accumulated ECEP that is attributable to an election to reduce liabilities; or

(B) The amount by which the corporation elected to reduce liabilities at the end of the taxable year preceding the year of complete termination.

For purposes of the preceding sentence, accumulated ECEP is attributable to an election to reduce liabilities to the extent that the ECEP was accumulated because of such an election rather than because of an increase in U.S. assets. For example, if a foreign corporation did not have positive ECEP in any year for which an election was made, it would not be required to include an amount as a dividend equivalent amount under this paragraph (e)(3)(v) because any accumulated ECEP that it may have is not attributable to an election to reduce liabilities.

(4) ***Artificial decrease in U.S. liabilities.*** If a foreign corporation repays or otherwise decreases its U.S. liabilities and one of the principal purposes of such decrease is to decrease artificially its U.S. liabilities on the determination date, then such decrease shall not be taken into account for purposes of computing the foreign corporation's U.S. net equity. Whether the U.S. liabilities of a foreign corporation are artificially decreased will depend on all the facts and circumstances of each case. Factors to be considered in determining whether one of the principal purposes for the repayment or decrease of the liabilities is to decrease artificially the U.S. liabilities of a foreign corporation shall include whether the aggregate liabilities are temporarily decreased on or before the determination

date by, for example, the repayment of liabilities, or U.S. liabilities are temporarily decreased on or before the determination date by the acquisition with contributed funds of passive-type assets that are not U.S. assets. For purposes of this paragraph (e)(4), to be one of the principal purposes, a purpose must be important, but it is not necessary that it be the primary purpose.

(5) ***Examples.*** The application of this paragraph (e) is illustrated by the following examples.

Example 1. General rule for computation of U.S. liabilities. As of the close of 1997, foreign corporation A, a calendar year taxpayer computes its U.S.-connected liabilities under § 1.882-5(c) using its actual ratio of liabilities to assets. For purposes of computing its U.S.- connected liabilities under § 1.882-5(c), A must determine the average total value of its assets that are U.S. assets. Assume that the average value of such assets is $100, while the amount of such assets as of the close of 1997 is $125. For purposes of § 1.882-5(c)(2), A must determine the ratio of the average of its worldwide liabilities for the year to the average total value of worldwide assets for the taxable year. Assume that A's average liabilities-to-assets ratio under § 1.882-5(c)(2) is 55 percent, while its liabilities-to-assets ratio at the close of 1997 is only 50 percent. Thus, assuming no further adjustments under paragraph (e)(3) of this section, A's U.S.-connected liabilities for purposes of § 1.882-5 are $55 ($100 × 55%). However, A's U.S. liabilities are $62.50 for purposes of this section, the value of its assets determined under § 1.882-5(b)(2) as of the close of December ($125) multiplied by the liabilities-to-assets ratio of (50%) as of such date.

Example 2. Election made to reduce liabilities. (i) As of the close of 2007, foreign corporation A, a real estate company, owns U.S. assets with an E&P basis of $1000. A has $800 of liabilities under paragraph (e)(1) of this section. A has accumulated ECEP of $500 and in 2008, A has $60 of ECEP that it intends to retain for future expansion of its U.S. trade or business. A elects under paragraph (e)(3) of this section to reduce its liabilities by $60 from $800 to $740. As a result of the election, assuming A's U.S. assets and U.S. liabilities would otherwise have remained constant, A's U.S. net equity as of the close of 2007 will increase by the amount of the decrease in liabilities ($60) from $200 to $260 and its ECEP will be reduced to zero. Under paragraph (e)(3)(iii) of this section, A's interest expense for the taxable year is reduced by the amount of interest attributable to $60 of liabilities and A's excess interest is reduced by the same amount. A's taxable income and ECEP are increased by the amount of the reduction in interest expense attributable to the liabilities, and A may make an election under paragraph (e)(3) of this section to further reduce its liabilities, thus increasing its U.S. net equity and reducing the amount of additional ECEP created for the election.
(ii) In 2009, assuming A again has $60 of ECEP, A may again make the election under paragraph (e)(3) to reduce its liabilities. However, assuming A's U.S. assets and liabilities under paragraph (e)(1) of this section remain constant, A will need to make an election to reduce its liabilities by $120 to reduce to zero its ECEP in 2009 and to continue to retain for expansion (without the payment of the branch profits tax) the $60 of ECEP earned in 2008. Without an election to reduce liabilities, A's dividend equivalent amount for 2009 would be $120 ($60 of ECEP plus the $60 reduction in U.S. net equity from

$260 to $200). If A makes the election to reduce liabilities by $120 (from $800 to $680), A's U.S. net equity will increase by $60 (from $260 at the end of the previous year to $320), the amount necessary to reduce its ECEP to $0. However, the reduction of liabilities will itself create additional ECEP subject to section 884 because of the reduction in interest expense attributable to the $120 of liabilities. A can make the election to reduce liabilities by $120 without exceeding the limitation on the election provided in paragraph (e)(3)(ii) of this section because the $120 reduction does not exceed the amount needed to treat the 2009 and 2008 ECEP as reinvested in the net equity of the trade or business within the United States.

(iii) If A terminates its U.S. trade or business in 2009 in accordance with the rules in § 1.884-2T(a), A would not be subject to the branch profits tax on the $60 of ECEP earned in that year. Under paragraph (e)(3)(v) of this section, however, it would be subject to the branch profits tax on the portion of the $60 of ECEP that it earned in 2008 that became accumulated ECEP because of an election to reduce liabilities.

(f) ***Effectively connected earnings and profits*** —

(1) ***In general.*** Except as provided in paragraph (f)(2) of this section and as modified by § 1.884-2T (relating to the incorporation or complete termination of a U.S. trade or business or the reorganization or liquidation of a foreign corporation or its domestic subsidiary), the term "effectively connected earnings and profits" ("ECEP") means the earnings and profits (or deficits therein) determined under section 312 and this paragraph (f) that are attributable to ECI (within the meaning of paragraph (d)(1)(iii) of this section). Because the term "ECI" includes income treated as effectively connected, income that is ECI under section 842(b) (relating to minimum net investment income of an insurance business) or 864(c)(7) (relating to gain from property formerly held for use in a U.S. trade or business) gives rise to ECEP. ECEP also includes earnings and profits attributable to ECI of a foreign corporation earned through a partnership, and through a trust or estate. For purposes of section 884, gain on the sale of a U.S. real property interest by a foreign corporation that has made an election to be treated as a domestic corporation under section 897(i) will also give rise to ECEP. ECEP is not reduced by distributions made by the foreign corporation during any taxable year or by the amount of branch profits tax or tax on excess interest (as defined in § 1.884-4(a)(2)) paid by the foreign corporation. Earnings and profits are treated as attributable to ECI even if the earnings and profits are taken into account under section 312 in an earlier or later taxable year than the taxable year in which the ECI is taken into account.

(2) ***Income that does not produce ECEP.*** The term "ECEP" does not include any earnings and profits attributable to—

(i) Income excluded from gross income under section 883(a)(1) or 883(a)(2) (relating to certain income derived from the operation of ships or aircraft);

(ii) Income that is ECI by reason of section 921(d) or 926(b) (relating to certain income of a FSC and certain dividends paid by a FSC to a foreign corporation or nonresident alien) that is not otherwise ECI;

(iii) Gain on the disposition of a U.S. real property interest described in section 897(c)(1)(A)(ii) (relating to certain interests in a domestic corporation);

(iv) Income that is ECI by reason of section 953(c)(3)(C) (relating to certain income of a captive insurance company that a corporation elects to treat as ECI) that is not otherwise ECI;

(v) Income that is exempt from tax under section 892 (relating to certain income of foreign governments); and

(vi) Income that is ECI by reason of section 882(e) (relating to certain interest income of banks organized under the laws of a possession of the United States) that is not otherwise ECI.

(3) ***Allocation of deductions attributable to income that does not produce ECEP.*** In determining the amount of a foreign corporation's ECEP for the taxable year, deductions and other adjustments shall be allocated and apportioned under the principles of § 1.861-8 between ECI that gives rise to ECEP and income described in paragraph (f)(2) of this section (relating to income that is ECI but does not give rise to ECEP).

(4) ***Examples.*** The principles of paragraph (f) of this section are illustrated by the following examples.

Example 1. Tax-exempt income. Foreign corporation A owns a tax-exempt municipal bond that is a U.S. asset as of the close of its 1989 taxable year. The municipal bond gives rise in 1989 to ECI (even though the income is excluded from gross income under section 103(a) and is not gross income of a foreign corporation by reason of section 882(b)), and therefore gives rise to ECEP in 1989.

Example 2. Income exempt under a treaty. Foreign corporation A derives ECI that constitutes business profits that are not attributable to a permanent establishment maintained by A in the United States. The ECI is exempt from taxation under section 882(a) by reason of an income tax treaty and section 894(a). The income nevertheless gives rise to ECEP under this paragraph (f). However, a dividend equivalent amount attributable to such ECEP may be exempt from the branch profits tax by reason of paragraph (g) of this section (relating to the application of the branch profits tax to corporations that are residents of countries with which the United States has an income tax treaty).

(g) ***Corporations resident in countries with which the United States has an income tax treaty*** —

(1) ***General rule.*** Except as provided in paragraph (g)(2) of this section, a foreign corporation that is a resident of a country with which the United States has an income tax treaty in effect for a taxable year in which it has a dividend equivalent amount and that meets the requirements, if any, of the limitation on benefits provisions of such treaty with respect to the dividend equivalent amount shall not be subject to the branch profits tax on such amount (or will qualify for a reduction in the amount of tax with respect to such amount) only if—

(i) The foreign corporation is a qualified resident of such country for the taxable year, within the meaning of § 1.884-5(a); or

(ii) The limitation on benefits provision, or an amendment to that provision, entered into force after December 31, 1986.

If, after application of § 1.884-5(e)(4)(iv), a foreign corporation is a qualified resident under § 1.884-5(e) (relating to the active trade or business test) only with respect to one of its trades or businesses in the United States, i.e., the trade or business that is an integral part of its business conducted in its country of residence, and not with respect to another, the rules of this paragraph shall apply only to that portion of its dividend equivalent amount attributable to the trade or business for which the foreign corporation is a qualified resident.

(2) *Special rules for foreign corporations that are qualified residents on the basis of their ownership* —

(i) ***General rule.*** A foreign corporation that, in any taxable year, is a qualified resident of a country with which the United States has an income tax treaty in effect solely by reason of meeting the requirements of § 1.884-5 (b) and (c) (relating, respectively, to stock ownership and base erosion) shall be exempt from the branch profits tax or subject to a reduced rate of branch profits tax under paragraph (g)(1) of this section with respect to the portion of its dividend equivalent amount for the taxable year attributable to accumulated ECEP only if the foreign corporation is a qualified resident of such country within the meaning of § 1.884-5(a) for the taxable years includable, in whole or in part, in a consecutive 36-month period that includes the taxable year of the dividend equivalent amount. A foreign corporation that fails the 36-month test described in the preceding sentence shall be exempt from the branch profits tax or subject to the branch profits tax at a reduced rate under paragraph (g)(1) of this section with respect to accumulated ECEP (determined on a last-in-first-out basis) accumulated only during prior years in which the foreign corporation was a qualified resident of such country within the meaning of § 1.884-5(a).

(ii) ***Rules of application.*** A foreign corporation that has not satisfied the 36-month test as of the close of the taxable year of the dividend equivalent amount but satisfies the test with respect to such dividend equivalent amount by meeting the 36-month test by the close of the second taxable year succeeding the taxable year of the dividend equivalent amount shall be subject to the branch profits tax for the year of the dividend equivalent amount without regard to paragraph (g)(1) of this section on the portion of the dividend equivalent amount attributable to accumulated ECEP derived in a taxable year in which the foreign corporation was not a qualified resident within the meaning of § 1.884-5(a). Upon meeting the 36-month test, the foreign corporation shall be entitled to claim by amended return a refund of the tax paid with respect to the dividend equivalent amount in excess of the branch profits tax calculated by taking into account paragraph (g)(2)(i) of this section, provided the foreign corporation establishes in the amended return for the taxable year that it has met the requirements of such paragraph. For purposes of section 6611 (dealing with interest on overpayments), any overpayment of branch profits tax by reason of this paragraph (g)(2)(ii) shall be deemed not to have been made before the filing date for the taxable year in which the foreign corporation establishes that it has met the 36-month test.

(iii) ***Example.*** The application of this paragraph (g)(2) is illustrated by the following example.

> *Example.* (i) Foreign corporation A, a calendar year taxpayer, is a resident of the United Kingdom. A has a dividend equivalent amount for its taxable year 1991 of $300, of which $100 is attributable to 1991 ECEP and $200 to accumulated ECEP. A is a qualified resident for its taxable year 1991 because for that year it meets the requirements of § 1.884-5 (b) and (c), relating, respectively, to stock ownership and base erosion. For 1991 A does not meet the requirements of § 1.884-5 (d), (e), or (f) for qualified residence. A is not a qualified resident of the United Kingdom for any taxable year prior to 1990 but is a qualified resident for its taxable years 1990 and 1992.
> (ii) Because A is a qualified resident for the 3-year period (1990, 1991, and 1992) that includes the taxable year of the dividend equivalent amount (1991), A satisfies the 36-month test of this paragraph (g)(2) and no branch profits tax is imposed on the total

> $300 dividend equivalent amount. However, since A was not a qualified resident for any taxable year prior to 1990 and therefore cannot establish that it has satisfied the 36-month test until the taxable year following the year of the dividend equivalent amount, A must pay the branch profits tax for its taxable year 1991 with respect to the portion of the dividend equivalent amount attributable to accumulated ECEP relating to years prior to 1990 without regard to paragraph (g)(1) of this section. A may file for a refund of the branch profits tax paid with respect to its 1991 taxable year at any time after it establishes that it is a qualified resident for its 1992 taxable year.

(3) ***Exemptions for foreign corporations resident in certain countries with income tax treaties in effect on January 1, 1987.*** The branch profits tax shall not be imposed on the portion of the dividend equivalent amount with respect to which a foreign corporation satisfies the requirements of paragraphs (g) (1) and (2) of this section for a country listed below, so long as the income tax treaty between the United States and that country, as in effect on January 1, 1987, remains in effect, except to the extent the treaty is modified on or after January 1, 1987, to expressly provide for the imposition of the branch profits tax:

Aruba
Austria
Belgium
People's Republic of China
Cyprus
Denmark
Egypt
Finland
Germany
Greece
Hungary
Iceland
Ireland
Italy
Jamaica
Japan
Korea
Luxembourg
Malta
Morocco
Netherlands
Netherlands Antilles
Norway
Pakistan
Philippines
Sweden
Switzerland
United Kingdom

(4) *Modifications with respect to other income tax treaties* —

(i) *Limitation on rate of tax* —

(A) ***General rule.*** If, under paragraphs (g) (1) and (2) of this section, a corporation qualifies for a reduction in the amount of the branch profits tax and paragraph (g)(3) of this section does not apply, the rate of tax shall be the rate of tax on branch profits specified in the treaty between the United States and the corporation's country of residence or, if no rate of tax on branch profits is specified, the rate of tax that would apply under such treaty to dividends paid to the foreign corporation by a wholly-owned domestic corporation.

(B) ***Certain treaties in effect on January 1, 1987.*** The branch profits tax shall generally be imposed at the following rates on the portion of the dividend equivalent amount with respect to which a foreign corporation satisfies the requirements of paragraphs (g) (1) and (2) of this section for a country listed below, for as long as the relevant provisions of those income tax treaties remain in effect and are not modified or superseded by subsequent agreement:

Australia (15%)
Barbados (5%)
Canada (10%)
France (5%)
New Zealand (5%)
Poland (5%)
Romania (10%)
South Africa (30%)
Trinidad & Tobago (10%)
U.S.S.R. (30%)

However, for special rates imposed on corporations resident in France and Trinidad & Tobago that have certain amounts of dividend and interest income, see the dividend articles of the income tax treaties with those countries.

(ii) ***Limitations other than rate of tax.*** If, under paragraphs (g) (1) and (2) of this section, a foreign corporation qualifies for a reduction in the amount of branch profits tax and paragraph (g) (3) of this section does not apply, then—

(A) The foreign corporation shall be entitled to the benefit of any limitations on imposition of a tax on branch profits (in addition to any limitations on the rate of tax) contained in the treaty; and

(B) No branch profits tax shall be imposed with respect to a dividend equivalent amount out of ECEP or accumulated ECEP of the foreign corporation unless the ECEP or accumulated ECEP is attributable to a permanent establishment in the United States or, if not otherwise prohibited under the treaty, to gain from the disposition of a U.S. real property interest described in section 897(c)(1)(A)(i), except to the extent the treaty specifically permits the imposition of the branch profits tax on such earnings and profits.

No article in such treaty shall be construed to provide any limitations on imposition of the branch profits tax other than as provided in this paragraph (g)(4).

(iii) ***Computation of the dividend equivalent amount if a foreign corporation has both ECEP attributable to a permanent establishment and not attributable to a permanent establishment.*** To determine the dividend equivalent amount of a foreign corporation out of ECEP that is attributable to a permanent establishment, the foreign corporation may only take into account its U.S. assets, U.S. liabilities, U.S. net equity and ECEP attributable to its permanent establishment. Thus, a foreign corporation may not reduce the amount of its ECEP attributable to its permanent establishment by reinvesting all or a portion of that amount in U.S. assets not attributable to the permanent establishment.

(iv) ***Limitations under the Canadian treaty.*** The limitations on the imposition of the branch profits tax under the Canadian treaty include, but are not limited to, those described in paragraphs (g)(4)(iv) (A) and (B).

(A) ***Effect of deficits in earnings and profits.*** In the case of a foreign corporation that is a qualified resident of Canada, the dividend equivalent amount for any taxable year shall not exceed the foreign corporation's accumulated ECEP as of the beginning of the taxable year plus the corporation's ECEP for the taxable year. Thus, for example, if a foreign corporation that is a qualified resident of Canada has a deficit in accumulated ECEP of $200 as of the beginning of the taxable year and ECEP of $100 for the taxable year, it will have no dividend equivalent amount for the taxable year because it would have a cumulative deficit in ECEP of $100 as of the close of the taxable year. For purposes of this paragraph (g)(4)(iii)(A), any net deficit in accumulated earnings and profits attributable to taxable years beginning before January 1, 1987, shall be includible in determining accumulated ECEP.

(B) ***One-time exemption of Canadian $500,000*** —

(*1*) ***General rule.*** In the case of a foreign corporation that is a qualified resident of Canada, the branch profits tax shall be imposed only with respect to that portion of the dividend equivalent amount for the taxable year that, when translated into Canadian dollars and added to the dividend equivalent amounts for preceding taxable years translated into Canadian dollars, exceeds Canadian $500,000. The value of the dividend equivalent amount in Canadian currency shall be determined by translating the ECEP for each taxable year that is includible in the dividend equivalent amount (as determined in U.S. dollars under the currency translation method used in determining the foreign corporation's taxable income for U.S. tax purposes) by the weighted average exchange rate for the taxable year (determined under the rules of section 989(b)(3)) during which the earnings and profits were derived.

(*2*) ***Reduction in amount of exemption in the case of related corporations.*** The amount of a foreign corporation's exemption under this paragraph (g)(4)(iii)(B) shall be reduced by the amount of any exemption that reduced the dividend equivalent amount of an associated foreign corporation with respect to the same or a similar business. For purposes of this paragraph (g)(4)(iii)(B), a foreign corporation is an associated foreign corporation if it is related to the foreign corporation for purposes of sectional 267(b) or it and the foreign corporation are stapled entities (within the meaning of section 269B(c)(2)) or are effectively stapled entities. A business is the same as or similar to another business if it involves the sale, lease, or manufacture of the same or a similar type of property or the provision of the same or a similar type of services.

A U.S. real property interest described in section 897(c)(1)(A)(i) shall be treated as a business and all such U.S. real property interests shall be treated as businesses that are the same or similar.

(3) ***Coordination with second-tier withholding tax.*** The value of the dividend equivalent amount that is exempt from the branch profits tax by reason of paragraph (g)(4)(iii)(B)(*1*) of this section shall not be subject to tax under section 871(a) or 881, or to withholding under section 1441 or 1442, when distributed by the foreign corporation.

(5) ***Benefits under treaties other than income tax treaties.*** A treaty that is not an income tax treaty does not exempt a foreign corporation from the branch profits tax or reduce the amount of the tax.

(h) ***Stapled entities.*** Any foreign corporation that is treated as a domestic corporation by reason of section 269B (relating to stapled entities) shall continue to be treated as a foreign corporation for purposes of section 884 and the regulations thereunder, notwithstanding section 269B or the regulations thereunder. Dividends paid by such foreign corporation shall be treated as paid by a domestic corporation and shall be subject to the tax imposed by section 871(a) or 881(a), and to withholding under section 1441 or 1442, as applicable, to the extent paid out of earnings and profits that are not subject to tax under section 884(a). Dividends paid by such foreign corporation out of earnings and profits subject to tax under section 884(a) shall be exempt from the tax imposed by sections 871(a) and 881(a) and shall not be subject to withholding under section 1441 or 1442. Whether dividends are paid out of earnings and profits that are subject to tax under section 884(a) shall be determined under section 884(e)(3)(A) and the regulations thereunder. The limitation on the application of treaty benefits in section 884(e)(3)(B) (relating to qualified residents) shall apply to a foreign corporation described in this paragraph (h).

(i) ***Effective date*** —

(1) ***General rule.*** This section is effective for taxable years beginning on or after October 13, 1992. With respect to a taxable year beginning before October 13, 1992 and after December 31, 1986, a foreign corporation may elect to apply this section in lieu of § 1.884-1T of the temporary regulations (as contained in the CFR edition revised as of April 1, 1992), but only if the foreign corporation also makes an election under § 1.884-4 (e) to apply § 1.884.4 in lieu of § 1.884-4T (as contained in the CFR edition revised as of April 1, 1992) for that taxable year, and the statute of limitations for assessment of a deficiency has not expired for that taxable year. Once an election has been made, an election under this section shall apply to all subsequent taxable years. However, paragraph (f)(2)(vi) of this section (relating to certain interest income of Possessions banks) shall not apply for taxable years beginning before January 1, 1990.

(2) ***Election to reduce liabilities.*** A foreign corporation may make an election to reduce its liabilities under paragraph (e)(3) of this section with respect to a taxable year for which an election under paragraph (i)(1) of this section is in effect by filing an amended return for the taxable year and recomputing its interest deduction and any other item affected by the election on an amended Form 1120F to take into account the reduction in liabilities for such year.

(3) ***Separate election for installment obligations.*** A foreign corporation may make a separate election to apply paragraphs (d)(2)(iii) and (d)(6)(ii) of this section (relating to installment obligations treated as U.S. assets) to any prior taxable year without making an election under paragraph (i)(1) of this section, provided the statute of limitations for assessment of a deficiency has not expired for that taxable year and each succeeding taxable year. Once an election under this paragraph (i)(3) has been made, it shall apply to all subsequent taxable years.

(4) ***Special rules for certain U.S. assets and liabilities.*** Paragraphs (c)(2) (i) and (ii), (d)(3), (d)(4), (d)(5)(iii), (d)(6)(iii), (d)(6)(vi), (e)(2), and (e)(3)(ii), of this section are effective for taxable years beginning on or after June 6, 1996.

(j) ***Transition rules*** —

(1) ***General rule.*** Except as provided in paragraph (j)(2) of this section, in order to compute its dividend equivalent amount in the first taxable year to which this section applies (whether or not such year begins before October 13, 1992, a foreign corporation must recompute its U.S. net equity as of close of the preceding taxable year using the rules of this section and use such recomputed amount, rather than the amount computed under § 1.884-1T (as contained in the CFR edition revised as of April 1, 1992), to determine the amount of any increase or decrease in the U.S. net equity as of the close of that taxable year.

(2) ***Installment obligations*** —

(i) ***Interest election.*** In recomputing its U.S. net equity as of the close of the preceding taxable year, a foreign corporation that holds an installment obligation treated as a U.S. asset under § 1.884-1T(d)(7) (as contained in the CFR edition revised as of April 1, 1992) as of such date may apply the rules of paragraph (d)(2)(iii) of this section without regard to the rule in that paragraph that requires interest or original issue discount on the obligation to be treated as ECI in order for such obligation to be treated as a U.S. asset.

(ii) ***1987 sales by certain foreign corporations.*** The E&P basis of an installment obligation arising in connection with a sale of property by a foreign corporation described in section 312(k)(4), where such sale occurs in a taxable year beginning in 1987, shall equal the E&P basis of the property sold as of the determination date reduced by payments received with respect to the obligation that do not represent gain for earnings and profits purposes, interest or original issue discount.

[T.D. 8432, 57 FR 41651, Sept. 11, 1992; 57 FR 49117, Oct. 29, 1992; 57 FR 60126, Dec. 18, 1992; 58 FR 17166, Apr. 1, 1993, as amended by T.D. 8657, 61 FR 9338, Mar. 8, 1996; 61 FR 14247, Apr. 1, 1996; T.D. 9281, 71 FR 47451, Aug. 17, 2006; T.D. 9465, 74 FR 49320, Sept. 28, 2009; 74 FR 57252, Nov. 5, 2009]

§ 1.884-2 Special rules for termination or incorporation of a U.S. trade or business or liquidation or reorganization of a foreign corporation or its domestic subsidiary.

(a)-(a)(2)(i) [Reserved]. For further information, see § 1.884-2T(a) through (a)(2)(ii).

(a) (2)(ii) *Waiver of period of limitations.* The waiver referred to in § 1.884-2T(a)(2)(i)(D) shall be executed on Form 8848, or substitute form, and shall extend the period for assessment of the branch profits tax for the year of complete termination to a date not earlier than the close of the sixth taxable year following that taxable year. This form shall include such information as is required by the form and accompanying instructions. The waiver must be signed by the person authorized to sign the income tax returns for the foreign corporation (including an agent authorized to do so under a general or specific power of attorney). The waiver must be filed on or before the date (including extensions) prescribed for filing the foreign corporation's income tax return for the year of complete termination. With respect to a complete termination occurring in a taxable year ending prior to June 6, 1996 a foreign corporation may also satisfy the requirements of this paragraph (a)(2)(ii) by applying § 1.884-2T(a)(2)(ii) of the temporary regulations (as contained in the CFR edition revised as of April 1, 1995). A properly executed Form 8848, substitute

form, or other form of waiver authorized by this paragraph (a)(2)(ii) shall be deemed to be consented to and signed by a Service Center Director or the Assistant Commissioner (International) for purposes of § 301.6501(c)-1(d) of this chapter.

(a) (3)-(4) [Reserved]. For further information, see § 1.884-2T(a)(3) through (a)(4).

(a) (5) *Special rule if a foreign corporation terminates an interest in a trust.* A foreign corporation whose beneficial interest in a trust terminates (by disposition or otherwise) in any taxable year shall be subject to the branch profits tax on ECEP attributable to amounts (including distributions of accumulated income or gain) treated as ECI to such beneficiary in such taxable year notwithstanding any other provision of § 1.884-2T(a).

(b) through (c) (2)(ii) [Reserved]. For further information, see § 1.884-2T (b) through (c)(2)(ii).

(c) (2)(iii) *Waiver of period of limitations and transferee agreement.* In the case of a transferee that is a domestic corporation, the provisions of § 1.884-2T(c)(2)(i) shall not apply unless, as part of the section 381(a) transaction, the transferee executes a Form 2045 (Transferee Agreement) and a waiver of period of limitations as described in this paragraph (c)(2)(iii), and files both documents with its timely filed (including extensions) income tax return for the taxable year in which the section 381(a) transaction occurs. The waiver shall be executed on Form 8848, or substitute form, and shall extend the period for assessment of any additional branch profits tax for the taxable year in which the section 381(a) transaction occurs to a date not earlier than the close of the sixth taxable year following the taxable year in which such transaction occurs. This form shall include such information as is required by the form and accompanying instructions. The waiver must be signed by the person authorized to sign Form 2045. With respect to a complete termination occurring in a taxable year ending prior to June 6, 1996 a foreign corporation may also satisfy the requirements of this paragraph (c)(2)(iii) by applying § 1.884-2T(c)(2)(iii) of the temporary regulations (as contained in the CFR edition revised as of April 1, 1995). A properly executed Form 8848, substitute form, or other form of waiver authorized by this paragraph (c)(2)(iii) shall be deemed to be consented to and signed by a Service Center Director or the Assistant Commissioner (International) for purposes of § 301.6501(c)-1(d) of this chapter.

(c) (3) through (c)(6)(i)(A) [Reserved]. For further guidance, see § 1.884-2T(c)(3) through (c)(6)(i)(A).

(B) Shareholders of the transferee (or of the transferee's parent in the case of a triangular reorganization described in section 368(a)(1)(C) or a reorganization described in sections 368(a)(1)(A) and 368(a)(2)(D) or (E)) who in the aggregate owned more than 25 percent of the value of the stock of the transferor at any time within the 12-month period preceding the close of the year in which the section 381(a) transaction occurs sell, exchange or otherwise dispose of their stock or securities in the transferee at any time during a period of three years from the close of the taxable year in which the section 381(a) transaction occurs.

(C) In the case of a triangular reorganization described in section 368(a)(1)(C) or a reorganization described in sections 368(a)(1)(A) and 368(a)(2)(D) or (E), the transferee's parent sells, exchanges, or otherwise disposes of its stock or securities in the transferee at any time during a period of three years from the close of the taxable year in which the section 381(a) transaction occurs.

(D) A corporation related to any such shareholder or the shareholder itself if it is a corporation (subsequent to an event described in paragraph (c)(6)(i)(A) or (B) of this section) or the transferee's parent (subsequent to an event described in paragraph (c)(6)(i)(C) of this section), uses, directly or indirectly, the proceeds or property received in

such sale, exchange or disposition, or property attributable thereto, in the conduct of a trade or business in the United States at any time during a period of three years from the date of sale in the case of a disposition of stock in the transferor, or from the close of the taxable year in which the section 381(a) transaction occurs in the case of a disposition of the stock or securities in the transferee (or the transferee's parent in the case of a triangular reorganization described in section 368(a)(1)(C) or a reorganization described in sections 368(a)(1)(A) and (a)(2)(D) or (E)). Where this paragraph (c)(6)(i) applies, the transferor's branch profits tax liability for the taxable year in which the section 381(a) transaction occurs shall be determined under § 1.884-1, taking into account all the adjustments in U.S. net equity that result from the transfer of U.S. assets and liabilities to the transferee pursuant to the section 381(a) transaction, without regard to any provisions in this paragraph (c). If an event described in paragraph (c)(6)(i)(A), (B), or (C) of this section occurs after the close of the taxable year in which the section 381(a) transaction occurs, and if additional branch profits tax is required to be paid by reason of the application of this paragraph (c)(6)(i), then interest must be paid on that amount at the underpayment rates determined under section 6621(a)(2), with respect to the period between the date that was prescribed for filing the transferor's income tax return for the year in which the section 381(a) transaction occurs and the date on which the additional tax for that year is paid. Any such additional tax liability together with interest thereon shall be the liability of the transferee within the meaning of section 6901 pursuant to section 6901 and the regulations thereunder.

(c) (6)(ii)-(f) [Reserved]. For further guidance, see § 1.884-2T(c)(6)(ii) through (f).

(g) *Effective dates.* Paragraphs (a)(2)(ii) and (c)(2)(iii) of this section are effective for taxable years beginning after December 31, 1986. Paragraph (a)(5) of this section is effective for taxable years beginning on or after June 6, 1996. Paragraphs (c)(6)(i)(B), (C), and (D), are applicable for tax years beginning after December 31, 1986, except that such paragraphs are applicable to transactions occurring on or after January 23, 2006, in the case of reorganizations described in sections 368(a)(1)(A) and 368(a)(2)(D) or (E).

[T.D. 8657, 61 FR 9341, Mar. 8, 1996, as amended by T.D. 9243, 71 FR 4292, Jan. 26, 2006]

§ 1.884-2T Special rules for termination or incorporation of a U.S. trade or business or liquidation or reorganization of a foreign corporation or its domestic subsidiary (temporary).

(a) ***Complete termination of a U.S. trade or business*** —

(1) ***General rule.*** A foreign corporation shall not be subject to the branch profits tax for the taxable year in which it completely terminates all of its U.S. trade or business within the meaning of paragraph (a)(2) of this section. A foreign corporation's non-previously taxed accumulated effectively connected earnings and profits as of the close of the taxable year of complete termination shall be extinguished for purposes of section 884 and the regulations thereunder, but not for other purposes (for example, sections 312, 316 and 381).

(2) ***Operating rules*** —

(i) ***Definition of complete termination.*** A foreign corporation shall have completely terminated all of its U.S. trade or business for any taxable year ("the year of complete termination") only if—

(A) As of the close of that taxable year, the foreign corporation either has no U.S. assets, or its shareholders have adopted an irrevocable resolution in that taxable year to completely liquidate and dissolve the corporation and, before the close of the immediately succeeding taxable year (also a "year of complete termination" for purposes of applying this paragraph (a)(2)), all of its U.S. assets are either distributed, used to pay off liabilities, or cease to be U.S. assets;

(B) Neither the foreign corporation nor a related corporation uses, directly or indirectly, any of the U.S. assets of the terminated U.S. trade or business, or property attributable thereto or to effectively connected earnings and profits earned by the foreign corporation in the year of complete termination, in the conduct of a trade or business in the United States at any time during a period of three years from the close of the year of complete termination;

(C) The foreign corporation has no income that is, or is treated as, effectively connected with the conduct of a trade or business in the United States (other than solely by reason of section 864 (c)(6) or (c)(7)) during the period of three years from the close of the year of complete termination; and

(D) The foreign corporation attaches to its income tax return for each year of complete termination a waiver of the period of limitations, as described in paragraph (a)(2)(ii) of this section.

If a foreign corporation fails to completely terminate all of its U.S. trade or business because of the failure to meet any of the requirements of this paragraph (a)(2), then its branch profits tax liability for the taxable year and all subsequent taxable years shall be determined under the provisions of § 1.884-1, without regard to any provisions in this paragraph (a), taking into account any reduction in U.S. net equity that results from a U.S. trade or business of the foreign corporation ceasing to have U.S. assets. Any additional branch profits tax liability that may result, together with interest thereon (charged at the underpayment rates determined under section 6621(a)(2) with respect to the period between the date that was prescribed for filing the foreign corporation's income tax return for the taxable year with respect to which the branch profits tax liability arises and the date on which the additional tax for that year is paid), and applicable penalties, if any, shall be the liability of the foreign corporation (or of any person who is a transferee of the foreign corporation within the meaning of section 6901).

(ii) ***Waiver of period of limitations.*** [Reserved]. See § 1.884-2(a)(2)(ii) for rules relating to this paragraph.

(iii) ***Property subject to reinvestment prohibition rule.*** For purposes of paragraph (a)(2)(i)(B) of this section—

(A) The term *U.S. assets of the terminated U.S. trade or business* shall mean all the money and other property that qualified as U.S. assets of the foreign corporation as of the close of the taxable year immediately preceding the year of complete termination; and

(B) Property attributable to U.S. assets or to effectively connected earnings and profits earned by the foreign corporation in the year of complete termination shall mean money or other property into which any part or all of such assets or effectively connected earnings and profits are converted at any time before the expiration of the three-year period specified in paragraph (a)(2)(i)(B) of this section by way of sale, exchange, or other disposition, as well as any money or other property attributable to the sale by a shareholder of the foreign corporation of its interest in the foreign corporation (or a successor corporation) at any time after a date which is 12 months before the close of the year of complete termination (24 months in the case of a foreign corporation that makes an election under paragraph (b) of this section).

(iv) ***Related corporation.*** For purposes of paragraph (a)(2)(i)(B) of this section, a corporation shall be related to a foreign corporation if either corporation is a 10-percent shareholder of the other corporation or, where the foreign corporation completely liquidates, if either corporation would

have been a 10-percent shareholder of the other corporation had the foreign corporation remained in existence. For this purpose, the term *10-percent shareholder* means any person described in section 871(h)(3)(B) as well as any person who owns 10 percent or more of the total value of the stock of the corporation, and stock ownership shall be determined on the basis of the attribution rules described in section 871(h)(3)(C).

(v) ***Direct or indirect use of U.S. assets.*** The use of any part or all of the property referred to in paragraph (a)(2)(i)(B) of this section shall include the loan thereof to a related corporation or the use thereof as security (as a pledge, mortgage, or otherwise) for any indebtedness of a related corporation.

(3) ***Complete termination in the case of a section 338 election.*** A foreign corporation whose stock is acquired by another corporation that makes (or is deemed to make) an election under section 338 with respect to the stock of the foreign corporation shall be treated as having completely liquidated as of the close of the acquisition date (as defined in section 338(h)(2)) and to have completely terminated all of its U.S. trade or business with respect to the taxable year ending on such acquisition date provided the foreign corporation that exists prior to the section 338 transaction complies with the requirements of paragraph (a)(2)(i) (B) and (D) of this section. For purposes of the preceding sentence, any of the money or other property paid as consideration for the acquisition of the stock in the foreign corporation (and for any debt claim against the foreign corporation) shall be treated as property attributable to the U.S. assets of the terminated U.S. trade or business and to the effectively connected earnings and profits of the foreign corporation earned in the year of complete termination.

(4) ***Complete termination in the case of a foreign corporation with income under section 864(c)(6) or 864(c)(7).*** No branch profits tax shall be imposed on effectively connected earnings and profits attributable to income that is treated as effectively connected with the conduct of a trade or business in the United States solely by reason of section 864(c)(6) or 864(c)(7) if—

(i) No income of the foreign corporation for the taxable year is, or is treated as, effectively connected with the conduct of a trade or business in the United States, without regard to section 864(c)(6) or 864(c)(7),

(ii) The foreign corporation has no U.S. assets as of the close of the taxable year, and

(iii) Such effectively connected earnings and profits would not have been subject to branch profits tax pursuant to the complete termination provisions of paragraph (a)(1) of this section if income or gain subject to section 864(c)(6) had not been deferred or if property subject to section 864(c)(7) had been sold immediately prior to the date the property ceased to have been used in the conduct of a trade or business in the United States.

(5) ***Special rule if a foreign corporation terminates an interest in a trust.*** [Reserved]. See § 1.884-2(a)(5) for rules relating to this paragraph.

(6) ***Coordination with second-level withholding tax.*** Effectively connected earnings and profits and non-previously taxed accumulated effectively connected earnings and profits of a foreign corporation that are exempt from branch profits tax by reason of the provisions of paragraph (a)(1) of this section shall not be subject to tax under section 871(a), 881(a), 1441 or 1442 when paid as a dividend by such foreign corporation (or a successor-in-interest).

(b) ***Election to remain engaged in a U.S. trade or business*** —

(1) ***General rule.*** A foreign corporation that would be considered to have completely terminated all of its U.S. trade or business for the taxable year under the provisions of paragraph (a)(2)(i) of this section, but for the provisions of paragraph (a)(2)(i)(B) of this section that prohibit reinvestment within a three-year period, may make an election under this paragraph (b) for the taxable year in which it completely terminates all its U.S. trade or business (as determined without regard to paragraph (a)(2)(i)(B) of this section) and, if it so chooses, for the following taxable year (but not for any succeeding taxable year). The election under this paragraph (b) is an election by the foreign corporation to designate an amount of marketable securities as U.S. assets for purposes of § 1.884-1. The marketable securities identified pursuant to the election under paragraph (b)(3) of this section shall be treated as being U.S. assets in an amount equal, in the aggregate, to the lesser of the adjusted basis of the U.S. assets that ceased to be U.S. assets during the taxable year in which the election is made (determined on the date or dates the U.S. assets ceased to be U.S. assets) or the adjusted basis of the marketable securities as of the end of the taxable year. The securities must be held from the date that they are identified until the end of the taxable year for which the election is made, or if disposed of during the taxable year, must be replaced on the date of disposition with other marketable securities that are acquired on or before that date and that have a fair market value as of the date of substitution not less than their adjusted basis.

(2) ***Marketable security.*** For purposes of this paragraph (b), the term *marketable security* means a security (including stock) that is part of an issue any portion of which is regularly traded on an established securities market (within the meaning of § 1.884-5(d)(2) and (4)) and a deposit described in section 871(i)(3) (A) or (B).

(3) ***Identification requirements.*** In order to qualify for this election—

(i) The marketable securities must be identified on the books and records of the U.S. trade or business within 30 days of the date an equivalent amount of U.S. assets ceases to be U.S. assets; and

(ii) On the date a marketable security is identified, its adjusted basis must not exceed its fair market value.

(4) ***Treatment of income from deemed U.S. assets.*** The income or gain from the marketable securities (or replacement securities) subject to an election under this paragraph (b) that arises in a taxable year for which an election is made shall be treated as ECI (other than for purposes of section 864(c)(7)), and losses from the disposition of such marketable securities shall be allocated entirely to income that is ECI. In addition, all such securities shall be treated as if they had been sold for their fair market value on the earlier of the last business day of a taxable year for which an election is in effect or the day immediately prior to the date of substitution by the foreign corporation of a U.S. asset for the marketable security, and any gain (but not loss) and accrued interest on the securities shall also be treated as ECI. The adjusted basis of such property shall be increased by the amount of any gain recognized by reason of this paragraph (b).

(5) ***Method of election.*** A foreign corporation may make an election under this paragraph (b) by attaching to its income tax return for the taxable year a statement—

(i) Identifying the marketable securities treated as U.S. assets under this paragraph (b);

(ii) Setting forth the E&P bases of such securities; and

(iii) Agreeing to treat any income, gain or loss as provided in paragraph (b)(4) of this section.

Such statement must be filed on or before the due date (including extensions) of the foreign corporation's income tax return for the taxable year. A foreign corporation shall not be permitted to make an election under this paragraph (b) more than once.

(6) ***Effective date.*** This paragraph (b) is effective for taxable years beginning on or after October 13, 1992. However, if a foreign corporation has made a valid election under § 1.884-1(i) to apply that section with respect to a taxable year beginning before October 13, 1992 and after December 31 1986, this paragraph (b) shall be effective beginning with such taxable year.

(c) ***Liquidation, reorganization, etc. of a foreign corporation.*** The following rules apply to the transfer by a foreign corporation engaged (or deemed engaged) in the conduct of a U.S. trade or business (the "transferor") of its U.S. assets to another corporation (the "transferee") in a complete liquidation or reorganization described in section 381(a) (a "section 381(a) transaction") if the transferor is engaged (or deemed engaged) in the conduct of a U.S. trade or business immediately prior to the section 381(a) transaction. For purposes of this paragraph (c), a section 381(a) transaction is considered to occur in the taxable year that ends on the date of distribution or transfer (as defined in § 1.381(b)-1(b)) pursuant to the section 381(a) transaction.

(1) ***Inapplicability of paragraph (a)(1) of this section to section 381(a) transactions.*** Paragraph (a)(1) of this section (relating to the complete termination of a U.S. trade or business of a foreign corporation) does not apply to exempt the transferor from branch profits tax liability for the taxable year in which the section 381(a) transaction occurs or in any succeeding taxable year.

(2) ***Transferor's dividend equivalent amount for the taxable year in which a section 381(a) transaction occurs.*** The dividend equivalent amount for the taxable year, including a short taxable year, in which a section 381(a) transaction occurs shall be determined under the provisions of § 1.884-1, as modified under the provisions of this paragraph (c)(2).

(i) ***U.S. net equity.*** The transferor's U.S. net equity as of the close of the taxable year shall be determined without regard to any transfer in that taxable year of U.S. assets to or from the transferee pursuant to a section 381(a) transaction, and without regard to any U.S. liabilities assumed or acquired by the transferee from the transferor in that taxable year pursuant to a section 381(a) transaction. The transferor's adjusted basis (for earnings and profits purposes) in U.S. assets transferred to the transferee pursuant to a section 381(a) transaction shall be the adjusted basis of those assets (for earnings and profits purposes) immediately prior to the section 381(a) transaction, adjusted as provided under section 362(b), treating the transferor, for that purpose, as though it were the transferee and treating the gain taken into account for earnings and profits purposes as gain recognized.

(ii) ***Effectively connected earnings and profits.*** The transferor's effectively connected earnings and profits for the taxable year in which the section 381(a) transaction occurs and its non-previously taxed accumulated effectively connected earnings and profits shall be determined without regard to the carryover to the transferee of the transferor's earnings and profits under section 381 (a) and (c)(2) and paragraph (c)(4) of this section. Effectively connected earnings and profits for the taxable year in which a section 381(a) transaction occurs shall be adjusted by the amount of any gain recognized to the transferor in that year pursuant to the section 381(a) transaction (to the extent taken into account for earnings and profits purposes).

(iii) ***Waiver of period of limitations and transferee agreement.*** [Reserved]. See § 1.884-2(c)(2)(iii) for rules relating to this paragraph.

(3) ***Transferor's dividend equivalent amount for any taxable year succeeding the taxable year in which the section 381(a) transaction occurs.*** Any decrease in U.S. net equity in any taxable year succeeding the taxable year in which the section 381(a) transaction occurs shall increase the transferor's dividend equivalent amount for those years without regard to the limitation in § 1.884-1(b)(3)(ii), to the extent such decrease in U.S. net equity does not exceed the balance of effectively connected earnings and profits and non-previously taxed accumulated effectively connected earnings and profits carried over to the transferee pursuant to section 381 (a) and (c)(2), as determined under paragraph (c)(4) of this section.

(4) ***Earnings and profits of the transferor carried over to the transferee pursuant to the section 381(a) transaction*** —

(i) ***Amount.*** The amount of effectively connected earnings and profits and non-previously taxed accumulated effectively connected earnings and profits of the transferor that carry over to the transferee under section 381 (a) and (c)(2) shall be the effectively connected earnings and profits and the non-previously taxed accumulated effectively connected earnings and profits of the transferor immediately before the close of the taxable year in which the section 381(a) transaction occurs. For this purpose, the provisions in § 1.381(c)(2)-1 shall generally apply with proper adjustments to reflect the fact that effectively connected earnings and profits and non-previously taxed accumulated effectively connected earnings and profits are not affected by distributions to shareholders but, rather, by dividend equivalent amounts. Therefore, the amounts of effectively connected earnings and profits and non-previously taxed accumulated effectively connected earnings and profits that carry over to the transferee pursuant to those provisions are reduced by the transferor's dividend equivalent amount for the taxable year in which the section 381(a) transaction occurs. Such amounts are also reduced to the extent of any dividend equivalent amount determined for any succeeding taxable year solely as a result of the provisions of paragraph (c)(3) of this section. For purposes of this paragraph (c)(4)(i), if the transferor accumulates non-previously taxed effectively connected earnings and profits, or incurs a deficit in effectively connected earnings and profits, attributable to a period that is after the close of the taxable year in which the section 381(a) transaction occurs and before the liquidation of the transferor, then such effectively connected earnings and profits, or deficits therein, shall be deemed to have been accumulated or incurred on or before the close of the taxable year in which the section 381(a) transaction occurs.

(ii) ***Retention of character.*** All of the transferor's effectively connected earnings and profits and non-previously taxed accumulated effectively connected earnings and profits that carry over to the transferee shall constitute non-previously taxed accumulated effectively connected earnings and profits of the transferee. In the case of a domestic transferee, such non-previously taxed accumulated effectively connected earnings and profits shall also constitute accumulated earnings and profits of the transferee for purposes of section 316(a)(2).

(iii) ***Treatment of distributions by a domestic transferee out of non-previously taxed accumulated effectively connected earnings and profits.*** In the event the transferee is a domestic corporation, distributions out of the transferee's non-previously taxed accumulated effectively connected earnings and profits that are received by a foreign distributee shall qualify for benefits under an applicable income tax treaty only

(A) if the distributee qualifies for the benefits under such treaty and

(B) to the extent that the transferor foreign corporation would have qualified under the principles of § 1.884-1(g) (1) and (2)(i) for an exemption or reduction in rate with respect to the branch profits tax if the non-previously taxed accumulated effectively connected earnings and profits had been reflected in a dividend equivalent amount for the taxable year in which the section 381(a) transaction occurs. (The tax rate on dividends specified in the treaty between the distributee's country of residence and the United States shall apply to any dividends received by a distributee who qualifies for a treaty benefit under the preceding sentence.) In addition, distributions out of such non-previously taxed accumulated effectively connected earnings and profits shall retain their character in the hands of any domestic distributee up a chain of corporate shareholders for purposes of applying this paragraph (c)(4)(iii) to distributions made by any such person to a foreign distributee. If a domestic transferee has non-previously taxed accumulated effectively connected earnings and profits carried over from the transferor as well as accumulated earnings and profits, then each category of earnings and profits shall be accounted for in two separate pools, and any distribution of earnings and profits shall be treated as a distribution out of each pool in proportion to the respective amount of undistributed earnings and profits in each pool. Section 871(i) (relating, in part, to dividends paid by a domestic corporation meeting the 80-percent foreign business requirements of section 861(c)(1)) shall not apply to any dividends paid by a domestic transferee out of its non-previously taxed accumulated effectively connected earnings and profits.

(5) ***Determination of U.S. net equity of a transferee that is a foreign corporation.*** In the event the transferee is a foreign corporation, then for purposes of determining the transferee's increase or decrease in U.S. net equity under § 1.884-1 for its taxable year during which the section 381(a) transaction occurs, its U.S. net equity as of the close of its immediately preceding taxable year shall be increased by the amount of U.S. net equity acquired by the transferee from the transferor pursuant to the section 381(a) transaction, taking into account the adjustments to the basis (for earnings and profits purposes) of U.S. assets under the principles of section 362(b).

(6) ***Special rules in the case of the disposition of stock or securities in a domestic transferee or in the transferor —***

(i) ***General rule.*** This paragraph (c)(6)(i) shall apply where the transferee is a domestic corporation, subdivision (A), (B), or (C) of this paragraph applies and subdivision (D) of this paragraph applies.

(A) Shareholders of the transferor sell, exchange or otherwise dispose of stock in the transferor at any time during a 12-month period before the date of distribution or transfer (as defined in § 1.381(b)-1(b)) and the aggregate amount of such stock sold, exchanged or otherwise disposed of exceeds 25 percent of the value of the stock of the transferor, determined on a date that is 12 months before the date of distribution or transfer.

(B) , (C), and (D) [Reserved]. For further guidance, see § 1.884-2(c)(6)(i)(B), (C), and (D).

Where this paragraph (c)(6)(i) applies, the transferor's branch profits tax liability for the taxable year in which the section 381(a) transaction occurs shall be determined under § 1.884-1, taking into account all the adjustments in U.S. net equity that result from the transfer of U.S. assets and liabilities to the transferee pursuant to the section 381(a) transaction, without regard to any provisions in this paragraph (c). If an event described in paragraph (c)(6)(i) (A), (B), or (C) of this section occurs after the close of the taxable year in which the section 381(a) transaction occurs, and if additional branch profits tax is required to be paid by reason of the application of

this paragraph (c)(6)(i), then interest must be paid on that amount at the underpayment rates determined under section 6621(a)(2), with respect to the period between the date that was prescribed for filing the transferor's income tax return for the year in which the section 381(a) transaction occurs and the date on which the additional tax for that year is paid. Any such additional tax liability together with interest thereon shall be the liability of the transferee within the meaning of section 6901 pursuant to section 6901 and the regulations thereunder.

(ii) ***Operating rule.*** For purposes of paragraph (c)(6)(i) of this section paragraphs (a)(2) (iii)(B), (iv) and (v) of this section shall apply for purposes of making the determinations under paragraph (c)(6)(i)(D) of this section.

(d) ***Incorporation under section 351*** —

(1) ***In general.*** The following rules apply to the transfer by a foreign corporation engaged (or deemed engaged) in the conduct of a U.S. trade or business (the "transferor") of part or all of its U.S. assets to a U.S. corporation (the "transferee") in exchange for stock or securities in the transferee in a transaction that qualifies under section 351(a) (a "section 351 transaction"), provided that immediately after the transaction, the transferor is in control (as defined in section 368(c)) of the transferee, without regard to other transferors.

(2) ***Inapplicability of paragraph (a)(1) of this section to section 351 transactions.*** Paragraph (a)(1) of this section does not apply to exempt the transferor from branch profits tax liability for the taxable year in which a section 351 transaction described in paragraph (d)(1) of this section occurs and shall not apply for any subsequent taxable year of the transferor in which it, or a successor-in-interest, owns stock or securities of a transferee as of the close of the transferor's taxable year.

(3) ***Transferor's dividend equivalent amount for the taxable year in which a section 351 transaction occurs.*** The dividend equivalent amount of the transferor for the taxable year in which a section 351 transaction described in paragraph (d)(1) of this section occurs shall be determined under the provisions of § 1.884-1, as modified by the provisions of this paragraph (d)(3) provided that the transferee elects under paragraph (d)(4) of this section to be allocated a proportionate amount of the transferor's effectively connected earnings and profits and non-previously taxed accumulated effectively connected earnings and profits and the foreign corporation files a statement as provided in paragraph (d)(5)(i) of this section and complies with the agreement included in such statement with respect to a subsequent disposition of the transferee's stock.

(i) ***U.S. net equity.*** The transferor's U.S. net equity as of the close of the taxable year shall be determined without regard to any transfer in that taxable year of U.S. assets to or from the transferee pursuant to a section 351 transaction, and without regard to any U.S. liabilities assumed or acquired by the transferee from the transferor in that taxable year pursuant to a section 351 transaction. The transferor's adjusted basis for earnings and profits purposes in U.S. assets transferred to the transferee pursuant to a section 351 transaction shall be the adjusted basis of those assets for earnings and profits purposes immediately prior to the section 351 transaction, increased by the amount of any gain recognized by the transferor on the transfer of such assets in the section 351 transaction to the extent taken into account for earnings and profits purposes.

(ii) ***Effectively connected earnings and profits.*** Subject to the limitation in paragraph (d)(3)(iii) of this section, the calculation of the transferor's dividend equivalent amount shall take into account the transferor's effectively connected earnings and profits for the taxable year in which a section 351 transaction occurs (including any amount of gain recognized to the transferor

pursuant to the section 351 transaction to the extent the gain is taken into account for earnings and profits purposes) and, for purposes of applying the limitation of § 1.884-1(b)(3)(ii), its non-previously taxed accumulated effectively connected earnings and profits, determined without regard to the allocation to the transferee of the transferor's effectively connected earnings and profits and non-previously taxed accumulated effectively connected earnings and profits pursuant to the election under paragraph (d)(4)(i) of this section.

(iii) ***Limitation on dividend equivalent amount.*** The dividend equivalent amount determined under this paragraph (d)(3) shall not exceed the sum of the transferor's effectively connected earnings and profits and non-previously taxed accumulated effectively connected earnings and profits determined after taking into account the allocation to the transferee of the transferor's earnings pursuant to an election under paragraph (d)(4)(i) of this section.

(4) ***Election to increase earnings and profits*** —

(i) ***General rule.*** The election referred to in paragraph (d)(3) of this section is an election by the transferee to increase its earnings and profits by the amount determined under paragraph (d)(4)(ii) of this section. An election under this paragraph (d)(4)(i) shall be effective only if the transferee attaches a statement to its timely filed (including extensions) income tax return for the taxable year in which the section 351 transaction occurs, in which—

(A) It agrees to be subject to the rules of paragraph (c)(4) (ii) and (iii) of this section with respect to the transferor's effectively connected earnings and profits and non-previously taxed accumulated effectively connected earnings and profits allocated to the transferee pursuant to the election under this paragraph (d)(4)(i) in the same manner as if such earnings and profits had been carried over to the transferee pursuant to section 381 (a) and (c)(2), and

(B) It identifies the amount of effectively connected earnings and profits and non-previously taxed accumulated effectively connected earnings and profits that are allocated from the transferor.

An election with respect to a taxable year ending on or before December 1, 1988, may be made by filing an amended Form 1120F on or before January 3, 1988, to which the statement described in this paragraph (d)(4)(i) shall be attached.

(ii) ***Amount of the transferor's effectively connected earnings and profits and non-previously taxed accumulated effectively connected earnings and profits allocated to the transferee.*** The amount referred to in paragraph (d)(4)(i) of this section is equal to the same proportion of the transferor's effectively connected earnings and profits and non-previously taxed accumulated effectively connected earnings and profits (determined immediately prior to the section 351 transaction and without regard to this paragraph (d)(4) or any dividend equivalent amount for the taxable year) that the adjusted bases for purposes of computing earnings and profits in all the U.S. assets transferred to the transferee by the transferor pursuant to the section 351 transaction bear to the adjusted bases for purposes of computing earnings and profits in all the U.S. assets of the transferor, determined immediately prior to the section 351 transaction.

(iii) ***Effect of election on transferor.*** For purposes of computing the transferor's dividend equivalent amount for the taxable year succeeding the taxable year in which a section 351 transaction occurs, the transferor's effectively connected earnings and profits and non-previously taxed accumulated effectively connected earnings and profits as of the close of the taxable year in which the section 351 transaction occurs shall be reduced by the amount of its effectively

connected earnings and profits and non-previously taxed accumulated effectively connected earnings and profits allocated to the transferee pursuant to the election under paragraph (d)(4)(i) of this section (and by its dividend equivalent amount for the taxable year in which the section 351 transaction occurs).

(5) ***Dispositions of stock or securities of the transferee by the transferor*** —

(i) ***General rule.*** The statement referred to in paragraph (d)(3) of this section is a statement executed by the transferor stating the transferor's agreement that, upon the disposition of part or all of the stock or securities it owns in the transferee (or a successor-in-interest), it shall treat as a dividend equivalent amount for the taxable year in which the disposition occurs an amount equal to the lesser of

(A) the amount realized upon such disposition or

(B) the total amount of effectively connected earnings and profits and non-previously taxed accumulated effectively connected earnings and profits that was allocated from the transferor to that transferee pursuant to an election under paragraph (d)(4)(i) of this section, which amount shall be reduced to the extent previously taken into account by the transferor as dividends or dividend equivalent amounts for tax or branch profits, tax purposes. The extent and manner in which such dividend equivalent amount may be subject to the branch profits tax in the taxable year of disposition shall be determined under the provisions of section 884 and the regulations thereunder, including the provisions of paragraph (a) of this section (relating to complete terminations), as limited under paragraph (d)(2) of this section. Except as otherwise provided in paragraph (d)(5)(ii) of this section, the term *disposition* means any transfer that would constitute a disposition by the transferor for any purpose of the Internal Revenue Code and the regulations thereunder. This paragraph (d)(5)(i) shall apply regardless of whether the stock or securities of the transferee are U.S. assets in the hands of the transferor at the time of sale, exchange or disposition.

(ii) ***Exception for certain tax-free dispositions.*** For purposes of paragraph (d)(5)(i) of this section, a disposition does not include a transfer of stock or securities of the transferee by the transferor in a transaction that qualifies as a transfer pursuant to a complete liquidation described in section 332(b) or a transfer pursuant to a reorganization described in section 368(a)(1)(F). Any other transfer that qualifies for non-recognition of gain or loss shall be treated as a disposition for purposes of paragraph (d)(5)(i) of this section, unless the Commissioner has, by published guidance or by prior ruling issued to the taxpayer upon its request, determined such transfer not to be a disposition for purposes of paragraph (d)(5)(i) of this section.

(iii) ***Distributions governed by section 355.*** In the case of a distribution or exchange of stock or securities of a transferee to which section 355 applies (or so much of section 356 as relates to section 355) and that is not in pursuance of a plan meeting the requirements of a reorganization as defined in section 368(a)(1)(D), § 1.3l2-10(b) (relating to the allocation of earnings and profits in certain corporate separations) shall not apply to reduce the transferor's effectively connected earnings and profits or non-previously taxed accumulated effectively connected earnings and profits.

(iv) ***Filing of statement.*** The statement referred to in paragraph (d)(5)(i) of this section shall be attached to a timely filed (including extensions) income tax return of the transferor for the taxable year in which the section 351 transaction occurs. An election with respect to a taxable

year ending on or before December 1, 1988, may be made by filing an amended Form 1120F on or before January 3, 1988, to which the statement described in this paragraph (d)(5)(iv) shall be attached.

(6) ***Example.*** The provisions of this paragraph (d) are illustrated by the following example.

Example. Foreign corporation X has a calendar taxable year. X's only assets are U.S. assets and X computes its interest deduction using the actual ratio of liabilities to assets under § 1.882-5(b)(2)(ii). X's U.S. net equity as of the close of its 1988 taxable year is $2,000, resulting from the following amounts of U.S. assets and liabilities:

U.S. assets		U.S. liabilities	
U.S. building A	$l,000	Mortgage A	800
U.S. building B	2,500	Mortgage B	1,500
Other U.S. assets	800		
Total	4,300		2,300

Assume that X's adjusted basis in its assets is equal to X's adjusted basis in its assets for earnings and profits purposes. On September 30, 1989, X transfers building A, which has a fair market value of $1,800, to a newly created U.S. corporation Y under section 351 in exchange for 100% of the stock of Y with a fair market value of $800, other property with a fair market value of $200, and the assumption of Mortgage A. Assume that under sections 11 and 351(b), tax of $30 is imposed with respect to the $200 of other property received by X. X's non-previously taxed accumulated effectively connected earnings and profits as of the close of its 1988 taxable year are $200 and its effectively connected earnings and profits for its 1989 taxable year are $330, including $170 of gain recognized to X on the transfer as adjusted for earnings and profits purposes (*i.e.,* $200 of gain recognized minus $30 of tax paid with respect to the gain). Y takes a $1,200 basis in the building transferred from X, equal to the basis in the hands of X ($1,000) increased by the amount of gain recognized to X in the section 351 transaction ($200). Y makes an election in the manner described in paragraph (d)(4)(i) of this section to increase its earnings and profits by the amount described in paragraph (d)(4)(ii) of this section and X files a statement as provided in paragraph (d)(5)(i) of this section. The branch profits tax consequences to X and Y in the taxable year in which the section 351 transaction occurs and in subsequent taxable years are as follows:
(i) *X's dividend equivalent amount for 1989.* The determination of X's dividend equivalent amount for 1989 is a three-step process: determining X's U.S. net equity as of the close of its 1989 taxable year under paragraph (d)(3)(i) of this section; determining the amount of X's

effectively connected earnings and profits and non-previously taxed accumulated effectively connected earnings and profits for its 1989 taxable year under paragraph (d)(3)(ii) of this section; and applying the limitation in paragraph (d)(3)(iii) of this section.

Step one: Pursuant to paragraph (d)(3)(i) of this section, X's U.S. net equity as of the close of its 1989 taxable year is calculated without regard to the section 351 transaction except that X's basis in its U.S. assets is increased by the $170 amount of gain it has recognized for earnings and profits purposes in connection with the section 351 transaction. Thus, X's U.S. net equity as of the close of its 1989 taxable year is $1,870, consisting of the following U.S. assets and liabilities, taking into account the fact that X's other U.S. assets have decreased to $500:

U.S. assets		U.S. liabilities	
Building A	$l,170	Mortgage A	800
Building B	2,500	Mortgage B	1,500
Other U.S. assets	500		
Total	4,170		2,300

Thus, X's U.S. net equity as of the close of its 1989 taxable year has decreased by $130 relative to its U.S. net equity as of the close of its 1988 taxable year.
Step two: Pursuant to paragraph (d)(3)(ii) of this section, X's effectively connected earnings and profits and non-previously taxed accumulated effectively connected earnings and profits for the taxable year are determined without taking into account the allocation to Y of X's effectively connected earnings and profits and non-previously taxed accumulated effectively connected earnings and profits pursuant to the election under paragraph (d)(4)(i) of this section. Thus, X's effectively connected earnings and profits for its 1989 taxable year are $330 and X's non-previously taxed accumulated effectively connected earnings and profits are $200. Thus, but for the limitation in paragraph (d)(3)(iii) of this section, X's dividend equivalent amount for the taxable year would be $460, equal to X's effectively connected earnings and profits for the taxable year ($330), increased by the decrease in X's U.S. net equity ($130).

Step three: Pursuant to paragraph (d)(3)(iii) of this section, X's dividend equivalent amount for its 1989 taxable year may not exceed the sum of the transferor's effectively connected earnings and profits and non-previously taxed accumulated effectively connected earnings and profits, determined as of the close of its 1989 taxable year, after taking into account the allocation of the transferor's earnings and profits pursuant to the election under paragraph (d)(4)(i) of this section. Based upon subdivision (ii) of this example, X's dividend equivalent

amount for 1989 cannot exceed $423, which is equal to the total amount of X's effectively connected earnings and profits and non-previously taxed accumulated effectively connected earnings and profits, determined as of the close of its 1989 taxable year without regard to the allocation of earnings and profits to Y pursuant to Y's election under paragraph (d)(4)(i) of this section ($530), reduced by the amount of X's effectively connected earnings and profits and non-previously taxed accumulated effectively connected earnings and profits allocated to Y pursuant to Y's election under paragraph (d)(4)(i) of this section ($107). Thus, X's dividend equivalent amount for its 1989 taxable year is limited to $423.

(ii) *Amount of X's effectively connected earnings and profits and non-previously taxed accumulated effectively connected earnings and profits transferred to Y.* Pursuant to Y's election under paragraph (d)(4)(i) of this section, Y increases its earnings and profits by the amount prescribed in paragraph (d)(4)(ii) of this section. This amount is equal to the sum of X's effectively connected earnings and profits and non previously taxed accumulated effectively connected earnings and profits determined immediately before the section 351 transaction, without regard to X's dividend equivalent amount for the year, allocated in the same proportion that X's basis in the U.S. assets transferred to Y bears to the bases of all of X's U.S. assets, which bases are determined immediately prior to the section 351(a) transaction. The amount of X's effectively connected earnings and profits immediately before the section 351 transaction is assumed to be $260. The total amount of effectively connected earnings and profits ($260) and non-previously taxed accumulated effectively connected earnings and profits ($200) determined immediately before the section 351 transaction is, therefore, $460. The portion of $460 that is allocated to Y pursuant to Y's election under paragraph (d)(4)(i) of this section is $107, calculated as $46? multiplied by a fraction, the numerator of which is the basis of the U.S. assets transferred to Y pursuant to the section 351 transaction ($1,000), and the denominator of which is the basis of X's U.S. assets determined immediately before the section 351 transaction ($4,300). Pursuant to paragraph (d)(4)(i) of this section, the amount of $107 of X's effectively connected earnings and profits and non-previously taxed accumulated effectively connected earnings and profits allocated to Y pursuant to paragraph (d)(4)(i) of this section constitutes non-previously taxed accumulated effectively connected earnings and profits of Y.

(iii) *X's non-previously taxed accumulated effectively connected earnings and profits for 1990.* Pursuant to paragraph (d)(4)(iii) of this section, X's non-previously taxed accumulated effectively connected earnings and profits as of the close of its 1989 taxable year for purposes of computing its dividend equivalent amount for its taxable year 1990 are zero, *i.e.*, $530 of effectively connected earnings and profits and non-previously taxed accumulated effectively connected earnings and profits reduced by $107 of effectively connected earnings and profits and non-previously taxed accumulated effectively connected earnings and profits allocated to Y, and further reduced by X's $423 dividend equivalent amount for its 1989 taxable year.

(iv) *X's U.S. net equity for purposes of determining the dividend equivalent amount for succeeding taxable years.* For 1990, X must determine its U.S. net equity as of December 31, 1989, in order to determine whether there has been an increase or decrease in its U.S. net equity as of December 31, 1990. For this purpose, X's U.S. net equity as of December 31, 1989 is determined under the provisions of § 1.884-1 without regard to the special rules in paragraph (d)(3)(i) of this section. Thus, X.'s U.S. net equity as of December 31, 1989 is $1,500, consisting of the following. U.S. assets and liabilities:

U.S. assets		U.S. liabilities	
Building B	$2,500	Mortgage B	1,500
Other U.S. assets	500		
Total	$3,000		1,500

(e) ***Certain transactions with respect to a domestic subsidiary.*** In the case of a section 381(a) transaction in which a domestic subsidiary of a foreign corporation transfers assets to that foreign corporation or to another foreign corporation with respect to which the first foreign corporation owns stock (directly or indirectly) meeting the requirements of section 1504(a)(2), the transferee's non-previously taxed accumulated effectively connected earnings and profits for the taxable year in which the section 381(a) transaction occurs shall be increased by all of the domestic subsidiary's current earnings and profits and earnings and profits accumulated after December 31, 1986, that carry over to the transferee under sections 381(a) and (c)(1) (including non-previously taxed accumulated effectively connected earnings and profits, if any, transferred to the domestic subsidiary under paragraphs (c)(4) and (d)(4) of this section and treated as earnings and profits under paragraphs (c)(4)(ii) and (d)(4)(ii) of this section). For purposes of determining the transferee's dividend equivalent amount for the taxable year in which the section 381(a) transaction occurs, the transferee's U.S. net equity as of the close of its taxable year immediately preceding the taxable year during which the section 381(a) transaction occurs shall be increased by the greater of

(1) The amount by which the transferee's U.S. net equity computed immediately prior to the transfer would have increased due to the transfer of the subsidiary's assets and liabilities if U.S. net equity were computed immediately prior to the transfer and immediately after the transfer (taking into account in the earnings and profits basis of the assets transferred any gain recognized on the transfer to the extent reflected in earnings and profits), or

(2) The total amount of U.S net equity transferred (directly or indirectly) by the foreign parent to the domestic subsidiary in one or more prior section 351 or 381(a) transactions.

(f) ***Effective date.*** This section is effective for taxable years beginning after December 31, 1986.

[T.D. 8223, 53 FR 34059, Sept. 2, 1988, as amended by T.D. 8432, 57 FR 41659, Sept. 11, 1992; 57 FR 49117, Oct. 29, 1993; 57 FR 60126, Dec. 18, 1992; T.D. 8657, 61 FR 9341, Mar. 8, 1996; T.D. 9243, 71 FR 4293, Jan. 26, 2006]

§ 1.884-3T Coordination of branch profits tax with second-tier withholding (temporary). [Reserved]

§ 1.884-4 Branch-level interest tax.

(a) *General rule* —

(1) ***Tax on branch interest.*** In the case of a foreign corporation that, during the taxable year, is engaged in trade or business in the United States or has gross income that is ECI (as defined in § 1.884-1(d)(1)(iii)), any interest paid by such trade or business (hereinafter "branch interest," as defined in paragraph (b) of this section) shall, for purposes of subtitle A (Income Taxes), be treated as if it were paid by a domestic corporation (other than a corporation described in section 861(c)(1), relating to a domestic corporation that meets the 80 percent foreign business requirement). Thus, for example, whether such interest is treated as income from sources within the United States by the person who receives the interest shall be determined in the same manner as if such interest were paid by a domestic corporation (other than a corporation described in section 861(c)(1)). Such interest shall be subject to tax under section 871(a) or 881, and to withholding under section 1441 or 1442, in the same manner as interest paid by a domestic corporation (other than a corporation described in section 861(c)(1)) if received by a foreign person and not effectively connected with the conduct by the foreign person of a trade or business in the United States, unless the interest, if paid by a domestic corporation, would be exempt under section 871(h) or 881(c) (relating to exemption for certain portfolio interest received by a foreign person), section 871(i) or 881(d) (relating, in part, to exemption for certain bank deposit interest received by a foreign person), or another provision of the Code. Such interest shall also be treated as interest paid by a domestic corporation (other than a corporation described in section 861(c)(1)) for purposes of sections 864(c), 871(b) and 882(a) (relating to income that is effectively connected with the conduct of a trade or business within the United States) and section 904 (relating to the limitation on the foreign tax credit). For purposes of this section, a foreign corporation also shall be treated as engaged in trade or business in the United States if, at any time during the taxable year, it owns an asset taken into account under § 1.882-5(a)(1)(ii) or (b)(1) for purposes of determining the amount of the foreign corporation's interest expense allocated or apportioned to ECI. See paragraph (b)(8) of this section for the effect of income tax treaties on branch interest.

(2) *Tax on excess interest* —

(i) Definition of excess interest. For purposes of this section, the term "excess interest" means—

(A) The amount of interest allocated or apportioned to ECI of the foreign corporation under § 1.882-5 for the taxable year, after application of § 1.884-1(e)(3); minus

(B) The foreign corporation's branch interest (as defined in paragraph (b) of this section) for the taxable year, but not including interest accruing in a taxable year beginning before January 1, 1987; minus

(C) The amount of interest determined under paragraph (c)(2) of this section (relating to interest paid by a partnership).

(ii) ***Imposition of tax.*** A foreign corporation shall be liable for tax on excess interest under section 881(a) in the same manner as if such excess interest were interest paid to the foreign corporation by a wholly-owned domestic corporation (other than a corporation described in section 861(c)(1)) on the last day of the foreign corporation's taxable year. Excess interest shall be exempt from tax under section 881(a) only as provided in paragraph (a)(2)(iii) of this section (relating to treatment of certain excess interest of banks as interest on deposits) or paragraph (c)(3) of this section (relating to income tax treaties).

(iii) ***Treatment of a portion of the excess interest of banks as interest on deposits.*** A portion of the excess interest of a foreign corporation that is a bank (as defined in section 585(a)(2)(B) without regard to the second sentence thereof) provided that a substantial part of its business in the United States, as well as all other countries in which it operates, consists of receiving deposits and making loans and discounts, shall be treated as interest on deposits (as described in section 871(i)(3)), and shall be exempt from the tax imposed by section 881(a) as provided in such section. The portion of the excess interest of the foreign corporation that is treated as interest on deposits shall equal the product of the foreign corporation's excess interest and the greater of—

(A) The ratio of the amount of interest bearing deposits, within the meaning of section 871(i)(3)(A), of the foreign corporation as of the close of the taxable year to the amount of all interest bearing liabilities of the foreign corporation on such date; or

(B) 85 percent.

(iv) ***Reporting and payment of tax on excess interest.*** The amount of tax due under section 884(f) and this section with respect to excess interest of a foreign corporation shall be reported on the foreign corporation's income tax return for the taxable year in which the excess interest is treated as paid to the foreign corporation under section 884(f)(1)(B) and paragraph (a)(2) of this section, and shall not be subject to withholding under section 1441 or 1442. The tax shall be due and payable as provided in section 6151 and such other sections of Subtitle F of the Internal Revenue Code as apply, and estimated tax payments shall be due with respect to a foreign corporation's liability for the tax on excess interest as provided in section 6655.

(3) ***Original issue discount.*** For purposes of this section, the term “interest” includes original issue discount, as defined in section 1273(a)(1).

(4) ***Examples.*** The application of this paragraph (a) is illustrated by the following examples.

Example 1. Taxation of branch interest and excess interest. Foreign corporation A, a calendar year taxpayer that is not a corporation described in paragraph (a)(2)(iii) of this section (relating to banks), has $120 of interest allocated or apportioned to ECI under § 1.882-5 for 1997. A's branch interest (as defined in paragraph (b) of this section) for 1997 is as follows: $55 of portfolio interest (as defined in section 871(h)(2)) to B, a nonresident alien; $25 of interest to foreign corporation C, which owns 15 percent of the combined voting power of A's stock, with respect to bonds issued by A; and $20 to D, a domestic corporation. B and C are not engaged in the conduct of a trade or business in the United States. A, B and C are residents of countries with which the United States does not have an income tax treaty. The interest payments made to B and D are not subject to tax under section 871(a) or 881 and are not subject to withholding under section 1441 or 1442. The payment to C, which does not qualify as portfolio interest because C owns at least 10 percent of the combined voting power of A's stock, is subject to withholding of $7.50 ($25 × 30%). In addition, because A's interest allocated or apportioned to ECI under § 1.882-5 ($120) exceeds its branch interest ($100), A has excess interest of $20, which is subject to a tax of $6 ($20 × 30%) under section 881. The tax on A's excess interest must be reported on A's income tax return for 1997.

Example 2. Taxation of excess interest of a bank. Foreign corporation A, a calendar year taxpayer, is a corporation described in paragraph (a)(2)(iii) of this section (relating to banks) and is a resident of a country with which the United States does not have an income tax treaty. A has excess interest of $100 for 1997. At the close of 1997, A has $10,000 of interest-bearing liabilities

(including liabilities that give rise to branch interest), of which $8,700 are interest-bearing deposits. For purposes of computing the tax on A's excess interest, $87 of the excess interest ($100 excess interest × ($8,700 interest-bearing deposits/$10,000 interest-bearing liabilities)) is treated as interest on deposits. Thus, $87 of A's excess interest is exempt from tax under section 881(a) and the remaining $13 of excess interest is subject to a tax of $3.90 ($13 × 30%) under section 881(a).

(b) ***Branch interest*** —

(1) ***Definition of branch interest.*** For purposes of this section, the term "branch interest" means interest that is—

(i) Paid by a foreign corporation with respect to a liability that is—

(A) A U.S. booked liability within the meaning of § 1.882-5(d)(2) (other than a U.S. booked liability of a partner within the meaning of § 1.882-5(d)(2)(vii)); or

(B) Described in § 1.884-1(e)(2) (relating to insurance liabilities on U.S. business and liabilities giving rise to interest expense that is directly allocated to income from a U.S. asset); or

(ii) In the case of a foreign corporation other than a corporation described in paragraph (a)(2)(iii) of this section, a liability specifically identified (as provided in paragraph (b)(3)(i) of this section) as a liability of a U.S. trade or business of the foreign corporation on or before the earlier of the date on which the first payment of interest is made with respect to the liability or the due date (including extensions) of the foreign corporation's income tax return for the taxable year, provided that—

(A) The amount of such interest does not exceed 85 percent of the amount of interest of the foreign corporation that would be excess interest before taking into account interest treated as branch interest by reason of this paragraph (b)(1)(ii);

(B) The requirements of paragraph (b)(3)(ii) of this section (relating to notification of recipient of interest) are satisfied; and

(C) The liability is not described in paragraph (b)(3)(iii) of this section (relating to liabilities incurred in the ordinary course of a foreign business or secured by foreign assets) or paragraph (b)(1)(i) of this section.

(2) [Reserved]

(3) ***Requirements relating to specifically identified liabilities*** —

(i) ***Method of identification.*** A liability described in paragraph (b)(1)(ii) of this section is identified as a liability of a U.S. trade or business only if the liability is shown on the records of the U.S. trade or business, or is identified as a liability of the U.S. trade or business on other records of the foreign corporation or on a schedule established for the purpose of identifying the liabilities of the U.S. trade or business. Each such liability must be identified with sufficient specificity so that the amount of branch interest attributable to the liability, and the name and address of the recipient, can be readily identified from such records or schedule. However, with respect to liabilities that give rise to portfolio interest (as defined in sections 871(h) and 881(c)) or that are payable 183 days or less from the date of original issue, and form part of a larger debt issue, such liabilities may be identified by reference to the issue and maturity date, principal amount and interest payable with respect to the entire debt issue. Records or schedules

described in this paragraph that identify liabilities that give rise to branch interest must be maintained in the United States by the foreign corporation or an agent of the foreign corporation for the entire period commencing with the due date (including extensions) of the income tax return for the taxable year to which the records or schedules relate and ending with the expiration of the period of limitations for assessment of tax for such taxable year. A foreign corporation that is subject to this section may identify a liability under paragraph (b)(1)(ii) of this section whether or not it is actually engaged in the conduct of a trade or business in the United States.

(ii) ***Notification to recipient.*** Interest with respect to a liability described in paragraph (b)(1)(ii) of this section shall not be treated as branch interest unless the foreign corporation paying the interest either—

(A) Makes a return, pursuant to section 6049, with respect to the interest payment; or

(B) Sends a notice to the person who receives such interest in a confirmation of the transaction, a statement of account, or a separate notice, within two months of the end of the calendar year in which the interest was paid, stating that the interest paid with respect to the liability is from sources within the United States.

(iii) ***Liabilities that do not give rise to branch interest under paragraph (b)(1)(ii) of this section.*** A liability is described in this paragraph (b)(3)(iii) (and interest with respect to the liability may not be treated as branch interest of a foreign corporation by reason of paragraph (b)(1)(ii) of this section) if—

(A) The liability is directly incurred in the ordinary course of the profit-making activities of a trade or business of the foreign corporation conducted outside the United States, as, for example, an account or note payable arising from the purchase of inventory or receipt of services by such trade or business; or

(B) The liability is secured (during more than half the days during the portion of the taxable year in which the interest accrues) predominantly by property that is not a U.S. asset (as defined in § 1.884-1(d)) unless such liability is secured by substantially all the property of the foreign corporation.

(4) [Reserved]

(5) ***Increase in branch interest where U.S. assets constitute 80 percent or more of a foreign corporation's assets*** —

(i) ***General rule.*** If a foreign corporation would have excess interest before application of this paragraph (b)(5) and the amount of the foreign corporation's U.S. assets as of the close of the taxable year equals or exceeds 80 percent of all money and the aggregate E&P basis of all property of the foreign corporation on such date, then all interest paid and accrued by the foreign corporation during the taxable year that was not treated as branch interest before application of this paragraph (b)(5) and that is not paid with respect to a liability described in paragraph (b)(3)(iii) of this section (relating to liabilities incurred in the ordinary course of a foreign business or secured by non-U.S. assets) shall be treated as branch interest. However, if application of the preceding sentence would cause the amount of the foreign corporation's branch interest to exceed the amount permitted by paragraph (b)(6)(i) of this section (relating

to branch interest in excess of a foreign corporation's interest allocated or apportioned to ECI under § 1.882-5) the amount of branch interest arising by reason of this paragraph shall be reduced as provided in paragraphs (b)(6) (ii) and (iii) of this section, as applicable.

(ii) ***Example.*** The application of this paragraph (b)(5) is illustrated by the following example.

Example. Application of 80 percent test. Foreign corporation A, a calendar year taxpayer, has $90 of interest allocated or apportioned to ECI under § 1.882-5 for 1993. Before application of this paragraph (b)(5), A has $40 of branch interest in 1993. A pays $60 of other interest during 1993, none of which is attributable to a liability described in paragraph (b)(3)(iii) of this section (relating to liabilities incurred in the ordinary course of a foreign business and liabilities predominantly secured by foreign assets). As of the close of 1993, A has an amount of U.S. assets that exceeds 80 percent of the money and E&P bases of all A's property. Before application of this paragraph (b)(5), A would have $50 of excess interest (i.e., the $90 interest allocated or apportioned to its ECI under § 1.882-5 less $40 of branch interest). Under this paragraph (b)(5), the $60 of additional interest paid by A is also treated as branch interest. However, to the extent that treating the $60 of additional interest as branch interest would create an amount of branch interest that would exceed the amount of branch interest permitted under paragraph (b)(6) of this section (relating to branch interest that exceeds a foreign corporation's interest allocated or apportioned to ECI under § 1.882-5) the amount of the additional branch interest is reduced under paragraph (b)(6)(iii) of this section, which generally allows a foreign corporation to specify certain liabilities that do not give rise to branch interest or paragraph (b)(6)(ii) of this section, which generally specifies liabilities that do not give rise to branch interest beginning with the most-recently incurred liability.

(6) ***Special rule where branch interest exceeds interest allocated or apportioned to ECI of a foreign corporation —***

(i) ***General rule.*** If the amount of branch interest that is both paid and accrued by a foreign corporation during the taxable year (including interest that the foreign corporation elects under paragraph (c)(1) of this section to treat as paid during the taxable year) exceeds the amount of interest allocated or apportioned to ECI of a foreign corporation under § 1.882-5 for the taxable year, then the amount of the foreign corporation's branch interest shall be reduced by the amount of such excess as provided in paragraphs (b)(6)(ii) and (iii) of this section, as applicable. The rules of paragraphs (b)(6)(ii) and (iii) of this section shall also apply where the amount of branch interest with respect to liabilities identified under paragraph (b)(1)(ii) of this section exceeds the maximum amount that may be treated as branch interest under that paragraph. This paragraph (b)(6) shall apply whether or not a reduction in the amount of branch interest occurs as a result of adjustments made during the examination of the foreign corporation's income tax return, such as a reduction in the amount of interest allocated or apportioned to ECI of the foreign corporation under § 1.882-5.

(ii) ***Reduction of branch interest beginning with most-recently incurred liability.*** Except as provided in paragraph (b)(6)(iii) of this section (relating to an election to specify liabilities that do not give rise to branch interest), the amount of the excess in paragraph (b)(6)(i) of this section shall first reduce branch interest attributable to liabilities described in paragraph (b)(1)(ii) of this section (relating to liabilities identified as giving rise to branch interest) and then, if such excess has not been reduced to zero, branch interest attributable to the group of liabilities described in paragraph (b)(1)(i) of this section. The reduction of branch interest attributable to each group

of liabilities (i.e., liabilities described in paragraph (b)(1)(ii) of this section and liabilities described in paragraph (b)(1)(i) of this section) shall be made beginning with interest attributable to the latest-incurred liability and continuing, in reverse chronological order, with branch interest attributable to the next-latest incurred liability. The branch interest attributable to a liability must be reduced to zero before a reduction is made with respect to branch interest attributable to the next-latest incurred liability. Where only a portion of the branch interest attributable to a liability is reduced by reason of this paragraph (b)(6)(ii), the reduction shall be made beginning with the last interest payment made with respect to the liability during the taxable year and continuing, in reverse chronological order, with the next-latest payment until the amount of branch interest has been reduced by the amount specified in paragraph (b)(6)(i) of this section. The amount of interest that is not treated as branch interest by reason of this paragraph (b)(6)(ii) shall not be treated as paid by a domestic corporation and thus shall not be subject to tax under section 871(a) or 881(a).

(iii) ***Election to specify liabilities that do not give rise to branch interest.*** For purposes of reducing the amount of branch interest under paragraph (b)(6)(i) of this section, a foreign corporation may, instead of using the method described in paragraph (b)(6)(ii) of this section, elect for any taxable year to specify which liabilities will not be treated as giving rise to branch interest or will be treated as giving rise only in part to branch interest. Branch interest paid during the taxable year with respect to a liability specified under this paragraph (b)(6)(iii) must be reduced to zero before a reduction is made with respect to branch interest attributable to the next-specified liability. If all interest payments with respect to a specified liability, when added to all interest payments with respect to other liabilities specified under this paragraph (b)(6)(iii), would exceed the amount of the reduction under paragraph (b)(6)(i) of this section, then only a portion of the branch interest attributable to that specified liability shall be reduced under this paragraph (b)(6)(iii), and the reduction shall be made beginning with the last interest payment made with respect to the liability during the taxable year and continuing, in reverse chronological order, with the next-latest payment until the amount of branch interest has been reduced by the amount of the reduction under paragraph (b)(6)(i) of this section. A foreign corporation that elects to have this paragraph (b)(6)(iii) apply shall note on its books and records maintained in the United States that the liability is not to be treated as giving rise to branch interest, or is to be treated as giving rise to branch interest only in part. Such notation must be made after the close of the taxable year in which the foreign corporation pays the interest and prior to the due date (with extensions) of the foreign corporation's income tax return for the taxable year. However, if the excess interest in paragraph (b)(6)(i) of this section occurs as a result of adjustments made during the examination of the foreign corporation's income tax return, the election and notation may be made at the time of examination. The amount of interest that is not treated as branch interest by reason of this paragraph (b)(6)(iii) shall not be treated as paid by a domestic corporation and thus shall not be subject to tax under section 871 (a) or 881 (a).

(iv) ***Examples.*** The application of this paragraph (b)(6) is illustrated by the following examples.

> *Example 1. Branch interest exceeds interest apportioned to ECI with no election in effect.* Foreign corporation A, a calendar year, accrual method taxpayer, has interest expense apportioned to ECI under § 1.882-5 of $230 for 1997. A's branch interest for 1997 is as follows:

(i) $130 paid to B, a domestic corporation, with respect to a note issued on March 10, 1997, and secured by real property located in the United States;

(ii) $60 paid to C, an individual resident of country X who is entitled to a 10 percent rate of withholding on interest payments under the income tax treaty between the United States and X, with respect to a note issued on October 15, 1996, which gives rise to interest subject to tax under section 871(a);

(iii) $80 paid to D, an individual resident of country Y who is entitled to a 15 percent rate of withholding on interest payments under the income tax treaty between the United States and Y, with respect to a note issued on February 15, 1997, which gives rise to interest subject to tax under section 871(a); and

(iv) $70 of portfolio interest (as defined in section 871(h) (2)) paid to E, a nonresident alien, with respect to a bond issued on March 1, 1997.

A's branch interest accrues during 1997 for purposes of calculating the amount of A's interest apportioned to ECI under § 1.882-5. A has identified under paragraph (b)(1)(ii) of this section the liabilities described in paragraphs (ii), (iii) and (iv) of this example. A has not made an election under paragraph (b)(6)(iii) of this section to specify liabilities that do not give rise to branch interest. The amount of A's branch interest in 1997 is limited under paragraph (b)(6)(i) of this section to $230, the amount of the interest apportioned to A's ECI for 1997. The amount of A's branch interest must thus be reduced by $110 ($340-$230) under paragraph (b)(6)(ii) of this section. The reduction is first made with respect to interest attributable to liabilities described in paragraph (b)(1)(ii) of this section (i.e., liabilities identified as giving rise to branch interest) and, within the group of liabilities described in paragraph (b)(1)(ii) of this section, is first made with respect to the latest-incurred liability. Thus, the $70 of interest paid to E with respect to the bond issued on March 1, 1997, and $40 of the $80 of interest paid to D with respect to the note issued on February 15, 1997, are not treated as branch interest. The interest paid to D is no longer subject to tax under section 871(a), and D may claim a refund of amounts withheld with respect to the interest payments. There is no change in the tax consequences to E because the interest received by E was portfolio interest and was not subject to tax when it was treated as branch interest.

Example 2. Effect of election to specify liabilities. Assume the same facts as in *Example 1* except that A makes an election under paragraph (b)(6)(iii) of this section to specify which liabilities are not to be treated as giving rise to branch interest. A specifies the liability to D, who would be taxable at a rate of 15 percent on interest paid with respect to the liability, as a liability that does not give rise to branch interest, and D is therefore not subject to tax under section 871 (a) and is entitled to a refund of amounts withheld with respect to the interest payments. A also specifies the liability to C as a liability that gives rise to branch

interest only in part. As a result, $30 of the $60 of interest paid to C is not treated as branch interest, and C is entitled to a refund with respect to the $30 of interest that is not treated as branch interest.

(7) ***Effect of election under paragraph (c)(1) of this section to treat interest as if paid in year of accrual.*** If a foreign corporation accrues an interest expense in a taxable year earlier than the taxable year of payment and elects under paragraph (c)(1) of this section to compute its excess interest as if the interest expense were branch interest paid in the year of accrual, the interest expense shall be treated as branch interest that is paid at the close of such year (and not in the actual year of payment) for all purposes of this section. Such interest shall thus be subject to tax under section 871(a) or 881(a) and withholding under section 1441 or section 1442, as if paid on the last day of the taxable year of accrual. Interest that is treated under paragraph (c)(1) of this section as paid in a later year for purposes of computing excess interest shall be treated as paid only in the actual year of payment for all purposes of this section other than paragraphs (a)(2) and (c)(1) of this section (relating to excess interest).

(8) ***Effect of treaties*** —

(i) ***Payor's treaty.*** In the case of a foreign corporation's branch interest, relief shall be available under an article of an income tax treaty between the United States and the foreign corporation's country of residence relating to interest paid by the foreign corporation only if, for the taxable year in which the branch interest is paid (or if the branch interest is treated as paid in an earlier taxable year under paragraph (b)(7) of this section, for the earlier taxable year)—

(A) The foreign corporation meets the requirements of the limitation on benefits provision, if any, in the treaty, and either—

(*1*) The corporation is a qualified resident (as defined in § 1.884-5(a)) of that foreign country in such year; or

(*2*) The corporation meets the requirements of paragraph (b)(8)(iii) of this section in such year; or

(B) The limitation on benefits provision, or an amendment to that provision, entered into force after December 31, 1986.

(ii) ***Recipient's treaty.*** A foreign person (other than a foreign corporation) that derives branch interest is entitled to claim benefits under provisions of an income tax treaty between the United States and its country of residence relating to interest derived by the foreign person. A foreign corporation may claim such benefits if it meets, with respect to the branch interest, the requirements of the limitation on benefits provision, if any, in the treaty and—

(A) The foreign corporation meets the requirements of paragraphs (b)(8)(i)(A) or (B) of this section; and

(B) In the case of interest paid in a taxable year beginning after December 31, 1988, with respect to an obligation with a maturity not exceeding one year, each foreign corporation that beneficially owned the obligation prior to maturity was a qualified resident (for the period specified in paragraph (b)(8)(i) of this section) of a foreign country with which the United States has an income tax treaty or met the requirements of the limitation on benefits provision in a treaty with respect to the interest payment and such provision entered into force after December 31, 1986.

(iii) ***Presumption that a foreign corporation continues to be a qualified resident.*** For purposes of this paragraph (b)(8), a foreign corporation that was a qualified resident for the prior taxable year because it fulfills the requirements of § 1.884-5 shall be considered a qualified resident with respect to branch interest that is paid or received during the current taxable year if—

(A) In the case of a foreign corporation that met the stock ownership and base erosion tests in § 1.884-5(b) and (c) for the preceding taxable year, the foreign corporation does not know, or have reason to know, that either 50 percent of its stock (by value) is not beneficially owned (or treated as beneficially owned by reason of § 1.884-5(b)(2)) by qualifying shareholders at any time during the portion of the taxable year that ends with the date on which the interest is paid, or that the base erosion test is not met during the portion of the taxable year that ends with the date on which the interest is paid;

(B) In the case of a foreign corporation that met the requirements of § 1.884-5(d) (relating to publicly-traded corporations) for the preceding taxable year, the foreign corporation is listed on an established securities exchange in the United States or its country of residence at all times during the portion of the taxable year that ends with the date on which the interest is paid and does not fail the requirements of § 1.884-5(d)(4)(iii) (relating to certain closely-held corporations) at any time during such period; or

(C) In the case of a foreign corporation that met the requirements of § 1.884-5(e) (relating to the active trade or business test) for the preceding taxable year, the foreign corporation continues to operate (other than in a nominal degree), at all times during the portion of the taxable year that ends with the date on which the interest is paid, the same business in the U.S. and its country of residence that caused it to meet such requirements for the preceding taxable year.

(iv) ***Treaties other than income tax treaties.*** A treaty that is not an income tax treaty does not provide any benefits with respect to branch interest.

(v) ***Effect of income tax treaties on interest paid by a partnership.*** If a foreign corporation is a partner (directly or indirectly) in a partnership that is engaged in a trade or business in the United States and owns an interest of 10 percent or more (as determined under the attribution rules of section 318) in the capital, profits, or losses of the partnership at any time during the partner's taxable year, the relief that may be claimed under an income tax treaty with respect to the foreign corporation distributive share of interest paid or treated as paid by the partnership shall not exceed the relief that would be available under paragraphs (b)(8) (i) and (ii) of this section if such interest were branch interest of the foreign corporation. See paragraph (c)(2) of this section for the effect on a foreign corporation's excess interest of interest paid by a partnership of which the foreign corporation is a partner.

(vi) ***Examples.*** The following examples illustrate the application of this paragraph (b)(8).

Example 1. Payor's treaty. The income tax treaty between the United States and country X provides that the United States may not impose a tax on interest paid by a corporation that is a resident of that country (and that is not a domestic corporation) if the recipient of the interest is a nonresident alien or a foreign corporation. Corp A is a qualified resident of country X and meets the limitation on benefits provision in the treaty. A's branch interest is not subject to tax under section 871(a) or 881(a) regardless of whether the recipient is entitled to benefits under an income tax treaty.

Example 2. Recipient's treaty and interest received from a partnership. A, a foreign corporation, and B, a nonresident alien, are partners in a partnership that owns and operates U.S. real estate and each has a distributive share of partnership interest deductions equal to 50 percent of the interest deductions of the partnership. There is no income tax treaty between the United States and the countries of residence of A and B. The partnership pays $1,000 of interest to a bank that is a resident of a foreign country, Y, and that qualifies under an income tax treaty in effect with the United States for a 5 percent rate of tax on U.S. source interest paid to a resident of country Y. However, the bank is not a qualified resident of country Y and the limitation on benefits provision of the treaty has not been amended since December 31, 1986. The partnership is required to withhold at a rate of 30 percent on $500 of the interest paid to the bank (i.e., A's 50 percent distributive share of interest paid by the partnership) because the bank cannot, under paragraph (b)(8)(iv) of this section, claim greater treaty benefits by lending money to the partnership than it could claim, if it lent money to A directly and the $500 were branch interest of A.

(c) ***Rules relating to excess interest —***

(1) ***Election to compute excess interest by treating branch interest that is paid and accrued in different years as if paid in year of accrual —***

(i) ***General rule.*** If branch interest is paid in one or more taxable years before or after the year in which the interest accrues, a foreign corporation may elect to compute its excess interest as if such branch interest were paid on the last day of the taxable year in which it accrues, and not in the taxable year in which it is actually paid. The interest expense will thus reduce the amount of the foreign corporation's excess interest in the year of accrual rather than in the year of actual payment. Except as provided in paragraph (c)(1)(ii) of this section, if an election is made for a taxable year, this paragraph (c)(1)(i) shall apply to all branch interest that is paid or accrued during that year. See paragraph (b)(7) of this section for the effect of an election under this paragraph (c)(1) on branch interest that accrues in a taxable year after the year of payment.

(ii) ***Election not to apply in certain cases.*** An election under this paragraph (c)(1) shall not apply to an interest expense that accrued in a taxable year beginning before January 1, 1987, and shall not apply to an interest expense that was paid in a taxable year beginning before such date unless the interest was income from sources within the United States. An election under this paragraph (c)(1) shall not apply to branch interest that accrues during the taxable year and is paid in an earlier taxable year if the branch interest reduced excess interest in such earlier year. However, a foreign corporation may amend its income tax return for such earlier taxable year so that the branch interest does not reduce excess interest in such year.

(iii) ***Requirements for election.*** A foreign corporation that elects to apply this paragraph (c)(1) shall attach to its income tax return (or to an amended income tax return) a statement that it elects to have the provisions of this paragraph (c)(1) apply, or shall provide written notice to the Commissioner during an examination that it elects to apply this paragraph (c)(1). The election shall be effective for the taxable year to which the return relates and for all subsequent taxable years unless the Commissioner consents to revocation of the election.

(iv) ***Examples.*** The following examples illustrate the application of this paragraph (c)(1).

Example 1. Interest accrued before paid. Foreign corporation A, a calendar year, accrual method taxpayer, has $100 of interest allocated or apportioned to ECI under § 1.882-5 for 1997. A has $60 of branch interest in 1997 before application of this paragraph (c)(1). A has an

interest expense of $20 that properly accrues for tax purposes in 1997 but is not paid until 1998. When the interest is paid in 1998 it will meet the requirements for branch interest under paragraph (b)(1) of this section. A makes a timely election under this paragraph (c)(1) to treat the accrued interest as if it were paid in 1997. A will be treated as having branch interest of $80 for 1997 and excess interest of $20 in 1997. The $20 of interest treated as branch interest of A in 1997 will not again be treated as branch interest in 1998.

Example 2. Interest paid before accrued. Foreign corporation A, a calendar year, accrual method taxpayer, has $60 of branch interest in 1997. The interest expense does not accrue until 1994 and the amount of interest allocated or apportioned to A's ECI under § 1.882-5 is zero for 1997 and $60 for 1998. A makes an election under this paragraph (c)(1) with respect to 1997. As a result of the election, A's $60 of branch interest in 1997 reduces the amount of A's excess interest for 1994 rather than in 1998.

(2) ***Interest paid by a partnership*** —

(i) ***General rule.*** Except as otherwise provided in paragraphs (c)(2) (i) and (ii) of this section, if a foreign corporation is a partner in a partnership that is engaged in trade or business in the United States, the amount of the foreign corporation's distributive share of interest paid or accrued by the partnership shall reduce (but not below zero) the amount of the foreign corporation's excess interest for the year to the extent such interest is taken into account by the foreign corporation in that year for purposes of calculating the interest allocated or apportioned to the ECI of the foreign corporation under § 1.882-5. A foreign corporation's excess interest shall not be reduced by its distributive share of partnership interest that is attributable to a liability described in paragraph (b)(3)(iii) of this section (relating to interest on liabilities incurred in the ordinary course of a foreign business or secured predominantly by assets that are not U.S. assets) or would be described in paragraph (b)(3)(iii) of this section if entered on the partner's books. See paragraph (b)(8)(v) of this section for the effect of income tax treaties on interest paid by a partnership.

(ii) ***Special rule for interest that is paid and accrued in different years.*** Paragraph (c)(2)(i) of this section shall not apply to any portion of a foreign corporation's distributive share of partnership interest that is paid and accrued in different taxable years unless the foreign corporation has an election in effect under paragraph (c)(1) of this section that is effective with respect to such interest and any tax due under section 871(a) or 881(a) with respect to such interest has been deducted and withheld at source in the earlier of the taxable year of payment or accrual.

(3) ***Effect of treaties*** —

(i) ***General rule.*** The rate of tax imposed on the excess interest of a foreign corporation that is a resident of a country with which the United States has an income tax treaty shall not exceed the rate provided under such treaty that would apply with respect to interest paid by a domestic corporation to that foreign corporation if the foreign corporation meets, with respect to the excess interest, the requirements of the limitation on benefits provision, if any, in the treaty and either—

(A) The corporation is a qualified resident (as defined in § 1.884-5(a)) of that foreign country for the taxable year in which the excess interest is subject to tax; or

(B) The limitation on benefits provision, or an amendment to that provision, entered into force after December 31, 1986.

(ii) ***Provisions relating to interest paid by a foreign corporation.*** Any provision in an income tax treaty that exempts or reduces the rate of tax on interest paid by a foreign corporation does not prevent imposition of the tax on excess interest or reduce the rate of such tax.

(4) ***Example.*** The application of paragraphs (c)(2) and (3) of this section is illustrated by the following example.

Example. Interest paid by a partnership. Foreign corporation A, a calendar year taxpayer, is not a resident of a foreign country with which the United States has an income tax treaty. A is engaged in the conduct of a trade or business both in the United States and in foreign countries, and owns a 50 percent interest in X, a calendar year partnership engaged in the conduct of a trade or business in the United States. For 1997, all of X's liabilities are of a type described in paragraph (b)(1) of this section (relating to liabilities on U.S. books) and none are described in paragraph (b)(3)(iii) of this section (relating to liabilities that may not give rise to branch interest). A's distributive share of interest paid by X in 1997 is $20. For 1997, A has $150 of interest allocated or apportioned to its ECI under § 1.882-5, $120 of which is attributable to branch interest. Thus, the amount of A's excess interest for 1997, before application of paragraph (c)(2)(i) of this section, is $30. Under paragraph (c)(2)(i) of this section, A's $30 of excess interest is reduced by $20, representing A's share of interest paid by X. Thus, the amount of A's excess interest for 1997 is reduced to $10. A is subject to a tax of 30 percent on its $10 of excess interest.

(d) ***Stapled entities.*** A foreign corporation that is treated as a domestic corporation by reason of section 269B (relating to stapled entities) shall continue to be treated as a foreign corporation for purposes of section 884 (f) and this section, notwithstanding section 269B and the regulations thereunder. Interest paid by such foreign corporation shall be treated as paid by a domestic corporation and shall be subject to the tax imposed by section 871 (a) or 881 (a), and to withholding under section 1441 and 1442, as applicable, to the extent such interest is not subject to tax by reason of section 884(f) and this section.

(e) ***Effective dates —***

(1) ***General rule.*** Except as provided in paragraph (e)(2) of this section, this section is effective for taxable years beginning October 13, 1992, and for payments of interest described in section 884(f)(1)(A) made (or treated as made under paragraph (b)(7) of this section) during taxable years of the payor beginning after such date. With respect to taxable years beginning before October 13, 1992, and after December 31, 1986, a foreign corporation may elect to apply this section in lieu of § 1.884-4T of the temporary regulations (as contained in the CFR edition revised as of April 1, 1992) as they applied to the foreign corporation after issuance of Notice 89-80, 1989-2 C.B. 394, but only if the foreign corporation has made an election under § 1.884-1 (i) to apply § 1.884-1 in lieu of § 1.884-1T (as contained in the CFR edition revised as of April 1, 1992) for that year, and the statute of limitations for assessment of a deficiency has not expired for that taxable year. Once an election has been made, an election under this section shall apply to all subsequent taxable years.

(2) ***Special rule.*** Paragraphs (a)(1), (a)(2)(i)(A), (a)(2)(iii), (b)(1), (b)(3), (b)(5)(i), (b)(6)(i), (b)(6)(ii), and (c)(2)(i) of this section are effective for taxable years beginning on or after June 6, 1996.

(f) ***Transition rules —***

(1) ***Election under paragraph (c)(1) of this section.*** If a foreign corporation has made an election described in § 1.884-4T(b)(7) (as contained in the CFR edition revised as of April 1, 1992) with respect to interest that has accrued and been paid in different taxable years, such election shall be effective for purposes of paragraph (c)(1) of this section as if the corporation had made the election under paragraph (c)(1) of this section of these regulations.

(2) ***Waiver of notification requirement for non-banks under Notice 89-80.*** If a foreign corporation that is not a bank has made an election under Notice 89-80 to apply the rules in part 2 of section I of the Notice in lieu of the rules in § 1.884-4T(b) (as contained in the CFR edition revised as of April 1, 1992) to determine the amount of its interest paid and excess interest in taxable years beginning prior to 1990, the requirement that the foreign corporation satisfy the notification requirements described in paragraph (b)(3)(ii) of this section is waived with respect to interest paid in taxable years ending on or before the date the Notice was issued.

(3) ***Waiver of legending requirement for certain debt issued prior to January 3, 1989.*** For purposes of sections 871(h), 881(c), and this section, branch interest of a foreign corporation that would be treated as portfolio interest under section 871(h) or 881(c) but for the fact that it fails to meet the requirements of section 163(f)(2)(B)(ii)(II) (relating to the legend requirement), shall nevertheless be treated as portfolio interest provided the interest arises with respect to a liability incurred by the foreign corporation before January 3, 1989, and interest with respect to the liability was treated as branch interest in a taxable year beginning before January 1, 1990.

[T.D. 8432, 57 FR 41660, Sept. 11, 1992; 57 FR 49117, Oct. 29, 1992; 57 FR 60126, Dec. 18, 1992, as amended by T.D. 8657, 61 FR 9341, Mar. 8, 1996]

§ 1.884-5 Qualified resident.

(a) ***Definition of qualified resident.*** A foreign corporation is a qualified resident of a foreign country with which the United States has an income tax treaty in effect if, for the taxable year, the foreign corporation is a resident of that country (within the meaning of such treaty) and either—

(1) Meets the requirements of paragraphs (b) and (c) of this section (relating to stock ownership and base erosion);

(2) Meets the requirements of paragraph (d) of this section (relating to publicly-traded corporations);

(3) Meets the requirements of paragraph (e) of this section (relating to the conduct of an active trade or business); or

(4) Obtains a ruling as provided in paragraph (f) of this section that it shall be treated as a qualified resident of its country of residence.

(b) ***Stock ownership requirement*** —

(1) ***General rule*** —

(i) ***Ownership by qualifying shareholders.*** A foreign corporation satisfies the stock ownership requirement of this paragraph (b) for the taxable year if more than 50 percent of its stock (by value) is beneficially owned (or is treated as beneficially owned by reason of paragraph (b)(2) of this section) during at least half of the number of days in the foreign corporation's taxable year by one or more qualifying shareholders. A person shall be treated as a qualifying shareholder only if such person meets the requirements of paragraph (b)(3) of this section and is either—

(A) An individual who is either a resident of the foreign country of which the foreign corporation is a resident or a citizen or resident of the United States;

(B) The government of the country of which the foreign corporation is a resident (or a political subdivision or local authority of such country), or the United States, a State, the District of Columbia, or a political subdivision or local authority of a State;

(C) A corporation that is a resident of the foreign country of which the foreign corporation is a resident and whose stock is primarily and regularly traded on an established securities market (within the meaning of paragraph (d) of this section) in that country or the United States or a domestic corporation whose stock is primarily and regularly traded on an established securities market (within the meaning of paragraph (d) of this section) in the United States;

(D) A not-for profit organization described in paragraph (b)(1)(iv) of this section that is not a pension fund as defined in paragraph (b)(8)(i)(A) of this section and that is organized under the laws of the foreign country of which the foreign corporation is a resident or the United States; or

(E) A beneficiary of certain pension funds (as defined in paragraph (b)(8)(i)(A) of this section) administered in or by the country in which the foreign corporation is a resident to the extent provided in paragraph (b)(8) of this section.

Beneficial owners of an association taxable as a corporation shall be treated as shareholders of such association for purposes of this paragraph (b)(1). If stock of a foreign corporation is owned by a corporation that is treated as a qualifying shareholder under paragraph (b)(1)(i)(C) of this section, such stock shall not also be treated as owned, directly or indirectly, by any qualifying shareholders of such corporation for purposes of this paragraph (b). Notwithstanding the above, a foreign corporation will not be treated as a qualified resident unless it obtains the documentation described in paragraph (b)(3) of this section to show that the requirements of this paragraph (b)(1)(i) have been met and maintains the documentation as provided in paragraph (b)(9) of this section. See also paragraph (b)(1)(iii) of this section, which treats certain publicly-traded classes of stock as owned by qualifying shareholders.

(ii) ***Special rules relating to qualifying shareholders.*** For purposes of applying paragraph (b)(1)(i) of this section—

(A) Stock owned on any day shall be taken into account only if the beneficial owner is a qualifying shareholder on that day or, in the case of a corporation or not-for-profit organization that is a qualifying shareholder under paragraph (b)(1)(i) (C) or (D) of this section, for a one-year period that includes such day; and

(B) An individual, corporation or not-for-profit organization is a resident of a foreign country if it is a resident of that country for purposes of the income tax treaty between the United States and that country.

(iii) ***Publicly-traded class of stock treated as owned by qualifying shareholders.*** A class of stock of a foreign corporation shall be treated as owned by qualifying shareholders if—

(A) The class of stock is listed on an established securities market in the United States or in the country of residence of the foreign corporation seeking qualified resident status; and

(B) The class of stock is primarily and regularly traded on such market (within the meaning of paragraphs (d) (3) and (4) of this section, applied as if the class of stock were the sole class of stock relied on to meet the requirements of paragraph (d)(4)(i)(A)).

For purposes of this paragraph (b), stock in such class shall not also be treated as owned by any qualifying shareholders who own such stock, either directly or indirectly.

(iv) ***Special rule for not-for-profit organizations.*** A not-for-profit organization is described in paragraph (b)(1)(iv) of this section if it meets the following requirements—

(A) It is a corporation, association taxable as a corporation, trust, fund, foundation, league or other entity operated exclusively for religious, charitable, educational, or recreational purposes, and it is not organized for profit;

(B) It is generally exempt from tax in its country of organization by virtue of its not-for-profit status; and

(C) Either—

(*1*) More than 50 percent of its annual support is expended on behalf of persons described in paragraphs (b)(1)(i)(A) through (E) of this section or on qualified residents of the country in which the organization is organized; or

(*2*) More than 50 percent of its annual support is derived from persons described in paragraphs (b)(1)(i) (A) through (E) of this section or from persons who are qualified residents of the country in which the organization is organized.

For purposes of meeting the requirements of paragraph (b)(1)(iv)(C) of this section, a not-for-profit organization may rely on the addresses of record of its individual beneficiaries and supporters to determine if such persons are resident in the country in which the not-for-profit organization is organized, provided that the addresses of record are not nonresidential addresses such as a post office box or in care of a financial intermediary, and the officers, directors or administrators of the organization do not know or have reason to know that the individual beneficiaries or supporters do not reside at that address.

(2) ***Rules for determining constructive ownership*** —

(i) ***General rules for attribution.*** For purposes of this section, stock owned by a corporation, partnership, trust, estate, or mutual insurance company or similar entity shall be treated as owned proportionately by its shareholders, partners, beneficiaries, grantors or other interest holders as provided in paragraph (b)(2)(ii) through (v) of this section. The proportionate interest rules of this paragraph (b)(2) shall apply successively upward through a chain of ownership, and a person's proportionate interest shall be computed for the relevant days or period that is taken into account in determining whether a foreign corporation is a qualified resident. Except as otherwise provided, stock treated as owned by a person by reason of this paragraph (b)(2) shall, for purposes of applying this paragraph (b)(2), be treated as actually owned by such person.

(ii) ***Partnerships.*** A partner shall be treated as having an interest in stock of a foreign corporation owned by a partnership in proportion to the least of—

(A) The partner's percentage distributive share of the partnership's dividend income from the stock;

(B) The partner's percentage distributive share of gain from disposition of the stock by the partnership;

(C) The partner's percentage distributive share of the stock (or proceeds from the disposition of the stock) upon liquidation of the partnership.

For purposes of this paragraph (b)(2)(ii), however, all qualifying shareholders that are partners of a partnership shall be treated as one partner. Thus, the percentage distributive shares of dividend income, gain and liquidation rights of all qualifying shareholders that are partners in a partnership are aggregated prior to determining the least of the three percentages.

(iii) *Trusts and estates* —

(A) ***Beneficiaries.*** In general, a person shall be treated as having an interest in stock of a foreign corporation owned by a trust or estate in proportion to the person's actuarial interest in the trust or estate, as provided in section 318(a)(2)(B)(i), except that an income beneficiary's actuarial interest in the trust will be determined as if the trust's only asset were the stock. The interest of a remainder beneficiary in stock will be equal to 100 percent minus the sum of the percentages of any interest in the stock held by income beneficiaries. The ownership of an interest in stock owned by a trust shall not be attributed to any beneficiary whose interest cannot be determined under the preceding sentence, and any such interest, to the extent not attributed by reason of this paragraph (b)(2)(iii)(A), shall not be considered owned by a beneficiary unless all potential beneficiaries with respect to the stock are qualifying shareholders. In addition, a beneficiary's actuarial interest will be treated as zero to extent that a grantor is treated as owning the stock under paragraph (b)(2)(iii)(B) of this section. A substantially separate and independent share of a trust, within the meaning of section 663(c), shall be treated as a separate trust for purposes of this paragraph (b)(2)(iii)(A), provided that payment of income, accumulated income or corpus of a share of one beneficiary (or group of beneficiaries) cannot affect the proportionate share of income, accumulated income or corpus of another beneficiary (or group of beneficiaries).

(B) ***Grantor trusts.*** A person is treated as the owner of stock of a foreign corporation owned by a trust to the extent that the stock is included in the portion of the trust that is treated as owned by the person under sections 671 to 679 (relating to grantors and others treated as substantial owners).

(iv) ***Corporations that issue stock.*** A shareholder of a corporation that issues stock shall be treated as owning stock of a foreign corporation that is owned by such corporation on any day in a proportion that equals the value of the stock owned by such shareholder to the value of all stock of such corporation. If there is an agreement, express or implied, that a shareholder of a corporation will not receive distributions from the earnings of stock owned by the corporation, the shareholder will not be treated as owning that stock owned by the corporation.

(v) ***Mutual insurance companies and similar entities.*** Stock held by a mutual insurance company, mutual savings bank, or similar entity (including an association taxable as a corporation that does not issue stock interests) shall be considered owned proportionately by the policy holders, depositors, or other owners in the same proportion that such persons share in the surplus of such entity upon liquidation or dissolution.

(vi) ***Pension funds.*** See paragraphs (b)(8) (ii) and (iii) of this section for the attribution of stock owned by a pension fund (as defined in paragraph (b)(8)(i)(A)) to beneficiaries of the fund.

(vii) ***Examples.*** The rules of paragraph (b)(2)(ii) of this section are illustrated by the following examples.

Example 1. Stock held solely by qualifying shareholders through a partnership. A and B, residents of country X, are qualifying shareholders, within the meaning of paragraphs (b)(1)(i) (A) through (E) of this section, and the sole partners of partnership P. P's only asset is the stock of foreign corporation Z, a country X corporation seeking qualified resident status under this section. A's distributive share of P's income and gain on the disposition of P's assets is 80 percent, but A's distributive share of P's assets (or the proceeds therefrom) on P's liquidation is 20 percent. B's distributive share of P's income and gain is 20 percent and B is entitled to 80 percent of the assets (or proceeds therefrom) on P's liquidation. Under the attribution rules of paragraph (b)(2)(ii) of this section, A and B will be treated as a single partner owning in the aggregate 100 percent of the stock of Z owned by P.

Example 2. Stock held by both qualifying and non-qualifying shareholders through a partnership.

Assume the same facts as in *Example 1* except that C, an individual who is not a qualifying shareholder, is also a partner in P and that C's distributive share of P's income is 60 percent. The distributive shares of A and B are the same as in *Example 1* except that A's distributive share of income is 20 percent. Under the attribution rules of paragraph (b)(2)(ii) of this section, A and B will be treated as a single partner owning in the aggregate 40 percent of the stock of Z owned by P (i.e., the least of A and B's aggregate distributive shares of dividend income (40 percent), gain (100 percent), and liquidation rights (100 percent) with respect to the Z stock).

Example 3. Stock held through tiered partnerships. Assume the same facts as in *Example 1,* except that P does not own the stock of Z directly, but rather is a partner in partnership P1, which owns the stock of Z. Assume that P's distributive share of the dividend income, gain and liquidation rights with respect to the Z stock held by P1 is 40 percent. Assume that of the remaining partners of P1 only D is a qualifying shareholder. D's distributive share of P1's dividend income and gain is 15 percent; D's distributive share of P1's assets on liquidation is 25 percent. Under the attribution rules of paragraph (b)(2)(ii) of this section, A and B, treated as a single partner, will own 40 percent of the Z stock owned by P1 (100 percent X 40 percent) and D will be treated as owning 15 percent of the Z stock owned by P1 (the least of D's dividend income (15 percent), gain (15 percent), and liquidation rights (25 percent) with respect to the Z stock). Thus, 55 percent of the Z stock owned by P1 is treated as owned by qualifying shareholders under paragraph (b)(2)(ii) of this section.

(3) ***Required documentation*** —

(i) ***Ownership statements, certificates of residency and intermediary ownership statements.*** Except as provided in paragraphs (b)(3)(ii), (iii) and (iv) and paragraph (b)(8) of this section, a person shall only be treated as a qualifying shareholder of a foreign corporation if—

(A) For the relevant period, the person completes an ownership statement described in paragraph (b)(4) of this section and, in the case of an individual who is not a U.S. citizen or resident, also obtains a certificate of residency described in paragraph (b)(5) of this section;

(B) In the case of a person owning stock in the foreign corporation indirectly through one or more intermediaries (including mere legal owners or recordholders acting as nominees), each intermediary completes an intermediary ownership statement described in paragraph (b)(6) of this section; and

(C) Such ownership statements and certificates of residency are received by the foreign corporation on or before the earlier of the date it files its income tax return for the taxable year to which the statements relate or the due date (including extensions) for filing such return or, in the case of a foreign corporation claiming treaty benefits under § 1.884-4(b)(8) (i) or (ii) (relating to branch interest) on or before the date on which such interest is paid.

(ii) ***Substitution of intermediary verification statement for ownership statements and certificates of residency.*** If a qualifying shareholder owns stock through an intermediary that is either a domestic corporation, a resident of the United States, or a resident (for treaty purposes) of a country with which the United States has an income tax treaty in effect, the intermediary may provide an intermediary verification statement (as described in paragraph (b)(7) of this section) in place of any relevant ownership statements and certificates of residency from qualifying shareholders, and in place of intermediary ownership statements (or, where applicable, intermediary verification statements) from all intermediaries standing in the chain of ownership between the qualifying shareholders and the intermediary issuing the intermediary verification statement. An intermediary verification statement generally certifies that the verifying intermediary holds the documentation described in the preceding sentence and agrees to make it available to the District Director on request. Such intermediary verification statements, along with an intermediary ownership statement from the verifying intermediary, must be received by the foreign corporation on or before the earlier of the date if files its income tax return for the taxable year to which the statements relate or the due date (including extensions) for filing such return. An indirect owner of a foreign corporation is thus treated as a qualifying shareholder of a foreign corporation if the foreign corporation receives, on or before the time specified above, an intermediary verification statement and an intermediary ownership statement from the verifying intermediary and an intermediary ownership statement from all intermediaries standing in the chain of the verifying intermediary's ownership of its interest in the foreign corporation.

(iii) ***Special rule for registered shareholders of widely-held corporations.*** An ownership statement and a certificate of residency shall not be required in the case of an individual who is a shareholder of record of a corporation that has at least 250 shareholders if—

(A) The individual owns less than one percent of the stock (by value) (applying the attribution rules of section 318) of the corporation at all times during the taxable year;

(B) The individual's address of record is in the corporation's country of residence and is not a nonresidential address such as a post office box or in care of a financial intermediary or stock transfer agent; and

(C) The officers and directors of the corporation do not know or have reason to know that the individual does not reside at that address.

The rule in this paragraph (b)(3)(iii) may also be applied with respect to individual owners of mutual insurance companies, mutual savings banks or similar entities, provided that the same conditions set forth in this paragraph (b)(3)(iii) are met with respect to such individuals.

(iv) ***Special rule for pension funds.*** See paragraphs (b)(8) (ii) through (v) of this section for special documentation rules applicable to pension funds (as defined in paragraph (b)(8)(i)(A) of this section).

(v) ***Reasonable cause exception.*** If a foreign corporation does not obtain the documentation described in this paragraph (b)(3) or (b)(8) of this section in a timely manner but is able to show prior to notification of an examination of the return for the taxable year that the failure was due to reasonable cause and not willful neglect, the foreign corporation may perfect the documentation after the deadlines specified in this paragraph (b)(3) or (b)(8) of this section. It may make such a showing by providing a written statement to the District Director having jurisdiction over the taxpayer's return or the Office of the Assistant Commissioner (International), as applicable, setting forth the reasons for the failure to obtain the documentation in a timely manner and describing the documentation that was received after the deadline had passed. Whether a failure to obtain the documentation in a timely manner was due to reasonable cause shall be determined by the District Director or the Office of the Assistant Commissioner (International), as applicable, under all the facts and circumstances.

(4) ***Ownership statements from qualifying shareholders*** —

(i) ***Ownership statements from individuals.*** An ownership statement from an individual is a written statement signed by the individual under penalties of perjury stating—

(A) The name, permanent address, and country of residence of the individual and, if the individual was not a resident of the country for the entire taxable year of the foreign corporation seeking qualified resident status, the period during which it was a resident of the foreign corporation's country of residence;

(B) If the individual is a direct beneficial owner of stock in the foreign corporation, the name of the corporation, the number of shares in each class of stock of the corporation that are so owned, and the period of time during the taxable year of the foreign corporation during which the individual owned the stock (or, in the case of an association taxable as a corporation, the amount and nature of the owner's interest in such association);

(C) If the individual directly owns an interest in a corporation, partnership, trust, estate or other intermediary that owns (directly or indirectly) stock in the foreign corporation, the name of the intermediary, the number and class of shares or amount and nature of the interest of the individual in such intermediary (that is relevant for purposes of attributing ownership in paragraph (b)(2) of this section), and the period of time during the taxable year of the foreign corporation during which the individual held such interest; and

(D) To the extent known by the individual, a description of the chain of ownership through which the individual owns stock in the foreign corporation, including the name and address of each intermediary standing between the intermediary described in paragraph (b)(4)(i)(C) of this section and the foreign corporation.

(ii) ***Ownership statements from governments.*** An ownership statement from a government that is a qualifying shareholder is a written statement signed by either—

(A) An official of the governmental authority, agency or office that has supervisory authority with respect to the government's ownership interest who is authorized to sign such a statement on behalf of the authority, agency or office; or

(B) The competent authority of the foreign country (as defined in the income tax treaty between the United States and the foreign country).

Such statement shall provide the title of the official signing the statement and the name and address of the government agency, and shall provide the information described in paragraphs (b)(4)(i) (B) through (D) of this section (substituting “government” for “individual”) with respect to the government's direct or indirect ownership of stock in the foreign corporation seeking qualified resident status.

(iii) ***Ownership statements from publicly-traded corporations.*** An ownership statement from a corporation that is a qualifying shareholder under paragraph (b)(1)(i)(C) of this section is a written statement signed by a person authorized to sign a tax return on behalf of the corporation under penalties of perjury stating—

(A) The name, permanent address, and principal place of business of the corporation (if different from its permanent address);

(B) The information described in paragraphs (b)(4)(i) (B) through (D) of this section (substituting “corporation” for “individual”); and

(C) That the corporation's stock is primarily and regularly traded on an established securities exchange (within the meaning of paragraph (d) of this section) in the United States or its country of residence.

(iv) ***Ownership statements from not-for-profit organizations.*** An ownership statement from a not-for-profit organization (other than a pension fund as defined in paragraph (b)(8)(i)(A) of this section) is a written statement signed by a person authorized to sign a tax return on behalf of the organization under penalties of perjury stating—

(A) The name, permanent address, and principal location of the activities of the organization (if different from its permanent address);

(B) The information described in paragraphs (b)(4)(i) (B) through (D) of this section (substituting “not-for-profit organization” for “individual”) with respect to the not-for-profit organization's direct or indirect ownership of stock in the foreign corporation seeking qualified resident status; and

(C) That the not-for-profit organization satisfies the requirements of paragraph (b)(1)(iv) of this section.

(v) ***Ownership through a nominee.*** For purposes of this paragraph (b)(4) and paragraph (b)(6) of this section, a person who owns either stock in a foreign corporation seeking qualified resident status or an interest in an intermediary described in paragraph (b)(4)(i)(C) of this section through a nominee shall be treated as owning such stock or interest directly and must, therefore, provide the information described in paragraphs (b)(4) (i) through (iv) of this section, as applicable. Such person must also provide the name and address of the nominee.

(5) ***Certificate of residency.*** A certificate of residency must be signed by the relevant authorities (as described below) of the country of residence of the individual shareholder and must state that the individual is a resident of that country for purposes of its income tax laws or, if the authorities do not customarily make such a determination, that the individual has filed a tax return claiming resident status and subjecting the individual's income to tax on a resident basis for the taxable year or period that ends with or within the taxable year for which the corporation is seeking qualified resident

status. In the case of an individual who is not legally required to file a tax return in his or her country of residence or in any other country, a certificate of residency of a parent or guardian residing at such individual's address shall be considered sufficient to meet that individual's obligation under this paragraph (b)(5). The relevant authorities shall be the competent authority of the foreign country of which the foreign corporation is a resident, as defined in the income tax treaty between the foreign country and the United States, or such other governmental office of the foreign country (or political subdivision thereof) that customarily provides statements of residence. Notwithstanding the foregoing, the Commissioner may consult with the competent authority of a country regarding the procedures set forth in this paragraph (b)(5) and if necessary agree on additional or alternative procedures under which these certificates may be issued.

(6) ***Intermediary ownership statement.*** An intermediary ownership statement is a written statement signed under penalties of perjury by the intermediary (if the intermediary is an individual) or a person that would be authorized to sign a tax return on behalf of the intermediary (if the intermediary is not an individual) containing the following information:

(i) The name, address, country of residence, and principal place of business (in the case of a corporation or partnership) of the intermediary and, if the intermediary is a trust or estate, the name and permanent address of all trustees or executors (or equivalent under foreign law);

(ii) The information described in paragraphs (b)(4)(i) (B) through (D) (substituting “intermediary making the ownership statement” for “individual”) with respect to the intermediary's direct or indirect ownership in the stock in the foreign corporation seeking qualified resident status;

(iii) If the intermediary is a nominee for a qualifying shareholder or another intermediary, the name and permanent address of the qualifying shareholder, or the name and principal place of business of such other intermediary;

(iv) If the intermediary is not a nominee for a qualifying shareholder or another intermediary, the proportionate interest in the intermediary of each direct shareholder, partner, beneficiary, grantor, or other interest holder (or if the direct holder is a nominee, of its beneficial shareholder, partner, beneficiary, grantor, or other interest holder) from which the intermediary received an ownership statement and the period of time during the taxable year for which the interest in the intermediary was owned by such shareholder, partner, beneficiary, grantor or other interest holder. For purposes of this paragraph (b)(6)(iv), the proportionate interest of a person in an intermediary is the percentage interest (by value) held by such person, determined using the principles for attributing ownership in paragraph (b)(2) of this section. If an intermediary is not required to receive an ownership statement from its individual registered shareholders or other interest holders by reason of paragraph (b)(3)(iii) of this section, then it must provide a list of the names and addresses of such registered shareholders or other interest holders and the aggregate proportionate interest in the intermediary of such registered shareholders or other interest holders.

(7) ***Intermediary verification statement.*** An intermediary verification statement that may be substituted for certain documentation under paragraph (b)(3)(ii) of this section is a written statement signed under penalties of perjury by the intermediary (if the intermediary is an individual) or by a person that would be authorized to sign a tax return on behalf of the intermediary (if the verifying intermediary is not an individual) containing the following information—

(i) The name, principal place of business, and country of residence of the verifying intermediary;

(ii) A statement that the verifying intermediary has obtained either—

(A) An ownership statement and, if applicable, a certificate of residency from a qualifying shareholder with respect to the foreign corporation seeking qualified resident status, and an intermediary ownership statement from each intermediary standing in the chain of ownership between the verifying intermediary and the qualifying shareholder; or

(B) An intermediary verification statement substituting for the documentation described in paragraph (b)(7)(ii)(A) and an intermediary ownership statement from such intermediary and each intermediary standing in the chain of ownership between such intermediary and the verifying intermediary;

(iii) The proportionate interest (as computed using the documentation described in paragraph (b)(7)(ii) of this section) in the intermediary owned directly or indirectly by qualifying shareholders;

(iv) An agreement to make available to the Commissioner at such time and place as the Commissioner may request the underlying documentation described in paragraph (b)(7)(ii) of this section; and

(v) A specific and valid waiver of any right to bank secrecy or other secrecy under the laws of the country in which the verifying intermediary is located, with respect to any qualifying shareholder ownership statements, certificates of residency, intermediary ownership statements or intermediary verification statements that the verifying intermediary has obtained pursuant to paragraph (b)(7)(ii) of this section.

A foreign corporation may combine, in a single statement, the information in an intermediary ownership statement and the information in an intermediary verification statement.

(8) *Special rules for pension funds* —

(i) *Definitions* —

(A) ***Pension fund.*** For purposes of this section, the term “pension fund” shall mean a trust, fund, foundation, or other entity that is established exclusively for the benefit of employees or former employees of one or more employers, the principal purpose of which is to provide retirement, disability, and death benefits to beneficiaries of such entity and persons designated by such beneficiaries in consideration for prior services rendered.

(B) ***Beneficiary.*** For purposes of this section, the term “beneficiary” of a pension fund shall mean any person who has made contributions to the pension fund, or on whose behalf contributions have been made, and who is currently receiving retirement, disability, or death benefits from the pension fund or can reasonably be expected to receive such benefits in the future, whether or not the person's right to receive benefits from the fund has vested.

(ii) ***Government pension funds.*** An individual who is a beneficiary of a pension fund that would be a controlled entity of a foreign sovereign within the principles of § 1.892-2T(c)(1) of the regulations (relating to pension funds established for the benefit of employees or former employees of a foreign government) shall be treated as a qualifying shareholder of a foreign corporation in which the pension fund owns a direct or indirect interest without having to meet the documentation requirements under paragraph (b)(3)(i)(A) of this section, if the foreign corporation is resident in the country of the foreign sovereign and the trustees, directors, or other administrators of the pension fund provide, with the pension fund's intermediary

ownership statement described in paragraph (b)(6) of this section, a written statement that the fund is a controlled entity described in this paragraphs (b)(8)(ii). See paragraph (b)(4)(ii) of this section regarding an ownership statement from a pension fund that is an integral part of a foreign government.

(iii) ***Non-government pension funds.*** For purposes of this section, an individual who is a beneficiary of a pension fund not described in paragraph (b)(8)(ii) of this section shall be treated as a qualifying shareholder of a foreign corporation owned directly or indirectly by such pension fund without having to meet the documentation requirements under paragraph (b)(3)(i)(A) of this section, if—

(A) The pension fund is administered in the foreign corporation's country of residence and is subject to supervision or regulation by a governmental authority (or other authority delegated to perform such supervision or regulation by a governmental authority) in such country;

(B) The pension fund is generally exempt from income taxation in its country of administration;

(C) The pension fund has 100 or more beneficiaries;

(D) The beneficiary's address, as it appears on the records of the fund, is in the foreign corporation's country of residence or the United States and is not a nonresidential address, such as a post office box or in care of a financial intermediary, and none of the trustees, directors or other administrators of the pension fund know, or have reason to know, that the beneficiary is not an individual resident of such foreign country or the United States;

(E) In the case of a pension fund that has fewer than 500 beneficiaries, the beneficiary's employer provides (if the beneficiary is currently contributing to the fund) to the trustees, directors or other administrators a written statement that the beneficiary is currently employed in the country in which the fund is administered or is usually employed in such country but is temporarily employed by the company outside of the country; and

(F) The trustees, directors or other administrators of the pension fund provide, with the pension fund's intermediary ownership statement described in paragraph (b)(6) of this section, a written statement signed under penalties of perjury declaring that the pension fund meets the requirements in paragraphs (b)(8)(iii) (A), (B), and (C) of this section and giving the number of beneficiaries who meet the requirements of paragraph (b)(8)(iii)(D) of this section, and, if applicable, paragraph (b)(8)(iii)(E) of this section.

(iv) ***Computation of beneficial interests in non-government pension funds.*** The number of shares in a foreign corporation that are held indirectly by beneficiaries of a pension fund who are qualifying shareholders may be computed based on the ratio of the number of such beneficiaries to all beneficiaries of the pension fund (rather than on the basis of the rules in paragraph (b)(2) of this section) if—

(A) The pension fund meets the requirements of paragraphs (b)(8)(iii) (A), (B), and (C) of this section;

(B) The trustees, directors or other administrators of the pension fund have no knowledge, and no reason to know, that the ratio of the pension fund's beneficiaries who are residents of either the country in which the pension fund is administered or of the United States to all beneficiaries of the pension fund would differ significantly from the ratio of the sum of the actuarial interests of such residents in the pension fund to the actuarial interests of all beneficiaries in the pension fund (or, if the beneficiaries' actuarial interest in the stock held directly or indirectly by the pension fund differs from the beneficiaries' actuarial interest in the pension fund, the ratio of actuarial interests computed by reference to the beneficiaries' actuarial interest in the stock);

(C) Either—

(*1*) Any overfunding of the pension fund would be payable, pursuant to the governing instrument or the laws of the foreign country in which the pension fund is administered, only to, or for the benefit of, one or more corporations that are qualified residents of the country in which the pension fund is administered, individual beneficiaries of the pension fund or their designated beneficiaries, or social or charitable causes (the reduction of the obligation of the sponsoring company or companies to make future contributions to the pension fund by reason of overfunding shall not itself result in such overfunding being deemed to be payable to or for the benefit of such company or companies); or

(*2*) The foreign country in which the pension fund is administered has laws that are designed to prevent overfunding of a pension fund and the funding of the pension fund is within the guidelines of such laws; or

(*3*) The pension fund is maintained to provide benefits to employees in a particular industry, profession, or group of industries or professions and employees of at least 10 companies (other than companies that are owned or controlled, directly or indirectly, by the same interests) contribute to the pension fund or receive benefits from the pension fund; and

(D) The trustees, directors or other administrators provide, with the pension fund's intermediary ownership statement described in paragraph (b)(6) of this section, a written statement signed under penalties of perjury certifying that the requirements in paragraphs (b)(8)(iv) (A), (B), and either (C)(*1*), (C)(*2*) or (C)(*3*) of this section have been met.

The statement described in paragraph (b)(8)(iv) (D) of this section may be combined, in a single statement, with the information required in paragraph (b)(8)(iv) (F) of this section.

(v) ***Time for making determinations.*** The determinations required to be made under this paragraph (b)(8) shall be made using information shown on the records of the pension fund for a date on or after the beginning of the foreign corporation's taxable year to which the determination is relevant.

(9) ***Availability of documents for inspection*** —

(i) ***Retention of documents by the foreign corporation.*** The documentation described in paragraphs (b)(3) and (b)(8) of this section must be retained by the foreign corporation until expiration of the period of limitations for the taxable year to which the documentation relates and must be made available for inspection by the District Director at such time and place as the District Director may request.

(ii) ***Retention of documents by an intermediary issuing an intermediary verification statement.*** The documentation upon which an intermediary relies to issue an intermediary verification statement under paragraph (b)(7) of this section must be retained by the intermediary for a period of six years from the date of issuance of the intermediary verification statement and must be made available for inspection by the District Director at such time and place as the District Director may request.

(10) ***Examples.*** The application of this paragraph (b) is illustrated by the following examples.

Example 1. Foreign corporation A is a resident of country L, which has an income tax treaty in effect with the United States. Foreign corporation A has one class of stock issued and outstanding consisting of 1,000 shares, which are beneficially owned by the following alien individuals, directly or by application of paragraph (b)(2) of this section:

Individual	Shares owned, directly or indirectly by application of paragraph (b)(2) of this section	Percentage
T—resident of the U.S	200	20
U—resident of country L	400	40
V—resident of country M	100	10
W—resident of country L	210	21
X—resident of country N	90	9
Total	1,000	100

(i) T owns his 200 shares directly and is a beneficial owner.
(ii) U and V own, respectively, an 80 percent and a 20 percent actuarial interest in foreign trust FT, (which interest does not differ from their respective interests in the stock owned by FT), which beneficially owns 100 percent of the stock of a foreign corporation B with bearer shares, which beneficially owns 500 shares of foreign corporation A. Foreign corporation B is incorporated in a country that does not have an income tax treaty with the United States. The foreign trust has deposited the bearer shares it owns in B with a bank in a foreign country that has an income tax treaty with the United States.

(iii) W beneficially owns all the shares of foreign corporation C, which are registered in the name of individual Z, a nominee, who resides in country L; foreign corporation C beneficially owns a 70 percent interest in foreign corporation D, which beneficially owns 300 shares of A.

D's shares are bearer shares that C (not a resident of a country with which the United States has an income tax treaty) has deposited with a bank in a foreign country that has an income tax treaty with the United States.

(iv) X beneficially owns a 30 percent interest in foreign corporation D.

(v) A is a qualified resident of country L if it obtains the applicable documentation described in paragraph (b)(3) of this section either with respect to ownership by individuals U and W or with respect to ownership by individuals T and U, since either combination of qualifying shareholders of foreign corporation A will exceed 50 percent.

Example 2. Assume the same facts as in *Example 1* and assume that foreign corporation A chooses to obtain documentation with respect to individuals T and U.
(i) A must obtain, pursuant to paragraph (b)(3)(i) of this section, an ownership statement (as described in paragraph (b)(4)(i) of this section) signed by T. T is not required to furnish a certificate of residency because T is a U.S. resident.

(ii) U must provide foreign trust FT with an ownership statement and certificate of residency, as described in paragraphs (b)(4) and (b)(5) of this section. The trustees of FT must provide the depository bank holding foreign corporation B's bearer shares with an intermediary ownership statement concerning its beneficial ownership of B's shares and must attach to it the documentation provided by U. The depository bank must provide B with an intermediary ownership statement regarding its holding of B shares on behalf of FT and has the choice of attaching—

(A) The documentation from U and the intermediary ownership statement from FT; or

(B) An intermediary verification statement described in paragraph (b)(7) of this section, in which case foreign corporation B would not be provided with U's individual documentation or FT's intermediary ownership statement, both of which are retained by the depository bank.

(iii) In either case, B must then provide foreign corporation A with an intermediary ownership statement regarding its direct beneficial ownership of shares in A and, as the case may be, either—

(A) U's documentation and the intermediary ownership statements by FT and the depository bank; or

(B) The depository bank's intermediary ownership and verification statements.

(iv) Thus, with respect to U, A must obtain under paragraph (b)(3)(i) of this section the individual documentation regarding U and an intermediary ownership statement from each intermediary standing in the chain of U's indirect beneficial ownership of shares in A, i.e., from FT, the depository bank and B. In the alternative, A must obtain under paragraph (b)(3)(ii) of this section an intermediary verification statement issued by the depository bank and an intermediary ownership statement from the bank and from B, which, in this example, are the only intermediaries standing in the chain of ownership of the verifying intermediary (i.e., the depository bank).

Example 3. Assume the same facts as in *Example 1.* In addition, assume that foreign corporation A chooses to obtain documentation with respect to individuals U and W. With respect to U, A must obtain the same documentation that is described in *Example 2.* With respect to W, A must obtain, under paragraph (b)(3)(i) of this section, individual documentation regarding W and an intermediary ownership statement from each intermediary standing in the chain of W's indirect beneficial ownership of shares in A, i.e., from individual Z, foreign corporation C, the depository bank in the foreign treaty country, and foreign corporation D. In the alternative, A must obtain, under paragraph (b)(3)(ii) of this section, either—
(i) An intermediary verification statement by the depository bank in the foreign treaty country and an intermediary ownership statement from the bank and from D; or

(ii) An intermediary verification statement from Z and an intermediary ownership statement from Z and from each intermediary standing in the chain of ownership of shares in foreign corporation A, i.e., from C, the depository bank in the foreign treaty country and D. C may not issue an intermediary verification statement because it is not a resident of a country with which the United States has an income tax treaty.

(c) ***Base erosion.*** A foreign corporation satisfies the requirement relating to base erosion for a taxable year if it establishes that less than 50 percent of its income for the taxable year is used (directly or indirectly) to make deductible payments in the current taxable year to persons who are not residents (or, in the case of foreign corporations, qualified residents) of the foreign country of which the foreign corporation is a resident and who are not citizens or residents (or, in the case of domestic corporations, qualified residents) of the United States. Whether a domestic corporation is a qualified resident of the United States shall be determined under the principles of this section. For purposes of this paragraph (c), the term “deductible payments” includes payments that would be ordinarily deductible under U.S. income tax principles without regard to other provisions of the Code that may require the capitalization of the expense, or disallow or defer the deduction. Such payments include, for example, interest, rents, royalties and reinsurance premiums. For purposes of this paragraph (c), the income of a foreign corporation means the corporation's gross income for the taxable year (or, if the foreign corporation has no gross income for the taxable year, the average of its gross income for the three previous taxable years) under U.S. tax principles, but not excluding items of income otherwise excluded from gross income under U.S. tax principles.

(d) ***Publicly-traded corporations*** —

(1) ***General rule.*** A foreign corporation that is a resident of a foreign country shall be treated as a qualified resident of that country for any taxable year in which—

(i) Its stock is primarily and regularly traded (as defined in paragraphs (d) (3) and (4) of this section) on one or more established securities markets (as defined in paragraph (d)(2) of this section) in that country, or in the United States, or both; or

(ii) At least 90 percent of the total combined voting power of all classes of stock of such foreign corporation entitled to vote and at least 90 percent of the total value of the stock of such foreign corporation is owned, directly or by application of paragraph (b)(2) of this section, by a foreign corporation that is a resident of the same foreign country or a domestic corporation and the stock of such parent corporation is primarily and regularly traded on an established securities market in that foreign country or in the United States, or both.

(2) ***Established securities market*** —

(i) ***General rule.*** For purposes of section 884, the term "established securities market" means, for any taxable year—

(A) A foreign securities exchange that is officially recognized, sanctioned, or supervised by a governmental authority of the country in which the market is located, is the principal exchange in that country, and has an annual value of shares traded on the exchange exceeding $1 billion during each of the three calendar years immediately preceding the beginning of the taxable year;

(B) A national securities exchange that is registered under section 6 of the Securities Act of 1934 (15 U.S.C. 78f); and

(C) A domestic over-the-counter market (as defined in paragraph (d)(2)(iv) of this section).

(ii) ***Exchanges with multiple tiers.*** If a principal exchange in a foreign country has more than one tier or market level on which stock may be separately listed or traded, each such tier shall be treated as a separate exchange.

(iii) ***Computation of dollar value of stock traded.*** For purposes of paragraph (d)(2)(i)(A) of this section, the value in U.S. dollars of shares traded during a calendar year shall be determined on the basis of the dollar value of such shares traded as reported by the International Federation of Stock Exchanges, located in Paris, or, if not so reported, then by converting into U.S. dollars the aggregate value in local currency of the shares traded using an exchange rate equal to the average of the spot rates on the last day of each month of the calendar year.

(iv) ***Definition of over-the-counter market.*** An over-the-counter market is any market reflected by the existence of an interdealer quotation system. An interdealer quotation system is any system of general circulation to brokers and dealers that regularly disseminates quotations of stocks and securities by identified brokers or dealers, other than by quotation sheets that are prepared and distributed by a broker or dealer in the regular course of business and that contain only quotations of such broker or dealer.

(v) ***Discretion to determine that an exchange qualifies as an established securities market.*** The Commissioner may, in his sole discretion, determine in a published document that a securities exchange that does not meet the requirements of paragraph (d)(2)(i)(A) of this section qualifies as an established securities market. Such a determination will be made only if it is established that—

(A) The exchange, in substance, has the attributes of an established securities market (including adequate trading volume, and comparable listing and financial disclosure requirements);

(B) The rules of the exchange ensure active trading of listed stocks; and

(C) The exchange is a member of the International Federation of Stock Exchanges.

(vi) ***Discretion to determine that an exchange does not qualify as an established securities market.*** The Commissioner may, in his sole discretion, determine in a published document that a securities exchange that meets the requirements of paragraph (d)(2)(i) of this section does not qualify as an established securities market. Such determination shall be made if, in the view of the Commissioner—

(A) The exchange does not have adequate listing, financial disclosure, or trading requirements (or does not adequately enforce such requirements); or

(B) There is not clear and convincing evidence that the exchange ensures the active trading of listed stocks.

(3) ***Primarily traded.*** For purposes of this section, stock of a corporation is "primarily traded" on one or more established securities markets in the corporation's country of residence or in the United States in any taxable year if, with respect to each class described in paragraph (d)(4)(l)(i)(A) of this section (relating to classes of stock relied on to meet the regularly traded test)—

(i) The number of shares in each class that are traded during the taxable year on all established securities markets in the corporation's country of residence or in the United States during the taxable year exceeds

(ii) The number of shares in each such class that are traded during that year on established securities markets in any other single foreign country.

(4) ***Regularly traded*** —

(i) ***General rule.*** For purposes of this section, stock of a corporation is "regularly traded" on one or more established securities markets in the foreign corporation's country of residence or in the United States for the taxable year if—

(A) One or more classes of stock of the corporation that, in the aggregate, represent 80 percent or more of the total combined voting power of all classes of stock of such corporation entitled to vote and of the total value of the stock of such corporation are listed on such market or markets during the taxable year;

(B) With respect to each class relied on to meet the 80 percent requirement of paragraph (d)(4)(i)(A) of this section—

(*1*) Trades in each such class are effected, other than in *de minimis* quantities, on such market or markets on at least 60 days during the taxable year (or $^{1}/_{6}$ of the number of days in a short taxable year); and

(2) The aggregate number of shares in each such class that is traded on such market or markets during the taxable year is at least 10 percent of the average number of shares outstanding in that class during the taxable year (or, in the case of a short taxable year, a percentage that equals at least 10 percent of the number of days in the short taxable year divided by 365).

If stock of a foreign corporation fails the 80 percent requirement of paragraph (d)(4)(i)(A) of this section, but a class of such stock meets the trading requirements of paragraph (d)(4)(i)(B) of this section, such class of stock may be taken into account under paragraph (b)(1)(iii) of this section as owned by qualifying shareholders for purposes of meeting the ownership test of paragraph (b)(1) of this section.

(ii) ***Classes of stock traded on a domestic established securities market treated as meeting trading requirements.*** A class of stock that is traded during the taxable year on an established securities market located in the United States shall be treated as meeting the trading requirements of paragraph (d)(4)(i)(B) of this section if the stock is regularly quoted by brokers or dealers making a market in the stock. A broker or dealer makes a market in a stock only if the broker or dealer holds himself out to buy or sell the stock at the quoted price.

(iii) ***Closely-held classes of stock not treated as meeting trading requirement*** —

(A) ***General rule.*** A class of stock shall not be treated as meeting the trading requirements of paragraph (d)(4)(i)(B) of this section (or the requirements of paragraph (d)(4)(ii) of this section) for a taxable year if, at any time during the taxable year, one or more persons who are not qualifying shareholders (as defined in paragraph (b)(1) of this section) and who each beneficially own 5 percent or more of the value of the outstanding shares of the class of stock own, in the aggregate, 50 percent or more of the outstanding shares of the class of stock for more than 30 days during the taxable year. For purposes of the preceding sentence, shares shall not be treated as owned by a qualifying shareholder unless such shareholder provides to the foreign corporation, by the time prescribed in paragraph (b)(3) of this section, the documentation described in paragraph (b)(3) of this section necessary to establish that it is a qualifying shareholder. For purposes of this paragraph (d)(4)(iii)(A), shares of stock owned by a pension fund, as defined in paragraph (b)(8)(i)(A) of this section, shall be treated as beneficially owned by the beneficiaries of such fund, as defined in paragraph (b)(8)(i)(B) of this section.

(B) ***Treatment of related persons.*** Persons related within the meaning of section 267(b) shall be treated as one person for purposes of this paragraph (d)(4)(iii). In determining whether two or more corporations are members of the same controlled group under section 267(b)(3), a person is considered to own stock owned directly by such person, stock owned with the application of section 1563(e)(1), and stock owned with the application of section 267(c). Further, in determining whether a corporation is related to a partnership under section 267(b)(10), a person is considered to own the partnership interest owned directly by such person and the partnership interest owned with the application of section 267(e)(3).

(iv) ***Anti-abuse rule.*** Trades between persons described in section 267(b) (as modified in paragraph (d)(4)(iii)(B) of this section) and trades conducted in order to meet the requirements of paragraph (d)(4)(i)(B) of this section shall be disregarded. A class of stock shall not be treated as meeting the trading requirements of paragraph (d)(4)(i)(B) of this section if there is a pattern of trades conducted to meet the requirements of that paragraph. For example, trades between

two persons that occur several times during the taxable year my be treated as an arrangement or a pattern of trades conducted to meet the trading requirements of paragraph (d)(4)(i)(B) of this section.

(5) ***Burden of proof for publicly-traded corporations.*** A foreign corporation that relies on this paragraph (d) to establish that it is a qualified resident of a country with which the United States has an income tax treaty shall have the burden of proving all the facts necessary for the corporation to be treated as a qualified resident, except that with respect to paragraphs (d)(4) (iii) and (iv) of this section, a foreign corporation, with either registered or bearer shares, will meet the burden of proof if it has no reason to know and no actual knowledge of facts that would cause the corporation's stock not to be treated as regularly traded under such paragraphs. A foreign corporation that has shareholders of record must also maintain a list of such shareholders and, on request, make available to the District Director such list and any other relevant information known to the foreign corporation.

(e) ***Active trade or business*** —

(1) ***General rule.*** A foreign corporation that is a resident of a foreign country shall be treated as a qualified resident of that country with respect to any U.S. trade or business if, during the taxable year—

(i) It is engaged in the active conduct of a trade or business (as defined in paragraph (e)(2) of this section) in its country of residence;

(ii) It has a substantial presence (within the meaning of paragraph (e)(3) of this section) in its country of residence; and

(iii) Either—

(A) Such U.S. trade or business is an integral part (as defined in paragraph (e)(4) of this section) of an active trade or business conducted by the foreign corporation in its country of residence; or

(B) In the case of interest received by the foreign corporation for which a treaty exemption or rate reduction is claimed pursuant to § 1.884-4(b)(8)(ii), the interest is derived in connection with, or is incidental to, a trade or business described in paragraph (e)(1)(i) of this section.

A foreign corporation may determine whether it is a qualified resident under this paragraph (e) by applying the rules of this paragraph (e) to the entire affiliated group (as defined in section 1504 (a) without regard to section 1504(b)(2) or (3)) of which the foreign corporation is a member rather than to the foreign corporation separately. If a foreign corporation chooses to apply the rules of this paragraph (e) to its entire affiliated group as provided in the preceding sentence, then it must apply such rules consistently to all of its U.S. trades or businesses conducted during the taxable year.

(2) ***Active conduct of a trade or business.*** A foreign corporation is engaged in the active conduct of a trade or business only if either—

(i) It is engaged in the active conduct of a trade or business within the meaning of section 367(a)(3) and the regulations thereunder; or

(ii) It qualifies as a banking or financing institution under the laws of the foreign country of which it is a resident, it is licensed to do business with residents of its country of residence, and it is engaged in the active conduct of a banking, financing, or similar business within the meaning of § 1.864-4(c)(5)(i) in its country of residence.

A foreign corporation that is an insurance company within the meaning of § 1.801-3 (a) or (b) is engaged in the active conduct of a trade or business only if it is predominantly engaged in the active conduct of an insurance business within the meaning of section 952(c)(1)(B)(v) and the regulations thereunder.

(3) *Substantial presence test* —

(i) ***General rule.*** Except as provided in paragraph (e)(3)(ii) of this section, a foreign corporation that is engaged in the active conduct of a trade or business in its country of residence has a substantial presence in that country if, for the taxable year, the average of the following three ratios exceeds 25 percent and each ratio is at least equal to 20 percent—

(A) The ratio of the value of the assets of the foreign corporation used or held for use in the active conduct of a trade or business in its country of residence at the close of the taxable year to the value of all assets of the foreign corporation at the close of the taxable year;

(B) The ratio of gross income from the active conduct of the foreign corporation's trade or business in its country of residence that is derived from sources within such country for the taxable year to the worldwide gross income of the foreign corporation for the taxable year; and

(C) The ratio of the payroll expenses in the foreign corporation's country of residence for the taxable year to the foreign corporation's worldwide payroll expenses for the taxable year.

(ii) *Special rules* —

(A) ***Asset ratio.*** For purposes of paragraph (e)(3)(i)(A) of this section, the value of an asset shall be determined using the method used by the taxpayer in keeping its books for purposes of financial reporting in its country of residence. An asset shall be treated as used or held for use in a foreign corporation's trade or business if it meets the requirements of § 1.367(a)-2(d)(5). Stock held by a foreign corporation shall not be treated as an asset of the foreign corporation for purposes of paragraph (e)(3)i)(A) of this section if the foreign corporation owns 10 percent or more of the total combined voting power of all classes of stock of such corporation entitled to vote. The rules of § 1.954-2T(b)(3) (other than § 1.954-2T(b)(3)(x)) shall apply to determine the location of assets used or held for use in a trade or business. Loans originated or acquired in the course of the normal customer loan activities of a banking, financing or similar institution, and securities and derivative financial instruments held by dealers, traders and insurance companies for use in a trade or business shall be treated as located in the country in which an office or other fixed place of business is primarily responsible for the acquisition of the asset and the realization of income, gain or loss with respect to the asset.

(B) *Gross income ratio* —

(*1*) ***General rule.*** For purposes of paragraph (e)(3)(i)(B) of this section, the term “gross income” means the gross income of a foreign corporation for purposes of financial reporting in its country of residence. Gross income shall not include, however,

dividends, interest, rent, or royalties unless such corporation derives such dividends, interest, rents, or royalties in the active conduct of its trade or business. Gross income shall also not include gain from the disposition of stock if the foreign corporation owns 10 percent or more of the total combined voting power of all classes of stock of such corporation entitled to vote. Except as provided in this paragraph (e)(3)(ii)(B), the principles of sections 861 through 865 shall apply to determine the amount of gross income of a foreign corporation derived within its country of residence.

(2) ***Banks, dealers and traders.*** Dividend income and gain from the sale of securities, or from entering into or disposing of derivative financial instruments by dealers and traders in such securities or derivative financial instruments shall be treated as derived within the country where the assets are located under paragraph (e)(3)(ii)(A) of this section. Other income, including interest and fees, earned in the active conduct of a banking, financing or similar business shall be treated as derived within the country where the payor of such interest or other income resides. For purposes of the preceding sentence, if a branch or similar establishment outside the country in which the payor resides makes a payment of interest or other income, such amounts shall be treated as derived within the country in which the branch or similar establishment is located.

(3) ***Insurance companies.*** The gross income of a foreign insurance company shall include only gross premiums received by the country.

(4) ***Other corporations.*** Gross income from the performance of services, including transportation services, shall be treated as derived within the country of residence of the person for whom the services are performed. Gross income from the sale of property by a foreign corporation shall be treated as derived within the country in which the purchaser resides.

(5) ***Anti-abuse rule.*** The Commissioner may disregard the source of income from a transaction determined under this paragraph (e)(3)(ii)(B) if it is determined that one of the principal purposes of the transaction was to increase the source of income derived within the country of residence of the foreign corporation for purposes of this section.

(C) ***Payroll ratio.*** For purposes of paragraph (e)(3)(i)(C) of this section, the payroll expenses of a foreign corporation shall include expenses for “leased employees” (within the meaning of section 414(n)(2) but without regard to subdivision (B) of that section) and commission expenses paid to employees and agents for services performed for or on behalf of the corporation. Payroll expense for an employee, agent or a “leased employee” shall be treated as incurred where the employee, agent or “leased employee” performs services on behalf of the corporation.

(iii) ***Exception to gross income test for foreign corporations engaged in certain trades or businesses.*** In determining whether a foreign corporation engaged primarily in selling tangible property or in manufacturing, producing, growing, or extracting tangible property has a substantial presence in its country of residence for purposes of paragraph (e)(3)(i) of this section, the foreign corporation may apply the ratio provided in this paragraph (e)(3)(iii) instead of the ratio described in paragraph (e)(3)(i)(B) of this section (relating to the ratio of gross income derived from its country of residence). This ratio shall be the ratio of the direct material costs of the

foreign corporation with respect to tangible property manufactured, produced, grown, or extracted in the foreign corporation's country of residence to the total direct material costs of the foreign corporation.

(4) ***Integral part of an active trade or business in a foreign corporation's country of residence*** —

(i) ***In general.*** A U.S. trade or business of a foreign corporation is an integral part of an active trade or business conducted by a foreign corporation in its country of residence if the active trade or business conducted by the foreign corporation in both its country of residence and in the United States comprise, in principal part, complementary and mutually interdependent steps in the United States and its country of residence in the production and sale or lease of goods or in the provision of services. Subject to the presumption and de minimis rule in paragraphs (e)(4)(iii) and (iv) of this section, if a U.S. trade or business of a foreign corporation sells goods that are not, in principal part, manufactured, produced, grown, or extracted by the foreign corporation in its country of residence, such business shall not be treated as an integral part of an active trade or business conducted in the foreign corporation's country of residence unless the foreign corporation takes physical possession of the goods in a warehouse or other storage facility that is located in its country of residence and in which goods of such type are normally stored prior to sale to customers in such country.

(ii) ***Presumption for banks.*** A U.S. trade or business of a foreign corporation that is described in § 1.884-4(a)(2)(iii) shall be presumed to be an integral part of an active banking business conducted by the foreign corporation in its country of residence provided that a substantial part of the business of the foreign corporation in both its country of residence and the United States consists of receiving deposits and making loans and discounts. This paragraph shall be effective for taxable years beginning on or after June 6, 1996.

(iii) ***Presumption if business principally conducted in country of residence.*** A U.S. trade or business of a foreign corporation shall be treated as an integral part of an active trade or business of a foreign corporation in its country or residence with respect to the sale or lease of property (or the performance of services) if at least 50 percent of the foreign corporation's worldwide gross income from the sale or lease of property of the type sold in the United States (or from the performance of services of the type performed in the United States) is derived from the sale or lease of such property for consumption, use, or disposition in the foreign corporation's country of residence (or from the performance of such services in the foreign corporation's country of residence). In determining whether property or services are of the same type, a foreign corporation shall follow recognized industry or trade usage or the three-digit major groups (or any narrower classification) of the Standard Industrial Classification as prepared by the Statistical Policy Division of the Office of Management and Budget, Executive Office of the President. The determination of whether income is of the same kind must be made in a consistent manner from year to year.

(iv) ***De minimis rule.*** If a foreign corporation is engaged in more than one U.S. trade or business and if at least 80 percent of the sum of the ECEP from the current year and the preceding two years is attributable to one or more trades or businesses that meet the integral part test of this paragraph (e)(4), all of the U.S. trades or businesses of the foreign corporation shall be treated as an integral part of an active or business conducted by the foreign corporation. If a foreign corporation has more than one U.S. trade or business and does not meet the requirements of

the preceding sentence but otherwise meets the requirements of this paragraph (e)(4) with regard to one or more trade or business, see § 1.884-1(g)(1) to determine the extent to which treaty benefits apply to such corporation.

(f) *Qualified resident ruling* —

(1) ***Basis for ruling.*** In his or her sole discretion, the Commissioner may rule that a foreign corporation is a qualified resident of its country or residence if the Commissioner determines that individuals who are not residents of the foreign country of which the foreign corporation is a resident do not use the treaty between that country and the United States in a manner inconsistent with the purposes of section 884. The purposes of section 884 include, but are not limited to, the prevention of treaty shopping by an individual with respect to any article of an income tax treaty between the country of residence of the foreign corporation and the United States.

(2) ***Factors.*** In order to make this determination, the Commissioner may take into account the following factors, including, but not limited to:

(i) The business reasons for establishing and maintaining the foreign corporation in its country of residence;

(ii) The date of incorporation of the foreign corporation in relation to the date that an income tax treaty between the United States and the foreign corporation's country of residence entered into force;

(iii) The continuity of the historical business and ownership of the foreign corporation;

(iv) The extent to which the foreign corporation meets the requirements of one or more of the tests described in paragraphs (b) through (e) of this section;

(v) The extent to which the U.S. trade or business is dependent on capital, assets, or personnel of the foreign trade or business;

(vi) The extent to which the foreign corporation receives special tax benefits in its country of residence;

(vii) Whether the foreign corporation is a member of an affiliated group (as defined in section 1504(a) without regard to section 1504(b)(2) or (3)), that has no members resident outside the country of residence of the foreign corporation; and

(viii) The extent to which the foreign corporation would be entitled to comparable treaty benefits with respect to all articles of an income tax treaty that would apply to that corporation if it had been incorporated in the country or countries of residence of the majority of its shareholders. For purposes of the preceding sentence, shareholders taken into account shall generally be limited to persons described in paragraph (b)(1)(i) of this section but for the fact that they are not residents of the foreign corporation's country of residence.

(3) ***Procedural requirements.*** A request for a ruling under this paragraph (f) must be submitted on or before the due date (including extensions) of the foreign corporation's income tax return for the taxable year for which the ruling is requested. A foreign corporation receiving a ruling will be treated as a qualified resident of its country of residence for the taxable year for which the ruling is requested and for the succeeding two taxable years. If there is a material change in any fact that formed the basis of the ruling, such as the ownership or the nature of the trade or business of the foreign corporation, the foreign corporation must notify the Secretary within 90 days of such change

and submit a new private letter ruling request. The Commissioner will then rule whether the change affects the foreign corporation's status as a qualified resident, and such ruling will be valid for the taxable year in which the material change occurred and the two succeeding taxable years, subject to the requirement in the preceding sentence to notify the Commissioner of a material change.

(g) ***Effective dates.*** Except as provided in paragraph (e)(4)(ii) of this section, this section is effective for taxable years beginning on or after October 13, 1992. With respect to a taxable year beginning before October 13, 1992, and after December 31, 1986, a foreign corporation may elect to apply this section in lieu of the temporary regulations under 1.884-5T (as contained in the CFR edition revised as of April 1, 1992), but only if the statute of limitations for assessment of a deficiency has not expired for that taxable year. Once an election has been made, an election shall apply to all subsequent taxable years.

(h) ***Transition rule.*** If a foreign corporation elects to apply this section in lieu of § 1.884-5T (as contained in the CFR edition revised as of April 1, 1992) as provided in paragraph (g) of this section, and the application of paragraph (b) of this section results in additional documentation requirements in order for the foreign corporation to be treated as a qualified resident, the foreign corporation must obtain the documentation required under that paragraph on or before March 11, 1993.

[T.D. 8432, 57 FR 41666, Sept. 11, 1992; 57 FR 49117, Oct. 29, 1992; 57 FR 60126, Dec. 18, 1992, as amended by T.D. 8657, 61 FR 9343, Mar. 8, 1996; 61 FR 14248, Apr. 1, 1996; T.D. 9803, 81 FR 91030, Dec. 16, 2016]

MISCELLANEOUS PROVISIONS

§ 1.891 Statutory provisions; doubling of rates of tax on citizens and corporations of certain foreign countries.

> Sec. 891. *Doubling of rates of tax on citizens and corporations of certain foreign countries.* Whenever the President finds that, under the laws of any foreign country, citizens or corporations of the United States are being subjected to discriminatory or extraterritorial taxes, the President shall so proclaim and the rates of tax imposed by sections 1, 3, 11, 802, 821, 831, 852, 871, and 881 shall, for the taxable year during which such proclamation is made and for each taxable year thereafter, be doubled in the case of each citizen and corporation of such foreign country; but the tax at such doubled rate shall be considered as imposed by such sections as the case may be. In no case shall this section operate to increase the taxes imposed by such sections (computed without regard to this section) to an amount in excess of 80 percent of the taxable income of the taxpayer (computed without regard to the deductions allowable under section 151 and under part VIII of subchapter B). Whenever the President finds that the laws of any foreign country with respect to which the President has made a proclamation under the preceding provisions of this section have been modified so that discriminatory and extraterritorial taxes applicable to citizens and corporations of the United States have been removed, he shall so proclaim, and the provisions of this section providing for doubled rates of tax shall not apply to any citizen or corporation of such foreign country with respect to any taxable year beginning after such proclamation is made.

(Sec. 891 as amended by sec. 5(6), Life Insurance Company Tax Act 1955 (70 Stat. 49); sec. 3(f)(1), Life Insurance Company Income Tax Act 1959 (73 Stat. 140))

[T.D. 6610, 27 FR 8723, Aug. 31, 1962]

§ 1.892-1T Purpose and scope of regulations (temporary regulations).

(a) ***In general.*** These regulations provide guidance with respect to the taxation of income derived by foreign governments and international organizations from sources within the United States. Under section 892, certain specific types of income received by foreign governments are excluded from gross income and are exempt, unless derived from the conduct of a commercial activity or received from or by a controlled commercial entity. This section sets forth the effective date of the regulations. Section 1.892-2T defines a foreign government. In particular it describes the extent to which either an integral part of a foreign sovereign or an entity which is not an integral part of a foreign sovereign will be treated as a foreign government for purposes of section 892. Section 1.892-3T describes the types of income that generally qualify for exemption and certain limitations on the exemption. Section 1.892-4T provides rules concerning the characterization of activities as commercial activities. Section 1.892-5T defines a controlled commercial entity. Section 1.892-6T sets forth the extent to which income of international organizations from sources within the United States is excluded from gross income and is exempt from taxation. Section 1.892-7T sets forth the relationship of section 892 to other Internal Revenue Code sections.

(b) ***Effective date.*** The regulations set forth in §§ 1.892-1T through 1.892-7T apply to income received by a foreign government on or after July 1, 1986. No amount of income shall be required to be deducted and withheld, by reason of the amendment of section 892 by section 1247 of the Tax Reform Act of 1986 (Pub. L. 99-514, 100 Stat. 2085, 2583) from any payment made before October 22, 1986.

[T.D. 8211, 53 FR 24061, June 27, 1988; 53 FR 27595, July 21, 1988]

§ 1.892-2T Foreign government defined (temporary regulations).

(a) ***Foreign government*** —

(1) ***Definition.*** The term “foreign government” means only the integral parts or controlled entities of a foreign sovereign.

(2) ***Integral part.*** An “integral part” of a foreign sovereign is any person, body of persons, organization, agency, bureau, fund, instrumentality, or other body, however designated, that constitutes a governing authority of a foreign country. The net earnings of the governing authority must be credited to its own account or to other accounts of the foreign sovereign, with no portion inuring to the benefit of any private person. An integral part does not include any individual who is a sovereign, official, or administrator acting in a private or personal capacity. Consideration of all the facts and circumstances will determine whether an individual is acting in a private or personal capacity.

(3) ***Controlled entity.*** The term “controlled entity” means an entity that is separate in form from a foreign sovereign or otherwise constitute a separate juridical entity if it satisfies the following requirements:

(i) It is wholly owned and controlled by a foreign sovereign directly or indirectly through one or more controlled entities;

(ii) It is organized under the laws of the foreign sovereign by which owned;

(iii) Its net earnings are credited to its own account or to other accounts of the foreign sovereign, with no portion of its income inuring to the benefit of any private person; and

(iv) Its assets vest in the foreign sovereign upon dissolution.

A controlled entity does not include partnerships or any other entity owned and controlled by more than one foreign sovereign. Thus, a foreign financial organization organized and wholly owned and controlled by several foreign sovereigns to foster economic, financial, and technical cooperation between various foreign nations is not a controlled entity for purposes of this section.

(b) ***Inurement to the benefit of private persons.*** For purposes of this section, income will be presumed not to inure to the benefit of private persons if such persons (within the meaning of section 7701(a)(1)) are the intended beneficiaries of a governmental program which is carried on by the foreign sovereign and the activities of which constitute governmental functions (within the meaning of § 1.892-4T(c)(4)). Income will be considered to inure to the benefit of private persons if such income benefits:

(1) Private persons through the use of a governmental entity as a conduit for personal investment; or

(2) Private persons who divert such income from its intended use by the exertion of influence or control through means explicitly or implicitly approved of by the foreign sovereign.

(c) ***Pension trusts*** —

(1) ***In general.*** A controlled entity includes a separately organized pension trust if it meets the following requirements:

(i) The trust is established exclusively for the benefit of

(A) employees or former employees of a foreign government or

(B) employees or former employees of a foreign government and non-governmental employees or former employees that perform or performed governmental or social services;

(ii) The funds that comprise the trust are managed by trustees who are employees of, or persons appointed by, the foreign government;

(iii) The trust forming a part of the pension plan provides for retirement, disability, or death benefits in consideration for prior services rendered; and

(iv) Income of the trust satisfies the obligations of the foreign government to participants under the plan, rather than inuring to the benefit of a private person.

Income of a pension trust is subject to the rules of § 1.892-5T(b)(3) regarding the application of the rules for controlled commercial entities to pension trusts. Income of a superannuation or similar pension fund of an integral part or controlled entity (which is not a separate pension trust as defined in this paragraph (c)(1)) is subject to the rules that generally apply to a foreign sovereign. Such a pension fund may also benefit non-governmental employees or former employees that perform or performed governmental or social services.

(2) ***Illustrations.*** The following examples illustrate the application of paragraph (c)(1).

Example 1. The Ministry of Welfare (MW), an integral part of foreign sovereign FC, instituted a retirement plan for FC's employees and former employees. Retirement benefits under the plan are based on a percentage of the final year's salary paid to an individual, times the number of years of government service. Pursuant to the plan, contributions are made by MW to a pension trust managed by persons appointed by MW to the extent actuarially necessary to fund accrued pension liabilities. The pension trust in turn invests such contributions partially in United States Treasury obligations. The income of the trust is credited to the trust's account and

subsequently used to satisfy the pension plan's obligations to retired employees. Under these circumstances, the income of the trust is not deemed to inure to the benefit of private persons. Accordingly, the trust is considered a controlled entity of FC.

Example 2. The facts are the same as in *Example* 1, except that the retirement plan also benefits employees performing governmental or social services for the following non-government institutions:

(i) A university in a local jurisdiction;

(ii) a harbor commission; and

(iii) a library system. The retirement benefits under the plan are based on the total amounts credited to an individual's account over the term of his or her employment. MW makes annual contributions to each covered employee's account equal to a percentage of annual compensation. In addition, the income derived from investment of the annual contributions is credited annually to individual accounts. The annual contributions do not exceed an amount that is determined to be actuarially necessary to provide the employee with reasonable retirement benefits. Notwithstanding that retirement benefits vary depending upon the investment experience of the trust, no portion of the income of the trust is deemed to inure to the benefit of private persons. Accordingly, the trust is considered a controlled entity of FC.

Example 3. The facts are the same as in *Example* 1, except that employees are allowed to make unlimited contributions to the trust, and such contributions are credited to the employee's account as well as interest accrued on such contributions. Retirement benefits will reflect the amounts credited to the individual accounts in addition to the usual annuity computation based on the final year's salary and years of service. A pension plan established under these rules is in part acting as an investment conduit. As a result, the income of the trust is deemed to inure to the benefit of private persons. Accordingly, the trust is not considered a controlled entity of FC.

Example 4. (a) The facts are the same as in *Example* 2, except that MW establishes a pension fund rather than a separate pension trust. A pension fund is merely assets of an integral part or controlled entity allocated to a separate account and held and invested for purposes of providing retirement benefits. Under these circumstances, the income of the pension fund is not deemed to inure to the benefit of private persons. Accordingly, income earned from the United States Treasury obligations by the pension fund is considered to be received by a foreign government and is exempt from taxation under section 892.
(b) The facts are the same as in *Example* 4(a), except that MW is a controlled entity of foreign sovereign FC. The result is the same as in *Example* 4(a). However, should MW engage in commercial activities (whether within or outside the United States), the income from the Treasury obligations earned by the pension fund will not be exempt from taxation under section 892 since MW will be considered a controlled commercial entity within the meaning of § 1.892-5T(a).

(d) ***Political subdivision and transnational entity.*** The rules that apply to a foreign sovereign apply to political subdivisions of a foreign country and to transnational entities. A transnational entity is an organization created by more than one foreign sovereign that has broad powers over external and domestic affairs of all participating foreign countries stretching beyond economic subjects to those concerning legal relations and transcending state or political boundaries.

[T.D. 8211, 53 FR 24061, June 27, 1988; 53 FR 27595, July 21, 1988]

§ 1.892-3 Income of foreign governments.

(a) ***Types of income exempt*** —

(1) ***In general.*** For further guidance, *see* § 1.892-3T(a)(1).

(2) ***Income from investments.*** For further guidance, *see* § 1.892-3T(a)(2).

(3) ***Securities.*** For further guidance, *see* § 1.892-3T(a)(3).

(4) ***Financial instrument*** —

(i) ***Definition.*** For purposes of this paragraph (a), the term *financial instrument* includes:

(A) Any interest rate, currency, equity, or commodity (as the term is used in section 864(b)(2)(B) and § 1.864-2(d)) notional principal contract (as the term is used in section 475(c)(2)); or

(B) Any evidence of an interest in options, forward or futures contracts, and any other similar contracts, the value of which, or any payment or other transfer with respect to which, is (directly or indirectly) determined by reference to one or more of the following:

(*1*) Commodity (as the term is used in section 864(b)(2)(B) and § 1.864-2(d));

(*2*) Currency;

(*3*) Share of stock;

(*4*) Partnership or beneficial ownership interest in a widely held or publicly traded partnership or trust;

(*5*) Note, bond, debenture, or other evidence of indebtedness; or

(*6*) Notional principal contract described in paragraph (a)(4)(i)(A) of this section.

(ii) ***Special rule.*** For purposes of paragraph (a)(4)(i) of this section, nonfunctional currency or gold is a financial instrument when physically held by a foreign central bank of issue (as defined in § 1.895-1(b)).

(5) ***Execution of financial or monetary policy.*** For further guidance, *see* § 1.892-3T(a)(5).

(6) ***Dividend equivalents.*** Income from investments in stocks includes the payment of a dividend equivalent described in section 871(m) and the regulations in this part under section 871(m).

(b) ***Illustrations.*** For further guidance, *see* § 1.892-3T(b).

(c) ***Applicability dates.***

(1) Paragraph (a)(4) of this section applies to taxable years beginning on or after December 15, 2025. See § 1.892-3T(a)(4), as contained in 26 CFR in part 1 in effect on April 1, 2025, for the rules that apply to taxable years beginning before December 15, 2025. A taxpayer may choose to apply paragraph (a)(4) of this section to a taxable year beginning before December 15, 2025, if the period of limitations on assessment of the taxable year is open under section 6501 and the taxpayer and entities that are related (within the meaning of section 267(b) or section 707(b)) to the taxpayer apply this rule and §§ 1.892-4 and 1.892-5 in their entirety to the taxable year and all succeeding taxable years beginning before December 15, 2025.

(2) Paragraph (a)(6) of this section applies to payments made on or after December 5, 2013.

[T.D. 10042, 90 FR 57915, Dec. 15, 2025]

§ 1.892-3T Income of foreign governments (temporary regulations).

(a) *Types of income exempt* —

(1) ***In general.*** Subject to the exceptions contained in §§ 1.892-4T and 1.892-5T for income derived from the conduct of a commercial activity or received from or by a controlled commercial entity, the following types of income derived by a foreign government (as defined in § 1.892-2T) are not included in gross income and are exempt:

(i) Income from investments in the United States in stocks, bonds, or other securities;

(ii) Income from investments in the United States in financial instruments held in the execution of governmental financial or monetary policy; and

(iii) Interest on deposits in banks in the United States of moneys belonging to such foreign government.

Income derived from sources other than described in this paragraph (such as income earned from a U.S. real property interest described in section 897(c)(1)(A)(i)) is not exempt from taxation under section 892. Furthermore, any gain derived from the disposition a U.S. real property interest defined in section 897(c)(1)(A)(i) shall in no event qualify for exemption under section 892.

(2) ***Income from investments.*** For purposes of paragraph (a) of this section, income from investments in stocks, bonds or other securities includes gain from their disposition and income earned from engaging in section 1058 securities lending transactions. Gain on the disposition of an interest in a partnership or a trust is not exempt from taxation under section 892.

(3) ***Securities.*** For purposes of paragraph (a) of this section, the term “other securities” includes any note or other evidence of indebtedness. Thus, an annuity contract, a mortgage, a banker's acceptance or a loan are securities for purposes of this section.

However, the term “other securities” does not include partnership interests (with the exception of publicly traded partnerships within the meaning of section 7704) or trust interests. The term also does not include commodity forward or futures contracts and commodity options unless they constitute securities for purposes of section 864(b)(2)(A).

(4) ***Financial instrument.*** For further guidance, *see* § 1.892-3(a)(4).

(5) ***Execution of financial or monetary policy*** —

(i) ***Rule.*** A financial instrument shall be deemed held in the execution of governmental financial or monetary policy if the primary purpose for holding the instrument is to implement or effectuate such policy.

(ii) ***Illustration.*** The following example illustrates the application of this paragraph (a)(5).

Example. In order to ensure sufficient currency reserves, the monetary authority of foreign country FC issues short-term government obligations. The amount received from the obligations is invested in U.S. financial instruments. Since the primary purpose for obtaining the U.S. financial instruments is to implement FC's monetary policy, the income received from the financial instruments is exempt from taxation under section 892.

(b) ***Illustrations.*** The principles of paragraph (a) of this section may be illustrated by the following examples.

Example 1. X, a foreign corporation not engaged in commercial activity anywhere in the world, is a controlled entity of a foreign sovereign within the meaning of § 1.892-2T(a)(3). X is not a Central bank of issue as defined in § 1.895-1(b). In 1987, X received the following items of income from investments in the United States:

(i) Dividends from a portfolio of publicly traded stocks in U.S. corporations in which X owns less than 50 percent of the stock;

(ii) dividends from BTB Corporation, an automobile manufacturer, in which X owns 50 percent of the stock;

(iii) interest from bonds issued by noncontrolled entities and from interest-bearing bank deposits in noncontrolled entities;

(iv) rents from a net lease on real property;

(v) gains from silver futures contracts;

(vi) gains from wheat futures contracts;

(vii) gains from spot sales of nonfunctional foreign currency in X's possession;

(viii) gains from the disposition of a publicly traded partnership interest, and

(ix) gains from the disposition of the stock of Z Corporation, a United States real property holding company as defined in section 897, of which X owns 12 percent of the stock. Only income derived from sources described in paragraph (a)(1) of this section is treated as income of a foreign government eligible for exemption from taxation. Accordingly, only income received by X from items (i), (iii), (v) provided that the silver futures contracts are held in the execution of governmental financial or monetary policy, and (ix) is exempt from taxation under section 892.

Example 2. The facts are the same as in *Example* 1, except that X is also a central bank of issue within the meaning of section 895. Since physical possession of nonfunctional foreign currency when held by a central bank of issue is considered a financial instrument, the item (vii) gains from spot sales of nonfunctional foreign currency are exempt from taxation under paragraph (a)(1) of this section, if physical possession of the currency was an essential part of X's reserve policy in the execution of its governmental financial or monetary policy.

Example 3. State Concert Bureau, an integral part of a foreign sovereign within the meaning of § 1.892-2T(a)(2), entered into an agreement with a U.S. corporation engaged in the business of promoting international cultural programs. Under the agreement the State Concert Bureau agreed to send a ballet troupe on tour

for 5 weeks in the United States. The Bureau received approximately $60,000 from the performances. Regardless of whether the performances themselves constitute commercial activities under § 1.892-4T, the income received by the Bureau is not exempt from taxation under section 892 since the income is from sources other than described in paragraph (a)(1) of this section.

[T.D. 8211, 53 FR 24062, June 27, 1988, as amended by T.D. 10042, 90 FR 57915, Dec. 15, 2025]

§ 1.892-4 Commercial activities.

(a) ***Purpose.*** The exemption generally applicable to a foreign government (as defined in § 1.892-2T) for income described in §§ 1.892-3T and 1.892-3 does not apply to income derived from the conduct of commercial activity (whether within or outside the United States), income received by a controlled commercial entity or received (directly or indirectly) from a controlled commercial entity, or income derived from the disposition of any interest in a controlled commercial entity. This section provides rules for determining whether income is derived from the conduct of commercial activity. The rules in this section also apply in determining under §§ 1.892-5T and 1.892-5 whether an entity is a controlled commercial entity.

(b) ***In general.*** Except as provided in paragraph (c) of this section, all activities (whether conducted within or outside the United States) that are ordinarily conducted for the current or future production of income or gain are commercial activities. Only the nature of the activity, not the purpose or motivation for conducting the activity, is determinative of whether the activity is commercial in character. For purposes of this paragraph (b), activities that constitute a trade or business for purposes of section 162 or constitute (or would constitute if undertaken in the United States) a trade or business in the United States for purposes of section 864(b) are commercial activities except as otherwise provided in paragraph (c) of this section.

(c) ***Activities that are not commercial*** —

(1) ***Investments*** —

(i) ***In general.*** Subject to the provisions of this paragraph (c), the following are not commercial activities: investments in stocks, bonds, and other securities (as defined in § 1.892-3T(a)(3)); loans; investments in financial instruments (as defined in § 1.892-3(a)(4)); the holding of partnership equity interests; the holding of net leases on real property; the holding of real property which is not producing income (other than on its sale or from an investment in net leases on real property); and the holding of deposits in any currency in banks. Transferring securities under a loan agreement which meets the requirements of section 1058 is an investment for purposes of this paragraph (c)(1)(i). An activity will not cease to be an investment solely because of the volume of transactions of that activity or because of other unrelated activities.

(ii) [Reserved]

(iii) ***Banking, financing, etc.*** For further guidance, *see* § 1.892-4T(c)(1)(iii).

(2) ***Trading.*** Effecting transactions in stocks, bonds, other securities (as defined in § 1.892-3T(a)(3)), partnership equity interests, commodities, or financial instruments (as defined in § 1.892-3(a)(4)) for a foreign government's own account does not constitute commercial activity. Such transactions are not commercial activities regardless of whether they are effected by the foreign government through its employees or through a broker, commission agent, custodian, or other independent agent and

regardless of whether or not any such employee or agent has discretionary authority to make decisions in effecting the transactions. Such transactions undertaken as a dealer (as determined under the principles of § 1.864-2(c)(2)(iv)(*a*)), however, constitute commercial activity. For purposes of this paragraph (c)(2), the term *commodities* means commodities of a kind customarily dealt in on an organized commodity exchange but only if the transaction is of a kind customarily consummated at such place.

(3) ***Disposition of a U.S. real property interest.*** A disposition (including a deemed disposition under section 897(h)(1)) of a U.S. real property interest (as defined in section 897(c)), by itself, does not constitute the conduct of commercial activity. As described in § 1.892-3T(a), however, gain derived from a disposition of a U.S. real property interest defined in section 897(c)(1)(A)(i) will not qualify for exemption from tax under section 892.

(4) ***Cultural events.*** For further guidance, *see* § 1.892-4T(c)(2).

(5) ***Non-profit activities.*** For further guidance, *see* § 1.892-4T(c)(3).

(6) ***Governmental functions.*** For further guidance, *see* § 1.892-4T(c)(4).

(7) ***Purchasing.*** For further guidance, *see* § 1.892-4T(c)(5).

(d) ***Applicability date.*** Except as otherwise provided in this paragraph (d), this section applies to taxable years beginning on or after December 15, 2025. *See* § 1.892-4T, as contained in 26 CFR in part 1 in effect on April 1, 2025, for the rules that apply to taxable years beginning before December 15, 2025. A taxpayer may choose to apply this section to a taxable year beginning before December 15, 2025, if the period of limitations on assessment of the taxable year is open under section 6501 and the taxpayer and entities that are related (within the meaning of section 267(b) or section 707(b)) to the taxpayer apply this section and §§ 1.892-3(a)(4) and 1.892-5 in their entirety to the taxable year and all succeeding taxable years beginning before December 15, 2025.

[T.D. 10042, 90 FR 57915, Dec. 15, 2025]

§ 1.892-4T Commercial activities (temporary regulations).

(a) ***Purpose.*** For further guidance, *see* § 1.892-4(a).

(b) ***In general.*** For further guidance, *see* § 1.892-4(b).

(c) ***Activities that are not commercial*** —

(1) ***Investments*** —

(i) ***In general.*** For further guidance, *see* § 1.892-4(c)(1)(i).

(ii) ***Trading.*** For further guidance, *see* § 1.892-4(c)(2).

(iii) ***Banking, financing, etc.*** Investments (including loans) made by a banking, financing, or similar business constitute commercial activities, even if the income derived from such investments is not considered to be income effectively connected to the active conduct of a banking, financing, or similar business in the U.S. by reason of the application of § 1.864-4(c)(5).

(2) ***Cultural events.*** Performances and exhibitions within or outside the United States of amateur athletic events and events devoted to the promotion of the arts by cultural organizations are not commercial activities.

(3) ***Non-profit activities.*** Activities that are not customarily attributable to or carried on by private enterprise for profit are not commercial activities. The fact that in some instances Federal, State, or local governments of the United States also are engaged in the same or similar activity does not mean necessarily that it is a non-profit activity. For example, even though the United States Government may be engaged in the activity of operating a railroad, operating a railroad is not a non-profit activity.

(4) ***Governmental functions.*** Governmental functions are not commercial activities. The term "governmental functions" shall be determined under U.S. standards. In general, activities performed for the general public with respect to the common welfare or which relate to the administration of some phase of government will be considered governmental functions. For example, the operation of libraries, toll bridges, or local transportation services and activities substantially equivalent to the Federal Aviation Authority, Interstate Commerce Commission, or United States Postal Service will all be considered governmental functions for purposes of this section.

(5) ***Purchasing.*** The mere purchasing of goods for the use of a foreign government is not a commercial activity.

[T.D. 8211, 53 FR 24063, June 27, 1988, as amended by T.D. 10042, 90 FR 57916, Dec. 15, 2025]

§1.892-5 Controlled commercial entity.

(a) ***In general*** —

(1) ***General rule and definition of the term controlled commercial entity.***

(i) Under section 892(a)(2)(A)(ii) and (iii), the exemption generally applicable to a foreign government (as defined in § 1.892-2T) for income described in §§ 1.892-3T and 1.892-3 does not apply to income received by a controlled commercial entity or received (directly or indirectly) from a controlled commercial entity, or to income derived from the disposition of any interest in a controlled commercial entity.

(ii) For purposes of section 892(a)(2)(B) and this section, the term *entity* includes a corporation, a partnership, a trust (including a pension trust described in § 1.892-2T(c)), and an estate.

(iii) The term *controlled commercial entity* means any entity (including a controlled entity as defined in § 1.892-2T(a)(3)) engaged in commercial activities (as defined in §§ 1.892-4T and 1.892-4) (whether conducted within or outside the United States) if the foreign government—

(A) Holds (directly or indirectly) any interest in such entity which (by value or voting power) is 50 percent or more of the total of such interests in such entity; or

(B) Holds (directly or indirectly) any other interest in such entity which provides the foreign government with effective control of such entity.

(2) ***Inadvertent commercial activity*** —

(i) ***General rule.*** For purposes of section 892(a)(2)(B) and paragraph (a)(1) of this section, a tested entity that conducts, including by attribution, only inadvertent commercial activity will not be considered to be engaged in commercial activities. However, any income derived from any foreign government's inadvertent commercial activity (including activity attributed from a partnership) will not qualify for exemption from tax under section 892. Commercial activity of a tested entity will be treated as inadvertent commercial activity only if:

(A) Failure to avoid conducting the commercial activity is reasonable as described in paragraph (a)(2)(ii) of this section;

(B) The commercial activity is timely cured as described in paragraph (a)(2)(iii) of this section; and

(C) The record maintenance requirements described in paragraph (a)(2)(iv) of this section are met.

(ii) ***Reasonable failure to avoid commercial activity*** —

(A) ***In general.*** Subject to paragraphs (a)(2)(ii)(B) and (C) of this section, whether a tested entity's failure to prevent its worldwide activities from resulting in commercial activity is reasonable will be determined based on all the facts and circumstances. Due regard will be given to the number of commercial activities conducted during the taxable year and the activities in the immediately preceding taxable year to the extent relevant in characterizing the activities in the current taxable year, as well as the amount of income earned from, and assets used in, the conduct of the commercial activities in relationship to the tested entity's total income and assets. For purposes of this paragraph (a)(2)(ii)(A) and paragraph (a)(2)(ii)(C) of this section, where commercial activity conducted by a partnership is attributed under paragraph (d)(5)(i) of this section to a tested entity owning an interest in the partnership—

(*1*) Assets used in the conduct of the commercial activity by the partnership are treated as assets used in the conduct of commercial activity by the entity in proportion to the tested entity's interest in the partnership; and

(*2*) The tested entity's distributive share of the partnership's income from the conduct of the commercial activity is treated as income earned by the tested entity from the conduct of commercial activities.

(B) ***Continuing due diligence requirement.*** A failure to avoid commercial activity will not be considered reasonable unless there is continuing due diligence to prevent the tested entity from engaging in commercial activities within or outside the United States as evidenced by having adequate written policies and operational procedures, within the meaning of this paragraph (a)(2)(ii)(B), in place to monitor the tested entity's worldwide activities. A failure to avoid commercial activity will not be considered reasonable if responsible employees have not undertaken reasonable efforts, based on all facts and circumstances, to establish, follow, and enforce such written policies and operational procedures with respect to the tested entity. For purposes of this paragraph (a)(2)(ii)(B), all facts and circumstances are considered in the determination of whether written policies and operational procedures are considered adequate, including whether the written policies and operational procedures:

(*1*) Prohibit the tested entity from engaging in commercial activities both directly and through investments in entities whose commercial activities would be attributed to the tested entity within the meaning of this section;

(*2*) Are communicated in writing to all persons who exercise discretionary authority, acting alone or as part of a decisional body, to cause the tested entity to undertake an investment;

(*3*) Require an advance determination, by receipt of an opinion of counsel or otherwise, as to whether an investment is commercial activity;

(*4*) Include an annual internal or external audit or review of direct investments and investments in entities whose commercial activities would be attributed to the tested entity within the meaning of this section; and

(*5*) Require the result of periodic tests to be reviewed and certified by responsible employees who have authority and obligation to cause the curing of any commercial activity disclosed in such procedures.

(C) ***Safe Harbor*** —

(*1*) ***In general.*** Provided that adequate written policies and operational procedures are in place to monitor the tested entity's worldwide activities as required in paragraph (a)(2)(ii)(B) of this section, the tested entity's failure to avoid commercial activity during the taxable year will be considered reasonable if:

(*i*) The value of the assets used in, or held for use in, all commercial activity does not exceed five percent of the total value of the assets reflected on the tested entity's balance sheet for the taxable year, determined using the average of the value of the assets as of the close of each quarter of the taxable year, as prepared for an applicable financial statement as defined in section 451(b)(3) and § 1.451-3(a), or, if the tested entity is not required to prepare a balance sheet for an applicable financial statement, as reflected in the books of account or records that are adequate and sufficient to establish the amount; and

(*ii*) The income earned by the tested entity from commercial activity does not exceed five percent of the tested entity's gross income as reflected on its income statement for the taxable year, as prepared for an applicable financial statement as defined in section 451(b)(3) and § 1.451-3(a), or, if the tested entity is not required to prepare an income statement for an applicable financial statement, as reflected in the books of account or records that are adequate and sufficient to establish the amount.

(*2*) ***Calculation of total assets and income.*** For purposes of paragraph (a)(2)(ii)(C)(*1*) of this section, the amount of total assets includes the value of the tested entity's qualified partnership interests under paragraph (d)(5)(iii) of this section, and the amount of total gross income includes the tested entity's distributive share of income, including income derived from commercial activity, from partnerships in which the tested entity holds a qualified partnership interest under paragraph (d)(5)(iii) of this section.

(iii) ***Cure requirement.*** A timely cure is considered to have been made if the tested entity discontinues the conduct of the commercial activity within 180 days of the date of discovery of the commercial activity by responsible employees who are responsible for monitoring and reviewing the tested entity's commercial activity pursuant to paragraph (a)(2)(ii)(B) of this section. For example, if a responsible employee discovers that the partnership in which the tested entity holds an interest as a partner is conducting commercial activity, the entity will satisfy the cure requirement if, within 180 days of that person discovering the commercial activity, the tested entity discontinues the conduct of the activity by divesting itself of its interest in the partnership (including by transferring its interest in the partnership to a related

entity), or the partnership discontinues its conduct of commercial activity. The tested entity may, depending on the facts and circumstances, be able to satisfy the cure requirement if, within 180 days of a responsible employee discovering the commercial activity, the tested entity exchanges its interest in the partnership for one that is a qualified partnership interest, within the meaning of paragraph (d)(5)(iii) of this section, of the same partnership (including a deemed exchange from an agreed modification of terms).

(iv) ***Record maintenance.*** Adequate records of each discovered commercial activity and the remedial action taken to cure that activity must be maintained. The records must be retained so long as the contents thereof may become material in the administration of section 892.

(v) ***Definitions.*** The following definitions apply for purposes of this paragraph (a)(2).

(A) ***Tested entity.*** A *tested entity* means an entity that is engaged, including by attribution under paragraph (d)(5)(i) of this section, in commercial activity without regard to paragraph (a)(2)(i) of this section.

(B) ***Responsible employees.*** Responsible employees may include employees of a tested entity or employees of an entity that controls (within the meaning of paragraph (a)(1) of this section) the tested entity.

(C) ***Reasonable efforts.*** The term *reasonable efforts* means exercising ordinary business care and prudence.

(3) ***Annual determination of controlled commercial entity status*** —

(i) ***In general.*** If an entity described in paragraph (a)(1) of this section engages in commercial activities at any time during its taxable year, the entity will be considered a controlled commercial entity for its entire taxable year. An entity that is not engaged in commercial activities during its taxable year will not be considered a controlled commercial entity for its taxable year. For purposes of determining whether an entity is engaged in commercial activities during its taxable year, that entity's activities during its immediately preceding taxable year will also be taken into account to the extent relevant in characterizing the activities in the current taxable year.

(ii) ***Certain corporate acquisitions*** —

(A) ***In general.*** For purposes of paragraph (a)(3)(i) of this section, if the assets of a corporation that is engaged in commercial activity in a taxable year are acquired by another corporation in an acquisition described in section 381(a), then, except as provided in paragraph (a)(3)(ii)(B) of this section, the acquiring corporation will not be treated as conducting commercial activity for the taxable year in which the acquisition occurs solely by reason of acquiring and holding the distributor or transferor corporation's assets, provided that the taxable year of the distributor or transferor corporation ends under section 381(b), and after the acquisition, the acquiring corporation is not the entity that directly continues the distributor or transferor corporation's commercial activity. If the taxable year of the distributor or transferor corporation does not end as a result of such acquisition, the acquiring corporation will be treated as conducting commercial activity for the taxable year in which the acquisition occurs.

(B) ***Exception.*** If the acquisition described in paragraph (a)(3)(ii)(A) of this section to which section 381(a) applies is between corporations that are controlled by the same foreign sovereign within the meaning of paragraph (a)(1) of this section, the acquiring corporation will be treated as conducting commercial activity for the taxable year of the acquiring corporation in which such acquisition occurs regardless of whether the taxable year of the distributor or transferor corporation ends as described in section 381(b) or whether the acquiring corporation directly continues the distributor or transferor corporation's commercial activity.

(b) ***Entities treated as engaged in commercial activity*** —

(1) ***United States real property holding corporations*** —

(i) ***General rule.*** Except as provided in paragraph (b)(1)(ii) of this section, a corporation that is a United States real property holding corporation as defined in section 897(c)(2), is treated as engaged in commercial activity and, therefore, is a controlled commercial entity if the requirements of paragraph (a)(1)(iii)(A) or (B) of this section are satisfied.

(ii) ***Exceptions.*** Paragraph (b)(1)(i) of this section does not apply to the following—

(A) Corporations that are foreign; or

(B) A corporation that is a United States real property holding corporation, as defined in section 897(c)(2), solely by reason of its direct or indirect ownership interest in one or more other corporations that are not controlled by the foreign government (as determined under paragraph (a)(1) of this section). For this purpose, the phrase *solely by reason of its direct or indirect ownership interest in one or more other corporations that are not controlled by the foreign government (as determined under paragraph (a)(1) of this section)* means disregarding any ownership interests, held directly or indirectly, in noncontrolled corporations (as determined under paragraph (a)(1) of this section), after applying the asset test under section 897(c)(2) and § 1.897-2.

(2) ***Central banks.*** For further guidance, *see* § 1.892-5T(b)(2).

(3) ***Pension trusts.*** For further guidance, *see* § 1.892-5T(b)(3).

(c) ***Control*** —

(1) ***Attribution.*** For further guidance, *see* § 1.892-5T(c)(1).

(2) ***Effective control.*** For further guidance, *see* § 1.892-5T(c)(2).

(d) ***Related controlled entities*** —

(1) ***Brother/sister entities.*** For further guidance, *see* § 1.892-5T(d)(1).

(2) ***Parent/subsidiary entities.*** For further guidance, *see* § 1.892-5T(d)(2).

(3) [Reserved]

(4) ***Illustrations.*** For further guidance, *see* § 1.892-5T(d)(4).

(5) ***Partnerships*** —

(i) ***General rule.*** Except as provided in paragraphs (d)(5)(ii) and (iii) of this section, the commercial activities of an entity classified as a partnership for Federal tax purposes are attributable to its partners for purposes of section 892. For example, if an entity described in paragraph (a)(1)(iii)(A) or (B) of this section holds an interest as a general or limited partner in a partnership that is engaged in commercial activities, except as provided in paragraphs (d)(5)(ii) and (iii) of this section, the partnership's commercial activities are attributed to that entity for purposes of determining if the entity is a controlled commercial entity within the meaning of section 892(a)(2)(B) and paragraph (a)(1) of this section.

(ii) ***Trading activity exception.*** An entity not otherwise engaged in commercial activities will not be considered to be engaged in commercial activities solely because the entity is a member of a partnership (whether domestic or foreign) that effects transactions in stocks, bonds, other securities (as defined in § 1.892-3T(a)(3)), partnership equity interests, commodities (as defined in § 1.892-4(c)(2)), or financial instruments (as defined in § 1.892-3(a)(4)) for the partnership's own account or solely because an employee of such partnership, or a broker, commission agent, custodian, or other agent, pursuant to discretionary authority granted by such partnership, effects such transactions for the account of the partnership. This paragraph (d)(5)(ii) does not apply to any member in the case of a partnership that is a dealer in stocks, bonds, other securities, partnership equity interests, commodities, or financial instruments, as determined under the principles of § 1.864-2(c)(2)(iv)(*a*).

(iii) ***Qualified partnership interest exception*** —

(A) ***General rule.*** An entity that is not otherwise engaged in commercial activities (including, for example, performing services for a partnership as described in section 707(a) or section 707(c)) will not be deemed to be engaged in commercial activities solely because it holds a *qualified partnership interest* in a partnership, notwithstanding that the entity may be considered as being engaged in a trade or business within the United States under section 875(1). Nevertheless, pursuant to section 892(a)(2)(A)(i), a foreign government member's distributive share of partnership income will be treated as from commercial activity, and thus will not be exempt from taxation under section 892 to the extent that the partnership derived such income from the conduct of commercial activity. For example, where a controlled entity described in § 1.892-2T(a)(3) that is not otherwise engaged in commercial activities holds a qualified partnership interest in a partnership that is a dealer in stocks, bonds, other securities, partnership equity interests, commodities, or financial instruments in the United States, although the controlled entity partner will not be deemed to be engaged in commercial activities solely because of its interest in the partnership, its distributive share of partnership income derived from the partnership's activity as a dealer will not be exempt from tax under section 892 because it was derived from the conduct of commercial activity.

(B) ***Qualified partnership interest*** —

(*1*) ***In general.*** Solely for purposes of paragraph (d)(5)(iii) of this section, an interest classified as equity in an entity classified as a partnership for Federal tax purposes is treated as a qualified partnership interest if the holder of such interest has limited liability within the meaning of § 301.7701-3(b)(2)(ii) of this chapter, does not possess the legal authority to bind or to act on behalf of the partnership, does not

control the partnership within the meaning of paragraph (a)(1) of this section, and does not have rights to participate in the management and conduct of the partnership's business at any time during the partnership's taxable year.

(2) ***Rights to participate in the management and conduct of a partnership's business*** —

(i) ***In general.*** Rights to participate in the management and conduct of a partnership's business mean rights to participate in the day-to-day management or operation of the partnership's business, including, for example, the right to participate in ordinary-course personnel and compensation decisions, or take active roles in formulating the partnership's business strategy or in respect of the partnership's acquisition or disposition of a specific investment. The existence of these rights is determined based on all facts and circumstances. In addition to the conduct of relevant parties, such determination shall consider the totality of all rights arising from all direct or indirect interests of the holder of the partnership, including rights provided under the law of the jurisdiction in which the partnership is organized, the partnership's governing documents, contractual agreements such as side letters, shareholders' agreements, and agreements with creditors of the partnership.

(ii) ***Rights to participate in the monitoring or protection of a partner's capital investment.*** Rights to participate in the management and conduct of a partnership's business generally do not include participation rights with respect to monitoring or protecting the partner's capital investment in the partnership, but only if such rights do not include rights to participate in the day-to-day management or operation of the partnership's business and do not result in effective control under paragraph (a)(1)(iii)(B) of this section. These rights may, subject to the limitations of the previous sentence, include oversight and supervision rights in the case of major strategic decisions such as: admission or expulsion of a partner; hiring or firing key strategic personnel; amendment of the partnership agreement; dissolution, merger, or conversion of the partnership; unusual and non-ordinary course deviations from previously determined investment parameters; extending the term of the partnership's governing agreement; and disposition of all or substantially all of the partnership's property outside of the ordinary course of the partnership's activities.

(iii) ***Holding more than one interest in a partnership.*** If a foreign sovereign holds directly or indirectly interests in a partnership through one or more integral parts or controlled entities (within the meaning of § 1.892-2T) or entities controlled by such foreign sovereign under paragraph (a)(1) of this section, then such interests are aggregated for purposes of this paragraph (d)(5)(iii)(B)(2). For example, if a controlled entity (within the meaning of § 1.892-2T) of a foreign sovereign or an entity controlled by the foreign sovereign under paragraph (a)(1) of this section holds a partnership interest that is not a qualified partnership interest, then any other equity interest held in the same partnership by any other controlled entities of the foreign sovereign is also not treated as a qualified partnership interest. Furthermore, if a foreign sovereign directly or indirectly holds more than one interest in a partnership through one or more integral parts or controlled entities (within the meaning of § 1.892-2T) or entities controlled by

such foreign sovereign under paragraph (a)(1) of this section and those partnership interests in the aggregate result in a disqualification from qualified partnership interest, then each such interest in the partnership is not treated as a qualified partnership interest.

(C) ***Safe harbor for de minimis interests.*** For purposes of this paragraph (d)(5)(iii), a holder of an interest classified as equity in an entity classified as a partnership for Federal tax purposes is treated as holding a qualified partnership interest (within the meaning of paragraph (d)(5)(iii)(B) of this section) if the holder at all times during the partnership's taxable year:

(*1*) Has limited liability within the meaning of § 301.7701-3(b)(2)(ii) of this chapter;

(*2*) Does not possess the legal authority to bind or to act on behalf of the partnership;

(*3*) Is not the partnership's managing partner, managing member, or an equivalent role under applicable law; and

(*4*) Does not own, directly or indirectly (under the principles of paragraph (d)(5)(iii)(B)(*2*)(*iii*) of this section), more than five percent of either the partnership's capital interests or the partnership's profits interests.

(D) ***Tiered partnerships.*** The rules of this paragraph (d)(5)(iii) apply in cases where a partnership (lower-tier partnership) that conducts commercial activity has a partner that is a partnership (upper-tier partnership). If an upper-tier partnership holds no interest in the lower-tier partnership other than a qualified partnership interest, within the meaning of paragraph (d)(5)(iii)(B) or (C) of this section, the lower-tier partnership's commercial activity is not attributed to the upper-tier partnership. Nevertheless, the upper-tier partnership's distributive share of the lower-tier partnership's income that is derived from the conduct of commercial activity will not be exempt from tax under section 892.

(iv) ***Illustration.*** The following examples illustrate the application of this paragraph (d)(5):

(A) ***Example 1*** —

(*1*) ***Facts.*** K is a controlled entity of a foreign sovereign under § 1.892-2T(a)(3). K holds a 20 percent equity interest in Opco, a domestic limited liability company that is classified as a partnership for Federal tax purposes. Opco owns and manages an office building that produces income from rental and advertising activities that constitute commercial activity under § 1.892-4. Under the governing agreement and the applicable law of Opco, K is not liable for the debts of or claims against Opco by reason of being a member, does not possess the legal authority to bind or act on behalf of Opco, and does not control Opco within the meaning of paragraph (a)(1) of this section. K is not the managing member of, and does not hold an equivalent role under applicable law in, Opco. Pursuant to a side letter between K and Opco, K, however, has rights to review and advise on Opco's material business contracts and business expenses.

(*2*) ***Analysis.*** Opco's commercial activity is attributable to K under paragraph (d)(5)(i) of this section unless K's interest in Opco is a qualified partnership interest. K's interest in Opco does not satisfy the safe harbor under paragraph (d)(5)(iii)(C) of this section because K holds a 20 percent equity interest in Opco. Under all facts and

circumstances as provided in paragraph (d)(5)(iii)(B) of this section, K's rights to review and advise on Opco's material business contracts and business expenses constitutes the right to participate in the day-to-day management and operation of Opco's business. As a result, K's interest in Opco is not a qualified partnership interest. Therefore, Opco's commercial activity is attributable to K under paragraph (d)(5)(i) of this section, and K will be treated as a controlled commercial entity.

(B) ***Example 2*** —

(*1*) ***Facts.*** The facts are the same as in paragraph (c)(5)(iv)(A) of this section (*Example 1*), except that K does not have rights to review and advise on Opco's material business contracts and business expenses. Instead, K is a member of Opco's member committee that only has the ability to make non-binding recommendations, but not decisions in respect of investor-level strategic matters such as dissolution of the partnership, deviations from previously determined investment parameters, and extending the term of the partnership's governing agreement. The extent of K's membership and participation in Opco's member committee does not result in control over Opco within the meaning of paragraph (a)(1) of this section. K does not otherwise have control over Opco within the meaning of paragraph (a)(1) of this section.

(*2*) ***Analysis.*** Although K is on Opco's member committee, the committee only has the ability to make non-binding recommendations but not decisions of an investor-level nature in respect of strategic matters, and not in respect of Opco's day-to-day operations. As a result, Opco's commercial activities will not be attributable to K pursuant to paragraph (d)(5)(iii)(A) of this section. Accordingly, if K is not treated as engaged in any other activities that are commercial activities, K will not be a controlled commercial entity. The portion of K's distributive share of income from Opco, however, that is derived from commercial activity will not be exempt from tax under section 892.

(e) ***Applicability date.*** Except as otherwise provided in this paragraph (e), this section applies to taxable years beginning on or after December 15, 2025. *See* §§ 1.892-5 and 1.892-5T, as contained in 26 CFR in part 1 in effect on April 1, 2025, for the rules that apply to taxable years beginning before December 15, 2025. A taxpayer may choose to apply this section to a taxable year beginning before December 15, 2025, if the period of limitations on assessment of the taxable year is open under section 6501 and the taxpayer and entities that are related (within the meaning of section 267(b) or section 707(b)) to the taxpayer apply this section and §§ 1.892-3(a)(4) and 1.892-4 in their entirety to the taxable year and all succeeding taxable years beginning before December 15, 2025. The rule in paragraph (a)(1)(ii) of this section applies on or after January 14, 2002.

[T.D. 10042, 90 FR 57916, Dec. 15, 2025]

§ 1.892-5T Controlled commercial entity (temporary regulations).

(a) ***In general.*** For further guidance, *see* § 1.892-5(a).

(b) ***Entities treated as engaged in commercial activity*** —

(1) ***U.S. real property holding corporations.*** For further guidance, *see* § 1.892-5(b)(1).

(2) ***Central banks.*** Notwithstanding paragraph (a) of this section, a central bank of issue (as defined in § 1.895-1(b)) shall be treated as a controlled commercial entity only if it engages in commercial activities within the United States.

(3) ***Pension trusts.*** A pension trust, described in § 1.892-2T(c), which engages in commercial activities within or outside the United States, shall be treated as a controlled commercial entity. Income derived by such a pension trust is not income of a foreign government for purposes of the exemption from taxation provided in section 892. A pension trust described in § 1.892-2T(c) shall not be treated as a controlled commercial entity if such trust solely earns income which would not be unrelated business taxable income (as defined in section 512(a)(1)) if the trust were a qualified trust described in section 401(a). However, only income derived by a pension trust that is described in § 1.892-3T and which is not from commercial activities as defined in § 1.892-4T is exempt from taxation under section 892.

(c) ***Control*** —

(1) ***Attribution*** —

(i) ***Rule.*** In determining for purposes of paragraph (a) of this section the interest held by a foreign government, any interest in an entity (whether or not engaged in commercial activity) owned directly or indirectly by an integral part or controlled entity of a foreign sovereign shall be treated as actually owned by such foreign sovereign.

(ii) ***Illustration.*** The following example illustrates the application of paragraph (c)(1)(i) of this section.

Example. FX, a controlled entity of foreign sovereign FC, owns 20 percent of the stock of Corp 1. Neither FX nor Corp 1 is engaged in commercial activity anywhere in the world. Corp 1 owns 60 percent of the stock of Corp 2, which is engaged in commercial activity. The remaining 40 percent of Corp 2's stock is owned by Bureau, an integral part of foreign sovereign FC. For purposes of determining whether Corp 2 is a controlled commercial entity of FC, Bureau will be treated as actually owning the 12 percent of Corp 2's stock indirectly owned by FX. Therefore, since Bureau directly and indirectly owns 52 percent of the stock of Corp 2, Corp 2 is a controlled commercial entity of FC within the meaning of paragraph (a) of this section. Accordingly, dividends or other income received, directly or indirectly, from Corp 2 by either Bureau or FX will not be exempt from taxation under section 892. Furthermore, dividends from Corp 1 to the extent attributable to dividends from Corp 2 will not be exempt from taxation. Thus, a distribution from Corp 1 to FX shall be exempt only to the extent such distribution exceeds Corp 1's earnings and profits attributable to the Corp 2 dividend amount received by Corp 1.

(2) ***Effective practical control.*** An entity engaged in commercial activity may be treated as a controlled commercial entity if a foreign government holds sufficient interests in such entity to give it “effective practical control” over the entity. Effective practical control may be achieved through a minority interest which is sufficiently large to achieve effective control, or through creditor, contractual, or regulatory relationships which, together with ownership interests held by the foreign government, achieve effective control. For example, an entity engaged in commercial activity may be treated as a controlled commercial entity if a foreign government, in addition to holding a small minority interest (by value or voting power), is also a substantial creditor of the entity or controls a strategic natural resource which such entity uses in the conduct of its trade or business, giving the foreign government effective practical control over the entity.

(d) *Related controlled entities* —

(1) ***Brother/sister entities.*** Commercial activities of a controlled entity are not attributed to such entity's other brother/sister related entities. Thus, investment income described in § 1.892-2T that is derived by a controlled entity that is not itself engaged in commercial activity within or outside the United States is exempt from taxation notwithstanding the fact that such entity's brother/sister related entity is a controlled commercial entity.

(2) *Parent/subsidiary entities* —

(i) ***Subsidiary to parent attribution.*** Commercial activities of a subsidiary controlled entity are not attributed to its parent. Thus, investment income described in § 1.892-3T that is derived by a parent controlled entity that is not itself engaged in commercial activity within or outside the United States is exempt from taxation notwithstanding the fact that its subsidiary is a controlled commercial entity. Dividends or other payments of income received by the parent controlled entity from the subsidiary are not exempt under section 892, because it constitutes income received from a controlled commercial entity. Furthermore, dividends paid by the parent are not exempt to the extent attributable to the dividends received by the parent from the subsidiary. Thus, a distribution by the parent shall be exempt only to the extent such distribution exceeds earnings and profits attributable to the dividend received from its subsidiary.

(ii) ***Parent to subsidiary attribution.*** Commercial activities of a parent controlled entity are attributed to its subsidiary. Thus, investment income described in § 1.892-3T that is derived by a subsidiary controlled entity (not engaged in commercial activity within or outside the United States) is not exempt from taxation under section 892 if its parent is a controlled commercial entity.

(3) [Reserved]

(4) ***Illustrations.*** The principles of this section may be illustrated by the following examples.

(i) ***Example 1.***

(A) The Ministry of Industry and Development is an integral part of a foreign sovereign under § 1.892-2T(a)(2). The Ministry is engaged in commercial activity within the United States. In addition, the Ministry receives income from various publicly traded stocks and bonds, soybean futures contracts and net leases on U.S. real property. Since the Ministry is an integral part, and not a controlled entity, of a foreign sovereign, it is not a controlled commercial entity within the meaning of paragraph (a) of this section. Therefore, income described in § 1.892-3T is ineligible for exemption under section 892 only to the extent derived from the conduct of commercial activities. Accordingly, the Ministry's income from the stocks and bonds is exempt from U.S. tax.

(B) The facts are the same as in paragraph (d)(4)(i)(A) of this section, except that the Ministry also owns 75 percent of the stock of R, a U.S. holding company that owns all the stock of S, a U.S. operating company engaged in commercial activity. Ministry's dividend income from R is income received indirectly from a controlled commercial entity. The Ministry's income from the stocks and bonds, with the exception of dividend income from R, is exempt from U.S. tax.

(C) The facts are the same as in paragraph (d)(4)(i)(A) of this section, except that the Ministry is a controlled entity of a foreign sovereign. Since the Ministry is a controlled entity and is engaged in commercial activity, it is a controlled commercial entity within the meaning of paragraph (a) of this section, and none of its income is eligible for exemption.

(ii) *Example 2.*

(A) Z, a controlled entity of a foreign sovereign, has established a pension trust under the laws of the sovereign as part of a pension plan for the benefit of its employees and former employees. The pension trust (T), which meets the requirements of § 1.892-2T(c), has investments in the U.S. in various stocks, bonds, annuity contracts, and a shopping center which is leased and managed by an independent real estate management firm. T also makes securities loans in transactions that qualify under section 1058. T's investment in the shopping center is not considered an unrelated trade or business within the meaning of section 513(b). Accordingly, T will not be treated as engaged in commercial activities. Since T is not a controlled commercial entity, its investment income described in § 1.892-3T, with the exception of income received from the operations of the shopping center, is exempt from taxation under section 892.

(B) The facts are the same as paragraph (d)(4)(ii)(A) of this section, except that T has an interest in a limited partnership (that is not a qualified partnership interest within the meaning of § 1.892-5(d)(5)(iii)) which owns the shopping center. The shopping center is leased and managed by the partnership rather than by an independent management firm. Managing a shopping center, directly or indirectly through a partnership of which a trust is a member, would be considered an unrelated trade or business within the meaning of section 513(b) giving rise to unrelated business taxable income. Since the commercial activities of a partnership are attributable to its partners, T will be treated as engaged in commercial activity and thus will be considered a controlled commercial entity. Accordingly, none of T's income will be exempt from taxation under section 892.

(C) The facts are the same as paragraph (d)(4)(ii)(A) of this section, except that Z is a controlled commercial entity. The result is the same as in paragraph (d)(4)(ii)(A) of this section.

(iii) *Example 3.*

(A) The Department of Interior, an integral part of foreign sovereign FC, wholly owns corporations G and H. G, in turn, wholly owns S. G, H and S are each controlled entities. G, which is not engaged in commercial activity anywhere in the world, receives interest income from deposits in banks in the United States. Both H and S do not have any investments in the U.S. but are both engaged in commercial activities. However, only S is engaged in commercial activities within the United States. Because neither the commercial activities of H nor the commercial activities of S are attributable to the Department of Interior or G, G's interest income is exempt from taxation under section 892.

(B) The facts are the same as paragraph (d)(4)(iii)(A) of this section, except that G rather than S is engaged in commercial activities and S rather than G receives the interest income from the United States. Since the commercial activities of G are attributable to S, S's interest income is not exempt from taxation.

[T.D. 8211, 53 FR 24064, June 27, 1988, as amended by T.D. 9012, 67 FR 49864, Aug. 1, 2002; T.D. 10042, 90 FR 57920, Dec. 15, 2025]

§ 1.892-6T Income of international organizations (temporary regulations).

(a) ***Exempt from tax.*** Subject to the provisions of section 1 of the International Organizations Immunities Act (22 U.S.C. 288) (the provisions of which are set forth in paragraph (b)(3) of § 1.893-1), the income of an international organization (as defined in section 7701(a)(18)) received from investments in the United States in stocks, bonds, or other domestic securities, owned by such international organization, or from interest on deposits in banks in the United States of moneys belonging to such international organization, or from any other source within the United States, is exempt from Federal income tax.

(b) ***Income received prior to Presidential designation.*** An organization designated by the President through appropriate Executive order as entitled to enjoy the privileges, exemptions, and immunities provided in the International Organizations Immunities Act may enjoy the benefits of the exemption with respect to income of the prescribed character received by such organization prior to the date of the issuance of such Executive order, if (i) the Executive order does not provide otherwise and (ii) the organization is a public international organization in which the United States participates, pursuant to a treaty or under the authority of an act of Congress authorizing such participation or making an appropriation for such participation, at the time such income is received.

[T.D. 8211, 53 FR 24065, June 27, 1988]

§ 1.892-7T Relationship to other Internal Revenue Code sections (temporary regulations).

(a) ***Section 893.*** The term "foreign government" referred to in section 893 (relating to the exemption for compensation of employees of foreign governments) has the same meaning as given such term in § 1.892-2T.

(b) ***Section 895.*** A foreign central bank of issue (as defined in § 1.895-1(b)) that fails to qualify for the exemption from tax provided by this section (for example, it is not wholly owned by a foreign sovereign) may nevertheless be exempt from tax on the items of income described in section 895.

(c) ***Section 883(b).*** Nothing in section 892 or these regulations shall limit the exemption provided under section 883(b) relating generally to the exemption of earnings derived by foreign participants from the ownership or operation of communications satellite systems.

(d) ***Section 884.*** Earnings and profits attributable to income of a controlled entity of a foreign sovereign which is exempt from taxation under section 892 shall not be subject to the tax imposed by section 884(a).

(e) ***Sections 1441 and 1442.*** No withholding is required under sections 1441 and 1442 in the case of income exempt from taxation under section 892.

[T.D. 8211, 53 FR 24066, June 27, 1988]

§ 1.893-1 Compensation of employees of foreign governments or international organizations.

(a) ***Employees of foreign governments*** —

(1) ***Exempt from tax.*** Except to the extent that the exemption is limited by the execution and filing of the waiver provided for in section 247(b) of the Immigration and Nationality Act (8 U.S.C. 1257(b)), all employees of a foreign government (including consular or other officers, or nondiplomatic

representatives) who are not citizens of the United States, or are citizens of the Republic of the Philippines (whether or not citizens of the United States), are exempt from Federal income tax with respect to wages, fees, or salaries received by them as compensation for official services rendered to such foreign government, provided

(i) the services are of a character similar to those performed by employees of the Government of the United States in that foreign country and

(ii) the foreign government whose employees are claiming exemption grants an equivalent exemption to employees of the Government of the United States performing similar services in that foreign country.

(2) ***Certificate by Secretary of State.*** Section 893(b) provides that the Secretary of State shall certify to the Secretary of the Treasury the names of the foreign countries which grant an equivalent exemption to the employees of the Government of the United States performing services in such foreign countries, and the character of the services performed by employees of the Government of the United States in foreign countries.

(3) ***Items not exempt.*** The income received by employees of foreign governments from sources other than their salaries, fees, or wages, referred to in subparagraph (1) of this paragraph, is subject to Federal income tax.

(4) ***Immigration and Nationality Act.*** Section 247(b) of the Immigration and Nationality Act provides as follows:

> Sec. 247. Adjustment of status of certain resident aliens.* * *
>
> (b) The adjustment of status required by subsection (a) [of section 247 of the Immigration and Nationality Act] shall not be applicable in the case of any alien who requests that he be permitted to retain his status as an immigrant and who, in such form as the Attorney General may require, executes and files with the Attorney General a written waiver of all rights, privileges, exemptions, and immunities under any law or any executive order which would otherwise accrue to him because of the acquisition of an occupational status entitling him to a nonimmigrant status under paragraph (15)(A), (15)(E), or (15)(G) of section 101(a).

(5) ***Effect of waiver.*** An employee of a foreign government who executes and files with the Attorney General the waiver provided for in section 247(b) of the Immigration and Nationality Act thereby waives the exemption conferred by section 893 of the Code. As a consequence, that exemption does not apply to income received by that alien after the date of filing of the waiver.

(6) ***Citizens of the United States.*** The compensation of citizens of the United States (other than those who are also citizens of the Republic of the Philippines) who are officers or employees of a foreign government is not exempt from income tax pursuant to this paragraph. But see section 911 and the regulations thereunder.

(b) ***Employees of international organizations*** —

(1) ***Exempt from tax.*** Except to the extent that the exemption is limited by the execution and filing of the waiver provided for in section 247(b) of the Immigration and Nationality Act and subject to the provisions of sections 1, 8, and 9 of the International Organizations Immunities Act (22 U.S.C. 288,

288e, 288f), wages, fees, or salary of any officer or employee of an international organization (as defined in section 7701(a)(18)) received as compensation for official services to that international organization is exempt from Federal income tax, if that officer or employee

(i) is not a citizen of the United States or

(ii) is a citizen of the Republic of the Philippines (whether or not a citizen of the United States).

(2) ***Income earned prior to executive action.*** An individual of the prescribed class who receives wages, fees, or salary as compensation for official services to an organization designated by the President through appropriate Executive order as entitled to enjoy the privileges, exemptions, and immunities provided in the International Organizations Immunities Act and who has been duly notified to, and accepted by, the Secretary of State as an officer or employee of that organization, or who has been designated by the Secretary of State, prior to formal notification and acceptance, as a prospective officer or employee of that organization, may enjoy the benefits of the exemption with respect to compensation of the prescribed character earned by that individual, either prior to the date of the Issuance of the Executive order, or prior to the date of the acceptance or designation by the Secretary of State, for official services to that organization, if

(i) the Executive order does not provide otherwise,

(ii) the organization is a public international organization in which the United States participates, pursuant to a treaty or under the authority of an act of Congress authorizing such participation or making an appropriation for such participation, at the time the compensation is earned, and

(iii) the individual is an officer or employee of that organization at that time.

(3) ***International Organizations Immunities Act.*** Sections 1, 8, and 9 of the International Organizations Immunities Act (22 U.S.C. 288, 288e, 288f) provide in part as follows:

> Section 1. For the purposes of this title [International Organizations Immunities Act], the term "international organization" means a public international organization in which the United States participates pursuant to any treaty or under the authority of any Act of Congress authorizing such participation or making an appropriation for such participation, and which shall have been designated by the President through appropriate Executive order as being entitled to enjoy the privileges, exemptions, and immunities herein provided. The President shall be authorized, in the light of the functions performed by any such international organization, by appropriate Executive order to withhold or withdraw from any such organization or its officers or employees any of the privileges, exemptions, and immunities provided for in this title (including the amendments made by this title) or to condition or limit the enjoyment by any such organization or its officers or employees of any such privilege, exemption, or immunity. The President shall be authorized, if in his judgment such action should be justified by reason of the abuse by an international organization or its officers and employees of the privileges, exemptions, and immunities herein provided or for any other reason, at any time to revoke the designation of any international organization under this section, whereupon the international organization in question shall cease to be classed as an international organization for the purposes of this title.

* * * * *

> Sec. 8. (a) No person shall be entitled to the benefits of this title [International Organizations Immunities Act] unless he (1) shall have been duly notified to and accepted by the Secretary of State as a * * * officer, or employee; or (2) shall have been designated by the Secretary of State, prior to formal notification and acceptance, as a prospective * * * officer, or employee; * * *.

(b) Should the Secretary of State determine that the continued presence in the United States of any person entitled to the benefits of this title is not desirable, he shall so inform the * * * international organization concerned * * *, and after such person shall have had a reasonable length of time, to be determined by the Secretary of State, to depart from the United States, he shall cease to be entitled to such benefits.

(c) No person shall, by reason of the provisions of this title, be considered as receiving diplomatic status or as receiving any of the privileges incident thereto other than such as are specifically set forth herein.

Sec. 9. The privileges, exemptions, and immunities of international organizations and of their officers and employees * * * provided for in this title [International Organizations Immunities Act], shall be granted notwithstanding the fact that the similar privileges, exemptions, and immunities granted to a foreign government, its officers, or employees, may be conditioned upon the existence of reciprocity by that foreign government: *Provided,* That nothing contained in this title shall be construed as precluding the Secretary of State from withdrawing the privileges, exemptions, and immunities herein provided from persons who are nationals of any foreign country on the ground that such country is failing to accord corresponding privileges, exemptions, and immunities to citizens of the United States.

(4) ***Effect of waiver.*** An officer or employee of an international organization who executes and files with the Attorney General the waiver provided for in section 247(b) of the Immigration and Nationality Act (8 U.S.C. 1257(b)) thereby waives the exemption conferred by section 893 of the Code. As a consequence, that exemption does not apply to income received by that individual after the date of filing of the waiver.

(5) ***Citizens of the United States.*** The compensation of citizens of the United States (other than those who are also citizens of the Republic of the Philippines) who are officers or employees of an international organization is not exempt from income tax pursuant to this paragraph. But see section 911 and the regulations thereunder.

(c) ***Tax conventions, consular conventions, and international agreements*** —

(1) ***Exemption dependent upon internal revenue laws.*** A tax convention or consular convention between the United States and a foreign country, which provides that the United States may include in the tax base of its residents all income taxable under the internal revenue laws, and which makes no specific exception for the income of the employees of that foreign government, does not provide any exemption (with respect to residents of the United States) beyond that which is provided by the internal revenue laws. Accordingly, the effect of the execution and filing of a waiver under section 247(b) of the Immigration and Nationality Act by an employee of a foreign government which is a party to such a convention is to subject the employee to tax to the same extent as provided in paragraph (a)(5) of this section with respect to the waiver of exemption under section 893.

(2) ***Exemption not dependent upon internal revenue laws.*** If a tax convention, consular convention, or international agreement provides that compensation paid by the foreign government or international organization to its employees is exempt from Federal income tax, and the application of this exemption is not dependent upon the provisions of the internal revenue laws, the exemption so conferred is not affected by the execution and filing of a waiver under section 247(b) of the Immigration and Nationality Act. For examples of exemptions which are not affected by the Immigration and Nationality Act, see article X of the income tax convention between the United

States and the United Kingdom (60 Stat. 1383); article IX, section 9(b), of the Articles of Agreement of the International Monetary Fund (60 Stat. 1414); and article VII, section 9(b), of the Articles of Agreement of the International Bank for Reconstruction and Development (60 Stat. 1458).

§ 1.894-1 Income affected by treaty.

(a) ***Income exempt under treaty.*** Income of any kind is not included in gross income and is exempt from tax under Subtitle A (relating to income taxes), to the extent required by any income tax convention to which the United States is a party. However, unless otherwise provided by an income tax convention, the exclusion from gross income under section 894(a) and this paragraph does not apply in determining the accumulated taxable income of a foreign corporation under section 535 and the regulations thereunder or the undistributed personal holding company income of a foreign corporation under section 545 and the regulations thereunder. Moreover, the distributable net income of a foreign trust is determined without regard to section 894 and this paragraph, to the extent provided by section 643(a)(6)(B). Further, the compensating tax adjustment required by section 819(a)(3) in the case of a foreign life insurance company is to be determined without regard to section 894 and this paragraph, to the extent required by section 819(a)(3)(A). See § 1.871-12 for the manner of determining the tax liability of a nonresident alien individual or foreign corporation whose gross income includes income on which the tax is reduced under a tax convention.

(b) ***Taxpayer treated as having no permanent establishment in the United States*** —

(1) ***In general.*** A nonresident alien individual or a foreign corporation, that is engaged in trade or business in the United States through a permanent establishment located therein at any time during a taxable year beginning after December 31, 1966, shall be deemed not to have a permanent establishment in the United States at any time during that year for purposes of applying any exemption from, or reduction in the rate of, any tax under Subtitle A of the Code which is provided by any income tax convention with respect to income which is not effectively connected for that year with the conduct of a trade or business in the United States by the taxpayer. This paragraph applies to all treaties or conventions entered into by the United States, whether entered into before, on, or after November 13, 1966, the date of enactment of the Foreign Investors Tax Act of 1966 (80 Stat. 1539). This paragraph is not considered to be contrary to any obligation of the United States under an income tax convention to which it is a party. The benefit granted under section 894(b) and this paragraph applies only to those items of income derived from sources within the United States which are subject to the tax imposed by section 871(a) or 881(a), and section 1441, 1442, or 1451, on the noneffectively connected income received from sources within the United States by a nonresident alien individual or a foreign corporation. The benefit does not apply to any income from real property in respect of which an election is in effect for the taxable year under § 1.871-10 or in determining under section 877(b) the tax of a nonresident alien individual who has lost United States citizenship at any time after March 8, 1965. The benefit granted by section 894(b) and this paragraph is not elective.

(2) ***Illustrations.*** The application of this paragraph may be illustrated by the following examples:

Example 1. M, a corporation organized in foreign country X, uses the calendar year as the taxable year. The United States and country X are parties to an income tax convention which provides in part that dividends received from sources within the United States by a corporation of country X not having a permanent establishment in the United States are subject to tax under Chapter 1 of the Code at a rate not to exceed 15 percent. During 1967, M is engaged in business in the United States through a permanent establishment located therein and receives $100,000 in dividends from domestic

corporation B, which under section 861(a)(2)(A) constitute income from sources within the United States. Under section 864(c)(2) and § 1.864-4(c), the dividends received from B are not effectively connected for 1967 with the conduct of a trade or business in the United States by M. Although M has a permanent establishment in the United States during 1967, it is deemed, under section 894(b) and this paragraph, not to have a permanent establishment in the United States during that year with respect to the dividends. Accordingly, in accordance with paragraph (c)(3) of § 1.871-12 the tax on the dividends is $15,000, that is, 15 percent of $100,000, determined without the allowance of any deductions.

Example 2. T, a corporation organized in foreign country X, uses the calendar year as the taxable year. The United States and country X are parties to an income tax convention which provides in part that an enterprise of country X is not subject to tax under chapter 1 of the Code in respect of its industrial or commercial profits unless it is engaged in trade or business in the United States during the taxable year through a permanent establishment located therein and that, if it is so engaged, the tax may be imposed upon the entire income of that enterprise from sources within the United States. The convention also provides that the tax imposed by Chapter 1 of the Code on dividends received from sources within the United States by a corporation of X which is not engaged in trade or business in the United States through a permanent establishment located therein shall not exceed 15 percent of the dividend. During 1967, T is engaged in a business (business A) in the United States which is carried on through a permanent establishment in the United States; in addition, T is engaged in a business (business B) in the United States which is not carried on through a permanent establishment. During 1967, T receives from sources within the United States $60,000 in service fees through the operation of business A and $10,000 in dividends through the operation of business B, both of which amounts are, under section 864(c)(2)(B) and § 1.864-4(c)(3), effectively connected for that year with the conduct of a trade or business in the United States by that corporation. The service fees are considered to be industrial or commercial profits under the tax convention with country X. Since T has no income for 1967 which is not effectively connected for that year with the conduct of a trade or business in the United States by that corporation, section 894(b), this paragraph, and § 1.871-12 do not apply. Accordingly, for 1967 T's entire income of $70,000 from sources within the United States is subject to tax, after allowance of deductions, in accordance with section 882(a)(1) and paragraph (b)(2) of § 1.882-1.

Example 3. S, a corporation organized in foreign country W, uses the calendar year as the taxable year. The United States and country W are parties to an income tax convention which provides in part that a corporation of country W is not subject to tax under Chapter 1 of the Code in respect of its industrial or commercial profits unless it is engaged in trade or business in the United States during the taxable year through a permanent establishment located therein and that, if it is so engaged, the tax may be imposed upon the entire income of that corporation from sources within the United States. The convention also provides that the tax imposed by Chapter 1 of the Code on dividends received from sources within the United States by a corporation of country W which is not engaged in trade or business in the United States through a permanent establishment located therein shall not exceed 15 percent of the dividend. During 1967, S is engaged in business in the United States through a permanent establishment located therein and derives from sources within the United States $100,000 in service fees which, under section 864(c)(2)(B) and § 1.864-4(c)(3), are effectively connected for that year with the conduct of a trade or business in the United States by S and which are considered to be industrial or commercial profits under the tax convention with country W. During 1967, S also derives from sources within the United States, through another business it carries on in foreign country X, $10,000 in sales income which, under section 864(c)(3) and § 1.864-4(b), is effectively connected for that year with the conduct of a trade or business in the United

States by S and $5,000 in dividends which, under section 864(c)(2)(A) and § 1.864-4(c)(2), are not effectively connected for that year with the conduct of a trade or business in the United States by S. The sales income is considered to be industrial or commercial profits under the tax convention with country W. Although S is engaged in a trade or business in the United States during 1967 through a permanent establishment located therein, it is deemed, under section 894(b) and this paragraph, not to have a permanent establishment therein with respect to the $5,000 in dividends. Accordingly, in accordance with paragraph (c) of § 1.871-12, for 1967 S is subject to a tax of $750 on the dividends ($5,000 × .15) and a tax, determined under section 882(a) and § 1.882-1, on its $110,000 industrial or commercial profits.

Example 4. (a) N, a corporation organized in foreign country Z, uses the calendar year as the taxable year. The United States and country Z are parties to an income tax convention which provides in part that the tax imposed by Chapter 1 of the Code on dividends received from sources within the United States by a corporation of country Z shall not exceed 15 percent of the amount distributed if the recipient does not have a permanent establishment in the United States or, where the recipient does have a permanent establishment in the United States, if the shares giving rise to the dividends are not effectively connected with the permanent establishment. The tax convention also provides that if a corporation of country Z is engaged in industrial or commercial activity in the United States through a permanent establishment in the United States, income tax may be imposed by the United States on so much of the industrial or commercial profits of such corporation as are attributable to the permanent establishment in the United States.
(b) During 1967, N is engaged in a business (business A) in the United States which is not carried on through a permanent establishment in the United States. In addition, N has a permanent establishment in the United States through which it carries on another business (business B) in the United States. During 1967, N holds shares of stock in domestic corporation D which are not effectively connected with N's permanent establishment in the United States. During 1967, N receives $100,000 in dividends from D which, pursuant to section 864(c)(2)(A) and § 1.864-4(c)(2), are effectively connected for that year with the conduct of business A. Under section 861(a)(2)(A) these dividends are treated as income from sources within the United States. In addition, during 1967, N receives from sources within the United States $150,000 in sales income which, pursuant to section 864(c)(3) and § 1.864-4(b), is effectively connected with the conduct of a trade or business in the United States and which is considered to be industrial or commercial profits under the tax convention with country Z. Of these total profits, $70,000 is from business A and $80,000 is from business B. Only the $80,000 of industrial or commercial profits is attributable to N's permanent establishment in the United States.

(c) Since N has no income for 1967 which is not effectively connected for that year with the conduct of a trade or business in the United States by that corporation, section 894(b) and this paragraph do not apply. However, N is entitled to the reduced rate of tax under the tax convention with country Z with respect to the dividends because the shares of stock are not

effectively connected with N's permanent establishment in the United States. Accordingly, assuming that there are no deductions connected with N's industrial or commercial profits, the tax for 1967, determined as provided in paragraph (c) of § 1.871-12, is $46,900 as follows:

Tax on nontreaty income:	
$80,000 × .48	$38,400
Less $25,000 × .26	6,500
	31,900
Tax on treaty income:	
$100,000 (gross dividends) × .15	15,000
Total tax	46,900

Example 5. M, a corporation organized in foreign country Z, uses the calendar year as the taxable year. The United States and country Z are parties to an income tax convention which provides in part that a corporation of country Z is not subject to tax under Chapter 1 of the Code in respect of its commercial and industrial profits except such profits as are allocable to its permanent establishment in the United States. The regulations in this chapter under the tax convention with country Z provide that a corporation of country Z having a permanent establishment in the United States is subject to U.S. tax upon its industrial and commercial profits from sources within the United States and that its industrial and commercial profits from such sources are deemed to be allocable to the permanent establishment in the United States. During 1967, M is engaged in a business (business A) in the United States which is carried on through a permanent establishment in the United States; in addition, M is engaged in a business (business B) in foreign country X and none of such business is carried on in the United States. During 1967, M receives from sources within the United States $40,000 in sales income through the operation of business A and $10,000 in sales income through the operation of business B, both of which amounts are, under section 864(c)(3) and § 1.864-4(b), effectively connected for that year with the conduct of a trade or business in the United States by that corporation. The sales income is considered to be industrial and commercial profits under the tax convention with country Z. Since M has no income for 1967 which is not effectively connected for that year with the conduct of a trade or business in the United States by that corporation, section 894(b) and this paragraph do not apply. Accordingly, for 1967 M's entire income of $50,000 from sources within the United States is subject to tax, after allowance of deductions, in accordance with section 882(a)(1) and paragraph (b)(2) of § 1.882-1.

(c)

(1) ***Substitute interest and dividend payments.*** The provisions of an income tax convention dealing with interest or dividends paid to or derived by a foreign person include substitute interest or dividend payments that have the same character as interest or dividends under § 1.864-5(b)92)(ii), 1.871-7(b)(2) or 1.881-2(b)(2). The provisions of this paragraph (c) shall apply for purposes of securities lending transactions or sale-repurchase transactions as defined in § 1.861-2(a)(7) and § 1.861-3(a)(6).

(2) ***Dividend equivalents.*** The provisions of an income tax convention relating to dividends paid to or derived by a foreign person apply to the payment of a dividend equivalent described in section 871(m) and the regulations thereunder.

(d) ***Special rule for items of income received by entities*** —

(1) ***In general.*** The tax imposed by sections 871(a), 881(a), 1443, 1461, and 4948(a) on an item of income received by an entity, wherever organized, that is fiscally transparent under the laws of the United States and/or any other jurisdiction with respect to an item of income shall be eligible for reduction under the terms of an income tax treaty to which the United States is a party only if the item of income is derived by a resident of the applicable treaty jurisdiction. For this purpose, an item of income may be derived by either the entity receiving the item of income or by the interest holders in the entity or, in certain circumstances, both. An item of income paid to an entity shall be considered to be derived by the entity only if the entity is not fiscally transparent under the laws of the entity's jurisdiction, as defined in paragraph (d)(3)(ii) of this section, with respect to the item of income. An item of income paid to an entity shall be considered to be derived by the interest holder in the entity only if the interest holder is not fiscally transparent in its jurisdiction with respect to the item of income and if the entity is considered to be fiscally transparent under the laws of the interest holder's jurisdiction with respect to the item of income, as defined in paragraph (d)(3)(iii) of this section. Notwithstanding the preceding two sentences, an item of income paid directly to a type of entity specifically identified in a treaty as a resident of a treaty jurisdiction shall be treated as derived by a resident of that treaty jurisdiction.

(2) ***Application to domestic reverse hybrid entities*** —

(i) ***In general.*** An income tax treaty may not apply to reduce the amount of federal income tax on U.S. source payments received by a domestic reverse hybrid entity. Further, notwithstanding paragraph (d)(1) of this section, the foreign interest holders of a domestic reverse hybrid entity are not entitled to the benefits of a reduction of U.S. income tax under an income tax treaty on items of income received from U.S. sources by such entity. A domestic reverse hybrid entity is a domestic entity that is treated as not fiscally transparent for U.S. tax purposes and as fiscally transparent under the laws of the interest holder's jurisdiction, with respect to the item of income received by the domestic entity.

(ii) ***Payments by domestic reverse hybrid entities*****—**

(A) ***General rule.*** Except as otherwise provided in paragraph (d)(2)(ii)(B) of this section, an item of income paid by a domestic reverse hybrid entity to an interest holder in such entity shall have the character of such item of income under U.S. law and shall be considered to be derived by the interest holder, provided the interest holder is not fiscally transparent in its jurisdiction, as defined in paragraph (d)(3)(iii) of this section, with respect to the item of income. In determining whether the interest holder is fiscally transparent with respect to the item of income under this paragraph (d)(2)(ii)(A), the determination under paragraph (d)(3)(ii) of this section shall be made based on the treatment that would have resulted had the item of income been paid by an entity that is not fiscally transparent under the laws of the interest holder's jurisdiction with respect to any item of income.

(B) ***Payment made to related foreign interest holder*** —

(*1*) ***General rule.*** If—

(*i*) A domestic entity makes a payment to a related domestic reverse hybrid entity that is treated as a dividend under either the laws of the United States or the laws of the jurisdiction of a related foreign interest holder in the domestic reverse hybrid entity, and under the laws of the jurisdiction of the related foreign interest holder in the domestic reverse hybrid entity, the related foreign interest holder is treated as deriving its proportionate share of the payment under the principles of paragraph (d)(1) of this section; and

(*ii*) The domestic reverse hybrid entity makes a payment of a type that is deductible for U.S. tax purposes to the related foreign interest holder or to a person, wherever organized, the income and losses of which are available, under the laws of the jurisdiction of the related foreign interest holder, to offset the income and losses of the related foreign interest holder, and for which a reduction in U.S. withholding tax would be allowed under an applicable income tax treaty; then

(*iii*) To the extent the amount of the payment described in paragraph (d)(2)(ii)(B)(*1*)(*ii*) of this section does not exceed the sum of the portion of the payment described in paragraph (d)(2)(ii)(B)(*1*)(*i*) of this section treated as derived by the related foreign interest holder and the portion of any other prior payments described in paragraph (d)(2)(ii)(B)(*1*)(*i*) of this section treated as derived by the related foreign interest holder, the amount of the payment described in (d)(2)(ii)(B)(*1*)(*ii*) of this section will be treated for all purposes of the Internal Revenue Code and any applicable income tax treaty as a distribution within the meaning of section 301(a) of the Internal Revenue Code, and the tax to be withheld from the payment described in paragraph (d)(2)(ii)(B)(*1*)(*ii*) of this section (assuming the payment is a dividend under section 301(c)(1) of the Internal Revenue Code) shall be determined based on the appropriate rate of withholding that would be applicable to dividends paid from the domestic reverse hybrid entity to the related foreign interest holder in accordance with the principles of paragraph (d)(2)(ii)(A) of this section.

(*2*) ***Determining amount to be recharacterized under paragraph (d)(2)(ii)(B)(1)(iii).*** For purposes of determining the amount to be recharacterized under paragraph (d)(2)(ii)(B)(*1*)(*iii*) of this section, the portion of the payment described in paragraph (d)(2)(ii)(B)(*1*)(*i*) of this section treated as derived by the related foreign interest holder shall be increased by the portion of the payment derived by any other person described in paragraph (d)(2)(ii)(B)(*1*)(*ii*), and shall be reduced by the amount of any prior section 301(c) distributions made by the domestic reverse hybrid entity to the related foreign interest holder or any other person described in paragraph (d)(2)(ii)(B)(*1*)(*ii*) and by the amount of any payments from the domestic reverse hybrid entity previously recharacterized under paragraph (d)(2)(ii)(B)(*1*)(*iii*) of this section.

(*3*) ***Tiered entities.*** The principles of this paragraph (d)(2)(ii)(B) also shall apply to payments referred to in this paragraph (d)(2)(ii)(B) made among related entities when there is more than one domestic reverse hybrid entity or other fiscally transparent entity involved.

(*4*) ***Definition of related.*** For purposes of this section, a person shall be treated as related to a domestic reverse hybrid entity if it is related by reason of the ownership requirements of section 267(b) or 707(b)(1), except that the language "at least 80 percent" applies instead of "more than 50 percent," where applicable. For purposes of determining whether a person is related by reason of the ownership requirements of section 267(b) or 707(b)(1), the constructive ownership rules of section 318 shall apply, and the attribution rules of section 267(c) also shall apply to the extent they attribute ownership to persons to whom section 318 does not attribute ownership.

(C) ***Payments to persons not described in paragraph*** (d)(2)(ii)(B)(1)(ii) —

(1) ***Related persons.*** The Commissioner may treat a payment by a domestic reverse hybrid entity to a related person (who is neither the related foreign interest holder nor otherwise described in paragraph (d)(2)(ii)(B)(*1*)(*ii*) of this section), in whole or in part, as being made to a related foreign interest holder for purposes of applying paragraph (d)(2)(ii)(B) of this section, if—

(i) The payment to the related person is of a type that is deductible by the domestic reverse hybrid entity; and

(*ii*) The payment is made in connection with one or more transactions the effect of which is to avoid the application of paragraph (d)(2)(ii)(B) of this section.

(*2*) ***Unrelated persons.*** The Commissioner may treat a payment by a domestic reverse hybrid entity to an unrelated person, in whole or in part, as being made to a related foreign interest holder for purposes of applying paragraph (d)(2)(ii)(B) of this section, if—

(*i*) The payment to the unrelated person is of a type that is deductible by the domestic reverse hybrid entity;

(*ii*) The unrelated person (or other person (whether related or not) which receives a payment in a series of transactions that includes a transaction involving such unrelated person) makes a payment to the related foreign interest holder (or other person described in paragraph (d)(2)(ii)(B)(*1*)(*ii*));

(*iii*) The foregoing payments are made in connection with a series of transactions which constitute a financing arrangement, as defined in § 1.881-3(a)(2)(i); and

(*iv*) The transactions have the effect of avoiding the application of paragraph (d)(2)(ii)(B) of this section.

(iii) ***Examples.*** The rules of this paragraph (d)(2) are illustrated by the following examples:

> *Example 1. Dividend paid by unrelated entity to domestic reverse hybrid entity.* (i) *Facts.* Entity A is a domestic reverse hybrid entity, as defined in paragraph (d)(2)(i) of this section, with respect to the U.S. source dividends it receives from B, a domestic corporation to which A is not related within the meaning of paragraph (d)(2)(ii)(B)(*4*) of this section. A's 85-percent shareholder, FC, is a corporation organized under the laws of Country X, which has an income tax treaty in effect with the United States. A's remaining 15-percent shareholder is an unrelated domestic corporation. Under Country X law, FC is

not fiscally transparent with respect to the dividend, as defined in paragraph (d)(3)(ii) of this section. In year 1, A receives $100 of dividend income from B. Under Country X law, FC is treated as deriving $85 of the $100 dividend payment received by A. The applicable rate of tax on dividends under the U.S.-Country X income tax treaty is 5 percent with respect to a 10-percent or more corporate shareholder.
(ii) *Analysis.* Under paragraph (d)(2)(i) of this section, the U.S.-Country X income tax treaty does not apply to the dividend income received by A because the payment is made by B, a domestic corporation, to A, another domestic corporation. A remains fully taxable under the U.S. tax laws as a domestic corporation with regard to that item of income. Further, pursuant to paragraph (d)(2)(i) of this section, notwithstanding the fact that A is treated as fiscally transparent with respect to the dividend income under the laws of Country X, FC may not claim a reduced rate of taxation on its share of the U.S. source dividend income received by A.

Example 2. Interest paid by domestic reverse hybrid entity to related foreign interest holder where dividend is paid by unrelated entity. (i) *Facts.* The facts are the same as in *Example 1.* Both the United States and Country X characterize the payment by B in year 1 as a dividend. In addition, in year 2, A makes a payment of $25 to FC that is characterized under the Internal Revenue Code as interest on a loan from FC to A. Under the U.S.-Country X income tax treaty, the rate of tax on interest is zero. Under Country X laws, had the interest been paid by an entity that is not fiscally transparent under Country X's laws with respect to any item of income, FC would not be fiscally transparent as defined in paragraph (d)(2)(ii) of this section with respect to the interest.
(ii) *Analysis.* The analysis is the same as in *Example 1* with respect to the $100 payment from B to A. With respect to the $25 payment from A to FC, paragraph (d)(2)(ii)(B) of this section will not apply because, although FC is a related foreign interest holder in A, A is not related to B, the payor of the dividend income it received. Under paragraph (d)(2)(ii)(A) of this section, the $25 of interest paid by A to FC in year 2 is characterized under U.S. law as interest. Accordingly, in year 2, A is entitled to an interest deduction with respect to the $25 interest payment from A to FC, and FC is entitled to the reduced rate of withholding applicable to interest under the U.S.-Country X income tax treaty, assuming all other requirements for claiming treaty benefits are met.

Example 3. Interest paid by domestic reverse hybrid entity to related foreign interest holder where dividend is paid by a related entity. (i) *Facts.* The facts are the same as in *Example 2,* except the $100 dividend income received by A in year 1 is from A's wholly-owned subsidiary, S.
(ii) *Analysis.* The analysis is the same as in *Example 1* with respect to the $100 dividend payment from S to A. However, the $25 interest payment in year 2 by A to FC will be treated as a dividend for all purposes of the Internal Revenue Code and the U.S.-Country

X income tax treaty because $25 does not exceed FC's share of the $100 dividend payment made by S to A ($85). Since FC is not fiscally transparent with respect to the payment as determined under paragraph (d)(2)(ii)(A) of this section, FC is entitled to the reduced rate applicable to dividends under the U.S.-Country X income tax treaty with respect to the $25 payment. Because the $25 payment in year 2 is recharacterized as a dividend for all purposes of the Internal Revenue Code and the U.S.-Country X income tax treaty, A is not entitled to an interest deduction with respect to that payment and FC is not entitled to claim the reduced rate of withholding applicable to interest.

Example 4. Definition of related foreign interest holder. (i) *Facts.* The facts are the same as in *Example 3,* except that A has two 50-percent shareholders, FC1 and FC2. In year 2, A makes an interest payment of $25 to both FC1 and FC2. FC1 is a corporation organized under the laws of Country X, which has an income tax treaty in effect with the United States. FC2 is a corporation organized under the laws of Country Y, which also has an income tax treaty in effect with the United States. FP owns 100-percent of both FC1 and FC2, and is organized under the laws of Country X. Under Country X law, FC1 is not fiscally transparent with respect to the dividend, as defined in paragraph (d)(3)(ii) of this section. Under Country X law, FC1 is treated as deriving $50 of the $100 dividend payment received by A because A is fiscally transparent under the laws of Country X, as determined under paragraph (d)(3)(iii) of this section. The applicable rate of tax on dividends under the U.S.-Country X income tax treaty is 5-percent with respect to a 10-percent or more corporate shareholder. Under Country Y law, FC2 is not treated as deriving any of the $100 dividend payment received by A because, under the laws of Country Y, A is not a fiscally transparent entity.
(ii) *Analysis.* The analysis is the same as in *Example 1* with respect to the $100 dividend payment from S to A. With respect to the $25 payment in year 2 by A to FC1, the payment will be treated as a dividend for all purposes of the Internal Revenue Code and the U.S.-Country X income tax treaty because FC1 is a related foreign interest holder as determined under paragraph (d)(2)(ii)(B)(*4*) of this section, and because $25 does not exceed FC1's share of the dividend payment made by S to A ($50). FC1 is a related foreign interest holder because FC1 is treated as owning the stock of A owned by FC2 under section 267(b)(3). Since FC1 is not fiscally transparent with respect to the payment as determined under paragraph (d)(2)(ii)(A) of this section, FC1 is entitled to the 5-percent reduced rate applicable to dividends under the U.S.-Country X income tax treaty with respect to the $25 payment. Because the $25 payment in year 2 is recharacterized as a dividend for all purposes of the Internal Revenue Code and the U.S.-Country X income tax treaty, A is not entitled to an interest deduction with respect to that payment. Even though FC2 is also a related foreign interest holder, the $25 interest payment by A to FC2 in year 2 is not recharacterized because A is not fiscally

transparent under the laws of Country Y, and FC2 is not treated as deriving any of the $100 dividend payment received by A. Thus, the U.S.-Country Y income tax treaty is not implicated.

Example 5. Higher treaty withholding rate on dividends. (i) *Facts.* The facts are the same as in *Example 3,* except that under the U.S.-Country X income tax treaty, the rate of tax on interest is 10-percent and the rate of tax on dividends is 5-percent.
(ii) *Analysis.* The analysis is the same as in *Example 1* with respect to the $100 dividend payment from S to A. The analysis is the same as in *Example 3* with respect to the $25 interest payment in year 2 from A to FC.

Example 6. Foreign sister corporation the income and losses of which may offset the income and losses of related foreign interest holder. (i) *Facts.* The facts are the same as *Example 3,* except that in year 2, A makes the interest payment of $25 to FS, a subsidiary of FC also organized in Country X. Under the laws of Country X, FS is not fiscally transparent with respect to the interest payment, and the income and losses of FS may be used to offset the income and losses of FC.
(ii) *Analysis.* The analysis is the same as in *Example 1* with respect to the $100 dividend payment from S to A. With respect to the $25 interest payment from A to FS in year 2, FS is a person described in paragraph (d)(2)(ii)(B)(*1*)(ii) of this section because the income and losses of FS may be used under the laws of Country X to offset the income and losses of FC, the related foreign interest holder that derived its proportionate share of the payment from S to A. Therefore, paragraph (d)(2)(ii)(B) of this section applies, and the $25 interest payment in year 2 by A to FS is treated as a dividend for all purposes of the Internal Revenue Code and the U.S.-Country X income tax treaty because the $25 payment does not exceed FC's share of the $100 dividend payment made by S to A ($85). Since FS is not fiscally transparent with respect to the payment as determined under paragraph (d)(2)(ii)(A) of this section, FS is entitled to obtain the rate applicable to dividends under the U.S.-Country X income tax treaty with respect to the $25 payment. Because the $25 payment in year 2 is recharacterized as a dividend for all purposes of the Internal Revenue Code and the U.S.-Country X income tax treaty, A is not entitled to an interest deduction with respect to the payment and FS is not entitled to claim the reduced rate of withholding applicable to interest under the U.S.-Country X income tax treaty.

Example 7. Interest paid by domestic reverse hybrid entity to unrelated foreign bank. (i) *Facts.* The facts are the same as in *Example 3,* except that in year 2, A makes the interest payment of $25 to FB, a Country Y unrelated foreign bank, on a loan from FB to A.

(ii) *Analysis.* The analysis is the same as in *Example 1* with respect to the $100 dividend payment from S to A. With respect to the payment from A to FB, paragraph (d)(2)(ii)(B) of this section will not apply because, although A is related to S, the payor of the dividend income it received, A is not related to FB under paragraph (d)(2)(ii)(B)(*4*) of this section. Under paragraph (d)(2)(ii)(A) of this section, the $25 interest payment made from A to FB in year 2 is characterized as interest under the Internal Revenue Code.

Example 8. Interest paid by domestic reverse hybrid to an unrelated entity pursuant to a financing arrangement. (i) *Facts.* The facts are the same as in *Example 7,* except that in year 3, FB makes an interest payment of $25 to FC on a deposit made by FC with FB.
(ii) *Analysis.* The analysis is the same as in *Example 1* with respect to the $100 dividend payment from S to A. With respect to the $25 payment from A to FB in year 2, because the payment is made in connection with a transaction that constitutes a financing arrangement within the meaning of paragraph (d)(2)(ii)(C)(*2*) of this section, the payment may be treated by the Commissioner as being made directly to FC. If the Commissioner disregards FB, then the analysis is the same as in *Example 3* with respect to the $25 interest payment in year 2 from A to FC.

Example 9. Royalty paid by related entity to domestic reverse hybrid entity. (i) *Facts.* The facts are the same as in *Example 3,* except the $100 income received by A from S in year 1 is a royalty payment under both the laws of the United States and the laws of Country X. The royalty rate under the treaty is 10 percent and the interest rate is 0 percent.
(ii) *Analysis.* The analysis as to the royalty payment from S to A is the same as in *Example 1* with respect to the $100 dividend payment from S to A. With respect to the $25 payment from A to FC, paragraph (d)(2)(ii)(B) of this section will not apply because the payment from S to A is not treated as a dividend under the Internal Revenue Code or the laws of Country X. Under paragraph (d)(2)(ii)(A) of this section, the $25 of interest paid by A to FC in year 2 is characterized as interest under the Internal Revenue Code. Accordingly, in year 2, FC may obtain the reduced rate of withholding applicable to interest under the U.S.-Country X income tax treaty, assuming all other requirements for claiming treaty benefits are met.

(3) ***Definitions*** —

(i) ***Entity.*** For purposes of this paragraph (d), the term *entity* shall mean any person that is treated by the United States or the applicable treaty jurisdiction as other than an individual. The term *entity* includes disregarded entities, including single member disregarded entities with individual owners.

(ii) ***Fiscally transparent under the law of the entity's jurisdiction*** —

(A) ***General rule.*** For purposes of this paragraph (d), an entity is fiscally transparent under the laws of the entity's jurisdiction with respect to an item of income to the extent that the laws of that jurisdiction require the interest holder in the entity, wherever resident, to separately take into account on a current basis the interest holder's respective share of the item of income paid to the entity, whether or not distributed to the interest holder, and the character and source of the item in the hands of the interest holder are determined as if such item were realized directly from the source from which realized by the entity. However, the entity will be fiscally transparent with respect to the item of income even if the item of income is not separately taken into account by the interest holder, provided the item of income, if separately taken into account by the interest holder, would not result in an income tax liability for that interest holder different from that which would result if the interest holder did not take the item into account separately, and provided the interest holder is required to take into account on a current basis the interest holder's share of all such nonseparately stated items of income paid to the entity, whether or not distributed to the interest holder. In determining whether an entity is fiscally transparent with respect to an item of income in the entity's jurisdiction, it is irrelevant that, under the laws of the entity's jurisdiction, the entity is permitted to exclude such item from gross income or that the entity is required to include such item in gross income but is entitled to a deduction for distributions to its interest holders.

(B) ***Special definitions.*** For purposes of this paragraph (d)(3)(ii), an entity's jurisdiction is the jurisdiction where the entity is organized or incorporated or may otherwise be considered a resident under the laws of that jurisdiction. An interest holder will be treated as taking into account that person's share of income paid to an entity on a current basis even if such amount is taken into account by the interest holder in a taxable year other than the taxable year of the entity if the difference is due solely to differing taxable years.

(iii) ***Fiscally transparent under the law of an interest holder's jurisdiction*** —

(A) ***General rule.*** For purposes of this paragraph (d), an entity is treated as fiscally transparent under the law of an interest holder's jurisdiction with respect to an item of income to the extent that the laws of the interest holder's jurisdiction require the interest holder resident in that jurisdiction to separately take into account on a current basis the interest holder's respective share of the item of income paid to the entity, whether or not distributed to the interest holder, and the character and source of the item in the hands of the interest holder are determined as if such item were realized directly from the source from which realized by the entity. However, an entity will be fiscally transparent with respect to the item of income even if the item of income is not separately taken into account by the interest holder, provided the item of income, if separately taken into account by the interest holder, would not result in an income tax liability for that interest holder different from that which would result if the interest holder did not take the item into account separately, and provided the interest holder is required to take into account on a current basis the interest holder's share of all such nonseparately stated items of income paid to the entity, whether or not distributed to the interest holder. An entity will not be treated as fiscally transparent with respect to an item of income under the laws of the interest holder's jurisdiction, however, if, under the laws of the interest holder's jurisdiction, the interest holder in the entity is required to include in gross income a share of all or a part of the entity's income on a current basis year under any type of anti-deferral or comparable mechanism. In

determining whether an entity is fiscally transparent with respect to an item of income under the laws of an interest holder's jurisdiction, it is irrelevant how the entity is treated under the laws of the entity's jurisdiction.

(B) ***Special definitions.*** For purposes of this paragraph (d)(3)(iii), an interest holder's jurisdiction is the jurisdiction where the interest holder is organized or incorporated or may otherwise be considered a resident under the laws of that jurisdiction. An interest holder will be treated as taking into account that person's share of income paid to an entity on a current basis even if such amount is taken into account by such person in a taxable year other than the taxable year of the entity if the difference is due solely to differing taxable years.

(iv) ***Applicable treaty jurisdiction.*** The term *applicable treaty jurisdiction* means the jurisdiction whose income tax treaty with the United States is invoked for purposes of reducing the rate of tax imposed under sections 871(a), 881(a), 1461, and 4948(a).

(v) ***Resident.*** The term *resident* shall have the meaning assigned to such term in the applicable income tax treaty.

(4) ***Application to all income tax treaties.*** Unless otherwise explicitly agreed upon in the text of an income tax treaty, the rules contained in this paragraph (d) shall apply in respect of all income tax treaties to which the United States is a party. Notwithstanding the foregoing sentence, the competent authorities may agree on a mutual basis to depart from the rules contained in this paragraph (d) in appropriate circumstances. However, a reduced rate under a tax treaty for an item of U.S. source income paid will not be available irrespective of the provisions in this paragraph (d) to the extent that the applicable treaty jurisdiction would not grant a reduced rate under the tax treaty to a U.S. resident in similar circumstances, as evidenced by a mutual agreement between the relevant competent authorities or by a public notice of the treaty jurisdiction. The Internal Revenue Service shall announce the terms of any such mutual agreement or public notice of the treaty jurisdiction. Any denial of tax treaty benefits as a consequence of such a mutual agreement or notice shall affect only payment of U.S. source items of income made after announcement of the terms of the agreement or of the notice.

(5) ***Examples.*** This paragraph (d) is illustrated by the following examples:

> *Example 1. Treatment of entity treated as partnership by U.S. and country of organization.*
> (i) *Facts.* Entity A is a business organization formed under the laws of Country X that has an income tax treaty in effect with the United States. A is treated as a partnership for U.S. federal income tax purposes. A is also treated as a partnership under the laws of Country X, and therefore Country X requires the interest holders in A to separately take into account on a current basis their respective shares of the items of income paid to A, whether or not distributed to the interest holders, and the character and source of the items in the hands of the interest holders are determined as if such items were realized directly from the source from which realized by A. A receives royalty income from U.S. sources that is not effectively connected with the conduct of a trade or business in the United States.

(ii) *Analysis.* A is fiscally transparent in its jurisdiction within the meaning of paragraph (d)(3)(ii) of this section with respect to the U.S. source royalty income in Country X and, thus, A does not derive such income for purposes of the U.S.-X income tax treaty.

Example 2. Treatment of interest holders in entity treated as partnership by U.S. and country of organization. (i) *Facts.* The facts are the same as under *Example 1.* A's partners are M, a corporation organized under the laws of Country Y that has an income tax treaty in effect with the United States, and T, a corporation organized under the laws of Country Z that has an income tax treaty in effect with the United States. M and T are not fiscally transparent under the laws of their respective countries of incorporation. Country Y requires M to separately take into account on a current basis M's respective share of the items of income paid to A, whether or not distributed to M, and the character and source of the items of income in M's hands are determined as if such items were realized directly from the source from which realized by A. Country Z treats A as a corporation and does not require T to take its share of A's income into account on a current basis whether or not distributed.
(ii) *Analysis.* M is treated as deriving its share of the U.S. source royalty income for purposes of the U.S.-Y income tax treaty because A is fiscally transparent under paragraph (d)(3)(iii) with respect to that income under the laws of Country Y. Under Country Z law, however, because T is not required to take into account its share of the U.S. source royalty income received by A on a current basis whether or not distributed, A is not treated as fiscally transparent. Accordingly, T is not treated as deriving its share of the U.S. source royalty income for purposes of the U.S.-Z income tax treaty.

Example 3. Dual benefits to entity and interest holder. (i) *Facts.* The facts are the same as under *Example 2,* except that A is taxable as a corporation under the laws of Country X. Article 12 of the U.S.-X income tax treaty provides for a source country reduced rate of taxation on royalties of 5-percent. Article 12 of the U.S.-Y income tax treaty provides that royalty income may only be taxed by the beneficial owner's country of residence.
(ii) *Analysis.* A is treated as deriving the U.S. source royalty income for purposes of the U.S.-X income tax treaty because it is not fiscally transparent with respect to the item of income within the meaning of paragraph (d)(3)(ii) of this section in Country X, its country of organization. M is also treated as deriving its share of the U.S. source royalty income for purposes of the U.S.-Y income tax treaty because A is fiscally transparent under paragraph (d)(3)(iii) of this section with respect to that income under the laws of Country Y. T is not treated as deriving the U.S. source royalty income for purposes of the U.S.-Z income tax treaty because under Country Z law A is not fiscally transparent. Assuming all other requirements for eligibility for treaty benefits have been satisfied, A is entitled to the 5-percent treaty reduced rate on royalties under the U.S.-X income tax treaty with respect to the entire

royalty payment. Assuming all other requirements for treaty benefits have been satisfied, M is also entitled to a zero rate under the U.S.-Y income tax treaty with respect to its share of the royalty income.

Example 4. Treatment of grantor trust. (i) *Facts.* Entity A is a trust organized under the laws of Country X, which does not have an income tax treaty in effect with the United States. M, the grantor and owner of A for U.S. income tax purposes, is a resident of Country Y, which has an income tax treaty in effect with the United States. M is also treated as the grantor and owner of the trust under the laws of Country Y. Thus, Country Y requires M to take into account all items of A's income in the taxable year, whether or not distributed to M, and determines the character of each item in M's hands as if such item was realized directly from the source from which realized by A. Country X does not treat M as the owner of A and does not require M to account for A's income on a current basis whether or not distributed to M. A receives interest income from U.S. sources that is neither portfolio interest nor effectively connected with the conduct of a trade or business in the United States.
(ii) *Analysis.* A is not fiscally transparent under the laws of Country X within the meaning of paragraph (d)(3)(ii) of this section with respect to the U.S. source interest income, but A may not claim treaty benefits because there is no U.S.-X income tax treaty. M, however, does derive the income for purposes of the U.S.-Y income tax treaty because under the laws of Country Y, A is fiscally transparent.

Example 5. Treatment of complex trust. (i) *Facts.* The facts are the same as in *Example 4* except that M is treated as the owner of the trust only under U.S. tax law, after application of section 672(f), but not under the law of Country Y. Although the trust document governing A does not require that A distribute any of its income on a current basis, some distributions are made currently to M. There is no requirement under Country Y law that M take into account A's income on a current basis whether or not distributed to him in that year. Under the laws of Country Y, with respect to current distributions, the character of the item of income in the hands of the interest holder is determined as if such item were realized directly from the source from which realized by A. Accordingly, upon a current distribution of interest income to M, the interest income retains its source as U.S. source income.
(ii) *Analysis.* M does not derive the U.S. source interest income because A is not fiscally transparent under paragraph (d)(3)(ii) of this section with respect to the U.S. source interest income under the laws of Country Y. Although the character of the interest in the hands of M is determined as if realized directly from the source from which realized by A, under the laws of Country Y, M is not required to take into account his share of A's interest income on a current basis whether or not distributed. Accordingly, neither A nor M is entitled to claim treaty benefits, since A is a resident of a non-treaty jurisdiction and M does not derive the U.S. source interest income for purposes of the U.S.-Y income tax treaty.

Example 6. Treatment of interest holders required to include passive income under anti-deferral regime. (i) *Facts.* The facts are the same as under *Example 2.* However, Country Z does require T, who is treated as owning 60-percent of the stock of A, to take into account its respective share of the royalty income of A under an anti-deferral regime applicable to certain passive income of controlled foreign corporations.
(ii) *Analysis.* T is still not eligible to claim treaty benefits with respect to the royalty income. T is not treated as deriving the U.S. source royalty income for purposes of the U.S.-Z income tax treaty under paragraph (d)(3)(iii) of this section because T is only required to take into account its pro rata share of the U.S. source royalty income by reason of Country Z's anti-deferral regime.

Example 7. Treatment of contractual arrangements operating as collective investment vehicles. (i) *Facts.* A is a contractual arrangement without legal personality for all purposes under the laws of Country X providing for joint ownership of securities. Country X has an income tax treaty in effect with the United States. A is a collective investment fund which is of a type known as a Common Fund under Country X law. Because of the absence of legal personality in Country X of the arrangement, A is not liable to tax as a person at the entity level in Country X and is thus not a resident within the meaning of the Residence Article of the U.S.-X income tax treaty. A is treated as a partnership for U.S. income tax purposes and receives U.S. source dividend income. Under the laws of Country X, however, investors in A only take into account their respective share of A's income upon distribution from the Common Fund. Some of A's interest holders are residents of Country X and some of Country Y. Country Y has no income tax treaty in effect with the United States.
(ii) *Analysis.* A is not fiscally transparent under paragraph (d)(3)(ii) of this section with respect to the U.S. source dividend income because the interest holders in A are not required to take into account their respective shares of such income in the taxable year whether or not distributed. Because A is an arrangement without a legal personality that is not considered a person in Country X and thus not a resident of Country X under the Residence Article of the U.S.-X income tax treaty, however, A does not derive the income as a resident of Country X for purposes of the U.S.-X income tax treaty. Further, because A is not fiscally transparent under paragraph (d)(3)(iii) of this section with respect to the U.S. source dividend income, A's interest holders that are residents of Country X do not derive the income as residents of Country X for purposes of the U.S.-X income tax treaty.

Example 8. Treatment of person specifically listed as resident in applicable treaty. (i) *Facts.* The facts are the same as in *Example 7* except that A (the Common Fund) is organized in Country Z and the Residence Article of the U.S.-Z income tax treaty provides that “the term 'resident of a Contracting State' includes, in the case of Country Z, Common Funds.* * *”

(ii) *Analysis.* A is treated, for purposes of the U.S.-Z income tax treaty as deriving the dividend income as a resident of Country Z under paragraph (d)(1) of this section because the item of income is paid directly to A, A is a Common Fund under the laws of Country Z, and Common Funds are specifically identified as residents of Country Z in the U.S.-Z treaty. There is no need to determine whether A meets the definition of fiscally transparent under paragraph (d)(3)(ii) of this section.

Example 9. Treatment of investment company when entity receives distribution deductions, and all distributions sourced by residence of entity. (i) *Facts.* Entity A is a business organization formed under the laws of Country X, which has an income tax treaty in effect with the United States. A is treated as a partnership for U.S. income tax purposes. Under the laws of Country X, A is an investment company taxable at the entity level and a resident of Country X. It is also entitled to a distribution deduction for amounts distributed to its interest holders on a current basis. A distributes all its net income on a current basis to its interest holders and, thus, in fact, has no income tax liability to Country X. A receives U.S. source dividend income. Under Country X law, all amounts distributed to interest holders of this type of business entity are treated as dividends from sources within Country X and Country X imposes a withholding tax on all payments by A to foreign persons. Under Country X laws, the interest holders in A do not have to separately take into account their respective shares of A's income on a current basis if such income is not, in fact, distributed.
(ii) *Analysis.* A is not fiscally transparent under paragraph (d)(3)(ii) of this section with respect to the U.S. source dividends because the interest holders in A do not have to take into account their respective share of the U.S. source dividends on a current basis whether or not distributed. A is also not fiscally transparent under paragraph (d)(3)(ii) of this section because there is a change in source of the income received by A when A distributes the income to its interest holders and, thus, the character and source of the income in the hands of A's interest holder are not determined as if such income were realized directly from the source from which realized by A. Accordingly, A is treated as deriving the U.S. source dividends for purposes of the U.S.-Country X treaty.

Example 10. Item by item determination of fiscal transparency. (i) *Facts.* Entity A is a business organization formed under the laws of Country X, which has an income tax treaty in effect with the United States. A is treated as a partnership for U.S. income tax purposes. Under the laws of Country X, A is an investment company taxable at the entity level and a resident of Country X. It is also entitled to a distribution deduction for amounts distributed to its interest holders on a current basis. A receives both U.S. source dividend income and interest income from U.S. sources that is neither portfolio interest nor effectively connected with the conduct of a trade or business in the United States. Country X law sources all distributions attributable to dividend income based on the residence of the investment company. In contrast, Country X law sources all distributions attributable to interest income based on the residence of the payor of the interest. No withholding applies with respect to distributions attributable to U.S. source

interest and the character of the distributions attributable to the interest income remains the same in the hands of A's interest holders as if such items were realized directly from the source from which realized by A. However, under Country X law the interest holders in A do not have to take into account their respective share of the interest income received by A on a current basis whether or not distributed.
(ii) *Analysis.* An item by item analysis is required under paragraph (d) of this section. The analysis is the same as *Example 9* with respect to the dividend income. A is also not fiscally transparent under paragraph (d)(3)(ii) of this section with respect to the interest income because, although the character of the distributions attributable to the interest income in the hands of A's interest holders is determined as if realized directly from the source from which realized by A, under Country X law the interest holders in A do not have to take into account their respective share of the interest income received by A on a current basis whether or not distributed. Accordingly, A derives the U.S. source interest income for purpose of the U.S.-X treaty.

Example 11. Treatment of charitable organizations. (i) *Facts.* Entity A is a corporation organized under the laws of Country X that has an income tax treaty in effect with the United States. Entity A is established and operated exclusively for religious, charitable, scientific, artistic, cultural, or educational purposes. Entity A receives U.S. source dividend income from U.S. sources. A provision of Country X law generally exempts Entity A's income from Country X tax due to the fact that Entity A is established and operated exclusively for religious, charitable, scientific, artistic, cultural, or educational purposes. But for such provision, Entity A's income would be taxed by Country X.
(ii) *Analysis.* Entity A is not fiscally transparent under paragraph (d)(3)(ii) of this section with respect to the U.S. source dividend income because, under Country X law, the dividend income is treated as an item of income of A and no other persons are required to take into account their respective share of the item of income on a current basis, whether or not distributed. Accordingly, Entity A is treated as deriving the U.S. source dividend income.

Example 12. Treatment of pension trusts. (i) *Facts.* Entity A is a trust established and operated in Country X exclusively to provide pension or other similar benefits to employees pursuant to a plan. Entity A receives U.S. source dividend income. A provision of Country X law generally exempts Entity A's income from Country X tax due to the fact that Entity A is established and operated exclusively to provide pension or other similar benefits to employees pursuant to a plan. Under the laws of Country X, the beneficiaries of the trust are not required to take into account their respective share of A's income on a current basis, whether or not distributed and the character and source of the income in the hands of A's interest holders are not determined as if realized directly from the source from which realized by A.
(ii) *Analysis.* A is not fiscally transparent under paragraph (d)(3)(ii) of this section with respect to the U.S. source dividend income because under the laws of Country X, the beneficiaries of A are not required to take into account their respective share of A's income on a current basis, whether or not distributed. A is also not fiscally transparent under paragraph (d)(3)(ii) of this section with respect to the U.S. source

> dividend income because under the laws of Country X, the character and source of the income in the hands of A's interest holders are not determined as if realized directly from the source from which realized by A. Accordingly, A derives the U.S. source dividend income for purposes of the U.S.-X income tax treaty.

(6) ***Effective dates.*** This paragraph (d) applies to items of income paid on or after June 30, 2000, except paragraphs (d)(2)(ii) and (d)(2)(iii) of this section apply to items of income paid by a domestic reverse hybrid entity on or after June 12, 2002 with respect to amounts received by the domestic reverse hybrid entity on or after June 12, 2002.

(e) ***Effective/applicability date.*** Paragraphs (a) and (b) of this section apply for taxable years beginning after December 31, 1966. For corresponding rules applicable to taxable years beginning before January 1, 1967, (see 26 CFR part 1 revised April 1, 1971). Paragraph (c)(1) of this section applies to payments made after November 13, 1997. Paragraph (c)(2) of this section applies to payments made on or after December 5, 2013. See paragraph (d)(6) of this section for applicability dates for paragraph (d) of this section.

[T.D. 7293, 38 FR 32800, Nov. 28, 1973, as amended by T.D. 8735, 62 FR 53502, Oct. 14, 1997; T.D. 8889, 65 FR 40997, July 3, 2000; 65 FR 76932, Dec. 8, 2000; T.D. 8999, 67 FR 40160, June 12, 2002; T.D. 9648, 78 FR 73080, Dec. 5, 2013]

§ 1.895-1 Income derived by a foreign central bank of issue, or by Bank for International Settlements, from obligations of the United States or from bank deposits.

(a) ***In general.*** Income derived by a foreign central bank of issue from obligations of the United States or of any agency or instrumentality thereof, or from interest on deposits with persons carrying on the banking business, is excluded from the gross income of such bank and is exempt from income tax if the bank is the owner of the obligations or deposits and does not hold the obligations or deposits for, or use them in connection with, the conduct of a commercial banking function or other commercial activity by such bank. For purposes of this section and paragraph (i) of § 1.1441-4, obligations of the United States or of any agency or instrumentality thereof include beneficial interests, participations, and other instruments issued under section 302(c) of the Federal National Mortgage Association Charter Act (12 U.S.C. 1717). See 24 CFR part 1600 *et seq.*

(b) ***Foreign central bank of issue.***

(1) A foreign central bank of issue is a bank which is by law or government sanction the principal authority, other than the government itself, issuing instruments intended to circulate as currency. Such a bank is generally the custodian of the banking reserves of the country under whose law it is organized. See also paragraph (b)(5) of § 1.861-2.

(2) The exclusion granted by section 895 applies to an instrumentality that is separate from a foreign government, whether or not owned in whole or in part by a foreign government. For example, foreign banks organized along the lines of, and performing functions similar to, the Federal Reserve System qualify as foreign central banks of issue for purposes of this section.

(3) The Bank for International Settlements shall be treated as though it were a foreign central bank of issue for purposes of obtaining the exclusion granted by section 895.

(c) ***Ownership of United States obligations or bank deposits.*** The exclusion does not apply if the obligations or bank deposits from which the income is derived are not owned by the foreign central bank of issue. Obligations held, or deposits made, by a foreign central bank of issue as agent, custodian, trustee, or in any other fiduciary capacity, shall be considered as not owned by such bank for purposes of this section.

(d) ***Commercial banking function or other commercial activity.*** The exclusion applies only to obligations of the United States or of any agency or instrumentality thereof, or to bank deposits, held for, or used in connection with, the conduct of a central banking function and not to obligations or deposits held for, or used in connection with, the conduct of commercial banking functions or other commercial activities by the foreign central bank.

(e) ***Other exclusions.*** See section 861(a)(1) (A) and (E) and § 1.861-2(b)(1) and (4), for special rules relating to interest paid or credited before January 1, 1977, on deposits and on similar amounts and for rules on interest derived from bankers' acceptances. For exemption from withholding under § 1.1441-1 on income derived by a foreign central bank of issue, or by the Bank of International Settlements, from obligations of the United States or of any agency or instrumentality thereof, or from bank deposits, see § 1.1441-4(i).

(f) ***Effective date.*** This section shall apply with respect to taxable years beginning after December 31, 1966. For corresponding rules applicable to taxable years beginning before January 1, 1967, see 26 CFR 1.85-1 (Revised as of January 1, 1972).

[T.D. 7378, 40 FR 45435, Oct. 2, 1975; 40 FR 48508, Oct. 16, 1975]

§ 1.897-1 Taxation of foreign investment in United States real property interests, definition of terms.

(a) ***In general*** —

(1) ***Purpose and scope of regulations.*** These regulations provide guidance with respect to the taxation of foreign investments in U.S. real property interests and related matters. This section defines various terms for purposes of sections 897, 1445, and 6039C and the regulations thereunder. Section 1.897-2 provides rules regarding the definition of, and consequences of, U.S. real property holding corporation status. Section 1.897-3 sets forth rules pursuant to which certain foreign corporations may elect under section 897(i) to be treated as domestic corporations for purposes of sections 897 and 6039C. Finally, § 1.987-4 provides rules concerning the similar election under section 897(k) for certain foreign corporations in the process of liquidation.

(2) ***Applicability date.*** Except as otherwise provided in this paragraph (a)(2), the regulations set forth in this section and §§ 1.897-2 through 1.897-4 apply to transactions occurring after June 18, 1980. Except as otherwise provided in paragraph (c)(3)(vi) of this section, paragraphs (c)(3) and (4), (k), and (l) of this section apply to transactions occurring on or after April 25, 2024, and transactions occurring before April 25, 2024, resulting from an entity classification election under § 301.7701-3 of this chapter that was effective on or before April 25, 2024, but was filed on or after April 25, 2024. For transactions occurring before April 25, 2024, *see* paragraphs (c)(2)(i) and (l) of this section and § 1.897-9T(c) contained in 26 CFR part 1, as revised April 1, 2024.

(b) ***Real property*** —

(1) ***In general.*** The term “real property” includes the following three categories of property: Land and unserved natural products of the land, improvements, and personal property associated with the use of real property. The three categories of real property are defined in subparagraphs (2), (3), and (4) of

this paragraph (b). Local law definitions will not be controlling for purposes of determining the meaning of the term "real property" as it is used in sections 897, 1445, and 6039C and the regulations thereunder.

(2) ***Land and unserved natural products of the land.*** The term "real property" includes land, growing crops and timber, and mines, wells, and other natural deposits. Crops and timber cease to be real property at the time that they are served from the land. Ores, minerals, and other natural deposits cease to be real property when they are extracted from the ground. The storage of severed or extracted crops, timber, or minerals in or upon real property will not cause such property to be recharacterized as real property.

(3) ***Improvements*** —

(i) ***In general.*** The term "real property" includes improvements on land. An improvement is a building, any other inherently permanent structure, or the structural components of either, as defined in subdivisions (ii) through (iv) of this paragraph (b)(3).

(ii) ***Building.*** The term "building" generally means any structure or edifice enclosing a space within its walls, and usually covered by a roof, the purpose of which is, for example, to provide shelter or housing or to provide working, office, parking, display, or sales space. The term includes, for example, structures such as apartment houses, factory and office buildings, warehouses, barns, garages, railway or bus stations, and stores. Any structure that is classified as a building for purposes of section 48(a)(1)(B) and § 1.48-1 shall be treated as such for purposes of this section.

(iii) ***Inherently permanent structure*** —

(A) ***In general.*** The term "inherently permanent structure" means any property not otherwise described in this paragraph (b)(3) that is affixed to real property and that will ordinarily remain affixed for an indefinite period of time. Property that is not classified as a building for purposes of section 48(a)(1)(B) and § 1.48-1 may nevertheless constitute an inherently permanent structure. For purposes of this section, affixation to real property may be accomplished by weight alone.

(B) ***Use of precedents under section 48.*** Any property not otherwise described in this paragraph (b)(3) that constitutes "other tangible property" under the principles of section 48(a)(1)(B) and § 1.48-1 (c) and (d) shall be treated for purposes of this section as an inherently permanent structure. Thus, for example, the term includes swimming pools, paved parking areas and other pavements, special foundations for heavy equipment, wharves and docks, bridges, fences, inherently permanent advertising displays, inherently permanent outdoor lighting facilities, railroad tracks and signals, telephone poles, permanently installed telephone and television cables, broadcasting towers, oil derricks, oil and gas pipelines, oil and gas storage tanks, grain storage bins, and silos. However, property that is determined to be either property in the nature of machinery under § 1.48-1(c) or property which is essentially an item of machinery or equipment under § 1.48-1(e)(1)(i) shall not be treated as an inherently permanent structure.

(C) ***Absence of precedents under section 48.*** Where precedents developed under the principles of section 48 fail to provide adequate guidance with respect to the classification of particular property, the determination of whether such property constitutes an inherently permanent structure shall be made in view of all the facts and circumstances. In particular, the following factors must be taken into account:

(*1*) The manner in which the property is affixed to real property;

(*2*) Whether the property was designed to be easily removable or to remain in place indefinitely;

(*3*) Whether the property has been moved since its initial installation;

(*4*) Any circumstances that suggest the expected period of affixation (e.g., a lease that requires removal of the property upon its expiration);

(*5*) The amount of damage that removal of the property would cause to the property itself or to the real property to which it is affixed; and

(*6*) The extent of the effort that would be required to remove the property, in terms of time and expense.

(iv) *Structural components of buildings and other inherently permanent structures.* Structural components of buildings and other inherently permanent structures, as defined in § 1.48-1 (e)(2), themselves constitute improvements. Structural components include walls, partitions, floors, ceilings, windows, doors, wiring, plumbing, central heating and central air conditioning systems, lighting fixtures, pipes, ducts, elevators, escalators, sprinkler systems, fire escapes and other components relating to the operation or maintenance of a building. However, the term "structural components" does not include machinery the sole justification for the installation of which is the fact that such machinery is required to meet temperature or humidity requirements which are essential for the operation of other machinery or the processing of materials or foodstuffs. Machinery may meet the "sole justification" test provided by the preceding sentence even though it incidentally provides for the comfort of employees or serves to an insubstantial degree areas where such temperature or humidity requirements are not essential.

(4) *Personal property associated with the use of the real property*—(i) *In general.* The term "real property" includes movable walls, furnishings, and other personal property associated with the use of the real property. Personal property is associated with the use of real property only if it is described in one of the categories set forth in subdivisions (A) through (D) of this paragraph (b)(4)(i). "Personal property" for purposes of this section means any property that constitutes "tangible personal property" under the principles of § 1.48-1(c), without regard to whether such property qualifies as section 38 property. Such property will be associated with the use of the real property only where both the personal property and the United States real property interest with which it is associated are held by the same person or by related persons within the meaning of § 1.897-1(i). For purposes of this paragraph (b)(4)(i), property is used "predominantly" in a named activity if it is devoted to that activity during at least half of the time in which it is in use during a calendar year.

(A) *Property used in mining, farming, and forestry.* Personal property is associated with the use of real property if it is predominantly used to exploit unsevered natural products in or upon the land. Such property includes mining equipment used to extract ores, minerals, and other natural deposits from the ground. It also includes any property used to cultivate the soil and harvest its products, such as farm machinery, draft animals, and equipment used in the growing and cutting of timber. However, personal property used to process or transport minerals, crops, or timber after they are severed from the land is not associated personal property.

(B) *Property used in the improvement of real property.* Personal property is associated with the use of real property if it is predominantly used to construct or otherwise carry out improvements to real property. Such property includes equipment used to alter the natural contours of the land, equipment used to clear and prepare raw land for construction, and equipment used to carry out the construction of improvements.

(C) *Property used in the operation of a lodging facility.* Personal property is associated with the use of real property if it is predominantly used in connection with the operation of a lodging facility. Property that is used in connection with the operation of a lodging facility includes property used in the living quarters of such facility, such as beds and other furniture, refrigerators, ranges and other equipment, as well as property used in the common areas of such facility, such as lobby furniture and laundry equipment. Such property constitutes personal property associated with the use of real property in the hands of the owner or operator of the facility, not of the tenant or guest. A lodging facility is an apartment house or apartment, hotel, motel, dormitory, residence, or any other facility (or part of a facility) predominantly used to provide, at a charge, living and/or sleeping accommodations, whether on daily, weekly, monthly, annual, or other basis. The term "lodging facility" does not include a personal residence occupied solely by its owner, or a facility used primarily as a means of transportation (such as an aircraft, vessel, or a railroad car) or used primarily to provide medical or convalescent services, even though sleeping accommodations are provided. Nor does the term include temporary living quarters provided by an employer due to the unavailability of lodgings within a reasonable distance of a work-site (such as a mine or construction project). The term "lodging facility" does not include any portion of a facility that constitutes a nonlodging commercial facility and that is available to persons not using the lodging facility on the same basis that it is available to tenants of the lodging facility. Examples of nonlodging commercial facilities include restaurants, drug stores, and grocery stores located in a lodging facility.

(D) *Property used in the rental of furnished office and other work space.* Personal property is associated with the use of real property if it is predominantly used by a lessor to provide furnished office or other work space to lessees. Property that is so used includes office furniture and equipment included in the rental of furnished space. Such property constitutes personal property associated with the use of real property in the hands of the lessor, not of the lessee.

(ii) ***Dispositions of associated personal property*** —

(A) ***In general.*** Personal property that has become associated with the use of a real property interest shall itself be treated as a real property interest upon its disposition, unless either:

(*1*) The personal property is disposed of more than one year before the disposition of any present right to use or occupy the real property with which it was associated (and subject to the provisions of subdivision (B) of this paragraph (b)(4)(ii));

(*2*) The personal property is disposed of more than one year after the disposition of all present rights to use or occupy the real property with which it was associated (and subject to the provisions of subdivision (C) of this paragraph (b)(4)(ii)); or

(*3*) The personal property and the real property with which it was associated are separately sold to persons that are related neither to the transferor nor to one another (and subject to the provisions of subdivision (D) of this paragraph (b)(4)(ii)).

(B) ***Personalty property disposed of one year before realty.*** A transferor of personal property associated with the use of real property need not treat such property as a real property interest upon disposition if on the date of disposition the transferor does not expect or intend to dispose of the real property until more than one year later.

However, if the real property is in fact disposed of within the following year, the transferor must treat the personal property as having been a real property interest as of the date on which the personalty was disposed of. If the transferor had not previously filed an income tax return, a return must be filed and tax paid, together with any interest due thereon, by the later of the date on which a tax return or payment is actually due (with extensions), or the 60th day following the date of disposition. If the transferor had previously filed an income tax return, an amended return must be filed and tax paid, together with any interest due thereon, by the later of the dates specified above. Such a transferor may be liable to penalties for failure to file, for late payment of tax, or for understatement of liability, but only if the transferor knew or had reason to anticipate that the real property would be disposed of within one year of the disposition of the associated personal property.

(C) ***Personalty disposed of one year after realty.*** A disposition of real property shall be disregarded for purposes of subdivision (A)(*2*) of this paragraph (b)(4)(ii) if any right to use or occupy the real property is reacquired within the one-year period referred to in that subdivision. However, the disposition shall not be disregarded if such reacquisition is made in foreclosure of a mortgage or other security interest, in the exercise of a contractual remedy, or in the enforcement of a judgment. If, however, the reacquisition of the property is made pursuant to a plan the principal purpose of which is the avoidance of the provisions of section 897, 1445, or 6039C and the regulations thereunder, then the initial disposition shall be disregarded for purposes of subdivision (A)(*2*) of this paragraph (b)(4)(ii).

(D) ***Separate dispositions of personalty and realty.*** A transferor of personal property associated with the use of real property need not treat such property as a real property interest upon disposition if within 90 days before or after such disposition the transferor separately disposes of the real property interest to persons that are related neither to the transferor nor to the purchaser of the personal property. A transferor may rely upon this rule unless the transferor knows or has reason to know that the purchasers of the real property and the personal property—

(*1*) Are related persons; or

(*2*) Intend to reassociate the personal property with the use of the real property within one year of the date of disposition of the personal property.

(E) ***Status of property in hands of transferee.*** Personal property that has been associated with the use of real property and that is sold to an unrelated party will be treated as real property in the hands of the transferee only if the personal property becomes associated with the use of real property held or acquired by the transferee, in the manner described in paragraph (b)(4)(i) of this section.

(iii) ***Determination dates.*** The determination of whether personal property is personal property associated with the use of real property as defined in this paragraph (b)(4) is to be made on the date the personal property is disposed of and on each applicable determination date. See § 1.897-2(c).

(c) *United States real property interest* —

(1) ***In general.*** The term "United States real property interest" means any interest, other than an interest solely as a creditor, in either:

(i) Real property located in the United States or the Virgin Islands, or

(ii) A domestic corporation unless it is established that the corporation was not a U.S. real property holding corporation within the period described in section 897(c)(1)(A)(ii).

In addition, for the limited purpose of determining whether any corporation is a U.S. real property holding corporation, the term "United States real property interest" means an interest, other than an interest solely as a creditor, in a foreign corporation unless it is established that the foreign corporation is not a U.S. real property holding corporation within the period prescribed in section 897(c)(1)(A)(ii). See § 1.897-2 for rules regarding the manner of establishing that a corporation is not a United States real property holding corporation.

(2) ***Exceptions and special rules.***

(i) [Reserved]

(ii) ***Corporation that has disposed of all U.S. real property interests.*** The term "United States real property interest" does not include an interest in a corporation which has disposed of all its U.S. real property interests in transactions in which the full amount of gain, if any, was recognized, as provided by section 897(c)(1)(B). See § 1.897-2(f) for rules regarding the requirements of section 897(c)(1)(B).

(iii) ***Publicly-traded corporations.*** If, at any time during the calendar year, any class of stock of a domestic corporation is regularly traded on an established securities market, an interest in such corporation shall be treated as a U.S. real property interest only in the case of:

(A) A regularly traded interest owned by a person who beneficially owned more than 5 percent of the total fair market value of that class of interests at any time during the five-year period ending either on the date of disposition of such interest or other applicable determination date (or the period since June 18, 1980, in shorter), or

(B) [Reserved]

Separate non-regularly traded interests that were acquired in transactions more than three years apart shall not be cumulated pursuant to this rule. In determining whether a shareholder holds 5 percent of a class of stock in a corporation (or any other interest of an equivalent fair market value), section 318(a) shall apply (except that sections 318(a) (2)(C) and (3)(C) are applied by substituting the phrase "5 percent" for "50 percent").

(iv) ***Publicly traded partnerships and trusts.*** If any class of interests in a partnership or trust is, within the meaning of § 1.897-1(m) and (n), regularly traded on an established securities market, then for purposes of sections 897(g) and 1445 and § 1.897-2 (d) and (e) an interest in the entity shall not be treated as an interest in a partnership or trust. Instead, such an interest shall be subject to the rules applicable to interests in publicly traded corporations pursuant to paragraph (c)(2)(iii) of this section. Such interests can be real property interests in the hands of a person that holds a greater than 5 percent interest. Therefore, solely for purposes of determining whether greater than 5 percent interests in such an entity constitute U.S. real property interests the disposition of which is subject to tax, the entity is required to determine

pursuant to the provisions of § 1.897-2 whether the assets it holds would cause it to be classified as a U.S. real property holding corporation if it were a corporation. The treatment of dispositions of U.S. real property interests by publicly traded partnerships and trusts is not affected by the rules of this paragraph (c)(2)(iv); by reason of the operation of section 897(a), foreign partners or beneficiaries are subject to tax upon their distributive share of any gain recognized upon such dispositions by the partnership or trust. The rules of this paragraph (c)(2)(iv) are illustrated by the following example.

Example. PTP is a partnership one class of interests in which is regularly traded on an established securities market. A is a nonresident alien individual who owns 1 percent of a class of limited partnership interests in PTP. B is a nonresident alien individual who owns 10 percent of the same class of limited partnership interests in PTP. On July 1, 1986, A and B sell their interests in PTP. Pursuant to the rules of this paragraph (c)(2)(iv), neither disposition is treated as the disposition of a partnership interest subject to the provisions of section 897(g). Instead, A and B are treated as having disposed of interests in a publicly traded corporation. Therefore, pursuant to the rule of paragraph (c)(2)(iii) of this section, A's disposition of a 1 percent interest has no consequences under section 897. However, B's disposition of a 10 percent interest will constitute the disposition of a U.S. real property interest subject to tax by reason of the operation of section 897 unless it is established pursuant to the rules of § 1.897-2 that the interest is not a U.S. real property interest.

(3) ***Domestically controlled QIE*** —

(i) ***In general.*** An interest in a domestically controlled qualified investment entity (QIE) is not a United States real property interest. A QIE is domestically controlled if foreign persons hold directly or indirectly less than 50 percent of the fair market value of the QIE's outstanding stock at all times during the testing period. For rules that apply to distributions by a QIE (including a domestically controlled QIE) attributable to gain from the sale or exchange of a United States real property interest, *see* section 897(h)(1).

(ii) ***Look-through approach for determining QIE stock held directly or indirectly.*** The following rules apply for purposes of determining whether a QIE is domestically controlled:

(A) ***Non-look-through persons considered holders.*** Only a non-look-through person is considered to hold directly or indirectly stock of the QIE.

(B) ***Attribution from look-through persons.*** Stock of a QIE that, but for the application of paragraph (c)(3)(ii)(A) of this section, would be considered directly or indirectly held by a look-through person, is instead considered held directly or indirectly by the look-through person's shareholders, partners, or beneficiaries, as applicable, that are non-look-through persons based on the non-look-through person's proportionate interest in the look-through person. To the extent the shareholders, partners, or beneficiaries, as applicable, of the look-through person are also look-through persons, this paragraph (c)(3)(ii)(B) applies to such shareholders, partners, or beneficiaries as if they directly or indirectly held, but for the application of paragraph (c)(3)(ii)(A) of this section, their proportionate share of the stock of the QIE.

(C) ***No attribution from non-look-through persons.*** Stock of a QIE considered held directly or indirectly by a non-look-through person is not considered held directly or indirectly by any other person.

(iii) ***Special rules for applying look-through approach.*** The following additional special rules apply for purposes of determining whether a QIE is domestically controlled:

(A) ***Certain holders of U.S. publicly traded QIE stock.*** Notwithstanding any other provision of this paragraph (c)(3), a person holding less than five percent of U.S. publicly traded stock of a QIE at all times during the testing period, determined without regard to paragraph (c)(3)(ii)(A) of this section, is treated as a United States person that is a non-look-through person with respect to that stock, unless the QIE has actual knowledge that such person is not a United States person or has actual knowledge that such person is foreign controlled as determined under paragraph (c)(3)(v)(B) of this section (treating any person that is not a non-public domestic C corporation as if it were a non-public domestic C corporation for this purpose). For an example illustrating the application of this paragraph (c)(3)(iii)(A), *see* paragraph (c)(3)(vii)(C) of this section (*Example 3*).

(B) ***Certain foreign-controlled domestic C corporations.*** A non-public domestic C corporation is treated as a look-through-person if it is a foreign-controlled domestic corporation. For an example illustrating the application of this paragraph (c)(3)(iii)(B), *see* paragraph (c)(3)(vii)(B) of this section (*Example 2*).

(C) ***Public QIEs.*** A public QIE is treated as a foreign person that is a non-look-through person. The preceding sentence does not apply, however, if the public QIE is a domestically controlled QIE as defined in this paragraph (c)(3), determined after the application of this paragraph (c)(3)(iii), in which case the public QIE is treated as a United States person that is a non-look-through person. For an example illustrating the application of this paragraph (c)(3)(iii)(C), *see* paragraph (c)(3)(vii)(C) of this section (*Example 3*).

(iv) ***Treatment of certain persons as foreign persons*** —

(A) ***Qualified foreign pension fund or qualified controlled entity.*** For purposes of this paragraph (c)(3), a qualified foreign pension fund (including any part of a qualified foreign pension fund) or a qualified controlled entity is treated as a foreign person, irrespective of whether the fund or entity qualifies for the exception from section 897 provided in § 1.897(l)-1(b)(1). For an example illustrating the application of this paragraph (c)(3)(iv)(A), *see* paragraph (c)(3)(vii)(A) of this section (*Example 1*). *See also* paragraph (k) of this section for a definition of foreign person that applies for purposes of sections 897, 1445, and 6039C.

(B) ***International organization.*** For purposes of this paragraph (c)(3), an international organization (as defined in section 7701(a)(18)) is treated as a foreign person. *See* § 1.897-9T(e) (regarding the treatment of international organizations under sections 897, 1445, and 6039C), which provides that an international organization is not a foreign person with respect to United States real property interests, and is not subject to sections 897, 1445, and 6039C on the disposition of a United States real property interest.

(v) ***Definitions.*** The following definitions apply for purposes of this paragraph (c)(3):

(A) A *domestic C corporation* is any domestic corporation other than a regulated investment company (RIC) as defined in section 851, a real estate investment trust (REIT) as defined in section 856, or an S corporation as defined in section 1361.

(B) A *foreign-controlled domestic corporation* is any non-public domestic C corporation if foreign persons hold directly or indirectly more than 50 percent of the fair market value of the non-public domestic C corporation's outstanding stock. For purposes of determining whether a non-public domestic C corporation is a foreign-controlled domestic corporation, the rules of paragraphs (c)(3)(ii)(A) through (C) and (c)(3)(iii)(C) of this section apply with the following modifications—

(*1*) In paragraphs (c)(3)(ii)(A) through (C) of this section, treating references to *QIE* as references to *non-public domestic C corporation;* and

(*2*) A non-public domestic C corporation that is a foreign-controlled domestic corporation under this paragraph (c)(3)(v)(B) is treated as a look-through person for purposes of determining whether any other non-public domestic C corporation is a foreign-controlled domestic corporation.

(C) A *look-through person* is any person other than a non-look-through person. Thus, for example, a look-through person includes a REIT that is not a public QIE, an S corporation, a partnership (domestic or foreign) that is not a publicly traded partnership, a RIC that is not a public RIC, and a trust (domestic or foreign, whether or not the trust is described in sections 671 through 679). For a special rule that treats certain non-public domestic C corporations as look-through persons, *see* paragraph (c)(3)(iii)(B) of this section.

(D) A *non-look-through person* is an individual, a domestic C corporation (other than a foreign-controlled domestic corporation), a nontaxable holder, a foreign corporation (including a foreign government pursuant to section 892(a)(3)), a publicly traded partnership (domestic or foreign), a public RIC, an estate (domestic or foreign), an international organization (as defined in section 7701(a)(18)), a qualified foreign pension fund (including any part of a qualified foreign pension fund), or a qualified controlled entity. For special rules that treat certain holders of QIE stock as non-look-through persons, *see* paragraphs (c)(3)(iii)(A) and (C) of this section.

(E) A *non-public domestic C corporation* is any domestic C corporation that is not a public domestic C corporation.

(F) A *nontaxable holder* is—

(*1*) Any organization that is exempt from taxation by reason of section 501(a);

(*2*) The United States, any State (as defined in section 7701(a)(10)), any territory of the United States, or a political subdivision of any State or any territory of the United States; or

(*3*) Any Indian Tribal government (as defined in section 7701(a)(40)) or its subdivision (determined in accordance with section 7871(d)).

(G) A *public domestic C corporation* is a domestic C corporation any class of stock of which is regularly traded on an established securities market within the meaning of §§ 1.897-1(m) and 1.897-9T(d). A domestic C corporation is not a public domestic C corporation, however, if the QIE whose status as domestically controlled is being determined under this paragraph (c)(3) has actual knowledge that the domestic C corporation is foreign controlled as determined under paragraph (c)(3)(v)(B) of this section (treating the domestic C corporation for this purpose as if it were a non-public domestic C corporation).

(H) A *public QIE* is a QIE any class of stock of which is regularly traded on an established securities market within the meaning of §§ 1.897-1(m) and 1.897-9T(d), or that is a RIC that issues redeemable securities within the meaning of section 2 of the Investment Company Act of 1940.

(I) A *public RIC* is a RIC that is not a QIE and any class of stock of which is either regularly traded on an established securities market within the meaning of §§ 1.897-1(m) and 1.897-9T(d), or common stock that is continuously offered pursuant to a public offering (within the meaning of section 4 of the Securities Act of 1933, as amended (15 U.S.C. 77a to 77aa)) and held by or for no fewer than 500 persons. A RIC is not a public RIC, however, if the QIE whose status as domestically controlled is being determined under this paragraph (c)(3) has actual knowledge that the RIC is foreign controlled as determined under paragraph (c)(3)(v)(B) of this section (treating the RIC for this purpose as if it were a non-public domestic C corporation).

(J) A *publicly traded partnership* is a partnership any class of interest of which is regularly traded on an established securities market within the meaning of §§ 1.897-1(m) and 1.897-9T(d). A domestic partnership is not a publicly traded partnership, however, if the QIE whose status as domestically controlled is being determined under this paragraph (c)(3) has actual knowledge that the domestic partnership is foreign controlled as determined under paragraph (c)(3)(v)(B) of this section (treating the partnership for this purpose as if it were a non-public domestic C corporation).

(K) A *qualified controlled entity* has the meaning set forth in § 1.897(l)-1(e)(9).

(L) A *qualified foreign pension fund* has the meaning set forth in § 1.897(l)-1(c).

(M) A *QIE* is a qualified investment entity, as defined in section 897(h)(4)(A).

(N) ***Testing period*** has the meaning set forth in section 897(h)(4)(D).

(O) ***U.S. publicly traded QIE stock*** is any class of stock of a QIE that is regularly traded on an established securities market within the meaning of §§ 1.897-1(m) and 1.897-9T(d), but only if the established securities market is in the United States.

(vi) ***Transition rule for certain QIEs owned by foreign-controlled domestic corporations*** —

(A) ***General rule.*** Except as provided in paragraph (c)(3)(vi)(B) of this section, paragraph (c)(3)(iii)(B) of this section does not apply with respect to a QIE that is in existence as April 24, 2024, and satisfies the following requirements at all times on and after April 24, 2024—

(*1*) The QIE is domestically controlled (as determined under this paragraph (c)(3), but without regard to paragraph (c)(3)(iii)(B) of this section);

(*2*) The aggregate fair market value of any United States real property interests acquired by the QIE directly and indirectly after April 24, 2024, is no more than 20 percent of the aggregate fair market value of the United States real property interests held directly and indirectly by the QIE as of April 24, 2024 (determined in accordance with paragraph (c)(3)(vi)(D) of this section); and

(*3*) The percentage of the stock of the QIE held directly or indirectly by one or more non-look-through persons (determined based on fair market value and under the rules of paragraphs (c)(3)(ii) through (v) of this section and this paragraph (c)(3)(vi), including paragraph (c)(3)(iii)(B) of this section) does not increase by more than 50 percentage points in the aggregate over the percentage of stock of the QIE owned directly or indirectly by such non-look-through persons on April 24, 2024.

(B) ***Termination of transition rule.*** The transition rule described in paragraph (c)(3)(vi)(A) of this section will cease to apply, and the rule in paragraph (c)(3)(iii)(B) of this section will apply for purposes of determining whether a QIE is domestically controlled, with respect to transactions occurring on or after the earlier of:

(*1*) The date immediately following the date on which the QIE fails to meet any of the requirements described in paragraph (c)(3)(vi)(A) of this section; and

(*2*) April 24, 2034. For an example illustrating the application of paragraph (c)(3)(vi)(A) of this section and this paragraph (c)(3)(vi)(B), *see* paragraph (c)(3)(vii)(E) of this section (*Example 5*).

(C) ***Effect of transition rule on testing period.*** If the transition rule described in paragraph (c)(3)(vi)(A) of this section ceases to apply to a QIE under paragraph (c)(3)(vi)(B) of this section, the rule in paragraph (c)(3)(iii)(B) of this section will not apply to the QIE with respect to the portion of any testing period during which the transition rule in this paragraph (c)(3)(vi) applied.

(D) ***Determination of fair market value of United States real property interests.*** For purposes of paragraph (c)(3)(vi)(A)(*2*) of this section, the fair market value of the United States real property interests held directly and indirectly by a QIE on April 24, 2024, is the value of such property interests as calculated under section 851(b)(3) or 856(c)(4) as of the close of the most recent quarter of the QIE's taxable year before April 24, 2024. For purposes of paragraph (c)(3)(vi)(A)(*2*) of this section, the fair market value of any property acquired after the close of the most recent quarter of the QIE's taxable year before April 24, 2024, whether acquired before or after April 24, 2024, is determined on the date of such acquisition using a reasonable method, provided the QIE consistently uses the same method with respect to all of its United States real property interests when applying this paragraph (c)(3)(vi).

(E) ***Binding commitments.*** For purposes of paragraphs (c)(3)(vi)(A)(*2*) and (*3*) of this section, a direct or indirect acquisition of a United States real property interest or of stock of a QIE pursuant to a written agreement that was (subject to customary conditions) binding before April 24, 2024, and all times thereafter, or pursuant to a tender offer announced before April 24, 2024, that is subject to section 14(e) of the Securities and Exchange Act of 1934 (15 U.S.C. 78n(e)) and 17 CFR 240.14e-1 through 240.14e-8 (Regulation 14E), is treated as occurring on April 24, 2024.

(F) ***Ownership by certain successors under section 368(a)(1)(F).*** For purposes of paragraph (c)(3)(vi)(A)(*3*) of this section, the transferor corporation and the resulting corporation (as defined in § 1.368-2(m)(1)) in a reorganization described under section 368(a)(1)(F) (whether engaged in by the QIE or by another corporation) are treated as the same corporation.

(G) ***Ownership by less than five-percent public shareholders.*** For purposes of paragraph (c)(3)(vi)(A)(*3*) of this section, in the case of any class of stock of a QIE that is regularly traded on an established securities market within the meaning of §§ 1.897-1(m) and 1.897-9T(d), all such stock owned by persons holding less than 5 percent of that class of stock, determined without regard to paragraph (c)(3)(ii)(A) of this section, is treated as stock owned by a single non-look-through person except to the extent that the QIE has actual knowledge regarding the ownership of any person.

(vii) ***Examples.*** The rules of this paragraph (c)(3) are illustrated by the following examples. It is assumed that each entity has a single class of stock or other ownership interests, that the ownership described existed throughout the relevant testing period and that, unless otherwise stated, a QIE is not a public QIE as defined under paragraph (c)(3)(v)(H) of this section.

(A) ***Example 1: QIE stock held by public domestic C corporation*** —(*1*) *Facts.* USR is a REIT, 51 percent of the stock of which is held by X, a public domestic C corporation as defined in paragraph (c)(3)(v)(G) of this section, and 49 percent of the stock of which is held by nonresident alien individuals, which are foreign persons as defined in paragraph (k) of this section.

(*2*) *Analysis.* Under paragraph (c)(3)(v)(M) of this section, USR is a QIE. Because X is a public domestic C corporation, it cannot be a foreign-controlled domestic corporation and, therefore, is a non-look-through person as defined under paragraph (c)(3)(v)(D) of this section. Thus, under paragraph (c)(3)(ii)(A) of this section X is considered as holding directly or indirectly stock of USR for purposes of determining whether USR is a domestically controlled QIE. Under paragraph (c)(3)(ii)(C) of this section, the USR stock held directly or indirectly by X is not considered held directly or indirectly by any other person, including the shareholders of X. Because X is not a foreign person as defined in paragraph (k) of this section and holds directly or indirectly 51 percent of the single class of outstanding stock of USR, foreign persons hold directly or indirectly less than 50 percent of the fair market value of the stock of USR, and USR therefore is a domestically controlled QIE under paragraph (c)(3)(i) of this section.

(*3*) *Alternative facts: QIE stock held by domestic partnership.* The facts are the same as in paragraph (c)(3)(vii)(A)(*1*) of this section (*Example 1*), except that, instead of being a public domestic C corporation, X is a domestic partnership that is not a publicly traded partnership as defined in paragraph (c)(3)(v)(J) of this section. In addition, FC1, a foreign corporation, holds a 50 percent interest in X, and the remaining interests in X are held by U.S. citizens. X is not a non-look-through person as defined in paragraph (c)(3)(v)(D) of this section and, therefore, is a look-through person as defined in paragraph (c)(3)(v)(C) of this section. Accordingly, under paragraph (c)(3)(ii)(A) of this section, X is not considered as holding directly or indirectly stock of USR for purposes of determining whether USR is a domestically controlled QIE. Under paragraph (c)(3)(ii)(B) of this section, the stock of USR that, but for paragraph (c)(3)(ii)(A) of this section, is considered held by X, a look-through person, is instead considered held proportionately by X's partners that are non-look-through persons. Accordingly, because FC1 and the U.S. citizen partners in X are non-look-through persons as defined in paragraph (c)(3)(v)(D) of this section, 25.5 percent of the stock of USR is considered as held directly or indirectly by FC1 (50% x 51%), a foreign person as defined in paragraph (k) of this section, and 25.5 percent (in the aggregate) of the stock of USR is considered as held directly or indirectly by the U.S. citizen partners in X (50% x 51%), who are not foreign persons as defined in paragraph (k) of this section.

Foreign persons therefore hold directly or indirectly 74.5 percent of the stock of USR (49 percent of the stock of USR held directly or indirectly by nonresident alien individuals, who are non-look-through persons as defined in paragraph (c)(3)(v)(D) of this section, plus the 25.5 percent held directly or indirectly by FC1), and USR is not a domestically controlled QIE under paragraph (c)(3)(i) of this section. The result described in this paragraph (c)(3)(vii)(A)(*3*) would be the same if, instead of being a domestic partnership, X were a foreign partnership.

(*4*) *Alternative facts: QIE stock held by a qualified foreign pension fund.* The facts are the same as in paragraph (c)(3)(vii)(A)(*3*) of this section (*Example 1*), except that, instead of being a foreign corporation, FC1 is a qualified foreign pension fund. The analysis is the same as in paragraph (c)(3)(vii)(A)(*3*) (*Example 1*) regarding the treatment of X as a look-through person as defined in paragraph (c)(3)(v)(C) of this section. In addition, FC1, a foreign person under paragraph (c)(3)(iv)(A) of this section, is a non-look-through person as defined in paragraph (c)(3)(v)(D) of this section. Because FC1 and the U.S. citizen partners in X are non-look-through persons, 25.5 percent of the stock of USR is considered as held directly or indirectly by FC1 (50% x 51%), and 25.5 percent (in the aggregate) of the stock of USR is considered as held directly or indirectly by the U.S. citizen partners in X (50% x 51%). Thus, for the same reasons described in paragraph (c)(3)(vii)(A)(*3*) (*Example 1*), foreign persons hold directly or indirectly 74.5 percent of the stock of USR, and USR is not a domestically controlled QIE under paragraph (c)(3)(i) of this section.

(B) ***Example 2: QIE stock held by non-public domestic C corporation that is a foreign-controlled domestic corporation*** —(*1*) *Facts.* USR is a REIT, 51 percent of the stock of which is held by X, a non-public domestic C corporation as defined in paragraph (c)(3)(v)(E) of this section, and 49 percent of the stock of which is held by nonresident alien individuals, which are foreign persons as defined in paragraph (k) of this section. FC1, a foreign corporation, holds 40 percent of the stock of X, and Y, a nonresident alien individual, holds 15 percent of the stock of X. The remaining 45 percent of the stock of X is held by U.S. citizens.

(*2*) *Analysis.* Under paragraph (c)(3)(v)(M) of this section, USR is a QIE. X, a non-public domestic C corporation, is a non-look-through person as defined under paragraph (c)(3)(v)(D) of this section, unless paragraph (c)(3)(iii)(B) of this section applies to treat X as a look-through person because X is a foreign-controlled domestic corporation. FC1, Y, and the U.S. citizen shareholders of X are non-look-through persons as defined under paragraph (c)(3)(v)(D). Under paragraph (c)(3)(v)(B)(*1*) of this section, FC1, Y, and the U.S. citizen shareholders are all considered as holding directly or indirectly stock of X for purposes of determining whether X is a foreign-controlled domestic corporation. Under paragraph (c)(3)(v)(B)(*1*) of this section, the stock held directly or indirectly by FC1, Y, and the U.S. citizen shareholders is not considered held directly or indirectly by any other person. Because FC1 and Y, both foreign persons as defined in paragraph (k) of this section, hold directly or indirectly 40 percent and 15 percent of the stock of X, respectively, foreign persons hold directly or indirectly more than 50 percent of the fair market value of the stock of X, and X is a foreign-controlled domestic corporation under paragraph (c)(3)(v)(B) of this section. Accordingly, under paragraph (c)(3)(iii)(B) of this section, X is a look-through person as defined in paragraph (c)(3)(v)(C) of this section and, therefore, under paragraph (c)(3)(ii)(A) of this section is not considered as holding directly or indirectly stock of USR for purposes of determining whether USR is a domestically controlled QIE. Under paragraph (c)(3)(ii)(B) of this section, the stock of USR that, but for

paragraph (c)(3)(ii)(A), is considered held by X, a look-through person, is instead considered held proportionately by X's shareholders that are non-look-through persons. Accordingly, because FC1, Y, and the U.S. citizen shareholders of X are non-look-through persons, 20.4 percent of the stock of USR is considered as held directly or indirectly by FC1 (40% x 51%), 7.65 percent of the stock of USR is considered as held directly or indirectly by Y (15% x 51%), and 22.95 percent (in the aggregate) of the stock of USR is considered as held directly or indirectly by the U.S. citizen shareholders (45% x 51%). Foreign persons therefore hold directly or indirectly 77.05 percent of the stock of USR (49 percent of the stock of USR held directly by nonresident alien individuals, who are foreign persons and non-look-through persons as defined in paragraph (c)(3)(v)(D), plus the 20.4 percent and 7.65 percent held indirectly by FC1 and Y, respectively), and USR is not a domestically controlled QIE under paragraph (c)(3)(i) of this section. The result described in this paragraph (c)(3)(vii)(B)(*2*) would be different if Y were a U.S. citizen instead of a nonresident alien individual, in which case X would be a non-look-through person because it is not a foreign-controlled domestic corporation under paragraph (c)(3)(v)(B) (the only foreign non-look-through person to hold directly or indirectly stock in X is FC1, which holds a 40-percent interest). Consequently, USR would be a domestically controlled QIE under paragraph (c)(3)(i) of this section because foreign persons hold directly or indirectly less than 50 percent of the stock of USR.

(C) ***Example 3: QIE stock held by public QIE that is a domestically controlled QIE*** —(*1*) *Facts.* USR2 is a REIT, 51 percent of the stock of which is held by USR1, a REIT that is a public QIE as defined in paragraph (c)(3)(v)(H) of this section, and 49 percent of the stock of which is held by nonresident alien individuals, which are foreign persons as defined in paragraph (k) of this section. The stock of USR1 is U.S. publicly traded QIE stock as defined in paragraph (c)(3)(v)(O) of this section. FC1 and FC2, both foreign corporations, each hold 20 percent of the stock of USR1. The remaining 60 percent of the stock of USR1 is held by persons that each hold less than 5 percent of the stock of USR1 and with respect to which USR1 has no actual knowledge that such person is not a United States person or is foreign controlled (as determined under paragraph (c)(3)(v)(B) of this section by treating any person that is not a non-public domestic C corporation as if it were a non-public domestic C corporation for this purpose) (USR1 less than five-percent public shareholders).

(*2*) *Analysis.* Under paragraph (c)(3)(v)(M) of this section, USR2 and USR1 are QIEs. Under paragraph (c)(3)(iii)(A) of this section, each of the USR1 less than five-percent public shareholders is treated as a United States person that is a non-look-through person. Consequently, under paragraph (c)(3)(i) of this section USR1 is a domestically controlled QIE because FC1 and FC2, each a foreign person as defined in paragraph (k) of this section that is a non-look-through person under paragraph (c)(3)(v)(D) of this section, together hold directly or indirectly only 40 percent of the stock of USR1 and, thus, foreign persons hold directly or indirectly less than 50 percent of the fair market value of the stock of USR1. In addition, the USR2 stock held by USR1 is treated as held directly or indirectly by a United States person that is a non-look-through person under paragraph (c)(3)(iii)(C) of this section. Because USR1 holds directly or indirectly 51 percent of the stock of USR2, foreign persons hold directly or indirectly less than 50 percent of the fair market value of the stock of USR2, and USR2 is a domestically controlled QIE under paragraph (c)(3)(i) of this section.

(*3*) *Alternative facts: QIE stock held by public QIE that is not a domestically controlled QIE.* The facts are the same as in paragraph (c)(3)(vii)(C)(*1*) of this section (*Example 3*), except that 25 percent of the stock of USR1 is held by each of FC1 and FC2, with the remaining 50 percent of the stock of USR1 held by the USR1 less than five-percent public shareholders. Regardless of the treatment of the USR1 less than five-percent public shareholders, USR1 is not a domestically controlled QIE under paragraph (c)(3)(i) of this section because FC1 and FC2, each a foreign person as defined in paragraph (k) of this section that is a non-look-through person under paragraph (c)(3)(v)(D) of this section, together hold directly or indirectly 50 percent of the stock of USR1 and, thus, foreign persons do not hold directly or indirectly less than 50 percent of the fair market value of the stock of USR1. In addition, the USR2 stock held by USR1 is treated as held by a foreign person that is a non-look-through person under paragraph (c)(3)(iii)(C) of this section. Because USR1 holds directly or indirectly 51 percent of the stock of USR2, foreign persons do not hold directly or indirectly less than 50 percent of the fair market value of the stock of USR2, and USR2 is not a domestically controlled QIE under paragraph (c)(3)(i) of this section.

(D) ***Example 4: QIE stock held by non-public QIE*** —(*1*) *Facts.* USR2 is a REIT, 49 percent of the stock of which is held by nonresident alien individuals, and 51 percent of the stock of which is held by USR1, a REIT. USR1 is not a public QIE as defined in paragraph (c)(3)(v)(H) of this section. U.S. citizens hold 50 percent of the stock of USR1. The remaining 50 percent of the stock of USR1 is held by PRS, a domestic partnership, 50 percent of the interests in which are held by DC, a public domestic C corporation as defined in paragraph (c)(3)(v)(G) of this section, and 50 percent of the interests in which are held by nonresident alien individuals.

(*2*) *Analysis.* Under paragraph (c)(3)(v)(M) of this section, USR2 and USR1 are QIEs. USR1 is not treated as a non-look-through person under paragraph (c)(3)(iii)(C) of this section because USR1 is not a public QIE as defined in paragraph (c)(3)(v)(H) of this section. Each of USR1 and PRS is a look-through person as defined in paragraph (c)(3)(v)(C) of this section that is not treated as holding directly or indirectly stock in USR2 for purposes of determining whether USR2 is a domestically controlled QIE under paragraph (c)(3)(ii)(A) of this section. Because the U.S. citizens who hold USR1 stock are non-look-through persons as defined in paragraph (c)(3)(v)(D) of this section, those U.S. citizens are treated under paragraph (c)(3)(ii)(B) of this section as holding directly or indirectly 25.5 percent of the stock of USR2 through their USR1 stock interest (50% x 51%) in accordance with paragraph (c)(3)(ii)(A) of this section. Similarly, because DC and the nonresident alien partners in PRS are non-look-through persons, each is treated under paragraph (c)(3)(ii)(B) of this section as holding directly or indirectly the stock of USR2 through its interest in PRS and PRS's interest in USR1. Thus, DC is treated as holding directly or indirectly 12.75 percent of the stock of USR2 (50% × 50% × 51%) and the nonresident alien individual partners, which are foreign persons as defined in paragraph (k) of this section, are treated as directly or indirectly holding a 12.75 percent aggregate interest in the stock of USR2 (50% × 50% × 51%). Foreign persons therefore hold directly or indirectly 61.75 percent of the stock of USR2 (the 49 percent stock in USR2 directly held by nonresident alien individuals, who are foreign persons and non-look-through persons as defined in paragraph (c)(3)(v)(D), plus the 12.75 percent in stock indirectly held by the nonresident alien individual partners in PRS), and USR2 is not a domestically controlled QIE under paragraph (c)(3)(i) of this section.

(E) ***Example 5: Transition rule asset requirement*** —(*1*) *Facts.* USR is a REIT formed on January 1, 2018. From formation, 51 percent of the stock of USR is held by X, a non-public domestic C corporation as defined in paragraph (c)(3)(v)(E) of this section, 25 percent of the stock of USR is held by FC1, a foreign corporation, and 24 percent of the stock of USR is held by nonresident alien individuals. FC2, a foreign corporation, and FC3, also a foreign corporation, each hold 50 percent of the stock of X. On April 24, 2024, USR's only property is Asset 1, a United States real property interest. The value of Asset 1, calculated under section 856(c)(4) as of the most recent quarter of USR's taxable year before 24, is $100x. On January 1, 2026, USR borrows $30x and acquires Asset 2, a United States real property interest, for $30x.

(*2*) *Analysis.* As of April 24, 2024, USR is a domestically controlled QIE under paragraph (c)(3)(i) of this section, because, as determined without regard to paragraph (c)(3)(iii)(B) of this section, X is a non-look-through person and, consequently, foreign persons hold directly or indirectly less than 50 percent of the stock of USR. Accordingly, USR satisfies the requirement under paragraph (c)(3)(vi)(A)(*1*) of this section. USR also satisfies the requirements under paragraphs (c)(3)(vi)(A)(*2*) and (*3*) of this section, respectively, as of such date, because USR has not acquired directly or indirectly any United States real property interests, and the ownership of stock of USR has not changed. Thus, as of April 24, 2024, USR qualifies for the transition relief under paragraph (c)(3)(vi)(A) of this section. However, on January 1, 2026, USR no longer meets the requirement for transition relief in paragraph (c)(3)(vi)(A)(*2*) of this section because the fair market value of Asset 2, $30x, is 30 percent (which is more than 20 percent) of $100x, which (as calculated in accordance with paragraphs (c)(3)(vi)(A)(*2*) and (c)(3)(vi)(D) of this section) is the fair market value of USR's United States real property interests, namely Asset 1, as of April 24, 2024. Therefore, under paragraph (c)(3)(vi)(B)(*1*) of this section the transition rule ceases to apply to USR and, thus, paragraph (c)(3)(iii)(B) applies for purposes of determining whether USR is domestically controlled with respect to transactions occurring after January 1, 2026. Because FC2 and FC3 are non-look-through persons that hold more than 50 percent of the stock of X, X is a foreign-controlled domestic corporation under paragraph (c)(3)(iii)(B), and USR will not be a domestically controlled QIE under paragraph (c)(3)(i) of this section as of January 2, 2026, because foreign non-look-through persons (FC1, 25 percent, FC2, 25.5 percent, FC3, 25.5 percent, and the nonresident alien individuals, 24 percent) directly or indirectly hold more than 50 percent of the stock of USR.

(*3*) *Alternative facts: transition rule ownership requirement.* The facts are the same as in paragraph (c)(3)(vii)(E)(*1*) of this section (*Example 5*), except that instead of USR borrowing funds and acquiring Asset 2, FC3 sells its 50-percent stock interest in X to FC2 on June 1, 2024, and, on January 1, 2026, FC1 sells its 25-percent stock interest in USR to FC4, a foreign corporation. Following FC3's sale of its X stock to FC2 on June 1, 2024, FC2's stock interest in USR has increased by 25.5 percentage points, from 25.5 percent on April 24, 2024 (which is 50 percent of 51 percent), to 51 percent. Following FC1's sale of its USR stock to FC4 on January 1, 2026, FC4's stock interest in USR has increased by 25 percentage points, from zero percent on April 24, 2024, to 25 percent. Accordingly, in the aggregate, non-look-through persons have increased their ownership in USR by 50.5 percentage points (25.5 percent and 25 percent for FC2 and FC4, respectively), and USR no longer meets the requirement for transition relief in paragraph (c)(3)(vi)(A)(*3*) of this section as of January 1, 2026. Therefore, under paragraph (c)(3)(vi)(B)(*1*) of this section

the transition rule ceases to apply to USR and, thus, paragraph (c)(3)(iii)(B) of this section applies for purposes of determining whether USR is domestically controlled with respect to transactions occurring after January 1, 2026. Because FC2, a non-look-through person, holds more than 50 percent of the stock of X, X is a foreign-controlled domestic corporation under paragraph (c)(3)(iii)(B) of this section, and USR will not be a domestically controlled QIE under paragraph (c)(3)(i) of this section because foreign non-look-through persons (FC2, 51 percent, FC4, 25 percent, and the nonresident alien individuals, 24 percent) directly or indirectly hold more than 50 percent of the stock of USR.

(4) ***Foreign ownership percentage.*** For purposes of calculating the foreign ownership percentage under section 897(h)(4)(C), the determination of the QIE stock that was held directly or indirectly by foreign persons is made under the rules of paragraphs (c)(3)(ii) through (vii) of this section.

(d) ***Interest other than an interest solely as a creditor*** —

(1) ***In general.*** This paragraph defines an interest other than an interest solely as a creditor, with respect to real property, and with respect to corporations, partnerships, trusts, and estates. An interest solely as a creditor either in real property or in a domestic corporation does not constitute a United States real property interest. Similarly, where one corporation holds an interest solely as a creditor in a second corporation or in a partnership, trust, or estate, that interest will be disregarded for purposes of determining whether the first corporation is a U.S. real property holding corporation (except to the extent that such interest constitutes an asset used or held for use in a trade or business, in accordance with rules of § 1.897-1(f)). In addition, the disposition of an interest solely as a creditor in a partnership, trust, or estate is not subject to sections 897, 1445, and 6039C. Whether an interest is considered debt under any provisions of the Code is not determinative of whether it constitutes an interest solely as a creditor for purpose of sections 897, 1445, and 6039C and the regulations thereunder.

(2) ***Interests in real property other than solely as creditor*** —

(i) ***In general.*** An interest in real property other than an interest solely as a creditor includes a fee ownership, co-ownership, or leasehold interest in real property, a time sharing interest in real property, and a life estate, remainder, or reversionary interest in such property. The term also includes any direct or indirect right to share in the appreciation in the value, or in the gross or net proceeds or profits generated by, the real property.

A loan to an individual or entity under the terms of which a holder of the indebtedness has any direct or indirect right to share in the appreciation in value of, or the gross or net proceeds or profits generated by, an interest in real property of the debtor or of a related person is, in its entirety, an interest in real property other than solely as a creditor. An interest in production payments described in section 636 does not generally constitute an interest in real property other than solely as a creditor. However, a right to production payments shall constitute an interest in real property other than solely as a creditor if it conveys a right to share in the appreciation in value of the mineral property. A production payment that is limited to a quantum of mineral (including a percentage of recoverable reserves produced) or a period of time will be considered to convey a right to share in the appreciation in value of the mineral property. The rules of this paragraph (d)(2)(i) are illustrated by the following example.

Example. A, a U.S. citizen, purchases a condominium unit located in the United States for $500,000. A makes a $100,000 down payment and borrows $400,000 from B, a foreign person, to pay the balance of the purchase price. Under the terms of the loan. A is to pay B 13 percent annual interest each year for 10 years and 35 percent of the appreciation in the fair market value of the condominium at the end of the 10-year period. Because B has a right to share in the appreciation in value of the condominium, B has an interest other than solely as a creditor in the condominium. B's entire interest in the obligation from A, therefore, is a United States real property interest.

(ii) ***Special rule*** —

(A) ***Installment obligations.*** A right to installment or other deferred payments from the disposition of an interest in real property will constitute an interest solely as a creditor if the transferor elects not to have the installment method of section 453(a) apply, any gain or loss is recognized in the year of disposition, and all tax due is timely paid. See section 1445 and regulations thereunder for further guidance concerning the availability of installment sale treatment under section 453. If an agreement for the payment of tax with respect to an installment sale is entered into with the Internal Revenue Service pursuant to section 1445, that agreement may specify whether or not the installment obligation will constitute an interest solely as a creditor. If an installment obligation constitutes an interest other than solely as a creditor then the receipt of each payment shall be treated as the disposition of an interest in real property that is subject to section 897(a) to the extent of any gain required to be taken into account pursuant to section 453.

If the original holder of an installment obligation that constitutes an interest other than solely as a creditor subsequently disposes of the obligation to an unrelated party and recognizes gain or loss pursuant to section 453B, the obligation will constitute an interest in real property solely as a creditor in the hands of the subsequent holder. However, if the obligation is disposed of to a related person and the full amount of gain realized upon the disposition of the real property has not been recognized upon such disposition of the installment obligation, then the obligation shall continue to be an interest in real property other than solely as a creditor in the hands of the subsequent holder subject to the rules of this paragraph (d)(2)(ii)(A).

In addition, if the obligation is disposed of to any person for a principal purpose of avoiding the provisions of sections 897, 1445, or 6039C, then the obligation shall continue to be an interest in real property other than solely as a creditor in the hands of the subsequent holder subject to the rules of this paragraph (d)(2)(ii)(A). However, rights to payments arising from dispositions that took place before June 19, 1980, shall in no event constitute interests in real property other than solely as a creditor, even if such payments are received after June 18, 1980. In addition, rights to payments arising from dispositions to unrelated parties that took place before January 1, 1985, and that were not subject to U.S. tax pursuant to the provisions of a U.S. income tax treaty, shall not constitute interests in real property other than solely as a creditor, even if such payments are received after December 31, 1984.

(B) ***Options.*** An option, a contract or a right of first refusal to acquire any interest in real property (other than an interest solely as a creditor) will itself constitute an interest in real property other than solely as a creditor.

(C) ***Security interests.*** A right to repossess or foreclose on real property under a mortgage, security agreement, financing statement, or other collateral instrument securing a debt will not be considered a reversionary interest in, or a right to share in the appreciation in value of or gross or net proceeds or profits generated by, an interest in real property. Thus, no such right of repossession or foreclosure will of itself cause an interest in real property which is otherwise an interest solely as a creditor to become an interest other than solely as a creditor. In addition, a person acting as mortgagee in possession shall not be considered to hold an interest in real property other than solely as a creditor, if the mortgagee's interest in the property otherwise constitutes an interest solely as a creditor.

(D) ***Indexed interest rates.*** An interest will not constitute a right to share in the appreciation in the value of, or gross or net proceeds or profits generated by, real property solely because it bears a rate of interest that is tied to an index of any kind that is intended to reflect general inflation or deflation of prices and interest rates (e.g., the Consumer Price Index). However, where an interest in real property bears a rate of interest that is tied to an index the principal purpose of which is to reflect changes in real property values, the real property interest will be considered an indirect right to share in the appreciation in value of, or gross or net proceeds or profits generated by, real property. Such an indirect right constitutes an interest in real property other than solely as a creditor.

(E) ***Commissions.*** A right to payment of a commission, brokerage fee, or similar charge for professional services rendered in connection with the arrangement or financing of a purchase, sale, or lease of real property does not constitute a right to share in the appreciation in value of, or gross or net proceeds or profits of, real property solely because it is based upon a percentage of the purchase price or rent. Thus, a right to a commission earned by a real estate agent based on a percentage of the sales price does not constitute an interest in real property other than solely as a creditor.

However, a right to a commission, brokerage fee, or similar charge will constitute an interest other than solely as a creditor if the total amount of the payment is contingent upon appreciation, proceeds, or profits of the real property occurring or arising after the date of the transaction with respect to which the professional services were rendered. For example, a commission earned in connection with the purchase of a real property interest that is contingent upon the amount of gain ultimately realized by the purchaser will constitute an interest in real property other than solely as a creditor.

(F) ***Trustees' fees, etc.*** A right to payment of reasonable compensation for services rendered as a trustee, as an administrator of an estate, or in a similar capacity does not constitute a right to share in the appreciation in the value of, or gross or net proceeds or profits of, real property solely because the assets of the trust or estate include U.S. real property interests.

(3) ***Interest in an entity other than solely as a creditor*** —

(i) In general. For purposes of sections 897, 1445, and 6039C, an interest in an entity other than an interest solely as a creditor is—

(A) Stock of a corporation;

(B) An interest in a partnership as a partner within the meaning of section 761(b) and the regulations thereunder;

(C) An interest in a trust or estate as a beneficiary within the meaning of section 643(c) and the regulations thereunder or an ownership interest in any portion of a trust as provided in sections 671 through 679 and the regulations thereunder;

(D) An interest which is, in whole or in part, a direct or indirect right to share in the appreciation in value of an interest in an entity described in subdivision (A), (B), or (C) of this paragraph (d)(3)(i) or a direct or indirect right to share in the appreciation in value of assets of, or gross or net proceeds or profits derived by, the entity; or

(E) A right (whether or not presently exercisable) directly or indirectly to acquire, by purchase, conversion, exchange, or in any other manner, an interest described in subdivision (A), (B), (C), or (D) of this paragraph (d)(3) (i).

(ii) *Special rules* —

(A) ***Installment obligations.*** A right to installment or other deferred payments from the disposition of an interest in an entity will constitute an interest solely as a creditor if the transferor elects not to have the installment method of section 453(a) apply, any gain or loss is recognized in the year of disposition, and tax due is timely paid. See section 1445 and regulations thereunder for further guidance concerning the availability of installment sale treatment under section 453. If an agreement for the payment of tax with respect to an installment sale is entered into with the Internal Revenue Service pursuant to section 1445, that agreement may specify whether or not the installment obligation will constitute an interest solely as a creditor. If an installment obligation constitutes an interest other than solely as a creditor then the receipt of each payment shall be treated as the disposition of such an interest and shall be subject to section 897(a) to the extent that:

(*1*) It constitutes the disposition of a U.S. real property interest and

(*2*) Gain or loss is required to be taken into account pursuant to section 453. Such treatment shall apply to payments arising from dispositions of interests in a corporation any class of the stock of which is regularly traded on an established securities market, but only in the case of a disposition of any portion of an interest described in paragraph (c)(2)(iii)(A) or (B) of this section. If the original holder of an installment obligation that constitutes an interest other than solely as a creditor subsequently disposes of the obligation to an unrelated party and recognizes gain or loss pursuant to section 453B, the obligation will constitute an interest in the entity solely as a creditor in the hands of the subsequent holder. However, if the obligation is disposed of to a related person and the full amount of gain realized upon the disposition of the interest in the entity has not been recognized upon such disposition of the installment obligation, then the obligation shall continue to be an interest in the entity other than solely as a creditor in the hands of the subsequent holder subject to the rules of this paragraph (d)(3)(ii)(A). In addition, if the obligation is disposed of to any person for a principal purpose of avoiding the provisions of section 897, 1445, or 6039C, then the obligation shall continue to be an interest in the entity other than solely as a creditor in the hands of the subsequent holder subject to the rules of this paragraph (d)(3)(ii)(A). However, rights to payments arising from dispositions that took place before June 19, 1980, shall in no event constitute interests in an entity other than solely as a creditor, even if such payments are received after June 18, 1980. In addition, such treatment shall not apply to payments

arising from dispositions to unrelated parties that took place before January 1, 1985, and that were not subject to U.S. tax pursuant to the provisions of a U.S. income tax treaty, regardless of when such payments are received.

(B) ***Contingent interests.*** The interests described in subdivision (D) of paragraph (d)(3)(i) of this section include any right to a payment from an entity the amount of which is contingent on the appreciation in value of an interest described in subdivision (A), (B), or (C) of paragraph (d)(3)(i) of this section or which is contingent on the appreciation in value of assets of, or the general gross or net proceeds or profits derived by, such entity. The right to such a payment is itself an interest in the entity other than solely as a creditor, regardless of whether the holder of such right actually holds an interest in the entity described in subdivision (A), (B), or (C) of paragraph (d)(3)(i) of this section. For example, a stock appreciation right constitutes an interest in a corporation other than solely as a creditor even if the holder of such right actually holds no stock in the corporation. However, the interests described in subdivision (D) of paragraph (d)(3)(i) of this section do not include any right to a payment that is (*1*) exclusively contingent upon and exclusively paid out of revenues from sales of personal property (whether tangible or intangible) or from services, or (*2*) exclusively contingent upon the resolution of a claim asserted against the entity by a person related neither to the entity nor to the holder of the interest.

(C) ***Security interests.*** A right to repossess or foreclose on an interest in an entity under a mortgage, security agreement, financing statement, or other collateral instrument securing a debt will not of itself cause an interest in an entity which is otherwise an interest solely as a creditor to become an interest other than solely as a creditor.

(D) ***Royalties.*** The interests described in subdivision (D) of paragraph (d)(3)(i) of this section do not include rights to payments representing royalties, license fees, or similar charges for the use of patents, inventions, formulas, copyrights, literary, musical or artistic compositions, trademarks, trade names, franchises, licenses, or similar intangible property.

(E) ***Commissions.*** The interests described in subdivision (D) of paragraph (d)(3)(i) of this section do not include a right to a commission, brokerage fee or similar charge for professional services rendered in connection with the purchase or sale of an interest in an entity. However, a right to such a payment will constitute an interest other than solely as a creditor if the total amount of the payment is contingent upon appreciation in value of assets of, or proceeds or profits derived by, the entity after the date of the transaction with respect to which the payment was earned.

(F) ***Trustee's fees.*** The interests described in subdivision (D) of paragraph (d)(3)(i) of this section do not include a right to payment representing reasonable compensation for services rendered as a trustee, as an administrator of an estate, or in a similar capacity.

(4) ***Aggregation of interests.*** If a person holds both interests solely as a creditor and interests other than solely as a creditor in real property or in an entity, those interests will generally be treated as separate and distinct interests. However, such interests shall be aggregated and treated as interests other than solely as a creditor in their entirety if the interest solely as a creditor has been separated from, or acquired separately from, the interest other than solely as a creditor, for a principal purpose of avoiding the provisions of section 897, 1445, or 6039C by causing one or more of such interests to be an interest solely as a creditor. The existence of such a purpose will be determined with reference to all the facts and circumstances. Where an interest solely as a creditor has arm's-length

interest and repayment terms it shall in no event be aggregated with and treated as an interest other than solely as a creditor. For purposes of this paragraph (d)(4), an interest rate that does not exceed 120 percent of the applicable Federal rate (as defined in section 1274(d)) shall be presumed to be an arm's-length interest rate. For purposes of applying the rules of this paragraph (d)(4), a person shall be treated as holding any interests held by a related person within the meaning of § 1.897-1(i).

(5) ***"Interest" means "interest other than solely as a creditor."*** Unless otherwise stated, the term "interest" as used with regard to real property or with regard to an entity hereafter in the regulations under sections 897, 1445, and 6039C, means an interest in such real property or entity other than an interest solely as a creditor.

(e) ***Proportionate share of assets held by an entity*** —

(1) ***In general.*** A person that holds an interest in an entity is for certain purposes treated as holding a proportionate or pro rata share of the assets held by the entity. Such proportionate share must be calculated, in accordance with the rules of this paragraph, for the following purposes.

(i) In determining whether a corporation is a U.S. real property holding corporation—

(A) A person holding an interest in a partnership, trust, or estate is treated as holding a proportionate share of the assets held by the partnership, trust, or estate (see section 897-2(e)(2)), and

(B) A corporation that holds a controlling interest in a second corporation is treated as holding a proportionate share of the assets held by the second corporation (see § 1.897-2(e)(3)).

(ii) In determining reporting obligations that may be imposed under section 6039C, the holder of an interest in a partnership, trust, or estate is treated as owning a proportionate share of the U.S. real property interests held by the partnership, trust, or estate.

(2) ***Proportionate share of assets held by a corporation or partnership*** —

(i) ***In general.*** A person's proportionate or pro rata share of assets held by a corporation or partnership is determined by multiplying—

(A) The person's percentage ownership interest in the entity, by

(B) The fair market value of the assets held by the entity (or the book value of such assets, in the case of a determination pursuant to § 1.897-2(b)(2)).

(ii) ***Percentage ownership interest.*** A person's percentage ownership interest in a corporation or partnership is the percentage equal to the ratio of

(A) the sum of the liquidation values of all interests in the entity held by the person to

(B) the sum of the liquidation values of all outstanding interest in the entity. The liquidation value of an interest in an entity is the amount of cash and the fair market value of any property that would be distributed with respect to such interest upon the liquidation of the entity after satisfaction of liabilities to persons having interests in the entity solely as creditors. With respect to an entity that has interests outstanding that grant a presently-exercisable option to acquire or right to convert into or otherwise acquire an interest in the entity other than solely as a creditor, the liquidation value of all interests in such entity

shall be calculated as though such option or right had been exercised, giving effect both to the payment of any consideration required to exercise the option or right and to the issuance of the additional interest.

The fair market value of the assets of the entity, the amount of cash held by the entity, and the amount of liabilities to persons having interests solely as creditors if determined for this purpose on the date with respect to which the percentage ownership interest is determined.

(iii) ***Examples.*** The rules of this paragraph (e)(2) are illustrated by the following examples.

Example 1. Corporation K's only assets are stock and securities with a fair market value as of the applicable determination date of $20,000,000 K's assets are subject to liabilities of $10,000,000. Among K's liabilities are a $1,000,000 loan from L, under the terms of which L is entitled, upon payment of the loan principal, to a profit share equal to 10 percent of the excess of the fair market value of K's assets over $18,000,000, but only if all other corporate liabilities have been paid. K has two classes of stock, common and preferred. PS1 and PS2 each own 100 of the 200 outstanding shares of preferred stock. CS1 and CS2 each own 500 of the 1,000 outstanding shares of common stock. Each preferred shareholder is entitled to $10,000 per share of preferred stock upon liquidation, subject to payment of all corporate liabilities and to any amount owed to L, but before any common shareholder is paid. The liquidation value of L's interest in K, which constitutes an interest other than an interest solely as a creditor, is $1,200 ($1,000,000 principal of the loan to K plus $200,000 (10 percent of the excess of $20,000,000 over $18,000,000). The liquidation value of each of PS1's and PS2's blocks of preferred stock is $1,000,000 ($10,000 times 100 shares each). The liquidation value of each of CS1's and CS2's blocks of common stock is $3,900,000 [$20,000,000 (the total fair market value of K's assets)—$9,000,000 (liabilities to creditors other than L)—$1,200,000 (L's liquidation value)—$2,000,000 (PS1's and PS2's liquidation value)) times 50 percent (the percentage of common stock owned by each)]. The sum of the liquidation values of all of the outstanding interests in K (i.e., interests other than solely as a creditor) is $11,000,000 [$1,200,000 (L's liquidation value) + $2,000,000 (PS1's and PS2's liquidation values) + $7,800,000 (CS1's and CS2's liquidation values)]. Each of CS1's and CS2's percentage ownership interests in K is 35.5 percent ($3,900,000 divided by $11,000,000). Each of PS1's and PS2's percentage ownership interests in K is 9 percent ($1,000,000 divided by $11,000,000). L's percentage ownership interest in K is 11 percent ($1,200,000 divided by $11,000,000).

Example 2. A, a U.S. person, and B, a foreign person are partners in a partnership the only asset of which is a parcel of undeveloped land located in the United States that was purchased by the partnership in 1980 for $300,000. The partnership has no liabilities, and its capital is $300,000. A's and B's interests in the capital of the partnership are 25 percent and 75 percent, respectively, and A and B each has a 50 percent profit interest in the partnership. The partnership agreement provides that upon liquidation any unrealized gain will be distributed in accordance with the partners' profit interest. In 1984 the partnership has no items of income or deduction, and the fair market value of its parcel of undeveloped land is $500,000. In 1984 the percentage ownership interest of A in the partnership is 35 percent [the ratio of $100,000 (the liquidation value of A's profit interest in 1984) plus $75,000 (the liquidation value of A's 25 percent interest in the partnership's $300,000 capital) to $500,000 (the sum of the liquidation values of all outstanding interests in the

partnership)]. The percentage ownership interest of B in the partnership in 1984 is 65 percent [the ratio of $325,000 (B's $100,000 profit interest plus his $225,000 capital interest) to $500,000]

(3) ***Proportionate share of assets held by trusts and estates*** —

(i) ***In general.*** A person's proportionate or pro rata share of assets held by a trust or estate is determined by multiplying—

(A) The person's percentage ownership interest in the trust or estate, by

(B) The fair market value of the assets held by the trust or estate (or the book value of such assets, in the case of a determination pursuant to § 1.897-2(b)(2)).

(ii) ***Percentage ownership interest*** —

(A) ***General rule.*** A person's percentage ownership interest in a trust or an estate—is the percentage equal to the ratio of:

(*1*) The sum of the actuarial values of such person's interests in the cash and other assets held by the trust or estate after satisfaction of the liabilities of the trust or estate to persons holding interests in the trust or estate solely as creditors, to (*2*) the entire amount of such cash and other assets after satisfaction of liabilities to persons holding interests in the trust or estate solely as creditors. For purposes of calculating this ratio, the fair market value of the trust's or estate's assets, the amount of cash held by the trust or estate, and the amount of the liabilities to persons having interests solely as creditors is determined on the date with respect to which the percentage ownership interest is determined. With respect to a trust or estate that has interests outstanding that grant a presently-exercisable option to acquire or right to convert into or otherwise acquire an interest in the trust or estate other than solely as a creditor, the liquidation value of all interests in such entity shall be calculated as though such option or right had been exercised, giving effect both to the payment of any consideration required to exercise the option or right and to the issuance of the additional interest. With respect to a trust or estate that has interests outstanding that entitle any person to a distribution of U.S. real property interests upon liquidation that is disproportionate to such person's interest in the total assets of the trust or estate, such disproportionate right shall be disregarded in the calculation of the interest-holders' proportionate share of the U.S. real property interests held by the entity. For purposes of determining his own percentage ownership interest in a trust, a grantor or other person will be treated as owning any portion of the trust's cash and other assets which such person is treated as owning under sections 671 through 679.

(B) ***Discretionary trusts and estates.*** In determining percentage ownership interest in a trust or an estate, the sum of the definitely ascertainable actuarial values of interests in the cash and the other assets of the trust or estate held by persons in existence on the date with respect to which such determination is made must equal the amount in paragraph (e)(3)(ii)(A)(*2*) of this section. If the amount in paragraph (e)(3)(ii)(A)(*2*) of this section exceeds the sum of the definitely ascertainable actuarial values of the interests held by persons in existence on the determination date, the excess will be considered to be owned in total by each beneficiary who is in existence on such date, whose interest in the excess is not definitely ascertainable and who is potentially entitled to such excess. However,

such excess shall not be considered to be owned in total by each beneficiary if the discretionary terms of the trust or estate were included for a principal purpose of avoiding the provisions of section 897, 1445, or 6039C by causing assets other than U.S. real property interests to be attributed in total to each beneficiary. The rules of this paragraph (e)(3) are illustrated by the following example.

Example. A, a U.S. person, established a trust on December 31, 1984, and contributed real property with a fair market value of $10,000 to the trust. The terms of that trust provided that the trustee, a bank that is unrelated to A, at its discretion may retain trust income or may distribute it to X, a foreign person, or to the head of state of any country other than the United States. The remainder upon the death of X is to go in equal shares to such of Y and Z, both foreign persons, as survive X. On December 31, 1984, the total value of the trust's assets is $10,000. On the same date, the actuarial values of the remainder interests of Y and Z in the corpus of the trust are definitely ascertainable. They are $1,000 and $500, respectively. Neither the income interest of X nor of the head of state of any country other than the United States has a definitely ascertainable actuarial value on December 31, 1984. The interests of Y and Z in the income portion of the trust similarly have no definitely ascertainable actuarial values on such date since the income may be distributed rather than retained by the trust. Since the sum of the actuarial values of definitely ascertainable interests of persons in existence ($1,500) is less than $10,000, the difference ($8,500) is treated as owned by each beneficiary who is in existence on December 31, 1984, and who is potentially entitled to such excess. Therefore, X, Y, Z, and the head of state of any country other than the United States are each considered as owning the entire $8,500 income interest in the trust. On December 31, 1984, the total actuarial value of X's interest is $8,500, and his percentage ownership interest is 85 percent. The total actuarial value of Y's interest in the trust is $9,500 ($1,000 plus $8,500), and his percentage ownership interest is 95 percent. The total actuarial value of Z's interest is $9,000 ($500 plus $8,500), and his percentage ownership interest is 90 percent. The actuarial value of the interest of the head of state of each country other than the United States is $8,500, and his percentage ownership interest is 85 percent.

(4) ***Dates with respect to which percentage ownership interests are determined.*** The dates with respect to which percentage ownership interests are determined are the applicable determination dates outlined in § 1.897-2 or in regulations under section 6039C.

(f) ***Asset used or held for use in a trade or business*** —

(1) ***In general.*** The term "asset used or held for use in a trade or business" means—

(i) Property, other than a U.S. real property interest, that is—

(A) Stock in trade of an entity or other property of a kind which would properly be included in the inventory of the entity if on hand at the close of the taxable year, or property held by the entity primarily for sale to customers in the ordinary course of its trade or business, or

(B) Depreciable property used or held for use in the trade or business, as described in section 1231(b)(1) but without regard to the holding period limitations of section 1231(b), or

(C) Livestock, including poultry, used or held for use in a trade or business for draft, breeding, dairy, or sporting purposes, and

(ii) Goodwill and going concern value, patents, inventions, formulas copyrights, literary, musical, or artistic compositions, trademarks, trade names, franchises, licenses, customer lists, and similar intangible property, but only to the extent that such property is used or held for use in the entity's trade or business and subject to the valuation rules of § 1.897-1(o)(4), and

(iii) Cash, stock, securities, receivables of all kinds, options or contracts to acquire any of the foregoing, and options or contracts to acquire commodities, but only to the extent that such assets are used or held for use in the corporation's trade or business and do not constitute U.S. real property interests.

(2) ***Used or held for use in a trade or business.*** An asset is used or held for use in an entity's trade or business if it is, under the principles of § 1.864-4(c)(2)—

(i) Held for the principal purpose of promoting the present conduct of the trade or business,

(ii) Acquired and held in the ordinary course of the trade or business, as, for example, in the case of an account or note receivable arising from that trade or business (including the performance of services), or

(iii) Otherwise held in a direct relationship to the trade or business.

In determining whether an asset is held in a direct relationship to the trade or business, consideration shall be given to whether the asset is needed in that trade or business. An asset shall be considered to be needed in a trade or business only if the asset is held to meet the present needs of that trade or business and not its anticipated future needs. An asset shall be considered as needed in the trade or business if, for example, the asset is held to meet the operating expenses of that trade or business. Conversely, an asset shall be considered as not needed in the trade or business if, for example, the asset is held for the purpose of providing for future diversification into a new trade or business, future expansion of trade or business activities, future plant replacement, or future business contingencies. An asset that is held to meet reserve or capitalization requirements imposed by applicable law shall be presumed to be held in a direct relationship to the trade or business.

(3) ***Special rules concerning liquid assets*** —

(i) ***Safe harbor amount.*** Assets described in paragraph (f)(1)(iii) of this section shall be presumed to be used or held for use in a trade or business, in an amount up to 5 percent of the fair market value of other assets used or held for use in the trade or business. However, the rule of this paragraph (f)(3)(i) shall not apply with respect to any assets described in paragraph (f)(1)(iii) of this section that are held or acquired for the principal purpose of avoiding the provisions of section 897 or 1445.

(ii) ***Investment companies.*** Assets described in paragraph (f)(1)(iii) of this section shall be presumed to be used or held for use in an entity's trade or business if the principal business of the entity is trading or investing in such assets for its own account. An entity's principal business shall be presumed to be trading or investing in assets described in paragraph (f)(1)(iii) of this section if the fair market value of such assets held by the entity equals or exceeds 90 percent of the sum of the fair market values of the entity's U.S. real property interests, interests in real property located outside the United States, assets otherwise used or held for use in trade or business, and assets described in paragraph (f)(1)(iii) of this section.

(4) ***Examples.*** The application of this paragraph (f) may be illustrated by the following examples:

Example 1. M, a domestic corporation engaged in industrial manufacturing, is required to hold a large current cash balance for the purposes of purchasing materials and meeting its payroll. The amount of the cash balance so required varies because of the fluctuating seasonal nature of the corporation's business. In months when large cash balances are not required, the corporation invests the surplus amount in U.S. Treasury bills. Since both the cash and the Treasury bills are held to meet the present needs of the business, they are held in a direct relationship to that business, and, therefore, constitute assets used or held for use in the trade or business.

Example 2. R, a domestic corporation engaged in the manufacture of goods, engages a stock brokerage firm to manage securities which were purchased with funds from R's general surplus reserves. The funds invested in these securities are intended to provide for the future expansion of R into a new trade or business. Thus, the funds are not necessary for the present needs of the business; they are accordingly not held in a direct relationship to the business and do not constitute assets used or held for use in the trade or business.

Example 3. B, a federally chartered and regulated bank, is required by law to hold substantial reserves of cash, stock, and securities. Pursuant to the rule of paragraph (f)(2) of this section, such assets are presumed to be held in a direct relationship to B's business, and thus constitute assets used or held for use in the trade or business. In addition, B holds substantial loan receivables which are acquired and held in the ordinary course of its banking business. Pursuant to the rule of paragraph (f)(1)(iii) of this section, such receivables constitute assets used or held for use in the trade or business.

(g) ***Disposition.*** For purposes of sections 897, 1445, and 6039C, the term "disposition" means any transfer that would constitute a disposition by the transferor for any purpose of the Internal Revenue Code and regulations thereunder. The severance of crops or timber and the extraction of minerals do not alone constitute the disposition of a U.S. real property interest.

(h) ***Gain or loss.*** The amount of gain or loss arising from the disposition of the U.S. real property interest shall be determined as provided in section 1001 (a) and (b). Such gain or loss shall be subject to the provisions of section 897 (a) and (b), unless a nonrecognition provision is applicable pursuant to section 897 (d) or (e) and regulations thereunder. Amounts otherwise treated for Federal income tax purposes as principal and interest payments on debt obligations of all kinds (including obligations that are interests other than solely as a creditor) do not give rise to gain or loss that is subject to section 897(a). However, principal payments on installment obligations described in §§ 1.897-1(d)(2)(ii)(A) and 1.897-1(d)(3)(ii)(A) do give rise to gain or loss that is subject to section 897(a), to the extent such gain or loss is required to be recognized pursuant to section 453. The rules of paragraphs (g) and (h) are illustrated by the following examples.

Example 1. Foreign individual C has an undivided fee interest in a parcel of real property located in the United States. The fair market value of C's interest is $70,000, and C's basis in such interest is $50,000. The only liability to which the real property is subject is the liability of $65,000 secured by a mortgage in the same amount. C transfers his fee interest in the property subject to the mortgage by gift to D. C realizes $15,000 of gain upon such transfer. As a transfer by gift constitutes a disposition for purposes of the Code, and as gain is realized upon that transfer, the gift is a disposition for purposes of sections 897, 1445, and 6039C and is subject to section 897(a) to the extent of the gain realized. However, section 897(a) would not be applicable to the transfer if the mortgage on the U.S. real property were equal to or less than C's $50,000 basis, since the transfer then would not give rise to the realization of gain or loss under the Internal Revenue Code.

Example 2. Foreign corporation Y makes a loan of $1 million to domestic individual Z, secured by a mortgage on residential real property purchased with the loan proceeds. The loan agreement provides that Y is entitled to receive fixed monthly payments from Z, constituting repayment of principal plus interest at a fixed rate. In addition, the agreement provides that Y is entitled to receive a percentage of the appreciation value of the real property as of the time that the loan is retired. The obligation in its entirety is considered debt for Federal income tax purposes. However, because of Y's right to share in the appreciation in value of the real property, the debt obligation gives Y an interest in the real property other than solely as a creditor. Nevertheless, as principal and interest payments do not constitute gain under section 1001 and paragraph (h) of this section, and both the monthly and final payments received by Y are considered to consist solely of principal and interest for Federal income tax purposes, section 897(a) shall not apply to Y's receipt of such payments. However, Y's sale of the debt obligation to foreign corporation A would give rise to gain that is subject to section 897(a).

(i) ***Related person.*** For purposes of sections 897, 1445, and 6039C, persons are considered to be related if they are partners or partnerships described in section 707(b)(1) of the Code or if they are related within the meaning of section 267 (b) and (c) of the Code (except that section 267(f) shall apply without regard to section 1563(b)(2)).

(j) ***Domestic corporation.*** The term "domestic corporation" has the same meaning as set forth in section 7701(a) (3) and (4) and § 301.7701-5. For purposes of sections 897 and 6039C, it also includes a foreign corporation with respect to which an election under section 897(i) and § 1.897-3 or section 897(k) and § 1.897-4 to be treated as domestic corporation is in effect.

(k) ***Foreign person.*** The term *foreign person* means a nonresident alien individual (including an individual subject to the provisions of section 877), a foreign corporation as defined in paragraph (l) of this section, a foreign partnership, a foreign trust or a foreign estate, as such persons are defined by section 7701 and the regulations in this chapter under section 7701. A resident alien individual, including a nonresident alien individual with respect to whom there is in effect an election under section 6013(g) or (h) to be treated as United States resident, is not a foreign person. With respect to the status of foreign governments and international organizations, *see* § 1.897-9T(e). *See* paragraph (c)(3)(iv)(A) of this section regarding the treatment of qualified foreign pension funds and qualified controlled entities as foreign persons for purposes of section 897(h)(4)(B).

(l) ***Foreign corporation.*** The term *foreign corporation* has the meaning ascribed to such term in section 7701(a)(3) and (5) and § 301.7701-5. For purposes of sections 897 and 6039C, however, the term does not include a foreign corporation with respect to which there is in effect an election under section 897(i) and § 1.897-3 to be treated as a domestic corporation. For purposes of section 897, the term does not include a qualified holder described in § 1.897(l)-1(d); *see* paragraph (c)(3)(iv)(A) of this section regarding the treatment of qualified foreign pension funds and qualified controlled entities as foreign persons for purposes of section 897(h)(4)(B).

(m) ***Established securities market.*** For purposes of sections 897, 1445, and 6039C, the term "established securities market" means—

(1) A national securities exchange which is registered under section 6 of the Securities Exchange Act of 1934 (15 U.S.C. 78f),

(2) A foreign national securities exchange which is officially recognized, sanctioned, or supervised by governmental authority, and

(3) Any over-the-counter market. An over-the-counter market is any market reflected by the existence of an interdealer quotation system. An interdealer quotation system is any system of general circulation to brokers and dealers which regularly disseminates quotations of stocks and securities by identified brokers or dealers, other than by quotation sheets which are prepared and distributed by a broker or dealer in the regular course of business and which contain only quotations of such broker or dealer.

(n) ***Regularly traded cross-reference. See*** § 1.897-9T(d) for a definition of regularly traded for purposes of sections 897, 1445, and 6039C.

(o) ***Fair market value*** —

(1) ***In general.*** For purposes of sections 897, 1445, and 6039C only, the term "fair market value" means the value of the property determined in accordance with the rules, contained in this paragraph (o). The definition of fair market value provided herein is not to be used in the calculation of gain or loss from the disposition of a U.S. real property interest pursuant to section 1001. An independent professional appraisal of the value of property must be submitted only if such an appraisal is specifically requested in connection with the negotiation of a security agreement pursuant to section 1445.

(2) ***Method of calculating fair market value*** —

(i) ***In general.*** The fair market value of property is its gross value (as defined in paragraph (o)(2)(ii) of this section) reduced by the outstanding balance of any debts secured by the property which are described in paragraph (o)(2)(iii) of this section. See § 1.897-2(b) for the alternative use of book values in certain limited circumstances.

(ii) ***Gross value.*** Gross value is the price at which the property would change hands between an unrelated willing buyer and willing seller, neither being under any compulsion to buy or to sell and both having reasonable knowledge of all relevant facts. Generally, with respect to trade or business assets, going concern value should be used as it will provide the most accurate reflection of such a price. However, taxpayers may use other methods of valuation if they can establish that such method will provide a more accurate determination of gross value and if they consistently apply such method to all assets to be valued. See subdivisions (3) and (4) of this paragraph (o) for special rules with respect to the valuation of leases and of intangible assets.

(iii) Debts secured by the property. The gross value of property shall be reduced by the outstanding balance of debts that are:

(A) Secured by a mortgage or other security interest in the property that is valid and enforceable under the law of the jurisdiction in which the property is located, and

(B) Either (*1*) Incurred to acquire the property (including long-term financing obtained in replacement of construction loans or other short-term debt within one year of the acquisition or completion of the property), or (*2*) otherwise incurred in direct connection with the property, such as property tax liens upon real property or debts incurred to maintain or improve property.

In addition, if any debt described in this paragraph (o)(2)(iii) is refinanced for a valid business purpose (such as obtaining a more favorable rate of interest), the principal amount of the replacement debt does not exceed the outstanding balance of the original debt, and the

replacement debt is secured by the property, then the gross value of the property shall be reduced by the replacement debt. Obligations to related persons shall not be taken into account for purposes of this paragraph (o)(2)(iii) unless such obligations constitute interests solely as a creditor pursuant to the provisions of paragraph (d)(4) of this section and unless the related person has made similar loans to unrelated persons on similar terms and conditions.

(iv) ***Anti-abuse rule.*** The gross value of real property located outside the United States and of assets used or held for use in a trade or business shall be reduced by the outstanding balance of any debt that was entered into for the principal purpose of avoiding the provisions of section 897, 1445, or 6039C by enabling the corporation to acquire such assets. The existence of such a purpose shall be determined with reference to all the facts and circumstances. Debts that a particular corporation routinely enters into in the ordinary course of its acquisition of assets used or held for use in its trade or business will not be considered to be entered into for the principal purpose of avoiding the provisions of section 897, 1445, or 6039C.

(3) ***Fair market value of leases and options.*** For purposes of sections 897, 1445, and 6039C, the fair market value of a leasehold interest in real property is the price at which the lease could be assigned or the property sublet, neither party to such transaction being under any compulsion to enter into the transaction and both having reasonable knowledge of all relevant facts. Thus, the value of a leasehold interest will generally consist of the present value, over the period of the lease remaining, of the difference between the rental provided for in the lease and the current rental value of the real property. A leasehold interest bearing restrictions on its assignment or sublease has a fair market value of zero, but only if those restrictions in practical effect preclude (rather than merely condition) the lessee's ability to transfer, at a gain, the benefits of a favorable lease. The normal commercial practice of lessors may be used to determine whether restrictions in a lease have the practical effect of precluding transfer at a gain. The fair market value of an option to purchase any property is, similarly, the price at which the option could be sold, consisting generally of the difference between the option price and the fair market value of the property, taking proper account of any restrictions upon the transfer of the option.

(4) ***Fair market value of intangible assets.*** For purposes of determining whether a corporation is a U.S. real property holding corporation, the fair market value of intangible assets described in § 1.897-1(f)(1)(ii) may be determined in accordance with the following rules.

(i) ***Purchase price.*** Intangible assets described in § 1.897-1(f)(1)(ii) that were acquired by purchase from a person not related to the purchaser within the meaning of § 1.897-1(i) may be valued at their purchase price. However, such purchase price must be adjusted to reflect any amortization required by generally accepted accounting principles applied in the United States. Intangible assets acquired by purchase shall include any amounts allocated to goodwill or going concern valued pursuant to section 338(b)(3) and regulations thereunder. Intangible assets acquired by purchase shall not include assets that were acquired indirectly through an acquisition of stock to which section 338 does not apply. Such assets must be value pursuant to a method described in subdivision (ii) or (iii) of this paragraph (o)(4).

(ii) ***Book value.*** Intangible assets described in § 1.897-1(f)(1)(ii) (other than good will and going concern value) may be valued at the amount at which such assets are carried on the financial accounting records of the holder of such assets, provided that such amount is determined in accordance with generally accepted accounting principles applied in the United States. However, this method may not be used with respect to assets acquired by purchase from a related person within the meaning of § 1.897-1(i).

(iii) ***Other methods.*** Intangible assets described in § 1.897-1(f)(1)(ii) may be valued pursuant to any other reasonable method at an amount reflecting the price at which the asset would change hands between an unrelated willing buyer and willing seller, neither being under any compulsion to buy or to sell and both having reasonable knowledge of all relevant facts. However, a corporation that uses a method of valuation other than the purchase price or book value methods may be required to comply with the special notification requirements of § 1.897-2(h)(1)(iii)(A).

(p) ***Identifying number.*** The "identifying number" of an individual is the individual's United States social security number or the identification number assigned by the Internal Revenue Service (see § 301.6109-1 of this chapter). The "identifying number" of any other person is its United States employer identification number.

(Approved by the Office of Management and Budget under control number l545-0123)

(Sec. 897 (94 Stat. 2683; 26 U.S.C. 897), sec. 6011 (68A Stat. 732; 26 U.S.C. 6011) and sec. 7805 (68A Stat. 917; 26 U.S.C. 7805) of the Internal Revenue Code of 1954)

[T.D. 7999, 49 FR 50693, Dec. 31, 1984; 50 FR 12530, Mar. 29, 1985, as amended by T.D. 8113, 51 FR 46626, Dec. 24, 1986; T.D. 8198, 53 FR 16217, May 5, 1988; T.D. 8657, 61 FR 9343, Mar. 8, 1996; 61 FR 14248, Apr. 1, 1996; T.D. 9082, 68 FR 46082, Aug. 5, 2003; T.D. 9992, 89 FR 31626, Apr. 25, 2024; T.D. 9992, 89 FR 105451, Dec. 27, 2024]

§ 1.897-2 United States real property holding corporations.

(a) ***Purpose and scope.*** This section provides rules regarding the definition and consequences of U.S. real property holding corporation status. U.S. real property holding corporation status is important for determining whether gain from the disposition by a foreign person of an interest in a domestic corporation is taxable. Such status is also important for purposes of the withholding and reporting requirements of sections 1445 and 6039C. For example, a person that buys stock of a U.S. real property holding corporation from a foreign person is required to withhold under section 1445. In addition, for purposes of determining whether another corporation is a U.S. real property holding corporation, an interest in a foreign corporation is a U.S. real property interest unless it is established that the foreign corporation is not a U.S. real property holding corporation. The general definition of a U.S. real property holding corporation is provided in paragraph (b) of this section. Paragraph (c) provides rules regarding the dates on which U.S. real property holding corporation status must be determined. The assets that must be included in making the determination of a corporation's status are set forth in paragraph (d), while paragraph (e) provides special rules regarding the treatment of interests held by a corporation in partnerships, trusts, estates, and other corporations. Rules regarding the termination of U.S. real property holding corporation status are set forth in paragraph (f). Paragraph (g) explains the manner in which an interest-holder can establish that a corporation is not a U.S. real property holding corporation, and paragraph (h) provides rules regarding certain notification requirements applicable to corporations.

(b) ***U.S. real property holding corporation*** —

(1) ***In general.*** A corporation is a U.S. real property holding corporation if the fair market value of the U.S. real property interests held by the corporation on any applicable determination date equals or exceeds 50 percent of the sum of the fair market values of its—

(i) U.S. real property interests;

(ii) Interests in real property located outside the United States; and

(iii) Assets other than those described in subdivision (i) or (ii) of this paragraph (b)(1) that are used or held for use in its trade or business.

See paragraphs (d) and (e) of this section for rules regarding the directly and indirectly held assets that must be included in the determination of whether a corporation is a U.S. real property holding corporation. The term "interest in real property located outside the United States" means an interest other than solely as a creditor (as defined in § 1.897-1(d)) in real property (as defined in § 1.897-(b)) that is located outside the United States or the Virgin Islands. If a corporation qualifies as a U.S. real property holding corporation on any applicable determination date after June 18, 1980, any interest in it shall be treated as a U.S. real property interest for a period of five years from that date, unless the provisions of paragraph (f)(2) of this section are applicable.

(2) *Alternative test* —

(i) ***In general.*** The fair market value of a corporation's U.S. real property interests shall be presumed to be less than 50 percent of the fair market value of the aggregate of its assets described in paragraphs (d) and (e) of this section if on an applicable determination date the total book value of the U.S. real property interests held by the corporation is 25 percent or less of the book value of the aggregate of the corporation's assets described in paragraphs (d) and (e) of this section.

(ii) ***Definition of book value.*** For purposes of this section and § 1.897-1(e) the term "book value" shall be defined as follows. In the case of assets that are held directly by the corporation, the term means the value at which an item is carried on the financial accounting records of the corporation, if such value is determined in accordance with generally accepted accounting principles applied in the United States. In the case of assets of which a corporation is treated as holding a pro rata share pursuant to paragraphs (e) (2) and (3) of this section and § 1.897-1(e), the term "book value" means the corporation's share of the value at which the asset is carried on the financial accounting records of the entity that directly holds the asset, if such value is determined in accordance with generally accepted accounting principles applied in the United States. For purposes of this paragraph (b)(2)(ii), an entity need not keep all of its books in accordance with U.S. accounting principles, so long as the value of the relevant assets is determined in accordance therewith.

(iii) ***Denial of presumption.*** If the Internal Revenue Service determines, on the basis of information as to the fair market values of a corporation's assets, that the presumption allowed by this paragraph (b)(2) may not accurately reflect the status of the corporation, the Service will notify the corporation that it may not rely upon the presumption. The Service will provide a written notice to the corporation that sets forth the general grounds for the Service's conclusion that the presumption may be inaccurate. By the 90th day following the date on which the corporation receives the Service's notification, the corporation must determine whether on its most recent determination date it was a U.S. real property holding corporation pursuant to the general rule set forth in paragraph (b)(1) of this section and must notify the Service of its determination. If the corporation determines that it was not a U.S. real property holding corporation pursuant to the general rule, then the corporation may upon future determination dates rely upon the presumption allowed by this paragraph (b)(2), unless on the basis of additional information the Service again requests that the determination be made pursuant to the general rule. If the corporation determines that it was a U.S. real property holding corporation on its most recent determination date, then by the 180th day following the date on

which the corporation received the Service's notification the corporation (if a domestic corporation) must notify each holder of an interest in it that contrary to any prior representations it was a U.S. real property holding corporation as of its most recent determination date.

(iv) ***Applicability of penalties.*** A corporation that had previously relied upon the presumption allowed by this paragraph (b)(2) but that is determined to be a U.S. real property holding corporation shall not be subject to penalties for any incorrect notice previously given pursuant to the requirements of paragraph (h) of this section, if:

(A) The corporation in fact carried out the necessary calculations enabling it to rely upon the presumption allowed by this paragraph (b)(2); and

(B) The corporation complies with the provisions of paragraph (b)(2)(iii) of this section. However, a corporation shall remain subject to any applicable penalties if at the time of its reliance on the presumption allowed by this paragraph (b)(2) the corporation knew that the book value of relevant assets was substantially higher or lower than the fair market value of those assets and therefore had reason to believe that under the general test of paragraph (b)(1) of this section the corporation would probably be a U.S. real property holding corporation. Information with respect to the fair market value of its assets is known by a corporation if such information is included on any books and records of the corporation or its agent, is known by its directors or officers, or is known by employees who in the course of their employment have reason to know such information. A corporation relying upon the presumption allowed by this paragraph (b)(2) has no affirmative duty to determine the fair market values of assets if such values are not otherwise known to it in accordance with the preceding sentence. The rules of this paragraph (b)(2)(iv) may be illustrated by the following examples.

Example 1. DC is a domestic corporation engaged in light manufacturing that knows that it has foreign shareholders. On its December 31, 1985 determination date DC held assets used in its trade or business, consisting largely of recently-purchased equipment, with a book value of $500,000. DC's only real property interest was a factory that it had occupied for over 50 years, which had a book value of $200,000. The factory was located in a deteriorated downtown area, and DC had no knowledge of any facts indicating that the fair market value of the property was substantially higher than its book value. Therefore, DC was entitled to rely upon the presumption allowed by § 1.897-2(b)(2) and any incorrect statement pursuant to § 1.897-2(h) that arose out of such reliance would not give rise to penalties.

Example 2. The facts are the same as in Example 1, except as follows. By the time of DC's December 31, 1989 determination date, the downtown area in which DC's factory was located had become the subject of an extensive urban renewal program. On December 1, 1989, the president of DC was offered $750,000 for the factory by a developer who planned to convert the property into condominiums. Because DC thus had knowledge of the fair market value of its assets which made it clear that the corporation would probably be a U.S. real property holding corporation under the general rule of § 1.897-2(b)(1), DC was not entitled to rely upon the presumption allowed by § 1.897-2(b)(2) after December 1, 1989, and any false statements arising out of such reliance thereafter would give rise to penalties.

(v) ***Effect on interest-holders and related persons.*** For the effect on interest holders and related persons of reliance on a statement issued by a corporation that made a determination as to whether it was a U.S. real property holding corporation under the provisions of § 1.897-2(b), see §§ 1.897-2(g)(1)(ii)(A) and 1.897-2(g)(2)(ii).

(c) ***Determination dates for applying U.S. real property holding corporation test*** —

(1) ***In general.*** Whether a corporation is a U.S. real property holding corporation is to be determined as of the following dates:

(i) The last day of the corporation's taxable year;

(ii) The date on which the corporation acquires any U.S. real property interest;

(iii) The date on which the corporation disposes of an interest in real property located outside the United States or disposes of other assets used or held for use in a trade or business during the calendar year, subject to the provisions of paragraph (c)(2)(i) of this section; and

(iv) In the case of a corporation that is treated pursuant to paragraph (d)(4) or (5) of this section as owning a portion of the assets held by an entity in which the corporation directly or indirectly holds an interest, the date on which that entity either

(A) acquires a U.S. real property interest,

(B) disposes of an interest in real property located outside the United States or

(C) disposes of other assets used or held for use in a trade or business during the calendar year, subject to the provisions of paragraph (c)(2)(ii) of this section. A determination that is triggered by a transaction described in subdivision (ii), (iii), or (iv) of this paragraph (c)(1) must take such transaction into account. However, the first determination of a corporation's status need not be made until the 120th day after the later of the date of incorporation or of the date on which the corporation first acquires a shareholder. In addition, no determination of a corporation's status need be made during the 12-month period beginning on the date on which a corporation adopts a plan of complete liquidation, provided that all the assets of the corporation (other than assets retained to meet claims) are distributed within such period.

(2) ***Transactions not requiring a determination*** —

(i) ***Transactions by corporation.*** Notwithstanding the provisions of paragraph (c)(1) of this section, a determination of U.S. real property holding corporation status need not be made on the date of:

(A) A corporation's disposition of inventory or livestock (as described in § 1.897-1(f)(1)(i) (A) and (C));

(B) The satisfaction of accounts receivable arising from the disposition of inventory or livestock or from the performance of services;

(C) The disbursement of cash to meet the regular operating needs of the business (e.g., to acquire inventory or to pay wages and salaries);

(D) A corporation's disposition of assets used or held for use in a trade or business (other than inventory or livestock) not in excess of a limitation amount determined in accordance with the rules of subdivision (iii) of this paragraph (c)(2); or

(E) A corporation's acquisition of U.S. real property interests not in excess of a limitation amount determined in accordance with the rules of subdivision (iii) of this paragraph (c)(2).

(ii) ***Transactions by entity other than corporation.*** Notwithstanding the provisions of paragraph (c)(1)(iv) or (c)(2)(v) of this section, in the case of a corporation that is treated as owning a portion of the assets held by an entity in which the corporation directly or indirectly holds an interest, a determination of U.S. real property holding corporation status need not be made on the date of:

(A) The entity's disposition of inventory or livestock (as described in § 1.897-1(f)(1)(i) (A) and (C));

(B) The satisfaction of accounts receivable arising from the entity's disposition of inventory or livestock or from the performance of personal services;

(C) The entity's disbursement of cash to meet the regular operating needs of its business (e.g. to acquire inventory or to pay wages and salaries);

(D) The entity's disposition of assets used or held for use in a trade or business (other than inventory or livestock) not in excess of a limitation amount determined in accordance with the rules of subdivision (iii) of this paragraph (c)(2); or

(E) The entity's acquisition of U.S. real property interests not in excess of a limitation amount determined in accordance with the rules of subdivision (iii) of this paragraph (c)(2).

(iii) ***Calculation of limitation amount.*** The amount of assets used or held for use in a trade or business that may be disposed of, and the amount of U.S. real property interests that may be acquired, by a corporation or other entity without triggering a determination date shall be calculated in accordance with the following rules:

(A) If, in accordance with the provisions of paragraphs (d) and (e) of this section, a corporation on its most recent determination date was considered to hold U.S. real property interests having a fair market value that was less than 25 percent of the aggregate fair market value of all the assets it was considered to hold, then the applicable limitation amount shall be 10 percent of the fair market value of all trade or business assets or all U.S. real property interests (as applicable) held directly by the corporation or by another entity described in paragraph (c)(1)(iv) of this section on that determination date.

(B) If, in accordance with the provisions of paragraphs (d) and (e) of this section, a corporation on its most recent determination date was considered to hold U.S. real property interests having a fair market value that was equal to or greater than 25 and less than 35 percent of the aggregate fair market value of all the assets it was considered to hold, then the applicable limitation amount shall be 5 percent of the fair market value of all trade or business assets or all U.S. real property interests (as applicable) held directly by the corporation or by another entity described in paragraph (c)(1)(iv) of this section on that determination date.

(C) If, in accordance with the provisions of paragraphs (d) and (e) of this section, a corporation on its most recent determination date was considered to hold U.S. real property interests having a fair market value that

was equal to or greater than 35 percent of the aggregate fair market value of all the assets it was considered to hold, then the applicable limitation amount shall be 2 percent of the fair market value of all trade or business assets or all U.S. real property interests (as applicable) held directly by the corporation or by another entity described in paragraph (c)(1)(iv) of this section on that determination date.

(D) If a corporation is not a U.S. real property holding corporation under the alternative test of paragraph (b)(2) of this section (relating to the book value of the corporation's assets), then the applicable limitation shall be 10 percent of the book value of all trade or business assets or all U.S. real property interests (as applicable) held directly by the corporation or by another entity described in paragraph (c)(1)(iv) of this section on the most recent determination date.

Dispositions or acquisitions by the corporation or other entity of assets having a value less than the applicable limitation amount must be cumulated by the corporation or entity making such dispositions or acquisitions, and a determination must be made on the date of a transaction that causes the total of either type to exceed the applicable limitation. Once a determination is triggered by a transaction that causes the applicable limitation to be exceeded, the computation of the amount of trade or business assets disposed of or real property interests acquired after that date shall begin again at zero.

The rules of this paragraph (c)(2) may be illustrated by the following examples.

Example 1. DC is a domestic corporation, no class of stock of which is regularly traded on an established securities market, that knows that it has several foreign shareholders. As of December 31, 1984, DC holds U.S. real property interests with a fair market value of $500,000, no real property interests located outside the U.S. and other assets used in its trade or business with a fair market value of $1,600,000. Thus, the fair market value of DC's U.S. real property interests ($500,000) is less than 25% ($525,000) of the total ($2,100,000) of DC's U.S. real property interests ($500,000), interests in real property located outside the United States (zero), and assets used or held for use in a trade or business ($1,600,000). DC is not a U.S. real property holding corporation, and under the rule of paragraph (c)(2)(i) of this section it may dispose of trade or business assets with a fair market value equal to 10 percent ($160,000) of the total fair market value ($1,600,000) of such assets held by it on its most recent determination date (December 31, 1984), without triggering a determination of its U.S. real property holding corporation status. Therefore, when DC disposes of $60,000 worth of trade or business assets (other than inventory or livestock) on March 1, 1985, and again on April 1, 1985, no determination of its status is required on either date. However, when DC disposes of a further $60,000 worth of such trade or business assets on May 1, its total dispositions of such assets ($180,000) exceeds its applicable limitation amount, and DC is therefore required to determine its U.S. real property holding corporation status. On May 1, 1985, the fair market value of DC's U.S. real property interests ($500,000) is greater than 25 percent ($480,000) and less than 35 percent ($672,000) of the total ($1,920,000) of DC's U.S. real property interests ($500,000), interests in real property located outside the United States (zero), and assets used or held for use in a trade or business ($1,420,000). DC is still not a U.S. real property holding corporation, but must now compute its applicable limitation amount as of the May 1 determination date. Under the rule of paragraph (c)(2)(iii)(B) of this section. DC could now dispose of trade or business assets other than inventory or livestock with a total fair market value equal to 5 percent of the fair market value of all trade or business assets held by DC on

the May 1 determination date. Therefore, disposition of such trade or business assets with a fair market value of more than $71,000 (5 percent of $1,420,000) will trigger a further determination date for DC.

Example 2. DC is a domestic corporation, no class of stock of which is regularly traded on an established securities market, that knows that it has several foreign shareholders. As of December 31, 1986, DC's only assets are a U.S. real property interest with a fair market value of $300,000 other assets used or held for use in its trade or business with a fair market value of $600,000, and a 50 percent partnership interest in domestic partnership DP. DC's interest in DP constitutes a percentage ownership interest in the partnership of 50 percent, and pursuant to the rules of paragraph (e)(2) of this section DC is treated as owning a portion of the assets of DP determined by multiplying that percentage by the fair market value of DP's assets. As of December 31, 1986, DP's only assets are U.S. real property interests with a fair market value of $120,000 and other assets used in its trade or business with a fair market value of $380,000. As of its December 31, 1986, determination date, the fair market value ($360,000) of the U.S. real property interests DC holds ($300,000) and is treated as holding ($80,000 [The fair market value of DP's U.S. real property interest ($120,000) multiplied by DC's percentage ownership interest in DP (50 percent)]), is equal to 31 percent of the sum of the fair market values ($1,150,000) of the U.S. real property interests DC holds and is treated as holding ($360,000) DC's interest in real property located outside the United States (zero), and assets used or held for use in a trade or business that DC holds or is treated as holding ($790,000 [$600,000 (held directly) plus $190,000 (DC's 50 percent share of assets used or held for use in a trade or business by DP)]). Thus, under the rules of paragraph (c)(2) (i) and (iii)(B) of this section DC may dispose of assets used or held for use in its trade or business with a fair market value equal to 5 percent ($30,000) of the total fair market value ($600,000) of such assets held directly by it on its most recent determination date (December 31, 1986), without triggering a determination of its U.S. real property holding corporation status. In addition, under the rules of paragraph (c)(2) (ii) and (iii)(A) of this section, a determination date for DC would not be triggered by DP's disposition of trade or business assets (other than inventory or livestock) with a fair market value equal to 5 percent ($19,000) of the total fair market value ($380,000) of such assets held by it as of DC's most recent determination date (December 31, 1986). However, any disposition of such assets by DP exceeding that limitation would trigger a determination of DC's U.S. real property holding corporation status. In addition under the rule of paragraph (c)(1)(iv) of this section, any disposition of a U.S. real property interest by DP would trigger a determination date for DC, while under the rule of paragraph (c)(2)(ii) of this section no disposition of inventory or livestock by DP would trigger a determination for DC.

(3) ***Alternative monthly determination dates*** —

(i) ***In general.*** Notwithstanding the provisions of paragraphs (c) (1) and (2) of this section, a corporation may choose to determine its U.S. real property holding corporation status in accordance with the rules of this paragraph (c)(3). In the case of a corporation that has determined that it is not a U.S. real property holding corporation pursuant to the alternative test of paragraph (b)(2) of this section (relating to the book value of the corporation's assets), the rules of this paragraph (c)(3) may be applied by using book values rather than fair market values in all relevant calculations.

(ii) ***Monthly determinations.*** A corporation that determines its U.S. real property holding corporation status in accordance with the rules of this paragraph (c)(3) must make a determination at the end of each calendar month.

(iii) ***Transactional determinations.*** A corporation that determines its U.S. real property holding corporation status in accordance with the rules of this paragraph (c)(3) must make a determination as of the date on which, pursuant to a single transaction (consisting of one or more transfers):

(A) U.S. real property interests are acquired, and/or

(B) Interests in real property located outside the U.S. and/or assets used or held for use in a trade or business are disposed of,

if the total fair market value of the assets acquired and/or disposed of exceeds 5 percent of the sum of the fair market values of the U.S. real property interests, interests in real property located outside the U.S., and assets used or held for use in a trade or business held by the corporation.

(iv) ***Exceptions.*** Notwithstanding any other provision of this paragraph (c)(3), the first determination of a corporation's status need not be made until the 120th day after the later of the date of incorporation or the date on which the corporation first acquires a shareholder. In addition, no determination of a corporation's status need be made during the 12-month period beginning on the date on which a corporation adopts a plan of complete liquidation, if all the assets of the corporation (other than assets retained to meet claims) are distributed within such period.

(4) ***Valuation date methods*** —

(i) ***In general.*** For purposes of determining whether a corporation is a U.S. real property holding corporation on any applicable determination date, the fair market value of the assets held by the corporation (in accordance with § 1.897-2(d)) as of that determination date must be used.

(ii) ***Alternative valuation date method for determination dates other than the last day of the taxable year.*** For purposes of paragraph (c)(4)(i) of this section, if an applicable determination date under paragraph (c) (1), (2), or (3) of this section is other than the last day of the taxable year, property may be valued as of the later of the last day of the previous taxable year or the date such property was acquired. For purposes of the determination date that falls on the last day of the taxable year, fair market value as of that date must always be used.

(iii) ***Consistent methods.*** The valuation date method selected under this paragraph (c)(4) for the first determination date in a taxable year must be used for all subsequent determination dates for such year. In addition, the valuation date method selected must be used for all property with respect to which the determination is made. The use of one method for one taxable year does not preclude the use of the other method for any other taxable year.

(5) ***Illustrations.*** The rules of this paragraph (c) are illustrated by the following examples:

Example 1. Nonresident alien individual C purchased 100 shares of stock of domestic corporation K on July 26, 1985. Although K has additional shares of common stock outstanding, its stock has never been traded on an established securities market. At all times during calendar year 1985, K's only assets were a parcel of U.S. real estate (parcel A) and a parcel of country Z real estate (parcel B). On December 31, 1985, the fair market value of parcel A was $1,000,000 and the fair market value of parcel B was $2,000,000. For purposes of determining whether K was a U.S. real property holding corporation during 1985, the only applicable determination date was December 31, 1985, because K did not make any acquisitions or dispositions described in paragraph (c)(1) of this section during the year. The test of paragraph (b) of this section is applied using the fair market value of the property

held on that date. K was not a U.S. real property holding corporation during 1985 because as of December 31, 1985, the fair market value ($1,000,000) of the U.S. real property interests held by K did not equal or exceed 50 percent ($1,500,000) of the sum ($3,000,000) of the fair market value of K's U.S. real property interest ($1,000,000), the interests in real property located outside the United States ($2,000,000), plus other assets used or held for use by K in a trade or business (zero).

Example 2. The facts are the same as in example 1, except that on April 7, 1986, K purchased another parcel of U.S. real estate for $2,000,000. K's purchase of real property on April 7 triggered a determination on that date. As provided in paragraph (c)(3)(ii) of this section, K chooses to use the value of parcels A and B as of the previous December 31, while newly acquired parcel C must be valued as of its acquisition on April 7, 1986. On that date, K qualifies as a U.S. real property holding corporation, since the fair market value of its U.S. real property interests ($3,000,000) exceeds 50 percent ($2,500,000) of the sum ($5,000,000) of the fair market value of K's U.S. real property interests ($3,000,000), its interests in real property located outside the U.S. ($2,000,000), and its other assets used or held for use in a trade or business (zero).

(d) ***Assets held by a corporation.*** The assets that must be included in the determination of whether a corporation is a U.S. real property holding corporation are the following:

(1) U.S. real property interests that are held directly by the corporation (including directly-held interests in foreign corporations that are treated as U.S. real property interests pursuant to the rules of paragraph (e)(1) of this section);

(2) Interests in real property located outside the United States that are held directly by the corporation;

(3) Assets used or held for use in a trade or business that are held directly by the corporation;

(4) A proportionate share of assets held through a partnership, trust, or estate pursuant to the rules of paragraph (e)(2) of this section; and

(5) A proportionate share of assets held through a domestic or foreign corporation in which a corporation holds a controlling interest, pursuant to the rules of paragraph (e)(3) of this section.

(e) ***Special rules regarding assets held by a corporation*** —

(1) ***Interests in foreign corporations.*** For purposes only of determining whether any corporation is a U.S. real property holding corporation, an interest in a foreign corporation shall be treated as a U.S. real property interest unless it is established that the interest was not a U.S. real property interest under the rules of this section on the applicable determination date. The rules of paragraph (g)(2) of this section must be complied with to establish that the interest is not a U.S. real property interest. However, regardless of whether an interest in a foreign corporation is treated as a U.S. real property interest for this purpose, gain or loss from the disposition of an interest in such corporation will not be treated as effectively connected with the conduct of a U.S. trade or business by reason of section 897(a). The rules of this paragraph (e)(1) are illustrated by the following examples. In each example, fair market value is determined as of the applicable determination dates under paragraph (c)(4)(i) of this section.

Example 1. Nonresident alien individual F holds all of the stock of domestic corporation DC. DC's only assets are 40 percent of the stock of foreign corporation FC, with a fair market value of $500,000, and a parcel of country W real estate, with a fair market value of $400,000. Foreign corporation FP, unrelated to DC, holds the other 60 percent of the stock of FC. FC's only asset is a parcel of U.S. real estate with a fair market value of $1,250,000. FC is a U.S. real property

holding corporation because the fair market value of its U.S. real property interests ($1,250,000) exceeds 50 percent ($625,000) of the sum of the fair market values of its U.S. real property interests ($1,250,000), its interests in real property located outside the United States (zero), plus its other assets used or held for use in a trade or business (zero). Consequently DC's interest in FC is treated as a U.S. real property interest under the rules of this paragraph (e)(1). DC is a U.S. real property holding corporation because the fair market value ($500,000) of its U.S. real property interest (the stock of FC) exceeds 50 percent ($450,000) of the sum ($900,000) of the fair market value of its U.S. real property interests ($500,000), its interests in real property located outside the United States ($400,000), plus its other assets used or held for use in a trade or business (zero). If F disposes of her stock within 5 years of the current determination date, her gain or loss on the disposition of her stock in DC will be treated as effectively connected with a U.S. trade or business under section 897(a). However, FP's gain on the disposition of its FC stock would not be subject to the provisions of section 897(a) because the stock of FC is a U.S. real property interest only for purposes of determining whether DC is a U.S. real property holding corporation.

Example 2. Nonresident alien individual B holds all of the stock of domestic corporation US. US's only assets are 40 percent of the stock of foreign corporation FC1. Nonresident alien individual N, unrelated to US, holds the other 60 percent of FC1's stock. FC1's only assets are 40 percent of the stock of foreign corporation FC2. The remaining 60 percent of the stock of FC2 is owned by nonresident alien individual X, who is unrelated to FC1. FC2's only asset is a parcel of U.S. real estate with fair market value of $1,000,000. FC2, therefore, is a U.S. real property holding corporation, and the stock of FC2 held by FC1 is a U.S. real property interest for purposes of determining whether FC1 is a U.S. real property holding corporation (but not for purposes of treating FC1's gain from the disposition of FC2 stock as effectively connected with a U.S. trade or business under section 897(a)). As all of FC1's assets are U.S. real property interests, the stock of FC1 held by US is a U.S. real property interest for purposes of determining whether US is a U.S. real property holding corporation (but not for purposes of subjecting N's gain on the disposition of FC1 stock to the provisions of section 897(a)). As US is a domestic corporation and as all of its assets are U.S. real property interests, US is a U.S. real property holding corporation, and the stock of US held by B is a U.S. real property interest for purposes of section 897(a)). Therefore, B's gain or loss upon the disposition of the stock of US within 5 years of the most recent determination date is subject to the provisions of section 897(a).

(2) Proportionate ownership of assets held by partnerships, trusts, and estates. For purposes of determining whether a corporation is a U.S. real property holding corporation, a holder of an interest in a partnership, a trust, or an estate (whether domestic or foreign) shall be treated pursuant to section 897(c)(4)(B) as holding a proportionate share of the assets held by the entity.

However, a holder of an interest shall not be treated as holding a proportionate share of assets that in the hands of the entity are subject to the rule of § 1.897-1(f)(3)(ii) (concerning the trade or business assets of investment companies). Such proportionate share is to be determined in accordance with the rules of § 1.897-1(e) on each applicable determination date. The interest in the entity shall itself be disregarded when a proportionate share of the entity's assets is attributed to the interest-holder pursuant to the rule of this paragraph (e)(2). Any asset treated as held by a holder of an interest by reason of this paragraph (e)(2) which is used or held for use in a trade or business by the partnership, trust, or estate shall be treated as so used or held for use by the holder of the interest. The proportionate ownership rule of this

paragraph (e)(2) applies successively upward through a chain of ownership. The proportionate ownership rule of this paragraph (e)(2) is illustrated by the following examples. In each example fair market value is determined as of the applicable determination date under paragraph (c)(4)(i) of this section.

Example 1. Nonresident alien individual F holds all of the stock of domestic corporation DC. DC is a partner in foreign partnership FP, and DC's percentage ownership interest in FP is 50 percent. DC's other assets are a parcel of country F real estate with a fair market value of $500,000 and other assets which it uses in its business with a fair market value of $100,000, FP's assets are a parcel of country Z real estate with a fair market value of $300,000 and a parcel of U.S. real estate with a fair market value of $2,000,000. For purposes of determining whether DC is a U.S. real property holding corporation, DC is treated as holding its pro rata share of the assets held by FP. DC's pro rata share of the U.S. real estate held by FP is $1,000,000, determined by multiplying the fair market value ($2,000,000) of the U.S. real property interests held by FP by DC's percentage ownership interest in FP (50 percent). DC's pro rata share of the country Z real estate held by FP is $150,000, determined in the same manner. DC is a U.S. real property holding corporation because the fair market value ($1,000,000) of its U.S. real property interests (the U.S. real estate it is treated as holding proportionately) exceeds 50 percent ($875,000) of the sum ($1,750,000) of the fair market value of its U.S. real property interests ($1,000,000), its interests in real property located outside the United States [($650,000) (its country F real estate and its pro rata share of the country Z real estate)], plus its other assets which are used or held for use in a trade or business ($100,000). Because DC is a domestic U.S. real property holding corporation, the stock of DC is a U.S. real property interest and F's gain or loss on the disposition of this DC stock within 5 years of the current determination date will be treated as effectively connected with a U.S. trade or business under section 897(a).

Example 2. Nonresident alien individual B holds all of the stock of domestic corporation US. US is a beneficiary of foreign trust FT. US's percentage ownership interest in FT is 90 percent. US has no other assets. FT is a partner in domestic partnership DP. FT's percentage ownership interest in DP is 30 percent. FT has no other assets. DP's only asset is a parcel of U.S. real estate with a fair market value of $1,000,000. FT is treated as holding U.S. real estate with a fair market value of $300,000 (30 percent of the U.S. real estate held by DP with a fair market value of $1,000,000). For purposes of determining whether US is a U.S. real property holding corporation, the proportionate ownership rule is applied successively upward through the chain of ownership. Thus, US is treated as holding 90 percent of FT's $300,000 pro rata share of the U.S. real estate held by DP. US is a U.S. real property holding corporation because the fair market value ($270,000) of its U.S. real property interests (its pro rata share of the U.S. real estate held by DP) exceeds 50 percent ($135,000) of the sum of the fair market values of its U.S. real property interests ($270,000), its interests in real property located outside the United States (zero), plus its other assets used or held for use in a trade or business (zero). Because US is a domestic U.S. real property holding corporation, the stock of US is a U.S. real property interest, and B's gain or loss from the disposition of US stock within 5 years of the current determination date will be treated as effectively connected with a U.S. trade or business under section 807(a).

(3) ***Controlling interests in corporations.*** For purposes only of determining whether a corporation is a U.S. real property holding corporation, if the corporation (the "first corporation") holds a controlling interest in a second corporation—

(i) The first corporation is treated as holding a proportionate share of each asset (i.e., U.S. real property interests, interests in real property located outside the United States, and assets used or held for use in a trade or business) held by the second corporation, determined in accordance with the rules of § 1.897-1(e);

(ii) Any asset so treated as held proportionately by the first corporation which is used or held for use by the second corporation in a trade or business shall be treated as so used or held for use by the first corporation; and

(iii) Interests in the second corporation held by the first corporation are not themselves taken into account as U.S. real property interests (regardless of whether the second corporation is a U.S. real property holding corporation) or as trade or business assets. However, the first corporation shall not be treated as holding a proportionate share of assets that in the hands of the second corporation are subject to the rules of § 1.897-1(f)(3)(ii) (concerning the trade or business assets of investment companies). A determination of what portion of the assets of the second corporation are considered to be held by the first corporation shall be made as of the applicable dates for determining whether the first corporation is a U.S. real property holding corporation.

A "controlling interest" means 50 percent or more of the fair market value of all classes of stock of the corporation, determined as of the applicable determination date. In determining whether a corporation holds a controlling interest in another corporation, section 318(a) shall apply (except that sections 318(a)(2)(C) and (3)(C) are applied by substituting the phrase "5 percent" for "50 percent"). However, a corporation that does not directly hold any interest in a second corporation shall not be treated as holding a controlling interest in the second corporation by reason of the application of section 318(a)(3)(C). The rules of this paragraph (e)(3) apply successively upward through a chain of ownership. For example, if the second corporation owns a controlling interest in a third corporation, the rules of this paragraph shall be applied first to determine the portion of the assets of the third corporation that is considered to be held by the second corporation and then to determine the portion of the assets held and considered to be held by the second corporation that is considered to be held by the first corporation. The controlling interest rules of this paragraph (e)(3) apply, regardless of whether a corporation is domestic or foreign, whenever it is necessary to determine whether a corporation is a U.S. real property holding corporation. The rules of this paragraph (e)(3) are illustrated by the following examples. In each example fair market value is determined as of the applicable determination date under paragraph (c)(4)(i) of this section and no corporation holds constructively any interest not specified in the example.

Example 1. Nonresident alien individual N owns all of the stock of domestic corporation DC. DC's only assets are 60 percent of the fair market value of all classes of stock of foreign corporation FS and 60 percent of the fair market value of all classes of stock of domestic corporation DS. The percentage ownership interest of DC in each of FS and DS is 60 percent. The balance of the stock in FS and DS is held by nonresident alien individual B, who is unrelated to DC. FS's only asset is a parcel of country F real estate with a fair market value of $1,000,000. DS's only asset is a parcel of U.S. real estate with a fair market value of $2,000,000. The value of DC stock in FS and DS is not taken into account for purposes of determining whether DC is a U.S. real property holding corporation. Rather, because DC holds a controlling interest (60 percent) in each of FS and DS, DC is treated as holding a portion of each asset held by FS and DS. DC's portion of the country F real estate held by FS is $600,000, determined by multiplying the fair market value ($1,000,000) of the country F real estate by DC's percentage ownership interest (60 percent). Similarly, DC's portion of the U.S. real estate held by DS is $1,200,000 (60 percent of $2,000,000). DC is a U.S. real property holding corporation, because the fair market value

($1,200,000) of its U.S. real property interests (its portion of the U.S. real estate) exceeds 50 percent ($900,000) of the sum ($1,800,000) of the fair market values of its U.S. real property interests ($1,200,000), its interests in real property located outside the United States (the $600,000 portion of country F real estate), plus its other assets used or held for use in a trade or business (zero). Because DC is a domestic U.S. real property holding corporation, the stock of DC is a U.S. real property interest, and N's gain or loss on the disposition of DC stock within 5 years of the current determination date would be treated as effectively connected with a U.S. trade or business under section 897(a).

Example 2. (i) Nonresident alien individual F owns all of the stock of domestic corporation US1. US1's only asset is 85 percent of the fair market value of all classes of stock of domestic corporation US2. US2's only assets are 60 percent of the fair market value of all classes of stock of domestic corporation US3, with a fair market value of $600,000, and a parcel of country D real estate with a fair market value of $800,000. US3's only asset is a parcel of U.S. real estate with a fair market value of $2,000,000. The percentage ownership interest of F in US1 is 100 percent.
Although US1 owns 85 percent of the stock of US2, US1's percentage ownership interest in US2 is 75 percent, because US2 has other interests other than solely as a creditor outstanding. US2's percentage ownership interest in US3 is 60 percent.

(ii) US2 holds a controlling interest in US3, since it holds more than 50 percent of the fair market value of all classes of stock of US3. Consequently, the value of US2's stock in US3 is not taken into account in determining whether US2 is a U.S. real property holding corporation, even though US3 is a U.S. real property holding corporation. Instead, US2 is treated as holding a portion of the U.S. real estate held by US3. US2's portion of the U.S. real estate is $1,200,000, determined by multiplying US2's percentage ownership interest (60 percent) by the fair market value ($2,000,000) of the U.S. real estate. US1 holds a controlling interest in US2 (75 percent.). By reapplying the rules of paragraph (e)(3) of this section successively upward through the chain of ownership, US1's stock in US2 is not taken into account, and US1 is treated as holding a portion of the country D real estate held by US2 and the U.S. real estate which US2 is treated as holding proportionately. US1's portion of the country D real estate is $600,000, determined by multiplying US1's percentage ownership interest (75 percent) by the fair market value ($800,000) of the country D real estate. US1's portion of the U.S. real estate which US2 is treated as owning is $900,000, determined by multiplying US1's percentage ownership interest (75 percent) by the fair market value ($1,200,000) of US2's portion of U.S. real estate held by US3. US1 is a U.S. real property holding corporation, because the fair market value ($900,000) of its U.S. real property interests (its portion of US2's portion of U.S. real estate) is more than 50 percent ($750,000) of the sum ($1,500,000) of fair market values of its U.S. real property interests ($900,000), its interests in real property located outside the United States ($800,000), plus its other assets need or held for use

in a trade or business (zero). Because US1 is a U.S. real property holding corporation and is a domestic corporation, the stock of US1 is a U.S. real property interest, and F's gain or loss on the disposition of US1 stock within 5 years of the current determination date will be treated as effectively connected with a U.S. trade or business under section 897(a).

Example 3. Nonresident alien individual B holds all of the stock of domestic corporation DC. DC's only assets are 40 percent of the fair market value of all classes of stock of foreign corporation FC and a parcel of country R real estate with a fair market value of $100,000. FC's only asset is one parcel of U.S. real estate with a fair market value of $1,000,000. The fair market value of the FC stock held by DC is $200,000. FC is a U.S. real property holding corporation. Since DC does not hold a controlling interest in FC, the controlling interest rules of paragraph (e)(3) of this section do not apply to treat DC as holding a portion of the U.S. real estate held by FC. However, because FC is a U.S. real property holding corporation, the stock of FC is a U.S. real property interest for purposes of determining whether DC is a U.S. real property holding corporation. DC is a U.S. real property holding corporation because the fair market value ($200,000) of its U.S. real property interest (the stock of FC) exceeds 50 percent ($150,000) of the sum ($300,000) of the fair market values of its U.S. real property interest ($200,000), its interests in real property located outside the United States ($100,000), plus its other assets used or held for use in a trade or business (zero). Because DC is a U.S. real property holding corporation and is a domestic corporation, its stock is a U.S. real property interest, and B's gain or loss on the disposition of DC stock within 5 years of the current determination date would be subject to the provisions of section 897(a).

Example 4. Nonresident alien individual C owns all of the stock of domestic corporation DC1. DC1's only assets are 25 percent of the fair market value of all classes of stock of domestic corporation DC2, and a parcel of U.S. real estate with a fair market value of $100,000. The stock of DC2 is not an asset used or held for use in DC1's trade or business. DC2's only assets are a building located in the U.S. with a fair market value of $100,000 and manufacturing equipment and inventory with a fair market value of $200,000, DC2 is not a U.S. real property holding corporation. Since DC1 does not hold a controlling interest in DC2, the rules of this paragraph (e)(3) do not apply to treat DC1 as holding a portion of the assets held by DC2. In addition, since DC2 is not a U.S. real property corporation, its stock does not constitute a U.S. real property interest. Therefore, for purposes of determining whether DC1 is a real property holding corporation, its interest in DC2 is not taken into account. Since DC1's only other asset is a parcel of U.S. real estate, DC1 is a U.S. real property holding corporation, and C's gain or loss on the disposition of DC1 stock within 5 years of the current determination date would be subject to the provisions of section 897(a).

(4) ***Co-application of rules of this paragraph (e).*** The rules of this paragraph (e) apply in conjunction with one another for purposes of determining whether a corporation is a U.S. real property holding corporation. The rule of this paragraph (e)(4) is illustrated by the following example. In the example fair market value is determined as of the applicable determination date in accordance with paragraph (c)(4)(i) of this section.

Example. Nonresident alien individual B holds 100 percent of the stock of domestic corporation US. US's only asset is 10 percent of the stock of foreign corporation FC1. FC1's only asset is 100 percent of the stock of foreign corporation FC2. FC2's only asset is a 50 percent interest in domestic partnership DP. FC2's percentage ownership interest in DP is 50 percent. DP's only asset is a parcel

of U.S. real estate with a fair market value of $10,000,000. In determining whether US is a U.S. real property holding corporation, the rules of this paragraph (e) apply in conjunction with one another. Consequently, under paragraph (e)(2) of the section FC2 is treated as holding U.S. real estate with a fair market value of $5,000,000 (50 percent of $10,000,000, its pro rata share of real estate held by DP). Under paragraph (e)(3) of this section, FC1 is treated as holding 100 percent of the assets of FC2 (U.S. real estate with a fair market value of $5,000,000). FC1, therefore, is a U.S. real property holding corporation. Under paragraph (e)(1) of this section, the stock of FC1 is treated as U.S. real property interest. US is a U.S. real property holding corporation because 100 percent of its assets (the stock of FC1) are U.S. real property interests. As US is a U.S. real property holding corporation and is a domestic corporation, the stock of US is a U.S. real property interest, and B's gain or loss from the disposition of stock of US within 5 years of the current determination date will be subject to the provisions of section 897(a).

(f) ***Termination of U.S. real property holding corporation status*** —

(1) ***In general.*** A U.S. real property holding corporation may voluntarily determine its status as of the date of any acquisition or disposition of assets. If the fair market value of its U.S. real property interests on such date no longer equals or exceeds 50 percent of the fair market value of all assets described in paragraphs (d) and (e) of this section, such corporation shall cease to be U.S. real property holding corporation as of such date, and on the day that is five years after such date interests in such corporation shall cease to be treated as U.S. real property interests (unless subsequent transactions within the five-year period have caused the fair market value of the corporation's U.S. real property interests to equal or exceed 50 percent of the fair market value of assets described in paragraphs (d) and (e) of this section). A corporation that determines that interests in it have ceased to be U.S. real property interests pursuant to the rules of this paragraph (f) may so inform the Internal Revenue Service, as provided in paragraph (h) of this section.

(2) ***Early termination.*** Interests in a U.S. real property holding corporation shall immediately cease to be U.S. real property interests as of the first date on which the following conditions are met—

(i) The corporation does not hold any U.S. real property interests;

(ii) All of the U.S. real property interests directly or indirectly held by such corporation at any time during the previous five years (but disregarding any disposed of before June 19, 1980) either

(A) were directly of indirectly disposed of in transactions in which the full amount of the gain (if any) was recognized or

(B) ceased to be U.S. real property interests by reason of the application of this paragraph (f) to one or more other corporations; and

(iii) If the disposition occurs on or after December 18, 2015, neither the corporation nor any predecessor of the corporation was a regulated investment company or a real estate investment trust at any time during the shorter of the periods described in section 897(c)(1)(A)(ii).

For purposes of this paragraph (f)(2), a corporation that disposes of all U.S. real property interests other than a lease that has a fair market value of zero will be considered to have disposed of all of its U.S. real property interests, provided that the leased property is used in the conduct by the corporation of a trade or business in the United States. Such a lease may include an option to renew, but only if such option is for a renewal at fair market rental rates prevailing at the time of renewal.

(g) *Establishing that a corporation is not a U.S. real property holding corporation* —

(1) *Foreign persons disposing of interests* —

(i) ***In general.*** A foreign person disposing of an interest in a domestic corporation (other than an interest solely as a creditor) must establish that the interest was not a U.S. real property interest as of the date of disposition, either by:

(A) Obtaining a statement from the corporation pursuant to the provisions of subdivision (ii) of this paragraph (g)(1), or

(B) Obtaining a determination by the Commissioner, Small Business/Self Employed Division (SB/SE) pursuant to the provisions of subdivision (iii) of this paragraph (g)(1).

If the foreign person does not establish by either method that the interest disposed of was not a U.S. real property interest then the interest shall be presumed to have been a U.S. real property interest the disposition of which is subject to section 897(a). See paragraph (g)(3) of this section for certain exceptions to this rule. It should be noted that the rules of this section relate solely to interests in a corporation that are interests other than solely as a creditor. Therefore, a statement by a corporation or a determination by the Commissioner (under paragraphs (g) or (h) of this section) that an interest is not a U.S. real property interest depends solely upon whether or not the corporation was a U.S. real property holding corporation during the period described in section 897(c)(1)(A)(ii) (subject to certain special rules). The determination of whether an interest is one solely as a creditor is made under the rules of § 1.897-1(d).

(ii) *Statement from corporation* —

(A) ***In general.*** A foreign person disposing of an interest in a domestic corporation may establish that the interest was not a U.S. real property interest as of the date of the disposition by requesting and obtaining from the corporation a statement that the interest was not a U.S. real property interest as of that date. However, a corporation's statement shall not be valid for purposes of this rule, and thus may not be relied upon for purposes of establishing that an interest was not a U.S. real property interest, unless the corporation complies with the notice requirements of paragraph (h) (2) or (h)(4) of this section.

A foreign person that requests and obtains such a statement is not required to forward the statement to the Internal Revenue Service and is not required to take any further action to establish that the interest disposed of was not a U.S. real property interest. To qualify under this rule, the foreign person must obtain the corporation's statement no later than the date, including any extensions, on which a tax return would otherwise be due with respect to a disposition. A foreign person that relies in good faith upon a statement from the corporation is not thereby excused from filing a return and paying any taxes and interest due thereon if the corporation's statement is later found to have been incorrect. However, such reliance shall be taken into account in determining whether the foreign person shall be subject to any penalty for the previous failure to file. However, a foreign person that knew or had reason to know that a corporation's statement was incorrect is not entitled to rely upon such statement and shall remain liable for all applicable penalties.

(B) ***Coordination with section 1445.*** Pursuant to section 1445 and regulations thereunder, withholding of tax is not required with respect to a foreign person's disposition of an interest in a domestic corporation, if the transferee is furnished with a statement by the

corporation under paragraph (h) of this section that the interest is not a U.S. real property interest. A foreign person that obtains a corporation's statement for that purpose prior to the date of disposition may also rely upon the statement for purposes of this paragraph (g)(1)(ii), unless the corporation informs the foreign person (pursuant to paragraph (h)(1)(iv)(C) of this section) that it became a U.S. real property holding corporation after the date of the notice but prior to the actual date of disposition.

(iii) ***Determination by Commissioner*** —

(A) ***In general.*** A foreign person disposing of an interest in a domestic corporation may establish that the interest was not a U.S. real property interest as of the date of disposition by requesting and obtaining a determination to that effect from the Commissioner. Such a determination may be requested pursuant to the provisions of subdivision (B) or (C) of this paragraph (g)(1)(iii). A request for a determination should be addressed to: Commissioner, Small Business/Self Employed Division (SB/SE); S C3-413 NCFB, 500 Ellin Road, Lanham, MD 20706. A foreign transferor who has requested a determination by the Commissioner pursuant to the rules of this paragraph (g)(1)(iii) is not thereby excused from filing a return and paying any tax due by the date, including any extensions, on which such return and payment would otherwise be due with respect to a disposition. If the Commissioner subsequently determines and notifies the foreign transferor that the interest was not a U.S. real property interest, the foreign transferor shall be entitled to a refund of any taxes, penalties, and interest paid by reason of the application of section 897(a) pursuant to the rules of paragraph (g)(1)(i) of this section, together with any interest otherwise due on such refund, if a claim for refund is made within the applicable time limits.

(B) ***Determination based on Commissioner's information.*** A foreign person may request that the Commissioner make a determination based on information contained in the Commissioner's records, if:

(*1*) The foreign person made a request to the corporation for information as to the status of its interest no later than the 90th day before the date, including any extensions, on which a tax return would otherwise be due with respect to a disposition, and

(*2*) The corporation failed to respond to such request by the 30th day following the date the request was delivered to the corporation.

If the Commissioner is unable to make a determination based on information available to him, he shall inform the foreign person that the interest must be treated as a U.S. real property interest unless the person subsequently obtains either the necessary statement from the corporation or a determination pursuant to subdivision (C) of this paragraph (g)(1)(iii).

(C) ***Determination based on information supplied by foreign person.*** A foreign person may request that the Commissioner make a determination based on information supplied by the foreign person. Such information may be drawn, for example, from annual reports, financial statements, or records of the corporation, and must establish to the satisfaction of the Commissioner that the foreign person's interest was not a U.S. real property interest as of the date of disposition.

(D) ***Determination by Commissioner on his own motion.*** Notwithstanding any other provision of this section, a foreign person shall not treat the disposition of an interest in a domestic corporation as a disposition of a U.S. real property interest if such person is notified that the Commissioner has upon his own motion determined that the interest was not a U.S. real property interest as of the date of disposition.

(2) ***Corporations determining U.S. real property holding corporation status*** —

(i) ***In general.*** A corporation that must determine whether it is a U.S. real property holding corporation, and that holds an interest in another corporation (other than a controlling interest as defined in paragraph (e)(3) of this section), must determine whether or not that interest was a U.S. real property interest as of its own determination date, by either:

(A) Obtaining a statement from the second corporation pursuant to the provisions of subdivision (ii) of this paragraph (g)(2);

(B) Obtaining a determination by the Commissioner pursuant to the provisions of subdivision (iii) of this paragraph (g)(2); or

(C) Making an independent determination pursuant to the provisions of subdivision (iv) of this paragraph (g)(2).

A corporation that is unable to determine by any of the above methods whether its interest in a second corporation is a U.S. real property interest must presume that such interest is a U.S. real property interest.

(ii) ***Statement from corporation.*** A corporation may determine whether or not an interest in a second corporation was a U.S. real property interest as of its own determination date by obtaining from the second corporation a statement that the interest was not a U.S. real property interest as of that date. However, the second corporation's statement shall not be valid for purposes of this rule, and thus may not be relied upon for purposes of establishing that an interest was not a U.S. real property interest, unless such corporation complies with the notice requirements of paragraph (h)(2) or (h)(4) of this section.

A corporation that requests and obtains such a statement is not required to forward the statement to the Internal Revenue Service and is not required to take any further action to establish that the interest in the second corporation was not a U.S. real property interest. If the second corporation's statement is later found to have been incorrect, the first corporation shall not be subject to penalties arising out of past failures to comply with the requirements of section 897 or 1445, if such failures were attributable to reliance upon the second corporation's statement. By the 90th day following receipt of a notification from the Service or from the second corporation that a prior statement was incorrect, the first corporation must redetermine its status (as of its most recent determination date) and if appropriate notify the Internal Revenue Service that it is a U.S. real property holding corporation in accordance with paragraph (h)(1)(ii)(C) of this section. However, a corporation that knew or had reason to know that a second corporation's statement was incorrect is not entitled to rely upon such statement and shall remain liable for all applicable taxes, penalties, and interest arising out of the second corporation's status as a U.S. real property holding corporation.

(iii) ***Determination by Commissioner*** —

(A) ***In general.*** A corporation may determine whether or not an interest in a second corporation was a U.S. real property interest as of its own determination date by requesting and obtaining a determination to that effect from the Commissioner. Such a determination may be requested pursuant to the provisions of subdivision (B) or (C) of this paragraph (g)(2)(iii). A request for a determination must be addressed to: Commissioner, Small Business/Self Employed Division (SB/SE); S C3-413 NCFB, 500 Ellin Road, Lanhan, MD 20706. A corporation that has requested a determination by the Commissioner pursuant to the provisions of this paragraph is not thereby excused from taking any action required by section 897 or 1445 by the date on which such action would otherwise be due. However, the Commissioner may grant a reasonable extension of time for the satisfaction of any requirement if the Commissioner is satisfied that the corporation has not sought a determination pursuant to this paragraph (g)(2)(iii) for a principal purpose of delay.

(B) ***Determination based on Commissioner's information.*** A corporation may request that the Commissioner make a determination based on information contained in the Commissioner's records, if:

(*1*) The corporation made a request to the second corporation for information as to the status of its interest no later than the fifth day following the first corporation's determination date, and

(*2*) The second corporation failed to respond to such request by the 30th day following the date the request was delivered to the second corporation.

Pending his resolution of such a request, the Commissioner will generally grant an extension with respect to the change-of-status notification that may otherwise be required pursuant to paragraph (h)(1)(ii) of this section. If the Commissioner is unable to make a determination based on information available to him, he shall inform the corporation that the interest must be treated as a U.S. real property interest unless the corporation subsequently obtains either the necessary statement from the second corporation or a determination pursuant to paragraph (g)(2)(iii)(C) or (g)(2)(iv) of this section.

(C) ***Determination based on information supplied by corporation.*** A corporation may request that the Commissioner make a determination based on information supplied by the corporation. Such information may be drawn, for example, from annual reports, financial statements, or records of the second corporation, and must establish to the satisfaction of the Commissioner that the interest in the second corporation was not a U.S. real property interest as of the first corporation's determination date.

(D) ***Determination by Commissioner on his own motion.*** Notwithstanding any other provision of this section, a corporation shall not treat an interest in a second corporation as a U.S. real property interest if the corporation is notified that the Commissioner has upon his own motion determined that the interest in the second corporation is not a U.S. real property interest.

(iv) ***Independent determination by corporation.*** A corporation may independently determine whether or not an interest in a second corporation was a U.S. real property interest as of the first corporation's own determination date. Such determination must be based upon the best evidence available, drawn from annual reports, financial statements, records of the second corporation, or from any other source, that demonstrates to a reasonable certainty that the interest in the second corporation was not a U.S. real property interest. A corporation that

makes an independent determination pursuant to this paragraph (g)(2)(iv) shall be subject to the special notification rule of paragraph (h)(1)(iii)(D) of the section. If the Commissioner subsequently determines that the corporation's independent determination was incorrect, the corporation shall be subject to penalties for any past failure to comply with the requirements of section 897 or 1445 only if the corporation's determination was unreasonable in view of facts that the corporation knew or had reason to know.

(3) ***Requirements not applicable.*** If at any time during the calendar year any class of stock of a corporation is regularly traded on an established securities market, the requirements of this paragraph (g) shall not apply with respect to any holder of an interest in such corporation other than a person who holds an interest described in § 1.897-1(c)(2)(iii) (A) or (B). For example, a corporation determining whether it is a U.S. real property holding corporation need not ascertain from a regularly traded corporation in which it neither holds, nor has held during the period described in section 897(c)(1)(A)(ii), more than a 5 percent interest whether that regularly traded corporation is itself a U.S. real property holding corporation.

In addition, the requirements of this paragraph (g) do not apply to any holder of an interest in a domestically-controlled RETT, as defined in section 897(h)(4)(B).

(h) ***Notice requirements applicable to corporations*** —

(1) ***Statement to foreign interest-holder*** —

(i) ***In general.*** A domestic corporation must, within a reasonable period after receipt of a request from a foreign person holding an interest in it, inform that person whether the interest constitutes a U.S. real property interest. No particular form is required for this statement, which need only indicate the corporation's determination. The statement must be dated and signed by a responsible corporate officer who must verify under penalties of perjury that the statement is correct to his knowledge and belief.

(ii) ***Required determination.*** For purposes of the statement required by paragraph (h)(1)(i) of this section, an interest in a corporation is a U.S. real property interest if the corporation was a U.S. real property holding corporation on any determination date during the 5-year period ending on the date specified in the interest-holder's request, or on the date such request was received if no date is specified (or during such shorter period ending on the date that is applicable pursuant to section 897(c)(1)(A)(ii). However, an interest in a corporation is not a U.S. real property interest if such interest is excluded under section 897(c)(1)(B).

(2) ***Notice to the Internal Revenue Service.*** If a foreign interest holder requests that a domestic corporation provide a statement described in paragraph (h)(1) of this section, then such corporation must provide a notice to the Internal Revenue Service in accordance with this paragraph (h)(2). No particular form is required for such notice, but the following must be provided:

(i) A statement that the notice is provided pursuant to the requirements of § 1.897-2(h)(2);

(ii) The name, address, and identifying number of the corporation providing the notice;

(iii) The name, address, and identifying number (if any) of the foreign interest holder that requested the statement (this information may be omitted from the notice if fully set forth in the statement to the foreign interest holder attached to the notice).

(iv) Whether the interest in question is a U.S. real property interest;

(v) A statement signed by a responsible corporate officer verifying under penalties of perjury that the notice (including any attachments thereto) is correct to his knowledge and belief. A copy of any statement provided to the foreign interest holder must be attached to the notice. The notice must be mailed to the address specified in the Instructions for Form 8288 under the heading "Where To File" on or before the 30th day after the statement referred to in § 1.897-2(h)(1) is mailed to the interest holder that requested it. Failure to mail such notice within the time period set forth in the preceding sentence will cause the statement provided pursuant to § 1.897-2(h)(1) to become an invalid statement.

(3) ***Requirements not applicable.*** The requirements of this paragraph (h) do not apply to domestically-controlled qualified investment entities, as defined in section 897(h)(4)(B). *But see* § 1.1445-2(c)(3) for rules providing that no withholding is required under section 1445(a) in certain cases when a statement is voluntarily issued by the corporation and otherwise complies with the requirements of this paragraph (h). The requirements of this paragraph (h) also do not apply to a corporation any class of stock in which is regularly traded on an established securities market at any time during the calendar year. However, such a corporation may voluntarily choose to comply with the requirements of paragraph (h)(4) of this section.

(4) ***Voluntary notice to Internal Revenue Service*** —

(i) ***In general.*** A domestic corporation which determines that it is not a U.S. real property holding corporation—

(A) On each of the applicable determination dates in a taxable year, or

(B) Pursuant to section 897(c)(1)(B), may attach to its income tax return for that year a statement informing the Internal Revenue Service of its determination. A corporation that has provided a voluntary notice described in this § 1.897-2(h)(4)(i) for the immediately preceding taxable year and that does not have an event described in § 1.897-2(c)(1) (ii), (iii) or (iv) prior to receiving a request from a foreign person under § 1.897-2(h)(1), is exempt from the notice requirement of § 1.897-2(h)(2).

(ii) ***Early termination of real property holding corporation status.*** A corporation that determines during the course of its taxable year that interests in it have ceased to be U.S. real property interests pursuant to the rules of section 897(c)(1)(B) may, on the day of its determination or thereafter, provide a statement to the address specified in the Instructions for Form 8288 under the heading "Where To File", informing the Service of its determination. No particular form is required but the statement must set forth the corporation's name, address, identification number, a brief statement regarding its determination and the date such determination was made. Such statement will enable foreign interest-holders to dispose of their interests without being subject to section 897(a), as provided in paragraph (g) of this section.

(5) ***Supplemental statements*** —

(i) ***By corporations with substantial intangible assets.*** A corporation that is subject to the requirements of paragraph (h)(2) of this section (or that voluntarily complies with the requirements of paragraph (h)(4) of this section) must submit a supplemental statement to the Internal Revenue Service if—

(A) Such corporation values any of the intangible assets described in § 1.897-1(f)(1)(ii) (other than goodwill or going concern value) by a method other than the purchase price or book value methods described in § 1.897-1(o)(4); and

(B) The fair market value of such intangible assets equals or exceeds 25 percent of the total of the fair market values of the assets the corporation is considered to hold in accordance with the provisions of paragraphs (d) and (e) of this section.

The supplemental statement must inform the Internal Revenue Service that the corporation meets the criteria of subdivisions (A) and (B) of this paragraph (h)(5)(i), and must summarize the methods and calculations upon which the corporation's determination of the fair market value of its intangible assets is based. In addition, the supplemental statement must list any intangible assets that were purchased from any person that have been valued by the corporation at an amount other than their purchase price, and must provide a justification for such a departure from the purchase price. The supplemental statement must be attached to or incorporated in the statement provided under paragraph (h)(2) or (h)(4) of this section.

(ii) ***Corporation not valuing goodwill or going concern value at purchase price.*** A corporation that is subject to the requirements of paragraph (h)(2) of this section (or that voluntarily complies with the requirements of paragraph (h)(4) of this section) must submit a supplemental statement to the Internal Revenue Service if such corporation values goodwill or going concern value pursuant to § 1.897-1(o)(4)(iii). The supplemental statement must set forth that it is made pursuant to this paragraph (h)(5)(ii), and must summarize the methods and calculations upon which the corporation's determination of the fair market value of such intangible assets is based. In addition, the supplemental statement must list any such assets that were purchased from any person that have been valued by the corporation at an amount other than their purchase price, and must provide a justification for such a departure from the purchase price. The supplemental statement must be attached to or incorporated in the statement provided under paragraph (h)(2) or (h)(4) of this section.

(iii) ***Corporation using alternative U.S. real property holding corporation test.*** A corporation that is subject to the requirements of paragraph (h)(2) of this section (or that voluntarily complies with the requirements of paragraph (h)(4) of this section) must submit a supplemental statement to the Internal Revenue Service if—

(A) Such corporation utilizes the rule of paragraph (b)(2) of this section (regarding the book values of assets held by the corporation) to presume that it is not a U.S. real property holding corporation; and

(B) Such corporation is engaged in or is planning to engage in a trade or business of mining, farming, or forestry, or of buying and selling or developing real property, or of leasing real property to tenants.

The supplemental statement must inform the Internal Revenue Service that the corporation meets the criteria of subdivisions (A) and (B) of this paragraph (h)(5)(iii), and must be attached to or incorporated in the statement provided under paragraph (h)(2) or (h)(4) of this section.

(iv) ***Corporation determining real property holding corporation status of second corporation.*** A corporation that is subject to the requirements of paragraph (h)(2) of this section (or that voluntarily complies with the requirements of paragraph (h)(4) of this section) must submit a supplemental statement to the Internal Revenue Service if such corporation independently determines whether or not an interest in a second corporation is a U.S. real property interest, pursuant to paragraph (g)(2)(iv) of this section. The supplemental statement must set forth

that it is made pursuant to this paragraph (h)(5)(iv) and must briefly summarize the facts upon which the corporation's determination is based and the sources of the information relied upon by the corporation. The supplemental statement must be attached to or incorporated in the statement provided under paragraph (h)(2) or (h)(4) of this section.

(i) *Transition Rules* —

(1) ***General waiver of penalties for failure to file.*** If a foreign person disposed of an interest in a domestic corporation between June 18, 1980 and January 23, 1987, and such person establishes under the rules of paragraph (g) of this section at any time that the interest disposed of was not a U.S. real property interest, then such person shall not be subject to tax under section 897 and shall not be subject to penalties (or interest) for failure to file an income tax return with respect to such disposition.

(2) ***Foreign persons that met the requirements of prior regulations.*** A foreign person that disposed of an interest in a domestic corporation between June 18, 1980 and January 23, 1987, shall be deemed to have satisfied the requirements of paragraph (g) of this section with respect to such disposition if such person established under prior temporary or prior final regulations issued under section 897 that the interest disposed of was not a U.S. real property interest.

(Sec. 897 (94 Stat. 2683; 26 U.S.C. 897), sec. 6011 (68A Stat. 732; 26 U.S.C. 6011) and sec. 7805 (68A Stat. 917; 26 U.S.C. 7805) of the Internal Revenue Code of 1954)

[T.D. 7999, 49 FR 50702, Dec. 31, 1984; 50 FR 12531, Mar. 29, 1985; T.D. 8113, 51 FR 46627, Dec. 24, 1986; 52 FR 3796, 3916, Feb. 6, 1987; T.D. 9082, 68 FR 46083, Aug. 5, 2003; T.D. 9751, Feb. 19, 2016; T.D. 9992, 89 FR 31632, Apr. 25, 2024]

§ 1.897-3 Election by foreign corporation to be treated as a domestic corporation under section 897(i).

(a) ***Purpose and scope.*** This section provides rules pursuant to which a foreign corporation may elect under section 897(i) to be treated as a domestic corporation for purposes of sections 897, 1445, and 6039C and the regulations thereunder. A foreign corporation with respect to which an election under section 897(i) is in effect is subject to all rules under sections 897 and 1445 that apply to domestic corporations. Thus, for example, if a foreign corporation that has made an election under section 897(i) is a U.S. real property holding corporation, interests in it are U.S. real property interests that are subject to withholding under section 1445, and any gain or loss from the disposition of such interests by a foreign person will be treated as effectively connected with a U.S. trade or business under section 897(a). Similarly, if a foreign corporation makes an election under section 897(i), its distribution of a U.S. real property interest pursuant to section 301 will be subject to the carryover basis rule of section 897(f). However, an interest in an electing corporation is not a U.S. real property interest if following the election the interest is described in section 897(c)(1)(B) or § 1.897-1(c)(2) (subject to the exceptions of subdivisions (i) and (ii) of that section). In addition, section 897(d) will not apply to any distribution of a U.S. real property interest by such corporation or to any sale or exchange of such interest pursuant to a plan of complete liquidation under section 337. A foreign corporation that makes an election under section 897(i) shall not be treated as a domestic corporation for purposes of any other provision of the Code or regulations, except to the extent that it is required to consent to such treatment as a condition to making the election. For further information concerning the effect of an election under section 897(i) upon the withholding requirements of section 1445, see § 1.1445-7. An election under section 897(i) is the exclusive remedy of any foreign person claiming discriminatory treatment under any treaty with respect to the application of sections 897,

1445, and 6039C to a foreign corporation. Therefore, if a corporation does not make an effective election, relief under a nondiscrimination article of any treaty shall not be otherwise available with respect to the application of sections 897, 1445, and 6039C to such corporation.

(b) ***General conditions.*** A foreign corporation may make an election under section 897(i) only if it meets all three of the following conditions.

(1) ***Holding a U.S. real property interest.*** The foreign corporation must hold a U.S. real property interest at the time of the election. This condition is satisfied when a U.S. real property interest is acquired simultaneously with the effective date of an election. For example, this condition is satisfied when real property is acquired in an exchange described in section 351 that is carried out simultaneously with the effective date of the election. This condition is also satisfied by a corporation that indirectly holds a U.S. real property interest through a partnership, trust, or estate.

(2) ***Entitlement to nondiscriminatory treatment.*** The foreign corporation must be entitled to nondiscriminatory treatment with respect to its U.S. real property interest under any treaty to which the United States is a party. Where the corporation indirectly holds a U.S. real property interest through a partnership, trust, or estate, the corporation itself must be entitled to nondiscriminatory treatment with respect to such property interest.

(3) ***Submission of election in proper form.*** The foreign corporation must comply with the requirements of paragraph (c) of this section respecting the manner and form in which an election must be submitted.

(c) ***Manner and form of election.*** An election under section 897(i) is made by filing the materials described in subparagraphs (1) through (5) of this paragraph (c) at the address specified in the Instructions for Form 8288 under the heading “Where To File”. The required items may be incorporated in a single document.

(1) ***General statement.*** The foreign corporation must supply a general statement indicating that an election under section 897(i) is being made. The general statement must be signed by a responsible corporate officer, who must verify under penalty of perjury that the statement and all other documents submitted pursuant to the requirements of this paragraph (c) are true and correct to his knowledge and belief. No particular form is required for the statement, which must contain all the following information—

(i) The name, address, identifying number, and place and date of incorporation of the foreign corporation;

(ii) The treaty and article under which the foreign corporation is seeking nondiscriminatory treatment;

(iii) A description of the U.S. real property interests held by the corporation, either directly or through a partnership, trust, or estate, including the dates such interests were acquired, the corporation's adjusted bases in such interests, and their fair market values as of the date of the election (or book values if the corporation is not a U.S. real property holding corporation under the alternative test of § 1.897-2(b)(2)); and

(iv) A list of all dispositions of any interests in the foreign corporation after December 31, 1979, and before June 19, 1980, between related persons (as defined in section 453(f)(1)), giving the type and the amount of any interest transferred, the name and address of the related person to whom the interest was transferred, the transferor's basis in the interest transferred, and the amount of any nontaxed gain as defined in section 1125(d) of Pub. L. 96-499.

(2) ***Waiver of treaty benefits.*** The foreign corporation must submit a binding waiver of the benefits of any U.S. treaty with respect to any gain or loss from the disposition of a U.S. real property interest during the period in which the election is in effect.

(3) ***Consent to be taxed.*** The foreign corporation must submit a binding agreement to treat as though it were a domestic corporation any gain or loss that is recognized upon—

(i) The disposition of any U.S. real property interest during the period in which the election is in effect, and

(ii) The disposition of any property that it acquired in exchange for a U.S. real property interest in a nonrecognition transaction (as defined under section 897(e)) during the period in which the election is in effect.

(4) ***Interest-holders' consent to election*** —

(i) ***In general.*** The foreign corporation must submit both a signed consent to the making of the election and a waiver of U.S. treaty benefits with respect to any gain or loss from the disposition of an interest in the corporation from each person who holds an interest in the corporation on the date the election is made. In the case of a corporation any class of stock of which is regularly traded on an established securities market at any time during the calendar year, the signed consent and waiver need only be provided by a person who holds an interest described in § 1.897-1(c)(2)(iii)(A) or (B) (determined after application of the constructive ownership rules of section 897(c)(6)(C). The foreign corporation must also include with the signed consents and waivers a list that identifies and describes the interest in the corporation held by each interest holder, including the type and amount of such interest and its fair market value as of the date of the election.

(ii) ***Corporation's retention of interest-holders' consents.*** A corporation need not file the consents and waivers of its interest-holders as required by paragraph (c)(4)(i) of this section, if it instead complies with the requirements of subdivisions (A) through (D) of this paragraph (c)(4)(ii).

(A) The corporation must place a legend on each outstanding certificate for shares of its stock that reads substantially as follows: "(Name of corporation) has made an election under section 897(i) of the United States Internal Revenue Code to be treated as a U.S. corporation for certain tax purposes, and any purchaser of this interest may therefore be required to withhold tax at the time of the purchase." The corporation must certify that the foregoing requirement has been met and that it will place an equivalent legend on every stock certificate that is issued while the election under section 897(i) is in effect and the corporation retains the consents and waivers of its interest-holders under the rules of this paragraph (c)(4)(ii). However, with respect to any registered certificate issued prior to January 30, 1985, in lieu of placing a legend on the certificate the corporation may certify that it will provide the purchaser of the interest with a copy of the legend at the time the certificate is surrendered for issuance of a new certificate.

(B) The corporation must include with its election a statement that the corporation has received both a signed consent to the making of the election and a waiver of U.S. treaty benefits with respect to any gain or loss from the disposition of an interest in the corporation from each person who holds an interest in the corporation on the date the election is made. In the case of a corporation any class of stock of which is regularly traded on an established securities market at any time during the calendar year, the signed

consent and waiver need only be provided by a person who holds or has held an interest described in § 1.897-1(c)(2)(iii) (A) or (B) (determined after application of the constructive ownership rules of section 897(c)(6)(C).

(C) The corporation must include with its election a list that describes the interests in the corporation held by each interest-holder. The list need not identify the interest-holders by name, but must set forth the type, amount, and fair market value of the interests held by each.

(D) The corporation must include with its election an agreement that the corporation will retain all signed consents and waivers for a period of three years from the date of the election and supply such documents to the Director within 30 days of his request for production thereof. The Director's review of the signed consents and waivers pursuant to this provision shall not constitute an examination for purposes of section 7605(b).

(5) ***Statement regarding prior dispositions.*** The foreign corporation must state that no interest in the corporation was disposed of during the shortest of (A) the period from June 19, 1980, through the date of the election, (B) the period from the date on which the corporation first holds a U.S. real property interest through the date of the election or (C) the five-year period ending on the date of the election. If the corporation cannot state that no such dispositions have been made, it may make the section 897(i) election only if it states that it has complied with the requirements of paragraph (d)(2) of this section.

(d) ***Time and duration of election*** —

(1) ***In general.*** A foreign corporation that meets the conditions of paragraph (b) of this section may make an election under section 897(i) at any time before the first disposition of an interest in the corporation which would be subject to section 897(a) if the election had been made before that disposition, except as otherwise provided in paragraph (d)(2) of this section. The period to which the election applies begins on the date on which the election is made, or such earlier date as is specified in the election, but not earlier than June 19, 1980. Unless revoked, an election applies for the duration of the time for which the corporation remains in existence. An election is made on the date that the statements described in paragraph (c) of this section are delivered to the address specified in the Instructions for Form 8288 under the heading “Where To File”. If the election is delivered by United States mail, the provisions of section 7502 and the regulations thereunder shall apply in determining the date of delivery.

(2) ***Election after disposition of stock.*** An election under section 897(i) may be made after any disposition of an interest in the corporation which would have been subject to section 897(a) if the election had been made before that disposition, but only if the requirements of either subdivision (i) or (ii) of this paragraph (d)(2) are met with respect to all dispositions of interests during the period described in paragraph (c)(5) of this section.

(i) There is a payment of an amount equal to any taxes which would have been imposed by reason of the application of section 897 upon all persons who had disposed of interests in the corporation during the period described in paragraph (c)(5) of this section had the corporation made the election prior to such dispositions. Such payment must be made by the later of the date the election is made, or the date on which payment of such taxes would otherwise have been due, and must include any interest that would have accrued had tax actually been due with respect to the disposition. As an election made prior to any disposition of interests in the corporation would have been conditioned on a waiver of treaty benefits by the interest-holders,

payment of an amount equal to tax and any interest with respect to such prior disposition is required as a condition to making a subsequent election under this subdivision (i) irrespective of the application of any treaty provision. For this purpose, it is not necessary that the payment be made by the person who would have owed the tax if the election under this section had been made prior to the disposition, and that person is under no obligation to supply any information to the present holders of interests in the electing corporation. The payment shall be made to the U.S. Treasury. Where the payment is made by a present holder of an interest, the basis of the person's interest in the corporation shall be increased to the extent of the amount paid.

(ii) Each person that acquired an interest in the electing corporation took a basis in the interest that was equal to the basis of the interest in the hands of the person from which the interest was acquired, increased by the sum of any gain recognized by the transferor of the interest and any tax paid under chapter 1 by the person that acquired the interest, if such interest was acquired after June 18, 1980.

(3) ***Adequate proof of basis.*** For purposes of meeting the conditions of paragraph (d)(2) (i) or (ii) of this section, a corporation must establish the bases of and amount of gain realized by all persons who disposed of interests in the corporation during the period described in paragraph (c)(5) of this section. See paragraph (g)(3) of this section for an exception to this rule.

(4) ***Acknowledgement of receipt.*** Within 60 days after its receipt of an election under section 897(i), the Internal Revenue Service will acknowledge receipt of the election. Such acknowledgement either will indicate that the information submitted with the election is complete or will specify any documents that remain to be submitted pursuant to the requirements of paragraph (c) of this section respecting the manner and form in which an election must be made.

(e) ***Anti-abuse rule*** —

(1) ***In general.*** A corporation that is otherwise eligible to make an election under section 897(i) may do so only by complying with the requirements of subdivision (2) of this paragraph, if during the period described in paragraph (c)(5) of this section—

(i) Prior to receipt of a U.S. real property interest by the corporation seeking to make the election, stock in such corporation (or in any corporation controlled by such corporation) was acquired in a transaction in which the person acquiring such stock obtained an increase in basis in the stock over the adjusted basis of the stock in the hands of the person from whom it was acquired;

(ii) The full amount of gain realized by the person from whom the stock was acquired was not subject to U.S. tax; and

(iii) The corporation seeking to make the election received the U.S. real property interest in a transaction or series of transactions to which section 897 (d)(1)(B) or (e)(1) applies to allow for nonrecognition of gain.

(2) ***Recognition of gain.*** A corporation described in subparagraph (1) of this paragraph (e) may make an election under section 897(i) only if it pays an amount equal to the tax on the full amount of gain realized by the transferors of the stock of such corporation (or of any corporation controlled by it) in the transaction described in paragraph (e)(1)(i) of this section. However, such amount must be paid only if the stock of the corporation seeking to make the election (or the stock of a corporation controlled by it) would have constituted a U.S. real property interest had it (or a corporation

controlled by it) made the election before that acquisition. Such amount must be paid by the later of the date of the election or the date on which such tax would otherwise be due, and must include any interest that would have accrued had tax actually been due with respect to the disposition.

(3) ***Definition of control.*** For purposes of this paragraph, a corporation controls a second corporation if it holds 80 percent or more of the total combined voting power of all classes of stock entitled to vote, and 80 percent or more of the total number of shares of all other classes of stock of the second corporation. In a chain of corporations where each succeeding corporation is controlled within the meaning of this subparagraph (3) by the corporation immediately above it in the chain, each corporation in the chain shall be considered to be controlled by all corporations that preceded it in the chain.

(4) ***Examples.*** The rules of this paragraph (e) are illustrated by the following examples.

Example 1. Nonresident alien individual X owns 100 percent of the stock of foreign corporation L which was organized in 1981. L's only asset is a parcel of U.S. real property which it has held since 1981. The fair market value of the U.S. real property held by L on January 1, 1984, is $1,000,000. L's basis in the property is $200,000. X's basis in the L stock is $500,000. On June 1, 1984, M corporation, a foreign corporation owned by foreign persons who are unrelated to X, purchases the stock of L from X for $1,000,000 with title passing outside of the United States. Since the stock of L is not a U.S. real property interest, X's gain from the disposition of the L stock ($500,000) is not treated as effectively connected with a U.S. trade or business under section 897(a). In addition, since X was neither engaged in a U.S. trade or business nor present in the U.S. at any time during 1984, such gain is not subject to U.S. tax under section 871. On January 1, 1987, M liquidates L under a plan of liquidation adopted on that same date. Under section 332 of the Code M recognizes no gain on receipt of the parcel of U.S. real property distributed by L in liquidation. Under section 334(b)(1) M takes $200,000 as its basis in the U.S. real property received from L. Under section 897(d)(1)(B) no gain would be recognized to L under section 897(d)(1)(A) on the liquidating distribution. As a consequence, no gain is recognized to L under section 336 of the Code. After its receipt of the U.S. real property from L, M seeks to make an election to be treated as a domestic corporation. Thus, M acquired the L stock in a transaction in which it obtained a basis in such stock in excess of the adjusted basis of X in the stock, U.S. tax was not paid on the full amount of the gain realized by X, and M has received the property in a distribution to which section 897(d)(1)(B) applied to provide for nonrecognition of gain to L. Therefore, M may make the election only if it pays an amount equal to the tax on the full amount of X's gain, pursuant to the rule of subparagraph (e)(2) of this section.

Example 2. Nonresident alien individual X owns 100 percent of the stock of foreign corporation A which owns 100 percent of the stock of foreign corporation B. X's basis in the A stock is $500,000. A's basis in the B stock is $500,000. B owns U.S. real property with a fair market value of $1,000,000. B's basis in the U.S. real property is $500,000. On January 1, 1985, X sells the stock of A to Y, an unrelated individual, for $1,000,000 with title passing outside of the United States. In addition, X was neither engaged in a U.S. trade or business nor present in the U.S. at any time during 1985. Since the A stock is not a U.S. real property interest, X's gain on such disposition is not treated as effectively connected with a U.S. trade or business under section 897(a) and is therefore not subject to U.S. tax under section 871. On July 1, 1987, a plan of liquidation is adopted, and B is liquidated into A. Under sections 332, 334(b)(1), 336, and 897(d)(1)(B), there is no tax to A on receipt of U.S. real property from B and no tax to B on the distribution of the U.S. real property interest to A. After receipt of the property A seeks to

make an election under section 897(i). Under the rules of paragraph (e) of this section, A may make the election only if it pays an amount equal to the tax on the full amount of X's gain. (Assuming that A is a U.S. real property holding corporation, the same result would be required by the rule of paragraph (d)(2) of this section.)

(f) ***Revocation of election*** —

(1) ***In general.*** An election under section 897(i) may be revoked only with the consent of the Commissioner. A request for revocation shall be in writing and shall be delivered to the address specified in the Instructions for Form 8288 under the heading "Where To File". The request shall include the name, address, and identifying number of the corporation seeking to revoke the election, and a description of all U.S. real property interests held by the corporation on the date of the request for revocation, including the dates such interests were acquired, the corporation's adjusted bases in such interests, and their fair market values as of the date of the request (or book value if the corporation is not a U.S. real property holding corporation under the alternative test of § 1.897-2(b)(2)). The request shall be signed by a responsible officer of the corporation under penalty of perjury and shall contain a statement either that the corporation has made no distributions described in subparagraph (2) of this paragraph (f) or that the conditions of that subparagraph have been satisfied. A revocation will be effective as of the date the request is delivered to the address specified in the Instructions for Form 8288 under the heading "Where To File", unless the Commissioner provides otherwise in his consent to the revocation. If the request is delivered by United States mail, the provisions of section 7502 and the regulations thereunder shall apply in determining the date of delivery. The Commissioner will generally consent to a revocation, provided either that there have been no distributions described in subparagraph (2) of this paragraph (f), or that the conditions of that subparagraph have been satisfied. Within 90 days after its receipt of a request to revoke an election under section 897(i), the Internal Revenue Service will acknowledge receipt of the request. Such acknowledgement either will indicate that the information submitted with the request is complete or will specify any information that remains to be submitted pursuant to the requirements of this paragraph (f).

(2) ***Revocation after distribution.*** If there have been any distributions of U.S. real property interests by the corporation during the period to which an election made under section 897(i) applies, the Commissioner shall consent to the revocation of such election only if one of the following conditions is met.

(i) The full amount of gain realized by the corporation upon the distribution was subject to U.S. income tax.

(ii) There is a payment of an amount equal to the taxes that would have been imposed upon the corporation by reason of the application of section 897 if the election had not been in effect on the date of the distribution. Such payment must be made by the later of the date of the request for revocation or the date on which payment of such tax would otherwise have been due, and must include any interest that would have accrued had tax actually been due with respect to the distribution. If under the terms of any treaty to which the United States is a party such distribution would not have been subject to U.S. income tax notwithstanding the provisions of section 897, then this condition may be satisfied by providing a statement with the request for revocation setting forth the treaty and article which would have exempted the distribution from U.S. tax had the election under section 897(i) not been in effect on the date thereof.

(iii) At the time of the receipt of the distributed property, the distributee would be subject to taxation under chapter 1 of the Code on a subsequent disposition of the distributed property, and the basis of the distributed property in the hands of the distributee is no greater than the adjusted basis of such property before the distribution, increased by the amount of gain (if any) recognized by the distributing corporation. For purposes of this paragraph (f)(2)(i)(C), a distributee shall be considered to be subject to taxation upon a subsequent disposition of distributed property only if such distributee waives the benefits of any U.S. treaty that would otherwise render such disposition not taxable by the United States. Such waiver must be attached to the corporation's request for revocation.

(g) *Transitional rules* —

(1) ***In general.*** An election under section 897(i) that was made at any time after June 18, 1980, must be amended to comply with the requirements of paragraphs (b), (c), and (d) of this section. Such amendment must be delivered in writing to the Director, Philadelphia Service Center by April 1, 1985. If the amendment is delivered by United States mail, the provisions of section 7502 and the regulations thereunder shall apply in determining the date of delivery. An election that is properly amended pursuant to the requirements of this section shall be effective as of the date of the original election.

(2) ***Corporations previously entitled to make election.*** A foreign corporation that would have been entitled under the rules of this section to make a section 897(i) election at any time between June 19, 1980, and January 30, 1985, may retroactively make such an election pursuant to the requirements of this section. Such election must be delivered to the Director, Foreign Operations District, by March 1, 1985.

(3) ***Interests in corporation disposed of prior to publication.*** Where interests in a corporation were disposed of before January 3, 1984, the requirement of paragraph (d)(2) of this section may be met, notwithstanding the requirement of paragraph (d)(3), by paying a tax that is based upon a reasonable estimate of the gain upon the prior dispositions. Such estimate must be based on all facts and circumstances known to, and ascertainable through the exercise of reasonable diligence by, the corporation seeking to make the election.

(h) ***Effective date.*** The requirement in paragraph (c)(1)(i) of this section that the statement making the section 897(i) election contain the identifying number of the foreign corporation (in all cases) is applicable November 3, 2003.

(Sec. 897 (94 Stat. 2683; 26 U.S.C. 897), sec. 6011 (68A Stat. 732; 26 U.S.C. 6011) and sec. 7805 (68A Stat. 917; 26 U.S.C. 7805) of the Internal Revenue Code of 1954)

[T.D. 7999, 49 FR 50713, Dec. 31, 1984; 50 FR 12531, Mar. 29, 1985; T.D. 8113, 51 FR 46629, Dec. 24, 1986; T.D. 9082, 68 FR 46083, Aug. 5, 2003; T.D. 9751, 81 FR 8400, Feb. 19, 2016]

§ 1.897-4AT Table of contents (temporary).

§ 1.897-5T Corporate distributions (temporary).

(a) Purpose and scope.

(b) Distributions by domestic corporations.

(1) Limitation of basis upon dividend distribution of U.S. real property interest.

(2) Distributions by U.S. real property holding corporation under generally applicable rules.

(3) Section 332 liquidations of U.S. real property holding corporations.

(i) General rules.

(ii) Distribution to a foreign corporation under section 332 after June 18, 1980, and before the repeal of the General Utilities doctrine.

(iii) Distribution to a foreign corporation under section 332 and former section 334(b)(2) after June 18, 1980.

(iv) Distribution to a foreign corporation under section 332(a) after July 31, 1986 and after the repeal of the General Utilities doctrine.

(A) Liquidation of domestic corporation.

(B) Liquidation of certain foreign corporations making a section 897(i) election.

(v) Transfer of foreign corporation stock followed by a section 332 liquidation treated as a reorganization.

(4) Section 897(i) companies.

(5) Examples.

(6) Section 333 elections.

(i) General rule.

(ii) Example.

(c) Distributions of U.S. real property interests by foreign corporations.

(1) Recognition of gain required.

(2) Recognition of gain not required.

(i) Statutory exception.

(ii) Section 332 liquidations.

(A) In general.

(B) Recognition of gain required in certain section 332 liquidations.

(iii) Examples.

(3) Limitation of gain recognized under paragraph (c)(1) of this section for certain section 355 distributions.

(i) In general.

(ii) Example.

(4) Distribution by a foreign corporation in certain reorganizations.

(i) In general.

(ii) Statutory exception.

(iii) Regulatory limitation on gain recognized.

(iv) Examples.

(5) Sales of U.S. real property interests by foreign corporations under section 337.

(6) Section 897(l) credit.

(7) Other applicable rules.

(d) Rules of general application.

(1) Interests subject to taxation upon later dispositions.

(i) In general.

(ii) Effects of income tax treaties.

(A) Effect of treaty exemption from tax.

(B) Effect of treaty reduction of tax.

(C) Waiver of treaty benefits to preserve nonrecognition.

(iii) Procedural requirements.

(2) Treaty exception to imposition of tax.

(3) Withholding.

(4) Effect on earnings and profits.

(e) Effective date.

§ 1.897-6T Nonrecognition exchanges applicable to corporations their shareholders, and other taxpayers, and certain transfers of property in corporate reorganizations (temporary).

(a) Nonrecognition exchanges.

(1) In general.

(2) Definition of nonrecognition provision.

(3) Consequence of nonapplication of nonrecognition provisions.

(4) Section 355 distributions treated as exchanges.

(5) Section 1034 rollover of gain.

(i) Purchase of foreign principal residence.

(ii) Purchase of U.S. principal residence.

(6) Determination of basis.

(7) Examples.

(8) Treatment of nonqualifying property.

(i) In general.

(ii) Treatment of mixed exchanges.

(A) Allocation of nonqualifying property.

(B) Recognition of gain.

(C) Treatment of other amounts.

(iii) Example.

(9) Treaty exception to imposition of tax.

(b) Certain foreign to foreign exchanges.

(1) Exceptions to the general rule.

(2) Applicability of exception.

(3) No exceptions.

(4) Examples.

(5) Contribution of property.

(c) Denial of nonrecognition with respect to certain tax avoidance transfers.

(1) In general.

(2) Certain transfers to domestic corporations.

(i) General rule.

(ii) Example.

(3) Basis adjustment for certain related person transactions.

(4) Rearrangement of ownership to gain treaty benefit.

(d) Effective date.

§ 1.897-7T Treatment of certain partnership interests as entirely U.S. real property interests under section 897(g) (temporary).

(a) Rule.

(b) Effective date.

§ 1.897-8T Status as a U.S. real property holding corporation as a condition for electing section 897(i) pursuant to § 1.897-3 (temporary).

(a) Purpose and scope.

(b) General conditions.

(c) Effective date.

§ 1.897-9T Treatment of certain interests in publicly traded corporations, definition of foreign person, and foreign governments and international organizations (temporary).

(a) Purpose and scope.

(b)

(c) Foreign person.

(d) Regularly traded.

(e) Foreign governments and international organizations.

(f) Effective date.

[T.D. 8198, 53 FR 16217, May 5, 1988]

§ 1.897-5 Corporate distributions.

(a)-(d) (1)(iii)(E) [Reserved]. For further guidance, see § 1.897-5T(a) through (d)(1)(iii)(E).

(d) (1)(iii)(F) Identification by name and address of the distributee or transferee, including the distributee's or transferee's taxpayer identification number;

(d) (1)(iii)(G) through (d)(4) [Reserved]. For further guidance, see § 1.897-5T(d)(1)(iii)(G) through (d)(4).

(e) ***Effective date.*** This section is applicable to transfers and distributions after November 3, 2003.

[T.D. 9082, 68 FR 46083, Aug. 5, 2003]

§ 1.897-5T Corporate distributions (temporary).

(a) ***Purpose and scope.*** This section provides rules concerning the recognition of gain or loss and adjustments to basis required with respect to certain corporate distributions that are subject to section 897. Paragraph (b) of this section provides rules concerning such distributions by domestic corporations, including distributions under section 301, distributions in redemption of stock, and distributions in liquidation. Paragraph (c) sets forth rules concerning distributions by foreign corporations, including distributions under sections 301 and 355, distributions in redemption of stock, and distributions in liquidation. Finally, various rules generally applicable to distributions subject to this section, as well as to transfers subject to § 1.897-6T, are set forth in paragraph (d). The rules contained in this section are also subject to the tax avoidance rules of § 1.897-6T(c).

(b) ***Distributions by domestic corporations*** —

(1) ***Limitation of basis upon dividend distribution of U.S. real property interest.*** Under section 897(f), if any domestic corporation (distributing corporation) distributes a U.S. real property interest to a shareholder that is a foreign person (distributee) in a distribution to which section 301 applies, then the basis of the distributed U.S. real property interest in the hands of the foreign distributee shall be determined in accordance with the provisions of section 301(d), and shall not exceed—

(i) The adjusted basis of the property before the distribution in the hands of the distributing corporation, increased by

(ii) The sum of—

(A) Any gain recognized by the distributing corporation on the distribution, and

(B) Any U.S. tax paid by or on behalf of the distributee with respect to the distribution.

(2) ***Distributions by U.S. real property holding corporations which are taxable exchanges of stock under generally applicable rules.*** If a domestic corporation, stock in which is treated as a U.S. real property interest, distributes property with respect to such stock to a foreign shareholder, the distributee shall be treated as having disposed of a U.S. real property interest, and shall recognize gain or loss on the stock of such domestic corporation to the extent that, with respect to the distributees—

(i) Part of all of the distribution is treated pursuant to section 301(c)(3)(A) as a sale or exchange of stock;

(ii) Part or all of the distribution is treated pursuant to section 302(a) as made in part or full payment in exchange for stock; or

(iii) Part or all of the distribution is treated pursuant to section 331(a) as made in full payment in exchange for stock.

Stock in a domestic corporation shall not be considered a U.S. real property interest pursuant to the provisions of § 1.897-2(f)(2) if the corporation does not hold any U.S. real property interests and has disposed of all of its U.S. real property interests owned within the previous five years in transactions in which the full amount of gain was recognized under the rules of § 1.897-2(f)(2). If gain is recognized at the corporate level on either a distribution of a U.S. real property interest or a sale of a U.S. real property interest in a liquidation, such distribution or sale shall be considered a disposition for purposes of § 1.897-2(f)(2). With regard to the consequences of a distribution from a U.S. real property holding corporation under section 355(a), see § 1.897-6T(a)(1) and (4).

(3) ***Section 332 liquidations of U.S. real property holding corporations*** —

(i) ***General rules.*** Exchanges that are subject to section 897(e) are normally covered by § 1.897-6T(a)(1), (2) and (3). This paragraph (b)(3) provides rules concerning the application of section 897(e) and the general principles of § 1.897-6T(a)(1), (2) and (3) to section 332 liquidations of U.S real property holding corporations.

(ii) ***Distribution to a foreign corporation under section 332 after June 18, 1980, and before the repeal of the General Utilities doctrine.*** Except for distributions under paragraph (b)(3)(iii) of this section (relating to section 332 and former section 334(b)(2)), the rules of this paragraph (b)(3)(ii) shall apply to section 332 distributions after June 18, 1980, and before January 1, 1990, pursuant to section 336(a) as in effect prior to the effective dates of the amendments made by section 631 of the Tax Reform Act of 1986. A foreign corporation that meets the stock ownership requirements of section 332(b) with respect to stock in a domestic corporation that is a U.S. real property interest shall not, after December 31, 1984, be subject to taxation by reason of section 367(a). The foreign corporation shall recognize gain pursuant to section 897(e)(1) on such stock upon the receipt of property in a section 332(a) liquidation from such domestic corporation, but only to the extent that the property received constitutes property other than a U.S. real property interest. The gain on the stock in the domestic corporation to be recognized by the foreign corporation pursuant to section 897(e)(1) shall be determined by multiplying the gain realized on the distribution by a fraction. The numerator of the fraction shall be the fair market value of the property other than U.S. real property interests received by the foreign corporation on the distribution, and the denominator shall be the fair market value of all property received by the foreign corporation on the distribution. The bases of the distributed U.S. real property interests in the hands of the foreign corporation shall be the same as the bases in the hands of the domestic corporation. The bases of the property other than

U.S. real property interests in the hands of the foreign corporation shall be the same as the bases in the hands of the domestic corporation, plus any gain recognized by the foreign corporation on the distribution allocated among such assets in proportion to the potential gain inherent in each such asset at the time of distribution. However, the basis of each asset is limited to its fair market value. Property, other than a U.S. real property interest that is distributed by the domestic corporation, shall not be considered to be distributed by the domestic corporation pursuant to a section 332 liquidation (that is, the foreign corporation shall not be considered to be a corporation for purposes of section 332) if the requirements of section 367(a) are not satisfied. *See,* for example, sections 1245(b)(3) and 1250(d)(3) regarding the consequences to the distributing domestic corporation if the requirements of section 367(a) are not satisfied.

(iii) ***Distribution to a foreign corporation under section 332 and former section 334(b)(2) after June 18, 1980.*** The rules of this paragraph (b)(2)(iii) shall apply to section 332 distributions after June 18, 1980 where the basis of the distributed property in the hands of the foreign corporation is determined under section 334(b)(2) as in effect prior to the Tax Equity and Fiscal Responsibility Act of 1982. A foreign corporation that meets the stock ownership requirements of section 332(b) with respect to stock in a domestic corporation that is a U.S. real property interest shall recognize gain on the receipt of property in a section 332(a) liquidation where section 334(b)(2) applies to the extent that the fair market value of the distributed assets that are not U.S real property interests exceeds the basis of such assets determined under section 334(b)(2) (for example, if the liquidation does not occur immediately upon the purchase of stock in the domestic corporation). The gain recognized shall not exceed the excess of the fair market value of the stock of the domestic corporation in the hands of the foreign corporation at the time of the distribution over the shareholder's adjusted basis in such stock. The basis of the distributed U.S. real property interests in the hands of the foreign corporation shall be determined under section 334(b)(2), by reference to the adjusted basis of the stock with respect to which the distribution was made. The basis of such property other than U.S. real property interests shall be tentatively determined under section 334(b)(2), and then increased by any gain recognized by the foreign corporation on the distribution allocated among such assets in proportion to the potential gain inherent in each such asset at the time of distribution (computed using the tentative basis as determined under section 334(b)(2)). The basis of each asset is limited, however, to its fair market value.

(iv) ***Distribution to a foreign corporation under section 332 after July 31, 1986 and after the repeal of the General Utilities doctrine.*** The rules of this subdivision (iv) shall apply to section 332 distributions after July 31, 1986, pursuant to section 337(a) as in effect after the effective dates of the amendments of section 631 of the Tax Reform Act of 1986.

(A) ***Liquidation of domestic corporation.*** A foreign corporation that meets the stock ownership requirements of section 332(b) with respect to stock in a domestic corporation that is a U.S. real property interest (except a foreign corporation that has made an effective election under section 897(i) and the stock of which is treated as a U.S. real property interest) shall not recognize any gain under sections 367(a) or 897(e)(1) on the receipt of property in a section 332(a) liquidation. The domestic corporation shall not recognize gain under section 367(e)(2) on the distribution of U.S. real property interests (other than stock in a former U.S. real property holding corporation which is treated as a U.S. real property interest) to the foreign corporation. The domestic corporation shall recognize gain under section 367(e)(2) on the distribution of stock in a former U.S. real property holding

corporation which is treated as a U.S. real property interest. With respect to the recognition of gain or loss by the domestic corporation under section 367(e)(2) on the distribution of property other than U.S. real property interests, see the regulations under section 367(e)(2). The basis of the distributed U.S. real property interests (other than stock in a former U.S. real property holding corporation) in the hands of the foreign corporation shall be the same as it was in the hands of the domestic corporation. The basis of any property (other than U.S. real property interests) and stock in a former U.S. real property holding corporation that is a U.S. real property interest in the hands of the foreign corporation shall be the same as it was in the hands of the domestic corporation increased by any gain recognized by the distributing corporation on the distribution that was subject to U.S. taxation.

(B) ***Liquidation of certain foreign corporations making a section 897(i) election.*** A foreign corporation that meets the stock ownership requirements of section 332(b) with respect to stock in another foreign corporation, that has made an effective election under section 897(i) and the stock of which is treated as a U.S. real property interest, shall recognize gain pursuant to section 897(e)(1) on such stock upon the receipt from the distributing foreign corporation of property that is not a U.S. real property interest, and that is not used by the distributee foreign corporation in the conduct of a trade or business within the United States (if the distributee foreign corporation is not a resident of a country with which the United States maintains an income tax treaty) or in a permanent establishment within the United States (if the distributee foreign corporation is a resident of a country with which the United States maintains an income tax treaty). The gain on the stock in the foreign corporation (making an effective election under section 897(i)) to be recognized by the distributee foreign corporation pursuant to section 897(e)(1) shall be determined by multiplying the gain realized on the distribution by a fraction. The numerator of the fraction shall be the fair market value of the property received by the distributee foreign corporation upon which it must recognize gain, and the denominator of the fraction shall be the fair market value of all property received by the distributee foreign corporation on the distribution. The distributing foreign corporation shall not recognize gain under section 367(e)(2) on the distribution of U.S. real property interests to the distributee foreign corporation. With respect to the recognition of gain or loss under section 367(e)(2) on the distribution of property other than U.S. real property interests, see the regulations under section 367(e)(2). The basis of the distributed U.S. real property interests in the hands of the distributee foreign corporation shall be the same as it was in the hands of the distributing foreign corporation. The basis of the property upon which the distributee foreign corporation recognized gain in the hands of the distributee foreign corporation shall be the same as the basis in the hands of the distributing foreign corporation, plus any gain recognized by the distributee foreign corporation on the receipt of such property allocated among such property in proportion to the potential gain inherent in each such property at the time of the distribution. In regard to the basis of any other property received by the distributee foreign corporation in the liquidation, see the regulations under section 367(e)(2). However, the basis of each asset is limited to its fair market value.

(v) ***Transfer of foreign corporation stock followed by a section 332 liquidation treated as a reorganization.*** If a nonresident alien or foreign corporation transfers the stock of a foreign-corporation that owns a U.S. real property interest to a domestic corporation in exchange for stock of the domestic corporation (or its domestic or foreign parent corporation) in a reorganization under section 368(a)(1)(B) or in an exchange under section 351(a), and if the

foreign corporation then distributes the U.S. real property interest to the domestic corporation in a liquidation described in section 332(a) within five years of the transfer of the stock of the foreign corporation to the domestic corporation, then the transfer of the foreign corporation stock and the liquidation shall be treated as a reorganization described in section 368(a)(1) (C) or (D). The rules of § 1.897-6T(a)(1) shall apply to the transfer of the U.S. real property interest to the domestic corporation in exchange for domestic corporation stock, and the rules of § 1.897-5T(c)(4) shall apply to the distribution of domestic corporation stock by the foreign corporation. However, the rules of this paragraph (b)(3)(v) shall not apply if the transfer of the foreign corporation stock and the liquidation under section 332(a) are separate and independent transactions justified by substantial and verifiable business purposes.

(4) ***Section 897(i) companies.*** Except as otherwise provided herein for purposes of this section and § 1.897-6T, a foreign corporation that has made a valid election under section 897(i) shall be treated as a domestic corporation and not as a foreign corporation in determining the application of section 897. For rules concerning the making of a section 897(i) election, see §§ 1.897-3 and 1.897-8T. In regard to section 367(e)(2) and foreign corporations that have made an effective election under section 897(i), see paragraph (b)(3)(iv) of this section.

(5) ***Examples.*** The following examples illustrate the rules of this paragraph (b). In each example there is no applicable income tax treaty to which the United States is a party.

Example 1. (i) A is a nonresident alien who owns 100 percent of the stock of DC, a U.S. real property holding corporation. DC's only asset is Parcel P, a U.S. real property interest, with a fair market value of $500,000 and an adjusted basis of $300,000. DC completely liquidates in 1987 and distributes Parcel P to A in exchange for the DC stock held by A.
(ii) Under section 336(a), DC must recognize gain to the extent of the excess of the fair market value ($500,000) over the adjusted basis ($300,000), or $200,000.

(iii) A does not recognize any gain under section 897(a) because the DC stock in the hands of A is no longer a U.S. real property interest under paragraph (b)(2) of this section and paragraph 2(f) of § 1.897-2. A does recognize gain (if any) under section 331(a); however, the gain is not subject to taxation under section 871(a). A's adjusted basis in Parcel P is $500,000.

(iv) If DC did not recognize all of the gain on the disposition under a transitional rule to section 631 of the Tax Reform Act of 1986, then paragraph (b)(2) of this section and paragraph 2(f) of § 1.897-2 would not apply to A. A would recognize gain (if any) under paragraph (b)(2) because the distribution is treated as in full payment in exchange for the DC stock under section 897(a).

Example 2. (i) FC, a Country F corporation, owns 100 percent of the stock of DC, a U.S. real property holding corporation. FC's basis in the stock of DC is $400,000, and the fair market value of the DC stock is $800,000. DC owns a U.S. real property interest with an adjusted basis of $350,000 and a fair market value of $600,000. DC also owns other assets that are not U.S. real property interests that have an adjusted basis of $125,000 and a fair market

value of $200,000. DC completely liquidates in 1985 and distributes all of its property to FC in exchange for the DC stock held by FC.
(ii) Under paragraph (b)(3)(ii) of this section, FC recognizes $100,000 of gain under section 897(a) on the disposition of the DC stock. This is determined by multiplying FC's gain realized ($400,000) by a fraction. The numerator of the fraction is the fair market value of the property other than U.S. real property interests ($200,000), and the denominator of the fraction is the fair market value of all property received ($800,000). FC takes a carryover adjusted basis in the U.S. real property interest ($350,000). FC's adjusted basis in the assets that are not U.S. real property interests ($200,000) is the basis of those assets in the hands of DC ($125,000) plus the gain recognized by FC on the distribution ($100,000) not to exceed the fair market value ($200,000).

Example 3. (i) FC, a Country F corporation, owns 100 percent of the stock of DC, a U.S. real property holding corporation. FC's basis in the stock of DC is $300,000, and the fair market value of the DC stock is $500,000. DC owns Parcel P, a U.S. real property interest, with an adjusted basis of $250,000 and a fair market value of $400,000. DC also owns all of the stock of DX, a former U.S. real property holding corporation whose stock is a U.S. real property interest, with an adjusted basis of $50,000 and a fair market value of $100,000. DC completely liquidates in 1987 and distributes all of its property to FC in exchange for the DC stock held by FC.
(ii) Under paragraph (b)(3)(iv)(A) of this section, DC recognizes $50,000 of gain on the distribution to FC of the DX stock. DC does not recognize any gain for purposes of section 367(e)(2) on the distribution to FC of Parcel P.

(iii) Under paragraph (b)(3)(iv)(A) of this section, FC's disposition of its DC stock is not treated as a disposition of a U.S. real property interest. Under section 334(b)(1), FC takes a carryover adjusted basis of $250,000 in Parcel P. FC takes an increased basis of $100,000 in the DX stock which is equal to DC's basis ($50,000) increased by the gain recognized by DC ($50,000).

(iv) The result would be the same if FC had made an effective election under section 897(i).

(6) ***Section 333 elections*** —

(i) ***General rule.*** A foreign shareholder that elects section 333 as in effect prior to its repeal by the Tax Reform Act of 1986 upon the distribution of property in a liquidation by a domestic corporation whose stock is treated as a U.S. real property interest shall recognize gain on such stock to the extent that—

(A) The property received by the foreign shareholder constitutes property other than U.S. real property interests subject to U.S. taxation upon its disposition as specified by paragraph (a)(1) of this section, or

(B) The basis of a U.S. real property interest subject to U.S. taxation upon its disposition in the hands of the recipient foreign shareholder exceeds the basis of the U.S. real property interest in the hands of the liquidating domestic corporation.

In determining the amount of gain recognized by the foreign shareholder, the foreign shareholder shall be considered to have exchanged the domestic corporation stock for all the property distributed on a proportionate fair market value basis. The gain recognized on a respective portion of domestic corporation stock shall not exceed the gain realized on that portion. Property other than U.S. real property interests subject to U.S. taxation upon disposition shall have a fair market value basis in the hands of the foreign shareholder. The basis of U.S. real property interests subject to U.S. taxation upon disposition shall be the basis of the proportionate part of the domestic corporation stock cancelled or redeemed in the liquidation, increased in the amount of gain recognized (other than gain recognized under this section) by the shareholder in respect to that proportionate part of the domestic corporation stock.

(ii) ***Example.*** The rules of paragraph (b)(6)(i) of this section may be illustrated by the following example.

Example. (i) A is a citizen and resident of Country F with which the U.S. does not have an income tax treaty. A owns all of the stock of DC, a U.S. real property holding corporation. The DC stock has a fair market value of $1,000,000. A acquired the DC stock in two purchases. The basis of one lot of the DC stock is $150,000, and the basis of the other lot is $650,000.
(ii) DC owns Parcel P, a U.S. real property interest, with a fair market value of $750,000 and an adjusted basis of $400,000. DC's only other property is equipment with a fair market value of $250,000 and an adjusted basis of $100,000. DC does not have any earnings and profits.

(iii) DC completely liquidates in 1985 in accordance with section 333 by distributing Parcel P and the equipment to A. A elects section 333 treatment.

(iv) A is considered as having exchanged 75 percent (fair market value of Parcel P/fair market value of all property distributed) of the DC stock for Parcel P. A realized gain of $150,000 on that portion of the DC stock ($750,000-$600,000). All of the gain of $150,000 is recognized under section 897 (a) because A's basis in Parcel P under section 334 (c) ($600,000) would exceed DC's basis in Parcel P ($400,000) by at least the amount of realized gain. A takes a basis of $750,000 in Parcel P.

(v) A is considered as having exchanged 25 percent (fair market value of equipment/fair market value of all property distributed) of the DC stock for the equipment. A realized gain of $50,000 on that portion of the DC stock ($250,000-$200,000). All of the gain of $50,000 is recognized under section 897 (a). A takes a basis of $250,000 in the equipment.

(c) *Distributions of U.S. real property interests by foreign corporations* —

(1) ***Recognition of gain required.*** If a foreign corporation makes a distribution (including a distribution in liquidation or redemption) of a U.S. real property interest to a shareholder (whether foreign or domestic), then, except as provided in paragraph (c) (2), (3), or (4) of this section, the distributing corporation shall recognize gain (but not loss) on the distribution under section 897 (d) (1). The gain recognized shall be equal to the excess of the fair market value of the U.S. real property interest (as of the time of the distribution) over its adjusted basis. Except as otherwise provided, the distributee's basis in the distributed U.S. real property interest shall be determined under the otherwise applicable sections of the Code. The distributee (whether domestic or foreign) of a foreign corporation in a liquidation under section 332 shall take the foreign corporation's basis in the distributed U.S. real property interest increased by any gain recognized (and subject to U.S. income taxation) by the foreign corporation on the distribution of such U.S. real property interest.

(2) *Recognition of gain not required* —

(i) ***Statutory exception rule.*** Under section 897(d)(2)(A), gain shall not be recognized by a distributing foreign corporation if—

(A) At the time of the receipt of the distributed U.S. real property interest, the distributee would be subject to U.S. income taxation on a subsequent disposition of the U.S. real property interest, determined in accordance with the rules of paragraph (d)(1) of this section;

(B) The basis of the distributed U.S. real property interest in the hands of the distributee is no greater than the adjusted basis of such property before the distribution, increased by the amount of gain (if any) recognized by the distributing corporation upon the distribution and added to the adjusted basis under the otherwise applicable provisions; and

(C) The distributing corporation complies with the filing requirements of paragraph (d)(1)(iii) of this section.

(ii) *Section 332 liquidations* —

(A) ***In general.*** A distributing foreign corporation that meets the requirements of paragraph (c)(2)(i) in a section 332(a) liquidation shall not recognize gain on the distribution of U.S. real property interests to a foreign corporation meeting the stock ownership requirements of section 332(b) if the distributing corporation complies with the procedural requirements of paragraph (d)(1)(iii). Whether a foreign corporation recognizes gain on the distribution of U.S. real property interests to a U.S. corporation meeting the stock ownership requirements of section 332(b) depends upon whether the U.S. corporation satisfies the subject to tax requirement provided in paragraph (d)(1)(i) (in addition to the procedural requirements of paragraph (d)(1)(iii)). With respect to section 332 distributions by a foreign corporation occurring after July 31, 1986, section 367(e)(2) shall not affect the application of section 337(a) (as in effect after the Tax Reform Act of 1986) and paragraph (c)(2)(i) of this section to the distribution of a U.S. real property interest.

(B) ***Recognition of gain required in certain section 332 liquidations.*** Notwithstanding the other rules of this paragraph (c), a foreign corporation shall, pursuant to the authority conferred by section 897(e)(2), recognize gain on its distribution after May 5, 1988 of a U.S. real property interest to a domestic corporation meeting the stock ownership requirements of section 332(b) if—

(1) The foreign corporation has not made an election under section 897(i), and any gain on the stock in the foreign corporation would be subject to U.S. taxation if an election were made on the date of the liquidation; and

(2) The distribution of the U.S. real property interest by the foreign corporation to the domestic corporation pursuant to section 332(a) occurs less than five years after the date of the last gain from the disposition of stock of the foreign corporation that would be subject to payment of tax under § 1.897-3(d)(2)(i) if an election under section 897(i) were made by the foreign corporation on the date of its liquidation.

With regard to the treatment of certain foreign corporations as domestic corporations under section 897(i), however, see §§ 1.897-3 and 1.897-8T.

(iii) ***Examples.*** The rules of this paragraph (c)(2) may be illustrated by the following examples.

> *Example 1.* (i) DC, a domestic corporation, owns 100 percent of the stock of FC, a Country F corporation, FC's only asset is Parcel P, a U.S. real property interest, with a fair market value of $500x and an adjusted basis of $100x. In September 1987, FC liquidates under section 332(a) and transfers Parcel P to DC. The transitional rules contained in section 633 of the Tax Reform Act of 1986 concerning the repeal of the *General Utilities* doctrine would not be applicable to a subsequent distribution or disposition of assets by DC.
> (ii) Assume that FC complies with the filing requirements of paragraph (d)(1)(iii). DC will be subject to U.S. income taxation on a subsequent disposition of Parcel P under the rules of paragraph (d)(1). The basis of Parcel P in the hands of DC will be $100x under section 334(b)(1), and thus no greater than the basis of Parcel P in the hands of FC. FC does not recognize any gain under the rules of paragraph (c)(1) of this section on the distribution because the exception of paragraph (d)(2)(i) applies.

Example 2. If in *Example* (1) the distribution by FC to DC occurred in September 1985, and DC sold or exchanged Parcel P under sections 336(a) or 337(a) as in effect prior to the Tax Reform Act of 1986, then FC must recognize gain of $400x on the distribution of Parcel P. The gain must be recognized because Parcel P in the hands of DC is not considered subject to U.S. income taxation on a subsequent disposition under the rules of paragraph (d)(1) of this section.

(3) ***Limitation of gain recognized under paragraph (c)(1) of this section for certain section 355 distributions —***

(i) ***In general.*** Under paragraph (c)(1) of this section, a foreign corporation that distributes stock in a domestic corporation that constitutes a U.S. real property interest in a distribution to which section 355 applies shall recognize gain on the distribution to the extent that the fair market value of the distributed stock exceeds its adjusted basis in the hands of the distributing foreign corporation. The gain recognized shall be limited under this paragraph (c)(3), however, to the amount by which the aggregate basis of the distributed stock in the hands of the distributees exceeds the aggregate adjusted basis of the distributed stock in the hands of the distributing corporation. The distributees' basis in the distributed U.S. real property interest shall be

determined under the otherwise applicable provisions of section 358. (Thus, the distributees' basis in the distributed U.S. real property interest shall be determined without any increase for any gain recognized by the foreign corporation).

(ii) ***Example.*** The rules of paragraph (c)(3)(i) of this section may be illustrated by the following example.

> *Example.* (i) C is a citizen and resident of Country F. C owns all of the stock of FC, a Country F corporation. The fair market value of the FC stock is 1000x, and C has a basis of 600x in the FC stock. Country F does not have an income tax treaty with the United States.
> (ii) In a transaction qualifying as a distribution of stock of a controlled corporation under section 355(a), FC distributes to C all of the stock of DC, a U.S. real property holding corporation. C does not surrender any of the FC stock. The DC stock has a fair market value of 600x, and FC has an adjusted basis of 200x in the DC stock. After the distribution, the FC stock has a fair market value of 400x.
>
> (iii) Under paragraph (c)(3)(i) of this section, FC must recognize gain on the distribution of the DC stock to C equal to the difference between the fair market value of the DC stock (600x) and FC's adjusted basis in the DC stock (200x). This results in a potential gain of 400x. Under section 358, C takes a 360x adjusted basis in the DC stock. Provided that FC complies with the filing requirements of paragraph (d)(1)(iii) of this section, the gain recognized by FC is limited under paragraph (c)(3)(i) to 160x because (A) this is the amount by which the basis of the DC stock in the hands of C (360x) exceeds the adjusted basis of the DC stock in the hands of FC (200x), and (B) at the time of receipt of the DC stock, C would be subject to U.S. taxation on a subsequent disposition of the stock.
>
> (iv) C's adjusted basis in the DC stock is not increased by the 160x recognized by FC.

(4) ***Distribution by a foreign corporation in certain reorganizations*** —

(i) ***In general.*** Under paragraph (c)(1) of this section, a foreign corporation that transfers property to another corporation in an exchange under section 361(a) for stock of a domestic corporation which is a United States real property holding corporation immediately after the transfer in a reorganization under section 368(a)(1) (C), (D), or (F) shall recognize gain under section 897(d)(1) on the distribution (whether actual or deemed) of the stock of the domestic corporation received by the foreign corporation to its shareholders (whether domestic or foreign). See § 1.897-6T(a) of the regulations for the consequences to the foreign corporation of the exchange of its property for the domestic corporation stock.

(ii) ***Statutory exception.*** Pursuant to the exception provided in section 897(d)(2)(A), no gain shall be recognized by the foreign corporation on its distribution of the domestic corporation stock if—

(A) At the time of the distribution, the distributee (*i.e.,* the exchanging shareholder in the section 354 exchange) would be subject to U.S. taxation on a subsequent disposition of the stock of the domestic corporation, determined in accordance with the rules of paragraph (d)(1) of this section;

(B) The distributee's adjusted basis in the stock of the foreign corporation immediately before the distribution was no greater than the foreign corporation's basis in the stock of the domestic corporation determined under section 358; and

(C) The distributing corporation complies with the filing requirements of paragraph (d)(1)(iii) of this section.

(iii) ***Regulatory limitation on gain recognized.*** If the requirements of subdivisions (A) and (C) of paragraph (c)(4)(ii) are met, the amount of any gain recognized by the foreign corporation shall not exceed the excess of the distributee's adjusted basis in the stock of the foreign corporation immediately before the distribution over the foreign corporation's basis in the stock of the domestic corporation immediately before the distribution as determined under section 358.

(iv) ***Examples.*** The rules of paragraph (c)(4) of this section may be illustrated by the following examples.

> *Example 1.* (i) A, a nonresident alien, organized FC, a Country W corporation, in September 1980 to invest in U.S. real estate. In 1986, FC's only asset is Parcel P, a U.S. real property interest with a fair market value of $600,000 and an adjusted basis to FC of $200,000. Parcel P is subject to a mortgage with an outstanding balance of $100,000. The fair market value of the FC stock is $500,000, and A's adjusted basis in the stock is $100,000. FC does not have liabilities in excess of the adjusted basis in Parcel P. The United States does not have a treaty with Country W that entitles FC to nondiscriminatory treatment as described in section 1.897-3(b)(2) of the regulations.
> (ii) Pursuant to a plan of reorganization under section 368(a)(1)(D), FC transfers Parcel P to DC, a newly formed domestic corporation, in exchange for DC stock. FC distributes the DC stock to A in exchange for A's FC stock.
>
> (iii) FC's exchange of Parcel P for the DC stock is a disposition of a U.S. real property interest. Under § 1.897-6T(a)(1), there is an exchange of a U.S. real property interest (Parcel P) for another U.S. real property interest (DC stock) so that no gain is recognized on the exchange under section 897(e). DC takes FC's basis of $200,000 in Parcel P under section 362(b). Under section 358(a)(1), FC takes a $100,000 basis in the DC stock because FC's substituted basis of $200,000 in the DC stock is reduced by the $100,000 of liabilities to which Parcel P is subject.
>
> (iv) Under section 897(d)(1) and paragraph (c)(4)(i) of this section, FC generally must recognize gain on the distribution of the DC stock received in exchange for FC's assets equal to the difference between the fair market value of the DC stock ($500,000) and FC's adjusted basis in the DC stock prior to the distribution ($100,000). This results in a

potential gain of $400,000. Under section 358(a)(1), A takes a basis in the DC stock equal to its basis in the FC stock of $100,000. Provided that FC complies with the filing requirements of paragraph (d)(1)(iii) of this section, no gain is recognized by FC on the distribution of the DC stock under the statutory exception to the general rule of section 897(d)(1) provided in section 897(d)(2)(A) and paragraph (c)(4)(ii) of this section because (*1*) A's basis in the DC stock ($100,000) does not exceed FC's adjusted basis in the DC stock ($100,000) immediately prior to the distribution and (*2*) A, at the time of receipt of the DC stock, would be subject to U.S. taxation on a subsequent disposition of the stock.

(v) The FC stock in the hands of A is not a U.S. real property interest because FC is a foreign corporation that has not elected to be treated as a domestic corporation under section 897(i). Accordingly, the exchange of the FC stock by A for DC stock is not a disposition of a U.S. real property interest under section 897(a).

Example 2. The facts are the same as in Example 1, except that A purchased the FC stock in September 1983 for $100,000 from S, a nonresident alien, and that S had a basis of $40,000 in the FC stock at the time of the sale to A. The results are the same as in Example 1.

Example 3. (i) The facts are the same as in *Example* 1, except that A's adjusted basis in the FC stock prior to the reorganization is $300,000. Following the distribution, A takes its basis of $300,000 in the FC stock as its basis in the DC stock pursuant to section 358(a)(1).
(ii) FC does not qualify under the statutory exception of paragraph (c)(4)(ii) to the general recognition rule of section 897(d)(1) and paragraph (c)(4)(i) of this section because A's basis in the DC stock ($300,000) exceeds FC's adjusted basis in the DC stock ($100,000) immediately prior to the distribution. However, provided that FC complies with the filing requirements of paragraph (d)(1)(iii) of this section, the gain recognized by FC is limited to $200,000 under the regulatory limitation of gain provided by paragraph (c)(4)(iii). This is the excess of A's basis in the FC stock immediately before the distribution ($300,000) over A's adjusted basis in the DC stock immediately before the distribution ($100,000).

(iii) A takes a basis of $300,000 in the DC stock under section 358(a)(1). A's basis in the DC stock is not increased by the gain recognized by FC. DC takes a basis of $200,000 in Parcel P under section 362(b).

Example 4. (i) The facts are the same as in *Example* 3, except that the United States has an income tax treaty with Country W entitling FC to nondiscriminatory treatment under section 1.897-3(b)(2) of the regulations. A valid election under section 897(i) is made to treat FC as a U.S. corporation.

(ii) FC is treated as a domestic corporation for purposes of section 897 and is not required to recognize gain under section 897(d)(1) and paragraph (c)(4)(i) of this section on the distribution of the DC stock as described in *Example* 3. (If a valid section 897(i) election were not made, the result would be same as in *Example* 3.)

(iii) The FC stock in the hands of A is a U.S. real property interest because an election was made under section 897(i) to treat FC as a U.S. corporation. The exchange of the FC stock for DC stock by A is a disposition of a U.S. real property interest. Under section 897(e)(1) and paragraph (a) of § 1.897-6T, A does not recognize gain on the exchange because there is an exchange of a U.S. real property interest (the FC stock) for another U.S. real property interest (the DC stock). Under section 358(a)(1), A takes as its basis in the DC stock A's basis in the FC stock ($300,000).

(5) ***Sales of U.S. real property interests by foreign corporations under section 337.*** Section 337 as in effect prior to the Tax Reform Act of 1986 shall not apply to any sale or exchange (including a deemed section 337 sale pursuant to an election under section 338(a) to treat a stock purchase as an asset acquisition) of a U.S. real property interest by a foreign corporation.

(6) ***Section 897(l) credit.*** If a foreign corporation adopts a plan of complete liquidation and if, solely by reason of section 897(d) and this section, section 337(a) (as in effect before the Tax Reform Act of 1986) does not apply to sales or exchanges of, or section 336 (as in effect before the Tax Reform Act of 1986) does not apply to distributions of, United States real property interests by the liquidating corporation, then—

(i) The amount realized by the shareholder on the distribution shall be increased by its proportionate share of the amount by which the tax imposed by chapter 1 of the Code, as modified by the provisions of any applicable U.S. income tax treaty, on the liquidating corporation would have been reduced if section 897(d) and this section had not been applicable, and

(ii) For purposes of the Code, the shareholder shall be deemed to have paid, on the last day prescribed by law for the payment of the tax imposed by subtitle A of the Code on the shareholder for the taxable year, an amount of tax equal to the amount of increase in the amount realized described in subdivison (i) of this paragraph (c).

The special rule provided by this paragraph (c)(5) applies only to shareholders who are United States citizens or residents, and who have held stock in the liquidating corporation continuously since June 18, 1980. This special rule also only applies for the first taxable year of any such shareholder in which the shareholder receives a distribution in complete liquidation from the foreign corporation.

(7) ***Other applicable rules.*** For rules concerning exemption of gain pursuant to a U.S. income tax treaty, withholding of tax from distributions, and other applicable rules, see paragraph (d) of this section. For the treatment of liquidations described in section 334(b)(2)(A) of certain foreign corporations acquired before November 6, 1980, see § 1.897-4.

(d) ***Rules of general application*** —

(1) ***Interests subject to taxation upon later disposition*** —

(i) ***In general.*** Pursuant to the otherwise applicable rules of this section and § 1.897-6T, nonrecognition of gain or loss may apply with respect to certain distribution or exchanges of U.S. real property interests if any gain from a subsequent disposition of the interests that are distributed or received by the transferor in the exchange would be included in the gross income of the distributee or transferor and be subject to U.S. taxation. Gain is considered subject to U.S. taxation if the gain is included on the income tax return of a U.S. tax paying entity even if there is no U.S. tax liability (for example, because of net operating losses or an investment tax credit). Gain is not considered subject to U.S. taxation if the gain is derived by a tax exempt entity. A real estate investment trust is considered to be a pass-through entity for purposes of the rule of taxability of this paragraph (d)(1)(i). Thus, for example, a tax exempt entity holding an interest in a real estate investment trust is not subject to tax. A domestic corporation (including a foreign corporation that makes an effective section 897(i) election after receipt of the U.S. real property interest) shall not be considered subject to U.S. taxation on a subsequent disposition of a U.S. real property interest if it received the U.S. real property interest prior to the effective date of the repeal of section 336(a) or 337(a) as in effect prior to the Tax Reform Act of 1986, unless the U.S. real property interest has not been sold or exchanged by the domestic corporation prior to such effective date in a transaction to which either section 336(a) or section 337(a) (as in effect prior to such effective date) applied. In addition, an interest shall be considered to be subject to U.S. taxation upon its subsequent disposition only if the requirements set forth in subdivision (iii) of this paragraph (d)(1) are met.

(ii) ***Effects of income tax treaties*** —

(A) ***Effect of treaty exemption from tax.*** Except as otherwise provided in subdivision (C) of this paragraph (d)(1)(ii), a U.S. real property interest shall not be considered to be subject to U.S. taxation upon a subsequent disposition if, at the time of its distribution or exchange, the recipient is entitled pursuant to the provisions of a U.S. income tax treaty to an exemption from U.S. taxation upon a disposition of the interest.

(B) ***Effect of treaty reduction of tax.*** If, at the time of a distribution or exchange, a distributee of a U.S. real property interest in a distribution or a transferor who receives a U.S. real property interest in an exchange would be entitled pursuant to the provisions of a U.S. income tax treaty to reduced U.S. taxation upon the disposition of the interest, then a portion of the interest received shall be treated as an interest subject to U.S. taxation upon its disposition, and, therefore, that portion shall be entitled to nonrecognition treatment under the rules of this section or § 1.897-6T. The portion of the interest that is treated as subject to U.S. taxation is determined by multiplying the fair market value of the interest by a fraction. The numerator of the fraction is the amount of tax that would be due pursuant to the provisions of the applicable U.S. income tax treaty upon the recipient's disposition of the interest, determined as of the date of the distribution or transfer. The denominator of the fraction is the amount of tax that would be due upon such disposition but for the provisions of the treaty. However, nonrecognition treatment may be preserved in accordance with the provisions of subdivision (C) of this paragraph (d)(1)(ii). With regard to the provisions of this paragraph, see Article XIII (9) of the United States-Canada Income Tax Convention.

(C) ***Waiver of treaty benefits to preserve nonrecognition.*** Notwithstanding the provisions of subdivisions (A) and (B) of this paragraph (d)(1)(ii), an interest shall be considered to be subject to U.S. taxation upon its subsequent disposition if, in accordance with paragraph

(d)(1)(iii)(F) of this section, the recipient waives the benefits of a U.S. income tax treaty that would otherwise entitle the recipient to an exemption from (or reduction of) U.S. tax upon a disposition of the interest.

(iii) ***Procedural requirements.*** If a U.S. real property interest is distributed or transferred after December 31, 1987, the transferor or distributor (that is a nonresident alien individual or a foreign corporation) shall file an income tax return for the taxable year of the distribution or transfer. Also, if a U.S. real property interest is distributed or transferred in a transaction before January 1, 1988, with respect to which nonrecognition treatment would not have been available under the express provisions of section 897 (d) or (e) of the Code but is available under the provisions of this section or § 1.897-6T, then the person that would otherwise be subject to tax by reason of the operation of section 897 must file an income tax return for the taxable year of the distribution or transfer. This requirement is satisfied by filing a tax return or an amended tax return for the year of the distribution or transfer by May 5, 1989, or by the date that the filing of the return is otherwise required. The person filing the return must attach thereto a document setting forth the following:

(A) A statement that the distribution or transfer is one to which section 897 applies;

(B) A description of the U.S. real property interest distributed or transferred, including its location, its adjusted basis in the hands of the distributor or tranferor immediately before the distribution or transfer, and the date of the distribution or transfer;

(C) A description of the U.S. real property interest received in an exchange;

(D) A declaration signed by an officer of the corporation that the distributing foreign corporation has substantiated the adjusted basis of the shareholder in its stock if the distributing corporation has nonrecognition or recognition limitation under paragraph (c)(3) or (4) of this section;

(E) The amount of any gain recognized and tax withheld by any person with respect to the distribution or transfer;

(F) [Reserved]. For further guidance, see § 1.897-5(d)(1)(iii)(F).

(G) The treaty and article (if any) under which the distributee or transferor would be exempt from U.S. taxation on a sale of the distributed U.S. real property interest or the U.S. real property interest received in the transfer; and

(H) A declaration, signed by the distributee or transferor or its authorized legal representative, that the distributee or transferor shall treat any subsequent sale, exchange, or other disposition of the U.S. real property interest as a disposition that is subject to U.S. taxation, notwithstanding the provisions of any U.S. income tax treaty or intervening change in circumstances.

A person who has provided or filed a notice described in § 1.1445-2(d)(2)(iii) or § 1.1445-5(b)(2)(ii) in connection with a transaction may satisfy the requirement of this paragraph (d)(1)(iii) by attaching to his return a copy of that notice together with any information or declaration required by this subdivision not contained in that notice.

(2) ***Treaty exception to imposition of tax.*** If gain that would be currently recognized pursuant to the provisions of this section or § 1.897-6T is subject to an exemption from (or reduction of) U.S. tax pursuant to a U.S. income tax treaty, then gain shall be recognized only as provided by that treaty, for

dispositions occurring before January 1, 1985. For dispositions occurring after December 31, 1984, all gain shall be recognized as provided in section 897 and the regulations thereunder, except as provided by Articles XIII (9) and XXX (5) of the United States-Canada Income Tax Convention or other income tax treaty entered into force after June 6, 1988.

With regard to Article XXX (5) of the Income Tax Treaty with Canada, see, Rev. Rul. 85-76, 1985-1 C.B. 409. With regard to basis adjustments for certain related person transactions, see, § 1.897-6T(c)(3).

(3) ***Withholding.*** Under sections 1441 and 1442, as modified by the provisions of any applicable U.S. income tax treaty, a corporation must withhold tax from a dividend distribution to which section 301 applies to a shareholder that is a foreign person, if the dividend is considered to be from sources inside the United States. For a description of dividends that are considered to be from sources inside the United States, see section 861(a)(2). Under section 1445, withholding is required with respect to certain dispositions and distributions of U.S. real property interests.

(4) ***Effect on earnings and profits.*** With respect to adjustments to earnings and profits for gain recognized to a distributing corporation on a distribution, see section 312 and the regulations thereunder.

(e) ***Effective date.*** Except as otherwise specifically provided in the text of these regulations, this section shall be effective for transfers, exchanges, distributions and other dispositions occurring after June 18, 1980.

[T.D. 8198, 53 FR 16217, May 5, 1988; 53 FR 18022, May 19, 1988; T.D. 9082, 68 FR 46084, Aug. 5, 2003]

§ 1.897-6T Nonrecognition exchanges applicable to corporations, their shareholders, and other taxpayers, and certain transfers of property in corporate reorganizations (temporary).

(a) ***Nonrecognition exchanges*** —

(1) ***In general.*** Except as otherwise provided in this section and in § 1.897-5T, for purposes of section 897(e) any nonrecognition provision shall apply to a transfer by a foreign person of a U.S. real property interest on which gain is realized only to the extent that the transferred U.S. real property interest is exchanged for a U.S. real property interest which, immediately following the exchange, would be subject to U.S. taxation upon its disposition, and the transferor complies with the filing requirements of paragraph (d)(1)(iii) of § 1.897-5T. No loss shall be recognized pursuant to section 897(e) or the rules of this section unless such loss is otherwise permitted to be recognized. In the case of an exchange of a U.S. real property interest for stock in a domestic corporation (that is otherwise treated as a U.S. real property interest), such stock shall not be considered a U.S. real property interest unless the domestic corporation is a U.S. real property holding corporation immediately after the exchange. Whether an interest would be subject to U.S. taxation in the hands of the transferor upon its disposition shall be determined in accordance with the rules of § 1.897-5T(d)(1).

(2) ***Definition of "nonrecognition" provision.*** A "nonrecognition provision" is any provision of the Code which provides that gain or loss shall not be recognized if the requirements of that provision are met. Nonrecognition provisions relevant to this section include, but are not limited to, sections 332, 351, 354, 355, 361, 721, 731, 1031, 1033, and 1036. For purposes of section 897(e), sections 121 and 453 are not nonrecognition provisions.

(3) ***Consequence of nonapplication of nonrecognition provisions.*** If a nonrecognition provision does not apply to a transaction, then the U.S. real property interest transferred shall be considered exchanged pursuant to a transaction that is subject to U.S. taxation by reason of the operation of section 897. See, however, § 1.897-5T (d)(2) with respect to the treaty exceptions to the imposition of tax. If a U.S. real property interest is exchanged for an interest the disposition of which is only partially subject to taxation under chapter 1 of the Code (as modified by the provisions of any applicable U.S. income tax treaty), then any nonrecognition provision shall apply only to the extent that the interest received in the exchange would be subject to taxation under chapter 1 of the Code, as modified. For example, the exchange of a U.S. real property interest for an interest in a partnership will receive nonrecognition treatment pursuant to section 721 only to the extent that a disposition of the partnership interest will be subject to U.S. taxation by reason of the operation of section 897(g).

(4) ***Section 355 distributions treated as exchanges.*** If a domestic corporation, stock in which is treated as a U.S. real property interest, distributes stock in a foreign corporation or stock in a domestic corporation that is not a U.S. real property holding corporation to a foreign person under section 355(a), then the foreign person shall be considered as having exchanged a proportionate part of the stock in the domestic corporation that is treated as a U.S. real property interest for stock that is not treated as a U.S. real property interest.

(5) [Reserved]

(6) ***Determination of basis.*** If a nonrecognition provision applies to the transfer of a U.S. real property interest pursuant to the provisions of this section, then the basis of the property received in the exchange shall be determined in accordance with the rules generally applicable with respect to such nonrecognition provision. Similarly, the basis of the exchanged property in the hands of the transferee shall be determined in accordance with the rules that generally apply to such transfer.

(7) ***Examples.*** The rules of paragraphs (a)(1) through (6) of this section may be illustrated by the following examples. In each instance, the filing requirements of paragraph (d)(1)(iii) of § 1.897-5T have been satisfied.

> *Example 1.* (i) A is a citizen and resident of Country F with which the U.S. does not have an income tax treaty. A owns Parcel P, a U.S. real property interest, with a fair market value of $500,000 and an adjusted basis of $300,000. A transfers Parcel P to DC, a newly formed U.S. real property holding corporation wholly owned by A, in exchange for DC stock.
> (ii) Under paragraph (a)(1) of this section, A has exchanged a U.S. real property interest (Parcel P) for another U.S. real property interest (DC stock) which is subject to U.S. taxation upon its disposition. The nonrecognition provisions of section 351(a) apply to A's transfer of Parcel P.
>
> (iii) Under paragraph (a)(6) of this section, the basis of the DC stock received by A is determined in accordance with the rules generally applicable to the transfer. A takes a $300,000 adjusted basis in the DC stock under the rules of section 358(a)(1).

> ***Examples 2-3.*** [Reserved]

> *Example 4.* (i) B is a citizen and resident of Country F with which the U.S. does not have an

income tax treaty. B owns stock in DC1, a U.S. real property holding corporation. In a reorganization qualifying for nonrecognition under section 368(a)(1)(B), B exchanges the DC1 stock under section 354(a) for stock in DC2, a U.S. real property holding corporation.
(ii) A does not recognize any gain under paragraph (a)(1) of this section on the exchange of the DC1 stock for DC2 stock because there is an exchange of a U.S. real property interest (the DC1 stock) for another U.S. real property interest (the DC2 stock) which is subject to U.S. taxation upon its disposition.

Example 5. (i) C is a citizen and resident of Country F with which the U.S. does not have an income tax treaty. C owns all of the stock of DC, a U.S. real property holding corporation. The fair market value of the DC stock is 500x, and C has a basis of 100x in the DC stock.
(ii) In a transaction qualifying as a distribution of stock of a controlled corporation under section 355(a), DC distributes to C all of the stock of FC, a foreign corporation that has not made a section 897(i) election. C does not surrender any of the DC stock. The FC stock has a fair market value of 200x. After the distribution, the DC stock has a fair market value of 300x.

(iii) Under the rules of paragraph (a)(4) of this section, C is considered to have exchanged DC stock with a fair market value of 200x and an adjusted basis of 40x for FC stock with a fair market value of 200x. Because the FC stock is not a U.S. real property interest, C must recognize gain of 160x under section 897(a) on the distribution. C takes a basis of 200x in the FC stock. C's basis in the DC stock is reduced to 60x pursuant to section 358(c).

Example. (i) A is an individual citizen and resident of Country F. F has an income tax treaty with the United States that exempts gain from the sale of stock, but not real property, by a resident of F from U.S. taxation. In 1981, A transferred Parcel P, an appreciated U.S. real property interest, to DC, a U.S. real property holding corporation, in exchange for DC stock. A owned all of the stock of DC.
(ii) Under the rules of paragraph (a)(1) of this section, A must recognize gain on the transfer of Parcel P. Even though there is an exchange of a U.S. real property interest for another U.S. real property interest, there is gain recognition because the U.S. real property interest received (the DC stock) would not have been subject to U.S. taxation upon a disposition immediately following the exchange. A may not convert a U.S. real property interest that was subject to taxation under section 897 into a U.S. real property interest that could be sold without taxation under section 897 due to a treaty exemption.

Example 7. (i) A, a nonresident alien, organized FC1, a Country W corporation in September 1980 to invest in U.S. real property. FC1's only asset is Parcel P, a U.S. real property interest with a fair market value of $500,000 and an adjusted basis of $200,000. The FCI stock has a fair market value of $500,000 and A's basis in the FC1 stock is $100,000. The United States does not have a treaty with Country W.

(ii) A, organized FC2, a Country W corporation in July 1987. FC2 organized DC in August 1987. Pursuant to a plan of reorganization under section 368 (a)(1)(C), FC1 transfers Parcel P to DC in exchange for FC2 voting stock. As a result of the transfer, DC is a U.S. real property holding corporation wholly owned by FC2. The FC2 stock used by DC in the acquisition had been transferred by FC2 to DC as part of the plan of reorganization. FC1 distributes the FC2 stock to A in exchange for A's FC1 stock.

(iii) FC1's exchange of Parcel P for the FC2 stock under section 361(a) is a disposition of a U.S. real property interest. FC1 must recognize gain of $300,000 under section 897(e) and paragraph (a)(1) of this section on the exchange because the FC2 stock received in exchange for Parcel P is not a U.S. real property interest.

(iv) Under section 362(b), DC takes a basis of $500,000 in Parcel P. FC2 takes a basis of $500,000 in the DC stock. A takes a basis of $100,000 in the FC2 stock under section 358(a)(1). Section 897(d) and paragraph (c)(1) of § 1.897-5T do not apply to FC1's distribution of the FC2 stock because the FC2 stock is not a U.S. real property interest.

Example 8. (i) The facts are the same as in *Example 7,* except that the United States has a treaty with Country W that entitles FC1 and FC2 to nondiscriminatory treatment as described in § 1.897-3(b)(2). FC1, but not FC2, makes a valid section 897(i) election prior to the transaction.
(ii) FC1's transfer of Parcel P to DC in exchange for FC2 stock is not subject to section 897(e) and paragraph (a)(1) of this section because FC1 made an election under section 897(i). DC takes a basis of $200,000 in Parcel P under section 362(b).

(iii) FC1's distribution of the FC2 stock to A in exchange for the FC1 stock is not subject to the section 897(d) and paragraph (c)(1) of § 1.897-5T because FC1 made an election under section 897(i).

(iv) A must recognize gain on the exchange under section 354(a) of the FC1 stock for the FC2 stock. A exchanged a U.S. real property interest (the FC1 stock) for an interest which is not a U.S. real property interest (the FC2 stock). A recognizes gain of $400,000. Under section 1012, A takes a $500,000 basis in the FC2 stock.

Example 9. (i) The facts are the same as in *Example 7* except that the United States has a treaty with Country W that entitles FC1 and FC2 to nondiscriminatory treatment as described in § 1.897-3(b)(2). FC2, but not FC1, makes a valid section 897(i) election prior to the transaction.

(ii) FC1's exchange of Parcel P for the FC2 stock under section 361(a) is a disposition of a U.S. real property interest. FC1 does not recognize any gain under section 897(e) and paragraph (a)(1) of this section because there is an exchange of a U.S. real property interest (Parcel P) for another U.S. real property interest (the FC2 stock). DC takes a basis of $200,000 in Parcel P under section 362(b). FC2 takes a basis of $200,000 in the DC stock.

(iii) FC1's distribution of the FC2 stock to A in exchange for the FC1 stock is subject to section 897(d) and paragraph (c)(1) of § 1.897-5T. Because A takes a basis of $100,000 in the FC2 stock under section 358(a) (which is less than the $200,000 basis of the FC2 stock in the hands of FC1), and A would be subject to U.S. taxation under section 897(a) on a subsequent disposition of the FC2 stock, FC1 does not recognize any gain under paragraph (c)(1) of § 1.897-5T due to the statutory exception of paragraph (c)(2)(i) of that section, provided that FC1 complies with the filing requirements of paragraph (d)(1)(C) of § 1.897-5T.

(iv) Since, the FC1 stock was not a U.S. real property interest, its disposition by A in the section 354(a) exchange for FC2 stock is not subject to section 897(e) and paragraph (a)(1) of this section.

Example 10. (i) The facts are the same as in *Example 7,* except that the United States has a treaty with Country W that entitles FC1 and FC2 to nondiscriminatory treatment as described in § 1.897-3(b)(2). FC1 and FC2 made valid section 897(i) elections prior to the transactions.
(ii) FC1's transfer of Parcel P to DC in exchange for FC2 stock is not subject to section 897(e) and paragraph (a)(1) of this section because FC1 made an election under section 897(i). DC takes a basis of $200,000 in Parcel P under section 362(a). FC2 takes a basis of $200,000 in the DC stock.

(iii) FC1's distribution of the FC2 stock to A in exchange for the FC1 stock is not subject to section 897(d) and paragraph (c)(1) of § 1.897-5T because FC1 made an election under section 897(i).

(iv) A does not recognize any gain on the exchange of the FC1 stock for the FC2 stock under section 354(a). Under paragraph (a)(1) of this section, there is an exchange of a U.S. real property interest (FC1 stock) for another U.S. real property interest (FC2 stock). A takes a basis of $100,000 in the FC2 stock under section 358(a).

(8) ***Treatment of nonqualifying property*** —

(i) ***In general.*** If, under paragraph (a)(1) of this section, a nonrecognition provision would apply to an exchange but for the fact that nonqualifying property (cash or property other than U.S. real property interests) is received in addition to property (U.S. real property interests) that is permitted to be received under paragraph (a)(1) of this section, then the transferor shall recognize gain under this section equal to the lesser of—

(A) The sum of the cash received plus the fair market value of the nonqualifying property received, or

(B) The gain realized with respect to the U.S. real property interest transferred. However, no loss shall be recognized pursuant to this paragraph (a)(8) unless such loss is otherwise permitted to be recognized.

(ii) ***Treatment of mixed exchanges.*** In a mixed exchange where both a U.S. real property interest and other property (including cash) is transferred in exchange both for property the receipt of which would qualify for nonrecognition treatment pursuant to paragraph (a)(1) of this section and for other property (including cash) which would not so qualify, the transferor will recognize gain in accordance with the rules set forth in subdivisions (A) through (C) of this paragraph (a)(8)(ii).

(A) ***Allocation of nonqualifying property.*** The amount of nonqualifying property (including cash) considered to be received in exchange for U.S. real property interests shall be determined by multiplying the fair market value of the nonqualifying property received by a fraction ("real property fraction"). The numerator of the fraction is the fair market value of the U.S. real property interest transferred in the exchange. The denominator of the fraction is the fair market value of all property transferred in the exchange.

(B) ***Recognition of gain.*** The amount of gain that must be recognized, and that shall be subject to U.S. taxation by reason of the operation of section 897, shall be equal to the lesser of:

(*1*) The amount determined under subdivision (A) of this paragraph (a)(8)(ii), or

(*2*) The gain or loss realized with respect to the U.S. real property interest exchanged.

(C) ***Treatment of other amounts.*** The treatment of other amounts received in a mixed exchange shall be determined as follows:

(*1*) The amount of nonqualifying property (including cash) considered to be received in exchange for property (including cash) other than U.S. real property interests shall be treated in the manner provided in the relevant nonrecognition provision. Such amounts shall be determined by subtracting the amount determined under subdivision (A) of this paragraph (a)(8)(ii) from the total amount of nonqualifying property received in the exchange.

(*2*) The amount of qualifying property considered to be received in exchange for U.S. real property interests shall be treated in the manner provided in paragraph (a)(1) of this section. Such amount shall be determined by multiplying the total fair market value of qualifying property received in the exchange by the real property fraction described in subdivision (A) of this paragraph (a)(8)(ii).

(*3*) The amount of qualifying property considered to be received in exchange for property other than U.S. real property interests shall be treated in the manner provided in the relevant nonrecognition provision. Such amount shall be determined by subtracting the amount determined under subdivision (*2*) of this paragraph (a)(8)(ii)(C) from the total fair market value of qualifying property received in the exchange.

(iii) ***Example.*** The rules of paragraph (a)(8)(ii) of this section may be illustrated by the following example.

Example. (i) A is an individual citizen and resident of country F. Country F does not have an income tax treaty with the United States. A is the sole proprietor of a business located in the United States, the assets of which consist of a U.S. real property interest with a fair market value of $1,000,000 and an adjusted basis of $700,000, and equipment used in the business with a fair market value of $500,000 and an adjusted basis of $250,000. A decides to incorporate the business, and on January 1, 1987, A transfers his assets to domestic corporation DC in exchange for 100 percent of the stock of DC, with a fair market value of $900,000. In addition, A receives a long term note (constituting a security) from DC for $600,000, bearing arm's length interest and repayment terms. DC has no assets other than those received in the exchange with A. Pursuant to section 897(c)(2) and § 1.897-2, DC is a U.S. real property holding corporation. Therefore, the stock of DC is a U.S. real property interest. Assume that the note from DC constitutes an interest in the corporation solely as a creditor as provided by § 1.897-1(d)(4) of the regulation. A complies with the filing requirements of paragraph (d)(1)(iii) of § 1.897-5T. (ii) Because the note from DC would not be subject to U.S. taxation upon its disposition, it is nonqualifying property for purposes of determining whether A is entitled to receive nonrecognition treatment pursuant to section 351 with respect to his exchange of the U.S. real property interest. Thus, A must recognize gain in the manner provided in paragraph (a)(8)(ii) of this section. Pursuant to paragraph (a)(8)(ii)(A), the amount of nonqualifying property received in exchange for the real property interests is determined by multiplying the fair market value of such property ($600,000) by the real property fraction. The numerator of the fraction is $1,000,000, the fair market value of the real property transferred by A. The denominator is $1,500,000, the fair market value of all property transferred by A. Thus, A is considered to have received $400,000 of the note in exchange for the real property ($600,000 × $1,000,000/$1,500,000). Pursuant to paragraph (a)(8)(ii)(B), A must recognize the lesser of the amount initially determined or the gain realized with respect to the U.S. real property interest. Therefore, A must recognize the $300,000 gain realized with respect to the real property.

(iii) Pursuant to paragraph (a)(8)(ii)(C) of this section, A is considered to have received $200,000 of the note in exchange for equipment ($600,000 [total value of note received] minus $400,000 [portion of note received in exchange for real property]), $600,000 of the stock in exchange for real property ($900,000 [total value of stock received] times $1,000,000/1,500,000) [proportion of property exchanged consisting of real property]), and $300,000 of the stock in exchange for equipment ($900,000 [total value of stock received] minus $600,000 [portion of stock received in exchange for real property]). All three amounts are entitled to nonrecognition treatment pursuant to section 351.

(iv) Pursuant to paragraph (a)(2) of this section, A's basis in the stock and note received and DC's basis in the U.S. real property interest and equipment will be determined in accordance with the generally applicable rules. The $400,000 portion of the note received in exchange for the real property interest is other property. Pursuant to section 358(a)(2), A takes a fair market value ($400,000) basis for that portion of the note. Pursuant to section 358(a)(1), A's basis in the property received without the recognition of gain (the DC stock and the other portion of the note) will be equal to the basis of the property transferred ($950,000 [$700,000 basis of U.S. real property interest plus $250,000 basis of equipment]), decreased by the fair market value of the other property received ($400,000 portion of the note), and increased by the amount of gain recognized to A on the transaction ($300,000). Thus, A's basis in the stock and the nonrecognition portion of the note is $850,000 ($950,000-$400,000 + $300,000). Under § 1.358-2(b)(2) of the regulations, the $850,000 is allocated between the stock and the nonrecognition portion of the note in proportion to their fair market values. A takes a basis of $697,000 in the DC stock ($850,000 × 900,000/1,100,000). A takes a basis of $153,000 in the nonrecognition portion of the note ($850,000 × 200,000/1,100,000). A's basis in the note is $553,000 ($400,000 + $153,000). DC's basis in the property received from A will be determined under section 362(a). DC takes a basis of $1,000,000 in the real property interest (A's basis of $700,000 increased by the $300,000 of gain recognized by A on it). DC takes a basis of $250,000 in the equipment (A's basis of $250,000).

(9) ***Treaty exception to imposition of tax.*** If gain that would be currently recognized pursuant to the provisions of this section is subject to an exemption from, or reduction of, U.S. tax pursuant to a U.S. income tax treaty, then gain shall be recognized only as provided by that treaty for dispositions occurring before January 1, 1985. For dispositions occurring after December 31, 1984, all gain shall be recognized as provided in section 897 and the regulations thereunder, except as provided by Articles XII (9) and XXX (5) of the United States-Canada Income Tax Convention or other income tax treaty entered into after June 6, 1988. In regard to Article XXX (5) the Income Tax Treaty with Canada, see, Rev. Rul. 85-76, 1985-1 C.B. 409.

(b) ***Certain foreign to foreign exchanges*** —

(1) ***Exceptions to the general rule.*** Notwithstanding the provisions of paragraph (a)(1) of this section and pursuant to authority conferred by section 897(e)(2), a foreign person shall not recognize gain, in the instances described in paragraph (b)(2) of this section, on the transfer of a U.S. real property interest to a foreign corporation in exchange for stock in a foreign corporation, but only if the transferee's subsequent disposition of the transferred U.S. real property interest would be subject to U.S. taxation, as determined in accordance with the provisions of § 1.897-5T(d)(1), if the filing requirements of paragraph (d)(1)(iii) of § 1.897-5T have been satisfied, if one of the five conditions set forth in paragraph (b)(2) exists, and if one of the following three forms of exchange takes place.

(i) The exchange is made by a foreign corporation pursuant to section 361(a) in a reorganization described in section 368(a)(1) (D) or (F) and there is an exchange of the transferor corporation stock for the transferee corporation stock under section 354(a); or

(ii) The exchange is made by a foreign corporation pursuant to section 361(a) in a reorganization described in section 368(a)(1)(C); there is an exchange of the transferor corporation stock for the transferee corporation stock (or stock of the transferee corporation's parent in the case of a parenthetical C reorganization) under section 354(a); and the transferor corporation's shareholders own more than fifty percent of the voting stock of the transferee corporation (or stock of the transferee corporation's parent in the case of a parenthetical C reorganization) immediately after the reorganization; or

(iii) The U.S. real property interest exchanged is stock in a U.S. real property holding corporation; the exchange qualifies under section 351(a) of section 354(a) in a reorganization described in section 368(a)(1)(B); and immediately after the exchange, all of the outstanding stock of the transferee corporation (or stock of the transferee corporation's parent in the case of a parenthetical B reorganization) is owned in the same proportions by the same nonresident alien individuals and foreign corporations that, immediately before the exchange, owned the stock of the U.S. real property holding corporation.

If, however, a nonresident alien individual or foreign corporation which received stock in an exchange described in subdivision (iii) of this paragraph (b)(1) (or the transferee corporation's parent) disposes of any of such foreign stock within three years from the date of its receipt, then that individual or corporation shall recognize that portion of the gain realized with respect to the stock in the U.S. real property holding corporation for which foreign stock disposed of was received.

(2) ***Applicability of exception.*** The exception to the provisions of paragraph (a)(1) provided by paragraph (b)(1) shall apply only if one of the following five conditions exists.

(i) Each of the interests exchanged or received in a transferor corporation or transferee corporation would not be a U.S. real property interest as defined in § 1.897-1(c)(1) if such corporations were domestic corporations; or

(ii) The transferee corporation (and the transferee corporation's parent in the case of a parenthetical B or C reorganization) is incorporated in a foreign country that maintains an income tax treaty with the United States that contains an information exchange provision; the transfer occurs after May 5, 1988; and the transferee corporation (and the transferee corporation's parent in the case of a parenthetical B or C reorganization) submit a binding waiver of all benefits of the respective income tax treaty (including the opportunity to make an election under section 897 (i)), which must be attached to each of the transferor and transferee corporation's income tax returns for the year of the transfer; or

(iii) The transferee foreign corporation (and the transferee corporation's parent in the case of a parenthetical B or C reorganization) is a qualified resident as defined in section 884(e) and any regulations thereunder of the foreign country in which it is incorporated; or

(iv) The transferee foreign corporation (and the transferee corporation's parent in the case of a parenthetical B or C reorganization) is incorporated in the same foreign country as the transferor foreign corporation; and there is an income tax treaty in force between that foreign country and the United States at the time of the transfer that contains an exchange of information provision; or

(v) The transferee foreign corporation is incorporated in the same foreign country as the transferor foreign corporation; and the transfer is incident to a mere change in identity, form, or place of organization of one corporation under section 368(a)(1)(F).

For purposes of any election by a transferee foreign corporation (or the transferee corporation's parent in the case of a parenthetical C reorganization) to be treated as a domestic corporation under section 897(i) and § 1.897-3 where the exchange was described in subdivisions (i) or (ii) of paragraph (b)(1) of this section, any prior dispositions of the transferor foreign corporation stock will be subject to the requirements of § 1.897-3(d)(2) upon an election under section 897(i) by the transferee foreign corporation (or the transferee corporation's parent in the case of a parenthetical C reorganization).

(3) ***No exceptions.*** No exception to recognition of gain under paragraph (a)(1) of this section is provided for the transfer of a U.S. real property interest by a foreign person to a foreign corporation in exchange for stock in a foreign corporation other than as provided in this paragraph (b). Thus, no exception is provided where—

(i) Such exchange is made pursuant to section 351 and the U.S. real property interest transferred is not stock in a U.S. real property holding corporation; or

(ii) Such exchange is made pursuant to section 361(a) in a reorganization described in section 368(a)(1) that does not qualify for nonrecognition of gain under this paragraph (b). With regard to the treatment of certain foreign corporations as domestic corporations under section 897(i), see §§ 1.897-3 and 1.897-8T.

(4) ***Examples.*** The rules of paragraph (b)(1) and (2) of this section may be illustrated by the following examples. In each instance, the filing requirements of paragraph (d)(1)(iii) of § 1.897-5T have been satisfied.

> *Example 1.* (i) FC is a Country F corporation that has not made a section 897 (i) election. FC owns Parcel P, a U.S. real property interest, with a fair market value of $450x and an adjusted basis of 100x.
> (ii) FC transfers Parcel P to FS, its wholly owned Country F subsidiary, in exchange for FS stock under section 351 (a). FS has not made a section 897(i) election. Under the rules of paragraph (a)(1) of this section, FC must recognize gain of 350x under section 897 (a) because the FS stock received in the exchange is not a U.S. real property interest. No exception to the recognition rule of paragraph (a)(1) is provided under this paragraph (b) for a transfer under section 351 (a) of a U.S. real property interest (that is not stock in a U.S. real property holding corporation) by a foreign corporation to another foreign corporation in exchange for stock to the transferee corporation.

> *Example 2.* (i) FC is a Country F corporation that has not made a section 897(i) election. FC owns several U.S. real property interests that have appreciated in value since FC purchased the interests. FP, a Country F corporation, owns all of the outstanding stock of FC. Country F maintains an income tax treaty with the United States.
> (ii) For valid business purposes, FC transferred substantially all of its assets including all of its U.S. real property interests to FS in 1989 under section 361(a) in a reorganization in exchange for FS stock. FS is a newly formed Country F corporation that is owned by FC. The

transfer qualifies as a reorganization under section 368(a)(1)(D). FC immediately distributes the FS stock to FP in exchange for the FC stock and FC dissolves. FP has no gain or loss on the exchange of the FC stock for the FS stock under section 354(a).

(iii) Under the rules of paragraph (b)(1)(i) of this section, FC does not recognize any gain on the transfer of the U.S. real property interests to FS under section 361(a) in the reorganization under section 368(a)(1)(D) because FS would be subject to U.S. taxation on a subsequent disposition of the interests, as required by paragraph (b)(1) of this section; there is an exchange of stock under section 354(a), as required by paragraph (b)(1)(i); and FC and FS are incorporated in Country F which maintains an income tax treaty with the United States, as required by paragraph (b)(2)(iv).

(5) ***Contributions of property.*** A foreign person that contributes a U.S. real property interest to a foreign corporation as paid in surplus or as a contribution to capital (including a contribution provided in section 304(a)) shall be treated, for purposes of section 897(j) and this section, as exchanging the U.S. real property interest for stock in the foreign corporation.

(c) ***Denial of nonrecognition with respect to certain tax avoidance transfers*** —

(1) ***In general.*** The provisions of § 1.897-5T and paragraphs (a) and (b) of this section are subject to the rules of this paragraph (c).

(2) ***Certain transfers to domestic corporations*** —

(i) ***General rule.*** If a foreign person transfers property, that is not a U.S. real property interest, to a domestic corporation in a nonrecognition exchange, where—

(A) The adjusted basis of such property transferred exceeded its fair market value on the date of the transfer to the domestic corporation;

(B) The property transferred will not immediately be used in, or held by the domestic corporation for use in, the conduct of a trade or business as defined in § 1.897-1(f); and

(C) Within two years of the transfer to the domestic corporation, the property transferred is sold at a loss;

then, it will be presumed, absent clear and convincing evidence to the contrary, that the purpose for transferring the loss property was the avoidance of taxation on the disposition of U.S. real property interests by the domestic corporation. Any loss recognized by the domestic corporation on the sale or exchange of such property shall not be used by the domestic corporation, either by direct offset or as part of a net operating loss or capital loss carryback or carryover to offset any gain recognized from the sale or exchange of a U.S. real property interest by the domestic corporation.

(ii) ***Example.*** The rules of paragraph (c)(2)(i) of this section may be illustrated by the following example.

Example. A is an individual citizen and resident of country F, which does not have an income tax treaty with the U.S. On January 1, 1987, A transfers a U.S. real property interest with a basis of $100,000 and a fair market value of $600,000 to domestic corporation DC in exchange for all of the stock of DC. On October 20, 1987, A transfers stock of a publicly

traded domestic corporation with a basis in his hands of $900,000 and a fair market value of $500,000, in exchange for additional stock of DC. The stock of the publicly traded domestic corporation does not constitute an asset used or held for use in DC's trade or business. If DC sells the stock of the publicly traded domestic corporation before October 20, 1989 and recognizes a loss, the loss may not be used to offset any gain recognized on the sale of the U.S. real property interests by DC.

(3) ***Basis adjustment for certain related person transactions.*** In the case of any disposition after December 31, 1979, of a U.S. real property interest to a related person (within the meaning of section 453(f)(1)), the basis of the interest in the hands of the person acquiring such interest shall be reduced by the amount of any gain which is not subject to taxation under section 871(b)(1) or 882(a)(1) because the disposition occurred before June 19, 1980 or because of any treaty obligation of the United States. If a foreign corporation makes an election under section 897(i), and the stock of such corporation was transferred between related persons after December 31, 1979 and before June 19, 1980, then such stock shall be treated as a U.S. real property interest solely for purposes of this paragraph (c)(3).

(4) ***Rearrangement of ownership to gain treaty benefit.*** A foreign person who directly or indirectly owns a U.S. real property interest may not directly or indirectly rearrange the incidents of ownership of the U.S. real property interest through the use of nonrecognition provisions in order to gain the benefit of a treaty exemption from taxation. Such nonrecognition will not apply to the foreign transferor. The transferor will recognize gain but not loss on the transfer under section 897(a).

(d) ***Effective date.*** Except as specifically provided otherwise in the text of the regulations, paragraphs (a) through (c) shall be effective for transfers, exchanges and other dispositions occurring after June 18, 1980. Paragraph (a)(5)(ii) of this section shall be effective for exchanges and elections occurring after June 6, 1988.

[T.D. 8198, 53 FR 16224, May 5, 1988; 53 FR 18022, May 19, 1988; T.D. 9082, 68 FR 46084, Aug. 5, 2003]

§ 1.897-7 Treatment of certain partnership interests, trusts and estates under section 897(g).

(a)-(b) [Reserved]. For further guidance, see § 1.897-7T(a) through (b).

(c) ***Coordination with section 864(c)(8).*** Except as provided in § 1.864(c)(8)-1, the amount of any money, and the fair market value of any property, received by a nonresident alien individual or foreign corporation in exchange for all or part of its interest in a partnership, trust, or estate will, to the extent attributable to United States real property interests, be considered as an amount received from the sale or exchange in the United States of such property. See also § 1.864(c)(8)-1(h) for an anti-stuffing rule that may apply to transactions subject to section 897. This paragraph applies to transfers occurring on or after December 26, 2018, and to amounts received on or after December 26, 2018, pursuant to an installment sale (as defined in section 453(b)) occurring on or after November 27, 2017.

[T.D. 9919, 85 FR 70971, Nov. 6, 2020]

§ 1.897-7T Treatment of certain partnership interests as entirely U.S. real property interests under sections 897(g) and 1445(e) (temporary).

(a) ***Rule.*** Pursuant to section 897(g), an interest in a partnership in which, directly or indirectly, fifty percent or more of the value of the gross assets consist of U.S. real property interests, and ninety percent or more of the value of the gross assets consist of U.S. real property interests plus any cash or cash equivalents shall, for purposes of section 1445, be treated as entirely a U.S. real property interest. For purposes of section 897(g), such interest shall be treated as a U.S. real property interest only to the extent that the gain on the disposition is attributable to U.S. real property interests (and not cash, cash equivalents or other property). Consequently, a disposition of any portion of such partnership interest shall be subject to partial taxation under section 897(a) and full withholding under section 1445(a). For purposes of this paragraph, cash equivalent means any asset readily convertible into cash (whether or not denominated in U.S. dollars) including, but not limited to, bank accounts, certificates of deposit, money market accounts, commercial paper, U.S. and foreign treasury obligations and bonds, corporate obligations and bonds, precious metals or commodities, and publicly traded instruments.

(b) ***Effective date.*** Section 1.897-7T shall be effective for transfers, exchanges, distributions and other dispositions occurring after June 6, 1988.

(c) ***Coordination with section 864(c)(8).*** [Reserved]. For further guidance, see § 1.897-7(c).

[T.D. 8198, 53 FR 16228, May 5, 1988, as amended by T.D. 9919, 85 FR 70971, Nov. 6, 2020]

§ 1.897-8T Status as a U.S. real property holding corporation as a condition for electing section 897(i) pursuant to § 1.897-3 (temporary).

(a) ***Purpose and scope.*** This section provides a temporary regulation that if and when adopted as a final regulation, will be added to paragraph (b) of § 1.897-3. Paragraph (b) of this section would then appear as paragraph (b)(4) of § 1.897-3.

(b) ***General conditions.*** The foreign corporation upon making an election under section 897(i) (including any retroactive election) must qualify as a U.S. real property holding corporation as defined in paragraph (b)(1) of § 1.897-2.

(c) ***Effective Date.*** Section 1.897-8T shall be effective as of June 6, 1988, with respect to foreign corporations making an election under section 897(i) after May 5, 1988.

[T.D. 8198, 53 FR 16229, May 5, 1988]

§ 1.897-9T Treatment of certain interest in publicly traded corporations, definition of foreign person, and foreign governments and international organizations (temporary).

(a) ***Purpose and scope.*** This section provides a temporary regulation that, if and when adopted as a final regulation will be added as new paragraphs (c)(2)(iii)(B), (k), (n) and (q) of § 1.897-1. Paragraph (b) of this section would then appear as paragraph (c)(2)(iii)(B) of § 1.897-1. Paragraph (c) of this section would then appear as paragraph (k) of § 1.897-1. Paragraph (d) of this section would then appear as paragraph (n) of § 1.897-1. Paragraph (e) of this section would then appear as paragraph (q) of § 1.897-1.

(b) Any other interest in the corporation (other than an interest solely as a creditor) if on the date such interest was acquired by its present holder it had a fair market value greater than the fair market value on that date of 5 percent of the regularly traded class of the corporation's stock with the lowest fair market

value. However, if a non-regularly traded class of interests in the corporation is convertible into a regularly traded class of interests in the corporation, an interest in such non-regularly traded class shall be treated as a U.S. real property interest if on the date it was acquired by its present holder it had a fair market value greater than the fair market value on that date of 5 percent of the regularly traded class of the corporation's stock into which it is convertible. If a person holds interests in a corporation of a class that is not regularly traded, and subsequently acquires additional interests of the same class, then all such interests must be aggregated and valued as of the date of the subsequent acquisition. If the subsequent acquisition causes that person's interests to exceed the applicable limitation, then all such interests shall be treated as U.S. real property interests, regardless of when acquired. In addition, if a person holds interests in a corporation of separate classes that are not regularly traded, and if such interests were separately acquired for a principal purpose of avoiding the applicable 5 percent limitation of this paragraph, then such interests shall be aggregated for purposes of applying that limitation. This rule shall not apply to interests of separate classes acquired in transactions more than three years apart. For purposes of paragraph (c)(2)(iii) of § 1.897-1, section 318(a) shall apply (except that section 318(a)(2)(C) and (3)(C) shall each be applied by substituting “5 percent” for “50 percent”).

(c) [Reserved]

(d) ***Regularly traded*** —

(1) ***General rule*** —

(i) ***Trading requirements.*** A class of interests that is traded on one or more established securities markets is considered to be regularly traded on such market or markets for any calendar quarter during which—

(A) Trades in such class are effected, other than in *de minimis* quantities, on at least 15 days during the calendar quarter;

(B) The aggregate number of the interests in such class traded is at least 7.5 percent or more of the average number of interests in such class outstanding during the calendar quarter; and

(C) The requirements of paragraph (d)(3) of this section are met.

(ii) ***Exceptions*** —

(A) in the case of the class of interests which is held by 2,500 or more record shareholders, the requirements of paragraph (d)(1)(i)(B) of this section shall be applied by substituting “2.5 percent” for “7.5 percent”.

(B) If at any time during the calendar quarter 100 or fewer persons own 50 percent or more of the outstanding shares of a class of interests, such class shall not be considered to be regularly traded for purposes of sections 897, 1445 and 6039C. Related persons shall be treated as one person for purposes of this paragraph (d)(1)(ii)(B).

(iii) ***Anti-abuse rule.*** Trades between related persons shall be disregarded. In addition, a class of interests shall not be treated as regularly traded if there is an arrangement or a pattern of trades designed to meet the requirements of this paragraph (d)(1). For example, trades between two persons that occur several times during the calendar quarter may be treated as an arrangement or a pattern of trades designed to meet the requirements of this paragraph (d)(1).

(2) ***Interests traded on domestic established securities markets.*** For purposes of sections 897, 1445 and 6039C, a class of interests that is traded on an established securities market located in the United States is considered to be regularly traded for any calendar quarter during which it is regularly quoted by brokers or dealers making a market in such interests. A broker or dealer makes a market in a class of interests only if the broker or dealer holds himself out to buy or sell interests in such class at the quoted price. Stock of a corporation that is described in section 851(a)(1) and units of a unit investment trust registered under the Investment Company Act of 1940 (15 U.S.C. sections 80a-1 to 80a-2) shall be treated as regularly traded within the meaning of this paragraph.

(3) ***Reporting requirement for interests traded on foreign securities markets.*** A class of interests in a domestic corporation that is traded on one or more established securities markets located outside the United States shall not be considered to be regularly traded on such market or markets unless such class is traded in registered form, and—

(i) The corporation registers such class of interests pursuant to section 12 of the Securities Exchange Act of 1934, 15 U.S.C. section 78, or

(ii) The corporation attaches to its Federal income tax return a statement providing the following:

(A) A caption which states "The following information concerning certain shareholders of this corporation is provided in accordance with the requirements of § 1.897-9T."

(B) The name under which the corporation is incorporated, the state in which such corporation is incorporated, the principal place of business of the corporation, and its employer identification number, if any;

(C) The identity of each person who, at any time during the corporation's taxable year, was the beneficial owner of more than 5 percent of any class of interests of the corporation to which this paragraph (d)(3) applies;

(D) The title, and the total number of shares issued, of any class of interests so owned; and

(E) With respect to each beneficial owner of more than 5 percent of any class of interests of the corporation, the number of shares owned, the percentage of the class represented thereby, and the nature of the beneficial ownership of each class of shares so owned.

Interests in a domestic corporation which has filed a report pursuant to this paragraph (d)(3)(ii) shall be considered to be regularly traded on an established securities market only for the taxable year of the corporation with respect to which such a report is filed.

(4) ***Coordination with section 1445.*** For purposes of section 1445, a class of interests in a corporation shall be presumed to be regularly traded during a calendar quarter if such interests were regularly traded within the meaning of this paragraph during the previous calendar quarter.

(e) ***Foreign governments and international organizations.*** A foreign government shall be treated as a foreign person with respect to U.S. real property interests, and shall be subject to sections 897, 1445, and 6039C on the disposition of a U.S. real property interest except to the extent specifically otherwise provided in the regulations in this chapter issued under section 892. An international organization (as defined in section 7701(a)(18)) is not a foreign person with respect to U.S. real property interests, and is not subject to sections 897, 1445, and 6039C on the disposition of a U.S. real property interest. *See* § 1.897-1(c)(3)(iv)(B) regarding the treatment of international organizations as foreign persons for

purposes of section 897(h)(4)(B). Buildings or parts of buildings and the land ancillary thereto (including the residence of the head of the diplomatic mission) used by the foreign government for a diplomatic mission shall not be a U.S. real property interest in the hands of the respective foreign government.

(f) ***Effective date.*** Section 1.897-9T with the exception of paragraph (e) shall be effective for transfers, exchanges, distributions and other dispositions occurring on or after June 6, 1988. Paragraph (e) of this section shall be effective for transfers, exchanges, distributions and other dispositions occurring on or after July 1, 1986.

[T.D. 8198, 53 FR 16229, May 5, 1988, as amended by T.D. 9992, 89 FR 31632, Apr. 25, 2024]

§ 1.897(l)-1 Exception for interests held by foreign pension funds.

(a) ***Scope and overview.*** This section provides rules regarding the exception from section 897 for qualified holders. The definitions and requirements in this section apply only for purposes of this section (including as applicable by cross-reference from other sections), and no inference is to be drawn with respect to the definitions and requirements in this section, including with respect to the meaning of a pension fund, for any other purpose. Paragraph (b) of this section provides the general rule excepting qualified holders from section 897. Paragraph (c) of this section provides the requirements that an eligible fund must satisfy to be treated as a qualified foreign pension fund. Paragraph (d) of this section provides the requirements that a qualified foreign pension fund or a qualified controlled entity must satisfy to be treated as a qualified holder. Paragraph (e) of this section provides definitions. Paragraph (f) of this section provides examples illustrating the application of the rules of this section. Paragraph (g) of this section provides applicability dates. For rules applicable to a qualified foreign pension fund or qualified controlled entity claiming an exemption from withholding under chapter 3, see generally §§ 1.1441-3, 1.1445-2, 1.1445-5, 1.1445-8, 1.1446-1, and 1.1446-2.

(b) ***Exception from section 897*** —

(1) ***In general.*** Gain or loss of a qualified holder from the disposition of a United States real property interest, including gain from a distribution described in section 897(h), is not subject to section 897(a).

(2) ***Limitation.*** Paragraph (b)(1) of this section applies solely with respect to gain or loss that is attributable to one or more qualified segregated accounts maintained by a qualified holder.

(c) ***Qualified foreign pension fund requirements*** —

(1) ***In general.*** An eligible fund is a qualified foreign pension fund if it satisfies the requirements of this paragraph (c). Paragraph (c)(2) of this section provides rules regarding the application of the requirements of section 897(l)(2) to an eligible fund. Paragraph (c)(3) of this section provides rules on the application of the requirements in paragraph (c)(2) of this section, including rules regarding the application of those requirements to an eligible fund that is an organization or arrangement and rules regarding recordkeeping.

(2) ***Applicable requirements*** —

(i) ***Created or organized.*** An eligible fund must be created, organized, or established under the laws of a foreign jurisdiction. For purposes of this paragraph (c)(2)(i), a governmental unit is treated as created or organized in the foreign jurisdiction with respect to which it is, or is a part of, the foreign government.

(ii) *Establishment of eligible fund* —

(A) *General requirement* —

(*1*) ***Purpose of and parties establishing eligible fund.*** An eligible fund must be established—

(*i*) By, or at the direction of, the foreign jurisdiction in which it is created or organized to provide retirement and pension benefits to participants or beneficiaries that are current or former employees or persons designated by such employees as a result of services rendered by such employees to their employers; or

(*ii*) By one or more employers (including a governmental unit in its capacity as an employer) to provide retirement and pension benefits to participants or beneficiaries that are current or former employees or persons designated by such employees in consideration for services rendered by such employees to such employers.

(*2*) ***Identification of type of eligible fund.*** An eligible fund that is described in both paragraphs (c)(2)(ii)(A)(*1*)(*i*) and (*ii*) of this section shall be treated solely as described in the latter paragraph.

(*3*) ***Role of parties other than the foreign jurisdiction or employer.*** For purposes of paragraph (c)(2)(ii)(A)(*1*) of this section, the determination of whether an eligible fund is established by, or at the direction of, a foreign jurisdiction or established by an employer is made without regard to whether one or more persons that are not the foreign jurisdiction or employer administer or otherwise provide services with regard to the eligible fund (including holding assets in a qualified segregated account as part of or on behalf of the eligible fund).

(B) ***Established to provide retirement or pension benefits.*** An eligible fund is established to provide retirement or pension benefits for purposes of the general requirement in paragraph (c)(2)(ii)(A) of this section if—

(*1*) All of the benefits that an eligible fund provides are qualified benefits provided to qualified recipients;

(*2*) At least 85 percent of the present value of the qualified benefits that the eligible fund reasonably expects to provide to qualified recipients in the future are retirement and pension benefits; and

(*3*) No more than five percent of the present value of the qualified benefits the eligible fund reasonably expects to provide to qualified recipients in the future are non-ancillary benefits.

(C) *Present valuation* —

(*1*) ***In general.*** For purposes of satisfying the requirements in paragraphs (c)(2)(ii)(B)(*2*) and (*3*) of this section, an eligible fund must determine, on at least an annual basis, the present value of the qualified benefits that the eligible fund reasonably expects to

provide to qualified recipients during the entire period during which the eligible fund is expected to be in existence. An eligible fund may utilize any reasonable method for performing the present valuation.

(*2*) ***48-month average alternative calculation.*** An eligible fund that does not satisfy the requirements of paragraph (c)(2)(ii)(B)(*2*) or (*3*) of this section based on the present value determination under paragraph (c)(2)(ii)(C)(*1*) of this section may satisfy the requirements of paragraph (c)(2)(ii)(B)(*2*) or (*3*) of this section based on the alternative calculation in this paragraph (c)(2)(ii)(C)(*2*). The alternative calculation in this paragraph is satisfied if the average of the present values of the future qualified benefits that the eligible fund reasonably expected to provide, as determined during the 48-month period preceding (and including) the most recent present valuation determination, satisfies the requirements of paragraph (c)(2)(ii)(B)(*2*) or (*3*) of this section, respectively. The determination of such average must be based on the valuations described in paragraph (c)(2)(ii)(C)(*1*) of this section that were carried out during the 48-month period preceding (and including) the most recent present value determination, and must use the values (not percentages) of the qualified benefits the eligible fund reasonably expected to provide. The determination described in this paragraph must be calculated using a weighted average whereby values are adjusted if the relevant valuations are applicable for different periods (as described in paragraph (c)(2)(ii)(C)(*3*) of this section) because an eligible fund performs valulations more frequently than on an annual basis. If an eligible fund has been in existence for less than 48 months, this paragraph (c)(2)(ii)(C)(*2*) is applied to the period that the eligible fund has been in existence. The alternative calculation in this paragraph (c)(2)(ii)(C)(*2*) may be satisfied based on any reasonable determination of the present valuation described in paragraph (c)(2)(ii)(C)(*1*) of this section for any period that starts before the date that the requirements of paragraph (c)(2)(ii)(C) of this section first apply to an organization or arrangement and ends on or before December 29, 2022.

(*3*) ***Application of present valuation.*** An eligible fund must use the present value determination made as of the most recent valuation under paragraph (c)(2)(ii)(C)(*1*) of this section or the alternative calculation provided in paragraph (c)(2)(ii)(C)(*2*) of this section (to the extent the eligible fund did not satisfy the requirements of paragraphs (c)(2)(ii)(B)(*2*) and (*3*) of this section in the most recent valuation) for purposes of meeting the requirements in paragraphs (c)(2)(ii)(B)(*2*) and (*3*) of this section with respect to dispositions of United States real property interests or distributions described in section 897(h) occurring in the twelve months succeeding the most recent valuation, or until a new present value determination is made, whichever occurs first.

(D) ***Certain distributions from eligible funds.*** The following distributions are not taken into account for purposes of determining whether an eligible fund satisfies the requirements of paragraph (c)(2)(ii)(B) of this section—

(*1*) A loan to a qualified recipient pursuant to terms set by the eligible fund (other than a loan with respect to which a qualified recipient defaults and is not required to repay in whole or part, unless the default is subject to tax and penalty in such foreign jurisdiction);

(2) A distribution (as permitted by the laws of the foreign jurisdiction in which the eligible fund is established or operates) made before the participant or beneficiary reaches the retirement age (as determined under the relevant foreign laws), provided that the distribution is to a designee that is a qualified holder or to another arrangement subject to similar distribution or tax rules under the laws of the foreign jurisdiction; and

(3) A withdrawal of funds before the participant or beneficiary reaches the retirement age (as determined under the relevant foreign laws) to satisfy a financial need (under principles similar to the U.S. hardship distribution rules, see § 1.401(k)-1(d)(3)) as permitted under the laws of the foreign jurisdiction in which the eligible fund is established or operates, provided the distribution (or at least the portion of the distribution exceeding basis) is subject to tax and penalty in such foreign jurisdiction.

(E) ***Certain employers and employees.*** For purposes of this section, the following rules apply—

(1) A self-employed individual is treated as both an employer and an employee;

(2) Employees of an individual, trust, corporation, or partnership that is a member of an employer group are treated as employees of each member of the employer group that includes the individual, trust, corporation, or partnership; and

(3) An eligible fund established by a trade union, professional association, or similar group, either alone or in combination with the employer or group of employers, is treated as established by any employer that funds, in whole or in part, the eligible fund.

(iii) ***Single participant or beneficiary*** —

(A) ***In general.*** An eligible fund may not have a single qualified recipient that has a right to more than five percent of the assets or income of the eligible fund.

(B) ***Constructive ownership.*** For purposes of paragraph (c)(2)(iii)(A) of this section, an individual is considered to have a right to the assets or income of an eligible fund to which any person who bears a relationship to the individual described in section 267(b) or 707(b) has a right.

(iv) ***Regulation and information reporting*** —

(A) ***In general.*** The eligible fund must be subject to government regulation and annually provide to the relevant tax authorities (or other relevant governmental units) in the foreign jurisdiction in which the eligible fund is established or operates information about the amount of qualified benefits (if any) provided to each qualified recipient by the eligible fund, or such information must otherwise be available to the relevant tax authorities (or other relevant governmental units). An eligible fund is not treated as failing to satisfy the requirement of this paragraph (c)(2)(iv)(A) as a result of the eligible fund not being required to provide information to the relevant tax authorities (or other relevant governmental units) in a year in which no qualified benefits are provided to qualified recipients.

(B) ***Treatment of certain eligible funds established by foreign jurisdictions.*** An eligible fund that is described in paragraph (c)(2)(ii)(A)(*1*)(*i*) of this section is deemed to satisfy the requirements of paragraph (c)(2)(iv)(A) of this section.

(v) *Tax treatment* —

(A) ***In general.*** The tax laws of the foreign jurisdiction in which the eligible fund is established or operates must provide that, due to the status of the eligible fund as a retirement or pension fund, either—

(*1*) Contributions to the eligible fund that would otherwise be subject to tax under such laws are deductible or excluded from the gross income of the eligible fund or taxed at a reduced rate; or

(*2*) Taxation of any investment income of the eligible fund is deferred or excluded from the gross income of the eligible fund or such income is taxed at a reduced rate.

(B) ***Income subject to preferential tax treatment.*** An eligible fund is treated as satisfying the requirement of paragraph (c)(2)(v)(A) of this section in a taxable year if, under the tax laws of the foreign jurisdiction in which the eligible fund is established or operates—

(*1*) At least 85 percent of the contributions to the eligible fund are subject to the tax treatment described in paragraph (c)(2)(v)(A)(*1*) of this section, or

(*2*) At least 85 percent of the investment income of the eligible fund is subject to the tax treatment described in paragraph (c)(2)(v)(A)(*2*) of this section.

(C) ***Income not subject to tax.*** An eligible fund is treated as satisfying the requirement of paragraph (c)(2)(v)(A) of this section if the eligible fund is exempt from the income tax of the foreign jurisdiction in which it is established or operates or the foreign jurisdiction in which it is established or operates has no income tax.

(D) ***Other preferential tax regimes.*** An eligible fund that does not receive the tax treatment described in either paragraph (c)(2)(v)(A)(*1*) or (*2*) of this section is nonetheless treated as satisfying the requirement of paragraph (c)(2)(v)(A) of this section if the eligible fund establishes that each of the conditions described in paragraphs (c)(2)(v)(D)(*1*) and (*2*) of this section is satisfied:

(*1*) Under the tax laws of the foreign jurisdiction in which the eligible fund is established or operates, the eligible fund is subject to a preferential tax regime due to its status as a retirement or pension fund; and

(*2*) The preferential tax regime described in paragraph (c)(2)(v)(D)(*1*) of this section has a substantially similar effect as the tax treatment described in paragraphs (c)(2)(v)(A)(*1*) or (*2*) of this section.

(E) ***Tax law of subnational jurisdictions.*** Solely for purposes of this paragraph (c)(2)(v), a reference to the tax law of a foreign jurisdiction includes the tax law of a political subdivision or other local authority of a foreign jurisdiction, provided that income taxes imposed under the subnational tax law are treated as covered taxes under an income tax treaty between that foreign jurisdiction and the United States.

(3) *Operating rules* —

(i) ***Rules on the application of the requirements in paragraph (c)(2) of this section*** —

(A) ***Organizations or arrangements.*** An organization or arrangement is treated as a single entity for purposes of determining whether the requirements of paragraph (c)(2) of this section are satisfied, except that each person or governmental unit that is part of or party to an organization or arrangement must satisfy the requirement of paragraph (c)(2)(i) of this section.

(B) ***Relevant income, assets, and functions.*** The determination of whether an eligible fund satisfies the requirements of paragraph (c)(2) of this section is made solely with respect to the assets and income of the eligible fund held in one or more qualified segregated accounts, the qualified benefits funded by the qualified segregated accounts, the information reporting and regulation related to the qualified segregated accounts, and the qualified recipients whose benefits are funded by the qualified segregated accounts. For this purpose, all assets held by an eligible fund in qualified segregated accounts (within the meaning of paragraph (e)(13)(ii) of this section) are treated as a single qualified segregated account.

(ii) ***Aggregate approach to partnerships.*** For purposes of this section, assets held by a partnership shall be treated as held proportionately by its partners, and activities conducted by a partnership shall be treated as conducted by its partners.

(iii) ***Recordkeeping.*** An eligible fund that claims the exemption under section 897(l) must have records sufficient to establish that it satisfies the requirements of paragraph (c)(2) of this section. See section 6001 and § 1.6001-1, requiring records to be maintained.

(d) ***Qualified holder requirements*** —

(1) ***In general.*** With respect to a disposition described in section 897(a) or a distribution described in section 897(h), a qualified foreign pension fund (including a part of a qualified foreign pension fund) or a qualified controlled entity is a qualified holder only if it satisfies the requirement of paragraph (d)(2) or (3) of this section.

(2) ***Qualified holders that did not hold U.S. real property interests.*** The requirement of this paragraph (d)(2) is satisfied if the qualified foreign pension fund or qualified controlled entity owned no United States real property interests as of the earliest date during an uninterrupted period, ending on the date of the disposition or distribution, in which the qualified foreign pension fund or qualified controlled entity satisfied the requirements of paragraph (c)(2) of this section or paragraph (e)(9) of this section, as applicable.

(3) ***Qualified holders that satisfy the testing period*** —

(i) ***In general.*** The requirement of this paragraph (d)(3) is satisfied if the qualified foreign pension fund or qualified controlled entity continuously satisfies the requirements of paragraph (c)(2) of this section or paragraph (e)(9) of this section, as applicable, for the duration of the testing period.

(ii) ***Testing Period.*** The term testing period means whichever of the following periods is the shortest:

(A) The period beginning on December 18, 2015, and ending on the date of the disposition or the distribution;

(B) The ten-year period ending on the date of the disposition or the distribution; and,

(C) The period beginning on the date the entity (or its predecessor) was created or organized and ending on the date of the disposition or the distribution.

(4) ***Transition Rules*** —

(i) ***Qualified foreign pension fund or qualified controlled entity requirements.*** With respect to any period from December 18, 2015, to the date when the requirements of paragraph (c)(2) or (e)(9) of this section first apply to a qualified foreign pension fund or qualified controlled entity under paragraph (g) of this section, as applicable (but in any event no later than December 29, 2022, in the case of paragraph (c)(2) of this section, and no later than June 6, 2019, in the case of paragraph (e)(9) of this section), the qualified foreign pension fund or qualified controlled entity is deemed to satisfy the requirements of paragraphs (c)(2) and (e)(9) of this section, as applicable, for purposes of paragraphs (d)(2) and (3) of this section if the qualified foreign pension fund or qualified controlled entity satisfies the requirements of section 897(l)(2) based on a reasonable interpretation of those requirements (including determining any applicable valuations using a consistent method).

(ii) ***Ownership of qualified controlled entity by service providers.*** Solely for purposes of paragraphs (d)(2) and (3) of this section, the determination of whether a corporation or trust is a qualified controlled entity will not include stock or interests held directly or indirectly by any person that provides services to such corporation or trust, provided that such stock or interests are, in the aggregate, no more than five percent (by vote or value) of the stock or interests of such corporation or trust. This paragraph (d)(4)(ii) applies to interests held from December 18, 2015 until February 27, 2023.

(e) ***Definitions.*** The following definitions apply for purposes of this section.

(1) ***Ancillary benefits*** —

(i) *In general.* The term *ancillary benefits* means—

(A) Benefits payable upon the diagnosis of a terminal illness, incidental death benefits (for example, funeral expenses), short-term disability benefits, life insurance benefits, and medical benefits;

(B) Unemployment, shutdown, or layoff benefits that do not continue past retirement age and do not affect the payment of accrued retirement and pension benefits; and

(C) Other health-related or unemployment benefits that are similar to the benefits described in paragraphs (e)(1)(i) and (ii) of this section.

(ii) ***Overlap with retirement and pension benefits.*** Ancillary benefits do not include any benefits that could also be defined as retirement and pension benefits within the meaning of paragraph (e)(14) of this section.

(2) ***Eligible fund.*** The term *eligible fund* means a trust, corporation, or other organization or arrangement that maintains one or more qualified segregated accounts.

(3) ***Employer group.*** The term *employer group* means all individuals, trusts, partnerships, and corporations with a relationship to each other specified in section 267(b) or section 707(b).

(4) ***Foreign jurisdiction.*** The term *foreign jurisdiction* means a jurisdiction other than the United States, including a country, a state, province, or political subdivision of a foreign country, and a territory of the United States.

(5) ***Governmental unit.*** The term *governmental unit* means any foreign government or part thereof, including any person, body, group of persons, organization, agency, bureau, fund, or instrumentality, however designated, of a foreign government.

(6) ***Non-ancillary benefits.*** The term *non-ancillary benefits* means benefits that are neither ancillary benefits (within the meaning of paragraph (e)(1) of this section) nor retirement and pension benefits (within the meaning of paragraph (e)(14) of this section), and are provided by the eligible fund as permitted or required under the laws of the foreign jurisdiction in which the eligible fund is established or operates.

(7) ***Organization or arrangement.*** The term *organization or arrangement* means one or more trusts, corporations, governmental units, or employers.

(8) ***Qualified benefits.*** The term *qualified benefits* means retirement and pension benefits, ancillary benefits and non-ancillary benefits. However, the portions of qualified benefits consisting of ancillary benefits and non-ancillary benefits provided by a qualified foreign pension fund are limited as provided in paragraph (c)(2)(ii)(B) of this section.

(9) ***Qualified controlled entity.*** The term *qualified controlled entity* means a trust or corporation created or organized under the laws of a foreign jurisdiction all of the interests of which are held by one or more qualified foreign pension funds directly or indirectly through one or more qualified controlled entities.

(10) ***Qualified foreign pension fund.*** The term *qualified foreign pension fund* means an eligible fund that satisfies the requirements of paragraph (c) of this section.

(11) ***Qualified holder.*** The term *qualified holder* means a qualified foreign pension fund or qualified controlled entity that satisfies the requirements of paragraph (d) of this section.

(12) ***Qualified recipient*** —

(i) ***In general.*** The term *qualified recipient* means—

(A) With respect to an eligible fund described in paragraph (c)(2)(ii)(A)(*1*)(*i*) of this section, any person eligible to be treated as a participant or beneficiary of such eligible fund and any person designated by such participant or beneficiary to receive qualified benefits, and

(B) With respect to an eligible fund described in paragraph (c)(2)(ii)(A)(*1*)(*ii*) of this section, a current or former employee, a spouse of a current or former employee, and any person designated by such participants or beneficiaries to receive qualified benefits.

(C) To the extent not already described in paragraph (e)(12)(i)(B) of this section, with respect to an eligible fund described in paragraph (c)(2)(ii)(A)(*1*)(*ii*) of this section, any person eligible to be treated as a participant or beneficiary of such fund and any person designated by such participant or beneficiary to receive qualified benefits, so long as such recipients do not exceed five percent of the eligible fund's total qualified recipients or have a right to more than five percent of the assets or income of the eligible fund. An eligible fund must make a determination for purposes of this paragraph (e)(12)(i)(C) on at least an annual basis and may utilize any reasonable method in doing so. An eligible fund must use its most recent determination under this paragraph with respect to dispositions of United States real property interests or distributions described in section 897(h) occurring in the twelve months succeeding such determination, or until a new determination is made, whichever occurs first.

(ii) ***Special rule regarding automatic designation.*** For purposes of paragraph (e)(12)(i) of this section, a person is treated as designating another person to receive qualified benefits if the other person is, by reason of such person's relationship or other status with respect to the first person, entitled to receive benefits pursuant to the terms applicable to the eligible fund or pursuant to the laws of the foreign jurisdiction in which the eligible fund is created or organized, whether or not the first person expressly designated such person as a beneficiary.

(13) ***Qualified segregated account*** —

(i) ***In general.*** The term *qualified segregated account* means an identifiable pool of assets maintained by an eligible fund or a qualified controlled entity for the sole purpose of funding and providing qualified benefits to qualified recipients.

(ii) ***Assets held by eligible funds.*** For purposes of paragraph (e)(13)(i) of this section, an identifiable pool of assets of an eligible fund is treated as maintained for the sole purpose of funding qualified benefits to qualified recipients, and hence as a qualified segregated account, only if the terms applicable to the eligible fund or the laws of the foreign jurisdiction in which the eligible fund is established or operates require that all the assets in the pool, and all the income earned with respect to such assets, be used exclusively to fund the provision of qualified benefits to qualified recipients or to satisfy necessary reasonable expenses of the eligible fund, and that such assets or income may not inure to the benefit of a person other than a qualified recipient. For purposes of this paragraph (e)(13)(ii), the fact that assets or income may inure to the benefit of a governmental unit by operation of escheat or similar laws, or may revert (such as upon plan termination or dissolution (after all obligations to qualified recipients and creditors have been satisfied) or the qualified recipients' benefits failing to vest) to the governmental unit or employer in accordance with applicable foreign law is ignored, so long as contributions to the plan are not more than reasonably necessary to fund the qualified benefits to be provided to qualified recipients.

(iii) ***Assets held by qualified controlled entities.*** For purposes of paragraph (e)(13)(i) of this section, the assets of a qualified controlled entity are treated as an identifiable pool of assets maintained for the sole purpose of funding qualified benefits to qualified recipients only if both of the following requirements are satisfied:

(A) All of the net earnings of the qualified controlled entity are credited to its own account or to the qualified segregated account of a qualified foreign pension fund or another qualified controlled entity, with no portion of the net earnings of the qualified controlled entity inuring to the benefit of a person other than a qualified recipient; and

(B) Upon dissolution, all of the assets of the qualified controlled entity, after satisfaction of liabilities to persons having interests in the entity solely as creditors, vest in a qualified segregated account of a qualified foreign pension fund or another qualified controlled entity.

(14) ***Retirement and pension benefits.*** The term *retirement and pension benefits* means distributions to qualified recipients that are made after the qualified recipient reaches retirement age as determined under or in accordance with the laws in the foreign jurisdiction in which the eligible fund is established or operates (including a benefit paid to a qualified recipient who retires on or after a stated early retirement age), or after a specified event that results in a qualified recipient being permanently unable to work, and includes any such distribution made to a surviving beneficiary of

the qualifying recipient. Retirement and pension benefits may be based on one or more of the following factors: contributions, investment performance, years of service with an employer, or compensation received by the qualified recipient.

(f) ***Examples.*** This paragraph (f) provides examples that illustrate the rules of this section. The examples do not illustrate the application of the applicable withholding rules, including sections 1445 and 1446 and the regulations thereunder. It is assumed that no person is entitled to more than five percent of any eligible fund's assets or income, taking into account the constructive ownership rules in paragraph (c)(2)(iii)(B) of this section, and that the eligible fund owns no United States real property interests other than as described.

(1) ***Example 1: No legal entity*** —

(i) ***Facts.*** On January 1, 2023, Country A establishes Retirement Plan for the sole purpose of providing retirement and pension benefits to citizens of Country A aged 65 or older. Retirement Plan is composed of Asset Pool and Agency. Asset Pool is a group of accounts maintained on the balance sheet of the government of Country A. Pursuant to the laws of Country A, income and gain earned by Asset Pool is used solely to support the provision of retirement and pension benefits by Retirement Plan. Agency is a Country A agency that administers the provision of benefits by Retirement Plan and manages Asset Pool's investments. Under the laws of Country A, investment income earned by Retirement Plan is not subject to Country A's income tax. At the end of each calendar year, Retirement Plan performs a present valuation of the retirement and pension benefits it reasonably expects to provide in the future, and all of the benefits that Retirement Plan reasonably expects to provide are retirement and pension benefits. On January 1, 2024, Agency purchases Property, which is an interest in real property located in the United States owned by Asset Pool. On June 1, 2026, Agency sells Property, realizing $100x of gain with respect to Property that would be subject to tax under section 897(a) unless paragraph (b) of this section applies with respect to the gain.

(ii) ***Analysis.***

(A) Retirement Plan, which is composed of Asset Pool and Agency, includes one or more governmental units described in paragraph (e)(5) of this section. Accordingly, Retirement Plan is an organization or arrangement described in paragraph (e)(7) of this section. Furthermore, Retirement Plan maintains a qualified segregated account in the form of Asset Pool, an identifiable pool of assets maintained for the sole purpose of funding retirement and pension benefits to beneficiaries of the Retirement Fund (qualified recipients as defined in paragraph (e)(12)(i)(A) of this section). Therefore, Retirement Plan is an eligible fund within the meaning of paragraph (e)(2) of this section.

(B) Paragraph (c)(3)(i) of this section applies for purposes of determining whether Retirement Plan is an eligible fund that satisfies the requirements of paragraph (c)(2) of this section and would therefore be treated as a qualified foreign pension fund. Accordingly, the activities of Asset Pool and Agency are integrated and treated as undertaken by a single entity to determine whether the requirements of paragraph (c)(2) of this section are met. However, Asset Pool and Agency must independently satisfy the requirement of paragraph (c)(2)(i) of this section.

(C) Retirement Plan is composed of Asset Pool and Agency, each of which is a governmental unit and treated as created or organized under the laws of Country A for purposes of paragraph (c)(2)(i) of this section. Accordingly, Retirement Plan satisfies the requirement of paragraph (c)(2)(i) of this section.

(D) Retirement Plan is established by Country A as an eligible fund described in paragraph (c)(2)(ii)(A)(*1*)(*i*) of this section to provide retirement and pension benefits, which are qualified benefits described in paragraph (e)(8) of this section, to citizens of Country A, who are qualified recipients described in paragraph (e)(12)(i)(A) of this section because they are eligible to be participants or beneficiaries of Retirement Plan. Accordingly, all of the benefits that Retirement Plan provides are qualified benefits provided to qualified recipients. In addition, Retirement Plan satisfies the requirements of the present valuation test as described in paragraphs (c)(2)(ii)(B) and (C) of this section. Accordingly, Retirement Plan satisfies the requirement of paragraph (c)(2)(ii) of this section.

(E) Retirement Plan provides retirement and pension benefits to citizens of Country A aged 65 or older, with no citizen entitled to more than five percent of Retirement Fund's assets or to more than five percent of the income of the eligible fund. Accordingly, Retirement Plan satisfies the requirement of paragraph (c)(2)(iii) of this section.

(F) Retirement Plan is composed solely of governmental units within the meaning of paragraph (e)(5) of this section. Accordingly, under paragraph (c)(2)(iv)(B) of this section, Retirement Plan is treated as satisfying the requirements of paragraph (c)(2)(iv)(A) of this section.

(G) Investment income earned by Retirement Plan is not subject to income tax in Country A. Accordingly, Retirement Plan satisfies the requirement of paragraph (c)(2)(v) of this section.

(H) Because Retirement Plan satisfies the requirements of paragraph (c)(2) of this section, Retirement Plan is a qualified foreign pension fund. Because Retirement Plan held no United States real property interests as of January 1, 2023, the earliest date during an uninterrupted period ending on June 1, 2026, the date of the disposition, in which it satisfied the requirements of paragraph (c)(2) of this section, Retirement Plan is a qualified holder under paragraph (d)(2) of this section. Retirement Plan's gain with respect to Property is attributable solely to Asset Pool, a qualified segregated account maintained by Retirement Plan. Accordingly, under paragraph (b) of this section, the $100x gain realized by Retirement Plan attributable to the disposition of Property is not subject to section 897(a).

(2) ***Example 2: Fund established by an employer*** —

(i) ***Facts.*** Employer, a corporation organized in Country B, establishes Fund to provide retirement and pension benefits to current and former employees of Employer and S1, a Country B corporation that is wholly owned by Employer. On January 1, 2023, Fund is established as a trust under the laws of Country B, and Employer retains discretion to invest assets and to administer benefits on Fund's behalf. Fund receives contributions from Employer and S1 and contributions from employees of Employer and S1 who are beneficiaries of Fund. All contributions to Fund and all of Fund's earnings are separately accounted for on Fund's books and records and are required by Fund's organizational documents to exclusively fund the provision of benefits to Fund's beneficiaries, except as necessary to satisfy reasonable

expenses of Fund. Fund currently has over 100 beneficiaries, a number that is reasonably expected to grow as Employer expands. Fund will pay benefits to employees upon retirement based on years of service and employee contributions, but, if a beneficiary dies before retirement, Fund will pay an incidental death benefit in addition to payment of any accrued retirement and pension benefits to the beneficiary's designee (or deemed designee under local laws if the beneficiary fails to identify a designee). Fund annually performs a present valuation of the benefits it reasonably expects to provide to Fund's beneficiaries, and the valuation concludes that more than 85 percent of the present value of the total benefits it reasonably expects to pay to its beneficiaries in the future are retirement and pension benefits. In addition, it is reasonably expected that the incidental death benefits paid by Fund will account for less than fifteen percent of the present value of the total benefits that Fund expects to provide in the future, and Fund does not reasonably expect to pay any other types of benefits to its beneficiaries in the future. Fund annually provides to the tax authorities of Country B the amount of benefits distributed to each participant (or designee). Country B's tax authorities prescribe rules and regulations governing Fund's operations. Under the laws of Country B, Fund is not taxed on its investment income. On January 1, 2024, Fund purchases Property, which is an interest in real property located in the United States. On June 1, 2026, Fund sells Property, realizing $100x of gain with respect to Property that would be subject to tax under section 897(a) unless paragraph (b) of this section applies with respect to the gain.

(ii) ***Analysis.***

(A) Fund is a trust that maintains an identifiable pool of assets for the sole purpose of funding retirement and pension benefits and ancillary benefits to current and former employees of the employer group (within the meaning of paragraph (e)(3) of this section) that includes Employer and S1 (current and former employees of Employer and S1 constitute qualified recipients, as defined in paragraph (e)(12)(i)(B) of this section). All assets held by Fund and all income earned by Fund are used to provide such benefits. Therefore, Fund is a trust that maintains a qualified segregated account within the meaning of paragraph (e)(13) of this section. Accordingly, Fund is an eligible fund within the meaning of paragraph (e)(2) of this section.

(B) Because Fund is created or organized under the laws of Country B, Fund satisfies the requirement of paragraph (c)(2)(i) of this section.

(C) The only benefits that Fund provides are retirement and pension benefits described in paragraph (e)(14) of this section and ancillary benefits (that is, the incidental death benefits) described in paragraph (e)(1) of this section, both of which constitute qualified benefits described in paragraph (e)(8) of this section, to qualified recipients, described in paragraph (e)(12)(i)(B) of this section. Furthermore, Fund satisfies the requirements of the present valuation test as described in paragraphs (c)(2)(ii)(B) and (C) of this section. Accordingly, Fund is established by Employer to provide retirement and pension benefits to qualified recipients in consideration for services rendered by such qualified recipients to Employer and S1, and Fund satisfies the requirement of paragraph (c)(2)(ii) of this section.

(D) No single qualified recipient has a right to more than five percent of the assets or income of the eligible fund. Accordingly, Fund satisfies the requirement of paragraph (c)(2)(iii) of this section.

(E) Fund is regulated and annually provides to the relevant tax authorities in the foreign jurisdiction in which it is established or operates the amount of qualified benefits provided to each qualified recipient by the eligible fund. Accordingly, Fund satisfies the requirements of paragraph (c)(2)(iv) of this section.

(F) Fund is not subject to income tax on its investment income. Accordingly, Fund satisfies the requirement of paragraph (c)(2)(v) of this section.

(G) Because Fund meets the requirements of paragraph (c)(2) of this section, Fund is treated as a qualified foreign pension fund. Furthermore, because Fund held no United States real property interests as of January 1, 2023, the earliest date during an uninterrupted period ending on June 1, 2026, the date of the disposition, in which it satisfied the requirements of paragraph (c)(2) of this section, Fund is a qualified holder under paragraph (d)(2) of this section. All of Fund's assets are held in a qualified segregated account within the meaning of paragraph (e)(13) of this section. Accordingly, under paragraph (b) of this section, the $100x gain attributable to the disposition of Property is not subject to section 897(a).

(3) ***Example 3: Fund established by an employer at the direction of a foreign jurisdiction*** —

(i) ***Facts.*** The facts are the same as in paragraph (f)(2) of this section (*Example 2*), except that Fund was established by Employer at the direction of Country B and, in addition to being established to provide retirement and pension benefits to current and former employees of Employer and S1, Fund was also established to provide retirement and pension benefits to other employees. All employees that are beneficiaries provide contributions to Fund. Fund makes a determination on at least an annual basis using a reasonable method to measure the number of participants in the Fund who are not current and former employees of Employer and S1. Each time such a determination is made, Fund finds that such employees constitute less than five percent of Fund's total qualified recipients and do not have a right to more than five percent of the assets or income of Fund.

(ii) ***Analysis.*** Fund satisfies the requirements of paragraph (c)(2)(ii)(A)(*1*)(*i*) of this section because it was established by, or at the direction of, Country B to provide retirement and pension benefits to participants or beneficiaries that are current or former employees or persons designated by such employees as a result of services rendered by such employees to their employers. Fund also satisfies the requirements of paragraph (c)(2)(ii)(A)(*1*)(*ii*) of this section because it was established by Employer to provide retirement and pension benefits to participants or beneficiaries that are current or former employees or persons designated by such employees in consideration for services rendered by such employees to Employer and S1. Because it satisfies the requirements of both such provisions, under paragraph (c)(2)(ii)(A)(*2*) of this section, Fund will be treated solely as an eligible fund under paragraph (c)(2)(ii)(A)(*1*)(*ii*) of this section. As a result, Fund must meet the reporting requirements described in paragraph (c)(2)(iv)(A) of this section and must apply the definition of qualified recipient described in paragraphs (e)(12)(i)(B) and (C) of this section. Because Fund makes a determination on at least an annual basis using a reasonable method to measure the number of participants in the Fund who are not current and former employees of Employer and S1, finding that such employees constitute less than five percent of Fund's total qualified recipients and do not have a right to more than five percent of the assets or income of Fund, the requirement of paragraph (c)(2)(ii)(B)(*1*) of this section, requiring that all of the benefits that an eligible fund provides are provided to qualified recipients, is considered satisfied. Because Fund meets the requirements

of paragraph (c)(2) of this section, Fund is treated as a qualified foreign pension fund under paragraph (b) of this section. Accordingly, the $100x gain attributable to the disposition of Property is not subject to section 897(a).

(4) ***Example 4: Employer controlled organization or arrangement*** —

(i) ***Facts.*** The facts are the same as in paragraph (f)(2) of this section (*Example 2*), except that S2, a Country B corporation that is wholly owned by Employer, performs all tax compliance functions for Employer, S1, and S2, including information reporting with respect to Fund participants.

(ii) ***Analysis.*** For purposes of the requirements of paragraph (c)(2) of this section, Fund and S2 are an organization or arrangement that is treated as a single entity under paragraph (c)(3)(i)(A) of this section and an eligible fund under paragraph (e)(2) of this section with respect to the qualified segregated account held by Fund. Because the eligible fund composed of Fund and S2 satisfies the requirements of paragraph (c)(2) of this section (including the rule under paragraph (c)(3)(i)(A) of this section that each entity satisfy the foreign organization requirement of paragraph (c)(2)(i) of this section) with respect to the qualified benefits provided to the qualified recipients out of the eligible fund's qualified segregated account (determined in accordance with paragraph (c)(3)(i)(B) of this section), the eligible fund that is composed of Fund and S2 constitutes a qualified foreign pension fund. Furthermore, the requirements for qualified holder status are satisfied, as described in paragraph (f)(2) of this section. Thus, under paragraph (b) of this section, the $100x gain attributable to the disposition of Property is not subject to section 897(a).

(5) ***Example 5: Third-party assumption of pension liabilities*** —

(i) ***Facts.*** The facts are the same as in paragraph (f)(2) of this section (*Example 2*), except that Fund does not purchase Property on January 1, 2024. In addition, Fund anticipates $100x of qualified benefits will be paid each year beginning on January 1, 2028. Fund enters into an agreement with Guarantor, a privately held Country B corporation, which provides that Fund will, on January 30, 2023, cede a portion of its assets to Guarantor in exchange for annual payments of $100x beginning on January 1, 2028 and continuing until one or more previously identified participants (and their designees) ceases to be eligible to receive benefits. Guarantor has discretion to invest the ceded assets as it chooses, subject to certain agreed upon investment restrictions. Pursuant to its agreement with Fund, Guarantor must maintain Segregated Pool, a pool of assets securing its obligations under its agreement with Fund. The value of Segregated Pool must exceed a specified amount (determined based on an agreed upon formula) until Guarantor's payment obligations are completed, and any remaining assets in Segregated Pool (that is, assets exceeding the required payments to Fund) are retained by Guarantor. Guarantor bears all investment risk with respect to Segregated Pool. Accordingly, Guarantor is required to make annual payments of $100x to Fund regardless of the performance of Segregated Pool. On January 1, 2024, Guarantor purchases stock in Company A, a United States real property holding company that is a United States real property interest, and holds the Company A stock in Segregated Pool. On June 1, 2027, Guarantor sells the stock in Company A, realizing a gain of $100x.

(ii) ***Analysis.*** The Segregated Pool is not a qualified segregated account, because it is not maintained for the sole purpose of funding qualified benefits to qualified recipients, and because income attributable to assets in the Segregated Pool (including the Company A stock) may inure to Guarantor, which is not a qualified recipient. Accordingly, Fund and Guarantor do

not qualify as an organization or arrangement that is an eligible fund with respect to the Company A stock. Therefore, Guarantor is not exempt under paragraph (b) of this section with respect to the $100x of gain realized in connection with the sale of its shares in Company A.

(6) *Example 6: Asset manager* —

(i) ***Facts.*** The facts are the same as in paragraph (f)(5) of this section (*Example 5*) except that instead of ceding legal ownership of a portion of its assets to Guarantor, Fund transfers the assets into Trust with respect to which Fund is the sole beneficiary on January 30, 2023, and Trust purchases stock in Company A on January 1, 2024. Guarantor has exclusive management authority over the Trust assets and is entitled to a reasonable fixed management fee which it withdraws annually from Trust's assets. On June 1, 2027, Trust sells the stock in Company A, realizing a gain of $100x.

(ii) ***Analysis.*** For purposes of testing the requirements of paragraph (c)(2) of this section, Fund and Trust are an organization or arrangement that is treated as a single entity under paragraph (c)(3)(i)(A) of this section and an eligible fund under paragraph (e)(2) of this section. Assets held by Trust are held in a qualified segregated account, and those assets are the assets that are relevant for purposes of determining whether the eligible fund composed of Fund and Trust meets the requirements of paragraph (c)(2) of this section. The eligible fund that is composed of Fund and Trust is treated as established by Employer notwithstanding that Guarantor provides management services. See paragraph (c)(2)(ii)(A)(*3*) of this section. Paragraph (e)(13)(ii) of this section provides that the assets held by an eligible fund in a qualified segregated account may be used to satisfy reasonable expenses of the eligible fund, such that the reasonable fixed management fee paid to Guarantor does not cause the assets held in Trust to fail to be treated as held in a qualified segregated account. All of the other requirements for qualified foreign pension fund status are satisfied by the eligible fund that is composed of Fund and Trust, as described in paragraph (f)(2) of this section. The eligible fund that is composed of Fund and Trust is a qualified holder under paragraph (d)(2) of this section because it held no United States real property interests on January 1, 2023, the earliest date during an uninterrupted period ending on June 1, 2027, the date of the disposition of Company A stock, in which it satisfied the requirements of paragraph (c)(2) of this section. The eligible fund that is composed of Fund and Trust is therefore exempt under paragraph (b) of this section with respect to the $100x of gain realized in connection with the sale by Trust of the shares in Company A.

(7) *Example 7: Partnership* —

(i) ***Facts.*** The facts are the same as in paragraph (f)(5) of this section (*Example 5*) except that instead of ceding legal ownership of the assets to Guarantor, Fund contributes the assets to a partnership (PRS) formed with Guarantor and PRS purchases stock in Company A on January 30, 2023. Guarantor receives a profits interest in the partnership that is reasonable in light of Guarantor's management activity. Guarantor has no direct or indirect ownership in PRS assets, and the partnership agreement provides that upon dissolution, PRS assets would be distributed to Fund. Guarantor serves as the general partner of PRS and has discretionary authority to buy and sell PRS assets without approval from Fund. On June 1, 2027, PRS sells the stock in Company A, realizing a gain of $100x.

(ii) ***Analysis.*** All of Fund's assets, including the assets held by PRS that are treated as held proportionately by Fund under paragraph (c)(3)(ii) of this section, are held in a qualified segregated account within the meaning of paragraph (e)(13) of this section. See paragraph

(f)(2)(ii)(A) of this section (*Example 2*). The eligible fund that is composed of Fund is treated as established by Employer notwithstanding that Guarantor provides management services to PRS. See paragraphs (c)(2)(ii)(A)(*3*) and (c)(3)(ii) of this section. All of the other requirements for qualified foreign pension fund status are satisfied by Fund as described in paragraphs (f)(2)(ii)(B) through (F) of this section, and Fund is a qualified holder as described in paragraph (f)(2)(ii)(G) of this section. Accordingly, Fund is exempt under paragraph (b) of this section with respect to its allocable share of the $100x of gain realized in connection with the sale by PRS of the shares in Company A. Guarantor is not exempt under paragraph (b) of this section with respect to its allocable share of the $100x of gain realized in connection with the sale by PRS of the shares in Company A because Guarantor is neither part of the organization or arrangement that forms Fund nor a qualified holder under paragraph (d) of this section that maintains qualified segregated accounts.

(8) ***Example 8: Not a qualified holder*** —

(i) ***Facts.*** Fund is a qualified foreign pension fund organized in Country C that meets the requirements of paragraph (c)(2) of this section. Fund owns all the outstanding stock of OpCo, a manufacturing corporation organized in Country C, in a qualified segregated account maintained by Fund. OpCo was originally formed by a person other than Fund on January 1, 2023. Fund purchased all of the stock of OpCo on November 1, 2023 for the purpose of conducting the manufacturing business and utilizing the business profits to fund pension liabilities. During the period from January 1, 2023, through October 31, 2023, OpCo was not a qualified foreign pension fund, a part of a qualified foreign pension fund, or a qualified controlled entity. On January 30, 2023, OpCo purchased Property A, a United States real property interest, from a third party. For all periods after Fund acquired OpCo, OpCo must either retain or distribute to Fund all of its net earnings, and upon dissolution, must distribute all of its assets to its stockholder (that is, Fund) after satisfaction of liabilities to its creditors. On June 1, 2024, OpCo realizes $100x of gain on the disposition of Property A.

(ii) ***Analysis.***

(A) A qualified controlled entity described in paragraph (e)(9) of this section includes any corporation organized under the laws of a foreign jurisdiction all the interests of which are owned by one or more qualified foreign pension funds directly or indirectly through one or more qualified controlled entities. Fund is a qualified foreign pension fund that wholly owns OpCo. Accordingly, OpCo is a qualified controlled entity for the period when it is owned by Fund beginning on November 1, 2023.

(B) Under paragraph (d)(1) of this section, a qualified controlled entity is a qualified holder only if either, under paragraph (d)(2) of this section, the qualified controlled entity owned no United States real property interests as of the earliest date during an uninterrupted period ending on the date of the disposition or distribution in which the qualified controlled entity satisfied the requirements of paragraph (e)(9) of this section, or, under paragraph (d)(3) of this section, the qualified controlled entity satisfies the requirements of paragraph (e)(9) of this section throughout the entire testing period. Because OpCo owned a United States real property interest as of November 1, 2023, the earliest date during an uninterrupted period ending on the date of the disposition during which it satisfied the requirements of paragraph (e)(9) of this section, OpCo cannot satisfy the requirements of paragraph (d)(2) of this section and must instead satisfy the requirements of paragraph (d)(3) of this section to be a qualified holder. Under paragraph

(d)(3) of this section, a qualified holder does not include any entity that was not a qualified foreign pension fund, a part of a qualified foreign pension fund, or a qualified controlled entity at any time during the testing period. The testing period with respect to OpCo is the period from January 1, 2023 (the date of OpCo's formation), to June 1, 2024 (the date of the disposition). Because OpCo was not a qualified foreign pension fund, a part of a qualified foreign pension fund, or a qualified controlled entity from January 1, 2023, to October 31, 2023, OpCo was not a qualified foreign pension fund, a part of a qualified foreign pension fund, or a qualified controlled entity at all times during the testing period. Accordingly, OpCo is not a qualified holder with respect to the disposition of Property A, and the $100x of gain recognized by OpCo is not exempt from tax under section 897(l), regardless of the amount of unrealized gain in Property A as of November 1, 2023.

(9) ***Example 9: 48-month alternative test*** —

(i) ***Facts.*** Fund is a qualified foreign pension fund organized in Country C that, except as otherwise noted, meets the requirements of paragraph (c)(2) of this section. Fund owns all the outstanding stock of OpCo, a manufacturing corporation organized in Country C and formed by Fund on January 1, 2023, in a qualified segregated account maintained by Fund. On January 30, 2023, OpCo purchased Property A, a United States real property interest, from a third party. OpCo either retains or distributes to Fund all of its net earnings, and upon dissolution, must distribute all of its assets to its stockholder (that is, Fund) after satisfaction of liabilities to its creditors. On June 1, 2027, OpCo realizes $100x of gain on the disposition of Property A. Fund reasonably expected to provide $90x of retirement and pension benefits and $100x of qualified benefits for the valuations that it performed pursuant to paragraph (c)(2)(ii)(C)(*1*) of this section on December 31, 2023, December 31, 2024, and December 31, 2025. Fund reasonably expected to provide $160x of retirement and pension benefits and $200x of qualified benefits for the valuation that it performed pursuant to paragraph (c)(2)(ii)(C)(*1*) of this section on December 31, 2026.

(ii) ***Analysis.*** In each of the years ending on December 31, 2023, December 31, 2024, and December 31, 2025, the valuation performed pursuant to paragraph (c)(2)(ii)(C)(*1*) of this section demonstrates that that the requirements of paragraph (c)(2)(ii)(B)(*2*) of this section have been met because $90x of retirement and pension benefits constitutes 90 percent of the total $100x of qualified benefits. For the year ending on December 31, 2026, the valuation performed pursuant to paragraph (c)(2)(ii)(C)(*1*) of this section does not demonstrate that that the requirements of paragraph (c)(2)(ii)(B)(*2*) of this section have been met because $160x of retirement and pension benefits constitutes only 80 percent of the total $200x of qualified benefits. Thus, Fund does not meet the requirements of paragraph (c)(2)(ii)(C)(*1*) of this section for the year ending on December 31, 2026. However, under the 48-month alternative calculation in paragraph (c)(2)(ii)(C)(*2*) of this section, Fund satisfies the requirement that it reasonably expects to provide 85 percent retirement and pension benefits to qualified recipients as of December 31, 2026. This is because when averaging the values (not percentages) of the qualified benefits and retirement and pension benefits that Fund reasonably expected to provide from the valuations performed over the preceding 48 months (including the most recent valuation), Fund divides the total retirement and pension benefits of $430x ($90x + $90x + $90x + $160x) by the total qualified benefits that it reasonably expected to provide of $500x ($100x + $100x + $100x + $200x) for an average of 86 percent. Under paragraph (c)(2)(ii)(C)(*3*) of this section, Fund may rely on either the most recent present valuation described in paragraph (c)(2)(ii)(C)(*1*) of this section or the alternative calculation in

paragraph (c)(2)(ii)(C)(*2*) of this section, both of which are determined as of December 31, 2026. Because Fund satisfies the requirements of paragraph (c)(2)(ii)(B)(*2*) of this section under the test in paragraph (c)(2)(ii)(C)(*2*) of this section, even though it does not do so under the test in paragraph (c)(2)(ii)(C)(*1*) of this section, Fund is a qualified foreign pension fund with respect to the disposition on June 1, 2027. Because OpCo is held by a qualified foreign pension fund as of the date of the disposition, OpCo is a qualified controlled entity within the meaning of paragraph (e)(9) of this section. Accordingly, the $100x of gain realized by OpCo is exempt from tax under section 897(l).

(10) ***Example 10: 48-month alternative test with multiple valuations in the same year*** —

(i) ***Facts.*** The facts are the same as in paragraph (f)(9) of this section (Example 9), except that in the year ending December 31, 2023, Fund carried out two valuations pursuant to paragraph (c)(2)(ii)(C)(*1*) of this section, one on June 30, 2023 and the second on December 31, 2023. For each valuation, Fund reasonably expected to provide $90x of retirement and pension benefits and $100x of qualified benefits. In addition, in the year ending on December 31, 2026, pursuant to a valuation carried out under paragraph (c)(2)(ii)(C)(*1*) of this section, Fund reasonably expected to provide $150x retirement and pension benefits and $200x of qualified benefits.

(ii) ***Analysis.*** In each of the years ending on December 31, 2023, December 31, 2024, and December 31, 2025 (including the two valuations performed in 2023), the valuation performed pursuant to paragraph (c)(2)(ii)(C)(*1*) of this section demonstrates that the requirements of paragraph (c)(2)(ii)(B)(*2*) of this section have been met because $90x of retirement and pension benefits constitutes 90 percent of the total $100x of qualified benefits. For the year ending on December 31, 2026, the valuation performed pursuant to paragraph (c)(2)(ii)(C)(*1*) of this section does not demonstrate that the requirements of paragraph (c)(2)(ii)(B)(*2*) of this section have been met because $150x of retirement and pension benefits constitutes 75 percent of the total $200x of qualified benefits. Thus, Fund does not meet the requirements of paragraph (c)(2)(ii)(C)(*1*) of this section for the year ending on December 31, 2026. Under the 48-month alternative calculation in paragraph (c)(2)(ii)(C)(*2*) of this section, Fund also does not satisfy the requirement that it reasonably expects to provide 85 percent retirement and pension benefits to qualified recipients as of December 31, 2026. This is because when averaging the values (not percentages) of the qualified benefits and retirement and pension benefits that Fund reasonably expected to provide from the valuations performed over the preceding 48 months (including the most recent valuation), Fund must use a weighted average whereby values are adjusted when the length of valuation periods differs. In this case, each of the two valuations in 2023 must be divided by two for a total weighted average for each valuation of $45x retirement and pension benefits and $50x of qualified benefits. When Fund then divides the total retirement and pension benefits that it reasonably expected to provide of $420x ($45x + $45x + $90x + $90x + $150x) by the total qualified benefits that it reasonably expected to provide of $500x ($50x + $50x + $100x + $100x + $200x), the average is 84 percent. Because Fund does not satisfy the requirements of paragraph (c)(2)(ii)(B)(*2*) of this section under the test in paragraph (c)(2)(ii)(C)(*2*) of this section or the test in paragraph (c)(2)(ii)(C)(*1*) of this section, Fund is not a qualified foreign pension fund with respect to the disposition on June 1, 2027. Because OpCo is not held by a qualified foreign pension fund as of the date of the disposition, OpCo is not a qualified controlled entity within the meaning of paragraph (e)(9) of this section. Accordingly, the $100x of gain realized by OpCo is not exempt from tax under section 897(l).

(11) ***Example 11: Qualified foreign pension fund as qualified holder*** —

(i) *Facts.* The facts are the same as in paragraph (f)(10) of this section (Example 10), except that OpCo does not dispose of Property A on June 1, 2027 and Fund reasonably expects to provide 85 percent of retirement and pension benefits to qualified recipients in the future in each of the annual present valuations it performs as of December 31, 2027 through December 31, 2033. Fund also satisfies the other requirements of paragraph (c)(2) of this section during this period. On April 1, 2029, Fund purchases Property B, a United States real property interest, and holds it in a qualified segregated account. On June 1, 2034, Fund realizes $100x of gain on the disposition of Property B and OpCo realizes $100x of gain on the disposition of Property A. At least 85 percent and no more than five percent of the actual value of the aggregate benefits provided by Fund before December 31, 2033, the most recent present value determination, were retirement and pension benefits and non-ancillary benefits, respectively.

(ii) *Analysis.*

(A) Because Fund reasonably expected to provide 85 percent of retirement and pension benefits to qualified recipients as of the valuation performed on December 31, 2033, and it met the other requirements of paragraph (c)(2) of this section, Fund is a qualified foreign pension fund under paragraph (c)(2)(ii)(C)(3) of this section for the twelve months succeeding the most recent valuation, which includes June 1, 2034, the date of the disposition of Property A and Property B.

(B) Fund is a qualified holder under paragraph (d)(2) of this section because Fund did not own any United States real property interests as of December 31, 2027, the earliest date during the uninterrupted period ending on the date of the disposition, June 1, 2034, during which it satisfied the requirements of paragraph (c)(2) of this section and therefore qualified as a qualified foreign pension fund. Fund is eligible for the exemption under section 897(l) with respect to the disposition of Property B because it held Property B in a qualified segregated account. Thus, the $100x of gain realized by Fund on the disposition of Property B is exempt from tax under section 897(l).

(C) Because OpCo owned Property A, a United States real property interest, as of December 31, 2027, the earliest date during an uninterrupted period ending on the date of the disposition, June 1, 2034, during which it was a qualified controlled entity, OpCo cannot satisfy the requirements of paragraph (d)(2) of this section and must instead satisfy the requirements of paragraph (d)(3) of this section to be a qualified holder. The testing period with respect to OpCo, determined under paragraph (d)(3)(ii) of this section, ends on June 1, 2034 (the date of the disposition) and begins on June 1, 2024 (the date that is ten years before the disposition date). Because Fund failed to qualify as a qualified foreign pension fund as of December 31, 2026, OpCo was not continuously owned by a qualified foreign pension fund for the duration of the testing period, and thus did not qualify as a qualified foreign pension fund, part of a qualified foreign pension fund, or a qualified controlled entity for the duration of the testing period. As a result, OpCo is not a qualified holder under paragraph (d)(3) of this section. Accordingly, the $100x of gain recognized by OpCo on the disposition of Property A is not exempt from tax under section 897(l).

(12) *Example 12: Qualified controlled entity as qualified holder* —

(i) *Facts.* Fund is a qualified foreign pension fund organized in Country C that meets the requirements of paragraph (c)(2) of this section as of December 31, 2022 and December 31, 2023. Fund purchases an interest in Company A, a United States real property holding company, on June 1, 2024. As of December 31, 2024, Fund fails to satisfy the present valuation

requirement of paragraph (c)(2)(ii)(B)(2) of this section and does not satisfy the alternative calculation under paragraph (c)(2)(ii)(C)(2) of this section. From December 31, 2025, through December 31, 2030, Fund satisfies the present valuation requirement of paragraph (c)(2)(ii)(B)(2) of this section and meets all other requirements in paragraph (c)(2) of this section to be treated as a qualified foreign pension fund. On June 1, 2026, Fund purchases all of the stock of Company B, a Country C corporation that owns no United States real property interests and is not a qualified foreign pension fund, a part of a qualified foreign pension fund, or a qualified controlled entity. On January 1, 2027, Company B purchases Property D, a United States real property interest. Company B retains or distributes to Fund all of its net earnings, and upon dissolution, must distribute all of its assets to its stockholders (that is, Fund) after satisfaction of liabilities to its creditors. On June 1, 2031, Fund realizes $100x of gain on the disposition of stock in Company A, and Company B realizes $100x of gain on the disposition of Property D.

(ii) ***Analysis.***

(A) Fund owned Company A, a United States real property holding company, as of December 31, 2025, the earliest date during an uninterrupted period ending on the date of the disposition, June 1, 2031, during which Fund satisfied the requirements of paragraph (c)(2) of this section. Accordingly, to be a qualified holder, Fund must satisfy the requirements of paragraph (d)(3) of this section. The testing period with respect to Fund, determined under paragraph (d)(3) of this section, ends on June 1, 2031 (the date of disposition) and begins on June 1, 2021 (the date that is ten years before the disposition date). Fund is not a qualified holder because it failed to satisfy the requirements of paragraph (c)(2) of this section as of December 31, 2024 and, thus, has not satisfied the requirements of paragraph (c)(2) of this section continuously for the duration of the testing period. Accordingly, the $100x of gain realized by Fund on the disposition of the stock of Company A is not exempt from tax under section 897(l).

(B) Although Fund is not a qualified holder as of June 1, 2031, the date of Company B's disposition of Property D, Fund is still a qualified foreign pension fund because it satisfies the requirements of paragraph (c)(2) of this section. Company B is therefore a qualified controlled entity within the meaning of paragraph (e)(9) of this section as of June 1, 2031, because it is wholly owned by Fund, a qualified foreign pension fund. Notwithstanding that Fund is not a qualified holder under either paragraph (d)(2) or (3) of this section, Company B is a qualified holder under paragraph (d)(2) of this section because Company B did not own a United States real property interest as of June 1, 2026, the earliest date during an uninterrupted period ending on June 1, 2031 (the date of the disposition) during which Company B was a qualified controlled entity. Lastly, all of Company B's assets constitute a qualified segregated account. Accordingly, the $100x of gain realized by Company B on the disposition of Property D is exempt from tax under section 897(l).

(g) ***Applicability date*** —

(1) ***In general.*** Except as otherwise provided in paragraph (g)(2) of this section, this section applies to dispositions of United States real property interests and distributions described in section 897(h) occurring on or after December 29, 2022.

(2) ***Certain provisions.*** Paragraphs (b)(1), (d), (e)(5) and (e)(9) of this section apply with respect to dispositions of United States real property interests and distributions described in section 897(h) occurring on or after June 6, 2019.

(3) ***Early application.*** An eligible fund may choose to apply this section with respect to dispositions and distributions occurring on or after December 18, 2015, and before December 29, 2022, provided that the eligible fund, and all persons bearing a relationship to the eligible fund described in section 267(b) or 707(b), consistently apply the rules in this section for all relevant years. An eligible fund that chooses to apply this section pursuant to this paragraph (g)(3) must apply the principles of paragraph (d)(4)(i) of this section to any valuation requirements with respect to dates preceding December 18, 2015.

[T.D. 9971, 87 FR 80055, Dec. 29, 2022]

Income From Sources Without the United States

FOREIGN TAX CREDIT

§ 1.901-1 Allowance of credit for foreign income taxes.

(a) ***In general.*** Citizens of the United States, domestic corporations, certain aliens resident in the United States or Puerto Rico, and certain estates and trusts may choose to claim a credit, as provided in section 901, against the tax imposed by chapter 1 of the Internal Revenue Code (Code) for certain taxes paid or accrued to foreign countries and possessions of the United States, subject to the conditions prescribed in this section.

(1) ***Citizen of the United States.*** An individual who is a citizen of the United States, whether resident or nonresident, may claim a credit for—

(i) The amount of any foreign income taxes, as defined in § 1.901-2(a), paid or accrued (as the case may be, depending on the individual's method of accounting for such taxes) during the taxable year;

(ii) The individual's share of any such taxes of a partnership of which the individual is a member, or of an estate or trust of which the individual is a beneficiary; and

(iii) In the case of an individual who has made an election under section 962, the taxes deemed to have been paid under section 960 (see § 1.962-1(b)(2)).

(2) ***Domestic corporation.*** A domestic corporation may claim a credit for—

(i) The amount of any foreign income taxes, as defined in § 1.901-2(a), paid or accrued (as the case may be, depending on the corporation's method of accounting for such taxes) during the taxable year;

(ii) The corporation's share of any such taxes of a partnership of which the corporation is a member, or of an estate or trust of which the corporation is a beneficiary; and

(iii) The taxes deemed to have been paid under section 960.

(3) ***Alien resident of the United States or Puerto Rico.*** Except as provided in a Presidential proclamation described in section 901(c), an individual who is a resident alien of the United States (as defined in section 7701(b)), or an individual who is a bona fide resident of Puerto Rico (as defined in section 937(a)) during the entire taxable year, may claim a credit for—

(i) The amount of any foreign income taxes, as defined in § 1.901-2(a), paid or accrued (as the case may be, depending on the individual's method of accounting for such taxes) during the taxable year;

(ii) The individual's share of any such taxes of a partnership of which the individual is a member, or of an estate or trust of which the individual is a beneficiary; and

(iii) In the case of an individual who has made an election under section 962, the taxes deemed to have been paid under section 960 (see § 1.962-1(b)(2)).

(4) ***Estates and trusts.*** An estate or trust may claim a credit for—

(i) The amount of any foreign income taxes, as defined in § 1.901-2(a), paid or accrued (as the case may be, depending on the estate or trust's method of accounting for such taxes) during the taxable year to the extent not allocable to and taken into account by its beneficiaries under paragraph (a)(1)(ii), (a)(2)(ii), or (a)(3)(ii) of this section (see section 642(a)); and

(ii) In the case of an estate or trust that has made an election under section 962, the taxes deemed to have been paid under section 960 (see § 1.962-1(b)(2)).

(b) ***Limitations.*** Certain Code sections, including sections 245A(d) and (e)(3), 814, 901(e) through (m), 904, 906, 907, 908, 909, 911, 965(g), 999, and 6038, reduce, defer, or otherwise limit the credit against the tax imposed by chapter 1 of the Code for certain amounts of foreign income taxes.

(c) ***Deduction denied if credit claimed*** —

(1) ***In general.*** Except as provided in paragraphs (c)(2) and (3) of this section, if a taxpayer chooses with respect to any taxable year to claim a credit under section 901 to any extent, such choice will apply to all of the foreign income taxes paid or accrued (as the case may be, depending on the taxpayer's method of accounting for such taxes) by the taxpayer in such taxable year, and no deduction from gross income is allowed for any portion of such taxes in any taxable year. See section 275(a)(4).

(2) ***Exception for taxes not subject to section 275.*** A deduction may be allowed under section 164(a)(3) for foreign income tax for which a credit is disallowed under any Code section and to which section 275 does not apply. See, for example, sections 901(f), 901(j)(3), 901(k)(7), 901(l)(4), 901(m)(6), and 908(b). For rules on the taxable year in which a deduction for foreign income taxes is allowed under section 164(a)(3), see §§ 1.446-1(c)(1)(ii), 1.461-2(a)(2), and 1.461-4(g)(6)(iii)(B).

(3) ***Exception for taxes paid by an accrual basis taxpayer that relate to a prior year in which the taxpayer deducted foreign income taxes.*** If a taxpayer claims a credit for foreign income taxes accrued in a taxable year (including a cash method taxpayer that elects under section 905(a) to claim a credit in the year the taxes accrue), a deduction may be claimed in that taxable year for additional foreign income taxes that are finally determined and paid as a result of a foreign tax redetermination in that taxable year if the additional foreign income taxes relate to a prior taxable year in which the taxpayer claimed a deduction, rather than a credit, for foreign income taxes paid or accrued (as the case may be, depending on the taxpayer's overall method of accounting) in that prior year.

(4) ***Example.*** The following example illustrates the application of paragraph (c)(3) of this section.

(i) ***Facts.*** U.S.C. is a domestic corporation that is engaged in a trade or business in Country X through a branch. U.S.C. uses the accrual method of accounting and a calendar year for U.S. and Country X tax purposes. For taxable Years 1 through 3, U.S.C. deducted foreign income

taxes accrued in those years. In Years 4 through 6, U.S.C. claimed a credit for foreign income taxes accrued in those years. In Year 6, U.S.C. paid an additional $50x tax to Country X that relates to Year 1 because of the close of a Country X tax audit.

(ii) ***Analysis.*** The additional $50x Country X tax paid by U.S.C. in Year 6 that relates to Year 1 cannot be claimed by U.S.C. as a deduction on an amended return for Year 1 because the additional tax accrued in Year 6. See section 461(f) (flush language); §§ 1.461-1(a)(2)(i) and 1.461-2(a)(2). In addition, because the additional $50x Country X tax relates to and is considered to accrue in Year 1 for foreign tax credit purposes, U.S.C. cannot claim a credit for the additional $50x Country X tax on its Federal income tax return for Year 6. See § 1.905-1(d)(1). However, pursuant to paragraph (c)(3) of this section, U.S.C. can claim a deduction for the additional $50x Country X tax that relates to Year 1 on its Federal income tax return for Year 6, even though it claims a credit for foreign income taxes that accrue in Year 6 and that relate to Year 6.

(d) ***Period during which election can be made or changed*** —

(1) ***In general.*** The taxpayer may, for a particular taxable year, elect to claim a credit under section 901 (or claim a deduction in lieu of electing to claim a credit) at any time before the expiration of the period within which a claim for credit or refund of Federal income tax for such taxable year that is attributable to such credit or deduction, as the case may be, may be made (or, if longer, the period prescribed by section 6511(c) if the refund period for that taxable year is extended by an agreement to extend the assessment period under section 6501(c)(4)). Thus, an election to claim a credit for foreign income taxes paid or accrued (as the case may be, depending on the taxpayer's method of accounting for such taxes) in a particular taxable year can be made within the period prescribed by section 6511(d)(3)(A) for claiming a credit or refund of Federal income tax for that taxable year that is attributable to a credit for the foreign income taxes paid or accrued in that particular taxable year or, if longer, the period prescribed by section 6511(c) with respect to that particular taxable year. A choice to claim a deduction under section 164(a)(3), rather than a credit under section 901, for foreign income taxes paid or accrued in a particular taxable year can be made within the period prescribed by section 6511(a) or 6511(c), as applicable, for claiming a credit or refund of Federal income tax for that particular taxable year.

(2) ***Manner in which election is made or changed.*** A taxpayer claims a deduction or a credit for foreign income taxes paid or accrued in a particular taxable year by filing an original or amended return for that taxable year within the relevant period specified in paragraph (d)(1) of this section. A claim for a credit shall be accompanied by Form 1116 in the case of an individual, estate or trust, and by Form 1118 in the case of a corporation (and an individual, estate or trust making an election under section 962). See §§ 1.905-3 and 1.905-4 for rules requiring the filing of amended returns for all affected years when a timely change in the taxpayer's election to claim a deduction or credit results in U.S. tax deficiencies.

(e) ***Joint return.*** In the case of spouses making a joint return, credit for taxes paid or accrued to any foreign country or to any possession of the United States shall be computed upon the basis of the total taxes so paid by or accrued against the spouses.

(f) ***Taxes against which credit is allowed.*** The credit for foreign income taxes is allowed only against the tax imposed by chapter 1 of the Code. The credit is not allowed against a tax that, under section 26(b)(2), is not treated as a tax imposed by such chapter.

(g) ***Taxpayers to whom credit not allowed.*** Among those to whom the credit for taxes is not allowed are the following:

(1) Except as provided in section 906, a foreign corporation.

(2) Except as provided in section 906, a nonresident alien individual who is not described in section 876 (see sections 874(c) and 901(b)(4)).

(3) A nonresident alien individual described in section 876 other than a bona fide resident (as defined in section 937(a) and the regulations under that section) of Puerto Rico during the entire taxable year (see sections 901(b)(3) and (4)).

(4) A U.S. citizen or resident alien individual who is a bona fide resident of a section 931 possession (as defined in § 1.931-1(c)(1)), the U.S. Virgin Islands, or Puerto Rico, and who excludes certain income from U.S. gross income to the extent of taxes allocable to the income so excluded (see sections 931(b)(2), 933(1), and 932(c)(4)).

(h) ***Taxpayers denied credit in a particular taxable year.*** Taxpayers who are denied the credit for taxes for particular taxable years are the following:

(1) Except as provided in paragraphs (c)(2) and (3) of this section, a taxpayer that claims a deduction for foreign income taxes paid or accrued (as the case may be, depending on the taxpayer's method of accounting for such taxes) for that taxable year (see sections 164 and 275); and

(2) A regulated investment company which has exercised the election under section 853.

(i) ***Dividends from a DISC treated as foreign.*** For purposes of sections 901 through 906 and the regulations thereunder, any amount treated as a dividend from a corporation which is a DISC or former DISC (as defined in section 992(a) (1) or (3) as the case may be) will be treated as a dividend from a foreign corporation to the extent such dividend is treated under section 861(a)(2)(D) as income from sources without the United States.

(j) ***Applicability date.*** Paragraph (g) of this section applies to taxable years ending after April 9, 2008. This section applies to foreign taxes paid or accrued in taxable years beginning on or after December 28, 2021.

[T.D. 6500, 25 FR 11910, Nov. 26, 1960]

Editorial Note: For FEDERAL REGISTER citations affecting § 1.901-1, see the List of CFR Sections Affected, which appears in the Finding Aids section of the printed volume and at *www.govinfo.gov.*

§ 1.901-2 Income, war profits, or excess profits tax paid or accrued.

(a) ***Definition of foreign income tax*** —

(1) ***Overview and scope.*** Paragraphs (a) and (b) of this section define a foreign income tax for purposes of section 901. Paragraph (c) of this section is reserved. Paragraph (d) of this section contains rules describing what constitutes a separate levy. Paragraph (e) of this section provides rules for determining the amount of foreign income tax paid by a taxpayer. Paragraph (f) of this section contains rules for determining by whom foreign income tax is paid. Paragraph (g) of this section defines the terms used in this section, and in particular provides that the term “paid” means “paid” or “accrued,” depending on the taxpayer's method of accounting for foreign income taxes. Paragraph (h) of this section provides the applicability date for this section.

(i) ***In general.*** Section 901 allows a credit for the amount of income, war profits, and excess profits taxes paid during the taxable year to any foreign country, and section 903 provides that for purposes of Part III of subchapter N of the Code and sections 164(a) and 275(a), such taxes include a tax paid in lieu of a tax on income, war profits or excess profits that is otherwise generally imposed by a foreign country (collectively, for purposes of this section, a "foreign income tax"). Whether a foreign levy is a foreign income tax is determined independently for each separate levy. A foreign tax either is or is not a foreign income tax, in its entirety, for all persons subject to the foreign tax.

(ii) ***Requirements.*** A foreign levy is a foreign income tax only if—

(A) It is a foreign tax; and

(B) Either:

(*1*) The foreign tax is a net income tax, as defined in paragraph (a)(3) of this section; or

(*2*) The foreign tax is a tax in lieu of an income tax, as defined in § 1.903-1(b).

(iii) ***Coordination with treaties.*** A foreign levy that is treated as an income tax under the relief from double taxation article of an income tax treaty entered into by the United States and the foreign country imposing the levy is a foreign income tax if the levy is, as determined under such income tax treaty, paid by a citizen or resident of the United States that elects benefits under the treaty. In addition, a foreign levy (including a foreign levy paid by a controlled foreign corporation) that is modified by an applicable income tax treaty to which the foreign country imposing the levy is a party may qualify as a foreign income tax notwithstanding that the unmodified foreign levy does not satisfy the requirements in paragraph (b) of this section or the requirements of § 1.903-1(b) if the levy, as modified by such treaty, satisfies the requirements of paragraph (b) of this section or the requirements of § 1.903-1(b). See paragraph (d)(1)(iv) of this section for rules treating as a separate levy a foreign tax that is limited in its application or otherwise modified by the terms of an income tax treaty to which the foreign country imposing the tax is a party.

(2) ***Tax*** —

(i) ***In general.*** A foreign levy is a tax if it requires a compulsory payment pursuant to the authority of a foreign country to levy taxes. A penalty, fine, interest, or similar obligation is not a tax, nor is a customs duty a tax. Whether a foreign levy requires a compulsory payment pursuant to a foreign country's authority to levy taxes is determined by principles of U.S. law and not by principles of law of the foreign country. Therefore, the assertion by a foreign country that a levy is pursuant to the foreign country's authority to levy taxes is not determinative that, under U.S. principles, it is pursuant thereto. Notwithstanding any assertion of a foreign country to the contrary, a foreign levy is not pursuant to a foreign country's authority to levy taxes, and thus is not a tax, to the extent a person subject to the levy receives (or will receive), directly or indirectly, a specific economic benefit (as defined in paragraph (a)(2)(ii)(B) of this section) from the foreign country in exchange for payment pursuant to the levy. Rather, to that extent, such levy requires a compulsory payment in exchange for such specific economic benefit. If, applying U.S. principles, a foreign levy requires a compulsory payment pursuant to the authority of a foreign country to levy taxes and also requires a compulsory payment in exchange for a specific economic benefit, the levy is considered to have two distinct elements: A tax and a requirement of compulsory payment in exchange for such specific economic benefit. In such a situation, these two distinct elements of the foreign levy (and the amount paid pursuant to each

such element) must be separated. No credit is allowable for a payment pursuant to a foreign levy by a dual capacity taxpayer (as defined in paragraph (a)(2)(ii)(A) of this section) unless the person claiming such credit establishes the amount that is paid pursuant to the distinct element of the foreign levy that is a tax. See paragraph (a)(2)(ii) of this section and § 1.901-2A.

(ii) ***Dual capacity taxpayers*** —

(A) ***In general.*** For purposes of this section and §§ 1.901-2A and 1.903-1, a person who is subject to a levy of a foreign state or of a possession of the United States or of a political subdivision of such a state or possession and who also, directly or indirectly (within the meaning of paragraph (a)(2)(ii)(E) of this section) receives (or will receive) a specific economic benefit from the state or possession or from a political subdivision of such state or possession or from an agency or instrumentality of any of the foregoing is referred to as a "dual capacity taxpayer." Dual capacity taxpayers are subject to the special rules of § 1.901-2A.

(B) ***Specific economic benefit.*** For purposes of this section and §§ 1.901-2A and 1.903-1, the term "specific economic benefit" means an economic benefit that is not made available on substantially the same terms to substantially all persons who are subject to the income tax that is generally imposed by the foreign country, or, if there is no such generally imposed income tax, an economic benefit that is not made available on substantially the same terms to the population of the country in general. Thus, a concession to extract government-owned petroleum is a specific economic benefit, but the right to travel or to ship freight on a government-owned airline is not, because the latter, but not the former, is made generally available on substantially the same terms. An economic benefit includes property; a service; a fee or other payment; a right to use, acquire or extract resources, patents or other property that a foreign country owns or controls (within the meaning of paragraph (a)(2)(ii)(D) of this section); or a reduction or discharge of a contractual obligation. It does not include the right or privilege merely to engage in business generally or to engage in business in a particular form.

(C) ***Pension, unemployment, and disability fund payments.*** A foreign levy imposed on individuals to finance retirement, old-age, death, survivor, unemployment, illness, or disability benefits, or for some substantially similar purpose, is not a requirement of compulsory payment in exchange for a specific economic benefit, as long as the amounts required to be paid by the individuals subject to the levy are not computed on a basis reflecting the respective ages, life expectancies or similar characteristics of such individuals.

(D) ***Control of property.*** A foreign country controls property that it does not own if the country exhibits substantial indicia of ownership with respect to the property, for example, by both regulating the quantity of property that may be extracted and establishing the minimum price at which it may be disposed of.

(E) ***Indirect receipt of a benefit.*** A person is considered to receive a specific economic benefit indirectly if another person receives a specific economic benefit and that other person—

(*1*) Owns or controls, directly or indirectly, the first person or is owned or controlled, directly or indirectly, by the first person or by the same persons that own or control, directly or indirectly, the first person; or

(2) Engages in a transaction with the first person under terms and conditions such that the first person receives, directly or indirectly, all or part of the value of the specific economic benefit.

(3) ***Net income tax.*** A foreign tax is a net income tax only if the foreign tax meets the net gain requirement in paragraph (b) of this section.

(b) ***Net gain requirement*** —

(1) ***In general.*** A foreign tax satisfies the net gain requirement only if the tax satisfies the realization, gross receipts, cost recovery, and attribution requirements in paragraphs (b)(2), (3), (4), and (5) of this section, respectively, or if the foreign tax is a surtax described in paragraph (b)(6) of this section. Paragraphs (b)(2) through (6) of this section are applied with respect to a foreign tax solely on the basis of the foreign tax law governing the calculation of the foreign taxable base, unless otherwise provided, and without any consideration of the rate of tax imposed on the foreign taxable base.

(2) ***Realization requirement*** —

(i) ***In general.*** A foreign tax satisfies the realization requirement if it is imposed upon one or more of the events described in paragraphs (b)(2)(i)(A) through (C) of this section. If a foreign tax meets the realization requirement in paragraphs (b)(2)(i)(A) through (C) of this section except with respect to one or more specific and defined classes of nonrealization events (such as, for example, imputed rental income from a personal residence used by the owner), and as judged based on the application of the foreign tax to all taxpayers subject to the foreign tax, the incidence and amounts of gross receipts attributable to such nonrealization events is insignificant relative to the incidence and amounts of gross receipts attributable to events covered by the foreign tax that do meet the realization requirement, then the foreign tax is treated as meeting the realization requirement in paragraph (b)(2) of this section (despite the fact that the foreign tax is also imposed on the basis of some nonrealization events, and that some persons subject to the foreign tax may only be taxed on nonrealization events).

(A) ***Realization events.*** The foreign tax is imposed upon or after the occurrence of events ("realization events") that result in the realization of income under the income tax provisions of the Internal Revenue Code.

(B) ***Pre-realization recapture events.*** The foreign tax is imposed upon the occurrence of an event before a realization event (a "pre-realization event") that results in the recapture (in whole or part) of a tax deduction, tax credit, or other tax allowance previously accorded to the taxpayer (for example, the recapture of an incentive tax credit if required investments are not completed within a specified period).

(C) ***Pre-realization timing difference events.*** The foreign tax is imposed upon the occurrence of a pre-realization event, other than one described in paragraph (b)(2)(i)(B) of this section, but only if the foreign country does not, upon the occurrence of a later event, impose tax under the same or a separate levy (a "second tax") on the same taxpayer (for purposes of this paragraph (b)(2)(i)(C), treating a disregarded entity as defined in § 301.7701-3(b)(2)(i)(C) of this chapter as a taxpayer separate from its owner), with respect to the income on which tax is imposed by reason of such pre-realization event (or, if it does impose a second tax, a credit or other comparable relief is available against the liability for such a second tax for tax paid on the occurrence of the pre-realization event) and—

(1) The imposition of the tax upon such pre-realization event is based on the difference in the fair market value of property at the beginning and end of a period;

(2) The pre-realization event is the physical transfer, processing, or export of readily marketable property (as defined in paragraph (b)(2)(ii) of this section) and the imposition of the tax upon the pre-realization event is based on the fair market value of such property; or

(3) The pre-realization event relates to a deemed distribution (for example, by a corporation to a shareholder) or inclusion (for example, under a controlled foreign corporation inclusion regime) of amounts (such as earnings and profits) that meet the realization requirement in paragraph (b)(2) of this section in the hands of the person that, under foreign tax law, is deemed to distribute such amounts.

(ii) ***Readily marketable property.*** Property is readily marketable if—

(A) It is stock in trade or other property of a kind that properly would be included in inventory if on hand at the close of the taxable year or if it is held primarily for sale to customers in the ordinary course of business, and

(B) It can be sold on the open market without further processing or it is exported from the foreign country.

(iii) ***Examples.*** The following examples illustrate the rules of paragraph (b)(2) of this section:

(A) ***Example 1.*** Residents of Country X are subject to a tax of 10 percent on the aggregate net appreciation in fair market value during the calendar year of all shares of stock held by them at the end of the year. In addition, all such residents are subject to a Country X tax that qualifies as a net income tax within the meaning of paragraph (a)(3) of this section. Included in the base of the net income tax are gains and losses realized on the sale of stock, and the basis of stock for purposes of determining such gain or loss is its cost. The operation of the stock appreciation tax and the net income tax as applied to sales of stock is exemplified as follows: A, a resident of Country X, purchases stock in June of Year 1 for 100u (units of Country X currency) and sells it in May of Year 3 for 160u. On December 31, Year 1, the stock is worth 120u and on December 31, Year 2, it is worth 155u. Pursuant to the stock appreciation tax, A pays 2u for Year 1 (10 percent of (120u−100u)), 3.5u for Year 2 (10 percent of (155u−120u)), and nothing for Year 3 because no stock was held at the end of that year. For purposes of the net income tax, A must include 60u (160u−100u) in his income for Year 3, the year of sale. Pursuant to paragraph (b)(2)(i)(C) of this section, the stock appreciation tax does not satisfy the realization requirement because Country X imposes a second tax upon the occurrence of a later event (that is, the sale of stock) with respect to the income that was taxed by the stock appreciation tax and no credit or comparable relief is available against such second tax for the stock appreciation tax paid.

(B) ***Example 2.*** The facts are the same as those in paragraph (b)(2)(iii)(A) of this section (the facts in *Example 1*), except that if stock was held on the December 31 last preceding the date of its sale, the basis of such stock for purposes of computing gain or loss under the net income tax is the value of the stock on such December 31. Thus, in Year 3, A includes only 5u (160u−155u) as income from the sale for purposes of the net income tax. Because the net income tax imposed upon the occurrence of a later event (the sale) does not impose a tax with respect to the income that was taxed by the stock appreciation tax, under paragraph (b)(2)(i)(C) of this section, the stock appreciation tax satisfies the

realization requirement. The result would be the same if, instead of a basis adjustment to reflect taxation pursuant to the stock appreciation tax, the Country X net income tax allowed a credit (or other comparable relief) to take account of the stock appreciation tax. If a credit mechanism is used, see also paragraph (e)(4)(i) of this section.

(C) ***Example 3.*** Country X imposes a tax on the realized net income of corporations that do business in Country X. Country X also imposes a branch profits tax on corporations organized under the law of a country other than Country X that do business in Country X. The branch profits tax is imposed when realized net income is remitted or deemed to be remitted by branches in Country X to home offices outside of Country X. Because the branch profits tax is imposed subsequent to the occurrence of events that would result in realization of income by corporations subject to such tax under the income tax provisions of the Internal Revenue Code, under paragraph (b)(2)(i)(A) of this section the branch profits tax satisfies the realization requirement.

(D) ***Example 4.*** Country X imposes a tax on the realized net income of corporations that do business in Country X (the "Country X corporate tax"). Country X also imposes a separate tax on shareholders of such corporations (the "Country X shareholder tax"). The Country X shareholder tax is imposed on the sum of the actual distributions received during the taxable year by such a shareholder from the corporation's realized net income for that year (that is, income from past years is not taxed in a later year when it is actually distributed) plus the distributions deemed to be received by such a shareholder. Deemed distributions are defined as a shareholder's pro rata share of the corporation's realized net income for the taxable year, less such shareholder's pro rata share of the corporation's Country X corporate tax for that year, less actual distributions made by such corporation to such shareholder from such net income. A shareholder's receipt of actual distributions is a realization event within the meaning of paragraph (b)(2)(i)(A) of this section. The deemed distributions are not realization events, but they are described in paragraph (b)(2)(i)(C)(3) of this section. Accordingly, the Country X shareholder tax satisfies the realization requirement.

(3) ***Gross receipts requirement*** —

(i) ***Rule.*** A foreign tax satisfies the gross receipts requirement if it is imposed on the basis of the amounts described in paragraphs (b)(3)(i)(A) through (D) of this section.

(A) Actual gross receipts.

(B) In the case of either an insignificant nonrealization event described in the second sentence of paragraph (b)(2)(i) of this section or a realization event described in paragraph (b)(2)(i)(A) of this section that does not result in actual gross receipts, deemed gross receipts in an amount that is reasonably calculated to produce an amount that is not greater than fair market value.

(C) Deemed gross receipts in the amount of a tax deduction that is recaptured by reason of a pre-realization recapture event described in paragraph (b)(2)(i)(B) of this section.

(D) The amount of deemed gross receipts arising from pre-realization timing difference events described in paragraph (b)(2)(i)(C) of this section.

(ii) ***Examples.*** The following examples illustrate the rules of paragraph (b)(3)(i) of this section.

(A) *Example 1: Cost-plus tax* —

(1) ***Facts.*** Country X imposes a "cost-plus tax" on Country X corporations that serve as regional headquarters companies for affiliated nonresident corporations, and this tax is a separate levy (within the meaning of paragraph (d)(1) of this section). A headquarters company for purposes of this tax is a corporation that performs administrative, management or coordination functions solely for nonresident affiliated entities. Due to the difficulty of determining on a case-by-case basis the arm's length gross receipts that headquarters companies would charge affiliates for such services, gross receipts of a headquarters company are deemed, for purposes of this tax, to equal 110 percent of the business expenses incurred by the headquarters company.

(2) ***Analysis.*** Because the cost-plus tax is based on costs and not on actual gross receipts, the cost-plus tax does not satisfy the gross receipts requirement of paragraph (b)(3)(i) of this section.

(B) *Example 2: Actual gross receipts determined under appropriate transfer pricing methodology* —

(1) ***Facts.*** Country X imposes a tax on resident corporations that meets the attribution requirement of paragraph (b)(5)(ii) of this section. The Country X tax is based on actual gross receipts, including gross receipts recorded on the taxpayer's books and records as due from related and unrelated persons. Corporation A, a resident of Country X, properly determines the arm's length transfer price for services provided to related persons using a cost-plus methodology, recording on its books and records receivables for the arm's length amounts due from those related persons and using those amounts to determine the realized gross receipts included in the base of the Country X tax.

(2) ***Analysis.*** Because the Country X tax is based on actual gross receipts, it satisfies the gross receipts requirement of paragraph (b)(3)(i) of this section.

(C) *Example 3: Petroleum taxed on extraction* —

(1) ***Facts.*** Country X imposes a tax that is a separate levy (within the meaning of paragraph (d)(1) of this section) on income from the extraction of petroleum. Under the terms of that tax, gross receipts from extraction income are deemed to equal 105 percent of the fair market value of petroleum extracted.

(2) ***Analysis.*** Because it is imposed on deemed gross receipts that exceed the fair market value of the petroleum extracted, the tax on extraction income does not satisfy the gross receipts requirement of paragraph (b)(3)(i) of this section.

(4) *Cost recovery requirement* —

(i) *Costs and expenses that must be recovered* —

(A) ***In general.*** A foreign tax satisfies the cost recovery requirement if the base of the tax is computed by reducing gross receipts (as described in paragraph (b)(3) of this section) to permit recovery of the significant costs and expenses (including capital expenditures) described in paragraph (b)(4)(i)(C) of this section attributable, under reasonable principles, to such gross receipts. A foreign tax need not permit recovery of significant

costs and expenses, such as certain personal expenses, that are not attributable, under reasonable principles, to gross receipts included in the foreign taxable base. A foreign tax whose base is gross receipts, with no reduction for costs and expenses, satisfies the cost recovery requirement only if there are no significant costs and expenses attributable to the gross receipts included in the foreign tax base that must be recovered under the rules of paragraph (b)(4)(i)(C)(*1*) of this section. See paragraph (b)(4)(iv)(A) of this section (*Example 1*). A foreign tax that provides an alternative cost allowance satisfies the cost recovery requirement only as provided in paragraph (b)(4)(i)(B) of this section. See paragraph (b)(4)(i)(D) of this section for rules regarding principles for attributing costs and expenses to gross receipts.

(B) ***Alternative cost allowances*** —

(*1*) ***In general.*** Except as provided in paragraph (b)(4)(i)(B)(*2*) of this section, if foreign tax law does not permit recovery of one or more significant costs and expenses in computing the base of the foreign tax but provides an alternative cost allowance, the foreign tax satisfies the cost recovery requirement only if the alternative allowance permits recovery of an amount that by its terms may be greater, but can never be less, than the actual amounts of such significant costs and expenses (for example, under a provision identical to percentage depletion allowed under section 613). If foreign tax law provides an optional alternative cost allowance or an election to recover costs and expenses under an alternative method, the foreign tax satisfies the cost recovery requirement if the foreign tax law also expressly provides an option to recover actual costs and expenses. See § 1.901-2(e)(5) for rules limiting the amount of foreign income tax paid to the amount due under the option that minimizes the taxpayer's liability for foreign income tax over time. If foreign tax law provides an alternative cost allowance that does not by its terms permit recovery of an amount equal to or greater than the actual amounts of significant costs and expenses, the foreign tax does not satisfy the cost recovery requirement, even if, in practice, the amounts recovered under the alternative allowance equal or exceed the amount of actual costs and expenses.

(*2*) ***Small business exception.*** If foreign tax law provides an alternative method for determining the amount of costs and expenses allowed in computing the taxable base of small business enterprises, the foreign tax satisfies the cost recovery requirement if the foreign tax law contains reasonable limits on the maximum size of business enterprises to which the alternative cost allowance applies (for example, business enterprises having asset values or annual gross revenues below specified thresholds). See paragraph (b)(4)(iv)(B) of this section (*Example 2*).

(C) ***Significant costs and expenses*** —

(*1*) ***Amounts that must be recovered.*** Whether a cost or expense is significant for purposes of this paragraph (b)(4)(i) is determined based on whether, for all taxpayers in the aggregate to which the foreign tax applies, the item of cost or expense constitutes a significant portion of the taxpayers' total costs and expenses. Costs and expenses (as characterized under foreign law) related to capital expenditures, interest, rents, royalties, wages or other payments for services, and research and experimentation are always treated as significant costs or expenses for purposes of this paragraph (b)(4)(i). Significant costs and expenses (such as interest expense)

are not considered to be recovered by reason of the time value of money attributable to the acceleration of a tax benefit or other economic benefit attributable to the timing of the recovery of other costs and expenses (such as the current expensing of debt-financed capital expenditures). Foreign tax law is considered to permit recovery of significant costs and expenses even if recovery of all or a portion of certain costs or expenses is disallowed, if such disallowance is consistent with any principle underlying the disallowances required under the Internal Revenue Code, including the principles of limiting base erosion or profit shifting and public policy concerns. For example, a foreign tax is considered to permit recovery of significant costs and expenses if the foreign tax law limits interest deductions based on a measure of taxable income (determined either before or after depreciation and amortization), disallows deductions in connection with hybrid transactions, disallows deductions attributable to gross receipts that in whole or in part are excluded, exempt or eliminated from taxable income, or disallows certain deductions based on public policy considerations similar to those underlying the disallowances contained in section 162. See paragraph (b)(4)(iv)(C) of this section (*Example 3*).

(2) ***Amounts that need not be recovered.*** A foreign tax is considered to permit recovery of significant costs and expenses even if the foreign tax law does not permit recovery of any costs and expenses attributable to wage income or to investment income that is not derived from a trade or business. In addition, in determining whether a foreign tax (the "tested foreign tax") meets the cost recovery requirement, it is immaterial whether the tested foreign tax allows a deduction for other taxes that would qualify as foreign income taxes (determined without regard to whether such other tax allows a deduction for the tested foreign tax). See paragraph (b)(4)(iv)(D) and (E) of this section (*Examples 4* and *5*).

(3) ***Timing of recovery.*** A foreign tax law permits recovery of significant costs and expenses even if such costs and expenses are recovered earlier or later than they are recovered under the Internal Revenue Code unless the time of recovery is so much later as effectively to constitute a denial of such recovery. The amount of costs and expenses that is recovered under the foreign tax law is neither discounted nor augmented by taking into account the time value of money attributable to any acceleration or deferral of a tax benefit resulting from the foreign law cost recovery method compared to when tax would be paid under the Internal Revenue Code. Therefore, a foreign tax satisfies the cost recovery requirement if items deductible under the Internal Revenue Code are capitalized under the foreign tax law and recovered either immediately, on a recurring basis over time, or upon the occurrence of some future event (for example, upon the property becoming worthless or being disposed of), or if the recovery of items capitalized under the Internal Revenue Code occurs more or less rapidly than under the foreign tax law.

(D) ***Attribution of costs and expenses to gross receipts.*** Principles used in the foreign tax law to attribute costs and expenses to gross receipts may be reasonable even if they differ from principles that apply under the Internal Revenue Code (for example, principles that apply under section 265, 465 or 861(b) of the Internal Revenue Code). See also paragraph (b)(5) of this section for additional requirements relating to foreign tax law rules for attributing costs and expenses to gross receipts.

(ii) ***Consolidation of profits and losses.*** In determining whether a foreign tax satisfies the cost recovery requirement, one of the factors to be taken into account is whether, in computing the base of the tax, a loss incurred in one activity (for example, a contract area in the case of oil and gas exploration) in a trade or business is allowed to offset profit earned by the same person in another activity (for example, a separate contract area) in the same trade or business. If such an offset is allowed, it is immaterial whether the offset may be made in the taxable period in which the loss is incurred or only in a different taxable period, unless the period is such that under the circumstances there is effectively a denial of the ability to offset the loss against profit. In determining whether a foreign tax satisfies the cost recovery requirement, it is immaterial that no such offset is allowed if a loss incurred in one such activity may be applied to offset profit earned in that activity in a different taxable period, unless the period is such that under the circumstances there is effectively a denial of the ability to offset such loss against profit. In determining whether a foreign tax satisfies the cost recovery requirement, it is immaterial whether a person's profits and losses from one trade or business (for example, oil and gas extraction) are allowed to offset its profits and losses from another trade or business (for example, oil and gas refining and processing), or whether a person's business profits and losses and its passive investment profits and losses are allowed to offset each other in computing the base of the foreign tax. Moreover, it is immaterial whether foreign tax law permits or prohibits consolidation of profits and losses of related persons, unless foreign tax law requires separate entities to be used to carry on separate activities in the same trade or business. If foreign tax law requires that separate entities carry on such separate activities, the determination whether the cost recovery requirement is satisfied is made by applying the same considerations as if such separate activities were carried on by a single entity.

(iii) ***Carryovers.*** In determining whether a foreign tax satisfies the cost recovery requirement, it is immaterial, except as otherwise provided in paragraph (b)(4)(ii) of this section, whether losses incurred during one taxable period may be carried over to offset profits incurred in different taxable periods.

(iv) ***Examples.*** The following examples illustrate the rules of paragraph (b)(4) of this section.

(A) ***Example 1: Tax on gross interest income of certain residents; no deductions allowed*** —

(*1*) ***Facts.*** Country X imposes a net income tax on corporations resident in Country X. Country X imposes a second tax (the “bank tax”) of 1 percent on the gross amount of interest income derived by banks resident in Country X; no deductions are allowed in determining the base of the bank tax. Banks resident in Country X incur substantial costs and expenses, including interest expense, attributable to their interest income.

(*2*) ***Analysis.*** Because the terms of the bank tax do not permit recovery of significant costs and expenses attributable to the gross receipts included in the tax base, the bank tax does not satisfy the cost recovery requirement of paragraph (b)(4)(i) of this section.

(B) ***Example 2: Small business alternative allowance*** —

(*1*) ***Facts.*** Country X imposes a tax on the income of corporations resident in Country X. Under Country X tax law, corporations are generally allowed to deduct actual costs and expenses attributable to the realized gross receipts included in the Country X tax

base. However, in lieu of deductions for actual costs and expenses, businesses with gross revenues of less than the Country X currency equivalent of $500,000 are allowed a flat cost allowance of 50 percent of gross revenues.

(2) ***Analysis.*** Under paragraph (b)(4)(i)(B)(2) of this section, the alternative cost allowance for small businesses provided under Country X tax law satisfies the cost recovery requirement.

(C) ***Example 3: Permissible deduction disallowance*** —

(1) ***Facts.*** Country X imposes a tax on the income of corporations resident in Country X. Under Country X tax law, deductions for the significant costs and expenses attributable to the gross receipts included in the Country X tax base are allowed, except that deductions for interest expense incurred by corporations are limited to 30 percent of the corporation's earnings before income taxes, depreciation, and amortization, and unused interest expense may be carried forward for a period of 5 years. In addition, Country X tax law contains anti-hybrid rules that deny deductions for interest, royalties, rents, and services payments made by a Country X resident to a related entity outside Country X that is treated as a transparent entity in the jurisdiction in which it is organized but as a separate entity in the jurisdiction of the entity's owners (a “reverse hybrid entity”) to the extent that the payment is not included in the income of the reverse hybrid entity or its owners.

(2) ***Analysis.*** Under paragraph (b)(4)(i)(C)(1) of this section, costs and expenses related to interest, rents, royalties, and payments for services are treated as significant costs or expenses that must be recoverable under Country X tax law. However, because the interest expense limitation rule and the anti-hybrid rules in Country X tax law are consistent with the principles underlying the disallowances required under the Internal Revenue Code (namely, section 163(j) and section 267A), the Country X tax satisfies the cost recovery requirement.

(D) ***Example 4: Gross basis tax on wages*** —

(1) ***Facts.*** A foreign country imposes payroll tax on resident employees at the rate of 10 percent of the amount of gross wages; no deductions are allowed in computing the base of the payroll tax.

(2) ***Analysis.*** Although the foreign tax law does not allow for the recovery of any costs and expenses attributable to gross receipts included in the taxable base, under paragraph (b)(4)(i)(C)(2) of this section, because the only gross receipts included in the taxable base are from wages, the payroll tax satisfies the cost recovery requirement.

(E) ***Example 5: No deduction for another net income tax*** —

(1) ***Facts.*** Each of Country X and Province Y (a political subdivision of Country X) imposes a tax on resident corporations, called the “Country X income tax” and the “Province Y income tax,” respectively. Each tax has an identical base, which is computed by reducing a corporation's realized gross receipts by deductions that, based on the laws of Country X and Province Y, generally permit recovery of the significant costs and expenses (including significant capital expenditures) that are attributable under reasonable principles to such gross receipts. However, the Country

X income tax does not allow a deduction for the Province Y income tax for which a taxpayer is liable, nor does the Province Y income tax allow a deduction for the Country X income tax for which a taxpayer is liable.

(2) ***Analysis.*** Under paragraph (d)(1)(i) of this section, each of the Country X income tax and the Province Y income tax is a separate levy. Without regard to whether the Province Y income tax may allow a deduction for the Country X income tax, and without regard to whether the Country X income tax may allow a deduction for the Province Y income tax, both taxes would qualify as net income taxes under paragraph (a)(3) of this section. Therefore, under paragraph (b)(4)(i)(C)(2) of this section the fact that neither levy's base allows a deduction for the other levy is immaterial, and both levies satisfy the cost recovery requirement.

(5) ***Attribution requirement.*** A foreign tax satisfies the attribution requirement if the amount of gross receipts and costs that are included in the base of the foreign tax are determined based on rules described in paragraph (b)(5)(i) of this section (with respect to a separate levy imposed on nonresidents of the foreign country) or paragraph (b)(5)(ii) of this section (with respect to a separate levy imposed on residents of the foreign country).

(i) ***Tax on nonresidents.*** The gross receipts and costs attributable to each of the items of income of nonresidents of a foreign country that is included in the base of the foreign tax must satisfy the requirements of paragraph (b)(5)(i)(A), (B), or (C) of this section.

(A) ***Income attribution based on activities.*** The gross receipts and costs that are included in the base of the foreign tax are limited to gross receipts and costs that are attributable, under reasonable principles, to the nonresident's activities within the foreign country imposing the foreign tax (including the nonresident's functions, assets, and risks located in the foreign country). For purposes of the preceding sentence, attribution of gross receipts under reasonable principles includes rules similar to those for determining effectively connected income under section 864(c) but does not include rules that take into account as a significant factor the mere location of customers, users, or any other similar destination-based criterion, or the mere location of persons from whom the nonresident makes purchases in the foreign country. In addition, for purposes of the first sentence of this paragraph (b)(5)(i)(A), reasonable principles do not include rules that deem the existence of a trade or business or permanent establishment based on the activities of another person (other than an agent or other person acting on behalf of the nonresident or a pass-through entity of which the nonresident is an owner), or that attribute gross receipts or costs to a nonresident based upon the activities of another person (other than an agent or other person acting on behalf of the nonresident or a pass-through entity of which the nonresident is an owner).

(B) ***Income attribution based on source.*** The amount of gross income arising from gross receipts (other than gross receipts from sales or other dispositions of property) that is included in the base of the foreign tax on the basis of source (instead of on the basis of activities or the situs of property as described in paragraphs (b)(5)(i)(A) and (C) of this section) is limited to gross income arising from sources within the foreign country that imposes the tax, and the sourcing rules of the foreign tax law are reasonably similar to the sourcing rules that apply under the Internal Revenue Code. A foreign tax law's application of such sourcing rules need not conform in all respects to the application of those sourcing rules for Federal income tax purposes. For purposes of determining whether the

sourcing rules of the foreign tax law are reasonably similar to the sourcing rules that apply under the Internal Revenue Code, the character of gross income arising from gross receipts is determined under the foreign tax law (except as provided in paragraph (b)(5)(i)(B)(*3*) of this section), and the following rules apply:

(*1*) ***Services.*** Under the foreign tax law, gross income from services must be sourced based on where the services are performed, as determined under reasonable principles (which do not include determining the place of performance of the services based on the location of the service recipient).

(*2*) ***Royalties.*** A foreign tax on gross income from royalties must be sourced based on the place of use of, or the right to use, the intangible property.

(*3*) ***Sales of property.*** Gross income arising from gross receipts from sales or other dispositions of property (including copyrighted articles sold through an electronic medium) must be included in the foreign tax base on the basis of the rules in paragraph (b)(5)(i)(A) or (C) of this section, and not on the basis of source. In the case of sales of copyrighted articles (as determined under rules similar to § 1.861-18), a foreign tax satisfies the attribution requirement of paragraph (b)(5) of this section only if the transaction is treated as a sale of tangible property and not as a license of intangible property.

(C) ***Attribution based on situs of property.*** A foreign tax on gains of nonresidents from the sale or disposition of property, including shares in a corporation or an interest in a partnership or other pass-through entity, based on the situs of property satisfies the attribution requirement only as provided in this paragraph (b)(5)(i)(C). The amount of gross receipts from the sale or disposition of property that is included in the base of the foreign tax on the basis of the situs of real property (instead of on the basis of activities as described in paragraph (b)(5)(i)(A) of this section) may only include gross receipts that are attributable to the disposition of real property situated in the foreign country imposing the foreign tax (or an interest in a resident corporation or other entity that owns such real property) under rules reasonably similar to the rules in section 897. The amount of gross receipts from the sale or disposition of property other than shares in a corporation, including an interest in a partnership or other pass-through entity, that is included in the base of the foreign tax on the basis of the situs of property other than real property may only include gross receipts that are attributable to property forming part of the business property of a taxable presence in the foreign country imposing the foreign tax under rules that are reasonably similar to the rules in section 864(c).

(ii) ***Tax on residents.*** The base of a foreign tax imposed on residents of the foreign country imposing the foreign tax may include all of the worldwide gross receipts of the resident. The foreign tax law must provide that any allocation to or from the resident of income, gain, deduction, or loss with respect to transactions between such resident and organizations, trades, or businesses owned or controlled directly or indirectly by the same interests (that is, any allocation made pursuant to the foreign country's transfer pricing rules) is determined under arm's length principles, without taking into account as a significant factor the location of customers, users, or any other similar destination-based criterion.

(iii) ***Examples.*** The following examples illustrate the rules of paragraph (b)(5) of this section.

(A) ***Example 1 —***

(1) ***Facts.*** Country X imposes a separate levy on nonresident companies that furnish, from a location outside of Country X, specified types of electronically supplied services to users located in Country X (the "ESS tax"). The base of the ESS tax is computed by taking the nonresident company's overall net income related to supplying electronically supplied services, and deeming a portion of such net income to be attributable to a deemed permanent establishment of the nonresident company in Country X. The amount of the nonresident company's net income attributable to the deemed permanent establishment is determined on a formulary basis based on the percentage of the nonresident company's total users that are located in Country X.

(2) ***Analysis.*** The taxable base of the ESS tax is not computed based on a nonresident company's activities located in Country X, but instead takes into account the location of the nonresident company's users. Therefore, the ESS tax does not meet the requirement in paragraph (b)(5)(i)(A) of this section. The ESS tax also does not meet the requirement in paragraph (b)(5)(i)(B) of this section because it is not imposed on the basis of source, and it does not meet the requirement in paragraph (b)(5)(i)(C) of this section because it is not imposed on the sale or other disposition of property.

(B) ***Example 2*** —

(1) ***Facts.*** The facts are the same as those in paragraph (b)(5)(iii)(A)(*1*) of this section (the facts in *Example 1*), except that instead of imposing the ESS tax by deeming nonresident companies to have a permanent establishment in Country X, Country X treats gross income from electronically supplied services provided to users located in Country X as sourced in Country X. The gross income sourced to Country X is reduced by costs that are reasonably attributed to such gross income, to arrive at the taxable base of the ESS tax. The amount of the nonresident's gross income and costs that are sourced to Country X is determined by multiplying the nonresident's total gross income and costs by the percentage of its total users that are located in Country X.

(2) ***Analysis.*** Country X tax law's rule for sourcing electronically supplied services is not based on where the services are performed and is instead based on the location of the service recipient. Therefore, the ESS tax, which is imposed on the basis of source, does not meet the requirement in paragraph (b)(5)(i)(B) of this section. The ESS tax also does not meet the requirement in paragraph (b)(5)(i)(A) of this section because it is not imposed on the basis of a nonresident's activities located in Country X, and it does not meet the requirement in paragraph (b)(5)(i)(C) of this section because it is not imposed on the sale or other disposition of property.

(6) ***Surtax on net income tax.*** A foreign tax satisfies the net gain requirement in this paragraph (b) if the base of the foreign tax is the amount of a net income tax. For example, if a tax (surtax) is computed as a percentage of a separate levy that is itself a net income tax, then such surtax is considered to satisfy the net gain requirement.

(c) [Reserved]

(d) ***Separate levies*** —

(1) ***In general.*** Each foreign levy must be analyzed separately to determine whether it is a net income tax within the meaning of paragraph (a)(3) of this section and whether it is a tax in lieu of an income tax within the meaning of § 1.903-1(b)(2). Whether a single levy or separate levies are imposed by a foreign country depends on U.S. principles and not on whether foreign tax law imposes the levy or levies pursuant to a single or separate statutes. A foreign levy is a separate levy described in this paragraph (d)(1) if it is described in paragraph (d)(1)(i), (ii), (iii), or (iv) of this section. In the case of levies that apply to dual capacity taxpayers, see also § 1.901-2A(a).

(i) ***Taxing authority.*** A levy imposed by one taxing authority (for example, the national government of a foreign country) is always separate from a levy imposed by another taxing authority (for example, a political subdivision of that foreign country), even if the base of the levy is the same.

(ii) ***Different taxable base.*** Where the base of a foreign levy is computed differently for different classes of persons subject to the levy, the levy is considered to impose separate levies with respect to each such class of persons. For example, foreign levies identical to the taxes imposed by sections 1, 11, 541, 871(a), 871(b), 881, 882, 3101 and 3111 of the Internal Revenue Code are each separate levies, because the levies are imposed on different classes of taxpayers, and the base of each of those levies contains different items than the base of each of the others. A taxable base of a separate levy may consist of a particular type of income (for example, wage income, investment income, or income from self-employment). The taxable base of a separate levy may also consist of an amount unrelated to income (for example, wage expense or assets). A separate levy may provide that items included in the base of the tax are computed separately merely for purposes of a preliminary computation and are then combined as a single taxable base. Income included in the taxable base of a separate levy may also be included in the taxable base of another levy (which may or may not also include other items of income); separate levies are considered to be imposed if the taxable bases are not combined as a single taxable base, even if the taxable bases are determined using the same computational rules. For example, a foreign levy identical to the tax imposed by section 1 is a separate levy from a foreign levy identical to the tax imposed by section 1411, because tax is imposed under each levy on a separate taxable base that is not combined with the other as a single taxable base. Where foreign tax law imposes a levy that is the sum of two or more separately computed amounts of tax, and each such amount is computed by reference to a different base, separate levies are considered to be imposed. Levies are not separate merely because different rates apply to different classes of taxpayers that are subject to the same provisions in computing the base of the tax. For example, a foreign levy identical to the tax imposed on U.S. citizens and resident alien individuals by section 1 of the Internal Revenue Code is a single levy notwithstanding that the levy has graduated rates and applies different rate schedules to unmarried individuals, married individuals who file separate returns, and married individuals who file joint returns. In addition, in general, levies are not separate merely because some provisions determining the base of the levy apply, by their terms or in practice, to some, but not all, persons subject to the levy. For example, a foreign levy identical to the tax imposed by section 11 of the Internal Revenue Code is a single levy even though some provisions apply by their terms to some but not all corporations subject to the section 11 tax (for example, section 465 is by its terms applicable to corporations described in sections 465(a)(1)(B), but not to other corporations), and even though some provisions apply in practice to some but not all corporations subject to the section 11 tax (for example, section 611 does not, in practice, apply to any corporation that does not have a qualifying interest in the type of property described in section 611(a)).

(iii) *Tax imposed on nonresidents.* A foreign levy imposed on nonresidents is always treated as a separate levy from that imposed on residents, even if the base of the tax as applied to residents and nonresidents is the same, and even if the levies are treated as a single levy under foreign tax law. In addition, a withholding tax (as defined in section 901(k)(1)(B)) that is imposed on gross income of nonresidents is treated as a separate levy as to each separate class of income described in section 61 (for example, interest, dividends, rents, or royalties) subject to the withholding tax. If two or more subsets of a separate class of income are subject to a withholding tax based on different income attribution rules (for example, if technical services are subject to tax based on the residence of the payor and other services are subject to tax based on where the services are performed), separate levies are considered to be imposed with respect to each subset of that separate class of income.

(iv) *Foreign levy modified by an applicable income tax treaty.* A foreign levy that is limited in its application by, or is otherwise modified by, an income tax treaty to which the foreign country imposing the levy is a party is a separate levy from the levy imposed under the domestic law (without regard to the treaty) of the foreign country, and is also a separate levy from the foreign levy as modified by a different income tax treaty to which the foreign country imposing the levy is a party, even if the two treaties modify the foreign levy in exactly the same manner. Accordingly, a foreign levy paid by taxpayers that qualify for and claim benefits under an income tax treaty is a separate levy from the levy as applied to taxpayers that are ineligible for, or that do not claim, benefits under that treaty, even if the two foreign levies would apply in the same manner to a particular taxpayer, and regardless of whether the unmodified foreign levy is a foreign income tax within the meaning of paragraph (a)(1)(ii) of this section.

(2) *Contractual modifications.* Notwithstanding paragraph (d)(1) of this section, if foreign tax law imposing a levy is modified for one or more persons subject to the levy by a contract entered into by such person or persons and the foreign country, then the foreign tax law is considered for purposes of sections 901 and 903 to impose a separate levy for all persons to whom such contractual modification of the levy applies, as contrasted to the levy as applied to all persons to whom such contractual modification does not apply.

(3) *Examples.* The following examples illustrate the rules of paragraph (d)(1) of this section.

(i) *Example 1: Separate taxable bases* —

(A) *Facts.* A foreign statute imposes a levy on corporations equal to the sum of 15% of the corporation's realized net income plus 3% of its net worth.

(B) *Analysis.* As the levy is the sum of two separately computed amounts, each of which is computed by reference to a separate base, under paragraph (d)(1)(ii) of this section each of the portion of the levy based on income and the portion of the levy based on net worth is considered, for purposes of sections 901 and 903, to be a separate levy.

(ii) *Example 2: Separate taxable bases* —

(A) *Facts.* A foreign statute imposes a levy on nonresident alien individuals analogous to the taxes imposed by section 871 of the Internal Revenue Code.

(B) *Analysis.* As the levy is imposed on separately computed amounts, each of which is computed by reference to a separate taxable base and portions of which comprise withholding tax on gross income of nonresidents, under paragraphs (d)(1)(ii) and (iii) of this section, each of the portions of the foreign levy imposed on each separate class of

gross income analogous to the tax imposed by section 871(a) and the portion of the foreign levy analogous to the tax imposed by sections 871(b) and 1 is considered, for purposes of sections 901 and 903, to be a separate levy.

(iii) *Example 3: Separate taxable bases* —

(A) *Facts.*

(*1*) A single foreign statute or separate foreign statutes impose a foreign levy that is the sum of the products of specified rates applied to specified bases, as follows:

TABLE 1 TO PARAGRAPH (d)(3)(III)(A)(*1*)

Base	Rate (percent)
Net income from mining	45
Net income from manufacturing	50
Net income from technical services	50
Net income from other services	45
Net income from investments	15
All other net income	50

(2) In computing each such base, deductible expenditures are allocated to the type of income they generate. If allocated deductible expenditures exceed the gross amount of a specified type of income, the excess may not be applied against income of a different specified type.

(B) *Analysis.* The levy is the sum of several separately computed amounts, each of which is computed by reference to a separate base. Accordingly, under paragraph (d)(1)(ii) of this section, each of the levies on mining net income, manufacturing net income, technical services net income, other services net income, investment net income and other net income is considered, for purposes of sections 901 and 903, to be a separate levy.

(iv) *Example 4: Combined taxable base after preliminary separate computation* —

(A) *Facts.* The facts are the same as those in paragraph (d)(3)(iii)(A) of this section (the facts in *Example 3*), except that excess deductible expenditures allocated to one type of income are applied against other types of income to which the same rate applies.

(B) *Analysis.* Under paragraph (d)(1)(ii) of this section, the levies on mining net income and other services net income together are considered, for purposes of sections 901 and 903, to be a single levy since, despite a separate preliminary computation of the bases, by reason of the permitted application of excess allocated deductible expenditures the bases are not separately computed. For the same reason, the levies on manufacturing net income, technical services net income and other net income together are considered, for purposes of sections 901 and 903, to be a single levy. The levy on investment net income

is considered, for purposes of sections 901 and 903, to be a separate levy. These results are not dependent on whether the application of excess allocated deductible expenditures to a different type of income is permitted in the same taxable period in which the expenditures are taken into account for purposes of the preliminary computation, or only in a different (for example, later) taxable period.

(v) ***Example 5: Combined taxable base with income subject to different rates*** —

(A) ***Facts.*** The facts are the same as those in paragraph (d)(3)(iii)(A) of this section (the facts in *Example 3*), except that excess deductible expenditures allocated to any type of income other than investment income are applied against the other types of income (including investment income) according to a specified set of priorities of application. Excess deductible expenditures allocated to investment income are not applied against any other type of income.

(B) ***Analysis.*** For the same reasons as those set forth in paragraph (d)(3)(iv)(B) of this section (the analysis in *Example 4*), all of the levies are together considered, for purposes of sections 901 and 903, to be a single levy.

(vi) ***Example 6: Minimum Tax*** —

(A) ***Facts.*** Country X imposes a net income tax ("Income Tax") and a minimum tax ("Minimum Tax") on its residents. Under Country X tax law, alternative minimum taxable income for purposes of the Minimum Tax equals the taxable income under the Income Tax increased by certain disallowed deductions. The Minimum Tax equals the excess, if any, of the alternative minimum taxable income times the Minimum Tax rate over the amount of the Income Tax.

(B) ***Analysis.*** Under paragraph (d)(1)(ii) of this section, the Minimum Tax is a separate levy from the Income Tax, because the taxable base of each levy is separately computed and not combined as a single taxable base. The result would be the same if under Country X tax law the Minimum Tax equaled the alternative minimum taxable income times the Minimum Tax rate, and residents of Country X were required to pay the greater of the Income Tax or the Minimum Tax (rather than the Income Tax plus the excess, if any, of the Minimum Tax over the Income Tax).

(vii) ***Example 7: Diverted Profits Tax*** —

(A) ***Facts.*** Country X imposes a 20% net income tax ("Income Tax") and a 25% "Diverted Profits Tax" on nonresident corporations. Under Country X tax law, taxable income under the Diverted Profits Tax is determined first by attributing gross receipts of the nonresident corporation to a hypothetical permanent establishment in Country X. Country X applies the same computational rules that apply under the Income Tax to determine the taxable income attributable to a hypothetical permanent establishment under the Diverted Profits Tax.

(B) ***Analysis.*** Under paragraph (d)(1)(ii) of this section, the Diverted Profits Tax is a separate levy from the Income Tax, because the taxable income under the Diverted Profits Tax is not combined with the taxable income under the Income Tax as a single taxable base.

(viii) ***Example 8: Modified Income Tax*** —

(A) ***Facts.*** Country X imposes a net income tax ("Income Tax") on nonresident corporations that carry on a trade or business in Country X through a permanent establishment. Under Country X tax law, the taxable base of the Income Tax as initially enacted is determined by attributing profits of the nonresident corporation to its permanent establishment in Country X based upon rules similar to Articles 5 and 7 of the 2016 U.S. Model Income Tax Convention. However, Country X later amends the Income Tax to provide that nonresident corporations that are engaged in certain digital transactions in Country X and earning revenues above certain thresholds are deemed to have a permanent establishment; under the Income Tax as originally enacted, such activities would not have created a permanent establishment in Country X.

(B) ***Analysis.*** Under paragraph (d)(1)(ii) of this section, the Income Tax as applied to nonresident corporations engaged in digital transactions and deemed to have a permanent establishment under the modified Income Tax is not a separate levy from the Income Tax as applied to the same or other nonresident corporations that would have permanent establishments under the Income Tax as originally enacted, because income attributable to both actual and deemed permanent establishments is combined as a single taxable base.

(ix) ***Example 9: Disallowed deductions*** —

(A) ***Facts.*** Country X imposes a net income tax ("Income Tax") on resident corporations. In determining the taxable base for the Income Tax, Country X tax law has a cap on allowed interest deductions for companies engaged in the extraction, production, or refinement of oil or natural gas.

(B) ***Analysis.*** Under paragraph (d)(1)(ii) of this section, the Income Tax as applied to corporations engaged in the extraction, production, or refinement of oil or natural gas is not a separate levy from the Income Tax as applied to other corporations subject to the levy. The Income Tax is a single levy even though the cap on allowed interest expense deductions applies by its terms to some, but not all, corporations subject to the Income Tax.

(x) ***Example 10: Different taxable base for class of taxpayers*** —

(A) ***Facts.*** Country X imposes a net income tax ("Income Tax") and an oil tax. The oil tax applies only to resident corporations engaged in the extraction, production, or refinement of oil, and resident corporations subject to the oil tax are not subject to the Income Tax. The taxable base under the oil tax is the taxable income under the Income Tax increased by disallowed interest expense.

(B) ***Analysis.*** Under paragraph (d)(1)(ii) of this section, the oil tax is a separate levy from the Income Tax, because the taxable income under the oil tax is not combined with the taxable income under the Income Tax as a single taxable base. The levies are imposed on different classes of taxpayers (resident taxpayers engaged in the extraction, production, or refinement of oil, in the case of the oil tax, and all other resident corporations, in the case of the Income Tax), and the base of each of those levies contains different items.

(e) ***Amount of foreign income tax that is creditable*** —

(1) ***In general.*** Credit is allowed under section 901 for the amount of foreign income tax that is paid by the taxpayer. Under paragraph (g) of this section, the term "paid" means "paid" or "accrued," depending on the taxpayer's method of accounting for such taxes. The amount of foreign income tax paid by the taxpayer is determined separately for each taxpayer under the rules in this paragraph (e).

(2) ***Refunds and credits*** —

(i) ***Refundable amounts.*** An amount remitted to a foreign country is not an amount of foreign income tax paid to the extent that it is reasonably certain that the amount will be refunded, rebated, abated, or forgiven. It is reasonably certain that an amount will be refunded, rebated, abated, or forgiven to the extent the amount exceeds a reasonable approximation of final foreign income tax liability to the foreign country. See section 905(c) and § 1.905-3 for the required redeterminations if amounts claimed as a credit (on either the cash or accrual basis) exceed the amount of the final foreign income tax liability.

(ii) ***Credits.*** Except as provided in paragraph (e)(2)(iii) of this section, an amount of foreign income tax liability is not an amount of foreign income tax paid to the extent the foreign income tax liability is reduced, satisfied, or otherwise offset by a tax credit, including a tax credit that under the foreign tax law is payable in cash only to the extent it exceeds the taxpayer's liability for foreign income tax or a tax credit acquired from another taxpayer.

(iii) ***Exception for overpayments and other fully refundable credits.*** An amount of foreign income tax paid is not reduced (or treated as constructively refunded) solely by reason of the fact that a credit is allowed (or may be allowed) for the amount paid to reduce the amount of a different separate levy owed by the taxpayer. See paragraphs (e)(2)(ii) and (e)(4) of this section. However, under paragraph (e)(2)(i) of this section (and taking into account any redetermination required under section 905(c) and § 1.905-3), an amount remitted with respect to a separate levy for a foreign taxable period that constitutes an overpayment of the taxpayer's final liability for that levy for that period, and that is refundable in cash at the taxpayer's option, is not an amount of tax paid. Therefore, if such an overpayment of one tax is applied as a credit against a different foreign income tax liability of the taxpayer for the same or a different taxable period, the credited amount of the overpayment may qualify as an amount paid of that different foreign income tax, if the credited amount does not exceed a reasonable approximation of the taxpayer's final foreign income tax liability for the taxable period to which the overpayment is applied. Similarly, if under the foreign tax law, the full amount of a tax credit is payable in cash at the taxpayer's option, the taxpayer's choice to apply all or a portion of the tax credit in satisfaction of a foreign income tax liability of the taxpayer is treated as a constructive payment of cash to the taxpayer in the amount so applied, followed by a constructive payment of the foreign income tax liability against which the credit is applied. An overpayment or other tax credit that under the foreign tax law is otherwise fully payable in cash at the taxpayer's option and that is applied in part in satisfaction of a foreign income tax liability is treated as an amount of foreign income tax paid notwithstanding that a portion of the amount otherwise payable in cash to the taxpayer is subject to a lien or otherwise seized in order to satisfy a different, pre-existing liability of the taxpayer to the foreign government or to a third party.

(iv) ***Examples.*** The following examples illustrate the rules of paragraph (e)(2) of this section.

(A) ***Example 1.*** The domestic law of Country X imposes a 25 percent tax described in § 1.903-1(b) on the gross amount of interest from sources in Country X that is received by a nonresident of Country X. Country X imposes the tax on the nonresident recipient and requires any resident of Country X that pays such interest to a nonresident to withhold and

pay over to Country X 25 percent of such interest, which is applied to offset the recipient's liability for the 25 percent tax. A tax treaty between the United States and Country X modifies domestic law of Country X and provides that Country X may not tax interest received by a resident of the United States from a resident of Country X at a rate in excess of 10 percent of the gross amount of such interest. A resident of the United States may claim the benefit of the treaty only by applying for a refund of the excess withheld amount (15 percent of the gross amount of interest income) after the end of the taxable year. A, a resident of the United States, receives a gross amount of 100u (units of Country X currency) of interest income from a resident of Country X from sources in Country X in Year 1, from which 25u of Country X tax is withheld. A files a timely claim for refund of the 15u excess withheld amount. 15u of the amount withheld (25u − 10u) is reasonably certain to be refunded; therefore, under paragraph (e)(2)(i) of this section 15u is not considered an amount of foreign income tax paid to Country X.

(B) ***Example 2.*** A's initial foreign income tax liability under Country X tax law is 100u (units of Country X currency). However, under Country X tax law A's initial income tax liability is reduced in order to compute A's final tax liability by an investment credit of 15u and a credit for charitable contributions of 5u. Under paragraph (e)(2)(ii) of this section, the amount of foreign income tax paid by A is 80u.

(C) ***Example 3.*** A computes foreign income tax liability in Country X for Year 1 of 100u (units of Country X currency), files a tax return on that basis, and remits 100u of tax. The day after A files that return, A files a claim for refund of 90u. The difference between the 100u of liability reflected in A's original return and the 10u of liability reflected in A's refund claim depends on whether a particular expenditure made by A is nondeductible or deductible, respectively. Based on an analysis of the Country X tax law, A's Country X tax advisors have advised A that it is not clear whether or not that expenditure is deductible. In view of the uncertainty as to the proper treatment of the item in question under Country X tax law, no portion of the 100u paid by A is reasonably certain to be refunded. If A receives a refund, A must treat the refund as required by section 905(c) of the Internal Revenue Code.

(D) ***Example 4.*** A levy of Country X, which qualifies as a foreign income tax within the meaning of paragraph (a)(1)(ii) of this section, provides that each person who makes payment to Country X pursuant to the levy will receive a bond to be issued by Country X with an amount payable at maturity equal to 10 percent of the amount paid pursuant to the levy. A remits 38,000u (units of Country X currency) to Country X and is entitled to receive a bond with an amount payable at maturity of 3,800u. It is reasonably certain that a refund in the form of property (the bond) will be made. The amount of that refund is equal to the fair market value of the bond. Therefore, only the portion of the 38,000u payment in excess of the fair market value of the bond is an amount of foreign income tax paid.

(3) ***Subsidies*** —

(i) ***General rule.*** An amount of foreign income tax is not an amount of foreign income tax paid by a taxpayer to a foreign country to the extent that—

(A) The amount is used, directly or indirectly, by the foreign country imposing the tax to provide a subsidy by any means (including, but not limited to, a rebate, a refund, a credit, a deduction, a payment, a discharge of an obligation, or any other method) to the taxpayer, to a related person (within the meaning of section 482), to any party to the transaction, or to any party to a related transaction; and

(B) The subsidy is determined, directly or indirectly, by reference to the amount of the tax or by reference to the base used to compute the amount of the tax.

(ii) ***Subsidy.*** The term "subsidy" includes any benefit conferred, directly or indirectly, by a foreign country to one of the parties enumerated in paragraph (e)(3)(i)(A) of this section. Substance and not form shall govern in determining whether a subsidy exists. The fact that the U.S. taxpayer may derive no demonstrable benefit from the subsidy is irrelevant in determining whether a subsidy exists.

(iii) ***Official exchange rate.*** A subsidy described in paragraph (e)(3)(i)(B) of this section does not include the actual use of an official foreign government exchange rate converting foreign currency into dollars where a free exchange rate also exists if—

(A) The economic benefit represented by the use of the official exchange rate is not targeted to or tied to transactions that give rise to a claim for a foreign tax credit;

(B) The economic benefit of the official exchange rate applies to a broad range of international transactions, in all cases based on the total payment to be made without regard to whether the payment is a return of principal, gross income, or net income, and without regard to whether it is subject to tax; and

(C) Any reduction in the overall cost of the transaction is merely coincidental to the broad structure and operation of the official exchange rate.

(iv) ***Examples.*** The following examples illustrate the rules of paragraph (e)(3) of this section.

(A) ***Example 1*** —

(*1*) ***Facts.*** Country X imposes a 30 percent tax on nonresident lenders with respect to interest which the nonresident lenders receive from borrowers who are residents of Country X, and it is established that this tax is a tax in lieu of an income tax within the meaning of § 1.903-1(b). Country X provides the nonresident lenders with receipts upon their payment of the 30 percent tax. Country X remits to resident borrowers an incentive payment for engaging in foreign loans, which payment is an amount equal to 20 percent of the interest paid to nonresident lenders.

(*2*) ***Analysis.*** Because the incentive payment is based on the interest paid, it is determined by reference to the base used to compute the tax that is imposed on the nonresident lender. The incentive payment is a subsidy under paragraph (e)(3)(i) of this section since it is provided to a party (the borrower) to the transaction and is based on the amount of tax that is imposed on the lender with respect to the transaction. Therefore, two-thirds (20 percent/30 percent) of the amount withheld by the resident borrower from interest payments to the nonresident lender is not an amount of foreign income tax paid.

(B) ***Example 2*** —

(1) ***Facts.*** A U.S. bank lends money to a development bank in Country X. The development bank relends the money to companies resident in Country X. A withholding tax is imposed by Country X on the U.S. bank with respect to the interest that the development bank pays to the U.S. bank, and appropriate receipts are provided. On the date that the tax is withheld, fifty percent of the tax is credited by Country X to an account of the development bank. Country X requires the development bank to transfer the amount credited to the borrowing companies.

(2) ***Analysis.*** The amount successively credited to the account of the development bank and then to the account of the borrowing companies is determined by reference to the amount of the tax and the tax base. Since the amount credited to the borrowing companies is a subsidy provided to a party (the borrowing companies) to a related transaction and is based on the amount of tax and the tax base, under paragraph (e)(3)(i) of this section it is not an amount of foreign income tax paid.

(C) ***Example 3*** —

(1) ***Facts.*** A U.S. bank lends dollars to a Country X borrower. Country X imposes a withholding tax on the lender with respect to the interest. The tax is to be paid in Country X currency, although the interest is payable in dollars. Country X has a dual exchange rate system, comprised of a controlled official exchange rate and a free exchange rate. Priority transactions such as exports of merchandise, imports of merchandise, and payments of principal and interest on foreign currency loans payable abroad to foreign lenders are governed by the official exchange rate which yields more dollars per unit of Country X currency than the free exchange rate. The Country X borrower remits the net amount of dollar interest due to the U.S. bank (interest due less withholding tax), pays the tax withheld in Country X currency to the Country X government, and provides to the U.S. bank a receipt for payment of the Country X taxes.

(2) ***Analysis.*** Under paragraph (e)(3)(iii) of this section, the use of the official exchange rate by the U.S. bank to determine foreign taxes with respect to interest is not a subsidy described in paragraph (e)(3)(i)(B) of this section. The official exchange rate is not targeted to or tied to transactions that give rise to a claim for a foreign tax credit. The use of the official exchange rate applies to the interest paid and to the principal paid. Any benefit derived by the U.S. bank through the use of the official exchange rate is merely coincidental to the broad structure and operation of the official exchange rate.

(D) ***Example 4*** —

(1) ***Facts.*** B, a U.S. corporation, is engaged in the production of oil and gas in Country X pursuant to a production sharing agreement among B, Country X, and the state petroleum authority of Country X. The agreement is approved and enacted into law by the Legislature of Country X. Both B and the petroleum authority are subject to the Country X income tax. Each entity files an annual income tax return and pays, to the tax authority of Country X, the amount of income tax due on its annual income. B is a dual capacity taxpayer as defined in § 1.901-2(a)(2)(ii)(A). Country X has agreed to return to the petroleum authority one-half of the income taxes paid by B by allowing it a credit in calculating its own tax liability to Country X.

(2) ***Analysis.*** The petroleum authority is a party to a transaction with B and the amount returned by Country X to the petroleum authority is determined by reference to the amount of the tax imposed on B. Therefore, under paragraph (e)(3)(i) of this section the amount returned is a subsidy, and one-half of the tax imposed on B is not an amount of foreign income tax paid.

(E) ***Example 5*** —

(*1*) ***Facts.*** The facts are the same as those in paragraph (e)(3)(iv)(D)(*1*) of this section (the facts in *Example 4*), except that the state petroleum authority of Country X does not receive amounts from Country X related to tax paid by B. Instead, the authority of Country X receives a general appropriation from Country X which is not calculated with reference to the amount of tax paid by B.

(2) ***Analysis.*** Because the general appropriation is not calculated with reference to the amount of tax paid by B, it is not a subsidy described in paragraph (e)(3)(i) of this section.

(4) ***Multiple levies*** —

(i) ***In general.*** If, under foreign law, a taxpayer's tentative liability for one levy (the “reduced levy”) is or can be reduced by the amount of the taxpayer's liability for a different levy (the “applied levy”), then the amount considered paid by the taxpayer to the foreign country pursuant to the applied levy is an amount equal to its entire liability for that applied levy (which is not considered to be reduced by the amount applied against the reduced levy), and the remainder of the total amount paid, if any, is considered paid pursuant to the reduced levy. See also paragraphs (e)(2)(ii) and (iii) of this section.

(ii) ***Examples.*** The following examples illustrate the rules of paragraphs (e)(2)(ii) and (iii) and (e)(4)(i) of this section.

(A) ***Example 1: Tax reduced by credits*** —

(*1*) ***Facts.*** A's tentative liability for foreign income tax imposed by Country X is 100u (units of Country X currency). However, under Country X tax law, in determining A's final foreign income tax liability, its tentative liability is reduced by a 15u credit for a separate Country X levy that does not qualify as a foreign income tax and that A accrued and paid on its gross services income and is also reduced by a 5u credit for charitable contributions. Under Country X tax law, the amount of the charitable contributions credit is refundable in cash to the extent the credit exceeds the taxpayer's Country X income tax liability after applying the credit for the tax on gross services income. A timely remits the 80u due to Country X.

(2) ***Analysis.*** Under paragraphs (e)(2)(ii) and (e)(4) of this section, the amount of Country X income tax paid by A is 80u (100u tentative liability − 20u tax credits), and the amount of Country X tax on gross services income paid by A is 15u.

(B) ***Example 2: Tax paid by credit for overpayment*** —

(*1*) ***Facts.*** The facts are the same as those in paragraph (e)(4)(ii)(A)(*1*) of this section (the facts in *Example 1*), except that A's final Country X income tax liability of 80u is satisfied by applying a credit for an otherwise refundable 60u overpayment from the previous taxable year of A's liability for a separate levy imposed by Country X that is also a foreign income tax and remitting the balance due of 20u.

(*2*) ***Analysis.*** The result is the same as in paragraph (e)(4)(ii)(A)(*2*) of this section (the analysis in *Example 1*). Under paragraph (e)(2)(iii) of this section, the portion of A's Country X income tax liability that was satisfied by applying the 60u overpayment of A's different foreign income tax liability for the previous taxable year qualifies as an amount of Country X income tax paid, because that refundable overpayment exceeded (and so is not treated as a payment of) A's different foreign income tax liability for the previous taxable year.

(5) ***Noncompulsory amounts*** —

(i) ***In general.*** An amount remitted to a foreign country (a “foreign payment”) is not a compulsory payment, and thus is not an amount of foreign income tax paid, to the extent that the foreign payment exceeds the amount of liability for foreign income tax under the foreign tax law (as defined in paragraph (g) of this section). A foreign payment does not exceed the amount of such liability if the foreign payment is determined by the taxpayer in a manner that is consistent with a reasonable interpretation and application of the substantive and procedural provisions of foreign tax law (including applicable tax treaties) in such a way as to reduce, over time, the taxpayer's reasonably expected liability under foreign tax law for foreign income tax, and if the taxpayer exhausts all effective and practical remedies, including invocation of competent authority procedures available under applicable tax treaties, to reduce, over time, the taxpayer's liability for foreign income tax (including liability pursuant to a foreign tax audit adjustment). See paragraphs (e)(5)(ii) through (v) of this section. Whether a taxpayer has satisfied its obligation to minimize the aggregate amount of its liability for foreign income taxes over time is determined without regard to the present value of a deferred tax liability or other time value of money considerations. However, a taxpayer is not required to reduce its foreign income tax liability to the extent the reasonably expected, arm's length costs of reducing the liability would exceed the amount by which the liability could be reduced. For this purpose, such costs may include an additional liability for a different foreign tax (but not U.S. taxes) that is not a foreign income tax only to the extent the amount of the additional liability is determined in a manner consistent with the rules of this paragraph (e)(5). A taxpayer is not required to alter its form of doing business, its business conduct, or the form of any business transaction in order to reduce its liability under foreign law for foreign income tax.

(ii) ***Reasonable application of foreign tax law.*** An interpretation or application of foreign tax law is not reasonable if there is actual notice or constructive notice (for example, a published court decision) to the taxpayer that the interpretation or application is likely to be erroneous. In interpreting foreign tax law, a taxpayer may generally rely on advice obtained in good faith from competent foreign tax advisors to whom the taxpayer has disclosed the relevant facts. Except as provided in paragraphs (e)(5)(i) and (e)(5)(iv) of this section, voluntarily forgoing a tax benefit to which a taxpayer is entitled under the foreign tax law results in a foreign payment in excess of the taxpayer's liability for foreign income tax.

(iii) ***Effect of foreign tax law elections*** —

(A) ***In general.*** Where foreign tax law includes options or elections whereby a taxpayer's foreign income tax liability may be shifted, in whole or part, to a different year or years, the taxpayer's use or failure to use such options or elections does not result in a foreign payment in excess of the taxpayer's liability for foreign income tax. Except as provided in paragraph (e)(5)(iii)(B) of this section, where foreign tax law provides a taxpayer with options or elections in computing its liability for foreign income tax whereby a taxpayer's foreign income tax liability may be permanently decreased in the aggregate over time, the taxpayer's failure to use such options or elections results in a foreign payment in excess of the taxpayer's liability for foreign income tax.

(B) ***Exception for certain options or elections*** —

(*1*) ***Entity classification elections.*** If foreign tax law provides an option or election to treat an entity as fiscally transparent or non-fiscally transparent, a taxpayer's decision to use or not use such option or election is not considered to increase the taxpayer's liability for foreign income tax over time for purposes of this paragraph (e)(5).

(*2*) ***Foreign consolidation, group relief, or other loss sharing regime.*** If foreign tax law provides an option or election for one foreign entity to join in the filing of a consolidated return with another foreign entity, or to surrender its loss in order to offset the income of another foreign entity pursuant to a foreign group relief or other loss-sharing regime, a taxpayer's decision whether to file a consolidated return, whether to surrender a loss, or whether to use a surrendered loss, is not considered to increase the taxpayer's liability for foreign income tax over time for purposes of this paragraph (e)(5).

(C) ***Alternative creditable levies.*** If under foreign tax law a taxpayer has the option to determine its foreign income tax liability under only one of multiple separate levies, each of which qualifies as a foreign income tax, then the amount of foreign income tax paid equals the smallest liability of the amounts that would be due under each of the alternative levies, regardless of which levy the taxpayer uses to determine its foreign income tax liability.

(iv) ***Exception for increase in liability in connection with anti-hybrid rules*** —

(A) ***In general.*** If a taxpayer (the “first taxpayer”) that makes a payment to another taxpayer (the “second taxpayer”) is permitted to increase the first taxpayer's liability for foreign income tax (for example, by waiving an otherwise allowable deduction), and doing so results in a greater decrease in the amount of liability for foreign income tax of the second taxpayer by reason of the deactivation of a hybrid mismatch rule that would otherwise apply to the second taxpayer, then the increase in the first taxpayer's liability is not considered to result in a foreign payment in excess of the first taxpayer's liability for foreign income tax for purposes of this paragraph (e)(5).

(B) ***Definition of hybrid mismatch rule.*** The term *hybrid mismatch rule* means foreign tax law rules substantially similar to sections 245A(e) and 267A and includes rules the purpose of which is to eliminate the deduction/no-inclusion outcome of hybrid and branch mismatch arrangements. Examples of such rules include rules based on, or substantially similar to, the recommendations contained in OECD/G-20, *Neutralising the Effects of Hybrid Mismatch Arrangements, Action 2: 2015 Final Report* (October 2015), and OECD/G-20, *Neutralising the Effects of Branch Mismatch Arrangements, Action 2: Inclusive Framework on BEPS* (July 2017).

(v) ***Exhaustion of remedies.*** In determining whether a taxpayer has exhausted all effective and practical remedies, a remedy is effective and practical only if the cost of pursuing it (including the reasonably expected risk of incurring an offsetting or additional foreign income tax or other tax liability) is reasonable considering the amount at issue and the likelihood of success. An available remedy is considered effective and practical if an economically rational taxpayer would pursue it whether or not a compulsory payment of the amount at issue would be eligible for a U.S. foreign tax credit. A settlement by a taxpayer of two or more issues will be evaluated on an overall basis, not on an issue-by-issue basis, in determining whether an amount is a compulsory payment.

(vi) ***Examples.*** The following examples illustrate the rules of paragraph (e)(5) of this section.

(A) ***Example 1.*** A, a corporation organized and doing business solely in the United States, owns all of the stock of B, a corporation organized in Country X. In Year 1, A buys merchandise from unrelated persons for $1,000,000, and shortly thereafter resells that merchandise to B for $600,000. Later in Year 1, B resells the merchandise to unrelated persons for $1,200,000. Under the Country X income tax, which is a net income tax within the meaning of paragraph (a)(3) of this section, all corporations organized in Country X are subject to a tax equal to 3 percent of their net income. In computing its Year 1 Country X income tax liability, B reports $600,000 ($1,200,000 − $600,000) of profit from the purchase and resale of merchandise. The Country X tax law requires that transactions between related persons be reported at arm's length prices, and a reasonable interpretation of this requirement, as it has been applied in Country X, would consider B's arm's length purchase price of the merchandise purchased from A to be $1,050,000. When it computes its Country X tax liability B is aware that $600,000 is not an arm's length price (by Country X standards). B's knowing use of a non-arm's length price (by Country X standards) of $600,000, instead of a price of $1,050,000 (an arm's length price under Country X's law), is not consistent with a reasonable interpretation and application of Country X tax law, determined in such a way as to reduce over time B's reasonably expected liability for Country X income tax. Accordingly, $13,500 (3 percent of $450,000 ($1,050,000 − $600,000)), the amount of Country X income tax remitted by B to Country X that is attributable to the purchase of the merchandise from B's parent at less than an arm's length price, is in excess of the amount of B's liability for Country X income tax, and thus is not an amount of foreign income tax paid.

(B) ***Example 2.*** A, a corporation organized and doing business solely in the United States, owns all of the stock of B, a corporation organized in Country X. Country X has in force an income tax treaty with the United States. The tax treaty provides that the profits of related persons shall be determined as if the persons were not related. A and B deal extensively with each other. A and B, with respect to a series of transactions involving both of them, treat A as having $300,000 of income and B as having $700,000 of income for purposes of A's United States income tax and B's Country X income tax, respectively. B has no actual or constructive notice that its treatment of these transactions under Country X tax law is likely to be erroneous. Subsequently, the Internal Revenue Service reallocates $200,000 of this income from B to A under the authority of section 482 and the tax treaty. This reallocation constitutes actual notice to A and constructive notice to B that B's interpretation and application of Country X's tax law and the tax treaty is likely to be erroneous. B does not exhaust all effective and practical remedies to obtain a refund of

the amount remitted by B to Country X that is attributable to the reallocated $200,000 of income. Under paragraph (e)(5)(i) of this section, this amount is in excess of the amount of B's liability for Country X income tax and thus is not an amount of foreign income tax paid.

(C) ***Example 3.*** The facts are the same as those in paragraph (e)(5)(vi)(B) of this section (the facts in *Example 2*), except that B files a claim for refund (an administrative proceeding) of Country X tax and A or B invokes the competent authority procedures of the tax treaty, the cost of which is reasonable in view of the amount at issue and the likelihood of success. Nevertheless, B does not obtain any refund of Country X income tax. The cost of pursuing any judicial remedy in Country X would be unreasonable in light of the amount at issue and the likelihood of B's success, and B does not pursue any such remedy. Under paragraph (e)(5)(i) of this section, the entire amount paid by B to Country X is a compulsory payment and thus is an amount of foreign income tax paid by B.

(D) ***Example 4.*** The facts are the same as those in paragraph (e)(5)(vi)(B) of this section (the facts in *Example 2*), except that, when the Internal Revenue Service makes the reallocation, the Country X statute of limitations on refunds has expired, and neither the internal law of Country X nor the tax treaty authorizes the Country X tax authorities to pay a refund that is barred by the statute of limitations. B does not file a claim for refund, and neither A nor B invokes the competent authority procedures of the tax treaty. Because the Country X tax authorities would be barred by the statute of limitations from paying a refund, B has no effective and practical remedies. Under paragraph (e)(5)(i) of this section, the entire amount paid by B to Country X is a compulsory payment and thus is an amount of foreign income tax paid by B.

(E) ***Example 5.*** A is a U.S. person doing business in Country X. In computing its income tax liability to Country X, A is permitted, at its election, to recover the cost of machinery used in its business either by deducting that cost in the year of acquisition or by depreciating that cost on the straight-line method over a period of 2, 4, 6 or 10 years. A elects to depreciate machinery over 10 years. This election merely shifts A's tax liability to different years (compared to the timing of A's tax liability under a different depreciation period); it does not result in a payment in excess of the amount of A's liability for Country X income tax in any year since the amount of Country X income tax paid by A is consistent with a reasonable interpretation of Country X tax law in such a way as to reduce over time A's reasonably expected liability for Country X income tax. Because the standard of paragraph (e)(5)(i) of this section refers to A's reasonably expected liability, not its actual liability, events actually occurring in subsequent years (for example, whether A has sufficient profit in such years so that such depreciation deductions actually reduce A's Country X tax liability or whether the Country X tax rates change) are immaterial.

(F) ***Example 6.*** The domestic law of Country X imposes a 25 percent tax described in § 1.903-1(b) on the gross amount of interest from sources in Country X that is received by a nonresident of Country X. Country X tax law imposes the tax on the nonresident recipient and requires any resident of Country X that pays such interest to a nonresident to withhold and pay over to Country X 25 percent of such interest, which is applied to offset the recipient's liability for the 25 percent tax. A tax treaty between the United States and Country X overrides domestic law of Country X and provides that Country X may not tax interest received by a resident of the United States from a resident of Country X at a rate in excess of 10 percent of the gross amount of such interest. A resident of the United States

may claim the benefit of the tax treaty only by applying for a refund of the excess withheld amount (15 percent of the gross amount of interest income) after the end of the taxable year. A, a resident of the United States, receives a gross amount of 100u (units of Country X currency) of interest income from a resident of Country X from sources in Country X in Year 1, from which 25u of Country X tax is withheld. A does not file a timely claim for refund. Under paragraph (e)(5)(i) of this section, 15u of the amount withheld (25u − 10u) is not a compulsory payment and thus is not an amount of foreign income tax paid.

(G) ***Example 7: Reasonable steps to minimize creditable tax—larger noncreditable tax cost*** —

(*1*) ***Facts.*** Corporations resident in Country X are subject to a 20% generally applicable net income tax, which qualifies as a foreign income tax under paragraph (a)(1)(ii) of this section ("Income Tax"), and a separate levy equal to 25% of certain deductible payments above a specified threshold made to related parties that are not residents of Country X, which does not qualify as a foreign income tax under paragraph (a)(1)(ii) of this section ("Base Erosion Tax"). CFC, a Country X corporation, makes payments to nonresident related parties that exceed the specified threshold of the Base Erosion Tax by 100u (units of Country X currency), which if claimed as deductions would result in a Base Erosion Tax of 25u (.25 × 100u), and would also result in 300u of taxable income for purposes of the Income Tax, thus resulting in Income Tax of 60u (.20 × 300u). If in computing its liability for Income Tax CFC does not claim deductions for the 100u of excess related party payments, its liability for the Base Erosion Tax would be zero, and its liability for Income Tax would be 80u (.20 × 400u).

(*2*) ***Analysis.*** If CFC chooses not to deduct the 100u of excess related party payments that would subject it to the Base Erosion Tax and pays 80u of Income Tax, the amount of foreign income tax paid under paragraph (e)(5) of this section is 80u. Under paragraph (e)(5)(i) of this section, although CFC could reduce its liability for Income Tax from 80u to 60u by claiming the deductions, no portion of the Income Tax remitted is a noncompulsory payment because reducing the Income Tax by 20u would incur a Base Erosion Tax of 25u, which exceeds the amount of the potential reduction.

(H) ***Example 8: Reasonable steps to minimize creditable tax—smaller noncreditable tax cost*** —

(*1*) ***Facts.*** The facts are the same as those in paragraph (e)(5)(vi)(G)(*1*) of this section (the facts in *Example 7*) except that the rate of the Base Erosion Tax is 20% and the rate of the Income Tax is 25%. Accordingly, if CFC claims the 100u of excess deductions its liability for Base Erosion Tax would be 20u (.20 × 100u), and its liability for Income Tax would be 75u (.25 × 300u). If CFC chooses not to claim the 100u of excess deductions its liability for Base Erosion Tax would be zero, and its liability for Income Tax would be 100u (.25 × 400u).

(*2*) ***Analysis.*** If CFC chooses not to claim the 100u of excess deductions in computing its liability for Income Tax and pays 100u of Income Tax, the amount of foreign income tax paid under paragraph (e)(5) of this section is 75u. CFC's additional payment of 25u is not an amount of Income Tax paid, because CFC could have reduced its Income Tax liability by 25u by claiming the excess deductions and paying 20u of Base Erosion Tax.

(I) *Example 9: Alternative creditable taxes* —

(*1*) ***Facts.*** The facts are the same as those in paragraph (e)(5)(vi)(G)(*1*) of this section (the facts in *Example 7*), except that Country X does not have a Base Erosion Tax, and it allows resident corporations to elect to pay either the Income Tax or a separate levy using an alternative cost allowance (the "Alternative Tax"), which qualifies as a tax in lieu of an income tax under § 1.903-1(b)(2). CFC's liability under the Income Tax is 80u, and its liability under the Alternative Tax is 100u. CFC chooses to pay the 100u of Alternative Tax rather than the 80u of Income Tax.

(*2*) ***Analysis.*** Under paragraph (e)(5)(iii)(C) of this section, the amount of foreign income tax paid by CFC is 80u, the smaller of the amounts due under the two alternative foreign income taxes.

(vii) *Structured passive investment arrangements* —

(A) ***In general.*** Notwithstanding paragraph (e)(5)(i) of this section, an amount paid to a foreign country (a "foreign payment") is not a compulsory payment, and thus is not an amount of foreign income tax paid, if the foreign payment is attributable (within the meaning of paragraph (e)(5)(vii)(B)(*1*)(*ii*) of this section) to a structured passive investment arrangement (as described in paragraph (e)(5)(vii)(B) of this section).

(B) ***Conditions.*** An arrangement is a structured passive investment arrangement if all of the following conditions are satisfied:

(*1*) ***Special purpose vehicle (SPV).*** An entity that is part of the arrangement meets the following requirements:

(*i*) Substantially all of the gross income (for U.S. tax purposes) of the entity, if any, is passive investment income, and substantially all of the assets of the entity are assets held to produce such passive investment income.

(*ii*) There is a foreign payment attributable to income of the entity (as determined under the laws of the foreign country to which such foreign payment is made), including the entity's share of income of a lower-tier entity that is a branch or pass-through entity under the laws of such foreign country, that, if the foreign payment were an amount of foreign income tax paid, would be paid in a U.S. taxable year in which the entity meets the requirements of paragraph (e)(5)(vii)(B)(*1*)(*i*) of this section. A foreign payment attributable to income of an entity includes a foreign payment attributable to income that is required to be taken into account by an owner of the entity, if the entity is a branch or pass-through entity under the laws of such foreign country. A foreign payment attributable to income of the entity also includes a withholding tax (within the meaning of section 901(k)(1)(B)) imposed on a dividend or other distribution (including distributions made by a pass-through entity or an entity that is disregarded as an entity separate from its owner for U.S. tax purposes) with respect to the equity of the entity.

(*2*) ***U.S. party.*** A person would be eligible to claim a credit under section 901(a) (including a credit for foreign taxes deemed paid under section 960) for all or a portion of the foreign payment described in paragraph (e)(5)(vii)(B)(*1*)(*ii*) of this section if the foreign payment were an amount of foreign income tax paid.

(*3*) ***Direct investment.*** The U.S. party's proportionate share of the foreign payment or payments described in paragraph (e)(5)(vii)(B)(*1*)(*ii*) of this section is (or is expected to be) substantially greater than the amount of credits, if any, that the U.S. party reasonably would expect to be eligible to claim under section 901(a) for foreign income taxes attributable to income generated by the U.S. party's proportionate share of the assets owned by the SPV if the U.S. party directly owned such assets. For this purpose, direct ownership shall not include ownership through a branch, a permanent establishment or any other arrangement (such as an agency arrangement or dual resident status) that would result in the income generated by the U.S. party's proportionate share of the assets being subject to tax on a net basis in the foreign country to which the payment is made. A U.S. party's proportionate share of the assets of the SPV shall be determined by reference to such U.S. party's proportionate share of the total value of all of the outstanding interests in the SPV that are held by its equity owners and creditors. A U.S. party's proportionate share of the assets of the SPV, however, shall not include any assets that produce income subject to gross basis withholding tax.

(*4*) ***Foreign tax benefit.*** The arrangement is reasonably expected to result in a credit, deduction, loss, exemption, exclusion or other tax benefit under the laws of a foreign country that is available to a counterparty or to a person that is related to the counterparty (determined under the principles of paragraph (e)(5)(vii)(C)(*7*) of this section by applying the tax laws of a foreign country in which the counterparty is subject to tax on a net basis). However, a foreign tax benefit in the form of a credit is described in this paragraph (e)(5)(vii)(B)(*4*) only if the amount of any such credit corresponds to 10 percent or more of the amount of the U.S. party's share (for U.S. tax purposes) of the foreign payment referred to in paragraph (e)(5)(vii)(B)(*1*)(*ii*) of this section. In addition, a foreign tax benefit in the form of a deduction, loss, exemption, exclusion or other tax benefit is described in this paragraph (e)(5)(vii)(B)(*4*) only if such amount corresponds to 10 percent or more of the foreign base with respect to which the U.S. party's share (for U.S. tax purposes) of the foreign payment is imposed. For purposes of the preceding two sentences, if an arrangement involves more than one U.S. party or more than one counterparty or both, the aggregate amount of foreign tax benefits available to all of the counterparties and persons related to such counterparties is compared to the aggregate amount of all of the U.S. parties' shares of the foreign payment or foreign base, as the case may be. Where a U.S. party indirectly owns interests in an SPV that are treated as equity interests for both U.S. and foreign tax purposes, a foreign tax benefit available to a foreign entity in the chain of ownership that begins with the SPV and ends with the first-tier entity in the chain does not correspond to the U.S. party's share of the foreign payment attributable to income of the SPV to the extent that such benefit relates to earnings of the SPV that are distributed with respect to equity interests in the SPV that are owned directly or indirectly by the U.S. party for purposes of both U.S. and foreign tax law.

(*5*) ***Counterparty.*** The arrangement involves a counterparty. A counterparty is a person that, under the tax laws of a foreign country in which the person is subject to tax on the basis of place of management, place of incorporation or similar criterion or otherwise subject to a net basis tax, directly or indirectly owns or acquires equity interests in, or assets of, the SPV. However, a counterparty does not include the SPV

or a person with respect to which for U.S. tax purposes the same domestic corporation, U.S. citizen or resident alien individual directly or indirectly owns more than 80 percent of the total value of the stock (or equity interests) of each of the U.S. party and such person. A counterparty also does not include a person with respect to which for U.S. tax purposes the U.S. party directly or indirectly owns more than 80 percent of the total value of the stock (or equity interests), but only if the U.S. party is a domestic corporation, a U.S. citizen or a resident alien individual. In addition, a counterparty does not include an individual who is a U.S. citizen or resident alien.

(*6*) ***Inconsistent treatment.*** The United States and an applicable foreign country treat one or more of the aspects of the arrangement listed in paragraph (e)(5)(vii)(B)(*6*)(*i*) through (*iv*) of this section differently under their respective tax systems, and for one or more tax years when the arrangement is in effect one or both of the following two conditions applies; either the amount of income attributable to the SPV that is recognized for U.S. tax purposes by the SPV, the U.S. party or parties, and persons related to a U.S. party or parties is materially less than the amount of income that would be recognized if the foreign tax treatment controlled for U.S. tax purposes; or the amount of credits claimed by the U.S. party or parties (if the foreign payment described in paragraph (e)(5)(vii)(B)(*1*)(*ii*) of this section were an amount of foreign income tax paid) is materially greater than it would be if the foreign tax treatment controlled for U.S. tax purposes:

(*i*) The classification of the SPV (or an entity that has a direct or indirect ownership interest in the SPV) as a corporation or other entity subject to an entity-level tax, a partnership or other flow-through entity or an entity that is disregarded for tax purposes.

(*ii*) The characterization as debt, equity or an instrument that is disregarded for tax purposes of an instrument issued by the SPV (or an entity that has a direct or indirect ownership interest in the SPV) to a U.S. party, a counterparty or a person related to a U.S. party or a counterparty.

(*iii*) The proportion of the equity of the SPV (or an entity that directly or indirectly owns the SPV) that is considered to be owned directly or indirectly by a U.S. party and a counterparty.

(*iv*) The amount of taxable income that is attributable to the SPV for one or more tax years during which the arrangement is in effect.

(C) ***Definitions.*** The following definitions apply for purposes of paragraph (e)(5)(vii) of this section.

(*1*) ***Applicable foreign country.*** An *applicable foreign country* means each foreign country to which a foreign payment described in paragraph (e)(5)(vii)(B)(*1*)(*ii*) of this section is made or which confers a foreign tax benefit described in paragraph (e)(5)(vii)(B)(*4*) of this section.

(*2*) ***Counterparty.*** The term *counterparty* means a person described in paragraph (e)(5)(vii)(B)(*5*) of this section.

(*3*) ***Entity.*** The term *entity* includes a corporation, trust, partnership or disregarded entity described in § 301.7701-2(c)(2)(i).

(*4*) ***Indirect ownership. Indirect ownership*** of stock or another equity interest (such as an interest in a partnership) shall be determined in accordance with the principles of section 958(a)(2), regardless of whether the interest is owned by a U.S. or foreign entity.

(*5*) ***Passive investment income*** —

(*i*) ***In general.*** The term *passive investment income* means income described in section 954(c), as modified by this paragraph (e)(5)(vii)(C)(*5*)(*i*) and paragraph (e)(5)(vii)(C)(*5*)(*ii*) of this section. In determining whether income is described in section 954(c), paragraphs (c)(1)(H), (c)(3), and (c)(6) of section 954 shall be disregarded. Sections 954(c), 954(h), and 954(i) shall be applied at the entity level as if the entity (as defined in paragraph (e)(5)(vii)(C)(*3*) of this section) were a controlled foreign corporation (as defined in section 957(a)). For purposes of determining if sections 954(h) and 954(i) apply for purposes of this paragraph (e)(5)(vii)(C)(*5*)(*i*) and paragraph (e)(5)(vii)(C)(*5*)(*ii*) of this section, any income of an entity attributable to transactions that, assuming the entity is an SPV, are with a person that is a counterparty, or with persons that are related to a counterparty within the meaning of paragraph (e)(5)(vii)(B)(*4*) of this section, shall not be treated as qualified banking or financing income or as qualified insurance income, and shall not be taken into account in applying sections 954(h) and 954(i) for purposes of determining whether other income of the entity is excluded from section 954(c)(1) under section 954(h) or 954(i), but only if any such person (or a person that is related to such person within the meaning of paragraph (e)(5)(vii)(B)(*4*) of this section) is eligible for a foreign tax benefit described in paragraph (e)(5)(vii)(B)(*4*) of this section. In addition, in applying section 954(h) for purposes of this paragraph (e)(5)(vii)(C)(*5*)(*i*) and paragraph (e)(5)(vii)(C)(*5*)(*ii*) of this section, section 954(h)(3)(E) shall not apply, section 954(h)(2)(A)(ii) shall be satisfied only if the entity conducts substantial activity with respect to its business through its own employees, and the term "any foreign country" shall be substituted for "home country" wherever it appears in section 954(h).

(*ii*) ***Income attributable to lower-tier entities; holding company exception.*** Income of an upper-tier entity that is attributable to an equity interest in a lower-tier entity, including dividends, an allocable share of partnership income, and income attributable to the ownership of an interest in an entity that is disregarded as an entity separate from its owner is passive investment income unless substantially all of the upper-tier entity's assets consist of qualified equity interests in one or more lower-tier entities, each of which is engaged in the active conduct of a trade or business and derives more than 50 percent of its gross income from such trade or business, and substantially all of the upper-tier entity's opportunity for gain and risk of loss with respect to each such interest in a lower-tier entity is shared by the U.S. party (or persons that are related to a U.S. party) and, assuming the entity is an SPV, a counterparty (or persons that are related to a counterparty) ("holding company exception"). If an arrangement involves more than one U.S. party or more than one counterparty or both, then substantially all of the upper-tier entity's opportunity for gain and risk of loss with respect to its interest in any lower-tier entity must be shared (directly or

indirectly) by one or more U.S. parties (or persons related to such U.S. parties) and, assuming the upper-tier entity is an SPV, one or more counterparties (or persons related to such counterparties). Substantially all of the upper-tier entity's opportunity for gain and risk of loss with respect to its interest in any lower-tier entity is not shared if the opportunity for gain and risk of loss is borne (directly or indirectly) by one or more U.S. parties (or persons related to such U.S. party or parties) or, assuming the upper-tier entity is an SPV, by one or more counterparties (or persons related to such counterparty or counterparties). Whether and the extent to which a person is considered to share in an upper-tier entity's opportunity for gain and risk of loss is determined based on all the facts and circumstances, provided, however, that a person does not share in an upper-tier entity's opportunity for gain and risk of loss if its equity interest in the upper-tier entity was acquired in a sale-repurchase transaction or if its interest is treated as debt for U.S. tax purposes. If a U.S. party owns an interest in an entity indirectly through a chain of entities, the application of the holding company exception begins with the lowest-tier entity in the chain that may satisfy the holding company exception and proceeds upward; provided, however, that the opportunity for gain and risk of loss borne by any upper-tier entity in the chain that is a counterparty shall be disregarded to the extent borne indirectly by a U.S. party. An upper-tier entity that satisfies the holding company exception is itself considered to be engaged in the active conduct of a trade or business and to derive more than 50 percent of its gross income from such trade or business for purposes of applying the holding company exception to the owners of such entity. A lower-tier entity that is engaged in a banking, financing, or similar business shall not be considered to be engaged in the active conduct of a trade or business unless the income derived by such entity would be excluded from section 954(c)(1) under section 954(h) or 954(i) as modified by paragraph (e)(5)(vii)(C)(*5*)(*i*) of this section.

(*6*) ***Qualified equity interest.*** With respect to an interest in a corporation, the term *qualified equity interest* means stock representing 10 percent or more of the total combined voting power of all classes of stock entitled to vote and 10 percent or more of the total value of the stock of the corporation or disregarded entity, but does not include any preferred stock (as defined in section 351(g)(3)). Similar rules shall apply to determine whether an interest in an entity other than a corporation is a qualified equity interest.

(*7*) ***Related person.*** Two persons are related if—

(*i*) One person directly or indirectly owns stock (or an equity interest) possessing more than 50 percent of the total value of the other person; or

(*ii*) The same person directly or indirectly owns stock (or an equity interest) possessing more than 50 percent of the total value of both persons.

(*8*) ***Special purpose vehicle (SPV).*** The term *SPV* means the entity described in paragraph (e)(5)(vii)(B)(*1*) of this section.

(*9*) ***U.S. party.*** The term *U.S. party* means a person described in paragraph (e)(5)(vii)(B)(*2*) of this section.

(D) ***Examples.*** The following examples illustrate the rules of paragraph (e)(5)(vii) of this section. No inference is intended as to whether a taxpayer would be eligible to claim a credit under section 901(a) if a foreign payment were an amount of foreign income tax paid. The examples set forth below do not limit the application of other principles of existing law to determine the proper tax consequences of the structures or transactions addressed in the regulations.

(*1*) ***Example 1: U.S. borrower transaction*** —

(*i*) ***Facts.*** A domestic corporation (USP) forms a Country M corporation (Newco), contributing $1.5 billion in exchange for 100% of the stock of Newco. Newco, in turn, loans the $1.5 billion to a second Country M corporation (FSub) wholly owned by USP. USP then sells its entire interest in Newco to a Country M corporation (FP) for the original purchase price of $1.5 billion, subject to an obligation to repurchase the interest in five years for $1.5 billion. The sale has the effect of transferring ownership of the Newco stock to FP for Country M tax purposes. Assume the sale-repurchase transaction is structured in a way that qualifies as a collateralized loan for U.S. tax purposes. Therefore, USP remains the owner of the Newco stock for U.S. tax purposes. All of FSub's income is subpart F income. In Year 1, FSub pays Newco $120 million of interest. Newco pays $36 million to Country M with respect to such interest income and distributes the remaining $84 million to FP. Under Country M law, the $84 million distribution is excluded from FP's income. None of FP's stock is owned, directly or indirectly, by USP or any shareholders of USP that are domestic corporations, U.S. citizens, or resident alien individuals. Under an income tax treaty between Country M and the United States, Country M does not impose Country M tax on interest received by U.S. residents from sources in Country M.

(*ii*) ***Result.*** The $36 million payment by Newco to Country M is not a compulsory payment, and thus is not an amount of foreign income tax paid because the foreign payment is attributable to a structured passive investment arrangement. First, Newco is an SPV because all of Newco's income is passive investment income described in paragraph (e)(5)(iv)(C)(5) of this section; Newco's only asset, a note, is held to produce such income; the payment to Country M is attributable to such income; and if the payment were an amount of foreign income tax paid it would be paid in a U.S. taxable year in which Newco meets the requirements of paragraph (e)(5)(vii)(B)(*1*)(*i*) of this section. Second, if the foreign payment were treated as an amount of foreign income tax paid, USP would be deemed to pay the foreign payment under section 960(a) and, therefore, would be eligible to claim a credit for such payment under section 901(a). Third, USP would not pay any Country M tax if it directly owned Newco's loan receivable. Fourth, the distribution from Newco to FP is exempt from tax under Country M law, and the exempt amount corresponds to more than 10% of the foreign base with respect to which USP's share (which is 100% under U.S. tax law) of the foreign payment was imposed. Fifth, FP is a counterparty because FP owns stock of Newco under Country M law and none of FP's stock is owned by USP or shareholders of USP that are domestic corporations, U.S. citizens, or resident alien individuals. Sixth, FP is the owner of 100% of Newco's stock for Country M tax purposes, while USP is the owner of 100% of Newco's

stock for U.S. tax purposes, and the amount of credits claimed by USP if the payment to Country M were an amount of foreign income tax paid is materially greater than it would be if Country M tax treatment controlled for U.S. tax purposes such that FP, rather than USP, owned 100% of Newco's stock. Because the payment to Country M is not an amount of foreign income tax paid, USP is not deemed to pay any Country M tax under section 960(a). USP includes $84 million in income under subpart F with respect to Newco and also has interest expense of $84 million. FSub's income and earnings and profits are reduced by $120 million of interest expense.

(*2*) ***Example 2: U.S. borrower transaction*** —

(*i*) ***Facts.*** The facts are the same as those in paragraph (e)(5)(vii)(D)(*1*)(*i*) of this section (the facts in *Example 1*), except that FSub is a wholly-owned subsidiary of Newco. In addition, assume FSub is engaged in the active conduct of manufacturing and selling widgets and derives more than 50% of its gross income from such business.

(*ii*) ***Result.*** The result is the same as in paragraph (e)(5)(vii)(D)(*1*)(*ii*) of this section (the result in *Example 1*), except that Newco's income is tested income rather than subpart F income, and if the $36 million foreign payment were an amount of foreign income tax paid USP would be deemed to pay a portion of the foreign payment under section 960(d), rather than 960(a). Although Newco wholly owns FSub, which is engaged in the active conduct of manufacturing and selling widgets and derives more than 50% of its income from such business, Newco's income that is attributable to Newco's equity interest in FSub is passive investment income because the sale-repurchase transaction limits FP's interest in Newco and its assets to that of a creditor, so that substantially all of Newco's opportunity for gain and risk of loss with respect to its stock in FSub is borne by USP. See paragraph (e)(5)(vii)(C)(*5*)(*ii*) of this section. Accordingly, Newco's stock in FSub is held to produce passive investment income. Thus, Newco is an SPV because all of Newco's income is passive investment income described in paragraph (e)(5)(vii)(C)(*5*) of this section, Newco's assets are held to produce such income, the payment to Country M is attributable to such income, and if the payment were an amount of foreign income tax paid it would be paid in a U.S. taxable year in which Newco meets the requirements of paragraph (e)(5)(vii)(B)(*1*)(*i*) of this section.

(*3*) ***Example 3: U.S. borrower transaction*** —

(*i*) ***Facts.*** A domestic corporation (USP) loans $750 million to its wholly-owned domestic subsidiary (Sub). USP and Sub form a Country M partnership (Partnership) to which each contributes $750 million. Partnership loans all of its $1.5 billion of capital to Issuer, a wholly-owned Country M affiliate of USP, in exchange for a note and coupons providing for the payment of interest at a fixed rate over a five-year term. Partnership sells all of the coupons to Coupon Purchaser, a Country N partnership owned by a Country M corporation (Foreign Bank) and a wholly-owned Country M subsidiary of Foreign Bank, for $300 million. At the time of the coupon sale, the fair market value of the coupons sold is $290 million and, pursuant to section 1286(b)(3), Partnership's basis

allocated to the coupons sold is $290 million. Several months later and prior to any interest payments on the note, Foreign Bank and its subsidiary sell all of their interests in Coupon Purchaser to an unrelated Country O corporation for $280 million. None of Foreign Bank's stock or its subsidiary's stock is owned, directly or indirectly, by USP or Sub or by any shareholders of USP or Sub that are domestic corporations, U.S. citizens, or resident alien individuals. Assume that both the United States and Country M respect the sale of the coupons for tax law purposes. In the year of the coupon sale, for Country M tax purposes USP's and Sub's shares of Partnership's profits total $300 million, a payment of $60 million to Country M is made with respect to those profits, and Foreign Bank and its subsidiary, as partners of Coupon Purchaser, are entitled to deduct the $300 million purchase price of the coupons from their taxable income. For U.S. tax purposes, USP and Sub recognize their distributive shares of the $10 million premium income and claim a direct foreign tax credit for their shares of the $60 million payment to Country M. Country M imposes no additional tax when Foreign Bank and its subsidiary sell their interests in Coupon Purchaser. Country M also does not impose Country M tax on interest received by U.S. residents from sources in Country M.

(*ii*) ***Result.*** The payment to Country M is not a compulsory payment, and thus is not an amount of foreign income tax paid, because the foreign payment is attributable to a structured passive investment arrangement. First, Partnership is an SPV because all of Partnership's income is passive investment income described in paragraph (e)(5)(vii)(C)(*5*) of this section; Partnership's only asset, Issuer's note, is held to produce such income; the payment to Country M is attributable to such income; and if the payment were an amount of foreign income tax paid, it would be paid in a U.S. taxable year in which Partnership meets the requirements of paragraph (e)(5)(vii)(B)(*1*)(*i*) of this section. Second, if the foreign payment were an amount of tax paid, USP and Sub would be eligible to claim a credit for such payment under section 901(a). Third, USP and Sub would not pay any Country M tax if they directly owned Issuer's note. Fourth, for Country M tax purposes, Foreign Bank and its subsidiary deduct the $300 million purchase price of the coupons and are exempt from Country M tax on the $280 million received upon the sale of Coupon Purchaser, and the deduction and exemption correspond to more than 10% of the $300 million base with respect to which USP's and Sub's 100% share of the foreign payments was imposed. Fifth, Foreign Bank and its subsidiary are counterparties because they indirectly acquired assets of Partnership, the interest coupons on Issuer's note, and are not directly or indirectly owned by USP or Sub or shareholders of USP or Sub that are domestic corporations, U.S. citizens, or resident alien individuals. Sixth, the amount of taxable income of Partnership for one or more years is different for U.S. and Country M tax purposes, and the amount of income attributable to USP and Sub for U.S. tax purposes is materially less than the amount of income they would recognize if the Country M tax treatment of the coupon sale controlled for U.S. tax purposes. Because the payment to Country M is not an amount of foreign income tax paid, USP and Sub are not considered to pay tax under section 901. USP and Sub have income of $10 million in the year of the coupon sale.

(*4*) ***Example 4: Active business; no SPV*** —

(*i*) ***Facts.*** A, a domestic corporation, wholly owns B, a Country X corporation engaged in the manufacture and sale of widgets. On January 1, Year 1, C, also a Country X corporation, loans $400 million to B in exchange for an instrument that is debt for U.S. tax purposes and equity in B for Country X tax purposes. As a result, C is considered to own stock of B for Country X tax purposes. B loans $55 million to D, a Country Y corporation wholly owned by A. In year 1, B has $166 million of net income attributable to its sales of widgets and $3.3 million of interest income attributable to the loan to D. Substantially all of B's assets are used in its widget business. Country Y does not impose tax on interest paid to nonresidents. B makes a payment of $50.8 million to Country X with respect to B's net income. Country X does not impose tax on dividend payments between Country X corporations. None of C's stock is owned, directly or indirectly, by A or by any shareholders of A that are domestic corporations, U.S. citizens, or resident alien individuals.

(*ii*) ***Result.*** B is not an SPV within the meaning of paragraph (e)(5)(vii)(B)(*1*) of this section because the amount of interest income received from D does not constitute substantially all of B's income and the $55 million note from D does not constitute substantially all of B's assets. Accordingly, the $50.8 million payment to Country X is not attributable to a structured passive investment arrangement.

(*5*) ***Example 5: U.S. lender transaction*** —

(*i*) ***Facts.*** A Country X corporation (Foreign Bank) contributes $2 billion to a newly-formed Country X company (Newco) in exchange for 90% of the common stock of Newco and securities that are treated as debt of Newco for U.S. tax purposes and preferred stock of Newco for Country X tax purposes. A domestic corporation (USP) contributes $1 billion to Newco in exchange for 10% of Newco's common stock and securities that are treated as preferred stock of Newco for U.S. tax purposes and debt of Newco for Country X tax purposes. Newco loans the $3 billion to a wholly-owned, Country X subsidiary of Foreign Bank (FSub) in return for a $3 billion, seven-year note paying interest currently. The Newco securities held by USP represent more than 50% of the voting power in Newco and more than 50% of the value of the securities in Newco that are treated as equity for U.S. tax purposes. The Newco securities held by USP entitle the holder to fixed distributions of $4 million per year, and the Newco securities held by Foreign Bank entitle the holder to receive $82 million per year, payable only on maturity of the $3 billion FSub note in Year 7. At the end of Year 5, pursuant to a prearranged plan, Foreign Bank acquires USP's Newco stock and securities for a prearranged price of $1 billion. Country X does not impose tax on dividends received by one Country X corporation from a second Country X corporation. Under an income tax treaty between Country X and the United States, Country X does not impose Country X tax on interest received by U.S. residents from sources in Country X. None of Foreign Bank's stock is owned, directly or indirectly, by USP or any shareholders of USP that are domestic corporations, U.S. citizens, or resident alien individuals. In each of Years 1 through 7, FSub pays Newco $124 million of interest on the $3 billion note.

Newco distributes $4 million to USP in each of Years 1 through 5. The distributions are deductible for Country X tax purposes, and Newco pays Country X $36 million with respect to $120 million of taxable income from the FSub note in each year. For U.S. tax purposes, in each year Newco's subpart F income and earnings and profits are increased by $124 million of interest income and reduced by accrued interest expense with respect to the Newco securities held by Foreign Bank.

(*ii*) ***Result.*** The $36 million payment to Country X is not a compulsory payment, and thus is not an amount of foreign income tax paid, because the foreign payment is attributable to a structured passive investment arrangement. First, Newco is an SPV because all of Newco's income is passive investment income described in paragraph (e)(5)(vii)(C)(*5*) of this section; Newco's only asset, a note of FSub, is held to produce such income; the payment to Country X is attributable to such income; and if the payment were an amount of foreign income tax paid it would be paid in a U.S. taxable year in which Newco meets the requirements of paragraph (e)(5)(vii)(B)(*1*)(*i*) of this section. Second, if the foreign payment were an amount of foreign income tax paid, USP would be deemed to pay its pro rata share of the foreign payment under section 960(a) in each of Years 1 through 5 and, therefore, would be eligible to claim a credit under section 901(a). Third, USP would not pay any Country X tax if it directly owned its proportionate share of Newco's assets, a note of FSub. Fourth, for Country X tax purposes, Foreign Bank is eligible to receive a tax-free distribution of $82 million attributable to each of Years 1 through 5, and that amount corresponds to more than 10% of the foreign base with respect to which USP's share of the foreign payment was imposed. Fifth, Foreign Bank is a counterparty because it owns stock of Newco for Country X tax purposes and none of Foreign Bank's stock is owned, directly or indirectly, by USP or shareholders of USP that are domestic corporations, U.S. citizens, or resident alien individuals. Sixth, the United States and Country X treat various aspects of the arrangement differently, including whether the Newco securities held by Foreign Bank and USP are debt or equity. The amount of credits claimed by USP if the payment to Country X were an amount of foreign income tax paid is materially greater than it would be if the Country X tax treatment controlled for U.S. tax purposes such that the securities held by USP were treated as debt or the securities held by Foreign Bank were treated as equity, and the amount of income recognized by Newco for U.S. tax purposes is materially less than the amount of income recognized for Country X tax purposes. Because the payment to Country X is not an amount of foreign income tax paid, USP is not deemed to pay any Country X tax under section 960(a). USP has a subpart F inclusion of $4 million in each of Years 1 through 5.

(*6*) ***Example 6: Holding company; no SPV*** —

(*i*) ***Facts.*** A, a Country X corporation, and B, a domestic corporation, each contribute $1 billion to a newly-formed Country X entity (C) in exchange for 50% of the common stock of C. C is treated as a corporation for Country X purposes and a partnership for U.S. tax purposes. C contributes $1.95 billion to a newly-formed Country X corporation (D) in exchange for 100% of D's common stock. C loans its remaining $50 million to D. Accordingly, C's sole assets are stock and

debt of D. D uses the entire $2 billion to engage in the business of manufacturing and selling widgets. In Year 1, D derives $300 million of income from its widget business and derives $2 million of interest income. Also in Year 1, C has dividend income of $200 million and interest income of $3.2 million with respect to its investment in D. Country X does not impose tax on dividends received by one Country X corporation from a second Country X corporation. C makes a payment of $960,000 to Country X with respect to C's net income.

(*ii*) ***Result.*** C qualifies for the holding company exception described in paragraph (e)(5)(vii)(C)(*5*)(*ii*) of this section because C holds a qualified equity interest in D, D is engaged in an active trade or business and derives more than 50% of its gross income from such trade or business, C's interest in D constitutes substantially all of C's assets, and A and B share in substantially all of C's opportunity for gain and risk of loss with respect to D. As a result, C's dividend income from D is not passive investment income and C's stock in D is not held to produce such income. Accordingly, C is not an SPV within the meaning of paragraph (e)(5)(vii)(B)(*1*) of this section, and the $960,000 payment to Country X is not attributable to a structured passive investment arrangement.

(*7*) ***Example 7: Holding company; no SPV*** —

(*i*) ***Facts.*** The facts are the same as those in paragraph (e)(5)(vii)(D)(*6*)(*i*) of this section (the facts in *Example 6*), except that instead of loaning $50 million to D, C contributes the $50 million to E in exchange for 10% of the stock of E. E is a Country Y corporation that is not engaged in the active conduct of a trade or business. Also in Year 1, D pays no dividends to C, E pays $3.2 million in dividends to C, and C makes a payment of $960,000 to Country X with respect to C's net income.

(*ii*) ***Result.*** C qualifies for the holding company exception described in paragraph (e)(5)(vii)(C)(*5*)(*ii*) of this section because C holds a qualified equity interest in D, D is engaged in an active trade or business and derives more than 50% of its gross income from such trade or business, C's interest in D constitutes substantially all of C's assets, and A and B share in substantially all of C's opportunity for gain and risk of loss with respect to D. As a result, less than substantially all of C's assets are held to produce passive investment income. Accordingly, C is not an SPV because it does not meet the requirements of paragraph (e)(5)(vii)(B)(*1*) of this section, and the $960,000 payment to Country X is not attributable to a structured passive investment arrangement.

(*8*) ***Example 8: Holding company; no SPV*** —

(*i*) ***Facts.*** The facts are the same as those in paragraph (e)(5)(vii)(D)(*6*)(*i*) of this section (the facts in *Example 6*), except that B's $1 billion investment in C consists of 30% of C's common stock and 100% of C's preferred stock. A's $1 billion investment in C consists of 70% of C's common stock. B sells its preferred stock to F, a Country X corporation, subject to a repurchase obligation. Assume that under Country X tax law, but not U.S. tax law, F is treated as the owner of the preferred shares and receives a distribution in Year 1 of $50 million. The remaining earnings are distributed 70% to A and 30% to B.

(*ii*) ***Result.*** C qualifies for the holding company exception described in paragraph (e)(5)(vii)(C)(*5*)(*ii*) of this section because C holds a qualified equity interest in D, D is engaged in an active trade or business and derives more than 50% of its gross income from such trade or business, and C's interest in D constitutes substantially all of C's assets. Additionally, although F does not share in C's opportunity for gain and risk of loss with respect to C's interest in D because F acquired its interest in C in a sale-repurchase transaction, B (the U.S. party) and in the aggregate A and F (who would be counterparties assuming C were an SPV) share in substantially all of C's opportunity for gain and risk of loss with respect to D and such opportunity for gain and risk of loss is not borne exclusively either by B or by A and F in the aggregate. Accordingly, C's shares in D are not held to produce passive investment income and the $200 million dividend from D is not passive investment income. C is not an SPV within the meaning of paragraph (e)(5)(vii)(B)(*1*) of this section, and the $960,000 payment to Country X is not attributable to a structured passive investment arrangement.

(*9*) ***Example 9: Asset holding transaction*** —

(*i*) ***Facts.*** A domestic corporation (USP) contributes $6 billion of Country Z debt obligations to a Country Z entity (DE) in exchange for all of the class A and class B stock of DE. DE is a disregarded entity for U.S. tax purposes and a corporation for Country Z tax purposes. A corporation unrelated to USP and organized in Country Z (FC) contributes $1.5 billion to DE in exchange for all of the class C stock of DE. DE uses the $1.5 billion contributed by FC to redeem USP's class B stock. The terms of the class C stock entitle its holder to all income from DE, but FC is obligated immediately to contribute back to DE all distributions on the class C stock. USP and FC enter into a contract under which USP agrees to buy after five years the class C stock for $1.5 billion and an agreement under which USP agrees to pay FC periodic payments on $1.5 billion. The transaction is structured in such a way that, for U.S. tax purposes, there is a loan of $1.5 billion from FC to USP, and USP is the owner of the class C stock and the class A stock. In Year 1, DE earns $400 million of interest income on the Country Z debt obligations. DE makes a payment to Country Z of $100 million with respect to such income and distributes the remaining $300 million to FC. FC contributes the $300 million back to DE. None of FC's stock is owned, directly or indirectly, by USP or shareholders of USP that are domestic corporations, U.S. citizens, or resident alien individuals. Assume that Country Z imposes a withholding tax on interest income derived by U.S. residents. Country Z treats FC as the owner of the class C stock. Pursuant to Country Z tax law, FC is required to report the $400 million of income with respect to the $300 million distribution from DE, but is allowed to claim credits for DE's $100 million payment to Country Z. For Country Z tax purposes, FC is entitled to current deductions equal to the $300 million contributed back to DE.

(*ii*) ***Result.*** The payment to Country Z is not a compulsory payment, and thus is not an amount of foreign income tax paid, because the payment is attributable to a structured passive investment arrangement. First, DE is an SPV because all of DE's income is passive investment income described in paragraph

(e)(5)(vii)(C)(*5*) of this section; all of DE's assets are held to produce such income; the payment to Country Z is attributable to such income; and if the payment were an amount of tax paid it would be paid in a U.S. taxable year in which DE meets the requirements of paragraph (e)(5)(vii)(B)(*1*)(*i*) of this section. Second, if the payment were an amount of foreign income tax paid, USP would be eligible to claim a credit for such amount under section 901(a). Third, USP's proportionate share of DE's foreign payment of $100 million is substantially greater than the amount of credits USP would be eligible to claim if it directly held its proportionate share of DE's assets, excluding any assets that would produce income subject to gross basis withholding tax if directly held by USP. Fourth, FC is entitled to claim a credit under Country Z tax law for the payment and recognizes a deduction for the $300 million contributed to DE under Country Z law. The credit claimed by FC corresponds to more than 10% of USP's share (for U.S. tax purposes) of the foreign payment and the deductions claimed by FC correspond to more than 10% of the base with respect to which USP's share of the foreign payment was imposed. Fifth, FC is a counterparty because FC is considered to own equity of DE under Country Z law and none of FC's stock is owned, directly or indirectly, by USP or shareholders of USP that are domestic corporations, U.S. citizens, or resident alien individuals. Sixth, the United States and Country Z treat certain aspects of the transaction differently, including the proportion of equity owned in DE by USP and FC, and the amount of credits claimed by USP if the Country Z payment were an amount of tax paid is materially greater than it would be if the Country Z tax treatment controlled for U.S. tax purposes such that FC, rather than USP, owned the class C stock. Because the payment to Country Z is not an amount of foreign income tax paid, USP is not considered to pay tax under section 901. USP has $400 million of interest income.

(*10*) ***Example 10: Loss surrender*** —

(*i*) ***Facts.*** The facts are the same as those in paragraph (e)(5)(vii)(D)(9)(*i*) of this section (the facts in *Example 9*), except that the deductions attributable to the arrangement contribute to a loss recognized by FC for Country Z tax purposes, and pursuant to a group relief regime in Country Z FC elects to surrender the loss to its Country Z subsidiary.

(*ii*) ***Result.*** The results are the same as in paragraph (e)(5)(vii)(D)(*9*)(*ii*) of this section (the results in *Example 9*). The surrender of the loss to a related party is a foreign tax benefit that corresponds to the base with respect to which USP's share of the foreign payment was imposed.

(*11*) ***Example 11: Joint venture; no foreign tax benefit*** —

(*i*) ***Facts.*** FC, a Country X corporation, and USC, a domestic corporation, each contribute $1 billion to a newly-formed Country X entity (C) in exchange for stock of C. FC and USC are entitled to equal 50% shares of all of C's income, gain, expense and loss. C is treated as a corporation for Country X purposes and a partnership for U.S. tax purposes. In Year 1, C earns $200 million of net passive investment income, makes a payment to Country X of $60 million with

respect to that income, and distributes $70 million to each of FC and USC. Country X does not impose tax on dividends received by one Country X corporation from a second Country X corporation.

(*ii*) ***Result.*** FC's tax-exempt receipt of $70 million, or its 50% share of C's profits, is not a foreign tax benefit within the meaning of paragraph (e)(5)(vii)(B)(*4*) of this section because it does not correspond to any part of the foreign base with respect to which USC's share of the foreign payment was imposed. Accordingly, the $60 million payment to Country X is not attributable to a structured passive investment arrangement.

(*12*) ***Example 12: Joint venture; no foreign tax benefit*** —

(*i*) ***Facts.*** The facts are the same as those in paragraph (e)(5)(vii)(D)(*11*)(*i*) of this section (the facts in *Example 11*), except that C in turn contributes $2 billion to a wholly-owned and newly-formed Country X entity (D) in exchange for stock of D. D is treated as a corporation for Country X purposes and disregarded as an entity separate from its owner for U.S. tax purposes. C has no other assets and earns no other income. In Year 1, D earns $200 million of passive investment income, makes a payment to Country X of $60 million with respect to that income, and distributes $140 million to C.

(*ii*) ***Result.*** C's tax-exempt receipt of $140 million is not a foreign tax benefit within the meaning of paragraph (e)(5)(vii)(B)(*4*) of this section because it does not correspond to any part of the foreign base with respect to which USC's share of the foreign payment was imposed. Fifty percent of C's foreign tax exemption is not a foreign tax benefit within the meaning of paragraph (e)(5)(vii)(B)(*4*) of this section because it relates to earnings of D that are distributed with respect to an equity interest in D that is owned indirectly by USC under both U.S. and foreign tax law. The remaining 50% of C's foreign tax exemption, as well as FC's tax-exempt receipt of $70 million from C, is also not a foreign tax benefit because it does not correspond to any part of the foreign base with respect to which USC's share of the foreign payment was imposed. Accordingly, the $60 million payment to Country X is not attributable to a structured passive investment arrangement.

(6) ***Soak-up taxes*** —

(i) ***In general.*** An amount remitted to a foreign country is not an amount of foreign income tax paid to the extent that liability for the foreign income tax is dependent (by its terms or otherwise) on the availability of a credit for the tax against income tax liability to another country. Liability for foreign income tax is dependent on the availability of a credit for the foreign income tax against income tax liability to another country only if and to the extent that the foreign income tax would not be imposed but for the availability of such a credit.

(ii) ***Examples.*** The following examples illustrate the application of paragraph (e)(6)(i) of this section.

(A) ***Example 1: Tax rates dependent on availability of credit*** —

(1) ***Facts.*** Country X imposes a tax on the receipt of royalties from sources in Country X by nonresidents of Country X. The tax is 15% of the gross amount of such royalties unless the recipient is a resident of the United States or of country A, B, C, or D, in which case the tax is 20% of the gross amount of such royalties. Like the United States, each of countries A, B, C, and D allows its residents a credit against the income tax otherwise payable to it for income taxes paid to other countries.

(2) ***Analysis.*** Because the 20% rate applies only to residents of countries that allow a credit for taxes paid to other countries and the 15% rate applies to residents of countries that do not allow such a credit, one-fourth of the Country X tax would not be imposed on residents of the United States but for the availability of such a credit. One-fourth of the Country X tax imposed on residents of the United States who receive royalties from sources in Country X is dependent on the availability of a credit for the Country X tax against income tax liability to another country and, accordingly, under paragraph (e)(6)(i) of this section that amount is not an amount of foreign income tax paid.

(B) ***Example 2: Tax not dependent on availability of credit*** —

(1) ***Facts.*** Country X imposes a net income tax on the realized net income of nonresidents of Country X from carrying on a trade or business in Country X. Although Country X tax law does not prohibit other nonresidents from carrying on business in Country X, United States persons are the only nonresidents of Country X that carry on business in Country X. The Country X tax would be imposed in its entirety on a nonresident of Country X irrespective of the availability of a credit for the Country X tax against income tax liability to another country.

(2) ***Analysis.*** Because no portion of the Country X tax liability is dependent on the availability of a credit for such tax in another country, under paragraph (e)(6)(i) of this section no portion of the Country X tax is a soak-up tax.

(C) ***Example 3: Tax holiday denied to corporations with shareholders eligible for credit*** —

(1) ***Facts.*** Country X imposes a net income tax on the realized net income of all corporations incorporated in Country X. Country X allows a tax holiday to qualifying corporations incorporated in Country X that are owned by nonresidents of Country X, pursuant to which no Country X tax is imposed on the net income of a qualifying corporation for the first 10 years of its operations in Country X. A corporation qualifies for the tax holiday if it meets certain minimum investment criteria and if the development office of Country X certifies that in its opinion the operations of the corporation will be consistent with specified development goals of Country X. The development office will not issue this certification to any corporation owned by persons resident in countries that allow a credit to shareholders (such as a deemed paid credit under section 960) for Country X tax paid by a corporation incorporated in Country X. In practice, tax holidays are granted to a large number of corporations, but the Country X net income tax is imposed on a significant number of other corporations incorporated in Country X (for example, those owned by Country X persons and those which have had operations for more than 10 years) in addition to corporations denied a tax holiday because their shareholders qualify for a credit for the Country X tax against income tax liability to another country.

(2) ***Analysis.*** Under paragraph (e)(6)(i) of this section, no portion of the Country X tax paid by Country X corporations denied a tax holiday because they have U.S. shareholders is dependent on the availability of a credit for the Country X tax against income tax liability to another country, because a significant number of other Country X corporations pay the Country X tax irrespective of the availability of a credit to their shareholders.

(D) ***Example 4: Tax deferral allowed for corporations with shareholders eligible for credit*** —

(1) ***Facts.*** The facts are the same as those in paragraph (e)(6)(ii)(C)(*1*) of this section (the facts of *Example 3*), except that Country X corporations owned by persons resident in countries that allow a credit for Country X tax when dividends are distributed by the corporations are granted a provisional tax holiday. Under the provisional tax holiday, instead of relieving such a corporation from Country X tax for 10 years, liability for such tax is deferred until the Country X corporation distributes dividends.

(2) ***Analysis.*** Because a significant number of other Country X corporations pay the Country X tax irrespective of the availability of a credit to their shareholders, the result is the same as in paragraph (e)(6)(ii)(C)(*2*) of this section.

(E) ***Example 5: Tax based on greater of tax in lieu of income tax or amount eligible for credit*** —

(1) ***Facts.*** Pursuant to a contract with Country X, A, a domestic corporation engaged in manufacturing activities in Country X, must pay tax to Country X equal to the greater of 5u (units of Country X currency) per item produced, or the maximum amount creditable by A against its U.S. income tax liability for that year with respect to income from its Country X operations. Also pursuant to the contract, A is exempted from Country X's otherwise generally-imposed net income tax. The contractual tax is a tax in lieu of income tax as defined in § 1.903-1(b). In Year 1, A produces 16 items, which would result in Country X tax of 16 × 5u = 80u, and taking into account the section 904 limitation, the maximum amount of Country X tax that A can claim as a credit against its U.S. income tax liability is 125u. Accordingly, A's contractual liability for Country X tax in lieu of income tax is 125u, the greater of the two amounts.

(2) ***Analysis.*** Under paragraph (e)(6)(i) of this section, the amount of tax paid by A that is dependent on the availability of a credit against income tax of another country is 125u−80u = 45u, the amount that would not be imposed but for the availability of a credit.

(f) ***Taxpayer*** —

(1) ***In general.*** The person by whom tax is considered paid for purposes of sections 901 and 903 is the person on whom foreign law imposes legal liability for such tax, even if another person (e.g., a withholding agent) remits such tax. For purposes of this section, § 1.901-2A and § 1.903-1, the person on whom foreign law imposes such liability is referred to as the “taxpayer.” A foreign tax of a type described in paragraph (a)(2)(ii)(C) of this section is considered to be imposed on the recipients of wages if such tax is deducted from such wages under provisions that are comparable to section 3102 (a) and (b) of the Internal Revenue Code.

(2) ***Party undertaking tax obligation as part of transaction*** —

(i) ***In general.*** Tax is considered paid by the taxpayer even if another party to a direct or indirect transaction with the taxpayer agrees, as a part of the transaction, to assume the taxpayer's foreign tax liability. The rules of the foregoing sentence apply notwithstanding anything to the contrary in paragraph (e)(3) of this section. See § 1.901-2A for additional rules regarding dual capacity taxpayers.

(ii) ***Examples.*** The following examples illustrate the rules of paragraphs (f)(1) and (2)(i) of this section.

(A) ***Example 1.*** Under a loan agreement between A, a resident of Country X, and B, a United States person, A agrees to pay B a certain amount of interest net of any tax that Country X may impose on B with respect to its interest income. Country X imposes a 10 percent tax on the gross amount of interest income received by nonresidents of Country X from sources in Country X, and it is established that this tax is a tax in lieu of an income tax within the meaning of § 1.903-1(b). Under the law of Country X this tax is imposed on the nonresident recipient, and any resident of Country X that pays such interest to a nonresident is required to withhold and pay over to Country X 10 percent of the amount of such interest, which is applied to offset the recipient's liability for the tax. Because legal liability for the tax is imposed on the recipient of such interest income, B is the taxpayer with respect to the Country X tax imposed on B's interest income from B's loan to A. Accordingly, B's interest income for Federal income tax purposes includes the amount of Country X tax that is imposed on B with respect to such interest income and that is paid on B's behalf by A pursuant to the loan agreement, and, under paragraph (f)(2)(i) of this section, such tax is considered for purposes of section 903 to be paid by B.

(B) ***Example 2.*** The facts are the same as those in paragraph (f)(2)(ii)(A) of this section (the facts in *Example 1*), except that in collecting and receiving the interest B is acting as a nominee for, or agent of, C, who is a United States person. Because C (not B) is the beneficial owner of the interest, legal liability for the tax is imposed on C, not B (C's nominee or agent). Thus, C is the taxpayer with respect to the Country X tax imposed on C's interest income from C's loan to A. Accordingly, C's interest income for Federal income tax purposes includes the amount of Country X tax that is imposed on C with respect to such interest income and that is paid on C's behalf by A pursuant to the loan agreement. Under paragraph (f)(2)(i) of this section, such tax is considered for purposes of section 903 to be paid by C. No such tax is considered paid by B.

(C) ***Example 3.*** Country X imposes a tax called the “Country X income tax.” A, a United States person engaged in construction activities in Country X, is subject to that tax. Country X has contracted with A for A to construct a naval base. A is a dual capacity taxpayer (as defined in paragraph (a)(2)(ii)(A) of this section) and, in accordance with paragraphs (a)(1) and (c)(1) of § 1.901-2A, A has established that the Country X income tax as applied to dual capacity persons and the Country X income tax as applied to persons other than dual capacity persons together constitute a single levy. A has also established that that levy is a net income tax within the meaning of paragraph (a)(3) of this section. Pursuant to the terms of the contract, Country X has agreed to assume any Country X tax liability that A may incur with respect to A's income from the contract. For Federal income tax purposes, A's income from the contract includes the amount of tax liability that is imposed by Country X on A with respect to its income from the contract and that is assumed by Country X; and for purposes of section 901 the amount of such tax liability assumed by

Country X is considered to be paid by A. By reason of paragraph (f)(2)(i) of this section, Country X is not considered to provide a subsidy, within the meaning of paragraph (e)(3) of this section, to A.

(3) *Taxes imposed on combined income of two or more persons* —

(i) ***In general.*** If foreign tax is imposed on the combined income of two or more persons (for example, a husband and wife or a corporation and one or more of its subsidiaries), foreign law is considered to impose legal liability on each such person for the amount of the tax that is attributable to such person's portion of the base of the tax. Therefore, if foreign tax is imposed on the combined income of two or more persons, such tax is allocated among, and considered paid by, such persons on a pro rata basis in proportion to each person's portion of the combined income, as determined under foreign law and paragraph (f)(3)(iii) of this section. Combined income with respect to each foreign tax that is imposed on a combined basis is computed separately, and the tax on that combined income is allocated separately under this paragraph (f)(3)(i). If foreign law exempts from tax, or provides for specific rates of tax with respect to, certain types of income, or if certain expenses, deductions or credits are taken into account only with respect to a particular type of income, combined income with respect to such portions of the combined income is also computed separately, and the tax on that combined income is allocated separately under this paragraph (f)(3)(i). The rules of this paragraph (f)(3) apply regardless of which person is obligated to remit the tax, which person actually remits the tax, or which person the foreign country could proceed against to collect the tax in the event all or a portion of the tax is not paid. For purposes of this paragraph (f)(3), the term *person* means an individual or an entity (including a disregarded entity described in § 301.7701-2(c)(2)(i) of this chapter) that is subject to tax in a foreign country as a corporation (or otherwise at the entity level). In determining the amount of tax paid by an owner of a partnership or a disregarded entity, this paragraph (f)(3) first applies to determine the amount of tax paid by the partnership or disregarded entity, and then paragraph (f)(4) of this section applies to allocate the amount of such tax to the owner.

(ii) ***Combined income.*** For purposes of this paragraph (f)(3), foreign tax is imposed on the combined income of two or more persons if such persons compute their taxable income on a combined basis under foreign law and foreign tax would otherwise be imposed on each such person on its separate taxable income. For example, income is computed on a combined basis if two or more persons add their items of income, gain, deduction, and loss to compute a single consolidated taxable income amount for foreign tax purposes. Foreign tax is considered to be imposed on the combined income of two or more persons even if the combined income is computed under foreign law by attributing to one such person (for example, the foreign parent of a foreign consolidated group) the income of other such persons or by treating persons that would otherwise be subject to tax as separate entities as unincorporated branches of a single corporation for purposes of computing the foreign tax on the combined income of the group. However, foreign tax is not considered to be imposed on the combined income of two or more persons if, because one or more persons is a fiscally transparent entity (under the principles of § 1.894-1(d)(3)) under foreign law, only one of such persons is subject to tax under foreign law (even if two or more of such persons are corporations for U.S. Federal income tax purposes). Therefore, foreign tax is not considered to be imposed on the combined income of two or more persons solely because foreign law:

(A) Permits one person to surrender a loss to another person pursuant to a group relief or other loss-sharing regime described in § 1.909-2(b)(2)(vi);

(B) Requires a shareholder of a corporation to include in income amounts attributable to taxes imposed on the corporation with respect to distributed earnings, pursuant to an integrated tax system that allows the shareholder a credit for such taxes;

(C) Requires a shareholder to include, pursuant to an anti-deferral regime (similar to subpart F of the Internal Revenue Code (sections 951 through 965)), income attributable to the shareholder's interest in the corporation;

(D) Reallocates income from one person to a related person under foreign transfer pricing rules;

(E) Requires a person to take into account a distributive share of income of an entity that is a partnership or other fiscally transparent entity for foreign tax law purposes; or

(F) Requires a person to take all or part of the income of an entity that is a corporation for U.S. Federal income tax purposes into account because foreign law treats the entity as a branch or fiscally transparent entity (a reverse hybrid). A reverse hybrid does not include an entity that is treated under foreign law as a branch or fiscally transparent entity solely for purposes of calculating combined income of a foreign consolidated group.

(iii) *Portion of combined income* —

(A) ***In general.*** Each person's portion of the combined income is determined by reference to any return, schedule or other document that must be filed or maintained with respect to a person showing such person's income for foreign tax purposes, as properly amended or adjusted for foreign tax purposes. If no such return, schedule or other document must be filed or maintained with respect to a person for foreign tax purposes, then, for purposes of this paragraph (f)(3), such person's income is determined from the books of account regularly maintained by or on behalf of the person for purposes of computing its income for foreign tax purposes. Each person's portion of the combined income is determined by adjusting such person's income determined under this paragraph (f)(3)(iii)(A) as provided in paragraph (f)(3)(iii)(B) and (f)(3)(iii)(C) of this section.

(B) ***Effect of certain payments.***

(*1*) Each person's portion of the combined income is determined by giving effect to payments and accrued amounts of interest, rents, royalties, and other amounts between persons whose income is included in the combined base to the extent such amounts would be taken into account in computing the separate taxable incomes of such persons under foreign law if they did not compute their income on a combined basis. Each person's portion of the combined income is determined without taking into account any payments from other persons whose income is included in the combined base that are treated as dividends or other non-deductible distributions with respect to equity under foreign law, and without taking into account deemed dividends or any similar attribution of income made for purposes of computing the combined income under foreign law, regardless of whether any such deemed dividend or attribution of income results in a deduction or inclusion under foreign law.

(*2*) For purposes of determining each person's portion of the combined income, the treatment of a payment is determined under foreign law. Thus, for example, interest accrued by one group member with respect to an instrument held by another

member that is treated as debt for foreign tax purposes but as equity for U.S. Federal income tax purposes would be considered income of the holder and would reduce the income of the issuer. See also § 1.909-2(b)(3)(i) for rules requiring suspension of foreign income taxes paid by the owner of a U.S. equity hybrid instrument.

(C) ***Net losses.*** If tax is considered to be imposed on the combined income of three or more persons and one or more of such persons has a net loss for the taxable year for foreign tax purposes, the following rules apply. If foreign law provides mandatory rules for allocating the net loss among the other persons, then the rules that apply for foreign tax purposes apply for purposes of this paragraph (f)(3). If foreign law does not provide mandatory rules for allocating the net loss, the net loss is allocated among all other such persons on a pro rata basis in proportion to the amount of each person's income, as determined under paragraphs (f)(3)(iii)(A) and (f)(3)(iii)(B) of this section. For purposes of this paragraph (f)(3)(iii)(C), foreign law is not considered to provide mandatory rules for allocating a net loss solely because such loss is attributed from one person to a second person for purposes of computing combined income, as described in paragraph (f)(3)(ii) of this section.

(iv) ***Collateral consequences.*** U.S. tax principles apply to determine the tax consequences if one person remits a tax that is the legal liability of, and thus is considered paid by, another person.

(4) ***Taxes imposed on partnerships and disregarded entities*** —

(i) ***Partnerships.*** If foreign law imposes tax at the entity level on the income of a partnership, the partnership is considered to be legally liable for such tax under foreign law and therefore is considered to pay the tax for Federal income tax purposes. The rules of this paragraph (f)(4)(i) apply regardless of which person is obligated to remit the tax, which person actually remits the tax, or which person the foreign country could proceed against to collect the tax in the event all or a portion of the tax is not paid. See §§ 1.702-1(a)(6) and 1.704-1(b)(4)(viii) for rules relating to the determination of a partner's distributive share of such tax.

(ii) ***Disregarded entities.*** If foreign law imposes tax at the entity level on the income of an entity described in § 301.7701-2(c)(2)(i) of this chapter (a *disregarded entity*), the person (as defined in section 7701(a)(1)) who is treated as owning the assets of the disregarded entity for Federal income tax purposes is considered to be legally liable for such tax under foreign law. Such person is considered to pay the tax for Federal income tax purposes. The rules of this paragraph (f)(4)(ii) apply regardless of which person is obligated to remit the tax, which person actually remits the tax, or which person the foreign country could proceed against to collect the tax in the event all or a portion of the tax is not paid.

(5) ***Allocation of taxes in the case of certain ownership or classification changes*** —

(i) ***In general.*** If a partnership, disregarded entity, or corporation undergoes one or more covered events during its foreign taxable year that do not result in a closing of the foreign taxable year, then a portion of the foreign income tax (other than a withholding tax described in section 901(k)(1)(B)) paid by a person under paragraphs (f)(1) through (4) of this section with respect to the continuing foreign taxable year in which such covered event or events occur is allocated to and among all persons that were predecessor entities or prior owners during such foreign taxable year. The allocation is made based on the respective portions of the taxable income (as determined under foreign law) for the continuing foreign taxable year that are attributable under the principles of § 1.1502-76(b) to the period of existence or ownership of each predecessor

entity or prior owner during the continuing foreign taxable year. Foreign income tax allocated to a person that is a predecessor entity is treated (other than for purposes of section 986) as paid by the person as of the close of the last day of its last U.S. taxable year. Foreign income tax allocated to a person that is a prior owner, for example a transferor of a disregarded entity, is treated (other than for purposes of section 986) as paid by the person as of the close of the last day of its U.S. taxable year in which the covered event occurred.

(ii) ***Covered event.*** For purposes of this paragraph (f)(5), a covered event is a partnership termination under section 708(b)(1), a transfer of a disregarded entity, or a change in the entity classification of a disregarded entity or a corporation.

(iii) ***Predecessor entity and prior owner.*** For purposes of this paragraph (f)(5), a predecessor entity is a partnership or a corporation that undergoes a covered event as described in paragraph (f)(5)(ii) of this section. A prior owner is a person that either transfers a disregarded entity or owns a disregarded entity immediately before a change in the entity classification of the disregarded entity as described in paragraph (f)(5)(ii) of this section.

(iv) ***Partnership variances.*** In the case of a change in any partner's interest in the partnership (a variance), except as otherwise provided in section 706(d)(2) (relating to certain cash basis items) or 706(d)(3) (relating to tiered partnerships), foreign tax paid by the partnership during its U.S. taxable year in which the variance occurs is allocated between the portion of the U.S. taxable year ending on, and the portion of the U.S. taxable year beginning on the day after, the day of the variance. The allocation is made under the principles of this paragraph (f)(5) as if the variance were a covered event.

(6) ***Allocation of foreign taxes in connection with elections under section 336(e) or 338 or § 1.245A-5(e).*** For rules relating to the allocation of foreign taxes in connection with elections made pursuant to section 336(e), see § 1.336-2(g)(3)(ii). For rules relating to the allocation of foreign taxes in connection with elections made pursuant to section 338, see § 1.338-9(d). For rules relating to the allocation of foreign taxes in connection with elections made pursuant to § 1.245A-5(e)(3)(i), see § 1.245A-5(e)(3)(i)(B).

(7) ***Examples.*** The following examples illustrate the rules of paragraphs (f)(3) through (6) of this section.

(i) ***Example 1*** —

(A) ***Facts.*** A, a United States person, owns 100 percent of B, an entity organized in Country X. B owns 100 percent of C, also an entity organized in Country X. B and C are corporations for U.S. and foreign tax purposes that use the “u” as their functional currency. Pursuant to a consolidation regime, Country X imposes a net income tax described in paragraph (a)(3) of this section on the combined income of B and C within the meaning of paragraph (f)(3)(ii) of this section. In year 1, C pays 25u of interest to B. If B and C did not report their income on a combined basis for Country X tax purposes, the interest paid from C to B would result in 25u of interest income to B and 25u of deductible interest expense to C. For purposes of reporting the combined income of B and C, Country X first requires B and C to determine their own income (or loss) on a separate schedule. For this purpose, however, neither B nor C takes into account the 25u of interest paid from C to B because the income of B and C is included in the same combined base. The separate income of B and C reported on their Country X schedules for year 1, which do not reflect the 25u

intercompany payment, is 100u and 200u, respectively. The combined income reported for Country X purposes is 300u (the sum of the 100u separate income of B and 200u separate income of C).

(B) ***Result.*** On the separate schedules described in paragraph (f)(3)(iii)(A) of this section, B's separate income is 100u and C's separate income is 200u. Under paragraph (f)(3)(iii)(B)(*1*) of this section, the 25u interest payment from C to B is taken into account for purposes of determining B's and C's portions of the combined income under paragraph (f)(3)(iii) of this section, because B and C would have taken the items into account if they did not compute their income on a combined basis. Thus, B's portion of the combined income is 125u (100u plus 25u) and C's portion of the combined income is 175u (200u less 25u). The result is the same regardless of whether the 25u interest payment from C to B is deductible for U.S. Federal income tax purposes. See paragraph (f)(3)(iii)(B)(*2*) of this section.

(ii) ***Example 2*** —

(A) ***Facts.*** A, a United States person, owns 100 percent of B, an entity organized in Country X. B is a corporation for Country X tax purposes, and a disregarded entity for U.S. income tax purposes. B owns 100 percent of C and D, entities organized in country X that are corporations for both U.S. and Country X tax purposes. B, C, and D use the “u” as their functional currency and file on a combined basis for Country X income tax purposes. Country X imposes a net income tax described in paragraph (a)(3) of this section at the rate of 30 percent on the taxable income of corporations organized in Country X. Under the Country X combined reporting regime, income (or loss) of C and D is attributed to, and treated as income (or loss) of, B. B has the sole obligation to pay Country X income tax imposed with respect to income of B and income of C and D that is attributed to, and treated as income of, B. Under Country X tax law, Country X may proceed against B, but not C or D, if B fails to pay over to Country X all or any portion of the Country X income tax imposed with respect to such income. In year 1, B has income of 100u, C has income of 200u, and D has a net loss of (60u). Under Country X tax law, B is considered to have 240u of taxable income with respect to which 72u of Country X income tax is imposed. Country X does not provide mandatory rules for allocating D's loss.

(B) ***Result.*** Under paragraph (f)(3)(ii) of this section, the 72u of Country X tax is considered to be imposed on the combined income of B, C, and D. Because Country X tax law does not provide mandatory rules for allocating D's loss between B and C, under paragraph (f)(3)(iii)(C) of this section D's (60u) loss is allocated pro rata: 20u to B ((100u/300u) × 60u) and 40u to C ((200u/300u) × 60u). Under paragraph (f)(3)(i) of this section, the 72u of Country X tax must be allocated pro rata among B, C, and D. Because D has no income for Country X tax purposes, no Country X tax is allocated to D. Accordingly, 24u (72u × (80u/240u)) of the Country X tax is allocated to B, and 48u (72u × (160u/240u)) of such tax is allocated to C. Under paragraph (f)(4)(ii) of this section, A is considered to have legal liability for the 24u of Country X tax allocated to B under paragraph (f)(3) of this section.

(g) ***Definitions.*** For purposes of this section and §§ 1.901-2A and 1.903-1, the following definitions apply.

(1) ***Foreign country and possession (territory) of the United States.*** The term *foreign country* means any foreign state, any possession (territory) of the United States, and any political subdivision of any foreign state or of any possession (territory) of the United States. The term *possession* (or *territory*) *of the United States* means American Samoa, Guam, the Commonwealth of the Northern Mariana Islands, the Commonwealth of Puerto Rico, and the U.S. Virgin Islands.

(2) ***Foreign levy.*** The term *foreign levy* means a levy imposed by a foreign country.

(3) ***Foreign tax.*** The term *foreign tax* means a foreign levy that is a tax as defined in paragraph (a)(2) of this section.

(4) ***Foreign tax law.*** The term *foreign tax law* means the laws of the foreign country imposing a foreign tax, including a separate levy that is modified by an applicable income tax treaty. The foreign tax law is construed on the basis of the foreign country's statutes, regulations, case law, and administrative rulings or other official pronouncements, as modified by an applicable income tax treaty.

(5) ***Paid, payment, and paid by.*** The term *paid* means "paid" or "accrued"; the term *payment* means "payment" or "accrual"; and the term *paid by* means "paid by" or "accrued by or on behalf of," depending on the taxpayer's method of accounting for foreign income taxes. In the case of a taxpayer that claims a foreign tax credit, the taxpayer's method of accounting for foreign income taxes refers to whether the taxpayer claims the foreign tax credit for taxes paid (that is, remitted) or taxes accrued (as determined under § 1.905-1(d)) during the taxable year. The term *paid* does not include foreign taxes deemed paid under section 904(c) or section 960.

(6) ***Resident and nonresident.*** The terms *resident* and *nonresident,* when used in the context of the foreign tax law of a foreign country, have the meaning provided in paragraphs (g)(6)(i) and (ii) of this section.

(i) ***Resident.*** An individual is a resident of a foreign country if the individual is liable to income tax in such country by reason of the individual's residence, domicile, citizenship, or similar criterion under such country's foreign tax law. An entity (including a corporation, partnership, trust, estate, or an entity that is disregarded as an entity separate from its owner for Federal income tax purposes) is a resident of a foreign country if the entity is liable to tax on its income (regardless of whether tax is actually imposed) under the laws of the foreign country by reason of the entity's place of incorporation or place of management in that country (or in a political subdivision or local authority thereof), or by reason of a criterion of similar nature, or if the entity is of a type that is specifically identified as a resident in an income tax treaty with the United States to which the foreign country is a party.

(ii) ***Nonresident.*** A nonresident with respect to a foreign country is any individual or entity that is not a resident of such foreign country.

(7) ***Taxpayer.*** The term *taxpayer* has the meaning set forth in paragraph (f)(1) of this section.

(h) ***Applicability dates.*** Except as otherwise provided in this paragraph (h), this section applies to foreign taxes paid (within the meaning of paragraph (g) of this section) in taxable years beginning on or after December 28, 2021. For foreign taxes that relate to (and if creditable are considered to accrue in) taxable years beginning before December 28, 2021, and that are remitted in taxable years beginning on or after December 28, 2021, by a taxpayer that accounts for foreign income taxes on the accrual basis, see § 1.901-2 as contained in 26 CFR part 1 revised as of April 1, 2021. For foreign taxes paid to Puerto Rico by reason of section 1035.05 of the Puerto Rico Internal Revenue Code of 2011, as amended (13 L.P.R.A. § 30155) (treating certain income, gain or loss as effectively connected with the active conduct of a trade or

business with Puerto Rico), this section applies to foreign taxes paid (within the meaning of paragraph (g) of this section) in taxable years beginning on or after January 1, 2023. For foreign taxes described in the preceding sentence that are paid in taxable years beginning before January 1, 2023, see § 1.901-2 as contained in 26 CFR part 1 revised as of April 1, 2021.

(Approved by the Office of Management and Budget under control number 1545-0746)

[T.D. 7918, 48 FR 46276, Oct. 12, 1983, as amended by T.D. 8372, 56 FR 56008, Oct. 31, 1991; T.D. 9416, 73 FR 40733, July 16, 2008; T.D. 9536, 76 FR 42037, July 18, 2011, T.D. 9535, 76 FR 42043, July 18, 2011; T.D. 9536, 76 FR 53819, Aug. 30, 2011; T.D. 9576, 77 FR 8125, Feb. 14, 2012; T.D. 9619, 78 FR 28489, May 15, 2013; T.D. 9634, 78 FR 54391, Sept. 4, 2013; T.D. 9959, 87 FR 335, Jan. 4, 2022; 87 FR 45019, July 27, 2022]

§ 1.901-2A Dual capacity taxpayers.

(a) ***Application of separate levy rules as applied to dual capacity taxpayers*** —

(1) ***In general.*** If the application of a foreign levy (as defined in § 1.901-2(g)(3)) is different, either by the terms of the levy or in practice, for dual capacity taxpayers (as defined in § 1.901-2(a)(2)(ii)(A)) from its application to other persons, then, unless the only such difference is that a lower rate (but the same base) applies to dual capacity taxpayers, such difference is considered to be related to the fact that dual capacity taxpayers receive, directly or indirectly, a specific economic benefit (as defined in § 1.901-2(a)(2)(ii)(B)) from the foreign country and thus to be a difference in kind, and not merely of degree. In such a case, notwithstanding any contrary provision of § 1.901-2(d), the levy as applicable to such dual capacity taxpayers is a separate levy (within the meaning of § 1.901-2(d)) from the levy as applicable to such other persons, regardless of whether such difference is in the base of the levy, in the rate of the levy, or both. In such a case, each of the levy as applied to dual capacity taxpayers and the levy as applied to other persons must be analyzed separately to determine whether it is an income tax within the meaning of § 1.901-2(a)(1) and whether it is a tax in lieu of an income tax within the meaning of § 1.903-1(a). However, if the application of the levy is neither different by its terms nor different in practice for dual capacity taxpayers from its application to other persons, or if the only difference is that a lower rate (but the same base) applies to dual capacity taxpayers, then, in accordance with § 1.901-2(d), such foreign levy as applicable to dual capacity taxpayers and such levy as applicable to other persons together constitute a single levy. In such a case, no amount paid (as defined in § 1.901-2(g)(1)) pursuant to such levy by any such dual capacity taxpayer is considered to be paid in exchange for a specific economic benefit, and such levy, as applicable in the aggregate to such dual capacity taxpayers and to such other persons, is analyzed to determine whether it is an income tax within the meaning of § 1.901-2(a)(1) or a tax in lieu of an income tax within the meaning of § 1.903-1(a). Application of a foreign levy to dual capacity taxpayers will be considered to be different in practice from application of that levy to other persons, even if no such difference is apparent from the terms of the levy, unless it is established that application of that levy to dual capacity taxpayers does not differ in practice from its application to other persons.

(2) ***Examples.*** The provisions of paragraph (a)(1) of this section may be illustrated by the following examples:

Example 1. Under a levy of country X called the country X income tax, every corporation that does business in country X is required to pay to country X 40 percent of its income from its business in country X. Income for purposes of the country X income tax is computed by subtracting specified deductions from the corporation's gross income derived from its business in country

X. The specified deductions include the corporation's expenses attributable to such gross income and allowances for recovery of the cost of capital expenditures attributable to such gross income, except that under the terms of the country X income tax a corporation engaged in the exploitation of minerals K, L or M in country X is not permitted to recover, currently or in the future, expenditures it incurs in exploring for those minerals. In practice, the only corporations that engage in exploitation of the specified minerals in country X are dual capacity taxpayers. Thus, the application of the country X income tax to dual capacity taxpayers is different from its application to other corporations. The country X income tax as applied to corporations that engage in the exploitation of minerals K, L or M (dual capacity taxpayers) is, therefore, a separate levy from the country X income tax as applied to other corporations. Accordingly, each of

(i) the country X income tax as applied to such dual capacity taxpayers and

(ii) the country X income tax as applied to such other persons, must be analyzed separately to determine whether it is an income tax within the meaning of § 1.901-2(a)(1) and whether it is a tax in lieu of an income tax within the meaning of § 1.903-1(a).

Example 2. The facts are the same as in example 1, except that it is demonstrated that corporations that engage in exploitation of the specified minerals in country X and that are subject to the levy include both dual capacity taxpayers and other persons. The country X income tax as applied to all corporations is, therefore, a single levy. Accordingly, no amount paid pursuant to the country X income tax by a dual capacity taxpayer is considered to be paid in exchange for a specific economic benefit; and, if the country X income tax is an income tax within the meaning of § 1.901-2(a)(1) or a tax in lieu of an income tax within the meaning of § 1.903-1(a), it will be so considered in its entirety for all corporations subject to it.

Example 3. Under a levy of country Y called the country Y income tax, each corporation incorporated in country Y is required to pay to country Y a percentage of its worldwide income. The applicable percentage is greater for such corporations that earn more than a specified amount of income than for such corporations that earn less than that amount. Income for purposes of the levy is computed by deducting from gross income specified types of expenses and specified allowances for capital expenditures. The expenses for which deductions are permitted differ depending on the type of business in which the corporation subject to the levy is engaged, *e.g.,* a deduction for interest paid to a related party is not allowed for corporations engaged in enumerated types of activities. In addition, carryover of losses from one taxable period to another is permitted for corporations engaged in specified types of activities, but not for corporations engaged in other activities. By its terms, the foreign levy makes no distinction between dual capacity taxpayers and other persons. It is established that in practice the higher rate of the country Y income tax applies to both dual capacity taxpayers and other persons and that in practice the differences in the base of the country Y income tax (*e.g.,* the lack of a deduction for interest paid to related parties for some corporations subject to the levy and the lack of a carryover provision for some corporations subject to the levy) apply to both dual capacity taxpayers and other persons. The country Y income tax as applied to all corporations incorporated in country Y is therefore a single levy. Accordingly, no amount paid pursuant to the country Y income tax by a dual capacity taxpayer is considered to be paid in exchange for a specific economic benefit; and if the country Y income tax is an income tax within the meaning of § 1.901-2(a)(1) or a tax in lieu of an income tax within the meaning of § 1.903-1(a), it will be so considered in its entirety for all persons subject to it.

Example 4. The facts are the same as in example 3, except that it is not established that in practice the higher rate does not apply only to dual capacity taxpayers. By reason of such higher rate, application of the country Y income tax to dual capacity taxpayers is different in practice from application of the country Y income tax to other persons subject to it. The country Y income tax as applied to dual capacity taxpayers is therefore a separate levy from the country Y income tax as applied to other corporations incorporated in country Y. Accordingly, each of

(i) the country Y income tax as applied to dual capacity taxpayers and

(ii) the country Y income tax as applied to other corporations incorporated in country Y, must be analyzed separately to determine whether it is an income tax within the meaning of § 1.901-2(a)(1) and whether it is a tax in lieu of an income tax within the meaning of § 1.903-1(a).

Example 5. Under a levy of country X called the country X tax, all persons who do not engage in business in country X and who receive interest income from residents of country X are required to pay to country X 25 percent of the gross amount of such interest income. It is established that the country X tax applies by its terms and in practice to certain banks that are dual capacity taxpayers and to persons who are not dual capacity taxpayers and that application to such dual capacity taxpayers does not differ by its terms or in practice from application to such other persons. The country X tax as applied to all such persons (both the dual capacity taxpayers and the other persons) is, therefore, a single levy. Accordingly, no amount paid pursuant to the country X tax by such a dual capacity taxpayer is considered to be paid in exchange for a specific economic benefit; and, if the country X tax is a tax in lieu of an income tax within the meaning of § 1.903-1(a), it will be so considered in its entirety for all persons subject to it.

Example 6. Under a levy of country X called the country X tax, every corporation incorporated outside of country X ("foreign corporation") that maintains a branch in country X is required annually to pay to country X 52 percent of its net income attributable to that branch. It is established that the application of the country X tax is neither different by its terms nor different in practice for certain banks that are dual capacity taxpayers from its application to persons (which may, but do not necessarily, include other banks) that are not dual capacity taxpayers. The country X tax as applied to all foreign corporations with branches in country X (*i.e.,* both those banks that are dual capacity taxpayers and the foreign corporations that are not dual capacity taxpayers) is, therefore, a single levy. Accordingly, no amount paid pursuant to the country X tax by a bank that is a dual capacity taxpayer is considered to be paid in exchange for a specific economic benefit; and, if the country X tax is an income tax within the meaning of § 1.901-2(a)(1) or a tax in lieu of an income tax within the meaning of § 1.903-1(a), it will be so considered in its entirety for all persons subject to it.

Example 7. Under a levy of country H called the country H tax, all corporations that are organized outside country H and that do not engage in business in country H are required to pay to country H a percentage of the gross amount of interest income derived from residents of country H. The percentage is 30 percent, except that it is 15 percent for a specified category of corporations. All corporations in that category are dual capacity taxpayers. It is established that the country H tax applies by its terms and in practice to dual capacity taxpayers and to persons that are not dual capacity taxpayers and that the only difference in application between such dual capacity taxpayers and such other persons is that a lower rate (but the same base) applies to such dual capacity taxpayers. The country H tax as applied to all such persons (both the dual capacity taxpayers and the other persons) is, therefore, a single levy. Accordingly, no amount paid pursuant to the country H

tax by such a dual capacity taxpayer is considered to be paid in exchange for a specific economic benefit, and if the country H tax is a tax in lieu of an income tax within the meaning of § 1.903-1(a), it will be so considered in its entirety for all persons subject to it.

(b) ***Burden of proof for dual capacity taxpayers*** —

(1) ***In general.*** For credit to be allowable under section 901 or 903, the person claiming credit must establish that the foreign levy with respect to which credit is claimed is an income tax within the meaning of § 1.901-2(a)(1) or a tax in lieu of an income tax within the meaning of § 1.903-1(a), respectively. Thus, such person must establish, among other things, that such levy is a tax. See § 1.901-2(a)(2)(i) and § 1.903-1(a). Where a person claims credit under section 901 or 903 for an amount paid by a dual capacity taxpayer pursuant to a foreign levy, § 1.901-2(a)(2)(i) and § 1.903-1(a), respectively, require such person to establish the amount, if any, that is paid pursuant to the distinct element of the levy that is a tax. If, pursuant to paragraph (a)(1) of this section and § 1.901-2(d), such levy as applicable to dual capacity taxpayers and such levy as applicable to other persons together constitute a single levy, then no amount paid pursuant to that levy by any such dual capacity taxpayer is considered to be paid in exchange for a specific economic benefit. Accordingly, such levy has only one distinct element, and the levy either is or is not, in its entirety, a tax. If, however, such levy as applicable to dual capacity taxpayers is a separate levy from such levy as applicable to other persons, then a person claiming credit under section 901 or 903 for an amount paid by a dual capacity taxpayer pursuant to such separate levy may establish the amount, if any, that is paid pursuant to the distinct element of the levy that is a tax only by the facts and circumstances method or the safe harbor method described in paragraph (c) of this section. If such person fails to so establish such amount, no portion of the amount that is paid pursuant to the separate levy by the dual capacity taxpayer to such foreign country shall be treated as an amount of tax. Any amount that, either by reason of application of the methods of paragraph (c) of this section or by reason of the immediately preceding sentence, is not treated as an amount of tax shall

(i) be considered to have been paid in exchange for a specific economic benefit;

(ii) be characterized (*e.g.,* as royalty, purchase price, cost of sales, reduction of the proceeds of a sale, or reduction of interest income) according to the nature of the transaction and of the specific economic benefit received; and

(iii) be treated according to such characterization for all purposes of chapter 1 of the Internal Revenue Code, except that any determination that an amount is not tax for purposes of section 901 or 903 by reason of application of the safe harbor method shall not be taken into account in determining whether or not such an amount is to be characterized and treated as tax for purposes of computing an allowance for percentage depletion under sections 611 and 613.

(2) ***Effect of certain treaties.*** If, irrespective of whether such credit would be allowable under section 901 or 903 in the absence of a treaty, the United States has in force a treaty with a foreign country that treats a foreign levy as an income tax for purposes of allowing credit for United States tax and if the person claiming credit is entitled to the benefit of such treaty, then, unless such person claims credit not under the treaty but under section 901 or 903, and except to the extent the treaty provides otherwise and subject to all terms, conditions and limitations provided in the treaty, no portion of an amount paid with respect to such levy by a dual capacity taxpayer shall be considered to be paid in exchange for a specific economic benefit. If, however, such person claims credit not under such treaty but rather under section 901 or 903 (*e.g.,* so as not to be subject to a limitation contained in such treaty), the provisions of this section apply to such levy.

(c) *Satisfaction of burden of proof* —

(1) ***In general.*** This paragraph (c) sets out the methods by which a person who claims credit under section 901 or 903 for an amount paid by a dual capacity taxpayer pursuant to a foreign levy that satisfies all of the criteria of section 901 or 903 other than the determination of the distinct element of the levy that is a tax and of the amount that is paid pursuant to that distinct element (a "qualifying levy") may establish such distinct element and amount. Such person must establish the amount paid pursuant to a qualifying levy that is paid pursuant to the distinct element of the levy that is a tax (which amount therefore is an amount of income tax within the meaning of § 1.901-2(a)(1) or an amount of tax in lieu of income tax within the meaning of § 1.903-1(a) (a "qualifying amount")) only by the facts and circumstances method set forth in paragraph (c)(2) of this section or the safe harbor method set forth in paragraph (c)(3) of this section. A levy is not a qualifying levy, and neither the facts and circumstances method nor the safe harbor method applies to an amount paid by a dual capacity taxpayer pursuant to a foreign levy, if it has been established pursuant to § 1.901-2(d) and paragraph (a)(1) of this section that that levy as applied to that dual capacity taxpayer and that levy as applied to persons other than dual capacity taxpayers together constitute a single levy, or if it has been established in accordance with the first sentence of paragraph (b)(2) of this section that credit is allowable by reason of a treaty for an amount paid with respect to such levy.

(2) *Facts and circumstances method* —

(i) ***In general.*** If the person claiming credit establishes, based on all of the relevant facts and circumstances, the amount, if any, paid by the dual capacity taxpayer pursuant to the qualifying levy that is not paid in exchange for a specific economic benefit, such amount is the qualifying amount with respect to such qualifying levy. In determining the qualifying amount with respect to a qualifying levy under the facts and circumstances method, neither the methodology nor the results that would have obtained if a person had elected to apply the safe harbor method to such qualifying levy is a relevant fact or circumstance. Accordingly, neither such methodology nor such results shall be taken into account in applying the facts and circumstances method.

(ii) ***Examples.*** The application of the facts and circumstances method is illustrated by the following examples:

Example 1. Country A, which does not have a generally imposed income tax, imposes a levy, called the country A income tax, on corporations that carry on the banking business through a branch in country A. All such corporations lend money to the government of country A, and the consideration (interest) paid by the government of country A for the loans is not made available by the government on substantially the same terms to the population of country A in general. Thus, the country A income tax is imposed only on dual capacity taxpayers. *L,* a corporation that carries on the banking business through a branch in country A and that is a dual capacity taxpayer, establishes that all of the criteria of section 901 are satisfied by the country A income tax, except for the determination of the distinct element of the levy that is a tax and of *L*'s qualifying amount with respect thereto. The country A income tax is, therefore, a qualifying levy. *L* establishes that, although all persons subject to the country A income tax are dual capacity taxpayers, the country A income tax applies in the same manner to income from such persons' transactions with the government of country A as it does to income from their transactions with private persons; that there are significant transactions (either in volume or in amount) with private persons; and that the portion of such persons' income that is derived from transactions with the government of country A on the one hand or private persons on the other varies

greatly among persons subject to the country A income tax. By making this showing, *L* has demonstrated that no portion of the amount paid by it to country A pursuant to the levy is paid in exchange for a specific economic benefit (the interest income). Accordingly, *L* has demonstrated under the facts and circumstances method that the entire amount it has paid pursuant to the country A income tax is a qualifying amount.

Example 2. A, a domestic corporation that is a dual capacity taxpayer subject to a qualifying levy of country X, pays 1000u (units of country X currency) to country X in 1986 pursuant to the qualifying levy. *A* does not elect to apply the safe harbor method to country X, but if it had so elected, 800u would have been *A's* qualifying amount with respect to the levy. Based on all of the relevant facts and circumstances (which do not include either the methodology of the safe harbor method or the qualifying amount that would have obtained under that method), *A* establishes that 628u of such 1000u is not paid in exchange for a specific economic benefit. *A* has demonstrated under the facts and circumstances method that 628u is a qualifying amount. Pursuant to paragraph (b)(1) of this section, 372u (1000u-628u) is considered to have been paid by *A* in exchange for a specific economic benefit. That amount is characterized and treated as provided in paragraph (b)(1) of this section.

Example 3. The facts are the same as in example 2 except that under the safe harbor method 580u would have been *A*'s qualifying amount with respect to the levy. That amount is not a relevant fact or circumstance and the result is the same as in example 2.

(3) ***Safe harbor method.*** Under the safe harbor method, the person claiming credit makes an election as provided in paragraph (d) of this section and, pursuant to such election, applies the safe harbor formula described in paragraph (e) of this section to the qualifying levy or levies to which the election applies.

(d) ***Election to use the safe harbor method*** —

(1) ***Scope of election.*** An election to use the safe harbor method is made with respect to one or more foreign states and possessions of the United States with respect to a taxable year of the person making the election (the "electing person"). Such election applies to such taxable year and to all subsequent taxable years of the electing person ("election years"), unless the election is revoked in accordance with paragraph (d)(4) of this section. If an election applies to a foreign state or possession of the United States ("elected country"), it applies to all qualifying levies of the elected country and to all qualifying levies of all political subdivisions of the elected country with respect to which the electing person claims credit for amounts paid (or deemed to be paid) by any dual capacity taxpayer. A member of an affiliated group that files a consolidated United States income tax return may use the safe harbor method for a foreign state or U.S. possession only if an election to use the safe harbor method for that state or possession has been made by the common parent of such affiliated group on behalf of all members of the group. Similarly, a member of an affiliated group that does not file a consolidated United States income tax return may elect to use the safe harbor method for a foreign state or U.S. possession only if an election to use the safe harbor method for that state or possession is made by each member of the affiliated group which claims credit for taxes paid to such state or possession or to any political subdivision thereof. An election to use the safe harbor method for an elected country does not apply to foreign taxes carried back or forward to any election year from any taxable year to which the election does not apply. Such

election does apply to foreign taxes carried back or forward from any election year to any taxable year. A person who elects to use the safe harbor method for one or more foreign countries may, in a later taxable year, also elect to use that method for other foreign countries.

(2) ***Effect of election.*** An election to use the safe harbor method described in paragraph (c)(3) of this section requires the electing person to apply the safe harbor formula of paragraph (e) of this section to all qualifying levies of all elected countries and their political subdivisions, and constitutes a specific waiver by such person of the right to use the facts and circumstances method described in paragraph (c)(2) of this section with respect to any levy of any elected country or any political subdivision thereof.

(3) ***Time and manner of making election*** —

(i) ***In general.*** To elect to use the safe harbor method, an electing person must attach a statement to its United States income tax return for the taxable year for which the election is made and must file such return by the due date (including extensions) for the filing thereof. Such statement shall state—

(A) That the electing person elects to use the safe harbor method for the foreign states and the possessions of the United States designated in the statement and their political subdivisions, and

(B) That the electing person waives the right, for any election year, to use the facts and circumstances method for any levy of the designated states, possessions and political subdivisions. Notwithstanding the foregoing, a person may, with the consent of the Commissioner, elect to use the safe harbor method for a taxable year for one or more foreign states or possessions of the United States, at a date later than that specified in the first sentence of this paragraph (d)(3)(i), *e.g.,* upon audit of such person's United States income tax return for such taxable year. The Commissioner will normally consent to such a later election if such person demonstrates that it failed to make a timely election for such a foreign state or possession for such taxable year because such person reasonably believed either that it was not a dual capacity taxpayer with respect to such state or possession or that no levy that it paid to such state or possession or any political subdivision thereof was a qualifying levy (for example, because it reasonably, but incorrectly, believed that the levy it paid was not a separate levy from that applicable to persons other than dual capacity taxpayers). The Commissioner will not, however, consent to such a later election with respect to any state or possession for a taxable year if such person (or any other member of an affiliated group of which such person is a member) applied the facts and circumstances method to any levy of such state or possession or any political subdivision thereof for such taxable year.

(ii) Certain retroactive elections. Notwithstanding the requirements of paragraph (d)(3)(i) of this section relating to the time and manner of making an election, an election may be made for a taxable year beginning on or before November 14, 1983, provided the electing person elects in accordance with § 1.901-2(h) to apply all of the provisions of this section, § 1.901-2 and § 1.903-1 to such taxable year and provided all of the requirements set forth in this paragraph (d)(3)(ii) are satisfied. Such an election shall be made by timely (including extensions) filing a federal income tax return or an amended federal income tax return for such taxable year; by attaching to such return a statement containing the statements and information set forth in paragraph (d)(3)(i) of this section; and by filing amended income tax returns for all subsequent election years for which income tax returns have previously been filed in which credit is claimed

under section 901 or 903 and applying the safe harbor method in such amended returns. All amended returns referred to in the immediately preceding sentence must be filed on or before October 12, 1984, (unless the Commissioner consents to a later filing in circumstances similar to those provided in paragraph (d)(3)(i)) and at a time when neither assessment of a deficiency for any of such election years nor the filing of a claim for any refund claimed in any such amended return is barred.

(iii) ***Election to credit taxes made in amended return.*** If a person has filed a United States income tax return for a taxable year to which this § 1.901-2A applies (including application by reason of the election provided in § 1.901-2(h)(2)) in which such person has deducted (instead of credited) qualifying foreign taxes and such person validly makes an election to credit (instead of deduct) such taxes in a timely filed amended return for such taxable year, an election to use the safe harbor method may be made in such amended return provided all of the requirements of paragraph (d)(3)(ii) of this section are satisfied other than the requirement that such amended return and the other amended returns referred to in that paragraph be filed on or before October 12, 1984.

(4) ***Revocation of election.*** An election to use the safe harbor method described in paragraph (c)(3) of this section may not be revoked without the consent of the Commissioner. An application for consent to revoke such election with respect to one or more elected countries shall be made to the Commissioner of Internal Revenue, Washington, DC 20224. Such application shall be made not later than the 30th day before the due date (including extensions) for the filing of the income tax return for the first taxable year for which the revocation is sought to be effective, except in the case of an event described in (i), (ii), (iii) or (iv) below, in which case an application for revocation with retroactive effect may be made within a reasonable time after such event. The Commissioner may make his consent to any revocation conditioned upon adjustments being made in one or more taxable years so as to prevent the revocation from resulting in a distortion of the amount of any item relating to tax liability in any taxable year. The Commissioner will normally consent to a revocation (including, in the case of (i), (ii), (iii) or (iv) below, one with retroactive effect), if—

(i) An amendment to the Internal Revenue Code or the regulations thereunder is made which applies to the taxable year for which the revocation is to be effective and the amendment substantially affects the taxation of income from sources outside the United States under subchapter N of chapter 1 of the Internal Revenue Code; or

(ii) After a safe harbor election is made with respect to a foreign state, a tax treaty between the United States and that state enters into force; that treaty covers a foreign tax to which the safe harbor election applies; and that treaty applies to the taxable year for which the revocation is to be effective; or

(iii) After a safe harbor election is made with respect to a foreign state or possession of the United States, a material change is made in the tax law of that state or possession or of a political subdivision of that state or possession; and the changed law applies to the taxable year for which the revocation is to be effective and has a material effect on the taxpayer; or

(iv) With respect to a foreign country to which a safe harbor election applies, the Internal Revenue Service issues a letter ruling to the electing person and that letter ruling (*A*) relates to the availability or application of the safe harbor method to one or more levies of such foreign country; (*B*) does not relate to the facts and circumstances method described in paragraph (c)(2) of this section; and (*C*) fails to include a ruling requested by the electing person or includes a ruling contrary to one requested by such person (in either case, other than one

relating to the facts and circumstances method) and such failure or inclusion has a material adverse effect on the amount of such electing person's credit for taxes paid to such foreign country for the taxable year for which the revocation is to be effective; or

(v) A corporation ("new member") becomes a member of an affiliated group; the new member and one or more pre-existing members of such group are dual capacity taxpayers with respect to the same foreign country; and, with respect to such country, either the new member or the pre-existing members (but not both) have made a safe harbor election; and the Commissioner in his discretion determines that obtaining the benefit of the right to revoke the safe harbor election with respect to such foreign country was not the principal purpose of the affiliation between such new member and such group; or

(vi) The election has been in effect with respect to at least three taxable years prior to the taxable year for which the revocation is to be effective.

The Commissioner may, in his discretion, consent to a revocation even if none of the foregoing subdivisions (i) through (vi) is applicable. If an election has been revoked with respect to an elected country, a subsequent election to apply the safe harbor method with respect to such elected country may be made only with the consent of the Commissioner and upon such terms and conditions as the Commissioner in his discretion may require.

(e) ***Safe harbor formula*** —

(1) ***In general.*** The safe harbor formula applies to determine the distinct element of a qualifying levy that is a tax and the amount paid by a dual capacity taxpayer pursuant to such qualifying levy that is the qualifying amount with respect to such levy. Under the safe harbor formula the amount paid in a taxable year pursuant to a qualifying levy that is the qualifying amount with respect to such levy is an amount equal to:

$$(A - B - C) \times D / (1 - D)$$

where (except as otherwise provided in paragraph (e)(5) of this section):

A = the amount of gross receipts as determined under paragraph (e)(2) of this section

B = the amount of costs and expenses as determined under paragraph (e)(2) of this section

C = the total amount paid in the taxable year by the dual capacity taxpayer pursuant to the qualifying levy (the "actual payment amount")

D = the tax rate as determined under paragraph (e)(3) of this section

In no case, however, shall the qualifying amount exceed the actual payment amount; and the qualifying amount is zero if the safe harbor formula yields a qualifying amount less than zero. The safe harbor formula is intended to yield a qualifying amount that is approximately equal to the amount of generally imposed income tax within the meaning of paragraphs (a) and (b)(1) of § 1.903-1 ("general tax") of the foreign country that would have been required to be paid in the taxable year by the dual capacity taxpayer if it had not been a dual capacity taxpayer and if the base of the general tax had allowed a deduction in such year for the amount ("specific economic benefit amount") by which the actual payment amount exceeds the qualifying amount. See, however, paragraph (e)(5) of this section if an elected country has no general tax. The specific economic benefit amount is considered to be the portion of the actual payment

amount that is paid pursuant to the distinct portion of the qualifying levy that imposes an obligation in exchange for a specific economic benefit. The specific economic benefit amount is therefore considered to be an amount paid by the dual capacity taxpayer in exchange for such specific economic benefit, which amount must be treated for purposes of chapter 1 of the Internal Revenue Code as provided in paragraph (b)(1) of this section.

(2) ***Determination of gross receipts and costs and expenses.*** For purposes of the safe harbor formula, gross receipts and costs and expenses are, except as otherwise provided in this paragraph (e), the gross receipts and the deductions for costs and expenses, respectively, as determined under the foreign law applicable in computing the actual payment amount of the qualifying levy to which the safe harbor formula applies. However, except as otherwise provided in this paragraph (e), if provisions of the qualifying levy increase or decrease the liability imposed on dual capacity taxpayers compared to the general tax liability of persons other than dual capacity taxpayers by reason of the determination or treatment of gross receipts or of costs or expenses, the provisions generally applicable in computing such other persons' tax base under the general tax shall apply to determine gross receipts and costs and expenses for purposes of computing the qualifying amount. If provisions of the qualifying levy relating to gross receipts meet the requirements of § 1.901-2(b)(3)(i), such provisions shall apply to determine gross receipts for purposes of computing the qualifying amount. If neither the general tax nor the qualifying levy permits recovery of one or more costs or expenses, and by reason of the failure to permit such recovery the qualifying levy does not satisfy the net income requirement of § 1.901-2(b)(4) (even though the general tax does satisfy that requirement), then such cost or expense shall be considered a cost or expense for purposes of computing the qualifying amount. If the qualifying levy does not permit recovery of one or more significant costs or expenses, but provides allowances that effectively compensate for nonrecovery of such significant costs or expenses, then, for purposes of computing the qualifying amount, costs and expenses shall not include the costs and expenses under the general tax whose nonrecovery under the qualifying levy is compensated for by such allowances but shall instead include such allowances. In determining costs and expenses for purposes of computing the qualifying amount with respect to a qualifying levy, the actual payment amount with respect to such levy shall not be considered a cost or expense. For purposes of this paragraph, the following differences in gross receipts and costs and expenses between the qualifying levy and the general tax shall not be considered to increase the liability imposed on dual capacity taxpayers compared to the general tax liability of persons other than dual capacity taxpayers, but only if the general tax would be an income tax within the meaning of § 1.901-2(a)(1) if such different treatment under the qualifying levy had also applied under the general tax:

(i) Differences in the time of realization or recognition of one or more items of income or in the time when recovery of one or more costs and expenses is allowed (unless the period of recovery of such costs and expenses pursuant to the qualifying levy is such that it effectively is a denial of recovery of such costs and expenses, as described in § 1.901-2(b)(4)(i)); and

(ii) Differences in consolidation or carryover provisions of the types described in paragraphs (b)(4)(ii) and (b)(4)(iii) of § 1.901-2.

(3) ***Determination of tax rate.*** The tax rate for purposes of the safe harbor formula is the tax rate (expressed as a decimal) that is applicable in computing tax liability under the general tax. If the rate of the general tax varies according to the amount of the base of that tax, the rate to be applied in computing the qualifying amount is the rate that applies under the general tax to a person whose base is, using the terminology of paragraph (e)(1) of this section, “A” minus “B” minus the specific

economic benefit amount paid by the dual capacity taxpayer pursuant to the qualifying levy, provided such rate applies in practice to persons other than dual capacity taxpayers, or, if such rate does not so apply in practice, the next lowest rate of the general tax that does so apply in practice.

(4) ***Determination of applicable provisions of general tax*** —

(i) ***In general.*** If the general tax is a series of income taxes (*e.g.,* on different types of income), or if the application of the general tax differs by its terms for different classes of persons subject to the general tax (*e.g.,* for persons in different industries), then, except as otherwise provided in this paragraph (e), the qualifying amount small be computed by reference to the income tax contained in such series of income taxes, or in the case of such different applications the application of the general tax, that by its terms and in practice imposes the highest tax burden on persons other than dual capacity taxpayers. Notwithstanding the preceding sentence, the general tax amount shall be computed by reference to the application of the general tax to entities of the same type (as determined under the general tax) as the dual capacity taxpayer and to persons of the same resident or nonresident status (as determined under the general tax) as the dual capacity taxpayer; and, if the general tax treats business income differently from non-business (*e.g.,* investment) income (as determined under the general tax), the dual capacity taxpayer's business and non-business income shall be treated as the general tax treats such income. If, for example, the dual capacity taxpayer would, under the general tax, be treated as a resident (*e.g.,* because the general tax treats an entity that is organized in the foreign country or managed or controlled there as a resident) and as a corporation (*i.e.,* because the rules of the general tax treat an entity like the dual capacity taxpayer as a corporation), and if some of the dual capacity taxpayer's income would, under the general tax, be treated as business income and some as non-business income, the dual capacity taxpayer and its income shall be so treated in computing the qualifying amount.

(ii) ***Establishing that provisions apply in practice.*** For purposes of the safe harbor formula a provision (including tax rate) shall be considered a provision of the general tax only if it is reasonably likely that that provision applies by its terms and in practice to persons other than dual capacity taxpayers. In general, it will be assumed that a provision (including tax rate) that by its terms applies to persons other than dual capacity taxpayers is reasonably likely to apply in practice to such other persons, unless the person claiming credit knows or has reason to know otherwise. However, in cases of doubt, the person claiming credit may be required to demonstrate that such provision is reasonably likely so to apply in practice.

(5) ***No general tax.*** If a foreign country does not impose a general tax (and thus a levy, in order to be a qualifying levy must satisfy all of the criteria of section 901 (because section 903 cannot apply), other than the determination of the distinct element of the levy that is a tax and of the amount that is paid pursuant to that distinct element), paragraphs (e)(2), (3) and (4) of this section do not apply to a qualifying levy of such country, and the terms of the safe harbor formula set forth in paragraph (e)(1) of this section are defined with respect to such levy as follows:

A = the amount of gross receipts as determined under the qualifying levy;

B = the amount of deductions for costs and expenses as determined under the qualifying levy;

C = the actual payment amount; and

D = the lower of the rate of the qualifying levy, or the rate of tax specified in section 11(b)(5) (or predecessor or successor section, as the case may be) of the Internal Revenue Code as applicable to the taxable year in which the actual payment amount is paid.

(6) ***Certain taxes in lieu of an income tax.*** To the extent a tax in lieu of an income tax (within the meaning of § 1.903-1(a)) that applies in practice to persons other than dual capacity taxpayers would actually have been required to be paid in the taxable year by a dual capacity taxpayer if it had not been a dual capacity taxpayer (*e.g.,* in substitution for the general tax with respect to a type of income, such as interest income, dividend income, royalty income, insurance income), such tax in lieu of an income tax shall be treated as if it were an application of the general tax for purposes of applying the safe harbor formula of this paragraph (e) to such dual capacity taxpayer, and such formula shall be applied to yield a qualifying amount that is approximately equal to the general tax (so defined) that would have been required to be paid in the taxable year by such dual capacity taxpayer if the base of such general tax had allowed a deduction in such year for the specific economic benefit amount.

(7) ***Multiple levies.*** If, in any election year of an electing person, with respect to any elected country and all of its political subdivisions,

(i) Amounts are paid by a dual capacity taxpayer pursuant to more than one qualifying levy or pursuant to one or more levies that are qualifying levies and one or more levies that are not qualifying levies by reason of the last sentence of paragraph (c)(1) of this section but with respect to which credit is allowable, or

(ii) More than one general tax (including a tax treated as if it were an application of the general tax under paragraph (e)(6)) would have been required to be paid by a dual capacity taxpayer (or taxpayers) if it (or they) had not been a dual capacity taxpayer (or taxpayers), or

(iii) Credit is claimed with respect to amounts paid by more than one dual capacity taxpayer, the provisions of this paragraph (e) shall be applied such that the aggregate qualifying amount with respect to such qualifying levy or levies plus the aggregate amount paid with respect to levies referred to in (e)(7)(i) that are not qualifying levies shall be the aggregate amount that would have been required to be paid in the taxable year by such dual capacity taxpayer (or taxpayers) pursuant to such general tax or taxes if it (or they) had not been a dual capacity taxpayer (or taxpayers) and if the base of such general tax or taxes had allowed a deduction in such year for the aggregate specific economic benefit amount (except that, if paragraph (e)(5) applies to any levy of such elected country or any political subdivision thereof, the aggregate qualifying amount for qualifying levies of such elected country and all of its political subdivisions plus the aggregate amount paid with respect to levies referred to in paragraph (e)(7)(i) that are not qualifying levies shall not exceed the greater of the aggregate amount paid with respect to levies referred to in paragraph (e)(7)(i) that are not qualifying levies and the amount determined in accordance with paragraph (e)(5) where “D” is the rate of tax specified in section 11(b)(5) (or predecessor or successor section, as the case may be) of the Internal Revenue Code as applicable to the taxable year in which the actual payment amount is paid). However, in no event shall such aggregate amount exceed the aggregate actual payment amount plus the aggregate amount paid with respect to levies referred to in (e)(7)(i) that are not qualifying levies, nor be less than the aggregate amount paid with respect to levies referred to in (e)(7)(i) that are not qualifying levies. In applying (e)(7)(ii) a person who is not subject to a levy but who is considered to receive a specific economic benefit by reason of § 1.901-2(a)(2)(ii)(E) shall be treated as a dual capacity taxpayer. See example 12 in paragraph (e)(8) of this section.

(8) ***Examples.*** The provisions of this paragraph (e) may be illustrated by the following examples:

Example 1. Under a levy of country X called the country X income tax, every corporation that does business in country X is required to pay to country X 40% of its income from its business in country X. Income for purposes of the country X income tax is computed by subtracting specified deductions from the corporation's gross income derived from its business in country X. The specified deductions include the corporation's expenses attributable to such gross income and allowances for recovery of the cost of capital expenditures attributable to such gross income, except that under the terms of the country X income tax a corporation engaged in the exploitation of minerals K, L or M in country X is not permitted to recover, currently or in the future, expenditures it incurs in exploring for those minerals. Under the terms of the country X income tax interest is not deductible to the extent it exceeds an arm's length amount (*e.g.,* if the loan to which the interest relates is not in accordance with normal commercial practice or to the extent the interest rate exceeds an arm's length rate). In practice, the only corporations that engage in exploitation of the specified minerals in country X are dual capacity taxpayers. Because no other persons subject to the levy engage in exploitation of minerals K, L or M in country X, the application of the country X income tax to dual capacity taxpayers is different from its application to other corporations. The country X income tax as applied to corporations that engage in the exploitation of minerals K, L or M (dual capacity taxpayers) is, therefore, a separate levy from the country X income tax as applied to other corporations. *A* is a U.S. corporation that is engaged in country X in exploitation of mineral K. Natural deposits of mineral K in country X are owned by country X, and *A* has been allowed to extract mineral K in consideration of payment of a bonus and of royalties to an instrumentality of country X. Therefore, *A* is a dual capacity taxpayer. In 1984, *A* does business in country X within the meaning of the levy. *A* has validly elected the safe harbor method for country X for 1984. In 1984, as determined in accordance with the country X income tax as applied to *A, A* has gross receipts of 120u (units of country X currency), deducts 20u of costs and expenses, and pays 40u (40% of (120u-20u)) to country X pursuant to the levy. *A* also incurs in 1984 10u of nondeductible expenditures for exploration for mineral K and 2u of nondeductible interest costs attributable to an advance of funds from a related party to finance an undertaking relating to the exploration for mineral K for which normal commercial financing was unavailable because of the substantial risk inherent in the undertaking. *A* establishes that the country X income tax as applied to persons other than dual capacity taxpayers is an income tax within the meaning of § 1.901-2(a)(1), that it is the generally imposed income tax of country X and hence the general tax, and that all of the criteria of section 903 are satisfied with respect to the country X income tax as applied to dual capacity taxpayers, except for the determination of the distinct element of the levy that is a tax and of *A*'s qualifying amount with respect thereto. (No conclusion is reached whether the country X income tax as applied to dual capacity taxpayers is an income tax within the meaning of § 1.901-2(a)(1). Such a determination would require, among other things, that the country X income tax as so applied, judged on the basis of its predominant character, meets the net income requirement of § 1.901-2(b)(4) notwithstanding its failure to permit recovery of exploration expenses.) *A* has therefore demonstrated that the country X income tax as applied to dual capacity taxpayers is a qualifying levy.In applying the safe harbor formula, in accordance with paragraph (e)(2), the amount of *A*'s costs and expenses includes the 10u of nondeductible exploration expenses. The failure to permit recovery of interest in excess of arm's length amounts, a provision of both the general tax and the qualifying levy, does not cause the qualifying levy to fail to satisfy the net income requirement of § 1.901-2(b)(4); therefore, the amount of *A*'s costs and expenses does not

include the 2u of nondeductible interest costs. Thus, under the safe harbor method, *A*'s qualifying amount with respect to the levy is 33.33u ((120u−30u−40u) × .40/(1−.40)). *A*'s specific economic benefit amount is 6.67u (*A*'s actual payment amount (40u) less *A*'s qualifying amount (33.33u)). Under paragraph (a) of this section, this 6.67u is considered to be consideration paid by *A* for the right to extract mineral K. Pursuant to paragraph (b) of this section, this amount is characterized according to the nature of *A*'s transactions with country X and its instrumentality and of the specific economic benefit received (the right to extract mineral K), as an additional royalty or other business expense paid or accrued by *A* and is so treated for all purposes of chapter 1 of the Internal Revenue Code, except that if an allowance for percentage depletion is allowable to *A* under sections 611 and 613 with respect to *A*'s interest in mineral K, the determination whether this 6.67u is tax or royalty for purposes of computing the amount of such allowance shall be made under sections 611 and 613 without regard to the determination that under the safe harbor formula such 6.67u is not tax for purposes of section 901 or 903.

Example 2. Under a levy of country Y called the country Y income tax, each corporation incorporated in country Y is required to pay to country Y a percentage of its worldwide income. The applicable percentage is 40 percent of the first 1,000u (units of country Y currency) of income and 50 percent of income in excess of 1,000u. Income for purposes of the levy is computed by deducting from gross income specified types of expenses and specified allowances for capital expenditures. The expenses for which deductions are permitted differ depending on the type of business in which the corporation subject to the levy is engaged, *e.g.*, a deduction for interest paid to a related party is not allowed for corporations engaged in enumerated types of activities. In addition, carryover of losses from one taxable period to another is permitted for corporations engaged in specified types of activities, but not for corporations engaged in other activities. By its terms, the foreign levy makes no distinction between dual capacity taxpayers and other persons. In practice the differences in the base of the country Y income tax (*e.g.*, the lack of a deduction for interest paid to related parties for some corporations subject to the levy and the lack of a carryover provision for some corporations subject to the levy) apply to both dual capacity taxpayers and other persons, but the 50 percent rate applies only to dual capacity taxpayers. By reason of such higher rate, application of the country Y income tax to dual capacity taxpayers is different in practice from application of the country Y income tax to other persons subject to it. The country Y income tax as applied to dual capacity taxpayers is therefore a separate levy from the country Y income tax as applied to other corporations incorporated in country Y. *B* is a corporation incorporated in country Y that is engaged in construction activities in country Y. *B* has a contract with the government of country Y to build a hospital in country Y for a fee that is not made available on substantially the same terms to substantially all persons who are subject to the general tax of country X. Accordingly, *B* is a dual capacity taxpayer. *B* has validly elected the safe harbor method for country Y for 1985. In 1985, as determined in accordance with the country Y income tax as applied to *B*, *B* has gross receipts of 10,000u, deducts 6,000u of costs and expenses, and pays 1900u ((1,000u × 40%) + (3,000u × 50%)) to country Y pursuant to the levy.It is assumed that *B* has established that the country Y income tax as applied to persons other than dual capacity taxpayers is an income tax within the meaning of § 1.901-2(a)(1) and is the general tax. It is further assumed that *B* has demonstrated that all of the criteria of section 901 are satisfied with respect to the country Y income tax as applied to dual capacity taxpayers, except for the determination of the distinct element of such levy that is a tax and of *B*'s qualifying amount with respect to that levy, and therefore that the country Y income tax as applied to dual capacity taxpayers is a qualifying

levy.In applying the safe harbor formula, in accordance with paragraph (e)(3), the 50 percent rate is not used because it does not apply in practice to persons other than dual capacity taxpayers. The next lowest rate of the general tax that does apply in practice to such persons, 40 percent, is used. Accordingly, under the safe harbor formula, *B*'s qualifying amount with respect to the levy is 1400u ((10,000u−6000u−1900u) × .40/(1−.40)). *B*'s specific economic benefit amount is 500u (B's actual payment amount (1900u) less *B*'s qualifying amount (1400u)). Pursuant to paragraph (b) of this section, *B*'s specific economic benefit amount is characterized according to the nature of *B*'s transactions with country Y and of the specific economic benefit received, as a reduction of *B*'s proceeds of its contract with country Y; and this amount is so treated for all purposes of chapter 1 of the Code, including the computation of *B*'s accumulated profits for purposes of section 902.

Example 3. The facts are the same as in example 2, with the following additional facts: The contract between *B* and country Y is a cost plus contract. One of the costs of the contract which country Y is required to pay or for which it is required to reimburse *B* is any tax of country Y on *B*'s income or receipts from the contract. Instead of reimbursing *B* therefor, country Y agrees with *B* to assume any such tax liability. Under country Y tax law, *B* is not considered to have additional income or receipts by reason of country Y's assumption of *B*'s country Y tax liability. In 1985, *B*'s gross receipts of 10,000u include 3000u from the contract, and its costs and expenses of 6000u include 2000u attributable to the contract. *B*'s other gross receipts and expenses do not relate to any transaction in which B receives a specific economic benefit. In accordance with the contract, country Y, and not *B,* is required to bear the amount of *B*'s country Y income tax liability on *B*'s 1000u (3000u-2000u) income from the contract. In accordance with the contract *B* computes its country Y income tax without taking this 1000u into account and therefore pays 1400u ((1000u × 40%) + (2000u × 50%)) to country Y pursuant to the levy. In accordance with § 1.901-2(f)(2)(i), the country Y income tax which country Y is, under the contract, required to bear is considered to be paid by country Y on behalf of *B*. *B*'s proceeds of its contract, for all purposes of chapter 1 of the Code (including the computation of *B*'s accumulated profits for purposes of section 902), therefore, are increased by the additional 500u (1900u computed as in example 2 less 1400u as computed above) of *B's* liability under the country Y income tax that is assumed by country Y and such 500u is considered to be paid pursuant to the levy by country Y on behalf of *B.* In applying the safe harbor formula, therefore, the computation is exactly as in example 2 and the results are the same as in example 2.

Example 4. Country L issues a decree (the "April 11 decree"), in which it states it is exercising its tax authority to impose a tax on all corporations on their "net income" from country L. "Net income" is defined as actual gross receipts less all expenses attributable thereto, except that in the case of income from extraction of petroleum, gross receipts are defined as 105 percent of actual gross receipts, and no deduction is allowed for interest incurred on loans whose proceeds are used for exploration for petroleum. Under the April 11 decree, wages paid by corporations subject to the decree are deductible in the year of payment, except that corporations engaged in the extraction of petroleum may deduct such wages only by amortization over a 5-year period and, to the extent such wages are paid to officers, they may be deducted only by amortization over a period of 50 years. The April 11 decree permits related corporations subject to the decree to file consolidated returns in which net income and net losses of related

corporations offset each other in computing net income for purposes of the April 11 decree, except that corporations engaged in petroleum exploration or extraction activities are not eligible for inclusion in such a consolidated return. The law of country L does not require separate entities to carry on separate activities in connection with exploring for or extracting petroleum. Net losses of a taxable year may be carried over for 10 years to offset income, except that no more than 25% of net income (before deducting the loss carryover) in any such future year may be offset by a carryover of net loss, and, in the case of any corporation engaged in exploration or extraction of petroleum, losses incurred prior to such a corporation's having net income from production may be carried forward for only 8 years and no more than 15% of net income in any such future year may be offset by such a net loss. The rate to be paid under the April 11 decree is 50% of net income (as defined in the levy), except that if net income exceeds 10,000u (units of country L currency), the rate is 75% of the corporation's net income (including the first 10,000u thereof). In practice, no corporations other than corporations engaged in extraction of petroleum have net income in excess of 10,000u. All petroleum resources of country L are owned by the government of country L, whose petroleum ministry licenses corporations to explore for and extract petroleum in consideration for payment of royalties as petroleum is produced.

J is a U.S. corporation that is engaged in country L in the exploration and extraction of petroleum and therefore is a dual capacity taxpayer. *J* has validly elected the safe harbor method for country L for the year 1983, the year that *J* commenced activities in country L, and has not revoked such election. For the years 1983 through 1986, *J*'s gross receipts, deductions and net income before application of the carryover provisions, determined in accordance with the April 11 decree, are as follows:

Year	Gross receipts (105 percent of actual gross receipts)	Deductions other than wages	Wages paid other than to officers (amortizable at 20 percent)	Wages paid to officers (amortizable at 2 percent)	Nondeductible exploration interest expense	Net income (loss) (B-C-amortization of cumulative D-amortization of cumulative E)
A.	B.	C.	D.	E.	F.	G.
1983	0	13,000u	100u	50u	1,000u	(13,021u)
1984	0	17,000u	100u	50u	2,800u	(17,042u)
1985	42,000u	15,000u	100u	50u	2,800u	26,937u

Year	Gross receipts (105 percent of actual gross receipts)	Deductions other than wages	Wages paid other than to officers (amortizable at 20 percent)	Wages paid to officers (amortizable at 2 percent)	Nondeductible exploration interest expense	Net income (loss) (B-C-amortization of cumulative D-amortization of cumulative E)
1986	105,000u	20,000u	100u	50u	2,800u	84,916u

After application of the carryover provisions, *J*'s net income and actual payment amounts pursuant to the April 11 levy are as follows:

Year	Net income (loss)	Actual payment amount (*I* × 75 percent)
H.	*I.*	*J.*
1983	(13,021u)	0
1984	(17,042u)	0
1985	22,896u	17,172u
1986	72,179u	54,134u

Pursuant to paragraph (a)(1) of this section, the April 11 decree as applied to corporations engaged in the exploration or extraction of petroleum in country L is a separate levy from the April 11 decree as applied to all other corporations. *J* establishes that the April 11 decree, as applied to such other corporations, is an income tax within the meaning of § 1.901-2(a)(1) and that the decree as so applied is the general tax. The April 11 decree as applied to corporations engaged in the exploration or extraction of petroleum in country L does not meet the gross receipts requirement of § 1.901-2(b)(3); therefore, irrespective of whether it meets the other requirements of § 1.901-2(b)(1), it is not an income tax within the meaning of § 1.901-2(a)(1). However, the April 11 decree as applied to such corporations is a qualifying levy because *J* has demonstrated that all of the criteria of section 903 are satisfied with respect to the April 11 decree as applied to such corporations, except for the determination of the distinct element of such levy that imposes a tax and of *J*'s qualifying amount with respect thereto.

In applying the safe harbor formula, in accordance with paragraph (e)(2), gross receipts are computed by reference to the general levy, and thus are 100%, not 105%, of actual gross receipts. Similarly, costs and expenses include exploration interest expense. In accordance with paragraph (e)(2)(i) of this section the difference between the general tax and the qualifying levy in the timing of the deduction for wages, other than wages of officers, is not considered to increase the liability of dual capacity taxpayers because the general tax would not have failed to be an income tax within the meaning of § 1.901-2(a)(1) if it had provided for 5-year amortization of such wages instead of for current deduction. *See* § 1.901-2(b)(4)(i). However, amortization of wages paid to officers over a 50-year period is such a deferred recovery of such wages that it effectively is a denial of the deduction of the excess of such wages paid in any year over the amortization of such cumulative wages permitted in such year. See § 1.901-2(b)(4)(i). The different treatment of wages paid to officers under the general tax and the qualifying levy is thus not merely a difference in timing within the meaning of paragraph (e)(2)(i) of this section. Accordingly, the difference between the amount of wages paid by *J* to officers in any year and *J*'s deduction (in computing the actual payment amount) for amortization of such cumulative wages allowed in such year is, pursuant to paragraph (e)(2) of this section, treated as a cost and expense in computing *J*'s qualifying amount for such year with respect to the April 11 decree. The differences in the consolidation and carryover provisions between the general tax and the qualifying levy are of the types described in paragraph (e)(2)(ii) of this section and, pursuant to paragraphs (b)(4)(ii) and (b)(4)(iii) of § 1.901-2, the general tax would not fail to be an income tax within the meaning of § 1.901-2(a)(i) even if it contained the consolidation and carryover provisions of the qualifying levy. Thus, such differences are not considered to increase the liability of dual capacity taxpayers pursuant to the qualifying levy as compared to the general tax liability of persons other than dual capacity taxpayers.

Accordingly, in applying the safe harbor formula to the qualifying levy for 1985 and 1986, gross receipts and costs and expenses are computed as follows:

Gross receipts

1985: 42,000u × (100/105) − 40,000u

1986: 105,000u × (100/105) − 100,000u

COSTS AND EXPENSES

Item	1985	1986
1. Deductions other than wages (column C in the preceding chart)	15,000u	20,000u
2. Amortization of cumulative wages paid in 1983 and thereafter other than to officers	60u	80u
3. Deduction of wages to officers paid in current year, instead of amortization allowed in current year of such cumulative wages paid in 1983 and thereafter	50u	50u
4. Deduction of exploration interest expense	2,800u	2,800u
5. Costs and expenses before carryover of net loss (sum of lines 1 through 4)	17,910u	22,930u
6. Recalculation of loss carryover by recalculating 1983 and 1984 net income (loss) to reflect current deduction of wages to officers and exploration interest expense: 1983 adjusted net loss carryover: (13,021u) + (49u) + (1000u) = (14,070u); 1984 adjusted net loss carryover: (17,042u) + (48u) + (2800u) = (19,890u)		
7. Recalculation of limitation on use of net loss carryover deduction:		
Gross receipts	40,000u	100,000u
Less costs and expenses	(17,910u)	(22,930)
Total	22,090u	77,070u
Times 15 percent limitation	3,314u	11,561u
8. Costs and expenses including net loss carryover deduction (line 5 plus line 7)	21,224u	34,491u

In years after 1986, costs and expenses for purposes of determining the qualifying amount would reflect net loss carryforward deductions based on the recomputed losses carried forward from 1983 and 1984 (14,070u and 19,890u, respectively) less the amounts thereof that were utilized in determining costs and expenses for 1985 and 1986 (3,314u and 11,561u, respectively). The 1983 and 1984 loss carryforwards would be considered utilized in accordance with the order of priority in which such losses are utilized under the terms of the qualifying levy.

In applying the safe harbor formula, the tax rate to be used, in accordance with paragraph (e)(3) of this section, is .50.

Accordingly, under the safe harbor method, *J*'s qualifying amounts with respect to the April 11 decree for 1985 and 1986 are computed as follows:

1985: (40,000u − 21,224u − 17,172u) × .50 / (1 − .50) = 1604u

1986: (100,000u − 34,491u − 54,134u) × .50 / (1 − .50) = 11,375u

Under the safe harbor method *J*'s qualifying amounts with respect to the April 11 decree for 1985 and 1986 are thus 1604u and 11,375u, respectively; and its specific economic benefit amounts are 15,568u (17,172u-1604u) and 42,759u, (54,134u-11,375u), respectively. Pursuant to paragraph (b) of this section, *J*'s specific economic benefit amounts are characterized according to the nature of *J*'s transactions with country L and of the specific economic benefit received by *J* as additional royalties paid to country L with respect to the petroleum extracted by *J* in country L in 1985 and 1986, and these amounts are so treated for all purposes of chapter 1 of the Code.

Example 5. Country E, which has no generally imposed income tax, imposes a levy called the country E income tax only on corporations carrying on the banking business through a branch in country E and on corporations engaged in the extraction of petroleum in country E. All of the petroleum resources of country E are owned by the government of country E, whose petroleum ministry licenses corporations to explore for and extract petroleum in consideration of payment of royalties as petroleum is extracted. The base of the country E income tax is a corporation's actual gross receipts from sources in country E less all expenses attributable, on reasonable principles, to such gross receipts; the rate of tax is 29 percent. *A* is a U.S corporation that carries on the banking business through a branch in country E. *B* is a U.S. corporation (unrelated to *A*) that is engaged in the extraction of petroleum in country E. In 1984 *A* receives interest on loans it has made to 160 borrowers in country E, seven of which are agencies and instrumentalities of the government of country E. The economic benefits received by *A* and *B* (*i.e.*, the interest received by *A* from the government and B's license to extract petroleum owned by the government) are not made available on substantially the same terms to the population of country E in general.*A* and *B* are dual capacity taxpayers. Each of them has validly elected the safe harbor method for country E for 1984. *A* demonstrates that the country E income tax as applied to it (a dual capacity taxpayer) is not different by its terms or in practice from the country E income tax as applied to persons (in this case other banks) that are not dual capacity taxpayers. *A* has therefore established pursuant to paragraph (a)(1) of this section and § 1.901-2(d) that the country E income tax as applied to it and the country E income tax as applied to persons other than dual capacity taxpayers are together a single levy. *A* establishes that such levy is an income tax within the meaning of § 1.901-2(a)(1). In accordance with paragraph (a)(1) of this section, no portion of the amount paid by *A* pursuant to such levy is considered to be paid in exchange for a specific economic benefit. Thus, the entire amount paid by *A* pursuant to this levy is an amount of income tax paid.*B* does not demonstrate that the country E income tax as applied to corporations engaged in the extraction of petroleum in country E (dual capacity taxpayers) is not different by its terms or in practice from the country E income tax as applied to persons other than dual capacity taxpayers (*i.e.,* banks that are not dual capacity taxpayers). Accordingly, pursuant to paragraph (a)(1) of this section and §

1.901-2(d), the country E income tax as applied to corporations engaged in the extraction of petroleum in country E is a separate levy from the country E income tax as applied to other persons.*B* demonstrates that all of the criteria of section 901 are satisfied with respect to the country E income tax as applied to corporations engaged in the exploration of petroleum in country E, except for the determination of the distinct element of such levy that imposes a tax and of *B*'s qualifying amount with respect to the levy. Pursuant to paragraph (e)(5) of this section, in applying the safe harbor formula to *B,* "A" is the amount of *B*'s gross receipts as determined under the country E income tax as applied to *B*; "B" is the amount of *B*'s costs and expenses as determined thereunder; "C" is *B*'s actual payment amount; and "D" is .29, the lower of the rate (29 percent) of the qualifying levy (the country E income tax as applied to corporations engaged in the extraction of petroleum in country E) or the rate (46 percent) of tax specified for 1984 in section 11(b)(5) of the Internal Revenue Code. Thus, *B*'s qualifying amount is equal to its actual payment amount.

Example 6. The facts are the same as in example 5, except that the rate of the country E income tax is 55 percent. For the reasons stated in example 5, the results with respect to *A* are the same as in example 5. In applying the safe harbor formula to *B,* "A," "B," and "C" are the same as in example 5, but "D" is .46, as that rate is less than .55. Thus, *B*'s qualifying amount is less than *B*'s actual payment amount, and the difference is *B*'s specific economic benefit amount.

Example 7. Country E imposes a tax (called the country E income tax) on the realized net income derived by corporations from sources in country E, except that, with respect to interest income received from sources in country E and certain insurance income, nonresident corporations are instead subject to other levies. With respect to such interest income a levy (called the country E interest tax) requires nonresident corporations to pay to country E 20 percent of such gross interest income unless the nonresident corporation falls within a specified category of corporations ("special corporations"), all of which are dual capacity taxpayers, in which case the rate is instead 25 percent. With respect to such insurance income nonresident corporations are subject to a levy (called the country E insurance tax), which is not an income tax within the meaning of § 1.901-2(a)(1). The country E interest tax applies at the 20 percent rate by its terms and in practice to persons other than dual capacity taxpayers. The country E interest tax as applied at the 25 percent rate to special corporations applies only to dual capacity taxpayers; therefore, the country E interest tax as applied to special corporations is a separate levy from the country E interest tax as applied at the 20 percent rate.*A* is a U.S. corporation which is a special corporation subject to the 25 percent rate of the country E interest tax. *A* does not have any insurance income that is subject to the country E insurance tax. *A,* a dual capacity taxpayer, has validly elected the safe harbor formula for 1984. In 1984 *A* receives 100u (units of country E currency) of gross interest income subject to the country E interest tax and pays 25u to country E.*A* establishes that the country E income tax is the generally imposed income tax of country E; that all of the criteria of section 903 are satisfied with respect to the country E interest tax as applied to special corporations except for the determination of the distinct element of the levy that is a tax and of *A*'s qualifying amount with respect thereto. *A* has therefore demonstrated that the country E interest tax as applied to special corporations is a qualifying levy. *A* establishes that the country E interest tax at the 20 percent rate is a tax in lieu of an income tax within the meaning of § 1.903-1(a). Pursuant to paragraph (e)(6) of this section the country E interest tax at the 20 percent rate is treated as if it were an application of the general tax for purposes of the safe harbor formula of this paragraph (e), since that tax would actually have been required to have been paid by *A* with respect to its interest income had *A* not been a dual capacity taxpayer (special corporation) instead subject to the qualifying

levy (the country E interest tax at the 25 percent rate).Even if the country E insurance tax is a tax in lieu of an income tax within the meaning of § 1.903-1(a), that tax is not treated as if it were an application of the general tax for purposes of applying the safe harbor formula to *A* since *A* had no insurance income in 1984 and hence such tax would not actually have been required to be paid by *A* had *A* not been a dual capacity taxpayer.

Example 8. Under a levy of country S called the country S income tax, each corporation operating in country S is required to pay country S 50 percent of its income from operations in country S. Income for purposes of the country S income tax is computed by subtracting all attributable costs and expenses from a corporation's gross receipts derived from its business in country S. Among corporations on which the country S income tax is imposed are corporations engaged in the exploitation of mineral K in country S. Natural deposits of mineral K in country S are owned by country S, and all corporations engaged in the exploitation thereof do so under concession agreement with an instrumentality of country S. Such corporations, in addition to the 50 percent country S income tax, are also subject to a levy called a surtax, which is equal to 60 percent of posted price net income less the amount of the country S income tax. The surtax is not deductible in computing the country S income tax of corporations engaged in the exploitation of mineral K in country S.
A is a U.S. corporation engaged in country S in the exploitation of mineral K, and *A* has been allowed to extract mineral K under a concession agreement with an instrumentality of country S. Therefore, *A* is a dual capacity taxpayer. In accordance with a term of the concession agreement, certain of *A*'s income (net of expenses attributable thereto) is exempted from the income tax and surtax.

The results for *A* in 1984 are as follows:

	Income Tax	Surtax
Gross Receipts:		
Realized—Taxable	120u	—
Realized—Exempt	15u	—
Posted Price-Taxable	—	145u
Costs:		
Attributable to Taxable Receipts	20u	20u
Attributable to Exempt Receipts	5u	—
Taxable Income	100u	125u
Tentative Surtax (60 percent)	—	75u
Petroleum Levy at 50 percent	50u	50u

	Income Tax	Surtax
Surtax	—	25u

Because of the difference (nondeductibility of the surtax) in the country S income tax as applied to dual capacity taxpayers from its application to other persons, the country S income tax as applied to dual capacity taxpayers and the country S income tax as applied to persons other than dual capacity taxpayers are separate levies. Moreover, because *A*'s concession agreement provides for a modification (exemption of certain income) of the country S income tax and surtax as they otherwise apply to other persons engaged in the exploitation of mineral K in country S, those levies (contractual levies) as applied to *A* are separate levies from those levies as applied to other persons engaged in the exploitation of mineral K in country S.
A establishes that the country S income tax as applied to persons other than dual capacity taxpayers is an income tax within the meaning of § 1.901-2(a)(1) and is the general tax. *A* demonstrates that all the criteria of section 903 are satisfied with respect to the country S income tax as applied to *A* and with respect to the surtax as applied to *A,* except for the determination of the distinct elements of such levies that are taxes and of *A*'s qualifying amounts with respect to such levies. Therefore, both the country S income tax as applied to *A* and the surtax as applied to *A* are qualifying levies.

In applying the safe harbor formula, in accordance with paragraph (e)(2), the amount of *A*'s gross receipts includes the exempt realized income, and the amount of *A*'s costs and expenses includes the costs attributable to such exempt income. In accordance with paragraph (e)(7)(i), the amount of the qualifying levy for purposes of the formula is the sum of *A*'s liability for the country S income tax and *A*'s liability for the surtax. Accordingly, under the safe harbor formula, *A*'s qualifying amount with respect to the country S income tax and the surtax is 35u ((135u−25u−75u) × .50/(1−.50)). *A*'s specific economic benefit amount is 40u (*A*'s actual payment amount (75u) less *A*'s qualifying amount (35u)).

Example 9. Country T imposes a levy on corporations, called the country T income tax. The country T income tax is imposed at a rate of 50 percent on gross receipts less all costs and expenses, and affiliated corporations are allowed to consolidate their results in applying the country T income tax. Corporations engaged in the exploitation of mineral L in country T are subject to a levy that is identical to the country T income tax except that no consolidation among affiliated corporations is allowed. The levy allows unlimited loss carryforwards.

C and *D* are affiliated U.S. corporations engaged in country T in the exploitation of mineral L. Natural deposits of mineral L in country T are owned by country T, and *C* and *D* have been allowed to extract mineral L in consideration of certain payments to an instrumentality of country T. Therefore, *C* and *D* are dual capacity taxpayers.

The results for *C* and *D* in 1984 and 1985 are as follows:

	1984		1985	
	C	***D***	***C***	***D***
Gross Receipts	120u	0	120u	120u
Costs	20u	50u	20u	20u
Loss Carryforward				50u
Net Income (Loss)	100u	(50u)	100u	50u
Income Tax	50u		50u	25u

C and *D* establish that the country T income tax as applied to persons other than dual capacity taxpayers is an income tax within the meaning of § 1.901-2(a)(1) and is the general tax. *C* and *D* demonstrate that all of the criteria of section 901 are satisfied with respect to the country T income tax as applied to dual capacity taxpayers, except for the determination of the distinct element of such levy that is a tax and of *C* and *D*'s qualifying amounts with respect to that levy. Therefore, the country T income tax as applied to dual capacity taxpayers is a qualifying levy.
In applying the safe harbor formula, in accordance with paragraphs (e)(2)(ii) and (e)(7)(iii), the gross receipts, costs and expenses, and actual payment amounts of *C* and *D* are aggregated, except that in *D*'s loss year (1984) its gross receipts and costs and expenses are disregarded. The results of any loss year are disregarded since the country T income tax as applied to dual capacity taxpayers does not allow consolidation, and, pursuant to paragraph (e)(2)(ii), differences in consolidation provisions between such levy and the country T income tax as applied to persons that are not dual capacity taxpayers are not considered. Accordingly, in 1984 the qualifying amount with respect to the country T income tax is 50u ((120u−20u−50u) × .50/(1−.50)), all of which is considered paid by *C*. In 1985 the qualifying amount is 75u ((120u + 120u−20u−20u−50u (loss carry forward)—50u—25u) × .50/(1−.50)), of which 50u is considered to be paid by *C* and 25u by *D*.

Example 10. Country W imposes a levy called the country W income tax on corporations doing business in country W. The country W income tax is imposed at a 50 percent rate on gross receipts less all costs and expenses. Corporations engaged in the

exploitation of mineral M in country W are subject to a levy that is identical in all respects to the country W income tax except that it is imposed at a rate of 80 percent (the "80 percent levy").

A is a U.S. corporation engaged in country W in exploitation of mineral M and is subject to the 80 percent levy. Natural deposits of mineral M in country W are owned by country W, and *A* has been allowed to extract mineral M in consideration of certain payments to an instrumentality of country W. Therefore, *A* is a dual capacity taxpayer. *B,* a U.S. corporation affiliated with *A,* also is engaged in business in country W, but has no transactions with country W. *B* is subject to the country W income tax. *B* is a dual capacity taxpayer within the meaning of § 1.901-2(a)(2)(ii)(A) by virtue of its affiliation with *A.*

The results for *A* and *B* in 1984 are as follows:

	A	***B***
Gross Receipts	120u	100u
Costs	20u	40u
Net Income	100u	60u
Tax Rate	.80	.50
Tax	80u	30u

A and *B* establish that the country W income tax as applied to persons other than dual capacity taxpayers is an income tax within the meaning of § 1.901-2(a)(1) and is the general tax. It is assumed that *B* has demonstrated that the country W income tax as applied to *B* does not differ by its terms or in practice from the country W income tax as applied to persons other than dual capacity taxpayers and hence that the country W income tax as applied to *B,* a dual capacity taxpayer, and the country W income tax as applied to such other persons is a single levy. Thus, with respect to *B,* the country W income tax is not a qualifying levy by reason of the last sentence of paragraph (c)(1) of this section. *A* demonstrates that all the criteria of section 901 are satisfied with respect to the 80 percent levy, except for the determination of the distinct element of such levy that is a tax and of *A*'s qualifying amount with respect thereto. Accordingly, the 80 percent levy as applied to *A* is a qualifying levy.

In applying the safe harbor formula in accordance with paragraphs (e)(7)(i) and (e)(7)(iii) in the instant case, it is not necessary to incorporate *B*'s results in the safe harbor formula because *B*'s taxation in country W is identical to the taxation of persons other than dual capacity taxpayers and because neither *A*'s and *B*'s results nor their taxation in country W interact in any way to change *A*'s taxation. All of the amount paid by *B,* 30u, is

an amount of income tax paid by *B* within the meaning of § 1.901-2(a)(1). Accordingly, under the safe harbor formula, the qualifying amount for *A* with respect to the 80 percent levy is 20u ((120u−20u−80u) × .50/(1−.50)). The remaining 60u paid by *A* (80u − 20u) is *A*'s specific economic benefit amount.

Example 11. The facts are the same as in example 10, except that it is assumed that *B* has not demonstrated that the country W income tax as applied to *B* does not differ by its terms or in practice from the country W income tax as applied to persons other than dual capacity taxpayers. In addition, *A* and *B* demonstrate that all the criteria of section 901 are satisfied with respect to each of the country W income tax and the 80 percent levy as applied to dual capacity taxpayers, except for the determination of the distinct elements of such levies that are taxes of *A* and *B*'s qualifying amounts with respect to such levies. Therefore, the country W income tax and 80 percent levy as applied to dual capacity taxpayers are qualifying levies. In applying the safe harbor formula in accordance with paragraphs (e)(7)(i) and (e)(7)(iii), the results of *A* and *B* are aggregated. Accordingly, under the safe harbor formula, the aggregate qualifying amount for *A* and *B* with respect to the country W income tax and 80 percent levy is 50u ([(120u + 100u)−(20u + 40u)−(80u + 30u)] × .50/(1−.50)).

Example 12. Country Y imposes a levy on corporations operating in country Y, called the country Y income tax. Income for purposes of the country Y income tax is computed by subtracting all costs and expenses from a corporation's gross receipts derived from its business in country Y. The rate of the country Y income tax is 50 percent. Country Y also imposes a 20 percent tax (the "withholding tax") on the gross amount of certain income, including dividends, received by persons who are not residents of country Y from persons who are residents of country Y and from corporations that operate there. Corporations engaged in the exploitation of mineral K in country Y are subject to a levy (the "75 percent levy") that is identical in all respects to the country Y income tax except that it is imposed at a rate of 75 percent. Dividends received from such corporations are not subject to the withholding tax. *C,* a wholly-owned country Y subsidiary of *D,* a U.S. corporation, is engaged in country Y in the exploitation of mineral K. Natural deposits of mineral K in country Y are owned by country Y, and *C* has been allowed to extract mineral K in consideration of certain payments to an instrumentality of country Y. Therefore, *C* is a dual capacity taxpayer. *D* has elected the safe harbor method for country Y for 1984. In 1984, *C*'s gross receipts are 120u (units of country Y currency), its costs and expenses are 20u, and its liability under the 75 percent levy is 75u. *C* distributes the amount that remains, 25u, as a dividend to *D.D* establishes that the country Y income tax as applied to persons other than dual capacity taxpayers is an income tax within the meaning of § 1.901-2(a)(1) and the general tax, and that all the criteria of section 901 are satisfied with respect to the 75 percent levy, except for the determination of the distinct element of such levy that is tax and of *C*'s qualifying amount with respect thereto. Accordingly, the 75 percent levy is a qualifying levy.Pursuant to paragraph (e)(7), *D* (which is not subject to a levy of country Y but is considered to receive a specific economic benefit by reason of § 1.901-2(a)(2)(ii)(E)) is treated as a dual capacity taxpayer in applying paragraph (e)(7)(ii). *D* demonstrates that the withholding tax is a tax in lieu of an income tax within the meaning of § 1.903-1, which tax applies in practice to persons other than dual capacity taxpayers, and that such tax actually would have applied to *D* had *D* not been a dual capacity taxpayer (*i.e.,* had *C* not been a dual capacity taxpayer, in which case *D* also would not have been one). Accordingly, the withholding tax is treated for purposes of the safe harbor formula as if it were an application of the general

tax.In applying the safe harbor formula to this situation in accordance with paragraph (e)(7)(ii), the rates of the country Y income tax and the withholding tax are aggregated into a single effective general tax rate. In this case, the rate is .60 (.50 + [(1−.50) × .20]). Accordingly, under the safe harbor formula, *C*'s qualifying amount with respect to the 75 percent levy is 37.5u [(120u−20u−75u) × .60/(1−.60)], the aggregate amount that *C* and *D* would have paid if *C* had been subject to the country Y income tax and had distributed to *D* as a dividend subject to the withholding tax the entire amount that remained for the year after payment of the country Y income tax. Because *C* is in fact the only taxpayer, the entire qualifying amount is paid by *C*.

Example 13. The facts are the same as in example 12, except that dividends received from corporations engaged in the exploitation of mineral K in country Y are subject to the withholding tax. Thus, *C*'s liability under the 75 percent levy is 75u, and *D*'s liability under the withholding tax on the 25u distribution is 5u. *D,* which is a dual capacity taxpayer, demonstrates that the withholding tax as applied to *D* does not differ by its terms or in practice from the withholding tax as applied to persons other than dual capacity taxpayers and hence that the withholding tax as applied to *D* and that levy as applied to such other persons is a single levy. *D* demonstrates that all of the criteria of section 903 are satisfied with respect to the withholding tax. The withholding tax is not a qualifying levy by reason of the last sentence of paragraph (c)(1) of this section.Paragraphs (e)(7)(i), (e)(7)(ii) and (e)(7)(iii) all apply in this situation. As in example 10, it is not necessary to incorporate the withholding tax into the safe harbor formula. All of the amount paid by *D,* 5u, is an amount of tax paid by *D* in lieu of an income tax. In applying the safe harbor formula to *C,* therefore, with respect to the 75 percent levy, "A" is 120, "B" is "20", "C" is 75 and "D" is .50. Accordingly, *C*'s qualifying amount with respect to the 75 percent levy is 25u; the remaining 50u that it paid is its specific economic benefit amount.

Example 14. The facts are the same as in example 12, except that dividends received from corporations engaged in the exploitation of mineral K in country Y are subject to a 10 percent withholding tax (the "10 percent withholding tax"). Thus, *C*'s liability under the 75 percent levy is 75u, and *D*'s liability under the 10 percent withholding tax on the 25u distribution is 2.5u. The only difference between the withholding tax and the 10 percent withholding tax applicable only to dual capacity taxpayers (including *D*) is that a lower rate (but the same base) applies to dual capacity taxpayers. Although the withholding tax and the 10 percent withholding tax are together a single levy, this difference makes it necessary, when dealing with multiple levies, to incorporate the withholding tax and *D*'s payment pursuant to the 10 percent withholding tax in the safe harbor formula. Accordingly, as in example 12, the safe harbor formula is applied by aggregation.The aggregate effective rate of the general taxes for purposes of the safe harbor formula is .60 (.50 + [(1−.50) × .20]). Pursuant to paragraph (e)(7), the aggregate actual payment amount of the qualifying levies for purposes of the formula is the sum of *C* and *D*'s liability for the 75 percent levy and the 10 percent withholding tax. Accordingly, under the safe harbor formula, the aggregate qualifying amount with respect to the 75 percent levy on *C* and the 10 percent withholding tax on *D* is 33.75u ((120u−20u−[75u + 2.5u]) × .60/(1−.60)), which is the aggregate amount of tax that *C* and *D* would have paid if *C* had been subject to the country Y income tax and had paid out its entire amount remaining after payment of that tax to *D* as a dividend subject to the withholding tax.

Example 15. The facts are the same as in example 5, except that the rate of the country E income tax is 45 percent and a political subdivision of country E also imposes a levy, called the "local tax," on all corporations subject to the country E income tax. The base of the local tax is the same as the base of the country E income tax; the rate is 10 percent. The reasoning of example 5 with

regard to the country E income tax as applied to *A* and *B,* respectively, applies equally with regard to the local tax as applied to *A* and *B,* respectively. Accordingly, the entire amount paid by *A* pursuant to each of the country E income tax and the local tax is an amount of income tax paid, and both the country E income tax as applied to *B* and the local tax as applied to *B* are qualifying levies.Pursuant to paragraph (e)(7), in applying the safe harbor formula to *B,* "A" is the amount of *B*'s gross receipts as determined under the (identical) country E income tax and local tax as applied to *B*; "B" is the amount of *B*'s costs and expenses thereunder; and "C" is the sum of *B*'s actual payment amounts with respect to the two levies. Pursuant to paragraph (e)(7), in applying the safe harbor formula to *B, B*'s aggregate qualifying amount with respect to the two levies is limited to the amount determined in accordance with paragraph (e)(5) where "D" is the rate of tax specified in section 11(b)(5) of the Internal Revenue Code. Accordingly, "D" is .46, which is the lower of the aggregate rate (55 percent) of the qualifying levies or the section 11(b)(5) rate (46 percent). *B*'s aggregate qualifying amount is, therefore, identical to *B*'s qualifying amount in example 6, which is less than its aggregate actual payment amount, and the difference is *B*'s specific economic benefit amount.

(f) ***Effective date.*** The effective date of this section is as provided in § 1.901-2(h).

(Approved by the Office of Management and Budget under control number 1545-0746)

[T.D. 7918, 48 FR 46284, Oct. 12, 1983]

§ 1.901-3 Reduction in amount of foreign taxes on foreign mineral income allowed as a credit.

(a) ***Determination of amount of reduction*** —

(1) ***In general.*** For purposes of determining the amount of taxes which are allowed as a credit under section 901(a) for taxable years beginning after December 31, 1969, the amount of any income, war profits, and excess profits taxes paid or accrued, or deemed to be paid under section 902, during the taxable year to any foreign country or possession of the United States with respect to foreign mineral income (as defined in paragraph (b) of this section) from sources within such country or possession shall be reduced by the amount, if any, by which—

(i) The smaller of—

(*a*) The amount of such foreign income, war profits, and excess profits taxes, or

(*b*) The amount of the tax which would be computed under chapter 1 of the Code for such year with respect to such foreign mineral income if the deduction for depletion were determined under section 611 without regard to the deduction for percentage depletion under section 613, exceeds

(ii) The amount of the tax computed under chapter 1 of the Code for such year with respect to such foreign mineral income.

The reduction required by this subparagraph must be made on a country-by-country basis whether the taxpayer uses for the taxable year the per-country limitation under section 904(a)(1), or the overall limitation under section 904(a)(2), on the amount of taxes allowed as credit under section 901(a).

(2) ***Determination of amount of tax on foreign mineral income*** —

(i) ***Foreign tax.*** For purposes of subparagraph (1)(i)(*a*) of this paragraph, the amount of the income, war profits, and excess profits taxes paid or accrued during the taxable year to a foreign country or possession of the United States with respect to foreign mineral income from sources within such country or possession is an amount which is the greater of—

(*a*) The amount by which the total amount of the income, war profits, and excess profits taxes paid or accrued during the taxable year to such country or possession exceeds the amount of such taxes that would be paid or accrued for such year to such country or possession without taking into account such foreign mineral income, or

(*b*) The amount of the income, war profits, and excess profits taxes that would be paid or accrued to such country or possession if such foreign mineral income were the taxpayer's only income for the taxable year, except that in no case shall the amount so determined exceed the total of all income, war profits, and excess profits taxes paid or accrued during the taxable year to such country or possession. For such purposes taxes which are paid or accrued also include taxes which are deemed paid under section 902. In the case of a dividend described in paragraph (b)(2)(i) (*a*) of this section which is from sources within a foreign country or possession of the United States and is attributable in whole or in part to foreign mineral income, the amount of the income, war profits, and excess profits taxes deemed paid under section 902 during the taxable year to such country or possession with respect to foreign mineral income from sources within such country or possession is an amount which bears the same ratio to the amount of the income, war profits, and excess profits taxes deemed paid under section 902 during such year to such country or possession with respect to such dividend as the portion of the dividend which is attributable to foreign mineral income bears to the total dividend. For purposes of (*a*) and (*b*) of this subdivision, foreign mineral income is to be reduced by any credits, expenses, losses, and other deductions which are properly allocable to such income under the law of the foreign country or possession of the United States from which such income is derived.

(ii) ***U.S. tax.*** For purposes of subparagraph (1)(ii) of this paragraph, the amount of the tax computed under chapter 1 of the Code for the taxable year with respect to foreign mineral income from sources within a foreign country or possession of the United States is the greater of—

(*a*) The amount by which the tax under chapter 1 of the Code on the taxpayer's taxable income for the taxable year exceeds a tax determined under such chapter on the taxable income for such year determined without regard to such foreign mineral income, or

(*b*) The amount of tax that would be determined under chapter 1 of the Code if such foreign mineral income were the taxpayer's only income for the taxable year.

For purposes of this subdivision the tax is to be determined without regard to any credits against the tax and without taking into account any tax against which a credit is not allowed under section 901(a). For purposes of (*b*) of this subdivision, the foreign mineral income is to be reduced only by expenses, losses, and other deductions properly allocable under chapter 1 of the Code to such income and is to be computed without any deduction for personal exemptions under section 151 or 642(b).

(iii) ***U.S. income tax computed without deduction allowed by section 613.*** For purposes of subparagraph (1)(i)(*b*) of this paragraph, the amount of the tax which would be computed under chapter 1 of the Code (without regard to section 613) for the taxable year with respect to

foreign mineral income from sources within a foreign country or possession of the United States is the amount of the tax on such income that would be computed under such chapter by using as the allowance for depletion cost depletion computed upon the adjusted depletion basis of the property. For purposes of this subdivision the tax is to be determined without regard to any credits against the tax and without taking into account any tax against which credit is not allowed under section 901(a). If the greater tax with respect to the foreign mineral income under subdivision (ii) of this subparagraph is the tax determined under (*a*) of such subdivision, the tax determined for purposes of subparagraph (1)(i)(*b*) of this paragraph is to be determined by applying the principles of

(*a*) (rather than of (*b*)) of subdivision (ii) of this subparagraph. On the other hand, if the greater tax with respect to the foreign mineral income under subdivision (ii) of this subparagraph is the tax determined under (*b*) of such subdivision, the tax determined for purposes of subparagraph (1)(i)(*b*) of this paragraph is to be determined by applying the principles of

(*b*) (rather than of (*a*)) of subdivision (ii) of this subparagraph.

(3) ***Special rules.***

(i) The reduction required by this paragraph in the amount of taxes paid, accrued, or deemed to be paid to a foreign country or possession of the United States applies only where the taxpayer is allowed a deduction for percentage depletion under section 613 with respect to any part of his foreign mineral income for the taxable year from sources within such country or possession, whether or not such deduction is allowed with respect to the entire foreign mineral income from sources within such country or possession for such year.

(ii) For purposes of this section, the term “foreign country” or “possession of the United States” includes the adjacent continental shelf areas to the extent, and in the manner, provided by section 638(2) and the regulations thereunder.

(iii) The provisions of this section are to be applied before making any reduction required by section 1503(b) in the amount of income, war profits, and excess profits taxes paid or accrued to foreign countries or possessions of the United States by a Western Hemisphere trade corporation.

(iv) If a taxpayer chooses with respect to any taxable year to claim a credit under section 901 and has any foreign mineral income from sources within a foreign country or possession of the United States with respect to which the deduction under section 613 is allowed, he must attach to his return a schedule showing the computations required by subdivisions (i), (ii), and (iii) of subparagraph (2) of this paragraph.

(v) A taxpayer who has elected to use the overall limitation under section 904(a)(2) on the amount of the foreign tax credit for any taxable year beginning before January 1, 1970, may, for his first taxable year beginning after December 31, 1969, revoke his election without first securing the consent of the Commissioner. See paragraph (d) of § 1.904-1.

(b) ***Foreign mineral income defined*** —

(1) ***In general.*** The term “foreign mineral income” means income (determined under chapter 1 of the Code) from sources within a foreign country or possession of the United States derived from—

(i) The extraction of minerals from mines, wells, or other natural deposits,

(ii) The processing of minerals into their primary products, or

(iii) The transportation, distribution, or sale of minerals or of the primary products derived from minerals.

Any income of the taxpayer derived from an activity described in either subdivision (i), (ii), or (iii) of this subparagraph is foreign mineral income, since it is not necessary that the taxpayer extract, process, and transport, distribute, or sell minerals or their primary products for the income derived from any such activity to be foreign mineral income. Thus, for example, an integrated oil company must treat as foreign mineral income from sources within a foreign country or possession of the United States all income from such sources derived from the production of oil, the refining of crude oil into gasoline, the distribution of gasoline to marketing outlets, and the retail sale of gasoline. Similarly, income from such sources from the refining, distribution, or marketing of fuel oil by the taxpayer is foreign mineral income, whether or not the crude oil was extracted by the taxpayer. In further illustration, income from sources within a foreign country or possession of the United States derived from the processing of minerals into their primary products by the taxpayer is foreign mineral income, whether or not the minerals were extracted, or the primary products were sold, by the taxpayer. Section 901(e) and this section apply whether or not the extraction, processing, transportation, distribution, or selling of the minerals or primary products is done by the taxpayer. Thus, for example, an individual who derives royalty income from the extraction of oil from an oil well in a foreign country has foreign mineral income for purposes of this paragraph. Income from the manufacture, distribution, and marketing of petrochemicals is not foreign mineral income. Foreign mineral income is not limited to gross income from the property within the meaning of section 613(c) and § 1.613-3.

(2) ***Income included in foreign mineral income*** —

(i) ***In general.*** Foreign mineral income from sources within a foreign country or possession of the United States includes, but is not limited to—

(*a*) Dividends from such sources, as determined under § 1.902-1(h)(1), received from a foreign corporation in respect of which taxes are deemed paid by the taxpayer under section 902, to the extent such dividends are attributable to foreign mineral income described in subparagraph (1) of this paragraph. The portion of such a dividend which is attributable to such income is that amount which bears the same ratio to the total dividend received as the earnings and profits out of which such dividend is paid that are attributable to foreign mineral income bear to the total earnings and profits out of which such dividend is paid. For such purposes, the foreign mineral income of a foreign corporation is its foreign mineral income described in this paragraph (including any dividends described in this (*a*) which are received from another foreign corporation), whether or not such income is derived from sources within the foreign country or possession of the United States in which, or under the laws of which, the former corporation is created or organized. A foreign corporation is considered to have no foreign mineral income for any taxable year beginning before January 1, 1970.

(*b*) Any section 78 dividend to which a dividend described in (*a*) of this subdivision gives rise, but only to the extent such section 78 dividend is deemed paid under paragraph (a)(2)(i) of this section with respect to foreign mineral income from sources within such country or possession and to the extent it is treated under of § 1.902-1(h)(1) as income from sources within such country or possession.

(c) Any amounts includible in income of the taxpayer under section 702(a) as his distributive share of the income of a partnership consisting of income described in subparagraph (1) of this paragraph.

(d) Any amounts includible in income of the taxpayer by virtue of section 652(a), 662(a), 671, 682(a), or 691(a), to the extent such amounts consist of income described in subparagraph (1) of this paragraph.

(ii) ***Illustration.*** The provisions of this subparagraph may be illustrated by the following example:

Example. (a) Throughout 1974, M, a domestic corporation, owns all the one class of stock of N, a foreign corporation which is not a less developed country corporation within the meaning of section 902(d). Both corporations use the calendar year as the taxable year. N is incorporated in foreign country Y. During 1974, N has income from sources within foreign country X, all of which is foreign mineral income. During 1974, N also has income from sources within country Y, none of which is foreign mineral income. N is taxed in each foreign country only on income derived from sources within that country. Neither country X nor country Y allows a credit against its tax for foreign income taxes. N pays a dividend of $40,000 to M for 1974. For purposes of section 902, the dividend is paid from earnings and profits for 1974.
(b) N's earnings and profits and taxes for 1974 are determined as follows:

Foreign mineral income from country X		$100,000
Less:		
Intangible drilling and development costs	$21,000	
Cost depletion	3,000	24,000
Taxable income from country X		76,000
Income tax rate of country X		× 50%
Tax paid to country X		38,000
Income from country Y		100,000
Less deductions		25,000
Taxable income from country Y		75,000
Income tax rate of country Y		× 60%
Tax paid to country Y		45,000
Total taxable income		151,000
Less total foreign income taxes		83,000
Total earnings and profits		68,000
Taxable income from foreign mineral income		76,000
Less: Tax paid on foreign mineral income		38,000

Earnings and profits from foreign mineral income	38,000

(c) For 1974, M has foreign mineral income from country Y of $49,636.68, determined in the following manner and by applying this section, § 1.78-1, and § 1.902-1(h)(1):

Portion of dividend from country Y attributable to foreign mineral income (subdivision (i)(*a*) of this subparagraph) ($40,000 × $38,000/$68,000)	$22,352.94
Foreign income tax deemed paid by M to country Y under section 902(a)(1) ($83,000 × $40,000/$68,000)	48,823.53
Foreign income tax deemed paid by M to country Y with respect to foreign mineral income from country Y (paragraph (a)(2)(i) of this section) ($48,823.53 × $22,352.94/$40,000)	27,283.74
Foreign mineral income from country Y:	
Dividend attributable to foreign mineral income from country Y	22,352.94
Sec. 78 dividend deemed paid with respect to foreign mineral income (subdivision (i)(*b*) of this subparagraph)	27,283.74
Total foreign mineral income	49,636.68

(c) ***Limitations on foreign tax credit*** —

(1) ***In general.*** The reduction under section 901(e) and paragraph (a)(1) of this section in the amount of foreign taxes allowed as a credit under section 901(a) is to be made whether the per-country limitation under section 904(a)(1) or the overall limitation under section 904(a)(2) is used for the taxable year, but the reduction in the amount of foreign taxes allowed as a credit under section 901(a) must be made on a country-by-country basis before applying the limitation under section 904(a) to the reduced amount of taxes. If for the taxable year the separate limitation under section 904(f) applies to any foreign mineral income, that limitation must also be applied after making the reduction under section 901(e) and paragraph (a)(1) of this section.

(2) ***Carrybacks and carryovers of excess tax paid*** —

(i) ***In general.*** Any amount by which (*a*) any income, war profits, and excess profits taxes paid or accrued, or deemed to be paid under section 902, during the taxable year to any foreign country or possession of the United States with respect to foreign mineral income from sources within such country or possession exceed (b) the reduced amount of such taxes as determined under paragraph (a)(1) of this section may not be deemed paid or accrued under section 904(d) in any other taxable year. See § 1.904-2(b)(2)(iii). However, to the extent such reduced amount of taxes exceeds the applicable limitation under section 904(a) for the taxable year it shall be deemed paid or accrued under section 904(d) in another taxable year as a carryback or

carryover of an unused foreign tax. The amount so deemed paid or accrued in another taxable year is not, however, deemed paid or accrued with respect to foreign mineral income in such other taxable year. See § 1.904-2(c)(3).

(ii) ***Carryovers to taxable years beginning after December 31, 1969.*** Where, under the provisions of section 904(d), taxes paid or accrued, or deemed to be paid under section 902, to any foreign country or possession of the United States in any taxable year beginning before January 1, 1970, are deemed paid or accrued in one or more taxable years beginning after December 31, 1969, the amount of such taxes so deemed paid or accrued shall not be deemed paid or accrued with respect to foreign mineral income and shall not be reduced under section 901(e) and paragraph (a)(1) of this section.

(iii) ***Carrybacks to taxable years beginning before January 1, 1970.*** Where income, war profits, and excess profits taxes are paid or accrued, or deemed to be paid under section 902, to any foreign country or possession of the United States in any taxable year beginning after December 31, 1969, with respect to foreign mineral income from sources within such country or possession, they must first be reduced under section 901(e) and paragraph (a)(1) of this section before they may be deemed paid or accrued under section 904(d) in one or more taxable years beginning before January 1, 1970.

(d) ***Illustrations.*** The application of this section may be illustrated by the following examples, in which the surtax exemption provided by section 11(d) and the tax surcharge provided by section 51(a) are disregarded for purposes of simplification:

Example 1. (a) M, a domestic corporation using the calendar year as the taxable year, is an operator drilling for oil in foreign country W. For 1971, M's gross income under chapter 1 of the Code is $100,000, all of which is foreign mineral income from a property in country W and is subject to the allowance for depletion. During 1971, M incurs intangible drilling and development costs of $15,000, which are currently deductible for purposes of the tax of both countries. Cost depletion amounts to $2,000 for purposes of the tax of both countries, and only cost depletion is allowed as a deduction under the law of country W. It is assumed that no other deductions are allowable under the law of either country. Based upon the facts assumed, the income tax paid to country W on such foreign mineral income is $41,500, and the U.S. tax on such income before allowance of the foreign tax credit is $30,240, determined as follows:

	U.S. tax	W tax
Foreign mineral income	$100,000	$100,000
Less:		
Intangible drilling and development costs	15,000	15,000
Cost depletion		2,000
Percentage depletion (22% of $100,000, but not to exceed 50% of $85,000)	22,000	
Taxable income	63,000	83,000
Income tax rate	48%	50%

	U.S. tax	W tax
Tax	30,240	41,500

(b) Without taking this section into account, M would be allowed a foreign tax credit for 1971 of $30,240 ($30,240 × $63,000/$63,000), and foreign income tax in the amount of $11,260 ($41,500 less $30,240) would first be carried back to 1969 under section 904(d).
(c) Pursuant to paragraph (a)(1) of this section, however, the foreign income tax allowable as a credit against the U.S. tax is reduced to $31,900, determined as follows:

Foreign income tax paid on foreign mineral income		$41,500
Less reduction under sec. 901(e):		
Smaller of $41,500 (tax paid to country W on foreign mineral income) or $39,840 (U.S. tax on foreign mineral income of $83,000 ($83,000 × 48%), determined by deducting cost depletion of $2,000 in lieu of percentage depletion of $22,000)	39,840	
Less: U.S. tax on foreign mineral income (before credit)	$30,240	9,600
Foreign income tax allowable as a credit		31,900

(d) After taking this section into account, M is allowed a foreign tax credit for 1971 of $30,240 ($30,240 × $63,000/$63,000). The amount of foreign income tax which may be first carried back to 1969 under section 904(d) is reduced from $11,260 to $1,660 ($31,900 less $30,240).

Example 2. (a) M, a domestic corporation using the calendar year as the taxable year, is an operator drilling for oil in foreign country X. For 1972, M has gross income under chapter 1 of the Code of $100,000, all of which is foreign mineral income from a property in country X and is subject to the allowance for depletion. During 1972, M incurs intangible drilling and development costs of $50,000 which are currently deductible for purposes of the U.S. tax but which must be amortized for purposes of the tax of country X. Percentage depletion of $22,000 is allowed as a deduction by both countries. For purposes of the U.S. tax, cost depletion for 1972 amounts to $15,000. It is assumed that no other deductions are allowable under the law of either country. Based upon these facts, the income tax paid to country X on such foreign mineral income is $27,200, and the U.S. tax on such income before allowance of the foreign tax credit is $13,440,

determined as follows:

	U.S. tax	X tax
Foreign mineral income	$100,000	$100,000
Less:		
Intangible drilling and development costs	50,000	10,000
Percentage depletion	22,000	22,000
Taxable income	28,000	68,000
Income tax rate	48%	40%
Tax	13,440	27,200

(b) Without taking this section into account, M would be allowed a foreign tax credit for 1972 of $13,440 ($13,440 × $28,000/$28,000), and foreign income tax in the amount of $13,760 ($27,200 less $13,440) would first be carried back to 1970 under section 904(d).
(c) Pursuant to paragraph (a)(1) of this section, however, the foreign income tax allowable as a credit against the U.S. tax is reduced to $23,840, determined as follows:

Foreign income tax paid on foreign mineral income		$27,200
Less reduction under sec. 901(e):		
Smaller of $27,200 (tax paid to country X on foreign mineral income) or $16,800 (U.S. tax on foreign mineral income of $35,000 ($35,000 × 48%), determined by deducting cost depletion of $15,000 in lieu of percentage depletion of $22,000)	$16,800	
Less: U.S. tax on foreign mineral income (before credit)	13,440	3,360
Foreign income tax allowable as a credit		23,840

(d) After taking this section into account, M is allowed a foreign tax credit of $13,440 ($13,440 × $28,000/$28,000). The amount of foreign income tax which may be first carried back to 1970 under section 904(d) is reduced from $13,760 to $10,400 ($23,840 less $13,440).

Example 3. (a) N, a domestic corporation using the calendar year as the taxable year, is an operator drilling for oil in foreign country Y. For 1972, N's gross income under chapter 1 of the Code is $100,000, all of which is foreign mineral income from a property in country Y and is subject to the allowance for depletion. During 1972, N incurs intangible drilling and development costs of $15,000, which are currently deductible for purposes of the U.S. tax but are not deductible under the law of country Y. Depreciation of $40,000 is allowed as a deduction for purposes of the U.S. tax; and of $20,000, for purposes of the Y tax. Cost depletion amounts to $10,000 for purposes of the tax of both countries, and only cost depletion is

allowed as a deduction under the law of country Y. It is assumed that no other deductions are allowable under the law of either country. Based upon the facts assumed, the income tax paid to country Y on such foreign mineral income is $14,000, and the U.S. tax on such income before allowance of the foreign tax credit is $11,040, determined as follows:

	U.S. tax	Y tax
Foreign mineral income	$100,000	$100,000
Less:		
Intangible drilling and development costs	15,000	
Depreciation	40,000	20,000
Cost depletion		10,000
Percentage depletion (22% of $100,000, but not to exceed 50% of $45,000)	22,000	
Taxable income	23,000	70,000
Income tax rate	48%	20%
Tax	11,040	14,000

(b) Without taking this section into account, N would be allowed a foreign tax credit for 1972 of $11,040 ($11,040 × $23,000/$23,000), and foreign income tax in the amount of $2,960 ($14,000 less $11,040) would first be carried back to 1970 under section 904(d).
(c) Pursuant to paragraph (a)(1) of this section, however, the foreign income tax allowable as a credit against the U.S. tax is reduced to $11,040, determined as follows:

Foreign income tax paid on foreign mineral income		$14,000
Less reduction under sec. 901(e):		
Smaller of $14,000 (tax paid to country Y on foreign mineral income) or $16,800 (U.S. tax on foreign mineral income of $35,000 ($35,000 × 48%), determined by deducting cost depletion of $10,000 in lieu of percentage depletion of $22,000)	$14,000	
Less: U.S. tax on foreign mineral income (before credit)	11,040	2,960
Foreign income tax allowable as a credit		11,040

(d) After taking this section into account, N is allowed a foreign tax credit for 1972 of $11,040 ($11,040 × $23,000/$23,000), but no foreign income tax is carried back to 1970 under section 904(d) since the allowable credit of $11,040 does not exceed the limitation of $11,040.

Example 4. (a) D, a domestic corporation using the calendar year as the taxable year, is an operator drilling for oil in foreign country Z. For 1971, D's gross income under chapter 1 of the Code is $100,000, all

of which is foreign mineral income from a property in country Z and is subject to the allowance for depletion. During 1971, D incurs intangible drilling and development costs of $85,000, which are currently deductible for purposes of the U.S. Tax but are not deductible under the law of country Z. Cost depletion in the amount of $10,000 is allowed as a deduction for purposes of both the U.S. tax and the tax of country Z. Percentage depletion is not allowed as a deduction under the law of country Z and is not taken as a deduction for purposes of the U.S. tax. It is assumed that no other deductions are allowable under the law of either country. Based upon the facts assumed, the income tax paid to country Z on such foreign mineral income is $27,000, and the U.S. tax on such income before allowance of the foreign tax credit is $2,400, determined as follows:

	U.S. tax	Z tax
Foreign mineral income	$100,000	$100,000
Less:		
Intangible drilling and development costs	85,000	
Cost depletion	10,000	10,000
Taxable income	5,000	90,000
Income tax rate	48%	30%
Tax	2,400	27,000

(b) Section 901(e) and this section do not apply to reduce the amount of the foreign income tax paid to country Z with respect to the foreign mineral income since for 1971 D is not allowed the deduction for percentage depletion with respect to any foreign mineral income from sources within country Z. Accordingly, D is allowed a foreign tax credit of $2,400 ($2,400 × $5,000/$5,000), and foreign income tax in the amount of $24,600 ($27,000 less $2,400) is first carried back to 1969 under section 904(d).

Example 5. (a) R, a domestic corporation using the calendar year as the taxable year, is an operator drilling for oil in the United States and in foreign country Z. For 1971, R's gross income under chapter 1 of the Code is $250,000, of which $100,000 is foreign mineral income from a property in foreign country Z and $150,000 is from a property in the United States, all being subject to the allowance for depletion. During 1971, R incurs intangible drilling and development costs of $125,000 in the United States and of $25,000 in country Z, all of which are currently deductible for purposes of the U.S. tax. Of these costs of $25,000 incurred in country Z, only $2,500 is currently deductible under the law of country Z. Cost depletion in the case of the U.S. property amounts to $60,000; and in the case of the property in country Z, to $5,000, which is allowed as a deduction under the laws of such country. Percentage depletion is not allowed as a deduction under the law of country Z. In computing the U.S. tax for 1971, R is required to use cost depletion with respect to the mineral income from the U.S. property and percentage depletion with respect to the foreign mineral income from the property in country Z. It is assumed that no other deductions are allowed under the law of either country. Based upon the facts assumed, the income tax paid to country Z

on the foreign mineral income from sources therein is $37,000, and the U.S. tax on the entire mineral income before allowance of the foreign tax credit is $8,640, determined as follows:

	U.S. tax	Z tax
Gross income (including foreign mineral income)	$250,000	$100,000
Less:		
Intangible drilling and development costs	150,000	2,500
Cost depletion	60,000	5,000
Percentage depletion on foreign mineral income (22% of $100,000, but not to exceed 50% of [$100,000−$25,000])	22,000	
Taxable income	18,000	92,500
Income tax rate	48%	40%
Tax	8,640	37,000

(b) Without taking this section into account, R would be allowed a foreign tax credit for 1971 of $8,640 ($8,640 × $18,000/$18,000), and foreign income tax in the amount of $28,360 ($37,000 less $8,640) would first be carried back to 1969 under section 904(d).
(c) Under paragraph (a)(2)(ii) of this section, the amount of the U.S. tax for 1971 with respect to foreign mineral income from country Z is $25,440, which is the greater of the amounts of tax determined under subparagraphs (1) and (2):

(1) U.S. tax on total taxable income in excess of U.S. tax on taxable income excluding foreign mineral income from country Z (determined under paragraph (a)(2)(ii)(*a*) of this section):

U.S. tax on total taxable income		$8,640
Less U.S. tax on taxable income other than foreign mineral income from country Z:		
Income from U.S. property	$150,000	
Intangible drilling and development costs	125,000	
Cost depletion	60,000	
Taxable income	0	
Income tax rate	48%	
U.S. tax	0	0
Excess tax		8,640

(2) U.S. tax on foreign mineral income from country Z (determined under paragraph (a)(2)(ii) (*b*) of this

section):

Foreign mineral income	$100,000
Intangible drilling and development costs	25,000
Percentage depletion (22% of $100,000, but not to exceed 50% of $75,000)	22,000
Taxable income	53,000
Income tax rate	48%
U.S. tax	25,440

(d) Under paragraph (a)(2)(iii) of this section, the amount of the U.S. tax which would be computed for 1971 (without regard to section 613) with respect to foreign mineral income from sources within country Z is $33,600, computed by applying the principles of paragraph (a)(2)(ii)(*b*) of this section:

Foreign mineral income	$100,000
Intangible drilling and development costs	25,000
Cost depletion	5,000
Taxable income	70,000
Income tax rate	48%
U.S. tax	33,600

(e) Pursuant to paragraph (a)(1) of this section, the foreign income tax allowable as a credit against the U.S. tax for 1971 is reduced to $28,840, determined as follows:

Foreign income tax paid on foreign mineral income		$37,000
Less reduction under sec. 901(e):		
Smaller of $37,000 (tax paid to country Z on foreign mineral income) or $33,600 (U.S. tax on foreign mineral income of $70,000, as determined under paragraph (d) of this example	$33,600	
Less: U.S. tax on foreign mineral income of $53,000, as determined under paragraph (c) of this example	25,440	8,160
Foreign income tax allowable as a credit		$28,840

(f) After taking this section into account, R is allowed a foreign tax credit for 1971 of $8,640 ($8,640 × $18,000/$18,000). The amount of foreign income tax which may be first carried back to 1969 under

section 904(d) is reduced from $28,360 to $20,200 ($28,840 less $8,640).

Example 6. (a) B, a single individual using the calendar year as the taxable year, is an operator drilling for oil in foreign countries X and Y. For 1972, B's gross income under chapter 1 of the Code is $250,000, of which $150,000 is foreign mineral income from a property in country X and $100,000 is foreign mineral income from a property in country Y, all being subject to the allowance for depletion. The assumption is made that B's earned taxable income for 1972 is insufficient to cause section 1348 to apply. During 1972, B incurs intangible drilling and development costs of $16,000 in country X and of $9,000 in country Y, which are currently deductible for purposes of both the U.S. tax and the tax of countries X and Y, respectively. For purposes of both the U.S. tax and the tax of countries X and Y, respectively, cost depletion in the case of the X property amounts to $8,000, and in the case of Y property, to $7,000; and only cost depletion is allowed as a deduction under the law of countries X and Y. For 1972, B uses the overall limitation under section 904(a)(2) on the foreign tax credit. Percentage depletion is not allowed as a deduction under the law of countries X and Y. It is assumed that the only other allowable deductions amount to $2,250. None of these deductions is attributable to the income from the properties in countries X and Y, and none is deductible under the laws of country X or country Y. Based upon the facts assumed, the income tax paid to countries X and Y on the foreign mineral income from each such country is $71,820 and $25,200, respectively, and the U.S. tax on B's total taxable income before allowance of the foreign tax credit is $99,990, determined as follows:

	U.S. Tax	X tax	Y tax
Total income (including foreign mineral income from countries X and Y)	$250,000	$150,000	$100,000
Intangible drilling and development costs	25,000	16,000	9,000
Cost depletion		8,000	7,000
Percentage depletion (22% of $150,000, but not to exceed 50% of $134,000; plus 22% of $100,000, but not to exceed 50% of $91,000)	55,000		
Adjusted gross income	170,000		
Other deductions	2,250		
Personal exemption	750		
Taxable income	167,000	126,000	84,000
Income tax rate		57%	30%
Foreign tax		71,820	25,200
U.S. tax ($53,090 plus 70% of $67,000)	99,990		

(b) Without taking this section into account, B would be allowed a foreign tax credit for 1972 of $97,020 ($71,820 + $25,200), but not to exceed the overall limitation under section 904(a)(2) of $99,990 ($99,990 × $167,750/$167,750). There would be no foreign income tax carried back to 1970 under section 904(d)

since the allowable credit of $97,020 does not exceed the limitation of $99,990.
(c) Under paragraph (a)(2)(ii) of this section, the amount of the U.S. tax for 1972 with respect to foreign mineral income from sources within country X is $69,760, which is the greater of the amounts of tax determined under subparagraphs (1) and (2):

(1) U.S. tax on total taxable income in excess of U.S. tax on taxable income excluding foreign mineral income from country X (determined under paragraph (a)(2)(ii)(*a*) of this section):

U.S. tax on total taxable income		$99,990
Less U.S. tax on taxable income other than foreign mineral income from country X:		
Foreign mineral income from country Y	$100,000	
Intangible drilling and development costs	9,000	
Percentage depletion (22% of $100,000, but not to exceed 50% of $91,000)	22,000	
Adjusted gross income	69,000	
Other deductions	2,250	
Personal exemption	750	
Taxable income	66,000	
U.S. tax ($26,390 plus 64% of $6,000)		30,230
Excess tax		69,760

(2) U.S. tax on foreign mineral income from country X (determined under paragraph (a)(2)(ii)(*b*) of this section):

Foreign mineral income from country X	$150,000.00
Intangible drilling and development costs	16,000.00
Percentage depletion (22% of $150,000, but not to exceed 50% of $134,000)	33,000.00
Adjusted gross income	101,000.00
Other deductions	
Taxable income	101,000.00
U.S. tax ($53,090 plus 70% of excess over $100,000)	53,790.00

(d) Under paragraph (a)(2)(iii) of this section, and by applying the principles of paragraph (a)(2)(ii)(*a*) of this section, the amount of the U.S. tax which would be computed for 1972 (without regard to section 613) with respect to foreign mineral income from sources within country X is $87,920, which is the excess of the U.S. tax ($127,990) determined under subparagraph (1) over the U.S. tax ($40,070) determined under subparagraph (2):

(1) U.S. tax on total taxable income determined without regard to section 613:

Total income	$250,000
Intangible drilling and development costs	25,000
Cost depletion	15,000
Adjusted gross income	210,000
Other deductions	2,250
Personal exemption	750
Taxable income	207,000
U.S. tax ($53,090 plus 70% of $107,000)	127,990

(2) U.S. tax on total taxable income other than foreign mineral income from country X, determined without regard to section 613:

Foreign mineral income from country Y	$100,000
Intangible drilling and development costs	9,000
Cost depletion	7,000
Adjusted gross income	84,000
Other deductions	2,250
Personal exemption	750
Taxable income	81,000
U.S. tax ($39,390 plus 68% of $1,000)	40,070

(e) Under paragraph (a)(2)(i) of this section, the amount of income tax paid to country X for 1972 with respect to foreign mineral income from sources within such country is $71,820. This is the amount determined under both (*a*) and (*b*) of paragraph (a)(2)(i) of this section, since, in this case, there is no income from sources within country X other than foreign mineral income, and there are no deductions allowed under the law of country X which are not allocable to such foreign mineral income.
(f) Pursuant to paragraph (a)(1) of this section, the foreign income tax with respect to foreign mineral income from sources within country X which is allowable as a credit against the U.S. tax for 1972 is reduced to $69,760, determined as follows:

Foreign income tax paid to country X on foreign mineral income	$71,820
Less reduction under sec. 901(e):	

Smaller of $71,820 (tax paid to country X on foreign mineral income) or $87,920 (U.S. tax on foreign mineral income from sources within country X, as determined under paragraph (d) of this example)	$71,820	
Less: U.S. tax on foreign mineral income from sources within country X, determined under paragraph (c) of this example	69,760	2,060
Foreign income tax of country X allowable as a credit		69,760

(g) Under paragraph (a)(2)(ii) of this section, the amount of the U.S. tax for 1972 with respect to foreign mineral income from sources within country Y is $48,280, which is the greater of the amounts of tax determined under subparagraphs (1) and (2):
(1) U.S. tax on total taxable income in excess of U.S. tax on taxable income excluding foreign mineral income from country Y (determined under paragraph (a)(2)(ii)(*a*) of this section):

U.S. tax on total taxable income		$99,990
Less U.S. tax on taxable income other than foreign mineral income from country Y:		
Foreign mineral income from country X	$150,000	
Intangible drilling and development costs	16,000	
Percentage depletion (22% of $150,000, but not to exceed 50% of $134,000)	33,000	
Adjusted gross income	101,000	
Other deductions	2,250	
Personal exemption	750	
Taxable income	98,000	
U.S. tax ($46,190 plus 69% of $8,000)		51,710
Excess tax		48,280

(2) U.S. tax on foreign mineral income from country Y (determined under paragraph (a)(2)(ii)(*b*) of this section):

Foreign mineral income from country Y	$100,000
Intangible drilling and development costs	9,000
Percentage depletion (22% of $100,000, but not to exceed 50% of $91,000)	22,000
Adjusted gross income	69,000
Other deductions	
Taxable income	69,000

U.S. tax ($26,390 plus 64% of $9,000)	32,150

(h) Under paragraph (a)(2)(iii) of this section, and by applying the principles of paragraph (a)(2)(ii)(*a*) of this section, the amount of the U.S. tax which would be computed for 1972 (without regard to section 613) with respect to foreign mineral income from sources within country Y is $58,800, which is the excess of the U.S. tax ($127,990) determined under paragraph (d)(1) of this example over the U.S. tax ($69,190) on total taxable income other than foreign mineral income from country Y, determined without regard to section 613, as follows:

Foreign mineral income from country X	$150,000
Intangible drilling and development costs	16,000
Cost depletion	8,000
Adjusted gross income	126,000
Other deductions	2,250
Personal exemption	750
Taxable income	123,000
U.S. tax ($53,090 plus 70% of $23,000)	69,190

(i) Under paragraph (a)(2)(i) of this section, the amount of income tax paid to country Y for 1972 with respect to foreign mineral income from sources within such country is $25,200. This is the amount determined under both (*a*) and (*b*) of paragraph (a)(2)(i) of this section, since, in this case, there is no income from sources within country Y other than foreign mineral income, and there are no deductions allowed under the law of country Y which are not allocable to such foreign mineral income.
(j) Pursuant to paragraph (a)(1) of this section, the foreign income tax with respect to foreign mineral income from sources within country Y which is allowable as a credit against the U.S. tax for 1972 is not reduced from $25,200, as follows:

Foreign income tax paid to country Y on foreign mineral income		$25,200
Less reduction under sec. 901(e):		
Smaller of $25,200 (tax paid to country Y on foreign mineral income) or $58,800 (U.S. tax on foreign mineral income from sources within country Y, as determined under paragraph (h) of this example)	$25,200	
Less: U.S. tax on foreign mineral income from sources within country Y, as determined under paragraph (g) of this example	48,280	

Foreign income tax of country Y allowable as a credit	25,200

(k) After taking this section into account, B is allowed a foreign tax credit for 1972 of $94,960 ($69,760 + $25,200), but not to exceed the overall limitation under section 904 (a)(2) of $99,990 ($99,990 × $167,750/$167,750). There would be no foreign income tax carried back to 1970 under section 904(d) since the allowable credit of $94,960 does not exceed the limitation of $99,990.

Example 7. (a) P, a domestic corporation using the calendar year as the taxable year, is an operator mining for iron ore in foreign country X. For 1971, P's gross income under chapter 1 of the Code is $100,000, all of which is foreign mineral income from a property in country X and is subject to the allowance for depletion. For 1971, cost depletion amounts to $5,000 for purposes of the tax of both countries, and only cost depletion is allowed as a deduction under the law of country X. It is assumed that deductions (other than for depletion) attributable to the mineral property in country X amount to $8,000, and these deductions are allowable under the law of both countries. Based upon the facts assumed, the income tax paid to country X on such foreign mineral income is $39,150, and the U.S. tax on such income before allowance of the foreign tax credit is $37,440 determined as follows:

	U.S. tax	X tax
Foreign mineral income	$100,000	$100,000
Less:		
Percentage depletion (14% of $100,000, but not to exceed 50% of $92,000)	14,000	
Cost depletion		5,000
Other deductions	8,000	8,000
Taxable income	78,000	87,000
Income tax rate	48%	45%
Tax	37,440	39,150

(b) Without taking this section into account, P would be allowed a foreign tax credit for 1971 of $37,440 ($37,440 × $78,000/ $78,000), and foreign income tax in the amount of $1,710 ($39,150 less $37,440) would first be carried back to 1969 under section 904(d).

(c) Pursuant to paragraph (a)(1) of this section, however, the foreign income tax allowable as a credit against the U.S. tax is reduced to $37,440, determined as follows:

Foreign income tax paid on foreign mineral income		$39,150
Less reduction under sec. 901(e):		
Smaller of $39,150 (tax paid to country X on foreign mineral income) or $41,760 (U.S. tax on foreign mineral income of $87,000 ($87,000 × 48%), determined by deducting cost depletion of $5,000 in lieu of percentage depletion of $14,000)	$39,150	
Less: U.S. tax on foreign mineral income (before credit)	37,440	1,710
Foreign income tax allowable as a credit		37,440

(d) After taking this section into account, P is allowed a foreign tax credit for 1971 of $37,440 ($37,440 × $78,000/$78,000), but no foreign income tax is carried back to 1969 under section 904(d) since the allowable credit of $37,440 does not exceed the limitation of $37,440.

Example 8. (a) The facts are the same as in example 7, except that P is assumed to have received dividends for 1971 of $25,000 from R, a foreign corporation incorporated in country X which is not a less developed country corporation within the meaning of section 902(d). Income tax of $2,500 ($25,000 × 10%) on such dividends is withheld at the source in country X. It is assumed that P is deemed under section 902(a)(1) and § 1.902-1(h) to have paid income tax of $22,500 to country X in respect of such dividends and that under paragraphs (a)(2)(i) and (b)(2)(i) of this section such dividends are deemed to be attributable to foreign mineral income from sources in country X and that such tax is deemed to be paid with respect to such foreign mineral income. Based upon the facts assumed, the U.S. tax on the foreign mineral income from sources in country X is $60,240 before allowance of the foreign tax credit, determined as follows:

Foreign mineral income from country X:		
Income from mining property	$100,000	
Dividends from R	25,000	
Sec. 78 dividend	22,500	$147,500
Less:		
Percentage depletion (14% of $100,000, but not to exceed 50% of $92,000)		$14,000
Other deductions		8,000
Taxable income		125,500
Income tax rate		48%

U.S. tax	60,240

(b) Without taking this section into account, P would be allowed a foreign tax credit for 1971 of $60,240 ($60,240 × $125,500/$125,500), and foreign income tax in the amount of $3,910 ([$39,150 + $22,500 + $2,500] less $60,240) would first be carried back to 1969 under section 904(d).
(c) Pursuant to paragraph (a)(1) of this section, however, the foreign income tax allowable as a credit against the U.S. tax is reduced from $64,150 to $60,240, determined as follows:

Foreign income tax paid, and deemed to be paid, to country X on foreign mineral income ($39,150 + $22,500 + $2,500)		$64,150
Less reduction under sec. 901(e):		
Smaller of $64,150 (tax paid and deemed paid to country X on foreign mineral income) or $64,560 (U.S. tax on foreign mineral income of $134,500 ($134,500 × 48%), determined by deducting cost depletion of $5,000 in lieu of percentage depletion of $14,000)	$64,150	
Less: U.S. tax on foreign mineral income (before credit)	$60,240	$3,910
Foreign income tax allowable as a credit		60,240

(d) After taking this section into account, P is allowed a foreign tax credit for 1971 of $60,240 ($60,240 × $125,500/$125,500), but no foreign income tax is carried back to 1969 under section 904(d) since the allowable credit of $60,240 does not exceed the limitation of $60,240.

[T.D. 7294, 38 FR 33074, Nov. 30, 1973, as amended by T.D. 7481, 42 FR 20130, Apr. 18, 1977]

§ 1.901(j)-1 Denial of foreign tax credit with respect to certain foreign countries.

(a) ***Sourcing rule for certain payments and inclusions.*** Any income paid or accrued through one or more entities is treated as income from sources within a country described in section 901(j)(2) if the income was, without regard to such entities, from sources within that country.

(b) ***Applicability date.*** This section applies to taxable years that end on or after December 4, 2018.

[T.D. 9882, 84 FR 69075, Dec. 17, 2019]

§ 1.901(m)-1 Definitions.

(a) ***Definitions.*** For purposes of section 901(m), this section, and §§ 1.901(m)-2 through 1.901(m)-8, the following definitions apply:

(1) The term *aggregate basis difference* means, with respect to a foreign income tax and a foreign payor, the sum of the allocated basis differences and the allocated basis difference adjustments for a U.S. taxable year of a section 901(m) payor, plus any aggregate basis difference carryover from the immediately preceding U.S. taxable year of the section 901(m) payor with respect to the foreign income tax and foreign payor, as adjusted under § 1.901(m)-6(c). For purposes of this definition, if foreign law imposes tax on the combined income (within the meaning of § 1.901-2(f)(3)(ii)) of two or more foreign payors, all foreign payors whose items of income, deduction, gain, or loss are included in the U.S. taxable income or earnings and profits of the section 901(m) payor are treated as a single foreign payor. Aggregate basis difference is determined with respect to each separate category.

(2) The term *aggregate basis difference carryover* has the meaning provided in § 1.901(m)-3(c).

(3) The term *aggregated CAA transaction* means a series of related CAAs occurring as part of a plan.

(4) The term *allocable foreign income* means the portion of foreign income of a foreign payor that relates to the foreign income tax amount of the foreign payor that is paid or accrued by, or considered paid or accrued by, a section 901(m) payor.

(5) The term *allocated basis difference* means, with respect to an RFA and a foreign income tax, the sum of the cost recovery amounts and disposition amounts assigned to a U.S. taxable year of the section 901(m) payor under § 1.901(m)-5.

(6) The term *allocated basis difference adjustment* means an adjustment to a section 901(m) payor's allocated basis difference with respect to an RFA and a foreign income tax for a U.S. taxable year. If the RFA has a positive basis difference, the allocated basis difference adjustment is equal to the lesser of the allocated basis difference or the portion of any unallocated CAA gain that corresponds to the CAA gain recognized by the section 901(m) payor or a member of the section 901(m) payor's consolidated group. If the RFA has a negative basis difference, the allocated basis difference adjustment is equal to the greater of the allocated basis difference or the portion of any unallocated CAA loss that corresponds to the CAA loss recognized by the section 901(m) payor or a member of the section 901(m) payor's consolidated group. For purposes of this paragraph, CAA gain or CAA loss recognized by the section 901(m) payor or a member of the section 901(m) payor's consolidated group includes their distributive share of CAA gain or CAA loss recognized by a partnership.

(7) The term *applicable foreign corporation* means—

(i) For taxable years of foreign corporations beginning before January 1, 2018, a section 902 corporation (as defined in section 909(d)(5) (as in effect on December 21, 2017)), and

(ii) For taxable years of foreign corporations beginning after December 31, 2017, a controlled foreign corporation (as defined in section 957).

(8) The term *basis difference* has the meaning provided in § 1.901(m)-4.

(9) The term *CAA gain* means the amount of gain recognized with respect to an RFA for U.S. tax purposes as a result of a CAA.

(10) The term *CAA loss* means the amount of loss recognized with respect to an RFA for U.S. tax purposes as a result of a CAA.

(11) The term *consolidated group* has the meaning provided in § 1.1502-1(h).

(12) The term *cost recovery amount* has the meaning provided in § 1.901(m)-5(b)(2).

(13) The term *covered asset acquisition* (or *CAA*) has the meaning provided in § 1.901(m)-2.

(14) The term *cumulative basis difference exemption* has the meaning provided in § 1.901(m)-7(b)(2).

(15) The term *disposition* means an event (for example, a sale, abandonment, or mark-to-market event) that results in gain or loss being recognized with respect to an RFA for purposes of U.S. income tax or a foreign income tax, or both.

(16) The term *disposition amount* has the meaning provided in § 1.901(m)-5(c)(2).

(17) The term *disqualified tax amount* has the meaning provided in § 1.901(m)-3(b).

(18) The term *disregarded entity* means an entity that is disregarded as an entity separate from its owner, as described in § 301.7701-2(c)(2)(i) of this chapter.

(19) The term *fiscally transparent entity* means an entity, including a disregarded entity, that is fiscally transparent under the principles of § 1.894-1(d)(3) for purposes of U.S. income tax or a foreign income tax (or both).

(20) The term *foreign basis* means the adjusted basis of an asset determined for purposes of a foreign income tax.

(21) The term *foreign basis election* has the meaning provided in § 1.901(m)-4(c).

(22) The term *foreign country creditable tax* (or *FCCT*) means, with respect to a foreign income tax amount, the amount of income, war profits, or excess profits tax paid or accrued to a foreign country or possession of the United States and claimed as a foreign tax credit for purposes of determining the foreign income tax amount. To qualify as a FCCT, the tax imposed by the foreign country or possession must be a foreign income tax or a withholding tax determined on a gross basis as described in section 901(k)(1)(B).

(23) The term *foreign disposition gain* means, with respect to a foreign income tax, the amount of gain recognized on a disposition of an RFA in determining foreign income, regardless of whether the gain is deferred or otherwise not taken into account currently. Notwithstanding the foregoing, if after a section 743(b) CAA there is a disposition of an asset that is an RFA with respect to that section 743(b) CAA, foreign disposition gain has the meaning provided in § 1.901(m)-5(c)(2)(iii).

(24) The term *foreign disposition loss* means, with respect to a foreign income tax, the amount of loss recognized on a disposition of an RFA in determining foreign income, regardless of whether the loss is deferred or disallowed or otherwise not taken into account currently. Notwithstanding the foregoing, if after a section 743(b) CAA there is a disposition of an asset that is an RFA with respect to that section 743(b) CAA, foreign disposition loss has the meaning provided in § 1.901(m)-5(c)(2)(iii).

(25) The term *foreign income* means, with respect to a foreign income tax, the taxable income (or loss) reflected on a foreign tax return (as properly amended or adjusted), even if the taxable income (or loss) is reported by an entity that is a fiscally transparent entity for purposes of the foreign income tax. If, however, foreign law imposes tax on the combined income (within the meaning of § 1.901-2(f)(3)(ii)) of two or more foreign payors, foreign income means the combined taxable income (or loss) of such foreign payors, regardless of whether such income (or loss) is reflected on a single foreign tax return.

(26) The term *foreign income tax* means an income, war profits, or excess profits tax for which a credit is allowable under section 901 or section 903, except that it does not include any withholding tax determined on a gross basis as described in section 901(k)(1)(B).

(27) The term *foreign income tax amount* means, with respect to a foreign income tax, the amount of tax (including an amount of tax that is zero) reflected on a foreign tax return (as properly amended or adjusted). If foreign law imposes tax on the combined income (within the meaning of § 1.901-2(f)(3)(ii)) of two or more foreign payors, however, a foreign income tax amount means the amount of tax imposed on the combined income, regardless of whether the tax is reflected on a single foreign tax return.

(28) The term *foreign payor* means an individual or entity (including a disregarded entity) subject to a foreign income tax. If foreign law imposes tax on the combined income (within the meaning of § 1.901-2(f)(3)(ii)) of two or more individuals or entities, each such individual or entity is a foreign payor. An individual or entity may be a foreign payor with respect to more than one foreign income tax for purposes of applying section 901(m).

(29) The term *foreign taxable year* means a taxable year for purposes of a foreign income tax.

(30) The term *mid-year transaction* means a transaction in which a foreign payor that is a corporation or a disregarded entity has a change in ownership or makes an election pursuant to § 301.7701-3 to change its entity classification, or a transaction in which a foreign payor that is a partnership terminates under section 708(b)(1), provided in each case that the foreign payor's foreign taxable year does not close as a result of the transaction, and, if the foreign payor is a corporation or a partnership, the foreign payor's U.S. taxable year closes.

(31) The term *prior CAA* has the meaning provided in § 1.901(m)-6(b)(2).

(32) The term *prior section 743(b) CAA* has the meaning provided in § 1.901(m)-6(b)(4)(iii).

(33) The term *relevant foreign asset* (or *RFA*) has the meaning provided in § 1.901(m)-2.

(34) The term *reverse hybrid* has the meaning provided in § 1.909-2(b)(1)(iv).

(35) The term *RFA class exemption* has the meaning provided in § 1.901(m)-7(b)(3).

(36) The term *RFA exemption* has the meaning provided in § 1.901(m)-7(b)(4).

(37) The term *RFA owner (U.S.)* means a person that owns an RFA for U.S. income tax purposes.

(38) The term *RFA owner (foreign)* means an individual or entity (including a disregarded entity) that owns an RFA for purposes of a foreign income tax.

(39) The term *section 338 CAA* has the meaning provided in § 1.901(m)-2(b)(1).

(40) The term *section 743(b) CAA* has the meaning provided in § 1.901(m)-2(b)(3).

(41) The term *section 901(m) payor* means a person eligible to claim the foreign tax credit allowed under section 901(a), regardless of whether the person chooses to claim the foreign tax credit, as well as an applicable foreign corporation. Each member of a consolidated group is a separate section 901(m) payor. If individuals file a joint return, those individuals are treated as a single section 901(m) payor.

(42) The term *separate category* means each separate category described in § 1.904-5(a)(4)(v), and in the case of an applicable foreign corporation described in paragraph (a)(7)(ii) of this section, each income group described in § 1.960-1(d)(2)(ii).

(43) The term *subsequent CAA* has the meaning provided in § 1.901(m)-6(b)(4)(i).

(44) The term *subsequent section 743(b) CAA* has the meaning provided in § 1.901(m)-6(b)(4)(iii).

(45) The term *successor transaction* has the meaning provided in § 1.901(m)-6(b)(2).

(46) The term *tentative disqualified tax amount* has the meaning provided in § 1.901(m)-3(b)(2)(ii).

(47) The term *unallocated basis difference* means, with respect to an RFA and a foreign income tax, the basis difference reduced by the sum of the cost recovery amounts and the disposition amounts that have been computed under § 1.901(m)-5.

(48) The term *unallocated CAA gain* means, with respect to an RFA, the CAA gain reduced by the sum of the allocated basis difference adjustments that have been computed with respect to the RFA.

(49) The term *unallocated CAA loss* means, with respect to an RFA, the CAA loss reduced by the sum of the allocated basis difference adjustments that have been computed with respect to the RFA.

(50) The term *U.S. basis* means the adjusted basis of an asset determined for U.S. income tax purposes.

(51) The term *U.S. basis deduction* has the meaning provided in § 1.901(m)-5(b)(3).

(52) The term *U.S. disposition gain* means the amount of gain recognized for U.S. income tax purposes on a disposition of an RFA, regardless of whether the gain is deferred or otherwise not taken into account currently. Notwithstanding the foregoing, if after a section 743(b) CAA there is a disposition of an asset that is an RFA with respect to that section 743(b) CAA, U.S. disposition gain has the meaning provided in § 1.901(m)-5(c)(2)(iii).

(53) The term *U.S. disposition loss* means the amount of loss recognized for U.S. income tax purposes on a disposition of an RFA, regardless of whether the loss is deferred or disallowed or otherwise not taken into account currently. Notwithstanding the foregoing, if after a section 743(b) CAA there is a disposition of an asset that is an RFA with respect to that section 743(b) CAA, U.S. disposition loss has the meaning provided in § 1.901(m)-5(c)(2)(iii).

(54) The term *U.S. taxable year* means a taxable year as defined in section 7701(a)(23).

(b) ***Applicability dates.***

(1) Except as provided in paragraph (b)(2) of this section, this section applies to CAAs occurring on or after March 23, 2020.

(2) Paragraphs (a)(8), (12), (13), (15), (16), (18), (19), (23) through (26), (31) through (33), (39), (40), (43) through (45), (47), (50), and (52) through (54) of this section apply to CAAs occurring on or after July 21, 2014, and to CAAs occurring before that date resulting from an entity classification election made under § 301.7701-3 that is filed on or after July 29, 2014, and that is effective on or before July 21, 2014. Paragraphs (a)(8), (12), (13), (15), (16), (18), (19), (23) through (26) through (33), (39), (40), (43) through (45), (47), (50), and (52) through (54) of this section also apply to CAAs occurring on or after January 1, 2011, and before July 21, 2014, other than CAAs occurring before July 21, 2014, resulting from an entity classification election made under § 301.7701-3 that is filed on or after July 29, 2014, and that is effective on or before July 21, 2014, but only if the basis difference (within the meaning of section 901(m)(3)(C)(i)) in one or more RFAs with respect to the CAA had not been fully

taken into account under section 901(m)(3)(B) either as of July 21, 2014, or, in the case of an entity classification election made under § 301.7701-3 that is filed on or after July 29, 2014, and that is effective on or before July 21, 2014, before the transactions that are deemed to occur under § 301.7701-3(g) as a result of the change in classification.

(3) Taxpayers may, however, choose to apply provisions in this section before the date such provisions are applicable pursuant to paragraph (b)(1) or (2) of this section, provided that they (along with any persons that are related (within the meaning of section 267(b) or 707(b)) to the taxpayer)—

(i) Consistently apply this section, § 1.704-1(b)(4)(viii)(*c*)(*4*)(*v*) through (*vii*), and §§ 1.901(m)-3 through 1.901(m)-8 (excluding § 1.901(m)-4(e)) to all CAAs occurring on or after January 1, 2011, and consistently apply § 1.901(m)-2 (excluding § 1.901(m)-2(d)) to all CAAs occurring on or after December 7, 2016, on any original or amended tax return for each taxable year for which the application of the provisions listed in this paragraph (b)(3)(i) affects the tax liability and for which the statute of limitations does not preclude assessment or the filing of a claim for refund, as applicable;

(ii) File all tax returns described in paragraph (b)(3)(i) of this section for any taxable year ending on or before March 23, 2020, no later than March 23, 2021; and

(iii) Make appropriate adjustments to take into account deficiencies that would have resulted from the consistent application under paragraph (b)(3)(i) of this section for taxable years that are not open for assessment.

[T.D. 9895, 85 FR 16249, Mar. 23, 2020]

§ 1.901(m)-2 Covered asset acquisitions and relevant foreign assets.

(a) ***In general.*** Paragraph (b) of this section sets forth the transactions that are covered asset acquisitions (or CAAs). Paragraph (c) of this section provides rules for identifying assets that are relevant foreign assets (or RFAs) with respect to a CAA. Paragraph (d) of this section provides special rules for identifying CAAs and RFAs with respect to transactions to which paragraphs (b) and (c) of this section do not apply. Paragraph (e) of this section provides examples illustrating the rules of this section, and paragraph (f) of this section provides applicability dates.

(b) ***Covered asset acquisitions.*** Except as provided in paragraph (d) of this section, the transactions set forth in this paragraph (b) are CAAs.

(1) A qualified stock purchase (as defined in section 338(d)(3)) to which section 338(a) applies (*section 338 CAA*);

(2) Any transaction that is treated as an acquisition of assets for U.S. income tax purposes and treated as an acquisition of stock of a corporation (or disregarded) for foreign income tax purposes;

(3) Any acquisition of an interest in a partnership that has an election in effect under section 754 (*section 743(b) CAA*);

(4) Any transaction (or series of transactions occurring pursuant to a plan) to the extent it is treated as an acquisition of assets for purposes of U.S. income tax and as the acquisition of an interest in a fiscally transparent entity for purposes of a foreign income tax;

(5) Any transaction (or series of transactions occurring pursuant to a plan) to the extent it is treated as a partnership distribution of one or more assets the U.S. basis of which is determined by section 732(b) or 732(d) or to the extent it causes the U.S. basis of the partnership's remaining assets to be adjusted under section 734(b), provided the transaction results in an increase in the U.S. basis of one or more of the assets distributed by the partnership or retained by the partnership without a corresponding increase in the foreign basis of such assets; and

(6) Any transaction (or series of transactions occurring pursuant to a plan) to the extent it is treated as an acquisition of assets for purposes of both U.S. income tax and a foreign income tax, provided the transaction results in an increase in the U.S. basis without a corresponding increase in the foreign basis of one or more assets.

(c) ***Relevant foreign asset*** —

(1) ***In general.*** Except as provided in paragraph (d) of this section, an RFA means, with respect to a foreign income tax and a CAA, any asset (including goodwill, going concern value, or other intangible) subject to the CAA that is relevant in determining foreign income for purposes of the foreign income tax.

(2) ***RFA status with respect to a foreign income tax.*** An asset is relevant in determining foreign income if income, deduction, gain, or loss attributable to the asset is taken into account in determining foreign income immediately after the CAA, or would be taken into account in determining foreign income immediately after the CAA if the asset were to give rise to income, deduction, gain, or loss at such time.

(3) ***Subsequent RFA status with respect to another foreign income tax.*** After a CAA, an asset will become an RFA with respect to another foreign income tax if, pursuant to a plan or series of related transactions that have a principal purpose of avoiding the application of section 901(m), an asset that was not relevant in determining foreign income for purposes of that foreign income tax immediately after the CAA becomes relevant in determining such foreign income. A principal purpose of avoiding section 901(m) will be deemed to exist if income, deduction, gain, or loss attributable to the asset is taken into account in determining such foreign income within the one-year period following the CAA, or would be taken into account in determining such foreign income during such time if the asset were to give rise to income, deduction, gain, or loss within the one-year period.

(d) ***Identifying covered asset acquisitions and relevant foreign assets to which paragraphs (b) and (c) of this section do not apply.*** For transactions occurring on or after January 1, 2011, and before July 21, 2014, other than transactions occurring before July 21, 2014, resulting from an entity classification election made under § 301.7701-3 of this chapter that is filed on or after July 29, 2014, and that is effective on or before July 21, 2014, the transactions set forth under section 901(m)(2) are CAAs and the assets that are relevant foreign assets with respect to the CAA under section 901(m)(4) are RFAs.

(e) ***Examples.*** The following examples illustrate the rules of this section:

(1) ***Example 1: CAA involving an acquisition of a partnership interest for foreign income tax purposes*** —

(i) ***Facts.***

(A) FPS is an entity organized in Country F that is treated as a partnership for both U.S. and Country F income tax purposes. FPS is owned equally by FC1 and FC2, each of which is a corporation organized in Country F and treated as a corporation for both U.S. and Country F income tax purposes. FPS has a single asset, Asset A. USP, a domestic corporation, owns all the interests in DE, a disregarded entity.

(B) Pursuant to the same transaction, USP acquires FC1's interest in FPS, and DE acquires FC2's interest in FPS. For U.S. income tax purposes, with respect to USP, the acquisition of the interests in FPS is treated as the acquisition of Asset A by USP. See Rev. Rul. 99-6, 1999-1 C.B. 432. For Country F tax purposes, the acquisitions of the interests of FPS by USP and DE are treated as acquisitions of partnership interests.

(ii) ***Result.*** The transaction is a CAA under paragraph (b)(4) of this section because it is treated as the acquisition of Asset A for U.S. income tax purposes and the acquisition of interests in a fiscally transparent entity for Country F tax purposes.

(2) ***Example 2: CAA involving an asset acquisition for purposes of both U.S. income tax and a foreign income tax*** —

(i) ***Facts.***

(A) USP, a domestic corporation, wholly owns CFC1, a foreign corporation, and CFC1 wholly owns CFC2, also a foreign corporation. CFC1 and CFC2 are organized in Country F. CFC1 owns Asset A.

(B) In an exchange described in section 351, CFC1 transfers Asset A to CFC2 in exchange for CFC2 common stock and cash. CFC1 recognizes gain on the exchange under section 351(b). Under section 362(a), CFC2's U.S. basis in Asset A is increased by the gain recognized by CFC1. For Country F tax purposes, gain or loss is not recognized on the transfer of Asset A to CFC2, and therefore there is no increase in the foreign basis in Asset A.

(ii) ***Result.*** The transaction is a CAA under paragraph (b)(6) of this section because it is treated as an acquisition of Asset A by CFC2 for both U.S. and Country F income tax purposes, and it results in an increase in the U.S. basis of Asset A without a corresponding increase in the foreign basis of Asset A.

(3) ***Example 3: RFA status determined immediately after CAA; application of principal purpose rule*** —

(i) ***Facts.***

(A) USP1 and USP2 are unrelated domestic corporations. USP1 wholly owns USSub, also a domestic corporation. On January 1 of Year 1, USP2 acquires all of the stock of USSub from USP1 in a qualified stock purchase (as defined in section 338(d)(3)) to which section 338(a) applies. Immediately after the acquisition, none of the income, deduction, gain, or loss attributable to any of the assets of USSub is taken into account in determining foreign income for purposes of a foreign income tax nor would such items be taken into account in determining foreign income for purposes of a foreign income tax immediately after the acquisition if such assets were to give rise to income, deduction, gain, or loss immediately after the acquisition.

(B) On December 1 of Year 1, USSub contributes all its assets to FSub, its wholly owned subsidiary, which is a corporation for both U.S. and Country X income tax purposes, in a transfer described in section 351 (subsequent transfer). USSub recognizes no gain or loss for U.S. or Country X income tax purposes as a result of the subsequent transfer. As a result of the subsequent transfer, income, deduction, gain, or loss attributable to the assets of USSub that were transferred to FSub is taken into account in determining foreign income of FSub for Country X tax purposes.

(ii) ***Result.***

(A) Under paragraph (b)(1) of this section, the acquisition by USP2 of the stock of USSub is a section 338 CAA. Under paragraph (c)(1) of this section, none of the assets of USSub are RFAs immediately after the CAA, because none of the income, deduction, gain, or loss attributable to such assets is taken into account for purposes of determining foreign income with respect to any foreign income tax immediately after the CAA (nor would such items be taken into account for purposes of determining foreign income immediately after the CAA if such assets were to give rise to income, deduction, gain, or loss at such time).

(B) Although the subsequent transfer is not a CAA under paragraph (b) of this section, the subsequent transfer causes the assets of USSub to become relevant in the hands of FSub in determining foreign income for Country X tax purposes. Because the subsequent transfer occurred within the one-year period following the CAA, it is presumed to have a principal purpose of avoiding section 901(m) under paragraph (c)(3) of this section. Accordingly, the assets of USSub with respect to the CAA occurring on January 1 of Year 1 become RFAs with respect to Country X tax as a result of the subsequent transfer. Thus, a basis difference with respect to Country X tax must be computed for the RFAs and taken into account under section 901(m).

(f) ***Applicability dates.***

(1) Except as provided in paragraph (f)(2) of this section, this section applies to CAAs occurring on or after March 23, 2020.

(2) Paragraphs (a), (b)(1) through (3), and (c)(1) of this section apply to transactions occurring on or after July 21, 2014, and to transactions occurring before that date resulting from an entity classification election made under § 301.7701-3 of this chapter that is filed on or after July 29, 2014, and that is effective on or before July 21, 2014. Paragraph (d) of this section applies to transactions occurring on or after January 1, 2011, and before July 21, 2014, other than transactions occurring before July 21, 2014, resulting from an entity classification election made under § 301.7701-3 of this chapter that is filed on or after July 29, 2014, and that is effective on or before July 21, 2014.

(3) Taxpayers may, however, choose to apply provisions in this section before the date such provisions are applicable pursuant to paragraph (f)(1) or (2) of this section, provided that they (along with any persons that are related (within the meaning of section 267(b) or 707(b)) to the taxpayer)—

(i) Consistently apply this section (excluding paragraph (d) of this section) to all CAAs occurring on or after December 7, 2016 and consistently apply § 1.704-1(b)(4)(viii)(*c*)(*4*)(*v*) through (*vii*), § 1.901(m)-1, and §§ 1.901(m)-3 through 1.901(m)-8 (excluding § 1.901(m)-4(e)) to all CAAs occurring on or after January 1, 2011, on any original or amended tax return for each taxable year for which the application of the provisions listed in this paragraph (f)(3)(i) affects the tax liability and for which the statute of limitations does not preclude assessment or the filing of a claim for refund, as applicable;

(ii) File all tax returns described in paragraph (f)(3)(i) of this section for any taxable year ending on or before March 23, 2020, no later than March 23, 2021; and

(iii) Make appropriate adjustments to take into account deficiencies that would have resulted from the consistent application under paragraph (f)(3)(i) of this section for taxable years that are not open for assessment.

[T.D. 9895, 85 FR 16251, Mar. 23, 2020]

§ 1.901(m)-3 Disqualified tax amount and aggregate basis difference carryover.

(a) ***In general.*** If a section 901(m) payor has an aggregate basis difference, with respect to a foreign income tax and a foreign payor, for a U.S. taxable year, the section 901(m) payor must determine the portion of a foreign income tax amount that is disqualified under section 901(m) (*disqualified tax amount*). Paragraph (b) of this section provides rules for determining the disqualified tax amount. Paragraph (c) of this section provides rules for determining what portion, if any, of aggregate basis difference will be carried forward to the next U.S. taxable year (*aggregate basis difference carryover*). Paragraph (d) of this section provides applicability dates.

(b) ***Disqualified tax amount*** —

(1) ***In general.*** A section 901(m) payor's disqualified tax amount is not taken into account in determining the credit allowed under section 901(a). If the section 901(m) payor is an applicable foreign corporation, the disqualified tax amount is not taken into account for purposes of section 902 (for tax years of foreign corporations beginning before January 1, 2018) or 960. Sections 78 and 275 do not apply to the disqualified tax amount. The disqualified tax amount is allowed as a deduction to the extent otherwise deductible. See sections 164, 212, and 964 and the regulations under those sections.

(2) ***Determination of disqualified tax amount*** —

(i) ***In general.*** Except as provided in paragraph (b)(2)(iv) of this section, the disqualified tax amount is equal to the lesser of the foreign income tax amount that is paid or accrued by, or considered paid or accrued by, the section 901(m) payor for the U.S. taxable year or the tentative disqualified tax amount. All calculations are determined with respect to each separate category.

(ii) ***Tentative disqualified tax amount.*** The tentative disqualified tax amount is equal to the amount determined under paragraph (b)(2)(ii)(A) of this section reduced (but not below zero) by the amount described in paragraph (b)(2)(ii)(B) of this section.

(A) The product of—

(*1*) The sum of the foreign income tax amount and the FCCTs that are paid or accrued by, or considered paid or accrued by, the section 901(m) payor, and

(*2*) A fraction, the numerator of which is the aggregate basis difference, but not in excess of the allocable foreign income, and the denominator of which is the allocable foreign income.

(B) The amount of the FCCT that is a disqualified tax amount of the section 901(m) payor with respect to another foreign income tax.

(iii) *Allocable foreign income* —

(A) ***No allocation required.*** Except as provided in paragraph (b)(2)(iii)(D) of this section, if the entire foreign income tax amount is paid or accrued by, or considered paid or accrued by, a single section 901(m) payor, then the allocable foreign income is equal to the entire foreign income, determined with respect to each separate category.

(B) ***Allocation required.*** Except as provided in paragraph (b)(2)(iii)(D) of this section, if the foreign income tax amount is allocated to, and considered paid or accrued by, more than one person, a section 901(m) payor's allocable foreign income is equal to the portion of the foreign income that relates to the foreign income tax amount allocated to that section 901(m) payor, determined with respect to each separate category.

(C) ***Rules for allocations.*** This paragraph (b)(2)(iii)(C) provides allocation rules that apply to determine allocable foreign income in certain cases.

(*1*) If the foreign payor is involved in a mid-year transaction and the foreign income tax amount is allocated under § 1.336-2(g)(3)(ii), § 1.338-9(d), or § 1.901-2(f)(4), then, to the extent any portion of the foreign income tax amount is allocated to, and considered paid or accrued by, a section 901(m) payor, the allocable foreign income of the section 901(m) payor is determined in accordance with the principles of § 1.1502-76(b). To the extent the foreign income tax amount is allocated to an entity that is a partnership for U.S. income tax purposes, a portion of the foreign income is first allocated to the partnership in accordance with the principles of § 1.1502-76(b), which is then allocated under the rules of paragraph (b)(2)(iii)(C)(*2*) of this section to determine the allocable foreign income of a section 901(m) payor that owns an interest in the partnership directly or indirectly through one or more other partnerships for U.S. income tax purposes.

(*2*) If the foreign income tax amount is considered paid or accrued by a section 901(m) payor for a U.S. taxable year under § 1.702-1(a)(6), the determination of the allocable foreign income must be consistent with the allocation of the foreign income tax amount that relates to the foreign income. See § 1.704-1(b)(4)(viii).

(*3*) If the foreign income tax amount that is allocated to, and considered paid or accrued by, a section 901(m) payor for a U.S. taxable year is determined under § 1.901-2(f)(3)(i), the allocable foreign income is determined in accordance with § 1.901-2(f)(3)(iii).

(D) ***Failure to substantiate allocable foreign income.*** If, pursuant to section 901(m)(3)(A), a section 901(m) payor fails to substantiate its allocable foreign income to the satisfaction of the Secretary, then allocable foreign income will equal the amount determined by dividing the sum of the foreign income tax amount and the FCCTs that are paid or accrued by, or considered paid or accrued by, the section 901(m) payor, by the highest marginal tax rate applicable to income of the foreign payor under foreign tax law.

(iv) ***Special rule.*** A section 901(m) payor's disqualified tax amount is zero for a U.S. taxable year if:

(A) The section 901(m) payor's aggregate basis difference for the U.S. taxable year is a negative amount;

(B) Foreign income is less than or equal to zero for the foreign taxable year of the foreign payor; or

(C) The foreign income tax amount that is paid or accrued by, or considered paid or accrued by, the section 901(m) payor for the U.S. taxable year is zero.

(3) ***Examples.*** The following examples illustrate the rules of paragraph (b)(2) of this section. For purposes of all the examples, unless otherwise specified: USP is a domestic corporation. CFC1, CFC2, DE1, and DE2 are organized in Country F and are treated as corporations for Country F tax purposes. CFC1 and CFC2 are applicable foreign corporations. DE1 and DE2 are disregarded entities. USP, CFC1, and CFC2 each have a calendar year for both U.S. and Country F income tax purposes, and DE1 and DE2 each have a calendar year for Country F tax purposes. Country F and Country G each impose a single tax that is a foreign income tax. CFC1, CFC2, DE1, and DE2 each have a functional currency of the u with respect to all activities. At all relevant times, 1u equals $1. All amounts are stated in millions. The examples assume that the applicable cost recovery method for property results in basis being recovered ratably over the life of the property beginning on the first day of the U.S. taxable year in which the property is acquired or placed into service; there is a single separate category with respect to a foreign income and foreign income tax amount; and a section 901(m) payor properly substantiates its allocable foreign income to the satisfaction of the Secretary.

(i) ***Example 1: Determining aggregate basis difference; multiple foreign payors*** —

(A) ***Facts.*** CFC1 wholly owns CFC2 and DE1. DE1 wholly owns DE2. Assume that the tax laws of Country F do not allow combined income reporting or the filing of consolidated income tax returns. Accordingly, CFC1, CFC2, DE1, and DE2 file separate tax returns for Country F tax purposes. USP acquires all of the stock of CFC1 in a qualified stock purchase (as defined in section 338(d)(3)) to which section 338(a) applies for both CFC1 and CFC2.

(B) ***Result.***

(*1*) The acquisition of CFC1 gives rise to four separate CAAs under § 1.901(m)-2(b). The acquisition of the stock of CFC1 and the deemed purchase of the stock of CFC2 under section 338(h)(3)(B) are each a section 338 CAA under § 1.901(m)-2(b)(1). Furthermore, because the deemed purchase of the assets of DE1 and DE2 for U.S. income tax purposes is disregarded for Country F tax purposes, each acquisition is a CAA under § 1.901(m)-2(b)(2). Because these four CAAs occur pursuant to a plan, under § 1.901(m)-1(a)(3) they are part of an aggregated CAA transaction. Under § 1.901(m)-1(a)(37), CFC1 is the RFA owner (U.S.) with respect to its assets and those of DE1 and DE2. CFC2 is the RFA owner (U.S.) with respect to its assets. Under § 1.901(m)-1(a)(28), CFC1, CFC2, DE1, and DE2 are each a foreign payor for Country F tax purposes. Under § 1.901(m)-1(a)(41), CFC1 is the section 901(m) payor with respect to foreign income tax amounts for which CFC1, DE1, and DE2 are the foreign payors (see § 1.901-2(f)(1) and (f)(4)(ii)). CFC2 is the section 901(m) payor with respect to foreign income tax amounts for which CFC2 is the foreign payor (see § 1.901-2(f)(1)).

(*2*) In determining aggregate basis difference under § 1.901(m)-1(a)(1) for a U.S. taxable year of CFC1, CFC1 has three computations with respect to Country F tax, because there are three foreign payors for Country F tax purposes whose foreign income tax amount, if any, is considered paid or accrued by CFC1 as the section 901(m) payor.

Furthermore, for each U.S. taxable year, CFC1 will compute a separate disqualified tax amount and aggregate basis difference carryover (if any) under paragraph (b)(2) of this section, with respect to each foreign payor.

(*3*) In determining aggregate basis difference for a U.S. taxable year of CFC2 under § 1.901(m)-1(a)(1), CFC2 has a single computation with respect to Country F tax, because there is a single foreign payor (CFC2) for Country F tax purposes whose foreign income tax amount, if any, is considered paid or accrued by CFC2 as the section 901(m) payor. Furthermore, for each U.S. taxable year, CFC2 will compute a disqualified tax amount and aggregate basis difference carryover (if any) under paragraph (b)(2) of this section.

(C) ***Alternative facts.*** Assume the same facts as in paragraph (b)(3)(i)(A) of this section (paragraph (A) of this *Example 1*), except that foreign income for Country F tax purposes is based on combined income (within the meaning of § 1.901-2(f)(3)(ii)) of CFC1, CFC2, DE1, and DE2. For purposes of determining an aggregate basis difference for a U.S. taxable year of CFC1 under § 1.901(m)-1(a)(1), CFC1, DE1, and DE2 are treated as a single foreign payor because all of the items of income, deduction, gain, or loss with respect to CFC1, DE1, and DE2 are included in the earnings and profits of CFC1 for U.S. income tax purposes. For each U.S. taxable year, CFC1 will therefore compute a single aggregate basis difference, disqualified tax amount, and aggregate basis difference carryover. The result for CFC2 under the alternative facts is the same as in paragraph (b)(3)(i)(B)(*3*) (paragraph (B)(*3*) of this *Example 1*).

(ii) Example 2: Computation of disqualified tax amount —

(A) ***Facts.*** On December 31 of Year 0, USP acquires all of the stock of CFC1 in a qualified stock purchase (as defined in section 338(d)(3)) to which section 338(a) applies (Acquisition). CFC1 owns four assets (Asset A, Asset B, Asset C, and Asset D, and collectively, Assets) and conducts activities in Country F and in a Country G branch. The activities conducted by CFC1 in Country G are not subject to tax in Country F. The tax rate is 25% in Country F and 30% in Country G. For Country F tax purposes, CFC1's foreign income and foreign income tax amount for each foreign taxable year 1 through 15 is 100u and $25 (25u translated at the exchange rate of $1 = 1u), respectively. For Country G tax purposes, CFC1's foreign income and foreign income tax amount for each foreign taxable year 1 through 5 is 400u and $120 (120u translated at the exchange rate of $1 = 1u), respectively. No dispositions occur for any of the Assets during the applicable cost recovery period. Additional facts relevant to each of the Assets are summarized below.

Assets	Relevant foreign income tax	Basis difference	Applicable cost recovery period (years)	Cost recovery amount
Asset A	Country F tax	150u	15	10u (150u/15).
Asset B	Country F tax	50u	5	10u (50u/5).
Asset C	Country G tax	300u	5	60u (300u/5).

Assets	Relevant foreign income tax	Basis difference	Applicable cost recovery period (years)	Cost recovery amount
Asset D	Country G tax	(100u)	5	negative 20u (negative 100/5).

(B) ***Result.***

(*1*) Under § 1.901(m)-2(b)(1), the acquisition of the stock of CFC1 is a section 338 CAA. Under § 1.901(m)-2(c)(1), Assets A and B are RFAs with respect to Country F tax, because they are relevant in determining foreign income of CFC1 for Country F tax purposes and were owned by CFC1 when the Acquisition occurred. Assets C and D are RFAs with respect to Country G tax, because they are relevant in determining foreign income of CFC1 for Country G tax purposes and were owned by CFC1 when the Acquisition occurred. Under § 1.901(m)-1(a)(37), CFC1 is the RFA owner (U.S.) with respect to all of the RFAs. Under § 1.901(m)-1(a)(41) and (28), CFC1 is the section 901(m) payor and the foreign payor for Country F and Country G tax purposes.

(*2*) In determining aggregate basis difference for a U.S. taxable year of CFC1, CFC1 has two computations, one with respect to Country F tax and one with respect to Country G tax. Under § 1.901(m)-1(a)(1), the aggregate basis difference for a U.S. taxable year with respect to Country F tax is equal to the sum of the allocated basis differences and allocated basis difference adjustments with respect to Assets A and B for the U.S. taxable year. Under § 1.901(m)-1(a)(5), allocated basis differences are the sum of cost recovery amounts and disposition amounts. Because there are no dispositions, the only allocated basis differences taken into account in determining an aggregate basis difference are cost recovery amounts. Under § 1.901(m)-5(b), any cost recovery amounts are attributed to CFC1, because CFC1 is the section 901(m) payor and RFA owner (U.S.) with respect to all of the Assets. For each U.S. taxable year, CFC1 will compute a separate disqualified tax amount and aggregate basis difference carryover (if any) with respect to Country F tax and Country G tax under paragraph (b)(2) of this section. For purposes of both disqualified tax amount computations, because CFC1 is the section 901(m) payor and foreign payor, the foreign income tax amount paid or accrued by CFC1 with respect to Country F tax and Country G tax, respectively, will be the entire foreign income tax amount and CFC1's allocable foreign income will be the entire foreign income.

(*3*) With respect to Country F tax, in U.S. taxable years 1 through 5, CFC1 has an aggregate basis difference of 20u each year (10u cost recovery amount with respect to Asset A plus 10u cost recovery amount with respect to Asset B). For U.S. taxable years 1 through 5, under paragraph (b)(2) of this section, the disqualified tax amount each year is $5, the lesser of two amounts: the tentative disqualified tax amount, in this case, $5 ($25 foreign income tax amount × (20u aggregate basis difference/ 100u allocable foreign income)), or the foreign income tax amount paid or accrued by CFC1, in this case, $25. After U.S. taxable year 5, Asset B has no unallocated basis

difference with respect to Country F tax. Accordingly, in U.S. taxable years 6 through 15, CFC1 has an aggregate basis difference of 10u each year. Accordingly, for U.S. taxable years 6 through 15, the disqualified tax amount each year is $2.50, the lesser of two amounts: the tentative disqualified tax amount, in this case, $2.50 ($25 foreign income tax amount × (10u aggregate basis difference/100u allocable foreign income)), or the foreign income tax amount paid or accrued by CFC1, in this case, $25. After U.S. taxable year 15, Asset A has no unallocated basis difference with respect to Country F tax and, therefore, CFC1 has no disqualified tax amount with respect to Country F Tax.

(*4*) With respect to Country G tax, in U.S. taxable years 1 through 5, CFC1 has an aggregate basis difference of 40u each year (60u cost recovery amount with respect to Asset C + (20u) cost recovery amount with respect to Asset D). For U.S. taxable years 1 through 5, under paragraph (b)(2) of this section, the disqualified tax amount each year is $12, the lesser of two amounts: the tentative disqualified tax amount, in this case, $12 ($120 foreign income tax amount × (40u aggregate basis difference/400u allocable foreign income)), or the foreign income tax amount paid or accrued by CFC1, in this case, $120. After U.S. taxable year 5, Asset C and Asset D have no unallocated basis difference with respect to Country G tax. Accordingly, in U.S. taxable years 6 through 15, CFC1 has no disqualified tax amount with respect to Country G Tax.

(iii) ***Example 3: FCCT*** —

(A) ***Facts.*** In U.S. taxable year 1, USP acquires all of the interests in DE1 in a transaction (Transaction) that is treated as a stock acquisition for Country F tax purposes. Immediately after the Transaction, DE1 owns assets (Pre-Transaction Assets), all of which are used in a Country G branch and give rise to income that is taken into account for Country F tax and Country G tax purposes. After the Transaction, DE1 acquires additional assets (Post-Transaction Assets), which are not used by the Country G branch. Both Country F and Country G have a tax rate of 30%. Country F imposes worldwide tax on its residents and provides a foreign tax credit for taxes paid to other jurisdictions. In foreign taxable year 3, 100u of income is attributable to DE1's Post-Transaction Assets and 100u of income is attributable to DE1's Pre-Transaction Assets. For Country G tax purposes, the foreign income is 100u and foreign income tax amount is 30u (30% × 100u). For Country F tax purposes, the foreign income is 200u and the pre-foreign tax credit tax is 60u (30% × 200u). The 60u of Country F pre-foreign tax credit tax is reduced by the 30u foreign income tax amount imposed for Country G tax purposes. Thus, the foreign income tax amount for Country F tax purposes is $30 (30u translated into dollars at the exchange rate of $1 = 1u). Assume that for U.S. taxable year 3 USP has 100u aggregate basis difference with respect to Country F tax and 100u aggregate basis difference with respect to Country G tax. USP does not dispose of DE1 or any assets of DE1 in U.S. taxable year 3.

(B) ***Result.***

(*1*) Under § 1.901(m)-2(b)(2), the Transaction is a CAA. Under § 1.901(m)-2(c)(1), the Pre-Transaction Assets are RFAs with respect to both Country F tax and Country G tax, because they are relevant in determining the foreign income of DE1 for Country F tax and Country G tax purposes and were owned by DE1 when the Transaction occurred. Under § 1.901(m)-1(a)(37), USP is the RFA owner (U.S.) with respect to the

RFAs. Under § 1.901(m)-1(a)(28), DE1 is a foreign payor for Country F tax and Country G tax purposes. Under § 1.901(m)-1(a)(41), USP is the section 901(m) payor with respect to foreign income tax amounts for which DE1 is the foreign payor (see § 1.901-2(f)(4)(ii)). Because the Country G foreign income tax amount is claimed as a credit for purposes of determining the Country F foreign income tax amount, the Country G foreign income tax amount is an FCCT under § 1.901(m)-1(a)(22).

(2) Under § 1.901(m)-1(a)(1), for each U.S. taxable year, USP will separately compute the aggregate basis difference with respect to Country F tax and with respect to Country G tax and will use those amounts to separately compute a disqualified tax amount and aggregate basis difference carryover (if any) with respect to each foreign income tax. Because DE1 is a disregarded entity owned by USP during the entire U.S. taxable year 3, the foreign income tax amount paid or accrued by DE1 is not subject to allocation. Accordingly, for purposes of each of the disqualified tax amount computations, the foreign income tax amount paid or accrued by USP with respect to Country F tax and Country G tax, respectively, is the entire foreign income tax amount paid or accrued by DE1, and, under paragraph (b)(2)(iii)(A) of this section, USP's allocable foreign income will be equal to DE1's entire foreign income.

(3) As stated in paragraph (b)(3)(iii)(A) of this section (paragraph (A) of this *Example 3*), for U.S. taxable year 3 USP has 100u aggregate basis difference with respect to Country F tax and 100u aggregate basis difference with respect to Country G tax. With respect to Country G tax, in U.S. taxable year 3, under paragraph (b)(2) of this section, the disqualified tax amount is $30, the lesser of the two amounts: the tentative disqualified tax amount, in this case, $30 ($30 foreign income tax amount × (100u aggregate basis difference/100u allocable foreign income)), or the foreign income tax amount considered paid or accrued by USP, in this case, $30.

(4) With respect to Country F tax, in U.S. taxable year 3, under paragraph (b)(2) of this section, the disqualified tax amount is $0, the lesser of two amounts: the tentative disqualified tax amount, in this case $0 (($30 foreign income tax amount + $30 Country G FCCT) × (100u aggregate basis difference/200u foreign income) = $30 reduced by $30 Country G FCCT that is a disqualified tax amount of USP), or the foreign income tax amount considered paid or accrued by USP, in this case, $30.

(c) ***Aggregate basis difference carryover*** —

(1) ***In general.*** If a section 901(m) payor has an aggregate basis difference carryover for a U.S. taxable year, as determined under this paragraph (c), the aggregate basis difference carryover is taken into account in computing the section 901(m) payor's aggregate basis difference for the next U.S. taxable year. For successor rules that apply to an aggregate basis difference carryover, see § 1.901(m)-6(c).

(2) ***Amount of aggregate basis difference carryover.***

(i) If a section 901(m) payor's disqualified tax amount is zero, all of the section 901(m) payor's aggregate basis difference (positive or negative) for the U.S. taxable year gives rise to an aggregate basis difference carryover to the next U.S. taxable year.

(ii) If a section 901(m) payor's disqualified tax amount is not zero, then aggregate basis difference carryover can arise in either or both of the following two situations:

(A) If a section 901(m) payor's aggregate basis difference for the U.S. taxable year exceeds its allocable foreign income, the excess gives rise to an aggregate basis difference carryover.

(B) If the tentative disqualified tax amount exceeds the disqualified tax amount, the excess tentative disqualified tax amount is converted into aggregate basis difference carryover by multiplying such excess by a fraction, the numerator of which is the allocable foreign income, and the denominator of which is the sum of the foreign income tax amount and the FCCTs that are paid or accrued by, or considered paid or accrued by, the section 901(m) payor.

(3) ***Example.*** The following example illustrates the rules of paragraph (c) of this section.

(i) ***Facts.***

(A) On July 1 of Year 1, CFC1 acquires all of the interests of DE1 in a transaction (Transaction) that is treated as a stock acquisition for Country F tax purposes. CFC1 and DE1 are organized in Country F and are treated as corporations for Country F tax purposes. CFC1 is an applicable foreign corporation, and DE1 is a disregarded entity. CFC1 has a calendar year for U.S. income tax purposes, and DE1 has a June 30 year-end for Country F tax purposes. Country F imposes a single tax that is a foreign income tax. CFC1 and DE1 each have a functional currency of the u with respect to all activities. Immediately after the Transaction, DE1 owns one asset, Asset A, that gives rise to income that is taken into account for Country F tax purposes. For the first U.S. taxable year (U.S. taxable year 1) there is a cost recovery amount with respect to Asset A of 9u, and for each subsequent U.S. taxable year until the U.S. basis is fully recovered, there is a cost recovery amount with respect to Asset A of 18u. There is no disposition of Asset A.

(ii) ***Result.***

(A) Under § 1.901(m)-2(b)(2), the Transaction is a CAA. Under § 1.901(m)-2(c)(1), Asset A is an RFA with respect to Country F tax because it is relevant in determining the foreign income of DE1 for Country F tax purposes and was owned by DE1 when the Transaction occurred. Under § 1.901(m)-1(a)(37), CFC1 is the RFA owner (U.S.) with respect to Asset A. Under § 1.901(m)-1(a)(28), DE1 is a foreign payor for Country F tax purposes. Under § 1.901(m)-1(a)(41), CFC1 is the section 901(m) payor with respect to foreign income tax amounts for which DE1 is the foreign payor (see § 1.901-2(f)(4)(ii)).

(B) Under § 1.901(m)-1(a)(1), in determining the aggregate basis difference for U.S. taxable year 1, CFC1 has one computation with respect to Country F tax. Under § 1.901(m)-1(a)(1), aggregate basis difference with respect to Country F tax is equal to the sum of allocated basis differences and allocated basis difference adjustments with respect to all RFAs, which, in this case, is only Asset A. Under § 1.901(m)-1(a)(5), allocated basis differences are the sum of cost recovery amounts and disposition amounts. Because there is no disposition of Asset A, the only allocated basis difference taken into account in determining an aggregate basis difference are cost recovery amounts with respect to Asset A. Under § 1.901(m)-5(b), any cost recovery amounts are assigned to a U.S taxable year of CFC1, because CFC1 is the section 901(m) payor and RFA owner (U.S.) with respect to Asset A. Under paragraph (b)(2) of this section, for each U.S. taxable year, CFC1 will compute a disqualified tax amount and aggregate basis difference carryover with respect to the aggregate basis difference. Because DE1 is a disregarded entity owned by CFC1, the foreign income tax amount paid or accrued by DE1 is not subject to

allocation. Accordingly, for purposes of the disqualified tax amount computation, the foreign income tax amount paid or accrued by CFC1 with respect to Country F tax is the entire foreign income tax amount paid or accrued by DE1, and under paragraph (b)(2)(iii)(A) of this section, CFC1's allocable foreign income will be equal to DE1's entire foreign income.

(C) In U.S. taxable year 1, CFC1 has an aggregate basis difference of 9u (the 9u cost recovery amount with respect to Asset A for U.S. taxable year 1). However, because the foreign taxable year of DE1, the foreign payor, will not end between July 1 and December 31, there will not be a foreign income tax amount for U.S. taxable year 1. Because the foreign income tax amount considered paid or accrued by CFC1 for U.S. taxable year 1 is zero, under paragraph (b)(2)(iv) of this section, the disqualified tax amount for U.S. taxable year 1 of CFC1 is also zero. Furthermore, because the disqualified tax amount is zero, under paragraph (c)(2)(i) of this section, CFC1 has an aggregate basis difference carryover equal to 9u, the entire amount of the aggregate basis difference for U.S. taxable year 1. Under paragraph (c)(1) of this section, the 9u aggregate basis difference carryover is taken into account in computing CFC1's aggregate basis difference for U.S. taxable year 2. Accordingly, in U.S. taxable year 2, CFC1 has an aggregate basis difference of 27u (18u cost recovery amount for U.S. taxable year 2, plus 9u aggregate basis difference carryover from U.S. taxable year 1).

(d) ***Applicability dates.*** This section applies to CAAs occurring on or after March 23, 2020. Taxpayers may, however, choose to apply this section before the date this section is applicable provided that they (along with any persons that are related (within the meaning of section 267(b) or 707(b)) to the taxpayer)—

(1) Consistently apply this section, § 1.704-1(b)(4)(viii)(*c*)(*4*)(*v*) through (*vii*), § 1.901(m)-1, and §§ 1.901(m)-4 through 1.901(m)-8 (excluding § 1.901(m)-4(e)) to all CAAs occurring on or after January 1, 2011, and consistently apply § 1.901(m)-2 (excluding § 1.901(m)-2(d)) to all CAAs occurring on or after December 7, 2016, on any original or amended tax return for each taxable year for which the application of the provisions listed in this paragraph (d)(1) affects the tax liability and for which the statute of limitations does not preclude assessment or the filing of a claim for refund, as applicable

(2) File all tax returns described in paragraph (d)(1) of this section for any taxable year ending on or before March 23, 2020, no later than March 23, 2021; and

(3) Make appropriate adjustments to take into account deficiencies that would have resulted from the consistent application under paragraph (d)(1) of this section for taxable years that are not open for assessment.

[T.D. 9895, 85 FR 16252, Mar. 23, 2020]

§ 1.901(m)-4 Determination of basis difference.

(a) ***In general.*** This section provides rules for determining for each RFA the basis difference that arises as a result of a CAA. A basis difference is computed separately with respect to each foreign income tax for which an asset subject to a CAA is an RFA. Paragraph (b) of this section provides the general rule for determining basis difference that references only U.S. basis in the RFA. Paragraph (c) of this section provides for an election to determine basis difference by reference to foreign basis and sets forth the procedures for making the election. Paragraph (d) of this section provides special rules for determining basis difference in the case of a section 743(b) CAA. Paragraph (e) of this section provides a special rule

for determining basis difference in an RFA with respect to a CAA to which paragraphs (b) through (d) of this section do not apply. Paragraph (f) of this section provides examples illustrating the rules of this section, and paragraph (g) of this section provides applicability dates.

(b) ***General rule.*** Except as otherwise provided in paragraphs (c), (d), and (e) of this section, basis difference is the U.S. basis in the RFA immediately after the CAA, less the U.S. basis in the RFA immediately before the CAA. Basis difference is an attribute that attaches to an RFA.

(c) ***Foreign basis election.***

(1) An election (*foreign basis election*) may be made to apply section 901(m)(3)(C)(i)(II) by reference to the foreign basis immediately after the CAA instead of the U.S. basis immediately before the CAA. Accordingly, if a foreign basis election is made, basis difference is the U.S. basis in the RFA immediately after the CAA, less the foreign basis in the RFA immediately after the CAA. For this purpose, the foreign basis immediately after the CAA takes into account any adjustment to that foreign basis resulting from the CAA for purposes of the foreign income tax.

(2) Except as otherwise provided in this paragraph (c), a foreign basis election is made by the RFA owner (U.S.). If, however, the RFA owner (U.S.) is a partnership, each partner in the partnership (and not the partnership) may independently make a foreign basis election. In the case of one or more tiered partnerships, the foreign basis election is made at the level at which a partner is not also a partnership.

(3) The foreign basis election may be made separately for each CAA, and with respect to each foreign income tax and each foreign payor. For purposes of making the foreign basis election, all CAAs that are part of an aggregated CAA transaction are treated as a single CAA. Furthermore, for purposes of making the foreign basis election, if foreign law imposes tax on the combined income (within the meaning of § 1.901-2(f)(3)(ii)) of two or more foreign payors, all foreign payors whose items of income, deduction, gain, or loss for U.S. income tax purposes are included in the U.S. taxable income or earnings and profits of a single section 901(m) payor are treated as a single foreign payor.

(4) A foreign basis election is made by using foreign basis to determine basis difference for purposes of computing a disqualified tax amount and an aggregate basis difference carryover for the U.S. taxable year, as provided under § 1.901(m)-3. A separate statement or form evidencing the foreign basis election need not be filed. Except as provided in paragraphs (c)(5) and (6) of this section, in order for a foreign basis election to be effective, the election must be reflected on a timely filed original federal income tax return (taking into account extensions) for the first U.S. taxable year that the foreign basis election is relevant to the computation of any amounts reported on such return, including on any required schedules.

(5) If the RFA owner (U.S.) is a partnership, a foreign basis election reflected on a partner's timely filed amended federal income tax return is also effective if all of the following conditions are satisfied:

(i) The partner's timely filed original federal income tax return (taking into account extensions) for the first U.S. taxable year of the partner in which a foreign basis election is relevant to the computation of any amounts reported on such return, including on any required schedules, does not reflect the application of section 901(m);

(ii) The information provided by the partnership to the partner for purposes of applying section 901(m) and any information required to be reported by the partnership is based solely on computations that use foreign basis to determine basis difference; and

(iii) Before the due date of the original federal income tax return described in paragraph (c)(5)(i) of this section, the partner delegated the authority to the partnership to choose whether to provide the partner with information to apply section 901(m) using foreign basis, either pursuant to a written partnership agreement (within the meaning of § 1.704-1(b)(2)(ii)(*h*)) or written notice provided by the partner to the partnership.

(6) If, pursuant to paragraph (g)(3) of this section, a taxpayer chooses to have this section apply to CAAs occurring on or after January 1, 2011, a foreign basis election will be effective if the election is reflected on a timely filed amended federal income tax return (or tax returns, as applicable) filed no later than March 23, 2021.

(7) The foreign basis election is irrevocable. Relief under § 301.9100-1 is not available for the foreign basis election.

(d) ***Determination of basis difference in a section 743(b) CAA*** —

(1) ***In general.*** Except as provided in paragraphs (d)(2) and (e) of this section, if there is a section 743(b) CAA, basis difference is the resulting basis adjustment under section 743(b) that is allocated to the RFA under section 755.

(2) ***Foreign basis election.*** If a foreign basis election is made with respect to a section 743(b) CAA, then, for purposes of paragraph (d)(1) of this section, the section 743(b) adjustment is determined by reference to the foreign basis of the RFA, determined immediately after the CAA.

(e) ***Determination of basis difference in an RFA with respect to a CAA with respect to which paragraphs (b), (c), and (d) of this section do not apply.*** For CAAs occurring on or after January 1, 2011, and before July 21, 2014, other than CAAs occurring before July 21, 2014, resulting from an entity classification election made under § 301.7701-3 of this chapter that is filed on or after July 29, 2014, and that is effective on or before July 21, 2014, basis difference in an RFA with respect to the CAA is the amount of any basis difference (within the meaning of section 901(m)(3)(C)(i)) that had not been taken into account under section 901(m)(3)(B) either as of July 21, 2014, or, in the case of an entity classification election made under § 301.7701-3 of this chapter that is filed on or after July 29, 2014, and that is effective on or before July 21, 2014, before the transactions that are deemed to occur under § 301.7701-3(g) as a result of the change in classification.

(f) ***Examples.*** The following examples illustrate the rules of this section:

(1) ***Example 1: Scope of basis choice; identifying separate CAAs, RFA owners (U.S.), and foreign payors in an aggregated CAA transaction*** —

(i) ***Facts.*** CFC1 wholly owns CFC2, both of which are applicable foreign corporations, organized in Country F, and treated as corporations for Country F tax purposes. CFC1 also wholly owns DE1, and DE1 wholly owns DE2. DE1 and DE2 are entities organized in Country F treated as corporations for Country F tax purposes and as disregarded entities for U.S. income tax purposes. Country F imposes a single tax that is a foreign income tax. All of the stock of CFC1 is acquired in a qualified stock purchase (within the meaning of section 338(d)(3)) to which section 338(a) applies for both CFC1 and CFC2. For Country F tax purposes, the transaction is treated as an acquisition of the stock of CFC1.

(ii) ***Result.***

(A) The acquisition of CFC1 gives rise to four separate CAAs described in § 1.901(m)-2. Under § 1.901(m)-2(b)(1), the acquisition of the stock of CFC1 and the deemed acquisition of the stock of CFC2 under section 338(h)(3)(B) are each a section 338 CAA. Furthermore, because the deemed acquisition of the assets of each of DE1 and DE2 for U.S. income tax purposes is disregarded for Country F tax purposes, the deemed acquisitions are CAAs under § 1.901(m)-2(b)(2). Because the four CAAs occurred pursuant to a plan, under § 1.901(m)-1(a)(3), all of the CAAs are part of an aggregated CAA transaction. Under § 1.901(m)-1(a)(37), CFC1 is the RFA owner (U.S.) with respect to its assets and the assets of DE1 and DE2 that are RFAs. CFC2 is the RFA owner (U.S.) with respect to its assets that are RFAs. Under § 1.901(m)-1(a)(28), CFC1, CFC2, DE1, and DE2 are each a foreign payor for Country F tax purposes.

(B) Under paragraph (c) of this section, a foreign basis election may be made by the RFA owner (U.S.). The election is made separately with respect to each CAA (for this purpose, treating all CAAs that are part of an aggregated CAA transaction as a single CAA) and with respect to each foreign income tax and foreign payor. Thus, in this case, CFC1 can make a separate foreign basis election for one or more of the following three groups of RFAs: RFAs that are relevant in determining foreign income of CFC1; RFAs that are relevant in determining foreign income of DE1; and RFAs that are relevant in determining foreign income of DE2. Furthermore, CFC2 can make a foreign basis election for all of its RFAs that are relevant in determining its foreign income.

(2) ***Example 2: Scope of basis choice; RFA owner (U.S.) is a partnership*** —

(i) ***Facts.*** USPS is a domestic partnership for which a section 754 election is in effect. USPS owns two assets, the stock of DE1 and DE2. DE1 is an entity organized in Country X and treated as a corporation for Country X tax purposes. DE2 is an entity organized in Country Y and treated as a corporation for Country Y tax purposes. DE1 and DE2 are disregarded entities. Country X and Country Y each impose a single tax that is a foreign income tax. US1 and US2, unrelated domestic corporations, and FP, a foreign person unrelated to US1 and US2, acquire partnership interests in USPS from existing partners of USPS pursuant to the same plan.

(ii) ***Result.*** Under § 1.901(m)-2(b)(3), the acquisitions of the partnership interests in USPS by US1, US2, and FP each give rise to separate section 743(b) CAAs, but under § 1.901(m)-1(a)(3), they are treated as an aggregated CAA transaction because they occur as part of a plan. Under § 1.901(m)-1(a)(37), USPS is the RFA owner (U.S.) with respect to the assets of DE1 and DE2 that are RFAs. Under § 1.901(m)-1(a)(28), DE1 is a foreign payor for Country X tax purposes, and DE2 is a foreign payor for Country Y tax purposes. Because the RFA owner (U.S.) is a partnership, paragraph (c)(2) of this section provides that US1, US2, and FP (the relevant partners in USPS) separately choose whether to make a foreign basis election for purposes of determining basis difference. Furthermore, under paragraph (c)(3) of this section, the choice to make the election is made separately by each partner with respect to each foreign payor. Thus, in this case, each partner may make separate elections for the RFAs that are relevant in determining foreign income of DE1 for Country X tax purposes and the RFAs that are relevant in determining foreign income of DE2 for Country Y tax purposes.

(g) ***Applicability dates.***

(1) Except as provided in paragraph (g)(2) of this section, this section applies to CAAs occurring on or after March 23, 2020.

(2) Paragraphs (a), (b), and (d)(1) of this section apply to CAAs occurring on or after July 21, 2014, and to CAAs occurring before that date resulting from an entity classification election made under § 301.7701-3 that is filed on or after July 29, 2014, and that is effective on or before July 21, 2014. Paragraph (e) of this section applies to CAAs occurring on or after January 1, 2011, and before July 21, 2014, other than CAAs occurring before July 21, 2014, resulting from an entity classification election made under § 301.7701-3 of this chapter that is filed on or after July 29, 2014, and that is effective on or before July 21, 2014. Taxpayers may, however, consistently apply paragraph (d)(1) of this section to all section 743(b) CAAs occurring on or after January 1, 2011. For this purpose, persons that are related (within the meaning of section 267(b) or 707(b)) will be treated as a single taxpayer.

(3) Taxpayers may, however, choose to apply provisions in this section before the date such provisions are applicable pursuant to paragraph (g)(1) or (2) of this section, provided that they (along with any persons that are related (within the meaning of section 267(b) or 707(b)) to the taxpayer)—

(i) Consistently apply this section (excluding paragraph (e) of this section), § 1.704-1(b)(4)(viii)(*c*)(*4*)(*v*) through (*vii*), § 1.901(m)-1, § 1.901(m)-3, and §§ 1.901(m)-5 through 1.901(m)-8 to all CAAs occurring on or after January 1, 2011, and consistently apply § 1.901(m)-2 (excluding § 1.901(m)-2(d)) to all CAAs occurring on or after December 7, 2016, on any original or amended tax return for each taxable year for which the application of the provisions listed in this paragraph (g)(3)(i) affects the tax liability and for which the statute of limitations does not preclude assessment or the filing of a claim for refund, as applicable;

(ii) File all tax returns described in paragraph (g)(3)(i) of this section for any taxable year ending on or before March 23, 2020, no later than March 23, 2021; and

(iii) Make appropriate adjustments to take into account deficiencies that would have resulted from the consistent application under paragraph (g)(3)(i) of this section for taxable years that are not open for assessment.

[T.D. 9895, 85 FR 16256, Mar. 23, 2020]

§ 1.901(m)-5 Basis difference taken into account.

(a) ***In general.*** This section provides rules for determining the amount of basis difference with respect to an RFA that is taken into account in a U.S. taxable year for purposes of determining the disqualified portion of a foreign income tax amount. Paragraph (b) of this section provides rules for determining a cost recovery amount and assigning that amount to a U.S. taxable year of a single section 901(m) payor when the RFA owner (U.S.) is the section 901(m) payor. Paragraph (c) of this section provides rules for determining a disposition amount and assigning that amount to a U.S. taxable year of a single section 901(m) payor when the RFA owner (U.S.) is the section 901(m) payor. Paragraph (d) of this section provides rules for allocating cost recovery amounts and disposition amounts when the RFA owner (U.S.) is a fiscally transparent entity for U.S. income tax purposes. Paragraph (e) of this section provides special rules for allocating cost recovery amounts and disposition amounts with respect to certain section 743(b) CAAs. Paragraph (f) of this section provides special rules for allocating certain disposition amounts when a foreign payor is transferred in a mid-year transaction. Paragraph (g) of this section provides special rules for allocating both cost recovery amounts and disposition amounts in certain cases in which the RFA owner (U.S.) either is a reverse hybrid or a fiscally transparent entity for both U.S. and foreign income

tax purposes that is directly or indirectly owned by a reverse hybrid. Paragraph (h) of this section provides examples illustrating the application of this section. Paragraph (i) of this section provides the applicability dates.

(b) ***Basis difference taken into account under applicable cost recovery method*** —

(1) ***In general.*** When the RFA owner (U.S.) is a section 901(m) payor, all of a cost recovery amount is attributed to the section 901(m) payor and assigned to the U.S. taxable year of the section 901(m) payor in which the corresponding U.S. basis deduction is taken into account under the applicable cost recovery method. This is the case regardless of whether the deduction is deferred or disallowed for U.S. income tax purposes. If instead the RFA owner (U.S.) is a fiscally transparent entity for U.S. income tax purposes, a cost recovery amount is allocated to one or more section 901(m) payors under paragraph (d) of this section, except as provided in paragraphs (e) and (g) of this section. If a cost recovery amount arises from an RFA with respect to a section 743(b) CAA, in certain cases the cost recovery amount is allocated to a section 901(m) payor under paragraph (e) of this section. In certain cases in which the RFA owner (U.S.) either is a reverse hybrid or a fiscally transparent entity for both U.S. and foreign income tax purposes that is directly or indirectly owned by a reverse hybrid, a cost recovery amount is allocated to one or more section 901(m) payors under paragraph (g) of this section.

(2) ***Determining a cost recovery amount*** —

(i) ***General rule.*** A cost recovery amount for an RFA is determined by applying the applicable cost recovery method to the basis difference rather than to the U.S. basis.

(ii) ***U.S. basis subject to multiple cost recovery methods.*** If the entire U.S. basis is not subject to the same cost recovery method, the applicable cost recovery method for determining the cost recovery amount is the cost recovery method that applies to the portion of the U.S. basis that corresponds to the basis difference.

(3) ***Applicable cost recovery method.*** For purposes of section 901(m), an applicable cost recovery method includes any method for recovering the cost of property over time for U.S. income tax purposes (each application of a method giving rise to a *U.S. basis deduction*). Such methods include depreciation, amortization, or depletion, as well as a method that allows the cost (or a portion of the cost) of property to be expensed in the year of acquisition or in the placed-in-service year, such as under section 179. Applicable cost recovery methods do not include any provision allowing the U.S. basis to be recovered upon a disposition of an RFA.

(c) ***Basis difference taken into account as a result of a disposition*** —

(1) ***In general.*** Except as provided in paragraph (f) of this section, when the RFA owner (U.S.) is a section 901(m) payor, all of a disposition amount is attributed to the section 901(m) payor and assigned to the U.S. taxable year of the section 901(m) payor in which the disposition occurs. If instead the RFA owner (U.S.) is a fiscally transparent entity for U.S. income tax purposes, except as provided in paragraphs (e), (f), and (g) of this section, a disposition amount is allocated to one or more section 901(m) payors under paragraph (d) of this section. If a disposition amount arises from an RFA with respect to a section 743(b) CAA, in certain cases the disposition amount is allocated to a section 901(m) payor under paragraph (e) of this section. If there is a disposition of an RFA in a foreign taxable year of a foreign payor during which there is a mid-year transaction, in certain cases a disposition amount is allocated under paragraph (f) of this section. In certain cases in which the RFA

owner (U.S.) either is a reverse hybrid or a fiscally transparent entity for both U.S. and foreign income tax purposes that is directly or indirectly owned by a reverse hybrid, a disposition amount is allocated to one or more section 901(m) payors under paragraph (g) of this section.

(2) ***Determining a disposition amount*** —

(i) ***Disposition is fully taxable for purposes of both U.S. income tax and the foreign income tax.*** If a disposition of an RFA is fully taxable (that is, results in all gain or loss, if any, being recognized with respect to the RFA) for purposes of both U.S. income tax and the foreign income tax, the disposition amount is equal to the unallocated basis difference with respect to the RFA.

(ii) ***Disposition is not fully taxable for purposes of U.S. income tax or the foreign income tax (or both).*** If the disposition of an RFA is not fully taxable for purposes of both U.S. income tax and the foreign income tax, the disposition amount is determined under this paragraph (c)(2)(ii). See § 1.901(m)-6 for rules regarding the continued application of section 901(m) if the RFA has any unallocated basis difference after determining the disposition amount under paragraph (c)(2)(ii)(A) or (B) of this section, as applicable.

(A) ***Positive basis difference.*** If the disposition of an RFA is not fully taxable for purposes of both U.S. income tax and the foreign income tax, and the RFA has a positive basis difference, the disposition amount equals the lesser of:

(*1*) Any foreign disposition gain plus any U.S. disposition loss (for this purpose, expressed as a positive amount), or

(*2*) Unallocated basis difference with respect to the RFA.

(B) ***Negative basis difference.*** If the disposition of an RFA is not fully taxable for purposes of both U.S. income tax and the foreign income tax, and the RFA has a negative basis difference, the disposition amount equals the greater of:

(*1*) Any U.S. disposition gain (for this purpose, expressed as a negative amount) plus any foreign disposition loss, or

(*2*) Unallocated basis difference with respect to the RFA.

(iii) ***Disposition of an RFA after a section 743(b) CAA.*** If an RFA was subject to a section 743(b) CAA and subsequently there is a disposition of the RFA, then, for purposes of determining the disposition amount, foreign disposition gain or foreign disposition loss are specially defined to mean the amount of gain or loss recognized for purposes of the foreign income tax on the disposition of the RFA that is allocable to the partnership interest that was transferred in the section 743(b) CAA. In addition, U.S. disposition gain or U.S. disposition loss are specially defined to mean the amount of gain or loss recognized for U.S. income tax purposes on the disposition of the RFA that is allocable to the partnership interest that was transferred in the section 743(b) CAA, taking into account the basis adjustment under section 743(b) that was allocated to the RFA under section 755.

(d) ***General rules for allocating and assigning a cost recovery amount or a disposition amount when the RFA owner (U.S.) is a fiscally transparent entity*** —

(1) ***In general.*** Except as provided in paragraphs (e), (f), and (g) of this section, this paragraph (d) provides rules for allocating a cost recovery amount or a disposition amount when the RFA owner (U.S.) is a fiscally transparent entity for U.S. income tax purposes in which a section 901(m) payor

directly or indirectly owns an interest, as well as for assigning the allocated amount to a U.S. taxable year of the section 901(m) payor. For purposes of this paragraph (d), unless otherwise indicated, a reference to direct or indirect ownership in an entity means for U.S. income tax purposes. For purposes of this paragraph (d), a person indirectly owns an interest in an entity for U.S. income tax purposes if the person owns the interest through one or more fiscally transparent entities for U.S. income tax purposes, and at least one of the fiscally transparent entities is not a disregarded entity. For purposes of this paragraph (d), a person indirectly owns an interest in an entity for foreign income tax purposes if the person owns the interest through one or more fiscally transparent entities for foreign income tax purposes. If the RFA owner (U.S.) is a lower-tier fiscally transparent entity for U.S. income tax purposes in which the section 901(m) payor indirectly owns an interest, the rules of this section apply in a manner consistent with the application of these rules when the section 901(m) payor directly owns an interest in the RFA owner (U.S.).

(2) ***Allocation of a cost recovery amount.*** A cost recovery amount is allocated to a section 901(m) payor that directly or indirectly owns an interest in the RFA owner (U.S.) to the extent the U.S. basis deduction that corresponds to the cost recovery amount is (or will be) included in the section 901(m) payor's distributive share of the income of the RFA owner (U.S.) for U.S. income tax purposes.

(3) ***Allocation of a disposition amount attributable to foreign disposition gain or foreign disposition loss*** —

(i) ***In general.*** Except as provided in paragraph (f) of this section, a disposition amount attributable to foreign disposition gain or foreign disposition loss (as determined under paragraph (d)(5) of this section) is allocated under paragraph (d)(3)(ii) or (d)(3)(iii) of this section to a section 901(m) payor that directly or indirectly owns an interest in the RFA owner (U.S.).

(ii) ***First allocation rule.*** This paragraph (d)(3)(ii) applies when a section 901(m) payor, or a disregarded entity directly owned by a section 901(m) payor, is the foreign payor whose foreign income includes a distributive share of the foreign income of the RFA owner (foreign) and, therefore, all of the foreign income tax amount of the foreign payor is paid or accrued by, or considered paid by, the section 901(m) payor. Thus, this paragraph (d)(3)(ii) applies when the RFA owner (U.S.) is a fiscally transparent entity for both U.S. and foreign income tax purposes and a section 901(m) payor either directly owns an interest in the RFA owner (U.S.) or directly owns an interest in another fiscally transparent entity for U.S. and foreign income tax purposes, which, in turn, directly or indirectly owns an interest in the RFA owner (U.S.) for both U.S. and foreign income tax purposes. In these cases, the section 901(m) payor is allocated the portion of a disposition amount that is equal to the product of the disposition amount attributable to foreign disposition gain or foreign disposition loss, as applicable, and a fraction, the numerator of which is the portion of the foreign disposition gain or foreign disposition loss recognized by the RFA owner (foreign) for foreign income tax purposes that is (or will be) included in the foreign payor's distributive share of the foreign income of the RFA owner (foreign), and the denominator of which is the foreign disposition gain or foreign disposition loss.

(iii) ***Second allocation rule.*** This paragraph (d)(3)(iii) applies when neither a section 901(m) payor nor a disregarded entity directly owned by a section 901(m) payor is the foreign payor with respect to the foreign income of the RFA owner (foreign). Instead, a section 901(m) payor directly or indirectly owns an interest in the foreign payor, which is a fiscally transparent entity for U.S. income tax purposes (other than a disregarded entity directly owned by the section 901(m) payor), and, therefore, the section 901(m) payor is considered to pay or accrue only its allocated portion of the foreign income tax amount of the foreign payor. This will be the case when the foreign payor is either the RFA owner (U.S.), another fiscally transparent entity for U.S.

income tax purposes (other than a disregarded entity directly owned by a section 901(m) payor) that directly or indirectly owns an interest in the RFA owner (U.S.) for both U.S. and foreign income tax purposes, or a disregarded entity directly owned by the RFA owner (U.S.). In these cases, the section 901(m) payor is allocated the portion of a disposition amount that is equal to the product of the disposition amount attributable to foreign disposition gain or foreign disposition loss, as applicable, and a fraction, the numerator of which is the portion of the foreign disposition gain or foreign disposition loss that is included in the allocable foreign income of the section 901(m) payor, and the denominator of which is the foreign disposition gain or foreign disposition loss. If allocable foreign income is not otherwise required to be determined because there is no foreign income tax amount, the numerator is the portion of the foreign disposition gain or foreign disposition loss that would be included in the allocable foreign income of the section 901(m) payor if there were a foreign income tax amount.

(4) ***Allocation of a disposition amount attributable to U.S. disposition gain or U.S. disposition loss.*** A section 901(m) payor that directly or indirectly owns an interest in the RFA owner (U.S.) is allocated the portion of a disposition amount that is equal to the product of the disposition amount attributable to U.S. disposition gain or U.S. disposition loss (as determined under paragraph (d)(5) of this section), as applicable, and a fraction, the numerator of which is the portion of the U.S. disposition gain or U.S. disposition loss that is (or will be) included in the section 901(m) payor's distributive share of income of the RFA owner (U.S.) for U.S. income tax purposes, and the denominator of which is the U.S. disposition gain or U.S. disposition loss.

(5) ***Determining the extent to which a disposition amount is attributable to foreign or U.S. disposition gain or loss*** —

(i) ***RFA with a positive basis difference.*** When there is a disposition of an RFA with a positive basis difference and the disposition results in either a foreign disposition gain or a U.S. disposition loss, but not both, the entire disposition amount is attributable to foreign disposition gain or U.S. disposition loss, as applicable, even if the disposition amount exceeds the foreign disposition gain or the absolute value of the U.S. disposition loss. If the disposition results in both a foreign disposition gain and a U.S. disposition loss, the disposition amount is attributable first to foreign disposition gain to the extent thereof, and the excess disposition amount, if any, is attributable to the U.S. disposition loss, even if the excess disposition amount exceeds the absolute value of the U.S. disposition loss.

(ii) ***RFA with a negative basis difference.*** When there is a disposition of an RFA with a negative basis difference and the disposition results in either a foreign disposition loss or a U.S. disposition gain, but not both, the entire disposition amount is attributable to foreign disposition loss or U.S. disposition gain, as applicable, even if the absolute value of the disposition amount exceeds the absolute value of the foreign disposition loss or the U.S. disposition gain. If the disposition results in both a foreign disposition loss and a U.S. disposition gain, the disposition amount is attributable first to foreign disposition loss to the extent thereof, and the excess disposition amount, if any, is attributable to the U.S. disposition gain, even if the absolute value of the excess disposition amount exceeds the U.S. disposition gain.

(6) ***U.S. taxable year of a section 901(m) payor to which an allocated cost recovery amount or disposition amount is assigned.*** A cost recovery amount or a disposition amount allocated to a section 901(m) payor under paragraph (d) of this section is assigned to the U.S. taxable year of the section 901(m) payor that includes the last day of the U.S. taxable year of the RFA owner (U.S.) in which, in the case

of a cost recovery amount, the RFA owner (U.S.) takes into account the corresponding U.S. basis deduction (without regard to whether the deduction is deferred or disallowed for U.S. income tax purposes), or in the case of a disposition amount, the disposition occurs.

(e) ***Special rules for certain section 743(b) CAAs.*** If a section 901(m) payor acquires a partnership interest in a section 743(b) CAA, including a section 743(b) CAA with respect to a lower-tier partnership that results from a direct acquisition by the section 901(m) payor of an interest in an upper-tier partnership, and subsequently there is a cost recovery amount or a disposition amount that arises from an RFA with respect to that section 743(b) CAA, all of the cost recovery amount or the disposition amount is allocated to that section 901(m) payor. The U.S. taxable year of the section 901(m) payor to which the cost recovery amount or the disposition amount is assigned is the U.S. taxable year in which, in the case of a cost recovery amount, the section 901(m) payor takes into account the corresponding U.S. basis deduction (without regard to whether the deduction is deferred or disallowed for U.S. income tax purposes), or in the case of a disposition amount, the disposition occurs.

(f) ***Mid-year transactions*** —

(1) ***In general.*** When a disposition of an RFA occurs in the same foreign taxable year that a foreign payor is involved in a mid-year transaction, the portion of the disposition amount that is attributable to foreign disposition gain or foreign disposition loss (as determined under paragraph (d)(5) of this section) is allocated to a section 901(m) payor and assigned to a U.S. taxable year of the section 901(m) payor under this paragraph (f). To the extent the disposition amount is attributable to U.S. disposition gain or U.S. disposition loss (as determined under paragraph (d)(5) of this section), see paragraph (c)(1) or (d) of this section, as applicable.

(2) ***Allocation rule.*** To the extent a disposition amount is attributable to foreign disposition gain or foreign disposition loss, a section 901(m) payor is allocated the portion of the disposition amount equal to the product of the disposition amount attributable to foreign disposition gain or foreign disposition loss, as applicable, and a fraction, the numerator of which is the portion of the foreign disposition gain or foreign disposition loss that is included in the allocable foreign income of the section 901(m) payor, and the denominator of which is the foreign disposition gain or foreign disposition loss. If allocable foreign income is not otherwise required to be determined because there is no foreign income tax amount, the numerator is the portion of the foreign disposition gain or foreign disposition loss that would be included in the allocable foreign income of the section 901(m) payor if there were a foreign income tax amount.

(3) ***Assignment to a U.S. taxable year of a section 901(m) payor.*** A disposition amount allocated to a section 901(m) payor under paragraph (f)(2) of this section is assigned to the U.S. taxable year of the section 901(m) payor in which the foreign disposition gain or foreign disposition loss (or portion thereof) is included in allocable foreign income of the section 901(m) payor or, if allocable foreign income is not otherwise required to be determined because there is no foreign income tax amount, the U.S. taxable year in which the foreign disposition gain or foreign disposition loss would be included in allocable foreign income if there were a foreign income tax amount.

(g) ***Reverse hybrids*** —

(1) ***In general.*** This paragraph (g) provides rules for allocating a cost recovery amount or a disposition amount when the RFA owner (U.S.) is either a reverse hybrid or a fiscally transparent entity for U.S. and foreign income tax purposes that is directly or indirectly owned by a reverse hybrid for U.S. and foreign income tax purposes, and in each case, the foreign payor whose foreign income includes a distributive share of the foreign income of the RFA owner (foreign) directly or indirectly owns an

interest in the reverse hybrid for foreign income tax purposes. Application of the allocation rules under paragraphs (g)(2) and (g)(3) of this section depend upon whether a section 901(m) payor or a disregarded entity directly owned by a section 901(m) payor is the foreign payor, or, instead, a section 901(m) payor directly or indirectly owns an interest in the foreign payor. For purposes of this paragraph (g), unless otherwise indicated, a reference to direct or indirect ownership in an entity means for U.S. income tax purposes. For purposes of this paragraph (g), a person indirectly owns an interest in an entity for U.S. income tax purposes if the person owns the interest through one or more fiscally transparent entities for U.S. income tax purposes, and at least one of the fiscally transparent entities is not a disregarded entity. For purposes of this paragraph (g), a person indirectly owns an interest in an entity for foreign income tax purposes if the person owns the interest through one or more fiscally transparent entities for foreign income tax purposes. If the RFA owner (U.S.) is a lower-tier fiscally transparent entity for U.S. income tax purposes in which the reverse hybrid indirectly owns an interest, the rules of this section apply in a manner consistent with the application of these rules when the reverse hybrid directly owns an interest in the RFA owner (U.S.).

(2) ***First allocation rule*** —

(i) ***Allocation to a section 901(m) payor.*** This paragraph (g)(2)(i) applies when a section 901(m) payor, or a disregarded entity directly owned by a section 901(m) payor, is the foreign payor whose foreign income includes a distributive share of the foreign income of the RFA owner (foreign), and, therefore, all of the foreign income tax amount of the foreign payor is paid or accrued by, or considered paid or accrued by, the section 901(m) payor. Thus, this paragraph (g)(2)(i) applies when a section 901(m) payor either directly owns an interest in the reverse hybrid or directly owns an interest in a fiscally transparent entity for U.S. and foreign income tax purposes, which, in turn, directly or indirectly owns an interest in the reverse hybrid for both U.S. and foreign income tax purposes. In these cases, the section 901(m) payor is allocated the portions of cost recovery amounts or disposition amounts (or both) with respect to RFAs that are equal to the product of the sum of the cost recovery amounts and the disposition amounts and a fraction, the numerator of which is the portion of the foreign income of the RFA owner (foreign) that is included in the foreign income of the foreign payor, and the denominator of which is the foreign income of the RFA owner (foreign).

(ii) ***Assignment to a U.S. taxable year of a section 901(m) payor.*** This paragraph (g)(2)(ii) applies when a cost recovery amount or a disposition amount, or portion thereof, is allocated to a section 901(m) payor under paragraph (g)(2)(i) of this section. If the reverse hybrid is the RFA owner (U.S.), a cost recovery amount or disposition amount, or portion thereof, is assigned to the U.S. taxable year of the section 901(m) payor that includes the last day of the U.S. taxable year of the reverse hybrid in which, in the case of a cost recovery amount, the reverse hybrid takes into account the corresponding U.S. basis deduction (without regard to whether the deduction is deferred or disallowed for U.S. income tax purposes), or, in the case of a disposition amount, the disposition occurs. If the reverse hybrid is not the RFA owner (U.S.) but instead the reverse hybrid directly or indirectly owns an interest in the RFA owner (U.S.) for both U.S. and foreign income tax purposes, a cost recovery amount or disposition amount, or portion thereof, is assigned to the U.S. taxable year of the section 901(m) payor that includes the last day of the U.S. taxable year of the reverse hybrid, which, in turn, includes the last day of the U.S. taxable year of the RFA owner (U.S.) in which, in the case of a cost recovery amount, the RFA owner (U.S.) takes into account the corresponding U.S. basis deduction (without regard to whether the deduction is deferred or disallowed for U.S. income tax purposes), or, in the case of a disposition amount, the disposition occurs.

(3) *Second allocation rule* —

(i) ***Allocation to a section 901(m) payor.*** This paragraph (g)(3)(i) applies when neither a section 901(m) payor nor a disregarded entity directly owned by a section 901(m) payor is the foreign payor with respect to the foreign income of the RFA owner (foreign). Instead, a section 901(m) payor directly or indirectly owns an interest in the foreign payor, which is a fiscally transparent entity for U.S. income tax purposes (other than a disregarded entity directly owned by the section 901(m) payor), and, therefore, the section 901(m) payor is considered to pay or accrue only its allocated portion of the foreign income tax amount of the foreign payor. In these cases, the section 901(m) payor is allocated the portions of cost recovery amounts or disposition amounts (or both) with respect to RFAs that are equal to the product of the sum of the cost recovery amounts and the disposition amounts and a fraction, the numerator of which is the portion of the foreign income of the RFA owner (foreign) that is included in the foreign income of the foreign payor and included in the allocable foreign income of the section 901(m) payor, and the denominator of which is the foreign income of the RFA owner (foreign). If allocable foreign income is not otherwise required to be determined for a section 901(m) payor because there is no foreign income tax amount, the numerator is the foreign income of the RFA owner (foreign) that is included in the foreign income of the foreign payor and that would be included in allocable foreign income of the section 901(m) payor if there were a foreign income tax amount.

(ii) ***Assignment to a U.S. taxable year of a section 901(m) payor.*** A cost recovery amount or a disposition amount, or portion thereof, that is allocated to a section 901(m) payor under paragraph (g)(3)(i) of this section is assigned to the U.S. taxable year of the section 901(m) payor in which the foreign income of the RFA owner (foreign) described in paragraph (g)(3)(i) of this section is included in the allocable foreign income of the section 901(m) payor, or, if there is no foreign income tax amount, the U.S. taxable year of the section 901(m) payor in which the foreign income of the RFA owner (foreign) described in paragraph (g)(3)(i) of this section would be included in allocable foreign income if there were a foreign income tax amount.

(h) ***Examples.*** The following examples illustrate the rules of this section. In addition to any facts described in a particular example, the following facts apply to all the examples unless otherwise specified: CFC1, CFC2, and DE are organized in Country F and treated as corporations for Country F tax purposes. CFC1 and CFC2 are each an applicable foreign corporation that is wholly owned by the same U.S. corporation, and DE is a disregarded entity. CFC1 and CFC2 each have a U.S. taxable year that is a calendar year, and CFC1, CFC2, and DE each have a foreign taxable year that is a calendar year. Country F imposes a single tax that is a foreign income tax. CFC1, CFC2, and DE each have a functional currency of the u with respect to all activities. At all relevant times, 1u equals $1. All amounts are stated in millions. The examples assume that the applicable cost recovery method for property results in basis being recovered ratably over the life of the property beginning on the first day of the U.S. taxable year in which the property is acquired or placed into service.

(1) *Example 1: CAA followed by disposition: Fully taxable for both U.S. income tax and foreign income tax purposes* —

(i) *Facts.*

(A) On January 1, Year 1, USP acquires all of the stock of CFC1 in a qualified stock purchase (as defined in section 338(d)(3)) to which section 338(a) applies (Section 338 Acquisition). At the time of the Section 338 Acquisition, CFC1 owns a single asset (Asset A) that is located in Country F. Asset A gives rise to income that is taken into account for

Country F tax purposes. Asset A is tangible personal property that, under the applicable cost recovery method in the hands of CFC1, is depreciable over 5 years. There are no cost recovery deductions available for Country F tax purposes with respect to Asset A. Immediately before the Section 338 Acquisition, Asset A has a U.S. basis of 10u and a foreign basis of 40u. Immediately after the Section 338 Acquisition, Asset A has a U.S. basis of 100u and foreign basis of 40u.

(B) On July 1, Year 2, Asset A is transferred to an unrelated third party in exchange for 120u in a transaction in which all realized gain is recognized for both U.S. income tax and Country F tax purposes (subsequent transaction). For U.S. income tax purposes, CFC1 recognizes U.S. disposition gain of 50u (amount realized of 120u, less U.S. basis of 70u (100u cost basis, less 30u of accumulated depreciation)) with respect to Asset A. The 30u of accumulated depreciation is the sum of 20u of depreciation in Year 1 (100u cost basis/5 years) and 10u of depreciation in Year 2 ((100u cost basis/5 years) × 6/12). For Country F tax purposes, CFC1 recognizes foreign disposition gain of 80u (amount realized of 120u, less foreign basis of 40u) with respect to Asset A. Immediately after the subsequent transaction, Asset A has a U.S. basis and a foreign basis of 120u.

(ii) ***Result.***

(A) Under § 1.901(m)-2(b)(1), USP's acquisition of the stock of CFC1 in the Section 338 Acquisition is a section 338 CAA. Under § 1.901(m)-2(c)(i), Asset A is an RFA with respect to Country F tax because it is relevant in determining the foreign income of CFC1 for Country F tax purposes. Under § 1.901(m)-4(b), the basis difference with respect to Asset A is 90u (100u−10u). Under § 1.901(m)-1(a)(37), CFC1 is the RFA owner (U.S.) with respect to Asset A. Under § 1.901(m)-1(a)(28), CFC1 is a foreign payor for Country F tax purposes. Under § 1.901(m)-1(a)(41), CFC1 is the section 901(m) payor with respect to a foreign income tax amount for which CFC1 is the foreign payor (see § 1.901-2(f)(1)).

(B) Under § 1.901(m)-1(a)(5), allocated basis differences are the sum of cost recovery amounts and disposition amounts. In Year 1, Asset A has an allocated basis difference that includes only a cost recovery amount. Under paragraph (b)(2) of this section, the cost recovery amount for Year 1 is determined by applying the applicable cost recovery method of Asset A in the hands of CFC1 to the basis difference with respect to Asset A. Accordingly, the cost recovery amount is 18u (90u basis difference/5 years). Under paragraph (b)(1) of this section, all of the 18u cost recovery amount is attributed to CFC1 and assigned to Year 1, because CFC1 is a section 901(m) payor and RFA owner (U.S.) with respect to Asset A and Year 1 is the U.S. taxable year of CFC1 in which it takes into account the corresponding 20u of depreciation. Immediately after Year 1, under § 1.901(m)-1(a)(47), unallocated basis difference is 72u with respect to Asset A (90u−18u).

(C) In Year 2, Asset A has an allocated basis difference that includes both a cost recovery amount and a disposition amount. Under paragraph (b)(2) of this section, the cost recovery amount for Year 2, as of the date of the subsequent transaction, is 9u ((90u basis difference/5 years) × 6/12). Under § 1.901(m)-1(a)(15), the subsequent transaction is a disposition of Asset A, because the subsequent transaction is an event that results in an amount of gain being recognized for U.S. income tax and Country F tax purposes. Because all realized gain in Asset A is recognized for U.S. income tax and Country F tax purposes, the rule in paragraph (c)(2)(i) of this section applies to determine the disposition amount. Under that rule, the disposition amount for Year 2 is the unallocated

basis difference of 63u (90u basis difference, less total 27u taken into account as cost recovery amounts in Year 1 and Year 2). Accordingly, the allocated basis difference for Year 2 is 72u (9u of cost recovery amount, plus 63u of disposition amount). Under paragraphs (b)(1) and (c)(1) of this section, all of the 72u of allocated basis difference is attributed to CFC1 and assigned to Year 2, because CFC1 is a section 901(m) payor and the RFA owner (U.S.) with respect to Asset A and Year 2 is the U.S. taxable year of CFC1 in which it takes into account the corresponding 10u of depreciation and in which the disposition occurred.

(D) Unallocated basis difference with respect to Asset A, as determined immediately after the subsequent transaction, is 0u (90u basis difference less 90u basis difference taken into account as 27u total cost recovery amount in Year 1 and Year 2 and as a 63u disposition amount in Year 2). Accordingly, because there is no unallocated basis difference with respect to Asset A attributable to the Section 338 Acquisition, the subsequent transaction is not a successor transaction as defined in § 1.901(m)-6(b)(2). Furthermore, the subsequent transaction is not a CAA under § 1.901(m)-2(b). For these reasons, section 901(m) no longer applies to Asset A.

(2) ***Example 2: CAA followed by disposition: nontaxable for U.S. income tax purposes and taxable for foreign income tax purposes*** —

(i) ***Facts.*** The facts are the same as in paragraph (h)(1)(i)(A) of this section (paragraph (i)(A) of *Example 1*) but the facts in paragraph (h)(1)(i)(B) of this section (paragraph (i)(B) of *Example 1*) are instead that on July 1, Year 2, Asset A is transferred to CFC2, in exchange for 100u of stock of CFC2 (subsequent transaction). For U.S. income tax purposes, CFC1 does not recognize any U.S. disposition gain or U.S. disposition loss with respect to Asset A. For Country F tax purposes, CFC1 recognizes foreign disposition gain of 60u (amount realized of 100u, less foreign basis of 40u) with respect to Asset A. Immediately after the subsequent transaction, Asset A has a U.S. basis of 70u (100u cost basis less 30u accumulated depreciation) and a foreign basis of 100u. The 30u of accumulated depreciation is the sum of 20u of depreciation in Year 1 (100u cost basis/5 years) and 10u in Year 2 ((100u cost basis/5 years) × 6/12).

(ii) ***Result.***

(A) The results described in paragraph (h)(1)(ii)(A) of this section (paragraph (ii)(A) of *Example 1)* also apply to this paragraph (h)(2)(ii) (the results of this *Example 2*).

(B) The result for Year 1 is the same as in paragraph (h)(1)(ii)(B) of this section (paragraph (ii)(B) of *Example 1*).

(C) In Year 2, Asset A has an allocated basis difference that includes both a cost recovery amount and a disposition amount. Under paragraph (b)(2) of this section, the cost recovery amount for Year 2, as of the date of the subsequent transaction, is 9u ((90u basis difference/5 years) × 6/12). Under § 1.901(m)-1(a)(15), the subsequent transaction is a disposition of Asset A, because the subsequent transaction is an event that results in an amount of gain being recognized for Country F tax purposes. Because the disposition is not also fully taxable for U.S. income tax purposes, the rule in paragraph (c)(2)(ii) of this section applies to determine the disposition amount. Under that rule, the disposition amount is 60u, the lesser of (i) 60u (60u foreign disposition gain plus absolute value of 0u U.S. disposition loss), and (ii) 63u unallocated basis difference (90 basis difference less total 27u taken into account as cost recovery amounts, 18u in Year 1 and 9u in Year 2).

Accordingly, the allocated basis difference for the first half of Year 2 is 69u (9u of cost recovery amount, plus 60u of disposition amount). Under paragraphs (b)(1) and (c)(1) of this section, all of the 69u of allocated basis difference is attributed to CFC1 and assigned to Year 2, because CFC1 is a section 901(m) payor and the RFA owner (U.S.) with respect to Asset A and Year 2 is the U.S. taxable year of CFC1 in which it takes into account the corresponding 10u of depreciation and in which the disposition occurred.

(D) Unallocated basis difference with respect to Asset A immediately after the subsequent transaction is 3u (90u basis difference less 87u basis difference taken into account as a 27u total cost recovery amount in Year 1 and Year 2 and as a 60u disposition amount in Year 2). Accordingly, because there is unallocated basis difference of 3u with respect to Asset A attributable to the Section 338 Acquisition, as determined immediately after the subsequent transaction, the subsequent transaction is a successor transaction as defined in § 1.901(m)-6(b)(2). Following the subsequent transaction, the unallocated basis difference of 3u must be taken into account as cost recovery amounts or disposition amounts (or both) by CFC2, the new section 901(m) payor and RFA owner (U.S.) of Asset A. See § 1.901(m)-6(b)(3)(ii). Because the subsequent transaction is not a CAA under § 1.901(m)-2(b), there is no additional basis difference with respect to Asset A as a result of the subsequent transaction.

(3) Example 3: CAA followed by disposition: nontaxable for both U.S. income tax and foreign income tax purposes —(i) *Facts.* The facts are the same as in paragraph (h)(1)(i)(A) of this section (paragraph (i)(A) of *Example 1*) but the facts in paragraph (h)(1)(i)(B) of this section (paragraph (i)(B) of *Example 1*) are instead that on July 1, Year 2, CFC1 transfers Asset A to CFC2, in exchange for 110u of stock of CFC2 (subsequent transaction). For U.S. income tax purposes, CFC1 does not recognize any U.S. disposition gain or U.S. disposition loss with respect to Asset A as a result of the subsequent transaction. Furthermore, for Country F tax purposes, CFC1 recognizes no foreign disposition gain or foreign disposition loss with respect to Asset A as a result of the subsequent transaction. Immediately after the subsequent transaction, Asset A has a U.S. basis of 70u (100u cost basis less 30u accumulated depreciation) and a foreign basis of 40u. The 30u of accumulated depreciation is the sum of 20u of depreciation in Year 1 (100u cost basis/5 years) and 10u in Year 2 ((100u cost basis/5 years) × 6/12).

(ii) ***Result.***

(A) The result for Year 1 is the same as in paragraph (h)(1)(ii)(A) of this section (paragraph (ii)(A) of *Example 1*).

(B) The result for Year 1 is the same as in paragraph (h)(1)(ii)(B) of this section (paragraph (ii)(B) of *Example 1*).

(C) In Year 2, Asset A has an allocated basis difference that includes only a cost recovery amount. Under paragraph (b)(2) of this section, the cost recovery amount for Year 2, as of the date of the subsequent transaction, is 9u ((90u basis difference/5 years) x 6/12). Under § 1.901(m)-1(a)(15), the subsequent transaction does not constitute a disposition of Asset A, because the subsequent transaction is not an event that results in an amount of gain or loss being recognized for U.S. income tax or for Country F tax purposes. Therefore, no disposition amount is taken into account for Asset A in Year 2. Under paragraph (b)(1) of this section, all of the 9u of allocated basis difference is attributed to

CFC1 and assigned to Year 2, because CFC1 is a section 901(m) payor and RFA owner (U.S.) with respect to Asset A and Year 2 is the U.S. taxable year of CFC1 in which it takes into account the corresponding 10u of depreciation.

(D) Unallocated basis difference with respect to Asset A immediately after the subsequent transaction is 63u (90u basis difference, less 27u total cost recovery amounts, 18u in Year 1 and 9u in Year 2). Accordingly, because there is unallocated basis difference of 63u with respect to Asset A attributable to the CAA, as determined immediately after the subsequent transaction, the subsequent transaction is a successor transaction as defined in § 1.901(m)-6(b)(2). Following the subsequent transaction, the unallocated basis difference of 63u must be taken into account as cost recovery amounts or disposition amounts (or both) by CFC2, the new section 901(m) payor and RFA owner (U.S.) of Asset A. See § 1.901(m)-6(b)(3)(ii). Because the subsequent transaction is not a CAA under § 1.901(m)-2(b), there is no additional basis difference with respect to Asset A as a result of the subsequent transaction.

(i) ***Applicability dates.***

(1) Except as provided in paragraph (i)(2) of this section, this section applies to CAAs occurring on or after March 23, 2020.

(2) Paragraphs (b)(2)(i) and (c)(2) of this section apply to CAAs occurring on or after July 21, 2014, and to CAAs occurring before that date resulting from an entity classification election made under § 301.7701-3 of this chapter that is filed on or after July 29, 2014, and that is effective on or before July 21, 2014. Paragraphs (b)(2)(i) and (c)(2) of this section also apply to CAAs occurring on or after January 1, 2011, and before July 21, 2014, other than CAAs occurring before July 21, 2014, resulting from an entity classification election made under § 301.7701-3 that is filed on or after July 29, 2014, and that is effective on or before July 21, 2014, but only with respect to basis difference determined under § 1.901(m)-4T(e) with respect to the CAA.

(3) Taxpayers may, however, choose to apply provisions in this section before the date such provisions are applicable pursuant to paragraphs (i)(1) and (2) of this section, provided that they (along with any persons that are related (within the meaning of section 267(b) or 707(b)) to the taxpayer)—

(i) Consistently apply this section, § 1.704-1(b)(4)(viii)(*c*)(*4*)(*v*) through (*vii*), § 1.901(m)-1, § 1.901(m)-3, § 1.901(m)-4 (excluding § 1.901(m)-4(e)), § 1.901(m)-6, § 1.901(m)-7, and § 1.901(m)-8 to all CAAs occurring on or after January 1, 2011, and consistently apply § 1.901(m)-2 (excluding § 1.901(m)-2(d)) to all CAAs occurring on or after December 7, 2016, on any original or amended tax return for each taxable year for which the application of the provisions listed in this paragraph (i)(3)(i) affects the tax liability and for which the statute of limitations does not preclude assessment or the filing of a claim for refund, as applicable;

(ii) File all tax returns described in paragraph (i)(3)(i) of this section for any taxable year ending on or before March 23, 2020, no later than March 23, 2021; and

(ii) Make appropriate adjustments to take into account deficiencies that would have resulted from the consistent application under paragraph (i)(3)(i) of this section for taxable years that are not open for assessment.

[T.D. 9895, 85 FR 16258, Mar. 23, 2020]

§ 1.901(m)-6 Successor rules.

(a) ***In general.*** This section provides successor rules applicable to section 901(m). Paragraph (b) of this section provides rules for the continued application of section 901(m) after an RFA that has unallocated basis difference has been transferred, including special rules applicable to successor transactions that are also CAAs or that involve partnerships. Paragraph (c) of this section provides rules for determining when an aggregate basis difference carryover of a section 901(m) payor either becomes an aggregate basis difference carryover of the section 901(m) payor with respect to another foreign payor or is transferred to another section 901(m) payor, and paragraph (d) of this section provides applicability dates.

(b) ***Successor rules for unallocated basis difference*** —

(1) ***In general.*** Except as provided in paragraph (b)(4) of this section, section 901(m) continues to apply after a successor transaction to any unallocated basis difference attached to a transferred RFA until the entire basis difference has been taken into account as a cost recovery amount or a disposition amount (or both) under § 1.901(m)-5.

(2) ***Definition of a successor transaction.*** A successor transaction occurs with respect to an RFA if, after a CAA (*prior CAA*), there is a transfer of the RFA for U.S. income tax purposes and the RFA has unallocated basis difference with respect to the prior CAA, determined immediately after the transfer. A successor transaction may occur regardless of whether the transfer of the RFA is a disposition, a CAA, or a non-taxable transaction for purposes of U.S. income tax. If the RFA was subject to multiple prior CAAs, a separate determination must be made with respect to each prior CAA as to whether the transfer is a successor transaction.

(3) ***Special considerations.***

(i) If an asset is an RFA with respect to more than one foreign income tax, this paragraph (b) applies separately with respect to each foreign income tax.

(ii) Any subsequent cost recovery amount for an RFA transferred in a successor transaction is determined based on the post-transaction applicable cost recovery method, as described in § 1.901(m)-5(b)(3), that applies to the U.S. basis (or portion thereof) that corresponds to the unallocated basis difference.

(4) ***Successor transaction is a CAA*** —

(i) ***In general.*** An asset may be an RFA with respect to multiple CAAs if a successor transaction is also a CAA (*subsequent CAA*). Except as otherwise provided in this paragraph (b)(4), if there is a subsequent CAA, unallocated basis difference with respect to any prior CAAs will continue to be taken into account under section 901(m) after the subsequent CAA. Furthermore, the subsequent CAA may give rise to additional basis difference subject to section 901(m).

(ii) ***Foreign basis election.*** If a foreign basis election is made under § 1.901(m)-4(c) with respect to a foreign income tax in a subsequent CAA, any unallocated basis difference with respect to one or more prior CAAs will not be taken into account under section 901(m). The only basis difference that will be taken into account after the subsequent CAA with respect to that foreign income tax is the basis difference with respect to the subsequent CAA.

(iii) ***Multiple section 743(b) CAAs.*** If an RFA is subject to two section 743(b) CAAs (*prior section 743(b) CAA* and *subsequent section 743(b) CAA*) and the same partnership interest is acquired in both the CAAs, the RFA will be treated as having no unallocated basis difference with respect

to the prior section 743(b) CAA if the basis difference for the section 743(b) CAA is determined independently from the prior section 743(b) CAA. In this regard, see generally § 1.743-1(f). If the subsequent section 743(b) CAA results from the acquisition of only a portion of the partnership interest acquired in the prior section 743(b) CAA, then the transferor will be required to equitably apportion the unallocated basis difference attributable to the prior section 743(b) CAA between the portion retained by the transferor and the portion transferred. In this case, with respect to the portion transferred, the RFAs will be treated as having no unallocated basis difference with respect to the prior section 743(b) CAA if basis difference for the subsequent section 743(b) CAA is determined independently from the prior section 743(b) CAA.

(5) ***Example.*** The following example illustrates the rules of paragraph (b) of this section.

(i) ***Facts.*** USP, a domestic corporation, wholly owns CFC, a foreign corporation organized in Country A and treated as a corporation for both U.S. and Country A tax purposes. FT is an unrelated foreign corporation organized in Country A and treated as a corporation for both U.S. and Country A tax purposes. FT owns one asset, a parcel of land (Asset). Country A imposes a single tax that is a foreign income tax. On January 1, Year 1, CFC acquires all of the stock of FT in exchange for 300u in a qualified stock purchase (as defined in section 338(d)(3)) to which section 338(a) applies (Acquisition). Immediately before the Acquisition, Asset had a U.S. basis of 100u, and immediately after the Acquisition, Asset had a U.S. basis of 300u. Effective on February 1, Year 1, FT elects to be a disregarded entity pursuant to § 301.7701-3. As a result of the election, FT is deemed, for U.S. income tax purposes, to distribute Asset to CFC in liquidation (Deemed Liquidation) immediately before the closing of the day before the election is effective pursuant to § 301.7701-3(g)(1)(iii) and (3)(ii). The Deemed Liquidation is disregarded for Country A tax purposes. No gain or loss is recognized on the Deemed Liquidation for either U.S. or Country A tax purposes.

(ii) ***Result.*** Under § 1.901(m)-2(b)(1), the acquisition by CFC of the stock of FT is a section 338 CAA. Under § 1.901(m)-2(c)(1), Asset is an RFA with respect to Country A tax and the Acquisition, because immediately after the Acquisition, Asset is relevant in determining foreign income of FT for Country A tax purposes, and FT owned Asset when the Acquisition occurred. Under § 1.901(m)-4(b), the basis difference with respect to Asset is 200u (300u—100u). Under § 1.901(m)-2(b)(2), the Deemed Liquidation is a CAA (subsequent CAA) because the Deemed Liquidation is treated as an acquisition of assets for U.S. income tax purposes and is disregarded for Country A tax purposes. Because the U.S. basis in Asset is 300u immediately before and after the Deemed Liquidation, the subsequent CAA does not give rise to any additional basis difference. The Deemed Liquidation is not a disposition under § 1.901(m)-1(a)(15) because it did not result in gain or loss being recognized with respect to Asset for U.S. or Country A tax purposes. Accordingly, no basis difference with respect to Asset is taken into account under § 1.901(m)-5 as a result of the Deemed Liquidation, and the unallocated basis difference with respect to Asset immediately after the Deemed Liquidation is 200u (200u—0u). Under paragraph (b)(2) of this section, the Deemed Liquidation is a successor transaction because there is a transfer of Asset for U.S. income tax purposes from FT to CFC and Asset has unallocated basis difference with respect to the Acquisition immediately after the Deemed Liquidation. Accordingly, under paragraph (b)(1) of this section, section 901(m) will continue to apply to the unallocated basis difference with respect to Asset until the entire 200u basis difference has been taken into account under § 1.901(m)-5.

(c) ***Successor rules for aggregate basis difference carryover —***

(1) ***Transfers of a section 901(m) payor's aggregate basis difference carryover to another person.*** If a corporation acquires the assets of a section 901(m) payor in a transaction to which section 381 applies, that corporation succeeds to any aggregate basis difference carryovers of the section 901(m) payor.

(2) ***Transfers of a section 901(m) payor's aggregate basis difference carryover with respect to a foreign payor to another foreign payor.*** If a section 901(m) payor has an aggregate basis difference carryover, with respect to a foreign income tax and a foreign payor, and substantially all of the assets of the foreign payor are transferred to another foreign payor in which the section 901(m) payor owns an interest, the section 901(m) payor's aggregate basis difference carryover with respect to the first foreign payor is transferred to the section 901(m) payor's aggregate basis difference carryover with respect to the other foreign payor. In such a case, the section 901(m) payor's aggregate basis difference carryover with respect to the first foreign payor is reduced to zero.

(3) ***Anti-abuse rule.*** If a section 901(m) payor has an aggregate basis difference carryover with respect to a foreign income tax and a foreign payor and, with a principal purpose of avoiding the application of section 901(m), assets of the foreign payor are transferred to another foreign payor in a transaction not described in paragraph (c)(1) or (2) of this section, then a portion of the aggregate basis difference carryover of the section 901(m) payor is transferred either to the aggregate basis difference carryover of the section 901(m) payor with respect to the other foreign payor or to another section 901(m) payor, as appropriate. The portion of the aggregate basis difference carryover transferred is determined based on the ratio of fair market value of the assets transferred to the fair market value of all of the assets of the foreign payor that transferred the assets. Similar principles apply when, with a principal purpose of avoiding the application of section 901(m), there is a change in the allocation of foreign income for foreign income tax purposes or the allocation of foreign income tax amounts for U.S. income tax purposes that would otherwise separate foreign income tax amounts from the related aggregate basis difference carryover.

(4) ***Ownership.*** For purposes of this paragraph (c), a section 901(m) payor owns an interest in a foreign payor if the section 901(m) payor owns the interest directly or indirectly through one or more fiscally transparent entities for U.S. income tax purposes.

(d) ***Applicability dates.***

(1) Except as provided in paragraph (d)(2) of this section, this section applies to CAAs occurring on or after March 23, 2020.

(2) Paragraphs (a), (b)(1) and (2), (b)(4)(i) and (iii), and (b)(5) of this section apply to CAAs occurring on or after July 21, 2014, and to CAAs occurring before that date resulting from an entity classification election made under § 301.7701-3 of this chapter that is filed on or after July 29, 2014, and that is effective on or before July 21, 2014. Paragraphs (a), (b)(1) and (2), (b)(4)(i) and (iii), and (b)(5) of this section also apply to CAAs occurring on or after January 1, 2011, and before July 21, 2014, other than CAAs occurring before July 21, 2014, resulting from an entity classification election made under § 301.7701-3 that is filed on or after July 29, 2014, and that is effective on or before July 21, 2014, but only with respect to basis difference determined under § 1.901(m)-4T(e) with respect to the CAA.

(3) Taxpayers may, however, choose to apply provisions in this section before the date such provisions are applicable pursuant to paragraphs (d)(1) and (2) of this section, provided that they (along with any persons that are related (within the meaning of section 267(b) or 707(b)) to the taxpayer)—

(i) Consistently apply this section, § 1.704-1(b)(4)(viii)(*c*)(*4*)(*v*) through (*vii*), § 1.901(m)-1, §§ 1.901(m)-3 through 1.901(m)-5 (excluding § 1.901(m)-4(e)), § 1.901(m)-7, and § 1.901(m)-8 to all CAAs occurring on or after January 1, 2011, and consistently apply § 1.901(m)-2 (excluding § 1.901(m)-2(d)) to all CAAs occurring on or after December 7, 2016, on any original or amended tax return for each taxable year for which the application of the provisions listed in this paragraph (d)(3)(i) affects the tax liability and for which the statute of limitations does not preclude assessment or the filing of a claim for refund, as applicable;

(ii) File all tax returns described in paragraph (d)(3)(i) of this section for any taxable year ending on or before March 23, 2020, no later than March 23, 2021; and

(iii) Make appropriate adjustments to take into account deficiencies that would have resulted from the consistent application under paragraph (d)(3)(i) of this section for taxable years that are not open for assessment.

[T.D. 9895, 85 FR 16263, Mar. 23, 2020]

§ 1.901(m)-7 De minimis rules.

(a) ***In general.*** This section provides rules describing basis difference that is not taken into account under section 901(m) because a CAA results in a de minimis amount of basis difference. Paragraph (b) of this section sets forth the general rule for determining whether the de minimis threshold is met. Paragraph (c) of this section modifies the general rule in the case of CAAs that are part of an aggregated CAA transaction. Paragraph (d) of this section provides rules for applying this section, and paragraph (e) of this section provides an anti-abuse rule applicable to related persons. Paragraph (f) of this section provides examples that illustrate the application of this section. Paragraph (g) of this section provides applicability dates.

(b) ***General rule*** —

(1) ***In general.*** A basis difference with respect to an RFA and a foreign income tax is not taken into account under section 901(m) if the requirements under the cumulative basis difference exemption, the RFA class exemption, or the RFA exemption are satisfied.

(2) ***Cumulative basis difference exemption.*** Except as provided in paragraph (c) of this section, a basis difference, with respect to an RFA and a foreign income tax, is not taken into account under section 901(m) (*cumulative basis difference exemption*) if the sum of that basis difference and all other basis differences (including negative basis differences), with respect to a single CAA and a single RFA owner (U.S.), is less than the greater of:

(i) $10 million, or

(ii) 10 percent of the total U.S. basis of all the RFAs immediately after the CAA.

(3) ***RFA class exemption*** —

(i) Except as provided in paragraph (c) of this section, a basis difference, with respect to an RFA and a foreign income tax, is not taken into account under section 901(m) (*RFA class exemption*) if the RFA is part of a class of RFAs and the absolute value of the sum of the basis differences (including negative basis differences), with respect to a single CAA and a single RFA owner, for all the RFAs in that class is less than the greater of:

(A) $2 million, or

(B) 10 percent of the total U.S. basis of all the RFAs in that class of RFAs immediately after the CAA.

(ii) For purposes of this paragraph (b)(3), the classes of RFAs are the seven asset classes defined in § 1.338-6(b), regardless of whether the CAA is a section 338 CAA.

(4) ***RFA exemption.*** A basis difference, with respect to an RFA and a foreign income tax, is not taken into account under section 901(m) (*RFA exemption*) if the absolute value of the basis difference with respect to the RFA is less than $20,000.

(c) ***Special rule if a CAA is part of an aggregated CAA transaction.*** If a CAA is part of an aggregated CAA transaction and a single RFA owner (U.S.) does not own all the RFAs attributable to the CAAs that are part of the aggregated CAA transaction, the cumulative basis difference exemption and the RFA class exemption apply to such CAA only if, in addition to satisfying the requirements of paragraph (b)(2) or (b)(3) of this section, respectively, determined without regard to this paragraph (c), the cumulative basis difference exemption or the RFA class exemption, as modified by this paragraph (c), is satisfied. Solely for purposes of this paragraph (c), the cumulative basis difference exemption and the RFA class exemption are applied taking into account all the basis differences with respect to all the RFAs owned by all the RFA owners (U.S.) that are attributable to the CAAs that are part of the aggregated CAA transaction.

(d) ***Rules of application.*** The following rules apply for purposes of this section.

(1) Whether a basis difference qualifies for the cumulative basis difference exemption, the RFA class exemption, or the RFA exemption is determined when an asset first becomes an RFA with respect to a CAA. In the case of a subsequent CAA described in § 1.901(m)-6(b)(4), the application of the cumulative basis difference exemption, the RFA class exemption, and the RFA exemption is based on basis difference, if any, that results from the subsequent CAA.

(2) If there is an aggregated CAA transaction, the cumulative basis difference exemption and each RFA class exemption are applied by treating all CAAs that are part of the aggregated CAA transaction as a single CAA.

(3) Basis difference is computed in accordance with § 1.901(m)-4 except that a foreign basis election need not be evidenced if the cumulative basis difference exemption, an RFA class exemption, or the RFA exemption apply to all RFAs with respect to the CAA.

(4) Basis difference is translated into U.S. dollars (if necessary) using the spot rate determined under the principles of § 1.988-1(d) on the date of the CAA.

(e) ***Anti-abuse rule.*** The cumulative basis difference exemption, an RFA class exemption, and the RFA exemption are not available if the transferor and transferee in the CAA are related persons (as described in section 267(b) or 707(b)) and the CAA was entered into, or structured, with a principal purpose of avoiding the application of section 901(m). See also § 1.901(m)-8(c), which provides that certain built-in loss assets are not taken into account for purposes of applying this section.

(f) ***Examples.*** The following examples illustrate the rules of this section:

(1) ***Example 1: De minimis; cumulative basis difference exemption*** —

(i) ***Facts.*** USP, a domestic corporation, as part of a plan, purchases all of the stock of CFC1 and CFC2 from a single seller. CFC1 and CFC2 are applicable foreign corporations, organized in Country F, and treated as corporations for Country F tax purposes. Country F imposes a single tax that is a foreign income tax. Each acquisition is a qualified stock purchase (as defined in

section 338(d)(3)) to which section 338(a) applies. A foreign basis election is not made under § 1.901(m)-4(c). Immediately after the acquisition of the stock of CFC1 and CFC2, the assets of CFC1 and CFC2 give rise to income that is taken into account for Country F tax purposes, and those assets are in a single class, as defined in § 1.338-6(b). Assume that the absolute value of the basis difference with respect to any single RFA is greater than $20,000. At all relevant times, 1u equals $1. All amounts are stated in millions. The additional facts are summarized below.

Relevant foreign assets	Total U.S. basis immediately before	Total U.S. basis immediately after	Total basis difference
Assets of CFC1	48u	60u	12u
Assets of CFC2	100u	96u	(4)u
Total	148u	156u	8u

(ii) ***Result.***

(A) Under § 1.901(m)-2(b)(1), USP's acquisitions of the stock of CFC1 and CFC2 are each a section 338 CAA. Under 1.901(m)-1(a)(3), the two section 338 CAAs constitute an aggregated CAA transaction because the acquisitions occur as part of a plan. Under § 1.901(m)-2(c)(1), the assets of CFC1 and CFC2 are RFAs for Country F tax purposes because they are relevant in determining foreign income of CFC1 and CFC 2, respectively, for Country F tax purposes. Under § 1.901(m)-1(a)(37), CFC1 is the RFA owner (U.S.) with respect to its assets, and CFC2 is the RFA owner (U.S.) with respect to its assets.

(B) Under paragraph (b)(2) of this section, the application of the cumulative basis difference exemption is based on a single CAA and a single RFA owner (U.S.), subject to the requirements under paragraph (c) of this section that apply when there is an aggregated CAA transaction. In the case of the section 338 CAA with respect to CFC1, without regard to paragraph (c) of this section, the requirements of the cumulative basis difference exemption are satisfied if the sum of the basis differences is less than the threshold of $10 million, the greater of $10 million or $6 million (10% of the total U.S. basis of $60 million (60 million u translated into dollars at the exchange rate of $1 = 1u)). In this case, the sum of the basis differences is $12 million (12 million u translated into dollars at the exchange rate of $1 = 1 u). Because the sum of the basis differences of $12 million is not less than the threshold of $10 million, the requirements of the cumulative basis difference exemption are not satisfied. Because the requirements of the cumulative basis difference exemption are not satisfied, without regard to paragraph (c) of this section, paragraph (c) of this section is not applicable. The RFA class exemption is not relevant because all of the RFAs of CFC1 are in a single class. Finally, because the absolute value with respect to each RFA is greater than $20,000, the RFA exemption does not apply. Accordingly, the basis differences with respect to all of the RFAs of CFC1 must be taken into account under section 901(m).

(C) In the case of the section 338 CAA with respect to CFC2, without regard to paragraph (c) of this section, the requirements of the cumulative basis difference exemption are satisfied if the sum of the basis differences is less than the threshold of $10 million, the greater of $10 million or $ 9.6 million (10% of the total U.S. basis of $96 million (96 million u translated into dollars at the exchange rate of $1 = 1u)) In this case, the sum of the basis differences is ($4) million ((4) million u translated into dollars at the exchange rate of $1 = 1 u). Because the sum of the basis differences of ($4) million is less than the threshold of $10 million, the requirements of the cumulative basis difference exemption are satisfied. However, because the section 338 CAA with respect to CFC2 is part of an aggregated CAA transaction that includes the section 338 CAA with respect to CFC1, paragraph (c) of this section is applicable. Under paragraph (c) of this section, the requirements of the cumulative basis difference exemption must also be satisfied taking into account all of the RFAs of both CFC2 and CFC1. In this case, the requirements of the cumulative basis difference exemption for purposes of paragraph (c) of this section are satisfied if the sum of the basis differences with respect to all of the RFAs of CFC2 and CFC1 is less than the threshold of $15.6 million, the greater of $10 million or $15.6 million (10% of the total U.S. basis of $156 million (156 million u translated into dollars at the exchange rate of $1 = 1u)). In this case, the sum of the basis differences is $8 million (8 million u translated into dollars at the exchange rate of $1 = 1 u). Because the sum of the basis differences of $8 million is less than the threshold of $15.6 million, the requirements of the cumulative basis difference exemption are satisfied in the case of the section 338 CAA with respect to CFC2. Accordingly, none of the basis differences with respect to the RFAs of CFC2 are taken into account under section 901(m).

(2) *Example 2: De minimis; RFA Class Exemption* —

(i) *Facts.* USP, a domestic corporation, acquires all the stock of CFC, an applicable foreign corporation organized in Country F and treated as a corporation for Country F tax purposes, in a qualified stock purchase (as defined in section 338(d)(3)) to which section 338(a) applies. Country F imposes a single tax that is a foreign income tax. A foreign basis election is not made under § 1.901(m)-4(c). Immediately after the acquisition of CFC, the assets of CFC give rise to income that is taken into account for Country F tax purposes. Assume that the absolute value of the basis difference with respect to any single RFA is greater than $20,000. At all relevant times, 1u equals $1. All amounts are stated in millions. The additional facts are summarized below.

Relevant foreign assets	Total U.S. basis immediately before	Total U.S. basis immediately after	Total basis difference
Cash (Class I)	10u	10u	0u
Inventory (Class IV)	14u	15u	1u
Buildings (Class V)	19u	30u	11u
Total	43u	55u	12u

(ii) *Result.*

(A) Under § 1.901(m)-2(b)(1), USP's acquisition of the stock of CFC is a section 338 CAA. Under § 1.901(m)-2(c)(1), the assets of CFC are RFAs for Country F tax purposes because they are relevant in determining foreign income of CFC for Country F tax purposes.

(B) Under paragraph (b)(2) of this section, the requirements of the cumulative basis difference exemption are satisfied if the sum of the basis differences is less than the threshold of $10 million, the greater of $10 million or $5.5 million (10% of the total U.S. basis of $55 million (55 million u translated into dollars at the exchange rate of $1 = 1u)). In this case, the sum of the basis differences is $12 million (12 million u translated into dollars at the exchange rate of $1 = 1 u). Because the sum of the basis differences of $12 million is not less than the threshold of $10 million, the requirements of the cumulative basis difference exemption are not satisfied.

(C) Under paragraph (b)(3) of this section, each of CFC's assets is allocated to its class under § 1.338-6(b) for purposes of the RFA class exemption. The requirements of the RFA class exemption with respect to the Class IV RFAs (in this case, inventory) are satisfied if the absolute value of the sum of the basis differences with respect to the Class IV RFAs is less than the threshold of $2 million, the greater of $2 million or $1.5 million (10% of the total U.S. basis of Class IV RFAs of $15 million (15 million u translated into dollars at the exchange rate of $1 = 1u)). In this case, the absolute value of the sum of the basis differences is $1 million (1 million u translated into dollars at the exchange rate of $1 = 1 u). Because the sum of the basis differences of $1 million is less than the threshold of $2 million, the requirements of the RFA class exemption are satisfied. Accordingly, the basis differences with respect to the Class IV RFAs are not taken into account under section 901(m).

(D) The requirements of the RFA class exemption with respect to the Class V RFAs (in this case, buildings) is satisfied if the absolute value of the sum of the basis differences with respect to the Class V RFAs is less than the threshold of $3 million, the greater of $2 million or $3 million (10% of the total U.S. basis of Class V RFAs of $30 million (30 million u translated into dollars at the exchange rate of $1 = 1u)). In this case, the absolute value of the sum of the basis differences is $11 million (11 million u translated into dollars at the exchange rate of $1 = 1 u). Because the sum of the basis differences of $11 million is not less than the threshold of $3 million, the requirements of the RFA class exemption are not satisfied. Finally, because the absolute value with respect to each RFA is greater than $20,000, the RFA exemption does not apply. Accordingly, the basis differences with respect to the Class V RFAs are taken into account under section 901(m).

(E) The Class I RFAs (in this case, cash) are irrelevant because there are no basis differences with respect to those RFAs.

(g) ***Applicability dates.*** This section applies to CAAs occurring on or after March 23, 2020. Taxpayers may, however, choose to apply this section before the date this section is applicable provided that they (along with any persons that are related (within the meaning of section 267(b) or 707(b)) to the taxpayer)—

(1) Consistently apply this section, § 1.704-1(b)(4)(viii)(*c*)(*4*)(*v*) through (*vii*), § 1.901(m)-1, §§ 1.901(m)-3 through 1.901(m)-6 (excluding § 1.901(m)-4(e)), and § 1.901(m)-8 to all CAAs occurring on or after January 1, 2011, and consistently apply § 1.901(m)-2 (excluding § 1.901(m)-2(d)) to all CAAs occurring on or after December 7, 2016, on any original or amended tax return for each taxable

year for which the application of the provisions listed in this paragraph (g)(1) affects the tax liability and for which the statute of limitations does not preclude assessment or the filing of a claim for refund, as applicable;

(2) File all tax returns described in paragraph (g)(1) of this section for any taxable year ending on or before March 23, 2020, no later than March 23, 2021; and

(3) Make appropriate adjustments to take into account deficiencies that would have resulted from the consistent application under paragraph (g)(1) of this section for taxable years that are not open for assessment.

[T.D. 9895, 85 FR 16265, Mar. 23, 2020]

§ 1.901(m)-8 Miscellaneous.

(a) ***In general.*** This section provides guidance on other matters under section 901(m). Paragraph (b) of this section provides guidance on the application of section 901(m) to pre-1987 foreign income taxes. Paragraph (c) of this section provides anti-abuse rules relating to built-in loss assets. Paragraph (d) of this section provides guidance on the interaction of section 901(m) and section 909. Paragraph (e) of this section provides applicability dates.

(b) ***Application of section 901(m) to pre-1987 foreign income taxes.*** Section 901(m) and §§ 1.901(m)-1 through 1.901-8 apply to pre-1987 foreign income taxes (as defined in § 1.902-1(a)(10)(iii)) of an applicable foreign corporation.

(c) ***Anti-abuse rule for built-in loss RFAs.*** A basis difference with respect to an RFA described in section 901(m)(3)(C)(ii) (*built-in loss RFA*) will not be taken into account for purposes of computing an allocated basis difference for a U.S. taxable year of a section 901(m) payor if any RFA, including an RFA other than built-in loss RFAs, is acquired with a principal purpose of using one or more built-in loss RFAs to avoid the application of section 901(m). Furthermore, a basis difference with respect to a built-in loss RFA will not be taken into account for purposes of the cumulative basis difference exemption or the RFA class exemption under § 1.901(m)-7 if any RFAs, including RFAs other than built-in loss RFAs, are acquired with a principal purpose of avoiding the application of section 901(m).

(d) ***Interaction with section 909.*** The amount of a foreign income tax that is disqualified under section 901(m) is determined before applying section 909. However, section 909 may apply to suspend a deduction for the amount of a foreign income tax that is disqualified under section 901(m).

(e) ***Applicability dates.*** This section applies to CAAs occurring on or after March 23, 2020. Taxpayers may, however, choose to apply this section before the date this section is applicable provided that they (along with any persons that are related (within the meaning of section 267(b) or 707(b)) to the taxpayer)—

(1) Consistently apply this section, § 1.704-1(b)(4)(viii)(*c*)(*4*)(*v*) through (*vii*), § 1.901(m)-1, and §§ 1.901(m)-3 through 1.901(m)-7 (excluding § 1.901(m)-4(e)) to all CAAs occurring on or after January 1, 2011, and consistently apply § 1.901(m)-2 (excluding § 1.901(m)-2(d)) to all CAAs occurring on or after December 7, 2016, on any original or amended tax return for each taxable year for which the application of the provisions listed in this paragraph (e)(1) affects the tax liability and for which the statute of limitations does not preclude assessment or the filing of a claim for refund, as applicable;

(2) File all tax returns described in paragraph (e)(1) of this section for any taxable year ending on or before March 23, 2020, no later than March 23, 2021; and

(3) Make appropriate adjustments to take into account deficiencies that would have resulted from the consistent application under paragraph (e)(2) of this section for taxable years that are not open for assessment.

[T.D. 9895, 85 FR 16267, Mar. 23, 2020]

§ 1.902-0 Outline of regulations provisions for section 902.

This section lists the provisions under section 902.

§ 1.902-1 Credit for domestic corporate shareholder of a foreign corporation for foreign income taxes paid by the foreign corporation.

(a) Definitions and special effective date.

(1) Domestic shareholder.

(2) First-tier corporation.

(3) Second-tier corporation.

(4) Third- or lower-tier corporation.

(i) Third-tier corporation.

(ii) Fourth-, fifth-, or sixth-tier corporation.

(5) Example.

(6) Upper- and lower-tier corporations.

(7) Foreign income taxes.

(8) Post-1986 foreign income taxes.

(i) In general.

(ii) Distributions out of earnings and profits accumulated by a lower-tier corporation in its taxable years beginning before January 1, 1987, and included in the gross income of an upper-tier corporation in its taxable year beginning after December 31, 1986.

(iii) Foreign income taxes paid or accrued with respect to high withholding tax interest.

(9) Post-1986 undistributed earnings.

(i) In general.

(ii) Distributions out of earnings and profits accumulated by a lower-tier corporation in its taxable years beginning before January 1, 1987, and included in the gross income of an upper-tier corporation in its taxable year beginning after December 31, 1986.

(iii) Reduction for foreign income taxes paid or accrued.

(iv) Special allocations.

(10) Pre-1987 accumulated profits.

(i) Definition.

(ii) Computation of pre-1987 accumulated profits.

(iii) Foreign income taxes attributable to pre-1987 accumulated profits.

(11) Dividend.

(12) Dividend received.

(13) Special effective date.

(i) Rule.

(ii) Example.

(b) Computation of foreign income taxes deemed paid by a domestic shareholder, first-tier corporation, or lower-tier corporation.

(1) General rule.

(2) Allocation rule for dividends attributable to post-1986 undistributed earnings and pre-1987 accumulated profits.

(i) Portion of dividend out of post-1986 undistributed earnings.

(ii) Portion of dividend out of pre-1987 accumulated profits.

(3) Dividends paid out of pre-1987 accumulated profits.

(4) Deficits in accumulated earnings and profits.

(5) Examples.

(c) Special rules.

(1) Separate computations required for dividends from each first-tier and lower-tier corporation.

(i) Rule.

(ii) Example.

(2) Section 78 gross-up.

(i) Foreign income taxes deemed paid by a domestic shareholder.

(ii) Foreign income taxes deemed paid by an upper-tier corporation.

(iii) Example.

(3) Creditable foreign income taxes.

(4) Foreign mineral income.

(5) Foreign taxes paid or accrued in connection with the purchase or sale of certain oil and gas.

(6) Foreign oil and gas extraction income.

(7) United States shareholders of controlled foreign corporations.

(8) Effect of certain liquidations, reorganizations, or similar transactions on certain foreign taxes paid or accrued in taxable years beginning on or before August 5, 1997.

(i) General rule.

(ii) Example.

(d) Dividends from controlled foreign corporations and noncontrolled section 902 corporations.

(1) General rule.

(2) Look-through.

(i) Dividends.

(ii) Coordination with section 960.

(e) Information to be furnished.

(f) Examples.

(g) Effective date.

§ 1.902-2 Treatment of deficits in post-1986 undistributed earnings and pre-1987 accumulated profits of a first- or lower-tier corporation for purposes of computing an amount of foreign taxes deemed paid under § 1.902-1.

(a) Carryback of deficits in post-1986 undistributed earnings of a first- or lower-tier corporation to pre-effective date taxable years.

(1) Rule.

(2) Examples.

(b) Carryforward of deficit in pre-1987 accumulated profits of a first- or lower-tier corporation to post-1986 undistributed earnings for purposes of section 902.

(1) General rule.

(2) Effect of pre-effective date deficit.

(3) Examples.

§ 1.902-3 Credit for domestic corporate shareholder of a foreign corporation for foreign income taxes paid with respect to accumulated profits of taxable years of the foreign corporation beginning before January 1, 1987.

(a) Definitions.

(1) Domestic shareholder.

(2) First-tier corporation.

(3) Second-tier corporation.

(4) Third-tier corporation.

(5) Foreign income taxes.

(6) Dividend.

(7) Dividend received.

(b) Domestic shareholder owning stock in a first-tier corporation.

(1) In general.

(2) Amount of foreign taxes deemed paid by a domestic shareholder.

(c) First-tier corporation owning stock in a second-tier corporation.

(1) In general.

(2) Amount of foreign taxes deemed paid by a first-tier corporation.

(d) Second-tier corporation owning stock in a third-tier corporation.

(1) In general.

(2) Amount of foreign taxes deemed paid by a second-tier corporation.

(e) Determination of accumulated profits of a foreign corporation.

(f) Taxes paid on or with respect to accumulated profits of a foreign corporation.

(g) Determination of earnings and profits of a foreign corporation.

(1) Taxable year to which section 963 does not apply.

(2) Taxable year to which section 963 applies.

(3) Time and manner of making choice.

(4) Determination by district director.

(h) Source of income from first-tier corporation and country to which tax is deemed paid.

(1) Source of income.

(2) Country to which taxes deemed paid.

(i) United Kingdom income taxes paid with respect to royalties.

(j) Information to be furnished.

(k) Illustrations.

(l) Effective date.

§ 1.902-4 Rules for distributions attributable to accumulated profits for taxable years in which a first-tier corporation was a less developed country corporation.

(a) In general.

(b) Combined distributions.

(c) Distributions of a first-tier corporation attributable to certain distributions from second- or third-tier corporations.

(d) Illustrations.

[T.D. 8708, 62 FR 927, Jan. 7, 1997, as amended by T.D. 9260, Apr. 25, 2006]

§ 1.902-1 Credit for domestic corporate shareholder of a foreign corporation for foreign income taxes paid by the foreign corporation.

(a) ***Definitions and special effective date.*** For purposes of section 902, this section, and § 1.902-2, the definitions provided in paragraphs (a)(1) through (12) of this section and the special effective date of paragraph (a)(13) of this section apply.

(1) ***Domestic shareholder.*** In the case of dividends received by a domestic corporation from a foreign corporation after December 31, 1986, the term domestic shareholder means a domestic corporation, other than an S corporation as defined in section 1361(a), that owns at least 10 percent of the voting stock of the foreign corporation at the time the domestic corporation receives a dividend from that foreign corporation.

(2) ***First-tier corporation.*** In the case of dividends received by a domestic shareholder from a foreign corporation in a taxable year beginning after December 31, 1986, the term first-tier corporation means a foreign corporation, at least 10 percent of the voting stock of which is owned by a domestic shareholder at the time the domestic shareholder receives a dividend from that foreign corporation. The term first-tier corporation also includes a DISC or former DISC, but only with respect to dividends from the DISC or former DISC that are treated under sections 861(a)(2)(D) and 862(a)(2) as income from sources without the United States.

(3) ***Second-tier corporation.*** In the case of dividends paid to a first-tier corporation by a foreign corporation in a taxable year beginning after December 31, 1986, the foreign corporation is a second-tier corporation if, at the time a first-tier corporation receives a dividend from that foreign corporation, the first-tier corporation owns at least 10 percent of the foreign corporation's voting stock and the product of the following equals at least 5 percent—

(i) The percentage of voting stock owned by the domestic shareholder in the first-tier corporation; multiplied by

(ii) The percentage of voting stock owned by the first-tier corporation in the second-tier corporation.

(4) ***Third- or lower-tier corporation.*** —

(i) ***Third-tier corporation.*** In the case of dividends paid to a second-tier corporation by a foreign corporation in a taxable year beginning after December 31, 1986, a foreign corporation is a third-tier corporation if, at the time a second-tier corporation receives a dividend from that foreign corporation, the second-tier corporation owns at least 10 percent of the foreign corporation's voting stock and the product of the following equals at least 5 percent—

(A) The percentage of voting stock owned by the domestic shareholder in the first-tier corporation; multiplied by

(B) The percentage of voting stock owned by the first-tier corporation in the second-tier corporation; multiplied by

(C) The percentage of voting stock owned by the second-tier corporation in the third-tier corporation.

(ii) ***Fourth-, fifth-, or sixth-tier corporation.*** In the case of dividends paid to a third-, fourth-, or fifth-tier corporation by a foreign corporation in a taxable year beginning after August 5, 1997, the foreign corporation is a fourth-, fifth-, or sixth-tier corporation, respectively, if at the time the dividend is paid, the corporation receiving the dividend owns at least 10 percent of the foreign corporation's voting stock, the chain of foreign corporations that includes the foreign corporation is connected through stock ownership of at least 10 percent of their voting stock, the domestic shareholder in the first-tier corporation in such chain indirectly owns at least 5 percent of the voting stock of the foreign corporation through such chain, such corporation is a controlled foreign corporation (as defined in section 957) and the domestic shareholder is a United States shareholder (as defined in section 951(b)) in the foreign corporation. Taxes paid by a fourth-, fifth-, or sixth-tier corporation shall be taken into account in determining post-1986 foreign income taxes only if such taxes are paid with respect to taxable years beginning after August 5, 1997, in which the corporation was a controlled foreign corporation.

(5) ***Example.*** The following example illustrates the ownership requirements of paragraphs (a)(1) through (4) of this section:

> *Example.* (i) Domestic corporation M owns 30 percent of the voting stock of foreign corporation A on January 1, 1991, and for all periods thereafter. Corporation A owns 40 percent of the voting stock of foreign corporation B on January 1, 1991, and continues to own that stock until June 1, 1991, when Corporation A sells its stock in Corporation B. Both Corporation A and Corporation B use the calendar year as the taxable year. Corporation B pays a dividend out of its post-1986 undistributed earnings to Corporation A, which Corporation A receives on February 16, 1991. Corporation A pays a dividend out of its post-1986 undistributed earnings to Corporation M, which Corporation M receives on January 20, 1992. Corporation M uses a fiscal year ending on June 30 as the taxable year.
> (ii) On February 16, 1991, when Corporation B pays a dividend to Corporation A, Corporation M satisfies the 10 percent stock ownership requirement of paragraphs (a)(1) and (2) of this section with respect to Corporation A. Therefore, Corporation A is a first-tier corporation within the meaning of paragraph (a)(2) of this section and Corporation M is a domestic shareholder of Corporation A within the meaning of paragraph (a)(1) of this section. Also on February 16, 1991, Corporation B is a second-tier corporation within the meaning of paragraph (a)(3) of this section because Corporation A owns at least 10 percent of its voting stock, and the percentage of voting stock owned by Corporation M in Corporation A on February 16, 1991 (30 percent) multiplied by the percentage of voting stock owned by Corporation A in Corporation B on February 16, 1991 (40 percent) equals 12 percent. Corporation A shall be deemed to have paid foreign income taxes of Corporation B with respect to the dividend received from Corporation B on February 16, 1991.

(iii) On January 20, 1992, Corporation M satisfies the 10-percent stock ownership requirement of paragraphs (a)(1) and (2) of this section with respect to Corporation A. Therefore, Corporation A is a first-tier corporation within the meaning of paragraph (a)(2) of this section and Corporation M is a domestic shareholder within the meaning of paragraph (a)(1) of this section. Accordingly, for its taxable year ending on June 30, 1992, Corporation M is deemed to have paid a portion of the post-1986 foreign income taxes paid, accrued, or deemed to be paid, by Corporation A. Those taxes will include taxes paid by Corporation B that were deemed paid by Corporation A with respect to the dividend paid by Corporation B to Corporation A on February 16, 1991, even though Corporation B is no longer a second-tier corporation with respect to Corporations A and M on January 20, 1992, and has not been a second-tier corporation with respect to Corporations A and M at any time during the taxable years of Corporations A and M that include January 20, 1992.

(6) ***Upper- and lower-tier corporations.*** In the case of a sixth-tier corporation, the term *upper-tier corporation* means a first-, second-, third-, fourth-, or fifth-tier corporation. In the case of a fifth-tier corporation, the term upper-tier corporation means a first-, second-, third-, or fourth-tier corporation. In the case of a fourth-tier corporation, the term upper-tier corporation means a first-, second-, or third-tier corporation. In the case of a third-tier corporation, the term upper-tier corporation means a first- or second-tier corporation. In the case of a second-tier corporation, the term upper-tier corporation means a first-tier corporation. In the case of a first-tier corporation, the term *lower-tier corporation* means a second-, third-, fourth-, fifth-, or sixth-tier corporation. In the case of a second-tier corporation, the term lower-tier corporation means a third-, fourth-, fifth-, or sixth-tier corporation. In the case of a third-tier corporation, the term lower-tier corporation means a fourth-, fifth-, or sixth-tier corporation. In the case of a fourth-tier corporation, the term lower-tier corporation means a fifth- or sixth-tier corporation. In the case of a fifth-tier corporation, the term lower-tier corporation means a sixth-tier corporation.

(7) ***Foreign income taxes.*** The term *foreign income taxes* means income, war profits, and excess profits taxes as defined in § 1.901-2(a), and taxes included in the term income, war profits, and excess profits taxes by reason of section 903, that are imposed by a foreign country or a possession of the United States, including any such taxes deemed paid by a foreign corporation under this section. Foreign income, war profits, and excess profits taxes shall not include amounts excluded from the definition of those taxes pursuant to section 901 and the regulations under that section. *See* section 901(f) and (i) and paragraph (c)(5) of this section. Foreign income, war profits, and excess profits taxes also shall not include taxes for which a credit is disallowed under section 901 and the regulations under section 901. *See* section 901(j), (k), and (l), and paragraphs (c)(4) and (8) of this section.

(8) ***Post-1986 foreign income taxes*** —

(i) ***In general.*** Except as provided in paragraphs (a)(10) and (13) of this section, the term *post-1986 foreign income taxes* of a foreign corporation means the sum of the foreign income taxes paid, accrued, or deemed paid in the taxable year of the foreign corporation in which it distributes a dividend plus the foreign income taxes paid, accrued, or deemed paid in the foreign corporation's prior taxable years beginning after December 31, 1986, to the extent the foreign taxes were not attributable to dividends distributed to, or earnings otherwise included (for example, under section 304, 367(b), 551, 951(a), 1248, or 1293) in the income of, a foreign or

domestic shareholder in prior taxable years. Except as provided in paragraph (b)(4) of this section, foreign taxes paid or deemed paid by the foreign corporation on or with respect to earnings that were distributed or otherwise removed from post-1986 undistributed earnings in prior post-1986 taxable years shall be removed from post-1986 foreign income taxes regardless of whether the shareholder is eligible to compute an amount of foreign taxes deemed paid under section 902, and regardless of whether the shareholder in fact chose to credit foreign income taxes under section 901 for the year of the distribution or inclusion. Thus, if an amount is distributed or deemed distributed by a foreign corporation to a United States person that is not a domestic shareholder within the meaning of paragraph (a)(1) of this section (for example, an individual or a corporation that owns less than 10% of the foreign corporation's voting stock), or to a foreign person that does not meet the definition of an upper-tier corporation under paragraph (a)(6) of this section, then although no foreign income taxes shall be deemed paid under section 902, foreign income taxes attributable to the distribution or deemed distribution that would have been deemed paid had the shareholder met the ownership requirements of paragraphs (a)(1) through (4) of this section shall be removed from post-1986 foreign income taxes. Further, if a domestic shareholder chooses to deduct foreign taxes paid or accrued for the taxable year of the distribution or inclusion, it shall nonetheless be deemed to have paid a proportionate share of the foreign corporation's post-1986 foreign income taxes under section 902(a), and the foreign income taxes deemed paid must be removed from post-1986 foreign income taxes. In the case of a foreign corporation the foreign income taxes of which are determined based on an accounting period of less than one year, the term *year* means that accounting period. *See* sections 441(b)(3) and 443.

(ii) ***Distributions out of earnings and profits accumulated by a lower-tier corporation in its taxable years beginning before January 1, 1987, and included in the gross income of an upper-tier corporation in its taxable year beginning after December 31, 1986.*** Post-1986 foreign income taxes shall include foreign income taxes that are deemed paid by an upper-tier corporation with respect to distributions from a lower-tier corporation out of nonpreviously taxed pre-1987 accumulated profits, as defined in paragraph (a)(10) of this section, that are received by an upper-tier corporation in any taxable year of the upper-tier corporation beginning after December 31, 1986, provided the upper-tier corporation's earnings and profits in that year are included in its post-1986 undistributed earnings under paragraph (a)(9) of this section. Foreign income taxes deemed paid with respect to a distribution of pre-1987 accumulated profits shall be translated from the functional currency of the lower-tier corporation into dollars at the spot exchange rate in effect on the date of the distribution. To determine the character of the earnings and profits and associated taxes for foreign tax credit limitation purposes, see section 904 and § 1.904-7(a).

(iii) ***Foreign income taxes paid or accrued with respect to high withholding tax interest.*** Post-1986 foreign income taxes shall not include foreign income taxes paid or accrued by a noncontrolled section 902 corporation (as defined in section 904(d)(2)(E)(i)) in a taxable year beginning on or before December 31, 2002 with respect to high withholding tax interest (as defined in section 904(d)(2)(B)) to the extent the foreign tax rate imposed on such interest exceeds 5 percent. See section 904(d)(2)(E)(ii) and § 1.904-4(g)(2)(iii) (26 CFR revised as of April 1, 2006). The reduction in foreign income taxes paid or accrued by the amount of tax in excess of 5 percent imposed on high withholding tax interest income must be computed in functional currency before foreign income taxes are translated into U.S. dollars and included in post-1986 foreign income taxes.

(9) *Post-1986 undistributed earnings* —

(i) ***In general.*** Except as provided in paragraphs (a)(10) and (13) of this section, the term post-1986 undistributed earnings means the amount of the earnings and profits of a foreign corporation (computed in accordance with sections 964(a) and 986) accumulated in taxable years of the foreign corporation beginning after December 31, 1986, determined as of the close of the taxable year of the foreign corporation in which it distributes a dividend. Post-1986 undistributed earnings shall not be reduced by reason of any earnings distributed or otherwise included in income, for example under section 304, 367(b), 551, 951(a), 1248 or 1293, during the taxable year. Post-1986 undistributed earnings shall be reduced to account for distributions or deemed distributions that reduced earnings and profits and inclusions that resulted in previously-taxed amounts described in section 959(c) (1) and (2) or section 1293(c) in prior taxable years beginning after December 31, 1986. Thus, post-1986 undistributed earnings shall not be reduced to the extent of the ratable share of a controlled foreign corporation's subpart F income, as defined in section 952, attributable to a shareholder that is not a United States shareholder within the meaning of section 951(b) or section 953(c)(1)(A), because that amount has not been included in a shareholder's gross income. Post-1986 undistributed earnings shall be reduced as provided herein regardless of whether any shareholder is deemed to have paid any foreign taxes, and regardless of whether any domestic shareholder chose to claim a foreign tax credit under section 901(a) for the year of the distribution. For rules on carrybacks and carryforwards of deficits and their effect on post-1986 undistributed earnings, see § 1.902-2. In the case of a foreign corporation the foreign income taxes of which are computed based on an accounting period of less than one year, the term year means that accounting period. See sections 441(b)(3) and 443.

(ii) ***Distributions out of earnings and profits accumulated by a lower-tier corporation in its taxable years beginning before January 1, 1987, and included in the gross income of an upper-tier corporation in its taxable year beginning after December 31, 1986.*** Distributions by a lower-tier corporation out of non-previously taxed pre-1987 accumulated profits, as defined in paragraph (a)(10) of this section, that are received by an upper-tier corporation in any taxable year of the upper-tier corporation beginning after December 31, 1986, shall be treated as post-1986 undistributed earnings of the upper-tier corporation, provided the upper-tier corporation's earnings and profits for that year are included in its post-1986 undistributed earnings under paragraph (a)(9)(i) of this section. To determine the character of the earnings and profits and associated taxes for foreign tax credit limitation purposes, see section 904 and § 1.904-7(a).

(iii) ***Reduction for foreign income taxes paid or accrued.*** In computing post-1986 undistributed earnings, earnings and profits shall be reduced by foreign income taxes paid or accrued regardless of whether the taxes are creditable. Thus, earnings and profits shall be reduced by foreign income taxes paid with respect to high withholding tax interest even though a portion of the taxes is not creditable pursuant to section 904(d)(2)(E)(ii) and is not included in post-1986 foreign income taxes under paragraph (a)(8)(iii) of this section. Earnings and profits of an upper-tier corporation, however, shall not be reduced by foreign income taxes paid by a lower-tier corporation and deemed to have been paid by the upper-tier corporation.

(iv) ***Special allocations.*** The term post-1986 undistributed earnings means the total amount of the earnings of the corporation determined at the corporate level. Special allocations of earnings and taxes to particular shareholders, whether required or permitted by foreign law or a shareholder agreement, shall be disregarded. If, however, the Commissioner establishes that there is an agreement to pay dividends only out of earnings in the separate categories for

passive or high withholding tax interest income, then only taxes imposed on passive or high withholding tax interest earnings shall be treated as related to the dividend. See § 1.904-6(a)(2).

(10) *Pre-1987 accumulated profits* —

(i) ***Definition.*** The term pre-1987 accumulated profits means the amount of the earnings and profits of a foreign corporation computed in accordance with section 902 and attributable to its taxable years beginning before January 1, 1987. If the special effective date of paragraph (a)(13) of this section applies, pre-1987 accumulated profits also includes any earnings and profits (computed in accordance with sections 964(a) and 986) attributable to the foreign corporation's taxable years beginning after December 31, 1986, but before the first day of the first taxable year of the foreign corporation in which the ownership requirements of section 902(c)(3)(B) and paragraphs (a)(1) through (4) of this section are met with respect to that corporation.

(ii) ***Computation of pre-1987 accumulated profits.*** Pre-1987 accumulated profits must be computed under United States principles governing the computation of earnings and profits. Pre-1987 accumulated profits are determined at the corporate level. Special allocations of accumulated profits and taxes to particular shareholders with respect to distributions of pre-1987 accumulated profits in taxable years beginning after December 31, 1986, whether required or permitted by foreign law or a shareholder agreement, shall be disregarded. Pre-1987 accumulated profits of a particular year shall be reduced by amounts distributed from those accumulated profits or otherwise included in income from those accumulated profits, for example under sections 304, 367(b), 551, 951(a), 1248 or 1293. If a deficit in post-1986 undistributed earnings is carried back to offset pre-1987 accumulated profits, pre-1987 accumulated profits of a particular taxable year shall be reduced by the amount of the deficit carried back to that year. See § 1.902-2. The amount of a distribution out of pre-1987 accumulated profits, and the amount of foreign income taxes deemed paid under section 902, shall be determined and translated into United States dollars by applying the law as in effect prior to the effective date of the Tax Reform Act of 1986. See §§ 1.902-3, 1.902-4 and 1.964-1.

(iii) ***Foreign income taxes attributable to pre-1987 accumulated profits.*** The term pre-1987 foreign income taxes means any foreign income taxes paid, accrued, or deemed paid by a foreign corporation on or with respect to its pre-1987 accumulated profits. Pre-1987 foreign income taxes of a particular year shall be reduced by the amount of taxes paid or deemed paid by the foreign corporation on or with respect to amounts distributed or otherwise included in income from pre-1987 accumulated profits of that year. Thus, pre-1987 foreign income taxes shall be reduced by the amount of taxes deemed paid by a domestic shareholder (regardless of whether the shareholder chose to credit foreign income taxes under section 901 for the year of the distribution or inclusion) or a first-tier or second-tier corporation, and by the amount of taxes that would have been deemed paid had any other shareholder been eligible to compute an amount of foreign taxes deemed paid under section 902. Foreign income taxes deemed paid with respect to a distribution of pre-1987 accumulated profits shall be translated from the functional currency of the distributing corporation into United States dollars at the spot exchange rate in effect on the date of the distribution.

(11) ***Dividend.*** For purposes of section 902, the definition of the term dividend in section 316 and the regulations under that section applies. Thus, for example, distributions and deemed distributions under sections 302, 304, 305(b) and 367(b) that are treated as dividends within the meaning of

section 301(c)(1) also are dividends for purposes of section 902. In addition, the term dividend includes deemed dividends under sections 551 and 1248, but not deemed inclusions under sections 951(a) and 1293. For rules concerning excess distributions from section 1291 funds that are treated as dividends solely for foreign tax credit purposes, (see Regulation Project INTL-656-87 published in 1992-1 C.B. 1124; see § 601.601(d)(2)(ii)(*b*) of this chapter).

(12) ***Dividend received.*** A dividend shall be considered received for purposes of section 902 when the cash or other property is unqualifiedly made subject to the demands of the distributee. See § 1.301-1(c). A dividend also is considered received for purposes of section 902 when it is deemed received under section 304, 367(b), 551, or 1248.

(13) ***Special effective date*** —

(i) ***Rule.*** If the first day on which the ownership requirements of section 902(c)(3)(B) and paragraphs (a)(1) through (4) of this section are met with respect to a foreign corporation, without regard to whether a dividend is distributed, is in a taxable year of the foreign corporation beginning after December 31, 1986, then—

(A) The post-1986 undistributed earnings and post-1986 foreign income taxes of the foreign corporation shall be determined by taking into account only taxable years beginning on and after the first day of the first taxable year of the foreign corporation in which the ownership requirements are met, including subsequent taxable years in which the ownership requirements of section 902(c)(3)(B) and paragraphs (a)(1) through (4) of this section are not met; and

(B) Earnings and profits accumulated prior to the first day of the first taxable year of the foreign corporation in which the ownership requirements of section 902(c)(3)(B) and paragraphs (a)(1) through (4) of this section are met shall be considered pre-1987 accumulated profits.

(ii) ***Example.*** The following example illustrates the special effective date rules of this paragraph (a)(13):

Example. As of December 31, 1991, and since its incorporation, foreign corporation A has owned 100 percent of the stock of foreign corporation B. Corporation B is not a controlled foreign corporation. Corporation B uses the calendar year as its taxable year, and its functional currency is the u. Assume 1u equals $1 at all relevant times. On April 1, 1992, Corporation B pays a 200u dividend to Corporation A and the ownership requirements of section 902(c)(3)(B) and paragraphs (a)(1) through (4) of this section are not met at that time. On July 1, 1992, domestic corporation M purchases 10 percent of the Corporation B stock from Corporation A and, for the first time, Corporation B meets the ownership requirements of section 902(c)(3)(B) and paragraph (a)(2) of this section. Corporation M uses the calendar year as its taxable year. Corporation B does not distribute any dividends to Corporation M during 1992. For its taxable year ending December 31, 1992, Corporation B has 500u of earnings and profits (after foreign taxes but before taking into account the 200u distribution to Corporation A) and pays 100u of foreign income taxes that is equal to $100. Pursuant to paragraph (a)(13)(i) of this section, Corporation B's post-1986 undistributed earnings and post-1986 foreign income taxes will include earnings and profits and foreign income taxes attributable to Corporation B's entire 1992 taxable year and all taxable years thereafter. Thus, the April 1, 1992, dividend to Corporation A will reduce post-1986 undistributed earnings to 300u (500u-200u) under paragraph (a)(9)(i) of

this section. The foreign income taxes attributable to the amount distributed as a dividend to Corporation A will not be creditable because Corporation A is not a domestic shareholder. Post-1986 foreign income taxes, however, will be reduced by the amount of foreign taxes attributable to the dividend. Thus, as of the beginning of 1993, Corporation B has $60 ($100-[$100 × 40% (200u/500u)]) of post-1986 foreign income taxes. See paragraphs (a)(8)(i) and (b)(1) of this section.

(b) ***Computation of foreign income taxes deemed paid by a domestic shareholder, first-tier corporation, or lower-tier corporation*** —

(1) ***General rule.*** If a foreign corporation pays a dividend in any taxable year out of post-1986 undistributed earnings to a shareholder that is a domestic shareholder or an upper-tier corporation at the time it receives the dividend, the recipient shall be deemed to have paid the same proportion of any post-1986 foreign income taxes paid, accrued or deemed paid by the distributing corporation on or with respect to post-1986 undistributed earnings which the amount of the dividend out of post-1986 undistributed earnings (determined without regard to the gross-up under section 78) bears to the amount of the distributing corporation's post-1986 undistributed earnings. An upper-tier corporation shall not be entitled to compute an amount of foreign taxes deemed paid on a dividend from a lower-tier corporation, however, unless the ownership requirements of paragraphs (a)(1) through (4) of this section are met at each tier at the time the upper-tier corporation receives the dividend. Foreign income taxes deemed paid by a domestic shareholder or an upper-tier corporation must be computed under the following formula:

$$\text{Foreign income taxes deemed paid by domestic shareholder (or upper-tier corporation)} = \text{Post-1986 foreign income taxes of first-tier corporation (or lower-tier corporation)} \times \frac{\text{Dividend paid to domestic shareholder (or upper-tier corporation) by first-tier corporation (or lower-tier corporation)}}{\text{Post-1986 undistributed earnings of first-tier corporation (or lower-tier corporation)}}$$

(2) ***Allocation rule for dividends attributable to post-1986 undistributed earnings and pre-1987 accumulated profits*** —

(i) ***Portion of dividend out of post-1986 undistributed earnings.*** Dividends will be deemed to be paid first out of post-1986 undistributed earnings to the extent thereof. If dividends exceed post-1986 undistributed earnings and dividends are paid to more than one shareholder, then the dividend to each shareholder shall be deemed to be paid pro rata out of post-1986 undistributed earnings, computed as follows:

$$\text{Portion of Dividend to a Shareholder Attributable to Post-1986 Undistributed Earnings} = \text{Post-1986 Undistributed Earnings} \times \frac{\text{Dividends to Shareholder}}{\text{Total Dividends Paid To all Shareholders}}$$

(ii) ***Portion of dividend out of pre-1987 accumulated profits.*** After the portion of the dividend attributable to post-1986 undistributed earnings is determined under paragraph (b)(2)(i) of this section, the remainder of the dividend received by a shareholder is attributable to pre-1987

accumulated profits to the extent thereof. That part of the dividend attributable to pre-1987 accumulated profits will be treated as paid first from the most recently accumulated earnings and profits. See § 1.902-3. If dividends paid out of pre-1987 accumulated profits are attributable to more than one pre-1987 taxable year and are paid to more than one shareholder, then the dividend to each shareholder attributable to earnings and profits accumulated in a particular pre-1987 taxable year shall be deemed to be paid pro rata out of accumulated profits of that taxable year, computed as follows:

$$\text{Portion of Dividend to a Shareholder Attributable to Accumulated Profits of a Particular Pre-1987 Taxable Year} = \text{Dividend Paid Out of Pre-1987 Accumulated Profits with Respect to the Particular Pre-1987 Taxable Year} \times \frac{\text{Dividends to Shareholder}}{\text{Total Dividends Paid To all Shareholders}}$$

(3) ***Dividends paid out of pre-1987 accumulated profits.*** If dividends are paid by a first-tier corporation or a lower-tier corporation out of pre-1987 accumulated profits, the domestic shareholder or upper-tier corporation that receives the dividends shall be deemed to have paid foreign income taxes to the extent provided under section 902 and the regulations thereunder as in effect prior to the effective date of the Tax Reform Act of 1986. See paragraphs (a) (10) and (13) of this section and §§ 1.902-3 and 1.902-4.

(4) ***Deficits in accumulated earnings and profits.*** No foreign income taxes shall be deemed paid with respect to a distribution from a foreign corporation out of current earnings and profits that is treated as a dividend under section 316(a)(2), and post-1986 foreign income taxes shall not be reduced, if as of the end of the taxable year in which the dividend is paid or accrued, the corporation has zero or a deficit in post-1986 undistributed earnings and the sum of current plus accumulated earnings and profits is zero or less than zero. The dividend shall reduce post- 1986 undistributed earnings and accumulated earnings and profits.

(5) ***Examples.*** The following examples illustrate the rules of this paragraph (b):

Example 1. Domestic corporation M owns 100 percent of foreign corporation A. Both Corporation M and Corporation A use the calendar year as the taxable year, and Corporation A uses the u as its functional currency. Assume that 1u equals $1 at all relevant times. All of Corporation A's pre-1987 accumulated profits and post-1986 undistributed earnings are non-subpart F general limitation earnings and profits under section 904(d)(1)(I). As of December 31, 1992, Corporation A has 100u of post-1986 undistributed earnings and $40 of post-1986 foreign income taxes. For its 1986 taxable year, Corporation A has accumulated profits of 200u (net of foreign taxes) and paid 60u of foreign income taxes on those earnings. In 1992, Corporation A distributes 150u to Corporation M. Corporation A has 100u of post-1986 undistributed earnings and the dividend, therefore, is treated as paid out of post-1986 undistributed earnings to the extent of 100u. The first 100u distribution is from post-1986 undistributed earnings, and, because the distribution exhausts those earnings, Corporation M is deemed to have paid the entire amount of post-1986 foreign income taxes of Corporation A ($40). The remaining 50u dividend is treated as a dividend out of 1986 accumulated profits under paragraph (b)(2) of this section. Corporation M is deemed to have paid $15 (60u × 50u/200u, translated at the appropriate exchange rates) of Corporation A's foreign income taxes for 1986. As of January 1,

1993, Corporation A's post-1986 undistributed earnings and post-1986 foreign income taxes are 0. Corporation A has 150u of accumulated profits and 45u of foreign income taxes remaining in 1986.

Example 2. Domestic corporation M (incorporated on January 1, 1987) owns 100 percent of foreign corporation A (incorporated on January 1, 1987). Both Corporation M and Corporation A use the calendar year as the taxable year, and Corporation A uses the u as its functional currency. Assume that 1u equals $1 at all relevant times. Corporation A has no pre-1987 accumulated profits. All of Corporation A's post-1986 undistributed earnings are non-subpart F general limitation earnings and profits under section 904(d)(1)(I). On January 1, 1992, Corporation A has a deficit in accumulated earnings and profits and a deficit in post-1986 undistributed earnings of (200u). No foreign taxes have been paid with respect to post-1986 undistributed earnings. During 1992, Corporation A earns 100u (net of foreign taxes), pays $40 of foreign taxes on those earnings and distributes 50u to Corporation M. As of the end of 1992, Corporation A has a deficit of (100u) ((200u) post1986 undistributed earnings + 100u current earnings and profits) in post-1986 undistributed earnings. Corporation A, however, has current earnings and profits of 100u. Therefore, the 50u distribution is treated as a dividend in its entirety under section 316(a)(2). Under paragraph (b)(4) of this section, Corporation M is not deemed to have paid any of the foreign taxes paid by Corporation A because post-1986 undistributed earnings and the sum of current plus accumulated earnings and profits are (100u). The dividend reduces both post-1986 undistributed earnings and accumulated earnings and profits. Therefore, as of January 1, 1993, Corporation A's post-1986 undistributed earnings are (150u) and its accumulated earnings and profits are (150u). Corporation A's post-1986 foreign income taxes at the start of 1993 are $40.

(c) ***Special rules*** —

(1) ***Separate computations required for dividends from each first-tier and lower-tier corporation*** —

(i) ***Rule.*** If in a taxable year dividends are received by a domestic shareholder or an upper-tier corporation from two or more first-tier corporations or two or more lower-tier corporations, the foreign income taxes deemed paid by the domestic shareholder or the upper-tier corporation under sections 902 (a) and (b) and paragraph (b) of this section shall be computed separately with respect to the dividends received from each first-tier corporation or lower-tier corporation. If a domestic shareholder receives dividend distributions from one or more first-tier corporations and in the same taxable year the first-tier corporation receives dividends from one or more lower-tier corporations, then the amount of foreign income taxes deemed paid shall be computed by starting with the lowest-tier corporation and working upward.

(ii) ***Example.*** The following example illustrates the application of this paragraph (c)(1):

Example. P, a domestic corporation, owns 40 percent of the voting stock of foreign corporation S. S owns 30 percent of the voting stock of foreign corporation T, and 30 percent of the voting stock of foreign corporation U. Neither S, T, nor U is a controlled foreign corporation. P, S, T and U all use the calendar year as their taxable year. In 1993, T and U both pay dividends to S and S pays a dividend to P. To compute foreign taxes deemed paid, paragraph (c)(1) of this section requires P to start with the lowest tier corporations and to compute foreign taxes deemed paid separately for dividends from each first-tier and lower-tier corporation. Thus, S first will compute foreign taxes deemed paid separately on its dividends from T and U. The deemed paid taxes will be added to S's post-1986

foreign income taxes, and the dividends will be added to S's post-1986 undistributed earnings. Next, P will compute foreign taxes deemed paid with respect to the dividend from S. This computation will take into account the taxes paid by T and U and deemed paid by S.

(2) *Section 78 gross-up* —

(i) ***Foreign income taxes deemed paid by a domestic shareholder.*** Except as provided in section 960(b) and the regulations under that section (relating to amounts excluded from gross income under section 959(b)), any foreign income taxes deemed paid by a domestic shareholder in any taxable year under section 902(a) and paragraph (b) of this section shall be included in the gross income of the domestic shareholder for the year as a dividend under section 78. Amounts included in gross income under section 78 shall, for purposes of section 904, be deemed to be derived from sources within the United States to the extent the earnings and profits on which the taxes were paid are treated under section 904(g) as United States source earnings and profits. Section 1.904-5(m)(6). Amounts included in gross income under section 78 shall be treated for purposes of section 904 as income in a separate category to the extent that the foreign income taxes were allocated and apportioned to income in that separate category. See section 904(d)(3)(G) and § 1.904-6(b)(3).

(ii) ***Foreign income taxes deemed paid by an upper-tier corporation.*** Foreign income taxes deemed paid by an upper-tier corporation on a distribution from a lower-tier corporation are not included in the earnings and profits of the upper-tier corporation. For purposes of section 904, foreign income taxes shall be allocated and apportioned to income in a separate category to the extent those taxes were allocated to the earnings and profits of the lower-tier corporation in that separate category. See section 904(d)(3)(G) and § 1.904-6(b)(3). To the extent that section 904(g) treats the earnings of the lower-tier corporation on which those foreign income taxes were paid as United States source earnings and profits, the foreign income taxes deemed paid by the upper-tier corporation on the distribution from the lower-tier corporation shall be treated as attributable to United States source earnings and profits. See section 904(g) and § 1.904-5(m)(6).

(iii) ***Example.*** The following example illustrates the rules of this paragraph (c)(2):

Example. P, a domestic corporation, owns 100 percent of the voting stock of controlled foreign corporation S. Corporations P and S use the calendar year as their taxable year, and S uses the u as its functional currency. Assume that 1u equals $1 at all relevant times. As of January 1, 1992, S has -0- post-1986 undistributed earnings and -0- post-1986 foreign income taxes. In 1992, S earns 150u of non-subpart F general limitation income net of foreign taxes and pays 60u of foreign income taxes. As of the end of 1992, but before dividend payments, S has 150u of post-1986 undistributed earnings and $60 of post-1986 foreign income taxes. Assume that 50u of S's earnings for 1992 are from United States sources. S pays P a dividend of 75u which P receives in 1992. Under § 1.904-5(m)(4), one-third of the dividend, or 25u (75u × 50u/150u), is United States source income to P. P computes foreign taxes deemed paid on the dividend under paragraph (b)(1) of this section of $30 ($60 × 50%[75u/150u]) and includes that amount in gross income under section 78 as a dividend. Because 25u of the 75u dividend is United States source income to P, $10 ($30 × 33.33%[25u/75u]) of the section 78 dividend will be treated as United States source income to P under this paragraph (c)(2).

(3) ***Creditable foreign income taxes.*** The amount of creditable foreign income taxes under section 901 shall include, subject to the limitations and conditions of sections 902 and 904, foreign income taxes actually paid and deemed paid by a domestic shareholder that receives a dividend from a first-tier corporation. Foreign income taxes deemed paid by a domestic shareholder under paragraph (b) of this section shall be deemed paid by the domestic shareholder only for purposes of computing the foreign tax credit allowed under section 901.

(4) ***Foreign mineral income.*** Certain foreign income, war profits and excess profits taxes paid or accrued with respect to foreign mineral income will not be considered foreign income taxes for purposes of section 902. See section 901(e) and § 1.901-3.

(5) ***Foreign taxes paid or accrued in connection with the purchase or sale of certain oil and gas.*** Certain income, war profits, or excess profits taxes paid or accrued to a foreign country in connection with the purchase and sale of oil or gas extracted in that country will not be considered foreign income taxes for purposes of section 902. See section 901(f).

(6) ***Foreign oil and gas extraction income.*** For rules relating to reduction of the amount of foreign income taxes deemed paid with respect to foreign oil and gas extraction income, see section 907(a) and the regulations under that section.

(7) ***United States shareholders of controlled foreign corporations.*** See paragraph (d) of this section and sections 960 and 962 and the regulations under those sections for special rules relating to the application of section 902 in computing foreign income taxes deemed paid by United States shareholders of controlled foreign corporations.

(8) ***Effect of certain liquidations, reorganizations, or similar transactions on certain foreign taxes paid or accrued in taxable years beginning on or before August 5, 1997*** —

(i) ***General rule.*** Notwithstanding the effect of any liquidation, reorganization, or similar transaction, foreign taxes paid or accrued by a member of a qualified group (as defined in section 902(b)(2)) shall not be eligible to be deemed paid if they were paid or accrued in a taxable year beginning on or before August 5, 1997, by a corporation that was a fourth-, fifth- or sixth-tier corporation with respect to the taxpayer on the first day of the corporation's first taxable year beginning after August 5, 1997.

(ii) ***Example.*** The following examples illustrate the application of this paragraph (c)(8):

Example. P, a domestic corporation, has owned 100 percent of the voting stock of foreign corporation S at all times since January 1, 1987. Until June 30, 2002, S owned 100 percent of the voting stock of foreign corporation T, T owned 100 percent of the voting stock of foreign corporation U, and U owned 100 percent of the voting stock of foreign corporation V. P, S, T, U, and V each use the calendar year as their U.S. taxable year. Thus, beginning in 1998 V was a fourth-tier controlled foreign corporation, and its foreign taxes paid or accrued in 1998 and later taxable years were eligible to be deemed paid. On June 30, 2002, T was liquidated, causing S to acquire 100 percent of the stock of U. As a result, V became a third-tier controlled foreign corporation. In 2003, V paid a dividend to U. Under paragraph (c)(8) of this section, foreign taxes paid by V in taxable years beginning before 1998 are not taken into account in computing the foreign taxes deemed paid with respect to the dividend paid by V to U.

(d) ***Dividends from controlled foreign corporations and noncontrolled section 902 corporations*** —

(1) ***General rule.*** If a dividend is described in paragraphs (d)(1)(i) through (iv) of this section, the following rules apply. If a dividend is paid out of post-1986 undistributed earnings or pre-1987 accumulated profits of a foreign corporation attributable to more than one separate category, the amount of foreign income taxes deemed paid by the domestic shareholder or the upper-tier corporation under section 902 and paragraph (b) of this section shall be computed separately with respect to the post-1986 undistributed earnings or pre-1987 accumulated profits in each separate category out of which the dividend is paid. *See* § 1.904-5(c)(4) and (i), and paragraph (d)(2) of this section. The separately computed deemed-paid taxes shall be added to other taxes paid by the domestic shareholder or upper-tier corporation with respect to income in the appropriate separate category. The rules of this paragraph (d)(1) apply to dividends received by —

(i) A domestic shareholder that is a United States shareholder (as defined in section 951(b) or section 953(c)) from a first-tier corporation that is a controlled foreign corporation;

(ii) A domestic shareholder from a first-tier corporation that is a noncontrolled section 902 corporation;

(iii) An upper-tier controlled foreign corporation from a lower-tier controlled foreign corporation if the corporations are related look-through entities within the meaning of § 1.904-5(i) (*see* § 1.904-5(i)(3)); or

(iv) A foreign corporation that is eligible to compute an amount of foreign taxes deemed paid under section 902(b)(1), from a controlled foreign corporation or a noncontrolled section 902 corporation (that is, both the payor and payee corporations are members of the same qualified group as defined in section 902(b)(2) (*see* § 1.904-5 (i)(4)).

(2) ***Look-through*** —

(i) ***Dividends.*** Any dividend distribution by a controlled foreign corporation or noncontrolled section 902 corporation to a domestic shareholder or a foreign corporation that is eligible to compute an amount of foreign taxes deemed paid under section 902(b)(1) shall be deemed paid pro rata out of each separate category of income. Any dividend distribution by a controlled foreign corporation to a controlled foreign corporation that is a related look-through entity within the meaning of § 1.904-5(i)(3) shall also be deemed to be paid pro rata out of each separate category of income. *See* §§ 1.904-5(c)(4) and (i), and 1.904-7. The portion of the foreign income taxes attributable to a particular separate category that shall be deemed paid by the domestic shareholder or upper-tier corporation must be computed under the following formula:

$$\text{Foreign taxes deemed paid by domestic shareholder or upper-tier corporation with respect to a separate category} = \text{Post-1986 foreign income taxes of first-tier or lower-tier corporation allocated and apportioned to the separate category under § 1.904-6} \times \frac{\text{Dividend amount attributable to the separate category}}{\text{Post-1986 undistributed earnings of first-tier or lower-tier corporation in the separate category}}$$

(ii) ***Coordination with section 960.*** For rules coordinating the computation of foreign taxes deemed paid with respect to amounts included in gross income under section 951(a) and dividends distributed by a controlled foreign corporation, see section 960 and the regulations under that section.

(e) ***Information to be furnished.*** If the credit for foreign income taxes claimed under section 901 includes foreign income taxes deemed paid under section 902 and paragraph (b) of this section, the domestic shareholder must furnish the same information with respect to the foreign income taxes deemed paid as it is required to furnish with respect to the foreign income taxes it directly paid or accrued and for which

the credit is claimed. See § 1.905-2. For other information required to be furnished by the domestic shareholder for the annual accounting period of certain foreign corporations ending with or within the shareholder's taxable year, and for reduction in the amount of foreign income taxes paid, accrued, or deemed paid for failure to furnish the required information, see section 6038 and the regulations under that section.

(f) ***Examples.*** The following examples illustrate the application of this section:

Example 1. Since 1987, domestic corporation M has owned 10 percent of the one class of stock of foreign corporation A. The remaining 90 percent of Corporation A's stock is owned by Z, a foreign corporation. Corporation A is not a controlled foreign corporation. Corporation A uses the u as its functional currency, and 1u equals $1 at all relevant times. Both Corporation A and Corporation M use the calendar year as the taxable year. In 1992, Corporation A pays a 30u dividend out of post-1986 undistributed earnings, 3u to Corporation M and 27u to Corporation Z. Corporation M is deemed, under paragraph (b) of this section, to have paid a portion of the post-1986 foreign income taxes paid by Corporation A and includes the amount of foreign taxes deemed paid in gross income under section 78 as a dividend. Both the foreign taxes deemed paid and the dividend would be subject to a separate limitation for dividends from Corporation A, a noncontrolled section 902 corporation. Under paragraph (a)(9)(i) of this section, Corporation A must reduce its post-1986 undistributed earnings as of January 1, 1993, by the total amount of dividends paid to Corporation M and Corporation Z in 1992. Under paragraph (a)(8)(i) of this section, Corporation A must reduce its post-1986 foreign income taxes as of January 1, 1993, by the amount of foreign income taxes that were deemed paid by Corporation M and by the amount of foreign income taxes that would have been deemed paid by Corporation Z had Corporation Z been eligible to compute an amount of foreign income taxes deemed paid with respect to the dividend received from Corporation A. Foreign income taxes deemed paid by Corporation M and Corporation A's opening balances in post-1986 undistributed earnings and post-1986 foreign income taxes for 1993 are computed as follows:

1. Assumed post-1986 undistributed earnings of Corporation A at start of 1992	25u
2. Assumed post-1986 foreign income taxes of Corporation A at start of 1992	$25
3. Assumed pre-tax earnings and profits of Corporation A for 1992	50u
4. Assumed foreign income taxes paid or accrued by Corporation A in 1992	15u
5. Post-1986 undistributed earnings in Corporation A for 1992 (pre-dividend) (Line 1 plus Line 3 minus Line 4)	60u
6. Post-1986 foreign income taxes in Corporation A for 1992 (pre-dividend) (Line 2 plus Line 4 translated at the appropriate exchange rates)	$40
7. Dividends paid out of post-1986 undistributed earnings of Corporation A to Corporation M in 1992	3u
8. Percentage of Corporation A's post-1986 undistributed earnings paid to Corporation M	5%

(Line 7 divided by Line 5)	
9. Foreign income taxes of Corporation A deemed paid by Corporation M under section 902(a) (Line 6 multiplied by Line 8)	$2
10. Total dividends paid out of post-1986 undistributed earnings of Corporation A to all shareholders in 1992	30u
11. Percentage of Corporation A's post-1986 undistributed earnings paid to all shareholders in 1992 (Line 10 divided by Line 5)	50%
12. Post-1986 foreign income taxes paid with respect to post-1986 undistributed earnings distributed to all shareholders in 1992 (Line 6 multiplied by Line 11)	$20
13. Corporation A's post-1986 undistributed earnings at the start of 1993 (Line 5 minus Line 10)	30u
14. Corporation A's post-1986 foreign income taxes at the start of 1993 (Line 6 minus Line 12)	$20

Example 2. (i) The facts are the same as in *Example 1,* except that Corporation M has also owned 10 percent of the one class of stock of foreign corporation B since 1987. Corporation B uses the calendar year as the taxable year. The remaining 90 percent of Corporation B's stock is owned by Corporation Z. Corporation B is not a controlled foreign corporation. Corporation B uses the u as its functional currency, and 1u equals $1 at all relevant times. In 1992, Corporation B has earnings and profits and pays foreign income taxes, a portion of which are attributable to high withholding tax interest, as defined in section 904(d)(2)(B)(i). Corporation B must reduce its pool of post-1986 foreign income taxes by the amount of tax imposed on high withholding tax interest in excess of 5 percent because that amount is not treated as a tax for purposes of section 902. See section 904(d)(2)(E)(ii) and paragraph (a)(8)(iii) of this section. Corporation B pays 50u in dividends in 1992, 5u to Corporation M and 45u to Corporation Z. Corporation M must compute its section 902(a) deemed paid taxes separately for the dividends it receives in 1992 from Corporation A (as computed in *Example 1*) and from Corporation B. Foreign income taxes of Corporation B deemed paid by Corporation M, and Corporation B's opening balances in post-1986 undistributed earnings and post-1986 foreign income taxes for 1993 are computed as follows:

1. Assumed post-1986 undistributed earnings of Corporation B at start of 1992	(100u)
2. Assumed post-1986 foreign income taxes of Corporation B at start of 1992	$0
3. Assumed pre-tax earnings and profits of Corporation B for 1992 (including 50u of high withholding tax interest on which 5u of tax is withheld)	302.50u
4. Assumed foreign income taxes paid or accrued by Corporation B in 1992	102.50u
5. Post-1986 undistributed earnings in Corporation B for 1992 (pre-dividend) (Line 1 plus Line 3 minus Line 4)	100u

6. Amount of foreign income tax of Corporation B imposed on high withholding tax interest in excess of 5% (5u withholding tax—[5% × 50u high withholding tax interest])	2.50u
7. Post-1986 foreign income taxes in Corporation B for 1992 (pre-dividend) (Line 2 plus [Line 4 minus Line 6 translated at the appropriate exchange rate])	$100
8. Dividends paid out of post-1986 undistributed earnings to Corporation M in 1992	5u
9. Percentage of Corporation B's post-1986 undistributed earnings paid to Corporation M (Line 8 divided by Line 5)	5%
10. Foreign income taxes of Corporation B deemed paid by Corporation M under section 902(a) (Line 7 multiplied by Line 9)	$5
11. Total dividends paid out of post-1986 undistributed earnings of Corporation B to all shareholders in 1992	50u
12. Percentage of Corporation B's post-1986 undistributed earnings paid to all shareholders in 1992 (Line 11 divided by Line 5)	50%
13. Post-1986 foreign income taxes of Corporation B paid on or with respect to post-1986 undistributed earnings distributed to all shareholders in 1992 (Line 7 multiplied by Line 12)	$50
14. Corporation B's post-1986 undistributed earnings at start of 1993 (Line 5 minus Line 11)	50u
15. Corporation B's post-1986 foreign income taxes at start of 1993 (Line 7 minus Line 13)	$50

(ii) For 1992, as computed in *Example 1,* Corporation M is deemed to have paid $2 of the post-1986 foreign income taxes paid by Corporation A and includes $2 in gross income as a dividend under section 78. Both the income inclusion and the credit are subject to a separate limitation for dividends from Corporation A, a noncontrolled section 902 corporation. Corporation M also is deemed to have paid $5 of the post-1986 foreign income taxes paid by Corporation B and includes $5 in gross income as a deemed dividend under section 78. Both the income inclusion and the foreign taxes deemed paid are subject to a separate limitation for dividends from Corporation B, a noncontrolled section 902 corporation.

Example 3. (i) Since 1987, domestic corporation M has owned 50 percent of the one class of stock of foreign corporation A. The remaining 50 percent of Corporation A is owned by foreign corporation Z. For the same time period, Corporation A has owned 40 percent of the one class of stock of foreign corporation B, and Corporation B has owned 30 percent of the one class of stock of foreign corporation C. The remaining 60 percent of Corporation B is owned by foreign corporation Y, and the remaining 70 percent of Corporation C is owned by foreign corporation X. Corporations A, B, and C are not controlled foreign corporations. Corporations A, B, and C use the u as their functional currency, and 1u equals $1 at all relevant times. Corporation B uses a fiscal year ending June 30 as its taxable year; all other corporations use the calendar year as the taxable year.

On February 1, 1992, Corporation C pays a 500u dividend out of post-1986 undistributed earnings, 150u to Corporation B and 350u to Corporation X. On February 15, 1992, Corporation B pays a 300u dividend out of post-1986 undistributed earnings computed as of the close of Corporation B's fiscal year ended June 30, 1992, 120u to Corporation A and 180u to Corporation Y. On August 15, 1992, Corporation A pays a 200u dividend out of post-1986 undistributed earnings, 100u to Corporation M and 100u to Corporation Z. In computing foreign taxes deemed paid by Corporations B and A, section 78 does not apply and Corporations B and A thus do not have to include the foreign taxes deemed paid in earnings and profits. See paragraph (c)(2)(ii) of this section. Foreign income taxes deemed paid by Corporations B, A and M, and the foreign corporations' opening balances in post-1986 undistributed earnings and post-1986 foreign income taxes for Corporation B's fiscal year beginning July 1, 1992, and Corporation C's and Corporation A's 1993 calendar years are computed as follows:

A. Corporation C (third-tier corporation):	
1. Assumed post-1986 undistributed earnings in Corporation C at start of 1992	1300u
2. Assumed post-1986 foreign income taxes in Corporation C at start of 1992	$500
3. Assumed pre-tax earnings and profits of Corporation C for 1992	500u
4. Assumed foreign income taxes paid or accrued in 1992	300u
5. Post-1986 undistributed earnings in Corporation C for 1992 (pre-dividend) (Line 1 plus Line 3 minus Line 4)	1500u
6. Post-1986 foreign income taxes in Corporation C for 1992 (pre-dividend) (Line 2 plus Line 4 translated at the appropriate exchange rates)	$800
7. Dividends paid out of post-1986 undistributed earnings of Corporation C to Corporation B in 1992	150u
8. Percentage of Corporation C's post-1986 undistributed earnings paid to Corporation B (Line 7 divided by Line 5)	10%
9. Foreign income taxes of Corporation C deemed paid by Corporation B under section 902(b)(2) (Line 6 multiplied by Line 8)	$80
10. Total dividends paid out of post-1986 undistributed earnings of Corporation C to all shareholders in 1992	500u
11. Percentage of Corporation C's post-1986 undistributed earnings paid to all shareholders in 1992 (Line 10 divided by Line 5)	33.33%
12. Post-1986 foreign income taxes paid with respect to post-1986 undistributed earnings distributed to all shareholders in 1992 (Line 6 multiplied by Line 11)	$266.66
13. Post-1986 undistributed earnings in Corporation C at start of 1993 (Line 5 minus Line 10)	1000u
14. Post-1986 foreign income taxes in Corporation C at start of 1993 (Line 6 minus Line 12)	$533.34
B. Corporation B (second-tier corporation):	
1. Assumed post-1986 undistributed earnings in Corporation B as of July 1, 1991	0

2. Assumed post-1986 foreign income taxes in Corporation B as of July 1, 1991	0
3. Assumed pre-tax earnings and profits of Corporation B for fiscal year ended June 30, 1992, (including 150u dividend from Corporation B)	1000u
4. Assumed foreign income taxes paid or accrued by Corporation B in fiscal year ended June 30, 1992	200u
5. Foreign income taxes of Corporation C deemed paid by Corporation B in its fiscal year ended June 30, 1992 (Part A, Line 9 of paragraph (i) of this Example 3)	$80
6. Post-1986 undistributed earnings in Corporation B for fiscal year ended June 30, 1992 (pre-dividend) (Line 1 plus Line 3 minus Line 4)	800u
7. Post-1986 foreign income taxes in Corporation B for fiscal year ended June 30, 1992 (pre-dividend) (Line 2 plus Line 4 translated at the appropriate exchange rates plus Line 5)	$280
8. Dividends paid out of post-1986 undistributed earnings of Corporation B to Corporation A on February 15, 1992	120u
9. Percentage of Corporation B's post-1986 undistributed earnings for fiscal year ended June 30, 1992, paid to Corporation A (Line 8 divided by Line 6)	15%
10. Foreign income taxes paid and deemed paid by Corporation B as of June 30, 1992, deemed paid by Corporation A under section 902(b)(1) (Line 7 multiplied by Line 9)	$42
11. Total dividends paid out of post-1986 undistributed earnings of Corporation B for fiscal year ended June 30, 1992	300u
12. Percentage of Corporation B's post-1986 undistributed earnings for fiscal year ended June 30, 1992, paid to all shareholders (Line 11 divided by Line 6)	37.5%
13. Post-1986 foreign income taxes paid and deemed paid with respect to post-1986 undistributed earnings distributed to all shareholders during Corporation B's fiscal year ended June 30, 1992 (Line 7 multiplied by Line 12)	$105
14. Post-1986 undistributed earnings in Corporation B as of July 1, 1992 (Line 6 minus Line 11)	500u
15. Post-1986 foreign income taxes in Corporation B as of July 1, 1992 (Line 7 minus Line 13)	$175
C. Corporation A (first-tier corporation):	
1. Assumed post-1986 undistributed earnings in Corporation A at start of 1992	250u
2. Assumed post-1986 foreign income taxes in Corporation A at start of 1992	$100
3. Assumed pre-tax earnings and profits of Corporation A for 1992 (including 120u dividend from Corporation B)	250u
4. Assumed foreign income taxes paid or accrued by Corporation A in 1992	100u
5. Foreign income taxes paid or deemed paid by Corporation B as of June 30, 1992, that are deemed paid by Corporation A in 1992 (Part B, Line 10 of paragraph (i) of this Example 3)	$42
6. Post-1986 undistributed earnings in Corporation A for 1992 (pre-dividend) (Line 1 plus Line 3 minus Line 4)	400u
7. Post-1986 foreign income taxes in Corporation A for 1992 (pre-dividend) (Line 2 plus Line 4 translated at the appropriate exchange rates plus Line 5)	$242
8. Dividends paid out of post-1986 undistributed earnings of Corporation A to	100u

Corporation M on August 15, 1992	
9. Percentage of Corporation A's post-1986 undistributed earnings paid to Corporation M in 1992 (Line 8 divided by Line 6)	25%
10. Foreign income taxes paid and deemed paid by Corporation A in 1992 that are deemed paid by Corporation M under section 902(a) (Line 7 multiplied by Line 9)	$60.50
11. Total dividends paid out of post-1986 undistributed earnings of Corporation A to all shareholders in 1992	200u
12. Percentage of Corporation A's post-1986 undistributed earnings paid to all shareholders in 1992 (Line 11 divided by Line 6)	50%
13. Post-1986 foreign income taxes paid and deemed paid by Corporation A with respect to post-1986 undistributed earnings distributed to all shareholders in 1992 (Line 7 multiplied by Line 12)	$121
14. Post-1986 undistributed earnings in Corporation A at start of 1993 (Line 6 minus Line 11)	200u
15. Post-1986 foreign income taxes in Corporation A at start of 1993 (Line 7 minus Line 13)	$121

(ii) Corporation M is deemed, under section 902(a) and paragraph (b) of this section, to have paid $60.50 of post-1986 foreign income taxes paid, or deemed paid, by Corporation A on or with respect to its post-1986 undistributed earnings (Part C, Line 10) and Corporation M includes that amount in gross income as a dividend under section 78. Both the income inclusion and the credit are subject to a separate limitation for dividends from Corporation A, a noncontrolled section 902 corporation.

Example 4. (i) Since 1987, domestic corporation M has owned 100 percent of the voting stock of controlled foreign corporation A, and Corporation A has owned 100 percent of the voting stock of controlled foreign corporation B. Corporations M, A and B use the calendar year as the taxable year. Corporations A and B are organized in the same foreign country and use the u as their functional currency. 1u equals $1 at all relevant times. Assume that all of the earnings of Corporations A and B are general limitation earnings and profits within the meaning of section 904(d)(2)(I), and that neither Corporation A nor Corporation B has any previously taxed income accounts. In 1992, Corporation B pays a dividend of 150u to Corporation A out of post-1986 undistributed earnings, and Corporation A computes an amount of foreign taxes deemed paid under section 902(b)(1). The dividend is not subpart F income to Corporation A because section 954(c)(3)(B)(i) (the same country dividend exception) applies. Pursuant to paragraph (c)(2)(ii) of this section, Corporation A is not required to include the deemed paid taxes in earnings and profits. Corporation A has no pre-1987 accumulated profits and a deficit in post-1986 undistributed earnings for 1992. In 1992, Corporation A pays a dividend of 100u to Corporation M out of its earnings and profits for 1992 (current earnings and profits). Under paragraph (b)(4) of

this section, Corporation M is not deemed to have paid any of the foreign income taxes paid or deemed paid by Corporation A because Corporation A has a deficit in post-1986 undistributed earnings as of December 31, 1992, and the sum of its current plus accumulated profits is less than zero. Note that if instead of paying a dividend to Corporation A in 1992, Corporation B had made an additional investment of $150 in United States property under section 956, that amount would have been included in gross income by Corporation M under section 951(a)(1)(B) and Corporation M would have been deemed to have paid $50 of foreign income taxes paid by Corporation B. See sections 951(a)(1)(B) and 960. Foreign income taxes of Corporation B deemed paid by Corporation A and the opening balances in post-1986 undistributed earnings and post-1986 foreign income taxes for Corporation A and Corporation B for 1993 are computed as follows:

A. Corporation B (second-tier corporation):	
1. Assumed post-1986 undistributed earnings in Corporation B at start of 1992	200u
2. Assumed post-1986 foreign income taxes in Corporation B at start of 1992	$50
3. Assumed pre-tax earnings and profits of Corporation B for 1992	150u
4. Assumed foreign income taxes paid or accrued in 1992	50u
5. Post-1986 undistributed earnings in Corporation B for 1992 (pre-dividend) (Line 1 plus Line 3 minus Line 4)	300u
6. Post-1986 foreign income taxes in Corporation B for 1992 (pre-dividend) (Line 2 plus Line 4 translated at the appropriate exchange rates)	$100
7. Dividends paid out of post-1986 undistributed earnings of Corporation B to Corporation A in 1992	150u
8. Percentage of Corporation B's post-1986 undistributed earnings paid to Corporation A (Line 7 divided by Line 5)	50%
9. Foreign income taxes of Corporation B deemed paid by Corporation A under section 902(b)(1) (Line 6 multiplied by Line 8)	$50
10. Post-1986 undistributed earnings in Corporation B at start of 1993 (Line 5 minus Line 7)	150u
11. Post-1986 foreign income taxes in Corporation B at start of 1993 (Line 6 minus Line 9)	$50
B. Corporation A (first-tier corporation):	
1. Assumed post-1986 undistributed earnings in Corporation A at start of 1992	(200u)
2. Assumed post-1986 foreign income taxes in Corporation A at start of 1992	0
3. Assumed pre-tax earnings and profits of Corporation A for 1992 (including 150u dividend from Corporation B)	200u
4. Assumed foreign income taxes paid or accrued by Corporation A in 1992	40u
5. Foreign income taxes paid by Corporation B in 1992 that are deemed paid by Corporation A (Part A, Line 9 of paragraph (i) of this Example 4)	$50
6. Post-1986 undistributed earnings in Corporation A for 1992 (pre-dividend) (Line 1 plus Line 3 minus Line 4)	(40u)
7. Post-1986 foreign income taxes in Corporation A for 1992 (pre-dividend) (Line 2 plus	$90

Line 4 translated at the appropriate exchange rates plus Line 5)	
8. Dividends paid out of current earnings and profits of Corporation A for 1992	100u
9. Percentage of post-1986 undistributed earnings of Corporation A paid to Corporation M in 1992 (Line 8 divided by the greater of Line 6 or zero)	0
10. Foreign income taxes paid and deemed paid by Corporation A in 1992 that are deemed paid by Corporation M under section 902(a) (Line 7 multiplied by Line 9)	0
11. Post-1986 undistributed earnings in Corporation A at start of 1993 (line 6 minus line 8)	(140u)
12. Post-1986 foreign income taxes in Corporation A at start of 1993 (Line 7 minus Line 10)	$90

(ii) For 1993, Corporation A has 500u of earnings and profits on which it pays 160u of foreign income taxes. Corporation A receives no dividends from Corporation B, and pays a 100u dividend to Corporation M. The 100u dividend to Corporation M carries with it some of the foreign income taxes paid and deemed paid by Corporation A in 1992, which were not deemed paid by Corporation M in 1992 because Corporation A had no post-1986 undistributed earnings. Thus, for 1993, Corporation M is deemed to have paid $125 of post-1986 foreign income taxes paid and deemed paid by Corporation A and includes that amount in gross income as a dividend under section 78, determined as follows:

1. Post-1986 undistributed earnings in Corporation A at start of 1993	(140u)
2. Post-1986 foreign income taxes in Corporation A at start of 1993	$90
3. Pre-tax earnings and profits of Corporation A for 1993	500u
4. Foreign income taxes paid or accrued by Corporation A in 1993	160u
5. Post-1986 undistributed earnings in Corporation A for 1993 (pre-dividend) (Line 1 plus Line 3 minus Line 4)	200u
6. Post-1986 foreign income taxes in Corporation A for 1993 (pre-dividend) (Line 2 plus Line 4 translated at the appropriate exchange rates)	$250
7. Dividends paid out of post-1986 undistributed earnings of Corporation A to Corporation M in 1993	100u
8. Percentage of post-1986 undistributed earnings of Corporation A paid to Corporation M in 1993 (Line 7 divided by Line 5)	50%
9. Foreign income taxes paid and deemed paid by Corporation A that are deemed paid by Corporation M in 1993 (Line 6 multiplied by Line 8)	$125
10. Post-1986 undistributed earnings in Corporation A at start of 1994 (Line 5 minus Line 7)	100u
11. Post-1986 foreign income taxes in Corporation A at start of 1994 (Line 6 minus	$125

Line 9)

Example 5. (i) Since 1987, domestic corporation M has owned 100 percent of the voting stock of controlled foreign corporation A. Corporation M also conducts operations through a foreign branch. Both Corporation A and Corporation M use the calendar year as the taxable year. Corporation A uses the u as its functional currency and 1u equals $1 at all relevant times. Corporation A has no subpart F income, as defined in section 952, and no increase in earnings invested in United States property under section 956 for 1992. Corporation A also has no previously taxed income accounts. Corporation A has general limitation income and high withholding tax interest income that, by operation of section 954(b)(4), does not constitute foreign base company income under section 954(a). Because Corporation A is a controlled foreign corporation, it is not required to reduce post-1986 foreign income taxes by foreign taxes paid or accrued with respect to high withholding tax interest in excess of 5 percent. See § 1.902-1(a)(8)(iii). Corporation A pays a 60u dividend to Corporation M in 1992. For 1992, Corporation M is deemed, under paragraph (b) of this section, to have paid $24 of the post-1986 foreign income taxes paid by Corporation A and includes that amount in gross income under section 78 as a dividend, determined as follows:

1. Assumed post-1986 undistributed earnings in Corporation A at start of 1992 attributable to:	
(a) Section 904(d)(1)(B) high withholding tax interest	20u
(b) Section 904(d)(1)(I) general limitation income	55u
2. Assumed post-1986 foreign income taxes in Corporation A at start of 1992 attributable to:	
(a) Section 904(d)(1)(B) high withholding tax interest	$5
(b) Section 904(d)(1)(I) general limitation income	$20
3. Assumed pre-tax earnings and profits of Corporation A for 1992 attributable to:	
(a) Section 904(d)(1)(B) high withholding tax interest	20u
(b) Section 904(d)(1)(I) general limitation income	20u
4. Assumed foreign income taxes paid or accrued in 1992 on or with respect to:	
(a) Section 904(d)(1)(B) high withholding tax interest	10u
(b) Section 904(d)(1)(I) general limitation income	5u
5. Post-1986 undistributed earnings in Corporation A for 1992 (pre-dividend) attributable to:	
(a) Section 904(d)(1)(B) high withholding tax interest (Line 1(a) + Line 3(a) minus Line 4(a))	30u
(b) Section 904(d)(1)(I) general limitation income (Line 1(b) + Line 3(b) minus Line 4(b))	70u

(c) Total	100u
6. Post-1986 foreign income taxes in Corporation A for 1992 (pre-dividend) attributable to:	
(a) Section 904(d)(1)(B) high withholding tax interest (Line 2(a) + Line 4(a) translated at the appropriate exchange rates)	$15
(b) Section 904(d)(1)(I) general limitation income (Line 2(b) + Line 4(b) translated at the appropriate exchange rates)	$25
7. Dividends paid to Corporation M in 1992	60u
8. Dividends paid to Corporation M in 1992 attributable to section 904(d) separate categories pursuant to § 1.904-5(d):	
(a) Dividends paid to Corporation M in 1992 attributable to section 904(d)(1)(B) high withholding tax interest (Line 7 multiplied by Line 5(a) divided by Line 5(c))	18u
(b) Dividends paid to Corporation M in 1992 attributable to section 904(d)(1)(I) general limitation income (Line 7 multiplied by Line 5(b) divided by Line 5(c))	42u
9. Percentage of Corporation A's post-1986 undistributed earnings for 1992 paid to Corporation M attributable to:	
(a) Section 904(d)(1)(B) high withholding tax interest (Line 8(a) divided by Line 5(a))	60%
(b) Section 904(d)(1)(I) general limitation income (Line 8(b) divided by Line 5(b))	60%
10. Foreign income taxes of Corporation A deemed paid by Corporation M under section 902(a) attributable to:	
(a) Foreign income taxes of Corporation A deemed paid by Corporation M under section 902(a) with respect to section 904(d)(1)(B) high withholding tax interest (Line 6(a) multiplied by Line 9(a))	$9
(b) Foreign income taxes of Corporation A deemed paid by Corporation M under section 902(a) with respect to section 904(d)(1)(I) general limitation income (Line 6(b) multiplied by Line 9(b))	$15
11. Post-1986 undistributed earnings in Corporation A at start of 1993 attributable to:	
(a) Section 904(d)(1)(B) high withholding tax interest (Line 5(a) minus Line 8(a))	12u
(b) Section 904(d)(1)(I) general limitation income (Line 5(b) minus Line 8(b))	28u
12. Post-1986 foreign income taxes in Corporation A at start of 1989 allocable to:	
(a) Section 904(d)(1)(B) high withholding tax interest (Line 6(a) minus Line 10(a))	$6
(b) Section 904(d)(1)(I) general limitation income (Line 6(b) minus Line 10(b))	$10

(ii) For purposes of computing Corporation M's foreign tax credit limitation, the post-1986 foreign income taxes of Corporation A deemed paid by Corporation M with respect to income in separate categories will be added to the foreign income taxes paid or accrued by Corporation M associated with income derived from Corporation M's branch operation in the same separate categories. The dividend (and the section 78 inclusion with respect to the dividend) will be treated as income in separate categories and added to Corporation M's other income, if any, attributable to the same separate categories. See section 904(d) and § 1.904-6.

(g) ***Effective/applicability dates.*** This section applies to any distribution made in and after a foreign corporation's first taxable year beginning on or after January 1, 1987, except that the provisions of paragraphs (a)(4)(ii), (a)(6), (a)(7), (a)(8)(i), and (c)(8) of this section and, except as provided in § 1.904-7(f)(9), the provisions of paragraph (d) of this section apply to distributions made in taxable years of foreign corporations ending on or after April 20, 2009. *See* 26 CFR 1.902-1T(a)(4)(ii), (a)(6), (a)(7), (a)(8)(i), and (c)(8) (revised as of April 1, 2009) for rules applicable to distributions made in taxable years of foreign corporations beginning after April 25, 2006, and ending before April 20, 2009, and 26 CFR 1.902-1T(d), except as provided in 26 CFR 1.904-7T(f)(9) (revised as of April 1, 2009), for rules applicable to distributions made in taxable years of foreign corporations beginning after December 31, 2002, and ending before April 20, 2009.

[T.D. 8708, 62 FR 928, Jan. 7, 1997, as amended by T.D. 8916, 66 FR 274, Jan. 3, 2001; T.D. 9260, 71 FR 24526, Apr. 25, 2006; 71 FR 77264, Dec. 26, 2006; T.D. 9452, 74 FR 27875, June 11, 2009; T.D. 9954, 86 FR 52614, Sept. 22, 2021]

§ 1.902-2 Treatment of deficits in post-1986 undistributed earnings and pre-1987 accumulated profits of a first- or lower-tier corporation for purposes of computing an amount of foreign taxes deemed paid under § 1.902-1.

(a) ***Carryback of deficits in post-1986 undistributed earnings of a first- or lower-tier corporation to pre-effective date taxable years —***

(1) ***Rule.*** For purposes of computing foreign income taxes deemed paid under § 1.902-1(b) with respect to dividends paid by a first- or lower-tier corporation, when there is a deficit in the post-1986 undistributed earnings of that corporation and the corporation makes a distribution to shareholders that is a dividend or would be a dividend if there were current or accumulated earnings and profits, then the post-1986 deficit shall be carried back to the most recent pre-effective date taxable year of the first- or lower-tier corporation with positive accumulated profits computed under section 902. See § 1.902-3(e). For purposes of this § 1.902-2, a pre-effective date taxable year is a taxable year beginning before January 1, 1987, or a taxable year beginning after December 31, 1986, if the special effective date of § 1.902-1(a)(13) applies. The deficit shall reduce the section 902 accumulated profits in the most recent pre-effective date year to the extent thereof, and any remaining deficit shall be carried back to the next preceding year or years until the deficit is completely allocated. The amount carried back shall reduce the deficit in post-1986 undistributed earnings. Any foreign income taxes paid in a post-effective date year will not be carried back to pre-effective date taxable years or removed from post-1986 foreign income taxes. See section 960 and the regulations under that section for rules governing the carryback of deficits and the computation of foreign income taxes deemed paid with respect to deemed income inclusions from controlled foreign corporations.

(2) ***Examples.*** The following examples illustrate the rules of this paragraph (a):

> *Example 1.* (i) From 1985 through 1990, domestic corporation M owns 10 percent of the one class of stock of foreign corporation A. The remaining 90 percent of Corporation A's stock is owned by Z, a foreign corporation. Corporation A is not a controlled foreign corporation and uses the u as its functional currency. 1u equals $1 at all relevant times. Both Corporation A and Corporation M use the calendar year as the taxable year. Corporation A has pre-1987 accumulated profits and post-1986 undistributed earnings or deficits in post-1986 undistributed earnings, pays pre-1987 and post-1986 foreign income taxes, and pays

dividends as summarized below:

Taxable year	1985	1986	1987	1988	1989	1990
Current E & P (Deficits) of Corp. A	150u	150u	(100u)	100u	0	0
Current Plus Accumulated E & P of Corp. A	150u	300u	200u	250u	250u	200u
Post-'86 Undistributed Earnings of Corp. A			(100u)	100u	100u	50u
Post-'86 Undistributed Earnings of Corp. A Reduced By Current Year Dividend Distributions (increased by deficit carryback)			0	100u	50u	50u
Foreign Income Taxes of Corp. A (Annual)	120u	120u	$10	$50	0	0
Post-'86 Foreign Income Taxes of Corp. A			$10	$60	$60	$30
12/31 Distributions to Corp. M	0	0	5u	0	5u	0
12/31 Distributions to Corp. Z	0	0	45u	0	45u	0

(ii) On December 31, 1987, Corporation A distributes a 5u dividend to Corporation M and a 45u dividend to Corporation Z. At that time Corporation A has a deficit of (100u) in post-1986 undistributed earnings and $10 of post-1986 foreign income taxes. The (100u) deficit (but not the post-1986 foreign income taxes) is carried back to offset the accumulated profits of 1986 and removed from post-1986 undistributed earnings. The accumulated profits for 1986 are reduced to 50u (150u−100u). The dividend is paid out of the reduced 1986 accumulated profits. Foreign taxes deemed paid by Corporation M with respect to the 5u dividend are 12u (120u × (5u / 50u)). See § 1.902-1(b)(3). Corporation M must include 12u in gross income (translated under the rule applicable to foreign income taxes paid on earnings accumulated in pre-effective date years) under section 78 as a dividend. Both the income inclusion and the foreign taxes deemed paid are subject to a separate limitation for dividends from Corporation A, a noncontrolled section 902 corporation. No accumulated profits remain in Corporation A with respect to 1986 after the carryback of the 1987 deficit and the December 31, 1987, dividend distributions to Corporations M and Z.

(iii) On December 31, 1989, Corporation A distributes a 5u dividend to Corporation M and a 45u dividend to Corporation Z. At that time Corporation A has 100u of post-1986 undistributed earnings and $60 of post-1986 foreign income taxes. Therefore, the dividend is considered paid out of Corporation A's post-1986 undistributed earnings. Foreign taxes deemed paid by Corporation M with respect to the 5u dividend are $3 ($60 × 5%[5u / 100u]). Corporation M must include $3 in gross income under section 78 as a dividend. Both the income inclusion and the foreign taxes deemed paid are subject to a separate limitation for dividends from noncontrolled section 902 corporation A. Corporation A's post-1986 undistributed earnings as of January 1, 1990, are 50u (100u−50u). Corporation A's post-1986 foreign income taxes must be reduced by the amount of foreign taxes that would have been deemed paid if both Corporations M and Z were eligible to compute an amount of deemed

paid taxes. Section 1.902-1(a)(8)(i). The amount of foreign income taxes that would have been deemed paid if both Corporations M and Z were eligible to compute an amount of deemed paid taxes on the 50u dividend distributed by Corporation A is $30 ($60 × 50%[50u / 100u]). Thus, post-1986 foreign income taxes as of January 1, 1990, are $30 ($60−$30).

Example 2. The facts are the same as in *Example 1,* except that Corporation A has a deficit in its post-1986 undistributed earnings of (150u) on December 31, 1987. The deficit is carried back to 1986 and reduces accumulated profits for that year to -0-. Thus, the foreign income taxes paid with respect to the 1986 accumulated profits will never be deemed paid. The 1987 dividend is deemed to be out of Corporation A's 1985 accumulated profits. Foreign taxes deemed paid by Corporation M under section 902 with respect to the 5u dividend paid on December 31, 1987, are 4u (120u × 5u / 150u). See § 1.902-1(b)(3). As a result of the December 31, 1987, dividend distributions, 100u (150u−50u) of accumulated profits and 80u (120u reduced by 40u[120u × 50u / 150u] of foreign taxes that would have been deemed paid had all of Corporation A's shareholders been eligible to compute an amount of foreign taxes deemed paid with respect to the dividend paid out of 1985 accumulated profits) remain in Corporation A with respect to 1985.

Example 3. (i) From 1986 through 1991, domestic corporation M owns 10 percent of the one class of stock of foreign corporation A. The remaining 90 percent of Corporation A's stock is owned by Corporation Z, a foreign corporation. Corporation A is not a controlled foreign corporation and uses the u as its functional currency. 1u equals $1 at all relevant times. Both Corporation A and Corporation M use the calendar year as the taxable year. Corporation A has pre-1987 accumulated profits and post-1986 undistributed earnings or deficits in post-1986 undistributed earnings, pays pre-1987 and post-1986 foreign income taxes, and pays dividends as summarized below:

Taxable year	1986	1987	1988	1989	1990	1991
Current E & P (Deficits) of Corp. A	100u	(50u)	150u	75u	25u	0
Current Plus Accumulated E & P of Corp. A	100u	50u	200u	175u	200u	80u
Post-'86 Undistributed Earnings of Corp. A		(50u)	100u	75u	100u	0
Post-'86 Undistributed Earnings of Corp. A Reduced By Current Year Dividend Distributions (increased by deficit carryback)		(50u)	0	75u	0	0
Foreign Income Taxes (Annual) of Corp. A	80u	0	$120	$20	$20	0
Post-'86 Foreign Income Taxes of Corp. A		0	$120	$20	$40	0
12/31 Distributions to Corp. M	0	0	10u	0	12u	0

12/31 Distributions to Corp. Z	0	0	90u	0	108u	0

(ii) On December 31, 1988, Corporation A distributes a 10u dividend to Corporation M and a 90u dividend to Corporation Z. At that time Corporation A has 100u in its post-1986 undistributed earnings and $120 in its post-1986 foreign income taxes. Corporation M is deemed, under § 1.902-1(b)(1), to have paid $12 ($120 × 10%[10u / 100u]) of the post-1986 foreign income taxes paid by Corporation A and includes that amount in gross income under section 78 as a dividend. Both the income inclusion and the foreign taxes deemed paid are subject to a separate limitation for dividends from noncontrolled section 902 corporation A. Corporation A's post-1986 undistributed earnings as of January 1, 1989, are 0 (100u-100u). Its post-1986 foreign taxes as of January 1, 1989, also are 0, $120 reduced by $120 of foreign income taxes paid that would have been deemed paid if both Corporations M and Z were eligible to compute an amount of foreign taxes deemed paid on the dividend from Corporation A ($120 × 100%[100u / 100u]).

(iii) On December 31, 1990, Corporation A distributes a 12u dividend to Corporation M and a 108u dividend to Corporation Z. At that time Corporation A has 100u in its post-1986 undistributed earnings and $40 in its post-1986 foreign income taxes. The dividend is paid out of post-1986 undistributed earnings to the extent thereof (100u), and the remainder of 20u is paid out of 1986 accumulated profits. Under § 1.902-1(b)(2), the 12u dividend to Corporation M is deemed to be paid out of post-1986 undistributed earnings to the extent of 10u (100u × 12u / 120u) and the remaining 2u is deemed to be paid out of Corporation A's 1986 accumulated profits. Similarly, the 108u dividend to Corporation Z is deemed to be paid out of post-1986 undistributed earnings to the extent of 90u (100u × 108u / 120u) and the remaining 18u is deemed to be paid out of Corporation A's 1986 accumulated profits. Foreign income taxes deemed paid by Corporation M under section 902 with respect to the portion of the dividend paid out of post-1986 undistributed earnings are $4 ($40 × 10%[10u / 100u]), and foreign taxes deemed paid by Corporation M with respect to the portion of the dividend deemed paid out of 1986 accumulated profits are 1.6u (80u × 2u / 100u). Corporation M must include $4 plus 1.6u translated under the rule applicable to foreign income taxes paid on earnings accumulated in taxable years prior to the effective date of the Tax Reform Act of 1986 in gross income as a dividend under section 78. The income inclusion and the foreign income taxes deemed paid are subject to a separate limitation for dividends from noncontrolled section 902 Corporation A. As of January 1, 1991, Corporation A's post-1986 undistributed earnings are 0 (100u-100u). 80u (100u-20u) of accumulated profits remain with respect to 1986. Post-1986 foreign income taxes as of January 1, 1991, are 0, $40 reduced by $40 of foreign income taxes paid that would have been

deemed paid if both Corporations M and Z were eligible to compute an amount of deemed paid taxes on the 100u dividend distributed by Corporation A out of post-1986 undistributed earnings ($40 × 100%[100u / 100u]). Corporation A has 64u of foreign income taxes remaining with respect to 1986, 80u reduced by 16u [80u × 20u / 100u] of foreign income taxes that would have been deemed paid if Corporations M and Z both were eligible to compute an amount of deemed paid taxes on the 20u dividend distributed by Corporation A out of 1986 accumulated profits.

(b) ***Carryforward of deficit in pre-1987 accumulated profits of a first- or lower-tier corporation to post-1986 undistributed earnings for purposes of section 902*** —

(1) ***General rule.*** For purposes of computing foreign income taxes deemed paid under § 1.902-1(b) with respect to dividends paid by a first- or lower-tier corporation out of post-1986 undistributed earnings, the amount of a deficit in accumulated profits of the foreign corporation determined under section 902 as of the end of its last pre-effective date taxable year is carried forward and reduces post-1986 undistributed earnings on the first day of the foreign corporation's first taxable year beginning after December 31, 1986, or on the first day of the first taxable year in which the ownership requirements of section 902(c)(3)(B) and § 1.902-1(a)(1) through (4) are met if the special effective date of § 1.902-1(a)(13) applies. Any foreign income taxes paid with respect to a pre-effective date year shall not be carried forward and included in post-1986 foreign income taxes. Post-1986 undistributed earnings may not be reduced by the amount of a pre-1987 deficit in earnings and profits computed under section 964(a). See section 960 and the regulations under that section for rules governing the carryforward of deficits and the computation of foreign income taxes deemed paid with respect to deemed income inclusions from controlled foreign corporations. For translation rules governing carryforwards of deficits in pre-1987 accumulated profits to post-1986 taxable years of a foreign corporation with a dollar functional currency, see § 1.985-6(d)(2).

(2) ***Effect of pre-effective date deficit.*** If a foreign corporation has a deficit in accumulated profits as of the end of its last pre-effective date taxable year, then the foreign corporation cannot pay a dividend out of pre-effective date years unless there is an adjustment made (for example, a refund of foreign taxes paid) that restores section 902 accumulated profits to a pre-effective date taxable year or years. Moreover, if a foreign corporation has a deficit in section 902 accumulated profits as of the end of its last pre-effective date taxable year, then no deficit in post-1986 undistributed earnings will be carried back under paragraph (a) of this section. For rules concerning carrybacks of eligible deficits from post-1986 undistributed earnings to reduce pre-1987 earnings and profits computed under section 964(a), see section 960 and the regulations under that section.

(3) ***Examples.*** The following examples illustrate the rules of this paragraph (b):

Example 1. (i) From 1984 through 1988, domestic corporation M owns 10 percent of the one class of stock of foreign corporation A. The remaining 90 percent of Corporation A's stock is owned by Corporation Z, a foreign corporation. Corporation A is not a controlled foreign corporation and uses the u as its functional currency. 1u equals $1 at all relevant times. Both Corporation A and Corporation M use the calendar year as the taxable year. Corporation A has pre-1987 accumulated profits or deficits in accumulated profits and post-1986 undistributed earnings, pays pre-1987 and post-1986 foreign income

taxes, and pays dividends as summarized below:

Taxable year	1984	1985	1986	1987	1988
Current E & P (Deficits) of Corp. A	25u	(100u)	(25u)	200u	100u
Current Plus Accumulated E & P (Deficits) of Corp. A	25u	(75u)	(100u)	100u	50u
Post-'86 Undistributed Earnings of Corp. A				100u	50u
Post-'86 Undistributed Earnings of Corp. A Reduced By Current Year Dividend Distributions (reduced by deficit carryforward)				(50u)	50u
Foreign Income Taxes (Annual) of Corp. A	20u	5u	0	$100	$50
Post-'86 Foreign Income Taxes of Corp. A				$100	$50
12/31 Distributions to Corp. M	0	0	0	15u	0
12/31 Distributions to Corp. Z	0	0	0	135u	0

(ii) On December 31, 1987, Corporation A distributes a 150u dividend, 15u to Corporation M and 135u to Corporation Z. Corporation A has 200u of current earnings and profits for 1987, but its post-1986 undistributed earnings are only 100u as a result of the reduction for pre-1987 accumulated deficits required under paragraph (b)(1) of this section. Corporation A has $100 of post-1986 foreign income taxes. Only 100u of the 150u distribution is a dividend out of post-1986 undistributed earnings. Foreign income taxes deemed paid by Corporation M in 1987 with respect to the 10u dividend attributable to post-1986 undistributed earnings, computed under § 1.902-1(b), are $10 ($100 × 10%[10u/100u]). Corporation M includes this amount in gross income under section 78 as a dividend. Both the income inclusion and the foreign taxes deemed paid are subject to a separate limitation for dividends from noncontrolled section 902 corporation A. After the distribution, Corporation A has (50u) of post-1986 undistributed earnings (100u −150u) and -0- post-1986 foreign income taxes, $100 reduced by $100 of foreign income taxes paid that would have been deemed paid if both Corporations M and Z were eligible to compute an amount of deemed paid taxes on the 100u dividend distributed by Corporation A out of post-1986 undistributed earnings ($100 × 100%[100u / 100u]).
(iii) The remaining 50u of the 150u distribution cannot be deemed paid out of accumulated profits of a pre-1987 year because Corporation A has an accumulated deficit as of the end of 1986 that eliminated all pre-1987 accumulated profits. See paragraph (b)(2) of this section. The 50u is a dividend out of current earnings and profits under section 316(a)(2), but Corporation M is not deemed to have paid any additional foreign income taxes paid by Corporation A with respect to that 50u dividend out of current earnings and profits. See § 1.902-1(b)(4).

Example 2. (i) From 1986 through 1991, domestic corporation M owns 10 percent of the one class of stock of foreign corporation A. The remaining 90 percent of Corporation A's stock is owned by Corporation Z, a foreign corporation. Corporation A is not a controlled foreign corporation and uses the u as its functional currency. 1u equals $1 at all relevant times. Both Corporation A and Corporation M use the

calendar year as the taxable year. Corporation A has pre-1987 accumulated profits or deficits in accumulated profits and post-1986 undistributed earnings, pays post-1986 foreign income taxes, and pays dividends as summarized below:

Taxable year	1986	1987	1988	1989	1990
Current E & P (Deficits) of Corp. A	(100u)	150u	(150u)	100u	250u
Current Plus Accumulated E & P (Deficits) of Corp. A	(100u)	50u	(200u)	(100u)	50u
Post-'86 Undistributed Earnings of Corp. A		50u	(200u)	(100u)	50u
Post-'86 Undistributed Earnings of Corp. A Reduced By Current Year Dividend Distributions (reduced by deficit carryforward)		(50u)	(200u)	(200u)	0
Foreign Income Taxes (Annual) of Corp. A	0	$120	0	$50	$100
Post-'86 Foreign Income Taxes of Corp. A		$120	0	$50	$150
12/31 Distributions to Corp. M	0	10u	0	10u	5u
12/31 Distributions to Corp. Z	0	90u	0	90u	45u

(ii) On December 31, 1987, Corporation A distributes a 10u dividend to Corporation M and a 90u dividend to Corporation Z. At the time of the distribution, Corporation A has 50u of post-1986 undistributed earnings and 150u of current earnings and profits. Thus, 50u of the dividend distribution (5u to Corporation M and 45u to Corporation Z) is a dividend out of post-1986 undistributed earnings. The remaining 50u is a dividend out of current earnings and profits under section 316(a)(2), but Corporation M is not deemed to have paid any additional foreign income taxes paid by Corporation A with respect to that 50u dividend out of current earnings and profits. See § 1.902-1(b)(4). Note that even if there were no current earnings and profits in Corporation A, the remaining 50u of the 100u distribution cannot be deemed paid out of accumulated profits of a pre1987 year because Corporation A has an accumulated deficit as of the end of 1986 that eliminated all pre-1987 accumulated profits. See paragraph (b)(2) of this section. Corporation A has $120 of post-1986 foreign income taxes. Foreign taxes deemed paid by Corporation M under section 902 with respect to the 5u dividend out of post-1986 undistributed earnings are $12 ($120 × 10%[5u/50u]). Corporation M includes this amount in gross income as a dividend under section 78. Both the foreign taxes deemed paid and the deemed dividend are subject to a separate limitation for dividends from noncontrolled section 902 corporation A. As of January 1, 1988, Corporation A has (50u) in its post-1986 undistributed earnings (50u−100u) and -0- in its post-1986 foreign income taxes, $120 reduced by $120 of foreign taxes that would have been deemed paid if both Corporations M and Z were eligible to compute an amount of deemed paid taxes on the dividend distributed by Corporation A out of post-1986 undistributed earnings ($120 × 100%[50u / 50u]).
(iii) On December 31, 1989, Corporation A distributes a 10u dividend to Corporation M and a 90u dividend to Corporation Z. Although the distribution is considered a dividend in its entirety out of 1989 earnings and profits pursuant to section 316(a)(2), post-1986 undistributed earnings are (100u). Accordingly, for

purposes of section 902, Corporation M is deemed to have paid no post-1986 foreign income taxes. See § 1.902-1(b)(4). Corporation A's post-1986 undistributed earnings as of January 1, 1990, are (200u) ((100u) − 100u). Corporation A's post-1986 foreign income taxes are not reduced because no taxes were deemed paid.

(iv) On December 31, 1990, Corporation A distributes a 5u dividend to Corporation M and a 45u dividend to Corporation Z. At that time Corporation A has 50u of post-1986 undistributed earnings, and $150 of post-1986 foreign income taxes. Foreign taxes deemed paid by Corporation M under section 902 with respect to the 5u dividend are $15 ($150 × 10%[5u / 50u]). Post-1986 undistributed earnings as of January 1, 1991, are -0- (50u − 50u). Post-1986 foreign income taxes as of January 1, 1991, also are -0-, $150 reduced by $150 ($150 × 100%[50u / 50u]) of foreign income taxes that would have been deemed paid if both Corporations M and Z were eligible to compute an amount of deemed paid taxes on the 50u dividend.

[T.D. 8708, 62 FR 937, Jan. 7, 1997, as amended by T.D. 9260, 71 FR 24526, Apr. 25, 2006; 71 FR 77265, Dec. 26, 2006]

§ 1.902-3 Credit for domestic corporate shareholder of a foreign corporation for foreign income taxes paid with respect to accumulated profits of taxable years of the foreign corporation beginning before January 1, 1987.

(a) ***Definitions.*** For purposes of section 902 and §§ 1.902-3 and 1.902-4:

(1) ***Domestic shareholder.*** In the case of dividends received by a domestic corporation after December 31, 1964, from a foreign corporation, the term “domestic shareholder” means a domestic corporation which owns at least 10 percent of the voting stock of the foreign corporation at the time it receives a dividend from such foreign corporation.

(2) ***First-tier corporation.*** In the case of dividends received by a domestic shareholder after December 31, 1964, from a foreign corporation, the term “first-tier corporation” means a foreign corporation at least 10 percent of the voting stock of which is owned by a domestic shareholder at the time it receives a dividend from such foreign corporation. The term “first-tier corporation” also means a DISC or former DISC, but only with respect to dividends from the DISC or former DISC to the extent they are treated under sections 861(a)(2)(D) and 862(a)(2) as income from sources without the United States.

(3) ***Second-tier corporation.***

(i) In the case of dividends paid to a first-tier corporation by a foreign corporation after January 12, 1971 (i.e., the date of enactment of Pub. L. 91-684, 84 Stat. 2068), but only for purposes of applying this section for a taxable year of a domestic shareholder ending after that date, the foreign corporation is a “second-tier corporation” if at least 10 percent of its voting stock is owned by the first-tier corporation at the time the first-tier corporation receives the dividend.

(ii) In the case of dividends paid to a first-tier corporation by a foreign corporation after January 12, 1971, but only for purposes of applying this section for a taxable year of a domestic shareholder ending before January 13, 1971, or in the case of any dividend paid to a first-tier corporation by a foreign corporation before January 13, 1971, the foreign corporation is a “second-tier corporation” if at least 50 percent of its voting stock is owned by the first-tier corporation at the time the first-tier corporation receives the dividend.

(4) ***Third-tier corporation.*** In the case of dividends paid to a second-tier corporation (as defined in paragraph (a)(3) (i) or (ii) of this section) by a foreign corporation after January 12, 1971, but only for purposes of applying this section for a taxable year of a domestic shareholder ending after that date, the foreign corporation is a "third-tier corporation" if at least 10 percent of its voting stock is owned by the second-tier corporation at the time the second-tier corporation receives the dividend.

(5) ***Foreign income taxes.*** The term "foreign income taxes" means income, war profits, and excess profits taxes, and taxes included in the term "income, war profits, and excess profits taxes" by reason of section 903, imposed by a foreign country or a possession of the United States.

(6) ***Dividend.*** For the definition of the term "dividend" for purposes of applying section 902 and this section, see section 316 and the regulations thereunder.

(7) ***Dividend received.*** A dividend shall be considered received for purposes of section 902 and this section when the cash or other property is unqualifiedly made subject to the demands of the distributee. See § 1.301-1(c).

(b) ***Domestic shareholder owning stock in a first-tier corporation*** —

(1) ***In general.***

(i) If a domestic shareholder receives dividends in any taxable year from its first-tier corporation, the credit for foreign income taxes allowed by section 901 includes, subject to the conditions and limitations of this section, the foreign income taxes deemed, in accordance with paragraph (b)(2) of this section, to be paid by such domestic shareholder for such year.

(ii) If dividends are received by a domestic shareholder from more than one first-tier corporation, the taxes deemed to be paid by such shareholder under section 902(a) and this paragraph (b) shall be computed separately with respect to the dividends received from each of such first-tier corporations.

(iii) Any taxes deemed paid by a domestic shareholder for the taxable year pursuant to section 902(a) and paragraph (b)(2) of this section shall, except as provided in § 1.960-3(b), be included in the gross income of such shareholder for such year as a dividend pursuant to section 78 and § 1.78-1. For the source of such a section 78 dividend, see paragraph (h)(1) of this section.

(iv) Any taxes deemed, under paragraph (b)(2) of this section, to be paid by the domestic shareholder shall be deemed to be paid by such shareholder only for purposes of the foreign tax credit allowed under section 901. See section 904 for other limitations on the amount of the credit.

(v) For rules relating to reduction of the amount of foreign income taxes deemed paid or accrued with respect to foreign mineral income, see section 901(e) and § 1.901-3.

(vi) For the nonrecognition as a foreign income tax for purposes of this section of certain income, profits, or excess profits taxes paid or accrued to a foreign country in connection with the purchase and sale of oil or gas extracted in such country, see section 901(f) and the regulations thereunder.

(vii) For rules relating to reduction of the amount of foreign income taxes deemed paid with respect to foreign oil and gas extraction income, see section 907(a) and the regulations thereunder.

(viii) See the regulations under sections 960, 962, and 963 for special rules relating to the application of section 902 in computing the foreign tax credit of United States shareholders of controlled foreign corporations.

(2) ***Amount of foreign taxes deemed paid by a domestic shareholder.*** To the extent dividends are paid by a first-tier corporation to its domestic shareholder out of accumulated profits, as defined in paragraph (e) of this section, for any taxable year, the domestic shareholder shall be deemed to have paid the same proportion of any foreign income taxes paid, accrued or deemed, in accordance with paragraph (c)(2) of this section, to be paid by such first-tier corporation on or with respect to such accumulated profits for such year which the amount of such dividends (determined without regard to the gross-up under section 78) bears to the amount by which such accumulated profits exceed the amount of such taxes (other than those deemed, under paragraph (c)(2) of this section, to be paid). For determining the amount of foreign income taxes paid or accrued by such first-tier corporation on or with respect to the accumulated profits for the taxable year of such first-tier corporation, see paragraph (f) of this section.

(c) ***First-tier corporation owning stock in a second-tier corporation*** —

(1) ***In general.*** For purposes of applying section 902(a) and paragraph (b)(2) of this section, if a first-tier corporation receives dividends in any taxable year from its second-tier corporation, the foreign income taxes deemed to be paid by the first-tier corporation on or with respect to its own accumulated profits for such year shall be the amount determined in accordance with paragraph (c)(2) of this section. This paragraph (c) shall not apply unless the product of—

(i) The percentage of voting stock owned by the domestic shareholder in the first-tier corporation at the time that the domestic shareholder receives dividends from the first-tier corporation in respect of which foreign income taxes are deemed to be paid by the domestic shareholder under paragraph (b)(1) of this section, and

(ii) The percentage of voting stock owned by the first-tier corporation in the second-tier corporation equals at least 5 percent. The percentage under paragraph (c)(1)(ii) of this section of voting stock owned by the first-tier corporation in the second-tier corporation is determined as of the time that the dividend distributed by the second-tier corporation is received by the first-tier corporation and thus included in accumulated profits of the first-tier corporation out of which dividends referred to in paragraph (c)(1)(i) of this section are distributed by the first-tier corporation to the domestic shareholder.

Example. On February 10, 1976, foreign corporation B pays a dividend out of its accumulated profits for 1975 to foreign corporation A. On February 16, 1976, the date on which it receives the dividend, A Corporation owns 40 percent of the voting stock of B Corporation. Both corporations use the calendar year as the taxable year. On June 1, 1976, A Corporation sells its stock in B Corporation. On January 17, 1977, A Corporation pays a dividend out of its accumulated profits for 1976 to domestic corporation M. M Corporation owns 30 percent of the voting stock of A Corporation on January 20, 1977, the date on which it receives the dividend. M Corporation uses a fiscal year ending on April 30 as the taxable year. On February 16, 1976, A Corporation satisfies the 10-percent stock ownership requirement referred to in paragraph (a)(3) of this section with respect to B Corporation, and on January 20, 1977, M Corporation satisfies the 10-percent stock-ownership requirement referred to in paragraph (a)(2) of this section with respect to A Corporation. The 5-percent requirement of this paragraph (c)(1) is also satisfied since 30 percent (the percentage of voting stock owned by M Corporation in A Corporation on January 20, 1977), when multiplied by 40 percent (the percentage of voting

stock owned by A Corporation in B Corporation on February 16, 1976), equals 12 percent. Accordingly, for its taxable year ending on April 30, 1977, M Corporation is entitled to a credit for a portion of the foreign income taxes paid, accrued, or deemed to be paid, by A Corporation for 1976; and for 1976 A Corporation is deemed to have paid a portion of the foreign income taxes paid or accrued by B Corporation for 1975.

(2) ***Amount of foreign taxes deemed paid by a first-tier corporation.*** A first-tier corporation which receives dividends in any taxable year from its second-tier corporation shall be deemed to have paid for such year the same proportion of any foreign income taxes paid, accrued, or deemed, in accordance with paragraph (d)(2) of this section, to be paid by its second-tier corporation on or with respect to the accumulated profits, as defined in paragraph (e) of this section, for the taxable year of the second-tier corporation from which such dividends are paid which the amount of such dividends bears to the amount by which such accumulated profits of the second-tier corporation exceed the taxes so paid or accrued. For determining the amount of the foreign income taxes paid or accrued by such second-tier corporation on or with respect to the accumulated profits for the taxable year of such second-tier corporation, see paragraph (f) of this section.

(d) ***Second-tier corporation owning stock in a third-tier corporation*** —

(1) ***In general.*** For purposes of applying section 902(b)(1) and paragraph (c)(2) of this section, if a second-tier corporation receives dividends in any taxable year from its third-tier corporation, the foreign income taxes deemed to be paid by the second-tier corporation on or with respect to its own accumulated profits for such year shall be the amount determined in accordance with paragraph (d)(2) of this section. This paragraph (d) shall not apply unless the product of—

(i) The percentage of voting stock arrived at in applying the 5-percent requirement of paragraph (c)(1) of this section with respect to dividends received by the first-tier corporation from the second-tier corporation, and

(ii) the percentage of voting stock owned by the second-tier corporation in the third-tier corporation equals at least 5 percent. The percentage under paragraph (d)(1)(ii) of this section of voting stock owned by the second-tier corporation in the third-tier corporation is determined as of the time that the dividend distributed by the third-tier corporation is received by the second-tier corporation and thus included in accumulated profits of the second-tier corporation out of which dividends referred to in paragraph (d)(1)(i) of this section are distributed by the second-tier corporation to the first-tier corporation.

Example. On February 27, 1975, foreign corporation C pays a dividend out of its accumulated profits for 1974 to foreign corporation B. On March 3, 1975, the date on which it receives the dividend, B Corporation owns 50 percent of the voting stock of C Corporation. On February 10, 1976, B Corporation pays a dividend out of its accumulated profits for 1975 to foreign corporation A. On February 16, 1976, the date on which it receives the dividend, A Corporation owns 40 percent of the voting stock of B Corporation. All three corporations use the calendar year as the taxable year. On January 17, 1977, A Corporation pays a dividend out of its accumulated profits for 1976 to domestic corporation M. M Corporation owns 30 percent of the voting stock of A Corporation on January 20, 1977, the date on which it receives the dividend. M Corporation uses a fiscal year ending on April 30 as the taxable year. On February 16, 1976, A Corporation satisfies the 10-percent stock ownership requirement referred to in paragraph (a)(3) of this section with respect to B Corporation, and on January 20, 1977, M Corporation satisfies the 10-percent stock-ownership requirement referred to in paragraph (a)(2) of this section with respect to A Corporation. The 5-percent requirement of paragraph (c)(1) of this section is also

satisfied since 30 percent (the percentage of voting stock owned by M Corporation in A Corporation on January 20, 1977), when multiplied by 40 percent (the percentage of voting stock owned by A Corporation in B Corporation on February 16, 1976), equals 12 percent. On March 3, 1975, B Corporation satisfies the 10 percent stock ownership requirement referred to in paragraph (a)(4) of this section with respect to C Corporation. The 5-percent requirement of this paragraph (d)(1) is also satisfied since 12 percent (the percentage of voting stock arrived at in applying the 5-percent requirement of paragraph (c)(1) of this section with respect to the dividends received by A Corporation from B Corporation on February 16, 1976), when multiplied by 50 percent (the percentage of voting stock owned by B Corporation in C Corporation on March 3, 1975), equals 6 percent. Accordingly, for its taxable year ending on April 30, 1977, M Corporation is entitled to a credit for a portion of the foreign income taxes paid, accrued, or deemed to be paid, by A Corporation for 1976; for 1976 A Corporation is deemed to have paid a portion of the foreign income taxes paid, accrued, or deemed to be paid, by B Corporation for 1975; and for 1975 B Corporation is deemed to have paid a portion of the foreign income taxes paid or accrued by C Corporation for 1974.

(2) ***Amount of foreign taxes deemed paid by a second-tier corporation.*** For purposes of applying paragraph (c)(2) of this section to a first-tier corporation, a second-tier corporation which receives dividends in its taxable year from its third-tier corporation shall be deemed to have paid for such year the same proportion of any foreign income taxes paid or accrued by its third-tier corporation on or with respect to the accumulated profits, as defined in paragraph (e) of this section, for the taxable year of the third-tier corporation from which such dividends are paid which the amount of such dividends bears to the amount by which such accumulated profits of the third-tier corporation exceed the taxes so paid or accrued. For determining the amount of the foreign income taxes paid or accrued by such third-tier corporation on or with respect to the accumulated profits for the taxable year of such third-tier corporation, see paragraph (f) of this section.

(e) ***Determination of accumulated profits of a foreign corporation.*** The accumulated profits for any taxable year of a first-tier corporation and the accumulated profits for any taxable year of a second-tier or third-tier corporation, which are taken into account in applying paragraph (c)(2) or (d)(2) of this section with respect to such first-tier corporation, shall be the sum of—

(1) The earnings and profits of such corporation for such year, and

(2) The foreign income taxes imposed on or with respect to the gains, profits, and income to which such earnings and profits are attributable.

(f) ***Taxes paid on or with respect to accumulated profits of a foreign corporation.*** For purposes of this section, the amount of foreign income taxes paid or accrued on or with respect to the accumulated profits of a foreign corporation for any taxable year shall be the entire amount of the foreign income taxes paid or accrued for such year on or with respect to such gains, profits, and income. For purposes of this paragraph (f), the gains, profits, and income of a foreign corporation for any taxable year shall be determined after reduction by any income, war profits, or excess profits taxes imposed on or with respect to such gains, profits, and income by the United States.

(g) ***Determination of earning and profits of a foreign corporation*** —

(1) ***Taxable year to which section 963 does not apply.*** For purposes of this section, the earnings and profits of a foreign corporation for any taxable year beginning after December 31, 1962, other than a taxable year to which paragraph (g)(2) of this section applies, may, if the domestic shareholder chooses, be determined under the rules provided by § 1.964-1 exclusive of paragraphs (d) and (e) of

such section. The translation of amounts so determined into United States dollars or other foreign currency shall be made at the proper exchange rate for the date of distribution with respect to which the determination is made.

(2) [Reserved]

(3) ***Time and manner of making choice.*** The controlling United States shareholders (as defined in § 1.964-1(c)(5)) of a foreign corporation shall make the choice referred to in paragraph (g)(1) of this section (including the elections permitted by § 1.964-1 (b) and (c)) by filing a written statement to such effect with the Director of the Internal Revenue Service Center, 11601 Roosevelt Boulevard, Philadelphia, Pennsylvania 19155, within 180 days after the close of the first taxable year of the foreign corporation during which such shareholders receive a distribution of earnings and profits with respect to which the benefits of this section are claimed or on or before November 15, 1965, whichever is later. For purposes of this paragraph (g)(3), the 180-day period shall commence on the date of receipt of any distribution which is considered paid from the accumulated profits of a preceding year or years under paragraph (g)(4) of this section. See § 1.964-1(c)(3) (ii) and (iii) for procedures requiring notification of the Director of the Internal Revenue Service Center and noncontrolling shareholders of action taken.

(4) ***Determination by district director.*** The district director in whose district is filed the income tax return of the domestic shareholder claiming a credit under section 901 for foreign income taxes deemed, under section 902 and this section, to be paid by such shareholder shall have the power to determine, with respect to a foreign corporation, from the accumulated profits of what taxable year or years the dividends were paid. In making such determination the district director shall, unless it is otherwise established to his satisfaction, treat any dividends which are paid in the first 60 days of any taxable year of such a corporation as having been paid from the accumulated profits of the preceding taxable year or years of such corporation and shall, in other respects, treat any dividends as having been paid from the most recently accumulated profits. For purposes of this paragraph (g)(4), in the case of a foreign corporation the foreign income taxes of which are determined on the basis of an accounting period of less than 1 year, the term “year” shall mean such accounting period. See sections 441 (b)(3) and 443.

(h) ***Source of income from first-tier corporation and country to which tax is deemed paid*** —

(1) ***Source of income.*** For purposes of section 904(a)(1) (relating to the per-country limitation), in the case of a dividend received by a domestic shareholder from a first-tier corporation there shall be deemed to be derived from sources within the foreign country or possession of the United States under the laws of which the first-tier corporation is created or organized the sum of the amounts which under paragraph (a)(3)(ii) of § 1.861-3 are treated, with respect to such dividend, as income from sources without the United States.

(2) ***Country to which taxes deemed paid.*** For purposes of section 904, all foreign income taxes paid, or deemed under paragraph (c) of this section to be paid, by a first-tier corporation shall be deemed to be paid to the foreign country or possession of the United States under the laws of which such first-tier corporation is created or organized.

(i) ***United Kingdom income taxes paid with respect to royalties.*** A taxpayer shall not be deemed under section 902 and this section to have paid any taxes with respect to which a credit is allowable to such taxpayer or any other taxpayer by virtue of section 905(b).

(j) ***Information to be furnished.*** If the credit for foreign income taxes claimed under section 901 includes taxes deemed, under paragraph (b)(2) of this section, to be paid, the domestic shareholder must furnish the same information with respect to such taxes as it is required to furnish with respect to the taxes actually paid or accrued by it and for which credit is claimed. See § 1.905-2. For other information required to be furnished by the domestic shareholder for the annual accounting period of certain foreign corporations ending with or within such shareholder's taxable year, and for reduction in the amount of foreign income taxes paid or deemed to be paid for failure to furnish such information, see section 6038 and the regulations thereunder.

(k) ***Illustrations.*** The application of this section may be illustrated by the following examples:

Example 1. Throughout 1978, domestic corporation M owns all the one class of stock of foreign corporation A. Both corporations use the calendar year as the taxable year. Corporation A has accumulated profits, pays foreign income taxes, and pays dividends for 1978 as summarized below. For 1978, M Corporation is deemed, under paragraph (b)(2) of this section, to have paid $20 of the foreign income taxes paid by A Corporation for 1978 and includes such amount in gross income under section 78 as a dividend, determined as follows:

Gains, profits, and income of A Corp.	$100
Foreign income taxes imposed on or with respect to gains, profits, and income	40
Accumulated profits	100
Foreign income taxes paid on or with respect to accumulated profits (total foreign income taxes)	40
Accumulated profits in excess of foreign income taxes	60
Dividends paid to M Corp	30
Foreign income taxes of A Corp. deemed paid by M Corp. under section 902(a) ($40 × $30/$60)	20

Example 2. The facts are the same as in example 1, except that M Corporation also owns all the one class of stock of foreign corporation B which also uses the calendar year as the taxable year. Corporation B has accumulated profits, pays foreign income taxes, and pays dividends for 1978 as summarized below. For 1978, M Corporation is deemed under paragraph (b)(2) of this section, to have paid $20 of the foreign income taxes paid by A Corporation for 1978 and to have paid $50 of the foreign income taxes paid by B Corporation for 1978, and includes $70 in gross income as a

dividend under section 78, determined as follows:

B Corporation

Gains, profits and income	$200
Foreign income taxes imposed on or with respect to gains, profits, and income	100
Accumulated profits	200
Foreign income taxes paid by B Corp. on or with respect to accumulated profits	100
Accumulated profits in excess of foreign income taxes	100
Dividends paid to M Corp	50
Foreign income taxes of B Corporation deemed paid by M Corporation under section 902(a) ($100 × $50/$100)	50

M Corporation

Foreign income taxes deemed paid under section 902(a):	
Taxes of A Corp. (from example 1)	$20
Taxes of B Corp. (as determined above)	50
Total	70
Foreign income taxes included in gross income under section 78 as a dividend:	
Taxes of A Corp. (from example 1)	20
Taxes of B Corp	50
Total	70

Example 3. For 1978, domestic corporation M owns all the one class of stock of foreign corporation A, which in turn owns all the one class of stock of foreign corporation B. All corporations use the calendar year as the taxable year. For 1978, M Corporation is deemed under paragraph (b)(2) of this section to have paid $50 of the foreign income taxes paid, or deemed under paragraph (c)(2) of this section to be paid, by A Corporation for such year and includes such amount in gross income as a dividend under section 78, determined as follows upon the basis of the facts assumed:

B Corp. (second-tier corporation):

Gains, profits, and income	$300
Foreign income taxes imposed on or with respect to gains, profits, and income	120
Accumulated profits	300
Foreign income taxes paid by B Corp. on or with respect to its accumulated profits (total foreign income taxes)	120
Accumulated profits in excess of foreign income taxes	180
Dividends paid on December 31, 1978 to A Corp.	90
Foreign income taxes of B Corp. deemed paid by A Corp. for 1978 under section 902(b)(1) ($120 × $90/$180)	60
A Corp. (first-tier corporation):	
Gains, profits, and income:	
Business operations	200
Dividends from B Corp.	90
Total	290
Foreign income taxes imposed on or with respect to gains, profits, and income	40
Accumulated profits	$290
Foreign income taxes paid by A Corp. on or with respect to its accumulated profits (total foreign income taxes)	40
Accumulated profits in excess of foreign income taxes	250
Foreign income taxes paid, and deemed to be paid, by A Corp. for 1978 on or with respect to its accumulated profits for such year ($60 + $40)	100
Dividends paid on December. 31, 1978, to M Corp.	125
M Corp. (domestic shareholder):	
Foreign income taxes of A Corp. deemed paid by M Corp. for 1978 under section 902(a) ($100 × $125/$250)	50
Foreign income taxes included in gross income of M Corp. under section 78 as a dividend received from A Corp.	50

Example 4. Throughout 1978, domestic corporation M owns 50 percent of the voting stock of foreign corporation A, not a less developed country corporation. A Corporation has owned 40 percent of the voting stock of foreign corporation B, since 1970; B Corporation has owned 30 percent of the voting stock of foreign corporation C, since 1972. B Corporation, uses a fiscal year ending on June 30 as its taxable year; all other corporations use the calendar year as the taxable year. On February 1, 1977, B Corporation receives a dividend from C Corporation out of C Corporation's accumulated profits for 1976. On February 15, 1977, A Corporation receives a dividend from B Corporation out of B Corporation's accumulated profits for its fiscal year ending in 1977. On February 15, 1978, M Corporation receives a dividend from A Corporation out of A Corporation's accumulated profits for 1977. For 1978, M Corporation is deemed under paragraph (b)(2) of this section to have paid $81.67 of the foreign income taxes paid, or deemed under paragraph (c)(2) of this section to be paid, by A Corporation on or with respect to its accumulated

profits for 1977, and M Corporation includes that amount in gross income as a dividend under section 78, determined as follows upon the basis of the facts assumed:

C Corp. (third-tier corporation):	
Gains, profits, and income for 1976	$2,000.00
Foreign income taxes imposed on or with respect to such gains, profits, and income	800.00
Accumulated profits	2,000.00
Foreign income taxes paid by C Corp. on or with respect to its accumulated profits (total foreign income taxes)	800.00
Accumulated profits in excess of foreign income taxes	1,200.00
Dividends paid on Feb. 1, 1977 to B Corp	150.00
Foreign income taxes of C Corp. for 1976 deemed paid by B Corp. for its fiscal year ending in 1977 ($800 × $150/$1,200)	100.00
B Corp. (second-tier corporation):	
Gains, profits, and income for fiscal year ending in 1977:	
Business operations	850.00
Dividends from C Corp	150.00
Total	1,000.00
Foreign income taxes imposed on or with respect to gains, profits, and income	200.00
Accumulated profits	1,000.00
Foreign income taxes paid by B Corp. on or with respect to its accumulated profits (total foreign income taxes)	$200.00
Accumulated profits in excess of foreign income taxes	800.00
Foreign income taxes paid, and deemed to be paid, by B Corp. for its fiscal year on or with respect to its accumulated profits for such year ($100 + $200)	300.00
Dividends paid on February 15, 1977 to A Corp	120.00
Foreign income taxes of B Corp. for its fiscal year deemed paid by A Corp. for 1977 ($300 × $120/$800)	45.00
A Corp. (first-tier corporation):	
Gains, profits, and income for 1977:	
Business operations	380.00
Dividends from B Corp	120.00
Total	500.00
Foreign income taxes imposed on or with respect to gains, profits, and income	200.00
Accumulated profits	500.00
Foreign income taxes paid by A Corp. on or with respect to its accumulated profits (total foreign income taxes)	200.00
Accumulated profits in excess of foreign taxes	300.00
Foreign income taxes paid, and deemed to be paid, by A Corp. for 1977 on or with respect to its accumulated profits for such year ($45 + $200)	245.00
Dividends paid on Feb. 15, 1978 to M Corp	100.00

M Corp. (domestic shareholder):	
Foreign income taxes of A Corp. for 1977 deemed paid by M Corp. for 1978 under section 902(a)(1) ($245 × $100/$300)	81.67
Foreign income taxes included in gross income of M Corp. under section 78 as a dividend received from A Corp	81.67

(l) ***Effective date.*** Except as provided in § 1.902-4, this section applies to any distribution received from a first-tier corporation by its domestic shareholder after December 31, 1964, and before the beginning of the foreign corporation's first taxable year beginning after December 31, 1986. If, however, the first day on which the ownership requirements of section 902(c)(3)(B) and § 1.902-1(a)(1) through (4) are met with respect to the foreign corporation is in a taxable year of the foreign corporation beginning after December 31, 1986, then this section shall apply to all taxable years beginning after December 31, 1964, and before the year in which the ownership requirements are first met. See § 1.902-1(a)(13)(i). For corresponding rules applicable to distributions received by the domestic shareholder prior to January 1, 1965, see § 1.902-5 as contained in the 26 CFR part 1 edition revised April 1, 1976.

[T.D. 7481, 42 FR 20125, Apr. 18, 1977, as amended by T.D. 7490, 42 FR 30497, June 15, 1977; T.D. 7649, 44 FR 60086, Oct. 18, 1979. Redesignated and amended by T.D. 8708, 62 FR 927, 940, Jan. 7, 1997; 62 FR 7155, Feb. 18, 1997; T.D. 9849, 84 FR 9236, Mar. 14, 2019; T.D. 9954, 86 FR 52614, Sept. 22, 2021]

§ 1.902-4 Rules for distributions attributable to accumulated profits for taxable years in which a first-tier corporation was a less developed country corporation.

(a) ***In general.*** If a domestic shareholder receives a distribution from a first-tier corporation before January 1, 1978, in a taxable year of the domestic shareholder beginning after December 31, 1964, which is attributable to accumulated profits of the first-tier corporation for a taxable year beginning before January 1, 1976, in which the first-tier corporation was a less developed country corporation (as defined in 26 CFR § 1.902-2 revised as of April 1, 1978), then the amount of the credit deemed paid by the domestic shareholder with respect to such distribution shall be calculated under the rules relating to less developed country corporations contained in (26 CFR § 1.902-1 revised as of April 1, 1978).

(b) ***Combined distributions.*** If a domestic shareholder receives a distribution before January 1, 1978, from a first-tier corporation, a portion of which is described in paragraph (a) of this section, and a portion of which is attributable to accumulated profits of the first-tier corporation for a year in which the first-tier corporation was not a less developed country corporation, then the amount of taxes deemed paid by the domestic shareholder shall be computed separately on each portion of the dividend. The taxes deemed paid on that portion of the dividend described in paragraph (a) shall be computed as specified in paragraph (a). The taxes deemed paid on that portion of the dividend described in this paragraph (b), shall be computed as specified in § 1.902-3.

(c) ***Distributions of a first-tier corporation attributable to certain distributions from second- or third-tier corporations.*** Paragraph (a) shall apply to a distribution received by a domestic shareholder before January 1, 1978, from a first-tier corporation out of accumulated profits for a taxable year beginning after December 31, 1975, if:

(1) The distribution is attributable to a distribution received by the first-tier corporation from a second- or third-tier corporation in a taxable year beginning after December 31, 1975.

(2) The distribution from the second- or third-tier corporation is made out of accumulated profits of the second- or third-tier corporation for a taxable year beginning before January 1, 1976, and

(3) The first-tier corporation would have qualified as a less developed country corporation under section 902(d) (as in effect on December 31, 1975), in the taxable year in which it received the distribution.

(d) ***Illustrations.*** The application of this section may be illustrated by the following examples:

Example 1. M, a domestic corporation owns all of the one class of stock of foreign corporation A. Both corporations use the calendar year as the taxable year. A Corporation pays a dividend to M Corporation on January 1, 1977, partly out of its accumulated profits for calendar year 1976 and partly out of its accumulated profits for calendar year 1975. For 1975 A Corporation qualified as a less developed country corporation under the former section 902(d) (as in effect on December 31, 1975). M Corporation is deemed under paragraphs (a) and (b) of this section to have paid $63 of foreign income taxes paid by A Corporation on or with respect to its accumulated profits for 1976 and 1975 and M Corporation includes $36 of that amount in gross income as a dividend under section 78, determined as follows upon the basis of the facts assumed:

1976

Gains, profits, and income of A Corp. for 1976	$120.00
Foreign income taxes imposed on or with respect to such gains, profits, and income	36.00
Accumulated profits	120.00
Foreign income taxes paid by A Corp. on or with respect to its accumulated profits (total foreign income taxes)	36.00
Accumulated profits in excess of foreign income taxes	84.00
Dividend to M Corp. out of 1976 accumulated profits	84.00
Foreign income taxes of A for 1976 deemed paid by M Corp. ($84/$84 × $36)	36.00
Foreign income taxes included in gross income of M Corp. under section 78 as a dividend from A Corp	36.00

1975

Gains, profits, and income of A Corp. for 1975	$257.14
Foreign income taxes imposed on or with respect to such gains, profits, and income	77.14

Accumulated profits (under section 902(c)(1)(B) as in effect prior to amendment by the Tax Reform Act of 1976)	180.00
Foreign income taxes paid by A Corp. on or with respect to its accumulated profits ($77.14 × $180/$257.14)	54.00
Dividend to M Corp. out of accumulated profits of A Corp. for 1975	90.00
Foreign income taxes of A Corp. for 1975 deemed paid by M Corp. (under section 902(a)(2) as in effect prior to amendment by the Tax Reform Act of 1976) ($54 × $90/$180)	27.00
Foreign income taxes included in gross income of M Corp. under section 78 as a dividend from A Corp	0

Example 2. The facts are the same as in example 1, except that the distribution from A Corporation to M Corporation on January 1, 1977, was from accumulated profits of A Corporation for 1976. A Corporation's accumulated profits for 1976 were made up of income from its trade or business, and a dividend paid by B, a second-tier corporation in 1976. The dividend from B Corporation to A Corporation was from accumulated profits of B Corporation for 1975. A Corporation would have qualified as a less developed country corporation for 1976 under the former section 902(d) (as in effect on December 31, 1975). M Corporation is deemed under paragraphs (b) and (c) of this section to have paid $543 of the foreign taxes paid or deemed paid by A Corporation on or with respect to its accumulated profits for 1976, and M Corporation includes $360 of that amount in gross income as a dividend under section 78, determined as follows upon the basis of the facts assumed:

Total gains, profits, and income of A Corp. for 1976	$1,500
Gains and profits from business operations	1,200
Gains and profits from dividend A Corp. received in 1976 from B Corp. out of accumulated profits of B Corp. for 1975	300
Foreign taxes imposed on or with respect to such profits and income	450
Foreign taxes paid by A Corp. attributable to gains and profits from A Corp.'s business operations	360
Foreign taxes paid by A Corp. attributable to dividend from B Corp. in 1976	90
Dividends from A Corp. to M Corp. on Jan. 1, 1977	1,050
Portion of dividend attributable to gains and profits of A Corp. from business operations. ($1,200/$1,500 × $1,050)	840
Portion of dividends attributable to gains on profits of A Corp. from dividend from B Corp. ($300/$1,500 × $1,050)	210

(a) *Amount of foreign taxes of A Corp. deemed paid by M Corp. on A Corp.'s gains and profits for 1976 from*

business operations.

Gains, profits, and income of A Corp. from business operations	$1,200
Foreign income taxes imposed on or with respect to gains, profits, and income	360
Accumulated profits	1,200
Foreign income taxes paid by A Corp. on or with respect to its accumulated profits (total foreign income taxes)	360
Accumulated profits in excess of foreign income taxes	840
Dividend to M Corp	840
Foreign taxes of A Corp. deemed paid by M Corp. ($360 × $840/$840)	360
Foreign taxes included in gross income of M Corp. under section 78 as a dividend	360

(b) *Amount of foreign taxes of A Corp. deemed paid by M Corp. on portion of the dividend attributable to B Corp.'s accumulated profits for 1975.*

B Corp. (second-tier corporation):	
Gains, profits, and income for calendar year 1975	$1,000
Foreign income taxes imposed on or with respect to gains, profits, and income	400
Accumulated profits (under section 902(c)(1)(B) as in effect prior to amendment by the Tax Reform Act of 1976)	600
Foreign income taxes paid by B Corp. on or with respect to its accumulated profits ($400 × $600/$1,000)	240
Dividend to A Corp. in 1976	300
Foreign taxes of B Corp. for 1975 deemed paid by A Corp. (under section 902(b)(1)(B) as in effect prior to amendment by the Tax Reform Act of 1976) ($240 × $300/$600)	120
A Corp. (first-tier corporation):	
Gains, profits, and income for 1976 attributable to dividend from B Corp.'s accumulated profits for 1975	300
Foreign income taxes imposed on or with respect to such gains, profits, and income	90
Accumulated profits (under section 902(c)(1)(B) as in effect prior to amendment by the Tax Reform Act of 1976)	210
Foreign taxes paid by A Corp. on or with respect to such accumulated profits ($90 × $210/$300)	63
Foreign income taxes paid and deemed to be paid by A Corp. for 1976 on or with respect to such accumulated profits ($120 + $63)	183
Dividend paid to M Corp. attributable to dividend from B Corp. out of accumulated profits for 1975)	210
Foreign taxes of A Corp. deemed paid by M Corp. (under section 902(a)(2) as in effect prior to amendment by the Tax Reform Act of 1976) ($183 × $210/$210)	183

Amount included in gross income of M Corp. under section 78	0

[T.D. 7649, 44 FR 60087, Oct. 18, 1979. Redesignated and amended by T.D. 8708, 62 FR 927, 940, Jan. 7, 1997]

§ 1.903-1 Taxes in lieu of income taxes.

(a) ***Overview.*** Section 903 provides that the term "income, war profits, and excess profits taxes" includes a tax paid in lieu of a tax on income, war profits, or excess profits that is otherwise generally imposed by any foreign country. Paragraphs (b) and (c) of this section define a tax described in section 903. Paragraph (d) of this section provides examples illustrating the application of this section. Paragraph (e) of this section sets forth the applicability date of this section. For purposes of this section and §§ 1.901-2 and 1.901-2A, a tax described in section 903 is referred to as a "tax in lieu of an income tax" or an "in lieu of tax" and the definitions in § 1.901-2(g) apply for purposes of this section. Determinations of the amount of a tax in lieu of an income tax that is paid by a person and determinations of the person by whom such tax is paid are made under § 1.901-2(e) and (f), respectively. Section 1.901-2A contains additional rules applicable to dual capacity taxpayers (as defined in § 1.901-2(a)(2)(ii)(A)).

(b) ***Definition of tax in lieu of an income tax*** —

(1) ***In general.*** Paragraphs (b)(2) and (c) of this section provide the requirements for a foreign levy to qualify as a tax in lieu of an income tax. The rules of this section are applied independently to each separate levy (within the meaning of §§ 1.901-2(d) and 1.901-2A(a)). A foreign tax either is or is not a tax in lieu of an income tax in its entirety for all persons subject to the tax. It is immaterial whether the base of the in lieu of tax bears any relation to realized net gain. The base of the foreign tax may, for example, be gross income, gross receipts or sales, or the number of units produced or exported. The foreign country's reason for imposing a foreign tax on a base other than net income (for example, because of administrative difficulty in determining the amount of income that would otherwise be subject to a net income tax) is immaterial, although paragraph (c)(1) of this section generally requires a showing that the foreign country made a deliberate and cognizant choice to impose the in lieu of tax instead of a net income tax (see paragraph (c)(1)(iii) of this section).

(2) ***Requirements.*** A foreign levy is a tax in lieu of an income tax only if—

(i) It is a foreign tax; and

(ii) It satisfies the substitution requirement of paragraph (c) of this section.

(c) ***Substitution requirement*** —

(1) ***In general.*** A foreign tax (the "tested foreign tax") satisfies the substitution requirement if, based on the foreign tax law, the requirements in paragraphs (c)(1)(i) through (iv) of this section are satisfied with respect to the tested foreign tax, or the tested foreign tax is a covered withholding tax described in paragraph (c)(2) of this section.

(i) ***Existence of generally-imposed net income tax.*** A separate levy that is a net income tax (as described in § 1.901-2(a)(3)) is generally imposed by the same foreign country (the "generally-imposed net income tax") that imposes the tested foreign tax.

(ii) ***Non-duplication.*** Neither the generally-imposed net income tax nor any other separate levy that is a net income tax is also imposed, in addition to the tested foreign tax, by the same foreign country on any persons with respect to any portion of the income to which the amounts (such as sales or units of production) that form the base of the tested foreign tax relate (the "excluded income"). Therefore, a tested foreign tax does not meet the requirement of this paragraph (c)(1)(ii) if a net income tax imposed by the same foreign country applies to the excluded income of any persons that are subject to the tested foreign tax, even if not all persons subject to the tested foreign tax are subject to the net income tax.

(iii) ***Close connection to excluded income.*** But for the existence of the tested foreign tax, the generally-imposed net income tax would otherwise have been imposed on the excluded income. The requirement in the preceding sentence is met only if the imposition of such tested foreign tax bears a close connection to the failure to impose the generally-imposed net income tax on the excluded income; the relationship cannot be merely incidental, tangential, or minor. A close connection must be established with proof that the foreign country made a cognizant and deliberate choice to impose the tested foreign tax instead of the generally-imposed net income tax. Such proof must be based on foreign tax law, or the legislative history of either the tested foreign tax or the generally-imposed net income tax that describes the provisions excluding taxpayers subject to the tested foreign tax from the generally-imposed net income tax. Thus, a close connection exists if the generally-imposed net income tax would apply by its terms to the excluded income, but for the fact that the excluded income is expressly excluded, and the tested foreign tax is enacted contemporaneously with the generally-imposed net income tax. A close connection also exists if the generally-imposed net income tax by its terms does not apply to, but does not expressly exclude, the excluded income, and the tested foreign tax is enacted contemporaneously with the generally-imposed net income tax. Where the tested foreign tax is not enacted contemporaneously with the generally-imposed net income tax and the generally-imposed net income tax is not amended contemporaneously with the enactment of the tested foreign tax to exclude the excluded income or to narrow the scope of the generally-imposed net income tax so as not to apply to the excluded income, a close connection can be established only by reference to the legislative history of the tested foreign tax (or a predecessor in lieu of tax). Not all income derived by persons subject to the tested foreign tax need be excluded income, provided the tested foreign tax applies only to amounts that relate to the excluded income.

(iv) ***Jurisdiction to tax excluded income.*** If the generally-imposed net income tax, or a hypothetical new tax that is a separate levy with respect to the generally-imposed net income tax, were applied to the excluded income, such generally-imposed net income tax or separate levy would meet the attribution requirement described in § 1.901-2(b)(5).

(2) ***Covered withholding tax.*** A tested foreign tax is a covered withholding tax if, based on the foreign tax law, the requirements in paragraphs (c)(1)(i) and (c)(2)(i) through (iii) of this section are met with respect to the tested foreign tax. See also § 1.901-2(d)(1)(iii) for rules treating withholding taxes as separate levies with respect to each class of income subject to the tax or with respect to each subset of a class of income that is subject to different income attribution rules.

(i) ***Withholding tax on nonresidents.*** The tested foreign tax is a withholding tax (as defined in section 901(k)(1)(B)) that is imposed on gross income of persons who are nonresidents of the foreign country imposing the tested foreign tax. It is immaterial whether the tested foreign tax is withheld by the payor or is imposed directly on the nonresident taxpayer.

(ii) ***Non-duplication.*** The tested foreign tax is not in addition to any net income tax that is imposed by the foreign country on any portion of the net income attributable to the gross income that is subject to the tested foreign tax. Therefore, a tested foreign tax does not meet the requirement of this paragraph (c)(2)(ii) if by its terms it applies to gross income of nonresidents that are also subject to a net income tax imposed by the same foreign country on the same income, even if not all nonresidents subject to the tested foreign tax are also subject to the net income tax.

(iii) ***Source-based attribution requirement.*** The income subject to the tested foreign tax satisfies the attribution requirement described in § 1.901-2(b)(5)(i)(B).

(d) ***Examples.*** The following examples illustrate the rules of this section.

(1) ***Example 1: Tax on gross income from services; non-duplication requirement*** —

(i) ***Facts.*** Country X imposes a tax at the rate of 3 percent on the gross receipts of companies, wherever resident, from furnishing specified types of electronically supplied services to customers located in Country X (the "ESS tax"). No deductions are allowed in determining the taxable base of the ESS tax. In addition to the ESS tax, Country X imposes a net income tax within the meaning of § 1.901-2(a)(3) on resident companies (the "resident income tax") and also imposes a net income tax within the meaning of § 1.901-2(a)(3) on the income of nonresident companies that is attributable, under reasonable principles, to the nonresident's permanent establishment within Country X (the "nonresident income tax"). Under Country X tax law, a permanent establishment is defined in the same manner as under the 2016 U.S. Model Income Tax Convention. Both the resident income tax and the nonresident income tax, which are separate levies under § 1.901-2(d)(1)(iii), qualify as generally-imposed net income taxes. Under Country X tax law, the ESS tax applies to both resident and nonresident companies regardless of whether the company is also subject to the resident income tax or the nonresident income tax, respectively.

(ii) ***Analysis.*** Under § 1.901-2(d)(1)(iii), the ESS tax comprises two separate levies, one imposed on resident companies (the "resident ESS tax"), and one imposed on nonresident companies (the "nonresident ESS tax"). Under paragraph (c)(1)(ii) of this section, neither the resident ESS tax nor the nonresident ESS tax satisfies the substitution requirement, because by its terms the income to which the gross receipts subject to the ESS tax relate is also subject to one of the two generally-imposed net income taxes imposed by Country X. Similarly, under paragraph (c)(2)(ii) of this section, the nonresident ESS tax is not a covered withholding tax because by its terms it is imposed in addition to the nonresident income tax. The fact that nonresident taxpayers that do not have a permanent establishment in Country X are in practice subject to the nonresident ESS tax but not to the nonresident income tax on the gross receipts included in the base of the nonresident ESS tax is not relevant to the determination of whether the ESS tax meets the substitution requirement under paragraph (c)(1) of this section. Therefore, neither the resident ESS tax nor the nonresident ESS tax is a tax in lieu of an income tax.

(2) ***Example 2: Tax on gross income from services; attribution of income*** —

(i) ***Facts.*** The facts are the same as those in paragraph (d)(1)(i) of this section (the facts in *Example 1*), except that under Country X tax law, the nonresident ESS tax is imposed only if the nonresident company does not have a permanent establishment in Country X. If the nonresident company has a Country X permanent establishment, the nonresident income tax applies to the profits attributable to that permanent establishment. In addition, the statutory

language and legislative history to the nonresident ESS tax demonstrate that Country X made a cognizant and deliberate choice to impose the nonresident ESS tax instead of the nonresident income tax with respect to the gross receipts that are subject to the nonresident ESS tax.

(ii) *Analysis* —

(A) ***General application of substitution requirement.*** The nonresident ESS tax meets the requirements in paragraphs (c)(1)(i) and (ii) of this section because Country X has two generally-imposed net income taxes and neither generally-imposed net income tax nor any other separate levy that is a net income tax is imposed by Country X on a nonresident's income to which gross receipts that form the base of the nonresident ESS tax relate (which is the excluded income). The statutory language and legislative history to the nonresident ESS tax demonstrate that Country X made a cognizant and deliberate choice not to impose the nonresident income tax on the excluded income. Therefore, the nonresident ESS tax meets the requirement in paragraph (c)(1)(iii) of this section because, but for the existence of the tested foreign tax, the nonresident income tax would otherwise have been imposed on the excluded income. However, the nonresident ESS tax does not meet the requirement in paragraph (c)(1)(iv) of this section, because if Country X had chosen to apply the nonresident income tax (rather than the nonresident ESS tax) to the excluded income, the modified nonresident income tax would fail the attribution requirement in § 1.901-2(b)(5). First, the modified tax would not satisfy the requirement in § 1.901-2(b)(5)(i)(A) because the modified tax would not apply to income attributable under reasonable principles to the nonresident's activities within the foreign country, since the modified tax is determined by taking into account the location of customers. Second, the modified tax would not satisfy the requirement in § 1.901-2(b)(5)(i)(B) because the excluded income is from services performed outside of Country X. Third, the modified tax would not satisfy the requirement in § 1.901-2(b)(5)(i)(C) because the excluded income is not from sales or dispositions of real property located in Country X or from property forming part of the business property of a taxable presence in Country X. Because the Country X nonresident income tax as applied to the excluded income would fail to meet the attribution requirement in § 1.901-2(b)(5), as required by paragraph (c)(1)(iv) of this section, the nonresident ESS tax does not satisfy the substitution requirement in paragraph (c)(1) of this section.

(B) ***Covered withholding tax analysis.*** The nonresident ESS tax meets the requirement in paragraph (c)(1)(i) of this section because there exists a generally-imposed net income tax. It also meets the requirements in paragraphs (c)(2)(i) and (ii) of this section because it is a withholding tax on gross receipts of nonresidents and the income attributable to those gross receipts is not subject to a net income tax. However, the nonresident ESS tax does not meet the requirement in paragraph (c)(2)(iii) of this section because the services income subject to the nonresident ESS tax is from electronically supplied services performed outside of Country X. See § 1.901-2(b)(5)(i)(B). Therefore, the nonresident ESS tax is not a covered withholding tax under paragraph (c)(2) of this section. Because the nonresident ESS tax does not satisfy the substitution requirement of paragraph (c) of this section, it is not a tax in lieu of an income tax.

(3) *Example 3: Withholding tax on royalties; attribution requirement* —

(i) ***Facts.*** YCo, a resident of Country Y, is a controlled foreign corporation wholly-owned by USP, a domestic corporation. In Year 1, YCo grants a license to XCo, a resident of Country X unrelated to YCo or USP, for the right to use YCo's intangible property (IP) throughout the world, including in Country X. Under Country X's domestic tax law, all royalties paid by a resident of Country X to a nonresident are sourced in Country X and are subject to a 30% withholding tax on the gross income, regardless of whether the nonresident payee has a taxable presence in Country X. Country X's withholding tax on royalties is a separate levy under § 1.901-2(d)(1)(iii). In Year 1, XCo withholds 30u (units of Country X currency) tax from 100u of royalties owed and paid to YCo under the licensing arrangement, of which 50u is attributable to XCo's use of the YCo IP in Country X and 50u is attributable to use of the YCo IP outside Country X. The United States and Country X have an income tax treaty (U.S.-Country X treaty); under the royalties article of the treaty, Country X agreed to impose its withholding tax on royalties paid to a U.S. resident only on royalties paid for IP used in Country X. Country X and Country Y do not have an income tax treaty.

(ii) ***Analysis.*** Under § 1.901-2(d)(1)(iv), the Country X withholding tax on royalties, as modified by the U.S.-Country X treaty, is a separate levy from the unmodified Country X withholding tax to which YCo was subject (because YCo is not a U.S. resident eligible for benefits under the U.S.-Country X treaty). The Country X withholding tax on royalties, unmodified by the U.S.-Country X treaty, does not meet the attribution requirement in § 1.901-2(b)(5)(i)(B) because Country X's source rule for royalties (based upon residence of the payor) is not reasonably similar to the sourcing rules that apply under the Internal Revenue Code. Thus, under paragraph (c)(2)(iii) of this section, the Country X withholding tax paid by YCo is not a covered withholding tax, and none of the 30u of Country X withholding tax paid by YCo with respect to the 100u of royalties for the use of the IP is a payment of foreign income tax.

(4) ***Example 4: Withholding tax on royalties; attribution requirement*** —

(i) ***Facts.*** The facts are the same as in paragraph (d)(3)(i) of this section (the facts of *Example 3*), except that XCo only uses the IP in Country X and the 100u of royalties paid to YCo in Year 1 is all attributable to XCo's use of the IP in Country X.

(ii) ***Analysis.*** The result is the same as in paragraph (d)(3) of this section (the analysis of *Example 3*). Because Country X's source rule for royalties (based upon residence of the payor) is not reasonably similar to the sourcing rules that apply under the Internal Revenue Code, the withholding tax paid by YCo does not meet the attribution requirement in § 1.901-2(b)(5)(i)(B). Under paragraph (c)(2)(iii) of this section, the Country X withholding tax paid by YCo is not a covered withholding tax, and none of the 30u of Country X withholding tax paid by YCo with respect to the 100u of royalties for IP used in Country X is a payment of foreign income tax.

(5) ***Example 5: Multiple in-lieu-of taxes*** —

(i) ***Facts.*** Country X imposes a net income tax within the meaning of § 1.901-2(a)(3) on the income of nonresident companies that is attributable, under reasonable principles, to the nonresident's activities within Country X (the “trade or business tax”). The trade or business tax applies to all nonresident corporations that engage in business in Country X except for nonresident corporations that engage in insurance activities, which are instead subject to two different taxes (“insurance taxes”). The insurance taxes apply to nonresident corporations that engage in insurance activities that are attributable, under reasonable principles, to the nonresident's activities within Country X. The insurance taxes do not satisfy the cost recovery requirement in § 1.901-2(b)(4). The trade or business tax and the two insurance taxes were enacted

contemporaneously, and the statutory language of the trade or business tax expressly excludes gross income derived by nonresident corporations engaged in insurance activities from the trade or business tax.

(ii) ***Analysis.*** The insurance taxes meet the requirements in paragraphs (c)(1)(i) and (ii) of this section because Country X has a generally-imposed net income tax, the trade or business tax, and neither the trade or business tax nor any other separate levy that is a net income tax is imposed by Country X on a nonresident's gross income to which the amounts that form the base of the insurance taxes (the "excluded income") relate. The Country X tax law expressly provides that the trade or business tax does not apply to nonresident corporations engaged in insurance activities. In addition, the two insurance taxes were enacted contemporaneously with the trade or business tax. Therefore, it is demonstrated that Country X made a cognizant and deliberate choice to impose the insurance taxes in lieu of the generally-imposed trade or business tax, and the insurance taxes meet the requirement in paragraph (c)(1)(iii) of this section. If the trade or business tax also applied to the excluded income, the trade or business tax would meet the requirement in § 1.901-2(b)(5)(i)(A), because it would apply only to income attributable, under reasonable principles, to the nonresident's activities within the foreign country. Thus, the insurance taxes meet the requirement in paragraph (c)(1)(iv) of this section. Therefore, the insurance taxes satisfy the substitution requirement in paragraph (c)(1) of this section.

(6) ***Example 6: Later-enacted in-lieu-of tax; close connection requirement*** —

(i) ***Facts.*** The facts are the same as those in paragraph (d)(5)(i) of this section (the facts in *Example 5*), except that one of the two insurance taxes applies only to nonresident corporations engaged in the life insurance business in Country X and was enacted five years after the enactment of the trade or business tax and the other insurance tax enacted contemporaneously with the trade or business tax. The legislative history to the later-enacted insurance tax shows that Country X intended to increase the tax imposed on nonresident corporations engaged in life insurance activities and, instead of amending the first insurance tax to increase the rate applicable to life insurance companies, it enacted the second insurance tax that only applies to life insurance corporations.

(ii) ***Analysis.*** The later-enacted insurance tax meets the requirements in paragraphs (c)(1)(i) and (ii) of this section because Country X has a generally-imposed net income tax, the trade or business tax, and neither the trade or business tax nor any other separate levy that is a net income tax is imposed by Country X on the income attributable to the activities that form the base of the later-enacted insurance tax. The later-enacted insurance tax meets the requirement in paragraph (c)(1)(iii) of this section because the legislative history to the later-enacted insurance tax demonstrates that Country X made a cognizant and deliberate choice to impose the later-enacted insurance tax on life insurance companies instead of the trade or business tax. The later-enacted insurance tax also meets the requirement of paragraph (c)(1)(iv) of this section for the reasons set forth in paragraph (d)(5)(ii) of this section. Therefore, the later-enacted insurance tax satisfies the substitution requirement in paragraph (c)(1) of this section.

(7) ***Example 7: Excise tax creditable against net income tax*** —

(i) ***Facts.*** Country X imposes an excise tax that does not satisfy the cost recovery requirement in § 1.901-2(b)(4), and a net income tax within the meaning of § 1.901-2(a)(3). The excise tax, which is payable independently of the net income tax, is allowed as a credit against the net income tax. In Year 1, A has a tentative net income tax liability of 100u (units of Country X currency) but is allowed a credit for 30u of excise tax that it paid that year.

(ii) ***Analysis.*** Pursuant to § 1.901-2(e)(4), the amount of excise tax A has paid to Country X is 30u and the amount of net income tax A has paid to Country X is 70u. The excise tax paid by A does not satisfy the substitution requirement set forth in paragraph (c)(1) of this section because the excise tax is imposed in addition to, and not in substitution for, the generally-imposed net income tax.

(e) ***Applicability dates.*** Except as otherwise provided in this paragraph (e), this section applies to foreign taxes paid (within the meaning of § 1.901-2(g)(5)) in taxable years beginning on or after December 28, 2021. For foreign taxes paid to Puerto Rico under section 3070.01 of the Puerto Rico Internal Revenue Code of 2011, as amended (13 L.P.R.A. § 31771) (imposing an excise tax on a controlled group member's acquisition from another group member of certain personal property manufactured or produced in Puerto Rico and certain services performed in Puerto Rico), this section applies to foreign taxes paid (within the meaning of § 1.901-2(g)(5)) in taxable years beginning on or after January 1, 2023. For foreign taxes described in the preceding sentence that are paid in taxable years beginning before January 1, 2023, see § 1.903-1 as contained in 26 CFR part 1 revised as of April 1, 2021.

[T.D. 9959, 87 FR 357, Jan. 4, 2022]

§ 1.904-1 Limitation on credit for foreign income taxes.

(a) ***In general.*** For each separate category described in § 1.904-5(a)(4)(v), the total credit for foreign income taxes (as defined in § 1.901-2(a)) paid or accrued (including those deemed to have been paid or accrued other than by reason of section 904(c)) to any foreign country (as defined in § 1.901-2(g)) does not exceed that proportion of the tax against which such credit is taken which the taxpayer's taxable income from foreign sources (but not in excess of the taxpayer's entire taxable income) in such separate category bears to the taxpayer's entire taxable income for the same taxable year.

(b) ***Special computation of taxable income.*** For purposes of computing the limitation under paragraph (a) of this section, the taxable income in the case of an individual, estate, or trust is computed without any deduction for personal exemptions under section 151 or 642(b).

(c) ***Joint return.*** In the case of spouses making a joint return, the applicable limitation prescribed by section 904(a) on the credit for taxes paid or accrued to foreign countries and possessions of the United States is applied with respect to the aggregate taxable income in each separate category from sources without the United States, and the aggregate taxable income from all sources, of the spouses.

(d) ***Consolidated group.*** For rules relating to the computation of the foreign tax credit limitation for a consolidated group, see § 1.1502-4.

(e) ***Applicability dates.*** This section applies to taxable years that both begin after December 31, 2017, and end on or after December 4, 2018.

[T.D. 9882, 84 FR 69075, Dec. 17, 2019, as amended by T.D. 9922, 85 FR 72056, Nov. 12, 2020]

§ 1.904-2 Carryback and carryover of unused foreign tax.

(a) ***Credit for foreign tax carryback or carryover.*** A taxpayer who chooses to claim a credit under section 901 for a taxable year is allowed a credit under that section not only for taxes otherwise allowable as a credit but also for taxes deemed paid or accrued in that year as a result of a carryback or carryover of an unused foreign tax under section 904(c). However, the taxes so deemed paid or accrued are not allowed as a deduction under section 164(a). Foreign tax paid, accrued, or deemed paid under section 960 with respect to section 951A category income, including section 951A category income that is reassigned to a separate category for income resourced under a treaty, may not be carried back or carried forward or deemed paid or accrued under section 904(c). See § 1.904-6 for rules for allocating and apportioning taxes to separate categories. For special rules regarding these computations in case of taxes paid, accrued, or deemed paid with respect to foreign oil and gas extraction income or foreign oil related income, see section 907(f).

(b) ***Years to which foreign taxes are carried.*** If the taxpayer chooses the benefits of section 901 for a taxable year, any unused foreign tax paid or accrued in that year is carried first to the immediately preceding taxable year and then, as applicable, to each of the ten succeeding taxable years, in chronological order, but only to the extent not absorbed as taxes deemed paid or accrued under paragraphs (a) and (d) of this section in a prior taxable year.

(c) ***Definitions.*** This paragraph (c) provides definitions that apply for purposes of this section.

(1) ***Unused foreign tax.*** The term *unused foreign tax* means, with respect to each separate category for any taxable year, the excess of the amount of creditable foreign tax paid or accrued, or deemed paid under section 902 (as in effect on December 21, 2017) or section 960, in such year, over the applicable foreign tax credit limitation under section 904 for the separate category in such year. Unused foreign tax does not include any amount for which a credit is disallowed, including foreign income taxes for which a credit is disallowed or reduced when the tax is paid, accrued, or deemed paid.

(2) ***Separate category.*** The term *separate category* has the same meaning as provided in § 1.904-5(a)(4)(v).

(3) ***Excess limitation*** —

(i) ***In general.*** The term *excess limitation* means, with respect to a separate category for any taxable year (the *excess limitation year*) and an unused foreign tax carried from another taxable year (the *excess credit year*), the amount (if any) by which the limitation for that separate category with respect to that excess limitation year exceeds the sum of—

(A) The creditable foreign tax actually paid or accrued or deemed paid under section 902 (as in effect on December 21, 2017) or section 960 with respect to the separate category in the excess limitation year; and

(B) The portion of any unused foreign tax for a taxable year preceding the excess credit year that is absorbed as taxes deemed paid or accrued in the excess limitation year under paragraphs (a) and (d) of this section.

(ii) ***Deduction years.*** Excess limitation for a taxable year absorbs unused foreign tax, regardless of whether the taxpayer chooses to claim a credit under section 901 for the year. In such case, the amount of the excess limitation, if any, for the year is determined in the same manner as though the taxpayer had chosen to claim a credit under section 901 for that year. For purposes

of this determination, if the taxpayer has an overall foreign loss account, the excess limitation in a deduction year is determined based on the amount of the overall foreign loss the taxpayer would have recaptured if the taxpayer had chosen to claim a credit under section 901 for that year and had not made an election under § 1.904(f)-2(c)(2) to recapture more of the overall foreign loss account than is required under § 1.904(f)-2(c)(1).

(d) ***Taxes deemed paid or accrued*** —

(1) ***Amount deemed paid or accrued.*** The amount of unused foreign tax with respect to a separate category that is deemed paid or accrued in any taxable year to which such unused foreign tax may be carried under paragraph (b) of this section is equal to the smaller of—

(i) The portion of the unused foreign tax that may be carried to the taxable year under paragraph (b) of this section; or

(ii) The amount, if any, of the excess limitation for such taxable year with respect to the separate category of such unused foreign tax.

(2) ***Carryback or carryover tax deemed paid or accrued in the same separate category.*** Any unused foreign tax, which is deemed to be paid or accrued under section 904(c) in the year to which it is carried, is deemed to be paid or accrued with respect to the same separate category as the category to which it was assigned in the year in which it was actually paid or accrued. However, see paragraphs (h) through (j) of this section for transition rules in the case of certain carrybacks and carryovers.

(3) ***No duplicate disallowance of creditable foreign tax.*** Foreign income taxes for which a credit is partially disallowed, including when the tax is paid, accrued, or deemed paid, are not reduced again by reason of the unused foreign tax being deemed to be paid or accrued in the year to which it is carried under section 904(c).

(e) ***Periods of less than 12 months.*** A fractional part of a year which is a taxable year under sections 441(b) and 7701(a)(23) is a preceding or a succeeding taxable year for the purpose of determining under section 904(c) the years to which the unused foreign tax may be carried, and any unused foreign tax or excess limitation for such fractional part of a year is the unused foreign tax or excess limitation for a taxable year.

(f) ***Statement with tax return.*** Every taxpayer claiming the benefit of a carryback or carryover of the unused foreign tax to any taxable year for which he chooses to claim a credit under section 901 shall file with his return (or with his claim for refund, if appropriate) for that year as an attachment to his Form 1116 or 1118, as the case may be, a statement setting forth the unused foreign tax deemed paid or accrued under this section and all material and pertinent facts relative thereto, including a detailed schedule showing the computation of the unused foreign tax so carried back or over.

(g) [Reserved]

(h) ***Transition rules for carryovers of pre-2003 unused foreign tax and carrybacks of post-2002 unused foreign tax paid or accrued with respect to dividends from noncontrolled section 902 corporations.*** For transition rules for carryovers of pre-2003 unused foreign tax, and carrybacks of post-2002 unused foreign tax, paid or accrued with respect to dividends from noncontrolled section 902 corporations, see 26 CFR 1.904-2(h) (revised as of April 1, 2018).

(i) ***Transition rules for carryovers of pre-2007 unused foreign tax and carrybacks of post-2006 unused foreign tax.*** For transition rules for carryovers of pre-2007 unused foreign tax, and carrybacks of post-2006 unused foreign tax, see 26 CFR 1.904-2(i) (revised as of April 1, 2018).

(j) *Transition rules for carryovers and carrybacks of pre-2018 and post-2017 unused foreign tax* —

(1) *Carryover of unused foreign tax* —

(i) ***In general.*** For purposes of this paragraph (j), the terms *post-2017 separate category, pre-2018 separate category,* and *specified separate category* have the meanings set forth in § 1.904(f)-12(j)(1). The rules of this paragraph (j)(1) apply to reallocate to the taxpayer's post-2017 separate categories for foreign branch category income, general category income, passive category income, and specified separate categories of income, any unused foreign taxes (as defined in paragraph (c)(1) of this section) that were paid or accrued or deemed paid under sections 902 and 960 with respect to income in a pre-2018 separate category.

(ii) ***Allocation to the same separate category.*** Except as provided in paragraph (j)(1)(iii) of this section, to the extent any unused foreign taxes paid or accrued or deemed paid with respect to a separate category of income are carried forward to a taxable year beginning after December 31, 2017, such taxes are allocated to the same post-2017 separate category as the pre-2018 separate category from which the unused foreign taxes are carried.

(iii) *Exception for certain general category unused foreign taxes* —

(A) ***In general.*** To the extent any unused foreign taxes with respect to general category income are carried forward to a taxable year beginning after December 31, 2017, a taxpayer may choose to allocate those taxes to the taxpayer's post-2017 separate category for foreign branch category income to the extent the unused foreign taxes would have been allocated to the taxpayer's post-2017 separate category for foreign branch category income, and would have been unused foreign taxes with respect to foreign branch category income if that separate category had applied in the year or years the unused foreign taxes arose. Any remaining unused foreign taxes paid or accrued or deemed paid with respect to general category income carried forward to a taxable year beginning after December 31, 2017, are allocated to the taxpayer's post-2017 separate category for general category income.

(B) ***Safe harbor.*** In lieu of applying paragraph (j)(1)(iii)(A) of this section, the taxpayer may choose to allocate the unused foreign taxes with respect to general category income in a taxable year beginning before January 1, 2018, to the taxpayer's post-2017 separate category for foreign branch category income based on a ratio equal to the amount of foreign income taxes assigned to the general category that were paid or accrued by the taxpayer's foreign branches (as defined in § 1.904-4(f)(3)(vii)) bears to all foreign income taxes assigned to the general category that were paid or accrued, or deemed paid by the taxpayer with respect to such taxable year. The amount of taxes paid or accrued by a foreign branch in a taxable year beginning before January1, 2018, means all foreign income taxes properly reflected on the separate set of books and records (as defined in § 1.989(a)-1(d)(1) and (2)) of the foreign branch as an expense (which does not include any taxes deemed paid under section 902 or 960).

(C) ***Rules regarding the exception.*** A taxpayer applying the exception described in this paragraph (j)(1)(iii) (the *branch carryover exception*) must apply the exception to all of its unused foreign taxes paid or accrued with respect to general category income that are carried forward to all taxable years beginning after December 31, 2017. A taxpayer may apply the branch carryover exception on a timely filed original return (including

extensions) or an amended return. A taxpayer that applies the exception on an amended return must make appropriate adjustments to eliminate any double benefit arising from application of the exception to years that are not open for assessment.

(D) ***Coordination rule.*** See § 1.904(f)-12(j)(6) for coordination rule with respect to the exception described in paragraph (j)(1)(iii) of this section and the exceptions described in § 1.904(f)-12(j)(2) through (4).

(2) ***Carryback of unused foreign tax*** —

(i) ***In general.*** The rules of this paragraph (j)(2) apply to any unused foreign taxes that were paid or accrued, or deemed paid under section 960, with respect to income in a post-2017 separate category.

(ii) ***Passive category income and specified separate categories of income described in § 1.904-4(m).*** Any unused foreign taxes paid or accrued or deemed paid with respect to passive category income or a specified separate category of income in a taxable year beginning after December 31, 2017, that are carried back to a taxable year beginning before January 1, 2018, are allocated to the same pre-2018 separate category as the post-2017 separate category from which the unused foreign taxes are carried.

(iii) ***General category income and foreign branch category income.*** Any unused foreign taxes paid or accrued or deemed paid with respect to general category income or foreign branch category income in a taxable year beginning after December 31, 2017, that are carried back to a taxable year beginning before January 1, 2018, are allocated to the taxpayer's pre-2018 separate category for general category income.

(k) ***Applicability date.*** Paragraphs (a) through (i) of this section apply to taxable years that both begin after December 31, 2017, and end on or after December 4, 2018. Paragraph (j) of this section applies to taxable years beginning after December 31, 2017. Paragraph (j)(2) of this section also applies to the last taxable year beginning before January 1, 2018.

[T.D. 6789, 29 FR 19244, Dec. 31, 1964]

Editorial Note: For FEDERAL REGISTER citations affecting § 1.904-2, see the List of CFR Sections Affected, which appears in the Finding Aids section of the printed volume and at *www.govinfo.gov*.

§ 1.904-3 Carryback and carryover of unused foreign tax by spouses making a joint return.

(a) ***In General.*** This section provides rules, in addition to those prescribed in § 1.904-2, for the carryback and carryover of the unused foreign tax paid or accrued to a foreign country or possession by spouses making a joint return for one or more of the taxable years involved in the computation of the carryback or carryover. The rules in this section apply separately with respect to each separate category as defined in § 1.904-5(a)(4)(v).

(b) ***Joint unused foreign tax and joint excess limitation.*** In the case of spouses the joint unused foreign tax or the joint excess limitation for a taxable year for which a joint return is made shall be computed on the basis of the combined income, deductions, taxes, and credit of both spouses as if the combined income, deductions, taxes, and credit were those of one individual.

(c) ***Continuous use of joint return.*** If spouses make a joint return for the current taxable year, and also make joint returns for each of the other taxable years involved in the computation of the carryback or carryover of the unused foreign tax to the current taxable year, the joint carryback or the joint carryover to the current taxable year shall be computed on the basis of the joint unused foreign tax and the joint excess limitations.

(d) ***From separate to joint return.*** If spouses make a joint return for the current taxable year, but make separate returns for all of the other taxable years involved in the computation of the carryback or carryover of the unused foreign tax to the current taxable year, the separate carrybacks or separate carryovers shall be a joint carryback or a joint carryover to the current taxable year.

(e) ***Amounts carried from or through a joint return year to or through a separate return year*** —

(1) ***In general.*** It is necessary to allocate to each spouse the spouse's share of an unused foreign tax or excess limitation for any taxable year for which the spouses filed a joint return if—

(i) The spouses file separate returns for the current taxable year and an unused foreign tax is carried thereto from a taxable year for which they filed a joint return;

(ii) The spouses file separate returns for the current taxable year and an unused foreign tax is carried to such taxable year from a year for which they filed separate returns but is first carried through a year for which they filed a joint return; or

(iii) The spouses file a joint return for the current taxable year and an unused foreign tax is carried from a taxable year for which they filed joint returns but is first carried through a year for which they filed separate returns.

(2) ***Computation and adjustments.*** In the cases described in paragraph (e)(1) of this section, the separate carryback or carryover of each spouse to the current taxable year shall be computed in the manner described in § 1.904-2 but with the modifications set forth in paragraph (f) of this section. Where applicable, appropriate adjustments are made to take into account the fact that, for any taxable year involved in the computation of the carryback or the carryover, either spouse has combined foreign oil and gas income described in section 907(b) with respect to which the limitation in section 907(a) applies.

(f) ***Allocation of unused foreign tax and excess limitation*** —

(1) ***Separate category limitation.*** The limitation in a separate category of a particular spouse for a taxable year for which a joint return is made shall be the portion of the limitation on the joint return which bears the same ratio to such limitation as such spouse's foreign source taxable income (with gross income and deductions taken into account to the same extent as taken into account on the joint return) in such separate category (but not in excess of the joint foreign source taxable income) bears to the joint foreign source taxable income in such separate category.

(2) ***Unused foreign tax.*** For purposes of this section, the term *unused foreign tax* means, with respect to a particular spouse and separate category for a taxable year for which a joint return is made, the excess of the foreign tax paid or accrued by that spouse with respect to that separate category over that spouse's separate category limitation.

(3) ***Excess limitation.*** For purposes of this section, the term *excess limitation* means, with respect to a particular spouse and separate category for a taxable year for which a joint return is made, the excess of that spouse's separate category limitation over the foreign taxes paid or accrued by such spouse with respect to such separate category for such taxable year.

(4) ***Excess limitation to be applied.*** The excess limitation of the particular spouse for any taxable year which is applied against the unused foreign tax of that spouse for another taxable year in order to determine the amount of the unused foreign tax which shall be carried back or over to a third taxable year shall be, in a case in which the excess limitation is determined on a joint return, the sum of the following amounts:

(i) Such spouse's excess limitation determined under subparagraph (3) of this paragraph reduced as provided in subparagraph (5)(i) of this paragraph, and

(ii) The excess limitation of the other spouse determined under subparagraph (3) of this paragraph for that taxable year reduced as provided in subparagraphs (5) (i) and (ii) of this paragraph.

(5) ***Reduction of excess limitation.***

(i) The part of the excess limitation which is attributable to each spouse for the taxable year, as determined under subparagraph (3) of this paragraph, shall be reduced by absorbing as taxes deemed paid or accrued under section 904(c) in that year the unabsorbed separate unused foreign tax of such spouse, and the unabsorbed unused foreign tax determined under subparagraph (2) of this paragraph of such spouse, for taxable years which begin before the beginning of the year of origin of the unused foreign tax of the particular spouse against which the excess limitation so determined is being applied.

(ii) In addition, the part of the excess limitation which is attributable to the other spouse for the taxable year, as determined under subparagraph (3) of this paragraph, shall be reduced by absorbing as taxes deemed paid or accrued under section 904(c) in that year the unabsorbed unused foreign tax, if any, of such other spouse for the taxable year which begins on the same date as the beginning of the year of origin of the unused foreign tax of the particular spouse against which the excess limitation so determined is being applied.

(g) [Reserved]

(h) ***Applicability date.*** This section is applicable for taxable years that both begin after December 31, 2017, and end on or after December 4, 2018.

[T.D. 6789, 29 FR 19246, Dec. 31, 1964, as amended by T.D. 7292, 38 FR 33292, Dec. 3, 1973; T.D. 7490, 42 FR 30497, June 15, 1977; T.D. 7961, 49 FR 26225, June 27, 1984; T.D. 9882, 84 FR 69076, Dec. 17, 2019]

§ 1.904-4 Separate application of section 904 with respect to certain categories of income.

(a) ***In general.*** A taxpayer is required to compute a separate foreign tax credit limitation for income received or accrued in a taxable year that is described in section 904(d)(1)(A) (section 951A category income), 904(d)(1)(B) (foreign branch category income), 904(d)(1)(C) (passive category income), 904(d)(1)(D) (general category income), or paragraph (m) of this section (specified separate categories). For purposes of this section, the definitions in § 1.904-5(a)(4) apply.

(b) ***Passive category income*** —

(1) ***In general.*** The term *passive category income* means passive income and specified passive category income.

(2) ***Passive income*** —

(i) ***In general.*** The term *passive income* means any—

(A) Income received or accrued by any person that is of a kind that would be foreign personal holding company income (as defined in section 954(c), taking into account any exceptions or exclusions to section 954(c), including, for example, section 954(c)(3), (c)(6), (h), or (i)) if the taxpayer were a controlled foreign corporation, including any amount of gain on the sale or exchange of stock in excess of the amount treated as a dividend under section 1248;

(B) Amount includible in gross income under section 1293;

(C) Distributive shares of partnership income treated as passive category income under paragraph (n)(1) of this section, and income from the sale of a partnership interest treated as passive category income under paragraph (n)(2) of this section; or

(D) Income treated as passive category income under the look-through rules in § 1.904-5.

(ii) ***Exceptions.*** Passive income does not include any export financing interest (as defined in paragraph (h) of this section), any high-taxed income (as defined in paragraph (c) of this section), financial services income (as defined in paragraph (e)(1)(ii) of this section), or any active rents and royalties (as defined in paragraph (b)(2)(iii) of this section). In addition, passive income does not include any income that would otherwise be passive but is excluded from passive category income under § 1.904-5(b)(1) or that is assigned to a separate category other than passive category income under § 1.904-5(c)(4)(iii). See also paragraph (k) of this section for rules relating to income resourced under a tax treaty. In determining whether any income is of a kind that would be foreign personal holding company income, the rules of section 864(d)(5)(A)(i) and (6) (treating related person factoring income of a controlled foreign corporation as foreign personal holding company income that is not eligible for the export financing income exception to the separate limitation for passive income) shall apply only in the case of income of a controlled foreign corporation (as defined in section 957). Thus, income earned directly by a United States person that is related person factoring income may be eligible for the exception for export financing interest.

(iii) ***Active rents or royalties*** —

(A) ***In general.*** For rents and royalties paid or accrued after September 20, 2004, passive income does not include any rents or royalties that are derived in the active conduct of a trade or business, regardless of whether such rents or royalties are received from a related or an unrelated person. Except as provided in paragraph (b)(2)(iii)(B) of this section, the principles of section 954(c)(2)(A) and the regulations under that section shall apply in determining whether rents or royalties are derived in the active conduct of a trade or business. For this purpose, the term taxpayer shall be substituted for the term controlled foreign corporation if the recipient of the rents or royalties is not a controlled foreign corporation.

(B) ***Active conduct of trade or business.*** Rents and royalties are considered derived in the active conduct of a trade or business by a United States person or by a controlled foreign corporation (or other entity to which the look-through rules apply) for purposes of section 904 (but not for purposes of section 954) if the requirements of section 954(c)(2)(A) are satisfied by one or more corporations that are members of an affiliated group of corporations (within the meaning of section 1504(a), determined without regard to section 1504(b)(3)) of which the recipient is a member. For purposes of this paragraph (b)(2)(iii)(B), an affiliated group includes only domestic corporations and foreign

corporations that are controlled foreign corporations in which domestic members of the affiliated group own, directly or indirectly, at least 80 percent of the total voting power and value of the stock. For purposes of this paragraph (b)(2)(iii)(B), indirect ownership shall be determined under section 318 and the regulations under that section.

(iv) ***Examples.*** The following examples illustrate the application of this paragraph (b)(2).

(A) ***Example 1.*** For Year 1, USP, a domestic corporation, has a net foreign currency gain that would not constitute foreign personal holding company income if USP were a controlled foreign corporation because the gain is directly related to the business needs of USP. See section 954(c)(1)(D). Under paragraph (b)(2)(i)(A) of this section, the foreign currency gain is, therefore, not passive category income to USP because it is not income of a kind that would be foreign personal holding company income.

(B) ***Example 2.*** Controlled foreign corporation, CFC, is a wholly-owned subsidiary of USP, a domestic corporation. CFC is regularly engaged in the restaurant franchise business. USP licenses trademarks, tradenames, certain know-how, related services, and certain restaurant designs for which CFC pays USP an arm's length royalty. USP is regularly engaged in the development and licensing of such property. Some of the franchisees are unrelated to CFC and USP. Other franchisees are related to CFC or USP and use the licensed property outside of CFC's country of incorporation. CFC does not satisfy, but USP does satisfy, the active trade or business requirements of section 954(c)(2)(A). The royalty income earned by CFC from both its related and unrelated franchisees is foreign personal holding company income because CFC does not satisfy the active trade or business requirements of section 954(c)(2)(A) and, in addition, the royalty income from the related franchisees does not qualify for the same country exception of section 954(c)(3) or the look-through exception in section 954(c)(6). However, all of the royalty income earned by CFC is general category income to CFC under § 1.904-4(b)(2)(iii) because USP, a member of CFC's affiliated group, satisfies the active trade or business test (which is applied without regard to whether the royalties are paid by a related person). USP's inclusion under section 951(a)(1)(A) of CFC's royalty income is general category income to USP under § 1.904-5(c)(5) and paragraph (d) of this section. The royalties received by USP are general category income to USP under § 1.904-5(b)(1) and paragraph (d) of this section.

(3) ***Specified passive category income*** means—

(i) Dividends from a DISC or former DISC (as defined in section 992(a)) to the extent such dividends are treated as income from sources without the United States;

(ii) Taxable income attributable to foreign trade income (within the meaning of section 923(b)); or

(iii) Distributions from a FSC (or a former FSC) out of earnings and profits attributable to foreign trade income (within the meaning of section 923(b)) or interest or carrying charges (as defined in section 927(d)(1)) derived from a transaction which results in foreign trade income (as defined in section 923(b)).

(c) ***High-taxed income*** —

(1) ***In general.*** Income received or accrued by a United States person that would otherwise be passive income is not treated as passive income if the income is determined to be high-taxed income. Income is considered to be high-taxed income if, after allocating expenses, losses, and other deductions of the United States person to that income under paragraph (c)(2) of this section, the

sum of the foreign income taxes paid or accrued, and deemed paid under section 960, by the United States person with respect to such income (reduced by any portion of such taxes for which a credit is not allowed) exceeds the highest rate of tax specified in section 1 or 11, whichever applies (and with reference to section 15 if applicable), multiplied by the amount of such income (including the amount treated as a dividend under section 78). If, after application of this paragraph (c), income that would otherwise be passive income is determined to be high-taxed income, the income is treated as general category income, foreign branch category income, section 951A category income, or income in a specified separate category, as determined under the rules of this section, and any taxes imposed on that income are considered related to the same separate category of income under § 1.904-6. If, after application of this paragraph (c), passive income is zero or less than zero, any taxes imposed on the passive income are considered related to the same separate category of income to which the passive income (if not reduced to zero or less than zero) would have been assigned had the income been treated as high-taxed income (general category, foreign branch category, section 951A category, or a specified separate category). For additional rules regarding losses related to passive income, see paragraph (c)(2) of this section. Income and taxes shall be translated at the appropriate rates, as determined under sections 986, 987 and 989 and the regulations under those sections, before application of this paragraph (c). For purposes of allocating taxes to groups of income, United States source passive income is treated as any other passive income. In making the determination whether income is high-taxed, however, only foreign source income, as determined under United States tax principles, is relevant.

(2) ***Grouping of items of income in order to determine whether passive income is high-taxed income***

(i) ***Grouping rules*** *—Initial allocation and apportionment of deductions and taxes.* For purposes of determining whether passive income is high-taxed, expenses, losses and other deductions shall be allocated and apportioned initially to each of the groups of passive income (described in paragraphs (c)(3), (4), and (5) of this section) under the rules of §§ 1.861-8 through 1.861-17 and 1.865-1 through 1.865-2. Taxpayers that allocate and apportion interest expense on an asset basis may nevertheless apportion passive interest expense among the groups of passive income on a gross income basis. Foreign taxes are allocated to groups under the rules of § 1.904-6(a)(1)(iii). If a loss on a disposition of property gives rise to foreign tax (i.e., the transaction giving rise to the loss is treated under foreign law as having given rise to a gain), the foreign tax shall be allocated to the group of passive income to which gain on the sale would have been assigned under paragraph (c)(3) or (4) of this section. A determination of whether passive income is high-taxed shall be made only after application of paragraph (c)(2)(ii) of this section (if applicable).

(ii) ***Reallocation of loss groups.*** If, after allocation and apportionment of expenses, losses and other deductions under paragraph (c)(2)(i) of this section, the sum of the allocable deductions exceeds the gross income in one or more groups, the excess deductions shall proportionately reduce income in the other groups (but not below zero).

(iii) ***Coordination with section 904(b), (f) and (g).*** The determination of whether foreign source passive income is high-taxed is made before taking into account any adjustments under section 904(b) or any allocation or recapture of a separate limitation loss, overall foreign loss, or overall domestic loss under section 904(f) and (g).

(3) ***Amounts received or accrued by United States persons.*** Except as otherwise provided in paragraph (c)(5) of this section, all passive income received by a United States person are subject to the rules of this paragraph (c)(3). Paragraph (c)(4) of this section provides additional rules for inclusions

under section 951(a)(1) or 951A(a) that are passive income, dividends from a controlled foreign corporation or noncontrolled 10-percent owned foreign corporation that are passive income, and income that is received or accrued by a United States person through a foreign QBU that is passive income. For purposes of this paragraph (c), a foreign QBU is a qualified business unit (as defined in section 989(a)), other than a controlled foreign corporation or noncontrolled 10-percent owned foreign corporation, that has its principal place of business outside the United States. The rules in this paragraph (c)(3) apply whether the income is received from a controlled foreign corporation of which the United States person is a United States shareholder, from a noncontrolled 10-percent owned foreign corporation of which the United States person is a United States shareholder that is a domestic corporation, or from any other person. In applying the rules in this paragraph (c)(3), passive income is not treated as subject to a withholding tax or other foreign tax when a credit is disallowed in full for such foreign tax, for example, under section 901(k). For purposes of determining whether passive income is high-taxed income, the following rules apply:

(i) All passive income received during the taxable year that is subject to a withholding tax of fifteen percent or greater shall be treated as one item of income.

(ii) All passive income received during the taxable year that is subject to a withholding tax of less than fifteen percent (but greater than zero) shall be treated as one item of income.

(iii) All passive income received during the taxable year that is subject to no withholding tax or other foreign tax shall be treated as one item of income.

(iv) All passive income received during the taxable year that is subject to no withholding tax but is subject to a foreign tax other than a withholding tax shall be treated as one item of income.

(4) ***Dividends and inclusions from controlled foreign corporations, dividends from noncontrolled 10-percent owned foreign corporations, and income attributable to foreign QBUs.*** Except as provided in paragraph (c)(5) of this section, the rules of this paragraph (c)(4) apply to all dividends and all amounts included in gross income of a United States shareholder under section 951(a)(1) or 951A(a) with respect to the foreign corporation that (after application of the look-through rules of section 904(d)(3) and § 1.904-5) are attributable to passive income received or accrued by a controlled foreign corporation, all dividends from a noncontrolled 10-percent owned foreign corporation that are received or accrued by a United States shareholder that (after application of the look-through rules of section 904(d)(4) and § 1.904-5) are treated as passive income, and all amounts of passive income received or accrued by a United States person through a foreign QBU. The grouping rules of paragraphs (c)(3)(i) through (iv) of this section apply separately to dividends, to inclusions under section 951(a)(1) and to inclusions under section 951A(a) with respect to each controlled foreign corporation of which the taxpayer is a United States shareholder, and to dividends with respect to each noncontrolled 10-percent owned foreign corporation of which the taxpayer is a United States shareholder that is a domestic corporation. The grouping rules of paragraphs (c)(3)(i) through (iv) of this section also apply separately to income attributable to each tested unit, as defined in § 1.951A-2(c)(7)(iv), of a controlled foreign corporation, and to each foreign QBU of a noncontrolled 10-percent owned foreign corporation or any other look-through entity defined in § 1.904-5(i), or of any United States person.

(5) *Special rules* —

(i) ***Certain rents and royalties.*** All items of rent or royalty income to which an item of rent or royalty expense is directly allocable shall be treated as a single item of income and shall not be grouped with other amounts.

(ii) ***Treatment of partnership income.*** A partner's distributive share of income from a foreign or domestic partnership that is treated as passive income under paragraph (n)(1)(ii) of this section (generally providing that a less than 10 percent partner's distributive share of partnership income is passive income) is treated as a single item of income and is not grouped with other amounts. A distributive share of income from a partnership that is treated as passive income under paragraph (n)(1)(i) of this section is grouped according to the rules in paragraph (c)(3) of this section, except that the portion, if any, of the distributive share of income attributable to income earned by a domestic partnership through a foreign QBU is separately grouped under the rules of paragraph (c)(4) of this section.

(iii) ***Currency gain or loss*** —

(A) ***Section 986(c).*** Any currency gain or loss with respect to a distribution received by a United States shareholder (other than a foreign QBU of that shareholder) of previously taxed earnings and profits that is recognized under section 986(c) and that is treated as an item of passive income shall be subject to the rules provided in paragraph (c)(3)(iii) of this section.

(B) ***Section 987.*** For special rules relating to the allocation and apportionment of foreign income taxes to section 987 items, *see* § 1.987-6(b)(3).

(C) ***Example.*** The following example illustrates the application of this paragraph (c)(5)(iii).

(*1*) ***Facts.*** USP, a domestic corporation, owns all of the stock of CFC, a controlled foreign corporation organized and operating in Country X that uses the “u” as its functional currency. In Year 1, when the highest rate of U.S. tax in section 11 is 21%, CFC earns 100u of passive category foreign personal holding company income subject to no foreign tax. When included in USP's income under section 951(a), the applicable exchange rate is 1u=$1x. Therefore, USP's section 951(a) inclusion is $100x and no foreign taxes are deemed paid by USP with respect to the inclusion. At the end of Year 1, CFC has previously taxed earnings and profits of 100u and USP's basis in those earnings is $100x. In Year 2, CFC has no earnings and profits and distributes 100u to USP. The value of the earnings when distributed is $150x. Assume that under section 986(c), USP must recognize $50x of passive category income attributable to the appreciation of the previously taxed earnings and profits. Country X does not recognize any gain or loss on the distribution, but imposes a 10u withholding tax on USP with respect to the distribution.

(*2*) ***Analysis.*** Because the section 986(c) gain is not subject to any foreign withholding tax or other foreign tax, under paragraph (c)(3)(iii) of this section the section 986(c) gain is grouped with other items of USP's income that are subject to no withholding tax or other foreign tax. Under paragraph (c)(6)(iii) of this section, the 10u withholding tax is related to passive category income. See section 960(c) and § 1.960-4 for rules relating to the increase in limitation in the year of distribution of previously taxed earnings and profits.

(iv) ***Coordination with section 954(b)(4).*** For rules relating to passive income of a controlled foreign corporation that is exempt from subpart F treatment because the income is subject to high foreign tax, see section 904(d)(3)(E), § 1.904-4(c)(7)(iii), and § 1.904-5(d)(2).

(6) ***Application of this paragraph to additional taxes paid or deemed paid in the year of receipt of previously taxed income*** —

(i) ***Determination made in year of inclusion.*** The determination of whether an amount included in gross income under section 951(a)(1) or 951A(a) is high-taxed income is made in the taxable year the income is included in the gross income of the United States shareholder under section 951(a) or 951A(a) (for purposes of this paragraph (c), the *year of inclusion*). Any increase in foreign taxes paid or accrued, or deemed paid, when the taxpayer receives an amount that is excluded from gross income under section 959(a) and that is attributable to a controlled foreign corporation's earnings and profits relating to the amount previously included in gross income will not be considered in determining whether the amount included in income in the year of inclusion is high-taxed income.

(ii) ***Exception.*** Paragraph (c)(6)(i) of this section shall not apply to an increase in tax in a case in which the taxpayer is required to adjust its foreign taxes in the year of inclusion under section 905(c).

(iii) ***Allocation of foreign taxes imposed on distributions of previously taxed income.*** If an item of income is considered high-taxed income in the year of inclusion and paragraph (c)(6)(i) of this section applies, then any increase in foreign income taxes imposed with respect to that item are considered to be related to the same separate category to which the income was assigned in the taxable year of inclusion. If an item of income is not considered to be high-taxed income in the year of inclusion and paragraph (c)(6)(i) of this section applies, the following rules shall apply. The taxpayer shall treat an increase in taxes paid or accrued, or deemed paid, on any distribution of the earnings and profits attributable to the amount included in gross income in the year of inclusion as taxes related to passive income to the extent of the excess of the product of the highest rate of tax in section 11 (determined with regard to section 15 and determined as of the year of inclusion) and the amount of the inclusion (after allocation of parent expenses) over the taxes paid or accrued, or deemed paid, in the year of inclusion. The taxpayer shall treat any taxes paid or accrued, or deemed paid, on the distribution in excess of this amount as taxes related to the same category of income to which such inclusion would have been assigned had the income been treated as high-taxed income in the year of inclusion (general category income, section 951A category income, or income in a specified separate category). If these additional taxes are not creditable in the year of distribution, the carryover rules of section 904(c) apply (see section 904(c) and § 1.904-2(a) for rules disallowing carryovers in the section 951A category). For purposes of this paragraph (c)(6), the foreign tax on an inclusion under section 951(a)(1) or 951A(a) is considered increased on distribution of the earnings and profits associated with that inclusion if the total of taxes paid and deemed paid on the inclusion and the distribution (taking into account any reductions in tax and any withholding taxes) exceeds the total taxes deemed paid in the year of inclusion. Any foreign currency loss associated with the earnings and profits that are distributed with respect to the inclusion is not to be considered as giving rise to an increase in tax.

(iv) ***Increase in taxes paid by successors.*** If passive earnings and profits previously included in income of a United States shareholder are distributed to a person that was not a United States shareholder of the distributing corporation in the year the earnings were included, any increase in foreign taxes paid or accrued, or deemed paid, on that distribution is treated as taxes related to general category income (or income in a specified separate category, if applicable) in the case of earnings and profits previously included under section 951(a)(1), and is treated as taxes related to section 951A category income (or income in a specified separate category, if

applicable) in the case of earnings and profits previously included under section 951A(a), regardless of whether the previously-taxed income was considered high-taxed income under section 904(d)(2)(F) in the year of inclusion.

(7) *Application of this paragraph to certain reductions of tax on distributions of income* —

(i) ***In general.*** If the effective rate of tax imposed by a foreign country on income of a foreign corporation that is included in a taxpayer's gross income is reduced under foreign law on distribution of such income, the rules of this paragraph (c) apply at the time that the income is included in the taxpayer's gross income, without regard to the possibility of a subsequent reduction of foreign tax on the distribution. If the inclusion is considered to be high-taxed income, then the taxpayer must initially treat the inclusion as general category income, section 951A category income, or income in a specified separate category as provided in paragraph (c)(1) of this section. When the foreign corporation distributes the earnings and profits to which the inclusion was attributable and the foreign tax on the inclusion is reduced, then if a redetermination of U.S. tax liability is required under § 1.905-3(b)(2), the taxpayer must redetermine whether the revised inclusion (if any) is considered to be high-taxed income. See § 1.905-3(b)(2)(ii) (requiring a redetermination of the amount of the inclusion, the application of the high-tax exception under section 954(b)(4), and the amount of foreign taxes deemed paid). If, taking into account the reduction in foreign tax, the inclusion is not considered high-taxed income, then the taxpayer, in redetermining its U.S. tax liability for the year or years affected, must treat the inclusion and the associated taxes (as reduced on the distribution) as passive category income and taxes. For purposes of this paragraph (c), the foreign tax on an inclusion under section 951(a)(1) or 951A(a) is considered reduced on distribution of the earnings and profits associated with the inclusion if the total taxes paid and deemed paid on the inclusion and the distribution (taking into account any reductions in tax and any withholding taxes) is less than the total taxes deemed paid in the year of inclusion. Therefore, any foreign currency gain associated with the earnings and profits that are distributed with respect to the inclusion is not taken into account in determining whether there is a reduction of tax requiring a redetermination of whether the inclusion is high-taxed income.

(ii) ***Allocation of reductions of foreign tax.*** For purposes of paragraph (c)(7)(i) of this section, reductions in foreign tax shall be allocated among the separate categories under the same principles as those of § 1.904-6 for allocating taxes among the separate categories. Thus, for purposes of determining to which year's taxes the reduction in taxes relates, foreign law shall apply. If, however, foreign law does not attribute a reduction in taxes to a particular year or years, then the reduction in taxes shall be attributable, on an annual last in-first out (LIFO) basis, to foreign taxes potentially subject to reduction that are associated with previously taxed income, then on a LIFO basis to foreign taxes associated with income that under paragraph (c)(7)(iii) of this section remains as passive income but that was excluded from subpart F income or tested income under section 954(b)(4) or section 951A(c)(2)(A)(i)(III), and finally on a LIFO basis to foreign taxes associated with other earnings and profits. Furthermore, in applying the ordering rules of section 959(c), distributions shall be considered made on a LIFO basis first out of earnings described in section 959(c)(1) and (2), then on a LIFO basis out of earnings and profits associated with income that remains passive income under paragraph (c)(7)(iii) of this section but that was excluded from subpart F income or tested income under section 954(b)(4) or section 951A(c)(2)(A)(i)(III), and finally on a LIFO basis out of other earnings and profits. For purposes of this paragraph (c)(7)(ii), foreign law is not considered to attribute a reduction in tax to a particular year or years if foreign law attributes the tax reduction

to a pool or group containing income from more than one taxable year and such pool or group is defined based on a characteristic of the income (for example, the rate of tax paid with respect to the income) rather than on the taxable year in which the income is derived.

(iii) ***Treatment of income excluded under section 954(b)(4) or section 951A(c)(2)(A)(i)(III).*** If the effective rate of tax imposed by a foreign country on income of a foreign corporation is reduced under foreign law on distribution of that income, the rules of section 954(b)(4) (including for purposes of determining tested income under section 951A(c)(2)(A)(i)(III)) are applied in the year of inclusion without regard to the possibility of a subsequent reduction of foreign tax. See §§ 1.954-1(d)(3)(iii) and 1.951A-2(c)(6)(iv). If a taxpayer excludes passive income from a controlled foreign corporation's foreign personal holding company income or tested income under section 954(b)(4) or section 951A(c)(2)(A)(i)(III), then, notwithstanding the general rule of § 1.904-5(d)(2), the income is considered to be passive category income until distribution of that income. At that time, if after the redetermination of U.S. tax liability required under § 1.905-3(b)(2) the taxpayer still elects to exclude the passive income under section 954(b)(4) or section 951A(c)(2)(A)(i)(III), the rules of this paragraph (c)(7)(iii) apply to determine whether the income is high-taxed income upon distribution and, therefore, income in another separate category. For purposes of determining whether a reduction in tax is attributable to taxes on income excluded under section 954(b)(4) or section 951A(c)(2)(A)(i)(III), the rules of paragraph (c)(7)(ii) of this section apply. The rules of paragraph (c)(7)(ii) of this section also apply for purposes of ordering distributions to determine whether such distributions are out of earnings and profits associated with such excluded income. For an example illustrating the operation of this paragraph (c)(7)(iii), see paragraph (c)(8)(vi) of this section (*Example 6*).

(8) ***Examples.*** The following examples illustrate the application of this paragraph (c). All of the examples assume that the highest tax rate under section 11 is 21%, unless otherwise noted.

(i) ***Example 1.*** CFC, a controlled foreign corporation, is a wholly-owned subsidiary of domestic corporation USP. CFC is a single qualified business unit (QBU) operating in foreign Country X. In Year 1, CFC earns $130x of gross royalty income that is passive income from Country X sources, and incurs $30x of expenses that do not include any payments to USP. CFC's $100x of pre-tax passive income from the royalty is subject to $30x of foreign tax, and is included under section 951(a)(1) in USP's gross income for the taxable year. USP allocates $50x of expenses to the $100x (consisting of the $70x section 951(a)(1) inclusion and $30x section 78 amount), resulting in net passive income of $50x. USP does not elect to exclude from subpart F under section 954(b)(4) the $70x of CFC's net passive income. After application of the high-tax kick-out rules of paragraph (c) of this section, the $50x of USP's net passive income is treated as general category income, and the $30x of taxes deemed paid are treated as taxes imposed on general category income, because the foreign taxes paid and deemed paid on the income exceed the highest U.S. tax rate multiplied by the $50x of net passive income ($30x > $10.5x (21% × $50x)).

(ii) ***Example 2.*** CFC, a controlled foreign corporation, is a wholly-owned subsidiary of domestic corporation USP. CFC is incorporated and operating in Country Y and has a branch in Country Z. CFC has two QBUs (QBU Y and QBU Z). In Year 1, CFC earns $65x of gross royalty income that is passive income in Country Y through QBU Y and $65x of gross royalty income that is passive income in Country Z through QBU Z. CFC allocates $15x of expenses to the gross royalty income earned by each QBU, resulting in pre-tax passive income of $50x in each QBU. Country Y imposes $5x of foreign tax on the royalty income earned in Y, and Country Z imposes $10x of tax on royalty income earned in Z. All of CFC's income constitutes foreign personal holding

company income that is passive income and is included under section 951(a)(1) in USP's gross income for the taxable year. USP allocates $50x of expenses pro rata to the $100x section 951(a)(1) inclusion attributable to the QBUs (consisting of the $45x section 951(a)(1) inclusion derived through QBU Y, the $5x section 78 amount attributable to QBU Y, the $40x section 951(a)(1) inclusion derived through QBU Z, and the $10x section 78 amount attributable to QBU Z), resulting in net passive income of $50x. Pursuant to paragraph (c)(4) of this section, the high-tax kickout rules must be applied separately to the subpart F inclusion attributable to the income earned by QBU Y and the income earned by QBU Z. After application of the high-tax kickout rules, the $25x of net passive income attributable to QBU Y will be treated as passive category income because the foreign taxes paid and deemed paid on the income do not exceed the highest U.S. tax rate multiplied by the $25x of net passive income ($5x < $5.25x (21% × $25x)). The $25x of net passive income attributable to QBU Z will be treated as general category income because the foreign taxes paid and deemed paid on the income exceed the highest U.S. tax rate multiplied by the $25x of net passive income ($10x > $5.25x (21% × $25x)).

(iii) ***Example 3.*** Domestic corporation USP operates in branch form in foreign countries X and Y. The branches are qualified business units (QBUs), within the meaning of section 989(a). In Year 1, QBU X earns passive royalty income, interest income, and rental income. All of the QBU X passive income is from Country Z sources. The royalty income is not subject to a withholding tax, and is not taxed by Country X, and the interest and the rental income are subject to a 4% and 10% withholding tax, respectively. QBU Y earns interest income in Country Y that is not subject to foreign tax. For purposes of determining whether USP's foreign source passive income is high-taxed income, the rental income and the interest income earned in QBU X are treated as one item of income pursuant to paragraph (c)(3)(ii) of this section. The interest income earned in QBU Y and the royalty income earned in QBU X are each treated as a separate item of income under paragraphs (c)(4) and (c)(3)(iii) of this section. If, after allocation of expenses, QBU X's items of income composed of rental income and interest income are high-taxed income, the income may be treated as foreign branch category income.

(iv) ***Example 4.*** CFC, a controlled foreign corporation incorporated in foreign Country R, is a wholly-owned subsidiary of USP, a domestic corporation. USP and CFC have calendar year taxable years for both U.S. and Country R tax purposes. The highest tax rate under section 11 is 34% and 21% in Year 1 and Year 2, respectively. For Year 1, USP is required under section 951(a)(1) to include in gross income $80x (not including the section 78 amount) attributable to the earnings and profits of CFC for such year, all of which is foreign personal holding company income that is passive rent or royalty income. CFC does not make any distributions in Year 1. Foreign income taxes paid by CFC for Year 1 that are deemed paid by USP for such year under section 960(a) with respect to the section 951(a)(1) inclusion equal $20x. USP properly allocates $30x of expenses to the section 951(a)(1) inclusion. The foreign income tax paid with respect to the section 951(a)(1) inclusion does not exceed the highest U.S. tax rate multiplied by the amount of income after allocation of USP's expenses ($20x < $23.80x (34% × $70x)). Thus, USP's section 951(a)(1) inclusion for Year 1 is included in USP's passive category income and the $20x of taxes attributable to that inclusion are treated as taxes related to passive category income. In Year 2, CFC distributes $70x to USP, and under section 959 that distribution is treated as attributable to the earnings and profits with respect to the amount included in income by USP in Year 1 and is excluded from USP's gross income. Foreign Country R imposes a withholding tax of $14x on the distribution in Year 2. Under paragraph (c)(6)(i) of this section, the withholding tax in Year 2 does not affect the characterization of the Year 1 inclusion as

passive category income, nor does it affect the characterization of the $20x of taxes paid in Year 1 as taxes paid with respect to passive category income. No further expenses of USP are allocable to the receipt of that distribution. In Year 2, the foreign taxes paid ($14x) exceed the product of the highest U.S. tax rate and the amount of the inclusion reduced by taxes deemed paid in the year of inclusion ($14x > $3.80x ((34% × $70x) − $20x)). Thus, under paragraph (c)(6)(iii) of this section, $3.80x ((34% × $70x) − $20x) of the $14x withholding tax paid in Year 2 is treated as taxes related to passive category income and the remaining $10.20x ($14x − $3.80x) of the withholding tax is treated as related to general category income.

(v) *Example 5.* CFC, a controlled foreign corporation, is a wholly-owned subsidiary of USP, a domestic corporation. USP and CFC are calendar year taxpayers. In Year 1, CFC's only earnings consist of $200x of pre-tax passive income that is foreign personal holding company income that is earned in foreign Country X. Under Country X's tax system, the corporate tax on particular earnings is reduced on distribution of those earnings and no withholding tax is imposed. In Year 1, CFC pays $100x of foreign tax with respect to its passive income. USP does not elect to exclude this income from subpart F under section 954(b)(4) and includes $200x in gross income ($100x of net foreign personal holding company income and $100x of the amount under section 78 (the "section 78 dividend")). At the time of the inclusion, the income is considered to be high-taxed income under paragraphs (c)(1) and (c)(6)(i) of this section and is general category income to USP ($100x > $42x (21% × $200x)). CFC does not distribute any of its earnings in Year 1. In Year 2, CFC has no additional earnings. On December 31, Year 2, CFC distributes the $100x of earnings from Year 1. At that time, CFC receives a $60x refund from Country X attributable to the reduction of the Country X corporate tax imposed on the Year 1 earnings. The refund is a foreign tax redetermination under § 1.905-3(a) that under §§ 1.905-3(b)(2) and 1.954-1(d)(3)(iii) requires a redetermination of CFC's Year 1 subpart F income and the application of section 954(b)(4), as well as a redetermination of USP's Year 1 inclusion under section 951(a)(1), its deemed paid taxes under section 960(a), and its Year 1 U.S. tax liability. As recomputed taking into account the $60x refund, CFC's Year 1 passive category net foreign personal holding company income is increased by $60x to $160x, CFC's foreign income taxes attributable to that income are reduced from $100x to $40x, and the income still qualifies to be excluded from CFC's subpart F income under section 954(b)(4) ($40x > $37.80x (90% × 21% × $200x)). Assuming USP does not change its Year 1 election, USP's Year 1 inclusion under section 951(a)(1) is increased by $60x to $160x, and the associated deemed paid tax and section 78 dividend are reduced by $60x to $40x. Under paragraph (c)(7)(i) of this section, in connection with the adjustments required under section 905(c), USP must redetermine whether the adjusted Year 1 inclusion is high-taxed income of USP. Taking into account the $60x refund, the inclusion is not considered high-taxed income of USP ($40x < $42x (21% × $200x)). Therefore, USP must treat the $200x of income ($160x inclusion plus $40x section 78 amount) and the $40x of taxes associated with the inclusion in Year 1 as passive category income and taxes. USP must also follow the appropriate procedures under § 1.905-4.

(vi) *Example 6.* The facts are the same as in paragraph (c)(8)(v) of this section (the facts in *Example 5*), except that in Year 1, USP elects to apply section 954(b)(4) to exclude CFC's passive income from its subpart F income, both before and after the recomputation of CFC's Year 1 subpart F income and USP's Year 1 U.S. tax liability that is required by reason of the Year 2 $60x foreign tax redetermination. Although the income is not considered to be subpart F income, under paragraph (c)(7)(iii) of this section it remains passive category income until distribution. In Year 2, the $100x distribution is a dividend to USP, because CFC has $160x of accumulated earnings and profits described in section 959(c)(3) (the $100x of earnings in Year 1 increased by the

$60x refund received in Year 2 that under § 1.905-3(b)(2) is taken into account in Year 1). Under paragraph (c)(7)(iii) of this section, USP must determine whether the dividend income is high-taxed income to USP in Year 2. The treatment of the dividend as passive category income may be relevant in determining deductions allocable or apportioned to such dividend income or related stock that are excluded in the computation of USP's foreign tax credit limitation under section 904(a) in Year 2. See section 904(b)(4). Under paragraph (c)(1) of this section, the dividend income is passive category income to USP because the foreign taxes paid and deemed paid by USP ($0x) with respect to the dividend income do not exceed the highest U.S. tax rate on that income.

(vii) ***Example 7.*** The facts are the same as in paragraph (c)(8)(v) of this section (the facts in *Example 5*), except that the distribution in Year 2 is subject to a withholding tax of $25x. Under paragraph (c)(7)(i) of this section, USP must redetermine whether its Year 1 inclusion should be considered high-taxed income of USP because there is a net $35x reduction ($60x refund of foreign corporate tax—$25x withholding tax) of foreign tax. By taking into account both the reduction in foreign corporate tax and the additional withholding tax, the inclusion continues to be considered high-taxed income of USP in Year 1 ($65x > $42x (21% × $200)). USP must follow the appropriate section 905(c) procedures. USP must redetermine its U.S. tax liability for Year 1, but the Year 1 inclusion and the $65x taxes ($40x of deemed paid tax in Year 1 and $25x withholding tax in Year 2) will continue to be treated as general category income and taxes.

(viii) ***Example 8.***

(A) CFC, a controlled foreign corporation operating in Country G, is a wholly-owned subsidiary of USP, a domestic corporation. USP and CFC are calendar year taxpayers. Country G imposes a tax of 50% on CFC's earnings. Under Country G's system, the foreign corporate tax on particular earnings is reduced on distribution of those earnings to 30% and no withholding tax is imposed. Under Country G's law, distributions are treated as made out of a pool of undistributed earnings subject to the 50% tax rate. For Year 1, CFC's only earnings consist of passive income that is foreign personal holding company income that is earned in foreign Country G. CFC has taxable income of $110x for Federal income tax purposes and $100x for Country G purposes. Country G, therefore, imposes a tax of $50x on the Year 1 earnings of CFC. USP does not elect to exclude this income from subpart F under section 954(b)(4) and includes $110x in gross income ($60x of net foreign personal holding company income under section 951(a) and $50x of the section 78 dividend). The highest rate of tax under section 11 in Year 1 is 34%. Therefore, at the time of the section 951(a) inclusion, the income is considered to be high-taxed income under paragraph (c) of this section ($50x > $37.4x (34% × $110x)) and is general category income to USP. CFC does not distribute any of its earnings in Year 1.

(B) In Year 2, CFC earns general category income that is not subpart F income or tested income. CFC again has $110x in taxable income for Federal income tax purposes and $100x in taxable income for Country G purposes, and CFC pays $50x of tax to foreign Country G. In Year 3, CFC has no taxable income or earnings. On December 31, Year 3, CFC distributes $60x of its total $120x of earnings and receives a refund of foreign tax of $24x. The $24x refund is a foreign tax redetermination under § 1.905-3(a) that under § 1.905-3(b)(2) requires a redetermination of CFC's Year 1 subpart F income and USP's deemed paid taxes and Year 1 U.S. tax liability. Country G treats the distribution of earnings as out of the 50% tax rate pool of $200x of earnings accumulated in Year 1 and Year 2, as calculated for Country G tax purposes. However, under paragraph (c)(7)(ii) of

this section, the distribution, and, therefore, the reduction of tax is treated as first attributable to the $60x of passive category earnings attributable to income previously taxed in Year 1, and none of the distribution is treated as made out of the $60x of earnings accumulated in Year 2 (which is not previously taxed). Because 40 percent (the reduction in tax rates from 50 percent to 30 percent is a 40 percent reduction in the tax) of the $50x of foreign taxes attributable to the $60x of Year 1 passive income as calculated for Federal income tax purposes is refunded, $20x of the $24x foreign tax refund reduces foreign taxes on CFC's Year 1 passive income from $50x to $30x. The other $4x of the tax refund reduces the taxes imposed in Year 2 on CFC's general category income from $50x to $46x.

(C) Under paragraph (c)(7) of this section, in connection with the section 905(c) adjustment USP must redetermine whether its Year 1 subpart F inclusion is considered high-taxed income. By taking into account the reduction in foreign tax, the inclusion is increased by $20x to $80x, the deemed paid taxes are reduced by $20x to $30x, and the inclusion is not considered high-taxed income ($30x < 34% × $110x). Therefore, USP must treat the revised section 951(a) inclusion and the taxes associated with the section 951(a) inclusion as passive category income and taxes in Year 1. USP must follow the appropriate procedures under § 1.905-4.

(ix) ***Example 9.*** USP, a domestic corporation, earns $100x of passive royalty income from sources within the United States. Under the laws of Country X, however, that royalty is considered to be from sources within Country X, and Country X imposes a 5% withholding tax on the payment of the royalty. USP also earns $100x of foreign source passive dividend income from Country Y subject to a 10% withholding tax to which $15x of expenses are allocated. In determining whether USP's passive income is high-taxed, the $5x withholding tax on USP's royalty income is allocated to passive income, and to the group of passive income described in paragraph (c)(3)(ii) of this section (passive income subject to a withholding tax of less than 15% (but greater than zero)). For purposes of determining whether the income is high-taxed, however, only the $85x of foreign source dividend income (and not the $100x of U.S. source royalty income) is taken into account. The foreign source dividend income is treated as passive category income because the foreign taxes paid on the passive income in the group ($15x) do not exceed the highest U.S. tax rate multiplied by the $85x of net foreign source income in the group ($15x < $17.85x ($100x − $15x) × 21%).

(x) ***Example 10.*** In Year 1, P, a U.S. citizen with a tax home in Country X, earns the following items of gross income: $400x of foreign source, passive interest income not subject to foreign withholding tax but subject to Country X income tax of $100x, $200x of foreign source, passive royalty income subject to a 5% foreign withholding tax (foreign tax paid is $10x), $1,300x of foreign source, passive rental income subject to a 25% foreign withholding tax (foreign tax paid is $325x), $500x of foreign source, general category loss, and $2,000x of U.S. source capital gain that is not subject to any foreign tax. P has a $900x deduction allocable to its passive rental income. P's only other deduction is a $700x capital loss on the sale of stock that is allocated to foreign source passive category income under § 1.865-2(a)(3)(i). The $700x capital loss is initially allocated to the group of passive income described in paragraph (c)(3)(iv) of this section (passive income subject to no withholding tax but subject to foreign tax other than withholding tax). This group comprises the $400x of interest income not subject to foreign withholding tax but subject to Country X income tax. Under paragraph (c)(2)(ii) of this section, the $300x amount by which the capital loss exceeds the income in the group must be

reallocated to the net income in the other groups described in paragraph (c)(3) of this section, but the $500x general category separate limitation loss is not allocated until the high-tax kickout rules are applied to determine whether the passive income is high-taxed income. P's $200x of royalty income subject to a 5% withholding tax is described in paragraph (c)(3)(i) of this section (passive income that is subject to a withholding tax of less than 15%, but greater than zero). P's $1,300x of rental income subject to a 25% withholding tax is described in paragraph (c)(3)(ii) of this section (passive income that is subject to a withholding tax of 15% or greater). The $1,300x of rental income is reduced by the $900x deduction allocable to such income. Therefore, the total net income in the other groups under paragraph (c)(3) is $600x, the $200x of royalty income and the $400x of rental income. The ($300x) net loss in the net basis tax group thus reduces the royalty income by $100x to $100x ($200x − ($300x × (200x/600x))) and the rental income by $200x to $200x ($400x − ($300x × (400x/600x))). The $100x of net royalty income is not high-taxed and remains passive category income because the foreign taxes of $10x do not exceed the highest U.S. rate of tax on that income, which is 37% for individuals ($10x < $37x (37% × $100x)). Under the high-tax kickout, the $200x of rental income and the $325x of associated foreign tax are assigned to the general category.

(xi) ***Example 11.*** The facts are the same as in paragraph (c)(8)(x) of this section (the facts in *Example 10*), except the amount of the capital loss that is allocated under § 1.865-2(a)(3)(i) and paragraph (c)(2) of this section to the group of foreign source passive income subject to no withholding tax but subject to foreign tax other than withholding tax is $1,200x. Under paragraph (c)(2)(ii) of this section, the excess deductions of $800x must be reallocated to the $200x of net royalty income subject to a 5% withholding tax and the $400x of net rental income subject to a 15% or greater withholding tax. The income in each of these groups is reduced to zero, and the foreign taxes imposed on the rental and royalty income are considered related to general category income. The remaining loss of $200x constitutes a separate limitation loss with respect to passive category income.

(xii) ***Example 12.*** In Year 1, USP, a domestic corporation, earns a $100x dividend that is foreign source passive income subject to a 30% withholding tax. The dividend is not paid by a specified 10-percent owned foreign corporation (as defined in section 245A(b)(1)). A foreign tax credit for the withholding tax on the dividend is disallowed under section 901(k). A deduction for the tax is allowed, however, under sections 164 and 901(k)(7). In determining whether USP's passive income is high-taxed, under paragraph (c)(3) of this section the $100x dividend and the $30x deduction are allocated to the group of income described in paragraph (c)(3)(iv) of this section (passive income subject to no withholding tax or other foreign tax).

(d) ***General category income.*** The term *general category income* means all income other than passive category income, foreign branch category income, section 951A category income, and income in a specified separate category. Any item that is excluded from the passive category under paragraph (c) or (h) of this section or § 1.904-5(b)(1) is included in general category income only to the extent that such item does not meet the definition of another separate category. General category income also includes income treated as general category income under the look-through rules referenced in § 1.904-5(a)(2).

(e) ***Financial services income*** —

(1) ***In general*** —

(i) ***Treatment of financial services income.*** Passive income that is characterized as financial services income is not assigned to the passive category but is assigned in accordance with this paragraph (e)(1)(i). Financial services income that meets the definition of foreign branch

category income (see paragraph (f)(1) of this section) is treated as income in that category. Financial services income of a controlled foreign corporation that is included in gross income of a United States shareholder under section 951A(a) is treated as section 951A category income in the hands of the United States shareholder. Financial services income that is neither treated as foreign branch category income nor treated as section 951A category income is treated as general category income. Distributions, interest, rents, or royalties received from a related person that is a financial services entity that would be assigned to the passive category under the look-through rules in § 1.904-5, but for the fact such amounts are paid by a financial services entity (and, therefore, not attributable to passive category income of the payor), are assigned to separate categories (other than the passive category) under the rules in this section.

(ii) ***Definition of financial services income.*** The term *financial services income* means income derived by a financial services entity, as defined in paragraph (e)(3) of this section, that is:

(A) Income derived in the active conduct of a banking, insurance, financing, or similar business (active financing income as defined in paragraph (e)(2) of this section);

(B) Passive income as defined in section 904(d)(2)(B) and paragraph (b) of this section as determined before the application of the exception for high-taxed income but after the application of the exception for export financing interest; or

(C) Incidental income as defined in paragraph (e)(4) of this section.

(2) ***Active financing income*** —

(i) ***Income included.*** For purposes of paragraph (e)(1) and (e)(3) of this section, income is active financing income only if it is described in any of the following subdivisions.

(A) Income that is of a kind that would be insurance income as defined in section 953(a) (including related party insurance income as defined in section 953(c)(2)) and determined without regard to those provisions of section 953(a)(1)(A) that limit insurance income to income from countries other than the country in which the corporation was created or organized.

(B) Income from the investment by an insurance company of its unearned premiums or reserves ordinary and necessary to the proper conduct of the insurance business, income from providing services as an insurance underwriter, income from insurance brokerage or agency services, and income from loss adjuster and surveyor services.

(C) Income from investing funds in circumstances in which the taxpayer holds itself out as providing a financial service by the acceptance or the investment of such funds, including income from investing deposits of money and income earned investing funds received for the purchase of traveler's checks or face amount certificates.

(D) Income from making personal, mortgage, industrial, or other loans.

(E) Income from purchasing, selling, discounting, or negotiating on a regular basis, notes, drafts, checks, bills of exchange, acceptances, or other evidences of indebtedness.

(F) Income from issuing letters of credit and negotiating drafts drawn thereunder.

(G) Income from providing trust services.

(H) Income from arranging foreign exchange transactions, or engaging in foreign exchange transactions.

(I) Income from purchasing stock, debt obligations, or other securities from an issuer or holder with a view to the public distribution thereof or offering or selling stock, debt obligations, or other securities for an issuer or holder in connection with the public distribution thereof, or participating in any such undertaking.

(J) Income earned by broker-dealers in the ordinary course of business (such as commissions) from the purchase or sale of stock, debt obligations, commodities futures, or other securities or financial instruments and dividend and interest income earned by broker dealers on stock, debt obligations, or other financial instruments that are held for sale.

(K) Service fee income from investment and correspondent banking.

(L) Income from interest rate and currency swaps.

(M) Income from providing fiduciary services.

(N) Income from services with respect to the management of funds.

(O) Bank-to-bank participation income.

(P) Income from providing charge and credit card services or for factoring receivables obtained in the course of providing such services.

(Q) Income from financing purchases from third parties.

(R) Income from gains on the disposition of tangible or intangible personal property or real property that was used in the active financing business (as defined in paragraph (e)(3)(i) of this section) but only to the extent that the property was held to generate or generated active financing income prior to its disposition.

(S) Income from hedging gain with respect to other active financing income.

(T) Income from providing traveller's check services.

(U) Income from servicing mortgages.

(V) Income from a finance lease. For this purpose, a finance lease is any lease that is a direct financing lease or a leveraged lease for accounting purposes and is also a lease for tax purposes.

(W) [Reserved]

(X) Income from providing investment advisory services, custodial services, agency paying services, collection agency services, and stock transfer agency services.

(Y) Any similar item of income that is disclosed in the manner provided in the instructions to the Form 1118 or 1116 or that is designated as a similar item of income in guidance published by the Internal Revenue Service.

(3) *Financial services entities* —

(i) ***In general.*** The term "financial services entity" means an individual or entity that is predominantly engaged in the active conduct of a banking, insurance, financing, or similar business (active financing business) for any taxable Year. Except as provided in paragraph (e)(3)(ii) of this section, a determination of whether an entity is a financial services entity shall be done on an entity-by-entity basis. An individual or entity is predominantly engaged in the active financing business for any year if for that year at least 80 percent of its gross income is income described in paragraph (e)(2)(i) of this section. For this purpose, gross income includes all income realized by an individual or entity, whether includible or excludible from gross income under other operative provisions of the Code, but excludes gain from the disposition of stock of a corporation that prior to the disposition of its stock is related to the transferor within the meaning of section 267(b). For this purpose, income received from a related person that is a financial services entity shall be excluded if such income is characterized under the look-through rules of section 904(d)(3) and § 1.904-5. In addition, income received from a related person that is not a financial services entity but that is characterized as financial services income under the look-through rules shall be excluded. Any income received from a related person that is characterized under the look-through rules and that is not otherwise excluded by this paragraph will retain its character either as active financing income or other income in the hands of the recipient for purposes of determining if the recipient is a financial services entity and if the income is financial services income to the recipient. For purposes of this paragraph, related person is defined in § 1.904-5(i)(1).

(ii) ***Special rule for affiliated groups.*** In the case of any corporation that is not a financial services entity under paragraph (e)(3)(i) of this section, but is a member of an affiliated group, such corporation will be deemed to be a financial services entity if the affiliated group as a whole meets the requirements of paragraph (e)(3)(i) of this section. For purposes of this paragraph (e)(3)(ii), affiliated group means an affiliated group as defined in section 1504(a), determined without regard to section 1504(b)(3). In counting the income of the group for purposes of determining whether the group meets the requirements of paragraph (e)(3)(i) of this section, the following rules apply. Only the income of group members that are United States corporations or foreign corporations that are controlled foreign corporations in which United States members of the affiliated group own, directly or indirectly, at least 80 percent of the total voting power and value of the stock shall be included. For purposes of this paragraph (e)(3)(ii), indirect ownership shall be determined under section 318 and the regulations under that section. The income of the group will not include any income from transactions with other members of the group. Passive income will not be considered to be active financing income merely because that income is earned by a member of the group that is a financial services entity without regard to the rule of this paragraph (e)(3)(ii).

(iii) ***Treatment of partnerships and other pass-through entities*** For purposes of determining whether a partner (including a partnership that is a partner in a second partnership) is a financial services entity, all of the partner's income shall be taken into account, except that income that is excluded under paragraph (e)(3)(i) of this section shall not be taken into account. Thus, if a partnership is determined to be a financial services entity none of the income of the partner received from the partnership that is characterized under the look-through rules shall be included for purpose of determining if the partner is a financial services entity. If a partnership is determined not to be a financial services entity, then income of the partner from the partnership that is characterized under the look-through rules will be taken into account (unless such income is financial services income) and such income will retain its character either as active financing income or as other income in the hands of the partner for purposes of

determining if the partner is a financial service entity and if the income is financial services income to the partner. If a partnership is a financial services entity and the partner's income from the partnership is characterized as financial services income under the look-through rules, then, for purposes of determining a partner's foreign tax credit limitation, the income from the partnership shall be considered to be financial services income to the partner regardless of whether the partner is itself a financial services entity. The rules of this paragraph (e)(3)(iii) will apply for purposes of determining whether an owner of an interest in any other pass-through entity the character of the income of which is preserved when such income is included in the income of the owner of the interest is a financial services entity.

(iv) [Reserved]

(4) ***Definition of incidental income*** —

(i) ***In general*** —

(A) ***Rule.*** Incidental income is income that is integrally related to active financing income of a financial services entity. Such income includes, for example, income from precious metals trading and commodity trading that is integrally related to futures income. If securities, shares of stock, or other types of property are acquired by a financial services entity as an ordinary and necessary incident to the conduct of an active financing business, the income from such property will be considered to be financial services income but only so long as the retention of such property remains an ordinary or necessary incident to the conduct of such business. Thus property, including stock, acquired as the result of, or in order to prevent, a loss in an active financing business upon a loan held by the taxpayer in the ordinary course of such business will be considered ordinary and necessary to the conduct of such business, but income from such property will be considered financial services income only so long as the holding of such property remains an ordinary and necessary incident to the conduct of such business. If an entity holds such property for five years or less then the property is considered held incident to the financial services business. If an entity holds such property for more than five years, a presumption will be established that the entity is not holding such property incident to its financial services business. An entity will be able to rebut the presumption by demonstrating that under the facts and circumstances it is not holding the property as an investment. However, the fact that an entity holds the property for more than five years and is not able to rebut the presumption that it is not holding the property incident to its financial services business will not affect the characterization of any income received from the property during the first five years as financial services income.

(B) [Reserved]

(ii) ***Income that is not incidental income.*** Income that is attributable to non-financial activity is not incidental income within the meaning of paragraph (e)(4) (i) and (ii) of this section solely because such income represents a relatively small proportion of the taxpayer's total income or that the taxpayer engages in non-financial activity on a sporadic basis. Thus, for example, income from data processing services provided to related or unrelated parties or income from the sale of goods or non-financial services (for example travel services) is not financial services income, even if the recipient is a financial services entity.

(f) ***Foreign branch category income*** —

(1) ***Foreign branch category income*** —

(i) ***In general.*** Except as provided in paragraph (f)(1)(ii), (iii), or (iv) of this section, the term *foreign branch category income* means income of a United States person, other than a pass-through entity, that is—

(A) Income attributable to foreign branches of the United States person held directly or indirectly through disregarded entities;

(B) A distributive share of partnership income that is attributable to foreign branches held by the partnership directly or indirectly through disregarded entities, or held indirectly by the partnership through another partnership or other pass-through entity that holds the foreign branch directly or indirectly through disregarded entities; and

(C) Income from other pass-through entities determined under principles similar to those described in paragraph (f)(1)(i)(B) of this section.

(ii) ***Passive category income excluded from foreign branch category income.*** Income assigned to the passive category under paragraph (b) of this section is not foreign branch category income, regardless of whether the income is described in paragraph (f)(1)(i) of this section. Income that is treated as passive category income under the look-through rules in § 1.904-5 is also excluded from foreign branch category income, regardless of whether the income is attributable to a foreign branch. However, income that would be passive category income but for the application of section 904(d)(2)(B)(iii) (export financing interest and high-taxed income) or 904(d)(2)(C) (financial services income) and also meets the definition of foreign branch category income is foreign branch category income.

(iii) ***Income arising from U.S. activities excluded from foreign branch category income.*** Gross income that is attributable to a foreign branch and that arises from activities carried out in the United States by any foreign branch, including income that is reflected on a foreign branch's separate books and records, is not assigned to the foreign branch category. Instead, such income is assigned to the general category or a specified separate category under the rules of this section. However, under paragraph (f)(2)(vi) of this section, gross income (including U.S. source gross income) attributable to activities carried on outside the United States by the foreign branch may be assigned to the foreign branch category by reason of a disregarded payment to a foreign branch from a foreign branch owner or another foreign branch that is allocable to income recorded on the books and records of the payor foreign branch or foreign branch owner.

(iv) ***Income arising from stock excluded from foreign branch category income*** —

(A) ***In general.*** Except as provided in paragraph (f)(1)(iv)(B) of this section, gross income that is attributable to a foreign branch and that comprises items of income arising from stock of a corporation (whether foreign or domestic), including gain from the disposition of such stock or any inclusion under section 951(a), 951A(a), 1248, or 1293(a), is not assigned to the foreign branch category. Instead, such income is assigned to the general category or a specified separate category under the rules of this section.

(B) ***Exception for dealer property.*** Paragraph (f)(1)(iv)(A) of this section does not apply to gain recognized from dispositions of stock of a corporation, if the stock would be dealer property (as defined in § 1.954-2(a)(4)(v)) if the foreign branch were a controlled foreign corporation.

(2) ***Gross income attributable to a foreign branch*** —

(i) ***In general.*** Except as provided in this paragraph (f)(2), gross income is attributable to a foreign branch to the extent the gross income (as adjusted to conform to Federal income tax principles) is reflected on the separate set of books and records (as defined in § 1.989(a)-1(d)(1) and (2)) of the foreign branch. Gross income that is not attributable to the foreign branch and is therefore attributable to the foreign branch owner is income in a separate category (other than the foreign branch category) under the other rules of this section.

(ii)-(iii) [Reserved]

(iv) ***Disposition of interests in certain entities*** —

(A) ***In general.*** Except as provided in paragraph (f)(2)(iv)(B) of this section, gross income attributable to a foreign branch does not include gain from the disposition of an interest in a partnership or other pass-through entity or an interest in a disregarded entity. See also paragraph (n)(2) of this section for general rules relating to the sale of a partnership interest.

(B) ***Exception for sales by a foreign branch in the ordinary course of business.*** The rule in paragraph (f)(2)(iv)(A) of this section does not apply to gain from the sale or exchange of an interest in a partnership or other pass-through entity or an interest in a disregarded entity if the gain is reflected on the books and records of a foreign branch and the interest is held by the foreign branch in the ordinary course of its active trade or business. An interest is considered to be held in the ordinary course of the foreign branch's active trade or business only if the foreign branch—

(*1*) Directly engages in the same, or a related, trade or business as that partnership, other pass-through entity, or disregarded entity; and

(*2*) In the case of a partnership or other pass-through entity, the foreign branch owns 10 percent or more of the capital or profits interests in the partnership or other pass-through entity.

(v) ***Adjustments to items of gross income reflected on the books and records.*** If a principal purpose of recording or failing to record an item of gross income on the books and records of a foreign branch, or of making or not making a disregarded payment described in paragraph (f)(2)(vi) of this section, is the avoidance of Federal income tax, the purposes of section 904, or the purposes of section 250 (in connection with section 250(b)(3)(A)(i)(VI)), the item must be attributed to one or more foreign branches or the foreign branch owner in a manner that reflects the substance of the transaction. For purposes of this paragraph (f)(2)(v), interest received by a foreign branch from a related person is presumed to be attributable to the foreign branch owner (and not to the foreign branch) unless the interest income meets the definition of financial services income under paragraph (e)(1)(ii) of this section. For purposes of this paragraph (f)(2)(v), a related person is any person that bears a relationship to the foreign branch owner described in section 267(b) or 707.

(vi) ***Attribution of gross income to which disregarded payments are allocable*** —

(A) ***In general.*** If a foreign branch makes a disregarded payment to its foreign branch owner or a second foreign branch, and the disregarded payment is allocable to gross income that would be attributable to the foreign branch under the rules in paragraphs (f)(2)(i) through (v) of this section, the gross income attributable to the foreign branch is adjusted downward (but not below zero) to reflect the allocable amount of the disregarded

payment, and the gross income attributable to the foreign branch owner or the second foreign branch is adjusted upward by the same amount as the downward adjustment, translated (if necessary) from the foreign branch's functional currency to U.S. dollars (or the second foreign branch's functional currency, as applicable) at the spot rate (as defined in § 1.988-1(d)) on the date of the disregarded payment. For rules addressing multiple disregarded payments in a taxable year, see paragraph (f)(2)(vi)(F) of this section. Similarly, if a foreign branch owner makes a disregarded payment to its foreign branch and the disregarded payment is allocable to gross income attributable to the foreign branch owner, the gross income attributable to the foreign branch owner is adjusted downward (but not below zero) to reflect the allocable amount of the disregarded payment, and the gross income attributable to the foreign branch is adjusted upward by the same amount as the downward adjustment, translated (if necessary) from U.S. dollars to the foreign branch's functional currency at the spot rate on the date of the disregarded payment. An adjustment to the amount of attributable gross income under this paragraph (f)(2)(vi) does not change the total amount, character, or source of the United States person's gross income; does not change the amount of a United States person's income in any separate category other than the foreign branch and general categories (or a specified separate category associated with the foreign branch and general categories); and has no bearing on the analysis of whether an item of gross income is eligible to be resourced under an income tax treaty.

(B) ***Allocation of disregarded payments*** —

(*1*) ***In general.*** Except as provided in paragraph (f)(2)(vi)(B)(*2*) of this section, whether a disregarded payment is allocable to gross income attributable to a foreign branch or gross income attributable to its foreign branch owner, and the source and separate category of the gross income to which the disregarded payment is allocable, is determined under the following rules:

(*i*) Disregarded payments from a foreign branch owner to its foreign branch are allocable to gross income attributable to the foreign branch owner to the extent a deduction for that payment or any disregarded cost recovery deduction relating to that payment, if regarded, would be allocated and apportioned to gross income attributable to the foreign branch owner under the principles of §§ 1.861-8 through 1.861-14T and 1.861-17 (without regard to exclusive apportionment) by treating foreign source gross income and U.S. source gross income in each separate category (determined prior to the application of this paragraph (f)(2)(vi) to the disregarded payment at issue) each as a statutory grouping; and

(*ii*) Disregarded payments from a foreign branch to its foreign branch owner or to another foreign branch are allocable to gross income attributable to the payor foreign branch to the extent a deduction for that payment or any disregarded cost recovery deduction relating to that payment, if regarded, would be allocated and apportioned to gross income attributable to the payor foreign branch under the principles of §§ 1.861-8 through 1.861-14T and 1.861-17 (without regard to exclusive apportionment) by treating foreign source gross income and U.S. source gross income in each separate category (determined before the application of this paragraph (f)(2)(vi) to the disregarded payment at issue) each as a statutory grouping.

(2) ***Special rule for certain disregarded payments.*** Whether a disregarded payment made in connection with a sale or exchange of property is allocable to gross income attributable to a foreign branch or its foreign branch owner, and the source and separate category of the gross income to which the disregarded payment is allocable, is determined under the following rules:

(*i*) Except as provided in paragraph (f)(2)(vi)(D) of this section, disregarded payments from a foreign branch owner to its foreign branch in respect of non-inventory property are allocable to the gross income attributable to the foreign branch owner, if any, that is recognized with respect to a regarded sale or exchange of that property (including gross income arising in a later taxable year) to the extent of the adjusted disregarded gain with respect to the transferred property, and in the same proportions as the source and separate category of the gain recognized on the regarded sale or exchange of the transferred property;

(*ii*) Except as provided in paragraph (f)(2)(vi)(D) of this section, disregarded payments from a foreign branch to its foreign branch owner or to another foreign branch in respect of non-inventory property are allocable to the gross income attributable to the foreign branch, if any, that is recognized with respect to a regarded sale or exchange of that property (including gross income arising in a later taxable year) to the extent of the adjusted disregarded gain with respect to the transferred property, and in the same proportions as the source and separate category of the gain recognized on the regarded sale or exchange of the transferred property; and

(*iii*) The principles of paragraphs (f)(2)(vi)(B)(*2*)(*i*) and (*ii*) of this section apply in the case of disregarded payments in respect of inventory property between a foreign branch and its foreign branch owner or between foreign branches to the extent the disregarded payment, if regarded, would, for purposes of determining gross income, be subtracted from gross receipts that are regarded for Federal income tax purposes.

(*3*) ***Timing of reattribution*** —

(*i*) ***In general.*** The gross income attributable to the foreign branch is adjusted under paragraph (f)(2)(vi)(B)(*1*) of this section only in the taxable year that a disregarded payment, if regarded, would be allowed as a deduction (including by giving rise to disregarded cost recovery deductions), or otherwise would be taken into account as an increase to cost of goods sold.

(*ii*) ***Disregarded sales of property.*** The gross income attributable to a foreign branch is adjusted under paragraph (f)(2)(vi)(B)(*2*) of this section only in the taxable year or years in which gain is recognized by reason of the disposition of property with an adjusted disregarded basis in a transaction that is regarded for Federal income tax purposes.

(C) ***Exclusion of certain disregarded payments.*** Paragraph (f)(2)(vi)(A) of this section does not apply to the following payments, accruals, or other transfers between a foreign branch and its foreign branch owner, or between foreign branches, that are disregarded for Federal income tax purposes:

(*1*) Interest, and interest equivalents that, if regarded, would be described in §§ 1.861-9(b) and 1.861-9T(b);

(*2*) Remittances from the foreign branch to its foreign branch owner, except as provided in paragraph (f)(2)(vi)(D) of this section;

(*3*) Contributions of money, securities, and other property from the foreign branch owner to its foreign branch, except as provided in paragraph (f)(2)(vi)(D) of this section; or

(*4*) Any disregarded payment that, if made to a foreign branch and regarded for Federal income tax purposes, could not result in the attribution of gross income to a foreign branch (for example, the sale of an interest in a partnership by a foreign branch to its foreign branch owner, unless the sale or exchange occurred in the ordinary course of business within the meaning of paragraph (f)(2)(iv)(B) of this section).

(D) ***Certain transfers of intangible property*** —

(*1*) ***In general.*** For purposes of applying this paragraph (f)(2)(vi), the amount of gross income attributable to a foreign branch (and the amount of gross income attributable to its foreign branch owner) must be adjusted under the principles of paragraph (f)(2)(vi)(B) of this section to reflect all transactions that are disregarded for Federal income tax purposes in which property described in section 367(d)(4) is transferred to or from a foreign branch or between foreign branches, whether or not a disregarded payment is made in connection with the transfer. In determining the amount of gross income that is attributable to a foreign branch that must be adjusted by reason of this paragraph (f)(2)(vi)(D), the principles of sections 367(d) and 482 apply. For example, if a foreign branch owner transfers property described in section 367(d)(4) to a foreign branch, the principles of section 367(d) are applied by treating the foreign branch as a separate foreign corporation to which the property is transferred in exchange for stock of the corporation in a transaction described in section 351. Similarly, if a foreign branch remits property described in section 367(d)(4) to its foreign branch owner, the foreign branch is treated as having sold the transferred property to the foreign branch owner in exchange for annual payments contingent on the productivity or use of the property, the amounts of which are determined under the principles of section 367(d).

(*2*) ***Transactions occurring before December 7, 2018.*** Paragraph (f)(2)(vi)(D)(*1*) of this section does not apply to a disregarded transfer of property that occurred before December 7, 2018.

(*3*) ***Transitory ownership*** —

(*i*) ***In general.*** Paragraph (f)(2)(vi)(D)(*1*) of this section does not apply to disregarded transfers of property by a foreign branch or a foreign branch owner (such foreign branch or foreign branch owner, the *limited transferor*), if the conditions in paragraphs (f)(2)(vi)(D)(*3*)(*ii*) and (*iii*) of this section are met.

(*ii*) ***Transitory ownership period.*** The limited transferor's ownership of the property is transitory.

(*iii*) ***Use of property.*** The limited transferor does not develop, exploit, or otherwise employ the property in a trade or business, other than in the ordinary course of the limited transferor's business during the period of transitory ownership.

(*iv*) ***Predecessors.*** For purposes of paragraphs (f)(2)(vi)(D)(*3*)(*ii*) and (*iii*) of this section, a reference to a limited transferor that is a foreign branch owner includes any predecessor to the foreign branch owner. No person is a predecessor with respect to a foreign branch under this paragraph (f)(2)(vi)(D)(*3*)(*iv*).

(*4*) ***Multiple transfers of intangible property.*** If the same intangible property is transferred in a series of transfers described in paragraph (f)(2)(vi)(D)(*1*) of this section, each successive transfer is separately subject to the provisions of paragraph (f)(2)(vi)(D)(*1*) and will not terminate or otherwise affect the application of paragraph (f)(2)(vi)(D)(*1*) to a prior transfer described in paragraph (f)(2)(vi)(D)(*1*).

(E) ***Amount of disregarded payments.*** The amount of each disregarded payment used to make an adjustment under this paragraph (f)(2)(vi) (or the absence of any adjustment) must be determined in a manner that results in the attribution of the proper amount of gross income to each of a foreign branch and its foreign branch owner under the principles of section 482, applied as if the foreign branch were a corporation.

(F) ***Multiple disregarded payments.*** In the case of multiple disregarded payments, this paragraph (f)(2)(vi) is applied with respect to each disregarded payment, and under the ordering rules specified in paragraphs (f)(2)(vi)(F)(*1*) and (*2*) of this section. For purposes of this paragraph (f)(2)(vi), paragraph (f)(2)(vi)(F)(*1*) of this section applies before paragraph (f)(2)(vi)(F)(*2*) of this section.

(*1*) ***Income initially attributable to a foreign branch.*** In applying this paragraph (f)(2)(vi) to gross income that would, but for this paragraph (f)(2)(vi), be attributable to a foreign branch, adjustments related to disregarded payments from a foreign branch to another foreign branch are computed first, followed by adjustments related to disregarded payments from a foreign branch to its foreign branch owner, followed by adjustments related to disregarded payments from a foreign branch owner to its foreign branch.

(*2*) ***Income initially attributable to a foreign branch owner.*** In applying this paragraph (f)(2)(vi) to gross income that would, but for this paragraph (f)(2)(vi), be attributable to a foreign branch owner, adjustments related to disregarded payments from a foreign branch owner to a foreign branch are computed first, followed by adjustments related to disregarded payments from a foreign branch to another foreign branch, followed by adjustments related to disregarded payments from a foreign branch to its foreign branch owner.

(G) ***Effect of disregarded payments made and received by non-branch taxable units*** —

(*1*) ***In general.*** For purposes of determining the amount, source, and character of gross income attributable to a foreign branch and its foreign branch owner under paragraph (f)(2) of this section, the rules of paragraph (f)(2) of this section apply to a non-branch taxable unit as though the non-branch taxable unit were a foreign branch or a foreign branch owner, as appropriate, to attribute gross income to the non-branch

taxable unit and to further attribute, under this paragraph (f)(2)(vi)(G), the income of a non-branch taxable unit to one or more foreign branches or to a foreign branch owner. See paragraph (f)(4)(xvi) of this section (*Example 16*).

(*2*) ***Foreign branch group income.*** The income of a foreign branch group is attributed to the foreign branch that owns the group. The income of a foreign branch group is the aggregate of the U.S. gross income that is attributed, under the rules of this paragraph (f)(2), to each member of the foreign branch group, determined after accounting for all disregarded payments made and received by each member of the foreign branch group.

(*3*) ***Foreign branch owner group income.*** The income of a foreign branch owner group is attributed to the foreign branch owner that owns the group. The income of a foreign branch owner group income is the aggregate of the U.S. gross income that is attributed, under the rules of this paragraph (f)(2), to each member of the foreign branch owner group, determined after accounting for all disregarded payments made and received by each member of the foreign branch owner group.

(3) ***Definitions.*** The following definitions apply for purposes of this paragraph (f).

(i) ***Adjusted disregarded basis.*** The term *adjusted disregarded basis* means, with respect to property transferred in a transaction that is disregarded for Federal income tax purposes, the tentative disregarded basis of the property—

(A) Reduced by any disregarded cost recovery deductions with respect to the property; and

(B) Increased by any disregarded section 1016(a)(1) expenditures with respect to the property.

(ii) ***Adjusted disregarded gain*** —

(A) ***In general.*** The term *adjusted disregarded gain* means, with respect to property transferred in a transaction that is disregarded for Federal income tax purposes, the lesser of—

(*1*) The adjusted disregarded basis of the property, reduced by the adjusted basis of the property at the time the property was transferred in a transaction that is disregarded for Federal income tax purposes; and

(*2*) The gain (if any) attributable to a regarded sale or exchange of the transferred property.

(B) ***Limitation.*** Adjusted disregarded gain may not be less than zero.

(iii) ***Disregarded cost recovery deduction.*** For a taxable year, the term *disregarded cost recovery deduction* means, with respect to property transferred in a transaction that is disregarded for Federal income tax purposes—

(A) The amounts that would be allowed as a deduction, and that would give rise to an adjustment described in section 1016(a)(2), with respect to the transferred property if the transfer (and the foreign branch) were regarded for Federal income tax purposes, to the extent that, under paragraph (f)(2)(vi)(B)(*1*) of this section, the deduction would be allocable to—

(*1*) Gross income attributable to a foreign branch owner, in the case of property transferred to a foreign branch owner; or

(*2*) Gross income attributable to a foreign branch, in the case of property transferred to a foreign branch; reduced by

(B) The amounts that are allowed as a deduction, and that give rise to an adjustment described in section 1016(a)(2), with respect to the transferred property to the extent that, under the principles of paragraph (f)(2)(vi)(B)(*1*) of this section, the deduction would be allocable to—

(*1*) Gross income attributable to a foreign branch owner, in the case of property transferred to a foreign branch owner; or

(*2*) Gross income attributable to a foreign branch, in the case of property transferred to a foreign branch.

(iv) ***Disregarded entity.*** The term *disregarded entity* means an entity described in § 301.7701-2(c)(2) of this chapter that is disregarded as an entity separate from its owner for Federal income tax purposes.

(v) ***Disregarded payment.*** A disregarded payment includes an amount of property (within the meaning of section 317(a)) that is transferred to or from a non-branch taxable unit, foreign branch, or foreign branch owner, including a payment in exchange for property or in satisfaction of an account payable, or a remittance or contribution, in connection with a transaction that is disregarded for Federal income tax purposes and that is reflected on the separate set of books and records of a non-branch taxable unit (other than an individual or domestic corporation) or a foreign branch. A disregarded payment also includes any other amount that is reflected on the separate set of books and records of a non-branch taxable unit (other than an individual or a domestic corporation) or a foreign branch in connection with a transaction that is disregarded for Federal income tax purposes and that would constitute an item of accrued income, gain, deduction, or loss of the non-branch taxable unit (other than an individual or a domestic corporation) or the foreign branch if the transaction to which the amount is attributable were regarded for Federal income tax purposes.

(vi) ***Disregarded section 1016(a)(1) expenditure.*** The term *disregarded section 1016(a)(1) expenditure* means a disregarded payment that, if regarded for Federal income tax purposes, would be described in section 1016(a)(1) and that, under the principles of paragraph (f)(2)(vi)(B)(*1*) of this section, would be allocable to—

(A) General category gross income, in the case of property held by a foreign branch owner; or

(B) Foreign branch category income, in the case of property held by a foreign branch.

(vii) ***Foreign branch*** —

(A) ***In general.*** The term *foreign branch* means a qualified business unit (QBU), as defined in § 1.989(a)-1(b)(2)(ii) and (b)(3), that conducts a trade or business outside the United States. For an illustration of the principles of this paragraph (f)(3)(vii), see paragraph (f)(4)(i) of this section (Example 1).

(B) ***Trade or business outside the United States.*** Activities carried out in the United States, whether or not such activities are described in § 1.989(a)-1(b)(3), do not constitute the conduct of a trade or business outside the United States. Activities carried out outside the United States that constitute a permanent establishment under the terms of an income tax treaty between the United States and the country in which the activities are carried out constitute a trade or business conducted outside the United States for purposes of this paragraph (f)(3)(vii)(B). In determining whether activities constitute a trade or business under § 1.989(a)-1(c), disregarded payments are taken into account and may give rise to a trade or business, provided that the activities (together with any other activities of the QBU) would otherwise satisfy the rule in § 1.989(a)-1(c).

(C) ***Activities of a partnership, estate, trust, or corporation*** —

(*1*) ***Treatment as a foreign branch.*** For purposes of this paragraph (f)(3)(vii), the activities of a partnership, estate, trust, or corporation that conducts a trade or business that satisfies the requirements of § 1.989(a)-1(b)(2)(ii)(A) (as modified by paragraph (f)(3)(vii)(B) of this section) are—

(*i*) Deemed to satisfy the requirements of § 1.989(a)-1(b)(2)(ii)(B); and

(*ii*) Comprise a foreign branch.

(*2*) ***Separate set of books and records.*** A foreign branch described in this paragraph (f)(3)(vii)(C) is treated as maintaining a separate set of books and records with respect to the activities described in paragraph (f)(3)(vii)(C)(*1*) of this section, and must determine, as the context requires, the items of gross income, disregarded payments, and any other items that would be reflected on those books and records in applying this paragraph (f) with respect to the foreign branch. The principles of § 1.1503(d)-5(c) apply for purposes of determining which items would be reflected on such books and records.

(viii) ***Foreign branch group.*** The term *foreign branch group* means a foreign branch and any non-branch taxable units (other than an individual or a domestic corporation), to the extent that the foreign branch owns the non-branch taxable unit (if any) directly or indirectly through one or more other non-branch taxable units.

(ix) ***Foreign branch owner.*** The term *foreign branch owner* means, with respect to a foreign branch, the person (including a foreign or domestic partnership or other pass-through entity) that owns the foreign branch, either directly or indirectly through one or more disregarded entities. For purposes of this paragraph (f)(3)(ix), the foreign branch owner does not include the foreign branch or another foreign branch of the person that owns the foreign branch.

(x) ***Foreign branch owner group.*** The term *foreign branch owner group* means a foreign branch owner and any non-branch taxable units (other than an individual or a domestic corporation), to the extent that the foreign branch owner owns the non-branch taxable unit (if any) directly or indirectly through one or more other non-branch taxable units.

(xi) ***Non-branch taxable unit.*** The term *non-branch taxable unit* has the meaning provided in § 1.904-6(b)(2)(i)(B).

(xii) ***Remittance.*** The term *remittance* means a transfer of property (within the meaning of section 317(a)) by a foreign branch that would be treated as a distribution if the foreign branch were treated as a separate corporation.

(xiii) ***Tentative disregarded basis.*** The term *tentative disregarded basis* means, in connection with the transfer of property in a transaction that is disregarded for Federal income tax purposes, the basis that property would have if the disregarded payment made in exchange for the transferred property were treated as the cost of such property under section 1012(a).

(4) ***Examples.*** The following examples illustrate the application of this paragraph (f).

(i) ***Example 1: Determination of foreign branches and foreign branch owner*** —

(A) ***Facts.***

(*1*) P, a domestic corporation, is a partner in PRS, a domestic partnership. All other partners in PRS are unrelated to P. PRS conducts activities solely in Country A (the Country A Business), and those activities constitute a trade or business outside the United States within the meaning of paragraph (f)(3)(vii)(B) of this section. PRS reflects items of income, gain, loss, and expense of the Country A Business on the books and records of PRS's home office. PRS is in the business of manufacturing bicycles.

(*2*) PRS owns FDE1, a disregarded entity organized in Country B. FDE1 conducts activities in Country B (the Country B Business), and those activities constitute a trade or business outside the United States within the meaning of paragraph (f)(3)(vii)(B) of this section. FDE1 maintains a set of books and records that are separate from those of PRS, and the separate set of books and records reflects items of income, gain, loss, and expense with respect to the Country B Business. FDE1 is in the business of selling bicycles manufactured by PRS.

(*3*) FDE1 owns FDE2, a disregarded entity organized in Country C. FDE2 conducts activities in Country C (the Country C Business), and those activities constitute a trade or business outside the United States within the meaning of paragraph (f)(3)(vii)(B) of this section. FDE2 maintains a set of books and records that are separate from those of PRS and FDE1, and the separate set of books and records reflects items of income, gain, loss, and expense with respect to the Country C Business. FDE2's paper business is not related to FDE1's bicycle sales business, and FDE1 does not hold its interest in FDE2 in the ordinary course of its trade or business.

(B) ***Analysis.***

(*1*) Country A Business's activities comprise a trade or business conducted outside the United States within the meaning of § 1.989(a)-1(b)(2)(ii)(A) and (b)(3) (in each case, as modified by paragraph (f)(3)(vii) of this section). PRS does not maintain a separate set of books and records with respect to the Country A Business. However, under paragraph (f)(3)(vii)(C) of this section, the Country A Business's activities are deemed to satisfy the requirement of § 1.989(a)-1(b)(2)(ii)(B) that a QBU maintain a separate set of books and records with respect to the relevant activities. Thus, for purposes of this paragraph (f), the activities of the Country A Business constitute a QBU as defined in § 1.989-1(b)(2)(ii) and (b)(3), as modified by paragraph (f)(3)(vii)

of this section, that conducts a trade or business outside the United States. Accordingly, the activities of the Country A Business constitute a foreign branch within the meaning of paragraph (f)(3)(vii) of this section. PRS, the person that owns the Country A Business, is the foreign branch owner, within the meaning of paragraph (f)(3)(ix) of this section, with respect to the Country A Business.

(2) Country B Business's activities comprise a trade or business outside the United States within the meaning of § 1.989(a)-1(b)(2)(ii)(A) and (b)(3) (in each case, as modified by paragraph (f)(3)(vii) of this section). PRS maintains a separate set of books and records with respect to the Country B Business, as described in § 1.989(a)-1(b)(2)(ii)(B). Thus, for purposes of this section, the activities of the Country B Business constitute a QBU as defined in § 1.989-1(b)(2)(ii) and (b)(3), as modified by paragraph (f)(3)(vii) of this section, that conducts a trade or business outside the United States. Accordingly, the activities of the Country B Business constitute a foreign branch within the meaning of paragraph (f)(3)(vii) of this section. Under paragraph (f)(3)(ix) of this section, PRS, the person that owns the Country B Business indirectly through FDE1 (a disregarded entity), is the foreign branch owner with respect to the Country B Business.

(3) The same analysis that applies to the Country B Business applies to the Country C Business. Accordingly, the activities of the Country C Business constitute a foreign branch within the meaning of paragraph (f)(3)(vii) of this section. PRS, the person that owns the Country C Business indirectly through FDE1 and FDE2 (disregarded entities), is the foreign branch owner with respect to the Country C Business.

(ii) ***Example 2: Sale of foreign branch*** —

(A) ***Facts.*** The facts are the same as in paragraph (f)(4)(i)(A) of this section (the facts in *Example 1*), except that in Year 1, FDE1 sells FDE2 to an unrelated person, recording gain from the sale on its books and records. In Year 2, PRS sells FDE1 to another unrelated person, recording gain from the sale on its books and records. In each year, PRS allocates a portion of the gain to P.

(B) ***Analysis*** —

(1) ***Sale of FDE2.*** Under paragraph (f)(1)(i)(B) of this section, P's distributive share of gain recognized by PRS in connection with the sales of FDE1 and FDE2 constitutes foreign branch category income if it is attributable to a foreign branch held by PRS directly or indirectly through one or more disregarded entities. PRS's gross income from the Year 1 sale of FDE2 is reflected on the separate set of books and records maintained with respect to the Country B Business (a foreign branch) operated by FDE1. Therefore, absent an exception, under paragraph (f)(2)(i) of this section PRS's gross income from the sale of FDE2 would be attributable to the Country B Business, and would constitute foreign branch category income. However, under paragraph (f)(2)(iv) of this section, gross income attributable to the Country B Business does not include gain from the sale or exchange of an interest in FDE2, a disregarded entity, unless the interest in FDE2 is held by the Country B Business in the ordinary course of its active trade or business (within the meaning of paragraph (f)(2)(iv)(B) of this section). In this case, the Country B Business does not hold FDE2 in the

ordinary course of its active trade or business within the meaning of paragraph (f)(2)(iv)(B) of this section. As a result, P's distributive share of gain from the sale of FDE2 is not attributable to a foreign branch, and is not foreign branch category income.

(2) ***Sale of FDE1.*** The analysis of PRS's sale of FDE1 in Year 2 is the same as the analysis for the sale of FDE2, except that PRS, through its Country A Business, holds FDE1 in the ordinary course of its active trade or business within the meaning of paragraph (f)(2)(iv)(B) of this section because the Country A Business engages in a trade or business that is related to the trade or business of FDE1. Therefore, P's distributive share of gain from the sale of FDE1 is attributable to a foreign branch, and is foreign branch category income.

(iii) ***Example 3: Disregarded payment for services*** —

(A) ***Facts.*** P, a domestic corporation, owns FDE, a disregarded entity that is a foreign branch within the meaning of paragraph (f)(3)(vii) of this section. FDE's functional currency is the U.S. dollar. In Year 1, P accrues and records on its books and records (and not FDE's books and records) $1,000x of gross income from the performance of services to unrelated parties that is not passive category income, $400x of which is foreign source income in respect of services performed outside the United States by employees of FDE and $600x of which is U.S. source income in respect of services performed in the United States. Absent the application of paragraph (f)(2)(vi) of this section, the $1,000x of gross income earned by P would be general category income that would not be attributable to FDE. FDE provides services in support of P's gross income from services. P compensates FDE for its services with an arm's length payment of $400x, which is disregarded for Federal income tax purposes. The deduction for the payment of $400x from P to FDE would be allocated to P's $1,000x of general category gross services income and apportioned entirely to the $400x of foreign source services income under §§ 1.861-8 and 1.861-8T principles (treating foreign source general category gross income and U.S. source general category gross income each as a statutory grouping) if the payment were regarded for Federal income tax purposes.

(B) ***Analysis.*** The disregarded payment from P, a United States person, to FDE, its foreign branch, is not recorded on FDE's separate books and records (as adjusted to conform to Federal income tax principles) within the meaning of paragraph (f)(2)(i) of this section because it is disregarded for Federal income tax purposes. However, the disregarded payment is allocable to gross income attributable to P because a deduction for the payment, if it were regarded, would be allocated and apportioned to the $400x of P's foreign source services income. Accordingly, under paragraphs (f)(2)(vi)(A) and (f)(2)(vi)(B)(*3*) of this section, the amount of gross income attributable to the FDE foreign branch (and the gross income attributable to P) is adjusted in Year 1 to take the disregarded payment into account. As such, $400x of P's foreign source gross income from the performance of services is attributable to the FDE foreign branch for purposes of this section. Therefore, $400x of the foreign source gross income that P earned with respect to its services in Year 1 constitutes gross income that is assigned to the foreign branch category.

(iv) ***Example 4: Disregarded payment for non-inventory property*** —

(A) ***Facts.*** P, a domestic corporation, owns FDE, a disregarded entity that is a foreign branch within the meaning of paragraph (f)(3)(vii) of this section. FDE's functional currency is the U.S. dollar. P holds Asset A, a non-depreciable asset, with an adjusted basis of $200x. In Year 1, P sells Asset A, which will be used in FDE's manufacturing business, to FDE for $500x. FDE makes no other disregarded payments with respect to Asset A. No adjustments described in section 1016(a) apply with respect to Asset A while FDE holds Asset A. In Year 3, FDE sells Asset A to a third party for $600x and reflects $400x of gross income on its separate set of books and records (that is, $600x amount realized less Asset A's $200x adjusted basis). Under sections 865(e)(1) and 904(d)(2)(B)(i), the income arising from the sale of Asset A is foreign source income that is not treated as passive category income. Asset A is not inventory property. Absent the application of paragraph (f)(2)(vi) of this section, the entire $400x of gross income earned by P by reason of FDE's sale of Asset A would be attributable to FDE and be treated as foreign branch category income.

(B) ***Analysis*** —

(*1*) ***Disregarded basis determinations.*** If regarded, the $500x payment from FDE to P would result in FDE holding Asset A with a basis of $500x under section 1012. Accordingly, the tentative disregarded basis (within the meaning of paragraph (f)(3)(xiii) of this section) with respect to Asset A is $500x. Because there are no adjustments described in section 1016 with respect to Asset A (including any adjustments resulting from any disregarded payments made with respect to the transferred property), the adjusted disregarded basis (within the meaning of paragraph (f)(3)(i) of this section) with respect to Asset A is $500x.

(*2*) ***Adjusted disregarded gain.*** Under paragraph (f)(3)(ii) of this section, the adjusted disregarded gain with respect to Asset A is $300x, which is equal to the lesser of $300x (FDE's adjusted disregarded basis in Asset A ($500x) less the adjusted basis of Asset A at the time that Asset A was transferred to FDE ($200x)) and $400x (the gain (if any) attributable to the regarded sale or exchange of Asset A).

(*3*) ***Attribution of gross income.*** Under paragraph (f)(2)(vi)(A) of this section, the gross income attributable to FDE ($400x) is adjusted downward to the extent that the $500x disregarded payment from FDE to P is allocable to gross income of FDE that is reflected on FDE's separate set of books and records. Under paragraph (f)(2)(vi)(B)(*2*)(*ii*) of this section, the $500x payment from FDE to P is allocable to gross income attributable to FDE to the extent of FDE's adjusted disregarded gain ($300x) with respect to Asset A. The source and separate category of the gross income of FDE to which the payment is allocable is proportionate to the source and separate category of the gain recognized by FDE with respect to Asset A. Accordingly, $300x of the payment is allocable to foreign source income that would be foreign branch category income. Thus, under paragraphs (f)(2)(vi)(A) and (f)(2)(vi)(B)(*3*) of this section, foreign source gross income attributable to P is adjusted upward by $300x (increasing foreign source general category income by $300x) and foreign source gross income attributable to FDE is adjusted downward by $300x (decreasing foreign source foreign branch category income by $300x) in Year 3.

(v) ***Example 5: Disregarded payment for depreciable non-inventory property*** —

(A) ***Facts.*** The facts are the same as in paragraph (f)(4)(iv)(A) of this section (the facts in *Example 4*), except as set forth in this paragraph (f)(4)(v)(A). Asset A is depreciable property. In Year 2, P is entitled to a $20x depreciation deduction with respect to Asset A, $18x of which is allocated and apportioned to non-passive category gross income attributable to FDE under §§ 1.861-8 through 1.861-14T and $2x of which is allocated and apportioned to passive category gross income under §§ 1.861-8 through 1.861-14T. If the transfer of Asset A were regarded for Federal income tax purposes, FDE would be entitled to a $50x depreciation deduction, 90% of which would be allocated and apportioned to non-passive category gross income attributable to FDE under §§ 1.861-8 through 1.861-14T and 10% of which would be allocated and apportioned to passive category gross income under §§ 1.861-8 through 1.861-14T. In Year 2, FDE earns $315x of gross income that it reflects on its books and records that, in the absence of paragraph (f)(2)(vi) of this section, would be foreign branch category income. FDE also earns $35x of passive category income in Year 2 from the non-active rental of a portion of Asset A. In Year 3, FDE reflects $420x of gross income on its separate set of books and records by reason of the sale of Asset A (that is, $600x amount realized less Asset A's $180x adjusted basis), $42x of which is passive category income under paragraph (b) of this section.

(B) ***Analysis*** —

(*1*) ***Attribution of gross income in Year 2.*** The disregarded payment from FDE to P in Year 1 is disregarded for Federal income tax purposes, and does not generate gross income. However, under paragraph (f)(2)(vi)(B)(*1*)(*ii*) of this section, the disregarded payment is allocable to gross income attributable to FDE to the extent of any disregarded cost recovery deduction relating to that payment in Year 2. Under paragraph (f)(3)(iii) of this section, the disregarded cost recovery deduction with respect to Asset A is $30x, which is $50x (the amount that would be allowed as a deduction, and that would give rise to an adjustment described in section 1016(a)(2), with respect to Asset A if the transfer of Asset A to FDE were regarded for Federal income tax purposes, to the extent that the deduction would be allocable to income attributable to a foreign branch), reduced by $20x (the amount allowed as a deduction, and that gives rise to an adjustment described in section 1016(a)(2), with respect to Asset A, to the extent allocable to income attributable to a foreign branch). If regarded, $27x (90% of $30x) of the disregarded cost recovery deduction would be allocated and apportioned to non-passive category gross income attributable to FDE under §§ 1.861-8 through 1.861-14T and $3x (10% of $30x) would be allocated and apportioned to passive category gross income under §§ 1.861-8 through 1.861-14T. Accordingly, under paragraphs (f)(2)(vi)(A) and (f)(2)(vi)(B)(*3*) of this section, the $315x of non-passive category gross income that would otherwise be attributed to FDE is reduced to $288x ($315x less $27x), and the non-passive category gross income attributable to P is increased by $27x in Year 2. As a result, in Year 2, P's foreign branch category gross income is $288x, and its general category gross income is increased by $27x. P's passive category gross income is $35x. *See* paragraphs (f)(1)(ii) and (f)(2)(vi)(A) of this section.

(*2*) ***Attribution of gross income in Year 3*** —

(*i*) ***Adjusted disregarded basis.*** If regarded, the $500x payment from FDE to P would result in FDE holding Asset A with a basis of $500x under section 1012. Accordingly, the tentative disregarded basis (within the meaning of paragraph

(f)(3)(xiii) of this section) with respect to Asset A is $500x. To determine FDE's adjusted disregarded basis with respect to Asset A under paragraph (f)(3)(i) of this section, FDE's tentative disregarded basis is reduced by $30x (the disregarded cost recovery deduction with respect to Asset A), resulting in an adjusted disregarded basis of $470x.

(*ii*) ***Adjusted disregarded gain.*** Under paragraph (f)(3)(ii) of this section, the adjusted disregarded gain with respect to Asset A is $270x, which is equal to the lesser of $270x (FDE's adjusted disregarded basis in Asset A ($470x) less the adjusted basis of Asset A at the time that Asset A was transferred to FDE ($200x)), and $420x (the gain attributable to the regarded sale or exchange of Asset A).

(*iii*) ***Sale of Asset A.*** Under paragraph (f)(2)(vi)(A) of this section, the gross income attributable to FDE ($420x) by reason of the sale of Asset A is adjusted downward to the extent that the $500x disregarded payment from FDE to P is allocable to gross income that would be attributable to FDE under paragraphs (f)(2)(i) through (v) of this section. Under paragraph (f)(2)(vi)(B)(*2*)(*ii*) of this section, the $500x payment from FDE to P is allocable to gross income attributable to FDE to the extent of the adjusted disregarded gain with respect to Asset A, which is $270x. The source and separate category of the gross income of FDE to which that amount is allocable is proportionate to the source and separate category of the $420x of gain recognized on the regarded sale of Asset A ($378x of foreign source non-passive category income and $42x of foreign source passive category income). Consequently, under paragraphs (f)(2)(vi)(A) and (f)(2)(vi)(B)(*3*) of this section, in Year 3, gross income attributable to P is adjusted upward by $270x (increasing P's foreign source general category gross income by $243x, which bears the same proportion to $270x as the foreign source non-passive gain ($378x) bears to P's overall gain with respect to Asset A ($420x)), and the foreign source gross income attributable to FDE is adjusted downward by $270x (with foreign source foreign branch category gross income reduced by $243x). P also has $42x of foreign source passive category income from the sale of Asset A. *See* paragraphs (f)(1)(ii) and (f)(2)(vi)(A) of this section.

(vi) ***Example 6: Disregarded payment for non-depreciable non-inventory property—regarded gain limitation —***

(A) ***Facts.*** The facts are the same as in paragraph (f)(4)(iv)(A) of this section (the facts in *Example 4*), except that in Year 3, FDE sells Asset A to a third party for $340x and reflects $140x of gross income on its separate set of books and records (that is, $340x amount realized less Asset A's $200x adjusted basis), none of which is passive category income.

(B) ***Analysis.*** The analysis is the same as the analysis in paragraph (f)(4)(iv)(B) of this section (the analysis in *Example 4*), except that in Year 3, the adjusted disregarded gain with respect to Asset A is $140x, which is equal to the lesser of $300x (FDE's adjusted disregarded basis in Asset A ($500x) less the adjusted basis of Asset A at the time that Asset A was transferred to FDE ($200x)), and $140x (the gain attributable to the regarded sale or exchange of Asset A). Accordingly, under paragraphs (f)(2)(vi)(A) and (f)(2)(vi)(B)(*3*) of this section, gross income attributable to P is adjusted upward by $140x

(increasing P's foreign source general category gross income by $140x) and gross income attributable to FDE is adjusted downward by $140x (decreasing P's foreign source foreign branch category gross income by $140x) in Year 3.

(vii) ***Example 7: Disregarded payment for non-depreciable non-inventory property—loss*** —

(A) ***Facts.*** The facts are the same as in paragraph (f)(4)(iv)(A) of this section (the facts in *Example 4*), except that in Year 3, FDE sells Asset A to a third party for $175x and reflects a $25x loss on its separate set of books and records (that is, $175x amount realized less Asset A's $200x adjusted basis).

(B) ***Analysis.*** The analysis is the same as the analysis in paragraph (f)(4)(iv)(B) of this section (the analysis in *Example 4*), except that in Year 3, the adjusted disregarded gain with respect to Asset A is $0x, which is equal to the lesser of $300x (FDE's adjusted disregarded basis in Asset A ($500x) less the adjusted basis of Asset A at the time that Asset A was transferred to FDE ($200x)), and $0x (the gain attributable to the regarded sale or exchange of Asset A). Accordingly, gross income amounts attributable to P and FDE are not adjusted under paragraph (f)(2)(vi)(A) of this section by reason of the transfer of Asset A from P to FDE.

(viii) ***Example 8: Disregarded payment for non-depreciable non-inventory property—disregarded gain limitation*** —

(A) ***Facts.*** The facts are the same as in paragraph (f)(4)(iv)(A) of this section (the facts in *Example 4*), except that in Year 1, P sells Asset A to FDE for $65x.

(B) ***Analysis.*** The analysis is the same as the analysis in paragraph (f)(4)(iv)(B) of this section (the analysis in *Example 4*), except that in Year 3, the tentative disregarded basis and the adjusted disregarded basis with respect to Asset A are $65x. Under paragraph (f)(3)(ii)(B) of this section, the adjusted disregarded gain with respect to Asset A is $0x. Accordingly, under paragraph (f)(2)(vi)(A) of this section, gross income amounts attributable to P and FDE are not adjusted under paragraph (f)(2)(vi)(A) of this section by reason of the transfer of Asset A from P to FDE.

(ix) ***Example 9: Application of the rules to the sale of inventory from a foreign branch owner to a foreign branch for distribution*** —

(A) ***Facts.*** P, a domestic corporation, owns FDE, a disregarded entity that is a foreign branch within the meaning of paragraph (f)(3)(vii) of this section. FDE's functional currency is the U.S. dollar. P manufactures portable electronic devices, which it sells to FDE for $1,500x during a taxable year in a transaction that is disregarded for Federal income tax purposes. In the same taxable year, FDE sells the portable electronic devices to its customers for $1,750x. P uses an overall accrual method of accounting and has $1,300x of cost of goods sold for the taxable year, $1,200x of which were incurred prior to the disregarded sale to FDE and recorded on P's separate set of books and records and $100x of which were incurred after the disregarded sale and recorded on the books and records of FDE. P reports $450x of gross income for the taxable year: $1,750x of gross receipts less cost of goods sold of $1,300x. The $450x of gross income from the sale of portable electronic devices is U.S. source income under section 863(b).

(B) ***Analysis*** —

(1) ***In general.*** The gross receipts from the sale of portable electronic devices ($1,750x), which results in U.S. source gross income of $450x, is recorded on FDE's separate books and records (as adjusted to conform to Federal income tax principles). Therefore, the gross income ($450x) generally would be foreign branch category income under paragraph (f)(2)(i) of this section. However, under paragraph (f)(2)(vi)(A) of this section, the amount of gross income attributable to FDE (and the gross income attributable to P) is adjusted to take the disregarded payment for the portable electronic devices from FDE to P into account. If both FDE and the disregarded payment from FDE to P were recognized for Federal income tax purposes, the amount of the payment ($1,500x) would reduce FDE's gross income. Therefore, under paragraph (f)(2)(vi)(B)(*2*)(*iii*) of this section, the principles of paragraph (f)(2)(vi)(B)(*2*)(*ii*) of this section apply for purposes of determining whether, and to what extent, the disregarded payment is allocable to non-passive category income attributable to FDE for purposes of determining the extent of any adjustment.

(2) ***Applying the principles of the tangible property rules to sales of inventory.*** The principles of paragraph (f)(2)(vi)(B)(*2*)(*ii*) of this section are applied by treating the cost of goods sold with respect to expenses recorded on P's separate set of books and records ($1,200x) similarly to the adjusted basis at the time of the disregarded sale; the gross income ($450x) similarly to gain from the disposition of non-inventory property; and the lesser of the recognized gross income ($450x) and the disregarded payment less the cost of goods sold attributable to expenses reflected on P's separate set of books and records ($1,500x less $1,200x) similarly to disregarded gain ($300x). Accordingly, under paragraph (f)(2)(vi)(A) of this section, general category U.S. source gross income attributable to P is adjusted upward by $300x and the non-passive category U.S. source gross income attributable to FDE is adjusted downward by $300x.

(x) ***Example 10: Gross income initially attributable to a foreign branch*** —

(A) ***Facts*** —

(1) ***Overview.*** P, a domestic corporation, owns FDE, which is a disregarded entity that is a foreign branch within the meaning of paragraph (f)(3)(vii) of this section that has the U.S. dollar as its functional currency. P, which is a foreign branch owner with respect to FDE, also conducts a trade or business in the United States. During a single taxable year, P and FDE engage in the transactions described in paragraphs (f)(4)(x)(A)(*2*) and (*3*) of this section.

(2) ***Unrelated party transactions.*** P, through its U.S. office, accrues and records on its books and records $5,000x of gross income from the performance of accounting services for Customer A, an unrelated party (the Customer A services). The gross income from the Customer A services performed by P is non-passive category income and, under section 861(a)(3), is U.S. source income. Absent the application of paragraph (f)(2)(vi) of this section, the gross income earned by P through its U.S. office would be general category income. FDE accrues and records on its books and records $3,400x of gross income from the performance of web design services for Customer B, an unrelated party (the Customer B services). The gross income from the Customer B services performed by FDE is non-passive category income and,

under section 862(a)(3), is foreign source income. Absent the application of paragraph (f)(2)(vi) of this section, the $3,400x of gross income earned by FDE would be foreign branch category income.

(3) ***Disregarded payments.*** FDE provides web design services to P. As compensation for those services, P pays $300x to FDE. The deduction for P's payment to FDE (if regarded) would be allocable to the $5,000x of general category U.S. source gross income earned from P's performance of the Customer A services. P provides accounting services to FDE from P's U.S. office. As compensation for those services, FDE pays $300x to P. The deduction for FDE's payment to P (if regarded) would be allocable to the $3,400x of non-passive category foreign source gross income earned from FDE's performance of the Customer B services.

(B) ***Analysis*** —

(1) ***Application of multiple disregarded payments rule.*** Under paragraph (f)(2)(vi)(F) of this section, paragraph (f)(2)(vi) of this section applies to determine the effects of the disregarded payments described in paragraph (f)(4)(x)(A)(3) of this section on gross income initially attributable to FDE before paragraph (f)(2)(vi) of this section is applied to gross income initially attributable to P.

(2) ***Disregarded payment from FDE to P.*** The disregarded payment from FDE to P is disregarded for Federal income tax purposes, and does not generate gross income. However, the disregarded payment is allocable to non-passive category gross income attributable to FDE because a deduction for the payment, if it were regarded, would be allocated to FDE's $3,400x of non-passive category foreign source gross services income under § 1.861-8. Under paragraph (f)(2)(vi)(A) of this section, the amount of non-passive category foreign source gross income attributable to FDE is adjusted downward, and the amount of general category foreign source gross income attributable to P (in its capacity as a foreign branch owner) is adjusted upward, to take the disregarded payment into account. Thus, $300x of FDE's foreign source gross income relating to the Customer B services is attributable to P for purposes of this section, and $3,100x of that income is attributable to FDE.

(3) ***Disregarded payment from P to FDE.*** The disregarded payment from P to FDE is not recorded on FDE's separate books and records (as adjusted to conform to Federal income tax principles) within the meaning of paragraph (f)(2)(i) of this section because it is disregarded for Federal income tax purposes. However, the disregarded payment is allocable to general category U.S. source gross income attributable to P because a deduction for the payment, if it were regarded, would be allocated to P's $5,000x of general category U.S. source gross services income under § 1.861-8. Accordingly, under paragraph (f)(2)(vi)(A) of this section, the amount of general category U.S. source gross income attributable to P is adjusted downward, and the amount of non-passive category U.S. source gross income attributable to FDE is adjusted upward, to take the disregarded payment into account. Thus, $300x of P's U.S. source gross income from the performance of Customer A services is attributable to FDE for purposes of this section, and $4,700x of that income is attributable to P.

(xi) ***Example 11: Ordering rule*** —

(A) *Facts* —

(*1*) ***Overview.*** P, a domestic corporation, owns FDE1 and FDE2, each of which is a disregarded entity that is a foreign branch within the meaning of paragraph (f)(3)(vii) of this section that has the U.S. dollar as its functional currency. P, which is a foreign branch owner with respect to FDE1 and FDE2, also conducts a trade or business in the United States. During a single taxable year, P, FDE1, and FDE2 engage in the transactions described in paragraphs (f)(4)(xi)(A)(*2*) and (*3*) of this section.

(*2*) ***Unrelated party transactions.*** FDE1 accrues and records on its books and records $1,000x of gross income from the performance of services for Customer A, an unrelated party (the Customer A services). The gross income from the Customer A services performed by FDE is non-passive category income and, under section 862(a)(3), is foreign source income. Absent the application of paragraph (f)(2)(vi) of this section, the $1,000x of non-passive foreign source gross income earned by FDE1 would be foreign branch category income. FDE2 accrues and records on its books and records $1,100x of gross income from royalties received from Customer B, an unrelated party (the Customer B royalties) on licensed intangible property developed by FDE2 and used by Customer B in the United States. The gross income from the Customer B royalties is non-passive category income and under section 861(a)(4) is U.S. source income. Absent the application of paragraph (f)(2)(vi) of this section, the $1,100x of non-passive category U.S. source gross income earned by FDE2 would be foreign branch category income.

(*3*) ***Disregarded payments.*** FDE2 provides services to FDE1. As compensation for those services, FDE1 pays $200x to FDE2. The deduction for FDE1's payment to FDE2 (if regarded) would be allocable to the $1,000x of non-passive category foreign source gross income earned from the Customer A services. P provides services to FDE2 from P's U.S. office. As compensation for those services, FDE2 pays $50x to P. The deduction for FDE2's payment to P (if regarded) would be allocable to the non-passive category foreign source gross income attributable to FDE2 (see paragraph (f)(4)(xi)(B)(*1*) of this section) relating to gross income from the Customer A services.

(B) *Analysis* —

(*1*) ***Disregarded payment from FDE1 to FDE2.*** The $1,000x of gross income earned by FDE1 from the Customer A services would, but for paragraph (f)(2)(vi) of this section, be attributable to FDE1 (a foreign branch). Accordingly, under paragraph (f)(2)(vi)(F)(*1*) of this section, adjustments related to disregarded payments from FDE1 to FDE2 are computed before adjustments related to disregarded payments from FDE2 to P (in its capacity as a foreign branch owner). The disregarded payment from FDE1 to FDE2 is not recorded on FDE2's separate books and records (as adjusted to conform to Federal income tax principles) within the meaning of paragraph (f)(2)(i) of this section because it is disregarded for Federal income tax purposes. However, the disregarded payment is allocable to gross income attributable to FDE1 because a deduction for the payment, if it were regarded, would be allocated to FDE1's $1,000x of non-passive category foreign source gross services income under § 1.861-8. Accordingly, under paragraph (f)(2)(vi)(A) of this section, the amount of non-passive category foreign source gross income

attributable to FDE1 is adjusted downward, and the amount of non-passive category foreign source gross income attributable to FDE2 is adjusted upward, to take the disregarded payment into account. Thus, $200x of FDE1's non-passive category foreign source gross income from the performance of Customer A services is attributable to FDE2 for purposes of this section, and $800x of that income is attributable to FDE1.

(2) ***Disregarded payment from FDE2 to P.*** The disregarded payment from FDE2 to P is disregarded for Federal income tax purposes, and does not generate gross income. However, the disregarded payment is allocable to gross income attributable to FDE2 because a deduction for the payment, if it were regarded, would be allocated to FDE2's $200x of non-passive category foreign source gross services income under § 1.861-8. Under paragraph (f)(2)(vi)(A) of this section, the amount of non-passive category foreign source gross income attributable to FDE2 is adjusted downward, and the amount of general category foreign source gross income attributable to P is adjusted upward, to take the $50x disregarded payment into account. Thus, $50x of non-passive category foreign source gross income relating to the Customer A services is attributable to P for purposes of this section, $150x of that income is attributable to FDE2, and $800x of that income remains attributable to FDE1. FDE2's $1,100x of U.S. source royalty income is not adjusted under paragraph (f)(2)(vi) of this section and remains foreign branch category income.

(xii) ***Example 12: Application of intangible property rules*** —

(A) ***Facts.*** P, a domestic corporation that has a calendar taxable year, owns FDE, a disregarded entity that is a foreign branch within the meaning of paragraph (f)(3)(vii) of this section. FDE's functional currency is the U.S. dollar. Asset A, a patent with a useful life ending on December 31, Year 2, was obtained with respect to a discovery that was made by FDE in the course of its trade or business and was used in that trade or business until December 31, Year 1. On December 31, Year 1, FDE remits Asset A to P and receives no consideration. Asset A has an adjusted basis of $0. In Year 2, P uses Asset A to generate general category gross income. P earns $1,000x of general category U.S. source gross income in Year 2, including the income generated by its use of Asset A. If FDE were a domestic corporation, P were a foreign corporation, and Asset A had been transferred in exchange for stock in a transaction described in section 351, such that section 367(d) applied by its terms (but all other facts remained the same), the payment determined under section 367(d) for Year 2 would be $300x. A disregarded payment for the use of Asset A, if it were regarded, would be allocated to FDE's $1,000x of general category U.S. source gross income under § 1.861-8.

(B) ***Analysis.*** The remittance of Asset A by FDE to P is a transfer of intangible property described in section 367(d)(4) from a foreign branch to its foreign branch owner. The facts in paragraph (f)(4)(xii)(A) of this section do not implicate an exception in paragraph (f)(2)(vi)(D)(*2*) or (*3*) of this section. Therefore, this is a transaction to which paragraph (f)(2)(vi)(D)(*1*) of this section applies. The foreign branch is treated as having sold the transferred property to the foreign branch owner in exchange for annual payments contingent on the productivity or use of the property, the amount of which for Year 2 is determined under the principles of section 367(d) to be $300x. Thus, in Year 2, P is treated as making a $300x disregarded payment to FDE. The payment would be allocable to general category U.S. source income under paragraph (f)(2)(vi)(B)(*1*)(*i*) of this section.

Therefore, $300x of P's non-passive category U.S. source gross income is attributable to FDE under paragraphs (f)(2)(vi)(A) and (f)(2)(vi)(B)(*3*) of this section. P has $700x of general category U.S. source gross income and $300x of foreign branch category U.S. source gross income in Year 2.

(xiii) ***Example 13: Disregarded payment from domestic corporation to foreign branch*** —

(A) ***Facts.*** P, a domestic corporation, owns FDE, a disregarded entity that is a foreign branch. FDE's functional currency is the U.S. dollar. In Year 1, P accrues and records on its books and records for Federal income tax purposes $400x of gross income from the license of intellectual property to unrelated parties that is not passive category income, all of which is U.S. source income. P also accrues $600x of foreign source passive category interest income. P compensates FDE for services that FDE performs in a foreign country with an arm's length payment of $350x, which FDE records on its books and records; the transaction is disregarded for Federal income tax purposes. Absent the application of paragraph (f)(2)(vi) of this section, the $400x of gross income earned by P from the license would be general category income that would not be attributable to FDE. If the $350x disregarded payment from P to FDE were regarded for Federal income tax purposes, the deduction for the payment would be allocated and apportioned entirely to P's $400x of general category gross licensing income under the principles of §§ 1.861-8 and 1.861-8T (treating U.S. source general category gross income and foreign source passive category gross income each as a statutory grouping). P and FDE incur no other expenses.

(B) ***Analysis.*** The $350x disregarded payment from P, a United States person, to FDE, its foreign branch, is not recorded on FDE's separate books and records (as adjusted to conform to Federal income tax principles) under paragraph (f)(2)(i) of this section because it is disregarded for Federal income tax purposes. The disregarded payment is allocable to gross income attributable to P because a deduction for the payment, if it were regarded, would be allocated and apportioned to the $400x of P's U.S. source licensing income. Accordingly, under paragraphs (f)(2)(vi)(A) and (f)(2)(vi)(B)(*3*) of this section, the amount of gross income attributable to the FDE foreign branch (and the gross income attributable to P) is adjusted in Year 1 to take the disregarded payment into account. Accordingly, $350x of P's $400x U.S. source general category gross income from the license is attributable to the FDE foreign branch for purposes of this section. Therefore, $350x of the U.S. source gross income that P earned with respect to its license in Year 1 constitutes U.S. source gross income that is assigned to the foreign branch category and $50x remains U.S. source general category income. P's $600x of foreign source passive category interest income is unchanged.

(xiv) ***Example 14: Regarded payment from non-consolidated domestic corporation to a foreign branch*** —

(A) ***Facts.*** The facts are the same as those in paragraph (f)(4)(xiii)(A) of this section (the facts in *Example 13*), except P wholly owns USS, and USS (rather than P) owns FDE. P and USS do not file a consolidated return. USS has no gross income other than the $350x foreign source services income from the $350x payment it receives from P, through FDE.

(B) ***Analysis.*** The $350x services payment from P, a United States person, to FDE, a foreign branch of USS, is not a disregarded payment because the transaction is regarded for Federal income tax purposes. Under §§ 1.861-8 and 1.861-8T, P's $350x deduction for the

services payment is allocated and apportioned to its U.S. source general category gross income. The payment of $350x from P to USS is services income attributable to FDE, and foreign branch category income of USS under paragraph (f)(2)(i) of this section. Accordingly, USS has $350x of foreign source foreign branch category gross income. P has $600x of foreign source passive category income and $400x of U.S. source general category gross income and a $350x deduction for the services payment, resulting in $50x of U.S. source general category taxable income to P.

(xv) ***Example 15: Regarded payment from a member of a consolidated group to a foreign branch of another member of the consolidated group*** —

(A) ***Facts.*** The facts are the same as those in paragraph (f)(4)(xiv)(A) of this section (the facts in *Example 14*), except that P and USS are members of an affiliated group that files a consolidated return pursuant to section 1502 (P group).

(B) ***Analysis*** —

(*1*) ***Definitions under § 1.1502-13.*** Under § 1.1502-13(b)(1), the $350x services payment from P to FDE, a foreign branch of USS, is an intercompany transaction between P and USS; USS is the selling member, P is the buying member, P has a deduction of $350x for the services payment that is a corresponding item, and USS has $350x of income that is an intercompany item. The payment is not a disregarded payment because the transaction is regarded for Federal income tax purposes.

(*2*) ***Timing and attributes under § 1.1502-13*** —

(*i*) ***Separate entity versus single entity analysis.*** Under a separate entity analysis, the result is the same as in paragraph (f)(4)(xiv)(B) of this section (the analysis in *Example 14*), whereby P has $600x of foreign source passive category income and $50x of U.S. source general category income, and USS has $350x of foreign source foreign branch category income. In contrast, under a single entity analysis, the result is the same as in paragraph (f)(4)(xiii)(B) of this section (the analysis in *Example 13*), whereby P has $600x of foreign source passive category income, $50x of U.S. source general category income, and $350x of U.S. source foreign branch category income.

(*ii*) ***Application of the matching rule.*** Under the matching rule in § 1.1502-13(c), the timing, character, source, and other attributes of USS's $350x intercompany item and P's $350x corresponding item are redetermined to produce the effect of transactions between divisions of a single corporation, as if the services payment had been made to a foreign branch of that corporation. Accordingly, all of USS's foreign source income of $350x is redetermined to be U.S. source, rather than foreign source, income. Therefore, for purposes of § 1.1502-4(c)(1), the P group has $600x of foreign passive category income, $50x of U.S. source general category income, and $350x of U.S. source foreign branch category income.

(xvi) ***Example 16: Disregarded payment made from non-branch taxable unit*** —

(A) ***Facts.*** The facts are the same as those in paragraph (f)(4)(xiii)(A) of this section (the facts in *Example 13*), except that P also wholly owns FDE1, a disregarded entity that is a non-branch taxable unit. In addition, FDE1 (rather than P) is the entity that properly accrues and

records on its books and records the $400x of U.S. source general category income from the license of intellectual property and the $600x of foreign source passive category interest income, and FDE1 (rather than P) is the entity that makes the $350x payment, which is disregarded for Federal income tax purposes, to FDE in compensation for services.

(B) ***Analysis.*** Under paragraph (f)(2)(vi)(G) of this section, the rules of paragraph (f)(2) of this section apply to attribute gross income to FDE1, a non-branch taxable unit, as though FDE1 were a foreign branch. Under these rules, the $400x of licensing income and the $600 of interest income are initially attributable to FDE1. This income is adjusted in Year 1 to account for the $350x disregarded payment, which is allocable to the $400x of licensing income of FDE1. Accordingly, $50x of the $400x of U.S. source general category licensing income is attributable to FDE1 and $350x of this income is attributable to the FDE foreign branch. To determine the income that is attributable to P, the foreign branch owner, and FDE, the foreign branch, the income that is attributed to FDE1, after taking into account all of the disregarded payments that it makes and receives, must be further attributed to one or more foreign branches or a foreign branch owner under paragraph (f)(2)(vi)(G) of this section. Under paragraph (f)(2)(vi)(G) of this section, the income of FDE1 is attributed to the foreign branch group or foreign branch owner group of which it is a member. Because FDE1 is wholly owned by P, FDE is a member solely of the foreign branch owner group that is owned by P. See definition of "foreign branch owner group" in § 1.904-4(f)(3). All the income that is attributed to FDE1 under paragraph (f)(2) of this section, namely, the $50x of U.S. source general category licensing income and the $600x of foreign source passive category interest income, is further attributed to P. See § 1.904-4(f)(2)(vi)(G)(*3*). Therefore, the result is the same as in paragraph (f)(4)(xiii)(B) of this section (the analysis in *Example 13*).

(g) ***Section 951A category income*** —

(1) ***In general.*** Except as provided in paragraph (g)(2) of this section, the term *section 951A category income* means amounts included (directly or indirectly through a pass-through entity) in gross income of a United States person under section 951A(a).

(2) ***Exceptions for passive category income.*** Section 951A category income does not include any amounts included under section 951A(a) that are allocable to passive category income under § 1.904-5(c)(6).

(h) ***Export financing interest*** —

(1) ***Definitions*** —

(i) ***Export financing interest.*** The term "export financing interest" means any interest derived from financing the sale (or other disposition) for use or consumption outside the United States of any property that is manufactured, produced, grown, or extracted in the United States by the taxpayer or a related person, and not more than 50 percent of the fair market value of which is attributable to products imported into the United States. For purposes of this paragraph, the term "United States" includes the fifty States, the District of Columbia, and the Commonwealth of Puerto Rico.

(ii) ***Fair market value.*** For purposes of this paragraph, the fair market value of any property imported into the United States shall be its appraised value, as determined by the Secretary under section 402 of the Tariff Act of 1930 (19 U.S.C. 1401a) in connection with its importation. For purposes of determining the foreign content of an item of property imported into the United States, see section 927 and the regulations thereunder.

(iii) ***Related person.*** For purposes of this paragraph, the term "related person" has the meaning given it by section 954(d)(3) except that such section shall be applied by substituting "the person with respect to whom the determination is being made" for "controlled foreign corporation" each place it applies.

(2) ***Treatment of export financing interest.*** Except as provided in paragraph (h)(3) of this section, if a taxpayer (including a financial services entity) receives or accrues export financing interest from an unrelated person, then that interest is not treated as passive category income. Instead, the interest income is treated as foreign branch category income, section 951A category income, general category income, or income in a specified separate category under the rules of this section.

(3) ***Exception.*** Unless it is received or accrued by a financial services entity, export financing interest shall be treated as passive category income if that income is also related person factoring income. For this purpose, related person factoring income is—

(i) Income received or accrued by a controlled foreign corporation that is income described in section 864(d)(6) (income of a controlled foreign corporation from a loan for the purpose of financing the purchase of inventory property of a related person); or

(ii) Income received or accrued by any person that is income described in section 864(d)(1) (income from a trade receivable acquired from a related person).

(4) ***Examples.*** The following examples illustrate the application of paragraph (h)(3) of this section.

(i) ***Example 1.*** Controlled foreign corporation CFC is a wholly-owned subsidiary of domestic corporation USP. CFC is not a financial services entity and has accumulated cash reserves. USP has uncollected trade and service receivables of foreign obligors. USP sells the receivables at a discount ("factors") to CFC. The income derived by CFC on the receivables is related person factoring income. The income is also export financing interest. Because the income is related person factoring income, the income is passive category income to CFC.

(ii) ***Example 2.*** Domestic corporation USS is a wholly-owned subsidiary of domestic corporation USP. USS is not a financial services entity, does not have any foreign qualified business entities, and has accumulated cash reserves. USP has uncollected trade and service receivables of foreign obligors. USP factors the receivables to USS. The income derived by USS on the receivables is related person factoring income. The income is also export financing interest. The income will be passive category income to USS.

(iii) ***Example 3.*** The facts are the same as in paragraph (h)(4)(ii) of this section (the facts in *Example 2*), except that instead of factoring USP's receivables, USS finances the sales of USP's goods by making loans to the purchasers of USP's goods. The interest derived by USS on these loans is export financing interest and is not related person factoring income. The income will be general category income to USS.

(5) ***Income eligible for section 864(d)(7) exception (same country exception) from related person factoring treatment*** —

(i) ***Income other than interest.*** If any foreign person receives or accrues income that is described in section 864(d)(7) (income on a trade or service receivable acquired from a related person in the same foreign country as the recipient) and such income would also meet the definition of export financing interest if section 864(d)(1) applied to such income (income on a trade or service receivable acquired from a related person treated as interest), then the income is considered to be export financing interest and is not treated as passive category income. The income is treated as foreign branch category income, section 951A category income, general category income, or income in a specified separate category under the rules of this section.

(ii) ***Interest income.*** If export financing interest is received or accrued by any foreign person and that income would otherwise be treated as related person factoring income of a controlled foreign corporation under section 864(d)(6) if section 864(d)(7) did not apply, section 904(d)(2)(B)(iii)(I) applies and the interest is not treated as passive category income. The income is treated as general category income in the hands of the controlled foreign corporation.

(iii) ***Examples.*** The following examples illustrate the application of this paragraph (h)(5):

(A) ***Example 1.*** CFC1, a controlled foreign corporation, is a wholly-owned subsidiary of domestic corporation USP. CFC2, a controlled foreign corporation, is a wholly-owned subsidiary of CFC1. CFC1 and CFC2 are incorporated in Country M. In Year 1, USP sells tractors to CFC2, which CFC2 sells to X, an unrelated foreign corporation organized in Country M. The tractors are to be used in Country M. CFC2 uses a substantial part of its assets in its trade or business located in Country M. CFC2 has uncollected trade receivables from X that it factors to CFC1. The income is not related person factoring income because it is described in section 864(d)(7) (income eligible for the same country exception) and is tested income. If section 864(d)(1) applied, the income CFC1 derived from the receivables would meet the definition of export financing interest. The income, therefore, is considered to be export financing interest and is general category income to CFC1 and may be section 951A category income to USP.

(B) ***Example 2.*** CFC1, a controlled foreign corporation, is a wholly-owned subsidiary of domestic corporation, USP. CFC2, a controlled foreign corporation, is a wholly-owned subsidiary of CFC1. CFC1 and CFC2 are incorporated in Country M. In Year 1, USP sells tractors to CFC2, which CFC2 sells to X, a foreign partnership that is organized in Country M and is related to CFC1 and CFC2. CFC1 makes a loan to X to finance the tractor sales. The interest earned by CFC1 from financing the sales is described in section 864(d)(7) and is export financing interest and is tested income. Therefore, the income is general category income to CFC1 and may be section 951A category income to USP.

(i) ***Interaction of section 907(c) and income described in this section.*** If a person receives or accrues income that is income described in section 907(c) (relating to oil and gas income), the rules of section 907(c) and the regulations thereunder, as well as the rules of this section, shall apply to the income. The reduction in amount allowed as foreign tax provided by section 907(a) shall therefore be calculated separately for income in each separate category.

(j) ***Special rule for DASTM gain or loss.*** Any DASTM gain or loss computed under § 1.985-3(d) must be allocated among the categories of income under the rules of § 1.985-3 (e)(2)(iv) or (e)(3). The rules of § 1.985-3(e) apply before the rules of section 904(d)(2)(B)(iii)(II) (the exception from passive income for high-taxed income).

(k) *Separate category under section 904(d)(6) or 865(h) for items resourced under treaties* —

(1) *Section 904(d)(6)* —

(i) ***In general.*** Except as provided in paragraph (k)(1)(iv)(A) of this section, sections 904(a), (b), (c), (d), (f), and (g) and sections 907 and 960 are applied separately to any item of income that, without regard to a treaty obligation of the United States, would be treated as derived from sources within the United States, but under a treaty obligation of the United States such item of income would be treated as arising from sources outside the United States, and the taxpayer chooses the benefits of such treaty obligation.

(ii) ***Aggregation of items of income in each other separate category.*** For purposes of applying the general rule of paragraph (k)(1) of this section, items of income in each other separate category of income that are resourced under each applicable treaty are aggregated in a single separate category for income in that separate category that is resourced under that treaty. For example, all items of passive category income that would otherwise be treated as derived from sources within the United States but which the taxpayer chooses to treat as arising from sources outside the United States pursuant to a provision of a bilateral U.S. income tax treaty are treated as income in a separate category for passive category income resourced under the particular treaty, and the high-tax kickout grouping rules of paragraph (c) of this section are applied separately to the groups of passive income included in that separate category. Any items of resourced high-taxed passive income are assigned to a separate category for general (or other) category income resourced under a tax treaty. Items of income described in paragraph (k)(1) of this section are not combined with other income that is foreign source income under the Code, even if the other income arises from sources within the jurisdiction with which the United States has a bilateral income tax treaty ("treaty jurisdiction") and is included in the same separate category to which the resourced income would be assigned without regard to section 904(d)(6). Items of income described in paragraph (k)(1) of this section are also not combined with other items of resourced income that are subject to a separate limitation by reason of a Code provision other than section 904(d)(6).

(iii) ***Related taxes.*** Foreign taxes, including foreign taxes paid to a foreign jurisdiction other than the treaty jurisdiction on an item of resourced income, are allocated to each separate category described in paragraph (k)(1)(ii) of this section in accordance with § 1.904-6.

(iv) *Coordination with certain income tax treaty provisions* —

(A) ***Exception for special relief from double taxation for individual residents of treaty jurisdictions.*** Section 904(d)(6)(A) and paragraph (k)(1) of this section do not apply to any item of income deemed to be from foreign sources by reason of the relief from double taxation rules in any U.S. income tax treaty that is solely applicable to U.S. citizens who are residents of the other Contracting State.

(B) ***U.S. competent authority assistance.*** For purposes of applying paragraph (k)(1) of this section, if, under the mutual agreement procedure provisions of an applicable income tax treaty, the U.S. competent authority agrees to allow a taxpayer to treat an item of income as foreign source income, where such item of income would otherwise be treated as derived from sources within the United States, then the taxpayer is considered to have chosen the benefits of such treaty obligation to treat the item as foreign source income.

(v) ***Coordination with other Code provisions.*** Section 904(d)(6)(A) and paragraph (k)(1) of this section do not apply to any item of income to which any of section 245(a)(10), 865(h), or 904(h)(10) applies. *See also* paragraph (l) of this section.

(2) ***Section 865(h).*** If any gain, as defined in section 865(h)(2)(A)(i), would be treated as derived from sources within the United States under section 865, but pursuant to a treaty obligation of the United States such gain would be treated as arising from sources outside the United States, and the taxpayer chooses the benefits of such treaty obligation, then that gain will be treated as foreign source income. However, sections 904(a), (b), (c), (d), (f), and (g) and sections 907 and 960 are applied separately to amounts described in the preceding sentence with respect to each treaty under which the taxpayer has claimed benefits and, within each treaty, to each separate category of income. The principles of the rules in paragraphs (k)(1)(ii) through (iv) of this section apply to gains, and foreign taxes on gains, that are subject to a separate limitation under section 865(h).

(l) ***Priority rule.*** Income that meets the definitions of a specified separate category and another category of income described in section 904(d)(1) is subject to the separate limitation described in paragraph (m) of this section and is not treated as general category income, foreign branch category income, passive category income, or section 951A category income.

(m) ***Income treated as allocable to a specified separate category.*** If section 904(a), (b), and (c) are applied separately to any category of income under the Internal Revenue Code (for example, under section 245(a)(10), 865(h), 901(j), 904(d)(6), or 904(h)(10)), that category of income is treated for all purposes of the Internal Revenue Code as if it were a separate category listed in section 904(d)(1). For purposes of this section, a separate category that is treated as if it were listed in section 904(d)(1) by reason of the first sentence in this paragraph (m) is referred to as a *specified separate category.*

(n) ***Income from partnerships and other pass-through entities*** —

(1) ***Distributive shares of partnership income*** —

(i) ***In general.*** Except as provided in paragraph (n)(1)(ii) of this section, a partner's distributive share of partnership income is characterized as passive category income to the extent that the distributive share is a share of income earned or accrued by the partnership in the passive category. A partner's distributive share of partnership income that is not described in the first sentence of this paragraph (n) is treated as foreign branch category income, general category income, or income in a specified separate category under the rules of this section. The principles of the rules in this paragraph (n)(1)(i) also apply to characterize a person's share of income from any other pass-through entity.

(ii) ***Less than 10 percent partners partnership interests*** —

(A) ***In general.*** Except as provided in paragraph (n)(1)(ii)(B) of this section, if any limited partner owns less than 10 percent of the value in a partnership, the partner's distributive share of partnership income from the partnership is passive income to the partner (subject to the exception for high-taxed income under section 904(d)(2)(B)(iii)(II) and paragraph (c) of this section), and the partner's distributive share of partnership deductions from the partnership is allocated and apportioned under the principles of § 1.861-8 only to the partner's passive income from that partnership. See also § 1.861-9(e)(4) for rules for apportioning partnership interest expense.

(B) ***Exception for partnership interest held in the ordinary course of business.*** If a partnership interest described in paragraph (n)(1)(ii)(A) of this section is held in the ordinary course of a partner's active trade or business, the rules of paragraph (n)(1)(i) of this section apply for purposes of characterizing the partner's distributive share of the partnership income. A partnership interest is considered to be held in the ordinary course of a partner's active trade or business if the partner (or a member of the partner's affiliated group of corporations (within the meaning of section 1504(a) and without regard to section 1504(b)(3))) engages (other than through a less than 10 percent interest in a partnership) in the same or a related trade or business as the partnership.

(2) ***Income from the sale of a partnership interest*** —

(i) ***In general.*** To the extent a partner recognizes gain on the sale of a partnership interest, that income shall be treated as passive income to the partner, subject to the exception for high-taxed income under section 904(d)(2)(B)(iii)(II) and paragraph (c) of this section.

(ii) ***Exception for sale by 25-percent owner.*** Except as provided in paragraph (f)(2)(iv) of this section, in the case of a sale of an interest in a partnership by a partner that is a 25-percent owner of the partnership, determined by applying section 954(c)(4)(B) and substituting “partner” for “controlled foreign corporation” every place it appears, for purposes of determining the separate category to which the income recognized on the sale of the partnership interest is assigned such partner is treated as selling the proportionate share of the assets of the partnership attributable to such interest.

(3) ***Value of a partnership interest.*** For purposes of paragraphs (n)(1) and (2) of this section, a partner will be considered as owning 10 percent of the value of a partnership for a particular year if the partner, together with any person that bears a relationship to the partner described in section 267(b) or 707, owns 10 percent of the capital and profits interest of the partnership. For purposes of this paragraph (n)(3), value will be determined at the end of the partnership's taxable year.

(4) ***Example.*** The following example illustrates the application of this paragraph (n).

(i) ***Facts.*** PRS is a domestic partnership. PRS has two general partners, A and B. A and B each have a greater than 10% interest in PRS. PRS also has two limited partners, C and D. C has a 50% interest in the partnership and D has a 9% interest. D's partnership interest is not held in the ordinary course of business. A, B, C and D are all United States persons. In Year 1, PRS has $100x of general category non-subpart F income on which it pays no foreign tax.

(ii) ***Analysis.*** Under paragraph (n)(1)(i) of this section, A's, B's, and C's distributive shares of PRS's income are not passive category income. Under paragraph (n)(1)(ii)(A) of this section, because D is a limited partner with a less than 10% interest in PRS, D's distributive share of PRS's income is passive category income.

(o) ***Separate category of section 78 gross up.*** The amount included in income under section 78 by reason of taxes deemed paid under section 960 is assigned to the separate category to which the taxes are allocated under 1.904-6(e).

(p) ***Separate category of foreign currency gain or loss.*** Foreign currency gain or loss recognized under section 986(c) with respect to a distribution of previously taxed earnings and profits (as described in section 959 or 1293(c)) is assigned to the separate category or categories of the previously taxed earnings and profits from which the distribution is made. See § 1.987-6(b) for rules on assigning section 987 gain or loss on a remittance from a section 987 QBU to a separate category or categories.

(q) *Applicability date.*

(1) Except as provided in paragraphs (q)(2) and (3) of this section, this section applies for taxable years that both begin after December 31, 2017, and end on or after December 4, 2018.

(2) Paragraphs (c)(7)(i) and (iii) and (c)(8)(v) through (viii) apply to taxable years ending on or after December 16, 2019. For taxable years that both begin after December 31, 2017, and end on or after December 4, 2018, and also end before December 16, 2019, see § 1.904-4(c)(7)(i) and (iii) as in effect on December 17, 2019.

(3) Except as provided in the following sentence, paragraph (f) of this section applies to taxable years that begin after December 31, 2019, and end on or after November 2, 2020. Paragraph (f)(2)(vi)(D)(*4*) of this section applies to taxable years that begin on or after October 10, 2024.

[T.D. 8214, 53 FR 27011, July 18, 1988]

Editorial Note: For FEDERAL REGISTER citations affecting § 1.904-4, see the List of CFR Sections Affected, which appears in the Finding Aids section of the printed volume and at *www.govinfo.gov.*

§ 1.904-5 Look-through rules as applied to controlled foreign corporations and other entities.

(a) *Scope and definitions* —

(1) ***Look-through rules under section 904(d)(3) to passive category income.*** Paragraph (c) of this section provides rules for determining the extent to which dividends, interest, rents, and royalties received or accrued by certain eligible persons, and inclusions under sections 951(a)(1) and 951A(a), are treated as passive category income. Paragraph (g) of this section provides rules applying the principles of paragraph (c) of this section to foreign source interest, rents, and royalties paid by a domestic corporation to a related corporation. Paragraph (h) of this section provides rules for assigning a partnership payment to a partner described in section 707 to the passive category. Paragraph (i) of this section provides rules applying the principles of this section to assign distributions and payments from certain related entities to the passive category or to treat the distributions and payments as not in the passive category.

(2) ***Other look-through rules under section 904(d).*** Under section 904(d)(4) and paragraph (c)(4)(iii) of this section, certain dividends from noncontrolled 10-percent owned foreign corporations are treated as income in a separate category. Under section 904(d)(3)(H) and paragraph (j) of this section, certain inclusions under section 1293 are treated as income in a separate category. Paragraph (i) of this section provides rules applying the principles of this section to assign distributions from certain related entities to separate categories.

(3) ***Other rules provided in this section.*** Paragraph (b) of this section provides operative rules for this section. Paragraph (d) of this section provides rules addressing exceptions to passive category income for certain purposes in the case of controlled foreign corporations that meet the requirements of section 954(b)(3)(A) (de minimis rule) or section 954(b)(4) (high-tax exception). Paragraph (e) of this section provides rules for characterizing a controlled foreign corporation's foreign base company income and gross insurance income when section 954(b)(3)(B) (full inclusion rule) applies. Paragraph (f) of this section modifies the look-through rules for certain types of income. Paragraph (k) of this section provides ordering rules for applying the look-through rules.

Paragraph (l) of this section provides examples illustrating the application of certain rules in this section. Paragraphs (m) and (n) of this section provide rules related to the resourcing rules described in section 904(h).

(4) ***Definitions.*** For purposes of this section, the following definitions apply:

(i) The term *controlled foreign corporation* has the meaning given such term by section 957 (taking into account the special rule for certain captive insurance companies contained in section 953(c)), determined without applying section 318(a)(3)(A), (B), and (C) so as to consider a United States person as owning stock which is owned by a person who is not a United States person.

(ii) The term *look-through rules* means the rules described in this section that assign income to a separate category based on the separate category of the income to which it is allocable.

(iii) The term *noncontrolled 10-percent owned foreign corporation* has the meaning provided in section 904(d)(2)(E)(i).

(iv) The term *pass-through entity* means a partnership, S corporation, or any other person (whether domestic or foreign) other than a corporation to the extent that the income or deductions of the person are included in the income of one or more direct or indirect owners or beneficiaries of the person. For example, if a domestic trust is subject to Federal income tax on a portion of its income and its owners are subject to tax on the remaining portion, the domestic trust is treated as a domestic pass-through entity with respect to such remaining portion.

(v) The term *separate category* means, as the context requires, any category of income described in section 904(d)(1)(A), (B), (C), or (D), any specified separate category of income as defined in § 1.904-4(m), or any category of earnings and profits to which income described in such provisions is attributable.

(vi) The term *United States shareholder* has the meaning given such term by section 951(b) (taking into account the special rule for certain captive insurance companies contained in section 953(c)), determined without applying section 318(a)(3)(A), (B), and (C) so as to consider a United States person as owning stock which is owned by a person who is not a United States person, except that for purposes of this section, a United States shareholder includes any member of the controlled group of the United States shareholder. For purposes of this paragraph (a)(4)(vi), the controlled group is any member of the affiliated group within the meaning of section 1504(a)(1) except that "more than 50 percent" is substituted for "at least 80 percent" wherever it appears in section 1504(a)(2). When used in reference to a noncontrolled 10-percent owned foreign corporation described in section 904(d)(2)(E)(i)(II), the term *United States shareholder* also means a taxpayer that meets the stock ownership requirements described in section 904(d)(2)(E)(i)(II).

(b) ***Operative rules*** —

(1) ***Assignment of income not assigned under the look-through rules.*** Except as provided by the look-through rules, dividends, interest, rents, and royalties received or accrued by a taxpayer from a controlled foreign corporation in which the taxpayer is a United States shareholder are excluded from passive category income. Income excluded from the passive category under this paragraph (b)(1) is assigned to another separate category (other than the passive category) under the rules in § 1.904-4.

(2) ***Priority and ordering of look-through rules.*** Except as provided in this paragraph (b)(2), to the extent the look-through rules assign income to a separate category, the income is assigned to that separate category rather than the separate category to which the income would have been assigned under § 1.904-4 (not taking into account § 1.904-4(l)). See paragraph (k) of this section for ordering rules for applying the look-through rules. However, passive income that is financial services income is assigned to a separate category under the rules in § 1.904-4(e)(1), (f)(1), and (l), regardless of whether the look-through rules otherwise would have assigned such income to the passive category.

(c) ***Rules for specific types of inclusions and payments*** —

(1) ***Scope.*** Subject to the exceptions in paragraph (f) of this section, paragraphs (c)(2) through (6) (other than paragraph (c)(4)(iii) of this section) of this section provide look-through rules with respect to interest, rents, royalties, dividends, and inclusions under sections 951(a)(1) and 951A(a) that are received or accrued from a controlled foreign corporation in which the taxpayer is a United States shareholder. Paragraph (c)(4)(iii) of this section provides a look-through rule for dividends received from a noncontrolled 10-percent owned foreign corporation by a domestic corporation that is a United States shareholder in the foreign corporation.

(2) ***Interest*** —

(i) ***In general.*** For purposes of this paragraph, related person interest is any interest paid or accrued by a controlled foreign corporation to any United States shareholder in that corporation (or to any other related person) to which the look-through rules of section 904(d)(3) and this section apply. Unrelated person interest is all interest other than related person interest. Related person interest is treated as passive category income to the extent it is allocable to passive category income of the controlled foreign corporation. If related person interest is received or accrued from a controlled foreign corporation by two or more persons, the amount of interest received or accrued by each person that is allocable to passive category income is determined by multiplying the amount of related person interest allocable to passive category income by a fraction. The numerator of the fraction is the amount of related person interest received or accrued by that person and the denominator is the total amount of related person interest paid or accrued by the controlled foreign corporation. Solely for purposes of assigning interest income to a separate category under section 904(d)(3) and the look-through rule in this paragraph (c)(2), the rules in paragraph (c)(2)(ii) of this section for allocating and apportioning interest expense of a controlled foreign corporation apply for purposes of characterizing interest income in the hands of the recipient, even if a deduction for the interest expense is deferred or disallowed to the controlled foreign corporation.

(ii) ***Allocating and apportioning expenses of a controlled foreign corporation including interest paid to a related person.*** Related person interest and other expenses of a controlled foreign corporation shall be allocated and apportioned in the following manner:

(A) Gross income in each separate category shall be determined;

(B) Any expenses that are definitely related to less than all of gross income as a class, including unrelated person interest that is directly allocated to income from a specific property, shall be allocated and apportioned under the principles of §§ 1.861-8 or 1.861-10T, as applicable, to income in each separate category;

(C) Related person interest shall be allocated to and shall reduce (but not below zero) the amount of passive foreign personal holding company income as determined after the application of paragraph (c)(2)(ii)(B) of this section;

(D) To the extent that related person interest exceeds passive foreign personal holding company income as determined after the application of paragraphs (c)(2)(ii) (B) and (C) of this section, the related person interest shall be apportioned under the rules of this paragraph to separate categories other than passive income.

(*1*) If under § 1.861-9T, the modified gross income method of apportioning interest expense is elected, related person interest shall be apportioned as follows:

$$\text{Related person interest minus Related person interest allocated under paragraph (c)(2)(ii)(C) of this section} \times \frac{\text{Gross income in a separate category (other than passive)}}{\text{Total gross income (other than passive)}}$$

(*2*) If under § 1.861-9T, the asset method of apportioning interest expense is elected, related person interest shall be apportioned according to the following formula:

$$\text{Related person interest minus Related person interest minus allocated under paragraph (c)(2)(ii)(C) of this section} \times \frac{\text{Value of assets in a separate category (other than passive)}}{\text{Value of total assets (other than passive)}}$$

(E) Any other expenses (including unrelated person interest that is not directly allocated to income from a specific property) that are not definitely related expenses or that are definitely related to all of gross income as a class shall be apportioned under the rules of this paragraph to reduce income in each separate category.

(*1*) If under § 1.861-9T, the modified gross income method of apportioning interest expense is elected, the interest expense shall be apportioned as follows:

$$\text{Expense apportionable to a separate category} = \text{Expense} \times \frac{\text{Gross income in a separate category (minus related person interest allocated under paragraph (c)(2)(ii)(C) of this section if the category is passive)}}{\text{Total gross income minus related person interest allocated to passive income under paragraph (c)(2)(ii)(C) of this section}}$$

(*2*) If under § 1.861-9T, the asset method of apportioning interest expense is elected, then the expense shall be apportioned as follows:

$$\text{Expense apportionable to a separate category} = \text{Expense} \times \frac{\text{Value of assets in a separate category (minus related person debt allocated to passive assets if the category is passive)}}{\text{Value of total assets minus related person debt allocated to passive assets}}$$

(3) Expenses other than interest shall be apportioned in a similar manner depending on the apportionment method used. *See* § 1.861-8T(c)(1) (i)-(vi).

(iii) ***Allocating and apportioning expenses of a noncontrolled 10-percent owned foreign corporation.*** Expenses of a noncontrolled 10-percent owned foreign corporation shall be allocated and apportioned in the same manner as expenses of a controlled foreign corporation under paragraph (c)(2)(ii) of this section, except that the related person interest rule of paragraphs (c)(2)(ii)(C) and (D) of this section shall not apply.

(iv) ***Definitions*** —

(A) ***Value of assets and reduction in value of assets and gross income.*** For purposes of paragraph (c)(2)(ii) (D) and (E) of this section, the value of total assets is the value of assets in all categories (determined under the principles of § 1.861-9T(g)). See § 1.861-10T(d)(2) to determine the reduction in value of assets and gross income for purposes of apportioning additional third person interest expense that is not directly allocated when some interest expense has been directly allocated. For purposes of this paragraph and paragraph (c)(2)(ii)(E) of this section, any reduction in the value of assets for indebtedness that relates to interest allocated under paragraph (c)(2)(ii)(C) of this section is made before determining the average of asset values. For rules relating to the averaging of reduced asset values see § 1.861-9T(g)(2).

(B) ***Related person debt allocated to passive assets.*** For purposes of paragraph (c)(2)(ii)(E) of this section, related person debt allocated to passive assets is determined as follows:

$$\text{Related person debt allocated to the passive category} = \text{Total related person debt} \times \frac{\text{Related person interest allocable to passive income under paragraph (c)(2)(ii)(C)}}{\text{All related person interest}}$$

For this purpose, the term *total related person debt* means the sum of the principal amounts of obligations of a controlled foreign corporation owed to any United States shareholder of such corporation or to any related entity (within the meaning of paragraph (g) of this section) determined at the end of the taxable year.

(v) ***Examples.*** The following examples illustrate the application of this paragraph (c)(2).

(A) ***Example 1.***

(1) CFC, a controlled foreign corporation, is a wholly-owned subsidiary of USP, a domestic corporation. In Year 1, CFC earns $200x of foreign personal holding company income that is passive category income. CFC also earns $100x of foreign base company sales income that is general category income. CFC has $2,000x of passive category assets and $2,000x of general category assets. In Year 1, CFC makes a $150x interest payment to USP with respect to a $1,500x loan from USP. CFC also pays $100x of interest to an unrelated person on a $1,000x loan from that person. CFC has no other expenses. CFC uses the asset method to apportion interest expense.

(2) Under paragraph (c)(2)(ii)(C) of this section, the $150x related person interest payment is allocable to CFC's passive category foreign personal holding company income. Therefore, the $150x interest payment is passive category income to USP. Because the entire related person interest payment is allocated to passive category income under paragraph (c)(2)(ii)(C) of this section, none of the related person interest payment is apportioned to general category income under paragraph (c)(2)(ii)(D) of this section. Under paragraph (c)(2)(iv)(B) of this section, the entire amount of the related person debt is allocable to passive category assets ($1,500x = $1,500x × $150x/$150x). Under paragraph (c)(2)(ii)(E) of this section, $20x of the interest expense paid to an unrelated person is apportioned to passive category income ($20x = $100x × ($2,000x − $1,500x)/($4,000x − $1,500x)), and $80x of the interest expense paid to an unrelated person is apportioned to general category income ($80x = $100x × $2,000x/($4,000x − $1,500x)).

(B) ***Example 2.*** The facts are the same as in paragraph (c)(2)(v)(A) of this section (the facts in *Example 1*), except that CFC uses the modified gross income method to apportion interest expense. Under paragraph (c)(2)(ii)(E) of this section, the unrelated person interest expense is apportioned based on gross income. Therefore, $33x of interest expense paid to an unrelated person is apportioned to CFC's passive category income ($33x = $100x × ($200x − $150x)/($300x − $150x)) and $67x of interest expense paid to an unrelated person is apportioned to CFC's general category income ($67x = $100x × $100x/($300x − $150x)).

(C) ***Example 3.***

(1) The facts are the same as in paragraph (c)(2)(v)(A) of this section (the facts in *Example 1*), except that CFC has an additional $50x of third person interest expense that is directly allocated to income from a specific property that produces only passive category income. The principal amount of indebtedness to which the interest relates is $500x. CFC also has $50x of additional non-interest expenses that are not definitely related expenses and that are apportioned on an asset basis.

(2) Under paragraph (c)(2)(ii)(B) of this section, the $50x of directly allocated third person interest is first allocated to reduce the passive category income of CFC. Under paragraph (c)(2)(ii)(C) of this section, the $150x of related person interest is allocated to the remaining $150x of passive category income. Under paragraph (c)(2)(iv)(B) of this section, all of the related person debt is allocated to passive category assets ($1,500x = $1,500x × $150x/$150x).

(3) Under paragraph (c)(2)(ii)(E) of this section, the non-interest expenses that are not definitely related are apportioned on the basis of the asset values reduced by the allocated related person debt. Therefore, $10x of these expenses are apportioned to the passive category ($50x × ($2,000x − $1,500x)/($4,000x − $1,500x)) and $40x are apportioned to the general category ($50x × $2,000x/($4,000x − $1,500x)).

(4) In order to apportion third person interest (that was not directly allocated third person interest) between the categories of assets, the value of assets in a separate category must also be reduced under the principles of § 1.861-8 by the indebtedness relating to the specifically allocated interest. Therefore, under paragraph (c)(2)(iv)(B) of this section, the value of assets in the passive category for purposes of apportioning the additional third person interest = 0 ($2,000x minus $500x (the principal amount of the debt, the interest payment on which is directly allocated to specific interest-producing properties) minus $1,500x (the related person debt allocated to passive category assets)). Under paragraph (c)(2)(ii)(E) of this section, all $100x of the non-definitely related third person interest expense is apportioned to the general category ($100x = $100x × $2,000x/($4,000x − $500x − $1,500x)).

(D) *Example 4.*

(1) CFC, a controlled foreign corporation, is a wholly-owned subsidiary of USP, a domestic corporation. In Year 1, CFC earns $100x of foreign personal holding company income that is passive category income. CFC also earns $100x of foreign base company sales income that is general category income. CFC has $1,000x of general category assets and $1,000x of passive category assets. In Year 1, CFC makes a $150x interest payment to USP on a $1,500x loan from USP and has $20x of general and administrative expenses (G & A) that under the principles of §§ 1.861-8 through 1.861-14T is treated as directly allocable to all of CFC's gross income. CFC also makes a $25x interest payment to an unrelated person on a $250x loan from the unrelated person. CFC has no other expenses. CFC uses the asset method to apportion interest expense. CFC uses the modified gross income method to apportion G & A.

(2) Under paragraph (c)(2)(iv)(B) of this section, related person debt allocated to passive category assets equals $1,000x ($1,000x = $1,500x × $100x/$150x).Under paragraph (c)(2)(ii)(C) of this section, $100x of the interest payment to USP is allocable to CFC's passive category foreign personal holding company income. Under paragraph (c)(2)(ii)(D) of this section, the additional $50x of related person interest expense is apportioned to CFC's general category income ($50x = $50x × $1,000x/$1,000x).

(3) Under paragraph (c)(2)(ii)(E) of this section, none of the $25x of interest expense paid to an unrelated person is apportioned to passive category income ($0 = $25x × ($1,000x − $1,000x)/($2,000x − $1,000x)). All $25x of the interest expense paid to an unrelated person is apportioned to general category income ($25x = $25x × $1,000x/($2,000x − $1,000x)). Under paragraph (c)(2)(ii)(E) of this section, none of the G & A is allocable to CFC's passive category foreign personal holding company income ($0 = $20x × ($100x − $100x)/($200x − $100x)). All $20x of the G & A is apportioned to CFC's general category income ($20x = $20x × $100x/($200x − $100x)).

(E) ***Example 5.*** The facts are the same as in paragraph (c)(2)(v)(D) of this section (the facts in *Example 4*), except that CFC uses the modified gross income method to apportion interest expense. As in paragraph (c)(2)(v)(D) of this section (*Example 4*), $100x of the interest payment to USP is allocated to passive category income under paragraph (c)(2)(ii)(C) of this section. Under paragraph (c)(2)(ii)(D) of this section, the additional $50x of related person interest expense is apportioned to general category income ($150x—100x × $100x/$100x). Under paragraph (c)(2)(ii)(E) of this section, none of the unrelated person interest expense and none of the G & A is apportioned to passive category income, because after the application of paragraph (c)(2)(ii)(C) of this section, no income remains in the passive category.

(F) ***Example 6.*** CFC2, a controlled foreign corporation, is a wholly-owned subsidiary of CFC1, a controlled foreign corporation. CFC1 is a wholly-owned subsidiary of USP, a domestic corporation. CFC1 and CFC2 are incorporated in the same country. In Year 1, USP sells tractors to CFC2, which CFC2 sells to X, a foreign corporation that is related to both CFC1 and CFC2 and is organized in the same country as CFC1 and CFC2. CFC1 makes a loan to × to finance the tractor sales. Assume that the interest earned by CFC1 from financing the sales is export financing interest that is neither related person factoring income nor foreign personal holding company income. Under § 1.904-4(h), the export financing interest earned by CFC1 is, therefore, general category income. CFC1 earns no other income. CFC1 makes a $100x interest payment to USP. The $100x of interest paid is not allocable under the look-through rules and paragraph (c)(2)(ii) of this section to passive category income of CFC1. The income is general category income to USP.

(3) ***Rents and royalties.*** Any rents or royalties received or accrued from a controlled foreign corporation in which the taxpayer is a United States shareholder are treated as passive category income to the extent they are allocable to passive category income of the controlled foreign corporation under the principles of §§ 1.861-8 through 1.861-14T.

(4) ***Dividends*** —

(i) ***Look-through rule for controlled foreign corporations.*** Except as provided in paragraph (d)(2) of this section, any dividend paid or accrued out of the earnings and profits of any controlled foreign corporation is treated as passive category income in proportion to the ratio of the portion of earnings and profits attributable to passive category income to the total amount of earnings and profits of the controlled foreign corporation. For purposes of this paragraph (c)(4), the term “dividend” includes any amount included in gross income under section 951(a)(1)(B) as a pro rata share of a controlled foreign corporation's increase in earnings invested in United States property.

(ii) ***Special rule for dividends attributable to certain loans.*** If a dividend is distributed to a taxpayer by a controlled foreign corporation, that controlled foreign corporation is the recipient of loan proceeds from a related look-through entity (within the meaning of § 1.904-5(i)), and the purpose of such loan is to alter the characterization of the dividend for purposes of this section, then, to the extent of the principal amount of the loan, the dividend shall be characterized with respect to the earnings and profits of the related person lender rather than with respect to the earnings and profits of the dividend payor. A loan will not be considered made for the purpose of altering the characterization of a dividend if the loan would have been made or maintained on substantially the same terms irrespective of the dividend. The determination of whether a loan would have been made or maintained on substantially the same terms irrespective of the

dividend will be made taking into account all the facts and circumstances of the relationship between the lender and the borrower. Thus, for example, a loan by a related party lender to a controlled foreign corporation that arises from the sale of inventory in the ordinary course of business will not be considered a loan made for the purpose of altering the character of any dividend paid by the borrower.

(iii) ***Look-through rule for dividends from noncontrolled 10-percent owned foreign corporations*** —

(A) ***In general.*** Except as provided in paragraph (c)(4)(iii)(B) of this section, any dividend that is distributed by a noncontrolled 10-percent owned foreign corporation and received or accrued by a domestic corporation that is a United States shareholder of such foreign corporation is treated as income in a separate category in proportion to the ratio of the portion of earnings and profits attributable to income in such category to the total amount of earnings and profits of the noncontrolled 10-percent owned foreign corporation.

(B) ***Inadequate substantiation.*** A dividend distributed by a noncontrolled 10-percent owned foreign corporation is treated as income in the separate category described in section 904(d)(4)(C)(ii) if the Commissioner determines that the look-through characterization of the dividend cannot reasonably be determined based on the available information.

(5) ***Inclusions under section 951(a)(1)(A).*** Any amount included in gross income under section 951(a)(1)(A) is treated as passive category income to the extent the amount included is attributable to income received or accrued by the controlled foreign corporation that is passive category income. All other amounts included in gross income under section 951(a)(1)(A) are treated as general category income or income in a specified separate category under the rules in § 1.904-4. For rules concerning a distributive share of partnership income, see § 1.904-4(n). For rules concerning the gross up under section 78, see § 1.904-4(o). For rules concerning inclusions under section 951(a)(1)(B), see paragraph (c)(4)(i) of this section.

(6) ***Inclusions under section 951A(a).*** Any amount included in gross income under section 951A(a) is treated as passive category income to the extent the amount included is attributable to income received or accrued by the controlled foreign corporation that is passive category income. All other amounts included in gross income under section 951A(a) are treated as section 951A category income or income in a specified separate category under the rules in § 1.904-4. For rules concerning a distributive share of partnership income, see § 1.904-4(n). For rules concerning the gross up under section 78, see § 1.904-4(o).

(7) ***Examples.*** The following examples illustrate the application of paragraph (c) of this section.

(i) ***Example 1*** —

(A) ***Facts.*** CFC, a controlled foreign corporation, is a wholly-owned subsidiary of USP, a domestic corporation. In Year 1, CFC earns $100x of net income, $85x of which is general category foreign base company sales income and $15x of which is passive category foreign personal holding company income. No foreign tax is imposed on the income. CFC's income of $100x is subpart F income taxed currently to USP under section 951(a)(1)(A).

(B) ***Analysis.*** Because $15x of the subpart F inclusion is attributable to passive category income of CFC, under section 904(d)(3)(B) and paragraph (c)(5) of this section $15x of the subpart F inclusion is passive category income to USP. The remaining $85x subpart F inclusion is general category income to USP.

(ii) *Example 2* —

(A) ***Facts.*** CFC1, a controlled foreign corporation, is a wholly-owned subsidiary of USP, a domestic corporation. CFC2 is a controlled foreign corporation wholly owned by CFC1 and is incorporated and operates all of its business in the same country as CFC1. All of CFC2's earnings and profits are attributable to passive category foreign personal holding company income. USP elects to exclude CFC2's income from subpart F income under section 954(b)(4). In Year 1, CFC2 makes a distribution to CFC1 and CFC1 makes a distribution to USP, all of which is attributable to Year 1 earnings and profits. CFC1 has no earnings and profits in Year 1 other than those received from CFC2.

(B) ***Analysis.***

(*1*) With respect to the dividend from CFC2 to CFC1, such amount is not subpart F income. *See* section 954(c)(3). Under section 904(d)(3)(D) and (E) and paragraphs (c)(4) and (d)(2) of this section the dividend income is not passive category income and therefore under § 1.904-4 it is general category income to CFC1. Under section 951A(c)(2)(A)(i)(IV), such dividend income is not tested income.

(*2*) With respect to the dividend from CFC1 to USP, under section 904(d)(3)(D) and (E) and paragraphs (c)(4) and (d)(2) of this section, such dividend income is not passive category income and therefore under § 1.904-4 is general category income to USP.

(iii) *Example 3* —

(A) ***Facts.*** The facts are the same as in paragraph (c)(7)(ii)(A) of this section (the facts in *Example 2*), except that CFC1 receives interest income from CFC2 instead of dividend income.

(B) ***Analysis.*** Under section 904(d)(3)(C) and paragraph (c)(2)(i) of this section, the interest income is passive category income to CFC1 because such interest is properly allocable to the passive category income of CFC2. The interest income from CFC2 is subpart F income of CFC1 taxable to USP because such income reduces the subpart F income of CFC2 or such interest is properly allocable to the subpart F income of CFC2. *See* section 954(c)(3) and (6). Under section 904(d)(3)(B) and paragraph (c)(5) of this section, the subpart F inclusion is passive category income to USP. Under section 959(a), the distribution from CFC1 to USP is excluded from USP's gross income.

(iv) *Example 4* —

(A) ***Facts.*** The facts are the same as in paragraph (c)(7)(iii)(A) of this section (the facts in *Example 3*), except that USP elects to exclude CFC1's interest income from subpart F income under section 954(b)(4).

(B) ***Analysis.*** Under section 904(d)(3)(D) and (E) and paragraphs (c)(4) and (d)(2) of this section, the distribution from CFC1 to USP is not a passive category dividend and therefore under § 1.904-4 is general category income to USP.

(v) *Example 5* —

(A) ***Facts.*** The facts are the same as in paragraph (c)(7)(iv)(A) of this section (the facts in *Example 4*), except that USP receives interest income from CFC1 instead of dividend income.

(B) ***Analysis.*** Under section 904(d)(3)(C) and paragraph (c)(2)(i) of this section, the interest income is passive category income to USP because such interest is properly allocable to passive category income of CFC1.

(d) ***Effect of exclusions from subpart F income*** —

(1) ***De minimis amount of subpart F income.*** If the sum of a controlled foreign corporation's gross foreign base company income (determined under section 954(a) without regard to section 954(b)(5)) and gross insurance income (determined under section 953(a)) for the taxable year is less than the lesser of 5 percent of gross income or $1,000,000, then none of that income is treated as passive category income. In addition, if the test in the first sentence of this paragraph (d)(1) is satisfied, for purposes of paragraphs (c)(2)(ii)(D) and (E) of this section (apportionment of interest expense to passive income using the asset method), any passive assets are not treated as passive category assets but are treated as assets in the general category or a specified separate category. The determination in the first sentence of this paragraph (d)(1) is made before the application of the exception for certain income subject to a high rate of foreign tax described in paragraph (d)(2) of this section.

(2) ***Exception for certain income subject to high foreign tax.*** Except as provided in § 1.904-4(c)(7)(iii) (relating to reductions in tax upon distribution), for purposes of the dividend look-through rule of paragraph (c)(4)(i) of this section, an item of net income that would otherwise be passive category income (after application of the priority rules of § 1.904-4(l)) and that is received or accrued by a controlled foreign corporation is not treated as passive category income, and the earnings and profits attributable to such income is not treated as passive category earnings and profits, if the taxpayer establishes to the satisfaction of the Secretary under section 954(b)(4) that the income was subject to an effective rate of income tax imposed by a foreign country greater than 90 percent of the maximum rate of tax specified in section 11 (with reference to section 15, if applicable). Such income is treated as general category income or income in a specified separate category under the rules in § 1.904-4. The first sentence of this paragraph (d)(2) has no effect on amounts (other than dividends) paid or accrued by a controlled foreign corporation to a United States shareholder of such controlled foreign corporation to the extent those amounts are allocable to passive category income of the controlled foreign corporation.

(3) ***Example.*** The following example illustrates the application of this paragraph (d).

(i) ***Facts.*** CFC, a controlled foreign corporation, is a wholly-owned subsidiary of USP, a domestic corporation. In Year 1, CFC earns $100x of gross income, $4x of which is interest that is foreign personal holding company income and $96x of which is gross manufacturing income that is not subpart F income. CFC has no other earnings for Year 1. CFC has no expenses and pays no foreign taxes.

(ii) ***Analysis.*** Under the de minimis rule of section 954(b)(3)(A) and § 1.954-1(b)(1)(i), none of CFC's income is treated as foreign base company income. All of CFC's income, therefore, is treated as general category income and tested income. In Year 1, USP has a GILTI inclusion amount with respect to CFC. Such amount is section 951A category income to USP.

(e) ***Treatment of subpart F income in excess of 70 percent of gross income*** —

(1) ***Rule.*** If the sum of a controlled foreign corporation's gross foreign base company income (determined without regard to section 954(b)(5)) and gross insurance income for the taxable year exceeds 70 percent of the gross income, then all of the controlled foreign corporation's gross income shall be treated as foreign base company income (whichever is appropriate) and, thus,

included in a United States shareholder's gross income. However, the inclusion in gross income of an amount that would not otherwise be subpart F income does not affect its character for purposes of determining whether the income is within a separate category. The determination of whether the controlled foreign corporation's gross foreign base company income and gross insurance income exceeds 70 percent of gross income is made before the exception for certain income subject to a high rate of foreign tax.

(2) ***Example.*** The following example illustrates the application of this paragraph (e).

(i) ***Facts.*** Controlled foreign corporation CFC is a wholly-owned subsidiary of USP, a domestic corporation. CFC earns $100x, $75x of which is foreign personal holding company income and $25x of which is non-subpart F services income. CFC's gross and net income are equal.

(ii) ***Analysis.*** Under the 70 percent full inclusion rule of section 954(b)(3)(B), the entire $100x is foreign base company income currently taxable to USP under section 951. Because $75x of the $100x section 951 inclusion is attributable to CFC's passive category income, $75x of the inclusion is passive category income to USP. The remaining $25x of the inclusion is treated as general category income to USP.

(f) ***Modification of look-through rules for certain income.***

(1) [Reserved]

(2) ***Distributions from a FSC.*** Income received or accrued by a taxpayer that, under the rules of paragraph (c)(4) of this section (look-through rules for dividends), would be treated as foreign trade income or as passive income that is interest and carrying charges (as defined in section 927(d)(1)), and that is also a distribution from a FSC (or a former FSC), shall be treated as a distribution from a FSC (or a former FSC).

(g) ***Application of look-through rules to certain domestic corporations.*** The principles of paragraph (c) of this section shall apply to any foreign source interest, rents and royalties paid by a domestic corporation to a related corporation. For this purpose, a domestic corporation and another corporation are considered to be related if one owns, directly or indirectly, stock possessing more than 50 percent of the total voting power of all classes of stock of the other corporation or more than 50 percent of the total value of the other corporation. In addition, a domestic corporation and another corporation shall be considered to be related if the same United States shareholders own, directly or indirectly, stock possessing more than 50 percent of the total voting power of all classes of stock or more than 50 percent of the total value of each corporation. For purposes of this paragraph, the constructive stock ownership rules of section 318 and the regulations under that section apply.

(h) ***Application of look-through rules to payments from a partnership or other pass-through entity.*** Payments to a partner described in section 707 (*e.g.,* payments to a partner not acting in capacity as a partner) are characterized as passive category income to the extent that the payment is attributable under the principles of § 1.861-8 and this section to passive category income of the partnership, if the payments are interest, rents, or royalties that would be characterized under the controlled foreign corporation look-through rules of paragraph (c) of this section if the partnership were a foreign corporation, and the partner who receives the payment owns 10 percent or more of the value of the partnership (as determined under § 1.904-4(n)(3)). A payment by a partnership to a member of the controlled group (as defined in paragraph (a)(4)(vi) of this section) of the partner is characterized under the look-through rules of this paragraph (h) if the payment would be a section 707 payment entitled to look-through treatment if it were made to the partner. The rules in this paragraph (h) do not apply with respect to interest to the extent the

interest income is assigned to a separate category under the downstream partnership loan rules described in § 1.861-9(e)(8). The principles of the rules in this paragraph (h) apply to characterize a payment from any other pass-through entity.

(i) *Application of look-through rules to related entities* —

(1) ***In general.*** Except as provided in paragraphs (i)(2) and (3) of this section, the principles of this section shall apply to distributions and payments that are subject to the look-through rules of section 904(d)(3) and this section from a controlled foreign corporation or other entity otherwise entitled to look-through treatment (a "look-through entity") under this section to a related look-through entity. A noncontrolled 10-percent owned foreign corporation shall be considered a look-through entity only to the extent provided in paragraph (i)(3) of this section. Two look-through entities shall be considered to be related to each other if one owns, directly or indirectly, stock possessing more than 50 percent of the total voting power of all classes of voting stock of the other entity or more than 50 percent of the total value of such entity. In addition, two look-through entities are related if the same United States shareholders own, directly or indirectly, stock possessing more than 50 percent of the total voting power of all voting classes of stock (in the case of a corporation) or more than 50 percent of the total value of each look-through entity. In the case of a corporation, value shall be determined by taking into account all classes of stock. For purposes of this paragraph (i)(1), indirect ownership of stock is determined under section 318. In the case of a partnership or other pass-through entity, indirect ownership and value is determined under the rules in paragraph (i)(2) of this section.

(2) ***Indirect ownership and value of a partnership interest.*** A person is considered as owning, directly or indirectly, more than 50 percent of the value of a partnership if the person, together with any other person that bears a relationship to the first person that is described in section 267(b) or 707, owns more than 50 percent of the capital and profits interests of the partnership. For purposes of this paragraph (i)(2), value will be determined at the end of the partnership's taxable year. The principles of this paragraph (i)(2) apply with respect to a person that owns a pass-through entity other than a partnership.

(3) ***Special rule for dividends between certain foreign corporations.*** Solely for purposes of dividend payments between controlled foreign corporations, noncontrolled 10-percent owned foreign corporations, or a controlled foreign corporation and a noncontrolled 10-percent owned foreign corporation, the two foreign corporations are considered related look-through entities if the same person is a United States shareholder of both foreign corporations.

(4) [Reserved]

(5) ***Examples.*** The following examples illustrate the application of this paragraph (i):

(i) ***Example 1.*** USP, a domestic corporation, owns all of the stock of CFC1, a controlled foreign corporation. CFC1 owns 40% of the stock of CFC2, a Country X corporation that is a controlled foreign corporation. The remaining 60% of the stock of CFC2 is owned by V, a domestic corporation, unrelated to USP. The percentages of value and voting power of CFC2 owned by CFC1 and V correspond to their percentages of stock ownership. CFC2 owns 40% (by vote and value) of the stock of CFC3, a Country Z corporation that is a controlled foreign corporation. The remaining 60% of CFC3 is owned by unrelated United States persons. CFC3 earns exclusively general category income that is neither subpart F income nor tested income. In Year 1, CFC3 makes an interest payment of $100x to CFC2. Look-through principles do not apply because CFC2 and CFC3 are not related look-through entities under paragraph (i)(1) of this

section (because CFC2 does not own more than 50% of the voting power or value of CFC3). The interest is passive category income to CFC2 and is subpart F income of CFC2 that is taxable to USP and V. Under paragraph (c)(5) of this section, USP and V's subpart F inclusion with respect to CFC2 is passive category income.

(ii) ***Example 2.*** The facts are the same as in paragraph (i)(5)(i) of this section (the facts in *Example 1*), except that instead of a $100x interest payment, CFC3 pays a $50x dividend to CFC2 in Year 1. USP and V each own, directly or indirectly, more than 10% of the voting power of all classes of stock of both CFC2 and CFC3, and, therefore, CFC2 and CFC3 have the same United States shareholders. Pursuant to paragraph (i)(3) of this section, because CFC2 and CFC3 have a common United States shareholder, for purposes of applying this section to the dividend from CFC2 to CFC3, CFC2 and CFC3 are treated as related look-through entities. Therefore, look-through principles apply. Because CFC3 has no passive category income or earnings and profits, the dividend income is characterized as general category income to CFC2. The dividend is subpart F income of CFC2 that is taxable to USP and V. Under paragraph (c)(5) of this section, the subpart F inclusions of USP and V are not passive category income to USP and V and therefore under § 1.904-4 the subpart F inclusions are general category income to USP and V.

(iii) ***Example 3.*** The facts are the same as in paragraph (i)(5)(i) of this section (the facts in *Example 1*), except that CFC3 pays both a $100x interest payment and a $50x dividend to CFC2, and CFC2 owns 80% (by vote and value) of CFC3. Under paragraph (i)(1) of this section, CFC2 and CFC3 are related look-through entities, because CFC2 owns more than 50% (by vote and value) of CFC3. Therefore, look-through principles apply to both the interest and dividend income paid or accrued by CFC3 to CFC2, and CFC2 treats both types of income as general category income because CFC3 does not have any passive category earnings. Under paragraph (c)(5) of this section and § 1.904-4, the resulting subpart F inclusions are general category income to USP and V.

(iv) ***Example 4.*** USP, a domestic corporation, owns 50% of the voting stock of CFC1, a controlled foreign corporation. CFC1 owns 10% of the voting stock of CFC2, a controlled foreign corporation. The remaining 50% of the stock of CFC1 is owned by X. The remaining 90% of the stock of CFC2 is owned by Y. X and Y are each United States shareholders of CFC2 but are not related to USP, CFC1, or each other. In Year 1, CFC2 pays a $100x dividend to CFC1. Under paragraph (i)(3) of this section because no person is a United States shareholder of both CFC1 and CFC2 (USP and X each own only 5% of CFC2), CFC1 and CFC2 are not related look-through entities. Because CFC2 is not a related person to CFC1 within the meaning of section 954(d)(3), section 954(c)(3) and (c)(6) are inapplicable, and the dividend is subpart F income of CFC1 that is taxable to USP and X. Therefore, under section 904(d)(2)(B)(i) and § 1.904-4(b)(2)(i)(A), because the dividend income is foreign personal holding company income, it is passive category income to CFC1.

(v) ***Example 5.*** The facts are the same as in paragraph (i)(5)(iv) of this section (the facts in *Example 4*), except that X owns 10% of the voting stock of CFC2 and Y owns only 80% of the voting stock of CFC2. Because CFC2 is not a related person to CFC1 within the meaning of section 954(d)(3), the dividend is subpart F income of CFC1 that is taxable to USP and X. In addition, because X is a United States shareholder of both CFC1 and CFC2, CFC2 and CFC1 are related look-through entities under paragraph (i)(3) of this section, the dividend income is general category income to CFC1 and the subpart F inclusion is general category income to USP and X.

(j) ***Look-through rules applied to passive foreign investment company inclusions.*** If a passive foreign investment company is a controlled foreign corporation and the taxpayer is a United States shareholder in that passive foreign investment company, any amount included in gross income under section 1293 shall be treated as income in a separate category to the extent the amount so included is attributable to income received or accrued by that controlled foreign corporation that is described as income in the separate category.

(k) ***Ordering rules*** —

(1) ***In general.*** Income received or accrued by a related person to which the look-through rules apply is characterized under § 1.904-4 before amounts included from, or paid or distributed by that person and received or accrued by a related person. For purposes of determining the character of income received or accrued by a person from a related person if the payor or another related person also receives or accrues income from the recipient and the look-through rules apply to the income in all cases, the rules of paragraph (k)(2) of this section apply.

(2) ***Specific rules.*** For purposes of characterizing income under this paragraph, the following types of income are characterized in the order stated:

(i) Rents and royalties;

(ii) Interest;

(iii) Inclusions under sections 951(a)(1)(A) and 951A(a) and distributive shares of partnership income;

(iv) Dividend distributions.

If an entity is both a recipient and a payor of income described in any one of the categories described in (k)(2) (i) through (iv) of this section, the income received will be characterized before the income that is paid. In addition, the amount of interest paid or accrued, directly or indirectly, by a person to a related person shall be offset against and eliminate any interest received or accrued, directly or indirectly, by a person from that related person before application of the ordering rules of this paragraph. In a case in which a person pays or accrues interest to a related person, and also receives or accrues interest indirectly from the related person, the smallest interest payment is eliminated and the amount of all other interest payments are reduced by the amount of the smallest interest payment.

(l) ***Examples.*** The following examples illustrate the application of this section.

(1) ***Example 1*** —

(i) ***Facts.*** CFC1 and CFC2, controlled foreign corporations, are wholly-owned subsidiaries of USP, a domestic corporation. CFC1 and CFC2 are incorporated in two different foreign countries and CFC2 is a financial services entity. In Year 1, CFC1 earns $100x of gross income that is passive category foreign personal holding company income. CFC1's only expense is a $50x interest payment to CFC2. CFC1's $50x of pre-tax income is subject to $20x of foreign income tax, and USP elects to exclude CFC1's $30x of net income from subpart F income under section 954(b)(4).

(ii) ***Analysis.*** The $50x of interest is foreign personal holding company income in CFC2's hands because section 954(c)(3)(A)(i) (same country exception for interest payments) and section 954(c)(6) do not apply, because the interest payment is allocable to and reduces CFC1's

subpart F income. The $50x of interest income is also passive category income to CFC2 because CFC1 and CFC2 are related look-through entities within the meaning of paragraph (i)(1) of this section and, therefore the look-through rules of paragraph (c)(2)(i) of this section apply to characterize the interest payment. However, because CFC2 is a financial services entity, under § 1.904-4(e)(1) and paragraph (b)(2) of this section, the income is treated as financial services income and therefore as general category income in CFC2's hands. Thus, with respect to CFC2, under § 1.904-4(d) and paragraph (c)(5) of this section, USP includes in its gross income a $50x general category inclusion under section 951(a)(1)(A) attributable to the general category foreign personal holding company income.

(2) *Example 2* —

(i) ***Facts.*** USP, a domestic corporation, owns 75% of USS, a domestic corporation. USP and USS are not financial services entities. In Year 1, USS's earnings consist of $100x of foreign source passive income. USS makes a $100x foreign source royalty payment to USP.

(ii) ***Analysis.*** Under paragraph (g) of this section, the royalty payment to USP is subject to the look-through rules of paragraph (c)(3) of this section and is characterized as passive category income the extent that it is allocable to such income in USS's hands.

(3) *Example 3* —

(i) ***Facts.*** USP, a domestic corporation, owns 100% of the stock of CFC1, a controlled foreign corporation, and CFC1 owns 100% of the stock of CFC2, a controlled foreign corporation. CFC1 has $100x of passive foreign personal holding company income from unrelated persons and $100x of general category income. CFC1 also has $50x of interest income from CFC2. CFC1 pays CFC2 $100x of interest.

(ii) ***Analysis.*** Under paragraph (k)(2) of this section, the $100x interest payment from CFC1 to CFC2 is reduced for limitation purposes to the extent of the $50x interest payment from CFC2 to CFC1 before application of the rules in paragraph (c)(2)(ii) of this section. Therefore, the interest payment from CFC2 to CFC1 is disregarded. CFC1 is treated as if it paid $50x of interest to CFC2, all of which is allocable to CFC1's passive category foreign personal holding company income under paragraph (c)(2)(ii)(C) of this section. Therefore, under paragraph (c)(2)(i) of this section, the $50x interest payment from CFC1 to CFC2 is passive category income.

(4) *Example 4* —

(i) ***Facts.*** USP, a domestic corporation, owns 100% of the stock of CFC1, a controlled foreign corporation. CFC1 owns 100% of the stock of CFC2, a controlled foreign corporation, and 100% of the stock of CFC3, a controlled foreign corporation. In Year 1, CFC2 pays CFC1 $5x of interest, CFC1 pays CFC3 $10x of interest, and CFC3 pays CFC2 $20x of interest.

(ii) ***Analysis.*** Under paragraph (k)(2) of this section, the interest payments from CFC1 to CFC3 must be offset by the amount of interest that CFC1 is considered as receiving indirectly from CFC3 and the interest payment from CFC3 to CFC2 is offset by the amount of the interest payment that CFC3 is considered as receiving indirectly from CFC2. The $10x payment by CFC1 to CFC3 is reduced by $5x, the amount of the interest payment from CFC2 to CFC1 that is treated as being paid indirectly by CFC3 to CFC1. Similarly, the $20x interest payment from CFC3 to CFC2 is reduced by $5x, the amount of the interest payment from CFC1 to CFC3 that is treated as

being paid indirectly by CFC2 to CFC3. Therefore, under paragraph (k)(2) of this section, CFC2 is treated as having made no interest payment to CFC1, CFC1 is treated as having paid $5x of interest to CFC3, and CFC3 is treated as having paid $15x to CFC2.

(5) *Example 5* —

(i) ***Facts.*** USP, a domestic corporation, owns 100% of the stock of CFC1, a controlled foreign corporation, and CFC1 owns 100% of the stock of CFC2, a controlled foreign corporation. In Year 1, CFC1 earns $100x of passive category foreign personal holding company income and $100x of general category non-subpart F sales income from unrelated persons and $100x of general category non-subpart F interest income from a related person. CFC1 pays $150x of interest to CFC2. CFC2 earns $200x of general category sales income from unrelated persons and the $150x interest payment from CFC1. CFC2 pays CFC1 $100x of interest. USP does not have an inclusion under section 951A.

(ii) *Analysis* —

(A) Under paragraph (k)(2) of this section, the $100x interest payment from CFC2 to CFC1 reduces the $150x interest payment from CFC1 to CFC2. CFC1 is treated as though it paid $50x of interest to CFC2. CFC2 is treated as though it made no interest payment to CFC1.

(B) Under paragraph (k)(2)(ii) of this section, the remaining $50x interest payment from CFC1 to CFC2 is then characterized. The interest payment is first allocable under the rules of paragraph (c)(2)(ii)(C) of this section to CFC1's passive category income. Therefore, under paragraph (c)(2)(i) of this section, the $50x interest payment to CFC2 is passive category income. The interest income is foreign personal holding company income in CFC2's hands. CFC2, therefore, has $50x of passive category subpart F income and $200x of general category non-subpart F income.

(C) Under paragraph (k)(2)(iii) of this section, inclusions under section 951(a)(1)(A) are characterized next. USP has an inclusion under section 951(a)(1)(A) with respect to CFC1 of $50x that is attributable to passive category income of CFC1 and is treated as passive category income to USP. USP has an inclusion under section 951(a)(1)(A) with respect to CFC2 of $50x that is attributable to passive category income of CFC2 and is treated as passive category income to USP.

(6) *Example 6* —

(i) ***Facts.*** USP, a domestic corporation, owns 100% of the stock of CFC1, a controlled foreign corporation, and CFC1 owns 100% of the stock of CFC2, a controlled foreign corporation. USP also owns 100% of the stock of CFC3, a controlled foreign corporation. CFC1, CFC2, and CFC3 are all incorporated in different foreign countries. In Year 1, CFC1 earns $100x of passive category foreign personal holding company income and $200x of general category non-subpart F income from unrelated persons. CFC1 also receives a $150x distribution from CFC2. CFC1 pays $100x of interest to CFC2 and $100x of interest to CFC3. CFC3 earns $300x of general category non-subpart F income and the $100x of interest received from CFC1. CFC3 pays a $100x royalty to CFC2. The royalty is directly allocable to CFC3's general category income and the royalty is not subpart F income to CFC2. CFC2 earns the $100x interest payment received from CFC1 and the $100x royalty received from CFC3. USP does not have an inclusion under section 951A.

(ii) *Analysis* —

(A) Under paragraph (k)(2)(i) of this section, the royalty paid by CFC3 to CFC2 is characterized first. With respect to CFC2, the royalty is general category non-subpart F income.

(B) Under paragraph (k)(2)(ii) of this section, the interest payments from CFC1 to CFC2 and CFC3 are characterized next. Under paragraph (c)(2)(ii)(C) of this section, the interest payments are first allocable to CFC1's passive category income. Therefore, under paragraph (c)(2)(i) of this section, $50x of the interest payment to CFC2 is passive category income and $50x of the interest payment to CFC3 is passive category income. The remaining $50x paid to CFC2 is general category income and the remaining $50x paid to CFC3 is general category income. Because $100x of the interest income received or accrued from CFC1 is properly allocable to income of CFC1 which is not subpart F income, under section 954(c)(6) the general category interest income is not treated as foreign personal holding company income to CFC2 and CFC3. The remaining $100x of interest income received or accrued from CFC1 is passive category subpart F foreign personal holding company income to both recipients. Therefore, CFC3 and CFC2 each have $50x of passive category subpart F foreign personal holding company income related to the interest received from CFC1.

(C) Under paragraph (k)(2)(iii) of this section, USP's $50x inclusion under section 951(a)(1)(A) with respect to CFC2 is characterized next. Under paragraph (c)(5) of this section, USP's inclusion under section 951(a)(1)(A) is attributable to the passive category portion of the interest income received by CFC2 from CFC1 and is passive category income to USP. Under paragraph (k)(2)(iii) of this section, USP's $50x inclusion under section 951(a)(1)(A) with respect to CFC3 is also characterized next. Under paragraph (c)(5) of this section, USP's inclusion under section 951(a)(1)(A) is attributable to the passive category portion of the interest income received by CFC3 from CFC2 and is passive category income to USP.

(D) Under paragraph (k)(2)(iv) of this section, the $150x distribution from CFC2 to CFC1 is characterized next. The first $50x of the distribution is out of passive category earnings and profits described in section 959(c)(2). The remaining $100x of the distribution is a dividend that is not attributable to CFC2's passive category income, so under paragraph (c)(4)(i) of this section it is general category income to CFC1 in its entirety. Because $100x of the dividend received or accrued from CFC2 is attributable to income of CFC2 which is not subpart F income, under section 954(c)(6) such dividend income is not treated as foreign personal holding company income of CFC1.

(7) *Example 7* —

(i) ***Facts.*** USP, a domestic corporation, owns 100% of the stock of CFC1, a controlled foreign corporation, and CFC1 owns 100% of the stock of CFC2, a controlled foreign corporation. USP also owns 100% of the stock of CFC3, a controlled foreign corporation. CFC1, CFC2, and CFC3 are all incorporated in different foreign countries. In Year 1, CFC2 earns $100x of general category income that is not subpart F income and distributes the entire amount to CFC1 as a dividend. CFC1 earns $100x of passive category foreign personal holding company income and the $100x dividend from CFC2. CFC1 pays $100x of interest to CFC3. CFC3 earns $200x of general category income that is foreign base company income and the $100x of interest income from CFC1. USP does not have an inclusion under section 951A.

(ii) ***Analysis.*** This transaction does not involve circular payments and, therefore, the ordering rules of paragraph (k)(2) of this section do not apply. Instead, pursuant to paragraph (k)(1) of this section, income received is characterized first. CFC2's earnings and, thus, the dividend from CFC2 to CFC1 are characterized first. Under paragraph (c)(4)(i) of this section, CFC1 includes the $100x dividend from CFC2 in gross income as general category income because none of CFC2's earnings are passive category income. CFC1 thus has $100x of passive category foreign personal holding company income and $100x of general category income that is excluded from subpart F income under section 954(c)(6)(A). The interest payment from CFC1 to CFC3 is then characterized as $100x passive category income under paragraph (c)(2)(ii)(C) of this section because it is allocable to passive foreign personal holding company income of CFC1. For Year 1, CFC3 thus has $200x of general category income that is subpart F income, and $100x of passive category foreign personal holding company income. For Year 1, under § 1.904-4(d) and paragraph (c)(5) of this section, USP includes in its gross income an inclusion under section 951(a)(1)(A) with respect to CFC3, $200x of which is general category income and $100x of which is passive category income.

(m) ***Application of section 904(h)*** —

(1) ***In general.*** This paragraph (m) applies to certain amounts derived from controlled foreign corporations and noncontrolled 10-percent owned foreign corporations that are treated as United States-owned foreign corporations as defined in section 904(h)(6). For purposes of determining the portion of an interest payment that is allocable to income earned or accrued by a controlled foreign corporation or noncontrolled 10-percent owned foreign corporations from sources within the United States under section 904(h)(3), the rules in paragraph (m)(2) of this section apply. For purposes of determining the portion of a dividend (which, for purposes of this paragraph (m), includes amounts described in section 951(a)(1)(B)) paid or accrued by a controlled foreign corporation or noncontrolled 10-percent owned foreign corporations that is treated as from sources within the United States under section 904(h)(4), the rules in paragraph (m)(4) of this section apply. For purposes of determining the portion of an amount included in gross income under section 951(a)(1)(A), 951A(a), or 1293 that is attributable to income of the controlled foreign corporation or noncontrolled 10-percent owned foreign corporations from sources within the United States under section 904(h)(2), the rules in paragraph (m)(5) of this section apply. In order to determine whether section 904(h) applies, section 904(h)(5) (exception if a United States-owned foreign corporation has a *de minimis* amount of United States source income) shall be applied to the total amount of earnings and profits of a controlled foreign corporation or noncontrolled 10-percent owned foreign corporations for a taxable year without regard to the characterization of those earnings under section 904(d).

(2) ***Treatment of interest payments*** —

(i) ***Interest payments from controlled foreign corporations.*** If interest is received or accrued by a United States shareholder or a person related to a United States shareholder (within the meaning of paragraph (c)(2)(ii) of this section) from a controlled foreign corporation, the interest shall be considered to be allocable to income of the controlled foreign corporation from sources within the United States for purposes of section 904(d) to the extent that the interest is allocable under paragraph (c)(2)(ii)(C) of this section to passive income that is from sources within the United States. If related person interest is less than or equal to passive income, the related person interest will be allocable to United States source passive income based on the ratio of United States source passive income to total passive income. To the extent that related person interest exceeds passive income, and, therefore, is allocated under paragraph

(c)(2)(ii)(D) of this section to income in a separate category other than passive, the following formulas apply in determining the portion of the interest payment that is from sources within the United States. If the taxpayer uses the gross income method to allocate interest, the portion of the interest payment from sources within the United States is determined as follows:

$$\text{The amount of the interest payment allocated to the separate category under paragraph (c)(2)(ii)(D) of this section} \times \frac{\text{Gross income from United States sources in that category}}{\text{Gross income from all sources in that category}}$$

(ii) ***Interest payments from noncontrolled 10-percent owned foreign corporations.*** If interest is received or accrued by a shareholder from a noncontrolled 10-percent owned foreign corporation (where the shareholder is a domestic corporation that is a United States shareholder of such noncontrolled 10-percent owned foreign corporation), the rules of paragraph (m)(2)(i) of this section apply in determining the portion of the interest payment that is from sources within the United States, except that the related party interest rules of paragraph (c)(2)(ii)(C) of this section do not apply.

(3) ***Examples.*** The following examples illustrate the application of this paragraph (m).

(i) ***Example 1*** —

(A) ***Facts.*** Controlled foreign corporation CFC is a wholly-owned subsidiary of USP, a domestic corporation. In Year 1, CFC pays USP $300x of interest. CFC has no other expenses. In Year 1, CFC has $3,000x of assets that generate $650x of foreign source general category income and a $1,000x loan to an unrelated foreign person that generates $20x of foreign source passive category interest income. CFC also has a $4,000x loan to an unrelated United States person that generates $70x of U.S. source passive category interest income and $4,000x of assets that generate $100x of U.S. source general category income. CFC uses the asset method to allocate interest expense. The following chart summarizes CFC's assets and income:

TABLE 1 TO PARAGRAPH (m)(3)(i)(A)

	Foreign	U.S.	Totals
Assets:			
Passive	1,000x	4,000x	5,000x
General	3,000x	4,000x	7,000x
Total	4,000x	8,000x	12,000x
Income:			
Passive	20x	70x	90x
General	650x	100x	750x

	Foreign	U.S.	Totals
Total	670x	170x	840x

(B) ***Analysis.*** Under paragraph (c)(2)(ii)(C) of this section, $90x of the related person interest payment is allocable to CFC's passive category income. Under paragraph (m)(2) of this section, $70x of USP's $90x of passive category interest income is from sources within the United States and $20x is from foreign sources. Under paragraph (c)(2)(ii)(D) of this section, the remaining $210x of the related person interest payment is allocated to general category income. Under paragraph (m)(2) of this section, $120x of the remaining $210x of USP's interest income is treated as general category income from sources within the United States ($120x = $210x × $4,000x/$7,000x) and $90x is treated as general category income from foreign sources ($90x = $210x × $3,000x/$7,000x).

(ii) ***Example 2.*** The facts are the same as in paragraph (m)(3)(i) of this section (the facts in *Example 1*), except that CFC uses the modified gross income method to allocate interest expense. The first $90x of related person interest expense is allocated to passive category income in the same manner as in paragraph (m)(3)(i) of this section (*Example 1*), $70x to U.S. sources and $20x to foreign sources. Under paragraph (c)(2)(ii)(D) of this section, the remaining $210x of the related person interest expense is allocated to CFC's general category income. Under paragraph (m)(2) of this section, $28x of the remaining $210x of USP's interest income is treated as general category income from U.S. sources ($28x = $210x × $100x/$750x) and $182x is treated as general category income from foreign sources ($182x = $210x × $650x/$750x).

(4) ***Treatment of dividend payments*** —

(i) ***Rule.*** Any dividend or distribution treated as a dividend under this paragraph (m) (including an amount included in gross income under section 951(a)(1)(B)) that is received or accrued by a United States shareholder from a controlled foreign corporation, or any dividend that is received or accrued by a domestic corporation from a noncontrolled 10-percent owned foreign corporation with respect to which the shareholder is a United States shareholder, are treated as income in a separate category derived from sources within the United States in proportion to the ratio of the portion of the earnings and profits of the controlled foreign corporation or noncontrolled 10-percent owned foreign corporation in the corresponding separate category from U.S. sources to the total amount of earnings and profits of the controlled foreign corporation or noncontrolled 10-percent owned foreign corporation in that separate category.

(ii) ***Determination of earnings and profits from United States sources.*** In order to determine the portions of earnings and profits from United States sources and from foreign sources within each separate category, related person interest shall be allocated to the United States source portion of income in a separate category by applying the rules of paragraph (m)(2) of this section. Other expenses shall be allocated by applying the rules of paragraph (c)(2)(ii) of this section separately to the United States source income and the foreign source income in each category. For example, unrelated person interest expense that is allocated among categories of income based upon the relative amounts of assets in a category must be allocated between

United States and foreign source income within each category by applying the rules of paragraph (c)(2)(ii)(E) of this section separately to United States source and foreign source assets in the separate category

(5) *Treatment of inclusions under sections 951(a)(1)(A), 951A and 1293* —

(i) ***Rule.*** Any amount included in the gross income of a United States shareholder of a controlled foreign corporation under section 951(a)(1)(A), 951A, or in the gross income of a domestic corporation that is a United States shareholder of a noncontrolled 10-percent owned foreign corporation described in section 904(d)(2)(E)(i)(II) that is a qualified electing fund under section 1293 is treated as income subject to a separate category that is derived from sources within the United States to the extent the amount is attributable to income of the controlled foreign corporation or qualified electing fund, respectively, in the corresponding category of income from sources within the United States. In order to determine a controlled foreign corporation's taxable income and earnings and profits from sources within the United States in each separate category, the principles of paragraph (m)(4)(ii) of this section shall apply. In order to determine a qualified electing fund's earnings and profits from sources within the United States in each separate category, the principles of paragraph (m)(4)(ii) of this section shall apply, except that the related person interest rule of paragraph (m)(2) of this section shall not apply.

(ii) ***Example.*** The following example illustrates the application of this paragraph (m)(5).

(A) ***Facts.*** Controlled foreign corporation CFC is a wholly-owned subsidiary of domestic corporation, USP. In Year 1, CFC earns $100x of subpart F foreign personal holding company income that is passive category income. Of this amount, $40x is derived from sources within the United States. CFC also earns $50x of subpart F general category income. None of this income is from sources within the United States. Assume that CFC pays no foreign taxes and has no expenses.

(B) ***Analysis.*** USP must include $150x in gross income under section 951(a). Of this amount, $60x is foreign source passive category income to USP, $40x is U.S. source passive category income to USP, and $50x is foreign source general category income to USP.

(6) ***Treatment of section 78 amount.*** For purposes of treating taxes deemed paid by a taxpayer under section 960 as a dividend under section 78, taxes that are paid or accrued with respect to United States source income in a separate category shall be treated as United States source income in that separate category.

(7) *Coordination with treaties* —

(i) ***Rule.*** If any amount of income derived from a United States-owned foreign corporation, as defined in section 904(h)(6), would be treated as derived from sources within the United States under section 904(h) and this paragraph (m) and, pursuant to an income tax convention with the United States, the taxpayer chooses to avail itself of benefits of the convention that treat that amount as arising from sources outside the United States under a rule explicitly treating the income as foreign source, then that amount will be treated as foreign source income. However, sections 904 (a), (b), (c), (d), (f), and (g), 907, and 960 shall be applied separately to amounts described in the preceding sentence with respect to each treaty under which the taxpayer has claimed benefits and, within each treaty, to each separate category of income.

(ii) ***Example.*** The following example illustrates the application of this paragraph (m)(7).

(A) ***Facts.*** Controlled foreign corporation CFC is incorporated in Country A and is a wholly-owned subsidiary of USP, a domestic corporation. In Year 1, CFC earns $80x of general category foreign base company sales income in Country A and $40x of passive category U.S. source interest income. CFC incurs $20x of expenses attributable to its sales business. CFC pays USP $40x of interest that is allocated to CFC's U.S. source passive category income under paragraph (c)(2)(ii)(C) of this section and so is U.S. source passive category income to USP under paragraphs (c)(2)(i) and (m)(2) of this section. Assume that earnings and profits equal net income. All of CFC's net income of $60x is subpart F income includible in USP's gross income under section 951(a)(1). For Year 1, USP also has $100x of foreign source passive category income derived from investments in Country B. Pursuant to section 904(h)(3) and paragraph (m)(2) of this section, the $40x interest payment from CFC is U.S. source income to USP because it is attributable to U.S. source interest income of CFC. The United States-Country A income tax treaty, however, treats all interest payments by residents of Country A as Country A sourced and USP elects to apply the treaty.

(B) ***Analysis.*** Pursuant to section 904(h)(10) and this paragraph (m)(7), the entire interest payment will be treated as foreign source income to USP. USP thus has $60x of foreign source general category income, $40x of foreign source Country A treaty category passive income from CFC, and $100x of foreign source passive category income.

(n) ***Order of application of section 904(d) and (h).*** In order to apply the rules of this section, § 1.904-4 shall first be applied to the controlled foreign corporation or noncontrolled 10-percent owned foreign corporation to determine the amount of income and earnings and profits derived by the controlled foreign corporation or noncontrolled 10-percent owned foreign corporation in each separate category. The income and earnings and profits in each separate category that are from United States sources shall then be determined. Section 904(d)(3), (d)(4), and (h) and this section are then applied for purposes of characterizing and sourcing income received, accrued, or included by a United States shareholder of the foreign corporation that is attributable or allocable to income or earnings and profits of the foreign corporation.

(o) ***Applicability dates.*** Except as otherwise provided in this paragraph (o), this section is applicable for taxable years that both begin after December 31, 2017, and end on or after December 4, 2018. Paragraphs (a)(4)(i) and (vi) of this section are applicable for taxable years of foreign corporations ending on or after October 1, 2019, and taxable years of United States persons ending on or after October 1, 2019. For taxable years of foreign corporations ending before October 1, 2019, and taxable years of United States persons ending before October 1, 2019, a taxpayer may apply such provisions to the last taxable year of a foreign corporation beginning before January 1, 2018, and each subsequent taxable year of the foreign corporation, and to taxable years of United States shareholders in which or with which such taxable years of the foreign corporation end, provided that the taxpayer and United States persons that are related (within the meaning of section 267 or 707) to the taxpayer consistently apply such provisions with respect to all foreign corporations. For taxable years of foreign corporations ending before October 1, 2019, and taxable years of United States persons ending before October 1, 2019, where the taxpayer does not apply the provisions of paragraphs (a)(4)(i) and (vi) of this section, see paragraphs (a)(4)(i) and (vi) of this section as in effect and contained in 26 CFR part 1, as revised April 1, 2020.

[T.D. 8214, 53 FR 27020, July 18, 1988]

Editorial Note: For FEDERAL REGISTER citations affecting § 1.904-5, see the List of CFR Sections Affected, which appears in the Finding Aids section of the printed volume and at *www.govinfo.gov*.

§ 1.904-6 Allocation and apportionment of foreign income taxes.

(a) ***In general.*** The amount of foreign income taxes paid or accrued with respect to a separate category (as defined in § 1.904-5(a)(4)(v)) of income (including U.S. source income assigned to the separate category) includes only those foreign income taxes that are allocated and apportioned to the separate category under the rules of § 1.861-20 (as modified by this section). In applying the foreign tax credit limitation under sections 904(a) and (d) to general category income described in section 904(d)(2)(A)(ii) and § 1.904-4(d), foreign source income in the general category is a statutory grouping. However, general category income is the residual grouping of income for purposes of assigning foreign income taxes to separate categories. In addition, in determining the numerator of the foreign tax credit limitation under sections 904(a) and (d), where U.S. source income is the residual grouping, the amount of foreign income taxes paid or accrued for which a deduction is allowed, for example, under section 901(k)(7), with respect to foreign source income in a separate category includes only those foreign income taxes that are allocated and apportioned to foreign source income in the separate category under the rules of § 1.861-20 (as modified by this section). For purposes of this section, unless otherwise stated, terms have the same meaning as provided in § 1.861-20(b). For examples illustrating the application of this section, see § 1.861-20(g).

(b) ***Assigning an item of foreign gross income to a separate category.*** For purposes of assigning an item of foreign gross income to a separate category or categories (or foreign source income in a separate category) under § 1.861-20, the rules of this paragraph (b) apply.

(1) ***Base differences.*** Any item of foreign gross income that is attributable to a base difference described in § 1.861-20(d)(2)(ii)(B) is assigned to the separate category described in section 904(d)(2)(H)(i), and to foreign source income in that category.

(2) ***Disregarded payments*** —

(i) ***In general*** —

(A) ***Assignment of foreign gross income.*** Except as provided in paragraph (b)(2)(ii) of this section, if a taxpayer that is an individual or a domestic corporation includes an item of foreign gross income by reason of the receipt of a disregarded payment by a foreign branch or foreign branch owner (as those terms are defined in § 1.904-4(f)(3)), or a non-branch taxable unit, the foreign gross income item is assigned to a separate category under § 1.861-20(d)(3)(v).

(B) ***Definition of non-branch taxable unit.*** The term *non-branch taxable unit* means a person or interest that is described in paragraph (b)(2)(i)(B)(*1*) or (*2*) of this section, respectively.

(*1*) ***Persons.*** A non-branch taxable unit described in this paragraph (b)(2)(i)(B)(*1*) means a person that is not otherwise a foreign branch owner and that is a U.S. individual, a domestic corporation, or a foreign or domestic partnership (or other pass-through entity, as defined in § 1.904-5(a)(4)) an interest in which is owned, directly or indirectly through one or more other partnerships (or other pass-through entities), by a U.S. individual or a domestic corporation.

(*2*) ***Interests.*** A non-branch taxable unit described in this paragraph (b)(2)(i)(B)(*2*) means an interest of a foreign branch owner or an interest of a person described in paragraph (b)(2)(i)(B)(*1*) of this section that is not otherwise a foreign branch, and

that is either a disregarded entity or a branch, as defined in § 1.267A-5(a)(2), including a branch described in § 1.951A-2(c)(7)(iv)(A)(*3*) (modified by substituting the term "person" for "controlled foreign corporation").

(ii) ***Foreign branch group contributions*** —

(A) ***In general.*** If a taxpayer includes an item of foreign gross income by reason of a foreign branch group contribution, the foreign gross income is assigned to the foreign branch category, or, in the case of a foreign branch owner that is a partnership, to the partnership's general category income that is attributable to the foreign branch. See, however, §§ 1.861-20(d)(3)(v)(C)(*2*), 1.960-1(d)(3)(ii)(A), and 1.960-1(e) for rules providing that foreign income tax on a disregarded payment that is a contribution from a controlled foreign corporation to a taxable unit is assigned to the residual grouping and cannot be deemed paid under section 960.

(B) ***Foreign branch group contribution.*** A foreign branch group contribution is a contribution (as defined in § 1.861-20(d)(3)(v)(E)) made by a member of a foreign branch owner group to a member of a foreign branch group that the payor owns, made by a member of a foreign branch group to another member of that group that the payor owns, or made by a member of a foreign branch group to a member of a different foreign branch group that the payor owns. For purposes of this paragraph (b)(2)(ii)(B), the terms *foreign branch group* and *foreign branch owner group* have the meanings provided in § 1.904-4(f)(3).

(c) ***Allocating and apportioning deductions.*** For purposes of applying § 1.861-20(e) to allocate and apportion deductions allowed under foreign law to foreign gross income in the separate categories, before undertaking the steps outlined in § 1.861-20(e), foreign gross income in the passive category is first reduced by any related person interest expense that is allocated to the income under the principles of section 954(b)(5) and § 1.904-5(c)(2)(ii)(C). In allocating and apportioning expenses not specifically allocated under foreign law, the principles of foreign law are applied only after taking into account the reduction of passive income by the application of section 954(b)(5). In allocating and apportioning expenses when foreign law does not provide rules for the allocation or apportionment of expenses, losses or other deductions to particular items of foreign gross income, then the principles of section 954(b)(5), in addition to the principles of the section 861 regulations (as defined in § 1.861-8(a)(1)), apply to allocate and apportion expenses, losses or other foreign law deductions to foreign gross income after reduction of passive income by the amount of related person interest expense allocated to passive income under section 954(b)(5) and § 1.904-5(c)(2)(ii)(C).

(d) ***Apportionment of taxes for purposes of applying the high-tax income tests.*** If taxes have been allocated and apportioned to passive income under the rules of paragraph (a) this section, the taxes must further be apportioned to the groups of income described in § 1.904-4(c)(3) through (5) for purposes of determining if the group is high-taxed income that is recharacterized as income in another separate category under the rules of § 1.904-4(c). See also § 1.954-1(c)(1)(iii)(B) (defining a single item of passive category foreign personal holding company income by reference to the grouping rules under § 1.904-4(c)(3) through (5)). Taxes are related to income in a particular group under the same rules as those in paragraph (a) of this section except that those rules are applied by apportioning foreign income taxes to the groups described in § 1.904-4(c)(3) through (5) instead of separate categories.

(e) ***Allocation and apportionment of deemed paid taxes and certain creditable foreign tax expenditures*** —

(1) ***Taxes deemed paid under section 960(a) or (d).*** If a domestic corporation that is a United States shareholder includes any amount in gross income under section 951(a)(1)(A) or 951A(a), any foreign tax deemed paid with respect to such amount under section 960(a) or (d) is allocated to the separate category to which the inclusion is assigned.

(2) ***Taxes deemed paid under section 960(b)(1).*** If a domestic corporation that is a United States shareholder receives a distribution of previously taxed earnings and profits from a first-tier corporation that is excluded from the domestic corporation's income under section 959(a) and § 1.959-1, any foreign tax deemed paid under section 960(b)(1) with respect to such distribution is allocated to the same separate category as the annual PTEP account and PTEP group (as defined in § 1.960-3(c)) from which the distribution is made.

(3) ***Taxes deemed paid under section 960(b)(2).*** If a controlled foreign corporation receives a distribution of previously taxed earnings and profits from an immediately lower-tier corporation that is excluded from such controlled foreign corporation's gross income under section 959(b) and § 1.959-2, any foreign tax deemed paid under section 960(b)(2) with respect to such distribution is allocated to the same separate category as the annual PTEP account and PTEP group (as defined in § 1.960-3(c)) from which the distribution is made. *See also* § 1.960-3(c)(2).

(4) ***Creditable foreign tax expenditures*** —

(i) ***In general.*** Except as provided in paragraph (e)(4)(ii) of this section, creditable foreign tax expenditures (CFTEs) allocated to a partner under § 1.704-1(b)(4)(viii)(*a*) are allocated for purposes of this section to the same separate category as the separate category to which the taxes were allocated in the hands of the partnership under the rules of paragraph (a) of this section.

(ii) ***Foreign branch category.*** CFTEs allocated to a partner in a partnership under § 1.704-1(b)(4)(viii)(*a*) are allocated and apportioned to the foreign branch category of the partner to the extent that:

(A) The CFTEs are allocated and apportioned by the partnership under the rules of paragraph (a) of this section to the general category;

(B) In the hands of the partnership, the CFTEs are related to general category income attributable to a foreign branch (as described in § 1.904-4(f)(2)) under the principles of paragraph (a) of this section; and

(C) The partner's distributive share of the income described in paragraph (e)(4)(ii)(B) of this section is foreign branch category income of the partner under § 1.904-4(f)(1)(i)(B).

(f) ***Treatment of certain foreign income taxes paid or accrued by United States shareholders.*** Some or all of the foreign gross income of a United States shareholder of a controlled foreign corporation, or of a U.S. person that owns the United States shareholder (the "U.S. owner"), that is attributable to foreign law inclusion regime income with respect to a foreign law CFC described in § 1.861-20(d)(3)(iii) or foreign law pass-through income from a reverse hybrid described in § 1.861-20(d)(3)(i)(C) is assigned to the section 951A category if, were the controlled foreign corporation the taxpayer that recognizes the foreign gross income, the foreign gross income would be assigned to the controlled foreign corporation's tested income group (as defined in § 1.960-1(b)(33)) within the general category to which an inclusion under section 951A is attributable. The amount of the United States shareholder's, or the U.S. owner's, foreign gross income that is assigned to the section 951A category (or a specified separate category associated with the section 951A category) is based on the inclusion percentage (as defined in § 1.960-2(c)(2)) of the

United States shareholder. For example, if a United States shareholder has an inclusion percentage of 60 percent, then 60 percent of the foreign gross income of a United States shareholder that would be assigned (under § 1.861-20(d)(3)(iii)) to the tested income group within the general category income of a reverse hybrid that is a controlled foreign corporation to which an inclusion under section 951A is attributable is assigned to the section 951A category or the specified separate category for income resourced under a tax treaty, and not to the general category.

(g) ***Applicability dates.*** Except as otherwise provided in this paragraph (g), this section applies to taxable years that begin after December 31, 2019. Paragraph (b)(2) of this section applies to taxable years that begin after December 31, 2019, and end on or after November 2, 2020.

[T.D. 8214, 53 FR 27029, July 18, 1988, as amended by T.D. 8412, 57 FR 20652, May 14, 1992; T.D. 9141, 69 FR 43308, July 20, 2004; T.D. 9260, 71 FR 24533, Apr. 25, 2006; T.D. 9882, 84 FR 69098, Dec. 17, 2019; T.D. 9922, 85 FR 72059, Nov. 12, 2020; 86 FR 54368, Oct. 1, 2021; T.D. 9959, 87 FR 363, Jan. 4, 2022]

§ 1.904-7 Transition rules.

(a) ***Characterization of distributions and section 951(a)(1) (A) (ii) and (iii) and (B) inclusions of earnings of a controlled foreign corporation accumulated in taxable years beginning before January 1, 1987, during taxable years of both the payor controlled foreign corporation and the recipient which begin after December 31, 1986 —***

(1) ***Distributions and section 951(a)(1) (A) (ii) and (iii) and (B) inclusions.*** Earnings accumulated in taxable years beginning before January 1, 1987, by a foreign corporation that was a controlled foreign corporation when such earnings were accumulated are characterized in that foreign corporation's hands under section 904(d)(1)(A) (separate limitation interest income) or section 904(d)(1)(E) (general limitation income) (prior to their amendment by the Tax Reform Act of 1986 (the Act)) after application of the de minimis rule of former section 904(d)(3)(C) (prior to its amendment by the Act). When, in a taxable year after the effective date of the Act, earnings and profits attributable to such income are distributed to, or included in the gross income of, a United States shareholder under section 951(a)(1) (A) (ii) or (iii) or (B) (hereinafter in this section “inclusions”), the ordering rules of section 904(d)(3)(D) and § 1.904-5(c)(4) shall be applied in determining initially the character of the income of the distributee or United States shareholder. Thus, a proportionate amount of a distribution described in this paragraph initially will be characterized as separate limitation interest income in the hands of the distributee based on the ratio of the separate limitation interest earnings and profits out of which the dividend was paid to the total earnings and profits out of which the dividend was paid. The distribution or inclusions must then be recharacterized in the hands of the distributee or United States shareholder on the basis of the following principles:

(i) Distributions and inclusions that initially are characterized as separate limitation interest income shall be treated as passive income;

(ii) Distributions and inclusions that initially are characterized as old general limitation income shall be treated as general limitation income, unless the taxpayer establishes to the satisfaction of the Commissioner that the distribution or inclusion is attributable to:

(A) Earnings and profits accumulated with respect to shipping income, as defined in section 904(d)(2)(D) and § 1.904-4(f); or

(B) In the case of a financial services entity, earnings and profits accumulated with respect to financial services income, as defined in section 904(d)(2)(C)(ii) and § 1.904-4(e)(1); or

(C) Earnings and profits accumulated with respect to high withholding tax interest, as defined in section 904(d)(2)(B) and § 1.904-4(d).

(2) ***Limitation on establishing the character of earnings and profits.*** In order for a taxpayer to establish that distributions or inclusions that are attributable to general limitation earnings and profits of a particular taxable year beginning before January 1, 1987, are attributable to shipping, financial services or high withholding tax interest earnings and profits, the taxpayer must establish the amounts of foreign taxes paid or accrued with respect to income attributable to those earnings and profits that are to be treated as taxes paid or accrued with respect to shipping, financial services or high withholding tax interest income, as the case may be, under section 904(d)(2)(I). Conversely, in order for a taxpayer to establish the amounts of general limitation taxes paid or accrued in a taxable year beginning before January 1, 1987, that are to be treated as taxes paid or accrued with respect to shipping, financial services or high withholding tax interest income, as the case may be, the taxpayer must establish the amount of any distributions or inclusions that are attributable to shipping, financial services or high withholding tax interest earnings and profits. For purposes of establishing the amounts of general limitation taxes that are to be treated as taxes paid or accrued with respect to shipping, financial services or high withholding tax interest income, the principles of § 1.904-6 shall be applied.

(b) ***Application of look-through rules to distributions (including deemed distributions) and payments by an entity to a recipient when one's taxable year begins before January 1, 1987 and the other's taxable year begins after December 31, 1986*** —

(1) ***In general.*** This paragraph provides rules relating to the application of section 904(d)(3) to payments made by a controlled foreign corporation or other entity to which the look-through rules apply during its taxable year beginning after December 31, 1986, but received in a taxable year of the recipient beginning before January 1, 1987. The paragraph also provides rules relating to distributions (including deemed distributions) or payments made by a controlled foreign corporation to which section 904(d)(3) (as in effect before the Act) applies during its taxable year beginning before January 1, 1987, and received in a taxable year of the recipient beginning after December 31, 1986.

(2) ***Payor of interest, rents, or royalties is subject to the Act and recipient is not subject to the Act.*** If interest, rents, or royalties are paid or accrued on or after the start of the payor's first taxable year beginning on or after January 1, 1987, but prior to the start of the recipient's first taxable year beginning on or after January 1, 1987, such interest, rents, or royalties shall initially be characterized in accordance with section 904(d)(3) and § 1.904-5. To the extent that interest payments in the hands of the recipient are initially characterized as passive income under these rules, they will be treated as separate limitation interest in the hands of the recipient. To the extent that rents or royalties in the hands of the recipient are initially characterized as passive income under these rules, they will be recharacterized as general limitation income in the hands of the recipient.

(3) ***Recipient of interest, rents, or royalties is subject to the Act and payor is not subject to the Act.*** If interest, rents, or royalties are paid or accrued before the start of the payor's first taxable year beginning on or after January 1, 1987, but on or after the start of the recipient's first taxable year beginning after January 1, 1987, the income in the recipient's hands shall be initially characterized in accordance with former section 904(d)(3) (prior to its amendment by the Act). To the extent interest income is characterized as separate limitation interest income under these rules, that income shall be recharacterized as passive income in the hands of the recipient. Rents or royalties will be characterized as general limitation income.

(4) ***Recipient of dividends and subpart F inclusions is subject to the Act and payor is not subject to the Act.*** If dividends are paid or accrued or section 951(a)(1) inclusions occur before the start of the first taxable year of a controlled foreign corporation beginning on or after January 1, 1987, but on or after the start of the first taxable year of the distributee or United States shareholder beginning on or after January 1, 1987, the dividends or section 951(a)(1) inclusions in the hands of the distributee or United States shareholder shall be initially characterized in accordance with former section 904(d)(3) (including the ordering rules of section 904(d)(3)(A). Therefore, under former section 904(d)(3)(A), dividends are considered to be paid or derived first from earnings attributable to separate limitation interest income. To the extent the dividend or section 951(a)(1) inclusion is initially characterized under these rules as separate limitation interest income in the hands of the distributee or United States shareholder, the dividend or section 951(a)(1) inclusion shall be recharacterized as passive income in the hands of the distributee or United States shareholder. The portion, if any, of the dividend or section 951(a)(1) inclusion that is not characterized as passive income shall be characterized according to the rules in paragraph (a) of this section. Therefore, a taxpayer may establish that income that would otherwise be characterized as general limitation income is shipping or financial services income. Rules comparable to the rules contained in section 904(d)(2)(I) shall be applied for purposes of characterizing foreign taxes deemed paid with respect to distributions and section 951(a)(1) inclusions covered by this paragraph (b)(4).

(5) ***Examples.*** The following examples illustrate the application of this paragraph (b).

Example 1. P is a domestic corporation that is a fiscal year taxpayer (July 1-June 30). S, a controlled foreign corporation, is a wholly-owned subsidiary of P and has a calendar taxable year. On June l, 1987, S makes a $100 interest payment to P. Because the payment is made after January 1, 1987 (the first day of S's first taxable year beginning after December 31, 1986), the look-through rules of section 904(d)(3) apply to characterize the payment made by S. To the extent, however, that the interest payment to P is allocable to passive income earned by S, the payment will be included in P's separate limitation for interest as provided in former section 904(d)(1)(A).

Example 2. P is a domestic corporation that is a calendar year taxpayer. S, a controlled foreign corporation, is a wholly-owned subsidiary of P and has a July 1-June 30 taxable year. On June 1, 1987, S makes a $100 interest payment to P. Because the payment is made prior to July l, 1987 (the first day of S's first taxable year beginning after December 31, 1986), the look-through rules of section 904(d)(3) do not apply. Assume that, under former section 904(d)(3), the interest payment would be characterized as separate limitation interest income. For purposes of determining P's foreign tax credit limitation, the interest payment will be passive income as provided in section 904(d)(1)(A).

Example 3. The facts are the same as in *Example* 2 except that on June 1, 1987, S makes a $100 dividend distribution to P. Because the dividend is paid prior to July l, 1987 (the first day of S's first taxable year beginning after December 31, 1986), the look-through rules of section 904(d)(3) do not apply. Assume that, under former section 904(d)(3), S's earnings and profits for the taxable year ending June 30, 1987, consist of $200 of earnings attributable to general limitation income and $75 of earnings attributable to separate limitation interest income. The portion of the dividend that is attributable to S's separate limitation interest and is treated as separate limitation interest income under former section 904(d)(3) is $75. The remaining $25 of the dividend is treated as general limitation income under former section 904(d)(3). For purposes of determining P's foreign tax credit limitation, $75 of the dividend will be

recharacterized as passive income. The remaining $25 of the dividend will be characterized as general limitation income, unless P can establish that the general limitation portion is attributable to shipping or financial services income.

(c) ***Installment sales.*** If income is received or accrued by any person on or after the effective date of the Act (as applied to such person) that is attributable to a disposition of property by such person with regard to which section 453 or section 453A applies (installment sale treatment), and the disposition occurred prior to the effective date of the Act, that income shall be characterized according to the rules of §§ 1.904-4 through 1.904-7.

(d) ***Special effective date for high withholding tax interest earned by persons with respect to qualified loans described in section 1201(e)(2) of the Act.*** For purposes of characterizing interest received or accrued by any person, the definition of high withholding tax interest in § 1.904-4(d) shall apply to taxable years beginning after December 31, 1986, except as provided in section 1201(e)(2) of the Act.

(e) ***Treatment of certain recapture income.*** Except as otherwise provided, if income is subject to recapture under section 585(c), the income shall be general limitation income. If the income is recaptured by a taxpayer that is a financial services entity, the entity may treat the income as financial services income if the taxpayer establishes to the satisfaction of the Secretary that the deduction to which the recapture amount is attributable is allocable to financial services income. If the taxpayer establishes to the satisfaction of the Secretary that the deduction to which the recapture amount is attributable is allocable to high-withholding tax interest income, the taxpayer may treat the income as high-withholding tax interest.

(f) ***Treatment of non-look-through pools of a noncontrolled section 902 corporation or a controlled foreign corporation in post-2002 taxable years —***

(1) ***Definition of non-look-through pools.*** The term *non-look-through pools* means the pools of post-1986 undistributed earnings (as defined in § 1.902-1(a)(9)) that were accumulated, and post-1986 foreign income taxes (as defined in § 1.902-1(a)(8)) paid, accrued, or deemed paid, in and after the first taxable year in which the foreign corporation had a domestic shareholder (as defined in § 1.902-1(a)(1)) but before any such shareholder was eligible for look-through treatment with respect to dividends from the foreign corporation.

(2) ***Treatment of non-look-through pools of a noncontrolled section 902 corporation.*** Any undistributed earnings in the non-look-through pool that were accumulated in taxable years beginning before January 1, 2003, by a noncontrolled section 902 corporation as of the last day of the corporation's last taxable year beginning before January 1, 2003, shall be treated in taxable years beginning after December 31, 2002, as if they were accumulated during a period when a dividend paid by the noncontrolled section 902 corporation to a domestic shareholder would have been eligible for look-through treatment under section 904(d)(4) and § 1.904-5. Post-1986 foreign income taxes paid, accrued or deemed paid with respect to such earnings shall be treated as if they were paid, accrued or deemed paid during a period when the related earnings were eligible for look-through treatment. Any such earnings and taxes in the non-look-through pools shall constitute the opening balance of the noncontrolled section 902 corporation's pools of post-1986 undistributed earnings and post-1986 foreign income taxes on the first day of the foreign corporation's first taxable year beginning after December 31, 2002, in accordance with the rules of paragraph (f)(4) of this section.

(3) ***Treatment of non-look-through pools of a controlled foreign corporation.*** A controlled foreign corporation may have non-look-through pools of post-1986 undistributed earnings and post-1986 foreign income taxes that were accumulated and paid in a taxable year beginning before January 1,

2003, in which it was a noncontrolled section 902 corporation. Any such undistributed earnings in the non-look-through pool as of the last day of the controlled foreign corporation's last taxable year beginning before January 1, 2003, shall be treated in taxable years beginning on or after January 1, 2003, as if they were accumulated during a period when a dividend paid by the controlled foreign corporation out of such earnings, or an amount included in the gross income of a United States shareholder under section 951 that is attributable to such earnings, would have been eligible for look-through treatment. Any post-1986 foreign income taxes paid, accrued, or deemed paid with respect to such earnings shall be treated in taxable years beginning on or after January 1, 2003, as if they were paid, accrued, or deemed paid during a period when a dividend or inclusion out of such earnings would have been eligible for look-through treatment. Any such undistributed earnings and taxes in the non-look-through pools shall be added to the pools of post-1986 undistributed earnings and post-1986 foreign income taxes of the controlled foreign corporation in the appropriate separate categories on the first day of the controlled foreign corporation's first taxable year beginning after December 31, 2002, in accordance with the rules of paragraph (f)(4) of this section. Similar rules shall apply to characterize any previously-taxed earnings and profits described in section 959(c)(1)(A) that are attributable to earnings in the non-look-through pool.

(4) ***Substantiation of look-through character of undistributed earnings and taxes in a non-look-through pool*** —

(i) ***Reconstruction of earnings and taxes pools.*** In order to substantiate the look-through characterization of undistributed earnings and taxes in a non-look-through pool under section 904(d)(4) and § 1.904-5, the taxpayer shall make a reasonable, good-faith effort to reconstruct the non-look-through pools of post-1986 undistributed earnings and post-1986 foreign income taxes (and previously-taxed earnings and profits, if any) on a look-through basis for each year in the non-look-through period, beginning with the first taxable year in which post-1986 undistributed earnings were accumulated in the non-look-through pool. Reconstruction shall be based on reasonably available books and records and other relevant information, and it must account for earnings distributed and taxes deemed paid in these years as if they were distributed and deemed paid pro rata from the amounts that were added to the non-look-through pools during the non-look-through period.

(ii) ***Safe harbor method.*** A taxpayer that was eligible for look-through treatment with respect to a distribution from the foreign corporation in the taxpayer's first taxable year ending after the first day of the foreign corporation's first taxable year beginning after December 31, 2002, may allocate the undistributed earnings and taxes in the non-look-through pools to the foreign corporation's look-through pools of post-1986 undistributed earnings and post-1986 foreign income taxes in other separate categories on the first day of the foreign corporation's first taxable year beginning after December 31, 2002, in the same percentages as the taxpayer properly characterizes the stock of the foreign corporation in the separate categories for purposes of apportioning the taxpayer's interest expense in its first taxable year ending after the first day of the foreign corporation's first taxable year beginning after December 31, 2002, under § 1.861-12T(c)(3) or § 1.861-12(c)(4), as the case may be. If the modified gross income method described in § 1.861-9T(j) is used to apportion interest expense of the foreign corporation in its first taxable year beginning after December 31, 2002, the taxpayer must allocate the undistributed earnings and taxes in the non-look-through pools to the foreign corporation's look-through pools of post-1986 undistributed earnings and post-1986 foreign income taxes based on an average of the foreign corporation's modified gross income ratios for the foreign corporation's taxable years beginning in 2003 and 2004. A taxpayer may also use

the safe harbor method described in this paragraph (f)(4)(ii) to allocate to separate categories any previously-taxed earnings and profits described in section 959(c)(1)(A) that are attributable to the non-look-through pool. A taxpayer may choose to use the safe harbor method on either a timely filed or amended tax return or during an audit. However, a taxpayer that uses the safe harbor method on an amended return or in the course of an audit must make appropriate adjustments to eliminate any duplicate benefits arising from application of the safe harbor method to taxable years that are not open for assessment. A taxpayer's choice to use the safe harbor method is evidenced by employing the method. The taxpayer need not file any separate statement.

(iii) ***Inadequate substantiation.*** If a taxpayer does not use, or is ineligible to use, the safe harbor method described in paragraph (f)(4)(ii) of this section and the Commissioner determines that the look-through characterization of earnings and taxes in the non-look-through pools cannot reasonably be determined based on the available information, the Commissioner shall allocate the undistributed earnings and taxes in the non-look-through pools to the foreign corporation's passive category.

(iv) ***Examples.*** The following examples illustrate the application of this paragraph (f)(4):

Example 1. P, a domestic corporation, has owned 50 percent of the voting stock of S, a foreign corporation, at all times since January 1, 1987, and S has been a noncontrolled section 902 corporation with respect to P since that date. P and S use the calendar year as their U.S. taxable year. The first year in which post-1986 undistributed earnings were accumulated in the non-look-through pool of S was 1987. As of December 31, 2002, S had 200u of post-1986 undistributed earnings and $100 of post-1986 foreign income taxes in its non-look-through pools. P does not use the safe harbor method under paragraph (f)(4)(ii) of this section to allocate the earnings and taxes in the non-look-through pools to S's other separate categories and does not attempt to substantiate the look-through characterization of S's non-look-through pools. The Commissioner, however, reasonably determines, based on information used to characterize S's stock for purposes of apportioning P's interest expense in P's 2003 and 2004 taxable years, that 100u of the earnings and all $100 of the taxes in the non-look-through pools are properly assigned on a look-through basis to the general limitation category, and 100u of earnings and no taxes are properly assigned on a look-through basis to the passive category. Therefore, in accordance with the Commissioner's look-through characterization of the earnings and taxes in S's non-look-through pools, on January 1, 2003, S has 100u of post-1986 undistributed earnings and $100 of post-1986 foreign income taxes in the general limitation category and 100u of post-1986 undistributed earnings and no post-1986 foreign income taxes in the passive category.

Example 2. The facts are the same as in *Example 1,* except that the Commissioner cannot reasonably determine, based on the available information, the proper look-through characterization of the 200u of undistributed earnings and $100 of taxes in S's non-look-through pools. Accordingly, the Commissioner will assign such earnings and taxes to the passive category, so that as of January 1, 2003, S has 200u of post-1986 undistributed earnings and $100 of post-1986 foreign income taxes in the passive category, and the Commissioner will treat S as a passive category asset for purposes of apportioning P's interest expense.

(5) ***Treatment of a deficit accumulated in a non-look-through pool.*** Any deficit in the non-look-through pool of a noncontrolled section 902 corporation or a controlled foreign corporation as of the end of its last taxable year beginning before January 1, 2003, shall be treated in taxable years beginning after December 31, 2002, as if the deficit had been accumulated during a period in which a dividend paid by the foreign corporation would have been eligible for look-through treatment. In the case of a noncontrolled section 902 corporation, the deficit and taxes, if any, in the non-look-through pools shall constitute the opening balance of the look-through pools of post-1986 undistributed earnings and post-1986 foreign income taxes of the noncontrolled section 902 corporation in the appropriate separate categories on the first day of its first taxable year beginning after December 31, 2002. In the case of a controlled foreign corporation, the deficit and taxes, if any, in the non-look-through pools shall be added to the balance of the look-through pools of post-1986 undistributed earnings and post-1986 foreign income taxes of the controlled foreign corporation in the appropriate separate categories on the first day of its first taxable year beginning after December 31, 2002. The taxpayer must substantiate the look-through characterization of the deficit and taxes in accordance with the rules of paragraph (f)(4) of this section. If a taxpayer does not use the safe harbor method described in paragraph (f)(4)(ii) of this section and the Commissioner determines that the look-through characterization of the deficit and taxes cannot reasonably be determined based on the available information, the Commissioner shall allocate the deficit and taxes, if any, in the non-look-through pools to the foreign corporation's passive category. If, as of the end of a taxable year beginning after December 31, 2002, in which it pays a dividend, the foreign corporation has zero or a deficit in post-1986 undistributed earnings (taking into account any earnings or a deficit accumulated in taxable years beginning before January 1, 2003), the deficit in post-1986 undistributed earnings shall be carried back to reduce pre-1987 accumulated profits, if any, on a last-in first-out basis. *See* § 1.902-2(a)(1). If, as of the end of a taxable year beginning after December 31, 2002, in which the foreign corporation pays a dividend out of current earnings and profits, it has zero or a deficit in post-1986 undistributed earnings (taking into account any earnings or a deficit accumulated in taxable years beginning before January 1, 2003), and the sum of current plus accumulated earnings and profits is zero or less than zero, no foreign taxes shall be deemed paid with respect to the dividend. *See* § 1.902-1(b)(4).

(6) ***Treatment of pre-1987 accumulated profits.*** Any pre-1987 accumulated profits (as defined in § 1.902-1(a)(10)) of a controlled foreign corporation or noncontrolled section 902 corporation shall be treated in taxable years beginning after December 31, 2002, as if they were accumulated during a period in which a dividend paid by the foreign corporation would have been eligible for look-through treatment. Any pre-1987 foreign income taxes (as defined in § 1.902-1(a)(10)(iii)) shall be treated as if they were paid, accrued or deemed paid during a year when a dividend out of the related pre-1987 accumulated profits would have been eligible for look-through treatment. The taxpayer must substantiate the look-through characterization of the pre-1987 accumulated profits and pre-1987 foreign income taxes in accordance with the rules of paragraph (f)(4) of this section. If a taxpayer does not use, or is ineligible to use, the safe harbor method described in paragraph (f)(4)(ii) of this section and the Commissioner determines that the look-through characterization of the pre-1987 accumulated profits and pre-1987 foreign income taxes cannot reasonably be determined based on the available information, the pre-1987 accumulated profits and pre-1987 foreign income taxes shall be allocated to the foreign corporation's passive category.

(7) ***Treatment of post-1986 undistributed earnings or a deficit of a controlled foreign corporation attributable to dividends from a noncontrolled section 902 corporation paid in taxable years beginning before January 1, 2003 —***

(i) ***Look-through treatment of post-1986 undistributed earnings at controlled foreign corporation level.*** Dividends paid by a noncontrolled section 902 corporation to a controlled foreign corporation in post-1986 taxable years of the noncontrolled section 902 corporation beginning before January 1, 2003, were assigned to a separate category for dividends from that noncontrolled section 902 corporation. Beginning on the first day of the controlled foreign corporation's first taxable year beginning on or after the first day of the lower-tier corporation's first taxable year beginning after December 31, 2002, any post-1986 undistributed earnings, or previously-taxed earnings and profits described in section 959(c)(1) or (2), of the controlled foreign corporation in such a separate category shall be treated as if they were accumulated during a period when a dividend paid by the noncontrolled section 902 corporation would have been eligible for look-through treatment. Any post-1986 foreign income taxes in such a separate category shall also be treated as if they were paid, accrued or deemed paid during a period when such a dividend would have been eligible for look-through treatment. Any such post-1986 undistributed earnings and post-1986 foreign income taxes in a separate category for dividends from a noncontrolled section 902 corporation shall be added to the opening balance of the controlled foreign corporation's look-through pools of post-1986 undistributed earnings and post-1986 foreign income taxes in the appropriate separate categories on the first day of the controlled foreign corporation's first taxable year beginning on or after the first day of the lower-tier corporation's first taxable year beginning after December 31, 2002. Any section 952(c)(2) recapture account with respect to such a separate category shall be allocated in the same manner as the associated post-1986 undistributed earnings. The taxpayer must substantiate the look-through characterization of such earnings and taxes in accordance with the rules of paragraph (f)(7)(iii) of this section.

(ii) ***Look-through treatment of deficit in post-1986 undistributed earnings at controlled foreign corporation level.*** If a controlled foreign corporation has a deficit in a separate category for dividends from a lower-tier noncontrolled section 902 corporation that is a member of the controlled foreign corporation's qualified group as defined in section 902(b)(2), such deficit shall be treated in taxable years of the upper-tier corporation beginning on or after the first day of the lower-tier corporation's first taxable year beginning after December 31, 2002, as if the deficit had been accumulated during a period in which a dividend from the lower-tier corporation would have been eligible for look-through treatment. Any post-1986 foreign income taxes in the separate category for dividends from the noncontrolled section 902 corporation shall also be treated as if they were paid, accrued or deemed paid during a period when the dividends were eligible for look-through treatment. The deficit and related post-1986 foreign income taxes, if any, shall be added to the opening balance of the controlled foreign corporation's look-through pools of post-1986 undistributed earnings and post-1986 foreign income taxes in the appropriate separate categories on the first day of the controlled foreign corporation's first taxable year beginning on or after the first day of the lower-tier corporation's first taxable year beginning after December 31, 2002. The taxpayer must substantiate the look-through characterization of the deficit and taxes in accordance with the rules of paragraph (f)(7)(iii) of this section.

(iii) ***Substantiation required for look-through treatment.*** The taxpayer must substantiate the look-through characterization of post-1986 undistributed earnings, previously-taxed earnings and profits, or a deficit in post-1986 undistributed earnings in a separate category for dividends paid by a noncontrolled section 902 corporation in taxable years beginning before January 1, 2003, by making a reasonable, good-faith effort to reconstruct the earnings (or deficit) and taxes in the separate category at the level of the controlled foreign corporation on a look-through basis,

in accordance with the principles of paragraph (f)(4)(i) of this section. Alternatively, the taxpayer may allocate the earnings (or deficit) and taxes to the controlled foreign corporation's look-through pools under the safe harbor method described in paragraph (f)(4)(ii) of this section at the level of the controlled foreign corporation. If the taxpayer uses the safe harbor method, the earnings (or deficit) and taxes shall be allocated to the controlled foreign corporation's look-through pools in the appropriate separate categories on the first day of the controlled foreign corporation's first taxable year beginning on or after the first day of the lower-tier corporation's first taxable year beginning after December 31, 2002. The allocation shall be made in the same percentages as the controlled foreign corporation would properly characterize the stock of the lower-tier noncontrolled section 902 corporation in the separate categories for purposes of apportioning the controlled foreign corporation's interest expense in its first taxable year ending after the first day of the noncontrolled section 902 corporation's first taxable year beginning after December 31, 2002. Under § 1.861-12T(c)(3), the apportionment ratios properly used by the controlled foreign corporation are in turn based on the apportionment ratios properly used by the noncontrolled section 902 corporation to apportion its interest expense in its first taxable year beginning after December 31, 2002. In the case of a taxpayer that uses the safe harbor method where the lower-tier noncontrolled section 902 corporation uses the modified gross income method described in § 1.861-9T(j) to apportion interest expense for its first taxable year beginning after December 31, 2002, earnings (or a deficit) and taxes in the separate category for dividends from the noncontrolled section 902 corporation shall be allocated to the look-through pools based on the average of the noncontrolled section 902 corporation's modified gross income ratios for its taxable years beginning in 2003 and 2004. In the case of a controlled foreign corporation that has in its qualified group a chain of lower-tier noncontrolled section 902 corporations, the safe harbor applies first to characterize the stock of the third-tier corporation and then to characterize the stock of the second-tier corporation. Where a taxpayer uses the safe harbor method with respect to a lower-tier noncontrolled section 902 corporation with respect to which the taxpayer did not meet the requirements of section 902(a) as of the end of the upper-tier controlled foreign corporation's last taxable year beginning before January 1, 2003, the earnings (or deficit) and taxes in the separate category for dividends from the lower-tier corporation shall be allocated to the upper-tier corporation's look-through pools in the separate categories in the same percentages as the stock of the lower-tier corporation would have been characterized for purposes of apportioning the upper-tier corporation's interest expense in the last year the taxpayer met the ownership requirements of section 902(a) with respect to the lower-tier corporation if the look-through rules had applied in that year. If a taxpayer does not use the safe harbor method described in this paragraph (f)(7)(iii), and the Commissioner determines that the look-through characterization of the earnings (or deficit) and taxes cannot reasonably be determined based on the available information, the Commissioner shall allocate the earnings (or deficit) and associated foreign income taxes to the controlled foreign corporation's passive category.

(8) ***Treatment of distributions received by an upper-tier corporation from a lower-tier noncontrolled section 902 corporation, including when the corporations do not have the same taxable years*** —

(i) ***Rule.*** In the case of dividends paid by a lower-tier noncontrolled section 902 corporation to an upper-tier corporation where both are members of the same qualified group as defined in section 902(b)(2), the following rules apply. Dividends paid by the lower-tier corporation in taxable years beginning before January 1, 2003, are assigned to a separate category for dividends from that corporation, regardless of whether the corresponding taxable year of the

recipient corporation began after December 31, 2002. Post-1986 undistributed earnings, previously-taxed earnings and profits, and post-1986 foreign income taxes in such a separate category shall be treated, beginning on the first day of the upper-tier corporation's first taxable year beginning on or after the first day of the lower-tier corporation's first taxable year beginning after December 31, 2002, as if they were accumulated during a period when a dividend paid by the lower-tier corporation would have been eligible for look-through treatment under section 904(d)(4) and § 1.904-5. Dividends paid by a lower-tier corporation in taxable years beginning after December 31, 2002, are eligible for look-through treatment when paid, without regard to whether the corresponding taxable year of the recipient upper-tier corporation began after December 31, 2002.

(ii) ***Example.*** The following example illustrates the application of paragraph (f) of this section:

Example. M, a domestic corporation, has directly owned 50 percent of the stock of foreign corporation X, and X has directly owned 50 percent of the stock of foreign corporation Y, at all times since X and Y were organized on January 1, 1990. Accordingly, X and Y are noncontrolled section 902 corporations with respect to M, and X and Y are members of the same qualified group. M and Y use the calendar year as their U.S. taxable year, and X uses a taxable year beginning on July 1. Under § 1.904-4(g) and paragraph (f)(10) of this section, a dividend paid to M by X on January 15, 2003 (during X's last pre-2003 taxable year) is not eligible for look-through treatment in 2003. However, under § 1.861-12(c)(4), M will characterize the stock of X on a look-through basis for purposes of interest expense apportionment in its 2003 taxable year. Under § 1.904-2(h)(1), any unused foreign taxes in M's separate category for dividends from X will be carried over to M's other separate categories on a look-through basis for M's taxable years beginning on and after January 1, 2004. Under paragraph (f)(2) of this section, any undistributed earnings and taxes in X's non-look-through pools will be allocated to X's other separate categories on July 1, 2003. Under § 1.904-5(i)(4) and paragraphs (f)(8)(i) and (f)(10) of this section, a dividend paid to X by Y on January 15, 2003 (during Y's first post-2002 taxable year) is eligible for look-through treatment when paid, notwithstanding that it is received in a pre-2003 taxable year of X.

(9) ***Election to apply pre-AJCA rules to 2003 and 2004 taxable years*** —

(i) ***Definition.*** The term *single category for dividends from all noncontrolled section 902 corporations* means the separate category described in section 904(d)(1)(E) as in effect for taxable years beginning after December 31, 2002, and prior to its repeal by the American Jobs Creation Act (AJCA), Public Law 108-357, 118 Stat. 1418 (October 22, 2004).

(ii) ***Time, manner, and form of election.*** A taxpayer may elect not to apply the provisions of section 403 of the AJCA and to apply the rules of this paragraph (f)(9) to taxable years of noncontrolled section 902 corporations beginning after December 31, 2002, and before January 1, 2005, without regard to whether the corresponding taxable years of the taxpayer or any upper-tier corporation begin before or after such dates. A taxpayer shall be eligible to make such an election provided that—

(A) The taxpayer's tax liability as shown on an original or amended tax return for each of its affected taxable years is consistent with the rules of this paragraph (f)(9), the guidance set forth in Notice 2003-5 (2003-1 CB 294) (*see* § 601.601(d)(2) of this chapter), and the principles of § 1.861-12(c)(4) for each such year for which the statute of limitations does not preclude the filing of an amended return;

(B) The taxpayer makes appropriate adjustments to eliminate any duplicate benefits arising from the application of this paragraph (f)(9) to taxable years that are not open for assessment; and

(C) The taxpayer attaches a statement to its next tax return for which the due date (with extensions) is more than 90 days after April 25, 2006, indicating that the taxpayer elects not to apply the provisions of section 403 of the AJCA to taxable years of its noncontrolled section 902 corporations beginning in 2003 and 2004, and that the taxpayer has filed original returns or will file amended returns reflecting tax liabilities for each affected year that satisfy the requirements described in this paragraph (f)(9)(ii).

(iii) ***Treatment of non-look-through pools in taxable years beginning after December 31, 2004.*** Undistributed earnings (or a deficit) and taxes in the non-look-through pools of a controlled foreign corporation or a noncontrolled section 902 corporation as of the end of its last taxable year beginning before January 1, 2005, shall be treated in taxable years beginning after December 31, 2004, as if they were accumulated and paid during a period in which a distribution out of earnings in the non-look-through pool would have been eligible for look-through treatment. Such earnings (or deficit) and taxes shall be added to the foreign corporation's pools of post-1986 undistributed earnings and post-1986 foreign income taxes in the appropriate separate categories on the first day of the foreign corporation's first taxable year beginning after December 31, 2004. In accordance with the principles of paragraph (f)(4) of this section, the taxpayer must reconstruct the non-look-through pools or, if the taxpayer chooses to use the safe harbor method, allocate the earnings and taxes in the non-look-through pools to the foreign corporation's look-through pools in the appropriate separate categories on the first day of the foreign corporation's first taxable year beginning after December 31, 2004. Under the safe harbor method, this allocation is made in the same percentages as the taxpayer properly characterized the stock of the foreign corporation for purposes of apportioning the taxpayer's interest expense in the taxpayer's first taxable year ending after the first day of the foreign corporation's first taxable year beginning after December 31, 2002. *See* § 1.861-12T(c)(3) and § 1.861-12(c)(4). If a taxpayer does not use the safe harbor method described in paragraph (f)(4)(ii) of this section and the Commissioner determines that the look-through characterization of the earnings (or deficit) and taxes cannot reasonably be determined based on the available information, the earnings (or deficit) and taxes shall be allocated to the foreign corporation's passive category.

(iv) ***Carryover of unused foreign tax.*** To the extent that a taxpayer has unused foreign taxes in the single category for dividends from all noncontrolled section 902 corporations, such taxes shall be carried forward to the appropriate separate categories in the taxpayer's taxable years beginning on or after the first day of the relevant noncontrolled section 902 corporation's first taxable year beginning after December 31, 2004. Such unused taxes shall be carried forward in the same manner as § 1.904-2(h)(1) provides that unused foreign taxes in the separate categories for dividends from each noncontrolled section 902 corporation are carried over to taxable years beginning on or after the first day of the noncontrolled section 902 corporation's first taxable year beginning after December 31, 2002, in the case of a taxpayer that does not make the election under this paragraph (f)(9). The electing taxpayer shall determine which noncontrolled section 902 corporations paid the dividends to which the unused foreign taxes are attributable and assign the taxes to the appropriate separate categories as if such dividends had been eligible for look-through treatment when paid. Accordingly, the taxpayer must substantiate the look-through characterization of the unused foreign taxes in accordance

with paragraph (f)(4) of this section by reconstructing the non-look-through pools or, if the taxpayer uses the safe harbor method, by allocating the unused foreign taxes to other separate categories in the same percentages as the taxpayer properly characterized the stock of the noncontrolled section 902 corporation for purposes of apportioning the taxpayer's interest expense for its first taxable year ending after the first day of the noncontrolled section 902 corporation's first taxable year beginning after December 31, 2002. The rule described in this paragraph (f)(9)(iv) shall apply only to unused foreign taxes attributable to dividends out of earnings that were accumulated by noncontrolled section 902 corporations in taxable years of such corporations beginning before January 1, 2003, because only unused foreign taxes attributable to distributions out of pre-2003 earnings are included in the single category for dividends from all noncontrolled section 902 corporations. To the extent that unused foreign taxes carried forward to the single category for dividends from all noncontrolled section 902 corporations under the rules of Notice 2003-5 were either absorbed by low-taxed dividends paid by noncontrolled section 902 corporations out of the non-look-through pool in taxable years of such corporations beginning in 2003 or 2004, or expired unused, the amount of taxes carried forward to the separate categories on a look-through basis will be smaller than the aggregate amount of taxes initially carried forward to the single category for dividends from all noncontrolled section 902 corporations. In this case, the unused foreign taxes arising in each taxable year shall be deemed attributable to each noncontrolled section 902 corporation in the same ratio as the dividends included in the separate category that were paid by such corporation in such year bears to all such dividends paid by all noncontrolled section 902 corporations in such year. Unused foreign taxes carried forward from the separate categories for dividends from each noncontrolled section 902 corporation to the single category for dividends from all noncontrolled section 902 corporations will similarly be deemed to have been utilized on a pro rata basis. The remaining unused foreign taxes are then assigned to the appropriate separate categories under the rules of paragraph (f)(4) of this section. Unused foreign taxes shall be treated as allocable to general category income to the extent that such taxes would otherwise have been allocable to passive income (based on reconstructed pools or the safe harbor method), or to the extent that, under paragraph (f)(4)(iii) of this section, the Commissioner determines that the look-through characterization cannot reasonably be determined based on the available information.

(v) ***Carryback of unused foreign tax.*** To the extent that a taxpayer has unused foreign taxes attributable to a dividend paid by a noncontrolled section 902 corporation that was eligible for look-through treatment under section 904(d)(4) and § 1.904-5, any such unused foreign taxes shall be carried back to prior taxable years within the same separate category and not to the single category for dividends from all noncontrolled section 902 corporations or any separate category for dividends from a noncontrolled section 902 corporation. See Notice 2003-5 for rules relating to the carryback of unused foreign taxes in the single category for dividends from all noncontrolled section 902 corporations.

(vi) ***Recapture of overall foreign loss or separate limitation loss in the single category for dividends from all noncontrolled section 902 corporations.*** To the extent that a taxpayer has a balance in a separate limitation loss or overall foreign loss account in the single category for dividends from all noncontrolled section 902 corporations under section 904(d)(1)(E) (prior to its repeal by the AJCA), at the end of the taxpayer's last taxable year beginning before January 1, 2005 (or a later taxable year in which the taxpayer received a dividend subject to the separate limitation for dividends from all noncontrolled section 902 corporations), the amount of such balance shall be allocated on the first day of the taxpayer's next taxable year to the taxpayer's other

separate categories. The amount of such balance that is attributable to each noncontrolled section 902 corporation shall be allocated in the same percentages as the taxpayer properly characterized the stock of such corporation for purposes of apportioning the taxpayer's interest expense for its first taxable year ending after the first day of such corporation's first taxable year beginning after December 31, 2002, under § 1.861-12T(c)(3) or § 1.861-12(c)(4), as the case may be. To the extent that a taxpayer has a balance in a separate limitation loss account for the single category for dividends from all noncontrolled section 902 corporations with respect to another separate category, and the separate limitation loss account would otherwise be assigned to that other category under this paragraph (f)(9)(vi), such balance shall be eliminated.

(vii) ***Recapture of separate limitation losses in other separate categories.*** To the extent that a taxpayer has a balance in any separate limitation loss account in a separate category with respect to the single category for dividends from all noncontrolled section 902 corporations at the end of the taxpayer's last taxable year with or within which ends the last taxable year of the relevant noncontrolled section 902 corporation beginning before January 1, 2005, such loss shall be recaptured in subsequent taxable years as income in the appropriate separate category. The separate limitation loss account shall be deemed attributable on a pro rata basis to those noncontrolled section 902 corporations that paid dividends out of earnings accumulated in taxable years beginning before January 1, 2003, in the years in which the separate limitation loss in the other separate category arose. The ratable portions of the separate limitation loss account shall be recaptured as income in the taxpayer's separate categories in the same percentages as the taxpayer properly characterized the stock of the relevant noncontrolled section 902 corporation for purposes of apportioning the taxpayer's interest expense in its first taxable year ending after the first day of such corporation's first taxable year beginning after December 31, 2002, under § 1.861-12T(c)(3) or § 1.861-12(c)(4), as the case may be. To the extent that a taxpayer has a balance in any separate limitation loss account in any separate category that would have been recaptured as income in that same category under this paragraph (f)(9)(vii), such balance shall be eliminated.

(viii) ***Treatment of undistributed earnings in an upper-tier corporation-level single category for dividends from lower-tier noncontrolled section 902 corporations.*** Where a controlled foreign corporation or noncontrolled section 902 corporation has a single category for dividends from all noncontrolled section 902 corporations containing earnings attributable to dividends paid by one or more lower-tier corporations, the following rules apply. The post-1986 undistributed earnings, previously-taxed earnings and profits described in section 959(c)(1) or (2), if any, and associated post-1986 foreign income taxes shall be allocated to the upper-tier corporation's other separate categories in the same manner as earnings and taxes in a separate category for dividends from each noncontrolled section 902 corporation maintained by the upper-tier corporation are allocated under paragraph (f)(7) of this section. Accordingly, post-1986 undistributed earnings, previously-taxed earnings and profits, if any, and post-1986 foreign income taxes in the single category for dividends from all noncontrolled section 902 corporations shall be treated as if they were accumulated and paid, accrued or deemed paid during a period when a dividend paid by each lower-tier corporation that paid dividends included in the single category would have been eligible for look-through treatment. If the taxpayer uses the safe harbor method described in paragraph (f)(7)(iii) of this section, the earnings and taxes shall be allocated based on the apportionment ratios properly used by the lower-tier corporation to apportion its interest expense for its first taxable year beginning after December 31, 2002. Any section 952(c)(2) recapture account with respect to the single

category shall be allocated in the same manner as the associated post-1986 undistributed earnings. The taxpayer must substantiate the look-through characterization of the earnings and taxes in accordance with the rules of paragraph (f)(7)(iii) of this section. If the taxpayer does not use the safe harbor method and the Commissioner determines that the look-through characterization of the earnings cannot reasonably be determined based on the available information, the earnings and taxes shall be assigned to the upper-tier corporation's passive category.

(ix) ***Treatment of a deficit in the single category for dividends from lower-tier noncontrolled section 902 corporations.*** Where a controlled foreign corporation or noncontrolled section 902 corporation had an aggregate deficit in the single category for dividends from all noncontrolled section 902 corporations as of the end of the upper-tier corporation's last taxable year beginning before January 1, 2005, such deficit and the associated post-1986 foreign income taxes, if any, shall be allocated to the upper-tier corporation's other separate categories in the same percentages in which the non-look-through pools of each lower-tier corporation to which the deficit is attributable were assigned to such corporation's other separate categories in its first taxable year beginning after December 31, 2002. If the taxpayer uses the safe harbor method described in paragraph (f)(7)(iii) of this section, the deficit and taxes shall be allocated based on how the taxpayer properly characterized the stock of the lower-tier noncontrolled section 902 corporation for purposes of apportioning the upper-tier corporation's interest expense for the upper-tier corporation's first taxable year ending after the first day of the lower-tier corporation's first taxable year beginning after December 31, 2002. The taxpayer must substantiate the look-through characterization of the deficit and taxes in accordance with the rules of paragraph (f)(7)(iii) of this section. If the taxpayer does not use the safe harbor method and the Commissioner determines that the look-through characterization of the deficit cannot reasonably be determined based on the available information, the deficit and taxes shall be assigned to the upper-tier corporation's passive category.

(10) ***Effective/applicability date.*** This paragraph (f) shall apply to dividends from a noncontrolled section 902 corporation that are paid in taxable years of the noncontrolled section 902 corporation ending on or after April 20, 2009. *See* 26 CFR § 1.904-7T(f) (revised as of April 1, 2009) for rules applicable, except in the case of a taxpayer that makes the election under paragraph (f)(9) of that section, to dividends from a noncontrolled section 902 corporation that are paid in taxable years of the noncontrolled section 902 corporation beginning after December 31, 2002, and ending before April 20, 2009. *See* 26 CFR 1.904-7T(f) (revised as of April 1, 2009) for rules applicable, in the case of a taxpayer that makes the election under paragraph (f)(9) of that section, to dividends from a noncontrolled section 902 corporation that are paid in taxable years of the noncontrolled section 902 corporation beginning after December 31, 2004, and ending before April 20, 2009. However, taxpayers may choose to apply paragraph (f) of this section in its entirety in lieu of 26 CFR 1.904-7T(f) to all dividends paid in periods covered by the temporary regulations, provided that appropriate adjustments are made to eliminate duplicate benefits arising from application of paragraph (f) to taxable years that are not open for assessment.

(g) ***Treatment of earnings and foreign taxes of a controlled foreign corporation or a noncontrolled section 902 corporation accumulated in taxable years beginning before January 1, 2007 —***

(1) ***Definitions —***

(i) ***Pre-2007 pools*** means the pools in each separate category of post-1986 undistributed earnings (as defined in § 1.902-1(a)(9)) that were accumulated, and post-1986 foreign income taxes (as defined in § 1.902-1(a)(8)) paid, accrued, or deemed paid, in taxable years beginning before January 1, 2007.

(ii) ***Pre-2007 separate categories*** means the separate categories of income described in section 904(d) as applicable to taxable years beginning before January 1, 2007, and any other separate category of income described in § 1.904-4(m).

(iii) ***Post-2006 separate categories*** means the separate categories of income described in section 904(d) as applicable to taxable years beginning after December 31, 2006, and any other separate category of income described in § 1.904-4(m).

(2) ***Treatment of pre-2007 pools of a controlled foreign corporation or a noncontrolled section 902 corporation.*** Any post-1986 undistributed earnings in a pre-2007 pool of a controlled foreign corporation or a noncontrolled section 902 corporation shall be treated in taxable years beginning after December 31, 2006, as if they were accumulated during a period in which the rules governing the determination of post-2006 separate categories applied. Post-1986 foreign income taxes paid, accrued, or deemed paid with respect to such earnings shall be treated as if they were paid, accrued, or deemed paid during a period in which the rules governing the determination of post-2006 separate categories (including the rules of section 904(d)(3)(E)) applied as well. Any such earnings and taxes in pre-2007 pools shall constitute the opening balance of the foreign corporation's post-1986 undistributed earnings and post-1986 foreign income taxes on the first day of the foreign corporation's first taxable year beginning after December 31, 2006, in accordance with the rules of paragraph (g)(3) of this section. Similar rules shall apply to characterize any deficits in the pre-2007 pools and previously-taxed earnings and profits described in section 959(c)(1) and (2) that are attributable to earnings in the pre-2007 pools. Any section 952(c)(2) recapture account with respect to a separate category shall be allocated in the same manner as the post-1986 undistributed earnings in the associated pre-2007 pool.

(3) ***Substantiation of post-2006 character of earnings and taxes in a pre-2007 pool*** —

(i) ***Reconstruction of earnings and taxes pools.*** In order to substantiate the post-2006 characterization of post-1986 undistributed earnings (as well as deficits and previously-taxed earnings, if any) and post-1986 foreign income taxes in pre-2007 pools of a controlled foreign corporation or a noncontrolled section 902 corporation, the taxpayer shall make a reasonable, good-faith effort to reconstruct the pre-2007 pools of post-1986 undistributed earnings (as well as deficits and previously-taxed earnings, if any) and post-1986 foreign income taxes following the rules governing the determination of post-2006 separate categories for each taxable year beginning before January 1, 2007, beginning with the first year in which post-1986 undistributed earnings were accumulated in the pre-2007 pool. Reconstruction shall be based on reasonably available books and records and other relevant information. To the extent any pre-2007 separate category includes earnings that would be allocated to more than one post-2006 separate category, the taxpayer must account for earnings distributed and taxes deemed paid in these years for such category as if they were distributed and deemed paid pro rata from the amounts that were added to that category during each taxable year beginning before January 1, 2007.

(ii) ***Safe harbor method*** —

(A) ***In general.*** Subject to the rules of paragraph (g)(3)(iii) of this section, a taxpayer may allocate the post-1986 undistributed earnings and post-1986 foreign income taxes in pre-2007 pools of a controlled foreign corporation or a noncontrolled section 902 corporation (as well as deficits and previously-taxed earnings, if any) under one of the safe harbor methods described in paragraphs (g)(3)(ii)(B) and (g)(3)(ii)(C) of this section. A taxpayer may choose to use the safe harbor method on a timely filed (original or amended) tax return or during an audit. A taxpayer that uses the safe harbor method on an amended return or in the course of an audit must make appropriate adjustments to eliminate any double benefit arising from application of the safe harbor method to years that are not open for assessment. A taxpayer's choice to use the safe harbor method is evidenced by employing the method. The taxpayer need not file any separate statement.

(B) ***General safe harbor method.***

(*1*) Any post-1986 undistributed earnings (as well as deficits and previously-taxed earnings, if any) and post-1986 foreign income taxes of a noncontrolled section 902 corporation or a controlled foreign corporation in a pre-2007 separate category for passive income, certain dividends from a DISC or former DISC, taxable income attributable to certain foreign trade income, or certain distributions from a FSC or former FSC shall be allocated to the post-2006 separate category for passive category income.

(*2*) Any post-1986 undistributed earnings (as well as deficits and previously-taxed earnings, if any) and post-1986 foreign income taxes of a noncontrolled section 902 corporation or a controlled foreign corporation in a pre-2007 separate category for financial services income, shipping income or general limitation income shall be allocated to the post-2006 separate category for general category income.

(*3*) Except as provided in paragraph (g)(3)(ii)(B)(*4*) of this section, any post-1986 undistributed earnings (as well as deficits and previously-taxed earnings, if any) and post-1986 foreign income taxes of a noncontrolled section 902 corporation or a controlled foreign corporation in a pre-2007 separate category for high withholding tax interest shall be allocated to the post-2006 separate category for passive category income.

(*4*) If a controlled foreign corporation has positive post-1986 undistributed earnings and post-1986 foreign income taxes in a pre-2007 separate category for high withholding tax interest, such earnings and taxes shall be allocated to the post-2006 separate category for general category income if the earnings would qualify as income subject to high foreign taxes under section 954(b)(4) if the entire amount of post-1986 undistributed earnings were treated as a net item of income subject to the rules of § 1.954-1(d). If the high withholding tax interest earnings would not qualify as income subject to high foreign taxes under section 954(b)(4), then the earnings and taxes shall be allocated to the post-2006 separate category for passive category income.

(C) ***Interest apportionment safe harbor.*** A taxpayer may allocate the post-1986 undistributed earnings (as well as deficits and previously-taxed earnings, if any) and post-1986 foreign income taxes in pre-2007 pools of a controlled foreign corporation or a noncontrolled section 902 corporation following the principles of paragraph (f)(4)(ii) of this section.

(iii) ***Consistency rule.*** The election to apply a safe harbor method under paragraph (g)(3)(ii) of this section in lieu of the rules described in paragraph (g)(3)(i) of this section may be made on a separate category by separate category basis. However, if a taxpayer elects to apply a safe harbor to allocate pre-2007 pools of more than one pre-2007 separate category of a controlled foreign corporation or a noncontrolled section 902 corporation, such safe harbor (the general safe harbor described in paragraph (g)(3)(ii)(B) of this section or the interest apportionment safe harbor described in paragraph (g)(3)(ii)(C) of this section) shall apply to allocate post-1986 undistributed earnings (as well as deficits and previously-taxed earnings, if any) and post-1986 foreign income taxes for the pre-2007 pools in each pre-2007 separate category of the foreign corporation for which the taxpayer elected to apply a safe harbor method in lieu of reconstructing the pre-2007 pools.

(4) ***Treatment of pre-1987 accumulated profits.*** Any pre-1987 accumulated profits (as defined in § 1.902-1(a)(10)) of a noncontrolled section 902 corporation or a controlled foreign corporation shall be treated in taxable years beginning after December 31, 2006, as if they had been accumulated during a period in which the rules governing the determination of post-2006 separate categories applied. Foreign income taxes paid, accrued, or deemed paid with respect to such earnings shall be treated as if they were paid, accrued, or deemed paid during a period in which the rules governing the determination of post-2006 separate categories applied as well. The taxpayer must substantiate the post-2006 characterization of the pre-1987 accumulated profits and pre-1987 foreign income taxes in accordance with the rules of paragraph (g)(3) of this section, including the safe harbor provisions. Similar rules shall apply to characterize any deficits or previously-taxed earnings and profits described in section 959(c)(1) and (2) that are attributable to pre-1987 accumulated profits.

(5) ***Treatment of earnings and foreign taxes in pre-2007 pools of a lower-tier controlled foreign corporation or noncontrolled section 902 corporation.*** The rules of paragraphs (g)(1) through (4) of this section apply to post-1986 undistributed earnings (as well as deficits and previously-taxed earnings, if any) and post-1986 foreign income taxes in pre-2007 pools, and pre-1987 accumulated profits and pre-1987 foreign income taxes, of a lower-tier controlled foreign corporation or noncontrolled section 902 corporation.

(6) ***Effective/applicability date.*** This paragraph (g) shall apply to taxable years of United States persons and, for purposes of section 906, foreign persons beginning after December 31, 2006 and ending on or after December 21, 2007, and to taxable years of a foreign corporation which end with or within taxable years of its domestic corporate shareholder beginning after December 31, 2006 and ending on or after December 21, 2007.

[T.D. 8214, 53 FR 27034, July 18, 1988, as amended by T.D. 8412, 57 FR 20653, May 14, 1992; T.D. 9260, 71 FR 24533, Apr. 25, 2006; T.D. 9368, 72 FR 72590, Dec. 21, 2007; T.D. 9452, 74 FR 27881, June 11, 2009; T.D. 9521, 76 FR 19272, Apr. 7, 2011]

§ 1.904(b)-0 Outline of regulation provisions.

This section lists the headings for §§ 1.904(b)-1 and 1.904(b)-2.

§ 1.904(b)-1 Special rules for capital gains and losses.

(a) Capital gains and losses included in taxable income from sources outside the United States.

(1) Limitation on capital gain from sources outside the United States when the taxpayer has net capital losses from sources within the United States.

(i) In general.

(ii) Allocation of reduction to separate categories or rate groups.

(A) In general.

(B) Taxpayer with capital gain rate differential.

(2) Exclusivity of rules; no reduction by reason of net capital loss from sources outside the United States in a different separate category.

(3) Capital losses from sources outside the United States in the same separate category.

(4) Examples.

(b) Capital gain rate differential.

(1) Application of adjustments only if capital gain rate differential exists.

(2) Determination of whether capital gain rate differential exists.

(3) Special rule for certain noncorporate taxpayers.

(c) Rate differential adjustment of capital gains.

(1) Rate differential adjustment of capital gains in foreign source taxable income.

(i) In general.

(ii) Special rule for taxpayers with a net long-term capital loss from sources within the United States.

(iii) Examples.

(2) Rate differential adjustment of capital gains in entire taxable income.

(d) Rate differential adjustment of capital losses from sources outside the United States.

(1) In general.

(2) Determination of which capital gains are offset by net capital losses from sources outside the United States.

(e) Qualified dividend income.

(1) In general.

(2) Exception.

(f) Definitions.

(1) Alternative tax rate.

(2) Net capital gain.

(3) Rate differential portion.

(4) Rate group.

(i) Short-term capital gains or losses.

(ii) Long-term capital gains.

(iii) Long-term capital losses.

(5) Terms used in sections 1(h), 904(b) or 1222.

(g) Examples.

(h) Coordination with section 904(f).

(1) In general.

(2) Examples.

(i) Effective date.

§ 1.904(b)-2 Special rules for application of section 904(b) to alternative minimum tax foreign tax credit.

(a) Application of section 904(b)(2)(B) adjustments.

(b) Use of alternative minimum tax rates.

(1) Taxpayers other than corporations.

(2) Corporate taxpayers.

(c) Effective date.

[T.D. 9371, 72 FR 72596, Dec. 21, 2007]

§ 1.904(b)-1 Special rules for capital gains and losses.

(a) *Capital gains and losses included in taxable income from sources outside the United States —*

(1) *Limitation on capital gain from sources outside the United States when the taxpayer has net capital losses from sources within the United States —*

(i) ***In general.*** Except as otherwise provided in this section, for purposes of section 904 and this section, taxable income from sources outside the United States (in all of the taxpayer's separate categories in the aggregate) shall include capital gain net income from sources outside the United States (determined by considering all of the capital gain and loss items in all of the taxpayer's separate categories in the aggregate) only to the extent of capital gain net income from all sources. Thus, capital gain net income from sources outside the United States (determined by considering all of the capital gain and loss items in all of the taxpayer's separate categories in the aggregate) shall be reduced to the extent such amount exceeds capital gain net income from all sources.

(ii) *Allocation of reduction to separate categories or rate groups —*

(A) ***In general.*** If capital gain net income from sources outside the United States exceeds capital gain net income from all sources, and the taxpayer has capital gain net income from sources outside the United States in only one separate category, such excess is allocated as a reduction to that separate category. If a taxpayer has capital gain net income from foreign sources in two or more separate categories, such excess must be apportioned on a pro rata basis as a reduction to each such separate category. For purposes of the preceding sentence, pro rata means based on the relative amounts of the capital gain net income from sources outside the United States in each separate category.

(B) ***Taxpayer with capital gain rate differential.*** If a taxpayer with a capital gain rate differential for the year (within the meaning of paragraph (b) of this section) has capital gain net income from foreign sources in only one rate group within a separate category, any reduction to such separate category pursuant to paragraph (a)(1)(ii)(A) of this section must be allocated to such rate group. If a taxpayer with a capital gain rate differential for the year (within the meaning of paragraph (b) of this section) has capital gain net income from foreign sources in two or more rate groups within a separate category, any reduction to such separate category pursuant to paragraph (a)(1)(ii)(A) of this section must be apportioned on a pro rata basis among such rate groups. For purposes of the preceding sentence, pro rata means based on the relative amounts of the capital gain net income from sources outside the United States in each rate group within the applicable separate category.

(2) ***Exclusivity of rules; no reduction by reason of net capital losses from sources outside the United States in a different separate category.*** Capital gains from sources outside the United States in any separate category shall be limited by reason of section 904(b)(2)(A) and the comparable limitation of section 904(b)(2)(B)(i) only to the extent provided in paragraph (a)(1) of this section (relating to limitation on capital gain from sources outside the United States when taxpayer has net capital losses from sources within the United States).

(3) ***Capital losses from sources outside the United States in the same separate category.*** Except as otherwise provided in paragraph (d) of this section, taxable income from sources outside the United States in each separate category shall be reduced by any capital loss that is allocable or apportionable to income from sources outside the United States in such separate category to the extent such loss is allowable in determining taxable income for the taxable year.

(4) ***Examples.*** The following examples illustrate the application of this paragraph (a) to taxpayers that do not have a capital gain rate differential for the taxable year. See paragraph (g) of this section for examples that illustrate the application of this paragraph (a) to taxpayers that have a capital gain rate differential for the year. The examples are as follows:

Example 1. Taxpayer A, a corporation, has a $3,000 capital loss from sources outside the United States in the general limitation category, a $6,000 capital gain from sources outside the United States in the passive category, and a $2,000 capital loss from sources within the United States. A's capital gain net income from sources outside the United States in the aggregate, from all separate categories, is $3,000 ($6,000 − $3,000). A's capital gain net income from all sources is $1,000 ($6,000 − $3,000 − $2,000). Thus, for purposes of section 904, A's taxable income from sources outside the United States in all of A's separate categories in the aggregate includes only $1,000 of capital gain net income from sources outside the United States. See paragraph (a)(1)(i) of this section. Pursuant to paragraphs (a)(1)(i) and (a)(1)(ii)(A) of this section, A must reduce the $6,000 of capital gain net income from sources outside the United States in the passive category by $2,000 ($3,000 of capital gain net income from sources outside the United States − $1,000 of capital gain net income from all sources). After the adjustment, A has $4,000 of capital gain from sources outside the United States in the passive category and $3,000 of capital loss from sources outside the United States in the general limitation category.

Example 2. Taxpayer B, a corporation, has a $300 capital gain from sources outside the United States in the general limitation category and a $200 capital gain from sources outside the United States in the passive category. B's capital gain net income from sources outside the United States is $500 ($300 + $200). B also has a $150 capital loss from sources within the United States and a $50 capital gain from sources within the United States. Thus, B's capital gain net income from all sources is $400 ($300 + $200 − $150 + $50). Pursuant to paragraph (a)(1)(ii)(A) of this section, the $100 excess of capital gain net income from sources outside the United States over capital gain net income from all sources ($500 − $400) must be apportioned, as a reduction, three-fifths ($300/$500 of $100, or $60) to the general limitation category and two-fifths ($200/$500 of $100, or $40) to the passive category. Therefore, for purposes of section 904, the general limitation category includes $240 ($300 − $60) of capital gain net income from sources outside the United States and the passive category includes $160 ($200 − $40) of capital gain net income from sources outside the United States.

Example 3. Taxpayer C, a corporation, has a $10,000 capital loss from sources outside the United States in the general limitation category, a $4,000 capital gain from sources outside the United States in the passive category, and a $2,000 capital gain from sources within the United States. C's capital gain net income from sources outside the United States is zero, since losses exceed gains. C's capital gain net income from all sources is also zero. C's capital gain net income from sources outside the United States does not exceed its capital gain net income from all sources, and therefore paragraph (a)(1) of this section does not require any reduction of C's passive category capital gain. For purposes of section 904, C's passive category includes $4,000 of capital gain net income. C's general limitation category includes a capital loss of $6,000 because only $6,000 of capital loss is allowable as a deduction in the current year. The

entire $4,000 of capital loss in excess of the $6,000 of capital loss that offsets capital gain in the taxable year is carried back or forward under section 1212(a), and none of such $4,000 is taken into account under section 904(a) or (b) for the current taxable year.

(b) *Capital gain rate differential* —

(1) ***Application of adjustments only if capital gain rate differential exists.*** Section 904(b)(2)(B) and paragraphs (c) and (d) of this section apply only for taxable years in which the taxpayer has a capital gain rate differential.

(2) ***Determination of whether capital gain rate differential exists.*** For purposes of section 904(b) and this section, a capital gain rate differential is considered to exist for the taxable year only if the taxpayer has taxable income (excluding net capital gain and qualified dividend income) for the taxable year, a net capital gain for the taxable year and—

(i) In the case of a taxpayer other than a corporation, tax is imposed on the net capital gain at a reduced rate under section 1(h) for the taxable year; or

(ii) In the case of a corporation, tax is imposed under section 1201(a) on the taxpayer at a rate less than any rate of tax imposed on the taxpayer by section 11, 511, or 831(a) or (b), whichever applies (determined without regard to the last sentence of section 11(b)(1)), for the taxable year.

(3) ***Special rule for certain noncorporate taxpayers.*** A taxpayer that has a capital gain rate differential for the taxable year under paragraph (b)(2)(i) of this section and is not subject to alternative minimum tax under section 55 for the taxable year may elect not to apply the rate differential adjustments contained in section 904(b)(2)(B) and paragraphs (c) and (d) of this section if the highest rate of tax imposed on such taxpayer's taxable income (excluding net capital gain and any qualified dividend income) for the taxable year under section 1 does not exceed the highest rate of tax in effect under section 1(h) for the taxable year and the amount of the taxpayer's net capital gain from sources outside the United States, plus the amount of the taxpayer's qualified dividend income from sources outside the United States, is less than $20,000. A taxpayer that has a capital gain rate differential for the taxable year under paragraph (b)(2)(i) of this section and is subject to alternative minimum tax under section 55 for the taxable year may make such election if the rate of tax imposed on such taxpayer's alternative minimum taxable income (excluding net capital gain and any qualified dividend income) under section 55 does not exceed 26 percent, the highest rate of tax imposed on such taxpayer's taxable income (excluding net capital gain and any qualified dividend income) for the taxable year under section 1 does not exceed the highest rate of tax in effect under section 1(h) for the taxable year and the amount of the taxpayer's net capital gain from sources outside the United States, plus the amount of the taxpayer's qualified dividend income from sources outside the United States, is less than $20,000. A taxpayer who makes this election shall apply paragraph (a) of this section as if such taxpayer does not have a capital gain rate differential for the taxable year. An eligible taxpayer shall be presumed to have elected not to apply the rate differential adjustments, unless such taxpayer applies the rate differential adjustments contained in section 904(b)(2)(B) and paragraphs (c) and (d) of this section in determining its foreign tax credit limitation for the taxable year.

(c) *Rate differential adjustment of capital gains* —

(1) *Rate differential adjustment of capital gains in foreign source taxable income* —

(i) ***In general.*** Subject to paragraph (c)(1)(ii) of this section, in determining taxable income from sources outside the United States for purposes of section 904 and this section, capital gain net income from sources outside the United States in each long-term rate group in each separate category (separate category long-term rate group), shall be reduced by the rate differential portion of such capital gain net income. For purposes of paragraph (c)(1) of this section, references to capital gain net income are references to capital gain net income remaining after any reduction to such income pursuant to paragraph (a)(1) of this section (*i.e.*, paragraph (a)(1) of this section applies before paragraphs (c) and (d) of this section).

(ii) ***Special rule for taxpayers with a net long-term capital loss from sources within the United States.*** If a taxpayer has a net long-term capital loss from sources within the United States (*i.e.*, the taxpayer's long-term capital losses from sources within the United States exceed the taxpayer's long-term capital gains from sources within the United States) and also has any short-term capital gains from sources within or without the United States, then capital gain net income from sources outside the United States in each separate category long-term rate group shall be reduced by the rate differential portion of the applicable rate differential amount. The applicable rate differential amount is determined as follows:

(A) ***Step 1: Determine the U.S. long-term capital loss adjustment amount.*** The U.S. long-term capital loss adjustment amount is the excess, if any, of the net long-term capital loss from sources within the United States over the amount, if any, by which the taxpayer reduced long-term capital gains from sources without the United States pursuant to paragraph (a)(1) of this section.

(B) ***Step 2: Determine the applicable rate differential amount.*** If a taxpayer has capital gain net income from sources outside the United States in only one separate category long-term rate group, the applicable rate differential amount is the excess of such capital gain net income over the U.S. long-term capital loss adjustment amount. If a taxpayer has capital gain net income from sources outside the United States in more than one separate category long-term rate group, the U.S. long-term capital loss adjustment amount shall be apportioned on a pro rata basis to each separate category long-term rate group with capital gain net income. For purposes of the preceding sentence, pro rata means based on the relative amounts of capital gain net income from sources outside the United States in each separate category long-term rate group. The applicable rate differential amount for each separate category long-term rate group with capital gain net income is the excess of such capital gain net income over the portion of the U.S. long-term capital loss adjustment amount apportioned to the separate category long-term rate group pursuant to this Step 2.

(iii) ***Examples.*** The following examples illustrate the provisions of paragraph (c)(1)(ii) of this section. The taxpayers in the examples are assumed to have taxable income (excluding net capital gain and qualified dividend income) subject to a rate of tax under section 1 greater than the highest rate of tax in effect under section 1(h) for the applicable taxable year. The examples are as follows:

> *Example 1.* (i) M, an individual, has $300 of long-term capital gain from foreign sources in the passive category, $200 of which is subject to tax at a rate of 15 percent under section 1(h) and $100 of which is subject to tax at a rate of 28% under section 1(h). M has $150 of short-term capital gain from sources within the United States. M has a $100 long-term capital loss from sources within the United States.

(ii) M's capital gain net income from sources outside the United States ($300) does not exceed M's capital gain net income from all sources ($350). Therefore, paragraph (a)(1) of this section does not require any reduction of M's capital gain net income in the passive category.

(iii) Because M has a net long-term capital loss from sources within the United States ($100) and also has a short-term capital gain from U.S. sources ($150), M must apply the provisions of paragraph (c)(1)(ii) of this section to determine the amount of the $300 of capital gain net income in the passive category that is subject to a rate differential adjustment. Under *Step 1*, the U.S. long-term capital loss adjustment amount is $100 ($100 − $0). Under *Step 2*, M must apportion this amount to each rate group in the passive category pro rata based on the amount of capital gain net income in each rate group. Thus, $66.67 ($200/$300 of $100) is apportioned to the 15 percent rate group and $33.33 ($100/$300 of $100) is apportioned to the 28 percent rate group. The applicable rate differential amount for the 15 percent rate group is $133.33 ($200 − $66.67). Thus, $133.33 of the $200 of capital gain net income in the 15 percent rate group is subject to a rate differential adjustment pursuant to paragraph (c)(1) of this section. The remaining $66.67 is not subject to a rate differential adjustment. The applicable rate differential amount for the 28 percent rate group is $66.67 ($100 − $33.33). Thus, $66.67 of the $100 of capital gain net income in the 28 percent rate group is subject to a rate differential adjustment pursuant to paragraph (c)(1) of this section. The remaining $33.33 is not subject to a rate differential adjustment.

Example 2. (i) N, an individual, has $300 of long-term capital gain from foreign sources in the passive category, all of which is subject to tax at a rate of 15 percent under section 1(h). N has $50 of short-term capital gain from sources within the United States. N has a $100 long-term capital loss from sources within the United States.
(ii) N's capital gain net income from sources outside the United States ($300) exceeds N's capital gain net income from all sources ($250). Pursuant to paragraph (a)(1) of this section, N must reduce the $300 capital gain in the passive category by $50. N has $250 of capital gain remaining in the passive category.

(iii) Because N has a net long-term capital loss from sources within the United States ($100) and also has a short-term capital gain from U.S. sources ($50), N must apply the provisions of paragraph (c)(1)(ii) of this section to determine the amount of the $250 of capital gain in the passive category that is subject to a rate differential adjustment. Under *Step 1*, the U.S. long-term capital loss adjustment amount is $50 ($100 − $50). Under *Step 2*, the applicable rate differential amount is $200 ($250 − $50). Thus, $200 of the capital gain in the passive category is subject to a rate differential adjustment under paragraph (c)(1) of this section. The remaining $50 is not subject to a rate differential adjustment.

Example 3. (i) O, an individual, has a $100 short-term capital gain from foreign sources in the passive category. O has $300 of long-term capital gain from foreign sources in the passive category, all of which is subject to tax at a rate of 15 percent under section 1(h). O has a $100 long-term capital loss from sources within the United States.
(ii) O's capital gain net income from sources outside the United States ($400) exceeds O's capital gain net income from all sources ($300). Pursuant to paragraph (a)(1) of this section, O must reduce the $400 capital gain net income in the passive category by $100. Because C has capital gain net income in two or more rate groups in the passive category, O must apportion such amount, as a reduction, to each rate group on a pro rata basis pursuant to paragraph (a)(1)(ii)(B) of this section. Thus, $25 ($100/$400 of $100) is apportioned to the short-term capital gain and $75 ($300/$400 of $100) is apportioned to the long-term capital gain in the 15 percent rate group. After application of paragraph (a)(1) of this section, O has $75 of short-term capital gain in the passive category and $225 of long-term capital gain in the 15 percent rate group in the passive category.

(iii) Because O has a net long-term capital loss from sources within the United States ($100) and also has a short-term capital gain from foreign sources ($100), O must apply the provisions of paragraph (c)(1)(ii) of this section to determine the amount of the $225 of long-term capital gain in the 15 percent rate group that is subject to a rate differential adjustment. Under *Step 1*, the U.S. long-term capital loss adjustment amount is $25 ($100 − $75). Under *Step 2*, the applicable rate differential amount is $200 ($225 − $25). Thus, $200 of the long-term capital gain is subject to a rate differential adjustment under paragraph (c)(1) of this section. The remaining $25 of long-term capital gain is not subject to a rate differential adjustment.

(2) ***Rate differential adjustment of capital gains in entire taxable income.*** For purposes of section 904 and this section, entire taxable income shall include gains from the sale or exchange of capital assets only to the extent of capital gain net income reduced by the sum of the rate differential portions of each rate group of net capital gain.

(d) ***Rate differential adjustment of capital losses from sources outside the United States*** —

(1) ***In general.*** In determining taxable income from sources outside the United States for purposes of section 904 and this section, a taxpayer with a net capital loss in a separate category rate group shall reduce such net capital loss by the sum of the rate differential portions of the capital gain net income in each long-term rate group offset by such net capital loss. A net capital loss in a separate category rate group is the amount, if any, by which capital losses in a rate group from sources outside the United States included in a separate category exceed capital gains from sources outside the United States in the same rate group and the same separate category.

(2) ***Determination of which capital gains are offset by net capital losses from sources outside the United States.*** For purposes of paragraph (d)(1) of this section, in order to determine the capital gain net income offset by net capital losses from sources outside the United States, the following rules shall apply in the following order:

(i) Net capital losses from sources outside the United States in each separate category rate group shall be netted against capital gain net income from sources outside the United States from the same rate group in other separate categories.

(ii) Capital losses from sources within the United States shall be netted against capital gains from sources within the United States in the same rate group.

(iii) Net capital losses from sources outside the United States in excess of the amounts netted against capital gains under paragraph (d)(2)(i) of this section shall be netted against the taxpayer's remaining capital gains from sources within and outside the United States in the following order, and without regard to any net capital losses, from any rate group, from sources within the United States—

(A) First against capital gain net income from sources within the United States in the same rate group;

(B) Next, against capital gain net income in other rate groups, in the order in which capital losses offset capital gains for purposes of determining the taxpayer's taxable income and without regard to whether such capital gain net income derives from sources within or outside the United States, as follows:

(*1*) A net capital loss in the short-term rate group is used first to offset any capital gain net income in the 28 percent rate group, then to offset capital gain net income in the 25 percent rate group, then to offset capital gain net income in the 15 percent rate group, and finally to offset capital gain net income in the 5 percent rate group.

(*2*) A net capital loss in the 28 percent rate group is used first to offset capital gain net income in the 25 percent rate group, then to offset capital gain net income in the 15 percent rate group, and finally to offset capital gain net income in the 5 percent rate group.

(*3*) A net capital loss in the 15 percent rate group is used first to offset capital gain net income in the 5 percent rate group, and then to offset capital gain net income in the 28 percent rate group, and finally to offset capital gain net income in the 25 percent rate group.

(iv) Net capital losses from sources outside the United States in any rate group, to the extent netted against capital gains in any other separate category under paragraph (d)(2)(i) of this section or against capital gains in the same or any other rate group under paragraph (d)(2)(iii) of this section, shall be treated as coming pro rata from each separate category that contains a net capital loss from sources outside the United States in that rate group. For example, assume that the taxpayer has $20 of net capital losses in the 15 percent rate group in the passive category and $40 of net capital losses in the 15 percent rate group in the general limitation category, both from sources outside the United States. Further assume that $50 of the total $60 net capital losses from sources outside the United States are netted against capital gain net income in the 28 percent rate group (from other separate categories or from sources within the United States). One-third of the $50 of such capital losses would be treated as coming from the passive category, and two-thirds of such $50 would be treated as coming from the general limitation category.

(v) In determining the capital gain net income offset by a net capital loss from sources outside the United States pursuant to this paragraph (d)(2), a taxpayer shall take into account any reduction to capital gain net income from sources outside the United States pursuant to paragraph (a) of this section and shall disregard any adjustments to such capital gain net income pursuant to paragraph (c)(1) of this section.

(vi) If at any time during a taxable year, tax is imposed under section 1(h) at a rate other than a rate of tax specified in this paragraph (d)(2), the principles of this paragraph (d)(2) shall apply to determine the capital gain net income offset by any net capital loss in a separate category rate group.

(vii) The determination of which capital gains are offset by capital losses from sources outside the United States under this paragraph (d)(2) is made solely in order to determine the appropriate rate-differential-based adjustments to such capital losses under this section and section 904(b), and does not change the source, allocation, or separate category of any such capital gain or loss for purposes of computing taxable income from sources within or outside the United States or for any other purpose.

(e) ***Qualified dividend income*** —

(1) ***In general.*** A taxpayer that has taxable income (excluding net capital gain and qualified dividend income) for the taxable year and that qualifies for a reduced rate of tax under section 1(h) on its qualified dividend income (as defined in section 1(h)(11)) for the taxable year shall adjust the amount of such qualified dividend income in a manner consistent with the rules of paragraphs (c)(1)(i) (first sentence) and (c)(2) of this section irrespective of whether such taxpayer has a net capital gain for the taxable year. For purposes of making adjustments pursuant to this paragraph (e), the special rule in paragraph (c)(1)(ii) of this section for taxpayers with a net long-term capital loss from sources within the United States shall be disregarded.

(2) ***Exception.*** A taxpayer that makes the election provided for in paragraph (b)(3) of this section shall not make adjustments pursuant to paragraph (e)(1) of this section. Additionally, a taxpayer other than a corporation that does not have a capital gain rate differential for the taxable year within the meaning of paragraph (b)(2) of this section may elect not to apply paragraph (e)(1) of this section if such taxpayer would have qualified for the election provided for in paragraph (b)(3) of this section had such taxpayer had a capital gain rate differential for the taxable year. Such a taxpayer shall be presumed to make the election provided for in the preceding sentence unless such taxpayer applies the rate differential adjustments provided for in paragraph (e)(1) of this section to the qualified dividend income in determining its foreign tax credit limitation for the taxable year.

(f) ***Definitions.*** For purposes of section 904(b) and this section, the following definitions apply:

(1) ***Alternative tax rate.*** The term *alternative tax rate* means, with respect to any rate group, the rate applicable to that rate group under section 1(h) (for taxpayers other than corporations) or section 1201(a) (for corporations). For example, the alternative tax rate for unrecaptured section 1250 gain is 25 percent.

(2) ***Net capital gain.*** For purposes of this section, net capital gain shall not include any qualified dividend income (as defined in section 1(h)(11)). See paragraph (e) of this section for rules relating to qualified dividend income.

(3) ***Rate differential portion.*** The term *rate differential portion* with respect to capital gain net income from sources outside the United States in a separate category long-term rate group (or the applicable portion of such amount), net capital gain in a rate group, or capital gain net income in a long-term rate group, as the case may be, means the same proportion of such amount as—

(i) The excess of the highest applicable tax rate (as defined in section 904(b)(3)(E)(ii)) over the alternative tax rate; bears to

(ii) The highest applicable tax rate (as defined in section 904(b)(3)(E)(ii)).

(4) ***Rate group.*** For purposes of this section, the term *rate group* means:

(i) ***Short-term capital gains or losses.*** With respect to a short-term capital gain or loss, the rate group is the short-term rate group.

(ii) ***Long-term capital gains.*** With respect to a long-term capital gain, the rate group is the particular rate of tax to which such gain is subject under section 1(h). Such a rate group is a long-term rate group. For example, the 28 percent rate group of capital gain net income from sources outside the United States consists of the capital gain net income from sources outside the United States that is subject to tax at a rate of 28 percent under section 1(h). Such 28 percent rate group is a long-term rate group. If a taxpayer has long-term capital gains that may be subject to tax at more than one rate under section 1(h) and the taxpayer's net capital gain attributable to such long-term capital gains and any qualified dividend income are taxed at one rate of tax under section 1(h), then all of such long-term capital gains shall be treated as long-term capital gains in that one rate group. If a taxpayer has long-term capital gains that may be subject to tax at more than one rate of tax under section 1(h) and the taxpayer's net capital gain attributable to such long-term capital gains and any qualified dividend income are taxed at more than one rate pursuant to section 1(h), the taxpayer shall determine the rate group for such long-term capital gains from sources within or outside the United States (and, to the extent from sources outside the United States, from each separate category) ratably based on the proportions of net capital gain and any qualified dividend income taxed at each applicable rate. For example, under the section 1(h) rates in effect for tax years beginning in 2004, a long-term capital gain (other than a long-term capital gain described in section 1(h)(4)(A) or (h)(6)) may be subject to tax at 5 percent or 15 percent.

(iii) ***Long-term capital losses.*** With respect to a long-term capital loss, a loss described in section 1(h)(4)(B)(i) (collectibles loss) or (iii) (long-term capital loss carryover) is a loss in the 28 percent rate group. All other long-term capital losses shall be treated as losses in the highest rate group in effect under section 1(h) for the tax year with respect to long-term capital gains other than long-term capital gains described in section 1(h)(4)(A) or (h)(6). For example, under the section 1(h) rates in effect for tax years beginning in 2004, a long-term capital loss not described in section 1(h)(4)(B)(i) or (iii) shall be treated as a loss in the 15 percent rate group.

(5) ***Terms used in sections 1(h), 904(b) or 1222.*** For purposes of this section, any term used in this section and also used in section 1(h), section 904(b) or section 1222 shall have the same meaning given such term by section 1(h), 904(b) or 1222, respectively, except as otherwise provided in this section.

(g) ***Examples.*** The following examples illustrate the provisions of this section. In these examples, the rate differential adjustment is shown as a fraction, the numerator of which is the alternative tax rate percentage and the denominator of which is 35 percent (assumed to be the highest applicable tax rate for individuals under section 1). Finally, all dollar amounts in the examples are abbreviated from amounts in the thousands (for example, $50 represents $50,000). The examples are as follows:

Example 1. (i) AA, an individual, has items from sources outside the United States only in the passive category for the taxable year. AA has $1000 of long-term capital gains from sources outside the United States that are subject to tax at a rate of 15 percent under section 1(h). AA has $700 of long-term capital losses from sources outside the United States, which are not described in section 1(h)(4)(B)(i) or (iii). For the same taxable year, AA has $800 of long-term capital gains from sources within the United States that are taxed at a rate of 28 percent under section 1(h). AA also has $100 of long-term capital losses from sources within the United States, which are not described in section 1(h)(4)(B)(i) or (iii). AA also has $500 of ordinary income from sources within the United States. The highest tax rate in effect under section 1(h) for the taxable year with respect to long-term capital gains other than long-term capital gains described in section 1(h)(4)(A) or (h)(6) is 15 percent. Accordingly, AA's long-term capital losses are in the 15 percent rate group.
(ii) AA's items of ordinary income, capital gain and capital loss for the taxable year are summarized in the following table:

	U.S. source	Foreign source: passive
15% rate group	($100)	$1,000
		(700)
28% rate group	800	
Ordinary income	500	

(iii) AA's capital gain net income from sources outside the United States ($300) does not exceed AA's capital gain net income from all sources ($1,000). Therefore, paragraph (a)(1) of this section does not require any reduction of AA's capital gain net income in the passive category.
(iv) In computing AA's taxable income from sources outside the United States in the numerator of the section 904(a) foreign tax credit limitation fraction for the passive category, AA's $300 of capital gain net income in the 15 rate group in the passive category must be adjusted as required under paragraph (c)(1) of this section. AA adjusts the $300 of capital gain net income using 15 percent as the alternative tax rate, as follows: $300 (15%/35%).

(v) In computing AA's entire taxable income in the denominator of the section 904(a) foreign tax credit limitation fraction, AA combines the $300 of capital gain net income from sources outside the United States and the $100 net capital loss from sources within the United States in the same

rate group (15 percent). AA must adjust the resulting $200 ($300 − $100) of net capital gain in the 15 percent rate group as required under paragraph (c)(2) of this section, using 15 percent as the alternative tax rate, as follows: $200 (15%/35%). AA must also adjust the $800 of net capital gain in the 28 percent rate group, using 28 percent as the alternative tax rate, as follows: $800 (28%/35%). AA must also include ordinary income from sources outside the United States in the numerator, and ordinary income from all sources in the denominator, of the foreign tax credit limitation fraction.

(vi) AA's passive category foreign tax credit limitation fraction is $128.58/$1225.72, computed as follows:

$$\frac{\$300\ (15\%/35\%)}{\$500 + \$200\ (15\%/35\%) + \$800\ (28\%/35\%)}$$

Example 2. (i) BB, an individual, has the following items of ordinary income, capital gain, and capital loss for the taxable year:

	U.S. source	Foreign source	
		General	Passive
15% rate group	$300	($500)	$100
25% rate group	200		
28% rate group	500	(300)	
Ordinary income	1,000	500	500

(ii) BB's capital gain net income from sources outside the United States in the aggregate (zero, since losses exceed gains) does not exceed BB's capital gain net income from all sources ($300). Therefore, paragraph (a)(1) of this section does not require any reduction of BB's capital gain net income in the passive category.

(iii) In computing BB's taxable income from sources outside the United States in the numerators of the section 904(a) foreign tax credit limitation fractions for the passive and general limitation categories, BB must adjust capital gain net income from sources outside the United States in each separate category long-tem rate group and net capital losses from sources outside the United States in each separate category rate group as provided in paragraphs (c)(1) and (d) of this section.

(A) The $100 of capital gain net income in the 15 percent rate group in the passive category is adjusted under paragraph (c)(1) of this section as follows: $100 (15%/35%).

(B) BB must adjust the net capital losses in the 15 percent and 28 percent rate groups in the general limitation category in accordance with the ordering rules contained in paragraph (d)(2) of this section. Under paragraph (d)(2)(i) of this section, BB's net capital loss in the 15 percent rate group is netted against capital gain net income from sources outside the United States in other separate categories in the same rate group. Thus, $100 of the $500 net capital loss in the 15 percent rate group in the general limitation category offsets $100 of capital gain net income in the 15 percent rate group in the passive category. Accordingly, $100 of the $500 net capital loss is adjusted under paragraph (d)(1) of this section as follows: $100 (15%/35%).

(C) Next, under paragraph (d)(2)(iii)(A) of this section, BB's net capital losses from sources outside the United States in any separate category rate group are netted against capital gain net income in the same rate group from sources within the United States. Thus, $300 of the $500 net capital loss in the 15 percent rate group in the general limitation category offsets $300 of capital gain net income in the 15 percent rate group from sources within the United States. Accordingly, $300 of the $500 net capital loss is adjusted under paragraph (d)(1) of this section as follows: $300 (15%/35%). Similarly, the $300 of net capital loss in the 28 percent rate group in the general limitation category offsets $300 of capital gain net income in the 28 percent rate group from sources within the United States. The $300 net capital loss is adjusted under paragraph (d)(1) of this section as follows: $300 (28%/35%).

(D) Finally, under paragraph (d)(2)(iii)(B) of this section, the remaining net capital losses in a separate category rate group are netted against capital gain net income from other rate groups from sources within and outside the United States. Thus, the remaining $100 of the $500 net capital loss in the 15 percent rate group in the general limitation category offsets $100 of the remaining capital gain net income in the 28 percent rate group from sources within the United States. Accordingly, the remaining $100 of net capital loss is adjusted under paragraph (d)(1) of this section as follows: $100 (28%/35%).

(iv) In computing BB's entire taxable income in the denominator of the section 904(a) foreign tax credit limitation fractions, BB must adjust net capital gain by netting all of BB's capital gains and losses, from sources within and outside the United States, and adjusting any remaining net capital gains, based on rate group, under paragraph (c)(2) of this section. BB must also include foreign source ordinary income in the numerators, and ordinary income from all sources in the denominator, of the foreign tax credit limitation fractions. The denominator of BB's foreign tax credit limitation fractions reflects $2,000 of ordinary income from all sources, $100 of net capital gain taxed at the 28% rate and adjusted as follows: $100 (28%/35%), and $200 of net capital gain taxed at the 25% rate and adjusted as follows: $200 (25%/35%).

(v) BB's foreign tax credit limitation fraction for the general limitation category is $8.56/$2222.86, computed as follows:

$$\frac{\$500-\$100\ (15\%/35\%)-\$300\ (15\%/35\%)-\$300\ (28\%/35\%)-\$100\ (28\%/35\%)}{\$1{,}000+\$500+\$500+\$100\ (28\%/35\%)+\$200\ (25\%/35\%)}$$

(vi) BB's foreign tax credit limitation fraction for the passive category is $542.86/$2222.86, computed as

follows:

$$\frac{\$500 + \$100\ (15\%/35\%)}{\$1{,}000 + \$500 + \$500 + \$100\ (28\%/35\%) + \$200\ (25\%/35\%)}$$

Example 3. (i) CC, an individual, has the following items of ordinary income, capital gain, and capital loss for the taxable year:

	U.S. source	Foreign source	
		General	Passive
15% rate group	$300	($720)	($80)
25% rate group	200		
28% rate group	500	(150)	50
Ordinary income	1,000	1,000	500

(ii) CC's capital gain net income from sources outside the United States (zero, since losses exceed gains) does not exceed CC's capital gain net income from all sources ($100). Therefore, paragraph (a)(1) of this section does not require any adjustment.
(iii) In computing CC's taxable income from sources outside the United States in the numerators of the section 904(a) foreign tax credit limitation fractions for the passive and general limitation categories, CC must adjust capital gain net income from sources outside the United States in each separate category long-tem rate group and net capital losses from sources outside the United States in each separate category rate group as provided in paragraphs (c)(1) and (d) of this section.

(A) CC must adjust the $50 of capital gain net income in the 28 percent rate group in the passive category pursuant to paragraph (c)(1) of this section as follows: $50 (28%/35%).

(B) Under paragraph (d)(2)(i) of this section, $50 of CC's $150 net capital loss in the 28 percent rate group in the general limitation category offsets $50 of capital gain net income in the 28 percent rate group in the passive category. Thus, $50 of the $150 net capital loss is adjusted as follows: $50 (28%/35%). Next, under paragraph (d)(2)(iii)(A) of this section, the remaining $100 of net capital loss in the 28 percent rate group in the general limitation category offsets $100 of capital gain net income in the 28 percent rate group from sources within the United States. Thus, the remaining $100 of net capital loss is adjusted as follows: $100 (28%/35%).

(C) Under paragraphs (d)(2)(iii)(A) and (d)(2)(iv) of this section, the net capital losses in the 15 percent rate group in the passive and general limitation categories offset on a pro rata basis the $300 of capital gain net income in the 15 percent rate group from sources within the United States. The proportionate amount

of the $720 net capital loss ($720/$800 of $300, or $270) is adjusted as follows: $270 (15%/35%). The proportionate amount of the $80 net capital loss ($80/$800 of $300, or $30) is adjusted as follows $30 (15%/35%).

(D) Of the remaining $500 of net capital loss in the 15 percent rate group in the general limitation and passive categories, $400 offsets the remaining $400 of capital gain net income in the 28 percent rate group from sources within the United States under paragraph (d)(2)(iii)(B)(*3*) of this section. The proportionate amount of the $720 net capital loss ($720/$800 of $400, or $360) is adjusted as follows: $360 (28%/35%). The proportionate amount of the $80 net capital loss ($80/$800 of $400, or $40) is adjusted as follows: $40 (28%/35%).

(E) Under paragraph (d)(2)(iii)(B)(*3*) of this section, the remaining $100 of net capital loss in the 15 percent rate group in the general limitation and passive limitation categories offsets $100 of capital gain net income in the 25 percent rate group from sources within the United States. The proportionate amount of the $720 net capital loss ($720/$800 of $100, or $90) is adjusted as follows: $90 (25%/35%). The proportionate amount of the $80 net capital loss ($80/$800 of $100 of $10) is adjusted as follows: $10 (25%/35%).

(iv) In computing CC's entire taxable income in the denominator of the section 904(a) foreign tax credit limitation fractions, CC must adjust capital gain net income by netting all of CC's capital gains and losses, from sources within and outside the United States, and adjusting any remaining net capital gains, based on rate group, under paragraph (c)(2) of this section. The denominator of CC's foreign tax credit limitation fractions reflects $2,500 of ordinary income from all sources and $100 of net capital gain taxed at the 25% rate and adjusted as follows: $100 (25%/35%).

(v) CC's foreign tax credit limitation fraction for the general limitation category is $412/$2571.42, computed as follows:

$$\frac{\$1{,}000 - \$50\ (28\%/35\%) - \$100\ (28\%/35\%) - \$270\ (15\%/35\%) - \$360\ (28\%/35\%) - \$90\ (25\%/35\%)}{\$1{,}000 + \$1{,}000 + \$500 + \$100\ (25\%/35\%)}$$

(vi) CC's foreign tax credit limitation fraction for the passive category is $488.00/$2571.42, computed as follows:

$$\frac{\$500 + \$50\ (28\%/35\%) - \$30\ (15\%/35\%) - \$40\ (28\%/35\%) - \$10\ (25\%/35\%)}{\$1{,}000 + \$1{,}000 + \$500 + \$100\ (25\%/35\%)}$$

Example 4. (i) DD, an individual, has the following items of ordinary income, capital gain and capital loss

for the taxable year:

	U.S. source	Foreign source	
		General	Passive
15% rate group	($80)	($100)	$300
Short-term		500	100
Ordinary income	500		

(ii) DD's capital gain net income from outside the United States ($800) exceeds DD's capital gain net income from all sources ($720). Pursuant to paragraph (a)(1)(ii)(A) of this section, DD must apportion the $80 of excess of capital gain net income from sources outside the United States between the general limitation and passive categories based on the amount of capital gain net income in each separate category. Thus, one-half ($400/$800 of $100, or $40) is apportioned to the general limitation category and one-half ($400/$800 of $80, or $40) is apportioned to the passive category. The $40 apportioned to the general limitation category reduces DD's $500 short-term capital gain in the general limitation category to $460. Pursuant to paragraph (a)(1)(ii)(B) of this section, the $40 apportioned to the passive category must be apportioned further between the capital gain net income in the short-term rate group and the 15 percent rate group based on the relative amounts of capital gain net income in each rate group. Thus, one-fourth ($100/$400 of $40 or $10) is apportioned to the short-term rate group and three-fourths ($300/$400 of $40 or $30) is apportioned to the 15 percent rate group. DD's passive category includes $90 of short-term capital gain and $270 of capital gain net income in the 15% rate group.
(iii) Because DD has a net long-term capital loss from sources within the United States ($80) and also has short-term capital gains, DD must apply the provisions of paragraph (c)(1)(ii) of this section to determine the amount of DD's $270 of capital gain net income in the 15% rate group that is subject to a rate differential adjustment under paragraph (c)(1) of this section. Under *Step 1*, the U.S. long-term capital loss adjustment amount is $50 ($80-$30). Under *Step 2*, the applicable rate differential amount is the excess of the remaining capital gain net income over the U.S. long-term adjustment amount. Thus, the applicable rate differential amount is $220 ($270 − $50). In computing DD's taxable income from sources outside the United States in the numerator of the section 904(a) foreign tax credit limitation fraction for the passive category, DD must adjust this amount as follows: $220 (15%/35%). DD does not adjust the remaining $50 of capital gain net income in the 15% rate group.

(iv) The amount of capital gain net income in the 15% rate group in the passive category, taking into account the adjustment pursuant to paragraph (a)(1) of this section and disregarding the adjustment pursuant to paragraph (c)(1) of this section, is $270. Under paragraphs (d)(2)(i) and (d)(2)(v) of this section, DD's $100 net capital loss in the 15% rate group in the general limitation category offsets capital gain net income in the 15% rate group in the passive category. Accordingly, the $100 of net capital loss is adjusted as follows: $100 (15%/35%).

(v) In computing DD's entire taxable income in the denominator of the section 904(a) foreign tax credit limitation fractions, DD must adjust capital gain net income by netting all of DD's capital gains and losses from sources within and outside the United States, and adjusting the remaining net capital gain in each rate group pursuant to paragraph (c)(2) of this section. The denominator of DD's foreign tax credit limitation fraction reflects $500 of ordinary income from all sources, $600 of short-term capital gain and $120 of net capital gain in the 15 percent rate group adjusted as follows: $120 (15%/35%).

(vi) DD's foreign tax credit limitation fraction for the general limitation category is $417.14/$1151.43, computed as follows:

$$\frac{\$460 - \$100\ (15\%/35\%)}{\$500 + \$600 + \$120\ (15\%/35\%)}$$

(vii) DD's foreign tax credit limitation fraction for the passive category is $234.29/$1151.43, computed as follows:

$$\frac{\$90 + \$220\ (15\%/35\%) + \$50}{\$500 + \$600 + \$120\ (15\%/35\%)}$$

Example 5. (i) EE, an individual, has the following items of ordinary income, capital gain and capital loss for the taxable year:

	U.S. source	Foreign source
		Passive
15% rate group	($150)	$300
28% rate group		200
Short-term	30	100
Ordinary income	500	

(ii) EE's capital gain net income from sources outside the United States ($600) exceeds EE's capital gain net income from all sources ($480). Pursuant to paragraph (a)(1)(ii) of this section, the $120 of excess capital gain net income from sources outside the United States is allocated as a reduction to the passive category and must be apportioned pro rata to each rate group within the passive category with capital gain net income. Thus, $20 ($100/$600 of $120) is apportioned to the short-term rate group, $60 ($300/$600 of $120) is apportioned to the 15 percent rate group and $40 ($200/$600 of $120) is apportioned to the 28 percent rate group. After application of paragraph (a)(1) of this section, EE has $80 of capital gain net income in the short-term rate group, $240 of capital gain net income in the 15 percent rate group and $160 of capital gain net income in the 28 percent rate group.

(iii) Because EE has a net long-term capital loss from sources within the United States ($150) and also has short-term capital gains, EE must apply the provisions of paragraph (c)(1)(ii) of this section to determine the amount of EE's remaining $400 ($240 + $160) of capital gain net income in long-term rate groups in the passive category that is subject to a rate differential adjustment to a rate differential adjustment. Under *Step 1*, the U.S. long-term capital loss adjustment amount is $50 ($150-$100). Under *Step 2*, EE must apportion this amount pro rata to each long-term rate group within the passive category with capital gain net income. Thus, $30 ($240/$400 of $50) is apportioned to the 15 percent rate group and $20 ($160/$400 of $50) is apportioned to the 28 percent rate group. The applicable rate differential amount for the 15 percent rate group is $210 ($240 − $30). The applicable rate differential amount for the 28 percent rate group is $140 ($160 − $20).

(iv) Pursuant to paragraph (c)(1)(ii) of this section, EE must adjust $210 of the $240 capital gain in the 15 percent rate group as follows: $210 (15%/35%). EE does not adjust the remaining $30. Pursuant to paragraph (c)(1)(ii) of this section, EE must adjust $140 of the $160 capital gain in the 28 percent rate group as follows: $140 (28%/35%). EE does not adjust the remaining $20.

(v) In computing EE's entire taxable income in the denominator of the section 904(a) foreign tax credit limitation fractions, EE must adjust capital gain net income by netting all of EE's capital gains and losses from sources within and outside the United States, and adjusting the remaining net capital gain in each rate group pursuant to paragraph (c)(2) of this section. The denominator of EE's foreign tax credit limitation fraction reflects $500 of ordinary income from all sources, $130 of short-term capital gain, $150 of net capital gain in the 15 percent rate group adjusted as follows: $150 (15%/35%), and $200 of net capital gain in the 28 percent rate group adjusted as follows: $200 (28%/35%).

(vi) EE's foreign tax credit limitation fraction for the passive category is $332/$854.29, computed as follows:

$$\frac{\$80 + \$210\ (15\%/35\%) + \$30 + \$140\ (28\%/35\%) + \$20}{\$500 + \$130 + \$150\ (15\%/35\%) + \$200\ (28\%/35\%)}$$

(h) ***Coordination with section 904(f)*** —

(1) ***In general.*** Section 904(b) and this section shall apply before the provisions of section 904(f) as follows:

(i) The amount of a taxpayer's separate limitation income or loss in each separate category, the amount of overall foreign loss, and the amount of any additions to or recapture of separate limitation loss or overall foreign loss accounts pursuant to section 904(f) shall be determined after applying paragraphs (a), (c)(1), (d) and (e) of this section to adjust capital gains and losses and qualified dividend income from sources outside the United States in each separate category.

(ii) To the extent a capital loss from sources within the United States reduces a taxpayer's foreign source taxable income under paragraph (a)(1) of this section, such capital loss shall be disregarded in determining the amount of a taxpayer's taxable income from sources within the United States for purposes of computing the amount of any additions to the taxpayer's overall foreign loss accounts.

(iii) In determining the amount of a taxpayer's loss from sources in the United States under section 904(f)(5)(D) (section 904(f)(5)(D) amount), the taxpayer shall make appropriate adjustments to capital gains and losses from sources within the United States to reflect adjustments pursuant to section 904(b)(2) and this section. Therefore, for purposes of section 904, a taxpayer's section 904(f)(5)(D) amount shall be equal to the excess of the taxpayer's foreign source taxable income in all separate categories in the aggregate for the taxable year (taking into account any adjustments pursuant to paragraphs (a)(1), (c)(1), (d) and (e) of this section) over the taxpayer's entire taxable income for the taxable year (taking into account any adjustments pursuant to paragraphs (c)(2) and (e) of this section).

(2) ***Examples.*** The following examples illustrate the application of paragraph (h) of this section:

Example 1. (i) W, an individual, has the following items of ordinary income, capital gain, and capital loss for the taxable year:

	U.S. source	Foreign source	
		General	Passive
15% rate group	$500	$100	($400)
Ordinary income	900	100	

(ii) In computing W's taxable income from sources outside the United States for purposes of section 904 and this section, W must adjust the capital gain net income and net capital loss in each separate category as provided in paragraphs (c)(1) and (d) of this section. Thus, W must adjust the $100 of capital gain net income in the general limitation category and the $400 of net capital loss in the passive category as follows: $100 (15%/35%) and $400 (15%/35%).

(iii) After the adjustment to W's net capital loss in the passive category, W has a $171.43 separate limitation loss in the passive category. After the adjustment to W's capital gain in the general limitation category, W has $142.86 of foreign source taxable income in the general limitation category. Thus, $142.86 of the separate limitation loss reduces foreign source taxable income in the general limitation category. See section 904(f)(5)(B). W adds $142.86 to the separate limitation loss account for the passive category. The remaining $28.57 of the separate limitation loss reduces income from sources within the United States. See section 904(f)(5)(A). Thus, W adds $28.57 to the overall foreign loss account for the passive category.

Example 2. (i) X, a corporation, has the following items of ordinary income, ordinary loss, capital gain and capital loss for the taxable year: foreign source:

	U.S. source	Foreign source: general
Capital gain	($500)	$700
Ordinary income	1100	(1000)

(ii) X's capital gain net income from sources outside the United States ($700) exceeds X's capital gain net income from all sources ($200). Pursuant to paragraph (a)(1) of this section, X must reduce the $700 capital gain in the general limitation category by $500. After the adjustment, X has $200 of capital gain net income remaining in the general limitation category. Thus, X has an overall foreign loss attributable to the general limitation category of $800.
(iii) For purposes of computing the amount of the addition to X's overall foreign loss account for the general limitation category, the $500 capital loss from sources within the United States is disregarded and X's taxable income from sources within the United States is $1100. Accordingly, X must increase its overall foreign loss account for the general limitation category by $800.

Example 3. (i) Y, a corporation, has the following items of ordinary income, ordinary loss, capital gain and capital loss for the taxable year:

	U.S. source	Foreign source: passive
Capital gain	($100)	$200
Ordinary income	(200)	500

(ii) Y's capital gain net income from sources outside the United States ($200) exceeds Y's capital gain net income from all sources ($100). Pursuant to paragraph (a)(1) of this section, Y must reduce the $200 capital gain in the passive category by $100. Y has $100 of capital gain net income remaining in the passive category.
(iii) Y is not required to make adjustments pursuant to paragraph (c), (d) or (e) of this section. See paragraphs (b) and (e) of this section. Y's foreign source taxable income in the passive category after the adjustment pursuant to paragraph (a)(1) of this section is $600. Y's entire taxable income for the taxable year is $400.

(iv) Y's section 904(f)(5)(D) amount is the excess of Y's foreign source taxable income in all separate categories in the aggregate for the taxable year after taking into account the adjustment pursuant to paragraph (a)(1) of this section ($600) over Y's entire taxable income for the taxable year ($400). Therefore, Y's section 904(f)(5)(D) amount is $200 and Y's foreign source taxable income in the passive category is reduced to $400. See section 904(f)(5)(D).

Example 4. (i) Z, an individual, has the following items of ordinary income, ordinary loss and capital gain for the taxable year:

	U.S. source	Foreign source:	
		General	Passive
15% rate group	$100		
Ordinary income	(200)	$300	$300

(ii) Z's foreign source taxable income in all of Z's separate categories in the aggregate for the taxable year is $600. (There are no adjustments to Z's foreign source taxable income pursuant to paragraph (a)(1), (c)(1), (d) or (e) of this section.)
(iii) In computing Z's entire taxable income in the denominator of the section 904(d) foreign tax credit limitation fractions, Z must adjust the $100 of net capital gain in the 15 percent rate group pursuant to paragraph (c)(2) of this section as follows: $100 (15%/35%). Thus, Z's entire taxable income for the taxable year, taking into account the adjustment pursuant to paragraph (c)(2) of this section, is $442.86.

(iv) Z's section 904(f)(5)(D) amount is the excess of Z's foreign source taxable income in all separate categories in the aggregate for the taxable year ($600) over Z's entire taxable income for the taxable year after the adjustment pursuant to paragraph (c)(2) of this section ($442.86). Therefore, Z's section 904(f)(5)(D) amount is $157.32. This amount must be allocated pro rata to the passive and general limitation categories in accordance with section 904(f)(5)(D).

Example 5. (i) O, an individual, has the following items of ordinary income, ordinary loss and capital gain for the taxable year:

	U.S. source	Foreign source	
		General	Passive
15% rate group	$1100	($500)	

	U.S. source	Foreign source	
		General	Passive
Ordinary income	(1000)	1000	$500

(ii) In determining O's taxable income from sources outside the United States, O must reduce the $500 capital loss in the general limitation category to $214.29 ($500 × 15%/35%) pursuant to paragraph (d) of this section. Taking this adjustment into account, O's foreign source taxable income in all of O's separate categories in the aggregate is $1285.71 ($1000 − $214.29 + $500).
(iii) In computing O's entire taxable income in the denominator of the section 904(a) foreign tax credit limitation fraction, O must reduce the $600 of net capital gain for the year to $257.14 ($600 × 15%/35%) pursuant to paragraph (c)(2) of this section. Taking this adjustment into account, O's entire taxable income for the year is $757.14 ($500 + $257.14).

(iv) Therefore, O's section 904(f)(5)(D) amount is $528.57 ($1285.71 − $757.14). This amount must be allocated pro rata to O's $500 of income in the passive category and O's $785.71 of adjusted income in the general limitation category in accordance with section 904(f)(5)(D).

(i) ***Effective date.*** This section shall apply to taxable years beginning after July 20, 2004. Taxpayers may choose to apply this section and § 1.904(b)-2 to taxable years ending after July 20, 2004.

[T.D. 9141, 69 FR 43308, July 20, 2004; 69 FR 61761, Oct. 21, 2004]

§ 1.904(b)-2 Special rules for application of section 904(b) to alternative minimum tax foreign tax credit.

(a) ***Application of section 904(b)(2)(B) adjustments.*** Section 904(b)(2)(B) shall apply for purposes of determining the alternative minimum tax foreign tax credit under section 59 (regardless of whether or not the taxpayer has made an election under section 59(a)(4)).

(b) ***Use of alternative minimum tax rates*** —

(1) ***Taxpayers other than corporations.*** In the case of a taxpayer other than a corporation, for purposes of determining the alternative minimum tax foreign tax credit under section 59—

(i) Section 904(b)(3)(D)(i) shall be applied by using the language “section 55(b)(3)” instead of “subsection (h) of section 1”;

(ii) Section 904(b)(3)(E)(ii)(I) shall be applied by using the language “section 55(b)(1)(A)(i)” instead of “subsection (a), (b), (c), (d), or (e) of section 1 (whichever applies)”; and

(iii) Section 904(b)(3)(E)(iii)(I) shall be applied by using the language “the alternative rate of tax determined under section 55(b)(3)” instead of “the alternative rate of tax determined under section 1(h)”.

(2) ***Corporate taxpayers.*** In the case of a corporation, for purposes of determining the alternative minimum tax foreign tax credit under section 59, section 904(b)(3)(E)(ii)(II) shall be applied by using the language "section 55(b)(1)(B)" instead of "section 11(b)".

(c) ***Effective date.*** This section shall apply to taxable years beginning after July 20, 2004. See § 1.904(b)-1(i) for a rule permitting taxpayers to choose to apply § 1.904(b)-1 and this § 1.904(b)-2 to taxable years ending after July 20, 2004.

[T.D. 9141, 69 FR 43316, July 20, 2004; 69 FR 61761, Oct. 21, 2004]

§ 1.904(b)-3 Disregard of certain dividends and deductions under section 904(b)(4).

(a) ***Disregard of certain dividends and deductions*** —

(1) ***In general.*** For purposes of section 904(a), in the case of a domestic corporation which is a United States shareholder with respect to a specified 10-percent owned foreign corporation (as defined in section 245A(b)), the domestic corporation's foreign source taxable income in a separate category and entire taxable income is determined without regard to the following items:

(i) Any dividend for which a deduction is allowed under section 245A;

(ii) Deductions properly allocable or apportioned to gross income in the section 245A subgroup as determined under paragraphs (b) and (c)(1) of this section; and

(iii) Deductions properly allocable or apportioned to stock of specified 10-percent owned foreign corporations in the section 245A subgroup as determined under paragraphs (b) and (c) of this section.

(2) ***Deductions properly allocable or apportioned to the residual grouping.*** Deductions that are properly allocable or apportioned to gross income or stock in the section 245A subgroup of the residual grouping (consisting of U.S. source income) are disregarded solely for purposes of determining entire taxable income under section 904(a).

(b) ***Determining properly allocable or apportioned deductions.*** The amount of deductions properly allocable or apportioned to gross income or stock described in paragraphs (a)(1)(ii) and (iii) of this section is determined by subdividing the United States shareholder's gross income and assets in each separate category described in § 1.904-5(a)(4)(v) into a section 245A subgroup and a non-section 245A subgroup. Gross income and assets in the residual grouping for U.S. source income are also subdivided into a section 245A subgroup and a non-section 245A subgroup. Each section 245A subgroup is treated as a statutory grouping under § 1.861-8(a)(4). Deductions properly allocable or apportioned to dividends or stock described in paragraphs (a)(1)(ii) and (iii) of this section only include those deductions that are allocated and apportioned under §§ 1.861-8 through 1.861-14T and 1.861-17 to the section 245A subgroups. The deduction allowed under section 245A(a) for dividends is allocated and apportioned solely among the section 245A subgroups on the basis of the relative amounts of gross income from such dividends in each section 245A subgroup.

(c) ***Income and assets in the 245A subgroups*** —

(1) ***In general.*** For purposes of applying the section 861 regulations (as defined in § 1.861-8(a)) to the deductions of a United States shareholder, the only gross income included in a section 245A subgroup is dividend income for which a deduction is allowed under section 245A. The only asset

included in a section 245A subgroup is the portion of the value of stock of each specified 10-percent owned foreign corporation that is assigned to the section 245A subgroup determined under paragraph (c)(2) of this section.

(2) ***Assigning stock to a subgroup.*** The value of stock of a specified 10-percent owned foreign corporation is characterized as an asset in a separate category described in § 1.904-5(a)(4)(v) or the residual grouping for U.S. source income under the rules of § 1.861-12(c). If the specified 10-percent owned foreign corporation is not a controlled foreign corporation, all of the value of its stock (other than the portion of stock assigned to the statutory groupings for gross section 245(a)(5) income under §§ 1.861-12(c)(4) and 1.861-13) in each separate category and in the residual grouping for U.S. source income is assigned to the section 245A subgroup in such separate category or residual grouping. If the specified 10-percent owned foreign corporation is a controlled foreign corporation, a portion of the value of stock in each separate category and in the residual grouping for U.S. source income is subdivided between a section 245A and non-section 245A subgroup under § 1.861-13(a)(5).

(d) ***Coordination with OFL and ODL rules*** —

(1) ***In general.*** Section 904(b)(4) and this section apply before the operation of the overall foreign loss rules in section 904(f) and the overall domestic loss rules in section 904(g). *See* § 1.904(g)-3(c).

(2) ***Net operating losses.*** If the taxpayer has a net operating loss in the current taxable year, then solely for purposes of determining the source and separate category of the net operating loss, the overall foreign loss rules in section 904(f) and the overall domestic loss rules in section 904(g) are applied without taking into account the adjustments required under section 904(b) and this section.

(e) ***Example.*** The following example illustrates the application of this section.

(1) ***Facts*** —

(i) ***Income and assets of USP.*** USP is a domestic corporation. USP owns a factory in the United States with a tax book value of $27,000x. USP also directly owns all of the stock of each of the following three controlled foreign corporations: CFC1, CFC2, and CFC3. USP's tax book value in each of CFC1, CFC2, and CFC3 is $10,000x. USP incurs $1,500x of interest expense and earns $1,600x of U.S. source gross income. Under section 951A and the section 951A regulations (as defined in § 1.951A-1(a)(1)), USP's GILTI inclusion amount is $2,200x. USP's deduction under section 250 is $1,100x ("section 250 deduction"), all of which is by reason of section 250(a)(1)(B)(i). No portion of USP's section 250 deduction is reduced by reason of section 250(a)(2)(B). None of the CFCs makes any distributions.

(ii) ***Characterization of CFC stock.*** After application of § 1.861-13(a), USP determined that $8,000x of the stock of each of CFC1, CFC2, and CFC3 is assigned to the section 951A category ("section 951A category stock") in the non-section 245A subgroup and the remaining $2,000x of the stock of each of CFC1, CFC2, and CFC3 is assigned to the general category ("general category stock") in the section 245A subgroup. Additionally, under § 1.861-8(d)(2)(ii)(C)(2), $4,000x of the stock of each of CFC1, CFC2, and CFC3 that is section 951A category stock is an exempt asset. Accordingly, with respect to the stock of its controlled foreign corporations in the aggregate, USP has $12,000x of section 951A category stock in a non-section 245A subgroup; $6,000x of general category stock in a section 245A subgroup; and $12,000x of stock that is an exempt asset.

(iii) ***Apportioning of expenses.*** Taking into account USP's factory and its stock in CFC1, CFC2, and CFC3, the tax book value of USP's assets for purposes of apportioning expenses is $45,000x (excluding the $12,000x of exempt assets). Under § 1.861-9T(g), USP's $1,500 of interest expense is apportioned as follows: $400x ($1,500x × $12,000x/$45,000x) to section 951A category income, $200x ($1,500x × $6,000x/$45,000x) to general category income, and the remaining $900x ($1,500 × $27,000x/$45,000x) to the residual U.S. source grouping. Under § 1.861-8(e)(14), all of USP's section 250 deduction is allocated and apportioned to section 951A category income.

(2) ***Analysis*** —

(i) ***USP's pre-credit U.S. tax.*** USP's worldwide taxable income is $1,200x, which equals its GILTI inclusion amount of $2,200x plus its U.S. source gross income of $1,600x, less its deduction under section 250 of $1,100 and its interest expense of $1,500x. For purposes of applying section 904(a), before taking into account any foreign tax credit under section 901, USP's Federal income tax liability is 21% of $1,200x, or $252x.

(ii) ***Application of section 904(b)(4).*** Under section 904(d)(1), USP applies section 904(a) separately to each separate category of income.

(A) ***General category income.*** Before application of section 904(b)(4) and the rules in this section, USP's foreign source taxable income in the general category is a loss of $200x, which equals $0 (USP's foreign source general category income) less $200x (interest expense apportioned to general category income), and USP's worldwide taxable income is $1,200. Under paragraph (d) of this section, the rules in section 904(f) and (g) apply after section 904(b)(4) and the rules in this section. Under paragraphs (b) and (c)(1) of this section, USP has no deductions properly allocable or apportioned to gross income in the section 245A subgroup because USP has no dividend income in the general category for which a deduction is allowed under section 245A. Under paragraphs (b) and (c) of this section, USP has $200x of deductions for interest expense that are properly allocable or apportioned to stock of specified 10-percent owned foreign corporations in the section 245A subgroup because USP's only general category assets are the general category stock of CFC1, CFC2, and CFC3, all of which are in the section 245A subgroup. Therefore, under paragraph (a) of this section, USP's foreign source taxable income in the general category and its worldwide taxable income are determined without regard to the $200x of deductions for interest expense. Accordingly, USP's foreign source taxable income in the general category is $0 and its worldwide taxable income is $1,400x, and therefore, there is no separate limitation loss for purposes of section 904(f). Under section 904(a) and (d)(1) USP's foreign tax credit limitation for the general category is $0.

(B) ***Section 951A category income.*** Before application of section 904(b)(4) and the rules in this section, USP's foreign source taxable income in the section 951A category is $700x, which equals $2,200x (USP's GILTI inclusion amount) less $1,100x (USP's section 250 deduction) less $400x (interest apportioned to section 951A category income). Under paragraphs (b) and (c)(1) of this section, USP has no deductions properly allocable and apportioned to gross income in a section 245A subgroup of the section 951A category. Under paragraphs (b) and (c) of this section, USP has no deductions properly allocable and apportioned to stock of specified 10-percent owned foreign corporations in a section 245A subgroup of section 951A category stock because no portion of section 951A category stock is assigned to a section 245A subgroup. *See* § 1.861-13(a)(5)(v). Therefore, under paragraph

(a) of this section no adjustment is made to USP's foreign source taxable income in the section 951A category. However, the adjustments to USP's worldwide taxable income described in paragraph (e)(2)(ii)(A) of this section apply for purposes of calculating USP's foreign tax credit limitation for the section 951A category. Accordingly, USP's foreign source taxable income in the section 951A category is $700x and its worldwide taxable income is $1,400x. Under section 904(a) and (d)(1), USP's foreign tax credit limitation for the section 951A category is $126x ($252x × $700x/$1,400x).

(f) ***Applicability dates.***

(1) Except as provided in paragraph (f)(2) of this section, this section applies to taxable years beginning after December 31, 2017.

(2) Paragraph (d)(2) of this section applies to taxable years ending on or after December 16, 2019.

[T.D. 9882, 84 FR 69099, Dec. 17, 2019, as amended by T.D. 9922, 85 FR 72060, Nov. 12, 2020]

§ 1.904(f)-0 Outline of regulation provisions.

This section lists the headings for §§ 1.904(f)-1 through 1.904(f)-8 and 1.904(f)-12.

§ 1.904(f)-0 Outline of regulation provisions.

This section lists the headings for §§ 1.904(f)-1 through 1.904(f)-8 and 1.904(f)-12.

§ 1.904(f)-1 Overall foreign loss and the overall foreign loss account.

(a)(1) Overview of regulations.

(2) Application to post-1986 taxable years.

(b) Overall foreign loss accounts.

(c) Determination of a taxpayer's overall foreign loss.

(1) Overall foreign loss defined.

(2) Separate limitation defined.

(3) Method of allocation and apportionment of deductions.

(d) Additions to the overall foreign loss account.

(1) General rule.

(2) Overall foreign losses of another taxpayer.

(3) Additions to overall foreign loss account created by loss carryovers.

(4) Adjustments for capital gains and losses.

(e) Reductions of overall foreign loss accounts.

(1) Pre-recapture reduction for amounts allocated to other taxpayers.

(2) Reduction for amounts recaptured.

(f) Illustrations.

(g) Effective/applicability date.

§ 1.904(f)-2 Recapture of overall foreign losses.

(a) In general.

(b) Determination of taxable income from sources without the United States for purposes of recapture.

(1) In general.

(c) Section 904(f)(1) recapture.

(1) In general.

(2) Election to recapture more of the overall foreign loss than is required under paragraph (c)(1).

(3) Special rule for recapture of losses incurred prior to section 936 election.

(4) Recapture of pre-1983 overall foreign losses determined on a combined basis.

(5) Illustrations.

(d) Recapture of overall foreign losses from dispositions under section 904(f)(3).

(1) In general.

(2) Treatment of net capital gain.

(3) Dispositions where gain is recognized irrespective of section 904(f)(3).

(i) Foreign source gain.

(ii) U.S. source gain.

(4) Dispositions in which gain would not otherwise be recognized.

(i) Recognition of gain to the extent of the overall foreign loss account.

(ii) Basis adjustment.

(iii) Recapture of overall foreign loss to the extent of amount recognized.

(iv) Priorities among dispositions in which gain is deemed to be recognized.

(5) Definitions.

(i) Disposition.

(ii) Property used in a trade or business.

(iii) Property used predominantly outside the United States.

(iv) Property which is a material factor in the realization of income.

(6) Carryover of overall foreign loss accounts in a corporate acquisition to which section 381(a) applies.

(7) Illustrations.

(e) Effective/applicability.

§ 1.904(f)-4 Recapture of foreign losses out of accumulation distributions from a foreign trust.

(a) In general.

(b) Effect of recapture on foreign tax credit limitation under section 667(d).

(c) Recapture if taxpayer deducts foreign taxes deemed distributed.

(d) Illustrations.

§ 1.904(f)-5 Special rules for recapture of overall foreign losses of a domestic trust.

(a) In general.

(b) Recapture of trust's overall foreign loss.

(1) Trust accumulates income.

(2) Trust distributes income.

(3) Trust accumulates and distributes income.

(c) Amounts allocated to beneficiaries.

(d) Section 904(f)(3) dispositions to which § 1.904(f)-2(d)(4)(i) is applicable.

(e) Illustrations.

§ 1.904(f)-6 Transitional rule for recapture of FORI and general limitation overall foreign losses incurred in taxable year beginning before January 1, 1983, from foreign source taxable income subject to the general limitation in taxable years beginning after December 31, 1982.

(a) General Rule.

(b) Recapture of pre-1983 FORI and general limitation overall foreign losses from post-1982 income.

(1) Recapture from income subject to the same limitation.

(2) Recapture from income subject to the other limitation.

(c) Coordination of recapture of pre-1983 and post-1982 overall foreign losses.

(d) Illustrations.

§ 1.904(f)-7 Separate limitation loss and the separate limitation loss account.

(a) Overview of regulations.

(b) Definitions.

(1) Separate category.

(2) Separate limitation income.

(3) Separate limitation loss.

(c) Separate limitation loss account.

(d) Additions to separate limitation loss accounts.

(1) General rule.

(2) Separate limitation losses of another taxpayer.

(3) Additions to separate limitation loss account created by loss carryovers.

(e) Reductions of separate limitation loss accounts.

(1) Pre-recapture reduction for amounts allocated to other taxpayers.

(2) Reduction for offsetting loss accounts.

(3) Reduction for amounts recaptured.

(f) Effective/applicability date.

§ 1.904(f)-8 Recapture of separate limitation loss accounts.

(a) In general.

(b) Effect of recharacterization of separate limitation income on associated taxes.

(c) Effective/applicability date.

§ 1.904(f)-12 Transition rules.

(a) Recapture in years beginning after December 31, 1986, of overall foreign losses incurred in taxable years beginning before January 1, 1987.

(1) In general.

(2) Rule for general limitation losses.

(i) In general.

(ii) Exception.

(3) Priority of recapture of overall foreign losses incurred in pre-effective date taxable years.

(4) Examples.

(b) Treatment of overall foreign losses that are part of net operating losses incurred in pre-effective date taxable years which are carried forward to post-effective date taxable years.

(1) Rule.

(2) Example.

(c) Treatment of overall foreign losses that are part of net operating losses incurred in post-effective date taxable years which are carried back to pre-effective date taxable years.

(1) Allocation to analogous income category.

(2) Allocation to U.S. source income.

(3) Allocation to other separate limitation categories.

(4) Examples.

(d) Recapture of FORI and general limitation overall foreign losses incurred in taxable years beginning before January 1, 1983.

(e) Recapture of pre-1983 overall foreign losses determined on a combined basis.

(f) Transition rules for taxable years beginning before December 31, 1990.

(g) Recapture in years beginning after December 31, 2002, of separate limitation losses and overall foreign losses incurred in years beginning before January 1, 2003, with respect to the separate category for dividends from a noncontrolled section 902 corporation.

(1) Recapture of separate limitation loss or overall foreign loss in a separate category for dividends from a noncontrolled section 902 corporation.

(2) Recapture of separate limitation loss in another separate category.

(3) Exception.

(4) Examples.

(5) Effective/applicability date.

(h) Recapture in years beginning after December 31, 2006, of separate limitation losses and overall foreign losses incurred in years beginning before January 1, 2007.

(1) Losses related to pre-2007 separate categories for passive income, certain dividends from a DISC or former DISC, taxable income attributable to certain foreign trade income or certain distributions from a FSC or former FSC.

(i) Recapture of separate limitation loss or overall foreign loss incurred in a pre-2007 separate category for passive income, certain dividends from a DISC or former DISC, taxable income attributable to certain foreign trade income or certain distributions from a FSC or former FSC.

(ii) Recapture of separate limitation loss with respect to a pre-2007 separate category for passive income, certain dividends from a DISC or former DISC, taxable income attributable to certain foreign trade income or certain distributions from a FSC or former FSC.

(2) Losses related to pre-2007 separate categories for shipping, financial services income or general limitation income.

(i) Recapture of separate limitation loss or overall foreign loss incurred in a pre-2007 separate category for shipping income, financial services income or general limitation income.

(ii) Recapture of separate limitation loss with respect to a pre-2007 separate category for shipping income, financial services income or general limitation income.

(3) Losses related to a pre-2007 separate category for high withholding tax interest.

(i) Recapture of separate limitation loss or overall foreign loss incurred in a pre-2007 separate category for high withholding tax interest.

(ii) Recapture of separate limitation loss with respect to a pre-2007 separate category for high withholding tax interest.

(4) Elimination of certain separate limitation loss accounts.

(5) Alternative method.

(6) Effective/applicability date.

[T.D. 9371, 72 FR 72596, Dec. 21, 2007; T.D. 9452, 74 FR 27886, June 11, 2009, T.D. 9521, 76 FR 19273, Apr. 7, 2011; T.D. 9595, 77 FR 37578, June 22, 2012]

§ 1.904(f)-1 Overall foreign loss and the overall foreign loss account.

(a)

(1) ***Overview of regulations.*** In general, section 904(f) and these regulations apply to any taxpayer that sustains an overall foreign loss (as defined in paragraph (c)(1) of this section) in a taxable year beginning after December 31, 1975. For taxable years ending after December 31, 1984, and beginning before January 1, 1987, there can be five types of overall foreign losses: a loss under each of the five separate limitations contained in former section 904(d)(1)(A) (passive interest limitation), (d)(1)(B) (DISC dividend limitation), (d)(1)(C) (foreign trade income limitation), (d)(1)(D) (foreign sales corporation (FSC) distributions limitation), and (d)(1)(E) (general limitation). For taxable years beginning after December 31, 1982, and ending before January 1, 1985, there can be three types of overall foreign losses under former section 904(d)(1)(A) (passive interest limitation), former section 904(d)(1)(B) (DISC dividend limitation) and former section 904(d)(1)(C) (general limitation). For taxpayers subject to section 907, the post-1982 general limitation overall foreign loss account may be further subdivided, as provided in § 1.904(f)-6. For taxable years beginning after December 31, 1975, and before January 1, 1983, taxpayers should have computed overall foreign losses separately under the passive interest limitation, the DISC dividend limitation, the general limitation, and the section 907(b) (FORI) limitation. However, for taxable years beginning after December 31, 1975, and before January 1, 1983, taxpayers may have computed only two types of overall foreign losses: A foreign oil related loss under the FORI limitation and an overall foreign loss computed on a combined basis for the passive interest limitation, the DISC dividend limitation, and the general limitation. A taxpayer that computed overall foreign losses for these years on a combined basis will not be required to amend its return to recompute such losses on a separate basis. If a taxpayer computed its overall foreign losses for these years separately under the passive interest limitation, the DISC dividend limitation, and the general limitation, on returns previously filed, a taxpayer may not amend those returns to compute such overall foreign losses on a combined basis. Section 1.904(f)-1 provides rules for determining a taxpayer's overall foreign losses, for establishing overall foreign loss accounts, and for making additions to and reductions of such accounts for purposes of section 904(f). Section 1.904(f)-2 provides rules for recapturing the balance in any overall foreign loss account under the general recapture rule of section 904(f)(1) and under the special recapture rule of

section 904(f)(3) when the taxpayer disposes of property used predominantly outside the United States in a trade or business. Section 1.904(f)-3 provides rules for allocating overall foreign losses that are part of net operating losses or net capital losses to foreign source income in years to which such losses are carried. In addition, § 1.904(f)-3 provides transition rules for the treatment of net operating losses incurred in taxable years beginning after December 31, 1982, and carried back to taxable years beginning before January 1, 1983, and of net operating losses incurred in taxable years beginning before January 1, 1983, and carried forward to taxable years beginning after December 31, 1982. Section 1.904(f)-4 provides rules for recapture out of an accumulation distribution of a foreign trust. Section 1.904(f)-5 provides rules for recapture of overall foreign losses of domestic trusts. Section 1.904(f)-6 provides a transition rule for recapturing a taxpayer's pre-1983 overall foreign losses under the general limitation and the FORI limitation out of taxable income subject to the general limitation in taxable years beginning after December 31, 1982. Section § 1.1502-9 provides rules concerning the application of these regulations to corporations filing consolidated returns.

(2) ***Application to post-1986 taxable years.*** The principles of §§ 1.904(f)-1 through 1.904(f)-5 shall apply to any overall foreign loss sustained in taxable years beginning after December 31, 1986, modified so as to take into account the effect of statutory amendments.

(b) ***Overall foreign loss accounts.*** Any taxpayer that sustains an overall foreign loss under paragraph (c) of this section must establish an account for such loss. Separate types of overall foreign losses must be kept in separate accounts. For taxable years beginning prior to January 1, 1983, taxpayers that computed losses on a combined basis in accordance with § 1.904(f)-1(c)(1) will keep one overall foreign loss account for such overall foreign loss. The balance in each overall foreign loss account represents the amount of such overall foreign loss subject to recapture by the taxpayer in a given year. From year to year, amounts may be added to or subtracted from the balances in such accounts as provided in paragraphs (d) and (e) of this section. The taxpayer must report the balances (if any) in its overall foreign loss accounts annually on a Form 1116 or 1118. Such forms must be filed for each taxable year ending after September 24, 1987. The balance in each account does not have to be attributed to the year or years in which the loss was incurred.

(c) ***Determination of a taxpayer's overall foreign loss*** —

(1) ***Overall foreign loss defined.*** For taxable years beginning after December 31, 1982, and before January 1, 1987, a taxpayer sustains an overall foreign loss in any taxable year in which its gross income from sources without the United States subject to a separate limitation (as defined in paragraph (c)(2) of this section) is exceeded by the sum of the deductions properly allocated and apportioned thereto. Such losses are to be determined separately in accordance with the principles of the separate limitations. Accordingly, income and deductions subject to a separate limitation are not to be netted with income and deductions subject to another separate limitation for purposes of determining the amount of an overall foreign loss. A taxpayer may, for example, have an overall foreign loss under the general limitation in the same taxable year in which it has taxable income under the DISC dividend limitation. The same principles of calculating overall foreign losses on a separate limitation basis apply for taxable years beginning before January 1, 1983, except that a taxpayer shall determine its overall foreign losses on a combined basis, except for income subject to the FORI limitation, if the taxpayer filed its pre-1983 returns on such basis. Thus, for taxable years beginning prior to January 1, 1983, a taxpayer can net income and losses among the passive interest limitation, the DISC dividend limitation, and the general limitation if the taxpayer calculated its overall foreign losses that way at the time. Taxpayers that computed overall foreign losses separately under

each of the separate limitations on their returns filed for taxable years beginning prior to January 1, 1983, may not amend such returns to compute their overall foreign losses for pre-1983 years on a combined basis.

(2) ***Separate limitation defined.*** For purposes of paragraph (c)(1) of this section and these regulations, the term separate limitation means any of the separate limitations under former section 904(d)(1)(A) (passive interest limitation), (B) (DISC dividend limitation), (C) (foreign trade income limitation), (D) (FSC distributions limitation), and (E) (general limitation) and the separate limitation under section 907(b) (FORI limitation) (for taxable years ending after December 31, 1975, and beginning before January 1, 1983).

(3) ***Method of allocation and apportionment of deductions.*** In determining its overall foreign loss, a taxpayer shall allocate and apportion expenses, losses, and other deductions to the appropriate category of gross income in accordance with section 862(b) and § 1.861-8 of the regulations. However, the following deductions shall not be taken into account:

(i) The amount of any net operating loss deduction for such year under section 172(a); and

(ii) To the extent such losses are not compensated for by insurance or otherwise, the amount of any—

(A) Expropriation losses for such year (as defined in section 172(h)), or

(B) Losses for such year which arise from fire, storm, shipwreck, or other casualty, or from theft.

(d) ***Additions to the overall foreign loss account*** —

(1) ***General rule.*** A taxpayer's overall foreign loss as determined under paragraph (c) of this section shall be added to the applicable overall foreign loss account at the end of its taxable year to the extent that the overall foreign loss has reduced United States source income during the taxable year or during a year to which the loss has been carried back. For rules with respect to carryovers see paragraph (d)(3) of this section and § 1.904(f)-3.

(2) ***Overall foreign losses of another taxpayer.*** If any portion of any overall foreign loss of another taxpayer is allocated to the taxpayer in accordance with § 1.904(f)-5 (relating to overall foreign losses of domestic trusts) or § 1.1502-9 (relating to consolidated overall foreign losses), the taxpayer shall add such amount to its applicable overall foreign loss account.

(3) ***Additions to overall foreign loss account created by loss carryovers.*** Subject to the adjustments under § 1.904(f)-1(d)(4), the taxpayer shall add to each overall foreign loss account—

(i) All net operating loss carryovers to the current taxable year attributable to the same limitation to the extent that overall foreign losses included in the net operating loss carryovers reduced United States source income for the taxable year, and

(ii) All capital loss carryovers to the current taxable year attributable to the same limitation to the extent that foreign source capital loss carryovers reduced United States source capital gain net income for the taxable year.

(4) ***Adjustments for capital gains and losses and qualified dividend income.*** If a taxpayer has capital gains or losses or qualified dividend income, as defined in section 1(h)(11), the taxpayer shall make adjustments to such capital gains and losses and qualified dividend income to the extent required under section 904(b)(2) and § 1.904(b)-1 before applying the provisions of § 1.904(f)-1. See § 1.904(b)-1(h).

(e) ***Reductions of overall foreign loss accounts.*** The taxpayer shall subtract the following amounts from its overall foreign loss accounts at the end of its taxable year in the following order, if applicable:

(1) ***Pre-recapture reduction for amounts allocated to other taxpayers.*** An overall foreign loss account is reduced by the amount of any overall foreign loss which is allocated to another taxpayer in accordance with § 1.904(f)-5 (relating to overall foreign losses of domestic trusts) or § 1.1502-9 (relating to consolidated overall foreign losses).

(2) ***Reduction for amounts recaptured.*** An overall foreign loss account is reduced by the amount of any foreign source income that is subject to the same limitation as the loss that resulted in the account and that is recaptured in accordance with § 1.904(f)-2 (c) (relating to recapture under section 904(f)(1)); § 1.904(f)-2 (d) (relating to recapture when the taxpayer disposes of certain properties under section 904(f)(3)); and § 1.904(f)-4 (relating to recapture when the taxpayer receives an accumulation distribution from a foreign trust under section 904(f)(4)).

(f) ***Illustrations.*** The rules of this section are illustrated by the following examples.

Example 1. X Corporation is a domestic corporation with foreign branch operations in country C. X's taxable income and losses for its taxable year 1983 are as follows: U.S. Source taxable income$1,000 Foreign source taxable income (loss) subject to the general limitation($500) Foreign source taxable income subject to the passive interest limitation$200X has a general limitation overall foreign loss of $500 for 1983 in accordance with paragraph (c) (1) of this section. Since the general limitation overall foreign loss is not considered to offset income under the separate limitation for passive interest income, it therefore offsets $500 of United States source taxable income. This amount is added to X's general limitation overall foreign loss account at the end of 1983 in accordance with paragraphs (c) (1) and (d) (1) of this section.

Example 2. Y Corporation is a domestic corporation with foreign branch operations in Country C. Y's taxable income and losses for its taxable year 1982 are as follows: U.S. source taxable income$1,000 Foreign source taxable income (loss) subject to the general limitation($500) Foreign source taxable income subject to the passive interest limitation$250For its pre-1983 taxable years, Y filed its returns determining its overall foreign losses on a combined basis. In accordance with paragraphs (a) and (c) (1) of this section, Y may net the foreign source income and loss before offsetting the United States source income. Y therefore has a section 904(d)(1)(A-C) overall foreign loss account of $250 at the end of 1982.

Example 3. X Corporation is a domestic corporation with foreign branch operations in country C. For its taxable year 1985, X has taxable income (loss) determined as follows: U.S. source taxable income$200 Foreign source taxable income (loss) subject to the general limitation($1,000) Foreign source taxable income (loss) subject to the passive limitation$1,800X has a general limitation overall foreign loss of $1,000 in accordance with paragraph (c)(1) of this section. The overall foreign loss offsets $200 of United States source taxable income in 1985 and, therefore, X has a $200 general limitation overall foreign loss account at the end of 1985. The remaining $800 general

limitation loss is offset by the passive interest limitation income in 1985 so that X has no net operating loss carryover that is attributable to the general limitation loss and no additional amount attributable to that loss will be added to the overall foreign loss account in 1985 or in any other year.

(g) ***Effective/applicability date.*** Paragraphs (a)(2) and (d)(4) of this section shall apply to taxable years beginning on or after January 1, 2012. Taxpayers may choose to apply paragraphs (a)(2) and (d)(4) of this section to other taxable years beginning after December 21, 2007, including periods covered by 26 CFR 1.904(f)-1T (revised as of April 1, 2010).

[T.D. 8153, 52 FR 31994, Aug. 25, 1987; 52 FR 43434, Nov. 12, 1987, as amended by T.D. 9371, 72 FR 72597, Dec. 21, 2007; T.D. 9595, 77 FR 37578, June 22, 2012]

§ 1.904(f)-2 Recapture of overall foreign losses.

(a) ***In general.*** A taxpayer shall be required to recapture an overall foreign loss as provided in this section. Recapture is accomplished by treating as United States source income a portion of the taxpayer's foreign source taxable income of the same limitation as the foreign source loss that resulted in an overall foreign loss account. As a result, if the taxpayer elects the benefits of section 901 or section 936, the taxpayer's foreign tax credit limitation with respect to such income is decreased. As provided in § 1.904 (f)-1(e)(2), the balance in a taxpayer's overall foreign loss account is reduced by the amount of loss recaptured. Recapture continues until such time as the amount of foreign source taxable income recharacterized as United States source income equals the amount in the overall foreign loss account. As provided in § 1.904 (f)-1(e)(2), the balance in an overall foreign loss account is reduced at the end of each taxable year by the amount of the loss recaptured during that taxable year. Regardless of whether recapture occurs in a year in which a taxpayer elects the benefits of section 901 or in a year in which a taxpayer deducts its foreign taxes under section 164, the overall foreign loss account is recaptured only to the extent of foreign source taxable income remaining after applying the appropriate section 904(b) adjustments, if any, as provided in paragraph (b) of this section.

(b) ***Determination of taxable income from sources without the United States for purposes of recapture*** —(1) *In general.* For purposes of determining the amount of an overall foreign loss subject to recapture, the taxpayer's taxable income from sources without the United States shall be computed with respect to each of the separate limitations described in § 1.904 (f)-1(c)(2) in accordance with the rules set forth in § 1.904 (f)-1(c) (1) and (3). This computation is made without taking into account foreign source taxable income (and deductions properly allocated and apportioned thereto) subject to other separate limitations. Before applying the recapture rules to foreign source taxable income, the following provisions shall be applied to such income in the following order:

(i) Former section 904(b)(3)(C) (prior to its removal by the Tax Reform Act of 1986) and the regulations thereunder shall be applied to treat certain foreign source gain as United States source gain; and

(ii) Section 904(b)(2) and the regulations thereunder shall be applied to make adjustments in the foreign tax credit limitation fraction for certain capital gains and losses.

(c) ***Section 904(f)(1) recapture*** —

(1) ***In general.*** In a taxable year in which a taxpayer elects the benefits of section 901 or section 30A, the section 904(f)(1) recapture amount is the amount of foreign source taxable income subject to recharacterization in a taxable year in which recapture of an overall foreign loss is required under paragraph (a) of this section. The section 904(f)(1) recapture amount equals the lesser of the aggregate amount of maximum potential recapture in all overall foreign loss accounts or fifty

percent of the taxpayer's total foreign source taxable income. If the aggregate amount of maximum potential recapture in all overall foreign loss accounts exceeds fifty percent of the taxpayer's total foreign source taxable income, foreign source taxable income in each separate category with an overall foreign loss account is recharacterized in an amount equal to the section 904(f)(1) recapture amount, multiplied by the maximum potential recapture in the overall foreign loss account, divided by the aggregate amount of maximum potential recapture in all overall foreign loss accounts. The maximum potential recapture in an overall foreign loss account in a separate category is the lesser of the balance in that overall foreign loss account or the foreign source taxable income for the year in the same separate category as the loss account. If, in any taxable year, in accordance with sections 164(a) and 275(a)(4)(A), a taxpayer deducts rather than credits its foreign taxes, recapture is applied to the extent of the lesser of—

(i) The balance in the overall foreign loss account in each separate category; or

(ii) Foreign source taxable income (net of foreign taxes) in each separate category.

(2) ***Election to recapture more of the overall foreign loss than is required under paragraph (c)(1).*** In a year in which a taxpayer elects the benefits of sections 901 or 936, a taxpayer may make an annual revocable election to recapture a greater portion of the balance in an overall foreign loss account than is required to be recaptured under paragraph (c)(1) of this section. A taxpayer may make such an election or amend a prior election by attaching a statement to its annual Form 1116 or 1118. If an amendment is made to a prior year's election, an amended tax return should be filed. The statement attached to the Form 1116 or 1118 must indicate the percentage and dollar amount of the taxpayer's foreign source taxable income that is being recharacterized as United States source income and the percentage and dollar amount of the balance (both before and after recapture) in the overall foreign loss account that is being recaptured. Except for the special recapture rules for section 936 corporations and for recapture of pre-1983 overall foreign losses determined on a combined basis, the taxpayer that elects to credit its foreign taxes may not elect to recapture an amount in excess of the taxpayer's foreign source taxable income subject to the same limitation as the loss that resulted in the overall foreign loss account.

(3) ***Special rule for recapture of losses incurred prior to section 936 election.*** If a corporation elects the application of section 936 and at the time of the election has a balance in any overall foreign loss account, such losses will be recaptured from the possessions source income of the electing section 936 corporation that qualifies for the section 936 credit, including qualified possession source investment income as defined in section 936(d)(2), even though the overall foreign loss to be recaptured may not be attributable to a loss in an income category of a type that would meet the definition of qualified possession source investment income. For purposes of recapturing an overall foreign loss incurred by a consolidated group including a corporation that subsequently elects to use section 936, the electing section 936 corporation's possession source income that qualifies for the section 936 credit, including qualified possession source investment income, shall be used to recapture the section 936 corporation's share of previously incurred overall foreign loss accounts. Rules for determining the section 936 corporation's share of the consolidated groups overall foreign loss accounts are provided in § 1.1502-9(c).

(4) ***Recapture of pre-1983 overall foreign losses determined on a combined basis.*** If a taxpayer computed its overall foreign losses on a combined basis in accordance with § 1.904(f)-1(c)(1) for taxable years beginning before January 1, 1983, any losses recaptured in taxable years beginning after December 31, 1982, shall be recaptured from income subject to the general limitation, subject to the rules in § 1.904(f)-6 (a) and (b). Ordering rules for recapture of these losses are provided in § 1.904(f)-6(c).

(5) ***Illustrations.*** The rules of this paragraph (c) are illustrated by the following examples, all of which assume a United States corporate tax rate of 50 percent unless otherwise stated.

Example 1. X Corporation is a domestic corporation that does business in the United States and abroad. On December 31, 1983, the balance in X's general limitation overall foreign loss account is $600, all of which is attributable to a loss incurred in 1983. For 1984, X has United States source taxable income of $500 and foreign source taxable income subject to the general limitation of $500. For 1984, X pays $200 in foreign taxes and elects section 901. Under paragraph (c)(1) of this section, X is required to recapture $250 (the lesser of $600 or 50 percent of $500) of its overall foreign loss. As a consequence, X's foreign tax credit limitation under the general limitation is $250/$1,000 × $500, or $125, instead of $500/$1,000 × $500, or $250. The balance in X's general limitation overall foreign loss account is reduced by $250 in accordance with § 1.904(f)-1(e)(2).

Example 2. The facts are the same as in example 1 except that X makes an election to recapture its overall foreign loss to the extent of 80 percent of its foreign source taxable income subject to the general limitation (or $400) in accordance with paragraph (c)(2) of this section. As a result of recapture, X's 1984 foreign tax credit limitation for income subject to the general limitation is $100/$1,000 × $500, or $50, instead of $500/$1,000 × $500, or $250. X's general limitation overall foreign loss account is reduced by $400 in accordance with § 1.904(f)-1(e)(2).

Example 3. The facts are the same as in example 1 except that X does not elect the benefits of section 901 in 1984 and instead deducts its foreign taxes paid. In 1984, X recaptures $300 of its overall foreign loss, the difference between X's foreign source taxable income of $500 and $200 of foreign taxes paid. The balance in X's general limitation overall foreign loss account is reduced by $300 in accordance with § 1.904(f)-1(e)(2).

Example 4. Y Corporation is a domestic corporation that does business in the United States and abroad. On December 31, 2007, the balance in Y's general category overall foreign loss account is $500, all of which is attributable to a loss incurred in 2007. Y has no other loss accounts subject to recapture. For 2008, Y has U.S. source taxable income of $400 and foreign source taxable income of $300 in the general category and $900 in the passive category. Under paragraph (c)(1) of this section, the amount of Y's general category income subject to recharacterization is the lesser of the aggregate maximum potential recapture or 50% of the total foreign source taxable income. In this case, Y's aggregate maximum potential recapture is $300 (the lesser of the $500 balance in the general category overall foreign loss account or $300 foreign source income in the general category for the year), which is less than 50% of Y's total foreign source taxable income ($1200 × 50% = $600). Therefore, pursuant to paragraph (c) of this section, $300 of foreign source income in the general category is recharacterized as U.S. source income. The balance in Y's general category overall foreign loss account is reduced to $200 in accordance with § 1.904(f)-1(e)(2).

Example 5. On December 31, 1980, V, a domestic corporation that does business in the United States and abroad, has a balance in its section 904(d)(1)(A-C) overall foreign loss account of $600. V also has a balance in its FORI limitation overall foreign loss account of $900. For 1981, V has foreign source taxable income subject to the general limitation of $500 and $500 of United States source income. V also has foreign source taxable income subject to the FORI limitation of $800. V is required to recapture $250 of its section 904(d)(1)(A-C) overall foreign loss account (the lesser of $600 or 50% of $500) and its general limitation foreign tax credit limitation is $250/$1,800 × $900, or $125 instead of $500/$1,800 × $900, or $250. V is also required to recapture $400 of its FORI limitation overall foreign loss account (the lesser of $900 or 50% of $800). V's foreign tax credit limitation for

FORI is $400/$1,800 × $900, or $200, instead of $800/$1,800 × $900, or $400. The balance in V's FORI limitation overall foreign loss account is reduced to $500 and the balance in V's section 904(d)(1)(A-C) account is reduced to $350, in accordance with § 1.904(f)-1(e)(2).

Example 6. This example assumes a United States corporate tax rate of 46 percent (under section 11(b)) and an alternative rate of tax under section 1201(a) of 28 percent. W is a domestic corporation that does business in the United States and abroad. On December 31, 1984, W has $350 in its general limitation overall foreign loss account. For 1985, W has $500 of United States source taxable income, and has foreign source income subject to the general limitation as follows:

Foreign source taxable income other than net capital gain	$720
Foreign source net capital gain	$460

Under paragraph (b)(2) of this section, foreign source taxable income for purposes of recapture includes foreign source capital gain net income, reduced, under section 904(b)(2), by the rate differential portion of foreign source net capital gain, which adjusts for the reduced tax rate for net capital gain under section 1201(a):

Foreign source capital gain net income	$460
Rate differential portion of foreign source net capital gain (18/46 of $460)	−180
Foreign source capital gain included in foreign source taxable income	$280

The total foreign source taxable income of W for purposes of recapture in 1985 is $1,000 ($720 + $280). Under paragraph (c)(1) of this section, W is required to recapture $350 (the lesser of $350 or 50 percent of $1,000), and W's general limitation overall foreign loss account is reduced to zero. W's foreign tax credit limitation for income subject to the general limitation is $650/$1,500 × $690 ((.46) (500 + 720) + (.28) (460)), or $299, instead of $1,000/$1,500 × $690, or $460.

(d) ***Recapture of overall foreign losses from dispositions under section 904(f)(3)*** —

(1) ***In general.*** If a taxpayer disposes of property used or held for use predominantly without the United States in a trade or business during a taxable year and that property generates foreign source taxable income subject to a separate limitation to which paragraph (a) of this section applies, the applicable overall foreign loss account shall be recaptured as provided in paragraphs (d)(2), (d)(3), and (d)(4) of this section. See paragraph (d)(5) of this section for definitions. See the ordering rules under § 1.904(g)-3(f) and (i) for coordination with other loss recapture under section 904(f) and (g).

(2) ***Treatment of net capital gain.*** If the gain from a disposition of property to which this paragraph (d) applies is treated as net capital gain, all references to such gain in paragraphs (d)(3) and (d)(4) of this section shall mean such gain as adjusted under paragraph (b) of this section. The amount by which the overall foreign loss account shall be reduced shall be determined from such adjusted gain.

(3) ***Dispositions where gain is recognized irrespective of section 904 (f)(3)*** —

(i) ***Foreign source gain.*** If a taxpayer recognizes foreign source gain in a separate category on the disposition of property described in paragraph (d)(1) of this section, and there is a balance in a taxpayer's overall foreign loss account that is attributable to a loss in such separate category after applying paragraph (c) of this section, an additional portion of such balance shall be recaptured in accordance with paragraphs (a) and (b) of this section. The amount recaptured shall be the lesser of such balance or the full amount of the foreign source gain recognized on the disposition that was not previously recharacterized.

(ii) ***U.S. source gain.*** If a taxpayer recognizes U.S. source gain on the disposition of property described in paragraph (d)(1) of this section, and there is a balance in a taxpayer's overall foreign loss account that is attributable to a loss in the separate category to which the income generated by such property is assigned after applying paragraph (c) of this section, an amount of the gain shall be treated as foreign source and an additional portion of such balance equal to that amount shall be recaptured in accordance with paragraphs (a) and (b) of this section. The amount of gain treated as foreign source and the amount of overall foreign loss recaptured shall be the lesser of the balance in the overall foreign loss account or the full amount of the gain recognized on the disposition.

(4) *Dispositions in which gain would not otherwise be recognized*—(1) *Recognition of gain to the extent of the overall foreign loss account.* If a taxpayer makes a disposition of property described in paragraph (d)(1) of this section in which any amount of gain otherwise would not be recognized in the year of the disposition, and such property was used or held for use to generate foreign source taxable income subject to a separate limitation under which the taxpayer had a balance in its overall foreign loss account (including a balance that arose in the year of the disposition), the taxpayer shall recognize foreign source taxable income in an amount equal to the lesser of:

(A) The sum of the balance in the applicable overall foreign loss account (but only after such balance has been increased by amounts added to the account for the year of the disposition or has been reduced by amounts recaptured for the year of the disposition under paragraph (c) and paragraph (d)(3) of this section) plus the amount of any overall foreign loss that would be part of a net operating loss for the year of the disposition if gain from the disposition were not recognized under section 904(f)(3), plus the amount of any overall foreign loss that is part of a net operating loss carryover from a prior year, or

(B) The excess of the fair market value of such property over the taxpayer's adjusted basis in such property.

The excess of the fair market value of such property over its adjusted basis shall be determined on an asset by asset basis. Losses from the disposition of an asset shall not be recognized. Any foreign source taxable income deemed received and recognized under this paragraph (d)(4)(i) will have the same character as if the property had been sold or exchanged in a taxable transaction and will constitute gain for all purposes.

(ii) ***Basis adjustment.*** The basis of the property received in an exchange to which this paragraph (d)(4) applies shall be increased by the amount of gain deemed recognized, in accordance with applicable sections of subchapters C (relating to corporate distributions and adjustments), K (relating to partners and partnerships), O (relating to gain or loss on the disposition of property), and P (relating to capital gains and losses). If the property to which this paragraph (d)(4) applies was transferred by gift, the basis of such property in the hands of the donor immediately preceding such gift shall be increased by the amount of the gain deemed recognized.

(iii) ***Recapture of overall foreign loss to the extent of amount recognized.*** The provisions of paragraphs (a) and (b) of this section shall be applied to the extent of 100 percent of the foreign source taxable income which is recognized under paragraph (d)(4)(i) of this section. However, amounts of foreign source gain that would not be recognized except by application of section 904(f)(3) and paragraph (d)(4)(i) of this section, and which are treated as United States source gain by application of section 904(b)(3)(C) (prior to its removal by the Tax Reform Act of 1986) and paragraph (b)(1) of this section, shall reduce the overall foreign loss account (subject to the adjustments described in paragraph (d)(2) of this section) if such gain is net capital gain, notwithstanding the fact that such amounts would otherwise not be recaptured under the ordering rules in paragraph (b) of this section.

(iv) ***Priorities among dispositions in which gain is deemed to be recognized.*** If, in a single taxable year, a taxpayer makes more than one disposition to which this paragraph (d)(4) is applicable, the rules of this paragraph (d)(4) shall be applied to each disposition in succession starting with the disposition which occurred earliest, until the balance in the applicable overall foreign loss account is reduced to zero. If the taxpayer simultaneously makes more than one disposition to which this paragraph (d)(4) is applicable, the rules of paragraph (d)(4) shall be applied so that the balance in the applicable overall foreign loss account to be recaptured will be allocated pro rata among the assets in proportion to the excess of the fair market value of each asset over the adjusted basis of each asset.

(5) ***Definitions —***

(i) ***Disposition.*** A disposition to which this paragraph (d) applies includes a sale; exchange; distribution; gift; transfer upon the foreclosure of a security interest (but not a mere transfer of title to a creditor upon creation of a security interest or to a debtor upon termination of a security interest); involuntary conversion; contribution to a partnership, trust, or corporation; transfer at death; or any other transfer of property whether or not gain or loss is recognized under other provisions of the Code. However, a disposition to which this paragraph (d) applies does not include:

(A) A distribution or transfer of property to a domestic corporation described in section 381 (a) (provided that paragraph (d)(6) of this section applies);

(B) A disposition of property which is not a material factor in the realization of income by the taxpayer (as defined in paragraph (d)(5)(iv) of this section);

(C) A transaction in which gross income is not realized; or

(D) The entering into of a unitization or pooling agreement (as defined in § 1.614-8(b)(6) of the regulations) containing a valid election under section 761(a)(2), and in which the source of the entire gain from any disposition of the interest created by the agreement would be determined to be foreign source under section 862(a)(5) if the disposition occurred presently.

(ii) ***Property used in a trade or business.*** Property is used in a trade or business if it is held for the principal purpose of promoting the present or future conduct of the trade or business. This generally includes property acquired and held in the ordinary course of a trade or business or otherwise held in a direct relationship to a trade or business. In determining whether an asset is held in a direct relationship to a trade or business, principal consideration shall be given to whether the asset is used in the trade or business. Property will be treated as held in a direct relationship to a trade or business if the property was acquired with funds generated by that trade or business or if income generated from the asset is available for use in that trade or business. Property used in a trade or business may be tangible or intangible, real or personal property. It includes property, such as equipment, which is subject to an allowance for depreciation under section 167 or cost recovery under section 168. Property may be considered used in a trade or business even if it is a capital asset in the hands of the taxpayer. However, stock of another corporation shall not be considered property used in a trade or business if a substantial investment motive exists for acquiring and holding the stock. On the other hand, stock acquired or held to assure a source of supply for a trade or business shall be considered property used in that trade or business. Inventory is generally not considered property used in a trade or business. However, when disposed of in a manner not in the ordinary course of a trade or business, inventory will be considered property used in the trade or business. A partnership interest will be treated as property used in a trade or business if the underlying assets of the partnership would be property used in a trade or business. For purposes of section 904(f) (3) and § 1.904(f)-2 (d) (1) and (5), a disposition of a partnership interest to which this section applies will be treated as a disposition of a proportionate share of each of the assets of the partnership. For purposes of allocating the purchase price of the interest and the seller's basis in the interest to those assets, the principles of § 1.751-1(a) will apply.

(iii) ***Property used predominantly outside the United States.*** Property will be considered used predominantly outside the United States if for a 3-year period ending on the date of the disposition (or, if shorter, the period during which the property has been used in the trade or business) such property was located outside the United States more than 50 percent of the time. An aircraft, railroad rolling stock, vessel, motor vehicle, container, or other property used for transportation purposes is deemed to be used predominantly outside the United States if, during the 3-year (or shorter) period, either such property is located outside the United States more than 50 percent of the time or more than 50 percent of the miles traversed in the use of such property are traversed outside the United States.

(iv) ***Property which is a material factor in the realization of income.*** For purposes of this section, property used in a trade or business will be considered a material factor in the realization of income unless the taxpayer establishes that it is not (or, if the taxpayer did not realize income from the trade or business in the taxable year, would not be expected to be) necessary to the realization of income by the taxpayer.

(6) ***Carryover of overall foreign loss accounts in a corporate acquisition to which section 381(a) applies.*** In the case of a distribution or transfer described in section 381(a), an overall foreign loss account of the distributing or transferor corporation shall be treated as an overall foreign loss account of the acquiring or transferee corporation as of the close of the date of the distribution or transfer. If the transferee corporation had an overall foreign loss account under the same separate limitation prior to the distribution or transfer, the balance in the transferor's account must be added to the transferee's account. If not, the transferee must adopt the transferor's overall foreign loss account. An overall foreign loss of the transferor will be treated as incurred by the transferee in the year prior to the year of the transfer.

(7) ***Illustrations.*** The rules of this paragraph (d) are illustrated by the following examples which assume that the United States corporate tax rate is 50 percent (unless otherwise stated). For purposes of these examples, none of the foreign source gains are treated as net capital gains (unless so stated).

Example 1. X Corporation has a balance in its general limitation overall foreign loss account of $600 at the close of its taxable year ending December 31, 1984. In 1985, X sells assets used predominantly outside the United States in a trade or business and recognizes $1,000 of gain on the sale under section 1001. This gain is subject to the general limitation. This sale is a disposition within the meaning of paragraph (d)(5)(i) of this section, and to which this paragraph (d) applies. X has no other foreign source taxable income in 1985 and has $1,000 of United States source taxable income. Under paragraph (c), X is required to recapture $500 (the lesser of the balance in X's general limitation overall foreign loss account ($600) or 50 percent of $1,000) of its overall foreign loss account. The balance in X's general limitation overall foreign loss account is reduced to $100 in accordance with § 1.904(f)-1(e)(2). In addition, under paragraph (d)(3) of this section, X is required to recapture $100 (the lesser of the remaining balance in its general limitation overall foreign loss account ($100) or 100 percent of its foreign source taxable income recognized on such disposition that has not been previously recharacterized ($500)). The total amount recaptured is $600. X's foreign tax credit limitation for income subject to the general limitation in 1985 is $200 ($400/$2,000 × $1,000) instead of $500 ($1,000/$2,000 × $1,000). The balance in X's general limitation overall foreign loss account is reduced to zero in accordance with § 1.904(f)-1(e)(2).

Example 2. On December 31, 1984, Y Corporation has a balance in its general limitation overall foreign loss account of $1,500. In 1985, Y has $500 of United States source taxable income and $200 of foreign source taxable income subject to the general limitation. Y's foreign source taxable income is from the sale of property used predominantly outside of the United States in a trade or business. This sale is a disposition to which this paragraph (d) is applicable. In 1985, Y also transferred property used predominantly outside of the United States in a trade or business to another corporation. Under section 351, no gain was recognized on this transfer. Such property had been used to generate foreign source taxable income subject to the general limitation. The excess of the fair market value of the property transferred over Y's adjusted basis in such property was $2,000. In accordance with paragraph (c) of this section, Y is required to recapture $100 (the lesser of $1,500, the amount in Y's general limitation overall foreign loss account, or 50 percent of $200, the amount of general limitation foreign source taxable income for the current year) of its general limitation overall foreign loss. Y is then required to recapture an additional $100 of its general

limitation overall foreign loss account under paragraph (d)(3) of this section out of the remaining gain recognized on the sale of assets, because 100 percent of such gain is subject to recapture. The balance in Y's general limitation overall foreign loss account is reduced to $1,300 in accordance with § 1.904(f)-1(e)(2). Y corporation is then required to recognize $1,300 of foreign source taxable income on its section 351 transfer under paragraph (d)(4) of this section. The remaining $700 of potential gain associated with the section 351 transfer is not recognized. Under paragraph (d)(4), 100 percent of the $1,300 is recharacterized as United States source taxable income, and Y's general limitation overall foreign loss account is reduced to zero. Y's entire taxable income for 1985 is:

U.S. source taxable income	$500
Foreign source taxable income subject to the general limitation that is recharacterized as U.S. source income by paragraphs (c) and (d)(3) of this section	200
Gain recognized under section 904(f)(3) and paragraph (d)(4) of this section, and recharacterized as U.S. source income	1,300
Total	$2,000

Y's foreign tax credit limitation for 1985 for income subject to the general limitation is $0 ($0/$2,000 × $1,000) instead of $100 ($200/$700 × $350).

Example 3. W Corporation is a calendar year domestic corporation with foreign branch operations in country C. As of December 31, 1984, W has no overall foreign loss accounts and has no net operating loss carryovers. W's entire taxable income in 1985 is:

U.S. source taxable income	$800
Foreign source taxable income (loss) subject to the general limitation	($1,000)

W cannot carry back its 1985 NOL to any earlier year. As of December 31, 1985, W therefore has $800 in its general limitation overall foreign loss account. In 1986, W earns $400 United States source taxable income and has an additional $1,000 loss from the operations of the foreign branch. Income in the loss category would be subject to the general limitation. Also in 1986, W disposes of property used predominately outside the United States in a trade or business. Such property generated income subject to the general limitation. The excess of the property's fair market value over its adjusted basis is $3,000. The disposition is of a type described in § 1.904 (f)-2(d)(4)(i). W has no other income in 1986. Under § 1.904 (f)-2(d)(4)(i),

W is required to recognize foreign source taxable income on the disposition in an amount equal to the lesser of $2,000 ($800 (the balance in the general limitation overall foreign loss account as of 1985) + $400 (the increase in the general limitation overall foreign loss account attributable to the disposition year) + $600 (the general limitation overall foreign loss that is part of the NOL from 1986) + $200 (the general limitation overall foreign loss that is part of the NOL from 1985)) or $3,000. The $2,000 foreign source income required to be recognized under section 904(f)(3) is reduced to $1,200 by the remaining $600 loss in 1986 and the $200 net operating loss carried forward from 1985. This $1,200 of income is subject to the general limitation. In computing foreign tax credit limitation for general limitation income, the $1,200 of foreign source income is treated as United States source income and, therefore, W's foreign tax credit limitation for income subject to the general limitation is zero. W's overall foreign loss account is reduced to zero.

Example 4. Z Corporation has a balance in its FORI overall foreign loss account of $1,500 at the end of its taxable year 1980. In 1981, Z has $1,600 of foreign oil related income subject to the separate limitation for FORI income and no United States source income. In addition, in 1981, Z makes two dispositions of property used predominantly outside the United States in a trade or business on which no gain was recognized. Such property generated foreign oil related income. The excess of the fair market value of the property transferred in the first disposition over Z's adjusted basis in such property is $575. The excess of the fair market value of the property transferred in the second disposition over Z's adjusted basis in such property is $1,000. Under paragraph (c) of this section, Z is required to recapture $800 (the lesser of 50 percent of its foreign oil related income of $1,600 or the balance ($1,500) in its FORI overall foreign loss account) of its foreign oil related loss. In accordance with paragraphs (d)(4) (i) and (iv) of this section, Z is required to recognize foreign oil related income in the amount of $575 on the first disposition and, since the foreign oil related loss account is now reduced by $1,375 (the $800 and $575 amounts previously recaptured), Z is required to recognize foreign oil related income in the amount of $125 on the second disposition. In accordance with paragraph (d)(4)(iii) of this section, the entire amount recognized is treated as United States source income and the balance in the FORI overall foreign loss account is reduced to zero under § 1.904 (f)-1 (e)(2). Z's foreign tax credit limitation for FORI is $400 ($800/$2,300 × $1,150) instead of $800 ($1,600/$1,600 × $800).

Example 5. The facts are the same as in example 4, except that the gain from the two dispositions of property is treated as net capital gain and the United States corporate tax rate is assumed to be 46 percent. As in example 4, Z is required to recapture $800 of its foreign oil related loss from its 1981 ordinary foreign oil related income. In accordance with paragraph (d)(4) (i) and (iv) of this section, Z is first required to recognize foreign oil related income (which is net capital gain) on the first disposition in the amount of $575. Under paragraphs (b) and (d) (2) of this section, this net capital gain is adjusted by subtracting the rate differential portion of such gain from the total amount of such gain to determine the amount by which the foreign oil related loss account is reduced, which is $350 ($575− ($575 × 18/46)). The balance remaining in Z's foreign oil related loss account after this step is $350. Therefore, this process will be repeated, in accordance with paragraph (d)(4)(iv) of this section, to recapture that remaining balance out of the gain deemed recognized on the second disposition, resulting in reduction of the foreign oil related loss account to zero and net capital gain required to be recognized from the second disposition in the amount of $575, which must also be adjusted by subtracting the rate differential portion to determine the amount by which the foreign oil

related loss account is reduced (which is $350). The $575 of net capital gain from each disposition is recharacterized as United States source net capital gain. Z's section 907 (b) foreign tax credit limitation is the same as in example 4, and Z has $1,150 ($575 + $575) of United States source net capital gain.

(e) ***Effective/applicability date.*** Paragraphs (c)(1), (c)(5) *Example 4,* (d)(1), and (d)(3) of this section shall apply to taxable years beginning on or after January 1, 2012. Taxpayers may choose to apply paragraphs (c)(1), (c)(5) *Example 4,* (d)(1), and (d)(3) of this section to other taxable years beginning after December 21, 2007, including periods covered by 26 CFR 1.904(f)-2T (revised as of April 1, 2010).

[T.D. 8153, 52 FR 31997, Aug. 25, 1987; 52 FR 43434, Nov. 12, 1987, as amended by T.D. 9371, 72 FR 72597, Dec. 21, 2007; T.D. 9595, 77 FR 37578, June 22, 2012]

§ 1.904(f)-3 Allocation of net operating losses and net capital losses.

For rules relating to the allocation of net operating losses and net capital losses, see § 1.904(g)-3T.

[T.D. 9371, 72 FR 72598, Dec. 21, 2007]

§ 1.904(f)-4 Recapture of foreign losses out of accumulation distributions from a foreign trust.

(a) ***In general.*** If a taxpayer receives a distribution of foreign source taxable income subject to a separate limitation in which the taxpayer had a balance in an overall foreign loss account and that income is treated under section 666 as having been distributed by a foreign trust in a preceding taxable year, a portion of the balance in the taxpayer's applicable overall foreign loss account shall be subject to recapture under this section. The amount subject to recapture shall be the lesser of the balance in the taxpayer's overall foreign loss account (after applying §§ 1.904(f)-1, 1.904(f)-2, 1.904(f)-3, and 1.904(f)-6 to the taxpayer's other income or loss in the current taxable year) or the entire amount of foreign source taxable income deemed distributed in a preceding year or years under section 666.

(b) ***Effect of recapture on foreign tax credit limitation under section 667(d).*** If paragraph (a) of this section is applicable, then in applying the separate limitation (in accordance with section 667(d)(1) (A) and (C)) to determine the amount of foreign taxes deemed distributed under section 666 (b) and (c) that can be credited against the increase in tax in a computation year, a portion of the foreign source taxable income deemed distributed in such computation year shall be treated as United States source income. Such portion shall be determined by multiplying the amount of foreign source taxable income deemed distributed in the computation year by a fraction. The numerator of this fraction is the balance in the taxpayer's overall foreign loss account (after application of §§ 1.904(f)-1, 1.904(f)-2, 1.904(f)-3, and 1.904(f)-6), and the denominator of the fraction is the entire amount of foreign source taxable income deemed distributed under section 666. However, the numerator of this fraction shall not exceed the denominator of the fraction.

(c) ***Recapture if taxpayer deducts foreign taxes deemed distributed.*** If paragraph (a) of this section is applicable and if, in accordance with section 667(d)(1)(B), the beneficiary deducted rather than credited its taxes in the computation year, the beneficiary shall reduce its overall foreign loss account (but not below zero) by an amount equal to the lesser of the balance in the applicable overall foreign loss account or the amount of the actual distribution deemed distributed in the computation year (without regard to the foreign taxes deemed distributed).

(d) ***Illustrations.*** The provisions of this section are illustrated by the following examples:

Example 1. X Corporation is a domestic corporation that has a balance of $10,000 in its general limitation overall foreign loss account on December 31, 1980. For its taxable year beginning January 1, 1981, X's only income is an accumulation distribution from a foreign trust of $20,000 of general limitation foreign source taxable income. Under section 666, the amount distributed and the foreign taxes paid on such amount ($4,000) are deemed distributed in two prior taxable years. In determining the partial tax on such distribution under section 667(b), the amount added to each computation year is $12,000 (the sum of the actual distribution plus the taxes deemed distributed ($24,000) divided by the number of accumulation years (2)). Of that amount, $5,000 ($10,000/$24,000 × $12,000) is treated as United States source taxable income in accordance with paragraph (b) of this section. Assuming the United States tax rate is 50 percent, X's separate foreign tax credit limitation against the increase in tax in each computation year is $3,500 ($7,000/$12,000 × $6,000) instead of $6,000 ($12,000/$12,000 × $6,000). X's overall foreign loss account is reduced to zero in accordance with paragraph (a) of this section.

Example 2. Assume the same facts as in Example 1, except that X deducted rather than credited its foreign taxes in the computation years. In 1979, the amount added to X's income is $12,000 under section 667(b), $2,000 of which is deductible under section 667(d)(1)(B). X must reduce its overall foreign loss account by $10,000, the amount of the actual distribution that is deemed distributed in 1979 (without regard to the $2,000 foreign taxes also deemed distributed). The entire overall foreign loss account is therefore reduced to $0 in 1979.

[T.D. 8153, 52 FR 32002, Aug. 25, 1987]

§ 1.904(f)-5 Special rules for recapture of overall foreign losses of a domestic trust.

(a) ***In general.*** Except as provided in this section, the rules contained in §§ 1.904(f)-1, 1.904(f)-2, 1.904(f)-3, 1.904(f)-4, and 1.904(f)-6 apply to domestic trusts.

(b) ***Recapture of trust's overall foreign loss.*** In taxable years in which a trust has foreign source taxable income subject to a separate limitation in which the trust has a balance in its overall foreign loss account, the balance in the trust's overall foreign loss account shall be recaptured as follows:

(1) ***Trust accumulates income.*** If the trust accumulates all of its foreign source taxable income subject to the same limitation as the loss that created the balance in the overall foreign loss account, its overall foreign loss shall be recaptured out of such income in accordance with §§ 1.904(f)-1, 1.904(f)-2, 1.904(f)-3, 1.904(f)-4, and 1.904(f)-6.

(2) ***Trust distributes income.*** If the trust distributes all of its foreign source taxable income subject to the same limitation as the loss that created the overall foreign loss account, the amount of the overall foreign loss that would be subject to recapture by the trust under paragraph (b)(1) of this section shall be allocated to the beneficiaries in proportion to the amount of such income which is distributed to each beneficiary in that year.

(3) ***Trust accumulates and distributes income.*** If the trust accumulates part of its foreign source taxable income subject to the same limitation as the loss that created the overall foreign loss account and distributes part of such income, the portion of the overall foreign loss that would be subject to recapture by the trust under paragraph (b)(1) of this section if the distributed income were accumulated shall be allocated to the beneficiaries receiving income distributions. The amount of overall foreign loss to be allocated to such beneficiaries shall be the same portion of the total amount of such overall foreign loss that would be recaptured as the amount of such income which is distributed to each beneficiary bears to the total amount of such income of the trust for such year.

That portion of the overall foreign loss subject to recapture in such year that is not allocated to the beneficiaries in accordance with this paragraph (b)(3) shall be recaptured by the trust in accordance with paragraph (b)(1).

(c) ***Amounts allocated to beneficiaries.*** Amounts of a trust's overall foreign loss allocated to any beneficiary in accordance with paragraph (b)(2) or (3) of this section shall be added to the beneficiary's applicable overall foreign loss account and treated as an overall foreign loss of the beneficiary incurred in the taxable year preceding the year of such allocation. Such amounts shall be recaptured in accordance with §§ 1.904(f)-1, 1.904(f)-2, 1.904(f)-3, 1.904(f)-4, and 1.904(f)-6 out of foreign source taxable income distributed by the trust which is subject to the same separate limitation.

(d) ***Section 904(f)(3) dispositions to which § 1.904(f)-2(d)(4)(i) is applicable.*** Foreign source taxable income recognized by a trust under § 1.904(f)-2(d)(4) on a disposition of property used in a trade or business outside the United States shall be deemed to be accumulated by the trust. All such income shall be used to recapture the trust's overall foreign loss in accordance with § 1.904(f)-2(d)(4).

(e) ***Illustrations.*** The provisions of this section are illustrated by the following examples:

Example 1. T, a domestic trust, has a balance of $2,000 in a general limitation overall foreign loss account on December 31, 1983. For its taxable year ending on December 31, 1984, T has foreign source taxable income subject to the general limitation of $1,600, all of which it accumulates. Under paragraph (b)(1) of this section, T is required to recapture $800 in 1984 (the lesser of the overall foreign loss or 50 percent of the foreign source taxable income). This amount is treated as United States source income for purposes of taxing T in 1984 and upon subsequent distribution to T's beneficiaries. At the end of its 1984 taxable year, T has a balance of $1,200 in its overall foreign loss account.

Example 2. The facts are the same as in example 1. In 1985, T has general limitation foreign source taxable income of $1,000, which it distributes to its beneficiaries as follows: $500 to A, $250 to B, and $250 to C. Under paragraph (b)(1) of this section, T would have been required to recapture $500 of its overall foreign loss if it had accumulated all of such income. Therefore, under paragraph (b)(2) of this section, T must allocate $500 of its overall foreign loss to A, B, and C as follows: $250 to A ($500 × $500/$1,000), $125 to B ($500 × $250/$1,000), and $125 to C ($500 × $250/$1,000). Under paragraph (c) of this section and § 1.904(f)-1(d)(4), A, B, and C must add the amounts of general limitation overall foreign loss allocated to them from T to their overall foreign loss accounts and treat such amounts as overall foreign losses incurred in 1984. A, B, and C must then apply the rules of §§ 1.904(f)-1, 1.904(f)-2, 1.904(f)-3, 1.904(f)-4, and 1.904(f)-6 to recapture their overall foreign losses. T's overall foreign loss account is reduced in accordance with § 1.904(f)-1(e)(1) by the $500 that is allocated to A, B, and C. At the end of 1985, T's general limitation overall foreign loss account has a balance of $700.

Example 3. The facts are the same as in example 2, including an overall foreign loss account at the end of 1984 of $1,200, except that in 1985 T's general limitation foreign source taxable income is $1,500 instead of $1,000, and T accumulates the additional $500. Under paragraph (b)(1) of this section, T would be required to recapture $750 of its overall foreign loss if it accumulated all of the $1,500. Under paragraph (b)(3) of this section, T must allocate $500 of its overall foreign loss to A, B, and C as follows: $250 to A ($750 × $500/$1,500) and $125 each to B and C (750 × $250/$1,500). T must also recapture $250 of its overall foreign loss, which is the amount subject to recapture in 1985 that is not allocated to the beneficiaries ($750−$500 = $250). Under § 1.904(f)-1(e)(1), T reduces its general limitation overall foreign loss account by $500. Under § 1.904(f)-1(e)(2), T reduces its general limitation overall foreign loss account by $250. At the end of 1985 there is a balance in the general limitation overall foreign loss account of $450 (($1,200−$500)−$250).

[T.D. 8153, 52 FR 32002, Aug. 25, 1987; 52 FR 43434, Nov. 12, 1987]

§ 1.904(f)-6 Transitional rule for recapture of FORI and general limitation overall foreign losses incurred in taxable years beginning before January 1, 1983, from foreign source taxable income subject to the general limitation in taxable years beginning after December 31, 1982.

(a) ***General rule.*** For taxable years beginning after December 31, 1982, foreign source taxable income subject to the general limitation includes foreign oil related income (as defined in section 907(c)(2) prior to its amendment by section 211 of the Tax Equity and Fiscal Responsibility Act of 1982). However, for purposes of recapturing general limitation overall foreign losses incurred in taxable years beginning before January 1, 1983 (pre-1983) out of foreign source taxable income subject to the general limitation in taxable years beginning after December 31, 1982 (post-1982), the taxpayer shall make separate determinations of foreign oil related income and other general limitation income (as if the FORI limitation under "old section 907(b)" (prior to its amendment by section 211 of the Tax Equity and Fiscal Responsibility Act of 1982) were still in effect), and shall apply the rules set forth in this section. The taxpayer shall maintain separate accounts for its pre-1983 FORI limitation overall foreign losses, its pre-1983 general limitation overall foreign losses (or its pre-1983 section 904(d)(1)(A-C) overall foreign losses if such losses were computed on a combined basis), and its post-1982 general limitation overall foreign losses. The taxpayer shall continue to maintain such separate accounts, make such separate determinations, and apply the rules of this section separately to each account until the earlier of—

(1) Such time as the taxpayer's entire pre-1983 FORI limitation overall foreign loss account and pre-1983 general limitation overall foreign loss account (or, if the taxpayer determined pre-1983 overall foreign losses on a combined basis, the section 904(d)(1)(A-C) account) have been recaptured, or

(2) The end of the taxpayer's 8th post-1982 taxable year, at which time the taxpayer shall add any remaining balance in its pre-1983 FORI limitation account and pre-1983 general limitation overall foreign loss account (or the section 904(d)(1)(A-C) account) to its post-1982 general limitation overall foreign loss account.

(b) ***Recapture of pre-1983 FORI and general limitation overall foreign losses from post-1982 income.*** A taxpayer having a balance in its pre-1983 FORI limitation overall foreign loss account or its pre-1983 general limitation overall foreign loss account (or its pre-1983 section 904(d)(1)(A-C) account) in a post-1982 taxable year shall recapture such overall foreign loss as follows:

(1) ***Recapture from income subject to the same limitation.*** The taxpayer shall first apply the rules of §§ 1.904(f)-1 through 1.904(f)-5 to the taxpayer's separately determined foreign oil related income to recapture the pre-1983 FORI limitation overall foreign loss account, and shall apply such rules to the taxpayer's separately determined general limitation income (exclusive of foreign oil related income) to recapture the pre-1983 general limitation overall foreign loss account (or the section 904(d)(1)(A-C) overall foreign loss account. Rules for determining the recapture of the pre-1983 section 904 (d)(1)(A-C) losses are contained in § 1.904(f)-2(c)(4).

(2) ***Recapture from income subject to the other limitation.*** The taxpayer shall next apply the rules of §§ 1.904(f)-1 through 1.904(f)-5 to the taxpayer's separately determined foreign oil related income to recapture the pre-1983 general limitation overall foreign loss account (or the section 904(d)(1)(A-C) overall foreign loss account) and shall apply such rules to the taxpayer's separately determined general limitation income to recapture foreign oil related losses to the extent that—

(i) The amount recaptured from such separately determined income under paragraph (b)(1) of this section is less than 50 percent (or such larger percentage as the taxpayer elects) of such separately determined income, and

(ii) The amount recaptured from such separately determined income under this paragraph (b)(2) does not exceed an amount equal to $12^1/_2$ percent of the balance in the taxpayer's pre-1983 FORI limitation overall foreign loss account or the pre-1983 general limitation overall foreign loss account (or the section 904(d)(1)(A-C) overall foreign loss account) at the beginning of the taxpayer's first post-1982 taxable year, multiplied by the number of post-1982 taxable years (including the year to which this rule is being applied) which have elapsed, less the amount (if any) recaptured in prior post-1982 taxable years under this paragraph (b)(2) from such separately determined income.

The taxpayer may elect to recapture a pre-1983 overall foreign loss from post-1982 income subject to the general limitation at a faster rate than is required by this paragraph (b)(2). This election shall be made in the same manner as an election to recapture more than 50 percent of the income subject to recapture under section 904(f)(1), as provided in § 1.904(f)-2(c)(2).

(c) ***Coordination of recapture of pre-1983 and post-1982 overall foreign losses.*** A taxpayer incurring a general limitation overall foreign loss in any post-1982 taxable year in which the taxpayer has a balance in a pre-1983 FORI limitation or its pre-1983 general limitation overall foreign loss account (or the section 904(d)(1)(A-C) overall foreign loss account) shall establish a separate overall foreign loss account for such loss. The taxpayer shall recapture its overall foreign losses in succeeding taxable years by first applying the rules of this section to recapture its pre-1983 overall foreign losses, and then applying the rules of §§ 1.904(f)-1 through 1.904(f)-5 to recapture its post-1982 general limitation overall foreign loss. A post-1982 general limitation overall foreign loss is required to be recaptured only to the extent that the amount of foreign source taxable income recharacterized under paragraph (b) of this section is less than 50 percent of the taxpayer's total general limitation foreign source taxable income (including foreign oil related income)) for such taxable year (except as required by section 904(f)(3)). However, a taxpayer may elect to recapture at a faster rate.

(d) ***Illustrations.*** The provisions of this section are illustrated by the following examples:

Example 1. X Corporation is a domestic corporation which has the calendar year as its taxable year. On December 31, 1982, X has a balance of $1,000 in its section 904(d)(1)(A-C) overall foreign loss account. X does not have a balance in a FORI limitation overall foreign loss account. For 1983, X has income of $1,200, which was subject to the general limitation and includes foreign oil related income of $1,000 and other general limitation income of $200. In 1983, X is required to recapture $225 of its pre-1983 section 904(d)(1)(A-C) overall foreign loss account computed as follows: Amount recaptured under paragraph (b)(1) of this section$100The amount recaptured from general limitation income exclusive of foreign oil related income is the lesser of $1,000 (the pre-1983 loss reflected in the section 904(d)(1)(A-C) overall foreign loss account) or 50 percent of $200 (the separately determined general limitation income (exclusive of foreign oil related income). Amount recaptured under paragraph (b)(2) of this section$125The amount recaptured from foreign oil related income is the lesser of $900 (the remaining pre-1983 section 904(d)(1)(A-C) overall foreign loss account after recapture under paragraph (b)(1) of this section) or 50 percent of $1,000 (the separately determined foreign oil related income), but as limited by paragraph (b)(2)(ii) of this section to ($12^1/_2$ percent of $1,000 × 1)−$0, which is $125. Total amount recaptured in 1983$225

Example 2. The facts are the same as in example 1, except that X has general limitation income of $50 for 1984 and $600 for 1985, all of which is foreign oil related income. X is required to recapture $25 in 1984 and $225 in 1985 of its pre-1983 section 904(d)(1)(A-C) overall foreign loss account computed as follows: Amount recaptured under paragraph (b)(2) of this section in 1984$25The amount recaptured from foreign oil related income is the lesser of $775 (the remaining pre-1983 section 904(d)(1)(A-C) overall foreign loss account or 50 percent of $50 (the separately determined foreign oil related income).This amount is within the limitation of paragraph (b)(2)(ii) of this section, (12$^{1}/_{2}$ percent of $1,000 × 2)−$125, which is $125. Amount recaptured under paragraph (b)(2) of this section in 1985$225The amount recaptured from foreign oil related income is the lesser of $750 (the remaining pre-1983 section 904(d)(1)(A-C) overall foreign loss account) or 50 percent of $600 (the separately determined foreign oil related income), but as limited by paragraph (b)(2)(ii) of this section to (12$^{1}/_{2}$ percent of $1,000 × 3)-($125 + $25), which is $225. ($125 is the amount recaptured in 1983 under paragraph (b)(2) of this section, and $25 is the amount recaptured in 1984 under paragraph (b)(2) of this section.)

Example 3. Y Corporation is a domestic corporation which has the calendar year as its taxable year. On December 31, 1982, Y has a balance of $400 in its section 904(d)(1)(A-C) overall foreign loss account. Y does not have a balance in a FORI overall foreign loss account. For 1983, Y has a general limitation overall foreign loss of $200. For 1984, Y has general limitation income of $1,200, all of which is foreign oil related income. In 1984, Y is required to recapture a total of $300 computed as follows: Amount of pre-1983 overall foreign loss recaptured under paragraph (b)(2) of this section$100The amount of the pre-1983 section 904(d)(1)(A-C) overall foreign loss account attributable to a general limitation loss recaptured from foreign oil related income is the lesser of $400 (the loss) or 50 percent of $1,200 (the separately determined foreign oil related income), but as limited by paragraph (b)(2)(ii) of this section to (12$^{1}/_{2}$ percent of $400 × 2) − $0, which is $100. Amount of post-1982 overall foreign loss recaptured under paragraph (c) of this section$200The amount of post-1982 general limitation overall foreign loss recaptured is the amount computed under § 1.904 (f)−2(c)(1), which is the lesser of $200 (the post-1982 loss) or 50 percent of $1,200 (the income), but only to the extent that the amount of pre-1983 loss recaptured under paragraph (b) of this section is less than 50 percent of such income ((50 percent of $1,200)—$100 recaptured under paragraph (b) = $500). Total amount recaptured in 1984$300At the end of 1984, Y has a balance in its pre-1983 section 904(d)(1)(A-C) overall foreign loss account of $300, and has reduced its post-1982 general limitation overall foreign loss account to zero.

Example 4. Z is a domestic corporation which has the calendar year as its taxable year. On December 31, 1982, Z has a balance of $400 in its section 904 (d)(1)(A-C) overall foreign loss account, and a balance of $1,000 in its FORI limitation overall foreign loss account. For 1983, Z has general limitation income of $2,000, which includes foreign oil related income of $1,000 and other general limitation income of $1,000. Keeping these amounts separate for purposes of this section, Z is required to recapture a total of $1,000 in 1983, computed as follows: Amount recaptured under paragraph (b)(1) of this section$900The amount of pre-1983 section 904(d)(1)(A-C) overall foreign loss account recaptured from general limitation income exclusive of foreign oil related income, in accordance with § 1.904 (f)-2(c)(1), is the lesser of $400 (the section 904(d)(1)(A-C) overall foreign loss) or 50 percent of $1,000, the general limitation income exclusive of foreign oil related income), which is $400. The amount of pre-1983 FORI overall foreign loss recaptured from foreign oil related income, in accordance with § 1.904(f)-2(c)(1), is the lesser of $1,000 (the FORI overall foreign loss) or 50 percent of $1,000 (the foreign oil related income), which is $500. Amount recaptured under paragraph (b)(2) of this section$100The amount of pre-1983 FORI 907(b) overall foreign loss recaptured from section general limitation income exclusive of foreign oil related income is the lesser of $500 (the remaining balance in that loss account) or 50 percent of $1,000 (the general limitation income exclusive of foreign oil related income), but only to the extent that the amount recaptured from such income under paragraph (b)(1) of this section is less than 50 percent of such

income, or $100 (50 percent of $1,000)—$400 recaptured due to section 904(d)(1)(A-C) overall foreign loss account, and only up to the amount permitted by paragraph (b)(2)(ii) of this section, which is (12½ percent of $1,000 × 1)−$0, or $125. Total amount recaptured in 1983$1,000At the end of 1983, Z has reduced its pre-1983 section 904(d)(1)(A-C) overall foreign loss account to zero, and has a balance in its pre-1983 FORI overall foreign loss account of $400.

[T.D. 8153, 52 FR 32003, Aug. 25, 1987; 52 FR 43434, Nov. 12, 1987]

§ 1.904(f)-7 Separate limitation loss and the separate limitation loss account.

(a) ***Overview of regulations.*** This section provides rules for determining a taxpayer's separate limitation losses, for establishing separate limitation loss accounts, and for making additions to and reducing such accounts for purposes of section 904(f). Section 1.904(f)-8 provides rules for recharacterizing the balance in any separate limitation loss account under the general recharacterization rule of section 904(f)(5)(C).

(b) ***Definitions.*** The definitions in paragraphs (b)(1) through (b)(4) of this section apply for purposes of this section and §§ 1.904(f)-8 and 1.904(g)-3.

(1) ***Separate category*** means each separate category of income described in section 904(d) and any other category of income described in § 1.904-4(m). For example, income subject to section 901(j) or section 904(h)(10) is income in a separate category.

(2) ***Separate limitation income*** means, with respect to any separate category, the taxable income from sources outside the United States, separately computed for that category for the taxable year. Separate limitation income shall be determined by taking into account any adjustments for capital gains and losses and qualified dividend income, as defined in section 1(h)(11), under section 904(b)(2) and § 1.904(b)-1. See § 1.904(b)-1(h)(1)(i).

(3) ***Separate limitation loss*** means, with respect to any separate category, the amount by which the foreign source gross income in that category is exceeded by the sum of expenses, losses and other deductions (not including any net operating loss deduction under section 172(a) or any expropriation loss or casualty loss described in section 907(c)(4)(D)(iii)) properly apportioned or allocated to that separate category for the taxable year. Separate limitation losses shall be determined by taking into account any adjustments for capital gains and losses and qualified dividend income under section 904(b)(2) and § 1.904(b)-1. See § 1.904(b)-1(h)(1)(i).

(c) ***Separate limitation loss account.*** Any taxpayer that sustains a separate limitation loss that is allocated to reduce separate limitation income in one or more other separate categories of the taxpayer under the rules of § 1.904(g)-3 must establish a separate limitation loss account for the loss with respect to each such other separate category. The balance in any separate limitation loss account represents the amount of such separate limitation loss that is subject to recapture in a given taxable year pursuant to § 1.904(f)-8 and section 904(f)(5)(F). From year to year, amounts may be added to or subtracted from the balance in such loss accounts, as provided in paragraphs (d) and (e) of this section.

(d) ***Additions to separate limitation loss accounts*** —

(1) ***General rule.*** A taxpayer's separate limitation loss as defined in paragraph (b)(3) of this section shall be added to the applicable separate limitation loss accounts at the end of its taxable year to the extent that the separate limitation loss reduces separate limitation income in one or more other separate categories in that taxable year or in a year to which the loss has been carried back. For rules with respect to net operating loss carryovers, see paragraph (d)(3) of this section and § 1.904(g)-3.

(2) ***Separate limitation losses of another taxpayer.*** If any portion of any separate limitation loss account of another taxpayer is allocated to the taxpayer in accordance with § 1.1502-9 (relating to consolidated separate limitation losses) the taxpayer shall add such amount to its applicable separate limitation loss account.

(3) ***Additions to separate limitation loss account created by loss carryovers.*** The taxpayer shall add to each separate limitation loss account all net operating loss carryovers to the current taxable year to the extent that separate limitation losses included in the net operating loss carryovers reduced foreign source income in one or more other separate categories for the taxable year.

(e) ***Reductions of separate limitation loss accounts.*** The taxpayer shall subtract the following amounts from its separate limitation loss accounts at the end of its taxable year in the following order as applicable:

(1) ***Pre-recapture reduction for amounts allocated to other taxpayers.*** A separate limitation loss account is reduced by the amount of any separate limitation loss account that is allocated to another taxpayer in accordance with § 1.1502-9 (relating to consolidated separate limitation losses).

(2) ***Reduction for offsetting loss accounts.*** A separate limitation loss account is reduced to take into account any netting of separate limitation loss accounts under § 1.904(g)-3(d)(1).

(3) ***Reduction for amounts recaptured.*** A separate limitation loss account is reduced by the amount of any separate limitation income that is earned in the same separate category as the separate limitation loss and that is recharacterized in accordance with § 1.904(f)-8 (relating to recapture of separate limitation losses) or section 904(f)(5)(F) (relating to recapture of separate limitation loss accounts out of gain realized from certain dispositions).

(f) ***Effective/applicability date.*** This section applies to taxpayers that sustain separate limitation losses in taxable years beginning on or after January 1, 2012. Taxpayers may choose to apply this section to separate limitation losses sustained in other taxable years beginning after December 21, 2007, including periods covered by 26 CFR 1.904(f)-7T (revised as of April 1, 2010). For rules relating to taxable years beginning after December 31, 1986, and on or before December 21, 2007, see section 904(f)(5).

[T.D. 9595, 77 FR 37579, June 22, 2012]

§ 1.904(f)-8 Recapture of separate limitation loss accounts.

(a) ***In general.*** A taxpayer shall recapture a separate limitation loss account as provided in this section. If the taxpayer has a separate limitation loss account or accounts in any separate category (the “loss category”) and the loss category has income in a subsequent taxable year, the income shall be recharacterized as income in that other category or categories. The amount of income recharacterized shall not exceed the aggregate balance in all separate limitation loss accounts for the loss category as determined under § 1.904(f)-7. If the taxpayer has more than one separate limitation loss account in a loss category, and there is not enough income in the loss category to recapture all of the loss accounts, then separate limitation income in the loss category shall be recharacterized as separate limitation income in the other

separate categories on a proportionate basis. This is determined by multiplying the total separate limitation income subject to recharacterization by a fraction, the numerator of which is the amount in a particular separate limitation loss account and the denominator of which is the total amount in all separate limitation loss accounts for the loss category.

(b) ***Effect of recharacterization of separate limitation income on associated taxes.*** Recharacterization of income under paragraph (a) of this section shall not result in the recharacterization of any tax. The rules of § 1.904-6, including the rules that the taxes are allocated on an annual basis and that foreign taxes paid on U.S. source income shall be allocated to the separate category that includes that U.S. source income (see § 1.904-6(a)), shall apply for purposes of allocating taxes to separate categories. Allocation of taxes pursuant to § 1.904-6 shall be made before the recapture of any separate limitation loss accounts of the taxpayer pursuant to the rules of this section.

(c) ***Effective/applicability date.*** This section applies to taxpayers that sustain separate limitation losses in taxable years beginning on or after January 1, 2012. Taxpayers may choose to apply this section to separate limitation losses sustained in other taxable years beginning after December 21, 2007, including periods covered by 26 CFR § 1.904(f)-8T (revised as of April 1, 2010). For rules relating to taxable years beginning after December 31, 1986, and on or before December 21, 2007, see section 904(f)(5).

[T.D. 9595, 77 FR 37580, June 22, 2012]

§§ 1.904(f)-9-1.904(f)-11 [Reserved]

§ 1.904(f)-12 Transition rules.

(a) ***Recapture in years beginning after December 31, 1986, of overall foreign losses incurred in taxable years beginning before January 1, 1987 —***

(1) ***In general.*** If a taxpayer has a balance in an overall foreign loss account at the end of its last taxable year beginning before January 1, 1987 (pre-effective date years), the amount of that balance shall be recaptured in subsequent years by recharacterizing income received in the income category described in section 904(d) as in effect for taxable years beginning after December 31, 1986 (post-effective date years), that is analogous to the income category for which the overall foreign loss account was established, as follows:

(i) Interest income as defined in section 904(d)(1)(A) as in effect for pre-effective date taxable years is analogous to passive income as defined in section 904(d)(1)(A) as in effect for post-effective date years;

(ii) Dividends from a DISC or former DISC as defined in section 904(d)(1)(B) as in effect for pre-effective date taxable years is analogous to dividends from a DISC or former DISC as defined in section 904(d)(1)(F) as in effect for post-effective date taxable years;

(iii) Taxable income attributable to foreign trade income as defined in section 904(d)(1)(C) as in effect for pre-effective date taxable years is analogous to taxable income attributable to foreign trade income as defined in section 904(d)(1)(G) as in effect for post-effective date years;

(iv) Distributions from a FSC (or former FSC) as defined in section 904(d)(1)(D) as in effect for pre-effective date taxable years is analogous to distributions from a FSC (or former FSC) as defined in section 904(d)(1)(H) as in effect for post-effective date taxable years;

(v) For general limitation income as described in section 904(d)(1)(E) as in effect for pre-effective date taxable years, see the special rule in paragraph (a)(2) of this section.

(2) ***Rule for general limitation losses*** —

(i) ***In general.*** Overall foreign losses incurred in the general limitation category of section 904(d)(1)(E), as in effect for pre-effective date taxable years, that are recaptured in post-effective date taxable years shall be recaptured from the taxpayer's general limitation income, financial services income, shipping income, and dividends from each noncontrolled section 902 corporation. If the sum of the taxpayer's general limitation income, financial services income, shipping income and dividends from each noncontrolled section 902 corporation for a taxable year subject to recapture exceeds the overall foreign loss to be recaptured, then the amount of each type of separate limitation income that will be treated as U.S. source income shall be determined as follows:

$$\text{Overall foreign loss subject to recapture} \times \frac{\text{Amount of income in each separate category from which the loss may be recaptured}}{\text{Sum of income in all separate categories from which the loss may be recaptured.}}$$

This recapture shall be made after the allocation of separate limitation losses pursuant to section 904(f)(5)(B) and before the recharacterization of post-effective date separate limitation income pursuant to section 904(f)(5)(C).

(ii) ***Exception.*** If a taxpayer can demonstrate to the satisfaction of the district director that an overall foreign loss in the general limitation category of section 904(d)(1)(E), as in effect for pre-effective date taxable years, is attributable, in sums certain, to losses in one or more separate categories of section 904(d)(1) (including for this purpose the passive income category and the high withholding tax interest category), as in effect for post-effective date taxable years, then the taxpayer may recapture the loss (in the amounts demonstrated) from those separate categories only.

(3) ***Priority of recapture of overall foreign losses incurred in pre-effective date taxable years.*** An overall foreign loss incurred by a taxpayer in pre-effective date taxable years shall be recaptured to the extent thereof before the taxpayer recaptures an overall foreign loss incurred in a post-effective date taxable year.

(4) ***Examples.*** The following examples illustrate the application of this paragraph (a).

Example 1. X corporation is a domestic corporation which operates a branch in Country Y. For its taxable year ending December 31, 1988, X has $800 of financial services income, $100 of general limitation income and $100 of shipping income. X has a balance of $100 in its general limitation overall foreign loss account which resulted from an overall foreign loss incurred during its 1986 taxable year. X is unable to demonstrate to which of the income categories set forth in section 904(d)(1) as in effect for post-effective date taxable years the loss is attributable. In addition, X has a balance of $100 in its shipping overall foreign loss account attributable to a shipping loss incurred during its 1987 taxable year. X has no other overall foreign loss accounts. Pursuant to section 904(f)(1), the full amount in each of X corporation's overall foreign loss accounts is subject to recapture since $200 (the sum of those amounts) is less than 50% of X's foreign source taxable income for its 1988 taxable year, or $500. X's overall

foreign loss incurred during its 1986 taxable year is recaptured before the overall foreign loss incurred during its 1987 taxable year, as follows: $80 ($100 × 800/1000) of X's financial services income, $10 ($100 × 100/1000) of X's general limitation income, and $10 (100 × 100/1000) of X's shipping income will be treated as U.S. source income. The remaining $90 of X corporation's 1988 shipping income will be treated as U.S. source income for the purpose of recapturing X's 100 overall foreign loss attributable to the shipping loss incurred in 1987. $10 remains in X's shipping overall foreign loss account for recapture in subsequent taxable years.

Example 2. The facts are the same as in *Example* 1 except that X has $800 of financial services income, $100 of general limitation income, a $100 dividend from a noncontrolled section 902 corporation and a ($100) shipping loss for its taxable year ending December 31, 1988. Separate limitation losses are allocated pursuant to the rules of section 904(f)(5) before the recapture of overall foreign losses. Therefore, the ($100) shipping loss incurred by X will be allocated to its separate limitation income as follows: $80 ($100 × 800/1000) will be allocated to X's financial services income, $10 ($100 × 100/1000) will be allocated to its general limitation income and $10 ($100 × 100/1000) will be allocated to X's dividend from the noncontrolled section 902 corporation. Accordingly, after allocation of the 1988 shipping loss, X has $720 of financial services income, $90 of general limitation income, and a $90 dividend from the noncontrolled section 902 corporation. Pursuant to section 904(f)(1), the full amount in each of X corporation's overall foreign loss accounts is subject to recapture since $200 (the sum of those amounts) is less than 50% of X's net foreign source taxable income for its 1988 taxable year, or $450. X's overall foreign loss incurred during its 1986 taxable year is recaptured as follows: $80 ($100 × 720/900) of X's financial services income, $10 ($100 × 90/900) of its general limitation income and $10 ($100 × 90/900) of its dividend from the noncontrolled section 902 corporation will be treated as U.S. source income. Accordingly, after application of section 904(f), X has $100 of U.S. source income, $640 of financial services income, $80 of general limitation income and a $80 dividend from the noncontrolled section 902 corporation for its 1988 taxable year. X must establish a separate limitation loss account for each portion of the 1988 shipping loss that was allocated to its financial services income, general limitation income and dividends from the noncontrolled section 902 corporation. X's overall foreign loss account for the 1986 general limitation loss is reduced to zero. X still has a $100 balance in its overall foreign loss account that resulted from the 1987 shipping loss.

Example 3. Y is a domestic corporation which has a branch operation in Country Z. For its 1988 taxable year, Y has $5 of shipping income, $15 of general limitation income and $100 of financial services income. Y has a balance of $100 in its general limitation overall foreign loss account attributable to its 1986 taxable year. Y has no other overall foreign loss accounts. Pursuant to section 904(f)(1), $60 of the overall foreign loss is subject to recapture since 50% of Y's foreign source income for 1988 is less than the balance in its overall foreign loss account. Y can demonstrate that the entire $100 overall foreign loss was attributable to a shipping limitation loss incurred in 1986. Accordingly, only Y's $5 of shipping limitation income received in 1988 will be treated as U.S. source income, Because Y can demonstrate that the 1986 loss was entirely attributable to a shipping loss, none of Y's general limitation income or financial services income received in 1988 will be treated as U.S. source income.

Example 4. The facts are the same as in *Example* 3 except that Y can only demonstrate that $50 of the 1986 overall foreign loss account was attributable to a shipping loss incurred in 1986. Accordingly, Y's $5 of shipping limitation income received in 1988 will be treated as U.S. source income. The remaining $50 of the 1986 overall foreign loss that Y cannot trace to a particular

separate limitation will be recaptured and treated as U.S. source income as follows: $43 ($50 × 100/115) of Y's financial services income will be treated as U.S. source income and $7 ($50 × 15/115) of Y's general limitation income will be treated as U.S. source income. Y has $45 remaining in its overall foreign loss account to be recaptured from shipping income in a future year.

(b) ***Treatment of overall foreign losses that are part of net operating losses incurred in pre-effective date taxable years which are carried forward to post-effective date taxable years*** —

(1) ***Rule.*** An overall foreign loss that is part of a net operating loss incurred in a pre-effective date taxable year which is carried forward, pursuant to section 172, to a post-effective date taxable year will be carried forward under the rules of section 904(f)(5) and the regulations under that section. *See also* Notice 89-3, 1989-1 C.B. 623. For this purpose the loss must be allocated to income in the category analogous to the income category set forth in section 904(d) as in effect for pre-effective date taxable years in which the loss occurred. The analogous category shall be determined under the rules of paragraph (a) of this section.

(2) ***Example.*** The following example illustrates the rule of paragraph (b)(1) of this section.

Example. Z is a domestic corporation which has a branch operation in Country D. For its taxable year ending December 31, 1988, Z has $100 of passive income and $200 of general limitation income. Z also has a $60 net operating loss which was carried forward pursuant to section 172 from its 1986 taxable year. The net operating loss resulted from an overall foreign loss attributable to the general limitation income category. Z can demonstrate that the loss is a shipping loss. Therefore, the net operating loss will be treated as a shipping loss for Z's 1988 taxable year. Pursuant to section 904(f)(5), the shipping loss will be allocated as follows: $20 ($60 × 100/300) will be allocated to Z's passive income and $40 ($60 × 200/300) will be allocated to Z's general limitation income. Accordingly, after application of section 904(f), Z has $80 of passive income and $160 of general limitation income for its 1988 taxable year. Although no addition to Z's overall foreign loss account for shipping income will result from the NOL carry forward, shipping income earned by Z in subsequent taxable years, will be subject to recharacterization as a passive income and general limitation income pursuant to the rules set forth in section 904(f)(5).

(c) ***Treatment of overall foreign losses that are part of net operating losses incurred in post-effective date taxable years which are carried back to pre-effective date taxable years*** —

(1) ***Allocation to analogous income category.*** An overall foreign loss that is part of a net operating loss incurred by the taxpayer in a post-effective date taxable year which is carried back, pursuant to section 172, to a pre-effective date taxable year shall be allocated first to income in the pre-effective date income category analogous to the income category set forth in section 904(d) as in effect for post-effective date taxable years in which the loss occurred. Except for the general limitation income category, the pre-effective date income category that is analogous to a post-effective date income category shall be determined under paragraphs (a)(1) (i) through (iv) of this section. The general limitation income category for pre-effective date years shall be treated as the income category that is analogous to the post-effective date categories for general limitation income, financial services income, shipping income, dividends from each noncontrolled section 902 corporation and high withholding tax interest income. If the net operating loss resulted from separate limitation losses in more than one post-effective date income category and more than one loss is carried back to pre-effective date general limitation income, then the losses shall be allocated to the pre-effective date general limitation income based on the following formula:

$$\text{Pre-effective date general limitation income} \times \frac{\text{Loss in each post-effective date separate limitation category that is analogous to pre-effective date general limitation income}}{\text{Losses in all post-effective categories that are analogous to pre-effective date general limitation income}}$$

(2) ***Allocation to U.S. source income.*** If an overall foreign loss is carried back to a pre-effective date taxable year and the loss exceeds the foreign source income in the analogous category for the carry back year, the remaining loss shall be allocated against U.S. source income as set forth in § 1.904(f)-3. The amount of the loss that offsets U.S. source income must be added to the taxpayer's overall foreign loss account. An addition to an overall foreign loss account resulting from the carry back of a net operating loss incurred by a taxpayer in a post-effective date taxable year shall be treated as having been incurred by the taxpayer in the year in which the loss arose and shall be subject to recapture pursuant to section 904(f) as in effect for post-effective date taxable years.

(3) ***Allocation to other separate limitation categories.*** To the extent that an overall foreign loss that is carried back as part of a net operating loss exceeds the separate limitation income to which it is allocated and the U.S. source income of the taxpayer for the taxable year to which the loss is carried, the loss shall be allocated pro rata to other separate limitation income of the taxpayer for the taxable year. However, there shall be no recharacterization of separate limitation income pursuant to section 904(f)(5) as a result of the allocation of such a net operating loss to other separate limitation income of the taxpayer.

(4) ***Examples.*** The following examples illustrate the rules of paragraph (c) of this section.

Example 1. X is a domestic corporation which has a branch operation in Country A. For its taxable year ending December 31, 1987, X has a $60 net operating loss which is carried back pursuant to section 172 to its taxable year ending December 31, 1985. The net operating loss resulted from a shipping loss; X had no U.S. source income in 1987. X had $20 of general limitation income, $40 of DISC limitation income and $10 of U.S. source income for its 1985 taxable year. The $60 NOL is allocated first to X's 1985 general limitation income to the extent thereof ($20) since the general limitation income category of section 904(d) as in effect for pre-effective date taxable years is the income category that is analogous to shipping income for post-effective date taxable years. Therefore, X has no general limitation income for its 1985 taxable year. Next, pursuant to section 904(f) as in effect for pre-effective date taxable years, the remaining $40 of the NOL is allocated first to X's $10 of U.S. source income and then to $30 of X's DISC limitation income for its 1985 taxable year. Accordingly, X has no U.S. source income and $10 of DISC limitation income for its 1985 taxable year after allocation of the NOL. X has a $10 balance in its shipping overall foreign loss account which is subject to recapture pursuant to section 904(f) as in effect for post-effective date taxable years. X will not be required to recharacterize, pursuant to section 904(f)(5), subsequent shipping income as DISC limitation income.

Example 2. Y is a domestic corporation which has a branch operation in Country B. For its taxable year ending December 31, 1987, X has a $200 net operating loss which is carried back pursuant to section 172 to its taxable year ending December 31, 1986. The net operating loss resulted from a ($100) general limitation loss and a ($100) shipping loss. Y had $100 of general limitation income and $200 of U.S. source income for its taxable year ending December 31,

1986. The separate limitation losses for 1987 are allocated pro rata to Y's 1986 general limitation income as follows: $50 of the ($100) general limitation loss ($100 × 100/200) and $50 of the ($100) shipping loss ($100 × 100/200) is allocated to Y's $100 of 1986 general limitation income. The remaining $50 of Y's general limitation loss and the remaining $50 of Y's shipping loss are allocated to Y's 1986 U.S. source income. Accordingly, Y has no foreign source income and $100 of U.S. source income for its 1986 taxable year. Y has a $50 balance in its general limitation overall foreign loss account and a $50 balance in its shipping overall foreign loss account, both of which will be subject to recapture pursuant to section 904(f) as in effect for post-effective date taxable years.

(d) ***Recapture of FORI and general limitation overall foreign losses incurred in taxable years beginning before January 1, 1983.*** For taxable years beginning after December 31, 1986, and before January 1, 1991, the rules set forth in § 1.904 (f)-6 shall apply for purposes of recapturing general limitation and foreign oil related income (FORI) overall foreign losses incurred in taxable years beginning before January 1, 1983 (pre-1983). For taxable years beginning after December 31, 1990, the rules set forth in this section shall apply for purposes of recapturing pre-1983 general limitation and FORI overall foreign losses.

(e) ***Recapture of pre-1983 overall foreign losses determined on a combined basis.*** The rules set forth in paragraph (a)(2) of this section shall apply for purposes of recapturing overall foreign losses incurred in taxable years beginning before January 1, 1983, that were computed on a combined basis in accordance with § 1.904 (f)-1(c) (1).

(f) ***Transition rules for taxable years beginning before December 31, 1990.*** For transition rules for taxable years beginning before January 1, 1990, see 26 CFR 1.904 (f)-13T as it appeared in the Code of Federal Regulations revised as of April 1, 1990.

(g) ***Recapture in years beginning after December 31, 2002, of separate limitation losses and overall foreign losses incurred in years beginning before January 1, 2003, with respect to the separate category for dividends from a noncontrolled section 902 corporation —***

(1) ***Recapture of separate limitation loss or overall foreign loss in a separate category for dividends from a noncontrolled section 902 corporation.*** To the extent that a taxpayer has a balance in any separate limitation loss or overall foreign loss account in a separate category for dividends from a noncontrolled section 902 corporation under section 904(d)(1)(E) (prior to its repeal by Public Law 108-357, 118 Stat. 1418 (October 22, 2004)) at the end of the taxpayer's last taxable year beginning before January 1, 2003 (or a later taxable year in which the taxpayer received a dividend subject to a separate limitation for dividends from that noncontrolled section 902 corporation), the amount of such balance shall be allocated on the first day of the taxpayer's next taxable year to the taxpayer's other separate categories. The amount of such balance shall be allocated in the same percentages as the taxpayer properly characterized the stock of the noncontrolled section 902 corporation for purposes of apportioning the taxpayer's interest expense for its first taxable year ending after the first day of such corporation's first taxable year beginning after December 31, 2002, under § 1.861-12T(c)(3) or § 1.861-12(c)(4), as the case may be. To the extent a taxpayer has a balance in any separate limitation loss account in a separate category for dividends from a noncontrolled section 902 corporation with respect to another separate category, and the separate limitation loss would otherwise be assigned to that other category under this paragraph (g)(1), such balance shall be eliminated.

(2) ***Recapture of separate limitation loss in another separate category.*** To the extent that a taxpayer has a balance in any separate limitation loss account in a separate category with respect to a separate category for dividends from a noncontrolled section 902 corporation under section 904(d)(1)(E)

(prior to its repeal by Public Law 108-357, 118 Stat. 1418 (October 22, 2004)) at the end of the taxpayer's last taxable year with or within which ends the last taxable year of the noncontrolled section 902 corporation beginning before January 1, 2003, such loss shall be recaptured in subsequent taxable years as income in the appropriate separate categories. The separate limitation loss shall be recaptured as income in other separate categories in the same percentages as the taxpayer properly characterizes the stock of the noncontrolled section 902 corporation for purposes of apportioning the taxpayer's interest expense in its first taxable year ending after the first day of the foreign corporation's first taxable year beginning after December 31, 2002, under § 1.861-12T(c)(3) or § 1.861-12(c)(4), as the case may be. To the extent a taxpayer has a balance in a separate limitation loss account in a separate category that would have been recaptured as income in that same category under this paragraph (g)(2), such balance shall be eliminated.

(3) ***Exception.*** Where a taxpayer formerly met the stock ownership requirements of section 902(a) with respect to a foreign corporation, but did not meet the requirements of section 902(a) on December 20, 2002 (or on the first day of the taxpayer's first taxable year beginning after December 31, 2002, in the case of a transaction that was the subject of a binding contract in effect on December 20, 2002), if the taxpayer has a balance in any separate limitation loss or overall foreign loss account for a separate category for dividends from that foreign corporation under section 904(d)(1)(E) (prior to its repeal by Public Law 108-357, 118 Stat. 1418 (October 22, 2004)) at the end of the taxpayer's last taxable year beginning before January 1, 2003, then the amount of such balance shall not be subject to recapture under section 904(f) and this section. If a separate limitation loss or overall foreign loss account for such category is not subject to recapture under this paragraph (g)(3), the taxpayer cannot carry over any unused foreign taxes in such separate category to any other limitation category. However, a taxpayer may elect to recapture the balances of all separate limitation loss and overall foreign loss accounts for all separate categories for dividends from such formerly-owned noncontrolled section 902 corporations under the rules of paragraphs (g)(1) and (2) of this section. If a taxpayer so elects, it may carry over any unused foreign taxes in these separate categories to the appropriate separate categories as provided in § 1.904-2(h).

(4) ***Examples.*** The following examples illustrate the application of this paragraph (g):

Example 1. X is a domestic corporation that meets the ownership requirements of section 902(a) with respect to Y, a foreign corporation the stock of which X owns 50 percent. Therefore, Y is a noncontrolled section 902 corporation with respect to X. Both X and Y use the calendar year as their taxable year. As of December 31, 2002, X had a $100 balance in its separate limitation loss account for the separate category for dividends from Y, of which $60 offset general limitation income and $40 offset passive income. For purposes of apportioning X's interest expense for its 2003 taxable year, X properly characterized the stock of Y as a multiple category asset (80% general and 20% passive). Under paragraph (g)(1) of this section, on January 1, 2003, $80 ($100 × 80/100) of the $100 balance in the separate limitation loss account is assigned to the general limitation category. Of this $80 balance, $32 ($80 × 40/100) is with respect to the passive category, and $48 ($80 × 60/100) is with respect to the general limitation category and therefore is eliminated. The remaining $20 balance ($100 × 20/100) of the $100 balance is assigned to the passive category. Of this $20 balance, $12 ($20 × 60/100) is with respect to the general limitation category, and $8 ($20 × 40/100) is with respect to the passive category and therefore is eliminated.

Example 2. The facts are the same as in *Example 1*, except that as of December 31, 2002, X had a $30 balance in its separate limitation loss account in the general limitation category, and a $20 balance in its separate limitation loss account in the passive category, both of which offset

income in the separate category for dividends from Y. Under paragraph (g)(2) of this section, the separate limitation loss accounts in the general limitation and passive categories with respect to the separate category for dividends from Y will be recaptured on and after January 1, 2003, from income in other separate categories, as follows. Of the $30 balance in X's separate limitation loss account in the general category with respect to the separate category for dividends from Y, $6 ($30 × 20/100) is with respect to the passive category, and $24 ($30 × 80/100) is with respect to the general limitation category and therefore is eliminated. Of the $20 balance in X's separate limitation loss account in the passive category with respect to the separate category for dividends from Y, $16 ($20 × 80/100) will be recaptured out of general limitation income, and $4 ($20 × 20/100) would otherwise be recaptured out of passive income and therefore is eliminated.

(5) ***Effective/applicability date.*** This paragraph (g) applies to taxable years ending on or after April 20, 2009. *See* 26 CFR 1.904(f)-12T(g) (revised as of April 1, 2009) for rules applicable to taxable years beginning after December 31, 2002, and ending before April 20, 2009.

(h) ***Recapture in years beginning after December 31, 2006, of separate limitation losses and overall foreign losses incurred in years beginning before January 1, 2007 —***

(1) ***Losses related to pre-2007 separate categories for passive income, certain dividends from a DISC or former DISC, taxable income attributable to certain foreign trade income or certain distributions from a FSC or former FSC —***

(i) ***Recapture of separate limitation loss or overall foreign loss incurred in a pre-2007 separate category for passive income, certain dividends from a DISC or former DISC, taxable income attributable to certain foreign trade income or certain distributions from a FSC or former FSC.*** To the extent that a taxpayer has a balance in any separate limitation loss or overall foreign loss account in a pre-2007 separate category (as defined in § 1.904-7(g)(1)(ii)) for passive income, certain dividends from a DISC or former DISC, taxable income attributable to certain foreign trade income or certain distributions from a FSC or former FSC, at the end of the taxpayer's last taxable year beginning before January 1, 2007, the amount of such balance, or balances, shall be allocated on the first day of the taxpayer's next taxable year to the taxpayer's post-2006 separate category (as defined in § 1.904-7(g)(1)(iii)) for passive category income.

(ii) ***Recapture of separate limitation loss with respect to a pre-2007 separate category for passive income, certain dividends from a DISC or former DISC, taxable income attributable to certain foreign trade income or certain distributions from a FSC or former FSC.*** To the extent that a taxpayer has a balance in any separate limitation loss account in any pre-2007 separate category with respect to a pre-2007 separate category for passive income, certain dividends from a DISC or former DISC, taxable income attributable to certain foreign trade income or certain distributions from a FSC or former FSC at the end of the taxpayer's last taxable year beginning before January 1, 2007, such loss shall be recaptured in subsequent taxable years as income in the post-2006 separate category for passive category income.

(2) ***Losses related to pre-2007 separate categories for shipping, financial services income or general limitation income —***

(i) ***Recapture of separate limitation loss or overall foreign loss incurred in a pre-2007 separate category for shipping income, financial services income or general limitation income.*** To the extent that a taxpayer has a balance in any separate limitation loss or overall foreign loss account in a pre-2007 separate category for shipping income, financial services income or

general limitation income at the end of the taxpayer's last taxable year beginning before January 1, 2007, the amount of such balance, or balances, shall be allocated on the first day of the taxpayer's next taxable year to the taxpayer's post-2006 separate category for general category income.

(ii) ***Recapture of separate limitation loss with respect to a pre-2007 separate category for shipping income, financial services income or general limitation income.*** To the extent that a taxpayer has a balance in any separate limitation loss account in any pre-2007 separate category with respect to a pre-2007 separate category for shipping income, financial services income or general limitation income at the end of the taxpayer's last taxable year beginning before January 1, 2007, such loss shall be recaptured in subsequent taxable years as income in the post-2006 separate category for general category income.

(3) ***Losses related to a pre-2007 separate category for high withholding tax interest*** —

(i) ***Recapture of separate limitation loss or overall foreign loss incurred in a pre-2007 separate category for high withholding tax interest.*** To the extent that a taxpayer has a balance in any separate limitation loss or overall foreign loss account in a pre-2007 separate category for high withholding tax interest at the end of the taxpayer's last taxable year beginning before January 1, 2007, the amount of such balance shall be allocated on the first day of the taxpayer's next taxable year on a pro rata basis to the taxpayer's post-2006 separate categories for general category and passive category income, based on the proportion in which any unused foreign taxes in the same pre-2007 separate category for high withholding tax interest are allocated under § 1.904-2(i)(1). If the taxpayer, other than a financial services entity as defined in § 1.904-4(e)(3), has no unused foreign taxes in the pre-2007 separate category for high withholding tax interest, then any loss account balance in that category shall be allocated to the post-2006 separate category for passive category income. If the taxpayer is a financial services entity, as defined in § 1.904-4(e)(3), and has no unused foreign taxes in the pre-2007 separate category for high withholding tax interest, then any loss account balance in that category shall be allocated to the post-2006 separate category for general category income.

(ii) ***Recapture of separate limitation loss with respect to a pre-2007 separate category for high withholding tax interest.*** To the extent that a taxpayer has a balance in a separate limitation loss account in any pre-2007 separate category with respect to a pre-2007 separate category for high withholding tax interest at the end of the taxpayer's last taxable year beginning before January 1, 2007, such loss shall be recaptured in subsequent taxable years on a pro rata basis as income in the post-2006 separate categories for general category and passive category income, based on the proportion in which any unused foreign taxes in the pre-2007 separate category for high withholding tax interest are allocated under § 1.904-2(i)(1). If the taxpayer, other than a financial services entity as defined in § 1.904-4(e)(3), has no unused foreign taxes in the pre-2007 separate category for high withholding tax interest, then the loss account balance shall be recaptured in subsequent taxable years solely as income in the post-2006 separate category for passive category income. If the taxpayer is a financial services entity, as defined in § 1.904-4(e)(3), and has no unused foreign taxes in the pre-2007 separate category for high withholding tax interest, then the loss account balance shall be recaptured in subsequent taxable years solely as income in the post-2006 separate category for general category income.

(4) ***Elimination of certain separate limitation loss accounts.*** After application of paragraphs (h)(1) through (h)(3) of this section, any separate limitation loss account allocated to the post-2006 separate category for passive category income for which income is to be recaptured as passive category income, as determined under those same provisions, shall be eliminated. Similarly, after application of paragraphs (h)(1) through (h)(3) of this section, any separate limitation loss account allocated to the post-2006 separate category for general category income for which income is to be recaptured as general category income, as determined under those same provisions, shall be eliminated.

(5) ***Alternative method.*** In lieu of applying the rules of paragraphs (h)(1) through (h)(3) of this section, a taxpayer may apply the principles of paragraphs (g)(1) and (g)(2) of this section to determine recapture in taxable years beginning after December 31, 2006, of separate limitation losses and overall foreign losses incurred in taxable years beginning before January 1, 2007. A taxpayer may choose to use the alternative method on a timely filed (original or amended) tax return or during an audit. A taxpayer that uses the alternative method on an amended return or in the course of an audit must make appropriate adjustments to eliminate any double benefit arising from application of the alternative method to years that are not open for assessment. A taxpayer's choice to use the alternative method is evidenced by employing the method. The taxpayer need not file any separate statement.

(6) ***Effective/applicability date.*** This paragraph (h) shall apply to taxable years beginning after December 31, 2006, and ending on or after December 21, 2007. However, taxpayers may choose to apply 26 CFR 1.904(f)-12T(h) as it appeared in the Code of Federal Regulations as of April 1, 2010, in lieu of this paragraph (h) to taxable years beginning after December 31, 2006 and ending on or after December 21, 2007, but ending before April 7, 2011 provided that appropriate adjustments are made to eliminate duplicate benefits arising from application of 26 CFR 1.904(f)-12T(h) to taxable years that are not open for assessment. In addition, if a taxpayer that is a financial services entity (as defined in § 1.904-4(e)(3)) chooses to apply 26 CFR 1.904(f)-12T(h) to taxable years ending before April 7, 2011, then as of the beginning of the taxpayer's first taxable year ending on or after April 7, 2011 any remaining balance in a passive category loss account that is attributable to a loss account in a pre-2007 separate category for high withholding tax interest shall be allocated to the general category or eliminated pursuant to § 1.904(f)-12(h)(4), and any remaining balance in a separate limitation loss account with respect to passive category income that is attributable to a loss account with respect to a pre-2007 separate category for high withholding tax interest will be recaptured in such year and subsequent taxable years as general category income or eliminated pursuant to § 1.904(f)-12(h)(4).

(i) [Reserved]

(j) ***Recapture in years beginning after December 31, 2017, of separate limitation losses, overall foreign losses, and overall domestic losses incurred in years beginning before January 1, 2018*** —

(1) ***Definitions*** —

(i) The term *pre-2018 separate categories* means the separate categories of income described in section 904(d) and any specified separate categories of income, as applicable to taxable years beginning before January 1, 2018.

(ii) The term *post-2017 separate categories* means the separate categories of income described in section 904(d) and any specified separate categories of income, as applicable to taxable years beginning after December 31, 2017.

(iii) The term *specified separate category* has the meaning set forth in § 1.904-4(m)).

(2) ***Allocation of separate limitation loss or overall foreign loss account incurred in a pre-2018 separate category*** —

(i) ***Allocation to the same category.*** To the extent that a taxpayer has a balance in any separate limitation loss or overall foreign loss account in a pre-2018 separate category at the end of the taxpayer's last taxable year beginning before January 1, 2018, the amount of such balance is allocated on the first day of the taxpayer's next taxable year to the same post-2017 separate category as the pre-2018 separate category of the separate limitation loss or overall foreign loss account.

(ii) ***Exception for general category separate limitation loss or overall foreign loss account*** —

(A) ***In general.*** To the extent a taxpayer has a balance in any separate limitation loss or overall foreign loss account in the pre-2018 separate category for general category income at the end of the taxpayer's last taxable year beginning before January 1, 2018, a taxpayer may choose to allocate any such balance to the taxpayer's post-2017 separate category for foreign branch category income to the extent the balance in the loss account would have been allocated to the taxpayer's post-2017 separate category for foreign branch category income if that separate category applied in the year or years the losses giving rise to the account were incurred. Any remaining portion of the balance in the separate limitation loss or overall foreign loss account is allocated to the taxpayer's post-2017 separate category for general category income.

(B) ***Safe harbor.*** In lieu of applying paragraph (j)(2)(ii)(A) of this section, the taxpayer may choose to recapture the balance in any loss account described in paragraph (j)(2)(ii)(A) of this section from the first available income in the taxpayer's post-2017 separate category for general category income or foreign branch category income. If the sum of taxpayer's general category income and foreign branch category income for a taxable year subject to recharacterization exceeds the amount of the loss account described in paragraph (j)(2)(ii)(A) of this section that is to be recaptured, then the amount of general category income and foreign branch category income that will be recharacterized under the relevant recapture provisions is determined on a proportionate basis. The recapture under this paragraph (j)(2)(ii)(B) of any loss account described in paragraph (j)(2)(ii)(A) of this section is made before the recapture of any amount by which the balance of the loss account is increased after the end of the taxpayer's last taxable year beginning before January 1, 2018.

(C) ***Rules regarding the exception.*** A taxpayer applying the exception described in paragraph (j)(2)(ii)(A) or (B) of this section must apply the exception to all balances in any separate limitation loss or overall foreign loss account in a pre-2018 separate category for general category income at the end of the taxpayer's last taxable year beginning before January 1, 2018. A taxpayer may apply the exception on a timely filed original return (including extensions) or an amended return. A taxpayer that applies the exception on an amended return must make appropriate adjustments to eliminate any double benefit arising from application of the exception to years that are not open for assessment.

(3) ***Recapture of separate limitation loss or overall domestic loss that reduced pre-2018 separate category income*** —

(i) ***Recapture as income in the same separate category.*** To the extent that at the end of the taxpayer's last taxable year beginning before January 1, 2018, a taxpayer has a balance in any separate limitation loss or overall domestic loss account which offset pre-2018 separate category income, such loss is recaptured in subsequent taxable years as income in the same post-2017 separate category as the pre-2018 separate category of income that was offset by the loss.

(ii) ***Exception for separate limitation loss or overall domestic loss that reduced general category income*** —

(A) ***In general.*** To the extent that a taxpayer's separate limitation loss or overall domestic loss account offset pre-2018 separate category income that was general category income, a taxpayer may choose to recapture the balance in the loss account at the end of the taxpayer's last taxable year beginning before January 1, 2018, in subsequent taxable years as income in the post-2017 separate category for foreign branch category income to the extent the balance in the loss account would have offset foreign branch category income had that separate category applied in the year or years the losses were incurred. Any remaining portion of the balance in the loss account is recaptured as income in the taxpayer's post-2017 separate category for general category income.

(B) ***Safe harbor.*** In lieu of applying paragraph (j)(3)(ii)(A) of this section, a taxpayer that had unused foreign income taxes in a pre-2018 taxable year that were allocated to the foreign branch category under § 1.904-2(j)(1)(iii)(A) or (B) may choose to recapture the balance in any loss account described in paragraph (j)(3)(ii)(A) of this section in subsequent taxable years ratably as income in the taxpayer's post-2017 separate categories for general category and foreign branch category income, based on the proportion in which any unused foreign taxes in the pre-2018 separate category for general category income are allocated under § 1.904-2(j)(1)(iii)(A) or (B).

(C) ***Rules regarding the exception.*** A taxpayer applying the exception described in paragraph (j)(2)(ii)(A) or (B) of this section must apply the exception to the recapture of all balances at the end of the taxpayer's last taxable year beginning before January 1, 2018 in any separate limitation loss or overall domestic loss account which offset pre-2018 separate category income that was general category income. A taxpayer may apply the exception on a timely filed original return (including extensions) or an amended return. A taxpayer that applies the exception on an amended return must make appropriate adjustments to eliminate any double benefit arising from application of the exception to years that are not open for assessment.

(4) ***Treatment of foreign losses that are part of net operating losses incurred in pre-2018 taxable years which are carried forward to post-2017 taxable years*** —

(i) ***Treatment as a loss in the same separate category.*** A foreign loss that is part of a net operating loss incurred in a taxable year beginning before January 1, 2018, which is carried forward, pursuant to section 172, to a taxable year beginning after December 31, 2017, will be carried forward under the rules of § 1.904(g)-3(b)(2). For purposes of applying the rules of § 1.904(g)-3(b)(2), the portion of a net operating loss carryforward that is attributable to a foreign loss from a pre-2018 separate category will be treated as a loss attributable to the same post-2017 separate category as the pre-2018 separate category.

(ii) ***Exception for general category foreign losses that are part of net operating losses*** —

(A) ***In general.*** A taxpayer may choose to treat the portion of a net operating loss carryforward that is attributable to a foreign loss from the pre-2018 separate category for general category income as attributable to the post-2017 separate category for foreign branch category income to the extent the net operating loss would have been attributable to the taxpayer's post-2017 separate category for foreign branch category income had that separate category applied in the year or years the net operating loss arose. Any remaining portion of the net operating loss carryforward is treated as attributable to the taxpayer's post-2017 separate category for general category income.

(B) ***Safe harbor.*** In lieu of applying paragraph (j)(4)(ii)(A) of this section, for the post-2017 taxable year in which a net operating loss carryforward described in paragraph (j)(4)(ii)(A) of this section is used, the taxpayer may choose to treat the net operating loss carryforward as attributable to the taxpayer's post-2017 separate categories for general category income and foreign branch category income to the extent of any general category income and foreign branch category income, respectively, that is available in the carryforward year to be offset by the net operating loss carryforward. To the extent the net operating loss carryforward offsets any other income in the carryforward year, it is treated as attributable to the taxpayer's post-2017 separate category for general category income. If the sum of taxpayer's general category income and foreign branch income in the carryforward year exceeds the amount of the net operating loss carryforward, then the amount of each type of separate income that is offset by the net operating loss carryforward, and therefore the separate category treatment of the net operating loss carryforward, is be determined on a proportionate basis. A general category net operating loss to which the exception is applied is absorbed before any general category net operating loss that is incurred after the end of the taxpayer's last taxable year beginning before January 1, 2018.

(C) ***Rules regarding the exception.*** A taxpayer applying the exception described in paragraph (j)(4)(ii)(A) or (B) of this section must apply the exception to all of its net operating losses that are attributable to a foreign loss from the pre-2018 separate category for general category income. A taxpayer may apply the exception on a timely filed original return (including extensions) or an amended return. A taxpayer that applies the exception on an amended return must make appropriate adjustments to eliminate any double benefit arising from application of the exception to years that are not open for assessment.

(5) ***Treatment of net operating losses incurred in post-2017 taxable years that are carried back to pre-2018 taxable years —***

(i) ***In general.*** Except as provided in paragraph (j)(5)(ii) of this section, a net operating loss incurred in a taxable year beginning after December 31, 2017 (a “post-2017 taxable year”), which is carried back, pursuant to section 172, to a taxable year beginning before January 1, 2018 (a “pre-2018 carryback year”), will be carried back under the rules of § 1.904(g)-3(b). For purposes of applying the rules of § 1.904(g)-3(b), income in a pre-2018 separate category in the taxable year to which the net operating loss is carried back is treated as if it included only income that would be assigned to the post-2017 general category. Therefore, any separate limitation loss created by reason of a passive category component of a net operating loss from a post-2017 taxable year that is carried back to offset general category income in a pre-2018 carryback year will be recaptured in post-2017 taxable years as general category income, and not as a combination of general, foreign branch, and section 951A category income.

(ii) ***Foreign source losses in the post-2017 separate categories for foreign branch category income and section 951A category income.*** Net operating losses attributable to a foreign source loss in the post-2017 separate categories for foreign branch category income and section 951A category income are treated as first offsetting general category income in a pre-2018 carryback year to the extent available to be offset by the net operating loss carryback. If the sum of foreign source losses in the taxpayer's separate categories for foreign branch category income and section 951A category income in the year the net operating loss is incurred exceeds the amount of general category income that is available to be offset in the carryback year, then the amount of foreign source loss in each of the foreign branch and section 951A categories that is treated as offsetting general category income under this paragraph (j)(5)(ii), is determined on a proportionate basis. General category income in the pre-2018 carryback year is first offset by foreign source loss in the taxpayer's post-2017 separate category for general category income in the year the net operating loss is incurred before any foreign source loss in that year in the separate categories for foreign branch category income and section 951A category income is carried back to reduce general category income. To the extent a foreign source loss in a post-2017 separate category for foreign branch category income or section 951A category income offsets general category income in a pre-2018 taxable year under the rules of this paragraph (j)(5)(ii), no separate limitation loss account is created.

(6) ***Coordination rule with respect to exceptions.*** A taxpayer that applies any exception described in § 1.904-2(j)(1)(iii) or paragraph (j)(2)(ii), (j)(3)(ii), or (j)(4)(ii) of this section must apply all such exceptions and cannot apply any of the general rules described in § 1.904-2(j)(1)(ii) or paragraph (j)(2)(i), (j)(3)(i), or (j)(4)(i) of this section. However, in applying each such exception, the taxpayer may choose to apply the safe harbor provision regardless of whether the safe harbor is applied for purposes of any other exception.

(7) ***Applicability date.*** Except as otherwise provided in this paragraph (j)(7), this paragraph (j) applies to taxable years ending on or after December 31, 2017. Paragraph (j)(5) of this section applies to carrybacks of net operating losses incurred in taxable years beginning on or after January 1, 2018.

[T.D. 8306, 55 FR 31381, Aug. 2, 1990, as amended by T.D. 9260, 71 FR 24539, Apr. 25, 2006; T.D. 9368, 72 FR 72591, Dec. 21, 2007; T.D. 9452, 74 FR 27886, June 11, 2009; T.D. 9521, 76 FR 19273, Apr. 7, 2011; T.D 9882, 84 FR 69100, Dec. 17, 2019; T.D. 9956, 86 FR 52972, Sept. 24, 2021]

§ 1.904(g)-0 Outline of regulation provisions.

This section lists the headings for §§ 1.904(g)-1 through 1.904(g)-3.

§ 1.904(g)-1 Overall domestic loss and the overall domestic loss account.

(a) Overview of regulations.

(b) Overall domestic loss accounts.

(1) In general.

(2) Taxable year in which overall domestic loss is sustained.

(c) Determination of a taxpayer's overall domestic loss.

(1) Overall domestic loss defined.

(2) Domestic loss defined.

(3) Qualified taxable year defined.

(4) Method of allocation and apportionment of deductions.

(d) Additions to overall domestic loss accounts.

(1) General rule.

(2) Overall domestic loss of another taxpayer.

(3) Adjustments for capital gains and losses.

(e) Reductions of overall domestic loss accounts.

(1) Pre-recapture reduction for amounts allocated to other taxpayers.

(2) Reduction for amounts recaptured.

(f) Effective/applicability date.

§ 1.904(g)-2 Recapture of overall domestic losses.

(a) In general.

(b) Determination of U.S. source taxable income for purposes of recapture.

(c) Section 904(g)(1) recapture.

(d) Effective/applicability date.

§ 1.904(g)-3 Ordering rules for the allocation of net operating losses, net capital losses, U.S. source losses, and separate limitation losses, and for the recapture of separate limitation losses, overall foreign losses, and overall domestic losses.

(a) In general.

(b) Step One: Allocation of net operating loss and net capital loss carryovers.

(1) In general.

(2) Full net operating loss carryover.

(3) Partial net operating loss carryover.

(4) Net capital loss carryovers.

(c) Step Two: Section 904(b) adjustments.

(d) Step Three: Allocation of separate limitation losses.

(e) Step Four: Allocation of U.S. source losses.

(f) Step Five: Recapture of overall foreign loss accounts.

(g) Step Six: Recapture of separate limitation loss accounts.

(h) Step Seven: Recapture of overall domestic loss accounts.

(i) Step Eight: Dispositions under section 904(f)(3) in which gain would not otherwise be recognized.

(j) [Reserved]

(k) Examples.

(l) Applicability date.

[T.D. 9371, 72 FR 72599, Dec. 21, 2007, as amended by T.D. 9595, 77 FR 37580, June 22, 2012; T.D 9882, 84 FR 69102, Dec. 17, 2019; T.D. 9882, 85 FR 29323, May 15, 2020]

§ 1.904(g)-1 Overall domestic loss and the overall domestic loss account.

(a) ***Overview of regulations.*** This section provides rules for determining a taxpayer's overall domestic losses, for establishing overall domestic loss accounts, and for making additions to and reducing such accounts for purposes of section 904(g). Section 1.904(g)-2 provides rules for recapturing the balance in any overall domestic loss account under the general recharacterization rule of section 904(g)(1). Section 1.904(g)-3 provides ordering rules for the allocation of net operating losses, net capital losses, U.S. source losses, and separate limitation losses, and the recapture of separate limitation losses, overall foreign losses and overall domestic losses.

(b) ***Overall domestic loss accounts*** —

(1) ***In general.*** Any taxpayer that sustains an overall domestic loss under paragraph (c) of this section must establish an overall domestic loss account for such loss with respect to each separate category, as defined in § 1.904(f)-7(b)(1), of the taxpayer in which foreign source income is offset by the domestic loss. The balance in each overall domestic loss account represents the amount of such overall domestic loss subject to recapture in a given taxable year. From year to year, amounts may be added to or subtracted from the balances in such loss accounts as provided in paragraphs (d) and (e) of this section.

(2) ***Taxable year in which overall domestic loss is sustained.*** When a domestic loss is carried back or carried forward as part of a net operating loss, and offsets foreign source income in a carryover year, the resulting overall domestic loss is treated as sustained in the later of the year in which the domestic loss was incurred or the year to which the loss was carried. Accordingly, when a taxpayer incurs a domestic loss that is carried back as part of a net operating loss to offset foreign source income in a qualified taxable year, as defined in paragraph (c)(3) of this section, the resulting overall domestic loss is treated as sustained in the later year in which the domestic loss was incurred and not in the earlier year in which the loss offset foreign source income. In addition, when a taxpayer incurs a domestic loss that is carried forward as part of a net operating loss and applied to offset foreign source income in a later taxable year, the resulting overall domestic loss is treated as sustained in the later year in which the domestic loss offsets foreign source income and not in the earlier year in which the loss was incurred. For example, if a taxpayer incurs a domestic loss in the 2007 taxable year that is carried back to the 2006 qualified taxable year and offsets foreign source income in 2006, the resulting overall domestic loss is treated as sustained in the 2007 taxable year. If a taxpayer incurs a domestic loss in a pre-2007 taxable year that is carried forward to a post-2006 qualified taxable year and offsets foreign source income in the post-2006 year, the resulting overall domestic loss is treated as sustained in the post-2006 year. An overall domestic loss account is established, or increased under paragraph (d) of this section, at the end of the taxable year in which the overall domestic loss is treated as sustained and will be recaptured from U.S. source income arising in subsequent taxable years.

(c) ***Determination of a taxpayer's overall domestic loss*** —

(1) ***Overall domestic loss defined.*** For taxable years beginning after December 31, 2006, a taxpayer sustains an overall domestic loss—

(i) In any qualified taxable year in which its domestic loss for such taxable year offsets foreign source taxable income for the taxable year or for any preceding qualified taxable year by reason of a carryback; and

(ii) In any other taxable year in which the domestic loss for such taxable year offsets foreign source taxable income for any preceding qualified taxable year by reason of a carryback.

(2) ***Domestic loss defined.*** For purposes of this section and §§ 1.904(g)-2 and 1.904(g)-3, the term *domestic loss* means the amount by which the U.S. source gross income for the taxable year is exceeded by the sum of the expenses, losses, and other deductions properly apportioned or allocated to such income, taking into account any net operating loss carried forward from a prior taxable year, but not any loss carried back. If a taxpayer has any capital gains or losses or qualified dividend income, as defined in section 1(h)(11), the amount of the taxpayer's domestic loss that offsets foreign source income must be determined taking into account adjustments under section 904(b)(2). See § 1.904(g)-1(d)(3) for further guidance.

(3) ***Qualified taxable year defined.*** For purposes of this section and §§ 1.904(g)-2 and 1.904(g)-3, the term *qualified taxable year* means any taxable year for which the taxpayer chooses the benefits of section 901.

(4) ***Method of allocation and apportionment of deductions.*** In determining its overall domestic loss, a taxpayer shall allocate and apportion expenses, losses, and other deductions to U.S. source gross income in accordance with sections 861(b) and 865 and the regulations thereunder, including §§ 1.861-8 through 1.861-14T.

(d) ***Additions to overall domestic loss accounts*** —

(1) ***General rule.*** A taxpayer's overall domestic loss as determined under paragraph (c) of this section shall be added to the applicable overall domestic loss account at the end of its taxable year to the extent that the overall domestic loss either reduces foreign source income for the year (but only if such year is a qualified taxable year) or reduces foreign source income for a qualified taxable year to which the loss has been carried back.

(2) ***Overall domestic loss of another taxpayer.*** If any portion of any overall domestic loss of another taxpayer is allocated to the taxpayer in accordance with § 1.1502-9 (relating to consolidated overall domestic losses) the taxpayer shall add such amount to its applicable overall domestic loss account.

(3) ***Adjustments for capital gains and losses.*** If the taxpayer has capital gains or losses or qualified dividend income, the amount by which a domestic loss is considered to reduce foreign source income in a taxable year shall equal the section 904(f)(5)(D) amount determined under § 1.904(b)-1(h)(1)(iii), regardless of the amount of domestic loss that was determined before taking any section 904(b)(2) adjustments into account.

(e) ***Reductions of overall domestic loss accounts.*** The taxpayer shall subtract the following amounts from its overall domestic loss accounts at the end of its taxable year in the following order, as applicable:

(1) ***Pre-recapture reduction for amounts allocated to other taxpayers.*** An overall domestic loss account is reduced by the amount of any overall domestic loss which is allocated to another taxpayer in accordance with § 1.1502-9 (relating to consolidated overall domestic losses).

(2) ***Reduction for amounts recaptured.*** An overall domestic loss account is reduced by the amount of any U.S. source income that is recharacterized in accordance with § 1.904(g)-2(c) (relating to recapture under section 904(g)(1)).

(f) ***Effective/applicability date.*** This section applies to taxpayers that sustain an overall domestic loss for a taxable year beginning on or after January 1, 2012. Taxpayers may choose to apply this section to overall domestic losses sustained in other taxable years beginning after December 31, 2006, including periods covered by 26 CFR § 1.904(g)-1T (revised as of April 1, 2010).

[T.D. 9595, 77 FR 37580, June 22, 2012]

§ 1.904(g)-2 Recapture of overall domestic losses.

(a) ***In general.*** A taxpayer shall recapture an overall domestic loss as provided in this section. Recapture is accomplished by treating a portion of the taxpayer's U.S. source taxable income as foreign source income. The recharacterized income is allocated among and increases foreign source income in separate categories in proportion to the balances of the overall domestic loss accounts with respect to those separate categories. As a result, if the taxpayer chooses the benefits of section 901, the taxpayer's foreign tax credit limitation is increased. As provided in § 1.904(g)-1(e)(2), the balance in a taxpayer's overall domestic loss account with respect to a separate category is reduced at the end of each taxable year by the amount of loss recaptured during that taxable year. Recapture continues until the amount of U.S. source income recharacterized as foreign source income equals the amount in the overall domestic loss account.

(b) ***Determination of U.S. source taxable income for purposes of recapture.*** For purposes of determining the amount of an overall domestic loss subject to recapture, the taxpayer's taxable income from U.S. sources shall be computed in accordance with the rules set forth in § 1.904(g)-1(c)(4). U.S. source taxable income

shall be determined by taking into account adjustments for capital gains and losses and qualified dividend income in a similar manner to the adjustments made to foreign source taxable income under section 904(b)(2) and § 1.904(b)-1, following the principles of § 1.904(b)-1(h)(1)(i).

(c) ***Section 904(g)(1) recapture.*** The amount of any U.S. source taxable income subject to recharacterization in a taxable year in which paragraph (a) of this section applies is the lesser of the aggregate balance of the taxpayer's overall domestic loss accounts or 50 percent of the taxpayer's U.S. source taxable income (as determined under paragraph (b) of this section).

(d) ***Effective/applicability date.*** This section applies to taxpayers that sustain an overall domestic loss for a taxable year beginning on or after January 1, 2012. Taxpayers may choose to apply this section to overall domestic losses sustained in other taxable years beginning after December 31, 2006, including periods covered by 26 CFR 1.904(g)-2T (revised as of April 1, 2010).

[T.D. 9595, 77 FR 37581, June 22, 2012]

§ 1.904(g)-3 Ordering rules for the allocation of net operating losses, net capital losses, U.S. source losses, and separate limitation losses, and for the recapture of separate limitation losses, overall foreign losses, and overall domestic losses.

(a) ***In general.*** This section provides ordering rules for the allocation of net operating losses, net capital losses, U.S. source losses, and separate limitation losses, and for the recapture of separate limitation losses, overall foreign losses, and overall domestic losses. The rules must be applied in the order set forth in paragraphs (b) through (j) of this section.

(b) ***Step One: Allocation of net operating loss and net capital loss carryovers*** —

(1) ***In general.*** Net operating losses from a current taxable year are carried forward or back to a taxable year in the following manner. Net operating losses that are carried forward pursuant to section 172 are combined with income or loss in the carryover year in the manner described in this paragraph (b). The combined amounts are then subject to the ordering rules provided in paragraphs (c) through (i) of this section. Net operating losses that are carried back to a prior taxable year pursuant to section 172 are allocated to income in the carryback year in the manner set forth in paragraphs (b)(2), (b)(3), (c), (d), and (e) of this section. The income in the carryback year to which the net operating loss is allocated is the foreign source income in each separate category and the U.S. source income after the application of sections 904(f) and 904(g) to income and loss in that previous year, including as a result of net operating loss carryovers or carrybacks from taxable years prior to the current taxable year. See §§ 1.861-8(e)(8), 1.904(b)-3(d)(2), and 1.1502-4(c)(1)(iii) for rules to determine the source and separate category components of a net operating loss.

(2) ***Full net operating loss deduction.*** If the full net operating loss (that remains after carryovers to other taxable years) is deducted in computing the taxable income in a particular year (carryover year), so that there is no remaining net operating loss that can be carried to other taxable years, U.S. source losses and foreign source losses in separate categories that comprise the net operating loss shall be combined with the U.S. source income or loss and the foreign source income or loss in the same separate categories in the carryover year.

(3) ***Partial net operating loss deduction.*** If the full net operating loss (that remains after carryovers to other taxable years) is not deducted in computing the taxable income in a carryover year, so that there is remaining loss that can be carried to other taxable years, the following rules apply:

(i) Any U.S. source loss (not to exceed the amount of the net operating loss carryover deducted in computing the taxable income in the carryover year (the net operating loss deduction)) shall be carried over to the extent of any U.S. source income in the carryover year.

(ii) If the net operating loss deduction exceeds the U.S. source loss carryover determined under paragraph (b)(3)(i) of this section, then separate limitation losses that are part of the net operating loss shall be tentatively carried over to the extent of separate limitation income in the same separate category in the carryover year. If the sum of the potential separate limitation loss carryovers determined under the preceding sentence exceeds the amount of the net operating loss deduction reduced by any U.S. source loss carried over under paragraph (b)(3)(i) of this section, then the potential separate limitation loss carryovers shall be reduced pro rata so that their sum equals such amount.

(iii) If the net operating loss deduction exceeds the sum of the U.S. and separate limitation loss carryovers determined under paragraphs (b)(3)(i) and (ii) of this section, then a proportionate part of the remaining loss from each separate category shall be carried over to the extent of such excess and combined with the foreign source loss, if any, in the same separate categories in the carryover year.

(iv) If the net operating loss deduction exceeds the sum of all the loss carryovers determined under paragraphs (b)(3)(i), (ii), and (iii) of this section, then any U.S. source loss not carried over under paragraph (b)(3)(i) of this section shall be carried over to the extent of such excess and combined with the U.S. source loss, if any, in the carryover year.

(4) ***Net capital loss carryovers.*** Rules similar to the rules of paragraphs (b)(1) through (3) of this section apply for purposes of determining the components of a net capital loss carryover to a taxable year.

(c) ***Step Two: Section 904(b) adjustments.*** The taxpayer shall make any required adjustments to capital gains and losses and qualified dividend income under section 904(b)(2). The taxpayer also takes into account any adjustments required under section 904(b)(4) and § 1.904(b)-3.

(d) ***Step Three: Allocation of separate limitation losses.*** The taxpayer shall allocate separate limitation losses sustained during the taxable year (increased, if appropriate, by any losses carried over under paragraph (b) of this section), in the following manner—

(1) The taxpayer shall allocate its separate limitation losses for the taxable year to reduce its separate limitation income in other separate categories on a proportionate basis, and increase its separate limitation loss accounts appropriately. To the extent a separate limitation loss in one separate category is allocated to reduce separate limitation income in a second separate category, and the second category has a separate limitation loss account from a prior taxable year with respect to the first category, the two separate limitation loss accounts shall be netted against each other.

(2) If the taxpayer's separate limitation losses for the taxable year exceed the taxpayer's separate limitation income for the year, so that the taxpayer has separate limitation losses remaining after the application of paragraph (d)(1) of this section, the taxpayer shall allocate those losses to its U.S. source income for the taxable year, to the extent thereof, and shall increase its overall foreign loss accounts to that extent in accordance with § 1.904(f)-1.

(e) ***Step Four: Allocation of U.S. source losses.*** The taxpayer shall allocate U.S. source losses sustained during the taxable year (increased, if appropriate, by any losses carried over under paragraph (b) of this section) to separate limitation income on a proportionate basis, and shall increase its overall domestic loss accounts to the extent of such allocation in accordance with § 1.904(g)-1.

(f) ***Step Five: Recapture of overall foreign loss accounts.*** If the taxpayer's separate limitation income for the taxable year (reduced by any losses carried over under paragraph (b) of this section) exceeds the sum of the taxpayer's U.S. source loss and separate limitation losses for the year, so that the taxpayer has separate limitation income remaining after the application of paragraphs (d)(1) and (e) of this section, then the taxpayer recaptures prior year overall foreign losses, if any, in accordance with § 1.904(f)-2, and reduces overall foreign loss accounts in accordance with § 1.904(f)-2. The recapture in this paragraph (f) includes amounts determined under § 1.904(f)-2(c) and (d)(3) but not § 1.904(f)-2(d)(4), which is covered in paragraph (i) of this section.

(g) ***Step Six: Recapture of separate limitation loss accounts.*** To the extent the taxpayer has remaining separate limitation income for the year after the application of paragraph (f) of this section, then the taxpayer shall recapture prior year separate limitation losses, if any, in accordance with § 1.904(f)-8 and reduce separate limitation loss accounts in accordance with § 1.904(f)-7.

(h) ***Step Seven: Recapture of overall domestic loss accounts.*** If the taxpayer's U.S. source income for the year (reduced by any losses carried over under paragraph (b) of this section or allocated under paragraph (d) of this section, but not increased by any recapture of overall foreign loss accounts under paragraph (f) of this section) exceeds the taxpayer's separate limitation losses for the year, so that the taxpayer has U.S. source income remaining after the application of paragraph (d)(2) of this section, then the taxpayer shall recapture its prior year overall domestic losses, if any, and reduce overall domestic loss accounts in accordance with § 1.904(g)-2.

(i) ***Step Eight: Dispositions under section 904(f)(3) in which gain would not otherwise be recognized.*** The taxpayer determines the amount of gain that would otherwise not be recognized but that must be recognized in accordance with § 1.904(f)-2(d)(4) (not exceeding the taxpayer's applicable overall foreign loss account) and then applies § 1.904(f)-2(a) and (b) to recapture and reduce its overall foreign loss accounts in an amount equal to the gain recognized. To the extent this recognition of gain in a taxable year reduces the amount of a current year net operating loss or increases the amount of a net operating loss carryover to that taxable year, paragraphs (b) through (e) of this section are applied to determine the allocation of any additional net operating loss deduction and other deductions or losses and the applicable increases in the taxpayer's overall foreign loss, separate limitation loss, and overall domestic loss accounts, but only after the applicable overall foreign loss account has been recaptured as provided in this paragraph (i).

(j) ***Step Nine: Dispositions that result in additional income recognition under the branch loss recapture and dual consolidated loss recapture rules —***

(1) ***In general.*** If, after any gain is required to be recognized under section 904(f)(3) on a transaction that is otherwise a nonrecognition transaction, an additional amount of income is recognized under section 91(d), section 367(a)(3)(C) (as applicable to losses incurred before January 1, 2018), or § 1.1503(d)-6, and that additional income amount is determined by taking into account an offset for the amount of gain recognized under section 904(f)(3) and so is not initially taken into account in applying paragraph (b) of this section, then paragraphs (b) through (h) of this section are applied to determine the allocation of any additional net operating loss deduction and other deductions or losses and the applicable increases in the taxpayer's overall foreign loss, separate limitation loss, and overall domestic loss accounts, as well as any additional recapture and reduction of the taxpayer's separate limitation loss, overall foreign loss, and overall domestic loss accounts.

(2) ***Rules for additional recapture of loss accounts.*** For the purpose of recapturing and reducing loss accounts under paragraph (j)(1) of this section, the taxpayer also takes into account any creation of or addition to loss accounts that result from the application of paragraphs (b) through (i) of this

section in the current tax year. If any of the additional income described in paragraph (j)(1) of this section is foreign source income in a separate category for which there is a remaining balance in an overall foreign loss account after applying paragraph (i) of this section, the section 904(f)(1) recapture amount under § 1.904(f)-2(c) for that additional income is determined by first computing a hypothetical recapture amount as it would have been determined prior to the application of paragraph (i) of this section but taking into account the additional foreign source income described in this paragraph (j)(2) and then subtracting the actual overall foreign loss recapture determined prior to the application of paragraph (i) of this section (that did not take into account the additional foreign source income). The remainder is the overall foreign loss recapture amount with respect to the additional foreign source income described in this paragraph (j)(2).

(k) ***Examples.*** The following examples illustrate the rules of this section. Unless otherwise noted, all corporations use the calendar year as the U.S. taxable year.

(1) ***Example 1*** —

(i) ***Facts*** —

(A) USC is a domestic corporation with foreign branch operations in Country X. For Year 1, USC had the following taxable income and losses after application of section 904(f) and (g) to income and loss in Year 1:

TABLE 1 TO PARAGRAPH (k)(1)(i)(A)

Foreign branch	Passive	US
$400x	$200x	$110x

(B) For Year 2, USC has a net operating loss of ($500x), determined as follows:

TABLE 2 TO PARAGRAPH (k)(1)(i)(B)

Foreign branch	Passive	US
($300x)	$0	($200x)

(ii) ***Analysis*** —

(A) ***Net operating loss allocation.*** Because USC's taxable income for Year 1 exceeds its total net operating loss for Year 2, the full net operating loss is carried back. Under paragraph (b) of this section (Step 1), each component of the net operating loss is carried back and combined with its same category in Year 1. See paragraph (b)(2) of this section. After allocation of the net operating loss, USC has the following taxable income and losses for Year 1:

TABLE 3 TO PARAGRAPH (k)(1)(ii)(A)

Foreign branch	Passive	US
$100x	$200x	($90x)

(B) ***Loss allocation.*** Under paragraph (e) of this section (Step 4), the ($90x) of U.S. loss is allocated proportionately to reduce the foreign branch category and passive category income. Accordingly, $30x ($90x × $100x/$300x) of the U.S. loss is allocated to foreign branch category income and $60x ($90x × $200x/$300x) of the U.S. loss is allocated to passive category income, with a corresponding creation or increase to USC's overall domestic loss accounts.

(2) ***Example 2*** —

(i) ***Facts*** —

(A) USC is a domestic corporation with foreign branch operations in Country X. As of January 1, Year 1, USC has no loss accounts subject to recapture. For Year 1, USC has a net operating loss of ($1,400x), determined as follows:

TABLE 4 TO PARAGRAPH (k)(2)(i)(A)

Foreign branch	Passive	US
($400x)	($200x)	($800x)

(B) For Year 2, USC has the following taxable income and losses:

TABLE 5 TO PARAGRAPH (k)(2)(i)(B)

Foreign branch	Passive	US
$500x	($100x)	$1200x

(ii) *Analysis* —

(A) ***Net operating loss allocation.*** Under paragraph (b) of this section (Step 1), because USC's total taxable income for Year 2 of $1600x ($1,200x + $500x − $100x) exceeds the total Year 1 net operating loss, the full $1,400x net operating loss is carried forward. Under paragraph (b)(2) of this section, each component of the net operating loss is carried forward and combined with its same category in Year 2. After allocation of the net operating loss, USC has the following taxable income and losses:

TABLE 6 TO PARAGRAPH (k)(2)(ii)(A)

Foreign branch	Passive	US
$100x	($300x)	$400x

(B) ***Loss allocation.*** Under paragraph (d) of this section (Step 3), $100x of the passive category loss offsets the $100x of foreign branch category income, resulting in a passive category separate limitation loss account with respect to foreign branch category income, and the other $200x of passive category loss offsets $200x of the U.S. source taxable income, resulting in the creation of an overall foreign loss account in the passive category.

(3) *Example 3* —

(i) ***Facts.*** Assume the same facts as in paragraph (k)(2)(i) of this section (the facts in *Example 2*), except that in Year 2, USC had the following taxable income and losses:

TABLE 7 TO PARAGRAPH (k)(3)(i)

Foreign branch	Passive	US
$200x	($100x)	$1200x

(ii) *Analysis* —

(A) ***Net operating loss allocation.*** Under paragraph (b) of this section (Step 1), because the total net operating loss for Year 1 of ($1,400x) exceeds total taxable income for Year 2 of $1,300x ($1,200x + $200x − $100x), USC has a partial net operating loss carryover to Year 2 of $1,300x. Under paragraph (b)(3)(i) of this section, first, the $800x U.S. source component of the net operating loss is allocated to U.S. income for Year 2. The tentative foreign branch category carryover under paragraph (b)(3)(ii) of this section ($200x) does not exceed the remaining net operating loss carryover amount ($500x). Therefore, $200x of the foreign branch category component of the net operating loss is next allocated to the foreign branch category income for Year 2. Under paragraph (b)(3)(iii) of this section, the remaining $300x of net operating loss carryover ($1300x − $800x − $200x) is carried over proportionally from the remaining net operating loss components in the foreign branch category ($200x, or $400x total foreign branch category loss − $200x foreign branch category loss already allocated) and passive category ($200x). Therefore, $150x ($300x × $200x/$400x) of the remaining net operating loss carryover is carried over from the foreign branch category for Year 1 and combined with the foreign branch category income for Year 2, and $150x ($300x × $200x/$400x) of the remaining net operating loss

carryover is carried over from the passive category for Year 1 and combined with the passive category loss for Year 2. After allocation of the net operating loss carryover from Year 1 to the appropriate categories for Year 2, USC has the following taxable income and losses:

TABLE 8 TO PARAGRAPH (k)(3)(ii)(A)

Foreign branch	Passive	US
($150x)	($250x)	$400x

(B) ***Loss allocation.*** Under paragraph (d) of this section (Step 3), the losses in the foreign branch and passive categories fully offset the U.S. source income, resulting in the creation of foreign branch category and passive category overall foreign loss accounts.

(4) ***Example 4*** —

(i) ***Facts.*** Assume the same facts as in paragraph (k)(2)(i) of this section (the facts in *Example 2*), except that in Year 2, USC has the following taxable income and losses:

TABLE 9 TO PARAGRAPH (k)(4)(i)

Foreign branch	Passive	US
$200x	$200x	($200x)

(ii) ***Analysis*** —

(A) ***Net operating loss allocation.*** Under paragraph (b) of this section (Step 1), because the total net operating loss of ($1400x) exceeds total taxable income for Year 2 of $200x ($200x + $200x − $200x), USC has a partial net operating loss carryover to Year 2 of $200x. Because USC has no U.S. source income in Year 2, under paragraph (b)(3)(i) of this section no portion of the U.S. source component of the net operating loss is initially carried into Year 2. Because the total tentative carryover under paragraph (b)(3)(ii) of this section of $400x ($200x in each of the foreign branch and passive categories) exceeds the net operating loss carryover amount, the tentative carryover from each separate category is reduced proportionately by $100x ($200x × $200x/$400x). Accordingly, $100x ($200x − $100x) of the foreign branch category component of the net operating loss is carried forward and $100x ($200x − $100x) of the passive category component of the net

operating loss is carried forward and combined with income in the same respective categories for Year 2. After allocation of the net operating loss carryover from Year 1, USC has the following taxable income and losses:

TABLE 10 TO PARAGRAPH (k)(4)(ii)(A)

Foreign branch	Passive	US
$100x	$100x	($200x)

(B) ***Loss allocation.*** Under paragraph (e) of this section (Step 4), the $200x U.S. source loss offsets the remaining $100x of foreign branch category income and $100x of passive category income, resulting in the creation of overall domestic loss accounts with respect to the foreign branch and passive categories.

(5) *Example 5* —

(i) ***Facts.*** Assume the same facts as in paragraph (k)(2)(i) of this section (the facts in *Example 2*), except that in Year 2, USC has the following taxable income and losses:

TABLE 11 TO PARAGRAPH (k)(5)(i)

Foreign branch	Passive	US
$800x	($100x)	$100x

(ii) *Analysis* —

(A) ***Net operating loss allocation.*** Under paragraph (b) of this section (Step 1), because USC's total net operating loss in Year 1 of ($1,400x) exceeds its total taxable income for Year 2 of $800x ($100x + $800x − $100x), USC has a partial net operating loss carryover to Year 2 of $800x. Under paragraph (b)(3)(i) of this section, $100x of the U.S. source component of the net operating loss is allocated to U.S. income for Year 2. The tentative foreign branch category carryover under paragraph (b)(3)(ii) of this section does not exceed the remaining net operating loss carryover amount. Therefore, $400x of the foreign branch category component of the net operating loss is allocated to reduce foreign branch category income in Year 2. Under paragraph (b)(3)(iii) of this section, of the remaining $300x of net operating loss carryover ($800x − $100x − $400x), $200x is carried forward from the passive category component of the net operating loss and combined with the passive category loss for Year 2. Under paragraph (b)(3)(iv) of this section, the remaining $100x ($300x − $200x) of net operating loss carryover is carried forward from the U.S. source component of the net operating loss and combined with the U.S. source income

(and the previously allocated U.S. source component of the net operating loss) for Year 2. After allocation of the net operating loss carryover from Year 1, USC has the following taxable income and losses:

TABLE 12 TO PARAGRAPH (k)(5)(ii)(A)

Foreign branch	Passive	US
$400x	($300x)	($100x)

(B) ***Loss allocation.***

(*1*) Under paragraph (d) of this section (Step 3), the $300x passive category loss offsets the $300x of income in the foreign branch category, resulting in the creation of a passive category separate limitation loss account with respect to the foreign branch category.

(*2*) Under paragraph (e) of this section (Step 4), the $100x U.S. source loss offsets the remaining $100x of the foreign branch category income, resulting in the creation of an overall domestic loss account with respect to the foreign branch category.

(6) ***Example 6*** —

(i) ***Facts*** —

(A) USC is a domestic corporation with foreign branch operations in Country X. USC has no net operating losses and does not make an election to recapture more than the required amount of overall foreign losses. As of January 1, Year 1, USC has a ($200x) foreign branch category overall foreign loss (OFL) account and a ($200x) foreign branch category separate limitation loss (SLL) account with respect to the passive category. For Year 1, USC has $400x of passive category income that is fully offset by a ($400x) domestic loss

in that taxable year, giving rise to the creation of an overall domestic loss (ODL) account with respect to the passive category. As of January 1, Year 2, USC has the following balances in its OFL, SLL, and ODL accounts:

TABLE 13 TO PARAGRAPH (k)(6)(i)(A)

Foreign branch		US
OFL	SLL (passive)	ODL (passive)
$200x	$200x	$400x

(B) In Year 2, USC has the following taxable income and losses:

TABLE 14 TO PARAGRAPH (k)(6)(i)(B)

Foreign branch	Passive	US
$400x	($100x)	$600x

(ii) *Analysis —*

(A) ***Loss allocation.*** Under paragraph (d) of this section (Step 3), the $100x of passive category loss offsets $100x of the foreign branch category income, creating a passive category SLL account of $100x with respect to the foreign branch category. Because there is an offsetting foreign branch category SLL account of $200x with respect to the passive category from a prior taxable year, the two accounts are netted against each other so that all that remains is a $100x foreign branch category SLL account with respect to the passive category.

(B) ***OFL account recapture.*** Under paragraph (f) of this section (Step 5), 50% of the remaining $300x, or $150x, of income in the foreign branch category is subject to recharacterization as U.S. source income as a recapture of part of the OFL account in the foreign branch category.

(C) ***SLL account recapture.*** Under paragraph (g) of this section (Step 6), $100x of the remaining $150x of income in the foreign branch category is recharacterized as passive category income as a recapture of the foreign branch category SLL account with respect to the passive category.

(D) ***ODL account recapture.*** Under paragraph (h) of this section (Step 7), 50% of the $600, or $300, of U.S. source income is subject to recharacterization as foreign source passive category income as a recapture of a part of the ODL account with respect to the passive

category. None of the $150x of foreign branch category income that was recharacterized as U.S. source income under paragraph (f) of this section (Step 5) is included here as income subject to recharacterization in connection with recapture of the ODL account.

(E) ***Results.***

(*1*) After the allocation of loss and recapture of loss accounts, USC has the following taxable income and losses for Year 2:

TABLE 15 TO PARAGRAPH (k)(6)(ii)(E)(*1*)

Foreign branch	Passive	US
$50x	$400x	$450x

(*2*) As of January 1, Year 3, USC has the following balances in its OFL, SLL and ODL accounts:

TABLE 16 TO PARAGRAPH (k)(6)(ii)(E)(*2*)

Foreign branch		Passive	US
OFL	SLL (passive)	SLL (foreign branch)	ODL (passive)
$50x	$0	$0	$100x

(l) ***Applicability date.*** This section applies to taxable years ending on or after November 2, 2020.

[T.D. 9595, 77 FR 37582, June 22, 2012, as amended by T.D. 9882, 84 FR 69102, Dec. 17, 2019; T.D. 9922, 85 FR 72060, Nov. 12, 2020; 86 FR 54368, Oct. 1, 2021]

§ 1.904(i)-0 Outline of regulation provisions.

This section lists the headings for § 1.904(i)-1.

> § 1.904(i)-1 Limitation on use of deconsolidation to avoid foreign tax credit limitations.
>
> (a) General rule.
>
> (1) Determination of taxable income.

(2) Allocation.

(b) Definitions and special rules.

(1) Affiliate.

(i) Generally.

(ii) Rules for consolidated groups.

(iii) Exception for newly acquired affiliates.

(2) Includible corporation.

(c) Taxable years.

(d) Consistent treatment of foreign taxes paid.

(e) Effective date.

[T.D. 9371, 72 FR 72603, Dec. 21, 2007]

§ 1.904(i)-1 Limitation on use of deconsolidation to avoid foreign tax credit limitations.

(a) ***General rule.*** If two or more includible corporations are affiliates, within the meaning of paragraph (b)(1) of this section, at any time during their taxable years, then, solely for purposes of applying the foreign tax credit provisions of section 59(a), sections 901 through 908, and section 960, the rules of this section will apply.

(1) ***Determination of taxable income*** —

(i) Each affiliate must compute its net taxable income or loss in each separate category (as defined in § 1.904-5(a)(4)(v), and treating U.S. source income or loss as a separate category) without regard to sections 904(f) and 907(c)(4). Only affiliates that are members of the same consolidated group use the consolidated return regulations (other than those under sections 904(f) and 907(c)(4)) in computing such net taxable income or loss. To the extent otherwise applicable, other provisions of the Code and regulations must be used in the determination of an affiliate's net taxable income or loss in a separate category.

(ii) The net taxable income amounts in each separate category determined under paragraph (a)(1)(i) of this section are combined for all affiliates to determine one amount for the group of affiliates in each separate category. However, a net loss of an affiliate (first affiliate) in a separate category determined under paragraph (a)(1)(i) of this section will be combined under this paragraph (a) with net income or loss amounts of other affiliates in the same category only if, and to the extent that, the net loss offsets taxable income, whether U.S. or foreign source, of the first affiliate. The consolidated return regulations that apply the principles of sections 904(f) and 907(c)(4) to consolidated groups will then be applied to the combined amounts in each separate category as if all affiliates were members of a single consolidated group.

(2) ***Allocation.*** Any net taxable income in a separate category calculated under paragraph (a)(1)(ii) of this section for purposes of the foreign tax credit provisions must then be allocated among the affiliates under any consistently applied reasonable method, taking into account all of the facts and circumstances. A method is consistently applied if used by all affiliates from year to year. Once chosen, an allocation method may be changed only with the consent of the Commissioner. This allocation will only affect the source and foreign tax credit separate limitation character of the income for purposes of the foreign tax credit separate limitation of each affiliate, and will not otherwise affect an affiliate's total net income or loss. This section applies whether the federal income tax consequences of its application favor, or are adverse to, the taxpayer.

(b) ***Definitions and special rules*** For purposes of this section only, the following terms will have the meanings specified.

(1) ***Affiliate*** —

(i) ***Generally.*** Affiliates are includible corporations—

(A) That are members of the same affiliated group, as defined in section 1504(a); or

(B) That would be members of the same affiliated group, as defined in section 1504(a) if—

(*1*) Any non-includible corporation meeting the ownership test of section 1504(a)(2) with respect to any such includible corporation was itself an includible corporation; or

(*2*) The constructive ownership rules of section 1563(e) were applied for purposes of section 1504(a).

(ii) ***Rules for consolidated groups.*** Affiliates that are members of the same consolidated group are treated as a single affiliate for purposes of this section. The provisions of paragraph (a) of this section shall not apply if the only affiliates under this definition are already members of the same consolidated group without operation of this section.

(iii) ***Exception for newly acquired affiliates*** —

(A) With respect to acquisitions after December 7, 1995, an includible corporation acquired from unrelated third parties (First Corporation) will not be considered an affiliate of another includible corporation (Second Corporation) during the taxable year of the First Corporation beginning before the date on which the First Corporation originally becomes an affiliate with respect to the Second Corporation.

(B) With respect to acquisitions on or before December 7, 1995, an includible corporation acquired from unrelated third parties will not be considered an affiliate of another includible corporation during its taxable year beginning before the date on which the first includible corporation first becomes an affiliate with respect to that other includible corporation.

(C) This exception does not apply where the acquisition of an includible corporation is used to avoid the application of this section.

(2) ***Includible corporation.*** The term *includible corporation* has the same meaning it has in section 1504(b).

(c) ***Taxable years.*** If all of the affiliates use the same U.S. taxable year, then that taxable year must be used for purposes of applying this section. If, however, the affiliates use more than one U.S. taxable year, then an appropriate taxable year must be used for applying this section. The determination whether a taxable year is appropriate must take into account all of the relevant facts and circumstances, including the U.S. taxable years used by the affiliates for general U.S. income tax purposes. The taxable year chosen by the affiliates for purposes of applying this section must be used consistently from year to year. The taxable year may be changed only with the prior consent of the Commissioner. Those affiliates that do not use the year determined under this paragraph (c) as their U.S. taxable year for general U.S. income tax purposes must, for purposes of this section, use their U.S. taxable year or years ending within the taxable year determined under this paragraph (c). If, however, the stock of an affiliate is disposed of so that it ceases to be an affiliate, then the taxable year of that affiliate will be considered to end on the disposition date for purposes of this section.

(d) ***Consistent treatment of foreign taxes paid.*** All affiliates must consistently either elect under section 901(a) to claim a credit for foreign income taxes paid or accrued, or deemed paid or accrued, or deduct foreign taxes paid or accrued under section 164. See also § 1.1502-4(a); § 1.905-1(a).

(e) ***Effective date.*** Except as provided in paragraph (b)(1)(iii) of this section (relating to newly acquired affiliates), this section is effective for taxable years of affiliates beginning after December 31, 1993.

[T.D. 8627, 60 FR 56119, Nov. 7, 1995, as amended by T.D. 9882, 84 FR 69104, Dec. 17, 2019]

§ 1.904(j)-0 Outline of regulation provisions.

This section lists the headings for § 1.904(j)-1.

> § 1.904(j)-1 Certain individuals exempt from foreign tax credit limitation.
>
> (a) Election available only if all foreign taxes are creditable foreign taxes.
>
> (b) Coordination with carryover rules.
>
> (1) No carryovers to or from election year.
>
> (2) Carryovers to and from other years determined without regard to election years.
>
> (3) Determination of amount of creditable foreign taxes.
>
> (c) Examples.
>
> (d) Effective date.

[T.D. 9371, 72 FR 72603, Dec. 21, 2007]

§ 1.904(j)-1 Certain individuals exempt from foreign tax credit limitation.

(a) ***Election available only if all foreign taxes are creditable foreign taxes.*** A taxpayer may elect to apply section 904(j) for a taxable year only if all of the taxes for which a credit is allowable to the taxpayer under section 901 for the taxable year (without regard to carryovers) are creditable foreign taxes (as defined in section 904(j)(3)(B)).

(b) ***Coordination with carryover rules*** —

(1) ***No carryovers to or from election year.*** If the taxpayer elects to apply section 904(j) for any taxable year, then no taxes paid or accrued by the taxpayer during such taxable year may be deemed paid or accrued under section 904(c) in any other taxable year, and no taxes paid or accrued in any other taxable year may be deemed paid or accrued under section 904(c) in such taxable year.

(2) ***Carryovers to and from other years determined without regard to election years.*** The amount of the foreign taxes paid or accrued, and the amount of the foreign source taxable income, in any year for which the taxpayer elects to apply section 904(j) shall not be taken into account in determining the amount of any carryover to or from any other taxable year. However, an election to apply section 904(j) to any year does not extend the number of taxable years to which unused foreign taxes may be carried under section 904(c) and § 1.904-2(b). Therefore, in determining the number of such carryover years, the taxpayer must take into account years to which a section 904(j) election applies.

(3) ***Determination of amount of creditable foreign taxes.*** Otherwise allowable carryovers of foreign tax credits from other taxable years shall not be taken into account in determining whether the amount of creditable foreign taxes paid or accrued by an individual during a taxable year exceeds $300 ($600 in the case of a joint return) for purposes of section 904(j)(2)(B).

(c) ***Examples.*** The following examples illustrate the provisions of this section:

Example 1. In 2006, X, a single individual using the cash basis method of accounting for income and foreign tax credits, pays $100 of foreign taxes with respect to general limitation income that was earned and included in income for United States tax purposes in 2005. The foreign taxes would be creditable under section 901 but are not shown on a payee statement furnished to X. X's only income for 2006 from sources outside the United States is qualified passive income, with respect to which X pays $200 of creditable foreign taxes shown on a payee statement. X may not elect to apply section 904(j) for 2006 because some of X's foreign taxes are not creditable foreign taxes within the meaning of section 904(j)(3)(B).

Example 2. (i) In 2009, A, a single individual using the cash basis method of accounting for income and foreign tax credits, pays creditable foreign taxes of $250 attributable to passive income. Under section 904(c), A may also carry forward to 2009 $100 of unused foreign taxes paid in 2005 with respect to passive income, $300 of unused foreign taxes paid in 2005 with respect to general limitation income, $400 of unused foreign taxes paid in 2006 with respect to passive income, and $200 of unused foreign taxes paid in 2006 with respect to general limitation income. In 2009, A's only foreign source income is passive income described in section 904(j)(3)(A)(i), and this income is reported to A on a payee statement (within the meaning of section 6724(d)(2)). If A elects to apply section 904(j) for the 2009 taxable year, the unused foreign taxes paid in 2005 and 2006 are not deemed paid in 2009, and A therefore cannot claim a foreign tax credit for those taxes in 2009.

> (ii) In 2010, A again is eligible for and elects the application of section 904(j). The carryforwards from 2005 expire in 2010. The carryforward period established under section 904(c) is not extended by A's election under section 904(j). In 2011, A does not elect the application of section 904(j). The $600 of unused foreign taxes paid in 2006 on passive and general limitation income are deemed paid in 2011, under section 904(c), without any adjustment for any portion of those taxes that might have been used as a foreign tax credit in 2009 or 2010 if A had not elected to apply section 904(j) to those years.

(d) ***Effective date.*** Section 1.904(j)-1 applies to taxable years beginning after July 20, 2004.

[T.D. 9141, 69 FR 43316, July 20, 2004]

§ 1.905-1 When credit for foreign income taxes may be taken.

(a) ***Scope.*** This section provides rules regarding when the credit for foreign income taxes (as defined in § 1.901-2(a)) may be taken, based on a taxpayer's method of accounting for such taxes. Paragraph (b) of this section provides the general rule. Paragraph (c) of this section sets forth rules for determining the taxable year in which taxpayers using the cash receipts and disbursement method of accounting for income ("cash method") may claim a foreign tax credit. Paragraph (d) of this section sets forth rules for determining the taxable year in which taxpayers using the accrual method of accounting for income ("accrual method") may claim a foreign tax credit. Paragraph (e) of this section provides rules for taxpayers using the cash method to claim foreign tax credits on the accrual basis pursuant to the election provided under section 905(a). Paragraph (f) of this section provides rules for when foreign income tax expenditures of a pass-through entity can be taken as a credit by the entity's partners, shareholders, or owners. Paragraph (g) of this section provides rules for when a foreign tax credit can be taken with respect to blocked income. Paragraph (h) provides the applicability dates for this section.

(b) ***General rule.*** The credit for foreign income taxes provided in subpart A, part III, subchapter N, chapter 1 of the Code (the "foreign tax credit") may be taken either on the return for the year in which the foreign income taxes accrued or on the return for the year in which the foreign income taxes were paid (that is, remitted), depending on whether the taxpayer uses the accrual or the cash receipts and disbursements method of accounting for purposes of computing taxable income and filing returns. However, regardless of the year in which the credit is claimed under the taxpayer's method of accounting for foreign income taxes, the foreign tax credit is allowed only to the extent the foreign income taxes are ultimately both owed and remitted to the foreign country (in the case of a taxpayer claiming the foreign tax credit on the accrual basis, within the time prescribed by section 905(c)(2)). See section 905(b) and §§ 1.901-1(a) and 1.901-2(e). Because the taxpayer's liability for foreign income tax may accrue (that is, become fixed and determinable) in a different taxable year than that in which the tax is paid (that is, remitted), the taxpayer's entitlement to the credit may be perfected, or become subject to adjustment, by reason of events that occur in a taxable year after the taxable year in which the credit is allowed. See section 905(c) and § 1.905-3(a) for rules relating to changes to the taxpayer's foreign income tax liability that require a redetermination of the allowable foreign tax credit and the taxpayer's U.S. tax liability.

(c) ***Rules for cash method taxpayers*** —

(1) ***Credit allowed in year paid.*** Except as provided in paragraph (e) of this section, a taxpayer who uses the cash method of accounting may claim a foreign tax credit only in the taxable year in which the foreign income taxes are paid. Generally, foreign income taxes are considered paid in the taxable

year in which the taxes are remitted to the foreign country. However, foreign withholding taxes described in section 901(k)(1)(B), as well as foreign net income taxes described in § 1.901-2(a)(3) that are withheld from the taxpayer's gross income by the payor, are treated as paid in the year in which they are withheld. Foreign income taxes that have been withheld or remitted but which are not considered an amount of tax paid for purposes of section 901 under the rules of § 1.901-2(e) (for example, because the amount withheld or remitted was not a compulsory payment), however, are not eligible for a foreign tax credit. See §§ 1.901-2(e) and 1.905-3(b)(1)(ii)(B) (*Example 2*).

(2) ***Payment of contested foreign tax liability.*** Under § 1.901-2(e)(2)(i), a foreign income tax liability that is contested by the taxpayer is not a reasonable approximation of the taxpayer's final foreign income tax liability and, therefore, is not considered an amount of tax paid for purposes of section 901 until the contest is resolved. Thus, except as provided in paragraph (c)(3) of this section, a foreign tax credit for a contested foreign income tax liability (or portion thereof) that has been remitted to the foreign country cannot be claimed until such time as the contest is resolved and the tax is considered paid. Once the contest is resolved and the foreign income tax liability is finally determined, the tax liability is treated as paid in the taxable year in which the foreign tax was remitted. See paragraph (c)(1) of this section; see also section 6511(d)(3) and § 301.6511(d)-3 of this chapter for a special 10-year period of limitations for claiming a credit or refund of U.S. tax that is attributable to foreign income taxes for which a credit is allowed under section 901, which for taxpayers claiming credits on the cash basis runs from the unextended due date of the return for the taxable year in which the foreign income taxes are paid (within the meaning of paragraph (c) of this section).

(3) ***Election to claim a provisional credit for contested taxes remitted before contest is resolved.*** A taxpayer claiming foreign tax credits on the cash basis may, under the conditions provided in this paragraph (c)(3), elect to claim a foreign tax credit for a contested foreign income tax liability (or a portion thereof) in the year the contested amount (or a portion thereof) is remitted to the foreign country, notwithstanding that the liability is not finally determined and so is not considered an amount of tax paid. Such election applies only for contested foreign income taxes that are remitted in a taxable year in which the taxpayer elects under section 901(a) to claim a credit, instead of a deduction under section 164(a)(3), for taxes paid in such year. To make the election, a taxpayer must file a Form 1116 (Foreign Tax Credit (Individual, Estate, or Trust)) or Form 1118 (Foreign Tax Credit—Corporations), and the agreement described in paragraphs (d)(4)(ii) and (iii) of this section. In addition, the taxpayer must, for each subsequent taxable year up to and including the taxable year in which the contest is resolved, file the annual notice described in paragraph (d)(4)(iv) of this section. Any portion of a contested foreign income tax liability for which a provisional credit is claimed under this paragraph (c)(3) that is subsequently refunded by the foreign country results in a foreign tax redetermination under § 1.905-3(a).

(4) ***Adjustments to taxes claimed as a credit in the year paid.*** A refund of foreign income taxes for which a foreign tax credit has been claimed on the cash basis, or a subsequent determination that the amount paid exceeds the taxpayer's liability for foreign income tax, requires a redetermination of foreign income taxes paid and the taxpayer's U.S. tax liability pursuant to section 905(c) and § 1.905-3. See § 1.905-3(a) and 1.905-3(b)(1)(ii)(G) (*Example 7*). Additional foreign income taxes paid that relate back to a prior year in which foreign income taxes were claimed as a credit on the cash basis, including by reason of the settlement of a dispute with the foreign tax authority, may be claimed as a credit only in the year the additional taxes are paid (within the meaning of paragraph (c) of this section). The payment of such additional taxes does not result in a redetermination pursuant

to section 905(c) or § 1.905-3 of the foreign income taxes paid in any prior year, although a redetermination of U.S. tax liability may be required due, for example, to a carryback of unused foreign tax under section 904(c) and § 1.904-2.

(d) ***Rules for accrual method taxpayers*** —

(1) ***Credit allowed in year accrued*** —

(i) ***In general.*** A taxpayer who uses the accrual method of accounting may claim a foreign tax credit only in the taxable year in which the foreign income taxes are considered to accrue for foreign tax credit purposes under the rules of this paragraph (d). Foreign income taxes accrue in the taxable year in which all the events have occurred that establish the fact of the liability and the amount of the liability can be determined with reasonable accuracy. See §§ 1.446-1(c)(1)(ii)(A) and 1.461-4(g)(6)(iii)(B). For purposes of the preceding sentence, a foreign income tax that is contingent on a future distribution of earnings does not meet the all events test until the earnings are distributed. A foreign income tax liability determined on the basis of a foreign taxable year becomes fixed and determinable at the close of the taxpayer's foreign taxable year. Therefore, foreign income taxes that are computed based on items of income, deduction, and loss that arise in a foreign taxable year accrue in the United States taxable year with or within which the taxpayer's foreign taxable year ends. Foreign withholding taxes that are paid with respect to a foreign taxable year and that represent advance payments of a foreign net income tax liability determined on the basis of that foreign taxable year accrue at the close of the foreign taxable year. Foreign withholding taxes imposed on a payment giving rise to an item of foreign gross income accrue on the date the payment from which the tax is withheld is made (or treated as made under foreign tax law).

(ii) ***Relation-back rule for adjustments to taxes claimed as a credit in year accrued.*** Additional tax paid as a result of a change in the foreign tax liability, including additional tax paid when a contest with a foreign tax authority is resolved, relates back and is considered to accrue at the end of the foreign taxable year with respect to which the tax is imposed (the "relation-back year"). Additional withholding tax paid as a result of a change in the amount of an item of foreign gross income (such as pursuant to a foreign transfer pricing adjustment) also relates back and is considered to accrue in the year in which the payment from which the additional tax is withheld is made (or considered to have been made under foreign tax law). Foreign income taxes that are not paid within 24 months after the close of the taxable year in which they were accrued are treated as refunded pursuant to § 1.905-3(a); when subsequently paid, the foreign income taxes are allowed as a credit in the relation-back year. See § 1.905-3(b)(1)(ii)(E) (*Example 5*). For special rules that apply to determine when foreign income tax is considered to accrue in the case of certain ownership and entity classification changes, see §§ 1.336-2(g)(3)(ii), 1.338-9(d), 1.901-2(f)(5), and 1.1502-76.

(2) ***Special rule for 52-53 week U.S. taxable years.*** If a taxpayer has elected pursuant to section 441(f) to use a U.S. taxable year consisting of 52-53 weeks, and such U.S. taxable year closes within six calendar days of the end of the taxpayer's foreign taxable year, the determination of when foreign income taxes accrue under paragraph (d)(1) of this section is made by deeming the taxpayer's U.S. taxable year to end on the last day of its foreign taxable year.

(3) ***Accrual of contested foreign tax liability.*** A contested foreign income tax liability is finally determined and accrues for purposes of paragraph (d)(1) of this section when the contest is resolved. However, pursuant to section 905(c)(2), no credit is allowed for any accrued tax that is not paid within 24 months of the close of the relation-back year until the tax is actually remitted and considered paid.

Thus, except as provided in paragraph (d)(4) of this section, a foreign tax credit for a contested foreign income tax liability cannot be claimed until such time as both the contest is resolved and the tax is considered paid, even if the contested liability (or portion thereof) has previously been remitted to the foreign country. Once the contest is resolved and the foreign income tax liability is finally determined and paid, the tax liability accrues, and is considered to accrue in the relation-back year for purposes of the foreign tax credit. See paragraph (d)(1) of this section; see also section 6511(d)(3) and § 301.6511(d)-3 of this chapter for a special 10-year period of limitations for claiming a credit or refund of U.S. tax that is attributable to foreign income taxes for which a credit is allowed under section 901, which for taxpayers claiming credits on the accrual basis runs from the unextended due date of the return for the taxable year in which the foreign income taxes accrued (within the meaning of this paragraph (d)).

(4) ***Election to claim a provisional credit for contested taxes remitted before accrual*** —

(i) ***Conditions of election.*** A taxpayer may, under the conditions provided in this paragraph (d)(4), elect to claim a foreign tax credit for a contested foreign income tax liability (or a portion thereof) in the relation-back year when the contested amount (or a portion thereof) is remitted to the foreign country, notwithstanding that the liability is not finally determined and so has not accrued. This election is available only for contested foreign income taxes that relate to a taxable year in which the taxpayer has elected under section 901(a) to claim a credit, instead of a deduction under section 164(a)(3), for foreign income taxes that accrue in such year. If the election is made by a taxpayer with respect to contested foreign income taxes of a controlled foreign corporation, such taxes are treated as deemed paid in the relation-back year and the controlled foreign corporation may deduct the taxes in computing its taxable income in the relation-back year. To make the election, a taxpayer must file an amended return for the taxable year to which the contested tax relates, together with a Form 1116 (Foreign Tax Credit (Individual, Estate, or Trust)) or Form 1118 (Foreign Tax Credit—Corporations), and the agreement described in paragraph (d)(4)(ii) of this section. In addition, the taxpayer must, for each subsequent taxable year up to and including the taxable year in which the contest is resolved, file the annual notice described in paragraph (d)(4)(iii) of this section. Any portion of a contested foreign income tax liability for which a provisional credit is claimed under this paragraph (d)(4) that is subsequently refunded by the foreign country results in a foreign tax redetermination under § 1.905-3(a).

(ii) ***Contents of provisional foreign tax credit agreement.*** The provisional foreign tax credit agreement must contain the following:

(A) A statement that the document is an election and an agreement under the provisions of paragraph (d)(4) of this section;

(B) A description of the contested foreign income tax liability, including the name (or other identifier) of the foreign tax or taxes being contested, the name of the country imposing the tax, the name and identifying number of the payor of the contested tax, the amount of the contested tax, and the U.S. taxable year(s) and the income to which the contested foreign income tax liability relates;

(C) The amount of the contested foreign income tax liability in paragraph (d)(4)(ii)(B) of this section that has been remitted to the foreign country and the date of the remittance(s);

(D) An agreement by the taxpayer, for a period of three years from the later of the filing or the due date (with extensions) of the return for the taxable year in which the taxpayer notifies the Internal Revenue Service of the resolution of the contest, not to assert the statute of limitations on assessment as a defense to the assessment of additional taxes or interest related to the contested foreign income tax liability described in paragraph (d)(4)(ii)(B) of this section that may arise from a determination that the taxpayer failed to exhaust all effective and practical remedies to minimize its foreign income tax liability, so that the amount of the contested foreign income tax is not a compulsory payment and is not considered paid within the meaning of § 1.901-2(e)(5);

(E) A statement that the taxpayer agrees to comply with all the conditions and requirements of paragraph (d)(4) of this section, including to provide notice to the Internal Revenue Service upon the resolution of the contest; and

(F) Any additional information as may be prescribed by the Commissioner of Internal Revenue in Internal Revenue Service forms or instructions.

(iii) ***Signatory.*** The provisional foreign tax credit agreement must be signed under penalties of perjury by a person authorized to sign the return of the taxpayer.

(iv) ***Annual notice.*** For each taxable year following the year in which an election pursuant to paragraph (d)(4) of this section is made up to and including the taxable year in which the contest is resolved, the taxpayer must include with its timely-filed return the information described in paragraphs (d)(4)(iii)(A) through (C) of this section on Form 1116 or Form 1118 or in such other form or manner prescribed by the Commissioner of Internal Revenue in Internal Revenue Service forms or instructions.

(A) A description of the contested foreign income tax liability, including the name (or other identifier) of the foreign tax or taxes, the name of the country imposing the tax, the name and identifying number of the payor of the contested tax, the amount of the contested tax, and a description of the status of the contest.

(B) With the return for the taxable year in which the contest is resolved, notification that the contest has been resolved. Such notification must include the date of final resolution and the amount of the finally determined foreign income tax liability.

(C) Any additional information, which may include a copy of the final judgment, order, settlement, or other documentation of the contest resolution, as may be prescribed by the Commissioner of Internal Revenue in Internal Revenue Service forms or instructions.

(5) ***Correction of improper accruals*** —

(i) ***In general.*** The accrual of a foreign income tax expense generally involves the determination of the proper timing for recognizing the expense for Federal income tax purposes. Thus, foreign income tax expense is a material item within the meaning of section 446. See § 1.446-1(e)(2)(ii). As a material item, a change in the timing of accruing a foreign income tax expense is generally a change in method of accounting. See section 446(e). A change from an improper method of accruing foreign income taxes to the proper method of accrual described in this paragraph (d) is treated as a change in a method of accounting, regardless of whether the taxpayer (or a partner or beneficiary taking into account a distributive share of foreign income taxes paid by a partnership or other pass-through entity) chooses to claim a deduction or a credit for such taxes in any taxable year. For purposes of this paragraph (d)(5), an improper

method of accruing foreign income taxes includes a method under which foreign income tax is accrued in a taxable year other than the taxable year in which the requirements of the all events test in §§ 1.446-1(c)(1)(ii)(A) and 1.461-4(g)(6)(iii)(B) are met, or which fails to apply the relation-back rule in paragraph (d)(1) of this section that applies for purposes of the foreign tax credit, but does not include corrections to estimated accruals or errors in computing the amount of foreign income tax that is allowed as a deduction or credit in any taxable year. Taxpayers must file a Form 3115, Application for Change in Accounting Method, in accordance with Revenue Procedure 2015-13 (or any successor administrative procedure prescribed by the Commissioner) to obtain the Commissioner's permission to change from an improper method of accruing foreign income taxes to the proper method described in this paragraph (d). In order to prevent a duplication or omission of a benefit for foreign income taxes that accrue in any taxable year (whether through the double allowance or double disallowance of either a deduction or a credit, the allowance of both a deduction and a credit, or the disallowance of either a deduction or a credit, for the same amount of foreign income tax), the rules in paragraphs (d)(5)(ii) through (iv) of this section, describing a modified cut-off approach, apply if the Commissioner grants permission for the taxpayer to change to the proper method of accrual. Under the modified cut-off approach, a section 481(a) adjustment is neither required nor permitted with respect to the amounts of foreign income tax that were improperly accrued (or improperly not accrued) under the taxpayer's improper method in taxable years before the taxable year of change.

(ii) ***Adjustments required to implement a change in method of accounting for accruing foreign income taxes.*** A change from an improper method of accruing foreign income taxes to the proper method described in this paragraph (d) is made under the modified cut-off approach described in this paragraph (d)(5)(ii). Under the modified cut-off approach, the amount of foreign income tax in a statutory or residual grouping (such as a separate category as defined in § 1.904-5(a)(4)) that properly accrues in the taxable year of change (accounted for in the currency in which the foreign tax liability is denominated) is first adjusted upward by the amount of foreign income tax in the same grouping that properly accrued in a taxable year before the taxable year of change but which, under the taxpayer's improper method of accounting, the taxpayer failed to accrue and claim as either a credit or a deduction in any taxable year before the taxable year of change, and next, adjusted downward (but not below zero) by the amount of foreign income tax in the same grouping that the taxpayer improperly accrued in a taxable year before the year of change and for which the taxpayer claimed a credit or a deduction in such prior taxable year, but only if the improperly-accrued amount of foreign income tax did not properly accrue in a taxable year before the taxable year of change. The modified cut-off approach is applied separately with respect to amounts of foreign income tax for which the foreign tax credit is disallowed and to which section 275 does not apply. See, for example, section 901(m)(6). For purposes of the foreign tax credit, the adjusted amounts of accrued foreign income taxes, including any upward adjustment, are translated into U.S. dollars under § 1.986(a)-1 as if those amounts properly accrued in the taxable year of change. To the extent that the downward adjustment in any grouping required under this modified cut-off approach exceeds the amount of foreign income tax properly accruing in that grouping in the year of change, as increased by the upward adjustment, if any, such excess will carry forward to each subsequent taxable year and reduce properly-accrued amounts of foreign income tax in the same grouping to the extent of those properly-accrued amounts, until all improperly-accrued amounts included in the downward adjustment are accounted for. See § 1.861-20 for

rules that apply to assign foreign income taxes to statutory and residual groupings. See paragraphs (d)(6)(v) through (d)(6)(ix) of this section for examples illustrating the application of the modified cut-off approach.

(iii) *Application of section 905(c)* —

(A) ***Two-year rule.*** Except as otherwise provided in this paragraph (d)(5)(iii), if the taxpayer claimed a credit for improperly-accrued amounts in a taxable year before the taxable year of change, no adjustment is required under section 905(c)(2) and § 1.905-3(a) solely by reason of the improper accrual. For purposes of applying section 905(c)(2) and § 1.905-3(a) to improperly-accrued amounts of foreign income tax that were claimed as a credit in any taxable year before the taxable year of change, the 24-month period runs from the close of the U.S. taxable year(s) in which those amounts were accrued under the taxpayer's improper method and claimed as a credit. To the extent any improperly-accrued amounts remain unpaid as of the date 24 months after the close of the taxable year in which the amounts were improperly accrued and claimed as a credit, an adjustment is required under section 905(c)(2) and § 1.905-3(a) as if the improperly-accrued amounts were refunded as of the date 24 months after the close of such taxable year. See § 1.986(a)-1(c) (a refund or other downward adjustment to foreign income taxes paid or accrued on more than one date reduces the foreign income taxes paid or accrued on a last-in, first-out basis, starting with the amounts most recently paid or accrued).

(B) ***Application of payments.*** Amounts of foreign income tax that a taxpayer accrued and claimed as a credit or a deduction in a taxable year before the taxable year of change under the taxpayer's improper method, but that had properly accrued either in the taxable year the credit or deduction was claimed or in a different taxable year before the taxable year of change, are not included in the downward adjustment required by paragraph (d)(5)(ii) of this section. Remittances to the foreign country of such amounts (accounted for in the currency in which the foreign tax liability is denominated) are treated first as payments of the amounts of tax that had properly accrued in the taxable year claimed as a credit or deduction to the extent thereof, and then as payments of the amounts of tax that were improperly accrued in a different taxable year, on a last-in, first-out basis, starting with the most recent improperly-accrued amounts. Remittances to the foreign country of amounts of foreign income tax that properly accrue in or after the taxable year of change (accounted for in the foreign currency in which the foreign tax liability is denominated) but that are offset by the amounts included in the downward adjustment required by paragraph (d)(5)(ii) of this section are treated as payments of the amounts of tax that were improperly accrued before the taxable year of change and included in the downward adjustment on a last-in, first-out basis, starting with the most recent improperly-accrued amounts. Additional amounts of foreign income tax that first accrue in or after the taxable year of change but that relate to a taxable year before the taxable year of change are taken into account in the earlier of the taxable year of change or the taxable year or years in which they would have been considered to accrue based upon the taxpayer's improper method. Additional amounts of foreign income tax that first accrue in or after the taxable year of change and that relate to the taxable year of change or a taxable year after the year of change are taken into account in the proper relation-back year, but may then be subject to the downward adjustment required by paragraph (d)(5)(ii) of this section.

(iv) ***Foreign income tax expense improperly accrued by a foreign corporation, partnership, or other pass-through entity.*** Foreign income tax expense of a foreign corporation reduces both the corporation's taxable income and its earnings and profits, and may give rise to an amount of foreign taxes deemed paid under section 960 that may be claimed as a credit by a United States shareholder that is a domestic corporation or that is a person that makes an election under section 962. If the Commissioner grants permission for a foreign corporation to change its method of accounting for foreign income tax expense, the duplication or omission of those expenses (accounted for in the functional currency of the foreign corporation) and the associated foreign income taxes (translated into dollars in accordance with § 1.986(a)-1) are accounted for by applying the rules in paragraph (d)(5)(ii) of this section as if the foreign corporation were itself eligible to, and did, claim a credit under section 901 for such amounts. In the case of a partnership or other pass-through entity that is granted permission to change its method of accounting for accruing foreign income taxes to a proper method as described in this paragraph (d), such partnership or other pass-through entity must provide its partners or other owners with the information needed for the partners or other owners to properly account for the improperly-accrued or unaccrued amounts under the rules in paragraph (d)(5)(ii) of this section as if their proportionate shares of foreign income tax expense were directly paid or accrued by them.

(6) ***Examples.*** The following examples illustrate the application of paragraph (d) of this section. Unless otherwise stated, the local currency of Country X and Country Y, and the functional currency of any foreign branch, is the Euro (€), and at all relevant times the exchange rate is $1:€1.

(i) ***Example 1: Accrual of foreign income tax*** —

(A) ***Facts.*** A, a U.S. citizen, resides and works in Country X. A uses the calendar year as the U.S. taxable year and has made an election under paragraph (e) of this section to claim foreign tax credits on an accrual basis. Country X has a tax year that begins on April 1 and ends on March 31. A's wages are subject to net income tax, at graduated rates, under Country X tax law and are subject to withholding on a monthly basis by A's employer in Country X. In the period between April 1, Year 1, and March 31, Year 2, A earns $50,000x in Country X wages, from which A's employer withholds $10,000x in tax. On December 1, Year 1, A receives a dividend distribution from a Country Y corporation, from which the corporation withheld $500x of tax. Country Y imposes withholding tax on dividends paid to nonresidents solely based on the gross amount of the dividend payment; A is not required to file a tax return in Country Y.

(B) ***Analysis.*** Under paragraph (d)(1) of this section, A's liability for Country X net income tax accrues on March 31, Year 2, the last day of the Country X taxable year. The Country X net income tax withheld by A's employer from A's wages is a reasonable approximation of, and represents an advance payment of, A's final net income tax liability for the year, which becomes fixed and determinable only at the close of the Country X taxable year. Thus, A cannot claim a credit for any portion of the Country X net income tax on A's Federal income tax return for Year 1, and may claim a credit for the entire Country X net income tax that accrues on March 31, Year 2, on A's Federal income tax return for Year 2. A may claim a credit for the Country Y withholding tax on A's Federal income tax return for Year 1, because the withholding tax accrued on December 1, Year 1.

(ii) ***Example 2: 52-53 week taxable year*** —

(A) ***Facts.*** U.S.C., an accrual method taxpayer, is a domestic corporation that operates in branch form in Country X. U.S.C. uses the calendar year for Country X tax purposes. For Federal income tax purposes, U.S.C. elects pursuant to § 1.441-2(a) to use a 52-53 week taxable year that ends on the last Friday of December. In Year 1, U.S.C.'s U.S. taxable year ends on Friday, December 25; in Year 2, U.S.C.'s U.S. taxable year ends Friday, December 31. For its foreign taxable year ending December 31, Year 1, U.S.C. earns $10,000x of foreign source income through its Country X branch and incurs Country X foreign income tax of $500x; for Year 2, U.S.C. earns $12,000x and incurs Country X foreign income tax of $600x.

(B) ***Analysis.*** Under paragraph (d)(1) of this section, the $500x of Country X foreign income tax becomes fixed and determinable at the close of U.S.C.'s foreign taxable year, on December 31, Year 1, which is after the close of its U.S. taxable year (December 25, Year 1). The $600x of Country X foreign income tax becomes fixed and determinable on December 31, Year 2. Thus, both the Year 1 and Year 2 Country X foreign income taxes accrue in U.S.C.'s U.S. taxable year ending December 31, Year 2. However, pursuant to paragraph (d)(2) of this section, for purposes of determining the amount of foreign income taxes accrued in each taxable year for foreign tax credit purposes, U.S.C.'s U.S. taxable year is deemed to end on December 31, the end of U.S.C.'s Country X taxable year. U.S.C. may therefore claim a foreign tax credit for $500x of Country X foreign income tax on its Federal income tax return for Year 1 and a credit for $600x of Country X foreign income tax on its Federal income tax return for Year 2.

(iii) ***Example 3: Contested tax*** —

(A) ***Facts.*** U.S.C. is a domestic corporation that operates in branch form in Country X. U.S.C. uses an accrual method of accounting and uses the calendar year as its U.S. and Country X taxable year. In Year 1, when the average exchange rate described in § 1.986(a)-1(a)(1) is $1:€1, U.S.C. earns €20,000x = $20,000x through its Country X branch for U.S. and Country X tax purposes and accrues Country X foreign income taxes of €500x = $500x, which U.S.C. claims as a credit on its Federal income tax return for Year 1. In Year 3, when the average exchange rate is $1:€1.2, Country X asserts that U.S.C. owes additional foreign income taxes of €100x with respect to U.S.C.'s Year 1 income. U.S.C. contests the liability but remits €40x to Country X with respect to the contested liability in Year 3. U.S.C. does not make an election under paragraph (d)(4) of this section to claim a provisional credit with respect to the €40x. In Year 6, after exhausting all effective and practical remedies, it is finally determined that U.S.C. is liable for €50x of additional Country X foreign income taxes with respect to its Year 1 income. U.S.C. pays an additional €10x to Country X on September 15, Year 6, when the spot rate described in § 1.986(a)-1(a)(2)(i) is $1:€2.

(B) ***Analysis.*** Pursuant to paragraph (d)(3) of this section, the additional liability asserted by Country X with respect to U.S.C.'s Year 1 income does not accrue until the contest is resolved in Year 6. U.S.C.'s remittance of €40x of contested tax in Year 3 is not a payment of accrued tax, and so is not a foreign tax redetermination. Both the €40x of Country X taxes paid in Year 3 and the €10x of Country X taxes paid in Year 6 accrue in Year 6, when the contest is resolved. Once accrued and paid, the €50x relates back for foreign tax credit purposes to Year 1, and can be claimed as a credit by U.S.C. on a timely-filed amended return for Year 1. Under § 1.986(a)-1(a), for foreign tax credit purposes the €40x paid in Year 3 is translated into dollars at the average exchange rate for Year 1 (€40x × $1/€1 =

$40x), and the €10x paid in Year 6 is translated into dollars at the spot rate on the date paid (€10x × $1/€2 = $5x). Accordingly, after the €50x of Country X income tax is paid in Year 6 U.S.C. may claim an additional foreign tax credit of $45x for Year 1.

(iv) ***Example 4: Provisional credit for contested tax*** —

(A) ***Facts.*** The facts are the same as those in paragraph (d)(6)(iii)(A) of this section (the facts in *Example 3*), except that U.S.C. pays the entire contested tax liability of €100x to Country X in Year 3 and elects under paragraph (d)(4) of this section to claim a provisional foreign tax credit on an amended return for Year 1. In Year 6, upon resolution of the contest, U.S.C. receives a refund of €50x from Country X.

(B) ***Analysis.*** In Year 3, U.S.C. may claim a provisional foreign tax credit for $100x (€100x translated at the average exchange rate for Year 1) of contested foreign tax paid to Country X by filing an amended return for Year 1, with Form 1118 attached, and a provisional foreign tax credit agreement described in paragraph (d)(4)(ii) of this section. In each year for Years 4 through 6, U.S.C. must attach the certification described in paragraph (d)(4)(iii) of this section to its timely-filed Federal income tax return. In Year 6, as a result of the €50x refund, U.S.C. must redetermine its U.S. tax liability for Year 1 and for any other affected year pursuant to § 1.905-3, reducing the Year 1 foreign tax credit by $50x (from $600x to $550x), and comply with the notification requirements in § 1.905-4. See § 1.986(a)-1(c) (refunds of foreign income tax translated into U.S. dollars at the rate used to claim the credit).

(v) ***Example 5: Improperly accelerated accrual*** —

(A) ***Facts*** —

(1) ***Foreign income tax accrued and paid.*** U.S.C. is a domestic corporation that operates a foreign branch in Country X. All of U.S.C.'s gross and taxable income is foreign source foreign branch category income, and all of its foreign income taxes are properly allocated and apportioned under § 1.861-20 to the foreign branch category. U.S.C. uses the accrual method of accounting and uses the calendar year as its U.S. taxable year. For Country X tax purposes, U.S.C. uses a fiscal year that ends on March 31. U.S.C. accrued €200x of Country X net income tax (as defined in § 1.901-2(a)(3)) for its foreign taxable year ending March 31, Year 2, for which the average exchange rate was $1:€1. It timely filed its Country X tax return and paid the €200x on January 15, Year 3. U.S.C. accrued and paid with its timely filed Country X tax returns €280x and €240x of Country X net income tax for its foreign taxable years ending on March 31 of Year 3 and Year 4, respectively, on January 15 of Year 4 and Year 5, respectively.

(2) ***Improper accrual.*** On its Federal income tax return for Year 1, U.S.C. improperly pro-rated and accelerated the accrual of Country X net income tax and claimed a credit for $150x, equal to three-fourths of the Country X net income tax of $200x that relates to U.S.C.'s foreign taxable year ending March 31, Year 2. Continuing with this improper method of accruing foreign income taxes, U.S.C. claimed a foreign tax credit of $260x on its U.S. tax return for Year 2, comprising $50x (one-fourth of the $200x of net income tax relating to its foreign taxable year ending March 31, Year 2) plus $210x (three-fourths of the $280x of net income tax relating to its foreign taxable year ending March 31, Year 3). Similarly, U.S.C. improperly accrued and

claimed a foreign tax credit on its U.S. tax return for Year 3 for $250x of Country X net income tax, comprising $70x (one-fourth of the $280x that properly accrued in Year 3) plus $180x (three-fourths of the $240x that properly accrued in Year 4). In Year 4, U.S.C. realizes its mistake and, as provided in paragraph (d)(5)(i) of this section, files Form 3115 with the IRS to seek permission to change from an improper method to a proper method of accruing foreign income taxes.

TABLE 1 TO PARAGRAPH (d)(6)(v)(A)(2)

Country X taxable year ending in U.S. calendar taxable year	Net income tax properly accrued ($1 = €1))	Net income tax accrued under improper method ($1 = €1))
3/31/Y1 ends in Year 1	0	$^{3}/_{4}$ (200x) = 150x.
3/31/Y2 ends in Year 2	200x	$^{1}/_{4}$ (200x) + $^{3}/_{4}$ (280x) = 260x.
3/31/Y3 ends in Year 3	280x	$^{1}/_{4}$ (280x) + $^{3}/_{4}$ (240x) = 250x.
3/31/Y4 ends in Year 4	240x	[year of change].

(B) *Analysis* —

(1) ***Downward adjustment.*** Under paragraph (d)(5)(ii) of this section, in Year 4, the year of change, U.S.C. must reduce (but not below zero) the amount (in Euros) of Country X net income tax in the foreign branch category that properly accrues in Year 4, €240x, by the amount of foreign income tax that was accrued and claimed as either a deduction or a credit in a year before the year of change, and that had not properly accrued in either the year in which the tax was accrued under U.S.C.'s improper method or in any other taxable year before the taxable year of change. For all taxable years before the taxable year of change, under its improper method U.S.C. had accrued and claimed as a credit a total of €660x = $660x of foreign income tax, of which only €480x = $480x had properly accrued. Therefore, the downward adjustment required by paragraph (d)(5)(ii) of this section is €180x (€660x − €480x = €180x). In Year 4, U.S.C.'s foreign tax credit in the foreign branch category is reduced by $180x (€180x downward adjustment translated into dollars at $1:€1, the average exchange rate for Year 4), from $240x to $60x.

(2) *Application of section 905(c)*—

(*i*) ***Year 1.*** Under paragraph (d)(5)(iii) of this section, the €200x U.S.C. paid on January 15, Year 3, that relates to its Country X taxable year ending on March 31, Year 2, is first treated as a payment of the €50x of that Country X net income tax liability that properly accrued and was claimed as a credit by U.S.C. in Year 2, and next as a payment of the €150x of that Country X net income tax liability that U.S.C. improperly accrued and claimed as a credit in Year 1. Because all

€150x of the Country X net income tax that was improperly accrued and claimed as a credit in Year 1 was paid within 24 months of December 31, Year 1, no foreign tax redetermination occurs, and no redetermination of U.S. tax liability is required, for Year 1.

(*ii*) ***Year 2.*** Under paragraph (d)(5)(iii) of this section, the €280x U.S.C. paid on January 15, Year 4, that relates to its Country X taxable year ending on March 31, Year 3, is first treated as a payment of the €70x = $70x of that Country X net income tax liability that properly accrued and was claimed as a credit by U.S.C. in Year 3, and next as a payment of the €210x = $210x of that Country X net income tax liability that U.S.C. improperly accrued and claimed as a credit in Year 2. Together with the €50x = $50x of U.S.C.'s Country X net income tax liability that properly accrued and was claimed as a credit in Year 2, all €260x of the Country X net income tax that was accrued and claimed as a credit in Year 2 under U.S.C.'s improper method was paid within 24 months of December 31, Year 2. Accordingly, no foreign tax redetermination occurs, and no redetermination of U.S. tax liability is required, for Year 2.

(*iii*) ***Year 3.*** Under paragraph (d)(5)(iii) of this section, the €240x U.S.C. paid on January 15, Year 5, that relates to its Country X taxable year ending on March 31, Year 4, is first treated as a payment of the €60x = $60x of that Country X net income tax liability that properly accrued and was claimed as a credit by U.S.C. in Year 4, and next as a payment of the €180x = $180x of that Country X net income tax liability that U.S.C. improperly accrued and claimed as a credit in Year 3. Together with the €70x = $70x of U.S.C.'s Country X net income tax liability that properly accrued and was claimed as a credit by U.S.C. in Year 3, all €250x of the Country X net income tax that was accrued and claimed as a credit in Year 3 under U.S.C.'s improper method was paid within 24 months of December 31, Year 3. Accordingly, no foreign tax redetermination occurs, and no redetermination of U.S. tax liability is required, for Year 3.

(*iv*) ***Year 4.*** Under paragraph (d)(5)(iii) of this section, €60x = $60x of U.S.C.'s January 15, Year 5 payment of €240x with respect to its Country X net income tax liability for Year 4 is treated as a payment of €60x = $60x of Country X net income tax that, after application of the downward adjustment required by paragraph (d)(5)(ii) of this section, was accrued and claimed as a credit in Year 4, the year of change.

(vi) ***Example 6: Failure to pay improperly-accrued tax within 24 months*** —

(A) ***Facts.*** The facts are the same as those in paragraph (d)(6)(v) of this section (the facts in *Example 5*), except that U.S.C. does not pay its €240x tax liability for its Country X taxable year ending on March 31, Year 4, until January 15 of Year 6, when the spot rate described in § 1.986(a)-1(a)(2)(i) is $1:€1.5.

(B) ***Analysis.*** The results are the same as in paragraphs (d)(6)(v)(B)(*2*)(*i*) and (*ii*) of this section (the analysis in *Example 5* for Year 1 and Year 2). With respect to Year 3, because the €180x = $180x of Year 4 foreign income tax that was improperly accrued and credited in Year 3 was not paid within 24 months of the end of Year 3, under section 905(c)(2) and § 1.905-3(a) that €180x = $180x is treated as refunded on December 31, Year 5, requiring a redetermination of U.S.C.'s Federal income tax liability for Year 3 (to reverse out the credit

claimed). In Year 6, when U.S.C. pays the €240x of Country X income tax liability for Year 4, under paragraph (d)(5)(iii) of this section that payment is first treated as a payment of the €60x = $60x that was properly accrued and claimed as a credit in Year 4, and then as a payment of the €180x that was improperly accrued and claimed as a credit in Year 3 and that was treated as refunded in Year 5. Under section 905(c)(2)(B) and § 1.905-3(a), that Year 6 payment of accrued but unpaid tax is a second foreign tax redetermination for Year 3 that also requires a redetermination of U.S.C.'s U.S. tax liability. Under § 1.986(a)-1(a)(2), the €180x of redetermined tax for Year 3 is translated into dollars at the spot rate on January 15, Year 6, when the tax is paid (€180x × $1/€1.5 = $120x). Under § 1.905-4(b)(1)(iv), U.S.C. may file one amended return accounting for both foreign tax redeterminations (which occur in two consecutive taxable years) with respect to Year 3, which taken together result in a reduction in U.S.C.'s foreign tax credit for Year 3 from $250x to $190x ($250x originally accrued − $180x unpaid after 24 months + $120x paid in Year 6).

(vii) ***Example 7: Additional payment of improperly-accrued tax*** —

(A) ***Facts.*** The facts are the same as those in paragraph (d)(6)(v)(A) of this section (the facts in *Example 5*), except that in Year 6, Country X assessed additional net income tax of €100x with respect to U.S.C.'s Country X taxable year ending March 31, Year 3, and after exhausting all effective and practical remedies to reduce its liability for Country X income tax, U.S.C. pays the additional assessed tax on September 15, Year 7, when the spot rate described in § 1.986(a)-1(a)(2)(i) is $1:€0.5.

(B) ***Analysis.*** Under paragraph (d)(3) of this section, the additional €100x of Country X income tax U.S.C. paid in Year 7 with respect to its foreign taxable year that ended March 31, Year 3, relates back and is considered to accrue in Year 3. However, under its improper method of accounting U.S.C. had accrued and claimed foreign tax credits for Country X net income tax that related to Year 3 on its Federal income tax returns for both Year 2 and Year 3. Accordingly, under paragraph (d)(5)(iii)(B) of this section U.S.C. must redetermine its U.S. tax liability for both Year 2 and Year 3 (and any other affected years) to account for the additional €100x of Country X net income tax liability, using the improper method it used to accrue foreign income taxes before the year of change. Therefore, three-fourths of the €100x of additional tax, or €75x, is treated as if it accrued in Year 2, and one-fourth of the additional tax, or €25x, is treated as if it accrued in Year 3. Pursuant to § 1.986(a)-1(a)(2)(i), the €75x of tax treated as if it accrued in Year 2 and the €25x of tax treated as if it accrued in Year 3 are converted into dollars using the September 15, Year 7, spot rate of $1:€0.5, to $150x and $50x, respectively. Under § 1.905-4(b)(1)(iii), U.S.C. may claim a refund for any resulting overpayment of U.S. tax for Year 2 or Year 3 or any other affected year by filing an amended return within the period provided in section 6511.

(viii) ***Example 8: Tax improperly accrued before year of change exceeds tax properly accrued in year of change*** —

(A) ***Facts.*** U.S.C. owns all of the stock in CFC, a controlled foreign corporation organized in Country X. Country X imposes net income tax on Country X corporations at a rate of 10% only in the year its earnings are distributed to its shareholders, rather than in the year the income is earned. Both U.S.C. and CFC use the calendar year as their taxable year for both Federal and Country X income tax purposes and CFC uses the Euro as its functional currency. In each of Years 1-3, CFC earns €1,000x for both Federal and Country X income

tax purposes of general category foreign base company sales income (before reduction for foreign income taxes). CFC improperly accrues €100x of Country X net income tax with respect to €1,000x of income at the end of each of Years 1 and 2, even though no distribution is made in those years. In Year 1, for which the average exchange rate is $1:€1, U.S.C. computes and includes in income with respect to CFC $900x of subpart F income, claims a deemed paid foreign tax credit of $100x under section 960(a), and has a section 78 dividend of $100x. In Year 2, for which the average exchange rate is $1:€0.5, U.S.C. computes and includes in income with respect to CFC $1,800x of subpart F income, claims a deemed paid foreign tax credit of $200x under section 960(a), and has a section 78 dividend of $200x. In Year 2, CFC makes a distribution to U.S.C. of €400x of earnings and pays €40x of net income tax to Country X. In Year 3, for which the average exchange rate is $1:€1, CFC makes another distribution to U.S.C. of €500x of earnings and pays €50x in net income tax to Country X. In Year 3, U.S.C. realizes its mistake and seeks permission from the IRS for CFC to change to a proper method of accruing foreign income taxes. In Year 4, for which the average exchange rate is $1:€2, CFC makes a distribution of €700x of earnings and pays €70x of net income tax to Country X.

TABLE 2 TO PARAGRAPH (d)(6)(viii)(A)

Taxable year ending	Foreign income tax properly accrued	Foreign income tax accrued under improper method
12/31/Y1 ($1:€1)	0	€100x = $100x.
12/31/Y2 ($1:€0.5)	€40x = $80x	€100x = $200x.
12/31/Y3 ($1:€1)	€50x = $50x	[year of change].
12/31/Y4 ($1:€2)	€70x = $35x	

(B) *Analysis* —

(1) ***Downward adjustment.*** Under paragraph (d)(5)(iv) of this section, CFC applies the rules of paragraph (d)(5) of this section as if it claimed a foreign tax credit under section 901 for Country X taxes. Under paragraph (d)(5)(ii) of this section, in Year 3, the year of change, CFC must reduce (but not below zero) the amount (in Euros) of Country X net income tax allocated and apportioned to its general category foreign base company sales income group that properly accrues in Year 3, €50x, by the amount of foreign income tax (in Euros) that was improperly accrued in that statutory grouping in a year before the year of change, and that had not properly accrued in either the year accrued or in another taxable year before the year of change. For all taxable years before the year of change, under its improper method CFC had accrued a total of €200x of foreign income tax with respect to its general category foreign base company sales income group, of which only €40x had properly accrued. Therefore, the downward adjustment required by paragraph (d)(5)(ii) of this section is €160x (€200x—€40x = €160x). In Year 3, CFC's €50x of eligible foreign

income taxes in the general category foreign base company sales income group is reduced by €50x to zero. The €110x balance of the downward adjustment carries forward to Year 4, and reduces CFC's €70x of eligible foreign income taxes in the general category foreign base company sales income group by €70x to zero. The remaining €40x balance of the downward adjustment carries forward to later years and will reduce CFC's eligible foreign income taxes in the general category foreign base company sales income group until all improperly-accrued amounts are accounted for.

(2) *Application of section 905(c)* —

(*i*) ***Year 2.*** Under paragraph (d)(5)(iii) of this section, CFC's payment in Year 2 of the €40x of Country X net income tax that properly accrued in Year 2, before the year of change, is treated as a payment of €40x of foreign income tax that CFC properly accrued in Year 2. The €60x of foreign income tax that CFC improperly accrued in Year 2 that remains unpaid at the end of Year 2 is not adjusted in Year 2. Under paragraph (d)(5)(iii) of this section, CFC's payment in Year 3 of €50x of Country X net income tax that properly accrued but was offset by the downward adjustment in Year 3 is treated as a payment of €50x of the remaining €60x of Country X net income tax that CFC improperly accrued in Year 2, the most recent improper accrual. In addition, CFC's payment in Year 4 of €70x of Country X net income tax that properly accrued but was offset by the downward adjustment in Year 4 is treated first as a payment of the remaining €10x of Country X net income tax that CFC improperly accrued in Year 2. Because all €100x of foreign income tax accrued in Year 2 under CFC's improper method of accounting is treated as paid within 24 months of December 31, Year 2, no foreign tax redetermination occurs, and no redetermination of CFC's foreign base company sales income, earnings and profits, and eligible foreign income taxes or of U.S.C.'s $1,800x subpart F inclusion, $200x deemed paid credit, $200x section 78 dividend and U.S. tax liability is required, for Year 2.

(*ii*) ***Year 1.*** Because all €100x of the tax CFC improperly accrued in Year 1 remained unpaid as of December 31, Year 3, the date 24 months after the end of Year 1, under section 905(c)(2) and § 1.905-3(a) that €100x is treated as refunded on December 31, Year 3. Under § 1.905-3(b)(2)(ii), U.S.C. must redetermine its Federal income tax liability for Year 1 to account for the foreign tax redetermination, increasing CFC's foreign base company sales income and earnings and profits by €100x, and decreasing its eligible foreign income taxes by $100x. However, under paragraph (d)(5)(iii)(B) of this section €60x of CFC's payment in Year 4 of €70x of Country X net income tax that properly accrued but was offset by the downward adjustment in Year 4 is treated as a payment of €60x of the €100x of Country X net income tax that was improperly accrued in Year 1 and treated as refunded in Year 3. Under § 1.905-4(b)(1)(iv), U.S.C. may account for the two foreign tax redeterminations that occurred in Years 3 and 4 on a single amended Federal income tax return for Year 1. CFC's foreign base company sales income (taking into account the reduction for foreign income taxes) and earnings and profits for Year 1 are recomputed as €1,000x of foreign base company sales income—€100x foreign income tax improperly accrued in

Year 1 + €100x improperly accrued foreign income tax treated as refunded on December 31, Year 3—€60x improperly accrued foreign income tax treated as paid in Year 4 = €940x. CFC's eligible foreign income taxes for Year 1 are translated into dollars at the applicable exchange rate and recomputed as $100x foreign income tax improperly accrued in Year 1—$100x improperly accrued foreign income tax treated as refunded on December 31, Year 3 + $30x improperly accrued foreign income tax treated as paid in Year 4 = $30x. U.S.C.'s subpart F inclusion with respect to CFC for Year 1 (translated at the average exchange rate for Year 1 of $1:€1) is increased from $900x to $940x (€940x x $1/€1), and the amount of foreign taxes deemed paid under section 960(a) and the amount of the section 78 dividend are reduced from $100x to $30x.

(*iii*) ***Summary.*** As of the end of Year 4, CFC and U.S.C. have been allowed a $30x foreign tax credit for Year 1, and a $200x foreign tax credit for Year 2. If in a later taxable year CFC distributes additional earnings to U.S.C. and accrues €40x of additional Country X net income tax that is offset by the balance of the €40x downward adjustment, CFC's payment of that €40x Country X net income tax liability will be treated as a payment of the remaining €40x of Country X net income tax that was improperly accrued in Year 1 and treated as refunded as of the end of Year 3.

(ix) ***Example 9: Improperly deferred accrual*** —

(A) ***Facts*** —

(*1*) ***Foreign income tax accrued and paid.*** U.S.C. is a domestic corporation that operates a foreign branch in Country X. All of U.S.C.'s gross and taxable income is foreign source foreign branch category income, and all of its foreign income taxes are properly allocated and apportioned under § 1.861-20 to the foreign branch category. U.S.C. uses the accrual method of accounting and uses the calendar year as its taxable year for both Federal and Country X income tax purposes. U.S.C. accrued €160x of Country X net income tax (as defined in § 1.901-2(a)(3)) with respect to Year 1. U.S.C. filed its Country X tax return and paid the €160x on June 30, Year 2. U.S.C. accrued €180x, €240x, and €150x of Country X tax for Years 2, 3, and 4, respectively, and paid with its timely filed Country X tax returns these tax liabilities on June 30 of Years 3, 4, and 5, respectively. The average exchange rate described in § 1.986(a)-1(a)(1) is $1:€0.5 in Year 1, $1:€1 in Year 2, $1:€1.25 in Year 3, and $1:€1.5 in Year 4.

(*2*) ***Improper accrual.*** On its Federal income tax return for Year 1, U.S.C. claimed no foreign tax credit. On its Federal income tax return for Year 2, U.S.C. improperly accrued and claimed a credit for $160x (€160x of Country X tax for Year 1 that it paid in Year 2, translated into dollars at the average exchange rate for Year 2). Continuing with this improper method of accounting, U.S.C. improperly accrued and claimed a credit in Year 3 for $144x (€180x of Country X tax for Year 2 that it paid in Year 3,

translated into dollars at the average exchange rate for Year 3). In Year 4, U.S.C. realizes its mistake and seeks permission from the IRS to change to a proper method of accruing foreign income taxes.

TABLE 3 TO PARAGRAPH (d)(6)(ix)(A)(2)

Taxable year ending	Foreign income tax properly accrued	Foreign income tax accrued under improper method
12/31/Y1 ($1:€0.5)	€160x = $320x	0.
12/31/Y2 ($1:€1)	€180x = $180x	€160x = $160x.
12/31/Y3 ($1:€1.25)	€240x = $192x	€180x = $144x.
12/31/Y4 ($1:€1.5)	€150x = $100x	[year of change].

(B) *Analysis* —

(1) ***Upward adjustment.*** Under paragraph (d)(5)(ii) of this section, in Year 4, the year of change, U.S.C. increases the amount of Country X net income tax allocated and apportioned to its foreign branch category that properly accrues in Year 4, €150x, by the amount of foreign income tax in that same grouping that properly accrued in a taxable year before the taxable year of change, but which, under its improper method of accounting, U.S.C. failed to accrue and claim as either a credit or deduction before the taxable year of change. For all taxable years before the taxable year of change, under a proper method, U.S.C. would have accrued a total of €580x of foreign income tax, of which it accrued and claimed a credit for only €340x under its improper method. Thus, in Year 4, U.S.C. increases its €150x of properly accrued foreign income taxes in the foreign branch category by €240x (€580x − €340x), and may claim a credit in that year for the total, €390x, or $260x (translated into dollars at the average exchange rate for Year 4, as if the total amount properly accrued in Year 4).

(2) ***Application of section 905(c).*** Under paragraph (d)(5)(iii) of this section, U.S.C.'s payment in Year 2 of €160x of Country X net income tax that properly accrued in Year 1 but that U.S.C. accrued and claimed as a credit in Year 2 under its improper method of accounting is first treated as a payment of the amount of the Year 1 tax liability that properly accrued in Year 2. Since none of the €160x properly accrued in Year 2, the €160x is treated as a payment of the Year 1 tax liability that U.S.C. improperly accrued and claimed as a credit in Year 2, €160x. Because all €160x of the Country X net income tax that was improperly accrued and claimed as a credit in Year 2 was paid within 24 months of the end of Year 2, no foreign tax redetermination occurs, and no redetermination of U.S.C.'s $160x foreign tax credit and U.S. tax liability is required, for Year 2. Similarly, because all €180x of the Year 2 Country X net income

tax that was improperly accrued and claimed as a credit in Year 3 was paid within 24 months of the end of Year 3, no foreign tax redetermination occurs, and no redetermination of U.S.C.'s $144x foreign tax credit and U.S. tax liability is required, for Year 3.

(e) ***Election by cash method taxpayer to take credit on the accrual basis*** —

(1) ***In general.*** A taxpayer who uses the cash method of accounting for income may elect to take the foreign tax credit in the taxable year in which the taxes accrue in accordance with the rules in paragraph (d) of this section. Except as provided in paragraph (e)(2) of this section, an election pursuant to this paragraph (e)(1) must be made on a timely-filed original return, by checking the appropriate box on Form 1116 (Foreign Tax Credit (Individual, Estate, or Trust)) or Form 1118 (Foreign Tax Credit—Corporations) indicating the cash method taxpayer's choice to claim the foreign tax credit in the year the foreign income taxes accrue. Once made, the election is irrevocable and must be followed for purposes of claiming a foreign tax credit for all subsequent years. See section 905(a).

(2) ***Exception for cash method taxpayers claiming a foreign tax credit for the first time.*** If the year with respect to which an election pursuant to paragraph (e)(1) of this section to claim the foreign tax credit on an accrual basis is made (the "election year") is the first year for which a taxpayer has ever claimed a foreign tax credit, the election to claim the foreign tax credit on an accrual basis can also be made on an amended return filed within the period permitted under § 1.901-1(d)(1). The election is binding in the election year and all subsequent taxable years in which the taxpayer claims a foreign tax credit.

(3) ***Treatment of taxes that accrued in a prior year.*** In the election year and subsequent taxable years, a cash method taxpayer that claimed foreign tax credits on the cash basis in a prior taxable year may claim a foreign tax credit not only for foreign income taxes that accrue in the election year, but also for foreign income taxes that accrued (or are considered to accrue) in a taxable year preceding the election year but that are paid in the election year or a subsequent taxable year, as applicable. Under paragraph (c) of this section, foreign income taxes paid with respect to a taxable year that precedes the election year may be claimed as a credit only in the year the taxes are paid and do not require a redetermination under section 905(c) or § 1.905-3 of U.S. tax liability in any prior year.

(4) ***Examples.*** The following examples illustrate the application of paragraph (e) of this section.

(i) ***Example 1*** —

(A) ***Facts.*** A, a U.S. citizen who is a resident of Country X, is a cash method taxpayer who uses the calendar year as the taxable year for both U.S. and Country X tax purposes. In Year 1 through Year 5, A claims foreign tax credits for Country X foreign income taxes on the cash method, in the year the taxes are paid. For Year 6, A makes a timely election to claim foreign tax credits on the accrual basis. In Year 6, A accrues $100x of Country X foreign income taxes with respect to Year 6. Also in Year 6, A pays $80x in foreign income taxes that had accrued in Year 5.

(B) ***Analysis.*** Pursuant to paragraph (e)(3) of this section, A can claim a foreign tax credit in Year 6 for the $100x of Country X taxes that accrued in Year 6 and for the $80x of Country X taxes that accrued in Year 5 but that are paid in Year 6.

(ii) ***Example 2*** —

(A) ***Facts.*** The facts are the same as those in paragraph (e)(4)(i)(A) of this section (the facts in *Example 1*), except that in Year 7, A is assessed an additional $10x of foreign income tax by Country X with respect to A's income in Year 3. After exhausting all effective and practical remedies, A pays the additional $10x to Country X in Year 8.

(B) ***Analysis.*** Pursuant to paragraph (e)(3) of this section, A can claim a foreign tax credit in Year 8 for the additional $10x of foreign income tax paid to Country X in Year 8 with respect to Year 3.

(f) ***Rules for creditable foreign tax expenditures of partners, shareholders, or beneficiaries of a pass-through entity*** —

(1) ***Effect of pass-through entity's method of accounting on when foreign tax credit or deduction can be claimed.*** Each partner that elects to claim the foreign tax credit for a particular taxable year may treat its distributive share of the creditable foreign tax expenditures (as defined in § 1.704-1(b)(4)(viii)(*b*)) of the partnership that are paid or accrued by the partnership, under the partnership's method of accounting, during the partnership's taxable year ending with or within the partner's taxable year, as foreign income taxes paid or accrued (as the case may be, according to the partner's method of accounting for such taxes) by the partner in that particular taxable year. See §§ 1.702-1(a)(6) and 1.703-1(b)(2). Under §§ 1.905-3(a) and 1.905-4(b)(2), additional creditable foreign tax expenditures of the partnership that result from a change in the partnership's foreign tax liability for a prior taxable year, including additional taxes paid when a contest with a foreign tax authority is resolved, must be identified by the partnership as a prior year creditable foreign tax expenditure in the information reported to its partners for its taxable year in which the additional tax is actually paid. Subject to the rules in paragraphs (c) and (e) of this section, a partner using the cash method of accounting for foreign income taxes may claim a credit (or a deduction) for its distributive share of such additional taxes in the partner's taxable year with or within which the partnership's taxable year ends. Subject to the rules in paragraph (d) of this section, a partner using the accrual method of accounting for foreign income taxes may claim a credit for the partner's distributive share of such additional taxes in the relation-back year, or may claim a deduction in its taxable year with or within which the partnership's taxable year ends. The principles of this paragraph (f)(1) apply to determine the year in which a shareholder of a S corporation, or the grantor or beneficiary of an estate or trust, may claim a foreign tax credit (or a deduction) for its proportionate share of foreign income taxes paid or accrued by the S corporation, estate or trust. See sections 642(a), 671, 901(b)(5), and 1373(a) and §§ 1.1363-1(c)(2)(iii) and 1.1366-1(a)(2)(iv). See §§ 1.905-3 and 1.905-4 for notifications and adjustments of U.S. tax liability that are required if creditable foreign tax expenditures of a partnership or S corporation, or foreign income taxes paid or accrued by a trust or estate, are refunded or otherwise reduced.

(2) ***Provisional credit for contested taxes.*** Under paragraph (d)(3) of this section, a contested foreign tax liability does not accrue until the contest is resolved and the amount of the liability has been finally determined. In addition, under section 905(c)(2), a foreign income tax that is not paid within 24 months of the close of the taxable year to which the tax relates may not be claimed as a credit until the tax is actually paid. Thus, a partnership or other pass-through entity cannot take the contested tax into account as a creditable foreign tax expenditure until both the contest is resolved and the tax is actually paid. However, to the extent that a partnership or other pass-through entity remits a contested foreign tax liability to a foreign country, a partner or other owner of such pass-through entity that claims foreign tax credits may, by complying with the rules in paragraph (c)(3) or (d)(4) of this section, as applicable, elect to claim a provisional credit for its distributive share of such

contested tax liability in the year the pass-through entity remits the tax (for owners claiming foreign tax credits on the cash basis) or in the relation-back year (for owners claiming foreign tax credits on the accrual basis).

(3) ***Example.*** The following example illustrates the application of paragraph (f) of this section.

(i) ***Facts.*** ABC is a U.S. partnership that is engaged in a trade or business in Country X. ABC has two U.S. partners, A and B. For Federal income tax purposes, ABC and partner A both use the accrual method of accounting and utilize a taxable year ending on September 30. ABC uses a taxable year ending on September 30 for Country X tax purposes. B is a calendar year taxpayer that uses the cash method of accounting. For its taxable year ending September 30, Year 1, ABC accrues $500x in foreign income tax to Country X; each partner's distributive share of the foreign income tax is $250x. In its taxable year ending September 30, Year 5, ABC settles a contest with Country X with respect to its Year 1 tax liability and, as a result of such settlement, accrues an additional $100x in foreign income tax for Year 1. ABC remits the additional tax to Country X in January of Year 6. A and B both elect to claim foreign tax credits for their respective taxable Years 1 through 6.

(ii) ***Analysis.*** For its taxable year ending September 30, Year 1, A can claim a credit for its $250x distributive share of foreign income taxes paid by ABC with respect to ABC's taxable year ending September 30, Year 1. Pursuant to paragraph (f)(1) of this section, B can claim its distributive share of $250x of foreign income tax for its taxable year ending December 31, Year 1, even if ABC does not remit the Year 1 taxes to Country X until Year 2. Although the additional $100x of Country X foreign income tax owed by ABC with respect to Year 1 accrued in its taxable year ending September 30, Year 5, upon conclusion of the contest, because ABC uses the accrual method of accounting, it does not take the additional tax into account until the tax is actually paid, in its taxable year ending September 30, Year 6. See section 905(c)(2)(B) and paragraph (f)(1) of this section. Pursuant to § 1.905-4(b)(2), ABC is required to notify the IRS and its partners of the foreign tax redetermination. A's distributive share of the additional tax relates back, is considered to accrue, and may be claimed as a credit for Year 1; however, A cannot claim a credit for the additional tax until Year 6, when ABC remits the tax to Country X. See § 1.905-3(a). B's distributive share of the additional tax does not relate back to Year 1 and is creditable in B's taxable year ending December 31, Year 6.

(g) ***Blocked income.*** If, under the provisions of the regulations under section 461, an amount otherwise constituting gross income for the taxable year from sources without the United States is, owing to monetary, exchange, or other restrictions imposed by a foreign country, not includible in gross income of the taxpayer for such year, the credit for foreign income taxes imposed by such foreign country with respect to such amount shall be taken proportionately in any subsequent taxable year in which such amount or portion thereof is includible in gross income.

(h) ***Applicability dates.*** This section applies to foreign income taxes paid or accrued in taxable years beginning on or after December 28, 2021. In addition, the election described in paragraphs (c)(3) and (d)(4) of this section may be made (including by a partner or other owner of a pass-through entity described in paragraph (f)(2) of this section) with respect to amounts of contested tax that are remitted in taxable years beginning on or after December 28, 2021 and that relate to a taxable year beginning before December 28, 2021.

[T.D. 9959, 87 FR 363, Jan. 4, 2022; 87 FR 45020, July 27, 2022]

§ 1.905-2 Conditions of allowance of credit.

(a) *Forms and information.*

(1) Whenever the taxpayer chooses, in accordance with paragraph (d) of § 1.901-1, to claim the benefits of the foreign tax credit, the claim for credit shall be accompanied by Form 1116 in the case of an individual or by Form 1118 in the case of a corporation.

(2) The form must be carefully filled in with all the information called for and with the calculations of credits indicated. Except where it is established to the satisfaction of the district director that it is impossible for the taxpayer to furnish such evidence, the taxpayer must provide upon request the receipt for each such tax payment if credit is sought for taxes already paid or the return on which each such accrued tax was based if credit is sought for taxes accrued. The receipt or return must be either the original, a duplicate original, or a duly certified or authenticated copy. The preceding two sentences are applicable for returns whose original due date falls on or after January 1, 1988. If the receipt or the return is in a foreign language, a certified translation thereof must be furnished by the taxpayer. Any additional information necessary for the determination under part I (section 861 and following), subchapter N, chapter 1 of the Code, of the amount of income derived from sources without the United States and from each foreign country shall, upon the request of the district director, be furnished by the taxpayer. If the taxpayer upon request fails without justification to furnish any such additional information which is significant, including any significant information which he is requested to furnish pursuant to § 1.861-8(f)(5) as proposed in the FEDERAL REGISTER for November 8, 1976, the District Director may disallow the claim of the taxpayer to the benefits of the foreign tax credit.

(b) *Secondary evidence.* Where it has been established to the satisfaction of the District Director that it is impossible to furnish a receipt for such foreign tax payment, the foreign tax return, or direct evidence of the amount of tax withheld at the source, the District Director, may, in his discretion, accept secondary evidence thereof as follows:

(1) *Receipt for payment.* In the absence of a receipt for payment of foreign taxes there shall be submitted a photostatic copy of the check, draft, or other medium of payment showing the amount and date thereof, with certification identifying it with the tax claimed to have been paid, together with evidence establishing that the tax was paid for taxpayer's account as his own tax on his own income. If credit is claimed on an accrual method, it must be shown that the tax accrued in the taxable year.

(2) *Foreign tax return.* If the foreign tax return is not available, the foreign tax has not been paid, and credit is claimed on an accrual method, there shall be submitted—

(i) A certified statement of the amount shall be submitted—

(ii) Excerpts from the taxpayer's accounts showing amounts of foreign income and tax thereon accrued on its books.

(iii) A computation of the foreign tax based on income from the foreign country carried on the books and at current rates of tax to be established by data such as excerpts from the foreign law, assessment notices, or other documentary evidence thereof.

(iv) A bond, if deemed necessary by the District Director, filed in the manner provided in cases where the foreign return is available, and

(v) In case a bond is not required, a specific agreement wherein the taxpayer shall recognize its liability to report the correct amount of tax when ascertained, as required by the provisions of section 905 (c).

If at any time the foreign tax receipts or foreign tax returns become available to the taxpayer, they shall be promptly submitted to the district director.

(3) ***Tax withheld at source.*** In the case of taxes withheld at the source from dividends, interest, royalties, compensation, or other form of income, where evidence of withholding and of the amount withheld cannot be secured from those who have made the payments, the district director may, in his discretion, accept secondary evidence of such withholding and of the amount of the tax so withheld, having due regard to the taxpayer's books of account and to the rates of taxation prevailing in the particular foreign country during the period involved.

(c) ***Credit for taxes accrued but not paid.*** In the case of a credit sought for a tax accrued but not paid, the district director may, as a condition precedent to the allowance of a credit, require a bond from the taxpayer, in addition to Form 1116 or 1118. If such a bond is required, Form 1117 shall be used by an individual or by a corporation. It shall be in such sum as the Commissioner may prescribe, and shall be conditioned for the payment by the taxpayer of any amount of tax found due upon any redetermination of the tax made necessary by such credit proving incorrect, with such further conditions as the district director may require. This bond shall be executed by the taxpayer, or the agent or representative of the taxpayer, as principal, and by sureties satisfactory to and approved by the Commissioner. See also 6 U.S.C. 15.

[T.D. 6500, 25 FR 11910, Nov. 26, 1960, as amended by T.D. 7292, 38 FR 33300, Dec. 3, 1973; 38 FR 34802, Dec. 19, 1973; T.D. 7456, 42 FR 1214, Jan. 6, 1977; T.D. 8210, 53 FR 23613, June 23, 1988; T.D. 8412, 57 FR 20653, May 14, 1992; T.D. 8759, 63 FR 3813, Jan. 27, 1998; T.D. 9882, 84 FR 69104, Dec. 17, 2019]

§ 1.905-3 Adjustments to U.S. tax liability and to current earnings and profits as a result of a foreign tax redetermination.

(a) ***Foreign tax redetermination.*** For purposes of this section and § 1.905-4, the term *foreign tax redetermination* means a change in the liability for foreign income taxes (as defined in § 1.901-2(a)) or certain other changes described in this paragraph (a) that may affect a taxpayer's U.S. tax liability, including by reason of a change in the amount of its foreign tax credit, a change to claim a foreign tax credit for foreign income taxes that it previously deducted, a change to claim a deduction for foreign income taxes that it previously credited, a change in the amount of its distributions or inclusions under sections 951, 951A, or 1293, a change in the application of the high-tax exception described in section 954(b)(4) (including for purposes of determining amounts excluded from gross tested income under section 951A(c)(2)(A)(i)(III) and § 1.951A-2(c)(1)(iii)), or a change in the amount of tax determined under sections 1291(c)(2) and 1291(g)(1)(C)(ii). In the case of a taxpayer that claims the credit in the year the taxes are paid, a foreign tax redetermination occurs if any portion of the tax paid is subsequently refunded, or if the taxpayer's liability is subsequently determined to be less than the amount paid and claimed as a credit. In the case of a taxpayer that claims the credit in the year the taxes accrue, a foreign tax redetermination occurs if taxes that when paid or later adjusted differ from amounts accrued by the taxpayer and claimed as a credit or added to PTEP group taxes (as defined in § 1.960-3(d)(1)). A foreign tax redetermination includes corrections and other adjustments to accrued amounts to reflect the final foreign tax liability, including additional payments of tax that accrue after the close of the taxable year to which the tax relates and, for foreign income taxes taken into account when accrued but translated into

dollars on the date of payment, a payment of accrued tax if the value of the foreign currency relative to the dollar has changed between the date or taxable year of accrual and the date of payment. A foreign tax redetermination occurs if any tax claimed as a credit or added to PTEP group taxes is refunded in whole or in part, regardless of whether such tax was paid within the meaning of § 1.901-2(e) at the time the tax was claimed as a credit or added to PTEP group taxes. A foreign tax redetermination also includes accrued foreign income taxes that are not paid on or before the date that is 24 months after the close of the taxable year of the section 901 taxpayer (as defined in § 1.986(a)-1(a)(1)) to which such taxes relate, as well as a subsequent payment of any such accrued but unpaid taxes. If accrued foreign income taxes are not paid on or before the date that is 24 months after the close of the taxable year to which they relate, the resulting foreign tax redetermination is accounted for as if the unpaid portion of the foreign income taxes were refunded on such date. Foreign income taxes that first accrue after the date 24 months after the close of the taxable year to which such taxes relate may not be claimed as a credit or added to PTEP group taxes until paid. See section 905(b) and § 1.461-4(g)(6)(iii)(B), which require the taxpayer to establish the amount of tax that was properly accrued.

(b) ***Redetermination of U.S. tax liability —***

(1) ***Foreign income taxes other than taxes deemed paid under section 960 —***

(i) ***In general.*** This paragraph (b)(1) applies to foreign income taxes claimed as a credit under section 901 other than foreign income taxes deemed paid under section 960. If a foreign tax redetermination occurs with respect to foreign income tax claimed as a credit under section 901 (other than a tax deemed paid under section 960), then a redetermination of U.S. tax liability is required for the taxable year in which the tax was claimed as a credit and any year to which unused foreign taxes from such year were carried under section 904(c). In the case of a taxpayer that claims the credit in the year the taxes are paid, the redetermination of U.S. tax liability is made by reducing the tax paid in such year by the amount refunded. In the case of a taxpayer that claims the credit in the year the taxes accrue, the redetermination of U.S. tax liability is made by treating the redetermined amount of foreign tax as the amount of tax that accrued in the year to which the redetermined tax relates. However, a redetermination of U.S. tax liability is not required (and a taxpayer need not notify the IRS) if the foreign income taxes are taken into account when accrued but translated into dollars on the date of payment, the difference between the dollar value of the accrued foreign income tax and the dollar value of the foreign income tax paid is solely attributable to fluctuations in the value of the foreign currency relative to the dollar between the date or taxable year of accrual and the date of payment, and the net dollar amount of the currency fluctuations attributable to the foreign tax redeterminations with respect to each and every foreign country is less than the lesser of $10,000 or two percent of the total dollar amount of the foreign income tax initially accrued with respect to that foreign country for the taxable year. In such case, if no redetermination of U.S. tax liability is made, an appropriate adjustment is made to the taxpayer's U.S. tax liability in the taxable year during which the foreign tax redeterminations occur.

(ii) ***Examples.*** The following examples illustrate the application of this paragraph (b)(1) and § 1.986(a)-1. In all examples, assume that USC is a domestic corporation that uses the calendar year as its taxable year both for Federal income tax purposes and for foreign tax purposes and that it is doing business through a foreign branch operating in Country X, which is a qualified business unit (within the meaning of section 989 and § 1.989(a)-1) (QBU) the functional currency of which is the “u.” Except as otherwise provided, the “u” is not an inflationary currency within the meaning of § 1.986(a)-1(a)(2)(iii). USC is an accrual basis taxpayer.

(A) *Example 1: Contested tax* —

(1) ***Facts.*** In Year 1, USC earned 500u of foreign source foreign branch category income through its foreign branch in Country X and accrued and paid 50u of Country X foreign income tax on its earnings. The average exchange rate for Year 1 used to translate the foreign income taxes into dollars was $1x:1u. *See* § 1.986(a)-1(a)(1). On its Year 1 income tax return, USC claimed a foreign tax credit under section 901 of $50x (50u translated at the average exchange rate for Year 1, that is, $1x:1u). In Year 4, Country X assessed an additional 20u of tax with respect to USC's Year 1 earnings. USC did not pay or accrue the additional 20u of tax and contested the assessment. After exhausting all effective and practical remedies to reduce, over time, its liability for foreign tax, USC settled the contest with Country X in Year 6, paying 10u of additional tax on September 1, Year 6, when the spot rate was $1.10x:1u.

(2) ***Analysis.*** USC's payment in Year 6 of the 10u of additional tax accrued with respect to Year 1 is a foreign tax redetermination under paragraph (a) of this section. Under paragraph (b)(1)(i) of this section, the additional tax is taken into account in Year 1, the year to which the redetermined tax relates, irrespective of when the tax is paid. Under § 1.986(a)-1(a)(2)(i), because the tax was paid more than 24 months after the close of the year to which the redetermined tax relates, the 10u of tax is translated into dollars at the spot rate on the date of payment in Year 6 (10u at $1.10x:1u = $11x). If USC timely notifies the IRS, it may claim an increased foreign tax credit for Year 1. USC must also make corresponding adjustments in determining its taxable income and net unrecognized section 987 gain or loss in Year 1. See §§ 1.987-3(c)(2)(v) and 1.987-4(d)(7).

(B) *Example 2: Refund of tax improperly claimed as a credit* —

(1) ***Facts.*** USC holds a note issued by FC, an unrelated foreign corporation in Country Y. In Year 1, FC owed USC 500u of interest on the loan. The statutory rate of withholding on interest paid to a nonresident of Country Y is 20%. On December 1, Year 1, when the spot rate was $1x:1u, FC withheld and remitted to Country Y 100u of tax and paid 400u to USC. Effective for Year 1, USC elected under § 1.986(a)-1(a)(2)(iv) to translate its taxes denominated in nonfunctional currency into dollars at the spot rate on the date the taxes are paid. Under the United States—Country Y Income Tax Treaty (Treaty), USC was entitled to a reduced 15% rate of withholding that would result in a withholding tax of 75u. However, USC improperly claimed a foreign tax credit under section 901 for 100u = $100x on its Year 1 Federal income tax return. (See § 1.901-2(e)(2)(i) and (e)(5), providing that an amount is not tax paid to the extent it exceeds the taxpayer's liability for tax or is reasonably certain to be refunded.) In Year 4, USC filed a refund claim with Country Y for 25u, the difference between the amount actually withheld at the 20% statutory rate of tax and the amount owed by USC at the 15% Treaty rate. On March 15, Year 6, when the spot rate was $1.10x:1u, USC received a refund from Country Y of 25u. USC converted the 25u into dollars on the same day.

(2) ***Analysis.*** Notwithstanding that the 25u of refundable tax did not constitute an amount of tax paid within the meaning of § 1.901-2(e) at the time USC improperly claimed it as a credit, the 25u refund in Year 6 is a foreign tax redetermination under paragraph (a) of this section. Under paragraph (b)(1)(i) of this section, USC must

redetermine its U.S. tax liability for Year 1, the taxable year to which the redetermined tax relates. Under § 1.986(a)-1(c), the refund is translated at the exchange rate that was used to translate such amount when originally claimed as a credit. Accordingly, if not previously adjusted by USC or the Internal Revenue Service, USC must file an amended return for Year 1, reducing the amount of foreign tax credit claimed for Year 1 by $25x (25u translated at the spot rate on December 1, Year 1; that is, $1x:1u). Under § 1.986(a)-1(e)(1), USC's basis in the 25u is the same dollar value of the refund as determined under § 1.986(a)-1(c), or $25x. When USC converted the 25u to $27.50x (translated at the spot rate on March 15, Year 6, that is, $1.10x:1u), it realized an exchange gain (within the meaning of § 1.988-1(e)) equal to $2.50x ($27.50x−$25x basis).

(C) *Example 3: Change in functional currency* —

(*1*) ***Facts.*** In Year 1, USC earned 500u of foreign source foreign branch category income through its foreign branch in Country X and accrued 100u of Country X foreign income tax on its earnings. The average exchange rate for Year 1 used to translate the foreign income taxes into dollars was $1x:1u. *See* § 1.986(a)-1(a)(1). On its Federal income tax return for Year 1, USC claimed a foreign tax credit under section 901 of $100x (100u translated at the average exchange rate for Year 1, that is, $1x:1u). As of Year 2, the foreign branch changed its functional currency from the "u" to the dollar, and pursuant to § 1.985-5(d)(2), USC's foreign branch terminated and USC recognized section 987 gain or loss on December 31, Year 1 (the date of change). The rate of exchange, as determined under § 1.985-5(c), used to calculate the U.S. dollar basis in the foreign branch's property on the date of the change was $1.10x:1u, the spot rate on December 31, Year 1. On June 15, Year 3, when the spot rate was $1.30x:1u, USC's foreign branch received a refund from Country X of 10u. The foreign branch converted the 10u into $13x on the same day.

(*2*) ***Analysis.*** The 10u refund in Year 3 is a foreign tax redetermination under paragraph (a) of this section. Under paragraph (b)(1)(i) of this section, USC must redetermine its U.S. tax liability for Year 1, the taxable year to which the redetermined tax relates. Under § 1.986(a)-1(c), the refund is translated at the exchange rate that was used to translate such amount when originally claimed as a credit. Accordingly, USC must file an amended return, reducing the amount of foreign tax credit claimed for Year 1 by $10x (10u translated at the average exchange rate for Year 1, that is $1x:1u). USC must also make corresponding adjustments in determining its taxable income and net unrecognized section 987 gain or loss in Year 1. See §§ 1.987-3(c)(2)(v) and 1.987-4(d)(8). Because the foreign branch changed its functional currency to the dollar in Year 2, the 10u it receives is a refund of nonfunctional currency tax that is denominated in a currency that was the functional currency of the foreign branch at the time USC originally claimed a credit for that foreign income tax. Under §§ 1.985-5(d)(2) and 1.987-4(d), in Year 1 USC must recognize an additional $1x of section 987 gain (or $1x less of section 987 loss) by reason of the 10u being treated as an asset of the foreign branch at the time of the foreign branch's termination. Under § 1.986(a)-1(e)(2), USC's basis in the 10u refund is $11x, which is determined by using the exchange rate used under § 1.985-5(c) when the foreign branch changed its functional currency in Year 2 ($1.10x:1u). When the foreign branch

converted the 10u to $13x (translated at the spot rate on June 15, Year 3, which is $1.30x:1u), it realized an exchange gain (within the meaning of § 1.988-1(e)) equal to $2x ($13x−$11x (10u translated at $1.10x:1u)).

(D) ***Example 4: Inflationary currency*** —

(1) ***Facts.*** In Year 1, USC earned 500u of foreign source foreign branch category income through its foreign branch in Country X and accrued 100u of Country X foreign income tax on its earnings. The average exchange rate for Year 1 used to translate the foreign income taxes into dollars was $1x:1u. *See* § 1.986(a)-1(a)(1). On its Federal income tax return for Year 1, USC claimed a foreign tax credit under section 901 of $100x (100u translated at the average exchange rate for Year 1, that is, $1x:1u). USC paid the 100u of tax on April 15, Year 3, when the spot rate was $1x:2u. In Year 3, but not in Year 1, the u was an inflationary currency within the meaning of § 1.986(a)-1(a)(2)(iii).

(2) ***Analysis.*** Under § 1.986(a)-1(a)(2)(iii), because the u was an inflationary currency in the year the taxes were paid, USC must translate the 100u of Year 1 tax into dollars using the spot rate on the date of payment of the foreign taxes. Under paragraph (a) of this section, because the translated value of USC's Year 1 taxes when paid, that is, $50x (100u translated at the spot rate on April 15, Year 3, that is, $1x:2u), differs from the amount claimed as credits, that is, $100x (100u translated at the average exchange rate for Year 1, that is, $1x:1u), a foreign tax redetermination has occurred. Under paragraph (b)(1)(i) of this section, because the $50x foreign tax redetermination resulting from the currency fluctuation exceeds 2% of the $100x initially accrued, USC must redetermine its U.S. tax liability for Year 1, the taxable year to which the redetermined tax relates. Accordingly, USC must notify the IRS, reducing the amount of foreign tax credit claimed for Year 1 by $50x (the excess of the translated value of the Year 1 taxes when accrued, that is, $100x, over the translated value of the Year 1 taxes when paid, that is, $50x).

(E) ***Example 5: Two-year rule*** —

(1) ***Facts.*** In Year 1, USC earned 500u of foreign source foreign branch category income through its foreign branch in Country X and accrued 100u of Country X foreign income tax on its earnings. The average exchange rate used to translate the foreign income taxes into dollars for Year 1 was $1x:1u. See § 1.986(a)-1(a)(1). On its Federal income tax return for Year 1, USC claimed a foreign tax credit under section 901 of $100x (100u translated at the average exchange rate for Year 1, that is, $1x:1u). USC did not pay the Year 1 foreign income taxes until March 15, Year 6, when the spot rate was $0.8x:1u.

(2) ***Analysis*** —

(*i*) ***Result in Year 3.*** USC's failure to pay the tax by the end of Year 3 results in a foreign tax redetermination under paragraph (a) of this section. Because the taxes were not paid on or before the date 24 months after the close of the taxable year to which the tax relates, USC must account for the redetermination as if the unpaid 100u of accrued taxes were refunded on the last day of Year 3. Under paragraph (b)(1)(i) of this section, USC must redetermine its U.S. tax liability for Year 1, the taxable year to which the redetermined tax relates. Under

§ 1.986(a)-1(c), the deemed refund is translated at the exchange rate that was used to translate such amount when originally claimed as a credit. Accordingly, USC must notify the IRS, reducing the amount of foreign tax credit claimed for Year 1 by $100x (100u translated at the average exchange rate for Year 1, that is, $1x:1u). USC must also make corresponding adjustments in determining its taxable income and net unrecognized section 987 gain or loss in Year 1. See §§ 1.987-3(c)(2)(v) and 1.987-4(d)(8).

(*ii*) ***Result in Year 6.*** USC's payment of the Year 1 tax liability of 100u on March 15, Year 6, results in a second foreign tax redetermination under paragraph (a) of this section. Under paragraph (b)(1)(i) of this section, the additional tax is taken into account in Year 1, the year to which the redetermined tax relates, irrespective of when the tax is paid. Under § 1.986(a)-1(a)(2)(i), because the tax was paid more than 24 months after the close of the year to which the tax relates, USC must translate the 100u of tax at the spot rate on the date of payment of the foreign taxes in Year 6. If USC timely notifies the IRS, it may claim an increased foreign tax credit for Year 1. USC must also make corresponding adjustments in determining its taxable income and net unrecognized section 987 gain or loss in Year 1. See §§ 1.987-3(c)(2)(v) and 1.987-4(d)(7).

(F) ***Example 6: Cash basis taxpayer that pays additional foreign tax*** —

(*1*) ***Facts.*** Individual A, a U.S. citizen resident in Country X, is a cash basis taxpayer who has not made an election under section 905(a) to claim the foreign tax credit in the year the taxes accrue. A uses the calendar year as the taxable year for both U.S. and Country X tax purposes. In Year 2, A pays 100u of foreign income taxes to Country X with respect to Year 1. The exchange rate used to translate the foreign income taxes into dollars was $1x:1u, the spot rate on the date A paid the taxes in Year 2. *See* section 986(a)(2)(A) and § 1.986(a)-1(b). On A's Year 2 Federal income tax return, A claims a foreign tax credit under section 901 of $100x. In Year 4, Country X assesses an additional 20u of tax with respect to A's Year 1 income. A does not pay the additional 20u of tax and contests the assessment. After exhausting all effective and practical remedies to reduce, over time, A's liability for foreign tax, A settles the contest with Country X in Year 6, paying 10u of additional tax on September 1, Year 6, when the spot rate is $1.10x:1u.

(*2*) ***Analysis.*** Because A is a cash basis taxpayer that claims the foreign tax credit in the year the taxes are paid, A's payment in Year 6 of 10u of additional tax owed with respect to Year 1 is not a foreign tax redetermination requiring a redetermination of U.S. tax liability under paragraph (b)(1) of this section. Rather, A is eligible to claim the additional tax as a credit in Year 6, the year in which the tax is paid. Under § 1.986(a)-1(b), the 10u of tax is translated into dollars at the spot rate on the date of payment in Year 6 (10u at $1.10x:1u = $11x).

(G) ***Example 7: Cash basis taxpayer that receives a refund of foreign tax*** —

(*1*) ***Facts.*** The facts are the same as paragraph (b)(1)(ii)(F) of this section (the facts in *Example 6*) except that instead of being assessed additional tax in Year 4, A receives a refund in Year 4 of 10u with respect to A's Year 1 tax that was claimed as a credit in Year 2.

(2) ***Analysis.*** Under paragraphs (a) and (b)(1) of this section, A must redetermine its U.S. tax liability for Year 2 and any year to which unused foreign taxes were carried from Year 2. Under § 1.986(a)-1(c), the amount of A's foreign tax credit for Year 2 is reduced by $10x, the 10u refund translated at the exchange rate used to translate the tax when claimed as a credit. Under § 1.986(a)-1(e)(1), A's basis in the 10u is $10x.

(2) ***Foreign income taxes paid or accrued by foreign corporations*** —

(i) ***In general.*** A redetermination of U.S. tax liability is required to account for the effect of a redetermination of foreign income taxes taken into account by a foreign corporation in the year accrued, or a refund of foreign income taxes taken into account by the foreign corporation in the year paid.

(ii) ***Required adjustments.*** If a redetermination of U.S. tax liability is required for any taxable year under paragraph (b)(2)(i) of this section, the foreign corporation's taxable income, earnings and profits, and current year taxes (as defined in § 1.960-1(b)(4)) must be adjusted in the year to which the redetermined tax relates (or, in the case of a foreign corporation that receives a refund of foreign income tax and uses the cash basis of accounting, in the year the tax was paid). The redetermination of U.S. tax liability is made by treating the redetermined amount of foreign tax as the amount of tax paid or accrued by the foreign corporation in such year. For example, in the case of a refund of foreign income taxes taken into account in the year accrued, the foreign corporation's subpart F income, tested income, and current earnings and profits are increased, as appropriate, in the year to which the foreign tax relates to reflect the functional currency amount of the foreign income tax refund. The required redetermination of U.S. tax liability must account for the effect of the foreign tax redetermination on the characterization and amount of distributions or inclusions under section 951, 951A, or 1293 taken into account by each of the foreign corporation's United States shareholders, on the application of the high-tax exception described in section 954(b)(4) (including for purposes of determining the exclusions from gross tested income under section 951A(c)(2)(A)(i)(III) and § 1.951A-2(c)(1)(iii)), and the amount of tax determined under sections 1291(c)(2) and 1291(g)(1)(C)(ii), as well as on the amount of foreign taxes deemed paid under section 960 in such year, regardless of whether any such shareholder chooses to deduct or credit its foreign income taxes in any taxable year. In addition, a redetermination of U.S. tax liability is required for any subsequent taxable year in which the characterization or amount of a United States shareholder's distribution or inclusion from the foreign corporation is affected by the foreign tax redetermination, up to and including the taxable year in which the foreign tax redetermination occurs, as well as any year to which unused foreign taxes from such year were carried under section 904(c).

(iii) ***Reduction of corporate level tax on distribution of earnings and profits.*** If a United States shareholder of a controlled foreign corporation receives a distribution out of previously taxed earnings and profits described in section 959(c)(1) and (2) and a foreign country has imposed tax on the income of the controlled foreign corporation, which tax is reduced on distribution of the earnings and profits of the corporation (resulting in a foreign tax redetermination), then the United States shareholder must redetermine its U.S. tax liability for the year or years affected. See also § 1.904-4(c)(7)(i).

(iv) ***Foreign tax redeterminations relating to taxable years beginning before January 1, 2018.*** In the case of a foreign tax redetermination of a foreign corporation that relates to a taxable year of the foreign corporation beginning before January 1, 2018, a redetermination of U.S. tax liability is required under the rules of § 1.905-5.

(v) ***Examples.*** The following examples illustrate the application of this paragraph (b)(2).

(A) ***Presumed Facts.*** Except as otherwise provided in this paragraph (b)(2)(v), the following facts are assumed for purposes of the examples in paragraphs (b)(2)(v)(B) through (E) of this section:

(*1*) All parties are accrual basis taxpayers that use the calendar year as their taxable year both for Federal income tax purposes and for foreign tax purposes and use the average exchange rate to translate accrued foreign income taxes;

(*2*) CFC, CFC1, and CFC2 are controlled foreign corporations organized in Country X that use the "u" as their functional currency;

(*3*) No income adjustment is required to reflect exchange gain or loss (within the meaning of § 1.988-1(e)) with respect to the disposition of nonfunctional currency attributable to a refund of foreign income taxes received by any CFC, because all foreign income taxes are denominated and paid in the CFC's functional currency;

(*4*) The highest rate of U.S. tax in section 11 and the rate applicable to USP in all years is 21 percent;

(*5*) No election to exclude high-taxed income under section 954(b)(4) or § 1.951A-2(c)(7) is made with respect to CFC, CFC1, or CFC2; and

(*6*) USP's foreign tax credit limitation under section 904(a) exceeds the amount of foreign income taxes it is deemed to pay.

(B) ***Example 1: Refund of tested foreign income taxes*** —

(*1*) ***Facts.*** CFC is a wholly-owned subsidiary of USP, a domestic corporation. In Year 1, CFC earns 3,660u of general category gross tested income and accrues and pays 300u of foreign income taxes with respect to that income. CFC has no allowable deductions other than the foreign income tax expense. Accordingly, CFC has tested income of 3,360u in Year 1. CFC has no qualified business asset investment (within the meaning of section 951A(d) and § 1.951A-3(b)). In Year 1, no portion of USP's deduction under section 250 ("section 250 deduction") is reduced by reason of section 250(a)(2)(B)(ii). USP's inclusion percentage (as defined in § 1.960-2(c)(2)) is 100%. In Year 1, USP earns no other income and has no other expenses. The average exchange rate used to translate USP's inclusion under section 951A and CFC's foreign income taxes into dollars for Year 1 is $1x:1u. See section 989(b)(3) and §§ 1.951A-1(d)(1) and 1.986(a)-1(a)(1). Accordingly, for Year 1, USP's tested foreign income taxes (as defined in § 1.960-2(c)(3)) with respect to CFC are $300x. In Year 3, CFC carries back a loss for foreign tax purposes and receives a refund of foreign tax of 100u that relates to Year 1.

(*2*) ***Analysis*** —

(*i*) ***Result in Year 1.*** In Year 1, CFC has tested income of 3,360u and tested foreign income taxes of $300x. Under section 951A(a) and § 1.951A-1(c)(1), USP has a GILTI inclusion amount of $3,360x (3,360u translated at $1x:1u). Under section 960(d) and § 1.960-2(c), USP is deemed to have paid $240x (80% × 100% × $300x) of foreign income taxes. Under section 78 and § 1.78-1(a), USP is treated as receiving a dividend of $300x (a "section 78 dividend"). USP's section 250 deduction is $1,830x (50% × ($3,360x + $300x)). Accordingly, for Year 1, USP has taxable income of $1,830x ($3,360x + $300x−$1,830x) and pre-credit U.S. tax liability of $384.30x (21% × $1,830x). Accordingly, USP pays U.S. tax of $144.30x ($384.30x−$240x).

(*ii*) ***Result in Year 3.*** The refund of 100u to CFC in Year 3 is a foreign tax redetermination under paragraph (a) of this section. Under paragraph (b)(2)(ii) of this section, USP must account for the effect of the foreign tax redetermination on its GILTI inclusion amount and foreign taxes deemed paid in Year 1. In redetermining USP's U.S. tax liability for Year 1, USP must increase CFC's tested income and its earnings and profits in Year 1 by the refunded tax amount of 100u, must determine the effect of that increase on its GILTI inclusion amount, and must adjust the amount of foreign taxes deemed paid and the section 78 dividend to account for CFC's refund of foreign tax. Under § 1.986(a)-1(c), the refund is translated into dollars at the exchange rate that was used to translate such amount when initially accrued. As a result of the foreign tax redetermination, for Year 1, CFC has tested income of 3,460u (3,360u + 100u) and tested foreign income taxes of $200x ($300x−$100x). Under section 951A(a) and § 1.951A-1(c)(1), USP has a redetermined GILTI inclusion amount of $3,460x (3,460u translated at $1x:1u). Under section 960(d) and § 1.960-2(c), USP is deemed to have paid $160x (80% × 100% × $200x) of foreign income taxes. Under section 78 and § 1.78-1(a), USP's section 78 dividend is $200x. USP's redetermined section 250 deduction is $1,830x (50% × ($3,460x + $200x)). Accordingly, USP's redetermined taxable income is $1,830x ($3,460x + $200x−$1,830x) and its pre-credit U.S. tax liability is $384.30x (21% × $1,830x). Therefore, USP's redetermined U.S. tax liability is $224.3x ($384.30x−$160x), an increase of $80x ($224.30x−$144.30x).

(C) ***Example 2: Additional payment of foreign income taxes*** —

(*1*) ***Facts.*** CFC is a wholly-owned subsidiary of USP, a domestic corporation. In Year 1, CFC earns 1,000u of general category gross foreign base company sales income and accrues and pays 100u of foreign income taxes with respect to that income. CFC has no allowable deductions other than the foreign income tax expense. The average exchange rate used to translate USP's subpart F inclusion and CFC's foreign income taxes into dollars for Year 1 is $1x:1u. See section 989(b)(3) and § 1.986(a)-1(a)(1). In Year 1, USP earns no other income and has no other expenses. In Year 5, pursuant to a Country X audit CFC accrues and pays additional foreign income tax of 80u with respect to its 1,000u of general category foreign base company sales income earned in Year 1. The spot rate (as defined in § 1.988-1(d)) on the date of payment of the tax in Year 5 is $1x:0.8u. The foreign income taxes accrued and paid in Year 1 and Year 5

are properly attributable to CFC's foreign base company sales income that is included in income by USP under section 951(a)(1)(A) ("subpart F inclusion") in Year 1 with respect to CFC.

(2) ***Analysis*** —

(i) ***Result in Year 1.*** In Year 1, CFC has subpart F income of 900u (1,000u−100u). Accordingly, USP has a $900x (900u translated at $1x:1u) subpart F inclusion. Under section 960(a) and § 1.960-2(b), USP is deemed to have paid $100x (100u translated at $1x:1u) of foreign income taxes. Under section 78 and § 1.78-1(a), USP's section 78 dividend is $100x. Accordingly, for Year 1, USP has taxable income of $1,000x ($900x + $100x) and pre-credit U.S. tax liability of $210x (21% × $1,000x). Accordingly, USP's U.S. tax liability is $110x ($210x−$100x).

(ii) ***Result in Year 5.*** CFC's payment of 80u of additional foreign income tax in Year 5 with respect to Year 1 is a foreign tax redetermination as defined in paragraph (a) of this section. Under paragraph (b)(2)(ii) of this section, USP must reduce CFC's subpart F income and its earnings and profits in Year 1 by the additional tax amount of 80u. Further, USP must reduce its subpart F inclusion, adjust the amount of foreign taxes deemed paid, and adjust the amount of the section 78 dividend to account for CFC's additional payment of foreign tax. Under section 986(a)(1)(B)(i) and § 1.986(a)-1(a)(2)(i), because CFC's payment of additional tax occurs more than 24 months after the close of the taxable year to which it relates, the additional tax is translated into dollars at the spot rate on the date of payment ($1x:0.8u). Therefore, CFC has foreign income taxes of $200x (100u translated at $1x:1u plus 80u translated at $1x:0.8u) that are properly attributable to CFC's foreign base company sales income that gives rise to USP's subpart F inclusion in Year 1. As a result of the foreign tax redetermination, for Year 1, USP has a subpart F inclusion of $820x (1,000u−180u = 820u translated at $1x:1u). Under section 960(a) and § 1.960-2(b), USP is deemed to have paid $200x of foreign income taxes. Under section 78 and § 1.78-1(a), USP's section 78 dividend is $200x. USP's redetermined U.S. taxable income is $1,020x ($820x + $200x) and its pre-credit U.S. tax liability is $214.20x (21% × $1,020x). Therefore, USP's redetermined U.S. tax liability is $14.20x ($214.20x−$200x), a decrease of $95.80x ($110x−$14.20x). If USP makes a timely refund claim within the period allowed by section 6511, USP will be entitled to a refund of any overpayment resulting from the redetermination of its U.S. tax liability.

(D) ***Example 3: Two-year rule*** —

(1) ***Facts.*** CFC is a wholly-owned subsidiary of USP, a domestic corporation. In Year 1, CFC earns 1,000u of general category gross foreign base company sales income and accrues 210u of foreign income taxes with respect to that income. In Year 1, USP earns no other income and has no other expenses. The average exchange rate used to translate USP's subpart F inclusion and CFC's foreign income taxes into dollars for Year 1 is $1x:1u. See sections 989(b)(3) and 986(a)(1)(A) and § 1.986(a)-1(a)(1). CFC does not pay its foreign income taxes for Year 1 until September 1, Year 5, when

the spot rate is $0.8x:1u. The foreign income taxes accrued and paid in Year 1 and Year 5, respectively, are properly attributable to CFC's foreign base company sales income that gives rise to USP's subpart F inclusion in Year 1 with respect to CFC.

(2) ***Analysis*** —

(i) ***Result in Year 1.*** In Year 1, CFC has subpart F income of 790u (1,000u−210u). Accordingly, USP has a $790x (790u translated at $1x:1u) subpart F inclusion. Under section 960(a) and § 1.960-2(b), USP is deemed to have paid $210x (210u translated at $1x:1u) of foreign income taxes. Under section 78 and § 1.78-1(a), USP's section 78 dividend is $210x. Accordingly, for Year 1, USP has taxable income of $1,000x ($790x + $210x) and pre-credit U.S. tax liability of $210x (21% × $1,000x). Accordingly, USP owes no U.S. tax ($210x−$210x = 0).

(ii) ***Result in Year 3.*** CFC's failure to pay the tax by the end of Year 3 results in a foreign tax redetermination under paragraph (a) of this section. Because the taxes are not paid on or before the date 24 months after the close of the taxable year to which the tax relates, under paragraph (a) of this section CFC must account for the redetermination as if the unpaid 210u of taxes were refunded on the last day of Year 3. Under paragraph (b)(2)(ii) of this section, USP must increase CFC's subpart F income and its earnings and profits in Year 1 by the unpaid tax amount of 210u. Further, USP must increase its subpart F inclusion, and decrease the amount of foreign taxes deemed paid and the amount of the section 78 dividend to account for the unpaid taxes. As a result of the foreign tax redetermination, for Year 1, USP has a subpart F inclusion of $1,000x (1,000u translated at $1x:1u). Under section 960(a) and § 1.960-2(b), USP is deemed to have paid no foreign income taxes. Under section 78 and § 1.78-1(a), USP has no section 78 dividend. Accordingly, USP's redetermined taxable income is $1,000x and its pre-credit U.S. tax liability is unchanged at $210x (21% × $1,000x). However, USP has no foreign tax credits. Therefore, USP's redetermined U.S. tax liability for Year 1 is $210x, an increase of $210x.

(iii) ***Result in Year 5.*** CFC's payment of the Year 1 tax liability of 210u on September 1, Year 5, results in a second foreign tax redetermination under paragraph (a) of this section. Under paragraph (b)(2)(ii) of this section, USP must decrease CFC's subpart F income and its earnings and profits in Year 1 by the tax paid amount of 210u. Further, USP must reduce its subpart F inclusion, and adjust the amount of foreign taxes deemed paid and the amount of the section 78 dividend to account for CFC's payment of foreign tax. Under section 986(a)(1)(B)(i) and § 1.986(a)-1(a)(2)(i), because the tax was paid more than 24 months after the close of the year to which the tax relates, CFC must translate the 210u of tax at the spot rate on the date of payment of the foreign taxes in Year 5. Therefore, CFC has foreign income taxes of $168x (210u translated at $0.8x:1u) that are properly attributable to CFC's foreign base company sales income that gives rise to USP's subpart F inclusion in Year 1. As a result of the foreign tax redetermination, for Year 1, USP has a subpart F inclusion of $790x (1,000u−210u = 790u translated at $1x:1u). Under section 960(a) and § 1.960-2(b), USP is deemed to have paid $168x of foreign income taxes. Under section 78 and § 1.78-1(a), USP's section 78 dividend is $168x. Accordingly, USP's redetermined taxable income is $958x ($790x + $168x), its pre-credit U.S.

tax liability is $201.18x (21% × $958x), and its redetermined U.S. tax liability is $33.18 ($201.18x−$168x), a decrease of $176.82x ($210x−$33.18x). If USP makes a timely refund claim within the period allowed by section 6511, USP will be entitled to a refund of any overpayment resulting from the redetermination of its U.S. tax liability.

(E) ***Example 4: Contested tax*** —

(*1*) ***Facts.*** CFC is a wholly-owned subsidiary of USP, a domestic corporation. In Year 1, CFC earns 360u of general category gross tested income and accrues and pays 160u of current year taxes with respect to that income. CFC has no allowable deductions other than the foreign income tax expense. Accordingly, CFC has tested income of 200u in Year 1. CFC has no qualified business asset investment (within the meaning of section 951A(d) and § 1.951A-3(b)). In Year 1, no portion of USP's section 250 deduction is reduced by reason of section 250(a)(2)(B)(ii). USP's inclusion percentage (as defined in § 1.960-2(c)(2)) is 100%. In Year 1, USP earns no other income and has no other expenses. The average exchange rate used to translate USP's section 951A inclusion and CFC's foreign income taxes into dollars for Year 1 is $1x:1u. See section 989(b)(3) and §§ 1.951A-1(d)(1) and 1.986(a)-1(a)(1). Accordingly, for Year 1, CFC's tested foreign income taxes (as defined in § 1.960-2(c)(3)) with respect to USP are $160x. In Year 3, Country X assessed an additional 30u of tax with respect to CFC's Year 1 income. CFC did not pay the additional 30u of tax and contested the assessment. After exhausting all effective and practical remedies to reduce, over time, its liability for foreign income tax, CFC settled the contest with Country X in Year 4 for 20u, which CFC did not pay until January 15, Year 5, when the spot rate was $1.1x:1u. CFC did not earn any other income or accrue any other foreign income taxes in Years 2 through 6 and made no distributions to USP. The additional taxes paid in Year 5 are also tested foreign income taxes of CFC with respect to USP.

(*2*) ***Analysis*** —

(*i*) ***Result in Year 1.*** In Year 1, CFC has tested income of 200u and tested foreign income taxes of $160x. Under section 951A(a) and § 1.951A-1(c)(1), USP has a GILTI inclusion amount of $200x (200u translated at $1x:1u). Under section 960(d) and § 1.960-2(c), USP is deemed to have paid $128x (80% × 100% × $160x) of foreign income taxes. Under section 78 and § 1.78-1(a), USP's section 78 dividend is $160x. USP's section 250 deduction is $180x (50% × ($200x + $160x)). Accordingly, for Year 1, USP has taxable income of $180x ($200x + $160x−$180x) and a pre-credit U.S. tax liability of $37.80x (21% × $180x). Under section 904(a), because all of USP's income is section 951A category income (see § 1.904-4(g)), USP's foreign tax credit limitation is $37.80x ($37.80x × $180x/$180x), which is less than the $128x of foreign income tax that USP is deemed to have paid. Accordingly, USP owes no U.S. tax ($37.80x−$37.80x = 0).

(*ii*) ***Result in Year 5.*** CFC's accrual and payment of the additional 20u of foreign income tax with respect to Year 1 is a foreign tax redetermination under paragraph (a) of this section. Under § 1.461-4(g)(6)(iii)(B), the additional taxes accrue when the tax contest is resolved, that is, in Year 4. However, because the taxes, which relate to Year 1, were not paid on or before the date 24 months

after close of CFC's taxable year to which the tax relates, that is, Year 1, under section 905(c)(2) and paragraph (a) of this section CFC cannot take these taxes into account when they accrue in Year 4. Instead, the taxes are taken into account when they are paid in Year 5. Under paragraph (b)(2)(ii) of this section, USP must decrease CFC's tested income and its earnings and profits in Year 1 by the additional tax amount of 20u. Further, USP must adjust its GILTI inclusion amount, the amount of foreign taxes deemed paid, and the amount of the section 78 dividend to account for CFC's additional payment of tax. Under section 986(a)(1)(B)(i) and § 1.986(a)-1(a)(2)(i), because CFC's payment of additional tax occurs more than 24 months after the close of the taxable year to which it relates, the additional tax is translated into dollars at the spot rate on the date of payment ($1.1x:1u). Therefore, CFC has tested foreign income taxes of $182x (160u translated at $1x:1u plus 20u translated at $1.1x:1u). As a result of the foreign tax redetermination, for Year 1, CFC has tested income of 180u (200u−20u). Under section 951A(a) and § 1.951A-1(c)(1), USP has a redetermined GILTI inclusion amount of $180x (180u, translated at $1x:1u). Under section 960(d) and § 1.960-2(c), USP is deemed to have paid $145.60x (80% × 100% × $182x) of foreign income taxes. Under section 78 and § 1.78-1(a), USP's section 78 dividend is $182x. USP's redetermined section 250 deduction is $181x (50% × ($180x + $182x)). Accordingly, USP's redetermined taxable income is $181x ($180x + $182x−$181x), its pre-credit U.S. tax liability is $38.01x (21% × $181x), and its redetermined U.S. tax liability is zero ($38.01x−$38.01x).

(3) ***Foreign tax redeterminations of successors or transferees.*** If at the time of a foreign tax redetermination the person with legal liability for the tax (or in the case of a refund, the legal right to such refund) (the "successor") is a different person than the person that had legal liability for the tax in the year to which the redetermined tax relates (the "original taxpayer"), the required redetermination of U.S. tax liability is made as if the foreign tax redetermination occurred in the hands of the original taxpayer. Federal income tax principles apply to determine the tax consequences if the successor remits (or receives a refund of) a tax that in the year to which the redetermined tax relates was the legal liability of, and thus under § 1.901-2(f) is considered paid by, the original taxpayer.

(4) ***Change in election to claim a foreign tax credit.*** A redetermination of U.S. tax liability is required to account for the effect of a timely change by the taxpayer to claim a foreign tax credit or a deduction for foreign income taxes paid or accrued in any taxable year as permitted under § 1.901-1(d).

(c) ***Foreign income tax imposed on foreign refund.*** If a redetermination of foreign income tax for a taxable year or years results from a refund to the section 901 taxpayer of foreign income taxes paid to a foreign country or possession of the United States and the foreign country or possession imposed foreign income tax on such refund, then, in accordance with section 905(c)(5), the amount of the refund is considered to be reduced by the amount of any foreign income tax described in section 901 imposed by the foreign country or possession of the United States with respect to such refund. In such case, no other credit under section 901, and no deduction under section 164, is allowed for any taxable year with respect to such tax imposed on such refund.

(d) ***Applicability dates.*** Except as provided in this paragraph (d), this section applies to foreign tax redeterminations occurring in taxable years ending on or after December 16, 2019, and to foreign tax redeterminations of foreign corporations occurring in taxable years that end with or within a taxable year

of a United States shareholder ending on or after December 16, 2019 and that relate to taxable years of foreign corporations beginning after December 31, 2017. The first two sentences of paragraph (a) of this section, and paragraph (b)(4) of this section, apply to foreign tax redeterminations occurring in taxable years beginning on or after December 28, 2021.

[T.D. 9882, 84 FR 69104, Dec. 17, 2019, as amended by T.D. 9922, 85 FR 72060, Nov. 12, 2020; T.D. 9959, 87 FR 373, Jan. 4, 2022]

§ 1.905-4 Notification of foreign tax redetermination.

(a) ***Application of this section.*** The rules of this section apply if, as a result of a foreign tax redetermination (as defined in § 1.905-3(a)), a redetermination of U.S. tax liability is required under section 905(c) and § 1.905-3(b).

(b) ***Time and manner of notification*** —

(1) ***Redetermination of U.S. tax liability*** —

(i) ***In general.*** Except as provided in paragraphs (b)(1)(v) and (b)(2) through (4) of this section, any taxpayer for which a redetermination of U.S. tax liability is required must notify the Internal Revenue Service (IRS) of the foreign tax redetermination by filing an amended return, Form 1118 (Foreign Tax Credit—Corporations) or Form 1116 (Foreign Tax Credit (Individual, Estate, or Trust)), and the statement described in paragraph (c) of this section for the taxable year with respect to which a redetermination of U.S. tax liability is required. Such notification must be filed within the time prescribed by this paragraph (b) and contain the information described in paragraph (c) of this section. If a foreign tax redetermination requires an individual to redetermine the individual's U.S. tax liability, and if, after taking into account such foreign tax redetermination, the amount of creditable foreign taxes (as defined in section 904(j)(3)(B)) that are paid or accrued by such individual during the taxable year does not exceed the applicable dollar limitation in section 904(j), the individual is not required to file Form 1116 with the amended return for such taxable year if the individual satisfies the requirements of section 904(j).

(ii) ***Increase in amount of U.S. tax liability.*** Except as provided in paragraphs (b)(1)(iv) and (v) and (b)(2) through (4) of this section, for each taxable year of the taxpayer with respect to which a redetermination of U.S. tax liability is required by reason of a foreign tax redetermination that increases the amount of U.S. tax liability, for example, by reason of a downward adjustment to the amount of foreign income taxes paid or accrued by the taxpayer or a foreign corporation with respect to which the taxpayer computes an amount of foreign taxes deemed paid, the taxpayer must file a separate notification by the due date (with extensions) of the original return for the taxpayer's taxable year in which the foreign tax redetermination occurs.

(iii) ***Decrease in amount of U.S. tax liability.*** Except as provided in paragraphs (b)(1)(iv) and (v) and (b)(2) through (4) of this section, for each taxable year of the taxpayer with respect to which a redetermination of U.S. tax liability is required by reason of a foreign tax redetermination that decreases the amount of U.S. tax liability and results in an overpayment, for example, by reason of an increase in the amount of foreign income taxes paid or accrued by the taxpayer or a foreign corporation with respect to which the taxpayer computes an amount of foreign taxes deemed paid, the taxpayer must file a claim for refund with the IRS within the period provided in section 6511. See section 6511(d)(3)(A) for the special refund period for refunds attributable to an increase in foreign tax credits.

(iv) ***Multiple redeterminations of U.S. tax liability for same taxable year.*** The rules of this paragraph (b)(1)(iv) apply except as provided in paragraphs (b)(1)(v) and (b)(2) through (4) of this section. If more than one foreign tax redetermination requires a redetermination of U.S. tax liability for the same affected taxable year of the taxpayer and those foreign tax redeterminations occur within the same taxable year or within two consecutive taxable years of the taxpayer, the taxpayer may file for the affected taxable year one amended return, Form 1118 or Form 1116, and the statement described in paragraph (c) of this section that reflects all such foreign tax redeterminations. If the taxpayer chooses to file one notification for such redeterminations, one or more of such redeterminations would increase the U.S. tax liability, and the net effect of all such redeterminations is to increase the U.S. tax liability for the affected taxable year, the taxpayer must file such notification by the due date (with extensions) of the original return for the taxpayer's taxable year in which the first foreign tax redetermination that would result in an increased U.S. tax liability occurred. If the taxpayer chooses to file one notification for such redeterminations, one or more of such redeterminations would decrease the U.S. tax liability, and the net effect of all such redeterminations is to decrease the total amount of U.S. tax liability for the affected taxable year, the taxpayer must file such notification as provided in paragraph (b)(1)(iii) of this section, within the period provided by section 6511. If a foreign tax redetermination with respect to the taxable year for which a redetermination of U.S. tax liability is required occurs after the date for providing such notification, more than one amended return may be required with respect to that taxable year.

(v) ***Amended return required only if there is a change in amount of U.S. tax due.*** If a redetermination of U.S. tax liability is required by reason of a foreign tax redetermination (or multiple foreign tax redeterminations, in the case of redeterminations described in paragraph (b)(1)(iv) of this section), but does not change the amount of U.S. tax due for any taxable year, the taxpayer may, in lieu of applying the applicable rules of paragraphs (b)(1)(i) through (iv) of this section, notify the IRS of such redetermination by attaching a statement to the original return for the taxpayer's taxable year in which the foreign tax redetermination occurs. The statement must be filed by the due date (with extensions) of the original return for the taxpayer's taxable year in which the foreign tax redetermination occurs and contain the information described in § 1.904-2(f). If a redetermination of U.S. tax liability is required by reason of a foreign tax redetermination (either alone, or if the taxpayer chooses to apply paragraph (b)(1)(iv) of this section, in combination with other foreign tax redeterminations, as provided therein) and the redetermination of U.S. tax liability results in a change to the amount of U.S. tax due for a taxable year, but does not change the amount of U.S. tax due for other taxable years, for example, because of a carryback or carryover of an unused foreign tax under section 904(c), the notification requirements for such other taxable years are deemed to be satisfied if the taxpayer complies with the applicable rules of paragraphs (b)(1)(i) through (iv) of this section with respect to each taxable year for which the foreign tax redetermination changes the amount of U.S. tax due.

(2) ***Notification with respect to a change in the amount of foreign tax reported to an owner by a pass-through entity*** —

(i) ***In general.*** If a partnership, trust, or other pass-through entity that reports to its beneficial owners (or to any intermediary on behalf of its beneficial owners), including partners, shareholders, beneficiaries, or similar persons, an amount of creditable foreign tax expenditures, such pass-through entity must notify both the IRS and its owners of any foreign tax redetermination described in § 1.905-3(a) with respect to the foreign tax so reported. For

purposes of this paragraph (b)(2), whether or not a redetermination has occurred within the meaning of § 1.905-3(a) is determined as if the pass-through entity were a domestic corporation which had elected to and claimed foreign tax credits in the amount reported for the year to which such foreign taxes relate. The notification required under this paragraph (b)(2) must include the statement described in paragraph (c) of this section along with any information necessary for the owners to redetermine their U.S. tax liability.

(ii) ***Partnerships subject to subchapter C of chapter 63 of the Code.*** Except as provided in paragraph (b)(4) of this section, if a redetermination of U.S. tax liability that is required under § 1.905-3(b) by reason of a foreign tax redetermination described in § 1.905-3(a) would require a partnership adjustment as defined in § 301.6241-1(a)(6) of this chapter, the partnership must file an administrative adjustment request under section 6227 and make any adjustments required under section 6227. See §§ 301.6227-2 and 301.6227-3 of this chapter for procedures for making adjustments with respect to an administrative adjustment request. An administrative adjustment request required under this paragraph (b)(2)(ii) must be filed by the due date (with extensions) of the original return for the partnership's taxable year in which the foreign tax redetermination occurs, and the restrictions in section 6227(c) do not apply to such filing. However, unless the administrative adjustment request may otherwise be filed after applying the limitations contained in section 6227(c), such a request is limited to adjustments that are required to be made under section 905(c). The requirements of paragraph (b)(2)(i) of this section are deemed to be satisfied with respect to any item taken into account in an administrative adjustment request filed under this paragraph (b)(2)(ii).

(3) ***Alternative notification requirements.*** An amended return and Form 1118 (Foreign Tax Credit—Corporations) or Form 1116 (Foreign Tax Credit (Individual, Estate, or Trust)), is not required to notify the IRS of the foreign tax redetermination and redetermination of U.S. tax liability if the taxpayer satisfies alternative notification requirements that may be prescribed by the IRS through forms, instructions, publications, or other guidance.

(4) ***Taxpayers under examination within the jurisdiction of the Large Business and International Division*** —

(i) ***In general.*** The alternative notification requirements of this paragraph (b)(4) apply if all of the conditions described in paragraphs (b)(4)(i)(A) through (E) of this section are satisfied.

(A) A foreign tax redetermination occurs while the taxpayer is under examination within the jurisdiction of the Large Business and International Division.

(B) The foreign tax redetermination results in an adjustment to the amount of foreign income taxes paid or accrued by the taxpayer or a foreign corporation with respect to which the taxpayer computes an amount of foreign income taxes deemed paid.

(C) The foreign tax redetermination requires a redetermination of U.S. tax liability that increases the amount of U.S. tax liability, and accordingly, but for this paragraph (b)(4), the taxpayer would be required to notify the IRS of such foreign tax redetermination under paragraph (b)(1)(ii) of this section (determined without regard to paragraphs (b)(1)(iv) and (v) of this section) or paragraph (b)(2)(ii) of this section. See paragraph (b)(4)(v) of this section regarding foreign tax redeterminations that decrease the amount of U.S. tax liability.

(D) The return for the taxable year for which a redetermination of U.S. tax liability is required is under examination.

(E) The due date specified in paragraph (b)(1)(ii) or (b)(2)(ii) of this section for providing notice of such foreign tax redetermination is not before the later of the opening conference or the hand-delivery or postmark date of the opening letter concerning an examination of the return for the taxable year for which a redetermination of U.S. tax liability is required by reason of such foreign tax redetermination.

(ii) *Notification requirements* —

(A) ***Foreign tax redetermination occurring before commencement of the examination.*** If a foreign tax redetermination described in paragraphs (b)(4)(i)(B) and (C) of this section occurs before the later of the opening conference or the hand-delivery or postmark date of the opening letter and if the condition provided in paragraph (b)(4)(i)(E) of this section with respect to such foreign tax redetermination is met, the taxpayer, in lieu of applying the rules of paragraphs (b)(1)(i) and (ii) of this section (requiring the filing of an amended return, Form 1116 or 1118, and the statement described in paragraph (c) of this section) or paragraph (b)(2)(ii) of this section (requiring the filing of an administrative adjustment request), must notify the IRS of such redetermination by providing the statement described in paragraph (b)(4)(iii) of this section to the examiner no later than 120 days after the later of the date of the opening conference of the examination, or the hand-delivery or postmark date of the opening letter concerning the examination.

(B) ***Foreign tax redetermination occurring within 180 days after commencement of the examination.*** If a foreign tax redetermination described in paragraphs (b)(4)(i)(B) and (C) of this section occurs on or after the latest of the opening conference or the hand-delivery or postmark date of the opening letter and on or before the date that is 180 days after the later of the opening conference or the hand-delivery or postmark date of the opening letter, the taxpayer, in lieu of applying the rules of paragraph (b)(1)(i) and (ii) of this section or paragraph (b)(2) of this section, must notify the IRS of such redetermination by providing the statement described in paragraph (b)(4)(iii) of this section to the examiner no later than 120 days after the date the foreign tax redetermination occurs.

(C) ***Foreign tax redetermination occurring more than 180 days after commencement of the examination.*** If a foreign tax redetermination described in paragraphs (b)(4)(i)(B) and (C) of this section occurs after the date that is 180 days after the later of the opening conference or the hand-delivery or postmark date of the opening letter, the taxpayer must either apply the rules of paragraphs (b)(1)(i) and (ii) of this section or paragraph (b)(2) of this section, or, in lieu of applying paragraphs (b)(1)(i) and (ii) of this section or paragraph (b)(2) of this section, provide the statement described in paragraph (b)(4)(iii) of this section to the examiner within 120 days after the date the foreign tax redetermination occurs. However, the IRS, in its discretion, may either accept such statement or require the taxpayer to comply with the rules of paragraphs (b)(1)(i) and (ii) of this section or paragraph (b)(2) of this section, as applicable.

(iii) ***Statement.*** The statement required by paragraphs (b)(4)(ii)(A) and (B) of this section must provide the original amount of foreign income taxes paid or accrued, the revised amount of foreign income taxes paid or accrued, and documentation with respect to the revisions, including exchange rates and dates of accrual or payment, and, if applicable, the information described in paragraph (c)(8) of this section. The statement must include the following

declaration signed by a person authorized to sign the return of the taxpayer: "Under penalties of perjury, I declare that I have examined this written statement, and to the best of my knowledge and belief, this written statement is true, correct, and complete."

(iv) ***Penalty for failure to file notice of a foreign tax redetermination.*** A taxpayer subject to the rules of this paragraph (b)(4) must satisfy the rules of paragraph (b)(4)(ii) of this section in order not to be subject to the penalty relating to the failure to file notice of a foreign tax redetermination under section 6689 and § 301.6689-1 of this chapter.

(v) ***Notification of foreign tax redetermination that decreases U.S. tax liability in an affected year under audit.*** A taxpayer may (but is not required to) notify the IRS as provided in this paragraph (b)(4)(v) if the taxpayer has a foreign tax redetermination that meets the conditions in paragraphs (b)(4)(i)(A), (B), and (D) of this section and results in a decrease in the amount of U.S. tax liability that, but for this paragraph (b)(4), would require the taxpayer to notify the IRS of such foreign tax redetermination under paragraph (b)(1)(iii) or (b)(2)(ii) of this section (determined without regard to paragraphs (b)(1)(iv) and (v) of this section). The notification should be made in the time and manner specified in paragraph (b)(4)(ii) of this section. The IRS, in its discretion, may either accept such alternate notification or require the taxpayer to comply with the rules of paragraphs (b)(1)(i) and (iii) or paragraphs (b)(2) of this section, as applicable.

(5) ***Examples.*** The following examples illustrate the application of paragraph (b) of this section.

(i) ***Example 1.***

(A) X, a domestic corporation, is an accrual basis taxpayer and uses the calendar year as its U.S. taxable year. X conducts business through a branch in Country M, the currency of which is the m, and also conducts business through a branch in Country N, the currency of which is the n. X uses the average exchange rate to translate foreign income taxes. X is able to claim a credit under section 901 for all foreign income taxes paid or accrued.

(B) In Year 1, X accrued and paid 100m of Country M income taxes with respect to 400m of foreign source foreign branch category income. The average exchange rate for Year 1 was $1:1m. Also in Year 1, X accrued and paid 50n of Country N income taxes with respect to 150n of foreign source foreign branch category income. The average exchange rate for Year 1 was $1:1n. On its Year 1 Federal income tax return, X claimed a foreign tax credit under section 901 of $150 ($100 (100m translated at $1:1m) + $50 (50n translated at $1:1n)) with respect to its foreign source foreign branch category income. See § 1.986(a)-1(a)(1).

(C) In Year 2, X accrued and paid 100n of Country N income taxes with respect to 300n of foreign source foreign branch category income. The average exchange rate for Year 2 was $1.50:1n. On its Year 2 Federal income tax return, X claimed a foreign tax credit under section 901 of $150 (100n translated at $1.5:1n). See § 1.986(a)-1(a)(1).

(D) On June 15, Year 5, when the spot rate was $1.40:1n, X received a refund of 10n from Country N, and, on March 15, Year 6, when the spot rate was $1.20:1m, X was assessed by and paid Country M an additional 20m of tax. Both payments were with respect to X's foreign source foreign branch category income in Year 1. On May 15, Year 6, when the spot rate was $1.45:1n, X received a refund of 5n from Country N with respect to its foreign source foreign branch category income in Year 2.

(E) Both of the refunds and the assessment are foreign tax redeterminations under § 1.905-3(a). Under § 1.905-3(b)(1), X must redetermine its U.S. tax liability for both Year 1 and Year 2. With respect to Year 1, under paragraph (b)(1)(ii) of this section X must notify the IRS of the June 15, Year 5, refund of 10n from Country N that increased X's U.S. tax liability by filing an amended return, Form 1118, and the statement required by paragraph (c) of this section for Year 1 by the due date of the original return (with extensions) for Year 5. The amended return and Form 1118 would reflect the reduced amount of foreign income taxes claimed as a credit under section 901 and the increase in X's U.S. tax liability of $10 (10n refund translated at the average exchange rate for Year 1, or $1:1n (see § 1.986(a)-1(c)). With respect to the March 15, Year 6, additional assessment of 20m by Country M, under paragraph (b)(1)(iii) of this section X must notify the IRS within the time period provided by section 6511, increasing the foreign income taxes available as a credit and reducing X's U.S. tax liability by $24 (20m translated at the spot rate on the date of payment, or $1.20:1m). See sections 986(a)(1)(B)(i) and 986(a)(2)(A) and § 1.986(a)-1(a)(2)(i). X may so notify the IRS by filing a second amended return, Form 1118, and the statement described in paragraph (c) of this section for Year 1, within the time period provided by section 6511. Alternatively, under paragraph (b)(1)(iv) of this section, when X redetermines its U.S. tax liability for Year 1 to take into account the 10n refund from Country N that occurred in Year 5, X may also take into account the 20m additional assessment by Country M that occurred on March 15, Year 6. If X reflects both foreign tax redeterminations on the same amended return, Form 1118, and in the statement described in paragraph (c) of this section for Year 1, the amount of X's foreign income taxes available as a credit would be reduced by $10 (10n refund translated at $1:1n), and increased by $24 (20m additional assessment translated at the spot rate on the date of payment, March 15, Year 6, or $1.20:1m). The foreign income taxes available as a credit therefore would be increased by $14 ($24 (additional assessment)−$10 (refund)). Because the net effect of the foreign tax redeterminations is to increase the amount of foreign taxes paid or accrued and decrease X's U.S. tax liability for Year 1, under paragraph (b)(1)(iv) of this section the Year 1 amended return, Form 1118, and the statement required in paragraph (c) of this section reflecting foreign tax redeterminations in both years must be filed within the period provided by section 6511.

(F) With respect to Year 2, under paragraph (b)(1)(ii) of this section X must notify the IRS by filing an amended return, Form 1118, and the statement required by paragraph (c) of this section for Year 2, in addition to the amended return, Form 1118, and statement that are required by reason of the separate foreign tax redeterminations that affect Year 1. The amended return, Form 1118, and the statement required by paragraph (c) of this section for Year 2 must be filed by the due date (with extensions) of X's original return for Year 6. The amended return and Form 1118 must reflect the reduced amount of foreign income taxes claimed as a credit under section 901 and the increase in X's U.S. tax liability of $7.50 (5n refund translated at the average exchange rate for Year 2, or $1.50:1n).

(ii) *Example 2.* X, a taxpayer within the jurisdiction of the Large Business and International Division, uses the calendar year as its U.S. taxable year. On November 15, Year 2, X receives a refund of foreign income taxes that constitutes a foreign tax redetermination and necessitates a redetermination of U.S. tax liability for X's Year 1 taxable year. Under paragraph (b)(1)(ii) of this section, X is required to notify the IRS of the foreign tax redetermination that increased its U.S. tax liability by filing an amended return, Form 1118, and the statement described in paragraph (c) of this section for its Year 1 taxable year by October 15, Year 3 (the due date (with

extensions) of the original return for X's Year 2 taxable year). On December 15, Year 3, the IRS hand delivers an opening letter concerning the examination of the return for X's Year 1 taxable year, and the opening conference for such examination is scheduled for January 15, Year 4. Because the date for notifying the IRS of the foreign tax redetermination under paragraph (b)(1)(ii) of this section (October 15, Year 3) is before the date of the opening conference concerning the examination of the return for X's Year 1 taxable year (January 15, Year 4), the condition of paragraph (b)(4)(i)(E) of this section is not met, and so paragraph (b)(4)(i) of this section does not apply. Accordingly, X must notify the IRS of the foreign tax redetermination by filing an amended return, Form 1118, and the statement described in paragraph (c) of this section for the Year 1 taxable year by October 15, Year 3.

(6) ***Transition rule for certain foreign tax redeterminations.*** In the case of foreign tax redeterminations occurring in taxable years ending on or after December 16, 2019, and before November 12, 2020, and foreign tax redeterminations of foreign corporations occurring in taxable years that end with or within a taxable year of a United States shareholder ending on or after December 16, 2019, and before November 12, 2020, any amended return or other notification that under paragraph (b)(1)(ii), (iv), or (v) or (b)(2)(ii) of this section must be filed by the due date (with extensions) of, or attached to, the original return for the taxpayer's taxable year in which the foreign tax redetermination occurs must instead be filed by the due date (with extensions) of, or attached to, the original return for the taxpayer's first taxable year ending on or after November 12, 2020. For purposes of paragraph (b)(4)(i)(E) of this section, the relevant due date is the due date specified in this paragraph (b)(6).

(c) ***Notification contents.*** The statement required by paragraphs (b)(1)(i) through (iv) and (b)(2) of this section must contain information sufficient for the IRS to redetermine U.S. tax liability if such a redetermination is required under section 905(c). The information must be in a form that enables the IRS to verify and compare the original computation of U.S. tax liability, the revised computation resulting from the foreign tax redetermination, and the net changes resulting therefrom. The statement must include the following:

(1) The taxpayer's name, address, identifying number, the taxable year or years of the taxpayer that are affected by the foreign tax redetermination, and, in the case of foreign taxes deemed paid, the name and identifying number, if any, of the foreign corporation;

(2) The date or dates the foreign income taxes were accrued, if applicable; the date or dates the foreign income taxes were paid; the amount of foreign income taxes paid or accrued on each date (in foreign currency) and the exchange rate used to translate each such amount, as provided in § 1.986(a)-1(a) or (b);

(3) Information sufficient to determine any change to the characterization of a distribution, the amount of any inclusion under section 951(a), 951A, or 1293, or the deferred tax amount under section 1291;

(4) Information sufficient to determine any interest due from or owing to the taxpayer, including the amount of any interest paid by the foreign government to the taxpayer and the dates received;

(5) In the case of any foreign income tax that is refunded in whole or in part, the taxpayer must provide the date of each such refund; the amount of such refund (in foreign currency); and the exchange rate that was used to translate such amount when originally claimed as a credit (as provided in § 1.986(a)-1(c)) and the spot rate (as defined in § 1.988-1(d)) for the date the refund was received (for purposes of computing foreign currency gain or loss under section 988);

(6) In the case of any foreign income taxes that are not paid on or before the date that is 24 months after the close of the taxable year to which such taxes relate, the amount of such taxes in foreign currency, and the exchange rate that was used to translate such amount when originally claimed as a credit or added to PTEP group taxes (as defined in § 1.960-3(d)(1));

(7) If a redetermination of U.S. tax liability results in an amount of additional tax due, and the carryback or carryover of an unused foreign income tax under section 904(c) only partially eliminates such amount, the information required in § 1.904-2(f); and

(8) In the case of a pass-through entity, the name, address, and identifying number of each beneficial owner to which foreign taxes were reported for the taxable year or years to which the foreign tax redetermination relates, and the amount of foreign tax initially reported to each beneficial owner for each such year and the amount of foreign tax allocable to each beneficial owner for each such year after the foreign tax redetermination is taken into account.

(d) ***Payment or refund of U.S. tax.*** The amount of tax, if any, due upon a redetermination of U.S. tax liability is paid by the taxpayer after notice and demand has been made by the IRS. Subchapter B of chapter 63 of the Internal Revenue Code (relating to deficiency procedures) does not apply with respect to the assessment of the amount due upon such redetermination. In accordance with sections 905(c) and 6501(c)(5), the amount of additional tax due is assessed and collected without regard to the provisions of section 6501(a) (relating to limitations on assessment and collection). The amount of tax, if any, shown by a redetermination of U.S. tax liability to have been overpaid is credited or refunded to the taxpayer in accordance with subchapter B of chapter 66 (sections 6511 through 6515).

(e) ***Interest and penalties*** —

(1) ***In general.*** If a redetermination of U.S. tax liability is required by reason of a foreign tax redetermination, interest is computed on the underpayment or overpayment in accordance with sections 6601 and 6611. No interest is assessed or collected on any underpayment resulting from a refund of foreign income taxes for any period before the receipt of the refund, except to the extent interest was paid by the foreign country or possession of the United States on the refund for the period before the receipt of the refund. See section 905(c)(5). In no case, however, will interest assessed and collected pursuant to the preceding sentence for any period before receipt of the refund exceed the amount that otherwise would have been assessed and collected under section 6601 for that period. Interest is assessed from the time the taxpayer (or the foreign corporation, partnership, trust, or other pass-through entity of which the taxpayer is a shareholder, partner, or beneficiary) receives a refund until the taxpayer pays the additional tax due the United States.

(2) ***Imposition of penalty.*** Failure to comply with the provisions of this section subjects the taxpayer to the penalty provisions of section 6689 and § 301.6689-1 of this chapter.

(f) ***Applicability date.*** This section applies to foreign tax redeterminations (as defined in § 1.905-3(a)) occurring in taxable years ending on or after December 16, 2019, and to foreign tax redeterminations of foreign corporations occurring in taxable years that end with or within a taxable year of a United States shareholder ending on or after December 16, 2019.

[T.D. 9922, 85 FR 72063, Nov. 12, 2020]

§ 1.905-5 Foreign tax redeterminations of foreign corporations that relate to taxable years of the foreign corporation beginning before January 1, 2018.

(a) *In general* —

(1) ***Effect of foreign tax redetermination of a foreign corporation.*** Except as provided in paragraph (e) of this section, a foreign tax redetermination (as defined in § 1.905-3(a)) of a foreign corporation that relates to a taxable year of the foreign corporation beginning before January 1, 2018, and that may affect a taxpayer's foreign tax credit in any taxable year, must be accounted for by adjusting the foreign corporation's taxable income and earnings and profits, post-1986 undistributed earnings as defined in § 1.902-1(a)(9), and post-1986 foreign income taxes as defined in § 1.902-1(a)(8) (or its pre-1987 accumulated profits as defined in § 1.902-1(a)(10)(i) and pre-1987 foreign income taxes as defined in § 1.902-1(a)(10)(iii), as applicable) in the taxable year of the foreign corporation to which the foreign taxes relate.

(2) ***Required redetermination of U.S. tax liability.*** Except as provided in paragraph (e) of this section, a redetermination of U.S. tax liability is required to account for the effect of the foreign tax redetermination on the earnings and profits and taxable income of the foreign corporation, the taxable income of a United States shareholder, and the amount of foreign taxes deemed paid by the United States shareholder under section 902 or 960 (as in effect before December 22, 2017), in the year to which the redetermined foreign taxes relate. For example, in the case of a refund of foreign income taxes, the subpart F income, earnings and profits, and post-1986 undistributed earnings (or pre-1987 accumulated profits, as applicable) of the foreign corporation are increased in the year to which the foreign tax relates to reflect the functional currency amount of the foreign income tax refund. The required redetermination of U.S. tax liability must account for the effect of the foreign tax redetermination on the characterization and amount of distributions or inclusions under section 951 or 1293 taken into account by each of the foreign corporation's United States shareholders and on the application of the high-tax exception described in section 954(b)(4), as well as on the amount of foreign income taxes deemed paid in such year. In addition, a redetermination of U.S. tax liability is required for any subsequent taxable year in which the United States shareholder received or accrued a distribution or inclusion from the foreign corporation, up to and including the taxable year in which the foreign tax redetermination occurs, as well as any year to which unused foreign taxes from such year were carried under section 904(c).

(b) *Notification requirements* —

(1) ***In general.*** The notification requirements of § 1.905-4, as modified by paragraphs (b)(2) and (3) of this section, apply if a redetermination of U.S. tax liability is required under paragraph (a) or (e) of this section.

(2) ***Notification relating to post-1986 undistributed earnings and post-1986 foreign income taxes.*** In the case of foreign tax redeterminations with respect to taxes included in post-1986 foreign income taxes, in addition to the information required by § 1.905-4(c), the taxpayer must provide the balances of the pools of post-1986 undistributed earnings and post-1986 foreign income taxes before and after adjusting the pools, the dates and amounts of any dividend distributions or other inclusions made out of earnings and profits for the affected year or years, and the amount of earnings and profits from which such dividends were paid or such inclusions were made for the affected year or years.

(3) ***Notification relating to pre-1987 accumulated profits and pre-1987 foreign income taxes.*** In the case of foreign tax redeterminations with respect to pre-1987 accumulated profits, in addition to the information required by § 1.905-4(c), the taxpayer must provide the following: The dates and amounts of any dividend distributions made out of earnings and profits for the affected year or years; the rate of exchange on the date of any such distribution; and the amount of earnings and profits from which such dividends were paid for the affected year or years.

(c) ***Currency translation rules for adjustments to pre-1987 foreign income taxes.*** Foreign income taxes paid with respect to pre-1987 accumulated profits that are deemed paid under section 960 (or under section 902 in the case of an amount treated as a dividend under section 1248) are translated into dollars at the spot rate for the date of the payment of the foreign income taxes, and refunds of such taxes are translated into dollars at the spot rate for the date of the refund. Foreign income taxes deemed paid by a taxpayer under section 902 with respect to an actual distribution of pre-1987 accumulated profits and refunds of such taxes are translated into dollars at the spot rate for the date of the distribution of the earnings to which the foreign income taxes relate. See section 902(c)(6) (as in effect before December 22, 2017) and § 1.902-1(a)(10)(iii). For purposes of this section, the term *spot rate* has the meaning provided in § 1.988-1(d).

(d) ***Timing and effect of pooling adjustments.*** The redetermination of U.S. tax liability required by paragraphs (a) and (e) of this section is made in accordance with section 905(c) as in effect for those taxable years, without regard (except as provided in paragraph (e) of this section) to rules that required adjustments to a foreign corporation's pools of post-1986 undistributed earnings and post-1986 foreign income taxes in the year of the foreign tax redetermination rather than in the year to which the redetermined foreign tax relates. No underpayment or overpayment of U.S. tax liability results from a foreign tax redetermination unless the required adjustments change the U.S. tax liability. Consequently, no interest is paid by or to a taxpayer as a result of adjustments, required by reason of a foreign tax redetermination, to a foreign corporation's pools of post-1986 undistributed earnings and post-1986 foreign income taxes in the year to which the redetermined foreign tax relates (or a subsequent year) that did not result in a change to U.S. tax liability, for example, because no foreign taxes were deemed paid in that year.

(e) ***Election to account for certain foreign tax redeterminations with respect to pre-2018 taxable years in the foreign corporation's last pooling year —***

(1) ***In general.*** A taxpayer may elect under the rules in paragraph (e)(2) of this section to account for foreign tax redeterminations of a foreign corporation that occur in the foreign corporation's taxable years ending with or within a taxable year of a United States shareholder of the foreign corporation ending on or after November 2, 2020, and that relate to taxable years of the foreign corporation beginning before January 1, 2018, by treating such foreign tax redeterminations as if they occurred in the foreign corporation's last taxable year beginning before January 1, 2018 (the “last pooling year”), and applying the rules in §§ 1.905-3T(d) and 1.905-5T for purposes of determining whether the foreign tax redetermination is accounted for in the foreign corporation's last pooling year or must be accounted for in the year to which the redetermined foreign tax relates. Except with respect to determining under the preceding sentence whether the foreign tax redetermination is accounted for in the foreign corporation's last pooling year or in the year to which the redetermined foreign tax relates, the rules of this section apply to foreign tax redeterminations covered by an election under this paragraph (e). Therefore, unless an exception in § 1.905-3T(d)(3) applies, a foreign tax redetermination to which an election under this paragraph (e) applies is accounted for under paragraph (a)(2) of this section by adjusting the foreign corporation's pools of post-1986 undistributed earnings and post-1986 foreign income taxes in the last pooling year, rather than in the

year to which the redetermined foreign tax relates. For purposes of this paragraph (e), references to §§ 1.905-3T and 1.905-5T are to such provisions as contained in 26 CFR part 1, revised as of April 1, 2019.

(2) ***Rules regarding the election*** —

(i) ***Time and manner of election.*** For a foreign corporation's first taxable year that ends with or within a taxable year of a United States shareholder of the foreign corporation ending on or after November 2, 2020 in which the foreign corporation has a foreign tax redetermination (the "first redetermination year"), the controlling domestic shareholders (as defined in § 1.964-1(c)(5)) of the foreign corporation make the election described in paragraph (e)(1) of this section by—

(A) Filing the statement required under § 1.964-1(c)(3)(ii) with a timely filed original income tax return for the taxable year of each controlling domestic shareholder of the foreign corporation in which or with which the foreign corporation's first redetermination year ends;

(B) Providing any notices required under § 1.964-1(c)(3)(iii);

(C) Filing amended returns as required under § 1.905-4 and this section for each controlling domestic shareholder's taxable year with or within which ends the foreign corporation's last pooling year and each other affected year before the controlling domestic shareholder's taxable year with or within which ends the foreign corporation's first redetermination year reflecting a redetermination of the controlling domestic shareholder's U.S. tax liability for each such taxable year, in cases where a redetermination of the shareholder's U.S. tax liability for taxable years ending before the foreign corporation's last pooling year ends is not required under the rules in §§ 1.905-3T(d) and 1.905-5T;

(D) Filing amended returns as required under § 1.905-4 and this section with respect to each affected year before the controlling domestic shareholder's taxable year with or within which ends the foreign corporation's first redetermination year reflecting a redetermination of the controlling domestic shareholder's U.S. tax liability for each such taxable year, in cases where a redetermination of the shareholder's U.S. tax liability for taxable years ending before the foreign corporation's last pooling year ends is required under the rules in §§ 1.905-3T(d) and 1.905-5T and this section; and

(E) Providing any additional information required by applicable administrative pronouncements.

(ii) ***Scope, duration, and effect of election.*** An election under paragraph (e)(1) of this section with respect to the first redetermination year of a foreign corporation is binding on all persons who are, or were in a prior year to which the election applies, United States shareholders of the foreign corporation. In addition, such election applies to all foreign tax redeterminations in the first redetermination year and all subsequent taxable years of such foreign corporation and cannot be revoked. For foreign tax redeterminations that occur in taxable years after the first redetermination year, all United States shareholders of such foreign corporation must account for the foreign tax redeterminations under the rules in paragraph (e)(1) of this section by filing amended returns and providing other information as required by § 1.905-4 and paragraphs (e)(2)(i)(C) through (E) of this section.

(iii) ***Requirements for valid election.*** An election under paragraph (e)(1) of this section is valid only if all of the requirements in paragraph (e)(2)(i) of this section, including the requirement to provide notice under paragraph (e)(2)(i)(B) of this section, are satisfied by each of the controlling domestic shareholders with respect to the first redetermination year.

(iv) ***CFC group conformity requirement*** —

(A) ***In general.*** An election made under paragraph (e)(1) of this section applies to all controlled foreign corporations that are members of the same CFC group, and the rules in paragraphs (e)(1) and (e)(2)(i) through (iii) of this section apply by reference to the CFC group. Therefore, an election by the controlling domestic shareholders of any controlled foreign corporation with respect to that controlled foreign corporation's first redetermination year also applies to foreign tax redeterminations of all members of the CFC group that includes that controlled foreign corporation, determined as of the close of that controlled foreign corporation's first redetermination year. The election is binding on all persons who are, or were in a prior year to which the election applies, United States shareholders of any member of the CFC group, applies with respect to foreign tax redeterminations of each member that occur in and after that member's first taxable year with or within which ends such controlled foreign corporation's first redetermination year, and cannot be revoked.

(B) ***Determination of the CFC group*** —

(*1*) ***Definition.*** Subject to the rules in paragraphs (b)(2)(iv)(B)(*2*) and (*3*) of this section, the term *CFC group* means an affiliated group as defined in section 1504(a) without regard to section 1504(b)(1) through (6), except that section 1504(a) is applied by substituting “more than 50 percent” for “at least 80 percent” each place it appears, and section 1504(a)(2)(A) is applied by substituting “or” for “and.” For purposes of this paragraph (e)(2)(iv)(B)(*1*), stock ownership is determined by applying the constructive ownership rules of section 318(a), other than section 318(a)(3)(A) and (B), by applying section 318(a)(4) only to options (as defined in § 1.1504-4(d)) that are reasonably certain to be exercised as described in § 1.1504-4(g), and by substituting in section 318(a)(2)(C) “5 percent” for “50 percent.”

(*2*) ***Member of a CFC group.*** The determination of whether a controlled foreign corporation is included in a CFC group is made as of the close of the first redetermination year of any controlled foreign corporation for which an election is made under paragraph (e)(1) of this section. One or more controlled foreign corporations are members of a CFC group if the requirements of paragraph (e)(2)(iv)(B)(*2*) of this section are satisfied as of the end of the first redetermination year of at least one of the controlled foreign corporations, even if the requirements are not satisfied as of the end of the first redetermination year of all controlled foreign corporations. If the controlling domestic shareholders do not have the same taxable year, the determination of whether a controlled foreign corporation is a member of a CFC group is made with respect to the first redetermination year that ends with or within the taxable year of the majority of the controlling domestic shareholders (determined based on voting power) or, if no such majority taxable year exists, the calendar year.

(3) ***Controlled foreign corporations included in only one CFC group.*** A controlled foreign corporation cannot be a member of more than one CFC group. If a controlled foreign corporation would be a member of more than one CFC group under paragraph (e)(2)(iv)(B)(2) of this section, then ownership of stock of the controlled foreign corporation is determined by applying paragraph (e)(2)(iv)(B)(2) of this section without regard to section 1504(a)(2)(B) or, if applicable, by reference to the ownership existing as of the end of the first redetermination year of a controlled foreign corporation that would cause a CFC group to exist.

(3) ***Rules for successor entities.*** All of the United States persons that own equity interests in a successor entity to a foreign corporation ("U.S. owners") may elect under the principles of paragraph (e)(2) of this section to apply the rules in paragraph (e)(1) to foreign tax redeterminations of such foreign corporation that occur in taxable years of the successor entity that end with or within taxable years of its U.S. owners ending on or after November 2, 2020.

(f) ***Applicability date.*** This section applies to foreign tax redeterminations (as defined in § 1.905-3(a)) of foreign corporation and successor entities that occur in taxable years that end with or within taxable years of a United States shareholder or other United States persons ending on or after November 2, 2020, and that relate to taxable years of such foreign corporations beginning before January 1, 2018.

[T.D. 9922, 85 FR 72067, Nov. 12, 2020]

§ 1.907-0 Outline of regulation provisions for section 907.

This section lists the paragraphs contained in §§ 1.907(a)-0 through 1.907(f)-1.

§ 1.907(a)-0 Introduction (for taxable years beginning after December 31, 1982).

(a) Effective dates.

(b) Key terms.

(c) FOGEI tax limitation.

(d) Reduction of creditable FORI taxes.

(e) FOGEI and FORI.

(f) Posted prices.

(g) Transitional rules.

(h) Section 907(f) carrybacks and carryovers.

(i) Statutes covered.

§ 1.907(a)-1 Reduction in taxes paid on FOGEI (for taxable years beginning after December 31, 1982).

(a) Amount of reduction.

(b) Foreign taxes paid or accrued.

(1) Foreign taxes.

(2) Foreign taxes paid or accrued.

(c) Limitation level.

(1) In general.

(2) Limitation percentage of corporations.

(3) Limitation percentage of individuals.

(4) Losses.

(5) Priority.

(d) Illustrations.

(e) Effect on other provisions.

(1) Deduction denied.

(2) Reduction inapplicable.

(3) Section 78 dividend.

(f) Section 904 limitation.

§ 1.907(b)-1 Reduction of creditable FORI taxes (for taxable years beginning after December 31, 1982).

§ 1.907(c)-1 Definitions relating to FOGEI and FORI (for taxable years beginning after December 31, 1982).

(a) Scope.

(b) FOGEI.

(1) General rule.

(2) Amount.

(3) Other circumstances.

(4) Income directly related to extraction.

(5) Income not included.

(6) Fair market value.

(7) Economic interest.

(c) Carryover of foreign oil extraction losses.

(1) In general.

(2) Reduction.

(3) Foreign oil extraction loss defined.

(4) Affiliated groups.

(5) FOGEI taxes.

(6) Examples.

(d) FORI.

(1) In general.

(2) Transportation.

(3) Distribution or sale.

(4) Processing.

(5) Primary product from oil.

(6) Primary product from gas.

(7) Directly related income.

(e) Assets used in a trade or business.

(1) In general.

(2) Section 907(c) activities.

(3) Stock.

(4) Losses on sale of stock.

(5) Character of gain or loss.

(6) Allocation of amount realized.

(7) Interest.

(f) Terms and items common to FORI and FOGEI.

(1) Minerals

(2) Taxable income.

(3) Interest on working capital.

(4) Exchange gain or loss.

(5) Allocation.

(6) Facts and circumstances.

(g) Directly related income.

(1) In general.

(2) Directly related services.

(3) Leases and licenses.

(4) Related person.

(5) Gross income.

(h) Coordination with other provisions.

(1) Certain adjustments.

(2) Section 901(f).

§ 1.907(c)-2 Section 907(c)(3) items (for taxable years beginning after December 31, 1982).

(a) Scope.

(b) Dividend.

(1) Section 1248.

(2) Section 78 dividend.

(c) Taxes deemed paid.

(1) Voting stock test.

(2) Dividends and interest.

(3) Amounts included under section 951(a).

(d) Amount attributable to certain items.

(1) Certain dividends.

(2) Interest received from certain foreign corporations.

(3) Dividends from domestic corporation.

(4) Amounts with respect to which taxes are deemed paid under section 960(a).

(5) Section 78 dividend.

(6) Special rule.

(7) Deficits.

(8) Illustrations.

(e) Dividends, interest, and other amounts from sources within a possession.

(f) Income from partnerships, trusts, etc.

§ 1.907(c)-3 FOGEI and FORI taxes (for taxable years beginning after December 31, 1982).

(a) Tax characterization, allocation and apportionment.

(1) Scope.

(2) Three classes of income.

(3) More than one class in a foreign tax base.

(4) Allocation of tax within a base.

(5) Modified gross income.

(6) Allocation of tax credits.

(7) Withholding taxes.

(b) Dividends.

(1) In general.

(2) Section 78 dividend.

(c) Includable amounts under section 951(a).

(d) Partnerships.

(e) Illustrations.

§ 1.907(d)-1 Disregard of posted prices for purposes of chapter 1 of the Code (for taxable years beginning after December 31, 1982).

(a) In general.

(1) Scope.

(2) Initial computation requirement.

(3) Burden of proof.

(4) Related parties.

(b) Adjustments.

(c) Definitions.

(1) Foreign government.

(2) Minerals.

(3) Posted price.

(4) Other pricing arrangement.

(5) Fair market value.

§ 1.907(f)-1 Carryback and carryover of credits disallowed by section 907(a) (for amounts carried between taxable years that each begin after December 31, 1982).

(a) In general.

(b) Unused FOGEI.

(1) In general.

(2) Year of origin.

(c) Tax deemed paid or accrued.

(d) Excess extraction limitation.

(e) Excess general section 904 limitation.

(f) Section 907(f) priority.

(g) Cross-reference.

(h) Example.

[T.D. 8338, 56 FR 11063, Mar. 15, 1991; 56 FR 21926, May 13, 1991; T.D. 8655, 61 FR 516, Jan. 8, 1996]

§ 1.907(a)-0 Introduction (for taxable years beginning after December 31, 1982).

(a) ***Effective dates.*** The provisions of §§ 1.907(a)-0 through 1.907(f)-1 apply to taxable years beginning after December 31, 1982. For provisions that apply to taxable years beginning before January 1, 1983, see §§ 1.907(a)-0A through 1.907(f)-1A.

(b) ***Key terms.*** For purposes of the regulations under section 907—

(1) ***FOGEI*** means foreign oil and gas extraction income.

(2) ***FORI*** means foreign oil related income.

(3) ***FOGEI taxes*** mean foreign oil and gas extraction taxes as defined in section 907(c)(5).

(4) ***FORI taxes*** means foreign taxes on foreign oil related income. See § 1.907(c)-3.

(c) ***FOGEI tax limitation.*** Section 907(a) limits the foreign tax credit for taxes paid or accrued on FOGEI. See § 1.907(a)-1.

(d) ***Reduction of creditable FORI taxes.*** Section 907(b) recharacterizes FORI taxes as non-creditable deductible expenses to the extent that the foreign law imposing the FORI taxes is structured, or in fact operates, so that the amount of tax imposed with respect to FORI will be materially greater, over a reasonable period of time, than the amount generally imposed on income that is neither FOGEI nor FORI. See § 1.907(b)-1.

(e) ***FOGEI and FORI.*** FOGEI includes the taxable income from the extraction of minerals from oil or gas wells by a taxpayer (or another person) and from the sale or exchange of assets used in the extraction business. FORI includes taxable income from the activities of processing oil and gas into their primary products, transporting or distributing oil and gas and their primary products, and from the disposition of assets used in these activities. For this purpose, a disposition includes only a sale or exchange. FOGEI and FORI may also include taxable income from the performance of related services or from the lease of related property and certain dividends, interest, or amounts described in section 951(a). See §§ 1.907(c)-1 through 1.907(c)-3.

(f) ***Posted prices.*** Certain sales prices are disregarded when computing FOGEI for purposes of chapter 1 of the Code. See § 1.907(d)-1.

(g) ***Transitional rules.*** Section 907(e) provides rules for the carryover of unused FOGEI taxes from taxable years beginning before January 1, 1983, and carryback of FOGEI taxes arising in taxable years beginning after December 31, 1982. See § 1.907(e)-1.

(h) ***Section 907(f) carrybacks and carryovers.*** FOGEI taxes disallowed under section 907(a) may be carried back or forward to other taxable years. These FOGEI taxes may be absorbed in another taxable year to the extent of the lesser of the separate excess extraction limitation or the excess limitation in the general limitation category (section 904(d)(1)(I)) for the carryback or carryover year. See § 1.907(f)-1.

(i) ***Statutes covered.*** The regulations under section 907 are issued as a result of the enactment of section 601 of the Tax Reduction Act of 1975, of section 1035 of the Tax Reform Act of 1976, of section 301(b)(14) of the Revenue Act of 1978, of section 211 of the Tax Equity and Fiscal Responsibility Act of 1982 and of section 1012(g)(6) (A)-(B) of the Technical and Miscellaneous Revenue Act of 1988.

[T.D. 8338, 56 FR 11065, Mar. 15, 1991]

§ 1.907(a)-1 Reduction in taxes paid on FOGEI (for taxable years beginning after December 31, 1982).

(a) ***Amount of reduction.*** FOGEI taxes are reduced by the amount by which they exceed a limitation level (as defined in paragraph (c) of this section).

(b) ***Foreign taxes paid or accrued.*** For purposes of the regulations under section 907—

(1) ***Foreign taxes.*** The term “foreign taxes” means income, war profits, or excess profits taxes of foreign countries or possessions of the United States otherwise creditable under section 901 (including those creditable by reason of section 903).

(2) ***Foreign taxes paid or accrued.*** The terms “foreign taxes paid or accrued,” “FOGEI taxes paid or accrued,” and “FORI taxes paid or accrued” include foreign taxes deemed paid under sections 902 and 960. Unless otherwise expressly provided, these terms do not include foreign taxes deemed paid by reason of sections 904(c) and 907(f).

(c) ***Limitation level*** —

(1) ***In general.*** The limitation level is FOGEI for the taxable year multiplied by the limitation percentage for that year.

(2) ***Limitation percentage for corporations.*** A corporation's limitation percentage is the highest rate of tax specified in section 11(b) for the particular year.

(3) ***Limitation percentage for individuals.*** Section 907(a)(2)(B) provides that the limitation percentage for individual taxpayers is the effective rate of tax for those taxpayers. The effective rate of tax is computed by dividing the entire tax, before the credit under section 901(a) is taken, by the taxpayer's entire taxable income.

(4) ***Losses.***

(i) For purposes of determining whether income is FOGEI, a taxpayer's FOGEI will be recharacterized as foreign source non-FOGEI to the extent that FOGEI losses for preceding taxable years beginning after December 31, 1982, exceed the amount of FOGEI already recharacterized. See § 1.907(c)-1(c). However, taxes that were paid or accrued on the recharacterized FOGEI will remain FOGEI taxes.

(ii) Taxes paid or accrued by a person to a foreign country may be FOGEI taxes even though that person has under U.S. law a net operating loss from sources within that country.

(iii) For purposes of determining whether income is FOGEI, a taxpayer's income will be treated as income from sources outside the United States even though all or a portion of that income may be resourced as income from sources within the United States under section 904(f) (1) and (4).

(5) ***Priority.***

(i) Section 907(a) applies before section 908, relating to reduction of credit for participation in or cooperation with an international boycott.

(ii) Section 901(f) (relating to certain payments with respect to oil and gas not considered as taxes) applies before section 907.

(d) ***Illustrations.*** Paragraphs (a) through (c) of this section are illustrated by the following examples.

Example 1. M, a U.S. corporation, uses the accrual method of accounting and the calendar year as its taxable year. For 1984, M has $20,000 of FOGEI, derived from operations in foreign countries X and Y, and has accrued $11,500 of foreign taxes with respect to FOGEI. The highest tax rate specified in section 11(b) for M's 1984 taxable year is 46 percent. Pursuant to section 907(a), M's FOGEI taxes limitation level for 1984 is $9,200 (46% × $20,000). The foreign taxes in excess of this limitation level ($2,300) may be carried back or forward. See section 907(f) and § 1.907(f)-1 and section 907(e) and § 1.907(e)-1.

Example 2. The facts are the same as in *Example 1* except that M is a partnership owned equally by U.S. citizens A and B who each file as unmarried individuals and do not itemize deductions. Pursuant to section 905(a), A and B have elected to credit foreign taxes in the year accrued. The total amount of foreign taxes accrued by A and B with respect to their distributive shares of M's FOGEI is $11,500 ($5,750 accrued by A and $5,750 accrued by B). A and B have no other FOGEI. A's only taxable income for 1984 is his 50% distributive share ($10,000) of M's FOGEI and A has a preliminary U.S. tax liability of $1,079. B has $112,130 of taxable income for 1984 (including his 50% distributive

share ($10,000) of M's FOGEI) and has a preliminary U.S. tax liability of $44,000. Pursuant to section 907(a), A's FOGEI taxes limitation level for 1984 is $1,079 (($1,079/$10,000) × $10,000) and B's FOGEI taxes limitation level for 1984 is $3,924 (($44,000/$112,130) × $10,000).

(e) ***Effect on other provisions*** —

(1) ***Deduction denied.*** If a credit is claimed under section 901, no deduction under section 164(a)(3) is allowed for the amount of the FOGEI taxes that exceed a taxpayer's limitation level for the taxable year. See section 275(a)(4)(A). Thus, FOGEI taxes disallowed under section 907(a) are not added to the cost or inventory amount of oil or gas.

(2) ***Reduction inapplicable.*** The reduction under section 907(a) does not apply to a taxpayer that deducts foreign taxes and does not claim the benefits of section 901 for a taxable year.

(3) ***Section 78 dividend.*** The reduction under section 907(a) has no effect on the amount of foreign taxes that are treated as dividends under section 78.

(f) ***Section 904 limitation.*** FOGEI taxes as reduced under section 907(a) are creditable only to the extent permitted by the general limitation of section 904(d)(1)(I).

[T.D. 8338, 56 FR 11066, Mar. 15, 1991]

§ 1.907(b)-1 Reduction of creditable FORI taxes (for taxable years beginning after December 31, 1982).

If the foreign law imposing a FORI tax (as defined in § 1.907(c)-3) is either structured in a manner, or operates in a manner, so that the amount of tax imposed on FORI is generally materially greater than the tax imposed by the foreign law on income that is neither FORI nor FOGEI ("described manner"), section 907(b) provides a special rule which limits the amount of FORI taxes paid or accrued by a person to a foreign country which will be considered income, war profits, or excess profits taxes. Section 907(b) will apply to a person regardless of whether that person is a dual capacity taxpayer as defined in § 1.901-2(a)(2)(ii)(A). (In general, a dual capacity taxpayer is a person who pays an amount to a foreign country part of which is attributable to an income tax and the remainder of which is a payment for a specific economic benefit derived from that country.) Foreign law imposing a tax on FORI will be considered either to be structured in or to operate in the described manner only if, under the facts and circumstances, there has been a shifting of tax by the foreign country from a tax on FOGEI to a tax on FORI.

[T.D. 8338, 56 FR 11066, Mar. 15, 1991]

§ 1.907(c)-1 Definitions relating to FOGEI and FORI (for taxable years beginning after December 31, 1982).

(a) ***Scope.*** This section explains the meaning to be given certain terms and items in section 907(c) (1), (2), and (4). See also §§ 1.907(a)-0(b) and 1.907(c)-2 for further definitions.

(b) ***FOGEI*** —

(1) ***General rule.*** Under section 907(c)(1), FOGEI means taxable income (or loss) derived from sources outside the United States and its possessions from the extraction (by the taxpayer or any other person) of minerals from oil or gas wells located outside the United States and its possessions or from the sale or exchange of assets used by the taxpayer in the trade or business of extracting those minerals. Extraction of minerals from oil or gas wells will result in gross income from extraction in

every case in which that person has an economic interest in the minerals in place. For other circumstances in which gross income from extraction may arise, see paragraph (b)(3) of this section. For determination of the amount of gross income from extraction, see paragraph (b)(2) of this section. For definition of the phrase “assets used by the taxpayer in the trade or business” and for rules relating to that type of FOGEI, see paragraph (e)(1) of this section. The term “minerals” is defined in paragraph (f)(1) of this section. For determination of taxable income, see paragraph (f)(2) of this section. FOGEI includes, in addition, items listed in section 907(c)(3) (relating to dividends, interest, partnership distributions, etc.) and explained in § 1.907(c)-2. For the reduction of what would otherwise be FOGEI by losses incurred in a prior year, see section 907(c)(4) and paragraph (c) of this section.

(2) ***Amount.*** The gross income from extraction is determined by reference to the fair market value of the minerals in the immediate vicinity of the well. Fair market value is determined under paragraph (b)(6) of this section.

(3) ***Other circumstances.*** Gross income from extraction or the sale or exchange of assets described in section 907(c)(1)(B) includes income from any arrangement, or a combination of arrangements or transactions, to the extent the income is in substance attributable to the extraction of minerals or such a sale or exchange. For instance, a person may have gross income from such a sale or exchange if the person purchased minerals from a foreign government at a discount and the discount reflects an arm's-length amount in consideration for the government's nationalization of assets that person owned and used in the extraction of minerals.

(4) ***Income directly related to extraction.*** Gross income from extraction includes directly related income under paragraph (g) of this section.

(5) ***Income not included.*** FOGEI as otherwise determined under this paragraph (b), nevertheless, does not include income to the extent attributable to marketing, distributing, processing or transporting minerals or primary products. Income from the purchase and sale of minerals is not ordinarily FOGEI. If the foreign taxes paid or accrued in connection with income from a purchase and sale are not creditable by reason of section 901(f), that income is not FOGEI. A taxpayer to whom section 901(f) applies is not a producer.

(6) ***Fair market value.*** For purposes of this paragraph (b), the fair market value of oil or gas in the immediate vicinity of the well depends on all of the facts and circumstances as they exist relative to a party in any particular case. The facts and circumstances that may be taken into account include, but are not limited to, the following—

(i) The facts and circumstances pertaining to an independent market value (if any) in the immediate vicinity of the well,

(ii) The facts and circumstances pertaining to the relationships between the taxpayer and the foreign government. If an independent fair market value in the immediate vicinity of the well cannot be determined but fair market value at the port, or a similar point, in the foreign country can be determined (port price), an analysis of the arrangement between the taxpayer and the foreign government that retains a share of production could be evidence of the appropriate, arm's-length difference between the port price and the field price, and

(iii) The other facts and circumstances pertaining to any difference in the producing country between the field and port prices.

(7) ***Economic interest.*** For purposes of this paragraph (b), the term "economic interest" means an economic interest as defined in § 1.611-1(b)(1), whether or not a deduction for depletion is allowable under section 611.

(c) ***Carryover of foreign oil extraction losses*** —

(1) ***In general.*** Pursuant to section 907(c)(4), the determination of FOGEI for a particular taxable year takes into account a foreign oil extraction loss incurred in prior taxable years beginning after December 31, 1982. There is no time limitation on this carryover of foreign oil extraction losses. Section 907(c)(4) does not provide for any carryback of these losses. Section 907(c)(4) operates solely for purposes of determining FOGEI and thus operates independently of section 904(f).

(2) ***Reduction.*** That portion of the income of the taxpayer for the taxable year which but for this paragraph (c) would be treated as FOGEI is reduced (but not below zero) by the excess of—

(i) The aggregate amount of foreign oil extraction losses for preceding taxable years beginning after December 31, 1982, over

(ii) The aggregate amount of reductions under this paragraph (c) for preceding taxable years beginning after December 31, 1982.

(3) ***Foreign oil extraction loss defined*** —

(i) ***In general.*** For purposes of this paragraph (c), the term "foreign oil extraction loss" means the amount by which the gross income for the taxable year that is taken into account in determining FOGEI for that year is exceeded by the sum of the deductions properly allocated and apportioned to that gross income as determined under paragraph (f)(2) of this section). A person can have a foreign oil extraction loss for a taxable year even if the person has not chosen the benefits of section 901 for that year.

(ii) ***Items not taken into account.*** For purposes of paragraph (c)(3)(i) of this section, the following items are not taken into account—

(A) The net operating loss deduction allowable for the taxable year under section 172(a),

(B) Any foreign expropriation loss (as defined in section 172(h)) for the taxable year, and

(C) Any loss for the taxable year which arises from fire, storm, shipwreck, or other casualty, or from theft.

A loss mentioned in paragraph (c)(3)(ii) (B) or (C) of this section is taken into account, however, to the extent compensation (for instance by insurance) for the loss is included in gross income.

(4) ***Affiliated groups.*** The foreign oil extraction loss of an affiliated group of corporations (within the meaning of section 1504(a)) that files a consolidated return is determined on a group basis. If the group does not have a foreign oil extraction loss, the foreign oil extraction loss of a member of that group will not reduce on a separate basis that member's FOGEI for a later taxable year. For special rules affecting the foreign oil extraction loss in the case of certain related domestic corporations that are not members of the same affiliated group, see section 904(i).

(5) ***FOGEI taxes.*** If FOGEI is reduced pursuant to this paragraph (c) (and thereby recharacterized as non-FOGEI income), any foreign taxes imposed on the FOGEI that is recharacterized as other income retain their character as FOGEI taxes. See section 907(c)(5).

(6) ***Examples.*** The provisions of this paragraph (c) may be illustrated by the following examples.

Example 1. (i) *Facts.* X, a U.S. corporation using the accrual method of accounting and the calendar year as its taxable year, is engaged in extraction activities in three foreign countries. X has only the following combined foreign tax items for the three countries (prior to the application of this paragraph (c)) for 1983, 1984, and 1985:

	1983	1984	1985
FOGEI	$(700)	$100	$450
FOGEI taxes	10	60	200
Net operating loss deduction	(200)	0	0
Foreign oil extraction loss allowable after adjustment for paragraph (c)(3)(ii) amounts	(500)	0	0
General limitation taxes other than FOGEI taxes	30	90	230

(ii) *1983.* Because X's FOGEI for 1983 is a loss of $(700), X's section 907(a) limitation for 1983 is $0 (.46 × $0). Thus, none of the FOGEI taxes paid or accrued in 1983 ($10) can be credited in 1983. They can, however, be carried back to 1981 or 1982 pursuant to the provisions of section 907(e)(2) and § 1.907(e)-1 and carried forward pursuant to the provisions of section 907(f) and § 1.907(f)-1.
(iii) *1984.* X's FOGEI for 1984, prior to the application of this paragraph (c), is $100. X has a foreign oil extraction loss for 1983 of $(500). This loss must be applied against X's preliminary FOGEI of $100 for 1984. Thus, X's FOGEI for 1984 is $0 and X has $(400) ($500−$100) of foreign oil extraction loss from 1983 to be carried to 1985. Since X's FOGEI for 1984 is $0, its section 907(a) limitation is $0 (.46 × $0). Therefore, none of the FOGEI taxes paid or accrued in 1984 ($60) can be credited in 1984. They can, however, be carried back pursuant to the provisions of section 907(e)(2) and § 1.907(e)-1 and carried forward pursuant to the provisions of section 907(f) and § 1.907(f)-1.

(iv) *1985.* X's FOGEI for 1985, prior to the application of this paragraph (c), is $450. X's remaining foreign oil extraction loss carryover from 1983 is $(400) and this must be applied against X's preliminary FOGEI of $450 for 1985. Thus, X's FOGEI for 1984 is $50 ($450−$400). X's section 907 (a) limitation is $23 (.46 × $50). Therefore, $23 of the FOGEI taxes paid or accrued in 1985, together with the other $230 of general limitation taxes, can be credited in 1985, subject to the general limitation of section 904(d)(1)(E) (as in effect prior to 1987). The excess of FOGEI taxes, $177 ($200−$23), can be carried back pursuant to the provisions of section 907(e)(2) and § 1.907(e)-1 and carried forward pursuant to the provisions of section 907(f) and § 1.907(f)-1.

Example 2. (i) *Facts.* The facts are the same as in *Example 1* except that X's paragraph

(c)(3)(ii) items for 1983 allocable to FOGEI are $(800) instead of $(200). FOGEI remains a loss of $(700). Thus, X does not have a foreign oil extraction loss for 1983 because it has $100 of FOGEI when its paragraph (c)(3)(ii) items are not taken into account ($(700) + $800).
(ii) *1983.* The results are the same as in Example 1.

(iii) *1984.* Although X had FOGEI loss of $(700) in 1983, there is not a loss that can be carried forward after adjustment for paragraph (c)(3)(ii) items. Thus, X's FOGEI for 1984 is not reduced by the 1983 loss. X's section 907(a) limitation for 1984 is $46 (.46 × $100). Therefore, $46 of the FOGEI taxes paid or accrued in 1984, together with the other $90 of general limitation taxes, can be credited in 1984, subject to the general limitation of section 904(d)(1)(E) (as in effect prior to 1987). The excess of $14 ($60−$46) can be carried back to 1982 pursuant to the provisions of section 907(e)(2) and § 1.907(e)-1 and carried forward pursuant to the provisions of section 907(f) and § 1.907(f)-1.

(iv) *1985.* Since there is no foreign oil extraction loss for either 1983 or 1984 to be applied in 1985, X's FOGEI for 1985 is $450. Thus, its section 907(a) limitation for 1985 is $207 (.46 × $450) and all of its FOGEI taxes paid or accrued in 1985 ($200), together with the other $230 of general limitation taxes, can be credited in 1985, subject to the general limitation of section 904(d)(1)(E) (as in effect prior to 1987). FOGEI taxes in the amount of $10 from 1983 and $14 from 1984 may be carried forward to 1985 if they have not been used in carryback years. However, because the excess section 907(a) limitation for 1985 is only $7, that is the maximum potential FOGEI taxes from 1983 or 1984 that may be used in 1985.

Example 3. (i) *Facts.* Y, a U.S. corporation using the accrual method of accounting and the calendar year as its taxable year, is engaged in extraction activities in three foreign countries. Y's only foreign taxable income is income subject to the general limitation of section 904(d)(1)(E) (as in effect prior to 1987). Y has no paragraph (c)(3)(ii) items. Y has the following foreign tax items for 1983 and 1984:

	1983	1984
FOGEI	$(400)	$300
Other foreign taxable income	250	200
U.S. taxable income	1,000	1,100
Worldwide taxable income	850	1,600
FOGEI taxes	10	180
Other general limitation taxes	50	40
Foreign oil extraction loss	(400)	0

(ii) *1983*—(A) *Section 907(a) limitation.* Because Y's FOGEI for 1983 is a loss of $(400), Y's

section 907(a) limitation for 1983 is $0. Thus, none of the FOGEI taxes paid or accrued in 1983 ($10) can be credited in 1983. They can, however, be carried back to 1981 or 1982 pursuant to the provisions of section 907(e)(2) and § 1.907(e)-1 and carried forward pursuant to the provisions of section 907(f) and § 1.907(f)-1.
(B) *Section 904(d) fraction.* Y has a foreign loss of $(150) ($(400 + $250) for 1983. Thus, its fraction for purposes of determining its general limitation of section 904(d)(1)(E) is $0/$850.

(iii) *1984*—(A) *Section 907(a) limitation.* Y's foreign oil extraction loss for 1983 is $(400). Applying this loss to its preliminary FOGEI for 1984 ($300) eliminates all of Y's FOGEI for 1984. Because Y's FOGEI for 1984 is $0, its section 907(a) limitation is also $0. Thus, none of the FOGEI taxes paid or accrued in 1984 ($180) can be credited in 1984. They can, however, be carried back to 1982 pursuant to the provisions of section 907(e)(2) and § 1.907(e)-1 and carried forward pursuant to the provisions of section 907(f) and § 1.907(f)-1. Y has a remaining foreign oil extraction loss of $(100) from 1983 to be carried to 1985.

(B) *Section 904(d) fraction.* Y's preliminary foreign taxable income for purposes of determining its general limitation of section 904(d)(1)(E) is $500 ($300 + $200). However, Y has an overall foreign loss from 1983 of $(150) ($(400) + $250) and thus, pursuant to section 904(f), Y must recharacterize $150 (lesser of $150 or 50% of $500) of its 1984 foreign taxable income as U.S. taxable income. Thus, Y's fraction for purposes of determining its general limitation of section 904(d)(1)(E) for 1984 is $350/$1,600.

Example 4. (i) *Facts.* Assume the same facts as in *Example 3* except that Y has the following foreign tax items:

	1983	1984	1985
FOGEI		$(100)	$225
Other foreign source taxable income subject to the general limitation of section 904(d)(1)(E)	$(50)		
U.S. source taxable income	50		
Worldwide taxable income		(100)	225
FOGEI taxes		10	125
Foreign oil extraction loss		(100)	

(ii) *1983.* For 1983, Y has a section 904(d)(1)(E) overall foreign loss account of $50; see section 904(f) and § 1.904(f)-1(b).

(iii) *1984.* Because Y's FOGEI for 1984 is a loss of $(100), Y's section 907(a) limitation for 1984 is $0. Thus, none of the FOGEI taxes paid or accrued in 1984 ($10) can be credited in 1984. They can, however, be carried back under the provisions of section 907(e)(2) and § 1.907(e)-1 and carried forward under the provisions of section 907(f) and § 1.907(f)-1.

(iv) *1985.* Y's FOGEI loss of $(100) for 1984 is carried forward to 1985 and offsets FOGEI income in that amount in 1985. The entire section 904(d)(1)(E) overall foreign loss account of $50 is recaptured in 1985; therefore, Y has $75 of foreign source income and $50 of U.S. source income. However, Y has $125 of FOGEI since, for purposes of section 907(a), the $50 resourced by section 904(f) will be treated as income from sources outside the United States; see § 1.907(a)-1(c)(4)(iii). Accordingly, Y's section 907(a) limitation is $57.50 (.46 × $125). Y's section 904(d)(1)(E) limitation is, however, only $34.50 (.46 × $75). Thus, Y may claim a foreign tax credit of $34.50 in 1985. Y may carry back or carry forward $23 ($57.50-$34.50) and that amount is not subject to the section 907(a) limitation in the carry to year. In addition, $67.50 ($125−$57.50) may be carried back pursuant to the provisions of section 907(e)(2) and § 1.907(e)-1 and carried forward pursuant to the provisions of section 907(f) and § 1.907(f)-1. This amount is subject to the section 907(a) limitation in the carry to year.

(d) ***FORI*** —

(1) ***In general.*** Section 907(c)(2) defines FORI to include taxable income from the processing of oil and gas into their primary products, from the transportation or distribution and sale of oil and gas and their primary products, from the disposition of assets used in these activities and from the performance of any other related service. FORI may also include, under section 907(c)(3), certain dividends, interest, or amounts described in section 951(a). This paragraph (d) defines certain terms and items applicable to FORI.

(2) ***Transportation.*** Gross income from transportation of minerals or primary products ("gross transportation income") is gross income arising from carrying minerals or primary products between two places (including time or voyage charter hires) by any means of transportation, such as a vessel, pipeline, truck, railroad, or aircraft. Except for directly related income under paragraphs (d)(7) and (g) of this section, gross transportation income does not include gross income received by a lessor from a bareboat charter hire of a means of transportation, certain other rental income, or income from the performance of certain services.

(3) ***Distribution or sale.*** The term "distribution or sale" means the sale or exchange of minerals or primary products to processors, users who purchase, store, or use in bulk quantities, other persons for further distribution, retailers, or consumers. Gross income from distribution or sale includes interest income attributable to the distribution of minerals or primary products on credit.

(4) ***Processing.*** The term "processing" means the destructive distillation, or a process similar in effect to destructive distillation, of crude oil and the processing of natural gas into their primary products including processes used to remove pollutants from crude oil or natural gas.

(5) ***Primary product from oil.*** The term "primary product" (in the case of oil) means all products derived from the processing of crude oil, including volatile products, light oils (such as motor fuel and kerosene), distillates (such as naphtha), lubricating oils, greases and waxes, and residues (such as fuel oil).

(6) ***Primary product from gas.*** The term "primary product" (in the case of gas) means all gas and associated hydrocarbon components from gas wells or oil wells, whether recovered at the lease or upon further processing, including natural gas, condensates, liquefiable petroleum gases (such as ethane, propane, and butane), and liquid products (such as natural gasoline).

(7) ***Directly related income.*** FORI also includes directly related income under paragraph (g) of this section.

(e) ***Assets used in a trade or business*** —

(1) ***In general.*** The term "assets used by the taxpayer in the trade or business" in section 907(c) (1)(B) and (2)(D) means property primarily used in one or more of the trades or businesses that are section 907(c) activities. For purposes of this paragraph (e), assets used in a trade or business are assets described in section 1231(b) (applied without regard to any holding period or the character of the asset as being subject to the allowance for depreciation under section 167).

(2) ***Section 907(c) activities.*** Section 907(c) activities are those described in section 907(c)(1)(A) (for FOGEI) or (c)(2) (A) through (C) (for FORI). If an asset is used primarily in one or more section 907(c) activities, then the entire gain (or loss) will be considered attributable to those activities. For example, if a person uses a service station primarily to distribute primary products from oil, then all of the gain (or loss) on the sale of the station is FORI even though the person uses the station to distribute products that are not primary products (such as tires or batteries). If an asset is not primarily used in one or more section 907(c) activities, then the entire gain or loss will not be FOGEI or FORI.

(3) ***Stock.*** Stock of any corporation (whether foreign or domestic) will not be treated as an asset used by a person in section 907(c) activities.

(4) ***Losses on sale of stock.*** If, under § 1.861-8(e)(7), a loss on the sale, exchange, or disposition of stock is considered a deduction which is definitely related and allocable to FOGEI or FORI, then notwithstanding § 1.861-8 (e)(7) and paragraph (f)(2) of this section, this loss shall be allocated and apportioned to the same class of income that would have been produced if there were capital gain from the sale, exchange or disposition.

(5) ***Character of gain or loss.*** Except in the case of stock, gain or loss from the sale, exchange or disposition of assets used in the trade or business may be FORI or FOGEI to the extent taken into account in computing taxable income for the taxable year, whether or not the gain or loss is ordinary income or ordinary loss.

(6) ***Allocation of amount realized.*** The amount realized from the sale, exchange or disposition of several assets in one transaction is allocated among them in proportion to their respective fair market values. This allocation is made under the principles set forth in § 1.1245-1(a)(5) (relating to allocation between section 1245 property and non-section 1245 property).

(7) ***Interest.*** Gross income from the sale, exchange or disposition of an asset used in a section 907(c) activity includes interest income from such a sale, exchange or disposition.

(f) ***Terms and items common to FORI and FOGEI*** —

(1) ***Minerals.*** The term "minerals" means hydrocarbon minerals extracted from oil and gas wells, including crude oil or natural gas (as defined in section 613A(e)). The term includes incidental impurities from these wells, such as sulphur, nitrogen, or helium. The term does not include hydrocarbon minerals derived from shale oil or tar sands.

(2) ***Taxable income.*** Deductions to be taken into account in computing taxable income or net operating loss attributable to FOGEI or FORI are determined under the principles of § 1.861-8. For an exception with regard to losses, see paragraph (e)(4) of this section.

(3) ***Interest on working capital.*** FORI and FOGEI may include interest on bank deposits or on any other temporary investment which is not in excess of funds reasonably necessary to meet the working capital requirements and the specifically anticipated business needs of the person that is engaged in the conduct of the activities described in section 907(c) (1) or (2).

(4) ***Exchange gain or loss.*** Exchange gain (and loss) may be FORI and FOGEI. For taxable years beginning after 1986, exchange gain or loss from a section 988 transaction may be FORI or FOGEI only if directly related to the business needs (under the principles of section 954(c)(1)(D)) attributable to the conduct of the section 907(c) activity.

(5) ***Allocation.*** Interest income and exchange gain (or loss) described, respectively, in paragraph (f) (3) and (4) of this section are allocated among FORI, FOGEI, and any other class of income relevant for purposes of the foreign tax credit limitations under any reasonable method which is consistently applied from year-to-year.

(6) ***Facts and circumstances.*** Income not described elsewhere in this section may be FOGEI or FORI if, under the facts and circumstances in the particular case, the income is in substance directly attributable to the activities described in section 907(c) (1) or (2). For example, assume that a producer in the North Sea suffers a casualty caused by an explosion, fire, and resulting destruction of a drilling platform. Insurance proceeds received for the platform's destruction in excess of the producer's basis is extraction income if the excess constitutes income from sources outside the United States. In addition, income from an insurance policy for business interruption may be extraction income to the extent the payments under the policy are geared directly to the loss of income from production and are treated as income from sources outside the United States. Also, if an oil company's oil concession or assets used in extraction activities described in section 907(c)(1)(A) and located outside the United States are nationalized or expropriated by a foreign government, or instrumentality thereof, income derived from that nationalization or expropriation (including interest on the income paid pursuant to the nationalization or expropriation) is FOGEI. Likewise, if a company's assets used in the activities described in section 907(c)(2) (A) through (C) and located outside the United States are nationalized or expropriated by a foreign government, or instrumentality thereof, income (including interest on the income paid pursuant to the nationalization or expropriation) derived from the nationalization or expropriation will be FORI. Nationalization or expropriation is deemed to be a sale or exchange for purposes of section 907(c)(1)(B) and a disposition for purposes of section 907(c)(2)(D). In further example, assume that an oil company has an exclusive right to buy all the oil in country X from Y, an instrumentality of the foreign sovereign which owns all of the oil in X. The oil company does not have an economic interest in any oil in country X. Y has a temporary cash-flow problem and demands that the oil company make advance deposits for the purchase of oil not yet delivered. In return, Y grants the oil company a discount on the price of the oil when delivered. Income represented by the discount on the later

disposition of the oil is FORI described in section 907(c)(2)(C). The result would be the same if Y credited the oil company with interest on the advance deposits, which had to be used to purchase oil (the interest income would be FORI).

(g) ***Directly related income*** —

(1) ***In general.*** Section 907(c)(2)(E) and this paragraph (g) include in FORI, and this paragraph (g) includes in FOGEI, income from the performance of directly related services (as defined in paragraph (g)(2) of this section). This paragraph (g) also includes in FORI and FOGEI income from the lease or license of related property (as defined in paragraph (g)(3) of this section). Section 907(c)(2)(E) with regard to FORI and this paragraph (g) with regard to both FORI and FOGEI do not apply to a person if—

(i) Neither that person nor a related person (as defined in paragraph (g)(4) of this section) has FOGEI described in paragraph (b) of this section (other than paragraph (b)(4) of this section relating to directly related income) or FORI described in paragraph (d) of this section (other than paragraph (d)(7) of this section relating to directly related income), or

(ii) Less than 50 percent of that person's gross income from sources outside the United States which is related exclusively to the performance of services and from the lease or license of property described in paragraph (g) (2) and (3) of this section, respectively, is attributable to services performed for (or on behalf of), leases to, or licenses with, related persons, but

(iii) Paragraph (g)(1)(ii) of this section will not apply to a person if 50 percent or more of that person's total gross income from sources outside the United States is FOGEI and FORI (as both are described in paragraph (g)(1)(i) of this section).

A person described in paragraph (g)(1) (i) or (ii) of this section will, however, have directly related services income which is FOGEI if the income is so classified by reason of the income based on output test set forth in paragraph (g)(2)(i)(B) of this section.

(2) ***Directly related services*** —

(i) ***FOGEI.***

(A) Income from directly related services will be FOGEI, as that term is defined in paragraph (b)(1) and (3) of this section, if those services are directly related to the active conduct of extraction (including exploration) of minerals from oil and gas wells. Paragraph (b)(1) of this section provides that, in order to have extraction income, a person must have an economic interest in the minerals in place. However, paragraph (b)(3) of this section recognizes that income arising from “other circumstances” is extraction income if that income is in substance attributable to the extraction of minerals.

(B) An example of “other circumstances” under paragraph (b)(3) of this section is the “income based on output test.” This income based on output test provides that, if the amount of compensation paid or credited to a person for services is dependent on the amount of minerals discovered or extracted, the income of the person from the performance of the services will be directly related services income which is FOGEI. This test will apply whether or not the person performing the services has, or had, an economic interest in the minerals discovered or extracted.

(ii) ***FORI.*** With regard to the determination of directly related services income which is FORI, directly related services are those services directly related to the active conduct of the operations described in section 907(c)(2)

(A) through (C) . Those services include, for example, services performed in relation to the distribution of minerals or primary products or in connection with the operation of a refinery, or the types of services described in § 1.954-6(d) (other than § 1.954-6(d)(4) which relate to foreign base company shipping income.

(iii) ***Recipient of the services.*** Directly related services described in paragraph (g)(2) (i) and (ii) of this section may be performed for any person without regard to whether that person is a related person.

(iv) ***Excluded services*** —

(A) ***FOGEI.*** Directly related services which produce FOGEI do not include insurance, accounting or managerial services.

(B) ***FORI.*** Directly related services which produce FORI do not, generally, include insurance, accounting or managerial services. These services will, however, produce FORI if they are performed by the person performing the operations described in section 907(c)(2) (A) through (C). For these purposes, insurance income which is FORI means taxable income as defined in section 832(a).

(3) ***Leases and licenses.*** A lease or license of related property is the lease or license of assets used (or held for use) by the lessor, licensor, or another person (including the lessee or a sublessee) in the active conduct of the activities described in section 907 (c)(1)(A) or (c)(2) (A) through (C). The leases or licenses described in this paragraph (g)(3) include, for example, a lease of a means of transportation under a bareboat charter hire, of drilling equipment used in extraction operations, or the license of a patent, know-how, or similar intangible property used in extracting, transporting, distributing or processing minerals or primary products. This paragraph (g)(3) applies without regard to whether the parties are related persons.

(4) ***Related person.*** A person will be treated as a related person for purposes of this paragraph (g) if that person would be so treated within the meaning of section 954(d)(3) (as applied by substituting the word “corporation” for the word “controlled foreign corporation”) or that person is a partnership or partner described in section 707(b)(1).

(5) ***Gross income.*** A foreign corporation shall be treated as a domestic corporation for the purpose of applying the gross-income rules in paragraph (g)(1) (ii) and (iii) of this section.

(h) ***Coordination with other provisions*** —

(1) ***Certain adjustments.*** The character of income as FOGEI or FORI is determined before making any adjustment under section 482 or section 907(d). For example, assume that X and Y are related parties, Y's only income is from the sale of oil that Y purchased from X, and FOGEI from X is diverted to Y through an arrangement described in paragraph (b)(3) of this section. Accordingly, Y has FOGEI. If under section 482 the Commissioner reallocates the FOGEI from Y to X, then Y's remaining income represents only a profit from distributing the oil, and thus is FORI. If the foreign taxes paid by Y on this income are otherwise creditable under section 901, the foreign taxes that are not refunded to Y retain their characterization as FOGEI taxes.

(2) ***Section 901(f).*** Section 901(f) (relating to certain payments with respect to oil and gas not considered as taxes) applies before section 907. Taxes disallowed by section 901(f) are added to the cost or inventory amount of oil or gas.

[T.D. 8338, 56 FR 11067, Mar. 15, 1991]

§ 1.907(c)-2 Section 907(c)(3) items (for taxable years beginning after December 31, 1982).

(a) ***Scope.*** This section provides rules relating to certain items listed in section 907(c)(3). The rules of this section are expressed in terms of FORI but apply for determining FOGEI by substituting "FOGEI" for "FORI" whenever appropriate. FOGEI does not include interest described in section 907(c)(3)(A). Dividends paid prior to January 1, 1987, and described in section 907(c)(3)(B), as in effect prior to amendment by the Technical and Miscellaneous Revenue Act of 1988, are included in FORI and not FOGEI.

(b) ***Dividend*** —

(1) ***Section 1248 dividend.*** A section 1248 dividend is a dividend described in section 907(c)(3)(A). Except as otherwise provided in this paragraph (b)(1), gain (or loss) from the disposition of stock in any corporation is not FOGEI or FORI. See § 1.907(c)-1(e) (3) and (4).

(2) ***Section 78 dividend.*** A section 78 dividend is FORI to the extent it arises from a dividend described in section 907(c)(3)(A), or an amount described in section 907(c)(3)(C).

(c) ***Taxes deemed paid*** —

(1) ***Voting stock test.*** Items described in section 907(c)(3) (A) or (C) are FORI only if a deemed-paid-tax test is met under the criteria of section 902 or 960. The purpose of this test is to require minimum direct or indirect ownership by a domestic corporation in the voting stock of a foreign corporation as a prerequisite for the item to qualify as FORI in the hands of the domestic corporation. The test is whether a domestic corporation would be deemed to pay any taxes of a foreign corporation when a dividend or an amount described in section 907(c)(3) (A) or (C), respectively, is included in the domestic corporation's gross income. In the case of interest described in section 907(c)(3)(A), the test is whether any taxes would be deemed paid if there were a hypothetical dividend.

(2) ***Dividends and interest.*** For purposes of section 907(c)(3)(A), a domestic corporation is deemed under section 902 to pay taxes in respect of dividends and interest received from a foreign corporation whether or not the foreign corporation:

(i) Actually pays or is deemed to pay taxes, or

(ii) In the case of interest, actually pays dividends.

This paragraph (c)(2) also applies to dividends received by a foreign corporation from a second-tier or third-tier foreign corporation (as defined in § 1.902-1(a)(3)(i) and (4), respectively). In the case of interest received by a foreign corporation from another foreign corporation, this paragraph (c)(2) applies if the taxes of both foreign corporations would be deemed paid under section 902 (a) or (b) for purposes of applying section 902(a) to the same taxpayer which is a domestic corporation. In the case of interest received by any corporation (whether foreign or domestic), all members of an affiliated group filing a consolidated return will be treated as the same taxpayer under section 907(c)(3)(A) if the foreign taxes of the payor and (if the recipient is a foreign corporation) the foreign taxes of the recipient would be deemed paid under section 902 by at least one member. The term "member" is defined in § 1.1502-1(b). Thus, for example, assume that P owns all of the stock of D1

and D2 and P. D1, and D2 are members of an affiliated group filing a consolidated return. Assume further that D1 owns all of the stock of F1 and D2 owns all of the stock of F2, where F1 and F2 are foreign corporations. Interest paid by F1 to P, D2, or F2 may be FORI.

(3) ***Amounts included under section 951(a).*** For purposes of section 907(c)(3)(C), a domestic corporation is deemed under section 960 to pay taxes in respect of a foreign corporation, whether or not the foreign corporation actually pays taxes on the amounts included in gross income under section 951(a).

(d) ***Amount attributable to certain items*** —

(1) ***Certain dividends*** —

(i) ***General rule.*** The portion of a dividend described in section 907(c)(3)(A) that is FORI equals—

Amount of dividend × a/b

a = FORI accumulated profits in excess of FORI taxes paid or accrued, and

b = Total accumulated profits in excess of total foreign taxes paid or accrued.

This paragraph (d)(1)(i) applies even though the FORI accumulated profits arose in a taxable year of a foreign corporation beginning before January 1, 1983. Determination of the FORI amount of dividends under this paragraph (d)(1)(i) must be made separately for FORI accumulated profits and total accumulated profits that arose in taxable years beginning before January 1, 1987, and for FORI accumulated profits and total accumulated profits that arose in taxable years beginning after December 31, 1986. Dividends are deemed to be paid first out of FORI and total accumulated profits that arose in table years beginning after December 31, 1986. With regard to FORI accumulated profits and total accumulated profits that arose in taxable years beginning after December 31, 1986, the portion of a dividend that is FORI equals—

Amount of dividend × a/b

a = Post-1986 undistributed FORI earnings determined under the principles of section 902(c)(1), and

b = Post-1986 undistributed earnings determined under the principles of section 902(c)(1).

(ii) ***Cross-references.*** See § 1.902-1(g) for the determination of a foreign corporation's earnings and profits and of those out of which a dividend is paid. See § 1.1248-2 or 1.1248-3 for the determination of the earnings and profits attributable to the sale or exchange of stock in certain foreign corporations.

(2) ***Interest received from certain foreign corporations.*** Interest described in section 907(c)(3)(A) is FORI to the extent the corresponding interest expense of the paying corporation is properly allocable and apportionable to the gross income of the paying corporation that would be FORI were that corporation a domestic corporation. This allocation and apportionment is made in a manner consistent with the rules of section 954(b)(5) and § 1.861-8(e)(2).

(3) ***Dividends from domestic corporation.*** The amount of a dividend from a corporation described in section 907(c)(3)(B), as in effect prior to amendment by the Technical and Miscellaneous Revenue Act of 1988, paid in a taxable year of that corporation beginning before December 31, 1986, that is

FORI is determined under the principles of paragraph (d)(1)(i) of this section with respect to its current earnings and profits under section 316(a)(2) or its accumulated earnings and profits under section 316(a)(1), as the case may be.

(4) ***Amounts with respect to which taxes are deemed paid under section 906(a)*** —

(i) ***Portion attributable to FORI.*** The portion of an amount described in section 907(c)(3)(C) that is FORI equals:

$$A \times \frac{B}{C}$$

A = Amount described in section 907(c)(3)(C)

B = FORI earnings and profits

C = Total earnings and profits

For taxable years ending after January 23, 1989, the facts and circumstances will be used to determined what part of the amount of the section 907(c)(3)(C) amount is directly attributable to FOGEI, FORI and other income.

(ii) ***Earnings and profits.*** Total earnings and profits are those of the foreign corporation for a taxable year under section 964 and the regulations under that section.

(5) ***Section 78 dividend.*** The portion of a section 78 dividend that will be considered FORI will equal the amount of taxes deemed paid under either section 902(a) or section 960(a)(1) with respect to the dividend to the extent the taxes deemed paid are FORI taxes under § 1.907(c)-3 (b) or (c). See § 1.907(c)-3(a)(1).

(6) ***Special rule.***

(i) No item in the formula described in paragraph (d)(1)(i) of this section includes amounts excluded from the gross income of a United States shareholder under section 959(a)(1).

(ii) With respect to a foreign corporation, earnings and profits in the formula described in paragraph (d)(4)(i) of this section do not include amounts excluded under section 959(b) from its gross income.

(7) ***Deficits*** —

(i) ***Allocation of deficits within a separate category.*** In a taxable year in which a foreign corporation described in section 907(c)(3)(A) pays a dividend or has income that is subject to inclusion under section 951, if the foreign corporation has positive post—1986 undistributed earnings in a separate category but within that separate category there is a deficit in post-1986 undistributed earnings attributable to earnings other than FOGEI and FORI, that deficit shall be allocated ratably between the FOGEI and FORI post-1986 undistributed earnings within that separate category. Any deficit in post-1986 undistributed earnings attributable to either FOGEI or FORI shall be allocated first to FOGEI or FORI post-1986 undistributed earnings (as the case may be) to the extent thereof. Post-1986 undistributed FORI earnings are the post-1986 undistributed earnings (as defined in section 902 and the regulations under that section)

attributable to FORI as defined in section 907(c) (2) and (3). Post-1986 undistributed FOGEI earnings are the post-1986 undistributed earnings (as defined in section 902 and the regulations under that section) attributable to FOGEI as defined in section 907(c) (1) and (3).

Example. Foreign corporation X for years 1987 and 1988 had the following undistributed earnings (none of which is income that is subject to inclusion under section 951) and foreign taxes:

	Earnings	Taxes
FOGEI	$800	$400
FORI	(750)	
Other	700	250
Total	$750	$650

On December 31, 1988, X paid a dividend of all of its post-1986 undistributed earnings to its sole shareholder Y. Under paragraph (d)(5) and (7)(i) of this section and § 1.907 (c)-2 (d)(5), $450 of Y's dividend is attributable to FOGEI ($50 from undistributed earnings plus a $400 section 78 dividend) and $950 is attributable to other earnings ($700 from undistributed earnings plus a $250 section 78 dividend).

(ii) ***Deficits allocated among separate categories.*** If a deficit in a separate category ("first separate category") is allocated to another separate category ("second separate category") under sections 902 and 960 pursuant to notice 88-71, 1988-2 CB 374 and the regulations under those sections, the following rules shall apply. Any deficit in post-1986 undistributed earnings attributable to either FOGEI (or FORI) from the first separate category shall be allocated to post-1986 undistributed earnings in the second separate category to the extent thereof in the following order:

(A) FOGEI (or FORI),

(B) FORI (or FOGEI), and

(C) Other income.

Any deficit in post-1986 undistributed earnings attributable to other income from the first separate category shall be allocated first to other post-1986 undistributed earnings and then ratably to FOGEI and FORI post—1986 undistributed earnings in the second separate category.

(iii) ***Pre-1987 deficits.*** The amount of a dividend paid by a foreign corporation described in section 907(c)(3)(A) out of positive pre-1987 earnings that is attributable to FOGEI and FORI shall be determined in a manner similar to that used in paragraph (d)(7) (i) and (ii) of this section except that the determinations shall be made on an annual basis.

(8) ***Illustrations.*** The application of this paragraph (d) is illustrated by the following examples.

Example 1. X, a domestic corporation, owns all of the stock of Y, a foreign corporation organized in country S. Y owns all of the stock of Z, a foreign corporation also organized in country S. Each corporation uses the calendar year as its taxable year. In 1983, Z has $150 of FOGEI earnings and profits and $250 of earnings and profits other than FOGEI or FORI. Assume that Z paid no taxes to S and X must include $100 in its gross income under section 951(a) with respect to Z. Under paragraph (d)(4)(i) of this section, $37.50 of the amount described in section 951(a) is FOGEI ($100 × $150/$400). the remaining $62.50 of the section 951(a) amount represents other income.

Example 2. Assume the same facts as in Example 1 except that the taxable year in question is 1988. In addition, under the facts and circumstances, it is determined that of the $100 section 951(a) amount included in X's gross income, $30 is directly attributable to Z's FOGEI activity, $60 is directly attributable to Z's FORI activity and $10 is directly attributable to Z's other activity. Accordingly, under paragraph (d)(4)(i), $30 will be FOGEI and $60 will be FORI to X.

Example 3. (i) Assume the same facts as in *Example 1.* Assume further that, in 1983, Z distributes its entire earnings and profits ($400) to Y which consists of a dividend of $300 and a section 959(a)(1) distribution of $100. Y has no other earnings and profits during 1983. Assume that the dividend and distribution are not foreign personal holding company income under section 954(c). Y pays no taxes to S. In 1983, Y distributes its entire earnings and profits to X.

(ii) Under paragraphs (c)(2) and (d)(1)(i) of this section, Y has FOGEI of $112.50, *i.e.,* the amount of the dividend received by Y ($300) multiplied by the fraction described in paragraph (d)(1)(i). The numerator of the fraction is Z's FOGEI accumulated profits in excess of the FOGEI taxes paid ($112.50) and the denominator is Z's total accumulated profits in excess of total foreign taxes paid ($400) minus the amount excluded from Y's gross income under section 959(a)(1) ($100). The rule of paragraph (d)(6)(ii) of this section does not apply since X does not include any amount in its gross income under section 951(a) with respect to Y. If Y paid taxes to S, this paragraph (d) would apply to characterize those taxes as FOGEI taxes or other taxes. See § 1.907(c)-3(a)(8) and Example 2 (iii) under § 1.907(c)-3(e).

(iii) The distribution from Y to X is a dividend to the extent of $300, *i.e.,* the amount of the distribution ($400) minus the amount excluded from X's gross income under section 959(a)(1) ($100). Under paragraphs (d) (1)(i) and (6)(i) of this section, $112.50 of the dividend is FOGEI, *i.e.,* the amount of the dividend ($300) multiplied by a fraction. The numerator of the fraction is $112.50, *i.e.,* the FOGEI accumulated profits of Y in excess of FOGEI taxes paid ($150) minus the FOGEI accumulated profits of Y in excess of FOGEI taxes paid excluded from X's gross income under section 959(a)(1) ($37.50). The denominator of the fraction is $300, *i.e.,* the total accumulated profits of Y in excess of taxes paid ($400) minus the amount excluded from X's gross income under section 959(a)(1) ($100).

Example 4. Assume the same facts as in Example 1 with the following modifications: In 1983, Z's only earnings and profits are FORI earnings and profits which are included in X's gross income under section 951(a). Z distributes its entire earnings and profits to Y. In 1983, Y has total earnings and profits of $100 without regard to the dividend from Z, $60 of which are FORI earnings and profits. Y

also has $40 which is included in X's gross income under section 951(a). Under paragraph (d)(6)(ii) of this section, the dividend from Z is disregarded for purposes of applying paragraph (d)(4)(i) of this section to the $40 included in X's gross income under section 951(a) with respect to Y. Accordingly, $24 of the amount described in section 951(a) is FORI ($40 × $60/$100). Had these circumstances existed in 1988, and if the $40 included in X's gross income under section 951(a) was directly attributable to FORI activity, all of that income would be FORI to X.

(e) ***Dividends, interest, and other amounts from sources within a possession.*** FORI includes the items listed in (A) and (C) to the extent attributable to FORI of a corporation that is created or organized in or under the laws of a possession of the United States.

(f) ***Income from partnerships, trusts, etc.*** FORI and FOGEI include a person's distributive share (determined under the principles of section 704) of the income of any partnership and amounts included in income under subchapter J of chapter 1 of the Code (relating to the taxation of trusts, estates, and beneficiaries) to the extent the income and amounts are attributable to FORI and FOGEI. For taxable years beginning after 1986, the principles of § 1.904-5 (h) and (i) shall be applied to determine whether (and to what extent) a person's distributive share is FORI and FOGEI. Thus, for example, a less-than-10 percent corporate partner's share of income of the partnership would generally be treated as passive income to the partner, and not as FORI or FOGEI, unless an exception under § 1.904-5 (h) and (i) applies.

[T.D. 8338, 56 FR 11071, Mar. 15, 1991]

§ 1.907(c)-3 FOGEI and FORI taxes (for taxable years beginning after December 31, 1982).

(a) ***Tax characterization, allocation and apportionment*** —

(1) ***Scope.*** Paragraphs (a)(2) through (6) of this section provides rules for the characterization, allocation, and apportionment of the income taxes (other than withholding taxes) paid or accrued to a foreign country among FOGEI, FORI, and other income relevant for purposes of sections 907 and 904. Some of the rules in this section are expressed in terms of FOGEI taxes but they apply to FORI taxes by substituting “FORI taxes” for “FOGEI taxes” whenever appropriate. For the treatment of withholding taxes, see paragraph (a)(8) of this section. FOGEI taxes are determined without any reduction under section 907(a). In addition, determination of FOGEI taxes will not be affected by recharacterization of FOGEI by section 907(c)(4). See § 1.907(c)-1(c)(5). Foreign taxes will not be characterized as creditable FORI taxes if section 907(b) and § 1.907(b)-1 apply.

(2) ***Three classes of income.*** There are three classes of income: FOGEI, FORI, and other income.

(3) ***More than one class in a foreign tax base.*** If more than one class of income is taxed under one tax base under the law of a foreign country, the amount of pre-credit foreign tax for each base must be determined. This amount is the foreign taxes paid or accrued to that country for the base as increased by the tax credits (if any) which reduced those taxes and were allowed in the country for that tax. More than one class of income is taxed under the same base, if, under a foreign country's law, deductions from one class of income may reduce the income of any other class and the classes are subject to foreign tax at the same rates.

(4) ***Allocation of tax within a base.*** If more than one class of income is taxed under the same base under a foreign country's law, the pre-credit foreign tax for the base is apportioned to each class of income in proportion to the income of each class. Tax credits are than allocated (under paragraph (a)(6) of this section) to the apportioned pre-credit tax. Income of a class over the deductions allowed under foreign law for, and which are attributable to, that class.

(5) ***Modified gross income.*** Modified gross income is not necessarily the same as gross income as defined for purposes of chapter 1 of the Internal Revenue Code. Modified gross income is determined with reference to the foreign tax base for gross income (or its equivalent). However, the characterization of the base as a particular class of income is governed by general principles of U.S. tax law. Thus, for example—

(i) Gross income from extraction is the fair market value of oil or gas in the immediate vicinity of the well (as determined under § 1.907(c)-1(b)(6) (without any deductions)).

(ii) Whether cost of goods sold (or any other deduction) is a deduction from modified gross income and the amount of such a deduction is determined under foreign law.

(iii) Modified gross income includes items that are part of the foreign tax base even though they are not gross income under U.S. law so long as the foreign taxes paid on the base constitute creditable taxes under section 901 (including taxes described in section 903). For example, if a foreign country imposes a tax (creditable under section 901) on a tax base that includes in small part a percentage of the value of a company's oil reserves in place, modified gross income from extraction includes such a percentage of value solely for purposes of making the tax allocation in paragraph (a)(4) of this section.

(iv) Modified gross income from extraction is increased for purposes of this paragraph (a)(5) by the entire excess of the posted price over fair market value if the foreign country uses a posted price system or other pricing arrangement described in section 907(d) in imposing its income tax.

(v) Modified gross income from FORI is that income attributable to the activities in sections 907(c)(2) (A) through (C) and (E).

(vi) Modified gross income for any class may not include gross income that is not subject to taxation by the foreign country.

(6) ***Allocation of tax credits.*** The foreign taxes paid or accrued on a particular class of income equals the precredit tax on the class reduced (but not below zero) by the credits allowed under foreign law against the foreign tax on the particular class. Any tax credit attributable to a class that is not allocated to that class is allocated to the other class in the base or, if there are three classes in the base, is apportioned ratably among the taxes paid or accrued on the other two classes (as reduced in accordance with the preceding sentence).

(7) ***Withholding taxes.*** Paragraph (a)(2) through (6) of this section does not apply to withholding taxes imposed by a foreign country. FOGEI taxes may include withholding taxes imposed with respect to a distribution from a corporation. The portion of the total withholding taxes on a distribution that constitutes FOGEI taxes is determined by the portion of the distribution that is FOGEI. In addition, FOGEI taxes may include taxes imposed on a distribution described in section 959(a)(1) or on amounts described in section 959(b). The portion of the total withholding taxes imposed on a distribution described in section 959(a)(1) or on amounts described in section 959(b) is determined by reference to the portion of the amount included in gross income under section 951(a) that was FOGEI.

(b) ***Dividends—In general.***

(i) FOGEI taxes deemed paid with respect to a dividend equal the total taxes deemed paid with respect to the dividend multiplied by the fraction:

FOGEI taxes paid or accrued by the payor/Total foreign taxes paid or accrued by the payor.

(ii) With regard to dividends received in taxable years beginning after December 31, 1986, FOGEI taxes deemed paid with respect to a dividend equal the total taxes deemed paid with respect to the portion of the dividend within a separate category multiplied by the fraction:

$$\frac{\text{Post-1986 FOGEI taxes as determined under the principles of section 902(c)(2) that are allocable to that separate category}}{\text{Post-1986 foreign income taxes as determined under the principles of section 902(c)(2) that are allocable to that separate category.}}$$

(iii) This paragraph (b) applies to a dividend described in section 907(c)(3)(A) (including a section 1248 dividend) with reference to the particular taxable year or years of those accumulated profits out of which a dividend is paid. Determination of FOGEI taxes under this paragraph (b) must be made separately.

(A) For FOGEI taxes paid on FOGEI accumulated profits and total taxes paid on accumulated profits that arose in taxable years beginning before January 1, 1987, to which paragraph (b)(1)(i) of this section applies, and

(B) For FOGEI taxes paid on FOGEI accumulated profits and total taxes paid on accumulated profits that arose in taxable years beginning after December 31, 1986, to which paragraph (b)(1)(ii) of this section applies.

For purposes of these determinations, dividends are deemed to be paid first out of FOGEI and total accumulated profits that arose in taxable years beginning after December 31, 1986. See § 1.907(c)-2(d)(1)(i). See section 960(a)(3) and § 1.960-2 relating to distributions that are treated as dividends for purposes of section 902.

(2) *Section 78 dividend.* There are no FOGEI taxes with respect to section 78 dividends.

(c) ***Includable amounts under section 951(a).***

(1) FOGEI taxes deemed paid with respect to an amount includable in gross income under section 951(a) equal the total taxes deemed paid with respect to that amount multiplied by the fraction:

$$\frac{\text{FOGEI taxes paid or accrued by the foreign corporation}}{\text{Total foreign taxes paid or accrued by the foreign corporation.}}$$

(2) With regard to an amount includable in gross income under section 951(a) in taxable years beginning after December 31, 1986, FOGEI taxes deemed paid with respect to that amount equal the total taxes deemed paid with respect to that amount within a separate category multiplied by the fraction:

$$\frac{\text{Post-1986 FOGEI taxes as determined under the principles of section 902(c)(2) that are allocable to that separate category}}{\text{Post-1986 foreign income taxes as determined under the principles of section 902(c)(2) that are allocable to that separate category.}}$$

Taxes in the fraction in this paragraph (c)(2) include only those foreign taxes that may be deemed paid under section 960(a) by reason of such inclusion. See §§ 1.960-1(c)(3) and 1.960-2(c).

(d) ***Partnerships.*** A partner's distributive share of the partnership's FOGEI taxes is determined under the principles of section 704.

(e) ***Illustrations.*** The application of this section may be illustrated by the following examples.

Example 1. X, a domestic corporation, owns all of the stock of Y, a foreign corporation organized in country S. Y owns all of the stock of Z, a foreign corporation organized in country T. Each corporation used the calendar year as its taxable year. In 1983, X includes in its gross income an amount described in section 951(a) with respect to Z. Assume that the taxes deemed paid under section 902(a) by X by reason of such an inclusion is $70. Assume further that Z paid total taxes of $120, $80 of which is FOGEI tax. Under paragraph (c) of this section, the FOGEI tax deemed paid is $46.67 (*i.e.,* $70 × $80/$120). This $46.67 is also FOGEI under § 1.907(c)-2(d)(5) because it must be included in X's gross income under section 78.

Example 2. (i) Assume the same facts as in Example 1. Assume further that in 1983, Z distributes its entire earnings and profits to Y. Y has no earnings and profits during 1983 other than this dividend. Y paid a tax of $50 to S. Assume that Y is deemed under section 902(b)(1) to pay $50 of the tax paid by Z which was not deemed paid by X under section 960(a)(1) in 1983. In 1983, Y distributes its entire earnings and profits to X. Assume that X is deemed under section 902(a) to pay $100 of the taxes actually paid, and deemed paid, by Y.
(ii) Paragraph (b)(1) of this section applies to characterize the $50 tax of Z that Y is deemed to pay under section 902(b)(1). Y is deemed to pay $33.33 of FOGEI tax, *i.e.,* the amount of the tax deemed paid by Y ($50) multiplied by a fraction. The numerator of the fraction is the amount of Z's FOGEI tax ($80) and the denominator is the total taxes paid by Z ($120).

(iii) Under paragraph (a)(8) of this section, a portion of the $50 tax actually paid by Y on the earnings and profits received from Z is FOGEI tax. The amount of tax actually paid by Y that is FOGEI tax depends on the amount of the distribution from Z that is FOGEI (see § 1.907(c)-2(d)(1)(i) and Example 2 (ii) under § 1.907(c)-2(d)(8)). This result does not depend upon whether a portion of the distribution from Z is described in section 959(b) and it follows even though a portion of Y's earnings and profits will be excluded from X's gross income under section 959(a)(1) when distributed by Y. Assume that $12.50 of the $50 tax actually paid by Y is FOGEI tax.

(iv) Under paragraph (b)(1) of this section, X is deemed to pay $45.83 of FOGEI tax by reason of the distribution from Y. This amount is determined by multiplying the total taxes deemed paid by X by reason of such distribution ($100) by a fraction. The numerator of the fraction is the FOGEI tax paid, and deemed paid, by Y ($45.83, *i.e.,* $33.33 under paragraph (ii) of this example plus $12.50 under paragraph (iii) of this example). The denominator of the fraction is the total taxes paid, and deemed paid, by Y ($100). This $45.83 is FOGEI under § 1.907(c)-2(d)(5) because it is included in X's gross income as a section 78 dividend.

Example 3. (i) X, a domestic corporation, has a concession with foreign country Y that gives it the exclusive right to extract and export the crude oil and natural gas owned by Y. The concession agreement and location of the oil and gas wells mandate that X construct a system of pipelines to

transport the minerals that are extracted to a port where they are loaded onto tankers for export. X owns the transportation facilities. Y has an income tax system under which income from mineral operations is subject to a 50 percent tax rate. The taxation by Y of the mineral operations is a separate tax base under paragraph (a)(3) of this section. Under this system, Y imposes the tax at the port prior to export and it establishes a posted price of $12 per barrel. Y also collects royalties of $1.44 per barrel (*i.e.,* 12 percent of this posted price) which is deductible in computing the petroleum tax. Y also allows X deductible lifting costs of $.20 per barrel and deductible transporting costs of $.80 per barrel. Y does not allow any credits against the mineral tax. Assume that X does not have any income in Y other than the mineral income. (In 1983, X extracts, transports, and exports 10,000,000 barrels of crude oil, but for convenience, all computations are in terms of one barrel). X pays foreign taxes of $4.78 per barrel, computed as follows:

Sales		$12.00
Royalties	$1.44	
Lifting	.20	
Transporting	.80	
	2.44	(2.44)
Income base		9.56
Tax rate (percent)		.50
Tax		4.78

Assume that these taxes are creditable taxes under section 901, that the fair market value of the oil at the port is $10 per barrel, and that under § 1.907(c)-1(b)(6) fair market value in the immediate vicinity of the oil wells is $9 per barrel. Thus, at the port, the excess of posted price ($12) over fair market value ($10) is $2.

(ii) The $4.78 foreign tax paid to Y is allocated to FOGEI and FORI in accordance with the rules in paragraph (a)(2) through (5) of this section.
(iii) Under paragraph (a)(3) of this section, FOGEI and FORI are subject to foreign taxation under one tax base. This foreign tax is allocated between FOGEI tax and FORI tax in accordance with paragraph (a)(4) and (5) of this section.

(iv) The modified gross income for FOGEI is $11, *i.e.,* fair market value in the immediate vicinity of the well ($9) plus the excess at the port of posted price over fair market value ($2). The modified gross income for FORI is $1, *i.e.,* value added to the oil beyond the well-head which is part of Y's tax base ($10-$9).

(v) The royalty deductions are all directly attributable to FOGEI.

(vi) Under paragraph (a)(4) of this section, the income of each class is determined as follows:

	FOGEI	FORI
Modified gross income	$11.00	$1.00
Deductions:		
Royalties	1.44	0
Lifting	.20	0
Transporting	0	.80
Total	1.64	.80
Net Income	9.36	.20

(vii) Under paragraph (a)(4) of this section, the total tax paid to Y is allocated to FOGEI and FORI in proportion to the income in each class. The calculation is as follows:
FOGEI tax = $4.78 × $9.36/$9.56 = $4.68

FORI tax = $4.78 × $0.20/$9.56 = $0.10

Thus, for the 10,000,000 barrels, the FOGEI tax is $46,800,000 and the FORI tax is $1,000,000.

(viii) The allocation under paragraph (a)(4) of this section, rather than the direct application of stated foreign tax rates to foreign-law taxable income in each class of income (which would produce the same results in the facts of this example), is necessary when a foreign country taxes more than one class of income under a progressive rate structure. See Example 4 in this paragraph (e).

Example 4. Assume the same facts as in Example 3 except that Y's tax is imposed at 40 percent for the first $20,000,000 of income and at 60 percent for all other income. The foreign taxes are allocated under paragraph (a)(4) of this section between FOGEI and FORI in the same manner as in paragraphs (vi) and (vii) of Example 3, as follows:

(1) Taxable income	$95,600,000
(2) Tax:	
(a) 40% of $20,000,000	8,000,000
(b) 60% of $75,600,000	45,360,000
(c) Total tax	53,360,000
(3) FOGEI tax (line 2(c) × $9.36/$9.56)	52,243,680

(4) FORI tax (line 2(c) × $0.20/$9.56)	1,116,320

Example 5. Assume the same facts as in Example 3. Assume further that X refines the crude oil into primary products prior to export and Y imposes its tax on the basis of crude oil equivalences of $12 per barrel, rather than the value of the primary products, to establish port prices. Assume that this arrangement is a pricing arrangement described in section 907(d). Thus, Y does not tax the refinery income. The results are the same as in Example 3 even if $12 per barrel is equal to, more than, or less than, the value of the primary products at the port. See paragraph (a)(5)(vi) of this section.

[T.D. 8338, 56 FR 11073, Mar. 15, 1991]

§ 1.907(d)-1 Disregard of posted prices for purposes of chapter 1 of the Code (for taxable years beginning after December 31, 1982).

(a) ***In general*** —

(1) ***Scope.*** Section 907(d) applies if a person has FOGEI from the—

(i) Acquisition (other than from a foreign government) or

(ii) Disposition of minerals at a posted price that differs from the fair market value at the time of the transaction. Also, if a seller (other than a foreign government) derives FOGEI upon a disposition described in the preceding sentence, section 907(d) applies to the acquisition by the purchaser whether or not the purchaser has FOGEI. Thus, section 907(d) may apply in determining a person's FORI.

(2) ***Initial computation requirement.*** If section 907(d) applies to any person, income on the transaction as initially reflected on the person's return shall be computed as if the transaction were effected at fair market value. This requirement applies the first time a person has taxable income derived from either the transaction or an item (such as a dividend described in section 907(c)(3)(A)) determined with reference to that income.

(3) ***Burden of proof.*** The taxpayer must be able to demonstrate the transaction as it actually occurred and the basis for reporting the transaction under the principles of paragraph (a)(2) of this section.

(4) ***Related parties.*** Section 907(d) (as a rule of characterization) applies whether or not the parties to the transaction are related. Thus, the excess of the posted price over the fair market value may never be taken into account in determining a person's FOGEI under section 907(a) but may be taken into account in determining a person's FORI.

(b) ***Adjustments.*** If a taxpayer does not comply with the initial requirement of paragraph (a)(2) of this section, adjustments under section 907(d) may be made only by the Commissioner in the same manner that section 482 is administered. Correlative and similar adjustments consistent with the substantive and procedural principles of section 482 and § 1.482-1(d) apply. However, section 907(d) is not a limitation on section 482. If a taxpayer disposing of minerals at a posted price does comply with the initial computation requirement of this section, adjustments and correlative and similar adjustments consistent with the substantive and procedural aspects of section 482 and § 1.482-1(d) shall apply, whether made

on the return by the taxpayer or on a later audit. This paragraph (b) does not apply to an actual sale or exchange of minerals made between persons with respect to whom adjustments under section 482 would never apply (but see paragraph (a)(4) of this section).

(c) ***Definitions.*** For purposes of this section—

(1) ***Foreign government.*** The term *foreign government* means only the integral parts or controlled entities of a foreign sovereign and political subdivisions of a foreign country.

(2) ***Minerals.*** The term *minerals* has the same meaning as in § 1.907(c)-1(f)(1).

(3) ***Posted price.*** The term *posted price* means the price set by, or at the direction of, a foreign government to calculate income for purposes of its tax or at which minerals must be sold.

(4) ***Other pricing arrangement.*** The term *other pricing arrangement* in section 907(d) means a pricing arrangement having the effect of a posted price.

(5) ***Fair market value.*** The term *fair market value,* whether or not at the port prior to export, is determined in the same way that the wellhead price is determined under § 1.907(c)-1(b)(6).

[T.D. 8338, 56 FR 11075, Mar. 15, 1991]

§ 1.907(e)-1 [Reserved]

§ 1.907(f)-1 Carryback and carryover of credits disallowed by section 907(a) (for amounts carried between taxable years that each begin after December 31, 1982).

(a) ***In general.*** If a taxpayer chooses the benefits of section 901, any unused FOGEI tax paid or accrued in a taxable year beginning after December 31, 1982, may be carried to the taxable years specified in section 907(f) under the carryback and carryover principles of this section § 1.904-2(b). See section 907(e) and § 1.907(e)-1 for transitional rules that apply to unused FOGEI taxes carried back or forward between a taxable year beginning before January 1, 1983, and a taxable year beginning after December 31, 1982.

(b) ***Unused FOGEI tax*** —

(1) ***In general.*** The “unused FOGEI tax” for purposes of this section is the excess of the FOGEI taxes for a taxable year (year of origin) over that year's limitation level (as defined in § 1.907(a)-1(b)).

(2) ***Year of origin.*** The term “year of origin” in the regulations under section 904 corresponds to the term “unused credit year” under section 907(f).

(c) ***Tax deemed paid or accrued.*** The unused FOGEI tax from a year of origin that may be deemed paid or accrued under section 907(f) in any preceding or succeeding taxable year (“excess limitation year”) may not exceed the lesser of—

(1) The excess extraction limitation for the excess limitation year, or

(2) The excess general section 904 limitation for the excess limitation year.

(d) ***Excess extraction limitation.*** Under section 907(f)(2)(A), the “excess extraction limitation” for an excess limitation year is the amount by which that year's section 907(a) extraction limitation exceeds the sum of—

(1) The FOGEI taxes paid or accrued, and

(2) The FOGEI taxes deemed paid or accrued in that year by reason of a section 907(f) carryback or carryover from preceding years of origin.

(e) ***Excess general section 904 limitation.*** Under section 907(f)(2)(B), the "excess general section 904 limitation" for an excess limitation year is the amount by which that year's section 904 general limitation exceeds the sum of—

(1) The general limitation taxes paid or accrued (or deemed to have been paid under section 902 or 960) to all foreign countries and possessions of the United States during the taxable year,

(2) The general limitation taxes deemed paid or accrued in such taxable year under section 904(c) and which are attributable to taxable years preceding the unused credit year, plus

(3) The FOGEI taxes deemed paid or accrued in that year by reason of a section 907(f) carryover (or carryback) from preceding years of origin.

(f) ***Section 907(f) priority.*** If a taxable year is a year of origin under both section 907(f) and section 904(c), section 907(f) applies first. See section 907(f)(3)(A).

(g) ***Cross-reference.*** In computing the carryback and carryover of disallowed credits under section 907(f), the principles of § 1.904-2 (d), (e), and (f) apply.

(h) ***Example.*** The following example illustrates the application of section 907(f).

Example. X, a U.S. corporation organized on January 1, 1983, uses the accrual method of accounting and the calendar year as its taxable year. X's only income is income which is not subject to a separate tax limitation under section 904(d). X's preliminary U.S. tax liability indicates an effective rate of 46% for taxable years 1983-1985. X has the following foreign tax items for 1983-1985:

	1983	1984	1985
1. FOGEI	$15,000	$20,000	$10,000
2. FOGEI taxes	7,500	9,200	4,200
3. Other foreign taxable income	8,000	5,000	10,000
4. Other foreign taxes	3,200	2,000	3,000
5. (a) Section 907(a) limitation (.46 × Line 1)	6,900	9,200	4,600
(b) General section 904 limitation (.46 × (line 1 plus line 3))	10,580	11,500	9,200
6. (a) Unused FOGEI taxes (excess of line 2 over line 5(a))	600	0	0
(b) Unused general limitation taxes (excess of line 4 plus lesser of line 2 or line 5(a) over line 5(b))	0	0	0
7. (a) FOGEI taxes from years preceding 1983 deemed accrued under section 907(f)	0	0	0
(b) Section 904 general limitation taxes from years preceding 1983 deemed accrued under section 904(c)	0	0	0
8. (a) Excess section 907(a) limitation (excess of line 5(a) over sum of line 2 and line 7(a))	0	0	400
(b) Excess section 904 general limitation (excess of line 5(b) over sum	480	300	2,000

	1983	1984	1985
of line 4, lesser of line 2 and line 5(a) and line 7(b))			
9. Limit on FOGEI taxes that will be deemed accrued under section 907(f) (lesser of line 8(a) and line 8(b)	0	0	400

X has unused 1983 FOGEI taxes of $600. Since the excess section 907(a) limitation for 1984 is zero, the unused FOGEI taxes are carried to 1985. Of the $600 carryover, $400 is deemed accrued in 1985 and the balance of $200 is carried to following years (but not to a year after 1988). After the carryover from 1983 to 1985, the excess section 904 general limitation for 1985 (line 8(b)) is reduced by $400 to $1,600 to reflect the amount of 1983 FOGEI taxes deemed accrued in 1985 under section 907(f).

[T.D. 8338, 56 FR 11079, Mar. 15, 1991]

EARNED INCOME OF CITIZENS OR RESIDENTS OF UNITED STATES

§ 1.908 [Reserved]

§ 1.909-0 Outline of regulation provisions for section 909.

This section lists the headings for §§ 1.909-1 through 1.909-6.

§ 1.909-1 Definitions and special rules.

(a) Definitions.

(b) Taxes paid or accrued by a partnership, S corporation or trust.

(c) Related income of a partnership, S corporation or trust.

(d) Application of section 909 to pre-1987 accumulated profits and pre-1987 foreign income taxes.

(e) Effective/applicability date.

§ 1.909-2 Splitter arrangements.

(a) Foreign tax credit splitting event.

(1) In general.

(2) Split taxes not taken into account.

(b) Splitter arrangements.

(1) Reverse hybrid splitter arrangements.

(i) In general.

(ii) Split taxes from a reverse hybrid splitter arrangement.

(iii) Related income from a reverse hybrid splitter arrangement.

(iv) Reverse hybrid.

(v) Examples.

(2) Loss-sharing splitter arrangements.

(i) In general.

(ii) U.S. combined income group.

(iii) Income and shared loss of a U.S. combined income group.

(iv) Split taxes from a loss-sharing splitter arrangement.

(v) Related income from a loss-sharing splitter arrangement.

(vi) Foreign group relief or other loss-sharing regime.

(vii) Examples.

(3) Hybrid instrument splitter arrangements.

(i) U.S. equity hybrid instrument splitter arrangement.

(ii) U.S. debt hybrid instrument splitter arrangement.

(4) Partnership inter-branch payment splitter arrangements.

(i) In general.

(ii) Split taxes from a partnership inter-branch payment splitter arrangement.

(iii) Related income from a partnership inter-branch payment splitter arrangement.

(c) Effective/applicability date.

§ 1.909-3 Rules regarding related income and split taxes.

(a) Interim rules for identifying related income and split taxes.

(b) Split taxes on deductible disregarded payments.

(c) Effective/applicability date.

§ 1.909-4 Coordination rules.

(a) Interim rules.

(b) Effective/applicability date.

§ 1.909-5 2011 and 2012 splitter arrangements.

(a) Taxes paid or accrued in taxable years beginning in 2011.

(b) Taxes paid or accrued in certain taxable years beginning in 2012 with respect to a foreign consolidated group splitter arrangement.

(c) Effective/applicability date.

§ 1.909-6 Pre-2011 foreign tax credit splitting events.

(a) Foreign tax credit splitting event.

(1) In general.

(2) Taxes not subject to suspension under section 909.

(3) Taxes subject to suspension under section 909.

(b) Pre-2011 splitter arrangements.

(1) Reverse hybrid structure splitter arrangements.

(2) Foreign consolidated group splitter arrangements.

(3) Group relief or other loss-sharing regime splitter arrangements.

(i) In general.

(ii) Split taxes and related income.

(4) Hybrid instrument splitter arrangements.

(i) In general.

(ii) U.S. equity hybrid instrument splitter arrangement.

(iii) U.S. debt hybrid instrument splitter arrangement.

(c) General rules for applying section 909 to pre-2011 split taxes and related income.

(1) Annual determination.

(2) Separate categories.

(d) Special rules regarding related income.

(1) Annual adjustments.

(2) Effect of separate limitation losses and deficits.

(3) Pro rata method for distributions out of earnings and profits that include both related income and other income.

(4) Alternative method for distributions out of earnings and profits that include both related income and other income.

(5) Distributions, deemed distributions, and inclusions out of related income.

(6) Carryover of related income.

(7) Related income taken into account by a section 902 shareholder.

(8) Related income taken into account by a payor section 902 corporation.

(9) Related income taken into account by an affiliated group of corporations that includes a section 902 shareholder.

(10) Distributions of previously-taxed earnings and profits.

(e) Special rules regarding pre-2011 split taxes.

(1) Taxes deemed paid pro rata out of pre-2011 split taxes and other taxes.

(2) Pre-2011 split taxes deemed paid in pre-2011 taxable years.

(3) Carryover of pre-2011 split taxes.

(4) Determining when pre-2011 split taxes are no longer treated as pre-2011 split taxes.

(f) Rules relating to partnerships and trusts.

(1) Taxes paid or accrued by partnerships.

(2) Section 704(b) allocations.

(3) Trusts.

(g) Interaction between section 909 and other Code provisions.

(1) Section 904(c).

(2) Section 905(a).

(3) Section 905(c).

(4) Other foreign tax credit provisions.

(h) Effective/applicability date.

[T.D. 9710, 80 FR 7327, Feb. 10, 2015]

§ 1.909-1 Definitions and special rules.

(a) ***Definitions.*** For purposes of section 909, this section, and §§ 1.909-2 through 1.909-5, the following definitions apply:

(1) The term *section 902 corporation* means any foreign corporation with respect to which one or more domestic corporations meet the ownership requirements of section 902(a) or (b).

(2) The term *section 902 shareholder* means any domestic corporation that meets the ownership requirements of section 902(a) or (b) with respect to a section 902 corporation.

(3) The term *payor* means a person that pays or accrues a foreign income tax within the meaning of § 1.901-2(f), and also includes a person that takes foreign income taxes paid or accrued by a partnership, S corporation, estate or trust into account pursuant to section 702(a)(6), section 901(b)(5) or section 1373(a).

(4) The term *covered person* means, with respect to a payor—

(i) Any entity in which the payor holds, directly or indirectly, at least a 10 percent ownership interest (determined by vote or value);

(ii) Any person that holds, directly or indirectly, at least a 10 percent ownership interest (determined by vote or value) in the payor; or

(iii) Any person that bears a relationship that is described in section 267(b) or 707(b) to the payor.

(5) The term *foreign income tax* means any income, war profits, or excess profits tax paid or accrued to any foreign country or to any possession of the United States. A foreign income tax includes any tax paid or accrued in lieu of such a tax within the meaning of section 903.

(6) The term *post-1986 foreign income taxes* has the meaning provided in § 1.902-1(a)(8).

(7) The term *post-1986 undistributed earnings* has the meaning provided in § 1.902-1(a)(9).

(8) The term *disregarded entity* means an entity that is disregarded as an entity separate from its owner, as provided in § 301.7701-2(c)(2)(i) of this chapter.

(9) The term *hybrid partnership* means a partnership that is subject to income tax in a foreign country as a corporation (or otherwise at the entity level) on the basis of residence, place of incorporation, place of management or similar criteria.

(b) ***Taxes paid or accrued by a partnership, S corporation or trust.*** Under section 909(c)(1), section 909 applies at the partner level, and similar rules apply in the case of an S corporation or trust. Accordingly, in the case of foreign income taxes paid or accrued by a partnership, S corporation or trust, taxes allocated to one or more partners, shareholders or beneficiaries (as the case may be) will be treated as split taxes to the extent such taxes would be split taxes if the partner, shareholder or beneficiary had paid or accrued the taxes directly on the date such taxes are taken into account by the partner under sections 702 and 706(a), by the shareholder under section 1373(a), or by the beneficiary under section 901(b)(5). Any such split taxes will be suspended in the hands of the partner, shareholder or beneficiary.

(c) ***Related income of a partnership, S corporation or trust.*** For purposes of determining whether related income is taken into account by a covered person, related income of a partnership, S corporation or trust is considered to be taken into account by the partner, shareholder or beneficiary to whom the related income is allocated.

(d) ***Application of section 909 to pre-1987 accumulated profits and pre-1987 foreign income taxes.*** Section 909 and §§ 1.909-1 through 1.909-5 will apply to pre-1987 accumulated profits (as defined in § 1.902-1(a)(10)(i)) and pre-1987 foreign income taxes (as defined in § 1.902-1(a)(10)(iii)) of a section 902 corporation attributable to taxable years beginning on or after January 1, 2012.

(e) ***Effective/applicability date.*** This section applies to taxable years ending after February 9, 2015. See 26 CFR 1.909-1T (revised as of April 1, 2014) for rules applicable to taxable years beginning on or after January 1, 2011, and ending on or before February 9, 2015.

[T.D. 9710, 80 FR 7328, Feb. 10, 2015]

§ 1.909-2 Splitter arrangements.

(a) ***Foreign tax credit splitting event —***

(1) ***In general.*** There is a foreign tax credit splitting event with respect to foreign income taxes paid or accrued if and only if, in connection with an arrangement described in paragraph (b) of this section (a *splitter arrangement*) the related income was, is or will be taken into account for U.S. Federal income tax purposes by a person that is a covered person with respect to the payor of the tax. Foreign income taxes that are paid or accrued in connection with a splitter arrangement are split taxes to the extent provided in paragraph (b) of this section. Income (or, as appropriate, earnings and profits) that was, is or will be taken into account by a covered person in connection with a splitter arrangement is related income to the extent provided in paragraph (b) of this section.

(2) ***Split taxes not taken into account.*** Split taxes will not be taken into account for U.S. Federal income tax purposes before the taxable year in which the related income is taken into account by the payor or, in the case of split taxes paid or accrued by a section 902 corporation, by a section 902 shareholder of such section 902 corporation. Therefore, in the case of split taxes paid or accrued by a section 902 corporation, split taxes will not be taken into account for purposes of sections 902 or 960, or for purposes of determining earnings and profits under section 964(a), before the taxable

year in which the related income is taken into account by the payor section 902 corporation, a section 902 shareholder of the section 902 corporation, or a member of the section 902 shareholder's consolidated group. See § 1.909-3(a) for rules relating to when split taxes and related income are taken into account.

(b) ***Splitter arrangements.*** The arrangements set forth in this paragraph (b) are splitter arrangements.

(1) ***Reverse hybrid splitter arrangements*** —

(i) ***In general.*** A reverse hybrid is a splitter arrangement when a payor pays or accrues foreign income taxes with respect to income of a reverse hybrid. A reverse hybrid splitter arrangement exists even if the reverse hybrid has a loss or a deficit in earnings and profits for a particular year for U.S. Federal income tax purposes (for example, due to a timing difference).

(ii) ***Split taxes from a reverse hybrid splitter arrangement.*** The foreign income taxes paid or accrued with respect to income of the reverse hybrid are split taxes.

(iii) ***Related income from a reverse hybrid splitter arrangement.*** The related income with respect to split taxes from a reverse hybrid splitter arrangement is the earnings and profits (computed for U.S. Federal income tax purposes) of the reverse hybrid attributable to the activities of the reverse hybrid that gave rise to income included in the payor's foreign tax base with respect to which the split taxes were paid or accrued. Accordingly, related income of the reverse hybrid includes items of income or expense attributable to a disregarded entity owned by the reverse hybrid only to the extent that the income attributable to the activities of the disregarded entity is included in the payor's foreign tax base.

(iv) ***Reverse hybrid.*** The term *reverse hybrid* means an entity that is a corporation for U.S. Federal income tax purposes but is a fiscally transparent entity (under the principles of § 1.894-1(d)(3)) or a branch under the laws of a foreign country imposing tax on the income of the entity.

(v) ***Examples.*** The following examples illustrate the rules of paragraph (b)(1) of this section.

> *Example 1.* (i) *Facts.* USP, a domestic corporation, wholly owns DE, a disregarded entity for U.S. federal income tax purposes that is organized in country A and treated as a corporation for country A tax purposes. DE wholly owns RH, a corporation for U.S. Federal income tax purposes that is organized in country A and treated as a fiscally transparent entity for country A tax purposes. Country A imposes an income tax at the rate of 30% on DE with respect to the items of income earned by RH. Prior to year 1, RH had no income for country A purposes and had no post-1986 earnings and profits for U.S. Federal income tax purposes. In year 1, RH earns 200u of income on which DE pays 60u of country A tax. Pursuant to § 1.901-2(f)(4)(ii), USP is treated as legally liable for the 60u of country A taxes paid by DE. DE has no other income. In year 2, RH earns no income and incurs no losses or expenses. At the end of year 2, RH distributes 100u to DE.
> (ii) *Result.* (A) *Split taxes and related income.* Pursuant to § 1.909-2(b)(1)(iv), RH is a reverse hybrid because it is a corporation for U.S. Federal income tax purposes and a fiscally transparent entity for country A purposes. Pursuant to § 1.909-2(b)(1), RH is a covered person with respect to USP because USP wholly owns RH for U.S. Federal

income tax purposes. Pursuant to § 1.909-2(b)(1)(i), there is a splitter arrangement with respect to RH because USP paid country A tax with respect to the income of RH. All 60u of taxes paid by USP in year 1 with respect to the income of RH are split taxes pursuant to § 1.909-2(b)(1)(ii). The post-1986 earnings and profits of RH are 200u as of the end of year 1. Pursuant to § 1.909-2(b)(1)(iii), the related income in year 1 is the 200u of RH's earnings and profits that are attributable to the activities that gave rise to the split taxes. No additional split taxes or related income arise in year 2.

(B) *Distribution.* Because DE is a disregarded entity, the 100u distribution by RH at the end of year 2 is treated as a dividend to USP. Pursuant to § 1.909-6(d)(7) and § 1.909-3(a), 100u of the 200u of related income of RH, or 50%, is taken into account by USP by reason of the 100u dividend. Accordingly, pursuant to § 1.909-6(e)(4) and § 1.909-3(a), a ratable portion of the split taxes, or 30u of taxes (50% of 60u), is no longer treated as split taxes and is taken into account by USP for U.S. Federal income tax purposes.

Example 2. (i) *Facts.* The facts are the same as in *Example 1,* except that in year 2, RH has a 100u loss for U.S. Federal income tax purposes as well as for country A tax purposes. For country A tax purposes, DE takes the 100u loss into account in year 2 and may not carry back the 100u loss to offset its country A taxable income for year 1. At the end of year 2, RH distributes 100u to DE.
(ii) *Result.* (A) *Split taxes and related income.* The split taxes and related income for year 1 are the same as in *Example 1.* Pursuant to § 1.909-2(b)(1)(iii), § 1.909-6(d)(1) and § 1.909-3(a), the total related income of RH is reduced to 100u (200u − 100u) in year 2 because RH incurred a 100u loss in year 2 attributable to the activities that are included in DE's country A tax base.

(B) *Distribution.* Because DE is a disregarded entity, the 100u distribution by RH at the end of year 2 is treated as a dividend to USP. Pursuant to § 1.909-6(d)(7) and § 1.909-3(a), 100u of the 100u of related income of RH, or 100%, is taken into account by USP by reason of the 100u dividend. Accordingly, pursuant to § 1.909-6(e)(4) and § 1.909-3(a), a ratable portion of the split taxes, or 60u of taxes (100% of 60u), is no longer treated as split taxes and is taken into account by USP for U.S. Federal income tax purposes.

(2) ***Loss-sharing splitter arrangements*** —

(i) ***In general.*** A foreign group relief or other loss-sharing regime is a loss-sharing splitter arrangement to the extent that a shared loss of a U.S. combined income group could have been used to offset income of that group in the current or in a prior foreign taxable year (*usable shared loss*) but is used instead to offset income of another U.S. combined income group.

(ii) ***U.S. combined income group.*** The term *U.S. combined income group* means an individual or a corporation and all entities (including entities that are fiscally transparent for U.S. Federal income tax purposes under the principles of § 1.894-1(d)(3)) that for U.S. Federal income tax purposes combine any of their respective items of income, deduction, gain or loss with the income, deduction, gain or loss of such individual or corporation. A U.S. combined income group can arise, for example, as a result of an entity being disregarded or, in the case of a partnership or hybrid partnership and a partner, as a result of the allocation of income or any other item of the partnership to the partner. For purposes of this paragraph (b)(2)(ii), a branch is treated as an entity, all members of a U.S. affiliated group of corporations (as defined in section 1504) that file a consolidated return are treated as a single corporation, and two or more individuals that file a joint return are treated as a single individual. A U.S. combined income group may consist of a single individual or corporation and no other entities, but cannot include more than one individual or corporation. In addition, an entity may belong to more than one U.S. combined income group. For example, a hybrid partnership with two corporate partners that do not combine any of their items of income, deduction, gain or loss for U.S. Federal income tax purposes is in a separate U.S. combined income group with each of its partners.

(iii) ***Income and shared loss of a U.S. combined income group*** —

(A) ***Income.*** Except as otherwise provided in this paragraph (b)(2)(iii)(A), the income of a U.S. combined income group is the aggregate amount of taxable income recognized or taken into account for foreign tax purposes by those members that have positive taxable income for foreign tax purposes. In the case of an entity that is fiscally transparent (under the principles of § 1.894-1(d)(3)) for foreign tax purposes and that is a member of more than one U.S. combined income group, the foreign taxable income of the entity is allocated between or among the groups under foreign tax law. In the case of an entity that is not fiscally transparent for foreign tax purposes and that is a member of more than one U.S. combined income group, the foreign taxable income of the entity is allocated between or among those groups based on U.S. Federal income tax principles. For example, in the case of a hybrid partnership, the foreign taxable income of the partnership is allocated between or among the groups in the manner the partnership allocates the income under section 704(b). To the extent the foreign taxable income would be income under U.S. Federal income tax principles in another year, the income is allocated between or among the groups based on how the hybrid partnership would allocate the income if the income were recognized for U.S. Federal income tax purposes in the year in which the income is recognized for foreign tax purposes. To the extent the foreign taxable income would not constitute income under U.S. Federal income tax principles in any year, the income is allocated between or among the groups in the same manner as the partnership items attributable to the activity giving rise to the foreign taxable income.

(B) ***Shared loss.*** The term *shared loss* means a loss of one entity for foreign tax purposes that, in connection with a foreign group relief or other loss-sharing regime, is taken into account by one or more other entities. Except as otherwise provided in this paragraph (b)(2)(iii)(B), the amount of shared loss of a U.S. combined income group is the sum of the shared losses of all members of the U.S. combined income group. In the case of an entity that is fiscally transparent (under the principles of § 1.894-1(d)(3)) for foreign tax purposes and that is a member of more than one U.S. combined income group, the shared loss of the entity is allocated between or among the groups under foreign tax law. In the case of an

entity that is not fiscally transparent for foreign tax purposes and that is a member of more than one U.S. combined income group, the shared loss of the entity will be allocated between or among those groups based on U.S. Federal income tax principles. For example, in the case of a hybrid partnership, the shared loss of the partnership will be allocated between or among the groups in the manner the partnership allocates the loss under section 704(b). To the extent the shared loss would be a loss under U.S. Federal income tax principles in another year, the loss is allocated between or among the groups based on how the partnership would allocate the loss if the loss were recognized for U.S. Federal income tax purposes in the year in which the loss is recognized for foreign tax purposes. To the extent the shared loss would not constitute a loss under U.S. Federal income tax principles in any year, the loss is allocated between or among the groups in the same manner as the partnership items attributable to the activity giving rise to the shared loss.

(iv) ***Split taxes from a loss-sharing splitter arrangement.*** Split taxes from a loss-sharing splitter arrangement are foreign income taxes paid or accrued by a member of the U.S. combined income group with respect to income from the current foreign taxable year, or, in the case of a foregone carryback loss, from the prior foreign taxable year, equal to the amount of the usable shared loss of that group that offsets income of another U.S. combined income group.

(v) ***Related income from a loss-sharing splitter arrangement.*** The related income with respect to split taxes from a loss-sharing splitter arrangement is an amount of income of the individual or corporate member of the U.S. combined income group equal to the amount of income under foreign tax law of that U.S. combined income group that is offset by the usable shared loss of another U.S. combined income group.

(vi) ***Foreign group relief or other loss-sharing regime.*** A foreign group relief or other loss-sharing regime exists when an entity may surrender its loss to offset the income of one or more other entities. A foreign group relief or other loss-sharing regime does not include an allocation of loss of an entity that is a partnership or other fiscally transparent entity (under the principles of § 1.894-1(d)(3)) for foreign tax purposes or regimes in which foreign tax is imposed on combined income (such as a foreign consolidated regime), as described in § 1.901-2(f)(3).

(vii) ***Examples.*** The following examples illustrate the rules of paragraph (b)(2) of this section.

> *Example 1.* (i) *Facts.* USP, a domestic corporation, wholly owns CFC1, a corporation organized in country A. CFC1 wholly owns CFC2 and CFC3, both corporations organized in country A. CFC2 wholly owns DE, an entity organized in country A. DE is a corporation for country A tax purposes and a disregarded entity for U.S. Federal income tax purposes. Country A has a loss-sharing regime under which a loss of CFC1, CFC2, CFC3 or DE may be used to offset the income of one or more of the others. Country A imposes an income tax at the rate of 30% on the taxable income of corporations organized in country A. In year 1, before any loss sharing, CFC1 has no income, CFC2 has income of 50u, CFC3 has income of 200u, and DE has a loss of 100u. Under the provisions of country A's loss-sharing regime, the group decides to use DE's 100u loss to offset 100u of CFC3's income. After the loss is shared, for country A's tax purposes, CFC2 still has 50u of income on which it pays 15u of country A tax. CFC3 has income of 100u (200u

less the 100u shared loss) on which it pays 30u of country A tax. For U.S. Federal income tax purposes, the loss sharing with CFC3 is not taken into account. Because DE is a disregarded entity, its 100u loss is taken into account by CFC2 and reduces its earnings and profits for U.S. Federal income tax purposes. Accordingly, before application of section 909, CFC2 has a loss for earnings and profits purposes of 65u (50u income less 15u taxes paid to country A less 100u loss of DE). CFC2 also has the U.S. dollar equivalent of 15u of foreign income taxes to add to its post-1986 foreign income taxes pool. CFC3 has earnings and profits of 170u (200u income less 30u of taxes) and the dollar equivalent of 30u of foreign income taxes to add to its post-1986 foreign income taxes pool.

(ii) *Result.* Pursuant to § 1.909-2(b)(2)(ii), CFC2 and DE constitute one U.S. combined income group, while CFC1 and CFC3 each constitute separate U.S. combined income groups. Pursuant to § 1.909-2(b)(2)(iii)(A), the income of the CFC2 U.S. combined income group is 50u (CFC2's country A taxable income of 50u). The income of the CFC3 U.S. combined income group is 200u (CFC3's country A taxable income of 200u). Pursuant to § 1.909-2(b)(2)(iii)(B), the shared loss of the CFC2 U.S. combined income group includes the 100u of shared loss incurred by DE. The usable shared loss of the CFC2 U.S. combined income group is 50u, the amount of the group's shared loss that could have otherwise offset CFC2's 50u of country A taxable income that is included in the income of the CFC2 U.S. combined income group. There is a splitter arrangement because the 50u usable shared loss of the CFC2 U.S. combined income group was used instead to offset income of CFC3, which is included in the CFC3 U.S. combined income group. Pursuant to § 1.909-2(b)(2)(iv), the split taxes are the 15u of country A income taxes paid by CFC2 on 50u of income, an amount of income of the CFC2 U.S. combined income group equal to the amount of usable shared loss of that group that was used to offset income of the CFC3 U.S. combined income group. Pursuant to § 1.909-2(b)(2)(v), the related income is the 50u of CFC3's income that equals the amount of income of the CFC3 U.S. combined income group that was offset by the usable shared loss of the CFC2 U.S. combined income group.

Example 2. (i) *Facts.* USP, a domestic corporation, wholly owns CFC1, a corporation organized in country B. CFC1 wholly owns CFC2 and CFC3, both corporations organized in country B. CFC2 wholly owns DE, an entity organized in country B. DE is a corporation for country B tax purposes and a disregarded entity for U.S. Federal income tax purposes. CFC2 and CFC3 each own 50% of HP1, an entity organized in country B. HP1 is a corporation for country B tax purposes and a partnership for U.S. Federal income tax purposes. All items of income and loss of HP1 are allocated for U.S. Federal income tax purposes equally between CFC2 and CFC3, and all entities use the country B currency “u” as their functional currency. Country B has a loss-sharing regime under which a loss of any of CFC1, CFC2, CFC3, DE, and HP1 may be used to offset the income of one or more

of the others. Country B imposes an income tax at the rate of 30% on the taxable income of corporations organized in country B. In year 1, before any loss sharing, CFC2 has income of 100u, CFC1 and CFC3 have no income, DE has a loss of 100u, and HP1 has income of 200u. Under the provisions of country B's loss-sharing regime, the group decides to use DE's 100u loss to offset 100u of HP1's income. After the loss is shared, for country B tax purposes, CFC2 has 100u of income on which it pays 30u of country B income tax, and HP1 has 100u of income (200u less the 100u shared loss) on which it pays 30u of country B income tax. For U.S. Federal income tax purposes, the loss sharing with HP1 is not taken into account, and, because DE is a disregarded entity, its 100u loss is taken into account by CFC2 and reduces CFC2's earnings and profits for U.S. Federal income tax purposes. The 200u income of HP1 is allocated 50/50 to CFC2 and CFC3, as is the 30u of country B income tax paid by HP1. Accordingly, before application of section 909, for U.S. Federal income tax purposes, CFC2 has earnings and profits of 55u (100u income plus 100u share of HP1's income less 100u loss of DE less 30u country B income tax paid by CFC2 less 15u share of HP1's country B income tax) and the dollar equivalent of 45u of country B income tax to add to its post-1986 foreign income taxes pool. CFC3 has earnings and profits of 85u (100u share of HP1's income less 15u share of HP1's country B income taxes) and the dollar equivalent of 15u of country B income tax to add to its post-1986 foreign income taxes pool.
(ii) *U.S. combined income groups.* Pursuant to § 1.909-2(b)(2)(ii), because the income and loss of HP1 are combined in part with the income and loss of both CFC2 and CFC3, it belongs to both of the separate CFC2 and CFC3 U.S. combined income groups. DE is a member of the CFC2 U.S. combined income group.

(iii) *Income of the U.S. combined income groups.* Pursuant to § 1.909-2(b)(2)(iii)(A), the income of the CFC2 U.S. combined income group is the 200u country B taxable income of the members of the group with positive taxable incomes (CFC2's country B taxable income of 100u plus 50% of HP1's country B taxable income of 200u, or 100u). Because DE does not have positive taxable income for country B tax purposes, its 100u loss is not included in the income of the CFC2 U.S. combined income group. The income of the CFC3 U.S. combined income group is 100u (50% of HP1's country B taxable income of 200u, or 100u).

(iv) *Shared loss of the U.S. combined income groups.* Pursuant to § 1.909-2(b)(2)(iii)(B), the shared loss of the CFC2 U.S. combined income group is the 100u loss incurred by DE that is used to offset 100u of HP1's income. The CFC3 U.S. combined income group has no shared loss. Pursuant to § 1.909-2(b)(2)(i), the usable shared loss of the CFC2 U.S. combined income group is 100u, the full amount of the group's 100u shared loss that could have been used to offset income of the CFC2 U.S. combined income group had the loss been used to offset 100u of CFC2's country B taxable income.

(v) *Income offset by shared loss.* The shared loss of the CFC2 combined income group is used to offset 100u country B taxable income of HP1. Because the taxable income of HP1 is allocated 50/50 between the CFC2 and CFC3 U.S. combined income groups, the shared loss is treated as offsetting 50u of the CFC2 U.S. combined income group's income and 50u of the CFC3 U.S. combined income group's income.

(vi) *Splitter arrangement.* There is a splitter arrangement because 50u of the 100u usable shared loss of the CFC2 U.S. combined income group was used to offset income of the CFC3 U.S. combined income group. Pursuant to § 1.909-2(b)(2)(iv), the split taxes are the 15u of country B income tax paid by CFC2 on 50u of its income, which is equal to the amount of the CFC2 U.S. combined income group's usable shared loss that was used to offset income of another U.S. combined income group. Pursuant to § 1.909-2(b)(2)(v), the related income is the 50u of CFC3's income that was offset by the usable shared loss of the CFC2 U.S. combined income group.

(3) ***Hybrid instrument splitter arrangements*** —

(i) ***U.S. equity hybrid instrument splitter arrangement*** —

(A) ***In general.*** A U.S. equity hybrid instrument is a splitter arrangement if:

(*1*) Under the laws of a foreign jurisdiction in which the instrument owner is subject to tax, the instrument gives rise to income includible in the instrument owner's income and such inclusion results in foreign income taxes paid or accrued by the instrument owner;

(*2*) Under the laws of a foreign jurisdiction in which the issuer is subject to tax, the instrument gives rise to deductions that are incurred or otherwise taken into account by the issuer; and

(*3*) The events that give rise to income includible in the instrument owner's income for foreign tax purposes as described in paragraph (b)(3)(i)(A)(1) of this section, and to deductions for the issuer for foreign tax purposes as described in paragraph (b)(3)(i)(A)(2) of this section, do not result in an inclusion of income for the instrument owner for U.S. federal income tax purposes.

(B) ***Split taxes from a U.S. equity hybrid instrument splitter arrangement.*** Split taxes from a U.S. equity hybrid instrument splitter arrangement equal the total amount of foreign income taxes paid or accrued by the owner of the hybrid instrument less the amount of foreign income taxes that would have been paid or accrued had the owner of the U.S. equity hybrid instrument not been subject to foreign tax on income from the instrument with respect to the events described in § 1.909-2(b)(3)(i)(A).

(C) ***Related income from a U.S. equity hybrid instrument splitter arrangement.*** The related income with respect to split taxes from a U.S. equity hybrid instrument splitter arrangement is income of the issuer of the U.S. equity hybrid instrument in an amount equal to the amounts giving rise to the split taxes that are deductible by the issuer for foreign tax purposes, determined without regard to the actual amount of the issuer's income or earnings and profits for U.S. Federal income tax purposes.

(D) ***U.S. equity hybrid instrument.*** The term *U.S. equity hybrid instrument* means an instrument that is treated as equity for U.S. Federal income tax purposes but for foreign income tax purposes either is treated as indebtedness or otherwise entitles the issuer to a deduction with respect to such instrument.

(E) ***Example*** —(i) *Facts.* USP, a domestic corporation, wholly owns CFC1, which wholly owns CFC2. Both CFC1 and CFC2 are corporations organized in country A. CFC2 issues an instrument to CFC1 that is treated as indebtedness for country A tax purposes but equity for U.S. Federal income tax purposes. Under country A's income tax laws, the instrument accrues interest at the end of each month, which results in a deduction for CFC2 and an income inclusion and tax liability for CFC1 in country A. The accrual of interest does not result in an inclusion of income for CFC1 for U.S. Federal income tax purposes. Pursuant to the terms of the instrument, CFC2 makes a distribution at the end of the year equal to the amounts of interest that have accrued during the year, and such payment is treated as a dividend that is included in the income of CFC1 for U.S. Federal income tax purposes.

(ii) ***Result.*** Pursuant to § 1.909-2(b)(3)(i)(D), because the instrument is treated as equity for U.S. Federal income tax purposes but is treated as indebtedness for country A tax purposes, it is a U.S. equity hybrid instrument. Pursuant to § 1.909-2(b)(3)(i)(A)(*3*), because the accrual of interest under foreign law does not result in an inclusion of income of CFC1 for U.S. Federal income tax purposes, there is a splitter arrangement. The fact that the payment of the accrued amount at the end of the year pursuant to the terms of the instrument gives rise to a dividend that is included in income of CFC1 for U.S. Federal income tax purposes does not change the result because it is the accrual of interest and not the payment that gives rise to income or deductions under foreign law. The payments will be treated as a distribution of related income to the extent provided by § 1.909-3 and § 1.909-6(d).

(ii) ***U.S. debt hybrid instrument splitter arrangement*** —

(A) ***In general.*** A U.S. debt hybrid instrument is a splitter arrangement if foreign income taxes are paid or accrued by the issuer of a U.S. debt hybrid instrument with respect to income in an amount equal to the interest (including original issue discount) paid or accrued on the instrument that is deductible for U.S. Federal income tax purposes but that does not give rise to a deduction under the laws of a foreign jurisdiction in which the issuer is subject to tax.

(B) ***Split taxes from a U.S. debt hybrid instrument splitter arrangement.*** Split taxes from a U.S. debt hybrid instrument splitter arrangement are the foreign income taxes paid or accrued by the issuer on the income that would have been offset by the interest paid or accrued on the U.S. debt hybrid instrument had such interest been deductible for foreign tax purposes.

(C) ***Related income from a U.S. debt hybrid instrument splitter arrangement.*** The related income from a U.S. debt hybrid instrument splitter arrangement is the gross amount of the interest income recognized for U.S. Federal income tax purposes by the owner of the U.S. debt hybrid instrument, determined without regard to the actual amount of the owner's income or earnings and profits for U.S. Federal income tax purposes.

(D) ***U.S. debt hybrid instrument.*** The term *U.S. debt hybrid instrument* means an instrument that is treated as equity for foreign tax purposes but as indebtedness for U.S. Federal income tax purposes.

(4) *Partnership inter-branch payment splitter arrangements* —

(i) ***In general.*** An allocation of foreign income tax paid or accrued by a partnership with respect to an inter-branch payment as described in § 1.704-1(b)(4)(viii)(*d*)(*3*) (revised as of April 1, 2011) (the *inter-branch payment tax*) is a splitter arrangement to the extent the inter-branch payment tax is not allocated to the partners in the same proportion as the distributive shares of income in the CFTE category to which the inter-branch payment tax is or would be assigned under § 1.704-1(b)(4)(viii)(*d*) without regard to § 1.704-1(b)(4)(viii)(*d*)(*3*).

(ii) ***Split taxes from a partnership inter-branch payment splitter arrangement.*** The split taxes from a partnership inter-branch splitter arrangement equal the excess of the amount of the inter-branch payment tax allocated to a partner under the partnership agreement over the amount of the inter-branch payment tax that would have been allocated to the partner if the inter-branch payment tax had been allocated to the partners in the same proportion as the distributive shares of income in the CFTE category referred to in paragraph (b)(4)(i) of this section.

(iii) ***Related income from a partnership inter-branch payment splitter arrangement.*** The related income from a partnership inter-branch payment splitter arrangement equals the amount of income allocated to a partner that exceeds the amount of income that would have been allocated to the partner if income in the CFTE category referred to in paragraph (b)(4)(i) of this section in the amount of the inter-branch payment had been allocated to the partners in the same proportion as the inter-branch payment tax was allocated under the partnership agreement.

(c) ***Effective/applicability date.*** This section applies to foreign income taxes paid or accrued in taxable years ending after February 9, 2015. However, a taxpayer may choose to apply the provisions of § 1.909-2T (as contained in 26 CFR part 1, revised as of April 1, 2014) in lieu of this section to foreign income taxes paid or accrued in its first taxable year ending after February 9, 2015, and in taxable years of foreign corporations with respect to which the taxpayer is a domestic shareholder (as defined in § 1.902-1(a)) that end with or within that first taxable year. See 26 CFR 1.909-2T (revised as of April 1, 2014) for rules applicable to foreign income taxes paid or accrued in taxable years beginning on or after January 1, 2012, and ending on or before February 9, 2015.

[T.D. 9710, 80 FR 7328, Feb. 10, 2015]

§ 1.909-3 Rules regarding related income and split taxes.

(a) ***Interim rules for identifying related income and split taxes.*** The principles of paragraphs (d) through (f) of § 1.909-6 apply to related income and split taxes in taxable years beginning on or after January 1, 2011, except that the alternative method for identifying distributions of related income described in § 1.909-6(d)(4) applies only to identify the amount of pre-2011 split taxes of a section 902 corporation that are suspended as of the first day of the section 902 corporation's first taxable year beginning on or after January 1, 2011.

(b) ***Split taxes on deductible disregarded payments.*** Split taxes include taxes paid or accrued in taxable years beginning on or after January 1, 2011, with respect to the amount of a disregarded payment that is deductible by the payor of the disregarded payment under the laws of a foreign jurisdiction in which the payor of the disregarded payment is subject to tax on related income from a splitter arrangement. The amount of the deductible disregarded payment to which this paragraph (b) applies is limited to the amount of related income from such splitter arrangement.

(c) ***Effective/applicability date.*** This section applies to taxable years ending after February 9, 2015. See 26 CFR 1.909-3T (revised as of April 1, 2014) for rules applicable to taxable years beginning on or after January 1, 2011, and ending on or before February 9, 2015.

[T.D. 9710, 80 FR 7332, Feb. 10, 2015]

§ 1.909-4 Coordination rules.

(a) ***Interim rules.*** The principles of paragraph (g) of § 1.909-6 apply to taxable years beginning on or after January 1, 2011.

(b) ***Effective/applicability date.*** This section applies to taxable years ending after February 9, 2015. See 26 CFR 1.909-4T (revised as of April 1, 2014) for rules applicable to taxable years beginning on or after January 1, 2011, and ending on or before February 9, 2015.

[T.D. 9710, 80 FR 7332, Feb. 10, 2015]

§ 1.909-5 2011 and 2012 splitter arrangements.

(a) ***Taxes paid or accrued in taxable years beginning in 2011.***

(1) Foreign income taxes paid or accrued by any person in a taxable year beginning on or after January 1, 2011, and before January 1, 2012, in connection with a pre-2011 splitter arrangement (as defined in § 1.909-6(b)), are split taxes to the same extent that such taxes would have been treated as pre-2011 split taxes if such taxes were paid or accrued by a section 902 corporation in a taxable year beginning on or before December 31, 2010. The related income with respect to split taxes from such an arrangement is the related income described in § 1.909-6(b), determined as if the payor were a section 902 corporation.

(2) Foreign income taxes paid or accrued by any person in a taxable year beginning on or after January 1, 2011, and before January 1, 2012, in connection with a partnership inter-branch payment splitter arrangement described in § 1.909-2(b)(4) are split taxes to the extent that such taxes are identified as split taxes in § 1.909-2(b)(4)(ii). The related income with respect to the split taxes is the related income described in § 1.909-2(b)(4)(iii).

(b) ***Taxes paid or accrued in certain taxable years beginning in 2012 with respect to a foreign consolidated group splitter arrangement.*** Foreign income taxes paid or accrued by any person in a taxable year beginning on or after January 1, 2012, and on or before February 14, 2012, in connection with a foreign consolidated group splitter arrangement described in § 1.909-6(b)(2) are split taxes to the same extent that such taxes would have been treated as pre-2011 split taxes if such taxes were paid or accrued by a section 902 corporation in a taxable year beginning on or before December 31, 2010. The related income with respect to split taxes from such an arrangement is the related income described in § 1.909-6(b)(2), determined as if the payor were a section 902 corporation.

(c) ***Effective/applicability date.*** The rules of this section apply to foreign income taxes paid or accrued in taxable years beginning on or after January 1, 2011, and on or before February 14, 2012.

[T.D. 9710, 80 FR 7332, Feb. 10, 2015]

§ 1.909-6 Pre-2011 foreign tax credit splitting events.

(a) *Foreign tax credit splitting event* —

(1) ***In general.*** This section provides rules for determining whether foreign income taxes paid or accrued by a section 902 corporation (as defined in section 909(d)(5)) in taxable years beginning on or before December 31, 2010 (*pre-2011 taxable years* and *pre-2011 taxes*) are suspended under section 909 in taxable years beginning after December 31, 2010, (*post-2010 taxable years*) of a section 902 corporation. Paragraph (b) of this section identifies an exclusive list of arrangements that will be treated as giving rise to foreign tax credit splitting events in pre-2011 taxable years (*pre- 2011 splitter arrangements*). Paragraphs (c), (d), and (e) of this section provide rules for determining the related income and pre-2011 split taxes paid or accrued with respect to pre-2011 splitter arrangements. Paragraph (f) of this section provides rules concerning the application of section 909 to partnerships and trusts. Paragraph (g) of this section provides rules concerning the interaction between section 909 and other Internal Revenue Code (*Code*) provisions.

(2) ***Taxes not subject to suspension under section 909.*** Pre-2011 taxes that will not be suspended under section 909 or paragraph (a) of this section are:

(i) Any pre-2011 taxes that were not paid or accrued in connection with a pre-2011 splitter arrangement identified in paragraph (b) of this section;

(ii) Any pre-2011 taxes that were paid or accrued in connection with a pre-2011 splitter arrangement identified in paragraph (b) of this section (*pre-2011 split taxes*) but that were deemed paid under section 902(a) or 960 on or before the last day of the section 902 corporation's last pre-2011 taxable year;

(iii) Any pre-2011 split taxes if either the payor section 902 corporation took the related income into account in a pre-2011 taxable year or a section 902 shareholder (as defined in § 1.909-1(a)(2)) of the relevant section 902 corporation took the related income into account on or before the last day of the section 902 corporation's last pre-2011 taxable year; and

(iv) Any pre-2011 split taxes paid or accrued by a section 902 corporation in taxable years of such section 902 corporation beginning before January 1, 1997.

(3) ***Taxes subject to suspension under section 909.*** To the extent that the section 902 corporation paid or accrued pre-2011 split taxes that are not described in paragraph (a)(2) of this section, section 909 and the regulations under that section will apply to such pre-2011 split taxes for purposes of applying sections 902 and 960 in post-2010 taxable years of the section 902 corporation. Accordingly, these taxes will be removed from the section 902 corporation's pools of post-1986 foreign income taxes and suspended under section 909 as of the first day of the section 902 corporation's first post-2010 taxable year. There is no increase to a section 902 corporation's earnings and profits for the amount of any pre-2011 taxes to which section 909 applies that were previously deducted in computing earnings and profits in a pre-2011 taxable year.

(b) ***Pre-2011 splitter arrangements.*** The arrangements set forth in this paragraph (b) are pre-2011 splitter arrangements.

(1) ***Reverse hybrid structure splitter arrangements.*** A reverse hybrid structure exists when a section 902 corporation owns an interest in a reverse hybrid. A reverse hybrid is an entity that is a corporation for U.S. Federal income tax purposes but is a pass-through entity or a branch under the laws of a foreign country imposing tax on the income of the entity. As a result, the owner of the reverse hybrid is

subject to tax on the income of the entity under foreign law. A pre-2011 splitter arrangement involving a reverse hybrid structure exists when pre-2011 taxes are paid or accrued by a section 902 corporation with respect to income of a reverse hybrid that is a covered person with respect to the section 902 corporation. A pre-2011 splitter arrangement involving a reverse hybrid structure may exist even if the reverse hybrid has a deficit in earnings and profits for a particular year (for example, due to a timing difference). Such taxes paid or accrued by the section 902 corporation are pre-2011 split taxes. The related income is the earnings and profits (computed for U.S. Federal income tax purposes) of the reverse hybrid attributable to the activities of the reverse hybrid that gave rise to income included in the foreign tax base with respect to which the pre-2011 split taxes were paid or accrued. Accordingly, related income of the reverse hybrid would not include any item of income or expense attributable to a disregarded entity (as defined in § 301.7701-2(c)(2)(i) of this chapter) owned by the reverse hybrid if income attributable to the activities of the disregarded entity is not included in the foreign tax base.

(2) ***Foreign consolidated group splitter arrangements.*** A foreign consolidated group exists when a foreign country imposes tax on the combined income of two or more entities. Tax is considered imposed on the combined income of two or more entities even if the combined income is computed under foreign law by attributing to one such entity the income of one or more entities. A foreign consolidated group is a pre-2011 splitter arrangement to the extent that the taxpayer did not allocate the foreign consolidated tax liability among the members of the foreign consolidated group based on each member's share of the consolidated taxable income included in the foreign tax base under the principles of § 1.901-2(f)(3) (revised as of April 1, 2011). A pre-2011 splitter arrangement involving a foreign consolidated group may exist even if one or more members has a deficit in earnings and profits for a particular year (for example, due to a timing difference). Pre-2011 taxes paid or accrued with respect to the income of a foreign consolidated group are pre-2011 split taxes to the extent that taxes paid or accrued by one member of the foreign consolidated group are imposed on a covered person's share of the consolidated taxable income included in the foreign tax base. The related income is the earnings and profits (computed for U.S. Federal income tax purposes) of such other member attributable to the activities of that other member that gave rise to income included in the foreign tax base with respect to which the pre-2011 split taxes were paid or accrued. No inference should be drawn from the treatment of foreign consolidated groups under section 909 as to the determination of the person who paid the foreign income tax for U.S. Federal income tax purposes.

(3) ***Group relief or other loss-sharing regime splitter arrangements*** —

(i) ***In general.*** A foreign group relief or other loss-sharing regime exists when one entity with a loss permits the loss to be used to offset the income of one or more entities (*shared loss*). A pre-2011 splitter arrangement involving a shared loss exists when the following three conditions are met:

(A) There is an instrument that is treated as indebtedness under the laws of the jurisdiction in which the issuer is subject to tax and that is disregarded for U.S. Federal income tax purposes (*disregarded debt instrument*). Examples of a disregarded debt instrument include a debt obligation between two disregarded entities that are owned by the same section 902 corporation, two disregarded entities that are owned by a partnership with one or more partners that are section 902 corporations, a section 902 corporation and a disregarded entity that is owned by that section 902 corporation, or a partnership in which the section 902 corporation is a partner and a disregarded entity that is owned by such partnership.

(B) The owner of the disregarded debt instrument pays a foreign income tax attributable to a payment or accrual on the instrument.

(C) The payment or accrual on the disregarded debt instrument gives rise to a deduction for foreign tax purposes and the issuer of the instrument incurs a shared loss that is taken into account under foreign law by one or more entities that are covered persons with respect to the owner of the instrument.

(ii) ***Split taxes and related income.*** In situations described in paragraph (b)(3)(i) of this section, pre-2011 taxes paid or accrued by the owner of the disregarded debt instrument with respect to amounts paid or accrued on the instrument (up to the amount of the shared loss) are pre-2011 split taxes. The related income of a covered person is an amount equal to the shared loss, determined without regard to the actual amount of the covered person's earnings and profits.

(4) ***Hybrid instrument splitter arrangements*** —

(i) ***In general.*** A hybrid instrument for purposes of this paragraph (b)(4) is an instrument that either is treated as equity for U.S. Federal income tax purposes but is treated as indebtedness for foreign tax purposes (*U.S. equity hybrid instrument*), or is treated as indebtedness for U.S. Federal income tax purposes but is treated as equity for foreign tax purposes (*U.S. debt hybrid instrument*).

(ii) ***U.S. equity hybrid instrument splitter arrangement.*** If the issuer of a U.S. equity hybrid instrument is a covered person with respect to a section 902 corporation that is the owner of the U.S. equity hybrid instrument, there is a pre-2011 splitter arrangement with respect to the portion of the pre-2011 taxes paid or accrued by the owner section 902 corporation with respect to the amounts on the instrument that are deductible by the issuer as interest under the laws of a foreign jurisdiction in which the issuer is subject to tax but that do not give rise to income for U.S. Federal income tax purposes. Pre-2011 split taxes paid or accrued by the section 902 corporation equal the total amount of pre-2011 taxes paid or accrued by the section 902 corporation less the amount of pre-2011 taxes that would have been paid or accrued had the section 902 corporation not been subject to tax on income from the U.S. equity hybrid instrument. The related income of the issuer of the U.S. equity hybrid instrument is an amount equal to the amounts that are deductible by the issuer for foreign tax purposes, determined without regard to the actual amount of the issuer's earnings and profits.

(iii) ***U.S. debt hybrid instrument splitter arrangement.*** If the owner of a U.S. debt hybrid instrument is a covered person with respect to a section 902 corporation that is the issuer of the U.S. debt hybrid instrument, there is a pre-2011 splitter arrangement with respect to the portion of the pre-2011 taxes paid or accrued by the section 902 corporation on income in an amount equal to the interest (including original issue discount) paid or accrued on the instrument that is deductible for U.S. Federal income tax purposes but that does not give rise to a deduction under the laws of a foreign jurisdiction in which the issuer is subject to tax. Pre-2011 split taxes are the pre-2011 taxes paid or accrued by the section 902 corporation on the income that would have been offset by the interest paid or accrued on the U.S. debt hybrid instrument had such interest been deductible for foreign tax purposes. The related income with respect to a U.S. debt hybrid instrument is the gross amount of the interest income recognized for U.S. Federal income tax purposes by the owner of the U.S. debt hybrid instrument, determined without regard to the actual amount of the owner's earnings and profits.

(c) ***General rules for applying section 909 to pre-2011 split taxes and related income*** —

(1) ***Annual determination.*** The determination of related income, other income, pre-2011 split taxes, and other taxes, and the portion of these amounts that were distributed, deemed paid or otherwise transferred or eliminated must be made on an annual basis beginning with the first taxable year of the section 902 corporation beginning after December 31, 1996 (*post-1996 taxable year*) in which the section 902 corporation paid or accrued a pre-2011 tax with respect to a pre-2011 splitter arrangement and ending with the section 902 corporation's last pre-2011 taxable year. Annual amounts of related income and pre-2011 split taxes are aggregated for each separate pre-2011 splitter arrangement.

(2) ***Separate categories.*** The determination of annual and aggregate amounts of related income and pre-2011 split taxes with respect to each pre-2011 splitter arrangement must be made for each separate category as defined in § 1.904-4(m) of the section 902 corporation, each covered person, and any other person that succeeds to the related income and pre-2011 split taxes. In the case of a pre-2011 splitter arrangement involving a shared loss (as described in paragraph (b)(3) of this section), the amount of the related income in each separate category of the covered person is equal to the amount of income in that separate category that was offset by the shared loss for foreign tax purposes. In the case of a pre-2011 splitter arrangement involving a U.S. equity hybrid instrument (as described in paragraph (b)(4)(ii) of this section), the related income is assigned to the issuer's separate categories in the same proportions as the pre-2011 split taxes. Earnings and profits, including related income, are assigned to separate categories under the rules of §§ 1.904-4, 1.904-5, and 1.904-7. Foreign income taxes, including pre-2011 split taxes, are assigned to separate categories under the rules of § 1.904-6. A section 902 shareholder must consistently apply methodologies for determining pre-2011 split taxes and related income with respect to all pre-2011 splitter arrangements.

(d) ***Special rules regarding related income*** —

(1) ***Annual adjustments.*** In the case of each pre-2011 splitter arrangement involving a reverse hybrid or a foreign consolidated group (as described in paragraphs (b)(1) and (2) of this section, respectively), a covered person's aggregate amount of related income must be adjusted each year by the net amount of income and expense attributable to the activities of the covered person that give rise to income included in the foreign tax base, even if the net amount is negative and regardless of whether the section 902 corporation paid or accrued any pre-2011 split taxes in such year.

(2) ***Effect of separate limitation losses and deficits.*** Related income is determined without regard to the application of § 1.960-1(i)(4) (relating to the effect of separate limitation losses on earnings and profits in another separate category) or section 952(c)(1) (relating to certain earnings and profits deficits).

(3) ***Pro rata method for distributions out of earnings and profits that include both related income and other income.*** If the earnings and profits of a covered person include amounts attributable to both related income and other income, including earnings and profits attributable to taxable years beginning before January 1, 1997, then distributions, deemed distributions, and inclusions out of earnings and profits (for example, under sections 301, 304, 367(b), 951(a), 964(e), 1248, or 1293) of the covered person are considered made out of related income and other income on a pro rata basis. Any reduction of a covered person's earnings and profits that results from a payment on stock that is not treated as a dividend for U.S. Federal income tax purposes (for example, pursuant to section 312(n)(7)) will also reduce related income and other income on a pro rata basis.

(4) ***Alternative method for distributions out of earnings and profits that include both related income and other income.*** Solely for purposes of identifying the amount of pre-2011 split taxes of a section 902 corporation that are suspended as of the first day of the section 902 corporation's first post-2010 taxable year, in lieu of the rule set forth in paragraph (d)(3) of this section, a section 902 shareholder may choose to treat all distributions, deemed distributions, and inclusions out of earnings and profits of a covered person as attributable first to related income. A section 902 shareholder may choose to use this alternative method on a timely filed original income tax return for the first post-2010 taxable year in which the shareholder computes an amount of foreign income taxes deemed paid with respect to a section 902 corporation that paid or accrued pre-2011 split taxes. Such choice by a section 902 shareholder is evidenced by employing the method on its income tax return; the section 902 shareholder need not file a separate statement. A section 902 shareholder that chooses this alternative method must consistently apply it with respect to all pre-2011 splitter arrangements.

(5) ***Distributions, deemed distributions, and inclusions of related income.*** Distributions, deemed distributions, and inclusions of related income (including indirectly through a partnership) to persons other than the payor section 902 corporation retain their character as related income with respect to the associated pre-2011 split taxes.

(6) ***Carryover of related income.*** Related income carries over to other corporations in the same manner as earnings and profits carry over under section 381, § 1.367(b)-7, or similar rules, and retains its character as related income with respect to the associated pre-2011 split taxes.

(7) ***Related income taken into account by a section 902 shareholder.*** Related income will be considered taken into account by a section 902 shareholder to the extent that the related income is recognized as gross income by the section 902 shareholder, or by an affiliated corporation described in paragraph (d)(9) of this section, upon a distribution, deemed distribution, or inclusion (such as under section 951(a)) out of the earnings and profits of the covered person attributable to such related income.

(8) ***Related income taken into account by a payor section 902 corporation.*** Related income will be considered taken into account by a payor section 902 corporation to the extent that:

(i) The related income is reflected in the earnings and profits of such section 902 corporation for U.S. Federal income tax purposes by reason of a distribution, deemed distribution, or inclusion out of the earnings and profits of the covered person attributable to such related income; or

(ii) The related income is reflected as a positive adjustment to the earnings and profits of such section 902 corporation for U.S. Federal income tax purposes by reason of the section 902 corporation and the covered person combining in a transaction described in section 381(a)(1) or (a)(2).

(9) ***Related income taken into account by an affiliated group of corporations that includes a section 902 shareholder.*** A section 902 shareholder will be considered to have taken related income into account if one or more members of an affiliated group of corporations (as defined in section 1504) that files a consolidated Federal income tax return that includes the section 902 shareholder takes the related income into account.

(10) ***Distributions of previously-taxed earnings and profits.*** Distributions and deemed distributions described in paragraph (d) of this section (including in the case of a section 902 shareholder that has chosen the alternative method described in paragraph (d)(4) of this section) do not include distributions of amounts described in section 959(c)(1) or (c)(2), which are distributed before amounts described in section 959(c)(3).

(e) ***Special rules regarding pre-2011 split taxes*** —

(1) ***Taxes deemed paid pro-rata out of pre-2011 split taxes and other taxes.*** If the pre-2011 taxes of a section 902 corporation include both pre-2011 split taxes and other taxes, then foreign income taxes deemed paid under section 902 or 960 or otherwise removed from post-1986 foreign income taxes in pre-2011 taxable years will be treated as attributable to pre-2011 split taxes and other taxes on a pro-rata basis.

(2) ***Pre-2011 split taxes deemed paid in pre-2011 taxable years.*** Pre-2011 split taxes deemed paid in pre-2011 taxable years in connection with a dividend paid to a shareholder described in section 902(b) retain their character as pre-2011 split taxes. The section 902(b) shareholder will be treated as the payor section 902 corporation with respect to those pre-2011 split taxes.

(3) ***Carryover of pre-2011 split taxes.*** Pre-2011 split taxes that carry over to another foreign corporation, including under section 381, § 1.367(b)-7 or similar rules, retain their character as pre-2011 split taxes. The transferee foreign corporation will be treated as the payor section 902 corporation with respect to those pre-2011 split taxes.

(4) ***Determining when pre-2011 split taxes are no longer treated as pre-2011 split taxes.*** For each pre-2011 splitter arrangement, as related income is taken into account by the payor section 902 corporation or a section 902 shareholder as provided in paragraph (d) of this section, a ratable portion of the associated pre-2011 split taxes will no longer be treated as pre-2011 split taxes. In the case of a pre-2011 splitter arrangement involving a reverse hybrid or a foreign consolidated group (as described in paragraphs (b)(1) and (2) of this section, respectively), if aggregate related income is reduced to zero (other than as a result of a distribution, deemed distribution, or inclusion described in paragraph (d) of this section) or less than zero, pre-2011 split taxes will retain their character as pre-2011 split taxes until the amount of aggregate related income is positive and the related income is taken into account by the payor section 902 corporation or a section 902 shareholder as provided in paragraph (d) of this section.

(f) ***Rules relating to partnerships and trusts*** —

(1) ***Taxes paid or accrued by partnerships.*** In the case of foreign income taxes paid or accrued by a partnership, the taxes will be treated as pre-2011 split taxes to the extent such taxes are allocated to one or more section 902 corporations and would be pre-2011 split taxes if the partner section 902 corporation had paid or accrued the taxes directly on the date such taxes are included by the section 902 corporation under sections 702 and 706(a). Further, any foreign income taxes subject to section 909 will be suspended in the hands of the partner section 902 corporation.

(2) ***Section 704(b) allocations.*** Partnership allocations that satisfy the requirements of section 704(b) and the regulations thereunder will not constitute pre-2011 splitter arrangements except to the extent the arrangement is otherwise described in paragraph (b) of this section (for example, a payment or accrual on a disregarded debt instrument that gives rise to a shared loss).

(3) ***Trusts.*** Rules similar to the rules of paragraph (f)(1) of this section will apply in the case of any trust with one or more beneficiaries that is a section 902 corporation.

(g) *Interaction between section 909 and other Code provisions* —

(1) ***Section 904(c).*** Section 909 does not apply to excess foreign income taxes that were paid or accrued in pre-2011 taxable years and carried forward and deemed paid or accrued under section 904(c) in a post-2010 taxable year.

(2) ***Section 905(a).*** For purposes of determining in post-2010 taxable years the allowable deduction for foreign income taxes paid or accrued under section 164(a), the carryover of excess foreign income taxes under section 904(c), and the extended period for claiming a credit or refund under section 6511(d)(3)(A), foreign income taxes to which section 909 applies are first taken into account and treated as paid or accrued in the year in which the related income is taken into account, and not in the earlier year to which the tax relates (determined without regard to section 909).

(3) ***Section 905(c).*** If a redetermination of foreign income taxes claimed as a direct credit under section 901 occurs in a post-2010 taxable year and the foreign tax redetermination relates to a pre-2011 taxable year, to the extent such foreign tax redetermination increased the amount of foreign income taxes paid or accrued with respect to the pre-2011 taxable year (for example, due to an additional assessment of foreign tax or a payment of a previously accrued tax not paid within two years), section 909 will not apply to such taxes. If a redetermination of foreign tax paid or accrued by a section 902 corporation occurs in a post-2010 taxable year and increases the amount of foreign income taxes paid or accrued by the section 902 corporation with respect to a pre-2011 taxable year (for example, due to an additional assessment of foreign tax or a payment of a previously accrued tax not paid within two years), such taxes will be treated as pre-2011 taxes. Section 909 will apply to such taxes if they are pre-2011 split taxes and the taxes will be suspended in the post-2010 taxable year in which they would otherwise be taken into account as a prospective adjustment to the section 902 corporation's pools of post-1986 foreign income taxes.

(4) ***Other foreign tax credit provisions.*** Section 909 does not affect the applicability of other restrictions or limitations on the foreign tax credit under existing law, including, for example, the substantiation requirements of section 905(b).

(h) ***Effective/applicability date.*** This section applies to foreign income taxes paid or accrued by section 902 corporations in pre-2011 taxable years for purposes of computing foreign income taxes deemed paid with respect to distributions or inclusions out of earnings and profits of section 902 corporations in taxable years of the section 902 corporation ending after February 9, 2015. See 26 CFR 1.909-6T (revised as of April 1, 2014) for rules applicable to foreign income taxes paid or accrued by section 902 corporations in pre-2011 taxable years for purposes of computing foreign income taxes deemed paid with respect to distributions or inclusions out of earnings and profits of section 902 corporations in taxable years of the section 902 corporation beginning after December 31, 2010, and ending on or before February 9, 2015.

[T.D. 9710, 80 FR 7332, Feb. 10, 2015]

§ 1.910 [Reserved]

§ 1.911-1 Partial exclusion for earned income from sources within a foreign country and foreign housing costs.

(a) ***In general.*** Section 911 provides that a qualified individual may elect to exclude the individual's foreign earned income and the housing cost amount from the individual's gross income for the taxable year. Foreign earned income is excludable to the extent of the applicable limitation for the taxable year. The housing cost amount for the taxable year is excludable to the extent attributable to employer provided

amounts. If a portion of the housing cost amount for the taxable year is attributable to non-employer provided amounts, such amount may be deductible by the qualified individual subject to a limitation. The amounts excluded under section 911(a) and the amount deducted under section 911(c)(3)(A) for the taxable year shall not exceed the individual's foreign earned income for such taxable year. Foreign earned income must be earned during a period for which the individual qualifies to make an election under section 911(d)(1). A housing cost amount that would be deductible except for the application of this limitation may be carried over to the next taxable year and is deductible to the extent of the limitation for that year. Except as otherwise provided, §§ 1.911-1 through 1.911-7 apply to taxable years beginning after December 31, 1981. These sections do not apply to any item of income, expense, deduction, or credit arising before January 1, 1982, even if such item is attributable to services performed after December 31, 1981.

(b) ***Scope.*** Section 1.911-2 provides rules for determining whether an individual qualifies to make an election under section 911. Section 1.911-3 provides rules for determining the amount of foreign earned income that is excludable under section 911(a)(1). Section 1.911-4 provides rules for determining the housing cost amount and the portions excludable under section 911(a)(2) or deductible under section 911(c)(3). Section 1.911-5 provides special rules applicable to married couples. Section 1.911-6 provides for the disallowance of deductions, exclusions, and credits attributable to amounts excluded under section 911. Section 1.911-7 provides procedural rules for making or revoking an election under section 911. Section 1.911-8 provides a reference to rules applicable to taxable years beginning before January 1, 1982.

(Sec. 911 (95 Stat. 194; 26 U.S.C. 911) and sec. 7805 (68A Stat. 917; 26 U.S.C. 7805) of the Internal Revenue Code of 1954)

[T.D. 8006, 50 FR 2964, Jan. 23, 1985]

§ 1.911-2 Qualified individuals.

(a) ***In general.*** An individual is a qualified individual if:

(1) The individual's tax home is in a foreign country or countries throughout—

(i) The period of bona fide residence described in paragraph (a)(2)(i) of this section, or

(ii) The 330 full days of presence described in paragraph (a)(2)(ii) of this section, and

(2) The individual is either—

(i) A citizen of the United States who establishes to the satisfaction of the Commissioner or his delegate that the individual has been a bona fide resident of a foreign country or countries for an uninterrupted period which includes an entire taxable year, or

(ii) A citizen or resident of the United States who has been physically present in a foreign country or countries for at least 330 full days during any period of twelve consecutive months.

(b) ***Tax home.*** For purposes of paragraph (a)(i) of this section, the term “tax home” has the same meaning which it has for purposes of section 162(a)(2) (relating to travel expenses away from home). Thus, under section 911, an individual's tax home is considered to be located at his regular or principal (if more than one regular) place of business or, if the individual has no regular or principal place of business because of the nature of the business, then at his regular place of abode in a real and substantial sense. An individual shall not, however, be considered to have a tax home in a foreign country for any period for which the individual's abode is in the United States. Temporary presence of the individual in the United States does

not necessarily mean that the individual's abode is in the United States during that time. Maintenance of a dwelling in the United States by an individual, whether or not that dwelling is used by the individual's spouse and dependents, does not necessarily mean that the individual's abode is in the United States.

(c) ***Determination of bona fide residence.*** For purposes of paragraph (a)(2)(i) of this section, whether an individual is a bona fide resident of a foreign country shall be determined by applying, to the extent practical, the principles of section 871 and the regulations thereunder, relating to the determination of the residence of aliens. Bona fide residence in a foreign country or countries for an uninterrupted period may be established, even if temporary visits are made during the period to the United States or elsewhere on vacation or business. An individual with earned income from sources within a foreign country is not a bona fide resident of that country if:

(1) The individual claims to be a nonresident of that foreign country in a statement submitted to the authorities of that country, and

(2) The earned income of the individual is not subject, by reason of nonresidency in the foreign country, to the income tax of that country.

If an individual has submitted a statement of nonresidence to the authorities of a foreign country the accuracy of which has not been resolved as of any date when a determination of the individual's bona fide residence is being made, then the individual will not be considered a bona fide resident of the foreign country as of that date.

(d) ***Determination of physical presence.*** For purposes of paragraph (a)(2)(ii) of this section, the following rules apply.

(1) ***Twelve-month test.*** A period of twelve consecutive months may begin with any day but must end on the day before the corresponding day in the twelfth succeeding month. The twelve-month period may begin before or after arrival in a foreign country and may end before or after departure.

(2) ***330-day test.*** The 330 full days need not be consecutive but may be interrupted by periods during which the individual is not present in a foreign country. In computing the minimum 330 full days of presence in a foreign country or countries, all separate periods of such presence during the period of twelve consecutive months are aggregated. A full day is a continuous period of twenty-four hours beginning with midnight and ending with the following midnight. An individual who has been present in a foreign country and then travels over areas not within any foreign country for less than twenty-four hours shall not be deemed outside a foreign country during the period of travel. If an individual who is in transit between two points outside the United States is physically present in the United States for less than twenty-four hours, such individual shall not be treated as present in the United States during such transit but shall be treated as travelling over areas not within any foreign country. For purposes of this paragraph (d)(2), the term “transit between two points outside the United States” has the same meaning that it has when used in section 7701(b)(6)(C).

(3) ***Illustrations of the physical presence requirement.*** The physical presence requirement of paragraph (a)(2)(ii) of this section is illustrated by the following examples:

Example 1. B, a U.S. citizen, arrives in Venezuela from New York at 12 noon on April 24, 1982. B remains in Venezuela until 2 p.m. on March 21, 1983, at which time B departs for the United States. Among other possible twelve month periods, B is present in a foreign country an aggregate of 330 full days during each of the following twelve month periods: March 21, 1982 through March 20, 1983; and April 25, 1982 through April 24, 1983.

Example 2. C, a U.S. citizen, travels extensively from the time C leaves the United States on March 5, 1982, until the time C departs the United Kingdom on January 1, 1984, to return to the United States permanently. The schedule of C's travel and the number of full days at each location are listed below:

Country	Time and date of arrival	Time and date of departure	Full days in foreign country
United States		10 p.m. (by air) Mar. 5, 1982	
United Kingdom	9 a.m. Mar. 6, 1982	10 p.m. (by ship) June 25, 1982	110
United States	11 a.m. June 30, 1982	1 p.m. (by ship) July 19, 1982	0
France	3 p.m. July 24, 1982	11 a.m. (by air) Aug. 22, 1983	393
United States	4 p.m. Aug. 22, 1983	9 a.m. (by air) Sept. 4, 1983	0
United Kingdom	9 a.m. Sept. 5, 1983	9 a.m. (by air) Jan. 1, 1984	117
United States	1 p.m. Jan. 1, 1984		

Among other possible twelve-month periods, C is present in a foreign country or countries an aggregate of 330 full days during the following twelve-month periods: March 2, 1982 through March 1, 1983; and January 21, 1983 through January 20, 1984. The computation of days with respect to each twelve month period may be illustrated as follows:
First twelve-month period (March 2, 1982 through March 1, 1983):

	Full days in foreign country
Mar. 2, 1982 through Mar. 6, 1982	0
Mar. 7, 1982 through June 24, 1982	110
June 25, 1982 through July 24, 1982	0
July 25, 1982 through Mar. 1, 1983	220

	Full days in foreign country
Total full days	330

Second twelve-month period (January 21, 1983 through January 20, 1984):

	Full days in foreign country
Jan. 21, 1983 through Aug. 21, 1983	213
Aug. 22, 1983 through Sept. 5, 1983	0
Sept. 6, 1983 through Dec. 31, 1983	117
Jan. 1, 1984 through Jan. 20, 1984	0
Total full days	330

(e) ***Special rules.*** For purposes only of establishing that an individual is a qualified individual under paragraph (a) of this section, residence or presence in a foreign country while there employed by the U.S. government or any agency or instrumentality of the U.S. government counts towards satisfaction of the requirements of § 1.911-2(a). (But see section 911(b)(1)(B)(ii) and § 1.911-3(c)(3) for the rule excluding amounts paid by the U.S. government to an employee from the definition of foreign earned income.) Time spent in a foreign country prior to January 1, 1982, counts toward satisfaction of the bona fide residence and physical presence requirements, even though no exclusion or deduction may be allowed under section 911 for income attributable to services performed during that time. For purposes or paragraph (a)(2)(ii) of this section, the term “resident of the United States” includes an individual for whom a valid election is in effect under section 6013 (g) or (h) for the taxable year or years during which the physical presence requirement is satisfied.

(f) ***Waiver of period of stay in foreign country due to war or civil unrest.*** Notwithstanding the requirements of paragraph (a) of this section, an individual whose tax home is in, a foreign country, and who is a bona fide resident of, or present in a foreign country for any period, who leaves the foreign country after August 31, 1978, before meeting the requirements of paragraph (a) of this section, may as provided in this paragraph, qualify to make an election under section 911(a) and § 1.911-7(a). If the Secretary determines, after consultation with the Secretary of State or his delegate, that war, civil unrest, or similar adverse conditions existed in a foreign country, then the Secretary shall publish the name of the foreign country and the dates between which such conditions were deemed to exist. In order to qualify to make an election under this paragraph, the individual must establish to the satisfaction of the Secretary that the individual left a foreign country, the name of which has been published by the Secretary, during the period when adverse conditions existed and that the individual could reasonably have expected to meet the requirements of paragraph (a) of this section but for the adverse conditions. The individual shall attach to his return for the taxable year a statement that the individual expected to meet the requirements of paragraph (a) of this section but for the conditions in the foreign country which precluded the normal conduct of business

by the individual. Such individual shall be treated as a qualified individual, but only for the actual period of residence or presence. Thus, in determining the number of the individual's qualifying days, only days within the period of actual residence or presence shall be counted.

(g) ***United States.*** The term "United States" when used in a geographical sense includes any territory under the sovereignty of the United States. It includes the states, the District of Columbia, the possessions and territories of the United States, the territorial waters of the United States, the air space over the United States, and the seabed and subsoil of those submarine areas which are adjacent to the territorial waters of the United States and over which the United States has exclusive rights, in accordance with international law, with respect to the exploration and exploitation of natural resources.

(h) ***Foreign country.*** The term "foreign country" when used in a geographical sense includes any territory under the sovereignty of a government other than that of the United States. It includes the territorial waters of the foreign country (determined in accordance with the laws of the United States), the air space over the foreign country, and the seabed and subsoil of those submarine areas which are adjacent to the territorial waters of the foreign country and over which the foreign country has exclusive rights, in accordance with international law, with respect to the exploration and exploitation of natural resources.

(Sec. 911 (95 Stat. 194; 26 U.S.C. 911) and sec. 7805 (68A Stat. 917; 26 U.S.C. 7805) of the Internal Revenue Code of 1954)

[T.D. 8006, 50 FR 2965, Jan. 23, 1985]

§ 1.911-3 Determination of amount of foreign earned income to be excluded.

(a) ***Definition of foreign earned income.*** For purposes of section 911 and the regulations thereunder, the term "foreign earned income" means earned income (as defined in paragraph (b) of this section) from sources within a foreign country (as defined in § 1.911-2(h)) that is earned during a period for which the individual qualifies under § 1.911-2(a) to make an election. Earned income is from sources within a foreign country if it is attributable to services performed by an individual in a foreign country or countries. The place of receipt of earned income is immaterial in determining whether earned income is attributable to services performed in a foreign country or countries.

(b) ***Definition of earned income*** —

(1) ***In general.*** The term "earned income" means wages, salaries, professional fees, and other amounts received as compensation for personal services actually rendered including the fair market value of all remuneration paid in any medium other than cash. Earned income does not include any portion of an amount paid by a corporation which represents a distribution of earnings and profits rather than a reasonable allowance as compensation for personal services actually rendered to the corporation.

(2) ***Earned income from business in which capital is material.*** In the case of an individual engaged in a trade or business (other than in corporate form) in which both personal services and capital are material income producing factors, a reasonable allowance as compensation for the personal services actually rendered by the individual shall be considered earned income, but the total amount which shall be treated as the earned income of the individual from such trade or business shall in no case exceed thirty percent of the individual's share of the net profits of such trade or business.

(3) ***Professional fees.*** Earned income includes all fees received by an individual engaged in a professional occupation (such as doctor or lawyer) in the performance of professional activities. Professional fees constitute earned income even though the individual employs assistants to perform part or all of the services, provided the patients or clients are those of the individual and look to the individual as the person responsible for the services rendered.

(c) ***Amounts not included in foreign earned income.*** Foreign earned income does not include an amount:

(1) Excluded from gross income under section 119;

(2) Received as a pension or annuity (including social security benefits);

(3) Paid to an employee by an employer which is the U.S. government or any U.S. government agency or instrumentality;

(4) Included in the individual's gross income by reason of section 402(b) (relating to the taxability of a beneficiary of a nonexempt trust) or section 403(c) (relating to the taxability of a beneficiary under a nonqualified annuity or under annuities purchased by exempt organizations);

(5) Included in gross income by reason of § 1.911-6(b)(4)(ii); or

(6) Received after the close of the first taxable year following the taxable year in which the services giving rise to the amounts were performed. For treatment of amounts received after December 31, 1962, which are attributable to services performed on or before December 31, 1962, and with respect to which there existed on March 12, 1962, a right (whether forfeitable or nonforfeitable) to receive such amounts, see § 1.72-8.

(d) ***Determination of the amount of foreign earned income that may be excluded under section 911(a)(1)*** —

(1) ***In general.*** Foreign earned income described in this section may be excluded under section 911(a)(1) and this paragraph only to the extent of the limitation specified in paragraph (d)(2) of this section. Income is considered to be earned in the taxable year in which the services giving rise to the income are performed. The determination of the amount of excluded earned income in this manner does not affect the time for reporting any amounts included in gross income.

(2) ***Limitation*** —

(i) ***In general.*** The term “section 911(a)(1) limitation” means the amount of foreign earned income for a taxable year which may be excluded under section 911(a)(1). The section 911(a)(1) limitation shall be equal to the lesser of the qualified individual's foreign earned income for the taxable year in excess of amounts that the individual elected to exclude from gross income under section 911(a)(2) or the product of the annual rate for the taxable year (as specified in paragraph (d)(2)(ii) of this section) multiplied by the following fraction:

$$\frac{\text{The number of qualifying days in the taxable year}}{\text{The number of days in the taxable year}}$$

(ii) ***Annual rate for the taxable year.*** The annual rate for the taxable year is the rate set forth in section 911(b)(2)(A).

(3) ***Number of qualifying days.*** For purposes of section 911 and the regulations thereunder, the number of qualifying days is the number of days in the taxable year within the period during which the individual met the tax home requirement and either the bona fide residence requirement or the physical presence requirement of § 1.911-2(a). Although the period of bona fide residence must include an entire taxable year, the entire uninterrupted period of residence may include fractional parts of a taxable year. For instance, if an individual who was a calendar year taxpayer established a tax home and a residence in a foreign country as of November 1, 1982, and maintained the tax home and the residence through March 31, 1984, then the uninterrupted period of bona fide residence includes fractional parts of the years 1982 and 1984, and all of 1983. The number of qualifying days in 1982 is sixty-one. The number of qualifying days in 1983 is 365. The number of qualifying days in 1984 is ninety-one. The period during which the physical presence requirement of § 1.911-2(a)(2)(ii) is met is any twelve consecutive month period during which the individual is physically present in one or more foreign countries for 330 days and the individual's tax home is in a foreign country during each day of such physical presence. Such period may include days when the individual is not physically present in a foreign country, and days when the individual does not maintain a tax home in a foreign country. Such period may include fractional parts of a taxable year. Thus, if an individual's period of physical, presence is the twelve-month period beginning June 1, 1982, and ending May 31, 1983, the number of qualifying days in 1982 is 214 and the number of qualifying days in 1983 is 151.

(e) ***Attribution rules*** —

(1) ***In general.*** Foreign earned income is considered to be earned in the taxable year in which the individual performed the services giving rise to the income. If income is earned in one taxable year and received in another taxable year, then, for purposes of determining the amount of foreign earned income that the individual may exclude under section 911(a), the individual must attribute the income to the taxable year in which the services giving rise to the income were performed. Thus, any reimbursement would be attributable to the taxable year in which the services giving rise to the obligation to pay the reimbursement were performed, not the taxable year in which the reimbursement was received. For example, tax equalization payments are normally received in the year after the year in which the services giving rise to the obligation to pay the tax equalization payment were performed. Therefore, such payments will almost always have to be attributed to the prior year. Foreign earned income attributable to services performed in a preceding taxable year shall be excludable from gross income in the year of receipt only to the extent such amount could have been excluded under paragraph (d)(1) in the preceding taxable year, had such amount been received in the preceding taxable year. The taxable year to which income is attributable will be determined on the basis of all the facts and circumstances.

(2) ***Priority of use of the section 911(a)(1) limitation.*** Foreign earned income received in the year in which it is earned shall be applied to the section 911(a)(1) limitation for that year before applying income earned in that year that is received in any other year. Foreign earned income that is earned in one year and received in another year shall be applied to the section 911(a)(1) limitation for the year in which it was earned, on a year by year basis, in any order that the individual chooses. (But see section 911(b)(1)(B)(iv)). An individual may not amend his return to change the treatment of income with respect to the section 911(a)(1) exclusion after the period provided by section 6511(a). The special period of limitation provided by section 6511(d)(3) does not apply for this purpose. For example, C, a qualified individual, receives an advance bonus of $10,000 in 1982, salary of $70,000 in 1983, and a performance bonus of $10,000 in 1984, all of which are foreign earned income for 1983. C has a section 911(a)(1) limitation for 1983 of $80,000, and has no housing cost amount exclusion. On his income tax return for 1983, C elects to exclude foreign earned income of $70,000 received in

1983. C may also exclude his $10,000 advance bonus received in 1982 (by filing an amended return for 1982), or he may exclude the $10,000 performance bonus received in 1984 on his 1984 income tax return. However, C may not exclude part of the 1982 bonus and part of the 1984 bonus.

(3) ***Exception for year-end payroll period.*** Notwithstanding paragraph (e)(1) of this section, salary or wage payments of a cash basis taxpayer shall be attributed entirely to the year of receipt under the following circumstances:

(i) The period for which the payment is made is a normal payroll period of the employer which regularly applies to the employee;

(ii) The payroll period includes the last day of the employee's taxable year;

(iii) The payroll period does not exceed 16 days; and

(iv) The payment is part of a normal payroll of the employer that is distributed at the same time, in relation to the payroll period, that such payroll would normally be distributed, and is distributed before the end of the next succeeding payroll period.

(4) ***Attribution of bonuses and substantially nonvested property to periods in which services were performed*** —

(i) ***In general.*** Bonuses and substantially nonvested property are attributable to all of the services giving rise to the income on the basis of all the facts and circumstances. If an individual receives a bonus or substantially nonvested property (as defined in § 1.83-3(b)) and it is determined to be attributable to services performed in more than one taxable year, then, for purposes of determining the amount eligible for exclusion from gross income in the year the bonus is received or the property vests, a portion of such amount shall be treated as attributable to services performed in each taxable year (or portion thereof) during the period when services giving rise to the bonus or the substantially nonvested property were performed. Such portion shall be determined by dividing the amount of the bonus or the excess of the fair market value of the vested property over the amount paid, if any, for the vested property, by the number of months in the period when services giving rise to such amount were performed, and multiplying the quotient by the number of months in such period in the taxable year. For purposes of this section, the term “month” means a calendar month. A fraction of a calendar month shall be deemed a month if it includes fifteen or more days.

(ii) ***Examples.*** The following examples illustrate the application of this paragraph (e)(4).

Example 1. A, an employee of M Corporation during all of 1983 and 1984, worked in the United States from January 1 through April 30, 1983, and received $12,000 of salary for that period. A worked in country F from May 1, 1983 through the end of 1984, and is a qualified individual under § 1.911-2(a) for that period. For the period from May 1 through December 31, 1983, A received $32,000 of salary. M pays a bonus on December 20, 1983 to each of M's employees in an amount equal to 10 percent of the employee's regular wages or salary for the 1983 calendar year. The amount of A's bonus is $4,400 for 1983. The portion of A's bonus that is attributable to services performed in country F and is foreign earned income for 1983 is $3,200, or $32,000 × 10 percent. The remaining $1,200 of A's bonus is attributable to services performed in the United States, and is not foreign earned income.

Example 2. The facts are the same as in example 1, except that M determines bonuses separately for each country based on the productivity of the employees in that country. M pays a bonus to employees in country F, in the amount of 15 percent of each employee's wages or salary earned in country F. A's country F bonus is $4,800 for 1983 ($32,000 × 15 percent), and is foreign earned income for 1983. If A also receives a bonus (or if A's bonus is increased) for working in the United States during 1983, that amount is not foreign earned income.

Example 3. X corporation offers its employees a bonus of $40,000 if the employee accepts employment in a foreign country and remains in a foreign country for a period of at least four years. A, an employee of X, is a calendar year and cash basis taxpayer. A accepts employment with X in foreign country F. A begins work in F on July 1, 1983 and continues to work in F for X until June 30, 1987. In 1987 X pays A a $40,000 bonus. The bonus is attributable to services A performed from July 1, 1983 through June 30, 1987. The amount of the bonus attributable to 1987 is $5,000 (($40,000 ÷ 48) × 6). The amount of the bonus attributable to 1986 is $10,000 (($40,000 ÷ 48) × 12). A may exclude the $10,000 attributable to 1986 only to the extent that amount could have been excluded under section 911(a)(1) had A received it in 1986. The remaining $25,000 is attributable to services performed in taxable years before 1986. Such amounts may not be excluded under section 911 because they are received after the close of the taxable year following the taxable year in which the services giving rise to the income were performed.

(iii) ***Special rule for elections under section 83(b).*** If an individual receives substantially nonvested property and makes an election under section 83(b) and § 1.83-2(a) to include in his gross income the amount determined under section 83(b)(1)(A) and (B) and § 1.83-2(a) for the taxable year in which the property is transferred (as defined in § 1.83-3(a)), then, for the purpose of determining the amount eligible for exclusion in the year of receipt, the individual may elect either of the following options:

(A) Substantially nonvested property may be treated as attributable entirely to services performed in the taxable year in which an election to include it in income is made. If so treated, then the amount otherwise included in gross income as determined under § 1.83-2(a) will be excludable under section 911(a) for such year subject to the limitation provided in § 1.911-3(d)(2) for such year.

(B) A portion of the substantially nonvested property may be treated as attributable to services performed or to be performed in each taxable year during which the substantial risk of forfeiture (as defined in section 83(c) and § 1.83-3(c)) exists. The portion treated as attributable to services performed or to be performed in each taxable year is determined by dividing the amount of the substantially nonvested property included in gross income as determined under § 1.83-2(a) by the number of months during the period when a substantial risk of forfeiture exists. The quotient is multiplied by the total number of months in the taxable year during which a substantial risk of forfeiture exists. The amount determined to be attributable to services performed in the year the election is made shall be excluded from gross income for such year as provided in paragraph (d)(2) of this section. Amounts treated as attributable to services performed in subsequent taxable years shall be excludable in the year of receipt only to the extent such amounts could be excluded under paragraph (d)(2) of this section in such subsequent years. An

individual may obtain such additional exclusion by filing an amended return for the taxable year in which the property was transferred. The individual may only amend his or her return within the period provided by section 6511(a) and the regulations thereunder.

(5) *Moving expense reimbursements* —

(i) ***Source of reimbursements.*** For the purpose of determining whether a moving expense reimbursement is attributable to services performed within a foreign country or within the United States, in the absence of evidence to the contrary, the reimbursement shall be attributable to future services to be performed at the new principal place of work. Thus, a reimbursement received by an employee from his employer for the expenses of a move to a foreign country will generally be attributable to services performed in the foreign country. A reimbursement received by an employee from his employer for the expenses of a move from a foreign country to the United States will generally be attributable to services performed in the United States. For purposes of this paragraph (e)(5), evidence to the contrary includes, but is not limited to, an agreement, between the employer and the employee, or a statement of company policy, which is reduced to writing before the move to the foreign country and which is entered into or established to induce the employee or employees to move to a foreign country. The writing must state that the employer will reimburse the employee for moving expenses incurred in returning to the United States regardless of whether the employee continues to work for the employer after the employee returns to the United States. The writing may contain conditions upon which the right to reimbursement is determined as long as the conditions set forth standards that are definitely ascertainable and the conditions can only be fulfilled prior to, or through completion of the employee's return move to the United States that is the subject of the writing. In no case will an oral agreement or statement of company policy concerning moving expenses be considered evidence to the contrary. For the purpose of determining whether a storage expense reimbursement is attributable to services performed within a foreign country, in the case of storage expenses incurred after December 31, 1983, the reimbursement shall be attributable to services performed during the period of time for which the storage expenses are incurred.

(ii) *Attribution of foreign source reimbursements to taxable years in which services are performed* —

(A) ***In general.*** If a reimbursement for moving expenses is determined to be from foreign sources under paragraph (e)(5)(i) of this section, then for the purpose of determining the amount eligible for exclusion in accordance with paragraphs (d)(2) and (e)(2) of this section, the reimbursement shall be considered attributable to services performed in the year of the move as long as the individual is a qualified individual for a period that includes 120 days in the year of the move. The period that is used in determining the number of qualifying days for purposes of the individual's section 911(a)(1) limitation (under paragraph (d)(2) of this section) must also be used in determining whether the individual is a qualified individual for a period that includes 120 days in the year of the move. If the individual is not a qualified individual for such period, then the individual shall treat a portion of the reimbursement as attributable to services performed in the year of the move, and a portion as attributable to services performed in the succeeding taxable year, if the move is from the United States to a foreign country, or to the prior taxable year, if the move is from a foreign country to the United States. The portion of the reimbursement treated as attributable to services performed in the year of the move shall be determined by multiplying the total reimbursement by the following fraction:

$$\frac{\text{The number of qualifying days (as defined in paragraph (d)(3) of this section) in the year of the move}}{\text{The number of days in the taxable year of the move.}}$$

The remaining portion of the reimbursement shall be treated as attributable to services performed in the year succeeding or preceding the year of the move. Amounts treated as attributable to services performed in a year succeeding or preceding the year of the move shall be excludable in the year of receipt only to the extent such amounts could be excluded under paragraph (d)(2) of this section in such succeeding or preceding year.

(B) ***Moves beginning before January 1, 1984.*** Notwithstanding paragraph (e)(5)(ii)(A) of this section, this paragraph (e)(5)(ii)(B) shall apply for moves begun before January 1, 1984. If a reimbursement for moving expenses is determined to be from foreign sources under paragraph (e)(5)(i) of this section, then for the purpose of determining the amount eligible for exclusion in accordance with paragraphs (d)(2) and (e)(2) of this section, the reimbursement shall be considered attributable to services performed in the year of the move. However, if the individual does not qualify under section 911(d)(1) and § 1.911-2(a) for the entire taxable year of the move, then the individual shall treat a portion of the reimbursement as attributable to services performed in the succeeding taxable year, if the move is from the United States to a foreign country, or to the prior taxable year, if the move is from a foreign country to the United States. The portion of the reimbursement treated as attributable to services performed in the year succeeding or preceding the move shall be determined by multiplying the total reimbursement by the following fraction:

$$\frac{\text{The number of qualifying days (as defined in paragraph (d)(3) of this section) in the year of the move}}{\text{The number of days in the taxable year of the move.}}$$

and subtracting the product from the total reimbursement. Amounts treated as attributable to services performed in a year succeeding or preceding the year of the move shall be excludable in the year of receipt only to the extent such amounts could be excluded under paragraph (d)(2) of this section in such succeeding or preceding year.

(f) ***Examples.*** The following examples illustrate the application of this section.

Example 1. A is a U.S. citizen and calendar year taxpayer. A's tax home was in foreign country F and A was physically present in F for 330 days during the period from July 4, 1982 through July 3, 1983. The number of A's qualifying days in 1982 as determined under paragraph (d)(2) of this section is 181. In 1982 A receives $40,000 attributable to services performed in foreign country F in 1982. Under paragraph (d)(2) of this section A's section 911(a)(1) limitation is $37,192, that is the lesser of $40,000 (foreign earned income) or

$$\$75{,}000\,(\text{annual rate}) \times \frac{181\,(\text{qualifying days})}{365\,(\text{days in taxable year}).}$$

Example 2. The facts are the same as in example 1 except that in 1982 A receives $30,000 attributable to services performed in foreign country F. A excludes this amount from gross income under paragraph (d) of this section. In addition, in 1983 A receives $10,000 attributable to services performed in F in 1982 and $35,000 attributable to services performed in F in 1983. On his return for 1983, A must report $45,000 of income. A's section 911(a)(1) limitation for 1983 is the lesser of $35,000 (foreign earned income) or $49,329, the annual rate for the taxable year multiplied by a fraction the numerator of which is A's qualifying days in the taxable year and the denominator of which is the number of days in the taxable year ($80,000 × 184/365). On his tax return for 1983 A may exclude $35,000 attributable to services performed in 1983. A may only exclude $7,192 of the $10,000 received in 1983 attributable to services performed in 1982 because such amount is only excludable in 1983 to the extent such amount could have been excluded in 1982 subject to the section 911(a)(1) limitation for 1982 which is $37,192 ($75,000 × 181/365). No portion of amounts attributable to services performed in 1982 may be used in calculating A's section 911(a)(1) limitation for 1983. Thus, even though A could have excluded an additional $5,329 in 1983 if A had had more foreign earned income attributable to 1983, A may not exclude the $2,808 of remaining foreign earned income attributable to 1982.

Example 3. C is a U.S. citizen and calendar year taxpayer. C establishes a bona fide residence and a tax home in foreign country J on March 1, 1982, and maintains a tax home and a residence in J until December 31, 1986. In March of 1982 C's employer, Y corporation, transfers stock in Y to C. The stock is subject to forfeiture if C returns to the U.S. before January 1, 1985. C elects under section 83(b) to include $15,000, the amount determined with respect to such stock under section 83(b)(1), in gross income in 1982. C's other foreign earned income in 1982 is $58,000. C elects under paragraph (e)(4)(iii)(B) of this section to treat the stock as if earned over the period of the substantial risk of forfeiture. The number of months in the period of the substantial risk of forfeiture is thirty-four. The number of months in the taxable year 1982 within the period of foreign employment is ten. For purposes of determining C's section 911(a)(1) limitation, $4,412 (($15,000/34) × 10) of the amount included in gross income under section 83(b) is treated as attributable to services performed in 1982, $5,294 is treated as attributable to services to be performed in 1983, and $5,294 is treated as attributable to services to be performed in 1984. In 1982, C excludes $62,412 under section 911(a)(1). That is the lesser of foreign earned income for 1982 ($58,000 + $4,412) or the annual rate for the taxable year multiplied by a fraction the numerator of which is C's qualifying days in the taxable year and the denominator of which is the number of days in the taxable year ($75,000 × 306/365). C continues to perform services in foreign country J throughout 1983 and 1984. C would be able to exclude the remaining $5,294 attributable to services performed in 1983 and $5,294 attributable to services performed in 1984 if those amounts would be excludable if they had been received in 1983 or 1984 respectively. If C is entitled to exclude the additional amounts, C must claim the exclusion by filing an amended return for 1982.

Example 4. D is a U.S. citizen and a calendar year taxpayer. In September, 1984 D moves to a foreign country K. D is physically present in K, and D's tax home is in K, from September 15, 1984 through December 31, 1985. D receives $6,000 in April, 1985 from his employer, as a reimbursement for expenses of moving to K, pursuant to a written agreement that such moving expenses would be reimbursed to D upon successful completion of 6 months employment in K. Under paragraph (e)(15)(i) of this section, the reimbursement is attributable to services performed in K. Under the physical presence test of § 1.911-2(a)(2)(ii), among other periods D is a qualified individual for the period of August 10, 1984 through August 9, 1985, which includes 144 days in 1984. Under paragraph (e)(5)(ii)(A) of this section, for the purpose of determining the amount eligible for exclusion, the reimbursement is considered attributable to services performed in 1984 (the year of

the move) because D is a qualified individual under § 1.911-2(a) for a period that includes 120 days in 1984. The reimbursement may be excluded under paragraphs (d)(2) and (e)(2) of this section, to the extent that D's foreign earned income for 1984 that was earned and received in 1984 was less than the annual rate for the taxable year multiplied by the number of D's qualifying days in the taxable year over the number of days in D's taxable year ($80,000 × 144/366), or $31,475.

Example 5. The facts are the same as in example 4 except that D is not a qualified individual under the physical presence test, but is a qualified individual under the bona fide residence test for the period of September 15, 1984 through December 31, 1985. Under paragraph (e)(5)(ii)(A) of this section, for the purpose of determining the amount eligible for exclusion, the reimbursement is considered attributable to services performed in 1984 and 1985 because D is not a qualified individual for a period that includes 120 days in 1984 (the year of the move). The portion of the reimbursement treated as attributable to services performed in 1984 is $6,000 × 108/366, or $1,770, and may be excluded, subject to D's 1984 section 911(a)(1) limitation. The balance of the reimbursement, $4,230, is treated as attributable to services performed in 1985, and may be excluded to the extent provided in paragraphs (d)(2) and (e)(2) of this section.

Example 6. The facts are the same as in example 4, with the following additions. Before D moved to K, D and his employer signed a written agreement that D would perform services for the employer for at least one year, primarily in country K, and, if D did not voluntarily cease to work for the employer primarily in country K before one year had elapsed, the employer would reimburse D for one half of D's expenses, up to a maximum of $4,000, of moving back to the United States. The agreement also stated that, if D did not voluntarily leave the employment in K before two years had elapsed, the employer would reimburse D for all of D's reasonable expenses of moving back to the United States. The agreement further stated that D's right to reimbursement would not be conditioned upon the performance of services after D ceased to work in K. D worked in country K for all of 1985. On January 1, 1986, D left K and moved to the United States. In February, 1986 the employer paid D $3,500 as reimbursement for one-half of D's expenses of moving to the United States. Although D did not fulfill the condition in the agreement to receive full reimbursement, all of the conditions in the agreement set forth definitely ascertainable standards and no condition could be fulfilled after D moved back to the United States. The agreement fulfills the requirements of paragraph (e)(5)(i) of this section, and therefore is evidence that the reimbursement should not be attributable to future services to be performed at D's new principal place of work. Under the facts and circumstances, the reimbursement is attributable to services performed in K. Under paragraph (e)(5)(ii)(A) of this section, the entire reimbursement is attributable to services performed in 1985. The amount attributable to 1985 may be excluded to the extent provided in paragraphs (d)(2) and (e)(2) of this section.

(Sec. 911 (95 Stat. 194; 26 U.S.C. 911) and sec. 7805 (68A Stat. 917; 26 U.S.C. 7805) of the Internal Revenue Code of 1954)

[T.D. 8006, 50 FR 2966, Jan. 23, 1985]

§ 1.911-4 Determination of housing cost amount eligible for exclusion or deduction.

(a) ***Definition of housing cost amount.*** The term "housing cost amount" means an amount equal to the reasonable expenses paid or incurred (as defined in section 7701(a)(25)) during the taxable year by or on behalf of the individual attributable to housing in a foreign country for the individual and any spouse or dependents who reside with the individual (or live in a second foreign household described in paragraph

(b)(5) of this section) less the base housing amount as defined in paragraph (c) of this section. The housing cost amount must be reduced by the amount of any military or section 912 allowance or similar allowance excludable from gross income that is intended to compensate the individual or the individual's spouse in whole or in part for the expenses of housing during the same period for which the individual claims a housing cost amount exclusion or deduction.

(b) ***Housing expenses*** —

(1) ***Included expenses.*** For purposes of paragraph (a) of this section, housing expenses include rent, the fair rental value of housing provided in kind by the employer, utilities (other than telephone charges), real and personal property insurance, occupancy taxes not described in paragraph (b)(2)(v) of this section, nonrefundable fees paid for securing a leasehold, rental of furniture and accessories, household repairs, and residential parking.

(2) ***Excluded expenses.*** Housing expenses do not include:

(i) The cost of house purchase, improvements, and other costs that are capital expenditures;

(ii) The cost of purchased furniture or accessories or domestic labor (maids, gardeners, etc.);

(iii) Amortized payments of principal with respect to an evidence of indebtedness secured by a mortgage on the taxpayer's housing;

(iv) Depreciation of housing owned by the taxpayer, or amortization or depreciation of capital improvements made to housing leased by the taxpayer;

(v) Interest and taxes deductible under section 163 or 164 or other amounts deductible under section 216(a) (relating to deduction of interest and taxes by cooperative housing corporation tenant);

(vi) The expenses of more than one foreign household except as provided in paragraph (b)(5) of this section;

(vii) Expenses excluded from gross income under section 119;

(viii) Expenses claimed as deductible moving expenses under section 217; or

(ix) The cost of a pay television subscription.

(3) ***Limitation.*** Housing expenses are taken into account for purposes of this section only to the extent attributable to housing for portions of the taxable year within the period during which the individual satisfies the requirements of § 1.911-2(a). Housing expenses are not taken into account for the period during which the value of the individual's housing is excluded from gross income under section 119, unless the individual maintains a second foreign household described in paragraph (b)(5) of this section. If an individual maintains two foreign households, only expenses incurred with respect to the abode which bears the closest relationship, not necessarily geographic, with respect to the individual's tax home shall be taken into account, unless one of the households is a second foreign household.

(4) ***Reasonableness.*** An amount paid for housing shall not be treated as reasonable, for purposes of paragraph (a) of this section, to the extent that the expense is lavish or extravagant under the circumstances.

(5) ***Expenses of a second foreign household*** —

(i) ***In general.*** The term "second foreign household" means a separate abode maintained by an individual outside of the U.S. for his or her spouse or dependents (who, if minors, are in the individual's legal custody or the joint custody of the individual and the individual's spouse) at a place other than the tax home of the individual because of adverse living conditions at the individual's tax home. If an individual maintains a second foreign household the expenses of the second foreign household may be included in the individual's housing expenses under paragraph (b)(1) of this section. Under no circumstances shall an individual be considered to maintain more than one second foreign household at the same time.

(ii) ***Adverse living conditions.*** Solely for purposes of paragraph (b)(5)(i) of this section, adverse living conditions are living conditions which are dangerous, unhealthful, or otherwise adverse. Adverse living conditions include a state of warfare or civil insurrection in the general area of the individual's tax home. Adverse living conditions exist if the individual resides on the business premises of the employer for the convenience of the employer and, because of the nature of the business (for example, a construction site or drilling rig), it is not feasible for the employer to provide housing for the individual's spouse or dependents. The criteria used by the Department of State in granting a separate maintenance allowance are relevant, but not determinative, for purposes of determining whether a separate household is provided because of adverse living conditions.

(c) ***Base housing amount*** —

(1) ***In general.*** The base housing amount is equal to the product of 16 percent of the annual salary of an employee of the United States who is compensated at a rate equal to the annual salary rate paid for step 1 of grade GS-14, multiplied by the following fraction:

$$\frac{\text{The number of qualifying days}}{\text{The number of days in the taxable year}}$$

For purposes of the above fraction, the number of qualifying days is determined in accordance with § 1.911-3(d)(3).

(2) ***Annual salary of step 1 of grade GS-14.*** The annual salary rate for a step 1 of grade GS-14 is determined on January first of the calendar year in which the individual's taxable year begins.

(d) ***Housing cost amount exclusion*** —

(1) ***Limitation.*** A qualified individual who has elected to exclude his or her housing cost amount may only exclude the lesser of the full amount of either the individual's housing cost amount attributable to employer provided amounts or the individual's foreign earned income for the taxable year. A qualified individual who elects to exclude his or her housing cost amount may not claim less than the full amount of the housing cost exclusion determined under this paragraph.

(2) ***Employer provided amounts.*** For purposes of this section, the term "employer provided amounts" means any amounts paid or incurred on behalf of the individual by the individual's employer which are foreign earned income included in the individual's gross income for the taxable year (without regard to section 911). Employer provided amounts include, but are not limited to, the following amounts: Any salary paid by the employer to the employee; any reimbursement paid by the employer to the employee for housing expenses, educational expenses for the individual's dependents, or as part of a tax equalization plan; the fair market value of compensation provided in kind (including lodging, unless excluded under section 119, relating to meals and lodging furnished for the

convenience of the employer); and any amount paid by the employer to any third party on behalf of the employee. An individual will only have earnings that are not employer provided amounts if the individual has earnings from self-employment.

(3) ***Housing cost amount attributable to employer provided amounts.*** For the purpose of determining what portion of the housing cost amount is excludable and what portion is deductible the following rules apply. If the individual has no income from self-employment, then the entire housing cost amount is attributable to employer provided amounts and is, therefore, excludable to the extent of the limitation provided in paragraph (d)(1) of this section. If the individual only has income from self-employment, then the entire housing cost amount is attributable to non-employer provided amounts and is, therefore, deductible to the extent of the limitation provided in paragraph (e) of this section. In all other instances, the housing cost amount attributable to employer provided amounts shall be determined by multiplying the housing cost amount by the following fraction: Employer provided amounts over foreign earned income for the taxable year. The housing cost amount attributable to non-employer provided amounts shall be determined by subtracting the portion of the housing cost amount attributable to employer provided amounts from the total housing cost amount.

(e) ***Housing cost amount deduction*** —

(1) ***In general.*** If a portion of the individual's housing cost amount is determined under paragraph (d)(3) of this section to be attributable to non-employer provided amounts, the individual may deduct that amount from gross income for the taxable year but only to the extent of the individual's foreign earned income (as defined in § 1.911-3) for the taxable year in excess of foreign earned income excluded and the housing cost amount excluded from gross income for the taxable year under § 1.911-3 and this section.

(2) ***Carryover.*** If any portion of the individual's housing cost amount deduction is disallowed for the taxable year under paragraph (e)(1) of this section, such portion shall be carried over and treated as a deduction from gross income for the succeeding taxable year (but only for the succeeding taxable year) to the extent of the excess, if any, of:

(i) The amount of foreign earned income for the succeeding taxable year less the foreign earned income and the housing cost amount excluded from gross income under § 1.911-3 and this section for the succeeding taxable year over,

(ii) The portion, if any, of the housing cost amount that is deductible under paragraph (e)(1) of this section for the succeeding taxable year.

(f) ***Examples.*** The following examples illustrate the application of this section. In all examples the annual rate for a step 1 of GS-14 as of January first of the calendar year in which the individual's taxable year begins is $39,689.

Example 1. B, a U.S. citizen is a calendar year taxpayer who was a bona fide resident of and whose tax home was located in foreign country G for the entire taxable year 1982. B receives an $80,000 salary from B's employer for services performed in G. B incurs no business expenses. B receives housing provided by B's employer with a fair rental value of $15,000. The value of the housing furnished by B's employer is not excluded from gross income under section 119. B pays $10,000 for housing expenses. B's gross income and foreign earned income for 1982 is $95,000. B elects the foreign earned income exclusion of section 911(a)(1) and the housing cost amount exclusion of section 911(a)(2). B must first compute his housing cost amount exclusion. B's housing cost amount is $18,650 determined by reducing B's housing expenses, $25,000 ($15,000 fair rental value of housing and $10,000 of other expenses), by the base housing amount of $6,350 (($39,689 × .16) × 365/365).

Because B has no income from self-employment, the entire amount is attributable to employer provided amounts and therefore, is excludable. B's section 911(a)(1) limitation is $75,000. That is the lesser of $75,000 × 365/365 or $95,000−18,650. B's total exclusion for 1982 under section 911(a)(1) and (2) is $93,650.

Example 2. The facts are the same as in example 1 except that B's salary for 1982 is $70,000. B's foreign earned income for 1982 is $85,000. B's housing cost amount is $18,650, all of which is attributable to employer provided amounts. B's housing cost amount is excludable to the extent of the lesser of B's housing cost amount attributable to employer provided amounts, $18,650, or the foreign earned income for the taxable year, $85,000. Thus, B excludes $18,650 under section 911(a)(2). B's section 911(a)(1) limitation for 1982 is $66,350 (the lesser of $75,000 × 365/365 or $85,000−18,650). B's total exclusion for 1982 under section 911(a)(1) and (2) is $85,000.

Example 3. The facts are the same as in example 2 except that in 1983, B receives $5,000 attributable to services performed in 1982. B may exclude the entire $5,000 in 1983 because such amount would have been excludable under § 1.911-3(d)(1) had it been received in 1982.

Example 4. C is a U.S. citizen self-employed and a calendar year and cash basis taxpayer. C arrived in foreign country H on October 3, 1982, and departed from H on March 8, 1984. C's tax home was located in H throughout that period. C was physically present for 330 full days during the twelve consecutive month period August 30, 1982, through August 29, 1983. The number of C's qualifying days in 1982 is 124. During 1982 C had $35,000 of foreign earned income, none of which was attributable to employer provided amounts and $8,000 of reasonable housing expenses. C's housing cost amount is $5,843 ($8,000−((39,689 × .16) × 124/365)). C elects to exclude her foreign earned income under § 1.911-3(d)(1). C's section 911(a)(1) limitation for 1982 is $25,479 (the lesser of C's foreign earned income for the taxable year ($35,000) or the annual rate for the taxable year multiplied by the number of C's qualifying days over the number of days in the taxable year ($75,000 × 124/365 = $25,479). C may not claim the housing cost amount exclusion under section 911(a)(2) because no portion of the housing cost amount is attributable to employer provided amounts. C may deduct the lesser of her housing cost amount ($5,843) or her foreign earned income in excess of amounts excluded under section 911(a) ($35,000−25,479 = $9,521). Thus, C's housing cost amount deduction is $5,843.

Example 5. The facts are the same as in example 4 except that C had $30,000 of foreign earned income for 1982, none of which was attributable to employer provided amounts. C elects to exclude $25,479 under § 1.911-3(d)(1). C may only deduct $4,521 of her housing cost amount under paragraph (e)(1) of this section because her foreign earned income in excess of amounts excluded under section 911(a) is $4,521($30,000−25,479). The $1,322 of unused housing cost amount deduction may be carried over to the subsequent taxable year.

Example 6. The facts are the same as in example 4 except that C had $15,000 of foreign earned income of 1982, none of which was attributable to employer provided amounts. C elects to exclude the entire $15,000 under § 1.911-3(d)(1). C is not entitled to a housing cost amount deduction for 1982 since she has no foreign earned income in excess of amounts excluded under section 911(a). C may carry over her entire housing cost amount deduction to 1983.

> *Example 7.* The facts are the same as in example 6. In addition, during taxable year 1983 C had $115,000 of foreign earned income, none of which was attributable to employer provided amounts, and $40,000 of reasonable housing expenses C elects to exclude her foreign

earned income under § 1.911-3(d)(1). C's section 911(a)(1) limitation is the lesser of $115,000 or $80,000 ($80,000 × 365/365). C's housing cost amount for 1983 is $33,650 (40,000−(39,689 × .16) × 365/365). Since no portion of that amount is attributable to employer provided amounts, C may not claim a housing cost amount exclusion. C may deduct the lesser of her housing cost amount ($33,650) or her foreign earned income in excess of amounts excluded under section 911(a) ($115,000−80,000 = 35,000). Thus, C may deduct her $33,650 housing cost amount in 1983. In addition, C may deduct $1,350 of the housing cost amount deduction carried over from taxable year 1982. (($115.000−80,000)−33,650 = $1,350). The remaining $4,493 ($5,843−1,350) of the housing cost amount deduction carried over from taxable year 1982 may not be deducted in 1983 or carried over to 1984.

Example 8. D is a U.S. citizen and a calendar year and cash basis taxpayer. D is a bona fide resident of and maintains his tax home in foreign country J for all of taxable year 1984. In 1984, D earns $80,000 of foreign earned income, $60,000 of which is an employer provided amount and $20,000 of which is a non-employer provided amount. D's total housing cost amount for 1984 is $25,000. D elects to exclude, under section 911(a)(2), the portion of his housing cost amount that is attributable to employer provided amounts. D's excludable housing cost amount is $18,750; that is the total housing cost amount ($25,000) multiplied by employer provided amounts for the taxable year ($60,000) over foreign earned income for the taxable year ($80,000). D also elects to exclude his foreign earned income under § 1.911-3(d)(1). D's section 911(a)(1) limitation for 1984 is $61,250 (the lesser of $80,000−$18,750 or $80,000 × 366/366). D's total exclusion for 1984 under section 911(a)(1) and (2) is $80,000. D cannot claim a housing cost amount deduction in 1984 because D has no foreign earned income in excess of his foreign earned income and housing cost amount excluded from gross income for the taxable year under § 1.911-3 and this section. D may carry over his housing cost amount deduction of $6,250, the total housing cost amount less the portion attributable to employer provided amounts ($25,000−18,750), to taxable year 1985.

(Sec. 911 (95 Stat. 194; 26 U.S.C. 911) and sec. 7805 (68A Stat. 917; 26 U.S.C. 7805) of the Internal Revenue Code of 1954)

[T.D. 8006, 50 FR 2970, Jan. 23, 1985]

§ 1.911-5 Special rules for married couples.

(a) ***Married couples with two qualified individuals*** —

(1) ***In general.*** In the case in which a husband and wife both are qualified individuals under § 1.911-2(a), each individual may make one or more elections under § 1.911-7 and exclude from gross income foreign earned income and exclude or deduct housing cost amounts subject to the rules of paragraphs (a)(2) and (3) of this section.

(2) ***Computation of excluded foreign earned income.*** The amount of excludable foreign earned income is determined separately for each spouse under the rule of § 1.911-3 on the basis of the income attributable to the services of that spouse. If the spouses file separate returns each may exclude the amount of his or her foreign earned income attributable to his or her services subject to the limitations of § 1.911-3(d)(2). If the spouses file a joint return, the sum of these foreign earned

income amounts so determined for each spouse may be excluded. For example, H and W both qualify under § 1.911-2(a)(2)(i) for the entire 1983 taxable year. During 1983 W earns $100,000 of foreign earned income and H earns $45,000 of foreign earned income. H and W file a joint return for 1983. On their joint return H and W may exclude from gross income a total of $125,000. That amount is determined by adding W's section 911(a)(1) limitation, $80,000 (the lesser of $80,000 × 365/365 or $100,000), and H's section 911(a)(1) limitation, $45,000 (the lesser of $80,000 × 365/365 or $45,000).

(3) *Computation of housing cost amount* —

(i) ***Spouses residing together.*** If the spouses reside together, and file a joint return, they may compute their housing cost amount either jointly or separately. If the spouses reside together and file separate returns, they must compute their housing cost amounts separately. If the spouses compute their housing cost amounts separately, they may allocate the housing expenses to either of them or between them for the purpose of calculating separate housing cost amounts, but each spouse claiming a housing cost amount exclusion or deduction must use his or her full base housing amount in such computation. If the spouses compute their housing cost amount jointly, then only one of the spouses may claim the housing cost amount exclusion or deduction.

Either spouse may claim the housing cost amount exclusion or deduction; however, if the spouses have different periods of residence or presence and the spouse with the shorter period of residence or presence claims the exclusion or deduction, then only the expenses incurred in that shorter period may be claimed as housing expenses. The spouse claiming the exclusion or deduction may aggregate the couple's housing expenses, and subtract his or her base housing amount. For example, H and W reside together and file a joint return. H was a bona fide resident of and maintained his tax home in foreign country M from August 17, 1982, through December 31, 1983. W was a bona fide resident of and maintained her tax home in foreign country M from September 15, 1982, through December 31, 1983. During 1982, H and W earn and receive, respectively, $25,000 and $10,000 of foreign earned income. H paid $10,000 for qualified housing expenses in 1982, $7,500 of that was for qualified housing expenses incurred from September 15, 1982, through December 31, 1982. W paid $3,000 for qualified housing expenses in 1982 all of which were incurred during her period of residence. H and W may choose to compute their housing cost amount jointly. If they do so and H claims the housing cost amount exclusion his exclusion would be $10,617. H's housing expenses would be $13,000 ($10,000 + $3,000) and his base housing amount would be $2,383 ((39,689 × .16) × 137/365 = $2,383). If instead W claims the housing cost amount exclusion her exclusion would be $8,621. W's housing expenses would be $10,500 ($7,500 + 3,000) and her base housing amount would be $1,879 (($39,689 × .16) × 108/365 = $1,879). If H and W file jointly and both claim a housing cost amount exclusion, then H's and W's housing cost amounts would be, respectively, $7,617 ($10,000−2,383) and $1,121 ($3,000−1,879).

(ii) ***Spouses residing apart.*** If the spouses reside apart, both spouses may exclude or deduct their housing cost amount if the spouses have different tax homes that are not within reasonable commuting distance (as defined in § 1.119-1(d)(4)) of each other and neither spouse's residence is within a reasonable commuting distance of the other spouse's tax home. If the spouses' tax homes, or one spouse's residence and the other spouse's tax home, are within a reasonable commuting distance of each other, only one spouse may exclude or deduct his or her housing cost amount. Regardless of whether the spouses file joint or separate returns, the amount of the housing cost amount exclusion or deduction must be determined separately for each spouse under the rules of § 1.911-4. If both spouses claim a housing cost amount

exclusion or deduction directly as qualified individuals, neither may claim any such exclusion or deduction under section 911(c)(2)(B)(ii), relating to a second foreign household maintained for the other spouse. If one spouse fails to claim a housing cost amount exclusion or deduction which that spouse could claim directly, the other spouse may claim such exclusion or deduction under section 911(c)(2)(B)(ii), relating to a second foreign household maintained for the first spouse, provided that all the requirements of that section are met. Spouses may not claim more than one second foreign household and the expenses of such household may only be claimed by one spouse. For example, if both H and W are qualified individuals and H's tax home is in London and W's tax home is in Paris, then both H and W may exclude or deduct their housing cost amounts; however, H and W must compute these amounts separately regardless of whether they file joint or separate returns. If instead of living in Paris, W lives in an area where there are adverse living conditions and W maintains H's home in London, then W may add those housing expenses to her housing expenses and compute one base housing amount. In that case H may not claim a housing cost amount exclusion or deduction.

(iii) ***Housing cost amount attributable to employer provided amounts.*** Each spouse claiming a housing cost amount exclusion or deduction shall compute the portion of the housing cost amount that is attributable to employer provided amounts separately, based on his or her separate foreign earned income, in accordance with § 1.911-4(d)(3).

(b) ***Married couples with community income.*** The amount of excludable foreign earned income of a husband and wife with community income is determined separately for each spouse in accordance with paragraph (a) of this section on the basis of income attributable to that spouse's services without regard to community property laws. See sections 879 and 6013 (g) and (h) for special rules regarding treatment of community income of a nonresident alien individual married to a U.S. citizen or resident.

(Sec. 911 (95 Stat. 194; 26 U.S.C. 911) and sec. 7805 (68A Stat. 917; 26 U.S.C. 7805) of the Internal Revenue Code of 1954)

[T.D. 8006, 50 FR 2972, Jan. 23, 1985]

§ 1.911-6 Disallowance of deductions, exclusions, and credits.

(a) ***In general.*** No deduction or exclusion from gross income under subtitle A of the Code or credit against the tax imposed by chapter 1 of the Code shall be allowed to the extent the deduction, exclusion, or credit is properly allocable to or chargeable against amounts excluded from gross income under section 911(a). For purposes of the preceding sentence, deductions, exclusions, and credits which are definitely related (as provided in § 1.861-8), in whole or in part, to earned income shall be allocated and apportioned to foreign earned income and U.S. source earned income in accordance with the rules contained in § 1.861-8. Deductions, exclusions, and credits which are definitely related to all gross income under § 1.861-8, including deductions for interest described in § 1.861-8(e)(2)(ii), are definitely related, in whole or in part, to earned income. In the case of interest expense allocable, in whole or in part, to foreign earned income under § 1.861-8(e)(2)(ii), the expense shall normally be apportioned under option one of the optional gross income methods of apportionment (§ 1.861-8(e)(2)(v)i(A)), but without regard to conditions (*1*) and (*2*) of subdivision (vi)(A) (the fifty percent conditions). Such interest expense shall not normally be apportioned under the asset method of § 1.861-8(e)(2)(v). This is because, where section 911 is the operative section, the expense normally relates more closely to gross income generated from activities than to the amount of capital utilized or invested in activities or property. Deductions that are allocated and apportioned to foreign earned income must then be allocated and apportioned to foreign

earned income that is excluded under section 911(a). If an individual has foreign earned income from both self-employment and other employment, the amount excluded under section 911(a)(1) shall be deemed to include a pro rata amount of the self-employment income and the income from other employment; thus, a pro rata portion of deductible expenses attributable to self-employment income must be disallowed. For purposes of section 911 (d)(6) and this section only, deductions, exclusions, or credits which are not definitely related to any class of gross income shall not be allocable or chargeable to excluded amounts and are, therefore, deductible to the extent allowed by chapter 1 of the Code. Examples of deductions that are not definitely related to a class of gross income are personal and family medical expenses, qualified retirement contributions (but see section 219(b)(1)), real estate taxes and mortgage interest on a personal residence, charitable contributions, alimony payments, and deductions for personal exemptions. In addition, for purposes of this section, amounts excludable or deductible under section 911 or 119 shall not be allocable or chargeable to other amounts excluded under section 911(a). Thus, an individual's housing cost amount which is excludable or deductible under § 1.911-4(d) for a taxable year is not apportioned in part to the individual's foreign earned income which is excluded for such year under § 1.911-3(d). Therefore, the entire amount of such exclusion or deduction is allowed to the extent provided in § 1.911-4. This section does not affect the time for claiming any deduction, exclusion, or credit that is not allocated or apportioned to excluded amounts.

(b) *Moving expenses* —

(1) ***In general.*** No deduction shall be allowed for moving expenses under section 217 to the extent the deduction is properly allocable to or chargeable against amounts of foreign earned income excluded from gross income under section 911(a). If an individual's new principal place of work is in a foreign country, deductible moving expenses will be allocable to foreign earned income. If an individual treats a reimbursement from his employer for the expenses of a move from a foreign country to the United States as attributable to services performed in a foreign country under § 1.911-3(e)(5)(i), then deductible moving expenses attributable to that move will be allocable to foreign earned income. If the individual is a qualified individual who elects to exclude foreign earned income under section 911(a), then some or all of such moving expenses must be disallowed as a deduction.

(2) ***Attribution of moving expense deduction to taxable years in which services are performed.*** If a moving expense deduction is properly allocable to foreign earned income, the deduction shall be considered attributable to services performed in the year of the move as long as the individual is a qualified individual under § 1.911-2(a) for a period that includes 120 days in the year of the move. If the individual is not a qualified individual for such period, then the individual shall treat the deduction as attributable to services performed in both the year of the move and the succeeding taxable year, if the move is from the United States to the foreign country, or the prior taxable year, if the move is from a foreign country to the United States. Notwithstanding the preceding two sentences, storage expenses incurred after December 31, 1983 shall be treated as attributable to services performed in the year in which the expenses are incurred.

(3) ***Formula for disallowance of moving expense deduction.*** The portion of the moving expense deduction that is disallowed shall be determined by multiplying the moving expense deduction by a fraction the numerator of which is all amounts excluded under section 911(a) for the year or years to which the deduction is attributable (under paragraph (b)(2) of this section) and the denominator of which is foreign earned income (as defined in § 1.911-3(a)) for that year or years.

(4) ***Effect of disallowance based on attribution of deduction to subsequent year's income.*** An individual may claim a moving expense deduction in the taxable year in which the amount of the expense is paid or incurred even if attributable, in part, to the succeeding year. However, at such time as the individual excludes income under section 911(a) for the year or years to which the deduction is attributable, the individual shall either—

(i) File an amended return for the year in which the deduction was claimed that does not claim the portion of the deduction that is disallowed because it is chargeable against excluded income, or

(ii) Include in income for the year following the year in which the deduction was claimed an amount equal to the amount of the deduction that is disallowed.

Any amount included in income under paragraph (b)(4)(ii) of this section is not foreign earned income.

(5) ***Moves beginning before January 1, 1984.*** Notwithstanding paragraphs (b)(1) through (3) of this section, the rules of this paragraph (b)(5) shall apply for moves beginning before January 1, 1984.

(i) ***Individual qualifies for the entire taxable year of the move.*** If the individual is a qualified individual for the entire taxable year of the move, then the amount of moving expense disallowed shall be determined by multiplying the moving expense deduction otherwise allowable by a fraction the numerator of which is the foreign earned income excluded under section 911(a) for the taxable year of the move and the denominator of which is the foreign earned income for the same taxable year.

(ii) ***Individual qualifies for less than the entire taxable year of the move.*** If the individual is a qualified individual for less than the entire taxable year of the move, then, for the purpose of determining the portion of the otherwise allowable moving expense deduction that is disallowed, the individual must attribute a portion of the otherwise allowable moving expense deduction either to the succeeding taxable year, if the move is from the United States to a foreign country, or to the prior taxable year, if the move is from a foreign country to the United States. The portion of the moving expense deduction treated as attributable to services performed in the year of the move shall be determined by multiplying the otherwise allowable moving expense deduction by the following fraction:

$$\frac{\text{The number of qualifying days (as defined in §1.911-3(d)(3) in the year of the move}}{\text{The number of days in the taxable year of the move.}}$$

The portion of the moving expense deduction treated as attributable to the year succeeding or preceding the move shall be determined by subtracting the portion of the moving expense deduction that is attributable to the year of the move from the total moving expense deduction. The allocation of a portion of the moving expense deduction to a succeeding or preceding taxable year does not affect the time for claiming the allowable moving expense deduction. The portion of the moving expense deduction that is disallowed shall be determined by multiplying the moving expense deduction attributable to the year of the move or the succeeding or preceding year, as the case may be, by a fraction the numerator of which is amounts excluded under section 911(a) for that year and the denominator of which is foreign earned income for that year.

(c) *Foreign taxes* —

(1) ***Amount disallowed.*** No deduction or credit is allowed for foreign income, war profits, or excess profits taxes paid or accrued with respect to amounts excluded from gross income under section 911. To determine the amount of disallowed foreign taxes, multiply the foreign tax imposed on foreign earned income (as defined in § 1.911-3(a)) received or accrued during the taxable year by a fraction, the numerator of which is amounts excluded under section 911(a) in such taxable year less deductible expenses properly allocated to such amounts (see paragraphs (a) and (b) of this section), and the denominator of which is foreign earned income (as defined in § 1.911-3(a)) received or accrued during the taxable year less deductible expenses properly allocated or apportioned thereto. For the purpose of determining the extent to which foreign taxes are disallowed, the housing cost amount deduction is treated as definitely related to foreign earned income that is not excluded. If the foreign tax is imposed on foreign earned income and some other income (for example earned income from sources within the United States or an amount not subject to tax in the United States), and the taxes on the other amount cannot be segregated, then the denominator equals the total of the amounts subject to tax less deductible expenses allocable to all such amounts.

(2) ***Definitions and special rules*** —

(i) ***Taxable year.*** For purposes of paragraph (c)(1) of this section, the term "taxable year" means the individual's taxable year for U.S. tax purposes. Such term includes the portion of any foreign taxable year within the individual's U.S. taxable year and excludes the portion of any foreign taxable year not within the individual's U.S. taxable year.

(ii) ***Apportionment of foreign taxes.*** For purposes of this paragraph (c), foreign taxes imposed on foreign earned income shall be deemed to accrue, on a pro rata basis, to income as the income is received or accrued. The taxes so accrued shall be apportioned to the taxable year during which the income is received or accrued. This rule applies for all individuals, regardless of their method of accounting.

(iii) ***Effect of disallowance.*** The disallowance of foreign taxes under this paragraph (c) shall not affect the time for claiming any deduction or credit for foreign taxes paid. Rather, the disallowance shall only affect the amount of taxes considered paid or accrued to any foreign country.

(iv) ***Interest on foreign taxes.*** Any interest expense incurred on a liability for foreign taxes is allocated and apportioned not under this paragraph (c) but under paragraph (a) of this section to foreign earned income and then to excluded foreign earned income and to that extent disallowed as a deduction under paragraph (a). In that regard, see also § 1.861-8(e)(2) for the specific rules for allocation and apportionment of interest expense.

(d) ***Examples.*** The following examples illustrate the application of this section.

Example 1. In 1982 A, an architect, operates his business as a sole proprietorship in which capital is not a material income producing factor. A receives $1,000,000 in gross receipts, all of which is foreign source earned income, and incurs $500,000 of otherwise deductible business expenses definitely related to the foreign earned income. A elects to exclude $75,000 under section 911(a)(1). The expenses must be apportioned to excluded earned income as follows: $500,000 × $75,000/1,000,000. Thus, $37,500 of the business expenses are not deductible.

Example 2. The facts are the same as in example 1, except that $100,000 of A's gross receipts is U.S. source earned income and $68,000 of A's business expenses are attributable to the U.S. source earned income. Thus, A has $900,000 of foreign earned income and $432,000 of deductions allocated to foreign earned income. The expenses apportioned to excluded earned income are $432,000 × $75,000/$900,000, or $36,000, which are not deductible.

Example 3. B is a U.S. citizen, calendar year and cash basis taxpayer. B moves to foreign country N and maintains a tax home and is physically present there from July 1, 1984 through May 26, 1985. Among other possible periods, B is a qualified individual for 219 days in the year of the move. B pays $6,000 of otherwise deductible moving expenses in 1984. For 1984, B's foreign earned income is $60,000 and B excludes $47,869 ($80,000 × 219/366) under section 911(a). Under paragraph (b)(2) of this section, B's moving expenses are attributable to services performed in 1984. Under paragraph (b)(3) of this section, $6,000 × $47,869/$60,000, or $4,789, of B's moving expense deduction is disallowed. B may deduct $1,211 of moving expenses on his 1984 return.

Example 4. The facts are the same as in example 3 except that B maintains a tax home and is physically present in foreign country N from October 9, 1984 through September 3, 1985. Among other possible periods, B is a qualified individual for no more than 119 days in 1984 and 281 days in 1985. B's foreign earned income for 1984 is $60,000. B's foreign earned income for 1985 is $150,000. Because B is a qualified individual for less than 120 days in the year of the move, under paragraph (b)(2) of this section, B's moving expenses are attributable to services performed in 1984 and 1985. At the close of 1984, B may either seek an extension of time to file under § 1.911-7(c) or may file an income tax return without claiming the exclusions or deduction under section 911. B does not seek an extension and files without excluding foreign earned income; thus B may deduct his moving expenses in full. B later amends his 1984 return and excludes foreign earned income for that year. B excludes foreign earned income for 1985. B must determine the portion of the moving expense deduction that is disallowed. The portion of the moving expense deduction that is disallowed is determined by multiplying the otherwise allowable moving expense deduction by a fraction. The numerator of the fraction is the sum of amounts excluded under section 911(a) for 1984 and 1985, that is $26,082 or $80,000 × 119/365, plus $61,589, or $80,000 × 281/365, which totals $87,671. The denominator of the fraction is the sum of foreign earned income for 1984 and 1985, that is $60,000 plus $150,000, or $210,000. B's allowable moving expense deduction is $3,495, or $6,000−($6,000 × $87,671/$210,000). If B does not file an amended 1984 return (and does not exclude foreign earned income for 1984), but excludes foreign earned income under section 911(a) for 1985, a portion of his moving expense deduction is disallowed, based on the same formula. The amount disallowed is $6,000 × $61,589/$210,000, or $1,760. This amount may be recaptured either by filing an amended return for 1984 or by including it in income for 1985 (in which case it is not foreign earned income).

Example 5. C is a U.S. citizen, a self-employed individual, and a cash basis and calendar year taxpayer. For the entire 1982 taxable year C maintained his tax home and his bona fide residence in foreign country P. During 1982 C earned and received $120,000 of foreign earned income, none of which was attributable to employer provided amounts. C paid $40,000 of business expenses. C elected to exclude foreign earned income under section 911(a)(1) and claimed a housing cost amount deduction of $15,000. C received $10,000 of foreign source interest income which was included with C's earned income in a single tax base and taxed at graduated rates. For 1982, C paid $30,000 in income tax to foreign country P. The amount of C's business expenses that is properly apportioned to excluded amounts (and therefore, not

deductible) equals $25,000, which is determined by multiplying the otherwise allowable deductions by C's excluded amounts over C's foreign earned income ($40,000 × 75,000/120,000). The amount of country P tax that is properly apportioned to excluded amounts (and therefore, not deductible or creditable) equals $20,000, which is determined by multiplying the tax of $30,000 by the following fraction:

$$\frac{\text{\$50,000 (\$75,000 excluded amounts less \$25,000 of deductible expenses allocable thereto)}}{\text{\$75,000 (((\$120,000 foreign earned income less \$40,000 of deductible expenses allocable thereto) less \$15,000 housing cost amount deduction allocable thereto) plus \$10,000 other taxable income).}}$$

Example 6. D is a U.S. citizen and an accrual basis and calendar year taxpayer for U.S. tax purposes. For the entire period from January 1, 1982 through December 31, 1983, D maintains his tax home and his bona fide residence in foreign country R. For purposes of R's income tax, D is a cash basis taxpayer and uses a fiscal year that begins on April 1 and ends on the following March 31. During his entire period of residence in R, D receives foreign earned income of $10,000 each month, all of which is attributable to employer provided amounts. For his foreign taxable year ending March 31, 1982, D pays $10,000 of income tax to R. For his foreign taxable year ending March 31, 1983, D pays $54,000 of income tax to R. Under paragraph (c)(2)(ii) of this section, all of the $10,000 of tax paid for this foreign taxable year ending March 31, 1982 is imposed on foreign earned income received in 1982, as is $40,500, or $^{9}/_{12}$ × $54,000, of tax paid for his foreign taxable year ending March 31, 1983. (D received $10,000 per month for the last 3 months of his foreign taxable year ending March 31, 1982, all of which are within his U.S. taxable year ending December 31, 1982 under paragraph (c)(2)(i) of this section, and $10,000 per month for each month of his foreign taxable year ending March 31, 1983, of which the first 9 months are within his U.S. taxable year ending December 31, 1982. Under paragraph (c)(2)(ii) of this section, foreign taxes are deemed to accrue on a pro rata basis to income as it is received or accrued. Thus, all of the $10,000 of foreign taxes imposed on the income received during D's foreign taxable year ending March 31, 1982 accrue to D's 1982 foreign earned income, as do $^{9}/_{12}$ (or $90,000/120,000) of foreign taxes imposed on income received during D's foreign taxable year ending March 31, 1983, for purposes of determining the amount of D's foreign taxes that is disallowed.) For 1982, D has no deductible expenses, and elects to exclude his housing cost amount of $21,000 under section 911(a)(2) and foreign earned income of $75,000 under section 911(a)(1). The amount of D's foreign taxes disallowed for deduction or credit purposes for 1982 is $8,000 (that is, $10,000 × $96,000/$120,000) of the taxes for his foreign taxable year ending March 31, 1982, plus $32,400 (that is, $40,500 × $96,000/$120,000) of the taxes for his foreign taxable year ending March 31, 1983, or $40,400. From 1982, D has $2,000 ($10,000−$8,000) of deductible or creditable taxes accrued on March 31, 1982, and $8,100 ($40,500-$32,400) of deductible or creditable taxes accrued on March 31, 1983, after the disallowance based on his 1982 excluded income.

Example 7. E is a United States citizen, calendar year and cash basis taxpayer. E is physically present in and establishes his tax home in foreign country S on May 1, 1981. For purposes of country S, E's taxable year begins on April 1 and ends the following March 31. E receives foreign earned income of $15,000 each month beginning on May 1, 1981. At the end of his foreign taxable year ending on March 31, 1982, E pays $70,000 of income tax to S on $165,000 of foreign earned income. Under section 911, as in effect for taxable years beginning before January 1, 1982, E may not exclude any income that is earned or received during 1981. None of E's taxes paid in 1982 that are attributable to

income earned or received in 1981 are subject to disallowance because, under paragraph (c)(2)(ii) of this section, the only taxes disallowed are those deemed to accrue on income earned and received after December 31, 1981, and excluded from gross income. The amount of E's taxes paid in 1982 that are attributable to 1981 is $50,909, or $70,000 × $120,000/$165,000. E elects to exclude foreign earned income for 1982. The amount of E's taxes paid to S in 1982 that accrue to 1982 foreign earned income, and are therefore subject to disallowance based on excluded income, is $19,091, or $70,000 × $45,000/$165,000.

(Sec. 911 (95 Stat. 194; 26 U.S.C. 911) and sec. 7805 (68A Stat. 917; 26 U.S.C. 7805) of the Internal Revenue Code of 1954)

[T.D. 8006, 50 FR 2973, Jan. 23, 1985]

§ 1.911-7 Procedural rules.

(a) ***Elections of a qualified individual*** —

(1) ***In general.*** In order to receive either exclusion provided by section 911(a), a qualified individual must elect, separately with respect to each exclusion, to exclude foreign earned income under section 911(a)(1) and the housing cost amount under section 911(a)(2). Any such elections may be made on Form 2555 or on a comparable form. Each election must be filed either with the income tax return, or with an amended return, for the first taxable year of the individual for which the election is to be effective. An election once made remains in effect for that year and all subsequent years unless revoked under paragraph (b) of this section. Each election shall contain information sufficient to determine whether the individual is a qualified individual as provided in § 1.911-2. The statement shall include the following information:

(i) The individual's name, address, and social security number;

(ii) The name of the individual's employer;

(iii) Whether the individual claimed exclusions under section 911 for earlier years after 1981 and within the five preceding taxable years;

(iv) Whether the individual has revoked a previously made election and the taxable year for which such revocation was effective;

(v) The exclusion or exclusions the individual is electing;

(vi) The foreign country or countries in which the individual's tax home is located and the date when such tax home was established;

(vii) The status (either bona fide residence or physical presence) under which the individual claims the exclusion;

(viii) The individual's qualifying period of residence or presence;

(ix) The individual's foreign earned income for the taxable year including the fair market value of all noncash remuneration; and,

(x) If the individual elects to exclude the housing cost amount, the individual's housing expenses.

(2) ***Requirement of a return*** —

(i) ***In general.*** In order to make a valid election under this paragraph (a), the election must be made:

(A) With an income tax return that is timely filed (including any extensions of time to file),

(B) With a later return filed within the period prescribed in section 6511(a) amending the foregoing timely filed income tax return,

(C) With an original income tax return that is filed within one year after the due date of the return (determined without regard to any extension of time to file); this one year period does not constitute an extension of time for any purpose—it is merely a period during which a valid election may be made on a late return, or

(D) With an income tax return filed after the period described in paragraphs (a)(2)(i)(A), (B), or (C) of this section provided—

(*1*) The taxpayer owes no federal income tax after taking into account the exclusion and files Form 1040 with Form 2555 or a comparable form attached either before or after the Internal Revenue Service discovers that the taxpayer failed to elect the exclusion; or

(*2*) The taxpayer owes federal income tax after taking into account the exclusion and files Form 1040 with Form 2555 or a comparable form attached before the Internal Revenue Service discovers that the taxpayer failed to elect the exclusion.

(*3*) A taxpayer filing an income tax return pursuant to paragraph (a)(2)(i)(D)(*1*) or (*2*) of this section must type or legibly print the following statement at the top of the first page of the Form 1040: "Filed Pursuant to Section 1.911-7(a)(2)(i)(D)."

(ii) ***Election for 1982 and 1983 taxable years.*** Solely for purposes of paragraph (a)(2)(i)(A) of this section, an income tax return for any taxable year beginning before January 1, 1984, shall be considered timely filed if it is filed on or before July 23, 1985.

(3) ***Housing cost amount deduction.*** An individual does not have to make an election in order to claim the housing cost amount deduction. However, such individual must provide the Commissioner with information sufficient to determine the individual's correct amount of tax. Such information shall include the following: The individual's name, address, and social security number; the name of the individual's employer; the foreign country in which the individual's tax home was established; the status under which the individual claims the deduction; the individual's qualifying period of residence or presence; the individual's foreign earned income for the taxable year; and the individual's housing expenses.

(4) ***Effect of immaterial error or omission.*** An inadvertent error or omission of information required to be provided to make an election under this paragraph (a) shall not render the election invalid if the error or omission is not material in determining whether the individual is a qualified individual or whether the individual intends to make the election.

(b) ***Revocation of election*** —

(1) ***In general.*** An individual may revoke any election made under paragraph (a) of this section for any taxable year. A revocation must be made separately with respect to each election. The individual may revoke an election for any taxable year, including the first taxable year for which an election was effective, by filing a statement that the individual is revoking one or more of the previously made elections. The statement must be filed with the income tax return, or with an amended return, for the first taxable year of the individual for which the revocation is to be effective. A revocation once made is effective for that year and all subsequent years. If an election is revoked for any taxable year,

including the first taxable year for which the election was effective, the individual may not, without the consent of the Commissioner, again make the same election until the sixth taxable year following the taxable year for which the revocation was first effective. For example, a qualified individual makes an election to exclude foreign earned income under section 911(a)(1) and files it with his 1982 income tax return. The individual files 1983 and 1984 income tax returns on which he excludes his foreign earned income. Then, within 3 years after filing his 1982 income tax return, the individual files an amended 1982 income tax return with a statement revoking his election to exclude foreign earned income under section 911(a)(1). The revocation of the election is effective for taxable years 1982, 1983, and 1984. The individual may not elect to exclude income under section 911(a)(1) for any taxable year before 1988, unless he obtains consent to reelect under paragraph (b)(2) of this section.

(2) ***Reelection before sixth taxable year after revocation.*** If an individual revoked an election under paragraph (b)(1) of this section and within five taxable years the individual wishes to reelect the same exclusion, then the individual may apply for consent to the reelection. The application for consent shall be made by requesting a ruling from the Associate Chief Counsel (Technical), National Office, Internal Revenue Service, 1111 Constitution Avenue NW., Washington, DC 20224. In determining whether to consent to reelection the Associate Chief Counsel or his delegate shall consider any facts and circumstances that may be relevant to the determination. Relevant facts and circumstances may include the following: a period of United States residence, a move from one foreign country to another foreign country with differing tax rates, a substantial change in the tax laws of the foreign country of residence or physical presence, and a change of employer.

(c) ***Returns and extensions*** —(1) *In general.* Any return filed before completion of the period necessary to qualify an individual for any exclusion of deduction provided by section 911 shall be filed without regard to any exclusion or deduction provided by that section. A claim for a credit or refund of any overpayment of tax may be filed, however, if the taxpayer subsequently qualifies for any exclusion or deduction under section 911. See section 6012(c) and § 1.6012-1(a)(3), relating to returns to be filed and information to be furnished by individuals who qualify for any exclusion or deduction under section 911.

(d) ***Declaration of estimated tax.*** In estimating gross income for the purpose of determining whether a declaration of estimated tax must be made for any taxable year, an individual is not required to take into account income which the individual reasonably believes will be excluded from gross income under the provisions of section 911. In computing estimated tax, however, the individual must take into account, among other things, the denial of the foreign tax credit for foreign taxes allocable to the excluded income (see § 1.911-6(c)).

(e) ***Effective/applicability date.*** This section applies to applications for extension of time to file returns filed after July 1, 2008.

(Sec. 911 (95 Stat. 194; 26 U.S.C. 911) and sec. 7805 (68A Stat. 917; 26 U.S.C. 7805) of the Internal Revenue Code of 1954)

[T.D. 8006, 50 FR 2976, Jan. 23, 1985, as amended by T.D. 8480, 58 FR 34885, June 30, 1993; 73 FR 37365, July 1, 2008]

§ 1.911-8 Former deduction for certain expenses of living abroad.

For rules relating to the deduction for certain expenses of living abroad applicable to taxable years beginning before January 1, 1982, see 26 CFR 1.913-1 through 1.913-13 as they appeared in the Code of Federal Regulations revised as of April 1, 1982.

(Sec. 911 (95 Stat. 194; 26 U.S.C. 911) and sec. 7805 (68A Stat. 917; 26 U.S.C. 7805) of the Internal Revenue Code of 1954)

[T.D. 8006, 50 FR 2977, Jan. 23, 1985]

EARNED INCOME OF CITIZENS OF UNITED STATES

§ 1.912-1 Exclusion of certain cost-of-living allowances.

(a) Amounts received by Government civilian personnel stationed outside the continental United States as cost-of-living allowances in accordance with regulations approved by the President are, by the provisions of section 912(1), excluded from gross income. Such allowances shall be considered as retaining their characteristics under section 912(1) notwithstanding any combination thereof with any other allowance. For example, the cost-of-living portion of a "living and quarters allowance" would be excluded from gross income whether or not any other portion of such allowance is excluded from gross income.

(b) For purposes of section 912(1), the term "continental United States" includes only the 48 States existing on February 25, 1944 (the date of the enactment of the Revenue Act of 1943 (58 Stat. 21)) and the District of Columbia.

§ 1.912-2 Exclusion of certain allowances of Foreign Service personnel.

Gross income does not include amounts received by personnel of the Foreign Service of the United States as allowances or otherwise under the provisions of chapter 9 of title I of the Foreign Service Act of 1980 or the provisions of section 28 of the State Department Basic Authorities Act (formerly section 914 of title IX of the Foreign Service Act of 1946).

[T.D. 8256, 54 FR 28620, July 6, 1989]

§ 1.921-1T Temporary regulations providing transition rules for DISCs and FSCs.

(a) ***Termination of a DISC*** —(1) *At end of 1984.*

Q-1: What is the effect of the termination on December 31, 1984, of a DISC's taxable year?

A-1: Without regard to the annual accounting period of the DISC, the last taxable year of each DISC beginning during 1984 shall be deemed to close on December 31, 1984. The corporation's DISC election also shall be deemed revoked at the close of business on December 31, 1984. (A DISC that does not elect to be an interest charge DISC as of January 1, 1985, in addition to a corporation described in section 992(a)(3), shall be referred to as a "former DISC".) A corporation which wishes to be treated as a FSC, a small FSC, or an interest charge DISC must make an election as provided under paragraph (b) (Q & A #1) of this section.

(2) *Deemed distributions for short taxable years.*

Q-2: If the termination of the DISC's taxable year on December 31, 1984, results in a short taxable year, how are the deemed distributions under section 995(b)(1)(E) determined?

A-2: The deemed distributions are determined on the basis of the DISC's taxable income for its short taxable year ending on December 31, 1984. In computing the incremental distribution under section 995(b)(1)(E), the export gross receipts for the short taxable year must be annualized.

(3) *Qualification as a DISC for 1984.*

Q-3: Must the DISC satisfy all the tests set forth in section 992(a)(1) for the DISC's taxable year ending December 31, 1984?

A-3: All of the tests under section 992(a)(1), except the qualified assets test under section 992(a)(1)(B), must be satisfied.

(4) *Commissions for 1984.*

Q-4: Must commissions be paid by a related supplier to a DISC with respect to the DISC's taxable year ending December 31, 1984?

A-4: No.

Q-4A: Must commissions which were earned prior to January 1, 1985, be paid by a related supplier if the last date payment is required (as set forth in § 1.994-1(e)(3)) is after December 31, 1984?

A-4A: No.

(5) *Producer's loans of 1984.*

Q-5: Must the producer's loan rules under section 993(d) be satisfied with respect to the DISC's taxable year ending December 31, 1984?

A-5: Yes.

(6) *Accumulated DISC income.*

Q-6. Under what circumstances is any remaining accumulated DISC income treated as previously taxed income (and not taxed)?

A-6. The accumulated DISC income of a DISC (but not a DISC described in section 992(a)(3)) as of December 31, 1984, is treated as previously taxed income when actually distributed after December 31, 1984. Any amounts distributed by the former DISC (including a DISC which has elected to be an interest charge DISC) after December 31, 1984, shall be treated as made first out of current earnings and profits and then out of previously taxed income to the extent thereof. For purposes of the preceding sentence, amounts distributed before July 1, 1985, shall be treated as made first out of previously taxed income to the extent thereof. If property other than money is distributed and if such property was a qualified export asset within the meaning of section 993(b) on December 31, 1984, then for purposes of section 311, no gain or loss will be recognized on the distribution and the distributee will have the same basis in the property as the distributor.

Q-7: May a DISC that was previously disqualified, but has requalified as of December 31, 1984, treat any accumulated DISC income as previously taxed income?

A-7: If a DISC was previously disqualified, but has requalified as of December 31, 1984, any accumulated DISC income previously required to be taken into income upon prior disqualification shall not be treated as previously taxed income. All accumulated DISC income derived since requalification, however, will be treated as previously taxed income.

(7) *Distribution of previously taxed income.*

Q-8: What effect will the distribution of previously taxed income have on the earnings and profits of corporate shareholders of the former DISC?

A-8: The earnings and profits of the corporate shareholders of the former DISC will be increased by the amount of money and the adjusted basis of any property which is distributed out of previously taxed income.

Q-9: Will the distribution of the former DISC's accumulated DISC income as previously taxed income after December 31, 1984, result in a reduction in the shareholder's basis of the stock of the former DISC and consequent taxation of the excess of the distribution over such basis as capital gain under section 996(d)?

A-9: No. This distribution will be treated both as amounts representing deemed distributions under section 995(b)(1) and as previously taxed income. Thus, no capital gain will arise.

(8) *Qualifying distributions.*

Q-10: How is a qualifying distribution to satisfy the qualified export receipts tests under section 992(c)(1)(A) which is made with respect to the DISC's taxable year ending on December 31, 1984, treated?

A-10: The distribution will not be treated as previously taxed income but will be taxed to the shareholder of the former DISC, as provided under section 992(c) and 996(a)(2) and the regulations thereunder, in the shareholder's taxable year in which the distribution is made.

(9) *Deficiency distributions.*

Q-11: With respect to an audit adjustment made after December 31, 1984, may a deficiency distribution be made, and if so, in what manner may it be made?

A-11: A deficiency distribution may be made notwithstanding the fact that after December 31, 1984, the former DISC is a taxable corporation under subchapter C, has elected to be treated as an interest charge DISC, or has been liquidated, reorganized or is otherwise no longer in existence. However, such deficiency distribution shall be treated as made out of accumulated DISC income which is not previously taxed income because it will be treated as distributed prior to December 31, 1984, to the DISC's shareholders.

Q-11A: Must a former DISC remain in existence in order for a former DISC shareholder to take advantage of the spread provided in section 995(b)(2) with respect to DISC disqualification?

A-11A: No. With respect to distributions deemed to be received by a former DISC shareholder under section 995(b)(2) for taxable years beginning after December 31, 1984, if the former DISC shareholder elects, the rules of section 995(b)(2)(B) shall apply even though the former DISC does not continue in existence. If the former DISC is no longer in existence, the former DISC's shareholders will be deemed to have received the distribution on the last day of their taxable years over the applicable period of time determined under section 995(b)(2) as if the former DISC had remained in existence.

(10) *Deemed distribution for 1984.*

Q-12: How is the deemed distribution to a shareholder for the DISC's taxable year ending December 31, 1984, taken into account?

A-12

(i) If the taxable year of the DISC ending on December 31, 1984,

(A) is the first taxable year of the DISC which begins in 1984,

(B) begins after the date in 1984 on which the taxable year of the DISC's shareholder begins, and

(C) if the DISC's shareholder makes an election under section 805(b)(3) of the Tax Reform Act of 1984, the deemed distribution under section 995(b) with respect to income derived by the DISC for such taxable year of the DISC shall be treated as received by the shareholder in 10 equal installments (unless the shareholder elects to be treated as receiving the deemed distribution in income over a smaller number of equal installments). The first installment shall be treated as received by the shareholder on the last day of the shareholder's second taxable year beginning in 1984 (if any), or if the shareholder had only one taxable year which began in 1984, on the last day of the shareholder's first taxable year beginning in 1985. One installment shall be treated as received by the shareholder on the last day of each succeeding taxable year of the shareholder until the entire amount of the DISC's 1984 deemed distribution has been included in the shareholder's taxable income. To make the election under section 805(b)(3) of the Tax Reform Act of 1984, the DISC shareholder must attach a statement to its timely filed tax return (including extensions) for its taxable year which includes December 31, 1984, indicating the total amount of the shareholder's pro rata share of the DISC's deemed distribution for 1984 (determined under section 995(b) of the Code without regard to the election under section 805(b)(3) of the Tax Reform Act of 1984), and the number of equal installments, if less than 10, over which the shareholder wishes to spread its pro rata share of the deemed distribution for 1984. If the election under section 805(b)(3) of the Tax Reform Act of 1984 is made, it may not be changed or revoked. In determining estimated tax payments, the portion of the deemed distribution includible in the shareholder's taxable income for any taxable year under this subdivision (i) shall be treated as received by the shareholder on the last day of such taxable year.

(ii) Except as provided in subdivision (i), the deemed distribution under section 995(b) with respect to income derived by the DISC for its taxable year ending on December 31, 1984, shall be included in the shareholder's taxable income for its taxable year which includes December 31, 1984. Thus, if the taxable year of the DISC and the DISC's shareholder both begin on January 1, 1984, and end on December 31, 1984 (or, if the taxable year of the DISC beginning in 1984 begins before the taxable year of the DISC's shareholder), the deemed distribution with respect to the DISC's taxable year ending on December 31, 1984, will be included in the DISC shareholder's taxable year ending on (or including) December 31, 1984, and the election described in subdivision (i) may not be made.

(iii) The provisions of this Question and Answer-12 apply without regard to any existence of the DISC after December 31, 1984, as an interest charge DISC.

Q-12A: If under section 805(b)(3) of the Tax Reform Act of 1984 the shareholders of the DISC are permitted to make an election to treat the DISC's 1984 deemed distribution as received over a 10-year period, must the DISC distribute that amount to its shareholders ratably over the 10-year period?

A-12A: No. Under section 805(b)(3) of the Tax Reform Act of 1984, if the DISC's deemed distribution for its taxable year which ended on December 31, 1984, is a qualified distribution, the shareholders of the DISC are permitted to make an election to treat the distribution as received over a 10-year period. The 10-year treatment applies even though the amount of the deemed distribution is distributed to the DISC's shareholders prior to the period in which the distribution is taken into income by the shareholders. In addition, under section 996(e) of the Code, the shareholder's basis in the stock of

the DISC will be considered as increased, as of the date of liquidation, by the shareholder's pro rata share of the amount of the undistributed qualified distribution even though that amount is treated as received by the shareholder in later years. Further, the actual distribution in liquidation of the former DISC after 1984 will increase the earnings and profits of a corporate distributee, and the amount actually distributed shall be treated under the rules of section 996.

(11) *Conformity of accounting period.*

Q-13: May a DISC be established or change its annual accounting period for taxable years beginning after March 21, 1984, and before January 1, 1985?

A-13: A DISC that is established or that changes its annual accounting period after March 21, 1984, must conform its annual accounting period to that of its principal shareholder (the shareholder with the highest percentage of voting power as defined in section 441(h)).

(12) *DISC gains and distributions from U.S. sources.*

Q-14: What is the effective date of the amendment to section 996(g), made by section 801(d)(10) of the Tax Reform Act of 1984, which treats certain DISC gains and distributions as derived from sources within the United States?

A-14: Under section 805(a)(3) of the Act, the amendment to section 996(g) shall apply to all gains referred to in section 995(c) and all distributions out of accumulated DISC income including deemed distributions made on or after June 22, 1984.

(b) ***Establishing and electing status as a FSC, small FSC or interest charge DISC*** —

(1) ***Ninety-day period.***

Q-1: How does a corporation elect to be treated as a FSC, a small FSC, or an interest charge DISC?

A-1: A corporation electing FSC or small FSC status must file Form 8279. A corporation electing interest charge DISC status must file Form 4876A. A corporation electing to be treated as a FSC, small FSC, or interest charge DISC for its first taxable year shall make its election within 90 days after the beginning of that year. A corporation electing to be treated as a FSC, small FSC, or interest charge DISC for any taxable year other than its first taxable year shall make its election during the 90-day period immediately preceding the first day of that taxable year. The election to be a FSC, small FSC, or interest charge DISC may be made by the corporation, however, during the first 90 days of a taxable year, even if that taxable year is not the corporation's first taxable year, if that taxable year begins before July 1, 1985. Likewise, the election to be a FSC (or a small FSC) may be made during the first 90 days of any taxable year of a corporation if the corporation had in a prior taxable year elected small FSC (or FSC) status and the corporation revokes the small FSC (or FSC) election within the 90 day period. A corporation which was a DISC for its taxable year ending December 31, 1984, which wishes to be treated as an interest charge DISC beginning with its first taxable year beginning after December 31, 1984, may make the election to be treated as an interest charge DISC by filing Form 4876A on or before July 1, 1987. Also, if a corporation which has elected FSC, small FSC or interest charge DISC status, or a shareholder of that corporation, is acquired in a qualified stock purchase under section 338(d)(3), and if an election under section 338(a) is effective with regard to that corporation, the corporation may re-elect FSC, small FSC or interest charge DISC status, (whichever is applicable) not later than the date of the election under section 338(a), see section 338(g)(i) and § 1.338-2(d). This re-election is necessary because the original

elections are deemed terminated if an election is made under section 338(a). The rules contained in § 1.992-2 (a)(1), (b)(1) and (b)(3) shall apply to the manner of making the election and the manner and form of shareholder consent.

(2) ***FSC incorporated in a possession.***

Q-2: Where does a FSC which is incorporated in a U.S. possession file its election?

A-2: The election is filed with the Internal Revenue Service Center, Philadelphia, Pennsylvania 19255.

(3) ***Information returns.***

Q-3: Must Form 5471 be filed with respect to the organization of a FSC pursuant to section 6046 or to provide information with respect to a FSC pursuant to section 6038?

A-3: A Form 5471 required under section 6046 need not be filed with respect to the organization of a FSC. The requirements of section 6046 shall be satisfied by the filing of a Form 8279 dealing with the election to be treated as a FSC or small FSC. However, a Form 5471 will be required with respect to a reorganization of a FSC (or small FSC) or an acquisition of stock of a FSC (or small FSC), as required under section 6046 and the regulations thereunder. Provided that a Form 1120 FSC is filed, a Form 5471 need not be filed to satisfy the requirements of section 6038.

(4) ***Conformity of accounting period.***

Q-4: Since a FSC, small FSC, and interest charge DISC must use the same annual accounting period as the principal shareholder, must such corporation delay the beginning of its first taxable year beyond January 1, 1985 if the principal shareholder (the shareholder with the highest percentage of voting power as defined in section 441(h)) is not a calendar year taxpayer?

A-4: No. Where the principal shareholder is not a calendar year taxpayer, a corporation may elect to be treated as a FFSC, small FSC, or interest charge DISC for a taxable year beginning January 1, 1985. However, such corporation must close its first taxable year and adopt the annual accounting period of its principal shareholder as of the first day of the principal shareholder's first taxable year beginning in 1985. A FSC, small FSC, or interest charge DISC need not obtain the consent of the Commissioner under section 442 to conform its annual accounting period to the annual accounting period of its principal shareholder.

(5) ***Dollar limitations for short taxable years.***

Q-5: If a small FSC or an interest charge DISC has a short taxable year, how are the dollar limitations on foreign trading export gross receipts and qualified export gross receipts, respectively, determined for small FSCs and interest charge DISCs?

A-5: The dollar limitations are to be prorated on a daily basis. Thus, for example, if for its 1985 taxable year a small FSC has a short taxable year of 73 days, then in determining exempt foreign trade income, any foreign trading gross receipts that exceed $1 million (73/365 × $5 million) will not be taken into account.

(6) ***Change of accounting period.***

Q-6: If the principal shareholder of a FSC, a small FSC, or an interest charge DISC (hereinafter referred to as a "FSC") changes its annual accounting period or is replaced by a new principal shareholder during a taxable year, is it necessary for the FSC to change its annual accounting period?

A-6: If the principal shareholder changes its annual accounting period, the FSC must also change its annual accounting period to conform to that of its principal shareholder. If the voting power of the principal shareholder is reduced by an amount equal to at least 10 percent of the total shares entitled to vote and such shareholder is no longer the principal shareholder, the FSC must conform its accounting period to that of its new principal shareholder. However, in determining whether a shareholder is a principal shareholder, the voting power of the shareholders is determined as of the beginning of the FSC's taxable year. Thus, for example, assume that for 1985 a FSC adopts a calendar year period as its annual accounting period to conform to that of its principal shareholder. Assume further than in March 1985 there is a 10 percent change in voting power and a different shareholder whose annual accounting period begins on July 1 becomes the new principal shareholder. The FSC will not be required to adopt the annual accounting period of its new principal shareholder until July 1, 1986. The FSC will have a short taxable year for the period January 1 to June 30, 1986.

(7) ***Transition transfers.***

Q-7. Under what circumstances may a DISC or former DISC transfer its assets to a FSC or small FSC without incurring any tax liability on the transfer?

A-7. A DISC or former DISC will recognize no income, gain, or loss on a transfer of its qualified assets (as defined in section 993(b)) to a FSC or small FSC if all of the following conditions are met:

(i) The assets transferred were held by the DISC on August 4, 1983, and were transferred by the DISC or former DISC to the FSC or small FSC in a transfer completed before January 1, 1986; and

(ii) The assets are transferred in a transaction which would qualify for nonrecognition under subchapter C of chapter 1 of the Code, or would so qualify but for section 367 of the Code.

In such case, section 367 shall not apply to the transfer.

In addition, other provisions of subchapter C will apply to the transfer, such as section 358 (basis to shareholders), section 362 (basis to corporations), and section 381 (carryovers in corporate acquisitions). In determining whether a transfer by a DISC to a FSC or small FSC qualifies for nonrecognition under subchapter C, a liquidation of the assets of the DISC into a parent corporation followed by a transfer by the parent of those assets to the FSC or small FSC will be treated as a transaction described in section 368(a)(1)(D).

Notwithstanding the foregoing answer, a taxpayer which transfers a right to use its corporate name to a FSC in a transaction described in sections 332, 351, 354, 356 and 361 shall not be treated as having sold that right under section 367(d) or as having transferred that right to an entity that is not a corporation under section 367(a) provided that the corporate name is used only by the FSC and is not licensed or otherwise made available to others by the FSC.

(8) *Completed contract method.*

Q-8: Under what conditions is a taxpayer using the completed contract method of accounting as defined in § 1.451-3(d) exempted from satisfying the foreign management and foreign economic process requirements of subsections (c) and (d) of section 924?

A-8: If the taxpayer has entered into a binding contract before March 16, 1984, or has on March 15, 1984, and at all times thereafter a firm plan, evidenced in writing, to enter the contract and enters into a binding contract by December 31, 1984, then the taxpayer will be treated as having satisfied the foreign management tests of section 924(c) for periods before December 31, 1984, and the foreign economic process tests of section 924(d) with respect to costs incurred before December 31, 1984, with respect to the transaction. The FSC rules will apply to the income from the long-term contract if an election is made and the general FSC requirements under section 922 are satisfied. However, such taxpayer need not satisfy the activities test under section 925(c) for activities which occur before January 1, 1985 in order to use the transfer pricing rules under section 925.

(9) ***Long-term contract—before March 15, 1984.***

Q-9: Under what conditions is a taxpayer who enters into a binding long-term contract (*i.e.,* a contract which is not completed in the taxable year in which it is entered into) before March 15, 1984, but does not use the completed contract method of accounting exempted from satisfying the foreign management and economic process requirements of subsections (c) and (d) of section 924?

A-9: If a taxpayer enters into a binding contract before March 15, 1984, the taxpayer will be treated as having satisfied the foreign management tests of section 924(c) for periods before December 31, 1984, and the foreign economic process tests of section 924(d) with respect to costs incurred before December 31, 1984, but only with respect to income attributable to such contracts that is recognized before December 31, 1986. The FSC rules will apply to the income from the long-term contract if an election is made and the general FSC requirements under section 922 are satisfied. However, such taxpayer need not satisfy the activities test under section 925(c) for activities which occur before January 1, 1985, in order to use the transfer pricing rules under section 925.

(10) ***Long-term contract—after March 15, 1984.***

Q-10: Under what conditions is a taxpayer who has a long-term contract (i.e., a contract which is not completed in the taxable year in which it is entered into) but does not use the completed contract method of accounting exempted from satisfying the foreign management and economic process requirements of subsections (c) and (d) of section 924 if such taxpayer enters into a binding contract after March 15, 1984 and before January 1, 1985?

A-10: If a taxpayer enters into a contract after March 15, 1984, and before January 1, 1985, the taxpayer will be treated as having satisfied the foreign management tests of section 924(c) for periods before December 31, 1984, and the foreign economic process tests of section 924(d) with respect to costs incurred before December 31, 1984, but only with respect to income attributable to such contract that is recognized before December 31, 1985.

The FSC rules will apply to the income from the long-term contract if an election is made and the general requirements under section 922 are satisfied. However, such taxpayer need not satisfy the activities test under section 925(c) for activities which occur before January 1, 1985 in order to use the transfer pricing rules under section 925.

(11) *Incomplete transactions.*

Q-11: In computing its foreign trade income, how should a FSC treat transfers of export property from a related supplier to a DISC which is subsequently resold by a FSC after the DISC's termination?

A-11: In applying the gross receipts and combined taxable income methods under section 925 (a)(1) and (a)(2), the transaction is treated as if the transfer of export property were made by the related supplier to the FSC except that the foreign management and economic processes tests under section 924 and the activities test under section 925(c) shall be deemed to be satisfied for purposes of the transaction.

(12) ***Pre-effective date costs and activities.***

Q-12: Are costs incurred and activities performed prior to January 1, 1985 taken into account for purposes of satisfying the foreign management and foreign economic processes requirements of subsections (c) and (d) of section 924 and the activities test under section 925(c)?

A-12: For purposes of determining the costs incurred and the activities performed to be taken into account with respect to contracts entered into after December 31, 1984, only those costs incurred and activities performed after December 31, 1984, are taken into consideration. Costs incurred and activities performed by a related supplier prior to January 1, 1985 (or prior to the effective date of a corporation's election to be treated as a FSC if other than January 1, 1985) with respect to transactions occurring after January 1, 1985 (or after the effective date of a corporation's election to be treated as a FSC) need not be taken into account for purposes of computing the FSC's profit under section 925 but are treated for section 925(c) purposes as if they were performed on behalf of the FSC.

(13) ***FSC and interest charge DISC.***

Q-13: Can a FSC and an interest charge DISC be members of the same controlled group?

A-13: A FSC and an interest charge DISC cannot be members of the same controlled group. If any controlled group of corporations of which an interest charge DISC is a member establishes a FSC, then any interest charge DISC which is a member of such group shall be treated as having terminated its status as an interest charge DISC.

(c) ***Export Trade Corporations*** —

(1) ***Previously taxed income.***

Q-1: Under what circumstances are earnings of an export trade corporation that have not been included in income under section 951 treated as previously taxed income previously included in the income of a U.S. shareholder for purposes of section 959 (and not taxed)?

A-1: A corporation which qualifies as an export trade corporation (ETC) with respect to its last taxable year beginning before January 1, 1985, and elects to discontinue operations as an ETC for all taxable years beginning after December 31, 1984, shall not be required to take into income earnings attributable to previously excluded export trade income, as defined in § 1.970-1(b), derived with respect to taxable years beginning before January 1, 1985. However,

any amounts distributed by the former ETC (*i.e.* a corporation which was an ETC for its last taxable year beginning before January 1, 1985) shall be treated as being made out of current earnings and profits and then out of previously taxed income. For purposes of determining the shareholder's basis in the ETC stock, distributions of previously excluded export trade income shall be treated as if made out of previously taxed income which has already been included in gross income under section 951(a)(1)(B). Thus, no basis adjustment under section 961 is necessary. In addition, upon the sale or exchange of the stock of such corporation in a transaction described in section 1248(a), the earnings and profits of the corporation attributable to such previously untaxed income shall not be subject to section 1248(a).

(2) ***Qualification as an ETC for last year.***

Q-2: Must an ETC satisfy all of the tests set forth in section 971(a)(1) for the ETC's last taxable year beginning before January 1, 1985?

A-2: All of the tests in section 971(a)(1) must be satisfied, except that for purposes of the working capital requirements set forth in section 971(c)(1), the working capital of the ETC at the close of its last taxable year beginning before January 1, 1985 shall be deemed reasonable.

(3) ***Continuation of ETC status.***

Q-3: May a corporation which chooses to remain an ETC after December 31, 1984, continue to do so?

A-3: Yes. However, previously untaxed income of such ETC shall not be treated as previously taxed income in accordance with Q&A #1 of this section.

(4) ***Discontinuation of ETC status.***

Q-4: How does an ETC make an election to discontinue its operation as an ETC?

A-4: The United States shareholders (as defined in section 951(b)) must file a statement of election on behalf of the ETC indicating the intent of the ETC to discontinue operations as an ETC for taxable years beginning after December 31, 1984. In addition, the statement of election must include the name, address, taxpayer identification number and stock interest of each United States shareholder. The statement must also indicate that the corporation on behalf of which the shareholders are making the election qualified as an ETC for its last taxable year beginning before January 1, 1985, and also the amount of earnings attributable to previously excluded export trade income. The statement must be jointly signed by each United States shareholder with each shareholder stating under penalties of perjury that he or she holds the stock interest specified for such shareholder in the statement of election. A copy of the statement of election must be attached to Form 5471 (information return with respect to a foreign corporation) filed with respect to the ETC's last taxable year beginning before January 1, 1985.

(5) ***Transition transfers.***

Q-5: Under what circumstances may an electing ETC transfer its assets to a FSC without incurring any tax liability on the transfer?

A-5: An electing ETC will recognize no income, gain, or loss on a transfer of its assets to a FSC but only if all of the following conditions are met:

(i) The assets transferred were held by the ETC on August 4, 1983, and were transferred by the ETC to the FSC in a transfer completed before January 1, 1986; and

(ii) The assets are transferred in a transaction which would qualify for nonrecognition under subchapter C of chapter 1 of the Code, or would so qualify but for section 367 of the Code.

In such case, section 367 shall not apply to the transfer. In addition, other provisions of subchapter C will apply to the transfer such as section 358 (basis to shareholders), section 362 (basis to corporation) and section 381 (carryovers in corporate acquisitions). In determining whether a transfer by an ETC to a FSC qualifies for nonrecognition under subchapter C, a liquidation of the assets of the ETC into a parent corporation followed by a transfer by the parent of those assets to the FSC will be treated as a transaction described in section 368(a)(1)(D).

(Secs. 803 and 805 of the Tax Reform Act of 1984 (98 Stat. 1001) and sec. 7805 of the Internal Revenue Code of 1954 (68A Stat. 917; 26 U.S.C. 7805); sec. 805 (b)(3)(C) and (D) of the Tax Reform Act of 1984 (98 Stat. 1002), and sec. 7805 of the Code (68A Stat. 917; 26 U.S.C. 7805); secs. 367, 927, and 7805 of the Internal Revenue Code of 1954 (98 Stat. 662, 26 U.S.C. 367; 98 Stat. 663, 26 U.S.C. 367; 98 Stat. 993, 26 U.S.C. 927; 98 Stat. 994, 26 U.S.C. 927; and 68A Stat. 917, 26 U.S.C. 7805); sec. 805 of the Tax Reform Act of 1984 (Pub. L. 98-69, 98 Stat. 1000))

[T.D. 7983, 49 FR 40013, Oct. 12, 1984, as amended by T.D. 7992, 49 FR 48283, Dec. 12, 1984; T.D. 7993, 49 FR 48291, Dec. 12, 1984; T.D. 7992, 49 FR 49450, Dec. 20, 1984; T.D. 8126, 52 FR 6434, 6435, Mar. 3, 1987; T.D. 8515, 59 FR 2984, Jan. 20, 1994; T.D. 8858, 65 FR 1237, Jan. 7, 2000; T.D. 8940, 66 FR 9929, Feb. 13, 2001]

§ 1.921-2 Foreign Sales Corporation—general rules.

(a) ***Definition of a FSC and the Effect of a FSC Election.***

Q-1. What is the definition of a Foreign Sales Corporation (hereinafter referred to as a "FSC" (All references to FSCs include small FSCs unless indicated otherwise))?

A-1. As defined in section 922(a), an FSC must satisfy the following eight requirements.

(i) The FSC must be a corporation organized or created under the laws of a foreign country that meets the requirements of section 927(e)(3) (a "qualifying foreign country") or a U.S. possession other than Puerto Rico (an "eligible possession"). See Q&As 3, 4, and 5 of § 1.922-1.

(ii) A FSC may not have more than 25 shareholders at any time during the taxable year. See Q&A 6 of § 1.922-1.

(iii) A FSC may not have any preferred stock outstanding during the taxable year. See Q&As 7 and 8 of § 1.922-1.

(iv) A FSC must maintain an office outside of the United States in a qualifying foreign country or an eligible possession and maintain a set of permanent books of account (including invoices or summaries of invoices) at such office. See Q&As 9, 10, 11, 12, 13, 14, and 15 of § 1.922-1.

(v) A FSC must maintain within the United States the records required under section 6001. See Q&A 16 of § 1.922-1.

(vi) The FSC must have a board of directors which includes at least one individual who is not a resident of the United States at all times during the taxable year. See Q&As 17, 18, 19, 20, and 21 of § 1.922-1.

(vii) A FSC may not be a member, at any time during the taxable year, of any controlled group of corporations of which an interest charge DISC is a member. See Q&A 2 of this section and Q&A 13, of § 1.921-1T(b)(13).

(viii) A FSC must have made an election under section 927(f)(1) which is in effect for the taxable year. See Q&A 1 of § 1.921-1T(b)(1) and § 1.927(f)-1.

In addition, under section 441(h), the taxable year of a FSC must conform to the taxable year of its principal shareholder. See Q&A 4 of § 1.921-1T(b)(4).

Q-2. Does the reference to a DISC under section 922(a)(1)(F) which provides that a FSC cannot be a member, at any time during the taxable year, of any controlled group of corporations of which a DISC is a member refer solely to an interest charge DISC?

A-2. Yes.

(b) ***Small FSC.***

Q-3. What is a small FSC?

A-3. A small FSC is a Foreign Sales Corporation which meets the requirements of section 922(a)(1) enumerated in Q&A 1 of this section as well as the requirements of section 922(b). Section 922(b) requires that a small FSC make a separate election to be treated as a small FSC. See Q&A 1 of § 1.921-1T(b) and § 1.927(f)-1. In addition, section 922(b) requires that the small FSC not be a member, at any time during the taxable year, of a controlled group of corporations which includes a FSC unless such FSC is a small FSC.

Q-4. What is the effect of an election as a small FSC?

A-4. Under section 924(b)(2), a small FSC need not meet the foreign management and economic processes tests of section 924(b)(1) in order to have foreign trading gross receipts. However, in determining the exempt foreign trade income of a small FSC, any foreign trading gross receipts for the taxable year in excess of $5 million are not taken into account. If the foreign trading gross receipts of a small FSC for the taxable year exceed the $5 million limitation, the FSC may select the gross receipts to which the limitation is allocated. In order to use the administrative pricing rules under section 925(a), a small FSC must satisfy the activities test under section 925(c). In addition, under section 441(h), the taxable year of a small FSC must conform to the taxable year of its principal shareholder (defined in Q&A 4 of § 1.921-1T(b)(4) as the shareholder with the highest percentage of its voting power).

Q-5. What is the effect on a small FSC (or FSC) (“target”) if it is acquired, directly or indirectly, by a corporation if that acquiring corporation (“acquiring”), or a member of the acquiring corporation's controlled group, is a FSC (or small FSC)?

A-5. Unless the corporations in the controlled group elect to terminate the FSC (or small (FSC) election of the acquiring corporation, the target's small FSC's (or FSC's) taxable year and election will terminate as of the day preceding the date the target small FSC and acquiring FSC became members of the same controlled group. The target small FSC will receive FSC benefits for the period prior to termination, but the $5 million small FSC limitation will be reduced to the amount which bears the same ratio to the $5 million as the number of days in the short year created by the termination bears to 365. The due date of the income tax return for the short taxable year created by this provision will be the date prescribed by section 6072(b), including extensions, starting with the last day of the short taxable year. If the short taxable year created by this provision ends prior to March 3, 1987, the filing date of the tax return for the short taxable year will be automatically extended until the earlier of May 18, 1987 or the date under section 6072 (b) assuming a short taxable year had not been created by these regulations.

(c) ***Comparison of FSC to DISC.***

Q-6. How does a FSC differ from a DISC?

A-6. A DISC is a domestic corporation which is not itself taxable while a FSC must be created or organized under the laws of a jurisdiction which is outside of the United States (including certain U.S. possessions) and may be taxable on its income except for its exempt foreign trade income. The DISC provisions enable a shareholder to obtain a partial deferral of tax on income from export sales and certain services, if 95 percent of its receipts and assets are export related. The FSC provisions contain no assets test, but a portion of income for export sales and certain services is exempt from U.S. taxes if the FSC satisfies certain foreign presence, foreign management, and foreign economic processes tests.

(d) ***Organization of a FSC.***

Q-7. Under the laws of what countries may a FSC be organized?

A-7. A FSC may not be created or organized under the laws of the United States, a state, or other political subdivision. However, a FSC may be created or organized under the laws of a possession of the United States, including Guam. American Samoa, the Commonwealth of the Northern Mariana Islands and the Virgin Islands of the United States, but not Puerto Rico. These eligible possessions are located outside the U.S. customs territory. In addition, a FSC may incorporate under the laws of a foreign country that is a party to—

(i) An exchange of information agreement that meets the standards of the Caribbean Basin Economic Recovery Act of 1983 (Code section 274(h)(6)(C)), or

(ii) A bilateral income tax treaty with the United States if the Secretary certifies that the exchange of information program under the treaty carries out the purpose of the exchange of information requirements of the FSC legislation as set forth in section 927(e)(3), if the company is covered under the exchange of information program under subdivision (i) or (ii). The Secretary may terminate the certification. Any termination by the Secretary will be effective six months after the date of the publication of the notice of such termination in the FEDERAL REGISTER.

(e) *Foreign Trade Income.*

Q-8. How is foreign trade income defined?

A-8. Foreign trade income, defined in section 923(b), is gross income of an FSC attributable to foreign trading gross receipts. It includes both the profits earned by the FSC itself from exports and commissions earned by the FSC from products and services exported by others.

(f) ***Investment Income and Carrying Charges.***

Q-9. What do the terms “investment income” and “carrying charges” mean?

A-9.

(i) Investment income means:

(A) Dividends,

(B) Interest,

(C) Royalties,

(D) Annuities,

(E) Rents (other than rents from the lease or rental of export property for use by the lessee outside of the United States);

(F) Gains from the sale of stock or securities,

(G) Gains from future transactions in any commodity on, or subject to the rules of, a board of trade or commodity exchange (other than gains which arise out of a bona fide hedging transaction reasonably necessary to conduct the business of the FSC in the manner in which such business is customarily conducted by others),

(H) Amounts includable in computing the taxable income of the corporation under part I of subchapter J, and

(I) Gains from the sale or other disposition of any interest in an estate or trust.

(ii) Carrying charges means:

(A) Charges that are imposed by a FSC or a related supplier and that are identified as carrying charges, ("stated carrying charges") and

(B)

(*1*) Charges that are considered to be included in the price of the property or services sold by an FSC or a related supplier, as provided under Q&As 1 and 2 of § 1.927(d)-1, and

(*2*) Any other unstated interest.

Q-10. How are investment income and carrying charges treated?

A-10. Investment income and carrying charges are not foreign trading gross receipts. Investment income and carrying charges are includable in the taxable income of an FSC, except in the case of a commission FSC where carrying charges are treated as income of the related supplier, and are treated as income effectively connected with a trade or business conducted through a permanent establishment within the United States. The source of investment income and carrying charges is determined under sections 861, 862, and 863 of the Code.

(g) ***Small Businesses.***

Q-11. What options are available to small businesses engaged in exporting?

A-11. A small business may elect to be treated as either a small FSC or an interest charge DISC. See Q&As 3 & 4 of § 1.921-2 relating to a small FSC. Rules with respect to interest charge DISCs are the subject of another regulations project.

[T.D. 8127, 52 FR 6469, Mar. 3, 1987]

§ 1.927(a)-1T Temporary regulations; definition of export property.

(a) ***General rule.*** Under section 927(a), except as otherwise provided with respect to excluded property in paragraphs (f), (g) and (h) of this section and with respect to certain short supply property in paragraph (i) of this section, export property is property in the hands of any person (whether or not a FSC) (any further reference to a FSC in this section shall include a small FSC unless indicated otherwise)—

(1) ***U.S. manufactured, produced, grown or extracted.*** Manufactured, produced, grown, or extracted in the United States by any person or persons other than a FSC (see paragraph (c) of this section),

(2) ***Foreign use, consumption or disposition.*** Held primarily for sale, lease or rental in the ordinary course of a trade or business by a FSC to a FSC or to any other person for direct use, consumption, or disposition outside the United States (see paragraph (d) of this section),

(3) ***Foreign content.*** Not more than 50 percent of the fair market value of which is attributable to articles imported into the United States (see paragraph (e) of this section), and

(4) ***Non-related FSC purchaser or user.*** Which is not sold, leased or rented by a FSC, or with a FSC as commission agent, to another FSC which is a member of the same controlled group (as defined in section 927(d)(4) and § 1.924(a)-1T(h)) as the FSC.

(b) ***Services.*** For purposes of this section, services (including the written communication of services in any form) are not export property. Whether an item is property or services shall be determined on the basis of the facts and circumstances attending the development and disposition of the item. Thus, for example, the preparation of a map of a particular construction site would constitute services and not export property, but standard maps prepared for sale to customers generally would not constitute services and would be export property if the requirements of this section were otherwise met.

(c) ***Manufacture, production, growth, or extraction of property*** —

(1) ***By a person other than a FSC.*** Export property may be manufactured, produced, grown, or extracted in the United States by any person, provided that that person does not qualify as a FSC. Property held by a FSC which was manufactured, produced, grown or extracted by it at a time when it did not qualify as a FSC is not export property of the FSC. Property which sustains further manufacture, production or processing outside the United States prior to sale or lease by a person but after manufacture, production, processing or extraction in the United States will be considered as manufactured, produced, grown or extracted in the United States by that person only if the property is reimported into the United States for further manufacturing, production or processing prior to final export sale. In order to be considered export property, the property manufactured, produced, grown or extracted in the United States must satisfy all of the provisions of section 927(a) and this section.

(2) ***Manufactured, produced or processed.*** For purposes of this section, property which is sold or leased by a person is considered to be manufactured, produced or processed by that person or by another person pursuant to a contract with that person if the property is manufactured or produced, as defined in § 1.954-3(a)(4). For purposes of this section, however, in determining if the 20% conversion test of § 1.954-3(a)(4)(iii) has been met, conversion costs include assembly and packaging costs but do not include the value of parts provided pursuant to a services contract as described in § 1.924(a)-1T(d)(3). In addition, for purposes of this section, the 20% conversion test is extended and applied to the export property's adjusted basis rather than to its cost of goods sold if it is leased or held for lease.

(d) ***Foreign use, consumption or disposition*** —

(1) ***In general.***

(i) Under paragraph (a)(2) of this section, export property must be held primarily for the purpose of sale, lease or rental in the ordinary course of a trade or business, by a FSC to a FSC or to any other person, and the sale or lease must be for direct use, consumption, or disposition outside the United States. Thus, property cannot qualify as export property unless it is sold or leased

for direct use, consumption, or disposition outside the United States. Property is sold or leased for direct use, consumption, or disposition outside the United States if the sale or lease satisfies the destination test described in subdivision (2) of this paragraph, the proof of compliance requirements described in subdivision (3) of this paragraph, and the use outside the United States test described in subdivision (4) of this paragraph.

(ii) ***Factors not taken into account.*** In determining whether property which is sold or leased to a FSC is sold or leased for direct use, consumption, or disposition outside the United States, the fact that the acquiring FSC holds the property in inventory or for lease prior to the time it sells or leases it for direct use, consumption, or disposition outside the United States will not affect the characterization of the property as export property. Fungible export property must be physically segregated from non-export property at all times after purchase by or rental by a FSC or after the start of the commission relationship between the FSC and related supplier with regard to the export property. Non-fungible export property need not be physically segregated from non-export property.

(2) ***Destination test.***

(i) For purposes of paragraph (d)(1) of this section, the destination test of this paragraph is satisfied with respect to property sold or leased by a seller or lessor only if it is delivered by the seller or lessor (or an agent of the seller or lessor) regardless of the F.O.B. point or the place at which title passes or risk of loss shifts from the seller or lessor—

(A) Within the United States to a carrier or freight forwarder for ultimate delivery outside the United States to a purchaser or lessee (or to a subsequent purchaser or sublessee),

(B) Within the United States to a purchaser or lessee, if the property is ultimately delivered outside the United States (including delivery to a carrier or freight forwarder for delivery outside the United States) by the purchaser or lessee (or a subsequent purchaser or sublessee) within 1 year after the sale or lease,

(C) Within or outside the United States to a purchaser or lessee which, at the time of the sale or lease, is a FSC or an interest charge DISC and is not a member of the same controlled group as the seller or lessor,

(D) From the United States to the purchaser or lessee (or a subsequent purchaser or sublessee) at a point outside the United States by means of the seller's or lessor's own ship, aircraft, or other delivery vehicle, owned, leased, or chartered by the seller or lessor,

(E) Outside the United States to a purchaser or lessee from a warehouse, storage facility, or assembly site located outside the United States, if the property was previously shipped by the seller or lessor from the United States, or

(F) Outside the United States to a purchaser or lessee if the property was previously shipped by the seller or lessor from the United States and if the property is located outside the United States pursuant to a prior lease by the seller or lessor, and either

(*1*) the prior lease terminated at the expiration of its term (or by the action of the prior lessee acting alone),

(*2*) the sale occurred or the term of the subsequent lease began after the time at which the term of the prior lease would have expired, or

(3) the lessee under the subsequent lease is not a related person with respect to the lessor and the prior lease was terminated by the action of the lessor (acting alone or together with the lessee).

(ii) For purposes of this paragraph (d)(2) (other than paragraphs (d)(2)(i)(C) and (F)(3)), any relationship between the seller or lessor and any purchaser, subsequent purchaser, lessee, or sublessee is immaterial.

(iii) In no event is the destination test of this paragraph (d)(2) satisfied with respect to property which is subject to any use (other than a resale or sublease), manufacture, assembly, or other processing (other than packaging) by any person between the time of the sale or lease by such seller or lessor and the delivery or ultimate delivery outside the United States described in this paragraph (d)(2).

(iv) If property is located outside the United States at the time it is purchased by a person or leased by a person as lessee, such property may be export property in the hands of such purchaser or lessee only if it is imported into the United States prior to its further sale or lease (including a sublease) outside the United States. Paragraphs (a)(3) and (e) of this section (relating to the 50 percent foreign content test) are applicable in determining whether such property is export property. Thus, for example, if such property is not subjected to manufacturing or production (as defined in paragraph (c) of this section) within the United States after such importation, it does not qualify as export property.

(3) ***Proof of compliance with destination test*** —

(i) ***Delivery outside the United States.*** For purposes of paragraph (d)(2) of this section (other than subdivision (i)(C) thereof), a seller or lessor shall establish ultimate delivery, use, or consumption of property outside the United States by providing—

(A) A facsimile or carbon copy of the export bill of lading issued by the carrier who delivers the property,

(B) A certificate of an agent or representative of the carrier disclosing delivery of the property outside the United States,

(C) A facsimile or carbon copy of the certificate of lading for the property executed by a customs officer of the country to which the property is delivered,

(D) If that country has no customs administration, a written statement by the person to whom delivery outside the United States was made,

(E) A facsimile or carbon copy of the Shipper's Export Declaration, a monthly shipper's summary declaration filed with the Bureau of Customs, or a magnetic tape filed in lieu of the Shipper's Export Declaration, covering the property, or

(F) Any other proof (including evidence as to the nature of the property or the nature of the property or the nature of the transaction) which establishes to the satisfaction of the Commissioner that the property was ultimately delivered, or directly sold, or directly consumed outside the United States within 1 year after the sale or lease.

(ii) The requirements of subdivision (i)(A), (B), (C), or (E) of this paragraph will be considered satisfied even though the name of the ultimate consignee and the price paid for the goods is marked out provided that, in the case of a Shipper's Export Declaration or other document listed

in subdivision (i)(E) of this paragraph or a document such as an export bill of lading, such document still indicates the country in which delivery to the ultimate consignee is to be made and, in the case of a certificate of an agent or representative of the carrier, that the document indicates that the property was delivered outside the United States.

(iii) A seller or lessor shall also establish the meeting of the requirement of paragraph (d)(2)(i) of this section (other than subdivision (i)(C) thereof), that the property was delivered outside the United States without further use, manufacture, assembly, or other processing within the United States.

(iv) For purposes of paragraph (d)(2)(i)(C) of this section, a purchaser or lessee of property is deemed to qualify as a FSC or an interest charge DISC for its taxable year if the seller or lessor obtains from the purchaser or lessee a copy of the purchaser's or lessee's election to be treated as a FSC or interest charge DISC together with the purchaser's or lessee's sworn statement that the election has been timely filed with the Internal Revenue Service Center. The copy of the election and the sworn statement of the purchaser or lessee must be received by the seller or lessor within 6 months after the sale or lease. A purchaser or lessee is not treated as a FSC or interest charge DISC with respect to a sale or lease during a taxable year for which the purchaser or lessee does not qualify as a FSC or interest charge DISC if the seller or lessor does not believe or if a reasonable person would not believe at the time the sale or lease is made that the purchaser or lessee will qualify as a FSC or interest charge DISC for the taxable year.

(v) If a seller or lessor fails to provide proof of compliance with the destination test as required by this paragraph (d)(3), the property sold or leased is not export property.

(4) ***Sales and leases of property for ultimate use in the United States*** —

(i) ***In general.*** For purposes of paragraph (d)(1) of this section, the use test in this paragraph (d)(4) is satisfied with respect to property which—

(A) Under subdivision (4)(ii) through (iv) of this paragraph is not sold for ultimate use in the United States, or

(B) Under subdivision (4)(v) of this paragraph is leased for ultimate use outside the United States.

(ii) ***Sales of property for ultimate use in the United States.*** For purposes of subdivision (4)(i) of this paragraph, a purchaser of property (including components, as defined in subdivision (4)(vii) of this paragraph) is deemed to use the property ultimately in the United States if any of the following conditions exist:

(A) The purchaser is a related party with respect to the seller and the purchaser ultimately uses the property, or a second product into which the property is incorporated as a component, in the United States.

(B) At the time of the sale, there is an agreement or understanding that the property, or a second product into which the property is incorporated as a component, will be ultimately used by the purchaser in the United States.

(C) At the time of the sale, a reasonable person would have believed that the property or the second product would be ultimately used by the purchaser in the United States unless, in the case of a sale of components, the fair market value of the components at the time of

delivery to the purchaser constitutes less than 20 percent of the fair market value of the second product into which the components are incorporated (determined at the time of completion of the production, manufacture, or assembly of the second product).

For purposes of subdivision (4)(ii)(B) of this paragraph, there is an agreement or understanding that property will ultimately be used in the United States if, for example, a component is sold abroad under an express agreement with the foreign purchaser that the component is to be incorporated into a product to be sold back to the United States. As a further example, there would also be such an agreement or understanding if the foreign purchaser indicated at the time of the sale or previously that the component is to be incorporated into a product which is designed principally for the United States market. However, such an agreement or understanding does not result from the mere fact that a second product, into which components exported from the United States have been incorporated and which is sold on the world market, is sold in substantial quantities in the United States.

(iii) ***Use in the United States.*** For purposes of subdivision (4)(ii) of this paragraph, property (including components incorporated into a second product) is or would be ultimately used in the United States by the purchaser if, at any time within 3 years after the purchase of such property or components, either the property is or the components (or the second product into which the components are incorporated) are resold by the purchaser for use by a subsequent purchaser within the United States or the purchaser or subsequent purchaser fails, for any period of 365 consecutive days, to use the property or second product predominantly outside the United States (as defined in subdivision (4)(vi) of this paragraph).

(iv) ***Sales to retailers.*** For purposes of subdivision (4)(ii)(C) of this paragraph, property sold to any person whose principal business consists of selling from inventory to retail customers at retail outlets outside the United States will be considered to be used predominantly outside the United States.

(v) ***Leases of property for ultimate use outside the United States.*** For purposes of subdivision (4)(i) of this paragraph, a lessee of property is deemed to use property ultimately outside the United States during a taxable year of the lessor if the property is used predominantly outside the United States (as defined in subdivision (4)(vi) of this paragraph) by the lessee during the portion of the lessor's taxable year which is included within the term of the lease. A determination as to whether the ultimate use of leased property satisfies the requirements of this subdivision is made for each taxable year of the lessor. Thus, leased property may be used predominantly outside the United States for a taxable year of the lessor (and thus, constitute export property if the remaining requirements of this section are met) even if the property is not used predominantly outside the United States in earlier taxable years or later taxable years of the lessor.

(vi) ***Predominant use outside the United States.*** For purposes of this paragraph (d)(4), property is used predominantly outside the United States for any period if, during that period, the property is located outside the United States more than 50 percent of the time. An aircraft, railroad rolling stock, vessel, motor vehicle, container, or other property used for transportation purposes is deemed to be used predominantly outside the United States for any period if, during that period, either the property is located outside the United States more than 50 percent of the time or more than 50 percent of the miles traversed in the use of the property are traversed outside the United States. However, property is deemed to be within the United States at all times during which it is engaged in transport between any two points within the United

States, except where the transport constitutes uninterrupted international air transportation within the meaning of section 4262(c)(3) and the regulations under that section (relating to tax on air transportation of persons). An orbiting satellite is deemed to be located outside the United States. For purposes of applying section 4262(c)(3) to this subdivision, the term "United States" includes the Commonwealth of Puerto Rico.

(vii) ***Component.*** For purposes of this paragraph (d)(4), a component is property which is (or is reasonably expected to be) incorporated into a second product by the purchaser of such component by means of production, manufacture, or assembly.

(e) ***Foreign content of property*** —

(1) ***The 50 percent test.*** Under paragraph (a)(3) of this section, no more than 50 percent of the fair market value of export property may be attributable to the fair market value of articles which were imported into the United States. For purposes of this paragraph (e), articles imported into the United States are referred to as "foreign content." The fair market value of the foreign content of export property is computed in accordance with paragraph (e)(4) of this section. The fair market value of export property which is sold to a person who is not a related person with respect to the seller is the sale price for such property (not including interest, finance or carrying charges, or similar charges.)

(2) ***Application of 50 percent test.*** The 50 percent test is applied on an item-by-item basis. If, however, a person sells or leases a large volume of substantially identical export property in a taxable year and if all of that property contains substantially identical foreign content in substantially the same proportion, the person may determine the portion of foreign content contained in that property on an aggregate basis.

(3) ***Parts and services.*** If, at the time property is sold or leased the seller or lessor agrees to furnish parts pursuant to a services contract (as provided in § 1.924(a)-1T(d)(3)) and the price for the parts is not separately stated, the 50 percent test is applied on an aggregate basis to the property and parts. If the price for the parts is separately stated, the 50 percent test is applied separately to the property and to the parts.

(4) ***Computation of foreign content*** —

(i) ***Valuation.*** For purposes of applying the 50 percent test, it is necessary to determine the fair market value of all articles which constitutes foreign content of the property being tested to determine if it is export property. The fair market value of the imported articles is determined as of the time the articles are imported into the United States.

(A) ***General rule.*** Except as provided in paragraph (e)(4)(i)(B), the fair market value of the imported articles which constitutes foreign content is their appraised value, as determined under section 403 of the Tariff Act of 1930 (19 U.S.C. 1401a) in connection with their importation. The appraised value of the articles is the full dutiable value of the articles, determined, however, without regard to any special provision in the United States tariff laws which would result in a lower dutiable value.

(B) ***Special election.*** If all or a portion of the imported article was originally manufactured, produced, grown, or extracted in the United States, the taxpayer may elect to determine the fair market value of the imported articles which constitutes foreign content under the provisions of this paragraph (e)(4)(i)(B) if the property is subjected to manufacturing or production (as defined in paragraph (c) of this section) within the United States after importation. A taxpayer making the election under this paragraph may determine the fair

market value of the imported articles which constitutes foreign content to be the fair market value of the imported articles reduced by the fair market value at the time of the initial export of the portion of the property that was manufactured, produced, grown, or extracted in the United States. The taxpayer must establish the fair market value of the imported articles and of the portion of the property manufactured, produced, grown, or extracted in the United States at the time of the initial export in accordance with subdivision (4)(ii)(B) of this paragraph.

(ii) ***Evidence of fair market value*** —

(A) ***General rule.*** For purposes of subdivision (4)(i)(A) of this paragraph, the fair market value of the imported articles is their appraised value, which may be evidenced by the customs invoice issued on the importation of such articles into the United States. If the holder of the articles is not the importer (or a related person with respect to the importer), the appraised value of the articles may be evidenced by a certificate based upon information contained in the customs invoice and furnished to the holder by the person from whom the articles (or property incorporating the articles) were purchased. If a customs invoice or certificate described in the preceding sentences is not available to a person purchasing property, the person shall establish that no more than 50 percent of the fair market value of such property is attributable to the fair market value of articles which were imported into the United States.

(B) ***Special election.*** For purposes of the special election set forth in subdivision (4)(i)(B) of this paragraph, if the initial export is made to a controlled person within the meaning of section 482, the fair market value of the imported articles and of the portion of the articles that are manufactured, produced, grown, or extracted within the United States shall be established by the taxpayer in accordance with the rules under section 482 and the regulations under that section. If the initial export is not made to a controlled person, the fair market value must be established by the taxpayer under the facts and circumstances.

(iii) ***Interchangeable component articles.***

(A) If identical or similar component articles can be incorporated interchangeably into property and a person acquires component articles that are imported into the United States and other component articles that are not imported into the United States, the determination whether imported component articles were incorporated in the property that is exported from the United States shall be made on a substitution basis as in the case of the rules relating to drawback accounts under the customs laws. See section 313(b) of the Tariff Act of 1930, as amended (19 U.S.C. 1313(b)).

(B) The provisions of subdivision (4)(iii)(A) of this paragraph may be illustrated by the following example:

Example. Assume that a manufacturer produces a total of 20,000 electronic devices. The manufacturer exports 5,000 of the devices and subsequently sells 11,000 of the devices to a FSC which exports the 11,000 devices. The major single component article in each device is a tube which represents 60 percent of the fair market value of the device at the time the device is sold by the manufacturer. The manufacturer imports 8,000 of the tubes and produces the remaining 12,000 tubes. For purposes of this subdivision, in accordance with the substitution principle used in the customs drawback laws, the 5,000 devices exported by the manufacturer are each treated as containing an imported tube because the devices were exported prior to the sale to the FSC. The remaining 3,000 imported tubes

are treated as being contained in the first 3,000 devices purchased and exported by the FSC. Thus, since the 50 percent test is not met with respect to the first 3,000 devices purchased and exported by the FSC, those devices are not export property. The remaining 8,000 devices purchased and exported by the FSC are treated as containing tubes produced in the United States, and those devices are export property (if they otherwise meet the requirements of this section).

(f) ***Excluded property*** —

(1) ***In general.*** Notwithstanding any other provision of this section, the following property is not export property—

(i) Property described in subdivision (2) of this paragraph (relating to property leased to a member of controlled group),

(ii) Property described in subdivision (3) of this paragraph (relating to certain types of intangible property),

(iii) Products described in paragraph (g) of this section (relating to oil and gas products), and

(iv) Products described in paragraph (h) of this section (relating to certain export controlled products).

(2) ***Property leased to member of controlled group*** —

(i) ***In general.*** Property leased to a person (whether or not a FSC) which is a member of the same controlled group as the lessor constitutes export property for any period of time only if during the period—

(A) The property is held for sublease, or is subleased, by the person to a third person for the ultimate use of the third person;

(B) The third person is not a member of the same controlled group; and

(C) The property is used predominantly outside the United States by the third person.

(ii) ***Predominant use.*** The provisions of paragraph (d)(4)(vi) of this section apply in determining under subdivision (2)(i)(C) of this paragraph whether the property is used predominantly outside the United States by the third person.

(iii) ***Leasing rule.*** For purposes of this paragraph (f)(2), leased property is deemed to be ultimately used by a member of the same controlled group as the lessor if such property is leased to a person which is not a member of the controlled group but which subleases the property to a person which is a member of the controlled group. Thus, for example, if X, a FSC for the taxable year, leases a movie film to Y, a foreign corporation which is not a member of the same controlled group as X, and Y then subleases the film to persons which are members of the controlled group for showing to the general public, the film is not export property. On the other hand, if X, a FSC for the taxable year, leases a movie film to Z, a foreign corporation which is a member of the same controlled group as X, and Z then subleases the film to Y, another foreign corporation, which is not a member of the same controlled group for showing to the general public, the film is not disqualified from being export property.

(iv) ***Certain copyrights.*** With respect to a copyright which is not excluded by subdivision (3) of this paragraph from being export property, the ultimate use of the property is the sale or exhibition of the property to the general public. Thus, if A, a FSC for the taxable year, leases recording

tapes to B, a foreign corporation which is a member of the same controlled group as A, and if B makes records from the recording tape and sells the records to C, another foreign corporation, which is not a member of the same controlled group, for sale by C to the general public, the recording tape is not disqualified under this paragraph from being export property, notwithstanding the leasing of the recording tape by A to a member of the same controlled group, since the ultimate use of the tape is the sale of the records (*i.e.,* property produced from the recording tape).

(3) ***Intangible property.*** Export property does not include any patent, invention, model, design, formula, or process, whether or not patented, or any copyright (other than films, tapes, records, or similar reproductions, for commercial or home use), goodwill, trademark, tradebrand, franchise, or other like property. Although a copyright such as a copyright on a book or computer software does not constitute export property, a copyrighted article (such as a book or standardized, mass marketed computer software) if not accompanied by a right to reproduce for external use is export property if the requirements of this section are otherwise satisfied. Computer software referred to in the preceding sentence may be on any medium, including, but not limited to, magnetic tape, punched cards, disks, semi-conductor chips and circuit boards. A license of a master recording tape for reproduction outside the United States is not disqualified under this paragraph from being export property.

(g) ***Oil and gas*** —

(1) ***In general.*** Under section 927(a)(2)(C), export property does not include oil or gas (or any primary product thereof).

(2) ***Primary product from oil or gas.*** A primary product from oil or gas is not export property. For purposes of this paragraph—

(i) ***Primary product from oil.*** The term “primary product from oil” means crude oil and all products derived from the destructive distillation of crude oil, including—

(A) Volatile products,

(B) Light oils such as motor fuel and kerosene,

(C) Distillates such as naphtha,

(D) Lubricating oils,

(E) Greases and waxes, and

(F) Residues such as fuel oil.

For purposes of this paragraph, a product or commodity derived from shale oil which would be a primary product from oil if derived from crude oil is considered a primary product from oil.

(ii) ***Primary product from gas.*** The term “primary product from gas” means all gas and associated hydrocarbon components from gas wells or oil wells, whether recovered at the lease or upon further processing, including—

(A) Natural gas,

(B) Condensates,

(C) Liquefied petroleum gases such as ethane, propane, and butane, and

(D) Liquid products such as natural gasoline.

(iii) ***Primary products and changing technology.*** The primary products from oil or gas described in subdivisions (2)(i) and (ii) of this paragraph and the processes described in those subdivisions are not intended to represent either the only primary products from oil or gas, or the only processes from which primary products may be derived under existing and future technologies. For example, petroleum coke, although not derived from the destructive distillation of crude oil, is a primary product from oil derived from an existing technology.

(iv) ***Non-primary products.*** For purposes of this paragraph, petrochemicals, medicinal products, insecticides and alcohols are not considered primary products from oil or gas.

(h) ***Export controlled products*** —

(1) ***In general.*** Section 927(a)(2)(D) provides that an export controlled product is not export property. A product or commodity may be an export controlled product at one time but not an export controlled product at another time. For purposes of this paragraph, a product or commodity is an "export controlled product" at a particular time if at that time the export of such product or commodity is prohibited or curtailed under section 7(a) of the Export Administration Act of 1979, to effectuate the policy relating to the protection of the domestic economy set forth in paragraph (2)(C) of section 3 of the Export Administration Act of 1979. That policy is to use export controls to the extent necessary to protect the domestic economy from the excessive drain of scarce materials and to reduce the serious inflationary impact of foreign demand.

(2) ***Products considered export controlled products*** —

(i) ***In general.*** For purposes of this paragraph, an export controlled product is a product or commodity, which is subject to short supply export controls under 15 CFR part 377. A product or commodity is considered an export controlled product for the duration of each control period which applies to such product or commodity. A control period of a product or commodity begins on and includes the initial control date (as defined in subdivision (2)(ii) of this paragraph) and ends on and includes the final control date (as defined in subdivision (2)(iii) of this paragraph).

(ii) ***Initial control date.*** The initial control date of a product or commodity which is subject to short supply export controls is the effective date stated in the regulations to 15 CFR part 377 which subjects the product or commodity to short supply export controls. If there is no effective date stated in these regulations, the initial control date of the product or commodity will be thirty days after the effective date of the regulations which subject the product or commodity to short supply export controls.

(iii) ***Final control date.*** The final control date of a product or commodity is the effective date stated in the regulations to 15 CFR part 377 which removes the product or commodity from short supply export controls. If there is no effective date stated in those regulations, the final control date of the product or commodity is the date which is thirty days after the effective date of the regulations which remove the product or commodity from short supply export control.

(iv) ***Expiration of Export Administration Act.*** An initial control date and final control date cannot occur after the expiration date of the Export Administration Act under the authority of which the short supply export controls were issued.

(3) ***Effective dates*** —

(i) ***Products controlled on January 1, 1985.*** If a product or commodity was subject to short supply export controls on January 1, 1985, this paragraph shall apply to all sales, exchanges, other dispositions, or leases of the product or commodity made after January 1, 1985, by the FSC or by the FSC's related supplier if the FSC is the commission agent on the transaction.

(ii) ***Products first controlled after January 1, 1985.*** If a product or commodity becomes subject to short supply export controls after January 1, 1985, this paragraph applies to sales, exchanges, other dispositions, or leases of such product or commodity made on or after the initial control date of such product or commodity, and to owning such product or commodity on or after such date.

(iii) ***Date of sales, exchange, lease, or other disposition.*** For purposes of this paragraph (h)(3), the date of sale, exchange, or other disposition of a product or commodity is the date as of which title to such product or commodity passes. The date of a lease is the date as of which the lessee takes possession of a product or commodity. The accounting method of a person is not determinative of the date of sale, exchange, other disposition, or lease.

(i) ***Property in short supply.*** If the President determines that the supply of any property which is otherwise export property as defined in this section is insufficient to meet the requirements of the domestic economy, he may by Executive Order designate such property as in short supply. Any property so designated will be treated under section 927(a)(3) as property which is not export property during the period beginning with the date specified in such Executive Order and ending with the date specified in an Executive Order setting forth the President's determination that such property is no longer in short supply.

[T.D. 8126, 52 FR 6459, Mar. 3, 1987]

§ 1.927(b)-1T [Reserved]

§ 1.927(d)-1 [Reserved]

§ 1.927(d)-2T Temporary regulations; definitions and special rules relating to Foreign Sales Corporation.

(a) ***Definition of related supplier.*** For purposes of sections 921 through 927 and the regulations under those sections, the term “related supplier” means a related party which directly supplies to a FSC any property or services which the FSC disposes of in a transaction producing foreign trading gross receipts, or a related party which uses the FSC as a commission agent in the disposition of any property or services producing foreign trading gross receipts. A FSC may have different related suppliers with respect to different transactions. If, for example, X owns all the stock of Y, a corporation, and of F, a FSC, and X sells a product to Y which is resold to F, only Y is the related supplier of F. If, however, X sells directly to F and Y also sells directly to F, then, as to the transactions involving direct sales to F, each of X and Y is a related supplier of F.

(b) ***Definition of related party.*** The term “related party” means a person which is owned or controlled directly or indirectly by the same interests as the FSC within the meaning of section 482 and § 1.482-1(a).

[T.D. 8126, 52 FR 6465, Mar. 3, 1987]

POSSESSIONS OF THE UNITED STATES

§ 1.931-1 Exclusion of certain income from sources within Guam, American Samoa, or the Northern Mariana Islands.

(a) ***General rule.***

(1) An individual (whether a United States citizen or an alien), who is a bona fide resident of a section 931 possession during the entire taxable year, will exclude from gross income the income derived from sources within any section 931 possession and the income effectively connected with the conduct of a trade or business by such individual within any section 931 possession, except amounts received for services performed as an employee of the United States or any agency thereof. For purposes of section 931(d) and this section, an employee of the government of a section 931 possession will not be considered an employee of the United States or of an agency of the United States.

(2) The following example illustrates the application of the general rule in paragraph (a)(1) of this section:

Example. D, a United States citizen, files returns on a calendar year basis. In April 2008, D moves to American Samoa, where he purchases a house and accepts a permanent position with a local employer. For the remainder of the year and for the following three taxable years, D continues to live and work in American Samoa and has a closer connection to American Samoa than to the United States or any foreign country. Assuming that D otherwise meets the requirements under section 937(a) and § 1.937-1(b) and (f)(1) (year-of-move exception), D is considered a bona fide resident of American Samoa for 2008. Accordingly, under section 931 and paragraph (a)(1) of this section, D should exclude from his 2008 Federal gross income any income from sources within American Samoa and any income that is effectively connected with the conduct of a trade or business within American Samoa, as determined under section 937(b) and §§ 1.937-2 and 1.937-3, as applicable.

(b) ***Deductions and credits.*** In any case in which any amount otherwise constituting gross income is excluded from gross income under the provisions of section 931, there will not be allowed as a deduction from gross income any items of expenses or losses or other deductions (except the deduction under section 151, relating to personal exemptions), or any credit, properly allocable to, or chargeable against, the amounts so excluded from gross income. For purposes of the preceding sentence, the rules of § 1.861-8 will apply (with creditable expenditures treated in the same manner as deductible expenditures).

(c) ***Definitions.*** For purposes of this section—

(1) The term *section 931 possession* means a possession that is a specified possession and that has entered into an implementing agreement, as described in section 1271(b) of the Tax Reform Act of 1986, Public Law 99-514 (100 Stat. 2085), with the United States that is in effect for the entire taxable year;

(2) The term *specified possession* means Guam, American Samoa, or the Northern Mariana Islands;

(3) The rules of § 1.937-1 will apply for determining whether an individual is a bona fide resident of a section 931 possession;

(4) The rules of § 1.937-2 will apply for determining whether income is from sources within a section 931 possession; and

(5) The rules of § 1.937-3 will apply for determining whether income is effectively connected with the conduct of a trade or business within a section 931 possession.

(d) ***Effective/applicability date.*** This section applies to taxable years ending after April 9, 2008.

[T.D. 9391, 73 FR 19360, Apr. 9, 2008]

§ 1.932-1 Coordination of United States and Virgin Islands income taxes.

(a) ***Scope*** —

(1) ***In general.*** Section 932 and this section set forth the special rules relating to the filing of income tax returns and income tax liabilities of individuals described in paragraph (a)(2) of this section. Paragraph (h) of this section also provides special rules requiring consistent treatment of business entities in the United States and in the United States Virgin Islands (Virgin Islands).

(2) ***Individuals covered.*** This section will apply to any individual who—

(i) Is a bona fide resident of the Virgin Islands during the entire taxable year;

(ii)

(A) Is a citizen or resident of the United States (other than a bona fide resident of the Virgin Islands) during the entire taxable year; and

(B) Has income derived from sources within the Virgin Islands, or effectively connected with the conduct of a trade or business within the Virgin Islands, for the taxable year; or

(iii) Files a joint return for the taxable year with any individual described in paragraph (a)(2)(i) or (ii) of this section.

(3) ***Definitions.*** For purposes of this section—

(i) The rules of § 1.937-1 will apply for determining whether an individual is a bona fide resident of the Virgin Islands;

(ii) The rules of § 1.937-2 will apply for determining whether income is from sources within the Virgin Islands; and

(iii) The rules of § 1.937-3 will apply for determining whether income is effectively connected with the conduct of a trade or business within the Virgin Islands.

(b) ***U.S. individuals with Virgin Islands income*** —

(1) ***Dual filing requirement.*** Subject to paragraph (d) of this section, an individual described in paragraph (a)(2)(ii) of this section must make an income tax return for the taxable year to the United States and file a copy of such return with the Virgin Islands. Such individuals must also attach Form 8689, "Allocation of Individual Income Tax to the U.S. Virgin Islands," to the U.S. income tax return and to the income tax return filed with the Virgin Islands.

(2) ***Tax payments.***

(i) Each individual to whom this paragraph (b) applies for the taxable year must pay the applicable percentage of the taxes imposed by this chapter for such taxable year (determined without regard to paragraph (b)(2)(ii) of this section) to the Virgin Islands.

(ii) A credit against the tax imposed by this chapter for the taxable year will be allowed in an amount equal to the taxes that are required to be paid to the Virgin Islands under paragraph (b)(2)(i) of this section and are so paid. Such taxes will be considered creditable in the same manner as taxes paid to the United States (for example, under section 31) and not as taxes paid to a foreign government (for example, under sections 27 and 901).

(iii) For purposes of this paragraph (b)(2)—

(A) The term *applicable percentage* means the percentage that Virgin Islands adjusted gross income bears to adjusted gross income;

(B) The term *Virgin Islands adjusted gross income* means adjusted gross income determined by taking into account only income derived from sources within the Virgin Islands and deductions properly apportioned or allocable to such income. For purposes of the preceding sentence, the rules of § 1.861-8 will apply; and

(C) Pursuant to § 1.937-2(a), the rules of § 1.937-2(c)(1)(ii) and (c)(2) do not apply.

(c) ***Bona fide residents of the Virgin Islands.*** Subject to paragraph (d) of this section, an individual described in paragraph (a)(2)(i) of this section will be subject to the following income tax return filing requirements:

(1) ***Virgin Islands filing requirements.*** An individual to whom this paragraph (c) applies must file an income tax return for the taxable year with the Virgin Islands. On this return, the individual must report income from all sources and identify the source of each item of income shown on the return.

(2) ***U.S. filing requirements.***

(i) For purposes of calculating the income tax liability to the United States of an individual to whom this paragraph (c) applies, gross income will not include any amount included in gross income on the return filed with the Virgin Islands pursuant to paragraph (c)(1) of this section, and deductions and credits allocable to such income will not be taken into account, provided that—

(A) The individual fully satisfied the reporting requirements of paragraph (c)(1) of this section; and

(B) The individual fully paid the tax liability referred to in section 934(a) to the Virgin Islands with respect to such income.

(ii) For purposes of the U.S. statute of limitations under section 6501(a), an income tax return filed with the Virgin Islands by an individual who takes the position that he or she is a bona fide resident of the Virgin Islands described in paragraph (a)(2)(i) of this section (or an individual who files a joint return with such an individual under paragraph (d) of this section) will be deemed to be a U.S. income tax return, provided that the United States and the Virgin Islands have entered into an agreement for the routine exchange of income tax information satisfying the requirements of the Commissioner. The working arrangement announced in Notice 2007-31 satisfies the condition of the preceding sentence. See Notice 2007-31 (2007-16 IRB 971) (applicable to taxable years ending on or after December 31, 2006, unless and until arrangement terminates). In the absence of such an agreement, individuals to whom this paragraph (c) applies generally must file an income tax return for the taxable year with the United States to begin the period of limitations for Federal income tax purposes as provided in section 6501(a), and in such circumstances the Commissioner may by revenue procedure, notice, or other administrative pronouncement specify U.S. filing and other information

reporting requirements for such individuals. For taxable years ending before December 31, 2006, the rules provided in section 3 of Notice 2007-19 (2007-11 IRB 689) will apply. See § 601.601(d)(2)(ii)(*b*).

(3) ***U.S. tax payments.*** In the case of an individual who is required to file an income tax return with the United States as a consequence of failing to satisfy the requirements of paragraphs (c)(2)(i)(A) or (B) of this section, there will be allowed as a credit against the tax imposed by this chapter for the taxable year an amount equal to the amount of the tax liability referred to in section 934(a) to the extent paid to the Virgin Islands. Such taxes shall be considered creditable in the same manner as taxes paid to the United States (for example, under section 31) and not as taxes paid to a foreign government (for example, under sections 27 and 901).

(d) ***Joint returns.*** In the case of married persons, if one or both spouses is an individual described in paragraph (a)(2) of this section and they file a joint return of income tax, the spouses must file their joint return with, and pay the tax due on such return to, the jurisdiction (or jurisdictions) where the spouse who has the greater adjusted gross income for the taxable year would be required under paragraph (b) or (c) of this section to file a return if separate returns were filed and all of their income were the income of such spouse. For this purpose, adjusted gross income of each spouse is determined under section 62 and the regulations under that section but without regard to community property laws; and, if one of the spouses dies, the taxable year of the surviving spouse will be treated as ending on the date of such death.

(e) ***Place for filing returns*** —

(1) ***U.S. returns.*** Except as otherwise provided for returns filed under paragraph (c)(2)(ii) of this section, a return required under the rules of paragraphs (b) and (c) of this section to be filed with the United States must be filed as directed in the applicable forms and instructions.

(2) ***Virgin Islands returns.*** A return required under the rules of paragraphs (b) and (c) of this section to be filed with the Virgin Islands must be filed as directed in the applicable forms and instructions.

(f) ***Tax accounting standards*** —

(1) ***In general.*** A dual filing taxpayer must use the same tax accounting standards on the returns filed with the United States and the Virgin Islands. A taxpayer who has filed a return only with the United States or only with the Virgin Islands as a single filing taxpayer for a prior taxable year and is required to file a return only with the other jurisdiction as a single filing taxpayer for a later taxable year may not, for such later taxable year, use different tax accounting standards unless the second jurisdiction consents to such change. However, such change will not be effective for returns filed thereafter with the first jurisdiction unless before such later date of filing the taxpayer also obtains the consent of the first jurisdiction to make such change. Any request for consent to make a change pursuant to this paragraph (f) must be made to the office where the return is required to be filed under paragraph (e) of this section and in sufficient time to permit a copy of the consent to be attached to the return for the taxable year.

(2) ***Definitions.*** For purposes of this paragraph (f), the terms—

(i) ***Dual filing taxpayer*** means a taxpayer who is required to file returns with the United States and the Virgin Islands for the same taxable year under the rules of paragraph (b) or (c) of this section;

(ii) ***Single filing taxpayer*** means a taxpayer who is required to file a return only with the United States (because the individual is not described in paragraph (a)(2) of this section) or only with the Virgin Islands (because the individual is described in paragraph (a)(2)(i) of this section and satisfies the conditions of paragraphs (c)(2)(i) and (ii) of this section) for the taxable year; and

(iii) ***Tax accounting standards*** includes the taxpayer's accounting period, methods of accounting, and any election to which the taxpayer is bound with respect to the reporting of taxable income.

(g) ***Extension of territory*** —

(1) ***Section 932(a) taxpayers*** —

(i) ***General rule.*** With respect to an individual to whom section 932(a) applies for a taxable year, for purposes of taxes imposed by Chapter 1 of the Internal Revenue Code (Code), the United States generally will be treated, in a geographical and governmental sense, as including the Virgin Islands. The purpose of this rule is to facilitate the coordination of the tax systems of the United States and the Virgin Islands. Accordingly, the rule will have no effect where it is manifestly inapplicable or its application would be incompatible with the intent of any provision of the Code.

(ii) ***Application of general rule.*** Contexts in which the general rule of paragraph (g)(1)(i) of this section apply include—

(A) The characterization of taxes paid to the Virgin Islands. An individual to whom section 932(a) applies may take income tax required to be paid to the Virgin Islands under section 932(b) into account under sections 31, 6315, and 6402(b) as payments to the United States. Taxes paid to the Virgin Islands and otherwise satisfying the requirements of section 164(a) will be allowed as a deduction under that section, but income taxes required to be paid to the Virgin Islands under section 932(b) will be disallowed as a deduction under section 275(a);

(B) The determination of the source of income for purposes of the foreign tax credit (for example, sections 901 through 904). Thus, for example, after an individual to whom section 932(a) applies determines which items of income constitute income from sources within the Virgin Islands under the rules of section 937(b), such income will be treated as income from sources within the United States for purposes of section 904;

(C) The eligibility of a corporation to make a subchapter S election (sections 1361 through 1379). Thus, for example, for purposes of determining whether a corporation created or organized in the Virgin Islands may make an election under section 1362(a) to be a subchapter S corporation, it will be treated as a domestic corporation and a shareholder to whom section 932(a) applies will not be treated as a nonresident alien individual with respect to such corporation. While such an election is in effect, the corporation will be treated as a domestic corporation for all purposes of the Internal Revenue Code. For the consistency requirement with respect to entity status elections, see paragraph (h) of this section;

(D) The treatment of items carried over from other taxable years. Thus, for example, if an individual to whom section 932(a) applies has for a taxable year a net operating loss carryback or carryover under section 172, a foreign tax credit carryback or carryover under section 904, a business credit carryback or carryover under section 39, a capital loss carryover under section 1212, or a charitable contributions carryover under section 170,

the carryback or carryover will be reported on the return filed in accordance with paragraph (b)(1) of this section, even though the return of the taxpayer for the taxable year giving rise to the carryback or carryover was required to be filed with the Virgin Islands under section 932(c); and

(E) The treatment of property exchanged for property of a like kind (section 1031). Thus, for example, if an individual to whom section 932(a) applies exchanges real property located in the United States for real property located in the Virgin Islands, notwithstanding the provisions of section 1031(h), such exchange may qualify as a like-kind exchange under section 1031 (provided that all the other requirements of section 1031 are satisfied).

(iii) ***Nonapplication of the general rule.*** Contexts in which the general rule of paragraph (g)(1)(i) of this section does not apply include—

(A) The application of any rules or regulations that explicitly treat the United States and any (or all) of its possessions as separate jurisdictions (for example, sections 931 through 937, 7651, and 7654).

(B) The determination of any aspect of an individual's residency (for example, sections 937(a) and 7701(b)). Thus, for example, an individual whose principal place of abode is in the Virgin Islands is not considered to have a principal place of abode in the United States for purposes of section 32(c);

(C) The characterization of a corporation for purposes other than subchapter S (for example, sections 367, 951 through 964, 1291 through 1298, 6038, and 6038B). Thus, for example, if an individual to whom section 932(a) applies transfers appreciated tangible property to a corporation created or organized in the Virgin Islands in a transaction described in section 351, he or she must recognize gain unless an exception under section 367(a) applies. Also, if a corporation created or organized in the Virgin Islands qualifies as a passive foreign investment company under sections 1297 and 1298 with respect to an individual to whom section 932(a) applies, a dividend paid to such shareholder does not constitute qualified dividend income under section 1(h)(11)(B).

(2) ***Section 932(c) taxpayers*** —

(i) ***General rule.*** With respect to an individual to whom section 932(c) applies for a taxable year, for purposes of the territorial income tax of the Virgin Islands (that is, mirrored sections of the Code), the Virgin Islands generally will be treated, in a geographical and governmental sense, as including the United States. The purpose of this rule is to facilitate the coordination of the tax systems of the United States and the Virgin Islands. Accordingly, the rule will have no effect where it is manifestly inapplicable or its application would be incompatible with the intent of any provision of the Code.

(ii) ***Application of general rule.*** Contexts in which the general rule of paragraph (g)(2)(i) of this section apply include—

(A) The characterization of taxes paid to the United States. A taxpayer described in section 932(c)(1) may take income tax paid to the United States into account under mirrored sections 31, 6315, and 6402(b) as payments to the Virgin Islands;

(B) The determination of the source of income for purposes of the foreign tax credit (for example, mirrored sections 901 through 904). Thus, for example, any item of income that constitutes income from sources within the United States under the rules of sections 861 through 865 will be treated as income from sources within the Virgin Islands for purposes of mirrored section 904;

(C) The eligibility of a corporation to make a subchapter S election (mirrored sections 1361 through 1379). Thus, for example, for purposes of determining whether a corporation created or organized in the United States may make an election under mirrored section 1362(a) to be a subchapter S corporation, it will be treated as a domestic corporation and a shareholder to whom section 932(c) applies will not be treated as a nonresident alien individual with respect to such corporation. While such an election is in effect, the corporation will be treated as a domestic corporation for all purposes of the territorial income tax. For the consistency requirement with respect to entity status elections, see paragraph (h) of this section;

(D) The treatment of items carried over from other taxable years. Thus, for example, if an individual to whom section 932(c) applies has for a taxable year a net operating loss carryback or carryover under mirrored section 172, a foreign tax credit carryback or carryover under mirrored section 904, a business credit carryback or carryover under mirrored section 39, a capital loss carryover under mirrored section 1212, or a charitable contributions carryover under mirrored section 170, the carryback or carryover will be reported on the return filed in accordance with paragraph (c)(1) of this section, even though the return of the taxpayer for the taxable year giving rise to the carryback or carryover was required to be filed with the United States; and

(E) The treatment of property exchanged for property of a like kind (mirrored section 1031). Thus, for example, if an individual to whom section 932(c) applies exchanges real property located in the United States for real property located in the Virgin Islands, notwithstanding the provisions of mirrored section 1031(h), such exchange may qualify as a like-kind exchange under mirrored section 1031 (provided that all the other requirements of mirrored section 1031 are satisfied).

(iii) ***Nonapplication of general rule.*** Contexts in which the general rule of paragraph (g)(2)(i) of this section does not apply include—

(A) The determination of any aspect of an individual's residency (for example, mirrored section 7701(b)). Thus, for example, an individual whose principal place of abode is in the United States is not considered to have a principal place of abode in the Virgin Islands for purposes of mirrored section 32(c).

(B) The determination of the source of income for purposes other than the foreign tax credit (for example, sections 932(a) and (b), 934(b), and 937). Thus, for example, compensation for services performed in the United States and rentals or royalties from property located in the United States do not constitute income from sources within the Virgin Islands for purposes of section 934(b); and

(C) The definition of wages (mirrored section 3401). Thus, for example, services performed by an employee for an employer in the United States do not constitute services performed in the Virgin Islands under mirrored section 3401(a)(8).

(h) ***Entity status consistency requirement*** —

(1) ***In general.*** Taxpayers should make consistent entity status elections (as defined in paragraph (h)(3) of this section), where applicable, in both the United States and the Virgin Islands. In the case of a business entity to which this paragraph (h) applies—

(i) If an entity status election is filed with the Internal Revenue Service (IRS) but not with the Virgin Islands Bureau of Internal Revenue (BIR), the Director of the BIR or his delegate, at his discretion, may deem the election also to have been made for Virgin Islands tax purposes;

(ii) If an entity status election is filed with the BIR but not with the IRS, the Commissioner, at his discretion, may deem the election also to have been made for Federal tax purposes; and

(iii) If inconsistent entity status elections are filed with the BIR and the IRS, both the Commissioner and the Director of the BIR or his delegate may, at their individual discretion, treat the elections they each received as invalid and may deem the election filed in the other jurisdiction to have been made also for tax purposes in their own jurisdiction. See Rev. Proc. 2006-23 (2006-1 CB 900) (see § 601.601(d)(2)(ii)(*b*) of this chapter) for procedures for requesting the assistance of the IRS when a taxpayer is or may be subject to inconsistent tax treatment by the IRS and a U.S. possession tax agency.

(2) ***Scope.*** This paragraph (h) applies to the following business entities:

(i) A business entity (as defined in § 301.7701-2(a) of this chapter) that is domestic (as defined in § 301.7701-5 of this chapter), or otherwise treated as domestic for purposes of the Code, and that is owned in whole or in part by any person who is either a bona fide resident of the Virgin Islands or a business entity created or organized in the Virgin Islands.

(ii) A business entity that is created or organized in the Virgin Islands and that is owned in whole or in part by any U.S. person (other than a bona fide resident of the Virgin Islands).

(3) ***Definition.*** For purposes of this section, the term *entity status election* includes an election under § 301.7701-3(c) of this chapter, an election under section 1362(a), and any other similar elections.

(4) ***Default status.*** Solely for the purpose of determining classification of an eligible entity under § 301.7701-3(b) of this chapter and under that section as mirrored in the Virgin Islands, an eligible entity subject to this paragraph (h) will be classified for both Federal and Virgin Islands tax purposes using the rule that applies to domestic eligible entities.

(5) ***Transition rules.***

(i) In the case of an election filed prior to April 11, 2005, except as provided in paragraph (h)(5)(ii) of this section, the rules of paragraph (h)(1) of this section will apply as of the first day of the first taxable year of the entity beginning after April 11, 2005.

(ii) In the unlikely circumstance that inconsistent elections described in paragraph (h)(1)(iii) of this section are filed prior to April 11, 2005, and the entity cannot change its classification to achieve consistency because of the sixty-month limitation described in § 301.7701-3(c)(1)(iv) of this chapter, then the entity may nevertheless request permission from the Commissioner or the Director of the BIR or his delegate to change such election to avoid inconsistent treatment by the Commissioner and the Director of the BIR or his delegate.

(iii) Except as provided in paragraphs (h)(5)(i) and (h)(5)(ii) of this section, in the case of an election filed with respect to an entity before it became an entity described in paragraph (h)(2) of this section, the rules of paragraph (h)(1) of this section will apply as of the first day that such entity is described in paragraph (h)(2) of this section.

(iv) In the case of an entity created or organized prior to April 11, 2005, paragraph (h)(4) of this section will take effect for Federal income tax purposes (or Virgin Islands income tax purposes, as the case may be) as of the first day of the first taxable year of the entity beginning after April 11, 2005.

(i) ***Examples.*** The rules of this section are illustrated by the following examples:

Example 1. (i) A is a U.S. citizen who resides in State R. For 2008, A files with the IRS a Form 1040, "U.S. Individual Income Tax Return," reporting adjusted gross income of $90x, which includes $30x from sources in the Virgin Islands. The income tax liability reported on A's Form 1040 is $18x. A files a copy of his Form 1040 with the Virgin Islands as required by section 932(a)(2) and paragraph (b)(1) of this section. A pays to the Virgin Islands the applicable percentage of his Federal income tax liability as required by section 932(b) and paragraph (b)(2) of this section, computed as follows: $30x/$90x × $18x = $6x income tax liability to the Virgin Islands.
(ii) A claims a credit in the amount of $6x against his Federal income tax liability reported on his Form 1040. A attaches a Form 8689, "Allocation of Individual Income Tax to the U.S. Virgin Islands," to the Form 1040 filed with the IRS and to the copy filed with the Virgin Islands.

Example 2. (i) B, a U.S. citizen, files returns on a calendar year basis. In November 2008, B moves to the Virgin Islands, purchases a house, and accepts a permanent position with a local employer. For the remainder of the year and throughout 2009, B continues to live and work in the Virgin Islands and has a closer connection to the Virgin Islands than to the United States or any foreign country. As a consequence of his employment in the Virgin Islands, B earns income from the performance of services in the Virgin Islands during 2008 and 2009.
(ii) For 2008, B does not qualify as a bona fide resident under section 937(a) and § 1.937-1(b) and (f)(1). Therefore, B is subject to the rules of sections 932(a) and (b) and paragraph (b) of this section for 2008 because he has income derived from sources within the Virgin Islands as determined under the rules of section 937(b) and § 1.937-2.

(iii) For 2009, assuming that B otherwise satisfies the requirements of section 937(a) and § 1.937-1(b), B qualifies as a bona fide resident of the Virgin Islands. Therefore, section 932(c) and paragraph (c) of this section apply to B for 2009, and he must file his income tax return with the Virgin Islands under paragraph (c)(1) of this section. Provided that B fully satisfies the reporting requirements of paragraph (c)(1) of this section and fully pays the tax liability referred to in section 934(a), B will have no Federal income tax filing requirement or liability under paragraphs (c)(2) and (3) of this section.

Example 3. H and W are U.S. citizens. H resides in State T and W is a bona fide resident of the Virgin Islands. For 2008, H and W prepare a joint Form 1040, "U.S. Individual Income Tax Return," reporting total adjusted gross income of $75x, of which $40x is attributable to compensation that W received for services performed in the Virgin Islands and $35x to compensation that H received for services performed in State T. Pursuant to section 932(d) and paragraph (d) of this section, because W would have the greater adjusted gross income if computed separately, H and W must file their joint Form 1040 with the Virgin Islands as required by section 932(c) and paragraph (c)(1) of this section. H and W may claim a tax credit on such return for income tax withheld during 2008 and paid to the IRS.

Example 4. (i) The facts are the same as in *Example 3*, except that H also earns $25x for services performed in the Virgin Islands, so that H and W's total adjusted gross income is $100x, and their total income tax liability is $20x.
(ii) Pursuant to section 932(d) and paragraph (d) of this section, because H would have the greater adjusted gross income if computed separately, H and W must file their joint Form 1040 with the IRS and must file a copy of that joint Form 1040 with the Virgin Islands as required by section 932(a)(2) and paragraph (b)(1) of this section. H and W must pay the applicable percentage of their Federal income tax liability to the Virgin Islands as required by section 932(b) and paragraph (b)(2) of this section, computed as follows: $65x /$100x × $20x = $13x income tax liability to the Virgin Islands.

(iii) H and W claim a credit against their Federal income tax liability reported on their joint Form 1040 in the amount of $13x, the portion of their Federal income tax liability required to be paid to the Virgin Islands. H and W attach a Form 8689, "Allocation of Individual Income Tax to the U.S. Virgin Islands," to their joint Form 1040 filed with the IRS and to the copy filed with the Virgin Islands.

Example 5. N, a U.S. citizen and calendar year taxpayer, takes the position that he is a bona fide resident of the Virgin Islands for the 2007 taxable year. On April 15, 2008, N files a Form 1040, "U.S. Individual Income Tax Return," with the Virgin Islands for his 2007 taxable year. N does not file a Form 1040 with the IRS. Because there is an agreement in force between the United States and the Virgin Islands for the routine exchange of income tax information, under paragraph (c)(2)(ii) of this section, the Federal 3-year period of limitations under section 6501(a) will expire on April 15, 2011, and the IRS will make no further assessment of income tax after that date for N's 2007 taxable year except as otherwise authorized by section 6501.

Example 6. (i) J is a U.S. citizen and a bona fide resident of the Virgin Islands. In 2008, J receives compensation for services performed as an employee in the Virgin Islands in the amount of $40x. J files with the Virgin Islands a Form 1040, "U.S. Individual Income Tax Return," reporting gross income of only $30x. Based on these facts, J has not satisfied the conditions of section 932(c)(4) and paragraph (c) of this section for an exclusion from gross income for Federal income tax purposes.

(ii) The facts are the same as in paragraph (i) of this *Example 6* except that on or before the last day prescribed for filing an income tax return for J's 2008 taxable year, J files with the Virgin Islands an amended Form 1040 for 2008, correctly reporting the full $40x of compensation. Provided that J otherwise fully satisfies the reporting requirements of paragraph (c)(1) of this section and fully pays the tax liability referred to in section 934(a), J will have no Federal income tax filing requirement or liability under paragraphs (c)(2) and (3) of this section.

Example 7. (i) N is a U.S. citizen and a bona fide resident of the Virgin Islands. In 2008, N receives compensation for services performed in Country M. N files with the Virgin Islands a Form 1040, "U.S. Individual Income Tax Return," reporting the compensation as income effectively connected with the conduct of a trade or business in the Virgin Islands. N claims a special credit against the tax on this compensation pursuant to a Virgin Islands law enacted within the limits of its authority under section 934.
(ii) Under the principles of section 864(c)(4) as applied pursuant to section 937(b)(1) and § 1.937-3(b), compensation for services performed outside the Virgin Islands may not be treated as income effectively connected with the conduct of a trade or business in the Virgin Islands for purposes of section 934(b). Consequently, N is not entitled to claim the special credit under Virgin Islands law with respect to N's income from services performed in Country M. Because N has not fully paid his tax liability referred to in section 934(a), he has not satisfied the conditions of section 932(c)(4) and paragraph (c) of this section for an exclusion from gross income for Federal income tax purposes. Therefore, income reported on the Form 1040 as filed with the Virgin Islands must be included in N's Federal gross income. Under paragraph (c)(3) of this section, the amount of tax paid to the Virgin Islands on such income will be allowed as a credit against N's Federal income tax liability.

(j) ***Effective/applicability date.*** Except as otherwise provided in this paragraph (j), this section applies to taxable years ending after April 9, 2008. Taxpayers may choose to apply paragraph (c)(2)(ii) of this section to open taxable years ending on or after December 31, 2006.

[T.D. 9391, 73 FR 19361, Apr. 9, 2008, as amended at T.D. 9391, 73 FR 27728, May 14, 2007; T.D. 9391, 76 FR 4244, Jan. 25, 2011]

§ 1.933-1 Exclusion of certain income from sources within Puerto Rico.

(a) ***General rule.***

(1) An individual (whether a United States citizen or an alien), who is a bona fide resident of Puerto Rico during the entire taxable year, will exclude from gross income the income derived from sources within Puerto Rico, except amounts received for services performed as an employee of the United States or any agency thereof. For purposes of section 933 and this section, an employee of the government of Puerto Rico will not be considered an employee of the United States or of an agency of the United States.

(2) The following example illustrates the application of the general rule in paragraph (a)(1) of this section:

Example. E, a United States citizen, files returns on a calendar year basis. In April 2008, E moves to Puerto Rico, where he purchases a house and accepts a permanent position with a local employer. For the remainder of the year and for the following three taxable years, E continues to live and work in Puerto Rico and has a closer connection to Puerto Rico than to the United States or any foreign country. Assuming that E otherwise meets the requirements under section 937(a) and § 1.937-1(b) and (f)(1) (year-of-move exception), E is considered a bona fide resident of Puerto Rico for 2008. Accordingly, under section 933(1) and paragraph (a)(1) of this section, E should exclude from his 2008 Federal gross income any income from sources within Puerto Rico, as determined under section 937(b) and § 1.937-2.

(b) ***Taxable year of change of residence from Puerto Rico.*** A citizen of the United States who changes his residence from Puerto Rico after having been a bona fide resident thereof for a period of at least two years immediately preceding the date of such change in residence shall exclude from his gross income the income derived from sources within Puerto Rico which is attributable to that part of such period of Puerto Rican residence which preceded the date of such change in residence, except amounts received for services performed as an employee of the United States or any agency thereof.

(c) ***Deductions and credits.*** In any case in which any amount otherwise constituting gross income is excluded from gross income under the provisions of section 933, there will not be allowed as a deduction from gross income any items of expenses or losses or other deductions (except the deduction under section 151, relating to personal exemptions), or any credit, properly allocable to, or chargeable against, the amounts so excluded from gross income. For purposes of the preceding sentence, the rules of § 1.861-8 will apply (with creditable expenditures treated in the same manner as deductible expenditures).

(d) ***Definitions.*** For purposes of this section—

(1) The rules of § 1.937-1 will apply for determining whether an individual is a bona fide resident of Puerto Rico; and

(2) The rules of § 1.937-2 will apply for determining whether income is from sources within Puerto Rico.

(e) ***Effective/applicability date.*** Paragraphs (a), (c), (d), and (e) of this section apply to taxable years ending after April 9, 2008.

[T.D. 6500, 25 FR 11910, Nov. 26, 1960; 25 FR 14021, Dec. 31, 1960, as amended by T.D. 9194, 70 FR 18934, Apr. 11, 2005; T.D. 9391, 73 FR 19365, Apr. 9, 2008]

§ 1.934-1 Limitation on reduction in income tax liability incurred to the Virgin Islands.

(a) ***General rule.*** Section 934(a) provides that tax liability incurred to the United States Virgin Islands (Virgin Islands) must not be reduced or remitted in any way, directly or indirectly, whether by grant, subsidy, or other similar payment, by any law enacted in the Virgin Islands, except to the extent provided in section 934(b). For purposes of the preceding sentence, the term "tax liability" means the liability incurred to the Virgin Islands pursuant to subtitle A of the Internal Revenue Code (Code), as made applicable in the Virgin Islands by the Act of July 12, 1921 (48 U.S.C. 1397), or pursuant to section 28(a) of the Revised Organic Act of the Virgin Islands (48 U.S.C. 1642), as modified by section 7651(5)(B).

(b) ***Exception for Virgin Islands income*** —

(1) ***In general.*** Section 934(b)(1) provides an exception to the application of section 934(a). Under this exception, section 934(a) does not apply with respect to tax liability incurred to the Virgin Islands to the extent that such tax liability is attributable to income derived from sources within the Virgin Islands or income effectively connected with the conduct of a trade or business within the Virgin Islands.

(2) ***Limitation.*** Section 934(b)(2) limits the scope of the exception provided by section 934(b)(1). Pursuant to this limitation, the exception does not apply with respect to an individual who is a citizen or resident of the United States (other than a bona fide resident of the Virgin Islands). For the rules for determining tax liability incurred to the Virgin Islands by such an individual, see section 932(a) and the regulations under that section.

(3) ***Computation rule*** —

(i) ***Operative rule.*** For purposes of section 934(b)(1) and this paragraph (b), tax liability incurred to the Virgin Islands for the taxable year attributable to income derived from sources within the Virgin Islands or income effectively connected with the conduct of a trade or business within the Virgin Islands will be computed as follows:

(A) Add to the income tax liability incurred to the Virgin Islands any credit against the tax allowed under mirrored section 901(a).

(B) Multiply by taxable income from sources within the Virgin Islands and income effectively connected with the conduct of a trade or business within the Virgin Islands (applying the rules of § 1.861-8 to determine deductions allocable to such income).

(C) Divide by total taxable income.

(D) Subtract the portion of any credit allowed under mirrored section 901 (other than credits for taxes paid to the United States) determined by multiplying the amount of taxable income from sources outside the Virgin Islands or the United States that is effectively connected to the conduct of a trade or business in the Virgin Islands divided by the total amount of taxable income from such sources.

(ii) ***Limitation.*** Tax liability incurred to the Virgin Islands attributable to income derived from sources within the Virgin Islands or income effectively connected with the conduct of a trade or business within the Virgin Islands, as computed in this paragraph (b)(3), however, will not exceed the total amount of income tax liability actually incurred.

(4) ***Definitions.*** For purposes of this section—

(i) ***Bona fide resident.*** The rules of § 1.937-1 will apply for determining whether an individual is a bona fide resident of the Virgin Islands;

(ii) ***Source.*** The rules of § 1.937-2 will apply for determining whether income is from sources within the Virgin Islands; and

(iii) ***Effectively connected income.*** The rules of § 1.937-3 will apply for determining whether income is effectively connected with the conduct of a trade or business in the Virgin Islands.

(c) ***Exception for qualified foreign corporations*** —

(1) ***In general.*** Section 934(b)(3) provides an exception to the application of section 934(a). Under this exception, section 934(a) does not apply with respect to tax liability incurred to the Virgin Islands by a qualified foreign corporation to the extent that such tax liability is attributable to income that is derived from sources outside the United States and that is not effectively connected with the conduct of a trade or business within the United States.

(2) ***Qualified foreign corporation.*** For purposes of paragraph (c)(1) of this section, the term *qualified foreign corporation* means any foreign corporation if 1 or more United States persons own or are treated as owning (within the meaning of section 958) less than 10 percent of—

(i) The total voting power of the stock of such corporation; and

(ii) The total value of the stock of such corporation.

(3) ***Computation rule*** —

(i) ***Operative rule.*** For purposes of section 934(b)(3) and this paragraph (c), tax liability incurred to the Virgin Islands for the taxable year attributable to income that is derived from sources outside the United States and that is not effectively connected with the conduct of a trade or business within the United States will be computed as follows:

(A) Add to the income tax liability incurred to the Virgin Islands any credit against the tax allowed under mirrored section 901(a).

(B) Multiply by taxable income that is derived from sources outside the United States and that is not effectively connected with the conduct of a trade or business within the United States (applying the rules of § 1.861-8 to determine deductions allocable to such income).

(C) Divide by total taxable income.

(D) Subtract any credit allowed under mirrored section 901 (other than credits for taxes paid to the United States or taxes for which a credit is allowable for Federal income tax purposes under section 906 of the Code).

(ii) ***Limitation.*** Tax liability incurred to the Virgin Islands attributable to income that is derived from sources outside the United States and that is not effectively connected with the conduct of a trade or business within the United States, as computed in this paragraph (c)(3), however, will not exceed the total amount of income tax liability actually incurred.

(4) ***U.S. income*** —

(i) ***In general.*** For purposes of this section, except as provided in paragraph (c)(4)(ii) of this section, the rules of sections 861 through 865 and the regulations under those provisions will apply for determining whether income is from sources outside the United States or effectively connected with the conduct of a trade or business within the United States.

(ii) ***Conduit arrangements.*** Income will be considered to be from sources within the United States for purposes of paragraph (c)(1) of this section if, pursuant to a plan or arrangement—

(A) The income is received in exchange for consideration provided to another person; and

(B) Such person (or another person) provides the same consideration (or consideration of a like kind) to a third person in exchange for one or more payments constituting income from sources within the United States.

(d) ***Examples.*** The rules of this section are illustrated by the following examples:

Example 1. (i) S is a U.S. citizen and a bona fide resident of the Virgin Islands. For 2008, S files a Form 1040INFO, "Non-Virgin Islands Source Income of Virgin Islands Residents," with the Virgin Islands on which S reports total gross income as follows:
Compensation for services performed in the Virgin Islands—$50,000

Compensation for services performed in the United States—$40,000

Compensation for services performed in Mexico—$30,000

Income from inventory sales in Latin America attributable to Virgin Islands office—$20,000

Interest on a U.S. bank account—$6,000

Interest on a V.I. bank account—$5,000

Dividends from a U.S. corporation—$4,000

(ii) Accordingly, S has total gross income of $155,000, comprising income from sources within the Virgin Islands or effectively connected to the conduct of a trade or business in the Virgin Islands (Virgin Islands ECI) of $75,000, income from sources within the United States of $50,000, and income from other sources (not Virgin Islands ECI) of $30,000. After taking into account allowable deductions, S's total taxable income is $120,000, of which $45,000 is taxable income from sources within the Virgin Islands, $15,000 is taxable income from other sources that is Virgin Islands ECI under the rules of section 937(b) and §§ 1.937-2 and 1.937-3, and $22,500 is taxable income from sources outside the Virgin Islands (and outside the United States) that is not Virgin Islands ECI. S's tax liability incurred to the Virgin Islands pursuant to the Internal Revenue Code as applicable in the Virgin Islands (mirror code) is $30,000. S is entitled to claim a credit under section 901 of the mirror code in the amount of $10,000 for income tax paid to Mexico and other Latin American countries, for a net income tax liability of $20,000.
(iii) Pursuant to a Virgin Islands law that was duly enacted within the limits of its authority under section 934, S may claim a special deduction relating to his business activities in the Virgin Islands. However, under section 934(b), S's ability to claim this special deduction is limited. Specifically, the maximum amount of the reduction in S's mirror code tax liability that may result from claiming this deduction, computed in accordance with paragraph (b)(3) of this section, is as follows: [($20,000 + $10,000) × (($45,000 + $15,000) / $120,000)] − [$10,000 × ($15,000 / ($15,000 + $22,500))] = [$30,000 × ($60,000 / $120,000)] − [$10,000 × ($15,000 / $37,500)] = ($30,000 × 0.5) − ($10,000 × 0.4) = $15,000 − $4,000 = $11,000

(iv) Accordingly, S's net tax liability incurred to the Virgin Islands must be at least $19,000 ($30,000 − $11,000), prior to taking into account any foreign tax credit.

Example 2. The facts are the same as *Example 1*, except that S is a U.S. citizen who resides in the United States. As required by section 932(a) and (b), S files with the Virgin Islands a copy of his Federal income tax return and pays to the Virgin Islands the portion of his Federal income tax liability that his Virgin Islands adjusted gross income bears to his adjusted gross income. Under section 934(b)(2), S may not claim the special deduction offered under Virgin Islands law relating to business activities like his in the Virgin Islands to reduce any of his tax liability payable to the Virgin Islands under section 932(b).

Example 3. (i) Z is a nonresident alien who resides in Country FC. In 2008, Z receives dividends from a corporation organized under the law of the Virgin Islands in the amount of $90x. Z's tax liability incurred to the Virgin Islands pursuant to section 871(a) of the Code as applicable in the Virgin Islands (mirror code) is $27x.
(ii) Pursuant to a Virgin Islands law that was duly enacted within the limits of its authority under section 934, Z may claim a special exemption for income relating to his investment in the Virgin Islands. The maximum amount of the reduction in Z's mirror code tax liability that may result from claiming this exemption, computed in accordance with paragraph (b)(3) of this section, is as follows: $27x × ($90x/$90x) = $27x.

(iii) Accordingly, depending on the terms of the exemption as provided under Virgin Islands law, Z's net tax liability incurred to the Virgin Islands may be reduced or eliminated entirely.

Example 4. (i) A Corp is organized under the laws of the Virgin Islands and is engaged in a trade or business in the United States through an office in State N. All of A Corp's outstanding stock is owned by U.S. citizens who are bona fide residents of the Virgin Islands. During 2008, A Corp had $50x in gross income from sources within the Virgin Islands (as determined under section 937(b) and § 1.937-2) that is not effectively connected with the conduct of a trade or business in the United States; $20x in gross income from sources in Country H that is effectively connected with the conduct of A Corp's trade or business in the United States; and $10x in gross income from sources in Country R that is not effectively connected with the conduct of A Corp's trade or business in the United States.
(ii) Section 934(b)(3) permits the Virgin Islands to reduce or remit the income tax liability of a qualified foreign corporation arising under the Code as applicable in the Virgin Islands (mirror code) with respect to income that is derived from sources outside the United States and that is not effectively connected with the conduct of a trade or business in the United States. A foreign corporation constitutes a "qualified foreign corporation" under section 934(b)(3)(B) if less than 10 percent of the total voting power and value of the stock of the corporation is owned or treated as owned (within the meaning of section 958) by one or more United States persons. A U.S. citizen is a "United States person" as defined in section 7701(a)(30)(A). Given that 10 percent or more of the voting power and value of its stock is owned by U.S. citizens, A

Corp does not constitute a "qualified foreign corporation" under section 934(b)(3)(B). Accordingly, the Virgin Islands may only reduce or remit A Corp's mirror code income tax liability with respect to its $50x in gross income from sources within the Virgin Islands.

Example 5. (i) The facts are the same as in *Example 4,* except that the outstanding stock of A Corp is owned by the following individuals:
U.S. citizens who are bona fide residents of the Virgin Islands—5%

U.S. citizens who are not bona fide residents of the Virgin Islands—3%

Nonresident aliens who are bona fide residents of the Virgin Islands—42%

Nonresident aliens who are not bona fide residents of the Virgin Islands—50%

(ii) Given that less than 10 percent of the voting power and value of its stock is owned by United States persons, A Corp constitutes a qualified foreign corporation under section 934(b)(3)(B). Accordingly, the Virgin Islands may reduce or remit A Corp's mirror code income tax liability with respect to its $50x in gross income from sources within the Virgin Islands and its $10x in gross income from sources in Country R that is not effectively connected with the conduct of A Corp's trade or business in the United States. In no event, however, may the Virgin Islands reduce or remit A Corp's mirror code income tax liability with respect to its $20x in gross income from sources in Country H that is effectively connected with the conduct of A Corp's trade or business in the United States.

(e) ***Effective/applicability date.*** This section applies for taxable years ending after April 9, 2008.

[T.D. 9391, 73 FR 19365, Apr. 9, 2008]

§ 1.935-1 Coordination of individual income taxes with Guam and the Northern Mariana Islands.

(a) ***Application of section*** —

(1) ***Scope.*** Section 935 and this section set forth the special rules relating to the filing of income tax returns, income tax liabilities, and estimated income tax of individuals described in paragraph (a)(2) of this section. Paragraph (e) of this section also provides special rules requiring consistent treatment of business entities in the United States and in section 935 possessions.

(2) ***Individuals covered.*** This section applies to any individual who—

(i) Is a bona fide resident of a section 935 possession during the entire taxable year, whether or not such individual is a citizen of the United States or a resident alien (as defined in section 7701(b)(1)(A));

(ii) Is a citizen of a section 935 possession but not otherwise a citizen of the United States;

(iii) Has income from sources within a section 935 possession for the taxable year, is a citizen of the United States or a resident alien (as defined in section 7701(b)(1)(A)) and is not a bona fide resident of a section 935 possession during the entire taxable year; or

(iv) Files a joint return for the taxable year with any individual described in paragraph (a)(2)(i), (ii), or (iii) of this section.

(3) ***Definitions.*** For purposes of this section, the following definitions apply:

(i) The term *section 935 possession* means Guam or the Northern Mariana Islands, unless such possession has entered into an implementing agreement, as described in section 1271(b) of the Tax Reform Act of 1986, Public Law 99-514 (100 Stat. 2085), with the United States that is in effect for the entire taxable year.

(ii) The term *relevant possession* means—

(A) With respect to an individual described in paragraph (a)(2)(i) of this section, the section 935 possession of which such individual is a bona fide resident;

(B) With respect to an individual described in paragraph (a)(2)(ii) of this section, the section 935 possession of which such individual is a citizen; and

(C) With respect to an individual described in paragraph (a)(2)(iii) of this section, the section 935 possession from which such individual derives income.

(iii) The rules of § 1.937-1 will apply for determining whether an individual is a bona fide resident of a section 935 possession.

(iv) The rules of § 1.937-2 generally will apply for determining whether income is from sources within a section 935 possession. Pursuant to § 1.937-2(a), however, the rules of § 1.937-2(c)(1)(ii) and (c)(2) do not apply for purposes of section 935(a)(3) (as in effect before the effective date of its repeal) and paragraph (a)(2)(iii) of this section.

(v) The term *citizen of the United States* means any individual who is a citizen within the meaning of § 1.1-1(c), except that the term does not include an individual who is a citizen of a section 935 possession but not otherwise a citizen of the United States. The term *citizen of a section 935 possession but not otherwise a citizen of the United States* means any individual who has become a citizen of the United States by birth or naturalization in the section 935 possession.

(vi) With respect to the United States, the term *resident* means an individual who is a citizen (as defined in § 1.1-1(c)) or resident alien (as defined in section 7701(b)) and who does not have a tax home (as defined in section 911(d)(3)) in a foreign country during the entire taxable year. The term does not include an individual who is a bona fide resident of a section 935 possession.

(vii) The term *U.S. taxpayer* means an individual described in paragraph (b)(1)(i) or (iii)(B) of this section.

(b) ***Filing requirement*** —

(1) ***Tax jurisdiction.*** An individual described in paragraph (a)(2) of this section must file an income tax return for the taxable year—

(i) With the United States if such individual is a resident of the United States;

(ii) With the relevant possession if such individual is described in paragraph (a)(2)(i) of this section; or

(iii) If neither paragraph (b)(1)(i) nor paragraph (b)(1)(ii) of this section applies—

(A) With the relevant possession if such individual is described in paragraph (a)(2)(ii) of this section; or

(B) With the United States if such individual is a citizen of the United States, as defined in paragraph (a)(3) of this section.

(2) ***Joint returns.*** In the case of married persons, if one or both spouses is an individual described in paragraph (a)(2) of this section and they file a joint return of income tax, the spouses shall file their joint return with, and pay the tax due on such return to, the jurisdiction where the spouse who has the greater adjusted gross income for the taxable year would be required under subparagraph (1) of this paragraph to file his return if separate returns were filed. For this purpose, adjusted gross income of each spouse is determined under section 62 and the regulations thereunder but without regard to community property laws; and, if one of the spouses dies, the taxable year of the surviving spouse shall be treated as ending on the date of such death.

(3) ***Place for filing returns*** —

(i) ***U.S. returns.*** A return required under this paragraph (b) to be filed with the United States must be filed as directed in the applicable forms and instructions.

(ii) ***Guam returns.*** A return required under this paragraph (b) to be filed with Guam must be filed as directed in the applicable forms and instructions.

(iii) ***NMI returns.*** A return required under this paragraph (b) to be filed with the Northern Mariana Islands must be filed as directed in the applicable forms and instructions.

(4) ***Tax accounting standards.*** A taxpayer who has filed his return with one of the jurisdictions named in subparagraph (1) of this paragraph for a prior taxable year and is required to file his return for a later taxable year with the other such jurisdiction may not, for such later taxable year, change his accounting period, method of accounting, or any election to which he is bound with respect to his reporting of taxable income to the first jurisdiction unless he obtains the consent of the second jurisdiction to make such change. However, such change will not be effective for returns filed thereafter with the first jurisdiction unless before such later date of filing he also obtains the consent of the first jurisdiction to make such change. Any request for consent to make a change pursuant to this subparagraph must be made to the office where the return is required to be filed under subparagraph (3) of this paragraph and in sufficient time to permit a copy of the consent to be attached to the return for the taxable year.

(5) ***Tax payments.*** The tax shown on the return must be paid to the jurisdiction with which such return is required to be filed and must be determined by taking into account any credit under section 31 for tax withheld by the relevant possession or the United States on wages, any credit under section 6402(b) for an overpayment of income tax to the relevant possession or the United States, and any payments under section 6315 of estimated income tax paid to the relevant possession or the United States.

(6) ***Liability to other jurisdiction*** —

(i) ***Filing with the relevant possession.*** In the case of an individual who is required under paragraph (b)(1) of this section to file a return with the relevant possession for a taxable year, if such individual properly files such return and fully pays his or her income tax liability to the relevant possession, such individual is relieved of liability to file an income tax return with, and to pay an income tax to, the United States for the taxable year.

(ii) ***Filing with the United States.*** In the case of an individual who is required under paragraph (b)(1) of this section to file a return with the United States for a taxable year, such individual is relieved of liability to file an income tax return with, and to pay an income tax to, the relevant possession for the taxable year.

(7) [Reserved]

(c) ***Extension of territory*** —

(1) ***U.S. taxpayers*** —

(i) ***General rule.*** With respect to a U.S. taxpayer, for purposes of taxes imposed by Chapter 1 of the Internal Revenue Code (Code), the United States generally will be treated, in a geographical and governmental sense, as including the relevant possession. The purpose of this rule is to facilitate the coordination of the tax systems of the United States and the relevant possession. Accordingly, the rule will have no effect where it is manifestly inapplicable or its application would be incompatible with the intent of any provision of the Code.

(ii) ***Application of general rule.*** Contexts in which the general rule of paragraph (c)(1)(i) of this section apply include—

(A) The characterization of taxes paid to the relevant possession. Income tax paid to the relevant possession may be taken into account under sections 31, 6315, and 6402(b) as payments to the United States. Taxes paid to the relevant possession and otherwise satisfying the requirements of section 164(a) will be allowed as a deduction under that section, but income taxes paid to the relevant possession will be disallowed as a deduction under section 275(a);

(B) The determination of the source of income for purposes of the foreign tax credit (for example, sections 901 through 904). Thus, for example, after a U.S. taxpayer determines which items of income constitute income from sources within the relevant possession under the rules of section 937(b), such income will be treated as income from sources within the United States for purposes of section 904;

(C) The eligibility of a corporation to make a subchapter S election (sections 1361 through 1379). Thus, for example, for purposes of determining whether a corporation created or organized in the relevant possession may make an election under section 1362(a) to be a subchapter S corporation, it will be treated as a domestic corporation and a U.S. taxpayer shareholder will not be treated as a nonresident alien individual with respect to such corporation. While such an election is in effect, the corporation will be treated as a domestic corporation for all purposes of the Code. For the consistency requirement with respect to entity status elections, see paragraph (e) of this section;

(D) The treatment of items carried over from other taxable years. Thus, for example, if a U.S. taxpayer has for a taxable year a net operating loss carryback or carryover under section 172, a foreign tax credit carryback or carryover under section 904, a business credit

carryback or carryover under section 39, a capital loss carryover under section 1212, or a charitable contributions carryover under section 170, the carryback or carryover will be reported on the return filed with the United States in accordance with paragraph (b)(1)(i) or (b)(1)(iii)(B) of this section, even though the return of the taxpayer for the taxable year giving rise to the carryback or carryover was required to be filed with a section 935 possession; and

(E) The treatment of property exchanged for property of a like kind (section 1031). Thus for example, if a U.S. taxpayer exchanges real property located in the United States for real property located in the relevant possession, notwithstanding the provisions of section 1031(h), such exchange may qualify as a like-kind exchange under section 1031 (provided that all the other requirements of section 1031 are satisfied).

(iii) ***Nonapplication of general rule.*** Contexts in which the general rule of paragraph (c)(1)(i) of this section does not apply include—

(A) The application of any rules or regulations that explicitly treat the United States and any (or all) of its possessions as separate jurisdictions (for example, sections 931 through 937, 7651, and 7654);

(B) The determination of any aspect of an individual's residency (for example, sections 937(a) and 7701(b)). Thus, for example, an individual whose principal place of abode is in the relevant possession is not considered to have a principal place of abode in the United States for purposes of section 32(c);

(C) The determination of the source of income for purposes other than the foreign tax credit (for example, sections 935, 937, and 7654). Thus, for example, income determined to be derived from sources within the relevant possession under section 937(b) will not be considered income from sources within the United States for purposes of Form 5074, “Allocation of Individual Income Tax to Guam or the Commonwealth of the Northern Mariana Islands (CNMI)”;

(D) The definition of wages (section 3401). Thus, for example, services performed by an employee for an employer in the relevant possession do not constitute services performed in the United States under section 3401(a)(8); and

(E) The characterization of a corporation for purposes other than subchapter S (for example, sections 367, 951 through 964, 1291 through 1298, 6038, and 6038B). Thus, for example, if a U.S. taxpayer transfers appreciated tangible property to a corporation created or organized in the relevant possession in a transaction described in section 351, he or she must recognize gain unless an exception under section 367(a) applies. Also, if a corporation created or organized in the relevant possession qualifies as a passive foreign investment company under sections 1297 and 1298 with respect to a U.S. taxpayer, a dividend paid to such shareholder does not constitute qualified dividend income under section 1(h)(11)(B).

(2) ***Application in relevant possession.*** In applying the territorial income tax of the relevant possession, such possession generally will be treated, in a geographical and governmental sense, as including the United States. Thus, for example, income tax paid to the United States may be taken into account under sections 31, 6315, and 6402(b) as payments to the relevant possession. Moreover, a citizen of the United States (as defined in paragraph (a)(3) of this section) not a resident of the relevant possession will not be treated as a nonresident alien individual for purposes of the territorial income

tax of the relevant possession. Thus, for example, a citizen of the United States (as so defined), or a resident of the United States, will not be treated as a nonresident alien individual for purposes of section 1361(b)(1)(C) of the Guam territorial income tax.

(d) *Special rules for estimated income tax* —

(1) ***In general.*** An individual must make each payment of estimated income tax (and any amendment to the estimated tax payment) to the jurisdiction with which the individual reasonably believes, as of the date of that payment (or amendment), that he or she will be required to file a return for the taxable year under paragraph (b)(1) of this section. In determining the amount of such estimated income tax, income tax paid to the relevant possession may be taken into account under sections 31 and 6402(b) as payments to the United States, and vice versa. For other rules relating to estimated income tax, see section 6654.

(2) ***Joint estimated income tax.*** In the case of married persons making a joint payment of estimated income tax, the taxpayers must make each payment of estimated income tax (and any amendment to the estimated tax payment) to the jurisdiction where the spouse who has the greater estimated adjusted gross income for the taxable year would be required under paragraph (d)(1) of this section to pay estimated income tax if separate payments were made. For this purpose, estimated adjusted gross income of each spouse for the taxable year is determined without regard to community property laws.

(3) ***Erroneous payment.*** If the individual or spouses erroneously pay estimated income tax to the United States instead of the relevant possession or vice versa, only subsequent payments or amendments of the payments are required to be made pursuant to paragraph (d)(1) or (d)(2) of this section with the other jurisdiction.

(4) ***Place for payment.*** Estimated income tax required under this paragraph (d) to be paid to Guam or the Northern Mariana Islands must be paid as directed in the applicable forms and instructions issued by the relevant possession. Estimated income tax required under paragraph (d)(1) of this section to be paid to the United States must be paid as directed in the applicable forms and instructions.

(5) *Liability to other jurisdiction* —

(i) ***Filing with Guam or the Northern Mariana Islands.*** Subject to paragraph (d)(6) of this section, an individual required under this paragraph (d) to pay estimated income tax (and amendments thereof) to Guam or the Northern Mariana Islands is relieved of liability to pay estimated income tax (and amendments thereof) to the United States.

(ii) ***Filing with the United States.*** Subject to paragraph (d)(6) of this section, an individual required under this paragraph (d) to pay estimated income tax (and amendments thereof) to the United States is relieved of liability to pay estimated income tax (and amendments thereof) to the relevant possession.

(6) ***Underpayments.*** The liability of an individual described in paragraph (a)(2) of this section for underpayments of estimated income tax for a taxable year, as determined under section 6654, will be to the jurisdiction with which the individual is required under paragraph (b) of this section to file his or her return for the taxable year.

(e) *Entity status consistency requirement* —

(1) ***In general.*** Taxpayers should make consistent entity status elections (as defined in paragraph (e)(3)(ii) of this section), when applicable, in both the United States and section 935 possessions. In the case of a business entity to which this paragraph (e) applies—

(i) If an entity status election is filed with the Internal Revenue Service (IRS) but not with the relevant possession, the appropriate tax authority of the relevant possession, at his discretion, may deem the election also to have been made for the relevant possession tax purposes;

(ii) If an entity status election filed with the relevant possession but not with the IRS, the Commissioner, at his discretion, may deem the election also to have been made for Federal tax purposes; and

(iii) If inconsistent entity status elections are filed with the relevant possession and the IRS, both the Commissioner and the appropriate tax authority of the relevant possession may, at their individual discretion, treat the elections they each received as invalid and may deem the election filed in the other jurisdiction to have been made also for tax purposes in their own jurisdiction. See Rev. Proc. 2006-23 (2006-1 C.B. 900) (see § 601.601(d)(2)(ii)(*b*) of this chapter) for procedures for requesting the assistance of the IRS when a taxpayer is or may be subject to inconsistent tax treatment by the IRS and a U.S. possession tax agency.)

(2) ***Scope.*** This paragraph (e) applies to the following business entities:

(i) A business entity (as defined in § 301.7701-2(a) of this chapter) that is domestic (as defined in § 301.7701-5 of this chapter), or otherwise treated as domestic for purposes of the Code, and that is owned in whole or in part by any person who is either a bona fide resident of a section 935 possession or a business entity created or organized in a section 935 possession.

(ii) A business entity that is created or organized in a section 935 possession and that is owned in whole or in part by any U.S. person (other than a bona fide resident of such possession).

(3) ***Definitions.*** For purposes of this section—

(i) The term *appropriate tax authority of the relevant possession* means the individual responsible for tax administration in such possession or his delegate; and

(ii) The term *entity status election* includes an election under § 301.7701-3(c) of this chapter, an election under section 1362(a), and any other similar elections.

(4) ***Default status.*** Solely for the purpose of determining classification of an eligible entity under § 301.7701-3(b) of this chapter and under that section as mirrored in the relevant possession, an eligible entity subject to this paragraph (e) will be classified for both Federal and the relevant possession tax purposes using the rule that applies to domestic eligible entities.

(5) ***Transition rules*** —

(i) In the case of an election filed prior to April 11, 2005, except as provided in paragraph (e)(5)(ii) of this section, the rules of paragraph (e)(1) of this section will apply as of the first day of the first taxable year of the entity beginning after April 11, 2005.

(ii) In the unlikely circumstance that inconsistent elections described in paragraph (e)(1)(iii) of this section are filed prior to April 11, 2005, and the entity cannot change its classification to achieve consistency because of the sixty-month limitation described in § 301.7701-3(c)(1)(iv)

of this chapter, then the entity may nevertheless request permission from the Commissioner or appropriate tax authority of the relevant possession to change such election to avoid inconsistent treatment by the Commissioner and the appropriate tax authority of the relevant possession.

(iii) Except as provided in paragraphs (e)(5)(i) and (e)(5)(ii) of this section, in the case of an election filed with respect to an entity before it became an entity described in paragraph (e)(2) of this section, the rules of paragraph (e)(1) of this section will apply as of the first day that such entity is described in paragraph (e)(2) of this section.

(iv) In the case of an entity created or organized prior to April 11, 2005, paragraph (e)(4) of this section will take effect for Federal income tax purposes (or the relevant possession income tax purposes, as the case may be) as of the first day of the first taxable year of the entity beginning after April 11, 2005.

(f) ***Examples.*** The application of this section is illustrated by the following examples:

Example 1. (i) B, a United States citizen, files returns on a calendar year basis. In November 2008, B moves to Possession G, a section 935 possession; purchases a house; and accepts a permanent position with a local employer. For the remainder of the year and throughout 2009, B continues to live and work in Possession G and has a closer connection to Possession G than to the United States or any foreign country. As a consequence of his employment in Possession G, B earns income from the performance of services in Possession G during 2008 and 2009.
(ii) For 2008, B does not qualify as a bona fide resident of Possession G under section 937(a) and § 1.937-1(b) and (f)(1). Therefore, B is subject to the rules applicable to individuals described in paragraph (a)(2)(iii) of this section for 2008 because he has income derived from sources within Possession G as determined under the rules of section 937(b) and § 1.937-2.

(iii) For 2009, assuming that B otherwise satisfies the requirements of section 937(a) and § 1.937-1(b), B qualifies as a bona fide resident of Possession G. Therefore, section 935(b)(1)(B) and paragraph (b)(1)(ii) of this section apply to B for 2009, and he must file his income tax return with Possession G under paragraph (b)(1) of this section. Provided that B properly files such return and pays his income tax liability to Possession G, B is relieved of liability to file an income tax return with, and to pay an income tax to, the United States for 2009 under paragraph (b)(6) of this section.

Example 2. (i) The facts are the same as in Example 1 except that B's employment terminates in June 2011. B properly pays his April 2008 estimated tax to the United States, continues to pay estimated tax for the 2008 taxable year to the United States under paragraph (d) of this section, and properly files his 2008 return with the United States.
(ii)(A) On the date of each payment of estimated tax in 2009, B reasonably believes that he would be required to file his return for 2009 with Possession G under paragraph (b)(1) of this section.

(B) In August 2009, B determines that he has overpaid tax for the previous year in the amount of $1000. B properly pays all estimated taxes to Possession G for 2009, subtracting the $1000 overpayment from his estimated tax payments pursuant to section 6402(b), and properly files his tax return with Possession G.

(iii) In April 2010, B reasonably believes that he would be returning to the United States in the Fall of 2010, and properly pays estimated tax to the United States. By June 2010, B reasonably believes that he would not be moving from Possession G and would be a bona fide resident of Possession G for the entire taxable year. B makes his remaining estimated tax payments to Possession G. On his 2010 tax return filed with Possession G, pursuant to section 6315, B properly takes into account payments made to both the United States and Possession G as estimated taxes.

(iv) In April 2011, B reasonably believes that he would be a bona fide resident of Possession G for the entire taxable year 2011 and properly pays estimated taxes to Possession G. By the time B pays his estimated taxes for June 2011, B's employment terminates and he moves to State H. B properly makes his remaining estimated tax payments to the United States. On his return for 2011, properly filed with the United States, B determines that he has underpaid estimated taxes throughout 2011 in an amount subject to penalty under section 6654. B owes the United States an estimated tax penalty under section 6654.

(g) ***Effective/applicability date.*** Paragraphs (a), (b)(1), (b)(3), (b)(5) through (b)(7), and (c) through (f) of this section apply to taxable years ending after April 9, 2008.

(Secs. 7805 (68A Stat. 917; 26 U.S.C. 7805) and 7654(e) (86 Stat. 1496; 26 U.S.C. 7654 (e)) of the Internal Revenue Code of 1954)

[T.D. 7385, 40 FR 50261, Oct. 29, 1975, as amended by T.D. 9194, 70 FR 18937, Apr. 11, 2005; T.D. 9391, 73 FR 19367, Apr. 9, 2008]

§ 1.936-1 Elections.

(a) ***Making an election.*** A domestic corporation shall make an election under section 936(e), for any taxable year beginning after December 31, 1975, by filing Form 5712 on or before the later of—

(1) The date on which such corporation is required, pursuant to sections 6072(b) and 6081, to file its Federal income tax return for the first taxable year for which the election is made; or

(2) April 8, 1980.

Form 5712 shall be filed with the Internal Revenue Service Center, 11601 Roosevelt Boulevard, Philadelphia, Pennsylvania 19155 (Philadelphia Center).

(b) ***Revoking an election.*** Any corporation to which an election under section 936 (e) applies on February 8, 1980 is hereby granted the consent of the Secretary to revoke that election for the first taxable year to which the election applied. (The corporation may make a new election under § 1.936-1 (a) for any subsequent taxable year.) The corporation shall make this revocation by sending to the Philadelphia Center a written statement of revocation on or before April 8, 1980.

(Secs. 7805 and 936(e) of the Internal Revenue Code of 1954 (68A Stat. 917 and 90 Stat. 1644; 26 U.S.C. 7805 and 936(e)))

[T.D. 7673, 45 FR 8588, Feb. 8, 1980; T.D. 7673, 45 FR 16174, Mar. 13, 1980]

§ 1.936-4 Intangible property income in the absence of an election out.

The rules in this section apply for purposes of section 936(h) and also for purposes of section 934(e), where applicable.

Q. 1: If a possessions corporation and its affiliates do not make an election under either the cost sharing or 50/50 profit split option, what rules will govern the treatment of income attributable to intangible property owned or leased by the possessions corporation?

A. 1: Intangible property income will be allocated to the possessions corporation's U.S. shareholders with the proration of income based on shareholdings. If a shareholder of the possessions corporation is a foreign person or a tax-exempt person, the possessions corporation will be taxable on that shareholder's pro rata amount of the intangible property income. If any class of the stock of a possessions corporation is regularly traded on an established securities market, then the intangible property income will be taxable to the possessions corporation rather than the corporation's U.S. shareholders. For these purposes, a United States shareholder includes any shareholder who is a United States person as described under section 7701(a)(30). The term “intangible property income” means the gross income of a possessions corporation attributable to any intangible property other than intangible property which has been licensed to such corporation since prior to 1948 and which was in use by such corporation on September 3, 1982.

Q. 2: What is the source of the intangible property income described in question 1?

A. 2: The intangible property income is U.S. source, whether taxed to U.S. shareholders or taxed to the possessions corporation. Such intangible property income, if treated as income of the possessions corporation, does not enter into the calculation of the 80-percent possessions source test or the 65-percent active trade or business test of section 936(a)(2)(A) and (B).

Q. 3: How will the amount of income attributable to intangible property be measured?

A. 3: Income attributable to intangible property includes the amount received by a possessions corporation from the sale, exchange, or other disposition of any product or from the rendering of a service which is in excess of the reasonable costs it incurs in manufacturing the product or rendering the service (other than costs incurred in connection with intangibles) plus a reasonable profit margin. A reasonable profit margin shall be computed with respect to direct and indirect costs other than (i) costs incurred in connection with intangibles, (ii) interest expense, and (iii) the cost of materials which are subject to processing or which are components in a product manufactured by the possessions corporation. Notwithstanding the above, certain taxpayers who have been permitted by the Internal Revenue Service in taxable years beginning before January 1, 1983, to use the cost-plus method of pricing without reflecting a return from intangibles, but including the cost of materials in the cost base, will not be precluded from doing so. (Sec. 3.02(3), Rev. Proc. 63-10, 1963-1 C.B. 490.) Thus, the Internal Revenue Service may continue in appropriate cases to permit such taxpayers to continue to report their income as they have been under existing procedures described in the previous sentence if it is appropriate under all the facts and circumstances and does not distort the income of the taxpayer.

Q. 4: If there is no intangible property related to a product produced in whole or in part by a possessions corporation, what method may the possessions corporation use to compute its income?

A. 4: The taxpayer may compute its income using the appropriate method as provided under section 482 and the regulations thereunder. The taxpayer may also elect the cost sharing or profit split method.

[T.D. 8090, 51 FR 21524, June 13, 1986]

§ 1.936-5 Intangible property income when an election out is made: Product, business presence, and contract manufacturing.

The rules in this section apply for purposes of section 936(h) and also for purposes of section 934(e), where applicable.

(a) ***Definition of product.***

Q. 1: What does the term "product" mean?

A. 1: The term "product" means an item of property which is the result of a production process. The term "product" includes component products, integrated products, and end-product forms. A component product is a product which is subject to further processing before sale to an unrelated party. A component product may be produced from other items of property, and if it is so produced, may be treated as including or not including (at the choice of the possessions corporation) one or more of such other items of property for all purposes of section 936(h)(5). An integrated product is a product which is not subject to any further processing before sale to an unrelated party and which includes all component products from which it is produced. An end-product form is a product which—

(1) Is not subject to any further processing before sale to an unrelated party;

(2) Is produced from a component product or products; and

(3) Is treated as not including certain component products for all purposes of section 936(h)(5).

A possessions corporation may treat a component product, integrated product, or end-product form as its possession product even though the final stage or stages of production occur outside the possession. Further processing includes transformation, incorporation, assembly, or packaging.

Q. 2: If a possessions corporation produces both a component product and an integrated product (which by definition includes the end-product form), may the possessions corporation use the options under section 936(h)(5) to compute its income with respect to either the component product, the integrated product or the end-product form?

A. 2: Yes. The possessions corporation may choose to treat the component product, the integrated product, or the end-product form as the product for purposes of determining whether the possessions corporation satisfies the significant business presence test. The possessions corporation must treat the same item of property as its product (the possession product) for all purposes of section 936(h)(5) for that taxable year, including the significant business presence test under section 936(h)(5)(B)(ii), the possessions sales calculation under section 936(h)(5)(C)(i)(I), the determination of income under section 936(h)(5)(C)(i)(II), and the combined taxable income computations under section 936(h)(5)(C)(ii). Although the possessions corporation must treat the same item of property as its product for all purposes of section 936(h)(5) in a particular taxable year, its choice of the component product, integrated product or end-product form may be different from

year to year. The possessions corporation must specify the possession product on a statement attached to its return (Schedule P of Form 5735). The possessions corporation may specify its choice by either listing the components that are included in the possession product or the components that are excluded from the possession product. The possessions corporation must file a separate Schedule P with respect to each possession product. The possessions corporation must attach to each Schedule P detailed computations indicating how the significant business presence test is satisfied with respect to the possession product identified in that Schedule P.

Q. 3: A possessions corporation produces a product that is sometimes sold to unrelated parties without further processing and is sometimes sold to unrelated parties after further processing. May the possessions corporation choose to treat the same item of property as the possession product even though in some cases it is an integrated product and in some cases it is a component product?

A. 3: Yes. Except as provided in questions and answers 4 and 5, the possessions corporation must designate a single possession product even though it is sometimes a component product and sometimes an integrated product.

Q. 4: A possessions corporation produces a product that is sometimes sold without further processing by any member of the affiliated group to unrelated parties or to related parties for their own consumption and is sometimes sold after further processing by any member of the affiliated group to unrelated parties or to related parties for their own consumption. May the possessions corporation designate two products as possession products?

A. 4: The possessions corporation may designate two or more possession products. The possessions corporation must use a consistent definition of the possession product for all items of property that are sold to unrelated parties or consumed by related parties at the same stage in the production process. The significant business presence test shall apply separately to each product designated by the possessions corporation. The possessions corporation shall compute its income separately with respect to each product.

Q. 5: A possessions corporation produces a product in one taxable year and does not sell all of the units that it produced. In the next taxable year the possessions corporation produces a product which includes the product produced in the prior year. The possessions corporation could not have satisfied the significant business presence test with respect to the units produced the first taxable year if the larger possession product had been designated. May the possessions corporation designate two possession products in the second year?

A. 5: Yes. The possessions corporation may designate two possession products. However, once a product has been designated for a particular year all sales of units produced in that year must be defined in the same manner. In addition, the taxpayer must maintain a significant business presence in a possession with respect to that product. Sales shall be deemed made first out of the current year's production. If all of the current year's production is sold and some inventory is liquidated, then the taxpayer's method of inventory accounting shall be applied to determine what year's layer of inventory is liquidated.

Example 1. A possessions corporation S, manufactures a bulk pharmaceutical in a possession. S transfers the bulk pharmaceutical to its U.S. parent, P, for encapsulation and sale by P to customers. S satisifes the significant business presence test with respect to the bulk pharmaceutical (the component product) and the combination of the bulk pharmaceutical and the capsule (the integrated product). S may use the cost sharing or profit split method to compute its income with respect to either the component product or the integrated product.

Example 2. The facts are the same as in example 1 except that S does not satisfy the significant business presence test with respect to the integrated product. S may use the cost sharing or profit split method to compute its income only with respect to the component product. However, if in a later taxable year S satisfies the significant business presence test with respect to the integrated product, then S may use the cost sharing or profit split method to compute its income with respect to that integrated product for that later taxable year.

Example 3. P, a domestic corporation, produces in bulk form in the United States the active ingredient for a pharmaceutical product, P transfers the bulk form to S, a wholly owned possessions corporation. S uses the bulk form to produce in Puerto Rico the finished dosage form drug. S transfers the drug in finished dosage form to P, which sells the drug to unrelated customers in the U.S. The direct labor costs incurred in Puerto Rico by S during its taxable year in formulating, filling and finishing the dosage form are at least 65 percent of the total direct labor costs incurred by the affiliated group in producing the bulk and finished forms during that period. S manufactures (within the meaning of section 954(d)(1)(A)) the finished dosage form. S has elected out under section 936(h)(5) under the profit split option for the drug product area (SIC 283). P and S may treat the bulk and finished dosage forms as parts of an integrated product. Since S satisfies the significant business presence requirement with respect to the integrated product, it is entitled to 50 percent of the combined taxable income on the integrated product.

Example 4. A possessions corporation, S. produces the keyboard of an electric typewriter and incorporates the keyboard with components acquired from a related corporation into finished typewriters. S does not satisfy the significant business presence test with respect to the typewriters (the integrated product). Therefore, S may use the cost sharing or profit split method to compute its income only with respect to a component product or end-product form. For taxable year 1983, S specifies on a statement attached to its return (Schedule P of Form 5735) that the possession product is the end-product form. The statement indentifies the components—for example, the keyboard structure and frame—which are included in the possession product. S's definition of the possession product will apply to all units of the electric typewriters which S produces in whole or in part in the possession and which are sold in 1983. Thus, all units of a given component incorporated into such typewriters will be treated in the same way. For example, all keyboards and all frames will be included in the possession product, and all electric drive mechanisms and rollers will be excluded from the possession product.

Example 5. Possessions corporation A produces printed circuit boards in a possession. The printed circuit boards are sold to unrelated parties. A also uses the boards to produce personal computers in the possession. A may designate two possession products: printed circuit boards and personal computers. The significant business presence test applies separately with respect to each of these products. Thus, for those printed circuit boards that are sold to unrelated parties, only the costs of the possessions corporation and the other members of the affiliated group that are incurred with respect to units of the printed circuit boards which are produced in whole or in part in the possessions and sold to third parties shall be taken into account. Conversely, with respect to personal computers, only the costs incurred with respect to the personal computers shall be taken into account. This would include the costs with respect to printed circuit boards that are incorporated into personal computers but not the costs incurred with respect to printed circuit boards that are sold without further processing to unrelated parties.

Example 6. Possessions corporation S produces integrated circuits in a possession. P, an affilate of S, produces circuit boards in the United States. P transfers the circuit boards to S. S assembles the integrated circuits and the circuit boards. S sells some of the loaded circuit boards to third parties. S retains some of the loaded circuit boards and incorporates them into central processing units. The central processing units are then sold to third parties. S may designate two possession products. S must use a consistent definition of the possession product for all units that are sold at the same stage in the production process. Thus, with respect to those units sold after assembly of the integrated circuits and the printed circuits boards, if S cannot satisfy the significant business presence test with respect to all the loaded circuit boards (the integrated product), then S must designate a lesser product, either the integrated circuit (the component product) or the loaded circuit board less the printed circuit board (the end-product form) as its possession product. With respect to the central processing units sold the same rule would apply. Thus, if S cannot satisfy the significant business presence test with respect to the entire central processing unit for all of the central processing units sold, S must designate some lesser product as its possession product.

Example 7. S is a possession corporation. In 1985, S produced 100 units of product X. Those units were finished into product Y in 1985 by affiliates of S. Product X is a component of product Y. In 1985, S satisfies the direct labor test with respect to product X but not with respect to product Y. S designates the component product X as its possession product. In 1986 S produces 100 units of product X and finishes those units into product Y. S would have satisfied the significant business presence test with respect to product X if S had designated product X as its possession product in 1986. In addition, in 1986 S satisfies the significant business presence test with respect to the integrated product Y. In 1986, S sells 150 units of Y. One hundred of those units would be deemed to be produced in 1986. With respect to those units S may designate the integrated product Y as its possession product. Under S's method of inventory accounting the remaining 50 units were determined to have been produced in 1985. With respect to those units S must define its possession product as it did for the taxable year in which those units were produced. Thus, S's possession product would be the component product X.

Q. 6: May an affiliated group establish groupings of possession products and treat the groupings as single products?

A. 6: An affiliated group may establish reasonable groupings of possession products based on similarities in the production processes of the possession products. Possession products that are grouped shall be treated as a single product. The determination of whether the production processes involved in producing the products that are to be grouped are similar is based on the production processes of the components that are included in the possession product. The affiliated group may establish new groupings each year. Any grouping which materially distorts a taxpayer's income or the application of the significant business presence test may be disallowed by the Commissioner. The mere fact that a grouping results in an increased allocation of income to the possessions corporation does not, of itself, create a material distortion of income. If the Commissioner determines that the taxpayer's grouping is improper with respect to one or more products in a group, then those products shall be excluded from the group. The effect of excluding a product or products from the group is that the taxpayer must demonstrate that the group without the excluded products (and each excluded product itself) satisfies the significant business presence test. If the group without the

excluded products, or any of the excluded products themselves, fails to satisfy the significant business presence test, then the possessions corporation's income from those products shall be determined under section 936(h)(1) through (4) and the regulations thereunder.

Example 1. The following are examples of possession products the processes of production of which are sufficiently similar that they may be grouped and treated as a single product:
(A) Beverage bases or concentrates for different soft drinks or soft drink syrups, regardless of whether some include sweeteners and some do not:

(B) Different styles of clothing;

(C) Different styles of shoes;

(D) Equipment which relies on gravity to deliver solutions to patients intravenously;

(E) Equipment which relies on machines to deliver solutions to patients intravenously;

(F) Video game cartridges, even though the concept and design of each game title is, in part, protected against infringement by separate copyrights;

(G) All integrated circuits;

(H) All printed circuit boards; and

(I) Hardware and software if the software is one of several alternative types of software offered by the manufacturer and sold only with the hardware, and a purchaser of the hardware would ordinarily purchase one or more of the manufacturer-provided alternative types of software. In all other cases, hardware and software may not be grouped and treated as a single product.

Groupings (D) and (E) do not include any solutions which are delivered through the equipment described therein.

Example 2. A possessions corporation produces in Puerto Rico non-programmable, interactive cathode ray tube computer terminals that vary in price. These terminals all interact with a computer or controller to perform their functions of data entry, graphics word processing, and program development. The terminals can be purchased with options that include a built-in printer, different language keyboards, specialized cathode ray tubes, and different power supply features. All terminals are produced in one integrated process requiring the same skills and operations. The differences in the production of the terminals include differences in the number of printed circuit boards incorporated in each terminal, the use of unique keyboards, and the installation and testing of the built-in printer. Some difference in direct labor time to manufacture the terminals occurs, primarily due to the differing number and complexity of printed circuit boards incorporated into each terminal. Different model numbers are assigned to

various computer terminals. A grouping by the taxpayer of all of the terminals as one product will be respected by the Service, unless the Service establishes that substantial distortion results. This grouping is proper because the processes of producing each of the terminals are similar.

Example 3. A possessions corporation, S produces several models of serial matrix impact printers and teleprinters. These products have differing performance standards based on such factors as speed (in characters per second), numbers of columns, and cost. The production process for all types of printers involves production of three basic elements: electronic circuitry, the printing head, and the mechanical parts. The process of producing all the printers is similar. Thus, all printers could be grouped and treated as a single product. S purchases electronic circuitry and mechanical parts from a U.S. affiliate. S performs manufacturing functions relative to the printing head and assembles and tests the finished printers. S does not satisfy the significant business presence test with respect to the integrated products. S therefore specifies on a statement attached to its return (Schedule P of Form 5735) that the possession product for both the serial matrix printers and the teleprinters is the end-product form. The statement identifies the components which are included in each possession product. S may group and treat as a single product the serial matrix printers and the teleprinters if both end-product forms include and exclude similar components. Thus, if the end-product form for both the serial matrix printers and the teleprinters includes the mechanical parts and excludes the electronic circuitry, then S may group and treat as a single product the two end-product forms. If, however, the end-product forms for the two items of property contain components that are not similar and as a result of this definition of the end-product forms the production processes involved in producing the two end-product forms are not similar, then S may not group the end-product forms.

Q. 7: Is the affiliated group permitted to include in a group an item of property that is not produced in whole or in part in a possession?

A. 7: No.

Example 1. Possessions corporation S produces 70 units of product A in a possession. P, an affiliate of S, produces 30 units of product A entirely in the United States. All of the units are sold to unrelated parties. The affiliated group is not permitted to group the 30 units of product A produced in the United States with the 70 units produced in the possession because those units are not produced in whole or in part in a possession.

Example 2. The facts are the same as in example 1 except that the 30 units of product A are transferred to possessions corporation S. S incorporates the 100 units of product A into product B. This incorporation takes place in the possession. S may group and treat as a single product all of the units of product B even though some of those units contain units of product A that were produced in the possession and some that were produced in the United States.

Q. 8: What factors should be disregarded in determining whether a particular grouping of similar items of property is reasonable?

A. 8: In general, differences in the following factors will be disregarded in determining whether a particular grouping of items of property is reasonable:

(1) Differences in testing requirements (*e.g.,* some products sold for military use may require more extensive or different testing than products sold for commercial use);

(2) Differences in the product specifications that are designed to accommodate the product to its area of use or for conditions under which used (*e.g.,* electrical products designed for ultimate use in the United States differ from electrical products designed for ultimate use in Europe);

(3) Differences in packaging or labeling (*e.g.,* differences in the number of units of the items shipped in one package); and

(4) Minor differences in the operations of the items of property.

Q. 9: What rules apply for purposes of determining whether pharmaceutical products are properly grouped and treated as a single product?

A. 9: The rules contained in questions and answers 6 through 8 of this section shall apply. Thus, an affiliated group may establish reasonable groupings based on similarities in the production processes of two or more possession products. In establishing a group the affiliated group may only compare the production processes involved in producing the possession products. The fact that two pharmaceutical products contain different active or inert ingredients is not relevant to the determination of whether the pharmaceutical products may be grouped. For example, if the possession products are bulk chemicals and the production processes involved in producing the bulk chemicals are similar, those bulk chemicals may be grouped and treated as a single product even though they contain different active or inert ingredients. The affiliated group may also group and treat as a single product the finished dosage form drug as long as the production processes involved in producing the finished dosage forms are similar. For these purposes, the production processes involved in producing the following classes of items shall be considered to be sufficiently similar that possession products delivered in a form described in one of the categories may be grouped with other possession products delivered in a form described in the same category.

The categories are:

(1) Capsules, tablets, and pills;

(2) Liquids, ointments, and creams; or

(3) Injectable and intravenous preparations.

No distinctions should be based on packaging, list numbers, or size of dosage. The affiliated group may group and treat as a single product the integrated product (combination of the bulk and the delivery form) only if all the production processes involved in producing the integrated products are similar. The rules of this question and answer are illustrated by the following examples.

Example 1. Possessions corporation S produces two chemical active ingredients X and Y. Both chemical ingredients are produced through the process of fermentation. The affiliated group is permitted to group and treat as a single product the two chemical ingredients.

Example 2. The facts are the same as in example 1 and possessions corporation S finishes chemical ingredient X into tablets and chemical ingredient Y into capsules. The affiliated group is permitted to group and treat as a single product the combination of the bulk pharmaceutical and the finishing because the production processes involved in producing the integrated products are similar.

Example 3. Possessions corporation S produces in a possession a bulk chemical X by fermentation. A United States affiliate, P, produces in the United States a bulk chemical, Y, by fermentation. Both bulk chemicals are finished by S in the possession. The finished dosage form of X is in pill

form. The finished dosage form of Y is in injectable form. If S's possession product is the integrated product or the end-product form then S may not group X and Y because the production processes involved in producing the finished dosage form of X and Y are not similar. If S's possession product is the component then S may not group X and Y because the bulk chemical Y is not produced in whole or in part in a possession.

Q. 10: Will the fact that a manufacturer of a drug must submit a New Drug Application ("NDA") or a supplemental NDA to the Food and Drug Administration have any effect on the definition or grouping of a product?

A. 10: No.

Q. 11: A possessions corporation which produced a product or rendered a type of service in a possession on or before September 3, 1982, is not required to meet the significant business presence test in a possession with respect to such product or type of service for its taxable years beginning before January 1, 1986 (the interim period). During such interim period, how will the term "product" be defined for purposes of allocating income under the cost sharing or profit split methods?

A. 11: During the interim period the product will be determined based on the activities performed by the possessions corporation within a possession on September 3, 1982. During the interim period the possessions corporation may compute its income under the cost sharing or profit split method only with respect to the product that is produced or manufactured within the meaning of section 954(d)(1)(A) within the possession. If the product is manufactured from a component or components produced by an affiliated corporation or a contract manufacturer, then the product will not be treated as including such component or components for purposes of the computation of income under the cost sharing or profit split methods. Thus, the possessions corporation is not entitled to any return on the intangibles associated with the component or components. Notwithstanding the preceding sentences, for taxable years beginning before January 1, 1986, a possessions corporation may compute its income under the cost sharing or profit split method with respect to a product which includes a component or components produced by an affiliated corporation or contract manufacturer if the possessions corporation satisfies with respect to such product the significant business presence test described in section 936(h)(5)(B)(ii) and the regulations thereunder.

Example 1. A possessions corporation, S, was manufacturing (within the meaning of section 954(d)(1)(A)) integrated circuits in a possession on September 3, 1982. S transferred those integrated circuits to related corporation P. P incorporated the integrated circuits into central processing units (CPUs in the United States) and sold the CPUs to unrelated parties. S continued to manufacture integrated circuits in the possession through Juanuary 1, 1986. For taxable years beginning before January 1, 1986, S may compute its income under the cost sharing or profit split method with respect to the integrated circuits regardless of whether S satisfies the significant business presence test. However, unless S satisfies the significant business presence test with respect to the central processing units, S may not compute its income under the cost sharing or profit split methods with respect to the CPUs, and thus, S is not entitled to any return on manufacturing intangibles associated with CPUs to the extent that they are not related to the integrated circuits produced by S, nor (except as provided in the profit split methods) to any return on marketing intangibles.

Example 2. A possessions corporation, S, was engaged on September 3, 1982, in the manufacture (within the meaning of section 954(d)(1)(A)) of a bulk pharmaceutical in Puerto Rico from raw materials. S sold the bulk pharmaceutical to its U.S. parent, P, for encapsulation and sale by P

to customers as the product X. Because S was not engaged in the encapsulation of X, S is not considered to have manufactured the integrated product, X, in Puerto Rico. During the interim period, S may compute its income under the cost sharing or profit split methods with respect to the integrated product, X, only if S satisfies the significant business presence test with respect to X. S may compute its income under the cost sharing or profit split methods with respect to the component product (the bulk pharmaceutical).

Example 3. P is a domestic corporation that is not a possessions corporation. P manufactures a bulk pharmaceutical in the United States. P transfers the bulk pharmaceutical to its wholly owned subsidiary, S, a possessions corporation. On September 3, 1982, S was engaged in the encapsulation of the bulk pharmaceutical in Puerto Rico in a manner which satisfies the test of section 954(d)(1)(A). For taxable years beginning before January 1, 1986, S may compute its income under the cost sharing or profit split methods with respect to the end-product form the (the encapsulated drug) regardless of whether S meets the significant business presence test. However, unless S satisfies the significant business presence test with respect to the integrated product, S may not compute its income under the cost sharing or profit split methods with respect to the integrated product, and thus, S is not entitled to any return on the intangibles associated with the bulk pharmaceutical.

Q. 12: On September 3, 1982, a possessions corporation, S was engaged in the manufacture (within the meaning of section 954(d)(1)(A)) of X in a possession. During the interim period, after September 3, 1982, but before January 1, 1986, S produced Y, which differs from X in terms of minor design features. S did not produce Y in a possession on September 3, 1982. Will S be considered to have commenced production of a new product after September 3, 1982, for purposes of the application of the significant business presence test for the interim period?

A. 12: No. X and Y will be considered to be a single product, and therefore S will not be required to satisfy the business presence test separately with respect to Y during the interim period. In all cases in which the items of property produced on or before September 3, 1982 and the items of property produced after that date could have been grouped together under the guidelines provided in § 1.936-5(a) questions and answers 6 through 10, the possessions corporation will not be considered to manufacture a new product after September 3, 1982.

Q. 13: May the term "product" be defined differently for export sales than for domestic sales?

A. 13: Yes. For rules concerning the application of the separate election for export sales see § 1.936-7(b).

(b) ***Requirement of significant business presence*** —

(1) ***General rules.***

Q. 1: In general, a possessions corporation may compute its income under the cost sharing or profit split methods with respect to a product only if the possessions corporation has a significant business presence in a possession with respect to that product. When will a possession corporation be considered to have a significant business presence in a possession?

A. 1: For purposes of the cost sharing method, the significant business presence test is met if the possessions corporation satisfies either a value added test or a direct labor test. For purposes of the profit split method, the significant business presence test is met if the possessions corporation satisfies either a value added test or a direct labor test and also manufactures the product in the possession within the meaning of section 954(d)(1)(A).

Q. 2: How may a possessions corporation satisfy the direct labor test with respect to a product?

A. 2: The possessions corporation will satisfy the direct labor test with respect to a product if the direct labor costs incurred by the possessions corporation as compensation for services performed in a possession are greater than or equal to 65 percent of the direct labor costs of the affiliated group for units of the possession product produced during the taxable year in whole or in part by the possessions corporation.

Q. 3: How may a possessions corporation satisfy the value added test?

A. 3: In order to satisfy the value added test, the production costs of the possessions corporation incurred in the possession with respect to units of the possession product produced in whole or in part by the possessions corporation in the possession and sold or otherwise disposed of during the taxable year by the affiliated group to unrelated parties must be greater than or equal to twenty-five percent of the difference between gross receipts from such sales or other dispositions and the direct material costs of the affilated group for materials purchased for such units from unrelated parties.

Q. 4: Must the significant business presence test be met with respect to all units of the product produced during the taxable year by the affiliated group?

A. 4: No. The significant business presence test must be met with respect to only those units of the product produced during the taxable year in whole or in part by the possessions corporation in a possession.

Q. 5: For purposes of determining whether a possessions corporation satisfies the significant business presence test, how shall the possessions corporation treat the cost of components transferred to the possessions corporation by a member of the affiliated group?

A. 5: The treatment of the cost of components transferred from an affiliate depends on whether the possession product is treated as including the components for purposes of section 936(h). If it is, then for purposes of the value added test, the production costs associated with the component shall be treated as production costs of the affiliated group that are not incurred by the possessions corporation. Those production costs, other than the cost of materials, shall not be treated as a cost of materials. For purposes of the direct labor test and the alternative significant business presence test, the direct labor costs associated with such components shall be treated as direct labor costs of the affiliated group that are not incurred by the possessions corporation. If the possession product is treated as not including such component for purposes of section 936(h), then, solely for purposes of determining whether the possessions corporation satisfies the value added test, the cost of the component shall not be treated as either a cost of materials or as a production cost. For purposes of the direct labor test and the alternative significant business presence test, the direct labor costs associated with such component shall not be treated as direct labor costs of the affiliated group. If the possession product is treated as not including such component, then the possessions corporation shall not be entitled to any return on the intangibles associated with the manufacturing or marketing of the component.

Q. 6: May two or more related possessions corporations aggregate their production or direct labor costs for purposes of determining whether they satisfy the significant business presence test with respect to a single product?

A. 6: No.

Q. 7: A possessions corporation, S, purchases raw materials and components from an unrelated corporation which conducts business outside of a possession. The unrelated corporation is not a contract manufacturer. What is the treatment of such raw materials and components for purposes of the significant business presence test?

A. 7: Where Company S purchases raw materials or components from an unrelated corporation which is not a contract manufacturer, the raw materials and components are treated as materials, and the costs related thereto are treated as a cost of materials.

(2) ***Direct labor costs.***

Q. 1: How is the term "direct labor costs" to be defined?

A. 1: The term "direct labor costs" has the same meaning which it has for purposes of § 1.471-11(b)(2)(i). Thus, direct labor costs include the cost of labor which can be identified or associated with particular units or groups of units of a specific product. The elements of direct labor include such items as basic compensation, overtime pay, vacation and holiday pay, sick leave pay (other than payments pursuant to a wage continuation plan under section 105(d)), shift differential, payroll taxes, and payments to a supplemental unemployment benefit plan paid or incurred on behalf of employees engaged in direct labor.

Q. 2: May a taxpayer treat a cost as a direct labor cost if it is not included in inventoriable costs under section 471 and the regulations thereunder?

A. 2: No. A cost may be treated as a direct labor cost only if it is included in inventoriable costs. However, a cost may be considered a direct labor cost even though the activity to which it relates would not constitute manufacturing under section 954(d)(1)(A) as long as the cost is included in inventoriable costs.

Q. 3: May the members of the affiliated group include as direct labor costs the labor element in indirect production costs?

A. 3: No. The labor element of indirect production costs may not be considered as part of direct labor costs.

Q. 4: Do direct labor costs include the costs which can be identified or associated with particular units or groups of units of a specific product if those costs could also be described as quality control and inspection?

A. 4: Yes. Direct labor costs include costs which can be identified or associated with particular units or groups of units of a specific product. Thus, if quality control and inspection is an integral part of the production process, then the labor associated with that quality control and inspection shall be considered direct labor. For example, integrated circuits are soldered to printed circuit boards by passing the boards over liquid solder. Employees inspect each of the boards and repair any imperfectly soldered joints discovered on that inspection. The labor associated with this process is direct labor. However, if a person performs random inspections on limited numbers of products, then that labor associated with those inspections shall be considered quality control and therefore indirect labor.

Q. 5: Do direct labor costs of the possessions corporation include only the costs which were actually incurred or do they take into account, in addition, any labor savings which result because the activities were performed in a possession rather than in the United States?

A. 5: Direct labor costs include only the costs which were actually incurred.

Q. 6: For purposes of determining whether a possessions corporation satisfies the significant business presence test for a taxable year with respect to a product, how shall the possessions corporation compute its direct labor costs of units of the product?

A. 6: The direct labor test shall be applied separately to products produced in whole or in part by the possessions corporation in the possession during each taxable year. Sales shall be deemed to be made first out of the current year's production. If sales are made only out of the current year's production, then the direct labor costs of producing those units that are sold shall be the pro rata portion of the total direct labor costs of producing all the units that are produced in whole or in part in the possession by the possessions corporation during the current year. If all of the current year's production is sold and some inventory is liquidated, then the direct labor test shall be applied separately to the current year's production and the liquidated inventory. The direct labor costs of producing the liquidated inventory shall be the pro rata portion of the total direct labor costs that were incurred in producing all the units that were produced in whole or in part by the possessions corporation in the possessions in the layer of liquidated inventory determined under the member's method of inventory accounting.

Example. S is a cash basis calendar year taxpayer that has made an election under section 936(a). In 1985 S produced 100 units of product X. Fifty percent of the direct labor costs of the affiliated group were incurred by S and were compensation for services performed in the possession. Thus, S did not satisfy the significant business presence test with respect to product X in taxable year 1985. During 1986 S produced 100 units of product X. One hundred percent of the direct labor costs of the affiliated group were incurred by S and were compensation for services performed in the possession. In 1986 S sells 150 units of product X. One hundred of those units are deemed to be from the units produced in 1986. With respect to those units S satisfies the significant business presence test. Under S's method of inventory accounting the remaining 50 units were determined to be produced in 1985. With respect to those units S does not satisfy the significant business presence test because only 50% of the direct labor costs incurred in producing those units were incurred by S and were compensation for services performed in the possession.

Q. 7: What is the result if in a particular taxable year the possessions corporation satisfies the significant business presence test with respect to units of the product produced in one year and fails the significant business with respect to units produced in another year?

A. 7: For those units of the product with respect to which the possession corporation satisfies the significant business presence test, the possessions corporation may compute its income under the provisions of section 936(h)(5). For those units of the product with respect to which the possessions corporations fails the significant business presence test, the possessions corporation must compute its income under section 936(h)(1) through (4).

Q. 8: Do direct labor costs include costs incurred in a prior taxable year with respect to units of the possession product that are finished in a later taxable year?

A. 8: Yes.

(3) ***Direct material costs.***

Q. 1: How is the term “direct material costs” to be defined?

A. 1: Direct material costs include the cost of those materials which become an integral part of the specific product and those materials which are consumed in the ordinary course of manufacturing and can be identified or associated with particular units or groups of units of that product. See § 1.471-3 for the elements of direct material costs.

Q. 2: May a taxpayer treat a cost as a direct material cost if it is not included in inventoriable costs under section 471 and the regulations thereunder?

A. 2: A taxpayer may not treat such costs as direct material costs.

(4) ***Production costs.***

Q. 1: How is the term “production costs” defined?

A. 1: The term “production costs” has the same meaning which it has for purposes of § 1.471-11(b) except that the term does not include direct material costs and interest. Thus, production costs include direct labor costs and fixed and variable indirect production costs (other than interest).

Q. 2: With respect to indirect production costs described in § 1.471-11(c)(2) (ii) and (iii), may a possessions corporation include these costs in production costs for purposes of section 936, if they are not included in inventoriable costs under section 471 and the regulations thereunder?

A. 2: No. A possessions corporation may include these costs only if they are included for purposes of section 471 and the regulations thereunder. If a possessions corporation and the other members of the affiliated group include and exclude different indirect production costs in their inventoriable costs, then, for purposes of the significant business presence test, the possessions corporation shall compute its production costs and the production costs of the other members of the affiliated group by subtracting from the production costs of each member all indirect costs included by that member that are not included in production costs by all other members of the affiliated group.

Q. 3: Does a change in a taxpayer's method of accounting for purposes of section 471 affect the taxpayer's computation of production costs for purposes of section 936?

A. 3: Yes. If a taxpayer changes its method of accounting for purposes of section 471, then the same change shall apply for purposes of section 936.

Q. 4: For purposes of determining whether a possessions corporation satisfies the significant business presence test for a taxable year with respect to a product, how shall the possessions corporation compute its costs of producing units of the product sold or otherwise disposed to unrelated parties during the taxable year?

A. 4: All members of the affiliated group may elect to use their current year production costs regardless of whether the members use the FIFO or LIFO method of inventory accounting. If some or all of the current year's production of a product is sold, then the production costs of producing those units sold shall be the pro rata portion of the total production costs of producing all the units produced in the current year. If all of the current year's production of a product is sold and some inventory is liquidated, then the production costs of producing the liquidated inventory shall be the pro rata portion of the production costs incurred in producing the layer of liquidated inventory as determined under the member's method of inventory accounting.

Q. 5: How should the members of the affiliated group determine the portion of their production costs that is allocable to units of the product sold or otherwise disposed of during the taxable year?

A. 5: The members of the affiliated group may use either standard production costs (so long as variances are not material), average production costs, or FIFO production costs to determine the production costs that will be considered to be attributable to units of the product sold or otherwise disposed of during the taxable year. However, all members of the affiliated group must use the same method.

Q. 6: When is the quality control and inspection of a product considered to be part of the production activity for that product?

A. 6: Quality control and inspection of a manufactured product before its sale or other disposition by the manufacturer, or before its incorporation into other products, is considered to be part of the indirect production activity for that initial product. Subsequent testing of a product to ensure that the product is compatible with other products is not a part of the production activity for the initial product.

When a component is incorporated into an end-product form and the end-product form is then tested, the latter testing will be considered to be a part of the indirect production activity for the end-product form and will not be considered to be a part of the production activity for the component.

Q. 7: For purposes of the significant business presence test and the allocation of income to a possessions corporation, what is the treatment of the cost of installation of a product?

A. 7: For purposes of the significant business presence test and the allocation of income to a possessions corporation, product installation costs need not be taken into account as costs incurred in the manufacture of that product, if the taxpayer keeps such permanent books of account or records as are sufficient to establish the fair market price of the uninstalled product. In such a case, the cost of installation materials, the cost of the labor for installation, and a reasonable profit for installation will not be included in the costs and income associated with the possession product. If the taxpayer does not keep such permanent books of account or records, then the cost of installation materials and the cost of labor for installation shall be treated as costs associated with the possession product and income will be allocated to the possessions corporation and its affiliates under the rules provided in these regulations.

Q. 8: For purposes of the significant business presence test and the allocation of income to a product or service, what is the treatment of the cost of servicing and maintaining a possession product that is sold to an unrelated party?

A. 8: The cost of servicing and maintaining a possession product after it is sold is not associated with the production of that product.

Q. 9: For purposes of the significant business presence test and the allocation of income to a possessions corporation, what is the treatment of the cost of samples?

A. 9: The cost of producing samples will be treated as a marketing expense and not as inventoriable costs for these purposes. However, for taxable years beginning prior to January 1, 1986, the cost of producing samples may be treated as either a marketing expense or as inventoriable costs.

(5) ***Gross receipts.***

Q. 1: How shall the affiliated group determine gross receipts from sales or other dispositions by the affiliated group to unrelated parties of the possession product?

A. 1: Gross receipts shall be determined in the same manner as possession sales under the rules contained in § 1.936-6(a)(2).

(6) ***Manufacturing within the meaning of section 954(d)(1)(A).***

Q. 1: What is the test for determining, within the meaning of section 954(d)(1)(A), whether a product is manufactured or produced by a possessions corporation in a possession?

A. 1: A product is considered to have been manufactured or produced by a possessions corporation in a possession within the meaning of section 954(d)(1)(A) and § 1.954-3(a)(4) if—

(i) The property has been substantially transformed by the possessions corporation in the possession;

(ii) The operations conducted by the possessions corporation in the possession in connection with the property are substantial in nature and are generally considered to constitute the manufacture or production of property; or

(iii) The conversion costs sustained by the possessions corporation in the possession, including direct labor, factory burden, testing of components before incorporation into an end product and testing of the manufactured product before sales account for 20 percent or more of the total cost of goods sold of the possessions corporation.

In no event, however, will packaging, repackaging, labeling, or minor assembly operations constitute manufacture or production of property. See particularly examples 2 and 3 of § 1.954-3(a)(4)(iii).

Q. 2: Does the requirement that a possession product be produced or manufactured in a possession within the meaning of section 954(d)(1)(A) apply to taxable years beginning before January 1, 1986?

A. 2: A possessions corporation must satisfy this requirement for taxable years beginning before January 1, 1986, in the following cases:

(i) If the possessions corporation makes a separate election under section 936(h)(5)(F)(iv)(II) with respect to export sales;

(ii) If the possessions corporation is electing as its possession product a product that is subject to the interim period rules of § 1.936-5(a) question and answer (10); or

(iii) If the possessions corporation is electing as its possession product a product that is not subject to the interim period rules of § 1.936-5 (a) question and answer (10) and the possessions corporation computes its income under the profit split method with respect to that product.

For rules concerning products first produced in a possession after September 3, 1982, see § 1.936-5(b)(7) question and answer (2).

(7) ***Start-up operations.***

Q. 1: With respect to products not produced (and types of services not rendered) in the possession on or before September 3, 1982, when must a possessions corporation first satisfy the 25 percent value added test or the 65 percent direct labor test?

A. 1: A transitional period is established such that a possessions corporation engaged in start-up operations with respect to a product or service need not satisfy the 25 percent value added test or the 65 percent labor test until the third taxable year following the taxable year in which such product is first sold by the possessions corporation or such service is first rendered by the possessions corporation. During the transitional period, the applicable percentages for these tests will be as follows:

	Any year after 1982		
	1	**2**	**3**
Value added test	10	15	20
Labor test	35	45	55

Q. 2: Does the requirement that a possession product be produced or manufactured in a possessions within the meaning of section 954(d)(1)(A) apply to a product if the possessions corporation is engaged in start-up operations with respect to that product?

A. 2: The possessions corporation must produce or manufacture the possessions product within the meaning of section 954(d)(1)(A) if the possessions corporation computes its income with respect to that product under the profit split method.

Q. 3: When will a possessions corporation be considered to be engaged in start-up operations?

A. 3: A possessions corporation is engaged in start-up operations if it begins operations in a possession with respect to a product or type of service after September 3, 1982. Subject to the further provisions of this answer, a possessions corporation will be considered to begin operations with respect to a product if, under the rules of § 1.936-5(a) questions and answers (6) through (10), such product could not be grouped with any other item of property manufactured in whole or in part in the possessions by any member of the affiliated group in any preceding taxable year. Any improvement or other change in a possession product which does not substantially change the production process would not be deemed to create a new product. A change in the division of manufacturing activity between the possessions corporation and its affiliates with respect to an item of property will not give rise to a new product. If a possessions corporation was producing a possession product that was either a component product or an end-product form and the possessions corporation expands its operations in the same possession so that it is now producing a product that includes the earlier possession product, the possessions corporation will not be entitled to use the start-up significant business presence test unless the production costs incurred by the possessions corporation in the possession in producing a unit of its new possession product are at least double the production costs incurred by the possessions corporation in the possession in producing a unit of the earlier possession product. If any member of an affiliated group actually groups two or more items of property then, solely for the purposes of determining whether any item of property in that group is a new product, that grouping shall be respected. However, the

fact that an affiliated group does not actually group two or more items of property shall be disregarded in determining whether any item of property is a new product. Notwithstanding the above, if a possessions corporation is producing a possession product in one possession and such corporation or a member of its affiliated group begins operations in a different possession, regardless of whether the items of property could be grouped, the affiliated group may treat the units of the item of property produced at the new site of operations in the different possession as a new product.

(8) ***Alternative significant business presence test.***

Q. 1: Will the Secretary adopt a significant business presence test other than those set forth in section 936(h)(5)(B)(ii)?

A. 1: Yes. The following significant business presence test is adopted both for the transitional period and thereafter. A possessions corporation will have a significant business presence in a possession for a taxable year with respect to a product or type of service if—

(i) No less than 50 percent of the direct labor costs of the affiliated group for units of the product produced, in whole or in part, during the taxable year by the possessions corporation or for the type of service rendered by the possessions corporation during the taxable year are incurred by the possessions corporation as compensation for services performed in the possession; and

(ii) The direct labor costs of the possessions corporation for units of the product produced or the type of service rendered plus the base period construction costs are no less than 70 percent of the sum of such base period construction costs and the direct labor costs of the affiliated group for such units of the product produced or the type of service rendered.

Notwithstanding satisfaction of the above test, for purposes of determining whether a possessions corporation may compute its income under the profit split method, a possessions corporation will not be treated as having a significant business presence in a possession with respect to a product unless the possessions corporation manufactures the product in the possession within the meaning of section 954(d)(1)(A).

Q. 2: How is the term “base period construction costs” defined?

A. 2: The term “base period construction costs” means the average construction costs incurred by or on behalf of the possessions corporation for services in the possession during the taxable year and the preceding four taxable years for section 1250 property (as defined in section 1250(c) and the regulations thereunder) that is used for the production of the product or the rendering of the service in the possession, and which represents the original use of the section 1250 property. For purposes of the preceding sentence, if the possessions corporation was not in existence during one or more of the four preceding taxable years, its construction costs for that year or years shall be deemed to be zero. Construction costs include architects' and engineers' fees, labor costs, and overhead and profit (if the construction is performed by a person that is not a member of the affiliated group).

(c) ***Definition and treatment of contract manufacturing.***

Q. 1: For purposes of determining whether a possessions corporation satisfies the significant business presence test with respect to a product, the costs incurred by the possessions corporation or by any of its affiliates in connection with contract manufacturing which is related to that product and is

performed outside the possession shall be treated as direct labor costs of the affiliated group and shall not be treated as production costs of the possessions corporation or as material costs. How is the term “contract manufacturing” to be defined?

A. 1: The term “contract manufacturing” includes any arrangement between a possessions corporation (or another member of the affiliated group) and an unrelated person if the unrelated person:

(1) Performs work on inventory owned by a member of the affiliated group for a fee without the passage of title;

(2) Performs production activities (including manufacturing, assembling, finishing, or packaging) under the direct supervision and control of a member of the affiliated group; or

(3) Does not undertake any significant risk in manufacturing its product (*e.g.,* it is paid by the hour).

Q. 2: Does an arrangement between a member of the affiliated group and an unrelated party constitute contract manufacturing if the unrelated party uses an intangible owned or licensed by a member of the affiliated group?

A. 2: Such an arrangement will be treated as contract manufacturing if the unrelated party makes use of a patent owned or licensed by a member of the affiliated group in producing the product which becomes part of the possession product of the possessions corporation. In addition, such use of manufacturing intangibles other than patents may be treated as contract manufacturing if it is established that the arrangement has the effect of materially distorting the application of the significant business presence test. However, the preceding sentence shall not apply if the possessions corporation establishes that the arrangement was entered into for a substantial business purpose (e.g., to obtain the benefit of special expertise of the manufacturer or economies of scale). These rules shall not apply to such contract manufacturing performed in taxable years beginning before January 1, 1986, nor shall the rules apply to binding contracts for the performance of such contract manufacturing entered into before June 13, 1986.

Q. 3: For purposes of the significant business presence test, how shall a possessions corporation treat the cost of contract manufacturing performed within a possession?

A. 3: If the possessions corporation uses the value added test, it will be permitted to treat the cost of the contract manufacturing performed in a possession, not including material costs, as a production cost of the possessions corporation. If it uses the direct labor test or the alternative significant business presence test set forth in § 1.936-5(b)(8), it is permitted to treat the direct labor costs of the contract manufacturer associated with such contract manufacturing as a cost of direct labor of the possessions corporation. The allowable amount of the direct labor cost shall be determined in accordance with question and answer 4 below.

Q. 4: How are the amounts paid by a possessions corporation to a contract manufacturer for services rendered in a possession to be treated by the possessions corporation in computing the direct labor cost of the product to which such contract manufacturing relates?

A. 4: If the possessions corporation can establish the contract manufacturer's direct labor cost which was incurred in the possession, such cost will be treated as incurred by the possessions corporation as compensation for services performed in the possession. If the possessions corporation cannot establish such cost, then 50 percent of the amount paid to such contract manufacturer may be treated as incurred by the possessions corporation as compensation for services performed in the possession: provided, that not more than 50 percent of the fair market value of the product

manufactured by the contract manufacturer is attributable to articles shipped into the possession, and the possessions corporation receives a statement from the contract manufacturer that this test has been satisfied. If this fair market value test is not satisfied, then the cost of contract manufacturing performed within a possession shall not be treated as a production cost or a direct labor cost of either the possessions corporation or the affiliated group.

Q. 5: For purposes of the significant business presence test, what is the treatment of costs which are incurred by a member of the affiliated group (including the possessions corporation) for contract manufacturing performed outside of the possession with respect to an item of property which is a component of the possession product?

A. 5: If the possession product is treated as including such component, the cost of the contract manufacturing shall be treated as a direct labor cost of members of the affiliated group other than the possessions corporation for purposes of the direct labor test and the alternative significant business presence test, and shall not be treated as a production cost of the possessions corporation or as a cost of materials for purposes of the value added test. If the possession product is treated as not including such component, the cost of the contract manufacturing shall not be treated as a direct labor cost of any member of the affiliated group for purposes of the direct labor test and the alternative significant business presence test, and shall not be treated as a production cost of the possessions corporation or as a cost of materials for purposes of the value added test.

[T.D. 8090, 51 FR 21524, June 13, 1986; 51 FR 27174, July 30, 1986]

§ 1.936-6 Intangible property income when an election out is made: Cost sharing and profit split options; covered intangibles.

The rules in this section apply for purposes of section 936(h) and also for purposes of section 934(e) where applicable.

(a) ***Cost sharing option —***

(1) ***Product area research.***

Q. 1: Cost sharing payments are based on research undertaken by the affiliated group in the “product area” which includes the possession product. The term “product area” is defined by reference to the three-digit classification under the Standard Industrial Classification (SIC) code. Which governmental agency has jurisdiction to decide the proper SIC category for any specfic product?

A. 1: Solely for the purpose of determining the tax consequences of operating in a possession, the Secretary or his delegate has exclusive jurisdiction to decide the proper SIC category under which a product is classified. For this purpose, the product area under which a product is classified will be determined according to the 1972 edition of the SIC code. From time to time and in appropriate cases, the Secretary may prescribe regulations or issue rulings determining the proper SIC category under which a particular product is to be classified, and may prescribe regulations for aggregating two or more three-digit classifications of the SIC code and for classifying product areas according to a system other than under the SIC code.

Q. 2: How is the term “affiliated group” defined for purposes of the cost sharing option?

A. 2: For purposes of the cost sharing option, the term "affiliated group" means the possessions corporation and all other organizations, trades or businesses (whether or not incorporated, whether or not organized in the United States, and whether or not affiliated) owned or controlled directly or indirectly by the same interests, within the meaning of section 482.

Q. 3: Are research and development expenditures that are included in product area research limited to research and development expenditures that are deductible under section 174 or that are incurred by U.S. affiliates?

A. 3: No, product area research is not limited to product area research expenditures deductible under section 174 or to expenses incurred by U.S. affiliates. Product area research also includes deductions permitted under section 168 with respect to research property which are not deductible under section 174; qualified research expenses within the meaning of section 30(b); payments (such as royalities) for the use of, or right to use, a patent, invention, formula, process, design, pattern or know-how; and a proper allowance for amounts incurred in the acquisition of manufacturing intangible property. In the case of an acquisition of depreciable or amortizable manufacturing intangible property, the annual amount of product area research shall be be equal to the allowable depreciation or amortization on the intangible property for the taxable year. In the case of an acquisition of nondepreciable or nonamortizable manufacturing intangible property, the amount expended for the acquisition shall be deemed to be amortized over a five year period and included in product area research in the year of the deemed amortization. Any contingent payment made with respect to the acquisition of nonamortizable manufacturing intangible property shall be treated as amounts incurred in the acquisition of nonamortizable manufacturing intangible property when paid or accrued.

Q. 4: Does royalty income from a person outside the affiliated group with respect to the manufacturing intangibles within a product area reduce the product area research pool within the same product area?

A. 4: Yes.

Q. 5: Does income received from a person outside the affiliated group from the sale of a manufacturing intangible reduce the product area research pool within the same product area?

A. 5: In determining product area research, the income from the sale attributable to noncontingent payments will reduce product area research ratably over the remaining useful life of the property in the case of an amortizable intangible and ratably over a 5-year period in the case of a nonamortizable intangible. Any income attributable to contingent amounts received with respect to the sale of manufacturing intangible property shall be treated as amounts received from the sale of the manufacturing intangible property in the year in which such contingent amounts are received or accrued.

Q. 6: If a member of an affiliated group incurs research and development expenses pursuant to a contract with an unrelated person who is entitled to exclusive ownership of all the technology resulting from the expenditures, is the amount of product area research reduced by the amount of such expenditures?

A. 6: To the extent that the product area research expenditures can be allocated solely to the technology produced for the unrelated person, such expenditures will not be included in product area research expenditures provided, however, that the unrelated person has exclusive ownership of all the technology resulting from these expenditures, and further that no member of the affiliated group has a right to use any of the technology.

Q. 7: What is the treatment of product area research expenditures attributable to a component where the component and the integrated product fall within different product areas?

A. 7: For purposes of the computation of product area research expenditures in the product area by the affiliated group, the product area in which the component falls is aggregated with the product area in which the integrated product falls. However, if the component product and integrated product are in separate SIC codes and if the component product is not included in the definition of the possession product, then the product area research expenditures are not aggregated. The same rule applies where the taxpayer elects a component product which encompasses another component product and the two component products fall into separate SIC codes. In such case, the product area in which the first component falls is aggregated with the product area in which the second component falls.

(2) ***Possession sales and total sales.***

Q. 1: The cost sharing payment is the same proportion of the total cost of product area research which the amount of "possession sales" of the affiliated group bears to the "total sales" of the affiliated group within the product area. How are "possession sales" defined for purposes of the cost sharing fraction?

A. 1: The term "possession sales" means the aggregate sales or other dispositions of the possession product, to persons who are not members of the affiliated group, less returns and allowances and less indirect taxes imposed on the production of the product, for the taxable year. Except as otherwise indicated in § 1.936-6(a)(2), the sales price to be used is the sales price received by the affiliated group from persons who are not members of the affiliated group.

Q. 2: For purposes of the numerator of the cost sharing fraction, how are possession sales computed where the possession product is a component product or an end-product form?

A. 2:

(i) The sales price of the component product or end-product form is determined as follows. With respect to a component product, an independent sales price from comparable uncontrolled transactions must be used if such price can be determined in accordance with § 1.482-2(e)(2). If an independent sales price of the component product from comparable uncontrolled transactions cannot be determined, then the sales price of the component product shall be deemed to be equal to the transfer price, determined under the appropriate section 482 method, which the possessions corporation uses under the cost sharing method in computing the income it derives from the active conduct of a trade or business in the possession with respect to the component product. The possessions corporation in lieu of using the transfer price determined under the preceding sentence may treat the sales price for the component product as equal to the same proportion of the third party sales price of the integrated product which the production costs attributable to the component product bear to the total production cost for the integrated product. Production cost will be the sum of direct and indirect production costs as defined in § 1.936-5(b)(4). If the possessions corporation determines the sales price of the component product using the production cost ratio, the transfer price used by the possessions corporation in computing its income from the component product under the cost sharing method may not be greater than such sales price.

(ii) With respect to an end-product form, the sales price of the end-product form is equal to the difference between the third party sales price of the integrated product and the independent sales price of the excluded component(s) from comparable uncontrolled transactions, if such price can be determined under § 1.482-2(e)(2). If an independent sales price of the excluded component(s) from uncontrolled transactions cannot be determined, then the sales price of the end-product form shall be deemed to be equal to the transfer price, determined under the appropriate section 482 method, which the possessions corporation uses under the cost sharing method in computing the income it derives from the active conduct of a trade or business in the possession with respect to such end-product form. The possessions corporation in lieu of using the transfer price determined under the preceding sentence may use the production cost ratio method described above to determine the sales price of the end-product form (*i.e.,* the same proportion of the third party sales price of the integrated product which the production costs attributable to the end-product form bear to the total production costs for the integrated product). If the possessions corporation determines the sales price of the end-product form using the production cost ratio, the transfer price used by the possessions corporation in computing its income from the end-product form under the cost sharing method may not be greater than such sales price. For similar rules applicable to the profit split option see § 1.936-6(b)(1), question and answer 12.

Q. 3: For purposes of determining possessions sales in the numerator of the cost sharing fraction, will the replacement part price of the product be treated as a price from comparable uncontrolled transactions?

A. 3: Prices for replacement parts are generally higher than prices for equipment sold as part of an original system. Thus, prices for replacement parts cannot generally be used directly as prices for comparable uncontrolled transactions. However, replacement part prices may be used for estimating comparable uncontrolled prices where the price differential can be reasonably determined and taken into account under § 1.482-2(e)(2).

Q. 4: For purposes of determining possession sales in the cost sharing fraction, what is the treatment of components that are purchased by one possessions corporation from an affiliated possessions corporation and which are incorporated into a possession product where the transferor possessions corporation treats the transferred component as a possession product?

A. 4: When one possessions corporation purchases components from a second possessions corporation which is an affiliated corporation, the purchase price of the components paid to the second possessions corporation shall be subtracted from the sales proceeds of the product produced in the possession by the first possessions corporation, and only the remainder is included in the numerator of the cost sharing formula for the first corporation. For example, assume that N corporation manufactures a component for sale to O corporation for $100 (a price which reflects prices in comparable uncontrolled transactions). Both N and O are affiliated possessions corporations. N has designated that component product as its possession product. O then incorporates that product into a second product which is sold to customers for $300 N and O must make separate cost sharing payments. The cost sharing payment of N corporation is determined by including $100 as possession sales, and the payment of O is determined by subtracting that $100 purchase price from the $300 received from customers. Thus, the possessions sales amount of O is $200. This rule is intended to prevent the double counting of the sales of a component produced by one possessions corporation and incorporated into another product by an affiliated possessions corporation.

Q. 5: Are pre-TEFRA sales included in the cost sharing fraction?

A. 5: No. Pre-TEFRA sales are sales of products produced by the possessions corporation and transferred to an affiliate prior to a possessions corporation's first taxable year beginning after December 31, 1982. Pre-TEFRA sales are not included in either the numerator or denominator of the cost sharing fraction. If the U.S. affiliate uses the FIFO method of costing inventory, the pre-TEFRA inventory will be treated as the first inventory sold by the U.S. affiliate during the first year in which section 936(h) applies. If the U.S. affiliate uses the LIFO method of costing inventory (either dollar-value or specific goods LIFO), pre-TEFRA inventor will be treated as inventory sold by the U.S. affiliate in the year in which the U.S. afiliate's LIFO layer containing pre-TEFRA LIFO inventory is liquidated.

Q. 6: How are “possession sales” determined under the cost sharing formula if members of the affiliated group (other than the possessions corporation) include purchases of the possession product, X, in a dollar-value LIFO inventory pool (as provided under § 1.472-8)?

A. 6: Possession sales may be determined by applying the revenue identification method provided under paragraph (b)(1) Question and Answer 18 of this section.

Q. 7: Do possession sales include excise taxes paid by the possessions corporation when the product is sold for ultimate use or consumption in the possession?

A. 7: No. The amount of excise taxes is excluded from both the numerator and denominator of the cost sharing fraction.

Q. 8: How are “total sales” defined for purposes of the cost sharing fraction?

A. 8: The term “total sales” means aggregate sales or other dispositions of products in the same product area as the possession product, less returns and allowances and less indirect taxes imposed on the production of the product, for the taxable year to persons who are not members of the affiliated group. The sales price to be used is the sales price received by the affiliated group from persons who are not members of the affiliated group.

Q. 9: In computing that cost sharing payment, how are “total sales” computed if the dollar-value LIFO inventory pool includes some products which are not included in the product area (determined under the 3-digit SIC code) on which the denominator of the cost sharing fraction is based?

A. 9: In such case, the amount of the total sales within the product area to persons who are not members of the affiliated group by persons who are members of the affiliated group is determined by multiplying the total sales of the products within the dollar-value LIFO inventory pool by a fraction. The numerator of the fraction includes the dollar-value of purchases by members of the affiliated group (including the possessions corporation) of products within the product area made during the year, plus any added production costs (as defined in § 1.471-11(b), (c), and (d) but not including the costs of materials) incurred by the affiliates during the same period. The denominator of the fraction includes the dollar-value of purchases by members of the affiliated group (including the possessions corporation) of products within the dollar-value LIFO inventory pool made during the same period (including any production costs, as described above, incurred by the affiliate during the same period). For these purposes, purchases of a possession product are determined on the basis of the possessions corporation's cost for its inventory purposes.

Q. 10: May a possessions corporation compute its income under the cost sharing method with respect to a possession product which the possessions corporation sells to a member of its affiliated group and which that member then leases to an unrelated person or uses in its own trade or business?

A. 10: Yes, provided that an independent sales price for the possession product from comparable uncontrolled transactions can be determined in accordance with § 1.482-2(e)(2), and, provided further, that such member complies with the requirements of § 1.936-6(a)(2), question and answer 14. If, however, there is a comparable uncontrolled price for an integrated product and the possession product is a component product or end-product form thereof, the possessions corporation may, if such member complies with the requirements of § 1.936-6(a)(2), question and answer 14, compute its income under the cost sharing method with respect to such possession product. In that case, the cost sharing payment shall be computed under the following question and answer.

Q. 11: How are possession sales and total sales to be determined for purposes of computing the cost sharing payment with respect to a possession product which the possessions corporation sells to a member of its affiliated group where that member then leases the possession product to unrelated persons or uses it in its own trade or business?

A. 11: If the possessions corporation is entitled to compute its income from such sales of the possession product under the cost sharing method, both possession sales and total sales shall be determined as if the possession product had been sold by the affiliate to an unrelated person at the time the possession product was first leased or otherwise placed in service by the affiliate. The sales price on such deemed sale shall be equal to the independent sales price from comparable uncontrolled transactions determined in accordance with § 1.482-2(e)(2), if any. If the possession product is a component product or an end-product form for which there is no such independent sales price but there is a comparable uncontrolled price for the integrated product which includes the possession product, the deemed sales price of the possession product shall be computed under the rules of § 1.936-6(a)(2) question and answer 2. The full amount of income received under the lease shall be treated as income of (and taxed to) the affiliate and not the possessions corporation.

Q. 12: When may a possessions corporation take into account in computing total sales under the cost sharing method products in the same product area as the possession product (other than the possession product itself) where such products are leased by members of the affiliated group to unrelated persons or used by any such member in its own trade or business?

A. 12: For purposes of computing total sales under the cost sharing method, the possessions corporation may take into account products in the same product area as the possession product itself where such products are leased by members of the affiliated group to unrelated persons or used in the trade or business of any such member, but only if an independent sales price of such products from comparable uncontrolled transactions may be determined under § 1.482-2(e)(2). In such cases, the units of such products which are leased or otherwise used internally by members of the affiliated group may be treated as sold to unrelated persons for such independent sales price for purposes of computing total sales.

Q. 13: Assuming that a possessions corporation is entitled to compute its income under the cost sharing method with respect to sales of a possession product to affiliates in cases where those affiliates lease units of the possession product to unrelated persons or use them internally, is the possessions corporation's income from the possession product any different than if the affiliates had sold the product to unrelated parties?

A. 13: No.

Q. 14: If a possessions corporation sells units of a possession product to a member of its affiliated group and that affiliate then leases those units to an unrelated person or uses the units in its own trade or business, what requirements must the affilate meet in order for the possessions corporation to be entitled to the benefits of the cost sharing method with respect to such units?

A. 14:

(i) For taxable years of the possessions corporation beginning on or before June 13, 1986, the affiliate need not meet any special requirements in order for the possessions corporation to be entitled to the beneifts of the cost sharing method with respect to such units. Thus, the affiliate's basis in such units shall be equal to the transfer price used for computing the possessions corporation's gross income with respect to such units under section 936(h)(5)(C)(i)(II), and the income derived by the affiliate from such lease or internal use shall be reported by the affiliate when and to the extent actually derived. The affiliate shall not be deemed to have sold such units to an unrelated party at the time they were first leased or otherwise placed in service for any purpose other than the computation of possession sales and total sales. A similar rule applies to other products in the same product area as the possession product which are sold by any member in its own trade or business and which the possessions corporation takes into account in computing total sales under the cost sharing method.

(ii) For taxable years of the possessions corporations beginning after June 13, 1986, a possessions corporations will not be entitled to the benefits of the cost sharing method with respect to units of the possession product which the possessions corporation sells to an affiliate where the affiliate then leases such units to an unrelated person or uses them in its own trade or business, unless the affiliate agrees to be treated for all tax purposes as having sold such units to an unrelated party at the time they were first leased or otherwise placed in service by such affiliate. The affiliate must demonstrate such agreement by reporting its income from such units as if:

(A) It had sold such units to an unrelated person at such time at a price equal to the price used to compute possessions sales under § 1.936-6(a)(2), question and answer 11;

(B) It had immediately repurchased such units for the same price; and

(C) Its basis in such units for all subsequent purposes was equal to its cost basis from such deemed repurchase.

For treatment of other products in the same product area as the possession product see § 1.936-6(a)(2), question and answer 12.

(iii) The principles contained in questions and answers 11, 12, 13, and 14 are illustrated by the following example:

Example. Possessions corporation S and its affiliate A are calendar year taxpayers. In 1985, S manufactures 100 units of possession product X. S sells 50 units of X to unrelated persons in arm's length transactions for $10 per unit. In applying the cost sharing method to determine the portion of its gross income from such sales which qualifies for the possessions tax credit, S determines that $8 of the $10 sales price may be taken into account. S sells the remaining 50 units of X to A, and A then leases such units to unrelated persons. In 1985, A also manufacturers 100 units of product Y, the only other product in the same product area as X manufactured or sold by any member of the affiliated group. A manufactured the 100 units of Y at a cost of $15 per unit, sold 50 units of Y to unrelated persons in arm's length transactions for $20 per unit, and leased the remaining 50 units of Y to unrelated persons. S may compute its income under the cost sharing method with respect to the 50 units of X it sold to A because S can determine an independent sales price of X from comparable uncontrolled transactions under § 1.482-2(e)(2). For purposes of computing both possessions sales and total sales, the 50 units of X sold to A will be deemed to have been sold by A to an unrelated person for $10 per unit. The income of S qualifying for the possessions tax credit from the sale of those 50 units of X to A, and A's basis in those units, will both be determined using the $8 transfer price determined under section 936 (h)(5)(C)(i)(II). For purposes of computing total sales in the denominator of the cost sharing fraction, S may also take into account the 50 units of Y leased by A to unrelated persons, as if A had sold those units for $20 per unit. A's basis in those units of Y will continue to be its actual cost basis of $15 per unit.If all of the above transactions had occurred in 1987, S would be entitled to compute its income under the cost sharing method with respect to the 50 units of X it sold to A only if A agreed to be treated for all tax purposes as if it had sold such units for $10 per unit, realized income on such deemed sale of $2 per unit, repurchased such units immediately for $10 per unit, and then leased such units, which would then have a $10 per unit basis in A's hands. For purposes of computing total sales, S would be entitled to take into account the 50 units of X leased by A to unrelated persons as if A had sold such units for $20 per unit.

(3) ***Credits against cost sharing payments.***

Q. 1: Is the cost of product area research paid or accrued by the possessions corporation in a taxable year creditable against the cost sharing payment?

A. 1: Yes, if the cost of the product area research is paid or accrued solely by the possessions corporation. Thus, payments by the possessions corporation under cost sharing arrangements with, or royalties paid to, unrelated persons are so creditable. Amounts (such as royalties) paid directly or indirectly to, or on behalf of, related persons and amounts paid under any cost sharing agreements with related persons are not creditable against the cost sharing payment.

Q. 2: Do royalties or other payments made by an affiliate of the possessions corporation to another member of the affiliated group reduce the cost sharing payment if such royalties or other payments are based, in part, on activity of the possessions corporation?

A. 2: No. Payments made between affiliated corporations do not reduce the cost sharing payment. Thus, for example, if a possessions corporation sells a component to a foreign affiliate for incorporation by the foreign affiliate into an integrated product sold to unrelated persons, and the foreign affiliate pays a royalty to the U.S. parent of the possessions corporation based on the total value of the integrated product, the cost sharing payment of the possessions corporation is not reduced.

(4) ***Computation of cost sharing payment.***

Q. 1: S is a possessions corporation engaged in the manufacture and sale of four products (A, B, C, and D) all of which are classified under the same three-digit SIC code. S sells its production to a U.S. affiliate, P, which resells it to unrelated parties in the United States. P's third party sales of each of these products produced in whole or in part by S (computed as provided under paragraph (a)(2) of § 1.936-6) are $1 million or a total of $4 million for A, B, C, and D. P's other sales of products in the same SIC code are $3,000,000; and the defined worldwide product area research of the affiliated group is $350,000. How should S compute the cost sharing amount for products A, B, C, and D?

A. 1: The cost sharing amount is computed separately for each product on Schedule P of Form 5735. S should use the following formula for each of the products A, B, C, and D:

$$\frac{\text{Sales to unrelated persons of possession product}}{\text{Total sales of products in SIC code}} \times \text{Worldwide product area research}$$

$$\frac{\$1{,}000{,}000}{\$7{,}000{,}000} \times \$350{,}000 = \$50{,}000$$

Q. 2: The facts are the same as in question 1 except that S manufactures product D under a license from an unrelated person. S pays the unrelated party an annual license fee of $20,000. Thus, the worldwide product area research expense of the affiliated group is $370,000. How should the cost sharing payment be adjusted?

A. 2: The cost sharing fee should be reduced by the $20,000 license fee made as a direct annual payment to a third party on account of product D. The cost sharing payment with respect to product D in this example will be adjusted as follows:

$$\frac{\text{Sales to unrelated persons of possession product}}{\text{Total sales of products in SIC code}} \times \text{Worldwide product area research} - \text{Amount paid by the possessions corporation to an unrelated party}$$

$$\left(\frac{1{,}000{,}000}{\$7{,}000{,}000} \times \$370{,}000\right) - \$20{,}000 = \$32{,}857$$

Q. 3: The facts are the same as in question 1 except that S also manufactures and exports product E to a foreign affiliate, which resells it to unrelated persons for $1 million. S makes a separate election for its export sales. How should S compute the cost sharing amount for product E?

A. 3: The numerator of the cost sharing fraction is the aggregate sales or other dispositions by members of the affiliated group of the units of product E produced in whole or in part in the possession to persons who are not members of the affiliated group. The cost sharing amount for product E would be computed as follows:

$$\frac{\text{Export sales of E}}{\text{Total sales of products in SIC code (In this example, U.S. Sales of A, B, C, and D + export sales of E)}} \times \text{Worldwide product area research}$$

or

$$\frac{\$1{,}000{,}000}{(\$7{,}000{,}000 + \$1{,}000{,}000)} \times \$350{,}000 = \$43{,}750$$

Q. 4: The facts are the same as in question 1, except that S also receives $10,000 in royalty income from unrelated persons for the licensing of certain manufacturing intangible property rights. What is the amount of the product area research that must be allocated in determining the cost sharing amount?

A. 4: If the affiliated group receives royalty income from unrelated persons with respect to manufacturing intangibles in the same product area, then the product area research to be considered shall be first reduced by such royalty income. In this case, the amount of product area research to be used in determining S's cost sharing payment should be reduced by the $10,000 royalty payment received to $340,000.

Q. 5: May a possessions corporation redetermine the amount of its required cost sharing payment after filing its tax return?

A. 5: If after filing its tax return, a possessions corporation files an amended return, or if an adjustment is made on audit, either of which affects the amount of the cost sharing payment required, then a redetermination of the cost sharing payment must be made. See, however, section 936(h)(5)(C)(i)(III)(*a*) with respect to the increase in the cost sharing payment due to interest imposed under section 6601(a).

(5) ***Effect of election under the cost sharing method.***

Q. 1: What is the effect of the cost sharing method?

A. 1: The cost sharing payment reduces the amount of deductions (and the amount of reductions in earnings and profits) otherwise allowable to the U.S. affiliates (other than tax-exempt affiliates) within the affiliated group as determined under section 936(h)(5)(C)(i)(I)(*b*) which have incurred research expenditures (as defined in § 1.936-6(a)(1), question and answer (3) in the same product area for which the cost sharing option is elected, during the taxable year in which the cost sharing payment accrues. If there are no such U.S. affiliates, the reductions with respect to deductions and earnings and profits, as the case may be, are made with respect to foreign affiliates within the same affiliated group which have incurred product area research expenditures in such product area attributable to a U.S. trade or business. If there are no affiliates which have incurred research expenditures in such product area, the reductions are then made with respect to any other U.S. affiliate and, if there is no such U.S. affiliate, then to any other foreign affiliate. The allocations of these reductions in each case shall be made in proportion to the gross income of the affiliates. In the case of foreign affiliates, the allocation shall be made in proportion to gross income attributable to the U.S. trade or business or

worldwide gross income, as the case may be. With respect to each group above, the reduction of deductions shall be applied first to deductions under section 174, then to deductions under section 162, and finally to any other deductions on a pro rata basis.

Q. 2: For purposes of estimated tax payments, when is the cost sharing amount deemed to accrue?

A. 2: The cost sharing amount is deemed to accrue to the appropriate affiliate on the last day of the taxable year of each such affiliate in which or with which the taxable year of the possessions corporation ends.

Q. 3: If the cost sharing method is elected and the year of accrual of the cost sharing payment to the appropriate affiliate (described in question and answer 1 of this paragraph (a)(5)) differs from the year of actual payment by the possessions corporation, in what year are the deductions of the recipients reduced?

A. 3: In the year the cost sharing payment has accrued.

Q. 4: What is the treatment of income from intangibles under the cost sharing method?

A. 4: Under the cost sharing method, a possessions corporation is treated as the owner, for purposes of obtaining a return thereon, of manufacturing intangibles related to a possession product. The term “manufacturing intangible” means any patent, invention, formula, process, design, pattern, or know-how. The possessions corporation will not be treated as the owner, for purposes of obtaining a return thereon, of any manufacturing intangibles related to a component product produced by an affiliated corporation and transferred to the possessions corporation for incorporation into the possession product, except in the case that the possession product is treated as including such component product for all purposes of section 936(h)(5). Further, the possessions corporation will not be treated as the owner, for purposes of obtaining a return thereon, of any marketing intangibles except “covered intangibles.” (See § 1.936-6(c).)

Q. 5: If the cost sharing option is elected, is it necessary for the possessions corporation to be the legal owner of the manufacturing intangibles related to the possession product in order for the possessions corporation to receive a full return with respect to such intangibles?

A. 5: No. There is no requirement that manufacturing intangibles be owned by the possessions corporation.

Q. 6: How is income attributable to marketing intangibles treated under the cost sharing method?

A. 6: Except in the case of “covered intangibles” (see § 1.936-6(c)), the possessions corporation is not treated as the owner of any marketing intangibles, and income attributable to marketing intangible of the possessions corporation will be allocated to the possessions corporation's U.S. shareholders with the proration of income based on shareholdings. If a shareholder of the possessions corporation is a foreign, person or is otherwise tax exempt, the possessions corporation is taxable on that shareholder's pro rata amount of the intangible property income. If the possessions corporation is a corporation any class of the stock of which is regularly traded on an established securities market, then the income attributable to marketing intangibles will be taxable to the possessions corporation rather than the corporation's U.S. shareholders.

Q. 7: What is the source of the intangible property income described in question and answer 6?

A. 7: The intangible property income is U.S. source whether taxed to the U.S. shareholder or taxed to the possessions corporation and section 863 (b) does not apply for this purpose. However, such intangible property income, if treated as income of the possessions corporation, does not enter into the calculation of the 80-percent possession source test or the 65-percent active trade or business test.

Q.7a: What is the source of the taxpayer's gross income derived from a sale in the United States of a possession product purchased by the taxpayer (or an affiliate) from a corporation that has an election in effect under section 936, if the income from such sale is taken into account to determine benefits under cost sharing for the section 936 corporation? Is the result different if the taxpayer (or an affiliate) derives gross income from a sale in the United States of an integrated product incorporating a possession product purchased by the taxpayer (or an affiliate) from the section 936 corporation, if the taxpayer (or an affiliate) processes the possession product or an excluded component in the United States?

A.7a: Under either scenario, the income is U.S. source, without regard to whether the possession product is a component, end-product, or integrated product. Section 863 does not apply in determining the source of the taxpayer's income. This Q&A 7a is applicable for taxable years beginning on or after November 13, 1998.

Q. 8: May marketing intangible income, if any, be allocated to the possessions corporation with respect to custom-made products?

A. 8: No. If the cost sharing option is elected, then income attributable to marketing intangibles (other than “covered intangibles” described in § 1.936-6(c)) will be taxed as discussed in questions and answers 6 and 7 of paragraph (a)(5) of this section. It is immaterial whether the product is custom-made.

Q. 9: In order to sell a pharmaceutical product in the United States, a New Drug Application (“NDA”) for the product must be approved by the U.S. Food and Drug Administration. Is an NDA considered a manufacturing or marketing intangible for purposes of the allocation of income under the cost sharing method?

A. 9: A manufacturing intangible.

Q. 10: Can a copyright be, in whole or in part, a manufacturing intangible for purposes of the allocation of income under the cost sharing method?

A. 10: In general, a copyright is a marketing intangible. See section 936(h)(3)(B)(ii). However, copyrights may be treated either as manufacturing intangibles or nonmanufacturing intangibles (or as partly each) depending upon the function or the use of the copyright. If the copyright is used in manufacturing, it will be treated as a manufacturing intangible; but if it is used in marketing, even if it is also classified as know-how, it will be treated as a marketing intangible.

Q. 11: If the cost sharing option is elected and a patent is related to the product produced by the possessions corporation, does the return to the possessions corporation with respect to the manufacturing intangible include the make, use, and sell elements of the patent?

A. 11: Yes. A patent confers an exclusive right for 17 years to sell a product covered by the patent. During this period, the return to the possessions corporation includes the make, use and sell elements of the patent.

Q. 12: For purposes of the cost sharing option, may a safe haven rule be applied to determine the amount of marketing intangible income?

A. 12: No. The amount of marketing intangible income is determined on the basis of all relevant facts and circumstances. The section 482 regulations will continue to apply except to the extent modified by the election. Rev. Proc. 63-10 and Rev. Proc. 68-22 do not apply for this purpose.

Q. 13: If a product covered by the cost sharing election is sold by a possessions corporation to an affiliated corporation for resale to an unrelated party, may the resale price method under section 482 be used to determine the intercompany price of the possessions corporation?

A. 13: In general, the resale price method may be used if (a) no comparable uncontrolled price for the product exists, and (b) the affiliated corporation does not add a substantial amount of value to the product by manufacturing or by the provision of services which are reflected in the sales price of the product to the customer. The possessions corporation will not be denied use of the resale price method for purposes of such inter-company pricing merely because the reseller adds more than an insubstantial amount to the value of the product by the use of intangible property.

Q. 14: If a possessions corporation makes the cost sharing election and uses the cost-plus method under section 482 to determine the arm's-length price of a possession product, will the cost base include the cost of materials which are subject to processing or which are components in the possession product?

A. 14: A taxpayer may include the cost of materials in the cost base if it is appropriate under the regulations under § 1.482-2(e)(4).

Q. 15: If the possessions corporation computes its income with respect to a product under the cost sharing method, and the price of the product is determined under the cost-plus method under section 482, does the cost base used in computing cost-plus under section 482 include the amount of the cost sharing payment?

A. 15: The amount of the cost sharing payment is included in the cost base. However, no profit with respect to the cost sharing payment will be allowed.

Q. 16: If a member of the affiliated group transfers to a possessions corporation a component which is incorporated into a possession product, how will the transfer price for the component be determined?

A. 16: The transfer price for the component will be determined under section 482, and as follows. If the possession product is treated as not including such component for purposes of section 936(h)(5), the transfer price paid for the component will include a return on all intangibles related to the component product. If the possession product is treated as including such component for purposes of section 936(h)(5), then the transfer price paid for the component by the possessions corporation will not include a return on any manufacturing intangible related to the component product, and the possessions corporation will obtain the return on the manufacturing intangibles associated with the component.

Q. 17: If the possessions corporation computes its income with respect to a product under the cost sharing method, with respect to which units of the product shall the possessions corporation be treated as owning intangible property as a result of having made the cost sharing election?

A. 17: The possessions corporation shall not be treated as owning intangible property, as a result of having made the cost sharing election, with respect to any units of a possession product which were not taken into account by the possessions corporation in applying the significant business presence test for the current taxable year or for any prior taxable year in which the possessions corporation also had a significant business presence in the possession with respect to such product.

(b) ***Profit split option*** —

(1) ***Computation of combined taxable income.***

Q. 1: In determining combined taxable income from sales of a possession product, how are the allocations and apportionments of expenses, losses, and other deductions to be determined?

A. 1:

(i) Expenses, losses, and other deductions are to be allocated and apportioned on a "fully-loaded" basis under § 1.861-8 to the combined gross income of the possessions corporation and other members of the affiliated group (other than foreign affiliates). For purposes of the profit split option, the term "affiliated group" is defined the same as under § 1.936-6 (a)(1) question and answer 2. The amount of research, development, and experimental expenses allocated and apportioned to combined gross income is to be determined under § 1.861-8(e)(3). The amount of research, development and experimental expenses and related deductions (such as royalties paid or accrued with respect to manufacturing intangibles by the possessions corporation or other domestic members of the affiliated group to unrelated persons or to foreign affiliates) allocated and apportioned to combined gross income shall in no event be less than the amount of the cost sharing payment that would have been required under the rules set forth in section 936(h)(5)(C)(i)(II) and paragraph (a) of this section if the cost sharing option had been elected. Other expenses which are subject to § 1.861-8(e) are to be allocated and apportioned in accordance with that section. For example, interest expense (including payments made with respect to bonds issued by the Puerto Rican Industrial, Medical and Environmental Control Facilities Authority (AFICA)) is to be allocated and apportioned under § 1.861-8(e)(2). With the exception of marketing and distribution expenses discussed below, the other remaining expenses which are definitely related to a class of gross income shall be allocated to that class of gross income and shall be apportioned on the basis of any reasonable method, as described in § 1.861-8 (b)(3) and (c)(1). Examples of such methods may include, but are not limited to, those specified in § 1.861-8(c)(1)(i) through (vi).

(ii) The class of gross income to which marketing and distribution expenses relate and shall be allocated is generally to be defined by the same "product area" as is determined for the relevant research, development, and experimental expenses (*i.e.,* the appropriate 3-digit SIC code), but shall include only gross income generated or reasonably expected to be generated from the geographic area or areas to which the expenses relate. It shall be presumed that marketing and distribution expenses relate to all product sales within the same product area. If, however, it can be established that any of these expenses are separately identifiable expenses, such as advertising, and relate, directly or indirectly, solely to a specific product or a specific group of products, such expenses shall be allocated to the class of gross income defined by the specific product or group of products. Thus, advertising and other separately identifiable marketing expenses which

relate specifically and exclusively to a particular product must be allocated entirely to the gross income from that product, even though the taxpayer or other members of an affiliated group which includes the taxpayer produce and market other products in the same 3-digit SIC code classification. The mere display of a company logo or mention of a company name solely in the context of identifying the manufacturer shall not prevent an advertisement from relating specifically and exclusively to a particular product or group of products.

(iii) If marketing and distribution expenses are allocated to a class of gross income which consists both of income from sales of possession products (the statutory grouping) and other income such as from sale by U.S. affiliates of products not produced in the possession (the residual grouping), then these marketing and distribution expenses shall be apportioned on a "fully loaded" basis which reflects, to a reasonably close extent, the factual relationship between these deductions and the statutory and residual groupings of gross income. Apportionment methods based upon comparisons of amounts incurred before ultimate sale of a product (including apportionment on a comparison of costs of goods sold, other expenses incurred, or other comparisons set forth in § 1.861-8 (c)(1)(v), such as time spent) are not on a "fully-loaded" basis and do not reflect this required factual relationship. These deductions shall be apportioned on a basis of comparison of the amount of gross sales or receipts or another method if it is established that such method similarly reflects the required factual relationship. Thus, for example, a comparison of units sold may be used only where the units are of the same or similar value and are, thus, in fact comparable.

(iv) The rules for allocation and apportionment of marketing and distribution expenses may be illustrated by the following examples:

Example 1. Assume that possessions corporation A manufacturers prescription pharmaceutical product #1 for resale by P, its U.S. parent corporation, in the United States. Additionally, assume that P manufactures prescription pharmaceutical products #2 and #3 in the United States for sale there. Further, assume that all three products are within the same product area, and that marketing and distribution expenses are internally divided by P among the three products on the basis of time spent by sales persons of P on marketing of the three products, as follows:

Product #1	50X
Product #2	80X
Product #3	110X

Total	240X

These expenses of 240X are allocated to gross income generated by all three products and shall be apportioned on the basis of gross sales or receipts of product #1 as compared to products #2 and #3 or another method which similarly reflects the factual relationship between these expenses and gross income derived from product #1 and products #2 and #3. Thus, if a sales method were used and sales of product #1 accounted for one-third of sales receipts from the three products, 80X (240 ÷ 3) of marketing and distribution expenses would be apportioned to the combined gross income from product #1.

Example 2. Corporation B produces and sells Brand W whiskey, in the United States. B's subsidiary, S, which is a possessions corporation, produces soft drink extract in Puerto Rico which it sells to independent bottlers to produce Brand S soft drinks for sale in the United States. Corporation B's advertisements and other promotional materials for Brand W whiskey make no reference to Brand S soft drinks (or any other Corporation B products), and Brand S soft drink advertisements and other promotional materials make no reference to Brand W whiskey (or any other corporation B products). For purposes of section 936(h), the advertising and other promotional expenses for Brand W whiskey must be allocated entirely to the gross income from sales of Brand W whiskey and the advertising and other promotional expenses for Brand S soft drink must be allocated entirely to the gross income from the sales of soft drink extract, notwithstanding the fact that whiskey and soft drink extract are both included in SIC code 208. A similar result would apply, for example, to separately identifiable advertising and other marketing expenses which relate specifically and exclusively to one or the other of the following pairs of products: chewing gum and granulated sugar (SIC code 206); canned tuna fish and freeze-dried coffee (SIC code 209); children's underwear and ladies' brassieres (SIC code 234); aspirin tablets and prescription antibiotic tablets (SIC code 283); floor wax and perfume (SIC code 284); adhesives and inks (SIC code 289); semi-conductors and cathode-ray tubes (SIC code 367); batteries and extension cords (SIC code 369); bandages and dental supplies (SIC code 384); stainless steel flatware and jewelry parts (SIC code 391); children's toys and sporting goods (SIC code 394); hair curlers and zippers (SIC code 396); and paint brushes and linoleum tiles (SIC code 399).

Example 3. Assume the same facts as in Example 1 and that possessions corporation A also manufactures aspirin, a non-prescription product, for resale by its U.S. parent corporation, P. Further, assume that the advertising and separately identifiable marketing expenses which relate specifically and exclusively to aspirin sales total $100 and that these expenses are allocable solely to gross income derived from aspirin sales. The sales method continues to be used to apportion the marketing and distribution expenses related, directly or indirectly, to products #1, #2, and #3, and the apportionment of such expenses to product #1 for purposes of determining combined taxable income from product #1 will remain as stated in Example 1. None of the advertising and other

separately identifiable marketing expenses which relate specifically and exclusively to aspirin will be taken into account in allocating and apportioning the marketing and distribution expenses relating to the gross income attributable to products #1, #2, and #3. Gross income attributable to aspirin will be considered as a separate class of gross income, and all the advertising and separately identifiable marketing expenses which relate specifically and exclusively to aspirin sales of $100 will be allocated to the class of gross income derived from aspirin sales. Similarly, none of the marketing and distribution expenses, directly or indirectly, related solely to the group of products #1, #2, and #3 will be taken into account in determining the combined taxable income from aspirin sales. the remaining marketing and distribution expenses which do not, directly or indirectly, relate solely to any specific product or group of products (*e.g.,* the salaries of a Vice-President of Marketing who has responsibility for marketing all products and his staff) shall be allocated and apportioned on the basis of the gross receipts from the sales of all of the products (or a similar method) in determining combined taxable income of any product.

Q. 2: How may the allocation and apportionment of expenses to combined gross income be verified?

A. 2: Substantiation of the allocation and apportionment of expenses will be required upon audit of the possessions corporation and affiliates. Detailed substantiation may be necessary, particularly where the entities are engaged in multiple lines of business involving distinct product areas. Sources of substantiation may include certified financial reports. Form 10-K's, annual reports, internal production reports, product line assembly work papers, and other relevant materials. In this regard, *see* § 1.861-8(f)(5).

Q. 3: Does section 936(h) override the moratorium provided by section 223 of the Economic Recovery Tax Act of 1981 and any subsequent similar moratorium?

A. 3: Yes. Thus, the allocation and apportionment of product area research described in question and answer 1 must be made without regard to the moratorium.

Q. 4: Is the cost of samples treated as a marketing expense?

A. 4: Yes. The cost of producing samples will be treated as a marketing expense and not as inventoriable costs for purposes of determining combined taxable income (and compliance with the significant business presence test). However, for taxable years beginning prior to January 1, 1986, the cost of producing samples may be treated as either a marketing expense or as inventoriable costs.

Q. 5: If a possessions corporation uses the profit split method to determine its taxable income from sales of a product, how does it determine its gross income for purposes of the 80-percent possession source test and the 65-percent active trade or business test of section 936(a)(2)?

A. 5: One-half of the deductions of the affiliated group (other than foreign affiliates) which are used in determining the combined taxable income from sales of the product are added to the portion of the combined taxable income allocated to the possessions corporation in order to determine the possessions corporation's gross income from sales of such product.

Q. 6: How will income from intangibles related to a possession product be treated under the profit split method?

A. 6: Combined taxable income of the possessions corporation and affiliates from the sale of the possession product will include income attributable to all intangibles, including both manufacturing and marketing intangibles, associated with the product.

Q. 7: Can a possessions corporation apply the profit split option to a possession product if no U.S. affiliates derive income from the sale of the possession product?

A. 7: Yes.

Q. 8: With respect to the factual situation discussed in question and answer 7 how is combined taxable income computed?

A. 8: The profit split option is applied to the taxable income of the possessions corporation from sales of the possession product to foreign affiliates and unrelated persons. Fifty percent of that income is allocated to the possessions corporation, and the remainder is allocated to the appropriate affiliates as described in question and answer 13 of this paragraph (b)(1).

Q. 9: May a possessions corporation compute its income under the profit split method with respect to units of a possession product which it sells to a U.S. affiliate if the U.S. affiliate leases such units to unrelated persons or to foreign affiliates or uses such units in its own trade or business?

A. 9: Yes, provided that an independent sales price for the possession product from comparable uncontrolled transactions can be determined in accordance with § 1.482-2 (e)(2). If, however, there is a comparable uncontrolled price for an integrated product and the possession product is a component product or end-product form thereof, the possessions corporation may compute its income under the profit split method with respect to such units. In either case, the possessions corporation shall compute combined taxable income with respect to such units under the following question and answer.

Q. 10: If the possessions corporation is entitled to use the profit split method in the situation described in *Q. 9* (leasing units of the possession product or use of such units in the taxpayer's own trade or business), how should it compute combined taxable income with respect to such units?

A. 10:

(i) Combined taxable income shall be computed as if the U.S. affiliate had sold the units to an unrelated person (or to a foreign affiliate) at the time the units were first leased or otherwise placed in service by the U.S. affiliate. The sales price on such deemed sale shall be equal to the independent sales price from comparable uncontrolled transactions determined in accordance with § 1.482-2(e)(2), if any.

(ii) **If the possession product is a component product or an end-product form, the combined taxable income with respect to the possession product shall be determined under *Q&A. 12*** of this paragraph (b)(1).

(iii) **For purposes of determining the basis of a component product or an end-product form, the deemed sales price of such product must be determined. The deemed sales price of the component product shall be determined by multiplying the deemed sales price of the integrated product that includes the component product by a ratio, the numerator of which is the production costs of the component product and the denominator of which is the production costs of the integrated product that includes the component product. The**

deemed sales price of an end-product form shall be determined by multiplying the deemed sales price of the integrated product that includes the end-product form by a ratio, the numerator of which is the production costs of the end-product form and the denominator of which is the production costs of the integrated product that includes the end-product form. For the definition of production costs, see *Q&A. 12* of this paragraph (b)(1).

(iv)

(A) If combined taxable income is determined under paragraph (v) of *A. 12* of this paragraph (b)(1), in the case of a component product, the deemed sales price shall be determined by using the actual sales price of that product when sold as an integrated product (as adjusted under the rules of the fourth sentence of § 1.482-3(b)(2)(ii)(A)).

(B) If combined taxable income is determined under paragraph (v) of *A. 12* of this paragraph (b)(1), in the case of an end-product form, the deemed sales price shall be determined by subtracting from the deemed sales price of the integrated product that includes the end-product form (e.g., the leased property) the actual sales price of the excluded component when sold as an integrated product to an unrelated person (as adjusted under the rules of the fourth sentence of § 1.482-3(b)(2)(ii)(A)).

(v) The full amount of income received under the lease shall be treated as income of (and be taxed to) the U.S. affiliate and not the possessions corporation.

Q. 11: In the situation described in question 9, how does the U.S. affiliate determine its basis in such units for purposes of computing depreciation and similar items?

A. 11: **The U.S. affiliate shall be treated, for purposes of computing its basis in such units, as if it had repurchased such units immediately following the deemed sale and at the deemed sales price as provided in *Q&A. 10*** of this paragraph (b)(1).

The principles of questions and answers 10 and 11 are illustrated by the following example:

Example: Possessions corporation S manufactures 100 units of possession product X. S sells 50 units of X to an unrelated person in an arm's length transaction for $10 per unit. S sells the remaining 50 units to its U.S. affiliate, A, which leases such units to unrelated persons. The combined taxable income for the 100 units of X is computed below on the basis of the given production, sales, and cost data:

Sales:	
1. Total sales by S to unrelated persons (50 × $10)	$500
2. Total deemed sales by A to unrelated persons (50 × $10)	500
3. Total gross receipts (line 1 plus line 2)	1,000
Total costs:	
4. Material costs	200

5. Production costs	300
6. Research expenses	0
7. Other expenses	100
8. Total (add lines 4 through 7)	600
Combined taxable income attributable to the 100 units of X:	
9. Combined taxable income (line 3 minus line 8)	400
10. Share of combined taxable income apportioned to S (50% of line 9)	200
11. Share of combined taxable income apportioned to A (line 9 minus line 10)	200
A's basis in 50 units of X leased by it to unrelated persons:	
12. 50 units times $10 deemed repurchase price	500

Subsequent leasing income is entirely taxed to A.

Q. 12: If the possession product is a component product or an end-product form, how is the combined taxable income for such product to be determined?

A. 12:

(i) Except as provided in paragraph (v) of this *A. 12,* combined taxable income for a component product or an end-product form is computed under the production cost ratio (PCR) method.

(ii) Under the PCR method, the combined taxable income for a component product will be the same proportion of the combined taxable income for the integrated product that includes the component product that the production costs attributable to the component product bear to the total production costs (including costs incurred by the U.S. affiliates) for the integrated product that includes the component product. Production costs will be the sum of the direct and indirect production costs as defined under § 1.936-5(b)(4) except that the costs will not include any costs of materials. If the possession product is a component product that is transformed into an integrated product in whole or in part by a contract manufacturer outside of the possession, within the meaning of § 1.936-5(c), the denominator of the PCR shall be computed by including the same amount paid to the contract manufacturer, less the costs of materials of the contract manufacturer, as is taken into account for purposes of the significant business presence test under § 1.936-5(c) *Q&A. 5.*

(iii) Under the PCR method the combined taxable income for an end-product form will be the same proportion of the combined taxable income for the integrated product that includes the end-product form that the production costs attributable to the end-product form bear to the total production costs (including costs incurred by the U.S. affiliates) for the integrated product that includes the end-product form. Production costs will be the sum of the direct and indirect production costs as defined under § 1.936-5(b)(4) except that the costs will not include any costs of materials. If the possession product is an end-product form and an excluded component is contract manufactured outside of the possession, within the meaning of § 1.936-5(c), the denominator shall be computed by including the

same amount paid to the contract manufacturer, less cost of materials of the contract manufacturer, as is also taken into account for purposes of the significant business presence test under § 1.936-5(c) *Q&A. 5.*

(iv) This paragraph (iv) of *A. 12* illustrates the computation of combined taxable income for a component product or end-product form under the PCR method. S, a possessions corporation, is engaged in the manufacture of microprocessors. S obtains a component from a U.S. affiliate, O. S sells its production to another U.S. affiliate, P, which incorporates the microprocessors into central processing units (CPUs). P transfers the CPUs to a U.S. affiliate, Q, which incorporates the CPUs into computers for sale to unrelated persons. S chooses to define the possession product as the CPUs. The combined taxable income for the sale of the possession product on the basis of the given production, sales, and cost data is computed as follows:

Production costs (excluding costs of materials):	
1. O's costs for the component	100
2. S's costs for the microprocessors	500
3. P's costs for the CPUs (the possession product)	200
4. Q's costs for the computers	400
5. Total production costs for the computer (Add lines 1 through 4)	1,200
6. Combined production costs for the CPU (the possession product) (Add lines 1 through 3)	800
7. Ratio of production costs for the CPUs (the possession product) to the production costs for the computer	0.667
Determination of combined taxable income for computers:	
Sales:	
8. Total possession sales of computers to unrelated customers and foreign affiliates	7,500
Total costs of O, S, P, and Q incurred in production of a computer:	
9. Production costs (enter from line 5)	1,200
10. Material costs	100
11. Total costs (line 9 plus line 10)	1,300
12. Combined gross income from sale of computers (line 8 minus line 11)	6,200
Expenses of the affiliated group (other than foreign affiliates) allocable and apportionable to the computers or any component thereof under the rules of §§ 1.861-8 through 1.861-14T and 1.936-6 (b)(1), Q&A. 1:	
13. Expenses (other than research expenses)	980
Research expenses of the affiliated group allocable and apportionable to the computers:	
14. Total sales in the 3-digit SIC Code	12,500
15. Possession sales of the computers (enter from line 8)	7,500
16. Cost sharing fraction (divide line 15 by line 14)	0.6
17. Research expenses incurred by the affiliated group in 3-digit SIC Code multiplied by 120 percent	700
18. Cost sharing amount (multiply line 16 by line 17)	420
19. Research of the affiliated group (other than foreign affiliates) allocable and apportionable	300

under §§ 1.861-17 and 1.861-14T(e)(2) to the computers	
20. Enter the greater of line 18 or line 19	420
Computation of combined taxable income of the computer and the CPU:	
21. Combined taxable income attributable to the computer (line 12 minus line 13 and line 20)	4,800
22. Combined taxable income attributable to CPUs (multiply line 21 by line 7) (production cost ratio)	3,200
23. Share of combined taxable income apportioned to S (50 percent of line 22)	1,600
Share of combined taxable income apportioned to U.S. affiliate(s) of S:	
24. Adjustments for research expenses (line 18 minus line 19 multiplied by line 7)	80
25. Adjusted combined taxable income (line 22 plus line 24)	3,280
26. Share of combined taxable income apportioned to affiliates of S (line 25 minus line 23)	1,680

(v)

(A) If a possession product is sold by a taxpayer or its affiliate to unrelated persons in covered sales both as an integrated product and as a component product and the conditions of paragraph (v)(C) of this *A. 12* are satisfied, the taxpayer may elect to determine the combined taxable income derived from covered sales of the component product under this paragraph (v). In that case, the combined taxable income derived from covered sales of the component product shall be determined by using the same per unit combined taxable income as is derived from covered sales of the product as an integrated product, but subject to the limitation of paragraph (v)(D) of this *A. 12.*

(B) In the case of a possession product that is an end-product form, if all of the excluded components are also separately sold by the taxpayer or its affiliate to unrelated persons in uncontrolled transactions and the conditions of paragraph (v)(C) of this *A. 12* are satisfied, the taxpayer may elect to determine the combined taxable income of such end-product form under this paragraph (v). In that case, the combined taxable income derived from covered sales of the end-product form shall be determined by reducing the per unit combined taxable income from the integrated product that includes the end-product form by the per unit combined taxable income for excluded components determined under the rules of this paragraph (v), but subject to the limitation of paragraph (v)(D) of this *A. 12.* For this purpose, combined taxable income of the excluded components must be determined under section 936 as if the excluded components were possession products.

(C) In the case of component products, this paragraph (v) applies only if the sales price of the possession product sold in covered sales as an integrated product (i.e., in uncontrolled transactions) would be the most direct and reliable measure of an arm's length price within the meaning of the fourth sentence of § 1.482-3(b)(2)(ii)(A) for the component product. For purposes of applying the fourth sentence of § 1.482-3(b)(2)(ii)(A), the sale of the integrated product that includes the component product is treated as being immediately preceded by a sale of the component (i.e. without further processing) in a controlled transaction. In the case of end-product

forms, this paragraph (v) applies only if the sales price of excluded components separately sold in uncontrolled transactions would be the most direct and reliable measure of an arm's length price within the meaning of the fourth sentence of § 1.482-3(b)(2)(ii)(A) for all excluded components of an integrated product that includes an end-product form. For purposes of applying the fourth sentence of § 1.482-3(b)(2)(ii)(A), the sale of the integrated product that includes excluded components is treated as being immediately preceded by a sale of the excluded components (i.e. without further processing) in a controlled transaction. Under the fourth sentence of § 1.482-3(b)(2)(ii)(A), the uncontrolled transactions referred to in this paragraph (v)(C) must have no differences with the controlled transactions that would affect price, or have only minor differences that have a definite and reasonably ascertainable effect on price and for which appropriate adjustments are made (resulting in appropriate adjustments to the computation of combined taxable income). If such adjustments cannot be made, or if there are more than minor differences between the controlled and uncontrolled transactions, the method provided by this paragraph (v)(C) cannot be used. Thus, for example, these uncontrolled transactions must involve substantially identical property in the same or a substantially identical geographic market, and must be substantially identical to the controlled transaction in terms of their volumes, contractual terms, and market level. See § 1.482-3(b)(2)(ii)(B).

(D) In no case can the per unit combined taxable income as determined under paragraph (v)(A) or (B) of this *A. 12* be greater than the per unit combined taxable income of the integrated product that includes the component product or end-product form.

(E) The provisions of this paragraph (v) are illustrated by the following example. Taxpayer manufactures product A in a U.S. possession. Some portion of product A is sold to unrelated persons as an integrated product and the remainder is sold to related persons for transformation into product AB. The combined taxable income of integrated product A is $400 per unit and the combined taxable income of product AB is $300 per unit. The production cost ratio with respect to product A when sold as a component of product AB, is 2/3. Unless the taxpayer elects and satisfies the conditions of this paragraph (v), the combined taxable income with respect to A will be $200 per unit (combined taxable income for AB of $300 × the production cost ratio of 2/3). If, however, the comparability standards of paragraph (v)(C) of this *A. 12* are met, the taxpayer may elect to determine combined taxable income of product A when sold as a component of product AB using the same per unit combined taxable income as product A when sold as an integrated product. However, the per unit combined taxable income from sales of product A as a component product may not exceed the per unit combined taxable income on the sale of product AB. Therefore, the combined taxable income of component product A may not exceed $300 per unit.

(vi) Taxpayers that have not elected the percentage limitation under section 936(a)(1) for the first taxable year beginning after December 31, 1993, may do so if the taxpayer has elected the profit split method and computation of combined taxable income is affected by *Q&A.12* of this paragraph (b)(1).

(vii) **The rules of *Q&A. 12*** of this paragraph (b)(1) apply for taxable years ending after June 9, 1996. If, however, the election under paragraph (v) of *A. 12* of § 1.936-6(b)(1) is made, this election must be made for the taxpayer's first taxable year beginning after December 31, 1993, and if not made effective for that year, the election cannot be made for any later taxable year. A successor corporation that makes the same or substantially similar products as its predecessor corporation cannot make an election under paragraph (v) of A.12 of § 1.936-6(b)(1) unless the election was made by its predecessor corporation for its first taxable year beginning after December 31, 1993.

Q. 13: If the profit split option is elected, how is the portion of combined taxable income not allocated to the possessions corporation to be treated?

A. 13:

(i) The income shall be allocated to affiliates in the following order, but no allocations will be made to affiliates described in a later category if there are any affiliates in a prior category—

(A) First, to U.S. affiliates (other than tax exempt affiliates) within the group (as determined under section 482) that derive income with respect to the product produced in whole or in part in the possession;

(B) Second, to U.S. affiliates (other than tax exempt affiliates) that derive income from the active conduct of a trade or business in the same product area as the possession product;

(C) Third, to other U.S. affiliates (other than tax-exempt affiliates);

(D) Fourth, to foreign affiliates that derive income from the active conduct of a U.S. trade or business in the same product area as the possession product (or, if the foreign members are resident in a country with which the U.S. has an income tax convention, then to those foreign members that have a permanent establishment in the United States that derives income in the same product area as the possession product); and

(E) Fifth, to all other affiliates.

(ii) The allocations made under paragraph (i)(A) of this *A. 13* shall be made on the basis of the relative gross income derived by each such affiliate with respect to the product produced in whole or in part in the possession. For this purpose, gross income must be determined consistently for each affiliate and consistently from year to year.

(iii) The allocations made under paragraphs (i)(B) and (i)(D) of this *A. 13* shall be made on the basis of the relative gross income derived by each such affiliate from the active conduct of the trade or business in the same product area.

(iv) The allocations made under paragraphs (i)(C) and (i)(E) of this *A. 13* shall be made on the basis of the relative total gross income of each such affiliate before allocating income under this section.

(v) Income allocated to affiliates shall be treated as U.S. source and section 863(b) does not apply for this purpose.

(vi) For purposes of determining an affiliate's estimated tax liability for income thus allocated for taxable years beginning prior to January 1, 1995, the income shall be deemed to be received on the last day of the taxable year of each such affiliate in which or with which the taxable year of the possessions corporation ends. For taxable years beginning after December 31, 1994, quarterly estimated tax payments will be required as provided under section 711 of the Uruguay Round Agreements, Public Law 103-465 (1994), page 230, and any administrative guidance issued by the Internal Revenue Service thereunder.

Q. 14: What is the source of the portion of combined taxable income allocated to the possessions corporation?

A. 14: Income allocated to the possessions corporation shall be treated as possession source income and as derived from the active conduct of a trade or business within the possession.

Q. 15: How is the profit split option to be applied to properly account for costs incurred in a year with respect to products which are sold by the possessions corporation to a U.S. affiliate during such year, but are not resold by the U.S. affiliate to persons who are not members of the affiliated group or to foreign affiliates until a later year?

A. 15: The rules under § 1.994-1(c)(5) are to be applied. Incomplete transactions will not be taken into consideration in computing combined taxable income. Thus, for example, if in 1983, A, a possessions corporation, sells units of a product with a cost to A of $5000 to B corporation, its U.S. affiliate, which use the dollar-value LIFO method of costing inventory, and B sells units with a cost of $4000 (representing A's cost) to C corporation, a foreign affiliate, only $4000 of such costs shall be taken into consideration in computing the combined taxable income of the possessions corporation and U.S. affiliates for 1983. If a specific goods LIFO inventory method is used by B, the determination of whether A's goods remain in B's inventory shall be based on whether B's specific goods LIFO grouping has experienced an increment or decrement for the year on the specific LIFO cost of such units, rather than on an average unit cost of such units. If the FIFO method of costing inventory is used by B, transfers may be based on the cost of the specific units transferred or on the average unit production cost of the units transferred, but in each case a FIFO flow assumption shall be used to identify the units transferred. For a determination of which goods are sold by taxpayers using the LIFO method, see question and answer 19.

Q. 16: If a possessions corporation purchases materials from an affiliate and computes combined taxable income for a possession product which includes such materials, how are those materials to be treated in the possessions corporation's inventory?

A. 16: The cost of those materials is considered to be equal to the affiliate's cost using the affiliate's method of costing inventory.

Q. 17: If the possessions corporation uses the FIFO method of costing inventory and the U.S. affiliate uses the LIFO method of costing inventory, or *vice versa,* what method of costing inventory should be used in computing combined taxable income?

A. 17: The transferor corporation's method of costing inventory determines the cost of inventory for purposes of combined taxable income while the transferee corporation's method of costing inventory determines the flow. Assume, for example, that X corporation, a possessions corporation, using the FIFO method of costing inventory purchases materials from Y corporation, U.S. affiliate, also using the FIFO method. X corporation produces a product which it transfers to Z corporation, another U.S. affiliate using the LIFO method. Assume also that the

final product satisfies the significant business presence test. Under the facts, the cost of the materials purchased by X from Y is Y's FIFO cost. The costs of the inventory transferred by X to Z are determined under X's FIFO method of accounting as is the flow of the inventory from X to Z. The costs added by Z are determined under Z's LIFO method of inventory, as is the flow of the inventory from Z to unrelated persons or foreign affiliates.

Q. 18: How are the costs of a possession product and the revenues derived from the sale of a possession product determined if the U.S. affiliate includes purchases of the possessions product in a dollar-value LIFO inventory pool (as provided under § 1.472-8)?

A. 18: The following method will be accepted in determining the revenues derived from the sale of a possession product and the costs of a possession product if the U.S. affiliate includes purchases of the possession product in a dollar-value LIFO inventory pool. The rules apply solely for the cost sharing and profit split options under section 936(h).

(i) ***Revenue identification.*** The identification of revenues derived from sales of a possession product must generally be made on a specific identification basis. The particular method employed by a taxpayer for valuing its inventory will have no impact on the determination of what units are sold or how much revenue is derived from such sales. Thus, if a U.S. affiliate sells both item A (a possession product) and item B (a non-possession product), the actual sales revenues received by the U.S. affiliate from item A sales would constitute possession product revenue for purposes of the profit split option and possession sales for purposes of the cost sharing option regardless of whether the U.S. affiliate values its inventories on the FIFO or the LIFO method. In instances where sales of item A (*i.e.,* the possession product) cannot be determined by use of specific identification (for example, in cases where items A and B are identical except that one is produced in the possession (item A) and the other (item B) is produced outside of the possession and it is not possible to segregate these items in the hands of the U.S. affiliate), it will be necessary to identify the portion of the combined sales of items A and B (which together can be identified on a specific identification basis) which is attributed to item A sales and the portion which is attributed to item B sales. The determination of the portion of aggregated sales attributable to item A and item B is independent of the LIFO method used to determine the cost of such sales and may be made under the following approach. A taxpayer may, for purposes of this section of the regulations, use the relative purchases (in units) of items A and B by the U.S. affiliate during the taxable year (or other appropriate measuring period such as the period during the taxable year used to determine current-year costs, *i.e.,* earliest acquisitions period, latest acquisitions period, etc.) in determining the ratio to apply against the combined items A and B sales revenue. If the sales exceed current purchases, the taxpayer can use a FIFO unit approach which identifies actual unit sales on a first-in, first-out basis. Revenue determination where specific identification is not possible is illustrated by the following example:

> *Example.* At the end of year 1, there are 600 units of combined items A and B which are to be allocated between A and B on the basis of annual purchases of A and B units during year 1. During year 1, 1,000 units of item A, a possession product, and 2,000 units of item B, a non-possession product, were purchased. Thus, the 600 units in year 1 ending inventory are allocated 200 (i.e. $^{1}/_{3}$) to item A

units and 400 (i.e. $^{2}/_{3}$) to item B units based on the relative purchases of A (1,000) and B (2,000) in year 1. These units appear as beginning inventory in year 2.
In year 2, 1,500 units of item A are purchased and 1,500 units of item B are purchased. However, 3,300 units of items A and B in the aggregate are sold for $600,000. The relative proportion of the $600,000 attributable to item A and to item B sales would be determined as follows:

Year 2 sales	Item A	Item B
Unit sales from opening inventory	200	400
Unit sale from current-year purchases	1,350	1,350
Total unit sales (3,300)	1,550	1,750
Percentage	47	53

Revenues from Item A sales ..... 281,818 $\left\{\$600{,}000 \times \frac{1550}{3300}\right\}$

Revenues from Item B sales ..... $318,182 $\left\{\$600{,}000 \times \frac{1750}{3300}\right\}$

Year 2 Closing Inventory	Units
Item A	150
Item B	150

Thus, revenues from Item A sales for purposes of computing possession sales for the cost sharing option and revenues for the profit split option are $281,818.

(ii) ***Cost identification.*** The determination of the cost of possession product sales by the U.S. affiliate must be based on the LIFO inventory method of the U.S. affiliate. The LIFO cost of possession product sales will, for purposes of this section of the regulations, be determined by maintaining a separate LIFO cost for possession products in a taxpayer's opening and closing LIFO inventory and using this cost to calculate an independent cost of possession product sales. This separate LIFO cost for possession products in the LIFO pool of a taxpayer is to be determined as follows:

(A) Determine the base-year cost of possession products in ending inventory in a LIFO pool.

(B) Determine the percentage of the base-year cost of possession products in the pool as compared to the total base-year cost of all items in the pool.

(C) Multiply the percentage determined in step (B) of this subdivision (ii) by the ending LIFO inventory value of the pool to determine the deemed LIFO cost attributable to possession products in the pool.

(D) Subtract the LIFO cost of possession products in ending inventory in the pool (as calculated in step (C) of this subdivision (ii)) from the sum of:

(1) Possession product purchases for the year, plus

(2) The portion of the opening LIFO inventory value of the pool attributed to possession products (*i.e.,* the result obtained in step (C) of this subdivision (ii) for the prior year).

The number determined by this calculation is the LIFO cost of possession product sales from the taxpayer's LIFO pool.

Example: Assume that item A is a possession product and item B is a non-possession product and also assume the inventory and purchases with respect to the LIFO pool as provided below:

YEAR 1—ENDING INVENTORY

	No. of units	Base-year cost/ unit	Base-year cost	Percent
Item A	100	$2.00	$200	20
Item B	200	4.00	800	80

YEAR 1—LIFO VALUE

	Base-year cost	Index	LIFO cost
Increment layer 2	$300	3.0	$900
Increment layer 1	400	2.0	800
Base layer	300	1.0	300

	Base-year cost	Index	LIFO cost
Pool total	$1,000		$2,000

Year 1—LIFO Value Per Item

	Base-year cost	LIFO value
Total pool	$1,000	$2,000
Item A	200	400
Item B	800	1,600

Year 2—Purchases

	Total purchases
Item A	$6,000
Item B	4,000

Year 2—Ending Inventory

	No. of units	Base-year cost/ unit	Base-year cost	Percent
Item A	200	$2.00	$400	50
Item	100	4.00	400	50

	No. of units	Base-year cost/ unit	Base-year cost	Percent
B				

YEAR 2—LIFO VALUE

	Base-year cost	Index	LIFO cost
Increment layer 2	$100	3.0	$300
Increment layer 1	400	2.0	800
Base layer	$300	1.0	300
Pool total	800		1,400

The year 2 LIFO cost of possession product A sales will be calculated as follows:

(1) Base-year cost of item in year 2 ending inventory = $400

(2) Percentage of item A base-year cost to total base-year cost ($400 ÷ $800) = 50%

(3) LIFO value of item A ($1,400 × 50%) = $700

(4) LIFO cost of item A sales is determined by adding to the beginning inventory in year 2 the purchases of item A in year 2 and subtracting from this amount the ending inventory in year 2 ($400 + $6000 − $700 = $5700). The beginning inventory in year 2 is determined by multiplying the LIFO cost of the year 1 ending inventory by a percentage of item A base year cost to the total base-year cost in year 1. The ending inventory in year 2 is determined under (3) above.

Q. 19: If a possession product is purchased from a possessions corporation by a U.S. affiliate using the dollar-value LIFO method of costing its inventory and is included in a LIFO pool of the U.S. affiliate which includes products purchased from the possessions corporation in pre-TEFRA years, how should the LIFO index computation of the U.S. affiliate be made in the first year in which section 936(h) applies and in subsequent taxable years?

A. 19: The U.S. affiliate should treat the first taxable year for which section 936(h) applies as a new base year in accordance with procedures provided by regulations under section 472. Thus, the opening inventory for the first year for which section 936(h) applies (valuing possession products purchased from the possessions corporation on the basis of the cost of such possession products), would equal the new base year cost of the inventory of such pool of the U.S. affiliate. Increments and decrements at new base year cost would be valued for LIFO purposes pursuant to the procedures provided by regulations under section 472.

Q. 20: If the possessions corporation computes its income with respect to a product under the profit split method, with respect to which units of the product shall the profit split method apply?

A. 20: The profit split method shall apply to units of the possession product produced in whole or in part by the possessions corporation in the possession and sold during the taxable year by members of the affiliated group (other than foreign affiliates) to unrelated parties or to foreign affiliates. In no event shall the profit split method apply to units of the product which were not taken into account by the possessions corporation in applying the significant business presence test for the current taxable year or for any prior taxable year in which the possessions corporation also had a significant business presence in the possession with respect to such product.

(2) ***Pre-TEFRA inventory.***

Q. 1: How is pre-TEFRA inventory to be determined if the profit split option is elected and the FIFO method of costing inventory is used by the U.S. affiliate?

A. 1: Pre-TEFRA inventory is inventory which was produced by the possessions corporation and transferred to a U.S. affiliate prior to the possessions corporation's first taxable year beginning after December 31, 1982. Pre-TEFRA inventory will not be included for purposes of the profit split option. If the U.S. affiliate uses the FIFO method of costing inventory, the pre-TEFRA inventory will be treated as the first inventory sold by the U.S. affiliate during the first year in which section 936(h) applies and will not be included in the computation of combined taxable income for purposes of the profit split option. The treatment of pre-TEFRA inventory when FIFO costing is used by both the U.S. affiliate and the possessions corporation is illustrated by the following example in which FIFO unit costing is used:

Example. Assume the following:

	X		Y	
	Possessions corporation		U.S. affiliate	
	Number of units	Cost per unit	Number of units	Cost per unit
Beginning inventory	500	$150	200	$225
Units produced during 1983	1,000	200		
Ending inventory	400	200	300	

In 1983, the beginning inventory of X, a possessions corporation, is 500 units with a unit cost of $150 and the beginning inventory of Y, the U.S. affiliate, is 200 units with a unit cost of $225, which represents the section 482 price paid by Y. Y's beginning inventory in 1983 represents purchases made in 1982 of products produced by X in that year. Y sells all the units it purchases from X to Z, a foreign affiliate. In 1983, X produces 1000 units at a unit cost of $200 and sells 1100 units to Y (the difference between 1500 units,

representing X's 1983 beginning inventory (500) and the units produced by X in 1983 (1000), and X's ending inventory of 400 units). Of the 1100 units sold by X to Y in 1983 only 800 units (and not 1000 units) which were sold by Y to Z are taken into consideration in computing combined taxable income for 1983. Since FIFO costing by the possessions corporation is used, the cost is $150 per unit for the first 500 units and $200 per unit for the remaining 300 units. The 200 units sold by X to Y in 1982 are pre-TEFRA inventory and are not included in the computation of combined taxable income for 1983. They are also treated as the first units sold by Y to Z in 1983. This inventory has a unit cost of $225, which reflects the section 482 transfer price from X to Y in 1982. Y's 1983 ending inventory of 300 units will not be taken into consideration in computing the combined taxable income of X and Y for 1983 because the units have not been sold to a foreign affiliate or to persons who are not members of the affiliated group. In a subsequent year when the units are sold to Z, the cost to X and selling price to Z of these units will enter into the computation of combined taxable income for that year.

(c) ***Covered Intangibles.***

Q. 1: What are “covered intangibles” under section 936(h)(5)(C)(i)(II)?

A. 1: The term “covered intangibles” means

(1) intangible property developed in a possession solely by the possessions corporation and owned by it,

(2) manufacturing intangible property (described in section 936(h)(3)(B)(i)) which is acquired by the possessions corporation from unrelated persons, and

(3) any other intangible property (described in section 936(h)(3)(B) (ii) through (v), to the extent not described in section 936(h)(3)(B)(i)) which relates to sales of products or services to unrelated persons for ultimate consumption or use in the possession in which the possessions corporation conducts its business. The possessions corporation is treated as the owner of covered intangibles for purposes of obtaining a return thereon.

Q. 2: Do covered intangibles include manufacturing intangible property which is acquired by an affiliate and subsequently transferred to the possessions corporation?

A. 2: No. In order for a manufacturing intangible to be treated as a covered intangible, the intangible property must be acquired directly by the possessions corporation from an unrelated person unless the manufacturing intangible was acquired by an affiliate from an unrelated person and was transferred to the possessions corporation by the affiliate prior to September 3, 1982.

Q. 3: If a possessions corporation licenses a manufacturing intangible from an unrelated party, will the licensed intangible be treated as a covered intangible?

A. 3: No.

Q. 4: How is ultimate consumption or use determined for purposes of the definition of covered intangibles?

A. 4: A product will be treated as having its ultimate use or consumption in a possession if it is sold by the possessions corporation to a related or unrelated person in a possession and is not resold or used or consumed outside of the possession within one year after the date of the sale.

Q. 5: Are sales of products that relate to covered intangibles excluded from the cost sharing fraction?

A. 5: If no manufacturing intangibles other than covered intangibles are associated with the possession product, then sales of such product will be excluded from the cost sharing fraction. If both covered and non-covered manufacturing intangibles are associated with the possession product, then sales of such product will be included in the cost sharing fraction.

Q. 6: If the cost sharing option is elected, is it necessary for the possessions corporation to be the legal owner of covered intangibles described in section 936(h)(5)(C)(i)(II)(*c*) related to the product in order for the possessions corporation to receive a full return with respect to such intangibles?

A. 6: No. For purposes of section 936(h), it is immaterial whether such covered intangibles are owned by the possessions corporation or by another member of the affiliated group. Moreover, if the legal owner of such covered intangibles which are subject to section 936(h)(5) is an affiliate of the possessions corporation, such person will not be required to charge an arm's-length royalty under section 482 to the possessions corporation.

[T.D. 8090, 51 FR 21532, June 13, 1986; 51 FR 27174, July 30, 1986, as amended by T.D. 8669, 61 FR 21367, May 10, 1996; 61 FR 39072, July 26, 1996; T.D. 8786, 63 FR 55025, Oct. 14, 1998]

§ 1.936-7 Manner of making election under section 936 (h)(5); special election for export sales; revocation of election under section 936(a).

(a) The rules in this section apply for purposes of section 936(h) and also for purposes of section 934(e), where applicable.

(b) ***Manner of making election.***

Q. 1: How does a possessions corporation make an election to use the cost sharing method or profit split method?

A. 1: A possessions corporation makes an election to use the cost sharing or profit split method by filing Form 5712-A ("Election and Verification of the Cost Sharing or Profit Split Method Under Section 936(h)(5)") and attaching it to its tax return. Form 5712-A must be filed on or before the due date (including extensions) of the tax return of the possessions corporation for its first taxable year beginning after December 31, 1982. The electing corporation must set forth on the form the name and the taxpayer identification number or address of all members of the affiliated group (including foreign affiliates not required to file a U.S. tax return). All members of the affiliated group must consent to the election. For elections filed with respect to taxable years beginning before January 1, 2003, an authorized officer of the electing corporation must sign the statement of election and must declare that he has received a signed statement of consent from an authorized officer, director, or other appropriate official of each member of the affiliated group. Elections filed for taxable years beginning after December 31, 2002, must incorporate a declaration by the electing corporation that it has received a signed consent from an authorized officer, director, or other appropriate official of each member of the affiliated group and will be verified by signing the return. The election is not valid for a taxable year unless all affiliates consent. A failure to obtain an affiliate's written consent will not invalidate the election out if the possessions corporation made a good faith effort to obtain

all the necessary consents or the failure to obtain the missing consent was inadvertent. Subsequently created or acquired affiliates are bound by the election. If an election out is revoked under section 936(h)(5)(F)(iii), a new election out with respect to that product area cannot be made without the consent of the Commissioner. The possessions corporation shall file an amended Form 5712-A with its timely filed (including extensions) income tax return to reflect any changes in the names or number of the members of the affiliated group for any taxable year after the first taxable year to which the election out applies. By consenting to the election out, all affiliates agree to provide information necessary to compute the cost sharing payment under the cost sharing method or combined taxable income under the profit split method, and failure to provide such information shall be treated as a request to revoke the election out under section 936(h)(5)(F)(iii).

Q. 2: May the "election out" under section 936(h)(5) be made on a product-by-product basis, or must it be made on a wide basis?

A. 2: An electing corporation is required to treat products in the same product area in the same manner. Similarly, all possessions corporations in the same affiliated group that produce any products or render any services in the same product area must make the same election for all products that fall within the same product area. However, § 1.936-7(b) provides that the electing corporation may make a different election for export sales than for domestic sales. The electing corporation or corporations may also make different elections for products that fall within different product areas.

Q. 3: May the possessions corporation elect to define product area more narrowly than the 3-digit SIC code?

A. 3: No. Certain alternatives, such as the 4-digit SIC code, would not be permitted under the statute. However, other methods for defining product area may be considered by the Commissioner in the future.

Q. 4: May a possessions corporation make an election out under the cost sharing method with respect to a product area if the affiliated group incurs no research, development or experimental costs in the product area?

A. 4: Yes. In that case the cost sharing payment will be zero.

Q. 5: If the significant business presence test is not satisfied for a product or type of service within the product area covered by the election out under section 936(h)(5) what rules will apply with respect to that product?

A. 5: With respect to the product which does not satisfy the significant business presence test, the provisions of section 936 (h)(1) through (h)(4) will apply to the allocation of income. However, if a cost sharing or a profit split election has been made with respect to the product area, the cost sharing payment or the research and development floor under section 936(h)(5)(C)(ii)(II) will not be reduced.

Q. 6: Is a taxpayer permitted to make a change of election with respect to the cost sharing and profit split methods?

A. 6: In general, once the election is properly made, it is binding for the first year in which it applies and all subsequent years (including upon any later created or acquired affiliates), and revocation is only permitted with the consent of the Commissioner of Internal Revenue. However, a taxpayer will be permitted to change its election once from the cost sharing method to the profit split method or *vice versa,* or from the method permitted under section 936 (h)(1) through (h)(4) to cost sharing or profit

split or *vice versa,* without the consent of the Commissioner if the change is made on the taxpayer's return for its first taxable year ending after June 13, 1986. Such change will apply to such taxable year and all subsequent taxable years, and, at the taxpayer's option, may also apply to all prior taxable years for which section 936(h) was in effect. A change of election will be treated as an election subject to the procedures set forth above and to section 481 of the Internal Revenue Code.

Q. 7: If the Commissioner determines that a possessions corporation does not meet the 80-percent possession source test or the 65-percent active trade or business test (the "qualification tests") for any taxable year beginning after 1982, under what circumstances is the possessions corporation permitted to make a distribution of property after the close of its taxable year to meet the qualification tests?

A. 7: A possessions corporation may make a pro rata distribution of property to its shareholders after the close of the taxable year if the Commissioner determines that the possessions corporation does not satisfy the qualification tests (a) by reason of the exclusion from gross income of intangible income under section 936(h)(1)(B) or section 936(h)(5)(C)(i)(II) or (b) by reason of the allocation to the shareholders of the possessions corporation of income under section 936(h)(5)(C)(ii)(III); provided, however, that the determination of the Commissioner does not contain a finding that the failure of such corporation to satisfy the qualification tests was due, in whole or in part, to fraud with intent to evade tax or willful neglect on the part of the possessions corporation. The possessions corporation must designate the distribution at the time the distribution is made as a distribution to meet qualification requirements, and it will be subject to the provisions of section 936(h)(4). Such distributions will not qualify for the dividends received deduction.

Q. 8: If a possessions corporation owns stock in a subsidiary possessions corporation, any intangible property income allocated to the parent possessions corporation under section 936(h) will be treated as U.S. source income and taxable to the parent possessions corporation. Is the intangible property income taken into consideration in determining whether the parent possessions corporation meets the income tests of section 936(a)(2)?

A. 8: While taxable to the parent possessions corporation, the intangible property income does not enter into the calculation of the 80-percent possession source test or the 65-percent active trade or business test of section 936(a)(2)(A) and (B). This would also be the case if the subsidiary possessions corporation made a qualifying distribution under section 936(h)(4).

(c) ***Separate election for export sales.***

Q. 1: What methods of computing income can a possessions corporation use under the separate election for export sales?

A. 1: The only two methods which are available under the separate election for export sales are the cost sharing method and the profit split method.

Q. 2: What is the definition of export sales for purposes of the separate election for export sales?

A. 2: The determination of export sales is based upon the destination of the product, *i.e.,* where it is to be used or consumed. If the product is sold to a U.S. affiliate, it will be treated as an export sale only if resold or otherwise transferred abroad to a foreign person (including a foreign affiliate or foreign branch of a U.S. affiliate) within one year from the date of sale to the U.S. affiliate for ultimate use or consumption outside the United States as provided under § 1.954-3(a)(3)(ii).

Q. 3: Assume that a possessions corporation sells a product to both foreign affiliates and foreign branches of U.S. affiliates. In addition, it sells the product to its U.S. parent for resale in the U.S. The possessions corporation makes a profit split election for domestic sales and a cost sharing election of export sales. Will the sales to foreign branches of U.S. affiliates be treated as exports subject to the cost sharing method or as domestic sales subject to the profit split method?

A. 3: The sales to a foreign branch of a U.S. corporation are exports if for ultimate use or consumption outside of the United States as provided under § 1.954-3(a)(3)(ii).

Q. 4: Under what circumstances may a possessions corporation make the separate election under section 936(h)(5)(F)(iv)(II) for computing its income from products exported to a foreign person when the income derived by such foreign person on the resale of such products is included in foreign base company income under section 954(a)?

A. 4: If the income derived by a foreign person on the resale of products manufactured, in whole or in part, by a possessions corporation is included in foreign base company income under section 954(a), then the possessions corporation may make the separate export election under section 936(h)(5)(F)(iv)(II) for computing its income from such products only if such foreign person has been formed or is availed of for substantial business reasons that are unrelated to an affiliated corporation's U.S. tax liability. For purposes of the proceding sentence, a foreign person will be considered to be formed or availed of for such substantial business reasons if the foreign person in the normal course of business purchases substantial quantities of products from both the possessions corporation and its affiliates for resale, and, in addition provides support services for affiliated companies such as centralized testing, marketing of products, management of local currency exposures, or other similar services. However, a foreign person that purchases and resells products only from a possessions corporation is presumed to be formed or availed of for other than such substantial business reasons, even if the foreign person provides additional services.

Q. 5: When will the “manufacturing” test set forth in subsection (d)(1)(A) of section 954 be applicable to the export sales of a product of a possessions corporation which makes a separate election for export sales?

A. 5: An electing corporation will be required to meet the “manufacturing” test set forth in subsection (d)(1)(A) of section 954 with respect to export sales of its product in each taxable year in which the separate election for export sales is in effect.

(d) ***Revocation of election under section 936(a).***

Q. 1: When may an election under section 936(a) be revoked?

A. 1: An election under section 936(a) may be revoked during the first ten years of section 936 status only with the consent of the Commissioner, and without the Commissioner's consent after that time. The Commissioner hereby consents to all requests for revocation that are made with respect to the taxapayer's first taxable year beginning after December 31, 1982 provided that the section 936(a) election was in effect for the corporation's last taxable year beginning before January 1, 1983, if the taxpayer agrees not to re-elect section 936(a) prior to its first taxable year beginning after December 31, 1988. A taxpayer that wishes to revoke a section 936(a) election under the terms of the blanket revocation must attach a “Statement of Revocation—Section 936” to the taxpayer's timely filed return (including extensions) and must state that in revoking the election the taxpayer agrees not to re-elect section 936(a) prior to its first taxable year beginning after December 31, 1988. Other requests to revoke not covered by the Commissioner's blanket consent should be addressed to the District Director having jurisdiction over the taxpayer's tax return.

[T.D. 8090, 51 FR 21545, June 13, 1986, as amended by T.D. 9100, 68 FR 70705, Dec. 19, 2003; T.D. 9300, 71 FR 71042, Dec. 8, 2006]

§ 1.936-8T Qualified possession source investment income (temporary). [Reserved]

§ 1.936-9T Source of qualified possession source investment income (temporary). [Reserved]

§ 1.936-10 Qualified investments.

(a) ***In general.*** [Reserved]

(b) ***Qualified investments in Puerto Rico.*** [Reserved]

(c) ***Qualified investment in certain Caribbean Basin countries*** —

(1) ***General rule.*** An investment of qualified funds described in this section shall be treated as a qualified investment of funds for use in Puerto Rico if the funds are used for a qualified investment in a qualified Caribbean Basin country. A qualified investment in a qualified Caribbean Basin country is a loan of qualified funds by a qualified financial institution (described in paragraph (c)(3) of this section) directly to a qualified recipient (described in paragraph (c)(9) of this section) or indirectly through a single financial intermediary for investment in active busines assets (as defined in paragraph (c)(4) of this section) in a qualified Caribbean Basin country (described in paragraph (c)(10)(ii) of this section) or for investment in development projects (as defined in paragraph (c)(5) of this section) in a qualified Caribbean Basin country, provided—

(i) The investment is authorized, prior to disbursement of the funds, by the Commissioner of Financial Institutions of Puerto Rico (or his delegate) pursuant to regulations issued by such Commissioner; and

(ii) The agreement, certification, and due diligency requirements under paragraphs (c)(11), (12), and (13) of this section are met.

A loan by a qualified financial institution shall not be disqualified merely because the loan transaction is processed by the central bank of issue of the country into which the loan is made pursuant to, and solely for purposes of complying with, the exchange control laws or regulations of such country. Further, a loan by a qualified financial institution shall not be disqualified merely because the loan is acquired by another person, provided such other person is also a qualified financial institution.

(2) ***Termination of qualification*** —

(i) ***In general.*** An investment that, at any time after having met the requirements for a qualified investment in a qualified Caribbean Basin country under the terms of this paragraph (c), fails to meet any of the conditions enumerated in this paragraph (c) shall no longer be considered a qualified investment in a qualified Caribbean Basin country from the time of such failure, unless the investment satisfies the requirements for a timely cure described in paragraph (c)(2)(ii) of this section. Such a failure includes, but is not limited to, the occurrence of any of the following events:

(A) Active business assets cease to qualify as such;

(B) Proceeds from the investment are diverted for the financing of assets, projects, or operations that are not active business assets or development projects or are not the assets or the project of the qualified recipient;

(C) The holder of the qualified recipient's obligation is not a qualified financial institution;

(D) The qualified recipient's qualified business activity ceases to qualify as such; or

(E) The qualified Caribbean Basin country ceases to be a country described in paragraph (c)(10)(ii) of this section.

(ii) *Timely cure* —

(A) ***In general.*** A timely cure shall be considered to have been made if the event or events that cause disqualification of the investment are corrected within a reasonable period of time. For purposes of this section, a reasonable period of time shall not exceed 60 days after such event or events come to the attention of the qualified recipient or the qualified financial institution or should have some to their attention by the exercise of reasonable diligence.

(B) ***Due diligence requirements.*** A time cure of a failure to comply with the due diligence requirements of paragraphs (c)(11), (12), and (13) of this section shall be considered to be made if the failure to comply is due to reasonable cause and, upon request of the Commissioner of Financial Institutions of Puerto Rico (or his delegate) or of the Assistant Commissioner (International) (or his authorized representative), the qualified financial institution (and its trustee or agent), if any), the financial intermediary, or the qualified recipient establishes to the satisfaction of the Commissioner of Financial Institutions of Puerto Rico (or his delegate) or of the Assistant Commissioner (International) (or his authorized representative) that it has exercised due diligence in ensuring that the funds were property disbursed to a qualified recipient and applied by or on behalf of such qualified recipient to uses that qualify the investment as an investment in qualified business assets or a development project under the provisions of this paragraph (c).

(iii) ***Assumption of qualified recipient's obligation.*** An investment shall not cease to qualify merely because the qualified recipient's obligation to the qualified financial institution (or to a financial intermediary, if any) is assumed by another person, provided such other person assumes the qualified recipient's agreement and certification requirements under paragraph (c)(11)(i) of this section and is either—

(A) A qualified recipient on the date of assumption, in which case such person shall be treated for purposes of this section as the original qualified recipient and shall be subject to all the requirements of this section for continued qualification of the loan as a qualified investment in a qualified Caribbean Basin country; or

(B) An international organization, the principal purpose of which is to foster economic development in developing countries and which is described in section 1 of the International Organizations Immunities Act (22 U.S.C. 288), if the assumption of the obligation is pursuant to a bona fide guarantee agreement.

(3) *Qualified financial institution* —

(i) ***General rule.*** For purposes of section 936(d)(4)(A) and this section, a qualified financial institution includes only—

(A) A banking, financing, or similar business defined in § 1.864-4(c)(5)(i) that is an eligible institution described in paragraph (c)(3)(ii) of this section, but not including branches of such institution outside of Puerto Rico;

(B) A single-purpose entity described in paragraph (c)(3)(iii) of this section;

(C) The Government Development Bank for Puerto Rico;

(D) The Puerto Rico Economic Development Bank; and

(E) Such other entity as may be determined by the Commissioner by Revenue Procedure or other guidance published in the Internal Revenue Bulletin.

(ii) ***Eligible institution.*** An eligible institution means an institution—

(A) That is an entity organized under the laws of the Commonwealth of Puerto Rico or is the Puerto Rican branch of an entity organized under the laws of another jurisdiction, if such entity is engaged in a banking, financing, or similar business defined in § 1.864-4(c)(5)(i), and

(B) That is licensed as an eligible institution under Regulation No. 3582 (or any successor regulation) issued by the Commissioner of Financial Institutions of Puerto Rico (hereinafter "Puerto Rican Regulation No. 3582").

(iii) ***Single-purpose entity.*** A single-purpose entity is an entity that meets all of the following conditions:

(A) The entity is organized under the laws of the Commonwealth of Puerto Rico and is a corporation, a partnership or a trust, which conducts substantially all of its activities in Puerto Rico.

(B) The sole purpose of the entity is to use qualified funds from possessions corporations to make one or more qualified investments in a qualified Caribbean Basin country and the entity actually uses such funds only for such purpose.

(C) In the case of an entity that is a trust, one of the trustees is a qualified financial institution described in paragraph (c)(3)(i) of this section.

(D) The entity is licensed as an eligible institution under Puerto Rican Regulation No. 3582 (or any successor regulation).

(E) Any temporary investment by the entity for its own account of funds received from a possessions corporation, and the income from the investment thereof, and any temporary investment by the entity for its own account of principal and interest paid by a borrower to the entity, and the income from the investment thereof, are limited to investments in eligible activities, as described in section 6.2.4 of Puerto Rican Regulation No. 3582, as in effect on September 22, 1989.

(4) ***Investments in active business assets*** —

(i) ***In general.*** For purposes of section 936(d)(4)(A)(i)(I) and this section and subject to the provisions of paragraph (c)(8) of this section, a loan qualifies as an investment in active business assets if—

(A) The amounts disbursed to a qualified recipient under the loan or bond issue are promptly applied (as defined in paragraphs (c)(6) and (7) of this section) by (or on behalf of) the qualified recipient solely for capital expenditures for the construction, rehabilitation (including demolition associated therewith), improvement, or upgrading of qualified assets described in paragraphs (c)(4)(ii)(A), (B), (E), and (F) of this section, for the acquisition of

qualified assets described in paragraphs (c)(4)(ii)(B), (C), (E), and (F) of this section, for the expenditures described in paragraphs (c)(4)(ii)(D), (E), and (F) of this section, and, if applicable, for the financing of incidental expenditures described in paragraph (c)(4)(iii) of this section;

(B) The qualified recipient owns the assets for United States income tax purposes and uses them in a qualified business activity (as defined in paragraph (c)(4)(iv)); and

(C) The requirements of paragraph (c)(6) of this section (regarding temporary investments and time periods within which the funds must be invested) and of paragraph (c)(7) of this section (regarding the refinancing of existing funding and the time periods within which funding for investments must be secured) are satisfied.

(ii) ***Definition of qualified assets.*** For purposes of this paragraph (c), qualified assets mean—

(A) Real property;

(B) Tangible personal property (such as furniture, machinery, or equipment) that is not property described in section 1221(1) and that is either new property or property which at no time during the period specified in paragraph (c)(4)(v) of this section was used in a business activity in the qualified Caribbean Basin country in which the property is to be used;

(C) Rights to intangible property that is a patent, invention, formula, process, design, pattern, know-how, or similar item, or rights under a franchise agreement, provided that such rights—

(*1*) Were not at any time during the period specified in paragraph (c)(4)(v) of this section used in a business activity in the qualified Caribbean Basin country in which the rights are to be used,

(*2*) Are not rights the use of which gives rise, or would give rise if used, to United States source income, and

(*3*) Are not rights acquired by the qualified recipient from a person related (within the meaning of section 267(b), using “10 percent” instead of “50 percent” in the places where it appears) to the qualified recipient;

(D) Exploration and development expenditures incurred by a qualified recipient for the purpose of ascertaining the existence, location, extent or quality of any deposit of ore, oil, gas, or other mineral in a qualified Caribbean Basin country, as well as for purposes of developing such deposit (within the meaning of section 616 of the Code and the regulations thereunder);

(E) Living plants and animals (other than crops, plants, and animals that are acquired primarily to hold as inventory by the qualified recipient for resale in the ordinary course of trade or business) acquired in connection with a farming business (as defined in § 1.263-1T(c)(4)(i)), expenditures of a preparatory nature to prepare the land or area for farming (such as planting trees, drilling wells, clearing brush, leveling land, laying pipes, building roads, constructing tanks and reservoirs), expenditures for soil and water conservation of a type described in section 175(c)(1), and expenditures of a development nature incurred in connection with, and during, the preproductive period of property produced in a farming business (as defined in § 1.263-1T(c)(4)(ii));

(F) Other assets or expenditures that are not described in paragraphs (c)(4)(ii)(A) through (E) of this section and that the Commissioner may, by Revenue Procedure or other guidance published in the Internal Revenue Bulletin or by ruling issued to a qualified financial institution or qualified recipient upon its request, determine to be qualified assets.

(iii) ***Incidental expenditures.*** An amount in addition to the loan proceeds borrowed to make an investment in active business assets shall be considered an investment in active business assets if such amount is applied to finance expenditures that are incidental to making the investment in active business assets, provided such amount is disbursed at or about the same time the proceeds for making the investment in active business assets are disbursed. For purposes of this section, expenditures incidental to an investment in active business assets include only the following items:

(A) A reasonable amount of costs (other than the cost of credit enhancement or bond insurance premiums) associated with arranging the financing of an investment in active business assets, not to exceed 3.5 percent of the proceeds of the loan or bond issue.

(B) A reasonable amount of installation costs and other reasonable costs associated with placing an active business asset in service in the qualified business activity.

(C) An amount not in excess of 10 percent of the total amount of investment in qualified assets to finance the acquisition of inventory, and other working capital requirements, but if an investment is in connection with a manufacturing or farming business, the percentage limitation shall be 50 percent rather than 10 percent provided the excess over the 10 percent limitation is used to finance inventory property. For purposes of this paragraph (c), whether a business is a manufacturing business shall be determined under principles similar to those described in section 954(d)(1)(A) and the regulations thereunder; whether a business is a farming business shall be determined under § 1.263-1T(c)(4)(i).

(D) An amount not in excess of 5 percent of the sum of the investment in active business assets and the costs described in paragraphs (c)(4)(iii)(A), (B), and (C) of this section for the refinancing of an existing debt of the qualified recipient if such refinancing is incidental to an investment in active business assets. For this purpose, the replacement of an existing loan arrangement shall not be considered the refinancing of an existing indebtedness to the extent that the funds under such loan arrangement have not yet been disbursed to the qualified recipient.

(iv) ***Qualified business activity.*** A qualified business activity is a lawful industrial or commercial activity that is conducted as an active trade or business (under principles similar to those described in § 1.367(a)-2T(b) (2) and (3)) in a qualified Caribbean Basin country. A trade or business for purposes of this paragraph (c)(4)(iv) is any business activity meeting the principles of section 367 of the Code and described in Divisions A through I (excluding group 43 in Division E (relating to the United States Postal Service) and groups 84 (relating to museums, art galleries, and botanical and zoological gardens), 86 (relating to membership organizations), and 88 (relating to private households in Division I) of the 1987 Standard Industrial Classification Manual issued by the Executive Office of the President, Office of Management and Budget, or in the comparable provisions of any successor Standard Industrial Classification Manual that is adopted by the Commissioner of Internal Revenue in a notice, regulation, or other document published in the Internal Revenue Cumulative Bulletin.

(v) ***Period of use.*** The period referred to in paragraphs (c)(4)(ii)(B) and (C) of this section shall be a five year period preceding the date of acquisition with the loan proceeds, if the date of acquisition is on or before May 13, 1991. If the date of acquisition is after May 13, 1991, then the period specified in this paragraph (c)(4)(v) shall be three years preceding the date of acquisition with the loan proceeds.

(5) ***Investments in development projects*** —

(i) ***In general.*** Subject to the provisions of paragraph (c)(8) of this section, this paragraph (c)(5)(i) describes the requirements in order for a loan by a qualified financial institution to qualify as an investment in a development project for purposes of section 936(d)(4)(A)(i)(II) and for this section.

(A) The amounts disbursed under the loan or bond issue must be promptly applied (as defined in paragraphs (c)(6) and (7) of this section) by (or on behalf of) the qualified recipient solely for one or more investments described in paragraph (c)(4)(i)(A) of this section and in any land, buildings, or other property functionally related and subordinate to a facility described in paragraph (c)(5)(ii) of this section (determined under principles similar to those described in § 1.103-8(a)(3)), for use (under principles similar to those described in § 1.367(a)-2T(b)(5)) in connection with one or more activities described in paragraph (c)(5)(i)(B) of this section.

(B) The activities referred to in paragraph (c)(5)(i)(A) of this section are—

(*1*) A development project described in paragraph (c)(5)(ii) of this section in a qualified Caribbean Basin country; or

(*2*) The performance in a qualified Caribbean Basin country of a non-commercial governmental function described in paragraph (c)(5)(iv) of this section;

(C) The qualified recipient must own the assets for United States income tax purposes;

(D) The requirements of paragraph (c)(6) of this section (regarding temporary investments and time periods within which the funds must be invested) and of paragraph (c)(7) of this section (regarding the refinancing of existing funding and time periods within which funding for investments must be secured) must be satisfied.

(ii) ***Development project.*** For purposes of this paragraph (c), a development project is one or more facilities in a qualified Caribbean Basin country that support economic development in that country and that satisfy the public use requirement of paragraph (c)(5)(iii) of this section. Examples of facilities that may meet the public use requirement include, but are not limited to—

(A) Transportation systems and equipment, including sea, surface, and air, such as roads, railways, air terminals, runways, harbor facilities, and ships and aircraft;

(B) Communications facilities;

(C) Training and education facilities related to qualified business activities;

(D) Industrial parks, including necessary support facilities such as roads; transmission lines for water, gas, electricity, and sewage; docks; plant sites preparations; power generation; sewage disposal; and water treatment;

(E) Sports facilities;

(F) Convention or trade show facilities;

(G) Sewage, solid waste, water, and electric facilities;

(H) Housing projects pursuant to a government program designed to provide affordable housing to low or moderate income families, based upon local standards; and

(I) Hydroelectric generating facilities.

(iii) ***Public use requirement.*** To satisfy the public use requirement in paragraph (c)(5)(ii) of this section, a facility must serve or be available on a regular basis for general public use, as contrasted with similar types of facilities which are constructed for the exclusive use of a limited number of persons as determined under principles similar to those described in § 1.103-8(a)(2).

(iv) ***Non-commercial governmental functions.*** For purposes of paragraph (c)(5)(i)(B) of this section, the term "non-commercial governmental functions" refers to activities that, under U.S. standards, are not customarily attributable to or carried on by private enterprises for profit and are performed for the general public with respect to the common welfare or which relate to the administration of some phase of government. For example, the operation of libraries, toll bridges, or local transportation services, and activities substantially equivalent to those carried out by the Federal Aviation Authority, Interstate Commerce Commission, or United States Postal Service, are considered non-commercial governmental functions. For purposes of this section, non-commercial government functions shall not include military activities.

(v) [Reserved]

(6) ***Prompt application of borrowed proceeds.*** This paragraph (c)(6) provides rules for determining whether amounts disbursed to a qualified recipient by a qualified financial institution (or a financial intermediary) shall be considered to have been promptly applied for the purpose of paragraphs (c)(4)(i)(A) and (c)(5)(i)(A) of this section.

(i) ***In general.*** Except as otherwise provided in paragraphs (c)(6)(ii) and (c)(7)(iii)(B) of this section, amounts disbursed to a qualified recipient by a qualified financial institution (or a financial intermediary) shall be considered to have been promptly applied for the purpose of paragraphs (c)(4)(i)(A) and (c)(5)(i)(A) of this section if the amounts are fully expended for any of the purposes described in paragraphs (c)(4)(i)(A) or (c)(5)(i)(A) of this section no later than six months from the date of such disbursement and any temporary investment of such funds by the qualified recipient during such period complies with the rules of paragraph (c)(6)(iii)(A) of this section. Where the amounts disbursed are bond proceeds described in paragraph (c)(6)(iv)(A) of this section, the six-month period shall begin on the date of issuance of the bonds. In the event the qualified financial institution (or financial intermediary) invests any part of the bond proceeds before disbursement of those proceeds to the qualified recipient, all earnings from any such investment shall be paid to the qualified recipient or applied for its benefit.

(ii) ***Special rules for long term projects financed out of bond proceeds.*** In the case of a long term project described in paragraph (c)(6)(iv)(B) of this section that is financed out of bond proceeds, the six-month period described in paragraph (c)(6)(i) of this section shall be extended with respect to the amount of bond proceeds used to fund the project for such

reasonable period of time as shall be necessary until completion of the project or until beginning of production (in the case of a farming business), but, in any event, not to exceed three years from the date of issuance of the bonds, and only if—

(A) The project that is financed out of bond proceeds was identified as of the date of issue;

(B) A construction and expenditure plan certified by an independent expert (such as an engineer, an architect, or a farming expert) is filed with, and approved by, the Commissioner of Financial Institutions of Puerto Rico (or his delegate) prior to the date of issue, which makes a reasonable estimate, as of the date of filing of the plan, of the amounts and uses of the bond proceeds and the time of completion or production, and includes a schedule of progress payments until such time;

(C) The terms of the construction and expenditure plan are disclosed in the public offering memorandum, private placement memorandum, or similar document prepared for information or disclosure purposes in relation to the issuance of bonds; and

(D) Any temporary investment of the bond proceeds complies with the rules of paragraph (c)(6)(iii)(A) and (B) of this section.

(iii) ***Temporary investments*** —

(A) ***During six-month period.*** During the six-month period described in paragraph (c)(6)(i) of this section, during the first six months of the period described in paragraph (c)(6)(ii) of this section, and during the 30-day period described in paragraph (c)(7)(iii)(A) of this section, loan proceeds disbursed to a qualified recipient, bond proceeds, and income from the investment thereof, may be held in unrestricted yield investments, provided such yield reflects normal market yield for such type of investments and provided the income from such investments, if any, is or would be sourced either in Puerto Rico or in a country in which the investment in active business assets or development project is to be made.

(B) ***During other periods.*** During any other period, any temporary investment of bond proceeds, and of income from such investments, shall be limited to investments in eligible activities. For purposes of this paragraph (c)(6)(iii)(B), the term “eligible activities” shall mean those investments described in section 6.2.4 of Puerto Rican Regulation No. 3582, as in effect on September 22, 1989.

(iv) ***Definitions*** —

(A) ***Bond proceeds.*** For purposes of this paragraph (c), bond proceeds shall mean the proceeds from the issuance of obligations by way of a public offering or a private placement by a qualified financial institution for investment in active business assets or a development project that has been identified at the time of issue and is described in a public offering memorandum, private placement memorandum, or similar document prepared for information or disclosure purposes in relation to the issuance of the bonds.

(B) ***Long term project.*** For purposes of this section, the term long term project means—

(*1*) A project, whether or not under a contract, for the construction, rehabilitation, improvement, upgrading, or production of qualified assets, or for expenditures, described in paragraph (c)(4)(ii) of this section (other than paragraph (c)(4)(ii)(C) of this section), which is reasonably expected to require more than 12 months to complete; or

(2) The production of property in a farming business referred to in paragraph (c)(4)(ii)(E) of this section, which is reasonably expected to require a preproductive period in excess of 12 months.

(7) ***Financing of previously incurred costs.*** Loan or bond proceeds which are disbursed after a qualified recipient has paid or incurred part or all of the costs of acquiring active business assets or investing in a development project shall be considered to have been applied for such purposes only as provided in this paragraph (c)(7).

(i) ***Replacement of temporary non-section 936 financing of a qualified investment.*** This paragraph (c)(7)(i) prescribes the maximum time limits within which temporary non-section 936 financing of qualified investments may be replaced with section 936 funds without being considered a prohibited refinancing transaction. This paragraph (c)(7)(i) applies to the refinancing of costs incurred with respect to investments that, at the time the costs were first incurred, were either qualified investments in a qualified Caribbean Basin country or were investments by a qualified recipient in active business assets or a development project in a qualified Caribbean Basin country. This paragraph (c)(7)(i) applies also to the refinancing of costs incurred with respect to any other investment. However, in the latter case, the amount of costs that may be refinanced with section 936 funds is limited to the amount of costs that are incurred with respect to the investment after the investment becomes a qualified investment in a qualified Caribbean Basin country. For purposes of this paragraph (c)(7)(i), the time when costs are incurred shall be determined under principles similar to those applicable under section 461(h) dealing with the economic performance test for the accrual of deductible liabilities. This paragraph (c)(7)(i) applies only to the situations described in this paragraph (c)(7)(i).

(A) In the case of an investment in active business assets or a development project, a loan shall be a qualified investment for purposes of this paragraph (c) if the loan proceeds are disbursed, or the obligations are issued, no later than six months after the date on which the qualified recipient takes possession of the asset or the facility or, if earlier, places the asset or the facility in service. However, in the case of a small project described in paragraph (c)(8)(v) of this section, the six-month period shall be one year.

(B) In the case of an investment in active business assets or a development project that is part of a long term project described in paragraph (c)(6)(iv)(B) of this section, a loan shall also be a qualified investment for purposes of this paragraph (c) if the loan proceeds are disbursed, or the obligations are issued, no later than six months after completion of the project or, in the case of a farming business, after the beginning of production, and in any event, no later than three years after the date on which the first payment is made toward the eligible costs of the project. The amount of the qualified investment may not exceed the sum of—

(*1*) The eligible costs relating to investments described in paragraph (c)(4)(i)(A) in the case of an investment in active business assets, or the eligible costs relating to investments described in paragraph (c)(5)(i) of this section in the case of a development project, but only to the extent of the costs that are incurred after the date described in paragraph (c)(7)(i)(D) of this section, and

(*2*) The portion of unpaid interest that would be required to be capitalized under U.S. tax rules and that accrued on prior temporary non-section 936 financing from the date described in paragraph (c)(7)(i)(D) of this section through the date the section 936 loan proceeds are disbursed or the section 936 obligations are issued.

(C) In order to qualify for the special rules of this paragraph (c)(7)(i), a plan must be filed with the Commissioner of Financial Institutions of Puerto Rico (or his delegate) stating the qualified recipient's intention to refinance the costs of the long term project with section funds.

(D) The date referred to in paragraph (c)(7)(i)(B) (*1*) and (*2*) of this section is a date that is the later of—

(*1*) The date the plan described in paragraph (c)(7)(i)(C) is filed, or

(*2*) The date the investment becomes a qualified investment by a qualified recipient in active business assets or a development project in a qualified Caribbean Basin country.

(ii) ***Refinancing of section 936 financing.*** A section 936 loan or bond issue used to finance a qualified investment described in paragraph (c)(1) of this section may be refinanced with section 936 funds through a new loan or bond issue to the extent of the remaining principal balance on such existing qualified financing, increased by the amount of unpaid interest accrued through the date the new loan proceeds are disbursed or the new obligations are issued and that would be required to be capitalized under U.S. tax rules.

(iii) ***Prompt application of borrowed proceeds*** —

(A) ***In general.*** In the case of a loan or bond issue described in paragraph (c)(7)(i) or (ii) of this section, the rules of paragraph (c)(6) of this section shall apply but the six-month period described in paragraph (c)(6)(i) of this section shall be limited to 30 days from the date of disbursement of loan proceeds to the qualified recipient or from the date of issuance in the case of a bond issue.

(B) ***Special rules for long term projects financed out of bond proceeds.*** In the case of a long term project described in paragraph (c)(6)(iv)(B) of this section that is financed out of bond proceeds, the 30-day period described in paragraph (c)(7)(iii)(A) of this section shall be extended with respect to the amount of bond proceeds used for the permanent financing of the long term project for such reasonable period of time as shall be necessary until completion of the project or beginning of production (in the case of a farming business), but, in any event, not to exceed three years from the date of issuance of the bonds. For purposes of this paragraph (c)(7)(iii)(B), the period of time shall be considered reasonable only if—

(*1*) A construction and expenditure plan certified by an independent expert (such as an engineer, an architect, or a farming expert) is filed with, and approved by, the Commissioner of Financial Institutions of Puerto Rico (or his delegate) prior to the date of issue, which makes a reasonable estimate, as of the date of issue, of the amounts and uses of the bond proceeds and the time of completion or production, and includes a schedule of progress payments until such time; and

(*2*) The terms of the construction and expenditure plan are disclosed in the public offering memorandum, private placement memorandum, or similar document prepared for information or disclosure purposes in relation to the bond issue.

(8) ***Miscellaneous operating rules*** —

(i) ***Sale and leaseback.*** An asset that is acquired and leased back to the person from whom acquired does not constitute an investment in an active business asset or an investment in a development project.

(ii) ***Use of asset in qualified business activity.*** For purposes of paragraph (c)(4)(i)(B), an asset shall be considered used or held for use in a qualified business activity if it is used or held for use in such activity under principles similar to those described in § 1.367(a)-2T(b)(5), or a successor provision.

(iii) ***Definition of capital expenditures.*** For purposes of this paragraph (c), capital expenditures mean those expenditures described in section 263(a) of the Code (without regard to paragraphs (A) through (G) of section 263(a)(1)), and those costs required to be capitalized under section 263A with respect to property described in section 263A(b)(1), relating to self-constructed assets.

(iv) ***Loans through certain financial intermediaries.*** A loan by a qualified financial institution shall not be disqualified from being an investment in active business assets or in a development project merely because the proceeds are first lent to a financial intermediary (as defined in paragraph (c)(8)(iv)(H) of this section) which, in turn, on-lends the proceeds directly to a qualified recipient, provided the requirements of this paragraph (c)(8)(iv) are satisfied.

(A) The loan to the qualified recipient must satisfy the requirements of paragraph (c)(4)(i) of this section in the case of an investment in active business assets, or of paragraph (c)(5)(i) of this section in the case of an investment in a development project.

(B) The qualified recipient and the active business assets or development project in which the proceeds are to be invested must be identified prior to disbursement of any part of the proceeds by the qualified financial institution to the financial intermediary.

(C) The effective interest rate charged by the qualified financial institution to the financial intermediary must not exceed the average interest rate paid by the qualified financial institution with respect to its eligible funds, increased by such number of basis points as is required to provide reasonable compensation to the qualified financial institution for services performed and risks assumed with respect to the loan to the financial intermediary that are not ordinarily required to be performed or assumed with respect to a deposit, loan, repurchase agreement or other transfer of eligible funds with another qualified financial institution. The average interest rate shall be the average rate, determined on a daily basis, paid by the qualified financial institution on its eligible funds over the most recent quarter preceding the date on which the rate on the loan to the financial intermediary is committed.

(D) The effective interest rate charged by the financial intermediary to the qualified recipient must not exceed the effective interest rate charged to the financial intermediary by the qualified financial institution, increased by such number of basis points as is required to provide reasonable compensation to the financial intermediary for services performed and risks assumed with respect to the loan to the qualified recipient.

(E) The financial intermediary must borrow from the qualified financial institution under substantially the same terms as it lends to the qualified recipient. In particular, both loans must have disbursement terms, repayment schedules and maturity dates for interest and

principal amounts such that the financial intermediary does not retain for more than 48 hours any of the funds disbursed by the qualified financial institution nor any of the funds paid by the qualified recipient in repayment of principal or interest on the loan.

(F) The financial institution and the financial intermediary must agree to comply with the due diligence requirements described in paragraphs (c)(11), (12), and (13) of this section;

(G) The time periods and temporary investments rules in paragraphs (c)(6) and (7) of this section must be complied with; and

(H) For purposes of this paragraph (c), the financial intermediary must be—

(*1*) An active trade or business which a person maintains in a qualified Caribbean Basin country and which consists of a banking, financing or similar business as defined in § 1.864-4(c)(5)(i) (other than a central bank of issue); or

(*2*) A public international organization, the principal purpose of which is to foster economic development in developing countries and which is described in section 1 of the International Organizations Immunities Act (22 U.S.C. 288).

For purposes of paragraphs (c)(8)(iv)(C) and (D) of this section, the determination of whether compensation is reasonable shall be made in relation to normal commercial practices for comparable transactions carrying a similar degree of commercial, currency and political risk. Reasonable credit enhancement fees and other reasonable fees and amounts charged to the financial intermediary or the qualified recipient with respect to the loan transaction in addition to interest shall be added to the interest cost in determining the effective interest rate.

(v) ***Small project.*** For purposes of this paragraph (c), a small project shall be a project (including the acquisition of an asset) for which the total amount of section 936 funds used for its financing does not exceed $1,000,000 in the aggregate, or such other amount as the Commissioner may publish, from time to time, in the Internal Revenue Bulletin.

(9) ***Qualified recipient.*** For purposes of this section, a qualified recipient is any person described in paragraph (c)(9)(i) or (ii) of this section. The term "person" means a person described in section 7701(a)(1) or a government (within the meaning of § 1.892-2T(a)(1)) of a qualified Caribbean Basin country.

(i) In the case of an investment described in paragraph (c)(4) of this section (relating to investments in active business assets), a qualified recipient is a person that carries on a qualified business activity in a qualified Caribbean Basin country, and complies with the agreement and certification requirements described in paragraph (c)(11)(i) of this section at all times during the period in which the investment remains outstanding.

(ii) In the case of an investment described in pargraph (c)(5) of this section (relating to investments in development projects), a qualified recipient is the borrower (including a person empowered by the borrower to authorize expenditures for the investment in the development project) that has authority to comply, and complies, with the agreement and certification requirements described in paragraph (c)(11)(i) of this section at all times during the period in which the investment remains outstanding.

(10) ***Investments in a qualified Caribbean Basin country*** —

(i) ***Rules for determining the place of an investment.*** The rules of this paragraph (c)(10)(i) shall apply to determine the extent to which an investment in an active business asset or a development project will be considered made in qualified Caribbean Basin Country.

(A) An investment in real property is considered made in the qualified Caribbean Basin country in which the real property is located.

(B) Except as otherwise provided in this paragraph (c)(10)(i)(B), an investment in tangible personal property is considered made in a qualified Caribbean Basin Country so long as the tangible personal property is predominantly used in that country. Whether property is used predominantly in a qualified Caribbean Basin country shall be determined under principles similar to those described in § 1.48-1(g)(1), (g)(2)(ii), (g)(2)(iv), (g)(2)(vi), (g)(2)(viii), and (g)(2)(x) (relating to investment tax credits for property used outside the United States) as in effect on December 31, 1985. A vessel, container, or aircraft shall be considered for use predominantly in a qualified Caribbean Basin country in any year if it is used for transport to and from such country with some degree of frequency during that year and at least 30 percent of the income from the use of such vessel, container or aircraft for that year is sourced in such country under principles similar to those described in section 863(c)(1) and (2) (relating to source rules for certain transportation income). Cables and pipelines which are premanently installed as part of a communication or transportation system between a qualified Caribbean Basin country and another country or among several countries which include a qualified Caribbean Basin country shall be considered used in a qualified Caribbean Basin country to the extent of 50 percent of the portion of the facility that directly links the qualified country to another country or to a hub, unless it is established by notice or other guidance published in the Internal Revenue Bulletin or by ruling issued to a qualified institution or qualified recipient upon request that it is appropriate to attribute a greater portion of the cost of the facility to the qualified Caribbean Basin country.

(C) An investment in rights to intangible property is considered made in a qualified Caribbean Basin country to the extent such rights are used in that country. Where rights to intangible property are used shall be determined under principles similar to those described in § 1.954-2T(b)(3)(vii) or a successor provision.

(ii) ***Qualified Caribbean Basin country.*** For purposes of this section, the term "qualified Caribbean Basin country" means any beneficiary country (within the meaning of section 212(a)(1)(A) of the Caribbean Basin Economic Recovery Act, Public Law 98-67 (Aug. 5, 1983), 97 Stat. 384, 19 U.S.C. 2702(a)(1)(A)), which meets the requirements of section 274(h)(6)(A)(i) and (ii) and the U.S. Virgin Islands, and includes the territorial waters and continental shelf thereof.

(11) ***Agreements and certifications by qualified recipients and financial intermediaries*** —

(i) ***In general.*** In order for an investment to be considered a qualified investment under section 936(d)(4) and paragraph (c)(1) of this section, a qualified recipient must certify to the qualified financial institution (or to the financial intermediary, if the loan is made through a financial intermediary) on the date of closing of the loan agreement and on each anniversary date thereof, that it is a qualified recipient described in paragraph (c)(9) of this section. In addition, the qualified recipient must agree in the loan agreement with the qualified financial institution (or with the financial intermediary, if the loan is made through a financial intermediary)—

(A) To use the funds at all times during the period the loan is outstanding solely for the purposes and in the manner described in paragraph (c)(4) of this section (regarding investment in active business assets) or in paragraph (c)(5) of this section (regarding investment in development projects);

(B) To comply with the requirements of paragraph (c)(6) of this section (regarding temporary investments and time periods within which the funds must be invested) and paragraph (c)(7) of this section (regarding the refinancing of existing funding and the time periods within which funding for investments must be secured);

(C) To notify the Assistant Commissioner (International), the qualified financial institution (or the financial intermediary, if the loan is made through a financial intermediary), and the Commissioner of Financial Institutions of Puerto Rico (or his delegate) pursuant to paragraph (c)(14) of this section if it no longer is a qualified recipient or if, for any other reason, the investment has ceased to qualify as a qualified investment described in paragraph (c)(1) of this section, promptly upon the occurrence of such disqualifying event; and

(D) To permit examination by the office of the Assistant Commissioner (International) (or by the office of any District Director authorized by the Assistant Commissioner (International)) and the Commissioner of Financial Institutions of Puerto Rico (or his delegate) of all necessary books and records that are sufficient to verify that the funds were used for investments in active business assets or development projects in conformity with the terms of the loan agreement.

(ii) ***Certification by a financial intermediary.*** In the case of a loan by a qualified financial institution to a financial intermediary, the financial intermediary must certify to the qualified financial institution (using the procedures described in paragraph (c)(11)(i) of this section) that it is a financial intermediary described in paragraph (c)(8)(iv)(H) of this section, and must furnish to the qualified financial institution a copy of the qualified recipient's certification described in paragraph (c)(11)(i) of this section and of its loan agreement with the qualified recipient. In addition, the financial intermediary must agree in the loan agreement with the qualified financial institution:

(A) To comply with the requirements of paragraph (c)(8)(iv) of this section; and

(B) To permit examination by the office of the Assistant Commissioner (International) (or by the office of any District Director authorized by the Assistant Commissioner (International)) and the Commissioner of Financial Institutions of Puerto Rico (or his delegate) of all its necessary books and records that are sufficient to verify that the funds were used in conformity with the terms of the loan agreements.

(12) ***Certification requirements.*** In order for an investment to be considered a qualified investment under section 936(d)(4), section 936(d)(4)(C)(i) requires that both the person in whose trade or business such investment is made and the financial institution certify to the Secretary of the Treasury and the Commissioner of Financial Institutions of Puerto Rico that the proceeds of the loan will be promptly used to acquire active business assets or to make other authorized expenditures. This certification requirement is satisfied as to the qualified financial institution, the financial intermediary (if any), and the qualified recipient if the qualified financial institution submits a certificate to both the Assistant Commissioner (International) and to the Commissioner of Financial Institutions of Puerto Rico (or his delegate) pursuant to paragraph (c)(14) of this section upon authorization of the investment by

the Commissioner of Financial Institutions and, in any event, prior to the first disbursement of the loan proceeds to the qualified recipient or to the financial intermediary (if any), in which the qualified financial institution—

(i) Represents that, as of the date of the certification, the qualified recipient and the financial intermediary (if any) have complied with the requirements described in paragraph (c)(11) of this section;

(ii) Describes the important terms of the loan to the financial intermediary (if any) and to the qualified recipient, including the amount of the loan, the nature of the investment, the basis for its qualification as an investment in active business assets or a development project under this section, the identity of the financial intermediary (if any) and of the qualified recipient, the qualified Caribbean Basin country involved, and the nature of the collateral or other security used, including any guarantee;

(iii) Agrees to permit examination by the Assistant Commissioner (International) (or by the office of any District Director authorized by the Assistant Commissioner (International)) and the Commissioner of Financial Institutions of Puerto Rico (or his delegate) of all its necessary books and records that are sufficient to verify that the funds were used for investments in active business assets or development projects in conformity with the terms of the loan agreement or agreements with the financial intermediary (if any) and with the qualified recipient; and

(iv) In the case of a single-purpose entity that is a qualified financial institution, discloses the name and address of the entity's trustee or agent, if any, that assists the qualified financial institution in the performance of its due diligence requirement under paragraph (c) of this section, and represents that the trustee or agent has agreed with the qualified financial institution to permit examination by the Assistant Commissioner (International) (or by the office of any District Director authorized by the Assistant Commissioner (International)) and the Commissioner of Financial Institutions of Puerto Rico (or his delegate) of all necessary books and records of such trustee or agent that are sufficient to verify that the funds were used for investments in active business assets or development projects in conformity with the terms of the loan agreement or agreements with the financial intermediary (if any) and with the qualified recipient.

(13) ***Continuing due diligence requirements.*** In order to maintain the qualification for an investment under paragraph (c)(1) of this section, the continuing due diligence requirements described in this paragraph (c)(13) must be satisfied.

(i) ***Requirements of qualified recipient.*** A qualified recipient must—

(A) Submit annually to the qualified financial institution or to the financial intermediary from which its qualified funds were obtained a copy of its most recent annual financial statement accompanied by an opinion of an independent accountant familiar with the financials of the qualified recipient disclosing the amount of the loan, the current outstanding balance of the loan, describing the assets financed with such loan and the qualified business activity in which such assets are used or the development project for which the loan is used, and stating that there are no reasons to doubt that the loan proceeds have been properly used and continue to be properly used, and

(B) Act in a manner consistent with its representations and agreements described in paragraph (c)(11) of this section.

(ii) ***Requirements of qualified financial institutions.*** Except as otherwise provided in paragraph (c)(13)(iii) of this section, a qualified financial institution described in paragraph (c)(3) of this section must maintain in its records and have available for inspection the documentation described in paragraph (c)(13)(ii)(A) or (B) of this section. In addition, the qualified financial institution is required to notify the Assistant Commissioner (International) and the Commissioner of Financial Institutions of Puerto Rico (or his delegate) pursuant to paragraph (c)(14) of this section upon becoming aware that a loan has ceased to be an investment in active business assets or a development project under this section. For purposes of this paragraph (c)(13)(ii), multiple loans for investment in a single qualified business activity or development project will be aggregated in determining what due diligence requirements apply.

(A) In the case of a small project described in paragraph (c)(8)(v) of this section, the following documents must be maintained and available for inspection:

(*1*) The loan application or other similar document;

(*2*) The financial statements of the qualified recipient filed as part of the loan application;

(*3*) The statement required by section 6.4.3(a)(iii) of Puerto Rican Regulation No. 3582 or any successor thereof, signed by the qualified recipient (or its duly authorized representative), acknowledging the receipt of the loan proceeds, describing the assets financed with such loan and the business activity in which such assets are to be used or the development project for which the funds will be utilized, the collateral to be provided for the transaction including any guarantee, and the basis for its qualification as a qualified recipient;

(*4*) The loan documents; and

(*5*) In the case of a qualified financial institution that is a single-purpose entity, a copy of the agreement with the entity's trustee or agent, if any, described in paragraph (c)(12)(iv) of this section.

(B) In the case of a disbursement concerning a project that is not a small project described in paragraph (c)(8)(v) of this section, the following documents must be maintained and available for inspection, in addition to the documents required by paragraph (c)(13)(ii)(A) of this section:

(*1*) A memorandum of credit prepared by an officer of the qualified financial institution (or, in the case of a single purpose entity, an agent of the entity or a trustee for the entity, if any) and signed by the officer of the qualified financial institution, containing the details of the investigation and review that the qualified financial institution, or its trustee or agent, if any, conducted in order to evaluate whether the investment is qualified under paragraph (c)(1) of this section and the opinion of the officer of the qualified financial institution, or the opinion of an officer of the agent of, or of the trustee for, the qualified financial institution, if any, that there is no reasonable ground for belief that the qualified funds will be diverted to a use that is not permitted under the provisions of this section; in making this investigation and review, factors that must be utilized are ones similar to those listed in Puerto Rico Regulation No. 3582, section 6.4.2;

(*2*) The annual financial statement of the qualified recipient; and

(3) The written report of an officer of the qualified financial institution, or of an officer of an agent of, or of the trustee for, the qualified financial institution, if any, documenting discussions, both before and after the disbursement of the loan proceeds, with each recipient's accounting, financial and executive personnel with respect to the proposed and actual use of the loan proceeds and his analysis of the annual financial statements of the qualified recipient including an analysis of the statement of sources and uses of funds. After the loan disbursement, such discussions and review shall occur annually during the term of the loan. Such report shall include the conclusion that in such officer's opinion there is no reasonable ground for belief that the qualified recipient is improperly utilizing the funds.

(iii) ***Requirements in the case of a financial intermediary.*** Where a qualified financial institution lends funds to a financial intermediary which are on-lent to a qualified recipient—

(A) The obligation to maintain the documentation described in paragraph (c)(13)(ii)(A) or (B) of this section shall apply only to the financial intermediary and not to the qualified financial institution and the provisions of paragraph (c)(13)(ii)(A) or (B) of this section shall be read so as to impose on the financial intermediary any obligation imposed on the qualified financial institution.

(B) The financial intermediary shall forward annually to the qualified financial institution a copy of the documentation it is required to maintain in its records pursuant to the provisions of this paragraph (c)(13)(iii) and shall notify the Assistant Commissioner (International), the Commissioner of Financial Institutions of Puerto Rico (or his delegate) and the qualified financial institution pursuant to paragraph (c)(14) of this section upon becoming aware that a loan has ceased to be an investment in active business assets or a development project under this section. The qualified financial institution must maintain in its records and have available for inspection the documentation furnished by the financial intermediary pursuant to this paragraph (c)(13)(iii)(B).

(C) The qualified financial institution shall cause one of its officers (or one of the officers of its agent or trustee, if any) to prepare a written report documenting his analysis of the documentation furnished by the financial intermediary pursuant to paragraph (c)(13)(iii)(B) of this section, his discussions, both before and after the disbursement of the loan proceeds, with the financial intermediary's accounting, financial and executive personnel with respect to the proposed and actual use of the loan proceeds, and his analysis of the annual financial statements of the qualified recipient including an analysis of the statement of sources and uses of funds. After the loan disbursement, such discussions and review shall occur annually during the term of the loan. Such report shall include the conclusion that in such officer's opinion there is no reasonable ground for belief that the qualified recipient is improperly utilizing the funds.

(14) ***Procedures for notices and certifications.*** Notices and certifications to the Assistant Commissioner (International) required under paragraphs (c)(11), (12) and (13) of this section shall be addressed to the attention of the Assistant Commissioner (International), Office of Taxpayer Service and Compliance, IN:C, 950 L'Enfant Plaza South, SW., Washington, DC 20024. Notices and certifications to the Commissioner of Financial Institutions of Puerto Rico required under paragraphs (c)(11), (12), and (13) of this section shall be addressed as follows: Commissioner of Financial Institutions, GPO Box 70324, San Juan, Puerto Rico 00936.

(15) ***Effective date.*** This paragraph (c) is effective May 13, 1991. It is applicable to investments by a possessions corporation in a financial institution that are used by a financial institution for investments in accordance with a specific authorization granted by the Commissioner of Financial Institutions of Puerto Rico (or his delegate) after September 22, 1989. However, the taxpayer may choose to apply § 1.936-10T(c) for periods before June 12, 1991.

[T.D. 8350, 56 FR 21927, May 13, 1991]

§ 1.936-11 New lines of business prohibited.

(a) ***In general.*** A possessions corporation that is an existing credit claimant, as defined in section 936(j)(9)(A) and this section, that adds a substantial new line of business during a taxable year, or that has a new line of business that becomes substantial during the taxable year, loses its status as an existing credit claimant for that year and all years subsequent.

(b) ***New line of business*** —

(1) ***In general.*** A new line of business is any business activity of the possessions corporation that is not closely related to a pre-existing business of the possessions corporation. The term *closely related* is defined in paragraph (b)(2) of this section. The term *pre-existing business* is defined in paragraph (b)(3) of this section.

(2) ***Closely related.*** To determine whether a new activity is closely related to a pre-existing business of the possessions corporation all the facts and circumstances must be considered, including those set forth in paragraphs (b)(2)(i)(A) through (G) of this section.

(i) ***Factors.*** The following factors will help to establish that a new activity is closely related to a pre-existing business activity of the possessions corporation—

(A) The new activity provides products or services very similar to the products or services provided by the pre-existing business;

(B) The new activity markets products and services to the same class of customers;

(C) The new activity is of a type that is normally conducted in the same business location;

(D) The new activity requires the use of similar operating assets;

(E) The new activity's economic success depends on the success of the pre-existing business;

(F) The new activity is of a type that would normally be treated as a unit with the pre-existing business' in the business accounting records; and

(G) The new activity and the pre-existing business are regulated or licensed by the same or similar governmental authority.

(ii) ***Safe harbors.*** An activity is not a new line of business if—

(A) If the activity is within the same six-digit North American Industry Classification System (NAICS) code (or four-digit Standard Industrial Classification (SIC) code). The similarity of the NAICS or SIC codes may not be relied upon to determine whether the activity is closely related to a pre-existing business where the code indicates a miscellaneous category;

(B) If the new activity is within the same five-digit NAICS code (or three-digit SIC code) and the facts relating to the new activity also satisfy at least three of the factors listed in paragraphs (b)(2)(i)(A) through (G) of this section; or

(C) If the pre-existing business is making a component product or end-product form, as defined in § 1.936-5(a)(1),Q&A1, and the new business activity is making an integrated product, or an end-product form with fewer excluded components, that is not within the same six-digit NAICS code (or four-digit SIC code) as the pre-existing business solely because the component product and the integrated product (or two end-product forms) have different end-uses.

(3) *Pre-existing business* —

(i) ***In general.*** Except as provided in paragraph (b)(3)(ii) of this section, a business activity is a pre-existing business of the existing credit claimant if—

(A) The existing credit claimant was actively engaged in the activity within the possession on or before October 13, 1995; and

(B) The existing credit claimant had elected the benefits of the Puerto Rico and possession tax credit pursuant to an election which was in effect for the taxable year that included October 13, 1995.

(ii) ***Acquisition of an existing credit claimant.***

(A) If all the assets of one or more trades or businesses of a corporation of an existing credit claimant are acquired by an affiliated or non-affiliated existing credit claimant which carries on the business activity of the predecessor existing credit claimant, the acquired business activity will be treated as a pre-existing business of the acquiring corporation. A non-affiliated acquiring corporation will not be bound by any section 936(h) election made by the predecessor existing credit claimant with respect to that business activity.

(B) Where all of the assets of one or more trades or businesses of a corporation of an existing credit claimant are acquired by a corporation that is not an existing credit claimant, the acquiring corporation may make a section 936(e) election for the taxable year in which the assets are acquired with the following effects—

(*1*) The acquiring corporation will be treated as an existing

(*2*) The activity will be considered a pre-existing business of the acquiring corporation;

(*3*) The acquiring corporation will be deemed to satisfy the rules of section 936(a)(2) for the year of acquisition; and

(*4*) After making an election under section 936(e), a non-affiliated acquiring corporation will not be bound by elections under sections 936(a)(4) and (h) made by the predecessor existing credit claimant.

(C) For purposes of this section the assets of a trade or business are determined at the time of acquisition provided that the transferee actively conducts the trade or business acquired.

(D) A mere change in the stock ownership of a possessions corporation will not affect its status as an existing credit claimant for purposes of this section.

(4) *Leasing of Assets.*

(i) The leasing of assets (and employees to operate leased assets) will not, for purposes of this section, be considered a new line of business of the existing credit claimant if—

(A) The existing credit claimant used the leased assets in an active trade or business for at least five years;

(B) The existing credit claimant does not through its own officers or staff of employees perform management or operational functions (but not including operational functions performed through leased employees) with respect to the leased assets; and

(C) The existing credit claimant does not perform marketing functions with respect to the leasing of the assets.

(ii) Any income from the leasing of assets not considered a new line of business pursuant to paragraph (b)(4)(i) of this section will not be income from the active conduct of a trade or business (and, therefore, the existing credit claimant may not receive a possession tax credit with respect to such income).

(5) *Timing rule.* The tests for a new line of business in this paragraph (whether the new activity is closely related to a pre-existing business) are applied only at the end of the taxable year during which the new activity is added.

(c) *Substantial* —

(1) *In general.* A new line of business is considered to be substantial as of the earlier of—

(i) The taxable year in which the possessions corporation derives more than 15 percent of its gross income from that new line of business (gross income test); or

(ii) The taxable year in which the possessions corporation directly uses in that new line of business more than 15 percent of its assets (assets test).

(2) *Gross income test.* The denominator in the gross income test is the amount that is the gross income of the possessions corporation for the current taxable year, while the numerator is the amount that is the gross income of the new line of business for the current taxable year. The gross income test is applied at the end of each taxable year. For purposes of this test, if a new line of business is added late in the taxable year, the income is not to be annualized in that year. In the case of a new line of business acquired through the purchase of assets, the gross income of such new line of business for the taxable year of the acquiring corporation that includes the date of acquisition is determined from the date of acquisition through the end of the taxable year. In the case of a consolidated group election made pursuant to section 936(i)(5), the test applies on a company by company basis and not on a consolidated basis.

(3) *Assets test* —

(i) *Computation.* The denominator is the adjusted tax basis of the total assets of the possessions corporation for the current taxable year. The numerator is the adjusted tax basis of the total assets utilized in the new line of business for the current taxable year. The assets test is computed annually using all assets including cash and receivables.

(ii) ***Exception.*** A new line of business of a possessions corporation will not be treated as substantial as a result of meeting the assets test if an event that is not reasonably anticipated causes assets used in the new line of business of the possessions corporation to exceed 15 percent of the adjusted tax basis of the possessions corporation's total assets. For example, an event that is not reasonably anticipated would include the destruction of plant and equipment of the pre-existing business due to a hurricane or other natural disaster, or other similar circumstances beyond the control of the possessions corporation. The expiration of a patent is not such an event and will not permit use of this exception.

(d) ***Examples.*** The following examples illustrate the rules described in paragraphs (a), (b), and (c) of this section. In the following examples, X Corp. is an existing credit claimant unless otherwise indicated:

Example 1. X Corp. is a pharmaceutical corporation which manufactured bulk chemicals (a component product). In March 1997, X Corp. began to also manufacture pills (e.g., finished dosages or an integrated product). The new activity provides products very similar to the products provided by the pre-existing business. The new activity is of a type that is normally conducted in the same business location as the pre-existing business. The activity's economic success depends on the success of the pre-existing business. The manufacture of bulk chemicals is in NAICS code 325411, Medicinal and Botanical Manufacturing, while the manufacture of the pills is in NAICS code 325412, Pharmaceutical Preparation Manufacturing. Although the products have a different end-use, may be marketed to a different class of customers, and may not use similar operating assets, they are within the same five-digit NAICS code and the activity also satisfies paragraphs (b)(2)(i)(A), (C), and (E) of this section. The manufacture of the pills by X Corp. will be considered closely related to the manufacture of the bulk chemicals. Therefore, X Corp. will not be considered to have added a new line of business for purposes of paragraph (b) of this section because it falls within the safe harbor rule of (b)(2)(ii)(B).

Example 2. X Corp. currently manufactures printed circuit boards in a possession. As a result of a technological breakthrough, X Corp. could produce the printed circuit boards more efficiently if it modified its existing production methods. Because demand for its products was high, X Corp. expanded when it modified its production methods. After these modifications to the facilities and production methods, the products produced through the new technology were in the same six-digit NAICS code as products produced previously by X Corp. See paragraph (b)(2)(ii)(A) of this section. Therefore, X Corp. will not be considered to have added a new line of business for purposes of paragraph (b) of this section because it falls within the safe harbor rule of (b)(2)(ii)(A).

Example 3. X Corp. has manufactured Device A in Puerto Rico for a number of years and began to manufacture Device B in Puerto Rico in 1997. Device A and Device B are both used to conduct electrical current to the heart and are both sold to cardiologists. There is no significant change in the type of activity conducted in Puerto Rico after the transfer of the manufacturing of Device B to Puerto Rico. Similar manufacturing equipment, manufacturing processes and skills are used in the manufacture of both devices. Both are regulated and licensed by the Food and Drug Administration. The economic success of Device B is dependent upon the success of Device A only to the extent that the liability and manufacturing prowess with respect to one reflects favorably on the other. Depending upon the heart abnormality, the cardiologist may choose to use Device A, Device B or both on a patient. The manufacture of Device B is treated as a unit with the manufacture of Device A in X Corp.'s accounting records. The manufacture of Device A is in the six-digit NAICS code 339112, Surgical and Medical Instrument Manufacturing. The manufacture of Device B is in the six-digit NAICS code 334510, Electromedical and Electrotherapeutic Apparatus Manufacturing. (The manufacture of Device A is in the four-digit SIC code 3845, Electromedical and Electrotherapeutic

Apparatus. The manufacture of Device B is in the four-digit SIC code 3841, Surgical and Medical Instruments and Apparatus.) The safe harbor of paragraph (b)(2)(ii)(B) of this section applies because the two activities are within the same three-digit SIC code and Corp. X satisfies paragraphs (b)(2)(i)(A), (B), (C), (D), (F), and (G) of this section.

Example 4. X Corp. has been manufacturing house slippers in Puerto Rico since 1990. Y Corp. is a U.S. corporation that is not affiliated with X Corp. and is not an existing credit claimant. Y Corp. has been manufacturing snack food in the United States. In 1997, X Corp. purchased the assets of Y Corp. and began to manufacture snack food in Puerto Rico. House slipper manufacturing is in the six-digit NAICS code 316212 (Four-digit SIC code 3142, House Slippers). The manufacture of snack foods falls under the six-digit NAICS code 311919, Other Snack Food Manufacturing (four-digit SIC code 2052, Cookies and Crackers (pretzels)). Because these activities are not within the same five or six digit NAICS code (or the same three or four-digit SIC code), and because snack food is not an integrated product that contains house slippers, the safe harbor of paragraph (b)(2)(ii) of this section cannot apply. Considering all the facts and circumstances, including the seven factors of paragraph (b)(2)(i) of this section, the snack food manufacturing activity is not closely related to the manufacture of house slippers, and is a new line of business, within the meaning of paragraph (b) of this section.

Example 5. X Corp., a calendar year taxpayer, is an existing credit claimant that has elected the profit-split method for computing taxable income. P Corp. was not an existing credit claimant and manufactured a product in a different five-digit NAICS code than the product manufactured by X Corp. In 1997, X Corp. acquired the stock of P Corp. and liquidated P Corp. in a tax-free liquidation under section 332, but continued the business activity of P Corp. as a new business segment. Assume that this new business segment is a new line of business within the meaning of paragraph (c) of this section. In 1997, X Corp. has gross income from the active conduct of a trade or business in a possession computed under section 936(a)(2) of $500 million and the adjusted tax basis of its assets is $200 million. The new business segment had gross income of $60 million, or 12 percent of the X Corp. gross income, and the adjusted basis of the new segment's assets was $20 million, or 10 percent of the X Corp. total assets. In 1997, X Corp. does not derive more than 15 percent of its gross income, or directly use more that 15 percent of its total assets, from the new business segment. Thus, the new line of business acquired from P Corp. is not a *substantial* new line of business within the meaning of paragraph (c) of this section, and the new activity will not cause X Corp. to lose its status as an existing credit claimant during 1997. In 1998, however, the gross income of X Corp. grew to $750 million while the gross income of the new line of business grew to $150 million, or 20% of the X Corp. 1998 gross income. Thus, in 1998, the new line of business is substantial within the meaning of paragraph (c) of this section, and X Corp. loses its status as an existing credit claimant for 1998 and all years subsequent.

(e) ***Loss of status as existing credit claimant.*** An existing credit claimant that adds a substantial new line of business in a taxable year, or that has a new line of business that becomes substantial in a taxable year, loses its status as an existing credit claimant for that year and all years subsequent.

(f) ***Effective date*** —

(1) ***General rule.*** This section applies to taxable years of a possessions corporation beginning on or after January 25, 2000.

(2) ***Election for retroactive application.*** Taxpayers may elect to apply retroactively all the provisions of this section for any open taxable year beginning after December 31, 1995. Such election will be effective for the year of the election and all subsequent taxable years. This section will not apply to activities of pre-existing businesses for taxable years beginning before January 1, 1996.

[T.D. 8868, 65 FR 3815, Jan. 25, 2000]

§ 1.937-1 Bona fide residency in a possession.

(a) ***Scope*** —

(1) ***In general.*** Section 937(a) and this section set forth the rules for determining whether an individual qualifies as a bona fide resident of a particular possession (the relevant possession) for purposes of subpart D, part III, Subchapter N, Chapter 1 of the Internal Revenue Code as well as section 865(g)(3), section 876, section 881(b), paragraphs (2) and (3) of section 901(b), section 957(c), section 3401(a)(8)(C), and section 7654(a).

(2) ***Definitions.*** For purposes of this section and §§ 1.937-2 and 1.937-3—

(i) ***Possession*** means one of the following United States possessions: American Samoa, Guam, the Northern Mariana Islands, Puerto Rico, or the Virgin Islands. When used in a geographical sense, the term comprises only the territory of each such possession (without application of sections 932(c)(3) and 935(c)(2) (as in effect before the effective date of its repeal)).

(ii) ***United States*** , when used in a geographical sense, is defined in section 7701(a)(9), and without application of sections 932(a)(3) and 935(c)(1) (as in effect before the effective date of its repeal).

(b) ***Bona fide resident*** —

(1) ***General rule.*** An individual qualifies as a bona fide resident of the relevant possession if such individual satisfies the requirements of paragraphs (c) through (e) of this section with respect to such possession.

(2) ***Special rule for members of the Armed Forces.*** A member of the Armed Forces of the United States who qualified as a bona fide resident of the relevant possession in a prior taxable year is deemed to have satisfied the requirements of paragraphs (c) through (e) of this section for a subsequent taxable year if such individual otherwise is unable to satisfy such requirements by reason of being absent from such possession or present in the United States during such year solely in compliance with military orders. Conversely, a member of the Armed Forces of the United States who did not qualify as a bona fide resident of the relevant possession in a prior taxable year is not considered to have satisfied the requirements of paragraphs (c) through (e) of this section for a subsequent taxable year by reason of being present in such possession solely in compliance with military orders. *Armed Forces of the United States* is defined (and members of the Armed Forces are described) in section 7701(a)(15).

(3) ***Juridical persons.*** Except as provided in § 1.881-5(f):

(i) Only natural persons may qualify as bona fide residents of a possession; and

(ii) The rules governing the tax treatment of bona fide residents of a possession do not apply to juridical persons (including corporations, partnerships, trusts, and estates).

(4) ***Transition rule.*** For taxable years beginning before October 23, 2004, and ending after October 22, 2004, an individual is considered to qualify as a bona fide resident of the relevant possession if that individual would be a bona fide resident of the relevant possession by applying the principles of §§ 1.871-2 through 1.871-5.

(5) ***Special rule for cessation of bona fide residence in Puerto Rico.*** See paragraph (f)(2)(ii) of this section for a special rule applicable to a citizen of the United States who ceases to be a bona fide resident of Puerto Rico during a taxable year.

(c) ***Presence test*** —

(1) ***In general.*** A United States citizen or resident alien individual (as defined in section 7701(b)(1)(A)) satisfies the requirements of this paragraph (c) for a taxable year if that individual—

(i) Was present in the relevant possession for at least 183 days during the taxable year;

(ii) Was present in the relevant possession for at least 549 days during the three-year period consisting of the taxable year and the two immediately preceding taxable years, provided that the individual was also present in the relevant possession for at least 60 days during each taxable year of the period;

(iii) Was present in the United States for no more than 90 days during the taxable year;

(iv) During the taxable year had earned income (as defined in § 1.911-3(b)) in the United States, if any, not exceeding in the aggregate the amount specified in section 861(a)(3)(B) and was present for more days in the relevant possession than in the United States; or

(v) Had no significant connection to the United States during the taxable year. See paragraph (c)(5) of this section.

(2) ***Special rule for alien individuals.*** A nonresident alien individual (as defined in section 7701(b)(1)(B)) satisfies the requirements of this paragraph (c) for a taxable year if during that taxable year that individual satisfies the substantial presence test of § 301.7701(b)-1(c) of this chapter (except for the substitution of the name of the relevant possession for the term *United States* where appropriate).

(3) ***Days of presence.*** For purposes of paragraph (c)(1) of this section—

(i) An individual is considered to be present in the relevant possession on:

(A) Any day that the individual is physically present in that possession at any time during the day;

(B) Any day that an individual is outside of the relevant possession to receive, or to accompany on a full-time basis a parent, spouse, or child (as defined in section 152(f)(1)) who is receiving, qualifying medical treatment as defined in paragraph (c)(4) of this section; and

(C) Any day that an individual is outside the relevant possession because the individual leaves or is unable to return to the relevant possession during any—

(*1*) 14-day period within which a major disaster occurs in the relevant possession for which a Federal Emergency Management Agency Notice of a Presidential declaration of a major disaster is issued in the FEDERAL REGISTER; or

(2) Period for which a mandatory evacuation order is in effect for the geographic area in the relevant possession in which the individual's place of abode is located.

(ii) An individual is considered to be present in the United States on any day that the individual is physically present in the United States at any time during the day. Notwithstanding the preceding sentence, the following days will not count as days of presence in the United States:

(A) Any day that an individual is temporarily present in the United States under circumstances described in paragraph (c)(3)(i)(B) or (C) of this section;

(B) Any day that an individual is in transit between two points outside the United States (as described in § 301.7701(b)-3(d) of this chapter), and is physically present in the United States for fewer than 24 hours;

(C) Any day that an individual is temporarily present in the United States as a professional athlete to compete in a charitable sports event (as described in § 301.7701(b)-3(b)(5) of this chapter);

(D) Any day that an individual is temporarily present in the United States as a student (as defined in section 152(f)(2)); and

(E) In the case of an individual who is an elected representative of the relevant possession, or who serves full time as an elected or appointed official or employee of the government of the relevant possession (or any political subdivision thereof), any day spent serving the relevant possession in that role.

(iii) If, during a single day, an individual is physically present—

(A) In the United States and in the relevant possession, that day is considered a day of presence in the relevant possession;

(B) In two possessions, that day is considered a day of presence in the possession where the individual's tax home is located (applying the rules of paragraph (d) of this section).

(4) ***Qualifying medical treatment*** —

(i) ***In general.*** The term *qualifying medical treatment* means medical treatment provided by (or under the supervision of) a physician (as defined in section 213(d)(4)) for an illness, injury, impairment, or physical or mental condition that satisfies the documentation and production requirements of paragraph (c)(4)(iii) of this section and that involves—

(A) Any period of inpatient care in a hospital or hospice and any period immediately before or after that inpatient care to the extent it is medically necessary; or

(B) Any temporary period of inpatient care in a residential medical care facility for medically necessary rehabilitation services;

(ii) ***Inpatient care.*** The term *inpatient care* means care requiring an overnight stay in a hospital, hospice, or residential medical care facility, as the case may be.

(iii) ***Documentation and production requirements.*** In order to satisfy the documentation and production requirements of this paragraph, an individual must, with respect to each qualifying medical treatment, prepare (or obtain), maintain, and, upon a request by the Commissioner (or the person responsible for tax administration in the relevant possession), make available within 30 days of such request:

(A) Records that provide—

(1) The patient's name and relationship to the individual (if the medical treatment is provided to a person other than the individual);

(2) The name and address of the hospital, hospice, or residential medical care facility where the medical treatment was provided;

(3) The name, address, and telephone number of the physician who provided the medical treatment;

(4) The date(s) on which the medical treatment was provided; and

(5) Receipt(s) of payment for the medical treatment;

(B) Signed certification by the providing or supervising physician that the medical treatment was qualified medical treatment within the meaning of paragraph (c)(4)(i) of this section, and setting forth—

(1) The patient's name;

(2) A reasonably detailed description of the medical treatment provided by (or under the supervision of) the physician;

(3) The dates on which the medical treatment was provided; and

(4) The medical facts that support the physician's certification and determination that the treatment was medically necessary; and

(C) Such other information as the Commissioner may prescribe by notice, form, instructions, or other publication (see § 601.601(d)(2) of this chapter).

(5) ***Significant connection.*** For purposes of paragraph (c)(1)(v) of this section—

(i) The term *significant connection to the United States* means—

(A) A permanent home in the United States;

(B) Current registration to vote in any political subdivision of the United States; or

(C) A spouse or child (as defined in section 152(f)(1)) who has not attained the age of 18 whose principal place of abode is in the United States other than—

(1) A child who is in the United States because the child is living with a custodial parent under a custodial decree or multiple support agreement; or

(2) A child who is in the United States as a student (as defined in section 152(f)(2)).

(ii) ***Permanent home*** —

(A) ***General rule.*** For purposes of paragraph (c)(5)(i)(A) of this section, except as provided in paragraph (c)(5)(ii)(B) of this section, the term *permanent home* has the same meaning as in § 301.7701(b)-2(d)(2) of this chapter.

(B) ***Exception for rental property.*** If an individual or the individual's spouse owns property and rents it to another person at any time during the taxable year, then notwithstanding that the rental property may constitute a permanent home under § 301.7701(b)-2(d)(2) of this chapter, it is not a permanent home under this paragraph (c)(5)(ii) unless the taxpayer

uses any portion of it as a residence during the taxable year under the principles of section 280A(d). In applying the principles of section 280A(d) for this purpose, an individual is treated as using the rental property for personal purposes on any day determined under the principles of section 280A(d)(2) or on any day that the rental property (or any portion of it) is not rented to another person at fair rental for the entire day. The rental property is not used for personal purposes on any day on which the principal purpose of the use of the rental property is to perform repair or maintenance work on the property. Whether the principal purpose of the use of the rental property is to perform repair or maintenance work is determined in light of all the facts and circumstances including, but not limited to, the following: The amount of time devoted to repair and maintenance work, the frequency of the use for repair and maintenance purposes during a taxable year, and the presence and activities of companions.

(iii) For purposes of this paragraph (c)(5), the term *spouse* does not include a spouse from whom the individual is legally separated under a decree of divorce or separate maintenance.

(d) ***Tax home test*** —

(1) ***General rule.*** Except as provided in paragraph (d)(2) of this section, an individual satisfies the requirements of this paragraph (d) for a taxable year if that individual did not have a tax home outside the relevant possession during any part of the taxable year. For purposes of section 937 and this section, an individual's tax home is determined under the principles of section 911(d)(3) without regard to the second sentence thereof. Thus, under section 937, an individual's tax home is considered to be located at the individual's regular or principal (if more than one regular) place of business. If the individual has no regular or principal place of business because of the nature of the business, or because the individual is not engaged in carrying on any trade or business within the meaning of section 162(a), then the individual's tax home is the individual's regular place of abode in a real and substantial sense.

(2) ***Exceptions*** —

(i) ***Year of move.*** See paragraph (f) of this section for a special rule applicable to an individual who becomes or ceases to be a bona fide resident of the relevant possession during a taxable year.

(ii) ***Special rule for seafarers.*** For purposes of section 937 and this section, an individual is not considered to have a tax home outside the relevant possession solely by reason of employment on a ship or other seafaring vessel that is predominantly used in local and international waters. For this purpose, a vessel is considered to be predominantly used in local and international waters if, during the taxable year, the aggregate amount of time it is used in international waters and in the waters within three miles of the relevant possession exceeds the aggregate amount of time it is used in the territorial waters of the United States, another possession, and a foreign country.

(iii) ***Special rule for students and government officials.*** Any days described in paragraphs (c)(3)(ii)(D) and (E) of this section are disregarded for purposes of determining whether an individual has a tax home outside the relevant possession under paragraph (d)(1) of this section during any part of the taxable year.

(e) ***Closer connection test*** —

(1) ***General rule.*** Except as provided in paragraph (e)(2) of this section, an individual satisfies the requirements of this paragraph (e) for a taxable year if that individual did not have a closer connection to the United States or a foreign country than to the relevant possession during any part of the taxable year. For purposes of this paragraph (e)—

(i) The principles of section 7701(b)(3)(B)(ii) and § 301.7701(b)-2(d) of this chapter apply (without regard to the final sentence of § 301.7701(b)-2(b) of this chapter); and

(ii) An individual's connections to the relevant possession are compared to the aggregate of the individual's connections with the United States and foreign countries.

(2) ***Exception for year of move.*** See paragraph (f) of this section for a special rule applicable to an individual who becomes or ceases to be a bona fide resident of the relevant possession during a taxable year.

(f) ***Year of move*** —

(1) ***Move to a possession.*** For the taxable year in which an individual's residence changes to the relevant possession, the individual satisfies the requirements of paragraphs (d)(1) and (e)(1) of this section if—

(i) For each of the 3 taxable years immediately preceding the taxable year of the change of residence, the individual is not a bona fide resident of the relevant possession;

(ii) For each of the last 183 days of the taxable year of the change of residence, the individual does not have a tax home outside the relevant possession or a closer connection to the United States or a foreign country than to the relevant possession; and

(iii) For each of the 3 taxable years immediately following the taxable year of the change of residence, the individual is a bona fide resident of the relevant possession.

(2) ***Move from a possession*** —

(i) ***General rule.*** Except for a bona fide resident of Puerto Rico to whom § 1.933-1(b) and paragraph (f)(2)(ii) of this section apply, for the taxable year in which an individual ceases to be a bona fide resident of the relevant possession, the individual satisfies the requirements of paragraphs (d)(1) and (e)(1) of this section if—

(A) For each of the 3 taxable years immediately preceding the taxable year of the change of residence, the individual is a bona fide resident of the relevant possession;

(B) For each of the first 183 days of the taxable year of the change of residence, the individual does not have a tax home outside the relevant possession or a closer connection to the United States or a foreign country than to the relevant possession; and

(C) For each of the 3 taxable years immediately following the taxable year of the change of residence, the individual is not a bona fide resident of the relevant possession.

(ii) ***Year of move from Puerto Rico.*** Notwithstanding an individual's failure to satisfy the presence, tax home, or closer connection test prescribed under paragraph (b)(1) of this section for the taxable year, the individual is a bona fide resident of Puerto Rico for that part of the taxable year described in paragraph (f)(2)(ii)(E) of this section if the individual—

(A) Is a citizen of the United States;

(B) Is a bona fide resident of Puerto Rico for a period of at least 2 taxable years immediately preceding the taxable year;

(C) Ceases to be a bona fide resident of Puerto Rico during the taxable year;

(D) Ceases to have a tax home in Puerto Rico during the taxable year; and

(E) Has a closer connection to Puerto Rico than to the United States or a foreign country throughout the part of the taxable year preceding the date on which the individual ceases to have a tax home in Puerto Rico.

(g) ***Examples.*** The principles of this section are illustrated by the following examples:

Example 1. Presence test. H, a U.S. citizen, is engaged in a profession that requires frequent travel. H spends 195 days of each of the years 2005 and 2006 in Possession N. In 2007, H spends 160 days in Possession N. Under paragraph (c)(1)(ii), H satisfies the presence test of paragraph (c) of this section with respect to Possession N for taxable year 2007. Assuming that in 2007 H does not have a tax home outside of Possession N and does not have a closer connection to the United States or a foreign country under paragraphs (d) and (e) of this section respectively, then regardless of whether H was a bona fide resident of Possession N in 2005 and 2006, H is a bona fide resident of Possession N for taxable year 2007.

Example 2. Presence test. W, a U.S. citizen, lives for part of the taxable year in a condominium, which she owns, located in Possession P. W also owns a house in State N where she lives for 120 days every year to be near her grown children and grandchildren. W is retired and her income consists solely of pension payments, dividends, interest, and Social Security benefits. For 2006, W is only present in Possession P for a total of 175 days because of a 70-day vacation to Europe and Asia. Thus, for taxable year 2006, W is not present in Possession P for at least 183 days, is present in the United States for more than 90 days, and has a significant connection to the United States by reason of her permanent home. However, under paragraph (c)(1)(iv) of this section, W still satisfies the presence test of paragraph (c) of this section with respect to Possession P because she has no earned income in the United States and is present for more days in Possession P than in the United States.

Example 3. Presence test. T, a U.S. citizen, was born and raised in State A, where his mother still lives in the house in which T grew up. T is a sales representative for a company based in Possession V. T lives with his wife and minor children in their house in Possession V. T is registered to vote in Possession V and not in the United States. In 2006, T spends 120 days in State A and another 120 days in foreign countries. When traveling on business to State A, T often stays at his mother's house in the bedroom he used when he was a child. T's stays are always of short duration, and T asks for his mother's permission before visiting to make sure that no other guests are using the room and that she agrees to have him as a guest in her house at that time. Therefore, under paragraph (c)(5)(ii) of this section, T's mother's house is not a permanent home of T. Assuming that no other accommodations in the United States constitute a permanent home with respect to T, then under paragraphs (c)(1)(v) and (c)(5) of this section, T has no significant connection to the United States. Accordingly, T satisfies the presence test of paragraph (c) of this section for taxable year 2006.

Example 4. Alien resident of possession—presence test. F is a citizen of Country G. F's tax home is in Possession C and F has no closer connection to the United States or a foreign country than to Possession C. F is present in Possession C for 123 days and in the United States for 110 days every year. Accordingly, F is a nonresident alien with respect to the United States under section 7701(b), and a bona fide resident of Possession C under paragraphs (b), (c)(2), (d), and (e) of this section.

Example 5. Seafarers—tax home. S, a U.S. citizen, is employed by a fishery and spends 250 days at sea on a fishing vessel in 2006. When not at sea, S resides with his wife at a house they own in Possession G. The fishing vessel upon which S works departs and arrives at various ports in Possession G, other possessions, and foreign countries, but is in international and local waters (within the meaning of paragraph (d)(2) of this section) for 225 days in 2006. Under paragraph (d)(2) of this section, for taxable year 2006, S will not be considered to have a tax home outside Possession G for purposes of section 937 and this section solely by reason of S's employment on board the fishing vessel.

Example 6. Seasonal workers—tax home and closer connection. P, a U.S. citizen, is a permanent employee of a hotel in Possession I, but works only during the tourist season. For the remainder of each year, P lives with her husband and children in Possession Q, where she has no outside employment. Most of P's personal belongings, including her automobile, are located in Possession Q. P is registered to vote in, and has a driver's license issued by, Possession Q. P does her personal banking in Possession Q and P routinely lists her address in Possession Q as her permanent address on forms and documents. P satisfies the presence test of paragraph (c) of this section with respect to both Possession Q and Possession I, because, among other reasons, under paragraph (c)(1)(iii) of this section she does not spend more than 90 days in the United States during the taxable year. P satisfies the tax home test of paragraph (d) of this section only with respect to Possession I, because her regular place of business is in Possession I. P satisfies the closer connection test of paragraph (e) of this section with respect to both Possession Q and Possession I, because she does not have a closer connection to the United States or to any foreign country (and possessions generally are not treated as foreign countries). Therefore, P is a bona fide resident of Possession I for purposes of the Internal Revenue Code.

Example 7. Closer connection to United States than to possession. Z, a U.S. citizen, relocates to Possession V in a prior taxable year to start an investment consulting and venture capital business. Z's wife and two teenage children remain in State C to allow the children to complete high school. Z travels back to the United States regularly to see his wife and children, to engage in business activities, and to take vacations. He has an apartment available for his full-time use in Possession V, but he remains a joint owner of the residence in State C where his wife and children reside. Z and his family have automobiles and personal belongings such as furniture, clothing, and jewelry located at both residences. Although Z is a member of the Possession V Chamber of Commerce, Z also belongs to and has current relationships with social, political, cultural, and religious organizations in State C. Z receives mail in State C, including brokerage statements, credit card bills, and bank advices. Z conducts his personal banking activities in State C. Z holds a State C driver's license and is registered to vote in State C. Based on the totality of the particular facts and circumstances pertaining to Z, Z is not a bona fide resident of Possession V because he has a closer connection to the United States than to Possession V and therefore fails to satisfy the requirements of paragraphs (b)(1) and (e) of this section.

Example 8. Year of move to possession. D, a U.S. citizen, files returns on a calendar year basis. From January 2003 through May 2006, D resides in State R. In June 2006, D moves to Possession N, purchases a house, and accepts a permanent position with a local employer. D's principal place of business from July 1 through December 31, 2006 is in Possession N, and during that period (which totals at least 183 days) D does not have a closer connection to the United States or a foreign country than to Possession N. For the remainder of 2006, and throughout years 2007 through 2009, D continues to live and work in Possession N and maintains a closer connection to Possession N than to the United States or any foreign country. D satisfies the tax home and closer connection

tests for 2006 under paragraphs (d)(2), (e)(2), and (f)(1) of this section. Accordingly, assuming that D also satisfies the presence test in paragraph (c) of this section, D is a bona fide resident of Possession N for all of taxable year 2006.

Example 9. Year of move from possession (other than Puerto Rico). J, a U.S. citizen, files returns on a calendar year basis. From January 2007 through December 2009, J is a bona fide resident of Possession C because she satisfies the requirements of paragraph (b)(1) of this section for each year. J continues to reside in Possession C until September 6, 2010, when she accepts new employment and moves to State H. J's principal place of business from January 1 through September 5, 2010 is in Possession C, and during that period (which totals at least 183 days) J does not have a closer connection to the United States or a foreign country than to Possession C. For the remainder of 2010 and throughout years 2011 through 2013, D continues to live and work in State H and is not a bona fide resident of Possession C. J satisfies the tax home and closer connection tests for 2010 with respect to Possession C under paragraphs (d)(2)(i), (e)(2), and (f)(2)(i) of this section. Accordingly, assuming that J also satisfies the presence test of paragraph (c) of this section, J is a bona fide resident of Possession C for all of taxable year 2010.

Example 10. Year of move from Puerto Rico. R, a U.S. citizen who files returns on a calendar year basis satisfies the requirements of paragraphs (b) through (e) of this section for years 2006 and 2007. From January through April 2008, R continues to reside and maintain his principal place of business in and closer connection to Puerto Rico. On May 5, 2008, R moves and changes his principal place of business (tax home) to State N and later that year establishes a closer connection to the United States than to Puerto Rico. R does not satisfy the presence test of paragraph (c) for 2008 with respect to Puerto Rico. Moreover, because R had a tax home outside of Puerto Rico and establishes a closer connection to the United States in 2008, R does not satisfy the requirements of paragraph (d)(1) or (e)(1) of this section for 2008. However, because R was a bona fide resident of Puerto Rico for at least two taxable years before his change of residence to State N in 2008, he is a bona fide resident of Puerto Rico from January 1 through May 4, 2008 under paragraphs (b)(5) and (f)(2)(ii) of this section. See section 933(2) and § 1.933-1(b) for rules on attribution of income.

(h) ***Information reporting requirement.*** The following individuals are required to file notice of their new tax status in such time and manner as the Commissioner may prescribe by notice, form, instructions, or other publication (see § 601.601(d)(2) of this chapter):

(1) Individuals who take the position for U.S. tax reporting purposes that they qualify as bona fide residents of a possession for a tax year subsequent to a tax year for which they were required to file Federal income tax returns as citizens or residents of the United States who did not so qualify.

(2) Citizens and residents of the United States who take the position for U.S. tax reporting purposes that they do not qualify as bona fide residents of a possession for a tax year subsequent to a tax year for which they were required to file income tax returns (with the Internal Revenue Service, the tax authorities of a possession, or both) as individuals who did so qualify.

(3) Bona fide residents of Puerto Rico or a section 931 possession (as defined in § 1.931-1(c)(1)) who take a position for U.S. tax reporting purposes that they qualify as bona fide residents of that possession for a tax year subsequent to a tax year for which they were required to file income tax returns as bona fide residents of the U.S. Virgin Islands or a section 935 possession (as defined in § 1.935-1(a)(3)(i)).

(i) ***Effective/applicability date.*** Except as provided in this paragraph (i), this section applies to taxable years ending after January 31, 2006. Paragraph (h) of this section also applies to a taxpayer's 3 taxable years immediately preceding the taxpayer's first taxable year ending after October 22, 2004. Taxpayers also may choose to apply this section in its entirety to all taxable years ending after October 22, 2004 for which the statute of limitations under section 6511 is open.

[T.D. 9248, 71 FR 5001, Jan. 31, 2006, as amended by T.D. 9297, 71 FR 66234, Nov. 14, 2006; T.D. 9391, 73 FR 19370, Apr. 9, 2008]

§ 1.937-2 Income from sources within a possession.

(a) ***Scope.*** Section 937(b) and this section set forth the rules for determining whether income is considered to be from sources within a particular possession (the relevant possession) for purposes of the Internal Revenue Code, including section 957(c) and Subpart D, Part III, Subchapter N, Chapter 1 of the Internal Revenue Code, as well as section 7654(a) of the 1954 Internal Revenue Code (until the effective date of its repeal). Paragraphs (c)(1)(ii) and (c)(2) of this section do not apply, however, for purposes of sections 932(a) and (b) and 935(a)(3) (as in effect before the effective date of its repeal). In the case of a possession or territory that administers income tax laws that are identical (except for the substitution of the name of the possession or territory for the term "United States" where appropriate) to those in force in the United States, these rules do not apply for purposes of the application of such laws. These rules also do not affect the determination of whether income is considered to be from sources without the United States for purposes of the Internal Revenue Code.

(b) ***In general.*** Except as provided in paragraphs (c) through (i) of this section, the principles of sections 861 through 865 and the regulations under those provisions (relating to the determination of the gross and the taxable income from sources within and without the United States) generally will be applied in determining the gross and the taxable income from sources within and without the relevant possession. In the application of such principles, it generally will be sufficient to substitute, where appropriate, the name of the relevant possession for the term "United States," and to substitute, where appropriate, the term "bona fide resident of" followed by the name of the relevant possession for the term "United States resident." Furthermore, the term *domestic* will be construed to mean created or organized in the relevant possession. In applying these principles, additional substitutions may be necessary to accomplish the intent of section 937(b) and this section. For example, in applying the principles of sections 863(d) and (e) to individuals under this paragraph (b), the term "bona fide resident of a possession" will be used instead of the term "United States person." In no case, however, will a bona fide resident or other person have, as a result of the application of these principles, more income from sources within the relevant possession than the amount of income from sources within the United States that a similarly situated U.S. person who is not a bona fide resident would have under sections 861 through 865.

(c) ***U.S. income —***

(1) ***In general.*** Except as provided in paragraph (d) of this section, income from sources within the relevant possession will not include any item of income determined under the rules of sections 861 through 865 and the regulations under those provisions to be—

(i) From sources within the United States; or

(ii) Effectively connected with the conduct of a trade or business within the United States.

(2) ***Conduit arrangements.*** Income will be considered to be from sources within the United States for purposes of paragraph (c)(1) of this section if, pursuant to a plan or arrangement—

(i) The income is received in exchange for consideration provided to another person; and

(ii) Such person (or another person) provides the same consideration (or consideration of a like kind) to a third person in exchange for one or more payments constituting income from sources within the United States.

(d) ***Income from certain sales of inventory property.*** For special rules that apply to determine the source of income from certain sales of inventory property, see § 1.863-3(e).

(e) ***Service in the Armed Forces.*** In the case of a member of the Armed Forces of the United States, the following rules will apply for determining the source of compensation for services performed in compliance with military orders:

(1) If the individual is a bona fide resident of a possession and such services are performed in the United States or in another possession, the compensation constitutes income from sources within the possession of which the individual is a bona fide resident (and not from sources within the United States or such other possession).

(2) If the individual is not a bona fide resident of a possession and such services are performed in a possession, the compensation constitutes income from sources within the United States (and not from sources within such possession).

(f) ***Gains from certain dispositions of property*** —

(1) ***Property of former U.S. residents.***

(i) Except to the extent an election is made under paragraph (f)(1)(vi) of this section, income from sources within the relevant possession will not include gains from the disposition of property described in paragraph (f)(1)(ii) of this section by an individual described in paragraph (f)(1)(iii) of this section. See also section 1277(e) of the Tax Reform Act of 1986, Public Law 99-514 (100 Stat. 2085) (providing that gains from the disposition of certain property by individuals who acquired residency in certain possessions will be considered to be from sources within the United States).

(ii) Property is described in this paragraph (f)(1)(ii) when the following conditions are satisfied—

(A) The property is of a kind described in section 731(c)(3)(C)(i) or 954(c)(1)(B); and

(B) The property was owned by the individual before such individual became a bona fide resident of the relevant possession.

(iii) An individual is described in this paragraph (f)(1)(iii) when the following conditions are satisfied—

(A) For the taxable year for which the source of the gain must be determined, the individual is a bona fide resident of the relevant possession; and

(B) For any of the 10 years preceding such year, the individual was a citizen or resident of the United States (other than a bona fide resident of the relevant possession).

(iv) If an individual described in paragraph (f)(1)(iii) of this section exchanges property described in paragraph (f)(1)(ii) of this section for other property in a transaction in which gain or loss is not required to be recognized (in whole or in part) under U.S. income tax principles, such other property will also be considered property described in paragraph (f)(1)(ii) of this section.

(v) If an individual described in paragraph (f)(1)(iii) of this section owns, directly or indirectly, at least 10 percent (by value) of any entity to which property described in paragraph (f)(1)(ii) of this section is transferred in a transaction in which gain or loss is not required to be recognized (in whole or in part) under U.S. income tax principles, any gain recognized upon a disposition of the property by such entity will be treated as income from sources outside the relevant possession if any gain recognized upon a direct or indirect disposition of the individual's interest in such entity would have been so treated under paragraph (f)(1)(iv) of this section.

(vi) Notwithstanding the general rule of paragraph (f)(1)(i) of this section and section 1277(e) of the Tax Reform Act of 1986, Public Law 99-514 (100 Stat. 2085), an individual described in paragraph (f)(1)(iii) of this section may elect to treat as gain from sources within the relevant possession the portion of the gain attributable to the individual's possession holding period. The election under this paragraph (f)(1)(vi) will be considered made if the individual's income tax return for the year of disposition of the property reports the portion of gain attributable to the taxpayer's possession holding period as determined in accordance with paragraph (f)(1)(vi)(A) or paragraph (f)(1)(vi)(B) of this section, as the case may be.

(A) In the case of marketable securities, the portion of gain attributable to the possession holding period will be determined by reference to the fair market value of the marketable security at the close of the market on the first day of the individual's possession holding period. In the event that the individual is a bona fide resident of the relevant possession for more than a single continuous period, the portion of gain described in this paragraph (f)(1)(vi)(A) will be the aggregate of the portions of gain (or offsetting loss) attributable to each possession holding period.

(B) In the case of property other than marketable securities, the portion of gain attributable to the possession holding period in the relevant possession will be determined by multiplying the total gain on disposition of the property by a fraction, the numerator of which is the number of days in the possession holding period and the denominator of which is the total number of days in the individual's holding period for the property. For purposes of the preceding sentence, in the event that the individual is a bona fide resident of the relevant possession for more than a single continuous period, the number of days in the numerator will be the aggregate of the number of days in each possession holding period. For purposes of this paragraph (f)(1)(vi)(B), the denominator will include days that are required to be included in an individual's holding period under section 735(b), section 1223, and any other applicable holding period rule in the Internal Revenue Code.

(vii) For purposes of paragraph (f)(1)(vi) of this section—

(A) The term *marketable securities* means property described in paragraph (f)(1)(ii) of this section that is, throughout the individual's holding period, actively traded within the meaning of § 1.1092(d)-1(a); and

(B) The term *possession holding period* means the part of the individual's holding period for the property during which the individual is a bona fide resident of the relevant possession. However, for this purpose, the possession holding period will be considered to commence in all cases on the first day during such period that the individual does not have a tax home outside the relevant possession. In the event that the individual is a bona fide resident of the relevant possession for more than a single continuous period, each

possession holding period prior to the one ending on the date of sale or other disposition will be considered to end on the first day that the individual has a tax home outside the relevant possession. With respect to the determination of tax home, see § 1.937-1(d).

(2) ***Special rules under section 865 for possessions*** —

(i) Except as provided in paragraph (f)(1) of this section—

(A) Gain that is considered to be derived from sources outside of the United States under section 865(g)(3) will be considered income from sources within Puerto Rico; and

(B) Gain that is considered to be derived from sources outside of the United States under section 865(h)(2)(B) will be considered income from sources within the possession in which the liquidating corporation is created or organized.

(ii) In applying the principles of section 865 and the regulations under that section pursuant to paragraph (b) of this section, the rules of section 865(g) will not apply, but the special rule of section 865(h)(2)(B) will apply with respect to gain recognized upon the liquidation of corporations created or organized in the United States.

(g) ***Dividends*** —

(1) ***Dividends from certain possessions corporations*** —

(i) ***In general.*** Except as provided in paragraph (g)(1)(ii) of this section, with respect to any possessions shareholder, only the possessions source ratio of any dividend paid or accrued by a corporation created or organized in a possession (possessions corporation) will be treated as income from sources within such possession. For purposes of this paragraph (g)—

(A) The *possessions source ratio* will be a fraction, the numerator of which is the gross income of the possessions corporation from sources within the possession in which it is created or organized (applying the rules of this section) for the testing period and the denominator of which is the total gross income of the corporation for the testing period; and

(B) The term *possessions shareholder* means any individual who is a bona fide resident of the possession in which the corporation is created or organized and who owns, directly or indirectly, at least 10 percent of the total voting stock of the corporation.

(ii) ***Dividends from corporations engaged in the active conduct of a trade or business in the relevant possession.*** The entire amount of any dividend paid or accrued by a possessions corporation will be treated as income from sources within the possession in which it is created or organized when the following conditions are met—

(A) 80 percent or more of the gross income of the corporation for the testing period was derived from sources within such possession (applying the rules of this section) or was effectively connected with the conduct of a trade or business in such possession (applying the rules of § 1.937-3); and

(B) 50 percent or more of the gross income of the corporation for the testing period was derived from the active conduct of a trade or business within such possession.

(iii) ***Testing period.*** For purposes of this paragraph (g)(1), the term *testing period* means the 3-year period ending with the close of the taxable year of the payment of the dividend (or for such part of such period as the corporation has been in existence).

(iv) ***Subsidiary look-through rule.*** For purposes of this paragraph (g)(1), if a possessions corporation owns (directly or indirectly) at least 25 percent (by value) of the stock of another corporation, such possessions corporation will be treated as if it—

(A) Directly received its proportionate share of the income of such other corporation; and

(B) Actively conducted any trade or business actively conducted by such other corporation.

(2) ***Dividends from other corporations.*** In applying the principles of section 861 and the regulations under that section pursuant to paragraph (b) of this section, the special rules relating to dividends for which deductions are allowable under section 243 or 245 will not apply.

(h) ***Income inclusions.*** For purposes of determining whether an amount described in section 904(h)(1)(A) constitutes income from sources within the relevant possession—

(1) If the individual owns (directly or indirectly) at least 10 percent of the total voting stock of the corporation from which such amount is derived, the principles of section 904(h)(2) will apply. In the case of an individual who is not a possessions shareholder (as defined in paragraph (g)(1)(i)(B) of this section), the preceding sentence will apply only if the corporation qualifies as a "United States-owned foreign corporation" for purposes of section 904(h); and

(2) In all other cases, the amount will be considered income from sources in the jurisdiction in which the corporation is created or organized.

(i) ***Interest*** —

(1) ***Interest from certain possessions corporations*** —

(i) ***In general.*** Except as provided in paragraph (i)(1)(ii) of this section, with respect to any possessions shareholder (as defined in paragraph (g)(1)(i)(B) of this section), interest paid or accrued by a possessions corporation will be treated as income from sources within the possession in which it is created or organized to the extent that such interest is allocable to assets that generate, have generated, or could reasonably have been expected to generate income from sources within such possession (under the rules of this section) or income effectively connected with the conduct of a trade or business within such possession (under the rules of § 1.937-3). For purposes of the preceding sentence, the principles of §§ 1.861-9 through 1.861-12 will apply.

(ii) ***Interest from corporations engaged in the active conduct of a trade or business in the relevant possession.*** The entire amount of any interest paid or accrued by a possessions corporation will be treated as income from sources within the possession in which it is created or organized when the conditions of paragraphs (g)(1)(ii)(A) and (B) of this section are met (applying the rules of paragraphs (g)(1)(iii) and (iv) of this section).

(2) ***Interest from partnerships.*** Interest paid or accrued by a partnership will be treated as income from sources within a possession only to the extent that such interest is allocable to income effectively connected with the conduct of a trade or business in such possession. For purposes of the preceding sentence, the principles of § 1.882-5 will apply (as if the partnership were a foreign corporation and as if the trade or business in the possession were a trade or business in the United States).

(j) ***Indirect ownership.*** For purposes of this section, the rules of section 318(a)(2) will apply except that the language "5 percent" will be used instead of "50 percent" in section 318(a)(2)(C).

(k) ***Examples.*** The provisions of this section may be illustrated by the following examples:

Example 1. (i) X, a U.S. citizen, resides in State N and acquires stock of Corporation C, a domestic corporation, in 2008 for $10x. X moves to the Northern Mariana Islands (NMI) on March 1, 2009 and changes his principal place of business to NMI on that same date. Assume for purposes of this example that, under § 1.937-1(b) and (f)(1) (year-of-move exception), X is considered a bona fide resident of NMI for 2009 through 2012. On March 1, 2009, the closing value of X's stock in Corporation C, a marketable security (within the meaning of paragraph (f)(1)(vii)(A) of this section), is $20x. On January 3, 2012, X sells all his Corporation C stock for $70x.
(ii) Pursuant to section 1277(e) of the Tax Reform Act of 1986, and absent an election under paragraph (f)(1)(vi) of this section, all of X's gain ($60x) will be treated as income from sources within the United States for all purposes of the Internal Revenue Code (including section 7654, as in effect with respect to the NMI), and (under paragraph (f)(1)(i) of this section) not as income from sources in the NMI. However, pursuant to paragraph (f)(1)(vi) of this section, X may elect on his 2012 income tax return filed with NMI to treat the portion of this gain attributable to X's possession holding period with respect to NMI as gain from sources within NMI. X's possession holding period with respect to NMI begins on March 1, 2009, the date his tax home changes to the NMI. Under paragraph (f)(1)(vi)(A) of this section, the portion of X's gain attributable to this possession holding period is $50x, the excess of the sale price of the stock ($70x) over its closing value ($20x) on the first day of the possession holding period. By reporting $50x of gain on his 2012 NMI return, X will elect under paragraph (f)(1)(vi) of this section to treat that amount as NMI source income.

Example 2. (i) R, a U.S. citizen, resides in State F and acquires a 5 percent interest in Partnership P on January 1, 2009. R moves to Puerto Rico on June 1, 2010 and changes her principal place of business to Puerto Rico on that same date. Assume for purposes of this example that under § 1.937-1(b) and (f)(1) (year-of-move exception), R is considered a bona fide resident of Puerto Rico for 2010 through 2012. On June 1, 2010, R's interest in Partnership P is not a marketable security within the meaning of paragraph (f)(1)(vii)(A) of this section. On December 31, 2012, having owned the interest in Partnership P for a period of 4 years (1461 days), R sells it, recognizing gain of $100x.
(ii) Pursuant to paragraph (f)(1) of this section, and absent an election under paragraph (f)(1)(vi) of this section, the gain will not be treated as income from sources within Puerto Rico for purposes of the Internal Revenue Code (including section 933(1)). However, pursuant to paragraph (f)(1)(vi) of this section, R may elect on her 2012 return filed with the IRS to treat the portion of this gain attributable to R's possession holding period with respect to Puerto Rico as gain from sources within Puerto Rico. R's possession holding period with respect to Puerto Rico is the 945-day period from June 1, 2010, the date her tax home changes to Puerto Rico, through December 31, 2012, the date of sale. Under paragraph (f)(1)(vi)(B) of this section, the portion of R's gain attributable to this possession holding period is $64.68x, computed as follows:

$$\$100x \text{ gain} \times \frac{945 \text{ days in possession holding period}}{1461 \text{ days in total holding period}}$$

(iii) By reporting $64.68x of gain on her 2012 Federal return, R will elect under paragraph (f)(1)(vi) of this section to treat that amount as Puerto Rico source income.

Example 3. X, a bona fide resident of Possession S, a section 931 possession (as defined in § 1.931-1(c)(1)), is engaged in a trade or business in the United States through an office in State H. In 2008, this office materially participates in the sale of inventory property in Possession S, such that the income from these inventory sales is considered effectively connected to this trade or business in the United States under section 864(c)(4)(B)(iii). This income will not be treated as income from sources within Possession S for purposes of section 931(a)(1) pursuant to paragraph (c)(1)(ii) of this section, but nonetheless will continue to be treated as income from sources without the United States under section 862 (for example, for purposes of section 904).

Example 4. (i) X, a bona fide resident of Possession I, owns 25 percent of the outstanding shares of A Corp, a corporation organized under the laws of Possession I. In 2010, X receives a dividend of $70x from A Corp. During 2008 through 2010, A Corp has gross income from the following sources:

	Possession I sources	***Sources outside possession I***
2008	$10x	$20x
2009	20x	10x
2010	25x	15x

(ii) A Corp owns 50 percent of the outstanding shares of B Corp, a corporation organized under the laws of Country FC. During 2008 through 2010, B Corp has gross income from the following sources:

	Possession I sources	***Sources outside possession I***
2008	$10x	$6x
2009	14x	8x
2010	10x	4x

(iii) A Corp is treated as having received 50 percent of the gross income of B Corp. Therefore,

for 2008 through 2010, the gross income of A Corp is from the following sources:

	Possession I sources	*Sources outside possession I*
2008	$15x	$23x
2009	27x	14x
2010	30x	17x
Totals	$72x	$54x

(iv) Pursuant to paragraph (g) of this section, the portion of the dividend of $70x that X receives from Corp A in 2010 that is treated as income from sources within Possession I is 72/126 of $70x, or $40x.

Example 5. X is a U.S. citizen and a bona fide resident of the Northern Mariana Islands (NMI). In 2008, X receives compensation for services performed as a member of the crew of a fishing boat. Ten percent of the services for which X receives compensation are performed in the NMI, and 90 percent of X's services are performed in international waters. Under the principles of section 861(a)(3) as applied pursuant to paragraph (b) of this section, the compensation that X receives for services performed in the NMI is treated as income from sources within the NMI. Under the principles of section 863(d)(1)(A) as applied pursuant to paragraph (b) of this section, the compensation that X receives for services performed in international waters is treated as income from sources within the NMI for purposes of the Internal Revenue Code (including section 7654, as in effect with respect to the NMI). Thus, all of X's compensation for services during 2008 is treated as income from sources within the NMI.

Example 6. X, a U.S. citizen, resides in State L and receives $2,500 of compensation for services performed in Possession J during 2008 for Y, X's employer. X is temporarily present in Possession J in 2008 for a period (or periods) not exceeding a total of 90 days. Y, a U.S. citizen, is not a bona fide resident of Possession J and is not engaged in a trade or business within Possession J. Under the principles of section 861(a)(3) as applied pursuant to paragraph (b) of this section, the compensation that X receives for services performed in Possession J during 2008 is not treated as income from sources within Possession J.

Example 7. (i) Company Y, a corporation organized in State C, produces, markets, and distributes music products. Y enters into a recording contract with Z, a recording artist who is a bona fide resident of the U.S. Virgin Islands (USVI). Pursuant to the contract between Y and Z, Z agrees to perform services as writer, musician, and vocalist on the recording of a new musical composition and related music video. Under the contract, all songs, recordings and related artwork, packaging copy, and liner notes, together with copyrights and other intellectual property in those works, are the sole property of Y, and Z obtains no proprietary rights in that property. As compensation for Z's services, all of which are performed at a recording studio or other locations in the USVI, Y agrees to pay amounts designated as the

"writer's share" to Z based on a percentage of the music products sold. Y also agrees to make an upfront payment to Z as an advance against future portions of Z's writer's share.
(ii) To the extent that Z performs personal services within the USVI, the compensation that Z receives for his services is sourced to the USVI under the principles of section 861(a)(3) and § 1.861-4 as applied pursuant to § 1.937-2(b). If all of Z's services are performed in the USVI, none of the writer's share is derived from sources within the United States under section 861(a)(3) and § 1.861-4, nor is it effectively connected with the conduct of a trade or business in the United States under section 864(c)(3). Accordingly, the U.S. income rule of section 937(b)(2) and paragraph (c)(1) of this section would not operate to prevent Z's services income from being USVI source or USVI effectively connected income within the meaning of section 937(b)(1). If Z also performs services in the United States, however, then the U.S. income rule would apply to the part of Z's compensation that is sourced to the United States under section 861(a)(3) and § 1.861-4. In the event that Y and Z are controlled taxpayers within the meaning of § 1.482-1(i)(5), section 482 and the regulations under that section, including § 1.482-9T(i), would apply to evaluate the arm's length amount charged for Z's controlled services.

(l) ***Effective/applicability dates.*** Except as otherwise provided in this paragraph (l), this section applies to income earned in taxable years ending after April 9, 2008. Taxpayers may choose to apply paragraph (b) of this section to income earned in open taxable years ending after October 22, 2004. Taxpayers may choose to apply paragraph (f)(1) of this section to dispositions made after April 11, 2005.

[T.D. 9391, 73 FR 19370, Apr. 9, 2008, as amended at T.D. 9391, 73 FR 27728, May 14, 2008; T.D. 9391, 73 FR 36594, June 27, 2008; T.D. 9921, 85 FR 79853, Dec. 11, 2020]

§ 1.937-3 Income effectively connected with the conduct of a trade or business in a possession.

(a) ***Scope.*** Section 937(b) and this section set forth the rules for determining whether income is effectively connected with the conduct of a trade or business within a particular possession (the relevant possession) for purposes of the Internal Revenue Code, including sections 881(b) and 957(c) and Subpart D, Part III, Subchapter N, Chapter 1 of the Internal Revenue Code. Paragraph (c) of this section does not apply, however, for purposes of section 881(b). In the case of a possession or territory that administers income tax laws that are identical (except for the substitution of the name of the possession or territory for the term "United States" where appropriate) to those in force in the United States, these rules do not apply for purposes of the application of such laws.

(b) ***In general.*** Except as provided in paragraphs (c) and (d) of this section, the principles of section 864(c) and the regulations under that section (relating to the determination of income, gain or loss that is effectively connected with the conduct of a trade or business within the United States) generally will be applied in determining whether income is effectively connected with the conduct of a trade or business within the relevant possession, without regard to whether the taxpayer qualifies as a nonresident alien individual or a foreign corporation with respect to such possession. Subject to the rules of this section, the principles of section 864(c)(4) will apply for purposes of determining whether income from sources without the relevant possession is effectively connected with the conduct of a trade or business in the relevant possession. For purposes of the preceding sentence, all income other than income from sources within the relevant possession (as determined under the rules of § 1.937-2) will be considered income

from sources without the relevant possession in the application of the principles of section 864(c) under this paragraph (b), it generally will be sufficient to substitute the name of the relevant possession for the term "United States" where appropriate, but additional substitutions may be necessary to accomplish the intent of section 937(b) and this section. In no case, however, will a bona fide resident or other person have, as a result of the application of these principles, more income effectively connected with the conduct of a trade or business in the relevant possession than the amount of U.S. effectively connected income that a similarly situated U.S. person who is not a bona fide resident would have under section 864(c).

(c) ***U.S. income*** —

(1) ***In general.*** Except as provided in paragraph (d) of this section, income considered to be effectively connected with the conduct of a trade or business within the relevant possession will not include any item of income determined under the rules of sections 861 through 865 and the regulations under those provisions to be—

(i) From sources within the United States; or

(ii) Effectively connected with the conduct of a trade or business within the United States.

(2) ***Conduit arrangements.*** Income will be considered to be from sources within the United States for purposes of paragraph (c)(1) of this section if, pursuant to a plan or arrangement—

(i) The income is received in exchange for consideration provided to another person; and

(ii) Such person (or another person) provides the same consideration (or consideration of a like kind) to a third person in exchange for one or more payments constituting income from sources within the United States.

(d) ***Income from certain sales of inventory property.*** Paragraph (c) of this section will not apply to income from sales of inventory property described in § 1.863-3(e).

(e) ***Examples.*** The provisions of this section may be illustrated by the following examples:

Example 1. X is a bona fide resident of Possession I, a section 931 possession (as defined in § 1.931-1(c)(1)). X has an office in Possession I from which X conducts a business consisting of the development and sale of specialized computer software. A purchaser of software will frequently pay X an additional amount to install the software on the purchaser's operating system and to ensure that the software is functioning properly. X performs the installation services at the purchaser's place of business, which may be in Possession I, in the United States, or in another country. The provision of such services is not de minimis and constitutes a separate transaction under the rules of § 1.861-18. Under the principles of section 864(c)(4) as applied pursuant to paragraph (b) of this section, the compensation that X receives for personal services performed outside of Possession I is not considered to be effectively connected with the conduct of a trade or business in Possession I for purposes of section 931(a)(2).

Example 2. (i) F Bank is organized under the laws of Country FC and operates an active banking business from offices in the U.S. Virgin Islands (USVI). In connection with this banking business, F Bank makes loans to and receives interest payments from borrowers who reside in the USVI, in the United States, and in Country FC.

(ii) Under the principles of section 861(a)(1) as applied pursuant to § 1.937-2(b), interest payments received by F Bank from borrowers who reside in the United States or in Country FC constitute income from sources outside of the USVI. Under the principles of section 864(c)(4) as applied pursuant to paragraph (b) of this section, interest income from sources outside of the USVI generally may constitute income that is effectively connected with the conduct of a trade or business within the USVI for purposes of the Internal Revenue Code. However, interest payments received by F Bank from borrowers who reside in the United States constitute income from sources within the United States under section 861(a)(1). Accordingly, under paragraph (c)(1) of this section, such interest income will not be treated as effectively connected with the conduct of a trade or business in the USVI for purposes of the Internal Revenue Code (for example, for purposes of section 934(b)). Interest payments received by F Bank from borrowers who reside in Country FC, however, may be treated as effectively connected with the conduct of a trade or business in the USVI for purposes of the Internal Revenue Code (including section 934(b)).

(iii) To the extent that, as described in section 934(a), the USVI administers income tax laws that are identical (except for the substitution of the name of the USVI for the term "United States" where appropriate) to those in force in the United States, interest payments received by F Bank from borrowers who reside in the United States or in Country FC may be treated as income that is effectively connected with the conduct of a trade or business in the USVI for purposes of F Bank's income tax liability to the USVI under mirrored section 882.

Example 3. (i) G is a partnership that is organized under the laws of, and that operates an active financing business from offices in, Possession I. Interests in G are owned by D, a bona fide resident of Possession I, and N, an alien individual who resides in Country FC. Pursuant to a pre-arrangement, G loans $x to T, a business entity organized under the laws of Country FC, and T in turn loans $y to E, a U.S. resident. In accordance with the arrangement, E pays interest to T, which in turn pays interest to G.
(ii) The arrangement constitutes a conduit arrangement under paragraph (c)(2) of this section, and the interest payments received by G are treated as income from sources within the United States for purposes of paragraph (c)(1) of this section. Accordingly, the interest received by G will not be treated as effectively connected with the conduct of a trade or business in Possession I for purposes of the Internal Revenue Code (including sections 931(a)(2) and 934(b), if applicable with respect to D). Whether such interest constitutes income from sources within the United States for other purposes of the Internal Revenue Code under generally applicable conduit principles will depend on the facts and circumstances. See, for example, *Aiken Indus., Inc.* v. *Commissioner*, 56 T.C. 925 (1971).

(iii) If Possession I administers income tax laws that are identical (except for the substitution of the name of the possession for the term "United States" where appropriate) to those in force in the United States, the interest received by G may be treated as income effectively

> connected with the conduct of a trade or business in Possession I under mirrored section 864(c)(4) for purposes of determining the Possession I territorial income tax liability of N under mirrored section 871.

(f) ***Effective/applicability date.*** Except as otherwise provided in this paragraph (f), this section applies to income earned in taxable years ending after April 9, 2008. Taxpayers may choose to apply paragraph (b) of this section to income earned in open taxable years ending after October 22, 2004.

[T.D. 9391, 73 FR 19374, Apr. 9, 2008, as amended at T.D. 9391, 73 FR 27728, May 14, 2008; T.D. 9921, 85 FR 79853, Dec. 11, 2020; T.D. 10022, 90 FR 3003, Jan. 14, 2025]

CONTROLLED FOREIGN CORPORATIONS

§ 1.951-1 Amounts included in gross income of United States shareholders.

(a) ***In general.*** If a foreign corporation is a controlled foreign corporation (within the meaning of section 957) at any time during any taxable year of such corporation, every person—

(1) Who is a United States shareholder (as defined in section 951(b) and paragraph (g) of this section) of such corporation at any time during such taxable year, and

(2) Who owns (within the meaning of section 958(a)) stock in such corporation on the last day, in such year, on which such corporation is a controlled foreign corporation shall include in his gross income for his taxable year in which or with which such taxable year of the corporation ends, the sum of—

(i) Such shareholder's pro rata share (determined under paragraph (b) of this section) of the corporation's subpart F income (as defined in section 952) for such taxable year of the corporation,

(ii) Such shareholder's pro rata share (determined under paragraph (c)(1) of this section) of the corporation's previously excluded subpart F income withdrawn from investment in less developed countries for such taxable year of the corporation,

(iii) Such shareholder's pro rata share (determined under paragraph (c)(2) of this section) of the corporation's previously excluded subpart F income withdrawn from investment in foreign base company shipping operations for such taxable year of the corporation, and

(iv) The amount determined under section 956 with respect to such shareholder for such taxable year of the corporation (but only to the extent not excluded from gross income under section 959(a)(2)).

(3) For purposes of determining whether a United States shareholder which is a domestic corporation is a personal holding company under section 542 and § 1.542-1, the character of the amount includible in gross income of such domestic corporation under this paragraph shall be determined as if such amount were realized directly by such corporation from the source from which it is realized by the controlled foreign corporation. See paragraph (a) of § 1.957-2 for special limitation on the amount of subpart F income in the case of a controlled foreign corporation described in section 957(b). See section 970(a) and § 1.970-1 which provides for the reduction of subpart F income of export trade corporations.

(4) See § 1.958-1(d) for rules regarding the ownership of stock of a foreign corporation through a domestic partnership for purposes of section 951 and for purposes of any provision that specifically applies by reference to section 951 or the regulations in this part under section 951.

(b) ***Limitation on a United States shareholder's pro rata share of subpart F income*** —

(1) ***In general.*** For purposes of paragraph (a)(2)(i) of this section, a United States shareholder's pro rata share (determined in accordance with the rules of paragraph (e) of this section) of the foreign corporation's subpart F income for the taxable year of such corporation is—

(i) The amount which would have been distributed with respect to the stock which such shareholder owns (within the meaning of section 958(a)) in such corporation if on the last day, in such corporation's taxable year, on which such corporation is a controlled foreign corporation it had distributed pro rata to its shareholders an amount which bears the same ratio to its subpart F income for such taxable year as the part of such year during which such corporation is a controlled foreign corporation bears to the entire taxable year, reduced by—

(ii) The lesser of—

(A) The amount of distributions received by any other person during such taxable year as a dividend with respect to such stock multiplied by a fraction, the numerator of which is the subpart F income of such corporation for the taxable year and the denominator of which is the sum of the subpart F income and the tested income (as defined in section 951A(c)(2)(A) and § 1.951A-2(b)(1)) of such corporation for the taxable year, and

(B) The dividend which would have been received by such other person if the distributions by such corporation to all its shareholders had been the amount which bears the same ratio to the subpart F income of such corporation for the taxable year as the part of such year during which such shareholder did not own (within the meaning of section 958(a)) such stock bears to the entire taxable year.

(2) ***Examples.*** The following examples illustrate the application of this paragraph (b).

(i) ***Facts.*** The following facts are assumed for purposes of the examples.

(A) A is a United States shareholder.

(B) M is a foreign corporation that has only one class of stock outstanding.

(C) B is a nonresident alien individual, and stock owned by B is not considered owned by a domestic entity under section 958(b).

(D) P and R are foreign corporations.

(E) All persons use the calendar year as their taxable year.

(F) Year 1 ends on or after October 3, 2018, and has 365 days.

(ii) ***Example 1*** —

(A) ***Facts.*** A owns 100% of the stock of M throughout Year 1. For Year 1, M derives $100x of subpart F income, has $100x of earnings and profits, and makes no distributions.

(B) ***Analysis.*** Under section 951(a)(2) and paragraph (b)(1) of this section, A's pro rata share of the subpart F income of M for Year 1 is $100x.

(iii) *Example 2* —

(A) ***Facts.*** The facts are the same as in paragraph (b)(2)(ii)(A) of this section (the facts in *Example 1*), except that instead of holding 100% of the stock of M for the entire year, A sells 60% of such stock to B on May 26, Year 1. Thus, M is a controlled foreign corporation for the period January 1, Year 1, through May 26, Year 1.

(B) ***Analysis.*** Under section 951(a)(2)(A) and paragraph (b)(1)(i) of this section, A's pro rata share of the subpart F income of M is limited to the subpart F income of M which bears the same ratio to its subpart F income for such taxable year ($100x) as the part of such year during which M is a controlled foreign corporation bears to the entire taxable year (146/365). Accordingly, under section 951(a)(2) and paragraph (b)(1) of this section, A's pro rata share of the subpart F income of M for Year 1 is $40x ($100x × 146/365).

(iv) *Example 3* —

(A) ***Facts.*** The facts are the same as in paragraph (b)(2)(ii)(A) of this section (the facts in *Example 1*), except that instead of holding 100% of the stock of M for the entire year, A holds 60% of such stock on December 31, Year 1, having acquired such stock on May 26, Year 1, from B, who owned such stock from January 1, Year 1. Before A's acquisition of the stock, M had distributed a dividend of $15x to B in Year 1 with respect to the stock so acquired by A. M has no tested income for Year 1.

(B) ***Analysis.*** Under section 951(a)(2) and paragraph (b)(1) of this section, A's pro rata share of the subpart F income of M for Year 1 is $21x, such amount being determined as follows:

TABLE 1 TO PARAGRAPH (b)(2)(iv)(B)

M's subpart F income for Year 1		$100x
Less: Reduction under section 951(a)(2)(A) for period (1-1 through 5-26) during which M is not a controlled foreign corporation ($100x × 146/365)		40x
Subpart F income for Year 1 as limited by section 951(a)(2)(A)		60x
A's pro rata share of subpart F income as determined under section 951(a)(2)(A) (0.6 × $60x)		36x
Less: Reduction under section 951(a)(2)(B) for dividends received by B during Year 1 with respect to the stock of M acquired by A:		
(i) Dividend received by B ($15x), multiplied by a fraction ($100x/$100x), the numerator of which is the subpart F income of such corporation for the taxable year ($100x) and the denominator of which is the sum of the subpart F income and the tested income of such corporation for the taxable year ($100x) ($15x × ($100x/$100x))	15x	
(ii) B's pro rata share (60%) of the amount which bears the same ratio to the subpart F income of such corporation for the taxable year ($100x) as the part of such year during which A did not own (within the meaning of section 958(a)) such stock bears to the entire taxable year (146/365) (0.6 × $100x × (146/365))	24x	
(iii) Amount of reduction under section 951(a)(2)(B) (lesser of (i) or (ii))		15x

A's pro rata share of subpart F income as determined under section 951(a)(2)	21x

(v) *Example 4* —

(A) ***Facts.*** A owns 100% of the only class of stock of P throughout Year 1, and P owns 100% of the only class of stock of R throughout Year 1. For Year 1, R derives $100x of subpart F income, has $100x of earnings and profits, and distributes a dividend of $20x to P. R has no gross tested income. P has no income for Year 1 other than the dividend received from R.

(B) ***Analysis.*** Under section 951(a)(2) and paragraph (b)(1) of this section, A's pro rata share of the subpart F income of R for Year 1 is $100x. A's pro rata share of the subpart F income of R is not reduced under section 951(a)(2)(B) and paragraph (b)(1)(ii) of this section for the dividend of $20x paid to P because there was no part of Year 1 during which A did not own (within the meaning of section 958(a)) the stock of R. Under section 959(b), the $20x distribution from R to P is not again includible in the gross income of A under section 951(a). The $20x distribution from R to P is not includible in the gross tested income of P.

(vi) *Example 5* —

(A) ***Facts.*** The facts are the same as in paragraph (b)(2)(v)(A) of this section (the facts in *Example 4*), except that instead of holding 100% of the stock of R for the entire year, P holds 60% of such stock on December 31, Year 1, having acquired such stock on March 14, Year 1, from B. Before P's acquisition of the stock, R had distributed a dividend of $100x to B in Year 1 with respect to the stock so acquired by P. The stock interest so acquired by P was owned by B from January 1, Year 1, until acquired by P. R also has $300x of tested income for Year 1.

(B) *Analysis* —

(*1*) ***Limitation of pro rata share of subpart F income.*** Under section 951(a)(2) and paragraph (b)(1) of this section, A's pro rata share of the subpart F income of M for Year 1 is $28x, such amount being determined as follows:

TABLE 1 TO PARAGRAPH (b)(2)(vi)(B)(*1*)

R's subpart F income for Year 1	$100x
Less: Reduction under section 951(a)(2)(A) for period (1-1 through 3-14) during which R is not a controlled foreign corporation ($100x × 73/365)	20x
Subpart F income for Year 1 as limited by section 951(a)(2)(A)	80x
A's pro rata share of subpart F income as determined under section 951(a)(2)(A) (0.6 × $80x)	48x
Less: Reduction under section 951(a)(2)(B) for dividends received by B during Year 1 with	

respect to the stock of R indirectly acquired by A:		
(i) Dividend received by B ($100x) multiplied by a fraction ($100x/$400x), the numerator of which is the subpart F income of such corporation for the taxable year ($100x) and the denominator of which is the sum of the subpart F income and the tested income of such corporation for the taxable year ($400x) ($100x × ($100x/$400x))	25x	
(ii) B's pro rata share (60%) of the amount which bears the same ratio to the subpart F income of such corporation for the taxable year ($100x) as the part of such year during which A did not own (within the meaning of section 958(a)) such stock bears to the entire taxable year (73/365) (0.6 × $100x × (73/365))	12x	
(iii) Amount of reduction under section 951(a)(2)(B) (lesser of (i) or (ii))		12x
A's pro rata share of subpart F income as determined under section 951(a)(2)		36x

(2) ***Limitation of pro rata share of tested income.*** Under section 951A(e)(1) and § 1.951A-1(d)(2), A's pro rata share of the tested income of M for Year 1 is $108x, such amount being determined as follows:

TABLE 1 TO PARAGRAPH (b)(2)(vi)(B)(2)

R's tested income for Year 1		$300x
Less: Reduction under section 951(a)(2)(A) for period (1-1 through 3-14) during which R is not a controlled foreign corporation ($300x × 73/365)		60x
Tested income for Year 1 as limited by under section 951(a)(2)(A)		240x
A's pro rata share of tested income as determined under § 1.951A-1(d)(2) (0.6 × $240x)		144x
Less: Reduction under section 951(a)(2)(B for dividends received by B during Year 1 with respect to the stock of R indirectly acquired by A:		
(i) Dividend received by B ($100x) multiplied by a fraction ($300x/$400x), the numerator of which is the tested income of such corporation for the taxable year ($300x) and the denominator of which is the sum of the subpart F income and the tested income of such corporation for the taxable year ($400x) ($100x × ($300x/$400x))	75x	
(ii) B's pro rata share (60%) of the amount which bears the same ratio to the tested income of such corporation for the taxable year ($300x) as the part of such year during which A did not own (within the meaning of section 958(a)) such stock bears to the entire taxable year (73/365) (0.6 × $300x × (73/365))	36x	
(iii) Amount of reduction under section 951(a)(2)(B) (lesser of (i) or (ii))		36x
A's pro rata share of tested income under section 951A(e)(1)		108x

(c)-(d) [Reserved]

(e) ***Pro rata share of subpart F income defined —***

(1) ***In general —***

(i) ***Hypothetical distribution.*** For purposes of paragraph (b) of this section, a United States shareholder's pro rata share of a controlled foreign corporation's subpart F income for a taxable year is the amount that bears the same ratio to the corporation's subpart F income for the taxable year as the amount of the corporation's allocable earnings and profits that would be distributed with respect to the stock of the corporation which the United States shareholder owns (within the meaning of section 958(a)) for the taxable year bears to the total amount of the corporation's allocable earnings and profits that would be distributed with respect to the stock owned by all the shareholders of the corporation if all the allocable earnings and profits of the corporation for the taxable year (not reduced by actual distributions during the year) were distributed (*hypothetical distribution*) on the last day of the corporation's taxable year on which such corporation is a controlled foreign corporation (*hypothetical distribution date*).

(ii) ***Definition of allocable earnings and profits.*** For purposes of this paragraph (e), the term *allocable earnings and profits* means, with respect to a controlled foreign corporation for a taxable year, the amount that is the greater of—

(A) The earnings and profits of the corporation for the taxable year determined under section 964; and

(B) The sum of the subpart F income (as determined under section 952 after the application of section 951A(c)(2)(B)(ii) and § 1.951A-6(b)) of the corporation for the taxable year and the tested income (as defined in section 951A(c)(2)(A) and § 1.951A-2(b)(1)) of the corporation for the taxable year.

(2) ***One class of stock.*** If a controlled foreign corporation for a taxable year has only one class of stock outstanding on the hypothetical distribution date, the amount of the corporation's allocable earnings and profits distributed in the hypothetical distribution with respect to each share in the class of stock is determined as if the hypothetical distribution were made pro rata with respect to each share in the class of stock.

(3) ***More than one class of stock.*** If a controlled foreign corporation for a taxable year has more than one class of stock outstanding on the hypothetical distribution date, the amount of the corporation's allocable earnings and profits distributed in the hypothetical distribution with respect to each class of stock is determined based on the distribution rights of each class of stock on the hypothetical distribution date, which amount is then further distributed pro rata with respect to each share in the class of stock. Subject to paragraphs (e)(4) through (6) of this section, the distribution rights of a class of stock are determined taking into account all facts and circumstances related to the economic rights and interest in the allocable earnings and profits of the corporation of each class, including the terms of the class of stock, any agreement among the shareholders and, if and to the extent appropriate, the relative fair market value of shares of stock. For purposes of this paragraph (e)(3), facts and circumstances do not include actual distributions (including distributions by redemption) or any amount treated as a dividend under any other provision of subtitle A of the Internal Revenue Code (for example, under section 78, 356(a)(2), 367(b), or 1248) made during the taxable year that includes the hypothetical distribution date.

(4) ***Special rules*** —

(i) ***Redemptions, liquidations, and returns of capital.*** No amount of allocable earnings and profits is distributed in the hypothetical distribution with respect to a particular class of stock based on the terms of the class of stock of the controlled foreign corporation or any agreement or

arrangement with respect thereto that would result in a redemption (even if such redemption would be treated as a distribution of property to which section 301 applies pursuant to section 302(d)), a distribution in liquidation, or a return of capital.

(ii) ***Certain cumulative preferred stock.*** If a controlled foreign corporation has outstanding a class of redeemable preferred stock with cumulative dividend rights and dividend arrearages on such stock do not compound at least annually at a rate that equals or exceeds the applicable Federal rate (as defined in section 1274(d)(1)) that applies on the date the stock is issued for the term from such issue date to the mandatory redemption date based on a comparable compounding assumption (the *relevant AFR*), the amount of the corporation's allocable earnings and profits distributed in the hypothetical distribution with respect to the class of stock may not exceed the amount of dividends actually paid during the taxable year with respect to the class of stock plus the present value at the end of the controlled foreign corporation's taxable year of the unpaid current dividends with respect to the class determined using the relevant AFR and assuming the dividends will be paid at the mandatory redemption date. For purposes of this paragraph (e)(4)(ii), if the class of preferred stock does not have a mandatory redemption date, the mandatory redemption date is the date that the class of preferred stock is expected to be redeemed based on all facts and circumstances.

(iii) ***Dividend arrearages.*** If there is an arrearage in dividends for prior taxable years with respect to a class of preferred stock of a controlled foreign corporation, an amount of the corporation's allocable earnings and profits is distributed in the hypothetical distribution to the class of preferred stock by reason of the arrearage only to the extent the arrearage exceeds the accumulated earnings and profits of the controlled foreign corporation remaining from prior taxable years beginning after December 31, 1962, as of the beginning of the taxable year, or the date on which such stock was issued, whichever is later (the *applicable date*). If there is an arrearage in dividends for prior taxable years with respect to more than one class of preferred stock, the previous sentence is applied to each class in order of priority, except that the accumulated earnings and profits remaining after the applicable date are reduced by the allocable earnings and profits necessary to satisfy arrearages with respect to classes of stock with a higher priority. For purposes of this paragraph (e)(4)(iii), the amount of any arrearage with respect to stock described in paragraph (e)(4)(ii) of this section is determined in the same manner as the present value of unpaid current dividends on such stock under paragraph (e)(4)(ii) of this section.

(5) ***Restrictions or other limitations on distributions*** —

(i) ***In general.*** A restriction or other limitation on distributions of an amount of earnings and profits by a controlled foreign corporation is not taken into account in determining the amount of the corporation's allocable earnings and profits distributed in a hypothetical distribution to a class of stock of the controlled foreign corporation.

(ii) ***Definition.*** For purposes of paragraph (e)(5)(i) of this section, a restriction or other limitation on distributions includes any limitation that has the effect of limiting the distribution of an amount of earnings and profits by a controlled foreign corporation with respect to a class of stock of the corporation, other than currency or other restrictions or limitations imposed under the laws of any foreign country as provided in section 964(b).

(iii) ***Exception for certain preferred distributions.*** For purposes of paragraph (e)(5)(i) of this section, the right to receive periodically a fixed amount (whether determined by a percentage of par value, a reference to a floating coupon rate, a stated return expressed in terms of a certain

amount of U.S. dollars or foreign currency, or otherwise) with respect to a class of stock the distribution of which is a condition precedent to a further distribution of earnings and profits that year with respect to any class of stock (not including a distribution in partial or complete liquidation) is not a restriction or other limitation on the distribution of earnings and profits by a controlled foreign corporation.

(iv) ***Illustrative list of restrictions and limitations.*** Except as provided in paragraph (e)(5)(iii) of this section, restrictions or other limitations on distributions include, but are not limited to—

(A) An arrangement that restricts the ability of a controlled foreign corporation to pay dividends on a class of stock of the corporation until a condition or conditions are satisfied (for example, until another class of stock is redeemed);

(B) A loan agreement entered into by a controlled foreign corporation that restricts or otherwise affects the ability to make distributions on its stock until certain requirements are satisfied; or

(C) An arrangement that conditions the ability of a controlled foreign corporation to pay dividends to its shareholders on the financial condition of the corporation.

(6) ***Transactions and arrangements with a principal purpose of changing pro rata shares.*** Appropriate adjustments must be made to the allocation of allocable earnings and profits that would be distributed (without regard to this paragraph (e)(6)) in a hypothetical distribution with respect to any share of stock outstanding as of the hypothetical distribution date to disregard the effect on the hypothetical distribution of any transaction or arrangement that is undertaken as part of a plan a principal purpose of which is the avoidance of Federal income taxation by changing the amount of allocable earnings and profits distributed in any hypothetical distribution with respect to such share. This paragraph (e)(6) also applies for purposes of the pro rata share rules described in § 1.951A-1(d) that reference this paragraph (e), including the rules in § 1.951A-1(d)(3) that determine the pro rata share of qualified business asset investment based on the pro rata share of tested income.

(7) ***Examples.*** The following examples illustrate the application of this paragraph (e).

(i) ***Facts.*** Except as otherwise stated, the following facts are assumed for purposes of the examples:

(A) FC1 is a controlled foreign corporation.

(B) USP1 and USP2 are domestic corporations.

(C) Individual A is a foreign individual, and FC2 is a foreign corporation that is not a controlled foreign corporation.

(D) All persons use the calendar year as their taxable year.

(E) Any ownership of FC1 by any shareholder is for all of Year 1.

(F) The common shareholders of FC1 are entitled to dividends when declared by FC1's board of directors.

(G) There are no accrued but unpaid dividends with respect to preferred shares, the preferred stock is not described in paragraph (e)(4)(ii) of this section, and common shares have positive liquidation value.

(H) There are no other facts and circumstances related to the economic rights and interest of any class of stock in the allocable earnings and profits of a foreign corporation, and no transaction or arrangement was entered into as part of a plan a principal purpose of which is the avoidance of Federal income taxation.

(I) FC1 has neither tested income within the meaning of section 951A(c)(2)(A) and § 1.951A-2(b)(1) nor tested loss within the meaning of section 951A(c)(2)(B)(i) and § 1.951A-2(b)(2).

(ii) *Example 1: Single class of stock* —

(A) ***Facts.*** FC1 has outstanding 100 shares of one class of stock. USP1 owns 60 shares of FC1. USP2 owns 40 shares of FC1. For Year 1, FC1 has $1,000x of earnings and profits and $100x of subpart F income within the meaning of section 952.

(B) ***Analysis.*** FC1 has one class of stock. Therefore, under paragraph (e)(2) of this section, FC1's allocable earnings and profits of $1,000x are distributed in the hypothetical distribution pro rata to each share of stock. Accordingly, under paragraph (e)(1) of this section, for Year 1, USP1's pro rata share of FC1's subpart F income is $60x ($100x × $600x/$1,000x) and USP2's pro rata share of FC1's subpart F income is $40x ($100x × $400x/$1,000x).

(iii) *Example 2: Common and preferred stock* —

(A) ***Facts.*** FC1 has outstanding 70 shares of common stock and 30 shares of 4% nonparticipating, voting preferred stock with a par value of $10x per share. USP1 owns all of the common shares. Individual A owns all of the preferred shares. For Year 1, FC1 has $100x of earnings and profits and $50x of subpart F income within the meaning of section 952.

(B) ***Analysis.*** The distribution rights of the preferred shares are not a restriction or other limitation within the meaning of paragraph (e)(5) of this section. Under paragraph (e)(3) of this section, the amount of FC1's allocable earnings and profits distributed in the hypothetical distribution with respect to Individual A's preferred shares is $12x (0.04 × $10x × 30) and with respect to USP1's common shares is $88x ($100x−$12x). Accordingly, under paragraph (e)(1) of this section, USP1's pro rata share of FC1's subpart F income is $44x ($50x − $88x/$100x) for Year 1.

(iv) *Example 3: Restriction based on cumulative income* —

(A) ***Facts.*** FC1 has outstanding 10 shares of common stock and 400 shares of 2% nonparticipating, voting preferred stock with a par value of $1x per share. USP1 owns all of the common shares. FC2 owns all of the preferred shares. USP1 and FC2 cause the governing documents of FC1 to provide that no dividends may be paid to the common shareholders until FC1 cumulatively earns $100,000x of income. For Year 1, FC1 has $50x of earnings and profits and $50x of subpart F income within the meaning of section 952.

(B) ***Analysis.*** The agreement restricting FC1's ability to pay dividends to common shareholders until FC1 cumulatively earns $100,000x of income is a restriction or other limitation within the meaning of paragraph (e)(5) of this section. Therefore, the restriction is disregarded for purposes of determining the amount of FC1's allocable earnings and profits distributed in the hypothetical distribution to a class of stock. The distribution rights of the preferred

shares are not a restriction or other limitation within the meaning of paragraph (e)(5) of this section. Under paragraph (e)(3) of this section, the amount of FC1's allocable earnings and profits distributed in the hypothetical distribution with respect to FC2's preferred shares is $8x (0.02 × $1x × 400) and with respect to USP1's common shares is $42x ($50x − $8x). Accordingly, under paragraph (e)(1) of this section, USP1's pro rata share of FC1's subpart F income is $42x for Year 1.

(v) *Example 4: Redemption rights* —

(A) ***Facts.*** FC1 has outstanding 40 shares of common stock and 10 shares of 4% nonparticipating, preferred stock with a par value of $50x per share. Pursuant to the terms of the preferred stock, FC1 has the right to redeem at any time, in whole or in part, the preferred stock. FC2 owns all of the preferred shares. USP1, wholly owned by FC2, owns all of the common shares. Pursuant to the governing documents of FC1, no dividends may be paid to the common shareholders while the preferred stock is outstanding. For Year 1, FC1 has $100x of earnings and profits and $100x of subpart F income within the meaning of section 952.

(B) ***Analysis.*** The agreement restricting FC1's ability to pay dividends to common shareholders while the preferred stock is outstanding is a restriction or other limitation within the meaning of paragraph (e)(5) of this section. Therefore, the restriction is disregarded for purposes of determining the amount of FC1's allocable earnings and profits distributed in the hypothetical distribution to a class of stock. Under paragraph (e)(4)(i) of this section, no amount of allocable earnings and profits is distributed in the hypothetical distribution to the preferred shareholders on the hypothetical distribution date as a result of FC1's right to redeem the preferred shares. This is the case regardless of the restriction on paying dividends to the common shareholders while the preferred stock is outstanding, and regardless of the fact that a redemption of FC2's preferred shares would be treated as a distribution to which section 301 applies under section 302(d) (due to FC2's constructive ownership of the common shares). Thus, neither the restriction on paying dividends to the common shareholders while the preferred stock is outstanding nor FC1's redemption rights with respect to the preferred shares affects the distribution of allocable earnings and profits in the hypothetical distribution to FC1's shareholders. However, the distribution rights of the preferred shares are not a restriction or other limitation within the meaning of paragraph (e)(5) of this section. As a result, the amount of FC1's allocable earnings and profits distributed in the hypothetical distribution with respect to FC2's preferred shares is $20x (0.04 × $50x × 10) and with respect to USP1's common shares is $80x ($100x−$20x). Accordingly, under paragraph (e)(1) of this section, USP1's pro rata share of FC1's subpart F income is $80x for Year 1.

(vi) *Example 5: Shareholder owns common and preferred stock* —

(A) ***Facts.*** FC1 has outstanding 40 shares of common stock and 60 shares of 6% nonparticipating, nonvoting preferred stock with a par value of $100x per share. USP1 owns 30 shares of the common stock and 15 shares of the preferred stock during Year 1. The remaining 10 shares of common stock and 45 shares of preferred stock of FC1 are owned by Individual A. For Year 1, FC1 has $1,000x of earnings and profits and $500x of subpart F income within the meaning of section 952.

(B) ***Analysis.*** The right of the holder of the preferred stock to receive 6% of par value is not a restriction or other limitation within the meaning of paragraph (e)(5) of this section. The amount of FC1's allocable earnings and profits distributed in the hypothetical distribution with respect to FC1's preferred shares is $360x (0.06 × $100x × 60) and with respect to its common shares is $640x ($1,000x−$360x). As a result, the amount of FC1's allocable earnings and profits distributed in the hypothetical distribution to USP1 is $570x, the sum of $90x ($360x × 15/60) with respect to its preferred shares and $480x ($640x × 30/40) with respect to its common shares. Accordingly, under paragraph (e)(1) of this section, USP1's pro rata share of the subpart F income of FC1 is $285x ($500x × $570x/$1,000x).

(vii) ***Example 6: Subpart F income and tested income*** —

(A) ***Facts.*** FC1 has outstanding 700 shares of common stock and 300 shares of 4% nonparticipating, voting preferred stock with a par value of $100x per share. USP1 owns all of the common shares. USP2 owns all of the preferred shares. For Year 1, FC1 has $10,000x of earnings and profits, $2,000x of subpart F income within the meaning of section 952, and $9,000x of tested income within the meaning of section 951A(c)(2)(A) and § 1.951A-2(b)(1).

(B) ***Analysis*** —

(*1*) ***Hypothetical distribution.*** The allocable earnings and profits of FC1 determined under paragraph (e)(1)(ii) of this section are $11,000x, the greater of FC1's earnings and profits as determined under section 964 ($10,000x) or the sum of FC1's subpart F income and tested income ($2,000x + $9,000x). The amount of FC1's allocable earnings and profits distributed in the hypothetical distribution with respect to USP2's preferred shares is $1,200x (0.04 × $100x × 300) and with respect to USP1's common shares is $9,800x ($11,000x−$1,200x).

(*2*) ***Pro rata share of subpart F income.*** Accordingly, under paragraph (e)(1) of this section, USP1's pro rata share of FC1's subpart F income is $1,782x ($2,000x × $9,800x/$11,000x), and USP2's pro rata share of FC1's subpart F income is $218x ($2,000x × $1,200x/$11,000x).

(*3*) ***Pro rata share of tested income.*** Accordingly, under § 1.951A-1(d)(2), USP1's pro rata share of FC1's tested income is $8,018x ($9,000x × $9,800x/$11,000x), and USP2's pro rata share of FC1's tested income is $982x ($9,000x × $1,200x/$11,000x) for Year 1.

(viii) ***Example 7: Subpart F income and tested loss*** —

(A) ***Facts.*** The facts are the same as in paragraph (e)(7)(vii)(A) of this section (the facts in *Example 6*), except that for Year 1, FC1 has $8,000x of earnings and profits, $10,000x of subpart F income within the meaning of section 952 (but without regard to the limitation in section 952(c)(1)(A)), and $2,000x of tested loss within the meaning of section 951A(c)(2)(B)(i) and § 1.951A-2(b)(2). Under section 951A(c)(2)(B)(ii) and § 1.951A-6(b), the earnings and profits of FC1 are increased for purposes of section 952(c)(1)(A) by the amount of FC1's tested loss. Accordingly, after the application of section 951A(c)(2)(B)(ii) and § 1.951A-6(b), the subpart F income of FC1 is $10,000x.

(B) ***Analysis*** —

(1) ***Pro rata share of subpart F income.*** The allocable earnings and profits determined under paragraph (e)(1)(ii) of this section are $10,000x, the greater of the earnings and profits of FC1 determined under section 964 ($8,000x) or the sum of FC1's subpart F income and tested income ($10,000x + $0). The amount of FC1's allocable earnings and profits distributed in the hypothetical distribution with respect to USP2's preferred shares is $1,200x (.04 × $100x × 300) and with respect to USP1's common shares is $8,800x ($10,000x−$1,200x). Accordingly, under paragraph (e)(1) of this section, for Year 1, USP1's pro rata share of FC1's subpart F income is $8,800x and USP2's pro rata share of FC1's subpart F income is $1,200x.

(2) ***Pro rata share of tested loss.*** The allocable earnings and profits determined under § 1.951A-1(d)(4)(i)(B) are $2,000x, the amount of FC1's tested loss. Under § 1.951A-1(d)(4)(i)(C), the entire $2,000x of tested loss is allocated in the hypothetical distribution to USP1's common shares. Accordingly, USP1's pro rata share of the tested loss is $2,000x.

(f) ***Determination of holding period.*** For purposes of sections 951 through 964, the holding period of an asset (including stock of a controlled foreign corporation) shall be determined by excluding the day on which such asset is acquired and including the day on which such asset is disposed of. The application of this paragraph may be illustrated by the following example:

Example. On June 30, 1963, United States person E acquires 70 of the 100 shares of the only class of stock of foreign corporation A from nonresident alien B, who until such time owns all such 100 shares. E sells 10 shares of stock of such corporation on November 30, 1963, and 60 shares on December 31, 1963, to nonresident alien F. Corporation A is a controlled foreign corporation for the period beginning with July 1, 1963, and extending through December 31, 1963. As to the 10 shares of stock sold on November 30, 1963, E is treated as not owning such shares at any time after November 30, 1963, nor before July 1, 1963. As to the remaining 60 shares of stock, E is treated as not owning them before July 1, 1963, or after December 31, 1963.

(g) ***United States shareholder defined*** —

(1) ***In general.*** For purposes of sections 951 through 964, the term *United States shareholder* means, with respect to a foreign corporation, a United States person (as defined in section 957(c)) who owns within the meaning of section 958(a), or is considered as owning by applying the rules of ownership of section 958(b), 10 percent or more of the total combined voting power of all classes of stock entitled to vote of such foreign corporation, or 10 percent or more of the total value of shares of all classes of stock of such foreign corporation.

(2) ***Percentage of total combined voting power owned by United States person*** —

(i) ***Meaning of combined voting power.*** In determining for purposes of subparagraph (1) of this paragraph whether a United States person owns the requisite percentage of voting power of all classes of stock entitled to vote, consideration will be given to all the facts and circumstances in each case. In any case where—

(*a*) A foreign corporation has more than one class of stock outstanding, and

(*b*) One or more United States persons own (within the meaning of section 958) shares of any one class of stock which possesses the power to elect, appoint, or replace a person, or persons, who with respect to such corporation, exercise the powers ordinarily exercised by a member of the board of directors of a domestic corporation, the percentage of the total

combined voting power with respect to such corporation owned by any such United States person shall be his proportionate share of the percentage of the persons exercising the powers ordinarily exercised by members of the board of directors of a domestic corporation (described in (*b*) of this subdivision) which such class of stock (as a class) possesses the power to elect, appoint, or replace. In all cases, however, a United States person will be deemed to own 10 percent or more of the total combined voting power with respect to a foreign corporation if such person owns (within the meaning of section 958) 20 percent or more of the total number of shares of a class of stock of such corporation possessing one or more powers enumerated in paragraph (b)(1) of § 1.957-1. Whether a foreign corporation is a controlled foreign corporation for purposes of sections 951 through 964 shall be determined by applying the rules of section 957 and §§ 1.957-1 through 1.957-4.

(ii) ***Illustration.*** The application of this paragraph may be illustrated by the following examples:

Example 1. Foreign corporation S has two classes of capital stock outstanding, consisting of 60 shares of class A stock and 40 shares of class B stock. Each class of the outstanding stock is entitled to participate on a share for share basis in any dividend distributions by S Corporation. The owners of a majority of the class A stock are entitled to elect 7 of the 10 corporate directors, and the owners of a majority of the class B stock are entitled to elect the other 3 of the 10 directors. Thus, the class A stock (as a class) possesses 70 percent of the total combined voting power of all classes of stock entitled to vote of S Corporation, and the class B stock (as a class) possesses 30 percent of such voting power. D, a United States person, owns 31 shares of the class A stock and thus owns 36,167 percent (31/60 × 70 percent) of the total combined voting power of all classes of stock entitled to vote of S Corporation. By reason of the ownership of such voting power, D is a United States shareholder of S Corporation under section 951(b). For purposes of section 957, S Corporation is a controlled foreign corporation by reason of D's ownership of a majority of the class A stock, as illustrated in example 2 of paragraph (c) of § 1.957-1. E, a United States person, owns eight shares of the class A stock and thus owns 9.333 percent (8/60 × 70 percent) of the total combined voting power of all classes of stock entitled to vote of S Corporation. Since E owns only 9.333 percent of such voting power and less than 20 percent of the number of shares of the class A stock, he is not a United States shareholder of S Corporation under section 951(b). F, a United States person, owns 14 shares of the class B stock and thus owns 10.5 percent (14/40 × 30 percent) of the total combined voting power of all classes of stock entitled to vote of S Corporation. By reason of the ownership of such voting power, F is a United States shareholder of S Corporation under section 951(b).

Example 2. Foreign corporation R has three classes of stock outstanding, consisting of 10 shares of class A stock, 20 shares of class B stock, and 300 shares of class C stock. Each class of the outstanding stock is entitled to participate on a share for share basis in any distribution by R Corporation. The owners of a majority of the class A stock are entitled to elect 6 of the 10 corporate directors, and the owners of a majority of the class B stock are entitled to elect the other 4 of the 10 directors. The class C stock is not entitled to vote. D, E, and F, United States persons, each own 2 shares of the class A stock and 100 shares of the class C stock. As owners of a majority of the class A stock, D, E, and F elect 6 members of the board of directors. D, E, and F are United States shareholders of R Corporation under section 951(b) since each owns 20 percent of the total number of shares of the class A stock which possesses the power to elect a majority of the board of directors of R Corporation. For purposes of section 957, R Corporation is a controlled foreign corporation by reason of the ownership by D, E, and F of a majority of the class A stock, as illustrated in example 2 of paragraph (c) of § 1.957-1.

(h) ***Applicability dates.*** Paragraphs (a), (b)(1)(ii), (b)(2), (e)(1)(ii)(B), and (g)(1) of this section apply to taxable years of foreign corporations beginning after December 31, 2017, and to taxable years of United States shareholders in which or with which such taxable years of foreign corporations end. Except for paragraph (e)(1)(ii)(B) of this section, paragraph (e) of this section applies to taxable years of United States shareholders ending on or after October 3, 2018.

[T.D. 6795, 30 FR 935, Jan. 29, 1965, as amended by T.D. 7893, 48 FR 22507, May 19, 1983; T.D. 9222, 70 FR 49866, Aug. 25, 2005; 70 FR 67906, Nov. 9, 2005; T.D. 9251, 71 FR 8944, Feb. 22, 2006; T.D. 9866, 84 FR 29337, June 21, 2019; 84 FR 44223, Aug. 23, 2019; 84 FR 53052, Oct. 4, 2019; T.D. 9960, 87 FR 3654, Jan. 25, 2022]

§ 1.951-2 [Reserved]

§ 1.951-3 Coordination of subpart F with foreign personal holding company provisions.

A United States shareholder (as defined in section 951(b)) who is required under section 551(b) to include in his gross income for his taxable year his share of the undistributed foreign personal holding company income for the taxable year of a foreign personal holding company (as defined in section 552) which for that taxable year is a controlled foreign corporation (as defined in section 957) shall not be required to include in his gross income for his taxable year under section 951(a) and paragraph (a) of § 1.951-1 any amount attributable to the earnings and profits of such corporation for that taxable year of such corporation. If a foreign corporation is both a foreign personal holding company and a controlled foreign corporation for the same period which is only a part of its taxable year, then, for purposes of applying the immediately preceding sentence, such corporation shall be deemed to be, for such part of such year, a foreign personal holding company and not a controlled foreign corporation and the earnings and profits of such corporation for the taxable year shall be deemed to be that amount which bears the same ratio to its earnings and profits for the taxable year as such part of the taxable year bears to the entire taxable year. The application of this section may be illustrated by the following examples:

Example 1. A, a United States shareholder, owns 100 percent of the only class of stock of controlled foreign corporation M which, in turn, owns 100 percent of the only class of stock of controlled foreign corporation N. A and Corporations M and N use the calendar year as a taxable year. During 1963, N Corporation derives $40,000 of gross income all of which is foreign personal holding company income within the meaning of section 553; thus, N Corporation is a foreign personal holding company for such year within the meaning of section 552(a). For 1963, N Corporation has undistributed foreign personal holding company income (as defined in section 556(a)) of $30,000, derives $25,000 of subpart F income, and has earnings and profits of $32,000. During 1963, M Corporation derives $100,000 of gross income (including as a dividend under section 555(c)(2) the $30,000 of N Corporation's undistributed foreign personal holding company income), 65 percent of which is foreign personal holding company income within the meaning of section 553. Therefore, M Corporation is a foreign personal holding company for such year. For 1963, M Corporation has undistributed foreign personal holding company income (as defined in section 556(a)) of $90,000, determined by taking into account under section 552(c)(1) N Corporation's $30,000 of undistributed foreign personal holding company income for such year; in addition, M Corporation derives $50,000 of subpart F income and has earnings and profits of $92,000. Neither M Corporation nor N Corporation makes any actual distributions during 1963. A is required under section 551(b) to include in his gross income for 1963 as a dividend the $90,000 of M Corporation's undistributed foreign personal holding company income for such year. For 1963, A is not required to include in his gross income under section 951(a) any of the $50,000 subpart F income of M Corporation or of the $25,000 subpart F income of N Corporation.

Example 2. The facts are the same as in example 1, except that only 45 percent of M Corporation's gross income (determined by including under section 555(c)(2) the $30,000 of N Corporation's undistributed foreign personal holding company income) is foreign personal holding company income within the meaning of section 553; accordingly, M Corporation is not a foreign personal holding company for 1963. Since for such year M Corporation is not a foreign personal holding company, the undistributed foreign personal holding company income ($30,000) of N Corporation is not required under section 555(b) to be included in the gross income of M Corporation for 1963; as a result, such income is not required under section 551(b) to be included in the gross income of A for such year even though N Corporation is a foreign personal holding company for that year. For 1963, A is required to include $75,000 in his gross income under section 951(a)(1)(A)(i) and paragraph (a) of § 1.951-1, consisting of the $50,000 subpart F income of M Corporation and the $25,000 subpart F income of N Corporation.

Example 3. The facts are the same as in example 1, except that in 1963 N Corporation actually distributes $30,000 to M Corporation and M Corporation, in turn, actually distributes $90,000 to A. Under section 556 the undistributed foreign personal holding company income of both M corporation and N Corporation is thus reduced to zero; accordingly, no amount is included in the gross income of A under section 551(b) by reason of his interest in corporations M and N. A must include $75,000 in his gross income for 1963 under section 951(a)(1)(A)(i) and paragraph (a) of § 1.951-1, consisting of the $50,000 subpart F income of M Corporation and the $25,000 subpart F income of N Corporation. Of the $90,000 distribution received by A from M Corporation, $75,000 is excludable from his gross income under section 959(a)(1) as previously taxed earnings and profits; the remaining $15,000 is includible in his gross income for 1963 as a dividend.

Example 4. (a) A, a United States shareholder, owns 100 percent of the only class of stock of controlled foreign corporation P, organized on January 1, 1963. Both A and P Corporation use the calendar year as a taxable year. During 1963, 1964, and 1965, P Corporation is not a foreign personal holding company as defined in section 552(a); in each of such years, P Corporation derives dividend income of $10,000 which constitutes foreign personal holding company income (within the meaning of § 1.954-2) but under 26 CFR 1.954-1(b)(1) (Revised as of April 1, 1975) excludes such amounts from foreign base company income as dividends received from, and reinvested in, qualified investments in less developed countries. Corporation P's earnings and profits accumulated for 1963, 1964, and 1965 and determined under paragraph (b)(2) of § 1.955-1 are $40,000. For 1966, P Corporation is a foreign personal holding company, has predistribution earnings and profits of $10,000, derives $10,000 of income which is both foreign personal holding company income within the meaning of section 553 and subpart F income within the meaning of section 952, distributes $8,000 to A, and has undistributed foreign personal holding company income of $2,000 within the meaning of section 556. In addition, for 1966 P Corporation has a withdrawal (determined under section 955(a) as in effect before the enactment of the Tax Reduction Act of 1975 but without regard to its earnings and profits for such year) of $25,000 of previously excluded subpart F income from investment in less developed countries. A is required under section 551(b) to include in his gross income for 1966 as a dividend the $2,000 undistributed foreign personal holding company income. The $8,000 distribution is includible in A's gross income for 1966 under sections 61(a)(7) and 301 as a distribution to which section 316(a)(2) applies. Corporation P's $25,000 withdrawal of previously excluded subpart F income from investment in less developed countries is includible in A's gross income for 1966 under section 951(a)(1)(A)(ii) and paragraph (a)(2) of § 1.951-1.

(b) If P Corporation's earnings and profits accumulated for 1963, 1964, and 1965 were $15,000, instead of $40,000, the result would be the same as in paragraph (a) of this example, except that a withdrawal of only $15,000 of previously excluded subpart F income from investment in less developed countries would be includible in A's gross income for 1966 under section 951(a)(1)(A)(ii) and paragraph (a)(2) of § 1.951-1.

(c) The principles of this example also apply to withdrawals (determined under section 955(a), as in effect before the enactment of the Tax Reduction Act of 1975) of previously excluded subpart F income from investment in less developed countries effected after the effective date of such Act, and to withdrawals (determined under section 955(a), as amended by such Act) of previously excluded subpart F income from investment in foreign base company shipping operations.

Example 5. (a) The facts are the same as in paragraph (a) of example 4, except that, instead of having a $25,000 decrease in qualified investments in less developed countries for 1966, P Corporation invests $20,000 in tangible property (not described in section 956(b)(2)) located in the United States and such investment constitutes an increase (determined under section 956(a) but without regard to the earnings and profits of P Corporation for 1966) in earnings invested in United States property. Corporation P's earnings and profits accumulated for 1963, 1964, and 1965 and determined under paragraph (b)(1) of § 1.956-1 are $22,000. The result is the same as in paragraph (a) of example 4, except that instead of including the $25,000 withdrawal, A must include $20,000 in his gross income for 1966 under section 951(a)(1)(B) and paragraph (a)(2)(iv) of § 1.951-1 as an investment of earnings in United States property.
(b) If P Corporation's earnings and profits accumulated for 1963, 1964, and 1965 were $9,000 instead of $22,000, the result would be the same as in paragraph (a) of this example, except that only $9,000 would be includible in A's gross income for 1966 under section 951(a)(1)(B) and paragraph (a)(2)(iv) of § 1.951-1 as an investment of earnings in United States property.

[T.D. 6795, 30 FR 937, Jan. 29, 1965, as amended by T.D. 7893, 48 FR 22508, May 19, 1983]

§ 1.951A-1 General provisions.

(a) ***Overview*** —

(1) ***In general.*** This section and §§ 1.951A-2 through 1.951A-7 (collectively, the *section 951A regulations*) provide rules to determine a United States shareholder's income inclusion under section 951A, describe certain consequences of an income inclusion under section 951A with respect to controlled foreign corporations and their United States shareholders, and define certain terms for purposes of section 951A and the section 951A regulations. This section provides general rules for determining a United States shareholder's inclusion of global intangible low-taxed income, including a rule relating to the application of section 951A and the section 951A regulations to domestic partnerships and their partners. Section 1.951A-2 provides rules for determining a controlled foreign corporation's tested income or tested loss. Section 1.951A-3 provides rules for determining a controlled foreign corporation's qualified business asset investment. Section 1.951A-4 provides rules for determining a controlled foreign corporation's tested interest expense and tested interest income. Section 1.951A-5 provides rules relating to the treatment of the inclusion of global intangible low-taxed

income for certain purposes. Section 1.951A-6 provides certain adjustments to earnings and profits and basis of a controlled foreign corporation related to a tested loss. Section 1.951A-7 provides dates of applicability.

(2) ***Scope.*** Paragraph (b) of this section provides the general rule requiring a United States shareholder to include in gross income its global intangible low-taxed income for a U.S. shareholder inclusion year. Paragraph (c) of this section provides rules for determining the amount of a United States shareholder's global intangible low-taxed income for the U.S. shareholder inclusion year, including a rule for the application of section 951A and the section 951A regulations to consolidated groups. Paragraph (d) of this section provides rules for determining a United States shareholder's pro rata share of certain items for purposes of determining the United States shareholder's global intangible low-taxed income. Paragraph (e) of this section provides rules for the treatment of a domestic partnership and its partners for purposes of section 951A and the section 951A regulations. Paragraph (f) of this section provides additional definitions for purposes of this section and the section 951A regulations.

(b) ***Inclusion of global intangible low-taxed income.*** Each person who is a United States shareholder of any controlled foreign corporation and owns section 958(a) stock of any such controlled foreign corporation includes in gross income in the U.S. shareholder inclusion year the shareholder's GILTI inclusion amount, if any, for the U.S. shareholder inclusion year.

(c) ***Determination of GILTI inclusion amount*** —

(1) ***In general.*** Except as provided in paragraph (c)(4) of this section, the term *GILTI inclusion amount* means, with respect to a United States shareholder and a U.S. shareholder inclusion year, the excess (if any) of—

(i) The shareholder's net CFC tested income (as defined in paragraph (c)(2) of this section) for the year, over

(ii) The shareholder's net deemed tangible income return (as defined in paragraph (c)(3) of this section) for the year.

(2) ***Definition of net CFC tested income.*** The term *net CFC tested income* means, with respect to a United States shareholder and a U.S. shareholder inclusion year, the excess (if any) of—

(i) The aggregate of the shareholder's pro rata share of the tested income of each tested income CFC (as defined in § 1.951A-2(b)(1)) for a CFC inclusion year that ends with or within the U.S. shareholder inclusion year, over

(ii) The aggregate of the shareholder's pro rata share of the tested loss of each tested loss CFC (as defined in § 1.951A-2(b)(2)) for a CFC inclusion year that ends with or within the U.S. shareholder inclusion year.

(3) ***Definition of net deemed tangible income return*** —

(i) ***In general.*** The term *net deemed tangible income return* means, with respect to a United States shareholder and a U.S. shareholder inclusion year, the excess (if any) of—

(A) The shareholder's deemed tangible income return (as defined in paragraph (c)(3)(ii) of this section) for the U.S. shareholder inclusion year, over

(B) The shareholder's specified interest expense (as defined in paragraph (c)(3)(iii) of this section) for the U.S. shareholder inclusion year.

(ii) ***Definition of deemed tangible income return.*** The term *deemed tangible income return* means, with respect to a United States shareholder and a U.S. shareholder inclusion year, 10 percent of the aggregate of the shareholder's pro rata share of the qualified business asset investment (as defined in § 1.951A-3(b)) of each tested income CFC for a CFC inclusion year that ends with or within the U.S. shareholder inclusion year.

(iii) ***Definition of specified interest expense.*** The term *specified interest expense* means, with respect to a United States shareholder and a U.S. shareholder inclusion year, the excess (if any) of—

(A) The aggregate of the shareholder's pro rata share of the tested interest expense (as defined in § 1.951A-4(b)(1)) of each controlled foreign corporation for a CFC inclusion year that ends with or within the U.S. shareholder inclusion year, over

(B) The aggregate of the shareholder's pro rata share of the tested interest income (as defined in § 1.951A-4(b)(2)) of each controlled foreign corporation for a CFC inclusion year that ends with or within the U.S. shareholder inclusion year.

(4) ***Determination of GILTI inclusion amount for consolidated groups.*** For purposes of section 951A and the section 951A regulations, a member of a consolidated group (as defined in § 1.1502-1(h)) determines its GILTI inclusion amount taking into account the rules provided in § 1.1502-51.

(d) ***Determination of pro rata share*** —

(1) ***In general.*** For purposes of paragraph (c) of this section, each United States shareholder that owns section 958(a) stock of a controlled foreign corporation as of a hypothetical distribution date determines its pro rata share (if any) of each tested item of the controlled foreign corporation for the CFC inclusion year that includes the hypothetical distribution date and ends with or within the U.S. shareholder inclusion year. Except as otherwise provided in this paragraph (d), a United States shareholder's pro rata share of each tested item is determined independently of its pro rata share of each other tested item. In no case may the sum of the pro rata share of any tested item of a controlled foreign corporation for a CFC inclusion year allocated to stock under this paragraph (d) exceed the amount of such tested item of the controlled foreign corporation for the CFC inclusion year. Except as modified in this paragraph (d), a United States shareholder's pro rata share of any tested item is determined under the rules of section 951(a)(2) and § 1.951-1(b) and (e) in the same manner as those provisions apply to subpart F income. Under section 951(a)(2) and § 1.951-1(b) and (e), as modified by this paragraph (d), a United States shareholder's pro rata share of any tested item for a U.S. shareholder inclusion year is determined with respect to the section 958(a) stock of the controlled foreign corporation owned by the United States shareholder on a hypothetical distribution date with respect to a CFC inclusion year that ends with or within the U.S. shareholder inclusion year. A United States shareholder's pro rata share of any tested item is translated into United States dollars using the average exchange rate for the CFC inclusion year of the controlled foreign corporation. Paragraphs (d)(2) through (5) of this section provide rules for determining a United States shareholder's pro rata share of each tested item of a controlled foreign corporation.

(2) ***Tested income*** —

(i) ***In general.*** Except as provided in paragraph (d)(2)(ii) of this section, a United States shareholder's pro rata share of the tested income of each tested income CFC for a U.S. shareholder inclusion year is determined under section 951(a)(2) and § 1.951-1(b) and (e), substituting “tested income” for “subpart F income” each place it appears, other than in § 1.951-1(e)(1)(ii)(B) and the denominator of the fraction described in § 1.951-1(b)(1)(ii)(A).

(ii) ***Special rule for prior allocation of tested loss.*** In any case in which tested loss has been allocated to any class of stock in a prior CFC inclusion year under paragraph (d)(4)(iii) of this section, tested income is first allocated to each such class of stock in the order of its liquidation priority to the extent of the excess (if any) of the sum of the tested loss allocated to each such class of stock for each prior CFC inclusion year under paragraph (d)(4)(iii) of this section, over the sum of the tested income allocated to each such class of stock for each prior CFC inclusion year under this paragraph (d)(2)(ii). Paragraph (d)(2)(i) of this section applies for purposes of determining a United States shareholder's pro rata share of the remainder of the tested income, except that, for purposes of the hypothetical distribution of section 951(a)(2)(A) and § 1.951-1(b)(1)(i) and (e)(1)(i), the amount of allocable earnings and profits of the tested income CFC is reduced by the amount of tested income allocated under the first sentence of this paragraph (d)(2)(ii). For an example of the application of this paragraph (d)(2), see paragraph (d)(4)(iv)(B) of this section (*Example 2*).

(3) ***Qualified business asset investment*** —

(i) ***In general.*** Except as provided in paragraphs (d)(3)(ii) of this section, a United States shareholder's pro rata share of the qualified business asset investment of a tested income CFC for a U.S. shareholder inclusion year bears the same ratio to the total qualified business asset investment of the tested income CFC for the CFC inclusion year as the United States shareholder's pro rata share of the tested income of the tested income CFC for the U.S. shareholder inclusion year bears to the total tested income of the tested income CFC for the CFC inclusion year.

(ii) ***Special rule for excess hypothetical tangible return*** —

(A) ***In general.*** If the tested income of a tested income CFC for a CFC inclusion year is less than the hypothetical tangible return of the tested income CFC for the CFC inclusion year, a United States shareholder's pro rata share of the qualified business asset investment of the tested income CFC for a United States shareholder inclusion year bears the same ratio to the qualified business asset investment of the tested income CFC as the United States shareholder's pro rata share of the hypothetical tangible return of the CFC for the U.S. shareholder inclusion year bears to the total hypothetical tangible return of the CFC for the CFC inclusion year.

(B) ***Determination of pro rata share of hypothetical tangible return.*** For purposes of paragraph (d)(3)(ii)(A) of this section, a United States shareholder's pro rata share of the hypothetical tangible return of a CFC for a CFC inclusion year is determined in the same manner as the United States shareholder's pro rata share of the tested income of the CFC for the CFC inclusion year under paragraph (d)(2) of this section by treating the amount of the hypothetical tangible return as the amount of tested income.

(C) ***Definition of hypothetical tangible return.*** For purposes of this paragraph (d)(3)(ii), the term *hypothetical tangible return* means, with respect to a tested income CFC for a CFC inclusion year, 10 percent of the qualified business asset investment of the tested income CFC for the CFC inclusion year.

(iii) ***Examples.*** The following examples illustrate the application of paragraphs (d)(2) and (3) of this section. See also § 1.951-1(e)(7)(vii) (*Example 6*) (illustrating a United States shareholder's pro rata share of tested income).

(A) ***Example 1*** —

(*1*) ***Facts.*** FS, a controlled foreign corporation, has outstanding 70 shares of common stock and 30 shares of 4% nonparticipating, cumulative preferred stock with a par value of $10x per share. P Corp, a domestic corporation and a United States shareholder of FS, owns all of the common shares. Individual A, a United States citizen and a United States shareholder, owns all of the preferred shares. Individual A, FS, and P Corp use the calendar year as their taxable year. Individual A and P Corp are shareholders of FS for all of Year 4. At the beginning of Year 4, FS had no dividend arrearages with respect to its preferred stock. For Year 4, FS has $100x of earnings and profits, $120x of tested income, and no subpart F income within the meaning of section 952. FS also has $750x of qualified business asset investment for Year 4.

(*2*) ***Analysis*** —

(*i*) ***Determination of pro rata share of tested income.*** For purposes of determining P Corp's pro rata share of FS's tested income under paragraph (d)(2) of this section, the amount of FS's allocable earnings and profits for purposes of the hypothetical distribution described in § 1.951-1(e)(1)(i) is $120x, the greater of its earnings and profits as determined under section 964 ($100x) and the sum of its subpart F income and tested income ($0 + $120x). Under paragraph (d)(2) of this section and § 1.951-1(e)(3), the amount of FS's allocable earnings and profits distributed in the hypothetical distribution with respect to Individual A's preferred shares is $12x (0.04 × $10x × 30) and the amount distributed with respect to P Corp's common shares is $108x ($120x − $12x). Accordingly, under paragraph (d)(2) of this section and § 1.951-1(e)(1), Individual A's pro rata share of FS's tested income is $12x, and P Corp's pro rata share of FS's tested income is $108x for Year 4.

(*ii*) ***Determination of pro rata share of qualified business asset investment.*** The special rule of paragraph (d)(3)(ii)(A) of this section does not apply because FS's tested income of $120x is not less than FS's hypothetical tangible return of $75x, which is 10% of FS's qualified business asset investment of $750x. Accordingly, under the general rule of paragraph (d)(3)(i) of this section, Individual A's and P Corp's respective pro rata shares of FS's qualified business asset investment bears the same ratio to FS's total qualified business asset investment as their respective pro rata shares of FS's tested income bears to FS's total tested income. Thus, Individual A's pro rata share of FS's qualified business asset investment is $75x ($750x × $12x/$120x), and P Corp's pro rata share of FS's qualified business asset investment is $675x ($750x × $108x/$120x).

(B) ***Example 2*** —

(*1*) ***Facts.*** The facts are the same as in paragraph (d)(3)(iv)(A)(*1*) of this section (the facts in *Example 1* of this section), except that FS has $1,500x of qualified business asset investment for Year 4.

(*2*) ***Analysis*** —

(*i*) ***Determination of pro rata share of tested income.*** The analysis and the result are the same as in paragraph (d)(3)(iv)(A)(*2*)(*i*) of this section (paragraph (i) of the analysis in *Example 1* of this section).

(*ii*) ***Determination of pro rata share of qualified business asset investment.*** The special rule of paragraph (d)(3)(ii)(A) of this section applies because FS's tested income of $120x is less than FS's hypothetical tangible return of $150x, which is 10% of FS's qualified business asset investment of $1,500x. Under paragraph (d)(3)(ii)(A) of this section, Individual A's and P Corp's respective pro rata shares of FS's qualified business asset investment bears the same ratio to FS's qualified business asset investment as their respective pro rata shares of the hypothetical tangible return of FS bears to the total hypothetical tangible return of FS. Under paragraph (d)(3)(ii)(B) of this section, P Corp's and Individual A's respective pro rata share of FS's hypothetical tangible return is determined under paragraph (d)(2) of this section in the same manner as their respective pro rata shares of the tested income of FS by treating the hypothetical tangible return as the amount of tested income. The amount of FS's allocable earnings and profits for purposes of the hypothetical distribution described in § 1.951-1(e)(1)(i) is $150x, the greater of its earnings and profits as determined under section 964 ($100x) and the sum of its subpart F income and hypothetical tangible return ($0 + $150x). The amount of FS's allocable earnings and profits distributed in the hypothetical distribution is $12x (.04 × $10x × 30) with respect to Individual A's preferred shares and $138x ($150x − $12x) with respect to P Corp's common shares. Accordingly, Individual A's pro rata share of FS's qualified business asset investment is $120x ($1,500x × $12x/$150x), and P Corp's pro rata share of FS's qualified business asset investment is $1,380x ($1,500x × $138x/$150x).

(C) ***Example 3*** —

(*1*) ***Facts.*** P Corp, a domestic corporation and a United States shareholder, owns 100% of the only class of stock of FS, a controlled foreign corporation, from January 1 of Year 1, until May 26 of Year 1. On May 26 of Year 1, P Corp sells all of its FS stock to R Corp, a domestic corporation that is not related to P Corp, and recognizes no gain or loss on the sale. R Corp, a United States shareholder of FS, owns 100% of the stock of FS from May 26 through December 31 of Year 1. For Year 1, FS has $50x of earnings and profits, $50x of tested income, and no subpart F income within the meaning of section 952. FS also has $1,500x of qualified business asset investment for Year 1. On May 1 of Year 1, FS distributes a $20x dividend to P Corp. P Corp, R Corp, and FS all use the calendar year as their taxable year.

(*2*) ***Analysis*** —

(*i*) ***Determination of pro rata share of tested income.*** For purposes of determining R Corp's pro rata share of FS's tested income under paragraph (d)(2) of this section, the amount of FS's allocable earnings and profits for purposes of the hypothetical distribution described in § 1.951-1(e)(1)(i) is $50x, the greater of its earnings and profits as determined under section 964 ($50x) or the sum of its subpart F income and tested income ($0 + $50x). Under paragraph (d)(2) of this section and § 1.951-1(e)(1), FS's allocable earnings and profits of $50x are

distributed in the hypothetical distribution pro rata to each share of stock. R Corp's pro rata share of FS's tested income for Year 1 is its pro rata share under section 951(a)(2)(A) and § 1.951-1(b)(1)(i) ($50x), reduced under section 951(a)(2)(B) and § 1.951-1(b)(1)(ii) by $20x, which is the lesser of $20x, the dividend received by P Corp during Year 1 with respect to the FS stock acquired by R Corp ($20x), multiplied by a fraction, the numerator of which is the tested income ($50x) of FS for Year 1 and the denominator of which is the sum of the subpart F income ($0) and the tested income ($50x) of FS for Year 1 ($20x × $50x/$50x), and $20x, which is P Corp's pro rata share (100%) of the amount which bears the same ratio to FS's tested income for Year 1 ($50x) as the period during which R Corp did not own (within the meaning of section 958(a)) the FS stock (146 days) bears to the entire taxable year (1 × $50x × 146/365). Accordingly, R Corp's pro rata share of tested income of FS for Year 1 is $30x ($50x − $20x).

(*ii*) ***Determination of pro rata share of qualified business asset investment.*** The special rule of paragraph (d)(3)(ii) of this section applies because FS's tested income of $50x is less than FS's hypothetical tangible return of $150x, which is 10% of FS's qualified business asset investment of $1,500x. Under paragraph (d)(3)(ii) of this section, R Corp's pro rata share of FS's qualified business asset investment is the amount that bears the same ratio to FS's qualified business asset investment as R Corp's pro rata share of the hypothetical tangible return of FS bears to the total hypothetical tangible return of FS. R Corp's pro rata share of FS's hypothetical tangible return is its pro rata share under section 951(a)(2)(A) and § 1.951-1(b)(1)(i) ($150x), reduced under section 951(a)(2)(B) and § 1.951-1(b)(1)(ii) by $20x, which is the lesser of $20x, the dividend received by P Corp during Year 1 with respect to the FS stock acquired by R Corp ($20x) multiplied by a fraction, the numerator of which is the hypothetical tangible return ($150x) of FS for Year 1 and the denominator of which is the sum of the subpart F income ($0) and the hypothetical tangible return ($150x) of FS for Year 1 ($20x × $150x/$150x), and $60x, which is P Corp's pro rata share (100%) of the amount which bears the same ratio to FS's hypothetical tangible return for Year 1 ($150x) as the period during which R Corp did not own (within the meaning of section 958(a)) the FS stock (146 days) bears to the entire taxable year (1 × $150x × 146/365). Accordingly, R Corp's pro rata share of the hypothetical tangible return of FS for Year 1 is $130x ($150x − $20x), and R Corp's pro rata share of FS's qualified business asset investment is $1,300x ($1,500x × $130x/$150x).

(4) ***Tested loss*** —

(i) ***In general.*** A United States shareholder's pro rata share of the tested loss of each tested loss CFC for a U.S. shareholder inclusion year is determined under section 951(a)(2) and § 1.951-1(b) and (e) with the following modifications—

(A) "Tested loss" is substituted for "subpart F income" each place it appears;

(B) For purposes of the hypothetical distribution described in section 951(a)(2)(A) and § 1.951-1(b)(1)(i) and (e)(1)(i), the amount of allocable earnings and profits of a controlled foreign corporation for a CFC inclusion year is treated as being equal to the tested loss of the tested loss CFC for the CFC inclusion year;

(C) Except as provided in paragraphs (d)(4)(ii) and (iii) of this section, the hypothetical distribution described in section 951(a)(2)(A) and § 1.951-1(b)(1)(i) and (e)(1)(i) is treated as made solely with respect to the common stock of the tested loss CFC; and

(D) In lieu of applying section 951(a)(2)(B) and § 1.951-1(b)(1)(ii), the United States shareholder's pro rata share of the tested loss allocated to section 958(a) stock of the tested loss CFC is reduced by an amount that bears the same ratio to the amount of the tested loss as the part of such year during which such shareholder did not own (within the meaning of section 958(a)) such stock bears to the entire taxable year.

(ii) ***Special rule in case of accrued but unpaid dividends.*** If a tested loss CFC's earnings and profits that have accumulated since the issuance of preferred shares are reduced below the amount necessary to satisfy any accrued but unpaid dividends with respect to such preferred shares, then the amount by which the tested loss reduces the earnings and profits below the amount necessary to satisfy the accrued but unpaid dividends is allocated in the hypothetical distribution described in section 951(a)(2)(A) and § 1.951-1(b)(1)(i) and (e)(1)(i) to the preferred stock of the tested loss CFC and the remainder of the tested loss is allocated in the hypothetical distribution to the common stock of the tested loss CFC.

(iii) ***Special rule for stock with no liquidation value.*** If a tested loss CFC's common stock has a liquidation value of zero and there is at least one other class of equity with a liquidation preference relative to the common stock, then the tested loss is allocated in the hypothetical distribution described in section 951(a)(2)(A) and § 1.951-1(b)(1)(i) and (e)(1)(i) to the most junior class of equity with a positive liquidation value to the extent of such liquidation value. Thereafter, tested loss is allocated to the next most junior class of equity to the extent of its liquidation value and so on. All determinations of liquidation value are to be made as of the beginning of the CFC inclusion year of the tested loss CFC.

(iv) ***Examples.*** The following examples illustrate the application of this paragraph (d)(4). See also § 1.951-1(e)(7)(viii) (*Example 7*) (illustrating a United States shareholder's pro rata share of subpart F income and tested loss).

(A) ***Example 1*** —

(*1*) ***Facts.*** FS, a controlled foreign corporation, has outstanding 70 shares of common stock and 30 shares of 4% nonparticipating, cumulative preferred stock with a par value of $10x per share. P Corp, a domestic corporation and a United States shareholder of FS, owns all of the common shares. Individual A, a United States citizen and a United States shareholder, owns all of the preferred shares. FS, Individual A, and P Corp all use the calendar year as their taxable year. Individual A and P Corp are shareholders of FS for all of Year 5. At the beginning of Year 5, FS had earnings and profits of $120x, which accumulated after the issuance of the preferred stock. At the end of Year 5, the accrued but unpaid dividends with respect to the preferred stock are $36x. For Year 5, FS has a $100x tested loss, and no other items of income, gain, deduction or loss. At the end of Year 5, FS has earnings and profits of $20x.

(2) ***Analysis.*** FS is a tested loss CFC for Year 5. Before taking into account the tested loss in Year 5, FS had sufficient earnings and profits to satisfy the accrued but unpaid dividends of $36x. The amount of the reduction in earnings below the amount necessary to satisfy the accrued but unpaid dividends attributable to the tested loss is $16x ($36x − ($120x − $100x)). Accordingly, under paragraph (d)(4)(ii) of this section, $16x of the tested loss is allocated to Individual A's preferred stock in the hypothetical distribution described in section 951(a)(2)(A) and § 1.951-1(b)(1)(i) and (e)(1)(i), and $84x ($100x − $16x) of the tested loss is allocated to P Corp's common shares in the hypothetical distribution.

(B) ***Example 2*** —

(1) ***Facts.*** FS, a controlled foreign corporation, has outstanding 100 shares of common stock and 50 shares of 4% nonparticipating, cumulative preferred stock with a par value of $100x per share. P Corp, a domestic corporation and a United States shareholder of FS, owns all of the common shares. Individual A, a United States citizen and a United States shareholder, owns all of the preferred shares. FS, Individual A, and P Corp all use the calendar year as their taxable year. Individual A and P Corp are shareholders of FS for all of Year 1 and Year 2. At the beginning of Year 1, the common stock has no liquidation value and the preferred stock has a liquidation value of $5,000x and no accrued but unpaid dividends. In Year 1, FS has a tested loss of $1,000x and no other items of income, gain, deduction, or loss. In Year 2, FS has tested income of $3,000x and no other items of income, gain, deduction, or loss. FS has earnings and profits of $3,000x for Year 2. At the end of Year 2, FS has accrued but unpaid dividends of $400x with respect to the preferred stock, the sum of $200x for Year 1 (0.04 × $100x × 50) and $200x for Year 2 (0.04 × $100x × 50).

(2) ***Analysis*** —

(*i*) ***Year 1.*** FS is a tested loss CFC in Year 1. The common stock of FS has liquidation value of zero, and the preferred stock has a liquidation preference relative to the common stock. The tested loss ($1,000x) does not exceed the liquidation value of the preferred stock ($5,000x). Accordingly, under paragraph (d)(4)(iii) of this section, the tested loss is allocated to the preferred stock in the hypothetical distribution described in section 951(a)(2)(A) and § 1.951-1(b)(1)(i) and (e)(1)(i). Individual A's pro rata share of the tested loss is $1,000x, and P Corp's pro rata share of the tested loss is $0.

(*ii*) ***Year 2.*** FS is a tested income CFC in Year 2. Because $1,000x of tested loss was allocated to the preferred stock in Year 1 under paragraph (d)(4)(iii) of this section, the first $1,000x of tested income in Year 2 is allocated to the preferred stock under paragraph (d)(2)(ii) of this section. P Corp's and Individual A's pro rata shares of the remaining $2,000x of tested income are determined under the general rule of paragraph (d)(2)(i) of this section, except that for purposes of the hypothetical distribution the amount of FS's allocable earnings and profits is reduced by the tested income allocated under paragraph (d)(2)(ii) of this section to $2,000x ($3,000x − $1,000x). Accordingly, under paragraph (d)(2)(i) of this section and § 1.951-1(e), the amount of FS's allocable earnings and profits distributed in the hypothetical distribution with respect to Individual A's preferred stock is $400x ($400x of accrued but unpaid dividends) and with

respect to P Corp's common stock is $1,600x ($2,000x − $400x). Individual A's pro rata share of the tested income is $1,400x ($1,000x + $400x), and P Corp's pro rata share of the tested income is $1,600x.

(5) ***Tested interest expense.*** A United States shareholder's pro rata share of tested interest expense of a controlled foreign corporation for a U.S. shareholder inclusion year is equal to the amount by which the tested interest expense reduces the shareholder's pro rata share of tested income of the controlled foreign corporation for the U.S. shareholder inclusion year, increases the shareholder's pro rata share of tested loss of the controlled foreign corporation for the U.S. shareholder inclusion year, or both.

(6) ***Tested interest income.*** A United States shareholder's pro rata share of tested interest income of a controlled foreign corporation for a U.S. shareholder inclusion year is equal to the amount by which the tested interest income increases the shareholder's pro rata share of tested income of the controlled foreign corporation for the U.S. shareholder inclusion year, reduces the shareholder's pro rata share of tested loss of the controlled foreign corporation for the U.S. shareholder inclusion year, or both.

(e) ***Stock owned through domestic partnerships.*** See § 1.958-1(d) for rules regarding the ownership of stock of a foreign corporation through a domestic partnership for purposes of section 951A and for purposes of any provision that specifically applies by reference to section 951A or the section 951A regulations.

(f) ***Definitions.*** This paragraph (f) provides additional definitions that apply for purposes of this section and the section 951A regulations. Other definitions relevant to the section 951A regulations are included in §§ 1.951A-2 through 1.951A-4.

(1) ***CFC inclusion year.*** The term *CFC inclusion year* means any taxable year of a foreign corporation beginning after December 31, 2017, at any time during which the corporation is a controlled foreign corporation.

(2) ***Controlled foreign corporation.*** The term *controlled foreign corporation* has the meaning set forth in section 957(a).

(3) ***Hypothetical distribution date.*** The term *hypothetical distribution date* has the meaning set forth in § 1.951-1(e)(1)(i).

(4) ***Section 958(a) stock.*** The term *section 958(a) stock* means stock of a controlled foreign corporation owned (directly or indirectly) by a United States shareholder within the meaning of section 958(a), as modified by paragraph (e)(1) of this section.

(5) ***Tested item.*** The term *tested item* means tested income, tested loss, qualified business asset investment, tested interest expense, or tested interest income.

(6) ***United States shareholder.*** The term *United States shareholder* has the meaning set forth in section 951(b).

(7) ***U.S. shareholder inclusion year.*** The term *U.S. shareholder inclusion year* means any taxable year of a United States shareholder in which or with which a CFC inclusion year of a controlled foreign corporation ends.

[T.D. 9866, 84 FR 29341, June 21, 2019, as amended by T.D. 9960, 87 FR 3654, Jan. 25, 2022]

§ 1.951A-2 Tested income and tested loss.

(a) ***Scope.*** This section provides rules for determining the tested income or tested loss of a controlled foreign corporation for purposes of determining a United States shareholder's net CFC tested income under § 1.951A-1(c)(2). Paragraph (b) of this section provides definitions related to tested income and tested loss. Paragraph (c) of this section provides rules for determining the gross tested income of a controlled foreign corporation and the deductions that are properly allocable to gross tested income.

(b) ***Definitions related to tested income and tested loss*** —

(1) ***Tested income and tested income CFC.*** The term *tested income* means the excess (if any) of a controlled foreign corporation's gross tested income for a CFC inclusion year, over the allowable deductions (including taxes) properly allocable to the gross tested income for the CFC inclusion year (a controlled foreign corporation with tested income for a CFC inclusion year, a *tested income CFC*).

(2) ***Tested loss and tested loss CFC.*** The term *tested loss* means the excess (if any) of a controlled foreign corporation's allowable deductions (including taxes) properly allocable to gross tested income (or that would be allocable to gross tested income if there were gross tested income) for a CFC inclusion year, over the gross tested income of the controlled foreign corporation for the CFC inclusion year (a controlled foreign corporation without tested income for a CFC inclusion year, a *tested loss CFC*).

(c) ***Rules relating to the determination of tested income and tested loss*** —

(1) ***Definition of gross tested income.*** The term *gross tested income* means the gross income of a controlled foreign corporation for a CFC inclusion year determined without regard to—

(i) Items of income described in section 952(b),

(ii) Gross income taken into account in determining the subpart F income of the corporation,

(iii) Gross income excluded from the foreign base company income (as defined in section 954) or the insurance income (as defined in section 953) of the corporation by reason of the exception described in section 954(b)(4) pursuant to an election under § 1.954-1(d)(5), or a tentative gross tested income item of the corporation that qualifies for the exception described in section 954(b)(4) pursuant to an election under paragraph (c)(7) of this section,

(iv) Dividends received by the corporation from related persons (as defined in section 954(d)(3)), and

(v) Foreign oil and gas extraction income (as defined in section 907(c)(1)) of the corporation.

(2) ***Determination of gross income and allowable deductions.*** For purposes of determining tested income and tested loss, the gross income and allowable deductions of a controlled foreign corporation for a CFC inclusion year are determined under the rules of § 1.952-2 for determining the subpart F income (as defined in section 952) of the controlled foreign corporation, except, for a controlled foreign corporation which is engaged in the business of reinsuring or issuing insurance or annuity contracts and which, if it were a domestic corporation engaged only in such business, would be taxable as an insurance company to which subchapter L of chapter 1 of the Code applies, the text “the principles of §§ 1.953-4 and 1.953-5” means “the rules of sections 953 and 954(i)” in § 1.952-2(b)(2).

(3) ***Allocation of deductions to gross tested income*** —

(i) ***In general.*** Except as provided in paragraph (c)(5) of this section, any deductions of a controlled foreign corporation allowable under paragraph (c)(2) of this section are allocated and apportioned to gross tested income under the principles of section 954(b)(5) and § 1.954-1(c), by treating gross tested income that falls within a single separate category (as defined in § 1.904-5(a)(4)(v)) as a single item of gross income, separate and in addition to the items set forth in § 1.954-1(c)(1)(iii). Losses in other separate categories of income resulting from the application of § 1.954-1(c)(1)(i) cannot reduce any separate category of gross tested income, and losses in a separate category of gross tested income cannot reduce income in a category of subpart F income. In addition, deductions of a controlled foreign corporation that are allocated and apportioned to gross tested income under this paragraph (c)(3) are not taken into account for purposes of determining a qualified deficit as defined in section 952(c)(1)(B)(ii).

(ii) ***Coordination with the high-tax exclusion*** —

(A) ***In general.*** In the case of a taxpayer that has made an election under paragraph (c)(7) of this section, in allocating and apportioning deductions under this paragraph (c)(3), the taxpayer must apply the rules of sections 861 through 865 and 904(d) (taking into account the rules of section 954(b)(5) and § 1.954-1(c)) in a manner that achieves results consistent with those under paragraph (c)(7) of this section.

(B) ***Application of consistency rule to deductions allocated and apportioned to the residual grouping in applying the high-tax exclusion.*** Deductions that are allocated and apportioned to the residual income group under paragraph (c)(7)(iii)(A) of this section for purposes of applying the high-tax exclusion to a controlled foreign corporation's tentative gross tested income items are allocated and apportioned for purposes of determining the controlled foreign corporation's net income in each relevant statutory grouping using a method that provides for a consistent allocation and apportionment of deductions to gross income in the relevant groupings. See §§ 1.954-1(c) and 1.960-1(d)(3) for rules relating to the allocation and apportionment of expenses for purposes of determining subpart F income, which is included in the residual grouping for purposes of applying the high-tax exclusion of sections 951A(c)(2)(A)(i)(III) and 954(b)(4) and paragraph (c)(7) of this section. Therefore, for example, interest expense that is apportioned under the modified gross income method to a tentative gross tested income item of a lower-tier corporation under paragraph (c)(7)(iii)(A) of this section may be allocated and apportioned to the tested income of the upper-tier corporation or to the residual grouping, depending on whether the lower-tier corporation's tentative gross tested income item is an item of gross tested income or is excluded from gross tested income under the high-tax exclusion. *See* paragraph (c)(8)(iii)(C) (Example 3) of this section for an example illustrating the rules of this paragraph (c)(3).

(4) ***Gross income taken into account in determining subpart F income*** —

(i) ***In general.*** Except as provided in paragraph (c)(4)(iii) of this section, gross income of a controlled foreign corporation for a CFC inclusion year described in section 951A(c)(2)(A)(i)(II) and paragraph (c)(1)(ii) of this section is gross income described in paragraphs (c)(4)(ii)(A) through (E) of this section.

(ii) ***Items of gross income included in subpart F income*** —

(A) ***Insurance income.*** Gross income described in this paragraph (c)(4)(ii)(A) is any item of gross income included in the insurance income (adjusted net insurance income as defined in § 1.954-1(a)(6)) of the controlled foreign corporation for the CFC inclusion year.

(B) ***Foreign base company income.*** Gross income described in this paragraph (c)(4)(ii)(B) is any item of gross income included in the foreign base company income (adjusted net foreign base company income as defined in § 1.954-1(a)(5)) of the controlled foreign corporation for the CFC inclusion year.

(C) ***International boycott income.*** Gross income described in this paragraph (c)(4)(ii)(C) is the product of the gross income of the controlled foreign corporation for the CFC inclusion year that gives rise to the income described in section 952(a)(3)(A) multiplied by the international boycott factor described in section 952(a)(3)(B).

(D) ***Illegal bribes, kickbacks, or other payments.*** Gross income described in this paragraph (c)(4)(ii)(D) is the sum of the amounts of the controlled foreign corporation for the CFC inclusion year described in section 952(a)(4).

(E) ***Income earned in certain foreign countries.*** Gross income described in this paragraph (c)(4)(ii)(E) is income of the controlled foreign corporation for the CFC inclusion year described in section 952(a)(5).

(iii) ***Coordination rules*** —

(A) ***Coordination with E&P limitation.*** Gross income of a controlled foreign corporation for a CFC inclusion year described in section 951A(c)(2)(A)(i)(II) and paragraph (c)(1)(ii) of this section includes any item of gross income that is excluded from subpart F income of the controlled foreign corporation for the CFC inclusion year, or that is otherwise excluded from the amount included under section 951(a)(1)(A) in the gross income of a United States shareholder of the controlled foreign corporation for the U.S. shareholder inclusion year in which or with which the CFC inclusion year ends, under section 952(c)(1) and § 1.952-1(c), (d), or (e).

(B) ***Coordination with E&P recapture.*** Gross income of a controlled foreign corporation for a CFC inclusion year described in section 951A(c)(2)(A)(i)(II) and paragraph (c)(1)(ii) of this section does not include any item of gross income that results in the recharacterization of earnings and profits as subpart F income of the controlled foreign corporation for the CFC inclusion year under section 952(c)(2) and § 1.952-1(f)(2).

(C) ***Coordination with full inclusion rule and high tax exception.*** Gross income of a controlled foreign corporation for a CFC inclusion year described in section 951A(c)(2)(A)(i)(II) and paragraph (c)(1)(ii) of this section does not include full inclusion foreign base company income that is excluded from subpart F income under § 1.954-1(d)(6). Full inclusion foreign base company income that is excluded from subpart F income under § 1.954-1(d)(6) is also not included in gross income of a controlled foreign corporation for a CFC inclusion year described in section 951A(c)(2)(A)(i)(III) and paragraph (c)(1)(iii) of this section.

(iv) ***Examples.*** The following examples illustrate the application of this paragraph (c)(4).

(A) ***Example 1*** —

(1) ***Facts.*** A Corp, a domestic corporation, owns 100% of the single class of stock of FS, a controlled foreign corporation. Both A Corp and FS use the calendar year as their taxable year. In Year 1, FS has passive category foreign personal holding company income of $100x, a general category loss in foreign oil and gas extraction income of $100x, and earnings and profits of $0. FS has no other income. In Year 2, FS has general category gross income of $100x and earnings and profits of $100x. Without regard to section 952(c)(2), in Year 2 FS has no income described in any of the categories of income excluded from gross tested income in paragraphs (c)(1)(i) through (v) of this section. FS has no allowable deductions properly allocable to gross tested income for Year 2.

(2) ***Analysis*** —

(*i*) ***Year 1.*** As a result of the earnings and profits limitation of section 952(c)(1)(A), FS has no subpart F income in Year 1, and A Corp has no inclusion with respect to FS under section 951(a)(1)(A). Under paragraph (c)(4)(iii)(A) of this section, gross income described in section 951A(c)(2)(A)(i)(II) and paragraph (c)(1)(ii) of this section includes any item of gross income excluded from the subpart F income of FS for Year 1 under section 952(c)(1)(A) and § 1.952-1(c). Therefore, the $100x foreign personal holding company income of FS in Year 1 is excluded from gross tested income by reason of section 951A(c)(2)(A)(i)(II) and paragraph (c)(1)(ii) of this section, and FS has no gross tested income in Year 1.

(*ii*) ***Year 2.*** In Year 2, under section 952(c)(2) and § 1.952-1(f)(2), FS's general category earnings and profits ($100x) in excess of its subpart F income ($0) give rise to the recharacterization of its passive category recapture account as subpart F income. Therefore, FS has passive category subpart F income of $100x in Year 2, and A Corp has an inclusion of $100x with respect to FS under section 951(a)(1)(A). Under paragraph (c)(4)(iii)(B) of this section, gross income described in section 951A(c)(2)(A)(i)(II) and paragraph (c)(1)(ii) of this section does not include any item of gross income that results in the recharacterization of earnings and profits as subpart F income in FS's taxable year under section 952(c)(2) and § 1.952-1(f)(2). Accordingly, the $100x of general category gross income of FS in Year 2 is not excluded from gross tested income by reason of section 951A(c)(2)(A)(i)(II) and paragraph (c)(1)(ii) of this section, and FS has $100x of general category gross tested income in Year 2.

(B) ***Example 2*** —

(1) ***Facts.*** A Corp, a domestic corporation, owns 100% of the single class of stock of FC1 and FC2, controlled foreign corporations. A Corp, FC1, and FC2 use the calendar year as their taxable year. In Year 1, FC1 has gross income of $290x from product sales to unrelated persons within its country of incorporation, gross interest income of $10x (an amount that is less than $1,000,000) that does not qualify for an exception to foreign personal holding company income, and earnings and profits of $300x. In Year 1, FC2 has gross income of $45x for performing consulting services within its country of incorporation for unrelated persons, gross interest income of $150x (an amount that is not less than $1,000,000) that does not qualify for an exception to foreign personal holding company income, and earnings and profits of $195x.

(2) ***Analysis*** —

(*i*) ***FC1.*** In Year 1, by application of the de minimis rule of section 954(b)(3)(A) and § 1.954-1(b)(1)(i), the $10x of gross interest income earned by FC1 is not treated as foreign base company income ($10x of gross foreign base company income is less than $15x, the lesser of 5% of $300x, FC's total gross income for Year 1, or $1,000,000). Accordingly, FC1 has no subpart F income in Year 1, and A Corp has no inclusion with respect to FC1 under section 951(a)(1)(A). Under paragraph (c)(4)(i) of this section, gross income described in section 951A(c)(2)(A)(i)(II) and paragraph (c)(1)(ii) of this section is any item of gross income included in foreign base company income, and thus gross income described in section 951A(c)(2)(A)(i)(II) and paragraph (c)(1)(ii) of this section does not include any item of gross income excluded from foreign base company income under the de minimis rule in section 954(b)(3)(A) and § 1.954-1(b)(1)(i). Accordingly, FS's $10x of gross interest income in Year 1 is not excluded from gross tested income by reason of section 951A(c)(2)(A)(i)(II) and paragraph (c)(1)(ii) of this section, and FC1 has $300x ($290x of gross sales income and $10x of gross interest income) of gross tested income in Year 1.

(*ii*) ***FC2.*** In Year 1, by application of the full inclusion rule in section 954(b)(3)(B) and § 1.954-1(b)(1)(ii), the $45x of gross income earned by FC2 for performing consulting services within its country of incorporation for unrelated persons is treated as foreign base company income ($150x of gross foreign base company income exceeds $136.5x, which is 70% of $195x, FC2's total gross income for Year 1). Therefore, FC2 has $195x of foreign base company income in Year 1, including $45x of full inclusion foreign base company income as defined in § 1.954-1(b)(2), and A Corp has an inclusion of $195x with respect to FC2 under section 951(a)(1)(A). Under paragraph (c)(4)(i) of this section, gross income described in section 951A(c)(2)(A)(i)(II) and paragraph (c)(1)(ii) of this section is any item of gross income included in foreign base company income, and thus gross income described in section 951A(c)(2)(A)(i)(II) and paragraph (c)(1)(ii) of this section includes any item of gross income included as foreign base company income under the full inclusion rule in section 954(b)(3)(B) and § 1.954-1(b)(1)(ii). Accordingly, FC2's $45x of gross services income and its $150x of gross interest income in Year 1 are excluded from gross tested income by reason of section 951A(c)(2)(A)(i)(II) and paragraph (c)(1)(ii) of this section, and FC2 has no gross tested income in Year 1.

(C) ***Example 3*** —

(*1*) ***Facts.*** A Corp, a domestic corporation, owns 100% of the single class of stock of FS, a controlled foreign corporation. A Corp and FS use the calendar year as their taxable year. In Year 1, FS has gross income of $1,000x, of which $720x is general category foreign base company sales income and $280x is general category income from sales within its country of incorporation; FS has expenses of $650x (including creditable foreign income taxes), of which $500x are allocated and apportioned to foreign base company sales income and $150x are allocated and apportioned to sales income from sales within FS's country of incorporation; and FS has earnings and profits of $350x for Year 1. Foreign income tax of $55x is considered imposed on the $220x ($720x−$500x) of net foreign base company sales income, and $26x is considered imposed on the $130x ($280x−$150x) of net income from sales within

FS's country of operation. The maximum rate of tax in section 11 for the taxable year is 21%, and FS elects the high tax exception of section 954(b)(4) under § 1.954-1(d)(1) for Year 1 for its foreign base company sales income. In a prior taxable year, FS had losses with respect to income other than foreign base company or insurance income that, by reason of the limitation in section 952(c)(1)(A), reduced the subpart F income of FS (consisting entirely of foreign source general category income) by $600x; as of the beginning of Year 1, such amount has not been recharacterized as subpart F income in a subsequent taxable year under section 952(c)(2).

(2) ***Analysis*** —

(i) ***Foreign base company income.*** In Year 1, by application of the full inclusion rule in section 954(b)(3)(B) and § 1.954-1(b)(1)(ii), the $280x of gross income earned by FS for sales within its country of incorporation is treated as foreign base company income ($720x of gross foreign base company income exceeds $700x, which is 70% of $1,000x, FS's total gross income for the taxable year). However, the $220x of foreign base company sales income qualifies for the high tax exception of section 954(b)(4) and § 1.954-1(d)(1), because the effective rate of tax with respect to the net foreign base company sales income ($220x) is 20% ($55x/($220x + $55x)) which is greater than 18.9% (90% of 21%, the maximum rate of tax in section 11 for the taxable year). Because the $220x of net foreign base company sales income qualifies for the high tax exception of section 954(b)(4) and § 1.954-1(d)(1), the $130x of full inclusion foreign base company income is also excluded from subpart F income under § 1.954-1(d)(6).

(ii) ***Recapture of subpart F income.*** Under section 952(c)(2) and § 1.952-1(f)(2), FS's general category earnings and profits ($350x) in excess of its subpart F income ($0) give rise to the recharacterization of its general category recapture account ($600x) as subpart F income to the extent of current year earnings and profits. Therefore, FS has general category subpart F income of $350x in Year 1, and A Corp has an inclusion of $350x with respect to FS under section 951(a)(1)(A).

(iii) ***Gross tested income.*** The $720x of gross foreign base company income is excluded from gross tested income under section 951A(c)(2)(A)(i)(III) and paragraph (c)(1)(iii) of this section. However, the $280x of gross sales income earned from sales within FS's country of incorporation is not excluded from gross tested income under either section 951A(c)(2)(A)(i)(II) and paragraph (c)(1)(ii) of this section or section 951A(c)(2)(A)(i)(III) and paragraph (c)(1)(iii) of this section. Under paragraph (c)(4)(iii)(B) of this section, the $280x of gross sales income earned from sales within FS's country of incorporation is not excluded from gross tested income under section 951A(c)(2)(A)(i)(II) and paragraph (c)(1)(ii) of this section, because gross income described in paragraph (c)(1)(ii) of this section does not include any item of gross income that results in the recharacterization of earnings and profits as subpart F income under section 952(c)(2) and § 1.952-1(f)(2). Further, under paragraph (c)(4)(iii)(C) of this section, the $280x of gross sales income earned from sales within FS's country of incorporation is not excluded from gross tested income under either section 951A(c)(2)(A)(i)(II) and paragraph (c)(1)(ii) of this section or section 951A(c)(2)(A)(i)(III) and paragraph (c)(1)(iii) of this section, because

gross income described in section 951A(c)(2)(A)(i)(II) and paragraph (c)(1)(ii) of this section or section 951A(c)(2)(A)(i)(III) and paragraph (c)(1)(iii) of this section does not include full inclusion foreign base company income that is excluded from subpart F income under § 1.954-1(d)(6). Accordingly, FS has $280x of gross tested income for Year 1.

(5) ***Allocation of deduction or loss attributable to disqualified basis*** —

(i) ***In general.*** A deduction or loss attributable to disqualified basis is allocated and apportioned solely to residual CFC gross income, and any depreciation, amortization, or cost recovery allowances attributable to disqualified basis is not properly allocable to property produced or acquired for resale under section 263, 263A, or 471.

(ii) ***Determination of deduction or loss attributable to disqualified basis.*** Except as otherwise provided in this paragraph (c)(5)(ii), in the case of a depreciation or amortization deduction with respect to property with disqualified basis and adjusted basis other than disqualified basis, the deduction or loss is treated as attributable to the disqualified basis in the same proportion that the disqualified basis bears to the total adjusted basis in the property. In the case of a loss from a taxable sale or exchange of property with disqualified basis and adjusted basis other than disqualified basis, the loss is treated as attributable to disqualified basis to the extent thereof.

(iii) ***Definitions.*** The following definitions apply for purposes of this paragraph (c)(5).

(A) ***Disqualified basis.*** The term *disqualified basis* has the meaning set forth in § 1.951A-3(h)(2)(ii).

(B) ***Residual CFC gross income.*** The term *residual CFC gross income* means gross income other than gross tested income, gross income taken into account in determining subpart F income, or gross income that is effectively connected, or treated as effectively connected, with the conduct of a trade or business in the United States (as described in § 1.882-4(a)(1)).

(iv) ***Reductions to disqualified basis pursuant to coordination rules.*** See § 1.245A-7(b) or § 1.245A-8(b), as applicable, for reductions to disqualified basis resulting from the application of § 1.245A-5.

(v) ***Examples.*** The following examples illustrate the application of this paragraph (c)(5).

(A) ***Example 1: Sale of intangible property during the disqualified period*** —

(*1*) ***Facts.*** USP, a domestic corporation, owns all of the stock in CFC1 and CFC2, each a controlled foreign corporation. Both USP and CFC2 use the calendar year as their taxable year. CFC1 uses a taxable year ending November 30. On November 1, 2018, before the start of its first CFC inclusion year, CFC1 sells Asset A to CFC2 in exchange for $100x of cash. Asset A is intangible property that is amortizable under section 197. Immediately before the sale, the adjusted basis in Asset A is $20x, and CFC1 recognizes $80x of gain as a result of the sale ($100x−$20x). CFC1's gain is not subject to U.S. tax or taken into account in determining an inclusion to USP under section 951(a)(1)(A).

(2) ***Analysis.*** The sale by CFC1 is a disqualified transfer (within the meaning of § 1.951A-3(h)(2)(ii)(C)(*2*)) because it is a transfer of property in which gain was recognized by CFC1, CFC1 and CFC2 are related persons, and the transfer occurs during the disqualified period (within the meaning of § 1.951A-3(h)(2)(ii)(C)(*1*)). The disqualified basis in Asset A is $80x, the excess of CFC2's adjusted basis in Asset A immediately after the disqualified transfer ($100x), over the sum of CFC1's basis in Asset A immediately before the transfer ($20x) and the qualified gain amount (as defined in § 1.951A-3(h)(2)(ii)(C)(*3*)) ($0). Accordingly, under paragraph (c)(5)(i) of this section, any deduction or loss of CFC2 attributable to the disqualified basis is allocated and apportioned solely to residual CFC gross income of CFC2 and, therefore, is not taken into account in determining the tested income, tested loss, subpart F income, or effectively connected income of CFC2 for any CFC inclusion year.

(B) ***Example 2: Related party transfer after the disqualified period; gain recognition*** —

(*1*) ***Facts.*** The facts are the same as in paragraph (c)(5)(v)(A)(*1*) of this section (the facts in *Example 1*), except that, on November 30, 2020, CFC2 sells Asset A to CFC3, a controlled foreign corporation wholly-owned by CFC2, in exchange for $120x of cash. Immediately before the sale, the adjusted basis in Asset A is $90x, $72x of which is disqualified basis. The gain recognized by CFC2 on the sale of Asset A is not described in paragraphs (c)(1)(i) through (v) of this section.

(2) ***Analysis.*** Paragraph (c)(5)(i) of this section does not apply to the sale of Asset A from CFC2 to CFC3 because the sale does not give rise to a deduction or loss attributable to disqualified basis, but instead gives rise to gain. Therefore, CFC2 recognizes $30x ($120x−$90x) of gain that is included in gross tested income for its CFC inclusion year ending November 30, 2019. Under § 1.951A-3(h)(2)(ii)(B)(*1*)(*ii*), because CFC2 sold Asset A to CFC3, a related person, and CFC2 did not recognize a deduction or loss on the sale, the disqualified basis in Asset A is not reduced or eliminated by reason of the sale. Accordingly, under paragraph (c)(5)(i) of this section, any deduction or loss of CFC3 attributable to the $72x of disqualified basis in Asset A is allocated and apportioned solely to residual CFC gross income of CFC3.

(C) ***Example 3: Related party transfer after the disqualified period; loss recognition*** —

(*1*) ***Facts.*** The facts are the same as in paragraph (c)(5)(v)(B)(*1*) of this section (the facts in *Example 2*), except that CFC2 sells Asset A to CFC3 in exchange for $70x of cash.

(2) ***Analysis.*** Under paragraph (c)(5)(ii) of this section, the $20x loss recognized by CFC2 on the sale is attributable to disqualified basis, to the extent thereof, notwithstanding that the loss may be deferred under section 267(f). Thus, under paragraph (c)(5)(i) of this section, the loss is allocated and apportioned solely to residual CFC gross income of CFC2 in the CFC inclusion year in which the loss is taken into account pursuant to section 267(f). Under § 1.951A-3(h)(2)(ii)(B)(*1*)(*ii*), the disqualified basis in Asset A is reduced by $20x, the loss of CFC2 that is attributable to disqualified basis under paragraph (c)(5)(ii) of this section. Accordingly, under paragraph (c)(5)(i) of this section, any deduction or loss of CFC3 attributable to the remaining $52x of disqualified basis in Asset A is allocated and apportioned solely to residual CFC gross income of CFC3.

(6) ***Allocation of deductions attributable to disqualified payments*** —

(i) ***In general.*** A deduction related directly or indirectly to a disqualified payment is allocated and apportioned solely to residual CFC gross income, and any deduction related to a disqualified payment is not properly allocable to property produced or acquired for resale under section 263, 263A, or 471.

(ii) ***Definitions.*** The following definitions apply for purposes of this paragraph (c)(6).

(A) ***Disqualified payment.*** The term *disqualified payment* means a payment made by a person to a related recipient CFC during the disqualified period with respect to the related recipient CFC, to the extent the payment would constitute income described in section 951A(c)(2)(A)(i) and paragraph (c)(1) of this section without regard to whether section 951A applies.

(B) ***Disqualified period.*** The term *disqualified period* has the meaning provided in § 1.951A-3(h)(2)(ii)(C)(*1*), substituting "related recipient CFC" for "transferor CFC."

(C) ***Related recipient CFC.*** The term *related recipient CFC* means, with respect to a payment by a person, a recipient of the payment that is a controlled foreign corporation that bears a relationship to the payor described in section 267(b) or 707(b) immediately before or after the payment.

(iii) ***Treatment of partnerships.*** For purposes of determining whether a payment is made by a person to a related recipient CFC for purposes of paragraph (c)(6)(ii)(A) of this section, a payment by or to a partnership is treated as made proportionately by or to its partners, as applicable.

(iv) ***Reductions to disqualified payments pursuant to coordination rules.*** See §§ 1.245A-5(j)(8) and 1.245A-7(b) or § 1.245A-8(b), as applicable, for reductions to disqualified payments resulting from the application of § 1.245A-5.

(v) ***Examples.*** The following examples illustrate the application of this paragraph (c)(6).

(A) ***Example 1: Deduction related directly to disqualified payment to related recipient CFC*** —

(*1*) ***Facts.*** USP, a domestic corporation, owns all of the stock in CFC1 and CFC2, each a controlled foreign corporation. Both USP and CFC2 use the calendar year as their taxable year. CFC1 uses a taxable year ending November 30. On October 15, 2018, before the start of its first CFC inclusion year, CFC1 receives and accrues a payment from CFC2 of $100x of prepaid royalties with respect to a license. The $100x payment is excluded from subpart F income pursuant to section 954(c)(6) and would constitute income described in section 951A(c)(2)(A)(i) and paragraph (c)(1) of this section without regard to whether section 951A applies.

(*2*) ***Analysis.*** CFC1 is a related recipient CFC (within the meaning of paragraph (c)(6)(ii)(C) of this section) with respect to the royalty prepayment by CFC2 because it is related to CFC2 within the meaning of section 267(b). The royalty prepayment is received by CFC1 during its disqualified period (within the meaning of paragraph (c)(6)(ii)(B) of this section) because it is received during the period beginning January 1, 2018, and ending November 30, 2018. Because it would constitute income described in section 951A(c)(2)(A)(i) and paragraph (c)(1) of this section without regard to whether section 951A applies, the payment is a disqualified payment.

Accordingly, CFC2's deductions related to such payment accrued during taxable years ending on or after April 7, 2020, are allocated and apportioned solely to residual CFC gross income under paragraph (c)(6)(i) of this section.

(B) ***Example 2: Deduction related indirectly to disqualified payment to partnership in which related recipient CFC is a partner*** —

(*1*) ***Facts.*** The facts are the same as in paragraph (c)(6)(v)(A)(*1*) of this section (the facts in *Example 1*), except that CFC1 and USP own 99% and 1%, respectively of FPS, a foreign partnership, which has a taxable year ending November 30. USP receives a prepayment of $110x from CFC2 for the performance of future services. USP subcontracts the performance of these future services to FPS for which FPS receives and accrues a $100x prepayment from USP. The services will be performed in the same country under the laws of which CFC1 and FPS are created or organized, and the $100x prepayment is not foreign base company services income under section 954(e) and § 1.954-4(a). The $100x prepayment would constitute income described in section 951A(c)(2)(A)(i) and paragraph (c)(1) of this section without regard to whether section 951A applies.

(*2*) ***Analysis.*** CFC1 is a related recipient CFC (within the meaning of paragraph (c)(6)(ii)(C) of this section) with respect to the services prepayment by USP because, under paragraph (c)(6)(iii) of this section, it is treated as receiving $99x (99% of $100x) of the services prepayment from USP, and it is related to USP within the meaning of section 267(b). The services prepayment is received by CFC1 during its disqualified period (within the meaning of paragraph (c)(6)(ii)(B) of this section) because it is received during the period beginning January 1, 2018, and ending November 30, 2018. Because it would constitute income described in section 951A(c)(2)(A)(i) and paragraph (c)(1) of this section without regard to whether section 951A applies, the prepayment is a disqualified payment. In addition, CFC2's deductions related to its prepayment to USP are indirectly related to the disqualified payment by USP. Accordingly, CFC2's deductions related to such payment accrued during taxable years ending on or after April 7, 2020 are allocated and apportioned solely to residual CFC gross income under paragraph (c)(6)(i) of this section.

(7) ***Election to apply high-tax exception of section 954(b)(4)*** —

(i) ***In general.*** For purposes of section 951A(c)(2)(A)(i)(III) and paragraph (c)(1)(iii) of this section, a tentative gross tested income item of a controlled foreign corporation for a CFC inclusion year qualifies for the exception described in section 954(b)(4) only if—

(A) An election made under paragraph (c)(7)(viii) of this section is effective with respect to the controlled foreign corporation for the CFC inclusion year; and

(B) The tentative tested income item with respect to the tentative gross tested income item was subject to an effective rate of foreign tax, as determined under paragraph (c)(7)(vi) of this section, that is greater than 90 percent of the maximum rate of tax specified in section 11.

(ii) ***Calculation of tentative gross tested income item*** —

(A) ***In general.*** A tentative gross tested income item with respect to a controlled foreign corporation for a CFC inclusion year is the aggregate of all items of gross income of the controlled foreign corporation attributable to a tested unit (as defined in paragraph (c)(7)(iv) of this section) of the controlled foreign corporation in the CFC inclusion year that would be gross tested income without regard to this paragraph (c)(7) and would be in a single tested income group (as defined in § 1.960-1(d)(2)(ii)(C)). A controlled foreign corporation may have multiple tentative gross tested income items. See paragraphs (c)(8)(iii)(A)(*2*)(*i*) (Example 1) and (c)(8)(iii)(B)(*2*)(*i*) (Example 2) of this section for illustrations of the application of the rule set forth in this paragraph (c)(7)(ii)(A).

(B) ***Gross income attributable to a tested unit*** —

(*1*) ***Items properly reflected on separate set of books and records.*** Items of gross income of a controlled foreign corporation are attributable to a tested unit of the controlled foreign corporation to the extent they are properly reflected on the separate set of books and records of the tested unit, as modified under paragraph (c)(7)(ii)(B)(*2*) of this section. Each item of gross income of a controlled foreign corporation is attributable to a tested unit (and not to more than one tested unit) of the controlled foreign corporation. See paragraphs (c)(8)(iii)(D)(*2*) and (c)(8)(iii)(D)(*5*) (Example 4) of this section for illustrations of the application of the rule set forth in this paragraph (c)(7)(ii)(B).

(*2*) ***Gross income determined under federal income tax principles, as adjusted for disregarded payments.*** For purposes of paragraph (c)(7)(ii)(B)(*1*) of this section, gross income must be determined under federal income tax principles, except that the principles of § 1.904-4(f)(2)(vi) apply to adjust gross income of the tested unit, to the extent thereof, to reflect disregarded payments. For purposes of this paragraph (c)(7)(ii)(B)(*2*), the principles of § 1.904-4(f)(2)(vi) are applied taking into account the rules in paragraphs (c)(7)(ii)(B)(*2*)(*i*) through (*v*) of this section.

(*i*) The controlled foreign corporation is treated as the foreign branch owner and any other tested units of the controlled foreign corporation are treated as foreign branches.

(*ii*) The principles of the rules in § 1.904-4(f)(2)(vi)(A) apply in the case of disregarded payments between a foreign branch and another foreign branch without regard to whether either foreign branch makes a disregarded payment to, or receives a disregarded payment from, the foreign branch owner.

(*iii*) The exclusion for interest and interest equivalents described in § 1.904-4(f)(2)(vi)(C)(*1*) does not apply to the extent of the amount of a disregarded payment that is deductible in the country of tax residence (or location, in the case of a branch) of the tested unit that is the payor.

(*iv*) In the case of an amount described in paragraph (c)(7)(ii)(B)(*2*)(*iii*) of this section, the rules for determining how a disregarded payment is allocated to gross income of a foreign branch or foreign branch owner in § 1.904-4(f)(2)(vi)(B) are applied by treating the disregarded payment as allocated and apportioned ratably to all of the gross income attributable to the tested unit that is making the disregarded payment. If a tested unit is both a payor and payee of an amount described in paragraph (c)(7)(ii)(B)(*2*)(*iii*) of this section,

gross income to which the disregarded payments are allocable include gross income allocated to the payor tested unit as a result of the receipt of amounts described in paragraph (c)(7)(ii)(B)(*2*)(*iii*) of this section, to the extent thereof. If a tested unit makes and receives payments described in paragraph (c)(7)(ii)(B)(*2*)(*iii*) of this section to and from the same tested unit, the payments are netted so that paragraph (c)(7)(ii)(B)(*2*)(*iii*) of this section and the principles of § 1.904-4(f)(2)(vi) apply only to the net amount of such payments between the two tested units.

(*v*) In the case of multiple disregarded payments, in lieu of § 1.904-4(f)(2)(vi)(F), disregarded payments are taken into account under paragraph (c)(7)(ii)(B)(*2*) of this section and the principles of § 1.904-4(f)(2)(vi) under the rules provided in this paragraph (c)(7)(ii)(B)(*2*)(*v*). Adjustments are made with respect to a disregarded payment received by a tested unit before payments made by that tested unit. Except as provided in paragraph (c)(7)(ii)(B)(*2*)(*iv*) of this section, if a tested unit both makes and receives disregarded payments, adjustments are first made with respect to disregarded payments that would be definitely related to a single class of gross income under the principles of § 1.861-8; second, adjustments are made with respect to disregarded payments that would be definitely related to multiple classes of gross income under the principles of § 1.861-8, but that are not definitely related to all gross income of the tested unit; third, adjustments are made with respect to disregarded payments (other than interest described in paragraph (c)(7)(ii)(B)(*2*)(*iii*) of this section) that would be definitely related to all gross income under the principles of § 1.861-8; and fourth, adjustments are made with respect to interest described in paragraph (c)(7)(ii)(B)(*2*)(*iii*) and disregarded payments that would not be definitely related to any gross income under the principles of § 1.861-8.

(iii) ***Calculation of tentative tested income item*** —

(A) ***In general.*** A tentative tested income item with respect to the tentative gross tested income item described in paragraph (c)(7)(ii)(A) of this section is determined by allocating and apportioning deductions for the CFC inclusion year (including expense for current year taxes (as defined in § 1.960-1(b)(4)), and not including any items described in § 1.951A-2(c)(5) or (c)(6)) to the tentative gross tested income item under the principles of § 1.960-1(d)(3) and the rules of § 1.861-20. For purposes of this paragraph (c)(7)(iii), each tentative gross tested income item (if any) is treated as assigned to a separate tested income group, as that term is described in § 1.960-1(d)(2)(ii)(C), and all other income is treated as assigned to a residual income group. For purposes of applying §§ 1.861-9 and 1.861-9T under the principles of § 1.960-1(d)(3), the amount of interest deductions that are allocated and apportioned to the assets (or gross income, in the case of a taxpayer that has elected the modified gross income method) of a lower-tier corporation, such as a corporation the stock of which is owned by the controlled foreign corporation indirectly through the tested unit, are allocated and apportioned to the residual income category and not to any tentative gross tested income item of the controlled foreign corporation. See paragraphs (c)(8)(iii)(A)(*2*)(*iii*) (Example 1), (c)(8)(iii)(B)(*2*)(*iv*) (Example 2), and (c)(8)(iii)(C)(*2*)(*iv*) (Example 3) of this section for illustrations of the application of the rules set forth in this paragraph (c)(7)(iii)(A).

(B) ***Effect of potential and actual changes in taxes paid or accrued.*** Except as otherwise provided in this paragraph (c)(7)(iii)(B), the amount of current year taxes paid or accrued by a controlled foreign corporation for purposes of this paragraph (c)(7) does not take into account any potential reduction in foreign income taxes that may occur by reason of a future distribution to shareholders of all or part of such income. However, to the extent the foreign income taxes paid or accrued by the controlled foreign corporation are reasonably certain to be returned to a shareholder by the foreign country imposing such taxes, directly or indirectly, through any means (including, but not limited to, a refund, credit, payment, discharge of an obligation, or any other method) on a subsequent distribution to such shareholder, the foreign income taxes are not treated as paid or accrued for purposes of this paragraph (c)(7). In addition, foreign income taxes that have not been paid or accrued because they are contingent on a future distribution of earnings (or other similar transaction, such as a loan to a shareholder) are not taken into account for purposes of this paragraph (c)(7). If, pursuant to section 905(c) and § 1.905-3, a redetermination of U.S. tax liability is required to account for the effect of a foreign tax redetermination (as defined in § 1.905-3(a)), this paragraph (c)(7) is applied in the adjusted year taking into account the adjusted amount of the redetermined foreign tax.

(iv) ***Tested unit rules*** —

(A) ***In general.*** Subject to the combination rule in paragraph (c)(7)(iv)(C) of this section, the term *tested unit* means any corporation, interest, or branch described in paragraphs (c)(7)(iv)(A)(*1*) through (*3*) of this section. See paragraph (c)(8)(iii)(D) (Example 4) of this section for an example that illustrates the application of the tested unit rules set forth in this paragraph (c)(7)(iv).

(*1*) A controlled foreign corporation (as defined in section 957(a)).

(*2*) An interest held directly or indirectly by a controlled foreign corporation in a pass-through entity that is—

(*i*) A tax resident (as described in § 1.267A-5(a)(23)(i)) of any foreign country; or

(*ii*) Not treated as fiscally transparent (as determined under the principles of § 1.267A-5(a)(8)) for purposes of the tax law of the foreign country of which the controlled foreign corporation is a tax resident or, in the case of an interest in a pass-through entity held by a controlled foreign corporation indirectly through one or more other tested units, for purposes of the tax law of the foreign country of which the tested unit that directly (or indirectly through the fewest number of transparent interests) owns the interest is a tax resident.

(*3*) A branch (as described in § 1.267A-5(a)(2)) the activities of which are carried on directly or indirectly (through one or more pass-through entities) by a controlled foreign corporation. However, in the case of a branch that does not give rise to a taxable presence under the tax law of the foreign country where the branch is located, the branch is a tested unit only if, under the tax law of the foreign country of which the controlled foreign corporation is a tax resident (or, if applicable, under the tax law of a foreign country of which the tested unit that directly (or indirectly, through the fewest number of transparent interests) carries on the activities of the branch is a tax resident), an exclusion, exemption, or other similar relief (such as a preferential rate) applies with respect to income attributable to the branch. For

purposes of this paragraph (c)(7)(iv)(A)(*3*), similar relief does not include a credit (for example, a foreign tax credit) against the tax imposed under such tax law. If a controlled foreign corporation carries on directly or indirectly (through one or more pass-through entities) less than all of the activities of a branch (for example, if the activities are carried on indirectly through an interest in a partnership), then the rules in this paragraph apply separately with respect to the portion (or portions, if carried on indirectly through more than one chain of pass-through entities) of the activities carried on by the controlled foreign corporation. See paragraphs (c)(8)(iii)(D)(*3*) and (c)(8)(iii)(D)(*4*) (Example 4) of this section for illustrations of the application of the rules set forth in this paragraph (c)(7)(iv)(A)(*3*).

(B) ***Items attributable to only one tested unit.*** For purposes of paragraph (c)(7) of this section, if an item is attributable to more than one tested unit in a tier of tested units, the item is considered attributable only to the lowest-tier tested unit. Thus, for example, if a controlled foreign corporation directly owns a branch tested unit described in paragraph (c)(7)(iv)(A)(*3*) of this section, and an item of gross income is (under the rules of paragraph (c)(7)(ii)(B) of this section) attributable to both the branch tested unit and the controlled foreign corporation tested unit, then the item is considered attributable only to the branch tested unit.

(C) ***Combination rule*** —

(*1*) ***In general.*** Except as provided in paragraph (c)(7)(iv)(C)(*2*) of this section, tested units of a controlled foreign corporation (including the controlled foreign corporation tested unit) are treated as a single tested unit if the tested units are tax residents of, or located in (in the case of a tested unit that is a branch, or a portion of the activities of a branch, that gives rise to a taxable presence under the tax law of a foreign country), the same foreign country. For purposes of this paragraph (c)(7)(iv)(C)(*1*), in the case of a tested unit that is an interest in a pass-through entity or a portion of the activities of a branch, a reference to the tax residency or location of the tested unit means the tax residency of the entity the interest in which is the tested unit or the location of the branch, as applicable. See paragraphs (c)(8)(iii)(D)(*2*) and (c)(8)(iii)(D)(*5*) (Example 4) of this section for illustrations of the application of the rule set forth in this paragraph (c)(7)(iv)(C)(*1*).

(*2*) ***Exception for nontaxed branches.*** The rule in paragraph (c)(7)(iv)(C)(*1*) of this section does not apply to a tested unit that is described in paragraph (c)(7)(iv)(A)(*3*) of this section if the branch described in paragraph (c)(7)(iv)(A)(*3*) of this section does not give rise to a taxable presence under the tax law of the foreign country where the branch is located. See paragraph (c)(8)(iii)(D)(*4*) (Example 4) of this section for an illustration of the application of the rule set forth in this paragraph (c)(7)(v)(C)(*2*).

(*3*) ***Effect of combination rule.*** If, pursuant to paragraph (c)(7)(iv)(C)(*1*) of this section, tested units are treated as a single tested unit, then, solely for purposes of paragraph (c)(7) of this section, items of gross income attributable to such tested units, and items of deduction and foreign taxes allocated and apportioned to such gross income, are aggregated for purposes of determining the combined tested unit's tentative gross tested income item, tentative tested income item, and foreign income taxes paid or accrued with respect to such tentative tested income item.

(v) ***Separate set of books and records*** —

(A) ***In general.*** For purposes of this paragraph (c)(7), the term *separate set of books and records* has the meaning set forth in § 1.989(a)-1(d). In addition, for purposes of this paragraph (c)(7), in the case of a tested unit or a transparent interest that is an interest in a pass-through entity or a portion of the activities of a branch, a reference to the separate set of books and records of the tested unit or the transparent interest means the separate set of books and records of the entity or the branch, as applicable.

(B) ***Failure to maintain separate set of books and records.*** If a separate set of books and records is not maintained for a tested unit or transparent interest, the items of gross income, disregarded payments, and any other items required to apply paragraph (c)(7) of this section that would be reflected on a separate set of books and records of the tested unit or transparent interest must be determined. Such items are treated as properly reflected on the separate set of books and records of the tested unit or transparent interest for purposes of applying paragraph (c)(7) of this section.

(C) ***Transparent interests.*** If a tested unit of a controlled foreign corporation or an entity an interest in which is a tested unit of a controlled foreign corporation holds a transparent interest, either directly or indirectly through one or more other transparent interests, then, for purposes of paragraph (c)(7) of this section (and subject to the rule of paragraph (c)(7)(iv)(C) of this section), items of the controlled foreign corporation properly reflected on the separate set of books and records of the transparent interest are treated as being properly reflected on the separate set of books and records of the tested unit, as modified under paragraph (c)(7)(ii)(B)(*2*) of this section. See paragraph (c)(8)(iii)(D)(*6*) (Example 4) of this section for an illustration of the application of the rule set forth in this paragraph (c)(7)(v)(C).

(D) ***Items not taken into account for financial accounting purposes.*** For purposes of this paragraph (c)(7), an item of gross income in a CFC inclusion year that is not taken into account in such year for financial accounting purposes, and therefore not properly reflected on a separate set of books and records of a tested unit or a transparent interest, or an entity an interest in which is a tested unit or a transparent interest, is treated as properly reflected on a separate set of books and records to the extent it would have been so reflected if the item were taken into account for financial accounting purposes in such CFC inclusion year.

(vi) ***Effective rate at which foreign taxes are imposed.*** For a CFC inclusion year of a controlled foreign corporation, the effective rate of foreign tax with respect to the tentative tested income items of the controlled foreign corporation is determined separately for each such item. See paragraphs (c)(8)(iii)(A)(*2*)(*v*) (Example 1), (c)(8)(iii)(B)(*2*)(*vi*) (Example 2), and (c)(8)(iii)(C)(*2*)(*vi*) (Example 3) of this section for illustrations of the application of the rules set forth in this paragraph (c)(7)(vi). The effective rate at which foreign income taxes are imposed on a tentative tested income item is—

(A) The U.S. dollar amount of foreign income taxes paid or accrued with respect to the tentative tested income item, determined by applying paragraph (c)(7)(vii) of this section; divided by

(B) The U.S. dollar amount of the tentative tested income item, increased by the amount of foreign income taxes referred to in paragraph (c)(7)(vi)(A) of this section.

(vii) ***Foreign income taxes paid or accrued with respect to a tentative tested income item.*** For a CFC inclusion year, the amount of foreign income taxes paid or accrued by a controlled foreign corporation with respect to a tentative tested income item of the controlled foreign corporation for purposes of this paragraph (c)(7) is the U.S. dollar amount of the controlled foreign corporation's eligible current year taxes (as defined in § 1.960-1(b)(5)) that are allocated and apportioned to the related tentative gross tested income item under the rules of paragraph (c)(7)(iii) of this section. See paragraphs (c)(8)(iii)(A)(*2*)(*iv*) (Example 1), (c)(8)(iii)(B)(*2*)(*v*) (Example 2), and (c)(8)(iii)(C)(*2*)(*v*) (Example 3) of this section for illustrations of the application of the rule set forth in this paragraph (c)(7)(vii).

(viii) ***Rules regarding the high-tax election*** —

(A) ***Manner*** —

(*1*) An election is made under this paragraph (c)(7)(viii) by the controlling domestic shareholders (as defined in § 1.964-1(c)(5)) with respect to a controlled foreign corporation for a CFC inclusion year (a *high-tax election*) in accordance with the rules provided in forms or instructions and by—

(*i*) Filing the statement required under § 1.964-1(c)(3)(ii) with a timely filed original federal income tax return, or with an amended federal income tax return in accordance with paragraph (c)(7)(viii)(A)(*2*) of this section, for the U.S. shareholder inclusion year of each controlling domestic shareholder in which or with which such CFC inclusion year ends;

(*ii*) Providing any notices required under § 1.964-1(c)(3)(iii); and

(*iii*) Providing any additional information required by applicable administrative pronouncements.

(*2*) In the case of an election (or revocation) made with an amended federal income tax return—

(*i*) The election (or revocation) must be made on an amended federal income tax return duly filed within 24 months of the unextended due date of the original federal income tax return for the U.S. shareholder inclusion year with or within which the CFC inclusion year ends;

(*ii*) Each United States shareholder that owns within the meaning of section 958(a) (including both domestic partnerships that are United States shareholders that own stock within the meaning of section 958(a) without regard to § 1.951A-1(e)(1) and partners of a domestic partnership that are United States shareholders that are treated as owning stock withing the meaning of section 958(a) by reason of § 1.951A-1(e)(1)) stock of the controlled foreign corporation as of the end of the CFC's taxable year to which the election relates must file amended Federal income tax returns (or timely original federal income tax returns if a return has not yet been filed) reflecting the effect of such election (or revocation) for the U.S. shareholder inclusion year with or within which the CFC inclusion year ends as well as for any other taxable year in which the U.S. tax liability of the United States shareholder would be increased by reason of the election (or revocation) (or in the case of a partnership if any item reported by the partnership or any partnership-related item would change as a

result of the election (or revocation)) within a single period no greater than six months within the 24-month period described in paragraph (c)(7)(viii)(A)(*2*)(*i*) of this section; and

(*iii*) Each United States shareholder in the controlled foreign corporation as of the end of the controlled foreign corporation's taxable year to which the election relates must pay any tax due as a result of such adjustments within a single period no greater than six months within the 24-month period described in paragraph (c)(7)(viii)(A)(*2*)(*i*) of this section.

(*3*) In the case of a United States shareholder that is a partnership, paragraphs (c)(7)(viii)(A)(*1*) and (*2*) and (c)(7)(viii)(C) of this section are applied by substituting "Form 1065 (or successor form)" for "federal income tax return" and by substituting "amended Form 1065 (or successor form) or administrative adjustment request (as described in § 301.6227-1), as applicable," for "amended federal income tax return", each place that it appears.

(*4*) A United States shareholder that is a partner in a partnership that is also a United States shareholder in the controlled foreign corporation must generally file an amended return, as required under paragraph (c)(7)(viii)(A)(*2*)(*ii*) of this section, and must generally pay any additional tax owed as required under paragraph (c)(7)(viii)(A)(*2*)(*iii*) of this section. However, in the case of a United States shareholder that is a partner in a partnership that duly files an administrative adjustment request under paragraph (c)(7)(viii)(A)(*2*) of this section, the partner is treated as having satisfied the requirements of paragraphs (c)(7)(viii)(A)(*2*)(*ii*) and (*iii*) of this section with respect to the interest held through that partnership if:

(*i*) The partnership timely files an administrative adjustment request described in paragraph (c)(7)(viii)(A)(*2*)(*i*) or (*ii*) of this section, as applicable; and,

(*ii*) Both the partnership and its partners timely comply with the requirements of section 6227 with respect to the administrative adjustment request. See §§ 301.6227-1 through -3 for rules relating to administrative adjustment requests.

(B) ***Scope.*** A high-tax election applies with respect to each tentative gross tested income item of the controlled foreign corporation for the CFC inclusion year and is binding on all United States shareholders of the controlled foreign corporation.

(C) ***Revocation.*** A high-tax election may be revoked by the controlling domestic shareholders of the controlled foreign corporation in the same manner as prescribed for an election made on an amended return as described in paragraph (c)(7)(viii)(A) of this section.

(D) ***Failure to satisfy election requirements.*** A high-tax election (or revocation) is valid only if all of the requirements in paragraph (c)(7)(viii)(A) of this section, including the requirement to provide notice under paragraph (c)(7)(viii)(A)(*1*)(*ii*) of this section, are satisfied.

(E) ***Rules applicable to CFC groups*** —

(1) ***In general.*** In the case of a controlled foreign corporation that is a member of a CFC group, a high-tax election is made under paragraph (c)(7)(viii)(A) of this section, or revoked under paragraph (c)(7)(viii)(C) of this section, with respect to all controlled foreign corporations that are members of the CFC group and the rules in paragraphs (c)(7)(viii)(A) through (D) of this section apply by reference to the CFC group.

(2) ***Determination of the CFC group*** —

(*i*) ***Definition.*** Subject to the rules in paragraphs (c)(7)(viii)(E)(2)(*ii*) and (*iii*) of this section, the term *CFC group* means an affiliated group as defined in section 1504(a) without regard to section 1504(b)(1) through (6), except that section 1504(a) is applied by substituting "more than 50 percent" for "at least 80 percent" each place it appears, and section 1504(a)(2)(A) is applied by substituting "or" for "and." For purposes of this paragraph (c)(7)(viii)(E)(2)(*i*), stock ownership is determined by applying the constructive ownership rules of section 318(a), other than section 318(a)(3)(A) and (B), by applying section 318(a)(4) only to options (as defined in § 1.1504-4(d)) that are reasonably certain to be exercised as described in § 1.1504-4(g), and by substituting in section 318(a)(2)(C) "5 percent" for "50 percent.

(*ii*) ***Member of a CFC group.*** The determination of whether a controlled foreign corporation is included in a CFC group is made as of the close of the CFC inclusion year of the controlled foreign corporation that ends with or within the taxable years of the controlling domestic shareholders. One or more controlled foreign corporations are members of a CFC group if the requirements of paragraph (c)(7)(viii)(E)(2) of this section are satisfied as of the end of the CFC inclusion year of at least one of the controlled foreign corporations, even if the requirements are not satisfied as of the end of the CFC inclusion year of all controlled foreign corporations. If the controlling domestic shareholders do not have the same taxable year, the determination of whether a controlled foreign corporation is a member of a CFC group is made with respect to the CFC inclusion year that ends with or within the taxable year of the majority of the controlling domestic shareholders (determined based on voting power) or, if no such majority taxable year exists, the calendar year. See paragraph (c)(8)(iii)(E) (Example 5) of this section for an example that illustrates the application of the rule set forth in this paragraph (c)(7)(viii)(E)(2)(*ii*). Notwithstanding the rule set forth in this paragraph (c)(7)(viii)(E)(2)(*ii*), a controlled foreign corporation is not a member of a CFC group if, as of the close of its CFC inclusion year, the controlled foreign corporation does not have a controlling domestic shareholder.

(*iii*) ***Controlled foreign corporations included in only one CFC group.*** A controlled foreign corporation cannot be a member of more than one CFC group. If a controlled foreign corporation would be a member of more than one CFC group under paragraph (c)(7)(viii)(E)(2) of this section, then ownership of stock of the controlled foreign corporation is determined by applying paragraph (c)(7)(viii)(E)(2) of this section without regard to section 1504(a)(2)(B) or, if applicable, by reference to the ownership existing as of the end of the first CFC inclusion year of a controlled foreign corporations that would cause a CFC group to exist.

(ix) ***Definitions.*** The following definitions apply for purposes of this paragraph (c)(7).

(A) ***Indirectly.*** The term *indirectly,* when used in reference to ownership, means ownership through one or more pass-through entities.

(B) ***Pass-through entity.*** The term *pass-through entity* means a partnership, a disregarded entity, or any other person (whether domestic or foreign) other than a corporation to the extent that income, gain, deduction or loss of the person is taken into account in determining the income or loss of a controlled foreign corporation that owns, directly or indirectly, interests in the person.

(C) ***Transparent interest.*** The term *transparent interest* means an interest in a pass-through entity (or the activities of a branch) that is not a tested unit.

(8) ***Examples*** —

(i) ***Scope.*** This paragraph (c)(8) provides examples illustrating the application of the rules in paragraph (c)(7) of this section.

(ii) ***Presumed facts.*** For purposes of the examples in paragraph (c)(8)(iii) of this section, except as otherwise stated, the following facts are presumed:

(A) USP is a domestic corporation.

(B) CFC1X and CFC2X are controlled foreign corporations organized in, and tax residents of, Country X.

(C) CFC3Z is a controlled foreign corporation organized in, and tax resident of, Country Z.

(D) FDEX is a disregarded entity that is a tax resident of Country X.

(E) FDE1Y and FDE2Y are disregarded entities that are tax residents of Country Y.

(F) FPSY is an entity that is organized in, and a tax resident of, Country Y but is classified as a partnership for federal income tax purposes.

(G) CFC1X, CFC2X, CFC3Z, and the interests in FDEX, FDE1Y, FDE2Y, and FPSY are tested units (the CFC1X tested unit, CFC2X tested unit, CFC3Z tested unit, FDEX tested unit, FDE1Y tested unit, FDE2Y tested unit, and FPSY tested unit, respectively).

(H) CFC1X, CFC2X, CFC3Z, FDEX, FDE1Y, and FDE2Y conduct activities in the foreign country in which they are tax resident, and properly reflect items of income, gain, deduction, and loss on separate sets of books and records.

(I) All entities have calendar taxable years (for both federal income tax purposes and for purposes of the relevant foreign country) and use the Euro (€) as their functional currency. At all relevant times €1 = $1.

(J) The maximum rate of tax specified in section 11 for the CFC inclusion year is 21 percent.

(K) Neither CFC1X, CFC2X, nor CFC3Z directly or indirectly earns income described in section 952(b), has any items of income, gain, deduction, or loss, or makes or receives disregarded payments. In addition, no tested unit of CFC1X, CFC2X, or CFC3Z makes or receives disregarded payments.

(L) An election made under section 954(b)(4) and paragraph (c)(7)(viii) of this section is effective with respect to CFC1X and CFC2X, as applicable, for the CFC inclusion year.

(M) The same amounts of regarded items of income and deduction that are accrued under federal income tax law are also accrued under foreign law.

(iii) *Examples* —

(A) *Example 1: Effect of disregarded interest* —

(*1*) *Facts* —

(*i*) ***Ownership.*** USP owns all of the stock of CFC1X, and CFC1X owns all of the interests of FDE1Y.

(*ii*) ***Gross income and deductions (other than for foreign income taxes).*** In Year 1, CFC1X generates €100x of gross income from services to unrelated parties that would be gross tested income without regard to paragraph (c)(7) of this section and that is properly reflected on the books and records of FDE1Y. The €100x of services income is general category income under § 1.904-4(d). In Year 1, FDE1Y accrues and pays €20x of interest to CFC1X that is deductible for Country Y tax purposes but is disregarded for federal income tax purposes. The €20x of disregarded interest income received by CFC1X from FDE1Y is properly reflected on CFC1X's books and records, and the €20x of disregarded interest expense paid from FDE1Y to CFC1X is properly reflected on FDE1Y's books and records.

(*iii*) ***Foreign income taxes.*** Country X imposes no tax on net income, and Country Y imposes a 25% tax on net income. For Country Y tax purposes, FDE1Y (which is not disregarded under Country Y tax law) has €80x of taxable income (€100x of services income from the unrelated parties, less a €20x deduction for the interest paid to CFC1X). Accordingly, FDE1Y incurs a Country Y income tax liability with respect to Year 1 of €20x (€80x x 25%), the U.S. dollar amount of which is $20x.

(*2*) *Analysis* —

(*i*) ***Tentative gross tested income items.*** Under paragraph (c)(7)(ii)(A) of this section, the tentative gross tested income item with respect to each of the CFC1X tested unit and the FDE1Y tested unit is the aggregate of the gross income of CFC1X that is attributable to the tested unit, that would be gross tested income (without regard to this paragraph (c)(7)), and that would be in a single tested income group. Under paragraphs (c)(7)(ii)(B)(*1*) and (*2*) of this section, items of gross income of CFC1X are attributable to the CFC1X tested unit, or the FDE1Y tested unit, to the extent properly reflected on its separate set of books and records, as determined under federal income tax principles and adjusted to take into account disregarded payments. Without regard to the €20x disregarded interest payment from FDE1Y to CFC1X, gross income attributable to the CFC1X tested unit would be €0 (that is, the €20x of interest income reflected on the books and records of CFC1X would be reduced by €20x, the amount attributable to the payment that is disregarded for federal income tax purposes). Similarly, without regard to the €20x disregarded interest payment

from FDE1Y to CFC1X, gross income attributable to the FDE1Y tested unit would be €100x (that is, €100x of services income reflected on the books and records of FDE1Y, unreduced by the €20x disregarded interest payment from FDE1Y to CFC1X). However, under paragraph (c)(7)(ii)(B)(*2*) of this section, the gross income attributable to each of the CFC1X tested unit and the FDE1Y tested unit is adjusted by €20x, the amount of the disregarded interest payment from FDE1Y to CFC1X that is deductible for Country Y tax purposes. Accordingly, the tentative gross tested income item attributable to the CFC1X tested unit (the "CFC1X tentative gross tested income item") is €20x (€0 + €20x), and the tentative gross tested income item attributable to the FDE1Y tested unit (the "FDE1Y tentative gross tested income item") is €80x (€100x − €20x).

(*ii*) ***Foreign income tax deduction.*** Under paragraph (c)(7)(iii)(A) of this section, CFC1X's tentative tested income items are computed by treating the CFC1X tentative gross tested income item and the FDE1Y tentative gross tested income item each as income in a separate tested income group (the "CFC1X income group" and the "FDE1Y income group") and by allocating and apportioning CFC1X's deductions for current year taxes under § 1.861-20 (CFC1X has no other deductions to allocate and apportion). Under paragraph (c)(7)(iii)(A) of this section and § 1.861-20(d)(3)(v), the €20x deduction for Country Y income taxes is allocated and apportioned solely to the FDE1Y income group (the "FDE1Y group tax") and none of the Country Y taxes are allocated and apportioned to the CFC1X income group.

(*iii*) ***Tentative tested income items.*** Under paragraph (c)(7)(iii) of this section, the tentative tested income item with respect to the CFC1X income group (the "CFC1X tentative tested item"), is €20x. The tentative tested income item with respect to the FDE1Y income group (the "CFC1X tentative tested item") is €60x (the FDE1Y tentative gross tested income item of €80x, less the €20x deduction for the FDE1Y group tax).

(*iv*) ***Foreign income tax paid or accrued with respect to a tentative tested income item.*** Under paragraph (c)(7)(vii) of this section, the foreign income taxes paid or accrued with respect to a tentative tested income item is the U.S. dollar amount of the eligible current year taxes that are allocated and apportioned to the related tentative gross tested income item under the rules of paragraph (c)(7)(iii) of this section. Therefore, the foreign income taxes paid or accrued with respect to the FDE1Y tentative tested income item is $20x, the U.S. dollar amount of the FDE1Y group tax. The foreign income tax paid or accrued with respect to the CFC1X tentative tested income item is $0, the U.S. dollar amount of the foreign tax allocated and apportioned to the CFC1X tentative gross tested income item under paragraph (c)(7)(iii) of this section.

(*v*) ***Effective foreign tax rate.*** The effective foreign tax rate is determined under paragraph (c)(7)(vi) of this section by dividing the U.S. dollar amount of foreign income taxes paid or accrued with respect to each respective tentative tested income item by the U.S. dollar amount of the tentative tested income item increased by the U.S. dollar amount of the relevant foreign income taxes. Therefore, the effective foreign tax rate with respect to the FDE1Y tentative

tested income item is 25%, computed by dividing $20x (the U.S. dollar amount of the foreign income taxes paid or accrued with respect to the FDE1Y tentative tested income item under paragraph (c)(7)(vii) of this section) by $80x (the sum of $60x, the U.S. dollar amount of the FDE1Y tentative tested income item, and $20x, the U.S. dollar amount of the foreign income taxes paid or accrued with respect to the FDE1Y tentative tested income item). The CFC1X tentative tested income item is not subject to any foreign income tax, so is subject to an effective foreign tax rate of 0%, calculated as $0 (the U.S. dollar amount of the foreign income taxes paid or accrued with respect to the CFC1X tentative tested income item) divided by $20x (the U.S. dollar amount of the CFC1X tentative tested income item).

(*vi*) ***Gross income items excluded under sections 954(b)(4) and 951A(c)(2)(A)(i)(III).*** The FDE1Y tentative tested income item is subject to an effective foreign tax rate (25%) that is greater than 18.9% (90% of the maximum rate of tax specified in section 11). Therefore, the requirement of paragraph (c)(7)(i)(B) of this section is satisfied, and the FDE1Y tentative gross tested income item qualifies under paragraph (c)(7)(i) of this section for the high-tax exception of section 954(b)(4) and is excluded from tested income under sections 951A(c)(2)(A)(i)(III) and 954(b)(4) and paragraph (c)(1)(iii) of this section. The CFC1X tentative tested income item is subject to an effective foreign tax rate of 0%. Therefore, the CFC1X tentative tested income item does not satisfy the requirement of paragraph (c)(7)(i)(B) of this section, and the CFC1X tentative gross tested income item does not qualify under paragraph (c)(7)(i) of this section for the high-tax exception of section 954(b)(4) and is not excluded from tested income under sections 951A(c)(2)(A)(i)(III) and 954(b)(4) and paragraph (c)(1)(iii) of this section.

(B) [Reserved]

(C) ***Example 3: Interest expense allocated and apportioned with respect to the income of a lower-tier CFC —***

(*1*) ***Facts —***

(*i*) ***Ownership.*** USP owns all of the stock of CFC1X. CFC1X directly owns all the interests of FDE1Y. FDE1Y owns all of the stock of CFC3Z. Pursuant to § 1.861-9(j) and § 1.861-9T(j), CFC1X uses the modified gross income method to allocate and apportion its interest expense.

(*ii*) ***Gross income and deductions (including for foreign income taxes).*** During Year 1, CFC1X generates €4,000x of gross income from services that would be gross tested income without regard to paragraph (c)(7) of this section, €3,000x of which is properly reflected on the books and records of the CFC1X tested unit and €1,000x of which is properly reflected on the books and records of the FDE1Y tested unit. CFC1X also accrues €1,000x of interest expense to an unrelated person. Country X imposes €200x of income taxes with respect to the €3,000x of gross income properly reflected on the books and records of the CFC1X tested unit, and Country Y imposes €200x of income taxes with respect to the €1,000x of gross income properly reflected on the books and records of the FDE1Y tested unit. CFC3Z generates €1,000x of gross income from services

that would be gross tested income without regard to paragraph (c)(7) of this section, and such gross income is properly reflected on the books and records of the CFC3Z tested unit. CFC3Z accrues no expenses, and Country Z imposes €100x of income taxes with respect to the €1,000x of gross income generated by CFC3Z.

(2) *Analysis* —

(i) ***Tentative gross tested income items.*** Under paragraph (c)(7)(ii) of this section, the €3,000x of gross income that is reflected on the books and records of the CFC1X tested unit, and the €1,000x of gross income that is reflected on the books and records of the FDE1Y tested unit, are attributable to the CFC1X tested unit and the FDE1Y tested unit, respectively. Under paragraph (c)(7)(ii) of this section, each of these amounts is a separate tentative gross tested income item of CFC1X (the "CFC1X tentative gross tested income item" and the "FDE1Y tentative gross tested income item," respectively). Under paragraph (c)(7)(ii) of this section, the €1,000x item of tentative gross tested income that is properly reflected on the books and records of the CFC3Z tested unit is attributable to the CFC3Z tested unit. Under paragraph (c)(7)(ii) of this section, the amount attributable to the CFC3Z tested unit is a tentative gross tested income item of CFC3Z (the "CFC3Z tentative gross tested income item").

(ii) ***Allocation and apportionment of interest expense.*** To compute CFC1X's tentative tested income items, the principles of § 1.960-1(d)(3) apply by treating each of CFC1X's tentative gross tested income items as income in a separate tested income group (the "CFC1X income group" and the "FDE1Y income group") and allocate and apportion its deductions among those income groups under federal income tax principles. Because CFC1X uses the modified gross income method under § 1.861-9(j) and § 1.861-9T(j) to allocate and apportion interest expense, it must allocate and apportion its interest expense between the CFC1X income group and the FDE1Y income group based on a combined gross income amount that includes both the gross income of CFC1X (including the gross income attributable to both the CFC1X tested unit and the FDE1Y tested unit) and the gross income of CFC3Z, adjusted as provided under § 1.861-9(j) and § 1.861-9T(j). Under § 1.861-9(j) and § 1.861-9T(j), the adjusted combined gross income of CFC1X comprises the CFC1X tentative gross tested income item (€3,000x), or 60% of the combined adjusted gross income amount, the FDE1Y tentative gross tested income item (€1,000x), or 20% of the combined adjusted gross income amount, and the CFC3Z gross tentative tested income item (€1,000x), or 20% of the combined adjusted gross income amount. Under paragraph (c)(7)(iii) of this section, interest expense of CFC1X that is allocated and apportioned to the gross income of CFC3Z under § 1.861-9(j) and § 1.861-9T(j) is not allocated and apportioned to either the CFC1X income group or the FDE1Y income group. Therefore, €600x of interest expense (60% of the €1,000x of interest expense) is allocated and apportioned to the CFC1X income group, and €200x of interest expense (20% of the €1,000x of interest expense) is allocated and apportioned to the FDE1Y income group. The €200x of interest expense that is allocated and apportioned to the €1,000x of gross tentative tested income of CFC3Z is allocated and apportioned to the residual income

group for purposes of paragraph (c)(7) of this section, but can still be allocated and apportioned to a statutory grouping of tested income of CFC1X for purposes of paragraph (c)(3) of this section. *See* paragraph (c)(7)(iii) of this section.

(*iii*) ***Foreign income tax deduction.*** Under paragraph (c)(7)(iii) of this section, deductions for foreign income taxes paid or accrued by CFC1X are allocated and apportioned under § 1.861-20 to the CFC1X income group and the FDE1Y income group. Similarly, foreign income taxes paid or accrued by CFC3Z are allocated and apportioned under § 1.861-20 to the tentative gross tested income item of CFC3Z (the "CFC3Z income group"). Under § 1.861-20, €200x of Country X income taxes are allocated and apportioned to the CFC1X income group (the "CFC1X group tax"), the €200x of Country Y income taxes are allocated and apportioned to the FDE1Y income group (the "FDE1Y group tax"), and the €100x of Country Z income taxes are allocated and apportioned to the CFC3Z income group (the "CFC3Z group tax").

(*iv*) ***Tentative tested income items.*** After the allocation and apportionment of deductions to reduce the tentative gross tested income in each income group, under paragraph (c)(7)(iii) of this section, CFC1X has a tentative tested income item with respect to the CFC1X tested unit of €2,200x (€3,000x, less €600x of interest expense and €200x of foreign income tax expense, the "CFC1X tentative tested income item") and a tentative tested income item with respect to the FDE1Y tested unit of €600x (€1,000x, less €200x of interest expense and €200x of foreign income tax expense, the "FDE1Y tentative tested income item"). CFC3Z has a tentative tested income item of €900x (€1,000x, less €100x of foreign income tax expense, the "CFC3Z tentative tested income item").

(*v*) ***Foreign income taxes paid or accrued with respect to a tentative tested income item.*** Under paragraph (c)(7)(vii) of this section, the foreign income taxes paid or accrued with respect to a tentative tested income item is the U.S. dollar amount of the eligible current year taxes that are allocated and apportioned to the related tentative gross tested income item under the rules of paragraph (c)(7)(iii) of this section. Therefore, the foreign income tax paid or accrued with respect to the CFC1X tentative tested income item is $200x, the U.S. dollar amount of the CFC1X group tax. Similarly, the foreign income tax paid or accrued with respect to the FDE1Y tentative tested income item is $200x, the U.S. dollar amount of the FDE1Y group tax, and the foreign income tax paid or accrued with respect to the CFC3Z tentative tested income item is $100x, the U.S. dollar amount of the CFC3Z group tax.

(*vi*) ***Effective foreign tax rate.*** The effective foreign tax rate is determined under paragraph (c)(7)(vi) of this section by dividing the U.S. dollar amount of foreign income taxes paid or accrued with respect to each respective tentative tested income item by the U.S. dollar amount of the tentative tested income item increased by the U.S. dollar amount of the relevant foreign income taxes. Therefore, the effective foreign tax rate for the CFC1X tentative tested income item is 8.3%, computed by dividing $200x (the U.S. dollar amount of the foreign income taxes paid or accrued with respect to the CFC1X tentative tested income item), by $2,400x (the sum of $2,200x, the U.S. dollar amount of the

CFC1X tentative tested income item and $200x, the U.S. dollar amount of the foreign taxes paid or accrued with respect to the CFC1X tentative tested income item). The effective foreign tax rate for the FDE1Y tentative tested income item is 25%, computed by dividing $200x (the U.S. dollar amount of the foreign taxes paid or accrued with respect to the FDE1Y tentative tested income item) by $800x (the sum of $600x, the U.S. dollar amount of the FDE1Y tentative tested income item, and $200x, the U.S. dollar amount of the foreign taxes paid or accrued with respect to the FDE1Y tentative tested income item). The effective foreign tax rate for the CFC3Z tentative tested income item is 10%, computed by dividing $100x (the U.S. dollar amount of the foreign taxes paid or accrued with respect to the CFC3Z tentative tested income item) by $1,000x (the sum of $900x, the U.S. dollar amount of the CFC3Z tentative tested income item, and $100x, the U.S. dollar amount of the foreign taxes paid or accrued with respect to the CFC3Z tentative tested income item).

(*vii*) ***Gross income items excluded under sections 954(b)(4) and 951A(c)(2)(A)(i)(III).*** The FDE1Y tentative tested income item is subject to tax at an effective foreign tax rate (25%) that is greater than 18.9% (90% of the maximum rate of tax specified in section 11). Therefore, the requirement of paragraph (c)(7)(i)(B) of this section is satisfied, and the FDE1Y tentative gross tested income item qualifies under paragraph (c)(7)(i) of this section for the high-tax exception of section 954(b)(4) and is excluded from tested income under sections 951A(c)(2)(A)(i)(III) and 954(b)(4) and paragraph (c)(1)(iii) of this section. In computing the tested income of CFC1X under paragraph (c)(3) of this section, the deductions of CFC1X that were allocated and apportioned to the FDE1Y tentative gross tested income item (that is, the €200x of interest expense and the €200x of FDE1Y group taxes) are allocated and apportioned to this item of tentative gross tested income. As a result, the €1,000x of tentative gross tested income excluded from tested income under section 954(b)(4), as well as the €200x of interest expense and €200x of foreign tax expense allocable to that gross income, are allocated and apportioned to the residual category under paragraph (c)(3) of this section for purposes of determining the tested income of CFC1X. Under § 1.960-1(d)(3), the $200x of foreign income taxes allocated and apportioned to the excluded gross income would also be assigned to the residual income group for purposes of determining CFC1X's tested taxes for purposes of section 960(d). The CFC1X tentative tested income item and CFC3Z tentative tested income item each have effective foreign tax rates (8.3% and 10%, respectively) that are not greater than 90% of the maximum rate of tax specified in section 11. Therefore, the CFC1X tentative gross tested income item and the CFC3Z tentative gross tested income item do not qualify under paragraph (c)(7)(i) of this section for the high-tax exception of section 954(b)(4), and are not excluded from tested income under sections 951A(c)(2)(A)(i)(III) and 954(b)(4) and paragraph (c)(1)(i) of this section. Under paragraph (c)(3) of this section, the corresponding deductions are allocated and apportioned to that gross tested income in a manner that achieves a result that is consistent the result of the allocation and apportionment of those deductions under paragraph (c)(7) of this section. Accordingly, because CFC3Z's tentative gross tested income is not excluded from gross tested income under sections

951A(c)(2)(A)(i)(IIII) and 954(b)(4) and paragraph (c)(1)(i) of this section, under paragraph (c)(3) of this section the €200x of CFC1X's interest expense that was apportioned to tentative gross tested income of CFC3Z under the modified gross income method in § 1.861-9 is allocated and apportioned to gross tested income of CFC1X and therefore reduces CFC1X's tested income. In contrast, if the CFC3Z tentative gross tested item had been excluded from gross tested income under sections 951A(c)(2)(A)(i)(III) and 954(b)(4) and paragraph (c)(1)(i) of this section, then the €200x of CFC1X's interest expense that was allocated and apportioned to that income would be assigned to the residual category.

(D) ***Example 4: Application of tested unit rules*** —

(*1*) ***Facts*** —

(*i*) ***Ownership.*** USP owns all of the stock of CFC1X. CFC1X directly owns all the interests of FDEX and FDE1Y. In addition, CFC1X directly carries on activities in Country Y that constitute a branch (as described in § 1.267A-5(a)(2)) and that give rise to a taxable presence under Country Y tax law and Country X tax law (such branch, "FBY").

(*ii*) ***Items reflected on books and records.*** For the CFC inclusion year, CFC1X had a €20x item of gross income (Item A), which is properly reflected on the books and records of FBY, and a €30x item of gross income (Item B), which is properly reflected on the books and records of FDEX.

(*2*) ***Analysis*** —

(*i*) ***Identifying the tested units of CFC1X.*** Without regard to the combination rule of paragraph (c)(7)(iv)(C) of this section, CFC1X, CFC1X's interest in FDEX, CFC1X's interest in FDE1Y, and FBY would each be a tested unit of CFC1X. *See* paragraph (c)(7)(iv)(A) of this section. Pursuant to the combination rule, however, the FDE1Y tested unit is combined with the FBY tested unit and treated as a single tested unit because FDE1Y is a tax resident of Country Y, the same country in which FBY is located (the "Country Y tested unit"). *See* paragraph (c)(7)(iv)(C)(*1*) of this section. The CFC1X tested unit (without regard to any items attributable to the FDEX, FDE1Y, or FBY tested units) is also combined with the FDEX tested unit and treated as a single tested unit because CFC1X and FDEX are both tax residents of County X (the "Country X tested unit"). *See* paragraph (c)(7)(iv)(C)(*1*) of this section.

(*ii*) ***Computing the items of CFC1X.*** Under paragraph (c)(7)(ii)(A) of this section, a tentative gross tested income item is determined with respect to each of the Country Y tested unit and the Country X tested unit. To determine the tentative gross tested income item of each tested unit, the item of gross income that is attributable to the tested unit is determined under paragraph (c)(7)(ii)(B) of this section. Under paragraph (c)(7)(ii)(B) of this section, only Item A is attributable to the Country Y tested unit. Item A is not attributable to the Country X tested unit because it is not reflected on the separate set of books and records of the CFC1X tested unit or the FDEX tested unit, and an item of gross income is only

attributable to one tested unit. *See* paragraph (c)(7)(ii)(B)(*1*) of this section. Under paragraph (c)(7)(ii)(B) of this section, only Item B is attributable to the Country X tested unit.

(*3*) ***Alternative facts—branch does not give rise to a taxable presence in country where located*** —

(*i*) ***Facts.*** The facts are the same as in paragraph (c)(8)(iii)(D)(*1*) of this section (the original facts in this *Example 4*), except that FBY does not give rise to a taxable presence under Country Y tax law; moreover, Country X tax law does not provide an exclusion, exemption, or other similar relief with respect to income attributable to FBY.

(*ii*) ***Analysis.*** FBY is not a tested unit but is a transparent interest. *See* paragraphs (c)(7)(iv)(A)(*3*) and (c)(7)(ix)(C) of this section. CFC1X has a tested unit in Country X that includes the CFC1X tested unit (without regard to any items related to the interest in FDEX or FDE1Y, but that includes FBY since it is a transparent interest and not a tested unit) and the interest in FDEX. *See* paragraph (c)(7)(iv)(C) of this section. CFC1X has another tested unit in Country Y, the interest in FDE1Y.

(*4*) ***Alternative facts—branch is a tested unit but is not combined*** —

(*i*) ***Facts.*** The facts are the same as in paragraph (c)(8)(iii)(D)(*1*) of this section (the original facts in this *Example 4*), except that FBY does not give rise to a taxable presence under Country Y tax law but Country X tax law provides an exclusion, exemption, or other similar relief (such as a preferential rate) with respect to income attributable to FBY.

(*ii*) ***Analysis.*** FBY is a tested unit. *See* paragraph (c)(7)(iv)(A)(*3*) of this section. CFC1X has two tested units in Country Y, the interest in FDE1Y and FBY. The interest in FDE1Y and FBY tested units are not combined because FBY does not give rise to a taxable presence under the tax law of Country Y. *See* paragraph (c)(7)(iv)(C)(*2*) of this section. CFC1X also has a tested unit in Country X that includes the activities of CFC1X (without regard to any items related to the interest in FDEX, the interest in FDE1Y, or FBY) and the interest in FDEX.

(*5*) ***Alternative facts—split ownership of tested unit*** —

(*i*) ***Facts.*** The facts are the same as in paragraph (c)(8)(iii)(D)(*1*) of this section (the original facts in this *Example 4*), except that USP also owns CFC2X, CFC1X does not own FDE1Y, and CFC1X and CFC2X own 60% and 40%, respectively, of the interests of FPSY.

(*ii*) ***Analysis for CFC1X.*** Under paragraph (c)(7)(iv)(C)(*1*) of this section, FBY and CFC1X's 60% interest in FPSY are combined and treated as a single tested unit of CFC1X (“CFC1X's Country Y tested unit”), and CFC1X's interest in FDEX and CFC1X's other activities are combined and treated as a single tested unit of CFC1X (“CFC1X's Country X tested unit”). CFC1X's Country Y tested unit is attributed any item of CFC1X that is derived through its interest in FPSY to the extent the item is properly reflected on the books and records of FPSY. *See* paragraph (c)(7)(ii)(B)(*1*) of this section.

(*iii*) ***Analysis for CFC2X.*** Under paragraphs (c)(7)(iv)(A)(*1*) and (c)(7)(iv)(A)(*2*)(*i*) of this section, CFC2X and CFC2X's 40% interest in FPSY are tested units of CFC2X. CFC2X's interest in FPSY is attributed any item of CFC2X that is derived through FPSY to the extent that it is properly reflected on the books and records of FPSY. *See* paragraph (c)(7)(ii)(B)(*1*) of this section.

(*iv*) ***Analysis for not combining CFC1X and CFC2X tested units.*** None of the tested units of CFC1X are combined with the tested units of CFC2X under paragraph (c)(7)(iv)(C)(*1*) of this section because they are tested units of different controlled foreign corporations, and the combination rule only combines tested units of the same controlled foreign corporation.

(*6*) ***Alternative facts—split ownership of transparent interest*** —

(*i*) ***Facts.*** The facts are the same as in paragraph (c)(8)(iii)(D)(*1*) of this section (the original facts in this *Example 4*), except that USP also owns CFC2X, CFC1X does not own FDE1Y, and CFC1X and CFC2X own 60% and 40%, respectively, of the interests in FPSY, but FPSY is not a tax resident of any foreign country and is fiscally transparent for Country X tax law purposes.

(*ii*) ***Analysis for CFC1X.*** CFC1X's interest in FPSY is not a tested unit but is a transparent interest. *See* paragraphs (c)(7)(iv)(A)(*2*) and (c)(7)(ix)(C) of this section. Under paragraph (c)(7)(v)(C) of this section, any item of CFC1X that is derived through its interest in FPSY and is properly reflected on the books and records of FPSY is treated as properly reflected on the books and records of CFC1X.

(*iii*) ***Analysis for CFC2X.*** CFC2X's interest in FPSY is not a tested unit but is a transparent interest. *See* paragraphs (c)(7)(iv)(A)(*2*) and (c)(7)(ix)(C) of this section. Under paragraph (c)(7)(v)(C) of this section, any item of CFC2X that is derived through its interest in FPSY and is properly reflected on the books and records of FPSY is treated as properly reflected on the books and records of CFC2X.

(E) ***Example 5: CFC group—Controlled foreign corporations with different taxable years*** —

(*1*) ***Facts.*** USP owns all the stock of CFC1X and CFC2X. CFC2X has a taxable year ending November 30. On December 15, Year 1, USP sells all the stock of CFC2X to an unrelated party for cash.

(*2*) ***Analysis.*** The determination of whether CFC1X and CFC2X are in a CFC group is made as of the close of their CFC inclusion years that end with or within the taxable year ending December 31, Year 1, the taxable year of USP, the controlling domestic shareholder. *See* paragraph (c)(7)(viii)(E)(*2*)(*ii*) of this section. Under paragraph (c)(7)(viii)(E)(*2*)(*i*) of this section, USP directly owns more than 50% of the stock of CFC1X as of December 31, Year 1, the end of CFC1X's CFC inclusion year. USP also directly owns more than 50% of the stock of CFC2X as of November 30, Year 1, the end of CFC2X's CFC inclusion year. Therefore, CFC1X and CFC2X are members of a CFC group, and USP must consistently make high-tax elections, or revocations, under paragraph (c)(7)(viii) of this section with respect to CFC1X's taxable year ending December 31, Year 1, and CFC2X's taxable year ending November 30, Year 1. This is

the case notwithstanding that USP does not directly own more than 50% of the stock of CFC2X as of December 31, Year 1, the end of CFC1X's CFC inclusion year. *See* paragraph (c)(7)(viii)(E)(2)(*ii*) of this section.

[T.D. 9866, 84 FR 29341, June 21, 2019; 84 FR 44694, Aug. 27, 2019, as amended by T.D. 9882, 84 FR 69107, Dec. 17, 2019; T.D. 9902, 85 FR 44638, July 23, 2020; T.D. 9902, 85 FR 64040, Oct. 9, 2020; T.D. 9922, 85 FR 72069, Nov. 12, 2020; T.D. 9934, 85 FR 76975, Dec. 1, 2020; T.D. 9902, 85 FR 79853, Dec. 11, 2020; T.D. 9959, 87 FR 373, Jan. 4, 2022; 87 FR 45020, July 27, 2022; 89 FR 82169, Oct. 10, 2024]

§ 1.951A-3 Qualified business asset investment.

(a) ***Scope.*** This section provides rules for determining the qualified business asset investment of a controlled foreign corporation for purposes of determining a United States shareholder's deemed tangible income return under § 1.951A-1(c)(3)(ii). Paragraph (b) of this section defines qualified business asset investment. Paragraph (c) of this section defines tangible property and specified tangible property. Paragraph (d) of this section provides rules for determining the portion of tangible property that is specified tangible property when the property is used in the production of both gross tested income and gross income that is not gross tested income. Paragraph (e) of this section provides rules for determining the adjusted basis in specified tangible property. Paragraph (f) of this section provides rules for determining qualified business asset investment of a tested income CFC with a short taxable year. Paragraph (g) of this section provides rules for increasing the qualified business asset investment of a tested income CFC by reason of property owned by a partnership. Paragraph (h) of this section provides anti-avoidance rules that disregard the basis in property transferred in certain transactions when determining the qualified business asset investment of a tested income CFC.

(b) ***Qualified business asset investment.*** The term *qualified business asset investment* means the average of a tested income CFC's aggregate adjusted bases as of the close of each quarter of a CFC inclusion year in specified tangible property that is used in a trade or business of the tested income CFC and is of a type with respect to which a deduction is allowable under section 167. In the case of partially depreciable property, only the depreciable portion of the property is of a type with respect to which a deduction is allowable under section 167. A tested loss CFC has no qualified business asset investment.

(c) ***Specified tangible property*** —

(1) ***In general.*** The term *specified tangible property* means, with respect to a tested income CFC and a CFC inclusion year, tangible property of the tested income CFC used in the production of gross tested income for the CFC inclusion year. For purposes of the preceding sentence, tangible property of a tested income CFC is used in the production of gross tested income for a CFC inclusion year if some or all of the depreciation or cost recovery allowance with respect to the tangible property is either allocated and apportioned to the gross tested income of the tested income CFC for the CFC inclusion year under § 1.951A-2(c)(3) or capitalized to inventory or other property held for sale, some or all of the gross income or loss from the sale of which is taken into account in determining tested income of the tested income CFC for the CFC inclusion year. None of the tangible property of a tested loss CFC is specified tangible property.

(2) ***Tangible property.*** The term *tangible property* means property for which the depreciation deduction provided by section 167(a) is eligible to be determined under section 168 without regard to section 168(f)(1), (2), or (5), section 168(k)(2)(A)(i)(II), (IV), or (V), and the date placed in service.

(d) ***Dual use property*** —

(1) ***In general.*** The amount of the adjusted basis in dual use property of a tested income CFC for a CFC inclusion year that is treated as adjusted basis in specified tangible property for the CFC inclusion year is the average of the tested income CFC's adjusted basis in the property multiplied by the dual use ratio with respect to the property for the CFC inclusion year.

(2) ***Definition of dual use property.*** The term *dual use property* means, with respect to a tested income CFC and a CFC inclusion year, specified tangible property of the tested income CFC that is used in both the production of gross tested income and the production of gross income that is not gross tested income for the CFC inclusion year. For purposes of the preceding sentence, specified tangible property of a tested income CFC is used in the production of gross tested income and the production of gross income that is not gross tested income for a CFC inclusion year if less than all of the depreciation or cost recovery allowance with respect to the property is either allocated and apportioned to the gross tested income of the tested income CFC for the CFC inclusion year under § 1.951A-2(c)(3) or capitalized to inventory or other property held for sale, the gross income or loss from the sale of which is taken into account in determining the tested income of the tested income CFC for the CFC inclusion year.

(3) ***Dual use ratio.*** The term *dual use ratio* means, with respect to dual use property, a tested income CFC, and a CFC inclusion year, a ratio (expressed as a percentage) calculated as—

(i) The sum of—

(A) The depreciation deduction or cost recovery allowance with respect to the property that is allocated and apportioned to the gross tested income of the tested income CFC for the CFC inclusion year under § 1.951A-2(c)(3), and

(B) The depreciation or cost recovery allowance with respect to the property that is capitalized to inventory or other property held for sale, the gross income or loss from the sale of which is taken into account in determining the tested income of the tested income CFC for the CFC inclusion year, divided by

(ii) The sum of—

(A) The total amount of the tested income CFC's depreciation deduction or cost recovery allowance with respect to the property for the CFC inclusion year, and

(B) The total amount of the tested income CFC's depreciation or cost recovery allowance with respect to the property capitalized to inventory or other property held for sale, the gross income or loss from the sale of which is taken into account in determining the income or loss of the tested income CFC for the CFC inclusion year.

(4) ***Example.*** The following example illustrates the application of this paragraph (d).

(i) ***Facts.*** FS is a tested income CFC and a wholesale distributor of Product A. FS owns a warehouse and trucks that store and deliver Product A, respectively. The warehouse has an average adjusted basis for Year 1 of $20,000x. The depreciation with respect to the warehouse for Year 1 is $2,000x, which is capitalized to inventory of Product A. Of the $2,000x depreciation capitalized to inventory of Product A, $500x is capitalized to FS's ending inventory of Product A, $1,200x is capitalized to inventory of Product A, the gross income or loss from the sale of which is taken into account in determining FS's tested income for Year 1, and $300x is capitalized to inventory of Product A, the gross income or loss from the sale of which is taken into account in determining FS's foreign base company sales income for Year 1. The trucks

have an average adjusted basis for Year 1 of $4,000x. FS does not capitalize depreciation with respect to the trucks to inventory or other property held for sale. FS's depreciation deduction with respect to the trucks is $20x for Year 1, $15x of which is allocated and apportioned to FS's gross tested income under § 1.951A-2(c)(3).

(ii) *Analysis* —

(A) ***Dual use property.*** The warehouse and trucks are property for which the depreciation deduction provided by section 167(a) is eligible to be determined under section 168 (without regard to section 168(f)(1), (2), or (5), section 168(k)(2)(A)(i)(II), (IV), or (V), and the date placed in service). Therefore, under paragraph (c)(2) of this section, the warehouse and trucks are tangible property. Furthermore, because the warehouse and trucks are used in the production of gross tested income in Year 1 within the meaning of paragraph (c)(1) of this section, the warehouse and trucks are specified tangible property. Finally, because the warehouse and trucks are used in both the production of gross tested income and the production of gross income that is not gross tested income in Year 1 within the meaning of paragraph (d)(2) of this section, the warehouse and trucks are dual use property. Therefore, under paragraph (d)(1) of this section, the amount of FS's adjusted basis in the warehouse and trucks that is treated as adjusted basis in specified tangible property for Year 1 is determined by multiplying FS's adjusted basis in the warehouse and trucks by FS's dual use ratio with respect to the warehouse and trucks determined under paragraph (d)(3) of this section.

(B) ***Depreciation not capitalized to inventory.*** Because none of the depreciation with respect to the trucks is capitalized to inventory or other property held for sale, FS's dual use ratio with respect to the trucks is determined entirely by reference the depreciation deduction with respect to the trucks. Therefore, under paragraph (d)(3) of this section, FS's dual use ratio with respect to the trucks for Year 1 is 75%, which is FS's depreciation deduction with respect to the trucks that is allocated and apportioned to gross tested income under § 1.951A-2(c)(3) for Year 1 ($15x), divided by the total amount of FS's depreciation deduction with respect to the trucks for Year 1 ($20x). Accordingly, under paragraph (d)(1) of this section, $3,000x ($4,000x × 0.75) of FS's average adjusted bases in the trucks is taken into account under paragraph (b) of this section in determining FS's qualified business asset investment for Year 1.

(C) ***Depreciation capitalized to inventory.*** Because all of the depreciation with respect to the warehouse is capitalized to inventory, FS's dual use ratio with respect to the warehouse is determined entirely by reference to the depreciation with respect to the warehouse that is capitalized to inventory and included in cost of goods sold. Therefore, under paragraph (d)(3) of this section, FS's dual use ratio with respect to the warehouse for Year 1 is 80%, which is FS's depreciation with respect to the warehouse that is capitalized to inventory of Product A, the gross income or loss from the sale of which is taken into account in determining in FS's tested income for Year 1 ($1,200x), divided by FS's depreciation with respect to the warehouse that is capitalized to inventory of Product A, the gross income or loss from the sale of which is taken into account in determining FS's income for Year 1 ($1,500x). Accordingly, under paragraph (d)(1) of this section, $16,000x ($20,000x × 0.8) of FS's average adjusted basis in the warehouse is taken into account under paragraph (b) of this section in determining FS's qualified business asset investment for Year 1.

(e) *Determination of adjusted basis in specified tangible property* —

(1) ***In general.*** Except as provided in paragraph (e)(3)(ii) of this section, the adjusted basis in specified tangible property for purposes of this section is determined by using the cost capitalization methods of accounting used by the controlled foreign corporation for purposes of determining the gross income and allowable deductions of the controlled foreign corporation under § 1.951A-2(c)(2) and the alternative depreciation system under section 168(g), and by allocating the depreciation deduction with respect to such property for a CFC inclusion year ratably to each day during the period in the CFC inclusion year to which such depreciation relates. For purposes of the preceding sentence, the period in the CFC inclusion year to which such depreciation relates is determined without regard to the applicable convention under section 168(d).

(2) ***Effect of change in law.*** The adjusted basis in specified tangible property is determined without regard to any provision of law enacted after December 22, 2017, unless such later enacted law specifically and directly amends the definition of qualified business asset investment under section 951A. For purposes of applying section 951A(d)(3) and this paragraph (e), the technical amendment to section 168(g) (to provide a recovery period of 20 years for qualified improvement property for purposes of the alternative depreciation system) enacted in section 2307(a) of the Coronavirus Aid, Relief, and Economic Security Act, Public Law 116-136 (2020) is treated as enacted on December 22, 2017.

(3) ***Specified tangible property placed in service before enactment of section 951A*** —

(i) ***In general.*** Except as provided in paragraph (e)(3)(ii) of this section, the adjusted basis in specified tangible property placed in service before December 22, 2017, is determined using the alternative depreciation system under section 168(g), as if this system had applied from the date that the property was placed in service.

(ii) ***Election to use income and earnings and profits depreciation method for property placed in service before the first taxable year beginning after December 22, 2017*** —

(A) ***In general.*** If a controlled foreign corporation is not required to use, and does not in fact use, the alternative depreciation system under section 168(g) for purposes of determining income under § 1.952-2 and earnings and profits under § 1.964-1 with respect to property placed in service before the first taxable year beginning after December 22, 2017, and the controlling domestic shareholders (as defined in § 1.964-1(c)(5)) of the controlled foreign corporation make an election described in this paragraph (e)(3)(ii), the adjusted basis in specified tangible property of the controlled foreign corporation that was placed in service before the first taxable year of the controlled foreign corporation beginning after December 22, 2017, and the partner adjusted basis in partnership specified tangible property of any partnership of which the controlled foreign corporation is a partner that was placed in service before the first taxable year of the partnership beginning after December 22, 2017, is determined for purposes of this section based on the method of accounting for depreciation used by the controlled foreign corporation for purposes of determining income under § 1.952-2, subject to the modification described in this paragraph (e)(3)(ii)(A). If the controlled foreign corporation's method of accounting for depreciation takes into account salvage value of the property, the salvage value is reduced to zero by allocating the salvage value ratably to each day of the taxable year immediately after the last taxable year in which the method of accounting determined an amount of depreciation deduction for the property.

(B) ***Manner of making the election.*** The controlling domestic shareholders making the election described in this paragraph (e)(3) must file a statement that meets the requirements of § 1.964-1(c)(3)(ii) with their income tax returns for the taxable year that includes the last day of the controlled foreign corporation's applicable taxable year and follow the notice requirements of § 1.964-1(c)(3)(iii). The controlled foreign corporation's applicable taxable year is the first CFC inclusion year that begins after December 31, 2017, and ends within the controlling domestic shareholder's taxable year. For purposes of § 301.9100-3 of this chapter (addressing requests for extensions of time for filing certain regulatory elections), a controlling domestic shareholder is qualified to make the election described in this paragraph (e)(3) only if the shareholder determined the adjusted basis in specified tangible property placed in service before the first taxable year beginning after December 22, 2017, by applying the method described in paragraph (e)(3)(ii)(A) of this section with respect to the first taxable year of the controlled foreign corporation beginning after December 22, 2017, and each subsequent taxable year. The election statement must be filed in accordance with the rules provided in forms or instructions.

(f) ***Special rules for short taxable years*** —

(1) ***In general.*** In the case of a tested income CFC that has a CFC inclusion year that is less than twelve months (a *short taxable year*), the rules for determining the qualified business asset investment of the tested income CFC under this section are modified as provided in paragraphs (f)(2) and (3) of this section with respect to the CFC inclusion year.

(2) ***Determination of quarter closes.*** For purposes of determining quarter closes, in determining the qualified business asset investment of a tested income CFC for a short taxable year, the quarters of the tested income CFC for purposes of this section are the full quarters beginning and ending within the short taxable year (if any), determining quarter length as if the tested income CFC did not have a short taxable year, plus one or more short quarters (if any).

(3) ***Reduction of qualified business asset investment.*** The qualified business asset investment of a tested income CFC for a short taxable year is the sum of—

(i) The sum of the tested income CFC's aggregate adjusted bases in specified tangible property as of the close of each full quarter (if any) in the CFC inclusion year divided by four, plus

(ii) The tested income CFC's aggregate adjusted bases in specified tangible property as of the close of each short quarter (if any) in the CFC inclusion year multiplied by the sum of the number of days in each short quarter divided by 365.

(4) ***Example.*** The following example illustrates the application of this paragraph (f).

(i) ***Facts.*** USP1, a domestic corporation, owns all of the stock of FS, a controlled foreign corporation. USP1 owns FS from the beginning of Year 1. On July 15, Year 1, USP1 sells FS to USP2, an unrelated person. USP2 makes a section 338(g) election with respect to the purchase of FS, as a result of which FS's taxable year is treated as ending on July 15. USP1, USP2, and FS all use the calendar year as their taxable year. FS's aggregate adjusted bases in specified tangible property is $250x as of March 31, $300x as of June 30, $275x as of July 15, $500x as of September 30, and $450x as of December 31.

(ii) ***Analysis*** —

(A) ***Determination of short taxable years and quarters.*** FS has two short taxable years in Year 1. The first short taxable year is from January 1 to July 15, with two full quarters (January 1 through March 31 and April 1 through June 30) and one short quarter (July 1 through July 15). The second taxable year is from July 16 to December 31, with one short quarter (July 16 through September 30) and one full quarter (October 1 through December 31).

(B) ***Calculation of qualified business asset investment for the first short taxable year.*** Under paragraph (f)(2) of this section, for the first short taxable year in Year 1, FS has three quarter closes (March 31, June 30, and July 15). Under paragraph (f)(3) of this section, the qualified business asset investment of FS for the first short taxable year is $148.80x, the sum of $137.50x (($250x + $300x)/4) attributable to the two full quarters and $11.30x ($275x × 15/365) attributable to the short quarter.

(C) ***Calculation of qualified business asset investment for the second short taxable year.*** Under paragraph (f)(2) of this section, for the second short taxable year in Year 1, FS has two quarter closes (September 30 and December 31). Under paragraph (f)(3) of this section, the qualified business asset investment of FS for the second short taxable year is $217.98x, the sum of $112.50x ($450x/4) attributable to the one full quarter and $105.48x ($500x × 77/365) attributable to the short quarter.

(g) ***Partnership property*** —

(1) ***In general.*** If a tested income CFC holds an interest in one or more partnerships during a CFC inclusion year (including indirectly through one or more partnerships that are partners in a lower-tier partnership), the qualified business asset investment of the tested income CFC for the CFC inclusion year (determined without regard to this paragraph (g)(1)) is increased by the sum of the tested income CFC's partnership QBAI with respect to each partnership for the CFC inclusion year. A tested loss CFC has no partnership QBAI for a CFC inclusion year.

(2) ***Determination of partnership QBAI.*** For purposes of paragraph (g)(1) of this section, the term *partnership QBAI* means, with respect to a partnership, a tested income CFC, and a CFC inclusion year, the sum of the tested income CFC's partner adjusted basis in each partnership specified tangible property of the partnership for each partnership taxable year that ends with or within the CFC inclusion year. If a partnership taxable year is less than twelve months, the principles of paragraph (f) of this section apply in determining a tested income CFC's partnership QBAI with respect to the partnership.

(3) ***Determination of partner adjusted basis*** —

(i) ***In general.*** For purposes of paragraph (g)(2) of this section, the term *partner adjusted basis* means the amount described in paragraph (g)(3)(ii) of this section with respect to sole use partnership property or paragraph (g)(3)(iii) of this section with respect to dual use partnership property. The principles of section 706(d) apply to this determination.

(ii) ***Sole use partnership property*** —

(A) ***In general.*** The amount described in this paragraph (g)(3)(ii), with respect to sole use partnership property, a partnership taxable year, and a tested income CFC, is the sum of the tested income CFC's proportionate share of the partnership adjusted basis in the sole use partnership property for the partnership taxable year and the tested income CFC's partner-specific QBAI basis in the sole use partnership property for the partnership taxable year.

(B) ***Definition of sole use partnership property.*** The term *sole use partnership property* means, with respect to a partnership, a partnership taxable year, and a tested income CFC, partnership specified tangible property of the partnership that is used in the production of only gross tested income of the tested income CFC for the CFC inclusion year in which or with which the partnership taxable year ends. For purposes of the preceding sentence, partnership specified tangible property of a partnership is used in the production of only gross tested income for a CFC inclusion year if all the tested income CFC's distributive share of the partnership's depreciation deduction or cost recovery allowance with respect to the property (if any) for the partnership taxable year that ends with or within the CFC inclusion year is allocated and apportioned to the tested income CFC's gross tested income for the CFC inclusion year under § 1.951A-2(c)(3) and, if any of the partnership's depreciation or cost recovery allowance with respect to the property is capitalized to inventory or other property held for sale, all the tested income CFC's distributive share of the partnership's gross income or loss from the sale of such inventory or other property for the partnership taxable year that ends with or within the CFC inclusion year is taken into account in determining the tested income of the tested income CFC for the CFC inclusion year.

(iii) ***Dual use partnership property*** —

(A) ***In general.*** The amount described in this paragraph (g)(3)(iii), with respect to dual use partnership property, a partnership taxable year, and a tested income CFC, is the sum of the tested income CFC's proportionate share of the partnership adjusted basis in the property for the partnership taxable year and the tested income CFC's partner-specific QBAI basis in the property for the partnership taxable year, multiplied by the tested income CFC's dual use ratio with respect to the property for the partnership taxable year determined under the principles of paragraph (d)(3) of this section, except that the ratio described in paragraph (d)(3) of this section is determined by reference to the tested income CFC's distributive share of the amounts described in paragraph (d)(3) of this section.

(B) ***Definition of dual use partnership property.*** The term *dual use partnership property* means partnership specified tangible property other than sole use partnership property.

(4) ***Determination of proportionate share of the partnership's adjusted basis in partnership specified tangible property*** —

(i) ***In general.*** For purposes of paragraph (g)(3) of this section, the tested income CFC's proportionate share of the partnership adjusted basis in partnership specified tangible property for a partnership taxable year is the partnership adjusted basis in the property multiplied by the tested income CFC's proportionate share ratio with respect to the property for the partnership taxable year. Solely for purposes of determining the proportionate share ratio under paragraph (g)(4)(ii) of this section, the partnership's calculation of, and a partner's distributive share of, any income, loss, depreciation, or cost recovery allowance is determined under section 704(b).

(ii) ***Proportionate share ratio.*** The term *proportionate share ratio* means, with respect to a partnership, a partnership taxable year, and a tested income CFC, the ratio (expressed as a percentage) calculated as—

(A) The sum of—

(1) The tested income CFC's distributive share of the partnership's depreciation deduction or cost recovery allowance with respect to the property for the partnership taxable year, and

(2) The amount of the partnership's depreciation or cost recovery allowance with respect to the property that is capitalized to inventory or other property held for sale, the gross income or loss from the sale of which is taken into account in determining the tested income CFC's distributive share of the partnership's income or loss for the partnership taxable year, divided by

(B) The sum of—

(1) The total amount of the partnership's depreciation deduction or cost recovery allowance with respect to the property for the partnership taxable year, and

(2) The total amount of the partnership's depreciation or cost recovery allowance with respect to the property capitalized to inventory or other property held for sale, the gross income or loss from the sale of which is taken into account in determining the partnership's income or loss for the partnership taxable year.

(5) ***Definition of partnership specified tangible property.*** The term *partnership specified tangible property* means, with respect to a tested income CFC, tangible property (as defined in paragraph (c)(2) of this section) of a partnership that is—

(i) Used in the trade or business of the partnership,

(ii) Of a type with respect to which a deduction is allowable under section 167, and

(iii) Used in the production of gross income included in the tested income CFC's gross tested income.

(6) ***Determination of partnership adjusted basis.*** For purposes of this paragraph (g), the term *partnership adjusted basis* means, with respect to a partnership, partnership specified tangible property, and a partnership taxable year, the amount equal to the average of the partnership's adjusted basis in the partnership specified tangible property as of the close of each quarter in the partnership taxable year determined without regard to any adjustments under section 734(b) except for adjustments under section 734(b)(1)(B) or section 734(b)(2)(B) that are attributable to distributions of tangible property (as defined in paragraph (c)(2) of this section) and for adjustments under section 734(b)(1)(A) or 734(b)(2)(A). The principles of paragraphs (e) and (h) of this section apply for purposes of determining a partnership's adjusted basis in partnership specified tangible property and the proportionate share of the partnership's adjusted basis in partnership specified tangible property.

(7) ***Determination of partner-specific QBAI basis.*** For purposes of this paragraph (g), the term *partner-specific QBAI basis* means, with respect to a tested income CFC, a partnership, and partnership specified tangible property, the amount that is equal to the average of the basis adjustment under section 743(b) that is allocated to the partnership specified tangible property of the partnership with respect to the tested income CFC as of the close of each quarter in the partnership taxable year. For this purpose, a negative basis adjustment under section 743(b) is expressed as a negative number. The principles of paragraphs (e) and (h) of this section apply for purposes of determining the partner-specific QBAI basis with respect to partnership specified tangible property.

(8) ***Examples.*** The following examples illustrate the rules of this paragraph (g).

(i) ***Facts.*** Except as otherwise stated, the following facts are assumed for purposes of the examples:

(A) FC, FC1, FC2, and FC3 are tested income CFCs.

(B) PRS is a partnership and its allocations satisfy the requirements of section 704.

(C) All properties are partnership specified tangible property.

(D) All persons use the calendar year as their taxable year.

(E) There is neither disqualified basis nor partner-specific QBAI basis with respect to any property.

(ii) ***Example 1: Sole use partnership property*** —

(A) ***Facts.*** FC is a partner in PRS. PRS owns two properties, Asset A and Asset B. The average of PRS's adjusted basis as of the close of each quarter of PRS's taxable year in Asset A is $100x and in Asset B is $500x. In Year 1, PRS's section 704(b) depreciation deduction is $10x with respect to Asset A and $5x with respect to Asset B, and FC's section 704(b) distributive share of the depreciation deduction is $8x with respect to Asset A and $1x with respect to Asset B. None of the depreciation with respect to Asset A or Asset B is capitalized to inventory or other property held for sale. FC's entire distributive share of the depreciation deduction with respect to Asset A and Asset B is allocated and apportioned to FC's gross tested income for Year 1 under § 1.951A-2(c)(3).

(B) ***Analysis*** —

(*1*) ***Sole use partnership property.*** Because all of FC's distributive share of the depreciation deduction with respect to Asset A and B is allocated and apportioned to gross tested income for Year 1, Asset A and Asset B are sole use partnership property within the meaning of paragraph (g)(3)(ii)(B) of this section. Therefore, under paragraph (g)(3)(ii)(A) of this section, FC's partner adjusted basis in Asset A and Asset B is equal to the sum of FC's proportionate share of PRS's partnership adjusted basis in Asset A and Asset B for Year 1 and FC's partner-specific QBAI basis in Asset A and Asset B for Year 1, respectively.

(*2*) ***Proportionate share.*** Under paragraph (g)(4)(i) of this section, FC's proportionate share of PRS's partnership adjusted basis in Asset A and Asset B is PRS's partnership adjusted basis in Asset A and Asset B for Year 1, multiplied by FC's proportionate share ratio with respect to Asset A and Asset B for Year 1, respectively. Because none of the depreciation with respect to Asset A or Asset B is capitalized to inventory or other property held for sale, FC's proportionate share ratio with respect to Asset A and Asset B is determined entirely by reference to the depreciation deduction with respect to Asset A and Asset B. Therefore, FC's proportionate share ratio with respect to Asset A for Year 1 is 80%, which is the ratio of FC's section 704(b) distributive share of PRS's section 704(b) depreciation deduction with respect to Asset A for Year 1 ($8x), divided by the total amount of PRS's section 704(b) depreciation deduction with respect to Asset A for Year 1 ($10x). FC's proportionate share ratio with respect to Asset B for Year 1 is 20%, which is the ratio of FC's section 704(b) distributive share of PRS's section 704(b) depreciation deduction with respect to Asset B for Year 1 ($1x), divided by the total amount of PRS's section 704(b)

depreciation deduction with respect to Asset B for Year 1 ($5x). Accordingly, under paragraph (g)(4)(i) of this section, FC's proportionate share of PRS's partnership adjusted basis in Asset A is $80x ($100x × 0.8), and FC's proportionate share of PRS's partnership adjusted basis in Asset B is $100x ($500x × 0.2).

(3) ***Partner adjusted basis.*** Because FC has no partner-specific QBAI basis with respect to Asset A and Asset B, FC's partner adjusted basis in Asset A and Asset B is determined entirely by reference to its proportionate share of PRS's partnership adjusted basis in Asset A and Asset B. Therefore, under paragraph (g)(3)(ii)(A) of this section, FC's partner adjusted basis in Asset A is $80x, FC's proportionate share of PRS's partnership adjusted basis in Asset A, and FC's partner adjusted basis in Asset B is $100x, FC's proportionate share of PRS's partnership adjusted basis in Asset A.

(4) ***Partnership QBAI.*** Under paragraph (g)(2) of this section, FC's partnership QBAI with respect to PRS is $180x, the sum of FC's partner adjusted basis in Asset A ($80x) and FC's partner adjusted basis in Asset B ($100x). Accordingly, under paragraph (g)(1) of this section, FC increases its qualified business asset investment for Year 1 by $180x.

(iii) ***Example 2: Dual use partnership property*** —

(A) ***Facts.*** FC owns a 50% interest in PRS. All section 704(b) and tax items are identical and are allocated equally between FC and its other partner. PRS owns three properties, Asset C, Asset D, and Asset E. PRS sells two products, Product A and Product B. All of FC's distributive share of the gross income or loss from the sale of Product A is taken into account in determining FC's tested income, and none of FC's distributive share of the gross income or loss from the sale of Product B is taken into account in determining FC's tested income.

(1) ***Asset C.*** The average of PRS's adjusted basis as of the close of each quarter of PRS's taxable year in Asset C is $100x. In Year 1, PRS's depreciation is $10x with respect to Asset C, none of which is capitalized to inventory or other property held for sale. FC's distributive share of the depreciation deduction with respect to Asset C is $5x ($10x × 0.5), $3x of which is allocated and apportioned to FC's gross tested income under § 1.951A-2(c)(3).

(2) ***Asset D.*** The average of PRS's adjusted basis as of the close of each quarter of PRS's taxable year in Asset D is $500x. In Year 1, PRS's depreciation is $50x with respect to Asset D, $10x of which is capitalized to inventory of Product A and $40x is capitalized to inventory of Product B. None of the $10x depreciation with respect to Asset D capitalized to inventory of Product A is capitalized to ending inventory. However, of the $40x capitalized to inventory of Product B, $10x is capitalized to ending inventory. Therefore, the amount of depreciation with respect to Asset D capitalized to inventory of Product A that is taken into account in determining FC's distributive share of the income or loss of PRS for Year 1 is $5x ($10x × 0.5), and the amount of depreciation with respect to Asset D capitalized to inventory of Product B that is taken into account in determining FC's distributive share of the income or loss of PRS for Year 1 is $15x ($30x × 0.5).

(3) ***Asset E.*** The average of PRS's adjusted basis as of the close of each quarter of PRS's taxable year in Asset E is $600x. In Year 1, PRS's depreciation is $60x with respect to Asset E. Of the $60x depreciation with respect to Asset E, $20x is allowed as a deduction, $24x is capitalized to inventory of Product A, and $16x is capitalized to inventory of Product B. FC's distributive share of the depreciation deduction with respect to Asset E is $10x ($20x × 0.5), $8x of which is allocated and apportioned to FC's gross tested income under § 1.951A-2(c)(3). None of the $24x depreciation with respect to Asset E capitalized to inventory of Product A is capitalized to ending inventory. However, of the $16x depreciation with respect to Asset E capitalized to inventory of Product B, $10x is capitalized to ending inventory. Therefore, the amount of depreciation with respect to Asset E capitalized to inventory of Product A that is taken into account in determining FC's distributive share of the income or loss of PRS for Year 1 is $12x ($24x × 0.5), and the amount of depreciation with respect to Asset E capitalized to inventory of Product B that is taken into account in determining FC's distributive share of the income or loss of PRS for Year 1 is $3x ($6x × 0.5).

(B) ***Analysis.*** Because Asset C, Asset D, and Asset E are not used in the production of only gross tested income in Year 1 within the meaning of paragraph (g)(3)(ii)(B) of this section, Asset C, Asset D, and Asset E are partnership dual use property within the meaning of paragraph (g)(3)(iii)(B) of this section. Therefore, under paragraph (g)(3)(iii)(A) of this section, FC's partner adjusted basis in Asset C, Asset D, and Asset E is the sum of FC's proportionate share of PRS's partnership adjusted basis in Asset C, Asset D, and Asset E, respectively, for Year 1, and FC's partner-specific QBAI basis in Asset C, Asset D, and Asset E, respectively, for Year 1, multiplied by FC's dual use ratio with respect to Asset C, Asset D, and Asset E, respectively, for Year 1, determined under the principles of paragraph (d)(3) of this section, except that the ratio described in paragraph (d)(3) of this section is determined by reference to FC's distributive share of the amounts described in paragraph (d)(3) of this section.

(1) ***Asset C*** —

(i) ***Proportionate share.*** Under paragraph (g)(4)(i) of this section, FC's proportionate share of PRS's partnership adjusted basis in Asset C is PRS's partnership adjusted basis in Asset C for Year 1, multiplied by FC's proportionate share ratio with respect to Asset C for Year 1. Because none of the depreciation with respect to Asset C is capitalized to inventory or other property held for sale, FC's proportionate share ratio with respect to Asset C is determined entirely by reference to the depreciation deduction with respect to Asset C. Therefore, FC's proportionate share ratio with respect to Asset C is 50%, which is the ratio calculated as the amount of FC's section 704(b) distributive share of PRS's section 704(b) depreciation deduction with respect to Asset C for Year 1 ($5x), divided by the total amount of PRS's section 704(b) depreciation deduction with respect to Asset C for Year 1 ($10x). Accordingly, under paragraph (g)(4)(i) of this section, FC's proportionate share of PRS's partnership adjusted basis in Asset C is $50x ($100x × 0.5).

(ii) ***Dual use ratio.*** Because none of the depreciation with respect to Asset C is capitalized to inventory or other property held for sale, FC's dual use ratio with respect to Asset C is determined entirely by reference to the depreciation deduction with respect to Asset C. Therefore, FC's dual use ratio with respect to

Asset C is 60%, which is the ratio calculated as the amount of FC's distributive share of PRS's depreciation deduction with respect to Asset C that is allocated and apportioned to FC's gross tested income under § 1.951A-2(c)(3) for Year 1 ($3x), divided by the total amount of FC's distributive share of PRS's depreciation deduction with respect to Asset C for Year 1 ($5x).

(*iii*) ***Partner adjusted basis.*** Because FC has no partner-specific QBAI basis with respect to Asset C, FC's partner adjusted basis in Asset C is determined entirely by reference to FC's proportionate share of PRS's partnership adjusted basis in Asset C, multiplied by FC's dual use ratio with respect to Asset C. Under paragraph (g)(3)(iii)(A) of this section, FC's partner adjusted basis in Asset C is $30x, FC's proportionate share of PRS's partnership adjusted basis in Asset C for Year 1 ($50x), multiplied by FC's dual use ratio with respect to Asset C for Year 1 (60%).

(*3*) ***Asset D*** —

(*i*) ***Proportionate share.*** Under paragraph (g)(4)(i) of this section, FC's proportionate share of PRS's partnership adjusted basis in Asset D is PRS's partnership adjusted basis in Asset D for Year 1, multiplied by FC's proportionate share ratio with respect to Asset D for Year 1. Because all of the depreciation with respect to Asset D is capitalized to inventory, FC's proportionate share ratio with respect to Asset D is determined entirely by reference to the depreciation with respect to Asset D that is capitalized to inventory and included in cost of goods sold. Therefore, FC's proportionate share ratio with respect to Asset D is 50%, which is the ratio calculated as the amount of PRS's section 704(b) depreciation with respect to Asset D capitalized to Product A and Product B that is taken into account in determining FC's section 704(b) distributive share of PRS's income or loss for Year 1 ($20x), divided by the total amount of PRS's section 704(b) depreciation with respect to Asset D capitalized to Product A and Product B that is taken into account in determining PRS's section 704(b) income or loss for Year 1 ($40x). Accordingly, under paragraph (g)(4)(i) of this section, FC's proportionate share of PRS's partnership adjusted basis in Asset D is $250x ($500x × 0.5).

(*ii*) ***Dual use ratio.*** Because all of the depreciation with respect to Asset D is capitalized to inventory, FC's dual use ratio with respect to Asset D is determined entirely by reference to the depreciation with respect to Asset D that is capitalized to inventory and included in cost of goods sold. Therefore, FC's dual use ratio with respect to Asset D is 25%, which is the ratio calculated as the amount of depreciation with respect to Asset D capitalized to inventory of Product A and Product B that is taken into account in determining FC's tested income for Year 1 ($5x), divided by the total amount of depreciation with respect to Asset D capitalized to inventory of Product A and Product B that is taken into account in determining FC's income or loss for Year 1 ($20x).

(*iii*) ***Partner adjusted basis.*** Because FC has no partner-specific QBAI basis with respect to Asset D, FC's partner adjusted basis in Asset D is determined entirely by reference to FC's proportionate share of PRS's partnership adjusted basis in Asset D, multiplied by FC's dual use ratio with respect to Asset D. Under

paragraph (g)(3)(iii)(A) of this section, FC's partner adjusted basis in Asset D is $62.50x, FC's proportionate share of PRS's partnership adjusted basis in Asset D for Year 1 ($250x), multiplied by FC's dual use ratio with respect to Asset D for Year 1 (25%).

(4) *Asset E* —

(i) ***Proportionate share.*** Under paragraph (g)(4)(i) of this section, FC's proportionate share of PRS's partnership adjusted basis in Asset E is PRS's partnership adjusted basis in Asset E for Year 1, multiplied by FC's proportionate share ratio with respect to Asset E for Year 1. Because the depreciation with respect to Asset E is partly deducted and partly capitalized to inventory, FC's proportionate share ratio with respect to Asset E is determined by reference to both the depreciation that is deducted and the depreciation that is capitalized to inventory and included in cost of goods sold. Therefore, FC's proportionate share ratio with respect to Asset E is 50%, which is the ratio calculated as the sum ($25x) of the amount of FC's section 704(b) distributive share of PRS's section 704(b) depreciation deduction with respect to Asset E for Year 1 ($10x) and the amount of PRS's section 704(b) depreciation with respect to Asset E capitalized to inventory of Product A and Product B that is taken into account in determining FC's section 704(b) distributive share of PRS's income or loss for Year 1 ($15x), divided by the sum ($50x) of the total amount of PRS's section 704(b) depreciation deduction with respect to Asset E for Year 1 ($20x) and the total amount of PRS's section 704(b) depreciation with respect to Asset E capitalized to inventory of Product A and Product B that is taken into account in determining PRS's section 704(b) income or loss for Year 1 ($30x). Accordingly, under paragraph (g)(4)(i) of this section, FC's proportionate share of PRS's partnership adjusted basis in Asset E is $300x ($600x × 0.5).

(ii) ***Dual use ratio.*** Because the depreciation with respect to Asset E is partly deducted and partly capitalized to inventory, FC's dual use ratio with respect to Asset E is determined by reference to the depreciation that is deducted and the depreciation that is capitalized to inventory and included in cost of goods sold. Therefore, FC's dual use ratio with respect to Asset E is 80%, which is the ratio calculated as the sum ($20x) of the amount of FC's distributive share of PRS's depreciation deduction with respect to Asset E that is allocated and apportioned to FC's gross tested income under § 1.951A-2(c)(3) for Year 1 ($8x) and the amount of depreciation with respect to Asset E capitalized to inventory of Product A and Product B that is taken into account in determining FC's tested income for Year 1 ($12x), divided by the sum ($25x) of the total amount of FC's distributive share of PRS's depreciation deduction with respect to Asset E for Year 1 ($10x) and the total amount of depreciation with respect to Asset E capitalized to inventory of Product A and Product B that is taken into account in determining FC's income or loss for Year 1 ($15x).

(iii) ***Partner adjusted basis.*** Because FC has no partner-specific QBAI basis with respect to Asset E, FC's partner adjusted basis in Asset E is determined entirely by reference to FC's proportionate share of PRS's partnership adjusted basis in Asset E, multiplied by FC's dual use ratio with respect to Asset E. Under paragraph (g)(3)(iii)(A) of this section, FC's partner adjusted basis in Asset E is

$240x, FC's proportionate share of PRS's partnership adjusted basis in Asset E for Year 1 ($300x), multiplied by FC's dual use ratio with respect to Asset E for Year 1 (80%).

(5) ***Partnership QBAI.*** Under paragraph (g)(2) of this section, FC's partnership QBAI with respect to PRS is $332.50x, the sum of FC's partner adjusted basis in Asset C ($30x), FC's partner adjusted basis in Asset D ($62.50x), and FC's partner adjusted basis in Asset E ($240x). Accordingly, under paragraph (g)(1) of this section, FC increases its qualified business asset investment for Year 1 by $332.50x.

(iv) ***Example 3: Sole use partnership specified tangible property; section 743(b) adjustments*** —

(A) ***Facts.*** The facts are the same as in paragraph (g)(8)(ii)(A) of this section (the facts in *Example 1*), except that there is an average of $40x positive adjustment to the adjusted basis in Asset A as of the close of each quarter of PRS's taxable year with respect to FC under section 743(b) and an average of $20x negative adjustment to the adjusted basis in Asset B as of the close of each quarter of PRS's taxable year with respect to FC under section 743(b).

(B) ***Analysis.*** Under paragraph (g)(3)(ii)(A) of this section, FC's partner adjusted basis in Asset A is $120x, which is the sum of $80x (FC's proportionate share of PRS's partnership adjusted basis in Asset A as illustrated in paragraph (g)(8)(ii)(B)(*2*) of this section (paragraph (B)(*2*) of the analysis in *Example 1*)) and $40x (FC's partner-specific QBAI basis in Asset A). Under paragraph (g)(3)(ii)(A) of this section, FC's partner adjusted basis in Asset B is $80x, the sum of $100x (FC's proportionate share of the partnership adjusted basis in the property as illustrated in paragraph (g)(8)(ii)(B)(*2*) of this section (paragraph (B)(*2*) of the analysis in *Example 1*)) and (−$20x) (FC's partner-specific QBAI basis in Asset B). Therefore, under paragraph (g)(2) of this section, FC's partnership QBAI with respect to PRS is $200x ($120x + $80x). Accordingly, under paragraph (g)(1) of this section, FC increases its qualified business asset investment for Year 1 by $200x.

(v) ***Example 4: Tested income CFC with distributive share of loss from a partnership*** —

(A) ***Facts.*** FC owns a 50% interest in PRS. All section 704(b) and tax items are identical and are allocated equally between FC and its other partner. PRS owns Asset F. None of the depreciation with respect to Asset F is capitalized to inventory or other property held for sale. The average of PRS's adjusted basis as of the close of each quarter of PRS's taxable year in Asset F is $220x. PRS has $20x of gross income, a $22x depreciation deduction with respect to Asset F, and no other income or expense in Year 1. FC's distributive share of the gross income is $10x, all of which is includible in FC's gross tested income in Year 1, and FC's distributive share of PRS's depreciation deduction with respect to Asset F is $11x in Year 1, all of which is allocated and apportioned to FC's gross tested income under § 1.951A-2(c)(3). FC's distributive share of loss from PRS is $1x. FC also has $8x of gross tested income from other sources in Year 1 and no other deductions. Therefore, FC has tested income of $7x for Year 1.

(B) ***Analysis.*** FC's partner adjusted basis in Asset F is $110x, which is the sum of FC's proportionate share of the partnership adjusted basis in the property ($220x × 0.5) and FC's partnership-specific QBAI basis in Asset F ($0). Therefore, FC's partnership QBAI with

respect to PRS is $110x. Accordingly, under paragraph (g)(1) of this section, FC increases its qualified business asset investment by $110x, notwithstanding that FC would not be a tested income CFC but for its $8x of gross tested income from other sources.

(vi) ***Example 5: Tested income CFC sale of partnership interest before CFC inclusion date*** —

(A) ***Facts.*** FC1 owns a 50% interest in PRS on January 1 of Year 1. On July 1 of Year 1, FC1 sells its entire interest in PRS to FC2. PRS owns Asset G. The average of PRS's adjusted basis as of the close of each quarter of PRS's taxable year in Asset G is $100x. FC1's section 704(b) distributive share of the depreciation deduction with respect to Asset G is 25% with respect to PRS's entire year. FC2's section 704(b) distributive share of the depreciation deduction with respect to Asset G is also 25% with respect to PRS's entire year. Both FC1's and FC2's entire distributive shares of the depreciation deduction with respect to Asset G are allocated and apportioned under § 1.951A-2(c)(3) to FC1's and FC2's gross tested income, respectively, for Year 1. PRS's allocations satisfy section 706(d).

(B) ***Analysis*** —

(*1*) ***FC1.*** Because FC1 owns an interest in PRS during FC1's CFC inclusion year and receives a distributive share of partnership items of the partnership under section 706(d), FC1 has partnership QBAI with respect to PRS in the amount determined under paragraph (g)(2) of this section. Under paragraph (g)(3)(i) of this section, FC1's partner adjusted basis in Asset G is $25x, the product of $100x (the partnership's adjusted basis in the property) and 25% (FC1's section 704(b) distributive share of depreciation deduction with respect to Asset G). Therefore, FC1's partnership QBAI with respect to PRS is $25x. Accordingly, under paragraph (g)(1) of this section, FC1 increases its qualified business asset investment by $25x for Year 1.

(*2*) ***FC2.*** FC2's partner adjusted basis in Asset G is also $25x, the product of $100x (the partnership's adjusted basis in the property) and 25% (FC2's section 704(b) distributive share of depreciation deduction with respect to Asset G). Therefore, FC2's partnership QBAI with respect to PRS is $25x. Accordingly, under paragraph (g)(1) of this section, FC2 increases its qualified business asset investment by $25x for Year 1.

(vii) ***Example 6: Partnership adjusted basis; distribution of property in liquidation of partnership interest*** —

(*A*) ***Facts.*** FC1, FC2, and FC3 are equal partners in PRS, a partnership. FC1 and FC2 each has an adjusted basis of $100x in its partnership interest. FC3 has an adjusted basis of $50x in its partnership interest. PRS has a section 754 election in effect. PRS owns Asset H with a fair market value of $50x and an adjusted basis of $0, Asset I with a fair market value of $100x and an adjusted basis of $100x, and Asset J with a fair market value of $150x and an adjusted basis of $150x. Asset H and Asset J are tangible property, but Asset I is not tangible property. PRS distributes Asset I to FC3 in liquidation of FC3's interest in PRS. None of FC1, FC2, FC3, or PRS recognizes gain on the distribution. Under section 732(b), FC3's adjusted basis in Asset I is $50x. PRS's adjusted basis in Asset H is increased by $50x to $50x under section 734(b)(1)(B), which is the amount by which PRS's adjusted basis in Asset I immediately before the distribution exceeds FC3's adjusted basis in Asset I.

(*B*) ***Analysis.*** Under paragraph (g)(6) of this section, PRS's adjusted basis in Asset H is determined without regard to any adjustments under section 734(b) except for adjustments under section 734(b)(1)(B) or section 734(b)(2)(B) that are attributable to distributions of tangible property and for adjustments under section 734(b)(1)(A) or 734(b)(2)(A). The adjustment to the adjusted basis in Asset H is under section 734(b)(1)(B) and is attributable to the distribution of Asset I, which is not tangible property. Accordingly, for purposes of applying paragraph (g)(1) of this section, PRS's adjusted basis in Asset H is $0.

(h) ***Anti-avoidance rules related to certain transfers of property*** —

(1) ***Disregard of adjusted basis in specified tangible property held temporarily*** —

(i) ***In general.*** For purposes of determining a controlled foreign corporation's aggregate adjusted bases in specified tangible property as of the close of a quarter (*tested quarter close*), the adjusted basis in specified tangible property is disregarded as of the tested quarter close if the controlled foreign corporation (*acquiring CFC*) acquires the property temporarily before the tested quarter close with a principal purpose of increasing the deemed tangible income return of a U.S. shareholder (*applicable U.S. shareholder*) for a U.S. shareholder year, and the holding of the property by the acquiring CFC as of the tested quarter close would, without regard to this paragraph (h)(1)(i), increase the deemed tangible income return of the applicable U.S. shareholder for the U.S. shareholder inclusion year.

(ii) ***Disregard of first quarter close.*** The adjusted basis in specified tangible property may be disregarded under paragraph (h)(1)(i) of this section for purposes of multiple tested quarter closes that follow an acquisition and on which the acquiring CFC holds the property. However, if the holding of specified tangible property would, without regard to paragraph (h)(1)(i) of this section, increase the deemed tangible income return of an applicable U.S. shareholder because the adjusted basis in such property is taken into account for only one additional quarter close of a tested income CFC of the applicable U.S. shareholder in determining the deemed tangible income return of the applicable U.S. shareholder of the U.S. shareholder inclusion year, the adjusted basis in the property is disregarded for purposes of determining the acquiring CFC's aggregate adjusted bases in specified tangible property only as of the first tested quarter close that follows the acquisition.

(iii) ***Safe harbor for certain transfers involving CFCs.*** The holding of specified tangible property as of a tested quarter close does not increase the deemed tangible income return of an applicable U.S. shareholder within the meaning of paragraph (h)(1)(i) of this section if each of the following conditions is satisfied with respect to the acquisition and subsequent transfer of property by the acquiring CFC—

(A) A controlled foreign corporation (*predecessor CFC*) holds the property on a quarter close of the predecessor CFC (*preceding quarter close*) that occurs on the same date as the last quarter close of the acquiring CFC preceding the acquisition.

(B) A controlled foreign corporation (*successor CFC*) holds the property on a quarter close of the successor CFC (*succeeding quarter close*) that occurs on the same date as the first quarter close of the acquiring CFC following the subsequent transfer.

(C) The proportion of the stock that the applicable U.S. shareholder owns (within the meaning of section 958(a)) of the acquiring CFC on the tested quarter close does not exceed the proportion of the stock that the applicable U.S. shareholder owns of either the predecessor CFC on the preceding quarter close or the successor CFC on the succeeding quarter close; and

(D) Each of the predecessor CFC and the successor CFC is a tested income CFC for its CFC inclusion year that includes the date of the tested quarter close.

(iv) ***Determination of principal purpose and transitory holding*** —

(A) ***Presumption for ownership less than 12 months.*** For purposes of paragraph (h)(1)(i) of this section, specified tangible property is presumed to be acquired temporarily with a principal purpose of increasing the deemed tangible income return of an applicable U.S. shareholder for a U.S. shareholder inclusion year if the property is held by the acquiring CFC for less than 12 months and the holding of the property by the acquiring CFC as of the tested quarter close would have the effect of increasing the deemed tangible income return of the applicable U.S. shareholder for a U.S. shareholder inclusion year. The presumption described in the preceding sentence may be rebutted only if the facts and circumstances clearly establish that the subsequent transfer of the property by the acquiring CFC was not contemplated when the property was acquired by the acquiring CFC and that a principal purpose of the acquisition of the property was not to increase the deemed tangible income return of the applicable U.S. shareholder for a U.S. shareholder inclusion year. In order to rebut the presumption, a statement must be attached to the Form 5471 filed by the taxpayer for the taxable year of the CFC in which the subsequent transfer occurs and include any information required by applicable administrative announcements, forms or instructions. The statement must explain the facts and circumstances supporting the rebuttal and be in accordance with any rules provided in forms and instructions.

(B) ***Presumption for ownership greater than 36 months.*** For purposes of paragraph (h)(1)(i) of this section, specified tangible property is presumed not to be acquired temporarily with a principal purpose of increasing the deemed tangible income return of an applicable U.S. shareholder for a U.S. shareholder inclusion year if the property is held by the acquiring CFC for more than 36 months. The presumption described in the preceding sentence may be rebutted only if the facts and circumstances clearly establish that the subsequent transfer of the property by the acquiring CFC was contemplated when the property was acquired by the acquiring CFC and that a principal purpose of the acquisition of the property was to increase the deemed tangible income return of the applicable U.S. shareholder for a U.S. shareholder inclusion year.

(v) ***Determination of holding period.*** For purposes of this paragraph (h)(1), the period during which an acquiring CFC holds specified tangible property is determined without regard to section 1223.

(vi) ***Treatment as single applicable U.S. shareholder.*** For purposes of this paragraph (h)(1), all U.S. persons that are related persons are treated as a single applicable U.S. shareholder. For purposes of the preceding sentence, U.S. persons are related if they bear a relationship described in section 267(b) or 707(b) immediately before or immediately after a transaction.

(vii) ***Examples.*** The following examples illustrate the application of this paragraph (h)(1).

(A) ***Facts.*** Except as otherwise stated, the following facts are assumed for purposes of the examples:

(*1*) USP is a domestic corporation.

(*2*) CFC1, CFC2 and CFC3 are tested income CFCs.

(*3*) R is unrelated to USP.

(*4*) All persons use the calendar year as their taxable year.

(*5*) Asset A is specified tangible property.

(*6*) Both Year 1 and Year 2 begin on or after January 1, 2018, and have 365 days.

(*7*) USP has no specified interest expense (as defined in § 1.951A-1(c)(3)(iii)).

(B) ***Example 1: Qualification for safe harbor*** —

(*1*) ***Facts.*** USP owns all of the stock of CFC1, which owns all of the stock of CFC2, which owns all the stock of CFC3. As of January 1, Year 1, CFC1 owns Asset A, which is specified tangible property. On December 30, Year 1, CFC1 transfers Asset A to CFC2. On April 10, Year 2, CFC2 transfers Asset A to CFC3. CFC3 holds Asset A for the rest of Year 2.

(*2*) ***Analysis.*** Under the safe harbor of paragraph (h)(1)(iii) of this section, CFC2's holding of Asset A as of each of the December 31, Year 1 tested quarter close and the March 31, Year 2 tested quarter close does not increase the deemed tangible income return of USP, the applicable United States shareholder, for Year 1 or Year 2 because each of the requirements in paragraphs (h)(1)(iii)(A) through (D) of this section is satisfied. The requirement in paragraph (h)(1)(iii)(A) of this section is satisfied because CFC1, a predecessor CFC, held Asset A on September 30, Year 1, a quarter close of CFC1 that occurs on the same date as the last quarter close of CFC2, the acquiring CFC, preceding the December 30, Year 1 acquisition of Asset A. The requirement in paragraph (h)(1)(iii)(B) of this section is satisfied because CFC3, a successor CFC, holds Asset A on June 30, Year 2, a quarter close of CFC3 that occurs on the same date as the first quarter close of CFC2 following April 10, Year 2, the date of the subsequent transfer of Asset A. The requirement in paragraph (h)(1)(iii)(C) of this section is satisfied because the proportion of stock that USP, the applicable U.S. shareholder, owns (within the meaning of section 958(a)) of CFC2, the acquiring CFC, on each of the December 31, Year 1 tested quarter close and the March 31, Year 2 tested quarter close (100%), does not exceed the proportion of the stock that USP owns of either CFC1 (100%) on the preceding quarter close (September 30, Year 1) or of CFC3 (100%) on the succeeding quarter close (June 30, Year 2). Finally, the requirement in paragraph (h)(1)(iii)(D) of this section is satisfied because each of CFC1 and CFC3 is a tested income CFC for Year 1 and Year 2, the CFC inclusion years that include the December 31, Year 1 tested quarter close and the March 31, Year 2 tested quarter close. Accordingly, paragraph (h)(1)(i) of this section does not apply to disregard the adjusted basis in Asset A in determining CFC2's aggregate adjusted basis in specified tangible property as of December 31, Year 1, or March 30, Year 2.

(C) ***Example 2: Transfers between CFCs with different taxable year ends*** —

(*1*) ***Facts.*** The facts are the same as in paragraph (h)(1)(vii)(B)(*1*) of this section (the facts in *Example 1*), except that CFC1 has a taxable year ending November 30, and the facts and circumstances do not clearly establish that the April 10, Year 2 transfer of Asset A by CFC2 was not contemplated when Asset A was acquired by CFC2 and that a principal purpose of the acquisition of the property was not to increase the deemed tangible income return of USP, the applicable U.S. shareholder.

(*2*) ***Analysis.*** CFC2's holding of Asset A as of each of the December 31, Year 1 tested quarter close and the March 31, Year 2 tested quarter close does not satisfy the safe harbor under paragraph (h)(1)(iii) of this section because CFC1, the predecessor CFC, does not hold Asset A on a quarter close of CFC1 that occurs on the same date as the September 30, Year 1, quarter close of CFC2, the acquiring CFC, which is the last quarter close of CFC2 preceding the December 30, Year 1 acquisition of Asset A. In addition, because CFC2 held Asset A for less than 12 months (from December 31, Year 1, until April 10, Year 2), the presumption in paragraph (h)(1)(iv)(A) of this section applies such that CFC2 is presumed to have acquired Asset A temporarily with a principal purpose of increasing the deemed tangible income return of USP for the shareholder inclusion year, and the facts and circumstances do not clearly establish that CFC2 did not acquire Asset A with such a principal purpose. Because CFC2 holds Asset A as of December 31, Year 1, the tested quarter close, the adjusted basis in Asset A would be, without regard to paragraph (h)(1)(i) of this section, taken into account for purposes of determining USP's deemed tangible income return for its Year 1 taxable year as of five quarter closes (CFC1's quarter closes on February 28, May 31, August 31, and November 30, and CFC2's quarter close on December 31). If instead CFC1 had retained Asset A during the period CFC2 temporarily held the asset and had transferred Asset A directly to CFC3 on January 10, Year 2, the adjusted basis in Asset A would have been taken into account for purposes of determining USP's deemed tangible income return for its Year 1 taxable year as of only four quarter closes (CFC1's quarter closes on February 28, May 30, August 30, and November 30). Under paragraph (h)(1)(ii) of this section, because the adjusted basis in Asset A would (without regard to paragraph (h)(1)(i) of this section) be taken into account for only one additional quarter close of a tested income CFC of USP in determining USP's deemed tangible income return for Year 1 and Year 2, the adjusted basis in Asset A is disregarded for purposes of determining CFC's aggregate adjusted bases in specified tangible property only as of December 31, Year 1, the first tested quarter close that follows the acquisition. Accordingly, under paragraph (h)(1)(i) of this section, the adjusted basis in Asset A is disregarded in determining CFC2's aggregate adjusted basis in specified tangible property as of December 31, Year 1.

(D) ***Example 3: Acquisition from unrelated person*** —

(*1*) ***Facts.*** USP owns all of the stock of CFC1 and CFC2. CFC1 has a taxable year ending November 30. On October 30, Year 1, CFC1 acquires Asset B from R. On December 30, Year 1, CFC1 transfers Asset B to CFC2. The facts and circumstances do not clearly establish that the December 31, Year 1, transfer of Asset B by CFC1 was not contemplated when Asset B was acquired by CFC1 and that a principal purpose of the acquisition of the property was not to increase the deemed tangible income return of USP, the applicable U.S. shareholder.

(2) ***Analysis.*** CFC1's holding of Asset B as of the November 30, Year 1 tested quarter close does not satisfy the safe harbor under paragraph (h)(1)(iii) of this section because the requirements in paragraphs (h)(1)(iii)(A) through (D) of this section are not satisfied. Because CFC1 held Asset B for less than 12 months (from October 30, Year 1, until December 30, Year 1), the presumption in paragraph (h)(1)(iv)(A) of this section applies such that CFC1 is presumed to have held Asset B temporarily with a principal purpose of increasing the deemed tangible income return of USP for the taxable year, and the facts and circumstances do not clearly establish that CFC1 did not acquire Asset B with a principal purpose of increasing the deemed tangible income return of USP. Because CFC1 holds Asset B as of November 30, Year 1, the adjusted basis in Asset B would be, without regard to paragraph (h)(1)(i) of this section, taken into account for purposes of determining USP's deemed tangible income return for its Year 1 taxable year as of two quarter closes (CFC1's quarter close on November 30, Year 1, and CFC2's quarter close on December 31, Year 1). If instead CFC2 had acquired Asset B directly from R, the adjusted basis in Asset B would have been taken into account for purposes of determining USP's deemed tangible income return for its Year 1 taxable year as of only one quarter close (CFC2's quarter close on December 31, Year 1). Accordingly, under paragraph (h)(1)(i) of this section, the adjusted basis in Asset B is disregarded in determining CFC1's aggregate adjusted basis in specified tangible property as of November 30, Year 1.

(E) ***Example 4: Acquisitions from tested loss CFCs*** —

(1) ***Facts.*** USP owns all of the stock of CFC1 and CFC2. As of January 1, Year 1, CFC1 owns Asset C. On March 30, Year 1, CFC1 transfers Asset C to CFC2. For Year 1, CFC1 is a tested loss CFC and CFC2 is a tested income CFC. On March 30, Year 2, CFC2 transfers Asset C back to CFC1. For Year 2, both CFC1 and CFC2 are tested income CFCs. A principal purpose of CFC2 holding Asset C as of March 31, Year 1, June 30, Year 1, September 30, Year 1, and December 31, Year 1, was to increase USP's deemed tangible income return.

(2) ***Analysis.*** CFC2's holding of Asset C as of March 31, Year 1, June 30, Year 1, September 30, Year 1, and December 31, Year 1 does not satisfy the safe harbor under paragraph (h)(1)(iii) of this section because CFC1 is not a tested income CFC for Year 1 and thus the requirement in paragraph (h)(1)(iii)(D) of this section is not satisfied. Because CFC2 acquired Asset C before, and temporarily held as of, March 31, Year 1, June 30, Year 1, September 30, Year 1, December 31, Year 1 and the holding of the property by CFC2 as of each such tested quarter close would increase the deemed tangible income return of USP, under paragraph (h)(1)(i) of this section, the adjusted basis in Asset C is disregarded in determining CFC2's aggregate adjusted basis in specified tangible property as of each of March 31, Year 1, June 30, Year 1, September 30, Year 1, and December 31, Year 1.

(2) ***Disregard of adjusted basis in property transferred during the disqualified period*** —

(i) ***Operative rules*** —

(A) ***In general.*** For purposes of determining the qualified business asset investment of a tested income CFC for any CFC inclusion year, disqualified basis in property is disregarded.

(B) ***Application to dual use property.*** In the case of dual use property (as defined in paragraph (d)(2) of this section), paragraph (h)(2)(i)(A) of this section applies by reducing the amount of the adjusted basis in the property treated as adjusted basis in specified tangible property for the CFC inclusion year under paragraph (d)(1) of this section by the amount of the disqualified basis in the property. For purposes of determining the amount described in paragraph (d)(1) of this section, including for purposes of determining whether tangible property is dual use property within the meaning of paragraph (d)(2) of this section and for purposes of determining the dual use ratio with respect to dual use property under paragraph (d)(3) of this section, the rules of § 1.951A-2(c)(5) are not taken into account.

(C) ***Application to partnership specified tangible property.*** In the case of partnership specified tangible property (as defined in paragraph (g)(5) of this section), paragraph (h)(2)(i)(A) of this section applies by reducing a tested income CFC's partner adjusted basis with respect to partnership specified tangible property under paragraph (g)(3)(i) of this section by the tested income CFC's share of the disqualified basis in the partnership specified tangible property. A tested income CFC's share of disqualified basis in partnership specified tangible property is the sum of the tested income CFC's proportionate share of the disqualified basis in the partnership specified tangible property determined under the principles of paragraph (g)(4) of this section and the tested income CFC's partner-specific QBAI basis in the property determined under the principles of paragraph (g)(7) of this section that is disqualified basis. For purposes of determining the amount described in paragraph (g)(3)(i) of this section, including for purposes of determining whether partnership specified tangible property is sole use partnership property within the meaning of paragraph (g)(3)(ii)(B) of this section or dual use partnership property within the meaning of paragraph (g)(3)(iii)(B) of this section and for purposes of determining the dual use ratio with respect to dual use partnership property under the principles of paragraph (d)(3) of this section, the rules of § 1.951A-2(c)(5) are not taken into account.

(ii) ***Determination of disqualified basis*** —

(A) ***In general.*** Subject to the adjustments described in paragraph (h)(2)(ii)(B) of this section, the term *disqualified basis* means, with respect to property (other than property described in section 1221(a)(1)), the excess (if any) of the property's adjusted basis immediately after a disqualified transfer, over the sum of the property's adjusted basis immediately before the disqualified transfer and the qualified gain amount with respect to the disqualified transfer. For this purpose, the adjusted basis in property immediately after a disqualified transfer includes a positive adjustment to the adjusted basis in partnership property with respect to a partner under section 734(b)(1)(A) or 743(b).

(B) ***Adjustments to disqualified basis*** —

(*1*) ***Reduction or elimination of disqualified basis*** —

(*i*) ***In general.*** Except to the extent provided in this paragraph (h)(2)(ii)(B)(*1*), disqualified basis in property is reduced or eliminated to the extent that such basis reduces taxable income through, for example, depreciation, amortization, and taxable sales or exchanges, or is otherwise reduced or eliminated, for example, through the application of section 362(e) or 732(a) or (b). In such circumstances, in the case of property with disqualified basis and adjusted basis other than disqualified basis, disqualified basis in the property is reduced

or eliminated in the same proportion that the disqualified basis bears to the total adjusted basis in the property. However, in the case of a loss from a taxable sale or exchange, disqualified basis in the property is reduced or eliminated to the extent the loss is treated as attributable to disqualified basis under § 1.951A-2(c)(5)(ii).

(*ii*) ***Exception for related party transfers.*** Disqualified basis in property is not reduced or eliminated by reason of any transfer of the property to a related person, except to the extent any loss recognized on the transfer of such property is treated as attributable to the disqualified basis under § 1.951A-2(c)(5)(ii), or the basis is reduced or eliminated in a nonrecognition transaction within the meaning of section 7701(a)(45), for example, through the application of section 362(e) or 732(a) or (b).

(*2*) ***Increase to disqualified basis for nonrecognition transactions*** —

(*i*) ***Increase corresponding to adjustments in other property.*** If the adjusted basis in property is increased by reason of a nonrecognition transaction (as defined in section 7701(a)(45)), for example, through the application of section 732(b) or section 734(b)(1)(B), the disqualified basis in the property is increased by a proportionate share of the aggregate reduction to the disqualified basis (if any) in one or more other properties by reason of such nonrecognition transaction under paragraph (h)(2)(ii)(B)(*1*) of this section.

(*ii*) ***Exchanged basis property.*** Disqualified basis in exchanged basis property (as defined in section 7701(a)(44)) includes the amount of the disqualified basis in any property by reference to which the adjusted basis in the exchanged basis property was determined, in whole or in part, provided that the nonrecognition transaction giving rise to such exchanged basis did not also increase the disqualified basis in the exchanged basis property under paragraph (h)(2)(ii)(B)(*2*)(*i*) of this section.

(*iii*) ***Increase by reason of section 732(d).*** Disqualified basis in property is increased by the amount of a positive adjustment to the adjusted basis in property under section 732(d) to the extent that, if an election provided in section 754 were in effect at the time of the acquisition described in section 732(d), the adjusted basis in the property immediately after the acquisition would have been disqualified basis under paragraph (h)(2)(ii)(A) of this section.

(*3*) ***Election to eliminate disqualified basis*** —

(*i*) ***In general.*** If an election made under this paragraph (h)(2)(ii)(B)(*3*) with respect to a controlled foreign corporation or a partnership is effective, the adjusted basis in each property with disqualified basis held by the controlled foreign corporation or the partnership is reduced by the amount of the disqualified basis and the disqualified basis in each property is eliminated. The reduction of the adjusted basis and the elimination of the disqualified basis described in the preceding sentence is treated as occurring immediately after the disqualified transfer of each property.

(*ii*) ***Manner of making the election with respect to a controlled foreign corporation.*** The election described in this paragraph (h)(2)(ii)(B)(*3*) with respect to a controlled foreign corporation is made by each controlling domestic shareholder (as defined in § 1.964-1(c)(5)) of the controlled foreign corporation by filing a statement as described in § 1.964-1(c)(3)(ii) with its income tax return for its taxable year that includes the last day of the taxable year of the controlled foreign corporation that includes the disqualified transfer and follow the notice requirements of § 1.964-1(c)(3)(iii). If the return for the taxable year has been filed before July 22, 2019, the statement must be included with an amended return filed within 180 days June 21, 2019. The election statement must be filed in accordance with the rules provided in forms or instructions.

(*iii*) ***Manner of making the election with respect to a partnership.*** The election described in this paragraph (h)(2)(ii)(B)(*3*) with respect to a partnership is made by the partnership by filing a statement as described in § 1.754-1(b)(1) for the taxable year that includes the date of the disqualified transfer. If a return for the taxable year has been filed before July 22, 2019, the statement must be included with an amended return filed within 180 days of June 21, 2019. The election statement must be filed in accordance with the rules provided in forms or instructions.

(*iv*) ***Conditions of making an election.*** An election under this paragraph (h)(2)(ii)(B)(*3*) with respect to a controlled foreign corporation or a partnership is not effective unless the election is made with respect to each controlled foreign corporation or partnership that holds property with disqualified basis and that is related (within the meaning of section 267(b) and 707(b)) to the controlled foreign corporation or partnership and unless any return that has been filed that is inconsistent with the elimination of the adjusted basis and disqualified basis immediately after the disqualified transfer by reason of this paragraph (h)(2)(ii)(B)(*3*) is amended to take into account the elimination of the adjusted basis and disqualified basis immediately after the disqualified transfer by reason of this paragraph (h)(2)(ii)(B)(*3*).

(C) ***Definitions related to disqualified basis.*** The following definitions apply for purposes of this paragraph (h)(2).

(*1*) ***Disqualified period.*** The term *disqualified period* means, with respect to a transferor CFC, the period beginning on January 1, 2018, and ending as of the close of the transferor CFC's last taxable year that is not a CFC inclusion year. A transferor CFC that has a CFC inclusion year beginning January 1, 2018, has no disqualified period.

(*2*) ***Disqualified transfer.*** The term *disqualified transfer* means a transfer of property during a transferor CFC's disqualified period by the transferor CFC to a related person in which gain was recognized, in whole or in part, by the transferor CFC.

(*3*) ***Qualified gain amount.*** The term *qualified gain amount* means, with respect to a disqualified transfer by a transferor CFC, the sum of the following amounts:

(*i*) The amount of gain recognized by the transferor CFC on the disqualified transfer of property that is subject to Federal income tax under section 882 (except to the extent the gain is exempt from tax pursuant to an applicable treaty obligation of the United States); and

(*ii*) Any United States shareholder's pro rata share of the gain recognized by the transferor CFC on the disqualified transfer of property (determined without regard to properly allocable deductions) taken into account in determining the United States shareholder's inclusion under section 951(a)(1)(A), excluding any amount that is described in paragraph (h)(2)(ii)(C)(*3*)(*i*) of this section.

(*4*) ***Related person.*** The term *related person* means, with respect to a person that transfers property, any person that bears a relationship to such person described in section 267(b) or 707(b) immediately before or immediately after the transfer.

(*5*) ***Transfer.*** The term *transfer* includes any disposition of property, including any sale, exchange, contribution, or distribution of property, and includes an indirect transfer. For example, a transfer of an interest in a partnership is treated as an indirect transfer of the property of the partnership and a transfer by or to a partnership is treated as an indirect transfer by or to its partners. In addition, a distribution of property to a partner with respect to which gain is recognized to the distributee partner under section 731(a)(1) is treated as an indirect transfer of the property of the partnership.

(*6*) ***Transferor CFC.*** The term *transferor CFC* means any controlled foreign corporation that transfers property during the disqualified period of the controlled foreign corporation.

(iii) ***Examples.*** The following examples illustrate the application of this paragraph (h)(2).

(A) ***Example 1: Sale of asset; disqualified period*** —

(*1*) ***Facts.*** USP, a domestic corporation, owns all of the stock of CFC1 and CFC2, each a controlled foreign corporation. Both USP and CFC2 use the calendar year as their taxable year. CFC1 uses a taxable year ending November 30. On November 1, 2018, before the start of its first CFC inclusion year, CFC1 sells Asset A, which has an adjusted basis of $10x in the hands of CFC1, to CFC2 in exchange for $100x of cash. CFC1 recognizes $90x of gain as a result of the sale ($100x − $10x), $30x of which is foreign base company income. USP includes in gross income under section 951(a)(1)(A) its pro rata share of the subpart F income of $30x. CFC1's gain is not otherwise subject to U.S. tax or taken into account in determining USP's inclusion under section 951(a)(1)(A).

(*2*) ***Analysis.*** The transfer of Asset A is a disqualified transfer of Asset A because it is a transfer of property (other than property described in section 1221(a)(1)) by CFC1; CFC1 and CFC2 are related persons; and the transfer occurs during the disqualified period, the period that begins on January 1, 2018, and ends the last day before the first CFC inclusion year of CFC1 (November 30, 2018). Accordingly, under paragraph (h)(2)(ii)(A) of this section, the disqualified basis in Asset A immediately after the disqualified transfer is $60x, the excess of CFC2's adjusted basis in Asset A immediately after the disqualified transfer ($100x), over the sum of CFC1's adjusted

basis in Asset A immediately before the transfer ($10x) and USP's pro rata share of the gain recognized by CFC1 on the transfer of the property taken into account by USP under section 951(a)(1)(A) ($30x).

(B) ***Example 2: Sale of asset; no disqualified period*** —

(*1*) ***Facts.*** The facts are the same as in paragraph (h)(2)(iii)(A)(*1*) of this section (the facts in *Example 1*), except that CFC1 uses the calendar year as its taxable year.

(*2*) ***Analysis.*** Because CFC1 has a taxable year beginning January 1, 2018, CFC1 has no disqualified period. Accordingly, the property was not transferred during a disqualified period of CFC1, and there is no disqualified basis with respect to the property.

(C) ***Example 3: Sale of partnership interest*** —

(*1*) ***Facts.*** USP, a domestic corporation, owns all of the stock of CFC1, CFC2, and CFC3, each a controlled foreign corporation. CFC1 and CFC2 are equal partners in PRS, a partnership. PRS owns Asset B with an adjusted basis of $20x and a fair market value of $100x. PRS has a section 754 election in effect. USP, CFC2, and CFC3 all use the calendar year as their taxable year. CFC1 uses a taxable year ending November 30. On November 1, 2018, before the start of its first CFC inclusion year, CFC1 sells its interest in the partnership to CFC3 for $50x of cash. CFC1 has an adjusted basis of $10x in its partnership interest, and thus CFC1 recognizes $40x of gain as a result of the sale ($50x − $10x), none of which is foreign base company income or otherwise subject to U.S. tax. As a result of the sale, there is a $40x adjustment to the adjusted basis in Asset B with respect to CFC3 under section 743(b).

(*2*) ***Analysis.*** The transfer of the PRS partnership interest is a disqualified transfer of Asset B because it is an indirect transfer of property (other than property described in section 1221(a)(1)) by CFC1; CFC1 and CFC3 are related persons; and the transfer occurs during the disqualified period, the period that begins on January 1, 2018, and ends the last day before the first CFC inclusion year of CFC1 (November 30, 2018). Accordingly, under paragraph (h)(2)(ii)(A) of this section, the disqualified basis in Asset B immediately after the disqualified transfer is $40x, the excess of CFC3's share of adjusted basis in Asset B immediately after the disqualified transfer ($50x), taking into account the basis adjustment with respect to CFC3 under section 743(b), over CFC1's share of adjusted basis in the property immediately before the transfer ($10x).

(D) ***Example 4: Distribution of property in liquidation of partnership interest*** —

(*1*) ***Facts.*** FC1, FC2, and FC3 are controlled foreign corporations that are equal partners in PRS, a partnership. FC1's adjusted basis in its partnership interest in PRS is $0, FC2's basis is $50x, and FC3's basis is $50x. PRS has a section 754 election in effect. PRS owns Asset C with a fair market value of $50x and an adjusted basis of $0, Asset D with a fair market value of $50x and an adjusted basis of $50x, and Asset E with a fair market value of $50x and an adjusted basis of $50x, and all the adjusted basis in Asset D and Asset E is disqualified basis. PRS distributes Asset C to FC3 in liquidation of FC3's interest in PRS. None of FC1, FC2, FC3, or PRS recognizes gain on the distribution. Under section 732(b), FC3's adjusted basis in Asset C is $50x.

PRS's adjusted bases in Asset D and Asset E are decreased, in the aggregate, by $50x under section 734(b)(2)(B), which is the amount by which FC3's adjusted basis in Asset C exceeds PRS's adjusted basis in Asset C immediately before the distribution.

(2) ***Analysis.*** The distribution of Asset C is a nonrecognition transaction under section 7701(a)(45). Under paragraph (h)(2)(ii)(B)(*1*)(*i*) of this section, the disqualified bases in Asset D and Asset E are reduced, in the aggregate, by $50x. Further, under paragraph (h)(2)(ii)(B)(*2*)(*i*) of this section, the disqualified basis in Asset C is increased by $50x, the aggregate reduction to the disqualified basis in Asset D and Asset E.

(E) ***Example 5: Distribution of property to a partner in basis reduction transaction*** —

(*1*) ***Facts.*** The facts are the same as in paragraph (h)(2)(iii)(D)(*1*) of this section (the facts in *Example 4*), except PRS distributes Asset D to FC1. Under section 732(a), FC1's adjusted basis in Asset D is $0. PRS's adjusted basis in Asset C is increased by $50x under section 734(b)(1)(B), which is the amount by which PRS's adjusted basis in Asset D immediately before the distribution exceeds FC1's adjusted basis in Asset D under section 732(a).

(*2*) ***Analysis.*** The distribution of Asset D is a nonrecognition transaction under section 7701(a)(45). Under paragraph (h)(2)(ii)(B)(*1*)(*i*) of this section, the disqualified basis in Asset D is reduced by $50x. Further, under paragraph (h)(2)(ii)(B)(*2*)(*i*) of this section, the disqualified basis in Asset C is increased by $50x, the reduction to the disqualified basis in Asset D.

(F) ***Example 6: Dual use property with disqualified basis*** —

(*1*) ***Facts.*** FS is a tested income CFC and a wholesale distributor of Product A. FS owns trucks that deliver Product A. The trucks are specified tangible property. In Year 1, FS earns $250x in total gross income from inventory sales of Product A, $200x of which is included in gross tested income. The trucks have an average adjusted basis for Year 1 of $4,000x, of which $2,500x is disqualified basis. FS does not capitalize depreciation with respect to the trucks to inventory or other property held for sale. The depreciation deduction with respect to the trucks is $20x, $15x of which would be allocated and apportioned to gross tested income under § 1.951A-2(c)(3) without regard to § 1.951A-2(c)(5).

(*2*) ***Analysis.*** Because the trucks are used in both the production of gross tested income and the production of gross income that is not gross tested income in Year 1, the trucks are dual use property within the meaning of paragraph (d)(2) of this section. Under paragraph (h)(2)(i)(A) of this section, the disqualified basis in the trucks is disregarded for purposes of determining FS's qualified business asset investment for Year 1. Under paragraph (h)(2)(i)(B) of this section, paragraph (h)(2)(i)(A) of this section applies by reducing the amount of FS's adjusted basis in the trucks treated as adjusted basis in specified tangible property for Year 1 under paragraph (d)(1) of this section (determined without regard to § 1.951A-2(c)(5)) by the amount of the disqualified basis in the trucks. Without regard to § 1.951A-2(c)(5), FS's adjusted basis in the trucks treated as adjusted basis in specified tangible property for Year 1 under paragraph (d)(1) of this section is FS's adjusted basis in the trucks multiplied

by FS's dual use ratio with respect to the trucks for Year 1. Because none of the depreciation with respect to the trucks is capitalized into inventory or other property held for sale, FS's dual use ratio with respect to the trucks is determined entirely by reference to the depreciation deduction with respect to the trucks. Therefore, under paragraph (d)(3) of this section, without regard to § 1.951A-2(c)(5), FS's dual use ratio with respect to the trucks for Year 1 is 75%, which is FS's depreciation deduction with respect to the trucks that is allocated and apportioned to gross tested income under § 1.951A-2(c)(3) for Year 1 ($15x), divided by FS's depreciation deduction with respect to the trucks for Year 1 ($20x). Accordingly, paragraph (d)(1) of this section, without regard to paragraph (h)(2)(i)(A) of this section, FS's adjusted basis in the trucks treated as adjusted basis in specified tangible property is $3,000x ($4,000x × 0.75). Under paragraph (h)(2)(i)(A) and (B) of this section, the amount of the adjusted basis in the trucks treated as adjusted basis in specified tangible property is reduced by the $2,500x of disqualified basis in the trucks. Accordingly, $500x ($3,000x − $2,500x) of FS's average adjusted basis in the trucks is taken into account under paragraph (b) of this section in determining FS's qualified business asset investment for Year 1.

[T.D. 9866, 84 FR 29341, June 21, 2019, as amended by T.D. 9956, 86 FR 52973, Sept. 24, 2021]

§ 1.951A-4 Tested interest expense and tested interest income.

(a) ***Scope.*** This section provides rules for determining the tested interest expense and tested interest income of a controlled foreign corporation for purposes of determining a United States shareholder's specified interest expense under § 1.951A-1(c)(3)(iii). Paragraph (b) of this section provides definitions related to tested interest expense and tested interest income. Paragraph (c) of this section provides examples illustrating these definitions and the application of § 1.951A-1(c)(3)(iii). The amount of specified interest expense determined under § 1.951A-1(c)(3)(iii) and this section is the amount of interest expense described in section 951A(b)(2)(B).

(b) ***Definitions related to specified interest expense*** —

(1) ***Tested interest expense*** —

(i) ***In general.*** The term *tested interest expense* means, with respect to a controlled foreign corporation for a CFC inclusion year, interest expense paid or accrued by the controlled foreign corporation that is allocated and apportioned to gross tested income of the controlled foreign corporation for the CFC inclusion year under § 1.951A-2(c)(3), reduced (but not below zero) by the sum of the qualified interest expense of the controlled foreign corporation for the CFC inclusion year and the tested loss QBAI amount of the controlled foreign corporation for the CFC inclusion year.

(ii) ***Interest expense.*** The term *interest expense* means any expense or loss that is treated as interest expense under section 163(j).

(iii) ***Qualified interest expense*** —

(A) ***In general.*** The term *qualified interest expense* means, with respect to a controlled foreign corporation for a CFC inclusion year, to the extent established by the controlled foreign corporation, the interest expense paid or accrued by the controlled foreign corporation that is allocated and apportioned to gross tested income of the controlled foreign

corporation for the CFC inclusion year under § 1.951A-2(c)(3), multiplied by a fraction, the numerator of which is the average of the aggregate adjusted bases as of the close of each quarter of the CFC inclusion year of qualified assets held by the controlled foreign corporation, and the denominator of which is the average of the aggregate adjusted bases as of the close of each quarter of the CFC inclusion year of all assets held by the controlled foreign corporation.

(B) ***Qualified asset*** —

(*1*) ***In general.*** Except as provided in paragraph (b)(1)(iii)(B)(*2*) of this section, the term *qualified asset* means, with respect to a controlled foreign corporation for a CFC inclusion year, any obligation or financial instrument held by the controlled foreign corporation that gives rise to income included in the gross tested income of the controlled foreign corporation for the CFC inclusion year that is excluded from foreign personal holding company income (as defined in section 954(c)(1)) by reason of section 954(c)(2)(C)(ii) or section 954(h) or (i).

(*2*) ***Exclusion for related party receivables.*** A qualified asset does not include an asset that gives rise to interest income that is also excludible from foreign personal holding company income by reason of section 954(c)(3) or (6).

(*3*) ***Look-through rule for subsidiary stock.*** For purposes of paragraph (b)(1)(iii)(A) of this section, the adjusted basis in the stock of another controlled foreign corporation held by a controlled foreign corporation is treated as adjusted basis in a qualified asset in an amount equal to the adjusted basis in the stock multiplied by the fraction described in paragraph (b)(1)(iii)(A) of this section determined with respect to the assets of such other controlled foreign corporation.

(*4*) ***Look-through rule for certain partnership interests.*** For purposes of paragraph (b)(1)(iii)(A) of this section, if a controlled foreign corporation owns 25 percent or more of the capital or profits interest in a partnership the controlled foreign corporation is treated as holding its attributable share of any property held by the partnership, as determined under the principles of § 1.956-4(b), and the controlled foreign corporation's basis in the partnership interest is not taken into account.

(iv) ***Tested loss QBAI amount.*** The term *tested loss QBAI amount* means, with respect to a tested loss CFC for a CFC inclusion year, 10 percent of the amount that would be the qualified business asset investment of the tested loss CFC for the CFC inclusion year under section 951A(d) and § 1.951A-3 if the tested loss CFC were a tested income CFC for the CFC inclusion year.

(2) ***Tested interest income*** —

(i) ***In general.*** The term *tested interest income* means, with respect to a controlled foreign corporation for a CFC inclusion year, interest income included in gross tested income of the controlled foreign corporation for the CFC inclusion year, reduced by qualified interest income of the controlled foreign corporation for the CFC inclusion year.

(ii) ***Interest income.*** The term *interest income* means any income or gain that is treated as interest income under section 163(j).

(iii) ***Qualified interest income*** —

(A) ***In general.*** Except as provided in paragraph (b)(2)(iii)(B) of this section, the term *qualified interest income* means, with respect to a controlled foreign corporation for a CFC inclusion year, interest income of the controlled foreign corporation for the CFC inclusion year included in the gross tested income of the controlled foreign corporation for the CFC inclusion year that is excluded from foreign personal holding company income (as defined in section 954(c)(1)) by reason of section 954(c)(2)(C)(ii) or section 954(h) or (i).

(B) ***Exclusion for related party interest.*** Qualified interest income does not include interest income that is also excludable from foreign personal holding company income by reason of section 954(c)(3) or (6).

(c) ***Examples.*** The following examples illustrate the application of this section.

(1) ***Example 1: Wholly-owned CFCs —***

(i) ***Facts.*** A Corp, a domestic corporation, owns 100% of the single class of stock of each of FS1 and FS2, each a controlled foreign corporation. A Corp, FS1, and FS2 all use the calendar year as their taxable year. For Year 1, FS1 and FS2 are both tested income CFCs. In Year 1, FS1 pays $100x of interest to FS2. The interest expense of FS1 is allocated and apportioned to its gross tested income under § 1.951A-2(c)(3). The interest income of FS2 is excluded from its foreign personal holding company income under section 954(c)(6). Also, in Year 1, FS2 pays $100x of interest to a bank that is not related to FS2, which interest expense is allocated and apportioned to FS2's gross tested income under § 1.951A-2(c)(3). Neither FS1 nor FS2 holds qualified assets or owns stock of another controlled foreign corporation.

(ii) ***Analysis —***

(A) ***CFC-level determination; tested interest expense and tested interest income —***

(*1*) ***Tested interest expense and tested interest income of FS1.*** FS1 has $100x of interest expense that is allocated and apportioned to its gross tested income under § 1.951A-2(c)(3). FS1 has no interest income. Accordingly, FS1 has $100x of tested interest expense and no tested interest income for Year 1.

(*2*) ***Tested interest expense and tested interest income of FS2.*** FS2 has $100x of interest expense that is allocated and apportioned to its gross tested income under § 1.951A-2(c)(3) and $100x of interest income that is included in its gross tested income. Accordingly, FS2 has $100x of tested interest expense and $100x of tested interest income for Year 1.

(B) ***United States shareholder-level determination; pro rata share and specified interest expense.*** Under § 1.951A-1(d)(5) and (6), A Corp's pro rata share of FS1's tested interest expense is $100x, its pro rata share of FS2's tested interest expense is $100x, and its pro rata share of FS2's tested interest income is $100x. For Year 1, A Corp's aggregate pro rata share of tested interest expense is $200x and its aggregate pro rata share of tested interest income is $100x. Accordingly, under § 1.951A-1(c)(3)(iii), A Corp's specified interest expense is $100x ($200x−$100x) for Year 1.

(2) ***Example 2: Less than wholly-owned CFCs —***

(i) ***Facts.*** The facts are the same as in paragraph (c)(1)(i) of this section (the facts in *Example 1*), except that A Corp owns 50% of the single class of stock of FS1 and 80% of the single class of stock of FS2.

(ii) *Analysis* —

(A) ***CFC-level determination; tested interest expense and tested interest income.*** The analysis is the same as in paragraph (c)(1)(ii)(A) of this section (paragraph (A) of the analysis in *Example 1*).

(B) ***United States shareholder-level determination; pro rata share and specified interest expense.*** Under § 1.951A-1(d)(5) and (6), A Corp's pro rata share of FS1's tested interest expense is $50x ($100x × 0.50), its pro rata share of FS2's tested interest expense is $80x ($100x × 0.80), and its pro rata share of FS2's tested interest income is $80x ($100x × 0.80). For Year 1, A Corp's aggregate pro rata share of the tested interest expense is $130x ($50x + $80x) and its aggregate pro rata share of the tested interest income is $80x ($0 + $80x). Accordingly, under § 1.951A-1(c)(3)(iii), A Corp's specified interest expense is $50x ($130x−$80x) for Year 1.

(3) *Example 3: Operating company; qualified interest expense* —

(i) ***Facts.*** B Corp, a domestic corporation, owns 100% of the single class of stock of each of FS1 and FS2, each a controlled foreign corporation. For Year 1, FS1 and FS2 are both tested income CFCs. B Corp, FS1, and FS2 all use the calendar year as their taxable year. FS2 is an eligible controlled foreign corporation within the meaning of section 954(h)(2). In Year 1, FS1 pays $100x of interest to FS2. The interest expense of FS1 is allocated and apportioned to its gross tested income under § 1.951A-2(c)(3). The interest income of FS2 is excluded from its foreign personal holding company income by reason of section 954(c)(6). In addition, in Year 1, FS2 receives $300x of interest from customers that are not related to FS2, which interest income is excluded from FS2's foreign personal holding company income by reason of section 954(h), and FS2 pays $300x of interest to a bank, which interest expense is allocated and apportioned to FS2's gross tested income under § 1.951A-2(c)(3). Neither FS1 nor FS2 owns stock of another controlled foreign corporation. FS1 does not hold qualified assets. FS2's average adjusted bases in qualified assets is $8,000x, and FS2's average adjusted bases in all its assets is $12,000x.

(ii) *Analysis* —

(A) *CFC-level determination; tested interest expense and tested interest income* —

(*1*) ***Tested interest expense and tested interest income of FS1.*** FS1 has $100x of interest expense that is allocated and apportioned to its gross tested income under § 1.951A-2(c)(3). FS1 has no interest income. Accordingly, FS1 has $100x of tested interest expense and no tested interest income for Year 1.

(*2*) ***Tested interest expense and tested interest income of FS2.*** FS2 has $300x of interest expense that is allocated and apportioned to its gross tested income under § 1.951A-2(c)(3) and $400x of interest income that is included in gross tested income. However, a portion of FS2's interest income is excluded from foreign personal holding company income by reason of section 954(h), and a portion of FS2's assets are qualified assets. As a result, in determining the tested interest income and tested interest expense of FS2, the qualified interest income and qualified interest expense of FS2 are excluded. FS2 has qualified interest income of $300x, the amount of FS2's interest income that is excluded from foreign personal holding company income by reason of section 954(h). In addition, FS2 has qualified interest expense of $200x, the amount of FS2's interest expense that is allocated and apportioned to its gross

tested income under § 1.951A-2(c)(3) ($300x), multiplied by a fraction, the numerator of which is FS2's average adjusted bases in qualified assets ($8,000x), and the denominator of which is FS2's average adjusted bases in all its assets ($12,000x). Accordingly, FS2 has tested interest income of $100x ($400x−$300x) and tested interest expense of $100x ($300x−$200x) for Year 1.

(B) ***United States shareholder-level determination; pro rata share and specified interest expense.*** Under § 1.951A-1(d)(5) and (6), B Corp's pro rata share of FS1's tested interest expense is $100x, its pro rata share of FS2's tested interest expense is $100x, and its pro rata share of FS2's tested interest income is $100x. For Year 1, B Corp's aggregate pro rata share of tested interest expense is $200x ($100x + $100x) and its aggregate pro rata share of tested interest income is $100x ($0 + $100x). Accordingly, under § 1.951A-1(c)(3)(iii), B Corp's specified interest expense is $100x ($200x−$100x) for Year 1.

(4) ***Example 4: Holding company; qualified interest expense*** —

(i) ***Facts.*** C Corp, a domestic corporation, owns 100% of the single class of stock of each of FS1 and FS2, each a controlled foreign corporation. FS2 owns 100% of the single class of stock of FS3, a qualifying insurance company within the meaning of section 953(e)(3). For Year 1, FS1, FS2, and FS3 are all tested income CFCs. C Corp, FS1, FS2, and FS3 all use the calendar year as their taxable year. In Year 1, FS1 pays $100x of interest to FS3. The interest expense of FS1 is allocated and apportioned to its gross tested income under § 1.951A-2(c)(3). The interest income of FS3 is excluded from its foreign personal holding company income by reason of section 954(c)(6). In addition, FS3 receives $300x of interest from persons that are not related to FS3, which interest income is excluded from FS's foreign personal holding company income by reason of section 954(i). Also in Year 1, FS2 pays $300x of interest to a bank, which interest expense is allocated and apportioned to FS2's gross tested income under § 1.951A-2(c)(3). None of FS1, FS2, or FS3 owns stock of another controlled foreign corporation, except for the stock of FS3 owned by FS2. FS2 has no assets other than the stock of FS3. Neither FS1 nor FS2 hold qualified assets directly. FS2's average adjusted bases in the FS3 stock is $6,000x. FS3's average adjusted bases in qualified assets is $8,000x, and FS3's average adjusted bases in all its assets is $12,000x.

(ii) ***Analysis*** —

(A) ***CFC-level determination; tested interest expense and tested interest income*** —*(1) Tested interest expense and tested interest income of FS1.* In Year 1, FS1 has $100x of interest expense allocated and apportioned to its gross tested income under § 1.951A-2(c)(3). FS1 has no interest income. Accordingly, FS1 has $100x of tested interest expense and no tested interest income for Year 1.

(2) ***Tested interest expense and tested interest income of FS2.*** FS2 has $300x of interest expense that is allocated and apportioned to its gross tested income under § 1.951A-2(c)(3). FS2 has no interest income. While FS2 holds no qualified assets directly, $4,000x of FS3's average adjusted basis in FS3 stock is treated as adjusted basis in a qualified asset, which is equal to FS3's average adjusted basis in FS3 stock ($6,000x) multiplied by a fraction, the numerator of which is FS3's average adjusted bases in qualified assets ($8,000x), and the denominator of which is FS3's average adjusted bases in all its assets ($12,000x). Accordingly, FS2 has qualified interest expense of $200x, the amount of FS2's interest expense allocated and apportioned to FS2's gross tested income under § 1.951A-2(c)(3) ($300x), multiplied by a fraction,

the numerator of which is FS2's average adjusted bases in qualified assets ($4,000x), and the denominator of which is FS2's average adjusted bases in all its assets ($6,000x). Therefore, FS2 has tested interest expense of $100x ($300x−$200x) and no tested interest income for Year 1.

(3) ***Tested interest expense and tested interest income of FS3.*** In Year 1, FS3 has no interest expense, but FS3 has $400x of interest income that is included in gross tested income. However, a portion of FS3's interest income is excluded from foreign personal holding company income by reason of section 954(i). As a result, in determining the tested interest income of FS3, the qualified interest income of FS3 is excluded. FS3 has qualified interest income of $300x, the amount of FS3's interest income that is excluded from foreign personal holding company income by reason of section 954(i). Therefore, FS2 has tested interest income of $100x ($400x−$300x) and no tested interest expense for Year 1.

(B) ***United States shareholder-level determination; pro rata share and specified interest expense.*** Under § 1.951A-1(d)(5) and (6), C Corp's pro rata share of FS1's tested interest expense is $100x, its pro rata share of FS2's tested interest expense is $100x, and its pro rata share of FS3's tested interest income is $100x. For Year 1, C Corp's aggregate pro rata share of tested interest expense is $200x ($100x + $100x + $0) and its aggregate pro rata share of tested interest income is $100x ($0 + $0 + $100x). Accordingly, under § 1.951A-1(c)(3)(iii), C Corp's specified interest expense is $100x ($200x−$100x) for Year 1.

(5) ***Example 5: Specified interest expense and tested loss QBAI amount*** —

(i) ***Facts.*** D Corp, a domestic corporation, owns 100% of a single class of stock of each of FS1 and FS2, each a controlled foreign corporation. For Year 1, FS1 is a tested income CFC and FS2 is a tested loss CFC. D Corp, FS1, and FS2 all use the calendar year as their taxable year. In Year 1, FS1 pays $100x of interest to FS2. The interest expense of FS1 is allocated and apportioned to its gross tested income under § 1.951A-2(c)(3). The interest income of FS2 is excluded from its foreign personal holding company income by reason of section 954(c)(6). Also, in Year 1, FS2 pays $100x of interest to a bank that is not related to FS2, which interest expense is allocated and apportioned to FS2's gross tested income under § 1.951A-2(c)(3). Neither FS1 nor FS2 holds qualified assets or owns stock of another controlled foreign corporation. Because FS2 is a tested loss CFC, FS2 has no QBAI. See § 1.951A-3(b). However, if FS2 were a tested income CFC, FS2 would have QBAI of $1,000x.

(ii) ***Analysis*** s—

(A) ***CFC-level determination; tested interest expense and tested interest income*** —

(1) ***Tested interest expense and tested interest income of FS1.*** In Year 1, FS1 has $100x of interest expense that is allocated and apportioned to its gross tested income under § 1.951A-2(c)(3). FS1 has no interest income. Accordingly, FS1 has $100x of tested interest expense and no tested interest income for Year 1.

(2) ***Tested interest expense and tested interest income of FS2.*** FS2 has $100x of interest income that is included in gross tested income. Accordingly, FS2 has $100x of tested interest income. FS2 also has 100x of interest expense that is allocated and apportioned to its gross tested income. However, because FS2 is a tested loss CFC, FS2's tested interest expense is reduced by its tested loss QBAI amount. FS2's tested

loss QBAI amount is $100x (10% of $1,000x, the amount that would be QBAI if FS2 were a tested income CFC). Accordingly, FS2's tested interest expense is $0 ($100x interest expense−$100x tested loss QBAI amount) for Year 1.

(B) ***United States shareholder-level determination; pro rata share and specified interest expense.*** Under § 1.951A-1(d)(5) and (6), D Corp's pro rata share of FS1's tested interest expense is $100x, its pro rata share of FS2's tested interest expense is $0, and its pro rata share of FS2's tested interest income is $100x. For Year 1, D Corp's aggregate pro rata share of tested interest expense is $100x, and its aggregate pro rata share of tested interest income is $100x. Accordingly, under § 1.951A-1(c)(3)(iii), D Corp's specified interest expense is $0 ($100x−$100x) for Year 1.

[T.D. 9866, 84 FR 29341, June 21, 2019]

§ 1.951A-5 Treatment of GILTI inclusion amounts.

(a) ***Scope.*** This section provides rules relating to the treatment of GILTI inclusion amounts and adjustments to earnings and profits to account for tested losses. Paragraph (b) of this section provides that a GILTI inclusion amount is treated in the same manner as an amount included under section 951(a)(1)(A) for purposes of applying certain Code sections. Paragraph (c) of this section provides rules for the treatment of amounts taken into account in determining the net CFC tested income of a United States shareholder when applying sections 163(e)(3)(B)(i) and 267(a)(3)(B). Paragraph (d) of this section provides a rule for the treatment of a GILTI inclusion amount for purposes of determining the personal holding company income of a United States shareholder that is a domestic corporation under section 543.

(b) ***Treatment as subpart F income for certain purposes*** —

(1) ***In general.*** A GILTI inclusion amount is treated in the same manner as an amount included under section 951(a)(1)(A) for purposes of applying sections 168(h)(2)(B), 535(b)(10), 851(b), 904(h)(1), 959, 961, 962, 993(a)(1)(E), 996(f)(1), 1248(b)(1), 1248(d)(1), 1411, 6501(e)(1)(C), 6654(d)(2)(D), and 6655(e)(4).

(2) ***Allocation of GILTI inclusion amount to tested income CFCs*** —

(i) ***In general.*** For purposes of the sections referred to in paragraph (b)(1) of this section, the portion of the GILTI inclusion amount of a United States shareholder for a U.S. shareholder inclusion year treated as being with respect to each controlled foreign corporation of the United States shareholder for the U.S. shareholder inclusion year is—

(A) In the case of a tested loss CFC, zero, and

(B) In the case of a tested income CFC, the portion of the GILTI inclusion amount of the United States shareholder which bears the same ratio to such amount as the United States shareholder's pro rata share of the tested income of the tested income CFC for the U.S. shareholder inclusion year bears to the aggregate amount of the United States shareholder's pro rata share of the tested income of each tested income CFC for the U.S. shareholder inclusion year.

(ii) ***Example.*** The following example illustrates the application of paragraph (b)(2)(i) of this section.

(A) ***Facts.*** USP, a domestic corporation, owns all of the stock of three controlled foreign corporations, CFC1, CFC2, and CFC3. USP, CFC1, CFC2, and CFC3 all use the calendar year as their taxable year. In Year 1, CFC1 has tested income of $100x, CFC2 has tested income of $300x, and CFC3 has tested loss of $50x. USP has no net deemed tangible income return for Year 1.

(B) ***Analysis.*** In Year 1, USP has net CFC tested income (as defined in § 1.951A-1(c)(2)) of $350x ($100x + $300x−$50x) and, because USP has no net deemed tangible income return, a GILTI inclusion amount (as defined in § 1.951A-1(c)(1)) of $350x ($350x−$0). The aggregate amount of USP's pro rata share of tested income is $400x ($100x from CFC1 + $300x from CFC2). Therefore, under paragraph (b)(2)(i) of this section, the portion of USP's GILTI inclusion amount treated as being with respect to CFC1 is $87.50x ($350x × $100x/$400x). The portion of USP's GILTI inclusion amount treated as being with respect to CFC2 is $262.50x ($350x × $300x/$400x). The portion of USP's GILTI inclusion amount treated as being with respect to CFC3 is $0 because CFC3 is a tested loss CFC.

(3) ***Translation of portion of GILTI inclusion amount allocated to tested income CFC.*** The portion of the GILTI inclusion amount of a United States shareholder allocated to a tested income CFC under section 951A(f)(2) and paragraph (b)(2)(i) of this section is translated into the functional currency of the tested income CFC using the average exchange rate for the CFC inclusion year of the tested income CFC.

(c) ***Treatment as an amount includible in the gross income of a United States person.*** For purposes of sections 163(e)(3)(B)(i) and 267(a)(3)(B), an item (including original issue discount) is treated as includible in the gross income of a United States person to the extent that the item increases a United States shareholder's pro rata share of tested income of a controlled foreign corporation for a U.S. shareholder inclusion year, reduces the shareholder's pro rata share of tested loss of a controlled foreign corporation for the U.S. shareholder inclusion year, or both.

(d) ***Treatment for purposes of personal holding company rules.*** For purposes of determining whether a United States shareholder that is a domestic corporation is a personal holding company under section 542, no portion of the adjusted ordinary gross income of such domestic corporation that consists of its GILTI inclusion amount for the U.S. shareholder inclusion year is personal holding company income (as defined in section 543(a)).

[T.D. 9866, 84 FR 29341, June 21, 2019]

§ 1.951A-6 Adjustments related to tested losses.

(a) ***Scope.*** This section provides rules relating to adjustments related to tested losses. Paragraph (b) of this section provides rules that increase the earnings and profits of a tested loss CFC for purposes of section 952(c)(1)(A). Paragraph (c) of this section is reserved for a rule for tested loss adjustments.

(b) ***Increase of earnings and profits of tested loss CFC for purposes of section 952(c)(1)(A).*** For purposes of section 952(c)(1)(A) with respect to a CFC inclusion year, the earnings and profits of a tested loss CFC are increased by an amount equal to the tested loss of the tested loss CFC for the CFC inclusion year.

(c) [Reserved]

[T.D. 9866, 84 FR 29341, June 21, 2019]

§ 1.951A-7 Applicability dates.

(a) ***In general.*** Except as otherwise provided in this section, sections 1.951A-1 through 1.951A-6 apply to taxable years of foreign corporations beginning after December 31, 2017, and to taxable years of United States shareholders in which or with which such taxable years of foreign corporations end.

(b) ***High-tax exception.*** Except as otherwise provided in this paragraph (b), section 1.951A-2(c)(1)(iii), (c)(3)(ii), and (c)(7) and (8) apply to taxable years of foreign corporations beginning on or after July 23, 2020, and to taxable years of United States shareholders in which or with which such taxable years of foreign corporations end. In addition, taxpayers may choose to apply the rules in § 1.951A-2(c)(1)(iii), (c)(3)(ii), and (c)(7) and (8) to taxable years of foreign corporations that begin after December 31, 2017, and before July 23, 2020, and to taxable years of U.S. shareholders in which or with which such taxable years of the foreign corporations end, provided that they consistently apply those rules and the rules in § 1.954-1(c)(1)(iii)(A)(*3*), § 1.954-1(c)(1)(iv), and the first sentence of § 1.954-1(d)(3)(i) to such taxable years. Section 1.951A-2(c)(7)(iii)(B), (c)(8)(ii), (c)(8)(iii)(A)(*2*)(*ii*), and (c)(8)(iii)(B) apply to taxable years of foreign corporations beginning on or after December 28, 2021, and to taxable years of United States shareholders in which or with which such taxable years of the foreign corporations end. In addition, taxpayers may choose to apply the rules in § 1.951A-2(c)(7)(iii)(B), (c)(8)(iii)(A)(*2*)(*ii*), and (c)(8)(iii)(B)(*2*)(*iii*) to taxable years of foreign corporations that begin after December 31, 2019, and before December 28, 2021, and to taxable years of U.S. shareholders in which or with which such taxable years of the foreign corporations end. For taxable years of foreign corporations beginning before December 28, 2021, see § 1.951A-2(c)(7)(iii)(B), (c)(8)(iii)(A)(*2*)(*ii*), and (c)(8)(iii)(B)(*2*)(*iii*) as contained in 26 CFR part 1 revised as of April 1, 2021.

(c) [Reserved]

(d) ***Deduction for disqualified payments.*** Section 1.951A-2(c)(6) applies to taxable years of foreign corporations ending on or after April 7, 2020, and to taxable years of United States shareholders in which or with which such taxable years end.

(e) ***Determination of gross income and allowable deductions.*** Section 1.951A-2(c)(2) applies to taxable years of foreign corporations ending on or after October 10, 2024, and to taxable years of United States shareholders in which or with which such taxable years end. For taxable years of foreign corporations ending before October 10, 2024, and to taxable years of United States shareholders in which or with which such taxable years end, *see* § 1.951A-2(c)(2)(i) and (ii) as contained in 26 CFR part 1, revised as of April 1, 2022.

[T.D. 9866, 84 FR 29341, June 21, 2019, as amended by T.D. 9902, 85 FR 44648, July 23, 2020; T.D. 9922, 85 FR 72070, Nov. 12, 2020; T.D. 9959, 87 FR 373, Jan. 4, 2022; 89 FR 82169, Oct. 10, 2024]

§ 1.952-1 Subpart F income defined.

(a) ***In general.*** For purposes of sections 951 through 964, a controlled foreign corporation's subpart F income for any taxable year shall, except as provided in paragraph (b) of this section and subject to the limitations of paragraphs (c) and (d) of this section, consist of the sum of—

(1) The income derived by such corporation for such year from the insurance of United States risks (determined in accordance with the provisions of section 953 and §§ 1.953-1 through 1.953-6),

(2) The income derived by such corporation for such year which constitutes foreign base company income (determined in accordance with the provisions of section 954 and §§ 1.954-1 through 1.954-8),

(3)

(i) An amount equal to the product of—

(A) The income of such corporation other than income which—

(*1*) Is attributable to earnings and profits of the foreign corporation included in the gross income of a United States person under section 951 (other than by reason of this paragraph) (determined in accordance with the provisions of section 951 and § 1.951-1), or

(*2*) Is described in section 952(b),

multiplied by

(B) The international boycott factor determined in accordance with the provisions of section 999(c)(1), or

(ii) In lieu of the amount determined under paragraph (a)(3)(i) of this section, the amount described under section 999(c)(2) of such international boycott income, and

(4) The sum of the amount of any illegal bribes, kickbacks, or other payments paid after November 3, 1976, by or on behalf of the corporation during the taxable year of the corporation directly or indirectly to an official, employee, or agent in fact of a government. An amount is paid by a controlled foreign corporation where it is paid by an officer, director, employee, shareholder or agent of such corporation for the benefit of such corporation. For purposes of this section, the principles of section 162(c) and the regulations thereunder shall apply. In the case of payments made after September 3, 1982, a payment is illegal if the payment would be unlawful under the Foreign Corrupt Practices Act of 1977 if the payor were a United States person. The fair market value of an illegal payment made in the form of property or services shall be considered the amount of such illegal payment.

Pursuant to section 951(a)(1)(A)(i) and § 1.951-1, a United States shareholder of such controlled foreign corporation must include his pro rata share of such subpart F income in his gross income for his taxable year in which or with which such taxable year of the foreign corporation ends. See section 952(a). However, see paragraph (a) of § 1.957-2 for special rule limiting the subpart F income to the income derived from the insurance of United States risks in the case of certain controlled foreign corporations described in section 957(b).

(b) ***Exclusion of U.S. income*** —

(1) ***Taxable years beginning before January 1, 1967.*** For rules applicable to taxable years beginning before January 1, 1967, see 26 CFR 1.952-1(b)(1) (Revisedof April 1, 1975).

(2) ***Taxable years beginning after December 31, 1966.*** Notwithstanding paragraph (a) of this section, a controlled foreign corporation's subpart F income for any taxable year beginning after December 31, 1966, shall not include any item of income from sources within the United States which is effectively connected for that year with the conduct by such corporation of a trade or business in the United States unless, pursuant to a treaty to which the United States is a party, such item of income either is exempt from the income tax imposed by chapter 1 (relating to normal taxes and surtaxes) of the Code or is subject to such tax at a reduced rate.

Thus, for example, dividends received from sources within the United States by a foreign corporation engaged in business in the United States during the taxable year, which are not effectively connected for that year with the conduct of a trade or business in the United States by that corporation, shall not be excluded from subpart F income under section 952(b) and this subparagraph even though such dividends are subject to the tax of 30 percent imposed by section 881 (a). Also, for example, if, by reason of an income tax convention to which the United States is a party, an amount of interest from sources within the United States which is effectively connected for the taxable year with the conduct of a business in the United States by a foreign corporation is subject to tax under chapter 1 at a flat rate of 15 percent, as provided in § 1.871-12, such interest is not excluded from subpart F income under section 952(b) and this subparagraph. The deductions attributable to items of income which are excluded from subpart F income under this subparagraph shall not be taken into account for purposes of section 952.

(3) ***Rule applicable under section 956 (b)(2).*** For purposes only of paragraph (b)(1))(viii) of § 1.956-2, an item of income derived by a controlled foreign corporation from sources within the United States with respect to which for the taxable year a tax is imposed in accordance with section 882(a) shall be considered described in section 952(b) whether or not such item of income would have constituted subpart F income for such year.

(c) ***Limitation on a controlled foreign corporation's subpart F income*** —

(1) ***In general.*** A United States shareholder's pro rata share (determined in accordance with the rules of paragraph (e) of § 1.951-1) of a controlled foreign corporation's subpart F income for any taxable year shall not exceed his pro rata share of the earnings and profits (as defined in section 964(a) and § 1.964-1) of such corporation for such taxable year, computed as of the close of such taxable year without diminution by reason of any distributions made during such taxable year, minus the sum of—

(i) The amount, if any, by which such shareholder's pro rata share of—

(*a*) The sum of such corporation's deficits in earnings and profits for prior taxable years beginning after December 31, 1962, plus

(*b*) The sum of such corporation's deficits in earnings and profits for taxable years beginning after December 31, 1959, and before January 1, 1963 (reduced by the sum of the earnings and profits (as so defined) of such corporation for any of such taxable years) exceeds

(*c*) The sum of such corporation's earnings and profits for prior taxable years beginning after December 31, 1962, which, with respect to such shareholder, are allocated to other earnings and profits under section 959(c)(3) and § 1.959-3; and

(ii) Such shareholder's pro rata share of any deficits in earnings and profits of other foreign corporations for a taxable year beginning after December 31, 1962, which are attributable to stock of such other foreign corporations owned by such shareholder within the meaning of section 958(a) and which, in accordance with section 952(d) and paragraph (d) of this section, are taken into account as a reduction in the controlled foreign corporation's earnings and profits for such taxable year.

For purposes of applying this subparagraph, the reduction (if any) provided by subdivision (i) of this subparagraph in a United States shareholder's pro rata share of the earnings and profits of a controlled foreign corporation shall be taken into account before the reduction provided by subdivision (ii) of this subparagraph. See section 952(c).

(2) ***Special rules.*** For purposes only of determining the limitation under subparagraph (1) of this paragraph on a United States shareholder's pro rata share of a controlled foreign corporation's subpart F income for any taxable year—

(i) ***Status of foreign corporation.*** The earnings and profits, or deficit in earnings and profits, of a foreign corporation for any taxable year shall be taken into account whether or not such foreign corporation is a controlled foreign corporation at the time such earnings and profits are derived or such deficit in earnings and profits is incurred.

(ii) ***Deficits in earnings and profits taken into account only once.*** A controlled foreign corporation's deficit in earnings and profits for any taxable year preceding the taxable year shall be taken into account for the taxable year only to the extent such deficit has not been taken into account under this paragraph, paragraph (d) of this section, or paragraph (d)(2)(ii) of § 1.963-2 (applied as if section 963 had not been repealed by the Tax Reduction Act of 1975) in computing a minimum distribution, for any taxable year preceding the taxable year, to reduce earnings and profits of such preceding year of such controlled foreign corporation or of any other controlled foreign corporation. To the extent a controlled foreign corporation's (the “first corporation”) excess foreign base company shipping deductions for any taxable year (determined under § 1.955A-3(c)(2)(i)) reduce the foreign base company shipping income of another member of a related group (as defined in § 1.955A-2(b)), such deductions shall not be taken into account in determining the earnings and profits or deficits in earnings and profits of such first corporation for such taxable year for purposes of this paragraph (c) and paragraph (d) of this section. The rule of the preceding sentence shall not apply to the extent the excess foreign base company shipping deductions of the first corporation reduce the foreign base company shipping income of another member of a related group below zero.

(iii) ***Determination of pro rata share.*** A United States shareholder's pro rata share of a controlled foreign corporation's earnings and profits, or deficit in earnings and profits, for any taxable year shall be determined in accordance with the principles of paragraph (e) of § 1.951-1 and paragraph (d)(2)(ii) of § 1.963-2.

(3) ***Illustrations.*** The application of this paragraph may be illustrated by the following examples:

> *Example 1.* (a) A is a United States shareholder who owns 100 percent of the only class of stock of M Corporation, a controlled foreign corporation organized on January 1, 1963. Both A and M Corporation use the calandar year as a taxable year.
> (b) During 1963, M Corporation derives $20,000 of subpart F income and has earnings and profits of $30,000. Corporation M makes no distributions to A during such year. The limitation under section 952(c) on M Corporation's subpart F income for 1963 is $30,000; and $20,000 is includible in A's gross income for such year under section 951(a)(1)(A)(i).
>
> (c) On January 1, 1964, M Corporation acquires 100 percent of the only class of stock of N Corporation, a controlled foreign corporation which uses the calendar year as a taxable year. During 1964, N Corporation derives $6,000 of subpart F income, has $7,000 of earnings and profits, and distributes $5,000 to M Corporation. The limitation under section 952(c) on N Corporation's subpart F income for 1964 is $7,000; and $6,000 of subpart F income is includible in A's gross income for such year under section 951(a)(1)(A)(i).

(d) During 1964, M Corporation derives $8,000 of rents which constitute subpart F income, makes a $10,000 distribution to A, and has earnings and profits of $12,000 (including the $5,000 dividend received from N Corporation). The limitation under section 952(c) on M Corporation's subpart F income for 1964 is $7,000, determined as follows:

Corporation M's earnings and profits for 1964 (determined under section 964(a) and § 1.964-1 as of the close of such year without diminution for any distributions made during such year)	$12,000
Less: Corporation M's earnings and profits for 1964 described in section 959(b)	5,000
Limitation on M Corporation's Subpart F income for 1964	7,000

Thus, for 1964 with respect to A's interest in M Corporation, $7,000 of subpart F income is includible in his gross income under section 951(a)(1)(A)(i). The $10,000 dividend received from M Corporation is excludible from A's gross income for 1964 under section 959(a)(1) and paragraph (b) of § 1.959-1.

Example 2. A is a United States shareholder who owns 100 percent of the only class of stock of R Corporation which was organized on January 1, 1961. R Corporation is a controlled foreign corporation for the entire period after December 31, 1962, here involved. Both A and R Corporation use the calendar year as a taxable year. During 1963, R Corporation derives $25,000 of subpart F income and has $50,000 of earnings and profits. Corporation R has $15,000 of earnings and profits for 1961, and a deficit in earnings and profits of $45,000 for 1962. Thus, R Corporation has as of December 31, 1963, a net deficit in earnings and profits of $30,000 for the years 1961 and 1962. Corporation R makes no distributions to A during 1963. The limitation under section 952(c) on R Corporation's subpart F income for 1963 is $20,000 ($50,000 minus $30,000), and $20,000 of subpart F income is includible in A's gross income for 1963 under section 951(a)(1)(A)(i). During 1964, R Corporation derives $18,000 of subpart F income and has $30,000 of earnings and profits. Corporation R makes no distributions to A during 1964. The entire $18,000 of subpart F income is includible in A's gross income for 1964 under section 951(a)(1)(A)(i).

(d) ***Treatment of deficits in earnings and profits attributable to stock of other foreign corporation indirectly owned by a United States shareholder*** —

(1) ***In general.*** For purposes of paragraph (c)(1)(ii) of this section, if—

(i) A United States shareholder owns (within the meaning of section 958(a)) stock in two or more foreign corporations in a chain of foreign corporations (as defined in subparagraph (2)(ii) of this paragraph), and

(ii) Any of the corporations in such chain has a deficit in earnings and profits for a taxable year beginning after December 31, 1962,

then, with respect to such shareholder and only for purposes of determining the limitation on subpart F income under paragraph (c) of this section, the earnings and profits for the taxable year of each such foreign corporation which is a controlled foreign corporation shall, in accordance with the rules of subparagraph (2) of this paragraph, be reduced to take into account any deficit in earnings and profits referred to in subdivision (ii) of this subparagraph. See section 952(d).

(2) ***Special rules.*** For purposes of this paragraph—

(i) ***Applicable rules.*** The special rules set forth in paragraph (c)(2) of this section shall apply.

(ii) ***"Chain" defined.*** A chain of foreign corporations shall, with respect to a United States shareholder, include—

(*a*) Any foreign corporation in which such shareholder owns (within the meaning of section 958(a)(1)(A)) stock but, only to the extent of the stock so owned and

(*b*) All foreign corporations in which such shareholder owns (within the meaning of section 958(a)(2)) stock, but only to the extent of the stock so owned by reason of his ownership of the stock referred to in (*a*) of this subdivision.

(iii) ***Allocation of deficit.*** If one or more foreign corporations (whether or not a controlled foreign corporation) includible in a chain of foreign corporations has a deficit in earnings and profits (determined under section 964(a) and § 1.964-1) for the taxable year, the amount of deficit taken into account under section 952(d) with respect to a United States shareholder in such chain as a reduction in earnings and profits for the taxable year of a controlled foreign corporation includible in such chain shall be an amount which bears the same ratio to such shareholder's pro rata share of the total deficit in earnings and profits for the taxable year of all includible foreign corporations as his pro rata share of the earnings and profits (determined under paragraph (c) of this section but without regard to the provisions of subparagraph (1)(ii) of such paragraph) for the taxable year of such includible controlled foreign corporation bears to his pro rata share of the total earnings and profits (as so determined under paragraph (c) of this section) for the taxable year of all includible controlled foreign corporations. The amount of deficit taken into account under this subdivision with respect to any controlled foreign corporation includible in a chain of foreign corporations shall not exceed the United States shareholder's pro rata share of the controlled foreign corporation's earnings and profits for the taxable year.

(iv) ***Taxable year.*** The taxable year from which a deficit is allocated under this paragraph, and the taxable year to which such deficit is allocated to reduce earnings and profits, shall be the taxable year of the foreign corporation ending with or within the taxable year of the United States shareholder described in subparagraph (1)(i) of this paragraph.

(3) ***Illustration.*** The application of this paragraph may be illustrated by the following examples:

> *Example 1.* (a) Domestic corporation M owns 100 percent, 20 percent, and 100 percent, respectively, of the only class of stock of foreign corporations A, B, and F, respectively. Corporation A owns 80 percent of the only class of stock of each of foreign corporations B and C, respectively. Corporation F owns 20 percent of such stock of C Corporation. Corporation B owns 75 percent of the only class of stock of foreign corporation D, and 50 percent of the only class of stock of each of foreign corporations G and H, respectively. C

Corporation owns 75 percent of the only class of stock of foreign corporation E. All the corporations use the calendar year as a taxable year, and all of the foreign corporations, except corporations G and H, are controlled foreign corporations throughout the period here involved.

(b) The subpart F income, and the earnings and profits (determined under paragraph (c) of this section but without regard to subparagraph (1)(ii) of such paragraph) or deficit in earnings and profits (determined under section 964(a) and § 1.964-1), of each of the foreign corporations for 1963 are as follows, the deficits being set forth in parentheses:

	Subpart F income	Earnings and profits (deficits)
A Corporation	$6,000	$18,000
B Corporation		(7,500)
C Corporation		(2,500)
D Corporation	4,000	5,000
E Corporation	12,000	15,000
F Corporation	8,000	20,250
G Corporation		(10,000)
H Corporation		7,000

(c) The chains of foreign corporations (within the meaning of subparagraph (2)(ii) of this paragraph) for 1963 are the “A” chain, consisting of corporations, A, B, C, D, E, G, and H, but only to the extent of M Corporation's stock interest in such corporations under section 958(a) by reason of its ownership of stock in A Corporation; the “B” chain, consisting of corporations B, D, G, and H, but only to the extent of M Corporation's stock interest in such corporations under section 958(a) by reason of its ownership of stock in B Corporation; and the “F” chain, consisting of corporations F, C, and E, but only to the extent of M Corporation's stock interest in such corporations under section 958(a) by reason of its ownership of stock in F Corporation.

(d) Corporation M's stock interest under section 958(a) in each of the chains of foreign corporations is as follows for 1963:

[In percent]

	A	B	C	D	E	F	G	H
A chain:								
Direct interest	100							
(100% × 80%)		80						
(100% × 80%)			80					
(80% × 75%)				60				
(80% × 75%)					60			
(80% × 50%)							40	
(80% × 50%)								40
B chain:								
Direct interest		20						
(20% × 75%)				15				
(20% × 50%)							10	
(20% × 50%)								10
F chain:								
Direct interest						100		
(100% × 20%)			20					
(20% × 75%)					15			
Total interests	100	100	100	75	75	100	50	50

(e) Corporation M's pro rata share of the earnings and profits (determined under paragraph (c) of this section but without regard to subparagraph (1)(ii) of such paragraph), or of the deficit, of each controlled foreign corporation of each foreign corporation, respectively, includible in the respective chains for 1963 is as follows:

	Earnings and profits	Deficit
A chain:		
A Corporation (100%)	$18,000	
B Corporation (80%)		($6,000)
C Corporation (80%)		(2,000)
D Corporation (60%)	3,000	
E Corporation (60%)	9,000	
G Corporation (40%)		(4,000)
H Corporation (40%)	([1])	
Total	30,000	(12,000)
B chain:		
B Corporation (20%)		($1,500)
D Corporation (15%)	$750	
G Corporation (10%)		(1,000)
H Corporation (10%)	([1])	
Total	$750	($2,500)
F chain:		
F Corporation (100%)	20,250	
C Corporation (20%)		(500)
E Corporation (15%)	2,250	
Total	$22,500	(500)

[1] *The earnings and profits of H Corporation are not included in the total earnings and profits for the chain because H Corporation is not a controlled foreign corporation.*

(f) The amount by which M Corporation's pro rata share of the earnings and profits for 1963 of the controlled foreign corporations in each respective chain shall be reduced under section 952(d) by M Corporation's pro rata share of the deficits of corporations B, C, and G for 1963 is

determined as follows:

		Amount of reduction
A chain:		
A Corporation ($12,000 × $18,000/$30,000)		$7,200
D Corporation ($12,000 × $3,000/$30,000)		1,200
E Corporation ($12,000 × $9,000/$30,000)		3,600
Total		12,000
B chain:		
D Corporation ($2,500 × $750/$750)	$2,500	
Limitation: M Corporation's pro-rata share of D Corporation's earnings and profits	750	
Allocation of used deficit ($750) to M Corporation's pro rata share of the deficits of corporations B and G:		
B Corporation ($750 × ($1,500/$2,500))	$450	
G Corporation ($750 × ($1,000/$2,500))	300	
Total	750	$750
F chain:		
F Corporation ($500 × $20,250/$22,500)		450
E Corporation ($500 × $2,250/$22,500)		50
Total		500

(g) Corporation M's pro rata share of the earnings and profits (determined after reduction for deficits under section 952(d)) for 1963 of each controlled foreign corporation in the respective chains, determined on a chain-by-chain basis, is determined as follows:

	Earnings and profits before reduction	Reduction (sec. 952(d))	Reduced earnings and profits
A chain:			
A Corporation	$18,000	$7,200	$10,800
D Corporation	3,000	1,200	1,800
E Corporation	9,000	3,600	5,400
B chain: D Corporation	750	750	
F chain:			
F Corporation	20,250	450	19,800

	Earnings and profits before reduction	Reduction (sec. 952(d))	Reduced earnings and profits
E Corporation	2,250	50	2,200

(h) Corporation M's pro rata share of each controlled foreign corporation's subpart F income, limited as provided by section 952(c) and paragraph (c) of this section, for 1963 which is includible in its gross income for such year under section 951(a)(1)(A)(i) and § 1.951-1 is determined as follows:

	Subpart F income (before limitation)	Earnings and profit (sec. 952 (c))	Amount includible in income
A Corporation (100%)	$6,000	$10,800	$6,000
D Corporation (75%)	3,000	1,800	1,800
E Corporation (75%)	9,000	7,600	7,600
F Corporation (100%)	8,000	19,800	8,000
Total includible under sec. 951(a)(1)(A)(i)			23,400

Example 2. The facts are the same as in example 1 except that, in addition, for 1964, foreign corporations C, D, and E have no subpart F income and no earnings and profits and foreign corporations G and H have no earnings and profits. For 1964, B Corporation has subpart F income of $1,000 and earnings and profits (determined in accordance with section 964(a) and § 1.964-1) of $1,500; A Corporation has subpart F income of $800 and earnings and profits of $1,000; and F Corporation has subpart F income of $500 and earnings and profits of $1,000. Such earnings and profits are determined without regard to distributions for 1964. Corporation B has an unused deficit in earnings and profits of $1,050 for 1963 ($1,500 minus $450) applicable to M Corporation's interest in such corporation (paragraph (f) of example 1), and, under paragraph (c)(1)(i)(*a*) of this section, with respect to M Corporation, such deficit reduces B Corporation's earnings and profits for 1964 to $450. Inasmuch as G Corporation is not a controlled foreign corporation for 1964, such corporation's unused deficit in earnings and profits of $700 for 1963 ($1,000 minus $300) applicable to M Corporation's interest in such corporation (paragraph (f) of example 1) may be used under paragraph (c)(1)(i)(*a*) of this section to reduce M Corporation's interest in G Corporation's earnings and profits in a later year or years for which G Corporation is a controlled foreign corporation. Corporation M's pro rata share of each controlled foreign corporation's subpart F income, limited as

provided by section 952(c) and paragraph (c) of this section, for 1964 which is includible in its gross income for such year under section 951(a)(1)(A)(i) and § 1.951-1 is determined as follows:

	Subpart F income (before limitation)	Earnings and profits (sec. 952(c))	Amount includible in income
A Corporation	$800	$1,000	$800
B Corporation	1,000	450	450
F Corporation	500	1,000	500

Example 3. The facts are the same as in example 2, except that for 1964 B Corporation has subpart F income of $550 and earnings and profits (determined in accordance with section 964(a) and § 1.964-1) of $550; such earnings and profits are determined without regard to distributions for 1964. Under paragraph (c)(1)(i)(a) of this section, B Corporation's unused deficit of $1,050 for 1963 reduces its earnings and profits for 1964 with respect to M Corporation to zero. The remaining $500 of the unused deficit for 1963 applicable to M Corporation's interest in B Corporation may be used under paragraph (c)(1)(i)(*a*) of this section in later years to reduce M Corporation's interest in B Corporation's earnings and profits.

(e) ***Application of current earnings and profits limitation*** —

(1) ***In general.*** If the subpart F income (as defined in section 952(a)) of a controlled foreign corporation exceeds the foreign corporation's earnings and profits for the taxable year, the subpart F income includible in the income of the corporation's United States shareholders is reduced under section 952(c)(1)(A) in accordance with the following rules. The excess of subpart F income over current year earnings and profits shall—

(i) First, proportionately reduce subpart F income in each separate category of the controlled foreign corporation, as defined in § 1.904-5(a)(4)(v), in which current earnings and profits are zero or less than zero;

(ii) Second, proportionately reduce subpart F income in each separate category in which subpart F income exceeds current earnings and profits; and

(iii) Third, proportionately reduce subpart F income in other separate categories.

(2) ***Allocation to a category of subpart F income.*** An excess amount that is allocated under paragraph (e)(1) of this section to a separate category must be further allocated to a category of subpart F income if the separate category contains more than one category of subpart F income described in section 952(a) or, in the case of foreign base company income, described in § 1.954-1(c)(1)(iii)(A) (*1*) or (*2*). In such case, the excess amount that is allocated to the separate category must be allocated to the various categories of subpart F income within that separate category on a proportionate basis.

(3) ***Recapture of subpart F income reduced by operation of earnings and profits limitation.*** Any amount in a category of subpart F income described in section 952(a) or, in the case of foreign base company income, described in § 1.954-1(c)(1)(iii)(A) (*1*) or (*2*) that is reduced by operation of the current year earnings and profits limitation of section 952(c)(1)(A) and this paragraph (e) shall be subject to recapture in a subsequent year under the rules of section 952(c)(2) and paragraph (f) of this section.

(4) ***Coordination with sections 953 and 954.*** The rules of this paragraph (e) shall be applied after the application of sections 953 and 954 and the regulations under those sections, except as provided in § 1.954-1(d)(4)(ii).

(5) ***Earnings and deficits retain separate limitation character.*** The income reduction rules of paragraph (e)(1) of this section shall apply only for purposes of determining the amount of an inclusion under section 951(a)(1)(A) from each separate category as defined in § 1.904-5(a)(4)(v) and the separate categories in which recapture accounts are established under section 952(c)(2) and paragraph (f) of this section. For rules applicable in computing post-1986 undistributed earnings, see generally section 902 and the regulations under that section. For rules relating to the allocation of deficits for purposes of computing foreign taxes deemed paid under section 960 with respect to an inclusion under section 951(a)(1)(A), see § 1.960-1(i).

(f) ***Recapture of subpart F income in subsequent taxable year —***

(1) ***In general.*** If a controlled foreign corporation's subpart F income for a taxable year is reduced under the current year earnings and profits limitation of section 952(c)(1)(A) and paragraph (e) of this section, recapture accounts will be established and subject to recharacterization in any subsequent taxable year to the extent the recapture accounts were not previously recharacterized or distributed, as provided in paragraphs (f)(2) and (3) of this section.

(2) ***Rules of recapture —***

(i) ***Recapture account.*** If a category of subpart F income described in section 952(a) or, in the case of foreign base company income, described in § 1.954-1(c)(1)(iii)(A) (*1*) or (*2*) is reduced under the current year earnings and profits limitation of section 952(c)(1)(A) and paragraph (e) of this section for a taxable year, the amount of such reduction shall constitute a recapture account.

(ii) ***Recapture.*** Each recapture account of the controlled foreign corporation will be recharacterized, on a proportionate basis, as subpart F income in the same separate category (as defined in § 1.904-5(a)(4)(v)) as the recapture account to the extent that current year earnings and profits exceed subpart F income in a taxable year. The United States shareholder must include his pro rata share (determined under the rules of § 1.951-1(e)) of each recharacterized amount in income as subpart F income in such separate category for the taxable year.

(iii) ***Reduction of recapture account and corresponding earnings.*** Each recapture account, and post-1986 undistributed earnings in the separate category containing the recapture account, will be reduced in any taxable year by the amount which is recharacterized under paragraph (f)(2)(ii) of this section. In addition, each recapture account, and post-1986 undistributed earnings in the separate category containing the recapture account, will be reduced in the amount of any distribution out of that account (as determined under the ordering rules of section 959(c) and paragraph (f)(3)(ii) of this section).

(3) ***Distribution ordering rules —***

(i) ***Coordination of recapture and distribution rules.*** If a controlled foreign corporation distributes an amount out of earnings and profits described in section 959(c)(3) in a year in which current year earnings and profits exceed subpart F income and there is an amount in a recapture account for such year, the recapture rules will apply first.

(ii) ***Distributions reduce recapture accounts first.*** Any distribution made by a controlled foreign corporation out of earnings and profits described in section 959(c)(3) shall be treated as made first on a proportionate basis out of the recapture accounts in each separate category to the extent thereof (even if the amount in the recapture account exceeds post-1986 undistributed earnings in the separate category containing the recapture account). Any remaining distribution shall be treated as made on a proportionate basis out of the remaining earnings and profits of the controlled foreign corporation in each separate category. See section 904(d)(3)(D).

(4) ***Examples.*** The application of paragraphs (e) and (f) of this section may be illustrated by the following examples:

Example 1. (i) A, a U.S. person, is the sole shareholder of CFC, a controlled foreign corporation formed on January 1, 1998, whose functional currency is the u. In 1998, CFC earns 100u of foreign base company sales income that is general limitation income described in section 904(d)(1)(I) and incurs a (200u) loss attributable to activities that would have produced general limitation income that is not subpart F income. In 1998 CFC also earns 100u of foreign personal holding company income that is passive income described in section 904(d)(1)(A), and 100u of foreign personal holding company income that is dividend income subject to a separate limitation described in section 904(d)(1)(E) for dividends from a noncontrolled section 902 corporation. CFC's subpart F income for 1998, 300u, exceeds CFC's current earnings and profits, 100u, by 200u. Under section 952(c)(1)(A) and paragraph (e) of this section, subpart F income is limited to CFC's current earnings and profits of 100u, all of which is included in A's gross income under section 951(a)(1)(A). The 200u of CFC's 1998 subpart F income that is not included in A's income in 1998 by reason of section 952(c)(1)(A) is subject to recapture under section 952(c)(2) and paragraph (f) of this section. (ii) For purposes of determining the amount and type of income included in A's gross income and the amount and type of income in CFC's recapture account, the rules of paragraphs (e)(1) and (2) of this section apply. Under paragraph (e)(1)(i) of this section, the amount by which CFC's subpart F income exceeds its earnings and profits for 1998, 200u, first reduces from 100u to 0 CFC's subpart F income in the general limitation category, which has a current year deficit of (100u) in earnings and profits. Next, under paragraph (e)(1)(iii) of this section, the remaining 100u by which CFC's 1998 subpart F income exceeds earnings and profits is applied proportionately to reduce CFC's subpart F income in the separate categories for passive income (100u) and dividends from the noncontrolled section 902 corporation (100u). Thus, A includes 50u of passive limitation/foreign personal holding company income and 50u of dividends from the noncontrolled section 902 corporation/foreign personal holding company income in gross income in 1998. CFC has 100u in its general limitation/foreign base company sales income recapture account attributable to the 100u of foreign base

company sales income that is not included in A's income by reason of the earnings and profits limitation of section 952(c)(1)(A). CFC also has 50u in its passive limitation recapture account, all of which is attributable to foreign personal holding company income, and 50u in its recapture account for dividends from the noncontrolled section 902 corporation, all of which is attributable to foreign personal holding company income.

(iii) For purposes of computing post-1986 undistributed earnings, the rules of sections 902 and 960, including the rules of § 1.960-1(i), apply. Under § 1.960-1(i), the general limitation deficit of (100u) is allocated proportionately to reduce passive limitation earnings of 100u and noncontrolled section 902 dividend earnings of 100u. Thus, passive limitation earnings are reduced by 50u to 50u (100u passive limitation earnings/200u total earnings in positive separate categories × (100u) general limitation deficit = 50u reduction), and the noncontrolled section 902 corporation earnings are reduced by 50u to 50u (100u noncontrolled section 902 corporation earnings/200u total earnings in positive separate categories × (100u) general limitation deficit = 50u reduction). All of CFC's post-1986 foreign income taxes with respect to passive limitation income and dividends from the noncontrolled section 902 corporation are deemed paid by A under section 960 with respect to the subpart F inclusions (50u inclusion/ 50u earnings in each separate category). After the inclusion and deemed-paid taxes are computed, at the close of 1998 CFC has a (100u) deficit in general limitation earnings (100u subpart F earnings + (200u) nonsubpart F loss), 50u of passive limitation earnings (100u of earnings attributable to foreign personal holding company income −50u inclusion) with a corresponding passive limitation/foreign personal holding company income recapture account of 50u, and 50u of earnings subject to a separate limitation for dividends from the noncontrolled section 902 corporation (100u earnings −50u inclusion) with a corresponding noncontrolled section 902 corporation/foreign personal holding company income recapture account of 50u.

Example 2. (i) The facts are the same as in *Example 1* with the addition of the following facts. In 1999, CFC earns 100u of foreign base company sales income that is general limitation income and 100u of foreign personal holding company income that is passive limitation income. In addition, CFC incurs (10u) of expenses that are allocable to its separate limitation for dividends from the noncontrolled section 902 corporation. Thus, CFC's subpart F income for 1999, 200u, exceeds CFC's current earnings and profits, 190u, by 10u. Under section 952(c)(1)(A) and paragraph (e) of this section, subpart F income is limited to CFC's current earnings and profits of 190u, all of which is included in A's gross income under section 951(a)(1)(A).
(ii) For purposes of determining the amount and type of income included in A's gross income and the amount and type of income in CFC's recapture accounts, the rules of paragraphs (e)(1) and (2) of this section apply. While CFC's general limitation post-1986 undistributed earnings for 1999 are 0 ((100u) opening balance + 100u subpart F income), CFC's general limitation subpart F income (100u) does not exceed its general limitation current earnings

and profits (100u) for 1999. Accordingly, under paragraph (e)(1)(iii) of this section, the amount by which CFC's subpart F income exceeds its earnings and profits for 1999, 10u, is applied proportionately to reduce CFC's subpart F income in the separate categories for general limitation income, 100u, and passive income, 100u. Thus, A includes 95u of general limitation foreign base company sales income and 95u of passive limitation foreign personal holding company income in gross income in 1999. At the close of 1999 CFC has 105u in its general limitation/foreign base company sales income recapture account (100u from 1998 + 5u from 1999), 55u in its passive limitation/foreign personal holding company income recapture account (50u from 1998 + 5u from 1999), and 50u in its dividends from the noncontrolled section 902 corporation/foreign personal holding company income recapture account (all from 1998).

(iii) For purposes of computing post-1986 undistributed earnings in each separate category, the rules of sections 902 and 960, including the rules of § 1.960-1(i), apply. Thus, post-1986 undistributed earnings (or an accumulated deficit) in each separate category are increased (or reduced) by current earnings and profits or current deficits in each separate category. The accumulated deficit in CFC's general limitation earnings and profits (100u) is reduced to 0 by the addition of 100u of 1999 earnings and profits. CFC's passive limitation earnings of 50u are increased by 100u to 150u, and CFC's noncontrolled section 902 corporation earnings of 50u are decreased by (10u) to 40u. After the addition of current year earnings and profits and deficits to the separate categories there are no deficits remaining in any separate category. Thus, the allocation rules of § 1.960-1(i)(4) do not apply in 1999. Accordingly, in determining the post-1986 foreign income taxes deemed paid by A, post-1986 undistributed earnings in each separate category are unaffected by earnings in the other categories. Foreign taxes deemed paid under section 960 for 1999 would be determined as follows for each separate category: with respect to the inclusion of 95u of foreign base company sales income out of general limitation earnings, the section 960 fraction is 95u inclusion/0 total earnings; with respect to the inclusion of 95u of passive limitation income the section 960 fraction is 95u inclusion/150u passive earnings. Thus, no general limitation taxes would be associated with the inclusion of the general limitation earnings because there are no accumulated earnings in the general limitation category. After the deemed-paid taxes are computed, at the close of 1999 CFC has a (95u) deficit in general limitation earnings and profits ((100u) opening balance + 100u current earnings −95u inclusion), 55u of passive limitation earnings and profits (50u opening balance + 100u current foreign personal holding company income −95u inclusion), and 40u of earnings and profits subject to the separate limitation for dividends from the noncontrolled section 902 corporation (50u opening balance + (10u) expense).

Example 3. (i) A, a U.S. person, is the sole shareholder of *CFC,* a controlled foreign corporation whose functional currency is the u. At the beginning of 1998, CFC has post-1986 undistributed earnings of 275u, all of which are general limitation earnings described in section 904(d)(1)(I). CFC has no previously-taxed earnings and profits described in section

959(c)(1) or (c)(2). In 1998, CFC has a (200u) loss in the shipping category described in section 904(d)(1)(D), 100u of foreign personal holding company income that is passive income described in section 904(d)(1)(A), and 125u of general limitation manufacturing earnings that are not subpart F income. CFC's subpart F income for 1998, 100u, exceeds CFC's current earnings and profits, 25u, by 75u. Under section 952(c)(1)(A) and paragraph (e) of this section, subpart F income is limited to CFC's current earnings and profits of 25u, all of which is included in A's gross income under section 951(a)(1)(A). The 75u of CFC's 1998 subpart F income that is not included in A's income in 1998 by reason of section 952(c)(1)(A) is subject to recapture under section 952(c)(2) and paragraph (f) of this section.
(ii) For purposes of determining the amount and type of income included in A's gross income and the amount and type of income in CFC's recapture account, the rules of paragraphs (e)(1) and (2) of this section apply. Under paragraph (e)(1) of this section, the amount of CFC's subpart F income in excess of earnings and profits for 1998, 75u, reduces the 100u of passive limitation foreign personal holding company income. Thus, A includes 25u of passive limitation foreign personal holding company income in gross income, and CFC has 75u in its passive limitation/foreign personal holding company income recapture account.

(iii) For purposes of computing post-1986 undistributed earnings in each separate category the rules of sections 902 and 960, including the rules of § 1.960-1(i), apply. Under § 1.960-1(i), the shipping limitation deficit of (200u) is allocated proportionately to reduce general limitation earnings of 400u and passive limitation earnings of 100u. Thus, general limitation earnings are reduced by 160u to 240u (400u general limitation earnings/500u total earnings in positive separate categories × (200u) shipping deficit = 160u reduction), and passive limitation earnings are reduced by 40u to 60u (100u passive earnings/500u total earnings in positive separate categories × (200u) shipping deficit = 40u reduction). Five-twelfths of CFC's post-1986 foreign income taxes with respect to passive limitation earnings are deemed paid by A under section 960 with respect to the subpart F inclusion (25u inclusion/60u passive earnings). After the inclusion and deemed-paid taxes are computed, at the close of 1998 CFC has 400u of general limitation earnings (275u opening balance + 125u current earnings), 75u of passive limitation earnings (100u of foreign personal holding company income −25u inclusion), and a (200u) deficit in shipping limitation earnings.

Example 4. (i) The facts are the same as in *Example 3* with the addition of the following facts. In 1999, CFC earns 50u of general limitation earnings that are not subpart F income and 75u of passive limitation income that is foreign personal holding company income. Thus, CFC has 125u of current earnings and profits. CFC distributes 200u to A. Under paragraph (f)(3)(i) of this section, the recapture rules are applied first. Thus, the amount by which 1999 current earnings and profits exceed subpart F income, 50u, is recharacterized as passive limitation foreign personal holding company income. CFC's total subpart F income for 1999 is 125u of passive limitation foreign personal holding company income (75u current earnings

plus 50u recapture account), and the passive limitation/foreign personal holding company income recapture account is reduced from 75u to 25u.
(ii) CFC has 150u of previously-taxed earnings and profits described in section 959(c)(2) (25u attributable to 1998 and 125u attributable to 1999), all of which is passive limitation earnings and profits. Under section 959(c), 150u of the 200u distribution is deemed to be made from earnings and profits described in section 959(c)(2). The remaining 50u is deemed to be made from earnings and profits described in section 959(c)(3). Under paragraph (f)(3)(ii) of this section, the dividend distribution is deemed to be made first out of the passive limitation recapture account to the extent thereof (25u). Under paragraph (f)(2)(iii) of this section, the passive limitation recapture account is reduced from 25u to 0. The remaining distribution of 25u is treated as made out of CFC's general limitation earnings and profits.

(iii) For purposes of computing post-1986 undistributed earnings, the rules of section 902 and 960, including the rules of § 1.960-1(i), apply. Thus, the shipping limitation accumulated deficit of (200u) reduces general limitation earnings and profits of 450u and passive limitation earnings and profits of 150u on a proportionate basis. Thus, 100% of CFC's post-1986 foreign income taxes with respect to passive limitation earnings are deemed paid by A under section 960 with respect to the 1999 subpart F inclusion of 125u (100u inclusion (numerator limited to denominator)/100u passive earnings). No post-1986 foreign income taxes remain to be deemed paid under section 902 in connection with the 25u distribution from the passive limitation/foreign personal holding company income recapture account. One-twelfth of CFC's post-1986 foreign income taxes with respect to general limitation earnings are deemed paid by A under section 902 with respect to the distribution of 25u general limitation earnings and profits described in section 959(c)(3) (25u inclusion/300u general limitation earnings). After the deemed-paid taxes are computed, at the close of 1999 CFC has 425u of general limitation earnings and profits (400u opening balance + 50u current earnings—25u distribution), 0 of passive limitation earnings (75u recapture account + 75u current foreign personal holding company income—125u inclusion—25u distribution), and a (200u) deficit in shipping limitation earnings.

(5) ***Effective date.*** Paragraph (e) of this section and this paragraph (f) apply to taxable years of a controlled foreign corporation beginning after March 3, 1997.

(g) ***Treatment of distributive share of partnership income*** —

(1) ***In general.*** A controlled foreign corporation's distributive share of any item of income of a partnership is income that falls within a category of subpart F income described in section 952(a) to the extent the item of income would have been income in such category if received by the controlled foreign corporation directly. For specific rules regarding the treatment of a distributive share of partnership income under certain provisions of subpart F, see §§ 1.954-1(g), 1.954-2(a)(5), 1.954-3(a)(6), and 1.954-4(b)(2)(iii).

(2) ***Example.*** The application of this paragraph (g) may be illustrated by the following example:

Example. CFC, a controlled foreign corporation, is an 80-percent partner in PRS, a foreign partnership. PRS earns $100 of interest income that is not export financing interest as defined in section 954(c)(2)(B), or qualified banking or financing income as defined in section 954(h)(3)(A), from a person unrelated to CFC. This interest income would have been foreign personal holding company income to CFC, under section 954(c), if it had received this income directly. Accordingly, CFC's distributive share of this interest income, $80, is foreign personal holding company income.

(3) ***Effective date.*** This paragraph (g) applies to taxable years of a controlled foreign corporation beginning on or after July 23, 2002.

[T.D. 6795, 30 FR 938, Jan. 29, 1965, as amended by T.D. 6892, 31 FR 11144, Aug. 23, 1966; T.D. 7293, 38 FR 32802, Nov. 28, 1973; T.D. 7545, 43 FR 19652, May 8, 1978; T.D. 7862, 47 FR 56490, Dec. 17, 1982; T.D. 7893, 48 FR 22508, May 19, 1983; T.D. 7894, 48 FR 22516, May 19, 1983; T.D. 8331, 56 FR 2846, Jan. 25, 1991; T.D. 8704, 62 FR 18, Jan. 2, 1997; T.D. 9008, 67 FR 48023, July 23, 2002; T.D. 9882, 84 FR 69107, Dec. 17, 2019]

§ 1.952-2 Determination of gross income and taxable income of a foreign corporation.

(a) ***Determination of gross income*** —

(1) ***In general.*** Except as provided in subparagraph (2) of this paragraph, the gross income of a foreign corporation for any taxable year shall, subject to the special rules of paragraph (c) of this section, be determined by treating such foreign corporation as a domestic corporation taxable under section 11 and by applying the principles of section 61 and the regulations thereunder.

(2) ***Insurance gross income*** —

(i) ***Life insurance gross income.*** The gross income for any taxable year of a controlled foreign corporation which is engaged in the business of reinsuring or issuing insurance or annuity contracts and which, if it were a domestic corporation engaged only in such business, would be taxable as a life insurance company to which part I (sections 801 through 820) of subchapter L of chapter 1 of the Code applies, shall, subject to the special rules of paragraph (c) of this section, be the sum of—

(*a*) The gross investment income, as defined under section 804(b), except that interest which is excluded from gross income under section 103 shall not be taken into account;

(*b*) The sum of the items taken into account under section 809(c), except that advance premiums shall not be taken into account; and

(*c*) The amount by which the net long-term capital gain exceeds the net short-term capital loss.

(ii) ***Mutual and other insurance gross income.*** The gross income for any taxable year of a controlled foreign corporation which is engaged in the business of reinsuring or issuing insurance or annuity contracts and which, if it were a domestic corporation engaged only in such business, would be taxable as a mutual insurance company to which part II (sections 821 through 826) of subchapter L of chapter 1 of the Code applies or as a mutual marine insurance or other insurance company to which part III (sections 831 and 832) of subchapter L of chapter 1 of the Code applies, shall, subject to the special rules of paragraph (c) of this section, be—

(*a*) The sum of—

(*1*) The gross income, as defined in section 832(b)(1);

(*2*) The amount of losses incurred, as defined in section 832(b)(5); and

(*3*) The amount of expenses incurred, as defined in section 832(b)(6); reduced by

(*b*) The amount of interest which under section 103 is excluded from gross income.

(b) ***Determination of taxable income*** —

(1) ***In general.*** Except as provided in subparagraph (2) of this paragraph, the taxable income of a foreign corporation for any taxable year shall, subject to the special rules of paragraph (c) of this section, be determined by treating such foreign corporation as a domestic corporation taxable under section 11 and by applying the principles of section 63.

(2) ***Insurance taxable income.*** The taxable income for any taxable year of a controlled foreign corporation which is engaged in the business of reinsuring or issuing insurance or annuity contracts and which, if it were a domestic corporation engaged only in such business, would be taxable as an insurance company to which subchapter L of chapter 1 of the Code applies shall, subject to the special rules of paragraph (c) of this section, be determined by treating such corporation as a domestic corporation taxable under subchapter L of chapter 1 of the Code and by applying the principles of §§ 1.953-4 and 1.953-5 for determining taxable income.

(c) ***Special rules for purposes of this section*** —

(1) ***Nonapplication of certain provisions.*** Except where otherwise distinctly expressed, the provisions of subchapters F, G, H, L, M, N, S, and T of chapter 1 of the Internal Revenue Code shall not apply and, for taxable years of a controlled foreign corporation beginning after March 3, 1997, the provisions of section 103 of the Internal Revenue Code shall not apply.

(2) ***Application of principles of § 1.964-1.*** The determinations with respect to a foreign corporation shall be made as follows:

(i) ***Books of account.*** The books of account to be used shall be those regularly maintained by the corporation for the purpose of accounting to its shareholders.

(ii) ***Accounting principles.*** Except as provided in subparagraphs (3) and (4) of this paragraph, the accounting principles to be employed are those described in paragraph (b) of § 1.964-1. Thus, in applying accounting principles generally accepted in the United States for purposes of reflecting in the financial statements of a domestic corporation the operations of foreign affiliates, no adjustment need be made unless such adjustment will have a material effect, within the meaning of paragraph (a) of § 1.964-1.

(iii) ***Translation into United States dollars*** —

(*a*) ***In general.*** Except as provided in (*b*) of this subdivision, the amounts determined in accordance with subdivision (ii) of this subparagraph shall be translated into United States dollars in accordance with the principles of paragraph (d) of § 1.964-1.

(*b*) ***Special rule.*** In any case in which the value of the foreign currency in relation to the United States dollar fluctuates more than 10 percent during any translation period (within the meaning of paragraph (d)(6) of § 1.964-1), the subpart F income and non-subpart F income shall be separately translated as if each constituted all the income of the controlled foreign corporation for the translation period.

(iv) *Tax accounting methods.* The tax accounting methods to be employed are those established or adopted by or on behalf of the foreign corporation under paragraph (c) of § 1.964-1. Thus, such accounting methods must be consistent with the manner of treating inventories, depreciation, and elections referred to in subdivisions (ii), (iii), and (iv) of paragraph (c)(1) of § 1.964-1 and used for purposes of such paragraph; however, if, in accordance with paragraph (c)(6) of § 1.964-1, a foreign corporation receives foreign base company income before any elections are made or before an accounting method is adopted by or on behalf of such corporation under paragraph (c)(3) of § 1.964-1, the determinations of whether an exclusion set forth in section 954(b) applies shall be made as if no elections had been made and no accounting method had been adopted.

(v) *Exchange gain or loss* —

(*a*) Exchange gain or loss, determined in accordance with the principles of § 1.964-1(e), shall be taken into account for purposes of determining gross income and taxable income.

(*b*) Exchange gain or loss shall be treated as foreign base company shipping income (or as a deduction allocable thereto) to the extent that it is attributable to foreign base company shipping operations. The extent to which exchange gain or loss is attributable to foreign base company shipping operations may be determined under any reasonable method which is consistently applied from year to year. For example, the extent to which the exchange gain or loss is attributable to foreign base company shipping operations may be determined on the basis of the ratio which the foreign based company shipping income of the corporation for the taxable year bears to its total gross income for the taxable year, such ratio to be determined without regard to this subdivision (v).

(*c*) The remainder of the exchange gain or loss shall be allocated between subpart F income and non-subpart F income under any reasonable method which is consistently applied from year to year. For example, such remainder may be allocated to subpart F income in the same ratio that the gross subpart F income (exclusive of foreign base company shipping income) of the corporation for the taxable year bears to its total gross income (exclusive of foreign base company shipping income) for the taxable year, such ratio to be determined without regard to this subdivision (v).

(3) *Necessity for recognition of gain or loss.* Gross income of a foreign corporation (including an insurance company) includes gain or loss only if such gain or loss would be recognized under the provisions of the Internal Revenue Code if the foreign corporation were a domestic corporation taxable under section 11 (subject to the modifications of subparagraph (1) of this paragraph). See section 1002. However, a foreign corporation shall not be treated as a domestic corporation for purposes of determining whether section 367 applies.

(4) *Gross income and gross receipts.* The term “gross income” may not have the same meaning as the term “gross receipts”. For example, in a manufacturing, merchandising, or mining business, gross income means the total sales less the cost of goods sold, plus any income from investments and from incidental or outside operations or sources.

(5) *Treatment of capital loss and net operating loss.* In determining taxable income of a foreign corporation for any taxable year—

(i) *Capital loss carryback and carryover.* The capital loss carryback and carryover provided by section 1212(a) shall not be allowed.

(ii) ***Net operating loss deduction.*** The net operating loss deduction under section 172(a) or the operations loss deduction under section 812 shall not be allowed.

(6) ***Corporations which have insurance income.*** For purposes of paragraphs (a)(2) and (b)(2) of this section, in determining whether a controlled foreign corporation which is engaged in the business of reinsuring or issuing insurance or annuity contracts and which, if it were a domestic corporation engaged only in such business, would be taxable as an insurance company to which subchapter L of chapter 1 of the Code applies, it is immaterial that—

(i) The corporation would be exempt from taxation as an organization described in section 501(a),

(ii) The corporation would not be taxable as an insurance company to which subchapter L of the Code applies, or

(iii) The corporation would be subject to the alternative tax for small mutual insurance companies provided by section 821(c).

[T.D. 6795, 30 FR 941, Jan. 29, 1965, as amended by T.D. 7893, 48 FR 22508, May 19, 1983; T.D. 7894, 48 FR 22516, May 19, 1983; T.D. 8704, 62 FR 20, Jan. 2, 1997]

§ 1.953-1 Income from insurance of United States risks.

(a) ***In general.*** The subpart F income of a controlled foreign corporation for any taxable year includes its income derived from the insurance of United States risks for such taxable year. See section 952(a)(1). A controlled foreign corporation shall have income derived from the insurance of United States risks for such purpose of it has taxable income, as determined under § 1.953-4 or § 1.953-5, which is attributable to the reinsuring or the issuing of any insurance or annuity contract in connection with United States risks, as defined in § 1.953-2 or § 1.953-3, and if it satisfies the 5-percent minimum premium requirement prescribed in paragraph (b) of this section. It is immaterial for purposes of this section whether the person insured or the beneficiary of any insurance, annuity, or reinsurance contract is, as to such corporation, a related person or a United States shareholder. For definition of the term “controlled foreign corporation” for purposes of taking into account income derived from the insurance of United States risks under section 953, see section 957 (a) and (b) and §§ 1.957-1 and 1.957-2.

(b) ***5-percent minimum premium requirement.*** A controlled foreign corporation shall not have income derived from the insurance of United States risks for purposes of this section unless the premiums received by such corporation during the taxable year which are attributable to the reinsuring and the issuing of insurance and annuity contracts in connection with the United States risks exceed 5 percent of the total premiums which are received by such corporation during such taxable year and which are attributable to the reinsuring and the issuing of insurance and annuity contracts in connection with all risks.

(c) ***General definitions.*** For purposes of §§ 1.953-1 to 1.953-6, inclusive—

(1) ***Reinsurance, etc.*** The terms “reinsurance”, “insurance”, and “annuity contract” have the same meaning which they have for purposes of applying section 809(c)(1) or section 832(b)(4), as the case may be.

(2) ***Premiums.*** The term “premiums” means the items taken into account for the taxable year under section 809(c)(1), or the amount computed for the taxable year under section 832(b)(4) without the application of subparagraph (B) thereof, as the case may be; except that, for purposes of determining the amount of premiums received in applying paragraph (b) of this section or paragraph (a) of § 1.953-3, advance premiums and deposits shall not be taken into account.

(3) ***Insurance company.*** The term "insurance company" has the same meaning which it has for purposes of applying section 801(a), determined by applying the principles of paragraph (a) of § 1.801-3.

(4) ***Related person.*** The term "related person", when used with respect to a controlled foreign corporation, shall have the meaning assigned to it by paragraph (e) of § 1.954-1.

(5) ***Policy period.*** With respect to any insurance or annuity contract under which a corporation is potentially liable at any time during its taxable year, the term "policy period" means with respect to such year each period of coverage under the contract if such period begins or ends with or within the taxable year, except that, if such period of coverage is more than one year, such term means such of the following periods as are applicable, each one of which is a policy period with respect to the taxable year:

(i) The one-year period which begins with the effective date of the contract and begins or ends with or within the taxable year,

(ii) The one-year period which begins with an anniversary of the contract and begins or ends with or within the taxable year, and

(iii) The period of less than one year if such period begins with an anniversary of the contract, ends with the date on which coverage under the contract terminates, and begins or ends with or within the taxable year.

For such purposes, the effective date of the contract is the date on which coverage under the contract begins, and the anniversary of the contract is the annual return of the effective date. The period of coverage under a contract is the period beginning with the effective date of the contract and ending with the date on which the coverage under the contract expires; except that, if the risk under the contract has been transferred by assumption reinsurance, the period of coverage shall end with the effective date of such transfer or, if the contract is canceled, with the effective date of cancellation. For this purpose, the term "assumption reinsurance" shall have the meaning provided by paragraph (a)(7)(ii) of § 1.809-5. The application of this subparagraph may be illustrated by the following examples:

Example 1. Controlled foreign corporation A issues to domestic corporation M an insurance contract which provides coverage for the $2^1/_2$ year period beginning on July 1, 1963. Corporation A uses the calendar year as the taxable year. For 1963, the policy period under such contract as to A Corporation is July 1, 1963, to June 30, 1964. For 1964, the policy periods under such contract as to A Corporation are July 1, 1963, to June 30, 1964, and July 1, 1964, to June 30, 1965. For 1965, the policy periods under such contract as to A Corporation are July 1, 1964, to June 30, 1965, and July 1, 1965, to December 31, 1965.

Example 2. The facts are the same as in example 1 except that M Corporation cancels the contract on August 31, 1963. For 1963, the policy period under such contract as to A Corporation is July 1, 1963, to August 31, 1963.

Example 3. The facts are the same as in example 1 except that on January 15, 1965, A Corporation cedes insurance under the contract to controlled foreign corporation B, which also uses the calendar year as the taxable year. For 1964, the policy periods under such contract as to A Corporation are July 1, 1963, to June 30, 1964, and July 1, 1964, to June 30, 1965. For 1965, the policy periods under such contract as to both A Corporation and B Corporation are July 1, 1964, to June 30, 1965, and July 1, 1965, to December 31, 1965.

Example 4. Controlled foreign corporation C, which uses the calendar year as the taxable year, issues to domestic corporation N an insurance contract which covers the marine risks in connection with shipping a machine to Europe. The contract does not specify the dates during which the machine is covered, but provides coverage from the time the machine is delivered alongside a named vessel in Hoboken, New Jersey, until the machine is delivered alongside such vessel in Liverpool, England. Such deliveries in New Jersey and England take place on February 1, and February 28, 1963, respectively. For 1963, the policy period under such contract as to C Corporation is February 1, to February 28, 1963.

(6) ***Foreign country.*** The term "foreign country" includes, where not otherwise expressly provided, a possession of the United States.

[T.D. 6781, 29 FR 18201, Dec. 23, 1964]

§ 1.953-2 Actual United States risks.

(a) ***In general.*** For purposes of paragraph (a) of § 1.953-1, the term "United States risks" means risks described in section 953(a)(1)(A)—

(1) In connection with property in the United States (as defined in paragraph (b) of this section),

(2) In connection with liability arising out of activity in the United States (as defined in paragraph (c) of this section), or

(3) In connection with the lives or health of residents of the United States (as defined in paragraph (d) of this section).

For purposes of section 953(a), the term "United States" is used in a geographical sense and includes only the States and the District of Columbia. Therefore, the reinsuring or the issuing of insurance or annuity contracts by a controlled foreign corporation in connection with property located in a foreign country or a possession of the United States, in connection with activity in a foreign country or a possession, or in connection with the lives or health of citizens of the United States who are not residents of the United States will not give rise to income to which paragraph (a) of § 1.953-1 applies, unless the income derived by the controlled foreign corporation from such contracts constitutes income derived in connection with risks which are deemed to be United States risks, as defined in § 1.953-3.

(b) ***Property in the United States.*** The term "property in the United States" means property, as defined in subparagraph (1) of this paragraph, which is in the United States, within the meaning of subparagraph (2) of this paragraph.

(1) ***Property defined.*** The term "property" means any interest of an insured in tangible (including real and personal) or intangible property. Such interests include, but are not limited to, those of an owner, landlord, tenant, mortgagor, mortgagee, trustee, beneficiary, or partner. Thus, for example, if insurance is issued against loss from fire and theft with respect to an insured's home and its contents, such risks are risks in connection with property, whether the insured is the owner or lessee and whether the contents include furniture or cash and securities. Furthermore, if insurance is issued against all risks of damage or loss with respect to the automobile of an insured, such risks are risks in connection with property, whether the risks insured against may be caused by the insured, another person, or natural forces.

(2) ***United States location*** —

(i) ***In general.*** Property will be considered property in the United States when it is exclusively located in the United States. Conversely, property will be considered property not in the United States when it is exclusively located outside the United States. In addition, property which is ordinarily located in, but temporarily located outside, the United States will be considered property in the United States both when it is ordinarily located in, and when it is temporarily located outside, the United States if the premium which is attributable to the reinsuring or issuing of any insurance contract in connection with such property cannot be allocated to, or apportioned between, risks incurred when such property is actually located in the United States and risks incurred when it is actually located outside the United States. If such premium can be so allocated or apportioned on a reasonable basis, however, such property will be considered property not in the United States when it is actually located outside the United States. However, property will not be considered property in the United States if it is neither property which is exclusively located in the United States nor property which is ordinarily located in, but temporarily located outside, the United States. The rules prescribed in subdivision (ii) of this subparagraph shall apply in determining whether a premium can be allocated or apportioned on a reasonable basis to or between risks incurred when property is actually located in the United States and risks incurred when such property is actually located outside the United States. The rules prescribed in subdivisions (iii) through (x) of this subparagraph shall apply in determining whether property is, or will be considered, exclusively located in or outside the United States and whether property is, or will be considered, ordinarily located in the United States; such rules also limit the rule of premium allocation and apportionment prescribed in this subdivision and subdivision (ii) of this subparagraph. The determinations required by this subparagraph shall be made with respect to the location of property during the policy period applicable to the taxable year of the insuring or reinsuring corporation, or, if more than one policy period exists with respect to such taxable year, such determinations shall be made separately with respect to the location of property during each such policy period.

(ii) ***Premium allocation or apportionment.*** Whether a premium can be allocated or apportioned on a reasonable basis to or between risks incurred when property is actually located in the United States and risks incurred when such property is actually located outside the United States shall depend on the intention of the parties to the insurance contract, as determined from its provisions and the facts and circumstances preceding its execution. Contract provisions on the basis of which the premium reasonably may be so allocated or apportioned include, but are not limited to, provisions which separately describe each risk covered, the period of coverage of each risk, the special warranties for each risk, the premium for each risk (or the basis for determining such premium), and the conditions of paying the premium for each risk. For purposes of this subdivision, it shall be unnecessary formally to make a separate policy with respect to each risk covered or with respect to each clause attached to the policy, provided that the intention of the parties to the contract is reasonably clear. For example, if in the ordinary course of carrying on an insurance business an insurance policy is issued which covers fire, theft, and water damage risks incurred when property is actually located in the United States and marine risks incurred when such property is actually located outside the United States and which, pursuant to accepted insurance principles, properly describes the premium rates as percentages of the amount of coverage as ".825% plus .3% fire, etc. risks plus .12% water risks = 1.245%", a reasonable basis exists to allocate a $124.50 premium paid for $10,000 of such coverage to $82.50 for foreign risks and $42.00 ($30.00 + $12.00) to United States risks.

(iii) ***Property in general—***

(a) ***Ordinary and temporary location.*** Except as otherwise provided in subdivisions (iv) through (x) of this subparagraph, the determination of whether property is ordinarily located in the United States will depend on all the facts and circumstances in each case. Property is ordinarily located in the United States if its location in the United States is regular, usual, or often occurring. However, in all cases property will be considered ordinarily located in the United States if it is actually located in the United States for an aggregate of more than 50 percent of the days in the applicable policy period whereas property will, under no circumstances, be considered ordinarily located in the United States if it is actually located in the United States for an aggregate of not more than 30 percent of the days in the applicable policy period. Property which is ordinarily located in the United States is temporarily located outside the United States when it is actually located outside the United States. For purposes of determining the number and percent of the days in an applicable policy period, the term "day" means, not any 24-consecutive-hour period, but a continuous period of twenty-four hours commencing from midnight and ending with the following midnight; in determining the location of property for such purposes, an amount of time which is at least one-half of such a day, but less than the entire day, shall be considered a day, and an amount of time which is less than one-half of such a day shall not be considered a day.

(*b*) ***Illustrations.*** The application of this subdivision may be illustrated by the following examples:

> ***Example 1.*** Controlled foreign corporation A issues to domestic corporation M a comprehensive blanket or floater insurance policy which, for one year, covers inventory samples which M Corporation regularly ships from the United States in order to encourage sales. Such shipments are made on the condition that they be returned to the United States within 5 days after they are received. During the one-year policy period, such samples are sent from, and returned to, the United States 50 times, and during such one-year period are actually located in the United States for an aggregate of 120 days. Since the location of the samples in the United States during such one-year period is often recurring, they are property ordinarily located in, but temporarily located outside, the United States. Therefore, they will be considered property in the United States even though for such one-year period their location in the United States is not regular or usual and is not for an aggregate of more than 50 percent of the days in the policy period. However, if, by considering such factors as the terms and premium schedule of the insurance contract as well as the number, value, and duration of the location in and outside the United States, of such samples, the premium which is attributable to the issuing of such contract can be allocated to, or apportioned between, risks occurring when such samples are actually located in the United States and risks occurring when they are actually located outside the United States, such samples will be considered property not in the United States when they are actually located outside the United States.

> ***Example 2.*** A machine, located for several years in a foreign branch of a United States manufacturer, is permanently transferred to the home office of such manufacturer, where it arrives on January 1, 1963, and remains for the remainder of 1963. Under a separate insurance contract issued by a controlled foreign corporation, which uses the calendar year as the taxable year, such machine is insured against damage for the

> three-year period commencing on May 1, 1962. Because of the change in location of the machine, the premiums are increased as of January 1, 1963. Since the machine is in the United States from January 1, 1963, to April 30, 1963, its location in the United States is regular and usual during the policy period of May 1, 1962, to April 30, 1963. Accordingly, the machine is ordinarily located in the United States for such policy period. However, since the premium which is attributable to the issuing of such contract is allocable to risks occurring when the machine is actually located in, and when it is actually located outside, the United States, such machine will be considered property not in the United States from May 1, 1962, through December 31, 1962.

(iv) ***Commercial motor vehicles, ships, aircraft, railroad rolling stock, and containers.*** Any motor vehicle, ship, aircraft, railroad rolling stock, or any container transported thereby, which is used exclusively in the commercial transportation of persons or property to or from the United States (including such transportation from one place to another in the United States) and is ordinarily located in the United States will be considered property in the United States both when such property is ordinarily located in, and when such property is temporarily located outside, the United States. Whether such property is used in the transportation of persons or property to or from the United States and is ordinarily located in the United States are issues to be determined from all the facts and circumstances in each case. However, in all cases such transportation property will be considered ordinarily located in the United States if either more than 50 percent of the miles traversed during the applicable policy period in the use of such property are traversed within the United States or such property is located in the United States more than 50 percent of the time during such period. Further, such transportation property will not at any time be considered property in the United States if either not more than 30 percent of the miles traversed during the applicable policy period in the use of such property are traversed within the United States or such property is located in the United States for not more than 30 percent of the time during such period. Nevertheless, if not more than 30 percent of the miles traversed during the applicable policy period in the use of such transportation property are traversed within the United States, such property will be considered ordinarily located in the United States if it is located in the United States more than 50 percent of the time during such period Moreover, if such transportation property is located in the United States for not more than 30 percent of the time during the applicable policy period, such property will be considered ordinarily located in the United States if more than 50 percent of the miles traversed during such period in the use of such property are traversed within the United States. If such transportation property is considered property in the United States because more than 50 percent of the miles traversed during the applicable policy period in the use of such property are traversed within the United States, the apportionment of premium provided in subdivision (i) of this subparagraph shall be made on a mileage basis. If, however, such property is considered property in the United States because such property is located in the United States more than 50 percent of the time during the applicable policy period, the apportionment of premium provided in subdivision (i) of this subparagraph shall be made on a time basis.

(v) ***Noncommercial motor vehicles, ships, aircraft, and railroad rolling stock.*** Except as provided in subdivision (iv) of this subparagraph, any motor vehicle, ship or boat, aircraft, or railroad rolling stock which at any time is actually located in the United States and which either (*a*) is registered with the United States, a State (including any political subdivision thereof), or any agency thereof or (*b*), if not so registered, is owned by a citizen, resident, or corporation of the United States will be considered property which is ordinarily located in the United States.

Unless the premium which is attributable to the reinsuring or issuing of any insurance contract in connection with such property considered ordinarily located in the United States is specifically allocated under the contract to risks incurred when such property is actually located in the United States and to risks incurred when it is actually located outside the United States, such property will be considered property in the United States both when it is ordinarily located in, and when it is temporarily located outside, the United States; under no circumstances will such property be considered outside the United States on the basis of any apportionment of such premium.

(vi) ***Property exported or imported by railroad or motor vehicle.*** Any property which is exported from, or imported to, the United States by railroad or motor vehicle will be considered property ordinarily located in the United States which, when such property is not actually located in the United States, is temporarily located outside the United States. For example, if an insurance contract reinsured or issued in connection with property exported from the United States by motor vehicle covers risks commencing when such property is loaded on the motor vehicle at the United States warehouse and terminating when such property is unloaded at the foreign warehouse, and if the premium payable with respect to risks incurred when the property is in the United States and risks incurred when the property is in the foreign country is not separately stated, such property will be considered property in the United States only until such property is actually located outside the United States, provided that the premium can be properly apportioned (for example) on the basis of time or mileage, between risks incurred when the property is actually located in the United States and risks incurred when it is actually located outside the United States. If in such case the premium is not so apportionable, such property will be considered property in the United States both when such property is ordinarily located in, and when it is temporarily located outside, the United States.

(vii) ***Property exported by ship or aircraft.*** If an insurance contract which is reinsured or issued in connection with property which is exported from the United States by ship or aircraft covers risks all of which terminate when such property is placed aboard a ship or aircraft at the United States port of exit for shipment from the United States, such property will be considered property in the United States. If such insurance contract covers risks all of which commence when such property is placed aboard a ship or aircraft at the United States port of exit for shipment from the United States, such property will be considered property not in the United States. If such insurance contract covers risks commencing before, and terminating after, such property is placed aboard a ship or aircraft at the United States port of exit for shipment from the United States, such property will be considered property ordinarily located in the United States which, after such property is placed aboard such ship or aircraft at the United States port of exit, is temporarily located outside the United States. The application of this subdivision may be illustrated by the following example:

Example. A controlled foreign corporation issues an insurance contract in connection with property exported from the United States by ship. The contract covers risks commencing after such property is removed from the United States warehouse and terminating when such property is unloaded at the foreign port of entry. Assuming that the premium payable with respect to the risks incurred before and the risks incurred after the property is placed aboard the ship at the United States port of exit for shipment from the United States or with respect to the steps in handling such property during such coverage, such as transporting the property to the United States port of exit, unloading the property there, placing the property aboard the ship, holding the property aboard the ship in port, the

actual voyage, and unloading the property at the foreign port of entry, is separately stated in, or is determinable from, such contract, the property will be considered property in the United States only until such property is placed aboard the ship at the United States port of exit for shipment from the United States. Assuming, however, that the premiums payable with respect to such steps, or with respect to the risks incurred before and the risks incurred after the property is placed aboard the ship at the United States port of exit, are not allocable or apportionable under the contract, such property will be considered property in the United States both before and after such property is placed aboard the ship at the United States port of exit.

(viii) ***Property imported by ship or aircraft.*** If an insurance contract which is reinsured or issued in connection with property which is imported to the United States by ship or aircraft covers risks all of which terminate when such property is unloaded at the United States port of entry, such property will be considered property not in the United States. If such insurance contract covers risks all of which commence after such property is unloaded at the United States port of entry, such property will be considered property in the United States. If such insurance contract covers risks commencing before, and terminating after, such property is unloaded at the United States port of entry, such property will be considered property ordinarily located in the United States which, before such property is unloaded at the United States port of entry, is temporarily located outside the United States. For an illustration pertaining to the allocation or apportionment of the premium, see the example in subdivision (vii) of this subparagraph.

(ix) ***Shipments originating and terminating in the United States.*** Any property which is shipped from one place in the United States to another place in the United States, on or over a foreign country, the high seas, or the coastal waters of the United States will be considered property actually located at all times in the United States. For example, property which is shipped from New York City to Los Angeles via the Panama Canal or from San Francisco to Hawaii or Alaska will be considered property actually located at all times in the United States.

(x) ***Shipments originating and terminating in a foreign country.*** Any property which is shipped by any means, or a combination of means, of transportation from one foreign country to another foreign country, or from a contiguous foreign country to the same contiguous foreign country, on or over the United States will be considered property exclusively located outside the United States. Notwithstanding the foregoing, any property which is shipped by any means, or a combination of means, of transportation from one contiguous foreign country to another contiguous foreign country on or over the United States will be considered property ordinarily located in the United States which, when such property is not actually located in the United States, is temporarily located outside the United States.

(c) ***Liability from United States activity.*** The term “liability arising out of activity in the United States” means a loss, as described in subparagraph (1) of this paragraph, or a liability, as described in subparagraph (2) of this paragraph, which could arise from activity performed in the United States, as defined in subparagraph (3) of this paragraph.

(1) ***Loss described.*** The term “loss” includes all loss of an insured which could arise from the occurrence of the event insured against except that such term does not include any loss in connection with property described in paragraph (b) of this section. For example, such term includes, in the case of a promoter of outdoor sporting events, the loss which could arise from the cancellation of such an event because of inclement weather.

(2) ***Liability described.*** The term "liability" includes all liability of an insured in tort, contract, property, or otherwise. It includes, for example, the liability of a principal for the acts of his agent, of a husband for the acts of his spouse, and of a parent for the acts of his child. The term not only includes the direct liability which may be incurred, for example, by a tortfeasor to the person harmed, but also the indirect liability which may be incurred, for example, by a manufacturer to the purchaser at retail for a breach of warranty.

(3) ***Activity in the United States*** —

(i) ***In general.*** A loss or liability will be considered a loss or liability which could arise from activity performed in the United States if the loss or liability would result, if at all, from an activity exclusively carried on in the United States. Conversely, a loss or liability will be considered a loss or liability which could not arise from activity performed in the United States if the loss or liability would result, if at all, from an activity exclusively carried on outside the United States. In addition, a loss or liability will be considered a loss or liability which could arise from activity performed in the United States if the loss or liability would result, if at all, from an activity ordinarily carried on in, but partly carried on outside, the United States. If the premium which is attributable to the reinsuring or issuing of any insurance contract in connection with an activity ordinarily carried on in, but partly carried on outside, the United States can, on a reasonable basis, be allocated to, or apportioned between, the risks incurred with respect to the activity carried on in, and the risks incurred with respect to the activity carried on outside, the United States, such loss or liability will be considered a loss or liability which could not arise from activity performed in the United States to the extent the loss or liability would result, if at all, from that activity carried on outside the United States. However, a loss or liability will not be considered a loss or liability which could arise from an activity performed in the United States if such loss or liability would result, if at all, from an activity which is neither exclusively carried on in the United States nor ordinarily carried on in, but partly carried on outside, the United States. The principles of paragraph (b)(2)(ii) of this section for allocating or apportioning a premium on a reasonable basis to or between risks incurred when property is actually located in the United States and risks incurred when such property is actually located outside the United States shall apply for allocating or apportioning a premium on a reasonable basis to or between the risks incurred with respect to the activity carried on in, and the risks incurred with respect to the activity carried on outside, the United States. The rules prescribed in subdivisions (ii) through (vi) of this subparagraph shall apply in determining whether an activity is, or will be considered, exclusively carried on in or outside the United States and whether an activity is, or will be considered, ordinarily carried on in the United States and in determining what is the activity which is performed by the insured from which a loss or liability results or could result; such rules also limit the rule of premium allocation and apportionment prescribed in this subdivision. The determinations required by this subparagraph shall be made with respect to the location of an activity of the insured performed during the policy period applicable to the taxable year of the insuring or reinsuring corporation, or, if more than one policy period exists with respect to such taxable year, such determinations shall be made separately with respect to the location of the activity during each such policy period.

(ii) ***Substantial activity carried on in the United States.*** The term "activity" is used in its broadest sense and includes the performance of an act unlawfully undertaken, the wrongful performance of an act lawfully undertaken, and the wrongful failure to perform an act lawfully required to be undertaken. With respect to a loss described in subparagraph (1) of this paragraph, the term "activity" includes the occurrence of the event insured against. The

determination of whether an activity ordinarily is carried on in, but is partly carried on outside, the United States will depend on all the facts and circumstances in each case. An activity ordinarily is carried on in the United States if a substantial amount of such activity is carried on in the United States. Factors which will be taken into account in determining whether a substantial amount of activity is carried on in the United States are those which are connected with the activity and include, but are not limited to, the location of the insured's assets, the place where personal services are performed, and the place where sales occur, but only if such assets, services, and sales are connected with the activity. In all cases an activity will be considered substantially carried on in the United States if more than 50 percent of the insured's total assets, personal services, and sales, if any, connected with such activity are located, performed, or occur in the United States. On the other hand, an activity will, under no circumstances, be considered substantially carried on in the United States if not more than 30 percent of the insured's total assets, personal services, and sales, if any, connected with such activity are located, performed, or occur in the United States. For this purpose, the mean of the value of the total assets at the beginning and end of the policy period shall be used, determined by taking assets into account at their actual value (not reduced by liabilities), which, in the absence of affirmative evidence to the contrary, shall be deemed to be

(*a*) face value in the case of bills receivable, accounts receivable, notes receivable, and open accounts held by an insured using the cash receipts and disbursements method of accounting and

(*b*) adjusted basis in the case of all other assets. Personal services shall be measured by the amount of compensation paid or accrued for such services, and sales shall be measured by the volume of gross sales. An activity is carried on partly outside the United States if it is carried on, whether substantially or in substantially, outside the United States.

(iii) ***Manufacturing, producing, constructing, or assembling activity.*** If a person who manufactures, produces, constructs, or assembles property is liable with regard to the consumption or use of such property, such liability will be considered to result from the activity performed of manufacturing, producing, constructing, or assembling such property. If such person manufactures, produces, constructs, or assembles more than one type of product, the liability with regard to the consumption or use of one of such products will be considered to result from the activity performed of manufacturing, producing, constructing, or assembling that particular product. For example, the liability of a building contractor, which constructs apartment buildings only in the United States, for the improper construction of, or the failure to construct, an apartment building, will be considered to result from an activity exclusively carried on in the United States and will be considered a liability which could arise from activity performed in the United States. In further illustration, the liability (which is covered by a single policy of insurance) of a domestic corporation, which assembles refrigerators exclusively in the United States and manufactures automobiles both in a foreign country and in the United States through substantial activity carried on in each of such countries, for the negligent manufacturing of a part for one of the automobiles by the foreign branch, will be considered to result from an activity ordinarily carried on in, but partly carried on outside, the United States and will be considered a liability which could arise from activity performed in the United States.

(iv) ***Selling activity.*** If a person is liable with regard to selling activity performed, such liability will be considered, except as provided in subdivisions (iii), (v), and (vi) of this subparagraph, to result from such selling activity. A person will be considered to be engaged in selling activity if such person engages in an activity resulting in the sale of property. Thus, it is immaterial that, under

the Code, such activity would not constitute engaging in or carrying on a trade or business in the country in which such activity is carried on, the property in the goods does not pass in such country, or delivery of the property is not made in such country. For example, if a foreign wholesale distributor, which manages its entire business operations in a foreign country and sells its inventory exclusively in the United States—its only contact in the United States being the promotion of such sales to United States retail outlets by advertising in trade publications and distributing sales catalogues—is liable for a breach of warranty with regard to the sale of property to a United States retail outlet, such liability will be considered to result from an activity exclusively carried on in the United States and will be considered a liability which could arise from activity performed in the United States.

(v) ***Liability from service or driving activity—***

(a) ***In general.*** If a person is liable with regard to any service activity performed, or is liable with regard to driving activity performed in connection with a motor vehicle, ship or boat, aircraft, or railroad rolling stock, whether or not exclusively used in the commercial transportation of persons or property, such liability will be considered to result from such service or driving activity. For example, if an oil company which drills for oil exclusively in a foreign country is liable with regard to the negligent handling by its employees of explosives in the course of such drilling there, such liability will be considered to result from an activity exclusively carried on outside the United States and will be considered a liability which could not arise from activity performed in the United States. In further illustration, if a corporation which services machinery exclusively in a foreign country under servicing contracts is liable with regard to the negligent repairing of a machine under such a contract, such liability will be considered to result from an activity exclusively carried on outside the United States and will be considered a liability which could not arise from activity performed in the United States.

(*b*) ***Location of activities in connection with transportation property.*** For purposes of (*a*) of this subdivision, service or driving activity performed in connection with a motor vehicle, ship or boat, aircraft, or railroad rolling stock, whether or not exclusively used in the commercial transportation of persons or property, will be considered activity performed in the United States if the activity is carried on at a time when such property is or will be considered, in accordance with subdivision (iv) or (v) of paragraph (b)(2) of this section, actually in the United States or ordinarily located in the United States. However, if the premium which is attributable to the reinsuring or issuing of any insurance contract in connection with such service or driving activity which is carried on at a time when such property is, or will be considered, ordinarily located in the United States can be allocated to, or apportioned between, the risks incurred when such property is actually located in the United States and risks incurred when it is actually located outside the United States, such liability will be considered a liability which could arise from activity performed in the United States only when such property is actually located in the United States. Any allocation or apportionment of premium under the preceding sentence shall be made in accordance with the rules of allocation and apportionment provided in subdivision (iv) or (v) of paragraph (b)(2) of this section. For example, if a person is liable with regard to the performance of services outside the United States in the operation of a motor vehicle which is used exclusively in the commercial transportation of persons to and from the United States and which, because more than 50 percent of the miles traversed during the applicable policy period in the use of such property are traversed within the United States,

is considered ordinarily located in the United States, such liability will be considered to be a liability which could not arise from activity performed in the United States only to the extent that the premium which is attributable to the reinsuring or issuing of any insurance contract in connection with such service activity is apportioned on a mileage basis between the risks incurred when such motor vehicle is actually located in the United States and when such vehicle is actually located outside the United States. See paragraph (b)(2)(iv) of this section. In further illustration, if a person is liable with regard to his negligent driving of a motor vehicle which is not used exclusively in the commercial transportation of persons or property, which is registered with any State, and which is driven both in the United States and a foreign country, such liability will be considered a liability which could arise from activity performed in the United States, unless the premium which is attributable to the reinsuring or issuing of an insurance contract in connection with such driving performed in such motor vehicle ordinarily located in the United States is specifically allocated under the contract to risks incurred with respect to driving performed in, and to risks incurred with respect to driving performed outside, the United States. See paragraph (b)(2)(v) of this section.

(c) ***Illustration.*** The application of this subdivision may be further illustrated by the following example:

> ***Example.*** Controlled foreign corporation A is a wholly owned subsidiary of domestic corporation M. Both corporations are insurance companies and use the calendar year as the taxable year. Corporation M is exclusively engaged in issuing to owners of commercial rental property which is located in the United States insurance contracts which cover any harm which may be caused in 1963 by the tortious conduct of the owners' employees in managing and maintaining such property. The owners insured under such contracts include both residents and nonresidents of the United States. In 1963, M Corporation cedes to A Corporation one-half of the insurance contracts issued by M Corporation in that year, including the contracts issued to nonresidents. Income of A Corporation derived in 1963 from reinsuring the risks of M Corporation is income from the insurance of United States risks since all the insurance contracts reinsured by it are in connection with a liability which could arise from service activity performed in the United States.

(vi) ***Liability from delivery of property.*** If the person who is obligated to deliver property is liable with regard to such delivery, such liability will be considered to result from the activity performed of delivering such property. For example, if a corporation which exports all of its inventory from the United States to foreign countries or possessions of the United States is liable with regard to its failure to make delivery outside the United States of inventory it has sold, such liability will be considered to result from an activity exclusively carried on outside the United States and will be considered a liability which could not arise from activity performed in the United States. In further illustration, if a corporation which exports all of its inventory from a foreign country to the United States is liable with regard to its improper delivery in the United States of inventory it has sold, such liability will be considered to result from an activity exclusively carried on in the United States and will be considered a liability which could arise from activity performed in the United States.

(d) ***Lives or health of United States residents.*** Risks in connection with the lives or health of residents of the United States include those risks which are the subject of insurance contracts referred to in section 801(a), relating to the definition of a life insurance company. If the insured is a resident of the United States at the time the insurance contract is approved, the risk is in connection with the life or health of a resident of the United States for the period of coverage under the contract. However, if during such period of coverage the insured notifies the insurer, or circumstances known to the insurer indicate, that the insured is no longer a resident of the United States, the risk shall cease to be a risk in connection with the life or health of a resident of the United States for the policy period in which the insured gives such notice or such circumstances are known to the insurer, and for each subsequent policy period. Conversely, if the insured is a resident of a particular foreign country at the time the insurance contract is approved, the risk is in connection with the life or health of a resident of such foreign country for the period of coverage under the contract. However, if during such period of coverage the insured notifies the insurer, or circumstances known to the insurer indicate, that the insured is no longer a resident of such foreign country, the risk shall cease to be a risk in connection with the life or health of a resident of such particular foreign country for the policy period in which the insured gives such notice or such circumstances are known to the insurer, and for each subsequent policy period. In determining the country of residence of an insured, the principles of §§ 301.7701(b)-1 through 301.7701(b)-9 of this chapter, relating to the determination of residence and nonresidence in the United States and of foreign residence, shall apply. Citizens of the United States are not residents of the United States merely because of their citizenship. The application of this paragraph may be illustrated by the following example:

Example. Controlled foreign corporation A is a wholly owned subsidiary of domestic corporation M. Corporation A uses the calendar year as the taxable year and is engaged in the life insurance business in foreign country X. In 1963, A Corporation issues ordinary life insurance contracts on the lives of residents of the United States, including one issued on February 1, 1963, to R, a citizen of foreign country Y and a resident of the United States on such date. All activity in connection with the issuing of such contracts is transacted by mail. On May 1, 1963, R abandons his United States residence and establishes residence in foreign country Z. There are no circumstances known to A Corporation that R has changed his residence until R, on March 1, 1964, actually notifies A Corporation of that change. Income of A Corporation for the policy period of February 1, 1963, to January 31, 1964, from issuing such insurance contracts is income derived from the insurance of United States risks. However, income of A Corporation derived for the policy period of February 1, 1964, to January 31, 1965, from R's insurance contract is not income derived from the insurance of United States risks.

(Secs. 913(m) (92 Stat. 3106; 26 U.S.C. 913(m)), and 7805 (68A Stat. 917; 26 U.S.C. 7805), Internal Revenue Code of 1954)

[T.D. 6781, 29 FR 18202, Dec. 23, 1964, as amended by T.D. 7736, 45 FR 76143, Nov. 18, 1980; T.D. 8411, 57 FR 15241, Apr. 27, 1992]

§ 1.953-3 Risks deemed to be United States risks.

(a) ***Artificial arrangements.*** For purposes of paragraph (a) of § 1.953-1, the term “United States risks” also includes under section 953(a)(1)(B) risks which are deemed to be United States risks. They are risks (other than United States risks described in section 953(a)(1)(A) and § 1.953-2) which a controlled foreign corporation reinsures under an insurance or annuity contract, or with respect to which a controlled foreign corporation issues any insurance or annuity contract, in accordance with any arrangement whereby another corporation which is not a controlled foreign corporation receives an amount of premiums (for reinsuring or issuing any insurance or annuity contract in connection with the United States risks

described in section 953(a)(1)(A) and § 1.953-2) which is substantially equal to the amount of premiums which the controlled foreign corporation receives under its contracts. Arrangements to which this rule applies include those entered into by the controlled foreign corporation, by its United States shareholders, or by a related person.

(b) ***Evidence of arrangements.*** The determination of the existence of an arrangement referred to in paragraph (a) of this section shall depend on all the facts and circumstances in each case. In making this determination, it will be recognized that arrangements of this type generally are orally entered into outside the United States and that direct evidence of such an arrangement is not ordinarily available. Therefore, in determining the existence of such an arrangement, consideration will be given to whether or not there is substantial similarity between the type, location, profit margin expected, and loss experience of the risks which the corporation which is not a controlled foreign corporation insures or reinsures and the risks which the controlled foreign corporation insures or reinsures. Further, consideration will be given to the existence of prior similar arrangements between, and the identity of the directors or shareholders of, the corporation which is not a controlled foreign corporation, its shareholders, or related persons and the controlled foreign corporation, its shareholders, or related persons. However, the absence of such prior arrangements or identity of directors or shareholders will not of itself establish the nonexistence of an arrangement referred to in paragraph (a) of this section. In determining whether the amounts received by the controlled foreign corporation and the corporation which is not a controlled foreign corporation are substantially equal, the period in which the controlled foreign corporation receives premiums need not be the same as, or identical in length with, that of the corporation which is not a controlled foreign corporation nor limited to a taxable year of the controlled foreign corporation.

(c) ***Illustrations.*** The application of this section may be illustrated by the following examples:

Example 1. Controlled foreign corporation A is a wholly owned subsidiary of domestic corporation M. Foreign corporation B is a wholly owned subsidiary of foreign corporation R. All corporations use the calendar year as the taxable year. Corporations M and R, which are not related persons, agree that from July 1, 1963, through December 31, 1963, B Corporation will reinsure all risks of M Corporation which are United States risks described in section 953(a)(1)(A), and that from January 1, 1964, through June 30, 1964, A Corporation will reinsure all risks of R Corporation which are not United States risks described in section 953(a)(1)(A). The amount of premiums received by A Corporation and B Corporation, respectively, as a result of the agreement are substantially equal. The income of A Corporation derived in 1964 from reinsuring the risks of R Corporation is income derived from the insurance of United States risks described in section 953(a)(1)(B).

Example 2. Assume the same facts as in example 1, except that M and R Corporations also agree, as part of their arrangement, that from July 1, 1964, through December 31, 1964, B Corporation will reinsure all risks of M Corporation which are United States risks described in section 953(a)(1)(A), and that from January 1, 1965, through June 30, 1965, A Corporation will reinsure all risks of R Corporation which are not United States risks described in section 953(a)(1)(A). The amount of premiums derived by B Corporation from July 1, 1963, through December 31, 1963, under the agreement is not substantially equal to the amount of premiums derived by A Corporation from January 1, 1964, through June 30, 1964, and the amount of premiums derived by B Corporation from July 1, 1964, through December 31, 1964, is not substantially equal to the amount of premiums derived by A Corporation from January 1, 1965, through June 30, 1965. However, the aggregate amount of premiums received by B Corporation under the arrangement is substantially equal to the aggregate amount of premiums received by A Corporation. The income of A Corporation derived in 1964 and 1965 from reinsuring the risks of R Corporation is income derived from the insurance of United States risks described in section 953(a)(1)(B).

Example 3. Assume the same facts as in example 1, except that foreign corporation C is also a wholly owned subsidiary of R Corporation. Assume that C Corporation uses the calendar year as its taxable year. Assume further that M Corporation and R Corporation agree that from July 1, 1963, through December 31, 1963, B Corporation and C Corporation together will reinsure the United States risks described in section 953(a)(1)(A) of M Corporation. The amount of premiums received by B Corporation in respect of such United States risks is equal to one-third of the amount received by A Corporation in respect of the risks which are not United States risks described in section 953(a)(1)(A), and the amount of premiums received by C Corporation in respect of such United States risks is equal to two-thirds of the amount so received by A Corporation. The income of A Corporation derived in 1964 from reinsuring the risks of R Corporation is income derived from the insurance of United States risks described in section 953(a)(1)(B).

Example 4. Assume the same facts as in example 3, except that controlled foreign corporation D is also a wholly owned subsidiary of M Corporation and uses the calendar year as its taxable year. Assume further that M Corporation and R Corporation agree that in 1964 R Corporation will pay premiums of $300,000 to A Corporation and $700,000 to D Corporation to reinsure all risks of R Corporation which are not United States risks described in section 953(a)(1)(A), and that in 1963 M Corporation will pay premiums of $400,000 to B Corporation and $600,000 to C Corporation to reinsure all risks of M Corporation which are United States risks described in section 953(a)(1)(A). The income of A Corporation and D Corporation derived in 1964 from reinsuring the risks of R Corporation is income derived from the insurance of United States risks described in section 953(a)(1)(B).

Example 5. Controlled foreign corporation A is a wholly owned subsidiary of domestic insurance corporation M. Controlled foreign corporation B is a wholly owned subsidiary of domestic insurance corporation N. All corporations use the calendar year as the taxable year. As a result of an arrangement between M Corporation and N Corporation, in 1963 A Corporation reinsures all the United States risks described in section 953(a)(1)(A) of N Corporation, and B Corporation reinsures all the United States risks described in section 953(a)(1)(A) of M Corporation. The premiums and other consideration received by A Corporation and B Corporation in respect of such reinsurance are not substantially equal. The income of A Corporation and B Corporation in 1962 from reinsuring the risks of N Corporation and M Corporation, respectively, is income derived from the insurance of United States risks described in section 953(a)(1)(A) and is not income derived from the insurance or United States risks described in section 953(a)(1)(B).

Example 6. Assume the same facts as in example 5, except that B Corporation is not a controlled foreign corporation. The income of A Corporation in 1963 from reinsuring the risks of N Corporation is income derived from the insurance of United States risks described in section 953(a)(1)(A) and is not income derived from the insurance of United States risks described in section 953(a)(1)(B).

[T.D. 6781, 29 FR 18207, Dec. 23, 1964]

§ 1.953-4 Taxable income to which section 953 applies.

(a) ***Taxable income defined*** —

(1) ***Life insurance taxable income.*** For a controlled foreign corporation which is engaged in the business of reinsuring or issuing insurance or annuity contracts and which, if it were a domestic corporation engaged only in such business, would be taxable as a life insurance company to which part I (sections 801 through 820) of subchapter L of the Code applies, the term "taxable income" means for purposes of paragraph (a) of § 1.953-1 the gain from operations, as defined in section 809(b) and as modified by this section, derived from, and attributable to, the insurance of United States risks.

For purposes of determining such taxable income, the provisions of section 802(b) (relating to the definition of life insurance company taxable income) shall not apply. Determinations for purposes of this subparagraph shall be made without regard to section 501(a).

(2) ***Mutual and other insurance taxable income.*** For a controlled foreign corporation which is engaged in the business of reinsuring or issuing insurance or annuity contracts and which, if it were a domestic corporation engaged only in such business, would be taxable as a mutual insurance company to which part II (sections 821 through 826) of subchapter L of the Code applies or a mutual marine insurance or other insurance company to which part III (sections 831 and 832) of subchapter L of the Code applies, the term "taxable income" means for purposes of paragraph (a) of § 1.953-1 taxable income, as defined in section 832(a) and as modified by this section, derived from, and attributable to, the insurance of United States risks. Determinations for purposes of this subparagraph shall be made without regard to section 501(a).

(3) ***Corporations not qualifying as insurance companies.*** For special rules applicable under this section in the case of a controlled foreign corporation which, if it were a domestic corporation, would not qualify as an insurance company, see § 1.953-5.

(b) ***Certain provisions inapplicable.*** In determining taxable income under this section, the following provisions of subchapter L of the Code shall not apply:

(1) Section 809(d)(4), relating to the operations loss deduction;

(2) Section 809(d)(5), relating to certain nonparticipating contracts;

(3) Section 809(d)(6), relating to certain accident and health insurance and group life insurance;

(4) Section 809(d)(10), relating to small business deduction;

(5) Section 817(b), relating to gain on property held on December 31, 1958, and certain substituted property acquired after 1958; and

(6) Section 832(c)(5), relating to capital losses.

(c) ***Computation of reserves required by law —***

(1) ***Law applicable in determining reserves.*** The reserves which will be taken into account as reserves required by law under section 801(b)(2), both in determining for any taxable year whether a controlled foreign corporation is a controlled foreign corporation described in paragraph (a)(1) or (2) of this section and in determining taxable income of such corporation for the taxable year under paragraph (a) of this section, shall be the following reserves:

(i) ***Reserves required by the law of a State.*** The reserves which are required by the law of the State or States to which the insurance business of the controlled foreign corporation is subject, but only with respect to its United States business, if any, which is taxable under section 819(a).

(ii) ***Reserves deemed to be required.*** To the extent of such controlled foreign corporation's insurance business not taxable under section 819(a)—

(*a*) Except as provided in (*b*) of this subdivision (ii), the reserves which would result if such reserves were determined by applying the minimum standards of the law of New York as if such controlled foreign corporation were an insurance company transacting all of its insurance business (other than its United States business which is taxable under section 819(a)) for such taxable year in such State, and

(*b*) With respect to all risks covered by insurance ceded to such controlled foreign corporation by an insurance company to which apply the provisions of subchapter L of the Code (determined without regard to section 501(a)) and in respect of which an election is made by or on behalf of such controlled foreign corporation to determine its reserves in accordance with this subdivision (b), the amount of reserves against such risks which would result if all of such reserves were determined by applying the law of the State, to which the risks in the hands of such insurance company are subject, as if such controlled foreign corporation were an insurance company engaged in reinsuring such risks in such State.

(2) ***Rules of application.*** For purposes of subparagraph (1) of this paragraph, the following rules shall apply:

(i) ***Life insurance reserves computed on preliminary term basis.*** For purposes of determining under paragraph (a) of this section the taxable income of a controlled foreign corporation, an election may be made by or on behalf of such corporation that the amount of reserves which are taken into account as life insurance reserves with respect to contracts for which reserves are computed on a preliminary term basis shall be determined as provided in section 818(c). This election shall apply, subject to section 818(c), to all life insurance reserves of the controlled foreign corporation, whether or not reserves applicable to the United States business taxable under section 819(a). However, reserves determined as provided in section 818(c) shall not be taken into account in determining whether a controlled foreign corporation is a controlled foreign corporation described in paragraph (a)(1) or (2) of this section.

(ii) ***Actual reserves required.***

(*a*) A controlled foreign corporation will be considered to have a reserve only to the extent the reserve has been actually held during the taxable year for which such reserve is claimed.

(*b*) For determining when reserves are required by the law of a State, see paragraph (b) of § 1.801-5 of this chapter.

(iii) ***Total reserves to be taken into account.*** The total reserves of a controlled foreign corporation shall be taken into account in determining whether such corporation is a controlled foreign corporation described in paragraph (a)(1) or (2) of this section. Therefore, in making such determination, the reserves which, under subparagraph (1)(i) of this paragraph, are required by the law of any State shall be taken into account together with the reserves which, under subparagraph (1)(ii) of this paragraph, are deemed to be required. Moreover, reserves applicable to the reinsuring or the issuing of insurance or annuity contracts of both United States risks and foreign risks shall be taken into account. Finally, except as provided in subdivision (i) of this subparagraph, the reserves which are taken into account in determining whether a controlled foreign corporation is a controlled foreign corporation described in paragraph (a)(1) or (2) of this section shall be the same reserves which are taken into account in determining under paragraph (a) of this section the taxable income of such corporation.

(iv) ***Method of comparing reserves when subject to more than one State.*** If the insurance business of a controlled foreign corporation is subject to the law of more than one State, the amount of reserves taken into account under subparagraph (1)(i) of this paragraph shall be the amount of the highest aggregate reserve required by any State, determined as provided in paragraph (a) of § 1.801-5 of this chapter.

(d) ***Domestic corporation tax attributes.*** In determining taxable income of a controlled foreign corporation under this section there shall be allowed, except as provided in section 953(b), this section, and § 1.953-5, the exclusions and deductions from gross income which would be allowed if such corporation were a domestic insurance company engaged in the business of only reinsuring or issuing the insurance or annuity contracts which have been reinsured or issued by such corporation. For this purpose, the provisions of sections 819, 821(e), 822(e), 831(b), and 832(d), relating to foreign insurance companies, shall not apply; however, for the exclusion from the taxable income determined under section 953 of amounts derived from sources within the United States, see section 952(b) and paragraph (b) of § 1.952-1. Furthermore, taxable income shall be determined under this section without regard to section 882 (b) and (c), relating to gross income and deductions of a foreign corporation, and without regard to whether the controlled foreign corporation is carrying on an insurance business in the United States. For other rules relating to the determination of gross income and taxable income of a foreign corporation for purposes of subpart F, see § 1.952-2.

(e) ***Limitation on certain amounts in respect of United States risks.*** In determining taxable income under this section the following amounts shall not, in accordance with section 953(b)(4), be taken into account except to the extent they are attributable to the reinsuring or issuing of any insurance or annuity contract in connection with United States risks described in § 1.953-2 or § 1.953-3:

(1) The amount of premiums determined under section 809(c)(1);

(2) The net decrease in reserves determined under section 809(c)(2);

(3) The net increase in reserves determined under section 809(d)(2); and

(4) The premiums earned on insurance contracts during the taxable year, as determined under section 832(b)(4). For the allocation and apportionment of such amounts to income from the insurance of United States risks, see paragraphs (f) and (g) of this section.

(f) ***Items allocated or apportioned*** —

(1) ***Rules of allocation or apportionment.*** In determining taxable income under this section, first determine all items of income, expenses, losses, and other deductions which directly relate to the premiums received for the reinsuring or the issuing of any insurance or annuity contract in connection with United States risks, as defined in §§ 1.953-2 and 1.953-3, and allocate such items to the insurance of United States risks. For example, the deductions allowed by section 809(d)(1), relating to death benefits, section 809(d)(3), relating to dividends to policyholders, and section 809(d)(7), relating to the assumption by another person of liabilities under insurance contracts, shall be allocated to the insurance of United States risks to the extent they relate directly to the premiums received for reinsuring or issuing insurance or annuity contracts in connection with United States risks. Next, determine all items of income, expenses, losses, and other deductions which directly relate to the premiums received for the reinsuring or the issuing of any insurance or annuity contract in connection with foreign risks and allocate such items to the reinsuring of foreign risks. Finally, determine all items of income, expenses, losses, and other deductions which relate to the premiums received for the reinsuring or the issuing of any insurance or annuity contract in connection with both United States risks and foreign risks, and, except as provided in paragraph (g) of this section, apportion such items between the insurance of United States risks and the insurance of foreign risks in the manner prescribed in subparagraph (2) or (3) of this paragraph, as the case may be. As used in this section, the term “foreign risks” means risks which are not United States risks as defined in § 1.953-2 or § 1.953-3.

(2) ***Method of apportionment in determination of life insurance taxable income*** —

(i) ***Investment yield and net long-term capital gain.*** Unless they can be allocated to the insurance of United States risks, as provided in subparagraph (1) of this paragraph, in determining a controlled foreign corporation's taxable income for any taxable year under paragraph (a)(1) of this section—

(*a*) The investment yield under section 804(c),

(*b*) The amount (if any) under section 809(b)(1)(B) by which the net long-term capital gain exceeds the net short-term capital loss, and

(*c*) Those deductions allowed under section 809(d)(8), (9), and (12) which relate to gross investment income shall be apportioned to the reinsuring and issuing of insurance and annuity contracts in connection with United States risks in an amount which bears the same ratio to each of such amounts of investment yield, excess gain, and deductions as the sum of the mean of each of the items described in section 810(c) at the beginning and end of the taxable year attributable to reinsuring and issuing any insurance and annuity contracts in connection with United States risks bears to the sum of the mean of each of the items described in section 810(c) at the beginning and end of the taxable year attributable to reinsuring and issuing all insurance and annuity contracts. Thus, for example, if the ratio which the sum of the mean of each of the items described in section 810(c) at the beginning and end of the taxable year attributable to reinsuring and issuing insurance and annuity contracts in connection with United States risks bears to the sum of the mean of each of the items described in section 810(c) at the beginning and end of the taxable year attributable to reinsuring and issuing all insurance and annuity contracts in one to three, then, unless an allocation to the insurance of United States risks can be made as provided in subparagraph (1) of this paragraph, one-third of each of such amounts of investment yield, excess gain, and deductions shall be apportioned to the reinsuring and issuing of insurance and annuity contracts in connection with United States risks, and two-thirds of each of such amounts shall be apportioned to the reinsuring and issuing of insurance and annuity contracts in connection with foreign risks.

(ii) ***Other income and deductions—***

(a) ***Amount taken into account.*** In determining a controlled foreign corporation's taxable income for any taxable year under paragraph (a)(1) of this section, all items of income taken into account under section 809(c)(3), relating to other amounts of gross income, and the other deductions allowed under section 809(d)(12) to the extent that such other deductions do not relate to gross investment income shall be apportioned to the reinsuring and issuing of insurance and annuity contracts in connection with United States risks in an amount which bears the same ratio to each of such items of income or of such other deductions as the numerator determined under (*b*) of this subdivision bears to the denominator determined under (*c*) of this subdivision.

(*b*) ***Numerator.*** The numerator used for purposes of the apportionment under (*a*) of this subdivision shall be an amount which equals the amount determined under (*c*) of this subdivision, but only to the extent that the amount so determined is taken into account under paragraph (e) of this section in determining taxable income for the taxable year.

(*c*) ***Denominator.*** The denominator used for purposes of the apportionment under (*a*) of this subdivision shall be an amount which equals—

(*1*) The amount of premiums determined under section 809(c)(1) for the taxable year, plus

(*2*) The net decrease in reserves determined under section 809(c)(2) for such year, minus

(*3*) The net increase in reserves determined under section 809(d)(2) for such year.

(iii) ***Reserves used in apportionment formula.*** The rules for determining which reserves are taken into account in determining the taxable income of a controlled foreign corporation under paragraph (a) of this section shall also apply under subdivision (ii) (*b*) and (*c*) of this subparagraph in determining the net decrease in reserves under section 809(c)(2) or the net increase in reserves under section 809(d)(2). See paragraph (c) of this section.

(3) ***Method of apportionment in determination of mutual and other insurance income*** —

(i) ***In general.*** In determining a controlled foreign corporation's taxable income for any taxable year under paragraph (a)(2) of this section, any item which is required to be apportioned under subparagraph (1) of this paragraph shall be apportioned to the reinsuring and issuing of insurance and annuity contracts in connection with United States risks in an amount which bears the same ratio to the total amount of such item as the amount of premiums earned on insurance contracts during the taxable year which is required to be taken into account by such corporation under paragraph (e)(4) of this section in determining such taxable income bears to the total amount of all its premiums earned (as determined under section 832(b)(4)) on insurance contracts during the taxable year.

(ii) ***Reserves used in apportionment formula.*** The principles of subparagraph (2)(iii) of this paragraph shall apply in determining the reserves included in premiums earned on insurance contracts during the taxable year for purposes of subdivision (i) of this subparagraph.

(g) ***Separate accounting.*** The methods of apportionment prescribed in subparagraphs (2) and (3) of paragraph (f) of this section for determining taxable income under this section shall not apply if the district director determines that the controlled foreign corporation, in good faith and unaffected by considerations of tax liability, regularly employs in its books of account a detailed segregation of receipts, expenditures, assets, liabilities, and net worth which clearly reflects the income derived from the reinsuring or issuing of insurance or annuity contracts in connection with United States risks. The district director, in making such determination, shall give effect to any foreign law, satisfactory evidence of which is presented by the United States shareholder to the district, director, which requires a reasonable segregation of those items of income, expense, losses, and other deductions which relate to determining such taxable income.

(h) ***Illustration.*** The application of paragraphs (e) and (f) of this section may be illustrated by the following example:

> *Example.* Controlled foreign corporation A, incorporated under, and engaged in an insurance business subject to, the laws of foreign country X, is a wholly owned subsidiary of domestic corporation M. Both corporations use the calendar year as the taxable year. Corporation M is a life insurance company as defined in section 801(a); A Corporation would, if it were a domestic corporation, be taxable under part I of subchapter L of the Code. In 1963, A Corporation derives income from the insurance of United States risks as a result of reinsuring the life insurance policies issued by M Corporation on lives of residents of the

United States. In 1963, A Corporation also issues policies of life insurance on individuals who are not residents of the United States, but its premiums from the reinsuring of United States risks exceed he 5-percent minimum premium requirement prescribed in paragraph (b) of § 1.953-1. Based upon the facts set forth in paragraph (a) of this example, A Corporation for 1963 has taxable income under this section of $40,200, which is attributable to the reinsuring of life insurance contracts in connection with United States risks, determined in the manner provided in paragraphs (b), (c), and (d) of this example.

(a) A summary of the entire operations of A Corporation for 1963, determined under this section as though such corporation were a domestic life insurance company but without applying paragraph (f) of this section, is as follows:

Item	Attributable to all insurance	Attributable to reinsuring U.S. risks	Attributable to insuring foreign risks
Investment Income:			
(1) Investment yield under section 804(c)	$90,000	Unallocable	Unallocable
(2) Sum of the mean of each of the items described in section 810(c) at beginning and end of 1963	2,500,000	$1,000,000	$1,500,000
(3) Required interest under section 809(a)(2)	60,000	25,000	35,000
(4) Deductions allowed under section 809(d)(8), (9), and (12) which relate to gross investment income	10,000	Unallocable	Unallocable
Underwriting Income:			
(5) Premiums under section 809(c)(1)	600,000	200,000	400,000
(6) Net decrease in reserves under section 809(c)(2)	10,000	None	10,000
(7) Net increase in reserves under section 809(d)(2)	40,000	40,000	None
(8) Deductions allowed under section 809(d) (other than deduction allowed under section 809(d)(2) and other than those deductions allowed under section 809(d)(8), (9), and (12) which relate to gross investment income):			
(i) Allocable	330,000	110,000	220,000
(ii) Unallocable	60,000	Unallocable	Unallocable

(b) The unallocable investment yield ($90,000) under paragraph (a)(1) of this example and the unallocable deductions ($10,000) under paragraph (a)(4) relating to gross investment income are apportioned to the reinsuring of United States risks under paragraph (f)(1)(i) of this section in the amounts of $36,000, and

$4,000, respectively, determined as follows:

(1) Sum of the mean of each of the items described in section 810(c) at beginning and end of 1963, attributable to reinsuring U.S. risks (paragraph (a)(2))	$1,000,000
(2) Sum of the mean of each of the items described in section 810(c) at beginning and end of 1963, attributable to all insurance (paragraph (a)(2))	$2,500,000
(3) Ratio of amount under subparagraph (1) to amount under subparagraph (2) ($1,000,000/$2,500,000)	40%
(4) Amount of investment yield attributable to reinsuring of U.S. risks (40% of $90,000)	$36,000
(5) Amount of such deductions attributable to reinsuring of U.S. risks (40% of $10,000)	$4,000

(c) The unallocable deductions ($60,000) under paragraph (a)(8)(ii) of this example which do not relate to gross investment income are apportioned to the reinsuring of United States risks under paragraph (f)(2)(ii) of this section in the amount of $16,800, determined as follows:
(1) The numerator determined under paragraph (f)(2)(ii)(*b*) of this section is $160,000, determined as follows:

(i) Premiums under section 809(c)(1) attributable to reinsuring U.S. risks (paragraph (a)(5))	$200,000	
(ii) Plus: Net decrease in reserves under section 809(c)(2) attributable to reinsuring U.S. risks (paragraph (a)(6))		$200,000
(iii) Less: Net increase in reserves under section 809(d)(2) attributable to reinsuring U.S. risks (paragraph (a)(7))		$40,000
		$160,000

(2) The denominator determined under paragraph (f)(2)(ii)(c) of this section is $570,000, determined as follows:

(i) Premiums under section 809(c)(1) attributable to all insurance (paragraph (a)(5))	$600,000	
(ii) Plus: Net decrease in reserves under section 809(c)(2) attributable to all insurance (paragraph (a)(6))	10,000	
		$610,000
(iii) Less: Net increase in reserves under section 809(d)(2) attributable to all insurance (paragraph (a)(7))		40,000

$570,000

(3) Ratio which the numerator determined under subparagraph (1) bears to the denominator determined under subparagraph (2) ($160,000/$570,000)—28%.
(4) Amount of deductions attributable to reinsuring of U.S. risks (28% of $60,000)—$16,800.

(d) The taxable income of A Corporation for 1963 which constitutes its income derived from the insurance of United States risks for purposes of paragraph (a) of § 1.953-1 is $40,200, determined as follows:

	Attributable to all insurance		Attributable to reinsuring U.S. risks		Attributable to insuring foreign risks	
Item:						
(1) Investment yield under section 804(c) (paragraph (a)(1), unallocable but as apportioned under paragraph (b)(4)	$90,000		$36,000		$54,000	
(2) Less: Required interest under section 809(a)(2) (paragraph (a)(3))	60,000		25,000		35,000	
(3) Life insurance company's share of investment yield under section 809(b)(1)(A)		$30,000		$11,000		$19,000
Plus sum of:						
(4) Premiums under section 809(c)(1) (paragraph (a)(5))	600,000		200,000		400,000	
(5) Net decrease in reserves under section 809(c)(2) (paragraph (a)(6))	10,000	610,000	None	200,000	10,000	410,000
Sum determined under section 809(b)(1)		640,000		211,000		429,000
Less sum of:						
(6) Net increase in reserves under section 809(d)(2) (paragraph (a)(7))	40,000		40,000		None	
(7) Deductions allowed under section 809(d)(8), (9), and (12) which relate to gross investment income (paragraph (a)(4)), unallocable but as apportioned under paragraph (b)(5)	10,000		4,000		6,000	
(8) Deductions allowed under section 809(d) (other than deduction allowed under section 809(d)(2) and other than those deductions allowed under						

	Attributable to all insurance		Attributable to reinsuring U.S. risks		Attributable to insuring foreign risks	
section 809(d)(8), (9), and (12) which relate to gross investment income) (paragraph (a)(8)):						
(i) Allocable	330,000		110,000		220,000	
(ii) Unallocable, but as apportioned under paragraph (c)(4)	60,000	440,000	16,800	170,800	43,200	269,200
Gain from operations		200,000		40,200		159,800

[T.D. 6781, 29 FR 18207, Dec. 23, 1964]

§ 1.953-5 Corporations not qualifying as insurance companies.

(a) ***In general.*** A controlled foreign corporation is not excluded from the application of paragraph (a) of § 1.953-1 because such corporation, if it were a domestic corporation, would not be taxable as an insurance company to which subchapter L of the Code applies. Thus, if a controlled foreign corporation reinsures or issues insurance or annuity contracts in connection with United States risks, as defined in § 1.953-2 or § 1.953-3, and satisfies the 5-percent minimum premium requirement prescribed in paragraph (b) of § 1.953-1, such corporation may derive income from the insurance of United States risks even though the primary and predominant business activity of such corporation during the taxable year is not the issuing of insurance or annuity contracts or the reinsuring of risks underwritten by insurance companies.

(b) ***Income from insurance of United States risks by noninsurance company.*** For purposes of paragraph (a) of § 1.953-1, the taxable income derived from the reinsuring or the issuing of any insurance or annuity contract in connection with United States risks by a controlled foreign corporation which, if it were a domestic corporation, would not be taxable as an insurance company to which subchapter L of the Code applies shall be determined under § 1.953-4, subject to, and to the extent not inconsistent with, the special rules prescribed in paragraph (c) or (d) of this section, whichever applies.

(c) ***Special rules in determining taxable income*** —

(1) ***In general.*** The rules prescribed in this paragraph apply in order to exclude from the determination under § 1.953-4 of the taxable income described in paragraph (b) of this section those items of the controlled foreign corporation's gross income and deductions which are not attributable to the reinsuring and issuing of insurance and annuity contracts.

(2) ***Life insurance taxable income*** —

(i) ***Amount of investment yield taken into account.*** For purposes of determining the taxable income of a controlled foreign corporation which would not be taxable as an insurance company to which subchapter L of the Code applies if it were a domestic corporation but would be taxable as an insurance company to which part I of such subchapter applies if it were a domestic insurance company engaged in the business of only reinsuring or issuing the insurance or annuity contracts which have been reinsured or issued by such corporation, the investment yield under section 804(c), the amount (if any) by which the net long-term capital gain exceeds

the net short-term capital loss, and all items of income taken into account under section 809(c)(3) shall be taken into account, subject to the provisions of paragraphs (e) and (f) of § 1.953-4, in an amount which bears the same ratio to each of such amounts of investment yield, excess gain, and income items, as the case may be, as the numerator determined under subdivision (ii) of this subparagraph bears to the denominator determined under subdivision (iii) of this subparagraph.

(ii) ***Numerator.*** The numerator used for purposes of the apportionment under subdivision (i) of this subparagraph shall be the sum of—

(*a*) The mean of each of the items described in section 810(c) at the beginning and end of the taxable year, determined in accordance with the rules prescribed in paragraph (c) of § 1.953-4 for purposes of determining taxable income of a controlled foreign corporation under paragraph (a) of § 1.953-4,

(*b*) The mean of other liabilities at the beginning and end of the taxable year which are attributable to the reinsuring and issuing of insurance and annuity contracts, and

(*c*) The mean of the earnings and profits accumulated by the controlled foreign corporation at the beginning and end of the taxable year (determined without diminution by reason of any distributions made during the taxable year) which are attributable to the reinsuring and issuing of insurance and annuity contracts.

(iii) ***Denominator.*** The denominator used for purposes of the apportionment under subdivision (i) of this subparagraph shall be the mean of the value of the total assets held by the controlled foreign corporation at the beginning and end of the taxable year, determined by taking assets into account at their actual value (not reduced by liabilities), which, in the absence of affirmative evidence to the contrary, shall be deemed to be (a) face value in the case of bills receivable, accounts receivable, notes receivable, and open accounts held by a controlled foreign corporation using the cash receipts and disbursements method of accounting and (b) adjusted basis in the case of all other assets.

(3) ***Mutual and other insurance taxable income*** —

(i) ***Amount of insurance income taken into account.*** For purposes of determining the taxable income of a controlled foreign corporation which, if it were a domestic corporation, would not be taxable as an insurance company to which subchapter L of the Code applies but which if it were a domestic insurance company engaged in the business of only reinsuring or issuing the insurance or annuity contracts which have been reinsured or issued by such corporation, would be taxable as a mutual insurance company to which part II of subchapter L of the Code applies, or would be taxable as a mutual marine insurance or other insurance company to which part III of subchapter L of the Code applies, the sum of the items of gross income referred to in section 832(b)(1) (except the gross amount earned during the taxable year from underwriting income described in section 832(b)(1)(A)) reduced by the deductions allowable under section 832(c) which are related to such items of gross income shall be taken into account, subject to the provisions of paragraphs (e) and (f) of § 1.953-4, in an amount which bears the same proportion to the sum of such items of gross income reduced by such deductions as the numerator determined under subdivision (ii) of this subparagraph bears to the denominator determined under subdivision (iii) of this subparagraph.

(ii) ***Numerator.*** The numerator used for purposes of the apportionment under subdivision (i) of this subparagraph shall be the sum of—

(*a*) The mean of the controlled foreign corporation's unearned premiums at the beginning and end of the taxable year, determined under section 832(b)(4)(B) and in accordance with the rules prescribed in paragraph (c) of § 1.953-4 for purposes of determining taxable income of a controlled foreign corporation under paragraph (a) of § 1.953-4,

(*b*) The mean of such corporation's unpaid losses at the beginning and end of the taxable year, determined under section 832(b)(5)(B),

(*c*) The mean of the items described in section 810(c)(4) at the beginning and end of the taxable year, to the extent allowable to such corporation under section 832(c)(11),

(*d*) The mean of other liabilities at the beginning and end of the taxable year which are attributable to the reinsuring and issuing of insurance and annuity contracts, and

(*e*) The mean of the earnings and profits accumulated by such corporation at the beginning and end of the taxable year (determined without diminution by reason of any distributions made during the taxable year) which are attributable to the reinsuring and issuing of insurance and annuity contracts.

(iii) ***Denominator.*** The denominator used for purposes of the apportionment under subdivision (i) of this subparagraph shall be the mean of the value of the total assets held by the controlled foreign corporation at the beginning and end of the taxable year, determined in the manner prescribed in subparagraph (2)(iii) of this paragraph.

(d) ***Separate accounting.*** The special rules prescribed in paragraph (c) of this section shall not apply if the district director determines that the controlled foreign corporation, in good faith and unaffected by considerations of tax liability, regularly employs in its books of account a detailed segregation of receipts, expenditures, assets, liabilities, and net worth which clearly reflects the income derived from the reinsuring or issuing of insurance or annuity contracts. The district director, in making such determination, shall give effect to any foreign law, satisfactory evidence of which is presented by the United States shareholder to the district director, which requires a reasonable segregation of the insurance assets of the controlled foreign corporation.

[T.D. 6781, 29 FR 18211, Dec. 23, 1964]

§ 1.953-6 Relationship of sections 953 and 954.

(a) ***Priority of application.*** For purposes of determining the subpart F income of a controlled foreign corporation under section 952 for any taxable year, the provisions of section 954, relating to foreign base company income, shall be applied, after first applying section 953, only with respect to income which is not income derived from the insurance of United States risks under section 953. For example, the provisions of section 954 may be applied with respect to the income of a controlled foreign corporation which is not income derived from the insurance of United States risks under section 953 because such corporation does not satisfy the 5-percent minimum premium requirement prescribed in paragraph (b) of § 1.953-1, even though such corporation has taxable income, as determined under § 1.953-4, which is attributable to the reinsuring or the issuing of any insurance or annuity contracts in connection with United States risks. In addition, the provisions of section 954 may apply with respect to the income of a controlled foreign corporation to the extent such income is not allocated or apportioned under § 1.953-4 to the insurance of United States risks.

(b) ***Decrease in income not material.*** It is not material that the income of a controlled foreign corporation is decreased as a result of the application of paragraph (a) of this section. Thus, in applying § 1.953-4 to the income of a controlled foreign corporation described in paragraph (c)(2) of § 1.953-5 which would, but for paragraph (a) of this section, be subject to the provisions of section 954, there shall be allowed, in determining the taxable income derived from the insurance of United States risks under § 1.953-4, a deduction under section 809(a)(1) for the share of each and every item of investment yield set aside for policyholders; it is not material that in determining foreign base company income such deduction would not be allowed under section 954(b)(5). Further, income of a controlled foreign corporation which is required to be taken into account under section 953 in determining income derived from the insurance of United States risks and would, but for the provisions of paragraph (a) of this section, constitute foreign base company income under section 954 shall not be taken into account under section 954(b)(3)(B) in determining whether foreign base company income exceeds 70 percent of gross income for the taxable year.

(c) ***Increase in income not material.*** It is not material that the income of a controlled foreign corporation is increased as a result of the application of paragraph (a) of this section. Thus, in applying § 1.953-4 to income of a controlled foreign corporation which would, but for paragraph (a) of this section, be subject to the provisions of section 954, it is not material that the dividends, interest, and gains from the sale or exchange of stock or securities derived from certain investments which would not be included in foreign personal holding company income under section 954(c)(3)(B) are included under section 953 in income derived from the insurance of United States risks. Further, income of a controlled foreign corporation which is required to be taken into account under section 953 in determining income derived from the insurance of United States risks and would, but for paragraph (a) of this section, constitute foreign base company income shall not be excluded under section 954(b)(3)(A) for the taxable year.

[T.D. 6781, 29 FR 18212, Dec. 23, 1964]

§ 1.954-0 Introduction.

(a) ***Effective dates*** —

(1) ***Final regulations*** —

(i) ***In general.*** Except as otherwise specifically provided, the provisions of §§ 1.954-1 and 1.954-2 apply to taxable years of a controlled foreign corporation beginning after November 6, 1995. If any of the rules described in §§ 1.954-1 and 1.954-2 are inconsistent with provisions of other regulations under subpart F, these final regulations are intended to apply instead of such other regulations.

(ii) ***Election to apply final regulations retroactively*** —

(A) ***Scope of election.*** An election may be made to apply the final regulations retroactively with respect to any taxable year of the controlled foreign corporation beginning on or after January 1, 1987. If such an election is made, these final regulations must be applied in their entirety for such taxable year and all subsequent taxable years. All references to section 11 in the final regulations shall be deemed to include section 15, where applicable.

(B) ***Manner of making election.*** An election under this paragraph (a)(1)(ii) is binding on all United States shareholders of the controlled foreign corporation and must be made—

(1) By the controlling United States shareholders, as defined in § 1.964-1(c)(5), by attaching a statement to such effect with their original or amended income tax returns for the taxable year of such United States shareholders in which or with which the taxable year of the CFC ends, and including any additional information required by applicable administrative pronouncements, or

(2) In such other manner as may be prescribed in applicable administrative pronouncements.

(C) ***Time for making election.*** An election may be made under this paragraph (a)(1)(ii) with respect to a taxable year of the controlled foreign corporation beginning on or after January 1, 1987 only if the time for filing a return or claim for refund has not expired for the taxable year of any United States shareholder of the controlled foreign corporation in which or with which such taxable year of the controlled foreign corporation ends.

(D) ***Revocation of election.*** An election made under this paragraph (a)(1)(ii) may not be revoked.

(2) ***Temporary regulations.*** The provisions of §§ 4.954-1 and 4.954-2 of this chapter apply to taxable years of a controlled foreign corporation beginning after December 31, 1986 and on or before November 6, 1995. However, the provisions of § 4.954-2(b)(6) of this chapter continue to apply. For transactions entered into on or before October 10, 1995, taxpayers may rely on Notice 89-90, 1989-2 C.B. 407, in applying the temporary regulations.

(3) ***§§ 1.954A-1 and 1.954A-2.*** The provisions of §§ 1.954A-1 and 1.954A-2 (as contained in 26 CFR part 1 edition revised April 1, 1995) apply to taxable years of a controlled foreign corporation beginning before January 1, 1987. All references therein to sections of the Code are to the Internal Revenue Code of 1954 prior to the amendments made by the Tax Reform Act of 1986.

(b) [Reserved]

[T.D. 8618, 60 FR 46508, Sept. 7, 1995; T.D. 8618, 60 FR 62024, Dec. 4, 1995; T.D. 8767, 63 FR 14615, Mar. 26, 1998; T.D. 9039, 68 FR 4917, Jan. 31, 2003; T.D. 9883, 84 FR 63803, Nov. 19, 2019; T.D. 9902, 85 FR 44649, July 23, 2020]

§ 1.954-1 Foreign base company income.

(a) ***In general*** —

(1) ***Purpose and scope.*** Section 954 and §§ 1.954-1 and 1.954-2 provide rules for computing the foreign base company income of a controlled foreign corporation. Foreign base company income is included in the subpart F income of a controlled foreign corporation under the rules of section 952. Subpart F income is included in the gross income of a United States shareholder of a controlled foreign corporation under the rules of section 951 and thus is subject to current taxation under section 1, 11 or 55 of the Internal Revenue Code. The determination of whether a foreign corporation is a controlled foreign corporation, the subpart F income of which is included currently in the gross income of its United States shareholders, is made under the rules of section 957.

(2) ***Gross foreign base company income.*** The gross foreign base company income of a controlled foreign corporation consists of the following categories of gross income (determined after the application of section 952(b))—

(i) Foreign personal holding company income, as defined in section 954(c);

(ii) Foreign base company sales income, as defined in section 954(d);

(iii) Foreign base company services income, as defined in section 954(e);

(iv) Foreign base company shipping income, as defined in section 954(f); and

(v) Foreign base company oil related income, as defined in section 954(g).

(3) ***Adjusted gross foreign base company income.*** The term *adjusted gross foreign base company income* means the gross foreign base company income of a controlled foreign corporation as adjusted by the de minimis and full inclusion rules of paragraph (b) of this section.

(4) ***Net foreign base company income.*** The term *net foreign base company income* means the adjusted gross foreign base company income of a controlled foreign corporation reduced so as to take account of deductions (including taxes) properly allocable or apportionable to such income under the rules of section 954(b)(5) and paragraph (c) of this section.

(5) ***Adjusted net foreign base company income.*** The term *adjusted net foreign base company income* means the net foreign base company income of a controlled foreign corporation reduced, first, by any items of net foreign base company income excluded from subpart F income pursuant to section 952(c) and, second, by any items excluded from subpart F income pursuant to the high tax exception of section 954(b). See paragraph (d)(4)(ii) of this section. The term *foreign base company income* as used in the Internal Revenue Code and elsewhere in the Income Tax Regulations means adjusted net foreign base company income, unless otherwise provided.

(6) ***Insurance income.*** The term *gross insurance income* includes all gross income taken into account in determining insurance income under section 953. The term *adjusted gross insurance income* means gross insurance income as adjusted by the de minimis and full inclusion rules of paragraph (b) of this section. The term *net insurance income* means adjusted gross insurance income reduced under section 953 so as to take into account deductions (including taxes) properly allocable or apportionable to such income. The term *adjusted net insurance income* means net insurance income reduced by any items of net insurance income that are excluded from subpart F income pursuant to section 952(b) or pursuant to the high tax exception of section 954(b). The term *insurance income* as used in subpart F of the Internal Revenue Code and in the regulations under that subpart means adjusted net insurance income, unless otherwise provided.

(7) ***Additional items of adjusted net foreign base company income or adjusted net insurance income by reason of section 952(c).*** Earnings and profits of the controlled foreign corporation that are recharacterized as foreign base company income or insurance income under section 952(c) are items of adjusted net foreign base company income or adjusted net insurance income, respectively. Amounts subject to recharacterization under section 952(c) are determined after adjusted net foreign base company income and adjusted net insurance income are otherwise determined under subpart F and are not again subject to any exceptions or special rules that would affect the amount of subpart F income. Thus, for example, items of gross foreign base company income or gross insurance income that are excluded from adjusted gross foreign base company income or adjusted gross insurance income because the de minimis test is met are subject to recharacterization under section 952(c). Further, the de minimis and full inclusion tests of paragraph (b) of this section, and the high tax exception of paragraph (d) of this section, for example, do not apply to such amounts.

(b) ***Computation of adjusted gross foreign base company income and adjusted gross insurance income —***

(1) ***De minimis and full inclusion tests —***

(i) *De minimis test* —

(A) ***In general.*** Except as provided in paragraph (b)(1)(i)(C) of this section, adjusted gross foreign base company income and adjusted gross insurance income are equal to zero if the sum of the gross foreign base company income and the gross insurance income of a controlled foreign corporation is less than the lesser of—

(*1*) 5 percent of gross income; or

(2) $1,000,000.

(B) ***Currency translation.*** Controlled foreign corporations having a functional currency other than the United States dollar shall translate the $1,000,000 threshold using the exchange rate provided under section 989(b)(3) for amounts included in income under section 951(a).

(C) ***Coordination with sections 864(d) and 881(c).*** Adjusted gross foreign base company income or adjusted gross insurance income of a controlled foreign corporation always includes income from trade or service receivables described in section 864(d)(1) or (6), and portfolio interest described in section 881(c), even if the de minimis test of this paragraph (b)(1)(i) is otherwise satisfied.

(ii) ***Seventy percent full inclusion test.*** Except as provided in section 953, adjusted gross foreign base company income consists of all gross income of the controlled foreign corporation other than gross insurance income and amounts described in section 952(b), and adjusted gross insurance income consists of all gross insurance income other than amounts described in section 952(b), if the sum of the gross foreign base company income and the gross insurance income for the taxable year exceeds 70 percent of gross income. See paragraph (d)(6) of this section, under which certain items of full inclusion foreign base company income may nevertheless be excluded from subpart F income.

(2) ***Character of gross income included in adjusted gross foreign base company income.*** The gross income included in the adjusted gross foreign base company income of a controlled foreign corporation generally retains its character as foreign personal holding company income, foreign base company sales income, foreign base company services income, foreign base company shipping income, or foreign base company oil related income. However, gross income included in adjusted gross foreign base company income because the full inclusion test of paragraph (b)(1)(ii) of this section is met is termed *full inclusion foreign base company income,* and constitutes a separate category of adjusted gross foreign base company income for purposes of allocating and apportioning deductions under paragraph (c) of this section.

(3) ***Coordination with section 952(c).*** Income that is included in subpart F income because the full inclusion test of paragraph (b)(1)(ii) of this section is met does not reduce amounts that, under section 952(c), are subject to recharacterization.

(4) *Anti-abuse rule* —

(i) ***In general.*** For purposes of applying the de minimis test of paragraph (b)(1)(i) of this section, the income of two or more controlled foreign corporations shall be aggregated and treated as the income of a single corporation if a principal purpose for separately organizing, acquiring, or

maintaining such multiple corporations is to prevent income from being treated as foreign base company income or insurance income under the de minimis test. A purpose may be a principal purpose even though it is outweighed by other purposes (taken together or separately).

(ii) ***Presumption.*** Two or more controlled foreign corporations are presumed to have been organized, acquired or maintained to prevent income from being treated as foreign base company income or insurance income under the de minimis test of paragraph (b)(1)(i) of this section if the corporations are related persons, as defined in paragraph (b)(4)(iii) of this section, and the corporations are described in paragraph (b)(4)(ii)(A), (B), or (C) of this section. This presumption may be rebutted by proof to the contrary.

(A) The activities carried on by the controlled foreign corporations, or the assets used in those activities, are substantially the same activities that were previously carried on, or assets that were previously held, by a single controlled foreign corporation. Further, the United States shareholders of the controlled foreign corporations or related persons (as determined under paragraph (b)(4)(iii) of this section) are substantially the same as the United States shareholders of the one controlled foreign corporation in a prior taxable year. A presumption made in connection with the requirements of this paragraph (b)(4)(ii)(A) may be rebutted by proof that the activities carried on by each controlled foreign corporation would constitute a separate branch under the principles of § 1.367(a)-6T(g)(2) if carried on directly by a United States person.

(B) The controlled foreign corporations carry on a business, financial operation, or venture as partners directly or indirectly in a partnership (as defined in section 7701(a)(2) and § 301.7701-3 of this chapter) that is a related person (as defined in paragraph (b)(4)(iii) of this section) with respect to each such controlled foreign corporation.

(C) The activities carried on by the controlled foreign corporations would constitute a single branch operation under § 1.367(a)-6T(g)(2) if carried on directly by a United States person.

(iii) ***Related persons.*** For purposes of this paragraph (b), two or more persons are related persons if they are in a relationship described in section 267(b). In determining for purposes of this paragraph (b) whether two or more corporations are members of the same controlled group under section 267(b)(3), a person is considered to own stock owned directly by such person, stock owned with the application of section 1563(e)(1), and stock owned with the application of section 267(c). In determining for purposes of this paragraph (b) whether a corporation is related to a partnership under section 267(b)(10), a person is considered to own the partnership interest owned directly by such person and the partnership interest owned with the application of section 267(e)(3).

(iv) ***Example.*** The following example illustrates the application of this paragraph (b)(4).

> *Example.* (i)(1) *USP* is the sole United States shareholder of three controlled foreign corporations: *CFC1, CFC2* and *CFC3.* The three controlled foreign corporations all have the same taxable year. The three controlled foreign corporations are partners in *FP,* a foreign entity classified as a partnership under section 7701(a)(2) and § 301.7701-3 of the regulations. For their current taxable years, each of the controlled foreign corporations derives all of its income other than foreign base company income from activities conducted through *FP,* and its foreign base company income from activities

conducted both jointly through *FP* and separately without *FP*. Based on the facts in the table below, the foreign base company income derived by each controlled foreign corporation for its current taxable year, including income derived from *FP*, is less than five percent of the gross income of each controlled foreign corporation and is less than $1,000,000:

	CFC1	CFC2	CFC3
Gross income	$4,000,000	$8,000,000	$12,000,000
Five percent of gross income	200,000	400,000	600,000
Foreign base company income	199,000	398,000	597,000

(2) Thus, without the application of the anti-abuse rule of this paragraph (b)(4), each controlled foreign corporation would be treated as having no foreign base company income after the application of the de minimis test of section 954(b)(3)(A) and paragraph (b)(1)(i) of this section.
(ii) However, under these facts, the requirements of paragraph (b)(4)(i) of this section are met unless the presumption of paragraph (b)(4)(ii) of this section is successfully rebutted. The sum of the foreign base company income of the controlled foreign corporations is $1,194,000. Thus, the amount of gross foreign base company income of each controlled foreign corporation will not be reduced by reason of the de minimis rule of section 954(b)(3)(A) and this paragraph (b).

(c) ***Computation of net foreign base company income*** —

(1) ***General rule.*** The net foreign base company income of a controlled foreign corporation (as defined in paragraph (a)(4) of this section) is computed under the rules of this paragraph (c)(1). The principles of § 1.904-5(k) shall apply where payments are made between controlled foreign corporations that are related persons (within the meaning of section 954(d)(3)). Consistent with these principles, only payments described in § 1.954-2(b)(4)(ii)(B)(2) may be offset as provided in § 1.904-5(k)(2).

(i) ***Deductions against gross foreign base company income.*** The net foreign base company income of a controlled foreign corporation is computed first by taking into account deductions in the following manner:

(A) First, the gross amount of each item of income described in paragraph (c)(1)(iii) of this section is determined.

(B) Second, any expenses definitely related to less than all gross income as a class shall be allocated and apportioned under the principles of sections 861, 864 and 904(d) to the gross income described in paragraph (c)(1)(i)(A) of this section.

(C) Third, foreign personal holding company income that is passive within the meaning of section 904 (determined before the application of the high-taxed income rule of § 1.904-4(c)) is reduced (but not below zero) by related person interest expense allocable to passive income under § 1.904-5(c)(2); such interest must be further allocated and apportioned to items described in paragraph (c)(1)(iii)(B) of this section.

(D) Fourth, the amount of each item of income described in paragraph (c)(1)(iii) of this section is reduced by other expenses allocable and apportionable to such income under the principles of sections 861, 864 and 904(d).

(ii) ***Losses reduce subpart F income by operation of earnings and profits limitation.*** Except as otherwise provided in § 1.954-2(g)(4), if after applying the rules of paragraph (c)(1)(i) of this section, the amount remaining in any category of foreign base company income or foreign personal holding company income is less than zero, the loss in that category may not reduce any other category of foreign base company income or foreign personal holding company income except by operation of the earnings and profits limitation of section 952(c)(1).

(iii) ***Items of income*** —

(A) ***Income other than passive foreign personal holding company income.*** A single item of income (other than foreign personal holding company income that is passive) is the aggregate amount from all transactions that falls within a single separate category (as defined in § 1.904-5(a)(4)(v)), and either—

(*1*) Falls within a single category of foreign personal holding company income as—

(*i*) Dividends, interest, rents, royalties and annuities;

(*ii*) Gain from certain property transactions;

(*iii*) Gain from commodities transactions;

(*iv*) Foreign currency gain; or

(*v*) Income equivalent to interest; or

(*2*) Falls within a single category of foreign base company income, other than foreign personal holding company income, as—

(*i*) Foreign base company sales income;

(*ii*) Foreign base company services income; or

(*iii*)—(*iv*) [Reserved]

(*v*) Full inclusion foreign base company income.

(*3*) For purposes of paragraph (c)(1)(iii)(A) of this section, the aggregate amount from all transactions that falls within a single separate category (as defined in § 1.904-5(a)(4)(v)) and is described in paragraph (c)(1)(iii)(A)(*1*)(*i*) of this section is a single item of income. Similarly, the aggregate amount from all transactions that falls within a single separate category (as defined in § 1.904-5(a)(4)(v)) and is described in each one of paragraphs (c)(1)(iii)(A)(*1*)(*ii*) through (c)(1)(iii)(A)(*1*)(*v*) of this section

is in each case a separate single item of income. The same principles apply for transactions described in each one of paragraphs (c)(1)(iii)(A)(*2*)(*i*) through (*v*) of this section.

(B) ***Passive foreign personal holding company income.*** A single item of foreign personal holding company income that is passive is an amount of income that falls within a single group of passive income under the grouping rules of § 1.904-4(c)(3), (4) and (5) and a single category of foreign personal holding company income described in paragraphs (c)(1)(iii)(A)(*1*) (*i*) through (*v*).

(iv) ***Treatment of deductions or loss attributable to disqualified basis.*** For purposes of paragraph (c)(1)(i) of this section (and in the case of insurance income, paragraph (a)(6) of this section), in determining the amount of a net item of foreign base company income or insurance income, deductions or loss described in § 1.951A-2(c)(5) or (c)(6) are not allocated and apportioned to gross foreign base company income or gross insurance income.

(2) ***Computation of net foreign base company income derived from same country insurance income.*** Deductions relating to foreign base company income attributable to the issuing (or reinsuring) of any insurance or annuity contract in connection with risks located in the country under the laws of which the controlled foreign corporation is created or organized shall be allocated and apportioned in accordance with the rules set forth in section 953.

(d) ***Computation of adjusted net foreign base company income or adjusted net insurance income*** —

(1) ***Application of high tax exception.*** Adjusted net foreign base company income (or adjusted net insurance income) equals the net foreign base company income (or net insurance income) of a controlled foreign corporation, reduced by any net item of such income that qualifies for the high tax exception provided by section 954(b)(4) and this paragraph (d). Any item of income that is portfolio interest, as described in section 881(c), does not qualify for the high tax exception. See paragraph (c)(1)(iii) of this section for the definition of the term *item of income.* For rules concerning the treatment for foreign tax credit purposes of amounts excluded from subpart F under section 954(b)(4), see § 1.904-4(c). For rules concerning the application of the high-tax exception of sections 954(b)(4) and 951A(c)(2)(A)(i)(III) to tentative gross tested income items, see § 1.951A-2(c)(1)(iii), (c)(3)(ii), and (c)(7) and (8). A net item of income qualifies for the high tax exception only if—

(i) An election is made under section 954(b)(4) and paragraph (d)(5) of this section to exclude the income from the computation of subpart F income; and

(ii) It is established that the net item of income was subject to foreign income taxes at an effective rate that is greater than 90 percent of the maximum rate of tax specified in section 11 for the taxable year of the controlled foreign corporation.

(2) ***Effective rate at which taxes are imposed.*** The effective rate with respect to a net item of income shall be determined separately for each controlled foreign corporation. The effective rate at which taxes are imposed on a net item of income is—

(i) The United States dollar amount of foreign income taxes paid or accrued with respect to the net item of income, determined under paragraph (d)(3) of this section; divided by

(ii) The United States dollar amount of the net item of foreign base company income or insurance income, described in paragraph (c)(1)(iii) of this section, increased by the amount of foreign income taxes referred to in paragraph (d)(2)(i) of this section.

(3) *Taxes paid or accrued with respect to an item of income* —

(i) ***In general.*** The amount of foreign income taxes paid or accrued by a controlled foreign corporation with respect to a net item of income for purposes of section 954(b)(4) and this paragraph (d) is the U.S. dollar amount of the controlled foreign corporation's current year taxes (as defined in § 1.960-1(b)(4)) that are allocated and apportioned under § 1.960-1(d)(3)(ii) to the subpart F income group (as defined in § 1.960-1(d)(2)(ii)(B)) that corresponds with the net item of income.

(ii) [Reserved]

(iii) ***Effect of potential and actual changes in taxes paid or accrued.*** Except as otherwise provided in this paragraph (d)(3)(iii), the amount of foreign income taxes paid or accrued with respect to a net item of income, determined in the manner provided in this paragraph (d), does not take into account any potential reduction in foreign income taxes that may occur by reason of a future distribution to shareholders of all or part of such income. However, to the extent the foreign income taxes paid or accrued by the controlled foreign corporation are reasonably certain to be returned by the foreign jurisdiction imposing such taxes to a shareholder, directly or indirectly, through any means (including, but not limited to, a refund, credit, payment, discharge of an obligation, or any other method) on a subsequent distribution to such shareholder, the foreign income taxes are not treated as paid or accrued for purposes of this paragraph (d)(3). In addition, foreign income taxes that have not been paid or accrued because they are contingent on a future distribution of earnings are not taken into account for purposes of this paragraph (d)(3). If, pursuant to section 905(c) and § 1.905-3(b)(2), a redetermination of U.S. tax liability is required to account for the effect of a foreign tax redetermination (as defined in § 1.905-3(a)), this paragraph (d) is applied in the adjusted year taking into account the adjusted amount of the redetermined foreign tax.

(4) *Special rules* —

(i) ***Consistency rule.*** An election to exclude income from the computation of subpart F income for a taxable year must be made consistently with respect to all items of passive foreign personal holding company income eligible to be excluded for the taxable year. Thus, high-taxed passive foreign personal holding company income of a controlled foreign corporation must either be excluded in its entirety, or remain subject to subpart F in its entirety.

(ii) ***Coordination with earnings and profits limitation.*** If the amount of income included in subpart F income for the taxable year is reduced by the earnings and profits limitation of section 952(c)(1), the amount of income that is a net item of income, within the meaning of paragraph (c)(1)(iii) of this section, is determined after the application of the rules of section 952(c)(1).

(iii) ***Example.*** The following example illustrates the provisions of paragraph (d)(4)(ii) of this section. All of the taxes referred to in the following example are foreign income taxes. For simplicity, this example assumes that the amount of taxes that are taken into account as a deduction under section 954(b)(5) and the amount of the gross-up required under sections 960 and 78 are equal. Therefore, this example does not separately illustrate the deduction for taxes and gross-up.

Example. During its 1995 taxable year, CFC, a controlled foreign corporation, earns royalty income, net of taxes, of $100 that is foreign personal holding company income. CFC has no expenses associated with this royalty income. CFC pays $50 of foreign income taxes with respect to the royalty income. For 1995, CFC has current earnings and profits of $50. CFC's subpart F income, as determined prior to the application of this paragraph (d), exceeds its current earnings and profits. Thus, under paragraph (d)(4)(ii) of this section, the amount of CFC's only net item of income, the royalty income, will be limited to $50. The remaining $50 will be subject to recharacterization in a subsequent taxable year under section 952(c)(2). Because the amount of foreign income taxes paid with respect to this net item of income is $50, the effective rate of tax on the item, for purposes of this paragraph (d), is 50 percent ($50 of taxes/$50 net item + $50 of taxes). Accordingly, an election under paragraph (d)(5) of this section may be made to exclude the item of income from the computation of subpart F income.

(5) ***Procedure.*** An election made under the procedure provided by this paragraph (d)(5) is binding on all United States shareholders of the controlled foreign corporation and must be made—

(i) By the controlling United States shareholders, as defined in § 1.964-1(c)(5), by attaching a statement to such effect with their original or amended income tax returns, and including any additional information required by applicable administrative pronouncements; or

(ii) In such other manner as may be prescribed in applicable administrative pronouncements.

(6) ***Coordination of full inclusion and high tax exception rules.*** Notwithstanding paragraph (b)(1)(ii) of this section, full inclusion foreign base company income will be excluded from subpart F income if more than 90 percent of the adjusted gross foreign base company income and adjusted gross insurance company income of a controlled foreign corporation (determined without regard to the full inclusion test of paragraph (b)(1) of this section) is attributable to net amounts excluded from subpart F income pursuant to an election to have the high tax exception described in section 954(b)(4) and this paragraph (d) apply.

(e) ***Character of income*** —

(1) ***Substance of the transaction.*** For purposes of section 954, income shall be characterized in accordance with the substance of the transaction, and not in accordance with the designation applied by the parties to the transaction. For example, an amount that is designated as rent by the taxpayer but actually constitutes income from the sale of property, royalties, or income from services shall not be characterized as rent but shall be characterized as income from the sale of property, royalties or income from services, as the case may be. Local law shall not be controlling in characterizing income.

(2) ***Separable character.*** To the extent the definitional provisions of section 953 or 954 describe the income or gain derived from a transaction, or any portion or portions thereof, that income or gain, or portion or portions thereof, is so characterized for purposes of subpart F. Thus, a single transaction may give rise to income in more than one category of foreign base company income described in paragraph (a)(2) of this section. For example, if a controlled foreign corporation, in its business of purchasing personal property and selling it to related persons outside its country of incorporation, also performs services outside its country of incorporation with respect to the property it sells, the sales income will be treated as foreign base company sales income and the services income will be treated as foreign base company services income for purposes of these rules.

(3) ***Predominant character.*** The portion of income or gain derived from a transaction that is included in the computation of foreign personal holding company income is always separately determinable and thus must always be segregated from other income and separately classified under paragraph (e)(2) of this section. However, the portion of income or gain derived from a transaction that would meet a particular definitional provision under section 954 or 953 (other than the definition of foreign personal holding company income) in unusual circumstances may not be separately determinable. If such portion is not separately determinable, it must be classified in accordance with the predominant character of the transaction. For example, if a controlled foreign corporation engineers, fabricates, and installs a fixed offshore drilling platform as part of an integrated transaction, and the portion of income that relates to services is not accounted for separately from the portion that relates to sales, and is otherwise not separately determinable, then the classification of income from the transaction shall be made in accordance with the predominant character of the arrangement.

(4) ***Coordination of categories of gross foreign base company income or gross insurance income*** —

(i) ***In general.*** The computations of gross foreign base company income and gross insurance income are limited by the following rules:

(A) If income is foreign base company shipping income, pursuant to section 954(f), it shall not be considered insurance income or income in any other category of foreign base company income.

(B) If income is foreign base company oil related income, pursuant to section 954(g), it shall not be considered insurance income or income in any other category of foreign base company income, except as provided in paragraph (e)(4)(i)(A) of this section.

(C) If income is insurance income, pursuant to section 953, it shall not be considered income in any category of foreign base company income except as provided in paragraph (e)(4)(i)(A) or (B) of this section.

(D) If income is foreign personal holding company income, pursuant to section 954(c), it shall not be considered income in any other category of foreign base company income, other than as provided in paragraph (e)(4)(i)(A), (B) or (C) of this section.

(ii) ***Income excluded from other categories of gross foreign base company income.*** Income shall not be excluded from a category of gross foreign base company income or gross insurance income under this paragraph (e)(4) by reason of being included in another category of gross foreign base company income or gross insurance income, if the income is excluded from that other category by a more specific provision of section 953 or 954. For example, income derived from a commodity transaction that is excluded from foreign personal holding company income under § 1.954-2(f) as income from a qualified active sale may be included in gross foreign base company income if it also meets the definition of foreign base company sales income. See § 1.954-2(a)(2) for the coordination of overlapping categories within the definition of foreign personal holding company income.

(f) ***Definition of related person*** —

(1) ***Persons related to controlled foreign corporation.*** Unless otherwise provided, for purposes of section 954 and §§ 1.954-1 through 1.954-8 inclusive, the following persons are considered under section 954(d)(3) to be related persons with respect to a controlled foreign corporation:

(i) ***Individuals.*** An individual, whether or not a citizen or resident of the United States, who controls the controlled foreign corporation.

(ii) ***Other persons.*** A foreign or domestic corporation, partnership, trust or estate that controls or is controlled by the controlled foreign corporation, or is controlled by the same person or persons that control the controlled foreign corporation.

(2) ***Control*** —

(i) ***Corporations.*** With respect to a corporation, control means the ownership, directly or indirectly, of stock possessing more than 50 percent of the total voting power of all classes of stock entitled to vote or of the total value of the stock of the corporation.

(ii) ***Partnerships.*** With respect to a partnership, control means the ownership, directly or indirectly, of more than 50 percent (by value) of the capital or profits interest in the partnership.

(iii) ***Trusts and estates.*** With respect to a trust or estate, control means the ownership, directly or indirectly, of more than 50 percent (by value) of the beneficial interest in the trust or estate.

(iv) ***Direct or indirect ownership.*** For purposes of section 954(d)(3) and this paragraph (f), to determine direct or indirect ownership—

(A) The principles of § 1.958-1 and section 958(a) apply without regard to whether a corporation, partnership, trust, or estate is foreign or domestic or whether an individual is a citizen or resident of the United States; and

(B) The principles of § 1.958-2 and section 958(b) apply, except that—

(*1*) Neither section 318(a)(3), nor § 1.958-2(d) or the principles thereof, applies to attribute stock or other interests to a corporation, partnership, estate, or trust; and

(*2*) Neither section 318(a)(4), nor § 1.958-2(e) or the principles thereof, applies to treat dividends, interest, rents, or royalties received or accrued from a foreign corporation as received or accrued from a controlled foreign corporation payor if a principal purpose of the use of an option to acquire stock or an equity interest, or an interest similar to such an option, that causes the foreign corporation to be a controlled foreign corporation payor is to qualify dividends, interest, rents, or royalties paid by the foreign corporation for the section 954(c)(6) exception. For purposes of this paragraph (f)(2)(iv)(B)(*2*), an interest that is similar to an option to acquire stock or an equity interest includes, but is not limited to, a warrant, a convertible debt instrument, an instrument other than debt that is convertible into stock or an equity interest, a put, a stock or equity interest subject to risk of forfeiture, and a contract to acquire or sell stock or an equity interest.

(*3*) Neither section 318(a)(4), nor § 1.958-2(e) or the principles thereof, applies to treat a person that has an option to acquire stock or an equity interest, or an interest similar to such an option, as owning the stock or equity interest if a principal purpose for the use of the option or similar interest is to treat a person as a related person with respect to a controlled foreign corporation under this paragraph (f). For purposes of this paragraph (f)(2)(iv)(B)(*3*), an interest that is similar to an option to acquire stock or an equity interest includes, but is not limited to, a warrant, a convertible debt

instrument, an instrument other than debt that is convertible into stock or an equity interest, a put, a stock or equity interest subject to risk of forfeiture, and a contract to acquire or sell stock or an equity interest.

(3) ***Applicability dates*** —

(i) ***General rule.*** Except as otherwise provided in this paragraph (f)(3), paragraph (f)(2)(iv) of this section applies to taxable years of controlled foreign corporations ending on or after November 19, 2019, and taxable years of United States shareholders in which or with which such taxable years end.

(ii) ***Option rule in paragraph (f)(2)(iv)(B)(2) of this section.*** Paragraph (f)(2)(iv)(B)(*2*) of this section applies to taxable years of controlled foreign corporations beginning after December 31, 2006, and ending before November 19, 2019, and taxable years of United States shareholders in which or with which such taxable years end.

(iii) ***Anti-abuse rule.*** Paragraphs (f)(2)(iv)(B)(*1*) and (*3*) of this section apply to taxable years of controlled foreign corporations ending on or after May 17, 2019, and to taxable years of United States shareholders in which or with which such taxable years end, with respect to amounts that are received or accrued by a controlled foreign corporation on or after May 17, 2019 to the extent the amounts are received or accrued in advance of the period to which such amounts are attributable with a principal purpose of avoiding the application of paragraph (f)(2)(iv)(B)(*1*) or (*3*) of this section with respect to such amounts.

(g) ***Distributive share of partnership income*** —

(1) ***Application of related person and country of organization tests.*** Unless otherwise provided, to determine the extent to which a controlled foreign corporation's distributive share of any item of gross income of a partnership would have been subpart F income if received by it directly, under § 1.952-1(g), if a provision of subpart F requires a determination of whether an entity is a related person, within the meaning of section 954(d)(3), or whether an activity occurred within or outside the country under the laws of which the controlled foreign corporation is created or organized, this determination shall be made by reference to such controlled foreign corporation and not by reference to the partnership.

(2) ***Application of related person test for sales and purchase transactions between a partnership and its controlled foreign corporation partner.*** For purposes of determining whether a controlled foreign corporation's distributive share of any item of gross income of a partnership is foreign base company sales income under section 954(d)(1) when the item of income is derived from the sale by the partnership of personal property purchased by the partnership from (or sold by the partnership on behalf of) the controlled foreign corporation; or the sale by the partnership of personal property to (or the purchase of personal property by the partnership on behalf of) the controlled foreign corporation (CFC-partnership transaction), the CFC-partnership transaction will be treated as a transaction with an entity that is a related person, within the meaning of section 954(d)(3), under paragraph (g)(1) of this section, if—

(i) The controlled foreign corporation purchased such personal property from (or sold it to the partnership on behalf of), or sells such personal property to (or purchases it from the partnership on behalf of), a related person with respect to the controlled foreign corporation (other than the partnership), within the meaning of section 954(d)(3); or

(ii) The branch rule of section 954(d)(2) applies to treat as foreign base company sales income the income of the controlled foreign corporation from selling to the partnership (or a third party) personal property that the controlled foreign corporation has manufactured, in the case where the partnership purchases personal property from (or sells personal property on behalf of) the controlled foreign corporation.

(3) ***Examples.*** The application of this paragraph (g) is illustrated by the following examples:

Example 1. CFC, a controlled foreign corporation organized in Country A, is an 80-percent partner in Partnership, a partnership organized in Country A. All of the stock of CFC is owned by USP, a U.S. corporation. Partnership earns commission income from purchasing Product O on behalf of USP, from unrelated manufacturers in Country B, for sale in the United States. To determine whether CFC's distributive share of Partnership's commission income is foreign base company sales income under section 954(d), CFC is treated as if it purchased Product O on behalf of USP. Under section 954(d)(3), USP is a related person with respect to CFC. Thus, with respect to CFC, the sales income is deemed to be derived from the purchase of personal property on behalf of a related person. Because the property purchased is both manufactured and sold for use outside of Country A, CFC's country of organization, CFC's distributive share of the sales income is foreign base company sales income.

Example 2. (i) CFC1, a controlled foreign corporation organized in Country A, is an 80-percent partner in Partnership, a partnership organized in Country B. CFC2, a controlled foreign corporation organized in Country B, owns the remaining 20 percent interest in Partnership. CFC1 and CFC2 are owned by a common U.S. parent, USP. CFC2 manufactures Product A in Country B. Partnership earns sales income from purchasing Product A from CFC2 and selling it to third parties located in Country B that are not related persons with respect to CFC1 or CFC2. To determine whether CFC1's distributive share of Partnership's sales income is foreign base company sales income under section 954(d), CFC1 is treated as if it purchased Product A from CFC2 and sold it to third parties in Country B. Under section 954(d)(3), CFC2 is a related person with respect to CFC1. Thus, with respect to CFC1, the sales income is deemed to be derived from the purchase of personal property from a related person. Because the property purchased is both manufactured and sold for use outside of Country A, CFC1's country of organization, CFC1's distributive share of the sales income is foreign base company sales income.
(ii) Because Product A is both manufactured and sold for use within CFC2's country of organization, CFC2's distributive share of Partnership's sales income is not foreign base company sales income.

Example 3. CFC, a controlled foreign corporation organized in Country A, is an 80 percent partner in MJK Partnership, a Country B partnership. CFC purchased goods from J Corp, a Country C corporation that is a related person with respect to CFC. CFC sold the goods to MJK Partnership. In turn, MJK Partnership sold the goods to P Corp, a Country D corporation that is unrelated to CFC. P Corp sold the goods to unrelated customers in Country D. The goods were manufactured in Country C by persons unrelated to J Corp . CFC's distributive share of the

income of MJK Partnership from the sale of goods to P Corp will be treated as income from the sale of goods purchased from a related person for purposes of section 954(d)(1) because CFC purchased the goods from J Corp, a related person. Because the goods were both manufactured and sold for use outside of Country A, CFC's distributive share of the income attributable to the sale of the goods is foreign base company sales income. Further, CFC's income from the sale of the goods to MJK Partnership will also be foreign base company sales income.

Example 4. The facts are the same as *Example 3,* except that MJK Partnership purchased the goods from P Corp and sold those goods to CFC. CFC sold the goods to J Corp. J Corp sold the goods to unrelated customers in Country C. CFC's distributive share of the income of MJK Partnership from the sale of the goods by the partnership to itself will be treated as income from the sale of goods to a related person, for purposes of section 954(d)(1). Because the goods were both manufactured and sold for use outside of Country A, CFC's distributive share of income attributable to the sale of the goods is foreign base company sales income. Further, CFC's income from the sale of the goods to J Corp is also foreign base company sales income.

(h) ***Applicability dates*** —

(1) ***Paragraph (d)(3) of this section.*** Paragraph (d)(3) of this section applies to taxable years of a controlled foreign corporation ending on or after December 16, 2019. For taxable years of a controlled foreign corporation ending on or after December 4, 2018, but ending before December 16, 2019, see § 1.954-1(d)(3) as contained in 26 CFR part 1 revised as of April 1, 2019.

(2) ***Paragraph (g) of this section.*** Paragraph (g) of this section applies to taxable years of a controlled foreign corporation beginning on or after July 23, 2002.

(3) ***Paragraphs (c)(1)(iii)(A)(3), (c)(1)(iv), and (d)(3)(i) of this section for taxable years beginning on or after*** July 23, 2020. Paragraphs (c)(1)(iii)(A)(*3*), (c)(1)(iv), and (d)(3)(i) of this section apply to taxable years of a controlled foreign corporation beginning on or after July 23, 2020, and to taxable years of United States shareholders in which or with which such taxable years of foreign corporations end. In addition, taxpayers may choose to apply the rules in paragraphs (c)(1)(iii)(A)(*3*), (c)(1)(iv), and (d)(3)(i) of this section to taxable years of controlled foreign corporations that begin after December 31, 2017, and before July 23, 2020, and to taxable years of United States shareholders in which or with which such taxable years of the controlled foreign corporations end, provided that they consistently apply those rules and the rules in § 1.951A-2(c)(1)(iii), (c)(3)(ii), and (c)(7) and (8) to such taxable years.

[T.D. 8618, 60 FR 46509, Sept. 7, 1995; 60 FR 62024, 62025, Dec. 4, 1995, as amended by T.D. 8704, 62 FR 20, Jan. 2, 1997; T.D. 8767, 63 FR 14615, Mar. 26, 1998; T.D. 8827, 64 FR 37677, July 13, 1999; T.D. 9008, 67 FR 48023, July 23, 2002; T.D. 9883, 84 FR 63803, Nov. 19, 2019; T.D. 9882, 84 FR 69107, Dec. 17, 2019; T.D. 9902, 85 FR 44649, July 23, 2020; T.D. 9922, 85 FR 72070, Nov. 12, 2020]

§ 1.954-2 Foreign personal holding company income.

(a) ***Computation of foreign personal holding company income*** —

(1) ***Categories of foreign personal holding company income.*** For purposes of subpart F and the regulations under that subpart, foreign personal holding company income consists of the following categories of income—

(i) Dividends, interest, rents, royalties, and annuities as described in paragraph (b) of this section;

(ii) Gain from certain property transactions as described in paragraph (e) of this section;

(iii) Gain from commodities transactions as described in paragraph (f) of this section;

(iv) Foreign currency gain as described in paragraph (g) of this section; and

(v) Income equivalent to interest as described in paragraph (h) of this section.

(2) *Coordination of overlapping categories under foreign personal holding company provisions* —

(i) ***In general.*** If any portion of income, gain or loss from a transaction is described in more than one category of foreign personal holding company income (as described in paragraph (a)(2)(ii) of this section), that portion of income, gain or loss is treated solely as income, gain or loss from the category of foreign personal holding company income with the highest priority.

(ii) ***Priority of categories.*** The categories of foreign personal holding company income, listed from highest priority (paragraph (a)(2)(ii)(A) of this section) to lowest priority (paragraph (a)(2)(ii)(E) of this section), are—

(A) Dividends, interest, rents, royalties, and annuities, as described in paragraph (b) of this section;

(B) Income equivalent to interest, as described in paragraph (h) of this section without regard to the exceptions in paragraph (h)(1)(ii)(A) of this section;

(C) Foreign currency gain or loss, as described in paragraph (g) of this section without regard to the exclusion in paragraph (g)(2)(ii) of this section;

(D) Gain or loss from commodities transactions, as described in paragraph (f) of this section without regard to the exclusion in paragraph (f)(1)(ii) of this section; and

(E) Gain or loss from certain property transactions, as described in paragraph (e) of this section without regard to the exceptions in paragraph (e)(1)(ii) of this section.

(3) *Changes in the use or purpose for which property is held* —

(i) ***In general.*** Under paragraphs (e), (f), (g) and (h) of this section, transactions in certain property give rise to gain or loss included in the computation of foreign personal holding company income if the controlled foreign corporation holds that property for a particular use or purpose. The use or purpose for which property is held is that use or purpose for which it was held for more than one- half of the period during which the controlled foreign corporation held the property prior to the disposition.

(ii) *Special rules* —

(A) ***Anti-abuse rule.*** If a principal purpose of a change in use or purpose of property was to avoid including gain or loss in the computation of foreign personal holding company income, all the gain or loss from the disposition of the property is treated as foreign personal holding company income. A purpose may be a principal purpose even though it is outweighed by other purposes (taken together or separately).

(B) ***Hedging transactions.*** The provisions of paragraph (a)(3)(i) of this section shall not apply to bona fide hedging transactions, as defined in paragraph (a)(4)(ii) of this section. A transaction will be treated as a bona fide hedging transaction only so long as it satisfies the requirements of paragraph (a)(4)(ii) of this section.

(iii) ***Example.*** The following example illustrates the application of this paragraph (a)(3).

Example. At the beginning of taxable year 1, *CFC,* a controlled foreign corporation, purchases a building for investment. During taxable years 1 and 2, *CFC* derives rents from the building that are included in the computation of foreign personal holding company income under paragraph (b)(1)(iii) of this section. At the beginning of taxable year 3, *CFC* changes the use of the building by terminating all leases and using it in an active trade or business. At the beginning of taxable year 4, *CFC* sells the building at a gain. The building was not used in an active trade or business of *CFC* for more than one-half of the period during which it was held by *CFC.* Therefore, the building is considered to be property that gives rise to rents, as described in paragraph (e)(2) of this section, and gain from the sale is included in the computation of *CFC*'s foreign personal holding company income under paragraph (e) of this section.

(4) ***Definitions and special rules.*** The following definitions and special rules apply for purposes of computing foreign personal holding company income under this section.

(i) ***Interest.*** The term *interest* includes all amounts that are treated as interest income (including interest on a tax-exempt obligation) by reason of the Internal Revenue Code or Income Tax Regulations or any other provision of law. For example, interest includes stated interest, acquisition discount, original issue discount, de minimis original issue discount, market discount, de minimis market discount, and unstated interest, as adjusted by any amortizable bond premium or acquisition premium.

(ii) ***Bona fide hedging transaction*** —

(A) ***Definition.*** The term *bona fide hedging transaction* means a transaction that meets the requirements of § 1.1221-2 (a) through (d) and that is identified in accordance with the requirements of paragraph (a)(4)(ii)(B) of this section, except that in applying § 1.1221-2(b)(1), the risk being hedged may be with respect to ordinary property, section 1231 property, or a section 988 transaction. A transaction that hedges the liabilities, inventory or other assets of a related person (as defined in section 954(d)(3)), that is entered into to assume or reduce risks of a related person, or that is entered into by a person other than a person acting in its capacity as a regular dealer (as defined in paragraph (a)(4)(iv) of this section) to reduce risks assumed from a related person, will not be treated as a bona fide hedging transaction. For an illustration of how this rule applies with respect to foreign currency transactions, see paragraph (g)(2)(ii)(D) of this section.

(B) ***Identification.*** The identification requirements of this section shall be satisfied if the taxpayer meets the identification and recordkeeping requirements of § 1.1221-2(f). However, for bona fide hedging transactions entered into prior to March 7, 1996 the identification and recordkeeping requirements of § 1.1221-2 shall not apply. Rather, for bona fide hedging transactions entered into on or after July 22, 1988 and prior to March 7, 1996 the identification and recordkeeping requirements shall be satisfied if such transactions are identified by the close of the fifth day after the day on which they are entered into. For bona fide hedging transactions entered into prior to July 22, 1988, the identification and recordkeeping requirements shall be satisfied if such transactions are identified reasonably contemporaneously with the date they are entered into, but no later than within the normal period prescribed under the method of accounting of the controlled foreign corporation used for financial reporting purposes.

(C) ***Effect of identification and non-identification*** —(*1*) *Transactions identified.* If a taxpayer identifies a transaction as a bona fide hedging transaction for purposes of this section, the identification is binding with respect to any loss arising from such transaction whether or not all of the requirements of paragraph (a)(4)(ii)(A) of this section are satisfied. Accordingly, such loss will be allocated against income that is not subpart F income (or, in the case of an election under paragraph (g)(3) of this section, against the category of subpart F income to which it relates) and apportioned among the categories of income described in section 904(d)(1). If the transaction is not in fact a bona fide hedging transaction described in paragraph (a)(4)(ii)(A) of this section, however, then any gain realized with respect to such transaction shall not be considered as gain from a bona fide hedging transaction. Accordingly, such gain shall be treated as gain from the appropriate category of foreign personal holding company income. Thus, the taxpayer's identification of the transaction as a hedging transaction does not itself operate to exclude gain from the appropriate category of foreign personal holding company income.

(*2*) *Inadvertent identification.* Notwithstanding paragraph (a)(4)(ii)(C)(*1*) of this section, if the taxpayer identifies a transaction as a bona fide hedging transaction for purposes of this section, the characterization of the loss is determined as if the transaction had not been identified as a bona fide hedging transaction if—

(*i*) The transaction is not a bona fide hedging transaction (as defined in paragraph (a)(4)(ii)(A) of this section);

(*ii*) The identification of the transaction as a bona fide hedging transaction was due to inadvertent error; and

(*iii*) All of the taxpayer's transactions in all open years are being treated on either original or, if necessary, amended returns in a manner consistent with the principles of this section.

(*3*) *Transactions not identified.* Except as provided in paragraphs (a)(4)(ii)(C)(*4*) and (*5*) of this section, the absence of an identification that satisfies the requirements of paragraph (a)(4)(ii)(B) of this section is binding and establishes that a transaction is not a bona fide hedging transaction. Thus, subject to the exceptions, the characterization of gain or loss is determined without reference to whether the transaction is a bona fide hedging transaction.

(*4*) *Inadvertent error.* If a taxpayer does not make an identification that satisfies the requirements of paragraph (a)(4)(ii)(B) of this section, the taxpayer may treat gain or loss from the transaction as gain or loss from a bona fide hedging transaction if—

(*i*) The transaction is a bona fide hedging transaction (as defined in paragraph (a)(4)(ii)(A) of this section);

(*ii*) The failure to identify the transaction was due to inadvertent error; and

(*iii*) All of the taxpayer's bona fide hedging transactions in all open years are being treated on either original or, if necessary, amended returns as bona fide hedging transactions in accordance with the rules of this section.

(*5*) ***Anti-abuse rule.*** If a taxpayer does not make an identification that satisfies all the requirements of paragraph (a)(4)(ii)(B) of this section but the taxpayer has no reasonable grounds for treating the transaction as other than a bona fide hedging transaction, then loss from the transaction shall be treated as realized with respect to a bona fide hedging transaction. Thus, a taxpayer may not elect to

exclude loss from its proper characterization as a bona fide hedging transaction. The reasonableness of the taxpayer's failure to identify a transaction is determined by taking into consideration not only the requirements of paragraph (a)(4)(ii)(A) of this section but also the taxpayer's treatment of the transaction for financial accounting or other purposes and the taxpayer's identification of similar transactions as hedging transactions.

(iii) ***Inventory and similar property*** —

(A) ***Definition.*** The term *inventory and similar property* (or *inventory or similar property*) means property that is stock in trade of the controlled foreign corporation or other property of a kind that would properly be included in the inventory of the controlled foreign corporation if on hand at the close of the taxable year (if the controlled foreign corporation were a domestic corporation), or property held by the controlled foreign corporation primarily for sale to customers in the ordinary course of its trade or business.

(B) ***Hedging transactions.*** A bona fide hedging transaction with respect to inventory or similar property (other than a transaction described in section 988(c)(1) without regard to section 988(c)(1)(D)(i)) shall be treated as a transaction in inventory or similar property.

(iv) ***Regular dealer.*** The term *regular dealer* means a controlled foreign corporation that—

(A) Regularly and actively offers to, and in fact does, purchase property from and sell property to customers who are not related persons (as defined in section 954(d)(3)) with respect to the controlled foreign corporation in the ordinary course of a trade or business; or

(B) Regularly and actively offers to, and in fact does, enter into, assume, offset, assign or otherwise terminate positions in property with customers who are not related persons (as defined in section 954(d)(3)) with respect to the controlled foreign corporation in the ordinary course of a trade or business.

(v) ***Dealer property*** —

(A) ***Definition.*** Property held by a controlled foreign corporation is *dealer property* if—

(*1*) The controlled foreign corporation is a regular dealer in property of such kind (determined under paragraph (a)(4)(iv) of this section); and

(*2*) The property is held by the controlled foreign corporation in its capacity as a dealer in property of such kind without regard to whether the property arises from a transaction with a related person (as defined in section 954(d)(3)) with respect to the controlled foreign corporation. The property is not held by the controlled foreign corporation in its capacity as a dealer if the property is held for investment or speculation on its own behalf or on behalf of a related person (as defined in section 954(d)(3)).

(B) ***Securities dealers.*** If a controlled foreign corporation is a licensed securities dealer, only the securities that it has identified as held for investment in accordance with the provisions of section 475(b) or section 1236 will be considered to be property held for investment or speculation under this section. A licensed securities dealer is a controlled foreign corporation that is both a securities dealer, as defined in section 475, and a regular dealer, as defined in paragraph (a)(4)(iv) of this section, and that is either—

(1) Registered as a securities dealer under section 15(a) of the Securities Exchange Act of 1934 or as a Government securities dealer under section 15C(a) of such Act; or

(2) Licensed or authorized in the country in which it is chartered, incorporated, or organized to purchase and sell securities from or to customers who are residents of that country. The conduct of such securities activities must be subject to bona fide regulation, including appropriate reporting, monitoring, and prudential (including capital adequacy) requirements, by a securities regulatory authority in that country that regularly enforces compliance with such requirements and prudential standards.

(C) ***Hedging transactions.*** A bona fide hedging transaction with respect to dealer property shall be treated as a transaction in dealer property.

(vi) ***Examples.*** The following examples illustrate the application of paragraphs (a)(4)(ii), (iv) and (v) of this section.

> *Example 1.* (i) *CFC1* and *CFC2* are related controlled foreign corporations (within the meaning of section 954(d)(3)) located in Countries F and G, respectively. *CFC1* and *CFC2* regularly purchase securities from and sell securities to customers who are not related persons with respect to *CFC1* or *CFC2* (within the meaning of section 954(d)(3)) in the ordinary course of their businesses and regularly and actively hold themselves out as being willing to, and in fact do, enter into either side of options, forward contracts, or other financial instruments. *CFC1* uses securities that are traded in securities markets in Country G to hedge positions that it enters into with customers located in Country F. *CFC1* is not a member of a securities exchange in Country G, so it purchases such securities from *CFC2* and unrelated persons that are registered as securities dealers in Country G and that are members of Country G securities exchanges. Such hedging transactions qualify as bona fide hedging transactions under paragraph (a)(4)(ii) of this section.
> (ii) Transactions that *CFC1* and *CFC2* enter into with each other do not affect the determination of whether they are regular dealers. Because *CFC1* and *CFC2* regularly purchase securities from and sell securities to customers who are not related persons within the meaning of section 954(d)(3) in the ordinary course of their businesses and regularly and actively hold themselves out as being willing to, and in fact do, enter into either side of options, forward contracts, or other financial instruments, however, they qualify as regular dealers in such property within the meaning of paragraph (a)(4)(iv) of this section. Moreover, because *CFC1* purchases securities from *CFC2* as bona fide hedging transactions with respect to dealer property, the securities are dealer property under paragraph (a)(4)(v)(C) of this section. Similarly, because *CFC2* sells securities to *CFC1* in the ordinary course of its business as a dealer, the securities are dealer property under paragraph (a)(4)(v)(A) of this section.

> *Example 2.* (i) *CFC* is a controlled foreign corporation located in Country B. *CFC* serves as the currency coordination center for the controlled group, aggregating currency risks

incurred by the group and entering into hedging transactions that transfer those risks outside of the group. *CFC* regularly and actively holds itself out as being willing to, and in fact does, enter into either side of options, forward contracts, or other financial instruments with other members of the same controlled group. *CFC* hedges risks arising from such transactions by entering into transactions with persons who are not related persons (within the meaning of section 954(d)(3)) with respect to *CFC*. However, *CFC* does not regularly and actively hold itself out as being willing to, and does not, enter into either side of transactions with unrelated persons.
(ii) *CFC* is not a regular dealer in property under paragraph (a)(4)(iv) of this section and its options, forwards, and other financial instruments are not dealer property within the meaning of paragraph (a)(4)(v) of this section.

(vii) ***Debt instrument.*** The term *debt instrument* includes bonds, debentures, notes, certificates, accounts receivable, and other evidences of indebtedness.

(5) ***Special rules applicable to distributive share of partnership income*** —

(i) [Reserved]

(ii) ***Certain other exceptions applicable to foreign personal holding company income.*** To determine the extent to which a controlled foreign corporation's distributive share of an item of income of a partnership is foreign personal holding company income—

(A) The exceptions contained in section 954(c) that are based on whether the controlled foreign corporation is engaged in the active conduct of a trade or business, including section 954(c)(2) and paragraphs (b)(2) and (6), (e)(1)(ii) and (3)(ii), (iii) and (iv), (f)(1)(ii), (g)(2)(ii), and (h)(3)(ii) of this section, shall apply only if any such exception would have applied to exclude the income from foreign personal holding company income if the controlled foreign corporation had earned the income directly, determined by taking into account only the activities of, and property owned by, the partnership and not the separate activities or property of the controlled foreign corporation or any other person;

(B) A controlled foreign corporation's distributive share of partnership income will not be excluded from foreign personal holding company income under the exception contained in section 954(h) unless the controlled foreign corporation is an eligible controlled foreign corporation within the meaning of section 954(h)(2) (taking into account the income of the controlled foreign corporation and any partnerships or other qualified business units, within the meaning of section 989(a), of the controlled foreign corporation, including the controlled foreign corporation's distributive share of partnership income) and the partnership, of which the controlled foreign corporation is a partner, generates qualified banking or financing income within the meaning of section 954(h)(3) (taking into account only the income of the partnership);

(C) A controlled foreign corporation's distributive share of partnership income will not be excluded from foreign personal holding company income under the exception contained in section 954(i) unless the controlled foreign corporation is a qualifying insurance company,

as defined in section 953(e)(3), and the income of the partnership would have been qualified insurance income, as defined in section 954(i)(2), if received by the controlled foreign corporation directly. See § 1.952-1(g)(1).

(iii) ***Examples.*** The application of paragraph (a)(5)(ii) is demonstrated by the following examples:

Example 1. B Corp, a Country C corporation, is a controlled foreign corporation within the meaning of section 957(a). B Corp is an 80 percent partner of RKS Partnership, a Country D partnership whose principal office is located in Country D. RKS Partnership is a qualified business unit of B Corp, within the meaning of section 989(a). B Corp, including income earned through RKS Partnership, derives more than 70 percent of its gross income directly from the active and regular conduct of a lending or finance business, within the meaning of section 954(h)(4), from transactions in various countries with customers which are not related persons. Thus, B Corp is predominantly engaged in the active conduct of a banking, financing, or similar business within the meaning of section 954(h)(2)(A)(i). B Corp conducts substantial activity with respect to such business within the meaning of section 954(h)(2)(A)(ii). RKS Partnership derives more than 30 percent of its income from the active and regular conduct of a lending or finance business, within the meaning of section 954(h)(4), from transactions with customers which are not related persons and which are located solely within the home country of RKS Partnership, Country D. B Corp's distributive share of RKS Partnership's income from its lending or finance business will satisfy the special rule for income derived in the active conduct of banking, financing, or similar business of section 954(h). B Corp is an eligible controlled foreign corporation within the meaning of section 954(h)(2) and RKS Partnership generates qualified banking or financing income within the meaning of section 954(h)(3). B Corp does not have any foreign personal holding company income with respect to its distributive share of RKS Partnership income attributable to its lending or finance business income earned in Country D.

Example 2. D Corp, a Country F corporation, is a controlled foreign corporation within the meaning of section 957(a). D Corp is a qualifying insurance company, within the meaning of section 953(e)(3), that is engaged in the business of issuing life insurance contracts. D Corp has reserves of $100x, all of which are allocable to exempt contracts, and $10x of surplus, which is equal to 10 percent of the reserves allocable to exempt contracts. D Corp contributed the $100x of reserves and $10x of surplus to DJ Partnership in exchange for a 40-percent partnership interest. DJ Partnership is an entity organized under the laws of Country G and is treated as a partnership under the laws of Country G and Country F. DJ Partnership earns $30x of investment income during the taxable year that is received from persons who are not related persons with respect to D Corp, within the meaning of section 954(d)(3). D Corp's distributive share of this investment income is $12x. This income is treated as earned by D Corp in Country F under the tax laws of Country F and meets the definition of exempt insurance income in section 953(e)(1). This $12x of investment income would be qualified insurance income, under section 954(i)(2), if D Corp had received the income directly, because the $110x invested by D Corp in DJ Partnership is equal to D Corp's reserves allocable to exempt contracts under section 954(i)(2)(A) and allowable surplus under section 954(i)(2)(B)(ii). Thus, D Corp's distributive share of DJ Partnership's income will be excluded from foreign personal holding company income under section 954(i).

(iv) [Reserved]

(v) ***Effective date.*** This paragraph (a)(5) applies to taxable years of a controlled foreign corporation beginning on or after July 23, 2002.

(b) ***Dividends, interest, rents, royalties, and annuities*** —

(1) ***In general.*** Foreign personal holding company income includes—

(i) Dividends, except certain dividends from related persons as described in paragraph (b)(4) of this section and distributions of previously taxed income under section 959(b);

(ii) Interest, except export financing interest as defined in paragraph (b)(2) of this section and certain interest received from related persons as described in paragraph (b)(4) of this section;

(iii) Rents and royalties, except certain rents and royalties received from related persons as described in paragraph (b)(5) of this section and rents and royalties derived in the active conduct of a trade or business as defined in paragraph (b)(6) of this section; and

(iv) Annuities.

(2) ***Exclusion of certain export financing interest*** —

(i) ***In general.*** Foreign personal holding company income does not include interest that is export financing interest. The term *export financing interest* means interest that is derived in the conduct of a banking business and is export financing interest as defined in section 904(d)(2)(G). Solely for purposes of determining whether interest is export financing interest, property is treated as manufactured, produced, grown, or extracted in the United States if it is so treated under § 1.927(a)-1T(c).

(ii) ***Exceptions.*** Export financing interest does not include income from related party factoring that is treated as interest under section 864(d)(1) or (6) after the application of section 864(d)(7).

(iii) ***Conduct of a banking business.*** For purposes of this section, export financing interest is considered derived in the conduct of a banking business if, in connection with the financing from which the interest is derived, the corporation, through its own officers or staff of employees, engages in all the activities in which banks customarily engage in issuing and servicing a loan.

(iv) ***Examples.*** The following examples illustrate the application of this paragraph (b)(2).

> *Example 1.* (i) *DS,* a domestic corporation, manufactures property in the United States. In addition to selling inventory (property described in section 1221(1)), *DS* occasionally sells depreciable equipment it manufactures for use in its trade or business, which is property described in section 1221(2). Less than 50 percent of the fair market value, determined in accordance with section 904(d)(2)(G), of each item of inventory or equipment sold by *DS* is attributable to products imported into the United States. *CFC,* a controlled foreign corporation with respect to which *DS* is a related person (within the meaning of section 954(d)(3)), provides loans described in section 864(d)(6) to unrelated persons for the purchase of property from *DS.* This property is purchased exclusively for use or consumption outside the United States and outside *CFC*'s country of incorporation.

(ii) If, in issuing and servicing loans made with respect to purchases from *DS* of depreciable equipment used in its trade or business, which is property described in section 1221(2) in the hands of *DS, CFC* engages in all the activities in which banks customarily engage in issuing and servicing loans, the interest accrued from these loans would be export financing interest meeting the requirements of this paragraph (b)(2) and, thus, not included in foreign personal holding company income. However, interest from the loans made with respect to purchases from *DS* of property that is inventory in the hands of *DS* cannot be export financing interest because it is treated as income from a trade or service receivable under section 864(d)(6) and the exception under section 864(d)(7) does not apply. Thus the interest from loans made with respect to this inventory is included in foreign personal holding company income under paragraph (b)(1)(ii) of this section.

Example 2. (i) DS, a domestic corporation, wholly owns two controlled foreign corporations organized in Country A, CFC1 and CFC2. CFC1 purchases from DS property that DS manufactures in the United States. CFC1 uses the purchased property as a component part of property that CFC1 manufactures in Country A within the meaning of § 1.954-3(a)(4). CFC2 provides loans described in section 864(d)(6) to unrelated persons in Country A for the purchase of the property that CFC1 manufactures in Country A.
(ii) The interest accrued from the loans by CFC2 is not export financing interest as defined in section 904(d)(2)(G) because the property sold by CFC1 is not manufactured in the United States under § 1.927(a)-1T(c). No portion of the interest is export financing interest as defined in this paragraph (b)(2). The full amount of the interest is, therefore, included in foreign personal holding company income under paragraph (b)(1)(ii) of this section.

(3) ***Treatment of tax exempt interest.*** For taxable years of a controlled foreign corporation beginning after March 3, 1997, foreign personal holding company income includes all interest income, including interest that is described in section 103 (see § 1.952-2(c)(1)).

(4) ***Exclusion of dividends or interest from related persons*** —

(i) ***In general*** —

(A) ***Corporate payor.*** Foreign personal holding company income received by a controlled foreign corporation does not include dividends or interest if the payor—

(*1*) Is a corporation that is a related person with respect to the controlled foreign corporation, as defined in section 954(d)(3);

(*2*) Is created or organized under the laws of the same foreign country (the *country of incorporation*) as is the controlled foreign corporation; and

(*3*) Uses a substantial part of its assets in a trade or business in its country of incorporation, as determined under this paragraph (b)(4).

(B) ***Payment by a partnership.*** For purposes of this paragraph (b)(4), if a partnership with one or more corporate partners makes a payment of interest, a corporate partner will be treated as the payor of the interest—

(*1*) If the interest payment gives rise to a partnership item of deduction under the Internal Revenue Code or Income Tax Regulations, to the extent that the item of deduction is allocable to the corporate partner under section 704(b); or

(*2*) If the interest payment does not give rise to a partnership item of deduction under the Internal Revenue Code or Income Tax Regulations, to the extent that a partnership item reasonably related to the payment would be allocated to that partner under an existing allocation under the partnership agreement (made pursuant to section 704(b)).

(ii) ***Exceptions*** —

(A) ***Dividends.*** Dividends are excluded from foreign personal holding company income under this paragraph (b)(4) only to the extent that they are paid out of earnings and profits that are earned or accumulated during a period in which—

(*1*) The stock on which dividends are paid with respect to which the exclusion is claimed was owned by the recipient controlled foreign corporation directly, or indirectly through a chain of one or more subsidiaries each of which meets the requirements of paragraph (b)(4)(i)(A) of this section; and

(*2*) Each of the requirements of paragraph (b)(4)(i)(A) of this section is satisfied or, to the extent earned or accumulated during a taxable year of the related foreign corporation ending on or before December 31, 1962, during a period in which the payor was a related corporation as to the controlled foreign corporation and the other requirements of paragraph (b)(4)(i)(A) of this section were substantially satisfied.

(*3*) This paragraph (b)(4)(ii)(A) is illustrated by the following example:

Example. A, a domestic corporation, owns all of the stock of *B,* a corporation created and organized under the laws of Country Y, and *C,* a corporation created and organized under the laws of Country X. The taxable year of each of the corporations is the calendar year. In Year 1, *B* earns $100 of income from the sale of products in Country Y that it manufactured in Country Y. *C* had no earnings and profits in Year 1. On January 1 of Year 2, *A* contributes all of the stock of *B* and *C* to Newco, a Country Y corporation, in exchange for all of the stock of Newco. Neither *B* nor *C* earns any income in Year 2, but at the end of Year 2 *B* distributes the $100 accumulated earnings and profits to Newco. Newco's income from the distribution, $100, is foreign personal holding company income because the earnings and profits distributed by *B* were not earned or accumulated during a period in which the stock of *B* was owned by Newco and in which each of the requirements of paragraph (b)(4)(i)(A) of this section was satisfied.

(B) ***Interest paid out of adjusted foreign base company income or insurance income*** —(*1*) *In general.* Interest may not be excluded from the foreign personal holding company income of the recipient under this paragraph (b)(4) to the extent that the deduction for the interest is allocated under § 1.954-1(a)(4) and (c) to the payor's adjusted gross foreign base

company income (as defined in § 1.954-1(a)(3)), adjusted gross insurance income (as defined in § 1.954-1(a)(6)), or any other category of income included in the computation of subpart F income under section 952(a).

(*2*) *Rule for corporations that are both recipients and payors of interest.* If a controlled foreign corporation is both a recipient and payor of interest, the interest that is received will be characterized before the interest that is paid. In addition, the amount of interest paid or accrued, directly or indirectly, by the controlled foreign corporation to a related person (as defined in section 954(d)(3)) shall be offset against and eliminate any interest received or accrued, directly or indirectly, by the controlled foreign corporation from that related person. In a case in which the controlled foreign corporation pays or accrues interest to a related person, as defined in section 954(d)(3), and also receives or accrues interest indirectly from the related person, the smallest interest payment is eliminated and the amounts of all other interest payments are reduced by the amount of the smallest interest payment.

(C) ***Coordination with sections 864(d) and 881(c).*** Income of a controlled foreign corporation that is treated as interest under section 864(d)(1) or (6), or that is portfolio interest, as defined by section 881(c), is not excluded from foreign personal holding company income under section 954(c)(3)(A)(i) and this paragraph (b)(4).

(iii) ***Trade or business requirement.*** Except as otherwise provided under this paragraph (b)(4), the principles of section 367(a) apply for purposes of determining whether the payor has a trade or business in its country of incorporation and whether its assets are used in that trade or business. Property purchased or produced for use in a trade or business is not considered used in a trade or business before it is placed in service or after it is retired from service as determined in accordance with the principles of sections 167 and 168.

(iv) ***Substantial assets test.*** A substantial part of the assets of the payor will be considered to be used in a trade or business located in the payor's country of incorporation for a taxable year only if the average value of the payor's assets for such year that are used in the trade or business and are located in such country equals more than 50 percent of the average value of all the assets of the payor (including assets not used in a trade or business). The average value of assets for the taxable year is determined by averaging the values of assets at the close of each quarter of the taxable year. The value of assets is determined under paragraph (b)(4)(v) of this section, and the location of assets used in a trade or business of the payor is determined under paragraphs (b)(4)(vi) through (xi) of this section.

(v) ***Valuation of assets.*** For purposes of determining whether a substantial part of the assets of the payor are used in a trade or business in its country of incorporation, the value of assets shall be their fair market value (not reduced by liabilities), which, in the absence of affirmative evidence to the contrary, shall be deemed to be their adjusted basis.

(vi) ***Location of tangible property*** —

(A) ***In general.*** Tangible property (other than inventory and similar property as defined in paragraph (a)(4)(iii) of this section, and dealer property as defined in paragraph (a)(4)(v) of this section) used in a trade or business is considered located in the country in which it is physically located.

(B) ***Exception.*** An item of tangible personal property that is used in the trade or business of a payor in the payor's country of incorporation is considered located within the payor's country of incorporation while it is temporarily located elsewhere for inspection or repair if the property is not placed in service in a country other than the payor's country of incorporation and is not to be so placed in service following the inspection or repair.

(vii) ***Location of intangible property*** —

(A) ***In general.*** Intangible property (other than inventory and similar property as defined in paragraph (a)(4)(iii) of this section, dealer property as defined in paragraph (a)(4)(v) of this section, and debt instruments) is considered located entirely in the payor's country of incorporation for a quarter of the taxable year only if the payor conducts all of its activities in connection with the use or exploitation of the property in that country during that entire quarter. For this purpose, the country in which the activities connected to the use or exploitation of the property are conducted is the country in which the expenses associated with these activities are incurred. Expenses incurred in connection with the use or exploitation of an item of intangible property are included in the computation provided by this paragraph (b)(4) if they would be deductible under section 162 or includible in inventory costs or the cost of goods sold if the payor were a domestic corporation. If the payor conducts such activities through an agent or independent contractor, then the expenses incurred by the payor with respect to the agent or independent contractor shall be deemed to be incurred by the payor in the country in which the expenses of the agent or independent contractor were incurred by the agent or independent contractor.

(B) ***Exception for property located in part in the payor's country of incorporation.*** If the payor conducts its activities in connection with the use or exploitation of an item of intangible property, including goodwill (other than inventory and similar property, dealer property and debt instruments) during a quarter of the taxable year both in its country of incorporation and elsewhere, then the value of the intangible considered located in the payor's country of incorporation during that quarter is a percentage of the value of the item as of the close of the quarter. That percentage equals the ratio that the expenses incurred by the payor (described in paragraph (b)(4)(vii)(A) of this section) during the entire quarter by reason of activities that are connected with the use or exploitation of the item of intangible property and are conducted in the payor's country of incorporation bear to all expenses incurred by the payor during the entire quarter by reason of all such activities worldwide.

(viii) ***Location of inventory and dealer property*** —

(A) ***In general.*** Inventory and similar property, as defined in paragraph (a)(4)(iii) of this section, and dealer property, as defined in paragraph (a)(4)(v) of this section, are considered located entirely in the payor's country of incorporation for a quarter of the taxable year only if the payor conducts all of its activities in connection with the production and sale, or purchase and resale, of such property in its country of incorporation during that entire quarter. If the payor conducts such activities through an agent or independent contractor, then the location of such activities is the place in which they are conducted by the agent or independent contractor.

(B) ***Inventory and dealer property located in part in the payor's country of incorporation.*** If the payor conducts its activities in connection with the production and sale, or purchase and resale, of inventory or similar property or dealer property during a quarter of the taxable year both in its country of incorporation and elsewhere, then the value of the inventory or

similar property or dealer property considered located in the payor's country of incorporation during each quarter is a percentage of the value of the inventory or similar property or dealer property as of the close of the quarter. That percentage equals the ratio that the costs and expenses incurred by the payor during the entire quarter by reason of activities connected with the production and sale, or purchase and resale, of inventory or similar property or dealer property that are conducted in the payor's country of incorporation bear to all costs or expenses incurred by the payor during the entire quarter by reason of all such activities worldwide. A cost incurred in connection with the production and sale or purchase and resale of inventory or similar property or dealer property is included in this computation if it—

(*1*) Would be included in inventory costs or otherwise capitalized with respect to inventory or similar property or dealer property under section 61, 263A, 471, or 472 if the payor were a domestic corporation; or

(*2*) Would be deductible under section 162 if the payor were a domestic corporation and is definitely related to gross income derived from such property (but not to all classes of gross income derived by the payor) under the principles of § 1.861-8.

(ix) ***Location of debt instruments.*** For purposes of this paragraph (b)(4), debt instruments, other than debt instruments that are inventory or similar property (as defined in paragraph (a)(4)(iii) of this section) or dealer property (as defined in paragraph (a)(4)(v) of this section) are considered to be used in a trade or business only if they arise from the sale of inventory or similar property or dealer property by the payor or from the rendition of services by the payor in the ordinary course of a trade or business of the payor, and only until such time as interest is required to be charged under section 482. Debt instruments that arise from the sale of inventory or similar property or dealer property during a quarter are treated as having the same location, proportionately, as the inventory or similar property or dealer property held during that quarter. Debt instruments arising from the rendition of services in the ordinary course of a trade or business are considered located on a proportionate basis in the countries in which the services to which they relate are performed.

(x) ***Treatment of certain stock interests.*** Stock in a controlled foreign corporation (lower-tier corporation) that is incorporated in the same country as the payor and that is more than 50-percent owned, directly or indirectly, by the payor within the meaning of section 958(a) shall be considered located in the payor's country of incorporation and, solely for purposes of section 954(c)(3), used in a trade or business of the payor in proportion to the value of the assets of the lower-tier corporation that are used in a trade or business in the country of incorporation. The location of assets used in a trade or business of the lower-tier corporation shall be determined under the rules of this paragraph (b)(4).

(xi) ***Treatment of banks and insurance companies.*** [Reserved]

(5) ***Exclusion of rents and royalties derived from related persons*** —

(i) ***In general*** —

(A) ***Corporate payor.*** Foreign personal holding company income received by a controlled foreign corporation does not include rents or royalties if—

(*1*) The payor is a corporation that is a related person with respect to the controlled foreign corporation, as defined in section 954(d)(3); and

(2) The rents or royalties are for the use of, or the privilege of using, property within the country under the laws of which the controlled foreign corporation receiving the payments is created or organized (the country of incorporation).

(B) ***Payment by a partnership.*** For purposes of this paragraph (b)(5), if a partnership with one or more corporate partners makes a payment of rents or royalties, a corporate partner will be treated as the payor of the rents or royalties—

(1) If the rent or royalty payment gives rise to a partnership item of deduction under the Internal Revenue Code or Income Tax Regulations, to the extent the item of deduction is allocable to the corporate partner under section 704(b); or

(2) If the rent or royalty payment does not give rise to a partnership item of deduction under the Internal Revenue Code or Income Tax Regulations, to the extent that a partnership item reasonably related to the payment would be allocated to that partner under an existing allocation under the partnership agreement (made pursuant to section 704(b)).

(ii) ***Exceptions*** —

(A) ***Rents or royalties paid out of adjusted foreign base company income or insurance income.*** Rents or royalties may not be excluded from the foreign personal holding company income of the recipient under this paragraph (b)(5) to the extent that deductions for the payments are allocated under section 954(b)(5) and § 1.954-1(a)(4) and (c) to the payor's adjusted gross foreign base company income (as defined in § 1.954-1(a)(3)), adjusted gross insurance income (as defined in § 1.954-1(a)(6)), or any other category of income included in the computation of subpart F income under section 952(a).

(B) ***Property used in part in the controlled foreign corporation's country of incorporation.*** If the payor uses the property both in the controlled foreign corporation's country of incorporation and elsewhere, the part of the rent or royalty attributable (determined under the principles of section 482) to the use of, or the privilege of using, the property outside such country of incorporation is included in the computation of foreign personal holding company income under this paragraph (b).

(6) ***Exclusion of rents and royalties derived in the active conduct of a trade or business.*** Foreign personal holding company income shall not include rents or royalties that are derived in the active conduct of a trade or business and received from a person that is not a related person (as defined in section 954(d)(3)) with respect to the controlled foreign corporation. For purposes of this section, rents or royalties are derived in the active conduct of a trade or business only if the provisions of paragraph (c) or (d) of this section are satisfied.

(c) ***Excluded rents*** —

(1) ***Active conduct of a trade or business.*** Rents will be considered for purposes of paragraph (b)(6) of this section to be derived in the active conduct of a trade or business if such rents are derived by the controlled foreign corporation (the lessor) from leasing any of the following—

(i) Property that the lessor, through its own officers or staff of employees, has manufactured or produced, or property that the lessor has acquired and, through its own officers or staff of employees, added substantial value to, but only if the lessor, through its officers or staff of employees, is regularly engaged in the manufacture or production of, or in the acquisition and addition of substantial value to, property of such kind;

(ii) Real property with respect to which the lessor, through its own officers or staff of employees, regularly performs active and substantial management and operational functions while the property is leased;

(iii) Personal property ordinarily used by the lessor in the active conduct of a trade or business, leased temporarily during a period when the property would, but for such leasing, be idle; or

(iv) Property that is leased as a result of the performance of marketing functions by such lessor through its own officers or staff of employees located in a foreign country or countries, if the lessor, through its officers or staff of employees, maintains and operates an organization either in such country or in such countries (collectively), as applicable, that is regularly engaged in the business of marketing, or of marketing and servicing, the leased property and that is substantial in relation to the amount of rents derived from the leasing of such property.

(2) *Special rules* —

(i) ***Adding substantial value.*** For purposes of paragraph (c)(1)(i) of this section, the performance of marketing functions will not be considered to add substantial value to property.

(ii) ***Substantiality of foreign organization.*** For purposes of paragraph (c)(1)(iv) of this section, whether an organization either in a foreign country or in foreign countries (collectively) is substantial in relation to the amount of rents is determined based on all the facts and circumstances. However, such an organization will be considered substantial in relation to the amount of rents if active leasing expenses, as defined in paragraph (c)(2)(iii) of this section, equal or exceed 25 percent of the adjusted leasing profit, as defined in paragraph (c)(2)(iv) of this section. In addition, for purposes of aircraft or vessels leased in foreign commerce, an organization will be considered substantial if active leasing expenses, as defined in paragraph (c)(2)(iii) of this section, equal or exceed 10 percent of the adjusted leasing profit, as defined in paragraph (c)(2)(iv) of this section. For purposes of paragraphs (c)(1)(iv) and (c)(2) of this section and § 1.956-2(b)(1)(vi), the term *aircraft or vessels* includes component parts, such as engines that are leased separately from an aircraft or vessel.

(iii) ***Active leasing expenses.*** The term *active leasing expenses* means the deductions incurred by an organization of the lessor in a foreign country that are properly allocable to rental income and that would be allowable under section 162 to the lessor if it were a domestic corporation, other than—

(A) Deductions for compensation for personal services rendered by shareholders of, or related persons (as defined in section 954(d)(3)) with respect to, the lessor;

(B) Deductions for amounts (including rents and royalties) paid or incurred by the lessor for the right to use the property (or a component thereof) that generated the rental income;

(C) Deductions that, although generally allowable under section 162, would be specifically allowable to the lessor (if the lessor were a domestic corporation) under any section of the Internal Revenue Code other than section 162;

(D) Deductions for payments made to agents or independent contractors with respect to the leased property other than payments for insurance, utilities and other expenses for like services, or for capitalized repairs; and

(E) Deductions for CST Payments or PCT Payments (as defined in § 1.482-7(b)).

(iv) ***Adjusted leasing profit.*** The term *adjusted leasing profit* means the gross income of the lessor from rents, reduced by the sum of—

(A) Amounts (including rents and royalties) paid or incurred by the lessor for the right to use the property (or a component thereof) that generated the rental income;

(B) The amounts that would be allowable to such lessor (if the lessor were a domestic corporation) as deductions under sections 167 or 168 with respect to such rental income; and

(C) The amounts paid by the lessor to agents or independent contractors with respect to such rental income other than payments for insurance, utilities and other expenses for like services, or for capitalized repairs.

(v) ***Leased in foreign commerce.*** For purposes of paragraphs (c)(1)(iv) and (c)(2)(ii) of this section, an aircraft or vessel is considered to be leased in foreign commerce if the aircraft or vessel is used in foreign commerce and is used predominantly outside the United States. An aircraft or vessel is considered to be used in foreign commerce if it is used for the transportation of property or passengers between a port (or airport) in the United States and a port (or airport) in a foreign country or between foreign ports (or airports). An aircraft or vessel will be considered to be used predominantly outside the United States if more than 50 percent of the miles traversed during the taxable year in the use of the aircraft or vessel are traversed outside the United States or if the aircraft or vessel is located outside the United States more than 50 percent of the time during the taxable year.

(vi) ***Leases acquired by the CFC lessor.*** Except as provided in this paragraph (c)(2)(vi), the exception in paragraph (c)(1)(iv) of this section will also apply to rents from leases acquired from any person, if following the acquisition the lessor performs active and substantial management, operational, and remarketing (including remarketing for purposes of re-leasing or selling the property) functions with respect to the leased property. However, if any person is claiming a benefit with respect to an acquired lease pursuant to section 921 or 114 of the Internal Revenue Code or section 101(d) of the American Jobs Creation Act of 2004, (Pub. L. 108-357 (118 Stat. 1418) (2004)), the rents from such lease, notwithstanding paragraphs (b)(6) and (c) of this section, are ineligible for the exception in section 954(c)(2)(A).

(vii) ***Marketing of leases.*** Paragraph (c)(1)(iv) of this section can apply whether a lessor is engaged in the marketing of leases as a form of financing or is engaged in marketing the property as such, and regardless of whether the lease is classified as a finance lease or an operating lease for financial accounting purposes, so long as such lease is treated as a lease for Federal income tax purposes.

(viii) ***Cost sharing arrangements (CSAs).*** For purposes of paragraphs (c)(1)(i) and (iv) of this section, CST Payments or PCT Payments (as defined in § 1.482-7(b)(1)) made by the lessor to another controlled participant (as defined in § 1.482-7(j)(1)(i)) pursuant to a CSA (as defined in § 1.482-7(a)) do not cause the activities undertaken by that other controlled participant to be considered to be undertaken by the lessor's own officers or staff of employees.

(3) ***Examples.*** The application of this paragraph (c) is illustrated by the following examples.

Example 1. Controlled foreign corporation *A* is regularly engaged in the production of office machines which it sells or leases to others and services. Under paragraph (c)(1)(i) of this section, the rental income of Corporation *A* from these leases is derived in the active conduct of a trade or business for purposes of section 954(c)(2)(A).

Example 2. Controlled foreign corporation *D* purchases motor vehicles which it leases to others. In the conduct of its short-term leasing of such vehicles in foreign country X, Corporation *D* owns a large number of motor vehicles in country X which it services and repairs, leases motor vehicles to customers on an hourly, daily, or weekly basis, maintains offices and service facilities in country X from which to lease and service such vehicles, and maintains therein a sizable staff of its own administrative, sales, and service personnel. Corporation *D* also leases in country X on a long-term basis, generally for a term of one year, motor vehicles that it owns. Under the terms of the long-term leases, Corporation *D* is required to repair and service, during the term of the lease, the leased motor vehicles without cost to the lessee. By the maintenance in country X of office, sales, and service facilities and its complete staff of administrative, sales, and service personnel, Corporation *D* maintains and operates an organization therein that is regularly engaged in the business of marketing and servicing the motor vehicles that are leased. The deductions incurred by such organization satisfy the 25-percent test of paragraph (c)(2)(ii) of this section; thus, such organization is substantial in relation to the rents Corporation *D* receives from leasing the motor vehicles. Therefore, under paragraph (c)(1)(iv) of this section, such rents are derived in the active conduct of a trade or business for purposes of section 954(c)(2)(A).

Example 3. Controlled foreign corporation *E* owns a complex of apartment buildings that it has acquired by purchase. Corporation *E* engages a real estate management firm to lease the apartments, manage the buildings and pay over the net rents to Corporation *E.* The rental income of Corporation *E* from such leases is not derived in the active conduct of a trade or business for purposes of section 954(c)(2)(A).

Example 4. Controlled foreign corporation *F* acquired by purchase a twenty-story office building in a foreign country, three floors of which it occupies and the rest of which it leases. Corporation *F* acts as rental agent for the leasing of offices in the building and employs a substantial staff to perform other management and maintenance functions. Under paragraph (c)(1)(ii) of this section, the rents received by Corporation *F* from such leasing operations are derived in the active conduct of a trade or business for purposes of section 954(c)(2)(A).

Example 5. Controlled foreign corporation *G* owns equipment that it ordinarily uses to perform contracts in foreign countries to drill oil wells. For occasional brief and irregular periods it is unable to obtain contracts requiring immediate performance sufficient to employ all such equipment. During such a period it sometimes leases such idle equipment temporarily. After the expiration of such temporary leasing of the property, Corporation *G* continues the use of such equipment in the performance of its own drilling contracts. Under paragraph (c)(1)(iii) of this section, rents Corporation *G* receives from such leasing of idle equipment are derived in the active conduct of a trade or business for purposes of section 954(c)(2)(A).

Example 6. The facts are the same as in *Example 2,* except that controlled foreign corporation D purchases aircraft which it leases to others. If Corporation D incurs active leasing expenses, as defined in paragraph (c)(2)(iii) of this section, equal to or in excess of 10 percent of its adjusted leasing profit, as defined in paragraph (c)(2)(iv) of this section, the organization maintained and

operated by Corporation D in country X is substantial in relation to the amount of rents Corporation D receives from leasing the aircraft. Therefore, under paragraph (c)(1)(iv) of this section, such rents are derived in the active conduct of a trade or business for purposes of section 954(c)(2)(A). If a particular aircraft subject to lease was not leased by the lessee corporation in foreign commerce, for example, because 50 percent or less of the miles during the taxable year were traversed outside the United States and the aircraft was located in the United States for 50 percent or more of the taxable year, Corporation D is not prevented from otherwise showing that it actively carries on a trade or business with regard to the rents derived from that aircraft under paragraph (c)(2)(ii) of this section, based on its facts and circumstances or a showing that active leasing expenses equal or exceed 25 percent of the adjusted leasing profit.

(d) ***Excluded royalties*** —

(1) ***Active conduct of a trade or business.*** Royalties will be considered for purposes of paragraph (b)(6) of this section to be derived in the active conduct of a trade or business if such royalties are derived by the controlled foreign corporation (the licensor) from licensing—

(i) Property that the licensor, through its own officers or staff of employees, has developed, created, or produced, or property that the licensor has acquired and, through its own officers or staff of employees, added substantial value to, but only so long as the licensor, through its officers or staff of employees, is regularly engaged in the development, creation, or production of, or in the acquisition and addition of substantial value to, property of such kind; or

(ii) Property that is licensed as a result of the performance of marketing functions by such licensor through its own officers or staff of employees located in a foreign country or countries, if the licensor, through its officers or staff of employees, maintains and operates an organization either in such foreign country or in such foreign countries (collectively), as applicable, that is regularly engaged in the business of marketing, or of marketing and servicing, the licensed property and that is substantial in relation to the amount of royalties derived from the licensing of such property.

(2) ***Special rules*** —

(i) ***Adding substantial value.*** For purposes of paragraph (d)(1)(i) of this section, the performance of marketing functions will not be considered to add substantial value to property.

(ii) ***Substantiality of foreign organization.*** For purposes of paragraph (d)(1)(ii) of this section, whether an organization either in a foreign country or in foreign countries (collectively) is substantial in relation to the amount of royalties is determined based on all of the facts and circumstances. However, such an organization will be considered substantial in relation to the amount of royalties if active licensing expenses, as defined in paragraph (d)(2)(iii) of this section, equal or exceed 25 percent of the adjusted licensing profit, as defined in paragraph (d)(2)(iv) of this section.

(iii) ***Active licensing expenses.*** The term *active licensing expenses* means the deductions incurred by an organization of the licensor in a foreign country that are properly allocable to royalty income and that would be allowable under section 162 to the licensor if it were a domestic corporation, other than—

(A) Deductions for compensation for personal services rendered by shareholders of, or related persons (as defined in section 954(d)(3)) with respect to, the licensor;

(B) Deductions for royalties paid or incurred;

(C) Deductions that, although generally allowable under section 162, would be specifically allowable to the licensor (if the controlled foreign corporation were a domestic corporation) under any section of the Internal Revenue Code other than section 162;

(D) Deductions for payments made to agents or independent contractors with respect to the licensed property; and

(E) Deductions for CST Payments or PCT Payments (as defined in § 1.482-7(b)).

(iv) ***Adjusted licensing profit.*** The term *adjusted licensing profit* means the gross income of the licensor from royalties, reduced by the sum of—

(A) The royalties paid or incurred by the licensor with respect to such royalty income;

(B) The amounts that would be allowable to such licensor as deductions under section 167 or 197 (if the licensor were a domestic corporation) with respect to such royalty income; and

(C) The amounts paid by the licensor to agents or independent contractors with respect to such royalty income.

(v) ***Cost sharing arrangements (CSAs).*** For purposes of paragraphs (d)(1)(i) and (ii) of this section, CST Payments or PCT Payments (as defined in § 1.482-7(b)(1)) made by the licensor to another controlled participant (as defined in § 1.482-7(j)(1)(i)) pursuant to a CSA (as defined in § 1.482-7(a)) do not cause the activities undertaken by that other controlled participant to be considered to be undertaken by the licensor's own officers or staff of employees.

(3) ***Examples.*** The application of this paragraph (d) is illustrated by the following examples.

Example 1. Controlled foreign corporation *A,* through its own staff of employees, owns and operates a research facility in foreign country X. At the research facility, employees of Corporation *A* who are scientists, engineers, and technicians regularly perform experiments, tests, and other technical activities, that ultimately result in the issuance of patents that it sells or licenses. Under paragraph (d)(1)(i) of this section, royalties received by Corporation *A* for the privilege of using patented rights that it develops as a result of such research activity are derived in the active conduct of a trade or business for purposes of section 954(c)(2)(A), but only so long as the licensor is regularly engaged in the development, creation or production of, or in the acquisition of and addition of substantial value to, property of such kind.

Example 2. Assume that Corporation *A* in *Example 1,* in addition to receiving royalties for the use of patents that it develops, receives royalties for the use of patents that it acquires by purchase and licenses to others without adding any value thereto. Corporation *A* generally consummates royalty agreements on such purchased patents as the result of inquiries received by it from prospective licensees when the fact becomes known in the business community, as a result of the filing of a patent, advertisements in trade journals, announcements, and contacts by employees of Corporation *A,* that Corporation *A* has acquired rights under a patent and is interested in licensing its rights. Corporation *A* does not, however, maintain and operate an organization in a foreign country that is regularly engaged in the business of marketing the purchased patents. The royalties received by Corporation *A* for the use of the purchased patents are not derived in the active conduct of a trade or business for purposes of section 954(c)(2)(A).

Example 3. Controlled foreign corporation *B* receives royalties for the use of patents that it acquires by purchase. The primary business of Corporation *B,* operated on a regular basis, consists of licensing patents that it has purchased raw from inventors and, through the efforts of a substantial staff of employees consisting of scientists, engineers, and technicians, made susceptible to commercial application. For example, Corporation *B,* after purchasing patent rights covering a chemical process, designs specialized production equipment required for the commercial adaptation of the process and, by so doing, substantially increases the value of the patent. Under paragraph (d)(1)(i) of this section, royalties received by Corporation *B* from the use of such patent are derived in the active conduct of a trade or business for purposes of section 954(c)(2)(A).

Example 4. Controlled foreign corporation *C* receives royalties for the use of a patent that it developed through its own staff of employees at its facility in country X. Corporation *C* has developed no other patents. It does not regularly employ a staff of scientists, engineers or technicians to create new products to be patented. Further, it does not purchase and license patents developed by others to which it has added substantial value. The royalties received by Corporation *C* are not derived from the active conduct of a trade or business for purposes of section 954(c)(2)(A).

Example 5. Controlled foreign corporation *D* finances independent persons in the development of patented items in return for an ownership interest in such items from which it derives a percentage of royalty income, if any, subsequently derived from the use by others of the protected right. Corporation *D* also attempts to increase its royalty income from such patents by contacting prospective licensees and rendering to licensees advice that is intended to promote the use of the patented property. Corporation *D* does not, however, maintain and operate an organization in a foreign country that is regularly engaged in the business of marketing the patents. Royalties received by Corporation *D* for the use of such patents are not derived in the active conduct of a trade or business for purposes of section 954(c)(2)(A).

(e) ***Certain property transactions*** —

(1) ***In general*** —

(i) ***Inclusions.*** Gain from certain property transactions described in section 954(c)(1)(B) includes the excess of gains over losses from the sale or exchange of—

(A) Property that gives rise to dividends, interest, rents, royalties or annuities, as described in paragraph (e)(2) of this section;

(B) Property that is an interest in a partnership, trust or REMIC; and

(C) Property that does not give rise to income, as described in paragraph (e)(3) of this section.

(ii) ***Exceptions.*** Gain or loss from certain property transactions described in section 954(c)(1)(B) and paragraph (e)(1)(i) of this section does not include gain or loss from the sale or exchange of—

(A) Inventory or similar property, as defined in paragraph (a)(4)(iii) of this section;

(B) Dealer property, as defined in paragraph (a)(4)(v) of this section; or

(C) Property that gives rise to rents or royalties described in paragraph (b)(6) of this section that are derived in the active conduct of a trade or business from persons that are not related persons (as defined in section 954(d)(3)) with respect to the controlled foreign corporation.

(iii) ***Treatment of losses.*** Section 1.954-1(c)(1)(ii) provides for the treatment of losses in excess of gains from the sale or exchange of property described in paragraph (e)(1)(i) of this section.

(iv) ***Dual character property.*** Property may, in part, constitute property that gives rise to certain income as described in paragraph (e)(2) of this section or, in part, constitute property that does not give rise to any income as described in paragraph (e)(3) of this section. However, property that is described in paragraph (e)(1)(i)(B) of this section cannot be dual character property. Dual character property must be treated as two separate properties for purposes of paragraph (e)(2) or (3) of this section. Accordingly, the sale or exchange of such dual character property will give rise to gain or loss that in part must be included in the computation of foreign personal holding company income under paragraph (e)(2) or (3) of this section, and in part is excluded from such computation. Gain or loss from the disposition of dual character property must be bifurcated under this paragraph (e)(1)(iv) pursuant to the method that most reasonably reflects the relative uses of the property. Reasonable methods may include comparisons in terms of gross income generated or the physical division of the property. In the case of real property, the physical division of the property will in most cases be the most reasonable method available. For example, if a controlled foreign corporation owns an office building, uses 60 percent of the building in its trade or business, and rents out the other 40 percent, then 40 percent of the gain recognized on the disposition of the property would reasonably be treated as gain that is included in the computation of foreign personal holding company income under this paragraph (e)(1). This paragraph (e)(1)(iv) addresses the contemporaneous use of property for dual purposes. For rules concerning changes in the use of property affecting its classification for purposes of this paragraph (e), see paragraph (a)(3) of this section.

(2) ***Property that gives rise to certain income*** —

(i) ***In general.*** Property the sale or exchange of which gives rise to foreign personal holding company income under this paragraph (e)(2) includes property that gives rise to dividends, interest, rents, royalties or annuities described in paragraph (b) of this section, including—

(A) Property that gives rise to export financing interest described in paragraph (b)(2) of this section; and

(B) Property that gives rise to income from related persons described in paragraph (b)(4) or (5) of this section.

(ii) ***Gain or loss from the disposition of a debt instrument.*** Gain or loss from the sale, exchange or retirement of a debt instrument is included in the computation of foreign personal holding company income under this paragraph (e) unless—

(A) In the case of gain—

(*1*) It is interest (as defined in paragraph (a)(4)(i) of this section); or

(*2*) It is income equivalent to interest (as described in paragraph (h) of this section); and

(B) In the case of loss—

(1) It is directly allocated to, or treated as an adjustment to, interest income (as described in paragraph (a)(4)(i) of this section) or income equivalent to interest (as defined in paragraph (h) of this section) under any provision of the Internal Revenue Code or Income Tax Regulations; or

(2) It is required to be apportioned in the same manner as interest expense under section 864(e) or any other provision of the Internal Revenue Code or Income Tax Regulations.

(3) ***Property that does not give rise to income.*** Except as otherwise provided in this paragraph (e)(3), for purposes of this section, the term *property that does not give rise to income* includes all rights and interests in property (whether or not a capital asset) including, for example, forwards, futures and options. Property that does not give rise to income shall not include—

(i) Property that gives rise to dividends, interest, rents, royalties or annuities described in paragraph (e)(2) of this section;

(ii) Tangible property (other than real property) used or held for use in the controlled foreign corporation's trade or business that is of a character that would be subject to the allowance for depreciation under section 167 or 168 and the regulations under those sections (including tangible property described in § 1.167(a)-2);

(iii) Real property that does not give rise to rental or similar income, to the extent used or held for use in the controlled foreign corporation's trade or business;

(iv) Intangible property (as defined in section 936(h)(3)(B)), goodwill or going concern value, to the extent used or held for use in the controlled foreign corporation's trade or business;

(v) Notional principal contracts (but see paragraphs (f)(2), (g)(2) and (h)(3) of this section for rules that include income from certain notional principal contracts in gains from commodities transactions, foreign currency gains and income equivalent to interest, respectively); or

(vi) Other property that is excepted from the general rule of this paragraph (e)(3) by the Commissioner in published guidance. See § 601.601(d)(2) of this chapter.

(f) ***Commodities transactions*** —

(1) ***In general*** —

(i) ***Inclusion in foreign personal holding company income.*** Foreign personal holding company income includes the excess of gains over losses from commodities transactions.

(ii) ***Exception.*** Gains and losses from qualified active sales and qualified hedging transactions are excluded from the computation of foreign personal holding company income under this paragraph (f).

(iii) ***Treatment of losses.*** Section 1.954-1(c)(1)(ii) provides for the treatment of losses in excess of gains from commodities transactions.

(2) ***Definitions*** —

(i) ***Commodity.*** For purposes of this section, the term *commodity* includes tangible personal property of a kind that is actively traded or with respect to which contractual interests are actively traded.

(ii) ***Commodities transaction.*** The term *commodities transaction* means the purchase or sale of a commodity for immediate (spot) delivery or deferred (forward) delivery, or the right to purchase, sell, receive, or transfer a commodity, or any other right or obligation with respect to a commodity accomplished through a cash or off-exchange market, an interbank market, an organized exchange or board of trade, or an over-the-counter market, or in a transaction effected between private parties outside of any market. Commodities transactions include, but are not limited to—

(A) A futures or forward contract in a commodity;

(B) A leverage contract in a commodity purchased from a leverage transaction merchant;

(C) An exchange of futures for physical transaction;

(D) A transaction, including a notional principal contract, in which the income or loss to the parties is measured by reference to the price of a commodity, a pool of commodities, or an index of commodities;

(E) The purchase or sale of an option or other right to acquire or transfer a commodity, a futures contract in a commodity, or an index of commodities; and

(F) The delivery of one commodity in exchange for the delivery of another commodity, the same commodity at another time, cash, or nonfunctional currency.

(iii) ***Qualified active sale*** —

(A) ***In general.*** The term *qualified active sale* means the sale of commodities in the active conduct of a commodities business as a producer, processor, merchant or handler of commodities if substantially all of the controlled foreign corporation's business is as an active producer, processor, merchant or handler of commodities. The sale of commodities held by a controlled foreign corporation other than in its capacity as an active producer, processor, merchant or handler of commodities is not a qualified active sale. For example, the sale by a controlled foreign corporation of commodities that were held for investment or speculation would not be a qualified active sale.

(B) ***Active conduct of a commodities business.*** For purposes of this paragraph, a controlled foreign corporation is engaged in the active conduct of a commodities business as a producer, processor, merchant or handler of commodities only with respect to commodities for which each of the following conditions is satisfied—

(*1*) It holds the commodities directly, and not through an agent or independent contractor, as inventory or similar property (as defined in paragraph (a)(4)(iii) of this section) or as dealer property (as defined in paragraph (a)(4)(v) of this section); and

(*2*) With respect to such commodities, it incurs substantial expenses in the ordinary course of a commodities business from engaging in one or more of the following activities directly, and not through an independent contractor—

(*i*) Substantial activities in the production of the commodities, including planting, tending or harvesting crops, raising or slaughtering livestock, or extracting minerals;

(*ii*) Substantial processing activities prior to the sale of the commodities, including the blending and drying of agricultural commodities, or the concentrating, refining, mixing, crushing, aerating or milling of commodities; or

(*iii*) Significant activities as described in paragraph (f)(2)(iii)(B)(*3*) of this section.

(*3*) For purposes of paragraph (f)(2)(iii)(B)(*2*)(*iii*) of this section, the significant activities must relate to—

(*i*) The physical movement, handling and storage of the commodities, including preparation of contracts and invoices, arranging freight, insurance and credit, arranging for receipt, transfer or negotiation of shipping documents, arranging storage or warehousing, and dealing with quality claims;

(*ii*) Owning and operating facilities for storage or warehousing; or

(*iii*) Owning or chartering vessels or vehicles for the transportation of the commodities.

(C) ***Substantially all.*** Substantially all of the controlled foreign corporation's business is as an active producer, processor, merchant or handler of commodities if the sum of its gross receipts from all of its qualified active sales (as defined in this paragraph (f)(2)(iii) without regard to the substantially all requirement) of commodities and its gross receipts from all of its qualified hedging transactions (as defined in paragraph (f)(2)(iv) of this section, applied without regard to the substantially all requirement of this paragraph (f)(2)(iii)(C)) equals or exceeds 85 percent of its total gross receipts for the taxable year (computed as though the corporation were a domestic corporation). In computing gross receipts, the District Director may disregard any sale or hedging transaction that has as a principal purpose manipulation of the 85 percent gross receipts test. A purpose may be a principal purpose even though it is outweighed by other purposes (taken together or separately).

(D) ***Activities of employees of a related entity.*** For purposes of this paragraph (f), activities of employees of an entity related to the controlled foreign corporation, who are made available to and supervised on a day-to-day basis by, and whose salaries are paid by (or reimbursed to the related entity by), the controlled foreign corporation, are treated as activities engaged in directly by the controlled foreign corporation.

(iv) ***Qualified hedging transaction entered into prior to January 31, 2003—***

(A) ***In general.*** The term *qualified hedging transaction* means a bona fide hedging transaction, as defined in paragraph (a)(4)(ii) of this section, with respect to qualified active sales (other than transactions described in section 988(c)(1) without regard to section 988(c)(1)(D)(i)).

(B) ***Exception.*** The term *qualified hedging transaction* does not include transactions that are not reasonably necessary to the conduct of business of the controlled foreign corporation as a producer, processor, merchant or handler of a commodity in the manner in which such business is customarily and usually conducted by others.

(C) ***Effective date.*** This paragraph (f)(2)(iv) applies to gain or loss realized by a controlled foreign corporation with respect to a qualified hedging transaction entered into prior to January 31, 2003.

(v) ***Qualified hedging transaction entered into on or after January 31, 2003 —***

(A) ***In general.*** The term *qualified hedging transaction* means a bona fide hedging transaction, as defined in paragraph (a)(4)(ii) of this section, with respect to one or more commodities transactions reasonably necessary to the conduct of any business by a producer, processor, merchant or handler of commodities in a manner in which such business is customarily and usually conducted by others. For purposes of this paragraph (f)(2)(v), a producer, processor, merchant or handler of commodities includes a controlled foreign corporation that regularly uses commodities in a manufacturing, construction, utilities, or transportation business.

(B) ***Exception.*** The term *qualified hedging transaction* does not include a transaction described in section 988(c)(1) (without regard to section 988(c)(1)(D)(i)).

(C) ***Examples.*** The following examples illustrate the provisions of this paragraph (f)(2)(v):

Example 1. CFC1 is a controlled foreign corporation located in country A. CFC1 manufactures and sells machinery in country B using aluminum and component parts purchased from third parties that contain significant amounts of aluminum. CFC1 conducts its manufacturing business in a manner in which such business is customarily and usually conducted by others. To protect itself against increases in the price of aluminum used in the machinery it manufactures, CFC1 enters into futures purchase contracts for the delivery of aluminum. These futures purchase contracts are bona fide hedging transactions. As CFC1 purchases aluminum and component parts containing significant amounts of aluminum in the spot market for use in its business, it closes out an equivalent amount of aluminum futures purchase contracts by entering into offsetting aluminum futures sales contracts. The aluminum futures purchase contracts are qualified hedging transactions as defined in paragraph (f)(2)(v)(A) of this section. Accordingly, any gain or loss on such aluminum futures purchase contracts is excluded from the computation of foreign personal holding company income.

Example 2. CFC2 is a controlled foreign corporation located in country B. CFC2 operates an airline business within country B in a manner in which such business is customarily and usually conducted by others. To protect itself against increases in the price of aviation fuel, CFC2 enters into forward contracts for the purchase of aviation fuel. These forward purchase contracts are bona fide hedging transactions. As CFC2 purchases aviation fuel in the spot market for use in its business, it closes out an equivalent amount of its forward purchase contracts for cash pursuant to a contractual provision that permits CFC2 to terminate the contract and make or receive a one-time payment representing the contract's fair market value. The aviation fuel forward purchase contracts are qualified hedging transactions as defined in paragraph (f)(2)(v)(A) of this section. Accordingly, any gain or loss on such aviation fuel forward purchase contracts is excluded from the computation of foreign personal holding company income.

(D) ***Effective date.*** This paragraph (f)(2)(v) applies to gain or loss realized by a controlled foreign corporation with respect to a qualified hedging transaction entered into on or after January 31, 2003.

(vi) ***Financial institutions not a producer, etc.*** For purposes of this paragraph (f), a corporation is not a producer, processor, merchant or handler of commodities if its business is primarily financial. For example, the business of a controlled foreign corporation is primarily financial if its principal business is making a market in notional principal contracts based on a commodities index.

(g) ***Foreign currency gain or loss*** —

(1) ***Scope and purpose.*** This paragraph (g) provides rules for the treatment of foreign currency gains and losses. Paragraph (g)(2) of this section provides the general rule. Paragraph (g)(3) of this section provides an election to include foreign currency gains or losses that would otherwise be treated as foreign personal holding company income under this paragraph (g) in the computation of another category of subpart F income. Paragraph (g)(4) of this section provides an alternative election to treat any net foreign currency gain or loss as foreign personal holding company income. Paragraph (g)(5) of this section provides rules for certain gains and losses not subject to this paragraph (g).

(2) ***In general*** —

(i) ***Inclusion.*** Except as otherwise provided in this paragraph (g), foreign personal holding company income includes the excess of foreign currency gains over foreign currency losses attributable to any section 988 transactions (foreign currency gain or loss). Section 1.954-1(c)(1)(ii) provides rules for the treatment of foreign currency losses in excess of foreign currency gains. However, if an election is made under paragraph (g)(4) of this section, the excess of foreign currency losses over foreign currency gains to which the election would apply may be apportioned to, and offset, other categories of foreign personal holding company income.

(ii) ***Exclusion for business needs*** —

(A) ***General rule.*** Foreign currency gain or loss directly related to the business needs of the controlled foreign corporation is excluded from foreign personal holding company income.

(B) ***Business needs.*** Foreign currency gain or loss is directly related to the business needs of a controlled foreign corporation if—

(*1*) The foreign currency gain or loss—

(*i*) Arises from a transaction (other than a hedging transaction) entered into, or property used or held for use, in the normal course of the controlled foreign corporation's trade or business, other than the trade or business of trading foreign currency;

(*ii*) Arises from a transaction or property that does not itself (and could not reasonably be expected to) give rise to subpart F income other than foreign currency gain or loss;

(*iii*) Does not arise from a transaction described in section 988(c)(1)(B)(iii); and

(*iv*) Is clearly determinable from the records of the controlled foreign corporation as being derived from such transaction or property; or

(*2*) The foreign currency gain or loss arises from a bona fide hedging transaction, as defined in paragraph (a)(4)(ii) of this section, with respect to a transaction or property that satisfies the requirements of paragraphs (g)(2)(ii)(B)(*1*) (*i*) through (*iii*) of this section, provided that any gain

or loss arising from such transaction or property that is attributable to changes in exchange rates is clearly determinable from the records of the CFC as being derived from such transaction or property. For purposes of this paragraph (g)(2)(ii)(B)(*2*), a hedging transaction will satisfy the aggregate hedging rules of § 1.1221-2(c)(3) only if all (or all but a de minimis amount) of the aggregate risk being hedged arises in connection with transactions or property that satisfy the requirements of paragraphs (g)(2)(ii)(B)(*1*) (*i*) through (*iii*) of this section, provided that any gain or loss arising from such transactions or property that is attributable to changes in exchange rates is clearly determinable from the records of the CFC as being derived from such transactions or property.

(C) ***Regular dealers—***

(1) ***General rule.*** Transactions in dealer property (as defined in paragraph (a)(4)(v) of this section) described in section 988(c)(1)(B) or (C) that are entered into by a controlled foreign corporation that is a regular dealer (as defined in paragraph (a)(4)(iv) of this section) in such property in its capacity as a dealer will be treated as directly related to the business needs of the controlled foreign corporation under paragraph (g)(2)(ii)(A) of this section.

(2) ***Certain interest-bearing liabilities treated as dealer property*** —(*i*) *In general.* For purposes of this paragraph (g)(2)(ii)(C), an interest-bearing liability incurred by a controlled foreign corporation that is denominated in (or determined by reference to) a non-functional currency shall be treated as dealer property of the type described in paragraph (g)(2)(ii)(C)(*1*) of this section if the liability, by being denominated in such currency, reduces the controlled foreign corporation's currency risk with respect to dealer property, and the liability is identified on the controlled foreign corporation's records as a liability treated as dealer property before the close of the day on which the liability is incurred.

(*ii*) *Failure to identify certain liabilities.* If a controlled foreign corporation identifies certain interest-bearing liabilities as liabilities treated as dealer property under paragraph (g)(2)(ii)(C)(*2*)(*i*) of this section but fails to so identify other interest-bearing liabilities that manage its currency risk with respect to assets held that constitute dealer property, the Commissioner may treat such other liabilities as properly identified as dealer property under paragraph (g)(2)(ii)(C)(*2*)(*i*) of this section if the Commissioner determines that the failure to identify such other liabilities had as one of its principal purposes the avoidance of Federal income tax.

(*iii*) *Effective date.* This paragraph (g)(2)(ii)(C)(*2*) applies only to gain or loss from an interest-bearing liability entered into by a controlled foreign corporation on or after January 31, 2003.

(D) ***Example.*** The following example illustrates the provisions of this paragraph (g)(2).

> *Example.* (i) *CFC1* and *CFC2* are controlled foreign corporations located in Country B, and are members of the same controlled group. *CFC1* is engaged in the active conduct of a trade or business that does not produce any subpart F income. *CFC2* serves as the currency coordination center for the controlled group, aggregating currency risks incurred by the group and entering into hedging transactions that

transfer those risks outside of the group. Pursuant to this arrangement, and to hedge the currency risk on a non-interest bearing receivable incurred by *CFC1* in the normal course of its business, on Day 1 *CFC1* enters into a forward contract to sell Japanese Yen to CFC2 in 30 days. Also on Day 1, *CFC2* enters into a forward contract to sell Yen to unrelated Bank X on Day 30. *CFC2* is not a regular dealer in Yen spot and forward contracts, and the Yen is not the functional currency for either *CFC1* or *CFC2*.

(ii) Because the forward contract entered into by *CFC1* to sell Yen hedges a transaction entered into in the normal course of *CFC1*'s business that does not give rise to subpart F income, it qualifies as a bona fide hedging transaction as defined in paragraph (a)(4)(ii) of this section. Therefore, *CFC1*'s foreign exchange gain or loss from that forward contract will not be treated as foreign personal holding company income or loss under this paragraph (g).

(iii) Because the forward contract to purchase Yen was entered into by *CFC2* in order to assume currency risks incurred by *CFC1* it does not qualify as a bona fide hedging transaction, as defined in paragraph (a)(4)(ii) of this section. Thus, foreign exchange gain or loss recognized by *CFC2* from that forward contract will be foreign personal holding company income. Because *CFC2* entered into the forward contract to sell Yen in order to hedge currency risks of *CFC1,* that forward contract also does not qualify as a bona fide hedging transaction. Thus, *CFC2*'s foreign currency gain or loss arising from that forward contract will be foreign personal holding company income.

(iii) *Special rule for foreign currency gain or loss from an interest-bearing liability.* Except as provided in paragraph (g)(2)(ii)(C)(*2*) or (g)(5)(iv) of this section, foreign currency gain or loss arising from an interest-bearing liability is characterized as subpart F income and non-subpart F income in the same manner that interest expense associated with the liability would be allocated and apportioned between subpart F income and non-subpart F income under §§ 1.861-9T and 1.861-12T.

(3) ***Election to characterize foreign currency gain or loss that arises from a specific category of subpart F income as gain or loss in that category*** —

(i) ***In general.*** For taxable years of a controlled foreign corporation beginning on or after November 6, 1995, the controlling United States shareholders of the controlled foreign corporation may elect, under this paragraph (g)(3), to exclude foreign currency gain or loss otherwise includible in the computation of foreign personal holding company income under this paragraph (g) from the computation of foreign personal holding company income under this paragraph (g) and include such foreign currency gain or loss in the category (or categories) of subpart F income (described in section 952(a), or, in the case of foreign base company income, described in § 1.954-1(c)(1)(iii)(A) (*1*) or (*2*)) to which such gain or loss relates. If an election is made under

this paragraph (g)(3) with respect to a category (or categories) of subpart F income described in section 952(a), or, in the case of foreign base company income, described in § 1.954-1(c)(1)(iii)(A) (*1*) or (*2*), the election shall apply to all foreign currency gain or loss that arises from—

(A) A transaction (other than a hedging transaction) entered into, or property used or held for use, in the normal course of the controlled foreign corporation's trade or business that gives rise to income in that category (or categories) and that is clearly determinable from the records of the controlled foreign corporation as being derived from such transaction or property; and

(B) A bona fide hedging transaction, as defined in paragraph (a)(4)(ii) of this section, with respect to a transaction or property described in paragraph (g)(3)(i)(A) of this section. For purposes of this paragraph (g)(3)(i)(B), a hedging transaction will satisfy the aggregate hedging rules of § 1.1221-2(c)(3) only if all (or all but a de minimis amount) of the aggregate risk being hedged arises in connection with transactions or property that generate the same category of subpart F income described in section 952(a), or, in the case of foreign base company income, described in § 1.954-1(c)(1)(iii)(A) (*1*) or (*2*).

(ii) ***Time and manner of election.*** The controlling United States shareholders, as defined in § 1.964-1(c)(5), make the election on behalf of the controlled foreign corporation by filing a statement with their original income tax returns for the taxable year of such United States shareholders ending with or within the taxable year of the controlled foreign corporation for which the election is made, clearly indicating that such election has been made. If the controlling United States shareholders elect to apply these regulations retroactively, under § 1.954-0(a)(1)(ii), the election under this paragraph (g)(3) may be made by the amended return filed pursuant to the election under § 1.954-0(a)(1)(ii). The controlling United States shareholders filing the election statement described in this paragraph (g)(3)(ii) must provide copies of the election statement to all other United States shareholders of the electing controlled foreign corporation. Failure to provide copies of such statement will not cause an election under this paragraph (g)(3) to be voidable by the controlled foreign corporation or the controlling United States shareholders. However, the District Director has discretion to void the election if it is determined that three was no reasonable cause for the failure to provide copies of such statement. The statement shall include the following information—

(A) The name, address, taxpayer identification number, and taxable year of such United States shareholder;

(B) The name, address, and taxable year of the controlled foreign corporation for which the election is effective; and

(C) Any additional information required by the Commission by administrative pronouncement.

(iii) ***Revocation of election.*** This election is effective for the taxable year of the controlled foreign corporation for which it is made and all subsequent taxable years of such corporation unless revoked by or with the consent of the Commissioner.

(iv) ***Example.*** The following example illustrates the provisions of this paragraph (g)(3).

> *Example.* (i) *CFC,* a controlled foreign corporation, is a sales company that earns foreign base company sales income under section 954(d). *CFC* makes an election under

this paragraph (g)(3) to treat foreign currency gains or losses that arise from a specific category (or categories) of subpart F income (as described in section 952(a), or, in the case of foreign base company income, as described in § 1.954-1(c)(1)(iii)(A) (*1*) or (*2*)) as that type of income. *CFC* aggregates the currency risk on all of its transactions that generate foreign base company sales income and hedges this net currency exposure.
(ii) Assuming no more than a de minimis amount of risk in the pool of risks being hedged arises from transactions or property that generate income other than foreign base company sales income, pursuant to its election under (g)(3), *CFC*'s net foreign currency gain from the pool and the hedging transactions will be treated as foreign base company sales income under section 954(d), rather than as foreign personal holding company income under section 954(c)(1)(D). If the pool of risks and the hedging transactions generate a net foreign base company sales loss, however, *CFC* must apply the rules of § 1.954-1(c)(1)(ii).

(4) ***Election to treat all foreign currency gains or losses as foreign personal holding company income*** —

(i) ***In general.*** If the controlling United States shareholders make an election under this paragraph (g)(4), the controlled foreign corporation shall include in its computation of foreign personal holding company income the excess of foreign currency gains over losses or the excess of foreign currency losses over gains attributable to any section 988 transaction (except those described in paragraph (g)(5) of this section) and any section 1256 contract that would be a section 988 transaction but for section 988(c)(1)(D). Separate elections for section 1256 contracts and section 988 transactions are not permitted. An election under this paragraph (g)(4) supersedes an election under paragraph (g)(3) of this section.

(ii) ***Time and manner of election.*** The controlling United States shareholders, as defined in § 1.964-1(c)(5), make the election on behalf of the controlled foreign corporation in the same time and manner as provided in paragraph (g)(3)(ii) of this section.

(iii) ***Revocation of election.*** This election is effective for the taxable year of the controlled foreign corporation for which it is made and all subsequent taxable years of such corporation unless revoked by or with the consent of the Commissioner.

(5) ***Gains and losses not subject to this paragraph*** —

(i) ***Capital gains and losses.*** Gain or loss that is treated as capital gain or loss under section 988(a)(1)(B) is not foreign currency gain or loss for purposes of this paragraph (g). Such gain or loss is treated as gain or loss from the sale or exchange of property that is included in the computation of foreign personal holding company income under paragraph (e)(1) of this section. Paragraph (a)(2) of this section provides other rules concerning income described in more than one category of foreign personal holding company income.

(ii) ***Income not subject to section 988.*** Gain or loss that is not treated as foreign currency gain or loss by reason of section 988 (a)(2) or (d) is not foreign currency gain or loss for purposes of this paragraph (g). However, such gain or loss may be included in the computation of other categories of foreign personal holding company income in accordance with its characterization

under section 988 (a)(2) or (d) (for example, foreign currency gain that is treated as interest income under section 988(a)(2) will be included in the computation of foreign personal holding company income under paragraph (b)(ii) of this section).

(iii) ***Qualified business units using the dollar approximate separate transactions method.*** This paragraph (g) does not apply to any DASTM gain or loss computed under § 1.985-3(d). Such gain or loss is allocated under the rules of § 1.985-3 (e)(2)(iv) or (e)(3). However, the provisions of this paragraph (g) do apply to section 988 transactions denominated in a currency other than the United States dollar or the currency that would be the qualified business unit's functional currency were it not hyperinflationary.

(iv) ***Gain or loss allocated under § 1.861-9.*** [Reserved]

(h) ***Income equivalent to interest*** —(1) *In general*—

(i) ***Inclusion in foreign personal holding company income.*** Except as provided in this paragraph (h), foreign personal holding company income includes income equivalent to interest as defined in paragraph (h)(2) of this section.

(ii) ***Exceptions*** —

(A) ***Liability hedging transactions.*** Income, gain, deduction or loss that is allocated and apportioned in the same manner as interest expense under the provisions of § 1.861-9T is not income equivalent to interest for purposes of this paragraph (h).

(B) ***Interest.*** Amounts treated as interest under section 954(c)(1)(A) and paragraph (b) of this section are not income equivalent to interest for purposes of this paragraph (h).

(2) *Definition of income equivalent to interest*—(i) *In general.* The term *income equivalent to interest* includes income that is derived from—

(A) A transaction or series of related transactions in which the payments, net payments, cash flows or return predominantly reflect the time value of money;

(B) Transactions in which the payments (or a predominant portion thereof) are, in substance, for the use or forbearance of money;

(C) Notional principal contracts, to the extent provided in paragraph (h)(3) of this section;

(D) Factoring, to the extent provided in paragraph (h)(4) of this section;

(E) Conversion transactions, but only to the extent that gain realized with respect to such a transaction is treated as ordinary income under section 1258;

(F) The performance of services, to the extent provided in paragraph (h)(5) of this section;

(G) The commitment by a lender to provide financing, if any portion of such financing is actually provided;

(H) Transfers of debt securities subject to section 1058;

(I) Any guaranteed payments for the use of capital under section 707(c); and

(J) Other transactions, as provided by the Commissioner in published guidance. See § 601.601(d)(2) of this chapter.

(ii) ***Income from the sale of property.*** Income from the sale of property will not be treated as income equivalent to interest by reason of paragraph (h)(2)(i)(A) or (B) of this section. Income derived by a controlled foreign corporation will be treated as arising from the sale of property only if the corporation in substance carries out sales activities. Accordingly, an arrangement that is designed to lend the form of a sales transaction to a transaction that in substance constitutes an advance of funds will be disregarded. For example, if a controlled foreign corporation acquires property on 30-day payment terms from one person and sells that property to another person on 90-day payment terms and at prearranged prices and terms such that the foreign corporation bears no substantial economic risk with respect to the purchase and sale other than the risk of non-payment, the foreign corporation has not in substance derived income from the sale of property.

(3) *Notional principal contracts*—(i) *In general.* Income equivalent to interest includes income from notional principal contracts denominated in the functional currency of the taxpayer (or a qualified business unit of the taxpayer, as defined in section 989(a)), the value of which is determined solely by reference to interest rates or interest rate indices, to the extent that the income from such transactions accrues on or after August 14, 1989.

(ii) ***Regular dealers.*** Income equivalent to interest does not include income earned by a regular dealer (as defined in paragraph (a)(4)(iv) of this section) from notional principal contracts that are dealer property (as defined in paragraph (a)(4)(v) of this section).

(4) *Income equivalent to interest from factoring*—(i) *General rule.* Income equivalent to interest includes factoring income. Except as provided in paragraph (h)(4)(ii) of this section, the term *factoring income* includes any income (including any discount income or service fee, but excluding any stated interest) derived from the acquisition and collection or disposition of a factored receivable. The amount of income equivalent to interest realized with respect to a factored receivable is the difference (if a positive number) between the amount paid for the receivable by the foreign corporation and the amount that it collects on the receivable (or realizes upon its sale of the receivable). The rules of this paragraph (h)(4) apply only with respect to the tax treatment of factoring income derived from the acquisition and collection or disposition of a factored receivable and shall not affect the characterization of an expense or loss of either the person whose goods or services gave rise to a factored receivable or the obligor under a receivable.

(ii) ***Exceptions.*** Factoring income shall not include—

(A) Income treated as interest under section 864(d)(1) or (6) (relating to income derived from trade or service receivables of related persons), even if such income is treated as not described in section 864(d)(1) by reason of the same-country exception of section 864(d)(7);

(B) Income derived from a factored receivable if payment for the acquisition of the receivable is made on or after the date on which stated interest begins to accrue, but only if the rate of stated interest equals or exceeds 120 percent of the Federal short-term rate (as defined under section 1274) (or the analogous rate for a currency other than the dollar) as of the date on which the receivable is acquired by the foreign corporation; or

(C) Income derived from a factored receivable if payment for the acquisition of the receivable by the foreign corporation is made only on or after the anticipated date of payment of all principal by the obligor (or the anticipated weighted average date of payment of a pool of purchased receivables).

(iii) ***Factored receivable.*** For purposes of this paragraph (h)(4), the term *factored receivable* includes any account receivable or other evidence of indebtedness, whether or not issued at a discount and whether or not bearing stated interest, arising out of the disposition of property or the performance of services by any person, if such account receivable or evidence of indebtedness is acquired by a person other than the person who disposed of the property or provided the services that gave rise to the account receivable or evidence of indebtedness. For purposes of this paragraph (h)(4), it is immaterial whether the person providing the property or services agrees to transfer the receivable at the time of sale (as by accepting a third-party charge or credit card) or at a later time.

(iv) ***Examples.*** The following examples illustrate the application of this paragraph (h)(4).

Example 1. DP, a domestic corporation, owns all of the outstanding stock of *FS,* a controlled foreign corporation. *FS* acquires accounts receivable arising from the sale of property by unrelated corporation *X.* The receivables have a face amount of $100, and after 30 days bear stated interest equal to at least 120 percent of the applicable Federal short-term rate (determined as of the date the receivables are acquired by *FS*). *FS* purchases the receivables from *X* for $95 on Day 1 and collects $100 plus stated interest from the obligor under the receivables on Day 40. Income (other than stated interest) derived by *FS* from the factored receivables is factoring income within the meaning of paragraph (h)(4)(i) of this section and, therefore, is income equivalent to interest.

Example 2. The facts are the same as in *Example 1,* except that, rather than collecting $100 plus stated interest from the obligor under the factored receivables on Day 40, *FS* sells the receivables to controlled foreign corporation *Y* on Day 15 for $97. Both the income derived by *FS* on the factored receivables and the income derived by *Y* (other than stated interest) on the receivables are factoring income within the meaning of paragraph (h)(4)(i) of this section, and therefore, constitute income equivalent to interest.

Example 3. The facts are the same as in *Example 1,* except that *FS* purchases the receivables from *X* for $98 on Day 30. Income derived by *FS* from the factored receivables is excluded from factoring income under paragraph (h)(4)(ii)(B) of this section and, therefore, does not give rise to income equivalent to interest.

Example 4. The facts are the same as in *Example 3,* except that it is anticipated that all principal will be paid by the obligor of the receivables by Day 30. Income derived by *FS* from this maturity factoring of the receivables is excluded from factoring income under paragraph (h)(4)(ii)(C) of this section and, therefore, does not give rise to income equivalent to interest.

Example 5. The facts are the same as in *Example 4,* except that *FS* sells the factored receivables to *Y* for $99 on Day 45, at which time stated interest is accruing on the unpaid balance of $100. Because interest was accruing at the time *Y* acquired the receivables at a rate equal to at least 120 percent of the applicable Federal short-term rate, income derived by *Y* from the factored receivables is excluded from factoring income under paragraph (h)(4)(ii)(B) of this section and, therefore, does not give rise to income equivalent to interest.

Example 6. DP, a domestic corporation engaged in an integrated credit card business, owns all of the outstanding stock of *FS,* a controlled foreign corporation. On Day 1, individual *A* uses a credit card issued by *DP* to purchase shoes priced at $100 from *X,* a foreign corporation unrelated to *DP, FS,* or *A.* On Day 7, *X* transfers the receivable (which does not bear stated interest) arising

from *A*'s purchase to *FS* in exchange for $95. *FS* collects $100 from *A* on Day 45. Income derived by *FS* on the factored receivable is factoring income within the meaning of paragraph (h)(4)(i) of this section and, therefore, is income equivalent to interest.

(5) *Receivables arising from performance of services.* If payment for services performed by a controlled foreign corporation is not made until more than 120 days after the date on which such services are performed, then the income derived by the controlled foreign corporation constitutes income equivalent to interest to the extent that interest income would be imputed under the principles of section 483 or the original issue discount provisions (sections 1271 through 1275), if—

(i) Such provisions applied to contracts for the performance of services;

(ii) The time period referred to in sections 483(c)(1) and 1274(c)(1)(B) were 120 days rather than six months; and

(iii) The time period referred to in section 483(c)(1)(A) were 120 days rather than one year.

(6) *Examples.* The following examples illustrate the application of this paragraph (h).

Example 1. CFC, a controlled foreign corporation, promises that Corporation *A* may borrow up to $500 in principal for one year beginning at any time during the next three months at an interest rate of 10 percent. In exchange, Corporation *A* pays *CFC* a commitment fee of $2. Pursuant to this agreement, *CFC* lends $80 to Corporation *A.* As a result, the entire $2 fee is included in the computation of *CFC*'s foreign personal holding company income under paragraph (h)(2)(i)(G) of this section.

Example 2. (i) At the beginning of its current taxable year, *CFC,* a controlled foreign corporation, purchases at face value a one-year debt instrument issued by Corporation *A* having a $100 principal amount and bearing a floating rate of interest set at the London Interbank Offered Rate (LIBOR) plus one percentage point. Contemporaneously, *CFC* borrows $100 from Corporation *B* for one year at a fixed interest rate of 10 percent, using the debt instrument as security.
(ii) During its current taxable year, *CFC* accrues $11 of interest from Corporation *A* on the bond. Because interest is excluded from the definition of income equivalent to interest under paragraph (h)(1)(ii)(B) of this section, the $11 is not income equivalent to interest.

(iii) During its current taxable year, *CFC* incurs $10 of interest expense with respect to the borrowing from Corporation *B.* That expense is allocated and apportioned to, and reduces, subpart F income to the extent provided in section 954(b)(5) and §§ 1.861-9T through 1.861-12T and 1.954-1(c).

Example 3. (i) On January 1, 1994, *CFC,* a controlled foreign corporation with the United States dollar as its functional currency, purchases at face value a 10-year debt instrument issued by Corporation *A* having a $100 principal amount and bearing a floating rate of interest set at LIBOR plus one percentage point payable on December 31st of each year. *CFC*

subsequently determines that it would prefer receiving a fixed rate of return. Accordingly, on January 1, 1995, *CFC* enters into a 9-year interest rate swap agreement with Corporation *B* whereby Corporation *B* promises to pay *CFC* on December 31st of each year an amount equal to 10 percent on a notional principal amount of $100. In exchange, *CFC* promises to pay Corporation *B* an amount equal to LIBOR plus one percentage point on the notional principal amount.
(ii) On December 31, 1995, *CFC* receives $9 of interest income from Corporation *A* with respect to the debt instrument. On the same day, *CFC* receives a total of $10 from Corporation *B* and pays $9 to Corporation *B* with respect to the interest rate swap.

(iii) The $9 of interest income is foreign personal holding income under section 954(c)(1). Pursuant to § 1.446-3(d), *CFC* recognizes $1 of swap income for its 1995 taxable year that is also foreign personal holding company income because it is income equivalent to interest under paragraph (h)(2)(i)(C) of this section.

Example 4. (i) *CFC,* a controlled foreign corporation, purchases commodity X on the spot market for $100 and, contemporaneously, enter into a 3-month forward contract to sell commodity X for $104, a price set by the forward market.
(ii) Assuming that substantially all of *CFC*'s expected return is attributable to the time value of the net investment, as described in section 1258(c)(1), the transaction is a conversion transaction under section 1258(c). Accordingly, any gain treated as ordinary income under section 1258(a) will be foreign personal holding company income because it is income equivalent to interest under paragraph (h)(2)(i)(E) of this section.

(i) ***Applicability dates*** —

(1) ***Paragraphs (c)(2)(v) through (vii).*** Paragraphs (c)(2)(v) through (vii) of this section and *Example 6* of paragraph (c)(3) of this section apply to taxable years of controlled foreign corporations beginning on or after May 2, 2006, and for taxable years of United States shareholders with or within which such taxable years of the controlled foreign corporations end. Taxpayers may elect to apply paragraphs (c)(2)(v) through (vii) to taxable years of controlled foreign corporations beginning after December 31, 2004, and for taxable years of United States shareholders with or within which such taxable years of the controlled foreign corporations end. If an election is made to apply § 1.956-2(b)(1)(vi) to taxable years beginning after December 31, 2004, then the election must also be made for paragraphs (c)(2)(v) through (vii) of this section.

(2) ***Paragraphs (c)(2)(iii)(B) and (c)(2)(iv)(A) of this section.*** Paragraphs (c)(2)(iii)(B) and (c)(2)(iv)(A) of this section apply for taxable years of controlled foreign corporations ending on or after November 19, 2019, and for the taxable years of United States shareholders in which or with which such taxable years end.

(3) ***Other paragraphs.*** Paragraphs (c)(1)(i) and (d)(1)(i) of this section apply to rents or royalties, as applicable, received or accrued during taxable years of controlled foreign corporations ending on or after September 1, 2015, and to taxable years of United States shareholders in which or with which such taxable years end, but only with respect to property manufactured, produced, developed, or

created, or in the case of acquired property, property to which substantial value has been added, on or after September 1, 2015. Paragraphs (c)(1)(iv), (c)(2)(ii), (c)(2)(iii)(E), (c)(2)(viii), (d)(1)(ii), (d)(2)(ii), (d)(2)(iii)(E), and (d)(2)(v) of this section apply to rents or royalties, as applicable, received or accrued during taxable years of controlled foreign corporations ending on or after September 1, 2015, and to taxable years of United States shareholders in which or with which such taxable years end, to the extent that such rents or royalties are received or accrued on or after September 1, 2015. See § 1.954-2(c)(1)(i), (c)(1)(iv), (c)(2)(ii), (c)(2)(iii), (d)(1)(i), (d)(1)(ii), (d)(2)(ii), and (d)(2)(iii), as contained in 26 CFR part 1 revised as of April 1, 2015, for rules applicable to rents or royalties, as applicable, received or accrued before September 1, 2015. Paragraph (h)(2)(i)(I) of this section applies to taxable years of controlled foreign corporations ending on or after December 16, 2019, and to taxable years of United States shareholders in which or with which such taxable years end.

[T.D. 8618, 60 FR 46517, Sept. 7, 1995]

Editorial Note: For FEDERAL REGISTER citations affecting § 1.954-2, see the List of CFR Sections Affected, which appears in the Finding Aids section of the printed volume and at *www.govinfo.gov*.

§ 1.954-3 Foreign base company sales income.

(a) ***Income included*** —

(1) ***In general*** —

(i) ***General rules.*** Foreign base company sales income of a controlled foreign corporation shall, except as provided in paragraphs (a)(2), (a)(3) and (a)(4) of this section, consist of gross income (whether in the form of profits, commissions, fees or otherwise) derived in connection with the purchase of personal property from a related person and its sale to any person, the sale of personal property to any person on behalf of a related person, the purchase of personal property from any person and its sale to a related person, or the purchase of personal property from any person on behalf of a related person. See section 954(d)(1). For purposes of the preceding sentence, except as provided in paragraphs (a)(2) and (a)(4) of this section, personal property sold by a controlled foreign corporation will be considered to be the same property that was purchased by the controlled foreign corporation regardless of whether the personal property is sold in the same form in which it was purchased, in a different form than the form in which it was purchased, or as a component part of a manufactured product. This section shall apply to the purchase and/or sale of personal property, whether or not such property was purchased and/or sold in the ordinary course of trade or business, except that income derived in connection with the sale of tangible personal property will not be considered to be foreign base company sales income if such property is sold to a person that is not a related person, as defined in § 1.954-1(f), after substantial use has been made of the property by the controlled foreign corporation in its trade or business. This section shall not apply to the excess of gains over losses from sales or exchanges of securities or from futures transactions, to the extent such excess gains are includible in foreign personal holding company income of the controlled foreign corporation under § 1.954-2; nor shall it apply to the sale of the controlled foreign corporation's property (other than its stock in trade or other property of a kind which would properly be included in its inventory if on hand at the close of the taxable year, or property held primarily for sale to customers in the ordinary course of its business) if substantially all the

property of such corporation is sold pursuant to the discontinuation of the trade or business previously carried on by such corporation. The term "any person" as used in this paragraph (a)(1)(i) includes a related person as defined in § 1.954-1(f).

(ii) ***Special rule—(a) In general.*** The term "personal property" as used in section 954(d) and this section shall not include agricultural commodities which are not grown in the United States (within the meaning of section 7701(a)(9)) in commercially marketable quantities. All of the agricultural commodities listed in table I shall be considered grown in the United States in commercially marketable quantities. Bananas, black pepper, cocoa, coconut, coffee, crude rubber, and tea shall not be considered grown in the United States in commercially marketable quantities. All other agricultural commodities shall not be considered grown in the United States in commercially marketable quantities when, in consideration of all of the facts and circumstances of the individual case, such commodities are shown to be produced in the United States in insufficient quantity and quality to be marketed commercially. The term "agricultural commodities" includes, but is not limited to, livestock, poultry, fish produced in fish farms, fruit, furbearing animals as well as the products of truck farms, ranches, nurseries, ranges, and orchards. A fish farm is an area where fish are grown or raised (artificially protected and cared for), as opposed to merely caught or harvested. However, the term "agricultural commodities" shall not include timber (either standing or felled), or any commodity at least 50 percent of the fair market value of which is attributable to manufacturing or processing, determined in a manner consistent with the regulations under section 993(c) (relating to the definition of export property). For purposes of applying such regulations, the term "processing" shall be deemed not to include handling, packing, packaging, grading, storing, transporting, slaughtering, and harvesting. Subdivision (ii) shall apply in the computation of foreign base company sales income for taxable years of controlled foreign corporations beginning after December 31, 1975, and to taxable years of U.S. shareholders (within the meaning of section 951(b)) within which or with which such taxable years of such foreign corporations end.

(*b*) *Table.*

Table I—Agricultural Commodities Grown in the United States in Commercially Marketable Quantities

Livestock and Products

Beeswax	Horses
Cattle and calves	Milk
Chickens	Mink
Chicken eggs	Mohair
Ducks	Rabbits
Geese	Sheep and lambs
Goats	Turkeys
Hogs	Wool
Honey	

Crops

Alfalfa
Almonds
Apples
Apricots
Artichokes
Asparagus
Avocadoes
Barley
Beans
Beets
Blackberries
Blueberries
Brussel sprouts
Broccoli
Bulbs
Cabbage
Cantaloupes
Carrots
Cauliflower
Celery
Cherries
Corn
Cotton
Cranberries
Cucumbers
Cut flowers
Dates
Eggplant
Escarole
Figs
Filberts
Flaxseed
Garlic
Grapes
Grapefruit
Grass seed
Hay
Honeydew melons
Hops
Lettuce
Lime
Macadamia nuts
Maple syrup and sugar
Mint
Mushrooms
Nectarines
Oats
Olives
Onions
Oranges
Papayas
Pecans
Peaches
Peanuts
Pears
Peas
Peppers
Plums and prunes
Potatoes
Potted plants
Raspberries
Rice
Rhubarb
Rye
Sorghum grain
Soybeans
Spinach
Strawberries
Sugar beets
Sugarcane
Sweet potatoes
Tangelos
Tangerines
Tobacco
Tomatoes
Walnuts
Watermelons

Lemons Wheat

(iii) The application of this subparagraph may be illustrated by the following examples:

Example 1. Controlled foreign corporation A, incorporated under the laws of foreign country X, is a wholly owned subsidiary of domestic corporation M. Corporation A purchases from M Corporation, a related person, articles manufactured in the United States and sells the articles to P, an unrelated person, for delivery and use in foreign country Y. Gross income of A Corporation derived from the purchase and sale of the personal property is foreign base company sales income.

Example 2. Corporation A in *Example 1* also purchases from P, an unrelated person, articles manufactured in country Y and sells the articles to foreign corporation B, a related person, for use in foreign country Z. Gross income of A Corporation derived from the purchase and sale of the personal property is foreign base company sales income.

Example 3. Controlled foreign corporation C, incorporated under the laws of foreign country X, is a wholly owned subsidiary of domestic corporation N. By contract, N Corporation agrees to pay C Corporation, a related person, a commission equal to 6 percent of the gross selling price of all personal property shipped by N Corporation as the result of orders solicited by C Corporation in foreign countries Y and Z. In fulfillment of such orders, N Corporation ships products manufactured by it in the United States. Corporation C does not assume title to the property sold. Gross commissions received by C Corporation from N Corporation in connection with the sale of such property for use in countries Y and Z constitute foreign base company sales income.

Example 4. Controlled foreign corporation D, incorporated under the laws of foreign country Y, is a wholly owned subsidiary of domestic corporation R. In 1964, D Corporation acquires a United States manufactured lathe from R Corporation. In 1972, after having made substantial use of the lathe in its manufacturing business, D Corporation sells the lathe to an unrelated person for use in foreign country Z. Gross income from the sale of the lathe is not foreign base company sales income since it is sold to an unrelated person after substantial use has been made of it by D Corporation in its business.

Example 5. Controlled foreign corporation E, incorporated under the laws of foreign country Y, is a wholly owned subsidiary of domestic corporation P. Corporation E purchases from P Corporation articles manufactured by P Corporation outside of country Y and sells the articles to F Corporation, an unrelated person, for use in foreign country Z. Corporation E finances the purchase of the articles by F Corporation by agreeing to accept payment over an extended period of time and receives not only the purchase price but also interest and service fees. All gross income of E Corporation derived in connection with the purchase and sale of the personal property, including interest and service fees derived from financing the sale to F Corporation, constitutes foreign base company sales income.

(2) ***Property manufactured, produced, constructed, grown, or extracted within the country in which the controlled foreign corporation is created or organized.*** Foreign base company sales income does not include income derived in connection with the purchase and sale of personal property (or purchase

or sale of personal property on behalf of a related person) in a transaction described in paragraph (a)(1) of this section if the property is manufactured, produced, constructed, grown, or extracted in the country under the laws of which the controlled foreign corporation which purchases and sells the property (or acts on behalf of a related person) is created or organized. See section 954(d)(1)(A). The principles set forth in paragraphs (a)(4)(ii) and (a)(4)(iii) of this section apply under this paragraph (a)(2) in determining what constitutes the manufacture, production, or construction of personal property, excluding the requirement set forth in paragraph (a)(4)(i) of this section that the provisions of paragraphs (a)(4)(ii) and (a)(4)(iii) of this section may only be satisfied through the activities of employees of the corporation manufacturing, producing, or constructing the personal property. The principles of paragraph (a)(4)(iv) of this section apply under this paragraph (a)(2) in determining what constitutes the manufacture, production, or construction of personal property but only when the personal property is manufactured, produced, or constructed by a person related to the controlled foreign corporation within the meaning of § 1.954-1(f). The application of this paragraph (a)(2) may be illustrated by the following examples:

Example 1. Controlled foreign corporation A, incorporated under the laws of foreign country X, is a wholly owned subsidiary of domestic corporation M. Corporation A purchases coffee beans grown in country X from foreign corporation P, a related person, and sells the beans to M Corporation, a related person, for use in the United States. Income from the purchase and sale of the coffee beans by A Corporation is not foreign base company sales income since the beans were grown in country X.

Example 2. Controlled foreign corporation B, incorporated under the laws of foreign country X, is a wholly owned subsidiary of controlled foreign corporation C, also incorporated under the laws of country X. Corporation B purchases and imports into country X rough diamonds mined in foreign country Y; in country X it cuts, polishes, and shapes the diamonds in a process which constitutes manufacturing within the meaning of subparagraph (4) of this paragraph. Corporation B sells the finished diamonds to C Corporation, a related person, which in turn sells them for use in foreign country Z. Since for purposes of this subparagraph the finished diamonds are manufactured in country X, gross income derived by C Corporation from their sale is not foreign base company sales income.

(3) ***Property sold for use, consumption, or disposition within the country in which the controlled foreign corporation is created or organized*** —

(i) ***In general.*** Foreign base company sales income does not include income derived in connection with the purchase and sale of personal property (or purchase or sale of personal property on behalf of a related person) in a transaction described in subparagraph (1) of this paragraph, (*a*) if the property is sold for use, consumption, or disposition in the country under the laws of which the controlled foreign corporation which purchases and sells the property (or sells on behalf of a related person) is created or organized or (*b*), where the property is purchased by the controlled foreign corporation on behalf of a related person, if such property is purchased for use, consumption, or disposition in the country under the laws of which such controlled foreign corporation is created or organized. See section 954(d)(1)(B).

(ii) ***Rules for determining country of use, consumption, or disposition.*** As a general rule, personal property which is sold to an unrelated person will be presumed for purposes of this subparagraph to have been sold for use, consumption, or disposition in the country of destination of the property sold; for such purpose, the occurrence in a country of a temporary interruption in shipment of goods shall not constitute such country the country of destination.

However, if at the time of a sale of personal property to an unrelated person the controlled foreign corporation knew, or should have known from the facts and circumstances surrounding the transaction, that the property probably would not be used, consumed, or disposed of in the country of destination, the controlled foreign corporation must determine the country of ultimate use, consumption, or disposition of the property or the property will be presumed to have been used, consumed, or disposed of outside the country under the laws of which the controlled foreign corporation is created or organized. A controlled foreign corporation which sells personal property to a related person is presumed to sell such property for use, consumption, or disposition outside the country under the laws of which the controlled foreign corporation is created or organized unless such corporation establishes the use made of the property by the related person; once it has established that the related person has disposed of the property, the rules in the two preceding sentences relating to sales by a controlled foreign corporation to an unrelated person will apply at the first stage in the chain of distribution at which a sale is made by a related person to an unrelated person. Notwithstanding the preceding provisions of this subdivision, a controlled foreign corporation which sells personal property to any person all of whose business except for an insubstantial part consists of selling from inventory to retail customers at retail outlets all within one country may assume at the time of such sale to such person that such property will be used, consumed, or disposed of within such country.

(iii) ***Fungible goods.*** For purposes of this subparagraph, a controlled foreign corporation which sells to a purchaser personal property which because of its fungible nature cannot reasonable be specifically traced to other purchasers and to the countries of ultimate use, consumption, or disposition shall, unless such corporation establishes a different disposition as being proper, treat such property as being sold, for ultimate use, consumption, or disposition in those countries, and to those other purchasers, in the same proportions in which property from the fungible mass of the first purchaser is sold in the regular course of business by such first purchaser. No apportionment need be made, however, on the basis of sporadic sales by the first purchaser. This subdivision shall apply only in a case where the controlled foreign corporation knew, or should have known from the facts and circumstances surrounding the transaction, the manner in which the first purchaser disposes of goods from the fungible mass.

(iv) ***Illustrations.*** The application of this subparagraph may be illustrated by the following examples:

Example 1. Controlled foreign corporation A, incorporated under the laws of foreign country X, and controlled foreign corporation B, incorporated under the laws of foreign country Y, are related persons. Corporation A purchases from B Corporation electric transformers produced by B Corporation in country Y and sells the transformers to D Corporation, an unrelated person, for installation in a factory building being constructed in country X. Since the personal property purchased and sold by A Corporation is to be used within the country in which A Corporation is incorporated, income of A Corporation derived from the purchase and sale of the electric transformers is not foreign base company sales income.

Example 2. Controlled foreign corporation C, incorporated under the laws of foreign country X, is a wholly owned subsidiary of domestic corporation N. Corporation C purchases from N Corporation sewing machines manufactured in the United States by N Corporation and sells the sewing machines to retail department stores, unrelated persons, located in foreign country X. The entire activities of the department stores to which C Corporation sells the machines consist of selling goods from inventory to retail customers at retail outlets in country X. Under these circumstances, at the time of sale C Corporation may assume the sewing machines will

be used, consumed, or disposed of in country X, and no attempt need be made by C Corporation to determine where the sewing machines will ultimately be used by the customers of the retail department stores. Gross income of C Corporation derived from the sales to the department stores located in country X is not foreign base company sales income.

Example 3. Controlled foreign corporation D, incorporated under the laws of foreign country Y, and controlled foreign corporation E, incorporated under the laws of foreign country X, are related persons. Corporation D purchases from E Corporation sulphur extracted by E Corporation from deposits located in country X. Corporation D sells the sulphur to F Corporation, an unrelated person, for delivery to F Corporation's storage facilities located in country Y. At the time of the sale of the sulphur from D Corporation to F Corporation, D Corporation knows that F Corporation is actively engaged in the business of selling a large amount of sulphur in country Y but also that F Corporation sells, in the normal course of its business, 25 percent of its sulphur for ultimate consumption in foreign country Z. However, D Corporation has no knowledge at the time of sale whether any portion of the particular shipment it sells to F Corporation will be resold by F Corporation for ultimate use, consumption, or disposition outside country Y. Moreover, delivery of the sulphur to F Corporation's storage facilities constitutes more than a temporary interruption in the shipment of the sulphur. Under such circumstances, D Corporation may, but is not required to, trace the ultimate disposition by F Corporation of the personal property sold to F Corporation; however, if D Corporation does not trace the ultimate disposition and if it does not establish a different disposition as being proper, 25 percent of the sulphur sold by D Corporation to F Corporation will be treated as being sold for consumption in country Z and 25 percent of the gross income from the sale of sulphur by D Corporation to F Corporation will be treated as foreign base company sales income.

Example 4. Controlled foreign corporation G, incorporated under the laws of foreign country X, is a wholly owned subsidiary of domestic corporation P. Corporation G purchases from P Corporation toys manufactured in the United States by P Corporation and sells the toys to R, an unrelated person, for delivery to a duty-free port in country X. Instructions for the assembly and operation of the toys are printed in a language which is not commonly used in country X. From the facts and circumstances surrounding the sales to R, G Corporation knows, or should know, that the toys will probably not be used, consumed, or disposed of within country X. Therefore, unless G Corporation determines the use to be made of the toys by R, such property will be presumed to have been sold by R for use, consumption, or disposition outside of country X, and the entire gross income of G Corporation derived from the sales will be considered foreign base company sales income.

(4) ***Property manufactured, produced, or constructed by the controlled foreign corporation*** —

(i) ***In general.*** Foreign base company sales income does not include income of a controlled foreign corporation derived in connection with the sale of personal property manufactured, produced, or constructed by such corporation. A controlled foreign corporation will have manufactured, produced, or constructed personal property which the corporation sells only if such corporation satisfies the provisions of paragraph (a)(4)(ii), (a)(4)(iii), or (a)(4)(iv) of this section through the activities of its employees (as defined in § 31.3121(d)-1(c) of this chapter) with respect to such property. A controlled foreign corporation will not be treated as having manufactured, produced, or constructed personal property which the corporation sells merely because the property is sold in a different form than the form in which it was purchased. For rules of apportionment in

determining foreign base company sales income derived from the sale of personal property purchased and used as a component part of property which is not manufactured, produced, or constructed, see paragraph (a)(5) of this section.

(ii) ***Substantial transformation of property.*** If personal property purchased by a foreign corporation is substantially transformed by such foreign corporation prior to sale, the property sold by the selling corporation is manufactured, produced, or constructed by such selling corporation. The application of this paragraph (a)(4)(ii) may be illustrated by the following examples:

Example 1. Controlled foreign corporation A, incorporated under the laws of foreign country X, operates a paper factory in foreign country Y. Corporation A purchases from a related person wood pulp grown in country Y. Corporation A, by a series of processes, converts the wood pulp to paper which it sells for use in foreign country Z. The transformation of wood pulp to paper constitutes the manufacture or production of property for purposes of this subparagraph.

Example 2. Controlled foreign corporation B, incorporated under the laws of foreign country X, purchases steel rods from a related person which produces the steel in foreign country Y. Corporation B operates a machining plant in country X in which it utilizes the purchased steel rods to make screws and bolts. The transformation of steel rods to screws and bolts constitutes the manufacture or production of property for purposes of this subparagraph.

Example 3. Controlled foreign corporation C, incorporated under the laws of foreign country X, purchases tuna fish from unrelated persons who own fishing boats which catch such fish on the high seas. Corporation C receives such fish in country X in the condition in which taken from the fishing boats and in such country processes, cans, and sells the fish to related person D, incorporated under the laws of foreign country Y, for consumption in foreign country Z. The transformation of such fish into canned fish constitutes the manufacture or production of property for purposes of this subparagraph.

(iii) ***Manufacture of a product when purchased components constitute part of the property sold.*** If purchased property is used as a component part of personal property which is sold, the sale of the property will be treated as the sale of a manufactured product, rather than the sale of component parts, if the assembly or conversion of the component parts into the final product by the selling corporation involves activities that are substantial in nature and generally considered to constitute the manufacture, production, or construction of property. Without limiting this substantive test, which is dependent on the facts and circumstances of each case, the operations of the selling corporation in connection with the use of the purchased property as a component part of the personal property which is sold will be considered to constitute the manufacture of a product if in connection with such property conversion costs (direct labor and factory burden) of such corporation account for 20 percent or more of the total cost of goods sold. In no event, however, will packaging, repackaging, labeling, or minor assembly operations constitute the manufacture, production, or construction of property for purposes of section 954(d)(1). The application of this paragraph (a)(4)(iii) may be illustrated by the following examples:

> *Example 1.* Controlled foreign corporation A, incorporated under the laws of foreign country X, sells industrial engines for use, consumption, and disposition outside country X. Corporation A, in connection with the assembly of such engines, performs machining

and assembly operations. In addition, A Corporation purchases, from related and unrelated persons, components manufactured in foreign country Y. On a per unit basis, A Corporation's selling price and costs of such engines are as follows:

Selling price			$400
Cost of goods sold:			
Material—			
Acquired from related persons	$100		
Acquired from others	40		
Total material		$140	
Conversion costs (direct labor and factory burden)		70	
Total cost of goods sold		210	
Gross profit		190	
Administrative and selling expenses		50	
Taxable income		140	

The conversion costs incurred by A Corporation are more than 20 percent of total costs of goods sold ($70/$210 or 33 percent). Although the product sold, an engine, is not sufficiently distinguishable from the components to constitute a substantial transformation of the purchased parts within the meaning of subdivision (ii) of this subparagraph, A Corporation will be considered under this subdivision to have manufactured the product it sells.

Example 2. Controlled foreign corporation B, incorporated under the laws of foreign country X, operates an automobile assembly plant. In connection with such activity, B Corporation purchases from related persons assembled engines, transmissions, and certain other components, all of which are manufactured outside of country X; purchases additional components from unrelated persons; conducts stamping, machining, and subassembly operations; and has a substantial investment in tools, jigs, welding equipment, and other machinery and equipment used in the assembly of an automobile. On a per unit basis, B Corporation's selling price and costs of such automobiles are as follows:

Selling price			$2,500
Cost of goods sold:			
Material—			

Acquired from related persons	$1,200		
Acquired from others	275		
Total material		$1,475	
Conversion costs (direct labor and factory burden)		25	
Total cost of goods sold			1,800
Gross profit			700
Administrative and selling expenses			300
Taxable income			400

The product sold, an automobile, is not sufficiently distinguishable from the components purchased (the engine, transmission, etc.) to constitute a substantial transformation of purchased parts within the meaning of subdivision (ii) of this subparagraph. Although conversion costs of B Corporation are less than 20 percent of total cost of goods sold ($325/$1800 or 18 percent), the operations conducted by B Corporation in connection with the property purchased and sold are substantial in nature and are generally considered to constitute the manufacture of a product. Corporation B will be considered under this subdivision to have manufactured the product it sells.

Example 3. Controlled foreign corporation C, incorporated under the laws of foreign country X, purchases from related persons radio parts manufactured in foreign country Y. Corporation C designs radio kits, packages component parts required for assembly of such kits, and sells the parts in a knocked-down condition to unrelated persons for use outside country X. These packaging operations of C Corporation do not constitute the manufacture, production, or construction of personal property for purposes of section 954(d)(1).

(iv) ***Substantial contribution to manufacturing of personal property*** —(*a*) *In general.* If an item of personal property would be considered manufactured, produced, or constructed (under the principles of paragraph (a)(4)(ii) or (a)(4)(iii) of this section) prior to sale by the controlled foreign corporation had all of the manufacturing, producing, and constructing activities undertaken with respect to that property prior to sale been undertaken by the controlled foreign corporation through the activities of its employees, then this paragraph (a)(4)(iv) applies. If this paragraph (a)(4)(iv) applies and if the facts and circumstances evince that the controlled foreign corporation makes a substantial contribution through the activities of its employees to the manufacture, production, or construction of the personal property sold, then the personal property sold by the controlled foreign corporation is manufactured, produced, or constructed by such controlled foreign corporation.

(*b*) ***Activities.*** The determination of whether a controlled foreign corporation makes a substantial contribution through the activities of its employees to the manufacture, production, or construction of the personal property sold involves, but will not necessarily be limited to, consideration of the following activities:

(*1*) Oversight and direction of the activities or process pursuant to which the property is manufactured, produced, or constructed (under the principles of paragraph (a)(4)(ii) or (a)(4)(iii) of this section).

(2) Activities that are considered in, but that are insufficient to satisfy, the tests provided in paragraphs (a)(4)(ii) and (a)(4)(iii) of this section.

(3) Material selection, vendor selection, or control of the raw materials, work-in-process or finished goods.

(4) Management of manufacturing costs or capacities (for example, managing the risk of loss, cost reduction or efficiency initiatives associated with the manufacturing process, demand planning, production scheduling, or hedging raw material costs).

(5) Control of manufacturing related logistics.

(6) Quality control (for example, sample testing or establishment of quality control standards).

(7) Developing, or directing the use or development of, product design and design specifications, as well as trade secrets, technology, or other intellectual property for the purpose of manufacturing, producing, or constructing the personal property.

(c) ***Application of substantial contribution test.*** When considering whether a controlled foreign corporation makes a substantial contribution to the manufacture, production, or construction of the personal property, the performance of any activity in paragraph (a)(4)(iv)(*b*) of this section will be taken into account. The performance or lack of performance of any particular activity in paragraph (a)(4)(iv)(*b*) of this section, or of a particular number of activities in (a)(4)(iv)(*b*) of this section, is not determinative. The weight accorded to the performance of any quantum of any activity (whether or not specified in paragraph (a)(4)(iv)(*b*) of this section) will vary with the facts and circumstances of the particular business. See paragraph (a)(4)(iv)(*d*) *Examples 8, 10* and *11* of this section. In determining whether the activities of the controlled foreign corporation constitute a substantial contribution, there is no minimum performance threshold before an activity can be considered. The fact that other persons make a substantial contribution to the manufacture, production, or construction of the personal property prior to sale does not preclude the controlled foreign corporation from making a substantial contribution to the manufacture, construction, or production of that property through the activities of its employees. See paragraph (a)(4)(iv)(*d*) *Example 9* of this section.

(d) ***Examples.*** The rules of this paragraph (a)(4)(iv) are illustrated by the following examples:

> *Example 1. No substantial contribution to manufacturing.* (i) *Facts.* FS, a controlled foreign corporation, purchases raw materials from a related person. The raw materials are manufactured (under the principles of paragraph (a)(4)(ii) or (a)(4)(iii) of this section) into Product X by CM, an unrelated corporation, pursuant to a contract manufacturing arrangement. CM physically performs the substantial transformation, assembly, or conversion outside of FS's country of organization. Product X is sold by FS for use outside of FS's country of organization. Under the terms of the contract, FS retains the right to control the raw materials, work-in-process, and finished goods, and the right to oversee and direct the activities or process pursuant to which Product X is manufactured by CM. FS owns the intellectual property used in the manufacturing process. However, FS does not exercise, through its employees, its powers to control the raw materials, work-in-process, or finished goods, and FS does not exercise its powers of oversight and direction. Likewise, FS does not, through its employees, develop or direct the use or development of the intellectual property for the purpose of manufacturing Product X.

(ii) *Result.* If the manufacturing activities undertaken with respect to Product X prior to sale had been undertaken by FS through the activities of its employees, FS would have satisfied the manufacturing exception contained in paragraph (a)(4)(ii) or (a)(4)(iii) of this section with respect to Product X. Therefore, this paragraph (a)(4)(iv) applies. FS does not satisfy the test under this paragraph (a)(4)(iv) because it does not make a substantial contribution through the activities of its employees to the manufacture of Product X. Mere contractual rights to control materials, contractual rights to oversee and direct the manufacturing activities or process pursuant to which the property is manufactured, and ownership of intellectual property are not sufficient to satisfy this paragraph (a)(4)(iv). Therefore, under the facts and circumstances of the business, FS is not considered to have manufactured Product X under paragraph (a)(4)(i) of this section.

Example 2. Substantial contribution to manufacturing. (i) *Facts.* Assume the same facts as in *Example 1*, except for the following. FS, through its employees, engages in product design and quality control and controls manufacturing related logistics. Employees of FS exercise the right to oversee and direct the activities of CM in the manufacture of Product X.
(ii) *Result.* If the manufacturing activities undertaken with respect to Product X prior to sale had been undertaken by FS through the activities of its employees, FS would have satisfied the manufacturing exception contained in paragraph (a)(4)(ii) or (a)(4)(iii) of this section with respect to Product X. Therefore, this paragraph (a)(4)(iv) applies. Under the facts and circumstances of the business, FS satisfies the test under this paragraph (a)(4)(iv) because it makes a substantial contribution through the activities of its employees to the manufacture of Product X. Therefore, FS is considered to have manufactured Product X under paragraph (a)(4)(i) of this section. The analysis and conclusion would be the same if CM were related to FS because the relationship between CM and FS is irrelevant for purposes of applying paragraph (a)(4) of this section.

Example 3. Raw materials procured by contract manufacturer. (i) *Facts.* FS, a controlled foreign corporation, enters into a contract with CM to manufacture (under the principles of paragraph (a)(4)(ii) or (a)(4)(iii) of this section) Product X. CM physically performs the substantial transformation, assembly, or conversion required to manufacture Product X outside of FS's country of organization. Product X is sold by FS to a related person for use outside of FS's country of organization. Employees of FS select the materials that will be used to manufacture Product X. FS does not own the materials or work-in-process during the manufacturing process. FS, through its employees, exercises oversight and direction of the manufacturing process and provides quality control. FS manages the manufacturing costs and capacities with respect to Product X by managing the risk of loss and engaging in demand planning and production scheduling.
(ii) *Result.* If the manufacturing activities undertaken with respect to Product X prior to sale had been undertaken by FS through the activities of its employees, FS would have satisfied the manufacturing exception contained in paragraph (a)(4)(ii) or (a)(4)(iii) of this section with respect to Product X. Therefore, this paragraph (a)(4)(iv) applies. Under the facts and circumstances of

the business, FS satisfies the test under this paragraph (a)(4)(iv) because it makes a substantial contribution through the activities of its employees to the manufacture of Product X. Therefore, FS is considered to have manufactured Product X under paragraph (a)(4)(i) of this section.

Example 4. Physical conversion by employees of a person other than the contract manufacturer. (i) *Facts.* FS, a controlled foreign corporation organized in Country M, purchases raw materials from a related person. The raw materials are manufactured (under the principles of paragraph (a)(4)(ii) or (a)(4)(iii) of this section) into Product X by CM, an unrelated corporation, pursuant to a contract manufacturing arrangement. CM physically performs the substantial transformation, assembly, or conversion required to manufacture Product X outside of FS's country of organization. Product X is sold by FS for use outside of FS's country of organization. CM contracts with another corporation for its employees in order to operate CM's manufacturing plant and transform, assemble, or convert the raw materials into Product X. Apart from the physical performance of the substantial transformation, assembly, or conversion of the raw materials into Product X, employees of FS perform all of the other manufacturing activities required in connection with the manufacture of Product X (for example, oversight and direction of the manufacturing process; vendor selection; control of raw materials, work-in-process, and finished goods; control of manufacturing related logistics; and quality control).
(ii) *Result.* If the manufacturing activities undertaken with respect to Product X prior to sale had been undertaken by FS through the activities of its employees, FS would have satisfied the manufacturing exception contained in paragraph (a)(4)(ii) or (a)(4)(iii) of this section with respect to Product X. Therefore, this paragraph (a)(4)(iv) applies. Under the facts and circumstances of the business, FS satisfies the test under this paragraph (a)(4)(iv) because it makes a substantial contribution through the activities of its employees to the manufacture of Product X. Therefore, FS is considered to have manufactured Product X under paragraph (a)(4)(i) of this section.

Example 5. Automated manufacturing supervised by another person. (i) *Facts.* FS, a controlled foreign corporation, purchases raw materials from a related person. The raw materials are manufactured (under the principles of paragraph (a)(4)(ii) or (a)(4)(iii) of this section) into Product X by CM, an unrelated corporation selected by FS, pursuant to a contract manufacturing arrangement. CM physically performs the substantial transformation, assembly, or conversion outside of FS's country of organization. Product X is sold by FS to related and unrelated persons for use outside of FS's country of organization. At all times, FS retains ownership of the raw materials, work-in-process, and finished goods. FS retains the right to oversee and direct the activities or process pursuant to which Product X is manufactured by CM, but does not exercise, through its employees, its powers of oversight and direction. FS is the owner of sophisticated software and network systems that remotely and automatically (without human involvement) take orders, route them to CM, order raw materials, and perform quality control. FS has a small number of computer technicians who monitor the software and network systems to ensure that they are running smoothly and apply any necessary patches or fixes. The software and network systems

were developed by employees of DP, the U.S. corporate parent of FS. DP's employees supervise the computer technicians, evaluate the results of the automated manufacturing business, and make ongoing operational decisions, including decisions related to acceptable performance of the manufacturing process, stoppages of that process, and decisions related to product and manufacturing process design. DP's employees develop and provide to FS all of the upgrades to the software and network systems. DP also has employees who direct and control other aspects of the manufacturing process such as vendor and material selection, management of the manufacturing costs and capacities, and the selection of CM. The need for DP's employees to direct the activities of the FS employees and otherwise contribute to the manufacturing process evinces that substantial operational responsibilities and decision making are required to be exercised by parties other than CM in order to manufacture Product X.
(ii) *Result.* If the manufacturing activities undertaken with respect to Product X prior to sale had been undertaken by FS through the activities of its employees, FS would have satisfied the manufacturing exception contained in paragraph (a)(4)(ii) or (a)(4)(iii) of this section with respect to Product X. Therefore, this paragraph (a)(4)(iv) applies. Under the facts and circumstance of the business, FS does not satisfy the test under this paragraph (a)(4)(iv) because it does not make a substantial contribution through the activities of its employees to the manufacture of Product X. Mere ownership of materials and intellectual property along with contractual rights to exercise powers of direction and control are not sufficient to satisfy this paragraph (a)(4)(iv). The employees of FS do not perform the amount of activity necessary to constitute a substantial contribution. FS is not considered to have manufactured Product X under paragraph (a)(4)(i) of this section.

Example 6. Automated manufacturing supervised by FS. (i) *Facts.* Assume the same facts as in *Example 5,* except for the following. FS, through its employees, engages in the activities undertaken by DP's employees in *Example 5.* DP's employees also contribute to product and manufacturing process design, and provide support and oversight to FS in connection with functions performed by FS through its employees.
(ii) *Result.* If the manufacturing activities undertaken with respect to Product X prior to sale had been undertaken by FS through the activities of its employees, FS would have satisfied the manufacturing exception contained in paragraph (a)(4)(ii) or (a)(4)(iii) of this section with respect to Product X. Therefore, this paragraph (a)(4)(iv) applies. Under the facts and circumstances of the business, FS satisfies the test under this paragraph (a)(4)(iv) because it makes a substantial contribution through the activities of its employees to the manufacture of Product X. This determination does not require a comparison between the activities of FS and the activities of DP. Selection of the contract manufacturer, even though not specifically identified in paragraph (a)(4)(iv)(*b*) of this section, is considered under paragraph (a)(4)(iv)(*c*) of this section in determining whether FS makes a substantial contribution to the manufacture of Product X through its employees. FS is considered to have manufactured Product X under paragraph (a)(4)(i) of this section.

Example 7. Automated manufacturing supervised by FS with purchased intellectual property. (i) *Facts.* Assume the same facts as in *Example 6,* except for the following. The software and network systems, and the upgrades to those systems, were purchased by FS rather than developed by employees of FS.
(ii) *Result.* If the manufacturing activities undertaken with respect to Product X prior to sale had been undertaken by FS through the activities of its employees, FS would have satisfied the manufacturing exception contained in paragraph (a)(4)(ii) or (a)(4)(iii) of this section with respect to Product X. Therefore, this paragraph (a)(4)(iv) applies. The lack of performance of software and network system development activities is not determinative under the facts and circumstances of the business. Therefore, FS satisfies the test under this paragraph (a)(4)(iv) because it makes a substantial contribution through the activities of its employees to the manufacture of Product X. This determination does not require a comparison between the activities of FS and the activities of DP. FS is considered to have manufactured Product X under paragraph (a)(4)(i) of this section.

Example 8. Manufacture without intellectual property. (i) *Facts.* FS, a controlled foreign corporation, purchases raw materials from a related person. The raw materials are manufactured (under the principles of paragraph (a)(4)(ii) or (a)(4)(iii) of this section) into Product X by CM, an unrelated corporation, pursuant to a contract manufacturing arrangement. CM physically performs the substantial transformation, assembly, or conversion outside of FS's country of organization. Product X is sold by FS for use outside of FS's country of organization. At all times, FS controls the raw materials, work-in-process, and finished goods. FS controls the manufacturing related logistics, manages the manufacturing costs and capacities, and provides quality control with respect to CM's manufacturing process and product. No intellectual property of significant value is required to manufacture Product X. FS does not own any intellectual property underlying Product X, or hold an exclusive or non-exclusive right to manufacture Product X.
(ii) *Result.* If the manufacturing activities undertaken with respect to Product X prior to sale had been undertaken by FS through the activities of its employees, FS would have satisfied the manufacturing exception contained in paragraph (a)(4)(ii) or (a)(4)(iii) of this section with respect to Product X. Therefore, this paragraph (a)(4)(iv) applies. Because use of intellectual property plays little or no role in the manufacture of Product X, it is not important to the substantial contribution analysis under paragraph (a)(4)(iv) of this section. Under the facts and circumstances of the business, FS satisfies the test under this paragraph (a)(4)(iv) because it makes a substantial contribution through the activities of its employees to the manufacture of Product X. Therefore, FS is considered to have manufactured Product X under paragraph (a)(4)(i) of this section.

Example 9. Substantial contribution by more than one CFC. (i) *Facts.* FS1 and FS2, unrelated controlled foreign corporations, contract with CM, an unrelated corporation, to manufacture (under the principles of paragraph (a)(4)(ii) or (a)(4)(iii) of this section) Product X. CM physically performs the substantial transformation, assembly, or conversion required to manufacture Product X outside of FS1's and FS2's respective countries of organization. Neither FS1 nor FS2

owns the materials or work-in-process during the manufacturing process. Product X is sold by FS1 and FS2 to persons related to FS1 and FS2, respectively, for disposition outside of FS1's and FS2's respective countries of organization. FS1, through its employees, designs Product X. FS1 directs the use of the product design and design specifications, and other intellectual property, for the purpose of manufacturing Product X. Employees of FS1 also select the materials that will be used to manufacture Product X, and the vendors that provide those materials. FS2, through its employees, designs the process for manufacturing Product X. FS2, through its employees, manages the manufacturing costs and capacities with respect to Product X. FS1 and FS2 each provide quality control and oversight and direction of CM's manufacturing activities with respect to different aspects of the manufacture of Product X.

(ii) *Result.* If the manufacturing activities undertaken with respect to Product X prior to sale had been undertaken by FS1 or FS2 through the activities of their employees, FS1 or FS2 would have satisfied the manufacturing exception contained in paragraph (a)(4)(ii) or (a)(4)(iii) of this section with respect to Product X. Therefore, this paragraph (a)(4)(iv) applies. The fact that other persons make a substantial contribution to the manufacture of personal property does not preclude a controlled foreign corporation from making a substantial contribution to the manufacture of personal property through the activities of its employees. In the analysis of whether FS1 or FS2 make a substantial contribution to the manufacture of Product X, each company takes into account its individual activities, including those of providing quality control and oversight and direction of the manufacture of Product X. In addition, no threshold level of activity is required, including with respect to providing quality control or oversight and direction of the activities or process pursuant to which Product X is manufactured, before FS1 and FS2 can take into account their respective activities. Under the facts and circumstances of the business, both FS1 and FS2 satisfy the test under this paragraph (a)(4)(iv) because each independently makes a substantial contribution through the activities of its employees to the manufacture of Product X. Therefore, FS1 and FS2 are each considered to have manufactured Product X under paragraph (a)(4)(i) of this section.

Example 10. Manufacture of products designed by CFC. (i) *Facts.* FS, a controlled foreign corporation, purchases raw materials from a related person. The raw materials are manufactured (under the principles of paragraph (a)(4)(ii) or (a)(4)(iii) of this section) into Product X by CM, an unrelated corporation, pursuant to a contract manufacturing arrangement. CM physically performs the substantial transformation, assembly, or conversion outside of FS's country of organization. Product X is sold by FS for use outside of FS's country of organization. Products in the X industry are distinguished (and vary widely in value) based on the raw materials used to make the product and the product design. FS designs the product and selects the materials that CM will use to manufacture Product X. FS also manages the manufacturing costs and capacities. Product X can be manufactured from the raw materials to FS's design specifications without significant oversight and direction, quality control, or control of manufacturing related logistics. The activities most relevant to the substantial contribution analysis under these facts are material selection, product design and management of the manufacturing costs and capacities.

(ii) *Result.* If the manufacturing activities undertaken with respect to Product X prior to sale had been undertaken by FS through the activities of its employees, FS would have satisfied the manufacturing exception contained in paragraph (a)(4)(ii) or (a)(4)(iii) of this section with respect to Product X. Therefore, this paragraph (a)(4)(iv) applies. Under the facts and circumstances of the business, FS makes a substantial contribution through the activities of its employees to the manufacture of Product X. FS satisfies the test under this paragraph (a)(4)(iv) because it makes a substantial contribution through the activities of its employees to the manufacture of Product X. Therefore, FS is considered to have manufactured Product X under paragraph (a)(4)(i) of this section.

Example 11. Direction and oversight of manufacturing and quality control through periodic visits. (i) *Facts.* FS, a controlled foreign corporation, purchases raw materials from a related person. The raw materials are manufactured (under the principles of paragraph (a)(4)(ii) or (a)(4)(iii) of this section) into Product X by CM, an unrelated corporation, pursuant to a contract manufacturing arrangement. CM physically performs the substantial transformation, assembly, or conversion outside of FS's country of organization. Product X is sold by FS for use outside of FS's country of organization. FS controls the raw material, work-in-process, and finished goods, manages the manufacturing costs and capacities, and provides oversight and direction of the manufacture of Product X. Employees of FS visit CM's manufacturing facility for one week each quarter and perform quality control tests on a random sample of the units of Product X produced during the week. In the X industry, quarterly visits to a manufacturing facility by qualified persons are sufficient to control the quality of manufacturing.
(ii) *Result.* If the manufacturing activities undertaken with respect to Product X prior to sale had been undertaken by FS through the activities of its employees, FS would have satisfied the manufacturing exception contained in paragraph (a)(4)(ii) or (a)(4)(iii) of this section with respect to Product X. Therefore, this paragraph (a)(4)(iv) applies. Under the facts and circumstances of the business, FS satisfies the test under this paragraph (a)(4)(iv) with respect to Product X because it makes a substantial contribution through the activities of its employees to the manufacture of Product X. Therefore, FS is considered to have manufactured Product X under paragraph (a)(4)(i) of this section.

(5) ***Rules for apportionment of income derived from the sale of purchased components used in property not manufactured, produced, or constructed.*** The foreign base company sales income derived by a controlled foreign corporation for the taxable year from sales of personal property purchased and used as a component part of property which is not manufactured, produced, or constructed by such corporation within the meaning of subparagraph (4) of this paragraph shall, unless the records of the controlled foreign corporation show that a different apportionment of income is proper or unless all the income from such sales is treated as foreign base company sales income, be determined by first making for such year the following separate classifications and subclassifications with respect to the property which is sold and then by apportioning the income for such year from such sales in accordance with the rules of this subparagraph:

(i) A classification of the cost of components used in the property which is sold into two classes consisting of the cost of components manufactured, produced, constructed, grown, or extracted—

(*a*) Within the country under the laws of which the controlled foreign corporation is created or organized, and

(*b*) Outside such country;

(ii) A subclassification of the class described in subdivision (i) (*b*) of this subparagraph into—

(*a*) The cost of such components purchased from unrelated persons, and

(*b*) The cost of such components purchased from related persons;

(iii) A classification of the income derived from such sales into two classes consisting of income derived from sales for use, consumption, or disposition—

(*a*) Within the country under the laws of which the controlled foreign corporation is created or organized, and

(*b*) Outside such country; and

(iv) A subclassification of the class described in subdivision (iii) (*b*) of this subparagraph into income from—

(*a*) Sales to unrelated persons, and

(*b*) Sales to related persons.

The foreign base company sales income for the taxable year from purchases of the property from related persons and sales to unrelated persons shall be the amount which bears to the amount described in subdivision (iv) (*a*) of this subparagraph the same ratio that the amount described in subdivision (ii) (*b*) of this subparagraph bears to the total cost of components used in the product which is sold. The foreign base company sales income for the taxable year from purchases of the property from related persons and sales to related persons is the amount which bears to the amount described in subdivision (iv) (*b*) of this subparagraph the same ratio that the amount described in subdivision (ii) (*b*) of this subparagraph bears to the total cost of components used in the product which is sold.

The foreign base company sales income for the taxable year from purchases of the property from unrelated persons and sales to related persons is the amount which bears to the amount described in subdivision (iv) (*b*) of this subparagraph the same ratio that the amount described in subdivision (ii) (*a*) of this subparagraph bears to the total cost of components used in the product which is sold. The application of this subparagraph may be illustrated by the following examples:

> *Example 1.* Controlled foreign corporation C, which is incorporated under the laws of foreign country X, uses the calendar year as the taxable year. For 1964, C Corporation purchases radio parts of which some are manufactured in foreign country Y; and others, in country X. Some of the parts manufactured in country Y are purchased from related persons. Corporation C uses the purchased parts in radio kits which it designs and sells for assembly by its customers, unrelated persons, some of whom use the kits outside country X. Unless the records of C Corporation show that a different apportionment of income is proper, the foreign

base company sales income for 1964 is determined in the following manner upon the basis of the following factual classifications for such year:

Cost of components purchased from all persons:		
Manufactured within country X		$20
Manufactured outside country X		40
Total cost		60
Cost of components manufactured outside country X:		
Purchased from unrelated persons		10
Purchased from related persons		30
Total cost		40
Gross income from sales:		
Gross receipts from sales		120
Cost of goods sold:		
Components	$60	
Direct labor and factory burden	10	70
Gross income		50
Gross income from sales:		
For use within country X		26
For use outside country X		24
Gross income		50
Foreign base company sales income from purchases from related persons and sales to unrelated persons ($24 × $30/$60)		12

Example 2. The facts are the same as in example 1 except that none of the purchases are from related persons and some of the sales for use outside country X are to related persons. Unless the records of C Corporation show that a different apportionment of income is proper, the foreign base company sales income for 1964 is determined in the following manner upon the basis of the following additional factual classification for such year:

Gross income from sales for use outside country X—	
To unrelated persons	$8
To related persons	16
Total gross income	24

Foreign base company sales income from purchases from unrelated persons and sales to related persons ($16 × $40/$60)	10.67

Example 3. The facts are the same as in example 1 except that some of the sales for use outside country X are to related persons as in example 2. Unless the records of C Corporation show that a different apportionment of income is proper, the foreign base company sales income for 1964 is determined in the following manner:

Foreign base company sales income from purchases from related persons and sales to unrelated persons ($8 × $30/$60)	$4.00
Foreign base company sales income from purchases from related persons and sales to related persons ($16 × $30/$60)	8.00
Foreign base company sales income from purchases from unrelated persons and sales to related persons ($16 × $10/$60)	2.67
Total foreign base company sales income	14.67

(6) ***Special rule applicable to distributive share of partnership income*** —

(i) ***In general.*** To determine the extent to which a controlled foreign corporation's distributive share of any item of gross income of a partnership would have been foreign base company sales income if received by it directly, under § 1.952-1(g), the property sold will be considered to be manufactured, produced, or constructed by the controlled foreign corporation, within the meaning of paragraph (a)(4)(i) of this section, only if the manufacturing exception of paragraph (a)(4)(i) of this section would have applied to exclude the income from foreign base company sales income if the controlled foreign corporation had earned the income directly, determined by taking into account only the activities of the employees of, and property owned by, the partnership.

(ii) ***Example.*** The application of paragraph (a)(6)(i) of this section is illustrated by the following example:

Example. CFC, a controlled foreign corporation organized under the laws of Country A, is an 80 percent partner in Partnership X, a partnership organized under the laws of Country B. Partnership X performs activities in Country B that would constitute the manufacture of Product O, within the meaning of paragraph (a)(4) of this section, if performed directly by CFC. Partnership X, through its sales offices in Country B, then sells Product O to Corp D, a corporation that is a related person with respect to CFC, within the meaning of section 954(d)(3), for use within Country B. CFC's distributive share of Partnership X's sales

income is not foreign base company sales income because the manufacturing exception of paragraph (a)(4) of this section would have applied to exclude the income from foreign base company sales income if CFC had earned the income directly.

(iii) ***Effective date.*** This paragraph (a)(6) applies to taxable years of a controlled foreign corporation beginning on or after July 23, 2002.

(b) *Branches of controlled foreign corporation treated as separate corporations—(1) General rules for determining when to apply separate treatment —(i) Sales or purchase branch—(a) In general.* If a controlled foreign corporation carries on purchasing or selling activities by or through a branch or similar establishment located outside the country under the laws of which such corporation is created or organized and the use of the branch or similar establishment for such activities has substantially the same tax effect as if the branch or similar establishment were a wholly owned subsidiary corporation of such controlled foreign corporation, the branch or similar establishment and the remainder of the controlled foreign corporation will be treated as separate corporations for purposes of determining foreign base company sales income of such corporation. See section 954(d)(2).

(*b*) *Allocation of income and comparison of effective rates of tax.* The determination as to whether such use of the branch or similar establishment has the same tax effect as if it were a wholly owned subsidiary corporation of the controlled foreign corporation shall be made by allocating to such branch or similar establishment only that income derived by the branch or establishment which, when the special rules of subparagraph (2)(i) of this paragraph are applied, is described in paragraph (a) of this section (but determined without applying subparagraphs (2), (3), and (4) of such paragraph). The use of the branch or similar establishment for such activities will be considered to have substantially the same tax effect as if it were a wholly owned subsidiary corporation of the controlled foreign corporation if the income allocated to the branch or similar establishment under the immediately preceding sentence is, by statute, treaty obligation, or otherwise, taxed in the year when earned at an effective rate of tax that is less than 90 percent of, and at least 5 percentage points less than, the effective rate of tax which would apply to such income under the laws of the country in which the controlled foreign corporation is created or organized, if, under the laws of such country, the entire income of the controlled foreign corporation were considered derived by the corporation from sources within such country from doing business through a permanent establishment therein, received in such country, and allocable to such permanent establishment, and the corporation were managed and controlled in such country.

(*c*) *Use of more than one branch.* If a controlled foreign corporation carries on purchasing or selling activities by or through more than one branch or similar establishment located outside the country under the laws of which such corporation is created or organized, then paragraph (b)(1)(i)(*b*) of this section shall be applied separately to the income derived by each such branch or similar establishment (by treating such purchasing or selling branch or similar establishment as if it were the only branch or similar establishment of the controlled foreign corporation and as if any such other branches or similar establishments were separate corporations) in determining whether the use of such branch or similar establishment has substantially the same tax effect as if such branch or similar establishment were a wholly owned subsidiary corporation of the controlled foreign corporation. See paragraph (b)(1)(ii)(*c*)(*1*) of this section for rules applicable to a

controlled foreign corporation that carries on purchase or sales activities by or through one or more branches or similar establishments in addition to carrying on manufacturing activities by or through one or more branches or similar establishments.

(ii) *Manufacturing branch*—(*a*) *In general.* If a controlled foreign corporation carries on manufacturing, producing, constructing, growing, or extracting activities by or through a branch or similar establishment located outside the country under the laws of which such corporation is created or organized and the use of the branch or similar establishment for such activities with respect to personal property purchased or sold by or through the remainder of the controlled foreign corporation has substantially the same tax effect as if the branch or similar establishment were a wholly owned subsidiary corporation of such controlled foreign corporation, the branch or similar establishment and the remainder of the controlled foreign corporation will be treated as separate corporations for purposes of determining the foreign base company sales income of such corporation. See section 954(d)(2). The provisions of this paragraph (b)(1)(ii) will apply only if the controlled foreign corporation (including any branches or similar establishments of such controlled foreign corporation) manufactures, produces, or constructs such personal property within the meaning of paragraph (a)(4)(i) of this section, or carries on growing or extracting activities with respect to such personal property.

(*b*) *Allocation of income and comparison of effective rates of tax.* The determination as to whether such use of the branch or similar establishment has substantially the same tax effect as if the branch or similar establishment were a wholly owned subsidiary corporation of the controlled foreign corporation shall be made by allocating to the remainder of such controlled foreign corporation only that income derived by the remainder of such corporation, which, when the special rules of subparagraph (2)(i) of this paragraph are applied, is described in paragraph (a) of this section (but determined without applying subparagraphs (2), (3), and (4) of such paragraph). The use of the branch or similar establishment for such activities will be considered to have substantially the same tax effect as if it were a wholly owned subsidiary corporation of the controlled foreign corporation if income allocated to the remainder of the controlled foreign corporation under the immediately preceding sentence is, by statute, treaty obligation, or otherwise, taxed in the year when earned at an effective rate of tax that is less than 90 percent of, and at least 5 percentage points less than, the effective rate of tax which would apply to such income under the laws of the country in which the branch or similar establishment is located, if, under the laws of such country, the entire income of the controlled foreign corporation were considered derived by such corporation from sources within such country from doing business through a permanent establishment therein, received in such country, and allocable to such permanent establishment, and the corporation were created or organized under the laws of, and managed and controlled in, such country.

(*c*) *Use of more than one branch*—(*1*) *Use of one or more sales or purchase branches in addition to a manufacturing branch.* If, with respect to personal property manufactured, produced, constructed, grown, or extracted by or through a branch or similar establishment located outside the country under the laws of which the controlled foreign corporation is created or organized, purchasing or selling activities are carried on by or through more than one branch or similar establishment, or by or through one or more branches or similar establishments located outside such country, of such corporation,

then paragraph (b)(1)(ii)(*b*) of this section shall be applied separately to the income derived by each such purchasing or selling branch or similar establishment (by treating such purchasing or selling branch or similar establishment as though it alone were the remainder of the controlled foreign corporation) for purposes of determining whether the use of such manufacturing, producing, constructing, growing, or extracting branch or similar establishment has substantially the same tax effect as if such branch or similar establishment were a wholly owned subsidiary corporation of the controlled foreign corporation. If this rule applies, the sales or purchase branch rules contained in paragraph (b)(1)(i) of this section do not apply. The application of this paragraph (b)(1)(ii)(*c*)(*1*) is illustrated by the following example:

> *Example. All activities of controlled foreign corporation conducted through sales branches and manufacturing branch.* (i) *Facts.* FS, a controlled foreign corporation organized under the laws of country M, operates three branches. Branch A, located in country A, manufactures Product X under the principles of paragraph (a)(4)(i) of this section. Branch B, located in Country B, sells Product X manufactured by Branch A to customers for use outside of Country B. Branch C, located in Country C sells Product X manufactured by Branch A to customers for use outside of Country C. FS does not conduct any manufacturing or selling activities apart from the activities of Branches A, B and C. Country M imposes an effective rate of tax on sales income of 0%. Country A imposes an effective rate of tax on sales income of 20%. Country B imposes an effective rate of tax on sales income of 20%. Country C imposes an effective rate of tax on sales income of 18%. (ii) *Result.* Pursuant to this paragraph (b)(1)(ii)(*c*)(*1*), paragraph (b)(1)(ii)(*b*) of this section is applied to the sales income derived by Branch B by treating Branch B as though it alone were the remainder of the controlled foreign corporation. The use of Branch B does not have the same tax effect as if Branch B were a wholly owned subsidiary of FS because the tax rate applicable to the income allocated to Branch B under paragraph (b)(1)(ii)(*b*) of this section (20%) is not less than 90% of, and at least 5 percentage points less than, the effective rate of tax which would apply to such income under the laws of Country A (20%), the country in which Branch A is located. In addition, paragraph (b)(1)(ii)(*b*) of this section is applied separately to the sales income derived by Branch C by treating Branch C as though it alone were the remainder of the controlled foreign corporation. The use of Branch C does not have the same tax effect as if Branch C were a wholly owned subsidiary of FS because the tax rate applicable to the income allocated to Branch C under paragraph (b)(1)(ii)(*b*) of this section (18%) is not less than 90% of, and at least 5 percentage points less than, the effective rate of tax which would apply to such income under the laws of Country A (20%), the country in which Branch A is located. Pursuant to this paragraph (b)(1)(ii)(*c*)(*1*), the rules under paragraph (b)(1)(i) of this section for determining whether a sales or purchase branch is treated as a separate corporation from the remainder of the controlled foreign corporation do not apply.

(*2*) *Use of more than one branch to manufacture, produce, construct, grow, or extract separate items of personal property.* If a controlled foreign corporation carries on manufacturing, producing, constructing, growing, or extracting activities with respect to separate items of personal property by or through more than one branch or similar establishment located outside the country under the laws of which such corporation is created or organized, then paragraphs (b)(1)(ii)(*b*) and (*c*) of this section will be applied separately to each such branch or similar establishment (by treating such manufacturing branch or similar establishment as if it were the only such branch or similar establishment of the controlled foreign corporation and as if any other such branches or similar establishments were separate corporations) for purposes of determining whether the use of such branch or similar establishment has substantially the same tax effect as if such branch or similar establishment were a wholly owned subsidiary corporation of the controlled foreign corporation. The application of this paragraph (b)(1)(ii)(*c*)(*2*) is illustrated by the following example:

Example. Multiple branches that satisfy paragraph (a)(4)(i). (i) *Facts.* FS is a controlled foreign corporation organized in Country M. FS operates two branches, Branch A and Branch B located in Country A and Country B, respectively. Branch A and Branch B each manufacture separate items of personal property (Product X and Product Y, respectively) within the meaning of paragraph (a)(4)(ii) or (iii) of this section. Raw materials used in the manufacture of Product X and Product Y are purchased by FS from an unrelated person. FS engages in activities in Country M to sell Product X and Product Y to a related person for use, disposition or consumption outside of Country M. Employees of FS located in Country M perform only sales functions. The effective rate of tax imposed in Country M on the income from the sales of Product X and Product Y is 10%. Country A imposes an effective rate of tax on sales income of 20%. Country B imposes an effective rate of tax on sales income of 12%.

(ii) *Result.* Pursuant to this paragraph (b)(1)(ii)(*c*)(*2*), paragraph (b)(1)(ii)(*b*) of this section is applied separately to Branch A and Branch B with respect to the sales income of FS attributable to Product X (manufactured by Branch A) and Product Y (manufactured by Branch B). Because the effective rate of tax on FS's sales income from the sale of Product X in Country M (10%) is less than 90% of, and at least 5 percentage points less than, the effective rate of tax that would apply to such income in the country in which Branch A is located (20%), the use of Branch A to manufacture Product X has substantially the same tax effect as if Branch A were a wholly owned subsidiary corporation of FS. Because the effective rate of tax on FS's sales income from the sale of Product Y in Country M (10%) is not less than 90% of, and at least 5 percentage points less than, the effective rate of tax that would apply to such income in the country in which Branch B is located (12%), the use of Branch B to manufacture Product Y does not have substantially the same tax effect as if Branch B were a wholly owned subsidiary corporation of FS. Consequently, only

> Branch A is treated as a separate corporation apart from the remainder of FS for purposes of determining foreign base company sales income from the sales of Product X.

(*3*) *Use of more than one manufacturing branch, or one or more manufacturing branches and the remainder of the controlled foreign corporation, to manufacture, produce, or construct the same item of personal property*—(*i*) *In general.* This paragraph (b)(1)(ii)(*c*)(*3*) applies to determine the location of manufacture, production, or construction of personal property for purposes of applying paragraph (b)(1)(i)(*b*) or (b)(1)(ii)(*b*) of this section where more than one branch or similar establishment of a controlled foreign corporation, or one or more branches or similar establishments of a controlled foreign corporation and the remainder of the controlled foreign corporation, each engage in manufacturing, producing, or constructing activities with respect to the same item of personal property which is then sold by the controlled foreign corporation. This paragraph (b)(1)(ii)(*c*)(*3*) is applied separately with respect to the income derived by each purchasing or selling branch or similar establishment or purchasing or selling remainder of the controlled foreign corporation as provided under paragraphs (b)(1)(i) and (b)(1)(ii) of this section. The location of manufacture, production, or construction is determined under paragraph (b)(1)(ii)(*c*)(*3*)(*ii*) of this section if one or more branches or similar establishments or the remainder of the controlled foreign corporation independently satisfies paragraph (a)(4)(i) of this section with respect to an item of personal property. The location of manufacture, production, or construction is determined under paragraph (b)(1)(ii)(*c*)(*3*)(*iii*) of this section if none of the branches or similar establishments or the remainder of the controlled foreign corporation independently satisfies paragraph (a)(4)(i) of this section with respect to an item of personal property, but the controlled foreign corporation as a whole makes a substantial contribution to the manufacture, production or construction of that property within the meaning of paragraph (a)(4)(iv) of this section. For purposes of this paragraph (b)(1)(ii)(*c*)(*3*), the location of any activity with respect to the manufacture, production, or construction of an item of personal property is determined under paragraph (b)(1)(ii)(*c*)(*3*)(*iv*) of this section. For purposes of this paragraph (b)(1)(ii)(*c*)(*3*), if multiple branches or similar establishments are located in a single jurisdiction, then the activities of those branches will be aggregated for purposes of determining whether a branch or remainder of the controlled foreign corporation satisfies paragraph (a)(4)(i) of this section.

(*ii*) *Manufacture, production, or construction in one or more locations.* If only one branch or similar establishment or only the remainder of a controlled foreign corporation independently satisfies paragraph (a)(4)(i) of this section with respect to an item of personal property, then that branch or similar establishment or the remainder of the controlled foreign corporation will be the location of manufacture, production, or construction of that property for purposes of applying paragraph (b)(1)(i)(*b*) or (b)(1)(ii)(*b*) of this section to the income from the sale of that property. See paragraph (b)(1)(ii)(*c*)(*3*)(*v*) *Example 1* of this section. If more than one branch or similar establishment or one or more branches or similar establishments and the remainder of the controlled foreign corporation, each independently satisfy paragraph (a)(4)(i) of this section with respect to an item of personal property, then the location of manufacture, production, or construction of that property for purposes of applying paragraph (b)(1)(i)(*b*) or (b)(1)(ii)(*b*) of this section will be the location of that branch or similar establishment or

the jurisdiction under the laws of which the remainder of the controlled foreign corporation is organized that satisfies paragraph (a)(4)(i) of this section and that would, after applying paragraph (b)(1)(ii)(*b*) of this section to such branch or similar establishment or paragraph (b)(1)(i)(*b*) of this section to the remainder of the controlled foreign corporation, impose the lowest effective rate of tax on the income allocated to such branch or the remainder of the controlled foreign corporation under such section (that is, either paragraph (b)(1)(i)(*b*) or (b)(1)(ii)(*b*) of this section). See paragraph (b)(1)(ii)(*c*)(*3*)(*v*) *Example 2* of this section.

(*iii*) *No location independently satisfies manufacturing test.* If no branch or similar establishment or the remainder of the controlled foreign corporation independently satisfies paragraph (a)(4)(i) of this section with respect to an item of personal property but the controlled foreign corporation as a whole makes a substantial contribution to the manufacture, production, or construction of that property within the meaning of paragraph (a)(4)(iv) of this section, then for purposes of applying paragraph (b)(1)(i)(*b*) or (b)(1)(ii)(*b*) of this section, the location of manufacture, production, or construction with respect to the income derived by a purchasing or selling branch or similar establishment or the purchasing or selling remainder of the controlled foreign corporation in connection with the purchase or sale of that property will be the "tested manufacturing location" unless the "tested sales location" provides a greater contribution to the manufacture, production, or construction of the property. The tested manufacturing location is the location of any branch or similar establishment or remainder of the controlled foreign corporation that contributes to the manufacture, production, or construction of the personal property, if any, that would, after applying paragraph (b)(1)(ii)(*b*) of this section to such branch or similar establishment or paragraph (b)(1)(i)(*b*) of this section to the remainder of the controlled foreign corporation, be treated as a separate corporation and would impose the lowest effective rate of tax on the income allocated to such branch or similar establishment or to the remainder of the controlled foreign corporation under such section (that is, either paragraph (b)(1)(i)(*b*) or (b)(1)(ii)(*b*) of this section). The tested sales location is the location of the purchasing or selling branch or similar establishment or the remainder of the controlled foreign corporation by or through which the purchasing or selling activities are carried on with respect to the personal property. For purposes of this paragraph (b)(1)(ii)(*c*)(*3*)(*iii*), the contribution to the manufacture, production, or construction of the personal property by the tested sales location will be deemed to include the activities of any branch or similar establishment or remainder of the controlled foreign corporation that would not be treated as a corporation separate from the tested sales location after the application of paragraph (b)(1)(i)(*b*) or (b)(1)(ii)(*b*) of this section. For purposes of this paragraph (b)(1)(ii)(*c*)(*3*)(*iii*), the contribution of the tested manufacturing location to the manufacture, production, or construction of the personal property will be deemed to include any activities of any branch or similar establishment or remainder of the controlled foreign corporation that would be treated as a corporation separate from the tested sales location after the application of paragraph (b)(1)(i)(*b*) or (b)(1)(ii)(*b*) of this section. Whether the tested sales location provides a greater contribution to the manufacture, production, or construction of the personal property is determined by weighing the relative contributions to the manufacture, production, or construction of that property by the tested sales location and the tested manufacturing location under the facts and circumstances test provided in paragraph (a)(4)(iv) of this section. See paragraph (b)(1)(ii)(*c*)(*3*)(*v*) *Examples 3, 4, 5,* and *6* of this section. If the

tested sales location provides a greater contribution to the manufacture, production, or construction of the personal property than the tested manufacturing location or if there is no tested manufacturing location, then the tested sales location is the location of manufacture, production, or construction of that property and the rules of paragraphs (b)(1)(i)(*a*) and (b)(1)(ii)(*a*) of this section will not apply with respect to the income derived by the tested sales location in connection with the purchase or sale of that property and the use of that purchasing or selling branch or similar establishment or the purchasing or selling remainder will not result in a branch being treated as a separate corporation for purposes of paragraph (b)(2)(ii) of this section.

(*iv*) ***Location of activity.*** For purposes of paragraph (b)(1)(ii)(*c*)(*3*) of this section, the location of any activity with respect to the manufacture, production, or construction of an item of personal property is the location where the employees of the controlled foreign corporation perform such activity. For example, the location of any activity concerning intellectual property is determined based on where employees of the controlled foreign corporation develop or direct the use or development of the intellectual property, not on the formal assignment of that intellectual property.

(*v*) ***Examples.*** The following examples illustrate the application of this paragraph (b)(1)(ii)(*c*)(*3*):

Example 1. Multiple branches contribute to the manufacture of a single product only one branch satisfies paragraph (a)(4)(i). (i) *Facts.* FS is a controlled foreign corporation organized in Country M. FS operates three branches, Branch A, Branch B, and Branch C, located respectively in Country A, Country B, and Country C. Branch A, Branch B, and Branch C each performs different manufacturing activities with respect to the manufacture of Product X. Branch A, through the activities of employees of FS located in Country A, designs Product X. Branch B, through the activities of employees of FS located in Country B, provides quality control and oversight and direction. Branch C, through the activities of employees of FS located in Country C, manufactures Product X (within the meaning of paragraph (a)(4)(ii) or (a)(4)(iii) of this section) using the designs developed by Branch A and under the oversight of the quality control personnel of Branch B. The activities of Branch A and Branch B do not independently satisfy paragraph (a)(4)(i) of this section. Employees of FS located in Country M purchase the raw materials used in the manufacture of Product X from a related person and control the work-in-process and finished goods throughout the manufacturing process. Employees of FS located in Country M also manage the manufacturing costs and capacities related to Product X. Further, employees of FS located in Country M oversee the coordination between the branches. The activities of the remainder of FS in Country M do not independently satisfy paragraph (a)(4)(i) of this section. Employees of FS located in Country M sell Product X to unrelated persons for use outside of Country M. The sales income from the sale of Product X is taxed in Country M at an effective rate of tax of 10%. Country C imposes an effective rate of tax of 20% on sales income.

(ii) *Result.* Country C is the location of manufacture for purposes of applying paragraph (b)(1)(ii)(*b*) of this section because only the activities of Branch C independently satisfy paragraph (a)(4)(i) of this section. The use of Branch C has substantially the same tax effect as if Branch C were a wholly owned subsidiary corporation of FS because the effective rate of tax on the sales income (10%) is less than 90% of, and at least 5 percentage points less than, the effective rate of tax that would apply to such income in the country in which Branch C is located (20%). Therefore, sales of Product X by the remainder of FS are treated as sales on behalf of Branch C. In determining whether the remainder of FS will qualify for the manufacturing exception under paragraph (a)(4)(iv) of this section, the activities of FS will include the activities of Branch A or Branch B, respectively, if each of those branches would not be treated as a separate corporation under paragraph (b)(1)(ii)(*b*) of this section, if that paragraph were applied independently to each of Branch A and Branch B. See paragraph (b)(2)(ii)(*a*) of this section.

Example 2. Multiple branches satisfy paragraph (a)(4)(i) with respect to the same product sold by the controlled foreign corporation. (i) *Facts.* Assume the same facts as in *Example 1*, except for the following. In addition to the design of Product X, Branch A also performs in Country A other manufacturing activities, including those ascribed to FS in *Example 1*, that are sufficient to qualify as manufacturing under paragraph (a)(4)(iv) of this section with respect to Product X. Country A imposes an effective rate of tax of 12% on sales income.
(ii) *Result.* Branch A and Branch C through their activities each independently satisfy the requirements of paragraph (a)(4)(i) of this section. Therefore, paragraph (b)(1)(ii)(*b*) of this section is applied by comparing the effective rate of tax imposed on the income from the sales of Product X against the lowest effective rate of tax that would apply to the sales income in either Country A or Country C if paragraph (b)(1)(ii)(*b*) of this section were applied separately to Branch A and Branch C. Country A imposes the lower effective rate of tax, and therefore, Branch A is treated as the location of manufacture for purposes of applying paragraph (b)(1)(ii)(*b*) of this section. The effective rate of tax in Country B is not considered because Branch B does not satisfy paragraph (a)(4)(i) of this section. Neither Branch A nor Branch C is treated as a separate corporation because the effective rate of tax on the sales income of FS from the sale of Product X (10%) is not less than 90% of, and at least 5 percentage points less than, the effective rate of tax that would apply to such income in the country in which Branch A is located (12%). Sales of Product X by the remainder of the controlled foreign corporation are not treated as made on behalf of any branch.

Example 3. Determining the location of manufacture when manufacturing activities performed by multiple branches and no branch independently satisfies paragraph (a)(4)(i). (i) *Facts.* FS, a controlled foreign corporation organized in Country M, purchases raw materials from a related person. The raw materials are manufactured

(under the principles of paragraph (a)(4)(ii) or (a)(4)(iii) of this section) into Product X by CM, an unrelated corporation, pursuant to a contract manufacturing arrangement. CM physically performs the substantial transformation, assembly, or conversion of the raw materials in Country C. FS has two branches, Branch A and Branch B, located in Country A and Country B respectively. Branch A, through the activities of employees of FS located in Country A, designs Product X. Branch B, through the activities of employees of FS located in Country B, controls manufacturing related logistics, provides oversight and direction during the manufacturing process, and controls the raw materials and work-in-process. FS manages the manufacturing costs and capacities related to the manufacture of Product X through employees located in Country M. Further, employees of FS located in Country M oversee the coordination between the branches. Employees of FS located in Country M also sell Product X to unrelated persons for use outside of Country M. Country M imposes an effective rate of tax on sales income of 10%. Country A imposes an effective rate of tax on sales income of 20%, and Country B imposes an effective rate of tax on sales income of 24%. Neither the remainder of FS, nor any branch of FS independently satisfies paragraph (a)(4)(i) of this section. However, under the facts and circumstances of the business, FS as a whole provides a substantial contribution to the manufacture of Product X within the meaning of paragraph (a)(4)(iv) of this section.
(ii) *Result.* Based on the facts, neither the remainder of FS (through the activities of its employees in Country M) nor any branch of FS independently satisfies paragraph (a)(4)(i) of this section with respect to Product X, but FS, as a whole, provides a substantial contribution through the activities of its employees to the manufacture of Product X. The remainder of FS, Branch A, and Branch B each provides a contribution through the activities of employees to the manufacture of Product X. Therefore, FS must determine the location of manufacture under paragraph (b)(1)(ii)(*c*)(*3*)(*iii*) of this section. The tested sales location is Country M because the selling activities with respect to Product X are carried on by the remainder of FS. The location of Branch A is the tested manufacturing location because the effective rate of tax imposed on FS's sales income by Country M (10%) is less than 90% of, and at least 5 percentage points less than, the effective rate of tax that would apply to such income in Country A (20%), and Country A has the lowest effective rate of tax among the manufacturing branches that would, after applying paragraph (b)(1)(ii)(*b*) of this section, be treated as a separate corporation. The activities of Branch B will be included in the contribution of Branch A for purposes of determining the location of manufacture of Product X because the effective rate of tax imposed on the sales income by Country M (10%) is less than 90% of, and at least 5 percentage points less than, the effective rate of tax that would apply to such income in Country B (24%). Under the facts and circumstances of the business, the activities of the remainder of FS would not provide a greater contribution to the manufacture of Product X than the activities of Branch A and Branch B, considered together. Therefore, the location of manufacture is Country A, the location of Branch A.

Example 4. Manufacturing activities performed by multiple branches, no branch independently satisfies paragraph (a)(4)(i), selling activities carried on by remainder of the controlled foreign corporation, remainder contribution includes branch manufacturing activities. (i) *Facts.* The facts are the same as *Example 3,* except that the effective rate of tax on sales income in Country B is 12%. In addition, under the facts of the particular business, the activities of employees of FS located in Country B and Country M, if considered together, would provide a greater contribution to the manufacture of Product X than the activities of employees of FS located in Country A. (ii) *Result.* Based on the facts, neither the remainder of FS (through activities of its employees in Country M) nor any branch of FS independently satisfies paragraph (a)(4)(i) of this section with respect to Product X, but FS, as a whole, provides a substantial contribution through the activities of its employees to the manufacture of Product X. The remainder of FS, Branch A, and Branch B each provide a contribution through the activities of their employees to the manufacture of Product X. Therefore, FS must determine the location of manufacture under paragraph (b)(1)(ii)(*c*)(*3*)(*iii*) of this section. The tested sales location is Country M because the selling activities with respect to Product X are carried on by the remainder of FS. The location of Branch A is the tested manufacturing location because the effective rate of tax imposed on FS's sales income by Country M (10%) is less than 90% of, and at least 5 percentage points less than, the effective rate of tax that would apply to such income in Country A (20%), and Branch A is the only branch that would, after applying paragraph (b)(1)(ii)(*b*) of this section, be treated as a separate corporation. The activities of Branch B will be included in the contribution of the remainder of FS for purposes of determining the location of manufacture of Product X because the effective rate of tax imposed on the sales income by Country M (10%) is not less than 90% of, and at least 5 percentage points less than, the effective rate of tax that would apply to such income in Country B (12%). Under a facts and circumstances analysis, considered together, the activities of Branch B and the remainder of FS would provide a greater contribution to the manufacture of Product X than the activities of Branch A. Therefore, the rules of paragraph (b)(1)(ii)(a) of this section will not apply with respect to the income derived by the remainder of FS in connection with the sale of Product X, and neither Branch A nor Branch B will be treated as a separate corporation for purposes of paragraph (b)(2)(ii) of this section.

Example 5. Manufacturing activities performed by multiple branches, no branch independently satisfies paragraph (a)(4)(i), sales carried on by remainder of the controlled foreign corporation and a sales branch. (i) *Facts.* The facts are the same as *Example 3,* except that sales of Product X are also carried on through Branch D in Country D, and Country D imposes a 16% effective rate of tax on sales income. In addition, under the facts and circumstances of the business, the activities of employees of FS located in Country A and Country M, considered together, would provide a greater

contribution to the manufacture of Product X than the activities of employees of FS located in Country B.

(ii) *Result.* Based on the facts, neither the remainder of FS nor any branch of FS independently satisfies paragraph (a)(4)(i) of this section with respect to Product X, but FS, as a whole, provides a substantial contribution through the activities of its employees to the manufacture of Product X. The remainder of FS, Branch A, and Branch B each provide a contribution through the activities of their employees to the manufacture of Product X. Therefore, FS must determine the location of manufacture under paragraph (b)(1)(ii)(*c*)(*3*)(*iii*) of this section. Further, pursuant to paragraph (b)(1)(ii)(*c*)(*1*) of this section, paragraph (b)(1)(ii)(*c*)(*3*)(*iii*) of this section must be applied separately to the sales income derived by the remainder of FS and Branch D respectively. The results with respect to the income derived by the remainder of FS in connection with the sale of Product X in this *Example 5* are the same as in *Example 3*. However, paragraph (b)(1)(ii)(*c*)(*3*)(*iii*) of this section must also be applied with respect to Branch D because the sale of Product X is also carried on through Branch D. Thus, for purposes of that sales income, the location of Branch D is the tested sales location. The location of Branch B is the tested manufacturing location because the effective rate of tax imposed on Branch D's sales income by Country D (16%) is less than 90% of, and at least 5 percentage points less than, the effective rate of tax that would apply to such income in Country B (24%), and Branch B is the only branch that would, after applying paragraph (b)(1)(ii)(*b*) of this section, be treated as a separate corporation. The manufacturing activities performed in Country M by the remainder of FS and the manufacturing activities performed in Country A by Branch A will be included in Branch D's contribution to the manufacture of Product X for purposes of determining the location of manufacture of Product X with respect to Branch D's sales income because the effective rate of tax imposed on the sales income by Country D (16%) is not less than 90% of, and at least 5 percentage points less than, the effective rate of tax that would apply to such income in Country M (10%) and Country A (20%). Under the facts and circumstances of the business, the activities of Branch D, Branch A, and the remainder of FS, considered together, would provide a greater contribution to the manufacture of Product X than the activities of Branch B. Therefore, the rules of paragraph (b)(1)(ii)(*a*) of this section will not apply with respect to the income derived by Branch D in connection with the sale of Product X and the use of Branch D to sell Product X will not result in a branch being treated as a separate corporation for purposes of paragraph (b)(2)(ii) of this section.

Example 6. Determining the location of manufacture when employees of remainder of controlled foreign corporation travel to location of unrelated contract manufacturer to perform manufacturing activities. (i) *Facts.* FS, a controlled foreign corporation organized in Country M, purchases raw materials from a related person. The raw materials are manufactured (under the principles of paragraph (a)(4)(ii) or (a)(4)(iii) of

this section) into Product X by CM, an unrelated corporation, pursuant to a contract manufacturing arrangement. CM physically performs the substantial transformation, assembly, or conversion of the raw materials in Country C. Employees of FS located in Country M sell Product X to unrelated persons for use outside of Country M. Employees of FS located in Country M engage in product design, manage the manufacturing costs and capacities with respect to Product X, and direct the use of intellectual property for the purpose of manufacturing Product X. Quality control and oversight and direction of the manufacturing process are conducted in Country C by employees of FS who are employed in Country M but who regularly travel to Country C. Branch A, located in Country A, is the only branch of FS. Product design with respect to Product X conducted by employees of FS located in Country A is supplemental to the bulk of the design work, which is done by employees of FS located in Country M. At all times, employees of Branch A control the raw materials, work-in-process and finished goods. Employees of FS located in Country A also control manufacturing related logistics with respect to Product X. Country M imposes an effective rate of tax on sales income of 10%. Country A imposes an effective rate of tax on sales income of 20%. Neither the remainder of FS nor Branch A independently satisfies paragraph (a)(4)(i) of this section. However, under the facts and circumstance of the business, FS as a whole (including Branch A) provides a substantial contribution to the manufacture of Product X within the meaning of paragraph (a)(4)(iv) of this section.

(ii) *Result.* Based on the facts, neither the remainder of FS nor Branch A independently satisfies paragraph (a)(4)(i) of this section with respect to Product X, but FS, as a whole, provides a substantial contribution through the activities of its employees to the manufacture of Product X. The remainder of FS and Branch A each provide a contribution through the activities of employees to the manufacture of Product X. Therefore, FS must determine the location of manufacture under paragraph (b)(1)(ii)(*c*)(*3*)(*iii*) of this section. The tested sales location is Country M because the selling activities with respect to Product X are carried on by the remainder of FS. The tested manufacturing location is the location of Branch A because the effective rate of tax imposed on the remainder of FS's sales income by Country M (10%) is less than 90% of, and at least 5 percentage points less than, the effective rate of tax that would apply to such income in Country A (20%), and Branch A is the only branch that would, after applying paragraph (b)(1)(ii)(*b*) of this section, be treated as a separate corporation. Although the activities of traveling employees are considered in determining whether FS, as a whole, makes a substantial contribution to the manufacture of Product X under paragraph (a)(4)(iv) of this section, the activities of the employees of FS that are performed in Country C are not taken into consideration in determining whether Country M, the jurisdiction under the laws of which FS is organized, is the location of manufacture under paragraph (b)(1)(ii)(*c*)(*3*)(*iii*) of this section. Activities of employees performed outside the jurisdiction in which the controlled foreign corporation is

organized and outside a location in which the controlled foreign corporation maintains a branch or similar establishment, are not considered in determining the location of manufacture. Under the facts and circumstances of the business, the activities of employees of FS performed in Country M do not provide a greater contribution to the manufacture of Product X than the activities of employees of FS performed in Country A. Therefore, the location of manufacture is Country A, the location of Branch A.

(*4*) *Use of more than one branch to manufacture, produce, construct, grow, or extract separate items of personal property.* For purposes of paragraphs (b)(1)(ii)(*c*)(*2*) and (b)(1)(ii)(*c*)(*3*) of this section, an item of personal property refers to an individual unit of personal property rather than a type or class of personal property.

(2) *Special rules*—(i) *Determination of treatment as a wholly owned subsidiary corporation.* For purposes of determining under this paragraph whether the use of a branch or similar establishment which is treated as a separate corporation has substantially the same tax effect as if the branch or similar establishment were a wholly owned subsidiary corporation of a controlled foreign corporation—

(*a*) ***Treatment as separate corporations.*** The branch or similar establishment will be treated as a wholly owned subsidiary corporation of the controlled foreign corporation, and such branch or similar establishment will be deemed to be incorporated in the country in which it is located.

(*b*) *Activities treated as performed on behalf of the remainder of corporation.* (*1*) With respect to purchasing or selling activities performed by or through the branch or similar establishment, such purchasing or selling activities will, with respect to personal property manufactured, produced, constructed, grown, or extracted by the remainder of the controlled foreign corporation, be treated as performed on behalf of the remainder of the controlled foreign corporation.

(*2*) With respect to purchasing or selling activities performed by or through the branch or similar establishment, such purchasing or selling activities will, with respect to personal property (other than property described in paragraph (b)(2)(i)(*b*)(*1*) of this section) purchased or sold, or purchased and sold, by the remainder of the controlled foreign corporation (or any branch treated as the remainder of the controlled foreign corporation), be treated as performed on behalf of the remainder of the controlled foreign corporation.

(*c*) *Activities treated as performed on behalf of branch.* With respect to manufacturing, producing, constructing, growing, or extracting activities performed by or through the branch or similar establishment, purchasing or selling activities performed by or through the remainder of the controlled foreign corporation with respect to the personal property manufactured, produced, constructed, grown, or extracted by or through the branch or similar establishment shall be treated as performed on behalf of the branch or similar establishment.

(*d*) [Reserved] For further guidance, see § 1.954-3T(b)(2)(i)(*d*).

(*e*) ***Tax laws to be taken into account.*** Tax determinations shall be made by taking into account only the income, war profits, excess profits, or similar tax laws (or the absence of such laws) of the countries involved.

(ii) *Determination of foreign base company sales income.* Once it has been determined under subparagraph (1) of this paragraph that a branch or similar establishment and the remainder of the controlled foreign corporation are to be treated as separate corporations, the determination of whether such branch or similar establishment, or the remainder of the controlled foreign corporation, as the case may be, has foreign base company sales income shall be made by applying the following rules:

(*a*) *Treatment as separate corporations.* The branch or similar establishment will be treated as a wholly owned subsidiary corporation of the controlled foreign corporation, and such branch or similar establishment will be deemed to be incorporated in the country in which it is located. For purposes of applying the rules of this paragraph (b)(2)(ii), a branch or similar establishment of a controlled foreign corporation treated as a separate corporation purchasing or selling on behalf of the remainder of the controlled foreign corporation under paragraph (b)(2)(ii)(*b*) of this section, or the remainder of the controlled foreign corporation treated as a separate corporation purchasing or selling on behalf of a branch or similar establishment of the controlled foreign corporation under paragraph (b)(2)(ii)(*c*) of this section, will include the activities of any other branch or similar establishment or remainder of the controlled foreign corporation that would not be treated as a separate corporation (apart from the branch or similar establishment of a controlled foreign corporation that is treated as performing purchasing or selling activities on behalf of the remainder of the controlled foreign corporation under paragraph (b)(2)(ii)(*b*) of this section or the remainder of the controlled foreign corporation that is treated as performing purchasing or selling activities on behalf of the branch or similar establishment under paragraph (b)(2)(ii)(*c*) of this section) if the effective rate of tax imposed on the income of the purchasing or selling branch or similar establishment, or purchasing or selling remainder of the controlled foreign corporation, were tested under the principles of paragraph (b)(1)(i)(*b*) or (b)(1)(ii)(*b*) of this section against the effective rate of tax that would apply to such income if it were considered derived by such other branch or similar establishment or the remainder of the controlled foreign corporation.

(*b*) *Activities treated as performed on behalf of the remainder of corporation.* (*1*) With respect to purchasing or selling activities performed by or through the branch or similar establishment, such purchasing or selling activities will, with respect to personal property manufactured, produced, constructed, grown, or extracted by the remainder of the controlled foreign corporation, be treated as performed on behalf of the remainder of the controlled foreign corporation.

(*2*) With respect to purchasing or selling activities performed by or through the branch or similar establishment, such purchasing or selling activities will, with respect to personal property (other than property described in paragraph (b)(2)(ii)(*b*)(*1*) of this section) purchased or sold, or purchased and sold, by the remainder of the controlled foreign corporation (or any branch treated as the remainder of the controlled foreign corporation), be treated as performed on behalf of the remainder of the controlled foreign corporation.

(*c*) *Activities treated as performed on behalf of branch.* With respect to manufacturing, producing, constructing, growing, or extracting activities performed by or through the branch or similar establishment, purchasing or selling activities performed by or through the remainder of the controlled foreign corporation with respect to the personal property manufactured, produced, constructed, grown, or extracted by or through the branch or similar establishment shall be treated as performed on behalf of the branch or similar establishment.

(*d*) [Reserved]

(*e*) *Comparison with ordinary treatment.* Income derived by a branch or similar establishment, or by the remainder of the controlled foreign corporation, will not be foreign base company sales income under paragraph (b) of this section if the income would not be foreign base company sales income if it were derived by a separate controlled foreign corporation under like circumstances.

(*f*) ***Priority of application.*** If income derived by the branch or similar establishment, or by the remainder of the controlled foreign corporation, from a transaction would be classified as foreign base company sales income of such controlled foreign corporation under section 954(d)(1) and paragraph (a) of this section, the income shall, notwithstanding this paragraph, be treated as foreign base company sales income under paragraph (a) of this section and the branch or similar establishment shall not be treated as a separate corporation with respect to such income.

(3) ***Inclusion of amounts in gross income of United States shareholders.*** A branch or similar establishment of a controlled foreign corporation and the remainder of such corporation shall be treated as separate corporations under this paragraph solely for purposes of determining the foreign base company sales income of each such corporation and for purposes of including an amount in subpart F income of the controlled foreign corporation under section 953(a). See section 954(b)(3) and paragraph (d)(4) of § 1.954-1 for rules relating to the treatment of a branch or similar establishment of a controlled foreign corporation and the remainder of such corporation as separate corporations for purposes of independently determining if the foreign base company income of each such corporation is less than 10 percent, or more than 70 percent, of its gross income. For all other purposes, however, a branch or similar establishment of a controlled foreign corporation and the remainder of such corporation shall not be treated as separate corporations. For example, if the controlled foreign corporation has a deficit in earnings and profits to which section 952(c) applies, the limitation of such section on the amount includable in the subpart F income of such corporation will apply. Moreover, income, war profits, or excess profits taxes paid by a branch or similar establishment to a foreign country will be treated as having been paid by the controlled foreign corporation for purposes of section 960 (relating to special rules for foreign tax credit) and the regulations thereunder. Also, income of a branch or similar establishment, treated as a separate corporation under this paragraph, will not be treated as dividend income of the controlled foreign corporation of which it is a branch or similar establishment.

(4) ***Illustrations.*** The application of this paragraph (b) may be illustrated by the following examples:

Example 1. Controlled foreign corporation A, incorporated under the laws of foreign country X, is engaged in the manufacturing business in such country. Corporation A negotiates sales of its products for use outside of country X through a sales office, branch B, maintained in foreign country Y. These activities constitute the only activities of A Corporation. Country X levies an income tax at an effective rate of 50 percent on the income of A Corporation derived by the manufacturing plant in country X but does not tax the sales income of A Corporation derived by branch B in country Y. Country Y levies an income tax at an effective rate of 10 percent on the sales income derived by branch B but does not tax the income of A Corporation derived by the manufacturing plant in country X. If the sales income derived by branch B were, under the laws of country X, derived from sources within country X by A Corporation, such income would be taxed by such country at an effective rate of 50 percent. In determining foreign base company sales income of A Corporation, branch B is treated as a separate wholly owned subsidiary corporation of A Corporation, the 10 percent rate of tax on branch B's income being less than 90 percent of, and at least 5 percentage points less than, the 50 percent rate. Income derived by branch B, treated as a separate corporation, from the sale by or through it for use, consumption, or disposition outside country Y of the personal property produced in country X is treated as

income from the sale of personal property on behalf of A Corporation, a related person, and constitutes foreign base company sales income. The remainder of A Corporation, treated as a separate corporation, derives no foreign base company sales income since it produces the product which is sold.

Example 2. Controlled foreign corporation C is incorporated under the laws of foreign country X. Corporation C maintains branch B in foreign country Y. Branch B manufactures articles in country Y which are sold through the sales offices of C Corporation located in country X. These activities constitute the only activities of C Corporation. Country Y levies an income tax at an effective rate of 30 percent on the manufacturing profit of C Corporation derived by branch B but does not tax the sales income of C Corporation derived by the sales offices in country X. Country X does not impose an income, war profits, excess profits, or similar tax, and no tax is paid to any foreign country with respect to income of C Corporation which is not derived by branch B. If C Corporation were incorporated under the laws of country Y, the sales income of the sales offices in country X would be taxed by country Y at an effective rate of 30 percent. In determining foreign base company sales income of C Corporation, branch B is treated as a separate wholly owned subsidiary corporation of C Corporation, the zero rate of tax on the income derived by the remainder of C Corporation being less than 90 percent of, and at least 5 percentage points less than, the 30 percent rate. Branch B, treated as a separate corporation, derives no foreign base company sales income since it produces the product which is sold. Income derived by the remainder of C Corporation, treated as a separate corporation, from the sale by or through it for use, consumption, or disposition outside country X of the personal property produced in country Y is treated as income from the sale of personal property on behalf of branch B, a related person, and constitutes foreign base company sales income.

Example 3. (i) *Facts.* Corporation E, a controlled foreign corporation incorporated under the laws of foreign Country X, is a wholly owned subsidiary of Corporation D, also a controlled foreign corporation incorporated under the laws of Country X. Corporation E maintains Branch B in foreign Country Y. Both corporations use the calendar year as the taxable year. In 1964, Corporation E's sole activity, carried on through Branch B, consists of the purchase of articles manufactured in Country X by Corporation D, a related person, and the sale of the articles through Branch B to unrelated persons. One hundred percent of the articles sold through Branch B are sold for use outside Country X and 90% are also sold for use outside of Country Y. The income of Corporation E derived by Branch B from such transactions is taxed to Corporation E by Country X only at the time Corporation E distributes such income to Corporation D and is taxed on the basis of what the tax (a 40% effective rate) would have been if the income had been derived in 1964 by Corporation E from sources within Country X from doing business through a permanent establishment therein. Country Y levies an income tax at an effective rate of 50% on income derived from sources within such country, but the income of Branch B for 1964 is effectively taxed by Country Y at a 5% rate since under the laws of such country, only 10% of Branch B's income is derived from sources within such country. Corporation E makes no distributions to Corporation D in 1964.

(ii) *Result.* In determining foreign base company sales income of Corporation E for 1964, Branch B is treated as a separate wholly owned subsidiary corporation of Corporation E, the 5% rate of tax being less than 90% of, and at least 5 percentage points less than the 40% rate. Income derived by Branch B, treated as a separate corporation, from the purchase from a related person (Corporation D), of personal property manufactured outside of Country Y and sold for use, disposition, or consumption outside of Country Y constitutes foreign base company sales income. If, instead, Corporation D were unrelated to Corporation E, none of the income would be foreign base company sales income because Corporation E would be purchasing from and selling to unrelated persons and if Branch B were treated as a separate corporation it would likewise be purchasing from and selling to unrelated persons. Alternatively, if Corporation D were related to Corporation E, but Branch B manufactured the articles prior to sale under the principles of paragraph (a)(4)(iv) of this section, the income would not be foreign base company sales income because Branch B, treated as a separate corporation, would qualify for the manufacturing exception under paragraph (a)(4) of this section.

Example 4. Controlled foreign corporation F, incorporated under the laws of foreign country X, is a wholly owned subsidiary of domestic corporation M. Corporation F, through its branch B in foreign country Y, purchases from controlled foreign corporation G, a wholly owned subsidiary of M Corporation incorporated under the laws of foreign country Z, personal property which G Corporation manufactures in country Z. Corporation F sells such property for use in foreign country W. Since the income of F Corporation from such purchases and sales is classified as foreign base company sales income under section 954(d)(1) and paragraph (a) of this section, branch B will not be treated as a separate corporation with respect to such income even if the tax differential between countries X and Y would otherwise justify such treatment.

Example 5. Controlled foreign corporation A, incorporated under the laws of foreign country X, is engaged in manufacturing articles through its home office, located in country X, and selling such articles through branch B, located in foreign country Y, and through branch C, located in foreign country Z, for use outside country X. These activities constitute the only activities of A Corporation for its taxable year 1963. Each such country levies an income tax on only the income derived from sources within such country, and all income derived in 1963 by the home office, branch B, and branch C, respectively, is derived from sources within countries X, Y, and Z, respectively. The income and income taxes of A Corporation for 1963 are as follows:

	X Country	Y Country	Z Country
Income of:			
Home office	$200,000		

	X Country	Y Country	Z Country
Branch B		$100,000	
Branch C			$100,000
Income tax	$100,000	$20,000	$20,000
Effective rate of tax	50%	20%	20%

By applying subparagraph (1)(i) of this paragraph and by treating branch B as though it were the only branch of A Corporation, branch B is treated as a separate wholly owned subsidiary corporation of A Corporation in determining foreign base company sales income of A Corporation for 1963, the 20 percent rate of tax on the income of such branch being less than 90 percent of, and at least 5 percentage points less than, the 50 percent rate of tax which would apply to the income of branch B under the laws of country X if, under the laws of such country, all the income of A Corporation for 1963 derived through the home office and branch B were derived from sources within country X. Moreover, by applying subparagraph (1)(i) of this paragraph and by treating branch C as though it were the only branch of A Corporation, branch C is treated as a separate wholly owned subsidiary corporation of A Corporation, the 20 percent rate of tax on the income of such branch being less than 90 percent of, and at least 5 percentage points less than, the 50 percent rate of tax which would apply to the income of branch C under the laws of country X if, under the laws of such country, all the income of A Corporation for 1963 derived through the home office and branch C were derived from sources within country X. The income derived by branch B and branch C, respectively, each treated as a separate corporation, from the sale by or through each of them for use, consumption, or disposition outside country Y and country Z, respectively, is treated as income from the sale of personal property on behalf of A Corporation, a related person, and constitutes foreign base company sales income for 1963. The home office of A Corporation, treated as a separate corporation, derives no foreign base company sales income for 1963 since it produces the articles which are sold.

Examples 6-7 [Reserved]

Example 8. Uniformly applicable incentive tax rate in one country. (i) *Facts.* FS is a controlled foreign corporation organized in Country M. FS operates one branch, Branch A, located in Country A. Branch A manufactures Product X within the meaning of paragraph (a)(4)(ii) or (a)(4)(iii) of this section. Raw materials used in the manufacture of Product X are purchased by FS from an unrelated person. FS engages in activities in Country M to sell Product X to a related person for use outside of Country M. Employees of FS located in Country M carry on only sales functions. The effective rate imposed in

Country M on the income from the sale of Product X is 10%. Country A generally imposes an effective rate of tax on income of 20%, but imposes a uniformly applicable incentive rate of tax of 10% on manufacturing income and related sales income.
(ii) *Result.* The use of Branch A to manufacture Product X does not have substantially the same tax effect as if Branch A were a wholly owned subsidiary corporation of FS because the effective rate of tax on FS's sales income from the sale of Product X in Country M (10%) is not less than 90% of, and at least 5 percentage points less than, the effective rate of tax that would apply to such income in the country in which Branch A is located (10%). Consequently, pursuant to paragraph (b)(1)(ii)(*b*) of this section, Branch A is not treated as a separate corporation apart from the remainder of FS for purposes of determining foreign base company sales income.

Example 9. Manufacturing activities performed by multiple branches, no branch independently satisfies paragraph (a)(4)(i), selling activities carried on by remainder of the controlled foreign corporation, some branch manufacturing activities included in remainder contribution. (i) *Facts.* FS, a controlled foreign corporation organized in Country M, has three branches, Branch A, Branch B, and Branch C, located in Country A, Country B, and Country C respectively. FS purchases raw materials from a related person. The raw materials are manufactured (under the principles of paragraph (a)(4)(ii) or (a)(4)(iii) of this section) into Product X by CM, an unrelated corporation, pursuant to a contract manufacturing arrangement. CM physically performs the substantial transformation, assembly, or conversion required to manufacture Product X outside of FS's country of organization. FS manages the manufacturing costs and capacities with respect to the manufacture of Product X through employees located in Country M. Further, employees of FS located in Country M oversee the coordination between the branches. Branch A, through the activities of employees of FS located in Country A, designs Product X, controls manufacturing related logistics, and controls the raw materials and work-in-process during the manufacturing process. Branch B, through the activities of employees of FS located in Country B, provides quality control. Branch C, through the activities of employees of FS located in Country C, provides oversight and direction during the manufacturing process. Employees of FS located in Country M sell Product X to unrelated persons for use outside of Country M. Country M imposes an effective rate of tax on sales income of 10%. Country A imposes an effective rate of tax on sales income of 12%, Country B imposes an effective rate of tax on sales income of 24%, and Country C imposes an effective rate of tax on sales income of 25%. None of the remainder of FS, Branch A, Branch B, or Branch C independently satisfies paragraph (a)(4)(i) of this section. However, under the facts and circumstances of the business, FS, as a whole, provides a substantial contribution to the manufacture of Product X within the meaning of paragraph (a)(4)(iv) of this section. Under the facts and circumstances of the business, the activities of the remainder of FS and Branch A, if considered

together, would not provide a greater contribution to the manufacture of Product X than the activities of Branch B and Branch C, if considered together. Under the facts and circumstances of the business, however, the activities of the employees of the remainder of FS and Branch A, if considered together, would constitute a substantial contribution to the manufacture of Product X.

(ii) *Result.* Based on the facts, neither the remainder of FS (through activities of its employees in Country M) nor any branch of FS independently satisfies paragraph (a)(4)(i) of this section with respect to Product X, but FS, as a whole, provides a substantial contribution through the activities of its employees to the manufacture of Product X. The remainder of FS, Branch A, Branch B, and Branch C each provide a contribution through the activities of employees to the manufacture of Product X. Therefore, FS must determine the location of manufacture under paragraph (b)(1)(ii)(*c*)(*3*)(*iii*) of this section. The tested sales location is Country M because the selling activities with respect to Product X are carried on by the remainder of FS. The location of Branch B is the tested manufacturing location because the effective rate of tax imposed on FS's sales income by Country M (10%) is less than 90% of, and at least 5 percentage points less than, the effective rate of tax that would apply to such income in Country B (24%), and Country B has the lowest effective rate of tax among the manufacturing branches that would, after applying paragraph (b)(1)(ii)(*b*) of this section, be treated as a separate corporation. The manufacturing activities performed in Country A by Branch A will be included in the contribution of the remainder of FS for purposes of determining the location of manufacture of Product X because the effective rate of tax imposed on the sales income by Country M (10%) is not less than 90% of, and at least 5 percentage points less than, the effective rate of tax that would apply to such income in Country A (12%). The manufacturing activities performed in Country C by Branch C will be included in the contribution of Branch B for purposes of determining the location of manufacture of Product X because the effective rate of tax imposed on the sales income by Country M (10%) is less than 90% of, and at least 5 percentage points less than, the effective rate of tax that would apply to such income in Country C (25%). Under the facts and circumstances of the business, the manufacturing activities of the remainder of FS and Branch A, considered together, would not provide a greater contribution to the manufacture of Product X than the activities of Branch B and Branch C, considered together. Therefore, the location of manufacture is Country B, the location of Branch B. In determining that Country B is the location of manufacture, it was determined that after applying paragraph (b)(1)(ii)(*b*) of this section Branch B would be treated as a separate corporation under paragraph (b)(1)(ii)(*a*) of this section for purposes of determining foreign base company sales income. To determine whether income from the sale of Product X is foreign base company sales income, the remainder of FS takes into account the activities of Branch A because, under paragraph (b)(2)(ii)(*a*) of this section, Branch A would not be treated as a separate corporation apart from FS. The remainder of FS is considered to have manufactured Product X under paragraph (a)(4)(i)

> of this section because the manufacturing activities of the remainder of FS and Branch A, considered together, would make a substantial contribution to the manufacture of Product X within the meaning of paragraph (a)(4)(iv) of this section. Therefore, income derived from the sale of Product X by the remainder of FS does not constitute foreign base company sales income.

(c) *Effective/applicability date.* Paragraphs (a)(1)(i), (a)(1)(iii) *Example 1,* (a)(1)(iii) *Example 2,* (a)(2), (a)(4)(i), (a)(4)(ii), (a)(4)(iii), (a)(4)(iv), (a)(6)(i), (b)(1)(i)(*c*), (b)(1)(ii)(*a*), (b)(1)(ii)(*c*), (b)(2)(i)(*b*), (b)(2)(ii)(*a*), (b)(2)(ii)(*b*), (b)(2)(ii)(*e*), and (b)(4) *Example 3,* (b)(4) *Example 8,* and (b)(4) *Example 9* of this section shall apply to taxable years of controlled foreign corporations beginning after June 30, 2009, and for taxable years of United States shareholders in which or with which such taxable years of the controlled foreign corporations end.

(d) *Application of regulations to earlier taxable years.* A taxpayer may choose to apply these regulations retroactively with respect to its open taxable years that began prior to July 1, 2009. The taxpayer may so choose if and only if the taxpayer and all members of the taxpayer's affiliated group (within the meaning of section 1504(a)) apply these regulations, in their entirety, to the earliest taxable year of each controlled foreign corporation that ends with or within an open taxable year of the taxpayer and to all subsequent taxable years.

[T.D. 6734, 29 FR 6392, May 15, 1964, as amended by T.D. 7545, 43 FR 32754, May 8, 1978; T.D. 7893, 48 FR 22508, May 19, 1983; T.D. 7894, 48 FR 22523, May 19, 1983; T.D. 9008, 67 FR 48025, July 23, 2002; T.D. 9438, 73 FR 79344, T.D. 9438, Dec. 29, 2008; 74 FR 11844, Mar. 20, 2009; T.D. 9563, 76 FR 78546, Dec. 19, 2011]

§ 1.954-4 Foreign base company services income.

(a) ***Items included.*** Except as provided in paragraph (d) of this section, foreign base company services income means income of a controlled foreign corporation, whether in the form of compensation, commissions, fees, or otherwise, derived in connection with the performance of technical, managerial, engineering, architectural, scientific, skilled, industrial, commercial, or like services which—

(1) Are performed for, or on behalf of a related person, as defined in paragraph (e)(1) of § 1.954-1, and

(2) Are performed outside the country under the laws of which the controlled foreign corporation is created or organized.

(b) ***Services performed for, or on behalf of, a related person*** —

(1) ***Specific cases.*** For purposes of paragraph (a)(1) of this section, "services which are performed for, or on behalf of, a related person" include (but are not limited to) services performed by a controlled foreign corporation in a case where—

(i) The controlled foreign corporation is paid or reimbursed by, is released from an obligation to, or otherwise receives substantial financial benefit from, a related person for performing such services;

(ii) The controlled foreign corporation performs services (whether or not with respect to property sold by a related person) which a related person is, or has been, obligated to perform;

(iii) The controlled foreign corporation performs services with respect to property sold by a related person and the performance of such services constitutes a condition or a material term of such sale; or

(iv) Substantial assistance contributing to the performance of such services has been furnished by a related person or persons.

(2) *Special rules* —

(i) ***Guaranty of performance.*** Subparagraph (1)(ii) of this paragraph shall not apply with respect to services performed by a controlled foreign corporation pursuant to a contract the performance of which is guaranteed by a related person, if

(*a*) the related person's sole obligation with respect to the contract is to guarantee performance of such services,

(*b*) the controlled foreign corporation is fully obligated to perform the services under the contract, and

(*c*) the related person (or any other person related to the controlled foreign corporation) does not in fact

(*1*) pay for performance of, or perform, any of such services the performance of which is so guaranteed or

(*2*) pay for performance of, or perform, any significant services related to such services. If the related person (or any other person related to the controlled foreign corporation) does in fact pay for performance of, or perform, any of such services or any significant services related to such services, subparagraph (1)(ii) of this paragraph shall apply with respect to the services performed by the controlled foreign corporation pursuant to the contract the performance of which is guaranteed by the related person, even though such payment or performance is not considered to be substantial assistance for purposes of subparagraph (1)(iv) of this paragraph. For purposes of this subdivision, a related person shall be considered to guarantee performance of the services by the controlled foreign corporation whether it guarantees performance of such services by a separate contract of guaranty or enters into a service contract solely for purposes of guaranteeing performance of such services and immediately thereafter assigns the entire contract to the controlled foreign corporation for execution.

(ii) ***Application of substantial assistance test.*** For purposes of subparagraph (1)(iv) of this paragraph—

(*a*) Assistance furnished by a related person or persons to the controlled foreign corporation shall include, but shall not be limited to, direction, supervision, services, know-how, financial assistance (other than contributions to capital), and equipment, material, or supplies.

(*b*) Assistance furnished by a related person or persons to a controlled foreign corporation in the form of direction, supervision, services, or know-how shall not be considered substantial unless either

(*1*) the assistance so furnished provides the controlled foreign corporation with skills which are a principal element in producing the income from the performance of such services by such corporation or

(2) the cost to the controlled foreign corporation of the assistance so furnished equals 50 percent or more of the total cost to the controlled foreign corporation of performing the services performed by such corporation. The term “cost”, as used in this subdivision (*b*), shall be determined after taking into account adjustments, if any, made under section 482.

(*c*) Financial assistance (other than contributions to capital), equipment, material, or supplies furnished by a related person to a controlled foreign corporation shall be considered assistance only in that amount by which the consideration actually paid by the controlled foreign corporation for the purchase or use of such item is less than the arm's length charge for such purchase or use. The total of such amounts so considered to be assistance in the case of financial assistance, equipment, material, and supplies furnished by all related persons shall be compared with the profits derived by the controlled foreign corporation from the performance of the services to determine whether the financial assistance, equipment, material, and supplies furnished by a related person or persons are by themselves substantial assistance contributing to the performance of such services. For purposes of this subdivision (*c*), determinations shall be made after taking into account adjustments, if any, made under section 482 and the term “consideration actually paid” shall include any amount which is deemed paid by the controlled foreign corporation pursuant to such an adjustment.

(*d*) Even though assistance furnished by a related person or persons to a controlled foreign corporation in the form of direction, supervision, services, or know-how is not considered to be substantial under (*b*) of this subdivision and assistance furnished by a related person or persons in the form of financial assistance (other than contributions to capital), equipment, material, or supplies is not considered to be substantial under (*c*) of this subdivision, such assistance may nevertheless constitute substantial assistance when taken together or in combination with other assistance furnished by a related person or persons which in itself is not considered to be substantial.

(*e*) Assistance furnished by a related person or persons to a controlled foreign corporation in the form of direction, supervision, services, or know-how shall not be taken into account under (*b*) or (*d*) of this subdivision unless the assistance so furnished assists the controlled foreign corporation directly in the performance of the services performed by such corporation.

(iii) ***Special rule applicable to distributive share of partnership income.*** A controlled foreign corporation's distributive share of a partnership's services income will be deemed to be derived from services performed for or on behalf of a related person, within the meaning of section 954(e)(1)(A), if the partnership is a related person with respect to the controlled foreign corporation, under section 954(d)(3), and, in connection with the services performed by the partnership, the controlled foreign corporation, or a person that is a related person with respect to the controlled foreign corporation, provided assistance that would have constituted substantial assistance contributing to the performance of such services, under paragraph (b)(2)(ii) of this section, if furnished to the controlled foreign corporation by a related person. This paragraph (b)(2)(iii) applies to taxable years of a controlled foreign corporation beginning on or after July 23, 2002.

(3) ***Illustrations.*** The application of this paragraph may be illustrated by the following examples:

Example 1. Controlled foreign corporation A is paid by related corporation M for the installation and maintenance of industrial machines which M Corporation manufactures and sells to B Corporation. Such installation and maintenance services by A Corporation are performed for, or on behalf of, M Corporation for purposes of section 954(e).

Example 2. Controlled foreign corporation B enters into a contract with an unrelated person to drill an oil well in a foreign country. Domestic corporation M owns all the outstanding stock of B Corporation. Corporation B employs a relatively small clerical and administrative staff and owns the necessary well-drilling equipment. Most of the technical and supervisory personnel who oversee the drilling of the oil well by B Corporation are regular employees of M Corporation who are temporarily employed by B Corporation. In addition, B Corporation hires on the open market unskilled and semiskilled laborers to work on the drilling project. The services performed by B Corporation under the well-drilling contract are performed for, or on behalf of, a related person for purposes of section 954(e) because the services of the technical and supervisory personnel which are provided by M Corporation are of substantial assistance in the performance of such contract in that they assist B Corporation directly in the execution of the contract and provide B Corporation with skills which are a principal element in producing the income from the performance of such contract.

Example 3. Controlled foreign corporation F enters into a contract with an unrelated person to construct a dam in a foreign country. Domestic corporation M owns all the outstanding stock of F Corporation. Corporation F leases or buys from M Corporation, on an arm's length basis, the equipment and material necessary for the construction of the dam. The technical and supervisory personnel who design and oversee the construction of the dam are regular full-time employees of F Corporation who are not on loan from any related person. The principal clerical work, and the financial accounting, required in connection with the construction of the dam by F Corporation are performed, on a remunerated basis, by full-time employees of M Corporation. All other assistance F Corporation requires in completing the construction of the dam is paid for by that corporation and furnished by unrelated persons. The services performed by F Corporation under the contract for the construction of the dam are not performed for, or on behalf of, a related person for purposes of section 954(e) because the clerical and accounting services furnished by M Corporation do not assist F Corporation directly in the performance of the contract.

Example 4. Controlled foreign corporation D, a wholly owned subsidiary of domestic corporation M, procures and enters a contract with an unrelated person to construct a superhighway in a foreign country, but such person enters the contract only on the condition that M Corporation agrees to perform, or to pay for the performance by some person other than D Corporation of, the services called for by the contract if D Corporation should fail to complete their performance. Corporation D is capable of performing such contract. No related person as to D Corporation pays for, or performs, any services called for by the contract, or pays for, or performs, any significant services related to such services. The construction of the superhighway by D Corporation is not considered for purposes of section 954(e) to be the performance of services for, or on behalf of M Corporation.

Example 5. Domestic corporation M is obligated under a contract with an unrelated person to construct a superhighway in a foreign country. At a later date M Corporation assigns the entire contract to its wholly owned subsidiary, controlled foreign corporation C, and the unrelated person releases M Corporation from any obligation under the contract. The construction of such highway by C Corporation is considered for purposes of section 954(e) to be the performance of services for, or on behalf of, M Corporation.

Example 6. Domestic corporation M enters a contract with an unrelated person to construct a superhighway in a foreign country. Corporation M immediately assigns the entire contract to its wholly owned subsidiary, controlled foreign corporation C. The unrelated person does not release M Corporation of its obligation under the contract, the sole purpose of these arrangements being to have M Corporation guarantee performance of the contract by C Corporation. Corporation C is capable of performing the construction contract. Neither M Corporation nor any other person related to C Corporation pays for, or performs, any services called for by the construction contract or at any time pays for, or performs, any significant services related to the services performed under such contract. The construction of the superhighway by C Corporation is not considered for purposes of section 954(e) to be the performance of services for, or on behalf of, M Corporation.

Example 7. The facts are the same as in example 6 except that M Corporation, preparatory to entering the construction contract, prepares plans and specifications which enable the submission of bids for the contract. Since M Corporation has performed significant services related to the services the performance of which it has guaranteed, the construction of such highway by C Corporation is considered for purposes of section 954(e) to be the performance of services for, or on behalf of, M Corporation.

Example 8. Domestic corporation M manufactures an industrial machine which requires specialized installation. Corporation M sells the machines for a basic price if the contract of sale contains no provision for installation. If, however, the customer agrees to employ controlled foreign corporation E, a wholly owned subsidiary of M Corporation, to install the machine and to pay E Corporation a specified installation charge, M Corporation sells the machine at a price which is less than the basic price. The installation services performed by E Corporation for customers of M Corporation purchasing the machine at the reduced price are considered for purposes of section 954(e) to be performed for, or on behalf of, M Corporation.

Example 9. Domestic corporation M manufactures and sells industrial machines with a warranty as to their performance conditional upon their installation and maintenance by a factory-authorized service agency. Controlled foreign corporation F, a wholly owned subsidiary of M Corporation, is the only authorized service agency. Any installation or maintenance services performed by F Corporation on such machines are considered for purposes of section 954(e) to be performed for, or on behalf of, M Corporation.

Example 10. Domestic corporation M manufactures electric office machines which it sells at a basic price without any provision for, or understanding as to, adjustment or maintenance of the machines. The machines require constant adjustment and maintenance services which M Corporation, certain wholly owned subsidiaries of M Corporation, and certain unrelated persons throughout the world are qualified to perform. From among the numerous persons qualified and available to perform adjustment and maintenance services with respect to such office machines, foreign corporation B, a customer of M Corporation, employs controlled foreign corporation G, a wholly owned subsidiary of M Corporation, to adjust and maintain the office machines which B Corporation purchases from M Corporation. The adjustment and maintenance services performed by G Corporation for B Corporation are not considered for purposes of section 954(e) to be performed for, or on behalf of, M Corporation.

(c) ***Place where services are performed.*** The place where services will be considered to have been performed for purposes of paragraph (a)(2) of this section will depend on the facts and circumstances of each case. As a general rule, services will be considered performed where the persons performing services for the controlled foreign corporation which derives income in connection with the performance of technical,

managerial, architectural, engineering, scientific, skilled, industrial, commercial, or like services are physically located when they perform their duties in the execution of the service activity resulting in such income. Therefore, in many cases, total gross income of a controlled foreign corporation derived in connection with each service contract or arrangement performed for or on behalf of a related person must be apportioned, between income which is not foreign base company services income and that which is foreign base company services income, on a basis of employee-time spent within the foreign country under the laws of which the controlled foreign corporation is created or organized and employee-time spent without the foreign country under the laws of which such corporation is created or organized. In allocating time spent within and without the foreign country under the laws of which the controlled foreign corporation is created or organized, relative weight must also be given to the value of the various functions performed by persons in fulfillment of the service contract or arrangement. For example, clerical work will ordinarily be assigned little value, while services performed by technical, highly skilled, and managerial personnel will be assigned greater values in relation to the type of function performed by each individual.

(d) ***Items excluded.*** Foreign base company services income does not include—

(1) Income derived in connection with the performance of services by a controlled foreign corporation if—

(i) The services directly relate to the sale or exchange of personal property by the controlled foreign corporation,

(ii) The property sold or exchanged was manufactured, produced, grown, or extracted by such controlled foreign corporation, and

(iii) The services were performed before the sale or exchange of such property by the controlled foreign corporation;

(2) Income derived in connection with the performance of services by a controlled foreign corporation if the services directly relate to an offer or effort to sell or exchange personal property which was, or would have been, manufactured, produced, grown, or extracted by such controlled foreign corporation whether or not a sale or exchange of such property was in fact consummated; or

(3) For taxable years beginning after December 31, 1975, foreign base company shipping income (as determined under § 1.954-6).

[T.D. 6734, 29 FR 6399, May 15, 1964, as amended by T.D. 6981, 33 FR 16497, Nov. 13, 1968; T.D. 7893, 48 FR 22523, May 19, 1983; T.D. 9008, 67 FR 48025, July 23, 2002]

§ 1.954-5 Increase in qualified investments in less developed countries; taxable years of controlled foreign corporations beginning before January 1, 1976.

For rules applicable to taxable years of controlled foreign corporations beginning before January 1, 1976, see section 954(b)(1) (as in effect before the enactment of the Tax Reduction Act of 1975) and 26 CFR 1.954-5 (Revised as of April 1, 1975).

[T.D. 7893, 48 FR 22508, May 19, 1983]

§ 1.954-6 Foreign base company shipping income.

(a) ***Scope*** —

(1) ***In general.*** This section prescribes rules for determining foreign base company shipping income under the provisions of section 954(f), as amended by the Tax Reduction Act of 1975.

(2) ***Effective date.***

(i) The rules prescribed in this section apply to taxable years of foreign corporations beginning after December 31, 1975, and to taxable years of United States shareholders (as defined in section 951 (b)) within which or with which such taxable years of such foreign corporations end.

(ii) Except as described in paragraph (b)(1)(viii) of this section, foreign base company shipping income does not include amounts earned by a foreign corporation in a taxable year of such corporation beginning before January 1, 1976. See example 1 of paragraph (g)(2) of this section for an illustration of the effect of this subparagraph on partnership income. See example 3 of paragraph (f)(4)(ii) of this section for an illustration of the effect of this subparagraph on certain dividend income. See paragraph (f)(5)(iii) of this section for the effect of this subparagraph on certain interest and gains.

(b) ***Definitions*** —

(1) ***Foreign base company shipping income.*** The term "foreign base company shipping income" means—

(i) Gross income derived from, or in connection with, the use (or hiring or leasing for use) of any aircraft or vessel in foreign commerce (see paragraph (c) of this section),

(ii) Gross income derived from, or in connection with, the performance of services directly related to the use of any aircraft or vessel in foreign commerce (see paragraph (d) of this section),

(iii) Gross income incidental to income described in subdivisions (i) and (ii) of this subparagraph, as provided in paragraph (e) of this section,

(iv) Gross income derived from the sale, exchange, or other disposition of any aircraft or vessel used or held for use (by the seller or by a person related to the seller) in foreign commerce,

(v) In the case of a controlled foreign corporation, dividends, interest, and gains described in paragraph (f) of this section,

(vi) Income described in paragraph (g) of this section (relating to partnerships, trusts, etc.),

(vii) Exchange gain, to the extent allocable to foreign base company shipping income (see § 1.952-2(c)(2)(v)(*b*), and

(viii) In the case of a controlled foreign corporation and at its option, dividends, interest, and gains attributable to income derived from aircraft and vessels (as defined in 26 CFR 1.954-1(b)(2) (Revised as of April 1, 1975)) by a less developed country shipping company (described in § 1.955-5(b)) in taxable years beginning after December 31, 1962, and before January 1, 1976. The portion of a dividend, interest, or gain attributable to such income shall be determined by the same method as that for determining the portion of a dividend, interest, or gain attributable to foreign base company shipping income under paragraphs (f)(4), (5), and (6) of this section, but without regard to paragraphs (f)(6)(ii) and (iv)(B).

(2) ***Foreign base company shipping operations.*** For purposes of sections 951 through 964, the term "foreign base company shipping operations" means the trade or business from which gross income described in subparagraph (1)(i) and (ii) of this paragraph is derived.

(3) ***Foreign commerce.*** For purposes of sections 951 through 964—

(i) An aircraft or vessel is used in foreign commerce to the extent it is used in transportation of property or passengers—

(A) Between a port (or airport) in the United States or possession of the United States and a port (or airport) in a foreign country, or

(B) Between a port (or airport) in a foreign country and another in the same country or between a port (or airport) in a foreign country and one in another foreign country.

Thus, for example, a trawler, a factory ship, and an oil drilling ship are not considered to be used in foreign commerce. On the other hand, a cruise ship which visits one or more foreign ports is considered to be so used. Notwithstanding subdivision (i)(B) of this paragraph (b)(3), foreign base company income does not include income derived from, or in connection with, the use of an aircraft or vessel in transportation of property or passengers between a port (or airport) in a foreign country and another port (or airport) in the same country if both the foreign corporation is created or organized and the aircraft or vessel is registered in that country.

(ii) The term *vessel* includes all water craft and other artificial contrivances of whatever description and at whatever stage of construction, whether on the stocks or launched, which are used or are capable of being used or are intended to be used as a means of transportation on water. This definition does not apply for purposes of section 956(b)(2)(G) and § 1.956-2(b)(1)(ix).

(iii) The term *port* means any place (whether on or off shore) where aircraft or vessels are accustomed to load or unload goods or to take on or let off passengers.

(iv) Any vessel (such as a lighter or beacon lightship) which serves other vessels used in foreign commerce (within the meaning of subdivision (i) of this subparagraph) shall, to the extent so used, also be considered to be used in foreign commerce.

(v) For the meaning of the term “foreign country”, see section 638(2).

(4) ***Use in foreign commerce.*** For purposes of sections 951 through 964, the use of an aircraft or vessel in foreign commerce includes the hiring or leasing (or subleasing) of an aircraft or vessel to another for use in foreign commerce. Thus, for example, an aircraft or vessel is “used in foreign commerce” within the meaning of section 955(b)(1)(A) if such aircraft or vessel is chartered (whether pursuant to a bareboat charter, time charter, or otherwise) to another for use in foreign commerce.

(5) ***Related person.*** With respect to a controlled foreign corporation, the term “related person” means a related person as defined in § 1.954-1(e)(1), and the term “unrelated person” means an unrelated person as defined in § 1.954-1(e)(2).

(c) ***Aircraft or vessel income*** —

(1) ***In general.*** The term “income derived from, or in connection with, the use (or hiring or leasing for use) of any aircraft or vessel in foreign commerce” as used in paragraph (b)(1)(i) of this section means—

(i) Income derived from transporting passengers or property by aircraft or vessel in foreign commerce and

(ii) Income derived from hiring or leasing an aircraft or vessel to another for use in foreign commerce.

(2) ***Illustrations.*** The application of this paragraph may be illustrated by the following examples:

Example 1. Foreign corporation C owns a foreign flag vessel which it charters under a long-term charter to foreign corporation D. The vessel is used by D as a tramp which has no fixed or regular schedule. The vessel carries bulk and packaged cargoes, as well as occasional passengers, under charter parties, contracts of affreightment, or other contracts of carriage. The carriage of cargoes and passengers is between a port in the United States and a port in a foreign country or between a port in one foreign country and another port in the same or a different foreign country. The charter hire paid to C by D constitutes income derived from the use of the vessel in foreign commerce, but is not foreign base company income to the extent the charter hire is allocable to income derived from the use of the vessel between ports in the same foreign country in which both C is incorporated and the vessel is registered. The charter hire and freight and passenger revenue (including demurrage and dead freight) derived by D also constitute income derived from the use of the vessel in foreign commerce, but is not foreign base company income to the extent the charter hire and freight and passenger revenue are allocable to the use of the vessel between ports in the same foreign country in which both D is incorporated and the vessel is registered.

Example 2. (a) Foreign corporation E owns a foreign flag tanker which it charters under a long-term bareboat charter to foreign corporation F for use in foreign commerce. F produces oil in a foreign country and ships the oil to other foreign countries and to the United States. The vessel, when not engaged in carrying F's oil, is used to carry bulk cargoes for unrelated persons in foreign commerce as opportunity offers. The charger hire received by E constitutes income derived from the use of the vessel in foreign commerce. The income derived by F from carrying bulk cargoes for unrelated persons also constitutes income derived from the use of the vessel in foreign commerce.
(b) F is forced to lay up the vessel as a result of adverse market developments. Pursuant to the terms of the charter, F continues to pay charter hire to E during the period of lay-up. The charter hire received by E during the period of lay-up constitutes income derived from the use of the vessel in foreign commerce.

Example 3. (a) A shipment of cheese is loaded into a container owned by controlled foreign corporation S at the consignor's place of business in Hamar, Norway. The cheese is transported to Milan, Italy, by the following routings:
(1) Overland by road from Hamar, Norway, to Gothenburg, Sweden, by unrelated motor carriers via Oslo, Norway,

(2) By sea from Gothenburg to Rotterdam, Netherlands, by feeder vessel under foreign flag, time chartered to S by unrelated owner,

(3) By sea from Rotterdam to Algeciras, Spain, by feeder vessel under foreign flag, time chartered to S by unrelated owner.

(4) By sea from Algeciras to Genoa, Italy, by line-haul vessel under U.S. flag, chartered by S from related company, and

(5) Overland from Genoa to Milan, Italy, by unrelated motor carrier.

(b) The consignor pays S total charges of $1,710, and S pays $676 to unrelated third parties, which amounts may be broken down as follows:

Description of charges	Amount billed to customer and collected by S	Revenue collected by S on behalf of an unrelated party	Costs paid to unrelated 3d party and absorbed by S
Ocean freight	$1,420		
Trucking charge of empty equipment to shipper's facility	50	$50	
Trucking charges Hamar to Oslo	60	60	
Trucking charges Oslo to Gothenburg			$315
Trucking charges Genoa to Milan	180	180	
Brokerage Commission in Europe			71
Total	1,710	290	386

(c) Of the $1,710 amount billed to the consignor and collected by S, $290 is collected by S on behalf of unrelated third parties. This $290 amount is not includable in S's gross income, and is therefore not includable in S's foreign base company shipping income. The remaining $1,420 amount (i.e., $1,710−$290) is includable in S's foreign base company shipping income. The $386 amount paid by S to unrelated third parties and absorbed by S is deductible from foreign base company shipping income under § 1.954-1(c).

(d) ***Services directly related*** —

(1) ***In general.*** The term "income derived from, or in connection with, the performance of services directly related to the use of an aircraft or vessel in foreign commerce", as used in paragraph (b)(1)(ii) of this section, means—

(i) Income derived from, or in connection with, the performance of services described in subparagraph (2) or (3) of this paragraph, and

(ii) Income treated as foreign base company shipping income under subparagraph (4) of this paragraph.

(2) ***Intragroup services.*** The services described in this subparagraph are services performed for a person who is the owner, lessor, lessee or operator of an aircraft or vessel used in foreign commerce, by such person or by a person related to such person, and which fall into one or more of the following categories:

(i) Terminal services, such as dockage, wharfage, storage, lights, water, refrigeration, and similar services;

(ii) Stevedoring and other cargo handling services;

(iii) Container related services (including the rental of containers and related equipment) performed either in connection with the local drayage or inland haulage of cargo or in the course of transportation in foreign commerce;

(iv) Services performed by tugs, lighters, barges, scows, launches, floating cranes, and other similar equipment;

(v) Maintenance and repairs;

(vi) Training of pilots and crews;

(vii) Licensing of patents, know-how, and similar intangible property developed and used in the course of foreign base company shipping operations;

(viii) Services performed by a booking, operating, or managing agent; and

(ix) Any service performed in the course of the actual transportation of passengers or property.

(3) ***Services for passenger, consignor, or consignee.*** The services described in this subparagraph are services provided by the operator (or person related to the operator) of an aircraft or vessel in foreign commerce for the passenger, consignor, or consignee, such as—

(i) Services described in one or more of the categories set out in subparagraphs (2)(i) through (iv) and (ix) of this paragraph,

(ii) The rental of staterooms, berths, or living accommodations and the furnishing of meals,

(iii) Barber shop and other services to passengers aboard vessels,

(iv) Excess baggage, and

(v) Demurrage, dispatch, and dead freight.

(4) ***The 70-percent test.*** At the option of the foreign corporation all the gross income for a taxable year derived by a foreign corporation from any facility used in connection with the performance of services described in one or more of the categories set out in subparagraph (2)(i) through (ix) of this paragraph is foreign base company shipping income if more than 70 percent of such gross income for either—

(i) Such taxable year, or

(ii) Such taxable year and the two preceding taxable years,

is foreign base company shipping income (determined without regard to this subparagraph). Thus, for example, if 80 percent of the gross income derived by a controlled foreign corporation at a stevedoring facility is treated as foreign base company shipping income under subparagraph (2) of this paragraph, then the remaining 20 percent is treated as foreign base company shipping income under this subparagraph.

(5) ***Rules for applying subparagraph (4).***

(i) Solely for purposes of applying subparagraphs (4) of this paragraph, foreign base company shipping income and gross income shall be deemed to include an arm's length charge (see paragraph (h)(5) of this section) for services performed by the foreign corporation for itself.

(ii) In determining whether services performed by a foreign corporation are performed at a single facility or at two or more different facilities, all of the facts and circumstances involved will be taken into account. Ordinarily, all services performed by a foreign corporation within a single port area will be considered performed at a single facility.

(iii) The application of this subparagraph and subparagraph (4) of this paragraph may be illustrated by the following example in which it is assumed that the foreign corporation has chosen to apply the 70-percent test of subparagraph (4):

Example. (a) Controlled foreign corporation X uses the calendar year as the taxable year. For 1976, X is divided into two operating divisions, A and B. Division A operates a number of vessels in foreign commerce. Division B operates a terminal facility at which it performs services described in subparagraph (2)(i) of this paragraph for vessels some of which are operated by division A, some of which are operated by persons related to X, and some of which are operated by persons unrelated to X. For 1976, X includes under subparagraph (5) as foreign base company shipping income and gross income, for purposes of subparagraph (4), an arm's length charge for services performed for itself. For 1976, the gross income derived by division B is reconstructed for purposes of subparagraph (4) of this paragraph as follows, based on the facts shown in the following table:

(1) Gross income derived from persons unrelated to *X*	$20
(2) Gross income derived from persons related to *X*	10
(3) Actual gross income (line (1) plus line (2))	30
(4) Hypothetical gross income derived from division A (determined by the application of subdivision (i) of this subparagraph)	70
(5) Total reconstructed gross income (line (3) plus line (4))	100

(b) Since 80 percent of the reconstructed gross income derived by division B would be treated as foreign base company shipping income under subparagraph (2) of this paragraph, the entire $30 amount of the gross income actually derived by division B is

> treated as foreign base company shipping income under subparagraph (4) of this paragraph.

(6) ***Arm's length charge.*** For purposes of this section, the arm's length charge for services performed by a foreign corporation for itself shall be determined by applying the principles of section 482 and the regulations thereunder as if the party for whom the services are performed and the party by whom the services are performed were not the same person, but were controlled taxpayers within the meaning of § 1.482-1(a)(4).

(7) ***Illustrations.*** The application of this paragraph may be illustrated by the following examples:

Example 1. Controlled foreign corporation A acts as a managing agent for foreign corporation B, a related person which contracts to construct and charter a foreign flag vessel for use in foreign commerce. As managing agent for B, A performs a broad range of services relating to the use of the vessel, including arranging for, and supervising of, construction and chartering of the vessel, and handling of operating services after construction is completed. The income derived by A from its management and operating services constitutes income derived in connection with the performance of services directly related to the use of the vessel in foreign commerce.

Example 2. Controlled foreign corporation C uses the calendar year as the taxable year. During 1976, C is engaged in the trade or business of acting as a steamship agent solely for unrelated persons. C's activities as steamship agent range from “husbanding” (i.e., arranging for fuel, supplies and port services, and attending to crew and customs matters) to the solicitation and booking of cargo at a number of foreign ports. None of C's other gross income for 1976 is foreign base company shipping income. Under these circumstances, C's gross income derived from its steamship agency does not constitute foreign base company shipping income.

(e) ***Incidental income*** —

(1) ***In general.*** Foreign base company shipping income includes all incidental income derived by a foreign corporation in the course of its active conduct of foreign base company shipping operations.

(2) ***Examples.*** Examples of incidental income derived in the course of the active conduct of foreign base company shipping operations include—

(i) Gain from the sale, exchange or other disposition of assets which are related shipping assets within the meaning of § 1.955A-2(b),

(ii) Income derived from temporary investments described in § 1.955A-2(b)(2)(i) and (iii),

(iii) Interest on accounts receivable and evidences of indebtedness described in § 1.955A-2(b)(2)(ii),

(iv) Income derived from granting concessions to others aboard aircraft or vessels used in foreign commerce,

(v) Income derived from stock and currency futures described in § 1.955A-2(b)(2)(vii) and (viii),

(vi) Income derived by the lessor of an aircraft or vessel used in foreign commerce from additional rentals for the use of related equipment (such as a complement of containers), and

(vii) Interest derived by the seller from a purchase money mortgage loan in respect of the sale of an aircraft or vessel described in § 1.955A-2(a)(1)(i).

(f) *Certain dividends, interest, and gain —*

(1) *In general.*

(i) The foreign base company shipping income of a controlled foreign corporation (referred to in subdivision (ii)(A) of this paragraph (f)(1) as "first corporation") includes—

(A) Dividends and interest received from foreign corporations listed in subdivision (ii) of this paragraph (f)(1), and

(B) Gain recognized from the sale, exchange, or other disposition of stock or obligations of foreign corporations listed in subdivision (ii) of this paragraph (f)(1),

but only to the extent that such dividends, interest, and gains are attributable to foreign base company shipping income of the foreign corporations listed in subdivision (ii) of this paragraph (f)(1).

(ii) The foreign corporations referred to in subdivision (i) of this paragraph (f)(1) are—

(A) Foreign corporations with respect to which the first corporation (see subdivision (i) of this paragraph (f)(1)) would be deemed under section 902(b) to pay taxes,

(B) Controlled foreign corporations which are related persons (within the meaning of section 954(d)(3)), and

(C) Less developed country shipping companies described in § 1.955-5(b).

(2) *Corporation deemed to pay taxes.*

(i) For purposes of this paragraph, a controlled foreign corporation would be deemed under section 902(b) to pay taxes in respect of any other foreign corporation if such controlled foreign corporation would be deemed, for purposes of applying section 902(a) to any United States shareholder of such controlled foreign corporation, to pay taxes in respect of dividends which were received from such other foreign corporation (whether or not such other foreign corporation actually pays any taxes or dividends). Solely for purposes of this subdivision, each United States shareholder (within the meaning of section 951(b)) shall be deemed to be a domestic corporation.

(ii) The application of subdivision (i) of this subparagraph may be illustrated by the following examples:

Example 1. Domestic corporation M owns 100 percent of the one class of stock of controlled foreign corporation X, which in turn owns 40 percent of the one class of stock of foreign corporation Y. Y is not a controlled foreign corporation. For purposes of subdivision (1) of this subparagraph, X is deemed to pay taxes in respect of Y.

Example 2. The facts are the same as in example 1, except that United States shareholder A, an individual, owns 80 percent of the stock of corporation X, and United States shareholders B and C, parent and child, own the other 20 percent in equal shares. For purposes of applying this paragraph to all three United States shareholders (A, B, and C), X is deemed to pay taxes in respect of Y.

(3) ***Obligation defined.*** For purposes of this section, the term "obligation" means any bond, note, debenture, certificate, or other evidence of indebtedness, and a debt recorded in the books of account of both the creditor and the debtor. In the absence of legal, governmental, or business reasons to the contrary, the indebtedness must bear interest or be issued at a discount.

(4) ***Dividends.***

(i) For purposes of this paragraph and § 1.954-1(b)(2), the portion of a dividend which is attributable to foreign base company shipping income is that amount which bears the same ratio to the total dividend received as the earnings and profits out of which such dividend is paid that are attributable to foreign base company shipping income bears to the total earnings and profits out of which such dividend is paid. For purposes of this subdivision, the source of the earnings and profits out of which a distribution is made shall be determined under section 316(a), except that the source of the earnings and profits out of which a distribution is made by a controlled foreign corporation with respect to stock owned (within the meaning of section 958(a)) by a United States shareholder of such controlled foreign corporation shall be determined under § 1.959-3.

(ii) The application of this subparagraph may be illustrated by the following examples:

Example 1. Domestic corporation M owns 100 percent of the one class of stock of controlled foreign corporation X, which in turn owns 40 percent of the one class of stock of foreign corporation Y. Y, which is not (and has not been) either a controlled foreign corporation or a less developed country shipping company, makes a distribution of $100 to X. Under section 316(a), such distribution is made out of Y's earnings and profits for 1978. Sixty percent of Y's earnings and profits for 1978 are attributable to foreign base company shipping income. As a result, $60 of the $100 distribution constitutes foreign base company shipping income to X under subdivision (i) of this subparagraph.

Example 2. The facts are the same as in example 1, except that under section 316(a) $20 of the $100 dividend is paid out of Y's earnings and profits for 1979, and the other $80 is paid out of Y's earnings and profits for 1978. Thirty percent of Y's earnings and profits for 1979 are attributable to foreign base company shipping income. Since 60 percent of Y's earnings and profits for 1978 are also attributable to foreign base company shipping income, $54, i.e. (.60 × $80) + (.30 × $20), of the $100 distribution constitutes foreign base company shipping income to X under subdivision (i) of this subparagraph.

Example 3. The facts are the same as in example 1 except that under section 316(a) the $100 dividend is made out of Y's earnings and profits for 1972. Since under paragraph (a)(2)(ii) of this section foreign base company shipping income does not include amounts earned by a foreign corporation (not a less developed country shipping company) in a taxable year beginning before January 1, 1978, no amount of such $100 distribution constitutes foreign base company shipping income to X under subdivision (i) of this subparagraph.

Example 4. Domestic corporation N owns 100 percent of the one class of stock of controlled foreign corporation S, which in turn owns 100 percent of the one class of stock of controlled foreign corporation T. T makes a distribution of $100 to S, of which $80 is allocable under § 1.959-3 to earnings and profits for 1977 which are described in § 1.959-3(b)(2), and $20 is allocable to earnings and profits for 1978 which are described in § 1.959-3(b)(3). The $80 amount is excluded from S's gross income under section 959(b) and therefore is not included in S's foreign base company shipping income. One hundred percent of T's earnings and profits for

1978 described in § 1.959-3(b)(3) were attributable to reinvested foreign base company shipping income. As a result, the entire $20 amount is included in S's foreign base company shipping income under this paragraph. See § 1.954-1(b)(2) for the rule that such $20 amount may be excluded from the foreign base company income of S.

(5) *Interest and gain.*

(i) Except as provided in subdivisions (ii) and (iii) of this subparagraph, the portion of any interest paid by a foreign corporation, or gain recognized from the sale, exchange, or other disposition of stock or obligations of a foreign corporation, which is attributable to the foreign base company shipping income of such foreign corporation is that amount which bears the same ratio to such interest or gain as the foreign base company shipping income of such corporation for the period described in subparagraph (6) of this paragraph bears to its gross income for such period.

(ii) Interest which is paid by a controlled foreign corporation is attributable to such corporation's foreign base company shipping income to the same extent that such interest is allocable (under the principles of § 1.954-1(c)) to its foreign base company shipping income.

(iii) If interest is paid by a foreign corporation, or if stock obligations of a foreign corporation are sold, exchanged, or otherwise disposed of, during a taxable year of such foreign corporation beginning before January 1, 1976, then no portion of such interest or gain is attributable to foreign base company shipping income.

(iv) Solely for purposes of subdivision

(i) of this subparagraph, if a controlled foreign corporation (the “first corporation”) owns more than 10 percent of the stock of another controlled foreign corporation (the “second corporation”), then

(A) The gross income of the first corporation for any taxable year shall be—

(*1*) Increased by its pro rata share of the gross income of the second corporation for the taxable year which ends with or within such taxable year of the first corporation, and

(*2*) Decreased by the amount of any dividends received from the second corporation; and

(B) The foreign base company shipping income of the first corporation for any taxable year shall be—

(*1*) Increased by its pro rata share of the foreign base company shipping income of the second corporation for the taxable year which ends with or within such taxable year of the first corporation, and

(*2*) Decreased by the amount of any dividends received from the second corporation which constitute foreign base company income.

(v) Solely for purposes of applying subdivision (i) of this subparagraph, the district director shall make such other adjustments to the gross income and the foreign base company shipping income of any foreign corporation as are necessary to properly determine the extent to which any interest or gain is attributable to foreign base company shipping income, including proper adjustments to reflect any transaction during the test period described in subparagraph (6) of this paragraph to which section 332, 351, 354, 355, 356, or 361 applies.

(6) *Test period.* (i) Except as provided in subdivisions (ii) and (iii) of this subparagraph the period described in this subparagraph with respect to any foreign corporation is the 3-year period ending with the close of such corporation's taxable year preceding the year during which interest was paid or stock or obligations were sold, exchanged, or otherwise disposed of, or such part of such period as such corporation was in existence.

(ii) The period described in this paragraph shall not include any part of a taxable year beginning before January 1, 1976.

(iii) If interest is paid by a foreign corporation, or if stock or obligations of a foreign corporation are sold, exchanged, or otherwise disposed of during its first taxable year, then the period described in this paragraph shall be such first taxable year.

(iv) For purposes of subdivision (iii) of this subparagraph, the first taxable year of a foreign corporation is the later of—

(A) The first taxable year of its existence, or

(B) Its first taxable year beginning after December 31, 1975.

(g) ***Income from partnerships, trusts, etc*** —

(1) ***In general.*** The foreign base company shipping income of any foreign corporation includes—

(i) Its distributive share of the gross income of any partnership, and

(ii) Any amounts includible in its gross income under section 652(a), 662(a), 671, or 691(a),

to the extent that such items would have been includible in its foreign base company shipping income had they been realized by it directly.

(2) ***Illustrations.*** The application of subparagraph (1) of this paragraph may be illustrated by the following examples:

Example 1. Controlled foreign corporations X and Y are equal partners in partnership P. The taxable years end on December 31 for X, June 30 for Y, and March 31 for P. In the fiscal year ending March 31, 1976, P's sole business activity is the use of a vessel in foreign commerce. P derives gross income of $200 from the use of the vessel, and incurs expenses, taxes, and other deductions of $160. Assume X's distributive share of such $200 of P's gross income is $100, all of which is includible in X's gross income. If X had realized its distributive share of $100 directly, then the amount which would have been includible in X's foreign base company shipping income under this paragraph is the portion allocable to the months of January, February, and March of 1976. Such amount, $25 (i.e., $^1/_2$ × $200 × 3 months/12 months), is included in X's foreign base company shipping income for its taxable year ending December 31, 1976. Similarly, X is entitled under this paragraph to a deduction from foreign base company shipping income of $20 (i.e., $^1/_2$ × $160 × 3 months/12 months). Since foreign base company shipping income does not include amounts earned by a foreign corporation (not a less developed country shipping corporation) in a taxable year beginning before January 1, 1976, Y has no foreign base company shipping income (under this paragraph or otherwise) for its taxable year beginning on July 1, 1975.

Example 2. The facts are the same as in example 1, except that P incurs expenses, taxes, and deductions of $240 in its taxable year ending on March 31, 1976. Accordingly, $25 is includible in X's foreign base company shipping income, and the amount deductible therefrom under this paragraph is $30 (i.e., $^1/_2$ × $240 × 3 months/12 months).

(3) ***Other income.*** Except as expressly provided in subparagraph (1) of this paragraph, foreign base company shipping income does not include any amount includible in the gross income of a controlled foreign corporation under part I of subchapter J (section 641 and following, relating to estates, trusts, and beneficiaries), and gains from the sale or other disposition of any interest in an estate or trust.

(h) ***Additional rules*** —

(1) ***Gross income.*** For purposes of this section and § 1.955A-2, the gross income of a foreign corporation (whether or not a controlled foreign corporation) shall be determined in accordance with the provisions of section 952 and § 1.952-2. Thus, for example, section 883 (relating to exclusions from gross income of foreign corporations) is inapplicable under § 1.952-2 (a)(1) and (c)(1). In addition, the gross income of a controlled foreign corporation shall be determined, with respect to a United States shareholder of such controlled foreign corporation, by excluding distributions received by such corporation which are excluded from gross income under section 959(b) with respect to such shareholder.

(2) ***Earnings and profits.*** For purposes of this section, the earnings and profits of a foreign corporation (whether or not a controlled foreign corporation) shall be determined in accordance with the provisions of section 964 and the regulations thereunder.

(3) ***No double counting.*** No item of gross income shall be counted as foreign base company shipping income under more than one provision of this section. For example, If $200 of gross income derived from the use of a lighter is treated as foreign base company shipping income under both paragraphs (b)(1)(i) and (ii) of this section, then such $200 is counted only once as foreign base company shipping income. A taxpayer may choose under which provision to include an item of income.

(4) ***Losses.***

(i) Generally, if a controlled foreign corporation has losses which are properly allocable to foreign base company shipping income, the extent to which such losses are deductible from such income shall be determined by treating such foreign corporation as a domestic corporation and applying the principles of section 63. See §§ 1.954-1(c) and 1.952-2(b). Thus for example, losses from sales or exchanges of capital assets are allowable only to the extent of gains from such sales or exchanges.

(ii) If gain from the sale, exchange, or other disposition of any stock or obligation would be treated (to any extent) as foreign base company shipping income, then loss from such sale, exchange, or other disposition is properly allocable to foreign base company shipping income (to the same extent).

(iii) In determining the extent to which any loss on the disposition of a qualified investment in foreign base company shipping operations is deductible from foreign base company shipping income, it is immaterial that such loss is taken into account under § 1.955A-1(b)(1)(ii) as a reduction in the amount of the decrease in (withdrawal from) qualified investments in foreign base company shipping operations.

(5) ***Hypothetical charges.*** Under paragraph (d)(5)(i) of this section and § 1.955A-2(a)(4)(ii)(A), gross income may be deemed to include hypothetical arm's length charges for services performed by a controlled foreign corporation for itself. Under paragraph (d)(2) of this section, certain of these hypothetical charges may be treated as foreign based company shipping income. Such hypothetical charges are deemed to be income solely for purposes of applying the "extent of use" tests prescribed by paragraph (d)(4) of this section and § 1.955A-2(a)(4). Charges for services performed by a controlled foreign corporation for itself shall in no event be included in income for any other purposes.

[T.D. 7894, 48 FR 22523, May 19, 1983]

§ 1.954-7 Increase in qualified investments in foreign base company shipping operations.

(a) ***Determination of investments at close of taxable year*** —

(1) ***In general.*** Under section 954(g), the increase in qualified investments in foreign base company shipping operations, for purposes of section 954(b)(2) and paragraph (b)(1) of § 1.954-1, of any controlled foreign corporation for any taxable year is, except as provided in paragraph (b) of this section, the amount by which—

(i) The controlled foreign corporation's qualified investments in foreign base company shipping operations at the close of the taxable year, exceed

(ii) Its qualified investments in foreign base company shipping operations at the close of the preceding taxable year.

(2) ***Preceding taxable year.*** For purposes of this section, a taxable year which begins before January 1, 1976, may be a preceding taxable year.

(3) ***Cross-reference.*** See section 955 (b) and § 1.955A-2 for the definition of the term "qualified investments in foreign base company shipping operations".

(b) ***Election to determine investments at close of following taxable year*** —

(1) ***General rule.*** In lieu of determining an increase in qualified investments in foreign base company shipping operations for a taxable year in the manner provided in paragraph (a) of this section, a United States shareholder of a controlled foreign corporation may make an election under section 955(b)(3) to determine the increase for the corporation's taxable year by ascertaining the amount by which—

(i) Such corporation's qualified investments in foreign base company shipping operations at the close of the taxable year immediately following such taxable year, exceed

(ii) Its qualified investments in foreign base company shipping operations at the close of the taxable year immediately preceding such following taxable year.

(2) ***Election with respect to first taxable year.*** Notwithstanding subparagraph (1) of this paragraph, if an election is made without consent by a United States shareholder under § 1.955A-4 (b)(1) with respect to a controlled foreign corporation, the increase in such controlled foreign corporation's qualified investments in foreign base company shipping operations for the first taxable year to which such election applies shall be the amount by which—

(i) Such corporation's qualified investments in foreign base company shipping operations at the close of the taxable year immediately following such first taxable year, exceed

(ii) Its qualified investments in foreign base company shipping operations at the close of the taxable year immediately preceding such first taxable year.

(3) ***Manner of making election.*** For the manner of making an election under section 955(b)(3), and for rules pertaining to the revocation of such an election, see § 1.955A-4.

(4) ***Coordination with prior law.*** If a United States shareholder makes an election without consent under § 1.955A-4(b)(1) with respect to a controlled foreign corporation, then such corporation's increase in qualified investments in foreign base company shipping operations for the first taxable year to which such election applies shall be determined by disregarding any change which occurs during such taxable year in the amount of such corporation's investments in stock or obligations of a less developed country shipping company described in § 1.955-5 (b) if both of the following conditions exist:

(i) Such taxable year is the first taxable year of such corporation which begins after December 31, 1975, and

(ii) Such United States shareholder has elected to determine the change in such corporation's qualified investments in less developed countries for its last taxable year beginning before January 1, 1976, under § 1.954-5(b) or § 1.955-3.

(5) ***Illustrations.*** The application of this paragraph may be illustrated by the following examples:

Example 1. (a) Controlled foreign corporation X is a wholly owned subsidiary of domestic corporation M. X uses the calendar year as the taxable year. The amounts of X's qualified investments in foreign base company shipping operations at the close of 1975 through 1979 are as follows:

Qualified investments at December 31, 1975	$16,000
Qualified investments at December 31, 1976	17,000
Qualified investments at December 31, 1977	23,000
Qualified investments at December 31, 1978	28,000
Qualified investments at December 31, 1979	30,000

(b) Assume that M properly files without consent a timely election under § 1.955A-4(b)(1) to determine X's increase for 1976 in qualified investments in foreign base company shipping operations pursuant to this paragraph, and that the election remains in force through 1978. Then X's increases for 1976 through 1978 in qualified investments in foreign base company

shipping operations are as follows:

Increase for 1976 ($23,000 minus $16,000)	$7,000
Increase for 1977 ($28,000 minus $23,000)	5,000
Increase for 1978 ($30,000 minus $28,000)	2,000

Example 2. Assume the same facts as in example 1, except that M never files an election under § 1.955A-4(b)(1). X's increases for 1976 through 1978 in qualified investments in foreign base company shipping operations are as follows:

Increase for 1976 ($17,000 minus $16,000)	$1,000
Increase for 1977 ($23,000 minus $17,000)	6,000
Increase for 1978 ($28,000 minus $23,000)	5,000

Example 3. The facts are the same as in example 1, except that X's qualified investments in foreign base company shipping operations include an investment in less developed country shipping companies described in § 1.955-5(b) of $500 on December 31, 1975, and $750 on December 31, 1976. Assume further that M has made an election under section 955(b)(3) (as in effect before the enactment of the Tax Reduction Act of 1975) with respect to X's taxable year 1975. Then X's increase in qualified investments in foreign base company shipping operations for 1976 is $6,750 (i.e., $7,000−$250).

(c) ***Illustration.*** The application of this section may be illustrated by the following example:

Example. (a) Controlled foreign corporation X uses the calendar year as the taxable year. On December 31, 1975, X's qualified investments in foreign base company shipping operations (determined as provided in § 1.955A-2(g)) consist of the following amounts:

Cash	$6,000
Readily marketable securities	1,000
Stock of related controlled foreign corporations	4,000
Traffic and other receivables	14,000
Marine insurance claims receivables	1,000
Foreign income tax refunds receivable	1,000
Prepaid shipping expenses and shipping inventories ashore	1,000
Vessel construction funds	0

Vessels	123,000
Vessel plans and construction in progress	3,000
Containers and chassis	0
Terminal property and equipment	2,000
Shipping office (land and building)	1,000
Vessel spare parts ashore	1,000
Performance deposits	2,000
Deferred charges	2,000
Stock of less developed country shipping company described in § 1-955-5(b)	10,000
	172,000

(b) On December 31, 1976, X's qualified investments in foreign base company shipping operations (determined as provided in § 1.955A-2(g)) consists of the following amounts:

Cash	$5,000
Readily marketable securities	2,000
Stock of related controlled foreign corporations	4,000
Traffic and other receivables	16,000
Foreign income tax refunds receivable	3,000
Prepaid shipping expenses and shipping inventories ashore	2,000
Vessel construction funds	1,000
Vessels	117,000
Vessel plans and construction in progress	12,000
Containers and chassis	4,000
Terminal property and equipment	2,000
Shipping office (land and building)	1,000
Vessel spare parts ashore	1,000
Performance deposits	2,000
Deferred charges	2,000
Stock of less developed country shipping company described in § 1.955-5(b)	0
	174,000

(c) For 1976, X's increase in qualified investments in foreign base company shipping operations is $2,000,

which amount is determined as follows:

Qualified investments at Dec. 31, 1976	$174,000
Qualified investments at Dec. 31, 1975	172,000
Increase for 1976	2,000

[T.D. 7894, 48 FR 22528, May 19, 1983]

§ 1.954-8 Foreign base company oil related income.

(a) ***Foreign base company oil related income*** —

(1) ***In general.*** Under section 954(g), the foreign base company oil related income of a controlled foreign corporation (except as provided under paragraph (b) of this section) consists of the items of foreign oil related income ("FORI") described in section 907(c)(2) and (3), other than such income derived from a source within a foreign country in connection with—

(i) Oil or gas which was extracted from an oil or gas well located in that foreign country ("extraction exception"), or

(ii) Oil, gas, or a primary product of oil or gas which is sold by the controlled foreign corporation or a related person for use or consumption within that country or is loaded in that country on a vessel or aircraft as fuel for the vessel or aircraft ("use or consumption exception").

A taxpayer claiming the use or consumption exception must establish its applicability on the basis of facts and circumstances. For special rules for applying the extraction exception, see paragraph (c) of this section.

(2) ***Source of income.*** The source of foreign base company oil related income is determined generally under the principles of §§ 1.861-1 to 1.863-5. See § 1.863-6. Thus, income from the performance of a service generally is sourced in the country where the service is performed. See § 1.861-4. Underwriting income from insuring a foreign oil related activity is sourced at the location of the risk. See section 861(a)(7) and § 1.953-2.

(3) ***Primary product.*** The term "primary product" of oil or gas has the meaning given this term by § 1.907(c)-1(d)(5) and (6).

(4) ***Vessel.*** For the definition of the term "vessel", see § 1.954-6(b)(3)(ii).

(5) ***Foreign country.*** For purposes of this section, the term "foreign country" has the same meaning as in section 638 (relating to continental shelf areas). Thus, for example, oil or gas extracted from a sea area will be deemed to be extracted in the country which has exclusive rights of exploitation of natural resources with respect to that area if the other conditions of section 638 are met.

(6) ***Country of use or consumption.*** For rules for determining the country of use or consumption, see § 1.954-3(a)(3)(ii).

(7) ***Insurance income.*** For purposes of this section, income derived from or attributable to insurance of section 907(c)(2) activities means taxable income as defined in section 832(a) and as modified by the principles of § 1.953-4 (other than as the section is applied to life insurance).

(8) ***Fuel product.*** For purposes of this section, the term "fuel product" means oil, gas or a primary product of oil or gas.

(9) ***Effective date.*** The provisions of section 954(g) and this section are applicable to taxable years of foreign corporations beginning on or after January 1, 1983, and to taxable years of United States shareholders in which or with which those taxable years of foreign corporations end.

(b) ***Exemption for small oil producers*** —

(1) ***In general.*** Foreign base company oil related income does not include any income of a foreign corporation which is not a large oil producer.

(2) ***Large oil producer.*** A corporation is a large oil producer (within the meaning of section 954(g)(2)) if the average daily production (extraction) of foreign crude oil and natural gas by the related group which includes the corporation and related persons (within the meaning of section 954(d)(3)) for the taxable year or immediately preceding taxable year is 1,000 or more barrels. The average daily production of foreign crude oil or natural gas for any taxable year (and the conversion of cubic feet of natural gas into barrels) is determined under rules similar to the rules of section 613A, except that only crude oil or natural gas from a well located outside the United States is taken into account.

(c) ***Special rules for applying the extraction exception of paragraph (a)(1)(i) of this section*** —

(1) ***Refining income described in section 907(c)(2)(A).*** With regard to a controlled foreign corporation's refining income from the processing of minerals extracted (by the taxpayer or by any other person) from oil or gas wells into their primary products, as described in section 907(c)(2)(A), a pro rata method will be applied for purposes of determining the part of the refining income that qualifies for the extraction exception of paragraph (a)(1)(i) of this section. The pro rata method will be based on the proportion that the barrels of the fuel product extracted in the country of processing bears to the total barrels of the fuel product processed in that country and will apply regardless of the country of sale of the primary product.

(2) ***Marketing income described in section 907(c)(2)(C).*** With regard to a controlled foreign corporation's marketing income from the distribution or sale of minerals extracted from oil or gas wells or of primary products, as described in section 907(c)(2)(C), a pro rata method will be applied for purposes of determining the part of the marketing income that qualifies for the extraction exception of paragraph (a)(1)(i) of this section. When applying the pro rata method to the sale of a fuel product other than a primary product, the pro rata method will be based on the proportion that the barrels of the fuel product extracted in the country of sale bears to the total barrels of the fuel product sold in that country. When applying the pro rata method to the sale of primary products, the method will be based on the proportion that the barrels of the fuel product extracted in the country of sale bears to the total barrels of the fuel product processed. For purposes of applying the pro rata method, data of the controlled foreign corporation's related group (as defined in section 954(g)(2)(C)) will be taken into account. The pro rata method will not apply, however, if the mineral or primary product is purchased by the controlled foreign corporation from a person not within the controlled foreign corporation's related group. In that situation, the marketing income will be presumed to qualify for the extraction exception if the country of the source of the marketing income is a net exporter of crude oil or gas, whichever is relevant. If the country of the source of the marketing income is not a net exporter of crude oil or gas, whichever is relevant, the marketing income will be presumed not to

qualify for the extraction exception. The controlled foreign corporation may, however, rebut this latter presumption by demonstrating on the basis of all the facts and circumstances that its marketing income does qualify for the extraction exception. If a primary product that is acquired from a person within the controlled foreign corporation's related group is commingled with like products acquired from persons not within that related group, the pro rata method based on the proportion that the barrels of the fuel product extracted in the country of sale bears to the total barrels of the fuel product processed will be applied to that portion of the total products sold that was purchased from persons within the related group, to the extent that that person did not sell product purchased from an unrelated person, and either the presumption or facts and circumstances will determine the characterization of the remainder.

(3) ***Transportation income described in section 907(c)(2)(B).*** With regard to a controlled foreign corporation's income from the transportation of minerals from oil and gas wells or of primary products, as described in section 907(c)(2)(B), the rules set forth in paragraph (c)(2) of this section will apply for purposes of determining the part of the transportation income that qualifies for the extraction exception of paragraph (a)(1)(i) of this section.

(4) ***Illustrations.*** The following examples illustrate the application of this paragraph.

Example 1. Controlled foreign corporation M has a refinery in foreign country A that refines 250x barrels of oil during its taxable year beginning in 1984. It is determined that 125x barrels of its 250x barrels were extracted in country A. M sold 150x barrels of its 250x barrels in country A for consumption in country A which resulted in $225x of income from refining and $225x of marketing income, as described in section 907(c)(2)(C). M also sold within foreign country B, for consumption in country B, 100x barrels of its 250x barrels which resulted in an additional $150x of income from refining for M and $170x of marketing income for M. The 100x barrels sold by M within country B, a contiguous country, were transported from M's refinery in country A to country B by a pipeline which is owned by M, and M recognized a total of $10x of income from the transportation of the 100x barrels. Of this $10x, $8x was recognized in country A and $2x was recognized in country B. Under the source of income rules of paragraph (a)(2) of this section, income from refining is considered derived from the country in which the refining occurs and not from the country where the sale of the refined product occurs.
(i) *M's refining income.* M has $75x of foreign base company oil related income with respect to its refining of the 250x barrels, determined as follows:

(A) Total amount of income from refining attributable to oil refined in country A by M	$375x
(B) Amount of income from refining with respect to oil sold for consumption ($225x) in country A (use or consumption exception under paragraph (a)(1)(ii) of this section	(225x)
(C) Pro rate amount of income from refining attributable to sales in country B considered extracted from country A ($150x times 125x barrels/250x barrels) (extraction exception under paragraph (a)(1)(i) of this section	*(75x)*
(D) Foreign base company oil related income	*$75x*

(ii) *M's marketing income.* M does not have foreign base company oil related income with respect to its sale of the 100x barrels in country B and 150x barrels in country A because the $170x and $225x, respectively, of marketing income was derived from the country in which the oil was sold for consumption (an exception under paragraph (a)(1)(ii) of this section).
(iii) *M's transportation income.* M does not have foreign base company oil related income with respect to its $2x of pipeline transportation income recognized in country B because the income was derived from the country in which the 100x barrels were sold for consumption, an exception under paragraph (a)(1)(ii) of this section. With regard to the $8x of pipeline transportation income recognized in country A, however, M has $4x of foreign base company oil related income since of the total barrels refined in country A (250x) only one-half were extracted in that country. Therefore, only one-half of the transportation income qualifies for the extraction exception of paragraph (a)(1)(i) of this section.

(iv) *M's extraction income.* M does not have foreign base company oil related income for its extraction activity because extraction income is excluded in all events. See section 954(g)(1)(A).

Example 2. Assume the same facts as in *Example 1* except that M sold all of the 250x barrels of refined oil in country A. In addition, assume that country A is a net exporter of crude oil. As in *Example 1,* M sold 150x barrels for consumption in country A with the same resulting income. M sold in country A the remaining 100x barrels to unrelated controlled foreign corporation N which resulted in an additional $150x of income from refining for M and $170x of marketing income for M. N immediately resold in country A for export those 100x barrels. N did not commingle the 100x barrels with any other refined oil. N earned $10x of marketing income on that sale.
(i) *M's refining income.* M has $75x foreign base company oil related income with respect to its refining of the 250x barrels determined as follows:

(A) Total amount of income from refining attributable to oil refined in country A by M	$375x
(B) Amount of income from refining with respect to oil sold for consumption ($225x) in country A (use or consumption exception under paragraph (a)(1)(ii) of this section)	(225x)
(C) Pro rata amount of income from refining attributable to sales in country A (for consumption outside of country A) considered extracted from country A ($150x times 125x barrels/250x barrels) (extraction exception under paragraph (a)(1)(i) of this section)	(*75x*)
(D) Foreign base company oil related income	*$75x*

(ii) *M's marketing income.* M does not have foreign base company oil related income with respect to its marketing income from the sale of the 150x barrels in country A because the $225x of marketing income was derived from the country in which the oil was sold for consumption (an exception under paragraph (a)(1)(ii) of this section). M has $85x of foreign base company oil related income with respect to its marketing income from sale to N of the 100x barrels, determined as follows:

(A) Total amount of marketing income from the sale	$170x
(B) Pro rata amount of marketing income attributable to oil product considered extracted in country A ($170x times 125x barrels/250x barrels) (extraction exception under paragraph (a)(1)(i) of this section)	*(85x)*
(C) Foreign base company oil related income	*$85x*

(iii) *N's marketing income.* N is not related to M. Therefore, since N sold the 100x barrels in country A, a net exporter of crude oil, and since N did not commingle the 100x barrels with other refined products, it is presumed that all of the 100x barrels were extracted in country A. Accordingly, all of N's $10x of marketing income is excepted under paragraph (a)(1)(i) of this section.

Example 3. Assume the same facts as in *Example 2* except that N is related to M. Characterization of M's income remains the same as in *Example 2.* N will have, however, $5x of foreign base company oil related income with regard to its marketing income, determined as follows:

(i) Total amount of marketing income from the sale	$10x
(ii) Pro rata amount of marketing income considered extracted from country A ($10x times 125x barrels/250x barrels) (extraction exception under paragraph (a)(1)(i) of this section)	*5x*
(iii) Foreign base company oil related income	*$5x*

Example 4. Assume that controlled foreign corporation M has a refinery in foreign country A that refines 200x barrels of oil during its taxable year beginning in 1984. It is determined that 100x barrels of that oil were extracted in country A and that the other 100x barrels were extracted in country B. Neither country A nor country B is a net exporter of crude oil. In addition, M purchased from an unrelated country A refiner 100x barrels of already refined oil. M does not know where this oil was extracted. These 100x barrels of purchased refined oil were commingled with the 200x barrels of refined oil from M's refinery. M sold 225x barrels of refined oil in country A for consumption in country A which resulted in $250x of income from refining and $225x of marketing income. M sold within foreign country B for consumption outside of country B 75x barrels of refined oil which resulted in $100x of income from refining and $75x of marketing income. The refined product was transported between country A and country B by an unrelated person.
(i) *M's refining income.* With regard to the sales in country A, M has $50x of foreign base company oil related income with respect to its refining of the 100x barrels, determined as follows:

(A) Total amount of income from refining attributable to oil refined in country A by M	$350x
(B) Amount of income from refining with respect to oil sold for consumption in country A ($250x) (use or consumption exception under paragraph (a)(1)(ii) of this section)	(250x)

(C) Pro rata amount of income from refining attributable to sales in country B considered extracted from country A ($100x times 100x barrels/200x barrels) (extraction exception under paragraph (a)(1)(i) of this section) *(50x)*

(D) Foreign base company oil related income *$50x*

(ii) *M's marketing income.* Since the barrels from M's refinery and those that M purchased were commingled, a portion, as follows, of the marketing income is deemed to derive from both purchased and refined products. Since M refined 200x barrels and purchased 100x barrels, its marketing income of $225x from the sale of the 225x barrels in country A for consumption in country A will be deemed to consist of $150x (200x/300x × $225x) from the sale of products refined by M and $75x (100x/300x × $225x) from the sale of purchased products. Likewise, its marketing income of $75x from the sale of the 75x barrels in country B for consumption outside of country B will be deemed to consist of $50x (200x/300x × $75x) from the sale of products refined by M and $25x (100x/300x × $75x) from the sale of purchased products.
(A) *Purchased products.* M is considered as having $75x of marketing income from the sale of purchased products in country A for consumption in country A. None of this marketing income is foreign base company oil related income since the marketing income is earned in country A, the country of consumption. See paragraph (a)(1)(ii) of this section. All of the $25x of M's marketing income from the sale of purchased products in country B will be foreign base company oil related income. The exception at paragraph (a)(1)(ii) of this section does not apply since the refined oil is not sold for use or consumption in country B. Likewise, the extraction exception under paragraph (a)(1)(i) of this section does not apply. The purchased product cannot be presumed to be extracted in country B since country B is not a net exporter of crude oil. In addition, M cannot show, on a facts and circumstances basis, that purchased products were refined from crude oil extracted in country B.

(B) *Products refined by M.* With regard to M's marketing income attributable to the sale of products refined by M, M does not have any foreign base company oil related income with regard to its $150x of marketing income in country A since that income was derived from the country in which the oil was sold for consumption (the use or consumption exception under paragraph (a)(1)(ii) of this section). M has $25x of foreign base company oil related income with regard to its $50x of marketing income in country B determined as follows:

(*1*) Total amount of income from marketing attributable to oil refined by M and sold in country B $50x

(*2*) Pro rata amount of income from marketing attributable to sales in country B considered extracted from country B ($50x times 100x barrels/200x barrels) (extraction exception under paragraph (a)(1)(i) of this section) *(25x)*

(*3*) Foreign base company oil related income *$25x*

[T.D. 8331, 56 FR 2847, Jan. 25, 1991; 56 FR 11511, Mar. 19, 1991]

§ 1.954(c)(6)-1 Certain cases in which section 954(c)(6) exception not available.

(a) ***Cross-references to other rules.*** For a non-exclusive list of rules that in certain cases limit the applicability of the exception to foreign personal holding company income under section 954(c)(6), see—

(1) Section 1.245A-5(d) (rules regarding the application of section 954(c)(6) to extraordinary disposition amounts);

(2) Section 1.245A-5(f) (rules regarding the application of section 954(c)(6) to tiered extraordinary reduction amounts);

(3) Section 1.245A(e)-1(c) (rules regarding tiered hybrid dividends);

(4) Section 1.367(b)-4(e)(4) (rules regarding income inclusion and gain recognition in certain exchanges following an inversion transaction);

(5) Section 964(e)(4)(A) (rules regarding certain gain from the sale or exchange of stock that is recharacterized as a dividend); and

(6) Section 1.7701(l)-4(e) (rules regarding recharacterization of certain transactions following an inversion transaction).

(b) ***Applicability date.*** This section applies as of August 27, 2020.

[T.D. 9909, 85 FR 53097, Aug. 27, 2020]

§ 1.955-0 Effective dates.

(a) ***Section 955 as in effect before the enactment of the Tax Reduction Act of 1975*** —

(1) ***In general.*** In general, §§ 1.955-1 through 1.955-6 are applicable with respect to withdrawals of previously excluded subpart F income from qualified investment in less developed countries for taxable years of foreign corporations beginning after December 31, 1962, and to taxable years of United States shareholders (as defined in section 951(b)) within which or with which such taxable years of such foreign corporations end. However, such sections are effective with respect to withdrawals of amounts invested in less developed country shipping companies described in section 955(c)(2) (as in effect before the enactment of the Tax Reduction Act of 1975) only for taxable years of foreign corporations beginning before January 1, 1976, and for taxable years of United States shareholders (as defined in section 951(b)) within which or with which such taxable years of such foreign corporations end. For rules applicable to withdrawals of amounts invested in less developed country shipping companies described in section 955(c)(2) (as in effect before such enactment), in taxable years of foreign corporations beginning after December 31, 1975, see section 955(b)(5) (as amended by such Act) and §§ 1.955A-1 through 1.955A-4.

(2) ***References.*** Except as otherwise provided therein, all references contained in §§ 1.955-1 through 1.955-6 to section 954 or 955 or to the regulations under section 954 are to those sections and regulations as in effect before the enactment of the Tax Reduction Act of 1975. For regulations under section 954 (as in effect before such enactment), see 26 CFR § 1.954-1 through 1.954-5 (Revised as of April 1, 1975). For taxable years of foreign corporations beginning after December 31, 1975, and for taxable years of United States shareholders (as described in section 951(b)) within which or with which such taxable years of such foreign corporations end, the definitions of less

developed countries and less developed country corporations contained in section 902(d) (as amended by such Act) and § 1.902-2 apply for purposes of determining the credit for corporate stockholders in foreign corporations under section 902.

(b) ***Section 955 as amended by the Tax Reduction Act of 1975.*** Except as otherwise provided therein, §§ 1.955A-1 through 1.955A-4 are applicable to taxable years of foreign corporations beginning after December 31, 1975, and to taxable years of United States shareholders (as defined in section 951(b)) within which or with which such taxable years of such foreign corporations end.

[T.D. 7893, 48 FR 22508, May 19, 1983, as amended by T.D. 7894, 48 FR 22529, May 19, 1983]

§ 1.955-1 Shareholder's pro rata share of amount of previously excluded subpart F income withdrawn from investment in less developed countries.

(a) ***In general.*** Pursuant to section 951(a)(1)(A)(ii) and the regulations thereunder, a United States shareholder of a controlled foreign corporation must include in its gross income its pro rata share (as determined in accordance with paragraph (c) of this section) of the amount of such controlled foreign corporation's previously excluded subpart F income which is withdrawn for any taxable year from investment in less developed countries. Section 955 provides rules for determining the amount of a controlled foreign corporation's previously excluded subpart F income for any taxable year of the corporation beginning after December 31, 1962, that is withdrawn from investment in less developed countries for any taxable year of the corporation beginning before January 1, 1976. Except for investment in less developed country shipping companies, section 955 also provides rules for determining the amount of a controlled foreign corporation's previously excluded subpart F income for any taxable year of the corporation beginning after December 31, 1962, which is withdrawn from investment in less developed countries in taxable years of the corporation beginning after December 31, 1975. To determine the amount of a controlled foreign corporation's previously excluded subpart F income withdrawn from investment in less developed country shipping companies described in section 955(c)(2) in taxable years of a controlled foreign corporation beginning after December 31, 1975, see section 955(b)(5) (as in effect after amendment by the Tax Reduction Act of 1975) and §§ 1.955A-1 through 1.955A-4. For effective dates, see § 1.955-0.

(b) ***Amount withdrawn by controlled foreign corporation*** —

(1) ***In general.*** For purposes of sections 951 through 964, the amount of a controlled foreign corporation's previously excluded subpart F income which is withdrawn for any taxable year from investment in less developed countries is an amount equal to the decrease for such year in such corporation's qualified investments in less developed countries. Such decrease is, except as provided in § 1.955-3—

(i) An amount equal to the excess of the amount of its qualified investments in less developed countries at the close of the preceding taxable year over the amount of its qualified investments in less developed countries at the close of the taxable year, minus

(ii) The amount (if any) by which recognized losses on sales or exchanges by such corporation during the taxable year of qualified investments in less developed countries exceed its recognized gains on sales or exchanges during such year of qualified investments in less developed countries,

but only to the extent that the net amount so determined does not exceed the limitation determined under subparagraph (2) of this paragraph. See § 1.955-2 for determining the amount of qualified investments in less developed countries.

(2) *Limitations applicable in determining decreases* —

(i) ***General.*** The limitation referred to in subparagraph (1) of this paragraph for any taxable year of a controlled foreign corporation shall be the lesser of the following two limitations:

(*a*) The sum of the controlled foreign corporation's earnings and profits (or deficit in earnings and profits) for the taxable year, computed as of the close of the taxable year without diminution by reason of any distributions made during the taxable year, plus the sum of its earnings and profits (or deficits in earnings and profits) accumulated for prior taxable years beginning after December 31, 1962, (including prior taxable years beginning after December 31, 1975) or,

(*b*) The sum of the amounts excluded under section 954(b)(1) and paragraph (b)(1) of § 1.954-1 from the foreign base company income of such corporation for all prior taxable years, minus the sum of the amounts (determined under this paragraph) of its previously excluded subpart F income withdrawn from investment in less developed countries for all prior taxable years.

(ii) ***Treatment of earnings and profits.*** For purposes of determining earnings and profits of a controlled foreign corporation under subdivision (i)(*a*) of this subparagraph, such earnings and profits shall be considered not to include any amounts which are attributable to—

(*a*)

(*1*) Amounts which, for the current taxable year, are included in the gross income of a United States shareholder of such controlled foreign corporation under section 951(a)(1)(A)(i) or (iii), or

(*2*) Amounts which, for any prior taxable year, have been included in the gross income of a United States shareholder of such controlled foreign corporation under section 951(a) and have not been distributed; or

(*b*)

(*1*) Amounts which, for the current taxable year, are included in the gross income of a United States shareholder of such controlled foreign corporation under section 551(b) or would be so included under such section but for the fact that such amounts were distributed to such shareholder during the taxable year, or

(*2*) Amounts which, for any prior taxable year, have been included in the gross income of a United States shareholder of such controlled foreign corporation under section 551(b) and have not been distributed.

The rules of this subdivision apply only in determining the limitation on a controlled foreign corporation's decrease in qualified investments in less developed countries. See section 959 and the regulations thereunder for limitations on the exclusion from gross income of previously taxed earnings and profits.

(3) *Taxable years beginning after December 31, 1975.*

(i) In the case of a taxable year of a controlled foreign corporation beginning after December 31, 1975, § 1.955-2(b)(5) must be applied in determining the amount of its qualified investments in less developed countries on both of the determination dates applicable to such taxable year.

(ii) The application of this subparagraph may be illustrated by the following examples:

Example 1. (a) Controlled foreign corporation M uses the calendar year as the taxable year. Throughout 1974 through 1976, M owns 100 percent of the only class of stock of foreign corporation N, a less developed country shipping company described in § 1.955-5(b), and M owns no other stock or obligations. The amount taken into account under § 1.955-2(d) with respect to the stock of N is $10,000 at the close of 1974, 1975, and 1976. The amount of M's previously excluded subpart F income which is withdrawn for 1975 (a year to which § 1.955-2(b)(5) does not apply) from investment in less developed countries is zero, determined as follows:

(1) Qualified investments in less developed countries at the close of 1974	$10,000
(2) Less: qualified investments in less developed countries at the close of 1975	10,000
(3) Balance	0

(Further computations similar to those set out in lines (iv) through (ix) of example 1 of paragraph (d) of this section are unnecessary because the balance in line (3) of this example is zero.)

(b) As a result of § 1.955-2(b)(5)(ii), the amount of M's previously excluded subpart F income which is withdrawn for 1976 from investment in less developed countries is zero, determined as follows:

(1) Qualified investments in less developed countries at the close of 1975	$0
(2) Less: qualified investments in less developed countries at the close of 1976	0
(3) Balance	0

Example 2. The facts are the same as in example 1, except that foreign corporation N is a less developed country corporation described in § 1.955-5(a). The amount of M's previously excluded subpart F income withdrawn for 1976 from investment in less

developed countries is zero, determined as follows:

(1) Qualified investments in less developed countries at the close of 1975	$10,000
(2) Less: qualified investments in less developed countries at the close of 1976	10,000
(3) Balance	0

(c) ***Shareholder's pro rata share of amount withdrawn by controlled foreign corporation*** —

(1) ***In general.*** A United States shareholder's pro rata share of a controlled foreign corporation's previously excluded subpart F income withdrawn for any taxable year from investment in less developed countries is his pro rata share of the amount withdrawn for such year by such corporation, as determined under paragraph (b) of this section. See section 955(a)(3).

(2) ***Special rule.*** A United States shareholder's pro rata share of the net amount determined under paragraph (b)(2)(i)(*b*) of this section with respect to any stock of the controlled foreign corporation owned by such shareholder shall be determined without taking into account any amount attributable to a period prior to the date on which such shareholder acquired such stock. See section 1248 and the regulations thereunder for rules governing treatment of gain from sales or exchanges of stock in certain foreign corporations.

(d) ***Illustrations.*** The application of this section may be illustrated by the following examples:

Example 1. A, a United States shareholder, owns 60 percent of the only class of stock of M Corporation, a controlled foreign corporation throughout the entire period here involved. Both A and M Corporation use the calendar year as a taxable year. Corporation M's qualified investments in less developed countries at the close of 1964 amount to $125,000; and, at the close of 1965, to $75,000. During 1965, M Corporation realizes recognized gains of $5,000 and recognized losses of $15,000, on sales of qualified investments in less developed countries. Corporation M's earnings and profits for 1965 and its accumulated earnings and profits for 1963 and 1964 amount to $45,000, as determined under paragraph (b)(2) of this section. The amount excluded under section 954(b)(1) for 1963 from its foreign base company income is $75,000, and the amount of its previously excluded subpart F income withdrawn for 1964 from investment in less developed countries is $25,000. The amount of M Corporation's previously excluded subpart F income withdrawn for 1965 from investment in less developed countries is $40,000, and A's pro rata share of such amount is $24,000, determined as follows:

(i) Qualified investments in less developed countries at the close of 1964	$125,000
(ii) Less: Qualified investments in less developed countries at the close of 1965	75,000

(iii) Balance	50,000
(iv) Less: Excess of recognized losses over recognized gains on sales during 1965 of qualified investments in less developed countries ($15,000 less $5,000)	10,000
(v) Tentative decrease in qualified investments in less developed countries for 1965	40,000
(vi) Earnings and profits for 1963, 1964, and 1965	45,000
(vii) Excess of amount excluded under section 954(b)(1) from foreign base company income for 1963 ($75,000 over amount of previously excluded subpart F income withdrawn for 1964 from investment in less developed countries ($25,000)	50,000
(viii) M Corporation's amount of previously excluded subpart F income withdrawn for 1965 from investment in less developed countries (item (v), but not to exceed the lesser of item (vi) or item (vii))	40,000
(ix) A's pro rata share of M Corporation's amount of previously excluded subpart F income withdrawn for 1965 from investment in less developed countries (60 percent of $40,000)	$24,000

Example 2. The facts are the same as in example 1, except that M Corporation's earnings and profits (determined under paragraph (b)(2) of this section) for 1963, 1964, and 1965 (item (vi)) are $30,000 instead of $45,000. Corporation M's amount of previously excluded subpart F income withdrawn for 1965 from investment in less developed countries is $30,000. A's pro rata share of such amount is $18,000 (60 percent of $30,000).

Example 3. The facts are the same as in example 1, except that the excess of the amount excluded under section 954(b)(1) for 1963 from M Corporation's foreign base company income over the amount of its previously excluded subpart F income withdrawn for 1964 from investment in less developed countries (item (vii)) is $20,000 instead of $50,000. Corporation M's amount of previously excluded subpart F income withdrawn for 1965 from investment in less developed countries is $20,000. A's pro rata share of such amount is $12,000 (60 percent of $20,000).

[T.D. 6683, 28 FR 11178, Oct. 18, 1963, as amended by T.D. 6795, 30 FR 942, Jan. 29, 1965; T.D. 7893, 48 FR 22509, May 19, 1983; T.D. 7894, 48 FR 22529, May 19, 1983]

§ 1.955-2 Amount of a controlled foreign corporation's qualified investments in less developed countries.

(a) ***Included property.*** For purposes of sections 951 through 964, a controlled foreign corporation's "qualified investments in less developed countries" are items of property (other than property excluded under paragraph (b)(1) of this section) owned directly by such corporation on the applicable determination date for purposes of section 954(f) or section 955(a)(2) and consisting of one or more of the following:

(1) Stock of a less developed country corporation if the controlled foreign corporation owns (within the meaning of paragraph (b)(2) of this section) on the applicable determination date 10 percent or more of the total combined voting power of all classes of stock of such less developed country corporation;

(2) An obligation (as defined in paragraph (b)(3) of this section) of a less developed country corporation which, at the time of acquisition (as defined in paragraph (b)(4) of this section) of such obligation by the controlled foreign corporation, has a maturity of one year or more, but only if the controlled foreign corporation owns (within the meaning of paragraph (b)(2) of this section) on the applicable determination date 10 percent or more of the total combined voting power of all classes of stock of such less developed country corporation; and

(3) An obligation (as defined in paragraph (b)(3) of this section) of a less developed country, including obligations issued or guaranteed by the government of such country or of a political subdivision thereof and obligations of any agency or instrumentality of such country, in which such country is financially committed. The application of this subparagraph may be illustrated by the following example:

Example. A, a political subdivision of foreign country X, constructs and operates a toll bridge. Country X is a less developed country throughout the period here involved. A issues bonds under an indenture which provides for amortization of the principal and interest of such bonds only out of the net revenues derived from operation of the bridge. The bonds of A are obligations in which X country is financially committed and, in the hands of a controlled foreign corporation, are qualified investments in less developed countries.

(b) *Special rules* —

(1) ***Excluded property.*** For purposes of paragraph (a) of this section, property which is disposed of within 6 months after the date of its acquisition shall be excluded from a controlled foreign corporation's qualified investments in less developed countries. However, the fact that property acquired by a controlled foreign corporation has not been held on an applicable determination date for more than 6 months after the date of its acquisition shall not prevent such property from being included in the controlled foreign corporation's qualified investments in less developed countries on such date. Proper adjustments shall be made subsequently, however, to exclude any item of property so included, if the property is in fact disposed of within 6 months after the date of its acquisition. See section 955(b)(4).

(2) ***Determination of stock ownership.*** In determining for purposes of paragraphs (a)(1) and (2) of this section whether a controlled foreign corporation owns 10 percent or more of the total combined voting power of all classes of stock of a less developed country corporation, only stock owned directly by such controlled foreign corporation shall be taken into account and the provisions of section 958 and the regulations thereunder shall not apply. See section 958(a)(1).

(3) ***Obligation defined.*** For purposes of paragraphs (a)(2) and (3) of this section, the term “obligation” means any bond, note, debenture, certificate, or other evidence of indebtedness. In the absence of legal, governmental, or business reasons to the contrary, the indebtedness must bear interest or be issued at a discount.

(4) ***Date of acquisition.*** For purposes of paragraphs (a)(2) and (b)(5)(i) of this section, stock or an obligation shall be considered acquired by a foreign corporation as of the date such corporation acquires an adjusted basis in the stock or obligation. For this purpose, in a case in which a foreign corporation acquires stock or an obligation in a transaction (other than a reorganization of the type described in section 368(a)(1)(E) or (F)) in which no gain or loss would be recognized had the transaction been between two domestic corporations, such corporation will be considered to have acquired an adjusted basis in such stock or obligation as of the date such transaction occurs.

(5) ***Taxable years beginning after December 31, 1975.*** For taxable years beginning after December 31, 1975, qualified investments in less developed countries do not include—

(i) Any property acquired after the latest determination date applicable to a taxable year beginning before December 31, 1975,

(ii) Stock or obligations of a less developed country shipping company described in § 1.955-5(b), and

(iii) Stock or obligations which were not treated as qualified investments in less developed countries on the later of the two determination dates applicable to the preceding taxable year.

See § 1.955-1(b)(3) for rules relating to the application of this subparagraph. See § 1.955A-2(h) for rules relating to the treatment of investments in stock or obligations described in subdivision (ii) of this subparagraph as qualified investments in foreign base company shipping operations.

(6) ***Determination dates.*** For purposes of subparagraph (5) of this paragraph and § 1.955-1(b)(3), the determination dates applicable to a taxable year of a controlled foreign corporation are—

(i) Except as provided in subdivision (ii) of this subparagraph, the close of such taxable year and the close of the preceding taxable year, and

(ii) With respect to a United States shareholder who has made an election under section 955(b)(3) to determine such corporation's increase in qualified investments in less developed countries at the close of the following taxable year, the close of such taxable year and the close of the taxable year immediately following such taxable year.

(c) ***Termination of designation as a less developed country.*** For purposes of sections 951 through 964, property which would constitute a qualified investment in a less developed country but for the fact that a foreign country or United States possession has, after the acquisition of such property by the controlled foreign corporation, ceased to be a less developed country shall be treated as a qualified investment in a less developed country. The application of this paragraph may be illustrated by the following example:

Example. On December 31, 1969, in accordance with the provisions of § 1.955-4, the designation of the foreign country X as an economically less developed country is terminated. Corporation M, a controlled foreign corporation, has $50,000 of qualified investments in country X acquired before December 31, 1969. After 1969 such investments are treated as qualified investments in a less developed country notwithstanding the termination of the status of X Country as an economically less developed country. However, if such qualified investments of M Corporation are reduced to $40,000, each United States shareholder of M Corporation is required, subject to the provisions of § 1.955-1, to include his pro rata share of the $10,000 decrease in his gross income under section 951(a)(1)(A)(ii) and the regulations thereunder.

(d) ***Amount attributable to property*** —

(1) ***General rule.*** For purposes of this section, the amount taken into account with respect to any property which constitutes a qualified investment in a less developed country shall be its adjusted basis as of the applicable determination date, reduced by any liability (other than a liability described in subparagraph (2) of this paragraph) to which such property is subject on such date. To be taken into account under this subparagraph, a liability must constitute a specific charge against the property involved. Thus, a liability evidenced by an open account or a liability secured only by the general credit of the controlled foreign corporation will not be taken into account. On the other hand, if a liability constitutes a specific charge against several items of property and cannot definitely be

allocated to any single item of property, the liability shall be apportioned against each of such items of property in that ratio which the adjusted basis of such item on the applicable determination date bears to the adjusted basis of all such items at such time. A liability in excess of the adjusted basis of the property which is subject to such liability shall not be taken into account for the purpose of reducing the adjusted basis of other property which is not subject to such liability.

(2) ***Excluded charges.*** For purposes of subparagraph (1) of this paragraph, a specific charge created with respect to any item of property principally for the purpose of artificially increasing or decreasing the amount of a controlled foreign corporation's qualified investments in less developed countries will not be recognized; whether a specific charge is created principally for such purpose will depend upon all the facts and circumstances of each case. One of the factors that will be considered in making such a determination with respect to a loan is whether the loan is from a related person, as defined in section 954(d)(3) and paragraph (e) of § 1.954-1.

(3) ***Statement required.*** If for purposes of this section a United States shareholder of a controlled foreign corporation reduces the adjusted basis of property which constitutes a qualified investment in a less developed country on the ground that such property is subject to a liability, he shall attach to his return a statement setting forth the adjusted basis of the property before the reduction and the amount and nature of the reduction.

(4) ***Taxable years beginning after December 31, 1975.*** For taxable years beginning after December 31, 1975, the amount taken into account under subparagraph (1) of this paragraph with respect to any property which constitutes a qualified investment in less developed countries shall not exceed the amount taken into account with respect to such property at the close of the preceding taxable year.

[T.D. 6683, 28 FR 11179, Oct. 18, 1963, as amended by T.D. 7894, 48 FR 22529, May 19, 1983]

§ 1.955-3 Election as to date of determining qualified investments in less developed countries.

(a) ***Nature of election.*** In lieu of determining the increase for a taxable year of a foreign corporation beginning before January 1, 1976, under the provisions of section 954(f) and paragraph (a) of § 1.954-5, or the decrease under the provisions of section 955(a)(2) and paragraph (b) of § 1.955-1, in a controlled foreign corporation's qualified investments in less developed countries for a taxable year in the manner provided in such provisions, a United States shareholder of such controlled foreign corporation may elect, under the provisions of section 955(b)(3) and this section, to determine such increase in accordance with the provisions of paragraph (b) of § 1.954-5 and to determine such decrease by ascertaining the amount by which—

(1) Such controlled foreign corporation's qualified investments in less developed countries at the close of such taxable year exceed its qualified investments in less developed countries at the close of the taxable year immediately following such taxable year, and reducing such excess by

(2) The amount determined under paragraph (b)(1)(ii) of § 1.955-1 for such taxable year,

subject to the limitation provided in paragraph (b)(2) of § 1.955-1 for such taxable year. An election under this section may be made with respect to each controlled foreign corporation with respect to which a person is a United States shareholder within the meaning of section 951(b), but the election may not be exercised separately with respect to the increases and the decreases of such controlled foreign corporation. If an election is made under this section to determine the increase of a controlled foreign

corporation in accordance with the provisions of paragraph (b) of § 1.954-5, subsequent decreases of such controlled foreign corporation shall be determined in accordance with this paragraph and not in accordance with paragraph (b) of § 1.955-1.

(b) *Time and manner of making election* —

(1) ***Without consent.*** An election under this section with respect to a controlled foreign corporation shall be made without the consent of the Commissioner by a United States shareholder's filing a statement to such effect with his return for his taxable year in which or with which ends the first taxable year of such controlled foreign corporation in which—

(i) Such shareholder owns, within the meaning of section 958(a), or is considered as owning by applying the rules of ownership of section 958(b), 10 percent or more of the total combined voting power of all classes of stock entitled to vote of such controlled foreign corporation, and

(ii) Such controlled foreign corporation realizes foreign base company income from which amounts are excluded under section 954(b)(1) and paragraph (b)(1) of § 1.954-1.

The statement shall contain the name and address of the controlled foreign corporation and identification of such first taxable year of such corporation. For taxable years of a foreign corporation beginning after December 31, 1975, no election under this section with respect to a controlled foreign corporation may be made without the consent of the Commissioner.

(2) ***With consent.*** An election under this section with respect to a controlled foreign corporation may be made by a United States shareholder at any time with the consent of the Commissioner. Consent will not be granted unless the United States shareholder and the Commissioner agree to the terms, conditions, and adjustments under which the election will be effected. Consent will not be granted if the first taxable year of the controlled foreign corporation with respect to which the shareholder desires to compute an amount described in section 954(b)(1) in accordance with the election provided in this section begins after December 31, 1975. The application for consent to elect shall be made by the United States shareholder's mailing a letter for such purpose to the Commissioner of Internal Revenue, Washington, DC 20224. The application shall be mailed before the close of the first taxable year of the controlled foreign corporation with respect to which the shareholder desires to compute an amount described in section 954(b)(1) in accordance with the election provided in this section. The application shall include the following information:

(i) The name, address, and taxable year of the United States shareholder;

(ii) The name and address of the controlled foreign corporation;

(iii) The first taxable year of the controlled foreign corporation for which income is to be computed under the election;

(iv) The amount of the controlled foreign corporation's qualified investments in less developed countries at the close of its preceding taxable year; and

(v) The sum of the amounts excluded under section 954(b)(1) and paragraph (b)(1) of § 1.954-1 from the foreign base company income of the controlled foreign corporation for all prior taxable years during which such shareholder was a United States shareholder of such corporation and the sum of the amounts of its previously excluded subpart F income withdrawn from investment in less developed countries for all prior taxable years during which such shareholder was a United States shareholder of such corporation.

(c) *Effect of election* —

(1) ***General.*** Except as provided in subparagraphs (3) and (4) of this paragraph, an election under this section with respect to a controlled foreign corporation shall be binding on the United States shareholder and shall apply to all qualified investments in less developed countries acquired, or disposed of, by such controlled foreign corporation during the taxable year following its taxable year for which income is first computed under the election and during all succeeding taxable years of such corporation.

(2) ***Returns.*** Any return of a United States shareholder required to be filed before the completion of a period with respect to which determinations are to be made as to a controlled foreign corporation's qualified investments in less developed countries for purposes of computing such shareholder's taxable income shall be filed on the basis of an estimate of the amount of the controlled foreign corporation's qualified investments in less developed countries at the close of the period. If the actual amount of such investments is not the same as the amount of the estimate, the United States shareholder shall immediately notify the Commissioner. The Commissioner will thereupon redetermine the amount of tax of such United States shareholder for the year or years with respect to which the incorrect amount was taken into account. The amount of tax, if any, due upon such redetermination shall be paid by the United States shareholder upon notice and demand by the district director. The amount of tax, if any, shown by such redetermination to have been overpaid shall be credited or refunded to the United States shareholder in accordance with the provisions of sections 6402 and 6511 and the regulations thereunder.

(3) ***Revocation.*** Upon application by the United States shareholder, the election made under this section may, subject to the approval of the Commissioner, be revoked. Approval will not be granted unless the United States shareholder and the Commissioner agree to the terms, conditions, and adjustments under which the rev- ocation will be effected. Unless such agreement provides otherwise, the change in the controlled foreign corporation's qualified investments in less developed countries for its first taxable year for which income is computed without regard to the election previously made will be considered to be zero for purposes of effectuating the revocation. The application for consent to revocation shall be made by the United States shareholder's mailing a letter for such purpose to the Commissioner of Internal Revenue, Washington, DC 20224. The application shall be mailed before the close of the first taxable year of the controlled foreign corporation with respect to which the shareholder desires to compute the amounts described in section 954(b)(1) or 955(a) without regard to the election provided in this section. The application may also be filed in a taxable year beginning after December 31, 1975. The application shall include the following information:

(i) The name, address, and taxpayer identification number of the United States shareholder;

(ii) The name and address of the controlled foreign corporation;

(iii) The taxable year of the controlled foreign corporation for which such amounts are to be so computed;

(iv) The amount of the controlled foreign corporation's qualified investments in less developed countries at the close of its preceding taxable year;

(v) The sum of the amounts excluded under section 954(b)(1) and paragraph (b)(1) of § 1.954-1 from the foreign base company income of the controlled foreign corporation for all prior taxable years during which such shareholder was a United States shareholder of such

corporation and the sum of the amounts of its previously excluded subpart F income withdrawn from investment in less developed countries for all prior taxable years during which such shareholder was a United States shareholder of such corporation; and

(vi) The reasons for the request for consent to revocation.

(4) ***Transfer of stock.*** If during any taxable year of a controlled foreign corporation—

(i) A United States shareholder who has made an election under this section with respect to such controlled foreign corporation sells, exchanges, or otherwise disposes of all or part of his stock in such controlled foreign corporation, and

(ii) The foreign corporation is a controlled foreign corporation immediately after the sale, exchange, or other disposition,

then, with respect to the stock so sold, exchanged, or disposed of, the controlled foreign corporation's acquisitions and dispositions of qualified investments in less developed countries for such taxable year shall be considered to be zero. If the United States shareholder's successor in interest is entitled to and does make an election under paragraph (b)(1) of this section to determine the controlled foreign corporation's increase in qualified investments in less developed countries for the taxable year in which he acquires such stock, such increase with respect to the stock so acquired shall be determined in accordance with the provisions of paragraph (b)(1) of § 1.954-5. If the controlled foreign corporation realizes no foreign base company income from which amounts are excluded under section 954(b)(1) and paragraph (b)(1) of § 1.954-1 for the taxable year in which the United States shareholder's successor in interest acquires such stock and such successor in interest makes an election under paragraph (b)(1) of this section with respect to a subsequent taxable year of such controlled foreign corporation, the increase in the controlled foreign corporation's qualified investments in less developed countries for such subsequent taxable year shall be determined in accordance with the provisions of paragraph (b)(2) of § 1.954-5.

(d) ***Illustrations.*** The application of this section may be illustrated by the following examples:

Example 1. Foreign corporation A is a wholly owned subsidiary of domestic corporation M. Both corporations use the calendar year as a taxable year. In a statement filed with its return for 1963, M Corporation makes an election under section 955(b)(3) and the election remains in force for the taxable year 1964. At December 31, 1964, A Corporation's qualified investments in less developed countries amount to $100,000; and, at December 31, 1965, to $80,000. For purposes of paragraph (a)(1) of this section, A Corporation's decrease in qualified investments in less developed countries for the taxable year 1964 is $20,000 and is determined by ascertaining the amount by which A Corporation's qualified investments in less developed countries at December 31, 1964 ($100,000) exceed its qualified investments in less developed countries at December 31, 1965 ($80,000).

Example 2. The facts are the same as in example 1 except that A Corporation experiences no changes in qualified investments in less developed countries during its taxable years 1966 and 1967. If M Corporation's election were to remain in force, A Corporation's acquisitions and dispositions of qualified investments in less developed countries during A Corporation's taxable year 1968 would be taken into account in determining whether A Corporation has experienced an increase or a decrease in qualified investments in less developed countries for its taxable year 1967. However, M Corporation duly files before the close of A Corporation's taxable year 1967 an application for consent to revocation of M Corporation's election under section 955(b)(3), and, pursuant to an agreement between the Commissioner and M Corporation, consent is granted by the Commissioner. Assuming such agreement does not provide otherwise, A Corporation's change in qualified investments in less developed countries for its taxable year

1967 is zero because the effect of the revocation of the election is to treat acquisitions and dispositions of qualified investments in less developed countries actually occurring in 1968 as having occurred in such year rather than in 1967.

Example 3. The facts are the same as in example 2 except that A Corporation's qualified investments in less developed countries at December 31, 1968, amount to $70,000. For purposes of paragraph (b)(1)(i) of § 1.955-1, the decrease in A Corporation's qualified investments in less developed countries for the taxable year 1968 is $10,000 and is determined by ascertaining the amount by which A Corporation's qualified investments in less developed countries at December 31, 1967 ($80,000) exceed its qualified investments in less developed countries at December 31, 1968 ($70,000).

Example 4. The facts are the same as in example 1 except that on September 30, 1965, M Corporation sells 40 percent of the only class of stock of A Corporation to N Corporation, a domestic corporation. Corporation N uses the calendar year as a taxable year. Corporation A remains a controlled foreign corporation immediately after such sale of its stock. Corporation A's qualified investments in less developed countries at December 31, 1966, amount to $90,000. The changes in A Corporation's qualified investments in less developed countries occurring in its taxable year 1965 are considered to be zero with respect to the 40-percent stock interest acquired by N Corporation. The entire $20,000 reduction in A Corporation's qualified investments in less developed countries which occurs during the taxable year 1965 is taken into account by M Corporation for purposes of paragraph (a)(1) of this section in determining its tax liability for the taxable year 1964. Corporation A's increase in qualified investments in less developed countries for the taxable year 1965 with respect to the 60-percent stock interest retained by M Corporation is $6,000 and is determined by ascertaining M Corporation's pro rata share (60 percent) of the amount by which A Corporation's qualified investments in less developed countries at December 31, 1968 ($90,000) exceed its qualified investments in less developed countries at December 31, 1965 ($80,000). Corporation N does not make an election under section 955(b)(3) in its return for its taxable year 1966. Corporation A's increase in qualified investments in less developed countries for the taxable year 1966 with respect to the 40-percent stock interest acquired by N Corporation is $4,000.

[T.D. 6683, 28 FR 11180, Oct. 18, 1963, as amended by T.D. 7893, 48 FR 22509, May 19, 1983; T.D. 7894, 48 FR 22530, May 19, 1983]

§ 1.955-4 Definition of less developed country.

(a) ***Designation by Executive order.*** For purposes of sections 951 through 964, the term "less developed country" means any foreign country (other than an area within the Sino-Soviet bloc) or any possession of the United States with respect to which, on the first day of the foreign corporation's taxable year, there is in effect an Executive order by the President of the United States designating such country or possession as an economically less developed country for purposes of such sections. Each territory, department, province, or possession of any foreign country other than a country within the Sino-Soviet bloc may be treated as a separate foreign country for purposes of such designation if the territory, department, province, or possession is overseas from the country of which it is a territory, department, province, or possession. Thus, for example, an overseas possession of a foreign country may be designated by Executive order as an economically less developed country even though the foreign country itself has not been designated as an economically less developed country; or the foreign country may be so designated even though the overseas possessions of such country have not been designated as economically less developed countries. The term "possession of the United States", for purposes of section 955(c)(3) and this section, shall be construed to have the same meaning as that contained in paragraph (b)(2) of § 1.957-3.

(b) ***Countries not eligible for designation.*** Section 955(c)(3) provides that no designation by Executive order may be made under section 955(c)(3) and paragraph (a) of this section with respect to—

Australia
Austria
Belgium
CanadaDenmark
France
Germany (Federal Republic)
Hong Kong
Italy
Japan
Liechtenstein
Luxembourg
Monaco
Netherlands
New Zealand
Norway
Union of South Africa
San Marino
Sweden
Switzerland
United Kingdom.

(c) ***Termination of designation.*** Section 955(c)(3) provides that, after the President has designated any foreign country or possession of the United States as an economically less developed country for purposes of sections 951 through 964, he may not terminate such designation (either by issuing an Executive order for the purpose of terminating such designation or by issuing an Executive order which has the effect of terminating such designation) unless, at least 30 days prior to such termination, he has notified the Senate and the House of Representatives of his intention to terminate such designation. If such 30-day notice is given, no action by the Congress of the United States is necessary to effectuate the termination. The requirement for giving 30-day notice to the Senate and House of Representatives applies also to the termination of a designation with respect to an overseas territory, department, province, or possession of a foreign country. See paragraph (c) of § 1.955-2 for the effect of a termination of a Presidential designation upon property which would be a qualified investment in a less developed country but for the fact of such termination.

[T.D. 6683, 28 FR 11182, Oct. 18, 1963]

§ 1.955-5 Definition of less developed country corporation.

(a) ***Less developed country corporation*** —

(1) ***In general.*** For purposes of sections 951 through 964, the term “less developed country corporation” means a foreign corporation described in paragraph (b) of this section and also any foreign corporation—

(i) Which is engaged in the active conduct of one or more trades or businesses during the entire taxable year;

(ii) Which derives 80 percent or more of its gross income, if any, for such taxable year from sources within less developed countries, as determined under the provisions of § 1.955-6; and

(iii) Which has 80 percent or more in value (within the meaning of paragraph (d) of this section) of its assets on each day of such taxable year consisting of one or more of the following items of property:

(*a*) Property (other than property described in (*b*) through (*h*) of this subdivision) which is used, or held for use, in such trades or businesses and is located in one or more less developed countries;

(*b*) Money;

(*c*) Deposits with persons carrying on the banking business;

(*d*) Stock of any other less developed country corporation;

(*e*) Obligations (within the meaning of paragraph (b)(3) of § 1.955-2) of another less developed country corporation which at the time of their acquisition (within the meaning of paragraph (b)(4) of § 1.955-2) by the foreign corporation have a maturity of one year or more;

(*f*) Obligations (within the meaning of paragraph (b)(3) of § 1.955-2) of any less developed country;

(*g*) Investments which are required to be made or held because of restrictions imposed by the government of any less developed country; and

(*h*) Property described in section 956(b)(2).

For purposes of this subparagraph, if a foreign corporation is a partner in a foreign partnership, as defined in section 7701(a)(2) and (5) and the regulations thereunder, such corporation will be considered to be engaged in the active conduct of a trade or business to the extent and in the manner in which the partnership is so engaged and to own directly its proportionate share of each of the assets of the partnership. For purposes of subdivision (i) of this subparagraph, a newly-organized foreign corporation will be considered engaged in the active conduct of a trade or business from the date of its organization if such corporation commences business operations as soon as practicable after such organization. In the absence of affirmative evidence showing that the 80-percent requirement of subdivision (iii) of this subparagraph has not been satisfied on each day of the taxable year, such requirement will be considered satisfied if it is established to the satisfaction of the district director that such requirement has been satisfied on the last day of each quarter of the taxable year of the foreign corporation. For purposes of subdivision (iii) of this subparagraph, property (other than stock in trade or other property of a kind which would properly be included in inventory of the foreign corporation if on hand at the close of the taxable year, or property held primarily for sale to customers in the ordinary course of the trade or business of the foreign corporation) purchased for use in a trade or business and temporarily located outside less developed countries will be considered located in less developed countries if, but only if, such property is shipped to and received in less developed countries promptly after such purchase.

(2) ***Special rules.*** For purposes of subparagraph (1)(iii)(*a*) of this paragraph—

(i) ***Treatment of receivables.*** Bills receivable, accounts receivable, notes receivable and open accounts shall be considered to be used in the trade or business and located in less developed countries if, but only if—

(*a*) Such obligations arise out of the rental of property located in less developed countries, the performance of services within less developed countries, or the sale of property manufactured, produced, grown, or extracted in less developed countries, but only to the extent that the aggregate amount of such obligations at any time during the taxable year does not exceed an amount which is ordinary and necessary to carry on the business of both parties to the transactions if such transactions are between unrelated persons or, if such transactions are between related persons, an amount which would be ordinary and necessary to carry on the business of both parties to the transactions if such transactions were between unrelated persons;

(*b*) In the case of bills receivable, accounts receivable, notes receivable, and open accounts arising out of transactions other than those referred to in (*a*) of this subdivision—

(*1*) If the obligor is an individual such individual is a resident of one or more less developed countries and of no other country which is not a less developed country;

(*2*) If the obligor is a corporation which as to the foreign corporation is a related person as defined in section 954(d)(3) and paragraph (e) of § 1.954-1, such obligor meets, with respect to the period ending with the close of its annual accounting period in which occurs the date on which the obligation is incurred, the 80-percent gross income requirement of paragraph (b)(1)(ii) of § 1.955-6.

(*3*) If the obligor is a corporation which as to the foreign corporation is not a related person as defined in section 954(d)(3) and paragraph (e) of § 1.954-1, it is reasonable, on the basis of ascertainable facts, for the obligee to believe that the obligor meets, with respect to such period, the 80-percent gross income requirement of paragraph (b)(1)(ii) of § 1.955-6.

(ii) ***Location of interests in real estate.*** Interests in real estate such as leaseholds of land or improvements thereon, mortgages on real property (including interests in mortgages on leaseholds of land or improvements thereon), and mineral, oil, or gas interests shall be considered located in less developed countries if, but only if, the underlying real estate is located in less developed countries.

(iii) ***Location of certain other intangibles.*** Intangible property (other than any such property described in subdivision (i) or (ii) of this subparagraph) used in the trade or business of the foreign corporation shall be considered to be located in less developed countries in the same ratio that the amount of the foreign corporation's tangible property and property described in subdivision (i) or (ii) of this subparagraph used in its trades or businesses and located or deemed located in less developed countries bears to the total amount of its tangible property and property described in subdivision (i) or (ii) of this subparagraph used in its trades or businesses.

(3) ***Illustration.*** The provisions of subparagraph (1) of this paragraph may be illustrated by the following example:

Example. Foreign corporation A is formed on November 1, 1963, to engage in the business of manufacturing and selling radios in Brazil, a less developed country as of November 1, 1963. Corporation A uses the calendar year as a taxable year. Shortly after it is formed, A Corporation acquires a plant site and begins construction of a plant which is completed on August 1, 1964. Corporation A commences business operations as soon as practicable and continues such operations through December 31, 1964, and thereafter. Corporation A will be considered for purposes of subparagraph (1)(i) of this paragraph to be engaged in the active conduct of a trade or business for its entire taxable years ending on December 31, 1963, and 1964. The plant site and the plant (while under construction and after completion) will be considered to be property held during such taxable years for use in A Corporation's trade or business.

(b) ***Shipping companies.*** For purposes of sections 951 through 964, the term "less developed country corporation" also means any foreign corporation—

(1) Which has 80 percent or more of its gross income, if any, for the taxable year consisting of one or more of—

(i) Gross income derived—

(*a*) From, or in connection with, the using (or hiring or leasing for use) in foreign commerce of aircraft or vessels registered under the laws of a less developed country,

(*b*) From, or in connection with, the performance of services directly related to the use in foreign commerce of aircraft or vessels registered under the laws of a less developed country, or

(*c*) From the sale or exchange of aircraft or vessels registered under the laws of a less developed country and used in foreign commerce by such foreign corporation;

(ii) Dividends and interest received or accrued from other foreign corporations which are less developed country corporations within the meaning of this paragraph and 10 percent or more of the total combined voting power of all classes of stock of which is owned at the time such dividends and interest are so received or accrued by such foreign corporation; and

(iii) Gain from the sale or exchange of stock or obligations of other foreign corporations which are less developed country corporations within the meaning of this paragraph and 10 percent or more of the total combined voting power of all classes of stock of which is owned by such foreign corporation immediately before such sale or exchange; and

(2) Which has 80 percent or more in value (within the meaning of paragraph (d) of this section) of its assets on each day of the taxable year consisting of—

(i) Assets used, or held for use, for the production of income described in subparagraph (1) of this paragraph, or in connection with the production of such income, whether or not such income is received during the taxable year, and

(ii) Property described in section 956(b)(2).

In the absence of affirmative evidence showing that the 80-percent requirement of this subparagraph has not been satisfied on each day of the taxable year such requirement will be considered satisfied if it is established to the satisfaction of the district director that such requirement has been satisfied on the last day of each quarter of the taxable year of the foreign corporation. The provisions of this subparagraph may be illustrated by the following example:

Example. Foreign corporation A is formed on November 1, 1963, for the purpose of constructing and operating a vessel and, on that date, enters a charter agreement which provides that such vessel will be registered under the laws of Liberia, a less developed country as of November 1, 1963, and operated between South American and European ports. Corporation A uses the calendar year as a taxable year. Construction of the vessel is completed on September 1, 1965, and the vessel is registered under the laws of Liberia and operated between South American and European ports through December 31, 1965, and thereafter. The charter and the vessel (while under construction and after completion), or any interest of A Corporation in such assets, will be considered assets which are held by A Corporation during its taxable years ending on December 31, 1963, 1964, and 1965, for use in the production of income described in subparagraph (1) of this paragraph.

(c) ***Determination of stock ownership.*** In determining for purposes of paragraph (b)(1)(ii) and (iii) of this section whether a foreign corporation owns 10 percent or more of the total combined voting power of all classes of stock of a less developed country corporation, only stock owned directly by such foreign corporation shall be taken into account and the provisions of section 958 and the regulations thereunder shall not apply. See section 958(a)(1).

(d) ***Determination of value.*** For purposes of paragraphs (a)(1)(iii) and (b)(2) of this section—

(1) ***General.*** Except as provided in subparagraph (2) of this paragraph, the value at which property shall be taken into account is its actual value (not reduced by liabilities) which, in the absence of affirmative evidence to the contrary, shall be deemed to be its adjusted basis.

(2) ***Treatment of certain receivables.*** The value at which receivables described in paragraph (a)(2)(i) of this section and held by a foreign corporation using the cash receipts and disbursements method of accounting shall be taken into account is their actual value (not reduced by liabilities) which, in the absence of affirmative evidence to the contrary, shall be deemed to be their face value.

[T.D. 6683, 28 FR 11182, Oct. 18, 1963]

§ 1.955-6 Gross income from sources within less developed countries.

(a) ***General.*** For purposes of paragraph (a)(1)(ii) of § 1.955.5, the determination whether a foreign corporation has derived 80 percent or more of its gross income from sources within less developed countries for any taxable year shall be made by the application of the provisions of sections 861 through 864, and §§ 1.861-1 through 1.863-5, in application of which the name of a less developed country shall be substituted for "the United States", except that if income is derived by the foreign corporation from—

(1) Interest (other than interest to which subparagraph (3) of this paragraph applies), the rules set forth in paragraph (b) of this section shall apply;

(2) Dividends, the rules set forth in paragraph (c) of this section shall apply; or

(3) Income (including interest) derived in connection with the sale of tangible personal property, the rules set forth in paragraph (d) of this section shall apply.

The source of income described in subparagraph (1), (2), or (3) of this paragraph shall be determined solely under the rules of this section and without regard to the rules of sections 861 through 864, and the regulations thereunder.

(b) ***Interest*** —

(1) ***In general.*** Except as provided in subparagraph (2) of this paragraph and paragraph (d) of this section, gross income derived by the foreign corporation from interest on any indebtedness—

(i) Of an individual shall be treated as income from sources within a less developed country if, but only if, such individual is a resident of one or more less developed countries and of no other country which is not a less developed country.

(ii) Of a corporation shall be treated as income from sources within less developed countries if, but only if, 80 percent or more of the gross income of the payer corporation for the 3-year period ending with the close of its annual accounting period in which such interest is paid, or for such part of such 3-year period as such corporation has been in existence, or for such part of such 3-year period as occurs on and after the beginning of such corporation's first annual accounting period beginning after December 31, 1962, whichever period is shortest, was derived from sources within less developed countries as determined in accordance with the principles of this section; or

(iii) Of a less developed country, including obligations issued or guaranteed by the government of such country or of a political subdivision thereof and obligations of any agency or instrumentality of such country, in which such country is financially committed shall be treated as income from sources within such country.

(2) ***Special rule.*** Gross income derived by the foreign corporation from interest on obligations of the United States shall be treated as income from sources within less developed countries without regard to the provisions of subparagraph (1) of this paragraph.

(3) ***Payers other than related persons.*** For purposes of subparagraph (1)(ii) of this paragraph, a payer corporation which as to the recipient corporation is not a related person as defined in section 954(d)(3) and paragraph (e) of § 1.954-1 shall be deemed to have satisfied the 80-percent gross income requirement if, on the basis of ascertainable facts, it is reasonable for the recipient corporation to believe that such requirement is satisfied.

(c) ***Dividends*** —

(1) ***In general.*** Gross income derived by the foreign corporation from dividends, as defined in section 316 and the regulations thereunder, shall be treated as income from sources within less developed countries if, but only if, 80 percent or more of the gross income of the payer corporation for the 3-year period ending with the close of its annual accounting period in which such dividends are distributed, or for such part of such 3-year period as such corporation has been in existence, or for such part of such 3-year period as occurs on and after the beginning of such corporation's first annual accounting period beginning after December 31, 1962, whichever period is shortest, was derived from sources within less developed countries as determined in accordance with the principles of this section.

(2) ***Payers other than related persons.*** See paragraph (b)(3) of this section for rule governing satisfaction of the 80-percent gross income requirement by payers other than related persons.

(d) ***Sale of tangible personal property*** —

(1) ***In general.*** Income (whether in the form of profits, commissions, fees, interest, or otherwise) derived by the foreign corporation in connection with the sale of tangible personal property shall be treated as income from sources within less developed countries if, but only if—

(i) Such property is produced (within the meaning of subparagraph (2) of this paragraph) within less developed countries; or

(ii) Such property is sold for use, consumption, or disposition within less developed countries even though produced outside less developed countries and the selling corporation is engaged within less developed countries, in connection with sales of such property, in continuous operational activities which are substantial in relation to such sales, as evidenced, for example, by the maintenance within less developed countries of a substantial sales or service organization or substantial facilities for the storage, handling, transportation, assembly, packaging, or servicing of such property.

(2) ***Production defined.*** For purposes of this paragraph, the term "produced" means manufactured, grown, extracted, or constructed and includes a substantial transformation of property purchased for resale or the manufacture of a product when purchased components constitute part of the property which is sold. See paragraph (a)(4)(ii) and (iii) of § 1.954-3 for a statement and illustration of the principles set forth in the preceding sentence.

[T.D. 6683, 28 FR 11183, Oct. 18, 1963, as amended by T.D. 6688, 28 FR 11632, Oct. 31, 1963]

§ 1.955A-1 Shareholder's pro rata share of amount of previously excluded subpart F income withdrawn from investment in foreign base company shipping operations.

(a) ***In general.*** Section 955 provides rules for determining the amount of a controlled foreign corporation's previously excluded subpart F income which is withdrawn for any taxable year beginning after December 31, 1975, from investment in foreign base company shipping operations. Pursuant to section 951(a)(1)(A)(iii) and the regulations thereunder, a United States shareholder of such controlled foreign corporation must include in his gross income his pro rata share of such amount as determined in accordance with paragraph (c) of this section.

(b) ***Amount withdrawn by controlled foreign corporation*** —

(1) ***In general.*** For purposes of sections 951 through 964, the amount of a controlled foreign corporation's previously excluded subpart F income which is withdrawn for any taxable year from investment in foreign base company shipping operations is an amount equal to the decrease for such year in such corporation's qualified investments in foreign base company shipping operations. Such decrease is, except as provided in § 1.955A-4—

(i) An amount equal to the excess of the amount of its qualified investments in foreign base company shipping operations at the close of the preceding taxable year over the amount of its qualified investments in foreign base company shipping operations at the close of the taxable year, minus

(ii) The amount (if any) by which recognized losses on sales or exchanges by such corporation during the taxable year of qualified investments in foreign base company shipping operations exceed its recognized gains on sales or exchanges during such year of qualified investments in foreign base company shipping operations,

but only to the extent that the net amount so determined does not exceed the limitation determined under subparagraph (2) of this paragraph. See § 1.955A-2 for determining the amount of qualified investments in foreign base company shipping operations.

(2) ***Limitation applicable in determining decreases*** —

(i) ***In general.*** The limitation referred to in subparagraph (i) of this paragraph for any taxable year of a controlled foreign corporation shall be the lesser of the following two limitations:

(A) The sum of

(*1*) the controlled foreign corporation's earnings and profits (or deficit in earnings and profits) for the taxable year, computed as of the close of the taxable year without diminution by reason of any distribution made during the taxable year,

(*2*) the sum of its earnings and profits (or deficits in earnings and profits) accumulated for prior taxable years beginning after December 31, 1975, and

(*3*) the amount described in subparagraph (3) of this paragraph; or

(B) The sum of the amounts excluded under section 954(b)(2) (see subparagraph (4) of this paragraph) from the foreign base company income of such corporation for all prior taxable years beginning after December 31, 1975, minus the sum of the amounts (determined under this paragraph) of its previously excluded subpart F income withdrawn from investment in foreign base company shipping operations for all such prior taxable years.

(C) For purposes of the immediately preceding subparagrah (B), the amount excluded under section 954(b)(2) for a taxable year of a controlled foreign corporation (the "first corporation") includes

(*1*) an amount excluded under section 954(b)(2) by another corporation which is a member of a related group (as defined in § 1.955A-3(b)(1)) attributable to the first corporation's excess investment (see § 1.955A-3(c)(4)) for a taxable year beginning after December 31, 1983,

(*2*) an amount excluded by a corporation under § 1.954-1(b)(4)(ii)(*b*) by reason of the application of the carryover rule there set forth, and

(*3*) an amount equal to the first corporation's pro rata share of a group excess deduction (see § 1.955A-3(c)(2)) of a related group for a taxable year beginning after December 31, 1983 (but not in excess of that portion of such pro rata share which would reduce the first corporation's foreign base company shipping income to zero). Such amounts will not be treated as excluded under section 954(b)(2) by any other corporation.

(ii) ***Certain exclusions from earnings and profits.*** For purposes of determining the earnings and profits of a controlled foreign corporation under subdivision (i)(A)(*1*) and (*2*) of this subparagraph, such earnings and profits shall be considered not to include any amounts which are attributable to—

(A)

(*1*) Amounts which, for the current taxable year, are included in the gross income of a United States shareholder of such controlled foreign corporation under section 951(a)(1)(A)(i), or

(*2*) Amounts which, for any prior taxable year, have been included in the gross income of a United States shareholder of such controlled foreign corporation under section 951(a) and have not been distributed; or

(B)

(*1*) Amounts which, for the current taxable year, are included in the gross income of a United States shareholder of such controlled foreign corporation under section 551(b) or would be so included under such section but for the fact that such amounts were distributed to such shareholder during the taxable year, or

(*2*) Amounts which, for any prior taxable year, have been included in the gross income of a United States shareholder of such controlled foreign corporation under section 551(b) and have not been distributed.

The rules of this subdivision apply only in determining the limitation on a controlled foreign corporation's decrease in qualified investments in foreign base company shipping operations. See section 959 and the regulations thereunder for rules relating to the exclusion from gross income of previously taxed earnings and profits.

(3) ***Carryover of amounts relating to investments in less developed country shipping companies*** —

(i) ***In general.*** The amount described in this subparagraph for any taxable year of a controlled foreign corporation beginning after December 31, 1975, is the lesser of—

(A) The excess of the amount described in subdivision (ii) of this subparagraph, over the amount described in subdivision (iii) of this subparagraph, or

(B) The limitation determined under subdivision (iv) of this subparagraph.

(ii) ***Previously excluded subpart F income invested in less developed country shipping companies.*** The amount described in this subdivision for all taxable years of a controlled foreign corporation beginning after December 31, 1975, is the lesser of—

(A) The amount of such corporation's qualified investments (determined under § 1.955-2 other than paragraph (b)(5) thereof) in less developed country shipping companies described in § 1.955-5(b) at the close of the last taxable year of such corporation beginning before January 1, 1976, or

(B) The limitation determined under § 1.955-1(b)(2)(i)(*b*) (relating to previously excluded subpart F income) for the first taxable year of such corporation beginning after January 1, 1976.

(iii) ***Amounts previously carried over.*** The amount described in this subdivision for any taxable year of a controlled foreign corporation shall be the sum of the excesses determined for each prior taxable year beginning after December 31, 1976, of—

(A) The amount (determined under this paragraph) of such corporation's previously excluded subpart F income withdrawn from investment in foreign base company shipping operations, over

(B) The sum of the earnings and profits determined under subparagraph (2)(i)(A)(*1*) and (*2*) of this paragraph.

(iv) ***Extent attributable to accumulated earnings and profits.*** The limitation determined under this subdivision for any taxable year of a controlled foreign corporation is the sum of such controlled foreign corporation's earnings and profits (or deficits in earnings and profits)

accumulated for taxable years beginning after December 31, 1962, and before January 1, 1976. For purposes of the preceding sentence, earnings and profits shall be determined by excluding the amounts described in subparagraph (2)(ii)(A) and (B) of this paragraph.

(v) ***Illustration.*** The application of this subparagraph may be illustrated by the following example:

Example. (a) Throughout the period here involved, A is a United States shareholder of controlled foreign corporation M. M is not a foreign personal holding company, and M uses the calendar year as the taxable year.
(b) The amount described in this subparagraph for M's taxable year 1978 with respect to A is determined as follows, based on the facts shown in the following table:

(1) Investment in less developed country shipping companies on December 31, 1975 (subdivision (ii)(A) amount)	$10,000
(2) § 1.955-1(b)(2)(i)(*b*) limitation for 1976 (previously excluded subpart F income not withdrawn from investment in less developed countries) (subdivision (ii)(B) amount)	50,000
(3) Subdivision (ii) amount (lesser of lines (1) and (2))	10,000
(4) Subdivision (iii) amount: Excess for 1977 of M's previously excluded subpart F income withdrawn from investment in foreign base country shipping operations, $3,000, over the sum of the amounts determined under subparagraphs (2)(i)(A)(*1*) and (*2*) of this paragraph, $1,000	2,000
(5) Excess of line (3) over line (4)	8,000
(6) Sum of M's earnings and profits accumulated for 1962 through 1975, determined on December 31, 1978	26,000
(7) Amount described in this subparagraph for 1978 (lesser of line (5) and line (6))	8,000

(c) For 1978, M's earnings and profits (reduced as provided in § 1.955-1(b)(2)(ii)(*a*)(*1*)) are $19,000, and the amount of M's previously excluded subpart F income withdrawn from investment in less developed countries determined under § 1.955-1(b)) is $42,000. Consequently, $23,000 of M's earnings and profits accumulated for 1962 through 1975 are attributable to such $42,000 amount, and will therefore be excluded under subparagraph (2)(ii))(A)(*2*) of this paragraph from M's earnings and profits accumulated for 1962 through 1975, determined as of December 31, 1979. No other portion of M's earnings and profits accumulated for 1962 through 1975 is distributed or included in the gross income of a United States shareholder in 1978.

(d) The amount described in this subparagraph for M's taxable year 1979 with respect to A is determined as follows, based on the additional facts shown in the following table:

(1) Subdivision (ii) amount (line (3) from paragraph (b) of this example)	$10,000
(2) Subdivision (iii) amount: (i) Excess for 1977 from line (4) of paragraph (b) of this example	2,000
(ii) Plus: excess for 1978 of M's previously excluded subpart F income withdrawn from investment in foreign base country shipping operations, $6,000, over the sum of the amounts determined under subparagraphs (2)(i)(A)(*1*) and (*2*) of this paragraph, $25,000	0
(iii) Subdivision (iii) amount	2,000
(3) Excess of line (1) over line (2)(iii)	8,000
(4) Sum of M's earnings and profits accumulated for 1962 through 1975, determined on December 31, 1979 ($26,000 minus $23,000)	3,000
(5) Amount described in this subparagraph for 1979 (lesser of line (3) and line (4))	3,000

(4) ***Amount excluded.*** For purposes of subparagraph (2)(i)(B) of this paragraph, the amount excluded under section 954(b)(2) from the foreign base company income of a controlled foreign corporation for any taxable year beginning after December 31, 1975, is the excess of—

(i) The amount which would have been equal to the subpart F income of such corporation for such taxable year if such corporation had had no increase in qualified investments in foreign base company shipping operations for such taxable year, over

(ii) The subpart F income of such corporation for such taxable year.

(c) ***Shareholder's pro rata share of amount withdrawn by controlled foreign corporation*** —

(1) ***In general.*** A United States shareholder's pro rata share of a controlled foreign corporation's previously excluded subpart F income withdrawn for any taxable year from investment in foreign base company shipping operations is his pro rata share of the amount withdrawn for such year by such corporation, as determined under paragraph (b) of this section. See section 955(a)(3). Such pro rata share shall be determined in accordance with the principles of § 1.195-1(e).

(2) ***Special rule.*** A United States shareholder's pro rata share of the net amount determined under paragraph (b)(2)(i)(B) of this section with respect to any stock of the controlled foreign corporation owned by such shareholder shall be determined without taking into account any amount attributable to a period prior to the date on which such shareholder acquired such stock. See section 1248 and the regulations thereunder for rules governing treatment of gain from sales or exchanges of stock in certain foreign corporations.

(d) ***Illustrations.*** The application of this section may be illustrated by the following examples:

Example 1. A, a United States shareholder, owns 60 percent of the only class of stock of M Corporation, a controlled foreign coporation throughout the entire period here involved. Both A and M use the calendar year as a taxable year. The amount of M's previously excluded subpart F income withdrawn for 1978 from investment in foreign base company shipping operations is $40,000, and A's pro rata share of such amount is $24,000 determined as follows based on the facts shown in the following table:

(a) Qualified investments in foreign base company shipping operations at the close of 1977	$125,000
(b) Less: qualified investments in foreign base company shipping operations at the close of 1978	75,000
(c) Balance	50,000
(d) Less: excess of recognized losses ($15,000) over recognized gains ($5,000) on sales during 1978 of qualified investments in foreign base company shipping operations	10,000
(e) Tentative decrease in qualified investment in foreign base company shipping operations for 1978	40,000
(f) Earnings and profits for 1976, 1977, and 1978	45,000
(g) Plus: amount determined under paragraph (b)(3) of this section	0
(h) Earnings and profits limitation	45,000
(i) Excess of amount excluded under section 954(b)(2) from foreign base company income for 1976 ($75,000) over amount of previously excluded subpart F income withdrawn for 1977 from investment in foreign base company shipping operations ($25,000)	50,000
(j) M's amount of previously excluded subpart F income withdrawn for 1978 from investment in foreign base company shipping operations (item (e), but not to exceed the lesser of item (h) or item (i)	40,000
(k) A's pro rata share of M Corporation's amount of previously excluded subpart F in come withdrawn for 1978 from investment in foreign base company shipping	24,000

operations (60 percent of $40,000)

Example 2. The facts are the same as in example 1, except that M's earnings and profits (determined under paragraph (b)(2) of this section) for 1976, 1977, and 1978 (item (f)) are $30,000 instead of $45,000. M's amount of previously excluded subpart F income withdrawn for 1978 from investment in foreign base company shipping operations is $30,000. A's pro rata share of such amount is $18,000 (60 percent of $30,000).

Example 3. The facts are the same as in example 1, except that the excess of the amount excluded under section 954(b)(2) for 1976 from M Corporation's foreign base company income over the amount of its previously excluded subpart F income withdrawn for 1977 from investment in foreign base company shipping operations (item (i)) is $20,000 instead of $50,000. M's amount of previously excluded subpart F income withdrawn for 1978 from investment in foreign base company shipping operations is $20,000. A's pro rata share of such amount is $12,000 (60 percent of $20,000).

[T.D. 7894, 48 FR 22530, May 19, 1983; 48 FR 40888, Sept. 12, 1983]

§ 1.955A-2 Amount of a controlled foreign corporation's qualified investments in foreign base company shipping operations.

(a) ***Qualified investments*** —

(1) ***In general.*** Under section 955(b), for purposes of sections 951 through 964, a controlled foreign corporation's "qualified investments in foreign base company shipping operations" are investments in—

(i) Any aircraft or vessel, to the extent that such aircraft or vessel is used (or hired or leased for use) in foreign commerce,

(ii) Related shipping assets (within the meaning of paragraph (b) of this section),

(iii) Stock or obligations of a related controlled foreign corporation, to the extent provided in paragraph (c) of this section,

(iv) A partnership, to the extent provided in paragraph (d) of this section, and

(v) Stock or obligations of a less developed country shipping company described in § 1.955-5(b), as provided in paragraph (h) of this section.

(2) ***Coordination of provisions.*** No amount shall be counted as a qualified investment in foreign base company shipping operations under more than one provision of this section. Thus, for example, if a $10,000 investment in stock of a controlled foreign corporation is treated as a qualified investment in foreign base company shipping operations under both subparagraphs (1)(iii) and (v) of this paragraph, then such $10,000 is counted only once as a qualified investment in foreign base company shipping operations.

(3) ***Definitions.*** If the meaning of any term is defined or explained in § 1.954-6, then such term shall have the same meaning when used in this section.

(4) *Extent of use.*

(i) For purposes of subparagraph (1)(i) of this paragraph and paragraph (b)(1) of this section, the extent to which an asset of a controlled foreign corporation is used during a taxable year in foreign base company shipping operations shall be determined on the basis of the proportion for such year which the foreign base company shipping income derived from the use of such asset bears to the total gross income derived from the use of such asset.

(ii) For purposes of determining under subdivision (i) of this subparagraph the amounts of foreign base company shipping income and gross income of a controlled foreign corporation—

(A) Such amounts shall be deemed to include an arm's length charge (see § 1.954-6(h)(5)) for services performed by such corporation for itself,

(B) Such amounts shall be deemed to include an arm's length charge for the use of an asset (such as a vessel under construction or laid up for repairs) which is held for use in foreign base company shipping operations, but is not actually so used,

(C) Foreign base company shipping income shall be deemed to include amounts earned in taxable years beginning before January 1, 1976, and

(D) The district director shall make such other adjustments to such amounts as are necessary to properly determine the extent to which any asset is used in foreign base company shipping operations.

(b) *Related shipping assets* —

(1) *In general.* For purposes of this section, the term “related shipping asset” means any asset which is used (or held for use) for or in connection with the production of income described in § 1.954-6(b)(1)(i) or (ii), but only to the extent that such asset is so used (or is so held for use).

(2) *Examples.* Examples of assets of a controlled foreign corporation which are used (or held for use) for or in connection with the production of income described in subparagraph (1) of this paragraph include—

(i) Money, bank deposits, and other temporary investments which are reasonably necessary to meet the working capital requirements of such corporation in its conduct of foreign base company shipping operations,

(ii) Accounts receivable and evidences of indebtedness which arise from the conduct of foreign base company shipping operations by such corporation or by a related person,

(iii) Amounts (other than amounts described in subdivision (i) of this subparagraph) deposited in bank accounts or invested in readily marketable securities pursuant to a specific, definite, and feasible plan to purchase any tangible asset for use in foreign base company shipping operations,

(iv) Amounts paid into escrow to secure the payment of

(A) charter hire for an aircraft, vessel, or other asset used in foreign base company shipping operations or

(B) a debt which constitutes a specific charge against such an asset,

(v) Capitalized expenditures (such as progress payments) made under a contract to purchase any asset for use in foreign base company shipping operations,

(vi) Prepaid expense and deferred charges incurred in the course of foreign base company shipping operations,

(vii) Stock acquired and retained to insure a source of supplies or services used in the conduct of foreign base company shipping operations, and

(viii) Currency futures acquired and retained as a hedge against international currency fluctuations in connection with foreign base company shipping operations.

(3) *Limitations* —

(i) ***Vessels generally.*** Notwithstanding any other provision of this paragraph, the term "related shipping assets" does not include any money or other intangible assets of a controlled foreign corporation, to the extent that such assets are permitted to accumulate in excess of the reasonably anticipated needs of the business.

(ii) ***Safe harbor.*** If a controlled foreign corporation accumulates money or other intangible assets pursuant to a plan to purchase one or more vessels for use in foreign commerce, and if—

(A) The amount so accumulated, plus

(B) The sum of the amounts accumulated by other controlled foreign corporations which are related persons (within the meaning of section 954(d)(3)) pursuant to similar plans, does not exceed 110 percent of a reasonable down payment on each vessel planned to be purchased within a reasonable period, then such plan will be considered to be feasible. For purposes of the preceding sentence, a reasonable down payment shall not exceed 28 percent of the total cost of acquisition. The determination dates applicable to the taxable year of a controlled foreign corporation are those set forth in paragraph (c)(2)(ii) of this section. In the case of accumulation of assets which do not come within the safe harbor limitation of this subdivision (ii), in determining whether such assets have accumulated beyond the reasonably anticipated needs of the business, factors to be taken into account include, but are not limited to, the availability of financing to purchase a vessel and the availability of a vessel suitable for the purposes to which the vessel is to be put.

(iii) ***Other assets.*** In determining whether a plan to purchase any asset other than a vessel for use in foreign base company shipping operations is feasible, principles similar to those stated in subdivision (ii) of this subparagraph shall be applied.

(4) ***Cross-reference.*** See § 1.954-7(c) for additional illustrations bearing on the application of this paragraph.

(c) *Stock and obligations* —

(1) ***In general.*** Investments by a controlled foreign corporation (the "first corporation") in stock or obligations of a second controlled foreign corporation which is a related person (within the meaning of section 954(d)(3) are considered to be qualified investments in foreign base company shipping operations to the extent that the assets of such second corporation are used (or held for use) in foreign base company shipping operations. See subparagraph (2) of this paragraph. However, an investment in an obligation of the second corporation will not be considered a qualified investment

in foreign base company shipping operations if the obligation represents a liability which constitutes a specific charge (nonrecourse or otherwise) against an asset of the second corporation which is not either—

(i) An aircraft or vessel used (or held for use) to some extent in foreign commerce, or

(ii) An asset described in paragraphs (a)(1)(ii) through (v) of this section.

(2) ***Extent of use.*** On any determination date applicable to a taxable year of the first corporation, the extent to which the assets of the second corporation are used in foreign base company shipping operations shall be determined on the basis of the proportion which the amount of such second corporation's qualified investments in foreign base company shipping operations bears to its net worth, such proportion to be determined at the close of the second corporation's last taxable year which ends on or before such determination date. For purposes of the preceding sentence—

(i) A controlled foreign corporation's net worth is the total adjusted basis of the corporate assets reduced by the total outstanding principal amount of the corporate liabilities, and

(ii) The determination dates applicable to a taxable year of a controlled foreign corporation are—

(A) Except as provided in (B) of this subdivision, the close of such taxable year and the close of the preceding taxable year, and

(B) With respect to a United States shareholder who has made an election under section 955(b)(3) to determine such corporation's increase in qualified investments in foreign base company shipping operations at the close of the following taxable year, the close of such taxable year and the close of the taxable year immediately following such taxable year.

(3) ***Illustrations.*** The application of this paragraph may be illustrated by the following examples:

> *Example 1.* On December 31, 1976, controlled foreign corporation X owns 100 percent of the single class of stock of controlled foreign corporation Y. X and Y both use the calendar year as the taxable year. On December 31, 1976, Y's assets consist of a vessel used in foreign commerce, related shipping assets, and other assets unrelated to its foreign base company shipping operations. On such date Y has qualified investments in foreign base company shipping operations (determined under paragraph (g) of this section) of $60,000, and a net worth of $100,000. If X's investment in the stock of Y is $50,000, then $30,000 of such amount, i.e.,
>
> $$\frac{\$60,000}{\$100,000} \times \$50,000$$
>
> is a qualified investment in foreign base company shipping operations.

> *Example 2.* The facts are the same as in example 1, except that on December 31, 1976, Y's assets consist entirely of a vessel used in foreign commerce and related shipping assets, Y has qualified investments in foreign base company shipping operations (determined under paragraph (g) of this section) of $16,000 and (therefore) a net worth of $16,000. If X's

investment in the stock of Y is $50,000, then the entire $50,000, i.e.,

$$\frac{\$16,000}{\$16,000} \times \$50,000$$

is a qualified investment in foreign base company shipping operations.

Example 3. On December 31, 1980, controlled foreign corporation J owns two notes of controlled foreign corporation K, which is a related person (within the meaning of section 954(d)(3)). Both J and K use the calendar year as the taxable year. J's adjusted basis in each of the two notes is $100,000. The first note is secured only by the general credit of K. The second note is secured by (and, therefore, constitutes a specific charge on) a hotel owned by K in a foreign country. On December 31, 1980, K has qualified investments in foreign base company shipping operation with an adjusted basis of $500,000 (before applying the rules of paragraph (g) of this section). The adjusted basis of all of K's corporate assets is $1,100,000. K's only liabilities are the two notes. The amount of K's qualified investments in foreign base company shipping operations (determined under paragraph (g) of this section) is $450,000. K's net worth is $900,000. The amount of J's qualified investment in foreign base company shipping operations in respect of the first note is $50,000, *i.e.,*

$$\frac{\$450,000}{\$900,000} \times \$100,000$$

The amount of J's qualified investment in respect of the second note is zero (see the last sentence of paragraph (c)(1) of this section).

(d) ***Partnerships*** —

(1) ***In general.*** A controlled foreign corporation's investment in a partnership at the close of any taxable year of such corporation shall be considered a qualified investment in foreign base company shipping operations to the extent of the proportion which such corporation's foreign base company shipping income for such taxable year would bear to its gross income for such taxable year if—

(i) Such corporation had realized no income other than its distributive share of the partnership gross income, and

(ii) Such corporation's income were adjusted in accordance with the rules stated in paragraphs (a)(4)(ii)(B) and (D) of this section.

(2) ***Transitional rule.*** For purposes of subparagraph (1)(i) of this paragraph, the controlled foreign corporation's distributive share of the partnership gross income shall not include any amount attributable to income earned by the partnership before the first day of such corporation's first taxable year beginning after December 31, 1975.

(3) ***Cross-reference.*** See paragraph (g)(4) of this section for rules relating to the determination of the amount of a controlled foreign corporation's investment in a partnership.

(e) ***Trusts*** —

(1) ***In general.*** An investment in a trust is not a qualified investment in a foreign base company shipping operations.

(2) ***Grantor trusts.*** Notwithstanding subparagraph (1) of this pargraph, if a controlled foreign corporation is treated as the owner of any portion of a trust under subpart E of part I of subchapter J (relating to grantors and others treated as substantial owners), then for purposes of this section such controlled foreign corporation is deemed to be the actual owner of such portion of the assets of the trust. Accordingly, its investments in such assets (as determined under paragraph (g)(5) of this section) may be treated as a qualified investment in foreign base company shipping operations.

(3) ***Definitions.*** For purposes of this section, the term "trust" means a trust as defined in § 301.7701-4.

(f) ***Excluded property.*** For purposes of paragraph (a) of this section, property acquired principally for the purpose of artificially increasing the amount of a controlled foreign corporation's qualified investments in foreign base company shipping operations will not be recognized; whether an item of property is acquired principally for such purpose will depend upon all the facts and circumstances of each case. One of the factors that will be considered in making such a determination with respect to an item of property is whether the item is disposed of within 6 months after the date of its acquisition.

(g) ***Amount attributable to property*** —

(1) ***General rule.*** For purposes of this section, the amount taken into account under section 955(b)(4) with respect to any property which constitutes a qualified investment in foreign base company shipping operations shall be its adjusted basis as of the applicable determination date, reduced by the outstanding principal amount of any liability (other than a liability described in subparagraph (2) of this paragraph) to which such property is subject on such date including a liability secured only by the general credit of the controlled foreign corporation. Liabilities shall be taken into account in the following order:

(i) The adjusted basis of each and every item of corporate property shall be reduced by any specific charge (non-recourse or otherwise) to which such item is subject. For this purpose, if a liability constitutes a specific charge against several items of property and cannot definitely be allocated to any single item of property, the specific charge shall be apportioned against each of such items of property in that ratio which the adjusted basis of such item on the applicable determination date bears to the adjusted basis of all such items on such date. The excess against property over the adjusted basis of such property shall be taken into account as a liability secured only by the general credit of the corporation.

(ii) A liability which is evidenced by an open account or which is secured only by the general credit of the controlled foreign corporation shall be apportioned against each and every item of corporate property in that ratio which the adjusted basis of such item on the applicable determination date (reduced as provided in subdivision (i) of this subparagraph) bears to the adjusted basis of all the corporate property on such date (reduced as provided in subdivision (i) of this subparagraph); provided that no liability shall be apportioned under this subdivision against any stock or obligations described in paragraph (h)(1) of this section.

(2) ***Excluded charges.*** For purposes of subparagraph (1) of this paragraph, a liability created principally for the purpose of artificially increasing or decreasing the amount of a controlled foreign corporation's qualified investments in foreign base company shipping operations will not be recognized. Whether a liability is created principally for such purpose will depend upon all the facts and circumstances of each case. One of the factors that will be considered in making such a determination with respect to a loan is whether the loan was both created after November 20, 1974,

and is from a related person, as defined in section 954(d)(3) and paragraph (e) of § 1.954-1. Another such factor is whether the liability was created after March 29, 1975, in a taxable year beginning before January 1, 1976. For purposes of this paragraph (g)(2), payments on liabilities which are represented by an open account are credited against the account transactions arising earliest in time.

(3) ***Statement required.*** If for purposes of this section the adjusted basis of property which constitutes a qualified investment in foreign base company shipping operations by a controlled foreign corporation is reduced on the ground that such property is subject to a liability, each United States shareholder shall attach to his return a statement setting forth the adjusted basis of the property before the reduction and the amount and nature of the reduction.

(4) ***Partnership interest.*** If a controlled foreign corporation is a partner in a partnership, its investment in the partnership taken into account under section 955(b)(4) shall be its adjusted basis in the partnership determined under section 722 or 742, adjusted as provided in section 705, and reduced as provided in subparagraph (1) of this paragraph. (However, if the partnership is not engaged solely in the conduct of foreign base company shipping operations, such amount shall be taken into account only to the extent provided in paragraph (d)(1) of this section).

(5) ***Grantor trust.*** If a controlled foreign corporation is deemed to own a portion of the assets of a trust under paragraph (e)(2) of this section then the amount taken into account under section 955 (b)(4) with respect to such assets shall be determined as provided in subparagraph (1) of this paragraph by the application of the following rules:

(i) Such controlled foreign corporation's adjusted basis in such assets shall be deemed to be a proportionate share of the trust's adjusted basis in such assets, and

(ii) A proportionate share of the liabilities of the trust shall be deemed to be liabilities of such controlled foreign corporation and to constitute specific charges against such assets.

(6) ***Translation into United States dollars.*** The amounts determined in accordance with this paragraph shall be translated into United States dollars in accordance with the principles of § 1.964-1(e)(4).

(h) ***Investments in shipping companies under prior law*** —

(1) ***In general.*** If an amount invested in stock or obligations of a less developed country shipping company described in § 1.955-5(b) is treated as a qualified investment in less developed countries under § 1.955-2 (applied without regard to paragraph (b)(5)(ii) thereof) on the applicable determination date for purposes of section 954(g) or section 955(a)(2) with respect to a taxable year beginning after December 31, 1975, then such amount shall be treated as a qualified investment in foreign base company shipping operations on such determination date. See section 955(b)(5).

(2) ***Effect on prior law.*** See § 1.955-2(b)(5)(ii) for the rule that investments which are treated as qualified investments in foreign base company shipping operations under subparagraph (1) of this paragraph shall not be treated as qualified investments in less developed countries for purposes of section 951(a)(1)(A)(ii).

(3) ***Illustration.*** The application of this paragraph may be illustrated by the following example:

> *Example.* (a) Throughout the period here involved, controlled foreign corporation X owns 100 percent of the single class of stock of controlled foreign corporation Y, X and Y each use the calendar years as the taxable year. At the close of 1975, X's $50,000 investment in the stock of Y is treated as a qualified

investment in less developed countries under § 1.955-2 (applied without regard to § 1.955-2(b)(5)(ii), and Y is a less developed country shipping company described in § 1.955-5(b).
(b) On December 31, 1976, Y is still a less developed country shipping company and X's $50,000 investment in the stock of Y is still treated as a qualified investment in less developed countries under § 1.955-2 (applied without regard to § 1.955-2(b)(5)(ii). Under subparagraph (1) of this paragraph X's entire $50,000 investment in the stock of Y is treated as a qualified investment in foreign base company shipping operations.

(c) For 1977, Y's gross income is $10,000 and Y's foreign base company shipping income is $7,500. Since Y fails to meet the 80-percent income test of § 1.955-5(b)(1), Y is no longer a less developed country shipping company described in § 1-955-5(b), and X's investment in the stock of Y is no longer treated as a qualified investment in less developed countries under § 1.955-2 (applied without regard to § 1.955-2(b)(5)(ii). However, assume that on December 31, 1977, Y's net worth (as defined in paragraph (c)(2)(1) of this section) is $100,000, that Y's qualified investments in foreign base company shipping operations (determined under this section) on December 31, 1977, are $75,000, and that X's investment in the stock of Y (as determined under paragraph (g) of this section) continues to be $50,000. Then $67,500, i.e.,

$$\frac{\$75,000}{\$100,000} \times \$50,000$$

of X's $50.000 investment in the stock of Y is treated as a qualified investment in foreign company shipping operations under paragraph (c) of this section.

(d) For 1978, all of Y's gross income is foreign base company shipping income. Although Y is again a less developed country shipping company described in § 1.955-5(b), X's investment in the stock of Y is no longer treated as a qualified investment in less developed countries under § 1.955-2(b)(5)(iii). Thus, X's investment in the stock of Y is not treated as a qualified investment in foreign base company shipping operations under subparagraph (1) of this paragraph. However, X's investment in the stock of Y may be so treated under another provision of this section, as was the case in item (c) of this example.

(Secs. 955 (b)(2) and 7805 of the Internal Revenue Code of 1954 (89 Stat. 63; 26 U.S.C. 955(b)(2), and 68A Stat. 917; 26 U.S.C. 7805))

[T.D. 7894, 48 FR 22532, May 19, 1983; 48 FR 40888, Sept. 12, 1983, as amended by T.D. 7959, 49 FR 22280, May 29, 1984]

§ 1.955A-3 Election as to qualified investments by related persons.

(a) ***In general.*** If a United States shareholder elects the benefits of section 955(b) 2 with respect to a related group (as defined in paragraph (b)(1) of this section) of controlled foreign corporations, then an investment in foreign base company shipping operation made by one member of such group will be treated as having been made by another member to the extent provided in paragraph (c)(4) of this section, and each member will be subject to the other provisions of paragraph (c) of this section. An

election once made shall apply for the taxable year for which it is made and for all subsequent years unless the election is revoked or a new election is made to add one or more controlled foreign corporations to election coverage. For the manner of making an election under section 955(b)(2), and for rules relating to the revocation of such an election, see paragraph (d) of this section. For rules relating to the coordination of sections 955(b)(2) and 955(b)(3), see paragraph (e) of this section.

(b) ***Related group*** —

(1) ***Related group defined.*** The term "related group" means two or more controlled foreign corporations, but only if all of the following requirements are met:

(i) All such corporations use the same taxable year.

(ii) The same United States shareholder controls each such corporation within the meaning of section 954(d)(3) at the end of such taxable year, and

(iii) Such United States shareholder elects to treat such corporations as a related group.

(iv) If any of the corporations is on a 52-53 week taxable year and if all of the taxable years of the corporations end within the same 7-day period, the rule of paragraph (b)(1)(i) of this section shall be deemed satisfied.

(v) An election under paragraph (b)(1)(iii) of this section will not be valid in the case of an election by a U.S. shareholder (the "first U.S. shareholder") if—

(A) The first U.S. shareholder controls a second U.S. shareholder,

(B) The second U.S. shareholder controls one or more controlled foreign corporations, and

(C) Any of the controlled foreign corporations are the subject of the election by the first U.S. shareholder, unless the second U.S. shareholder consents to the election by the first U.S. shareholder.

(2) ***Group taxable years defined.*** The "group taxable year" is the common taxable year of a related group.

(3) ***Limitation.*** If a United States shareholder elects to treat two or more corporations as a related group for a group taxable year (the "first group taxable year"), then such United States shareholder (and any other United States shareholder which is controlled by such shareholder) may not also elect to treat two or more other corporations as a related group for a group taxable year any day of which falls within the first group taxable year.

(4) ***Illustrations.*** The application of this paragraph may be illustrated by the following examples:

Example 1. Domestic corporation M owns 100 percent of the only class of stock of controlled foreign corporations A, B, C, D, and E. A, B, and C use the calendar year as the taxable year. D and E use the fiscal year ending on June 30 as the taxable year. M may elect to treat A, B and C as a related group. However, M may not elect to treat C, D, and E as a related group.

Example 2. The facts are the same as in example 1. In addition, M elects to treat A, B, and C as a related group for the group taxable year which ends on December 31, 1976. M may not also elect to treat D and E as a related group for the group taxable year ending on June 30, 1977.

Example 3. United States shareholder A owns 60 percent of the only class of stock of controlled foreign corporation X and 40 percent of the only class of stock of controlled foreign corporation Y. United States shareholder B owns the other 40 percent of the stock of X and the other 60 percent of the stock of Y. Neither A nor B (nor both together) may elect to treat X and Y as a related group.

(c) ***Effect of election.*** If a United States shareholder elects to treat two or more controlled foreign corporations as a related group for any group taxable year then, for purposes of determining the foreign base company income (see § 1.954-1) and the increase or decrease in qualified investments in foreign base company shipping operations (see §§ 1.954-7. 1.955A-1, and 1.955A-4) of each member of such group for such year, the following rules shall apply:

(1) ***Intragroup dividends.*** The gross income of each member of the related group shall be deemed not to include dividends received from any other member of such group, to the extent that such dividends are attributable (within the meaning of § 1.954-6(f)(4)) to foreign base company shipping income. In determining net foreign base company shipping income, deductions allocable to intragroup dividends attributable to foreign base company shipping income shall not be allowed.

(2) ***Group excess deduction.***

(i) The deductions allocable under § 1.954-1(c) to the foreign base company shipping income of each member of the related group shall be deemed to include such member's pro rata share of the group excess deduction.

(ii) The group excess deduction for the group taxable year is the sum of the excesses for each member of the related group (having an excess) of—

(A) The member's deductions (determined without regard to this subparagraph) allocable to foreign base company shipping income for such year, over

(B) The member's foreign base company shipping income for such year.

(iii) A member's pro rata share of the group excess deduction is the amount which bears the same ratio to such group excess deduction as—

(A) The excess of such member's foreign base company shipping income over the deductions (so determined) allocable thereto, bears to

(B) The sum of such excesses for each member of the related group having an excess.

(iv) For purposes of this subparagraph, "foreign base company shipping income" means foreign base company shipping income (as defined in § 1.954-6), reduced by excluding therefrom all amounts which are—

(A) Excluded from subpart F income under section 952(b) (relating to exclusion of United States income) or

(B) Excluded from foreign base company income under section 954(b)(4) (relating to exception for foreign corporation not availed of to reduce taxes).

(v) The application of this subparagraph may be illustrated by the following example:

> *Example.* Controlled foreign corporations X, Y, and Z are a related group for calendar year 1976. The excess group deduction for 1976 is $9, X's pro rata share of the group excess deduction is $6, and Y's pro rata share is $3, determined as follows on the basis

of the facts shown in the following table:

	X	Y	Z	Group
(1) Gross shipping income	$100	$90	$90	
(2) Shipping deductions	60	70	80	
(3) Net shipping income	40	20	(9)	
(4) Group excess deduction				80
(5) X's pro rata share of group excess deduction ($9 × $40/$60)	6			
(6) Y's pro rata share of group excess deduction ($9 × $20/$60)		3		

(3) ***Intragroup investments.*** On both of the determination dates applicable to the group taxable year for purposes of section 954(g) or section 955(a)(2), the qualified investments in foreign base company shipping operations of each member of the related group shall be deemed not to include stock of any other member of the related group. In addition, neither the gains nor the losses on dispositions of such stock during the group taxable year shall be taken into account under § 1.955A-1(b)(1)(ii) in determining the decrease in qualified investments in foreign base company shipping operations of any member of such related group.

(4) ***Group excess investment.***

(i) On the later (and only the later) of the two determination dates applicable to the group taxable year for purposes of section 954(g) or section 955(a)(2), the qualified investments in foreign base company shipping operations of each member of the related group shall be deemed to include such member's pro rata share of the group excess investment.

(ii) The group excess investment for the group taxable year is the sum of the excess for each member of the related group (having an excess) of—

(A) The member's increase in qualified investments in foreign base company shipping operations (determined under § 1.954-7 after the application of subparagraph (3) of this paragraph) for such year, over

(B) The member's foreign base company shipping income for such year.

(iii) A member's pro rata share of the group excess investment is the amount which bears the same ratio to such group excess investment as—

(A) Such member's shortfall, in qualified investments bears to

(B) the sum of the shortfalls in qualified investments of each member of such related group having a shortfall.

(iv) If a member has an increase in qualified investments in foreign base company shipping operations (determined as provided in § 1.954-7 after the application of subparagraph (3) of this paragraph) for the group taxable year, then such member's “shortfall in qualified investments” is the excess of—

(A) Such member's foreign base company shipping income for such year, over

(B) Such increase.

(v) If a member has a decrease in qualified investments in foreign base company shipping operations (determined under § 1.955A-1(b)(1) or § 1.955A-4(a), whichever is applicable, after the application of subparagraph (3) of this paragraph) for the group taxable year, then such member's "shortfall in qualified investments" is the sum of—

(A) Such member's foreign base company shipping income for such year and

(B) Such decrease.

(vi) For purposes of this subparagraph, "foreign base company shipping income" means foreign base company shipping income (as defined in subparagraph (2)(iv) of this paragraph), reduced by the deductions allocable thereto under § 1.954-1(c) (including the additional deductions described in subparagraph (2) of this paragraph).

(vii) The application of paragraphs (c)(1), (3), and (4) of this section may be illustrated by the following example:

Example. (a) Controlled foreign corporations R, S, and T are a related group for calendar year 1977. R and S do not own the stock of any member of the related group. (b) On December 31, 1977, T has qualified investments in foreign base company shipping operations (determined without regard to paragraphs (c)(3) and (4)) of $105, of which $15 consists of stock of S. After application of paragraph (c)(3) (but before application of paragraph (c)(4)), on December 31, 1977, T has qualified investments in foreign base company shipping operations of $90, determined as follows:

(1) Qualified investments (determined without regard to paragraph (c)(3)) on December 31, 1977	$105
(2) Less: Qualified investments in stock of another member of a related group (as required by paragraph (c)(3))	15
(3) Balance	90

(c) During 1977, T's foreign base company shipping income is $180, determined without regard to paragraph (c)(1). Included in the $180 is $5 in dividends in respect of T's stock in S. During 1977, T has shipping deductions of $91. Of T's shipping deductions, $1 is allocable to the dividends from S. After application of paragraph (c)(1), T's net shipping

income during 1977 is $85, determined as follows:

(1) Foreign base company shipping income		$180
(2) Less: intragroup dividends (as required by paragraph (c)(1))		5
(3) Balance		175
(4) Shipping deductions	$91	
(5) Less: deductions allocable to intragroup dividends (as required by paragraph (c)(1))	1	
(6) Balance	90	
(7) Net shipping income (line (3) minus line (6))		85

(d) During 1977 (without regard to paragraph (c)(4)), R's increase in qualified investments in foreign base company shipping operations is $120; S's decrease is $55; and T's increase is $35, determined on the basis of the facts shown in the following table. In all cases, the listed amounts of qualified investments on December 31, 1976, reflect any adjustments required by paragraph (c)(3) for 1976, but not any adjustment required by paragraph (c)(4) for 1976 (see §§ 1.955A-3 (c)(3) and (4)(i)).

	R	S	T
(1) Qualified investments on December 31, 1977 (in the case of T, taken from line (3) of part (b) of this example)	$220	$150	$90
(2) Qualified investments on December 31, 1976	100	205	55
(3) Increase (decrease) (line (1) minus line (2))	120	(55)	35

(e) In 1977, R's net shipping income is $100; S's is $95; and T's is $85, determined as follows:

	R	S	T
(1) Gross foreign base company shipping income (in the case of T, taken from line (3) of part (c) of this example)	$200	$180	$175
(2) Shipping deductions (in the case of T, taken from line (6) of part (c) of this example)	100	85	90

	R	S	T
(3) Net shipping income (line (1) minus line (2))	100	95	85

(f) By application of paragraph (c)(4) for 1977, S's pro rata share of the group excess investment is $15, and T's pro rata share is $5, determined as follows:

	R	S	T	Group
(1) Net shipping income (taken from line (3) of part (e) of this example)	$100	$95	$85	
(2) Increase (decrease) in qualified investments (taken from line (3) of part (d) of this example)	120	(55)	35	
(3) Excess investment	20			$20
(4) Shortfall		150	50	200
(5) S's pro rata share of group excess investment ($20 × $150/$200)		15		
(6) T's pro rata share of group excess investment ($20 × $50/$200)			5	

(g) After application of paragraph (c)(4), for purposes of determining their increase or decrease in qualified investments in foreign base company shipping operations for 1977, on December 31, 1977, the amount of R's qualified investments is $200; the amount of S's is $165; and the amount of T's is $95, determined as follows:

	R	S	T
(1) Qualified investments on December 31, 1977 (taken from line (1) of part (d) of this example)	$220	$150	$90
(2) Plus: pro rata share of group excess investment (as required by paragraph (c)(4)) (taken from lines (5) and (6) of part (f) of this example)		15	5
(3) Minus: Excess investment treated as investments of related group members (taken from line (3) of part (f) of this example)	20		
(4) Total qualified investments	200	165	95

(h) After application of paragraph (c)(1), (3), and (4), during 1977, R's increase in qualified investments in foreign base company shipping operations is $100; S's decrease

is $40; and T's increase is $40, determined as set forth in the table below. In all cases, the listed amounts of qualified investments on December 31, 1976, reflect any similar adjustments required by paragraph (c)(3) for 1976, but not any adjustment required by paragraph (c)(4) for 1976 (see § 1.955A-3(c)(3) and (4)(i)).

	R	S	T
(1) Qualified investments on December 31, 1977 (taken from line (4) of part (g) of this example)	$200	$165	$95
(2) Qualified investments on December 31, 1976 (see line (2) of part (d) of this example)	100	205	55
(3) Increase (decrease) (line (1) minus line (2))	100	(40)	40

(5) *Collateral effect.*

(i) An election under this section by a United States shareholder to treat two or more controlled foreign corporations as a related group for a group taxable year shall have no effect on—

(A) Any other United States shareholder (including a minority shareholder of a member of such related group).

(B) Any other controlled foreign corporation, and

(C) The foreign personal holding company income, foreign base company sales income, and foreign base company services income, and the deductions allocable under § 1.954-1(c) thereto, of any member of such related group.

(ii) See § 1.952-1(c)(2)(ii) for the effect of an election under this section on the computation of earnings and profits and deficits in earnings and profits under section 952 (c) and (d).

(iii) The application of this subparagraph may be illustrated by the following example:

Example. United States shareholder A owns 80 percent of the only class of stock of controlled foreign corporations X and Y. United States shareholder B owns the other 20 percent of the stock of X and Y. X and Y both use the calendar year as the taxable year. A elects to treat X and Y as a related group for 1977. For purposes of determining the amounts includible in B's gross income under section 951(a) in respect of X and Y, the election made by A shall be disregarded and all of B's computations shall be made without regard to this section, as illustrated in § 1.952-3(d).

(d) *Procedure* —

(1) *Time and manner of making election.* A United States shareholder shall make an election under this section to treat two or more controlled foreign corporations as a related group for a group taxable year and subsequent years by filing a statement to such effect with the return for the taxable year within which or with which such group taxable year ends. The statement shall include the following information:

(i) The name, address, taxpayer identification number, and taxable year of the United States shareholder;

(ii) The name, address, and taxable year of each controlled foreign corporation which is a member of the related group and is to be subject to the election; and

(iii) A schedule showing the calculations by which the amounts described in this section have been determined for the taxable year for which the election is first effective. With respect to each subsequent taxable year to which the election applies, a new schedule showing calculations of such amounts for that taxable year must be filed with the return for that taxable year. A consent to an election required by paragraph (b)(1)(v) of this section shall include the same information required for the election statement.

(2) ***Revocation.***

(i) Except as provided in subdivision (ii) of this subparagraph, an election under this section by a United States shareholder shall be binding for the group taxable year for which it is made and for subsequent years.

(ii) Upon application by the United States shareholder (and any other United States shareholder controlled by such shareholder which consented under paragraph (b)(1)(v) of this section to the election), an election made under this section may, subject to the approval of the Commissioner, be revoked. An application to revoke the election, as of a specified group taxable year, with respect to one or more (but not all) controlled foreign corporations, subject to an election shall be deemed to be an application to revoke the election. Approval will not be granted unless a material and substantial change in circumstances occurs which could not have been anticipated when the election was made. The application for consent to revocation shall be made by mailing a letter for such purpose to Commissioner of Internal Revenue, Attention: T:C:C, Washington, DC 20224, containing a statement of the facts which justify such consent. If a member of a related group subject to an election ceases to meet the requirements of paragraph (b) of this section for membership in the group by reason of any action taken by it or any member of the group or the electing United States shareholder, then the election will be deemed to be revoked as of the beginning of the taxable year in which such action occurred. If such action is taken principally for the purpose of revoking the election without applying for and obtaining the approval of the Commissioner to the revocation, then no further election covering any member of that related group may be made by any United States shareholder for the remainder of the taxable year in which the action occurred and the five succeeding taxable years.

(e) ***Coordination with section 955(b)(3).*** If a United States shareholder elects under this section to treat two or more controlled foreign corporations as a related group for any taxable year, and if such United States shareholder is required under § 1.955A-4(c)(2) for purposes of filing any return to estimate the qualified investments in foreign base company shipping operations of any member of such group, then such United States shareholder shall, for purposes of filing such return, determine the amount includible in his gross income in respect of each member of such related group on the basis of such estimate. If the actual amount of such investments is not the same as the amount of the estimate, the United States shareholder shall immediately notify the Commissioner. The Commissioner will thereupon redetermine the amount of tax of such United States shareholder for the year or years with respect to which the incorrect amount was taken into account. The amount of tax, if any, due upon such redetermination shall be paid by the United States shareholder upon notice and demand by the district director. The amount of tax, if any, shown by such redetermination to have been overpaid shall be credited or refunded to the United States shareholder in accordance with the provisions of sections 6402 and 6511 and the regulations thereunder. If a United States shareholder elects under this section and if the United States

shareholder has made an election under section 955(b)(3) as to at least one member of the related group, then the qualified investment amounts necessary for the calculations of paragraphs (c)(3) and (4) of this section shall be obtained, for each member of the related group, as of the determination dates applicable to each of the members.

(f) ***Illustrations.*** The application of this section may be illustrated by the following examples:

Example 1. (a) Controlled foreign corporations X and Y are wholly owned subsidiaries of domestic corporation M, X and Y use the calendar year as the taxable year. For 1977, X and Y are not export trade corporations (as defined in section 971(a)), nor have they any income derived from the insurance of United States risks (within the meaning of section 963(a)). M does not elect to treat X and Y as a related group for 1977.

(b) For 1977, X and Y each have gross income (determined as provided in § 1.951-6(h)(1)) of $1,000. X's foreign base company income is $20 and Y's foreign base company imcome is $0, determined as follows, based on the facts shown in the following table:

	X	Y
(1) Foreign lease company shipping income	$1,000	$1,000
(2) Less: amounts excluded from subpart F income under section 952(b) (relating to U.S. income) and amounts excluded from foreign base company income under section 945(b)(4) (relating to corporation not availed of to reduce taxes)	0	0
(3) Balance	1,000	1,000
(4) Less: deductions allocable under § 1.954-1(c) to balance	800	1,040
(5) Remaining balance	200	0
(6) Less: Increase in qualified investments in foreign base company shipping operations	180	
(7) Foreign base company income	20	

(c) For 1977, Y has a withdrawal of previously excluded Subpart F income from investment in foreign base company shipping operations of $20, determined as follows, on the basis of the facts shown in the following table:

(1) Qualified investments in foreign base company shipping operations at December 31, 1976	$1,210
(2) Less: qualified investments in foreign base company shipping operations at December 31, 1977	1,170
(3) Balance	40
(4) Less: excess of recognized losses over recognized gains on sales during 1977 of	20

qualified investments in foreign base company shipping operations	
(5) Tentative decrease in qualified investments in foreign base company shipping operations for 1977	20
(6) Limitation described in § 1.955A-1(b)(2)	160
(7) Y's amount of previously excluded subpart F income withdrawn from investment in foreign base company shipping operations (lesser of lines (5) and (6))	20

Example 2. (a) The facts are the same as in example 1, except that M does elect to treat X and Y as a related group for 1977.
(b) The group excess deduction, which is solely attributable to Y's net shipping loss, is $40 (i.e., $1,040−$1,000). Since X is the only member of the related group with net shipping income, X's pro rata share of the group excess deduction is the entire $40 amount.

(c) X's foreign base company income for 1977 is zero, determined as follows:

(1) Preliminary net foreign base company shipping income (line (b)(5) of example 1)	$200
(2) Less: X's pro rata share of group excess deduction	40
(3) Remaining balance	160
(4) Less: increase in qualified investments in foreign base company shipping operations	180
(5) Foreign base company income	0

(d) The group excess investment, which is solely attributable to X's excess investment, is $20 (i.e., $180 minus $160). Since Y is the only member of the related group with a shortfall in qualified investments, Y's share of the group excess investment is the entire $20 amount.
(e) During 1976 and 1977, Y owns no stock of X. Y's withdrawal of previously excluded subpart F income from investment in foreign base company shipping operations for 1977 is zero, determined as follows:

(1) Qualified investments at December 31, 1976	$1,210
(2)(i) Qualified investments at December 31, 1977 (determined without regard to paragraph (c)(4) of this section)	1,170
(ii) Y's pro rata share of group excess investment	20
(iii) Total qualified investments at December 31, 1977 (Line (i) plus line (ii)	1,190
(3) Balance (line (1) minus line (2)(iii)	20
(4) Less: excess of recognized losses over recognized gains on sales during 1977 of	20

qualified investments in foreign base company shipping operations	
(5) Decrease in qualified investments for 1977	0

(Secs. 955 (b)(2) and 7805 of the Internal Revenue Code of 1954 (89 Stat. 63; 26 U.S.C. 955(b)(2), and 68A Stat. 917; 26 U.S.C. 7805))

[T.D. 7894, 48 FR 22535, May 19, 1983; 48 FR 40888, Sept. 12, 1983, as amended by T.D. 7959, 49 FR 22280, May 29, 1984]

§ 1.955A-4 Election as to date of determining qualified investment in foreign base company shipping operations.

(a) ***Nature of election.*** In lieu of determining the increase under the provisions of section 954(g) and § 1.954-7(a) or the decrease under the provisions of section 955(a)(2) and § 1.955A-1(b) in a controlled foreign corporation's qualified investments in foreign base company shipping operations for a taxable year in the manner provided in such provisions, a United States shareholder of such controlled foreign corporation may elect, under the provisions of section 955(b)(3) and this section, to determine such increase in accordance with the provisions of § 1.954-7(b) and to determine such decrease by ascertaining the amount by which—

(1) Such controlled foreign corporation's qualified investments in foreign base company shipping operations at the close of such taxable year exceed its qualified investments in foreign base company shipping operations at the close of the taxable year immediately following such taxable year, and reducing such excess by

(2) The amount determined under § 1.955A-1(b)(1)(ii) for such taxable year subject to the limitation provided in § 1.995A-1(b)(2) for such taxable year. An election under this section may be made with respect to each controlled foreign corporation with respect to which a person is a United States shareholder within the meaning of section 951(b), but the election may not be exercised separately with respect to the increases and the decreases of such controlled foreign corporation. If an election is made under this section to determine the increase of a controlled foreign corporation in accordance with the provisions of § 1.954-7(b), subsequent decreases of such controlled foreign corporation shall be determined in accordance with this paragraph and not in accordance with § 1.955A-1(b).

(b) ***Time and manner of making election*** —

(1) ***Without consent.*** An election under this section with respect to a controlled foreign corporation shall be made without the consent of the Commissioner by a United States shareholder's filing a statement to such effect with his return for his taxable year in which or with which ends the first taxable year of such controlled foreign corporation in which—

(i) Such shareholder is a United States shareholder, and

(ii) Such controlled foreign corporation realizes foreign base company shipping income, as defined in § 1.954-6.

The statement shall contain the name and address of the controlled foreign corporation and identification of such first taxable year of such corporation.

(2) ***With consent.*** An election under this section with respect to a controlled foreign corporation may be made by a United States shareholder at any time with the consent of the Commissioner. Consent will not be granted unless the United States shareholder and the Commissioner agree to the terms, conditions, and adjustments under which the election will be effected. The application for consent to elect shall be made by the United States shareholder's mailing a letter for such purpose to the Commissioner of Internal Revenue, Washington, DC 20224. The application shall be mailed before the close of the first taxable year of the controlled foreign corporation with respect to which the shareholder desires to compute an amount described in section 954(b)(2) in accordance with the election provided in this section. The application shall include the following information.

(i) The name, address, and taxpayer identification number, and taxable year of the United States shareholder;

(ii) The name and address of the controlled foreign corporation;

(iii) The first taxable year of the controlled foreign corporation for which income is to be computed under the election;

(iv) The amount of the controlled foreign corporation's qualified investments in foreign base company shipping operations at the close of its preceding taxable year; and

(v) The sum of the amounts excluded under section 954(b)(2) and § 1.954-1(b)(1) from the foreign base company income of the controlled foreign corporation for all prior taxable years during which such shareholder was a United States shareholder of such corporation and the sum of the amounts of its previously excluded subpart F income withdrawn from investment in foreign base company shipping operations for all prior taxable years during which such shareholder was a United States shareholder of such corporation.

(c) ***Effect of election*** —

(1) ***General.*** Except as provided in subparagraphs (3) and (4) of this paragraph, an election under this section with respect to a controlled foreign corporation shall be binding on the United States shareholder and shall apply to all qualified investments in foreign base company shipping operations acquired, or disposed of, by such controlled foreign corporation during the taxable year following its taxable year for which income is first computed under the election and during all succeeding taxable years of such corporation.

(2) ***Returns.*** Any return of a United States shareholder required to be filed before the completion of a period with respect to which determinations are to be made as to a controlled foreign corporation's qualified investments in foreign base company shipping operations for purposes of computing such shareholder's taxable income shall be filed on the basis of an estimate of the amount of the controlled foreign corporation's qualified investments in foreign base company shipping operations at the close of the period. If the actual amount of such investments is not the same as the amount of the estimate, the United States shareholder shall immediately notify the Commissioner. The Commissioner will thereupon redetermine the amount of tax of such United States shareholder for the year or years with respect to which the incorrect amount was taken into account. The amount of tax, if any, due upon such redetermination shall be paid by the United States shareholder upon notice and demand by the district director. The amount of tax, if any, shown by such redetermination to have been overpaid shall be credited or refunded to the United States shareholder in accordance with the provisions of sections 6402 and 6511 and the regulations thereunder.

(3) ***Revocation.*** Upon application by the United States shareholder, the election made under this section may, subject to the approval of the Commissioner, be revoked. Approval will not be granted unless the United States shareholder and the Commissioner agree to the terms, conditions, and adjustments under which the revocation will be effected. Unless such agreement provides otherwise, the change in the controlled foreign corporation's qualified investments in foreign base company shipping operations for its first taxable year for which income is computed without regard to the election previously made will be considered to be zero for purposes of effectuating the revocation. The application for consent to revocation shall be made by the United States shareholder's mailing a letter for such purpose to the Commissioner of Internal Revenue, Washington, DC 20224. The application shall be mailed before the close of the first taxable year of the controlled foreign corporation with respect to which the shareholder desires to compute the amounts described in section 954(b)(2) or 955(a) without regard to the election provided in this section. The application shall include the following information:

(i) The name, address, and taxpayer identification number of the United States shareholder:

(ii) The name and address of the controlled foreign corporation;

(iii) The taxable year of the controlled foreign corporation for which such amounts are to be computed;

(iv) The amount of the controlled foreign corporation's qualified investments in foreign base company shipping operations at the close of its preceding taxable year;

(v) The sum of the amounts excluded under section 954(b)(2) and § 1.954-1(b)(1) from the foreign base company income of the controlled foreign corporation for all prior taxable years during which such shareholder was a United States shareholder of such corporation and the sum of the amounts of its previously excluded subpart F income withdrawn from investment in foreign base company shipping operations for all prior taxable years during which such shareholder was a United States shareholder of such corporation; and

(vi) The reasons for the request for consent to revocation.

(4) ***Transfer of stock.*** If during any taxable year of a controlled foreign corporation—

(i) A United States shareholder who has made an election under this section with respect to such controlled foreign corporation sells, exchanges, or otherwise disposes of all or part of his stock in such controlled foreign corporation, and

(ii) The foreign corporation is a controlled foreign corporation immediately after the sale, exchange, or other disposition,

then, with respect to the stock so sold, exchanged, or disposed of, the change in the controlled foreign corporation's qualified investments in foreign base company shipping operations for such taxable year shall be considered to be zero. If the United States shareholder's successor in interest is entitled to and does make an election under paragraph (b)(1) of this section to determine the controlled foreign corporation's increase in qualified investments in foreign base company shipping operations for the taxable year in which he acquires such stock, such increase with respect to the stock so acquired shall be determined in accordance with the provisions of § 1.954-7(b)(1). If the controlled foreign corporation realizes no foreign base company income from which amounts are excluded under section 954(b)(2) and § 1.954-1(b)(1) for the taxable year in which the United States shareholder's successor in interest acquires such stock and such successor in interest makes an

election under paragraph (b)(1) of this section with respect to a subsequent taxable year of such controlled foreign corporation, the increase in the controlled foreign corporation's qualified investments in foreign base company shipping operations for such subsequent taxable year shall be determined in accordance with the provisions of § 1.954-7(b)(2).

(d) ***Illustrations.*** The application of this section may be illustrated by the following examples:

Example 1. Foreign corporation A is a wholly owned subsidiary of domestic corporation M. Both corporations use the calendar year as a taxable year. In a statement filed with its return for 1977, M makes an election under section 955(b)(3) and the election remains in force for the taxable year 1978. At December 31, 1978, A's qualified investments in foreign base company shipping operations amount to $100,000; and, at December 31, 1979, to $80,000. For purposes of paragraph (a)(1) of this section, A Corporation's decrease in qualified investments in foreign base company shipping operations for the taxable year 1978 is $20,000 and is determined by ascertaining the amount by which A Corporation's qualified investments in foreign base company shipping operations at December 31, 1978 ($100,000) exceed its qualified investments in foreign base company shipping operations at December 31, 1979 ($80,000).

Example 2. The facts are the same as in example 1 except that A experiences no changes in qualified investments in foreign base company shipping operations during its taxable years 1980 and 1981. If M's election were to remain in force, A's acquisitions and dispositions of qualified investments in foreign base company shipping operations during A's taxable year 1982 would be taken into account in determining whether A has experienced an increase or a decrease in qualified investments in foreign base company shipping operations for its taxable year 1981. However, M duly files before the close of A's taxable year 1981 as application for consent to revocation of M Corporation's election under section 955(b)(3), and, pursuant to an agreement between the Commissioner and M, consent is granted by the Commissioner. Assuming such agreement does not provide otherwise, A's change in qualifed investments in foreign base company shipping operations for its taxable year 1981 is zero because the effect of the revocation of the election is to treat acquisitions and dispositions of qualified investments in foreign base company shipping operations actually occurring in 1982 as having occurred in such year rather than in 1981.

Example 3. The facts are the same as in example 2 except that A's qualified investments in foreign base company shipping operations at December 31, 1982, amount to $70,000. For purposes of paragraph (b)(1)(i) of § 1.955A-1, the decrease in A's qualified investments in foreign base company shipping operations for the taxable year 1982 is $10,000 and is determined by ascertaining the amount by which A's qualified investments in foreign base company shipping operations at December 31, 1981 ($80,000) exceed its qualified investments in foreign base company shipping operations at December 31, 1982 ($70,000).

Example 4. The facts are the same as in example 1. Assume further that on September 30, 1979, M sells 40 percent of the only class of stock of A to N Corporation, a domestic corporation. N uses the calendar year as a taxable year. A remains a controlled foreign corporation immediately after such sale of its stock. A's qualified investments in foreign base company shipping operations at December 31, 1980, amount to $90,000. The changes in A Corporation's qualified investments in foreign base company shipping operations occurring in its taxable year 1979 are considered to be zero with respect to the 40-percent stock interest acquired by N Corporation. The entire $20,000 reduction in A Corporation's qualified investments in foreign base company shipping operations which occurs during the taxable year 1979 is taken into account by M for purposes of paragraph (c)(1) of this section in determining its tax liability for the taxable year 1978. A's increase in qualified investments in foreign base company shipping operations for the taxable year 1979 with respect to the 60-percent stock interest retained by M is $6,000 and is determined by ascertaining M's pro rata share (60 percent) of the amount by which A's qualified

investments in foreign base company shipping operations at December 31, 1980 ($90,000) exceed its qualified investments in foreign base company shipping operations at December 31, 1979 ($80,000). N does not make an election under section 955(b)(3) in its return for its taxable year 1980. Corporation A's increase in qualified investments in foreign base company shipping operations for the taxable year 1980 with respect to the 40-percent stock interest acquired by N is $4,000.

[T.D. 7894, 48 FR 22539, May 19, 1983]

§ 1.956-1 Shareholder's pro rata share of the average of the amounts of United States property held by a controlled foreign corporation.

(a) ***Overview and scope*** —

(1) ***In general.*** Subject to the provisions of section 951(a) and the regulations in this part, a United States shareholder of a controlled foreign corporation is required to include in gross income the amount determined under section 956 with respect to the shareholder for the taxable year but only to the extent not excluded from gross income under section 959(a)(2) and the regulations in this part. See § 1.958-1(d) for rules regarding the ownership of stock of a foreign corporation through a domestic partnership for purposes of section 956(a) and for purposes of any provision that specifically applies by reference to section 956(a) or the regulations in this part under section 956 that relate to section 956(a).

(2) ***Reduction for certain United States shareholders*** —

(i) ***In general.*** For a taxable year of a controlled foreign corporation, the amount determined under section 956 with respect to each share of stock of the controlled foreign corporation owned (within the meaning of section 958(a)) by a United States shareholder is the amount that would be determined under section 956 with respect to such share for the taxable year, absent the application of this paragraph (a)(2) for the taxable year (such amount, the *tentative section 956 amount,* and in the aggregate with respect to all shares owned (within the meaning of section 958(a)) by the United States shareholder, the *aggregate tentative section 956 amount*), reduced by the amount of the deduction under section 245A, if any, that the shareholder would be allowed if the shareholder received as a distribution from the controlled foreign corporation an amount equal to the tentative section 956 amount with respect to such share on the last day during the taxable year on which the foreign corporation is a controlled foreign corporation (*hypothetical distribution*).

(ii) ***Determination of the amount of the deduction that would be allowed under section 245A with respect to a hypothetical distribution.*** For purposes of determining the amount of the deduction under section 245A that a United States shareholder would be allowed with respect to a share of stock of a controlled foreign corporation by reason of a hypothetical distribution, the rules in paragraphs (a)(2)(ii)(A) through (C) of this section apply—

(A) If a United States shareholder owns a share of stock of a controlled foreign corporation indirectly (within the meaning of section 958(a)(2)), then—

(*1*) Sections 245A(a) through (d), 246(a), and 959 apply to the hypothetical distribution as if the United States shareholder directly owned (within the meaning of section 958(a)(1)(A)) the share;

(2) Section 245A(e) applies to the hypothetical distribution as if the distribution were made to the United States shareholder through each entity by reason of which the United States shareholder indirectly owns such share and pro rata with respect to the equity that gives rise to such indirect ownership;

(3) To the extent that a distribution treated as made to a controlled foreign corporation pursuant to the hypothetical distribution by reason of paragraph (a)(2)(ii)(A)(2) of this section would be subject to section 245A(e)(2), the United States shareholder is treated as not being allowed a deduction under section 245A by reason of the hypothetical distribution; and

(4) Section 246(c) applies to the hypothetical distribution by substituting the phrase "owned (within the meaning of section 958(a))" for the term "held" each place it appears in section 246(c);

(B) Section 246(c) applies to the hypothetical distribution by substituting "the last day during the taxable year on which the foreign corporation is a controlled foreign corporation" for the phrase "the date on which such share becomes ex-dividend with respect to such dividend" in section 246(c)(1)(A); and

(C) The hypothetical distribution is treated as attributable first to earnings and profits of the controlled foreign corporation described in section 959(c)(2), then to earnings and profits of the controlled foreign corporation described in section 959(c)(3).

(3) ***Examples.*** The examples in this paragraph (a)(3) illustrate the application of paragraph (a)(2) of this section.

(i) ***Example 1*** —

(A) ***Facts.***

(1) USP, a domestic corporation, owns all of the single class of stock of FC, a foreign corporation. The stock of FC consists of 100 shares, and USP satisfies the holding period requirement of section 246(c) (as modified by paragraph (a)(2)(ii)(B) of this section) with respect to each share of FC stock. Any dividend from FC to USP would not constitute a hybrid dividend for purposes of section 245A(e). FC owns all of the stock of USS, a domestic corporation. FC's adjusted basis in the stock of USS is $0.

(2) The functional currency of FC is the U.S. dollar. FC has $100x of undistributed earnings as defined in section 245A(c)(2) at the end of the taxable year, $90x of which constitute undistributed foreign earnings as defined in section 245A(c)(3), and $10x of which are described in section 245(a)(5)(B) (that is, earnings attributable to a dividend that FC received from USS). None of the earnings and profits of FC are described in section 959(c)(1) or (2) or are earnings and profits attributable to income excluded from subpart F income under section 952(b). FC's applicable earnings (as defined in section 956(b)(1)) are $100x. FC also has held an obligation of USP with an adjusted basis of $120x on every day during the taxable year of FC, and such obligation was acquired while all of its stock was owned by USP.

(B) ***Analysis.*** Because USP directly owns all of the stock of FC at the end of FC's taxable year, USP's aggregate tentative section 956 amount with respect to FC is $100x, the lesser of USP's pro rata share of the average amounts of United States property held by FC ($120x)

and its pro rata share of FC's applicable earnings ($100x). Under paragraph (a)(2)(i) of this section, USP's section 956 amount with respect to FC is its aggregate tentative section 956 amount with respect to FC reduced by the deduction under section 245A that USP would be allowed if USP received an amount equal to its aggregate tentative section 956 amount as a distribution with respect to the FC stock. USP would be allowed a $90x deduction under section 245A with respect to the foreign-source portion of the $100x hypothetical distribution (that is, an amount of the dividend that bears the same ratio to the dividend as the $90x of undistributed foreign earnings bears to the $100x of undistributed earnings). Accordingly, USP's section 956 amount with respect to FC is $10x, its aggregate tentative section 956 amount ($100x) with respect to FC reduced by the amount of the deduction that USP would have been allowed under section 245A with respect to the hypothetical distribution ($90x).

(ii) *Example 2* —

(A) ***Facts.*** The facts are the same as in paragraph (a)(3)(i)(A) of this section (the facts in *Example 1*), except that all $100x of FC's undistributed earnings are described in section 959(c)(2).

(B) ***Analysis.*** As in paragraph (a)(3)(i)(B) of this section (the analysis in *Example 1*), USP's aggregate tentative section 956 amount with respect to FC is $100x, the lesser of USP's pro rata share of the average amounts of United States property held by FC ($120x) and its pro rata share of FC's applicable earnings ($100x). However, paragraph (a)(2) of this section does not reduce USP's section 956 amount because USP would not be allowed any deduction under section 245A with respect to the $100x hypothetical distribution by reason of section 959(a) and (d). Accordingly, USP's section 956 amount is $100x. However, under sections 959(a)(2) and 959(f)(1), USP's inclusion under section 951(a)(1)(B) with respect to FC is $0, because USP's section 956 amount with respect to FC does not exceed the earnings and profits of FC described in section 959(c)(2) with respect to USP. The $100x of earnings and profits of FC described in section 959(c)(2) are reclassified as earnings and profits described in section 959(c)(1).

(iii) *Example 3* —

(A) ***Facts.*** The facts are the same as in paragraph (a)(3)(i)(A) of this section (the facts in *Example 1*), except that FC has $200x of undistributed earnings, which constitute undistributed foreign earnings as defined in section 245A(c)(3), of which $100x are described in section 959(c)(1)(A) and $100x are described in section 959(c)(3).

(B) ***Analysis.*** USP's aggregate tentative section 956 amount with respect to FC is $20x, the lesser of $20x, the excess of USP's pro rata share of the average amounts of United States property held by FC ($120x) over the earnings and profits described in section 959(c)(1)(A) with respect to USP ($100x), and its pro rata share of FC's applicable earnings ($100x). Under paragraph (a)(2)(i) of this section, USP's section 956 amount with respect to FC is its aggregate tentative section 956 amount with respect to FC reduced by the deduction under section 245A that USP would be allowed if USP received an amount equal to its aggregate tentative section 956 amount as a distribution with respect to the FC stock. USP would be allowed a $20x deduction under section 245A with respect to the foreign-source portion of the $20x hypothetical distribution, which, under paragraph (a)(2)(ii)(C) of this section, is treated as attributable to the earnings and profits of FC described in section 959(c)(3) despite the fact that FC has $100x of earnings and profits

described in section 959(c)(1)(A) that would otherwise be distributed before earnings and profits described in section 959(c)(3). Accordingly, USP's section 956 amount with respect to FC is $0, its aggregate tentative section 956 amount ($20x) with respect to FC reduced by the amount of the deduction that USP would have been allowed under section 245A with respect to the hypothetical distribution after applying the rule in paragraph (a)(2)(ii)(C) of this section ($20x).

(iv) *Example 4* —

(A) *Facts.*

(*1*) USP, a domestic corporation, owns all of the single class of stock of FC1, a foreign corporation, and has held such stock for five years. FC1 has held 70% of the single class of stock of FC2, a foreign corporation, for three years. The other 30% of the FC2 stock has been held since FC2's formation by a foreign individual unrelated to USP or FC1. Any dividend from FC2 or FC1 to FC1 or USP, respectively, would not constitute a hybrid dividend for purposes of section 245A(e). FC2 has a calendar taxable year. On December 1, Year 1, FC1 acquires the remaining 30% of the stock of FC2 for cash. On June 30, Year 2, FC1 sells to a third party the 30% of FC2 stock acquired in Year 1 at no gain. FC2 made no distributions during Year 1.

(*2*) The functional currency of FC1 and FC2 is the U.S. dollar. For Year 1, FC2 has $120x of undistributed earnings as defined in section 245A(c)(2), all of which constitute undistributed foreign earnings. None of the earnings and profits of FC2 are described in section 959(c)(1) or (2) or are earnings and profits attributable to income excluded from subpart F income under section 952(b). FC2's applicable earnings (as defined in section 956(b)(1)) for Year 1 are $120x. FC2 has held an obligation of USP with an adjusted basis of $100x on every day of Year 1 that was acquired while USP owned all of the stock of FC1 and FC1 held 70% of the single class of stock of FC2.

(B) *Analysis.* Because USP indirectly owns (within the meaning of section 958(a)) all of the stock of FC2 at the end of Year 1, USP's aggregate tentative section 956 amount with respect to FC2 for Year 1 is $100x, the lesser of USP's pro rata share of the average amounts of United States property held by FC2 ($100x) and its pro rata share of FC2's applicable earnings ($120x). Under paragraph (a)(2)(i) of this section, USP's section 956 amount with respect to FC2 for Year 1 is its aggregate tentative section 956 amount with respect to FC2 reduced by the deduction under section 245A that USP would be allowed if USP received an amount equal to its aggregate tentative section 956 amount as a distribution with respect to the FC2 stock that USP owns indirectly within the meaning of section 958(a)(2). For purposes of determining the consequences of this hypothetical distribution, under paragraph (a)(2)(ii)(A)(*1*) of this section, USP is treated as owning the FC2 stock directly. In addition, under paragraph (a)(2)(ii)(A)(*4*) of this section, the holding period requirement of section 246(c) is applied by reference to the period during which USP owned (within the meaning of section 958(a)) the stock of FC2. Therefore, with respect to the hypothetical distribution from FC2 to USP, USP would satisfy the holding period requirement under section 246(c) with respect to the 70% of the FC2 stock that USP indirectly owned for three years through FC1, but not with respect to the 30% of the FC2 stock that USP indirectly owned through FC1 for a period of less than 365 days. Accordingly, USP's section 956 amount with respect to FC2 for Year 1 is $30x, its

aggregate tentative section 956 amount ($100x) reduced by the amount of the deduction that USP would have been allowed under section 245A with respect to the hypothetical distribution ($70x).

(b) ***Amount of United States property held indirectly by a controlled foreign corporation*** —

(1) ***General rule.*** For purposes of section 956, United States property held indirectly by a controlled foreign corporation includes—

(i) United States property held on behalf of the controlled foreign corporation by a trustee or a nominee;

(ii) United States property acquired by any other foreign corporation that is controlled by the controlled foreign corporation if a principal purpose of creating, organizing, or funding by any means (including through capital contributions or debt) the other foreign corporation is to avoid the application of section 956 with respect to the controlled foreign corporation; and

(iii) Property acquired by a partnership that is controlled by the controlled foreign corporation if the property would be United States property if held directly by the controlled foreign corporation, and a principal purpose of creating, organizing, or funding by any means (including through capital contributions or debt) the partnership is to avoid the application of section 956 with respect to the controlled foreign corporation.

(2) ***Control.*** For purposes of paragraphs (b)(1)(ii) and (iii) of this section, a controlled foreign corporation controls a foreign corporation or partnership if the controlled foreign corporation and the other foreign corporation or partnership are related within the meaning of section 267(b) or section 707(b). For this purpose, in determining whether two corporations are members of the same controlled group under section 267(b)(3), a person is considered to own stock owned directly by such person, stock owned for the purposes of section 1563(e)(1), and stock owned with the application of section 267(c).

(3) ***Coordination rule.*** Paragraph (b)(1)(iii) of this section applies only to the extent that the amount of United States property that is treated under that paragraph as held indirectly by a controlled foreign corporation through the partnership exceeds the sum of—

(i) The amount of United States property described in paragraph (b)(1)(iii) of this section that is treated as held by the controlled foreign corporation as a result of the application of § 1.956-4(b) with respect to the partnership; and

(ii) The amount of United States property that is treated as held by the controlled foreign corporation as a result of the application of § 1.956-4(c) with respect to any portion of an obligation attributable to the funding described in paragraph (b)(1)(iii) of this section of the partnership by the controlled foreign corporation.

(4) ***Examples.*** The examples in this paragraph (b)(4) illustrate the rules of this paragraph (b). In each example, P is a United States citizen that wholly owns two controlled foreign corporations, FS1 and FS2.

(i) ***Example 1—***

(A) ***Facts.*** FS1 sells inventory to FS2 in exchange for trade receivables due in 60 days. Avoiding the application of section 956 with respect to FS1 was not a principal purpose of establishing the trade receivables. FS2 has no earnings and profits, and FS1 has

substantial accumulated earnings and profits. FS2 makes a loan to P equal to the amount it owes FS1 under the trade receivables. FS2 pays the trade receivables according to their terms.

(B) ***Result.*** FS1 will not be considered to indirectly hold United States property under this paragraph (b) because the funding of FS2 through the sale of inventory in exchange for the establishment of trade receivables was not undertaken with a principal purpose of avoiding the application of section 956 with respect to FS1.

(ii) ***Example 2*** —

(A) ***Facts.*** The facts are the same as in paragraph (b)(4)(i)(A) of this section (the facts in *Example 1*), except that, with a principal purpose of avoiding the application of section 956 with respect to FS1, FS1 and FS2 agree to defer FS2's payment obligation, and FS2 does not timely pay the receivables.

(B) ***Result.*** FS1 is considered to hold indirectly United States property under this paragraph (b) and § 1.956-2(a) because there was a funding of FS2, a principal purpose of which was to avoid the application of section 956 with respect to FS1.

(iii) ***Example 3*** —

(A) ***Facts.*** FS1 has $100x of post-1986 undistributed earnings and profits and $100x post-1986 foreign income taxes, but does not have any cash. FS2 has earnings and profits of at least $100x, no post-1986 foreign income taxes, and substantial cash. Neither FS1 nor FS2 has earnings and profits described in section 959(c)(1) or section 959(c)(2). FS2 loans $100x to FS1. FS1 then loans $100x to P. An income inclusion by P of $100x under sections 951(a)(1)(B) and 956 with respect to FS1 would result in foreign income taxes deemed paid by P under section 960. A principal purpose of funding FS1 through the loan from FS2 is to avoid the application of section 956 with respect to FS2.

(B) ***Result.*** Under paragraph (b)(1)(ii) of this section, FS2 is considered to indirectly hold the $100x obligation of P that is held by FS1. As a result, P has an income inclusion of $100x under sections 951(a)(1)(B) and 956 with respect to FS2, and the foreign income taxes deemed paid by P under section 960 is $0. P does not have an income inclusion under sections 951(a)(1)(B) and 956 with respect to FS1 related to the $100x loan from FS1 to P.

(iv) ***Example 4*** —

(A) ***Facts.*** FS1 deposits $100x with BK, an unrelated foreign financial institution. FS2 subsequently borrows $100x from BK. BK would not have loaned the $100x to FS2 on the same terms absent FS1's deposit. FS2 loans the $100x borrowed from BK to P. FS2 has no earnings and profits, and FS1 has substantial accumulated earnings and profits. A principal purpose for the transactions is to avoid the application of section 956 with respect to FS1.

(B) ***Result.*** FS1 is considered to hold indirectly United States property under this paragraph (b) and § 1.956-2(a) because FS1's deposit with BK, which facilitates BK's loan to FS2, is considered a funding by FS1 of FS2, a principal purpose of which was to avoid the application of section 956 with respect to FS1.

(v) ***Example 5*** —

(A) ***Facts.*** FS1 sells inventory to FS2 in exchange for $100x. The sale occurred in the ordinary course of FS1's trade or business and FS2's trade or business, and the terms of the sale are consistent with terms that would be observed among parties dealing at arm's length. FS1 makes a $100x loan to P. FS2 has no earnings and profits, and FS1 has substantial accumulated earnings and profits.

(B) ***Result.*** FS2 will not be considered to indirectly hold United States property under this paragraph (b) because a sale in the ordinary course of business for cash on terms that are consistent with those that would be observed among parties dealing at arm's length does not constitute a funding.

(vi) ***Example 6*** —

(A) ***Facts.*** In Year 1, FS2 loans $100x to FS1 to finance FS1's trade or business. The terms of the loan are consistent with those that would be observed among parties dealing at arm's length. In Year 2, FS1 repays the loan in accordance with the terms of the loan. Immediately after the repayment by FS1, FS2 loans $100x to P. FS2 has no earnings and profits, and FS1 has substantial accumulated earnings and profits.

(B) ***Result.*** FS1 will not be considered to indirectly hold United States property under this paragraph (b) because a repayment of a loan that has terms that are consistent with those that would be observed among parties dealing at arm's length and that is repaid consistent with those terms does not constitute a funding.

(vii) ***Example 7*** —

(A) ***Facts.*** FS1 has substantial earnings and profits. P and FS1 are the only partners in FPRS, a foreign partnership. FS1 contributes $600x cash to FPRS in exchange for a 60% interest in the partnership, and P contributes real estate located outside the United States ($400x value) to FPRS in exchange for a 40% interest in the partnership. There are no special allocations in the FPRS partnership agreement. FPRS lends $100x to P. Under § 1.956-4(b) and § 1.956-2(a), FS1 is treated as holding United States property of $60x (60% x $100x) as a result of the FPRS loan to P. A principal purpose of creating, organizing, or funding FPRS is to avoid the application of section 956 with respect to FS1.

(B) ***Result.*** Before taking into account paragraph (b)(3) of this section, because FS1 controls FPRS and a principal purpose of creating, organizing, or funding FPRS was to avoid the application of section 956 with respect to FS1, FS1 is considered under paragraph (b)(1)(iii) of this section to indirectly hold the $100x obligation of P that would be United States property if held directly by FS1. However, under paragraph (b)(3) of this section, FS1 is treated as holding United States property under paragraph (b)(1)(iii) only to the extent the amount held indirectly under paragraph (b)(1)(iii) of this section exceeds the sum of the amount of the United States property that FS1 is treated as holding as a result of the application of § 1.956-4(b) with respect to FPRS. The amount of United States property that FS1 is treated as indirectly holding under paragraph (b)(1)(iii) of this section and § 1.956-2(a) ($100x) exceeds the amount determined under § 1.956-4(b) ($60x) by $40x. Thus, FS1 is considered to hold United States property within the meaning of section 956(c) in the amount of $100x ($60x under § 1.956-4(b) and $40x under paragraphs (b)(1)(iii) and (b)(3) of this section).

(viii) ***Example 8*** —

(A) ***Facts.*** FS1 and FS2 have substantial earnings and profits. P and FS1 are the only partners in FPRS, a foreign partnership. There are no special allocations in the FPRS partnership agreement. P's liquidation value percentage with respect to FPRS is 40%, and FS1's liquidation value percentage with respect to FPRS is 60%. FS2 lends $100x to FPRS, and FPRS lends $100x to P. Under § 1.956-4(c) and § 1.956-2(a), FS2 is treated as holding United States property of $40x (40% x $100x) as a result of its loan to FPRS. A principal purpose of funding FPRS is to avoid the application of section 956 with respect to FS2.

(B) ***Result.*** Before taking into account paragraph (b)(3) of this section, because FS2 controls FPRS and a principal purpose of funding FPRS was to avoid the application of section 956 with respect to FS2, FS2 is considered under paragraph (b)(1)(iii) of this section to indirectly hold the $100x obligation of P that would be United States property if held directly by FS2. However, under paragraph (b)(3) of this section, FS2 is treated as holding United States property under paragraph (b)(1)(iii) only to the extent the amount held indirectly under paragraph (b)(1)(iii) of this section exceeds the amount of United States property that FS2 is treated as holding as a result of the application of § 1.956-4(c) with respect to the obligation with which FS2 funds FPRS. The amount of United States property that FS2 is treated as indirectly holding under paragraph (b)(1)(iii) of this section and § 1.956-2(a) ($100x) exceeds the amount determined under § 1.956-4(c) ($40x) by $60x. Thus, FS2 is considered to hold United States property within the meaning of section 956(c) in the amount of $100x ($40x under § 1.956-4(c) and $60x under paragraphs (b)(1)(iii) and (b)(3) of this section). P does not have an income inclusion under sections 951(a)(1)(B) and 956 with respect to FS1 related to the P obligation held by FPRS.

(c)-(d) [Reserved]

(e) ***Amount attributable to property*** —

(1) ***General rule.*** Except as provided in subparagraph (2) of this paragraph, for purposes of paragraph (b)(1) of this section the amount taken into account with respect to any United States property shall be its adjusted basis, as of the applicable determination date, reduced by any liability (other than a liability described in subparagraph (3) of this paragraph) to which such property is subject on such date. To be taken into account under this subparagraph, a liability must constitute a specific charge against the property involved. Thus, a liability evidenced by an open account or a liability secured only by the general credit of the controlled foreign corporation will not be taken into account. On the other hand, if a liability constitutes a specific charge against several items of property and cannot definitely be allocated to any single item of property, the liability shall be apportioned against each of such items of property in that ratio which the adjusted basis of such item on the applicable determination date bears to the adjusted basis of all such items at such time. A liability in excess of the adjusted basis of the property which is subject to such liability shall not be taken into account for the purpose of reducing the adjusted basis of other property which is not subject to such liability. See § 1.956-1(e)(6) for a special rule for determining amounts attributable to United States property acquired as the result of certain nonrecognition transactions.

(2) ***Rule for pledges and guarantees.*** For purposes of this section, the amount of an obligation treated as held (before application of § 1.956-4(b)) as a result of a pledge or guarantee described in § 1.956-2(c) is the unpaid principal amount of the obligation on the applicable determination date.

(3) ***Excluded charges.*** For purposes of subparagraph (1) of this paragraph, a specific charge created with respect to any item of property principally for the purpose of artificially increasing or decreasing the amount of a controlled foreign corporation's investment of earnings in United States property will not be recognized; whether a specific charge is created principally for such purpose will depend upon all the facts and circumstances of each case. One of the factors that will be considered in making such a determination with respect to a loan is whether the loan is from a related person, as defined in section 954 (d)(3) and paragraph (e) of § 1.954-1.

(4) ***Statement required.*** If for purposes of this section a United States shareholder of a controlled foreign corporation reduces the adjusted basis of property which constitutes United States property on the ground that such property is subject to a liability, he shall attach to his return a statement setting forth the adjusted basis of the property before the reduction and the amount and nature of the reduction.

(5) [Reserved] For further guidance, see § 1.956-1T(e)(5).

(6) ***Adjusted basis of property acquired in certain nonrecognition transactions*** —

(i) ***Scope.*** This paragraph (e)(6) provides rules for determining, solely for purposes of applying section 956, the adjusted basis of specified United States property acquired by a controlled foreign corporation pursuant to an exchange in which the controlled foreign corporation's basis in such specified United States property is determined under section 362(a). This paragraph (e)(6) also applies if specified United States property, the adjusted basis in which has been determined under these regulations, is transferred (in one or more subsequent exchanges) to a related person (within the meaning of section 954(d)(3)), pursuant to one or more exchanges in which the related person's adjusted basis in such property is determined, in whole or in part, by reference to the transferor controlled foreign corporation's adjusted basis in such property.

(ii) ***Definition of specified United States property.*** For purposes of this paragraph (e)(6), *specified United States property* is stock of a domestic corporation described in section 956(c)(1)(B) or an obligation of a domestic corporation described in section 956(c)(1)(C) that is acquired by a controlled foreign corporation from the domestic issuing corporation. Specified United States property does not include property described in section 956(c)(2).

(iii) ***Adjusted basis of specified United States property.*** Solely for purposes of applying section 956, the adjusted basis of specified United States property acquired by a controlled foreign corporation in connection with an exchange to which this paragraph (e)(6) applies shall be no less than the fair market value of any property transferred by the controlled foreign corporation in exchange for such specified United States property. For purposes of this paragraph (e)(6), the term *property* has the meaning set forth in section 317(a), but also includes any liability that is assumed by the controlled foreign corporation in connection with the exchange notwithstanding the application of section 357(a). The assumption of a liability by the controlled foreign corporation in connection with the exchange will be considered the transfer of property. The fair market value of such property will be the amount of the liability assumed. The fair market value of any property transferred by the controlled foreign corporation in exchange for the specified United States property shall be determined at the time of the exchange.

(iv) ***Timing.*** For purposes of § 1.956-2(d)(1)(i)(a), a controlled foreign corporation that acquires specified United States property in an exchange to which this paragraph (e)(6) applies acquires an adjusted basis in such property at the time of the controlled foreign corporation's exchange of property for such specified United States property.

(v) ***Transfers to r elated persons.*** If a controlled foreign corporation transfers specified United States property, the adjusted basis in which has been determined under this paragraph (e)(6), to a related person (within the meaning of section 954(d)(3)) (related person transferee) in one or more exchanges pursuant to which the related person transferee's adjusted basis in such specified United States property is determined, in whole or in part, by reference to the controlled foreign corporation's adjusted basis in such specified United States property, then, solely for purposes of applying section 956 following such exchange, the controlled foreign corporation's adjusted basis in any United States property received in the exchange (or exchanges) shall be no less than the aggregate adjusted basis of the specified United States property as determined under paragraph (e)(6)(iii) of this section, and the related person transferee's adjusted basis in such specified United States property shall be no less than the adjusted basis of such specified United States property in the hands of the controlled foreign corporation as determined under paragraph (e)(6)(iii) of this section. This paragraph (e)(6)(v) shall also apply in the case of one or more successive transfers of the specified United States property by a related person transferee to one or more persons related to the controlled foreign corporation (within the meaning of section 954(d)(3)). This paragraph (e)(6)(v) shall apply regardless of whether a subsequent transfer was part of a plan (or series of related transactions) that includes the controlled foreign corporation's acquisition of the specified United States property.

(vi) ***Examples.*** The rules of this paragraph (e)(6) are illustrated by the following examples:

> *Example 1.* (i) *Facts.* USP, a domestic corporation, is the common parent of an affiliated group that joins in the filing of a consolidated return. USP owns 100 percent of the stock of US1 and US2, both domestic corporations and members of the USP consolidated group. US1 owns 100 percent of the stock of CFC, a controlled foreign corporation. US2 issues $100x of its stock to CFC in exchange for $10x of CFC stock and $90x cash. US2's transfer of its stock to CFC is described in section 351, US2 recognizes no gain in the exchange under section 1032(a), and CFC's basis in the US2 stock acquired in the exchange is determined under section 362(a).
> (ii) *Analysis.* The US2 stock acquired by CFC in the exchange constitutes specified United States property under paragraph (e)(6)(ii) of this section because CFC acquires the US2 stock from US2, the issuing corporation. Therefore, because CFC's adjusted basis in the US2 stock is determined under section 362(a), then for purposes of applying section 956, CFC's adjusted basis in the US2 stock shall, under paragraph (e)(6)(iii) of this section, be no less than $90x, the fair market value of the property exchanged by CFC for the US2 stock (the $10x of CFC stock issued in the exchange does not constitute property for purposes of paragraph (e)(6)(iii) of this section). Pursuant to paragraph (e)(6)(iv) of this section, for purposes of § 1.956-2(d)(1)(i)(a) CFC shall be treated as acquiring its adjusted basis of no less than $90x in the US2 stock at the time

of its transfer of property to US2 in exchange for the US2 stock. The result would be the same if, instead of CFC transferring $90x of cash to US2 in the exchange, CFC assumes a $90x liability of US2.

Example 2. (i) *Facts.* USP, a domestic corporation, owns 100 percent of the stock of USS, a domestic corporation. USP also owns 100 percent of the stock of CFC, a controlled foreign corporation. USP's adjusted basis in its USS stock equals the fair market value of the USS stock, or $100x. USP transfers its USS stock to CFC in exchange for $100x of CFC stock. USP's transfer of its USS stock to CFC is described in section 351, USP recognizes no gain in the exchange under section 351(a), and CFC's adjusted basis in the USS stock acquired in the exchange, determined under section 362(a), equals $100x.
(ii) *Analysis.* The USS stock acquired by CFC in the exchange does not constitute specified United States property under paragraph (e)(6)(ii) of this section because CFC acquires the USS stock from USP. Therefore, CFC's adjusted basis in the USS stock, for purposes of section 956, is not determined under this paragraph (e)(6). Instead, CFC's adjusted basis in the USS stock is determined under the general rule of section 956(a) and under paragraphs (e)(1) through (4) of this section. As determined under section 362(a), CFC's adjusted basis in the USS stock is $100x.

Example 3. (i) *Facts.* USP, a domestic corporation, owns 100 percent of the stock of CFC1, a controlled foreign corporation. CFC1 holds specified United States property (within the meaning of paragraph (e)(6)(ii) of this section) with an adjusted basis of $30x for purposes of applying section 956 that was determined under paragraph (e)(6)(iii) of this section. CFC1 owns 100 percent of the stock of CFC2, a controlled foreign corporation. CFC1 transfers the specified United States property to CFC2 in an exchange described in section 351. CFC2's adjusted basis in the specified United States property is determined under section 362(a).
(ii) *Analysis.* In the section 351 exchange, CFC1 transferred specified United States property to CFC2 with an adjusted basis that was determined under paragraph (e)(6)(iii) of this section. Further, CFC2's adjusted basis in the specified United States property is determined under section 362(a) by reference, in whole or in part, to CFC1's adjusted basis in such property. Therefore, for purposes of applying section 956, pursuant to paragraph (e)(6)(v) of this section CFC2's adjusted basis in the specified United States property shall be no less than $30x. Paragraph (e)(6)(v) of this section would also apply if CFC2 subsequently transfers the specified United States property to another person related to CFC1 (within the meaning of section 954(d)(3)) if such related person's adjusted basis in the specified United States property is determined by reference, in

> whole or in part, to CFC2's adjusted basis in such property. See also § 1.956-1T(b)(4) if one of the principal purposes of CFC1's transfer of property to CFC2 was the avoidance of the application of section 956 with respect to CFC1.

(f) [Reserved] For further guidance, see § 1.956-1T(f).

(g) ***Applicability dates.***

(1) Paragraph (a)(1) of this section applies to taxable years of controlled foreign corporations ending on or after November 3, 2016, and to taxable years of United States shareholders in which or with which such taxable years end.

(2) Paragraph (b) of this section applies to taxable years of controlled foreign corporations ending on or after September 1, 2015, and to taxable years of United States shareholders in which or with which such taxable years end, with respect to property acquired on or after September 1, 2015. See paragraph (b)(4) of § 1.956-1T, as contained in 26 CFR part 1 revised as of April 1, 2015, for the rules applicable to taxable years of controlled foreign corporations ending before September 1, 2015, and property acquired before September 1, 2015. For purposes of this paragraph (g)(2), a deemed exchange of property pursuant to section 1001 on or after September 1, 2015 constitutes an acquisition of the property on or after that date.

(3) Paragraph (e)(2) of this section applies to taxable years of controlled foreign corporations ending on or after November 3, 2016, and taxable years of United States shareholders in which or with which such taxable years end, with respect to pledges or guarantees entered into on or after September 1, 2015. For purposes of this paragraph (g)(3), a pledgor or guarantor is treated as entering into a pledge or guarantee when there is a significant modification, within the meaning of § 1.1001-3(e), of an obligation with respect to which it is a pledgor or guarantor on or after September 1, 2015.

(4) Paragraphs (a)(2) and (3) of this section apply to taxable years of controlled foreign corporations beginning on or after July 22, 2019, and to taxable years of a United States shareholder in which or with which such taxable years of the controlled foreign corporations end. Notwithstanding the preceding sentence, a United States shareholder may apply paragraphs (a)(2) and (3) of this section to taxable years of controlled foreign corporations beginning after December 31, 2017, and to taxable years of the United States shareholder in which or with which such taxable years of the controlled foreign corporations end, provided that the United States shareholder and United States persons that are related (within the meaning of section 267 or 707) to the United States shareholder consistently apply those paragraphs with respect to all controlled foreign corporations in which they are United States shareholders for taxable years of the controlled foreign corporations beginning after December 31, 2017. For taxable years of controlled foreign corporations beginning before January 25, 2022, and taxable years of United States shareholders in which or with which such taxable years of foreign corporations end, see § 1.956-1(a)(2)(i) and (iii) and (a)(3)(iv) as in effect and contained in 26 CFR part 1, as revised April 1, 2021.

(5) Paragraph (e)(6) of this section applies to property acquired in exchanges occurring on or after June 24, 2011.

[T.D. 6704, 29 FR 2600, Feb. 20, 1964, as amended by T.D. 6795, 30 FR 942, Jan. 29, 1965; T.D. 7712, 45 FR 52374, Aug. 7, 1980; T.D. 8209, 53 FR 22171, June 14, 1988; T.D. 9402, 73 FR 35582, June 24, 2008; T.D. 9630, 76 FR 36994, June 24, 2011; T.D. 9733, 80 FR 52981, Sept. 2, 2015; 80 FR 66416, Oct. 29, 2015; T.D. 9792, 81 FR 76505, Nov. 3, 2016; T.D. 9859, 84 FR 23717, May 23, 2019; 84 FR 29799, June 25, 2019; T.D. 9960, 87 FR 3654, Jan. 25, 2022]

§ 1.956-1T Shareholder's pro rata share of the average of the amounts of United States property held by a controlled foreign corporation (temporary).

(a)-(e) (4) [Reserved]

(5) *Exclusion for certain recourse obligations.* For purposes of § 1.956-1(e)(1) of the regulations, in the case of an investment in United States property consisting of an obligation of a related person, as defined in section 954(d)(3) and paragraph (f) of § 1.954-1, a liability will not be recognized as a specific charge if the liability representing the charge is with recourse with respect to the general credit or other assets of the investing controlled foreign corporation.

(e) (6) [Reserved] For further guidance, see § 1.956-1(e)(6).

(f) ***Effective/applicability date.*** Paragraph (e)(5) of this section applies to investments made on or after June 14, 1988.

(g)-(h) [Reserved]

[T.D. 9792, 81 FR 76507, Nov. 3, 2016; 81 FR 95471, Dec. 28, 2016]

§ 1.956-2 Definition of United States property.

(a) ***Included property*** —

(1) ***In general.*** For purposes of section 956(a) and § 1.956-1, United States property is (except as provided in paragraph (b) of this section) any property acquired (within the meaning of paragraph (d)(1) of this section) by a foreign corporation (whether or not a controlled foreign corporation at the time) during any taxable year of such foreign corporation beginning after December 31, 1962, which is—

(i) Tangible property (real or personal) located in the United States;

(ii) Stock of a domestic corporation;

(iii) An obligation (as defined in paragraph (d)(2) of this section) of a United States person (as defined in section 957(d)); or

(iv) Any right to the use in the United States of—

(*a*) A patent or copyright,

(*b*) An invention, model, or design (whether or not patented),

(*c*) A secret formula or process, or

(*d*) Any other similar property right, which is acquired or developed by the foreign corporation for use in the United States by any person. Whether a right described in this subdivision has been acquired or developed for use in the United States by any person is to be determined from all the facts and circumstances of each case. As a general rule, a right actually used principally in the United States will be considered to have been acquired or developed for use in the United States in the absence of affirmative evidence showing that the right was not so acquired or developed for such use.

(2) ***Illustrations.*** The application of the provisions of this paragraph may be illustrated by the following examples:

Example 1. Foreign corporation R uses as a taxable year a fiscal year ending on June 30. Corporation R acquires on June 1, 1963, and holds on June 30, 1963, $100,000 of tangible property (not described in section 956(b)(2)) located in the United States. Corporation R's aggregate investment in United States property at the close of its taxable year ending June 30, 1963, is zero since the property which is acquired on June 1, 1963, is not acquired during a taxable year of R Corporation beginning after December 31, 1962. Assuming no change in R Corporation's aggregate investment in United States property during its taxable year ending June 30, 1964, R Corporation's increase in earnings invested in United States property for such taxable year is zero.

Example 2. Foreign corporation S uses the calendar year as a taxable year and is a controlled foreign corporation for its entire taxable year 1965. Corporation S is not a controlled foreign corporation at any time during its taxable years 1963 and 1964. Corporation S owns on December 31, 1964, $100,000 of tangible property (not described in section 956(b)(2)) located in the United States which it acquires during taxable years beginning after December 31, 1962. Corporation S's aggregate investment in United States property on December 31, 1964, is $100,000. Corporation S's current and accumulated earnings and profits (determined as provided in paragraph (b) of § 1.956-1) as of December 31, 1964, are in excess of $100,000. Assuming no change in S Corporation's aggregate investment in United States property during its taxable year 1965, S Corporation's increase in earnings invested in United States property for such taxable year is zero.

Example 3. Foreign corporation T uses the calendar year as a taxable year and is a controlled foreign corporation for its entire taxable years 1963, 1964, and 1966. At December 31, 1964, T Corporation's investment in United States property is $100,000. Corporation T is not a controlled foreign corporation at any time during its taxable year 1965 in which it acquires $25,000 of tangible property (not described in section 956(b)(2)) located in the United States. On December 31, 1965, T Corporation holds the United States property of $100,000 which it held on December 31, 1964, and, in addition, the United States property acquired in 1965. Corporation T's aggregate investment in United States property at December 31, 1965, is $125,000. Corporation T's current and accumulated earnings and profits (determined as provided in paragraph (b) of § 1.956-1) as of December 31, 1965, are in excess of $125,000, and T Corporation pays no amount during 1965 to which section 959 (c)(1) applies. Assuming no change in T Corporation's aggregate investment in United States property during its taxable year 1966, T Corporation's increase in earnings invested in United States property for such taxable year is zero.

(3) ***Treatment of disregarded entities.*** For purposes of section 956, an obligation of a business entity (as defined in § 301.7701-2(a) of this chapter) that is disregarded as an entity separate from its owner for federal tax purposes under §§ 301.7701-1 through 301.7701-3 of this chapter is treated as an obligation of its owner.

(4) ***Certain foreign stock and obligations held by expatriated foreign subsidiaries following an inversion transaction*** —

(i) ***General rule.*** Except as provided in paragraph (a)(4)(ii) of this section, for purposes of section 956 and paragraph (a) of this section, United States property includes an obligation of a foreign person and stock of a foreign corporation when the following conditions are satisfied—

(A) The obligation or stock is held by a controlled foreign corporation that is an expatriated foreign subsidiary, regardless of whether, when the obligation or stock was acquired, the acquirer was a controlled foreign corporation or an expatriated foreign subsidiary;

(B) The foreign person or foreign corporation is a non-EFS foreign related person, regardless of whether, when the obligation or stock was acquired, the foreign person or foreign corporation was a non-EFS foreign related person; and

(C) The obligation or stock was acquired—

(*1*) During the applicable period; or

(*2*) In a transaction related to the inversion transaction.

(ii) ***Exceptions.*** For purposes of section 956 and paragraph (a) of this section, United States property does not include—

(A) Any obligation of a non-EFS foreign related person arising in connection with the sale or processing of property if the amount of the obligation at no time during the taxable year exceeds the amount that would be ordinary and necessary to carry on the trade or business of both the other party to the sale or processing transaction and the non-EFS foreign related person had the sale or processing transaction been made between unrelated persons; and

(B) Any obligation of a non-EFS foreign related person to the extent the principal amount of the obligation does not exceed the fair market value of readily marketable securities sold or purchased pursuant to a sale and repurchase agreement or otherwise posted or received as collateral for the obligation in the ordinary course of its business by a United States or foreign person which is a dealer in securities or commodities.

(iii) ***Definitions.*** The definitions in § 1.7874-12 apply for the purposes of the application of paragraphs (a)(4), (c)(5), and (d)(2) of this section.

(iv) ***Examples.*** The following examples illustrate the rules of this paragraph (a)(4). For purposes of the examples, FA, a foreign corporation, wholly owns DT, a domestic corporation, which, in turn, wholly owns FT, a foreign corporation that is a controlled foreign corporation. FA also wholly owns FS, a foreign corporation that is a controlled foreign corporation for its taxable year beginning January 1, 2017, but not for prior taxable years except as a result of a transaction described in the facts of an example. All entities have a calendar year tax year for U.S. tax purposes. FA acquired DT in an inversion transaction that was completed on January 1, 2015.

> *Example 1.* (A) *Facts.* FT acquired an obligation of FS on January 31, 2015.
> (B) *Analysis.* Pursuant to § 1.7874-12, DT is a domestic entity, FT is an expatriated foreign subsidiary, and FS is a non-EFS foreign related person. In addition, FT acquired the FS obligation during the applicable period. Thus, as of January 31, 2015, the obligation of FS is United States property with respect to FT for purposes of section 956(a) and this paragraph (a).

> *Example 2.* (A) *Facts.* The facts are the same as in *Example 1* of this paragraph (a)(4)(iv), except that on February 15, 2015, FT contributed assets to FS in exchange for 60% of the stock of FS, by vote and value.

(B) *Analysis.* As a result of the transaction on February 15, 2015, FS became a controlled foreign corporation with respect to which an expatriated entity, DT, is a United States shareholder. Accordingly, under § 1.7874-12(a)(9), FS is an expatriated foreign subsidiary, and is therefore not a non-EFS foreign related person. Thus, as of February 15, 2015, the stock and obligation of FS are not United States property with respect to FT for purposes of section 956(a) and this paragraph (a). FS is not excluded from the definition of expatriated foreign subsidiary pursuant to § 1.7874-12(a)(9)(ii) because FS was not a CFC on the completion date.

Example 3. (A) *Facts.* Before the inversion transaction, FA also wholly owns USP, a domestic corporation, which, in turn, wholly owns, LFS, a foreign corporation that is a controlled foreign corporation. DT was not a United States shareholder of LFS on or before the completion date. On January 31, 2015, FT contributed assets to LFS in exchange for 60% of the stock of LFS, by vote and value. FT acquired an obligation of LFS on February 15, 2015.
(B) *Analysis.* LFS is a foreign related person. Because LFS was a controlled foreign corporation and a member of the EAG with respect to the inversion transaction on the completion date, and DT was not a United States shareholder with respect to LFS on or before the completion date, LFS is excluded from the definition of expatriated foreign subsidiary pursuant to § 1.7874-12(a)(9)(ii). Thus, pursuant to § 1.7874-12(a)(16), LFS is a non-EFS foreign related person, and the stock and obligation of LFS are United States property with respect to FT for purposes of section 956(a) and this paragraph (a). The fact that FT contributed assets to LFS in exchange for 60% of the stock of LFS does not change this result.

Example 4. (A) *Facts.* The facts are the same as in *Example 3* of this paragraph (a)(4)(iv), except that on February 10, 2015, LFS organized a new foreign corporation (LFSS), transferred all of its assets to LFSS, and liquidated, in a transaction treated as a reorganization described in section 368(a)(1)(F), and FT acquired an obligation of LFSS, instead of LFS, on February 15, 2015. On March 1, 2015, LFSS acquired an obligation of FS.
(B) *Analysis.* LFS is a controlled foreign corporation with respect to which USP, an expatriated entity, is a United States shareholder. USP is an expatriated entity because on the completion date, USP and DT became related to each other within the meaning of section 267(b). Because LFSS was not a member of the EAG with respect to the inversion transaction on the completion date, LFSS is not excluded from the definition of expatriated foreign subsidiary pursuant to § 1.7874-12(a)(9)(ii). Accordingly, under § 1.7874-12(a)(9)(i), LFFS is an expatriated foreign subsidiary and is therefore not a non-EFS foreign related person. Thus, the stock and obligation of LFSS are not United States property with respect to FT for purposes of section 956(a) and paragraph (a) of this

> section. However, because LFSS is an expatriated foreign subsidiary, pursuant to § 1.7874-12(a)(9), the obligation of FS, a non-EFS foreign related person, is United States property with respect to LFSS for purposes of section 956(a) and this paragraph (a).

(b) ***Exceptions*** —

(1) ***Excluded property.*** For purposes of section 956(a) and paragraph (a) of this section, United States property does not include the following types of property held by a foreign corporation:

(i) Obligations of the United States.

(ii) Money.

(iii) Deposits with persons carrying on the banking business, unless the deposits serve directly or indirectly as a pledge or guarantee within the meaning of paragraph (c) of this section. See paragraph (e)(2) of § 1.956-1.

(iv) Property located in the United States which is purchased in the United States for export to, or use in, foreign countries. For purposes of this subdivision, property to be used outside the United States will be considered property to be used in a foreign country. Whether property is of a type described in this subdivision is to be determined from all the facts and circumstances in each case. Property which constitutes export trade assets within the meaning of section 971(c)(2) and paragraph (c)(3) of § 1.971-1 will be considered property of a type described in this subdivision.

(v) Any obligation (as defined in paragraph (d)(2) of this section) of a United States person (as defined in section 957(d)) arising in connection with the sale or processing of property if the amount of such obligation outstanding at any time during the taxable year of the foreign corporation does not exceed an amount which is ordinary and necessary to carry on the trade or business of both the other party to the sale or processing transaction and the United States person, or, if the sale or processing transaction occurs between related persons, would be ordinary and necessary to carry on the trade or business of both the other party to the sale or processing transaction and the United States person if such persons were unrelated persons. Whether the amount of an obligation described in this subdivision is ordinary and necessary is to be determined from all the facts and circumstances in each case.

(vi) Any aircraft, railroad rolling stock, vessel, motor vehicle, or container used in the transportation of persons or property in foreign commerce and used predominantly outside the United States. Whether transportation property described in this paragraph (b)(1)(vi) is used in foreign commerce and predominantly outside the United States is to be determined from all the facts and circumstances of each case. As a general rule, such transportation property will be considered to be used predominantly outside the United States if 70 percent or more of the miles traversed (during the taxable year at the close of which a determination is made under section 956(a)(2)) in the use of such property are traversed outside the United States or if such property is located outside the United States 70 percent of the time during such taxable year. Notwithstanding the above, an aircraft or vessel, including component parts, is excluded from United States property if the aircraft or vessel is leased in foreign commerce (as the term is defined in § 1.954-2(c)(2)(v)) and rents derived from leasing such aircraft or vessel are excluded from foreign personal holding company income under section 954(c)(2)(A).

(vii) An amount of assets described in paragraph (a) of this section of an insurance company equivalent to the unearned premiums or reserves which are ordinary and necessary for the proper conduct of that part of its insurance business which is attributable to contracts other than those described in section 953(a)(1) and the regulations thereunder. For purposes of this subdivision, a reserve will be considered ordinary and necessary for the proper conduct of an insurance business if, under the principles of paragraph (c) of § 1.953-4, such reserve would qualify as a reserve required by law. See paragraph (d)(3) of § 1.954-2 for determining, for purposes of this subdivision, the meaning of insurance company and of unearned premiums.

(viii) For taxable years beginning after December 31, 1975, the voting or nonvoting stock or obligations of an unrelated domestic corporation. For purposes of this subdivision, an unrelated domestic corporation is a domestic corporation which is neither a United States shareholder (as defined in section 951(b)) of the controlled foreign corporation making the investment, nor a corporation 25 percent or more of whose total combined voting power of all classes of stock entitled to vote is owned or considered as owned (within the meaning of section 958 (b)) by United States shareholders of the controlled foreign corporation making the investment. The determination of whether a domestic corporation is an unrelated corporation is made immediately after each acquisition of stock or obligations by the controlled foreign corporations.

(ix) For taxable years beginning after December 31, 1975, movable drilling rigs or barges and other movable exploration and exploitation equipment (other than a vessel or an aircraft) when used on the Continental Shelf (as defined in section 638) of the United States in the exploration for, development, removal, or transportation of natural resources from or under ocean waters. Property used on the Continental Shelf includes property located in the United States which is being constructed or is in storage or in transit within the United States for use on the Continental Shelf. In general, the type of property which qualifies for the exception under this subdivision includes any movable property which would be entitled to the investment credit if used outside the United States in certain geographical areas of the Western Hemisphere pursuant to section 48(a)(2)(B)(x) (without reference to sections 49 and 50).

(x) An amount of—

(*a*) A controlled foreign corporation's assets described in paragraph (a) of this section equivalent to its earnings and profits which are accumulated after December 31, 1962, and are attributable to items of income described in section 952(b) and the regulations thereunder, reduced by the amount of

(*b*) The earnings and profits of such corporation which are applied in a taxable year of such corporation beginning after December 31, 1962, to discharge a liability on property, but only if the liability was in existence at the close of such corporation's taxable year immediately preceding its first taxable year beginning after December 31, 1962, and the property would have been United States property if it had been acquired by such corporation immediately before such discharge.

For purposes of this subdivision, distributions made by such corporation for any taxable year shall be considered first made out of earnings and profits for such year other than earnings and profits referred to in (*a*) of this subdivision.

(xi) [Reserved] For further guidance, see § 1.956-2T(b)(1)(xi).

(2) ***Statement required.*** If a United States shareholder of a controlled foreign corporation excludes any property from the United States property of such controlled foreign corporation on the ground that section 956(b)(2) applies to such excluded property, he shall attach to his return a statement setting forth, by categories described in paragraph (a)(1) of this section, the amount of United States property of the controlled foreign corporation and, by categories described in subparagraph (1) of this paragraph, the amount of such property which is excluded.

(c) ***Treatment of pledges and guarantees*** —

(1) ***General rule.*** Except as provided in paragraph (c)(4) of this section, for purposes of section 956, any obligation of a United States person with respect to which a controlled foreign corporation or a partnership is a pledgor or guarantor will be considered to be held by the controlled foreign corporation or the partnership, as the case may be. See § 1.956-1(e)(2) for rules that determine the amount of the obligation treated as held by a pledgor or guarantor under this paragraph (c). For rules that treat an obligation of a foreign partnership as an obligation of the partners in the foreign partnership for purposes of section 956, see § 1.956-4(c).

(2) ***Indirect pledge or guarantee.*** If the assets of a controlled foreign corporation or a partnership serve at any time, even though indirectly, as security for the performance of an obligation of a United States person, then, for purposes of paragraph (c)(1) of this section, the controlled foreign corporation or partnership will be considered a pledgor or guarantor of that obligation. If a partnership is considered a pledgor or guarantor of an obligation, a controlled foreign corporation that is a partner in the partnership will not also be treated as a pledgor or guarantor of the obligation solely as a result of its ownership of an interest in the partnership. For purposes of this paragraph, a pledge of stock of a controlled foreign corporation representing at least $66^{2}/_{3}$ percent of the total combined voting power of all classes of voting stock of such corporation will be considered an indirect pledge of the assets of the controlled foreign corporation if the pledge is accompanied by one or more negative covenants or similar restrictions on the shareholder effectively limiting the corporation's discretion to dispose of assets and/or incur liabilities other than in the ordinary course of business. See § 1.956-4(d) for guidance on the treatment of indirect pledges or guarantees of an obligation of a partnership attributed to its partners under § 1.956-4(c).

(3) ***Illustrations.*** The following examples illustrate the application of this paragraph (c):

Example 1. A, a United States person, borrows $100,000 from a bank in foreign country X on December 31, 1964. On the same date controlled foreign corporation R pledges its assets as security for A's performance of A's obligation to repay such loan. The place at which or manner in which A uses the money is not material. For purposes of paragraph (b) of § 1.956-1, R Corporation will be considered to hold A's obligation to repay the bank $100,000, and, under the provisions of paragraph (e)(2) of § 1.956-1, the amount taken into account in computing R Corporation's aggregate investment in United States property on December 31, 1964, is the unpaid principal amount of the obligation on that date ($100,000).

Example 2. The facts are the same as in example 1, except that R Corporation participates in the transaction, not by pledging its assets as security for A's performance of A's obligation to repay the loan, but by agreeing to buy for $1,00,000 at maturity the note representing A's obligation if A does not repay the loan. Separate arrangements are made with respect to the payment of the interest on the loan. The agreement of R Corporation to buy the note constitutes a guarantee of A's obligation. For purposes of paragraph (b) of § 1.956-1, R Corporation will be considered to hold A's obligation to repay the bank $100,000, and, under the provisions of paragraph (e)(2) of

§ 1.956-1, the amount taken into account in computing R Corporation's aggregate investment in United States property on December 31, 1964, is the unpaid principal amount of the obligation on that date ($100,000).

Example 3. A, a United States person, borrows $100,000 from a bank on December 10, 1981, pledging 70 percent of the stock of X, a controlled foreign corporation, as collateral for the loan. A and X use the calendar year as their taxable year. in the loan agreement, among other things, A agrees not to cause or permit X Corporation to do any of the following without the consent of the bank:
(a) Borrow money or pledge assets, except as to borrowings in the ordinary course of business of X Corporation;

(b) Guarantee, assume, or become liable on the obligation of another, or invest in or lend funds to another;

(c) Merge or consolidate with any other corporation or transfer shares of any controlled subsidiary;

(d) Sell or lease (other than in the ordinary course of business) or otherwise dispose of any substantial part of its assets;

(e) Pay or secure any debt owing by X Corporation to A; and

(f) Pay any dividends, except in such amounts as may be required to make interest or principal payments on A's loan from the bank.

A retains the right to vote the stock unless a default occurs by A. Under paragraph (c)(2) of this section, the assets of X Corporation serve indirectly as security for A's performance of A's obligation to repay the loan and X Corporation will be considered a pledgor or guarantor with respect to that obligation. For purposes of paragraph (b) of § 1.956-1, X Corporation will be considered to hold A's obligation to repay the bank $100,000 and under paragraph (e)(2) of § 1.956-1, the amount taken into account in computing X Corporation's aggregate investment in United States property on December 31, 1981, is the unpaid principal amount of the obligation on that date.

Example 4. (i) *Facts.* USP, a domestic corporation, owns 70% of the stock of FS, a controlled foreign corporation, and a 90% interest in FPRS, a foreign partnership. X, an unrelated foreign person, owns 30% of the stock of FS. Y, an unrelated foreign person, owns a 10% interest in FPRS. There are no special allocations in the FPRS partnership agreement. FPRS borrows $100x from Z, an unrelated person. FS pledges its assets as security for FPRS's performance of its obligation to repay the $100x loan. USP's share of the $100x FPRS obligation, determined in accordance with its liquidation value

percentage, is $90x. Under § 1.956-4(c), $90x of the FPRS obligation is treated as an obligation of USP for purposes of section 956.
(ii) *Result.* For purposes of section 956, under paragraph (c)(1) of this section, FS is considered to hold an obligation of USP in the amount of $90x, and thus is treated as holding United States property in the amount of $90x.

(4) ***Special rule for certain conduit financing arrangements.*** The rule contained in subparagraph (1) of this paragraph shall not apply to a pledge or a guarantee by a controlled foreign corporation to secure the obligation of a United States person if such United States person is a mere conduit in a financing arrangement. Whether the United States person is a mere conduit in a financing arrangement will depend upon all the facts and circumstances in each case. A United States person will be considered a mere conduit in a financing arrangement in a case in which a controlled foreign corporation pledges stock of its subsidiary corporation, which is also a controlled foreign corporation, to secure the obligation of such United States person, where the following conditions are satisfied:

(i) Such United States person is a domestic corporation which is not engaged in the active conduct of a trade or business and has no substantial assets other than those arising out of its relending of the funds borrowed by it on such obligation to the controlled foreign corporation whose stock is pledged; and

(ii) The assets of such United States person are at all times substantially offset by its obligation to the lender.

(5) ***Special guarantee and pledge rule for expatriated foreign subsidiaries*** —

(i) ***General rule.*** In applying paragraphs (c)(1) and (2) of this section to a controlled foreign corporation that is an expatriated foreign subsidiary, the phrase "of a United States person or a non-EFS foreign related person" is substituted for the phrase "of a United States person" each place it appears.

(ii) ***Additional rules.*** The rule in paragraph (c)(5)(i) of this section—

(A) Applies regardless of whether, when the pledge or guarantee was entered into or treated as entered into, the controlled foreign corporation was a controlled foreign corporation or an expatriated foreign subsidiary, or a foreign person whose obligation is subject to the pledge or guarantee, or deemed pledge or guarantee, was a non-EFS foreign related person; and

(B) Applies to pledges or guarantees entered into, or treated pursuant to paragraph (c)(2) of this section as entered into—

(*1*) During the applicable period; or

(*2*) In a transaction related to the inversion transaction.

(d) ***Definitions*** —

(1) ***Meaning of "acquired"*** —

(i) ***Applicable rules.*** For purposes of this section—

(*a*) Property shall be considered acquired by a foreign corporation when such corporation acquires an adjusted basis in the property;

(*b*) Property which is an obligation of a United States person with respect to which a controlled foreign corporation is a pledgor or guarantor (within the meaning of paragraph (c) of this section) shall be considered acquired when the corporation becomes liable as a pledgor or guarantor or is otherwise considered a pledgor or guarantor (within the meaning of paragraph (c)(2) of this section); and

(*c*) Property shall not be considered acquired by a foreign corporation if—

(*1*) Such property is acquired in a transaction in which gain or loss would not be recognized under this chapter to such corporation if such corporation were a domestic corporation;

(*2*) The basis of the property acquired by the foreign corporation is the same as the basis of the property exchanged by such corporation; and

(*3*) The property exchanged by the foreign corporation was not United States property (as defined in paragraph (a)(1) of this section) but would have been such property if it had been acquired by such corporation immediately before such exchange.

(ii) ***Illustrations.*** The application of this subparagraph may be illustrated by the following examples:

Example 1. Foreign corporation R uses the calendar year as a taxable year and acquires before January 1, 1963, stock of domestic corporation M having as to R Corporation an adjusted basis of $10,000. The stock of M Corporation is not United States property of R Corporation on December 31, 1962, since it is not acquired in a taxable year of R Corporation beginning on or after January 1, 1963. On June 30, 1963, R Corporation sells the M Corporation stock for $15,000 in cash and expends such amount in acquiring stock of domestic corporation N which has as to R Corporation an adjusted basis of $15,000. For purposes of determining R Corporation's aggregate investment in United States property on December 31, 1963, R Corporation has, by virtue of acquiring the stock of N Corporation, acquired $15,000 of United States property.

Example 2. Foreign corporation S, a controlled foreign corporation for the entire period here involved, uses the calendar year as a taxable year and purchases for $100,000 on December 31, 1963, tangible property (not described in section 956(b)(2)) located in the United States and having a remaining estimated useful life of 10 years, subject to a mortgage of $80,000 payable in 5 annual installments. The property constitutes United States property as of December 31, 1963, and the amount taken into account for purposes of determining the aggregate amount of S Corporation's investment in United States property under paragraph (b) of § 1.956-1 is $20,000. No depreciation is sustained with respect to the property during the taxable year 1963. During the taxable year 1964, S Corporation pays $16,000 on the mortgage and sustains $10,000 of depreciation with respect to the property. As of December 31, 1964, the amount taken into account with respect to the property for purposes of determining the aggregate amount of S Corporation's investment in United States property under paragraph (b) of §

1.956-1 is $26,000, computed as follows:

Cost of property		$100,000
Less: Reserve for depreciation		10,000
Adjusted basis of property		90,000
Less: Liability to which property is subject:		
Gross amount of mortgage	$80,000	
Payment during 1964	16,000	
		64,000
Amount taken into account (12-31-64)		26,000

Example 3. Controlled foreign corporation T uses the calendar year as a taxable year and acquires on December 31, 1963, $10,000 of United States property not described in section 956(b)(2); no depreciation is sustained with respect to the property during 1963. Corporation T's current and accumulated earnings and profits (determined as provided in paragraph (b) of § 1.956-1) as of December 31, 1963, are in excess of $10,000, and T Corporation's United States shareholders include in their gross income under section 951(a)(1)(B) their pro rata share of T Corporation's increase ($10,000) for 1963 in earnings invested in United States property. On January 1, 1964, T Corporation acquires an additional $10,000 of United States property not described in section 956(b)(2). Each of the two items of property has an estimated useful life of 5 years, and T Corporation sustains $4,000 of depreciation with respect to such properties during its taxable year 1964. Corporation T's current and accumulated earnings and profits as of December 31, 1964, exceed $16,000, determined as provided in paragraph (b) of § 1.956-1. Corporation T pays no amounts during 1963 to which section 959(c)(1) applies. Corporation T's investment of earnings in United States property at December 31, 1964, is $16,000, and its increase for 1964 in earnings invested in United States property is $6,000.

Example 4. Foreign corporation U uses the calendar year as a taxable year and acquires before January 1, 1963, stock in domestic corporation M having as to U Corporation an adjusted basis of $10,000. On December 1, 1964, pursuant to a statutory merger described in section 368(a)(1), M Corporation merges into domestic corporation N, and U Corporation receives on such date one share of stock in N Corporation, the surviving corporation, for each share of stock it held in M Corporation. Pursuant to section 354 no gain or loss is recognized to U Corporation, and pursuant to section 358 the basis of the property received (stock of N Corporation) is the same as that of the property exchanged (stock of M Corporation). Corporation U is not considered for purposes of section 956 to have acquired United States property by reason of its receipt of the stock in N Corporation.

Example 5. The facts are the same as in example 4, except that U Corporation acquires the stock of M Corporation on February 1, 1963, rather than before January 1, 1963. For purposes of determining U Corporation's aggregate investment in United States property on December 31, 1963, U Corporation has, by virtue of acquiring the stock of M Corporation, acquired $10,000 of United States property. Corporation U pays no amount during 1963 to which section 959(c)(1) applies. The reorganization and resulting acquisition on December 1, 1964, by U Corporation of

N Corporation's stock also represents an acquisition of United States property; however, assuming no other change in U Corporation's aggregate investment in United States property during 1964, U Corporation's increase for such year in earnings invested in United States property is zero.

(2) ***Obligation defined.*** For purposes of section 956 and this section, the term "obligation" includes any bond, note, debenture, certificate, bill receivable, account receivable, note receivable, open account, or other indebtedness, whether or not issued at a discount and whether or not bearing interest, except that the term does not include—

(i) Any indebtedness arising out of the involuntary conversion of property which is not United States property within the meaning of paragraph (a) of this section;

(ii) Any obligation of a United States person (as defined in section 957(c)) arising in connection with the provision of services by a controlled foreign corporation to the United States person if the amount of the obligation outstanding at any time during the taxable year of the controlled foreign corporation does not exceed an amount which would be ordinary and necessary to carry on the trade or business of the controlled foreign corporation and the United States person if they were unrelated. The amount of the obligations shall be considered to be ordinary and necessary to the extent of such receivables that are paid within 60 days;

(iii) Any obligation of a non-EFS foreign related person arising in connection with the provision of services by an expatriated foreign subsidiary to the non-EFS foreign related person if the amount of the obligation outstanding at any time during the taxable year of the expatriated foreign subsidiary does not exceed an amount which would be ordinary and necessary to carry on the trade or business of the expatriated foreign subsidiary and the non-EFS foreign related person if they were unrelated. The amount of the obligations shall be considered to be ordinary and necessary to the extent of such receivables that are paid within 60 days; or

(iv) Any obligation of a United States person (as defined in section 957(c)) that is collected within 30 days from the time it is incurred (a *30-day obligation*), unless the controlled foreign corporation that holds the 30-day obligation holds for 60 or more calendar days during the taxable year in which it holds the 30-day obligation any obligations which, without regard to the exclusion described in this paragraph (d)(2)(iv), would constitute United States property within the meaning of section 956 and paragraph (a) of this section.

(e) ***Effective/applicability date.*** The last sentence of paragraph (b)(1)(vi) of this section applies to taxable years of controlled foreign corporations beginning on or after May 2, 2006, and for taxable years of United States shareholders with or within which such taxable years of the controlled foreign corporations end. Taxpayers may elect to apply the rule of the last sentence of paragraph (b)(1)(vi) of this section to taxable years of controlled foreign corporations beginning after December 31, 2004, and for taxable years of United States shareholders with or within which such taxable years of the controlled foreign corporations end. If an election is made to apply the last two sentences of § 1.954-2(c)(2)(ii) and § 1.954-2(c)(2)(v) through (vii) to taxable years of a controlled foreign corporation beginning after December 31, 2004, then the election must also be made for the last sentence of paragraph (b)(1)(vi) of this section.

(f) [Reserved] For further guidance, see § 1.956-2T(f).

(g) [Reserved]

(h) ***Effective/applicability date.***

(1) Paragraph (a)(3) of this section applies to taxable years of controlled foreign corporations ending on or after November 3, 2016, and taxable years of United States shareholders in which or with which such taxable years end, with respect to obligations held on or after November 3, 2016.

(2) Paragraphs (c)(1), (c)(2), and *Example 4* of paragraph (c)(3) of this section apply to taxable years of controlled foreign corporations ending on or after November 3, 2016, and taxable years of United States shareholders in which or with which such taxable years end, with respect to pledges and guarantees entered into on or after September 1, 2015. For purposes of this paragraph (h)(2), a pledgor or guarantor is treated as entering into a pledge or guarantee when there is a significant modification, within the meaning of § 1.1001-3(e), of an obligation with respect to which it is a pledgor or guarantor on or after September 1, 2015.

(3) Except as otherwise provided in this paragraph (h)(3), paragraphs (a)(4) and (c)(5) of this section apply to obligations or stock acquired or to pledges or guarantees entered into, or treated as entered into, on or after September 22, 2014, but only if the inversion transaction was completed on or after September 22, 2014. The phrase ", regardless of whether, when the obligation or stock was acquired, the acquirer was a controlled foreign corporation or an expatriated foreign subsidiary" in paragraph (a)(4)(i)(A) of this section, the phrase "regardless of whether, when the obligation or stock was acquired, the foreign person or foreign corporation was a non-EFS foreign related person" in paragraph (a)(4)(i)(B) of this section, and paragraphs (a)(4)(i)(C)(*2*), (c)(5)(ii)(A), and (c)(5)(ii)(B)(*2*) of this section apply to obligations or stock acquired or pledges or guarantees entered into or treated as entered into on or after April 4, 2016, but only if the inversion transaction was completed on or after September 22, 2014. Paragraph (a)(4)(ii) of this section applies to obligations acquired on or after April 4, 2016. For inversion transactions completed on or after September 22, 2014, however, taxpayers may elect to apply paragraph (a)(4)(ii) of this section to an obligation acquired before April 4, 2016. For purposes of paragraph (a)(4)(i) of this section and this paragraph (h)(3), a deemed exchange of an obligation or stock pursuant to section 1001 constitutes an acquisition of the obligation or stock. For purposes of paragraph (c)(5) of this section and this paragraph (h)(3), a pledgor or guarantor or deemed pledgor or guarantor is treated as entering into a pledge or guarantee when there is a significant modification, within the meaning of § 1.1001-3(e), of an obligation with respect to which it is a pledgor or guarantor or is treated as a pledgor or guarantor.

(4) Paragraphs (d)(2)(i) and (ii) of this section are effective June 14, 1988, with respect to investments made on or after June 14, 1988.

(5) Paragraph (d)(2)(iii) of this section applies to obligations acquired on or after April 4, 2016, but only if the inversion transaction was completed on or after September 22, 2014. For inversion transactions completed on or after September 22, 2014, however, taxpayers may elect to apply paragraph (d)(2)(iii) of this section to an obligation acquired on or after September 22, 2014, and before April 4, 2016. For purposes of paragraph (d)(2)(iii) of this section and this paragraph (h)(5), a significant modification, within the meaning of § 1.1001-3(e), of an obligation on or after April 4, 2016, constitutes an acquisition of an obligation on or after April 4, 2016.

(6) Paragraph (d)(2)(iv) of this section applies to obligations held on or after September 16, 1988. See § 1.956-2T(d)(2)(v), as contained in 26 CFR part 1 revised as of April 1, 2017, for additional rules applicable to certain taxable years of a foreign corporation beginning before January 1, 2011.

(Secs. 956(c), 7805, Internal Revenue Code of 1954 (76 Stat. 1017, 68A Stat. 917; (26 U.S.C. 956(c) and 7805 respectively)))

[T.D. 6704, 29 FR 2601, Feb. 20, 1964, as amended by T.D. 7712, 45 FR 52374, Aug. 7, 1980; T.D. 7797, 46 FR 57675, Nov. 25, 1981; T.D. 8209, 53 FR 22171, June 14, 1988; T.D. 9008, 67 FR 48025, July 23, 2002; T.D. 9406, 73 FR 38117, July 3, 2008; T.D. 9525, 76 FR 26181, May 6, 2011; T.D. 9589, 77 FR 27614, May 11, 2012; T.D. 9761, 81 FR 20886, Apr. 8, 2016; T.D. 9792, 81 FR 76507, Nov. 3, 2016; T.D. 9834, 83 FR 32536, July 12, 2018]

§ 1.956-2T Definition of United States Property (temporary).

(a)

(1) through(a)

(3) [Reserved] For further guidance, see § 1.956-2(a) through (b)(1)(x).

(4) [Reserved]

(b)

(1) introductory text through (b)(1)(x) [Reserved] For further guidance, see § 1.956-2(a) through (b)(1)(x).

(xi) An obligation of a United States person arising from a nonperiodic payment by a controlled foreign corporation (within the meaning of section 957(a)) with respect to a notional principal contract described in § 1.446-3T(g)(4)(ii)(B)(*1*) or (*2*) if the following conditions are satisfied—

(A) The controlled foreign corporation that makes the nonperiodic payment is either a dealer in securities (within the meaning of section 475(c)(1)) or a dealer in commodities; and

(B) The conditions set forth in § 1.446-3T(g)(4)(ii)(C)(*1*) (relating to full margin or collateral in cash) are satisfied.

(C) ***Examples.*** The following examples illustrate the application of this paragraph (b)(1)(xi):

> *Example 1. Full margin—cleared contract.* (i) A domestic corporation (U.S.C.) wholly owns a controlled foreign corporation (CFC) that is a dealer in securities under section 475(c)(1). CFC enters into an interest rate swap contract with unrelated counterparty B. The contract is required to be cleared and is accepted for clearing by a U.S.-registered derivatives clearing organization (DCO). CFC is not a member of the DCO. CFC uses a U.S. affiliate (CM), which is a member of the DCO, as its clearing member to submit the contract to be cleared. CM is a domestic corporation that is wholly owned by U.S.C.. The standardized terms of the contract provide that, for a term of X years, CFC will pay B a fixed coupon of 1% per year and receive a floating coupon on a notional principal amount of $Y. When CFC and B enter into the contract, the market coupon for similar interest rate swaps is 2% per year. The DCO requires CFC to make an upfront payment to compensate B for the below-market annual coupon payments that B will receive, and CFC makes the upfront payment in cash. CFC makes the upfront payment through CM to the DCO, which then makes the payment to B. The DCO also requires B to post initial variation margin in an amount equal to the upfront payment and requires each party to post and collect daily variation margin in an amount equal to the change in the fair market value of the contract on a daily basis for the entire term of the contract. B posts

the initial variation margin in U.S. dollars, which is received by CFC (through DCO and CM), and the parties post and collect daily variation margin in U.S. dollars.
(ii) Because the contract is subject to initial variation margin in an amount equal to the upfront payment and daily variation margin in an amount equal to the change in the fair market value of the contract on a daily basis for the entire term of the contract, the contract is described in § 1.446-3T(g)(4)(ii)(B)(*1*). Furthermore, because the additional conditions set forth in this paragraph (b)(1)(xi) are satisfied, the obligation of CM arising from the upfront payment by CFC does not constitute United States property for purposes of section 956.

Example 2. *Full margin—uncleared contract.* (i) Assume the same facts as in *Example 1,* except for the following. CFC's counterparty to the contract is U.S.C., CM is not involved, and the contract is not required to be cleared and is not accepted for clearing by a U.S.-registered derivatives clearing organization. The contract requires CFC to make an upfront payment to compensate U.S.C. for the below-market annual coupon payments that U.S.C. will receive, and CFC makes the upfront payment in U.S. dollars. Pursuant to the requirements of a federal regulator, U.S.C. is obligated to post initial variation margin with CFC in an amount equal to CFC's upfront payment, and U.S.C. and CFC are obligated to post and collect daily variation margin in an amount equal to the change in the fair market value of the contract on a daily basis for the entire term of the contract. U.S.C. posts the initial variation margin in U.S. dollars, which is received by CFC, and the parties post and collect daily variation margin in U.S. dollars.
(ii) Because the contract is subject to initial variation margin in an amount equal to the upfront payment and daily variation margin in an amount equal to the change in the fair market value of the contract on a daily basis for the entire term of the contract, the contract is described in § 1.446-3T(g)(4)(ii)(B)(*2*). Furthermore, because the additional conditions set forth in this paragraph (b)(1)(xi) are satisfied, the obligation of U.S.C. arising from the upfront payment by CFC does not constitute United States property for purposes of section 956.

(b) (2) through (c)(4) [Reserved] For further guidance, see § 1.956-2(b)(2) through (c)(4).

(5) [Reserved]

(d) introductory text through (d)(1) [Reserved] For further guidance, see § 1.956-2(b)(2) through (d)

(1) .

(2) [Reserved]

(e) [Reserved] For further guidance see § 1.956-2(e).

(f) ***Effective/applicability date.*** Paragraph (b)(1)(xi) of this section applies to payments described in § 1.956-2T(b)(1)(xi) made on or after May 8, 2015. Taxpayers may apply the rules of paragraph (b)(1)(xi) to payments made before May 8, 2015.

(g) ***Expiration date.*** The applicability of paragraph (b)(1)(xi) of this section expires on May 7, 2018.

(h) [Reserved]

[T.D. 8209, 53 FR 22171, June 14, 1988, as amended at T.D. 9406, 73 FR 38117, July 3, 2008; T.D. 9525, 76 FR 26181, May 6, 2011; T.D. 9589, 77 FR 27614, May 11, 2012; T.D. 9719, 80 FR 26442, May 8, 2015; T.D. 9761, 81 FR 20886, Apr. 8, 2016; T.D. 9761, 81 FR 46833, July 19, 2016; T.D. 9834, 83 FR 32538, July 12, 2018]

§ 1.956-3 Certain trade or service receivables acquired from United States persons.

(a) ***In general.*** For purposes of section 956(a) and § 1.956-1, the term "United States property" also includes any trade or service receivable if the trade or service receivable is acquired (directly or indirectly) from a related person who is a United States person (as defined in section 7701(a)(30)) (a *related United States person*) and the obligor under the receivable is a United States person. A trade or service receivable described in this paragraph is considered to be United States property notwithstanding the exceptions (other than subparagraph (H)) contained in section 956(c)(2). The terms "trade or service receivable" and "related person" have the respective meanings given to the terms by section 864(d) and the regulations thereunder, including § 1.864-8T(b). For purposes of this section, the exception in § 1.956-2T(d)(2)(ii) does not apply to trade or service receivables described in this paragraph.

(b) ***Acquisition of a trade or service receivable*** —

(1) ***General rule.*** The rules of § 1.864-8T(c)(1) apply to determine whether a controlled foreign corporation has acquired a trade or service receivable.

(2) ***Indirect acquisitions*** —

(i) ***Acquisition through unrelated person.*** A trade or service receivable is considered acquired from a related person when it is acquired from an unrelated person who acquired (directly or indirectly) the receivable from a person who is a related person to the acquiring person.

(ii) ***Acquisition by nominee, pass-through entity, or related foreign corporation.*** A controlled foreign corporation is treated as holding a trade or service receivable that is held by a nominee on its behalf, or by a simple trust or other pass-through entity (other than a partnership) to the extent of its direct or indirect ownership or beneficial interest in such simple trust or other pass-through entity. See §§ 1.956-1(b) and 1.956-4(b) for rules that may treat a controlled foreign corporation as indirectly holding a trade or service receivable held by a foreign corporation or partnership. A controlled foreign corporation that is treated as holding a trade or service receivable held by another person (the *direct holder*) (or that would be treated as holding the receivable if the receivable were United States property or would be United States property if held directly by the controlled foreign corporation) is considered to have acquired the receivable from the person from whom the direct holder acquired the receivable. This paragraph (b)(2)(ii) does not limit the application of paragraph (b)(2)(iii) of this section. The following examples illustrate the application of this paragraph (b)(2)(ii):

> *Example 1.* (i) *Facts.* A domestic corporation, P, wholly owns a controlled foreign corporation, FS, with substantial earnings and profits. FS contributes $200x of cash to a partnership, PRS, in exchange for an 80% partnership interest. An unrelated foreign person contributes real estate located in a foreign country with a fair market value of $50x to PRS for the remaining 20% partnership interest. There are no special allocations

in the PRS partnership agreement. PRS uses the $200x of cash received from FS to purchase trade receivables from P. The obligors with respect to the trade receivables are United States persons that are not related to any partner in PRS. The liquidation value percentage, as determined under § 1.956-4(b), for FS with respect to PRS is 80%. A principal purpose of funding PRS (through FS's cash contribution) is to avoid the application of section 956 with respect to FS.
(ii) *Result.* Under § 1.956-4(b)(1), FS is treated as holding 80% of the trade receivables acquired by PRS from P, with a basis equal to $160x (80% × $200x, PRS's basis in the trade receivables). However, because FS controls PRS and a principal purpose of FS funding PRS was to avoid the application of section 956 with respect to FS, under § 1.956-1(b), if the trade receivables would be United States property if held directly by FS, FS additionally would be treated as holding the trade receivables to the extent that they exceed the amount of the receivables it holds under § 1.956-4(b), which is $40x ($200x−$160x). Accordingly, under this paragraph (b)(2)(ii), FS is treated as having acquired from P, a related United States person, the trade receivables that it is treated as holding with a basis equal to $200x ($160x + $40x). Thus, FS is treated as holding United States property with a basis of $200x under paragraph (a) of this section.

Example 2. (i) *Facts.* A domestic corporation, P, wholly owns a controlled foreign corporation, FS1, that has earnings and profits of at least $300x. FS1 organizes a foreign corporation, FS2, with a $200x cash contribution. FS2 uses the cash contribution to purchase trade receivables from P. The obligors with respect to the trade receivables are unrelated United States persons. A principal purpose of funding FS2 (through FS1's cash contribution) is to avoid the application of section 956 with respect to FS1.
(ii) *Result.* Under § 1.956-1(b), if the trade receivables held by FS2 were United States property, FS1 would be treated as holding the trade receivables held by FS2 because FS1 controls FS2 and a principal purpose of FS1 funding FS2 was to avoid the application of section 956 with respect to FS1. Accordingly, under this paragraph (b)(2)(ii), FS1 is treated as having acquired from P, a related United States person, the trade receivables that it would be treated as holding with a basis equal to $200x. Thus, FS1 is treated as holding United States property with a basis of $200x under paragraph (a) of this section.

(iii) ***Swap or pooling arrangements.*** A trade or service receivable of a United States person is considered to be a trade or service receivable acquired from a related United States person and subject to the rules of this section when it is acquired in accordance with an arrangement that involves two or more groups of related persons, if the groups are unrelated to each other and the effect of the arrangement is that one or more persons in each group acquire (directly or indirectly) trade or service receivables from one or more unrelated United States persons who are also parties to the arrangement in exchange for reciprocal purchases of receivables from related United States persons. The following example illustrates the application of this paragraph (b)(2)(iii):

Example. (i) *Facts.* Controlled foreign corporations A, B, C, and D are wholly-owned subsidiaries of domestic corporations M, N, O, and P, respectively. M, N, O, and P are not related persons. According to a prearranged plan, A, B, C, and D each acquire trade or service receivables from M, N, O, and/or P. The obligors under some or all of the receivables acquired by each of A, B, C, and D are United States persons.
(ii) *Result.* The effect of the prearranged plan is that each of A, B, C, and D acquires trade or service receivables of United States persons from one or more unrelated United States persons who are also parties to the arrangement, in exchange for reciprocal purchases of receivables from a related United States person. Accordingly, each of A, B, C, and D is treated as holding a trade or service receivable acquired from a related United States person and is subject to the rules of this section. As a result, each of A, B, C, and D is treated as holding an amount of United States property equal to its adjusted basis in the receivables acquired pursuant to the arrangement with respect to which the obligors are United States persons.

(iv) ***Financing arrangements.*** If a controlled foreign corporation participates (directly or indirectly) in a lending transaction that results in a loan to a United States person who purchases property described in section 1221(a)(1) (*inventory property*) or services from a related United States person, or to any person who purchases from a related United States person trade or service receivables under which the obligor is a United States person, or to a person who is a related person with respect to the purchaser, and if the loan would not have been made or maintained on the same terms but for the corresponding purchase, then the controlled foreign corporation is considered to have indirectly acquired a trade or service receivable described in paragraph (a) of this section. For purposes of this paragraph (b)(2)(iv), it is immaterial that the sums lent are not, in fact, the sums used to finance the purchase of the inventory property or services or trade or service receivables from a related United States person. The amount to be taken into account with respect to the United States property treated as held by a controlled foreign corporation as a result of the application of this paragraph (b)(2)(iv) is the lesser of the amount lent pursuant to a lending transaction described in this paragraph (b)(2)(iv) and the purchase price of the inventory property, services, or trade or service receivables. The following examples illustrate the application of this paragraph (b)(2)(iv):

Example 1. (i) *Facts.* P, a domestic corporation, owns all of the outstanding stock of FS1, a controlled foreign corporation. P sells inventory property for $200x to X, an unrelated United States person. FS1 makes a $100x short-term loan to X, which loan would not have been made or maintained on the same terms but for X's purchase of P's inventory property.
(ii) *Result.* FS1 directly participates in a lending transaction described in this paragraph (b)(2)(iv). Thus, FS1 is considered to have acquired a trade or service receivable described in paragraph (a) of this section. That is, FS1 is considered to have acquired a trade or service receivable of a United States person from a related United States person. As a result, FS1 is treated as holding United States property in the amount of $100x.

Example 2. (i) *Facts.* The facts are the same as in *Example 1* of this paragraph (b)(2)(iv), except that instead of loaning money to X directly, FS1 deposits $300x with an unrelated financial institution that loans $200x to X in order for X to purchase P's inventory property. The loan would not have been made or maintained on the same terms but for the corresponding deposit.
(ii) *Result.* FS1 is considered to have acquired a trade or service receivable described in paragraph (a) of this section because FS1 indirectly participates in a lending transaction described in this paragraph (b)(2)(iv). See Rev. Rul. 87-89, 1987-2 CB 195. That is, FS1 is considered to have acquired a trade or service receivable of a United States person from a related United States person. Thus, FS1 is treated as holding United States property in the amount of $200x.

Example 3. (i) *Facts.* P, a domestic corporation, owns all of the outstanding stock of FS1, a controlled foreign corporation. FS1 makes a $300x loan to U, an unrelated foreign corporation, in connection with U's purchase from P of receivables from the sale of inventory property by P to United States obligors for $200x.
(ii) *Result.* FS1 is considered to have acquired a trade or service receivable described in paragraph (a) of this section because FS1 directly participates in a lending transaction described in this paragraph (b)(2)(iv). That is, FS1 is considered to have acquired a trade or service receivable of a United States person from a related United States person. Thus, FS1 is treated as holding United States property in the amount of $200x.

(c) ***Substitution of obligor.*** For purposes of this section, the substitution of another person for a United States obligor is disregarded, unless it can be demonstrated by the parties to the transaction that the primary purpose for the arrangement was not the avoidance of section 956. The following example illustrates the application of this paragraph (c):

Example. (i) *Facts.* P, a domestic corporation, owns all of the outstanding stock of FS1, a controlled foreign corporation with substantial accumulated earnings and profits. P sells inventory property to X, a domestic corporation unrelated to P. To pay for the inventory property, X arranges for a foreign financing entity to issue a note to P. P then sells the note to FS1. P and X cannot demonstrate that the primary purpose for X's assignment of the payment obligation to the foreign financing entity was not the avoidance of section 956.
(ii) *Result.* The substitution of the foreign financing entity for X is disregarded, and FS1 is treated as holding an obligation of a United States person acquired from a related United States person. Thus, FS1 is treated as holding United States property in the amount of the purchase price of the note.

(d) ***Effective/applicability date.***

(1) Except as provided in paragraph (d)(2) of this section, this section applies to trade or service receivables acquired (directly or indirectly) after March 1, 1984.

(2) Paragraph (b)(2)(ii) of this section applies to taxable years of controlled foreign corporations ending on or after November 3, 2016, and taxable years of United States shareholders in which or with which such taxable years end, with respect to trade or service receivables acquired on or after September 1, 2015. For purposes of this paragraph (d), a significant modification, within the meaning of § 1.1001-3(e), of a trade or service receivable on or after September 1, 2015, constitutes an acquisition of the trade or service receivable on or after that date.

[T.D. 9792, 81 FR 76508, Nov. 3, 2016]

§ 1.956-4 Certain rules applicable to partnerships.

(a) ***Overview.*** This section provides rules concerning the application of section 956 to certain obligations of and property held by a partnership. Paragraph (b) of this section provides rules concerning United States property held indirectly by a controlled foreign corporation through a partnership. Paragraph (c) of this section provides rules that generally treat obligations of a foreign partnership as obligations of the partners in the foreign partnership, as well as a special rule that treats a partner that is a United States person as owing additional amounts of a partnership obligation in certain circumstances. Paragraph (d) of this section sets forth a rule concerning the application of the indirect pledge or guarantee rule to obligations of partnerships. Paragraph (e) of this section provides that obligations of a domestic partnership are obligations of a United States person. Paragraph (f) of this section provides effective and applicability dates. See §§ 1.956-1(b) and 1.956-2(c) for additional rules applicable to partnerships.

(b) ***Property held indirectly through a partnership*** —

(1) ***General rule.*** For purposes of section 956, a partner in a partnership is treated as holding its attributable share of any property held by the partnership (including an obligation that the partnership is treated as holding as a result of the application of § 1.956-2(c)). A partner's attributable share of partnership property is determined under the rules set forth in paragraph (b)(2) of this section. An upper-tier partnership's attributable share of the property of a lower-tier partnership is treated as property of the upper-tier partnership for purposes of applying this paragraph (b)(1) to the partners of the upper-tier partnership. For purposes of section 956, a partner's adjusted basis in the property of the partnership equals the partner's attributable share of the partnership's adjusted basis in the property, as determined under the rules set forth in paragraph (b)(2) of this section, taking into account any adjustments to basis under section 743(b) (with respect to the partner) or section 734(b) or any similar adjustments to basis. The rules in § 1.956-1(e)(2) apply to determine the amount of an obligation treated as held by a partnership as a result of the application of § 1.956-2(c). See § 1.956-1(b) for special rules that may treat a controlled foreign corporation as holding a greater amount of United States property held by a partnership than the amount determined under this section.

(2) ***Methodology*** —

(i) ***Liquidation value percentage*** —

(A) ***Calculation.*** Except as otherwise provided in paragraph (b)(2)(ii) of this section, for purposes of paragraph (b)(1) of this section, a partner's attributable share of partnership property is determined in accordance with the partner's liquidation value percentage. For purposes of this paragraph (b)(2)(i) and paragraph (c)(1) of this section, the liquidation value of a partner's interest in a partnership is the amount of cash the partner would receive with respect to the interest if, on the applicable determination date, as provided in

paragraph (b)(2)(i)(B) of this section, the partnership sold all of its assets for cash equal to the fair market value of such assets (taking into account section 7701(g)), satisfied all of its liabilities (other than those described in § 1.752-7), paid an unrelated third party to assume all of its § 1.752-7 liabilities in a fully taxable transaction, and then liquidated. A partner's liquidation value percentage is the ratio (expressed as a percentage) of the liquidation value of the partner's interest in the partnership divided by the aggregate liquidation value of all of the partners' interests in the partnership.

(B) ***Determination date.*** The *determination date* with respect to a partnership is the most recent of—

(*1*) The formation of the partnership;

(*2*) An event described in § 1.704-1(b)(2)(iv)(*f*)(*5*) or § 1.704-1(b)(2)(iv)(*s*)(*1*) (a *revaluation event*), irrespective of whether the capital accounts of the partners are adjusted in accordance with § 1.704-1(b)(2)(iv)(*f*); or

(*3*) The first day of the partnership's taxable year, as determined under section 706, provided the liquidation value percentage determined for any partner on that day would differ from the most recently determined liquidation value percentage of that partner by more than 10 percentage points.

(ii) ***Special allocations.*** For purposes of paragraph (b)(1) of this section, if a partnership agreement provides for the allocation of book income (or, where appropriate, book gain) from a subset of the property of the partnership to a partner other than in accordance with the partner's liquidation value percentage in a particular taxable year (a *special allocation*), then the partner's attributable share of that property is determined solely by reference to the partner's special allocation with respect to the property, provided the special allocation will be respected for federal income tax purposes under section 704(b) and the regulations thereunder and does not have a principal purpose of avoiding the purposes of section 956.

(3) ***Examples.*** The following examples illustrate the rules of this paragraph (b):

Example 1. (i) *Facts.* USP, a domestic corporation, wholly owns FS, a controlled foreign corporation, which, in turn, owns an interest in FPRS, a foreign partnership. The remaining interest in FPRS is owned by an unrelated foreign person. FPRS holds non-depreciable property with an adjusted basis of $100x (the "FPRS property") that would be United States property if held by FS directly. At the close of quarter 1 of year 1, the liquidation value percentage, as determined under paragraph (b)(2) of this section, for FS with respect to FPRS is 25%. There are no special allocations in the FPRS partnership agreement.
(ii) *Result.* Under paragraph (b)(1) of this section, for purposes of section 956, FS is treated as holding its attributable share of the property held by FPRS with an adjusted basis equal to its attributable share of FPRS's adjusted basis in such property. Under paragraph (b)(2) of this section, FS's attributable share of property held by FPRS is determined in accordance with FS's liquidation value percentage, which is 25%. Thus, FS's attributable share of the FPRS property is 25%, and its attributable share of FPRS's basis in the FPRS property is $25x.

Accordingly, for purposes of determining the amount of United States property held by FS as of the close of quarter 1 of year 1, FS is treated as holding United States property with an adjusted basis of $25x.

Example 2. (i) *Facts.* The facts are the same as in *Example 1* of this paragraph (b)(3), except that the FPRS partnership agreement, which satisfies the requirements of section 704(b), specially allocates 80% of the income with respect to the FPRS property to FS. The special allocation does not have a principal purpose of avoiding the purposes of section 956.
(ii) *Result.* Under paragraph (b)(1) of this section, for purposes of section 956, FS is treated as holding its attributable share of property held by FPRS with an adjusted basis equal to its attributable share of FPRS's adjusted basis in such property. In general, FS's attributable share of property held by FPRS is determined in accordance with FS's liquidation value percentage. However, because the special allocation does not have a principal purpose of avoiding the purposes of section 956, under paragraph (b)(2)(ii) of this section, FS's attributable share of the FPRS property is determined by reference to its special allocation. FS's special allocation percentage for the FPRS property is 80%, and thus FS's attributable share of the FPRS property is 80% and its attributable share of FPRS's basis in the FPRS property is $80x. Accordingly, for purposes of determining the amount of United States property held by FS as of the close of quarter 1 of year 1, FS is treated as holding United States property with an adjusted basis of $80x.

Example 3. (i) *Facts.* USP, a domestic corporation, wholly owns FS, a controlled foreign corporation, which, in turn, owns an interest in FPRS, a foreign partnership. USP owns the remaining interest in FPRS. FPRS holds property (the “FPRS property”) that would be United States property if held by FS directly. The FPRS property has an adjusted basis of $100x and is anticipated to appreciate in value but generate relatively little income. The FPRS partnership agreement, which satisfies the requirements of section 704(b), specially allocates 80% of the income with respect to the FPRS property to USP and 80% of the gain with respect to the disposition of FPRS property to FS. The special allocation does not have a principal purpose of avoiding the purposes of section 956.
(ii) *Result.* Because the special allocation does not have a principal purpose of avoiding the purposes of section 956, under paragraph (b)(2)(ii) of this section, FS's attributable share of the FPRS property is determined by reference to a special allocation with respect to the FPRS property. Given the income and gain anticipated with respect to the FPRS property, it is appropriate to determine FS's attributable share of the property in accordance with the special allocation of gain. Accordingly, for purposes of determining the amount of United States property held by FS in each year that FPRS holds the FPRS property, FS's attributable share of the FPRS property is 80% and its attributable share of FPRS's basis in the FPRS property is $80x. Thus, FS is treated as holding United States property with an adjusted basis of $80x.

(c) *Obligations of a foreign partnership* —

(1) ***In general.*** Except as provided in paragraphs (c)(2) and (c)(3) of this section, for purposes of section 956, an obligation of a foreign partnership is treated as a separate obligation of each of the partners in the partnership to the extent of each partner's share of the obligation. A partner's share of the partnership's obligation is determined in accordance with the partner's liquidation value percentage, as determined under the rules set forth in paragraph (b)(2)(i) of this section, without regard to the rules set forth in paragraph (b)(2)(ii) of this section. An upper-tier partnership's share of an obligation of a lower-tier partnership is treated as an obligation of the upper-tier partnership for purposes of applying this paragraph (c)(1) to the partners of the upper-tier partnership.

(2) ***Exception for obligations of partnerships in which neither the lending controlled foreign corporation nor any person related to the lending controlled foreign corporation is a partner.*** For purposes of applying section 956 with respect to a controlled foreign corporation, an obligation of a foreign partnership is treated as an obligation of a foreign partnership, and not as an obligation of its partners, if neither the controlled foreign corporation nor any person related to the controlled foreign corporation within the meaning of section 954(d)(3) is a partner in the partnership. For purposes of section 956, an obligation treated as an obligation of a foreign partnership pursuant to this paragraph (c)(2) is not an obligation of a United States person.

(3) *Special obligor rule in the case of certain partnership distributions* —

(i) ***General rule.*** For purposes of determining a partner's share of a foreign partnership's obligation under section 956, if the foreign partnership distributes an amount of money or property to a partner that is related to a controlled foreign corporation within the meaning of section 954(d)(3) and whose obligation would be United States property if held (or if treated as held) by the controlled foreign corporation, and the foreign partnership would not have made the distribution but for a funding of the partnership through an obligation held (or treated as held) by the controlled foreign corporation, notwithstanding § 1.956-1(e), the partner's share of the partnership obligation is the greater of—

(A) The partner's share of the partnership obligation as determined under paragraph (c)(1) of this section; and

(B) The lesser of the amount of the distribution to the partner that would not have been made but for the funding of the partnership and the amount of the obligation (as determined under § 1.956-1(e)).

(ii) ***Deemed treatment.***

(A) For purposes of applying paragraph (c)(3)(i) of this section, in the case of a distribution of liquid assets by a foreign partnership to a partner, the foreign partnership is treated as if it would not have made the distribution of liquid assets to the partner but for the funding of the partnership through an obligation or obligations held (or treated as held) by the controlled foreign corporation to the extent the foreign partnership does not have sufficient liquid assets to make the distribution immediately prior to the distribution, without taking into account the obligation or obligations.

(B) If the controlled foreign corporation holds (or is treated as holding) multiple obligations of the foreign partnership, paragraph (c)(3)(ii)(A) of this section applies to the obligations in reverse chronological order starting with the obligation that was acquired (or the obligation with respect to which a pledge or guarantee was entered into) closest in time to

the distribution. Paragraph (c)(3)(ii)(A) of this section applies to an obligation only to the extent that the full amount of the distribution is not otherwise treated, pursuant to paragraph (c)(3)(ii)(A) of this section, as if it would not have been made but for the funding of the partnership through one or more other obligations.

(C) For purposes of paragraph (c)(3)(ii) of this section, a significant modification, within the meaning of § 1.1001-3(e), of an obligation constitutes an acquisition of the obligation on or after that date, and a pledgor or guarantor is treated as entering into a pledge or guarantee when there is a significant modification, within the meaning of § 1.1001-3(e), of an obligation with respect to which it is a pledgor or guarantor.

(D) For purposes of paragraph (c)(3)(ii) of this section, liquid assets means cash or cash equivalents, marketable securities within the meaning of section 453(f)(2), or an obligation owed by a related person (within the meaning of section 954(d)(3)).

(4) ***Examples.*** The following examples illustrate the rules of this paragraph (c):

> *Example 1.* (i) *Facts.* USP, a domestic corporation, wholly owns FS, a controlled foreign corporation, and owns an interest in FPRS, a foreign partnership. At the close of quarter 1 of year 1, the liquidation value percentage, as determined under paragraph (b)(2)(i) of this section, for USP with respect to FPRS is 90%. X, a foreign person that is unrelated to USP or FS, owns the remaining interest in FPRS. FPRS borrows $100x from FS. FS's basis in the FPRS obligation is $100x.
> (ii) *Result.* Under paragraph (c)(1) of this section, for purposes of section 956, the obligation of FPRS is treated as obligations of its partners (USP and X) in proportion to each partner's liquidation value percentage with respect to FPRS. Because USP, a partner in FPRS, is related to FS within the meaning of section 954(d)(3), the exception in paragraph (c)(2) of this section does not apply. Based on its liquidation value percentage, USP's share of the FPRS obligation is $90x. Accordingly, for purposes of section 956, $90x of the FPRS obligation held by FS is treated as an obligation of USP and is United States property within the meaning of section 956(c). Therefore, on the date the loan is made, FS is treated as holding United States property of $90x.

> *Example 2.* (i) *Facts.* The facts are the same as in *Example 1* of this paragraph (c)(4), except that USP owns 40% of the stock of FS and is not a related person (as defined in section 954(d)(3)) with respect to FS. Y, a United States person that is unrelated to USP or X, owns the remaining 60% of the stock of FS.
> (ii) *Result.* Because neither FS nor any person related to FS within the meaning of section 954(d)(3) is a partner in FPRS, the exception in paragraph (c)(2) of this section applies to treat the FPRS obligation as an obligation of a foreign partnership and not an obligation of a United States person. Therefore, paragraph (c)(1) of this section does not apply, and FS is not treated as holding United States property.

> *Example 3.* (i) *Facts.* USP, a domestic corporation, wholly owns FS, a controlled foreign

corporation. USP and FS own interests in FPRS, a foreign partnership. USP's liquidation value percentage with respect to FPRS is 60%, and FS's liquidation value percentage with respect to FPRS is 30%. USP2, a domestic corporation that is unrelated to USP and FS, also owns an interest in FPRS; its liquidation value percentage is 10%. FPRS borrows $100x from an unrelated person. FS guarantees the FPRS obligation.
(ii) *Result.* Under paragraph (c)(1) of this section, for purposes of section 956, the obligation of FPRS is treated as obligations of its partners (USP, FS, and USP2) in proportion to each partner's liquidation value percentage. Because USP, a partner in FPRS, is related to FS within the meaning of section 954(d)(3), and because FS is a partner in FPRS, the exception in paragraph (c)(2) of this section does not apply. Based on their liquidation value percentages, USP's share of the FPRS obligation is $60x, and USP2's share of the FPRS obligation is $10x. For purposes of section 956, $60x of the FPRS obligation is treated as an obligation of USP, and $10x of the FPRS obligation is treated as an obligation of USP2. Under § 1.956-2(c)(1), FS is treated as holding the obligations of USP and USP2 that FS guaranteed. All of the exceptions to the definition of United States property contained in section 956 and § 1.956-2 must be considered to determine whether the obligations of USP and USP2 that are treated as held by FS constitute United States property. Accordingly, the obligation of USP2 is not United States property under section 956(c)(2)(F) and § 1.956-2(b)(1)(viii). The obligation of USP, however, is United States property within the meaning of section 956(c). Therefore, on the date the guarantee is made, FS is treated as holding United States property of $60x.

Example 4. (i) *Facts.* USP, a domestic corporation, wholly owns FS, a controlled foreign corporation. USP owns an interest in FPRS, a foreign partnership; its liquidation value percentage with respect to FPRS is 70%. A domestic corporation that is unrelated to USP and FS owns the remaining interest in FPRS; its liquidation value percentage is 30%. FPRS borrows $100x from FS and makes a distribution of $80x to USP. FPRS would not have made the distribution to USP but for the funding of FPRS by FS.
(ii) *Result.* Because USP, a partner in FPRS, is related to FS within the meaning of section 954(d)(3), the exception in paragraph (c)(2) of this section does not apply. Moreover, an obligation of USP held by FS would be United States property. USP's share of the FPRS obligation as determined under paragraph (c)(1) of this section in accordance with USP's liquidation value percentage is $70x. Under paragraph (c)(3) of this section, USP's share of the FPRS obligation is the greater of (i) USP's attributable share of the obligation, $70x, or (ii) the lesser of the amount of the distribution, $80x, or the amount of the obligation, $100x. For purposes of section 956, therefore, $80x of the FPRS obligation is treated as an obligation of USP and is United States property within the meaning of section 956(c). Thus, on the date the loan is made, FS is treated as holding United States property of $80x.

(d) ***Limitation on a partner's indirect pledge or guarantee.*** For purposes of section 956 and § 1.956-2(c), a controlled foreign corporation that is a partner in a partnership is not considered a pledgor or guarantor of the portion of an obligation of the partnership attributed to its partners that are United States persons under paragraph (c) of this section solely as a result of the attribution of a portion of the partnership's assets to the controlled foreign corporation under paragraph (b) of this section.

(e) ***Obligations of a domestic partnership.*** For purposes of section 956, an obligation of a domestic partnership is an obligation of a United States person. See section 956(c)(2)(L) for an exception from the treatment of such an obligation as United States property.

(f) ***Effective/applicability dates.***

(1) Paragraph (b) of this section applies to taxable years of controlled foreign corporations ending on or after November 3, 2016, and taxable years of United States shareholders in which or with which such taxable years end, with respect to property acquired on or after November 3, 2016. For purposes of this paragraph (f)(1), a deemed exchange of property pursuant to section 1001 on or after November 3, 2016, constitutes an acquisition of the property on or after that date. See § 1.956-2(a)(3), as contained in 26 CFR part 1 revised as of April 1, 2016, for the rules applicable to taxable years of a controlled foreign corporation beginning on or after July 23, 2002, and ending before November 3, 2016, and with respect to property acquired before November 3, 2016, to taxable years of a controlled foreign corporation beginning on or after July 23, 2002.

(2) Except as otherwise provided in this paragraph (f)(2), paragraph (c) of this section applies to taxable years of controlled foreign corporations ending on or after November 3, 2016, and taxable years of United States shareholders in which or with which such taxable years end, with respect to obligations acquired, or pledges or guarantees entered into, on or after September 1, 2015, and, for purposes of paragraph (c)(3) of this section, in the case of distributions made on or after September 1, 2015. Paragraph (c)(3)(ii) of this section applies to taxable years of controlled foreign corporations ending on or after November 3, 2016, and taxable years of United States shareholders in which or with which such taxable years end, with respect to obligations acquired, or pledges or guarantees entered into, on or after September 1, 2015, and distributions made on or after November 3, 2016. For purposes of this paragraph (f)(2), a significant modification, within the meaning of § 1.1001-3(e), of an obligation on or after September 1, 2015 constitutes an acquisition of the obligation on or after that date. Furthermore, for purposes of this paragraph (f)(2), a pledgor or guarantor is treated as entering into a pledge or guarantee when there is a significant modification, within the meaning of § 1.1001-3(e), of an obligation with respect to which it is a pledgor or guarantor on or after September 1, 2015. See § 1.956-1T(b)(5), as contained in 26 CFR part 1 revised as of April 1, 2016, for rules applicable to taxable years of controlled foreign corporations ending on or after September 1, 2015, and before November 3, 2016, and to taxable years of United States shareholders in which or with which such taxable years end, in the case of distributions made on or after September 1, 2015.

(3) Paragraph (d) of this section applies to taxable years of controlled foreign corporations ending on or after November 3, 2016, and taxable years of United States shareholders in which or with which such taxable years end, with respect to pledges or guarantees entered into on or after September 1, 2015. For purposes of this paragraph (f)(3), a pledgor or guarantor is treated as entering into a pledge or guarantee when there is a significant modification, within the meaning of § 1.1001-3(e), of an obligation with respect to which it is a pledgor or guarantor on or after September 1, 2015.

(4) Paragraph (e) of this section applies to taxable years of controlled foreign corporations ending on or after November 3, 2016, and to taxable years of United States shareholders in which or with which such taxable years end, with respect to obligations held on or after November 3, 2016.

[T.D. 9792, 81 FR 76509, Nov. 3, 2016; 81 FR 95471, Dec. 28, 2016]

§ 1.957-1 Definition of controlled foreign corporation.

(a) ***In general.*** The term *controlled foreign corporation* means any foreign corporation of which more than 50 percent (or such lesser amount as is provided in section 957(b) or section 953(c)) of either—

(1) The total combined voting power of all classes of stock of the corporation entitled to vote; or

(2) The total value of the stock of the corporation, is owned within the meaning of section 958(a), or (except for purposes of section 953(c)) is considered as owned by applying the rules of section 958(b) and § 1.958-2, by United States shareholders on any day during the taxable year of such foreign corporation. For the definition of the term *United States shareholder,* see sections 951(b) and 953(c)(1)(A). For the definition of the term *foreign corporation,* see § 301.7701-5 of this chapter (Procedure and Administration Regulations). For the treatment of associations as corporations, see section 7701(a)(3) and §§ 301.7701-1 and 301.7701-2 of this chapter. For the definition of the term *stock,* see sections 958(a)(3) and 7701(a)(7). For the classification of a member in an association, joint stock company or insurance company as a shareholder, see section 7701(a)(8).

(b) ***Percentage of total combined voting power owned by United States shareholders*** —

(1) ***Meaning of combined voting power.*** In determining for purposes of paragraph (a) of this section whether United States shareholders own the requisite percentage of total combined voting power of all classes of stock entitled to vote, consideration will be given to all the facts and circumstances of each case. In all cases, however, United States shareholders of a foreign corporation will be deemed to own the requisite percentage of total combined voting power with respect to such corporation—

(i) If they have the power to elect, appoint, or replace a majority of that body of persons exercising, with respect to such corporation, the powers ordinarily exercised by the board of directors of a domestic corporation;

(ii) If any person or persons elected or designated by such shareholders have the power, where such shareholders have the power to elect exactly one-half of the members of such governing body of such foreign corporation, either to cast a vote deciding an evenly divided vote of such body or, for the duration of any deadlock which may arise, to exercise the powers ordinarily exercised by such governing body; or

(iii) If the powers which would ordinarily be exercised by the board of directors of a domestic corporation are exercised with respect to such foreign corporation by a person whom such shareholders have the power to elect, appoint, or replace.

(2) ***Shifting of formal voting power.*** Any arrangement to shift formal voting power away from United States shareholders of a foreign corporation will not be given effect if in reality voting power is retained. The mere ownership of stock entitled to vote does not by itself mean that the shareholder owning such stock has the voting power of such stock for purposes of section 957. For example, if there is any agreement, whether express or implied, that any shareholder will not vote his stock or will vote it only in a specified manner, or that shareholders owning stock having not more than 50 percent of the total combined voting power will exercise voting power normally possessed by a

majority of stockholders, then the nominal ownership of the voting power will be disregarded in determining which shareholders actually hold such voting power, and this determination will be made on the basis of such agreement. Moreover, where United States shareholders own shares of one or more classes of stock of a foreign corporation which has another class of stock outstanding, the voting power ostensibly provided such other class of stock will be deemed owned by any person or persons on whose behalf it is exercised or, if not exercised, will be disregarded if the percentage of voting power of such other class of stock is substantially greater than its proportionate share of the corporate earnings, if the facts indicate that the shareholders of such other class of stock do not exercise their voting rights independently or fail to exercise such voting rights, and if a principal purpose of the arrangement is to avoid the classification of such foreign corporation as a controlled foreign corporation under section 957.

(c) ***Illustrations.*** The application of this section may be illustrated by the following examples:

Example 1. Foreign corporation R has two classes of capital stock outstanding, 60 shares of class A stock, and 40 shares of class B stock. Each share of each class of stock has one vote for all purposes. E, a United States person, owns 51 shares of class A stock. Corporation R is a controlled foreign corporation.

Example 2. Foreign corporation S has three classes of capital stock outstanding, consisting of 60 shares of class A stock, 40 shares of class B stock, and 200 shares of class C stock. The owners of a majority of class A stock are entitled to elect 6 of the 10 corporate directors, and the owners of a majority of the class B stock are entitled to elect the other 4 of the 10 directors. Class C stock has no voting rights. D, a United States person, owns all of the shares of the class C stock. He also owns 31 shares of class A stock and as such an owner can elect 6 members of the board of directors. None of the remaining shares of class A stock, or the 40 shares of class B stock, is owned, or considered as owned, within the meaning of section 958, by a United States person. Since, as owner of 31 shares of the class A stock, D has sufficient voting power to elect 6 directors, D has more than 50 percent of the total combined voting power of all classes of stock entitled to vote, and S Corporation is a controlled foreign corporation.

Example 3. M, a United States person, owns a 51-percent interest in R Company, a foreign company of which he is a member. The company, if it were domestic, would be taxable as a corporation. The remaining interest of 49 percent in the company is owned by seven other members none of whom is a United States person. The memorandum of association of R Company provides for only one manager, who with respect to the company exercises the powers ordinarily exercised by a board of directors of a domestic corporation. The manager is to be elected by unanimous agreement of all the members. Since M owns 51 percent of the company, he will be deemed to own more than 50 percent of the total combined voting power of all classes of stock of R Company entitled to vote, notwithstanding that he has power to elect a manager only with the agreement of the other members. Company R is a controlled foreign corporation.

Example 4. Domestic corporation M owns a 49-percent interest in S Company, a foreign company of which it is a member. The company, if it were domestic, would be taxable as a corporation. Company S is formed under the laws of foreign country Y. The remaining interest of 51 percent in S Company is owned by persons who are not United States persons. The organization contract of S Company provides for one manager, B, a citizen and resident of country Y who is an officer of M Corporation in charge of its foreign operations in such country, or any person M Corporation may at any time appoint to succeed B in such capacity. The manager has the sole authority with respect to S

Company to exercise powers ordinarily exercised by a board of directors of a domestic corporation. Since M Corporation has the discretionary power to replace B and to appoint his successor as manager of S Company, the company is a controlled foreign corporation.

Example 5. N, a United States person, owns 50 percent of the outstanding shares of the only class of capital stock of foreign corporation R. An additional 48 percent of the outstanding shares is owned by foreign corporation S. The remaining 2 percent of shares is owned by P, a citizen and resident of foreign country T, who regularly acts as attorney for N in the conduct of N's business affairs in country T. All of the shares of the outstanding capital stock of R Corporation are bearer shares. At the time of the issuance of the shares to him, P places the certificates for such shares in a depository to which N has access. On several occasions N, with P's acquiescence, has taken such shares from the depository and, on one such occasion, used the shares as collateral in borrowing funds on a loan. Although dividends, when paid, are paid to P on his shares, his charges to N for legal fees are reduced by the amount of the dividends paid on such shares. Although P votes his shares at meetings of shareholders, the facts set forth above indicate an implied agreement between P and N that N is really to retain dominion over the stock. N is deemed to own the voting rights ostensibly attached to the stock owned by P, and R Corporation is a controlled foreign corporation.

Example 6. M, a domestic corporation which manufactures in the United States and distributes all of its production for foreign consumption through N, a person other than a related person or a United States person, forms foreign corporation S to purchase products from M Corporation and sell them to N. Corporations S and M have common directors. The outstanding capital stock of S Corporation consists of 10,000 shares of $100 par value class A stock, which has no voting rights except to vote for dissolution of the corporation on a share-for-share basis, and 500 shares of no par class B stock which has full voting rights. Each class of the outstanding stock is to participate on a share for share basis in any dividend. The class A stock has a preference as to assets on dissolution of the corporation to the extent of its par value as well as the right to participate with the class B stock in all other assets on a share for share basis. All of the shares of class A stock are issued to M Corporation in return for property having a value of $1 million. Of the class B stock, 300 of the shares are issued to N in return for $3,000 in cash and 200 shares are issued to M Corporation for $2,000 in cash. At stockholder meetings N never votes in opposition to M Corporation on important issues. Corporation S has average annual earnings of $200,000, all of which will be subpart F income if S Corporation is held to be a controlled foreign corporation. All such earnings are accumulated. Although N ostensibly has 60 percent of the voting power of S Corporation by virtue of his ownership of 300 shares of class B stock, he has the right to only approximately 3 percent of any dividends which may be paid by S Corporation; in addition, upon liquidation of S Corporation, N is entitled to share in the assets only after M Corporation has received the par value of its 10,000 shares of class A stock, or $1 million. Thus, the voting power owned by N is substantially greater than its proportionate share of the earnings of S Corporation. In addition, the facts set forth above indicate that N is not exercising his voting rights independently and that a principal purpose of the capitalization arrangement is to avoid classification of S Corporation as a controlled foreign corporation. For these reasons, the voting power ostensibly provided the class B stock will be deemed owned by M Corporation, and S Corporation is a controlled foreign corporation.

Example 7. Foreign corporation A, authorized to issue 100 shares of one class of capital stock, issues, for $1,000 per share, 45 shares to domestic corporation M, 45 shares to foreign corporation B, and 10 shares to foreign corporation C. Corporation C, a bank, lends $3 million to finance the operations of A Corporation. In the course of negotiating these financial arrangements, D, an officer of C

Corporation, and E, an officer of M Corporation, orally agree that C Corporation will vote its stock as M Corporation directs. By virtue of such oral agreement M Corporation possesses the voting power ostensibly owned by C Corporation, and A Corporation is a controlled foreign corporation.

Example 8. For its prior taxable year, *JV,* a foreign corporation, had outstanding 1000 shares of class A stock, which is voting common, and 1000 shares of class B stock, which is nonvoting preferred. *DP,* a domestic corporation, and *FP,* a foreign corporation, each owned precisely 500 shares of both class A and class B stock, and each elected 5 of the 10 members of *JV*'s board of directors. The other facts and circumstances were such that *JV* was not a controlled foreign corporation on any day of the prior taxable year. On the first day of the current taxable year, *DP* purchased one share of class B stock from *FP. JV* was a controlled foreign corporation on the following day because over 50 percent of the total value in the corporation was held by a person that was a United States shareholder under section 951(b). See § 1.951-1(f).

Example 9. The facts are the same as in *Example 8* except that the stock of *FP* was publicly traded, *FP* had one class of stock, and on the first day of the current taxable year *DP* purchased one share of *FP* stock on the foreign stock exchange instead of purchasing one share of *JV* stock from *FP. JV* became a controlled foreign corporation on the following day because over 50 percent of the total value in the corporation was held by a person that was a United States shareholder under section 951(b).

Example 10. X, a foreign corporation, is incorporated under the laws of country *Y.* Under the laws of country *Y, X* is considered a mutual insurance company. *X* issues insurance policies that provide the policyholder with the right to vote for directors of the corporation, the right to a share of the assets upon liquidation in proportion to premiums paid, and the right to receive policyholder dividends in proportion to premiums paid. Only policyholders are provided with the right to vote for directors, share in assets upon liquidation, and receive distributions. United States policyholders contribute 25 percent of the premiums and have 25 percent of the outstanding rights to vote for the board of directors. Based on these facts, the United States policyholders are United States shareholders owning the requisite combined voting power and value. Thus, *X* is a controlled foreign corporation for purposes of taking into account related person insurance income under section 953(c).

(d) ***Effective date.*** Paragraphs (a) and (c) *Examples 8* through *10* of this section are effective for taxable years of a controlled foreign corporation beginning after November 6, 1995.

[T.D. 6688, 28 FR 11631, Oct. 31, 1963, as amended by T.D. 8216, 53 FR 27510, July 21, 1988; T.D. 8618, 60 FR 46529, Sept. 7, 1995; 60 FR 62026, Dec. 4, 1995; T.D. 8704, 62 FR 21, Jan. 2, 1997]

§ 1.957-2 Controlled foreign corporation deriving income from insurance of United States risks.

(a) ***In general.*** For purposes of taking into account only the income derived from the insurance of United States risks under § 1.953-1, the term "controlled foreign corporation" means any foreign corporation of which more than 25 percent, but not more than 50 percent, of the total combined voting power of all classes of stock entitled to vote is owned within the meaning of section 958(a), or is considered as owned by applying the rules of ownership of section 958(b), by United States shareholders on any day of the taxable year of such foreign corporation, but only if the gross amount of premiums received by such foreign corporation during such taxable year which are attributable to the reinsuring and the issuing of insurance and annuity contracts in connection with United States risks, as defined in § 1.953-2 or 1.953-3, exceeds 75 percent of the gross amount of all premiums received by such foreign corporation during such year which are attributable to the reinsuring and the issuing of insurance and annuity contracts in

connection with all risks. The subpart F income for a taxable year of a foreign corporation which is a controlled foreign corporation for such taxable year within the meaning of this paragraph shall, subject to the provisions of section 952(b), (c), and (d), and § 1.952-1, include only the income derived from the insurance of United States risks, as determined under § 1.953-1.

(b) ***Gross amount of premiums defined.*** For a foreign corporation which is engaged in the business of reinsuring or issuing insurance or annuity contracts and which, if it were a domestic corporation engaged only in such business, would be taxable as—

(1) A life insurance company to which part I (sections 801 through 820) of subchapter L of the Code applies,

(2) A mutual insurance company to which part II (sections 821 through 826) of subchapter L of the Code applies, or

(3) A mutual marine insurance or other insurance company to which part III (sections 831 and 832) of subchapter L of the Code applies,

the term "gross amount of premiums" means, for purposes of paragraph (a) of this section, the gross amount of premiums and other consideration which are taken into account by a life insurance company under section 809(c)(1). Determinations for purposes of this paragraph shall be made without regard to section 501(a).

[T.D. 6795, 30 FR 942, Jan. 29, 1965]

§ 1.957-3 United States person defined.

(a) ***Basic rule*** —

(1) ***In general.*** The term *United States person* has the same meaning for purposes of sections 951 through 965 that it has under section 7701(a)(30) and the regulations under that section, except as provided in paragraphs (b) and (c) of this section, which provide, with respect to corporations organized in possessions of the United States, that certain residents of such possessions are not United States persons. The effect of determining that an individual is not a United States person for such purposes is to exclude such individual in determining whether a foreign corporation created or organized in, or under the laws of, a possession of the United States is a controlled foreign corporation. See § 1.957-1 for the definition of the term "controlled foreign corporation."

(2) ***Special provisions applicable to possessions of the United States.*** For purposes of this section—

(i) The term *possession of the United States* means Puerto Rico or any section 931 possession;

(ii) The term *section 931 possession* has the same meaning that it has under § 1.931-1(c)(1);

(iii) The rules of § 1.937-1 will apply for determining whether an individual is a bona fide resident of a possession of the United States;

(iv) Except as provided in paragraph (b)(2) of this section, the rules of § 1.937-2 will apply for determining whether income is from sources within a possession of the United States; and

(v) The rules of § 1.937-3 will apply for determining whether income is effectively connected with the conduct of a trade or business in a possession of the United States.

(b) ***Puerto Rico corporation and resident.*** An individual (who, without regard to this paragraph (b), is a United States person) will not be considered a United States person with respect to a foreign corporation created or organized in, or under the laws of, Puerto Rico for the taxable year of such corporation that ends with or within the taxable year of such individual if—

(1) Such individual is a bona fide resident of Puerto Rico during his entire taxable year in which or with which the taxable year of such foreign corporation ends; and

(2) A dividend received by such individual from such corporation during the taxable year of such corporation would, for purposes of section 933(1), be treated as income derived from sources within Puerto Rico. For purposes of this paragraph (b)(2), the rules of § 1.937-2(g)(1) will not apply.

(c) ***Section 931 possession corporation and resident.*** An individual (who, without regard to this paragraph (c), is a United States person) will not be considered a United States person with respect to a foreign corporation created or organized in, or under the laws of, a section 931 possession for the taxable year of such corporation that ends with or within the taxable year of such individual if—

(1) Such individual is a bona fide resident of such section 931 possession during his entire taxable year in which or with which the taxable year of such foreign corporation ends; and

(2) Such corporation satisfies the following conditions—

(i) 80 percent or more of its gross income for the 3-year period ending at the close of the taxable year (or for such part of such period as such corporation or any predecessor has been in existence) was derived from sources within section 931 possessions or was effectively connected with the conduct of a trade or business in section 931 possessions; and

(ii) 50 percent or more of its gross income for such period (or part) was derived from the active conduct of a trade or business within section 931 possessions.

(d) ***Effective/applicability date.*** This section applies to taxable years ending after April 9, 2008.

[T.D. 9391, 73 FR 19375, Apr. 9, 2008]

§ 1.958-1 Direct and indirect ownership of stock.

(a) ***In general.*** Section 958(a) provides that, for purposes of sections 951 to 964 (other than sections 955(b)(1)(A) and (B) and 955(c)(2)(A)(ii) (as in effect before the enactment of the Tax Reduction Act of 1975), and 960(a)(1)), stock owned means—

(1) Stock owned directly; and

(2) Stock owned with the application of paragraph (b) of this section.

The rules of section 958(a) and this section provide a limited form of stock attribution primarily for use in determining the amount taxable to a United States shareholder under section 951(a). These rules also apply for purposes of other provisions of the Code and regulations which make express reference to section 958(a).

(b) ***Stock ownership through foreign entities.*** For purposes of paragraph (a)(2) of this section, stock owned, directly or indirectly, by or for a foreign corporation, foreign partnership, foreign trust (within the meaning of section 7701(a)(31)) described in sections 671 through 679, or other foreign trust or foreign estate (within the meaning of section 7701(a)(31)) shall be considered as being owned proportionately by its shareholders, partners, grantors or other persons treated as owners under sections 671 through 679 of

any portion of the trust that includes the stock, or beneficiaries, respectively. Stock considered to be owned by reason of the application of this paragraph shall, for purposes of reapplying this paragraph, be treated as actually owned by such person. Thus, this rule creates a chain of ownership; however, since the rule applies only to stock owned by a foreign entity, attribution under the rule stops with the first United States person in the chain of ownership running from the foreign entity. The application of this paragraph may be illustrated by the following example:

Example. Domestic corporation M owns 75 percent of the one class of stock in foreign corporation R, which in turn owns 80 percent of the one class of stock in foreign corporation S, which in turn owns 90 percent of the one class of stock in foreign corporation T. Under this paragraph, R Corporation is considered as owning 80 percent of the 90 percent of the stock which S Corporation owns in T Corporation, or 72 percent. Corporation M is considered as owning 75 percent of such 72 percent of the stock in T Corporation, or 54 percent. Since M Corporation is a domestic corporation, the attribution under this paragraph stops with M Corporation, even though, illustratively, such corporation is wholly owned by domestic corporation N.

(c) ***Rules of application*** —

(1) ***Special rule for mutual insurance companies.*** For purposes of applying paragraph (a) of this section in the case of a foreign mutual insurance company, the term "stock" shall include any certificate entitling the holder to voting power in the corporation.

(2) ***Amount of interest in foreign corporation, foreign partnership, foreign trust, or foreign estate.*** The determination of a person's proportionate interest in a foreign corporation, foreign partnership, foreign trust, or foreign estate will be made on the basis of all the facts and circumstances in each case. Generally, in determining a person's proportionate interest in a foreign corporation, the purpose for which the rules of section 958(a) and this section are being applied will be taken into account. Thus, if the rules of section 958(a) are being applied to determine the amount of stock owned for purposes of section 951(a), a person's proportionate interest in a foreign corporation will generally be determined with reference to such person's interest in the income of such corporation. If the rules of section 958(a) are being applied to determine the amount of voting power owned for purposes of section 951(b) or 957, a person's proportionate interest in a foreign corporation will generally be determined with reference to the amount of voting power in such corporation owned by such person. However, any arrangement which artificially decreases a United States person's proportionate interest will not be recognized. See §§ 1.951-1 and 1.957-1.

(d) ***Stock of foreign corporations owned through domestic partnerships*** —

(1) ***In general.*** Except as otherwise provided in paragraph (d)(2) of this section, for purposes of sections 951, 951A, and 956(a), and for purposes of any provision that specifically applies by reference to any of such sections or the regulations in this part under section 951, 951A, or 956 (but only as the regulations in this part under section 956 relate to section 956(a)), a domestic partnership is not treated as owning stock of a foreign corporation within the meaning of section 958(a). For purposes of determining the persons that own stock of the foreign corporation within the meaning of section 958(a) when the preceding sentence applies, stock of a foreign corporation owned by a domestic partnership is treated in the same manner as stock of a foreign corporation owned by a foreign partnership under section 958(a)(2) and paragraph (b) of this section.

(2) ***Non-application for certain purposes.*** Paragraph (d)(1) of this section does not apply for purposes of—

(i) Determining whether any United States person is a United States shareholder (as defined in section 951(b));

(ii) Determining whether any foreign corporation is a controlled foreign corporation (CFC) (as defined in section 957(a));

(iii) Applying section 956(c) and (d);

(iv) Applying section 1248; or

(v) Determining whether any United States shareholder is a controlling domestic shareholder (as defined in § 1.964-1(c)(5)).

(3) ***Examples.*** The following examples illustrate the application of this paragraph (d).

(i) ***Example 1*** —

(A) ***Facts.*** USP, a domestic corporation, and Individual A, a United States citizen unrelated to USP, own 95% and 5%, respectively, of PRS, a domestic partnership. PRS owns 100% of the single class of stock of FC, a foreign corporation.

(B) ***Analysis*** —

(*1*) ***United States shareholder and CFC determinations.*** Under paragraphs (d)(2)(i) and (ii) of this section, respectively, the determination of whether PRS, USP, and Individual A (each a United States person) are United States shareholders of FC, and whether FC is a controlled foreign corporation, is made without regard to paragraph (d)(1) of this section. PRS, a United States person, owns 100% of the total combined voting power or value of the FC stock within the meaning of section 958(a). Accordingly, PRS is a United States shareholder under section 951(b), and FC is a controlled foreign corporation under section 957(a). USP is also a United States shareholder of FC because it owns 95% of the total combined voting power or value of the FC stock under sections 958(b) and 318(a)(2)(A). Individual A, however, is not a United States shareholder of FC because Individual A owns only 5% of the total combined voting power or value of the FC stock under sections 958(b) and 318(a)(2)(A).

(*2*) ***Application of sections 951 and 951A.*** Under paragraph (d)(1) of this section, for purposes of sections 951 and 951A, PRS is not treated as owning (within the meaning of section 958(a)) the FC stock; instead, for purposes of determining the persons that own the FC stock within the meaning of section 958(a), the FC stock is treated as if it were owned by a foreign partnership under paragraph (b) of this section. Therefore, for purposes of sections 951 and 951A, USP is treated as owning 95% of the FC stock under section 958(a), and Individual A is treated as owning 5% of the FC stock under section 958(a). USP is a United States shareholder of FC, and therefore USP determines its income inclusions under sections 951 and 951A directly with respect to FC based on its ownership of FC stock under section 958(a). However, because Individual A is not a United States shareholder of FC, Individual A does not have an income inclusion under section 951 with respect to FC or a pro rata share of any amount of FC for purposes of section 951A. This is the case even though PRS is a United States shareholder of FC.

(ii) ***Example 2*** —

(A) ***Facts.*** USP, a domestic corporation, and Individual A, a United States citizen, own 90% and 10%, respectively, of PRS1, a domestic partnership. PRS1 and Individual B, a nonresident alien individual, own 90% and 10%, respectively, of PRS2, a domestic partnership. PRS2 owns 100% of the single class of stock of FC, a foreign corporation. USP, Individual A, and Individual B are unrelated to each other.

(B) ***Analysis*** —

(*1*) ***United States shareholder and CFC determinations.*** Under paragraphs (d)(2)(i) and (ii) of this section, the determination of whether PRS1, PRS2, USP, and Individual A (each a United States person) are United States shareholders of FC, and whether FC is a controlled foreign corporation, is made without regard to paragraph (d)(1) of this section. PRS2 owns 100% of the total combined voting power or value of the FC stock within the meaning of section 958(a). Accordingly, PRS2 is a United States shareholder under section 951(b), and FC is a controlled foreign corporation under section 957(a). Under sections 958(b) and 318(a)(2)(A), PRS1 is treated as owning 90% of the FC stock owned by PRS2. Accordingly, PRS1 is also a United States shareholder under section 951(b). Further, under section 958(b)(2), PRS1 is treated as owning 100% of the FC stock for purposes of determining the FC stock treated as owned by USP and Individual A under section 318(a)(2)(A). Therefore, USP is treated as owning 90% of the FC stock under section 958(b) (100% × 100% × 90%), and Individual A is treated as owning 10% of the FC stock under section 958(b) (100% × 100% × 10%). Accordingly, both USP and Individual A are also United States shareholders of FC under section 951(b).

(*2*) ***Application of sections 951 and 951A.*** Under paragraph (d)(1) of this section, for purposes of sections 951 and 951A, PRS1 and PRS2 are not treated as owning (within the meaning of section 958(a)) the FC stock; instead, for purposes of determining the persons that own the FC stock within the meaning of section 958(a), as the FC stock is treated as if it were owned by foreign partnerships under paragraph (b) of this section. Therefore, for purposes of determining the amount included in gross income under sections 951 and 951A, under section 958(a) USP is treated as owning 81% (100% × 90% × 90%) of the FC stock, and Individual A is treated as owning 9% (100% × 90% × 10%) of the FC stock. Because USP and Individual A are both United States shareholders of FC, USP and Individual A determine their respective inclusions under sections 951 and 951A directly with respect to FC based on their ownership of FC stock under section 958(a). This is the case even though PRS2 is a United States shareholder of FC.

(iii) ***Example 3*** —

(A) ***Facts.*** Individual A, a United States citizen, Individual B, a United States citizen unrelated to Individual A, and Individual C, a foreign person unrelated to both Individuals A and B, own 10%, 5%, and 85%, respectively, of PRS, a domestic partnership. PRS owns 100% of the single class of stock of FC, a foreign corporation. FC holds an account receivable from PRS that constitutes an obligation of a United States person within the meaning of section 956(c)(1)(C) and § 1.956-2(a)(1)(iii).

(B) ***Analysis*** —

(1) ***United States shareholder and CFC determinations.*** Under paragraphs (d)(2)(i) and (ii) of this section, respectively, the determination of whether PRS, Individual A, and Individual B (each a United States person) are United States shareholders of FC, and whether FC is a controlled foreign corporation, is made without regard to paragraph (d)(1) of this section. PRS, a United States person, owns 100% of the total combined voting power or value of the FC stock within the meaning of section 958(a). Accordingly, PRS is a United States shareholder under section 951(b), and FC is a controlled foreign corporation under section 957(a). Individual A is also a United States shareholder of FC because it owns 10% of the total combined voting power or value of the FC stock under sections 958(b) and 318(a)(2)(A). Individual B, however, is not a United States shareholder of FC because Individual B owns only 5% of the total combined voting power or value of the FC stock under sections 958(b) and 318(a)(2)(A).

(2) ***Application of section 956(a).*** Under paragraph (d)(1) of this section, for purposes of section 956(a), PRS is not treated as owning (within the meaning of section 958(a)) the FC stock; instead, for purposes of determining the persons that own the FC stock within the meaning of section 958(a), as the FC stock is treated as if it were owned by a foreign partnership under paragraph (b) of this section. Therefore, for purposes of section 956(a), under section 958(a) Individual A is treated as owning 10% of the FC stock, and Individual B is treated as owning 5% of the FC stock. Individual A is a United States shareholder of FC, and therefore Individual A determines the amount it must include in gross income under section 951(a)(1)(B) by reason of the PRS obligation held by FC based on its ownership of FC stock under section 958(a) as determined under paragraph (d)(1) of this section. However, because Individual B is not a United States shareholder of FC, Individual B does not have an amount to include in income under sections 956(a) and 951(a)(1)(B).

(3) ***Application of section 956(c) and (d).*** Under paragraph (d)(2)(iii) of this section, for purposes of section 956(c) and (d), the determination of whether FC holds United States property is made without regard to paragraph (d)(1) of this section. Therefore, PRS is treated as owning stock of FC within the meaning of section 958(a) for purposes of determining the amount of United States property held by FC arising from its account receivable from PRS.

(4) ***Applicability dates*** —

(i) ***Paragraphs (d)(1) through (3) of this section.*** Paragraphs (d)(1) through (3) of this section apply to taxable years of foreign corporations beginning on or after January 25, 2022, and to taxable years of United States persons in which or with which such taxable years of foreign corporations end. For taxable years of a foreign corporation that precede the taxable years described in the preceding sentence, a domestic partnership may apply paragraphs (d)(1) through (3) of this section in their entirety to taxable years of a foreign corporation beginning after December 31, 2017, and to taxable years of the domestic partnership in which or with which such taxable years of the foreign corporation end, provided that the partnership, its partners that are United States shareholders of the foreign corporation, and other domestic partnerships that bear relationships described in section 267(b) or 707(b) to the partnership (and their United States shareholder partners) consistently apply paragraphs (d)(1) through (3)

of this section with respect to all foreign corporations whose stock the domestic partnerships own within the meaning of section 958(a) (determined without regard to paragraph (d)(1) of this section).

(ii) ***Rules applicable before January 25, 2022.*** For taxable years of foreign corporations beginning before January 25, 2022, and to taxable years of United States persons in which or with which such taxable years of foreign corporations end, see §§ 1.951-1(h) and 1.951A-1(e) as in effect and contained in 26 CFR part 1, as revised April 1, 2021.

(e) [Reserved]

(f) ***Illustration.*** The application of this section may be illustrated by the following examples:

Example 1. United States persons A and B own 25 percent and 50 percent, respectively, of the one class of stock in foreign corporation M. Corporation M owns 80 percent of the one class of stock in foreign corporation N, and N Corporation owns 60 percent of the one class of stock in foreign corporation P. Under paragraph (b) of this section, M Corporation is considered to own 48 percent (80 percent of 60 percent) of the stock in P Corporation; such 48 percent is treated as actually owned by M Corporation for the purpose of again applying paragraph (b) of this section. Thus, A and B are considered to own 12 percent (25 percent of 48 percent) and 24 percent (50 percent of 48 percent), respectively, of the stock in P Corporation.

Example 2. United States person C is a 60-percent partner in foreign partnership X. Partnership X owns 40 percent of the one class of stock in foreign corporation Q. Corporation Q is a 50-percent partner in foreign partnership Y, and partnership Y owns 100 percent of the one class of stock in foreign corporation R. By the application of paragraph (b) of this section, C is considered to own 12 percent (60 percent of 40 percent of 50 percent of 100 percent) of the stock in R Corporation.

Example 3. Foreign trust Z was created for the benefit of United States persons D, E, and F. Under the terms of the trust instrument, the trust income is required to be divided into three equal shares. Each beneficiary's share of the income may either be accumulated for him or distributed to him in the discretion of the trustee. In 1970, the trust is to terminate and there is to be paid over to each beneficiary the accumulated income applicable to his share and one-third of the corpus. The corpus of trust Z is composed of 90 percent of the one class of stock in foreign corporation S. By the application of this section, each of D, E, and F is considered to own 30 percent ($^{1}/_{3}$ of 90 percent) of the stock in S Corporation.

Example 4. Among the assets of foreign estate W are Blackacre and a block of stock, consisting of 75 percent of the one class of stock of foreign corporation T. Under the terms of the will governing estate W, Blackacre is left to G, a nonresident alien, for life, remainder to H, a nonresident alien, and the block of stock is left to United States person K. By the application of this section, K is considered to own the 75 percent of the stock of T Corporation, and G and H are not considered to own any of such stock.

[T.D. 6889, 31 FR 9455, July 12, 1966, as amended by T.D. 7893, 48 FR 22509, May 19, 1983; T.D. 8955, 66 FR 37897, July 20, 2001; T.D. 9960, 87 FR 3654, Jan. 25, 2022; 87 FR 9445, Feb. 22, 2022]

§ 1.958-2 Constructive ownership of stock.

(a) ***In general.*** Section 958(b) provides that, for purposes of sections 951(b), 954(d)(3), 956(b)(2), and 957, the rules of section 318(a) as modified by section 958(b) and this section shall apply to the extent that the effect is to treat a United States person as a United States shareholder within the meaning of section 951(b), to treat a person as a related person within the meaning of section 954(d)(3), to treat the stock of a domestic corporation as owned by a United States shareholder of a controlled foreign corporation under

section 956(b)(2), or to treat a foreign corporation as a controlled foreign corporation under section 957. The rules contained in this section also apply for purposes of other provisions of the Code and regulations which make express reference to section 958(b).

(b) ***Members of family*** —

(1) ***In general.*** Except as provided in subparagraph (3) of this paragraph, an individual shall be considered as owning the stock owned, directly or indirectly, by or for—

(i) His spouse (other than a spouse who is legally separated from the individual under a decree of divorce or separate maintenance); and

(ii) His children, grandchildren, and parents.

(2) ***Effect of adoption.*** For purposes of subparagraph (1)(ii) of this paragraph, a legally adopted child of an individual shall be treated as a child of such individual by blood.

(3) ***Stock owned by nonresident alien individual.*** For purposes of this paragraph, stock owned by a nonresident alien individual (other than a foreign trust or foreign estate) shall not be considered as owned by a United States citizen or a resident alien individual. However, this limitation does not apply for purposes of determining whether the stock of a domestic corporation is owned or considered as owned by a United States shareholder under section 956(b)(2) and § 1.956-2(b)(1)(viii). See section 958(b)(1).

(c) ***Attribution from partnerships, estates, trusts, and corporations*** —

(1) ***In general.*** Except as provided in subparagraph (2) of this paragraph—

(i) ***From partnerships and estates.*** Stock owned, directly or indirectly, by or for a partnership or estate shall be considered as owned proportionately by its partners or beneficiaries.

(ii) ***From trusts—***

(a) ***To beneficiaries.*** Stock owned, directly or indirectly, by or for a trust (other than an employees' trust described in section 401(a) which is exempt from tax under section 501(a)) shall be considered as owned by its beneficiaries in proportion to the actuarial interest of such beneficiaries in such trust.

(*b*) ***To owner.*** Stock owned, directly or indirectly, by or for any portion of a trust of which a person is considered the owner under sections 671 to 679 (relating to grantors and others treated as substantial owners) shall be considered as owned by such person.

(iii) ***From corporations.*** If 10 percent or more in value of the stock in a corporation is owned, directly or indirectly, by or for any person, such person shall be considered as owning the stock owned, directly or indirectly, by or for such corporation, in that proportion which the value of the stock which such person so owns bears to the value of all the stock in such corporation. See section 958(b)(3).

(2) ***Rules of application.*** For purposes of subparagraph (1) of this paragraph, if a partnership, estate, trust, or corporation owns, directly or indirectly, more than 50 percent of the total combined voting power of all classes of stock entitled to vote in a corporation, it shall be considered as owning all the stock entitled to vote. See section 958(b)(2).

(d) ***Attribution to partnerships, estates, trusts, and corporations.***

(1) Except as otherwise provided in paragraph (d)(2) of this section and § 1.954-1(f)—

(i) ***To partnerships and estates.*** Stock owned, directly or indirectly, by or for a partner or a beneficiary of an estate shall be considered as owned by the partnership or estate.

(ii) ***To trusts*** —

(*a*) ***From beneficiaries.*** Stock owned, directly or indirectly, by or for a beneficiary of a trust (other than an employees' trust described in section 401(a) which is exempt from tax under section 501(a)) shall be considered as owned by the trust, unless such beneficiary's interest in the trust is a remote contingent interest. For purposes of the preceding sentence, a contingent interest of a beneficiary in a trust shall be considered remote if, under the maximum exercise of discretion by the trustee in favor of such beneficiary, the value of such interest, computed actuarially, is 5 percent or less of the value of the trust property.

(*b*) ***From owner.*** Stock owned, directly or indirectly, by or for a person who is considered the owner of any portion of a trust under sections 671 to 678 (relating to grantors and others treated as substantial owners) shall be considered as owned by the trust.

(iii) ***To corporations.*** If 50 percent or more in value of the stock in a corporation is owned, directly or indirectly, by or for any person, such corporation shall be considered as owning the stock owned, directly or indirectly, by or for such person. This subdivision shall not be applied so as to consider a corporation as owning its own stock.

(2) [Reserved]

(e) ***Options.*** Except as otherwise provided in § 1.954-1(f), if any person has an option to acquire stock, such stock shall be considered as owned by such person. For purposes of the preceding sentence, an option to acquire such an option, and each one of a series of such options, shall be considered as an option to acquire such stock.

(f) ***Rules of application.*** For purposes of this section—

(1) ***Stock treated as actually owned*** —

(i) ***In general.*** Except as provided in subdivisions (ii) and (iii) of this subparagraph, stock constructively owned by a person by reason of the application of paragraphs (b), (c), (d), and (e) of this section shall, for purposes of applying such paragraphs, be considered as actually owned by such person.

(ii) ***Members of family.*** Stock constructively owned by an individual by reason of the application of paragraph (b) of this section shall not be considered as owned by him for purposes of again applying such paragraph in order to make another the constructive owner of such stock.

(iii) ***Partnerships, estates, trusts, and corporation.*** Stock constructively owned by a partnership, estate, trust, or corporation by reason of the application of paragraph (d) of this section shall not be considered as owned by it for purposes of applying paragraph (c) of this section in order to make another the constructive owner of such stock.

(iv) ***Option rule in lieu of family rule.*** For purposes of this subparagraph, if stock may be considered as owned by an individual under paragraph (b) or (e) of this section, it shall be considered as owned by him under paragraph (e).

(2) ***Coordination of different attribution rules.*** For purposes of any one determination, stock which may be owned under more than one of the rules of § 1.958-1 and this section, or by more than one person, shall be owned under that attribution rule which imputes to the person, or persons, concerned the largest total percentage of such stock. The application of this subparagraph may be illustrated by the following examples:

Example 1. (a) United States persons A and B, and domestic corporation M, own 9 percent, 32 percent, and 10 percent, respectively, of the one class of stock in foreign corporation R. A also owns 10 percent of the one class of stock in M Corporation. For purposes of determining whether A is a United States shareholder with respect to R Corporation, 10 percent of the 10-percent interest of M Corporation in R Corporation is considered as owned by A. See paragraph (c)(1)(iii) of this section. Thus, A owns 10 percent (9 percent plus 10 percent of 10 percent) of the stock in R Corporation and is a United States shareholder with respect to such corporation. Corporation M and B, by reason of owning 10 percent and 32 percent, respectively, of the stock in R Corporation are United States shareholders with respect to such corporation.
(b) For purposes of determining whether R Corporation is a controlled foreign corporation, the 1 percent of the stock in R Corporation directly owned by M Corporation and considered as owned by A cannot be counted twice. Therefore, the total amount of stock in R Corporation owned by United States shareholders is 51 percent, determined as follows:

STOCK OWNERSHIP IN R CORPORATION
[PERCENT]

A	9
B	32
M Corporation	10
Total	51

Example 2. United States person C owns 10 percent of the one class of stock in foreign corporation N, which owns 60 percent of the one class of stock in foreign corporation S. Under paragraph (a)(2) of § 1.958-1, C is considered as owning 6 percent (10 percent of 60 percent) of the stock in S Corporation. Under paragraph (c)(1)(iii) and (2) of this section N Corporation is considered as owning 100 percent of the stock in S Corporation and C is considered as owning 10 percent of such 100 percent, or 10 percent of the stock in S Corporation. Thus, for purposes of determining whether C is a United States shareholder with respect to S Corporation, the attribution rules of paragraph (c)(1)(iii) and (2) of this section are used inasmuch as C owns a larger total percentage of the stock of S Corporation under such rules.

(g) ***Illustration.*** The application of this section may be illustrated by the following examples:

(1) *Example 1.* United States persons A and B own 5 percent and 25 percent, respectively, of the one class of stock in foreign corporation M. Corporation M owns 60 percent of the one class of stock in foreign corporation N. Under paragraph (a)(2) of § 1.958-1, A and B are considered as owning 3 percent (5 percent of 60 percent) and 15 percent (25 percent of 60 percent), respectively, of the stock in N Corporation. Under paragraph (c)(2) of this section, M Corporation is treated as owning all the stock in N Corporation, and, under paragraph (c)(1)(iii) of this section, B is considered as owning 25 percent of such 100 percent, or 25 percent of the stock in N Corporation. Inasmuch as A owns less than 10 percent of the stock in M Corporation, he is not considered as owning, under paragraph (c)(1)(iii) of this section, any of the stock in N Corporation owned by M Corporation. Thus, the attribution rules of paragraph (a)(2) of § 1.958-1 are used with respect to A inasmuch as he owns a larger total percentage of the stock of N Corporation under such rules; and the attribution rules of paragraphs (c)(1)(iii) and (c)(2) of this section are used with respect to B inasmuch as he owns a larger total percentage of the stock of N Corporation under such rules.

(2) *Example 2.* United States person C owns 60 percent of the one class of stock in domestic corporation P; corporation P owns 60 percent of the one class of stock in foreign corporation Q; and corporation Q owns 60 percent of the one class of stock in foreign corporation R. Under paragraph (a)(2) of § 1.958-1, P Corporation is considered as owning 36 percent (60 percent of 60 percent) of the stock in R Corporation, and C is considered as owning none of the stock in R Corporation inasmuch as the chain of ownership stops at the first United States person and P Corporation is such a person. Under paragraph (c)(2) of this section, Q Corporation is treated as owning 100 percent of the stock in R Corporation, and under paragraph (c)(1)(iii) of this section, P Corporation is considered as owning 60 percent of such 100 percent, or 60 percent of the stock in R Corporation. For purposes of determining the amount of stock in R Corporation which C is considered as owning, P Corporation is treated under paragraph (c)(2) of this section as owning 100 percent of the stock in R Corporation; therefore, C is considered as owning 60 percent of the stock in R Corporation. Thus, the attribution rules of paragraphs (c)(1)(iii) and (c)(2) of this section are used with respect to C and P Corporation inasmuch as they each own a larger total percentage of the stock of R Corporation under such rules.

(3) *Example 3.* United States person D owns 25 percent of the one class of stock in foreign corporation S. D is also a 40-percent partner in domestic partnership X, which owns 50 percent of the one class of stock in domestic corporation T. Under paragraph (d)(1)(i) of this section, the 25 percent of the stock in S Corporation owned by D is considered as being owned by partnership X; since such stock is treated as actually owned by partnership X under paragraph (f)(1)(i) of this section, such stock is in turn considered as being owned by T Corporation under paragraph (d)(1)(iii) of this section. Thus, under paragraphs (d)(1) and (f)(1)(i) of this section, T Corporation is considered as owning 25 percent of the stock in S Corporation.

(4) *Example 4.* Foreign corporation U owns 100 percent of the one class of stock in domestic corporation V and also 100 percent of the one class of stock in foreign corporation W. Because more than 50 percent in value of the stock of V Corporation is owned by its sole shareholder, U Corporation, V Corporation is considered under paragraph (d)(1)(iii) of this section as owning the stock owned by U Corporation in W Corporation, and accordingly is a United States shareholder of W Corporation.

(5) *Example 5.* United States citizen E owns 15 percent of the one class of stock in foreign corporation Y, and United States citizen F, E's spouse, owns 5 percent of such stock. E and F's four nonresident alien grandchildren each own 20 percent of the stock in Y Corporation. Under paragraph (b)(1) of this

section, E is considered as owning the stock owned by F in Y Corporation; however, by virtue of paragraph (b)(3) of this section, E may not be considered under paragraph (b)(1) of this section as owning any of the stock in Y Corporation owned by such grandchildren.

(6) ***Example 6.*** United States person F owns 10 percent of the one class of stock in foreign corporation Z; corporation Z owns 10 percent of the one class of stock in foreign corporation K; and corporation K owns 100 percent of the one class of stock in foreign corporation L. United States person G, F's spouse, owns 9 percent of the stock in K Corporation. Under paragraph (c)(1)(iii) of this section or paragraph (a)(2) of § 1.958-1, F is considered as owning 1 percent (10 percent of 10 percent of 100 percent) of the stock in L Corporation by reason of his ownership of stock in Z Corporation, and, under paragraph (b)(1) of this section, G is considered as owning such 1 percent of the stock in L Corporation. Under paragraph (a)(2) of § 1.958-1, G is considered as owning 9 percent (9 percent of 100 percent) of the stock in L Corporation by reason of her ownership of stock in K Corporation, and, under paragraph (b)(1) of this section, F is considered as owning such 9 percent of the stock in L Corporation. Thus, for the purpose of determining whether F or G is a United States shareholder with respect to L Corporation, each of F and G is considered as owning a total of 10 percent of the stock in L Corporation by applying the rules of paragraph (a)(2) of § 1.958-1 and paragraphs (b)(1) and (c)(1)(iii) of this section.

(h) ***Applicability date.*** Paragraphs (d)(1) and (e) of this section apply for taxable years of controlled foreign corporations ending on or after November 19, 2019, and for the taxable years of United States shareholders in which or with which such taxable years end. Paragraphs (d)(2) and (g)(4) of this section apply to taxable years of foreign corporations ending on or after October 1, 2019, and taxable years of United States shareholders in which or with which such taxable years of foreign corporations end. For taxable years of foreign corporations ending before October 1, 2019, and taxable years of United States shareholders in which or with which such taxable years of foreign corporations end, a taxpayer may apply such provisions to the last taxable year of a foreign corporation beginning before January 1, 2018, and each subsequent taxable year of the foreign corporation, and to taxable years of United States shareholders in which or with which such taxable years of the foreign corporation end, provided that the taxpayer and United States persons that are related (within the meaning of section 267 or 707) to the taxpayer consistently apply such provisions with respect to all foreign corporations. For taxable years of foreign corporations ending before October 1, 2019, and taxable years of United States shareholders in which or with which such taxable years of foreign corporations end, where the taxpayer does not apply the provisions of paragraphs (d)(2) and (g)(4) of this section, see paragraph (d)(2) and (g)(4) of this section as in effect and contained in 26 CFR part 1, as revised April 1, 2020.

[T.D. 6889, 31 FR 9455, July 12, 1966, as amended by T.D. 7712, 45 FR 52375, Aug. 7, 1980; T.D. 8955, 66 FR 37897, July 20, 2001; T.D. 9883, 84 FR 63804, Nov. 19, 2019; T.D. 9908, 85 FR 59435, Sept. 22, 2020]

§ 1.959-1 Exclusion from gross income of United States persons of previously taxed earnings and profits.

(a) ***In general.*** Sections 951 through 964 provide that certain types of income of controlled foreign corporations will be subject to United States income tax even though such amounts are not currently distributed to the United States shareholders of such corporations. The amounts so taxed to certain United States shareholders are described as subpart F income, previously excluded subpart F income withdrawn from investment in less developed countries, previously excluded subpart F income withdrawn from investment in foreign base company shipping operations, and increases in earnings invested in United States property. Section 959 provides that amounts taxed as subpart F income, as previously

excluded subpart F income withdrawn from investment in less developed countries, or as previously excluded subpart F income withdrawn from investment in foreign base company shipping operations are not taxed again as increases in earnings invested in United States property. Section 959 also provides an exclusion whereby none of the amounts so taxed are taxed again when actually distributed directly, or indirectly through a chain of ownership described in section 958(a), to United States shareholders or to such shareholders' successors in interest. The exclusion also applies to amounts taxed to United States shareholders as income of one controlled foreign corporation and later distributed to another controlled foreign corporation in such a chain of ownership where such amounts would otherwise be again included in the income of such shareholders or their successors in interest as subpart F income of the controlled foreign corporation to which they are distributed. Section 959 also provides rules for the allocation of distributions to earnings and profits and for the non-dividend treatment of actual distributions which are excluded from gross income.

(b) ***Actual distributions to United States persons.*** The earnings and profits for a taxable year of a foreign corporation attributable to amounts which are, or have been, included in the gross income of a United States shareholder of such corporation under section 951(a) shall not, when such amounts are distributed to such shareholder directly, or indirectly through a chain of ownership described in section 958(a), be again included in the gross income of such United States shareholder. See section 959(a)(1). Thus, earnings and profits attributable to amounts which are, or have been, included in the gross income of a United States shareholder of a foreign corporation under section 951 (a)(1)(A)(i) as subpart F income, under section 951(a)(1)(A)(ii) as previously excluded subpart F income withdrawn from investment in less developed countries, under section 951(a)(1)(A)(iii) as previously excluded subpart F income withdrawn from investment in foreign base company shipping operations, or under section 951(a)(1)(B) as earnings invested in United States property, shall not be again included in the gross income of such shareholder when such amounts are actually distributed, directly or indirectly, to such shareholder. See paragraph (d) of this section for exclusion applicable to such shareholder's successor in interest. The application of this paragraph may be illustrated by the following example:

> *Example.* (a) A, a United States shareholder, owns 100 percent of the only class of stock of R Corporation, a corporation organized on January 1, 1963, which is a controlled foreign corporation throughout the period here involved. Both A and R Corporation use the calendar year as a taxable year.
> (b) During 1964, R Corporation derives $100 of subpart F income, and A includes such amount in his gross income under section 951(a)(1)(A)(i). Corporation R's current and accumulated earnings and profits (before taking into account distributions made during 1964) are $150. Also, during 1964, R Corporation distributes $50 to A. The $50 distribution is excludable from A's gross income for 1964 under this paragraph and § 1.959-3 because such distribution represents earnings and profits attributable to amounts which are included in A's gross income for such year under section 951(a).
>
> (c) If instead of deriving the $100 of subpart F income in 1964, R Corporation derives such amount during 1963 and has earnings and profits for 1963 in excess of $100, A must include $100 in his gross income for 1963 under section 951(a)(1)(A)(i). However, the $50 distribution made by R

Corporation to A during 1964 is excludable from A's gross income for such year under this paragraph and § 1.959-3 because such distribution represents earnings and profits attributable to amounts which have been included in A's gross income for 1963 under section 951(a).

(d) If, with respect to 1964—

(1) Instead of owning the stock of R Corporation directly, A owns such stock through a chain of ownership described in section 958(a), that is, A owns 100 percent of M Corporation which owns 100 percent of N Corporation which owns 100 percent of R Corporation,

(2) Both M and N Corporations use the calendar year as a taxable year and are controlled foreign corporations throughout the period here involved,

(3) Corporation R derives $100 of subpart F income and has earnings and profits in excess of $100,

(4) Neither M Corporation nor N Corporation has earnings and profits or a deficit in earnings and profits, and

(5) The $50 distribution is from R Corporation to N Corporation to M Corporation to A,

A must include $100 in his gross income for 1964 under section 951(a)(1)(A)(i) by reason of his indirect ownership of R Corporation. However, the $50 distribution is excludable from A's gross income for 1964 under this paragraph and § 1.959-3 because such distribution represents earnings and profits attributable to amounts which are included in A's gross income for such year under section 951(a) and are distributed indirectly to A through a chain of ownership described in section 958(a).

(c) ***Excludable investment of earnings in United States property.*** The earnings and profits for a taxable year of a foreign corporation attributable to amounts which are, or have been, included in the gross income of a United States shareholder of such corporation under section 951(a)(1)(A) shall not, when such amounts would, but for section 959(a)(2) and this paragraph, be included under section 951(a)(1)(B) in the gross income of such shareholder directly, or indirectly through a chain of ownership described in section 958(a), be again included in the gross income of such United States shareholder. Thus, earnings and profits attributable to amounts which are, or have been, included in the gross income of a United States shareholder of a foreign corporation under section 951(a)(1)(A)(i) as subpart F income, under section 951(a)(1)(A)(ii) as previously excluded subpart F income withdrawn from investment in less developed countries, or under section 951(a)(1)(A)(iii) as previously excluded subpart F income withdrawn from investment in foreign base company shipping operations, may be invested in United States property without being again included in such shareholder's income under section 951 (a). Moreover, the first amount deemed invested in United States property are amounts previously included in the gross income of a United States shareholder under section 951(a)(1)(A). See paragraph (d) of this section for exclusion applicable to such shareholder's successor in interest. The application of this paragraph may be illustrated by the following example:

Example. (a) A, a United States shareholder, owns 100 percent of the only class of stock of R Corporation, a corporation organized on January 1, 1963, which is a controlled foreign corporation throughout the period here involved. Both A and R Corporation use the calendar year as a taxable year.
(b) During 1964, R Corporation derives $35 of subpart F income, and A includes such amount in his gross income under section 951(a)(1)(A)(i). During 1964, R Corporation also invests $50 in tangible property (other than property described in section 956(b)(2)) located in the United States. Corporation R makes no distributions during the year, and its current earnings and profits are in excess of $50. Of the $50 investment of earnings in United States property, $35 is excludable from A's gross income for 1964 under section 959(a)(2) because such amount represents earnings and profits which are attributable to amounts which are included in A's gross income for such year under section 951(a)(1)(A)(i) and therefore may be invested in United States property without again being included in A's gross income. The remaining $15 is includible in A's gross income for 1964 under section 951(a)(1)(B).

(c) If, instead of deriving $35 of subpart F income in 1964, R Corporation has no subpart F income for 1964 but derives the $35 of subpart F income during 1963 and has earnings and profits for such year in excess of $35, A must include $35 in his gross income for 1963 under section 951(a)(1)(A)(i). However, of the $50 investment of earnings in United States property made by R Corporation during 1964, $35 is excludable from A's gross income for 1964 under section 959(a)(2) because such amount represents earnings and profits attributable to amounts which have been included in A's gross income for 1963 under section 951(a)(1)(A)(i). The remaining $15 is includible in A's gross income for 1964 under section 951(a)(1)(B).

(d) ***Application of exclusions to shareholder's successor in interest.*** If a United States person (as defined in § 1.957-4) acquires from any person any portion of the interest in the foreign corporation of a United States shareholder referred to in paragraph (b) or (c) of this section, the rules of such paragraph shall apply to such acquiring person but only to the extent that the acquiring person establishes to the satisfaction of the district director his right to the exclusion provided by such paragraph. The information to be furnished by the acquiring person to the district director with his return for the taxable year to support such exclusion shall include:

(1) The name, address, and taxable year of the foreign corporation from which the distribution is received and of all other corporations, partnerships, trusts, or estates in any applicable chain of ownership described in section 958(a);

(2) The name, address, and (in the case of information required to be furnished after June 20, 1983) taxpayer identification number of the person from whom the stock interest was acquired;

(3) A description of the stock interest acquired and its relation, if any, to a chain of ownership described in section 958(a);

(4) The amount for which an exclusion under section 959(a) is claimed; and

(5) Evidence showing that the earnings and profits for which an exclusion is claimed are attributable to amounts which were included in the gross income of a United States shareholder under section 951(a), that such amounts were not previously excluded from the gross income of a United States person, and the identity of the United States shareholder including such amounts.

The acquiring person shall also furnish to the district director such other information as may be required by the district director in support of the exclusion.

Example. (a) A, a United States shareholder, owns 100 percent of the only class of stock of R Corporation, a corporation organized on January 1, 1964, and a controlled foreign corporation throughout the period here involved. Both A and R Corporation use the calendar year as a taxable year.
(b) During 1964, R Corporation has $100 of subpart F income and earnings and profits in excess of $100. A includes $100 in his gross income for 1964 under section 951(a)(1)(A)(i). During 1965, A sells 40 percent of his stock in R Corporation to B, a United States person who uses the calendar year as a taxable year. In 1965, R Corporation has no earnings and profits and experiences no increase in earnings invested in United States property. Corporation R distributes $40 to B on December 1, 1965. If B establishes his right to the exclusion to the satisfaction of the district director, he may exclude $40 from his gross income for 1965 under section 959(a)(1).

(c) If, instead of selling his 40-percent interest directly to B, A sells on February 1, 1965, 40 percent of his stock in R Corporation to C, a nonresident alien, and on October 1, 1965, B acquires the 40-percent interest in R Corporation from C, the result is the same as in paragraph (b) of this example, if B establishes his right to the exclusion to the satisfaction of the district director.

(d) If, instead of acquiring 40 percent, B acquires only 5 percent of A's stock in R Corporation and R Corporation distributes $5 to B during 1965, B is not a United States shareholder (within the meaning of section 951(b)) with respect to R Corporation since he owns only 5 percent of the stock of R Corporation. Notwithstanding, B may exclude the $5 distribution from his gross income for 1965 under section 959(a)(1) if he establishes his right to the exclusion to the satisfaction of the district director.

(e) If the facts are assumed to be the same as in paragraphs (a) and (b) of this example except that—

(1) A owns the stock of R Corporation indirectly through a chain of ownership described in section 958(a), that is, A owns 100 percent of M Corporation which owns 100 percent of N Corporation which owns 100 percent of R Corporation,

(2) B acquires from N Corporation 40 percent of the stock in R Corporation,

(3) Both M Corporation and N Corporation are controlled foreign corporations which use the calendar year as a taxable year,

(4) Neither M Corporation nor N Corporation has any amount in 1964 or 1965 which is includible in gross income of United States shareholders under section 951(a), and

(5) Neither M Corporation nor N Corporation has a deficit in earnings and profits for 1964;

the result is the same as in paragraph (b) of this example if B establishes his right to the exclusion to the satisfaction of the district director.

[T.D. 6795, 30 FR 943, Jan. 29, 1965, as amended by T.D. 7893, 48 FR 22509, May 19, 1983]

§ 1.959-2 Exclusion from gross income of controlled foreign corporations of previously taxed earnings and profits.

(a) ***Applicable rule.*** The earnings and profits for a taxable year of a controlled foreign corporation attributable to amounts which are, or have been, included in the gross income of a United States shareholder under section 951(a) shall not, when distributed through a chain of ownership described in section 958(a), be also included in the gross income of another controlled foreign corporation in such chain for purposes of the application of section 951(a) to such other controlled foreign corporation with respect to such United States shareholder. See section 959(b). The exclusion from the income of such other foreign corporation also applies with respect to any other United States shareholder who acquires from such United States shareholder or any other person any portion of the interest of such United States shareholder in the controlled foreign corporation, but only to the extent the acquiring shareholder establishes to the satisfaction of the district director his right to such exclusion. An acquiring shareholder claiming the exclusion under section 959(b) shall furnish to the district director with his return for the taxable year the information required under paragraph (d) of § 1.959-1 to support the exclusion under this paragraph.

(b) ***Illustration.*** The application of this section may be illustrated by the following example:

Example. (a) A, a United States shareholder, owns 100 percent of the only class of stock of M Corporation which in turn owns 100 percent of the only class of stock of N Corporation. A and corporations M and N use the calendar year as a taxable year and corporations M and N are controlled foreign corporations throughout the period here involved.
(b) During 1963, N Corporation invests $100 in tangible property (other than property described in section 956(b)(2)) located in the United States and has earnings and profits in excess of $100. A is required to include $100 in his gross income for 1963 under section 951(a)(1)(B) by reason of his indirect ownership of the stock of N Corporation. During 1963, M Corporation has no income or investments other than the income derived from a distribution of $100 from N Corporation. Corporation M has earnings and profits of $100 for 1963. Under paragraph (a) of § 1.954-2, the $100 distribution received by M Corporation from N Corporation would otherwise constitute subpart F income of M Corporation; however, by reason of section 959(b) and this section, this amount does not constitute gross income of M Corporation for purposes of determining amounts includible in A's gross income under section 951(a)(1)(A)(i).

(c) During 1964, N Corporation derives $100 of subpart F income and distributes $100 to M Corporation which has no subpart F income for 1964 but which invests the $100 distribution in tangible property (other than property described in section 956(b)(2)) located in the United States. Corporation N's earnings and profits for 1964 are in excess of $100, and M Corporation's current and accumulated earnings and profits (before taking into account distributions made during 1964) are in excess of $100. A is required with

respect to N Corporation to include $100 in his gross income for 1964 under section 951(a)(1)(A)(i) by reason of his indirect ownership of the stock of N Corporation. The investment by M Corporation in United States property would otherwise constitute an investment of earnings in United States property to which section 956 applies; however, by reason of section 959(b) and this section, such amount does not constitute gross income of M Corporation for purposes of determining amounts includible in A's gross income under section 951(a)(1)(B).

(d) If during 1965, N Corporation invests $100 in tangible property (other than property described in section 956(b)(2)) located in the United States and has earnings and profits in excess of $100, A will be required with respect to N Corporation to include $100 in his gross income for 1965 under section 951(a)(1)(B), because the $100 of earnings and profits for 1964 attributable to N Corporation's subpart F income which was taxed to A in 1964 was distributed to M Corporation in such year.

(e) If, with respect to 1966—

(1) Corporation N owns 100 percent of the only class of stock of R Corporation,

(2) Corporation R derives $100 of subpart F income, has earnings and profits in excess of $100, and makes no distributions to N Corporation,

(3) Corporation N invests $25 in tangible property (other than property described in section 956(b)(2)) located in the United States and has current and accumulated earnings and profits in excess of $25, and

(4) Corporation M has no income or investments and does not have a deficit in earnings and profits,

the $100 of subpart F income derived by R Corporation is includible in A's gross income for 1966 under section 951(a)(1)(A)(i) and the $25 investment of earnings in United States property by N Corporation is includible in A's gross income for 1966 under section 951(a)(1)(B).

(f) If, however, the facts are the same as in paragraph (e) of this example except that—
(1) During 1966, R Corporation distributes $20 to N Corporation, and

(2) Corporation N makes no distributions during such year to M Corporation,

of the $25 investment in United States property by N Corporation, $20 is not includible in A's gross income for 1966 because such amount represents earnings and profits which are attributable to amounts included in A's gross income for such year under section 951(a)(1)(A)(i) with respect to R Corporation and which have been distributed to N Corporation by R Corporation. By reason of section 959(B) and this section, such $20 distribution to N Corporation does not constitute gross income of N Corporation for purposes of determining amounts includible in A's gross income under section 951(a)(1)(B); however, the remaining $5 of investment of earnings in United States property by N Corporation in 1966 is includible in A's gross income for such year under section 951(a)(1)(B).

[T.D. 6795, 30 FR 944, Jan. 29, 1965]

§ 1.959-3 Allocation of distributions to earnings and profits of foreign corporations.

(a) ***In general.*** For purposes of §§ 1.959-1 and 1.959-2, the source of the earnings and profits from which distributions are made by a foreign corporation as between earnings and profits attributable to increases in earnings invested in United States property, previously taxed subpart F income, previously excluded subpart F income withdrawn from investment in less developed countries, previously excluded subpart F income withdrawn from investment in foreign base company shipping operations, and other amounts shall be determined in accordance with section 959(c) and paragraphs (b) through (e) of this section.

(b) ***Applicability of section 316(a).*** For purposes of this section, section 316(a) shall be applied, in determining the source of distributions from the earnings and profits of a foreign corporation, by first applying section 316(a)(2) and then by applying section 316(a)(1)—

(1) First, as provided by section 959 (c)(1), to earnings and profits attributable to amounts included in gross income of a United States shareholder under section 951(a)(1)(B) (or which would have been so included but for section 959(a)(2) and paragraph (c) of § 1.959-1),

(2) Secondly, as provided by section 959(c)(2), to earnings and profits attributable to amounts included in gross income of a United States shareholder under section 951(a)(1)(A) (but reduced by amounts not included in such gross income under section 951(a)(1)(B) because of the exclusion provided by section 959(a)(2) and paragraph (c) of § 1.959-1), and

(3) Finally, as provided by section 959(c)(3), to other earnings and profits. Thus, distributions shall be considered first attributable to amounts, if any, described in subparagraph (1) of this paragraph (first for the current taxable year and then for prior taxable years beginning with the most recent prior taxable year), secondly to amounts, if any, described in subparagraph (2) of this paragraph (first for the current taxable year and then for prior taxable years beginning with the most recent prior taxable year), and finally to the amounts, if any, described in subparagraph (3) of this paragraph (first for the current taxable year and then for prior taxable years beginning with the most recent prior taxable year). See, however, paragraph (e) of § 1.963-3 (applied as if section 963 had not been repealed by the Tax Reduction Act of 1975) for a special rule for determination of the source of distributions counting as minimum distributions. Earnings and profits are classified as to year and as to section 959(c) amount in the year in which such amounts are included in gross income of a United States shareholder under section 951(a) and are reclassified as to section 959(c) amount in the year in which such amounts would be so included but for the provisions of section 959(a)(2); any subsequent distribution of such amounts to a higher tier in a chain of ownership described in section 958(a) does not of itself change such classifications. For example, earnings and profits of a foreign corporation attributable to amounts of previously excluded subpart F income withdrawn from investment in less developed countries (or from investments in export trade assets or foreign base company shipping operations) shall be reclassified as amounts to which subparagraph (2), rather than subparagraph (3), of this paragraph applies for purposes of determining priority of distribution, and such earnings and profits shall be considered attributable to the taxable year in which the withdrawal occurs. This paragraph shall apply to distributions by one foreign corporation to another foreign corporation and by a foreign corporation to a United States person. The application of this paragraph may be illustrated by the following example:

> *Example.* (a) M, a controlled foreign corporation, is organized on January 1, 1963, and is 100-percent owned by A, a United States shareholder. Both A and M Corporation use the

calendar year as a taxable year, and M Corporation is a controlled foreign corporation throughout the period here involved. As of December 31, 1966, M Corporation's accumulated earnings and profits of $450 (before taking into account distributions made in 1966) applicable to A's interest in such corporation are classified for purposes of section 959(c) as follows:

Year	Classification of earnings and profits for purposes of section 959		
	(c)(1)	(c)(2)	(c)(3)
1963	$100		
1964	100	$75	
1965		75	$50
1966			50

(b) During 1966, M Corporation makes three separate distributions to A of $150 each, and the source of such distributions under section 959(c) is as follows:

	Amount	Year	Allocation of distributions under section 959
Distribution No. 1	$100	1964	(c)(1)
	50	1963	(c)(1)
	150		
Distribution No. 2	50	1963	(c)(1)
	75	1965	(c)(2)
	25	1964	(c)(2)
	150		
Distribution No. 3	50	1964	(c)(2)
	50	1966	(c)(3)
	50	1965	(c)(3)
	150		

(c) If, in addition to the above facts—

(1) M Corporation owns throughout the period here involved 100 percent of the only class of stock of N Corporation, a controlled foreign corporation which uses the calendar year as a taxable year,

(2) Corporation N derives $60 of subpart F income for 1963 which A includes in his gross income for such year under section 951(a)(1)(A)(i),

(3) Corporation N has earnings and profits for 1963 of $60 but has neither earnings or profits nor a deficit in earnings and profits for 1964, 1965, or 1966, and

(4) During 1966, N Corporation invests $20 in tangible property (not described in section 956(b)(2)) located in the United States and distributes $45 to M Corporation,

the $20 investment of earnings in United States property is excludable from A's gross income for 1966, under section 959(a)(2) and paragraph (c) of § 1.959-1, with respect to N Corporation and the $45 dividend received by M Corporation does not, under section 959(b) and § 1.959-2, constitute gross income of M Corporation for 1966 for purposes of determining amounts includible in A's gross income under section 951(a)(1)(A)(i) with respect to M Corporation. However, the $45 dividend paid by N Corporation to M Corporation is allocated under section 959(c) and this paragraph to the earnings and profits of N Corporation as follows: $20 to 1963 earnings described in section 959(c)(1) and $25 to 1963 earnings described in section 959(c)(2). In such case, M Corporation's earnings and profits of $495 (before taking into account distributions made in 1966) would be classified as follows for purposes of section 959(c):

Year	Classification of earnings and profits for purposes of section 959		
	(c)(1)	(c)(2)	(c)(3)
1963	$120	$25	
1964	100	75	
1965		75	$50
1966			50

(d) The three distributions to A in 1966 of $150 each would then have the following source under section 959(c):

	Amount	Year	Allocation of distributions under section 959
Distribution No. 1	$100	1964	(c)(1)
	50	1963	(c)(1)
	150		
Distribution No. 2	70	1963	(c)(1)
	75	1965	(c)(2)
	5	1964	(c)(2)
	150		

	Amount	Year	Allocation of distributions under section 959
Distribution No. 3	70	1964	(c)(2)
	25	1963	(c)(2)
	50	1966	(c)(3)
	5	1965	(c)(3)
	150		

(c) ***Treatment of deficits in earnings and profits.*** For purposes of this section, a United States shareholder's pro rata share (determined in accordance with the principles of paragraph (e) of § 1.951-1) of a foreign corporation's deficit in earnings and profits, determined under section 964(a) and § 1.964-1, for any taxable year shall be applied only to earnings and profits described in paragraph (b)(3) of this section.

(d) ***Treatment of certain foreign taxes.*** For purposes of this section, any amount described in subparagraph (1), (2), or (3) of paragraph (b) of this section which is distributed by a foreign corporation through a chain of ownership described in section 958(a)(2) shall be reduced by any income, war profits, or excess profits taxes imposed on or with respect to such distribution by any foreign country or possession of the United States.

Example. (a) Domestic corporation M owns 100 percent of the only class of stock of foreign corporation A, which is incorporated under the laws of foreign country X and which, in turn, owns 100 percent of the only class of stock of foreign corporation B, which is incorporated under the laws of foreign country Y. All corporations use the calendar year as a taxable year and corporations A and B are controlled foreign corporations throughout the period here involved.
(b) During 1963, B Corporation (a less developed country corporation for 1963 within the meaning of § 1.955-5) derives $90 of subpart F income, after incurring $10 of foreign income tax allocable to such income under paragraph (c) of § 1.954-1, has earnings and profits in excess of $90, and makes no distributions. Corporation M must include $90 in its gross income for 1963 under section 951(a)(1)(A)(i). As of December 31, 1963, with respect to M Corporation, B Corporation has earnings and profits for 1963 described in section 959(c)(2) of $90.

(c) During 1964, B Corporation has neither earnings and profits nor a deficit in earnings and profits but distributes $90 to A Corporation, and, by reason of section 959(b) and § 1.959-2, such amount is not includible in the gross income of M Corporation for 1964 under section 951(a) with respect to A Corporation. Corporation A incurs a withholding tax of $13.50 on the $90 dividend distributed from B Corporation (15 percent of $90) and an additional foreign income tax of 10 percent or $7.65 by reason of the inclusion of the net distribution of $76.50 ($90 minus $13.50) in its taxable income for 1964. As of December 31, 1964, with respect to M Corporation, B Corporation's earnings and profits for 1963 described in section 959(c)(2) amount to zero ($90 minus $90); and A Corporation's earnings and profits for 1963 described in section 959(c)(2) amount to $68.85 ($90 minus $13.50 minus $7.65).

(e) ***Determination of foreign tax credit.*** For purposes of applying section 902 and section 960 in determining the foreign tax credit allowable under section 901 in a case in which distributions are made by a second-tier corporation or a first-tier corporation, as the case may be, from its earnings and profits for a taxable year which are attributable to an amount included in the gross income of a U.S. shareholder under section 951(a) or which are attributable to amounts excluded from the gross income of such foreign corporation under section 959(b) and § 1.959-2 with respect to a U.S. shareholder, the rules of paragraph (b) of this section shall apply except that in applying subparagraph (1) or (2) of such paragraph—

(1) Distributions from the earnings and profits for such taxable year of the second-tier corporation shall be considered first attributable to its earnings and profits attributable to distributions from the earnings and profits of the foreign corporation, if any, next lower in the chain of ownership described in section 958(a), to the extent of such earnings and profits of the second-tier corporation, and then to the other earnings and profits of such second-tier corporation, and

(2) Distributions from the earnings and profits for such taxable year of the first-tier corporation shall be considered first attributable to its earnings and profits attributable to distributions from the earnings and profits of the second-tier corporation, to the extent of such earnings and profits of the first-tier corporation, and then to the other earnings and profits of such first-tier corporation. For purposes of this paragraph, a second-tier corporation is a foreign corporation referred to in section 960(a)(1)(B), and a first-tier corporation is a foreign corporation referred to in section 960 (a)(1)(A). The application of this paragraph may be illustrated by the following examples:

> *Example 1.* (a) Domestic corporation A, a United States shareholder, owns 100 percent of the only class of stock of foreign corporation R which, in turn, owns 100 percent of the only class of stock of foreign corporation S. All corporations use the calendar year as a taxable year, and corporations R and S are controlled foreign corporations throughout the period here involved.
> (b) Neither R Corporation nor S Corporation has subpart F income for 1963. During 1963, S Corporation increases by $100 its investment in tangible property (not described in section 956(b)(2)) located in the United States, makes no distributions, and has earnings and profits of $100. Corporation A must include $100 in its gross income for 1963 under section 951(a)(1)(B) with respect to S Corporation. During 1963, R Corporation also increases by $100 its investment in tangible property (not described in section 956(b)(2)) located in the United States, makes no distributions, and has earnings and profits of $100. Corporation A must include $100 in its gross income for 1963 under section 951(a)(1)(B) with respect to R Corporation.
>
> (c) During 1964, S Corporation distributes $100 to R Corporation, and R Corporation distributes $100 to A Corporation. Neither corporation has any earnings or profits or deficit in earnings and profits for such year. On December 31, 1964, R Corporation has earnings and profits (computed before distributions to A Corporation made for the year) of $200, consisting of $100 of section 959(c)(1) amounts of R Corporation for 1963 and of $100 of section 959(c)(1) amounts of S Corporation for 1963. For purposes of determining the

foreign tax credit under section 960 and the regulations thereunder, the $100 distribution by R Corporation shall be considered attributable to S Corporation's earnings and profits for 1963 described in section 959(c)(1).

Example 2. (a) Domestic corporation A, a United States shareholder, owns 100 percent of the only class of stock of foreign corporation T which, in turn, owns 100 percent of the only class of stock of foreign corporation U. All corporations use the calendar year as a taxable year, and corporations T and U are controlled foreign corporations throughout the period here involved.
(b) During 1964, T Corporation invests $100 in tangible property (not described in section 956(b)(2)) located in the United States. For 1964, T Corporation has no subpart F income and makes no distributions; A must include $100 in its gross income for 1964 under section 951(a)(1)(B) with respect to T Corporation. For 1964, U Corporation has no subpart F income or investment of earnings in United States property but U Corporation has $100 of earnings and profits which it distributes to T Corporation. At December 31, 1964, T Corporation has earnings and profits of $300, consisting of operating income of $100 for each of the years 1963 and 1964 and $100 in dividends received from the earnings and profits of U Corporation for 1964. These earnings and profits are classified as follows under section 959(c): $100 of section 959(c)(1) amounts of T Corporation for 1964, $100 of section 959(c)(3) amounts of U Corporation for 1964, and $100 of section 959(c)(3) amounts of T Corporation for 1963.

(c) During 1965 neither T Corporation nor U Corporation has any earnings and profits or deficit in earnings and profits or investment of earnings in U.S. property, but T Corporation distributes $100 to A Corporation. For purposes of determining the foreign tax credit under section 960 and the regulations thereunder, the $100 distribution of T Corporation shall be considered attributable to T Corporation's earnings and profits for 1964 described in section 959(c)(1).

(f) ***Illustration.*** The application of this section may be illustrated by the following example:

Example. (a) M, a controlled foreign corporation is organized on January 1, 1963, and is wholly owned by A, a United States shareholder. Both A and Corporation M use the calendar year as a taxable year.
(b) Corporation M's earnings and profits (before distributions) for 1963 are $200, $100, of which is attributable to subpart F income. Corporation M's earnings and profits for such year also include $25 attributable to subpart F income which is excluded from M Corporation's foreign base company income under section 954(b)(1) as dividends, interest, and gains invested in qualified investments in less developed countries. Corporation M's increase in earnings invested in tangible property (not described in section 956(b)(2)) located in the United States for 1963, is $50, and M Corporation makes a distribution of

such property during such year of $20. For purposes of section 959, A's interest in M Corporation's earnings and profits as of December 31, 1963, determined after the distributions of $20, is classified as follows:

Section 959(c)(1) amounts:			
Earnings for 1963 attributable to increased investment in U.S. property which would have been included in A's gross income but for application of section 959(a)(2) and § 1.959-1(c)		$50	
Less: Distribution for 1963 allocated under section 959(c)(1) and paragraph (b)(1) of this section to such amounts		20	$30
Section 959(c)(2) amounts:			
Earnings for 1963 attributable to subpart F income included in A's gross income under section 951(a)(1)(A)(i)		100	
Less: Earnings for 1963 attributable to increased investment in U.S. property which would have been included in A's gross income but for application of section 959(a)(2) and § 1.959-1(c)		50	50
Section 959(c)(3) amounts:			
Predistribution earnings for 1963		200	
Less: Earnings for 1963 classified as:			
Section 959(c)(1) amounts	$50		
Section 959(c)(2) amounts	50	100	100
A's total interest in M Corporation's earnings and profits			180

For 1963, A is required to include $100 of subpart F income in his gross income under section 951(a)(1)(A)(i). He would have been required to include $50 in his gross income under section 951(a)(1)(B) as M Corporation's increase in earnings invested in United States property, except that section 959(a)(2) and paragraph (c) of § 1.959-1 provide in effect that earnings and profits taxed to A under section 951(a)(1)(A) with respect to M Corporation (whether in the current taxable year or in prior years) may be invested in United States property without again being included in gross income under section 951(a). The $20 dividend from M Corporation is excluded from A's gross income under section 959(a)(1) and paragraph (b) of § 1.959-1, since such distribution is allocated under section 959(c)(1) and paragraph (b)(1) of this section to amounts described in section 959(c)(1).

(c) During 1964, M Corporation's earnings and profits (before distributions) are $300, $75 of which is attributable to subpart F income. Corporation M has no change in investments in United States property during such year and withdraws $15 of previously excluded subpart F income from investment in less developed countries. Corporation M makes a cash distribution of $250 to A during 1964. For purposes of section 959, A's interest in M Corporation's earnings and profits as of December 31, 1964, determined after

the distribution of $250, is classified as follows:

Section 959 (c)(1) amounts:				
Section 959(c)(1) net amount for 1963 (as determined under paragraph (b) of this example)			$30	
Less: Distribution for 1964 allocated under section 959(c)(1) and paragraph (b)(1) of this section to such amount			30	
Section 959(c)(2) amounts:				
Section 959(c)(2) net amount for 1963 (as determined under paragraph (b) of this example)			50	
Plus: Earnings for 1964 attributable to:				
Subpart F income for 1964 included in A's gross income under section 951(a)(1)(A)(i)			75	
Previously excluded subpart F income withdrawn in 1964 from investment in less developed countries and included in A's gross income under section 951(a)(1)(A)(ii)			15	
			140	
Less: Distribution for 1964 allocated under section 959(c)(2) and paragraph (b)(2) of this section to such amounts			140	
Section 959(c)(3) amounts:				
Section 959(c)(3) net amount for 1963 (as determined under paragraph (b) of this example)			100	
Plus: Section 959(c)(3) net amount for 1964:				
Predistribution earnings for 1964		$300		
Less:				
Earnings for 1964 classified as section 959(c)(1) amounts ($0) and as section 959(c)(2) amounts ($75 + $15)	$90			
Distributions for 1964 allocated under section 959(c)(3) and paragraph (b)(3) of this section	80	170	130	$230
A's total interest in M Corporation's earnings and profits				230

For 1964, A is required to include in his gross income under section 951(a)(1)(A)(i) $75 of subpart F income, and under section 951 (a)(1)(A)(ii) $15 of previously excluded subpart F income withdrawn from investment in less developed countries. Of the $250 cash distribution, A may exclude $170 from his gross income under section 959(a)(1) and paragraph (b) of § 1.959-1 and $80 is includible in his gross income as a dividend.

(d) The source under section 959(c) of the 1964 distribution of $250 to A is as follows:

Year	Amount	Allocation of distribution under section 959
1963	$30	(c)(1).
1964	90	(c)(2).
1963	50	(c)(2).
1964	80	(c)(3).
	250	

[T.D. 6795, 30 FR 945, Jan. 29, 1965, as amended by T.D. 7334, 39 FR 44211, Dec. 23, 1974; T.D. 7545, 43 FR 19652, May 8, 1978; T.D. 7893, 48 FR 22510, May 19, 1983]

§ 1.959-4 Distributions to United States persons not counting as dividends.

Except as provided in section 960(a)(3) and § 1.960-2, any distribution to a United States person which is excluded from the gross income of such person under section 959(a)(1) and § 1.959-1 shall be treated for purposes of chapter 1 (relating to normal taxes and surtaxes) of subtitle A (relating to income taxes) of the Code as a distribution which is not a dividend. However, see paragraph (b)(1) of § 1.956-1, relating to the dividend limitation on the amount of a controlled foreign corporation's investment of earnings in United States property.

[T.D. 7120, 36 FR 10860, June 4, 1971]

§ 1.960-1 Overview, definitions, and computational rules for determining foreign income taxes deemed paid under section 960(a), (b), and (d).

(a) *Overview* —

(1) *Scope of §§ 1.960-1 through 1.960-3.* This section and §§ 1.960-2 and 1.960-3 provide rules to associate foreign income taxes of a controlled foreign corporation with the income that a domestic corporation that is a United States shareholder of the controlled foreign corporation takes into account in determining a subpart F inclusion or GILTI inclusion amount of the domestic corporation, as well as to associate foreign income taxes of a controlled foreign corporation with distributions of previously taxed earnings and profits. This section and §§ 1.960-2 and 1.960-3 provide the exclusive rules for determining the foreign income taxes deemed paid by a domestic corporation under section 960. Therefore, only foreign income taxes of a controlled foreign corporation that are associated under these rules with a subpart F inclusion or GILTI inclusion amount of a domestic corporation that is a United States shareholder of the controlled foreign corporation, or with previously taxed earnings and profits, are eligible to be deemed paid. This section provides definitions and computational rules for determining foreign income taxes deemed paid under section 960(a), (b), and (d). Section 1.960-2 provides rules for computing the amount of foreign income taxes deemed paid by a domestic corporation that is a United States shareholder of a controlled foreign corporation under section 960(a) and (d). Section 1.960-3 provides rules for computing the amount of foreign income taxes deemed paid by a domestic corporation that is a United States shareholder of a controlled foreign corporation, or by a controlled foreign corporation,

under section 960(b). This section and §§ 1.960-2 and 1.960-3 also apply for purposes of any provision that treats a taxpayer as a domestic corporation that is deemed to pay foreign income taxes or treats a foreign corporation as a controlled foreign corporation for purposes of section 960. See, for example, sections 962(a)(2) and 1293(f).

(2) ***Scope of this section.*** Paragraph (b) of this section provides definitions for purposes of this section and §§ 1.960-2 and 1.960-3. Paragraph (c) of this section provides computational rules to coordinate the various calculations under this section and §§ 1.960-2 and 1.960-3. Paragraph (d) of this section provides rules for computing the income in an income group within a section 904 category, and for associating foreign income taxes with an income group. Paragraph (e) of this section provides a rule for the treatment of taxes associated with the residual income group. Paragraph (f) of this section provides an example illustrating the application of this section.

(b) ***Definitions.*** The following definitions apply for purposes of this section and §§ 1.960-2 and 1.960-3.

(1) ***Annual PTEP account.*** The term *annual PTEP account* has the meaning set forth in § 1.960-3(c)(1).

(2) ***Controlled foreign corporation.*** The term *controlled foreign corporation* means a foreign corporation described in section 957(a).

(3) ***Current taxable year.*** The term *current taxable year* means the U.S. taxable year of a controlled foreign corporation that is an inclusion year, or during which the controlled foreign corporation receives a section 959(b) distribution or makes a section 959(a) distribution or a section 959(b) distribution.

(4) ***Current year tax.*** The term *current year tax* means a foreign income tax that is paid or accrued by a controlled foreign corporation in a current taxable year (taking into account any adjustments resulting from a foreign tax redetermination (as defined in § 1.905-3(a)). See § 1.905-1 for rules on when foreign income taxes are considered paid or accrued for foreign tax credit purposes; see also § 1.367(b)-7(g) for rules relating to foreign income taxes associated with foreign section 381 transactions and hovering deficits.

(5) ***Eligible current year tax.*** The term *eligible current year tax* means a current year tax, other than a current year tax for which a credit is disallowed or suspended at the level of the controlled foreign corporation. See, for example, section 245A(e)(3) and § 1.245A(d)-1(a)(2) and sections 901(k)(1), (l), and (m), 909, and 6038(c)(1)(B). An eligible current year tax, however, includes a current year tax that may be deemed paid but for which a credit is reduced or disallowed at the level of the United States shareholder. See, for example, sections 901(e), 901(j), 901(k)(2), 908, 965(g), and 6038(c)(1)(A).

(6) ***Foreign income tax.*** The term *foreign income tax* has the meaning provided in § 1.901-2(a).

(7) ***Foreign taxable year.*** The term *foreign taxable year* has the meaning set forth in section 7701(a)(23), applied by substituting “under foreign law” for the phrase “under subtitle A.”

(8) ***Foreign taxable income.*** The term *foreign taxable income* means the base upon which a current year tax is imposed that comprises the items included in gross income under foreign law and the deductions allowed under foreign law. In the case of a current year tax that is imposed with respect to a taxable period, foreign taxable income includes all of the items taken into account under foreign law with respect to that period. See paragraph (d)(3)(ii)(A) of this section for rules for apportioning current year tax to section 904 categories or income groups on the basis of foreign taxable income.

(9) ***GILTI inclusion amount.*** The term *GILTI inclusion amount* has the meaning set forth in § 1.951A-1(c)(1) (or, in the case of a member of a consolidated group, § 1.1502-51(b)).

(10) ***Gross tested income.*** The term *gross tested income* has the meaning set forth in § 1.951A-2(c)(1).

(11) ***Inclusion percentage.*** The term *inclusion percentage* has the meaning set forth in § 1.960-2(c)(2).

(12) ***Inclusion year.*** The term *inclusion year* means the U.S. taxable year of a controlled foreign corporation which ends during or with the taxable year of a United States shareholder of the controlled foreign corporation in which the United States shareholder includes an amount in income under section 951(a)(1) or 951A(a) with respect to the controlled foreign corporation.

(13) ***Income group.*** The term *income group* means a group of income described in paragraph (d)(2)(ii) of this section.

(14) ***Partnership CFC.*** The term *partnership CFC* means, with respect to a U.S. shareholder partnership, a controlled foreign corporation stock of which is owned (within the meaning of section 958(a)) by the U.S. shareholder partnership.

(15) ***Passive category.*** The term *passive category* means the separate category of income described in section 904(d)(1)(C) and § 1.904-4(b).

(16) ***Previously taxed earnings and profits.*** The term *previously taxed earnings and profits* means earnings and profits described in section 959(c)(1) or (2), including earnings and profits described in section 959(c)(2) by reason of section 951A(f)(1) and § 1.951A-5(b)(1).

(17) ***PTEP group.*** The term *PTEP group* has the meaning set forth in § 1.960-3(c)(2).

(18) ***PTEP group taxes.*** The term *PTEP group taxes* has the meaning set forth in § 1.960-3(d)(1).

(19) ***Recipient controlled foreign corporation.*** The term *recipient controlled foreign corporation* has the meaning set forth in § 1.960-3(b)(2).

(20) ***Reclassified previously taxed earnings and profits.*** The term *reclassified previously taxed earnings and profits* has the meaning set forth in § 1.960-3(c)(4).

(21) ***Reclassified PTEP group.*** The term *reclassified PTEP group* has the meaning set forth in § 1.960-3(c)(4).

(22) ***Residual income group.*** The term *residual income group* has the meaning set forth in paragraph (d)(2)(ii)(D) of this section.

(23) ***Section 904 category.*** The term *section 904 category* means a separate category of income described in § 1.904-5(a)(4)(v).

(24) ***Section 951A category.*** The term *section 951A category* means the separate category of income described in section 904(d)(1)(A) and § 1.904-4(g).

(25) ***Section 959 distribution.*** The term *section 959 distribution* means a section 959(a) distribution or a section 959(b) distribution.

(26) ***Section 959(a) distribution.*** The term *section 959(a) distribution* means a distribution excluded from the gross income of a United States shareholder under section 959(a).

(27) ***Section 959(b) distribution.*** The term *section 959(b) distribution* means a distribution excluded from the gross income of a controlled foreign corporation for purposes of section 951(a) under section 959(b).

(28) ***Section 959(c)(2) PTEP group.*** The term *section 959(c)(2) PTEP group* has the meaning set forth in § 1.960-3(c)(4).

(29) ***Subpart F inclusion.*** The term *subpart F inclusion* has the meaning set forth in § 1.960-2(b)(1).

(30) ***Subpart F income.*** The term *subpart F income* has the meaning set forth in section 952 and § 1.952-1(a).

(31) ***Subpart F income group.*** The term *subpart F income group* has the meaning set forth in paragraph (d)(2)(ii)(B)(*1*) of this section.

(32) ***Tested foreign income taxes.*** The term *tested foreign income taxes* has the meaning set forth in § 1.960-2(c)(3).

(33) ***Tested income.*** The term *tested income* means the amount with respect to a controlled foreign corporation that is described in section 951A(c)(2)(A) and § 1.951A-2(b)(1).

(34) ***Tested income group.*** The term *tested income group* has the meaning set forth in paragraph (d)(2)(ii)(C) of this section.

(35) ***United States shareholder.*** The term *United States shareholder* has the meaning set forth in section 951(b).

(36) ***U.S. shareholder partner.*** The term *U.S. shareholder partner* means, with respect to a U.S. shareholder partnership and a partnership CFC of the U.S. shareholder partnership, a United States person that is a partner in the U.S. shareholder partnership and that is also a United States shareholder (as defined in section 951(b)) of the partnership CFC.

(37) ***U.S. shareholder partnership.*** The term *U.S. shareholder partnership* means a domestic partnership (within the meaning of section 7701(a)(4)) that is a United States shareholder of one or more controlled foreign corporations.

(38) ***U.S. taxable year.*** The term *U.S. taxable year* has the same meaning as that of the term *taxable year* set forth in section 7701(a)(23).

(c) ***Computational rules*** —

(1) ***In general.*** For purposes of computing foreign income taxes deemed paid by either a domestic corporation that is a United States shareholder with respect to a controlled foreign corporation under § 1.960-2 or § 1.960-3 or by a controlled foreign corporation under § 1.960-3 for the current taxable year, the following rules apply in the following order, beginning with the lowest-tier controlled foreign corporation in a chain with respect to which the domestic corporation is a United States shareholder:

(i) First, items of gross income of the controlled foreign corporation for the current taxable year other than a section 959(b) distribution are assigned to section 904 categories and included in income groups within those section 904 categories under the rules in paragraph (d)(2) of this section. The receipt of a section 959(b) distribution by the controlled foreign corporation is accounted for under § 1.960-3(c)(3).

(ii) Second, deductions (other than for current year taxes) of the controlled foreign corporation for the current taxable year are allocated and apportioned to reduce gross income in the section 904 categories and the income groups within a section 904 category. See paragraph (d)(3)(i) of this section. Deductions for current year taxes (other than eligible current year taxes) of the controlled foreign corporation for the current taxable year are allocated and apportioned to

reduce gross income in the section 904 categories and the income groups within a section 904 category. Additionally, the functional currency amounts of eligible current year taxes are allocated and apportioned to reduce gross income in the section 904 categories and the income groups within a section 904 category, and to reduce earnings and profits in the PTEP groups that were increased as provided in paragraph (c)(1)(i) of this section. No deductions other than eligible current year taxes are allocated and apportioned to PTEP groups. See paragraph (d)(3)(ii) of this section.

(iii) Third, for purposes of computing foreign taxes deemed paid, eligible current year taxes that were allocated and apportioned to income groups and PTEP groups in the section 904 categories are translated into U.S. dollars in accordance with section 986(a).

(iv) Fourth, eligible current year taxes deemed paid under section 960(a) and (d) by the domestic corporation with respect to income of the controlled foreign corporation are computed under the rules of § 1.960-2. In addition, foreign income taxes deemed paid under section 960(b)(2) with respect to the receipt of a section 959(b) distribution by the controlled foreign corporation are computed under the rules of § 1.960-3(b).

(v) Fifth, any previously taxed earnings and profits of the controlled foreign corporation resulting from subpart F inclusions and GILTI inclusion amounts with respect to the controlled foreign corporation's current taxable year are separated from other earnings and profits of the controlled foreign corporation and added to an annual PTEP account, and a PTEP group within the PTEP account, under the rules of § 1.960-3(c).

(vi) Sixth, paragraphs (c)(1)(i) through (iv) of this section are repeated for each next higher-tier controlled foreign corporation in the chain.

(vii) Seventh, with respect to the highest-tier controlled foreign corporation in a chain that is owned directly (or indirectly through a partnership) by the domestic corporation, foreign income taxes that are deemed paid under section 960(b)(1) in connection with the receipt of a section 959(a) distribution by the domestic corporation are computed under the rules of § 1.960-3(b).

(2) ***Inclusion of current year items.*** For a current taxable year, the items of income and deductions (including for taxes), and the U.S. dollar amounts of current year taxes, that are included in the computations described in this section and assigned to income groups and PTEP groups for the taxable year are the items that the controlled foreign corporation accrues and takes into account during the current taxable year. An item of income with respect to a current taxable year does not include an amount included as subpart F income of a controlled foreign corporation by reason of the recharacterization of a recapture account established in a prior U.S. taxable year (and the corresponding earnings and profits) of the controlled foreign corporation under section 952(c)(2) and § 1.952-1(f).

(3) ***Functional currency and translation.*** The computations described in this paragraph (c) that relate to income and earnings and profits are made in the functional currency of the controlled foreign corporation (as determined under section 985), and references to taxes deemed paid are to U.S. dollar amounts (translated in accordance with section 986(a)).

(d) ***Computing income in a section 904 category and an income group within a section 904 category*** —

(1) ***Scope.*** This paragraph (d) provides rules for assigning gross income (including gains) of a controlled foreign corporation for the current taxable year to a section 904 category and income group within a section 904 category, and for allocating and apportioning deductions (including losses and current

year taxes) and the U.S. dollar amount of eligible current year taxes of the controlled foreign corporation for the current taxable year among the section 904 categories, income groups within a section 904 category, and PTEP groups. For rules regarding maintenance of previously taxed earnings and profits in an annual PTEP account, and assignment of those previously taxed earnings and profits to PTEP groups, see § 1.960-3.

(2) ***Assignment of gross income to section 904 categories and income groups within a category*** —

(i) ***Assigning items of gross income to section 904 categories.*** Items of gross income of the controlled foreign corporation for the current taxable year are first assigned to a section 904 category of the controlled foreign corporation under §§ 1.904-4 and 1.904-5, and under § 1.960-3(c)(1) in the case of gross income relating to a section 959(b) distribution received by the controlled foreign corporation. Income of a controlled foreign corporation, other than gross income relating to a section 959(b) distribution, cannot be assigned to the section 951A category. *See* § 1.904-4(g).

(ii) ***Grouping gross income within a section 904 category*** —

(A) ***In general.*** Gross income within a section 904 category is assigned to an income group under the rules of this paragraph (d)(2)(ii), or to a PTEP group under the rules of § 1.960-3(c)(3). Gross income other than a section 959(b) distribution is assigned to a subpart F income group, tested income group, or residual income group.

(B) ***Subpart F income groups*** —

(*1*) ***In general.*** The term *subpart F income group* means an income group within a section 904 category that consists of income that is described in paragraph (d)(2)(ii)(B)(*2*) of this section. Gross income that is treated as a single item of income under § 1.954-1(c)(1)(iii) is in a separate subpart F income group under paragraph (d)(2)(ii)(B)(*2*)(*i*) of this section. Items of gross income that give rise to income described in paragraph (d)(2)(ii)(B)(*2*)(*ii*) of this section are aggregated and treated as gross income in a separate subpart F income group. Similarly, items of gross income that give rise to income described in each one of paragraphs (d)(2)(ii)(B)(*2*)(*iii*) through (*v*) of this section are aggregated and treated as gross income in a separate subpart F income group.

(*2*) ***Income in subpart F income groups.*** The income included in subpart F income groups is:

(*i*) Items of foreign base company income treated as a single item of income under § 1.954-1(c)(1)(iii);

(*ii*) Insurance income described in section 952(a)(1);

(*iii*) Income subject to the international boycott factor described in section 952(a)(3);

(*iv*) Income from certain bribes, kickbacks and other payments described in section 952(a)(4); and

(*v*) Income subject to section 901(j) described in section 952(a)(5).

(C) ***Tested income groups.*** The term *tested income group* means an income group that consists of tested income within a section 904 category. Items of gross tested income in each section 904 category are aggregated and treated as gross income in a separate tested income group.

(D) ***Residual income group.*** The term *residual income group* means the income group within a section 904 category that consists of income that is not in a subpart F income group, tested income group, or PTEP group.

(E) ***Examples.*** The following examples illustrate the application of this paragraph (d)(2)(ii).

(*1*) ***Example 1: Subpart F income groups*** —

(*i*) ***Facts.*** CFC, a controlled foreign corporation, is incorporated in Country X. CFC uses the "u" as its functional currency. At all relevant times, 1u = $1x. CFC earns from sources outside of Country X portfolio dividend income of 100,000u, portfolio interest income of 1,500,000u, and 70,000u of royalty income that is not derived from the active conduct of a trade or business. CFC also earns 50,000u from the sale of personal property to a related person for use outside of Country X that gives rise to foreign base company sales income under section 954(d). Finally, CFC earns 45,000u for performing consulting services outside of Country X for related persons that gives rise to foreign base company services income under section 954(e). None of the income is taxed by Country X. The dividend income is subject to a 15 percent third-country withholding tax after application of the applicable income tax treaty. The interest income and the royalty income are subject to no third-country withholding tax. CFC incurs no expenses.

(*ii*) ***Analysis.*** Under paragraph (d)(2)(i) of this section and § 1.904-4, the interest income, dividend income, and royalty income are passive category income and the sales and consulting income are general category income. Under paragraph (d)(2)(ii)(B) of this section, CFC has a separate subpart F income group within the passive category with respect to the 100,000u of dividend income, which is foreign personal holding company income described in § 1.954-1(c)(1)(iii)(A)(*1*)(*i*) (dividends, interest, rents, royalties and annuities) that falls within a single group of income under § 1.904-4(c)(3)(i) for passive income that is subject to withholding tax of fifteen percent or greater. CFC also has a separate subpart F income group within the passive category with respect to the 1,500,000u of interest income and the 70,000u of royalty income (in total 1,570,000u) which together are foreign personal holding company income described in § 1.954-1(c)(1)(iii)(A)(*1*)(*i*) (dividends, interest, rents, royalties and annuities) that falls within a single group of income under § 1.904-4(c)(3)(iii) for passive income that is subject to no withholding tax or other foreign tax. With respect to its 50,000u of sales income, CFC has a separate subpart F income group with respect to foreign base company sales income described in § 1.954-1(c)(1)(iii)(A)(*2*)(*i*) within the general category. With respect to its 45,000u of services income, CFC has a separate subpart F income group with respect to foreign base company services income described in § 1.954-1(c)(1)(iii)(A)(*2*)(*ii*) within the general category.

(*2*) ***Example 2: Tested income groups*** —

(*i*) ***Facts.*** CFC, a controlled foreign corporation, is incorporated in Country X. CFC uses the "u" as its functional currency. At all relevant times, 1u = $1x. CFC earns 500u from the sale of goods to unrelated parties. CFC also earns 75u for performing consulting services for unrelated parties. All of its income is gross tested income. CFC incurs no deductions.

(*ii*) ***Analysis.*** Under paragraph (d)(2)(i) of this section and section 904 and § 1.904-4, the sales income and services income are both general category income. Under paragraph (d)(2)(ii)(C) of this section, with respect to the 500u of sales income and 75u services income (in total 575u), CFC has one tested income group within the general category.

(3) ***Allocation and apportionment of deductions among section 904 categories, income groups within a section 904 category, and certain PTEP groups*** —

(i) ***In general.*** Gross income of the controlled foreign corporation in each income group within each section 904 category is reduced by deductions (including losses) of the controlled foreign corporation for the current taxable year under the rules in this paragraph (d)(3)(i). No deductions of the controlled foreign corporation for the current taxable year other than a deduction for eligible current year taxes imposed solely by reason of the receipt of a section 959(b) distribution are allocated or apportioned to reduce earnings and profits in a PTEP group.

(A) First, the rules of sections 861 through 865 and 904(d) (taking into account the rules of section 954(b)(5) and § 1.954-1(c), and section 951A(c)(2)(A)(ii) and § 1.951A-2(c)(3), as appropriate) apply to allocate and apportion to reduce gross income (or create a loss) in each section 904 category and income group within a section 904 category any deductions of the controlled foreign corporation that are definitely related to less than all of the controlled foreign corporation's gross income as a class. See paragraph (d)(3)(ii) of this section for special rules for allocating and apportioning current year taxes to section 904 categories, income groups, and PTEP groups.

(B) Second, related person interest expense is allocated to and apportioned among the subpart F income groups within the passive category under the principles of §§ 1.904-5(c)(2) and 1.954-1(c)(1)(i).

(C) Third, any remaining deductions are allocated and apportioned to reduce gross income (or create a loss) in the section 904 categories and income groups within each section 904 category under the rules referenced in paragraph (d)(3)(i)(A) of this section.

(ii) ***Allocation and apportionment of a current year tax*** —

(A) ***In general.*** A current year tax is allocated and apportioned among the section 904 categories under the rules of § 1.904-6. An amount of the current year tax that is allocated and apportioned to a section 904 category is then allocated and apportioned among the income groups within the section 904 category under § 1.861-20 (as modified by § 1.904-6(c)) by treating each income group as a statutory grouping and treating the residual income group as the residual grouping. Therefore, foreign gross income attributable to a base difference is assigned to the residual income grouping under § 1.861-20(d)(2)(ii)(B). See, however, paragraph (d)(3)(ii)(B) of this section for special rules for applying § 1.861-20 in the case of PTEP groups. For purposes of determining foreign income taxes deemed paid under the rules in §§ 1.960-2 and 1.960-3, the U.S. dollar

amount of eligible current year taxes is assigned to the section 904 categories, income groups, and PTEP groups (to the extent provided in paragraph (d)(3)(ii)(B) of this section) to which the eligible current year taxes are allocated and apportioned.

(B) ***Foreign taxable income that includes previously taxed earnings and profits.*** For purposes of allocating and apportioning an eligible current year tax under this paragraph (d)(3)(ii), a PTEP group that is increased under § 1.960-3(c)(3) as a result of the receipt of a section 959(b) distribution in the current taxable year of the controlled foreign corporation is treated as an income group within the section 904 category. In such case, under § 1.861-20, the portion of the foreign gross income (as defined in § 1.861-20(b)(5)) that is characterized under Federal income tax principles as a distribution of previously taxed earnings and profits that results in the increase in the PTEP group in the current taxable year is assigned to that PTEP group. If a PTEP group is not treated as an income group under the first sentence of this paragraph (d)(3)(ii)(B), and the rules of § 1.861-20 would otherwise apply to assign foreign gross income to a PTEP group, that foreign gross income is instead assigned to the subpart F income group or tested income group to which the income that gave rise to the previously taxed earnings and profits would be assigned if the income were recognized by the recipient controlled foreign corporation under Federal income tax principles in the current taxable year. For example, a net basis or withholding tax imposed on a controlled foreign corporation's receipt of a section 959(b) distribution is allocated or apportioned to a PTEP group. In contrast, a withholding tax imposed on a disregarded payment from a disregarded entity to its controlled foreign corporation owner is never treated as related to a PTEP group, even if all of the controlled foreign corporation's earnings are previously taxed earnings and profits, because the payment that gives rise to the foreign gross income from which the tax was withheld does not constitute a section 959(b) distribution in the current taxable year. That foreign gross income, however, may be assigned to a subpart F income group or tested income group.

(e) ***No deemed paid credit for current year taxes related to residual income group.*** Current year taxes paid or accrued by a controlled foreign corporation that are allocated and apportioned under paragraph (d)(3)(ii) of this section to a residual income group cannot be deemed paid under section 960 for any taxable year.

(f) ***Example.*** The following example illustrates the application of this section and § 1.960-3.

(1) ***Facts —***

(i) ***Income of CFC1 and CFC2.*** CFC1, a controlled foreign corporation, conducts business in Country X. CFC1 uses the “u” as its functional currency. At all relevant times, 1u=$1x. CFC1 owns all of the stock of CFC2, a controlled foreign corporation. CFC1 and CFC2 both use the calendar year as their U.S. and foreign taxable years. In 2019, CFC1 earns 2,000,000u of gross income that is foreign oil and gas extraction income, within the meaning of section 907(c)(1), and 2,000,000u of interest income from unrelated persons, for both U.S. and Country X tax law purposes. Country X exempts interest income from tax. In 2019, CFC1 also receives a section 959(b) distribution from CFC2 of 4,000,000u of previously taxed earnings and profits attributable to an inclusion under section 965(a) for CFC2's 2017 U.S. taxable year. The inclusion under section 965(a) was income in the general category. There are no PTEP group taxes associated with the previously taxed earnings and profits distributed by CFC2 at the level of CFC2. The section 959(b) distribution is treated as a dividend taxable to CFC1 under Country X law. In 2019, CFC2 earns no gross income and receives no distributions.

(ii) ***Pre-tax deductions of CFC1 and CFC2.*** For both U.S. and Country X tax purposes, in 2019, CFC1 incurs 1,500,000u of deductible expenses other than current year taxes that are allocable to all gross income. For U.S. tax purposes, under §§ 1.861-8 through 1.861-14T, 750,000u of such deductions are apportioned to each of CFC1's foreign oil and gas extraction income and interest income. Under Country X law, 1,000,000u of deductions are allocated and apportioned to the 4,000,000u treated as a dividend, and 500,000u of deductions are allocated and apportioned to the 2,000,000u of foreign oil and gas extraction income. Under Country X law, no deductions are allocable to the interest income. Country X imposes eligible current year tax of 900,000u on a base of 4,500,000u (6,000,000u gross income−1,500,000u deductions) consisting of 3,000,000u (4,000,000u−1,000,000u) attributable to CFC1's section 959(b) distribution and 1,500,000u (2,000,000u−500,000u) attributable to CFC1's foreign oil and gas extraction income. In 2019, CFC2 has no expenses (including current year taxes).

(iii) ***United States shareholders of CFC1.*** All of the stock of CFC1 is owned (within the meaning of section 958(a)) by corporate United States shareholders that use the calendar year as their U.S. taxable year. In 2019, the United States shareholders of CFC1 include in gross income subpart F inclusions in the passive category totaling $1,250,000x with respect to 1,250,000u of subpart F income of CFC1.

(2) ***Analysis*** —

(i) ***CFC2.*** Under paragraph (c)(1) of this section, the computational rules of paragraph (c)(1) of this section are applied beginning with CFC2. However, CFC2 has no gross income or expenses in 2019 (the "current taxable year"). Accordingly, the computational rules described in paragraphs (c)(1)(i) through (v) of this section are not relevant with respect to CFC2. Under paragraph (c)(1)(vi) of this section, the rules in paragraph (c)(1)(i) through (v) of this section are then applied to CFC1.

(ii) ***CFC1*** —

(A) ***Step 1.*** Under paragraph (c)(1)(i) of this section, CFC1's items of gross income for the current taxable year are assigned to section 904 categories and included in income groups within those section 904 categories. In addition, CFC1's receipt of a section 959(b) distribution is assigned to a PTEP group. Under paragraph (d)(2)(i) of this section and § 1.904-4, the interest income is passive category income and the foreign oil and gas extraction income is general category income. Under paragraph (d)(2)(ii) of this section, the 2,000,000u of interest income is assigned to a subpart F income group (the "subpart F income group") within the passive category because it is foreign personal holding company income described in § 1.954-1(c)(1)(iii)(A)(*1*)(*i*) that falls within a single group of income under § 1.904-4(c)(3)(iii) for passive income that is subject to no withholding tax or other foreign tax. The 2,000,000u of foreign oil and gas extraction income is assigned to the residual income group within the general category. Under § 1.960-3(c), the 4,000,000u section 959(b) distribution is assigned to the PTEP group described in § 1.960-3(c)(2)(vii) within the 2017 annual PTEP account (the "PTEP group") within the general category.

(B) ***Step 2*** —

(*1*) ***Allocation and apportionment of deductions for expenses other than taxes.*** Under paragraph (c)(1)(ii) of this section, CFC1's deductions for the current taxable year are allocated and apportioned among the section 904 categories, income groups within

a section 904 category, and any PTEP groups that were increased as provided in paragraph (c)(1)(i) of this section. Under paragraph (d)(3)(i) of this section and §§ 1.861-8 through 1.861-14T, 750,000u of deductions are allocated and apportioned to the residual income group within the general category, and 750,000u of deductions are allocated and apportioned to the subpart F income group within the passive category. Therefore, CFC1 has 1,250,000u (2,000,000u−750,000u) of pre-tax income attributable to the residual income group within the general category and 1,250,000u (2,000,000u−750,000u) of pre-tax income attributable to the subpart F income group within the passive category. For U.S. tax purposes, no deductions other than eligible current year taxes are allocated and apportioned to the 4,000,000u in CFC1's PTEP group.

(2) ***Allocation and apportionment of current year taxes.*** Under paragraph (c)(1)(ii) of this section, CFC1's current year taxes are allocated and apportioned among the section 904 categories, income groups within a section 904 category, and any PTEP groups that were increased as provided in paragraph (c)(1)(i) of this section. Under paragraphs (d)(3)(i) and (ii) of this section, for purposes of allocating and apportioning taxes to reduce the income in a section 904 category, an income group, or PTEP group, § 1.904-6(a)(1) and (ii) are applied to determine the amount of foreign taxable income, computed under Country X law but characterized under Federal income tax law, in each section 904 category, income group, and PTEP group that is included in the Country X tax base. For Country X purposes, 1,000,000u of deductions are apportioned to CFC1's PTEP group within the general category, 500,000u of deductions are apportioned to the residual income group within the general category, and no deductions are apportioned to the subpart F income group in the passive category. Therefore, for Country X purposes, CFC1 has 3,000,000u of foreign taxable income attributable to the PTEP group within the general category, 1,500,000u of foreign taxable income attributable to the residual income group within the general category, and no income attributable to the subpart F income group within the passive category. Under paragraph (d)(3)(ii) of this section, 600,000u (3,000,000u/4,500,000u × 900,000u) of the 900,000u eligible current year taxes paid by CFC1 are related to the PTEP group within the general category, and 300,000u (1,500,000u/4,500,000u × 900,000u) are related to the residual income group within the general category. No current year taxes are allocated or apportioned to the subpart F income group within the passive category because the interest expense is exempt from Country X tax. Thus, for U.S. tax purposes, CFC1 has 3,400,000u of previously taxed earnings and profits (4,000,000u−600,000u) in the PTEP group within the general category, 1,250,000u of income in the subpart F income group within the passive category, and 950,000u of income (1,250,000u−300,000u) in the residual income group within the general category.

(C) ***Step 3.*** Under paragraph (c)(1)(iii) of this section, for purposes of computing foreign taxes deemed paid under section 960, CFC1 has $600,000x of foreign income taxes in the PTEP group within the general category and $300,000x of current year taxes in the residual income group within the general category. Under paragraph (e) of this section, the United States shareholders of CFC1 cannot claim a credit with respect to the $300,000x of taxes on CFC1's income in the residual income group.

(D) *Step 4.* Under paragraph (c)(1)(iv) of this section, the United States shareholders of CFC1 compute current year taxes deemed paid under section 960(a) and (d) and the rules of § 1.960-2. None of the Country X tax is allocated to CFC1's subpart F income group. Therefore, there are no current year taxes deemed paid by CFC1's United States shareholders with respect to their passive category subpart F inclusions. See § 1.960-2(b)(5) and (c)(7) for examples of the application of section 960(a) and (d) and the rules in § 1.960-2. Additionally, under paragraph (c)(1)(iv) of this section, foreign income taxes deemed paid under section 960(b)(2) by CFC1 are determined with respect to the section 959(b) distribution from CFC2 under the rules of § 1.960-3. There are no PTEP group taxes associated with the previously taxed earnings and profits distributed by CFC2 in the hands of CFC2. Therefore, there are no foreign income taxes deemed paid by CFC1 under section 960(b)(2) with respect to the section 959(b) distribution from CFC2. See § 1.960-3(e) for examples of the application of section 960(b) and the rules in § 1.960-3.

(E) *Step 5.* Under paragraph (c)(1)(v) of this section, previously taxed earnings and profits resulting from subpart F inclusions and GILTI inclusion amounts with respect to CFC1's current taxable year are separated from CFC1's other earnings and profits and added to an annual PTEP account and PTEP group within the PTEP account, under the rules of § 1.960-3(c). The United States shareholders of CFC1 include in gross income subpart F inclusions totaling $1,250,000x with respect to 1,250,000u of subpart F income of CFC1, and the subpart F inclusions are passive category income. Therefore, under § 1.960-3(c)(2), 1,250,000u of previously taxed earnings and profits resulting from the subpart F inclusions is added to CFC1's section 951(a)(1)(A) PTEP within the 2019 annual PTEP account within the passive category.

(F) *Step 6.* Paragraph (c)(1)(vi) of this section does not apply because CFC1 is the highest-tier controlled foreign corporation in the chain.

(G) *Step 7.* Paragraph (c)(1)(vii) of this section does not apply because CFC1 did not make a section 959(a) distribution.

[T.D. 9882, 84 FR 69107, Dec. 17, 2019, as amended by T.D. 9922, 85 FR 72071, Nov. 12, 2020; T.D. 9959, 87 FR 374, Jan. 4, 2022]

§ 1.960-2 Foreign income taxes deemed paid under sections 960(a) and (d).

(a) *Scope.* Paragraph (b) of this section provides rules for computing the amount of foreign income taxes deemed paid by a domestic corporation that is a United States shareholder of a controlled foreign corporation under section 960(a). Paragraph (c) of this section provides rules for computing the amount of foreign income taxes deemed paid by a domestic corporation that is a United States shareholder of a controlled foreign corporation under section 960(d).

(b) *Foreign income taxes deemed paid under section 960(a)* —

(1) *In general.* If a domestic corporation that is a United States shareholder of a controlled foreign corporation includes in gross income under section 951(a)(1)(A) its pro rata share of the subpart F income of the controlled foreign corporation (a *subpart F inclusion*), the domestic corporation is deemed to have paid the amount of the controlled foreign corporation's foreign income taxes that are properly attributable to the items of income in a subpart F income group of the controlled foreign corporation that give rise to the subpart F inclusion of the domestic corporation that is attributable to the subpart F income group. For each section 904 category, the domestic corporation is deemed

to have paid foreign income taxes equal to the sum of the controlled foreign corporation's foreign income taxes that are properly attributable to the items of income in the subpart F income groups to which the subpart F inclusion is attributable. See § 1.904-6(b)(1) for rules on assigning the foreign income tax to a section 904 category. No foreign income taxes are deemed paid under section 960(a) with respect to an inclusion under section 951(a)(1)(B).

(2) ***Properly attributable.*** The amount of the controlled foreign corporation's foreign income taxes that are properly attributable to the items of income in the subpart F income group of the controlled foreign corporation to which a subpart F inclusion is attributable equals the domestic corporation's proportionate share of the eligible current year taxes of the controlled foreign corporation that are allocated and apportioned under § 1.960-1(d)(3)(ii) to the subpart F income group. No other foreign income taxes are considered properly attributable to an item of income of the controlled foreign corporation.

(3) ***Proportionate share*** —

(i) ***In general.*** A domestic corporation's proportionate share of the eligible current year taxes of a controlled foreign corporation that are allocated and apportioned under § 1.960-1(d)(3)(ii) to a subpart F income group within a section 904 category of the controlled foreign corporation is equal to the total U.S. dollar amount of eligible current year taxes that are allocated and apportioned under § 1.960-1(d)(3)(ii) to the subpart F income group multiplied by a fraction (not to exceed one), the numerator of which is the portion of the domestic corporation's subpart F inclusion that is attributable to the subpart F income group and the denominator of which is the total net income in the subpart F income group, both determined in the functional currency of the controlled foreign corporation. If the numerator or denominator of the fraction is zero or less than zero, then the proportionate share of the eligible current year taxes that are allocated and apportioned under § 1.960-1(d)(3)(ii) to the subpart F income group is zero.

(ii) ***Effect of qualified deficits.*** Neither an accumulated deficit nor any prior year deficit in the earnings and profits of a controlled foreign corporation reduces its net income in a subpart F income group. Accordingly, any such deficit does not affect the denominator of the fraction described in paragraph (b)(3)(i) of this section. However, the first sentence of this paragraph (b)(3)(ii) does not affect the application of section 952(c)(1)(B) for purposes of determining the domestic corporation's subpart F inclusion. Any reduction to the domestic corporation's subpart F inclusion under section 952(c)(1)(B) is reflected in the numerator of the fraction described in paragraph (b)(3)(i) of this section.

(iii) ***Effect of current year E&P limitation or chain deficit.*** To the extent that an amount of income in a subpart F income group is excluded from the subpart F income of the controlled foreign corporation under section 952(c)(1)(A) or (C), the net income in the subpart F income group that is the denominator of the fraction described in paragraph (b)(3)(i) of this section is reduced (but not below zero) by the amount excluded. The domestic corporation's subpart F inclusion that is the numerator of the fraction described in paragraph (b)(3)(i) of this section is based on the controlled foreign corporation's subpart F income computed with the application of section 952(c)(1)(A) and (C). See § 1.960-1(c)(2) for a rule regarding the treatment of an increase in the subpart F income of a controlled foreign corporation by reason of the recharacterization of a recapture account and the corresponding accumulated earnings and profits under section 952(c) and § 1.952-1(f).

(4) ***Domestic partnerships.*** For purposes of applying this paragraph (b), in the case of a domestic partnership that is a U.S. shareholder partnership with respect to a partnership CFC, the distributive share of a U.S. shareholder partner of the U.S. shareholder partnership's subpart F inclusion with respect to the partnership CFC is treated as a subpart F inclusion of the U.S. shareholder partner with respect to the partnership CFC.

(5) ***Example.*** The following example illustrates the application of this paragraph (b).

(i) ***Facts.*** USP, a domestic corporation, owns 80% of the stock of CFC, a controlled foreign corporation. The remaining portion of the stock of CFC is owned by an unrelated person. USP and CFC both use the calendar year as their U.S. taxable year, and CFC also uses the calendar year as its foreign taxable year. CFC uses the "u" as its functional currency. At all relevant times, 1u=$1x. For its U.S. taxable year ending December 31, 2018, after the application of the rules in § 1.960-1(d) the income of CFC after foreign taxes is assigned to the following income groups: 1,000,000u of dividend income in a subpart F income group within the passive category ("subpart F income group 1"); 2,400,000u of gain from commodities transactions in a subpart F income group within the passive category ("subpart F income group 2"); and 1,800,000u of foreign base company services income in a subpart F income group within the general category ("subpart F income group 3"). CFC has current year taxes, all of which are eligible current year taxes, translated into U.S. dollars, of $740,000x that are allocated and apportioned as follows: $50,000x to subpart F income group 1; $240,000x to subpart F income group 2; and $450,000x to subpart F income group 3.USP has a subpart F inclusion with respect to CFC of 4,160,000u = $4,160,000x, of which 800,000u is attributable to subpart F income group 1, 1,920,000u to subpart F income group 2, and 1,440,000u to subpart F income group 3.

(ii) ***Analysis*** —

(A) ***Passive category.*** Under paragraphs (b)(2) and (3) of this section, the amount of CFC's foreign income taxes that are properly attributable to items of income in subpart F income group 1 to which a subpart F inclusion is attributable equals USP's proportionate share of the eligible current year taxes that are allocated and apportioned under § 1.960-1(d)(3)(ii) to subpart F income group 1, which is $40,000x ($50,000x × 800,000u/1,000,000u). Under paragraphs (b)(2) and (3) of this section, the amount of CFC's foreign income taxes that are properly attributable to items of income in subpart F income group 2 to which a subpart F inclusion is attributable equals USP's proportionate share of the eligible current year taxes that are allocated and apportioned under § 1.960-1(d)(3)(ii) to subpart F income group 2, which is $192,000x ($240,000x × 1,920,000u/2,400,000u). Accordingly, under paragraph (b)(1) of this section, USP is deemed to have paid $232,000x ($40,000x + $192,000x) of passive category foreign income taxes of CFC with respect to its $2,720,000x subpart F inclusion in the passive category.

(B) ***General category.*** Under paragraphs (b)(2) and (3) of this section, the amount of CFC's foreign income taxes that are properly attributable to items of income in subpart F income group 3 to which a subpart F inclusion is attributable equals USP's proportionate share of the eligible current year taxes that are allocated and apportioned under § 1.960-1(d)(3)(ii) to subpart F income group 3, which is $360,000x ($450,000x × 1,440,000u/1,800,000u). CFC has no other subpart F income groups within the general category. Accordingly, under paragraph (b)(1) of this section, USP is deemed to have paid $360,000x of general category foreign income taxes of CFC with respect to its $1,440,000x subpart F inclusion in the general category.

(c) *Foreign income taxes deemed paid under section 960(d)* —

(1) ***In general.*** If a domestic corporation that is a United States shareholder of one or more controlled foreign corporations includes an amount in gross income under section 951A(a) and § 1.951A-1(b), the domestic corporation is deemed to have paid an amount of foreign income taxes equal to 80 percent of the product of its inclusion percentage multiplied by the sum of all tested foreign income taxes in the tested income group within each section 904 category of the controlled foreign corporation or corporations.

(2) ***Inclusion percentage.*** The term *inclusion percentage* means, with respect to a domestic corporation that is a United States shareholder of one or more controlled foreign corporations, the domestic corporation's GILTI inclusion amount divided by the aggregate amount described in section 951A(c)(1)(A) and § 1.951A-1(c)(2)(i) with respect to the United States shareholder.

(3) ***Tested foreign income taxes.*** The term *tested foreign income taxes* means, with respect to a domestic corporation that is a United States shareholder of a controlled foreign corporation, the amount of the controlled foreign corporation's foreign income taxes that are properly attributable to tested income taken into account by the domestic corporation under section 951A and § 1.951A-1.

(4) ***Properly attributable.*** The amount of the controlled foreign corporation's foreign income taxes that are properly attributable to tested income taken into account by the domestic corporation under section 951A(a) and § 1.951A-1(b) equals the domestic corporation's proportionate share of the eligible current year taxes of the controlled foreign corporation that are allocated and apportioned under § 1.960-1(d)(3)(ii) to the tested income group within each section 904 category of the controlled foreign corporation. No other foreign income taxes are considered properly attributable to tested income.

(5) ***Proportionate share.*** A domestic corporation's proportionate share of eligible current year taxes of a controlled foreign corporation that are allocated and apportioned under § 1.960-1(d)(3)(ii) to a tested income group within a section 904 category of the controlled foreign corporation is the U.S. dollar amount of eligible current year taxes that are allocated and apportioned under § 1.960-1(d)(3)(ii) to a tested income group within a section 904 category of the controlled foreign corporation multiplied by a fraction (not to exceed one), the numerator of which is the portion of the tested income of the controlled foreign corporation in the tested income group within the section 904 category that is included in computing the domestic corporation's aggregate amount described in section 951A(c)(1)(A) and § 1.951A-1(c)(2)(i), and the denominator of which is the income in the tested income group within the section 904 category, both determined in the functional currency of the controlled foreign corporation. If the numerator or denominator of the fraction is zero or less than zero, the domestic corporation's proportionate share of the eligible current year taxes allocated and apportioned under § 1.960-1(d)(3)(ii) to the tested income group is zero.

(6) ***Domestic partnerships.*** See § 1.951A-1(e) for rules regarding the determination of the GILTI inclusion amount of a U.S. shareholder partner.

(7) ***Examples.*** The following examples illustrate the application of this paragraph (c).

(i) *Example 1: Directly owned controlled foreign corporation* —

(A) ***Facts.*** USP, a domestic corporation, owns 100% of the stock of a number of controlled foreign corporations, including CFC1. USP and CFC1 each use the calendar year as their U.S. taxable year. CFC1 uses the “u” as its functional currency. At all relevant times, 1u = $1x. For its U.S. taxable year ending December 31, 2018, after application of the rules in §

1.960-1(d), the income of CFC1 is assigned to a single income group: 2,000u of income from the sale of goods in a tested income group within the general category ("tested income group"). CFC1 has current year taxes, all of which are eligible current year taxes, translated into U.S. dollars, of $400x that are all allocated and apportioned to the tested income group. For its U.S. taxable year ending December 31, 2018, USP has a GILTI inclusion amount determined by reference to all of its controlled foreign corporations, including CFC1, of $6,000x, and an aggregate amount described in section 951A(c)(1)(A) and § 1.951A-1(c)(2)(i) of $10,000x. All of the income in CFC1's tested income group is included in computing USP's aggregate amount described in section 951A(c)(1)(A) and § 1.951A-1(c)(2)(i).

(B) ***Analysis.*** Under paragraph (c)(5) of this section, USP's proportionate share of the eligible current year taxes that are allocated and apportioned under § 1.960-1(d)(3)(ii) to CFC1's tested income group is $400x ($400x × 2,000u/2,000u). Therefore, under paragraph (c)(4) of this section, the amount of foreign income taxes that are properly attributable to tested income taken into account by USP under section 951A(a) and § 1.951A-1(b) is $400x. Under paragraph (c)(3) of this section, USP's tested foreign income taxes with respect to CFC1 are $400x. Under paragraph (c)(2) of this section, USP's inclusion percentage is 60% ($6,000x/$10,000x). Accordingly, under paragraph (c)(1) of this section, USP is deemed to have paid $192 of the foreign income taxes of CFC1 (80% × 60% × $400x).

(ii) ***Example 2: Controlled foreign corporation owned through domestic partnership*** —

(A) ***Facts.***

(*1*) US1, a domestic corporation, owns 95% of PRS, a domestic partnership. The remaining 5% of PRS is owned by US2, a domestic corporation that is unrelated to US1. PRS owns all of the stock of CFC1, a controlled foreign corporation. In addition, US1 owns all of the stock of CFC2, a controlled foreign corporation. US1, US2, PRS, CFC1, and CFC2 all use the calendar year as their taxable year. CFC1 and CFC2 both use the "u" as their functional currency. At all relevant times, 1u=$1x. For its U.S. taxable year ending December 31, 2018, after application of the rules in § 1.960-1(d), the income of CFC1 is assigned to a single income group: 300u of income from the sale of goods in a tested income group within the general category ("CFC1's tested income group"). CFC1 has current year taxes, all of which are eligible current year taxes, translated into U.S. dollars, of $100x that are all allocated and apportioned to CFC1's tested income group. The income of CFC2 is also assigned to a single income group: 200u of income from the sale of goods in a tested income group within the general category ("CFC2's tested income group"). CFC2 has current year taxes, all of which are eligible current year taxes, translated into U.S. dollars, of $20x that are allocated and apportioned to CFC2's tested income group.

(*2*) Under § 1.951A-1(e)(1), for purposes of determining the GILTI inclusion amount of US1 and US2, PRS is not treated as owning (within the meaning of section 958(a)) the stock of CFC1; instead, PRS is treated in the same manner as a foreign partnership for purposes of determining the stock of CFC1 owned by US1 and US2 under section 958(a)(2). Therefore, only US1 is a United States shareholder of CFC1. Taking into account both CFC1 and CFC2, US1 has a GILTI inclusion amount in the general category of $485x, and an aggregate amount described in section 951A(c)(1)(A) and § 1.951A-1(c)(2)(i) within the general category of $485x. 285u

(95% × 300u) of the income in CFC1's tested income group and 200u of the income in CFC2's tested income group is included in computing US1's aggregate amount described in section 951A(c)(1)(A) and § 1.951A-1(c)(2)(i) within the general category. Because US2 is not a U.S. shareholder with respect to CFC1, US2 does not take into account CFC1's tested income in determining its GILTI inclusion amount.

(B) *Analysis* —

(*1*) *US1* —

(*i*) ***CFC1.*** Under paragraphs (c)(5) and (6) of this section, US1's proportionate share of the eligible current year taxes that are allocated and apportioned under § 1.960-1(d)(3)(ii) to CFC1's tested income group is $95x ($100x × 285u/300u). Therefore, under paragraph (c)(4) of this section, the amount of the foreign income taxes that are properly attributable to tested income taken into account by US1 under section 951A(a) and § 1.951A-1(b) is $95x. Under paragraph (c)(3) of this section, US1's tested foreign income taxes with respect to CFC1 are $95x. Under paragraph (c)(2) of this section, US1's inclusion percentage is 100% ($485x/$485x). Accordingly, under paragraph (c)(1) of this section, US1 is deemed to have paid $76x of the foreign income taxes of CFC1 (80% × 100% × $95x).

(*ii*) ***CFC2.*** Under paragraph (c)(5) of this section, US1's proportionate share of the eligible current year taxes that are allocated and apportioned under § 1.960-1(d)(3)(ii) to CFC2's tested income group is $20x ($20x × 200u/200u). Therefore, under paragraph (c)(4) of this section, the amount of foreign income taxes properly attributable to tested income taken into account by US1 under section 951A(a) and § 1.951A-1(b) is $20x. Under paragraph (c)(3) of this section, US1's tested foreign income taxes with respect to CFC2 are $20. Under paragraph (c)(2) of this section, US1's inclusion percentage is 100% ($485x/$485x). Accordingly, under paragraph (c)(1) of this section, US1 is deemed to have paid $16 of the foreign income taxes of CFC2 (80% × 100% × $20x).

(*2*) ***US2.*** US2 is not a United States shareholder of CFC1 or CFC2. Accordingly, under paragraph (c)(1) of this section, US2 is not deemed to have paid any of the foreign income taxes of CFC1 or CFC2.

[T.D. 9882, 84 FR 69112, Dec. 17, 2019, as amended by T.D. 9922, 85 FR 72071, Nov. 12, 2020; T.D. 9959, 87 FR 375, Jan. 4, 2022; 87 FR 45020, July 27, 2022]

§ 1.960-3 Foreign income taxes deemed paid under section 960(b).

(a) ***Scope.*** Paragraph (b) of this section provides rules for computing the amount of foreign income taxes deemed paid by a domestic corporation that is a United States shareholder of a controlled foreign corporation, or by a controlled foreign corporation, under section 960(b). Paragraph (c) of this section provides rules for the establishment and maintenance of PTEP groups within an annual PTEP account. Paragraph (d) of this section defines the term PTEP group taxes. Paragraph (e) of this section provides examples illustrating the application of this section.

(b) *Foreign income taxes deemed paid under section 960(b)* —

(1) ***Foreign income taxes deemed paid by a domestic corporation with respect to a section 959(a) distribution.*** If a controlled foreign corporation makes a distribution to a domestic corporation that is a United States shareholder with respect to the controlled foreign corporation and that distribution is, in whole or in part, a section 959(a) distribution with respect to a PTEP group within a section 904 category, the domestic corporation is deemed to have paid the amount of the foreign corporation's foreign income taxes that are properly attributable to the section 959(a) distribution with respect to the PTEP group and that have not been deemed to have been paid by a domestic corporation under section 960 for the current taxable year or any prior taxable year. See § 1.965-5(c)(1)(iii) for rules disallowing credits in relation to a distribution of certain previously taxed earnings and profits resulting from the application of section 965. For each section 904 category, the domestic corporation is deemed to have paid foreign income taxes equal to the sum of the controlled foreign corporation's foreign income taxes that are properly attributable to section 959(a) distributions with respect to all PTEP groups within the section 904 category. See § 1.904-6(b)(2) for rules on assigning the foreign income tax to a section 904 category.

(2) ***Foreign income taxes deemed paid by a controlled foreign corporation with respect to a section 959(b) distribution.*** If a controlled foreign corporation (*distributing controlled foreign corporation*) makes a distribution to another controlled foreign corporation (recipient controlled foreign corporation) and the distribution is, in whole or in part, a section 959(b) distribution from a PTEP group within a section 904 category, the recipient controlled foreign corporation is deemed to have paid the amount of the distributing controlled foreign corporation's foreign income taxes that are properly attributable to the section 959(b) distribution from the PTEP group and that have not been deemed to have been paid by a domestic corporation under section 960 for the current taxable year or any prior taxable year. See § 1.904-6(b)(3) for rules on assigning the foreign income tax to a section 904 category.

(3) ***Properly attributable.*** The amount of foreign income taxes that are properly attributable to a section 959 distribution from a PTEP group within a section 904 category equals the domestic corporation's or recipient controlled foreign corporation's proportionate share of the PTEP group taxes with respect to the PTEP group within the section 904 category. No other foreign income taxes are considered properly attributable to a section 959 distribution.

(4) ***Proportionate share.*** A domestic corporation's or recipient controlled foreign corporation's proportionate share of the PTEP group taxes with respect to a PTEP group within a section 904 category is equal to the total amount of the PTEP group taxes with respect to the PTEP group multiplied by a fraction (not to exceed one), the numerator of which is the amount of the section 959 distribution from the PTEP group, and the denominator of which is the total amount of previously taxed earnings and profits in the PTEP group, both determined in the functional currency of the controlled foreign corporation. If the numerator or denominator of the fraction is zero or less than zero, then the proportionate share of the PTEP group taxes with respect to the PTEP group is zero.

(5) ***Domestic partnerships.*** For purposes of applying this paragraph (b), in the case of a domestic partnership that is a U.S. shareholder partnership with respect to a partnership CFC, the distributive share of a U.S. shareholder partner of a U.S. shareholder partnership's section 959(a) distribution from the partnership CFC is treated as a section 959(a) distribution received by the U.S. shareholder partner from the partnership CFC.

(c) ***Accounting for previously taxed earnings and profits*** —

(1) ***Establishment of annual PTEP account.*** A separate, annual account (*annual PTEP account*) must be established for the previously taxed earnings and profits of the controlled foreign corporation to which inclusions under section 951(a) and GILTI inclusion amounts of United States shareholders of

the CFC are attributable. Each account must correspond to the inclusion year of the previously taxed earnings and profits and to the section 904 category to which the inclusions under section 951(a) or GILTI inclusion amounts were assigned at the level of the United States shareholders. Accordingly, a controlled foreign corporation may have an annual PTEP account in the section 951A category or a treaty category (as defined in § 1.861-13(b)(6)), even though income of the controlled foreign corporation that gave rise to the previously taxed earnings and profits cannot initially be assigned to the section 951A category or a treaty category.

(2) ***PTEP groups within an annual PTEP account.*** The amount in an annual PTEP account is further assigned to one or more of the following groups of previously taxed earnings and profits (each, a *PTEP group*) within the account:

(i) Earnings and profits described in section 959(c)(1)(A) that were initially described in section 959(c)(2) by reason of section 965(a) ("reclassified section 965(a) PTEP");

(ii) Earnings and profits described in section 959(c)(1)(A) that were initially described in section 959(c)(2) by reason of section 965(b)(4)(A) ("reclassified section 965(b) PTEP");

(iii) Earnings and profits described in paragraphs (c)(2)(iii)(A) through (C) of this section (which are aggregated into a single PTEP group, "general section 959(c)(1) PTEP"):

(A) Earnings and profits described in section 959(c)(1)(A) by reason of section 951(a)(1)(B) and not by reason of section 959(a)(2);

(B) Earnings and profits described in section 959(c)(1)(A) that were initially described in section 959(c)(2) by reason of section 951(a)(1)(A) (other than earnings that were initially described in paragraphs (c)(2)(vi) through (ix) of this section); and

(C) Earnings and profits described in section 959(c)(1)(B), including by reason of section 959(a)(3) (before its repeal);

(iv) Earnings and profits described in section 959(c)(1)(A) that were initially described in section 959(c)(2) by reason of section 951A(f)(2) ("reclassified section 951A PTEP");

(v) Earnings and profits described in paragraphs (c)(2)(v)(A) through (C) of this section (which are aggregated into a single PTEP group, "reclassified section 245A(d) PTEP"):

(A) Earnings and profits described in section 959(c)(1)(A) that were initially described in section 959(c)(2) by reason of section 245A(e)(2);

(B) Earnings and profits described in section 959(c)(1)(A) that were initially described in section 959(c)(2) by reason of section 959(e); and

(C) Earnings and profits described in section 959(c)(1)(A) that were initially described in section 959(c)(2) by reason of section 964(e)(4);

(vi) Earnings and profits described in section 959(c)(2) by reason of section 965(a) ("section 965(a) PTEP");

(vii) Earnings and profits described in section 959(c)(2) by reason of section 965(b)(4)(A) ("section 965(b) PTEP");

(viii) Earnings and profits described in section 959(c)(2) by reason of section 951A(f)(2) ("section 951A PTEP");

(ix) Earnings and profits described in paragraphs (c)(2)(ix)(A) through (C) of this section (which are aggregated into a single PTEP group, "section 245A(d) PTEP"):

(A) Earnings and profits described in section 959(c)(2) by reason of section 245A(e)(2);

(B) Earnings and profits described in section 959(c)(2) by reason of section 959(e); and

(C) Earnings and profits described in section 959(c)(2) by reason of section 964(e)(4); and

(x) Earnings and profits described in section 959(c)(2) by reason of section 951(a)(1)(A) not otherwise described in paragraph (c)(2)(vi) through (ix) of this section ("section 951(a)(1)(A) PTEP").

(3) ***Accounting for distributions of previously taxed earnings and profits.*** With respect to a recipient controlled foreign corporation that receives a section 959(b) distribution, such distribution amount is added to the annual PTEP account, and PTEP group within the annual PTEP account, that corresponds to the inclusion year and section 904 category of the annual PTEP account, and PTEP group within the annual PTEP account, from which the distributing controlled foreign corporation is treated as making the distribution under section 959. Similarly, with respect to a controlled foreign corporation that makes a section 959 distribution, such distribution amount reduces the annual PTEP account, and PTEP group within the annual PTEP account, that corresponds to the inclusion year and section 904 category of the annual PTEP account, and PTEP group within the annual PTEP account, from which the controlled foreign corporation is treated as making the distribution under section 959. Earnings and profits in a PTEP group are reduced by the amount of current year taxes that are allocated and apportioned to the PTEP group under § 1.960-1(d)(3)(ii), and the U.S. dollar amount of the taxes are added to an account of PTEP group taxes under the rules in paragraph (d)(1) of this section.

(4) ***Accounting for reclassifications of earnings and profits described in section 959(c)(2) to earnings and profits described in section 959(c)(1).*** If an amount of previously taxed earnings and profits that is in a PTEP group described in paragraphs (c)(2)(vi) through (x) of this section (each, a section 959(c)(2) PTEP group) is reclassified as previously taxed earnings and profits described in section 959(c)(1) (reclassified previously taxed earnings and profits), the section 959(c)(2) PTEP group is reduced by the functional currency amount of the reclassified previously taxed earnings and profits. This amount is added to the corresponding PTEP group described in paragraph (c)(2)(i), (ii), (iii) (by reason of paragraph (c)(2)(iii)(B) of this section), (iv) or (v) of this section (each, a reclassified PTEP group) in the same section 904 category and same annual PTEP account as the reduced section 959(c)(2) PTEP group.

(d) ***PTEP group taxes*** —

(1) ***In general.*** The term *PTEP group taxes* means the U.S. dollar amount of foreign income taxes (translated in accordance with section 986(a)) that are paid, accrued, or deemed paid with respect to an amount in each PTEP group within an annual PTEP account. The foreign income taxes that are paid, accrued, or deemed paid with respect to a PTEP group within an annual PTEP account of a controlled foreign corporation are—

(i) The sum of—

(A) The current year taxes paid or accrued by the controlled foreign corporation that are allocated and apportioned to the PTEP group under § 1.960-1(d)(3)(ii);

(B) Foreign income taxes that are deemed paid under section 960(b)(2) and paragraph (b)(2) of this section by the controlled foreign corporation with respect to a section 959(b) distribution received by the controlled foreign corporation, the amount of which is added to the PTEP group under paragraph (c)(3) of this section; and

(C) In the case of a reclassified PTEP group of the controlled foreign corporation, reclassified PTEP group taxes that are attributable to the section 959(c)(2) PTEP group that corresponds to the reclassified PTEP group.

(ii) Reduced by—

(A) Foreign income taxes that were deemed paid under section 960(b)(2) and paragraph (b)(2) of this section by another controlled foreign corporation that received a section 959(b) distribution from the controlled foreign corporation, the amount of which is subtracted from the controlled foreign corporation's PTEP group under paragraph (c)(3) of this section;

(B) Foreign income taxes that were deemed paid under section 960(b)(1) and paragraph (b)(1) of this section by a domestic corporation that is a United States shareholder of the controlled foreign corporation that received a section 959(a) distribution from the controlled foreign corporation, the amount of which is subtracted from the controlled foreign corporation's PTEP group under paragraph (c)(3) of this section; and

(C) In the case of a section 959(c)(2) PTEP group of the controlled foreign corporation, reclassified PTEP group taxes.

(2) ***Reclassified PTEP group taxes.*** Reclassified PTEP group taxes are foreign income taxes that are initially included in PTEP group taxes with respect to a section 959(c)(2) PTEP group under paragraph (d)(1)(i)(A) or (B) of this section multiplied by a fraction, the numerator of which is the portion of the previously taxed earnings and profits in the section 959(c)(2) PTEP group that become reclassified previously taxed earnings and profits, and the denominator of which is the total previously taxed earnings and profits in the section 959(c)(2) PTEP group.

(3) ***Foreign income taxes deemed paid with respect to PTEP groups established for pre-2018 inclusion years.*** In the case of foreign income taxes paid or accrued in a taxable year of the controlled foreign corporation that began before January 1, 2018, with respect to an annual PTEP account, and a PTEP group within such account, that was established for an inclusion year that begins before January 1, 2018, the foreign income taxes are treated as PTEP group taxes of a controlled foreign corporation for purposes of this section only if those foreign income taxes were—

(i) Not included in a controlled foreign corporation's post-1986 foreign income taxes (as defined in section 902(c)(2) as in effect on December 21, 2017) used to compute foreign taxes deemed paid under section 902 (as in effect on December 21, 2017) in any taxable year that began before January 1, 2018; and

(ii) Not treated as deemed paid under section 960(a)(3) (as in effect on December 21, 2017) by a domestic corporation that was a United States shareholder of the controlled foreign corporation.

(e) ***Examples.*** The following examples illustrate the application of this section.

(1) ***Example 1: Establishment of PTEP groups and PTEP accounts*** —

(i) ***Facts.*** USP, a domestic corporation, owns all of the stock of CFC1, a controlled foreign corporation. CFC1 owns all of the stock of CFC2, a controlled foreign corporation. USP, CFC1, and CFC2 each use the calendar year as their U.S. taxable year. CFC1 and CFC2 use the "u" as their functional currency. At all relevant times, 1u = $1x. With respect to CFC2, USP includes in gross income a subpart F inclusion of 1,000,000u = $1,000,000x for the taxable year ending December 31, 2018. The inclusion is with respect to passive category income. In its U.S. taxable year ending December 31, 2019, CFC2 distributes 1,000,000u to CFC1. CFC2 has no earnings and profits except for the 1,000,000u of previously taxed earnings and profits resulting from USP's 2018 taxable year subpart F inclusion. CFC2's country of organization, Country X, imposes a withholding tax on CFC1 of 300,000u on CFC2's distribution to CFC1. Under § 1.960-1(d)(3)(ii), CFC1's 300,000u of current year taxes are allocated and apportioned to the PTEP group within the annual PTEP account within the section 904 category to which the 1,000,000u of previously taxed earnings and profits are assigned.

(ii) ***Analysis*** —

(A) Under paragraph (c)(1) of this section, a separate annual PTEP account in the passive category for the 2018 taxable year is established for CFC2 as a result of USP's subpart F inclusion. Under paragraph (c)(2) of this section, this account contains one PTEP group, section 951(a)(1)(A) PTEP.

(B) Under paragraph (c)(3) of this section, in the 2019 taxable year, the 1,000,000u related to the section 959(b) distribution from CFC2 is added to CFC1's annual PTEP account for the 2018 taxable year in the passive category and to the section 951(a)(1)(A) PTEP within such account. Similarly, CFC2's 2018 taxable year annual PTEP account within the passive category, and the section 951(a)(1)(A) PTEP within such account, is reduced by the amount of the 1,000,000u section 959(b) distribution to CFC1. Additionally, CFC1's annual PTEP account for the 2018 taxable year in the passive category, and the section 951(a)(1)(A) PTEP within such account, is reduced by the 300,000u of withholding tax imposed on CFC1 by Country X. Therefore, CFC1's annual PTEP account for the 2018 taxable year within the passive category and the section 951(a)(1)(A) PTEP within such account is 700,000u.

(C) Under paragraph (d)(1) of this section, the 300,000u of withholding tax is translated into U.S. dollars and $300,000x is added to the PTEP group taxes with respect to CFC1's section 951(a)(1)(A) PTEP within the annual PTEP account for the 2018 taxable year within the passive category.

(2) ***Example 2: Foreign income taxes deemed paid under section 960(b)*** —

(i) ***Facts.*** USP, a domestic corporation, owns 100% of the stock of CFC1, which in turn owns 60% of the stock of CFC2, which in turn owns 100% of the stock of CFC3. USP, CFC1, CFC2, and CFC3 all use the calendar year as their U.S. taxable year. CFC1, CFC2, and CFC3 all use the "u" as their functional currency. At all relevant times, 1u = $1x. On July 1, 2020, CFC2 distributes 600u to CFC1 and the entire distribution is a section 959(b) distribution ("distribution 1"). On October 1, 2020, CFC1 distributes 800u to USP and the entire distribution is a section 959(a) distribution ("distribution 2"). CFC1 and CFC2 make no other distributions in the year ending December 31, 2020, earn no other income, and incur no taxes on distribution 1 or distribution 2. Before taking into account distribution 1, CFC2 has 1,000u of section 951(a)(1)(A) PTEP within an annual PTEP account for the 2016 taxable year within the general category. The previously taxed earnings and profits in CFC2's PTEP group relate to subpart F income of CFC3 that was

included by USP in 2016. CFC3 distributed the earnings and profits to CFC2 before the 2020 taxable year and, solely as a result of the distribution of the previously taxed earnings and profits, CFC2 incurred withholding and net basis tax, resulting in $150 of PTEP group taxes with respect to section 951(a)(1)(A) PTEP. Before taking into account distribution 1 and distribution 2, CFC1 has 200u in section 951A PTEP within an annual PTEP account for the 2018 taxable year within the section 951A category. The previously taxed earnings and profits in CFC1's PTEP group relate to the portion of a GILTI inclusion amount that was included by USP in 2018 and allocated to CFC2 under section 951A(f)(2) and § 1.951A-5(b)(2). CFC2 distributed the earnings and profits to CFC1 before the 2020 taxable year and, solely as a result of the distribution of the previously taxed earnings and profits, CFC1 incurred withholding and net basis tax, resulting in $25x of PTEP group taxes with respect to section 951A PTEP.

(ii) *Analysis* —

(A) ***Foreign income taxes deemed paid by CFC1.*** With respect to distribution 1 from CFC2 to CFC1, under paragraph (b)(4) of this section CFC1's proportionate share of PTEP group taxes with respect to CFC2's section 951(a)(1)(A) PTEP within an annual PTEP account for the 2016 taxable year within the general category is $90x ($150x × 600u/1,000u). Under paragraph (b)(3) of this section, the amount of foreign income taxes that are properly attributable to distribution 1 is $90x. Accordingly, under paragraph (b)(2) of this section, CFC1 is deemed to have paid $90x of general category foreign income taxes of CFC2 with respect to its 600u section 959(b) distribution in the general category.

(B) ***Adjustments to PTEP accounts of CFC1 and CFC2.*** Under paragraph (c)(3) of this section, the 600u related to distribution 1 is added to CFC1's section 951(a)(1)(A) PTEP within an annual PTEP account for the 2016 taxable year within the general category. Similarly, CFC2's section 951(a)(1)(A) PTEP within an annual PTEP account for the 2016 taxable year within the general category is reduced by 600u, the amount of the section 959(b) distribution to CFC1. Additionally, under paragraph (d) of this section, CFC1's PTEP group taxes with respect to its section 951(a)(1)(A) PTEP within an annual PTEP account for the 2016 taxable year within the general category are increased by $90 and CFC2's PTEP group taxes with respect to section 951(a)(1)(A) PTEP within an annual PTEP account for the 2016 taxable year within the general category are reduced by $90x.

(C) ***Foreign income taxes deemed paid by USP.*** With respect to distribution 2 from CFC1 to USP, because CFC1 has PTEP groups in more than one section 904 category, this section is applied separately to each section 904 category (that is, distribution 2 of 800u is applied separately to the 200u of CFC1's section 951A PTEP and 600u of CFC1's section 951(a)(1)(A) PTEP).

(*1*) ***Section 951A category.*** Under paragraph (b)(4) of this section, USP's proportionate share of PTEP group taxes with respect to CFC1's section 951A PTEP within an annual PTEP account for the 2018 taxable year within the section 951A category is $25x ($25x × 200u/200u). Under paragraph (b)(3) of this section, the amount of foreign income taxes within the section 951A category that are properly attributable to distribution 2 is $25x. Accordingly, under paragraph (b)(1) of this section USP is deemed to have paid $25x of section 951A category foreign income taxes of CFC1 with respect to its 200u section 959(a) distribution in the section 951A category.

(2) ***General category.*** Under paragraph (b)(4) of this section, USP's proportionate share of PTEP group taxes with respect to CFC1's section 951(a)(1)(A) PTEP within an annual PTEP account for the 2016 taxable year within the general category is $90x ($90x × 600u/600u). Under paragraph (b)(3) of this section, the amount of foreign income taxes that are properly attributable to distribution 2 is $90x. Accordingly, under paragraph (b)(1), USP is deemed to have paid $90x of general category foreign income taxes of CFC1 with respect to its 600u section 959(a) distribution in the general category.

[T.D. 9882, 84 FR 69114, Dec. 17, 2019, as amended by T.D. 9922, 85 FR 72071, Nov. 12, 2020]

§ 1.960-4 Additional foreign tax credit in year of receipt of previously taxed earnings and profits.

(a) ***Increase in section 904(a) limitation for the taxable year of exclusion*** —

(1) ***In general.*** The applicable limitation under section 904(a) for a taxpayer's taxable year (hereinafter in this section referred to as the “taxable year of exclusion”) in which the taxpayer receives an amount which is excluded from gross income under section 959(a)(1) and which is attributable to a controlled foreign corporation's earnings and profits in respect of which an amount was required to be included in the gross income of such taxpayer under section 951(a) for a taxable year (hereinafter in this section referred to as the “taxable year of inclusion”) previous to the taxable year of exclusion shall be increased under section 960(c)(1) by the amount described in paragraph (b) of this section if the conditions described in paragraph (a)(2) of this section are satisfied. For purposes of this section, an amount included in gross income under section 951A(a) is treated as an amount included in gross income under section 951(a). The amount of the increase in the foreign tax credit limitation allowed by this section is determined with regard to each separate category of income described in § 1.904-5(a)(4)(v).

(2) ***Conditions under which increase in limitation is allowed for the taxable year of exclusion.*** The increase in limitation described in subparagraph (1) of this paragraph for the taxable year of exclusion shall be made only if the taxpayer—

(i) For the taxable year of inclusion either chose to claim a foreign tax credit as provided in section 901 or did not pay or accrue any foreign income taxes,

(ii) Chooses to claim a foreign tax credit as provided in section 901 for the taxable year of exclusion, and

(iii) For the taxable year of exclusion pays, accrues, or is deemed to have paid foreign income taxes with respect to the amount, described in subparagraph (1) of this paragraph, which is excluded from his gross income for such year under section 959(a)(1).

(b) ***Amount of increase in limitation for the taxable year of exclusion.*** The amount of increase under section 960 (b)(1) in the applicable limitation under section 904(a) for the taxable year of exclusion shall be—

(1) The amount by which the applicable section 904(a) limitation for the taxable year of inclusion was increased, determined as provided in paragraph (c) of this section, by reason of the inclusion of the amount in the taxpayer's income for such year under section 951(a), reduced by

(2) The amount of foreign income taxes allowed as a credit under section 901 for such taxable year of inclusion and which were allowable to such taxpayer solely by reason of the inclusion of such amount in his gross income under section 951(a), as determined under paragraph (d) of this section, and then by

(3) The additional reduction for such taxable year of inclusion arising by reason of increases in limitation under section 960(c)(1) for taxable years intervening between such taxable year of inclusion and such taxable year of exclusion, as determined under paragraph (e) of this section in respect of such inclusion under section 951(a),

except that the amount of increase determined under this paragraph for the taxable year of exclusion shall in no case exceed the amount of foreign income taxes paid, accrued, or deemed to be paid by such taxpayer for such taxable year of exclusion with respect to the amount, described in paragraph (a)(1) of this section, which is excluded from gross income for such year under section 959(a)(1).

(c) ***Determination of increase in limitation for the taxable year of inclusion.*** The amount of the increase in the applicable limitation under section 904(a) for the taxable year of inclusion which arises by reason of the inclusion of the amount in gross income under section 951(a) shall be the amount of the applicable limitation under section 904(a) for such year reduced by the amount which would have been the applicable limitation under section 904(a) for such year if the amount had not been included in gross income for such year under section 951(a).

(d) ***Determination of foreign income taxes allowed for taxable year of inclusion by reason of section 951(a) amount.*** The amount of foreign income taxes allowed as a credit under section 901 for the taxable year of inclusion which were allowable solely by reason of the inclusion of the amount in gross income for such year under section 951(a) shall be the amount of foreign income taxes allowed as a credit under section 901 for such year reduced by the amount of foreign income taxes which would have been allowed as a credit under section 901 for such year if the amount had not been included in gross income for such year under section 951(a). For purposes of this paragraph (d), the term “foreign income taxes” includes foreign income taxes paid or accrued, foreign income taxes deemed paid or accrued under section 904(c), and foreign income taxes deemed paid under section 960 (or section 902 with respect to taxable years of foreign corporations beginning before January 1, 2018), for the taxable year of inclusion.

(e) ***Additional reduction for the taxable year of inclusion arising by reason of increases in limitation for intervening years.*** The amount of increase in the applicable limitation under section 904(a) for the taxable year of inclusion shall also be reduced, after first deducting the foreign income taxes described in paragraph (b)(2) of this section, by any increases in limitation which arise under section 960(c)(1)—by reason of any earlier exclusions under section 959(a)(1) in respect of the same inclusion under section 951(a) for such taxable year of inclusion—for the first, second, third, fourth, etc., succeeding taxable years of exclusion, in that order, which follow such taxable year of inclusion and precede the taxable year of exclusion in respect of which the increase in limitation under section 960(c)(1) and paragraph (b) of this section is being determined. The amount of any increase in limitation which arises under section 960(c)(1) for any such succeeding taxable year of exclusion shall be the amount of foreign income taxes allowed as a credit under section 901 for each such taxable year reduced by the amount of foreign income taxes which would have been allowed as a credit under section 901 for each such year if the limitation for each such year were not increased under section 960(c)(1). For any such succeeding taxable year of exclusion for which the taxpayer does not choose to claim a foreign tax credit as provided in section 901, the same increase in limitation under section 960(c)(1) shall be treated as having been made, for purposes of this paragraph, which would have been made for such taxable year if the taxpayer had chosen to claim the foreign tax credit for such year.

(f) ***Examples.*** The application of this section may be illustrated by the following examples:

(1) ***Example 1.*** USP, a domestic corporation, owns all of the one class of stock of CFC, a controlled foreign corporation that uses the U.S. dollar as its functional currency. CFC, after paying foreign income taxes of $10x, has earnings and profits for Year 1 of $90x, all of which are attributable to an amount required under section 951(a) to be included in USP's gross income for Year 1 because the income is general category foreign base company services income of CFC. Both corporations use the calendar year as the taxable year. For Year 2 and Year 3, CFC has no earnings and profits attributable to an amount required to be included in USP's gross income under section 951(a); for each such year it makes a distribution of $45x (from its section 951(a)(1)(A) PTEP within the annual PTEP account for Year 1) from which a foreign income tax of $6x is withheld. For each of Year 1, Year 2, and Year 3, USP derives taxable income of $50x from sources within the United States and claims a foreign tax credit under section 901, subject to the limitation under section 904. The U.S. tax payable by USP is determined as follows, assuming a corporate tax rate of 21%:

TABLE 1 TO PARAGRAPH (f)(1)

YEAR 1

Taxable income of USP:		
U.S. sources		$50.00x
Sources without the U.S.:		
Amount required to be included in USP's gross income under section 951(a)	$90.00x	
Foreign income taxes deemed paid by USP under section 960(a) and included in USP's gross income under section 78 ($10x × $90x/$90x)	10.00x	100.00x
Total taxable income		150.00x
U.S. tax payable for Year 1:		
U.S. tax before credit ($150x × 21%)		31.50x
Credit: Foreign income taxes of $10x, but not to exceed the limitation of $21x for Year 1 ($100x/$150x × $31.50x)		10.00x
U.S. tax payable		21.50x

TABLE 2 TO PARAGRAPH (f)(1)

YEAR 2

Taxable income of USP, consisting of income from U.S. sources		$50.00x
U.S. tax before credit ($50x × 21%)		10.50x
Section 904 limitation for Year 2:		
Limitation for Year 2 before increase under section 960(c)(1) ($10.50x × $0/$50x)		0

Plus: Increase in limitation for Year 2 under sec. 960(c)(1):		
Amount by which Year 1 limitation was increased by reason of inclusion in USP's gross income under section 951(a) for Year 1 ($21x−[($50x × 21%) × $0/$50x])	21.00x	
Less: Foreign income taxes allowed as a credit for Year 1 which were allowable solely by reason of such section 951(a) inclusion ($10x−$0)	10.00x	
Balance	11.00x	
But: Such balance not to exceed foreign income taxes paid by USP for Year 2 with respect to $45x distribution excluded under section 959(a)(1) ($6x tax withheld)	6.00x	6.00x
Limitation for Year 2		6.00x
U.S. tax payable for Year 2:		
U.S. tax before credit ($50x × 21%)		10.50x
Credit: Foreign income taxes of $6x, but not to exceed limitation of $6x for Year 2		6.00x
U.S. tax payable		4.50x

TABLE 3 TO PARAGRAPH (f)(1)

YEAR 3

Taxable income of USP, consisting of income from U.S. sources		$50.00x
U.S. tax before credit ($50x × 21%)		10.50x
Section 904 limitation for Year 3:		
Limitation for Year 3 before increase under section 960(c)(1) ($10.50x × $0/$50x)		0
Plus: Increase in limitation for Year 3 under section 960(c)(1):		
Amount by which Year 1 limitation was increased by reason of inclusion in USP's gross income under section 951(a) for Year 1 ($21x−[($50 × 21%) × $0/$50x])	$21.00x	
Less: Foreign income taxes allowed as a credit for Year 1 which were allowable solely by reason of such section 951(a) inclusion ($10x−$0)	10.00x	
Tentative balance	11.00x	
Less: Increase in limitation under section 960(c)(1) for Year 2 by reason of such sec. 951(a) inclusion	6.00x	
Balance	5.00x	
But: Such balance not to exceed foreign income taxes paid by USP for Year 3 with respect to $45x distribution excluded under section 959(a)(1) ($6x tax withheld)	6.00x	5.00x
Limitation for Year 3		5.00x
U.S. tax payable for Year 3:		
U.S. tax before credit ($50x × 21%)		10.50x
Credit: Foreign income taxes of $6, but not to exceed section 904(a) limitation of $5x		5.00x

U.S. tax payable		5.50x

(2) ***Example 2.*** The facts for Year 1 and Year 2 are the same as in paragraph (f)(1) of this section (the facts in *Example 1*), except that in Year 0, in which USP also claimed a foreign tax credit under section 901, USP pays $11x of foreign income taxes in excess of the general category limitation and such excess is not absorbed as a carryback to the prior year under section 904(c). Therefore, there is no increase under section 960(c)(1) in the limitation for Year 2 since the amount ($21x) by which the Year 1 limitation was increased by reason of the inclusion in USP's gross income for Year 1 under section 951(a), less the foreign income taxes ($21x) allowed as a credit which were allowable solely by reason of such inclusion, is zero. The foreign income taxes so allowed as a credit for Year 1 which were allowable solely by reason of such section 951(a) inclusion consist of the $10 of foreign income taxes deemed paid for Year 1 under section 960(a) and the $11x of foreign income taxes for Year 0 carried over and deemed paid for Year 1 under section 904(c).

[T.D. 7120, 36 FR 10859, June 4, 1971, as amended by T.D. 7649, 44 FR 60089, Oct. 18, 1979; T.D. 9882, 84 FR 69117, Dec. 17, 2019; T.D. 9922, 85 FR 72071, Nov. 12, 2020]

§ 1.960-5 Credit for taxable year of inclusion binding for taxable year of exclusion.

(a) ***Taxes not allowed as a deduction for taxable year of exclusion.*** In the case of any taxpayer who—

(1) Chooses to claim a foreign tax credit as provided in section 901 for the taxable year for which he is required to include in gross income under section 951(a) or 951A(a) an amount attributable to the earnings and profits of a controlled foreign corporation; and

(2) Does not choose to claim a foreign tax credit as provided in section 901 for a taxable year in which he receives an amount which is excluded from gross income under section 959(a)(1) and which is attributable to such earnings and profits of such controlled foreign corporation,

No deduction shall be allowed under section 164 for the taxable year of such exclusion for any foreign income taxes paid or accrued on or with respect to such excluded amount.

(b) ***Example.*** The application of this section may be illustrated by the following example:

(1) ***Facts.*** USP, a domestic corporation, owns all the one class of stock of CFC, a controlled foreign corporation. Both corporations use the calendar year as the taxable year and the functional currency of CFC is the U.S. dollar. All of CFC's earnings and profits of $80x for Year 1 (after payment of foreign income taxes of $20x on its total income of $100x for such year) are attributable to amounts required under section 951(a) to be included in USP's gross income for Year 1 because such income is general category foreign base company services income of CFC. For Year 1, USP chooses to claim a foreign tax credit for the $20x of foreign income taxes which for such year are paid by CFC and deemed paid by USP under section 960(a) and § 1.960-2(b). In Year 2, CFC distributes the entire $80x of Year 1 previously taxed earnings and profits, from which a foreign income tax of $8x is withheld. Also in Year 2, CFC pays $40x of interest to USP, from which a foreign income tax of $4x is withheld. For Year 2, USP chooses to claim deductions for its creditable foreign income taxes under section 164 rather than a foreign tax credit under section 901.

(2) ***Analysis.*** Although USP does not choose to claim a foreign tax credit for Year 2, under section 960(c)(4) and paragraph (a) of this section it may not deduct the $8x of foreign income taxes under section 164. USP may, however, deduct under such section the foreign income tax of $4x which is withheld from the interest paid by CFC in Year 2.

[T.D. 7120, 36 FR 10859, June 4, 1971, as amended by T.D. 7649, 44 FR 60089, Oct. 18, 1979; T.D. 9882, 84 FR 69119, Dec. 17, 2019]

§ 1.960-6 Overpayments resulting from increase in limitation for taxable year of exclusion.

(a) ***Amount of overpayment.*** If an increase in the limitation under section 960(c)(1) and § 1.960-4 for a taxable year of exclusion exceeds the tax (determined before allowance of any credits against tax) imposed by chapter 1 of the Code for such year, the amount of such excess shall be deemed an overpayment of tax for such year and shall be refunded or credited to the taxpayer in accordance with chapter 65 (section 6401 and following) of the Code.

(b) ***Example.*** The application of this section may be illustrated by the following example:

(1) ***Facts.*** USP, a domestic corporation, owns all of the one class of stock of CFC, a controlled foreign corporation. Both corporations use the calendar year as the taxable year, and the functional currency of CFC is the U.S. dollar. For Year 1, CFC has total income of $100,000x on which it pays foreign income taxes of $20,000x. All of CFC's earnings and profits for Year 1 of $80,000x are attributable to an amount which is required under section 951(a) to be included in USP's gross income for Year 1 because such income is general category foreign base company services income of CFC. By reason of such income inclusion USP is deemed for Year 1 to have paid under section 960(a), and is required under section 78 to include in gross income for such year, the $20,000x ($20,000x × $80,000x/$80,000x) of foreign income taxes paid by CFC for such year. USP also derives $100,000x of taxable income from sources within the United States for Year 1. For Year 2, USP has $4,000x of taxable income, all of which is derived from sources within the United States. No part of CFC's earnings and profits for Year 2 is attributable to an amount required under section 951(a) or section 951A(a) to be included in USP's gross income. During Year 2, CFC makes one distribution consisting of its $80,000x earnings and profits for Year 1, all of which is excluded under section 959(a)(1) from USP's gross income for Year 2, and from which distribution foreign income taxes of $1,000x are withheld. For Year 1 and Year 2, USP claims the foreign tax credit under section 901, subject to the limitation of section 904.

(2) ***Analysis.*** The U.S. tax liability of USP is determined as follows for such years, assuming a corporate tax rate of 21%:

Table 1 to Paragraph (b)(2)

Year 1		
Taxable income of USP:		
U.S. sources		$100,000.00x
Sources without the U.S.:		

Amount required to be included in USP's gross income under section 951(a)	$80,000.00x	
Foreign income taxes deemed paid by USP under section 960(a) and included in USP's gross income under section 78 ($20,000x × $80,000x/$80,000x)	20,000.00x	100,000.00x
Total taxable income		200,000.00x
U.S. tax payable for Year 1:		
U.S. tax before credit ([$200,000x × 21%])		42,000.00x
Credit: Foreign income taxes of $20,000x, but not to exceed limitation of $21,000x ($42,000x × $100,000x/$200,000x)		20,000.00x
U.S. tax payable		22,000.00x

TABLE 2 TO PARAGRAPH (b)(2)

YEAR 2

Taxable income of USP, consisting of income from U.S. sources		$4,000x
U.S. tax before credit ($4,000x × 21%)		840x
Section 904 limitation for Year 2:		
Limitation for Year 2 before increase under section 960(c)(1) ($840x × $0/$4,000x)		0
Plus: Increase in section 904 limitation for Year 2 under section 960(c)(1):		
Amount by which Year 1 limitation was increased by reason of inclusion in USP's gross income under section 951(a) for Year 1 ($21,000x-[$21,000x × $0/$100,000x])	$21,000x	
Less: Foreign income taxes allowed as a credit for Year 1 which were allowable solely by reason of such section 951(a) inclusion ($20,000x-$0)	20,000x	
Balance	1,000x	
But: Such balance not to exceed foreign income taxes paid by USP for Year 2 with respect to $80,000x distribution excluded under section 959(a)(1) ($1,000x tax withheld)	1,000x	1,000x
Limitation for Year 2		1,000x
U.S. tax payable for Year 2:		
U.S. tax before credit ($4,000x × 21%)		840x
Credit: Foreign income taxes of $1,000x, but not to exceed limitation of $1,000x for Year 2		1,000x
U.S. tax payable		None
Overpayment of tax for Year 2:		
Increase in limitation under section 960(c)(1) for Year 2		1,000x

Less: Tax imposed for Year 2 under chapter 1 of the Code		840x
Excess treated as overpayment		160x

[T.D. 7120, 36 FR 10859, June 4, 1971, as amended by T.D. 7649, 44 FR 60089, Oct. 18, 1979; T.D. 9882, 84 FR 69119, Dec. 17, 2019]

§ 1.960-7 Applicability dates.

(a) Except as provided in paragraph (b) of this section, §§ 1.960-1 through 1.960-6 apply to each taxable year of a foreign corporation ending on or after December 4, 2018, and to each taxable year of a domestic corporation that is a United States shareholder of the foreign corporation in which or with which such taxable year of such foreign corporation ends.

(b) Section 1.960-1(c)(2) and (d)(3)(ii) apply to taxable years of a foreign corporation beginning after December 31, 2019, and to each taxable year of a domestic corporation that is a United States shareholder of the foreign corporation in which or with which such taxable year of such foreign corporation ends. For taxable years of a foreign corporation that end on or after December 4, 2018, and also begin before January 1, 2020, see § 1.960-1(c)(2) and (d)(3)(ii) as in effect on December 17, 2019. Paragraphs (b)(4), (5), and (6), (c)(1)(ii), (iii), and (iv), and (d)(3)(ii)(A) and (B) of § 1.960-1, and paragraphs (b)(2), (b)(3)(i), (b)(5)(i), (b)(5)(iv)(A), and (c)(4), (5), and (7) of § 1.960-2, apply to taxable years of foreign corporations beginning on or after December 28, 2021, and to each taxable year of a domestic corporation that is a United States shareholder of the foreign corporation in which or with which such taxable year of such foreign corporation ends. For taxable years of foreign corporations beginning before December 28, 2021, with respect to the paragraphs described in the preceding sentence, see §§ 1.960-1 and 1.960-2 as in effect on November 12, 2020.

[T.D. 9922, 85 FR 72072, Nov. 12, 2020, as amended by T.D. 9959, 87 FR 375, Jan. 4, 2022]

§ 1.961-1 Increase in basis of stock in controlled foreign corporations and of other property.

(a) ***Increase in basis*** —

(1) ***In general.*** Except as provided in subparagraph (2) of this paragraph, the basis of a United States shareholder's—

(i) Stock in a controlled foreign corporation; or

(ii) Property (as defined in paragraph (b)(1) of this section) by reason of the ownership of which he is considered under section 958(a)(2) as owning stock in a controlled foreign corporation shall be increased under section 961(a), as of the last day in the taxable year of such corporation on which it is a controlled foreign corporation, by the amount required to be included with respect to such stock or such property in such shareholder's gross income under section 951(a) for his taxable year in which or with which such taxable year of such corporation ends. The increase in basis provided by the preceding sentence shall be made only to the extent to which such amount required to be included in gross income under section 951(a) was so included in gross income.

(2) ***Limitation on amount of increase in case of election under section 962.*** In the case of a United States shareholder who makes the election under section 962 for the taxable year, the amount of the increase in basis provided by subparagraph (1) of this paragraph shall not exceed the amount of United States tax paid in accordance with such election with respect to the amounts included in such shareholder's gross income under section 951(a) for such year (as determined under § 1.962-1).

(b) ***Rules of application*** —

(1) ***Property defined.*** The property of a United States shareholder referred to in paragraph (a)(1)(ii) of this section shall consist of—

(i) Stock in a foreign corporation;

(ii) An interest in a foreign partnership; or

(iii) A beneficial interest in a foreign estate or trust (as defined in section 7701(a)(31)).

(2) ***Increase with respect to each share of stock.*** Any increase under paragraph (a) of this section in the basis of a United States shareholder's stock in a foreign corporation shall be made in the amount included in gross income under section 951(a) or in the amount of United States tax paid in accordance with an election under section 962, as the case may be, with respect to each share of such stock.

(c) ***Illustration.*** The application of this section may be illustrated by the following examples:

Example 1. Domestic corporation M owns 800 of the 1,000 shares of the one class of stock in controlled foreign corporation R which owns all of the one class of stock in controlled foreign corporation S. Corporations M, R, and S use the calendar year as a taxable year. In 1964, S Corporation has $100,000 of earnings and profits after the payment of $11,250 of foreign income taxes, and $100,000 of subpart F income. Corporation R has no earnings and profits. With respect to S Corporation, M Corporation is required to include in gross income $80,000 (800/1,000 × $100,000) under section 951(a), and $9,000 ($80,000/$100,000 × $11,250) under section 78. On December 31, 1964, M Corporation must increase the basis of each share of its stock in R Corporation by $100 ($80,000/800).

Example 2. A, an individual United States shareholder, owns all of the 1,000 shares of the one class of stock in controlled foreign corporation T. Corporation T and A use the calendar year as a taxable year. In 1964, T Corporation has $80,000 of earnings and profits after the payment of $20,000 of foreign income taxes, and $80,000 of subpart F income. A makes the election under section 962 for 1964 and in accordance with such election pays a United States tax of $23,000 with respect to the $80,000 included in his gross income under section 951(a). On December 31, 1964, A must increase the basis of each share of his stock in T Corporation by $23 ($23,000/1,000).

[T.D. 6850, 30 FR 11854, Sept. 16, 1965]

§ 1.961-2 Reduction in basis of stock in foreign corporations and of other property.

(a) ***Reduction in basis*** —

(1) ***In general.*** Except as provided in subparagraph (2) of this paragraph, the adjusted basis of a United States person's—

(i) Stock in a foreign corporation;

(ii) Interest in a foreign partnership; or

(iii) Beneficial interest in a foreign estate or trust (as defined in section 7701(a)(31)),

with respect to which such United States person receives an amount which is excluded from gross income under section 959(a), shall be reduced under section 961(b), as of the time such person receives such excluded amount, by the sum of the amount so excluded and any income, war profits, or excess profits taxes imposed by any foreign country or possession of the United States on or with respect to the earnings and profits attributable to such excluded amount when such earnings and profits were actually distributed directly or indirectly through a chain of ownership described in section 958(a)(2).

(2) ***Limitation on amount of reduction in case of election under section 962.*** In the case of a distribution of earnings and profits attributable to amounts with respect to which an election under section 962 has been made, the amount of the reduction in basis provided by subparagraph (1) of this paragraph shall not exceed the sum of—

(i) The amount of such distribution which is excluded from gross income under section 959(a) after the application of section 962(d) and § 1.962-3; and

(ii) Any income, war profits, or excess profits taxes imposed by any foreign country or possession of the United States on or with respect to the earnings and profits attributable to such excluded amount when such earnings and profits were actually distributed directly or indirectly through a chain of ownership described in section 958(a)(2).

(b) ***Reduction with respect to each share of stock.*** Any reduction under paragraph (a) of this section in the adjusted basis of a United States person's stock in a foreign corporation shall be made with respect to each share of such stock in the sum of—

(1)

(i) The amount excluded from gross income under section 959(a); or

(ii) The amount excluded from gross income under section 959(a) after the application of section 962(d) and § 1.962-3; and

(2) The amount of any income, war profits, or excess profits taxes imposed by any foreign country or possession of the United States on or with respect to the earnings and profits attributable to such excluded amount when such earnings and profits were actually distributed directly or indirectly through a chain of ownership described in section 958(a)(2).

(c) ***Amount in excess of basis.*** To the extent that the amount of the reduction in the adjusted basis of property provided by paragraph (a) of this section exceeds such adjusted basis, the amount shall be treated as gain from the sale or exchange of property.

(d) ***Illustration.*** The application of this section may be illustrated by the following examples:

> *Example 1.* (a) Domestic corporation M owns all of the 1,000 shares of the one class of stock in controlled foreign corporation R, which owns all of the 500 shares of the one class of stock in controlled foreign corporation S. Each share of M Corporation's stock in R Corporation has a basis of $200. Corporations M, R, and S use the calendar year as a taxable year. In 1963, S Corporation has $100,000 of earnings and profits after the payment of $50,000 of foreign income taxes and

$100,000 of subpart F income. For 1963, M Corporation includes $100,000 in gross income under section 951(a) with respect to S Corporation. In accordance with the provisions of § 1.961-1, M Corporation increases the basis of each of its 1,000 shares of stock in R Corporation to $300 ($200 + $100,000/1,000) as of December 31, 1963.

(b) On July 31, 1964, M Corporation sells 250 of its shares of stock in R Corporation to domestic corporation N at a price of $350 per share. Corporation N satisfies the requirements of paragraph (d) of § 1.959-1 so as to qualify as M Corporation's successor in interest. On September 30, 1964, the earnings and profits attributable to the $100,000 included in M Corporation's gross income under section 951(a) for 1963 are distributed to R Corporation which incurs a withholding tax of $10,000 on such distribution (10 percent of $100,000) and an additional foreign income tax of $33^1/_3$ percent or $30,000 by reason of the inclusion of the net distribution of $90,000 ($100,000 minus $10,000) in its taxable income for 1964. On June 30, 1965, R Corporation distributes the remaining $60,000 of such earnings and profits to corporations M and N: Corporation M receives $45,000 (750/1,000 × $60,000) and excludes such amount from gross income under section 959(a); Corporation N receives $15,000 (250/1,000 × $60,000) and, as M Corporation's successor in interest, excludes such amount from gross income under section 959(a). As of June 30, 1965, M Corporation must reduce the adjusted basis of each of its 750 shares of stock in R Corporation to $200 ($300 minus ($45,000/750 + $10,000/1,000 + $30,000/1,000)); and N Corporation must reduce the basis of each of its 250 shares of stock in R Corporation to $250 ($350 minus ($15,000/250 + $10,000/1,000 + $30,000/1,000)).

Example 2. The facts are the same as in paragraph (a) of example 1, except that in addition, on July 31, 1964, R Corporation sells its 500 shares of stock in S Corporation to domestic corporation P at a price of $600 per share. Corporation P satisfies the requirements of paragraph (d) of § 1.959-1 so as to qualify as M Corporation's successor in interest. On September 30, 1964, S Corporation distributes $100,000 of earnings and profits to P Corporation, which earnings and profits are attributable to the $100,000 included in M Corporation's gross income under section 951(a) for 1963. Corporation P incurs a withholding tax of $10,000 on the distribution from S Corporation (10 percent of $100,000). As M Corporation's successor in interest, P Corporation excludes the $90,000 it receives from gross income under section 959(a). As of September 30, 1964, P Corporation must reduce the basis of each of its 500 shares of stock in S Corporation to $400 ($600 minus ($90,000/500 + $10,000/500)).

[T.D. 6850, 30 FR 11854, Sept. 16, 1965]

§ 1.962-1 Limitation of tax for individuals on amounts included in gross income under section 951(a).

(a) ***In general.*** An individual United States shareholder may, in accordance with § 1.962-2, elect to have the provisions of section 962 apply for his taxable year. In such case—

(1) The tax imposed under chapter 1 of the Internal Revenue Code on all amounts which are included in his gross income for such taxable year under section 951(a) shall (in lieu of the tax determined under section 1) be an amount equal to the tax which would be imposed under section 11 if such amounts were received by a domestic corporation (determined in accordance with paragraph (b)(1) of this section), and

(2) For purposes of applying sections 960(a) and 960(d) (relating to foreign tax credit) such amounts shall be treated as if received by a domestic corporation (as provided in paragraph (b)(2) of this section).

(3) Thus, an individual United States shareholder may elect to be subject to tax at corporate rates on amounts included in his gross income under section 951(a) and to have the benefit of a credit for certain foreign taxes paid with respect to the earnings and profits attributable to such amounts. Section 962 also provides rules for the treatment of an actual distribution of earnings and profits previously taxed in accordance with an election of the benefits of this section. See § 1.962-3.

(b) ***Rules of application.*** For purposes of this section—

(1) ***Application of section 11.*** For purposes of applying section 11 for a taxable year as provided in paragraph (a)(1) of this section in the case of an electing United States shareholder—

(i) ***Determination of taxable income.*** The term *taxable income* means the excess of—

(A) The sum of—

(*1*) All amounts required to be included in his gross income under section 951(a) for the taxable year with respect to a foreign corporation of which he is a United States shareholder, including—

(*i*) His section 965(a) inclusion amounts (as defined in § 1.965-1(f)(38)); and

(*ii*) His domestic pass-through owner shares (as defined in § 1.965-1(f)(21)) of section 965(a) inclusion amounts with respect to deferred foreign income corporations (as defined in § 1.965-1(f)(17)) of which he is a United States shareholder; plus

(*2*) His GILTI inclusion amount (as defined in § 1.951A-1(c)(1)) for the taxable year; plus

(*3*) All amounts which would be required to be included in his gross income under section 78 for the taxable year with respect to the amounts referred to in paragraph (b)(1)(i)(A)(*1*) and (*2*) of this section if the shareholder were a domestic corporation; over

(B) The sum of the following deductions, but no other deductions or amounts—

(*1*) His section 965(c) deduction amount (as defined in § 1.965-1(f)(42)) for the taxable year;

(*2*) His domestic pass-through owner shares of section 965(c) deduction amounts corresponding to the amounts referred to in paragraph (b)(1)(i)(A)(*1*)(*ii*) of this section; and

(*3*) The portion of the deduction under section 250 and § 1.250(a)-1 that would be allowed to a domestic corporation equal to the percentage applicable to global intangible low-taxed income for the taxable year under section 250(a)(1)(B)

(including as modified by section 250(a)(3)(B)) multiplied by the sum of the amount described in paragraph (b)(1)(i)(A)(*2*) of this section and the amount described in paragraph (b)(1)(i)(A)(*3*) of this section that is attributable to the amount described in paragraph (b)(1)(i)(A)(*2*) of this section.

(ii) [Reserved]

(2) ***Allowance of foreign tax credit*** —

(i) ***In general.*** Subject to the applicable limitation of section 904 and to the provisions of this paragraph (b)(2), there shall be allowed as a credit against the United States tax on the amounts described in paragraph (b)(1)(i) of this section the foreign income, war profits, and excess profits taxes deemed paid under section 960(a) or section 960(d) by the electing United States shareholder with respect to such amounts.

(ii) ***Application of sections 960(a) and 960(d).*** In applying sections 960(a) and 960(d) for purposes of this paragraph (b)(2) in the case of an electing United States shareholder, the term "domestic corporation" as used in sections 960(a), 960(d), and 78, and the term "corporation" as used in sections 901 and 960(d)(2)(A) and (B), are treated as referring to such shareholder with respect to the amounts described in paragraph (b)(1)(i) of this section.

(iii) ***Carryback and carryover of excess tax deemed paid.*** For purposes of this paragraph (b)(2), other than with respect to section 951A category income (as defined in § 1.904-4(g)) (including section 951A category income that is reassigned to a separate category for income resourced under a treaty), any amount by which the foreign income, war profits, and excess profits taxes deemed paid by the electing United States shareholder for any taxable year under section 960 exceed the limitation determined under paragraph (b)(2)(iv)(A) of this section is treated as a carryback and carryover of excess tax paid under section 904(c), except that in no case will excess tax paid be deemed paid in another taxable year under section 904(c) if an election under section 962 by the shareholder does not apply for such taxable year. Such carrybacks and carryovers are applied only against the United States tax on amounts described in paragraph (b)(1)(i) of this section.

(iv) ***Limitation on credit.*** For purposes of determining the limitation under section 904 on the amount of the credit for foreign income, war profits, and excess profits taxes—

(A) Deemed paid with respect to amounts described in subparagraph (1)(i) of this paragraph, the electing United States shareholder's taxable income shall be considered to consist only of the amounts described in such subparagraph (1)(i), and

(B) Paid with respect to amounts other than amounts described in subparagraph (1)(i) of this paragraph, the electing United States shareholder's taxable income shall be considered to consist only of amounts other than the amounts described in such subparagraph (1)(i).

(v) ***Effect of choosing benefits of sections 901 to 905.*** The provisions of this subparagraph shall apply for a taxable year whether or not the electing United States shareholder chooses the benefits of subpart A of part III of subchapter N of chapter 1 (sections 901 to 905) of the Internal Revenue Code for such year.

(c) ***Example.*** The application of this section may be illustrated by the following example.

(1) ***Facts.***

(i) Individual A is a U.S. resident who owns all of the shares of the one class of stock in CFC, a controlled foreign corporation. A and CFC each use the calendar year as their U.S. and foreign taxable years and the U.S. dollar as their functional currency. A owns no direct or indirect interest in any other controlled foreign corporation.

(ii) For the 2019 taxable year, CFC has $6,000,000 of pre-foreign tax earnings with respect to which it accrues and pays $1,000,000 of foreign income tax, leaving $5,000,000 of after-tax net income. Of this amount, $3,000,000 is general category tested income as defined in section 951A(c)(2), and $2,000,000 is passive category subpart F income described in sections 952 and 904(d)(1)(C) that is all in a single subpart F income group under §§ 1.954-1(c)(1)(iii) and 1.960-1(d)(2)(ii)(B)(*2*)(*i*). Of the $1,000,000 of foreign income taxes paid or accrued by CFC, $600,000 is allocated and apportioned to its general category tested income group and $400,000 is allocated and apportioned to its passive category subpart F income group under § 1.960-1(d)(3)(ii).

(iii) For the 2019 taxable year, A includes under section 951A(a) all $3,000,000 of the tested income of CFC as A's GILTI inclusion amount, as defined in § 1.951A-1(c)(1). In addition, A includes under section 951(a)(1) the $2,000,000 of passive category subpart F income of CFC.

(iv) For the 2019 taxable year, A earns $1,000,000 of foreign source passive category gross income and $3,000,000 of U.S. source gross income. A pays $100,000 of foreign withholding taxes with respect to the $1,000,000 of foreign source passive category gross income. A incurs $1,000,000 of deductible expenses for the 2019 taxable year that are definitely related to all of A's gross income and are properly allocated and apportioned under §§ 1.861-8(b)(5) and 1.861-8T(c)(1) among the section 904 statutory and residual groupings on the basis of the relative amounts of gross income in each grouping.

(v) A elects to apply section 962 and chooses to claim credits under section 901 for the 2019 taxable year.

(2) ***Analysis with respect to section 962 taxable income*.**

(i) Section 962(a)(1) and § 1.962-1(a)(1) provide that when an individual United States shareholder elects to apply section 962 for a taxable year, the U.S. tax imposed with respect to amounts that the individual includes under section 951(a) (the "section 951(a) inclusions") equals the tax that would be imposed under section 11 if the amounts were included by a domestic corporation under section 951(a). For purposes of section 962, an amount included under section 951A is treated as an inclusion under section 951(a). See section 951A(f)(1)(A). Therefore, A has total section 951(a) inclusions of $5,000,000: a $2,000,000 passive category subpart F inclusion and a $3,000,000 GILTI inclusion amount. A is taxed at the corporate rates under section 11 with respect to these inclusions.

(ii) Section 962(a)(2), § 1.962-1(a)(2), and § 1.962-1(b)(2) provide that sections 960(a) and 960(d) apply to the section 951(a) inclusions of an electing individual United States shareholder as though the inclusions were received by a domestic corporation, and the electing individual United States shareholder is allowed a credit against the U.S. tax imposed with respect to the section 951(a) inclusions.

(iii) Section 960(a) deems a domestic corporation that is a United States shareholder of a controlled foreign corporation to pay the foreign income taxes paid or accrued by the foreign corporation that are properly attributable to the foreign corporation's items of income included in the domestic corporation's income under section 951(a). The foreign income taxes of a CFC

that are properly attributable to such items are the domestic corporation's proportionate share of the taxes that are allocated and apportioned to the relevant subpart F income group. See § 1.960-1(c) and § 1.960-2(b). A owns 100 percent of CFC, and includes all of its subpart F income, which is in a single subpart F income group. Therefore, all of the $400,000 of foreign income taxes that are allocable to CFC's subpart F income are properly attributable to the section 951(a) inclusion of A, and A is deemed to pay these taxes.

(iv) Section 960(d) provides that a domestic corporation that has an inclusion in income under section 951A is deemed to pay an amount of foreign income taxes equal to 80 percent of the product of the domestic corporation's inclusion percentage multiplied by the sum of all tested foreign income taxes. Tested foreign income taxes are the foreign income taxes of a controlled foreign corporation that are properly attributable to its tested income that the domestic corporation takes into account under section 951A. The foreign income taxes that are properly attributable to the tested income taken into account by a domestic corporation are the domestic corporation's proportionate share of the controlled foreign corporation's foreign income taxes that are allocated and apportioned to the relevant tested income. See § 1.960-1(c) and § 1.960-2(c). Because A owns 100% of CFC and takes all $3,000,000 of CFC's tested income into account in computing A's GILTI inclusion amount, all $600,000 of the foreign income taxes that are allocated and apportioned to the general category tested income group of CFC are tested foreign income taxes. A has an inclusion percentage of 100 percent because A's GILTI inclusion amount equals all of A's share of the tested income of CFC. A is therefore deemed to pay under section 960(d) 80 percent of the $600,000 of tested foreign income taxes of CFC, or $480,000 of the tested foreign income taxes.

(v) Section 1.962-1(b)(1)(i)(A) provides that, for purposes of computing taxable income under section 962, gross income includes amounts that would be included under section 78 if the shareholder with the section 951(a) inclusions were a domestic corporation. Section 78 requires a domestic corporation to include in its gross income the foreign income taxes that it is deemed to pay under section 960, computed without regard to the 80 percent limitation under section 960(d), and to which the benefits of section 901 apply. See section 78. A therefore includes in gross income the $600,000 of foreign income taxes that A is deemed to pay under section 960(d), computed without regard to the 80 percent limitation, and the $400,000 of taxes that A is deemed to pay under section 960(a).

(vi) Section 1.962-1(b)(1)(i)(B)(*3*) provides that, for purposes of computing taxable income under section 962, gross income is reduced only by specified deductions, which include the deduction allowed to a domestic corporation under section 250 and § 1.250(a)-1 equal to 50 percent of the sum of the GILTI inclusion amount and the inclusion under section 78 with respect to the GILTI inclusion amount. See section 250(a). A is therefore allowed a deduction under section 250 equal to 50 percent of $3,600,000 (the $3,000,000 GILTI inclusion amount plus the $600,000 inclusion under section 78), or $1,800,000.

(vii) A's taxable income and pre-credit U.S. tax liability with respect to the section 951(a) inclusions are computed as follows:

TABLE 1 TO PARAGRAPH (c)(2)(vii)

Section 951(a) inclusions with respect to CFC	$5,000,000
Section 78 inclusions	1,000,000
Deduction under section 250	(1,800,000)
Taxable income under section 962	4,200,000
Pre-credit U.S. tax (0.21 × $4,200,000)	882,000

(viii) Section 962 and § 1.962-1(b)(2) provide that, in computing the section 904 limitation on the credit for foreign income taxes that an electing individual United States shareholder is deemed to pay under sections 960(a) and (d), the individual's taxable income for a taxable year is considered to consist only of section 951(a) inclusions and the deductions allowed under section 962. Section 904 limits the credit that a taxpayer may claim for the taxes that it pays or accrues, or is deemed to pay, to the amount of its U.S. tax that is attributable to the taxpayer's foreign source income, and applies this limitation separately with respect to each separate category of income. The limitation amount is computed by multiplying the taxpayer's total pre-credit U.S. tax by the ratio of the taxpayer's foreign source taxable income in a separate category for the taxable year to the taxpayer's total taxable income for the taxable year. See section 904(a) and § 1.904-1(a).

(ix) A must compute the limitation on the credit for the foreign income taxes deemed paid under section 960(d) separately with respect to A's taxable income in the separate category described in section 904(d)(1)(A) (the “GILTI category”), namely, taxable income attributable to the GILTI inclusion amount. The limitation is computed using only A's 2019 taxable income under section 962 and the pre-credit U.S. tax of $882,000 on this income. A therefore computes the limitation by multiplying $882,000 by the ratio of A's foreign source GILTI category taxable income under section 962 to A's total taxable income under section 962, as follows:

TABLE 2 TO PARAGRAPH (c)(2)(ix)

GILTI inclusion amount	$3,000,000
Section 78 inclusion	$600,000
Section 250 deduction	($1,800,000)
Total GILTI category taxable income under section 962	$1,800,000
Ratio of GILTI category taxable income to total taxable income under section 962 (1,800,000/$4,200,000)	42.86%

Limitation amount (pre-credit U.S. tax of $882,000 × ($1,800,000/$4,200,000))	$378,000

(x) A also must compute the limitation on the credit for the foreign income taxes deemed paid under section 960(a) separately with respect to the foreign source passive category taxable income under section 962, namely, A's taxable income attributable to the subpart F inclusion. A computes the limitation by multiplying A's pre-credit U.S. tax of $882,000 by the ratio of A's foreign source passive category taxable income under section 962 to A's total taxable income under section 962, as follows:

TABLE 3 TO PARAGRAPH (c)(2)(x)

Subpart F inclusion	$2,000,000
Section 78 inclusion	$400,000
Total foreign source passive category taxable income	$2,400,000
Ratio of foreign source passive category taxable income to total taxable income under section 962 ($2,400,000/$4,200,000)	57.14%
Limitation amount (pre-credit U.S. tax of $882,000 × ($2,400,000/$4,200,000))	$504,000

(xi) A may claim a foreign tax credit for $378,000 of the $480,000 of foreign income taxes deemed paid under section 960(d), and a foreign tax credit for all $400,000 of the foreign income taxes deemed paid under section 960(a), for a total foreign tax credit of $778,000. The U.S. tax on A's 2019 taxable income with respect to CFC under section 962 is reduced from $882,000 to $104,000 ($882,000 minus $778,000).

(3) ***Analysis with respect to other income.***

(i) A's taxable income and pre-credit U.S. tax liability with respect to A's other income is computed as follows:

TABLE 4 TO PARAGRAPH (c)(3)(i)

Gross income	$4,000,000
Deductions	1,000,000
Taxable Income	3,000,000

Pre-credit U.S. tax computed under section 1(j)	1,074,988

(ii) A must compute a separate limitation on the credit for the foreign withholding taxes paid with respect to A's other foreign source passive category taxable income. Under § 1.962-1(b)(2)(iv)(B), A's section 904 limitation on this income is computed on the basis of A's taxable income other than the amounts taken into account under § 1.962-1(b)(1)(i). Accordingly, $250,000 of A's deductions ($1,000,000 × $1,000,000/$4,000,000) are apportioned to A's $1,000,000 of other foreign source passive category gross income, and $750,000 of deductions ($1,000,000 × $3,000,000/$4,000,000) are apportioned to A's $3,000,000 of U.S. source gross income, resulting in $750,000 of other foreign source passive category taxable income and $2,250,000 of U.S. source taxable income A computes the limitation by multiplying A's pre-credit U.S. tax on A's other income of $1,074,988 by the ratio of A's other foreign source passive category taxable income to A's other total taxable income, as follows:

TABLE 5 TO PARAGRAPH (c)(3)(ii)

Total other foreign source passive category taxable income	$750,000
Ratio of other foreign source passive category taxable income to total other taxable income ($750,000/$3,000,000)	25%
Limitation amount (pre-credit U.S. tax of $1,074,988 × ($750,000/$3,000,000))	$268,747

(iii) A may claim a foreign tax credit under section 901 for all $100,000 of the foreign withholding taxes on the other passive income. The U.S. tax on A's $3,000,000 of other taxable income is reduced from $1,074,988 to $974,988 ($1,074,88 minus $100,000).

(d) ***Applicability dates.*** Except as otherwise provided in this paragraph (d), paragraph (b)(1)(i) of this section applies beginning the last taxable year of a foreign corporation that begins before January 1, 2018, and with respect to a United States person, for the taxable year in which or with which such taxable year of the foreign corporation ends. Paragraphs (b)(1)(i)(A)(*2*) and (b)(1)(i)(B)(*3*) of this section apply to taxable years of a foreign corporation that end on or after March 4, 2019, and with respect to a United States person, for the taxable year in which or with which such taxable year of the foreign corporation ends. Paragraphs (a)(2), (b)(1)(ii), (b)(2)(i) through (iii), and (c) of this section apply to taxable years of a foreign corporation that end on or after July 15, 2020, and with respect to a United States person, for the taxable year in which or with which such taxable year of the foreign corporation ends. For taxable years that precede the applicability dates described in the preceding two sentences, taxpayers may choose to apply the provisions of paragraphs (a)(2), (b)(1)(i)(A)(*2*), (b)(1)(i)(B)(*3*), (b)(1)(ii), (b)(2)(i) through (iii), and (c) of this section for taxable years of a foreign corporation beginning on or after January 1, 2018, and with respect to a United States person, for the taxable year in which or with which such taxable year of the foreign corporation ends.

[T.D. 6858, 30 FR 13695, Oct. 28, 1965, as amended by T.D. 7413, 41 FR 12640, Mar. 26, 1976; T.D. 9846, 84 FR 1874, Feb. 5, 2019; T.D. 9849, 84 FR 9236, Mar. 14, 2019; T.D. 9901, 85 FR 43109, July 15, 2020]

§ 1.962-2 Election of limitation of tax for individuals.

(a) ***Who may elect.*** The election under section 962 may be made only by an individual (including a trust or estate) who is a United States shareholder (including an individual who is a United States shareholder because, by reason of section 958(b), he is considered to own stock of a foreign corporation owned (within the meaning of section 958(a)) by a domestic pass-through entity (as defined in § 1.965-1(f)(19))).

(b) ***Time and manner of making election.*** A United States shareholder shall make an election under this section by filing a statement to such effect with his return for the taxable year with respect to which the election is made. The statement shall include the following information:

(1) The name, address, and taxable year of each controlled foreign corporation with respect to which the electing shareholder is a United States shareholder and of all other corporations, partnerships, trusts, or estates in any applicable chain of ownership described in section 958(a);

(2) The amounts, on a corporation-by-corporation basis, which are included in such shareholder's gross income for his taxable year under section 951(a);

(3) Such shareholder's pro rata share of the earnings and profits (determined under § 1.964-1) of each such controlled foreign corporation with respect to which such shareholder includes any amount in gross income for his taxable year under section 951(a) and the foreign income, war profits, excess profits, and similar taxes paid on or with respect to such earnings and profits;

(4) The amount of distributions received by such shareholder during his taxable year from each controlled foreign corporation referred to in subparagraph (1) of this paragraph from excludable section 962 earnings and profits (as defined in paragraph (b)(1)(i) of § 1.962-3), from taxable section 962 earnings and profits (as defined in paragraph (b)(1)(ii) of § 1.962-3), and from earnings and profits other than section 962 earnings and profits, showing the source of such amounts by taxable year; and

(5) Such further information as the Commissioner may prescribe by forms and accompanying instructions relating to such election.

(c) ***Effect of election*** —

(1) ***In general.*** Except as provided in subparagraph (2) of this paragraph, an election under this section by a United States shareholder for a taxable year shall be applicable to all controlled foreign corporations with respect to which such shareholder includes any amount in gross income for his taxable year under section 951(a) and shall be binding for the taxable year for which such election is made.

(2) ***Revocation.*** Upon application by the United States shareholder, an election made under this section may, subject to the approval of the Commissioner, be revoked. Approval will not be granted unless a material and substantial change in circumstances occurs which could not have been anticipated when the election was made. The application for consent to revocation shall be made by the United States shareholder's mailing a letter for such purpose to Commissioner of Internal Revenue, Attention: T:R, Washington, DC 20224, containing a statement of the facts upon which such shareholder relies in requesting such consent.

(d) ***Applicability dates.*** Paragraph (a) of this section applies beginning the last taxable year of a foreign corporation that begins before January 1, 2018, and with respect to a United States person, for the taxable year in which or with which such taxable year of the foreign corporation ends.

[T.D. 6858, 30 FR 13696, Oct. 28, 1965, as amended by T.D. 9846, 84 FR 1875, Feb. 5, 2019; T.D. 9849, 84 FR 9236, Mar. 14, 2019]

§ 1.962-3 Treatment of actual distributions.

(a) ***In general.*** Section 962(d) provides that the earnings and profits of a foreign corporation attributable to amounts which are, or have been, included in the gross income of an individual United States shareholder under section 951(a) by reason of such shareholder's ownership (within the meaning of section 958(a)) of stock in such corporation and with respect to which amounts an election under § 1.962-2 applies or applied shall, when such earnings and profits are distributed to such shareholder with respect to such stock, notwithstanding the provisions of section 959(a)(1), be included in his gross income to the extent that such earnings and profits exceed the amount of income tax paid by such shareholder under this chapter on the amounts to which such election applies or applied. Thus, when such shareholder receives an actual distribution of section 962 earnings and profits (as defined in paragraph (b)(1) of this section) from a foreign corporation, only the excludable section 962 earnings and profits (as defined in paragraph (b)(1)(i) of this section) may be excluded from his gross income.

(b) ***Rules of application.*** For purposes of this section—

(1) ***Section 962 earnings and profits defined.*** With respect to an individual United States shareholder, the term “section 962 earnings and profits” means the earnings and profits of a foreign corporation referred to in paragraph (a) of this section. Such earnings and profits include—

(i) ***Excludable section 962 earnings and profits.*** Excludable section 962 earnings and profits which are the amount of the section 962 earnings and profits equal to the amount of income tax paid under this chapter by such shareholder on the amounts included in his gross income under section 951(a); and

(ii) ***Taxable section 962 earnings and profits.*** Taxable section 962 earnings and profits which are the excess of section 962 earnings and profits over the amount described in subdivision (i) of this subparagraph.

(2) ***Determinations made separately for each taxable year.*** If section 962 earnings and profits attributable to more than one taxable year are distributed by a foreign corporation the determinations under this section shall be made separately with respect to each such taxable year.

(3) ***Source of distributions*** —

(i) ***In general.*** Except as otherwise provided in this subparagraph, the provisions of paragraphs (a) through (d) of § 1.959-3 shall apply in determining the source of distributions of earnings and profits by a foreign corporation.

(ii) ***Treatment of section 962 earnings and profits under § 1.959-3.*** For purposes of a section 959(c) amount and year classification under paragraph (b) of § 1.959-3, a distribution of earnings and profits by a foreign corporation shall be first allocated to earnings and profits other than section 962 earnings and profits (as defined in subparagraph (1) of this paragraph) and then to section 962 earnings and profits. Thus distributions shall be considered first attributable to amounts described in paragraph (b)(1) of § 1.959-3 which are not section 962 earnings and profits and then to amounts described in such paragraph (b)(1) which are section 962 earnings and profits

(first for the current taxable year and then for prior taxable years beginning with the most recent prior taxable year), secondly to amounts described in paragraph (b)(2) of § 1.959-3 which are not section 962 earnings and profits and then to amounts described in such paragraph (b)(2) which are section 962 earnings and profits (first for the current taxable year and then for prior taxable years beginning with the most recent prior taxable year), and finally to the amounts described in paragraph (b)(3) of § 1.959-3 (first for the current taxable year and then for prior taxable years beginning with the most recent prior taxable year).

(iii) ***Allocation to excludable section 962 earnings and profits.*** A distribution of section 962 earnings and profits by a foreign corporation for any taxable year shall be considered first attributable to the excludable section 962 earnings and profits (as defined in subparagraph (1)(i) of this paragraph) and then to taxable section 962 earnings and profits.

(iv) ***Allocation of deficits in earnings and profits.*** A United States shareholder's pro rata share (determined in accordance with the principles of paragraph (e) of § 1.951-1) of a foreign corporation's deficit in earnings and profits (determined under § 1.964-1) for any taxable year shall be applied in accordance with the provisions of paragraph (c) of § 1.959-3 except that such deficit shall also be applied to taxable section 962 earnings and profits (as defined in subparagraph (1)(ii) of this paragraph).

(4) ***Distribution in exchange for stock.*** The provisions of this section shall not apply to a distribution of section 962 earnings and profits which is treated as in part or full payment in exchange for stock under subchapter C of chapter 1 of the Internal Revenue Code. The application of this subparagraph may be illustrated by the following example:

Example. Individual United States shareholder A owns 60 percent of the only class of stock in foreign corporation M, the basis of which is $10,000. Both A and M Corporation use the calendar year as a taxable year. In each of the taxable years 1964, 1965, and 1966, M Corporation has $1,000 of earnings and profits and $1,000 of subpart F income. With respect to each such amount, A includes $600 in gross income under section 951(a), makes the election under section 962, and pays a United States tax of $132 (22 percent of $600). Accordingly, A increases the basis of his stock in M corporation under section 961(a) by $132 in each of the years 1964, 1965, and 1966, and thus on December 31, 1966, the adjusted basis for A's stock in M Corporation is $10,396. In 1967, M Corporation is completely liquidated (in a transaction described in section 331) and A receives $13,800, consisting of $1,800 of earnings and profits attributable to the amounts which A included in gross income under section 951(a) in 1964, 1965, and 1966, and $12,000 attributable to the other assets of M Corporation. No amount of the $3,404 gain realized by A on such distribution ($13,800 minus $10,396) may be excluded from gross income under section 959(a)(1). However, section 962(d) will not prevent any part of such $3,404 from being treated as a capital gain under section 331.

(5) ***Illustration.*** The application of this paragraph may be illustrated by the following example:

> *Example.* (a) M, a controlled foreign corporation is organized on January 1, 1963; A and B, individual United States shareholders, own 50 percent and 25 percent, respectively, of the only class of stock in M Corporation. Corporation M, A, and B use the calendar year as a taxable year, and M Corporation is a controlled foreign corporation throughout the period here involved. For the taxable years 1963, 1964, 1965, and 1966, A and B must include amounts in gross income under section 951(a) with respect to M Corporation. For the years 1963, 1965,

and 1966, A makes the election under section 962. On January 1, 1967, B sells his 25-percent interest in M Corporation to A; A satisfies the requirements of paragraph (d) of § 1.959-1 so as to qualify as B's successor in interest. As of December 31, 1967, M Corporation's accumulated earnings and profits of $675 (before taking into account distributions made in 1967) applicable to A's interest (including his interest as B's successor in interest) in such corporation are classified under § 1.959-3 and this section for purposes of section 962(d) as follows:

Classification of Earnings and Profits for Purposes of § 1.962-3

Year	Section 959(c)(1)			Section 959(c)(2)			Section 959 (c)(3)
	Non-section 962 earnings and profits	Excludable section 962 earnings and profits	Taxable section 962, earnings and profits	Non-section 962 earnings and profits	Excludable section 962 earnings and profits	Taxable section 962 earnings and profits	
1963	$25	$11	$39				
1964	75			$60			$15
1965				75	$33	$117	
1966				50	22	78	
1967							75

(b) During 1967, M Corporation makes three separate distributions to A of $200, $208, and $267. The source of such distributions under § 1.959-3 and this section is as follows:

Distribution	Amount	Year	Classification of distributions under sections 959 and 962(d)
No. 1	$75	1964	(c)(1) non-section 962.
	25	1963	Do.
	11	1963	(c)(1) excludable section 962.
	39	1963	(c)(1) taxable section 962.
	50	1966	(c)(2) non-section 962.
Total	200		
No. 2	22	1966	(c)(2) excludable section 962
	78	1966	(c)(2) taxable section 962.
	75	1965	(c)(2) non-section 962.
	33	1965	(c)(2) excludable section 962.
Total	208		
No. 3	117	1965	(c)(2) taxable section 962.
	60	1964	(c)(2) non-section 962.
	75	1967	(c)(3).
	15	1964	Do.
Total	267		

(c) A must include $324 in his gross income for 1967. The source of these amounts is as follows:

Distribution	Amount	Year	Classification
No. 1	$39	1963	(c)(1) taxable section 962.
No. 2	78	1966	(c)(2) taxable section 962.
No. 3	117	1965	Do.
	75	1967	(c)(3).
	15	1964	Do.
Total	324		

(c) *Treatment of shareholder's successor in interest* —

(1) ***In general.*** If a United States person (as defined in § 1.957-4) acquires from any person any portion of the interest in the foreign corporation of a United States shareholder referred to in this section, the rules of paragraphs (a) and (b) of this section shall apply to such acquiring person. However, no

exclusion of section 962 earnings and profits under paragraph (a) of this section shall be allowed unless such acquiring person establishes to the satisfaction of the district director his right to such exclusion. The information to be furnished by the acquiring person to the district director with his return for the taxable year to support such exclusion shall include:

(i) The name, address, and taxable year of the foreign corporation from which a distribution of section 962 earnings and profits is received and of all other corporations, partnerships, trusts, or estates in any applicable chain of ownership described in section 958(a);

(ii) The name and address of the person from whom the stock interest was acquired;

(iii) A description of the stock interest acquired and its relation, if any, to a chain of ownership described in section 958(a);

(iv) The amount for which an exclusion under paragraph (a) of this section is claimed; and

(v) Evidence showing that the section 962 earnings and profits for which an exclusion is claimed are attributable to amounts which were included in the gross income of a United States shareholder under section 951(a) subject to an election under § 1.962-2, that such amounts were not previously excluded from the gross income of a United States person, and the identity of the United States shareholder including such amount.

The acquiring person shall also furnish to the district director such other information as may be required by the district director in support of the exclusion.

(2) ***Taxes previously deemed paid by an individual United States shareholder.*** If a corporate successor in interest of an individual United States shareholder receives a distribution of section 962 earnings and profits, the income, war profits, and excess profits taxes paid to any foreign country or to any possession of the United States in connection with such earnings and profits shall not be taken into account for purposes of section 902, to the extent such taxes were deemed paid by such individual United States shareholder under paragraph (b)(2) of § 1.962-1 and section 960(a)(1) for any prior taxable year.

[T.D. 6858, 30 FR 13696, Oct. 28, 1965]

§ 1.963-0 Repeal of section 963; effective dates.

(a) ***Repeal of section 963.*** Except as provided in paragraphs (b) and (c) of this section, the provisions of section 963 and §§ 1.963-1 through 1.963-7 are repealed for taxable years of foreign corporations beginning after December 31, 1975, and for taxable years of United States shareholders (within the meaning of section 951(b), within which or with which such taxable years of such foreign corporations end.

(b) ***Transitional rules for chain or group election*** —

(1) ***In general.*** If a United States shareholder (within the meaning of section 951(b) makes either a chain election pursuant to § 1.963-1(e) or a group election pursuant to § 1.963-1(f) for a taxable year of such shareholder beginning after December 31, 1975, then a foreign corporation shall be includible in such election only if—

(i) It has a taxable year beginning before January 1, 1976, which ends within such taxable year of the United States shareholder, and

(ii) It is either—

(A) A controlled foreign corporation or

(B) A foreign corporation by reason of ownership of stock in which such shareholder indirectly owns (within the meaning of section 958(a)(2)) stock in a controlled foreign corporation to which this subparagraph applies.

(2) ***Series rule.*** If any foreign corporation in a series of foreign corporations is excluded by subparagraph (i) of this paragraph from a chain or group election of a United States shareholder for its taxable year, then any foreign corporation in which the United States shareholder owns stock indirectly by reason of ownership of stock in such excluded corporation shall also be excluded from such election to the extent of such indirect ownership regardless of when its taxable year begins.

(3) ***Illustration.*** The application of this paragraph may be illustrated by the following example:

> *Example.* (a) M is a domestic corporation, A, B, D, and E are controlled foreign corporations, and C is a foreign corporation other than a controlled foreign corporation. All five foreign corporations, each have only one class of stock outstanding. M owns directly all of the stock of A, which in turn owns directly all of the stock of B, which in turn owns directly 60 percent of the stock of D, which in turn owns directly all of the stock of E. M also owns directly 40 percent of the stock of C, which in turn owns directly the remaining 40 percent of the stock of D. M is a United States shareholder with respect to no other foreign corporation. M and B each use the calendar year as the taxable year. A, C, D, and E each use a fiscal year ending on November 30 as the taxable year. For calendar year 1976, M may make either a first-tier election with respect to A, a chain election with respect to C and D (to the extent of M's indirect 16-percent stock interest in D by reason of its direct ownership of 40 percent of the stock of C) or a group election with respect to A, C, D (to the extent of such 16-percent stock interest) and E (to the extent of M's indirect 16-percent stock interest in E).
> (b) M's indirect 100 percent stock interest in B will be excluded from any chain or group election made by M for calendar year 1976 since B is a controlled foreign corporation which does not have a taxable year beginning before January 1, 1976, which ends within the taxable year of M beginning after December 31, 1975, for which M has made either a chain or group election.
>
> (c) M's indirect 60 percent stock interest through A and B in D and E will be excluded from any chain or group election made by M for calendar year 1976 since such 60 percent interests are indirectly owned by M by reason of its indirect ownership of stock in B, which is a foreign corporation which does not have a taxable year beginning before January 1, 1976, which ends within the taxable year of M beginning after December 31, 1975, for which M has made either a chain or group election.

> (d) If C used the calendar year as its taxable year and was therefore excluded from a chain election made with respect to it and D, then D would also be excluded from such an election, since D would then be a foreign corporation in which M owns stock indirectly by reason of ownership of stock in C, which is excluded from such election.

(c) ***Deficiency distributions.*** The rules relating to deficiency distributions under section 963(e)(2) and § 1.963-6 shall continue to apply to a taxable year beginning after the effective date of the repeal of section 963 in which it is determined that a deficiency distribution must be made for an earlier taxable year for which a United States shareholder made an election to secure the exclusion under section 963 but failed to receive a minimum distribution.

(d) ***Special adjustments pursuant to section 963 to be taken into account for taxable years subsequent to the repeal of section 963.*** If a United States shareholder of a controlled foreign corporation elects to receive a minimum distribution under section 963 for a taxable year, section 963 and the regulations thereunder may require certain elections and adjustments to be made in subsequent taxable years. These elections and adjustments shall be taken into account for subsequent taxable years as if section 963 were still in effect and no election to receive a minimum distribution were made after the effective date of the repeal of section 963. Examples of these elections and special adjustments include, but are not limited to, the election which may be made pursuant to § 1.963-3(g)(2), relating to the special extended distribution period, and the special adjustments to be made pursuant to § 1.963-4, relating to the minimum overall tax burden test.

[T.D. 7545, 43 FR 19652, May 8, 1978]

§ 1.963-1 [Reserved]

§ 1.963-2 Determination of the amount of the minimum distribution.

(a) ***Application of statutory percentage to earnings and profits.*** The amount of the minimum distribution required to be received by a United States shareholder with respect to stock to which the election under paragraph (c) of § 1.963-1 applies for the taxable year in order to qualify for a section 963 exclusion for such year shall be the amount, if any, determined by the multiplication of the statutory percentage applicable for the taxable year by—

(1) In the case of a first-tier election, such shareholder's proportionate share (as determined under paragraph (d)(2) of this section) of the earnings and profits for the taxable year of the single first-tier corporation to which the election relates,

(2) In the case of a chain election, the consolidated earnings and profits (as determined under paragraph (d)(3) of this section) with respect to such shareholder for the taxable year of the chain to which the election relates, or

(3) In the case of a group election, the consolidated earnings and profits (as determined under paragraph (d)(3) of this section) with respect to such shareholder for the taxable year of the group to which the election relates.

For the requirement that the overall United States and foreign income tax incurred in respect of a minimum distribution from a chain or group must equal or exceed either 90 percent of the United States corporate tax rate applied against pretax and predistribution consolidated earnings and profits or, with the

application of the special rules set forth therein, must equal or exceed the overall United States and foreign income tax which would have resulted from a pro rata minimum distribution, see paragraph (a)(1) of § 1.963-4.

(b) ***Statutory percentage.*** The statutory percentage (referred to in paragraph (a) of this section) for the taxable year shall be determined by applying the effective foreign tax rate (as defined in paragraph (c) of this section) for such year with respect to the single first-tier corporation, chain, or group, as the case may be, against—

(1) The table set forth in section 963(b)(1) in the case of an election to secure an exclusion under section 963 for a taxable year of the United States shareholder beginning in 1963 and a taxable year entirely within the surcharge period ending before January 1, 1970.

(2) The table set forth in section 963(b)(2) in the case of an election to secure an exclusion under section 963 for a taxable year of the U.S. shareholder beginning in 1964 or for a taxable year of such shareholder beginning in 1969 and ending in 1970 to the extent subparagraph (B) of section 963(b)(3) applies,

(3) The table set forth in section 963(b)(3) in the case of an election to secure an exclusion under section 963 for a taxable year of the U.S. shareholder beginning after December 31, 1964 except a taxable year which includes any part of the surcharge period, or

(4) The table set forth in paragraph (b) of § 1.963-8 in the case of an election to secure an exclusion under section 963 for the calendar year 1970.

Example. Domestic corporation M owns all the one class of stock in controlled foreign corporation A. Corporation M uses the calendar year as its taxable year, and A Corporation uses a fiscal year ending August 31. For 1964, M Corporation makes a first-tier election in order to exclude from gross income for such year the subpart F income of A Corporation for its taxable year ending on August 31, 1964. Although, such election applies to the taxable year of A Corporation beginning on September 1, 1963, the applicable table, for purposes of determining the statutory percentages to be used under paragraph (a) of this section for the taxable year, is that set forth in section 963(b)(2), which relates to taxable years of United States shareholders beginning in 1964. Thus, if for the taxable year of A Corporation ending August 31, 1964, the effective foreign tax rate is 30 percent, A Corporation would have to distribute 72 percent of its earnings and profits for such year in order for M Corporation to be entitled to an exclusion under section 963 for 1964.

(c) ***Effective foreign tax rate*** —

(1) ***Single first-tier corporation.*** For purposes of section 963 the term “effective foreign tax rate” for a taxable year means, with respect to a single first-tier corporation, the percentage which—

(i) The United States shareholder's proportionate share (as determined under paragraph (e)(1) of this section) of the foreign income tax of such corporation for such taxable year is of—

(ii) The sum of—

(*a*) The United States shareholder's proportionate share (as determined under paragraph (d)(2) of this section) of the earnings and profits of such corporation for such taxable year, and

(*b*) The amount referred to in subdivision (i) of this subparagraph.

(2) ***Chain or group of corporations.*** For purposes of section 963, the term "effective foreign tax rate" for a taxable year means, with respect to a chain or group, the percentage which—

(i) The consolidated foreign income taxes (as determined under paragraph (e)(2) of this section) of such chain or group with respect to the United States shareholder for such taxable year is of—

(ii) The sum of—

(*a*) The consolidated earnings and profits (as determined under paragraph (d)(3) of this section) of such chain or group with respect to such United States shareholder for such taxable year, and

(*b*) The amount referred to in subdivision (i) of this subparagraph.

(3) ***Treatment of United States tax as foreign tax.*** For the purpose solely of determining the effective foreign tax rate under this paragraph, if a foreign corporation has pretax earnings and profits attributable to income from sources within the United States for the taxable year upon which it pays United States income tax and if distributions from the earnings and profits of such corporation for such year to the electing United States shareholder with respect to stock to which the election to secure an exclusion under section 963 relates do not entitled such shareholder to the dividends-received deduction under section 245, the amount of the United States income tax shall be taken into account as though such tax were foreign income tax. The amount so treated as foreign income tax shall not exceed 90 percent of an amount determined by multiplying such pretax earnings and profits attributable to income from sources within the United States by a percentage which is the sum of the normal tax rate and the surtax rate (determined without regard to the surtax exemption) prescribed by section 11 for the taxable year of the United States shareholder.

(d) ***Determination of proportionate share of earnings and profits and consolidated earnings and profits*** —

(1) ***Earnings and profits of foreign corporations.*** For purposes of §§ 1.963-1 through 1.963-8, the earnings and profits, or deficit in earnings and profits, for the taxable year, of a single first-tier corporation or of a foreign corporation in a chain or group shall be the amount of its earnings and profits for such year, determined under section 964(a) and § 1.964-1 but without reduction for foreign income tax or for distributions made by such corporation, less—

(i) In the case of a foreign corporation included in a chain or group, the amount of any distributions received (computed without reduction for any income tax paid or accrued by such corporation with respect to such distributions) by such corporation during its taxable year from the earnings and profits (whether or not from earnings and profits of the taxable year to which the election under section 963 applies) of another foreign corporation in the chain or group.

(ii) In the case of every foreign corporation, the amount of foreign income tax paid or accrued by such corporation during its taxable year other than foreign income tax referred to in subdivision (i) and (iii) of this subparagraph, and

(iii) In the case of a foreign corporation included in a chain or group, the foreign income tax paid or accrued by such corporation with respect to distributions from the earnings and profits of any other foreign corporation in the chain or group for the taxable year of such other corporation to which the election under section 963 applies, but only if the U.S. shareholder chooses under

this subdivision to take such tax into account in determining the effective foreign tax rate rather than count it toward the amount of the minimum distribution as provided in paragraph (b)(2) of § 1.963-3.

In the event that the foreign income tax of a corporation included in a chain or group depends upon the extent to which distributions are made by such corporation, the amount of foreign income tax referred to in subdivision (ii) of this subparagraph shall, only for purposes of determining the effective foreign tax rate, be the amount which would have been paid or accrued if no distributions had been made. For the rules in other cases involving corporations whose foreign income tax varies with distributions, see § 1.963-5. For the manner of computing the earnings and profits of a foreign branch treated as a wholly owned foreign subsidiary corporation see paragraph (f)(4)(ii) of § 1.963-1.

(2) ***Shareholder's proportionate share of earnings and profits*** —

(i) ***Corporation with earnings and profits*** —(*a*) *In general.* A United States shareholder's proportionate share, with respect to stock to which the election to secure an exclusion under section 963 relates, of the earnings and profits of a foreign corporation (not including a foreign branch described in (*b*) of this subdivision) for its taxable year shall be the share which such shareholder would receive if the total amount of such corporation's earnings and profits, as determined under subparagraph (1) of this paragraph, for such year were distributed on the last day of such corporation's taxable year on which such corporation is a controlled foreign corporation or is a foreign corporation by reason of the ownership of stock in which the United States shareholder indirectly owns within the meaning of section 958(a)(2) stock in a controlled foreign corporation.

(*b*) *Foreign branch treated as a foreign subsidiary corporation.* A United States shareholder's proportionate share of the earnings and profits, for the taxable year, of a branch treated as a wholly owned foreign subsidiary corporation and included in a group under paragraph (f)(4) of § 1.963-1 shall be the total earnings and profits of such branch for the taxable year, as determined under paragraph (f)(4)(ii) of such section.

(*c*) *Indirectly held foreign corporations.* If the proportionate share to be determined is of earnings and profits of a foreign corporation the stock of which is owned by the United States shareholder by reason of its ownership of stock (with respect to which the election relates) in another corporation, such shareholder's proportionate share of such earnings and profits for the taxable year shall be determined on the basis of the amount such shareholder would receive from such foreign corporation with respect to stock in such foreign corporation if there were distributed for the taxable year all such earnings and profits, as determined under subparagraph (1) of this paragraph, and of all the earnings and profits of all other corporations through which such earnings and profits must pass in order to be received by such shareholder with respect to the stock to which the election relates. For purposes of the preceding sentence, the amount received by the shareholder from the earnings and profits of a foreign corporation shall be determined without taking into account deductions (whether or not allowable under chapter 1 of the Code) of other foreign corporations through which such earnings and profits are distributed.

(*d*) *More than one class of stock.* If a foreign corporation for a taxable year has more than one class of stock outstanding, the earnings and profits of such corporation for such year which shall be taken into account with respect to any one class of such stock shall be the earnings and profits which would be distributed with respect to such class if all earnings and profits of

such corporation for such year were distributed on the last day of such corporation's taxable year, on which such corporation is a controlled foreign corporation or is a foreign corporation by reason of the ownership of stock in which the United States shareholder indirectly owns within the meaning of section 958(a)(2) stock in a controlled foreign corporation. If an arrearage in dividends for prior taxable years exists with respect to a class of preferred stock of such corporation, the earnings and profits for the taxable year shall be attributed to such arrearage only to the extent such arrearage exceeds the earnings and profits of such corporation remaining from prior taxable years beginning after December 31, 1962. For example, if a controlled foreign corporation, using the calendar year as its taxable year, has earnings and profits for 1963 of $100 accumulated at December 31, 1963, and an arrearage of $150 for such year in respect of preferred stock, the earnings and profits for 1964 attributable to such arrearage may not exceed $50 ($150−$100).

(*e*) *Discretionary power to allocate earnings to different classes of stock.* If the allocation of a foreign corporation's earnings and profits for the taxable year between two or more classes of stock depends upon the exercise of discretion by that body of persons which exercises with respect to such corporation the power ordinarily exercised by the board of directors of a domestic corporation, the allocation of such earnings and profits to such classes shall be made for purposes of this subdivision as if such classes constituted one class of stock in which each share has the same rights to dividends as any other share, unless a different method of allocation of such earnings and profits is made by such body not later than 90 days after the close of such taxable year.

(*f*) *Illustrations.* The application of this subdivision may be illustrated by the following examples:

Example 1. Domestic corporation M directly owns 80 percent of the one class of stock of controlled foreign corporation A, which directly owns 60 percent of the one class of stock of controlled foreign corporation B. Each such corporation has earnings and profits of $70 for the taxable year, as determined under subparagraph (1) of this paragraph. Corporation M's proportionate share of the earnings and profits is $56 (0.80 × $70) as to A Corporation and $33.60 (0.80 × 0.60 × $70) as to B Corporation.

Example 2. Throughout 1964 controlled foreign corporation A, which uses the calendar year as the taxable year, has outstanding 40 shares of common stock and 60 shares of 6-percent, nonparticipating, noncumulative preferred stock with a par value of $100 per share. Corporation A has earnings and profits of $1,000, for 1964, as determined under subparagraph (1) of this paragraph. In such case, $360 (0.06 × $100 × 60) of earnings and profits would be taken into account with respect to the preferred stock and $640 ($1,000−$360), with respect to the common stock. Thus, if a United States shareholder owns 10 shares of common stock and 30 shares of preferred stock for 1964, its proportionate share of the earnings and profits for such year is $340 ([10/40 × $640] + [30/60 × $360]).

(ii) ***Deficit in earnings and profits of a corporation in a chain or group.*** A United States shareholder's proportionate share, with respect to stock to which the election to secure an exclusion under section 963 relates, of a deficit in earnings and profits of a foreign corporation in a chain or group for a taxable year shall be the portion of such deficit which, if such corporation had earnings and profits for such year as determined under subparagraph (1) of this paragraph and all of such earnings and profits were distributed on the date described in subdivision (i)(*a*) of this subparagraph, the share of such earnings and profits such shareholder would receive bears

to the total of the earnings and profits which would be so distributed on such date. For the determination of the deficit of a foreign branch treated as a wholly owned foreign subsidiary corporation and included in a group, see paragraph (f)(4)(ii) of § 1.963-1. A United States shareholder's proportionate share of the deficit of such a branch shall be the total deficit of such branch for the taxable year.

(iii) ***Controlled foreign corporation for part of year.*** If—

(*a*) Stock in a foreign corporation is owned within the meaning of section 958(a) by a United States shareholder on the last day in the taxable year of such corporation for which such corporation is a controlled foreign corporation to which applies an election by such shareholder to secure an exclusion under section 963 with respect to such stock, or

(*b*) Stock in a foreign corporation which is not a controlled foreign corporation is owned within the meaning of section 958(a) by a United States shareholder on the last day in the taxable year of such corporation on which another foreign corporation (which, by reason of the stock so owned, is owned by such shareholder within the meaning of section 958(a)) is a controlled foreign corporation to which applies an election by such shareholder to secure an exclusion under section 963 with respect to such stock,

the earnings and profits of such foreign corporation for the taxable year which are taken into account in determining such shareholder's proportionate share thereof shall be an amount of such earnings and profits, determined as provided in subparagraph (1) of this paragraph, which bears to the total of such earnings and profits the same ratio which the part (computed on a daily basis) of such year during which such corporation is a controlled foreign corporation (or, in case such corporation is not a controlled foreign corporation, during which such other corporation is a controlled foreign corporation) bears to the total taxable year. If the United States shareholder by sufficient records and accounts establishes to the satisfaction of the district director the gross income received or accrued, and the deductions paid or accrued, for the part of such year during which such corporation is a controlled foreign corporation (or, in case such corporation is not a controlled foreign corporation, during which such other corporation is a controlled foreign corporation), the amount of earnings and profits based on such records and accounts may be used in lieu of the amount determined under the preceding sentence. The application of this subdivision may be illustrated by the following examples:

Example 1. Domestic corporation M on June 30, 1963, purchases 60 percent of the one class of stock of A Corporation which on July 1 becomes a controlled foreign corporation and remains such throughout the remainder of 1963. Both corporations use the calendar year as the taxable year. Corporation M makes a first-tier election with respect to A Corporation. For 1963, A Corporation has $100 of earnings and profits, as determined under subparagraph (1) of this paragraph. Corporation M's proportionate share of such earnings and profits for 1963 is $30.25 (0.60 × [184/365 × $100]).

Example 2. (a) Throughout 1963 domestic corporation M directly owns 20 percent of the one class of stock of foreign corporation A, not a controlled foreign corporation at any time, which directly owns 50 percent of the one class of stock of foreign corporation B, which becomes a controlled foreign corporation on July 1, 1963, and remains such throughout the remainder of 1963. All such corporations use the calendar year as the taxable year. Each of corporations A and B has earnings and profits for 1963 of $100, as

determined under subparagraph (1) of this paragraph. Corporation M makes a chain election for 1963 with respect to corporations A and B. Corporation M's proportionate share of the earnings and profits of A Corporation for 1963 is $10.08 (0.20 × [184/365 × $100]). Corporation M's proportionate share of the earnings and profits of B Corporation for 1963 is $5.04 (0.20 × 0.50 × [184/365 × $100]).
(b) If B Corporation had been a controlled foreign corporation throughout 1963, M Corporation's proportionate share of the earnings and profits of corporations A and B for 1963 would have been $20 (0.20 × $100) and $10 (0.20 × 0.50 × $100), respectively.

(c) If corporations A and B had each been a controlled foreign corporation only for the period of January 1, 1963, through June 30, 1963, M Corporation's proportionate share of the earnings and profits of such corporations would have been $9.92 (0.20 × [181/365 × $100]) and $4.98 (0.20 × 0.50 × [181/365 × $100]), respectively.

(d) If A Corporation had been a controlled foreign corporation throughout 1963 or during the period of July 1, 1963, through December 31, 1963, but B Corporation had been a controlled foreign corporation only during the period of January 1, 1963, through June 30, 1963, M Corporation's proportionate share of the earnings and profits of such corporations would have been $20 (0.20 × $100) and $4.96 (0.20 × 0.50 × [181/365 × $100]), respectively.

(3) ***Consolidated earnings and profits with respect to United States shareholder.*** The consolidated earnings and profits of a chain or group with respect to any United States shareholder for the taxable year shall be the sum of such shareholder's proportionate shares of the earnings and profits, and of the deficit in earnings and profits, determined under subparagraph (2) of this paragraph, for such year of all foreign corporations, whether or not controlled foreign corporations, in such chain or group.

(e) ***Foreign income taxes used in determining effective foreign tax rate.*** For purposes of determining the effective foreign tax rate under paragraph (c) of this section—

(1) ***Shareholder's proportionate share of taxes of a foreign corporation.*** The foreign income tax of a foreign corporation for a taxable year shall consist of the foreign income tax referred to in paragraph (d)(1)(ii) of this section with respect to such year and, if the United States shareholder chooses to take the foreign income tax described in paragraph (d)(1)(iii) of this section into account in determining the effective foreign tax rate of a chain or group which includes such foreign corporation, the foreign income tax referred to in such paragraph with respect to such year. A United States shareholder's proportionate share, with respect to stock to which the election to secure an exclusion under section 963 applies, of the foreign income tax of such foreign corporation for a taxable year shall be the same proportion of such foreign income tax that such shareholder's proportionate share (as determined under paragraph (d)(2)(i) of this section) of the earnings and profits of such corporation for such year bears to the total earnings and profits of such corporation for such year. A United States shareholder's proportionate share of the foreign income tax, for the

taxable year, of a branch treated as a wholly owned foreign subsidiary corporation and included in a group under paragraph (f)(4) of § 1.963-1 shall be the total foreign income tax of such branch for the taxable year.

(2) ***Consolidated foreign income taxes with respect to United States shareholder.*** The consolidated foreign income taxes of a chain or group with respect to a United States shareholder for the taxable year of such chain or group shall be the sum of such shareholder's proportionate shares (as determined under subparagraph (1) of this paragraph) of the foreign income tax of all foreign corporations, whether or not controlled foreign corporations, in such chain or group.

(3) ***Taxes paid by foreign corporation on distributions received during its distribution period.*** If a distribution received by a foreign corporation in a chain or group from another foreign corporation in such chain or group after the close of the recipient's taxable year but during its distribution period for such year is allocated to the earnings and profits of such recipient corporation for such year under paragraph (c)(2) of § 1.963-3, then any foreign income tax paid or accrued by such recipient corporation on such distribution shall be treated as paid or accrued for such taxable year.

(f) ***Illustrations.*** The application of this section may be illustrated by the following examples:

Example 1. For 1966, domestic corporation M makes a first-tier election with respect to controlled foreign corporation A, 80 percent of the one class of stock of which M Corporation owns directly. Both corporations use the calendar year as the taxable year. For 1966, A Corporation has earnings and profits (before reduction for foreign income tax) of $100 with respect to which it pays foreign income tax of $30. Its earnings and profits are $70 ($100−$30). Corporation M's proportionate share of such earnings and profits is $56 (0.80 × $70), and its proportionate share of the foreign income tax is $24 ($56/$70 × $30). The effective foreign tax rate is 30 percent ($24/[$56 + $24]). Based on such effective foreign tax rate, the statutory percentage under section 963(b)(3) for 1966 is 69 percent. Thus, the amount of the minimum distribution which M Corporation must receive from A Corporation's 1966 earnings and profits is a dividend of $38.64 (0.69 × $56).

Example 2. For 1966, domestic corporation M makes a first-tier election with respect to controlled foreign corporation A, all of whose one class of stock M Corporation owns directly. Both corporations use the calendar year as the taxable year. For 1966, A Corporation has earnings and profits (before reduction for income tax) of $100, of which $40 is attributable to income from sources within the United States on which $12 United States income tax is paid. The foreign country in which A Corporation is incorporated imposes an income tax at 30 percent on the $100 but allows a credit against its tax for the $12 of United States income tax, so that it imposes a net foreign income tax of $18 for 1966. In determining the effective foreign tax rate of A Corporation for 1966, such $12 of United States income tax may be treated as foreign income tax to the extent it does not exceed $17.28 ($40 × 0.90 × 0.48). Corporation A has earnings and profits of $70 for 1966. Although A Corporation's effective foreign tax rate for 1966 is 30 percent, determined by dividing $30 by the sum of $70 plus $30, none of the United States tax which is taken into account in determining such rate shall be treated as foreign income tax for purposes of determining the foreign tax credit of M Corporation under section 902. Based on such effective foreign tax rate, the statutory percentage under section 963(b)(3) for 1966 is 69 percent. Thus, the amount of the minimum distribution which M Corporation must receive from A Corporation's 1966 earnings and profits is a dividend of $48.30 (0.69 × $70).

Example 3. Domestic corporation M directly owns throughout 1966, 60 percent of the one class of stock of controlled foreign corporation A, not a less developed country corporation under

section 902(d), which has for 1966 earnings and profits of $70 (all of which is attributable to subpart F income) after having paid foreign income tax of $30. Both corporations use the calendar year as the taxable year. Corporation A is created under the laws of a foreign country which imposes a 6-percent dividend withholding tax. Corporation M would be required, but for section 963, to include $42 (0.60 × $70) of A Corporation's subpart F income in gross income under section 951(a)(1)(A)(i). For 1966, however, M Corporation makes a first-tier election with respect to A Corporation. Since the tax withheld on distributions made by A Corporation is considered to have been paid by M Corporation, the effective foreign tax rate applicable to A Corporation for 1966 is only 30 percent, the percentage which such $30 of foreign income tax is of $100 (the sum of $30 plus $70). Thus, the statutory percentage under section 963(b) for 1966 is 69 percent. The amount of the minimum distribution which M Corporation must receive from A Corporation's 1966 earnings and profits is the distribution M Corporation will receive if A Corporation distributes 69 percent of its earnings and profits for 1966. Thus, if M Corporation receives a distribution of 69 percent of its proportionate share of such earnings and profits or $28.98 (0.69 × 0.60 × $70), it may exclude from gross income for 1966 $42 otherwise required to be included in gross income under section 951(a)(1)(A)(i) and will determine its income tax, assuming no other income and no surtax exemption under section 11(c), as follows:

Dividend	$28.98
Gross-up under section 78 ($28.98/ $70 × $30)	12.42
Taxable income	41.40
U.S. tax before foreign tax credit ($41.40 × 0.48)	19.87
Foreign tax credit ($12.42 + [0.06 × $28.98])	14.16
U.S. tax payable	5.71

Example 4. (a) For 1966 domestic corporation M makes a chain election with respect to controlled foreign corporation A, all of whose one class of stock it directly owns, and controlled foreign corporation B, all of whose one class of stock is directly owned by A Corporation. Both foreign corporations are subject to a foreign income tax at a flat rate of 30 percent, and all corporations use the calendar year as a taxable year. For 1966, B Corporation has pretax earnings and profits of $100 and distributes $51.50. For 1966, A Corporation has pretax earnings and profits of $151.50, consisting of $100 from selling activities and $51.50 received as a distribution from B Corporation, upon which it pays a foreign income tax of $45.45 (i.e., 30 percent of $151.50).

(b) Corporation M chooses under paragraph (d)(1)(iii) of this section to take the foreign tax paid by A Corporation on the dividend received from B Corporation into account in determining the effective foreign tax rate of the chain rather than count it toward the amount of the minimum distribution. Thus, to determine consolidated earnings and profits of the chain for 1966, A

Corporation's pretax earnings and profits of $151.50 are first reduced by the intercorporate dividend of $51.50 received from B Corporation so that A Corporation has pretax and predistribution earnings and profits of $100 ($151.50 less $51.50). Corporation A's pretax and predistribution earnings and profits of $100 are then reduced by the foreign income tax of $30 (30 percent of $100) paid on such earnings and profits, resulting in predistribution earnings and profits of $70 ($100 less $30). Since M Corporation chooses to count toward the effective foreign tax rate, rather than toward the minimum distribution, A Corporation's foreign income tax of $15.45 (0.30 × 51.50) imposed on the dividend received from B Corporation, such predistribution earnings and profits of $70 of A Corporation are further reduced by such $15.45 of tax to $54.55 ($70−$15.45). Corporation B, having received no dividends from any other corporation in the chain, has predistribution earnings and profits of $70 ($100 less foreign income tax of $30).

(c) The consolidated earnings and profits of the chain for 1966 are $124.55 ($54.55 + $70). The consolidated foreign income taxes for such year are $75.45 ($30 + $15.45 + $30). The effective foreign tax rate of the chain for 1966 is 37.73 percent ($75.45/[$124.55 + $75.45]). The statutory percentage for 1966 under section 963(b)(3) is 51 percent. Thus, the amount of the minimum distribution which M Corporation must receive from the 1966 consolidated earnings and profits of the chain is $63.52 (0.51 × $124.55).

Example 5. The facts are the same as in example 4 except that M Corporation does not choose under paragraph (d)(1)(iii) of this section to take into account, in determining the effective foreign tax rate, the foreign income tax of $15.45 paid by A Corporation on the distribution of $51.50 received from B Corporation. In such case, the consolidated earnings and profits of the chain are $140 ($70 + $70) and the consolidated foreign income taxes are $60 ($30 + $30), the latter amount being determined without taking into account A Corporation's foreign income tax of $15.45 on the distribution of $51.50 received from B Corporation. The effective foreign tax rate for 1966 is 30 percent ($60/[$140 + $60]), and the statutory percentage under section 963(b) is 69 percent. Thus, the amount of the minimum distribution which must be made from the 1966 consolidated earnings and profits of the chain is $96.60 (0.69 × $140). For the counting of such $15.45 of A Corporation's tax toward the $96.60 amount of the minimum distribution, see paragraph (b)(2) of § 1.963-3.

Example 6. For 1966 domestic corporation M directly owns the following percentages of the one class of stock of the following controlled foreign corporations in respect of which it makes a group election: 80 percent of A Corporation, 60 percent of B Corporation, and 70 percent of C Corporation. All corporations use the calendar year as the taxable year; none of the foreign corporations is a less developed country corporation under section 902(d). Each foreign corporation makes distributions during 1966. The consolidated earnings and profits, and the consolidated foreign income taxes, of the group for 1966 with respect to M Corporation, and the amount of the minimum distribution which M Corporation must receive, are determined as follows, based on the earnings and profits and foreign income tax shown in the

following table:

	Controlled foreign corporations		
	A	B	C
Predistribution and pretax earnings and profits	$100	$100	$100.00
Foreign income tax	15	25	35.00
Predistribution earnings and profits	85	75	65.00
M Corporation's proportionate share of earnings and profits:			
(0.80 × $85)	68		
(0.60 × $75)		45	
(0.70 × $65)			45.50
Consolidated earnings and profits with respect to M Corporation ($68 + $45 + $45.50)			158.50
M Corporation's proportionate share of foreign income tax:			
($15 × [$68/$85])	12		
($25 × [$45/$75])		15	
($35 × [$45.50/$65])			24.50
Consolidated foreign income taxes with respect to M Corporation ($12 + $15 + $24.50)			51.50

The effective foreign tax rate for 1966 is 24.5 percent ($51.50/[$158.50 + $51.50]) and the statutory percentage under section 963(b)(3) for such year is 76 percent. Thus, the amount of the minimum distribution which M Corporation must receive from the 1966 consolidated earnings and profits of the group is $120.46 (0.76 × $158.50).

Example 7. (a) For 1966 domestic corporation M makes a chain election with respect to the following controlled foreign corporations: A Corporation, 80 percent of whose one class of stock M Corporation owns directly; B Corporation, 60 percent of whose one class of stock is directly owned by A Corporation; and C Corporation, 70 percent of whose one class of stock is directly owned by B Corporation. All corporations use the calendar year as the taxable year; none of the foreign corporations is a less developed country corporation under section 902(d). The predistribution and pretax earnings and profits of each foreign corporation are $100. Each foreign corporation pays a flat rate of foreign income tax on all income computed without reduction for dividends paid and determined by including dividends received. Such rate is 15 percent for A Corporation, 25 percent for B Corporation, and 35 percent for C Corporation. Corporation C distributes $65, and B Corporation distributes $100, for 1966. Corporation M chooses under paragraph (d)(1)(iii) of this section to count toward the effective foreign tax rate, rather than toward the amount of the minimum distribution, the foreign income tax paid by corporations A and B, respectively, on distributions received from corporations B and C, respectively.

(b) The consolidated earnings and profits, and the consolidated foreign income taxes, of the chain, and the amount of the minimum distribution for 1966, with respect to M Corporation are determined as follows:

	Controlled foreign corporations			
	A	B	C	Total
Pretax earnings and profits	$160.00	$145.50	$100.00	
Reduction for intercorporate dividends:				
(0.60 × $100)	60.00			
(0.70 × $65)		45.50		
Pretax and predistribution earnings and profits	100.00	100.00	100.00	
Reduction for foreign income tax on such pretax and predistribution earnings and profits:				
(0.15 × $100)	15.00			
(0.25 × $100)		25.00		
(0.35 × $100)			35.00	
Predistribution earnings and profits	85.00	75.00	65.00	
Reduction for foreign income tax on intercorporate distributions of 1966 earnings and profits:				
(0.15 × $60)	9.00			
(0.25 × $45.50)		11.38		
	76.00	63.62	65.00	
Consolidated earnings and profits with respect to M Corporation:				
(0.80 × $76)	60.80			
(0.80 × 0.60 × $63.62)		30.54		
(0.80 × 0.60 × 0.70 × $65)			21.84	$113.18
Consolidated foreign income taxes with respect to M Corporation:				
($60.80/$76 × [$15 + $9])	19.20			
($30.54/$63.62 × [$25 + $11.38])		17.46		
($21.84/$65 × $35)			11.76	$48.42
Effective foreign tax rate ($48.42/[$113.18 + $48.42])				29.96%
Statutory percentage under section 963(b)				69%
Amount of minimum distribution which M Corporation must receive from 1966 consolidated earnings and profits (0.69 × $113.18), no amount of the tax on intercorporate distributions being counted toward the minimum distribution				$78.0

Example 8. The facts are the same as in example 7 except that M Corporation does not choose under paragraph (d)(1)(iii) of this section to take into account, in determining the effective foreign tax rate, the

foreign income tax paid by the recipient corporations on the intercorporate distributions. The consolidated earnings and profits, the consolidated foreign income taxes, of the chain, and the amount of the minimum distribution which M Corporation must receive, for 1966 are determined as follows:

	Controlled foreign corporations			
	A	B	C	Total
Pretax earnings and profits	$160.00	$145.50	$100.00	
Reduction for intercorporate dividends:				
(0.60 × $100)	60.00			
(0.70 × $65)		45.50		
Pretax and predistribution earnings and profits	100.00	100.00	100.00	
Reduction for foreign income tax on such pretax and predistribution earnings and profits:				
(0.15 × $100)	15.00			
(0.25 × $100)		25.00		
(0.35 × $100)			35.00	
Predistribution earnings and profits	85.00	75.00	65.00	
Consolidated earnings and profits with respect to M Corporation:				
(0.80 × $85)	68.00			
(0.80 × 0.60 × $75)		36.00		
(0.80 × 0.60 × 0.70 × $65)			21.84	$125.84
Consolidated foreign income taxes with respect to M Corporation:				
($68/$85 × $15)	12.00			
($36/$75 × $25)		12.00		
($21.84/$65 × $35)			11.76	$35.76
Effective foreign tax rate ($35.76/[$125.84 + $35.76])				22.13%
Statutory percentage under section 963(b)				76%
Amount of minimum distribution to be made from 1966 consolidated earnings and profits with respect to M Corporation: (0.76 × $125.84)				$95.64
Foreign income tax on intercorporate distributions of 1966 earnings and profits which is counted toward the minimum distribution (see § 1.963-3(b)(2)):				
($68/$85 × [0.15 × $60])	7.20			
($36/$75 × [0.25 × $45.50])		5.46		$12.66
Amount of minimum distribution which M Corporation must actually receive from the chain ($95.64−$12.66)				$82.98

[T.D. 6759, 29 FR 13329, Sept. 25, 1964, as amended by T.D. 6767, 29 FR 14877, Nov. 3, 1964; T.D. 7100, 36 FR 5335, Mar. 20, 1971]

§ 1.963-3 Distributions counting toward a minimum distribution.

(a) *Conditions under which earnings and profits are counted toward a minimum distribution* —

(1) ***In general.*** A distribution to the United States shareholder by a single first-tier corporation or by a foreign corporation included in a chain or group shall count toward a minimum distribution for the taxable year of such shareholder to which the election under section 963 relates only to the extent that—

(i) It is received by such shareholder during such year or within 180 days thereafter,

(ii) It is a distribution of the type described in paragraph (b) of this section,

(iii) Under paragraph (c) of this section, it is deemed to be distributed from the earnings and profits of the foreign corporations for the taxable year of such corporation to which the election relates, and

(iv) Such shareholder chooses to include it in gross income for the taxable year of such shareholder to which the election relates notwithstanding that such distribution, by reason of its receipt after the close of such year, would ordinarily be includible in the gross income of a subsequent year.

Amounts taken into account under this subparagraph as gross income of the United States shareholder for the taxable year to which the election relates shall not be considered to be includible in the gross income of such shareholder for a subsequent taxable year. For purposes of determining the foreign tax credit under sections 901 through 905, foreign income tax paid or accrued by such shareholder on or with respect to such amounts shall be treated as paid or accrued during the taxable year of such election.

(2) ***Distributions made prior to acquisition of stock.*** A United States shareholder which owns within the meaning of section 958(a) stock in a foreign corporation with respect to which such shareholder elects to secure an exclusion under section 963 for the taxable year may count toward the minimum distribution any distribution made with respect to such stock, and before its acquisition by the United States shareholder, to any other domestic corporation not exempt from income tax under chapter 1 of the Code, to the extent that such distribution is made out of the United States shareholder's proportionate share, as determined under paragraph (d)(2) of § 1.963-2, of such corporation's earnings and profits for the taxable year and would have counted toward a minimum distribution if it had been distributed to such United States shareholder. The application of this subparagraph may be illustrated by the following examples:

Example 1. Controlled foreign corporation A, which uses the calendar year as the taxable year, has for 1963 $100 of earnings and profits and 100 shares of only one class of stock outstanding. Domestic corporation M, not exempt from income tax under chapter 1 of the Code, directly owns all of such shares during the period from January 1, 1963, through June 30, 1963. On June 30, 1963, M Corporation transfers all of such shares to domestic corporation N, which owns them throughout the remainder of 1963 and elects to secure an exclusion under section 963 for such year with respect to the subpart F income of A Corporation. During June 1963, M Corporation receives a dividend of $75 from A Corporation, which would count toward a minimum distribution if it had been distributed to N Corporation for such year. Corporation N's proportionate share of the earnings and profits of A Corporation for 1963 is $100; N Corporation may count toward a minimum distribution for 1963 the entire dividend of $75 paid to M Corporation.

Example 2. The facts are the same as in example 1 except that M is a nonresident alien individual. Since A Corporation is not a controlled foreign corporation from January 1, 1963, through June 30, 1963, N Corporation's proportionate share of the earnings and profits of A Corporation for 1963 is $50.41 ($100 × 184/365), as determined under paragraph (d)(2)(iii) of § 1.963-2. Although $25.41 ($75−$49.59) of the $75 distribution to M is paid from N Corporation's proportionate share of A Corporation's 1963 earnings and profits, N Corporation may not count toward a minimum distribution any part of the $75 dividend distributed to M, since M is not a domestic corporation.

(b) ***Qualifying distributions*** —

(1) ***Amounts not counted toward a minimum distribution.*** No distribution received by a United States shareholder shall count toward a minimum distribution for the taxable year with respect to such shareholder to the extent the distribution is excludable from gross income to the extent gain on the distribution is not recognized, or to the extent the distribution is treated as a distribution in part or full payment in exchange for stock. Undistributed amounts required to be included in gross income under section 551 as undistributed foreign personal holding company income or under section 951 as undistributed amounts of a controlled foreign corporation shall not count toward a minimum distribution under section 963. An amount received by a United States shareholder as a distribution which under section 302 or section 331 is treated as a distribution in part or full payment in exchange for stock shall not count toward a minimum distribution even though such amount is includible in gross income under section 1248 as a dividend. For purposes of this subparagraph, any portion of a distribution of earnings and profits which is attributable to an increase in current earnings, invested in United States property which, but for paragraph (e) of this section, would be included in the gross income of the United States shareholder under section 951(a)(1)(B) shall not be treated as an amount excludable from gross income.

(2) ***Inclusion of tax on intercorporate distributions.*** In the case of a chain or group election, the United States shareholder's proportionate share of the amount of the foreign income tax paid or accrued for the taxable year by a foreign corporation in the chain or group with respect to distributions received by such corporation from the earnings and profits, of another foreign corporation in such chain or group, for the taxable year of such other corporation to which the election relates shall count toward a minimum distribution from such chain or group for the taxable year, but only if the United States shareholder does not choose under paragraph (d)(1)(iii) of § 1.963-2 to take such tax into account in determining the effective foreign tax rate of such chain or group for the taxable year. To the extent that foreign income tax counts toward a minimum distribution under this subparagraph, it shall be applied against and reduce the amount of the minimum distribution required to be received by the United States shareholder, determined without regard to this paragraph.

(c) ***Rules for allocation of distributions to earnings and profits for a taxable year.*** To determine whether a distribution to the United States shareholder by a single first-tier corporation or by a foreign corporation in a chain or group is made from the earnings and profits of such corporation for the taxable year to which the election under section 963 relates, the following subparagraphs shall apply:

(1) ***Exception to section 316.*** Section 316 shall apply except that a distribution of earnings and profits made by a foreign corporation either to another foreign corporation or to the United States shareholder shall be treated as having been paid from the earnings and profits of the distributing corporation for the taxable year of such corporation to which the election relates only if it is made during its distribution period (described in paragraph (g) of this section) for such year.

(2) ***Distributions from other corporations.*** The earnings and profits of a foreign corporation shall be determined in accordance with paragraph (d)(1) of § 1.963-2 (applied as though the United States shareholder had chosen under subparagraph (1)(iii) of such paragraph to take the tax described therein into account in determining the effective foreign tax rate) except that, in the case of a chain or group election, a distribution received by a foreign corporation in the chain or group from another foreign corporation in such chain or group shall be taken into account as earnings and profits of the recipient corporation for the taxable year of such recipient corporation to which the election relates but only to the extent that—

(i) The distribution is received by the recipient corporation during the distribution period for the taxable year of such recipient corporation to which the election relates,

(ii) If the distribution had been received by the United States shareholder, it would have constituted a distribution of the type described in paragraph (b) of this section, and

(iii) The distribution is made from the earnings and profits of the distributing corporation for the taxable year of such distributing corporation to which the election relates.

(d) ***Year of inclusion in income of foreign corporation and effect upon subpart F income.*** To the extent that a distribution to the United States shareholder counting toward a minimum distribution from a chain or group consists of earnings and profits distributed to a foreign corporation in the chain or group after the close of the recipient corporation's taxable year but during its distribution period for such year by another foreign corporation in such chain or group, such amount shall be treated as received by the recipient corporation on the last day of such taxable year and shall not be regarded as foreign personal holding company income (within the meaning of section 553(a) or 954(c)) of such corporation for the taxable year in which such amount is actually received. The extent to which a distribution counting toward a minimum distribution consists of earnings and profits distributed to a foreign corporation in a chain or group shall be determined under the ordering rules of paragraph (b)(3) of § 1.963-4 (applied in each instance as though the United States shareholder had not chosen under paragraph (d)(1)(iii) of § 1.963-2 to take the tax described therein into account in determining the effective foreign tax rate). However, for such purpose, the amount of foreign income tax, if any, which counts toward the minimum distribution shall be determined without regard to paragraph (b)(2) of this section but in accordance with paragraph (b)(3)(iii) of § 1.963-4.

(e) ***Distribution of current earnings invested in United States property.*** A distribution made by a foreign corporation during its distribution period for a taxable year shall, notwithstanding section 959(c), first be attributed to earnings and profits for such year described in section 959(c)(3) and then to other earnings and profits. For such purposes, earnings and profits of such foreign corporation for such year attributable to amounts which would otherwise be included in gross income of the United States shareholder under section 951(a)(1)(B) for such year shall be treated as earnings and profits to which section 959(c)(3) applies, shall not be excluded from gross income under section 959 (a) or (b), and shall count toward a minimum distribution for such year. See paragraph (c)(1)(v) of § 1.960-1 and paragraph (a) of § 1.960-2.

(f) ***Cumulative dividends in arrears.*** A distribution in satisfaction of arrearages shall be treated as being made out of earnings and profits of the foreign corporation for the taxable year to which the election under section 963 applies only to the extent the dividend is not attributed, under paragraph (d)(2)(i)(*d*) of § 1.963-2, to the earnings and profits of such corporation remaining from prior taxable years beginning after December 31, 1962. The application of this paragraph may be illustrated by the following example:

Example. For 1963, single first-tier corporation A, which uses the calendar year as the taxable year, has earnings and profits of $50; for 1964, a deficit in earnings and profits of $20; for 1965, earnings and profits of $100; and for 1966, earnings and profits of $240. For each of such years preferred dividends accumulate at the rate of $60; but no dividend is paid until 1966 during which year the current dividend is paid and $180 is distributed toward the arrearages. Of this $180, only $50 ($180−$130) shall be treated as paid from 1966 earnings and profits.

(g) ***Distribution period of a foreign corporation*** —

(1) ***General distribution period.*** Except as provided by subparagraph (2) of this paragraph, the distribution period with respect to a foreign corporation for its taxable year shall begin immediately after the close of the distribution period for the preceding taxable year and shall end with the close of the 60th day of the next succeeding taxable year. If no election to secure an exclusion under section 963 applied to the preceding taxable year, the distribution period for the taxable year shall begin with the 61st day of the taxable year.

(2) ***Special extended distribution period.*** If the United States shareholder of the foreign corporation so elects in statement filed with its return for the taxable year for which the election to secure the exclusion under section 963 is made, the distribution period with respect to such foreign corporation for its taxable year to which the election to secure the exclusion applies shall end with any day which occurs no earlier than the last day of such taxable year of such foreign corporation and no later than the 180th day after the close of such taxable year. The statement shall designate the day so elected as the end of the distribution period.

(h) ***Illustrations.*** The application of this section may be illustrated by the following examples:

Example 1. For 1963 domestic corporation M makes a chain election with respect to controlled foreign corporation A, all of whose one class of stock M Corporation directly owns, and controlled foreign corporation B, all of whose one class of stock is directly owned by A Corporation. All such corporations use the calendar year as the taxable year, and the distribution periods of corporations A and B for 1963 coincide. Corporations A and B each have earnings and profits (before distributions) of $100 for 1963. On June 1, 1963, B Corporation distributes earnings and profits of $120, of which $100 is from its earnings and profits for 1963 and $20 is from prior earnings. For 1963, A Corporation pays no income tax and distributes earnings and profits of $150 to M Corporation. Under paragraph (c) of this section, such $150 is allocated to A Corporation's earnings and profits of $200 for 1963, consisting of its total earnings and profits for that year of $220 less the $20 received as a distribution from B Corporation's prior earnings.

Example 2. Domestic corporation M directly owns all of the one class of stock of controlled foreign corporation A. Both corporations use the calendar year as the taxable year, and A Corporation's taxable year and its distribution period for 1963 coincide. For 1963, $50 is included in the gross income of M Corporation under section 951(a)(1)(B) as A Corporation's increase in earnings invested for such year in United States property. For 1964, M Corporation makes a first-tier election with respect to A Corporation. For 1964, A Corporation has earnings and profits of $100, including $10 attributable to an increase in earnings invested for such year in United States property. During 1964, A Corporation distributes earnings and profits of $80 to M Corporation. Without regard to paragraph (e) of this section, $10 of this distribution is attributable under section 959(c)(1) to A Corporation's 1964 earnings and profits required to be included in M Corporation's gross income under section 951(a)(1)(D). Pursuant to paragraph (e) of this section, however, the entire distribution of $80 counts toward a minimum distribution for 1964 and is considered to be from earnings and profits of A Corporation for 1964 described in section 959(c)(3). Thus the entire distribution of $80 is included in M Corporation's gross income as a dividend and the foreign tax credit in respect of such amount is determined in accordance with section 902 as modified by the regulations

under section 963. On the other hand, if A Corporation made no distributions for 1964, no part of the $10 of A Corporation's increase in earnings invested in United States property for such year would count toward a minimum distribution for any other year but would be included in the gross income for M Corporation for 1964 under section 951(a)(1)(B), and the foreign tax credit in respect of such amount would be determined in accordance with § 1.960-1.

Example 3. For 1964 domestic corporation M makes a chain election with respect to controlled foreign corporation A, all the one class of stock of which is owned directly by M Corporation, and controlled foreign corporation B, all the one class of stock of which is owned directly by A Corporation. Corporation M makes no election under section 963 for 1963 or 1965. Corporations M and B use the calendar year as the taxable year, and A Corporation uses for its taxable year a fiscal year ending on September 30. Corporation M elects to have the distribution period for each controlled foreign corporation end on March 29, 1965, such date being the 180th day after the close of A Corporation's taxable year ending on September 30, 1964. Corporation A's distribution period for its taxable year ending on September 30, 1964, begins on November 30, 1963, the 61st day of such taxable year. The distribution period of B Corporation for 1964 begins on March 1, 1964, the 61st day of such taxable year. A distribution counting toward a minimum distribution for 1964 may be made from the earnings and profits of B Corporation only if the amount thereof is distributed by B Corporation to A Corporation, and in turn by A Corporation to M Corporation, during the period of March 1, 1964, through March 29, 1965.

Example 4. The facts are the same as in example 3, except that for their taxable years ending in 1964, corporations A and B each have earnings and profits (before distributions) of $100. On March 10, 1965, B Corporation distributes to A Corporation a dividend of $80 upon which A Corporation incurs foreign income tax at the rate of 10 percent. On March 15, 1965, A Corporation distributes to M Corporation a dividend of $50. Corporation M chooses to take into account as gross income for 1964 from such distribution only $40. For purposes of applying this section, the distribution counting toward a minimum distribution is $44.44, consisting of the $40 of earnings and profits actually received by M Corporation plus the $4.44 ($40/$72 × $8) of foreign income tax incurred by A Corporation attributable thereto; A Corporation is deemed to have received $44.44 ($40 ÷ 0.90) of the distribution from B Corporation on September 30, 1964, the last day of the taxable year of A Corporation to which the election relates; and the foreign personal holding company income derived by A Corporation for its taxable year ending in 1965 from the distribution from B is only $35.56 ($80–$44.44). Assuming that no exceptions, exclusions, or exemptions were applicable, subpart F income would be realized by A Corporation for its taxable year ending on September 30, 1965, upon the distribution by B Corporation to A Corporation, but only in the amount of $32 ($35.56 less a deduction under section 954(b)(5) for taxes of $3.56).

[T.D. 7100, 36 FR 10860, June 4, 1971; 36 FR 11924, June 23, 1971, as amended by T.D. 7334, 39 FR 44214, Dec. 23, 1974]

§ 1.963-4--1.963-5 [Reserved]

§ 1.963-6 Deficiency distribution.

(a) ***In general.*** Section 963(e)(2) and this section provide a method under which, by virtue of a deficiency distribution, a United States shareholder may be relieved from the payment of a deficiency in tax for any taxable year arising by reason of failure to include subpart F income in gross income under section 951(a)(1)(A)(i), when it has been determined that such shareholder has failed to receive a minimum distribution for such year in respect of which it elected to secure the exclusion under section 963. In addition, this section provides rules with respect to a credit or refund of part or all of any such deficiency which has been paid. Under the method provided, the benefit of the exclusion of subpart F income from

gross income of the United States shareholder is allowed retroactively for the taxable year in respect of which the election under section 963 applied, but only if the subsequent deficiency distribution meets the requirements of this section. The benefits of the retroactive exclusion will not, however, prevent the assessment of interest, additional amounts, and assessable penalties.

(b) ***Requirements for deficiency distribution*** —

(1) ***Distribution made on or after date of determination.*** If—

(i) A United States shareholder, in making its return of the tax imposed by chapter 1 of the Code for any taxable year, elects to secure an exclusion under section 963 for such year,

(ii) It is subsequently determined (within the meaning of paragraph (c) of this section) that an exclusion under section 963 of subpart F income with respect to stock to which such election relates does not apply for such taxable year because of the failure of such shareholder to receive a minimum distribution for such year with respect to such stock, and

(iii) Such failure is due to reasonable cause, a deficiency distribution which is received by such shareholder with respect to such stock from a foreign corporation which was the single first-tier corporation, or a corporation in the chain or group, as the case may be, with respect to which the election was made, shall count toward a minimum distribution under section 963 for such year of election if such deficiency distribution is received (except as provided by subparagraph (2) of this paragraph) on, or within 90 days after, the date of such determination and prior to the filing of a claim under paragraph (d)(1) of this section. Such claim must be filed within 120 days after the date of such determination, and the deficiency distribution must be a dividend of such a nature (except as otherwise provided in this section) as would have permitted it to count toward a minimum distribution for the taxable year of the election if it had been received by the United States shareholder during such year. No distribution shall count as a deficiency distribution under this subparagraph unless a claim therefor is filed under paragraph (d)(1) of this section.

(2) ***Distribution made before date of determination.*** A deficiency distribution may also be received by a United States shareholder at any time prior to the date on which the determination required by subparagraph (1) of this paragraph is made. A distribution will count as a deficiency distribution under this subparagraph—

(i) To the extent that such distribution otherwise satisfies the requirements of this section;

(ii) If the United States shareholder files within 90 days after such distribution but before the determination date an advance claim described in paragraph (d)(2) of this section for treatment of such distribution as a deficiency distribution;

(iii) If such shareholder consents in such claim to include such deficiency distribution in gross income for the taxable year of the election to the extent necessary to complete a minimum distribution for such year and under section 6501 to extend the period for the making of assessments, and the bringing of distraint or a proceeding in court for collection, in respect of a deficiency and all interest, additional amounts, and assessable penalties for such taxable year;

(iv) If, when requested by the district director, such shareholder consents under section 6501 in such claim to extend the period for the making of assessments, and the bringing of distraint or a proceeding in court for collection, in respect of a deficiency and all interest, additional amounts and assessable penalties for the year of receipt of such distribution; and

(v) To the extent that such shareholder makes advance payment of tax which would result from the inclusion of such distribution in gross income as a minimum distribution for the year of such deficiency.

To the extent that such distribution is not necesasry under the determination (when made under paragraph (c) of this section) for a deficiency distribution, it shall be included in the United States shareholder's gross income for the taxable year of receipt of such distribution and paragraph (g) of this section shall not apply.

(3) ***Earnings and profits of year of election to be first distributed.*** If—

(i) In the case of a first-tier election, the United States shareholder's proportionate share of the earnings and profits of the foreign corporation which was the single first-tier corporation, or

(ii) In the case of a chain or group election, any portion of the share of any corporation or corporations (which were in the chain or group) of the consolidated earnings and profits with respect to the United States shareholder,

for the taxable year of the election has not been distributed on the stock with respect to which the election was made, then a distribution, in order to be counted toward a deficiency distribution, must be made by such corporation or corporations and from such earnings and profits to the extent thereof. Once all such earnings and profits of such corporation or corporations have been completely distributed, a deficiency distribution may be made from other earnings and profits of such foreign corporation which was a single first-tier corporation, or of such corporation or corporations which were in such chain or group, as the case may be.

(4) ***Proof of reasonable cause.*** Reasonable cause for failure to receive a minimum distribution shall be deemed to exist, in the absence of circumstances demonstrating bad faith, if the electing United States shareholder receives, within the period prescribed by paragraph (a)(1)(i) of § 1.963-3 with respect to the year of election, at least 80 percent of the amount of a minimum distribution (from the earnings and profits to which the election for such year relates) which if received during such period would have satisfied the conditions for the section 963 exclusion to apply to such year. If less than 80 percent of the amount of a minimum distribution is received during such period, the existence of a reasonable cause for failure to receive a minimum distribution must be established by clear and convincing evidence; however, the preceding sentence shall not be taken as a limitation on the establishment of reasonable cause by any other proof of reasonable cause. For example, reasonable cause will exist if a single first-tier corporation for its taxable year makes a distribution which would be a minimum distribution but for a refund of foreign income tax which it has paid in good faith under foreign law but which is found not to be due after the United States income tax return of the United States shareholder has been filed.

(c) ***Nature and details of determination.***

(1) A determination that the section 963 exclusion does not apply to a United States shareholder for a taxable year due to its failure to receive a minimum distribution for such year shall, for the purposes of this section, be established by—

(i) A decision by the Tax Court or a judgment, decree, or other order by any court of competent jurisdiction, which has become final;

(ii) A closing agreement made under section 7121; or,

(iii) An agreement which is signed by the district director, or such other official to whom authority to sign the agreement is delegated, and by, or on behalf of, such shareholder and which relates to the liability of such shareholder for the tax under chapter 1 of the Code for such year.

(2) The date of determination by a decision of the Tax Court shall be the date upon which such decision becomes final, as prescribed in section 7481.

(3) The date upon which a judgment of a court becomes final shall be determined upon the basis of the facts in the particular case. Ordinarily, a judgment of a United States district court shall become final upon the expiration of the time allowed for taking an appeal, if no such appeal is duly taken within such time; and a judgment of the United States Court of Claims shall become final upon the expiration of the time allowed for filing a petition for certiorari, if no such petition is duly filed within such time.

(4) The date of determination by a closing agreement made under section 7121 shall be the date such agreement is approved by the Commissioner.

(5) The date of a determination made by an agreement which is signed by the district director, or such other official to whom authority to sign the agreement is delegated, shall be the date prescribed by this subparagraph. The agreement shall be sent to the United States shareholder at his last known address by either registered or certified mail. For further guidance regarding the definition of last known address, see § 301.6212-2 of this chapter. If registered mail is used for such purpose, the date of registration shall be treated as the date of determination; if certified mail is used for such purpose, the date of the postmark on the sender's receipt for such mail shall be treated as the date of determination. However, if the deficiency distribution is received by such shareholder before such registration or postmark date but on or after the date the agreement is signed by the district director or such other official to whom authority to sign the agreement is delegated, the date of determination shall be the date on which the agreement is so signed.

(6) The determination under this paragraph shall find that, due to the United States shareholder's failure to receive a minimum distribution, the section 963 exclusion does not apply for the taxable year with respect to stock to which the election under such section relates. A determination described in subdivision (ii) or (iii) of subparagraph (1) of this paragraph shall set forth the amount of the deficiency distribution and the amount of additional income tax for which the United States shareholder is liable under Chapter 1 of the Code by reason of not including in gross income for such year the amount of the deficiency distribution. If a determination described in subdivision (i) of subparagraph (1) of this paragraph does not establish the amount of the deficiency distribution and such amount of additional tax, such amounts may be established by an agreement which is signed by the district director, or such other official to whom authority to sign the agreement is delegated.

(d) ***Claim for treatment of distribution as a deficiency distribution*** —

(1) ***Claim filed after date of determination.*** A claim (including any amendments thereof) for treatment of a deficiency distribution as counting toward a minimum distribution for the taxable year of election shall be filed in duplicate, within 120 days after the date of the determination described in paragraph (c) of this section, with the requisite declaration prescribed by the Commissioner on the appropriate claim form and shall be accompanied by—

(i) A copy of such determination and a description of how it became final;

(ii) If requested by the district director, or by such other official to whom authority to sign the agreement referred to in paragraph (c)(1) or (6) of this section is delegated, a consent by the United States shareholder under section 6501 to extend the period for the making of assessments, and the bringing of distraint or a proceeding in court for collection, in respect of a deficiency and all interest, additional amounts, and assessable penalties for the taxable year of election; and

(iii) Such other information as may be required by the claim form or the district director, or other official, in support of the claim.

(2) ***Advance claim.*** An advance claim for treatment of a deficiency distribution as counting toward a minimum distribution for the taxable year of election shall be filed in duplicate, within 90 days after such distribution but before the date of determination described in paragraph (c) of this section, and shall satisfy all requirements of subparagraph (1) of this paragraph other than subdivision (i) of such subparagraph. However, within 120 days after the date of the determination described in paragraph (c) of this section, the advance claim shall be completed so that it satisfies all requirements of subparagraph (1) of this paragraph.

(e) ***Computation of interest on deficiencies in tax.*** If a United States shareholder, for the taxable year of the election under section 963, completes a minimum distribution for such year by receiving a deficiency distribution to which this section applies, the interest on the deficiency in tax due by reason of the failure to include the amount of such deficiency distribution in such shareholder's gross income for such year shall be computed for the period from the last date prescribed for payment of the tax for such year to the date such deficiency in tax is paid. No interest shall be due by reason of the failure to include Subpart F income in gross income for a taxable year in respect of which a minimum distribution under section 963 is completed by a deficiency distribution to which this section applies.

(f) ***Claim for credit or refund.*** If a deficiency in tax is asserted for any taxable year by reason of failure to include Subpart F income in gross income under section 951(a)(1)(A)(i) and the United States shareholder has paid any portion of such asserted deficiency, such shareholder is entitled to a credit or refund of such payment to the extent that such payment constitutes an overpayment of tax as the result of the receipt of a deficiency distribution to which this section applies. To secure credit or refund of such overpayment of tax, the United States shareholder must file a claim for refund in accordance with § 301.6402-3, in addition to the claim form required under paragraph (d) of this section. No interest shall be allowed on such credit or refund. For other rules applicable to the filing of claims for credit or refund of an overpayment of tax, see section 6402 and the regulations thereunder. For the limitations applicable to the credit or refund for an overpayment of tax, see section 6511 and the regulations thereunder.

(g) ***Effect of deficiency distribution*** —

(1) ***Allocation of distributions.*** The deficiency distribution shall be allocated, by applying the rules of § 1.963-3 (and paragraph (b) of § 1.963-4, if applicable for the year of election), as a distribution first from the earnings and profits (to the extent thereof) of the foreign corporation which was the single first-tier corporation, or of the distributing corporation or corporations which were in the chain or group, as the case may be, for the taxable year in respect of which the election was made, and then from earnings and profits (to the extent thereof) described in section 959(c)(3) and determined as provided in section 959 for the most recent taxable year and the first, second, etc., taxable years preceding such recent taxable years, in that order, of the distributing corporation or corporations. In applying the preceding sentence to taxable years other than the taxable year in respect of which the election was made, the deficiency distribution shall first be allocated, in the order of allocation

prescribed by such sentence, first to taxable years in respect of which no election under section 963 was made with respect to the stock on which such distribution is received and then to taxable years in respect of which an election under such section was made.

(2) ***Year of receipt.*** Any deficiency distribution made with respect to a taxable year of the United States shareholder shall be treated, except as provided in paragraph (b)(2) of this section, as having been received by the shareholder in that year for which such shareholder elected to secure an exclusion under section 963; and, for purposes of the foreign tax credit under section 901, the foreign income taxes paid or accrued, or deemed paid, by the United States shareholder by reason of a distribution of any amount treated as a deficiency distribution for such year shall be treated as paid or accrued, or deemed paid, for such year.

(3) ***Year of payment.*** A distribution counting toward a deficiency distribution for a taxable year of election shall, except as provided in paragraph (b)(2) of this section, be treated for purposes of applying paragraph (a) of § 1.963-3, relating to conditions under which earnings and profits are counted toward a minimum distribution, and paragraph (b)(3) of § 1.963-4, relating to rules for distributing through a chain or group, as if it were distributed during the distribution period (as defined in paragraph (g) of § 1.963-3) with respect to the distributing corporation and each foreign corporation through which such distribution is made to the United States shareholder, for the taxable year to which the election under section 963 applies; and the foreign income taxes paid by any foreign corporation by reason of such distribution shall, in the application of section 902 and of the special rules of paragraph (c) of § 1.963-4, be treated as paid or accrued by such foreign corporation for its taxable year to which such election applies. The distribution shall not count toward a minimum distribution for any other taxable year.

(4) ***Allocation of reduction in tax credit.*** If any portion of a deficiency distribution from a corporation which was in a chain or group is paid from earnings and profits of a taxable year other than that in respect of which the election was made, then the minimum distribution toward which such deficiency distribution counts may not be treated as a pro rata minimum distribution for purposes of § 1.963-4. Moreover, the amount of the overall United States and foreign income tax with respect to such minimum distribution must satisfy the minimum tax requirements of paragraph (a)(1)(i), or paragraph (ii), of § 1.963-4, but, if the latter applies, without any reduction and deferral under paragraph (c)(3) of such section of the foreign tax credit allowable under section 901 with respect to the deficiency distribution.

[T.D. 6759, 29 FR 13346, Sept. 25, 1964, as amended by T.D. 6767, 29 FR 14879, Nov. 3, 1964; T.D. 7410, 41 FR 11020, Mar. 16, 1976; T.D. 8939, 66 FR 2819, Jan. 12, 2001]

§ 1.964-1 Determination of the earnings and profits of a foreign corporation.

(a)

(1) ***In general.*** For rules for determining the earnings and profits (or deficit in earnings and profits) of a foreign corporation for taxable years beginning before January 1, 1987, for purposes of sections 951 through 964, *see* 26 CFR 1.964-1(a) (revised as of April 1, 2006). For taxable years beginning after December 31, 1986, except as otherwise provided in the Code and regulations, the earnings and profits (or deficit in earnings and profits) of a foreign corporation for its taxable year shall be computed for all Federal income tax purposes substantially as if such corporation were a domestic corporation by—

(i) Preparing a profit and loss statement with respect to such year from the books of account regularly maintained by the corporation for the purpose of accounting to its shareholders.

(ii) Making the adjustments necessary to conform such statement to the accounting principles described in paragraph (b) of this section; and

(iii) Making the further adjustments necessary to conform such statement to the tax accounting standards described in paragraph (c) of this section.

(2) ***Required adjustments.*** The computation described in paragraph (a)(1) of this section shall be made in the foreign corporation's functional currency (determined under section 985 and the regulations under that section) and may be made by following the procedures described in paragraphs (a)(1)(i) through (a)(1)(iii) of this section in an order other than the one listed, as long as the result so obtained would be the same. In determining earnings and profits, or the deficit in earnings and profits, of a foreign corporation under section 964, the amount of an illegal bribe, kickback, or other payment (within the meaning of section 162(c), as amended by section 288 of the Tax Equity and Fiscal Responsibility Act of 1982 in the case of payments made after September 3, 1982, and the regulations issued pursuant to section 964) paid after November 3, 1976, by or on behalf of the corporation during the taxable year of the corporation directly or indirectly to an official, employee, or agent in fact of a government shall not be taken into account to decrease such earnings and profits or to increase such deficit. No adjustment shall be required under paragraph (a)(1)(ii) or (iii) of this section unless it is material. Whether an adjustment is material depends on the facts and circumstances of the particular case, including the amount of the adjustment, its size relative to the general level of the corporation's total assets and annual profit or loss, the consistency with which the practice has been applied, and whether the item to which the adjustment relates is of a recurring or merely a nonrecurring nature. For the treatment of earnings and profits whose distribution is prevented by restrictions and limitations imposed by a foreign government, see section 964(b) and the regulations issued pursuant to section 964.

(3) ***Translation into dollars.*** In the case of a foreign corporation with a functional currency other than the United States dollar (dollar), see sections 986(b) and 989(b) for rules regarding the time and manner of translating distributions or inclusions of the foreign corporation's earnings and profits into dollars.

(b) ***Accounting adjustments*** —

(1) ***In general.*** The accounting principles to be applied in making the adjustments required by paragraph (a)(1)(ii) of this section shall be those accounting principles generally accepted in the United States for purposes of reflecting in the financial statements of a domestic corporation the operations of its foreign affiliates, including the following:

(i) ***Clear reflection of income.*** Any accounting practice designed for purposes other than the clear reflection on a current basis of income and expense for the taxable year shall not be given effect. For example, an adjustment will be required where an allocation is made to an arbitrary reserve out of current income.

(ii) ***Physical assets, depreciation, etc.*** All physical assets (as defined in paragraph (e)(5)(ii) of this section), including inventory when reflected at cost, shall be taken into account at historical cost computed either for individual assets or groups of similar assets. The historical cost of such an asset shall not reflect any appreciation or depreciation in its value or in the relative value of the currency in which its cost was incurred. Depreciation, depletion, and amortization allowances shall be based on the historical cost of the underlying asset and no effect shall be given to any such allowance determined on the basis of a factor other than historical cost. For

special rules for determining historical cost where assets are acquired during a taxable year beginning before January 1, 1950, or a majority interest in the foreign corporation is acquired after December 31, 1949, but before October 27, 1964, see subparagraph (2) of this paragraph.

(iii) ***Valuation of assets and liabilities.*** Any accounting practice which results in the systematic undervaluation of assets or overvaluation of liabilities shall not be given effect, even though expressly permitted or required under foreign law, except to the extent allowable under paragraph (c) of this section. For example, an adjustment will be required where inventory is written down below market value. For the definition of market value, see paragraph (a) of § 1.471-4.

(iv) ***Income equalization.*** Income and expense shall be taken into account without regard to equalization over more than one accounting period; and any equalization reserve or similar provision affecting income or expense shall not be given effect, even though expressly permitted or required under foreign law, except to the extent allowable under paragraph (c) of this section.

(v) ***Foreign currency.*** If transactions effected in a foreign currency other than that in which the books of the corporation are kept are translated into the foreign currency reflected in the books, such translation shall be made in a manner substantially similar to that as prescribed in section 988 and the regulations under that section for the translation of foreign currency amounts into United States dollars.

(2) ***Historical cost.*** For purposes of this section, the historical cost of an asset acquired by the foreign corporation during a taxable year beginning before January 1, 1963, shall be determined, if it is so elected by or on behalf of such corporation—

(i) In the event that the foreign corporation became a majority owned subsidiary of a United States person (within the meaning of section 7701(a)(30)) after December 31, 1949, but before October 27, 1964, and the asset was held by such foreign corporation at that time, as though the asset was purchased on the date during such period the foreign corporation first became a majority owned subsidiary at a price equal to its then fair market value, or

(ii) In the event that subdivision (i) of this subparagraph is inapplicable but the asset was acquired by the foreign corporation during a taxable year beginning before January 1, 1950, as though the asset were purchased on the first day of the first taxable year of the foreign corporation beginning after December 31, 1949, at a price equal to the undepreciated cost (cost or other basis minus book depreciation) of that asset as of that date as shown on the books of account of such corporation regularly maintained for the purpose of accounting to its shareholders.

For purposes of this subparagraph, a foreign corporation shall be considered a majority owned subsidiary of a United States person if, taking into account only stock acquired by purchase (as defined in section 334(b)(3)), the United States person owns (within the meaning of section 958(a)) more than 50 percent of the total combined voting power of all classes of stock of the foreign corporation entitled to vote. The election under this subparagraph shall be made for the first taxable year beginning after December 31, 1962, in which the foreign corporation is a controlled foreign corporation (within the meaning of section 957), or for which it is included in a chain or group under section 963(c)(2)(B) or (3)(B) (applied as if section 963 had not been repealed by the Tax Reduction Act of 1975), or has a deficit in earnings and profits sought to be taken into account under section 952(d) or pays a dividend that is included in the foreign base company shipping income of a

controlled foreign corporation under § 1.954-6(f). Once made, such an election shall be irrevocable. For the time and manner in which an election may be made on behalf of a foreign corporation, see paragraph (c)(3) of this section.

(3) ***Illustrations.*** The application of this paragraph may be illustrated by the following examples:

Example 1. Corporation M is a controlled foreign corporation which regularly maintains books of account for the purpose of accounting to its shareholders in accordance with the accounting practices prevalent in country X, the country in which it operates. As a consequence of those practices, the profit and loss statement prepared from these books of account reflects an allocation to an arbitrary reserve out of current income and depreciation allowances based on replacement values which are greater than historical cost. Adjustments are necessary to conform such statement to accounting principles generally accepted in the United States. Assuming these adjustments to be material, the unacceptable practices, will have to be eliminated from the statement, an increase in the amount of profit (or a decrease in the amount of loss) thereby resulting.

Example 2. In 1973, Corporation N is a foreign corporation which is not a controlled foreign corporation but which is included in a chain, for minimum distribution purposes, under section 963(c)(2)(B). Corporation N regularly maintains books of account for the purpose of accounting to its shareholders in accordance with the accounting practices of country Y, the country in which it operates. As a consequence of those practices, the profit and loss statement prepared from these books of account reflects the inclusion in income of stock dividends and of corporate distributions representing a return of capital. Adjustments are necessary to conform such statement to accounting principles generally accepted in the United States. Assuming these adjustments to be material, the unacceptable practices will have to be eliminated from the statement, a decrease in the amount of profit (or increase in the amount of loss) thereby resulting.

(c) ***Tax adjustments*** —

(1) ***In general.*** The tax accounting standards to be applied in making the adjustments required by paragraph (a)(1)(iii) of this section shall be the following:

(i) ***Accounting methods.*** The method of accounting shall reflect the provisions of section 446 and the regulations thereunder.

(ii) ***Inventories.*** Inventories shall be taken into account in accordance with the provisions of sections 471 and 472 and the regulations thereunder.

(iii) ***Depreciation.*** Depreciation shall be computed as follows:

(*a*) For any taxable year beginning before July 1, 1972; depreciation shall be computed in accordance with section 167 and the regulations thereunder.

(*b*) If, for any taxable year beginning after June 30, 1972, 20 percent or more of the gross income from all sources of the corporation is derived from sources within the United States, then depreciation shall be computed in accordance with the provisions of § 1.312-15.

(*c*) If, for any taxable year beginning after June 30, 1972, less than 20 percent of the gross income from all sources of the corporation is derived from sources within the United States, then depreciation shall be computed in accordance with section 167 and the regulations thereunder.

(iv) ***Elections.*** Effect shall be given to any election made in accordance with an applicable provision of the Code and the regulations thereunder and these regulations.

(v) ***Taxable years.*** The period for computation of taxable income and earnings and profits known as the taxable year shall reflect the provisions of section 441 and the regulations under that section.

(vi) ***Applicable requirements.*** Except as provided in paragraphs (c)(2) and (c) (3) of this section, any requirements imposed by the Code or applicable regulations with respect to making an election or adopting or changing a method of accounting or taxable year must be satisfied by or on behalf of the foreign corporation just as though it were a domestic corporation if such election or such adoption or change of method or taxable year is to be taken into account in the computation of its earnings and profits.

(2) ***Adoption or change of method or taxable year.*** For the first taxable year of a foreign corporation beginning after April 25, 2006, in which such foreign corporation first qualifies as a controlled foreign corporation (as defined in section 957 or 953) or a noncontrolled section 902 corporation (as defined in section 904(d)(2)(E)), any method of accounting or taxable year allowable under this section may be adopted, and any election allowable under this section may be made, by such foreign corporation or on its behalf notwithstanding that, in previous years, its books or financial statements were prepared on a different basis, and notwithstanding that such election is required by the Code or regulations to be made in a prior taxable year. Any allowable methods adopted or elections made shall be reflected in the computation of the foreign corporation's earnings and profits for such taxable year, prior taxable years, and (unless the Commissioner consents to a change) subsequent taxable years. However, see section 898 for the rules regarding the taxable year of a specified foreign corporation as defined in section 898(b). Any allowable method of accounting or election that relates to events that first arise in a subsequent taxable year may be adopted or made by or on behalf of the foreign corporation for such year. Adjustments to the appropriate separate category (as defined in § 1.904-5(a)(1)) of earnings and profits and income of the foreign corporation shall be required under section 481 to prevent any duplication or omission of amounts attributable to previous years that would otherwise result from any change in a method of accounting. *See* paragraph (c)(3) of this section for the manner in which a method of accounting or a taxable year may be adopted or changed on behalf of the foreign corporation. *See* paragraph (c)(4) of this section for applicable rules if the amount of the foreign corporation's earnings and profits became significant for United States tax purposes before a method of accounting or taxable year was adopted by the foreign corporation or on its behalf in accordance with the rules of paragraph (c)(3) of this section. *See* paragraph (c)(6) of this section for special rules postponing the time for taking action by or on behalf of a foreign corporation until the amount of its earnings and profits becomes significant for U.S. tax purposes. *See also* §§ 1.985-5, 1.985-6, and 1.985-7 relating to adjustments to earnings and profits of a QBU required when the QBU changes its functional currency or begins to use the dollar approximate separate transactions method of accounting.

(3) ***Action on behalf of corporation*** —

(i) ***In general.*** An election shall be deemed made, or an adoption or change in method of accounting or taxable year deemed effectuated, on behalf of the foreign corporation only if its controlling domestic shareholders (as defined in paragraph (c)(5) of this section)—

(A) Satisfy for such corporation any requirements imposed by the Internal Revenue Code or applicable regulations with respect to such election or such adoption or change in method or taxable year (including the provisions of sections 442 and 446 and the regulations

under those sections, as well as any operative provisions), such as the filing of forms, the execution of consents, securing the permission of the Commissioner, or maintaining books and records in a particular manner. For purposes of this paragraph (c)(3)(i)(A), the books of the foreign corporation shall be considered to be maintained in a particular manner if the controlling domestic shareholders or the foreign corporation regularly keep the records and accounts required by section 964(c) and the regulations under that section in that manner;

(B) File the statement described in paragraph (c)(3)(ii) of this section, at the time and in the manner prescribed therein; and

(C) Provide the written notice required by paragraph (c)(3)(iii) of this section at the time and in the manner prescribed therein.

(ii) ***Statement required to be filed with a tax return.*** The statement required by this paragraph (c)(3)(ii) shall set forth the name, country of organization, and U.S. employer identification number (if applicable) of the foreign corporation, the name, address, stock interests, and U.S. employer identification number of each controlling domestic shareholder (or, if applicable, the shareholder's common parent) approving the action, and the names, addresses, U.S. employer identification numbers, and stock interests of all other domestic shareholders notified of the action taken. Such statement shall describe the nature of the action taken on behalf of the foreign corporation and the taxable year for which made, and identify a designated shareholder who retains a jointly executed consent confirming that such action has been approved by all of the controlling domestic shareholders and containing the signature of a principal officer of each such shareholder (or its common parent). Each controlling domestic shareholder (or its common parent) shall file the statement with, and on or before the due date (including extensions) of, its own tax return (or information return, if applicable) for its taxable year with or within which ends the taxable year of the foreign corporation for which the election is made or for which the method of accounting or taxable year is adopted or changed. In the case of a controlling domestic shareholder that is the sole shareholder of a controlled foreign corporation, no separate statement need be filed if the information described in this paragraph (c)(3)(ii) is included on Form 5471 and Form 3115 or 1128, as applicable, filed with respect to the controlled foreign corporation with the shareholder's return for such taxable year.

(iii) ***Notice.*** On or before the filing date described in paragraph (c)(3)(ii) of this section, the controlling domestic shareholders shall provide written notice of the election made or the adoption or change of method or taxable year effected to all other persons known by them to be domestic shareholders who own (within the meaning of section 958(a)) stock of the foreign corporation. Such notice shall set forth the name, country of organization and U.S. employer identification number (if applicable) of the foreign corporation, and the names, addresses, and stock interests of the controlling domestic shareholders. Such notice shall describe the nature of the action taken on behalf of the foreign corporation and the taxable year for which made, and identify a designated shareholder who retains a jointly executed consent confirming that such action has been approved by all of the controlling domestic shareholders and containing the signature of a principal officer of each such shareholder (or its common parent). However, the failure of the controlling domestic shareholders to provide such notice to a person required to be notified shall not invalidate the election made or the adoption or change of method or taxable year effected.

(4) ***Effect of action or inaction by controlling domestic shareholders —***

(i) ***In general.*** Any election, or adoption or change of method of accounting or taxable year made by the controlling domestic shareholders on behalf of the foreign corporation pursuant to paragraph (c)(3) of this section or any other provision of the regulations (for example, § 1.985-2(c)(2) or (3)) shall be reflected in the computation of the earnings and profits of such corporation under this section to the extent that it bears upon the federal income tax liability of the domestic shareholders of the foreign corporation. Any such action shall bind both the foreign corporation and its domestic shareholders as to the computation of the foreign corporation's earnings and profits for the taxable year of the foreign corporation for which the election is made or for which the method of accounting or taxable year is adopted or changed and in subsequent taxable years unless the Commissioner consents to a change. The preceding sentence shall apply regardless of—

(A) When the action was taken;

(B) Whether the foreign corporation was a controlled foreign corporation or a noncontrolled section 902 corporation at the time the action was taken;

(C) When ownership was acquired; or

(D) Whether the domestic shareholder received the written notice required by paragraph (c)(3)(iii) of this section.

(ii) ***Inaction or untimely action.*** In the event that action by or on behalf of the foreign corporation is not undertaken by the time specified in paragraph (c)(6) of this section and such failure is shown to the satisfaction of the Commissioner to be due to reasonable cause, such action may be undertaken during any period of at least 30 days occurring after such showing is made which the Commissioner may specify as appropriate for this purpose. In the event that action by or on behalf of the foreign corporation is not undertaken by the time specified in paragraph (c)(6) of this section and such failure is not shown to the satisfaction of the Commissioner to be due to reasonable cause, earnings and profits shall be computed as if no elections had been made and any permissible accounting methods not requiring an election and reflected in the books of account regularly maintained by the foreign corporation for the purpose of accounting to its shareholders had been adopted. Accordingly, if the earnings and profits of a noncontrolled section 902 corporation became significant for United States income tax purposes in a taxable year beginning on or before April 25, 2006, the corporation's earnings and profits shall be computed as if no elections had been made and any permissible accounting methods not requiring an election and reflected in the books of account regularly maintained by the foreign corporation for purposes of accounting to its shareholders had been adopted. Thereafter, any change in a particular accounting method or methods or taxable year may be made by, or on behalf of, the foreign corporation only with the Commissioner's consent.

(iii) ***Computation of earnings and profits by a minority shareholder prior to majority election or significant event.*** A shareholder of a foreign corporation may be required to compute the foreign corporation's earnings and profits before the foreign corporation or its controlling domestic shareholders make, or are required under this section to make, an election or adopt a method of accounting for federal income tax purposes. In such a case, the shareholder must compute earnings and profits in accordance with this section. Such computation shall be made as if no elections had been made and any permissible accounting methods not requiring an election and reflected in the books of account regularly maintained by the foreign corporation

for the purpose of accounting to its shareholders had been adopted. However, a later, properly filed, and timely election or adoption of method by, or on behalf of, the foreign corporation shall not be treated as a change in accounting method.

(5) *Controlling domestic shareholders* —

(i) ***Controlled foreign corporations.*** For purposes of this paragraph (c), the controlling domestic shareholders of a controlled foreign corporation shall be its controlling United States shareholders. The controlling United States shareholders of a controlled foreign corporation shall be those United States shareholders (as defined in section 951(b) or 953(c)) who, in the aggregate, own (within the meaning of section 958(a)) more than 50 percent of the total combined voting power of all classes of the stock of such foreign corporation entitled to vote and who undertake to act on its behalf. In the event that the United States shareholders of the controlled foreign corporation do not, in the aggregate, own (within the meaning of section 958(a)) more than 50 percent of the total combined voting power of all classes of the stock of such foreign corporation entitled to vote, the controlling United States shareholders of the controlled foreign corporation shall be all those United States shareholders who own (within the meaning of section 958(a)) stock of such corporation.

(ii) ***Noncontrolled section 902 corporations.*** For purposes of this paragraph (c), the controlling domestic shareholders of a noncontrolled section 902 corporation that is not a controlled foreign corporation shall be its majority domestic corporate shareholders. The majority domestic corporate shareholders of a noncontrolled section 902 corporation shall be those domestic corporations that meet the ownership requirements of section 902(a) with respect to the noncontrolled section 902 corporation (or to a first-tier foreign corporation that is a member of the same qualified group (as defined in section 902(b)(2)) as the noncontrolled section 902 corporation) that, in the aggregate, own directly or indirectly more than 50 percent of the combined voting power of all of the voting stock of the noncontrolled section 902 corporation that is owned directly or indirectly by all domestic corporations that meet the ownership requirements of section 902(a) with respect to the noncontrolled section 902 corporation (or a relevant first-tier foreign corporation).

(6) ***Action not required until significant.*** Notwithstanding any other provision of this paragraph, action by or on behalf of a foreign corporation (other than a foreign corporation subject to tax under section 882) to make an election or to adopt a taxable year or method of accounting shall not be required until the due date (including extensions) of the return for a controlling domestic shareholder's first taxable year with or within which ends the foreign corporation's first taxable year in which the computation of its earnings and profits is significant for United States tax purposes with respect to its controlling domestic shareholders (as defined in § 1.964-1(c)(5)). The filing of the information return required by section 6038 shall not itself constitute a significant event. For taxable years beginning after April 25, 2006, events that cause a foreign corporation's earnings and profits to have United States tax significance include, without limitation:

(A) A distribution from the foreign corporation to its shareholders with respect to their stock.

(B) An amount is includible in gross income with respect to such corporation under section 951(a).

(C) An amount is excluded from subpart F income of the foreign corporation or another foreign corporation by reason of section 952(c).

(D) Any event making the foreign corporation subject to tax under section 882.

(E) The use by the foreign corporation's controlling domestic shareholders of the tax book value (or alternative tax book value) method of allocating interest expense under section 864(e)(4).

(F) A sale or exchange of the foreign corporation's stock of the controlling domestic shareholders that results in the recharacterization of gain under section 1248.

(7) ***Revocation of election.*** Notwithstanding any other provision of this section, any election made by or on behalf of a foreign corporation (other than a foreign corporation subject to tax under section 882) may be modified or revoked by or on behalf of such corporation for the taxable year for which made whenever the consent of the Commissioner is secured for such modification or revocation, even though such election would be irrevocable but for this subparagraph.

(8) [Reserved]

(d) ***Effective/applicability dates.*** Paragraphs (c)(1)(v) through (c)(6) of this section apply to taxable years ending on or after April 20, 2009. *See* 26 CFR §§ 1.964-1T(c)(1)(v) through (c)(6) (revised as of April 1, 2009) for rules applicable to taxable years beginning after April 25, 2006, and ending before April 20, 2009. However, taxpayers may choose to apply paragraphs (c)(1)(v) through (c)(6) of this section in their entirety in lieu of 26 CFR §§ 1.964-1T(c)(1)(v) through (c)(6) for periods covered by the temporary regulations, provided that appropriate adjustments are made to eliminate duplicate benefits arising from the application of paragraphs (c)(1)(v) through (c)(6) of this section to taxable years that are not open for assessment.

[T.D. 6764, 29 FR 14628, Oct. 27, 1964]

Editorial Note: For FEDERAL REGISTER citations affecting § 1.964-1, see the List of CFR Sections Affected, which appears in the Finding Aids section of the printed volume and at *www.govinfo.gov.*

§ 1.964-2 Treatment of blocked earnings and profits.

(a) ***General rule.*** If, in accordance with paragraph (d) of this section, it is established to the satisfaction of the district director that any amount of the earnings and profits of a controlled foreign corporation for the taxable year (determined under § 1.964-1) was subject to a currency or other restriction or limitation imposed under the laws of any foreign country (within the meaning of paragraph (b) of this section) on its distribution to United States shareholders who own (within the meaning of section 958(a)) stock of such corporation, such amount shall not be included in earnings and profits for purposes of sections 952, 955 (as in effect both before and after the enactment of the Tax Reduction Act of 1975), and 956 for such taxable year. For rules governing the treatment of amounts with respect to which such restriction or limitation is removed, see paragraph (c) of this section.

(b) ***Rules of application.*** For purposes of paragraph (a) of this section—

(1) ***Period of restriction or limitation.*** An amount of earnings and profits of a controlled foreign corporation for any taxable year shall not be included in earnings and profits for purposes of sections 952, 955 (as in effect both before and after the enactment of the Tax Reduction Act of 1975), and 956 only if such amount of earnings and profits is subject to a currency or other restriction or limitation (within the meaning of subparagraph (2) of this paragraph) throughout the 150-day period beginning 90 days before the close of the taxable year and ending 60 days after the close of such taxable year.

(2) ***Restriction or limitation defined.*** Whether earnings and profits of a controlled foreign corporation are subject to a currency or other restriction or limitation imposed under the laws of a foreign country must be determined on the basis of all the facts and circumstances in each case. Generally, such a restriction or limitation must prevent—

(i) The ready conversion (directly or indirectly) of such currency into United States dollars, or into property of a type normally owned by such corporation in the operation of its business or other money which is readily convertible into United States dollars; or

(ii) The distribution of dividends by such corporation to its United States shareholders.

For purposes of this subparagraph, if a United States shareholder owns (within the meaning of section 958(a)), or is considered as owning by applying the rules of ownership of section 958(b), 80 percent or more of the total combined voting power of all classes of stock of a foreign corporation in a chain of ownership described in section 958(a), the distribution of dividends by such corporation to such shareholder will not be considered prevented solely by reason of the existence of a currency or other restriction or limitation at an intermediate tier in such chain if dividends may be distributed directly to such shareholders.

(3) ***Foreign laws.*** A currency or other restriction or limitation on the distribution of earnings and profits may be imposed in a foreign country by express statutory provisions, executive orders or decrees, rules or regulations of a governmental agency, court decisions, the actions of appropriate officials who are acting within the scope of their authority, or by any similar official action. A currency restriction will not be considered to exist unless export restrictions are also imposed which prevent the exportation of property of a type normally owned by the controlled foreign corporation in the operation of its business which could be readily converted into United States dollars.

(4) ***Voluntary restriction or limitation.*** A currency or other restriction or limitation arising from the voluntary act of the controlled foreign corporation or its United States shareholders during a taxable year beginning after December 31, 1962, will not be taken into account. For example, if a controlled foreign corporation—

(i) Issues a stock dividend which has the effect of capitalizing earnings and profits;

(ii) Elects to restrict its earnings and profits or to make certain investments as a means of avoiding current tax or securing a reduced rate of tax; or

(iii) Allocates earnings and profits to an optional or arbitrary reserve; such restriction is voluntary and will not be taken into account.

(5) ***Treatment of earnings and profits in cases of certain mandatory reserves*** —

(i) ***In general.*** If a controlled foreign corporation is required under the laws of a foreign country to establish a reserve out of earnings and profits for the taxable year, such earnings and profits shall be considered subject to a restriction or limitation by reason of such requirement only to the extent that the amount required to be included in such reserve at the close of the taxable year exceeds the accumulated earnings and profits (determined in accordance with subdivision (ii) of this subparagraph) of such corporation at the close of the preceding taxable year.

(ii) ***Determination of earnings and profits.*** For purposes of determining the accumulated earnings and profits of a controlled foreign corporation under subdivision (i) of this subparagraph, such earnings and profits shall not include any amounts which are attributable to—

(*a*) Amounts which, for any prior taxable year, have been included in the gross income of a United States shareholder under section 951(a) and have not been distributed;

(*b*) Amounts which, for any prior taxable year, have been included in the gross income of a United States shareholder of such foreign corporation under section 551(b) and have not been distributed; or

(*c*) Amounts which become subject to a voluntary restriction or limitation (within the meaning of subparagraph (4) of this paragraph) during a taxable year beginning before January 1, 1963.

The rules of this subdivision apply only in determining the accumulated earnings and profits of a controlled foreign corporation for purposes of this subparagraph. See section 959 and the regulations thereunder for limitations on the exclusion from gross income of previously taxed earnings and profits.

(6) ***Exhaustion of procedures for distributing earnings and profits.*** Earnings and profits of a controlled foreign corporation for a taxable year will not be considered subject to a currency or other restriction or limitation on their distribution unless the United States shareholders of such corporation demonstrate either that the available procedures for distributing such earnings and profits have been exhausted or that the use of such procedures will be futile. As a general rule, such procedures will be considered to have been exhausted if the foreign corporation applies for dollars (or foreign currency readily convertible into dollars) at the appropriate rate of exchange and complies with the applicable laws and regulations governing the acquisition and transfer of such currency including submission of the necessary documentation to the exchange authority. The fact that available procedures for distributing earnings and profits were exhausted without success with respect to a prior year is not, of itself, sufficient evidence that such procedures would not be successful with respect to the current taxable year.

(c) ***Removal of restriction or limitation*** —

(1) ***In general.*** If, during any taxable year, a currency or other restriction or limitation (within the meaning of paragraph (b) of this section) imposed under the laws of a foreign country on the distribution of earnings and profits of a controlled foreign corporation to its United States shareholders is removed—

(i) ***Treatment of deferred income.*** Each United States shareholder of such corporation on the last day in such year that such corporation is a controlled foreign corporation shall include in his gross income for such taxable year the amounts attributable to such earnings and profits which would have been includible in his gross income under section 951(a) for prior taxable years but for the existence of the currency or other restriction or limitation except that the amounts included under this subdivision (i) shall not exceed his pro rata share of—

(*a*) The earnings and profits upon which the restriction was removed determined on the basis of his stock ownership on the last day of the immediately preceding taxable year, and

(*b*) The applicable limitations under paragraph (c) of § 1.952-1, paragraph (b)(2) of § 1.955-1, paragraph (b)(2) of § 1.955A-1, or paragraph (b) of § 1.956-1, determined as of the last day of the immediately preceding taxable year, taking into account the provisions of subdivision (ii) of this subparagraph.

(ii) ***Treatment of earnings and profits.*** For purposes of sections 952, 955 (as in effect both before and after the enactment of the Tax Reduction Act of 1975), and 956, the earnings and profits which are no longer subject to a currency or other restriction or limitation shall be treated as included in the corporation's earnings and profits for the year in which such earnings and profits were derived.

Amounts with respect to which a currency or other restriction or limitation is removed shall be translated into United States dollars at the appropriate exchange rate for the translation period during which such currency or other restriction or limitation is removed. See paragraph (d) of § 1.964-1. Amounts with respect to which a currency or other restriction or limitation is removed shall not be taken into account in determining whether a deficiency distribution (within the meaning of § 1.963-6 (applied as if section 963 had not been repealed by the Tax Reduction Act of 1975)) is required to be made for the year in which such earnings and profits were derived.

(2) ***Removal of restriction or limitation defined.*** An amount of earnings and profits shall be considered no longer subject to a limitation or restriction if and to the extent that—

(i) Money or property in such foreign country is readily convertible into United States dollars, or into other money or property of a type normally owned by such corporation in the operation of its business which is readily convertible into United States dollars;

(ii) Notwithstanding the existence of any laws or regulations forbidding the exchange of money or property into United States dollars, conversion is actually made into United States dollars, or other money or property of a type normally owned by such corporation in the operation of its business which is readily convertible into United States dollars; or

(iii) A mandatory reserve requirement (described in paragraph (b)(5) of this section) is removed either by a change in law of the foreign country imposing such requirement or by an accumulation of earnings and profits not subject to such requirement.

(3) ***Distribution in foreign country.*** If, during any taxable year, earnings and profits previously subject to a currency or other restriction or limitation are distributed in a foreign country to one or more United States shareholders of a controlled foreign corporation directly, or indirectly through a chain of ownership described in section 958(a), such earnings and profits shall be considered no longer subject to a restriction or limitation. However, distributed amounts may be excluded from such shareholder's gross income for the taxable year of receipt if such shareholder elects a method of accounting under which the reporting of blocked foreign income is deferred until the income ceases to be blocked.

(4) ***Source of distribution.*** If, during any taxable year, earnings and profits previously subject to a currency or other restriction or limitation is distributed to one or more United States shareholders of a controlled foreign corporation directly, or indirectly through a chain of ownership described in section 958(a), the source of such distribution shall be determined in accordance with the rules of § 1.959-3.

(5) ***Illustration.*** The provisions of this paragraph may be illustrated by the following example:

> *Example.* (a) M, a United States person, owns all of the only class of stock of A Corporation, a foreign corporation incorporated under the laws of foreign country X on January 1, 1963. Both M and A Corporations use the calendar year as a taxable year and A Corporation is a controlled foreign corporation throughout the period here involved.

(b) During 1963, A Corporation derives income of $100,000 all of which is subpart F income and has earnings and profits of $100,000. Under the laws of X Country, currency cannot be exported without a license. During the last 90 days of 1963 and the first 60 days of 1964, A Corporation can obtain a license to distribute only an amount equivalent to $10,000. M must include $10,000 in his gross income for 1963 under section 951(a)(1)(A)(i) and $90,000 of A Corporation's earnings and profits for 1963 are not taken into account for purposes of sections 952, 955, and 956.

(c) During 1964, A Corporation has no income and no earnings and profits. On June 1, 1964, A Corporation converts an amount equivalent to $20,000 into property of a type normally owned by such corporation in the operation of its business which is readily convertible into United States dollars but does not distribute such amount. Corporation A must include $20,000 in its earnings and profits for 1963 for purposes of sections 952, 955, and 956. M must include $20,000 in his gross income for 1964.

(d) During 1965, A Corporation has no income and no earnings and profits. On December 15, 1965, A Corporation distributes an amount equivalent to $15,000 to M in X Country. Neither M nor A Corporation can obtain a license to export currency from X Country. In his return for the taxable year 1965, M elects a method of accounting under which the reporting of blocked foreign income is deferred until the income ceases to be blocked. Accordingly, M does not include the $15,000 in his gross income for 1965.

(e) During 1966, A Corporation has no income and no earnings and profits. On February 1, 1966, notwithstanding the laws and regulations of X Country which forbid the exchange of X Country's currency into United States dollars, M converts an amount equivalent to $15,000 into a currency which is readily convertible into United States dollars. Since the income has ceased to be blocked, M must include $15,000 in his gross income for 1966.

(d) ***Manner of claiming existence of restriction or limitation on distribution of earnings and profits.*** A United States shareholder claiming that an amount of the earnings and profits of a controlled foreign corporation for the taxable year was subject to a currency or other restriction or limitation imposed under the laws of a foreign country on its distribution shall file a statement with his return for the taxable year with or within which the taxable year of the foreign corporation ends which shall include—

(1) The name and address of the foreign corporation,

(2) A description of the classes of stock of the foreign corporation and a statement of the number of shares of each class owned (within the meaning of section 958(a)) or considered as owned (by applying the rules of ownership of section 958(b)) by the United States shareholder,

(3) A description of the currency or other restriction or limitation on the distribution of earnings and profits,

(4) The total earnings and profits of the foreign corporation for the taxable year (before any amount is excluded from earnings and profits under this section) and the United States shareholder's pro rata share of such total earnings and profits,

(5) The United States shareholder's pro rata share of the amount of earnings and profits subject to a restriction or limitation on distribution,

(6) The amounts which would be includible in the United States shareholder's gross income under section 951(a) but for the existence of the currency or other restriction or limitation,

(7) A description of the available procedures for distributing earnings and profits and a statement setting forth the steps taken to exhaust such procedures or a statement setting forth the reasons that the use of such procedures would be futile, and

(8) The amount of distributions made in a foreign country and a statement as to whether a method of accounting has been elected under which the reporting of blocked income is deferred until such income ceases to be blocked, including an identification of the taxable year and place of filing of such election.

In addition, such United States shareholder shall furnish to the district director such other information as he may require to verify the status of a currency or other restriction or limitation.

[T.D. 6892, 31 FR 11142, Aug. 23, 1966, as amended by T.D. 7545, 43 FR 19652, May 8, 1978; T.D. 7893, 48 FR 22510, May 19, 1983]

§ 1.964-3 Records to be provided by United States shareholders.

(a) ***Shareholder's responsibility for providing records.*** For purposes of verifying his income tax liability in respect of amounts includible in income under section 951 for the taxable year of a controlled foreign corporation each United State shareholder (as defined in section 951(b)) who owns (within the meaning of section 958(a)) stock of such corporation shall, within a reasonable time after demand by the district director, provide the district director—

(1) Such permanent books of account or records as are sufficient to satisfy the requirements of section 6001 and section 964(c), or true copies thereof, as are reasonably demanded, and

(2) If such books or records are not maintained in the English language, either

(i) an accurate English translation of such books or records or

(ii) the services of a qualified interpreter satisfactory to the district director.

If such books or records are being used by another district director, the United States shareholder upon whom the district director has made a demand to provide such books or records shall file a statement of such fact with his district director, indicating the location of such books or records. For the length of time the United States shareholder of a controlled foreign corporation must cause such books or records as are under his control to be retained, see paragraph (e) of § 1.6001-1.

(b) ***Records to be provided.*** Except as otherwise provided in paragraph (c) of this section, the requirements of section 6001 and section 964(c) for record keeping shall be considered satisfied if the books or records produced are sufficient to verify for the taxable year—

(1) The subpart F income of the controlled foreign corporation and, if any part of such income is excluded from the income of the United States shareholder under section 963 or section 970(a), the application of such exclusion,

(2) The previously excluded subpart F income of such corporation withdrawn from investment in less developed countries,

(3) The previously excluded subpart F income of such corporation withdrawn from investment in foreign base company shipping operations,

(4) The previously excluded export trade income of such corporation withdrawn from investment, and

(5) The increase in earnings invested by such corporation in United States property.

(c) ***Special rules.*** Verification of the subpart F income of the controlled foreign corporation for the taxable year shall not be required if—

(1) It can be demonstrated to the satisfaction of the district director that—

(i) The locus and nature of such corporation's activities were such as to make it unlikely that the foreign base company income of such corporation (determined in accordance with paragraph (c)(3) of § 1.952-3) exceeded 5 percent of its gross income (determined in accordance with paragraph (b)(1) of § 1.952-3) for the taxable year. (For taxable years to which § 1.952-3 does not apply, such amounts shall be determined under 26 CFR § 1.954-1(d)(3)(i) and (ii) (Revised as of April 1, 1975))), and

(ii) If such corporation reinsures or issues insurance or annuity contracts in connection with United States risks, the 5-percent minimum premium requirement prescribed in paragraph (b) of § 1.953-1 has not been exceeded for the taxable year, or

(2) The United States shareholder's pro rata share of such subpart F income is excluded in full from his income under section 963 and the books or records verify the application of such exclusion.

[T.D. 6824, 30 FR 6480, May 11, 1965, as amended by T.D. 7893, 48 FR 22510, May 19, 1983]

§ 1.964-4 Verification of certain classes of income.

(a) ***In general.*** The provisions of this section shall apply for purposes of determining when books or records are sufficient for purposes of § 1.964-3 to verify the classes of income described in such section.

(b) ***Subpart F income.*** Books or records sufficient to verify the subpart F income of a controlled foreign corporation must establish for the taxable year—

(1) Its gross income and deductions,

(2) The income derived from the insurance of United States risks (as provided in paragraph (c) of this section),

(3) The foreign base company income (as provided in paragraph (d) of this section), and

(4) In the case of a United States shareholder claiming the benefit of the exclusion provided in section 952(b) or the limitation provided in section 952(c)—

(i) The items of income excluded from subpart F income by paragraph (b) of § 1.952-1 as income derived from sources within the United States, the United States income tax incurred with respect thereto, and the deductions properly allocable thereto and connected therewith, and

(ii) The earnings and profits, or deficit in earnings and profits, of any foreign corporation necessary for the determinations provided in paragraphs (c) and (d) of § 1.952-1.

(c) ***Income from insurance of United States risks.*** Books or records sufficient to verify the income of a controlled foreign corporation from the insurance of United States risks must establish for the taxable year—

(1) That the 5-percent minimum premium requirement prescribed in paragraph (b) of § 1.953-1 has not been exceeded, or

(2) The taxable income, as determined under § 1.953-4 or § 1.953-5, which is attributable to the reinsuring or the issuing of any insurance or annuity contracts in connection with United States risks, as defined in § 1.953-2 or § 1.953-3.

(d) ***Foreign base company income and exclusions therefrom.*** Books or records sufficient to verify the income of a controlled foreign corporation which is foreign base company income must establish for the taxable year the following items:

(1) ***Foreign personal holding company income.*** The foreign personal holding company income to which section 954(c) and § 1.954-2 apply, for which purpose there must be established the gross income from—

(i) All rents and royalties,

(ii) Rents and royalties received in the active conduct of a trade or business from an unrelated person, as determined under section 954(c)(3)(A) and paragraph (d)(1) of § 1.954-2,

(iii) Rents and royalties received from a related person for the use of property in the country of incorporation of the controlled foreign corporation, as determined under section 954(c)(4)(C) and paragraph (e)(3) of § 1.954-2,

(iv) All dividends, interest, and except where the controlled foreign corporation is a regular dealer in stock or securities, all gains and losses from the sale or exchange of stock or securities,

(v) Dividends, interest, and gains from the sale or exchange of stock or securities, received in the conduct of a banking, financing, or insurance business from an unrelated person, as determined under section 954(c)(3)(B) and paragraph (d)(2) and (3) of § 1.954-2,

(vi) Dividends and interest received from a related corporation organized in the country of incorporation of the controlled foreign corporation, as determined under section 954(c)(4)(A) and paragraph (e)(1) of § 1.954-2,

(vii) Interest received in the conduct of a banking or other financing business from a related person, as determined under section 954(c)(4)(B) and paragraph (e)(2) of § 1.954-2,

(viii) All annuities,

(ix) All gains from commodities transactions described in section 553(a)(3),

(x) All income from estates and trusts described in section 553(a)(4),

(xi) All income from personal service contracts described in section 553(a)(5), and

(xii) All compensation for the use of corporate property by shareholders described in section 553(a)(6).

(2) ***Foreign base company sales income.*** The foreign base company sales income to which section 954(d) and § 1.954-3 apply, for which purpose there must be established the gross income from—

(i) All sales by the controlled foreign corporation of its personal property and all purchases or sales of personal property by such corporation on behalf of another person,

(ii) Purchases and/or sales of personal property in connection with transactions not involving related persons (as defined in paragraph (e)(2) of § 1.954-1),

(iii) Purchases and/or sales of personal property manufactured, produced, etc., in the country of incorporation of the controlled foreign corporation, as determined under paragraph (a)(2) of § 1.954-3,

(iv) Purchases and/or sales of personal property for use, etc., in the country of incorporation of the controlled foreign corporation, as determined under paragraph (a)(3) of § 1.954-3, and

(v) Sales of personal property manufactured or produced by the controlled foreign corporation, as determined under paragraph (a)(4) of § 1.954-3.

Where an item of income falls within more than one of subdivisions (ii) through (v) of this subparagraph, it shall be sufficient to establish that it falls within any one of them. If a branch or similar establishment is treated as a wholly owned subsidiary corporation through the application of section 954(d)(2) and paragraph (b) of § 1.954-3, the requirements of this subparagraph shall be satisfied separately for each branch or similar establishment so treated and for the remainder of the controlled foreign corporation.

(3) ***Foreign base company services income.*** The foreign base company services income to which section 954(e) and § 1.954-4 apply, for which purpose there must be established the gross income from—

(i) All services performed by the controlled foreign corporation,

(ii) Services other than those (as determined under paragraph (b) of § 1.954-4) performed for, or on behalf of, a related person,

(iii) Services performed in the country of incorporation of the controlled foreign corporation, as determined under paragraph (c) of § 1.954-4, and

(iv) Services performed in connection with the sale or exchange of, or with an offer or effort to sell or exchange, personal property manufactured, produced, etc., by the controlled foreign corporation, as determined under paragraph (d) of § 1.954-4.

Where an item of income falls within more than one of subdivisions (ii) through (iv) of this subparagraph, it shall be sufficient to establish that it falls within any one of them.

(4) ***Foreign base company oil related income.***

(i) The foreign base company oil related income described in section 954(g) and § 1.954-8, for which purpose there must be established, with respect to each foreign country, the gross income derived from—

(A) The processing of minerals extracted (by the taxpayer or by any other person) from oil or gas wells into their primary products, as determined under section 907(c)(2)(A),

(B) The transportation of such minerals or primary products, as determined under section 907(c)(2)(B),

(C) The distribution or sale of such minerals or primary products, as determined under section 907(c)(2)(C),

(D) The disposition of assets used by the taxpayer in a trade or business described in subdivision (A), (B) or (C), as determined under section 907(c)(2)(D),

(E) Dividends, interests, partnership distributions, and other amounts, as determined under section 907(c)(3).

Where an item of income falls within more than one of the listings in paragraphs (d)(4)(i)(A) through (E) of this section, it shall be sufficient to establish that it falls within any one of them.

(ii) If any of the items of income listed in paragraph (d)(4)(i) of this section arising from sources within a foreign country relates to oil, gas, or a primary product thereof and is described in section 954(g)(1)(A) or (B) and § 1.954-8(a)(1)(i) or (ii) (and, hence, is not foreign base company oil related income), then there must be established facts sufficient to verify the amount of such item of income which is not foreign base company oil related income. In this regard, the total quantities of oil, gas and primary products thereof which gave rise to such item of income and the portions of such quantities which were extracted or sold within the foreign country must be established.

(5) ***Qualified investments in less developed countries.*** For rules in effect for taxable years of foreign corporations beginning before January 1, 1976, see 26 CFR 1.964-4(d)(4) (Revised as of April 1, 1975).

(6) ***Income derived from aircraft or ships.*** For rules in effect for taxable years of foreign corporations beginning before January 1, 1976, see CFR § 1.964-4(d)(5) (Revised as of April 1, 1975).

(7) ***Foreign base company shipping income.*** The foreign base company shipping income to which section 954(f) and § 1.954-6 apply, for which purpose there must be established—

(i) Gross income derived from, or in connection with, the use (or hiring or leasing for use) of any aircraft or vessel in foreign commerce, as determined under § 1.954-6(c),

(ii) Gross income derived from, or in connection with, the performance of services directly related to the use of any aircraft or vessel in foreign commerce, as determined under § 1.954-6(d),

(iii) Gross income incidental to income described in subdivisions (i) and (ii) of this subparagraph, as determined under § 1.954-6(e),

(iv) Gross income derived from the sale, exchange, or other disposition of any aircraft or vessel used (by the seller or by a person related to the seller) in foreign commerce,

(v) Dividends, interest, and gains described in §§ 1.954-6(f) and 1.954(b) (1)(viii),

(vi) Income described in § 1.954-6(g) (relating to partnerships, trusts, etc.), and

(vii) Exchange gain, to the extent allocable to foreign base company shipping income, as determined under § 1.952-2(c)(2)(v)(*b*).

If the controlled foreign corporation has income derived from or in connection with, the use (or hiring or leasing for use) of any aircraft or vessel in foreign commerce, or derived from, or in connection with, the performance of services directly related to the use of any aircraft or vessel in foreign commerce, it shall be necessary to establish, from the books and records of the controlled foreign corporation, that such aircraft or vessel was used in foreign commerce within the meaning of subparagraphs (3) and (4) of § 1.954-6(b).

(8) ***Income on which taxes are not substantially reduced.*** The gross income excluded from foreign base company income under section 954(b)(4) and paragraph (b)(3) or (4) of § 1.954-1 in the case of a controlled foreign corporation not availed of to substantially reduce income taxes, the income or similar taxes incurred with respect thereto, and all other factors necessary to verify the application of such exclusion.

(9) ***Qualified investments in foreign base company shipping operations.*** The foreign base company shipping income that is excluded from foreign base company income under section 954(b)(2) and § 1.954-1(b)(1).

(10) ***Special rule for shipping income.*** The distributions received through a chain of ownership described in section 958(a) which are excluded from foreign base company income under section 954(b)(6)(B) and § 1.954-1(b)(2).

(11) ***Deductions.*** The deductions allocable, under paragraph (c) of § 1.954-1, to each of the classes and subclasses of gross income described in subparagraphs (1) through (9) of this paragraph.

(e) [Reserved]

(f) ***Exclusion under section 970(a).*** Books or records sufficient to verify the application for the taxable year of the exclusion provided by section 970(a) in respect of export trade income which is foreign base company income must establish for such year—

(1) That the controlled foreign corporation is an export trade corporation, as defined in section 971(a) and paragraph (a) of § 1.971-1,

(2) The export trade income, as determined under section 971(b) and paragraph (b) of § 1.971-1, which constitutes foreign base company income,

(3) The export promotion expenses, as determined under section 971(d) and paragraph (d) of § 1.971-1, which are allocable to the excludable export trade income,

(4) The gross receipts, and the gross amount on which is computed compensation included in gross receipts, from property in respect of which the excludable export trade income is derived, as described in section 970(a)(1)(B) and paragraph (b)(2)(ii) of § 1.970-1, and

(5) The increase in investments in export trade assets, as determined under section 970(c)(2) and paragraph (d)(2) of § 1.970-1.

(g-1) *Withdrawal of previously excluded subpart F income from qualified investment in less developed countries.* Books or records sufficient to verify the previously excluded subpart F income of the controlled foreign corporation withdrawn from investment in less developed countries for the taxable year must establish—

(1) The sum of the amounts of income excluded from foreign base company income under section 954(b)(1) and paragraph (b)(1) of § 1.954-1 (as in effect for taxable years beginning before January 1, 1976; see 26 CFR 1.954-1(b)(1) (Revised as of April 1, 1975)) for all prior taxable years,

(2) The sum of the amounts of previously excluded subpart F income withdrawn from investment in less developed countries for all prior taxable years, as determined under section 955(a) (as in effect before the enactment of the Tax Reduction Act of 1975) and paragraph (b) of § 1.955-1, and

(3) The amount withdrawn from investment in less developed countries for the taxable year as determined under section 955(a) (as in effect before the enactment of the Tax Reduction Act of 1975) and paragraph (b) of § 1.955-1.

(g-2) *Withdrawal of previously excluded subpart F income from investment in foreign base company shipping operations.* Books or records sufficient to verify the previously excluded subpart F income of the controlled foreign corporation withdrawn from investment in foreign base company shipping operations for the taxable year must establish—

(1) The sum of the amounts of income excluded from foreign base company income under section 954(b)(2) and paragraph (b)(1) of § 1.954-1 for all prior taxable years,

(2) The sum of the amounts of previously excluded subpart F income withdrawn from investment in foreign base company shipping operations for all prior taxable years, as determined under section 955(a) and paragraph (b) of § 1.955A-1,

(3) The amount withdrawn from investment in foreign base company shipping operations for the taxable year as determined under section 955(a) and paragraph (b) of § 1.955A-1, and

(4) If the carryover (as described in § 1.955A-1(b)(3)) of amounts relating to investments in less developed country shipping companies (as described in § 1.995-5(b)) is applicable,

(i) the amount of the corporation's qualified investments (determined under § 1.955-2 other than paragraph (b)(5) thereof) in less developed country shipping companies at the close of the last taxable year of the corporation beginning before January 1, 1976, and

(ii) the amount of the limitation with respect to previously excluded subpart F income (determined under § 1.955-1(b)(1)(i)(*b*)) for the first taxable year of the corporation beginning after December 31, 1975.

(h) ***Withdrawal of previously excluded export trade income from investment.*** Books or records sufficient to verify the previously excluded export trade income of the controlled foreign corporation withdrawn from investment for the taxable year must establish the United States shareholder's proportionate share of—

(1) The sum of the amounts by which the subpart F income of such corporation was reduced for all prior taxable years under section 970(a) and paragraph (b) of § 1.970-1,

(2) The sum of the amounts described in section 970(b)(1)(B),

(3) The sum of the amounts of previously excluded export trade income of such corporation withdrawn from investment under section 970(b) and paragraph (c) of § 1.970-1 for all prior taxable years, and

(4) The amount withdrawn from investment under section 970(b) and paragraph (c) of § 1.970-1 for the taxable year.

(i) ***Increase in earnings invested in United States property.*** Books or records sufficient to verify the increase for the taxable year in earnings invested by the controlled foreign corporations in United States property must establish—

(1) The amount of such corporation's earnings invested in United States property (as defined in section 956(b)(1) and paragraph (a) of § 1.956-2) at the close of the current and preceding taxable years, as determined under paragraph (b) of § 1.956-1,

(2) The amount of excluded property described in section 956(b)(2) and paragraph (b) of § 1.956-2 held by such corporation at the close of such years,

(3) The earnings and profits, to which section 959(c)(1) and paragraph (b)(1) of § 1.959-3 apply, distributed by such corporation during the preceding taxable year, and

(4) The amount of increase in earnings invested by such corporation in United States property which is excluded from the United States shareholder's gross income for the taxable year under section 959(a)(2) and paragraph (c) of § 1.959-1.

[T.D. 6824, 30 FR 6481, May 11, 1965, as amended by T.D. 7211, 37 FR 21436, Oct. 11, 1972; T.D. 7893, 48 FR 22511, May 19, 1983; T.D. 8331, 56 FR 2849, Jan. 25, 1991; T.D. 9849, 84 FR 9237, Mar. 14, 2019]

§ 1.964-5 Effective date of subpart F.

Sections 951 through 964 and §§ 1.951 through 1.964-4 shall apply with respect to taxable years of foreign corporations beginning after December 31, 1962, and to taxable years of United States shareholders within which or with which such taxable years of such corporations end.

[T.D. 7120, 36 FR 10862, June 4, 1971]

§ 1.965-0 Outline of section 965 regulations.

This section lists the headings for §§ 1.965-1 through 1.965-9.

§ 1.965-1 Overview, general rules, and definitions.

(a) Overview.

(1) In general.

(2) Scope.

(b) Section 965(a) inclusion amounts.

(1) Inclusion of the pro rata share of the section 965(a) earnings amount.

(2) Reduction by the allocable share of the aggregate foreign E&P deficit.

(c) Section 965(c) deduction amounts.

(d) Treatment of specified foreign corporation as a controlled foreign corporation.

(e) Special rule for certain controlled domestic partnerships.

(1) In general.

(2) Definition of a controlled domestic partnership.

(f) Definitions.

(1) 8 percent rate amount.

(2) 8 percent rate equivalent percentage.

(3) 15.5 percent rate amount.

(4) 15.5 percent rate equivalent percentage.

(5) Accounts payable.

(6) Accounts receivable.

(7) Accumulated post-1986 deferred foreign income.

(8) Aggregate foreign cash position.

(9) Aggregate foreign E&P deficit.

(10) Aggregate section 965(a) inclusion amount.

(11) Allocable share.

(12) Bona fide hedging transaction.

(13) Cash-equivalent asset.

(i) In general.

(ii) Specified commodity.

(14) Cash-equivalent asset hedging transaction.

(i) In general.

(ii) Aggregate hedging transactions.

(15) Cash measurement dates.

(16) Cash position.

(i) General rule.

(ii) Fair market value of cash-equivalent assets.

(iii) Measurement of derivative financial instruments.

(iv) Translation of cash position amounts.

(17) Deferred foreign income corporation.

(i) In general.

(ii) Priority rule.

(18) Derivative financial instrument.

(19) Domestic pass-through entity.

(20) Domestic pass-through owner.

(21) Domestic pass-through owner share.

(22) E&P deficit foreign corporation.

(i) In general.

(ii) Determination of deficit in post-1986 earnings and profits.

(23) E&P measurement dates.

(24) Final cash measurement date.

(25) First cash measurement date.

(26) Inclusion year.

(27) Net accounts receivable.

(28) Pass-through entity.

(29) Post-1986 earnings and profits.

(i) General rule.

(ii) Foreign income taxes.

(iii) Deficits in earnings and profits.

(30) Pro rata share.

(31) Second cash measurement date.

(32) Section 958(a) stock.

(33) Section 958(a) U.S. shareholder.

(34) Section 958(a) U.S. shareholder inclusion year.

(35) Section 965 regulations.

(36) Section 965(a) earnings amount.

(37) Section 965(a) inclusion.

(38) Section 965(a) inclusion amount.

(39) Section 965(a) previously taxed earnings and profits.

(40) Section 965(b) previously taxed earnings and profits.

(41) Section 965(c) deduction.

(42) Section 965(c) deduction amount.

(43) Short-term obligation.

(44) Specified E&P deficit.

(45) Specified foreign corporation.

(i) General rule.

(ii) Special attribution rule.

(A) In general.

(B) Attribution for purposes of the ten percent standard.

(iii) Passive foreign investment companies.

(46) Spot rate.

(47) United States shareholder.

(g) Examples.

(1) Example 1.

(i) Facts.

(ii) Analysis.

(2) Example 2.

(i) Facts.

(ii) Analysis.

(3) Example 3.

(i) Facts.

(ii) Analysis.

(4) Example 4.

(i) Facts.

(ii) Analysis.

(5) Example 5.

(i) Facts.

(ii) Analysis.

(A) Determination of status as a deferred foreign income corporation.

(B) Determination of status as an E&P deficit foreign corporation.

(6) Example 6.

(i) Facts.

(ii) Analysis.

(7) Example 7.

(i) Facts.

(ii) Analysis.

(8) Example 8.

(i) Facts.

(ii) Analysis.

§ 1.965-2 Adjustments to earnings and profits and basis.

(a) Scope.

(b) Determination of and adjustments to earnings and profits of a specified foreign corporation for purposes of applying sections 902, 959, 960, and 965.

(c) Adjustments to earnings and profits by reason of section 965(a).

(d) Adjustments to earnings and profits by reason of section 965(b).

(1) Adjustments to earnings and profits described in section 959(c)(2) and (c)(3) of deferred foreign income corporations.

(2) Adjustments to earnings and profits described in section 959(c)(3) of E&P deficit foreign corporations.

(i) Increase in earnings and profits by an amount equal to the portion of the section 958(a) U.S. shareholder's pro rata share of the specified E&P deficit.

(A) In general.

(B) Reduction of a qualified deficit.

(ii) Determination of portion of a section 958(a) U.S. shareholder's pro rata share of a specified E&P deficit taken into account.

(A) In general.

(B) Designation of portion of a section 958(a) U.S. shareholder's pro rata share of a specified E&P deficit taken into account.

(e) Adjustments to basis by reason of section 965(a).

(1) General rule.

(2) Section 962 election.

(f) Adjustments to basis by reason of section 965(b).

(1) In general.

(2) Election to make adjustments to basis to account for the application of section 965(b).

(i) In general.

(ii) Basis adjustments.

(A) Increase in basis with respect to a deferred foreign income corporation.

(*1*) In general.

(*2*) Limited basis adjustment.

(B) Reduction in basis with respect to an E&P deficit foreign corporation.

(*1*) In general.

(*2*) Limited basis adjustment.

(C) Section 962 election.

(iii) Rules regarding the election.

(A) Consistency requirement.

(B) Manner of making election.

(*1*) Timing.

(*i*) In general.

(*ii*) Transition rule.

(*2*) Election statement.

(g) Gain reduction rule.

(1) Reduction in gain recognized under section 961(b)(2) by reason of distributions attributable to section 965 previously taxed earnings and profits in the inclusion year.

(i) In general.

(ii) Definition of section 965 previously taxed earnings and profits.

(2) Reduction in basis by an amount equal to the gain reduction amount.

(h) Rules of application for specified basis adjustments.

(1) Timing of basis adjustments.

(2) Netting of basis adjustments.

(3) Gain recognition for reduction in excess of basis.

(4) Adjustments with respect to each share.

(i) Section 958(a) stock.

(ii) Applicable property.

(5) Stock or property for which adjustments are made.

(i) In general.

(ii) Special rule for an interest in a foreign pass-through entity.

(i) Definitions.

(1) Applicable property.

(2) Foreign pass-through entity.

(3) Property.

(j) Examples.

(1) Example 1.

(i) Facts.

(ii) Analysis.

(A) Adjustments to section 959(c) classification of earnings and profits for inclusion under section 951(a)(1)(A) without regard to section 965.

(B) Distributions between specified foreign corporations before January 1, 2018.

(C) Section 965(a) inclusion amount.

(*1*) CFC1 section 965(a) earnings amount.

(*2*) CFC2 section 965(a) earnings amount.

(*3*) Effect on earnings and profits described in section 959(c)(2) and (3).

(D) Distribution to United States shareholder.

(E) Section 902 and section 960 consequences.

(*1*) Distribution by and inclusions with respect to CFC2.

(*2*) Inclusions with respect to CFC1.

(2) Example 2.

(i) Facts.

(ii) Analysis.

(A) Adjustments to section 959(c) classification of earnings and profits for inclusion under section 951(a)(1)(A) without regard to section 965.

(B) Distributions between specified foreign corporations before January 1, 2018.

(C) Section 965(a) inclusion amount.

(*1*) CFC1 section 965(a) earnings amount.

(*2*) CFC2 section 965(a) earnings amount.

(*3*) Effect on earnings and profits described in section 959(c)(2) and (3).

(D) Distribution to United States shareholder.

(3) Example 3.

(i) Facts.

(ii) Analysis.

(A) Adjustments to section 959(c) classification of earnings and profits for inclusion under section 951(a)(1)(A) without regard to section 965.

(B) Distributions between specified foreign corporations before January 1, 2018.

(C) Section 965(a) inclusion amount.

(*1*) CFC1 section 965(a) earnings amount.

(*2*) CFC2 section 965(a) earnings amount.

(*3*) Effect on earnings and profits described in section 959(c)(2) and (3).

(D) Distribution to United States shareholder.

(4) Example 4.

(i) Facts.

(ii) Analysis.

(A) Adjustments to section 959(c) classification of earnings and profits for inclusion under section 951(a)(1)(A) without regard to section 965.

(B) Distributions between specified foreign corporations before January 1, 2018.

(C) Section 965(a) inclusion amount.

(*1*) CFC1 section 965(a) earnings amount.

(*2*) CFC2 section 965(a) earnings amount.

(*3*) Effect on earnings and profits described in section 959(c)(2) and (3).

(D) Distribution to United States shareholder.

(*1*) Distribution that is a specified payment.

(*2*) Distribution to United States shareholder.

(E) Section 902 and section 960 consequences.

(5) Example 5.

(i) Facts.

(ii) Analysis.

(A) Section 965(a) inclusion amount.

(*1*) CFC section 965(a) earnings amount.

(*2*) Effect on earnings and profits described in section 959(c)(2) and (3).

(6) Example 6.

(i) Facts.

(ii) Analysis.

(A) Adjustments to section 959(c) classification of earnings and profits for section 1248 inclusion.

(B) Section 965(a) inclusion amount.

(C) Distributions to United States shareholders.

(7) Example 7.

(i) Facts.

(ii) Analysis.

(8) Example 8.

(i) Facts.

(ii) Analysis.

(A) Application of the gain reduction rule.

(B) Adjustments to the basis of CFC1.

(9) Example 9.

(i) Facts.

(ii) Analysis.

(A) Application of the gain reduction rule.

(B) Adjustments to the basis of CFC1 and CFC2.

§ 1.965-3 Section 965(c) deductions.

(a) Scope.

(b) Rules for disregarding certain assets for determining aggregate foreign cash position.

(1) Disregard of certain obligations between related specified foreign corporations.

(2) Disregard of other assets upon demonstration of double-counting.

(3) Disregard of portion of cash position of noncorporate entities treated as specified foreign corporations.

(4) Examples.

(i) Example 1.

(A) Facts.

(B) Analysis.

(*1*) Loan from CFC1 to CFC2.

(*2*) Account receivable of CFC1 held by CFC2.

(*3*) Loan from CFC1 to CFC3.

(ii) Example 2.

(A) Facts.

(B) Analysis.

(iii) Example 3.

(A) Facts.

(B) Analysis.

(iv) Example 4.

(A) Facts.

(B) Analysis.

(v) Example 5.

(A) Facts.

(B) Analysis.

(*1*) Treatment of PS1.

(*2*) Treatment of PS2.

(c) Determination of aggregate foreign cash position for a section 958(a) U.S. shareholder inclusion year.

(1) Single section 958(a) U.S. shareholder inclusion year.

(2) Multiple section 958(a) U.S. shareholder inclusion years.

(i) Allocation to first section 958(a) U.S. shareholder inclusion year.

(ii) Allocation to succeeding section 958(a) U.S. shareholder inclusion years.

(3) Estimation of aggregate foreign cash position.

(4) Examples.

(i) Example 1.

(A) Facts.

(B) Analysis.

(ii) Example 2.

(A) Facts.

(B) Analysis.

(d) Increase of income by section 965(c) deduction of an expatriated entity.

(1) In general.

(2) Definition of expatriated entity.

(3) Definition of surrogate foreign corporation.

(e) Section 962 election.

(1) In general.

(2) Example.

(i) Facts.

(ii) Analysis.

(f) Treatment of section 965(c) deduction under certain provisions of the Internal Revenue Code.

(1) Section 63(d).

(2) Sections 705, 1367, and 1368.

(i) Adjustments to basis.

(ii) S corporation accumulated adjustments account.

(iii) Example.

(A) Facts.

(B) Analysis.

(3) Section 1411.

(4) Section 4940.

(g) Domestic pass-through entities.

§ 1.965-4 Disregard of certain transactions.

(a) Scope.

(b) Transactions undertaken with a principal purpose of changing the amount of a section 965 element.

(1) General rule.

(2) Presumptions and exceptions for the application of the general rule.

(i) Overview.

(ii) Definitions.

(A) Relatedness.

(B) Transfer.

(*1*) In general.

(*2*) Indirect transfer.

(iii) Cash reduction transactions.

(A) General rule.

(B) Per se rules for certain distributions.

(iv) E&P reduction transactions.

(A) General rule.

(*1*) Definition of pro rata share reduction transaction.

(2) Definition of E&P deficit transaction.

(B) Per se rule for internal group transactions.

(C) Example.

(1) Facts.

(2) Analysis.

(c) Disregard of certain changes in method of accounting and entity classification elections.

(1) Changes in method of accounting.

(2) Entity classification elections.

(d) Definition of a section 965 element.

(e) Rules for applying paragraphs (b) and (c) of this section.

(1) Determination of whether there is a change in the amount of a section 965 element.

(2) Treatment of domestic pass-through owners as United States shareholders.

(3) Exception for certain incorporation transactions.

(i) In general.

(ii) Aggregate foreign cash position.

(4) Consequences of liquidation.

(i) In general.

(ii) Specified liquidation date.

(f) Disregard of certain transactions occurring between E&P measurement dates.

(1) Disregard of specified payments.

(2) Definition of specified payment.

(3) Non-application of disregard rule.

(4) Examples.

(i) Example 1.

(A) Facts.

(B) Analysis.

(ii) Example 2.

(A) Facts.

(B) Analysis.

(iii) Example 3.

(A) Facts.

(B) Analysis.

(iv) Example 4.

(A) Facts.

(B) Analysis.

(v) Example 5.

(A) Facts.

(B) Analysis.

(vi) Example 6.

(A) Facts.

(B) Analysis.

§ 1.965-5 Allowance of credit or deduction for foreign income taxes.

(a) Scope.

(b) Rules for foreign income taxes paid or accrued.

(c) Rules for foreign income taxes treated as paid or accrued.

(1) Disallowed credit.

(i) In general.

(ii) Foreign income taxes deemed paid under section 960(a)(3) (as in effect on December 21, 2017).

(iii) [Reserved]

(2) Disallowed deduction.

(3) Coordination with section 78.

(i) In general.

(ii) Domestic corporation that is a domestic pass-through owner.

(d) Applicable percentage.

(1) In general.

(2) No section 965(a) inclusion amount.

(3) Applicable percentage for domestic pass-through owners.

(4) Applicable percentage with respect to certain distributions of previously taxed earnings and profits.

§ 1.965-6 Computation of foreign income taxes deemed paid and allocation and apportionment of deductions.

(a) Scope.

(b) Computation of foreign income taxes deemed paid.

(1) In general.

(2) Dividend or inclusion in excess of post-1986 undistributed earnings.

(3) Treatment of adjustment under section 965(b)(4)(B).

(4) Section 902 fraction.

(c) Allocation and apportionment of deductions.

(d) Hovering deficits.

§ 1.965-7 Elections, payment, and other special rules.

(a) Scope.

(b) Section 965(h) election.

(1) In general.

(i) Amount of installments.

(ii) Increased installments due to a deficiency or a timely filed or amended return.

(A) In general.

(B) Timing.

(C) Exception for negligence, intentional disregard, or fraud.

(iii) Due date of installments.

(A) In general.

(B) Extension for specified individuals.

(2) Manner of making election.

(i) Eligibility.

(ii) Timing.

(iii) Election statement.

(3) Acceleration of payment.

(i) Acceleration.

(ii) Acceleration events.

(iii) Eligible section 965(h) transferee exception.

(A) In general.

(*1*) Requirement to have a covered acceleration event.

(*2*) Requirement to enter into a transfer agreement.

(B) Transfer agreement.

(*1*) Eligibility.

(*2*) Filing requirements.

(*i*) In general.

(*ii*) Transition rule.

(*3*) Signature requirement.

(*4*) Terms of agreement.

(*5*) Consolidated groups.

(*6*) Leverage ratio.

(C) Consent of Commissioner.

(*1*) In general.

(*2*) Material misrepresentations and omissions.

(D) Effect of assumption.

(*1*) In general.

(*2*) Eligible section 965(h) transferor liability.

(E) Qualifying consolidated group member transaction.

(*1*) Definition of qualifying consolidated group member transaction.

(*2*) Definition of qualified successor.

(*3*) Departure of multiple members of a consolidated group.

(c) Section 965(i) election.

(1) In general.

(2) Manner of making election.

(i) Eligibility.

(ii) Timing.

(iii) Election statement.

(3) Triggering events.

(i) In general.

(ii) Triggering events.

(iii) Partial transfers.

(iv) Eligible section 965(i) transferee exception.

(A) In general.

(*1*) Requirement to have a covered triggering event.

(*2*) Requirement to enter into a transfer agreement.

(B) Transfer agreement.

(*1*) Eligibility.

(*2*) Filing requirements.

(*i*) In general.

(*ii*) Transition rule.

(*iii*) Death of eligible section 965(i) transferor.

(*3*) Signature requirement.

(*4*) Terms of agreement.

(*5*) Special rule in the case of death of eligible section 965(i) transferor.

(*6*) Leverage ratio.

(C) Consent of Commissioner.

(*1*) In general.

(*2*) Material misrepresentations and omissions.

(D) Effect of assumption.

(*1*) In general.

(*2*) Eligible section 965(i) transferor liability.

(v) Coordination with section 965(h) election.

(A) In general.

(B) Timing for election.

(C) Due date for installment.

(D) Limitation.

(*1*) In general.

(*2*) Manner of obtaining consent.

(*i*) In general.

(*ii*) Transition rule.

(*3*) Signature requirement.

(*4*) Terms of agreement.

(*5*) Consent of Commissioner.

(*i*) In general.

(*ii*) Material misrepresentations and omissions.

(*6*) Leverage ratio.

(4) Joint and several liability.

(5) Extension of limitation on collection.

(6) Annual reporting requirement.

(i) In general.

(ii) Failure to report.

(d) Section 965(m) election and special rule for real estate investment trusts.

(1) In general.

(2) Inclusion schedule for section 965(m) election.

(3) Manner of making election.

(i) Eligibility.

(ii) Timing.

(iii) Election statement.

(4) Coordination with section 965(h).

(5) Acceleration of inclusion.

(6) Treatment of section 965(a) inclusions of a real estate investment trust.

(e) Section 965(n) election.

(1) In general.

(i) General rule.

(ii) Applicable amount for section 965(n) election.

(iii) Scope of section 965(n) election.

(iv) [Reserved]

(2) Manner of making election.

(i) Eligibility.

(ii) Timing.

(iii) Election statement.

(f) Election to use alternative method for calculating post-1986 earnings and profits.

(1) Effect of election for specified foreign corporations that do not have a 52-53-week taxable year.

(2) Effect of election for specified foreign corporations that have a 52-53-week taxable year.

(3) Computation of post-1986 earnings and profits using alternative method.

(4) Definitions.

(i) 52-53-week taxable year.

(ii) Annualized earnings and profits amount.

(iii) Daily earnings amount.

(iv) Notional measurement date.

(5) Manner of making election.

(i) Eligibility.

(ii) Timing.

(iii) Election statement.

(6) Examples.

(i) Example 1.

(A) Facts.

(B) Analysis.

(ii) Example 2.

(A) Facts.

(B) Analysis.

(g) Definitions.

(1) Deferred net tax liability.

(2) REIT section 965 amounts.

(3) Section 965(h) election.

(4) Section 965(h) net tax liability.

(5) Section 965(i) election.

(6) Section 965(i) net tax liability.

(7) Section 965(m) election.

(8) Section 965(n) election.

(9) Specified individual.

(10) Total net tax liability under section 965.

(i) General rule.

(ii) Net income tax.

(iii) Foreign tax credits.

§ 1.965-8 Affiliated groups (including consolidated groups).

(a) Scope.

(b) Reduction of E&P net surplus shareholder's pro rata share of the section 965(a) earnings amount of a deferred foreign income corporation by the allocable share of the applicable share of the aggregate unused E&P deficit.

(1) In general.

(2) Consolidated group as part of an affiliated group.

(c) Designation of portion of excess aggregate foreign E&P deficit taken into account.

(1) In general.

(2) Consolidated group as part of an affiliated group.

(d) [Reserved]

(1) [Reserved]

(2) Consolidated groups.

(e) Treatment of a consolidated group as a single section 958(a) U.S. shareholder or a single person.

(1) In general.

(2) Limitation.

(3) Determination of section 965(c) deduction amount.

(f) Definitions.

(1) Aggregate unused E&P deficit.

(i) In general.

(ii) Reduction with respect to E&P net deficit shareholders that are not wholly owned by the affiliated group.

(2) Allocable share.

(3) Applicable share.

(4) Consolidated group aggregate foreign cash position.

(5) E&P net deficit shareholder.

(6) E&P net surplus shareholder.

(7) Excess aggregate foreign E&P deficit.

(8) Group cash ratio.

(9) Group ownership percentage.

(g) Examples.

(1) Example 1.

(i) Facts.

(A) In general.

(B) Facts relating to section 965.

(ii) Analysis.

(A) Section 965(a) inclusion amounts before application of section 965(b)(5).

(B) Application of section 965(b)(5).

(*1*) Determination of E&P net surplus shareholders and E&P net deficit shareholders.

(*2*) Determining section 965(a) inclusion amounts under section 965(b)(5).

(C) Aggregate foreign cash position.

(D) Section 965(c) deduction amount.

(2) Example 2.

(i) Facts.

(ii) Analysis.

(A) Section 965(a) inclusion amount.

(*1*) Single section 958(a) U.S. shareholder treatment.

(*2*) Determination of inclusion amount.

(B) Consolidated group aggregate foreign cash position.

(C) Section 965(a) deduction amount.

§ 1.965-9 Applicability dates.

(a) In general.

(b) Applicability dates for rules disregarding certain transactions.

[T.D. 9846, 84 FR 1875, Feb. 5, 2019, as amended by T.D. 9846, 84 FR 14260, Apr. 10, 2019]

§ 1.965-1 Overview, general rules, and definitions.

(a) ***Overview*** —

(1) ***In general.*** This section provides general rules and definitions under section 965. Section 1.965-2 provides rules relating to adjustments to earnings and profits and basis to determine and account for the application of section 965 and a rule that limits the amount of gain recognized under section 961(b)(2) by reason of distributions attributable to section 965 previously taxed earnings and profits (as defined in § 1.965-2(g)(1)(ii)) in the inclusion year. Section 1.965-3 provides rules regarding the determination of section 965(c) deductions. Section 1.965-4 sets forth rules that disregard certain transactions for purposes of section 965. Sections 1.965-5 and 1.965-6 provide rules with respect to foreign tax credits. Section 1.965-7 provides rules regarding elections and payments. Section 1.965-8 provides rules regarding affiliated groups, including consolidated groups. Section 1.965-9 provides dates of applicability. *See also* §§ 1.962-1 and 1.962-2 (providing rules regarding the application of section 962) and 1.986(c)-1 (providing rules regarding the application of section 986(c)).

(2) ***Scope.*** Paragraph (b) of this section provides the general rules concerning section 965(a) inclusion amounts. Paragraph (c) of this section provides the general rule concerning section 965(c) deduction amounts. Paragraph (d) of this section provides a rule for specified foreign corporations that are not controlled foreign corporations. Paragraph (e) of this section treats certain controlled domestic partnerships as foreign partnerships for purposes of section 965. Paragraph (f) of this section provides definitions applicable for the section 965 regulations and §§ 1.962-1, 1.962-2, and 1.986(c)-1. Paragraph (g) of this section contains examples illustrating the general rules and definitions set forth in this section.

(b) ***Section 965(a) inclusion amounts*** —

(1) ***Inclusion of the pro rata share of the section 965(a) earnings amount.*** For an inclusion year of a deferred foreign income corporation, the subpart F income of the deferred foreign income corporation (as otherwise determined for the inclusion year under section 952 and § 1.952-1) is increased by the section 965(a) earnings amount of the deferred foreign income corporation. *See* section 965(a). Accordingly, a section 958(a) U.S. shareholder with respect to a deferred foreign income corporation generally includes in gross income under section 951(a)(1) for the section 958(a) U.S. shareholder inclusion year its pro rata share of the section 965(a) earnings amount of the deferred foreign income corporation, translated (if necessary) into U.S. dollars using the spot rate on December 31, 2017, and subject to reduction under section 965(b), paragraph (b)(2) of this section, and § 1.965-8(b). The amount of the section 958(a) U.S. shareholder's inclusion with respect to a deferred foreign income corporation as a result of section 965(a) and this paragraph (b)(1), as reduced under section 965(b), paragraph (b)(2) of this section, and § 1.965-8(b), as applicable, is referred to as the *section 965(a) inclusion amount.* Neither the section 965(a) earnings amount nor the section 965(a) inclusion amount is subject to the rules or limitations in section 952 or limited by the accumulated earnings and profits of the deferred foreign income corporation on the date of the inclusion.

(2) ***Reduction by the allocable share of the aggregate foreign E&P deficit.*** For purposes of determining a section 958(a) U.S. shareholder's section 965(a) inclusion amount with respect to a deferred foreign income corporation, the U.S. dollar amount of the section 958(a) U.S. shareholder's pro rata share of the section 965(a) earnings amount of the deferred foreign income corporation, translated (if necessary) into U.S. dollars using the spot rate on December 31, 2017, is reduced by the deferred foreign income corporation's allocable share of the section 958(a) U.S. shareholder's aggregate foreign E&P deficit. *See* section 965(b). If the section 958(a) U.S. shareholder is a member of a consolidated group, under § 1.965-8(e), all section 958(a) U.S. shareholders that are members of the consolidated group are treated as a single section 958(a) U.S. shareholder for purposes of this paragraph (b)(2).

(c) ***Section 965(c) deduction amounts.*** For a section 958(a) U.S. shareholder inclusion year, a section 958(a) U.S. shareholder is generally allowed a deduction in an amount equal to the section 965(c) deduction amount.

(d) ***Treatment of specified foreign corporation as a controlled foreign corporation.*** A specified foreign corporation described in section 965(e)(1)(B) and paragraph (f)(45)(i)(B) of this section that is not otherwise a controlled foreign corporation is treated as a controlled foreign corporation solely for purposes of paragraph (b) of this section and sections 951, 961, and § 1.1411-10. *See* 965(e)(2).

(e) ***Special rule for certain controlled domestic partnerships*** —

(1) ***In general.*** For purposes of the section 965 regulations, a controlled domestic partnership is treated as a foreign partnership for purposes of determining the section 958(a) U.S. shareholder of a specified foreign corporation and the section 958(a) stock of the specified foreign corporation owned by the section 958(a) U.S. shareholder if the following conditions are satisfied—

(i) Without regard to this paragraph (e), the controlled domestic partnership is a section 958(a) U.S. shareholder of the specified foreign corporation and thus owns section 958(a) stock of the specified foreign corporation (*tested section 958(a) stock*);

(ii) If the controlled domestic partnership (and all other controlled domestic partnerships in the chain of ownership of the specified foreign corporation) were treated as foreign—

(A) The specified foreign corporation would continue to be a specified foreign corporation; and

(B) At least one United States shareholder of the specified foreign corporation—

(1) Would be treated as a section 958(a) U.S. shareholder of the specified foreign corporation; and

(2) Would be treated as owning (within the meaning of section 958(a)) tested section 958(a) stock of the specified foreign corporation through another foreign corporation that is a direct or indirect partner in the controlled domestic partnership.

(2) ***Definition of a controlled domestic partnership.*** For purposes of paragraph (e)(1) of this section, the term *controlled domestic partnership* means a domestic partnership that is controlled by a United States shareholder described in paragraph (e)(1)(ii)(B) of this section and persons related to the United States shareholder. For purposes of this paragraph (e)(2), control is determined based on all the facts and circumstances, except that a partnership will be deemed to be controlled by a United States shareholder and related persons if those persons, in the aggregate, own (directly or indirectly through one or more partnerships) more than 50 percent of the interests in the partnership capital or profits. For purposes of this paragraph (e)(2), a related person is, with respect to a United States shareholder, a person that is related (within the meaning of section 267(b) or 707(b)(1)) to the United States shareholder.

(f) ***Definitions.*** This paragraph (f) provides definitions that apply for purposes of the section 965 regulations and §§ 1.962-1, 1.962-2, and 1.986(c)-1. Unless otherwise indicated, all amounts are expressed as positive numbers.

(1) ***8 percent rate amount.*** The term *8 percent rate amount* means, with respect to a section 958(a) U.S. shareholder and a section 958(a) U.S. shareholder inclusion year, the excess, if any, of the section 958(a) U.S. shareholder's aggregate section 965(a) inclusion amount for the section 958(a) U.S. shareholder inclusion year over the amount of the section 958(a) U.S. shareholder's aggregate foreign cash position for the section 958(a) U.S. shareholder inclusion year as determined under § 1.965-3(c).

(2) ***8 percent rate equivalent percentage.*** The term *8 percent rate equivalent percentage* means, with respect to a section 958(a) U.S. shareholder and a section 958(a) U.S. shareholder inclusion year, the percentage that would result in the 8 percent rate amount being subject to an 8 percent rate of tax determined by only taking into account a deduction equal to such percentage of such amount and the highest rate of tax specified in section 11 for the section 958(a) U.S. shareholder inclusion year. In the case of a section 958(a) U.S. shareholder inclusion year of a section 958(a) U.S. shareholder to which section 15 applies, the highest rate of tax under section 11 before the effective date of the change in rates and the highest rate of tax under section 11 after the effective date of such change will each be taken into account under the preceding sentence in the same proportions as the portion of the section 958(a) U.S. shareholder inclusion year that is before and after such effective date, respectively.

(3) ***15.5 percent rate amount.*** The term *15.5 percent rate amount* means, with respect to a section 958(a) U.S. shareholder and a section 958(a) U.S. shareholder inclusion year, the amount of the section 958(a) U.S. shareholder's aggregate foreign cash position for the section 958(a) U.S. shareholder inclusion year as determined under § 1.965-3(c) to the extent it does not exceed the section 958(a) U.S. shareholder's aggregate section 965(a) inclusion amount for the section 958(a) U.S. shareholder inclusion year.

(4) ***15.5 percent rate equivalent percentage.*** The term *15.5 percent rate equivalent percentage,* with respect to a section 958(a) U.S. shareholder and a section 958(a) U.S. shareholder inclusion year, has the meaning provided for the term "8 percent rate equivalent percentage" applied by substituting "15.5 percent rate amount" for "8 percent rate amount" and "15.5 percent rate of tax" for "8 percent rate of tax."

(5) ***Accounts payable.*** The term *accounts payable* means payables arising from the purchase of property described in section 1221(a)(1) or section 1221(a)(8) or the receipt of services from vendors or suppliers, provided the payables have a term upon issuance of less than one year.

(6) ***Accounts receivable.*** The term *accounts receivable* means receivables described in section 1221(a)(4) that have a term upon issuance of less than one year.

(7) ***Accumulated post-1986 deferred foreign income*** —

(i) ***In general.*** The term *accumulated post-1986 deferred foreign income* means, with respect to a specified foreign corporation, the post-1986 earnings and profits of the specified foreign corporation except to the extent such earnings and profits—

(A) Are attributable to income of the specified foreign corporation that is effectively connected with the conduct of a trade or business within the United States and subject to tax under chapter 1;

(B) If distributed, would, in the case of a controlled foreign corporation, be excluded from the gross income of a United States shareholder under section 959; or

(C) If distributed, would, in the case of a controlled foreign corporation that has shareholders that are not United States shareholders on an E&P measurement date, be excluded from the gross income of such shareholders under section 959 if such shareholders were United States shareholders, determined by applying the principles of Revenue Ruling 82-16, 1982-1 C.B. 106.

(ii) ***Earnings and profits attributable to subpart F income in the same taxable year as an E&P measurement date.*** For purposes of determining the accumulated post-1986 deferred foreign income of a specified foreign corporation as of an E&P measurement date, earnings and profits of the specified foreign corporation that are or would be, applying the principles of Revenue Ruling 82-16, 1982-1 C.B. 106, described in section 959(c)(2) by reason of subpart F income (as defined in section 952 without regard to section 965(a)) are described in section 965(d)(2)(B) and paragraph (f)(7)(i)(B) or (f)(7)(i)(C) of this section only to the extent that such income has been accrued by the specified foreign corporation as of the E&P measurement date. For rules regarding the interaction of sections 951, 956, 959, and 965 generally, see § 1.965-2(b).

(8) ***Aggregate foreign cash position*** —

(i) ***In general.*** The term *aggregate foreign cash position* means, with respect to a section 958(a) U.S. shareholder that is not a member of a consolidated group, the greater of—

(A) The aggregate of the section 958(a) U.S. shareholder's pro rata share of the cash position of each specified foreign corporation determined as of the final cash measurement date of the specified foreign corporation; or

(B) One half of the sum of—

(1) The aggregate described in paragraph (f)(8)(i)(A) of this section determined as of the second cash measurement date of each specified foreign corporation, plus

(2) The aggregate described in paragraph (f)(8)(i)(A) of this section determined as of the first cash measurement date of each specified foreign corporation.

(ii) ***Other rules.*** For rules for determining the aggregate foreign cash position for a section 958(a) U.S. shareholder inclusion year of the section 958(a) U.S. shareholder, see § 1.965-3(c). For the rule for determining the aggregate foreign cash position of a section 958(a) U.S. shareholder that is a member of a consolidated group, see § 1.965-8(e)(3). For rules disregarding certain assets for purposes of determining the aggregate foreign cash position of a section 958(a) U.S. shareholder, see § 1.965-3(b).

(9) ***Aggregate foreign E&P deficit.*** The term *aggregate foreign E&P deficit* means, with respect to a section 958(a) U.S. shareholder, the lesser of—

(i) The aggregate of the section 958(a) U.S. shareholder's pro rata share of the specified E&P deficit of each E&P deficit foreign corporation, translated (if necessary) into U.S. dollars using the spot rate on December 31, 2017, or

(ii) The aggregate of the section 958(a) U.S. shareholder's pro rata share of the section 965(a) earnings amount of each deferred foreign income corporation, translated (if necessary) into U.S. dollars using the spot rate on December 31, 2017.

(10) ***Aggregate section 965(a) inclusion amount.*** The term *aggregate section 965(a) inclusion amount* means, with respect to a section 958(a) U.S. shareholder, the sum of all of the section 958(a) U.S. shareholder's section 965(a) inclusion amounts.

(11) ***Allocable share.*** The term *allocable share* means, with respect to a deferred foreign income corporation and an aggregate foreign E&P deficit of a section 958(a) U.S. shareholder, the product of the aggregate foreign E&P deficit and the ratio determined by dividing—

(i) The section 958(a) U.S. shareholder's pro rata share of the section 965(a) earnings amount of the deferred foreign income corporation, translated (if necessary) into U.S. dollars using the spot rate on December 31, 2017, by

(ii) The amount described in paragraph (f)(9)(ii) of this section with respect to the section 958(a) U.S. shareholder.

(12) ***Bona fide hedging transaction.*** The term *bona fide hedging transaction* means a hedging transaction that meets (or that would meet if the specified foreign corporation were a controlled foreign corporation) the requirements of a bona fide hedging transaction described in § 1.954-2(a)(4)(ii), except that in the case of a specified foreign corporation that is not a controlled foreign corporation, the identification requirements of § 1.954-2(a)(4)(ii)(B) do not apply.

(13) ***Cash-equivalent asset*** —

(i) ***In general.*** The term *cash-equivalent asset* means any of the following assets—

(A) Personal property which is of a type that is actively traded and for which there is an established financial market, other than a specified commodity;

(B) Commercial paper, certificates of deposit, the securities of the Federal government and of any State or foreign government;

(C) Any foreign currency;

(D) A short-term obligation; or

(E) Derivative financial instruments, other than bona fide hedging transactions.

(ii) ***Specified commodity.*** The term *specified commodity* means a commodity held, or, for purposes of paragraph (f)(18) of this section, to be held, by a specified foreign corporation that, in the hands of the specified foreign corporation, is property described in section 1221(a)(1) or 1221(a)(8). This paragraph (f)(13)(ii) does not apply with respect to commodities held by a specified foreign corporation in its capacity as a dealer or trader in commodities.

(14) ***Cash-equivalent asset hedging transaction*** —

(i) ***In general.*** The term *cash-equivalent asset hedging transaction* means a bona fide hedging transaction identified on a specified foreign corporation's books and records as hedging a cash-equivalent asset.

(ii) ***Aggregate hedging transactions.*** For purposes of paragraph (f)(14)(i) of this section, the amount of a bona fide hedging transaction described in § 1.1221-2(c)(3) (an *aggregate hedging transaction*) that is treated as a cash-equivalent asset hedging transaction is the amount that bears the same proportion to the fair market value of the aggregate hedging transaction as the value of the cash-equivalent assets being hedged by the aggregate hedging transaction bears to the value of all assets being hedged by the aggregate hedging transaction.

(15) ***Cash measurement dates.*** The term *cash measurement dates* means, with respect to a specified foreign corporation, the first cash measurement date, the second cash measurement date, and the final cash measurement date, collectively, and each a *cash measurement date.*

(16) ***Cash position*** —

(i) ***General rule.*** The term *cash position* means, with respect to a specified foreign corporation, the sum of—

(A) Cash held by the corporation;

(B) The net accounts receivable of the corporation; and

(C) The fair market value of the cash-equivalent assets held by the corporation.

(ii) ***Fair market value of cash-equivalent assets.*** For purposes of determining the fair market value of a cash-equivalent asset of a specified foreign corporation, the value of the cash-equivalent asset must be adjusted by the fair market value of any cash- equivalent asset hedging transaction with respect to the cash-equivalent asset, but only to the extent that the cash-equivalent asset hedging transaction does not reduce the fair market value of the cash-equivalent asset below zero.

(iii) ***Measurement of derivative financial instruments.*** The amount of derivative financial instruments taken into account in determining the cash position of a specified foreign corporation is the aggregate fair market value of its derivative financial instruments that constitute cash-equivalent assets, provided such amount is not less than zero.

(iv) ***Translation of cash position amounts.*** The cash position of a specified foreign corporation with respect to a cash measurement date must be expressed in U.S. dollars. For this purpose, the amounts described in paragraph (f)(16)(i) of this section must be translated (if necessary) into U.S. dollars using the spot rate on the relevant cash measurement date.

(17) ***Deferred foreign income corporation*** —

(i) ***In general.*** The term *deferred foreign income corporation* means a specified foreign corporation that has accumulated post-1986 deferred foreign income greater than zero as of an E&P measurement date.

(ii) ***Priority rule.*** If a specified foreign corporation satisfies the definition of a deferred foreign income corporation under section 965(d)(1) and paragraph (f)(17)(i) of this section, it is classified solely as a deferred foreign income corporation and not also as an E&P deficit foreign corporation even if it otherwise satisfies the requirements of section 965(b)(3)(B) and paragraph (f)(22) of this section.

(18) ***Derivative financial instrument.*** The term *derivative financial instrument* includes a financial instrument that is one of the following—

(i) A notional principal contract,

(ii) An option contract,

(iii) A forward contract, other than a forward contract with respect to a specified commodity (as defined in paragraph (f)(13)(ii) of this section), but solely to the extent that the specified foreign corporation identified, or could have identified, the forward contract as a hedging transaction (within the meaning of § 1.1221-2(b)) with respect to one or more specified commodities held by the specified foreign corporation,

(iv) A futures contract,

(v) A short position in securities or commodities, other than a forward contract with respect to a specified commodity, but solely to the extent that the specified foreign corporation identified, or could have identified, the forward contract as a hedging transaction (within the meaning of § 1.1221-2(b)) with respect to one or more specified commodities held by the specified foreign corporation, or

(vi) Any financial instrument similar to one described in paragraphs (f)(18)(i) through (v) of this section.

(19) ***Domestic pass-through entity.*** The term *domestic pass-through entity* means a pass-through entity that is a United States person (as defined in section 7701(a)(30)).

(20) ***Domestic pass-through owner.*** The term *domestic pass-through owner* means, with respect to a domestic pass-through entity, a United States person (as defined in section 7701(a)(30)) that is a partner, shareholder, beneficiary, grantor, or owner, as the case may be, in the domestic pass-through entity. Notwithstanding the preceding sentence, the term does not include a partner, shareholder, beneficiary, grantor, or owner of the domestic pass-through entity that is itself a domestic pass-through entity but does include any other United States person that is an indirect partner, shareholder, beneficiary, grantor, or owner of the domestic pass-through entity through one or more other pass-through entities.

(21) ***Domestic pass-through owner share.*** The term *domestic pass-through owner share* means, with respect to a domestic pass-through owner and a domestic pass-through entity, the domestic pass-through owner's share of the aggregate section 965(a) inclusion amount and the section 965(c) deduction amount, as applicable, of the domestic pass-through entity, including the domestic pass-through owner's share of the aggregate section 965(a) inclusion amount and section 965(c) deduction amount, as applicable, of a domestic pass-through entity owned indirectly by the domestic pass-through owner through one or more other pass-through entities.

(22) ***E&P deficit foreign corporation*** —

(i) ***In general.*** The term *E&P deficit foreign corporation* means, with respect to a section 958(a) U.S. shareholder, a specified foreign corporation, other than a deferred foreign income corporation, if, as of November 2, 2017—

(A) The specified foreign corporation had a deficit in post-1986 earnings and profits,

(B) The corporation was a specified foreign corporation, and

(C) The shareholder was a United States shareholder of the corporation.

(ii) ***Determination of deficit in post-1986 earnings and profits.*** In the case of a specified foreign corporation that has post-1986 earnings and profits that include earnings and profits described in section 959(c)(1) or 959(c)(2) (or both) and a deficit in earnings and profits (including hovering deficits, as defined in § 1.367(b)-7(d)(2)(i)), the specified foreign corporation has a deficit in post-1986 earnings and profits described in paragraph (f)(22)(i)(A) of this section only to the extent the deficit in post-1986 earnings and profits exceeds the aggregate of its post-1986 earnings and profits described in section 959(c)(1) and 959(c)(2).

(23) ***E&P measurement dates.*** The term *E&P measurement dates* means November 2, 2017, and December 31, 2017, collectively, and each an *E&P measurement date.*

(24) ***Final cash measurement date.*** The term *final cash measurement date* means, with respect to a specified foreign corporation, the close of the last taxable year of the specified foreign corporation that begins before January 1, 2018, and ends on or after November 2, 2017, if any.

(25) ***First cash measurement date.*** The term *first cash measurement date* means, with respect to a specified foreign corporation, the close of the last taxable year of the specified foreign corporation that ends after November 1, 2015, and before November 2, 2016, if any.

(26) ***Inclusion year.*** The term *inclusion year* means, with respect to a deferred foreign income corporation, the last taxable year of the deferred foreign income corporation that begins before January 1, 2018.

(27) ***Net accounts receivable.*** The term *net accounts receivable* means, with respect to a specified foreign corporation, the excess (if any) of—

(i) The corporation's accounts receivable, over

(ii) The corporation's accounts payable (determined consistent with the rules of section 461).

(28) ***Pass-through entity.*** The term *pass-through entity* means a partnership, S corporation, or any other person (whether domestic or foreign) other than a corporation to the extent that the income or deductions of the person are included in the income of one or more direct or indirect owners or beneficiaries of the person. For example, if a domestic trust is subject to federal income tax on a

portion of its section 965(a) inclusion amount and its domestic pass-through owners are subject to tax on the remaining portion, the domestic trust is treated as a domestic pass-through entity with respect to such remaining portion.

(29) ***Post-1986 earnings and profits*** —

(i) ***General rule.*** The term *post-1986 earnings and profits* means, with respect to a specified foreign corporation and an E&P measurement date, the earnings and profits (including earnings and profits described in section 959(c)(1) and 959(c)(2)) of the specified foreign corporation (computed in accordance with sections 964(a) and 986, subject to § 1.965-4(f), and by taking into account only periods when the foreign corporation was a specified foreign corporation) accumulated in taxable years beginning after December 31, 1986, and determined—

(A) As of the E&P measurement date, except as provided in paragraph (f)(29)(ii) of this section, and

(B) Without diminution by reason of dividends distributed during the last taxable year of the foreign corporation that begins before January 1, 2018, other than dividends distributed to another specified foreign corporation to the extent the dividends increase the post-1986 earnings and profits of the distributee specified foreign corporation.

(ii) ***Foreign income taxes.*** For purposes of determining a specified foreign corporation's post-1986 earnings and profits as of the E&P measurement date on November 2, 2017, in the case in which foreign income taxes (as defined in section 901(m)(5)) of the specified foreign corporation accrue after November 2, 2017, but on or before December 31, 2017, and during the specified foreign corporation's U.S. taxable year that includes November 2, 2017, the specified foreign corporation's post-1986 earnings and profits as of November 2, 2017, are reduced by the applicable portion of such foreign income taxes. For purposes of the preceding sentence, the applicable portion of the foreign income taxes is the amount of the taxes that are attributable to the portion of the taxable income (as determined under foreign law) that accrues on or before November 2, 2017.

(iii) ***Deficits in earnings and profits.*** Any deficit related to post-1986 earnings and profits, including a hovering deficit (as defined in § 1.367(b)-7(d)(2)(i)), of a specified foreign corporation is taken into account for purposes of determining the post-1986 earnings and profits (including a deficit) of the specified foreign corporation.

(30) ***Pro rata share.*** The term *pro rata share* means, with respect to a section 958(a) U.S. shareholder of a specified foreign corporation, a deferred foreign income corporation, or an E&P deficit foreign corporation, as applicable—

(i) With respect to the section 965(a) earnings amount of a deferred foreign income corporation, the portion of the section 965(a) earnings amount that would be treated as distributed to the section 958(a) U.S. shareholder under § 1.951-1(e), determined as of the last day of the inclusion year of the deferred foreign income corporation on which it is a specified foreign corporation;

(ii) With respect to the specified E&P deficit of an E&P deficit foreign corporation, the portion of the specified E&P deficit allocated to the section 958(a) U.S. shareholder, determined by allocating the specified E&P deficit among the shareholders of the corporation's common stock in

proportion to the liquidation value of the common stock held by the shareholders, determined as of the last day of the last taxable year of the E&P deficit foreign corporation that begins before January 1, 2018, provided that—

(A) If the corporation's common stock has a liquidation value of zero and there is at least one other class of equity with a liquidation preference relative to the common stock, then the specified E&P deficit is allocated as if it were distributed in a hypothetical distribution described in § 1.951-1(e)(1)(i) with respect to the most junior class of equity with a positive liquidation value to the extent of such liquidation value, and then to the next most junior class of equity to the extent of its liquidation value, and so on, applying § 1.951-1(e) by substituting "specified E&P deficit" for "subpart F income" each place it appears and treating the amount of current earnings and profits of the corporation for the year as being equal to the specified E&P deficit of the corporation for the year; and

(B) If the corporation's common stock has a liquidation value of zero and there is no other class of equity with a liquidation preference relative to the common stock, the specified E&P deficit is allocated among the common stock using any reasonable method consistently applied; and

(iii) With respect to the cash position of a specified foreign corporation on a cash measurement date, the portion of the cash position that would be treated as distributed to the section 958(a) U.S. shareholder under § 1.951-1(e) if the cash position were subpart F income, determined as of the close of the cash measurement date and without regard to whether the section 958(a) U.S. shareholder is a section 958(a) U.S. shareholder of the specified foreign corporation as of any other cash measurement date of the specified foreign corporation, including the final cash measurement date of the specified foreign corporation.

(31) ***Second cash measurement date.*** The term *second cash measurement date* means, with respect to a specified foreign corporation, the close of the last taxable year of the specified foreign corporation that ends after November 1, 2016, and before November 2, 2017, if any.

(32) ***Section 958(a) stock.*** The term *section 958(a) stock* means, with respect to a specified foreign corporation, a deferred foreign income corporation, or an E&P deficit foreign corporation, as applicable, stock of the corporation owned (directly or indirectly) by a United States shareholder within the meaning of section 958(a).

(33) ***Section 958(a) U.S. shareholder.*** The term *section 958(a) U.S. shareholder* means, with respect to a specified foreign corporation, a deferred foreign income corporation, or an E&P deficit foreign corporation, as applicable, a United States shareholder of such corporation that owns section 958(a) stock of the corporation.

(34) ***Section 958(a) U.S. shareholder inclusion year.*** The term *section 958(a) U.S. shareholder inclusion year* means the taxable year of a section 958(a) U.S. shareholder in which or with which the last day of the inclusion year of a deferred foreign income corporation on which it is a specified foreign corporation occurs.

(35) ***Section 965 regulations.*** The term *section 965 regulations* means the regulations under §§ 1.965-1 through 1.965-9, collectively.

(36) ***Section 965(a) earnings amount.*** The term *section 965(a) earnings amount* means, with respect to a deferred foreign income corporation, the greater of the accumulated post-1986 deferred foreign income of the deferred foreign income corporation as of the E&P measurement date on November 2,

2017, or the accumulated post-1986 deferred foreign income of the deferred foreign income corporation as of the E&P measurement date on December 31, 2017, determined in each case in the functional currency of the specified foreign corporation. If the functional currency of a specified foreign corporation changes between the two E&P measurement dates, the comparison must be made in the functional currency of the specified foreign corporation as of December 31, 2017, by translating the specified foreign corporation's accumulated post-1986 deferred foreign income as of November 2, 2017, into the new functional currency using the spot rate on November 2, 2017.

(37) ***Section 965(a) inclusion.*** The term *section 965(a) inclusion* means, with respect to a person and a deferred foreign income corporation, an amount included in income by the person by reason of section 965 with respect to the deferred foreign income corporation, whether because the person is a section 958(a) U.S. shareholder of the deferred foreign income corporation with a section 965(a) inclusion amount with respect to the deferred foreign income corporation or because the person is a domestic pass-through owner with respect to a domestic pass-through entity that is a section 958(a) U.S. shareholder of the deferred foreign income corporation and the person includes in income its domestic pass-through owner share of the section 965(a) inclusion amount of the domestic pass-through entity with respect to the deferred foreign income corporation.

(38) ***Section 965(a) inclusion amount.*** The term *section 965(a) inclusion amount* has the meaning provided in paragraph (b)(1) of this section.

(39) ***Section 965(a) previously taxed earnings and profits.*** The term *section 965(a) previously taxed earnings and profits* has the meaning provided in § 1.965-2(c).

(40) ***Section 965(b) previously taxed earnings and profits.*** The term *section 965(b) previously taxed earnings and profits* has the meaning provided in § 1.965-2(d).

(41) ***Section 965(c) deduction.*** The term *section 965(c) deduction* means, with respect to a person, an amount allowed as a deduction to the person by reason of section 965(c), whether because the person is a section 958(a) U.S. shareholder with a section 965(c) deduction amount or because the person is a domestic pass-through owner with respect to a domestic pass-through entity that is a section 958(a) U.S. shareholder and the person takes into account its domestic pass-through owner share of the section 965(c) deduction amount of the domestic pass-through entity.

(42) ***Section 965(c) deduction amount.*** The term *section 965(c) deduction amount* means an amount equal to the sum of—

(i) A section 958(a) U.S. shareholder's 8 percent rate equivalent percentage of the section 958(a) U.S. shareholder's 8 percent rate amount for the section 958(a) U.S. shareholder inclusion year, plus

(ii) The section 958(a) U.S. shareholder's 15.5 percent rate equivalent percentage of the section 958(a) U.S. shareholder's 15.5 percent rate amount for the section 958(a) U.S. shareholder inclusion year.

(43) ***Short-term obligation.*** The term *short-term obligation* means any obligation with a term upon issuance that is less than one year and any loan that must be repaid at the demand of the lender (or that must be repaid within one year of such demand), but does not include any accounts receivable.

(44) ***Specified E&P deficit.*** The term *specified E&P deficit* means, with respect to an E&P deficit foreign corporation, the amount of the deficit described in paragraph (f)(22)(i)(A) of this section.

(45) ***Specified foreign corporation*** —

(i) ***General rule.*** Except as provided in paragraph (f)(45)(iii) of this section, the term *specified foreign corporation* means—

(A) A controlled foreign corporation, or

(B) A foreign corporation of which one or more domestic corporations is a United States shareholder.

(ii) ***Special attribution rule*** —

(A) ***In general.*** Solely for purposes of determining whether a foreign corporation is a specified foreign corporation within the meaning of section 965(e)(1)(B) and paragraph (f)(45)(i)(B) of this section, stock owned, directly or indirectly, by or for—

(*1*) A partner (*tested partner*) will not be considered as being owned by a partnership under sections 958(b) and 318(a)(3)(A) and § 1.958-2(d)(1)(i) if the tested partner owns less than ten percent of the interests in the partnership's capital and profits; and

(*2*) A beneficiary (*tested beneficiary*) will not be considered as being owned by a trust under sections 958(b) and 318(a)(3)(B) and § 1.958-2(d)(1)(ii) if the value of the interest of the tested beneficiary, computed actuarially, whether vested or contingent, current or remainder, is less than ten percent of the value of the trust property, assuming the maximum exercise of discretion in favor of the beneficiary.

(B) ***Attribution for purposes of the ten percent standard.*** For purposes of paragraph (f)(45)(ii)(A) of this section, an interest in a partnership or trust owned by a partner or beneficiary other than the tested partner or tested beneficiary will be considered as being owned by the tested partner or tested beneficiary under the principles of sections 958(b) and 318, as modified by this paragraph (f)(45)(ii), as if interests in a partnership or trust were stock.

(iii) ***Passive foreign investment companies.*** A foreign corporation that is a passive foreign investment company (as defined in section 1297) with respect to a United States shareholder and that is not a controlled foreign corporation is not a specified foreign corporation of the United States shareholder.

(46) ***Spot rate.*** The term *spot rate* has the meaning provided in § 1.988-1(d).

(47) ***United States shareholder.*** The term *United States shareholder* has the meaning provided in section 951(b).

(g) ***Examples.*** The following examples illustrate the definitions and general rules set forth in this section.

(1) ***Example 1. Definition of specified foreign corporation*** —

(i) ***Facts.*** A, an individual, owns 1% of the interests in a partnership, PS, and 10% by vote and value of the stock of a foreign corporation, FC. PS owns 100% of the stock of a domestic corporation, DC. A United States citizen, USI, owns an additional 10% by vote and value of the stock of FC. The remaining 80% by vote and value of the stock of FC is owned by non-United States persons that are unrelated to A, USI, DC, and PS.

(ii) ***Analysis.***

(A) Absent the application of sections 958(b), 318(a)(3)(A), and 318(a)(3)(C), and § 1.958-2(d)(1)(i) and (iii), FC would not be a specified foreign corporation because FC is not a controlled foreign corporation and there would be no domestic corporation that is a United States shareholder of FC. However, under sections 958(b) and 318(a)(3)(A) and § 1.958-2(d)(1)(i), absent the special attribution rule in paragraph (f)(45)(ii) of this section, PS would be treated as owning 10% of the stock of FC. As a result, under sections 958(b), 318(a)(5)(A), and 318(a)(3)(C), and § 1.958-2(f)(1)(i) and (d)(1)(iii), DC would be treated as owning the stock of FC treated as owned by PS, and thus DC would be a United States shareholder with respect to FC, causing FC to be a specified foreign corporation within the meaning of section 965(e)(1)(B) and paragraph (f)(45)(i)(B) of this section. The results would be the same whether A or PS or both are domestic or foreign persons.

(B) Under the special attribution rule in paragraph (f)(45)(ii) of this section, solely for purposes of determining whether a foreign corporation is a specified foreign corporation within the meaning of section 965(e)(1)(B) and paragraph (f)(45)(i)(B) of this section, the stock of FC owned by A is not considered as being owned by PS under sections 958(b) and 318(a)(3)(A) and § 1.958-2(d)(1)(i) because A owns less than 10% of the interests in PS's capital and profits. Accordingly, FC is not a specified foreign corporation within the meaning of section 965(e)(1)(B) and paragraph (f)(45)(i)(B) of this section.

(2) ***Example 2. Definition of specified foreign corporation*** —

(i) ***Facts.*** The facts are the same as in paragraph(g)(1)(i) of this section (the facts in *Example 1*), except that A is a foreign corporation wholly owned by B, a foreign corporation, and B directly owns 9% of the interests in PS.

(ii) ***Analysis.*** Applying the principles of sections 958(b) and 318, as modified by paragraph (f)(45)(ii) of this section, as if the interest in PS were stock, A is treated as owning the interests in PS owned by B (in addition to the 1% interest in PS that A owns directly), and thus A is not treated as owning less than 10% of the interests in PS's capital and profits. Accordingly, the special attribution rule in paragraph (f)(45)(ii) of this section does not apply, and PS is treated as owning A's stock of FC for purposes of determining whether FC is a specified foreign corporation within the meaning of section 965(e)(1)(B) and paragraph (f)(45)(i)(B) of this section. Accordingly, under the analysis described in paragraph (ii)(A) of *Example 1* of paragraph (g)(1) of this section, FC is a specified foreign corporation within the meaning of section 965(e)(1)(B) and paragraph (f)(45)(i)(B) of this section.

(3) ***Example 3. Determination of accumulated post-1986 deferred foreign income*** —

(i) ***Facts.*** USP, a domestic corporation, and FP, a foreign corporation unrelated to USP, have owned 70% and 30% respectively, by vote and value, of the only class of stock of FS, a foreign corporation, from January 1, 2016, until December 31, 2017. USP and FS both have a calendar year taxable year. FS had no income until its taxable year ending December 31, 2016, in which it had 100u of income, all of which constituted subpart F income, and USP included 70u in income with respect to FS under section 951(a)(1) for such year. FS earned no income in 2017. Therefore, FS's post-1986 earnings and profits are 100u as of both E&P measurement dates.

(ii) ***Analysis.*** Because USP included 70u in income with respect to FS under section 951(a)(1), 70u of such post-1986 earnings and profits would, if distributed, be excluded from the gross income of USP under section 959. Thus, FS's accumulated post-1986 deferred foreign income would be reduced by 70u pursuant to section 965(d)(2)(B) and paragraph (f)(7)(i)(B) of this section.

Furthermore, under paragraph (f)(7)(i)(C) of this section, the accumulated post-1986 deferred foreign income of FS is reduced by amounts that would be excluded from the gross income of FP if FP were a United States shareholder, consistent with the principles of Revenue Ruling 82-16. Accordingly, FS's accumulated post-1986 deferred foreign income is reduced by the remaining 30u of the 100u of post-1986 earnings and profits to which USP's 70u of section 951(a)(1) income inclusions were attributable. As a result, FS's accumulated post-1986 deferred foreign income is 0u (100u minus 70u minus 30u).

(4) ***Example 4. Determination of status as a deferred foreign income corporation or an E&P deficit foreign corporation; specified foreign corporation is solely a deferred foreign income corporation*** —

(i) ***Facts.*** USP, a domestic corporation, owns all of the stock of FS, a foreign corporation. As of November 2, 2017, FS has a deficit in post-1986 earnings and profits of 150u. As of December 31, 2017, FS has 200u of post-1986 earnings and profits. FS does not have earnings and profits that are attributable to income of the specified foreign corporation that is effectively connected with the conduct of a trade or business within the United States and subject to tax under chapter 1, or that, if distributed, would be excluded from the gross income of a United States shareholder under section 959 or from the gross income of another shareholder if such shareholder were a United States shareholder.

(ii) ***Analysis.*** FS's accumulated post-1986 deferred foreign income is equal to its post-1986 earnings and profits because no adjustment to post-1986 earnings and profits is made under section 965(d)(2) or § 1.965-1(f)(7). Under paragraph (f)(17)(i) of this section, FS is a deferred foreign income corporation because FS has accumulated post-1986 deferred foreign income greater than zero as of the E&P measurement date on December 31, 2017. In addition, under paragraph (f)(17)(ii) of this section, because FS is a deferred foreign income corporation, FS is not also an E&P deficit foreign corporation, notwithstanding that FS has a deficit in post-1986 earnings and profits as of the E&P measurement date on November 2, 2017.

(5) ***Example 5. Determination of status as a deferred foreign income corporation or an E&P deficit foreign corporation; specified foreign corporation is neither a deferred foreign income corporation nor an E&P deficit foreign corporation*** —

(i) ***Facts.*** USP, a domestic corporation, owns all of the stock of FS, a foreign corporation. As of both November 2, 2017, and December 31, 2017, FS has 100u of earnings and profits described in section 959(c)(2) and a deficit of 90u in earnings and profits described in section 959(c)(3), all of which were accumulated in taxable years beginning after December 31, 1986, while FS was a specified foreign corporation. Accordingly, as of both November 2, 2017, and December 31, 2017, FS has 10u of post-1986 earnings and profits.

(ii) ***Analysis*** —

(A) ***Determination of status as a deferred foreign income corporation.*** Under paragraph (f)(17) of this section, for purposes of determining whether FS is a deferred foreign income corporation, a determination must be made whether FS has accumulated post-1986 deferred foreign income greater than zero as of either the E&P measurement date on November 2, 2017, or the E&P measurement date on December 31, 2017. Under section 965(d)(2) and paragraph (f)(7) of this section, FS's accumulated post-1986 deferred foreign income is its post-1986 earnings and profits, except to the extent such earnings and profits are attributable to income of the specified foreign corporation that is effectively connected with the conduct of a trade or business within the United States and

subject to tax under chapter 1, or that, if distributed, would be excluded from the gross income of a United States shareholder under section 959 or from the gross income of another shareholder if such shareholder were a United States shareholder. Disregarding FS's 100u of post-1986 earnings and profits described in paragraph (f)(7)(i)(B) of this section, FS has a 90u deficit in accumulated post-1986 deferred foreign income as of both E&P measurement dates. Accordingly, FS does not have accumulated post-1986 deferred foreign income greater than zero as of either E&P measurement date, and, therefore, FS is not a deferred foreign income corporation.

(B) ***Determination of status as an E&P deficit foreign corporation.*** Under paragraph (f)(22)(i) of this section, for purposes of determining whether FS is an E&P deficit foreign corporation, a determination must be made whether FS has a deficit in post-1986 earnings and profits as of the E&P measurement date on November 2, 2017. Under paragraph (f)(22)(ii) of this section, because the deficit in the earnings and profits of FS described in section 959(c)(3) of 90u does not exceed the earnings and profits of FS described in section 959(c)(2) of 100u, FS does not have a deficit in post-1986 earnings and profits as of the E&P measurement date on November 2, 2017, and, therefore, FS is not an E&P deficit foreign corporation. Accordingly, FS is neither a deferred foreign income corporation nor an E&P deficit foreign corporation.

(6) ***Example 6. Application of currency translation rules*** —

(i) ***Facts.*** As of November 2, 2017, and December 31, 2017, USP, a domestic corporation, owns all of the stock of CFC1, an E&P deficit foreign corporation with the “u” as its functional currency; CFC2, an E&P deficit foreign corporation with the “v” as its functional currency; CFC3, a deferred foreign income corporation with the “y” as its functional currency; and CFC4, a deferred foreign income corporation with the “z” as its functional currency. USP, CFC1, CFC2, CFC3, and CFC4 each have a calendar year taxable year. As of December 31, 2017, 1u=$1, .75v=$1, .50y=$1, and .25z=$1. CFC1 has a specified E&P deficit of 100u, CFC2 has a specified E&P deficit of 120v, CFC3 has a section 965(a) earnings amount of 50y, and CFC4 has a section 965(a) earnings amount of 75z.

(ii) ***Analysis.***

(A) Under paragraph (f)(38) of this section, for purposes of determining USP's section 965(a) inclusion amounts with respect to CFC3 and CFC4, the section 965(a) earnings amount of each of CFC3 and CFC4 is translated into U.S. dollars at the spot rate on December 31, 2017, which equals $100 (50y at .50y=$1) and $300 (75z at .25z=$1), respectively. Furthermore, USP's pro rata share of the section 965(a) earnings amounts, as translated, is $100 and $300, respectively, or 100% of each section 965(a) earnings amount.

(B) Under paragraph (f)(9) of this section, for purposes of determining USP's aggregate foreign E&P deficit, the specified E&P deficit of each of CFC1 and CFC2 is translated into U.S. dollars at the spot rate on December 31, 2017, which equals $100 (100u at 1u=$1) and $160 (120v at .75v=$1), respectively. Furthermore USP's pro rata share of each specified E&P deficit, as translated, is $100 and $160, respectively, or 100% of each specified E&P deficit. Therefore, USP's aggregate foreign E&P deficit is $260.

(C) Under section 965(b)(1) and paragraph (b)(2) of this section, for purposes of determining USP's section 965(a) inclusion amount with respect to each of CFC3 and CFC4, the U.S. dollar amount of USP's pro rata share of the section 965(a) earnings amount of each of

CFC3 and CFC4 is reduced by each of CFC3 and CFC4's allocable share of USP's aggregate foreign E&P deficit. Under section 965(b)(2) and paragraph (f)(11) of this section, CFC3's allocable share of USP's aggregate foreign E&P deficit of $260 is $65 ($260 × ($100/$400)) and CFC4's allocable share of USP's aggregate foreign E&P deficit is $195 ($260 × ($300/400)). After reduction under section 965(b)(1) and paragraph (b)(2) of this section, the section 965(a) inclusion amount of USP with respect to CFC3 is $35 ($100−$65) and the section 965(a) inclusion amount of USP with respect to CFC4 is $105 ($300−$195). Under § 1.965-2(c), the section 965(a) previously taxed earnings and profits of each of CFC3 and CFC4, translated into the respective functional currencies of CFC3 and CFC4 at the spot rate on December 31, 2017, are 17.5y ($35 at .50y=$1) and 26.25z ($105 at .25z=$1), respectively. Under § 1.965-6(b)(1), for purposes of applying section 960(a)(1), the amounts treated as a dividend paid by each of CFC3 and CFC4, translated into the respective functional currencies of CFC3 and CFC4 at the spot rate on December 31, 2017, are 17.5y ($35 at .50y=$1) and 26.25z ($105 at .25z=$1).

(D) For purposes of determining the section 965(b) previously taxed earnings and profits of each of CFC3 and CFC4 under section 965(b)(4)(A) and § 1.965-2(d)(1) as a result of the reduction to USP's section 965(a) inclusion amounts with respect to CFC3 and CFC4, the amount of the aggregate foreign E&P deficit of USP allocated to each of CFC3 and CFC4 under section 965(b)(2) and paragraph (f)(11) of this section, translated into the respective functional currencies of CFC3 and CFC4 at the spot rate on December 31, 2017, is 32.5y ($65 at .50y=$1) and 48.75z ($195 at .25z=$1), respectively.

(7) ***Example 7. Determination of cash measurement dates and pro rata shares of cash positions*** —

(i) ***Facts.*** Except as otherwise provided, for all relevant periods, USP, a domestic corporation, has owned directly at least 10% of the stock of CFC1, CFC2, CFC3, and CFC4, each a foreign corporation. CFC1 and CFC2 have calendar year taxable years. CFC3 and CFC4 have taxable years that end on November 30. No entity has a short taxable year, except as a result of the transactions described below.

(A) USP transferred all of its stock of CFC2 to an unrelated person on June 30, 2016, at which point USP ceased to be a United States shareholder with respect to CFC2.

(B) CFC4 dissolved on December 30, 2010, and, as a result, its final taxable year ended on December 30, 2010.

(ii) ***Analysis.*** Each of CFC1, CFC2, CFC3, and CFC4 is a specified foreign corporation of USP, subject to the sale of CFC2 on June 30, 2016, and the dissolution of CFC4 on December 30, 2010. Under the definition of aggregate foreign cash position in paragraph (f)(8)(i) of this section, the definition of pro rata share of a cash position in paragraph (f)(30)(iii) of this section, and the definitions of the final cash measurement date, second cash measurement date, and first cash

measurement date in paragraphs (f)(24), (25), and (31) of this section, the cash measurement dates of the specified foreign corporations to be taken into account by USP in determining its aggregate foreign cash position are summarized in the following table:

CASH MEASUREMENT DATES

	Final	Second	First
CFC1	December 31, 2017	December 31, 2016	December 31, 2015.
CFC2	N/A	N/A	December 31, 2015.
CFC3	November 30, 2018	November 30, 2016	November 30, 2015.
CFC4	N/A	N/A	N/A.

(8) *Example 8. Determination of section 958(a) U.S. shareholder in case of a controlled domestic partnership* —

(i) ***Facts.*** USP, a domestic corporation, owns all of the stock of CFC1 and CFC2. CFC1 and CFC2 own 60% and 40%, respectively, of the interests in the capital and profits of DPS, a domestic partnership. DPS owns all of the stock of CFC3 and CFC4. This ownership structure has existed since the date of formation of CFC1, CFC2, CFC3, and CFC4. CFC1, CFC2, CFC3, and CFC4 are each a foreign corporation. USP, DPS, CFC1, CFC2, CFC3, and CFC4 have calendar year taxable years. On both E&P measurement dates, CFC3 has 50u of accumulated post-1986 deferred foreign income. On both E&P measurement dates, CFC4 has a deficit in post-1986 earnings and profits of 30u. On all cash measurement dates, CFC1, CFC2, and CFC3 each have a cash position of 0u, and CFC4 has a cash position of 200u.

(ii) ***Analysis.*** DPS is a controlled domestic partnership with respect to USP within the meaning of paragraph (e)(2) of this section because more than 50% of the interests in its capital and profits are owned by persons related to USP within the meaning of section 267(b), CFC1 and CFC2, and thus DPS is controlled by USP and related persons. Without regard to paragraph (e) of this section, DPS is a section 958(a) U.S. shareholder of CFC3 and CFC4, each of which is a controlled foreign corporation. If DPS were treated as foreign, CFC3 and CFC4 would each continue to be a controlled foreign corporation, and USP would be treated as a section 958(a) U.S. shareholder of each of CFC3 and CFC4, and would be treated as owning (within the meaning of section 958(a)) tested section 958(a) stock of each of CFC3 and CFC4 through CFC1 and CFC2, which are both partners in DPS. Thus, under paragraph (e)(1) of this section, DPS is treated as a foreign partnership for purposes of determining the section 958(a) U.S. shareholder of both CFC3 and CFC4 and the section 958(a) stock of both CFC3 and CFC4 owned by the section 958(a) U.S. shareholder. Thus, USP's pro rata share of CFC3's section 965(a) earnings amount is 50u, and its pro rata share of CFC4's specified E&P deficit is 30u. USP's aggregate foreign cash position is 200u. DPS is not a section 958(a) U.S. shareholder with respect to either CFC3 or CFC4.

[T.D. 9846, 84 FR 1875, Feb. 5, 2019, as amended by T.D. 9846, 84 FR 14260, Apr. 10, 2019]

§ 1.965-2 Adjustments to earnings and profits and basis.

(a) ***Scope.*** This section provides rules relating to adjustments to earnings and profits and basis to determine and account for the application of section 965(a) and (b) and § 1.965-1(b) and a rule that limits the amount of gain recognized under section 961(b)(2) by reason of distributions attributable to section 965 previously taxed earnings and profits (as defined in paragraph (g)(1)(ii) of this section) in the inclusion year. Paragraph (b) of this section provides rules relating to adjustments to earnings and profits of a specified foreign corporation for purposes of applying sections 902, 959, 960, and 965. Paragraph (c) of this section provides rules regarding adjustments to earnings and profits by reason of section 965(a). Paragraph (d) of this section provides rules regarding adjustments to earnings and profits by reason of section 965(b). Paragraph (e) provides rules regarding adjustments to basis by reason of section 965(a). Paragraph (f) of this section provides an election to make certain adjustments to basis corresponding to adjustments to earnings and profits by reason of section 965(b). Paragraph (g) of this section provides rules that limit the amount of gain recognized in connection with the application of section 961(b)(2) and that require related reductions in basis. Paragraph (h) of this section provides rules regarding basis adjustments. Paragraph (i) of this section provides definitions that apply for purposes of this section. Paragraph (j) of this section provides examples illustrating the application of this section.

(b) ***Determination of and adjustments to earnings and profits of a specified foreign corporation for purposes of applying sections 902, 959, 960, and 965.*** For the taxable year of a specified foreign corporation in which an E&P measurement date occurs, and the last taxable year of a specified foreign corporation that begins before January 1, 2018, and the taxable year of a section 958(a) U.S. shareholder in which or with which any such year ends, the adjustments to earnings and profits described in paragraphs (b)(1) through (b)(5) of this section apply in sequence. For purposes of determining the consequences under sections 902 and 960 of a distribution or an inclusion under section 951(a)(1), after the application of those paragraphs, the ordering rule in § 1.960-1(i)(2) applies except that section 902 is applied with respect to any distributions from the specified foreign corporation described in paragraph (b)(2) of this section that are not disregarded under § 1.965-4 before section 960 is applied with respect to an inclusion or distribution described in paragraph (b)(3), (b)(4), or (b)(5) of this section.

(1) Each of the subpart F income of the specified foreign corporation and the amount required to be included in income under section 1248, if any, are determined without regard to section 965(a), but taking into account any relevant distributions, and earnings and profits of the specified foreign corporation that are described in section 959(c)(2) with respect to the section 958(a) U.S. shareholder are increased to the extent of the section 958(a) U.S. shareholder's inclusion under section 951(a)(1)(A) without regard to section 965(a) (including to the extent provided in section 959(e)).

(2) The treatment of a distribution by the specified foreign corporation to another specified foreign corporation that is made before January 1, 2018, and, in the case of a taxable year of a specified foreign corporation before its last taxable year that begins before January 1, 2018, any other distribution from the specified foreign corporation made before the relevant E&P measurement date, is determined under section 959.

(3) Each of the post-1986 earnings and profits (including a deficit) of the specified foreign corporation, the accumulated post-1986 deferred foreign income of the specified foreign corporation, the section 965(a) earnings amount of the specified foreign corporation, and the section 965(a) inclusion amount with respect to the specified foreign corporation, if any, is determined, taking into account the rules of § 1.965-4, and the earnings and profits (including a deficit) of the specified foreign

corporation are adjusted as provided in paragraphs (c) and (d) of this section. For a rule disregarding subpart F income earned after an E&P measurement date for purposes of calculating accumulated post-1986 deferred foreign income as of the E&P measurement date, see § 1.965-1(f)(7)(ii).

(4) The treatment of distributions described in paragraph (b)(2) of this section that are disregarded under § 1.965-4 is redetermined (if necessary) and the treatment of all distributions from the specified foreign corporation other than those described in paragraph (b)(2) of this section is determined under section 959.

(5) An amount is determined under section 956 with respect to the specified foreign corporation and the section 958(a) U.S. shareholder; earnings and profits of the specified foreign corporation described in section 959(c)(2) with respect to the section 958(a) U.S. shareholder are reclassified as earnings and profits described in section 959(c)(1) with respect to the section 958(a) U.S. shareholder to the extent the amount determined under section 956 would, but for section 959(a)(2), be included by the section 958(a) U.S. shareholder under section 951(a)(1)(B); and earnings and profits described in section 959(c)(1) with respect to the section 958(a) U.S. shareholder are further increased to the extent of the section 958(a) U.S. shareholder's inclusion under section 951(a)(1)(B).

(c) ***Adjustments to earnings and profits by reason of section 965(a).*** The earnings and profits of a deferred foreign income corporation described in section 959(c)(2) with respect to a section 958(a) U.S. shareholder are increased by an amount equal to the section 965(a) inclusion amount of the section 958(a) U.S. shareholder with respect to the deferred foreign income corporation, if any, translated (if necessary) into the functional currency of the deferred foreign income corporation using the spot rate on December 31, 2017, provided the section 965(a) inclusion amount is included in income by the section 958(a) U.S. shareholder. For purposes of the section 965 regulations, the earnings and profits described in section 959(c)(2) by reason of this paragraph (c) and the earnings and profits initially described in section 959(c)(2) by reason of this paragraph (c) but subsequently reclassified as earnings and profits described in section 959(c)(1), if any, are referred to as *section 965(a) previously taxed earnings and profits.* Furthermore, the earnings and profits (including a deficit) of the deferred foreign income corporation that are described in section 959(c)(3) (or that would be described in section 959(c)(3) but for the application of section 965(a) and the section 965 regulations) are reduced (or, in the case of a deficit, increased) by an amount equal to the section 965(a) previously taxed earnings and profits.

(d) ***Adjustments to earnings and profits by reason of section 965(b)*** —

(1) ***Adjustments to earnings and profits described in section 959(c)(2) and (c)(3) of deferred foreign income corporations.*** The earnings and profits of a deferred foreign income corporation described in section 959(c)(2) with respect to a section 958(a) U.S. shareholder are increased by an amount equal to the reduction to the section 958(a) U.S. shareholder's pro rata share of the section 965(a) earnings amount of the deferred foreign income corporation under section 965(b), § 1.965-1(b)(2), and § 1.965-8(b), as applicable, translated (if necessary) into the functional currency of the deferred foreign income corporation using the spot rate on December 31, 2017, provided the section 958(a) U.S. shareholder includes the section 965(a) inclusion amount (if any) with respect to the deferred foreign income corporation in income. For purposes of the section 965 regulations, the earnings and profits described in section 959(c)(2) by reason of this paragraph (d) and the earnings and profits initially described in section 959(c)(2) by reason of this paragraph (d) but subsequently reclassified as earnings and profits described in section 959(c)(1) are referred to as *section 965(b) previously taxed earnings and profits,* and are treated as having been previously included in the gross income of the section 958(a) U.S. shareholder under section 951 for purposes of section 1248(d)(1). Furthermore, the earnings and profits (including a deficit) described in section 959(c)(3) of the

deferred foreign income corporation (or that would be described in section 959(c)(3) but for the application of section 965(b) and the section 965 regulations) are reduced (or, in the case of a deficit, increased) by an amount equal to the section 965(b) previously taxed earnings and profits.

(2) ***Adjustments to earnings and profits described in section 959(c)(3) of E&P deficit foreign corporations*** —

(i) ***Increase in earnings and profits by an amount equal to the portion of the section 958(a) U.S. shareholder's pro rata share of the specified E&P deficit taken into account*** —

(A) ***In general.*** For an E&P deficit foreign corporation's last taxable year that begins before January 1, 2018, the earnings and profits of the E&P deficit foreign corporation described in section 959(c)(3) are increased by an amount equal to the portion of a section 958(a) U.S. shareholder's pro rata share of the specified E&P deficit of the E&P deficit foreign corporation taken into account under section 965(b), § 1.965-1(b)(2), and § 1.965-8(b), as determined under paragraph (d)(2)(ii) of this section, translated (if necessary) into the functional currency of the E&P deficit foreign corporation using the spot rate on December 31, 2017. For purposes of section 316, the earnings and profits of the E&P deficit foreign corporation attributable to the increase described in the preceding sentence are not treated as earnings and profits of the taxable year described in section 316(a)(2). See also § 1.965-6(b)(3) for the timing of this adjustment for purposes of determining foreign taxes deemed paid under sections 902 and 960.

(B) ***Reduction of a qualified deficit.*** For purposes of section 952, a section 958(a) U.S. shareholder's pro rata share of the earnings and profits of an E&P deficit foreign corporation is increased by an amount equal to the portion of the section 958(a) U.S. shareholder's pro rata share of the specified E&P deficit of the E&P deficit foreign corporation taken into account under section 965(b), § 1.965-1(b)(2), or § 1.965-8(b), as applicable, as determined under paragraph (d)(2)(ii) of this section, translated (if necessary) into the functional currency of the E&P deficit foreign corporation using the spot rate on December 31, 2017, and such increase is attributable to the same activity to which the deficit so taken into account was attributable.

(ii) ***Determination of portion of a section 958(a) U.S. shareholder's pro rata share of a specified E&P deficit taken into account*** —

(A) ***In general.*** The portion of a section 958(a) U.S. shareholder's pro rata share of a specified E&P deficit of an E&P deficit foreign corporation taken into account under section 965(b), § 1.965-1(b)(2), or § 1.965-8(b), as applicable, is 100 percent of the section 958(a) U.S. shareholder's pro rata share of the specified E&P deficit if either of the following conditions is satisfied:

(*1*) The section 958(a) U.S. shareholder (including a consolidated group of which the section 958(a) U.S. shareholder is a member) does not have an excess aggregate foreign E&P deficit (as defined in § 1.965-8(f)(7)(i)), or

(*2*) If the section 958(a) U.S. shareholder is a member of an affiliated group in which not all members are members of the same consolidated group, the amount described in § 1.965-8(f)(1)(i)(B) with respect to the affiliated group is equal to or greater than the amount described § 1.965-8(f)(1)(i)(A).

(B) ***Designation of portion of a section 958(a) U.S. shareholder's pro rata share of a specified E&P deficit taken into account.*** If neither the condition in paragraph (d)(2)(ii)(A)(*1*) nor the condition in paragraph (d)(2)(ii)(A)(*2*) is satisfied with respect to a section 958(a) U.S. shareholder, then the section 958(a) U.S. shareholder must designate the portion taken into account by reporting to each E&P deficit foreign corporation of the section 958(a) U.S. shareholder, and maintaining, in its books and records, a statement setting forth the following information—

(*1*) The portion of the section 958(a) U.S. shareholder's pro rata share of the specified E&P deficit of the E&P deficit foreign corporation taken into account under section 965(b), § 1.965-1(b)(2), or § 1.965-8(b), as designated under § 1.965-8(c), as applicable, and

(*2*) In the case of an E&P deficit foreign corporation that has a qualified deficit (as determined under section 952 and § 1.952-1), the portion (if any) of the section 958(a) shareholder's pro rata share of the specified E&P deficit of the E&P deficit foreign corporation taken into account under paragraph (d)(2)(ii)(B)(*1*) of this section that is attributable to a qualified deficit, including the qualified activities to which such portion is attributable.

(e) ***Adjustments to basis by reason of section 965(a)*** —

(1) ***General rule.*** Except as provided in paragraph (e)(2) of this section, a section 958(a) U.S. shareholder's basis in section 958(a) stock of a deferred foreign income corporation, or a section 958(a) U.S. shareholder's basis in applicable property with respect to a deferred foreign income corporation, is increased by the section 958(a) U.S. shareholder's section 965(a) inclusion amount with respect to the deferred foreign income corporation included in income by the section 958(a) U.S. shareholder. *See* section 961(a).

(2) ***Section 962 election.*** In the case of a section 958(a) U.S. shareholder who has made an election under section 962 for a section 958(a) U.S. shareholder's inclusion year, the increase in basis in the section 958(a) U.S. shareholder's section 958(a) stock of, or applicable property with respect to, a deferred foreign income corporation cannot exceed an amount equal to the amount of tax paid under chapter 1 of the Code with respect to the section 958(a) U.S. shareholder's section 965(a) inclusion amount with respect to the deferred foreign income corporation, taking into account any section 965(h) election made by the section 958(a) U.S. shareholder.

(f) ***Adjustments to basis by reason of section 965(b)*** —

(1) ***In general.*** Except as provided in paragraph (f)(2) of this section, no adjustments to basis of stock or property are made under section 961 (or any other provision of the Code) to take into account the reduction to a section 958(a) U.S. shareholder's pro rata share of the section 965(a) earnings amount of a deferred foreign income corporation under section 965(b), § 1.965-1(b)(2), or § 1.965-8(b), as applicable.

(2) ***Election to make adjustments to basis to account for the application of section 965(b)*** —

(i) ***In general.*** If a section 958(a) U.S. shareholder makes the election as provided in this paragraph (f)(2), the adjustments to basis described in paragraph (f)(2)(ii) of this section are made with respect to each deferred foreign income corporation and each E&P deficit foreign corporation in which the section 958(a) U.S. shareholder owns section 958(a) stock.

(ii) ***Basis adjustments*** —

(A) ***Increase in basis with respect to a deferred foreign income corporation*** —

(*1*) ***In general.*** Except as provided in paragraphs (f)(2)(ii)(A)(*2*) and (C) of this section, a section 958(a) U.S. shareholder's basis in section 958(a) stock of a deferred foreign income corporation, or a section 958(a) U.S. shareholder's basis in applicable property with respect to a deferred foreign income corporation, is increased by an amount equal to the section 965(b) previously taxed earnings and profits of the deferred foreign income corporation with respect to the section 958(a) U.S. shareholder, translated (if necessary) into U.S. dollars using the spot rate on December 31, 2017.

(*2*) ***Limited basis adjustment.*** A section 958(a) U.S. shareholder may, in lieu of applying paragraph (f)(2)(ii)(A)(*1*) of this section, designate the amount by which it increases its basis in section 958(a) stock of, or applicable property with respect to, a deferred foreign income corporation, provided that—

(*i*) The increase does not exceed the section 965(b) previously taxed earnings and profits of the deferred foreign income corporation with respect to the section 958(a) U.S. shareholder, translated (if necessary) into U.S. dollars using the spot rate on December 31, 2017; and

(*ii*) The aggregate amount of a section 958(a) U.S. shareholder's increases in basis with respect to stock or applicable property pursuant to paragraph (f)(2)(ii)(A)(*2*) of this section does not exceed the aggregate amount of the section 958(a) U.S. shareholder's reductions in basis pursuant to paragraph (f)(2)(ii)(B) of this section subject to the limitation under paragraph (f)(2)(ii)(B)(*2*) of this section.

(B) ***Reduction in basis with respect to an E&P deficit foreign corporation*** —

(*1*) ***In general.*** Except as provided in paragraphs (f)(2)(ii)(B)(*2*) and (f)(2)(ii)(C) of this section, a section 958(a) U.S. shareholder's basis in section 958(a) stock of an E&P deficit foreign corporation, or a section 958(a) U.S. shareholder's basis in applicable property with respect to an E&P deficit foreign corporation, is reduced by an amount equal to the portion of the section 958(a) U.S. shareholder's pro rata share of the specified E&P deficit of the E&P deficit foreign corporation taken into account under section 965(b), § 1.965-1(b)(2), and § 1.965-8(b), as applicable, as determined under paragraph (d)(2)(ii) of this section, translated (if necessary) into U.S. dollars using the spot rate on December 31, 2017. For rules requiring gain recognition, see paragraph (h)(3) of this section.

(*2*) ***Limited basis adjustment.*** If a section 958(a) U.S. shareholder adjusts its basis in section 958(a) stock of, or applicable property with respect to, one or more deferred foreign income corporations under paragraph (f)(2)(ii)(A)(*2*) of this section, the section 958(a) U.S. shareholder's aggregate reductions in basis in section 958(a) stock of, or applicable property with respect to, an E&P deficit foreign corporation pursuant to paragraph (f)(2)(ii)(B)(*1*) of this section on a day may not exceed the amount of the section 958(a) U.S. shareholder's basis in the section 958(a) stock of,

or applicable property with respect to, such E&P deficit foreign corporation, determined without taking into account specified basis adjustments to the section 958(a) stock of, or applicable property with respect to, such E&P deficit foreign corporation.

(C) ***Section 962 election.*** In the case of a section 958(a) U.S. shareholder who has made an election under section 962 for a section 958(a) U.S. shareholder's inclusion year, the adjustments provided in paragraphs (f)(2)(ii)(A) and (B) of this section do not apply.

(iii) ***Rules regarding the election*** —

(A) ***Consistency requirement.*** In order for the election described in this paragraph (f)(2) to be effective, a section 958(a) U.S. shareholder and each section 958(a) U.S. shareholder of an E&P deficit foreign corporation or of a deferred foreign income corporation with respect to which the second section 958(a) U.S. shareholder's pro rata share of the section 965(a) earnings amount is reduced under section 965(b), § 1.965-1(b)(2), or § 1.965-8(b) that is related to the first section 958(a) U.S. shareholder must make the election described in this paragraph (f)(2). For purposes of this paragraph (f)(2)(iii)(A), a person is treated as related to a section 958(a) U.S. shareholder if the person bears a relationship to the section 958(a) U.S. shareholder described in section 267(b) or 707(b).

(B) ***Manner of making election*** —

(*1*) ***Timing*** —

(*i*) ***In general.*** Except as provided in paragraph (f)(2)(iii)(B)(*1*)(*ii*) of this section, the election provided in this paragraph (f)(2) must be made no later than the due date (taking into account extensions, if any) for the section 958(a) U.S. shareholder's return for the first taxable year that includes the last day of the last taxable year of a deferred foreign income corporation or E&P deficit foreign corporation of the shareholder that begins before January 1, 2018. Relief is not available under § 301.9100-2 or 301.9100-3 to file a late election. Except as provided in paragraph (f)(2)(iii)(B)(*1*)(*ii*) of this section, the election provided in this paragraph (f)(2) is irrevocable.

(*ii*) ***Transition rule.*** If the due date referred to in paragraph (f)(2)(iii)(B)(*1*)(*i*) of this section occurs before May 6, 2019, the election must be made by May 6, 2019. In the case of an election made before February 5, 2019, the election may be revoked by attaching a statement, signed under penalties of perjury, to an amended return filed by May 6, 2019. The statement must contain the section 958(a) U.S. shareholder's name and taxpayer identification number and a statement that the section 958(a) U.S. shareholder and all related persons, as defined in paragraph (f)(2)(iii)(A) of this section, that are section 958(a) U.S. shareholders of E&P deficit foreign corporations or of deferred foreign income corporations with respect to which the section 958(a) U.S. shareholder's pro rata share of the section 965(a) earnings amount is reduced under section 965(b), § 1.965-1(b)(2), or § 1.965-8(b) revoke the election provided in this paragraph (f)(2).

(*2*) ***Election statement.*** Except as otherwise provided in publications, forms, instructions, or other guidance, to make the election provided in this paragraph (f)(2), a section 958(a) U.S. shareholder must attach a statement, signed under penalties of perjury

consistent with the rules for signatures applicable to the section 958(a) U.S. shareholders return, to its return for the first taxable year that includes the last day of the last taxable year of a deferred foreign income corporation or E&P deficit foreign corporation of the shareholder that begins before January 1, 2018. The statement must include the section 958(a) U.S. shareholder's name, taxpayer identification number, and a statement that the section 958(a) U.S. shareholder and all related persons, as defined in paragraph (f)(2)(iii)(A) of this section, that are section 958(a) U.S. shareholders of E&P deficit foreign corporations or of deferred foreign income corporations with respect to which the section 958(a) U.S. shareholder's pro rata share of the section 965(a) earnings amount is reduced under section 965(b), § 1.965-1(b)(2), or § 1.965-8(b) make the election provided in this paragraph (f)(2). If the section 958(a) U.S. shareholder increases its basis in stock or applicable property under paragraph (f)(2)(ii)(A)(*2*) of this section and decreases its basis in stock or applicable property pursuant to paragraph (f)(2)(ii)(B) of this section subject to the limitation under paragraph (f)(2)(ii)(B)(*2*) of this section, the election statement must so indicate. The attachment of an unsigned copy of the election statement to the timely-filed return for the relevant taxable year satisfies the signature requirement of this paragraph (f)(2)(iii)(B)(*2*) if the section 958(a) U.S. shareholder retains the original signed election statement in the manner specified by § 1.6001-1(e).

(g) ***Gain reduction rule*** —

(1) ***Reduction in gain recognized under section 961(b)(2) by reason of distributions attributable to section 965 previously taxed earnings and profits in the inclusion year*** —

(i) ***In general.*** If a section 958(a) U.S. shareholder receives a distribution from a deferred foreign income corporation (including through a chain of ownership described under section 958(a)) during the inclusion year of the deferred foreign income corporation that is attributable to section 965 previously taxed earnings and profits of the deferred foreign income corporation, then the amount of gain that otherwise would be recognized under section 961(b)(2) by the section 958(a) U.S. shareholder with respect to the section 958(a) U.S. shareholder's section 958(a) stock of the deferred foreign income corporation or interest in applicable property with respect to the deferred foreign income corporation is reduced (but not below zero) by an amount equal to the section 965 previously taxed earnings and profits of the deferred foreign income corporation with respect to the section 958(a) U.S. shareholder, translated (if necessary) into U.S. dollars at the spot rate on December 31, 2017.

(ii) ***Definition of section 965 previously taxed earnings and profits.*** For purposes of paragraph (g)(1)(i) of this section, the term *section 965 previously taxed earnings and profits* means, with respect to a deferred foreign income corporation and a section 958(a) U.S. shareholder, the sum of the section 965(a) previously taxed earnings and profits of the deferred foreign income corporation with respect to the section 958(a) U.S. shareholder, and, if the section 958(a) U.S. shareholder has made the election described in paragraph (f)(2) of this section, the section 965(b) previously taxed earnings and profits of the deferred foreign income corporation with respect to the section 958(a) U.S. shareholder.

(2) ***Reduction in basis by an amount equal to the gain reduction amount.*** If a section 958(a) U.S. shareholder does not recognize gain under section 961(b)(2) by reason of paragraph (g)(1) of this section with respect to a distribution from a deferred foreign income corporation (including through

a chain of ownership described under section 958(a)), the section 958(a) U.S. shareholder's basis in the section 958(a) stock of the deferred foreign income corporation, or the section 958(a) U.S. shareholder's basis in the applicable property with respect to the deferred foreign income corporation, is reduced by the amount of gain that would otherwise be recognized by the section 958(a) U.S. shareholder without regard to paragraph (g)(1) of this section.

(h) ***Rules of application for specified basis adjustments.*** This paragraph (h) applies for purposes of making any adjustment to the basis of section 958(a) stock or applicable property with respect to a specified foreign corporation described in paragraph (e), (f)(2), or (g)(2) of this section (collectively, *specified basis adjustments,* and each a *specified basis adjustment*).

(1) ***Timing of basis adjustments.*** Except as provided in paragraph (e)(2) of this section, a specified basis adjustment to section 958(a) stock or applicable property with respect to a specified foreign corporation is made as of the last day of the last taxable year of the specified foreign corporation that begins before January 1, 2018, on which it is a specified foreign corporation.

(2) ***Netting of basis adjustments.*** If one or more specified basis adjustments occur on the same day with respect to the same section 958(a) stock or applicable property, a single basis adjustment is made as of the close of such day with respect to such stock or applicable property in an amount equal to the net amount, if any, of the increase or reduction, as applicable.

(3) ***Gain recognition for reduction in excess of basis.*** The excess (if any) of a net reduction in basis with respect to section 958(a) stock or applicable property of a section 958(a) U.S. shareholder by reason of one or more specified basis adjustments over the section 958(a) U.S. shareholder's basis in such stock or applicable property without regard to the specified basis adjustments is treated as gain from the sale or exchange of property.

(4) ***Adjustments with respect to each share*** —

(i) ***Section 958(a) stock.*** If a specified basis adjustment is made with respect to section 958(a) stock, the specified basis adjustment is made with respect to each share of the section 958(a) stock in a manner consistent with the section 958(a) U.S. shareholder's pro rata share of the section 965(a) earnings amount or specified E&P deficit, as applicable, by reason of such share.

(ii) ***Applicable property.*** If a specified basis adjustment is made with respect to applicable property, the adjustment is made with respect to the applicable property in a manner consistent with the application of paragraph (h)(4)(i) of this section.

(5) ***Stock or property for which adjustments are made*** —

(i) ***In general.*** Except as provided in paragraph (h)(5)(ii) of this section, a specified basis adjustment is made solely with respect to section 958(a) stock owned by the section 958(a) U.S. shareholder within the meaning of section 958(a)(1)(A) or applicable property owned directly by the section 958(a) U.S. shareholder.

(ii) ***Special rule for an interest in a foreign pass-through entity.*** If the applicable property of the section 958(a) U.S. shareholder described in paragraph (h)(5)(i) of this section is an interest in a foreign pass-through entity, then, for purposes of determining the foreign pass-through entity's basis in section 958(a) stock or applicable property, as applicable, with respect to the section 958(a) U.S. shareholder, a specified basis adjustment is made with respect to section 958(a) stock or applicable property of the section 958(a) U.S. shareholder owned through the

foreign pass-through entity in the same manner as if the section 958(a) stock or applicable property were owned directly by the section 958(a) U.S. shareholder. In the case of tiered foreign pass-through entities, this paragraph (h)(5)(ii) applies with respect to each foreign pass-through entity.

(i) ***Definitions.*** This paragraph (i) provides definitions that apply for purposes of this section.

(1) ***Applicable property.*** The term *applicable property* means, with respect to a section 958(a) U.S. shareholder and a specified foreign corporation, property owned by the section 958(a) U.S. shareholder (including through one or more foreign pass-through entities) by reason of which the section 958(a) U.S. shareholder is considered under section 958(a)(2) as owning section 958(a) stock of the specified foreign corporation.

(2) ***Foreign pass-through entity.*** The term *foreign pass-through entity* means a foreign partnership or a foreign estate or trust (as defined in section 7701(a)(31)) (including a controlled domestic partnership treated as a foreign partnership pursuant to § 1.965-1(e)).

(3) ***Property.*** The term *property* has the meaning provided in § 1.961-1(b)(1).

(j) ***Examples.*** The following examples illustrate the application of this section.

(1) ***Example 1. Determination of accumulated post-1986 deferred foreign income with subpart F income earned before E&P measurement date on November 2, 2017 —***

(i) ***Facts.*** USP, a domestic corporation, owns all of the stock of CFC1, a foreign corporation, which owns all of the stock of CFC2, also a foreign corporation. USP, CFC1, and CFC2 all have taxable years ending December 31, 2017. As of January 1, 2017, CFC1 has no earnings and profits, and CFC2 has 100u of earnings and profits described in section 959(c)(3) that were accumulated in taxable years beginning after December 31, 1986, while CFC2 was a specified foreign corporation, and $21x of post-1986 foreign income taxes. None of CFC2's earnings and profits are attributable to income treated as effectively connected with the conduct of a trade or business within the United States. On March 1, 2017, CFC1 earns 30u of subpart F income (as defined in section 952), and CFC2 earns 20u of subpart F income. No foreign income tax is imposed on CFC1's or CFC2's subpart F income. For purposes of section 904, the post-1986 undistributed earnings, subpart F income, and post-1986 foreign income taxes are in the general category. On July 1, 2017, CFC2 distributes 40u to CFC1. On November 1, 2017, CFC1 distributes 60u to USP. USP does not have an aggregate foreign E&P deficit. USP includes in gross income all amounts that it is required to include under section 951. No foreign income tax is imposed or withheld on the distribution by CFC2 to CFC1 or the distribution by CFC1 to USP.

(ii) ***Analysis —***

(A) ***Adjustments to section 959(c) classification of earnings and profits for inclusion under section 951(a)(1)(A) without regard to section 965.*** The distribution from CFC2 to CFC1 does not give rise to subpart F income to CFC1 due to the application of section 954(c)(6). Accordingly, USP's inclusion under section 951(a)(1)(A) without regard to section 965(a) is 30u with respect to CFC1 and 20u with respect to CFC2 for their taxable years ending December 31, 2017. As a result of the inclusions under section 951(a)(1)(A), CFC1 and CFC2 increase their earnings and profits described in section 959(c)(2) by 30u and 20u, respectively.

(B) ***Distributions between specified foreign corporations before January 1, 2018.*** The distribution of 40u from CFC2 to CFC1 is treated as a distribution of 20u out of earnings and profits described in section 959(c)(2) (attributable to inclusions under section 951(a)(1)(A) without regard to section 965(a)) and 20u out of earnings and profits described in section 959(c)(3).

(C) ***Section 965(a) inclusion amount.*** USP determines whether CFC1 and CFC2 are deferred foreign income corporations and, if so, determines its section 965(a) inclusion amounts with respect to CFC1 and CFC2. CFC1 and CFC2 are specified foreign corporations, and CFC1 and CFC2 each have accumulated post-1986 deferred foreign income greater than zero as of an E&P measurement date. Accordingly, CFC1 and CFC2 are deferred foreign income corporations. USP's section 965(a) inclusion amount with respect to each of CFC1 and CFC2, respectively, equals the section 965(a) earnings amount of CFC1 and CFC2, respectively.

(*1*) ***CFC1 section 965(a) earnings amount.*** The section 965(a) earnings amount with respect to CFC1 is 20u, the amount of its accumulated post-1986 deferred foreign income as of both November 2, 2017, and December 31, 2017, which is equal to 70u of post-1986 earnings and profits (30u earned and 40u attributable to the CFC2 distribution) reduced by 50u of such post-1986 earnings and profits described in section 959(c)(2) (30u earned and 20u attributable to the CFC2 distribution) under section 965(d)(2)(B) and § 1.965-1(f)(7)(i)(B). Under section 965(d)(3)(B) and § 1.965-1(f)(29)(i)(B), the post-1986 earnings and profits of CFC1 are not reduced by the 60u distribution to USP.

(*2*) ***CFC2 section 965(a) earnings amount.*** The section 965(a) earnings amount with respect to CFC2 is 80u, the amount of its accumulated post-1986 deferred foreign income as of both November 2, 2017, and December 31, 2017, which is equal to the amount of CFC2's post-1986 earnings and profits of 80u. CFC2's accumulated post-1986 deferred foreign income is equal to its post-1986 earnings and profits because CFC2 does not have earnings and profits that are attributable to income of the specified foreign corporation that is effectively connected with the conduct of a trade or business within the United States and subject to tax under chapter 1, or that, if distributed, would be excluded from the gross income of a United States shareholder under section 959 or from the gross income of another shareholder if such shareholder were a United States shareholder, and, therefore, no adjustment is made under section 965(d)(2) or § 1.965-1(f)(7). CFC2's 80u of post-1986 earnings and profits consists of 120u of earnings and profits that it earned, reduced by the 40u distribution to CFC1 under section 965(d)(3)(B) and § 1.965-1(f)(29)(i)(B). The amount of the reduction to the post-1986 earnings and profits of CFC2 for the 40u distribution is not limited by § 1.965-1(f)(29)(i)(B) because CFC1's post-1986 earnings and profits are increased by 40u as a result of the distribution. Furthermore, because the 40u distribution was made on July 1, 2017, which is before the E&P measurement date on November 2, 2017, § 1.965-4(f) is not relevant.

(*3*) ***Effect on earnings and profits described in section 959(c)(2) and (3).*** CFC1 and CFC2 increase their earnings and profits described in section 959(c)(2) by USP's section 965(a) inclusion amounts with respect to CFC1 and CFC2, 20u and 80u, respectively, and reduce their earnings and profits described in section 959(c)(3) by an equivalent amount.

(D) ***Distribution to United States shareholder.*** The distribution from CFC1 to USP is treated as a distribution of 60u out of the earnings and profits of CFC1 described in section 959(c)(2), which include earnings and profits attributable to the section 965(a) inclusion amount taken into account by USP.

(E) ***Section 902 and section 960 consequences*** —

(*1*) ***Distribution by and inclusions with respect to CFC2.*** Under section 960, USP is deemed to pay $3.50x ($21x × (20u/120u)) of CFC2's post-1986 foreign income taxes as a result of its inclusion under section 951(a)(1)(A) without regard to section 965(a) with respect to CFC2. As a result of the distribution from CFC2 to CFC1, CFC2's post-1986 foreign income taxes are reduced, and CFC1's post-1986 foreign income taxes are increased, by the foreign income taxes deemed paid by CFC1 under section 902 of $3.50x (($21x−$3.50x) × (20u/120u−20u)). Under section 960, USP is deemed to pay $14x (($21x−$3.50x−$3.50x) × 80u/(120u−40u)) of CFC2's post-1986 foreign income taxes as a result of its section 965(a) inclusion with respect to CFC2. The taxes deemed paid by USP as a result of its section 965(a) inclusion with respect to CFC2 are subject to the applicable percentage disallowance under section 965(g).

(*2*) ***Inclusions with respect to CFC1.*** As determined in paragraph (j)(1)(ii)(E)(*1*) of this *section (paragraph (E)*(1) *in the analysis in this Example 1),* as a result of the distribution from CFC2 to CFC1, CFC1 is deemed under section 902 to pay $3.50x of CFC2's post-1986 foreign income taxes. Under section 960, USP is deemed to pay $2.10x ($3.50x × (30u/(30u + 20u))) of CFC1's post-1986 foreign income taxes as a result of its inclusion under section 951(a)(1)(A) without regard to section 965(a) with respect to CFC1. Under section 960, USP is deemed to pay $1.40x (($3.50x−$2.10x) × 20u/(30u + 20u−30u)) of CFC1's post-1986 foreign income taxes as a result of its section 965(a) inclusion with respect to CFC1. The taxes deemed paid by USP as a result of its section 965(a) inclusion with respect to CFC1 are subject to the applicable percentage disallowance under section 965(g).

(2) ***Example 2. Determination of accumulated post-1986 deferred foreign income with subpart F income earned after E&P measurement date on November 2, 2017*** —

(i) ***Facts.*** The facts are the same as in paragraph (j)(1)(i) of this section (the facts in *Example 1*), except that on December 1, 2017, CFC1 earns an additional 50u of subpart F income (as defined in section 952), and neither CFC1 nor CFC2 has any post-1986 foreign income taxes.

(ii) ***Analysis*** —

(A) ***Adjustments to section 959(c) classification of earnings and profits for inclusion under section 951(a)(1)(A) without regard to section 965.*** USP determines its inclusion under section 951(a)(1)(A) without regard to section 965(a), which is 80u with respect to CFC1 and 20u with respect to CFC2 for their taxable years ending December 31, 2017. As a result of the inclusions under section 951(a)(1)(A), CFC1 and CFC2 increase their earnings and profits described in section 959(c)(2) by 80u and 20u, respectively.

(B) ***Distributions between specified foreign corporations before January 1, 2018.*** The analysis is the same as in paragraph (j)(1)(ii)(B) of this section (paragraph (B) in the analysis in *Example 1*).

(C) ***Section 965(a) inclusion amount.*** USP determines whether CFC1 and CFC2 are deferred foreign income corporations and, if so, determines its section 965(a) inclusion amounts with respect to CFC1 and CFC2. CFC1 and CFC2 are specified foreign corporations, and CFC1 and CFC2 each have accumulated post-1986 deferred foreign income greater than zero as of an E&P measurement date. Accordingly, CFC1 and CFC2 are deferred foreign income corporations. USP's section 965(a) inclusion amount with respect to each of CFC1 and CFC2, respectively, equals the section 965(a) earnings amount of CFC1 and CFC2, respectively.

(*1*) ***CFC1 section 965(a) earnings amount.*** The section 965(a) earnings amount with respect to CFC1 is 20u, the greater of—

(*i*) The amount of its accumulated post-1986 deferred foreign income as of November 2, 2017, 20u, which is equal to 70u of post-1986 earnings and profits (30u earned and 40u attributable to the CFC2 distribution) reduced by 50u of such post-1986 earnings and profits described in section 959(c)(2) without regard to the subpart F income earned after November 2, 2017 (30u earned and 20u attributable to the CFC2 distribution) under section 965(d)(2)(B) and § 1.965-1(f)(7)(i)(B) and (ii), and

(*ii*) The amount of its accumulated post-1986 deferred foreign income as of December 31, 2017, 20u, which is equal to 120u of post-1986 earnings and profits (80u earned and 40u attributable to the CFC2 distribution) reduced by 100u of such post-1986 earnings and profits described in section 959(c)(2) with regard to the subpart F income earned on or before December 31, 2017 (80u earned and 20u attributable to the CFC2 distribution) under section 965(d)(2)(B) and § 1.965-1(f)(7)(i)(B) and (ii).

(*2*) ***CFC2 section 965(a) earnings amount.*** The analysis is the same as in paragraph (j)(1)(ii)(C)(*2*) of this section (paragraph (C)(*2*) in the analysis in *Example 1*)).

(*3*) ***Effect on earnings and profits described in section 959(c)(2) and (3).*** The analysis is the same as in paragraph (j)(1)(ii)(C)(*3*) of this section (paragraph (C)(*3*) in the analysis in *Example 1*).

(D) ***Distribution to United States shareholder.*** The analysis is the same as in paragraph (j)(1)(ii)(D) of this section (paragraph (D) in the analysis in *Example 1*).

(3) ***Example 3. Determination of accumulated post-1986 deferred foreign income with subpart F income earned after E&P measurement date on November 2, 2017, but previously taxed earnings and profits attributable to the subpart F income distributed before E&P measurement date on November 2, 2017*** —

(i) ***Facts.*** The facts are the same as in paragraph (j)(1)(i) of this section (the facts in *Example 1*), except that on December 1, 2017, CFC2 earns an additional 50u of subpart F income (as defined in section 952), and neither CFC1 nor CFC2 has any post-1986 foreign income taxes.

(ii) ***Analysis*** —

(A) ***Adjustments to section 959(c) classification of earnings and profits for inclusion under section 951(a)(1)(A) without regard to section 965.*** USP determines its inclusion under section 951(a)(1)(A) without regard to section 965(a), which is 30u with respect to CFC1

and 70u with respect to CFC2 for their taxable years ending December 31, 2017. As a result of the inclusions under section 951(a)(1)(A), CFC1 and CFC2 increase their earnings and profits described in section 959(c)(2) by 30u and 70u, respectively.

(B) ***Distributions between specified foreign corporations before January 1, 2018.*** The distribution of 40u from CFC2 to CFC1 is treated as a distribution of 40u out of earnings and profits described in section 959(c)(2) (attributable to inclusions under section 951(a)(1)(A) without regard to section 965(a)).

(C) ***Section 965(a) inclusion amount.*** USP determines whether CFC1 and CFC2 are deferred foreign income corporations, and, if so, determines its section 965(a) inclusion amounts with respect to CFC1 and CFC2. Because USP wholly owns CFC1 and CFC2 under section 958(a) and USP does not have an aggregate foreign E&P deficit, USP's section 965(a) inclusion amount with respect to each of CFC1 and CFC2, respectively, equals the section 965(a) earnings amount, if any, of CFC1 and CFC2, respectively.

(*1*) ***CFC1 section 965(a) earnings amount.*** CFC1 is not a deferred foreign income corporation and does not have a section 965(a) earnings amount because the amount of its accumulated post-1986 deferred foreign income as of both November 2, 2017, and December 31, 2017, is 0u, which is equal to 70u of post-1986 earnings and profits (30u earned and 40u attributable to the CFC2 distribution) reduced by 70u of such post-1986 earnings and profits described in section 959(c)(2) (30u earned and 40u attributable to the CFC2 distribution) under section 965(d)(2)(B) and § 1.965-1(f)(7)(i)(B).

(*2*) ***CFC2 section 965(a) earnings amount.*** The section 965(a) earnings amount with respect to CFC2 is 100u, the greater of the amounts in paragraph (j)(3)(ii)(C)(2)(*i*) and (*ii*) of this section (paragraph (C)(2)(*i*) and (*ii*) in the analysis in this *Example 3*)—

(*i*) The amount of its accumulated post-1986 deferred foreign income as of November 2, 2017, 80u. CFC2's 80u of accumulated post-1986 deferred foreign income as of November 2, 2017, is equal to its 80u of post-1986 earnings and profits because no adjustment is made under section 965(d)(2) or § 1.965-1(f)(7), as CFC2 does not have earnings and profits that are attributable to income of the specified foreign corporation that is effectively connected with the conduct of a trade or business within the United States and subject to tax under chapter 1, or that, if distributed, would be excluded from the gross income of a United States shareholder under section 959 or from the gross income of another shareholder if such shareholder were a United States shareholder, without regard to the subpart F income earned after November 2, 2017. CFC2's 80u of post-1986 earnings and profits consists of 120u of earnings and profits that it earned, reduced by the 40u distribution to CFC1 under section 965(d)(3)(B) and § 1.965-1(f)(29)(i)(B). The amount of the reduction to the post-1986 earnings and profits of CFC2 for the 40u distribution is not limited by § 1.965-1(f)(29)(i)(B) because CFC1's post-1986 earnings and profits are increased by 40u as a result of the distribution. Furthermore, because the 40u distribution was made on July 1, 2017, which is before any E&P measurement date, § 1.965-4(f) is not relevant.

(*ii*) The amount of its accumulated post-1986 deferred foreign income as of December 31, 2017, 100u, which is equal to 130u of post-1986 earnings and profits reduced by 30u of such post-1986 earnings and profits described in section 959(c)(2) with regard to the subpart F income earned before December 31, 2017, under section 965(d)(2)(B) and § 1.965-1(f)(7)(i)(B) and (ii). CFC2's 130u of post-1986 earnings and profits consists of 170u of earnings and profits that it earned, reduced by the 40u distribution to CFC1 under section 965(d)(3)(B) and § 1.965-1(f)(29)(i)(B).

(*3*) ***Effect on earnings and profits described in section 959(c)(2) and (3).*** CFC2 increases its earnings and profits described in section 959(c)(2) by USP's section 965(a) inclusion amount with respect to CFC2, 100u, and reduces its earnings and profits described in section 959(c)(3) by an equivalent amount.

(D) ***Distribution to United States shareholder.*** The analysis is the same as in paragraph (j)(1)(ii)(D) of this section (paragraph (D) in the analysis in *Example 1*).

(4) ***Example 4. Determination of accumulated post-1986 deferred foreign income with distribution made after E&P measurement date on November 2, 2017 —***

(i) ***Facts.*** USP, a domestic corporation, owns all of the stock of CFC1, a foreign corporation, which owns all of the stock of CFC2, also a foreign corporation. USP, CFC1, and CFC2 all have taxable years ending December 31, 2017. As of January 1, 2017, CFC1 has 10u of earnings and profits described in section 959(c)(3) that were accumulated in taxable years beginning after December 31, 1986, while CFC1 was a specified foreign corporation, and $2x of post-1986 foreign income taxes; and CFC2 has 100u of earnings and profits described in section 959(c)(3) that were accumulated in taxable years beginning after December 31, 1986, while CFC2 was a specified foreign corporation and $10x of post-1986 foreign income taxes. For purposes of section 904, the post-1986 undistributed earnings and post-1986 foreign income taxes are in the general category. None of CFC1's or CFC2's earnings and profits are attributable to income treated as effectively connected with the conduct of a trade or business within the United States. On December 1, 2017, CFC2 distributes 100u to CFC1, and CFC1 distributes 10u to USP. USP does not have an aggregate foreign E&P deficit. USP includes in gross income all amounts that it is required to include under section 951. No foreign income tax is imposed or withheld on the distribution by CFC2 to CFC1 or the distribution by CFC1 to USP. USP does not apply § 1.965-4(f)(3) to determine the post-1986 earnings and profits of CFC1 and CFC2.

(ii) ***Analysis —***

(A) ***Adjustments to section 959(c) classification of earnings and profits for inclusion under section 951(a)(1)(A) without regard to section 965.*** The distribution from CFC2 to CFC1 does not give rise to subpart F income to CFC1 due to the application of section 954(c)(6). Accordingly, USP does not have an inclusion under section 951(a)(1)(A) without regard to section 965(a) with respect to CFC1 or CFC2 for their taxable years ending December 31, 2017. As a result, neither CFC1 nor CFC2 has earnings and profits described in section 959(c)(2).

(B) ***Distributions between specified foreign corporations before January 1, 2018.*** The distribution of 100u from CFC2 to CFC1 is initially treated as a distribution out of earnings and profits described in section 959(c)(3).

(C) ***Section 965(a) inclusion amount.*** USP determines whether CFC1 and CFC2 are deferred foreign income corporations, and, if so, determines its section 965(a) inclusion amounts with respect to CFC1 and CFC2. CFC1 and CFC2 are specified foreign corporations, and CFC1 and CFC2 each have accumulated post-1986 deferred foreign income greater than zero as of an E&P measurement date. Accordingly, CFC1 and CFC2 are deferred foreign income corporations. USP's section 965(a) inclusion amount with respect to each of CFC1 and CFC2, respectively, equals the section 965(a) earnings amount of CFC1 and CFC2, respectively.

(1) ***CFC1 section 965(a) earnings amount.*** The section 965(a) earnings amount with respect to CFC1 is 10u, the amount of its accumulated post-1986 deferred foreign income as of both November 2, 2017, and December 31, 2017, which is equal to the amount of CFC1's post-1986 earnings and profits of 10u. CFC1's accumulated post-1986 deferred foreign income is equal to its post-1986 earnings and profits because CFC1 does not have earnings and profits that are attributable to income of the specified foreign corporation that is effectively connected with the conduct of a trade or business within the United States and subject to tax under chapter 1, or that, if distributed, would be excluded from the gross income of a United States shareholder under section 959 or from the gross income of another shareholder if such shareholder were a United States shareholder, and therefore no adjustment is made under section 965(d)(2) or § 1.965-1(f)(7). But for § 1.965-4(f), CFC1's post-1986 earnings and profits as of December 31, 2017, would be 110u, but because the distribution from CFC2 is a specified payment, it is disregarded in determining CFC1's post-1986 earnings and profits as of December 31, 2017, under § 1.965-4(f). Under section 965(d)(3)(B) and § 1.965-1(f)(29)(i)(B), the post-1986 earnings and profits of CFC1 are not reduced by the 10u distribution to USP.

(2) ***CFC2 section 965(a) earnings amount.*** The section 965(a) earnings amount with respect to CFC2 is 100u, the amount of its accumulated post-1986 deferred foreign income as of both November 2, 2017, and December 31, 2017, which is equal to the amount of CFC2's post-1986 earnings and profits of 100u. CFC2's accumulated post-1986 deferred foreign income is equal to its post-1986 earnings and profits because CFC2 does not have earnings and profits that are attributable to income of the specified foreign corporation that is effectively connected with the conduct of a trade or business within the United States and subject to tax under chapter 1, or that, if distributed, would be excluded from the gross income of a United States shareholder under section 959 or from the gross income of another shareholder if such shareholder were a United States shareholder, and therefore no adjustment is made under section 965(d)(2) or § 1.965-1(f)(7). But for § 1.965-4(f), CFC2's post-1986 earnings and profits as of December 31, 2017, would be 0u, but because the distribution to CFC1 is a specified payment, it is disregarded in determining CFC2's post-1986 earnings and profits as of December 31, 2017, under § 1.965-4(f).

(3) ***Effect on earnings and profits described in section 959(c)(2) and (3).*** CFC1 and CFC2 increase their earnings and profits described in section 959(c)(2) by USP's section 965(a) inclusion amounts with respect to CFC1 and CFC2, 10u and 100u, respectively, and reduce their earnings and profits described in section 959(c)(3) by an equivalent amount.

(D) ***Distributions —***

(1) ***Distribution that is a specified payment.*** The distribution from CFC2 to CFC1 is recharacterized as a distribution of 100u out of the earnings and profits of CFC2 described in section 959(c)(2), which include earnings and profits attributable to the section 965(a) inclusion amount taken into account by USP.

(2) ***Distribution to United States shareholder.*** The distribution from CFC1 to USP is treated as a distribution of 10u out of the earnings and profits of CFC1 described in section 959(c)(2), which include earnings and profits attributable to the section 965(a) inclusion amount taken into account by USP.

(E) ***Section 902 and section 960 consequences.*** Under section 960, USP is deemed to pay $10x ($10x × (100u/100u)) of CFC2's post-1986 foreign income taxes as a result of its section 965(a) inclusion with respect to CFC2 and $2x ($2x × (10u/10u) of CFC1's post-1986 foreign income taxes as a result of its section 965(a) inclusion with respect to CFC1. Such taxes are subject to the applicable percentage disallowance under section 965(g).

(5) ***Example 5. Determination of accumulated post-1986 deferred foreign income with section 951(a)(1)(B) inclusion after E&P measurement date on November 2, 2017*** —

(i) ***Facts.*** USP, a domestic corporation, owns all of the stock of CFC, a foreign corporation. USP has a taxable year ending December 31, 2017, and CFC has a taxable year ending November 30, 2017. As of December 1, 2016, CFC has 110u of earnings and profits described in section 959(c)(3) that were accumulated in taxable years beginning after December 31, 1986, while CFC was a specified foreign corporation. CFC holds 150u of United States property throughout its taxable year ending November 30, 2017, but disposes of it on December 1, 2017, recognizing no gain or loss on the property. Between December 1, 2017, and December 31, 2017, CFC earns an additional 10u of income that does not constitute subpart F income or income treated as effectively connected with the conduct of a trade or business within the United States that gives rise to 10u of earnings and profits. USP includes in income all amounts that it is required to include under section 951.

(ii) ***Analysis*** —

(A) ***Section 965(a) inclusion amount.*** USP determines whether CFC is a deferred foreign income corporation, and, if so, determines its section 965(a) inclusion amount with respect to CFC. CFC is a specified foreign corporation, and CFC has accumulated post-1986 deferred foreign income greater than zero as of an E&P measurement date. Accordingly, CFC is a deferred foreign income corporation. USP's section 965(a) inclusion amount with respect to CFC equals the section 965(a) earnings amount of CFC.

(1) ***CFC section 965(a) earnings amount.*** The section 965(a) earnings amount with respect to CFC is 110u, the greater of the amount of its accumulated post-1986 deferred foreign income as of November 2, 2017, which is 110u, and the amount of its accumulated post-1986 deferred foreign income as of December 31, 2017, which is 10u. CFC's accumulated post-1986 deferred foreign income as of November 2, 2017, is equal to its 110u of post-1986 earnings and profits, which are not reduced by the 110u of earnings and profits described in section 959(c)(1) as a result of USP's section 951(a)(1)(B) inclusion with respect to CFC as of December 31, 2017, because such amounts would not be excluded from the gross income of a United States shareholder under section 959 under section 965(d)(2) or § 1.965-1(f)(7) if distributed on November 2, 2017. CFC's accumulated post-1986 deferred foreign

income as of December 31, 2017, is equal to its 120u of post-1986 earnings and profits reduced by the 110u of earnings and profits described in section 959(c)(1) as a result of USP's section 951(a)(1)(B) inclusion with respect to CFC as of December 31, 2017, which would be excluded from the gross income of a United States shareholder under section 959 under section 965(d)(2) or § 1.965-1(f)(7) if distributed on December 31, 2017.

(2) ***Effect on earnings and profits described in section 959(c)(2) and (3).*** In USP's taxable year ending December 31, 2018, CFC increases its earnings and profits described in section 959(c)(2) by USP's section 965(a) inclusion amount with respect to CFC, 110u, and reduces its earnings and profits described in section 959(c)(3) by an equivalent amount.

(B) ***Section 956 inclusion.*** In USP's taxable year ending December 31, 2017, USP increases its earnings and profits described in section 959(c)(1) by USP's amount included under sections 951(a)(1)(B) and 956 with respect to CFC, 110u, and reduces its earnings and profits described in section 959(c)(3) by an equivalent amount.

(6) ***Example 6. Section 1248 inclusion*** —

(i) ***Facts.*** USP1, a domestic corporation, owns all of the stock of CFC, a foreign corporation, until it sells all of such stock to USP2, a domestic corporation, on December 1, 2017, in a sale on which USP1 recognizes $100x of gain. Throughout 2017, 1u=$1x. USP1, USP2, and CFC all have taxable years ending December 31, 2017. As of January 1, 2017, CFC has 100u of earnings and profits described in section 959(c)(3) that were accumulated in taxable years beginning after December 31, 1986, while CFC was wholly owned by USP1. On March 1, 2017, CFC distributes 20u to USP1. None of CFC's earnings and profits are attributable to income treated as effectively connected with the conduct of a trade or business within the United States. USP2 does not have an aggregate foreign E&P deficit. USP1 and USP2 include in income all amounts that they are required to include under sections 951 and 1248.

(ii) ***Analysis*** —

(A) ***Adjustments to section 959(c) classification of earnings and profits for section 1248 inclusion.*** USP1's inclusion under section 1248 with respect to CFC is $80x ($100x−$20x). As a result of the inclusion under section 1248, under section 959(e), CFC increases its earnings and profits described in section 959(c)(2) by 80u.

(B) ***Section 965(a) inclusion amount.*** USP2 determines whether CFC is a deferred foreign income corporation and, if so, determines its section 965(a) inclusion amount with respect to CFC. CFC is a specified foreign corporation, and CFC has accumulated post-1986 deferred foreign income greater than zero as of an E&P measurement date. Accordingly, CFC is a deferred foreign income corporation. USP2's section 965(a) inclusion amount with respect to CFC equals the section 965(a) earnings amount of CFC. The section 965(a) earnings amount with respect to CFC is 20u, the amount of its accumulated post-1986 deferred foreign income as of both November 2, 2017, and December 31, 2017, which is equal to 100u of post-1986 earnings and profits reduced by 80u of such post-1986 earnings and profits described in section 959(c)(2) under section 965(d)(2)(B) and § 1.965-1(f)(7)(i)(B). CFC increases its earnings and profits described in

section 959(c)(2) by USP2's section 965(a) inclusion amount with respect to CFC, 20u, and reduces its earnings and profits that would be described in section 959(c)(3) but for the application of section 965(a) by an equivalent amount.

(C) ***Distributions to United States shareholders.*** The distributions from CFC to USP1 (including the deemed dividend under section 1248) are treated as distributions out of the earnings and profits of CFC described in section 959(c)(3).

(7) ***Example 7. Distribution attributable to section 965(a) previously taxed earnings and profits*** —

(i) ***Facts.*** USP, a domestic corporation, owns all of the stock of CFC1, a specified foreign corporation that has no post-1986 earnings and profits (or deficit in post-1986 earnings and profits), and CFC1 owns all the stock of CFC2, a deferred foreign income corporation. USP is a calendar year taxpayer. CFC1's last taxable year beginning before January 1, 2018, ends on November 30, 2018; CFC2 has an inclusion year that ends on November 30, 2018. The functional currency of CFC1 and CFC2 is the U.S. dollar. USP's adjusted basis in the stock of CFC1 is zero. On January 1, 2018, CFC2 distributes $100x to CFC1, and CFC1 distributes $100x to USP. USP has a section 965(a) inclusion amount of $100x with respect to CFC2 that is taken into account for USP's taxable year ending December 31, 2018. CFC2 has no earnings and profits described in section 959(c)(1) or (2) other than section 965(a) previously taxed earnings and profits.

(ii) ***Analysis.*** Under paragraph (c) of this section, CFC2 has $100x of section 965(a) previously taxed earnings and profits with respect to USP. USP receives a distribution from CFC2 through a chain of ownership described in section 958(a) during the inclusion year of CFC2 that is attributable to the $100x of section 965(a) previously taxed earnings and profits of CFC2. Under paragraph (g)(1) of this section, the amount of gain that USP otherwise would recognize with respect to the stock of CFC1 under section 961(b)(2) is reduced (but not below zero) by $100x, the amount of CFC2's section 965(a) previously taxed earnings and profits with respect to USP. As of the close of November 30, 2018, USP's basis in CFC1 is increased under paragraph (e) of this section by USP's section 965(a) inclusion amount with respect to CFC2 ($100x), and is reduced under paragraph (g)(2) of this section by the amount of gain that would have been recognized by USP under section 961(b)(2) but for the application of paragraph (g)(1) of this section ($100x).

(8) ***Example 8. Distribution attributable to section 965(b) previously taxed earnings and profits; parent-subsidiary*** —

(i) ***Facts.*** The facts are the same as in paragraph (j)(7)(i) of this section (the facts in *Example 7*), except that CFC1 has a specified E&P deficit of $100x. Because of the specified E&P deficit of CFC1, USP's section 965(a) inclusion amount with respect to CFC2 is reduced to zero pursuant to section 965(b)(1) and § 1.965-1(b)(2). USP makes the election described in paragraph (f)(2) of this section.

(ii) ***Analysis*** —

(A) ***Application of the gain reduction rule.*** Under paragraph (d)(1) of this section, CFC2 has $100x of section 965(b) previously taxed earnings and profits with respect to USP, and, under paragraph (d)(2) of this section, CFC1's earnings and profits described in section 959(c)(3) are increased by $100x to $0. USP receives a distribution from CFC2 through a chain of ownership described in section 958(a) during the inclusion year of CFC2 that is attributable to the $100x of section 965(b) previously taxed earnings and profits of CFC2.

Under paragraph (g)(1) of this section, the amount of gain that USP otherwise would recognize with respect to the stock of CFC1 under section 961(b)(2) is reduced (but not below zero) by $100x, the amount of CFC2's section 965(b) previously taxed earnings and profits with respect to USP under paragraph (d)(1) of this section.

(B) ***Adjustments to the basis of CFC1.*** Because USP makes the election described in paragraph (f)(2) of this section, as of the close of November 30, 2018, USP's basis in CFC1 is increased under paragraph (f)(2)(ii)(A) of this section by an amount equal to CFC2's section 965(b) previously taxed earnings and profits with respect to USP under paragraph (d)(1) of this section ($100x), reduced under paragraph (f)(2)(ii)(B) of this section by an amount equal to the portion of the specified E&P deficit of CFC1 taken into account in determining USP's section 965(a) inclusion amount with respect to CFC2 ($100x), and reduced under paragraph (g)(2) of this section by the amount of gain that would have been recognized by USP with respect to the stock of CFC1 under section 961(b)(2) but for the application of paragraph (g)(1) of this section ($100x). Under paragraph (h)(2) and (3) of this section, the excess of the net reduction from the adjustments under paragraphs (f) and (g) of this section over USP's basis in the stock of CFC1 (in this case, $100x) is treated as gain recognized by USP from the sale or exchange of property.

(9) ***Example 9. Distribution attributable to section 965(b) previously taxed earnings and profits; brother-sister —***

(i) ***Facts.*** The facts are the same as in paragraph (j)(8)(i) of this section (the facts in *Example 8*), except that USP owns all the stock of CFC2, USP's adjusted basis in the stock of CFC2 is zero, CFC1 made no distributions, and on January 1, 2018, CFC2 distributes $100x to USP.

(ii) ***Analysis —***

(A) ***Application of the gain reduction rule.*** Under paragraph (d)(1) of this section, CFC2 has $100x of section 965(b) previously taxed earnings and profits with respect to USP, and, under paragraph (d)(2) of this section, CFC1's earnings and profits described in section 959(c)(3) (deficit of $100x) are increased by $100x to $0. USP receives a distribution from CFC2 during the inclusion year of CFC2 that is attributable to the $100x of section 965(b) previously taxed earnings and profits of CFC2. Under paragraph (g)(1) of this section, the amount of gain that USP otherwise would recognize with respect to the stock of CFC2 under section 961(b)(2) is reduced (but not below zero) by $100x, the amount of CFC2's section 965(b) previously taxed earnings and profits with respect to USP under paragraph (d)(1) of this section.

(B) ***Adjustments to the basis of CFC1 and CFC2.*** Because USP makes the election described in paragraph (f)(2) of this section, as of the close of November 30, 2018, USP's basis in the stock of CFC2 is increased under paragraph (f)(2)(ii)(A) of this section by the amount of CFC2's section 965(b) previously taxed earnings and profits with respect to USP under paragraph (d)(1) of this section ($100x) and reduced under paragraph (g)(2) of this section by the amount of gain that would have been recognized by USP with respect to the stock of CFC2 under section 961(b)(2) but for the application of paragraph (g)(1) of this section ($100x). As of the close of November 30, 2018, USP's basis in CFC1 is reduced under paragraph (f)(2)(ii)(B) of this section by an amount equal to the portion of USP's pro rata share of the specified E&P deficit of CFC1 taken into account in determining USP's section 965(a) inclusion amount with respect to CFC2 ($100x). Under paragraph (h)(3) of

this section, the excess of the reduction under paragraph (f) of this section over USP's basis in the stock of CFC1 (in this case, $100x) is treated as gain recognized by USP from the sale or exchange of property.

[T.D. 9846, 84 FR 1875, Feb. 5, 2019, as amended by T.D. 9846, 84 FR 14260, Apr. 10, 2019]

§ 1.965-3 Section 965(c) deductions.

(a) ***Scope.*** This section provides rules regarding section 965(c) deductions and section 965(c) deduction amounts. Paragraph (b) of this section provides rules for disregarding certain assets for purposes of determining the aggregate foreign cash position of a section 958(a) U.S. shareholder. Paragraph (c) of this section provides rules for determining the aggregate foreign cash position for a section 958(a) U.S. shareholder inclusion year. Paragraph (d) of this section provides a rule regarding certain expatriated entities. Paragraph (e) of this section provides a rule for the treatment of section 965(c) deductions in connection with an election under section 962. Paragraph (f) of this section provides rules regarding the treatment of a section 965(c) deduction under certain provisions of the Internal Revenue Code. Paragraph (g) of this section provides a rule for domestic pass-through entities.

(b) ***Rules for disregarding certain assets for determining aggregate foreign cash position*** —

(1) ***Disregard of certain obligations between related specified foreign corporations.*** In determining the aggregate foreign cash position of a section 958(a) U.S. shareholder, any account receivable, account payable, short-term obligation, or derivative financial instrument between a specified foreign corporation with respect to which the section 958(a) U.S. shareholder owns section 958(a) stock and a related specified foreign corporation on corresponding cash measurement dates is disregarded to the extent of the smallest of the product of the amount of the item on such corresponding cash measurement dates of each specified foreign corporation and the section 958(a) U.S. shareholder's ownership percentage of section 958(a) stock of the specified foreign corporation owned by the section 958(a) U.S. shareholder on such dates. For purposes of this paragraph (b)(1)(i), a specified foreign corporation is treated as a related specified foreign corporation with respect to another specified foreign corporation if, as of the cash measurement date referred to in the preceding sentence of each specified foreign corporation, the specified foreign corporations are related persons within the meaning of section 954(d)(3), substituting the term “specified foreign corporation” for “controlled foreign corporation” in each place that it appears.

(2) ***Disregard of other assets upon demonstration of double-counting.*** For purposes of determining the aggregate foreign cash position of a section 958(a) U.S. shareholder, the section 958(a) U.S. shareholder's pro rata share of the cash position of a specified foreign corporation on a cash measurement date is reduced by amounts of net accounts receivable, actively traded property, and short-term obligations to the extent such amounts are attributable to amounts taken into account in determining the section 958(a) U.S. shareholder's pro rata share of the cash position of another specified foreign corporation on the corresponding cash measurement date of such other specified corporation and to the extent not disregarded pursuant to paragraph (b)(1) of this section. However, the preceding sentence applies only if the section 958(a) U.S. shareholder attaches a statement containing the information outlined in paragraphs (b)(2)(i) through (v) of this section to its timely filed return (taking into account extensions, if any) for the section 958(a) U.S. shareholder inclusion year, or, if the section 958(a) U.S. shareholder has multiple section 958(a) U.S. shareholder inclusion

years, the later of such years. Relief is not available under § 301.9100-2 or 301.9100-3 to allow late filing of the statement. The statement must contain the following information with respect to each specified foreign corporation for which the cash position is reduced under this paragraph (b)(2)—

(i) A description of the asset that would be taken into account with respect to both specified foreign corporations,

(ii) A statement of the amount by which its pro rata share of the cash position of one specified foreign corporation is reduced,

(iii) A detailed explanation of why there would otherwise be double-counting, including the computation of the amount taken into account with respect to the other specified foreign corporation, and

(iv) An explanation of why paragraph (b)(1) of this section does not apply to disregard such amount.

(3) ***Disregard of portion of cash position of noncorporate entities treated as specified foreign corporations.*** If an entity is treated as a specified foreign corporation of a section 958(a) U.S. shareholder pursuant to section 965(c)(3)(E), for purposes of determining the aggregate foreign cash position of the section 958(a) U.S. shareholder, the section 958(a) U.S. shareholder's pro rata share of the cash position of the entity (determined taking into account paragraphs (b)(1) and (b)(2) of this section) is reduced by the amount of the pro rata share attributable to deemed stock of the entity not owned (within the meaning of section 958(a), applied by treating domestic pass-through entities as foreign) by a specified foreign corporation of the section 958(a) U.S. shareholder (determined without taking into account section 965(c)(3)(E)).

(4) ***Examples.*** The following examples illustrate the application of this paragraph (b).

(i) ***Example 1*** —

(A) ***Facts.*** USP, a domestic corporation, owns all of the stock of CFC1, a foreign corporation. CFC1 owns 95% of the only class of stock of CFC2, also a foreign corporation, and 40% of the only class of stock of CFC3, also a foreign corporation. The remaining 5% of the only class of stock of CFC2 is owned by a person unrelated to USP, CFC1, and CFC2; and the remaining 60% of the only class of stock of CFC3 is owned by a person unrelated to USP and CFC1. USP, CFC1, and CFC3 have calendar year taxable years. CFC2 has a taxable year ending on November 30. On November 15, 2015, CFC1 makes a loan of $100x to CFC2, which is required to be and is, in fact, repaid on January 1, 2016. On November 15, 2016, CFC2 sells inventory to CFC1 in exchange for an account receivable of $200x, which is required to be and is, in fact, repaid on December 15, 2016. On August 1, 2017, CFC1 makes a loan of $300x to CFC3, which is required to be and is, in fact, repaid on January 31, 2018.

(B) ***Analysis*** —

(*1*) ***Loan from CFC1 to CFC2.*** For purposes of determining the aggregate foreign cash position of USP, a section 958(a) U.S. shareholder of CFC1, under paragraph (b)(1) of this section, because CFC1 and CFC2 are related within the meaning of paragraph (b)(1) of this section, the short-term obligation of CFC2 held by CFC1 outstanding on the first cash measurement date of each specified foreign corporation, November 30, 2015, and December 31, 2015, respectively, is disregarded to the extent of 95%, the

smallest ownership percentage of section 958(a) stock of CFC1 and CFC2 owned by USP on such first cash measurement dates. Accordingly, USP only takes into account $5 ($100−95% of $100) of the short-term obligation in determining CFC1's cash position for purposes of determining its aggregate foreign cash position.

(2) ***Account receivable of CFC1 held by CFC2.*** Because the account receivable of CFC1 held by CFC2 on its second cash measurement date, November 30, 2016, is not outstanding on CFC1's second cash measurement date, December 31, 2016, paragraph (b)(1) of this section does not apply to disregard any portion of such account receivable.

(3) ***Loan from CFC1 to CFC3.*** Because CFC3 is not related to CFC1 within the meaning of paragraph (b)(1) of this section, paragraph (b)(1) of this section does not apply to disregard any portion of such short-term obligation.

(ii) ***Example 2*** —

(A) ***Facts.*** The facts are the same as in paragraph (b)(4)(i)(A) of this section (the facts in *Example 1*), except that on December 1, 2015, CFC1 sells 5% of the stock of CFC2 to an unrelated person.

(B) ***Analysis.*** The analysis is the same as in paragraph (b)(4)(i)(B) of this section (the analysis in *Example 1*), except that the short-term obligation of CFC2 held by CFC1 outstanding on both of their first cash measurement dates, November 30, 2015, and December 31, 2015, respectively, is disregarded under paragraph (b)(1) of this section to the extent of 90%, the smallest ownership percentage of section 958(a) stock of CFC1 and CFC2 by USP on such first cash measurement dates. Accordingly, USP takes into account $10 ($100−90% of $100) of the short-term obligation in determining CFC1's cash position for purposes of determining its aggregate foreign cash position.

(iii) ***Example 3*** —

(A) ***Facts.*** USP, a domestic corporation, owns all of the stock of CFC1, a foreign corporation, which owns 45% of the only class of stock of CFC2, also a foreign corporation. The remainder of the CFC2 stock is actively traded on an established financial market but is not owned by any person related to USP or CFC1. USP, CFC1, and CFC2 have calendar year taxable years. The value of the CFC2 stock owned by CFC1 is $500x on each of the cash measurement dates. Also on each of the cash measurement dates, CFC2 has $300x of assets described in section 965(c)(3)(B) and § 1.965-1(f)(16) that are taken into account in determining its cash position.

(B) ***Analysis.*** For purposes of determining USP's aggregate foreign cash position, USP's pro rata share of the cash position of CFC1 on each cash measurement date may be reduced by the amount of the stock of CFC2 to the extent attributable to amounts taken into account in determining USP's pro rata share of the cash position of CFC2 on such cash measurement date (that is, to the extent of the $135x taken into account with respect to CFC2), provided USP attaches a statement to its timely filed return (taking into account extensions, if any) containing the following: A description of the CFC2 stock and the assets of CFC2 taken into account in determining its cash position; a statement that USP's pro rata share of the cash position of CFC1 is being reduced by $135x; the computation of the $135x taken into account with respect to CFC2; and an explanation of why paragraph (b)(1) of this section does not apply to disregard such amount.

(iv) *Example 4* —

(A) ***Facts.*** USP, a domestic corporation, owns all of the stock of CFC1 and CFC2, each a foreign corporation. USP, CFC1, and CFC2 have calendar year taxable years. CFC1 buys goods on credit from a third party for $100x and thus has an account payable of $100x. CFC1 modifies the goods and sells to CFC2 for $105x in exchange for an account receivable of $105x. CFC2 modifies the goods and sells to another third party for $110x in exchange for an account receivable of $110x. All of the accounts payable and accounts receivable are outstanding on the final cash measurement date.

(B) ***Analysis.*** For purposes of determining USP's aggregate foreign cash position, on the final cash measurement date, CFC1 has net accounts receivable of $0 because, pursuant to paragraph (b)(1) of this section, CFC1's account receivable from CFC2 is disregarded, and CFC2 has net accounts receivable of $110x because, pursuant to paragraph (b)(1) of this section, CFC2's account payable to CFC1 is disregarded. USP cannot rely on the rule in paragraph (b)(2) of this section because no amounts attributable to CFC2's net accounts receivable are taken into account with respect to another specified foreign corporation.

(v) *Example 5* —

(A) ***Facts.*** USP, a domestic corporation, owns all of the stock of CFC1 and CFC2, each a foreign corporation. USP and CFC1 own 60% and 40%, respectively, of the interests in the capital and profits of PS1, a partnership. PS1 and CFC2 own 70% and 30%, respectively, of the interests in the capital and profits of PS2, a partnership. On each cash measurement date, PS1's cash position of $100x consists entirely of cash, and PS2's cash position of $200x includes a $50x short-term obligation of CFC2.

(B) *Analysis* —

(*1*) ***Treatment of PS1.*** Because an interest in PS1 is held by CFC1, a specified foreign corporation of USP, and PS1 would be a specified foreign corporation of USP if it were a foreign corporation, PS1 is treated as a specified foreign corporation of USP for purposes of determining USP's aggregate foreign cash position. Without regard to paragraph (b)(3) of this section, USP must take into account $100x, its pro rata share of PS1's cash position, for purposes of determining its aggregate foreign cash position. However, 60% of that amount is attributable to deemed stock of PS1 that is not owned (within the meaning of section 958(a)) by a specified foreign corporation of USP. Accordingly, pursuant to paragraph (b)(3) of this section, the amount of PS1's cash position that USP must take into account for purposes of determining its aggregate foreign cash position is reduced by $60x (60% of $100x) to $40x ($100x−$60x).

(*2*) ***Treatment of PS2.*** Because an interest in PS2 is held by CFC2, a specified foreign corporation of USP, and PS2 would be a specified foreign corporation of USP if it were a foreign corporation, PS2 is treated as a specified foreign corporation of USP for purposes of determining USP's aggregate foreign cash position. USP, CFC1, CFC2, PS1, and PS2 all have calendar year taxable years. For purposes of determining the aggregate foreign cash position of USP, a section 958(a) U.S. shareholder of PS2, under paragraph (b)(1) of this section, the short-term obligation of CFC2 held by PS2 outstanding on each cash measurement date of each specified foreign corporation is disregarded on such cash measurement dates. Accordingly, without regard to

paragraph (b)(3) of this section, USP must take into account $150x ($200x−$50x) of PS2's cash position for purposes of determining its aggregate foreign cash position. However, 42% (60% × 70%) of that amount is attributable to deemed stock of PS2 that is not owned (within the meaning of section 958(a), applied by treating PS1 as foreign if it is a domestic pass-through entity) by a specified foreign corporation of USP (determined without taking into account section 965(c)(3)(E)). Accordingly, pursuant to paragraph (b)(3) of this section, the amount of PS2's cash position that USP must take into account for purposes of determining its aggregate foreign cash position is reduced by $63x (42% of $150x) to $87x ($150x−$63x).

(c) ***Determination of aggregate foreign cash position for a section 958(a) U.S. shareholder inclusion year*** —

(1) ***Single section 958(a) U.S. shareholder inclusion year.*** If a section 958(a) U.S. shareholder has a single section 958(a) U.S. shareholder inclusion year, then the section 958(a) U.S. shareholder's aggregate foreign cash position for the section 958(a) U.S. shareholder inclusion year is equal to the aggregate foreign cash position of the section 958(a) U.S. shareholder.

(2) ***Multiple section 958(a) U.S. shareholder inclusion years.*** If a section 958(a) U.S. shareholder has multiple section 958(a) U.S. shareholder inclusion years, then the section 958(a) U.S. shareholder's aggregate foreign cash position for each section 958(a) U.S. shareholder inclusion year is determined by allocating the aggregate foreign cash position to a section 958(a) U.S. shareholder inclusion year under paragraphs (c)(2)(i) and (c)(2)(ii) of this section.

(i) ***Allocation to first section 958(a) U.S. shareholder inclusion year.*** A portion of the aggregate foreign cash position of the section 958(a) U.S. shareholder is allocated to the first section 958(a) U.S. shareholder inclusion year in an amount equal to the lesser of the section 958(a) U.S. shareholder's aggregate foreign cash position or the section 958(a) U.S. shareholder's aggregate section 965(a) inclusion amount for the section 958(a) U.S. shareholder inclusion year.

(ii) ***Allocation to succeeding section 958(a) U.S. shareholder inclusion years.*** The amount of the section 958(a) U.S. shareholder's aggregate foreign cash position allocated to any succeeding section 958(a) U.S. shareholder inclusion year equals the lesser of the excess, if any, of the section 958(a) U.S. shareholder's aggregate foreign cash position over the aggregate amount of its aggregate foreign cash position allocated to preceding section 958(a) U.S. shareholder inclusion years under paragraph (c)(2)(i) of this section and this paragraph (c)(2)(ii) or the section 958(a) U.S. shareholder's aggregate section 965(a) inclusion amount for such succeeding section 958(a) U.S. shareholder inclusion year.

(3) ***Estimation of aggregate foreign cash position.*** For purposes of determining the aggregate foreign cash position of a section 958(a) U.S. shareholder, the section 958(a) U.S. shareholder may assume that its pro rata share of the cash position of any specified foreign corporation whose last taxable year beginning before January 1, 2018, ends after the date the return for such section 958(a) U.S. shareholder inclusion year (the *estimated section 958(a) U.S. shareholder inclusion year*) is timely filed (taking into account extensions, if any) is zero as of the cash measurement date with which the taxable year of such specified foreign corporation ends. If a section 958(a) U.S. shareholder's pro rata share of the cash position of a specified foreign corporation is treated as zero pursuant to the preceding sentence, the amount described in § 1.965-1(f)(8)(i)(A) with respect to such section 958(a) U.S. shareholder in fact exceeds the amount described in § 1.965-1(f)(8)(i)(B) with respect to such section 958(a) U.S. shareholder, and the aggregate section 965(a) inclusion amount for the estimated section 958(a) U.S. shareholder inclusion year exceeds the amount described in §

1.965-1(f)(8)(i)(B) with respect to such section 958(a) U.S. shareholder, interest and penalties will not be imposed if such section 958(a) U.S. shareholder amends the return for the estimated section 958(a) U.S. shareholder inclusion year to account for the correct aggregate foreign cash position for the year. The amended return must be filed by the due date (taking into account extensions, if any) for the return for the year after the estimated section 958(a) U.S. shareholder inclusion year.

(4) ***Examples.*** The following examples illustrate the application of this paragraph (c).

(i) ***Example 1. Estimation of aggregate foreign cash position for a section 958(a) U.S. shareholder inclusion year*** —

(A) ***Facts.*** USP, a domestic corporation, owns all of the stock of CFC1, a foreign corporation, which owns all of the stock of CFC2, also a foreign corporation. USP is a calendar year taxpayer. CFC1 has a taxable year ending on December 31, and CFC2 has a taxable year ending on November 30. The cash position of CFC1 on each of December 31, 2015, December 31, 2016, and December 31, 2017, is $100x. The cash position of CFC2 on each of November 30, 2015, and November 30, 2016, is $200x. USP has a section 965(a) inclusion amount of $300x with respect to CFC1.

(B) ***Analysis.*** In determining its aggregate foreign cash position for its 2017 taxable year, USP may assume that its pro rata share of the cash position of CFC2 will be zero as of November 30, 2018, for purposes of filing its return due on April 18, 2018 (or due on October 15, 2018, with extension). Therefore, USP's aggregate foreign cash position is treated as $300x, which is the greater of (a) $300x, 50% of the sum of USP's pro rata shares of the cash position of CFC1 as of December 31, 2015, and December 31, 2016, and of the cash position of CFC2 as of November 30, 2015, and November 30, 2016, and (b) $100x, USP's pro rata share of the cash position of CFC1 as of December 31, 2017. If USP's pro rata share of the cash position of CFC2 as of November 30, 2018, in fact exceeds $200x, USP must amend its return for its 2017 taxable year to reflect the correct aggregate foreign cash position by the due date for its return for its 2018 taxable year, April 15, 2019 (or October 15, 2019, with extension).

(ii) ***Example 2. Allocation of aggregate foreign cash position among section 958(a) U.S. shareholder inclusion years*** —

(A) ***Facts.*** The facts are the same as in paragraph (c)(4)(i)(A) of this section (the facts in *Example 1*), except that the cash position of each of CFC1 and CFC2 on all relevant cash measurement dates is $200x, with the result that USP has an aggregate foreign cash position determined under § 1.965-1(f)(8)(i) of $400x. For its 2017 taxable year, USP has a section 965(a) inclusion amount with respect to CFC1 of $300x, and for its 2018 taxable year, USP has a section 965(a) inclusion amount with respect to CFC2 of $300x.

(B) ***Analysis.*** Under paragraph (c)(2)(i) of this section, USP's aggregate foreign cash position for 2017 is $300x, which is the lesser of USP's aggregate foreign cash position determined under § 1.965-1(f)(8)(i) ($400x) or the section 965(a) inclusion amount ($300x) that USP takes into account in 2017. Under paragraph (c)(2)(ii) of this section, the amount of USP's aggregate foreign cash position for 2018 is $100x, USP's aggregate foreign cash position determined under § 1.965-1(f)(8)(i) ($400x) reduced by the amount of its aggregate foreign cash position for 2017 ($300x) under paragraph (c)(2)(i) of this section.

(d) ***Increase of income by section 965(c) deduction of an expatriated entity*** —

(1) ***In general.*** If a person is allowed a section 965(c) deduction and the person (or a successor) first becomes an expatriated entity, with respect to a surrogate foreign corporation, at any time during the 10-year period beginning on December 22, 2017, then the tax imposed by chapter 1 of the Internal Revenue Code is increased for the first taxable year in which such person becomes an expatriated entity by an amount equal to 35 percent of the person's section 965(c) deductions, and no credits are allowed against such increase in tax. The preceding sentence applies only if the surrogate foreign corporation first becomes a surrogate foreign corporation on or after December 22, 2017.

(2) ***Definition of expatriated entity.*** For purposes of paragraph (d)(1) of this section, the term *expatriated entity* has the same meaning given such term under section 7874(a)(2), except that such term does not include an expatriated entity if the surrogate foreign corporation with respect to the expatriated entity is treated as a domestic corporation under section 7874(b).

(3) ***Definition of surrogate foreign corporation.*** For purposes of paragraph (d)(1) of this section, the term *surrogate foreign corporation* has the meaning given such term in section 7874(a)(2)(B).

(e) ***Section 962 election*** —

(1) ***In general.*** In the case of an individual (including a trust or estate) that makes an election under section 962, any section 965(c) deduction taken into account under § 1.962-1(b)(1)(i)(B) in determining taxable income as used in section 11 is not taken into account for purposes of determining the individual's taxable income under section 1.

(2) ***Example.*** The following example illustrates the application of the rule in this paragraph (e).

(i) ***Facts.*** USI, a United States citizen, owns 10% of the capital and profits of USPRS, a domestic partnership that has a calendar year taxable year, the remainder of which is owned by foreign persons unrelated to USI or USPRS. USPRS owns all of the stock of FS, a foreign corporation that is a controlled foreign corporation with a calendar year taxable year. USPRS has a section 965(a) inclusion amount with respect to FS of $1,000x and has a section 965(c) deduction amount of $700x. FS has no post-1986 foreign income taxes. USI makes a valid election under section 962 for 2017.

(ii) ***Analysis.*** USI's “taxable income” described in § 1.962-1(b)(1)(i) equals $100x (USI's domestic pass-through owner share of USPRS's section 965(a) inclusion amount) minus $70x (USI's domestic pass-through owner share of USPRS's section 965(c) deduction amount), or $30x. No other deductions are allowed in determining this amount. USI's tax on the $30x section 965(a) inclusion will be equal to the tax that would be imposed on such amount under section 11 if USI were a domestic corporation. Under paragraph (e)(1) of this section, USI cannot deduct $70x for purposes of determining USI's taxable income that is subject to tax under section 1.

(f) ***Treatment of section 965(c) deduction under certain provisions of the Internal Revenue Code*** —

(1) ***Sections 62(a) and 63(d).*** A section 965(c) deduction is treated as a deduction described in section 62(a) and is not treated as an itemized deduction for any purpose of the Internal Revenue Code.

(2) ***Sections 705, 1367, and 1368*** —

(i) ***Adjustments to basis.*** In the case of a domestic partnership or S corporation—

(A) The aggregate amount of its section 965(a) inclusions net of the aggregate amount of its section 965(c) deductions is treated as a separately stated item of net income solely for purposes of calculating basis under section 705(a) and § 1.705-1(a) and section 1367(a)(1) and § 1.1367-1(f), and

(B) The aggregate amount of its section 965(a) inclusions equal to the aggregate amount of its section 965(c) deductions is treated as income exempt from tax solely for purposes of calculating basis under sections 705(a)(1)(B), 1367(a)(1)(A), and § 1.1367-1(f).

(ii) ***S corporation accumulated adjustments account.*** In the case of an S corporation, the aggregate amount of its section 965(a) inclusions equal to the aggregate amount of its section 965(c) deductions is treated as income not exempt from tax solely for purposes of determining whether an adjustment is made to an accumulated adjustments account under section 1368(e)(1)(A) and § 1.1368-2(a)(2).

(iii) ***Example.*** The following example illustrates the application of this paragraph (f)(2).

(A) ***Facts.*** USI, a United States citizen, owns all of the stock of S Corp, an S corporation, which owns all of the stock of FS, a foreign corporation. S Corp has a section 965(a) inclusion of $1,000x with respect to FS and has a $700x section 965(c) deduction.

(B) ***Analysis.*** As a result of the application of paragraph (f)(2)(i)(A) of this section, solely for purposes of calculating basis under section 1367(a)(1) and § 1.1367-1(f), USI treats as a separately stated item of net income $300x (its pro rata share of the net of S Corp's $1,000x aggregate section 965(a) inclusion and S Corp's $700x aggregate section 965(c) deduction). Accordingly, USI's basis in S Corp is increased under section 1367(a)(1) by $300x. As a result of the application of paragraph (f)(2)(i)(B) of this section, an amount of S Corp's aggregate section 965(a) inclusion equal to its aggregate section 965(c) deduction, $700x, is treated as tax exempt income solely for purposes of calculating basis under section 1367(a)(1)(A) and § 1.1367-1(f), and accordingly, USI's basis in S Corp is further increased by its pro rata share of such amount, $700x. S Corp's accumulated adjustments account ("AAA") is increased under section 1368(e)(1)(A) by the $1,000x section 965(a) inclusion taken into account and reduced by the $700x section 965(c) deduction taken into account. In addition, as a result of the application of paragraph (f)(2)(ii) of this section, S Corp's AAA is further increased by an amount of S Corp's aggregate section 965(a) inclusion equal to its aggregate section 965(c) deduction, $700x, which is not treated as tax-exempt income for purposes of § 1.1368-2(a)(2).

(3) ***Section 1411.*** For purposes of section 1411 and § 1.1411-4(f)(6), a section 965(c) deduction is not treated as being properly allocable to any section 965(a) inclusion.

(4) ***Section 4940.*** For purposes of section 4940(c)(3)(A), a section 965(c) deduction is not treated as an ordinary and necessary expense paid or incurred for the production or collection of gross investment income.

(g) ***Domestic pass-through entities.*** For purposes of determining a domestic pass-through owner share, a section 965(c) deduction amount of a domestic pass-through entity must be allocated to a domestic pass-through owner in the same proportion as an aggregate section 965(a) inclusion amount of the domestic pass-through entity for a section 958(a) U.S. shareholder inclusion year is allocated to the domestic pass-through owner.

[T.D. 9846, 84 FR 1875, Feb. 5, 2019]

§ 1.965-4 Disregard of certain transactions.

(a) ***Scope.*** This section provides rules that disregard certain transactions for purposes of applying section 965 to a United States shareholder. Paragraph (b) of this section provides rules that disregard transactions undertaken with a principal purpose of changing the amount of a section 965 element of a United States shareholder. Paragraph (c) of this section provides rules that disregard certain changes in method of accounting and entity classification elections that would otherwise change the amount of a section 965 element. Paragraph (d) of this section defines the term section 965 element. Paragraph (e) of this section provides rules of application concerning paragraphs (b) and (c) of this section. Paragraph (f) of this section provides rules that disregard certain transactions occurring between E&P measurement dates. Paragraph (g) of this section provides examples illustrating the application of this section.

(b) ***Transactions undertaken with a principal purpose of changing the amount of a section 965 element*** —

(1) ***General rule.*** Except as otherwise provided in paragraph (e)(3) of this section, a transaction is disregarded for purposes of determining the amounts of all section 965 elements of a United States shareholder if each of the following conditions is satisfied with respect to any section 965 element of the United States shareholder—

(i) The transaction occurs, in whole or in part, on or after November 2, 2017 (the *specified date*);

(ii) The transaction is undertaken with a principal purpose of changing the amount of a section 965 element of the United States shareholder; and

(iii) The transaction would, without regard to this paragraph (b)(1), change the amount of the section 965 element of the United States shareholder.

(2) ***Presumptions and exceptions for the application of the general rule*** —

(i) ***Overview.*** Under paragraphs (b)(2)(iii) through (v) of this section, certain transactions are presumed to be undertaken with a principal purpose of changing the amount of a section 965 element of a United States shareholder for purposes of paragraph (b)(1) of this section. The presumptions described in paragraphs (b)(2)(iii) through (v) of this section may be rebutted only if facts and circumstances clearly establish that the transaction was not undertaken with a principal purpose of changing the amount of a section 965 element of a United States shareholder. A taxpayer that takes the position that the presumption is rebutted must attach a statement to its return for its taxable year in which or with which the relevant taxable year of the relevant specified foreign corporation ends disclosing that it has rebutted the presumption. In the case of a transaction described in paragraph (b)(2)(iii) or (iv) of this section, if the presumption does not apply because the transaction occurs in the ordinary course of business, whether the transaction was undertaken with a principal purpose of changing the amount of a section 965 element of a United States shareholder must be determined under all the facts and circumstances. Under paragraphs (b)(2)(iii) through (v) of this section, certain transactions are treated per se as being undertaken with a principal purpose of changing the amount of a section 965 element of a United States shareholder, and, therefore, such transactions are disregarded under paragraph (b)(1) of this section if the conditions of paragraphs (b)(1)(i) and (iii) of this section are satisfied. Further, under paragraph (b)(2)(iii) of this section, certain distributions are treated per se as not being undertaken with a principal purpose of changing the amount of a section 965 element of a United States shareholder and therefore are not disregarded under paragraph (b)(1) of this section.

(ii) ***Definitions*** —

(A) ***Relatedness.*** For purposes of paragraphs (b)(2)(iii) through (v) of this section, a person is treated as related to a United States shareholder if, either immediately before or immediately after the transaction (or series of related transactions), the person bears a relationship to the United States shareholder described in section 267(b) or section 707(b).

(B) ***Transfer*** —

(*1*) ***In general.*** For purposes of paragraphs (b)(2)(iii) and (v) of this section, the term *transfer* includes any disposition of stock or property, including a sale or exchange, contribution, distribution, issuance, redemption, recapitalization, or loan of stock or property, and includes an indirect transfer of stock or property.

(2) ***Indirect transfer.*** For purposes of paragraph (b)(2)(ii)(B)(*1*) of this section, the term *indirect transfer* includes a transfer of property or stock owned by an entity through a transfer of an interest in such entity (or an interest in an entity that has a direct or indirect interest in such entity), and a transfer of property or stock to a person through a transfer of property or stock to a pass-through entity of which such person is a direct or indirect owner.

(iii) ***Cash reduction transactions*** —

(A) ***General rule.*** For purposes of paragraph (b)(1) of this section, a cash reduction transaction is presumed to be undertaken with a principal purpose of changing the amount of a section 965 element of a United States shareholder. For this purpose, the term *cash reduction transaction* means a transfer of cash, accounts receivable, or cash-equivalent assets by a specified foreign corporation to a United States shareholder of the specified foreign corporation or a person related to a United States shareholder of the specified foreign corporation, or an assumption by a specified foreign corporation of an account payable of a United States shareholder of the specified foreign corporation or a person related to a United States shareholder of the specified foreign corporation, if such transfer or assumption would, without regard to paragraph (b)(1) of this section, reduce the aggregate foreign cash position of the United States shareholder. The presumption described in this paragraph (b)(2)(iii) does not apply to a cash reduction transaction that occurs in the ordinary course of business.

(B) ***Per se rules for certain distributions.*** Notwithstanding the presumption described in paragraph (b)(2)(iii)(A) of this section, except in the case of a specified distribution, a cash reduction transaction that is a distribution by a specified foreign corporation to a United States shareholder of the specified foreign corporation is treated per se as not being undertaken with a principal purpose of changing the amount of a section 965 element of the United States shareholder for purposes of paragraph (b)(1) of this section. A specified distribution is treated per se as being undertaken with a principal purpose of changing the amount of a section 965 element of a United States shareholder for purposes of paragraph (b)(1) of this section. For purposes of this paragraph (b)(2)(iii)(B), the term *specified distribution* means a cash reduction transaction that is a distribution by a specified foreign corporation of a United States shareholder if and to the extent that, at the time of the distribution, there was a plan or intention for the distributee to transfer cash, accounts receivable, or cash-equivalent assets to any specified foreign corporation of the United States shareholder or a distribution that is a non pro rata distribution to a foreign person that is related to the United States shareholder. For purposes of the preceding

sentence, there is no plan or intention for the distributee to transfer cash, accounts receivable, or cash-equivalent assets to any specified foreign corporation of the United States shareholder if the transfer is pursuant to a legal obligation entered into before November 2, 2017. A taxpayer that takes the position that a cash reduction transaction is not a specified distribution because a transfer of cash, accounts receivable, or cash-equivalent asset is pursuant to a legal obligation entered into before November 2, 2017, must attach a statement to its return for its taxable year in which or with which the relevant taxable year of the relevant specified foreign corporation ends disclosing the position.

(iv) ***E&P reduction transactions*** —

(A) ***General rule.*** For purposes of paragraph (b)(1) of this section, an E&P reduction transaction is presumed to be undertaken with a principal purpose of changing the amount of a section 965 element of a United States shareholder. For purposes of this paragraph (b)(2)(iv), the term *E&P reduction transaction* means a transaction between a specified foreign corporation and any of a United States shareholder of the specified foreign corporation, another specified foreign corporation of a United States shareholder of the specified foreign corporation, or any person related to a United States shareholder of the specified foreign corporation, if the transaction would, without regard to paragraph (b)(1) of this section, reduce either the accumulated post-1986 deferred foreign income or the post-1986 undistributed earnings (as defined in section 902(c)(1)) of the specified foreign corporation or another specified foreign corporation of any United States shareholder of such specified foreign corporation. The presumption described in this paragraph (b)(2)(iv)(A) does not apply to an E&P reduction transaction that occurs in the ordinary course of business.

(B) ***Per se rule for specified transactions.*** A specified transaction is treated per se as being undertaken with a principal purpose of changing the amount of a section 965 element of a United States shareholder for purposes of paragraph (b)(1) of this section. For purposes of the preceding sentence, the term *specified transaction* means an E&P reduction transaction that involves one or more of the following: A complete liquidation of a specified foreign corporation to which section 331 applies; a sale or other disposition of stock by a specified foreign corporation; or a distribution by a specified foreign corporation that reduces the earnings and profits of the specified foreign corporation pursuant to section 312(a)(3).

(v) ***Pro rata share transactions*** —

(A) ***General rule.*** For purposes of paragraph (b)(1) of this section, a pro rata share transaction is presumed to be undertaken with a principal purpose of changing the amount of a section 965 element of a United States shareholder. For this purpose, the term *pro rata share transaction* means either a pro rata share reduction transaction or an E&P deficit transaction.

(*1*) ***Definition of pro rata share reduction transaction.*** For purposes of this paragraph (b)(2)(v)(A), the term *pro rata share reduction transaction* means a transfer of the stock of a specified foreign corporation by either a United States shareholder of the specified foreign corporation or a person related to a United States shareholder of the specified foreign corporation (including by the specified foreign corporation itself) to a person related to the United States shareholder if the transfer would,

without regard to paragraph (b)(1) of this section, reduce the United States shareholder's pro rata share of the section 965(a) earnings amount of the specified foreign corporation, reduce the United States shareholder's pro rata share of the cash position of the specified foreign corporation, or both.

(2) ***Definition of E&P deficit transaction.*** For purposes of this paragraph (b)(2)(v)(A), the term *E&P deficit transaction* means a transfer to either a United States shareholder or a person related to the United States shareholder of the stock of an E&P deficit foreign corporation by a person related to the United States shareholder (including by the E&P deficit foreign corporation itself) if the transfer would, without regard to paragraph (b)(1) of this section, increase the United States shareholder's pro rata share of the specified E&P deficit of the E&P deficit foreign corporation.

(B) ***Per se rule for internal group transactions.*** An internal group transaction is treated per se as being undertaken with a principal purpose of changing the amount of a section 965 element of a United States shareholder for purposes of paragraph (b)(1) of this section. For purposes of the preceding sentence, the term *internal group transaction* means a pro rata share transaction if, immediately before or after the transfer, the transferor of the stock of the specified foreign corporation and the transferee of such stock are members of an affiliated group in which the United States shareholder is a member. For this purpose, the term *affiliated group* has the meaning set forth in section 1504(a), determined without regard to paragraphs (1) through (8) of section 1504(b), and the term *members of an affiliated group* means entities included in the same affiliated group. For purposes of identifying an affiliated group and the members of such group, each partner in a partnership, as determined without regard to this sentence, is treated as holding its proportionate share of the stock held by the partnership, as determined under the rules and principles of sections 701 through 777, and if one or more members of an affiliated group own, in the aggregate, at least 80 percent of the interests in a partnership's capital or profits, the partnership will be treated as a corporation that is a member of the affiliated group.

(C) ***Example.*** The following example illustrates the application of the rules in this paragraph (b)(2)(v).

(1) ***Facts.*** FP, a foreign corporation, owns all of the stock of USP, a domestic corporation. USP owns all of the stock of FS, a foreign corporation. USP has a calendar year taxable year; FS's taxable year ends November 30. On January 2, 2018, USP transfers all of the stock of FS to FP in exchange for cash. On January 3, 2018, FS makes a distribution with respect to the stock transferred to FP. USP treats the transaction as a taxable sale of the FS stock and claims a dividends received deduction under section 245A with respect to its deemed dividend under section 1248(j) as a result of the sale. FS has post-1986 earnings and profits as of December 31, 2017, and no post-1986 earnings and profits that are attributable to income effectively connected with the conduct of a trade or business within the United States and subject to tax under chapter 1 or that, if distributed, would be excluded from the gross income of a United States shareholder under section 959.

(2) ***Analysis.*** The transfer of the stock of FS is a pro rata share reduction transaction and thus a pro rata share transaction because such transfer is by USP, a United States shareholder, to FP, a person related to USP, and the transfer would, without regard to

the rule in paragraph (b)(1) of this section, reduce USP's pro rata share of the section 965(a) earnings amount of FS. Because USP and FP are also members of an affiliated group within the meaning of paragraph (b)(2)(v)(B) of this section, the transfer of the stock of FS is also an internal group transaction and is treated per se as being undertaken with a principal purpose of changing the amount of a section 965 element of USP. Accordingly, because the transfer occurs after the specified date and reduces USP's section 965(a) inclusion amount with respect to FS, the transfer is disregarded for purposes of determining any section 965 element of USP with the result that, among other things, USP's pro rata share of FS's section 965(a) earnings amount is determined as if USP owned (within the meaning of section 958(a)) 100% of the stock of FS on the last day of FS's inclusion year and no other person received a distribution with respect to such stock during such year. *See* section 951(a)(2)(A) and (B).

(c) ***Disregard of certain changes in method of accounting and entity classification elections*** —

(1) ***Changes in method of accounting.*** Any change in method of accounting made for a taxable year of a specified foreign corporation that ends in 2017 or 2018 is disregarded for purposes of determining the amounts of all section 965 elements with respect to a United States shareholder if the change in method of accounting would, without regard to this paragraph (c)(1), change the amount of any section 965 element described in paragraph (d)(1) or (2) of this section with respect to the United States shareholder, or change the amount of the section 965 element described in paragraph (d)(3) of this section other than by reason of an increase in a section 965(a) inclusion amount with respect to the specified foreign corporation, regardless of whether the change in method of accounting is made with a principal purpose of changing the amount of a section 965 element with respect to the United States shareholder. The rule described in the preceding sentence applies regardless of whether the change in method of accounting was made in accordance with the procedures described in Rev. Proc. 2015-13, 2015-5 I.R.B. 419 (or successor), and regardless of whether the change in method of accounting was properly made, but it does not apply to a change in method of accounting for which the original and/or duplicate copy of any Form 3115, "Application for Change in Accounting Method," requesting the change was filed before the specified date (as defined in paragraph (b)(1) of this section).

(2) ***Entity classification elections.*** Except as otherwise provided in paragraph (e)(3) of this section, an election under § 301.7701-3 to change the classification of an entity that is filed on or after the specified date (as defined in paragraph (b)(1) of this section) is disregarded for purposes of determining the amounts of all section 965 elements of a United States shareholder if the election would, without regard to this paragraph (c)(2), change the amount of any section 965 element of the United States shareholder, regardless of whether the election is made with a principal purpose of changing the amount of a section 965 element of the United States shareholder. An election filed on or after the specified date is subject to the preceding sentence even if the election was filed with an effective date that is before the specified date.

(d) ***Definition of a section 965 element.*** For purposes of paragraphs (b) and (c) of this section, the term *section 965 element* means, with respect to a United States shareholder, any of the following amounts (collectively, *section 965 elements*)—

(1) The United States shareholder's section 965(a) inclusion amount with respect to a specified foreign corporation;

(2) The aggregate foreign cash position of the United States shareholder; or

(3) The amount of foreign income taxes of a specified foreign corporation deemed paid by the United States shareholder under section 960 as a result of a section 965(a) inclusion.

(e) ***Rules for applying paragraphs (b) and (c) of this section*** —

(1) ***Determination of whether there is a change in the amount of a section 965 element.*** For purposes of paragraphs (b) and (c) of this section, there is a change in the amount of a section 965 element of a United States shareholder as a result of a transaction, change in accounting method, or election to change an entity's classification, if, without regard to paragraph (b)(1), (c)(1), or (c)(2) of this section, the transaction, change in accounting method, or change in entity classification would—

(i) Reduce the amount described in paragraph (d)(1) of this section,

(ii) Reduce the amount described in paragraph (d)(2) of this section, but only if such amount is less than the United States shareholder's aggregate section 965(a) inclusion amount, or

(iii) Increase the amount described in paragraph (d)(3) of this section.

(2) ***Treatment of domestic pass-through owners as United States shareholders.*** For purposes of paragraphs (b) and (c) of this section, if a domestic pass-through entity is a United States shareholder, then a domestic pass-through owner with respect to the domestic pass-through entity that is not otherwise a United States shareholder is treated as a United States shareholder.

(3) ***Exception for certain incorporation transactions*** —

(i) ***In general.*** Paragraphs (b) and (c)(2) of this section do not apply to disregard a transfer of stock of a specified foreign corporation by a United States shareholder to a domestic corporation (for this purpose, including an S corporation), provided that—

(A) The transferee's section 965(a) inclusion amount with respect to the transferred stock of the specified foreign corporation is no lower than the transferor's section 965(a) inclusion amount with respect to the transferred stock of the specified foreign corporation, determined without regard to the transfer; and

(B) The transferee and the transferor determine their aggregate foreign cash position under paragraph (e)(3)(ii) of this section.

(ii) ***Aggregate foreign cash position.*** In the case of a transfer described in paragraph (e)(3)(i) of this section, in order to rely on the exception in paragraph (e)(3)(i) of this section—

(A) The transferee must treat its pro rata share of the cash position of a specified foreign corporation as of a cash measurement date as of which it did not own the transferred stock of the specified foreign corporation as including the transferor's pro rata share of the cash position of the specified foreign corporation with respect to the transferred stock of the specified foreign corporation as of such cash measurement date for purposes of determining its aggregate foreign cash position; and

(B) The transferor must treat its pro rata share of the cash position of a specified foreign corporation as of a cash measurement date as of which it did not own the transferred stock of the specified foreign corporation as including the transferee's pro rata share of the cash position of the specified foreign corporation with respect to the transferred stock of the specified foreign corporation as of such cash measurement date for purposes of determining its aggregate foreign cash position.

(4) *Consequences of liquidation* —

(i) ***In general.*** In the case of a liquidation of a specified foreign corporation that is disregarded for purposes of determining the section 965 elements of a United States shareholder pursuant to paragraph (b) or (c)(2) of this section, for purposes of determining the amounts of the section 965 elements of the United States shareholder, the date that is treated as the last day of the taxable year of the specified foreign corporation is the later of—

(A) The date of the liquidation; and

(B) The specified liquidation date, if any.

(ii) ***Specified liquidation date.*** The term *specified liquidation date* means, in the case of a liquidation of a specified foreign corporation pursuant to an entity classification election that is disregarded for purposes of determining the section 965 elements of a United States shareholder—

(A) November 30, 2017, with respect to a United States shareholder that must include in income under § 1.367(b)-3 as a deemed dividend the all earnings and profits amount with respect to the United States shareholder's stock of the liquidating specified foreign corporation; or

(B) The date of filing of the entity classification election, with respect to all other United States shareholders.

(f) *Disregard of certain transactions occurring between E&P measurement dates* —

(1) ***Disregard of specified payments.*** Except as provided in paragraph (f)(3) of this section, a specified payment made by a specified foreign corporation (*payor specified foreign corporation*) to another specified foreign corporation (*payee specified foreign corporation*) is disregarded for purposes of determining the post-1986 earnings and profits of each of the payor specified foreign corporation and the payee specified foreign corporation as of the E&P measurement date on December 31, 2017.

(2) ***Definition of specified payment.*** For purposes of paragraph (f)(1) of this section, the term *specified payment* means any amount paid or accrued by the payor specified foreign corporation, including a distribution by the payor specified foreign corporation with respect to its stock, if each of the following conditions are satisfied:

(i) Immediately before or immediately after the payment or accrual of the amount, the payor specified foreign corporation and the payee specified foreign corporation are related within the meaning of section 954(d)(3), substituting the term “specified foreign corporation” for “controlled foreign corporation” in each place that it appears;

(ii) The payment or accrual of the amount occurs after November 2, 2017, and on or before December 31, 2017; and

(iii) The payment or accrual of the amount would, without regard to the application of paragraph (f)(1) of this section, reduce the post-1986 earnings and profits of the payor specified foreign corporation as of the E&P measurement date on December 31, 2017.

(3) ***Non-application of disregard rule.*** A section 958(a) U.S. shareholder may determine the post-1986 earnings and profits of a specified foreign corporation without regard to paragraph (f)(1) of this section, provided that it and every section 958(a) U.S. shareholder related to the first section 958(a) U.S. shareholder determines the post-1986 earnings and profits of each of its specified foreign

corporations without regard to paragraph (f)(1) of this section. For purposes of this paragraph (f)(3), a person is treated as related to a section 958(a) U.S. shareholder if the person bears a relationship to the section 958(a) U.S. shareholder described in section 267(b) or 707(b).

(4) ***Examples.*** The following examples illustrate the application of the rules in this paragraph (f).

(i) ***Example 1. Deductible payment between wholly owned specified foreign corporations is a specified payment*** —

(A) ***Facts.*** USP, a domestic corporation, owns all of the stock of CFC1, a foreign corporation, which owns all of the stock of CFC2, also a foreign corporation. USP, CFC1, and CFC2 have calendar year taxable years. On November 2, 2017, each of CFC1 and CFC2 has post-1986 earnings and profits of 100u. Neither CFC1 nor CFC2 has post-1986 earnings and profits that are attributable to income of the specified foreign corporation that is effectively connected with the conduct of a trade or business within the United States and subject to tax under chapter 1 or that, if distributed, would be excluded from the gross income of a United States shareholder under section 959 or from the gross income of another shareholder if such shareholder were a United States shareholder; therefore, no adjustment is made under section 965(d)(2) or § 1.965-1(f)(7), and each of CFC1's and CFC2's accumulated post-1986 deferred foreign income is equal to such corporation's post-1986 earnings and profits. On November 3, 2017, CFC2 makes a deductible payment of 10u to CFC1. The payment does not constitute subpart F income. CFC1 and CFC2 have no other items of income or deduction.

(B) ***Analysis.*** The payment from CFC2 to CFC1 is a specified payment because

(*1*) CFC1 and CFC2 are related specified foreign corporations;

(*2*) the payment occurs after November 2, 2017, and on or before December 31, 2017; and

(*3*) the payment would, without regard to the application of the rule in paragraph (f)(1) of this section, reduce the post-1986 earnings and profits of CFC2 as of the E&P measurement date on December 31, 2017. Under paragraph (f)(1) of this section, the payment is disregarded, and CFC1 and CFC2 each have post-1986 earnings and profits of 100u as of December 31, 2017. Accordingly, the section 965(a) earnings amount of each of CFC1 and CFC2 is 100u.

(ii) ***Example 2. Distribution is a specified payment*** —

(A) ***Facts.*** The facts are the same as in paragraph (f)(4)(i)(A) of this section (the facts in *Example 1*), except instead of a deductible payment to CFC1, CFC2 makes a 10u distribution on November 3, 2017, that, without regard to paragraph (f)(1) of this section would reduce the post-1986 earnings and profits of CFC2 as of the E&P measurement date on December 31, 2017, and increase the post-1986 earnings and profits of CFC1 as of the E&P measurement date on December 31, 2017, by 10u.

(B) ***Analysis.*** The distribution is a specified payment because

(*1*) CFC1 and CFC2 are related specified foreign corporations;

(*2*) the distribution occurs after November 2, 2017, and on or before December 31, 2017; and

(3) the distribution would, without regard to the application of the rule in paragraph (f)(1) of this section, reduce the post-1986 earnings and profits of CFC2 as of the E&P measurement date on December 31, 2017. Under paragraph (f)(1) of this section, the distribution is disregarded with the result that CFC1 and CFC2 each have post-1986 earnings and profits of 100u as of the E&P measurement date on December 31, 2017, and a section 965(a) earnings amount of 100u.

(iii) ***Example 3. Deductible payment between related (but not wholly owned) specified foreign corporations is a specified payment*** —

(A) ***Facts.*** The facts are the same as in paragraph (f)(4)(i)(A) of this section (the facts in *Example 1*), except that CFC1 owns only 51% of the only class of stock of CFC2, the remainder of which is owned by USI, a United States citizen unrelated to USP, CFC1, and CFC2.

(B) ***Analysis.*** The analysis is the same as in paragraph (f)(4)(i)(B) of this section (the analysis in *Example 1*); thus, the payment is disregarded with the result that CFC1 and CFC2 each have post-1986 earnings and profits of 100u as of the E&P measurement date on December 31, 2017, and a section 965(a) earnings amount of 100u.

(iv) ***Example 4. Deductible payment between unrelated specified foreign corporations is not a specified payment*** —

(A) ***Facts.*** The facts are the same as in paragraph (f)(4)(i)(A) of this section (the facts in *Example 1*), except that CFC1 owns only 50% of the only class of stock of CFC2, the remainder of which is owned by USI, a United States citizen unrelated to USP, CFC1, and CFC2.

(B) ***Analysis.*** Paragraph (f)(1) of this section does not apply because CFC1 and CFC2 are not related. Thus, the payment is taken into account with the result that CFC1 has post-1986 earnings and profits of 110u as of the E&P measurement date on December 31, 2017, and a section 965(a) earnings amount of 110u.

(v) ***Example 5. Deductible payment and income accrued from unrelated persons are not specified payments*** —

(A) ***Facts.*** The facts are the same as in paragraph (f)(4)(i)(A) of this section (the facts in *Example 1*), except that CFC2 does not make a deductible payment to CFC1, and, between E&P measurement dates, CFC2 accrues gross income of 20u from a person that is not related to CFC2, and CFC1 incurs a deductible expense of 20u to a person that is not related to CFC1.

(B) ***Analysis.*** Paragraph (f)(1) of this section does not apply because neither the deductible expense of CFC1 nor the income accrual by CFC2 are attributable to a specified payment.

(vi) ***Example 6. Deductible payment and income accrued with respect to unrelated persons are not specified payments; deductible payment between wholly specified foreign corporations is a specified payment*** —

(A) ***Facts.*** The facts are the same as in paragraph (f)(4)(v)(A) of this section (the facts in *Example 5*), except that CFC2 also makes a deductible payment of 10u to CFC1 on November 3, 2017.

(B) *Analysis.* The deductible payment is a specified payment because

(*1*) CFC1 and CFC2 are related specified foreign corporations;

(*2*) the payment occurs after November 2, 2017, and on or before December 31, 2017; and

(*3*) the deductible payment would, without regard to the application of the rule in paragraph (f)(1) of this section, reduce the post-1986 earnings and profits of CFC2 as of the E&P measurement date on December 31, 2017. Accordingly, under paragraph (f)(1) of this section, the deductible payment is disregarded with the result that CFC1 and CFC2 have 80u and 120u of post-1986 earnings and profits as of the E&P measurement date on December 31, 2017, respectively. Accordingly, CFC1 and CFC2 have section 965(a) earnings amounts of 100u and 120u, respectively.

[T.D. 9846, 84 FR 1875, Feb. 5, 2019]

§ 1.965-5 Allowance of credit or deduction for foreign income taxes.

(a) *Scope.* This section provides rules for the allowance of a credit or deduction for foreign income taxes in connection with the application of section 965. Paragraph (b) of this section provides rules under section 965(g) for the allowance of a credit or deduction for foreign income taxes paid or accrued. Paragraph (c) of this section provides rules for the allowance of a credit or deduction for foreign income taxes treated as paid or accrued in connection with the application of section 965. Paragraph (d) of this section defines the term applicable percentage.

(b) *Rules for foreign income taxes paid or accrued—*

(1) *In general.* Neither a deduction (including under section 164) nor a credit under section 901 is allowed for the applicable percentage of any foreign income taxes paid or accrued with respect to any amount for which a section 965(c) deduction is allowed for a section 958(a) U.S. shareholder inclusion year. Neither a deduction (including under section 164) nor a credit under section 901 is allowed for the applicable percentage of any foreign income taxes attributable to a distribution of section 965(a) previously taxed earnings and profits or section 965(b) previously taxed earnings and profits. Accordingly, for example, no deduction or credit is allowed for the applicable percentage of any withholding taxes imposed on a United States shareholder by the jurisdiction of residence of the distributing foreign corporation with respect to a distribution of section 965(a) previously taxed earnings and profits or section 965(b) previously taxed earnings and profits. Similarly, for example, no deduction or credit is allowed for the applicable percentage of foreign income taxes imposed on a United States citizen by the citizen's jurisdiction of residence upon receipt of a distribution of section 965(a) previously taxed earnings and profits or section 965(b) previously taxed earnings and profits.

(2) *Attributing taxes to section 959(a) distributions of section 965 previously taxed earnings and profits.* For purposes of paragraph (b)(1) of this section, foreign income taxes are attributable to a distribution of section 965(a) previously taxed earnings and profits or section 965(b) previously taxed earnings and profits if such taxes would be allocated and apportioned to a distribution of such previously taxed earnings and profits under the principles of § 1.904-6(a)(1)(iv), regardless of whether an actual distribution is made or recognized for Federal income tax purposes. Therefore, for example, a credit or deduction for the applicable percentage of foreign income taxes imposed on a United States shareholder that pays foreign tax on a distribution that is not recognized for Federal

income tax purposes (for example, in the case of a consent dividend or stock dividend upon which a withholding tax is imposed) is not allowed under paragraph (b)(1) of this section to the extent it is attributable to a distribution of section 965(a) previously taxed earnings and profits or section 965(b) previously taxed earnings and profits under the principles of § 1.904-6(a)(1)(iv). For taxable years of foreign corporations beginning after December 31, 2019, in lieu of applying the principles of § 1.904-6 under this paragraph (b)(2), the rules in § 1.861-20 apply by treating the portion of a distribution attributable to section 965(a) previously taxed earnings and profits and the portion of a distribution attributable to section 965(b) previously taxed earnings and profits each as a statutory grouping, and the portion of the distribution that is attributable to other earnings and profits as the residual grouping. See § 1.861-20(g)(7) (*Example 6*).

(c) ***Rules for foreign income taxes treated as paid or accrued*** —

(1) ***Disallowed credit*** —

(i) ***In general.*** A credit under section 901 is not allowed for the applicable percentage of any foreign income taxes treated as paid or accrued with respect to any amount for which a section 965(c) deduction is allowed for a section 958(a) U.S. shareholder inclusion year. For purposes of the preceding sentence, taxes treated as paid or accrued include foreign income taxes deemed paid under section 960(a)(1) with respect to a section 965(a) inclusion, foreign income taxes deemed paid under section 960(a)(3) (as in effect on December 21, 2017) or section 960(b) (as applicable to taxable years of controlled foreign corporations beginning after December 31, 2017) with respect to distributions of section 965(a) previously taxed earnings and profits or section 965(b) previously taxed earnings and profits, foreign income taxes allocated to an entity under § 1.901-2(f)(4), and a distributive share of foreign income taxes paid or accrued by a partnership.

(ii) ***Foreign income taxes deemed paid under section 960(a)(3) (as in effect on December 21, 2017).*** Foreign income taxes deemed paid by a domestic corporation under section 960(a)(3) with respect to a distribution of section 965(a) previously taxed earnings and profits or section 965(b) previously taxed earnings and profits include only the foreign income taxes paid or accrued by an upper-tier foreign corporation with respect to a distribution of section 965(a) previously taxed earnings and profits or section 965(b) previously taxed earnings and profits from a lower-tier foreign corporation. No credit is allowed under section 960(a)(3) or any other section for foreign income taxes that would have been deemed paid under section 960(a)(1) with respect to the portion of a section 965(a) earnings amount that is reduced under § 1.965-1(b)(2) or § 1.965-8(b).

(iii) ***Foreign income taxes deemed paid under section 960(b) (as applicable to taxable years of controlled foreign corporations beginning after December 31, 2017, and to taxable years of United States persons in which or with which such taxable years of foreign corporations end).*** Paragraph (c)(1)(i) of this section applies to foreign income taxes deemed paid under section 960(b) (as in effect for a taxable year of a controlled foreign corporation beginning after December 31, 2017, and a taxable year of a United States person in which or with which such controlled foreign corporation's taxable year ends) only if such taxes are deemed paid under § 1.960-3(b)(1) with respect to distributions to a domestic corporation of section 965(a) previously taxed earnings and profits or section 965(b) previously taxed earnings and profits. *See also* § 1.960-3(c)(2)(i), (ii), (vi), or (vii). Foreign income taxes that would have been deemed paid under section 960(a)(1) (as in effect on December 21, 2017) with respect to the portion of

a section 965(a) earnings amount that was reduced under § 1.965-1(b)(2) or § 1.965-8(b) are not eligible to be deemed paid under section 960(b) and § 1.960-3(b) or any other section of the Code.

(2) ***Disallowed deduction.*** No deduction (including under section 164) is allowed for the applicable percentage of any foreign income taxes treated as paid or accrued with respect to any amount for which a section 965(c) deduction is allowed. Such taxes include foreign income taxes allocated to an entity under § 1.901-2(f)(4) and a distributive share of foreign income taxes paid or accrued by a partnership.

(3) ***Coordination with section 78*** —

(i) ***In general.*** With respect to foreign income taxes deemed paid by a domestic corporation with respect to its section 965(a) inclusion amount for a section 958(a) U.S. shareholder inclusion year, section 78 applies only to so much of such taxes as bears the same proportion to the amount of such taxes as—

(A) The excess of—

(*1*) The section 965(a) inclusion amount for a section 958(a) U.S. shareholder inclusion year, over

(*2*) The section 965(c) deduction amount allowable with respect to such section 965(a) inclusion amount, bears to

(B) Such section 965(a) inclusion amount.

(ii) ***Domestic corporation that is a domestic pass-through owner.*** With respect to foreign income taxes deemed paid by a domestic corporation attributable to such corporation's domestic pass-through owner share of a section 965(a) inclusion amount of a domestic pass-through entity, section 78 applies only to so much of such taxes as bears the same proportion to the amount of such taxes as the proportion determined under paragraph (c)(3)(i) of this section as applied to the domestic pass-through entity's section 965(a) inclusion amount for a section 958(a) U.S. shareholder inclusion year.

(d) ***Applicable percentage*** —

(1) ***In general.*** For purposes of this section, except as provided in paragraph (d)(2) and (d)(3) of this section, the term *applicable percentage* means, with respect to a section 958(a) U.S. shareholder and a section 958(a) U.S. shareholder inclusion year, the amount (expressed as a percentage) equal to the sum of—

(i) 0.771 multiplied by the ratio of—

(A) The section 958(a) U.S. shareholder's 8 percent rate amount for the section 958(a) U.S. shareholder inclusion year, divided by

(B) The sum of the section 958(a) U.S. shareholder's 8 percent rate amount for the section 958(a) U.S. shareholder inclusion year plus the section 958(a) U.S. shareholder's 15.5 percent rate amount for the section 958(a) U.S. shareholder inclusion year; plus

(ii) 0.557 multiplied by the ratio of—

(A) The section 958(a) U.S. shareholder's 15.5 percent rate amount for the section 958(a) U.S. shareholder inclusion year, divided by

(B) The amount described in paragraph (d)(1)(i)(B) of this section.

(2) ***No section 965(a) inclusion amount.*** If a section 958(a) U.S. shareholder does not have an aggregate section 965(a) inclusion amount, the section 958(a) U.S. shareholder's applicable percentage is 55.7 percent.

(3) ***Applicable percentage for domestic pass-through owners.*** In the case of a domestic pass-through owner with respect to a domestic pass-through entity, the domestic pass-through owner's applicable percentage that is applied to foreign income taxes attributable to the domestic pass-through owner share of the section 965(a) inclusion amount or of distributions of section 965(a) previously taxed earnings and profits or section 965(b) previously taxed earnings and profits is equal to the applicable percentage determined under paragraph (d)(1) or (2) of this section, as applicable, with respect to the domestic pass-through entity.

(4) ***Applicable percentage with respect to certain distributions of previously taxed earnings and profits.*** In the case of a distribution of section 965(a) previously taxed earnings and profits or section 965(b) previously taxed earnings and profits (other than with respect to a section 958(a) U.S. shareholder described in paragraph (d)(2) of this section), the applicable percentage that is applied to foreign income taxes attributable to the distribution is the applicable percentage that applied with respect to the section 958(a) U.S. shareholder and the section 958(a) U.S. inclusion year in which, or with which, the inclusion year of the relevant deferred foreign income corporation ends. For this purpose, the relevant deferred foreign income corporation is the deferred foreign income corporation with respect to which the section 958(a) U.S. shareholder had the section 965(a) inclusion as a result of which the section 965(a) previously taxed earnings and profits first arose (as described in § 1.965-2(c)) or the section 965(b) previously taxed earnings and profits first arose (as described in § 1.965-2(d)).

[T.D. 9846, 84 FR 1875, Feb. 5, 2019, as amended by T.D. 9882, 84 FR 69120, Dec. 17, 2019; T.D. 9922, 85 FR 72072, Nov. 12, 2020]

§ 1.965-6 Computation of foreign income taxes deemed paid and allocation and apportionment of deductions.

(a) ***Scope.*** This section provides rules for the computation of foreign income taxes deemed paid and the allocation and apportionment of deductions. Paragraph (b) of this section provides the general rules for the computation of foreign income taxes deemed paid under sections 902 and 960. Paragraph (c) of this section provides rules for allocation and apportionment of expenses. Paragraph (d) of this section provides rules for foreign income taxes associated with hovering deficits.

(b) ***Computation of foreign incomes taxes deemed paid*** —

(1) ***In general.*** For purposes of determining foreign income taxes deemed paid under section 960(a)(1) with respect to a section 965(a) inclusion attributable to a deferred foreign income corporation that is a member of a qualified group (as defined in section 902(b)(2)), section 902 applies as if the section 965(a) inclusion, translated (if necessary) into the functional currency of the deferred foreign income corporation using the spot rate on December 31, 2017, were a dividend paid by the deferred foreign income corporation. For purposes of computing the amount of foreign income taxes deemed paid under section 960(a)(1), §§ 1.965-2(b), 1.965-5, sections 902 and 960, the regulations under those sections, and this section apply.

(2) ***Dividend or inclusion in excess of post-1986 undistributed earnings.*** When the denominator of the section 902 fraction is positive but less than the numerator of such fraction, the section 902 fraction is one. When the denominator of the section 902 fraction is zero or less than zero, the section 902 fraction is zero, and no foreign taxes are deemed paid.

(3) ***Treatment of adjustment under section 965(b)(4)(B).*** For purposes of section 902(c)(1), the post-1986 undistributed earnings of an E&P deficit foreign corporation are increased under section 965(b)(4)(B) and § 1.965-2(d)(2)(i)(A) as of the first day of the foreign corporation's first taxable year following the E&P deficit foreign corporation's last taxable year that begins before January 1, 2018.

(4) ***Section 902 fraction.*** The term *section 902 fraction* means, with respect to either a deferred foreign income corporation or an E&P deficit foreign corporation, the fraction that is—

(i) The dividends paid by, or the inclusion under section 951(a)(1) (including a section 965(a) inclusion) with respect to, the foreign corporation, as applicable (the *numerator*), divided by

(ii) The foreign corporation's post-1986 undistributed earnings or pre-1987 accumulated profits, as applicable (the *denominator*).

(c) ***Allocation and apportionment of deductions.*** For purposes of allocating and apportioning expenses, a section 965(c) deduction does not result in any gross income, including a section 965(a) inclusion, being treated as exempt, excluded, or eliminated income within the meaning of section 864(e)(3) or § 1.861-8T(d). Similarly, a section 965(c) deduction does not result in the treatment of stock as an exempt asset within the meaning of section 864(e)(3) or § 1.861-8T(d). In addition, consistent with the general inapplicability of § 1.861-8T(d)(2) to earnings and profits described in section 959(c)(1) or 959(c)(2), neither section 965(a) previously taxed earnings and profits nor section 965(b) previously taxed earnings and profits are treated as giving rise to gross income that is exempt, excluded, or eliminated income. Similarly, the asset that gives rise to a section 965(a) inclusion, section 965(a) previously taxed earnings and profits, or section 965(b) previously taxed earnings and profits is not treated as a tax-exempt asset.

(d) ***Hovering deficits.*** In the last taxable year that begins before January 1, 2018, of a deferred foreign income corporation that is also a foreign surviving corporation, as defined in § 1.367(b)-7(a), solely for purposes of determining the amount of related taxes that are included in post-1986 foreign income taxes under § 1.367(b)-7(d)(2)(iii)—

(1) The post-transaction earnings described in § 1.367(b)-7(d)(2)(ii) that can be offset by a hovering deficit include any post-transaction earnings earned in that year that were not considered accumulated because they were included in income under section 965 and § 1.965-1(b)(1) by a section 958(a) U.S. shareholder; and

(2) Any offset for purposes of § 1.367(b)-7(d)(2)(ii) is treated as occurring on the last day of the foreign surviving corporation's inclusion year.

[T.D. 9846, 84 FR 1875, Feb. 5, 2019]

§ 1.965-7 Elections, payment, and other special rules.

(a) ***Scope.*** This section provides rules regarding certain elections and payments. Paragraph (b) of this section provides rules regarding the section 965(h) election. Paragraph (c) of this section provides rules regarding the section 965(i) election. Paragraph (d) of this section provides rules regarding the section 965(m) election and a special rule for real estate investment trusts. Paragraph (e) of this section provides rules

regarding the section 965(n) election. Paragraph (f) of this section provides rules regarding the election to use the alternative method for calculating post-1986 earnings and profits. Paragraph (g) of this section provides definitions that apply for purposes of this section.

(b) ***Section 965(h) election*** —

(1) ***In general.*** Any person with a section 965(h) net tax liability (that is, a section 958(a) U.S. shareholder or a domestic pass-through owner with respect to a domestic pass-through entity that is a section 958(a) U.S. shareholder, but not a domestic pass-through entity itself) may elect under section 965(h) and this paragraph (b) to pay its section 965(h) net tax liability in eight installments. This election may be revoked only by paying the full amount of the remaining unpaid section 965(h) net tax liability.

(i) ***Amount of installments.*** Except as provided in paragraph (b)(3) of this section, if a person makes a section 965(h) election, the amounts of the installments are—

(A) Eight percent of the section 965(h) net tax liability in the case of each of the first five installments;

(B) Fifteen percent of the section 965(h) net tax liability in the case of the sixth installment;

(C) Twenty percent of the section 965(h) net tax liability in the case of the seventh installment; and

(D) Twenty-five percent of the section 965(h) net tax liability in the case of the eighth installment.

(ii) ***Increased installments due to a deficiency or a timely filed or amended return*** —

(A) ***In general.*** If a person makes a section 965(h) election, except as provided in paragraph (b)(1)(ii)(C) of this section, any deficiency or additional liability will be prorated to the installments described under paragraph (b)(1)(i) of this section if any of the following occur:

(*1*) A deficiency is assessed with respect to the person's section 965(h) net tax liability;

(*2*) The person files a return by the due date of the return (taking into account extensions, if any) increasing the amount of its section 965(h) net tax liability beyond that taken into account in paying the first installment described under paragraph (b)(1)(i) of this section; or

(*3*) The person files an amended return that reflects an increase in the amount of its section 965(h) net tax liability.

(B) ***Timing.*** If the due date for the payment of an installment to which the deficiency is prorated has passed, the amount prorated to such installment must be paid on notice and demand by the Secretary, or, in the case of an additional liability reported on a return increasing the amount of the section 965(h) net tax liability after payment of the first installment or on an amended return, with the filing of the return. If the due date for the payment of an installment to which the deficiency or additional liability is prorated has not passed, then such amount will be due at the same time as, and as part of, the relevant installment.

(C) ***Exception for negligence, intentional disregard, or fraud.*** If a deficiency or additional liability is due to negligence, intentional disregard of rules and regulations, or fraud with intent to evade tax, the proration rule of this paragraph (b)(1)(ii) will not apply, and the deficiency or additional liability (as well as any applicable interest and penalties) must be paid on notice and demand by the Secretary or, in the case of an additional liability reported on a return increasing the amount of the section 965(h) net tax liability after payment of the first installment or on an amended return, with the filing of the return.

(iii) ***Due date of installments*** —

(A) ***In general.*** If a person makes a section 965(h) election, the first installment payment is due on the due date (without regard to extensions) for the return for the relevant taxable year. For purposes of this paragraph (b), the term *relevant taxable year* means, in the case in which the person is a section 958(a) U.S. shareholder, the section 958(a) U.S. shareholder inclusion year, or, in the case in which the person is a domestic pass-through owner, the taxable year in which the person has the section 965(a) inclusion to which the section 965(h) net tax liability is attributable. Each succeeding installment payment is due on the due date (without regard to extensions) for the return for the taxable year following the taxable year with respect to which the previous installment payment was made.

(B) ***Extension for specified individuals.*** If a person is a specified individual with respect to a taxable year within which an installment payment is due pursuant to paragraph (b)(1)(iii)(A) of this section, then, for purposes of determining the due date of an installment payment under paragraph (b)(1)(iii)(A) of this section, the due date of the return (without regard to extensions) due within the taxable year will be treated as the fifteenth day of the sixth month following the close of the prior taxable year. This paragraph (b)(1)(iii)(B) is applicable regardless of whether the person is a specified individual with respect to the relevant taxable year.

(2) ***Manner of making election*** —

(i) ***Eligibility.*** Any person with a section 965(h) net tax liability may make the section 965(h) election, provided that, with respect to the person, none of the acceleration events described in paragraph (b)(3)(ii) of this section has occurred before the election is made. Notwithstanding the preceding sentence, a person that would be eligible to make the section 965(h) election but for the occurrence of an event described in paragraph (b)(3)(ii) of this section may make the section 965(h) election if the exception described in paragraph (b)(3)(iii)(A) of this section applies.

(ii) ***Timing.*** A section 965(h) election must be made no later than the due date (taking into account extensions, if any, or any additional time that would have been granted if the person had made an extension request) for the return for the relevant taxable year. Relief is not available under § 301.9100-2 or § 301.9100-3 to file a late election.

(iii) ***Election statement.*** Except as otherwise provided in publications, forms, instructions, or other guidance, to make a section 965(h) election, a person must attach a statement, signed under penalties of perjury consistent with the rules for signatures applicable to the person's return, to its return for the relevant taxable year. The statement must include the person's name, taxpayer identification number, total net tax liability under section 965, section 965(h) net tax liability, section 965(i) net tax liability with respect to which a section 965(i) election is effective (if applicable), and the anticipated amounts of each installment described under paragraph

(b)(1)(i) of this section. The statement must be filed in the manner prescribed in publications, forms, instructions, or other guidance. The attachment of an unsigned copy of the election statement to the timely-filed return for the relevant taxable year satisfies the signature requirement of this paragraph (b)(2)(iii) if the person making the election retains the original signed election statement in the manner specified by § 1.6001-1(e).

(3) ***Acceleration of payment*** —

(i) ***Acceleration.*** Notwithstanding paragraph (b)(1)(i) of this section, if a person makes a section 965(h) election and an acceleration event described in paragraph (b)(3)(ii) of this section subsequently occurs, then, except as provided in paragraph (b)(3)(iii) of this section, the unpaid portion of the remaining installments will be due on the date of the acceleration event (or in the case of a title 11 or similar case, the day before the petition is filed).

(ii) ***Acceleration events.*** The following events are acceleration events for purposes of paragraph (b)(3)(i) of this section with respect to a person that has made a section 965(h) election—

(A) An addition to tax is assessed for the failure to timely pay an installment described in paragraph (b)(1)(i) of this section;

(B) A liquidation, sale, exchange, or other disposition of substantially all of the assets of the person (including in a title 11 or similar case, or, in the case of an individual, by reason of death);

(C) In the case of a person that is not an individual, a cessation of business by the person;

(D) Any event that results in the person no longer being a United States person, including a resident alien (as defined in section 7701(b)(1)(A)) becoming a nonresident alien (as defined in section 7701(b)(1)(B));

(E) In the case of a person that was not a member of any consolidated group, the person becoming a member of a consolidated group;

(F) In the case of a consolidated group, the group ceasing to exist (including by reason of the acquisition of a consolidated group within the meaning of § 1.1502-13(j)(5)) or the group otherwise discontinuing in the filing of a consolidated return; or

(G) A determination by the Commissioner described in the second sentence of paragraph (b)(3)(iii)(C)(*2*) of this section.

(iii) ***Eligible section 965(h) transferee exception*** —

(A) ***In general.*** Paragraph (b)(3)(i) of this section does not apply (such that the unpaid portion of all remaining installments will not be due as of the date of the acceleration event) to a person with respect to which an acceleration event occurs if the requirements described in paragraphs (b)(3)(iii)(A)(*1*) and (*2*) of this section are satisfied. A person with respect to which an acceleration event described in this paragraph (b)(3)(iii)(A) occurs is referred to as an *eligible section 965(h) transferor.*

(*1*) ***Requirement to have a covered acceleration event.*** The acceleration event satisfies the requirements of this paragraph (b)(3)(iii)(A)(*1*) if it is described in—

(*i*) Paragraph (b)(3)(ii)(B) of this section, and the acceleration event is a qualifying consolidated group member transaction within the meaning of paragraph (b)(3)(iii)(E) of this section;

(*ii*) Paragraph (b)(3)(ii)(B) of this section (other than, in the case of an individual, an acceleration event caused by reason of death) in a transaction that is not a qualifying consolidated group member transaction;

(*iii*) Paragraph (b)(3)(ii)(E) of this section;

(*iv*) Paragraph (b)(3)(ii)(F) of this section, and the acceleration event results from the acquisition of a consolidated group within the meaning of § 1.1502-13(j)(5), and the acquired consolidated group members join a different consolidated group as of the day following the acquisition;

(*v*) Paragraph (b)(3)(ii)(F) of this section, and the group ceases to exist as a result of the transfer of all of the assets of one or more members of the consolidated group to other members with only one entity remaining (the *successor entity*); or

(*vi*) Paragraph (b)(3)(ii)(F) of this section, and the group ceases to exist as a result of the termination of the subchapter S election pursuant to section 1362(d) of a shareholder of the common parent of the consolidated group and, for the shareholder's taxable year immediately following the termination, the shareholder joins in the filing of a consolidated return as a consolidated group that includes all of the former members of the former consolidated group.

(*2*) ***Requirement to enter into a transfer agreement.*** An eligible section 965(h) transferor and an eligible section 965(h) transferee (as defined in paragraph (b)(3)(iii)(B)(*1*) of this section) must enter into an agreement with the Commissioner that satisfies the requirements of paragraph (b)(3)(iii)(B) of this section.

(B) ***Transfer agreement*** —

(*1*) ***Eligibility.*** A transfer agreement that satisfies the requirements of this paragraph (b)(3)(iii)(B) must be entered into by an eligible section 965(h) transferor and an eligible section 965(h) transferee. For this purpose, the term *eligible section 965(h) transferee* refers to a single United States person that is not a domestic pass-through entity and that—

(*i*) With respect to an acceleration event described in paragraph (b)(3)(iii)(A)(*1*)(*i*) of this section, is a departing member (as defined in paragraph (b)(3)(iii)(E)(*1*)(*i*) of this section) or its qualified successor (as defined in paragraph (b)(3)(iii)(E)(*2*) of this section);

(*ii*) With respect to an acceleration event described in paragraph (b)(3)(iii)(A)(*1*)(*ii*) of this section, acquires substantially all of the assets of an eligible section 965(h) transferor;

(*iii*) With respect to an acceleration event described in paragraph (b)(3)(iii)(A)(*1*)(*iii*) of this section, is the agent (within the meaning of § 1.1502-77) of the consolidated group that the eligible section 965(h) transferor joins;

(*iv*) With respect to an acceleration event described in paragraph (b)(3)(iii)(A)(*1*)(*iv*) of this section, is the agent (within the meaning of § 1.1502-77) of the surviving consolidated group;

(*v*) With respect to an acceleration event described in paragraph (b)(3)(iii)(A)(*1*)(*v*) of this section, is the successor entity (within the meaning of paragraph (b)(3)(iii)(A)(*1*)(*v*) of this section); or

(*vi*) With respect an acceleration event described in paragraph (b)(3)(iii)(A)(*1*)(*vi*) of this section, is the agent (within the meaning of § 1.1502-77) of the consolidated group that includes the shareholder whose subchapter S election was terminated and all of the former members of the former consolidated group.

(*2*) ***Filing requirements*** —

(*i*) ***In general.*** A transfer agreement must be timely filed. Except as provided in paragraph (b)(3)(iii)(B)(*2*)(*ii*) of this section, a transfer agreement is considered timely filed only if the transfer agreement is filed within 30 days of the date that the acceleration event occurs. The transfer agreement must be filed in accordance with the rules provided in publications forms, instructions, or other guidance. In addition, a duplicate copy of the transfer agreement must be attached to the returns of both the eligible section 965(h) transferee and the eligible section 965(h) transferor for the taxable year during which the acceleration event occurs filed by the due date for such returns (taking into account extensions, if any). Relief is not available under § 301.9100-2 or 301.9100-3 to file a transfer agreement late.

(*ii*) ***Transition rule.*** If an acceleration event occurs on or before February 5, 2019, the transfer agreement must be filed by March 7, 2019, to be considered timely filed.

(*3*) ***Signature requirement.*** The transfer agreement that is filed within 30 days of the acceleration event or by the due date specified in paragraph (b)(3)(iii)(B)(*2*)(*ii*) of this section must be signed under penalties of perjury by a person who is authorized to sign a return on behalf of the eligible section 965(h) transferor and a person who is authorized to sign a return on behalf of the eligible section 965(h) transferee.

(*4*) ***Terms of agreement.*** A transfer agreement under this paragraph (b)(3)(iii)(B) must be entitled “Transfer Agreement Under Section 965(h)(3)” and must contain the following information and representations—

(*i*) A statement that the document constitutes an agreement by the eligible section 965(h) transferee to assume the liability of the eligible section 965(h) transferor for any unpaid installment payments of the eligible section 965(h) transferor under section 965(h);

(*ii*) A statement that the eligible section 965(h) transferee (and, if the eligible section 965(h) transferor continues in existence immediately after the acceleration event, the eligible section 965(h) transferor) agrees to comply with

all of the conditions and requirements of section 965(h) and paragraph (b) of this section, as well as any other applicable requirements in the section 965 regulations;

(*iii*) The name, address, and taxpayer identification number of the eligible section 965(h) transferor and the eligible section 965(h) transferee;

(*iv*) The amount of the eligible section 965(h) transferor's section 965(h) net tax liability remaining unpaid, as determined by the eligible section 965(h) transferor, which amount is subject to adjustment by the Commissioner;

(*v*) A copy of the eligible section 965(h) transferor's most recent Form 965-A or Form 965-B, as applicable, if the eligible section 965(h) transferor has been required to file a Form 965-A or Form 965-B;

(*vi*) A detailed description of the acceleration event that led to the transfer agreement;

(*vii*) A representation that the eligible section 965(h) transferee is able to make the remaining payments required under section 965(h) and paragraph (b) of this section with respect to the section 965(h) net tax liability being assumed;

(*viii*) If the eligible section 965(h) transferor continues to exist immediately after the acceleration event, an acknowledgement that the eligible section 965(h) transferor and any successor to the eligible section 965(h) transferor will remain jointly and severally liable for any unpaid installment payments of the eligible section 965(h) transferor under section 965(h), including, if applicable, under § 1.1502-6;

(*ix*) A statement as to whether the leverage ratio of the eligible section 965(h) transferee and all subsidiary members of its affiliated group immediately after the acceleration event exceeds three to one, which ratio may be modified as provided in publications, forms, instructions, or other guidance;

(*x*) A certification by the eligible section 965(h) transferee stating that the eligible section 965(h) transferee waives the right to a notice of liability and consents to the immediate assessment of the portion of the section 965(h) net tax liability remaining unpaid; and

(*xi*) Any additional information, representation, or certification required by the Commissioner in publications, forms, instructions, or other guidance.

(*5*) ***Consolidated groups.*** For purposes of this paragraph (b)(3)(iii)(B), in the case of a consolidated group, the terms “eligible section 965(h) transferor” and “eligible section 965(h) transferee” each refer to a consolidated group that is a party to a covered acceleration event described in paragraph (b)(3)(iii)(A)(*1*) of this section. In such a case, any transfer agreement under this paragraph (b)(3)(iii)(B) must be entered into by the agent (as defined in § 1.1502-77) of the relevant consolidated group.

(*6*) ***Leverage ratio.*** For purposes of paragraph (b)(3)(iii)(B)(4)(*ix*) of this section, and except as otherwise provided in publications, forms, instructions, or other guidance, the term *leverage ratio* means the ratio that the total indebtedness of the eligible

section 965(h) transferee bears to the sum of its money and all other assets reduced (but not below zero) by such total indebtedness. For this purpose, the amount taken into account with respect to any asset is the adjusted basis thereof for purposes of determining gain, and the amount taken into account with respect to any indebtedness with original issue discount is its issue price plus the portion of the original issue discount previously accrued as determined under the rules of section 1272 (determined without regard to subsection (a)(7) or (b)(4) thereof).

(C) ***Consent of Commissioner*** —

(*1*) ***In general.*** Except as otherwise provided in publications, forms, instructions, or other guidance, if an eligible section 965(h) transferor and an eligible section 965(h) transferee file a transfer agreement in accordance with the provisions of paragraph (b)(3)(iii)(B) of this section, the eligible section 965(h) transferor and the eligible section 965(h) transferee will be considered to have entered into an agreement described in paragraph (b)(3)(iii)(A)(*2*) of this section with the Commissioner for purposes of section 965(h)(3) and paragraph (b)(3)(iii) of this section. If the Commissioner determines that additional information is necessary (for example, additional information regarding the ability of the eligible section 965(h) transferee to fully pay the remaining section 965(h) net tax liability), the eligible section 965(h) transferee must provide such information upon request.

(*2*) ***Material misrepresentations and omissions.*** If the Commissioner determines that an agreement filed by an eligible section 965(h) transferor and an eligible section 965(h) transferee contains a material misrepresentation or material omission, or if the eligible section 965(h) transferee does not provide the additional information requested under paragraph (b)(3)(iii)(C)(*1*) of this section within a reasonable timeframe communicated by the Commissioner to the eligible section 965(h) transferee, then the Commissioner may reject the transfer agreement (effective as of the date of the related acceleration event). In the alternative, on the date that the Commissioner determines that the transfer agreement includes a material misrepresentation or material omission, the Commissioner may determine that an acceleration event has occurred with respect to the eligible section 965(h) transferee as of the date of the determination, such that any unpaid installment payments of the eligible section 965(h) transferor that were assumed by the eligible section 965(h) transferee become due on the date of the determination.

(D) ***Effect of assumption*** —

(*1*) ***In general.*** If the exception in this paragraph (b)(3)(iii) applies with respect to an eligible section 965(h) transferor and an eligible section 965(h) transferee, the eligible section 965(h) transferee assumes all of the outstanding obligations and responsibilities of the eligible section 965(h) transferor with respect to the section 965(h) net tax liability as though the eligible section 965(h) transferee had included the section 965(a) inclusion in income. Accordingly, the eligible section 965(h) transferee is responsible for making payments and reporting with respect to any unpaid installment payments. In addition, for example, if an acceleration event described in paragraph (b)(3)(ii) of this section occurs with respect to an eligible section 965(h) transferee, any unpaid installment payments of the eligible section

965(h) transferor that were assumed by the eligible section 965(h) transferee will become due on the date of such event, subject to any applicable exception in paragraph (b)(3)(iii) of this section.

(2) ***Eligible section 965(h) transferor liability.*** An eligible section 965(h) transferor (or a successor) remains jointly and severally liable for any unpaid installment payments of the eligible section 965(h) transferor that were assumed by the eligible section 965(h) transferee, as well as any penalties, additions to tax, or other additional amounts attributable to such net tax liability.

(E) ***Qualifying consolidated group member transaction*** —

(1) ***Definition of qualifying consolidated group member transaction.*** For purposes of this paragraph (b)(3), the term *qualifying consolidated group member transaction* means a transaction in which—

(*i*) A member of a consolidated group (the *departing member*) ceases to be a member of the consolidated group (including by reason of the distribution, sale, or exchange of the departing member's stock);

(*ii*) The transaction results in the consolidated group (which is treated as a single person for this purpose under § 1.965-8(e)(1)) being treated as transferring substantially all of its assets for purposes of paragraph (b)(3)(ii)(B) of this section; and

(*iii*) The departing member either continues to exist immediately after the transaction or has a qualified successor.

(2) ***Definition of qualified successor.*** For purposes of this paragraph (b)(3), the term *qualified successor* means, with respect to a departing member described in this paragraph (b)(3)(iii)(E), another domestic corporation (or consolidated group) that acquires substantially all of the assets of the departing member (including in a transaction described in section 381(a)(2)).

(3) ***Departure of multiple members of a consolidated group.*** Multiple members that deconsolidate from the same consolidated group as a result of a single transaction are treated as a single departing member to the extent that, immediately after the transaction, they become members of the same (second) consolidated group, which would be treated as a single person under § 1.965-8(e)(1).

(c) ***Section 965(i) election*** —

(1) ***In general.*** Each shareholder of an S corporation (including a person listed in § 1.1362-6(b)(2) with respect to a trust or estate, but not a domestic pass-through entity itself) that is a United States shareholder of a deferred foreign income corporation may elect under section 965(i) and this paragraph (c) to defer the payment of the shareholder's section 965(i) net tax liability with respect to the S corporation until the shareholder's taxable year that includes a triggering event described in paragraph (c)(3) of this section. This election may be revoked only by paying the full amount of the unpaid section 965(i) net tax liability.

(2) ***Manner of making election*** —

(i) ***Eligibility.*** Each shareholder with a section 965(i) net tax liability with respect to an S corporation may make the section 965(i) election with respect to such S corporation, provided that, with respect to the shareholder, none of the triggering events described in paragraph (c)(3)(ii) of this section have occurred before the election is made. Notwithstanding the preceding sentence, a shareholder that would be eligible to make the section 965(i) election but for the occurrence of an event described in paragraph (c)(3)(ii) of this section may make the section 965(i) election if an exception described in paragraph (c)(3)(iv) of this section applies.

(ii) ***Timing.*** A section 965(i) election must be made no later than the due date (taking into account extensions, if any) for the shareholder's return for each taxable year that includes the last day of the taxable year of the S corporation in which the S corporation has a section 965(a) inclusion to which the shareholder's section 965(i) net tax liability is attributable. Relief is not available under § 301.9100-2 or 301.9100-3 to make a late election.

(iii) ***Election statement.*** Except as otherwise provided in publications, forms, instructions, or other guidance, to make a section 965(i) election, a shareholder must attach a statement, signed under penalties of perjury consistent with the rules for signatures applicable to the person's return, to its return for the taxable year that includes the last day of a taxable year of the S corporation in which the S corporation has a section 965(a) inclusion to which the shareholder's section 965(i) net tax liability is attributable. The statement must include the shareholder's name, taxpayer identification number, the name and taxpayer identification number of the S corporation with respect to which the election is made, the amount described in paragraph (g)(10)(i)(A) of this section as modified by paragraph (g)(6) of this section for purposes of determining the section 965(i) net tax liability with respect to the S corporation, the amount described in paragraph (g)(10)(i)(B) of this section, and the section 965(i) net tax liability with respect to the S corporation. The statement must be filed in the manner prescribed in publications, forms, instructions, or other guidance. The attachment of an unsigned copy of the election statement to the timely-filed return for the relevant taxable year satisfies the signature requirement of this paragraph (c)(2)(iii) if the shareholder retains the original signed election statement in the manner specified by § 1.6001-1(e).

(3) ***Triggering events*** —

(i) ***In general.*** If a shareholder makes a section 965(i) election with respect to an S corporation, the shareholder defers payment of its section 965(i) net tax liability with respect to the S corporation until the shareholder's taxable year that includes the occurrence of a triggering event described in paragraph (c)(3)(ii) of this section with respect to the section 965(i) net tax liability with respect to the S corporation. If a triggering event described in paragraph (c)(3)(ii) of this section with respect to an S corporation occurs, except as provided in paragraph (c)(3)(iv) of this section, the shareholder's section 965(i) net tax liability with respect to the S corporation will be assessed as an addition to tax for the shareholder's taxable year that includes the triggering event.

(ii) ***Triggering events.*** The following events are considered triggering events for purposes of paragraph (c)(3)(i) of this section with respect to a shareholder's section 965(i) net tax liability with respect to an S corporation—

(A) The corporation ceases to be an S corporation (determined as of the first day of the first taxable year that the corporation is not an S corporation);

(B) A liquidation, sale, exchange, or other disposition of substantially all of the assets of the S corporation (including in a title 11 or similar case), a cessation of business by the S corporation, or the S corporation ceasing to exist;

(C) The transfer of any share of stock of the S corporation by the shareholder (including by reason of death or otherwise) that results in a change of ownership for federal income tax purposes; or

(D) A determination by the Commissioner described in the second sentence of paragraph (c)(3)(iv)(C)(*2*) of this section.

(iii) ***Partial transfers.*** If an S corporation shareholder transfers less than all of its shares of stock of the S corporation, the transfer will be a triggering event only with respect to the portion of a shareholder's section 965(i) net tax liability that is properly allocable to the transferred shares.

(iv) ***Eligible section 965(i) transferee exception*** —

(A) ***In general.*** Paragraph (c)(3)(i) of this section will not apply (such that a shareholder's section 965(i) net tax liability with respect to an S corporation will not be assessed as an addition to tax for the shareholder's taxable year that includes the triggering event) if the requirements described in paragraphs (c)(3)(iv)(A)(*1*) and (*2*) of this section are satisfied. A shareholder with respect to which a triggering event described in this paragraph (c)(3)(iv)(A) occurs is referred to as an *eligible section 965(i) transferor.*

(*1*) ***Requirement to have a covered triggering event.*** The triggering event satisfies the requirements of this paragraph (c)(3)(iv)(A)(*1*) if it is described in paragraph (c)(3)(ii)(C) of this section.

(*2*) ***Requirement to enter into a transfer agreement.*** The shareholder with respect to which a triggering event occurs and an eligible section 965(i) transferee (as defined in paragraph (c)(3)(iv)(B)(*1*) of this section) must enter into an agreement with the Commissioner that satisfies the requirements of paragraph (c)(3)(iv)(B) of this section.

(B) ***Transfer agreement*** —

(*1*) ***Eligibility.*** A transfer agreement that satisfies the requirements of this paragraph (c)(3)(iv)(B) may be entered into by an eligible section 965(i) transferor and an eligible section 965(i) transferee. For this purpose, the term *eligible section 965(i) transferee* refers to a single United States person that becomes a shareholder of the S corporation (including a person listed in § 1.1362-6(b)(2) with respect to a trust or estate, but not a domestic pass-through entity itself). In the case of a transfer that consists of multiple partial transfers (as described in paragraph (c)(3)(iii) of this section), a transfer agreement that satisfies the requirements of this paragraph (c)(3)(iv)(B) may be entered into by an eligible section 965(i) transferor and an eligible section 965(i) transferee for each partial transfer.

(*2*) ***Filing requirements*** —

(*i*) ***In general.*** A transfer agreement must be timely filed. Except as provided in paragraphs (c)(3)(iv)(B)(*2*)(*ii*) and (*iii*) of this section, a transfer agreement is considered timely filed only if the transfer agreement is filed within 30 days of the date that the triggering event occurs. The transfer agreement must be filed

in accordance with the rules provided in publications, forms, instructions, or other guidance. In addition, a duplicate copy of the transfer agreement must be attached to the returns of both the eligible section 965(i) transferee and the eligible section 965(i) transferor for the taxable year during which the triggering event occurs filed by the due date (taking into account extensions, if any) for such returns. Relief is not available under § 301.9100-2 or 301.9100-3 to file a transfer agreement late.

(*ii*) ***Transition rule.*** If a triggering event occurs on or before February 5, 2019, the transfer agreement must be filed by March 7, 2019, to be considered timely filed.

(*iii*) ***Death of eligible section 965(i) transferor.*** If the triggering event is the death of the eligible section 965(i) transferor, the transfer agreement must be filed by the later of the unextended due date for the eligible section 965(i) transferor's final income tax return or March 7, 2019.

(*3*) ***Signature requirement.*** The transfer agreement that is filed within 30 days of the triggering event or by the due date specified in paragraph (c)(3)(iv)(B)(*2*)(*ii*) or (*iii*) of this section must be signed under penalties of perjury by a person who is authorized to sign a return on behalf of the eligible section 965(i) transferor and a person who is authorized to sign a return on behalf of the eligible section 965(i) transferee.

(*4*) ***Terms of agreement.*** A transfer agreement under this paragraph (c)(3)(iv)(B) must be entitled “Transfer Agreement Under Section 965(i)(2)” and must contain the following information and representations:

(*i*) A statement that the document constitutes an agreement by the eligible section 965(i) transferee to assume the liability of the eligible section 965(i) transferor for the unpaid portion of the section 965(i) net tax liability, or, in the case of a partial transfer, for the unpaid portion of the section 965(i) net tax liability attributable to the transferred stock;

(*ii*) A statement that the eligible section 965(i) transferee agrees to comply with all of the conditions and requirements of section 965(i) and paragraph (c) of this section, including the annual reporting requirement, as well as any other applicable requirements in the section 965 regulations;

(*iii*) The name, address, and taxpayer identification number of the eligible section 965(i) transferor and the eligible section 965(i) transferee;

(*iv*) The amount of the eligible section 965(i) transferor's unpaid section 965(i) net tax liability or, in the case of a partial transfer, the unpaid portion of the section 965(i) net tax liability attributable to the transferred stock, each as determined by the eligible section 965(i) transferor, which amount is subject to adjustment by the Commissioner;

(*v*) A copy of the eligible section 965(i) transferor's most recent Form 965-A, if the eligible section 965(i) transferor has been required to file a Form 965-A;

(*vi*) A detailed description of the triggering event that led to the transfer agreement, including the name and taxpayer identification number of the S corporation with respect to which the section 965(i) election was effective;

(*vii*) A representation that the eligible section 965(i) transferee is able to pay the section 965(i) net tax liability being assumed;

(*viii*) An acknowledgement that the eligible section 965(i) transferor and any successor to the eligible section 965(i) transferor will remain jointly and severally liable for the section 965(i) net tax liability being assumed by the eligible section 965(i) transferee;

(*ix*) A statement as to whether the leverage ratio of the eligible section 965(i) transferee immediately after the triggering event exceeds three to one, which ratio may be modified as provided in publications, forms, instructions, or other guidance;

(*x*) Any additional information, representation, or certification required by the Commissioner in publications, forms, instructions, or other guidance.

(*5*) ***Special rule in the case of death of eligible section 965(i) transferor.*** Except in the case of transfers to trusts, if the triggering event is the death of the eligible section 965(i) transferor, and the identity of the beneficiary or beneficiaries (in the case of multiple partial transfers) is determined as of the due date for the transfer agreement described in paragraph (c)(3)(iv)(B)(*2*)(*iii*) of this section, then the transfer may be treated as a transfer directly between the eligible 965(i) transferor and the beneficiary or beneficiaries. If, however, the identity of the beneficiary or beneficiaries is not determined as of the due date for the transfer agreement described in paragraph (c)(3)(iv)(B)(*2*)(*iii*) of this section, then the transfer must be treated first as a transfer between the eligible section 965(i) transferor and his or her estate at the time of death and second as a transfer between the estate and the beneficiary or beneficiaries when the shares are actually transferred to the beneficiary or beneficiaries. Separate transfer agreements must be filed for each transfer. The transfer from the eligible section 965(i) transferor to his or her estate is a transfer resulting from a triggering event that is the death of the eligible section 965(i) transferor, and the transfer agreement is subject to the timing rules in paragraph (c)(3)(iv)(B)(*2*)(*iii*) of this section. The transfer from the estate to the beneficiary or beneficiaries is not a transfer resulting from a triggering event that is the death of the eligible section 965(i) transferor, and the transfer agreement is subject to the timing rules in paragraph (c)(3)(iv)(B)(*2*)(*i*) and (*ii*) of this section.

(*6*) ***Leverage ratio.*** For purposes of paragraph (c)(3)(iv)(B)(4)(*ix*) of this section, and except as otherwise provided in publications, forms, instructions, or other guidance, the term *leverage ratio* means the ratio that the total indebtedness of the eligible section 965(i) transferee bears to the sum of its money and all other assets reduced (but not below zero) by such total indebtedness. For this purpose, the amount taken into account with respect to any asset is the adjusted basis thereof for purposes of determining gain, and the amount taken into account with respect to any indebtedness with original issue discount is its issue price plus the portion of the original issue discount previously accrued as determined under the rules of section 1272 (determined without regard to subsection (a)(7) or (b)(4) thereof).

(C) *Consent of Commissioner* —

(*1*) ***In general.*** Except as otherwise provided in publications, forms, instructions, or other guidance, if an eligible section 965(i) transferor and an eligible section 965(i) transferee file a transfer agreement in accordance with the provisions of paragraph (c)(3)(iv)(B) of this section, the eligible section 965(i) transferor and the eligible section 965(i) transferee will be considered to have entered into an agreement with the Commissioner for purposes of section 965(i)(2) and paragraph (c)(3)(iv) of this section. If the Commissioner determines that additional information is necessary (for example, additional information regarding the ability of the eligible section 965(i) transferee to pay the eligible section 965(i) transferor's unpaid section 965(i) net tax liability), the eligible section 965(i) transferee must provide such information upon request.

(*2*) ***Material misrepresentations and omissions.*** If the Commissioner determines that an agreement filed by an eligible section 965(i) transferor and an eligible section 965(i) transferee contains a material misrepresentation or material omission, or if the eligible section 965(i) transferee does not provide the additional information requested under paragraph (c)(3)(iv)(C)(*1*) of this section within a reasonable timeframe communicated by the Commissioner to the eligible section 965(i) transferee, then the Commissioner may reject the transfer agreement (effective as of the date of the related triggering event). In the alternative, on the date that the Commissioner determines that the transfer agreement includes a material misrepresentation or material omission, the Commissioner may determine that a triggering event has occurred with respect to the eligible section 965(i) transferee as of the date of the determination, such that the unpaid section 965(i) net tax liability of the eligible section 965(i) transferor that was assumed by the eligible section 965(i) transferee becomes due on the date of the determination.

(D) *Effect of assumption* —

(*1*) ***In general.*** When the exception in this paragraph (c)(3)(iv) applies with respect to an eligible section 965(i) transferor and an eligible section 965(i) transferee, the eligible section 965(i) transferee assumes all of the outstanding obligations and responsibilities of the eligible section 965(i) transferor with respect to the section 965(i) net tax liability with respect to the S corporation as though the eligible section 965(i) transferee had included the section 965(a) inclusion in income. Accordingly, the eligible section 965(i) transferee is responsible for making payments and reporting with respect to any unpaid section 965(i) net tax liability with respect to the S corporation. In addition, for example, if a triggering event described in paragraph (c)(3)(ii) of this section occurs with respect to an eligible section 965(i) transferee, any unpaid portion of the section 965(i) net tax liability of the eligible section 965(i) transferor that was assumed by the eligible section 965(i) transferee becomes due on the date of such event, subject to any applicable exception in paragraph (c)(3)(iv) or (v) of this section.

(2) ***Eligible section 965(i) transferor liability.*** An eligible section 965(i) transferor remains jointly and severally liable for any unpaid installment payments of the eligible section 965(i) transferor that were assumed by the eligible section 965(i) transferee, as well as any penalties, additions to tax, or other additional amounts attributable to such net tax liability.

(v) ***Coordination with section 965(h) election*** —

(A) ***In general.*** Subject to the limitation described in paragraph (c)(3)(v)(D) of this section, a shareholder that has made a section 965(i) election with respect to an S corporation, upon the occurrence of a triggering event with respect to such S corporation, may make a section 965(h) election with respect to the portion of the shareholder's section 965(i) net tax liability with respect to such S corporation that is assessed as an addition to tax for the shareholder's taxable year that includes the triggering event pursuant to paragraph (c)(3)(i) of this section as if such portion were a section 965(h) net tax liability.

(B) ***Timing for election.*** A section 965(h) election made pursuant to section 965(i)(4) and paragraph (c)(3)(v)(A) of this section must be made no later than the due date (taking into account extensions, if any) for the shareholder's return for the taxable year in which the triggering event with respect to the S corporation occurs. Relief is not available under § 301.9100-2 or § 301.9100-3 to make a late election.

(C) ***Due date for installment.*** If a shareholder makes a section 965(h) election pursuant to section 965(i)(4) and paragraph (c)(3)(v)(A) of this section, the payment of the first installment (as described in paragraph (b)(1)(i) of this section) must be made no later than the due date (without regard to extensions) for the shareholder's return of tax for the taxable year in which the triggering event with respect to the S corporation occurs.

(D) ***Limitation*** —

(*1*) ***In general.*** Notwithstanding paragraph (c)(3)(v)(A) of this section, if the triggering event with respect to an S corporation is a triggering event described in paragraph (c)(3)(ii)(B) of this section, then the section 965(h) election may only be made with the consent of the Commissioner.

(*2*) ***Manner of obtaining consent*** —

(*i*) ***In general.*** In order to obtain the consent of the Commissioner as required by paragraph (c)(3)(v)(D)(*1*) of this section, the shareholder intending to make the section 965(h) election must file the agreement described in paragraph (c)(3)(v)(D)(*4*) of this section within 30 days of the occurrence of the triggering event, except as described in paragraph (c)(3)(v)(D)(*2*)(*ii*) of this section. The agreement must be filed in accordance with the rules provided in publications, forms, instructions, or other guidance. In addition, a duplicate copy of the agreement must be filed, with the shareholder's timely-filed return for the taxable year during which the triggering event occurs (taking into account extensions, if any), along with the election statement described in paragraph (b)(2)(iii) of this section. Relief is not available under § 301.9100-2 or § 301.9100-3 to file an agreement late.

(*ii*) ***Transition rule.*** If a triggering event occurs on or before February 5, 2019, the agreement must be filed by March 7, 2019, in order to be considered timely filed.

(*3*) ***Signature requirement.*** The agreement that is filed within 30 days of the triggering event or by the due date specified in paragraph (c)(3)(v)(D)(*2*)(*ii*) of this section must be signed under penalties of perjury by the shareholder.

(*4*) ***Terms of agreement.*** The agreement under this paragraph (c)(3)(v)(D) must be entitled "Consent Agreement Under Section 965(i)(4)(D)" and must contain the following information and representations—

(*i*) A statement that the shareholder agrees to comply with all of the conditions and requirements of section 965(h) and paragraph (b) of this section, as well as any other applicable requirements in the section 965 regulations;

(*ii*) The name, address, and taxpayer identification number of the shareholder;

(*iii*) The amount of the section 965(i) net tax liability under section 965 remaining unpaid with respect to which the section 965(h) election is made pursuant to section 965(i)(4)(D) and paragraph (c)(3)(v)(A) of this section, as determined by the shareholder, which amount is subject to adjustment by the Commissioner; and

(*iv*) A representation that the shareholder is able to make the payments required under section 965(h) and paragraph (b) of this section with respect to the portion of the total net tax liability under section 965 remaining unpaid described in paragraph (c)(3)(v)(D)(*4*)(*iii*) of this section.

(*v*) A statement as to whether the leverage ratio of the shareholder and all subsidiary members of its affiliated group immediately following the triggering event exceeds three to one; and

(*vi*) Any additional information, representation, or certification required by the Commissioner in publications, forms, instructions, or other guidance.

(*5*) ***Consent of Commissioner*** —

(*i*) ***In general.*** If a shareholder files an agreement in accordance with the provisions of paragraph (c)(3)(v)(D) of this section, the shareholder will be considered to have obtained the consent of the Commissioner for purposes of section 965(i)(4)(D) and paragraph (c)(3)(v)(D)(*1*) of this section. However, if the Commissioner reviews the agreement and determines that additional information is necessary, the shareholder must provide such information upon request.

(*ii*) ***Material misrepresentations and omissions.*** If the Commissioner determines that an agreement filed by a shareholder in accordance with the provisions of this paragraph (c)(3)(v)(D) contains a material misrepresentation or material omission, or if the shareholder does not provide the additional information requested under paragraph (c)(3)(v)(D)(*5*)(*i*) of this section within a reasonable

timeframe communicated by the Commissioner to the shareholder, then the Commissioner may reject the agreement (effective as of the date of the related triggering event).

(6) ***Leverage ratio.*** For purposes of paragraph (c)(3)(v)(D)(4)(*v*) of this section, and except as otherwise provided in publications, forms, instructions, or other guidance, the term *leverage ratio* means the ratio that the total indebtedness of the shareholder bears to the sum of its money and all other assets reduced (but not below zero) by such total indebtedness. For this purpose, the amount taken into account with respect to any asset is the adjusted basis thereof for purposes of determining gain, and the amount taken into account with respect to any indebtedness with original issue discount is its issue price plus the portion of the original issue discount previously accrued as determined under the rules of section 1272 (determined without regard to subsection (a)(7) or (b)(4) thereof).

(4) ***Joint and several liability.*** If any shareholder of an S corporation makes a section 965(i) election, the S corporation is jointly and severally liable for the payment of the shareholder's section 965(i) net tax liability with respect to the S corporation, as well as any penalties, additions to tax, or other additional amounts attributable to such net tax liability.

(5) ***Extension of limitation on collection.*** If an S corporation shareholder makes a section 965(i) election with respect to its section 965(i) net tax liability with respect to an S corporation, any limitation on the time period for the collection of the net tax liability shall not begin before the date of the triggering event with respect to the section 965(i) net tax liability.

(6) ***Annual reporting requirement*** —

(i) ***In general.*** A shareholder that makes a section 965(i) election with respect to its section 965(i) net tax liability with respect to an S corporation is required to report the amount of its deferred net tax liability on its return of tax for the taxable year in which the election is made and on the return of tax for each subsequent taxable year until such net tax liability has been fully assessed.

(ii) ***Failure to report.*** If a shareholder fails to report the amount of its deferred net tax liability as required with respect to any taxable year by the due date (taking into account extensions, if any) for the return of tax for that taxable year, five percent of such deferred net tax liability will be assessed as an addition to tax for such taxable year.

(d) ***Section 965(m) election and special rule for real estate investment trusts*** —

(1) ***In general.*** A real estate investment trust may elect under section 965(m) and this paragraph (d) to defer the inclusion in gross income (for purposes of the computation of real estate investment trust taxable income under section 857(b)) of its REIT section 965 amounts and include them in income according to the schedule described in paragraph (d)(2) of this section. This election is revocable only by including in gross income (for purposes of the computation of real estate investment trust taxable income under section 857(b)) the full amount of the REIT section 965 amounts.

(2) ***Inclusion schedule for section 965(m) election.*** If a real estate investment trust makes the section 965(m) election, the REIT section 965 amounts will be included in the real estate investment trust's gross income as follows—

(i) Eight percent of the REIT section 965 amounts in each taxable year in the five-taxable year period beginning with the taxable year the amount would otherwise be included;

(ii) Fifteen percent of the REIT section 965 amounts in the first year following the five year period described in paragraph (d)(2)(i) of this section;

(iii) Twenty percent of the REIT section 965 amounts in the second year following the five year period described in paragraph (d)(2)(i) of this section; and

(iv) Twenty-five percent of the REIT section 965 amounts in the third year following the five year period described in paragraph (d)(2)(i) of this section.

(3) ***Manner of making election*** —

(i) ***Eligibility.*** A real estate investment trust with section 965(a) inclusions may make the section 965(m) election.

(ii) ***Timing.*** A section 965(m) election must be made no later than the due date (taking into account extensions, if any) for the return for the first year of the five year period described in paragraph (d)(2)(i) of this section. Relief is not available under § 301.9100-2 or § 301.9100-3 to make a late election.

(iii) ***Election statement.*** Except as otherwise provided in publications, forms, instructions, or other guidance, to make a section 965(m) election, a real estate investment trust must attach a statement, signed under penalties of perjury consistent with the rules for signatures applicable to the person's return, to its return for the taxable year in which it would otherwise be required to include the REIT section 965 amounts in gross income. The statement must include the real estate investment trust's name, taxpayer identification number, REIT section 965 amounts, and the anticipated amounts of each portion of the REIT section 965 amounts described under paragraph (d)(2) of this section, and the statement must be filed in the manner prescribed in publications, forms, instructions, or other guidance. The attachment of an unsigned copy of the election statement to the timely-filed return for the relevant taxable year satisfies the signature requirement of this paragraph (d)(3)(iii) if the real estate investment trust retains the original signed election statement in the manner specified by § 1.6001-1(e).

(4) ***Coordination with section 965(h).*** A real estate investment trust that makes the section 965(m) election may not also make a section 965(h) election for any year with respect to which a section 965(m) election is in effect.

(5) ***Acceleration of inclusion.*** If a real estate investment trust makes a section 965(m) election and subsequently there is a liquidation, sale, exchange, or other disposition of substantially all of the assets of the real estate investment trust (including in a title 11 or similar case), or a cessation of business by the real estate investment trust, any amount not yet included in gross income (for purposes of the computation of real estate investment trust taxable income under section 857(b)) as a result of the section 965(m) election will be so included as of the day before the date of the event. The unpaid portion of any tax liability with respect to such inclusion will be due on the date of the event (or in the case of a title 11 or similar case, the day before the petition is filed).

(6) ***Treatment of section 965(a) inclusions of a real estate investment trust.*** Regardless of whether a real estate investment trust has made a section 965(m) election, and regardless of whether it is a United States shareholder of a deferred foreign income corporation, any section 965(a) inclusions of the real estate investment trust are not taken into account as gross income of the real estate investment

trust for purposes of applying paragraphs (2) and (3) of section 856(c) for any taxable year for which the real estate investment trust takes into account a section 965(a) inclusion, including pursuant to paragraph (d)(2) of this section.

(e) *Section 965(n) election* —

(1) *In general* —

(i) ***General rule.*** A person may elect to not take into account the amount described in paragraph (e)(1)(ii) of this section in determining its net operating loss under section 172 for the taxable year or in determining the amount of taxable income for such taxable year (computed without regard to the deduction allowable under section 172) that may be reduced by net operating loss carryovers or carrybacks to such taxable year under section 172. Except as provided in paragraph (e)(2)(ii)(B) of this section, the election for each taxable year is irrevocable. If the section 965(n) election creates or increases a net operating loss under section 172 for the taxable year, then the taxable income of the person for the taxable year cannot be less than the amount described in paragraph (e)(1)(ii) of this section. The amount of deductions equal to the amount by which a net operating loss is created or increased for the taxable year by reason of the section 965(n) election (the *deferred amount*) is not taken into account in computing taxable income or the separate foreign tax credit limitations under section 904 for that year. The source and separate category (as defined in § 1.904-5(a)(4)(v)) components of the deferred amount are determined in accordance with paragraph (e)(1)(iv) of this section.

(ii) ***Applicable amount for section 965(n) election.*** If a person makes a section 965(n) election, the amount referred to in paragraph (e)(1)(i) of this section is the sum of—

(A) The person's section 965(a) inclusions for the taxable year reduced by the person's section 965(c) deductions for the taxable year, and

(B) In the case of a domestic corporation, the taxes deemed paid under section 960(a)(1) for the taxable year with respect to the person's section 965(a) inclusions that are treated as dividends under section 78.

(iii) ***Scope of section 965(n) election.*** If a person makes a section 965(n) election, the election applies to both net operating losses for the taxable year for which the election is made and the net operating loss carryovers or carrybacks to such taxable year, each in their entirety. Any section 965(n) election made by the agent (within the meaning of § 1.1502-77) of a consolidated group applies to all net operating losses available to the consolidated group, including all components of the consolidated net operating loss deduction (as defined in § 1.1502-21(a)).

(iv) *Effect of section 965(n) election* —

(A) ***In general.*** The section 965(n) election for a taxable year applies solely for purposes of determining the amount of net operating loss under section 172 for the taxable year and determining the amount of taxable income for the taxable year (computed without regard to the deduction allowable under section 172) that may be reduced by net operating loss carryovers or carrybacks to such taxable year under section 172. Paragraph (e)(1)(iv)(B) of this section provides a rule for coordinating the section 965(n) election's effect on section 172 with the computation of the separate foreign tax credit limitations under section 904.

(B) ***Ordering rule for allocation and apportionment of deductions for purposes of the section 904 limitation.*** The effect of a section 965(n) election with respect to a taxable year on the computation of the separate foreign tax credit limitations under section 904 is computed as follows and in the following order.

(*1*) Deductions, including those that create or increase a net operating loss for the taxable year by reason of the section 965(n) election, are allocated and apportioned under §§ 1.861-8 through 1.861-17 to the relevant statutory and residual groupings, taking into account the amount described in paragraph (e)(1)(ii) of this section. The source and separate category of the net operating loss carryover or carryback to the taxable year, if any, is determined under the rules of § 1.904(g)-3(b), taking into account the amount described in paragraph (e)(1)(ii) of this section. Therefore, if the amount of the net operating loss carryover or carryback to the taxable year (as reduced by reason of the section 965(n) election) exceeds the U.S. source loss component of the net operating loss that is carried over under § 1.904(g)-3(b)(3)(i), but such excess is less than the potential carryovers (or carrybacks) of the separate limitation losses that are part of the net operating loss, the potential carryovers (or carrybacks) are proportionately reduced as provided in § 1.904(g)-3(b)(3)(ii) or (iii), as applicable.

(*2*) If a net operating loss is created or increased for the taxable year by reason of the section 965(n) election, the deferred amount (as defined in paragraph (e)(1)(i) of this section) is not allowed as a deduction for the taxable year. See paragraph (e)(1)(i) of this section. The deferred amount (which is the corresponding addition to the net operating loss for the taxable year) comprises a ratable portion of the deductions (including the deduction allowed under section 965(c)) allocated and apportioned to each statutory and residual grouping under paragraph (e)(1)(iv)(B)(*1*) of this section. Such ratable portion equals the deferred amount multiplied by a fraction, the numerator of which is the deductions allocated and apportioned to the statutory or residual grouping under paragraph (e)(1)(iv)(B)(*1*) of this section and the denominator of which is the total deductions described in paragraph (e)(1)(iv)(B)(*1*) of this section. Accordingly, the fraction described in the previous sentence takes into account the deferred amount.

(*3*) Taxable income and the separate foreign tax credit limitations under section 904 for the taxable year are computed without taking into account any deferred amount. Deductions allocated and apportioned to the statutory and residual groupings under paragraph (e)(1)(iv)(B)(*1*) of this section, to the extent deducted in the taxable year rather than deferred to create or increase a net operating loss, are combined with income in the statutory and residual groupings to which those deductions are assigned in order to compute the amount of separate limitation income or loss in each separate category and U.S. source income or loss for the taxable year. Section 904(b), (f), and (g) are then applied to determine the applicable foreign tax credit limitations for the taxable year.

(2) ***Manner of making election*** —

(i) ***Eligibility.*** A person with a section 965(a) inclusion may make the section 965(n) election.

(ii) ***Timing*** —

(A) ***In general.*** A section 965(n) election must be made no later than the due date (taking into account extensions, if any) for the person's return for the taxable year to which the election applies. Relief is not available under § 301.9100-2 or § 301.9100-3 of this chapter to make a late election.

(B) ***Transition rule.*** In the case of a section 965(n) election made before June 21, 2019, the election may be revoked by attaching a statement, signed under penalties of perjury, to an amended return for the taxable year to which the election applies (the *election year*). The statement must include the person's name, taxpayer identification number, and a statement that the person revokes the section 965(n) election. The amended return to which the statement is attached must be filed by—

(*1*) In the case of a revocation with respect to an election due before February 5, 2019, the due date (taking into account extensions, if any, or any additional time that would have been granted if the person had made an extension request) for the return for the taxable year following the election year; or

(*2*) In the case of a revocation with respect to an election due on or after February 5, 2019, the due date (taking into account extensions, if any, or any additional time that would have been granted if the person had made an extension request) for the return for the election year.

(iii) ***Election statement.*** Except as otherwise provided in publications, forms, instructions, or other guidance, to make a section 965(n) election, a person must attach a statement, signed under penalties of perjury consistent with the rules for signatures applicable to the person's return, to its return for the taxable year to which the election applies. The statement must include the person's name, taxpayer identification number, the amounts described in section 965(n)(2)(A) and paragraph (e)(1)(ii)(A) of this section and section 965(n)(2)(B) and paragraph (e)(1)(ii)(B) of this section, and the sum thereof, and the statement must be filed in the manner prescribed in publications, forms, instructions, or other guidance. The attachment of an unsigned copy of the election statement to the timely-filed return for the relevant taxable year satisfies the signature requirement of this paragraph (e)(2)(iii) if the person making the election retains the original signed election statement in the manner specified by § 1.6001-1(e).

(3) ***Examples.*** The following examples illustrate the application of paragraph (e)(1)(iv) of this section.

(i) ***Example 1: Net operating loss in inclusion year*** —

(A) ***Facts.*** USP, a domestic corporation, has a section 965(a) inclusion of $100x and has a section 965(c) deduction of $70x for its taxable year ending December 31, 2017. USP also includes in gross income the amount treated as dividends under section 78 of $50x (the foreign taxes deemed paid under section 960(a) for the taxable year with respect to USP's section 965(a) inclusion). The section 965(a) inclusion and the section 78 dividends are foreign source general category income. During the 2017 taxable year, USP also has U.S. source gross income of $150x and other deductions of $210x, comprising $60x of interest expense and $150x of other deductible expenses that are not definitely related to any gross income. USP's total tax book value of its assets, as determined under §§ 1.861-9(g)(2) and 1.861-9T(g)(3), is divided equally between assets that generate foreign source general category income and assets that generate U.S. source income. USP elects under paragraph (e)(1)(i) of this section to not take into account the amount described in paragraph (e)(1)(ii) of this section in determining its net operating loss under section 172

for the taxable year. Before taking into account the section 965(n) election, USP's total deductions are $280x ($210x + $70x) and USP's taxable income is $20x ($100x + $50x + $150x−$70x−$210x).

(B) ***Analysis.***

(*1*) The amount described in paragraph (e)(1)(ii) of this section is $80x ($100x section 965(a) inclusion−$70x section 965(c) deduction + $50x section 78 dividends). Not taking into account the $80x creates a net operating loss under section 172 of $60x ($20x taxable income without regard to the section 965(n) election−$80x) for the taxable year (the "deferred amount"). Under paragraph (e)(1)(i) of this section, the deferred amount of $60x constitutes a net operating loss and is not allowed as a deduction for the taxable year. USP's taxable income for the year is $80x ($100x + $50x + $150x−($280x−$60x)).

(*2*) Under paragraph (e)(1)(iv)(B)(*1*) of this section, deductions are allocated and apportioned under §§ 1.861-8 through 1.861-17 to the relevant statutory and residual groupings, taking into account the amount described in paragraph (e)(1)(ii) of this section. Under § 1.861-8(b), USP's section 965(c) deduction is definitely related to the section 965(a) inclusion, and, therefore, is allocated solely to foreign source general category income. Under § 1.861-9T, based on USP's asset values, the interest expense of $60x is ratably apportioned $30x to foreign source general category income and $30x to U.S. source income. Under § 1.861-8(c)(3), based on $150x of gross U.S. source income and $150x of gross foreign source general category income, the other expenses of $150x are ratably apportioned $75x to foreign source general category income and $75x to U.S. source income. Therefore, USP's deductions allocated and apportioned to foreign source general category income are $175x ($70x + $30x + $75x) and its deductions allocated and apportioned to U.S. source income are $105x ($30x + $75x).

(*3*) Under paragraph (e)(1)(iv)(B)(*2*) of this section, the deferred amount of $60x comprises a ratable portion of the allocated and apportioned deductions. Therefore, $37.5x ($60x × $175x/$280x) of the deferred amount comprises deductions allocated and apportioned to foreign source general category income, and $22.5x ($60x × $105x/$280x) comprises deductions allocated and apportioned to U.S. source income.

(*4*) Under paragraph (e)(1)(iv)(B)(*3*) of this section, for purposes of the separate foreign tax credit limitation under section 904, foreign source general category income for the taxable year is computed without taking into account the $37.5x of the deferred amount that is attributable to the deductions allocated and apportioned to the foreign source general category. Therefore, for the 2017 taxable year, foreign source general category income is $12.5x ($100x section 965(a) inclusion + $50x section 78 dividends−($175x deductions−$37.5x deferred amount). The remaining taxable income of $67.5x is U.S. source income.

(ii) ***Example 2: Net operating loss carryover to the inclusion year*** —

(A) ***Facts.*** USP, a domestic corporation, has a section 965(a) inclusion of $100x and has a section 965(c) deduction of $60x for its taxable year ending December 31, 2017. USP also includes in gross income the amount treated as dividends under section 78 of $40x (the

foreign taxes deemed paid under section 960(a) for the taxable year with respect to USP's section 965(a) inclusion). The section 965(a) inclusion and the section 78 dividends are foreign source general category income. USP also has U.S. source gross income of $200x, foreign source passive category gross income of $100x, and other deductions of $140x. Under § 1.861-8(b), USP's $60x section 965(c) deduction is definitely related to the section 965(a) inclusion, and, therefore, is allocated solely to foreign source general category income. Under §§ 1.861-8 through 1.861-17, USP allocates and apportions the other $140x of deductions as follows: $40x to foreign source general category income, $40x to foreign source passive category income, and $60x to U.S. source income. USP has a net operating loss of $260x for the 2016 taxable year consisting of a $120x U.S. source loss, a $75x general category separate limitation loss, and a $65x passive category separate limitation loss. Under paragraph (e)(1)(i) of this section, USP elects to not take into account the amount described in paragraph (e)(1)(ii) of this section in determining the amount of taxable income that may be reduced by net operating loss carryovers and carrybacks to the taxable year under section 172. USP's taxable income before taking into account the section 965(n) election and any net operating loss carryover deduction is $240x:

TABLE 1 TO PARAGRAPH (e)(3)(ii)(A)

	General	Passive	U.S.	Total
Section 965(a) inclusion	$100x			$100x
Section 78 dividend	40x			40x
Other gross income		100x	200x	300x
Section 965(c) deduction	(60x)			(60x)
Other deductions	(40x)	(40x)	(60x)	(140x)
Net Income	40x	60x	140x	240x

(B) *Analysis* —

(*1*) The amount described in paragraph (e)(1)(ii) of this section is $80x ($100x section 965(a) inclusion−$60x section 965(c) deduction + $40x section 78 dividends). As a result of the section 965(n) election, the net operating loss deduction allowed in the 2017 taxable year is reduced from $240x to $160x (the amount of USP's taxable income reduced by the amount described in paragraph (e)(1)(ii) of this section).

(*2*) Under paragraph (e)(1)(iv)(B)(*1*) of this section, the source and separate category of the net operating loss deduction allowed in the 2017 taxable year is determined under the rules of § 1.904(g)-3(b), taking into account the amount described in paragraph (e)(1)(ii) of this section. Under § 1.904(g)-3(b)(3)(i), first the $120x U.S. source component of the net operating loss is allocated to U.S. source income for the 2017 taxable year. Because the total tentative carryover under § 1.904(g)-3(b)(3)(ii) of $100x ($40x in the general category and $60x in the passive category) exceeds the remaining net operating loss deduction of $40x

($160x−$120x), the tentative carryover amount from each separate category is reduced proportionately, to $16x ($40x × $40x/$100x) for the general category and $24x ($40x × $60x/$100x) for the passive category. Accordingly, $16x of the general category component of the net operating loss is carried forward, and $24x of the passive category component of the net operating loss is carried forward and combined with income in the same respective categories for the 2017 taxable year. After allocation of the net operating loss carryover from 2016, USP's taxable income for the 2017 taxable year is as follows:

TABLE 1 TO PARAGRAPH (e)(3)(ii)(B)(2)

	General	Passive	U.S.	Total
Net income before NOL deduction	$40x	$60x	$140x	$240x
NOL deduction	(16x)	(24x)	(120x)	(160x)
Net income after NOL deduction	24x	36x	20x	80x

(f) *Election to use alternative method for calculating post-1986 earnings and profits* —

(1) ***Effect of election for specified foreign corporations that do not have a 52-53-week taxable year.*** If an election is made under this paragraph (f) with respect to a specified foreign corporation that does not have a 52-53-week taxable year, the amount of the post-1986 earnings and profits (including a deficit) as of the E&P measurement date on November 2, 2017, is determined under paragraph (f)(3) of this section. The election described in this paragraph (f) is irrevocable. A specified foreign corporation that does not have a 52-53-week taxable year may not use the alternative method of determination in paragraph (f)(3) of this section for purposes of determining its post-1986 earnings and profits on the E&P measurement date on December 31, 2017.

(2) ***Effect of election for specified foreign corporations that have a 52-53-week taxable year.*** If an election is made under this paragraph (f) with respect to a specified foreign corporation that has a 52-53-week taxable year, the amount of the post-1986 earnings and profits (including a deficit) as of both E&P measurement dates is determined under paragraph (f)(3) of this section. The election described in this paragraph (f) is irrevocable.

(3) ***Computation of post-1986 earnings and profits using alternative method.*** With respect to an E&P measurement date, the post-1986 earnings and profits of a specified foreign corporation for which an election is properly made equals the sum of—

(i) The specified foreign corporation's post-1986 earnings and profits (including a deficit) determined as of the notional measurement date, as if it were an E&P measurement date, plus

(ii) The specified foreign corporation's annualized earnings and profits amount with respect to the notional measurement date.

(4) *Definitions* —

(i) ***52-53-week taxable year.*** The term *52-53-week taxable year* means a taxable year described in § 1.441-2(a)(1).

(ii) ***Annualized earnings and profits amount.*** The term *annualized earnings and profits amount* means, with respect to a specified foreign corporation, an E&P measurement date, and a notional measurement date, the amount equal to the product of the number of days between the notional measurement date and the E&P measurement date (not including the former, but including the latter) multiplied by the daily earnings amount of the specified foreign corporation. The annualized earnings and profits amount is expressed as a negative number if the E&P measurement date precedes the notional measurement date.

(iii) ***Daily earnings amount.*** The term *daily earnings amount* means, with respect to a specified foreign corporation and a notional measurement date, the post-1986 earnings and profits (including a deficit) of the specified foreign corporation determined as of the close of the notional measurement date that were earned (or incurred) during the specified foreign corporation's taxable year that includes the notional measurement date, divided by the number of days that have elapsed in such taxable year as of the close of the notional measurement date.

(iv) ***Notional measurement date.*** The term *notional measurement date* means—

(A) With respect to an E&P measurement date of a specified foreign corporation with a 52-53-week taxable year, the closest end of a fiscal month to such E&P measurement date, and

(B) With respect to the E&P measurement date on November 2, 2017, of all specified foreign corporations not described in paragraph (f)(4)(iv)(A) of this section, October 31, 2017.

(5) ***Manner of making election*** —

(i) ***Eligibility.*** An election with respect to a specified foreign corporation to use the alternative method of calculating post-1986 earnings and profits as of an E&P measurement date pursuant to this paragraph (f) must be made on behalf of the specified foreign corporation by a controlling domestic shareholder (as defined in § 1.964-1(c)(5)) pursuant to the rules of § 1.964-1(c)(3), except that the controlling domestic shareholder is not required to file the statement described in § 1.964-1(c)(3)(ii).

(ii) ***Timing.*** An election under this paragraph (f) must be made no later than the due date (taking into account extensions, if any) for the person's return for the first taxable year in which the person has a section 965(a) inclusion amount with respect to the specified foreign corporation or in which the person takes into account a specified E&P deficit with respect to the specified corporation for purposes of computing a section 965(a) inclusion amount with respect to another specified foreign corporation. Relief is not available under § 301.9100-2 or § 301.9100-3 to make a late election.

(iii) ***Election statement.*** Except as otherwise provided in publications, forms, instructions, or other guidance, to make an election under this paragraph (f), a person must attach a statement, signed under penalties of perjury consistent with the rules for signatures applicable to the person's return, to the person's return for the taxable year described in paragraph (f)(5)(ii) of this section. The statement must include the person's name, taxpayer identification number, and the name and taxpayer identification number, if any, of each of the specified foreign corporations with respect to which the election is made, and the statement must be filed in the manner prescribed in instructions or other guidance. The attachment of an unsigned copy of

the election statement to the timely-filed return for the relevant taxable year satisfies the signature requirement of this paragraph (f)(5)(iii) if the person making the election retains the original signed election statement in the manner specified by § 1.6001-1(e).

(6) ***Examples.*** The following examples illustrate the application of this paragraph (f).

Example 1. (i)(A) *Facts.* FS, a foreign corporation, has a calendar year taxable year, and as of October 31, 2017, FS has post-1986 earnings and profits of 10,000u, 3,040u of which were earned during the taxable year that includes October 31, 2017. An election is properly made under paragraph (f)(5) of this section with respect to FS, allowing FS to determine its post-1986 earnings and profits under the alternative method with respect to its E&P measurement date on November 2, 2017.
(B) *Analysis.* As of the close of October 31, 2017, the notional measurement date with respect to the E&P measurement date on November 2, 2017, 304 days have elapsed in the taxable year of FS that includes October 31, 2017. Therefore, FS's daily earnings amount is 10u (3,040u divided by 304), and FS's annualized earnings and profits amount is 20u (10u multiplied by 2 (the number of days between the notional measurement date on October 31, 2017, and the E&P measurement date on November 2, 2017)). Accordingly, FS's post-1986 earnings and profits as of November 2, 2017, are 10,020u (its post-1986 earnings and profits as of October 31, 2017 (10,000u), plus its annualized earnings and profits amount (20u)).

Example 2. (ii)(A) *Facts.* The facts are the same as in paragraph (f)(6)(i)(A) of this section (the facts in *Example 1*), except that a deficit of 3,040u was incurred during the taxable year that includes October 31, 2017.
(B) *Analysis.* The analysis is the same as in paragraph (f)(6)(i)(B) of this section (the analysis in *Example 1*), except that FS's daily earnings amount is (10u) ((3,040u) divided by 304), and FS's annualized earnings and profits amount is (20u) ((10u) multiplied by 2 (the number of days between the notional measurement date on October 31, 2017, and the E&P measurement date on November 2, 2017)). Accordingly, FS's post-1986 earnings and profits as of November 2, 2017, are 9,980u (its post-1986 earnings and profits as of October 31, 2017 (10,000u), plus its annualized earnings and profits amount ((20u))).

(g) ***Definitions.*** This paragraph (g) provides definitions that apply for purposes of this section.

(1) ***Deferred net tax liability.*** The term *deferred net tax liability* means, with respect to any taxable year of a person, the amount of the section 965(i) net tax liability the payment of which has been deferred under section 965(i) and paragraph (c) of this section.

(2) ***REIT section 965 amounts.*** The term *REIT section 965 amounts* means, with respect to a real estate investment trust and a taxable year of the real estate investment trust, the aggregate amount of section 965(a) inclusions and section 965(c) deductions that would (but for section 965(m)(1)(B) and paragraph (d) of this section) be taken into account in determining the real estate investment trust's income for the taxable year.

(3) ***Section 965(h) election.*** The term *section 965(h) election* means the election described in section 965(h)(1) and paragraph (b)(1) of this section.

(4) ***Section 965(h) net tax liability.*** The term *section 965(h) net tax liability* means, with respect to a person that has made a section 965(h) election, the total net tax liability under section 965 reduced by the aggregate amount of the person's section 965(i) net tax liabilities, if any, with respect to which section 965(i) elections are effective.

(5) ***Section 965(i) election.*** The term *section 965(i) election* means the election described in section 965(i)(1) and paragraph (c)(1) of this section.

(6) ***Section 965(i) net tax liability.*** The term *section 965(i) net tax liability* means, with respect to an S corporation and a shareholder of the S corporation, in the case in which a section 965(i) election is made, the amount determined pursuant to paragraph (g)(10)(i) of this section by adding before the word "over" in (g)(10)(i)(A) of this section "determined as if the only section 965(a) inclusions included in income by the person are domestic pass-through entity shares of section 965(a) inclusions by the S corporation with respect to deferred foreign income corporations of which the S corporation is a United States shareholder."

(7) ***Section 965(m) election.*** The term *section 965(m) election* means the election described in section 965(m)(1)(B) and paragraph (d)(1) of this section.

(8) ***Section 965(n) election.*** The term *section 965(n) election* means the election described in section 965(n)(1) and paragraph (e)(1)(i) of this section.

(9) ***Specified individual.*** The term *specified individual* means, with respect to a taxable year, a person described in § 1.6081-5(a)(5) or (6) who receives an extension of time to file and pay under § 1.6081-5(a) for the taxable year.

(10) ***Total net tax liability under section 965*** —

(i) ***General rule.*** The term *total net tax liability under section 965* means, with respect to a person, the excess (if any) of—

(A) The person's net income tax for the taxable year in which the person includes a section 965(a) inclusion in income, over—

(B) The person's net income tax for the taxable year determined—

(*1*) Without regard to section 965, and

(*2*) Without regard to any income, deduction, or credit properly attributable to a dividend received (directly or through a chain of ownership described in section 958(a)) by the person (or, in the case of a domestic pass-through owner, by the person's domestic pass-through entity) from, or an inclusion under sections 951(a)(1)(B) and 956 with respect to, a deferred foreign income corporation and paid during, or included with respect to, the deferred foreign income corporation's inclusion year.

(ii) ***Net income tax.*** For purposes of this paragraph (g)(10), the term *net income tax* means the regular tax liability (as defined in section 26(b)) reduced by the credits allowed under subparts A, B, and D of part IV of subchapter A of chapter 1 of subtitle A of the Internal Revenue Code.

(iii) ***Foreign tax credits.*** The foreign tax credit disregarded in determining net income tax determined under paragraph (g)(10)(i)(B) of this section includes the credit for foreign income taxes deemed paid with respect to section 965(a) inclusions or foreign income taxes deemed paid with respect to a dividend, including a distribution that would have been treated as a dividend in the absence of section 965. The foreign tax credit disregarded under paragraph (g)(10)(i)(B) of this section also includes the credit for foreign income taxes imposed on distributions of section 965(a) previously taxed earnings and profits or 965(b) previously taxed earnings and profits made in the taxable year in which the person includes a section 965(a) inclusion in income.

[T.D. 9846, 84 FR 1875, Feb. 5, 2019, as amended by T.D. 9846, 84 FR 14261, Apr. 10, 2019; T.D. 9866, 84 FR 29365, June 21, 2019; T.D. 9882, 84 FR 69120, Dec. 17, 2019]

§ 1.965-8 Affiliated groups (including consolidated groups).

(a) ***Scope.*** This section provides rules for applying section 965 and the section 965 regulations to members of an affiliated group (as defined in section 1504(a)), including members of a consolidated group (as defined in § 1.1502-1(h)). Paragraph (b) of this section provides guidance regarding the application of section 965(b)(5) to determine the section 965(a) inclusion amounts of a member of an affiliated group. Paragraph (c) of this section provides guidance for designating the source of aggregate unused E&P deficits. Paragraph (d) provides rules regarding earning and profits and stock basis adjustments. Paragraph (e) of this section provides rules that treat members of a consolidated group as a single person for certain purposes. Paragraph (f) of this section provides definitions that apply for purposes of this section. Paragraph (g) of this section provides examples illustrating the application of this section.

(b) ***Reduction of E&P net surplus shareholder's pro rata share of the section 965(a) earnings amount of a deferred foreign income corporation by the allocable share of the applicable share of the aggregate unused E&P deficit*** —

(1) ***In general.*** This paragraph (b) applies after the application of § 1.965-1(b)(2) for purposes of determining the section 965(a) inclusion amount with respect to a deferred foreign income corporation of a section 958(a) U.S. shareholder that is both an E&P net surplus shareholder and a member of an affiliated group in which not all members are members of the same consolidated group. If this paragraph (b) applies, the U.S. dollar amount of the section 958(a) U.S. shareholder's pro rata share of the section 965(a) earnings amount of the deferred foreign income corporation is further reduced (but not below zero) by the deferred foreign income corporation's allocable share of the section 958(a) U.S. shareholder's applicable share of the affiliated group's aggregate unused E&P deficit.

(2) ***Consolidated group as part of an affiliated group.*** If some, but not all, members of an affiliated group are members of a consolidated group, then the consolidated group is treated as a single member of the affiliated group for purposes of § 1.965-1(b)(2) and paragraph (b)(1) of this section.

(c) ***Designation of portion of excess aggregate foreign E&P deficit taken into account*** —

(1) ***In general.*** This paragraph (c) provides rules for designating the source of an aggregate unused E&P deficit of an affiliated group that is not also a consolidated group taken into account under section 965(b)(5) and paragraph (b) of this section if the amount described in paragraph (f)(1)(i)(A) of this section with respect to the affiliated group exceeds the amount described in paragraph (f)(1)(i)(B) of this section with respect to the affiliated group. If this paragraph (c)(1) applies, each member of the

affiliated group that is an E&P net deficit shareholder must designate by maintaining in its books and records a statement (identical to the statement maintained by all other such members) setting forth the portion of the excess aggregate foreign E&P deficit of the E&P net deficit shareholder taken into account under section 965(b)(5) and paragraph (b) of this section. See § 1.965-2(d)(2)(ii)(B) for a rule for designating the portion of a section 958(a) U.S. shareholder's pro rata share of a specified E&P deficit of an E&P deficit foreign corporation taken into account under section 965(b), § 1.965-1(b)(2), and paragraph (b) of this section, as applicable.

(2) ***Consolidated group as part of an affiliated group.*** If some, but not all, members of an affiliated group are properly treated as members of a consolidated group, then the consolidated group is treated as a single member of the affiliated group for purposes of applying paragraph (c)(1) of this section.

(d) ***Adjustments to earning and profits and stock basis.***

(1) [Reserved]

(2) ***Consolidated groups.*** See § 1.1502-33(d)(1) for adjustments to members' earnings and profits and § 1.1502-32(b)(3) for adjustments to members' basis.

(e) ***Treatment of a consolidated group or other affiliated group as a single section 958(a) U.S. shareholder or a single person —***

(1) ***In general.*** All members of a consolidated group that are section 958(a) U.S. shareholders of a specified foreign corporation are treated as a single section 958(a) U.S. shareholder for purposes of section 965(b), § 1.965-1(b)(2), and § 1.965-3. Furthermore, all members of a consolidated group are treated as a single person for purposes of paragraphs (h), (k), and (n) of section 965 and § 1.965-7. In addition, all members of an affiliated group that are section 958(a) U.S. shareholders of a specified foreign corporation are treated as a single section 958(a) U.S. shareholder for purposes of § 1.965-2(f). Thus, for example, any election governed by section 965(h) and § 1.965-7(b) must be made by the agent (within the meaning of § 1.1502-77) of the group as a single election on behalf of all members of the consolidated group. Similarly, the determination of whether the transfer of assets by one member to a non-member of the consolidated group would constitute an acceleration event under § 1.965-7(b)(3)(ii)(B) takes into account all of the assets of the consolidated group, which for purposes of this determination, includes all of the assets of each consolidated group member. In analyzing issues relating to the transfer of assets of a consolidated group, appropriate adjustments are made to prevent the duplication of assets or asset value.

(2) ***Limitation.*** Paragraph (e)(1) of this section does not apply to treat all members of a consolidated group as a single section 958(a) U.S. shareholder or a single person, as applicable, for purposes of determining the amount of any member's inclusion under section 951 (including a section 965(a) inclusion), the foreign income taxes deemed paid with respect to a section 965(a) inclusion (see sections 960 and 902), or any purpose other than those specifically listed in paragraph (e)(1) of this section or another provision of the section 965 regulations.

(3) ***Determination of section 965(c) deduction amount.*** For purposes of determining the section 965(c) deduction amount of any section 958(a) U.S. shareholder that is a member of a consolidated group, the aggregate foreign cash position of the section 958(a) U.S. shareholder is equal to the aggregate section 965(a) inclusion amount of the section 958(a) U.S. shareholder multiplied by the group cash ratio of the consolidated group.

(f) ***Definitions.*** This paragraph (f) provides definitions that apply for purposes of applying the section 965 regulations to members of an affiliated group, including members of a consolidated group.

(1) ***Aggregate unused E&P deficit*** —

(i) ***General rule.*** The term *aggregate unused E&P deficit* means, with respect to an affiliated group, the lesser of—

(A) The sum of the excess aggregate foreign E&P deficit with respect to each E&P net deficit shareholder that is a member of the affiliated group, or

(B) The amount determined under paragraph (f)(3)(ii) of this section.

(ii) ***Reduction with respect to E&P net deficit shareholders that are not wholly owned by the affiliated group.*** If the group ownership percentage of an E&P net deficit shareholder is less than 100 percent, the amount of the excess aggregate foreign E&P deficit with respect to the E&P net deficit shareholder that is taken into account under paragraph (f)(1)(i) of this section is the product of the group ownership percentage multiplied by the excess aggregate foreign E&P deficit.

(2) ***Allocable share.*** The term *allocable share* means, with respect to a deferred foreign income corporation and an E&P net surplus shareholder's applicable share of an aggregate unused E&P deficit of an affiliated group, the product of the E&P net surplus shareholder's applicable share of the affiliated group's aggregate unused E&P deficit and the ratio described in § 1.965-1(f)(11) with respect to the deferred foreign income corporation.

(3) ***Applicable share.*** The term *applicable share* means, with respect to an E&P net surplus shareholder and an aggregate unused E&P deficit of an affiliated group, the amount that bears the same proportion to the affiliated group's aggregate unused E&P deficit as—

(i) The product of—

(A) The E&P net surplus shareholder's group ownership percentage, multiplied by

(B) The amount that would (but for section 965(b)(5) and paragraph (b) of this section) constitute the E&P net surplus shareholder's aggregate section 965(a) inclusion amount, bears to

(ii) The aggregate amount determined under paragraph (f)(3)(i) of this section with respect to all E&P net surplus shareholders that are members of the group.

(4) ***Consolidated group aggregate foreign cash position.*** The term *consolidated group aggregate foreign cash position* means, with respect to a consolidated group, the aggregate foreign cash position (as defined in § 1.965-1(f)(8)(i)) determined by treating each member of the consolidated group that is a section 958(a) U.S. shareholder as a single section 958(a) U.S. shareholder pursuant to paragraph (e)(1) of this section.

(5) ***E&P net deficit shareholder.*** The term *E&P net deficit shareholder* means a section 958(a) U.S. shareholder that has an excess aggregate foreign E&P deficit.

(6) ***E&P net surplus shareholder.*** The term *E&P net surplus shareholder* means a section 958(a) U.S. shareholder that would (but for section 965(b)(5) and paragraph (b) of this section) have an aggregate section 965(a) inclusion amount greater than zero.

(7) ***Excess aggregate foreign E&P deficit.*** The term *excess aggregate foreign E&P deficit* means, with respect to a section 958(a) U.S. shareholder, the amount, if any, by which the amount described in § 1.965-1(f)(9)(i) with respect to the section 958(a) U.S. shareholder exceeds the amount described in § 1.965-1(f)(9)(ii) with respect to the section 958(a) U.S. shareholder.

(8) ***Group cash ratio.*** The term *group cash ratio* means, with respect to a consolidated group, the ratio of—

(i) The consolidated group aggregate foreign cash position, to

(ii) The sum of the aggregate section 965(a) inclusion amounts of all members of the consolidated group.

(9) ***Group ownership percentage.*** The term *group ownership percentage* means, with respect to a section 958(a) U.S. shareholder that is a member of an affiliated group, the percentage of the value of the stock of the United States shareholder which is held by other includible corporations in the affiliated group. Notwithstanding the preceding sentence, the group ownership percentage of the common parent of the affiliated group is 100 percent. Any term used in this paragraph (f)(9) that is also used in section 1504 has the same meaning as when used in such section. Additionally, if the term is used in the context of a rule for which all members of a consolidated group are treated as a single section 958(a) U.S. shareholder under paragraph (e)(1) of this section, then the group ownership percentage is determined solely with respect to the value of the stock of the common parent of the consolidated group held by other includible corporations that are not members of the consolidated group.

(g) ***Examples.*** The following examples illustrate the application of this section.

Example 1. (1) *Application of affiliated group rule*—(i) *Facts*—(A) *In general.* USP owns all of the stock of USS1, USS2, and USS3. Each of USP, USS1, USS2, and USS3 is a domestic corporation and is a member of an affiliated group of which USP is the common parent (the "USP Group"). The USP Group has not elected to file a consolidated federal income tax return. USS1 owns all of the stock of CFC1 and CFC2, USS2 owns all of the stock of CFC3, and USS3 owns all of the stock of CFC4. Each of CFC1, CFC2, CFC3, and CFC4 is a controlled foreign corporation within the meaning of section 957(a), and, therefore, each is a specified foreign corporation under section 965(e) and § 1.965-1(f)(45). Each of USP, USS1, USS2, USS3, CFC1, CFC2, CFC3, and CFC4 has the calendar year as its taxable year.
(B) *Facts relating to section 965.* CFC1 and CFC3 are deferred foreign income corporations with section 965(a) earnings amounts of $600x and $300x, respectively. CFC1 and CFC3 have cash positions of $0x and $50x, respectively, on each of their cash measurement dates. CFC2 and CFC4 are E&P deficit foreign corporations with specified E&P deficits of $400x and $100x, respectively. CFC2 and CFC4 have cash positions of $100x and $50x, respectively, on each of their cash measurement dates. The cash positions all consist solely of cash. CFC1, CFC2, CFC3, and CFC4 all use the U.S. dollar as their functional currency.

(ii) *Analysis*—(A) *Section 965(a) inclusion amounts before application of section 965(b)(5).* USS1 is a section 958(a) U.S. shareholder with respect to CFC1 and CFC2; USS2 is a section 958(a) U.S. shareholder with respect to CFC3; and USS3 is a section 958(a) U.S. shareholder with respect to CFC4. USS1's pro rata share of CFC1's section 965(a) earnings amount is $600x. Under section 965(b)(3)(A) and § 1.965-1(f)(9), USS1's aggregate foreign E&P deficit is $400x, the lesser of the aggregate of USS1's pro rata share of the

specified E&P deficit of each E&P deficit foreign corporation ($400x) and the amount described in § 1.965-1(f)(9)(ii) with respect to USS1 ($600x). Under section 965(b) and § 1.965-1(b)(2), in determining its section 965(a) inclusion amount with respect to CFC1, USS1 reduces its pro rata share of the U.S. dollar amount of section 965(a) earnings amount of CFC1 by CFC1's allocable share of USS1's aggregate foreign E&P deficit. CFC1's allocable share of USS1's aggregate foreign E&P deficit is $400x, which is the product of USS1's aggregate foreign E&P deficit ($400x) and 1, which is the ratio determined by dividing USS1's pro rata share of the section 965(a) earnings amount of CFC1 ($600x), by the amount described in § 1.965-1(f)(9)(ii) with respect to USS1 ($600x). Accordingly, under section 965(b) and § 1.965-1(b)(2) (before applying section 965(b)(5) and paragraph (b) of this section), USS1's section 965(a) inclusion amount with respect to CFC1 would be $200x (USS1's pro rata share of the section 965(a) earnings amount of CFC1 of $600x reduced by CFC1's allocable share of USS1's aggregate foreign E&P deficit of $400x). Under section 965(b) and § 1.965-1(b)(2) (before applying section 965(b)(5) and paragraph (b) of this section), USS2's section 965(a) inclusion amount with respect to CFC3 would be $300x (USS2's pro rata share of the section 965(a) earnings amount of CFC3).

(B) *Application of section 965(b)(5)—(1) Determination of E&P net surplus shareholders and E&P net deficit shareholders.* USS1 is an E&P net surplus shareholder because it would have an aggregate section 965(a) inclusion amount of $200x but for the application of section 965(b)(5) and paragraph (b) of this section. USS2 is also an E&P net surplus shareholder because it would have an aggregate section 965(a) inclusion amount of $300x but for the application of section 965(b)(5) and paragraph (b) of this section. USS3 is an E&P net deficit shareholder because it has an excess aggregate foreign E&P deficit of $100x.

(*2*) *Determining section 965(a) inclusion amounts under section 965(b)(5).* Under section 965(b) and paragraph (b) of this section, for purposes of determining the section 965(a) inclusion amount of a section 958(a) U.S. shareholder with respect to a deferred foreign income corporation, if, after applying § 1.965-1(b)(2), the section 958(a) U.S. shareholder is an E&P net surplus shareholder, then the U.S. dollar amount of the section 958(a) U.S. shareholder's pro rata share of the section 965(a) earnings amount of the deferred foreign income corporation is further reduced (but not below zero) by the deferred foreign income corporation's allocable share of the section 958(a) U.S. shareholder's applicable share of the affiliated group's aggregate unused E&P deficit. USS3 is the only E&P net deficit shareholder in the USP Group, and, therefore, the aggregate unused E&P deficit of the USP Group is equal to USS3's excess aggregate foreign E&P deficit ($100x). The applicable share of the USP Group's aggregate unused E&P deficit of each of USS1 and USS2, respectively, is an amount that bears the same proportion to the USP Group's aggregate unused E&P deficit as the product of the group ownership percentage of USS1 and USS2, respectively, multiplied by the amount that would (but for section 965(b)(5) and paragraph (b) of this section) constitute the aggregate section 965(a) inclusion amount of USS1 and USS2, respectively, bears to the aggregate of such amounts with respect to both USS1 and USS2. Therefore, USS1's applicable share of the USP Group's aggregate unused E&P deficit is $40 ($100x × ($200x/($200x + $300x))) and USS2's applicable share of the USP Group's aggregate unused E&P deficit is $60x ($100x × ($300x/($200x + $300x))). Because USS1 is a section 958(a) U.S. shareholder with respect to only one deferred foreign income corporation, the entire $40x of USS1's applicable share of the USP Group's aggregate unused E&P

deficit is treated as CFC1's allocable share of USS1's applicable share of the USP Group's aggregate unused E&P deficit, and thus USS1's section 965(a) inclusion amount with respect to CFC1 is reduced to $160x ($200x−$40x). Because USS2 is a section 958(a) U.S. shareholder with respect to only one deferred foreign income corporation, the entire $60x of USS2's applicable share of the USP Group's aggregate unused E&P deficit is treated as CFC3's allocable share of USS2's applicable share of the USP Group's aggregate unused E&P deficit, and thus USS2's section 965(a) inclusion amount with respect to CFC3 is reduced to $240x ($300x−$60x).

(C) *Aggregate foreign cash position.* Under section 965(c) and § 1.965-1(c), a section 958(a) U.S. shareholder that includes a section 965(a) inclusion amount in income is allowed a deduction equal to the section 965(c) deduction amount. The section 965(c) deduction amount is computed by taking into account the aggregate foreign cash position of the section 958(a) U.S. shareholder. Under § 1.965-1(f)(8)(i), the aggregate foreign cash position of USS1 is $100x, and the aggregate foreign cash position of USS2 is $50x.

(D) *Section 965(c) deduction amount.* The section 965(c) deduction amount of USS1 is $102x, which is equal to (i) USS1's 8 percent rate equivalent percentage (77.1428571%) of its 8 percent rate amount for USS1's 2017 year ($60x ($160x−$100x)), plus USS1's 15.5 percent rate equivalent percentage (55.7142857%) of its 15.5 percent rate amount for USS1's 2017 year ($100x). The section 965(c) deduction amount of USS2 is $174.43x, which is equal to (i) USS2's 8 percent rate equivalent percentage (77.1428571%) of its 8 percent rate amount for USS2's 2017 year ($190x ($240x−$50x)), plus USS2's 15.5 percent rate equivalent percentage (55.7142857%) of its 15.5 percent rate amount for USS2's 2017 year ($50x). Because USS3 has no section 965(a) inclusion amount, it has no section 965(c) deduction amount and therefore is not allowed a section 965(c) deduction.

Example 2 —(2) *Application to members of a consolidated group*—(i) *Facts.* The facts are the same as in paragraph (g)(1)(i) of this section (the facts in *Example 1*), except that the USP Group has elected to file a consolidated return.
(ii) *Analysis*—(A) *Section 965(a) inclusion amount*—(*1*) *Single section 958(a) U.S. shareholder treatment.* Because each of USS1, USS2, and USS3 is a section 958(a) U.S. shareholder of a specified foreign corporation and is a member of a consolidated group, paragraph (e)(1) of this section applies to treat USS1, USS2, and USS3 as a single section 958(a) U.S. shareholder for purposes of section 965(b) and § 1.965-1(b)(2).

(*2*) *Determination of inclusion amount.* The single section 958(a) U.S. shareholder composed of USS1, USS2, and USS3 is a section 958(a) U.S. shareholder with respect to CFC1, CFC2, CFC3, and CFC4. Under § 1.965-1(b)(2), in determining USS1's section 965(a) inclusion amount, the single section 958(a) U.S. shareholder decreases its pro rata share of the U.S. dollar amount of the section 965(a) earnings amount of CFC1 by CFC1's allocable share of the aggregate foreign E&P deficit of the single section 958(a) U.S. shareholder. CFC1's allocable share of the aggregate foreign E&P deficit is $333.33x, which is the product of the aggregate foreign E&P deficit of the single section 958(a) U.S. shareholder ($500x ($400x + $100x))

and .67, which is the ratio determined by dividing its pro rata share of the section 965(a) earnings amount of CFC1 ($600x) by the amount described in § 1.965-1(f)(9)(ii) with respect to the single section 958(a) U.S. shareholder ($900x ($600x + $300x)). Therefore, USS1's section 965(a) inclusion amount with respect to CFC1 is $266.67 (its pro rata share of the section 965(a) earnings amount of CFC1 ($600) less CFC1's allocable share of the aggregate foreign E&P deficit of the single section 958(a) U.S. shareholder ($333.33x)). Similarly, under § 1.965-1(b)(2), in determining the section 965(a) inclusion amount of USS2, the single section 958(a) U.S. shareholder decreases its pro rata share of the U.S. dollar amount of the section 965(a) earnings amount of CFC3 by CFC3's allocable share of the aggregate foreign E&P deficit of the single section 958(a) U.S. shareholder. CFC3's allocable share of the aggregate foreign E&P deficit is $166.67x, which is the product of the aggregate foreign E&P deficit of the single section 958(a) U.S. shareholder ($500x) and .33, which is the ratio determined by dividing its pro rata share of the section 965(a) earnings amount of CFC3 ($300x) by the amount described in § 1.965-1(f)(9)(ii) with respect to the single section 958(a) U.S. shareholder ($900x ($600x + $300x)). Therefore, USS2's section 965(a) inclusion amount with respect to CFC3 is $133.33x (its pro rata share of the section 965(a) earnings amount of CFC3 ($300x) less CFC3's allocable share of the aggregate foreign E&P deficit of the single section 958(a) U.S. shareholder ($166.67x)).

(B) *Consolidated group aggregate foreign cash position.* Because USS1 and USS2 are members of a consolidated group, the aggregate foreign cash position of each of USS1 and USS2 is determined under paragraph (e)(3) of this section. Under paragraph (e)(3) of this section, the aggregate foreign cash position of each of USS1 and USS2 is equal to the aggregate section 965(a) inclusion amount of USS1 and USS2, respectively, multiplied by the group cash ratio of the USP Group, as determined pursuant to paragraph (f)(8) of this section. The group cash ratio of the USP Group is .50, which is the ratio of the USP Group's consolidated group aggregate foreign cash position ($200x ($50x + $100x + $50x)) and the sum of the aggregate section 965(a) inclusion amounts of all members of the USP Group ($400x ($266.67x + $133.33x)). Therefore, under paragraph (e)(3) of this section, the aggregate foreign cash positions of USS1 and USS2 are, respectively, $133.34x ($266.67x × ($200x/$400x)) and $66.67 ($133.33x × ($200x/400x)).

(C) *Section 965(c) deduction amount.* The section 965(c) deduction amount of USS1 is $177.14x, which is equal to (i) USS1's 8 percent rate equivalent percentage (77.1428571%) of its 8 percent rate amount for USS1's 2017 year ($133.33x ($266.67x−$133.34x)), plus USS1's 15.5 percent rate equivalent percentage (55.7142857%) of its 15.5 percent rate amount for USS1's 2017 year ($133.34x). The section 965(c) deduction amount of USS2 is $88.56x, which is equal to (i) USS2's 8 percent rate equivalent percentage (77.1428571%) of its 8 percent rate amount for USS2's 2017 year ($66.66x ($133.33x−$66.67x)), plus USS2's 15.5 percent rate equivalent percentage (55.7142857%) of its 15.5 percent rate amount for USS2's 2017 year ($66.67x). Because USS3 has no section 965(a) inclusion amount, it has no section 965(c) deduction amount and therefore is not allowed a section 965(c) deduction.

[T.D. 9846, 84 FR 1875, Feb. 5, 2019, as amended by T.D. 9846, 84 FR 14261, Apr. 10, 2019]

§ 1.965-9 Applicability dates.

(a) ***In general.*** Except as otherwise provided in this section, §§ 1.965-1 through 1.965-8 apply beginning the last taxable year of a foreign corporation that begins before January 1, 2018, and with respect to a United States person, beginning the taxable year in which or with which such taxable year of the foreign corporation ends.

(b) ***Applicability dates for rules disregarding certain transactions.*** Section 1.965-4 applies regardless of whether, with respect to a foreign corporation, the transaction, effective date of a change in method of accounting, effective date of an entity classification election, or specified payment described in § 1.965-4 occurred before the first day of the foreign corporation's last taxable year that begins before January 1, 2018, or, with respect to a United States person, the transaction, effective date of a change in method of accounting, effective date of an entity classification election, or specified payment described in § 1.965-4 occurred before the first day of the taxable year of the United States person in which or with which the taxable year of the foreign corporation ends.

(c) ***Applicability date for certain portions of § 1.965-5.*** Paragraph (c)(1)(iii) of § 1.965-5 applies to taxable years of foreign corporations that both begin after December 31, 2017, and end on or after December 4, 2018, and with respect to a United States person, to the taxable years in which or with which such taxable years of the foreign corporations end. Section 1.965-5(b)(2) applies to taxable years of foreign corporations that end on or after December 16, 2019, and with respect to a United States person, to the taxable years in which or with which such taxable years of the foreign corporations end.

[T.D. 9846, 84 FR 1875, Feb. 5, 2019, as amended by T.D. 9882, 84 FR 69120, Dec. 17, 2019; T.D. 9922, 85 FR 72072, Nov. 12, 2020]

EXPORT TRADE CORPORATIONS

§ 1.970-1 Export trade corporations.

(a) ***In general.*** Sections 970 through 972 provide in general that if a controlled foreign corporation is an export trade corporation for any taxable year, the subpart F income of such corporation shall, subject to limitations provided by section 970(a) and paragraph (b) of this section, be reduced by so much of such corporation's export trade income as constitutes foreign base company income. To the extent subpart F income of an export trade corporation is reduced under section 970 and this section, an amount is required by section 970(b) and paragraph (c) of this section to be included in gross income of United States shareholders of the corporation if there is a subsequent decrease in such corporation's investments in export trade assets. See section 971(a) and paragraph (a) of § 1.971-1 for definition of the term “export trade corporation”, section 971(b) and paragraph (b) of § 1.971-1 for definition of the term “export trade income”, and section 971(c) and paragraph (c) of § 1.971-1 for definition of the term “export trade assets”.

(b) ***Amount by which export trade income shall reduce subpart F income*** —

(1) ***Deductible amount.*** The subpart F income, determined as provided in section 952 and the regulations thereunder but without regard to section 970 and this paragraph, of a controlled foreign corporation which is an export trade corporation for its taxable year shall be reduced by an amount equal to so much of its export trade income as constitutes foreign base company income for such taxable year, but only to the extent that such amount of export trade income does not exceed the limitation

determined under subparagraph (2) of this paragraph for such taxable year. See section 972 and § 1.972-1 for rules relating to the consolidation of export trade corporations for purposes of determining the limitations described in subparagraph (2) of this paragraph.

(2) ***Limitation on the amount of export trade income deductible from subpart F income.*** The amount by which subpart F income of an export trade corporation may be reduced for any taxable year under subparagraph (1) of this paragraph may not exceed whichever of the following limitations is the smallest:

(i) The amount which is equal to 150 percent of the export promotion expenses, as defined in section 971(d) and paragraph (d) of § 1.971-1, of the export trade corporation paid or incurred during the taxable year which are properly allocable to the receipt or the production of so much of its export trade income as constitutes foreign base company income for such taxable year;

(ii) The amount which is equal to 10 percent of the gross receipts (other than from commissions, fees, or other compensation for services), plus 10 percent of the gross amount upon the basis of which are computed commissions, fees, or other compensation for services included in gross receipts, of the export trade corporation received or accrued during the taxable year from, or in connection with, the sale, installation, operation, maintenance, or use of property in respect of which such corporation derives export trade income which constitutes foreign base company income for such taxable year; or

(iii) The amount which bears the same ratio to the increase in investments in export trade assets, as defined in section 970(c)(2) and paragraph (d)(2) of this section, of the export trade corporation for its taxable year as the export trade income which constitutes foreign base company income of such corporation for such taxable year bears to the entire export trade income of the corporation for such year.

Under subdivision (ii) of this subparagraph, in the case of minimum or maximum fee arrangements, the determination shall be made on the basis of the actual gross amounts with respect to which such fees are paid, rather than on the basis of the amounts upon which such minimum or maximum fees are computed. All determinations of limitations under this subparagraph shall be made on an aggregate basis and not with respect to separate items or categories of income described in paragraph (b)(1) of § 1.971-1.

(3) ***Determination of export promotion expense limitation.*** For purposes of determining the limitation contained in subparagraph (2)(i) of this paragraph for any taxable year of the export trade corporation, there shall be taken into account with respect to those items or categories of export trade income which constitute foreign base company income the entire amount of those export promotion expenses which are directly related to such items or categories of income and a ratable part of any other export promotion expenses which are indirectly related to such items or categories of income, except that no export promotion expense shall be allocated to an item or category of income to which it clearly does not apply and no deduction allowable to such corporation under section 882(c) and the regulations thereunder shall be taken into account.

(4) ***Application of section 482.*** The limitations provided in section 970(a) and subparagraph (2) of this paragraph shall not affect the authority of the district director to apply the provisions of section 482 and the regulations thereunder, relating to allocation of income and deductions among taxpayers.

(5) ***Illustrations.*** The application of this paragraph may be illustrated by the following examples:

Example 1. Foreign corporation A is a wholly owned subsidiary of domestic corporation M. Both corporations use the calendar year as the taxable year. For 1963, A Corporation's subpart F income determined under section 952 and the regulations thereunder is $35, the total of its gross receipts and gross amounts referred to in subparagraph (2)(ii) of this paragraph is $310, its export promotion expenses properly allocable to its export trade income which constitutes foreign base company income are $18, its increase in investments in export trade assets is $32, and its export trade income is $40, of which $30 constitutes foreign base company income and $10 does not constitute foreign base company income. The subpart F income of A Corporation for 1963 as reduced under section 970(a) is $11, determined as follows:

(i) Subpart F income		$35
(ii) Less: $30 export trade income which constitutes foreign base company income, but deduction not to exceed the smallest of the following limitations (smallest of (*a*), (*b*), or (*c*)):		
(*a*) 150 percent of allocable export promotion expenses referred to in subparagraph (2)(i) of this paragraph (150% of $18)	$27	
(*b*) 10 percent of gross receipts and gross amounts referred to in subparagraph (2)(ii) of this paragraph (10% of $310)	$31	
(*c*) Amount which bears to the increase in investments in export trade assets ($32) the same ratio as the export trade income which constitutes foreign base company income ($30) bears to total export trade income ($40) (75% [$30/$40] of $32)	$24	$24
(iii) Subpart F income as reduced under section 970(a)		11

Example 2. The facts are the same as in example 1, except that A Corporation's export promotion expenses properly allocable to export trade income which constitutes foreign base company income are $14 instead of $18. The applicable limitation on the amount deductible from A Corporation's subpart F income for 1963 is $21 (150% of $14) instead of $24. The subpart F income as reduced under section 970(a) is $14 ($35 less $21).

Example 3. The facts are the same as in example 1, except that the total amount of A Corporation's gross receipts and gross amounts referred to in subparagraph (2)(ii) of this paragraph is $200 instead of $310. The applicable limitation on the amount deductible from A Corporation's subpart F income for 1963 is $20 (10 percent of $200) instead of $24. The subpart F income as reduced under section 970(a) is $15 ($35 less $20).

Example 4. The facts are the same as in example 1, except that A Corporation derives its export trade income which constitutes foreign base company income of $30 in a service arrangement with M Corporation under which it receives as a fee 5 percent of the gross receipts from M Corporation's sales or a minimum fee of $30. Such gross receipts are $220. The gross amounts taken into account in determining the limitation under subparagraph (2)(ii) of this paragraph are $220. The applicable

limitation on the amount deductible from A Corporation's subpart F income for 1963 is $22 (10 percent of $220) instead of $24. The subpart F income as reduced under section 970(a) is $13 ($35 minus $22).

Example 5. The facts are the same as in example 1, except that A Corporation derives its export trade income which constitutes foreign base company income of $30 in a service arrangement with M Corporation under which it receives as a fee 9 percent of the gross receipts from M Corporation's sales or a maximum fee of $30. Such gross receipts are $400. In such instance, the limitation under (ii)(*b*) of example 1 is $40 (10 percent of $400) instead of $31. The applicable limitation on the amount deductible from A Corporation's subpart F income for 1963 is $24, the smallest of the three limitations. The subpart F income as reduced under section 970(a) is $11 ($35 less $24).

(c) ***Withdrawal of previously excluded export trade income*** —

(1) ***Inclusion of withdrawal in income of United States shareholders.*** If—

(i) A controlled foreign corporation was an export trade corporation for any taxable year,

(ii) Such corporation in any such taxable year derived subpart F income which, under the provisions of section 970(a) and paragraph (b) of this section, was reduced, and

(iii) Such corporation has in a subsequent taxable year a decrease in investments in export trade assets,

every person who is a United States shareholder, as defined in section 951(b), of such corporation on the last day of such subsequent taxable year on which such corporation is a controlled foreign corporation shall include in his gross income, under section 951(a)(1)(A)(ii) and the regulations thereunder as an amount to which section 955 (as in effect before the enactment of the Tax Reduction Act of 1975) applies, his pro rata share of the amount of such decrease in investments but only to the extent that such pro rata share does not exceed the limitations determined under subparagraph (2) of this paragraph. A United States shareholder's pro rata share of a controlled foreign corporation's decrease for any taxable year in investments in export trade assets shall be his pro rata share of such corporation's decrease for such year determined under section 970(c)(3) and paragraph (d)(3) of this section.

(2) ***Limitations applicable in determining amount includible in income*** —

(i) ***General.*** A United States shareholder's pro rata share of a controlled foreign corporation's decrease in investments in export trade assets for any taxable year of such corporation shall, for purposes of determining an amount to be included in the gross income for any taxable year of such shareholder, not exceed the lesser of the limitations determined under (*a*) and (*b*) of this subdivision:

(*a*) Such shareholder's pro rata share of the sum of the controlled foreign corporation's earnings and profits (or deficit in earnings and profits) for the taxable year, computed as of the close of the taxable year without diminution by reason of any distributions made during the taxable year, plus his pro rata share of the sum of its earnings and profits (or deficits in earnings and profits) accumulated for prior taxable years beginning after December 31, 1962, or

(*b*)

(*1*) Such shareholder's pro rata share of the sum of the amounts by which the subpart F income of such controlled foreign corporation for prior taxable years was reduced under section 970(a) and paragraph (b) of this section, plus

(*2*) Such shareholder's pro rata share of the sum of the amounts which were not included in the subpart F income of such controlled foreign corporation for such prior taxable years by reason of the application of section 972 and § 1.972-1, minus

(*3*) Such shareholder's pro rata share of the sum of the amounts which were previously included in his gross income for prior taxable years under section 951(a)(1)(A)(ii) by reason of the application of section 970(b) and this paragraph with respect to such controlled foreign corporation.

The net amount determined under (*b*) of this subdivision with respect to any stock owned by the United States shareholder shall be determined without taking into account any amount attributable to a period prior to the date on which such shareholder acquired such stock. See section 1248 and the regulations thereunder for rules governing the treatment of gain from sales or exchanges of stock in certain foreign corporations.

(ii) ***Treatment of earnings and profits.*** For purposes of determining earnings and profits of a controlled foreign corporation under subdivision (i) (*a*) of this subparagraph, such earnings and profits shall be considered not to include any amounts which are attributable to—

(*a*) Amounts which are, or have been, included in the gross income of a United States shareholder of such controlled foreign corporation under section 951(a) (other than an amount included in the gross income of a United States shareholder under section 951(a)(1)(A)(ii) or section 951(a)(1)(B) for the taxable year) and have not been distributed, or

(*b*)

(*1*) Amounts which for the current taxable year, are included in the gross income of a United States shareholder of such controlled foreign corporation under section 551(b) or would be so included under such section but for the fact that such amounts were distributed to such shareholder during the taxable year, or

(*2*) Amounts which, for any prior taxable year, have been included in the gross income of a United States shareholder of such controlled foreign corporation under section 551(b) and have not been distributed.

The rules of this subdivision apply only in determining the limitation on a United States shareholder's pro rata share of a controlled foreign corporation's decrease in investments in export trade assets. See section 959 and the regulations thereunder for limitations on the exclusion of previously taxed earnings and profits.

(iii) ***Rules of application.*** The determinations made under subdivision (i) of this subparagraph for purposes of determining the United States shareholder's pro rata share of a controlled foreign corporation's decrease in investments in export trade assets for any taxable year shall be made on the basis of the stock such shareholder owns, within the meaning of section 958(a) and the regulations thereunder, in the controlled foreign corporation on the last day in the taxable year on which such corporation is a controlled foreign corporation even though such shareholder owned more or less stock in such corporation prior to that date. See section 972 and paragraph

(b)(3) of § 1.972-1 for rules relating to the allocation of a decrease in investments in export trade assets of export trade corporations in a consolidated chain of such corporations. See section 951(a)(3) and the regulations thereunder for an additional limitation upon the amount of a United States shareholder's pro rata share determined under this paragraph.

(3) ***Illustrations.*** The application of this paragraph may be illustrated by the following examples:

Example 1. Foreign corporation A, which has one class of stock outstanding, is a wholly owned subsidiary of domestic corporation M throughout 1963 and 1964. Both corporations use the calendar year as the taxable year. For 1963, A Corporation qualifies as an export trade corporation and its subpart F income, determined in accordance with the provisions of section 952 and the regulations thereunder, is reduced by $20 under the provisions of section 970(a) and paragraph (b) of this section. Section 972 is assumed not to apply to A Corporation. For 1964, A Corporation has a decrease of $8 in investments in export trade assets. For 1963 and 1964, A Corporation has earnings and profits of $30 (determined under the provisions of subparagraph (2) of this paragraph). Corporation M's pro rata share of A Corporation's decrease in investments in export trade assets for 1964 which is includible in M Corporation's gross income for 1964 under section 951(a)(1)(A)(ii) by reason of the application of section 970(b) is $8, determined as follows:

(i) Corporation M's pro rata share of A Corporation's decrease in investments in export trade assets for 1964 (100% of $8)			$8
(ii) Limitation on amount includible in gross income of M Corporation for 1964 (smaller of (*a*) or (*b*)):			
(*a*) Corporation M's pro rata share of A Corporation's earnings and profits for 1963 and 1964 determined under subparagraph (2) of this paragraph (100% of $30)		$30	
(*b*) Corporation M's pro rata share of amounts by which the subpart F income of A Corporation for 1963 was reduced under section 970(a) (100% of $20)	$20		
Plus: Corporation M's pro rata share of amounts which were not included in subpart F income of A Corporation for 1963 by reason of the application of section 972	0		
Total	20		
Less: Corporation M's pro rata share of the sum of amounts which were previously included in gross income of M Corporation under section 951(a)(1)(A)(ii) by reason of the application of section 970(b) with respect to A Corporation	0	20	
(iii) Corporation M's pro rata share includible in gross income for 1964 under section 951(a)(1)(A)(ii) by reason of the application of section			8

970(b) (smaller of (i) or (ii))

Example 2. Assume the same facts as in example 1, except that on February 14, 1965, M Corporation sells 25 percent of its stock in A Corporation to N Corporation. Corporation N is a domestic corporation which also uses the calendar year as a taxable year. For 1965, A Corporation has a decrease of $16 in investments in export trade assets. Corporation A's earnings and profits for 1963 and 1964 (determined under the provisions of subparagraph (2) of this paragraph) are $22 ($30 minus $8). Corporation A's earnings and profits for 1965 are $6 (determined under the provisions of subparagraph (2) of this paragraph). For 1965, M Corporation's pro rata share of A Corporation's decrease in investments in export trade assets which is includible in M Corporation's gross income under section 951(a)(1)(A)(ii) is $9, and N Corporation's pro rata share includible in gross income under such section is $0, determined as follows:

M Corporation

(i) Corporation M's pro rata share of A Corporation's decrease in investments in export trade assets for 1965 (75% of $16)			$12
(ii) Limitation on amount includible in gross income of M Corporation for 1965 (smaller of (*a*) or (*b*)):			
(*a*) Corporation M's pro rata share of A Corporation's earnings and profits for 1963, 1964, and 1965 determined under subparagraph (2) of this paragraph (75% of $28)		$21	
(*b*) Corporation M's pro rata share of amounts by which the subpart F income of A Corporation for 1963 was reduced under section 970(a) (75% of $20)	$15		
Plus: Corporation M's pro rata share of amounts which were not included in subpart F income of A Corporation for 1963 and 1964 by reason of the application of section 972	0		
Total	$15		
Less: Corporation M's pro rata share of the sum of amounts which were previously included in gross income of M Corporation under section 951(a)(1)(A)(ii) by reason of the application of section 970(b) with respect to A Corporation (75% of $8)	6	9	
(iii) Corporation M's pro rata share includible in gross income for 1965 under section 951(a)(1)(A)(ii) by reason of the application of section 970(b) (smaller of (i) or (ii))			9

N Corporation

(i) Corporation N's pro rata share of A Corporation's decrease in investments in export trade assets for 1965 (25% of $16)			0
(ii) Limitation on amount includible in gross income of N Corporation for 1965 (smaller of (*a*) or (*b*)):			
(*a*) Corporation N's pro rata share of A Corporation's earnings and profits for 1963, 1964, and 1965 determined under subparagraph (2) of this paragraph (25% of $28)		07	
(*b*) Corporation N's pro rata share of amounts by which the subpart F income of A Corporation for 1963 was reduced under section 970(a) (amounts prior to 2/14/65 not being taken into account)	0		
Plus: Corporation N's pro rata share of amounts which were not included in subpart F income of A Corporation for 1963 and 1964 by reason of the application of section 972 (amounts prior to 2/14/65 not being taken into account)	0		
Total	0		
Less: Corporation N's pro rata share of the sum of amounts which were previously included in gross income of N Corporation under section 951(a)(1)(A)(ii) by reason of the application of section 970(b) with respect to A Corporation (amounts prior to 2/14/65 not being taken into account)	0	0	
(iii) Corporation N's pro rata share includible in gross income for 1965 under section 951(a)(1)(A)(ii) by reason of the application of section 970(b) (smaller of (i) or (ii))			0

(d) ***Investments in export trade assets*** —

(1) ***Amount of investments.*** For purposes of sections 970 through 972 and §§ 1.970-1 to 1.972-1, inclusive, export trade assets shall be taken into account on the following bases:

(i) ***Working capital.*** Working capital to which section 971(c)(1) applies shall be taken into account at the adjusted basis of current assets, determined as of the applicable determination date, less any current liabilities (except as provided in subdivision (iii) of this subparagraph).

(ii) ***Other export trade assets.*** Inventory to which section 971(c)(2) applies, facilities to which section 971(c)(3) applies, and evidences of indebtedness to which section 971(c)(4) applies, shall be taken into account at their adjusted bases as of the applicable determination date, reduced by any liabilities (except as provided in subdivision (iii) of this subparagraph) to which such property is subject on such date. To be taken into account under this subparagraph, a liability must constitute a specific charge against the property involved. Thus, a liability evidenced by an open account or a liability secured only by the general credit of the controlled foreign corporation will not be taken into account. On the other hand, if a liability constitutes a specific charge against several items of property and cannot definitely be allocated to any single item of property, the liability shall be apportioned against each of such items of property in that ratio which the adjusted basis of such item on the applicable determination date bears to the adjusted basis of all such items on such date. A liability in excess of the adjusted basis of the property which is subject to such liability will not be taken into account for the purpose of

reducing the adjusted basis of other property which is not subject to such liability. See paragraph (c)(6) of § 1.971-1 for treatment of export trade assets which constitute working capital to which section 971(c)(1) applies and which also constitute inventory to which section 971(c)(2) applies or evidences of indebtedness to which section 971(c)(4) applies.

(iii) ***Treatment of certain liabilities.*** For purposes of subdivisions (i) and (ii) of this subparagraph, a current liability, or a specific charge created with respect to any item of property, principally for the purpose of artificially increasing or decreasing the amount of a controlled foreign corporation's investments in export trade assets shall be taken into account in such a manner as to properly reflect the controlled foreign corporation's investments in export trade assets; whether a specific charge or current liability is created principally for such purpose will depend upon all the facts and circumstances of each case. One of the factors that will be considered in making such a determination with respect to a loan is whether the loan is from a related person, as defined in section 954(d)(3) and paragraph (e) of § 1.954-1.

(iv) ***Statement required.*** If for purposes of this section a United States shareholder of a controlled foreign corporation reduces the adjusted basis of property which constitutes an export trade asset on the ground that such property is subject to a liability, he shall attach to his return a statement setting forth the adjusted basis of the property before the reduction and the amount and nature of the reduction.

(2) ***Increase in investments in export trade assets.*** For purposes of section 970(a) and paragraph (b) of this section, the amount of increase in investments in export trade assets of a controlled foreign corporation for a taxable year shall be, except as provided in § 1.970-2, the amount by which—

(i) The amount of its investments in export trade assets at the close of such taxable year, exceeds

(ii) The amount of its investments in export trade assets at the close of the preceding taxable year.

(3) ***Decrease in investments in export trade assets.*** For purposes of section 970(b) and paragraph (c) of this section, the amount of the decrease in investments in export trade assets of a controlled foreign corporation for a taxable year shall be, except as provided in § 1.970-2, the amount by which—

(i) The amount of its investments in export trade assets at the close of the preceding taxable year, minus

(ii) An amount equal to the excess of recognized losses over recognized gains on sales, exchanges, involuntary conversions, assets or other dispositions, of export trade during the taxable year, exceeds

(iii) The amount of its investments in export trade assets at the close of the taxable year.

For purposes of subdivision (ii) of this subparagraph, recognized losses include a write-down of inventory to lower of cost or market in accordance with a method of inventory valuation established or adopted by or on behalf of such foreign corporation under paragraph (c) of § 1.964-1.

[T.D. 6755, 29 FR 12704, Sept. 9, 1964, as amended by T.D. 6795, 30 FR 947, Jan. 29, 1965; T.D. 6892, 31 FR 11144, Aug. 23, 1966; T.D. 7293, 38 FR 32802, Nov. 28, 1973; T.D. 7893, 48 FR 22511, May 19, 1983]

§ 1.970-2 Elections as to date of determining investments in export trade assets.

(a) ***Nature of elections*** —

(1) ***In general.*** In lieu of determining the increase under the provisions of paragraph (d)(2) of § 1.970-1, or the decrease under the provisions of paragraph (d)(3) of § 1.970-1, in a controlled foreign corporation's investments in export trade assets for a taxable year in the manner provided in such provisions, a United States shareholder of such corporation may elect, under the provisions of section 970(c)(4) and this section, to determine such increase or decrease in accordance with the provisions of subparagraph (2) of this paragraph or, in the case of export trade assets which are facilities described in section 971(c)(3), in accordance with the provisions of subparagraph (3) of this paragraph. Separate elections may be made under subparagraph (2) and/or (3) of this paragraph with respect to each controlled foreign corporation with respect to which a person is a United States shareholder, within the meaning of section 951(b).

(2) ***Election of 75-day rule.*** A United States shareholder of a controlled foreign corporation may elect with respect to a taxable year of such corporation to make the determinations under subparagraphs (2)(i) and (3)(iii) of paragraph (d) of § 1.970-1 of the amount of such corporation's investments in export trade assets as of the 75th day after the close of the taxable year referred to in such subparagraphs of paragraph (d) of § 1.970-1. The election provided by this subparagraph may be made with respect to export trade assets other than facilities described in section 971(c)(3) or with respect to export trade assets which are facilities or with respect to both types of export trade assets (but the election under this paragraph with respect to export trade assets which are facilities or with respect to both types of export trade assets may be made only if the election provided by subparagraph (3) of this paragraph is not made). If the election provided by this subparagraph is made, the amount of export trade assets with respect to which such election is made at the close of the preceding taxable year which is described in subparagraphs (2)(ii) and (3)(i) of paragraph (d) of § 1.970-1 shall be the amount of export trade assets which was considered by application of the 75-day rule to be the amount of export trade assets at the close of such preceding taxable year; except that for the first taxable year of the controlled foreign corporation for which the 75-day rule is elected the amount of investments in export trade assets with respect to which such election is made at the close of such preceding year described in subparagraphs (2)(ii) and (3)(i) of paragraph (d) of § 1.970-1 shall be the amount of investments in export trade assets at the actual close of such preceding year. In the case of a taxable year of such corporation beginning after December 31, 1962, and before December 31, 1963, the amount of investments in export trade assets with respect to which such election is made alternatively may be determined by the United States shareholder as of the 75th day after the close of the preceding taxable year referred to in subparagraphs (2)(ii) and (3)(i) of paragraph (d) of § 1.970-1 rather than as of the close of such preceding taxable year.

(3) ***Election for export trade assets which are facilities.*** A United States shareholder of a controlled foreign corporation may elect with respect to a taxable year of such corporation to make the determinations under subparagraphs (2)(i) and (3)(iii) of paragraph (d) of § 1.970-1 of the amount of such corporation's investments in export trade assets which are facilities described in section 971(c)(3) as of the close of such corporation's taxable year following the taxable year referred to in such subparagraphs of paragraph (d) of § 1.970-1. The election provided by this subparagraph may be made only if the United States shareholder does not elect the 75-day rule of subparagraph (2) of this paragraph with respect to export trade assets which are facilities. If the election provided by this subparagraph is made, the amount of investments in export trade assets which are facilities at the close of the preceding taxable year which is described in subparagraphs (2)(ii) and (3)(i) of paragraph (d) of § 1.970-1 shall be the amount of export trade assets which are facilities which was considered, by reason of the application of the following-year rule provided in this subparagraph with respect to such preceding taxable year, to be the amount of export trade assets which are facilities at the close of such preceding taxable year; except that for the first taxable year of the controlled

foreign corporation for which such following-year rule is elected the amount of investments in export trade assets which are facilities at the close of the preceding taxable year described in subparagraphs (2)(ii) and (3)(i) of paragraph (d) of § 1.970-1 shall be the amount of investments in export trade assets which are facilities at the actual close of such preceding taxable year.

(b) *Time and manner of making elections* —

(1) ***Without consent.*** A United States shareholder may, with respect to any controlled foreign corporation, make one or both of the elections described in paragraph (a)(2) or (3) of this section without the consent of the Commissioner by filing a statement to such effect with his return for his taxable year in which or with which ends the first taxable year of such corporation in which—

(i) Such shareholder owns, within the meaning of section 958(a), or is considered as owning, by applying the rules of section 958(b), 10 percent or more of the total combined voting power of all classes of stock entitled to vote of such corporation, and

(ii) Such corporation realizes subpart F income which is reduced under section 970(a) and paragraph (b) of § 1.970-1.

The statement shall contain the name and address of the controlled foreign corporation, identification of such first taxable year of such corporation, and an indication as to which election or elections described in paragraph (a) of this section the United States shareholder is making. If such return has been filed on or before the 90th day after the date these regulations are published in the FEDERAL REGISTER, such United States shareholder shall file such statement with the district director with which the return was filed on or before such 90th day.

(2) ***With consent.*** A United States shareholder may make one or both of the elections described in paragraph (a)(2) or (3) of this section with respect to any controlled foreign corporation at any time with the consent of the Commissioner. Consent will not be granted unless the shareholder and the Commissioner agree to the terms, conditions, and adjustments under which the election will be effected. The application for consent to elect shall be made by the shareholder's mailing a letter for such purpose to the Commissioner of Internal Revenue, Washington, DC 20224. The application shall be mailed before the close of the first taxable year of the controlled foreign corporation with respect to which the shareholder desires to determine an exclusion under section 970(a) in accordance with one or both of the elections provided in paragraph (a) of this section. The application shall include the following information:

(i) The name, address, and taxable year of the United States shareholder;

(ii) The name, address, and taxable year of the controlled foreign corporation;

(iii) A statement indicating which of the elections the shareholder desires to make;

(iv) The amount of the foreign corporation's investments in export trade assets (by a category which includes export trade assets other than facilities and a category which includes only export trade assets which are facilities) at the close of its preceding taxable year;

(v) The shareholder's pro rata share of the sum of the amounts by which the subpart F income of the foreign corporation, for all prior taxable years during which such shareholder was a United States shareholder of such corporation, was reduced under section 970(a) and paragraph (b) of § 1.970-1;

(vi) The shareholder's pro rata share of the sum of the amounts which were not included in the subpart F income of the foreign corporation, for all prior taxable years during which such shareholder was a United States shareholder of such corporation, by reason of the application of section 972 and § 1.972-1; and

(vii) The shareholder's pro rata share of the sum of the amounts which were previously included in his gross income, for all prior taxable years during which such shareholder was a United States shareholder of such corporation, under section 951(a)(1)(A)(ii) by reason of the application of section 970(b) and paragraph (b) of § 1.970-1 to the foreign corporation.

(c) *Effect of elections* —

(1) ***In general.*** Except as provided in subparagraphs (3) and (4) of this paragraph, an election made under paragraph (a) of this section with respect to a controlled foreign corporation shall be binding on the United States shareholder and—

(i) In the case of the election described in paragraph (a)(2) of this section, shall apply to all investments in export trade assets with respect to which such election is made acquired, or disposed of, by such corporation during the 75-day period following its taxable year for which subpart F income is first computed under the election and during all succeeding corresponding 75-day periods of such corporation, or

(ii) In the case of the election described in paragraph (a)(3) of this section, shall apply to all investments in export trade assets which are facilities acquired, or disposed of, by such corporation during the taxable year following its taxable year for which subpart F income is first computed under the election and during all succeeding corresponding taxable years of such corporation.

(2) ***Returns.*** Any return of a United States shareholder required to be filed before the completion of a period with respect to which determinations are to be made as to a controlled foreign corporation's investments in export trade assets for purposes of computing such shareholder's taxable income shall be filed on the basis of an estimate of the amount of such corporation's investments in export trade assets at the close of the period. If the actual amount of such investments is not the same as the amount of the estimate, the shareholder shall immediately notify the Commissioner. The Commissioner will thereupon redetermine the amount of such shareholder's tax for the year or years with respect to which the incorrect amount was taken into account. The amount of tax, if any, due upon such redetermination shall be paid by the shareholder upon notice and demand by the district director. The amount of tax, if any, shown by such redetermination to have been overpaid shall be credited or refunded to the shareholder in accordance with the provisions of sections 6402 and 6511 and the regulations thereunder.

(3) *Revocation* —

(i) *In general* —

(a) ***Consent required.*** Upon application by the United States shareholder, an election made under paragraph (a) of this section may, subject to the approval of the Commissioner, be revoked. Approval will not be granted unless the shareholder and the Commissioner agree to the terms, conditions, and adjustments under which the revocation will be effected.

(*b*) ***Revocation of 75-day rule.*** In the case of the revocation of an election described in paragraph (a)(2) of this section, the change in the controlled foreign corporation's investments in export trade assets with respect to which such election was made for its first taxable year for which subpart F income or a decrease in investments in export trade assets is computed without regard to the election previously made shall, unless the agreement with the Commissioner provides otherwise, be considered to be the amount by which—

(*1*) Such corporation's investments in export trade assets with respect to which such election was made at the close of such taxable year exceeds or, if applicable, is exceeded by

(*2*) Such corporation's investments in export trade assets with respect to which such election was made at the close of the 75th day after the close of the preceding taxable year of such corporation.

(*c*) ***Revocation of following-year rule.*** In the case of the revocation of an election described in paragraph (a)(3) of this section, the change in the controlled foreign corporation's investments in export trade assets which are facilities for its first taxable year for which subpart F income or a decrease in investments in export trade assets is computed without regard to the election previously made shall, unless the agreement with the Commissioner provides otherwise, be considered to be zero.

(ii) ***Time and manner of applying for consent to revocation*** —

(*a*) ***Application to Commissioner.*** The application for consent to revocation of an election shall be made by the United States shareholder's mailing a letter for such purpose to the Commissioner of Internal Revenue, Washington, DC, 20224. The application shall be mailed before the close of the first taxable year of the controlled foreign corporation with respect to which the shareholder desires to determine an exclusion under section 970(a) or an inclusion under section 970(b) without regard to such election.

(*b*) ***Information required.*** The application shall include the following information:

(*1*) The name, address, and taxable year of the United States shareholder;

(*2*) The name, address, and taxable year of the controlled foreign corporation;

(*3*) A statement indicating the election the shareholder desires to revoke under this subparagraph;

(*4*) The information required under subdivisions (iv) through (vii) of paragraph (b)(2) of this section;

(*5*) In the case of an application for consent to revocation of an election made under paragraph (a)(2) of this section, the amount of the foreign corporation's investments in export trade assets with respect to which such election was made at the close of the 75th day after the close of such corporation's taxable year immediately preceding the taxable year of such corporation; and

(*6*) The reasons for the request for consent to revocation.

(4) ***Transfer of stock*** —

(i) *Election of 75-day rule in force.*

(*a*) If during any taxable year of a controlled foreign corporation—

(*1*) A United States shareholder who has made the election described in paragraph (a)(2) of this section with respect to such corporation sells, exchanges, or otherwise disposes of all or part of his stock in such corporation, and

(*2*) The foreign corporation is a controlled foreign corporation immediately after the sale, exchange, or other disposition,

then, with respect to the stock so sold, exchanged, or disposed of, the successor in interest shall consider the controlled foreign corporation's change during the first 75 days of such taxable year in investments in export trade assets with respect to which such election is made to be zero.

(*b*) If the United States shareholder's successor in interest makes an election under paragraph (a)(2) of this section in order to determine an exclusion under section 970(a) for the taxable year of such corporation in which the acquires such stock, the amount of the controlled foreign corporation's investments in export trade assets with respect to which such election is made at the close of its preceding taxable year shall be considered, with respect to the stock so acquired, to be the amount of such corporation's investments in export trade assets with respect to which such election is made at the close of the 75th day after the close of such preceding taxable year.

(*c*) If the United States shareholder's successor in interest makes an election under paragraph (a)(2) of this section in order to determine an exclusion under section 970(a) for a taxable year of such corporation subsequent to the taxable year in which he acquired the stock, the amount of the controlled foreign corporation's investments in export trade assets with respect to which such election is made at the close of its taxable year immediately preceding such subsequent taxable year shall, with respect to the stock so acquired, be the amount of such corporation's investments in such assets at the actual close of such preceding taxable year.

(ii) *Election in force with respect to export trade assets which are facilities* —

(*a*) If during any taxable year of a controlled foreign corporation—

(*1*) A United States shareholder who has made the election described in paragraph (a)(3) of this section with respect to such corporation sells, exchanges, or otherwise disposes of all or part of his stock in such corporation, and

(*2*) The foreign corporation is a controlled foreign corporation immediately after the sale, exchange or other disposition,

then, with respect to the stock so sold, exchanged, or disposed of, the successor in interest shall consider the controlled foreign corporation's change for such taxable year in investments in export trade assets which are facilities to be zero.

(*b*) If the United States shareholder's successor in interest makes an election under paragraph (a)(3) of this section in order to determine an exclusion under section 970(a) for the taxable year of such corporation in which he acquires such stock, the amount of the controlled foreign corporation's investments in export trade assets which are facilities at

the close of its preceding taxable year shall be considered, with respect to the stock so acquired, to be the amount of such corporation's investments in export trade assets which are facilities at the close of the taxable year in which such stock is acquired.

(c) If the United States shareholder's successor in interest makes an election under paragraph (a)(3) of this section in order to determine an exclusion under section 970(a) for a taxable year of such corporation subsequent to the taxable year in which he acquired the stock, the amount of the controlled foreign corporation's investments in export trade assets which are facilities at the close of its taxable year immediately preceding such subsequent taxable year shall, with respect to the stock so acquired, be the amount of such corporation's investments in such assets at the actual close of such preceding taxable year.

(d) ***Illustrations.*** The principles contained in this section are illustrated by the examples set forth in paragraph (d) of § 1.955.3.

[T.D. 6755, 29 FR 12707, Sept. 9, 1964]

§ 1.970-3 Effective date of subpart G.

Sections 970 through 972 and §§ 1.970-1 through 1.972-1 shall apply with respect to taxable years of foreign corporations beginning after December 31, 1962, and to taxable years of United States shareholders within which or with which such taxable years of such corporations end.

[T.D. 6755, 29 FR 12709, Sept. 9, 1964]

§ 1.971-1 Definitions with respect to export trade corporations.

(a) ***Export trade corporations*** —

(1) ***In general.*** For purposes of sections 970 through 972 and §§ 1.970-1 to 1.972-1, inclusive, the term “export trade corporation” means a controlled foreign corporation which for the period specified in subparagraph (2) of this paragraph satisfies the conditions specified in subparagraph (3) of this paragraph. However, no controlled foreign corporation may qualify as an export trade corporation for any taxable year beginning after October 31, 1971, unless it qualified as an export trade corporation for any taxable year beginning before such date. In addition, if a corporation fails to qualify as an export trade corporation for a period of any 3 consecutive taxable years beginning after October 31, 1971, then for any taxable year beginning after such 3-year period, such corporation shall not be included within the term “export trade corporation”.

(2) ***Three-year period.*** The period referred to in subparagraph (1) of this paragraph is the 3-year period ending with the close of the controlled foreign corporation's current taxable year, or such part of such 3-year period as occurs on and after the beginning of the corporation's first taxable year beginning after December 31, 1962, whichever period is shorter.

(3) ***Gross income requirements.*** The conditions referred to in subparagraph (1) of this paragraph are that the controlled foreign corporation derives—

(i) 90 percent or more of its gross income from sources without the United States, and

(ii) (*a*) 75 percent of more of its gross income from transactions, activities, or interest described in section 971(b) and paragraph (b) of this section, or

(*b*) 50 percent or more of its gross income from transactions, activities, or interest described in section 971(b) and paragraph (b) of this section in respect of agricultural products grown in the United States.

(4) ***Determination of sources of gross income.*** The sources of gross income of a controlled foreign corporation shall be determined for purposes of subparagraph (3)(i) of this paragraph in accordance with the rules for determining sources of gross income set forth in sections 861 through 864 and the regulations thereunder.

(b) ***Export trade income*** —

(1) ***General rule.*** For purposes of sections 970 through 972 and §§ 1.970-1 to 1.972-1, inclusive, the term "export trade income" means the gross export trade income of a controlled foreign corporation derived from transactions, activities, or interest described in subdivisions (i) through (vii) of this subparagraph, less deductions allowed under subdivision (viii) of this subparagraph.

(i) ***Sale of export property.*** Gross export trade income of a controlled foreign corporation includes gross income it derives from the sale of export property (as defined in paragraph (e) of this section) which it purchases, if the sale is made to an unrelated person for use, consumption, or disposition outside the United States. See section 971(b)(1). As a general rule, property will be presumed to have been sold for use, consumption, or disposition in the country of destination of the sale. However, if at the time of the sale the controlled foreign corporation knows, or should have known from the facts and circumstances surrounding the sales transaction, that the property will probably be used, consumed, or disposed of in the United States, such property will be presumed to have been sold for use, consumption, or disposition in the United States unless the controlled foreign corporation establishes that such property was used, consumed, or disposed of outside the United States. For purposes of this subdivision, export property must be sold by a controlled foreign corporation in essentially the same form in which such property is purchased. Whether export property sold is in essentially the same form in which such property is purchased shall be determined on the basis of all the facts and circumstances in each case. Storage, handling, transportation, packaging, or servicing of property will be considered not to alter the form in which property is purchased. However, manufacture or production, within the meaning of paragraph (a)(4) of § 1.954-3, will be considered to alter the form in which property is purchased and no part of the gross income from the sale of such property will be treated as export trade income. The application of this subdivision may be illustrated by the following example:

Example. Controlled foreign corporation A, incorporated under the laws of foreign country Y, purchases articles manufactured in the United States from domestic corporation M and sells them in the form in which purchased to foreign corporation B, unrelated to A Corporation, for use in foreign countries, X, Y, and Z. The gross income of A Corporation from the purchase and sale of the articles constitutes gross export trade income.

(ii) ***Commissions and other income derived in connection with the sale of export property.*** Gross export trade income of a controlled foreign corporation includes gross commissions, fees, compensation, or other income derived by such corporation from the performance for any person of commercial, industrial, financial, technical, scientific, managerial, engineering, architectural, skilled, or other services in respect of a sale by such corporation in a transaction described in subdivision (i) of this subparagraph or in respect of the sale by any other person of export property to a person unrelated to the controlled foreign corporation for use, consumption, or disposition outside the United States. Such gross export trade income

includes payments received for surveys made prior to, and in connection with, the sale of such export property (whether or not such sales are ultimately consummated). See section 971(b)(1). The term "any person" or "any other person" as used in this subdivision includes a related person as defined in section 954(d)(3) and paragraph (e) of § 1.954-1. The application of this subdivision may be illustrated by the following examples:

Example 1. Controlled foreign corporation A, incorporated under the laws of foreign country X, receives from M Corporation a commission equal to 6 percent of the gross selling price of all personal property shipped by M Corporation as a result of services performed by A Corporation in soliciting orders in foreign countries X, Y, and Z. In fulfillment of such orders, M Corporation ships products manufactured by it in the United States. Corporation A does not assume title to the property sold. Gross commissions received by A Corporation from M Corporation in connection with the sale of such property to persons unrelated to A Corporation for use, consumption, or disposition outside the United States constitute gross export trade income.

Example 2. Foreign corporation B, incorporated under the laws of foreign country X, is a wholly owned subsidiary of domestic corporation N. Corporation N, is engaged in the business of manufacturing heavy duty electrical equipment in the United States. By contract, N Corporation engages B Corporation for the purpose of conducting engineering, technical, and financial studies required by N Corporation in the preparation of bids to supply foreign country Y with electrical equipment for a construction project to be undertaken by such country. Corporation N pays B Corporation a fee for the services, all of which are performed in country Y, which is based upon the number of hours of work performed without regard to whether a sale is ultimately consummated. Corporation N does not receive a contract from country Y on its bid to supply equipment. Income derived by B Corporation from performance of the service contract constitutes gross export trade income.

(iii) ***Commissions and other income derived in connection with the installation or maintenance of export property.*** Gross export trade income of a controlled foreign corporation includes gross commissions, fees, compensation, or other income derived by such corporation from the performance for any person of commercial, industrial, financial, technical, scientific, managerial, engineering, architectural, skilled, or other services in respect of the installation or maintenance of export property which has been sold by such corporation in a transaction described in subdivision (i) of this subparagraph or by any other person to a person unrelated to the controlled foreign corporation for use, consumption, or disposition outside the United States. See section 971(b)(1). The term "any person" or "any other person" as used in this subdivision includes a related person as defined in section 954(d)(3) and paragraph (e) of § 1.954-1.

(iv) ***Commissions and other income derived in connection with the use of patents, copyrights, and other like property.*** Gross export trade income of a controlled foreign corporation includes gross commissions, fees, compensation, or other income derived by such corporation from the performance for any person of commercial, industrial, financial, technical, scientific, managerial, engineering, architectural, skilled, or other services in connection with the use outside of the United States by an unrelated person of patents, copyrights, secret processes and formulas, goodwill, trademarks, trade brands, franchises, and other like property, including gross income derived from obtaining licensees for patents, but only if the patent, copyright, or other like property is acquired, or developed, and owned by the manufacturer, producer, grower,

or extractor of any export property, in respect of which the controlled foreign corporation also derives gross export trade income within the meaning of subdivision (i), (ii), or (iii) of this subparagraph. See section 971(b)(2). The application of this subdivision may be illustrated by the following example:

Example. Foreign corporation A incorporated under the laws of foreign country X, is a wholly owned subsidiary of domestic corporation M. Corporation M, the owner of a patent registered in foreign country X, grants B Corporation, a corporation unrelated to A Corporation, the right to use such patent in foreign country Y in exchange for payment of a royalty. By a separate contract with B Corporation, A Corporation agrees for a gross fee of $100,000 to furnish, by maintaining a staff of technical representatives at the offices of B Corporation, technical services to B Corporation in connection with B Corporation's use of the patent. Corporation A also derives export trade income from the sale of export property which it purchases from M Corporation, the manufacturer of such property, and sells to C Corporation, an unrelated person, for use in country Y by C Corporation. The gross fee of $100,000 received by A Corporation for the furnishing of technical services in connection with B Corporation's use of M Corporation's patent constitutes gross export trade income since the service for which the fee is paid is performed in connection with the use outside the United States by an unrelated person (B Corporation) of a patent owned by a manufacturer (M Corporation) of export property in respect of which the controlled foreign corporation (A Corporation) derives gross export trade income from the sale to an unrelated person (C Corporation) for use outside the United States of export property purchased by it from the manufacturer (M Corporation).

(v) ***Income attributable to use of export property by an unrelated person.*** Gross export trade income of a controlled foreign corporation includes gross commissions, fees, rents, compensation, or other income which is received by such corporation from an unrelated person and is attributable to the use of export property by such unrelated person. See section 971(b)(3). The application of this subdivision may be illustrated by the following example:

Example. Foreign corporation A, incorporated under the laws of foreign country X, is a wholly owned subsidiary of domestic corporation M. Corporation A acquires by purchase bottling machines manufactured in the United States and leases the machines to B Corporation, a corporation unrelated to A Corporation, for use by B Corporation in foreign country Y. Gross rental income of A Corporation from the lease of the machines to B Corporation constitutes gross export trade income.

(vi) ***Income attributable to the use of export property in the rendition of technical, scientific, or engineering services*** —

(*a*) ***General.*** Gross export trade income of a controlled foreign corporation includes gross commissions, fees, compensation, or other income which is received by such corporation from an unrelated person and is attributable to the use of export property in the performance of technical, scientific, or engineering services to such unrelated person. See section 971(b)(3).

(*b*) ***Rule of apportionment.*** If a commission, fee, or other income received by a controlled foreign corporation from an unrelated person under a contract or arrangement for the performance of technical, scientific, or engineering services is not solely attributable to the use of export property in the performance of such services and the amount of the gross income attributable to such use of export property cannot be established by

reference to transactions between other unrelated persons, such gross income shall be an amount which bears the same ratio to total gross income from the contract or arrangement as the cost of the export property consumed in the performance of such services, including a reasonable allowance for depreciation with respect to the export property so used, bears to the total costs and expenses attributable to the production of income under the contract or arrangement.

(c) ***Illustration.*** The application of this subdivision may be illustrated by the following example:

Example. Foreign corporation A, incorporated under the laws of foreign country X, is a wholly owned subsidiary of domestic corporation M. Corporation A is engaged in the seismograph service business in foreign country X. In an effort to establish the probable existence of oil in a concession area it owns in foreign country Y, B Corporation which is unrelated to A Corporation enters into a contract with A Corporation whereby A Corporation is required to make seismographic tests of the area in country Y for a fixed fee of $100,000. In performance of the contract, A Corporation hires a skilled crew to carry out the contract and utilizes equipment and supplies (for example, trucks, seismographic equipment, etc.) which constitute export property. Corporation A cannot establish by reference to transactions between other unrelated persons, the income attributable to the use of the export property in the performance of the contract. Corporation A's total costs and expenses (for example, salaries of the crew, administrative expenses, all supplies, total depreciation on property used in performance of the contract, etc.) incurred in performance of the contract are $80,000. The cost of export property consumed in performance of the contract (for example, dynamite, motor oil, and other supplies which were produced in the United States, reasonable depreciation on trucks and seismographic equipment manufactured in the United States and used in performance of the contract, etc.) is $30,000. Corporation A's gross export trade income from the contract is $37,500, that is, the amount which bears the same ratio to total gross income from the contract ($100,000) as the cost of the export property consumed in the rendition of the services ($30,000) bears to total costs and expenses attributable to the contract ($80,000).

(vii) ***Interest from export trade assets.*** Gross export trade income of a controlled foreign corporation includes interest derived by it from export trade assets described in section 971(c)(4) and paragraph (c)(5) of this section. See section 971(b)(4).

(viii) ***Deductions to be taken into account.*** Export trade income of a controlled foreign corporation for any taxable year shall be the amount determined by deducting from the items or categories of gross income described in subdivisions (i) through (vii) of this subparagraph the entire amount of those expenses, taxes, and other deductions properly allocable to such items or categories of income. For purposes of this section, expenses, taxes, and other deductions shall first be allocated to items or categories of gross income to which they directly relate; then, expenses, taxes, and other deductions which cannot definitely be allocated to some item or category of gross income shall be ratably apportioned among all items or categories of gross income, except that no expense, tax, or other deduction shall be allocated to an item or category of income to which it clearly does not apply and no deduction allowable to such controlled foreign corporation under section 882(c) and the regulations thereunder shall be taken into account.

(2) ***Cross reference.*** For rules governing the determination of gross income and taxable income of a foreign corporation, see § 1.952-2.

(c) ***Export trade assets*** —

(1) ***In general.*** For purposes of sections 970 through 972 and §§ 1.970-1 to 1.972-1, inclusive, the term "export trade assets" means—

(i) Working capital reasonably necessary for the production of export trade income,

(ii) Inventory of export property held for use, consumption, or disposition outside the United States,

(iii) Facilities located outside the United States for the storage, handling, transportation, packaging, servicing, sale, or distribution of export property, and

(iv) Evidences of indebtedness executed by unrelated persons in connection with payment for purchases of export property for use, consumption, or disposition outside the United States, or in connection with the payment for services described in section 971(b)(2) or (3) and paragraph (b)(1)(iv), (v), or (vi) of this section.

(2) ***Working capital.*** For purposes of subparagraph (1)(i) of this paragraph, working capital of a controlled foreign corporation is the excess of its current assets over its current liabilities. Liabilities maturing in one year or less shall be considered current liabilities. A determination of the amount of working capital of a controlled foreign corporation which is reasonably necessary for the production of export trade income will depend upon the nature and volume of the activities of the controlled foreign corporation which produce export trade income as they exist on the applicable determination date. In determining working capital which is reasonably necessary for the production of export trade income, the anticipated future needs of the business will be taken into account to the extent that such needs relate to the year of the controlled foreign corporation following the applicable determination date; anticipated future needs relating to a later period will not be taken into account unless it is clearly established that such needs are reasonably related to the production of export trade income as of the applicable determination date.

(3) ***Inventory of export property.*** For purposes of subparagraph (1)(ii) of this paragraph, the inclusion of items in inventory shall be determined in accordance with rules applicable to domestic corporations. See §§ 1.471-1 through 1.471-9. Inventory of export property of a controlled foreign corporation includes export property held for use, consumption, or disposition outside the United States regardless of where it is located on the applicable determination date. Thus, such property may be physically located in the United States on such date. However, for property physically located in the United States to constitute export property, it must have been acquired by the controlled foreign corporation with a clear intent that it would dispose of the property for use, consumption, or disposition outside the United States. As a general rule, if during the year following the applicable determination date export property which was physically located in the United States on such date is actually exported for use, consumption, or disposition outside the United States, such property will be deemed held for such purpose on the applicable determination date. On the other hand, the indefinite warehousing of export property in the United States by the controlled foreign corporation, or the subsequent sale of export property by such corporation for use, consumption, or disposition in the United States, will evidence a lack of intent by such corporation on the applicable determination date to hold such property for use, consumption, or disposition outside the United States.

(4) ***Facilities located outside the United States*** —

(i) ***In general.*** For purposes of subparagraph (1)(iii) of this paragraph, a facility, as defined in subdivision (ii)(*a*) of this subparagraph, will be considered an export trade asset only—

(*a*) If such facility is located outside the United States, and

(*b*) To the extent that such facility is used, within the meaning of subdivision (ii)(*c*) of this subparagraph, by the controlled foreign corporation for the storage, handling, transportation, packaging, servicing, sale, or distribution of export property in essentially the same form in which such property is acquired by such corporation.

Thus, a facility in which property is manufactured or produced, even though export property is used or consumed in the production or becomes a component part of the manufactured article, will not qualify as an export trade asset.

(ii) *Special rules* —

(*a*) ***Facility defined.*** For purposes of subdivision (i) of this subparagraph, the term "facility" includes any asset or group of assets used for the storage, handling, transportation, packaging, servicing, sale, or distribution of export property. Thus, such term includes warehouse, storage, or sales facilities (for example, sales office equipment), transportation equipment (for example, motor trucks, vessels, etc.), and machinery and equipment (for example, packaging equipment, servicing equipment, cranes, forklift trucks used in warehouses, etc.).

(*b*) ***Determination of location of transportation facilities.*** A transportation facility shall be considered to be located outside the United States for purposes of subdivision (i)(*a*) of this subparagraph if such property is predominantly located outside the United States. As a general rule, on an applicable determination date a transportation facility will be considered to be predominantly located outside the United States if 70 percent or more of the miles traversed (during the 12-month period immediately preceding such determination date or for such part of such period as such facility is owned by the controlled foreign corporation) in the use of such facility are traversed outside the United States or if such facility is located outside the United States at least 70 percent of the time during such period or such part thereof.

(*c*) ***Determination of use.*** For purposes of subdivision (i)(*b*) of this subparagraph, the extent to which a facility is used in carrying on the activities described in such subdivision depends on the use made of the facility for the 12-month period immediately preceding the applicable determination date or for such part of such period as such facility is owned by the controlled foreign corporation. The method of measuring such use will depend upon the facts and circumstances in each case. However, such determinations of use will generally be made for a facility as a whole and not on the basis of individual items used in the operation of a facility. Thus, a determination as to the use of a warehouse facility will generally be made with respect to the entire facility and not separately for the items used in such warehouse, such as forklift trucks, storage bins, etc.

(5) ***Evidences of indebtedness.*** For purposes of subparagraph (1)(iv) of this paragraph, the term "evidence of indebtedness" shall mean a note, installment sales contract, a time bill of exchange evidencing a sale on credit, or similar written instrument executed by an unrelated person which evidences the obligation of an unrelated person to pay for export property which an unrelated person purchases for use, consumption, or disposition outside the United States or to pay for services described in section 971(b)(2) or (3) and paragraph (b)(1)(iv), (v), or (vi) of this section which are performed for an unrelated person. Receivables which arise out of the delivery of export property, or the performance of services, which are evidenced by invoices, bills of lading, bills of exchange which do not evidence a sale on credit, sales slips, and similar documents created by the unilateral act of a creditor shall not be considered evidences of indebtedness for purposes of section 971(c)(4).

(6) ***Duplication of treatment and priority of application.*** No asset which constitutes an export trade asset shall be taken into account more than once in determining the investments in export trade assets of a controlled foreign corporation. Assets which constitute working capital and also constitute inventory to which section 971(c)(2) applies or evidences of indebtedness to which section 971(c)(4) applies shall be taken into account in determining whether the amount of working capital of the controlled foreign corporation is reasonably necessary for the production of export trade income. However, to the extent that the amount of inventory to which section 971(c)(2) applies or evidences of indebtedness to which section 971(c)(4) applies is not included in working capital to which section 971(c)(1) applies on the ground that such amount is not reasonably necessary for the production of export trade income, the amount shall be included under section 971(c)(2) or 971(c)(4), as the case may be, in a controlled foreign corporation's investments in export trade assets.

(d) ***Export promotion expenses*** —

(1) ***In general.*** For purposes of sections 970 through 972 and §§ 1.970-1 to 1.972-1, inclusive, the term "export promotion expenses" means, subject to the provisions of subparagraph (2) of this paragraph, all the ordinary and necessary expenses paid or incurred during the taxable year by the controlled foreign corporation which are reasonably allocable to the receipt or production of export trade income including—

(i) A reasonable allowance for salaries or other compensation for personal services actually rendered for such purpose,

(ii) Rentals or other payments for the use of property actually used for such purpose, and

(iii) A reasonable allowance for the exhaustion, wear and tear, or obsolescence of property actually used for such purpose.

In determining for purposes of this subparagraph whether expenses are reasonably allocable to the receipt or production of export trade income, consideration shall be given to the facts and circumstances of each case. As a general rule, if export trade income results from the sale of export property, export promotion expenses allocable to such income shall include warehousing, advertising, selling, billing, collection, other administrative, and similar costs properly allocable to the marketing activity, but shall not include cost of goods sold, income or similar tax, any expense which does not advance the distribution or sale of export property for use, consumption, or disposition outside the United States, or any expense for which the controlled foreign corporation is reimbursed. If export trade income results from the rental of export property, export promotion expenses allocable to such income shall include a reasonable allowance for depreciation and servicing of such property, and the administrative and similar costs properly allocable to the rental activity. If export trade income results from the performance of services, export promotion expenses shall include a reasonable allowance for compensation of the persons performing services for the controlled foreign corporation in the execution of the service contract or arrangement and administrative expenses reasonably allocable to the service activity. In no case shall income taxes be included in export promotion expenses.

(2) ***Expenses incurred within the United States.*** No expense incurred within the United States shall be treated as an export promotion expense for purposes of section 971(d) and subparagraph (1) of this paragraph unless at least—

(i) 90 percent of all salaries and other personal service compensation incurred in the receipt or the production of export trade income,

(ii) 90 percent of rents and other payments for the use of property used in the receipt or the production of export trade income,

(iii) 90 percent of the allowances for the exhaustion, wear and tear, or obsolescence of property used in the receipt or the production of export trade income, and

(iv) 90 percent of all other ordinary and necessary expenses reasonably allocable to the receipt or the production of export trade income,

is incurred outside the United States. For this purpose, personal service compensation will be considered incurred at the place where the service is performed (for example, salaries will be considered incurred at the place where the employee works; payments for art work will be considered incurred at the place where the art work is prepared, etc.); rent, depreciation, and other expenses related to real or personal property will be considered incurred at the place where the property is located; and expenses for media advertising will be considered incurred at the place where the advertising is consumed. For such purpose, newspaper or periodical advertising will be considered consumed where the newspaper or periodical is principally distributed, and television and radio advertising will be considered consumed at the place where the audience is primarily located. Technicalities of contract or payment, for example, the place where a contract is executed or the location of a bank account from which payment is made, shall not be determinative of the place where an expense is incurred.

(e) ***Export property.*** For purposes of sections 970 through 972 and §§ 1.970-1 to 1.972-1, inclusive, the term "export property" means property, or any interest in property, which is manufactured, produced, grown, or extracted in the United States. Whether property will be considered manufactured or produced in the United States will depend on the facts and circumstances of each case. As a general rule, if—

(1) The property sold, serviced, used, or rented by the controlled foreign corporation is substantially transformed in the United States prior to its export from the United States, or

(2) The operations conducted in the United States with respect to the property sold, serviced, used, or rented by the controlled foreign corporation, whether performed in the United States by one person or a series of persons in a chain of distribution, are substantial in nature and are generally considered to constitute the manufacture or production of property,

then the property sold, serviced, used, or rented will be considered to have been manufactured or produced in the United States. The rules under paragraph (a)(4)(ii) of § 1.954-3, relating to the substantial transformation of property, and paragraph (a)(4)(iii) of such section, dealing with a substantive test for determining whether property will be treated as having been manufactured or produced, shall apply for purposes of making determinations under this paragraph.

(f) ***Unrelated person.*** For purposes of sections 970 through 972 and §§ 1.970-1 to 1.972-1, inclusive, the term "unrelated person" means a person other than a related person as defined in section 954(d)(3) and paragraph (e) of § 1.954-1.

[T.D. 6755, 29 FR 12710, Sept. 9, 1964, as amended by T.D. 7293, 38 FR 32802, Nov. 28, 1973; T.D. 7533, 43 FR 6603, Feb. 15, 1978]

§ 1.972-1 Consolidation of group of export trade corporations.

(a) ***Election to consolidate*** —

(1) ***In general.*** One or more United States shareholders (as defined in section 951(b)) owning (within the meaning of section 958(a)) or who are considered as owning by applying the rules of ownership of section 958(b) more than 50 percent of the total combined voting power of all classes of stock entitled to vote of an export trade corporation, which is the top-tier corporation in a chain (within the meaning of subparagraph (2) of this paragraph) of export trade corporations, may, subject to the provisions of this section, elect to consolidate such chain for purposes of determining—

(i) The limitations, described in section 970(a) and paragraph (b)(2) of § 1.970-1, on the amount by which subpart F income of an export trade corporation in such chain shall be reduced as provided in section 970(a) and paragraph (b)(1) of § 1.970-1, and

(ii) The amount includible in gross income of such shareholders under section 951(a)(1)(A)(ii) with respect to such a corporation's decrease in investments in export trade assets to which section 970(b) applies as described in paragraph (c) of § 1.970-1.

(2) ***"Chain" defined.*** A chain of export trade corporations shall include—

(i) The top-tier export trade corporation referred to in subparagraph (1) of this paragraph which is the first export trade corporation in a chain of ownership described in section 958(a);

(ii) All export trade corporations 80 percent or more of the total combined voting power of all classes of stock entitled to vote of which is owned directly by such top-tier export trade corporation on the last day of its taxable year; and

(iii) All export trade corporations 80 percent or more of the total combined voting power of all classes of stock entitled to vote of which is owned directly by the export trade corporations described in subdivision (ii) of this subparagraph on the last day of the taxable year of the export trade corporation described in subdivision (i) of this subparagraph.

For purposes of this section, a reference to a top-tier corporation shall mean an export trade corporation described in subdivision (i) of this subparagraph, a reference to a second-tier corporation shall mean an export trade corporation described in subdivision (ii) of this subparagraph, and a reference to a third-tier corporation shall mean an export trade corporation described in subdivision (iii) of this subparagraph.

(3) ***Inclusion requirement.*** If an election is made by a United States shareholder under this paragraph with respect to a chain of export trade corporations (as defined in subparagraph (2) of this paragraph), all export trade corporations which are included in the chain must be included in the consolidation. If such an election is made, the determinations under section 970 shall be made on a consolidated basis with respect to the entire interest which the electing United States shareholder owns in each of the export trade corporations in the chain, including any minority interests owned directly or indirectly by such shareholder in second-tier and third-tier corporations in the chain. A United States shareholder may elect to consolidate his interest in export trade corporations in one chain of such corporations without electing to consolidate his interest in export trade corporations in other chains.

(4) ***Conditions for making initial election*** —

(i) ***Without consent.*** The initial election to consolidate a chain of export trade corporations may be made without the consent of the Commissioner only if, immediately before the election to consolidate, each of the export trade corporations to be included in the consolidation is using the same taxable year and has the same elections under section 970(c)(4) and § 1.970-2 in

force, or not in force, as the case may be. The election shall be made by the electing shareholder or shareholders with respect to the taxable year in which or with which ends the first taxable year of the top-tier corporation to which the election to consolidate applies and at the time of filing such shareholders' returns for such taxable year or within 90 days after final regulations under this section are published in the FEDERAL REGISTER, whichever date occurs later. Each United States shareholder making such an election shall attach to his return a statement showing:

(*a*) The name, address, and taxable year of each export trade corporation in the chain of such corporations for which an election is made,

(*b*) The amount and percentage of each class of stock owned by such shareholder (within the meaning of section 958), corporation by corporation, in each of such export trade corporations, and

(*c*) A list of the names and addresses, and a description of the ownership interests, of all other United States shareholders, if any, who are making the same election to consolidate and a statement that such shareholders are also making the election.

(ii) ***With consent.*** If, immediately before the election to consolidate, each of the export trade corporations in a chain of such corporations does not use the same taxable year or does not have the same elections under section 970(c)(4) and § 1.970-2 in force, or not in force, as the case may be, the initial election to consolidate such chain may be exercised by the electing shareholder or shareholders only with the consent of the Commissioner. Consent will not be granted unless each electing United States shareholder and the Commissioner agree to the terms, conditions, and adjustments under which such consolidation is to be effected and unless, subject to such terms, conditions, and adjustments as the Commissioner may prescribe, each of the export trade corporations in the chain adopts a common taxable year and has the same elections under section 970(c)(4) and § 1.970-2 in force, or not in force, as the case may be. The application for consent to consolidate shall be made by mailing a letter, signed by each of the electing United States shareholders, to the Commissioner of Internal Revenue, Washington, DC 20224. The application shall be mailed before the close of the first taxable year of the top-tier corporation with respect to which the electing shareholder or shareholders desire to make a consolidation or before the close of the 90th day after final regulations under this section are published in the FEDERAL REGISTER, whichever date occurs later, and shall include the statement described in subdivision (i) of this subparagraph.

(5) ***Effect of election.*** If an election to consolidate a chain of export trade corporations is made for a taxable year of a United States shareholder, such election shall, except as provided in subparagraph (6) of this paragraph, be binding on such shareholder for such taxable year and for all succeeding taxable years. If, in a subsequent taxable year of the United States shareholder, an export trade corporation for the first time qualifies as a second-tier or third-tier corporation in such chain on the last day of the taxable year of the top-tier corporation which ends in or with the subsequent taxable year of such shareholder, the shareholder's interest in such export trade corporation shall be included in the consolidation to which the election applies, but only if such export trade corporation as of such last day uses the same taxable year and has the same elections under section 970(c)(4) and § 1.970-2 in force, or not in force, as the case may be, as such top-tier corporation. The United States shareholder shall, with respect to such additional export trade corporation, submit with his return for such subsequent taxable year the statement described in subparagraph (4)(i) of this paragraph.

(6) ***Termination of election.*** An election under this paragraph to consolidate a chain of export trade corporations shall terminate for the first taxable year of the foreign corporation which during the period of consolidation is a top-tier corporation—

(i) At the close of which any foreign corporation which was included in such consolidation for the preceding taxable year ceases to qualify as an export trade corporation or to be eligible under this paragraph for inclusion in such chain,

(ii) At the close of which an export trade corporation for the first time qualifies as a second-tier or third-tier corporation in such chain but does not as of such close of the year use the same taxable year or have the same elections under section 970(c)(4) and § 1.970-2 in force, or not in force, as the case may be, as such top-tier corporation, or

(iii)

(*a*) In respect of which the Commissioner, upon application made by a United States shareholder who made the election to consolidate, or his successor in interest, consents to a termination of the election. Approval will not be granted unless the United States shareholder and the Commissioner agree to the terms, conditions, and adjustments under which the termination will be effected.

(*b*) The application for consent to termination shall be made by the United States shareholder's mailing a letter for such purpose to the Commissioner of Internal Revenue, Washington, DC 20224. The application shall be mailed before the close of the taxable year of the foreign corporations with respect to which the shareholder desires to terminate the consolidation and shall include the following information:

(*1*) The name, address, and taxable year of each export trade corporation in the chain of such corporations for which the election was made,

(*2*) The amount and percentage of each class of stock owned by such shareholder (within the meaning of section 958), corporation by corporation, in each of such export trade corporations, and

(*3*) A list of the names and addresses, and a description of the ownership interests, of all other United States shareholders, if any, who participated in making the election with such United States shareholder, or their successors in interest, and a statement whether such other persons are or are not terminating the election.

(7) ***Election subsequent to initial election.*** If a United States shareholder elects under subparagraph (4) of this paragraph to consolidate his interest in a chain of export trade corporations and the election to consolidate such corporations terminates under the provisions of subparagraph (6) of this paragraph, such shareholder may not thereafter elect under this section to consolidate his interest in any corporation which was in that chain of export trade corporations unless he receives the consent of the Commissioner to do so. Application to obtain such consent of the Commissioner shall be made by a letter mailed to the Commissioner of Internal Revenue, Washington, DC, 20224, before the close of the first taxable year of the top-tier corporation of the chain of export trade corporations in which the election to include such interest is to apply. Such application for consent shall include a statement showing:

(i) With respect to such chain, the information required to be shown in the statement described in subparagraph (4)(i) of this paragraph, and

(ii) The United States shareholder's interest in such chain which was previously included in a consolidation, the taxable years of such previous consolidation, and the manner in which such previous consolidation was terminated.

(8) ***Illustration.*** The application of this paragraph may be illustrated by the following example:

Example. Domestic corporation M owns 60 percent of the only class of stock of foreign corporation A, and 100 percent of the only class of stock of foreign corporation F, respectively. Corporation A owns 80 percent of the only class of stock of foreign corporations B and C, respectively. Corporation M also owns 20 percent of the stock of B Corporation. Corporation B owns 80 percent of the only class of stock of foreign corporation D. Corporations B and C each own 50 percent of the only class of stock of foreign corporation E. Corporation F owns 100 percent of the only class of stock of foreign corporation G, which owns 100 percent of the only class of stock of foreign corporation H. Corporation F also owns 20 percent of the stock of C Corporation. Domestic corporations N and R own 30 percent and 10 percent, respectively, of the stock of A Corporation. All corporations use the calendar year as a taxable year, and all foreign corporations qualify as export trade corporations for 1963. Corporation M may elect for 1963 to consolidate its interest in the chain (the “A” chain) of export trade corporations which includes corporations A, B, C, D, and E; and Corporation M need not, but may, elect to consolidate its interest in the chain (the “F” chain) of export trade corporations which includes corporations F, G, and H. Consolidation of M Corporation's interest in the “A” chain with its interest in the “F” chain is not permitted. If M Corporation elects to consolidate the “A” chain, M Corporation must include in the consolidation its 20 percent directly owned interest in B Corporation and its 20 percent indirectly owned (through F Corporation) interest in C Corporation. Either N Corporation or R Corporation, or both, may join M Corporation in electing to consolidate their interests in the “A” chain. However, neither N Corporation nor R Corporation may elect to consolidate the “A” chain unless M Corporation also agrees to so elect, because corporations N and R, neither jointly nor separately, own more than 50 percent of the total combined voting power of all classes of stock entitled to vote of A Corporation. If corporations M, N, and R elect to consolidate the “A” chain, the determinations specified in subparagraph (1) of this paragraph will be made on a consolidated basis with respect to such corporations' respective interest in the chain as shown in the following tabulation:

	A %	B %	C %	D %	E %
M Corporation's interest:					
Direct interest	60				
(60% × 80%) + 20% direct interest		68			

	A %	B %	C %	D %	E %
(60% × 80%) + 20% indirect interest			68		
(68% × 80%)				54.4	
(68% × 50%) + (68% × 50%)					68
N Corporation's interest:					
Direct interest	30				
(30% × 80%)		24			
(30% × 80%)			24		
(24% × 80%)				19.2	
(24% × 50%) + (24% × 50%)					24
R Corporation's interest:					
Direct interest	10				
(10% × 80%)		8			
(10% × 80%)			8		
(8% × 80%)				6.4	
(8% × 50%) + (8% × 50%)					8
Total interests to which consolidation applies	100	100	100	80	100

(b) ***Effect of consolidation*** —

(1) ***Determination of subpart F income, export trade income, etc.*** An election under paragraph (a) of this section to consolidate export trade corporations in a chain of such corporations shall have no effect on the determination of the character of income as subpart F income or on the determination of export trade income, export trade income which constitutes foreign base company income, or earnings and profits of the individual export trade corporations in the chain. Thus, the consolidation of export trade corporations under this section shall not have the effect of reducing earnings and profits of such corporations or of changing the characterization of income from that which is, for example, foreign base company income to that which is not. The application of this paragraph may be illustrated by the following example:

Example. Corporation A, incorporated under the laws of foreign country X, and corporation B, incorporated under the laws of foreign country Y, are both wholly owned subsidiaries of domestic corporation M. Corporations A and B both qualify under section 971(a) as export trade corporations. Corporation A purchases personal property produced in the United States from an unrelated person and sells the property to B Corporation for use outside of country X. Corporation B resells the property to an unrelated person for use in foreign country Z. Corporations A and B each derive foreign base company sales income described in § 1.954-3 from the purchase and sale transactions. Consolidation of Corporations A and B under this section does not result in the two transactions being treated as one transaction which is a purchase of property from an unrelated person and a sale of property to an unrelated person or the nonrecognition of gain on the sale of export property by A Corporation to B Corporation.

(2) ***Determination of amount by which consolidated subpart F income is reduced*** —

(i) ***In general.*** In determining the amount by which the subpart F income of each export trade corporation includible in a consolidation of export trade corporations shall be reduced as provided in section 970(a) and paragraph (b)(1) of § 1.970-1 for any taxable year of consolidation, the limitations provided by section 970(a) and paragraph (b)(2) of § 1.970-1 on such amount for each such export trade corporation shall be determined on the basis of such corporation's separate share of—

(*a*) Amounts included in the total export promotion expense,

(*b*) The total gross receipts from the sale, installation, operation, maintenance, or use of property in respect of which each such corporation derives such export trade income as is properly allocable to the export trade income which constitutes foreign base company income, and

(*c*) The total increase in investments in export trade assets,

of all export trade corporations to which the consolidation applies for the taxable year.

(ii) ***Limitations not effective.*** If for any taxable year each of the limitations under paragraph (b)(2) of § 1.970-1, determined on a consolidated basis, equals or exceeds the total export trade income which constitutes foreign base company income of all corporations includible in the consolidation of export trade corporations, the subpart F income of each includible corporation shall be reduced under section 970(a) for such year by its separate export trade income which constitutes foreign base company income.

(iii) ***Limitation effective.*** If for any taxable year one of the limitations under paragraph (b)(2) of § 1.970-1, determined on a consolidated basis, is less than the total export trade income which constitutes foreign base company income of all corporations includible in the consolidation of export trade corporations, the amount by which the subpart F income of each includible corporation shall be reduced under section 970(a) for such year shall be an amount which bears the same ratio to the amount by which the subpart F income may be reduced on a consolidated basis as the export trade income which constitutes foreign base company income of each includible corporation bears to the total export trade income which constitutes foreign base company income of all export trade corporations includible in the consolidation of export trade corporations.

(iv) ***Illustration.*** The application of this subparagraph may be illustrated by the following example:

> *Example.* (a) Domestic corporation M owns 100 percent of the only class of stock of controlled foreign corporation A, which, in turn, owns 100 percent of the only class of stock of controlled foreign corporation B. All corporations use the calendar year as the taxable year, and corporations A and B are export trade corporations throughout the period here involved. Corporation M elects under this section to consolidate corporations A and B for the entire period here involved. Corporation M elects under paragraph (a)(2) of § 1.970-2 for 1963 to determine both A Corporation's and B Corporation's investments in export trade assets as of the close of the 75th day after the close of such corporations' taxable year.

(b) The following amounts are applicable to corporations A and B for 1964:

	Corporation A	Corporation B
Subpart F income	$100	$200
Export trade income which constitutes foreign base company income	25	75
Other export trade income	10	15
Export promotion expenses allocable to export trade income which constitutes foreign base company income	10	80
Gross receipts from the sale of property in respect of which export trade income which constitutes foreign base company income is derived	400	600
Increase in investments in export trade assets for period beginning with March 16, 1964, and ending with March 16, 1965	35	120

(c) The amount by which subpart F income of corporations A and B is reduced for 1964 on a separate-company basis without regard to section 972 may be determined as set forth in items (i) through (vii) below, and the results of the consolidation of corporations A and B for 1964 are set forth in items (viii) through (x). Assuming an alternative case in which for 1964 the facts are the same as set forth in paragraphs (a) and (b) of this example except that B Corporation incurs export promotion expenses of $50 (rather than $80) which are allocable to the export trade income which constitutes foreign base company income, the results of the consolidation of corporations A and B for such year (a case where one of the limitations under paragraph (b)(2) of § 1.970-1 is effective) are set forth in items (xi) through (xiii):

	A Corporation (1)	B Corporation (2)	Total (3)
(i) Subpart F income	$100	$200	$300
(ii) Export trade income which constitutes foreign base company income	25	75	100
(iii) Other export trade income	10	15	25
(iv) Total export trade income	35	90	125

	A Corporation (1)	B Corporation (2)	Total (3)
(v) Limitations under § 1.970-1(b)(2):			
(*a*) Increase in export trade assets limitation:			
($35 × $25/$35)	25		
($120 × $75/$90)		100	
([$35 + $120] × $100/ $125)			124
(*b*) Gross receipts limitation:			
(10% of $400)	40		
(10% of $600)		60	
(10% of $1,000)			100
(*c*) Export promotion expenses limitation:			
(150% of $10)	15		
(150% of $80)		120	
(150% of $90)			135
(*d*) Export promotion expenses limitation (alternative case):			
(150% of $10)	15		
(150% of $50)		75	
(150% of $60)			90
(vi) Reduction in subpart F income on a separate company basis determined without regard to section 972 (item (ii), but not to exceed smallest of items (v) (*a*), (*b*), and (*c*), in columns (1) and (2))	15	60	75
(vii) Subpart F income as reduced on a separate company basis (item (i) minus item (vi))	85	140	225
(viii) Reduction in subpart F income on a consolidated basis determined under section 972 (item (ii), but not to exceed smallest of items (v) (*a*), (*b*), and (*c*), in column (3))			100
(ix) Apportionment of reduction in subpart F income (item (ii))	25	75	100
(x) Subpart F income as reduced on a consolidated basis (item (i) minus item (ix))	75	125	200
Alternative Case			
(xi) Reduction in subpart F income on a consolidated basis determined under section 972 (item (ii) but not to exceed smallest of items (v) (*a*), (*b*), and (*d*), in column (3))			9
(xii) Apportionment of reduction in subpart F	$22.50		

	A Corporation (1)	B Corporation (2)	Total (3)
income (item (xi) times [item (ii) of column (1) over item (ii) of column (3)] and item (xi) times [item (ii) of column (2) over item (ii) of column (3)]); ($90 × $25/$100)			
($90 × $75/$100)		$67.50	90
(xiii) Subpart F income as reduced on a consolidated basis (item (i) minus item (xii))	77.50	132.50	210

(3) ***Determination of pro rata share of consolidated withdrawal of previously excluded export trade income*** —

(i) ***In general.*** If, for any taxable year, there is a decrease in investments in export trade assets under section 970(b) and paragraph (c)(1) of § 1.970-1, determined on a consolidated basis, of export trade corporations includible in a consolidated chain of such corporations, each United States shareholder who has elected under paragraph (a) of this section to consolidate his interest in such chain of corporations shall include in his gross income, under section 951(a)(1)(A)(ii) and the regulations thereunder as an amount to which section 955 (as in effect before the enactment of the Tax Reduction Act of 1975) applies, his pro rata share of the amount of such consolidated decrease in investments but only to the extent such pro rata share does not exceed the lesser of the limitations provided by section 970(b) and paragraph (c)(2) of § 1.970-1 with respect to such shareholder determined on a consolidated basis. The consolidated decrease in investments and the consolidated limitations shall be determined by aggregating the applicable amounts determined under paragraph (c) of § 1.970-1 with respect to such shareholder's interest in each corporation includible in the consolidation.

(ii) ***Allocation of pro rata share of consolidated decrease in investments in export trade assets.*** For purposes of determining the amount referred to in paragraph (c)(2)(i)(*b*)(*3*) of § 1.970-1 for a subsequent taxable year, a United States shareholder's pro rata share of a consolidated decrease in investments determined under subdivision (i) of this subparagraph for the current taxable year shall be allocated to such shareholder's interest in each of the export trade corporations includible in the consolidation in that ratio which—

(*a*) The net amount determined under paragraph (c)(2)(i)(*b*) of § 1.970-1 with respect to such shareholder's interest in such corporation for all prior taxable years (whether or not a taxable year occurring during the period of consolidation) bears to

(*b*) The total of the net amounts determined under paragraph (c)(2)(i) (*b*) of § 1.970-1 with respect to such shareholder's interests in all export trade corporations includible in such consolidation for all prior taxable years (whether or not a taxable year occurring during the period of consolidation).

(iii) ***Illustration.*** The application of this subparagraph may be illustrated by the following example:

Example. (a) Domestic corporation M owns 60 percent of the only class of stock of controlled foreign corporation A, which, in turn, owns 100 percent of the only class of stock of controlled foreign corporation B. All corporations use the calendar year as a taxable year, and corporations A and B are export trade corporations throughout the period here involved. Corporation M elects to consolidate corporations A and B for the entire period here involved.
(b) The following amounts are applicable to corporations A and B for 1964:

	A (1)	B (2)	Consolidated (3)
(i) Consolidated decrease in investments in export trade assets (determined before application of § 1.970-1(c)(2))			$100
(ii) M Corporation's pro rata share of consolidated decrease (60%)			60
(iii) M Corporation's pro rata share of earnings and profits for 1963 and 1964 (§ 1.970-1(c) (2)(i)(*a*)	$120	$90	210
(iv) M Corporation's pro rata share of net amount determined under § 1.970-1(c)(2)(i)(*b*) for 1963	180	60	240
(v) Amount includible in M Corporation's gross income for 1964 (smallest of items (ii), (iii), and (iv) in column (3))			60

Corporation M must include $60 in its gross income for 1964 under section 951(a)(1)(A)(ii) by reason of the application of section 970(b) as its pro rata share of the consolidated decrease in investments in export trade assets; and, for purposes of determining the amount under paragraph (c)(2)(i)(*b*)(3) of § 1.970-1 with respect to M Corporation's interest in each of corporations A and B for a subsequent taxable year, such consolidated decrease for 1964 is allocated as follows: to M Corporation's interest in A Corporation, $45 ($60 times $180/$240); and to its interest in B Corporation, $15 ($60 times $60/$240).

(c) The following amounts are applicable to corporations A and B for 1965:

	A(1)	B(2)	Consolidated (3)
(i) Consolidated decrease in investments in export trade assets (determined before application of § 1.970-1(c)(2))			$150
(ii) M Corporation's pro rata share of consolidated decrease (60%)			90
(iii) M Corporation's pro rata share of earnings and profits (and deficits in earnings and profits) for 1963, 1964, and 1965 (§ 1.970-1(c)(2)(i)(*a*))	$100	($20)	80
(iv) M Corporation's pro rata share of the net amount determined under § 1.970-1(c)(2)(i)(*b*) for 1963 and 1964			

	A(1)	B(2)	Consolidated (3)
($180−$45)	135		
($60−$15)		45	
Total			180
(v) Amount includible in M Corporation's gross income for 1965 (smallest of items (ii), (iii), and (iv) in column (3)).			80

Corporation M must include $80 in its gross income for 1965 under section 951(a)(1)(A)(ii) by reason of the application of section 970(b) as its pro rata share of the consolidated decrease in investments in export trade assets; and, for purposes of determining the amount under paragraph (c)(2)(i)(*b*)(3) of § 1.970-1 with respect to M Corporation's interest in each of corporations A and B for a subsequent taxable year, such consolidated decrease for 1965 is allocated as follows: to M Corporation's interest in A Corporation, $60 ($80 times $135/$180); and to its interest in B Corporation, $20 ($80 times $45/$180).

(d) The following amounts are applicable to corporations A and B for 1966:

	A(1)	B(2)	Consolidated (3)
(i) Consolidated decrease in investments in export trade assets (determined before application of § 1.970-1(c)(2))			$200
(ii) M Corporation's pro rata share of consolidated decrease (60%)			120
(iii) M Corporation's pro rata share of earnings and profits (and deficits in earnings and profits) for 1963, 1964, 1965, and 1966 (§ 1.970-1(c)(2)(i)(*a*))	$120	$50	170
(iv) M Corporation's pro rata share of the net amount determined under § 1.970-1(c)(2)(i)(b) for 1963, 1964, and 1965			
($180 minus [$45 + $60])	75		
($60−[$15 + $20])		25	
Total			100
(v) Amount includible in M Corporation's gross income for 1966 (smallest of items (ii), (iii), and (iv) in column (3))			100

Corporation M must include $100 in its gross income for 1966 under section 951(a)(1)(A)(ii) by reason of the application of section 970(b) as its pro rata share of the consolidated decrease in investments in export trade assets; and, for purposes of determining the amount under paragraph (c)(2)(i)(b)(3) of §

> 1.970-1 with respect to M Corporation's interest in each of corporations A and B for a subsequent taxable year, such consolidated decrease for 1966 is allocated as follows: to M Corporation's interest in A Corporation, $75 ($100 times $75/$100); and to its interest in B Corporation, $25 ($100 times $25/$100).

[T.D. 6754, 29 FR 12714, Sept. 9, 1964, as amended by T.D. 7893, 48 FR 22512, May 19, 1983]

§ 1.981-0 Repeal of section 981; effective dates.

The provisions of section 981 are not effective for taxable years beginning after December 31, 1976. For the treatment of the community income of aliens and their spouses for taxable years beginning after December 31, 1976, see section 879 and the regulations thereunder.

[T.D. 7670, 45 FR 6929, Jan. 31, 1980]

§ 1.981-1 Foreign law community income for taxable years beginning after December 31, 1966, and before January 1, 1977.

(a) ***Election for special treatment*** —

(1) ***In general.*** An individual citizen of the United States who meets the requirements of section 981(a)(1) and subparagraph (2) of this paragraph for any open taxable year beginning after December 31, 1966, and before January 1, 1977, may make a binding election with his nonresident alien spouse to have section 981(b) and paragraph (b) of this section apply to their income for such year which is treated as community income under the applicable community property laws of a foreign country or countries. Generally, the community property laws of a foreign country operate upon land situated within its jurisdiction and upon personal property owned by spouses domiciled therein. If the election is made for any taxable year, it shall also apply for all subsequent open taxable years of such citizen and his nonresident alien spouse for which all the requirements of section 981(a)(1) and subparagraph (2) of this paragraph are met, unless the Director of International Operations consents, in accordance with paragraph (c)(2) of this section, to a termination of the election. An election under section 981(a) and this section has no effect for any taxable year beginning before January 1, 1967, for which a separate election, if made, must be made under section 981(c)(1) and § 1.981-2. For the definition of “open taxable year” see section 981(e)(2) and paragraph (a) of § 1.981-3. If the citizen and his nonresident alien spouse have different taxable years, see paragraph (c) of § 1.981-3. If one of the spouses is deceased, see paragraph (d) of § 1.981-3.

(2) ***Requirements to be met.*** In order for a U.S. citizen and his nonresident alien spouse to make an election under section 981(a) and this section for any taxable year and in order for the election to apply for any subsequent taxable year it is required under section 981(a)(1) that, for each such taxable year, such citizen be

(i) a citizen of the United States,

(ii) a bona fide resident of a foreign country or countries during the entire taxable year, and

(iii) married at the close of the taxable year to an individual who is (*a*) a nonresident alien during the entire taxable year and (*b*), in the case of any such subsequent taxable year, the same nonresident alien individual to whom the citizen was married at the close of the earliest of such taxable years. If either spouse dies during a taxable year, the taxable year of the surviving

spouse shall be treated, solely for purposes of making the determination under subdivision (iii) of this subparagraph, as ending on the date of such death. A citizen of the United States shall be considered as not married at the close of his taxable year if he is legally separated from his spouse under a decree of divorce or of separate maintenance. However, the mere fact that spouses have not lived together during the course of the taxable year shall not cause them to be considered as not married at the close of the taxable year. A husband and wife who are separated under an interlocutory decree of divorce retain the relationship of husband and wife until the decree becomes final.

(3) ***Determination of residence.*** The principles of paragraphs (a)(2) and (b)(7) of § 1.911-1 (26 CFR 1.911-1 (1978)) shall apply in order to determine for purposes of this paragraph whether a U.S. citizen is a *bona fide* resident of a foreign country or countries during the entire taxable year. The principles of §§ 1.871.2 through 1.871-5 shall apply in order to determine whether the alien spouse of a U.S. citizen is a nonresident during the entire taxable year.

(4) ***Manner of electing.*** The election under section 981(a) and this section shall be made in accordance with the applicable rules set forth in paragraph (c) of this section.

(b) ***Treatment of community income*** —

(1) ***In general.*** Community income for any taxable year to which an election under section 981(a) and this section applies, and the deductions properly allocable to such income, shall be divided between the electing U.S. citizen and nonresident alien spouses in accordance with the rules set forth in section 981(b) and subparagraphs (2) through (6) of this paragraph. Community income for this purpose means all gross income, whether derived from sources within or without the United States, which is treated as community income of the spouses under the community property laws of the foreign country having jurisdiction to determine the legal ownership of the income. A spouse has ownership of the income for this purpose if under the applicable foreign law he has a proprietary vested interest in the income.

(2) ***Earned income.*** Wages, salaries, or professional fees, and other amounts received as compensation for personal services actually performed, which are community income for the taxable year, shall be treated as the income of the spouse who actually performed the personal services. This subparagraph does not apply, however, to community income

(i) derived from any trade or business carried on by the husband or the wife,

(ii) attributable to a spouse's distributive share of the income of a partnership to which subparagraph (4) of this paragraph applies,

(iii) consisting of compensation for personal services rendered to a corporation which represents a distribution of the earnings and profits of the corporation rather than a reasonable allowance as compensation for the personal services actually performed, or

(iv) derived from property which is acquired as consideration for personal services performed.

(3) ***Trade or business income.*** If any income derived from a trade or business carried on by the husband or wife is community income for the taxable year, all of the gross income, and the deductions attributable to such income, shall be treated as the gross income and deductions of the husband unless the wife exercises substantially all of the management and control of the trade or business, in which case all of the gross income and deductions shall be treated as the gross income and deductions of the wife. This subparagraph does not apply to any income derived from a trade or

business carried on by a partnership of which both or one of the spouses is a member. For purposes of this subparagraph, income derived from a trade or business includes any income derived from a trade or business in which both personal services and capital are material income producing factors. The term “management and control” means management and control in fact, not the management and control imputed to the husband under the community property laws of a foreign country. For example, a wife who operates a beauty parlor without any appreciable collaboration on the part of a husband is considered as having substantially all of the management and control of the business despite the provisions of any community property laws of a foreign country vesting in the husband the right of management and control of community property; and the income and deductions attributable to the operation of the beauty parlor are considered the income and deductions of the wife.

(4) ***Partnership income.*** If any portion of a spouse's distributive share of the income of a partnership of which such spouse is a member is community income for the taxable year, all of that distributive share shall be treated as the income of that spouse and shall not be taken into account in determining the income of the other spouse. If both spouses are members of the same partnership, the distributive share of the income of each spouse which is community income shall be treated as the income of that spouse. A spouse's distributive share of such income of a partnership shall be determined as provided in section 704, and the regulations thereunder.

(5) ***Income from separate property.*** Any community income for the taxable year, other than income described in section 981(b)(1) or (2) and subparagraph (2), (3), or (4) of this paragraph, which is derived from the separate property of one of the spouses shall be treated as the income of that spouse. The determination of what property is separate property for this purpose shall be made in accordance with the laws of the foreign country which, in accordance with subparagraph (1) of this paragraph, has jurisdiction to determine that the income from such property is community income.

(6) ***Other community income.*** Any community income for the taxable year, other than income described in section 981(b)(1), (2), or (3), and subparagraph (2), (3), (4), or (5) of this paragraph, shall be treated as the income of that spouse who has a proprietary vested interest in that income under the laws of the foreign country which, in accordance with subparagraph (1) of this paragraph, has jurisdiction to determine that such income is community income. Thus, for example, this subparagraph applies to community income not described in subparagraph (2), (3), (4), or (5) of this paragraph which consists of dividends, interest, rents, royalties, or gains, from community property or of the earnings of unemancipated minor children.

(7) ***Illustrations.*** The application of this paragraph may be illustrated by the following examples:

Example 1. H, a nonresident alien individual and W, a U.S. citizen, each of whose taxable years is the calendar year, were married throughout 1967. H and W were residents of, and domiciled in, foreign country Z during the entire taxable year. During 1967, H earned $10,000 from the performance of personal services as an employee. H also received $500 in dividend income from stock which under the community property laws of country Z is considered to be the separate property of H. W had no separate income for 1967. Under the community property laws of country Z all income earned by either spouse is considered to be community income, and one-half of such income is considered to belong to the other spouse. In addition, such laws of country Z provide that all income derived from property held separately by either spouse is to be treated as community income and treated as belonging one-half to each spouse. Thus, under the community property laws of country Z, H and W are both considered to have realized income of $5,250 during 1967, even though such laws

recognize the stock as the separate property of H. If the election under this section is in effect for 1967, under the rules of subparagraphs (2) and (5) of this paragraph all of the income of $10,500 derived during 1967 shall be treated, for U.S. income tax purposes, as the income of H.

Example 2. The facts are the same as in example 1 except that H is the sole proprietor of a retail merchandising company and such company has a $10,000 profit during 1967. W exercises no management and control over the business. In addition, H is a partner in a wholesale distributing company, and his distributive share of the partnership profit is $5,000. Both of these amounts of income are treated as community income under the community property laws of country Z, and under such laws both H and W are treated as realizing $7,500 of such income. If the election under this section is in effect for 1967, under the rule of subparagraphs (3) and (4) of this paragraph all $15,000 of such income shall be treated as the income of H for U.S. income tax purposes.

Example 3. The facts are the same as in example 1 except that H also received $1,000 in dividends on stock held separately in his name. Under the community property laws of country Z the stock is considered to be community property; and the dividends, to be community income, one-half of such income being treated as the income of each spouse. If the election under this section is in effect for 1967, under the rule of subparagraph (6) of this paragraph, $500 of the dividend income shall be treated, for U.S. income tax purposes, as the income of each spouse.

(c) ***Time and manner of making or terminating an election*** —

(1) ***In general.*** A citizen of the United States and his nonresident alien spouse shall, for the first taxable year beginning after December 31, 1966, for which an election under section 981(a) and this section is to apply, make the election by filing a return, an amended return, or a claim for refund, whichever is proper, for such taxable year and attaching thereto a statement that the election is being made and that the requirements of paragraph (a)(2) of this section are met for such taxable year. The statement must show the name, address, and account number, if any, of each spouse, the name and address of the executor, administrator, or other person making the election for a deceased spouse, the taxable year to which the election applies, and the name of the foreign country or countries having jurisdiction to determine the ownership of any income being treated in accordance with section 981(b) and paragraph (b) of this section. The statement must be signed by both persons making the election. An election under this section may be made only for a taxable year which, on the date of the election, as defined in paragraph (b) of § 1.981-3, is open within the meaning of section 981(e)(2) and paragraph (a) of § 1.981-3.

(2) ***Termination only with consent of Director of International Operations*** —

(i) ***In general.*** An election under this section for any taxable year is binding and may not be revoked. The election shall also remain in effect for all subsequent taxable years of the spouses for which the requirements of paragraph (a)(2) of this section are met and which on the date of the election are open, within the meaning of paragraph (a) of § 1.981-3, unless the election is terminated for any such subsequent taxable year or years in accordance with subdivision (ii) of this subparagraph. Any return, amended return, or claim for refund in respect of any such subsequent taxable year for which the election is in effect shall have attached thereto a copy of the statement filed in accordance with subparagraph (1) of this paragraph and an additional signed statement that for such subsequent taxable year the requirements of paragraph (a)(2) of this section are met.

(ii) ***Written request to terminate required.*** A request to terminate an election under this section for a subsequent taxable year or years shall be made in writing by the persons who made the election and shall be addressed to the Director of International Operations, Internal Revenue Service, Washington, DC 20225. The request must include the name, address, and account number, if any, of each spouse and must be signed by the persons making the request. It must specify the taxable year or years for which the termination is to be effective and the grounds which justify the termination. The request shall be filed not later than 90 days before the close of the period for assessing a deficiency against the U.S. citizen for the earliest taxable year of such citizen for which the termination is to be effective. The Director of International Operations may require such other information as may be necessary in order to determine whether the termination will be permitted. A copy of the consent by the Director of International Operations to terminate must be attached to an amended income tax return for each taxable year for which the termination is effective and for which a return has previously been filed.

(Secs. 913(m) (92 Stat. 3106; 26 U.S.C. 913(m)), and 7805 (68A Stat. 917; 26 U.S.C. 7805), Internal Revenue Code of 1954)

[T.D. 7330, 39 FR 38372, Oct. 31, 1974, as amended by T.D. 7670, 45 FR 6929, Jan. 31, 1980; T.D. 7736, 45 FR 76143, Nov. 18, 1980]

§ 1.981-2 Foreign law community income for taxable years beginning before January 1, 1967.

(a) ***Election for special treatment*** —

(1) ***In general.*** For all open taxable years beginning before January 1, 1967, for which an individual citizen of the United States meets the requirements of subparagraphs (A) and (C) of section 981(a)(1) and subparagraph (2) of this paragraph, such citizen and his nonresident alien spouse may make a joint election to have section 981(c)(2) and paragraph (b) of this section apply to their income which is treated as community income under the applicable community property laws of a foreign country or countries. However, if the conditions prescribed by section 981(d)(3) and subparagraph (3) of this paragraph are met, the nonresident alien spouse is not required to join in the election and such citizen may make a separate election to have section 981(c)(2) and paragraph (b) of this section apply to such income for such taxable years. An election under section 981(c)(1) and this section shall apply to every open taxable year of such citizen and his nonresident alien spouse beginning before January 1, 1967, for which all the requirements of subparagraphs (A) and (C) of section 981(a)(1) and subparagraph (2) of this paragraph are met. It is immaterial whether such open taxable year is a taxable year subject to the provisions of the 1954 Code, the 1939 Code, or any other internal revenue law in effect before the 1939 Code. An election under section 981(c)(1) and this section has no effect for any taxable year beginning after December 31, 1966. For the definition of “open taxable year” see section 981(e)(2) and paragraph (a) of § 1.981-3. If the citizen and his nonresident alien spouse have different taxable years, see paragraph (c) of § 1.981-3. If one of the spouses is deceased, see paragraph (d) of § 1.981-3. An election under section 981(c)(1) and this section is binding and may not be revoked.

(2) ***Requirements to be met.*** In order for the citizen of the United States to make an election under this section, whether required to be made jointly with his nonresident alien spouse or permitted to be made separately, it is required under section 981(c)(1) that, for each taxable year to which the election applies, the citizen making the election be

(i) a citizen of the United States and

(ii) married at the close of the taxable year to an individual who is (*a*) a nonresident alien during the entire taxable year and (*b*), in the case of any such taxable years subsequent to the first, the same nonresident alien individual to whom the citizen was married at the close of such first taxable year. The provisions of paragraph (a)(2) of § 1.981-1 apply to determine whether a U.S. citizen making an election under section 981(c)(1) and this section is married at the close of a taxable year to an individual who is a nonresident alien during the entire taxable year.

(3) ***Cases where joint election is not required.*** A nonresident alien spouse is not required to join in an election under section 981(c)(1) and this section if the Director of International Operations determines in accordance with paragraph (c)(4) of this section—

(i) That an election under section 981(c)(1) and this section would not affect the liability for Federal income tax of the nonresident alien spouse for any taxable year, whether beginning on, before, or after January 1, 1967, or

(ii) That the effect of the election on the liability of the nonresident alien spouse for Federal income tax for any such taxable year cannot be ascertained and that to deny the election to the U.S. citizen spouse would be inequitable and cause undue hardship to the U.S. citizen.

If in accordance with this subparagraph the nonresident alien spouse is not required to join in the election by the U.S. citizen, the provisions of section 981(d)(2) and paragraph (e) of § 1.981-3 shall not apply so as to extend the period for assessing deficiencies or filing a claim for credit or refund for any taxable year of the nonresident alien spouse.

(4) ***Manner of electing.*** The election under section 981(c)(1) and this section shall be made in accordance with the applicable rules set forth in paragraph (c) of this section.

(b) ***Treatment of community income*** —

(1) ***In general.*** Community income, as defined in paragraph (b)(1) of § 1.981-1, for any taxable year beginning before January 1, 1967, to which an election under section 981(c)(1) and this section applies, and the deductions properly allocable to such income, shall be divided between the U.S. citizen and his nonresident alien spouse in accordance with the rules set forth in section 981(c)(2) and subparagraphs (2) and (3) of this paragraph. The income shall be divided in such manner even though the nonresident alien spouse is not required, in accordance with paragraph (a)(3) of this section, to join in the election by the U.S. citizen.

(2) ***Earned income, business income, partnership income, and income from separate property.*** All community income for any taxable year to which this paragraph applies which is treated as the income of one of the spouses in accordance with section 981(b)(1), (2), or (3) and paragraph (b)(2), (3), (4), or (5) of § 1.981-1 shall be treated as the income of that spouse for purposes of this paragraph.

(3) ***Other community income.*** All community income for any taxable year to which this paragraph applies, other than income described in subparagraph (2) of this paragraph, shall be treated as the income of the spouse who, for such taxable year, has a greater amount of gross income than the other spouse, determined by adding to the amount of gross income which is treated as the gross income of that spouse in accordance with subparagraph (2) of this paragraph the amount of the gross income for the taxable year which is treated as the separate income of that spouse under the community property laws of the foreign country having jurisdiction to determine the legal ownership of the income. If either spouse dies during a taxable year, the taxable year of the surviving spouse shall be treated as ending on the date of such death for the purpose of determining which spouse has the

greater amount of gross income for such taxable year. Moreover, if the U.S. citizen and his nonresident alien spouse do not have the same taxable year, as defined in section 441(b) and the regulations thereunder, the periods for which the amounts of gross income are to be compared under this subparagraph are

(i) the taxable year of the citizen and

(ii) that period falling within the consecutive taxable years of the nonresident alien spouse which coincides with the period covered by such taxable year of the citizen. See paragraph (c) of § 1.981-3.

(c) *Time and manner of making election* —

(1) ***In general.*** A citizen of the United States and his nonresident alien spouse or, if subparagraph (4) of this paragraph applies, such citizen alone may make an election under section 981(c)(1) and this section at any time on or after November 13, 1966, for each and every taxable year beginning before January 1, 1967, which on the date of the election, as defined in paragraph (b) of § 1.981-3, is open within the meaning of section 981(e)(2) and paragraph (a) of § 1.981-3. The election shall be made by filing a return, an amended return, or a claim for refund, whichever is proper, for each taxable year to which the election applies and attaching thereto a statement that the election is being made and that the requirements of paragraph (a)(2) of this section are met for each such taxable year. The statement must also show the information required by subparagraph (2) of this paragraph and must, where applicable, be signed by both persons making the election.

(2) ***Information required.*** The statement described in subparagraph (1) of this paragraph must show—

(i) The name, address, and account number, if any, of each spouse,

(ii) The name and address of the executor, administrator, or other person making the election for a deceased spouse,

(iii) The taxable years to which the election applies,

(iv) The office of the district director, or the service center, where the return or returns, if any, for such taxable year or years were filed,

(v) The dates on which such return or returns, if any, were filed and on which the tax for such taxable year or years was paid, if the tax has been paid, and

(vi) The name of the foreign country or countries having jurisdiction to determine the ownership of any income being treated in accordance with section 981(c)(2) and paragraph (b) of this section.

(3) ***Place for filing.*** Any return, amended return, or claim for refund filed under subparagraph (1) of this paragraph in respect of any taxable year shall be filed with the Director of International Operations, Internal Revenue Service, Washington, DC 20225. (See § 1.6091-3.)

(4) ***Determination that joint election is not required.*** A U.S. citizen spouse entitled to make an election under section 981(c)(1) and this section for open taxable years beginning before January 1, 1967, may apply to the Director of International Operations for a determination under section 981(d)(3) that the nonresident alien spouse is not required to join in the election by such citizen. This application shall be made by filing with the Director of International Operations, Internal Revenue Service, Washington, DC 20225, a statement setting forth the same information required by subparagraph (2) of this paragraph and such other information as is required by the Director of

International Operations to justify a claim that the requirements of section 981(d)(3) and paragraph (a)(3) of this section are met. The Director of International Operations shall notify the U.S. citizen by letter of his determination with respect to the application. If the determination is that the nonresident alien spouse is not required to join in the election, a copy of the letter of determination shall be attached to each return, amended return, or claim for refund, to be filed pursuant to subparagraph (1) of this paragraph.

[T.D. 7330, 39 FR 38373, Oct. 31, 1974]

§ 1.981-3 Definitions and other special rules.

(a) ***Open taxable years.***

(1) For purposes of paragraph (a) of § 1.981-1, and paragraph (a) of § 1.981-2, a taxable year of the U.S. citizen, and the taxable year or years of his nonresident alien spouse ending or beginning within such taxable year of such citizen, shall be treated as open if the period prescribed by section 6501(a) (or section 6501(c)(4) if the period is extended by agreement) for assessing a deficiency against the citizen for his taxable year has not expired before the date of the election, determined under paragraph (b) of this section. Thus, for example, a taxable year of a U.S. citizen beginning before January 1, 1967, is open for purposes of this subparagraph if, before the election under section 981(c)(1) and § 1.981-2, such citizen has never filed a return for such year and a return was required under section 6012 without reference to section 981. For example, if a U.S. citizen spouse on a calendar year basis who has never filed a return for 1960 decides in 1975 that he wishes to make the election under section 981(c)(1) and § 1.981-2 in order to avoid being subject to tax for 1960 on his share of the community income for that year, he may in 1975 elect the benefits of section 981(c)(2) by filing an election in accordance with paragraph (c) of § 1.981-2. In such case, a taxable year or years of the nonresident alien spouse of such citizen ending or beginning within 1960 shall be treated in 1975 as an open taxable year.

(2) Subparagraph (1) of this paragraph shall apply even though the period prescribed by section 6501 for assessing a deficiency against the nonresident alien spouse for his taxable year or years ending or beginning within the taxable year of the U.S. citizen has expired before the election is made.

(3) If either spouse dies during a taxable year to which an election under § 1.981-1 or § 1.981-2 applies, the taxable year of the decedent and the surviving spouse shall be determined under this paragraph without regard to section 981(e)(4), relating to death of spouse during the taxable year. See paragraph (a)(2) of § 1.443-1.

(4) For definition of the term “taxable year”, see section 441(b) and the regulations thereunder.

(b) ***Date of election.***

(1) For purposes of § 1.981-1 and this section the date of an election made under section 981(a) and § 1.981-1 is the date on which the return, amended return, or claim for refund required by paragraph (c)(1) of § 1.981-1 is filed.

(2) For purposes of § 1.981-2 and this section the date of an election made under section 981(c)(1) and § 1.981-2 is the date on which the returns, amended returns, or claims for refund, required by paragraph (c)(1) of § 1.981-2 are filed.

(3) For provisions treating timely mailing as timely filing, see section 7502 and the regulations thereunder.

(c) ***Spouses with different taxable years.*** If the U.S. citizen and his nonresident alien spouse do not have the same taxable year, as defined in section 441(b) and the regulations thereunder, the election under § 1.981-1 or § 1.981-2 shall apply to each taxable year of such citizen in respect of which the election is made and to that period falling within the consecutive taxable years of the nonresident alien spouse which coincides with the period covered by such taxable year of the citizen.

(d) ***Election on behalf of deceased spouse.*** Any election, statement, or request, required to be made under paragraph (c) of § 1.981-1, or paragraph (c) of § 1.981-2, by one of the spouses may, if such spouse is deceased, be made by the executor, administrator, or other person charged with the property of such deceased spouse.

(e) ***Extension of period of limitations on assessment or refund —***

(1) ***Assessment of deficiency.*** Except as provided in subparagraph (3) of this paragraph, if an election under section 981(a) and § 1.981-1, or under section 981(c)(1) and § 1.981-2, is properly made, the period within which a deficiency may be assessed for any taxable year to which the election applies shall, to the extent the deficiency is attributable to the application of such election, not expire before one year after the date of the election, determined under paragraph (b) of this section.

(2) ***Refund of tax.*** Except as provided in subparagraph (3) of this paragraph, if an election under section 981(a) and § 1.981-1, or under section 981(c)(1) and § 1.981-2, is properly made, the period within which a claim for credit or refund of an overpayment for any taxable year to which the election applies may be filed shall, to the extent the overpayment is attributable to the application of the election, not expire before one year after the date of the election, determined under paragraph (b) of this section.

(3) ***Exception in case of nonelecting alien.*** Subparagraphs (1) and (2) of this paragraph shall not apply to any taxable year of a nonresident alien spouse who, in accordance with paragraph (a)(3) of § 1.981-2, is not required to join in the election by the U.S. citizen spouse under section 981(c)(1) and § 1.981-2.

(f) ***Payment of interest for extension period.*** To the extent that an overpayment or deficiency for any taxable year is attributable to an election made under § 1.981-1 or § 1.981-2, no interest shall be allowed or paid for any period ending with the day before the date which is one year after the date of the election, determined under paragraph (b) of this section.

[T.D. 7330, 39 FR 38374, Oct. 31, 1974]

FOREIGN CURRENCY TRANSACTIONS

Source: T.D. 10016, 89 FR 100164, Dec. 11, 2024, unless otherwise noted.

§ 1.985-0 Outline of regulation.

This section lists the paragraphs contained in §§ 1.985-1 through 1.985-6.

§ 1.985-1 Functional currency.

(a) Applicability and effective date.

(b) Dollar functional currency.

(c) Functional currency of a QBU that is not required to use the dollar.

(d) Single functional currency for a foreign corporation.

(e) Translation of nonfunctional currency transactions.

(f) Examples.

§ 1.985-2 Election to use the United States dollar as the functional currency of a QBU.

(a) Background and scope.

(b) Eligible QBU.

(c) Time and manner for dollar election.

(d) Effect of dollar election.

§ 1.985-3 United States dollar approximate separate transactions method.

(a) Scope and effective date.

(b) Statement of method.

(c) Translation into United States dollars.

(d) Computation of DASTM gain or loss.

(e) Effect of DASTM gain or loss on gross income, taxable income, or earnings and profits.

§ 1.985-4 Method of accounting.

(a) Adoption or election.

(b) Condition for changing functional currencies.

(c) Relationship to certain other sections of the Code.

§ 1.985-5 Adjustments required upon change in functional currency.

(a) In general.

(b) Step 1—Taking into account exchange gain or loss on certain section 988 transactions.

(c) Step 2—Determining the new functional currency basis of property and the new functional currency amount of liabilities and any other relevant items.

(d) Step 3A—Additional adjustments that are necessary when a branch changes functional currency.

(e) Step 3B—Additional adjustments that are necessary when a taxpayer changes functional currency.

(f) Examples.

Section 1.985-6 Transition rules for a QBU that uses the dollar approximate separate transactions method for its first taxable year beginning in 1987.

(a) In general.

(b) Certain controlled foreign corporations.

(c) All other foreign corporations.

(d) Pre-1987 section 902 amounts.

(e) Net worth branch.

(f) Profit and loss branch.

[T.D. 8263, 54 FR 38653, Sept. 20, 1989, as amended by T.D. 8464, 58 FR 232, Jan. 5, 1993; T.D. 8556, 59 FR 37672, July 25, 1994]

§ 1.985-1 Functional currency.

(a) ***Applicability and effective date*** —

(1) ***Purpose and scope.*** These regulations provide guidance with respect to defining the functional currency of a taxpayer and each qualified business unit (QBU), as defined in section 989(a). Generally, a taxpayer and each QBU must make all determinations under subtitle A of the Code (relating to income taxes) in its respective functional currency. This section sets forth rules for determining when the functional currency is the United States dollar (dollar) or a currency other than the dollar. Section 1.985-2 provides an election to use the dollar as the functional currency for certain QBUs that absent the election would have a functional currency that is a hyperinflationary currency, and explains the effect of making the election. Section 1.985-3 sets forth the dollar approximate separate transactions method that certain QBUs must use to compute their income or loss or earnings and profits. Section 1.985-4 provides that the adoption of a functional currency is a method of accounting and sets forth conditions for a change in functional currency. Section 1.985-5 provides adjustments that are required to be made upon a change in functional currency. Finally, § 1.985-6 provides transition rules for a QBU that uses the dollar approximate separate transactions method for its first taxable year beginning after December 31, 1986.

(2) ***Effective date.*** These regulations apply to taxable years beginning after December 31, 1986. However, any taxpayer desiring to apply temporary Income Tax Regulations § 1.985-0T through § 1.985-4T in lieu of these regulations to all taxable years beginning after December 31, 1986, and on or before October 20, 1989 may (on a consistent basis) so choose. For the text of the temporary regulations, see 53 FR 20308 (1988).

(b) ***Dollar functional currency*** —

(1) ***In general.*** The dollar shall be the functional currency of a taxpayer or QBU described in paragraph (b)(1)(i) through (v) of this section regardless of the currency used in keeping its books and records (as defined in § 1.989(a)-1(d)). The dollar shall be the functional currency of—

(i) A taxpayer that is not a QBU (e.g., an individual);

(ii) A QBU that conducts its activities primarily in dollars. A QBU conducts its activities primarily in dollars if the currency of the economic environment in which the QBU conducts its activities is primarily the dollar. The facts and circumstances test set forth in paragraph (c)(2) of this section shall apply in making this determination;

(iii) Except as otherwise provided by ruling or administrative pronouncement, a QBU that has the United States, or any possession or territory of the United States where the dollar is the standard currency, as its residence (as defined in section 988(a)(3)(B));

(iv) A QBU that does not keep books and records in the currency of any economic environment in which a significant part of its activities is conducted. Whether a QBU keeps such books and records is determined in accordance with paragraph (c)(3) of this section; or

(v) A QBU that produces income or loss that is, or is treated as, effectively connected with the conduct of a trade or business within the United States.

(2) ***QBUs operating in a hyperinflationary environment*** —

(i) ***Taxable years beginning on or before August 24, 1994.*** For taxable years beginning on or before August 24, 1994, see § 1.985-2 with respect to a QBU that elects to use, or is otherwise required to use, the dollar as its functional currency.

(ii) ***Taxable years beginning after August 24, 1994*** —

(A) ***In general.*** For taxable years beginning after August 24, 1994, except as otherwise provided in paragraph (b)(2)(ii)(B) of this section, any QBU that otherwise would be required to use a hyperinflationary currency as its functional currency must use the dollar as its functional currency and compute income or loss or earnings and profits under the rules of § 1.985-3.

(B) ***Exceptions*** —

(*1*) ***Certain QBU branches.*** The functional currency of a QBU that otherwise would be required to use a hyperinflationary currency as its functional currency and that is a branch of a foreign corporation having a non-dollar functional currency that is not hyperinflationary shall be the functional currency of the foreign corporation. Such QBU's income or loss or earnings and profits shall be determined under § 1.985-3 by substituting the functional currency of the foreign corporation for the dollar.

(2) ***Corporation that is not a controlled foreign corporation.*** A foreign corporation (or its QBU branch) operating in a hyperinflationary environment is not required to use the dollar as its functional currency pursuant to paragraph (b)(2)(ii)(A) of this section if that foreign corporation is not a controlled foreign corporation as defined in section 957 or 953(c)(1)(B). However, a noncontrolled section 902 corporation, as defined in section 904(d)(2)(E), may elect to use the dollar (or, if appropriate, the currency specified in paragraph (b)(2)(ii)(B)(*1*) of this section) as its (or its QBU branch's) functional currency under the procedures set forth in § 1.985-2(c)(3).

(C) ***Change in functional currency*** —

(*1*) ***In general.*** If a QBU is required to change its functional currency to the dollar under paragraph (b)(2)(ii)(A) of this section, or chooses or is required to change its functional currency to the dollar for any open taxable year (and all subsequent taxable years) under § 1.985-3(a)(2)(ii), the change is considered to be made with the consent of the Commissioner for purposes of § 1.985-4. A QBU changing functional currency must make adjustments described in § 1.985-7 if the year of change (as defined in § 1.481-1(a)(1)) begins after 1987, or the adjustments described in § 1.985-6 if the year of change begins in 1987. No adjustments under section 481 are required solely because of a change in functional currency described in this paragraph (b)(2)(ii)(C).

(2) ***Effective date.*** This paragraph (b)(2)(ii)(C) applies to taxable years beginning after April 6, 1998. However, a taxpayer may choose to apply this paragraph (b)(2)(ii)(C) to all open years after December 31, 1986, provided each person, and each QBU branch of a person, that is related (within the meaning of § 1.985-2(d)(3)) also applies to this paragraph (b)(2)(ii)(C).

(D) ***Hyperinflationary currency.*** For purposes of sections 985 through 989, the term hyperinflationary currency means the currency of a country in which there is cumulative inflation during the base period of at least 100 percent as determined by reference to the consumer price index of the country listed in the monthly issues of the “International Financial Statistics” or a successor publication of the International Monetary Fund. If a country's currency is not listed in the monthly issues of “International Financial Statistics,” a QBU may use any other reasonable method consistently applied for determining the country's consumer price index. Base period means, with respect to any taxable year, the thirty-six calendar months immediately preceding the first day of the current calendar year. For this purpose, the cumulative inflation rate for the base period is based on compounded inflation rates. Thus, if for 1991, 1992, and 1993, a country's annual inflation rates are 29 percent, 25 percent, and 30 percent, respectively, the cumulative inflation rate for the three-year base period is 110 percent [((1.29 × 1.25 × 1.3)−1.0 × 1.10) × 100 = 110%] and the currency of the country for the QBU's 1994 year is considered hyperinflationary. In making the determination whether a currency is hyperinflationary, the determination for purposes of United States generally accepted accounting principles may be used for income tax purposes provided the determination is based on criteria that is substantially similar to the rules previously set forth in this paragraph (b)(2)(ii)(D), the method of determination is applied consistently from year to year, and the same method is applied to all related persons as defined in § 1.985-3(e)(2)(vi).

(E) ***Change in functional currency when currency ceases to be hyperinflationary*** —

(1) ***In general.*** A QBU that has been required to use the dollar as its functional currency under paragraph (b)(2) of this section, or has elected to use the dollar as its functional currency under paragraph (b)(2)(ii)(B)(2) of this section or § 1.985-2, must change its functional currency as of the first day of the first taxable year that follows three consecutive taxable years in which the currency of its economic environment, determined under paragraph (c)(2) of this section, is not a hyperinflationary currency. The functional currency of the QBU for such year shall be determined in accordance with paragraph (c) of this section. For purposes of § 1.985-4, the change is considered to be made with the consent of the Commissioner. See § 1.985-5 for adjustments that are required upon a change in functional currency.

(2) ***Effective Date.*** This paragraph (b)(2)(ii)(E) of this section applies to taxable years beginning after April 6, 1998.

(c) ***Functional currency of a QBU that is not required to use the dollar*** —

(1) ***General rule.*** The functional currency of a QBU that is not required to use the dollar under paragraph (b) of this section shall be the currency of the economic environment in which a significant part of the QBU's activities is conducted, if the QBU keeps, or is presumed under paragraph (c)(3) of this section to keep, its books and records in such currency.

(2) ***Economic environment.*** For purposes of section 985 and the regulations thereunder, the economic environment in which a significant part of a QBU's activities is conducted shall be determined by taking into account all the facts and circumstances.

(i) ***Facts and circumstances.*** The facts and circumstances that are considered in determining the economic environment in which a significant part of a QBU's activities is conducted include, but are not limited to, the following:

(A) The currency of the country in which the QBU is a resident as determined under section 988(a)(3)(B);

(B) The currencies of the QBU's cash flows;

(C) The currencies in which the QBU generates revenues and incurs expenses;

(D) The currencies in which the QBU borrows and lends;

(E) The currencies of the QBU's sales markets;

(F) The currencies in which pricing and other financial decisions are made;

(G) The duration of the QBU's business operations; and

(H) The significance and/or volume of the QBU's independent activities.

(ii) ***Rate of inflation.*** The rate of inflation (regardless of how it is determined) shall not be a factor used to determine a QBU's economic environment.

(iii) ***Consistency.*** A taxpayer must consistently apply the facts and circumstances test set forth in this paragraph (c)(2) in evaluating the economic environment of its QBUs, *e.g.,* its branches, that engage in the same or similar trades or businesses.

(3) ***Books and records presumption.*** A QBU shall be presumed to keep books and records in the currency of the economic environment in which a significant part of its activities are conducted. The presumption may be overcome only if the QBU can demonstrate to the satisfaction of the district director that a substantial nontax purpose exists for not keeping any books and records in such currency. A taxpayer may not use this presumption affirmatively in determining a QBU's functional currency.

(4) ***Multiple currencies.*** If a QBU has more than one currency that satisfies the requirements of paragraph (c)(1) of this section, the QBU may choose any such currency as its functional currency.

(5) ***Relationship of United States accounting principles.*** In making the functional currency determination under this paragraph (c), the currency of the QBU for purposes of United States generally accepted accounting principles (GAAP) will ordinarily be accepted as the functional currency of the QBU for income tax purposes, provided that the GAAP determination is based on facts and circumstances substantially similar to those set forth in paragraph (c)(2) of this section.

(6) ***Effect of changed circumstances.*** Regardless of any change in circumstances, a QBU may change its functional currency determined under this paragraph (c) only if the QBU complies with § 1.985-4 or the Commissioner's consent is considered to have been granted under § 1.985-2(d)(4) or § 1.985-3(a)(2)(ii). For special rules relating to the conversion to the euro, see § 1.985-8.

(d) ***Single functional currency for a foreign corporation*** —

(1) ***General rule.*** This paragraph (d) applies to a foreign corporation that has two or more QBUs that do not have the same functional currency. The foreign corporation shall be treated as having a single functional currency for the corporation as a whole that is different from the functional currency of one or more of its QBUs. The determination of a foreign corporation's functional currency shall be made by first applying paragraph (d)(1)(i) and then paragraph (d)(l)(ii) of this section.

(i) ***Step 1.*** Each QBU of the foreign corporation determines its functional currency in accordance with the rules set forth in paragraphs (b) and (c) of this section and § 1.985-2.

(ii) ***Step 2.*** The foreign corporation determines its functional currency applying the principles of paragraphs (b) and (c) of this section to the corporation's activities as a whole. Thus, if a foreign corporation has two branches, the corporation shall determine its functional currency by applying the principles of paragraphs (b) and (c) of this section to the combined activities of the corporation and the branches. For purposes of this paragraph (d)(1), if a QBU of a foreign corporation has the dollar as its functional currency under paragraph (b)(2) of this section, the QBU's activities shall be considered dollar activities of the corporation.

(2) ***Translation of income or loss of QBUs having different functional currencies than the foreign corporation as a whole.*** Where the functional currency of a foreign corporation as a whole differs from the functional currency of one or more of its QBUs, each such QBU shall determine the amount of its income or loss or earnings and profits (or deficit in earnings and profits) in its functional currency under the principles of section 987 (relating to branch transactions). The amount of income or loss or earnings and profits (or deficit in earnings and profits) of each QBU in its functional currency shall then be translated into the foreign corporation's functional currency using the appropriate exchange rate as defined in section 989(b)(4) for purposes of determining the corporation's income or loss or earnings and profits (or deficit in earnings and profits).

(e) ***Translation of nonfunctional currency transactions.*** Except for a QBU using the dollar approximate separate transactions method described in § 1.985-3, *see* section 988 and the regulations thereunder for the treatment of nonfunctional currency transactions.

(f) ***Examples.*** The provisions of this section are illustrated by the following examples:

(1) ***Example 1.*** P, a domestic corporation, operates exclusively through foreign branch X in Country A. X is a QBU within the meaning of section 989(a) and its residence is Country A as determined under section 988 (a)(3)(B). The currency of Country A is the LC. All of X's purchases, sales, and expenses are in the LC. The laws of A require X to keep books and records in the LC. It is determined that the LC is the currency of X under United States generally accepted accounting principles. This determination is based on facts and circumstances substantially similar to those set forth in paragraph (c)(2) of this section. Under these facts, while the functional currency of P is the dollar since its residence is the United States, the functional currency of X is the LC.

(2) ***Example 2.*** P, a publicly-held domestic regulated investment company (as defined under section 851), operates exclusively through foreign branch B in Country R. B is a QBU within the meaning of section 989(a) and its residence is Country R as determined under section 988(a)(3)(B). The currency of Country R is the LC. B's principal activities consist of purchasing and selling stock and securities of Country R companies and securities issued by Country R. It is determined that the dollar is the currency of B under United States generally accepted accounting principles. This determination is not based on facts and circumstances substantially similar to those set forth in paragraph (c)(2) of this section. Under these facts, while the functional currency of P is the dollar since its residence is the United States, B may choose the LC as its functional currency because it has significant activities in the LC provided it keeps books and records in the LC. The fact that the dollar is the currency of B under generally accepted accounting principles is irrelevant for purposes of determining B's functional currency because the GAAP determination was not based on factors similar to those set forth in paragraph (c)(2) of this section.

(3) ***Example 3.*** P, a domestic bank, operates through foreign branch X in Country R. X is a QBU within the meaning of section 989(a) and its residence is Country R as determined under section 988(a)(3)(B). The currency of Country R is the LC. The laws of R require X to keep books and records in the LC. The branch customarily loans dollars and LCs. In the case of its LC loans, X ordinarily fixes the terms of the loans by reference to a contemporary London Inter-Bank Offered Rate (LIBOR) on dollar deposits. For instance, the interest on the amount of the outstanding LC loan principal might equal LIBOR plus 2 percent and the amount of the outstanding LC loan principal would be adjusted to reflect changes in the dollar value of the LC. X is primarily funded with dollar-denominated funds borrowed from related and unrelated parties. X's only LC activities are paying local taxes, employee wages, and local expenses such as rent and electricity. Under these facts, X's activities are primarily conducted in dollars. Thus, although X keeps its books and records in LCs, X's functional currency is the dollar.

(4) ***Example 4.*** S, a foreign corporation organized in Country U, is wholly-owned by P, a domestic corporation. The currency of Country U is the LC. S's sole function is acting as a financing vehicle for P and domestic corporations that are affiliated with P. All borrowing and lending transactions between S and P and its domestic affiliates are in dollars. Furthermore, primarily all of S's other borrowings are dollar-denominated or based on a dollar index. S's only LC activities are paying local taxes, employee wages, and local expenses such as rent and electricity. S keeps its books and records in the LC. Under these facts, S's activities are primarily conducted in dollars. Thus, although S keeps its books and records in LCs, S's functional currency is the dollar.

(5) ***Example 5.*** D is a domestic corporation whose primary activity is the extraction of natural gas and oil through foreign branch X in Country Y. X is a QBU within the meaning of section 989(a) and its residence is Country Y as determined under section 988(a)(3)(B). The currency of Country Y is the LC. X bills a significant amount of its natural gas and oil sales in dollars and a significant amount in LCs. X also incurs significant LC and dollar expenses and liabilities. The laws of Country Y require X to keep its books and records in the LC. It is determined that the LC is the currency of X under United States generally accepted accounting principles. This determination is based on facts and circumstances substantially similar to those set forth in paragraph (c)(2) of this section. Absent other factors indicating that X primarily conducts its activities in the dollar, D could choose either the dollar or the LC as X's functional currency because X has significant activities in both the dollar and the LC, provided the books and records requirement is satisfied. If, instead, X's activities were determined to be primarily in the dollar, then X would have to use the dollar as its functional currency.

(6) ***Example 6.*** S, a foreign corporation organized in Country U, is wholly-owned by P, a domestic corporation. The currency of U is the LC. S purchases the products it sells from related and unrelated parties, including P. These purchases are made in the LC. In addition, most of S's gross receipts are generated by transactions denominated in the LC. S attempts to determine its LC price for goods sold in such a manner as to obtain an LC equivalent of a certain dollar amount after reduction for all LC costs. However, local market conditions sometimes result in pricing adjustments. Thus, changes in the LC-dollar exchange rate from period to period generally result in corresponding changes in the LC price of S's products. S pays local taxes, employee wages, and other local expenses in the LC. It is determined that the dollar is the currency of S under United States generally accepted accounting principles. This determination is not based on facts and circumstances substantially similar to those set forth in paragraph (c)(2) of this section. Under these facts, S could choose either the dollar or the LC as its functional currency because S has significant activities in both the dollar and the LC, provided that the books and records requirement is satisfied.

(7) ***Example 7.*** S, a foreign corporation organized in Country X, is wholly-owned by P, a domestic corporation. S conducts all of its operations through two branches. Branch A is located in Country F and branch B is located in Country G. S, A, and B are QBUs within the meaning of section 989(a). Branch A's and branch B's residences are Country F and Country G respectively as determined under section 988(a)(3)(B). The currency of Country F is the FC and the currency of Country G is the LC. The functional currencies of S, A, and B are determined in a two step procedure.

Step 1: The functional currency of branches A and B. Branch A and branch B both conduct all activities in their respective local currencies. The FC is the currency of branch A and the LC is the currency of branch B under United States generally accepted accounting principles. This determination is based on facts and circumstances substantially similar to those set forth in paragraph (c)(2) of this section. Under these facts, the functional currency of branch A is the FC and the functional currency of branch B is the LC.

Step 2: The functional currency of S. S's functional currency is determined by disregarding the fact that A and B are branches. When A's activities and B's activities are viewed as a whole, S determines that it only conducts significant activities in the LC. Therefore, S's functional currency is the LC. See Examples 9, 10, and 11 for how the earnings and profits of a foreign corporation, which has branches with different functional currencies, are determined.

(8) ***Example 8.*** Assume the same facts as in Example 7, except that S does not exist and P conducts all of its operations through branch A and branch B. In this instance P's functional currency in Step 2 is the dollar, regardless of the fact that its branches' activities viewed as a whole are in the LC, because P is a taxpayer whose residence is the United States under section 988(a)(3)(B)(i). Therefore, while the functional currency of branch A is the FC and the functional currency of branch B is the LC, the functional currency of P is the dollar because its residence is the United States.

(9)-(11) [Reserved]

(12) ***Example 12.*** F, a foreign corporation, has gain from the disposition of a United States real property interest (as defined in section 897(c)). The gain is taken into account as if F were engaged in a trade or business within the United States during the taxable year and as if such gain were effectively connected with such trade or business. F's disposition activity shall be treated as a separate QBU with a dollar functional currency because such activity produced income that is treated as effectively connected with a trade or business within the United States. Therefore, F must compute its gain from the disposition by giving the United States real property interest an historic dollar basis.

[T.D. 8263, 54 FR 38653, Sept. 20, 1989, as amended by T.D. 8556, 59 FR 37672, July 25, 1994; T.D. 8765, 63 FR 10774, Mar. 5, 1998; 63 FR 15760, Apr. 1, 1998; T.D. 8776, 63 FR 40368, July 29, 1998; T.D. 8927, 66 FR 2216, Jan. 11, 2001; T.D. 10016, 89 FR 100164, Dec. 11, 2024]

§ 1.985-2 Election to use the United States dollar as the functional currency of a QBU.

(a) ***Background and scope*** —

(1) ***In general.*** This section permits an eligible QBU to elect to use the dollar as its functional currency for taxable years beginning on or before August 24, 1994. An election to use a dollar functional currency is not permitted for a QBU other than an eligible QBU. Paragraph (b) of this section defines an eligible QBU. Paragraph (c) of this section describes the time and manner for making the dollar election and paragraph (d) of this section describes the effect of making the election. For the definition of a QBU, see section 989(a). See § 1.985-1(b)(2)(ii) for rules requiring a QBU to use the dollar as its functional currency in taxable years beginning after August 24, 1994.

(2) ***Exception.*** Pursuant to § 1.985-1(b)(2)(ii)(B)(2), the rules of paragraph (c)(3) of this section shall apply with respect to the procedure required to be followed by a noncontrolled section 902 corporation as defined in section 904(d)(2)(E) to elect the dollar as its (or its QBU branch's) functional currency and the application of § 1.985-3.

(b) ***Eligible QBU*** —

(1) ***In general.*** The term “eligible QBU” means a QBU that could have used a hyperinflationary currency as its functional currency absent the dollar election. *See* § 1.985-1 for how a QBU determines its functional currency absent the dollar election.

(2) ***Hyperinflationary currency.*** See § 1.985-1(b)(2)(ii)(D) for the definition of hyperinflationary currency.

(c) ***Time and manner for dollar election*** —

(1) ***QBUs that are branches of United States persons*** —

(i) ***Rule.*** If an eligible QBU is a branch of a United States person, the dollar election shall be made by attaching a completed Form 8819 to the United States person's timely filed (taking extensions into account) tax return for the first taxable year for which the election is to be effective.

(ii) ***Procedure prior to the issuance of Form 8819.*** In the absence of Form 8819, the election shall be made in accordance with § 1.985-2T(c)(1). Failure to file an amended return within the time period prescribed in § 1.985-2T(c)(1) shall not invalidate the dollar election if it is established to the satisfaction of the district director that reasonable cause existed for such failure. A subsequent election for 1988 will not prejudice the taxpayer with respect to such reasonable cause determination. Nevertheless, each United States person making an election under the § 1.985-2T(c)(1) must file a Form 8819 in the time and manner provided in the Form's instructions.

(2) ***Eligible QBUs that are controlled foreign corporations or branches of controlled foreign corporations*** —

(i) ***Rule.*** If an eligible QBU is a controlled foreign corporation (as described in section 957), or a branch of a controlled foreign corporation, the election may be made either by the foreign corporation or by the controlling United States shareholders on behalf of the foreign corporation by—

(A) Filing a completed Form 8819 in the time and manner provided in the Form's instructions, and

(B) Providing the written notice required by paragraph (c)(2)(ii) of this section at the time and in the manner prescribed therein.

The term *controlling United States shareholders* means those United States shareholders (as defined in section 951(b)) who, in the aggregate, own (within the meaning of section 958(a)) greater than 50 percent of the total combined voting power of all classes of stock of the foreign corporation entitled to vote. If the foreign corporation is a controlled foreign corporation (as described in section 957) but the United States shareholders do not, in the aggregate, own the requisite voting power, the term “controlling United States shareholders” means all the United States shareholders (as defined in section 951(b)) who own (within the meaning of section 958(a)) stock of the controlled foreign corporation.

(ii) ***Notice.*** Prior to filing Form 8819, the controlling United States shareholders (or the foreign corporation, if the dollar election is made by the corporation) shall provide written notice that the dollar election will be made to all United States persons known to be shareholders who own (within the meaning of section 958(a)) stock of the foreign corporation. Such notice shall also include all information required in Form 8819.

(iii) ***Reasonable cause exception.*** Failure of the controlling United States shareholders (or the foreign corporation, if the dollar election is made by the corporation) to timely file Form 8819 or provide written notice to a United States person required to be notified by paragraph (c)(2)(ii) of this section shall not invalidate the dollar election, if it is established to the satisfaction of the district director that reasonable cause existed for such failure.

(iv) ***Procedure prior to the issuance of Form 8819.*** In the absence of Form 8819, an eligible QBU described in paragraph (c)(2)(i) of this section shall make the dollar election in accordance with § 1.985-2T(c)(2). Nevertheless, the person or persons that made such election must file a Form 8819 in the time and manner provided in the Form's instructions.

(3) *Eligible QBUs that are noncontrolled foreign corporations or branches of noncontrolled foreign corporations* —

(i) ***Rule.*** If an eligible QBU is a noncontrolled foreign corporation (a foreign corporation not described in section 957), or a branch of a noncontrolled foreign corporation, the dollar election must be made by the corporation or the majority domestic corporate shareholders on behalf of the corporation by applying the rules provided in paragraph (c)(2)(i)(A) and (B), (ii), (iii), and (iv) of this section substituting "majority domestic corporate shareholders" for "controlling United States shareholders" wherever it appears therein. The term "majority domestic corporate shareholders" means those domestic corporate shareholders (as described in section 902(a)) who, in the aggregate, own (within the meaning of section 958(a)) greater than 50 percent of the total combined voting stock of all classes of stock of the noncontrolled foreign corporation entitled to vote that is owned (within the meaning of section 958(a)) by all the domestic corporate shareholders.

(ii) ***Procedure prior to the issuance of Form 8819.*** In the absence of Form 8819, an eligible QBU described in paragraph (c)(3)(i) of this section shall make the dollar election in accordance with § 1.985-2T(c)(3). Nevertheless, the person or persons that made such election must file a Form 8819 in the time and manner provided in the Form's instructions.

(4) ***Others.*** Any other person making a dollar election under this section shall elect by filing Form 8819 and fulfilling any other notice requirements that may be required by the Commissioner.

(d) *Effect of dollar election* —

(1) ***General rule.*** If a dollar election is made (or considered made under paragraph (d)(3) of this section) by or on behalf of an eligible QBU, the QBU shall be deemed to have the dollar as its functional currency. Each United States person that owns (within the meaning of section 958(a)) stock of a foreign corporation which has the dollar as its functional currency under § 1.985-2 must make all of its federal income tax calculations with respect to the foreign corporation using the dollar as the corporation's functional currency (regardless of when ownership was acquired or whether the United States person received the written notice required by paragraph (c)(2)(i)(B) of this section).

(2) *Computation* —

(i) ***In general.*** Except as provided in paragraph (d)(2)(ii) of this section, any eligible QBU that pursuant to this § 1.985-2 has a dollar functional currency must compute income or loss or earnings and profits (or deficit in earnings and profits) in dollars using the dollar approximate separate transactions method described in § 1.985-3.

(ii) ***Alternative method.*** An eligible QBU that has a dollar functional currency pursuant to this § 1.985-2 may use a method other than the dollar approximate separate transactions method described in § 1.985-3 only if the QBU demonstrates to the satisfaction of the Commissioner that it can properly employ such method. Generally, the QBU must show that it could compute foreign currency gain or loss under the principles of section 988 with respect to each of its section 988 transactions. If subsequently the QBU can no longer demonstrate to the satisfaction of the district director that it can properly employ such an alternative method, then the QBU will be deemed to have changed its method of accounting to the dollar approximate separate transactions method described in § 1.985-3. This change in accounting will be treated as having been made with the consent of the Commissioner. No adjustments under either §

1.985-5T (or any succeeding final regulation) or section 481(a) shall be required solely because of the change. Rather the QBU shall begin accounting for its operations under § 1.985-3 based on its dollar books and records as of the time of the change.

(3) *Conformity* —

(i) ***General rule.*** If a dollar election is made under this § 1.985-2 for an eligible QBU ("electing QBU"), then the dollar shall be the functional currency of any related person (regardless of when such person became related to the electing QBU) that is an eligible QBU, or any branch of any such related person that is an eligible QBU. For purposes of the preceding sentence, the term "related person" means any person with a relationship defined in section 267 (b) to the electing QBU (or to the United States or foreign person of which the electing QBU is a part). In determining whether two or more corporations are members of the same controlled group under section 267(b)(3), a person is considered to own stock owned directly by such person, stock owned with the application of section 1563(e)(1), and stock owned with the application of section 267(c).

(ii) ***Branches of United States and foreign persons.*** If a dollar election is made for a QBU branch of any person, each eligible QBU branch of such person shall have the dollar as its functional currency.

(4) ***Required adjustments.*** If an eligible QBU's functional currency changes due to a dollar election, or due to the conformity requirements of paragraph (d)(3) of this section, such change shall be deemed for purposes of § 1.9B5-4 to be consented to by the Commissioner. No adjustments under section 481(a) shall be required solely because of the change. However, the QBU must make those adjustments required by § 1.985-5T (or any succeeding final regulation).

(5) ***Taxable year conformity required.*** Generally, the adjustments required by paragraph (d)(4) of this section shall be made for a related person's taxable year—

(i) That includes the date in which the electing QBU made the dollar election if the person was related to such electing QBU at any time during the QBU's taxable year that includes such date, or

(ii) During which the person first becomes related to any electing QBU, in all other cases.

For purposes of this paragraph (d)(5), the date in which the electing QBU makes the dollar election shall be the last day of the electing QBU's taxable year. The district director may permit the related party to make such adjustments beginning one taxable year later if, in the district director's sole judgment, reasonable cause exists for the related party not being able to make the required adjustments for the earlier year.

(6) ***Availability of election.*** A dollar election may be made by or on behalf of a QBU, or considered made under the conformity rule of paragraph (d)(3), in any year in which the QBU is an eligible QBU. If a dollar election is not made by or on behalf of a QBU for its first taxable year beginning after December 31, 1986 in which it is an eligible QBU, then any dollar election made by or on behalf of the QBU, or considered made under the conformity rules of paragraph (d)(3) of this section, that results in a change in the QBU's functional currency shall be treated as having been made with the consent of the Commissioner. In such a case, however, the taxpayer must make those adjustments required by § 1.985-5T (or any succeeding final regulation).

(7) ***Effect of changed circumstances.*** Regardless of any change in circumstances (*e.g.,* a currency ceases to qualify as hyperinflationary), a QBU whose functional currency is the dollar under this section may change its functional currency only if the QBU complies with § 1.985-4.

(8) ***Examples.*** The provisions of this section are illustrated by the following examples.

Example 1. X is a calendar year domestic corporation that in 1987 establishes a branch, A, in Country Z. A's functional currency under sections 985(b)(1) and (2) and § 1.985-1 is the "h", the currency of Country Z. The cumulative inflation in Country Z exceeds 100 percent for the thirty-six months prior to January 1987, as measured by the consumer price index of Country Z listed in the monthly issues of the "International Financial Statistics". Accordingly, A is an eligible QBU in 1987 because the h is a hyperinflationary currency. Thus, X may elect the dollar as the functional currency of A for 1987.

Example 2. The facts are the same as in Example (1). X does not elect the dollar as the functional currency of A for 1987. Rather, X elects the dollar as the functional currency of A for l991, a year A is an eligible QBU. The election constitutes a change in A's functional currency that is made with the consent of the Commissioner. However, A must make the adjustments required under § 1.985-5T (or any succeeding final regulation).

Example 3. X is a domestic corporation that establishes A, an eligible QBU branch. X is wholly owned by domestic corporation Y. Y has an eligible QBU branch, B. Both X and Y are calendar year taxpayers. X makes a dollar election for A in 1987. Thus, A is an electing QBU. X and Y are related persons as defined in section 267(b) (*i.e.,* Y has a relationship under section 267(b)(3) to X, the corporation of which A is a part). Therefore, the dollar election by X for A in 1987 results in B, the eligible QBU branch of Y, also having the dollar as its functional currency for 1987.

Example 4. The facts are the same as in Example 3, except that Y does not have an eligible QBU branch but owns all the stock of C, a calendar year controlled foreign corporation, which is not itself an eligible QBU but which has an eligible QBU branch, D. X and C are related persons as defined in section 267(b) (*i.e.,* C has a relationship under section 267(b)(3) to X, the corporation of which A is a part). Therefore, the dollar election by X for A in 1987 results in D, the eligible QBU branch of C, also having the dollar as its functional currency for 1987.

Example 5. X, whose taxable year ends September 30, is an eligible QBU that does not use the dollar as its functional currency. X is wholly-owned by domestic corporation W. On January 1, 1989, X acquires all the stock of Y, an unrelated eligible QBU that made the dollar election under § 1.985-2. Y is a calendar year taxpayer. After the stock purchase, X and Y are related persons as defined in section 267(b). Under §§ 1.985-2(d)(3) and (5), the dollar shall be the functional currency of X, any person related to X, and any branch of such related person that is an eligible QBU beginning with the taxable year that includes December 31, 1989. Thus, X must change to the dollar for its taxable year beginning October 1, 1988. However, the district director may allow X to change to the dollar for its taxable year beginning October 1, 1989, provided reasonable cause exists. Those QBUs changing to the dollar as their functional currency as the result of the conformity requirements must make the adjustments required under § 1.985-5T (or any succeeding final regulation).

Example 6. The facts are the same as in Example 5, except that before X purchased the Y stock, X made the dollar election under § 1.985-2 but Y did not use the dollar as its functional currency. Under §§ 1.985-2(d)(3) and (5) the dollar shall be the functional currency of Y, any person

related to Y, and any branch of such related person that is an eligible QBU beginning with the taxable year that includes September 30, 1989. Thus, Y must change to the dollar for its taxable year beginning January 1, 1989. However the district director may allow Y to change to the dollar for its taxable year beginning January 1, 1990, provided reasonable cause exists. Those QBUs changing to the dollar as their functional currency as the result of the conformity requirements must make the adjustments required under § 1.985-5T (or any succeeding final regulation).

[T.D. 8263, 54 FR 38656, Sept. 20, 1989, as amended by T.D. 8556, 59 FR 37673, July 25, 1994]

§ 1.985-3 United States dollar approximate separate transactions method.

(a) ***Scope and effective date*** —

(1) ***Scope.*** This section describes the United States dollar (dollar) approximate separate transactions method of accounting (DASTM). For all purposes of subtitle A, this method of accounting must be used to compute the gross income, taxable income or loss, or earnings and profits (or deficit in earnings and profits) of a QBU (as defined in section 989(a)) that has the dollar as its functional currency pursuant to § 1.985-1(b)(2).

(2) ***Effective date*** —

(i) ***In general.*** This section is effective for taxable years beginning after August 24, 1994.

(ii) ***DASTM prior-year election.*** A taxpayer may elect to apply this section to any open taxable year beginning after December 31, 1986 (whether or not DASTM has been previously elected for some or all of those years). In order to make this election, the taxpayer must apply § 1.985-3 to that year and all subsequent years. In addition, each person that is related (within the meaning of § 1.985-3(e)(2)(vi)) to the taxpayer on the last day of any taxable year for which the election is effective and that would have been eligible to elect DASTM must also apply these rules to that year and all subsequent years. A taxpayer that has not previously elected to apply DASTM to its prior taxable years may make the DASTM election for the pertinent years by filing amended returns and complying with the applicable election procedures of § 1.985-2. Form 8819 shall be attached to the return for the first year for which the election is to be effective. A taxpayer that has elected DASTM for prior taxable years and applied the rules under § 1.985-3 (as contained in the April 1, 1994 edition of 26 CFR part 1 (1.908 to 1.1000)) may amend its returns to apply the rules of this § 1.985-3. In either case, the DASTM election for prior taxable years shall be deemed to be made with the consent of the Commissioner.

(b) ***Statement of method.*** Under DASTM, income or loss or earnings and profits (or a deficit in earnings and profits) of a QBU for its taxable year shall be determined in dollars by—

(1) Preparing an income or loss statement from the QBU's books and records (within the meaning of § 1.989(a)-1(d)) as recorded in the QBU's hyperinflationary currency (as defined in § 1.985-1(b)(2)(ii)(D));

(2) Making the adjustments necessary to conform such statement to United States generally accepted accounting principles and tax accounting principles (including reversing monetary correction adjustments required by local accounting principles);

(3) Translating the amounts of hyperinflationary currency as shown on such adjusted statement into dollars in accordance with paragraph (c) of this section; and

(4) Adjusting the resulting dollar income or loss or earnings and profits (or deficit in earnings and profits) and, where necessary, particular items of gross income, deductible expense or other amounts, in accordance with paragraph (e) of this section to reflect the amount of DASTM gain or loss as determined under paragraph (d) of this section.

(c) *Translation into United States dollars* —

(1) ***In general.*** Except as otherwise provided in this paragraph (c), the amounts shown on the income or loss statement, as adjusted under paragraph (b)(2) of this section, shall be translated into dollars at the exchange rate (as defined in paragraph (c)(6) of this section) for the translation period (as defined in paragraph (c)(7) of this section) to which they relate. However, if the QBU previously changed its functional currency to the dollar, and the rules of § 1.985-5 (or, if applicable, § 1.985-5T, as contained in the April 1, 1993 edition of 26 CFR part 1 (1.908 to 1.1000)) applied in translating its balance sheet amounts into dollars, then the spot exchange rate applied under those rules shall be used to translate any amount that would otherwise be translated at a rate determined by reference to a translation period prior to the change in functional currency. For example, depreciation with respect to an asset acquired while the QBU had a nondollar functional currency shall be translated into dollars at the spot rate on the last day of the taxable year before the year of change to a dollar functional currency, rather than at the rate for the period in which the asset was acquired.

(2) ***Cost of goods sold.*** The dollar value of cost of goods sold shall equal the sum of the dollar values of beginning inventory and purchases less the dollar value of closing inventory as these amounts are determined under paragraph (c)(3) of this section.

(3) *Beginning inventory, purchases, and closing inventory* —

(i) ***Beginning inventory.*** Amounts representing beginning inventory shall be translated so as to obtain the same amount of dollars which represented such items in the closing inventory balance for the preceding taxable year.

(ii) ***Purchases.*** Amounts representing items purchased or otherwise first included in inventory during the taxable year shall be translated at the exchange rate for the translation period in which the cost of such items was incurred.

(iii) *Closing inventory* —

(A) ***In general.*** Amounts representing items included in the closing inventory balance shall be translated at the exchange rate for the translation period in which the cost of such items was incurred. However, if amounts representing items included in the closing inventory balance are either valued at market or written down to market value, they shall be translated at the exchange rate existing on the last day of the taxable year. For purposes of determining lower of cost or market, items of inventory included in the closing inventory balance shall be translated into dollars at the exchange rate for the translation period in which the cost of such items was incurred and compared with market as determined in the QBU's hyperinflationary currency translated into dollars at the exchange rate existing on the last day of the taxable year.

(B) ***Determination of translation period.*** The method used to determine the translation period of amounts representing items of closing inventory for purposes of paragraph (c)(3)(iii)(A) of this section may be based upon reasonable approximations and averages, including rates of turnover, provided that the method is used consistently from year to year.

(4) ***Depreciation, depletion, and amortization.*** Amounts representing allowances for depreciation, depletion, or amortization shall be translated at the exchange rate for the translation period in which the cost of the underlying asset was incurred, except as provided in paragraph (c)(1) of this section.

(5) ***Prepaid expenses or income.*** Amounts representing expense or income paid or received in a prior taxable year shall be translated at the exchange rate for the translation period during which they were paid or received.

(6) ***Exchange rate.*** The exchange rate for a translation period may be determined under any reasonable method, provided that the method is consistently applied to all translation periods and conforms to the taxpayer's method of financial accounting. Reasonable methods include the average of beginning and ending exchange rates for the translation period and the spot rate on the last day of the translation period. Once chosen, a method for determining an exchange rate can be changed only with the consent of the district director.

(7) ***Translation period*** —

(i) ***In general.*** Except as provided in paragraphs (c)(3)(iii)(B) and (c)(7)(ii) of this section, a translation period shall be each month within a QBU's taxable year.

(ii) ***Exception.*** A taxpayer may divide its taxable year into translation periods of equal length (with not more than one short period annually) that are less than one month. Once such a translation period is established, it may not be changed without the consent of the district director.

(8) ***Dollar transactions*** —

(i) ***In general.*** Except as provided in paragraph (c)(8)(ii) of this section, no DASTM gain or loss is realized with respect to dollar transactions since the dollar is the functional currency of the QBU. Thus, the amount of any payment or receipt of dollars shall be reflected in the income or loss statement by the amount of such dollars. Also, the income or loss attributable to any transaction in which the amount that a QBU is entitled to receive (or is required to pay) by reason of such transaction is denominated in terms of the dollar, or is determined by reference to the value of the dollar, must be computed transaction by transaction. For example, if a foreign corporation lends 20 LC when 20 LC = $20 and is entitled to receive the LC equivalent of $20 at maturity plus a market rate of interest in dollars (or its LC equivalent), the loan is a dollar transaction. Similarly, this paragraph applies to any transaction that is determined to be a dollar transaction under section 988.

(ii) ***Non-dollar functional currency.*** If pursuant to § 1.985-1(b)(2)(ii)(B)(*1*), a QBU is required to use a functional currency other than the dollar, then that currency shall be substituted for the dollar in applying paragraph (c)(8)(i) of this section.

(9) ***Third currency transactions.*** A taxpayer may use any reasonable method of accounting for transactions described in sections 988(c)(1)(B) and (C) that are denominated in, or determined by reference to, a currency other than the QBU's hyperinflationary currency or the dollar (third currency transactions) so long as such method is consistent with its method of financial accounting.

(10) ***Examples.*** The provisions of this paragraph (c) are illustrated by the following examples:

Example 1. S is an accrual basis QBU that is required to use the dollar as its functional currency for its first taxable year beginning in 1994. S's hyperinflationary currency is the "h." During 1994, S accrues 100 dollars attributable to dollar-denominated sales. Because this is a dollar transaction under paragraph (c)(8) of this section, S's income or loss for 1994 shall reflect the 100 dollars (not the hyperinflationary value of such dollars when accrued).

Example 2. (i) S is an accrual basis QBU that is required to use the dollar as its functional currency for its first taxable year beginning in 1994. S's hyperinflationary currency is the "h." During 1994, S's sales amounted to 240,000,000h, its currently deductible expenses were 26,000,000h, and its total inventory purchases amounted to 100,000,000h. During January and February of 1994, S purchased depreciable assets for 80,000,000h and was allowed depreciation of 4,000,000h. At the end of 1994, S's closing inventory was 23,000,000h. No election to use a translation period other than the month is made, S had no transactions described in paragraph (c)(8) or (c)(9) of this section, and S's closing inventory was computed on the first-in, first-out inventory method. S's adjusted income or loss statement for 1994 is translated into dollars as follows:

	Hyperinflationary currency	Exchange rate	United States dollars
SALES			
(Jan.-Feb.)	10,000,000h	[1] 20:1	$500,000
(Mar.-Apr.)	20,000,000	21:1	952,381
(May.-June.)	50,000,000	22:1	2,272,727
(July)	50,000,000	23:1	2,173,913
(August)	20,000,000	26:1	769,231
(Sept.)	20,000,000	28:1	714,286
(Oct.)	20,000,000	29:1	689,655
(Nov.)	20,000,000	30:1	666,667
(Dec.)	30,000,000	31:1	967,742
Total	240,000,000h		9,706,602
COST OF GOODS SOLD			
Opening Inventory	0		0
Purchases:			
(Jan.-Feb.)	15,000,000h	20:1	750,000
(Mar.-Apr.)	10,000,000	21:1	476,190
(May-June)	30,000,000	22:1	1,363,636
(July)	20,000,000	23:1	869,565
(August)	10,000,000	26:1	384,615

[1] *Where multiple months are indicated, the exchange rate applies for all months.*

[2] *See paragraph (ii) of this Example.*

	Hyperinflationary currency	Exchange rate	United States dollars
(Sept.)	5,000,000	28:1	178,571
(Oct.)	5,000,000	29:1	172,414
(Nov.)	2,500,000	30:1	83,333
(Dec.)	2,500,000	31:1	80,645
Less Closing Inventory	(23,000,000)	([2])	(822,655)
	77,000,000h		3,536,314

[1] *Where multiple months are indicated, the exchange rate applies for all months.*

[2] *See paragraph (ii) of this Example.*

(ii) Since S uses the first-in, first-out inventory method, the closing inventory is assumed to consist of purchases made during the most recent translation period as follows:

	Hyperinflationary currency	Exchange rate	United States dollars
December	2,500,000h	31:1	$80,645
November	2,500,000	30:1	83,333
October	5,000,000	29:1	172,414
September	5,000,000	28:1	178,571
August	8,000,000	26:1	307,692
Total	23,000,000h		822,655
NON-CAPITALIZED EXPENSES			
(Jan.-Feb.)	4,000,000h	20:1	200,000
(Mar.-Apr.)	2,500,000	21:1	119,048
(May-June)	2,500,000	22:1	113,636
(July)	2,000,000	23:1	86,957
(August)	3,000,000	26:1	115,385
(Sept.)	3,000,000	28:1	107,143
(Oct.)	2,000,000	29:1	68,966
(Nov.)	3,000,000	30:1	100,000
(Dec.)	4,000,000	31:1	129,032
Total	26,000,000h		1,040,167
Depreciation	4,000,000h	20:1	200,000
Total Cost & Expenses	107,000,000h		4,776,481

	Hyperinflationary currency	Exchange rate	United States dollars
Operating Profit	133,000,000h		4,930,121

(d) *Computation of DASTM gain or loss* —

(1) ***Rule.*** DASTM gain or loss of a QBU equals—

(i) The net worth of the QBU (as determined under paragraph (d)(2) of this section) at the end of the taxable year minus the net worth of the QBU at the end of the preceding taxable year; plus

(ii) The dollar amount of the items described in paragraph (d)(3) of this section and minus the dollar amount of the items described in paragraph (d)(4) of this section; minus

(iii) The amount of dollar income or earnings and profits (or plus the amount of any dollar loss or deficit in earnings and profits) as determined for the taxable year pursuant to paragraphs (b)(1) through (b)(3) of this section.

(2) ***Net worth.*** Net worth of a QBU at the end of any taxable year equals the aggregate dollar amount representing assets on the QBU's balance sheet at the end of the taxable year less the aggregate dollar amount representing liabilities on the balance sheet. Notwithstanding any other provision in this paragraph (d)(2), the district director may adjust the amount of any asset or liability if a purpose for acquiring (or disposing of) the asset or incurring (or discharging) the liability is to manipulate the composition of the balance sheet for any period during the taxable year in order to avoid tax. The taxpayer shall determine net worth by—

(i) Preparing a balance sheet as of the end of the taxable year from the QBU's books and records (within the meaning of § 1.989(a)-1(d)) as recorded in the QBU's hyperinflationary currency;

(ii) Making adjustments necessary to conform such balance sheet to United States generally accepted accounting principles and tax accounting principles (including reversing monetary correction adjustments required by local accounting principles); and

(iii) Translating the asset and liability amounts shown on the balance sheet into United States dollars in accordance with paragraph (d)(5) of this section.

(3) *Positive adjustments* —

(i) ***In general.*** The items described in this paragraph (d)(3) are dividend distributions for the taxable year and any items that decrease net worth for the taxable year but that generally do not affect income or loss or earnings and profits (or a deficit in earnings and profits). Such items include a transfer to the home office of a QBU branch and a return of capital.

(ii) ***Translation.*** Except as provided by ruling or administrative pronouncement, items described in paragraph (d)(3)(i) of this section shall be translated into dollars as follows:

(A) If the item giving rise to the adjustment would be translated under paragraph (d)(5) of this section at the exchange rate for the last translation period of the taxable year if it were shown on the QBU's year-end balance sheet, such item shall be translated at the exchange rate on the date the item is transferred.

(B) If the item giving rise to the adjustment would be translated under paragraph (d)(5) of this section at the exchange rate for the translation period in which the cost of the item was incurred if it were shown on the QBU's year-end balance sheet, such item shall be translated at the same historical rate.

(iii) ***Effective date.*** Paragraph (d)(3)(ii) of this section is applicable for any transfer, dividend, or distribution that is a return of capital that is made after March 8, 2005, and that gives rise to an adjustment under this paragraph (d)(3).

(4) ***Negative adjustments.*** The items described in this paragraph (d)(4) are items that increase net worth for the taxable year but that generally do not affect income or loss or earnings and profits (or a deficit in earnings and profits). Such items include a capital contribution or a transfer from a home office to a QBU branch. Except as otherwise provided by ruling or administrative pronouncement, if the contribution or transfer is not in dollars, the amount of a capital contribution or transfer shall be translated into dollars at the exchange rate on the date made.

(5) ***Translation of balance sheet.*** Asset and liability amounts shown on the balance sheet in hyperinflationary currency (adjusted pursuant to paragraph (d)(2)(ii) of this section) shall be translated into dollars as provided in this paragraph (d)(5). However, if the QBU previously changed its functional currency to the dollar and the rules of § 1.985-5 (or, if applicable, § 1.985-5T, as contained in the April 1, 1993 edition of 26 CFR part 1 (1.908 to 1.1000)) applied in translating its balance sheet amounts into dollars, then the spot exchange rate applied under those rules shall be used to translate any amount that would otherwise be translated at a rate determined by reference to a translation period prior to the change in functional currency. For example, the basis of real property acquired while the QBU had a nondollar functional currency shall be translated into dollars at the spot rate on the last day of the taxable year before the year of change to a dollar functional currency, rather than at the rate for the period in which the cost was incurred.

(i) ***Closing inventory.*** Amounts representing items of inventory included in the closing inventory balance shall be translated in accordance with paragraph (c)(3)(iii) of this section.

(ii) ***Bad debt reserves.*** Amounts representing bad debt reserves shall be translated at the exchange rate for the last translation period for the taxable year.

(iii) ***Prepaid income or expense.*** Amounts representing expenses or income paid or received in a prior taxable year shall be translated in accordance with paragraph (c)(5) of this section.

(iv) ***Hyperinflationary currency.*** Amounts of the hyperinflationary currency and hyperinflationary demand deposit balances shall be translated at the exchange rate for the last translation period of the taxable year.

(v) ***Certain assets*** —

(A) ***In general.*** Amounts representing plant, real property, equipment, goodwill, and patents and other intangibles shall be translated at the exchange rate for the translation period in which the cost of the asset was incurred.

(B) ***Adjustment to certain assets.*** Amounts representing depreciation, depletion, and amortization reserves shall be translated in accordance with paragraph (c)(4) of this section.

(vi) ***Hyperinflationary debt obligations.*** Except as provided in paragraph (d)(5)(vii) of this section, amounts representing a hyperinflationary debt obligation (including accounts receivable and payable) shall be translated at the exchange rate for the last translation period for the taxable year.

(vii) ***Accrued foreign income taxes.*** Amounts representing an accrued but unpaid foreign income tax shall be translated at the exchange rate on the last day of the last translation period of the taxable year of accrual.

(viii) ***Certain hyperinflationary financial instruments.*** Amounts representing any item described in section 988(c)(1)(B)(iii) (relating to forward contracts, futures contracts, options, or similar financial instruments) denominated in or determined by reference to the hyperinflationary currency shall be translated at the exchange rate for the last translation period for the taxable year.

(ix) ***Other assets and liabilities.*** Amounts representing assets and liabilities, other than those described in paragraphs (d)(5)(i) through (viii) of this section, shall be translated at the exchange rate for the translation period in which the cost of the asset or the amount of the liability was incurred.

(6) ***Dollar transactions.*** Notwithstanding any other provisions of this paragraph (d), where the amount representing an item shown on the balance sheet reflects a dollar transaction (described in paragraph (c)(8) of this section), the transaction shall be taken into account in accordance with that paragraph.

(7) ***Third currency transactions.*** A taxpayer may use any reasonable method of accounting for transactions described in section 988(c)(1)(B) and (C) that are denominated in, or determined by reference to, a currency other than the QBU's hyperinflationary currency or the dollar (third currency transactions), so long as such method is consistent with its method of financial accounting.

(8) ***Character.*** The amount of DASTM gain or loss determined under paragraph (d)(1) of this section shall be ordinary income or loss.

(9) ***Example.*** The provisions of this paragraph (d) are illustrated by the following example:

> *Example.* (i) S, an accrual method calendar year foreign corporation, uses DASTM. S's hyperinflationary currency is the “h.” S's net worth at December 31, 1993 was $3,246,495. For 1994, S's operating profit is 81,340,000h, or $2,038,200. S made a 5,000,000h distribution in April and again in December of 1994. S's translation period is the month. None of S's assets or liabilities reflect a dollar or third currency transaction described in paragraph (c)(8) or (c)(9) of this section, respectively. The exchange rate for each month in 1994 is as follows:

January	32h:$1
Feb.-Mar.	33:1
April-May	34:1
June	35:1

July	36:1
Aug.-Sept.	37:1
Oct.	38:1
Nov.	39:1
Dec.	40:1

(ii) At the end of 1994, S's assets and liabilities, as adjusted and translated pursuant to paragraphs (d)(2) and (d)(5) of this section, are as follows:

	Hyperin-flationary	Exchange rate	U.S. dollar
Hyperinflationary cash on hand	40,000h	40:1	$1,000
Checking account	400,000	40:1	10,000
Accounts Receivable- 30 Day Accounts	20,000,000	[1] 40:1	500,000
60 Day Accounts	25,000,000	40:1	625,000
Inventory	65,000,000	([2])	2,500,000
Fixed assets—Property	90,000,000	27:1	3,333,333
Plant	190,000,000	([3])	6,785,714
Accumulated Depreciation	(600,000)	([3])	(21,428)
Equipment	10,000,000	([4])	340,000
Accumulated Depreciation	(400,000)	([4])	(13,333)
Common Stock—Stock A	500,000	34:1	14,706
Stock B	400,000	26:1	15,385
Preferred Stock	1,000,000	32:1	31,250
C.D.s	5,000,000	40:1	125,000
Total Assets	406,340,000		14,246,627
Accounts Payable Long-term liabilities:	35,000,000	40:1	875,000
Liability A	150,000,000	40:1	3,750,000
Liability B	80,000,000	40:1	2,000,000
Liability C	30,000,000	40:1	750,000

[1] S ages its accounts receivable and groups them into two categories—those outstanding for 30 days and those outstanding for 60 days.

[2] Translated the same as closing inventory under paragraph (c)(3)(iii).

[3] The cost of S's plant was incurred in several translation periods. Therefore, the dollar cost and dollar depreciation reflect several translation rates.

[4] S has a variety of equipment. Therefore, S's dollar basis represents the sum of the hyperinflationary cost of each, translated according to the exchange rate for the translation period incurred.

	Hyperin-flationary	Exchange rate	U.S. dollar
Total Liabilities	295,000,000h		$7,375,000

[1] *S ages its accounts receivable and groups them into two categories—those outstanding for 30 days and those outstanding for 60 days.*

[2] *Translated the same as closing inventory under paragraph (c)(3)(iii).*

[3] *The cost of S's plant was incurred in several translation periods. Therefore, the dollar cost and dollar depreciation reflect several translation rates.*

[4] *S has a variety of equipment. Therefore, S's dollar basis represents the sum of the hyperinflationary cost of each, translated according to the exchange rate for the translation period incurred.*

(iii) The DASTM gain of S for 1994 is computed as follows:

Net worth—1994		$6,871,627
Less—Net worth—1993		$3,246,495
Plus—1994 Dividends:		
April	$149,254	
December	[1] 126,582	275,836
Less Operating Profit—1994		2,038,200
DASTM Gain		$1,862,768

[1] *The exchange rates on the date of the April and December dividends were 33.5h:$1 and 39.5h:$1, respectively.*

(iv) Thus, total profit = $2,038,200 + $1,862,768 = $3,900,968

(e) ***Effect of DASTM gain or loss on gross income, taxable income, or earnings and profits*** —

(1) ***In general.*** For all purposes of subtitle A, the amount of DASTM gain or loss of a QBU determined under paragraph (d) of this section is taken into account by the QBU for purposes of determining the amount of its gross income, taxable income or loss, earnings and profits (or deficit in earnings and profits), and, where necessary, particular items of income, expense or other amounts. DASTM gain or loss is allocated under one of two methods. Certain small QBUs may elect the small QBU DASTM allocation described in paragraph (e)(2) of this section. All other QBUs must use the 9-step procedure described in paragraph (e)(3) of this section.

(2) ***Small QBU DASTM allocation*** —

(i) ***Election threshold.*** A taxpayer may elect to use the small QBU DASTM allocation described in paragraph (e)(2)(iv) of this section with respect to a QBU that has an adjusted basis in assets (translated as provided in paragraph (d)(5) of this section) of $10 million or less at the end of any taxable year. In calculating the $10 million threshold, a QBU shall be treated as owning all

of the assets of each related QBU (as defined in paragraph (e)(2)(vi) of this section) having its residence (as defined in section 988(a)(3)(B)) in the QBU's country of residence (related same-country QBU). For this purpose, appropriate adjustment shall be made to eliminate the double counting of assets created in transactions between related QBUs resident in the same country. For example, assume QBU-1, resident in country X, sells inventory to related QBU-2, also resident in country X, in exchange for an account receivable. For purposes of determining the assets of QBU-1 under this paragraph (e)(2)(i), the taxpayer shall take into account either the inventory shown on the books of QBU-2 or QBU-1's receivable from QBU-2 (but not both).

(ii) ***Consent to election.*** The election of the small QBU DASTM allocation or subsequent application of the rules of paragraph (e)(3) of this section due to an increase in the adjusted basis of the QBU's assets shall be deemed to have been made with the consent of the Commissioner. Once the election under paragraph (e)(2)(iii) of this section is made, it shall apply for all years in which the adjusted basis of the assets of the QBU (and any related same-country QBU) is $10 million or less, unless revoked with the Commissioner's consent. If the adjusted basis of the assets of the QBU (and any related same- country QBU) exceeds $10 million at the end of any taxable year, the rules of paragraph (e)(3) of this section shall apply to that QBU (and any related same-country QBU) for such year and each subsequent year unless such QBU again qualifies, and applies for and obtains the Commissioner's consent, to use the small QBU DASTM allocation. However, if a QBU acquires assets with a principal purpose of avoiding the application of paragraph (e)(2)(iv) of this section, the Commissioner may disregard the acquisition of such assets.

(iii) ***Manner of making election —***

(A) ***QBUs that are branches of United States persons.*** For the first year in which this election is effective, in the case of a QBU branch of a United States person, a statement shall be attached to the United States person's timely filed Federal income tax return (taking extensions into account). The statement shall identify the QBU (or QBUs) for which the election is being made by describing its business and its country of residence, state the adjusted basis of the assets of the QBU (and any related same-country QBUs) to which the election applies, and include a statement that the election is being made pursuant to § 1.985-3(e)(2).

(B) ***Other QBUs.*** In the case of a QBU other than one described in paragraph (e)(2)(iii)(A) of this section, an election must be made in the manner prescribed in § 1.964-1. The statement filed with the Internal Revenue Service as required under § 1.964-1 must include the information required under paragraph (e)(2)(iii)(A) of this section.

(iv) ***Effect of election.*** If a taxpayer elects under this paragraph (e)(2) to use the small QBU DASTM allocation, DASTM gain or loss, as determined under paragraph (d) of this section, of a small QBU shall be allocated ratably to all items of the QBU's gross income (determined prior to adjustment for DASTM gain or loss). Therefore, for purposes of the foreign tax credit, DASTM gain or loss shall be allocated on the basis of the relative amounts of gross income in each separate category as defined in § 1.904-5(a)(4)(v). In the case of a controlled foreign corporation (within the meaning of section 957 or 953(c)(1)(B)), for purposes of section 952, DASTM gain or loss shall be allocated to subpart F income in a separate category in the same ratio that the gross subpart F income in that category for the taxable year bears to its total gross income in that category for the taxable year.

(v) ***Conformity.*** If a person (or a QBU of such person) makes an election under this paragraph (e)(2) to use the small QBU DASTM allocation, then each QBU of any related person (as defined in paragraph (e)(2)(vi) of this section) that satisfies the threshold requirement of paragraph (e)(2)(i) of this section (after application of the aggregation rule of paragraph (e)(2)(i) of this section) shall be deemed to have made the election.

(vi) ***Related person.*** The term related person means any person with a relationship to the QBU (or to the United States or foreign person of which the electing QBU is a part) that is defined in section 267(b) or section 707(b).

(3) ***DASTM 9-step procedure*** —

(i) ***Step 1—prepare balance sheets.*** The taxpayer shall prepare an opening and a closing balance sheet for the QBU for each balance sheet period during the taxable year. The balance sheet period is the most frequent period for which balance sheet data are reasonably available (but in no event less frequently than quarterly). The balance sheet period may not be changed without the consent of the district director. The balance sheets must be prepared under the principles of paragraph (d)(2) of this section.

(ii) ***Step 2—identify certain assets and liabilities.*** The taxpayer shall identify each item on the balance sheet that is described in section 988(c)(1)(B) or (C) and that would have been translated under paragraph (d)(5) of this section into dollars at the exchange rate for the last translation period for the taxable year (or the exchange rate on the last day of the last translation period of the taxable year in the case of an accrued foreign income tax liability).

(iii) ***Step 3—characterize the assets.*** The taxpayer shall characterize and group the assets identified in paragraph (e)(3)(ii) of this section (Step 2) according to the source and the type of income that they generate, have generated, or may reasonably be expected to generate by applying the principles of § 1.861-9T(g)(3) or its successor regulation (relating to characterization of assets for purposes of interest expense allocation). If a purpose for a taxpayer's business practices is to manipulate asset characterization or groupings, the district director may allocate or apportion DASTM gain or loss attributable to the assets. Thus, if a taxpayer that previously did not separately state interest on accounts receivable begins to impose an interest charge and a purpose for the change was to manipulate tax characterizations or groupings, then the district director may require that none of the DASTM gain or loss attributable to those receivables be allocated or apportioned to interest income.

(iv) ***Step 4—determine DASTM gain or loss attributable to certain assets*** —

(A) ***General rule.*** The taxpayer shall determine the dollar amount of DASTM gain or loss attributable to assets in each group identified in paragraph (e)(3)(iii) of this section (Step 3) as follows:

$$\left[\left(\mathrm{bb}+\mathrm{eb}\right)\div 2\right]\times\left[\mathrm{er}-\mathrm{br}\right]$$

where

bb = the hyperinflationary currency adjusted basis of the assets in the group at the beginning of the balance sheet period.

eb = the hyperinflationary currency adjusted basis of the assets in the group at the end of the balance sheet period.

er = one dollar divided by the number of hyperinflationary currency units that equal one dollar at the end of the balance sheet period.

br = one dollar divided by the number of hyperinflationary currency units that equal one dollar at the beginning of the balance sheet period.

(B) ***Weighting to prevent distortion.*** If averaging the adjusted basis of assets in a group at the beginning and end of a balance sheet period results in an allocation of DASTM gain or loss that does not clearly reflect income, as might be the case in the event of a purchase or disposition of an asset that is not in the normal course of business, the taxpayer must use a weighting method that reflects the time the assets are held by the QBU during the translation period.

(C) ***Example.*** The provisions of this paragraph (e)(3)(iv) are illustrated by the following example:

Example. S is a foreign corporation that operates in the hyperinflationary currency "h" and computes its income or loss or earnings and profits under DASTM. S's adjusted basis in a group of assets described in section 988(c)(1)(B) or (C) that generate general limitation foreign source income (as characterized under paragraph (e)(3)(iii) of this section) at the beginning of the balance sheet period is 750,000h. S's basis in such assets at the end of the balance sheet period is 1,250,000h. The exchange rate at the beginning of the balance sheet period is $1 = 200h. The exchange rate at the end of the balance sheet period is $1 = 500h. The DASTM loss attributable to the assets described above is $3,000, determined as follows: [(750,000h + 1,250,000h) ÷ 2] × [($1 ÷ 500h) − ($1 ÷ 200h)] = ($3000)

(v) ***Step 5—adjust dollar gross income by DASTM gain or loss from assets.*** The taxpayer shall adjust the dollar amount of the QBU's gross income (computed under paragraphs (b)(1) through (b)(3) of this section) generated by each group of assets characterized in paragraph (e)(3)(iii) of this section (Step 3) by the amount of DASTM gain or loss attributable to those assets computed under paragraph (e)(3)(iv) of this section (Step 4). Thus, if a group of assets, such as accounts receivable, generates both a category of income described in section 904(d)(1)(I) (relating to general limitation income) that is not foreign base company income as defined in section 954 and a DASTM loss under paragraph (e)(3)(iv) of this section (Step 4), the amount of the DASTM loss would reduce the amount of the QBU's gross income in that category. Similarly, if a group of assets, such as short-term bank deposits, generates both foreign personal holding company income that is passive income (described in sections 954(c)(1)(A) and 904(d)(1)(A)) and a DASTM loss under paragraph (e)(3)(iv) of this section (Step 4), the amount of the DASTM loss would reduce the amount of the QBU's foreign personal holding company income and passive income. See section 904(f) and the regulations thereunder in the case where that section would apply and DASTM loss attributable to a group of assets exceeds the income generated by such assets.

(vi) ***Step 6—determine DASTM gain or loss attributable to liabilities*** —

(A) ***General rule.*** The taxpayer shall determine the dollar amount of DASTM gain or loss attributable to liabilities identified in paragraph (e)(3)(ii) of this section (Step 2), and described in paragraph (e)(3)(vi)(B) of this section as follows:

$$[(bl+el)\div 2]\times[br-er]$$

where

bl = the hyperinflationary currency amount of liabilities at the beginning of the balance sheet period.

el = the hyperinflationary currency amount of liabilities at the end of the balance sheet translation period.

br = one dollar divided by the number of hyperinflationary currency units that equal one dollar at the beginning of the balance sheet period.

er = one dollar divided by the number of hyperinflationary currency units that equal one dollar at the end of the balance sheet period.

(B) ***Separate calculation.*** The calculation shall be made separately for interest-bearing liabilities described in paragraph (e)(3)(vii) of this section (Step 7) and for each of the classes of non-interest-bearing liabilities described in paragraph (e)(3)(viii) of this section (Step 8).

(C) ***Weighting to prevent distortion.*** Where a distortion would result from averaging the amount of liabilities at the beginning and end of a balance sheet period, as might be the case where a taxpayer incurs or retires a substantial liability, the taxpayer must use a different method that more clearly reflects the average amount of liabilities weighted to reflect the time the liability was outstanding during the balance sheet period.

(vii) ***Step 7—adjust dollar income and expense by DASTM gain or loss from interest-bearing liabilities—***

(A) ***In general.*** The taxpayer shall apply the amount of DASTM gain on interest-bearing liabilities computed under paragraph (e)(3)(vi) of this section (Step 6) to reduce interest expense generated by such liabilities (*e.g.,* prior to the application of § 1.861-9T or its successor regulation). To the extent DASTM gain on such liabilities exceeds interest expense, it shall be sourced or otherwise classified in the same manner that interest expense is allocated and apportioned under § 1.861-9T or its successor regulation. The amount of DASTM loss on interest-bearing liabilities computed under paragraph (e)(3)(vi) of this section (Step 6) shall be allocated and apportioned in the same manner that interest expense is allocated and apportioned under § 1.861-9T or its successor regulation (without regard to the exceptions to fungibility in § 1.861-10T or its successor regulation). For purposes of this section, an interest-bearing liability is a liability that requires payment of periodic interest (whether fixed or variable), has original issue discount, or would have interest imputed under subtitle A.

(B) ***Allocation of DASTM gain or loss from interest-bearing liabilities that generate related person interest expense.*** DASTM gain or loss from interest-bearing liabilities that generate related person interest expense (as provided in section 954(b)(5)) shall be allocated for

purposes of subtitle A (including sections 904 and 952) in the same manner that the related person interest expense of that debt is required to be allocated under the rules of section 954(b)(5) and § 1.904-5(c)(2).

(C) ***Modified gross income method.*** In applying the modified gross income method described in § 1.861-9T(j) or its successor regulation, gross income shall be adjusted for any DASTM gain or loss from assets as provided in paragraph (e)(3)(v) of this section (Step 5) and any DASTM gain or loss with respect to short-term, non-interest-bearing trade payables as provided in paragraph (e)(3)(viii)(A) of this section.

(viii) ***Step 8—adjust dollar income and expense by DASTM gain or loss from non-interest bearing liabilities*** —

(A) ***Short-term, non-interest-bearing trade payables.*** The taxpayer shall allocate DASTM gain or loss on short-term non-interest-bearing trade payables for purposes of subtitle A (including sections 904 and 952) to the same category or type of gross income as the cost or expense to which the trade payable relates. For this purpose, a short-term, non-interest-bearing trade payable is a non-interest-bearing liability with a term of 183 days or less that is incurred to purchase property or services to be used by the obligor in an active trade or business.

(B) ***Excise tax payables.*** The taxpayer shall allocate DASTM gain or loss on excise tax payables for purposes of subtitle A (including sections 904 and 952) to the same category or type of gross income as would be derived from the activity to which the excise tax relates.

(C) ***Other non-interest-bearing liabilities*** —

(*1*) ***In general.*** Except as provided in paragraphs (e)(3)(viii)(A), (e)(3)(viii)(B), and (e)(3)(viii)(C)(*2*) of this section, DASTM gain or loss on non-interest-bearing liabilities shall be allocated under paragraph (e)(3)(ix) of this section (Step 9).

(*2*) ***Tracing if substantial distortion of income.*** DASTM gains and losses on liabilities described in paragraph (e)(3)(viii)(C)(*1*) of this section may be attributed to the same section 904(d) separate category or subpart F category as the transaction to which the liability relates if the taxpayer demonstrates to the satisfaction of the district director, or it is determined by the district director, that application of paragraph (e)(3)(viii)(C)(*1*) of this section results in a substantial distortion of income.

(ix) ***Step 9—allocate residual DASTM gain or loss.*** If there is a difference between the net DASTM gain or loss determined under paragraphs (e)(3)(i) through (viii) of this section (Steps 1 through 8) and the DASTM gain or loss determined under paragraph (d) of this section, the amount of the difference must be allocated for purposes of subtitle A (including sections 904 and 952) to the QBU's gross income (computed under paragraphs (b)(1) through (3) of this section, as adjusted under paragraphs (e)(3)(i) through (viii) of this section (Steps 1 through 8)) on the basis of the relative amounts of each category or type of gross income.

[T.D. 8556, 59 FR 37673, July 25, 1994, as amended by T.D. 9320, 72 FR 15044, Mar. 30, 2007; T.D. 9882, 84 FR 69120, Dec. 17, 2019]

§ 1.985-4 Method of accounting.

(a) ***Adoption of election.*** The adoption of, or the election to use, a functional currency shall be treated as a method of accounting. The functional currency shall be used for the year of adoption (or election) and for all subsequent taxable years unless permission to change is granted, or considered to be granted under § 1.985-2 or § 1.985-8, by the Commissioner.

(b) ***Condition for changing functional currencies.*** Generally, permission to change functional currencies shall not be granted unless significant changes in the facts and circumstances of the QBU's economic environment occur. If the determination of the functional currency of the QBU for purposes of United States generally accepted accounting principles (GAAP) is based on facts and circumstances substantially similar to those set forth in § 1.985-1(c)(2), then ordinarily the Commissioner will grant a taxpayer's request to change its functional currency (or the functional currency of its branch that is a QBU) to a new functional currency only if the taxpayer (or its QBU) also changes to the new functional currency for purposes of GAAP. However, permission to change will not necessarily be granted merely because the new functional currency will conform to the taxpayer's GAAP functional currency.

(c) ***Relationship to certain other sections of the Code.*** Nothing in this section shall be construed to override the provisions of any other sections of the Code of regulations that require the use of consistent accounting methods. Such provisions must be independently satisfied separate and apart from the identification of a functional currency. For instance, while separate geographical divisions of a taxpayer's trade or business may have different functional currencies, such geographical divisions may nevertheless be required to consistently use other methods of accounting.

[T.D. 8263, 54 FR 38661, Sept. 20, 1989, as amended by T.D. 8776, 63 FR 40368, July 29, 1998; T.D. 8927, Jan. 11, 2001]

§ 1.985-5 Adjustments required upon change in functional currency.

(a) ***In general.*** This section applies in the case of a taxpayer or qualified business unit (QBU) (including a section 987 QBU (as defined in § 1.987-1(b)(3)) changing from one functional currency (old functional currency) to another functional currency (new functional currency). A taxpayer or QBU subject to the rules of this section shall make the adjustments set forth in the 3-step procedure described in paragraphs (b) through (e) of this section. Except as otherwise provided in this section, the adjustments shall be made on the last day of the last taxable year ending before the year of change (as defined in § 1.481-1(a)(1)). Gain or loss required to be recognized under paragraphs (b), (d)(2), (e)(2), and (e)(4)(iii) of this section is not subject to section 481 and, therefore, the full amount of the gain or loss must be included in income on the last day of the last taxable year ending before the year of change.

(b) ***Step 1—Taking into account exchange gain or loss on certain section 988 transactions.*** The taxpayer or QBU shall recognize or otherwise take into account for all purposes of the Internal Revenue Code the amount of any unrealized exchange gain or loss attributable to a section 988 transaction (as defined in section 988(c)(1)(A) through (C)) that, after applying section 988(d), is denominated in terms of or determined by reference to the new functional currency. The amount of such gain or loss shall be determined without regard to the limitations of section 988(b) (that is, whether any gain or loss would be realized on the transaction as a whole). The character and source of such gain or loss shall be determined under section 988.

(c) ***Step 2—Determining the new functional currency basis of property and the new functional currency amount of liabilities and any other relevant items.*** Except as otherwise provided in this section, the new functional currency adjusted basis of property and the new functional currency amount of liabilities and any other

relevant items (for example, items described in section 988(c)(1)(B)(iii)) shall equal the product of the old functional currency adjusted basis or liability and the new functional currency/old functional currency spot rate on the last day of the last taxable year ending before the year of change.

(d) ***Step 3A—Additional adjustments that are necessary when a QBU changes functional currency*** —

(1) ***QBU changing to a functional currency other than the owner's functional currency*** —

(i) ***Rule.*** If a QBU changes its functional currency, and after the change the QBU is a section 987 QBU that is subject to §§ 1.987-1 through 1.987-15 pursuant to § 1.987-1(b)(1), then the adjustments described in either paragraph (d)(1)(ii) or (d)(1)(iii) of this section shall be taken into account for purposes of section 987.

(ii) ***QBU and the owner had different functional currencies prior to the change.*** If the QBU and the owner of the QBU had different functional currencies prior to the change and as a result the QBU was a section 987 QBU prior to the change, then the adjustments described in paragraphs (d)(1)(ii)(A) and (d)(1)(ii)(B) of this section shall be taken into account.

(A) ***Determining new historic rates.*** The historic rate (as defined in § 1.987-1(c)(3)) for the year of change and subsequent taxable years with respect to a historic item (as defined in § 1.987-1(e)) reflected on the balance sheet of the section 987 QBU immediately prior to the year of change shall be equal to the historic rate prior to the year of change (that is, a rate that translates the section 987 QBU's old functional currency into the owner's functional currency) divided by the spot rate (as defined in § 1.987-1(c)(1)) for translating an amount denominated in the section 987 QBU's old functional currency into the section 987 QBU's new functional currency on the last day of the last taxable year ending before the year of change. For example, if a taxpayer with a U.S. dollar (USD) functional currency owns a section 987 QBU that changes from a British pound (GBP) functional currency to a euro (EUR) functional currency, the historic rate for translating a specific historic item of this section 987 QBU from GBP to USD is 1.50, and the spot rate for translating GBP to EUR on the last day of the last taxable year before the change is 1.30, then the new historic rate for translating this historic item from EUR to USD is 1.15 (1.50/1.30).

(B) ***Determining the owner functional currency net value of the QBU on the last day of the last taxable year ending before the year of change under § 1.987-4(d)(1)(i)(B).*** For purposes of determining the owner functional currency net value of the section 987 QBU on the last day of the last taxable year ending before the year of change under § 1.987-4(d)(1)(i)(B) and § 1.987-4(e), the section 987 QBU's marked items (as defined in § 1.987-1(d)) shall be translated from the section 987 QBU's old functional currency into the owner's functional currency using the spot rate on the last day of the last taxable year ending before the year of change.

(iii) ***QBU and the taxpayer had the same functional currency prior to the change.*** If a QBU that has the same functional currency as a taxpayer changes its functional currency to a new functional currency that is different than the functional currency of the taxpayer, and as a result the taxpayer becomes an owner of a section 987 QBU (see § 1.987-1), the taxpayer and section 987 QBU will become subject to section 987 for the year of change and subsequent years.

(2) ***QBU changing to the owner's functional currency.*** If a section 987 QBU changes its functional currency to the functional currency of its owner, the section 987 QBU shall be treated as if it terminated on the last day of the last taxable year ending before the year of change.*See* §§ 1.987-5, 1.987-8, 1.987-12, and 1.987-13 for the effect of a termination of a section 987 QBU that is subject to §§ 1.987-1 through 1.987-15.

(e) ***Step 3B—Additional adjustments that are necessary when a taxpayer/owner changes functional currency*** —

(1) ***Corporations.*** The amount of a corporation's new functional currency earnings and profits and the amount of its new functional currency paid-in capital shall equal the old functional currency amounts of such items multiplied by the spot rate for translating an amount denominated in the corporation's old functional currency into the corporation's new functional currency on the last day of the last taxable year ending before the year of change.

(2) ***Collateral consequences to a United States shareholder of a corporation changing to the United States dollar as its functional currency.*** A United States shareholder (within the meaning of section 951(b) or section 953(c)(1)(A)) of a controlled foreign corporation (within the meaning of section 957 or section 953(c)(1)(B)) changing its functional currency to the dollar shall recognize foreign currency gain or loss computed under section 986(c) as if all previously taxed earnings and profits, if any, (including amounts attributable to pre-1987 taxable years that were translated from dollars into functional currency in the foreign corporation's first post-1986 taxable year) were distributed immediately prior to the change.

(3) ***Taxpayers that are not corporations.*** [Reserved]

(4) ***Adjustments to a section 987 QBU's balance sheet and unrecognized section 987 gain or loss when an owner changes functional currency*** —

(i) ***Owner changing to a functional currency other than the section 987 QBU's functional currency.*** If an owner of a section 987 QBU, subject to §§ 1.987-1 through 1.987-15 pursuant to § 1.987-1(b)(1), changes to a functional currency other than the functional currency of the section 987 QBU, the adjustments described in paragraphs (e)(4)(i)(A) through (C) of this section are taken into account for purposes of section 987.

(A) ***Determining new historic rates.*** The historic rate (as defined in § 1.987-1(c)(3)) for the year of change and subsequent taxable years with respect to a historic item (as defined in § 1.987-1(e)) reflected on the balance sheet of the section 987 QBU immediately before the year of change is equal to the historic rate before the year of change (that is, a rate that translates the section 987 QBU's functional currency into the owner's old functional currency) divided by the spot rate for translating an amount denominated in the owner's new functional currency into the owner's old functional currency on the last day of the last taxable year ending before the year of change. For example, if a taxpayer that owns a section 987 QBU with a British pound functional currency changes from a U.S. dollar functional currency to a euro functional currency, and the historic rate for translating a specific item of the section 987 QBU from GBP to USD is 1.50 and the spot rate for translating EUR to USD on the last day of the last taxable year before the change is 1.10, then the new historic rate for translating this historic item from GBP to EUR is 1.36 (1.50/1.10).

(B) ***Determining the owner functional currency net value of the section 987 QBU on the last day of the last taxable year ending before the year of change under § 1.987-4(d)(1)(i)(B).*** For purposes of determining the change in the owner functional currency net value of the

section 987 QBU on the last day of the last taxable year preceding the year of change under § 1.987-4(d)(1)(i)(B) and (e), the section 987 QBU's marked items are translated into the owner's new functional currency at the spot rate on the last day of the last taxable year ending before the year of change.

(C) ***Translation of unrecognized section 987 gain or loss.*** Any net accumulated unrecognized section 987 gain or loss determined under § 1.987-4(c), cumulative suspended section 987 loss determined under § 1.987-11(b), or deferred section 987 gain or loss determined under § 1.987-12 is translated from the owner's old functional currency into the owner's new functional currency using the spot rate for translating an amount denominated in the owner's old functional currency into the owner's new functional currency on the last day of the last taxable year ending before the year of change.

(ii) ***Taxpayer with the same functional currency as its QBU changing to a different functional currency.*** If a taxpayer with the same functional currency as its QBU changes to a new functional currency and as a result the taxpayer becomes an owner of a section 987 QBU (*see* § 1.987-1), the taxpayer and the section 987 QBU become subject to section 987 for the year of change and subsequent taxable years.

(iii) ***Owner changing to the same functional currency as the section 987 QBU.*** If an owner changes its functional currency to the functional currency of its section 987 QBU, the section 987 QBU is treated as if it terminated on the last day of the last taxable year ending before the year of change. *See* §§ 1.987-5, 1.987-8, 1.987-12, and 1.987-13 for the consequences of a termination of a section 987 QBU that is subject to §§ 1.987-1 through 1.987-15.

(f) ***Example.*** The provisions of this section are illustrated by the following example:

(1) ***Facts.*** FC, a foreign corporation, is wholly owned by DC, a domestic corporation. The Commissioner granted permission to change FC's functional currency from the British pound to the euro beginning January 1, year 2. The EUR/GBP exchange rate on December 31, year 1, is €1:£0.50.

(2) ***Analysis*** —

(i) ***Determining new functional currency basis of property and liabilities.*** The following table shows how FC must convert the items on its balance sheet from the British pound to the euro on December 31, year 1.

TABLE 1 TO PARAGRAPH (f)(2)(i) CONVERSION OF FC'S BALANCE SHEET ITEMS

	GBP	EUR
Assets:		
Cash on hand	£40,000	€80,000
Accounts Receivable	10,000	20,000
Inventory	100,000	200,000
100,000 Euro Bond (100,000 historical basis)	50,000	100,000
Fixed assets:		

	GBP	EUR
Property	200,000	400,000
Plant	500,000	1,000,000
Accumulated Depreciation	(200,000)	(400,000)
Equipment	1,000,000	2,000,000
Accumulated Depreciation	(400,000)	(800,000)
Total Assets	1,300,000	2,600,000
Liabilities and Equity:		
Accounts Payable	50,000	100,000
Long-term Liabilities	400,000	800,000
Paid-in-Capital	800,000	1,600,000
Retained Earnings	50,000	100,000
Total Liabilities and Equity	1,300,000	2,600,000

(ii) ***Exchange gain or loss on section 988 transactions.*** Under paragraph (b) of this section, FC will recognize a £50,000 loss (£50,000 current value minus £100,000 historical basis) on the Euro Bond resulting from the change in functional currency because, after the change, the Euro Bond will no longer be an asset denominated in a non-functional currency. The amount of FC's retained earnings on its December 31, year 1, balance sheet reflects the £50,000 loss on the Euro Bond.

(g) ***Applicability date.*** Generally, this section applies to taxable years beginning after December 31, 2024. However, if pursuant to § 1.987-15(b), a taxpayer chooses to apply §§ 1.987-1 through 1.987-15 to a taxable year before the first taxable year described in § 1.987-15(a)(1), then this section applies to that taxable year and subsequent years.

[T.D. 9794, 81 FR 88819, Dec. 8, 2016, as amended at T.D. 10016, 89 FR 100164, Dec. 11, 2024]

§ 1.985-6 Transition rules for a QBU that uses the dollar approximate separate transactions method for its first taxable year beginning in 1987.

(a) ***In general.*** This section sets forth transition rules for a QBU that used the dollar approximate separate transactions method of accounting set forth in § 1.985-3 or § 1.985-3T (as contained in the April 1, 1989 edition of 26 CFR part 1 (1.908 to 1.1000)) for its first taxable year beginning in 1987 (DASTM QBU). A DASTM QBU must determine the dollar and hyperinflationary currency basis of its assets and the dollar and hyperinflationary currency amount of its liabilities that were acquired or incurred in taxable years beginning before January 1, 1987. In addition, a DASTM QBU must determine its net worth, including its retained earnings, at the end of the QBU's last taxable year beginning before January 1, 1987. This section provides rules for controlled foreign corporations (as defined in section 957 or section 953(c)(1)(B)), other foreign corporations, and branches of United States persons that must make these determinations.

(b) ***Certain controlled foreign corporations.*** If a DASTM QBU was a controlled foreign corporation for its last taxable year beginning before January 1, 1987, and it had a significant event as described in § 1.964-1(c)(6) in a taxable year beginning before January 1, 1987, then the rules of this paragraph (b) shall apply.

(1) ***Basis in assets and amount of liabilities.*** The hyperinflationary currency adjusted basis of the QBU's assets and the hyperinflationary currency amount of the QBU's liabilities acquired or incurred by the QBU in a taxable year beginning before January 1, 1987, shall be the basis or the amount as determined under § 1.964-1(e) prior to translation under § 1.964-1(e)(4). The dollar adjusted basis of such assets and the dollar amount of such liabilities shall be the adjusted basis or the amount as determined under the rules of § 1.964-1(e) after translation under § 1.964-1(e)(4).

(2) ***Retained earnings.*** The dollar amount of the QBU's retained earnings at the end of its last taxable year beginning before January 1, 1987, shall be the dollar amount determined under § 1.964-1(e)(3).

(c) ***All other foreign corporations.*** If a foreign corporation is a DASTM QBU that is not described in paragraph (b) of this section, then the hyperinflationary currency and dollar adjusted basis in the QBU's assets acquired in taxable years beginning before January 1, 1987, the hyperinflationary currency and dollar amount of the QBU's liabilities acquired or incurred in taxable years beginning before January 1, 1987, and the dollar amount of the QBU's net worth, including its retained earnings, at the end of its last taxable year beginning before January 1, 1987, shall be determined by applying the principles of § 1.985-3T or § 1.985-3. Thus, for example, the dollar basis of plant and equipment shall be determined using the appropriate historical exchange rate.

(d) ***Pre-1987 section 902 amounts*** —

(1) ***Translation of pre-1987 section 902 accumulated profits and taxes into United States dollars.*** The foreign income taxes and accumulated profits or deficits in accumulated profits of a foreign corporation that were maintained in foreign currency for purposes of section 902 and that are attributable to taxable years of the foreign corporation beginning before January 1, 1987, shall be translated into dollars at the spot exchange rate on the first day of its first taxable year beginning after December 31, 1986. Once translated into dollars, these accumulated profits and taxes shall (absent a change in functional currency) remain in dollars for all federal income tax purposes.

(2) ***Carryforward of accumulated deficits in accumulated profits from pre-1987 taxable years to post-1986 taxable years.*** For purposes of sections 902 and 960, the post-1986 undistributed earnings of a foreign corporation that is subject to the rules of this section shall be reduced by the dollar amount of the corporation's deficit in accumulated profits, if any, determined under section 902 and the regulations thereunder, that was accumulated at the end of the corporation's last taxable year beginning before January 1, 1987. The dollar amount of the accumulated deficit shall be determined by multiplying the foreign currency amount of such deficit by the spot exchange rate on the last day of the corporation's last taxable year beginning before January 1, 1987, and shall be taken into account on the first day of the corporation's first taxable year beginning after December 31, 1986. Post-1986 undistributed earnings may not be reduced by the dollar amount of a pre-1987 deficit in retained earnings determined under § 1.964-1(e).

(e) ***Net worth branch.*** If a DASTM QBU is a branch of a United States person and the QBU used a net worth method of accounting for its last taxable year beginning before January 1, 1987, then the rules of this paragraph (e) shall apply. A net worth method of accounting is any method of accounting under which the taxpayer calculates the taxable income of a QBU based on the net change in the dollar value of the QBU's

equity (assets minus liabilities) during the course of a taxable year, taking into account any contributions or remittances made during the year. See, *e.g.,* Rev. Rul. 75-106, 1975-1 C.B. 31. (See § 601.601(d)(2)(ii)(*b*) of this chapter).

(1) ***Basis in assets and amount of liabilities*** —

(i) ***Hyperinflationary amounts.*** For the first taxable year beginning in 1987, the hyperinflationary currency adjusted basis of a QBU's assets or the hyperinflationary currency amounts of its liabilities acquired or incurred in a taxable year beginning before January 1, 1987 is the hyperinflationary currency basis or amount at the date when acquired or incurred, as adjusted according to United States generally accepted accounting and tax accounting principles. If a hyperinflationary currency basis or amount was not determined at such date, the dollar basis or amount, as adjusted according to United States generally accepted accounting and tax accounting principles, shall be translated into hyperinflationary currency at the spot exchange rate on the date when the asset or liability was acquired or incurred.

(ii) ***Dollar amounts.*** For the first taxable year beginning in 1987, the dollar adjusted basis of the QBU's assets and the amounts of its liabilities shall be those amounts reflected on the QBU's dollar books and records at the end of the taxpayer's last taxable year beginning before January 1, 1987, after adjusting the books and records according to United States generally accepted accounting and tax accounting principles.

(2) ***Ending net worth.*** The dollar amount of the QBU's net worth at the end of its last taxable year beginning before January 1, 1987 shall equal the QBU's net worth at that date as determined under paragraph (e)(1)(ii) of this section.

(f) ***Profit and loss branch.*** If a DASTM QBU is a branch of a United States person and the QBU used a profit and loss method of accounting for its last taxable year beginning before January 1, 1987, then the United States person shall first apply the transition rules of § 1.987-5 in order to determine the beginning amount and dollar basis of the branch's EQ pool, the hyperinflationary currency basis of the branch's assets, and the hyperinflationary currency amounts of its liabilities. A profit and loss method of accounting is any method of accounting under which the taxpayer calculates the profits of a QBU by computing the QBU's profits in its functional currency and translating the net result into dollars. See *e.g.,* Rev. Rul. 75-107, 1975-1 C.B. 32. (See § 601.601(d)(2)(ii)(*b*) of this chapter). The QBU and the taxpayer must then make the adjustments required by § 1.985-5, *e.g.,* the QBU must take into account unrealized exchange gain or loss on dollar-denominated section 988 transactions, the taxpayer must account for the deemed termination of the branch, and the taxpayer must translate the QBU's balance sheet items from hyperinflationary currency into dollars at the spot rate.

[T.D. 8464, 58 FR 234, Jan. 5, 1993]

§ 1.985-7 Adjustments required in connection with a change to DASTM.

(a) ***In general.*** If a QBU begins to use the dollar approximate separate transactions method of accounting set forth in § 1.985-3 (DASTM) in a taxable year beginning after April 6, 1998, adjustments shall be made as provided by this section. For the rules with respect to foreign corporations, see paragraph (b) of this section. For the rules with respect to adjustments to the income of United States shareholders of controlled foreign corporations, see paragraph (c) of this section. For the rules with respect to adjustments relating to QBU branches, see paragraph (d) of this section. For the effective date of this section, see paragraph (e). For purposes of applying this section, the look-back period shall be the period

beginning with the first taxable year after the transition date and ending on the last day prior to the taxable year of change. The term transition date means the later of the last day of the last taxable year ending before the base period as defined in § 1.985-1(b)(2)(ii)(D) or the last day of the taxable year in which the QBU last applied DASTM. The taxable year of change shall mean the taxable year of change as defined in § 1.481-1(a)(1). The application of this paragraph may be illustrated by the following examples:

Example 1. A calendar year QBU that has not previously used DASTM operates in a country in which the functional currency of the country is hyperinflationary as defined under § 1.985-1(b)(2)(ii)(D) for the QBU's 1999 tax year. The look-back period is the period from January 1, 1996 through December 31, 1998, the transition date is December 31, 1995, and the taxable year of change is the taxable year beginning January 1, 1999.

Example 2. A QBU that has not previously used DASTM with a taxable year ending June 30, operates in a country in which the functional currency of the country is hyperinflationary for the QBU's tax year beginning July 1, 1999 as defined under § 1.985-1(b)(2)(ii)(D) (where the base period is the thirty-six calendar months immediately preceding the first day of the current calendar year 1999). The look-back period is the period from July 1, 1995 through June 30, 1999, the transition date is June 30, 1995, and the taxable year of change is the taxable year beginning July 1, 1999.

(b) ***Adjustments to foreign corporations*** —

(1) ***In general.*** In the case of a foreign corporation, the corporation shall make the adjustments set forth in paragraphs (b)(2) through (4) of this section. The adjustments shall be made on the first day of the taxable year of change.

(2) ***Treatment of certain section 988 transactions*** —

(i) ***Exchange gain or loss from section 988 transactions unrealized as of the transition date.*** A foreign corporation shall adjust earnings and profits by the amount of any unrealized exchange gain or loss that was attributable to a section 988 transaction (as defined in sections 988(c)(1)(A), (B), and (C)) that was denominated in terms of (or determined by reference to) the dollar and was held by the corporation on the transition date. Such gain or loss shall be computed as if recognized on the transition date and shall be reduced by any gain and increased by any loss recognized by the corporation with respect to such transaction during the look-back period. The amount of such gain or loss shall be determined without regard to the limitations of section 988(b) (i.e., whether any gain or loss would be realized on the transaction as a whole). The character and source of such gain or loss shall be determined under section 988. Proper adjustments shall be made to account for gain or loss taken into account by reason of this paragraph (b)(2). See § 1.985-5(f) *Example 1, footnote 1.*

(ii) ***Treatment of a section 988 transaction entered into and terminated during the look-back period.*** A foreign corporation shall reduce earnings and profits by the amount of any gain, and increase earnings and profits by the amount of any loss, that was recognized with respect to any dollar denominated section 988 transactions entered into and terminated during the look-back period.

(3) ***Opening balance sheet.*** The opening balance sheet of a foreign corporation for the taxable year of change shall be determined as if the corporation had changed its functional currency to the dollar by applying § 1.985-5(c) on the transition date and had translated its assets and liabilities acquired and incurred during the look-back period under § 1.985-3.

(4) ***Earnings and profits adjustments*** —

(i) ***Pre-1987 accumulated profits.*** The foreign income taxes and accumulated profits or deficits in accumulated profits of a foreign corporation that are attributable to taxable years beginning before January 1, 1987, as stated on the transition date, and that were maintained for purposes of section 902 in the old functional currency, shall be translated into dollars at the spot rate in effect on the transition date. The applicable accumulated profits shall be reduced on a last-in, first-out basis by the aggregate dollar amount (translated from functional currency in accordance with the rules of section 989(b)) attributable to earnings and profits that were distributed (or treated as distributed) during the look-back period to the extent such amounts distributed exceed the earnings and profits calculated under (b)(4)(ii) or (b)(4)(iii), as applicable. See § 1.902-1(b)(2)(ii). Once translated into dollars, these pre-1987 taxes and accumulated profits or deficits in accumulated profits shall (absent a change in functional currency) remain in dollars for all federal income tax purposes.

(ii) ***Post-1986 undistributed earnings of a CFC.*** In the case of a controlled foreign corporation (within the meaning of section 957 or section 953(c)(1)(B))(CFC) or a foreign corporation subject to the rules of § 1.904-6(a)(2), the corporation's post-1986 undistributed earnings in each separate category as defined in § 1.904-5(a)(1) as of the first day of the taxable year of change (and prior to adjustment under paragraph (c)(1) of this section) shall equal the sum of—

(A) The corporation's post-1986 undistributed earnings and profits (or deficit in earnings and profits) in each separate category as defined in § 1.904-5(a)(1) as stated on the transition date translated into dollars at the spot rate in effect on the transition date; and

(B) The sum of the earnings and profits (or deficit in earnings and profits) in each separate category determined under § 1.985-3 for each post-transition date taxable year prior to the taxable year of change.

Such amount shall be reduced by the aggregate dollar amount (translated from functional currency in accordance with the rules of section 989(b)) attributable to earnings and profits that were distributed (or treated as distributed) during the look-back period out of post-1986 earnings and profits in such separate category. For purposes of applying this paragraph (b)(4)(ii)(B), the opening balance sheet for calculating earnings and profits under § 1.985-3 for the first post-transition year shall be translated into dollars pursuant to § 1.985-5(c).

(iii) ***Post-1986 undistributed earnings of other foreign corporations.*** In the case of a foreign corporation that is not a CFC or subject to the rules of § 1.904-6(a)(2), the corporation's post-1986 undistributed earnings shall equal the sum of—

(A) The corporation's post-1986 undistributed earnings (or deficit) on the transition date translated into dollars at the spot rate in effect on the transition date; and

(B) The sum of the earnings and profits (or deficit in earnings and profits) determined under § 1.985-3 for each post-transition date taxable year (or such later year determined under section 902(c)(3)(A)) prior to the taxable year of change.

Such amount shall be reduced by the aggregate dollar amount (translated from functional currency in accordance with the rules of section 989(b)) that was distributed (or treated as distributed) during the look-back period out of post-1986 earnings and profits. For purposes of applying this paragraph (b)(4)(iii)(B), the opening balance sheet for calculating earnings and profits under § 1.985-3 for the first post-transition year shall be translated into dollars pursuant to § 1.985-5(c).

(c) *United States shareholders of controlled foreign corporations* —

(1) ***In general.*** A United States shareholder (within the meaning of section 951(b) or section 953(c)(1)(B)) of a CFC that changes to DASTM shall make the adjustments set forth in paragraphs (c) (2) through (5) of this section on the first day of the taxable year of change. Adjustments under this section shall be taken into account by the shareholder (or such shareholder s successor in interest) ratably over four taxable years beginning with the taxable year of change. Similar rules shall apply in determining adjustments to income of United States persons who have made an election under section 1295 to treat a passive foreign investment company as a qualified electing fund.

(2) ***Treatment under subpart F of income recognized on section 988 transactions.*** The character of amounts taken into account under paragraph (b)(2) of this section for purposes of sections 951 through 964, shall be determined on the transition date and to the extent characterized as subpart F income shall be taken into account in accordance with the rules of paragraph (c)(1) of this section. Such amounts shall retain their character for all federal income tax purposes (including sections 902, 959, 960, 961, 1248, and 6038).

(3) ***Recognition of foreign currency gain or loss on previously taxed earnings and profits on the transition date.*** Gain or loss is recognized under section 986(c) as if all previously taxed earnings and profits as determined on the transition date, if any, were distributed on such date. Such gain or loss shall be reduced by any foreign currency gain and increased by any foreign currency loss that was recognized under section 986(c) with respect to distributions of previously taxed earnings and profits during the look-back period. Such amount shall be characterized in accordance with section 986(c) and taken into account in accordance with the rules of paragraph (c)(1) of this section.

(4) ***Subpart F income adjustment.*** Subpart F income in a separate category shall be determined under § 1.985-3 for each look-back year. For this purpose, the opening DASTM balance sheet shall be determined under § 1.985-5. The sum of the difference (positive or negative) between the amount computed pursuant to § 1.985-3 and amount that was included in income for each year shall be taken into account in the taxable year of change pursuant to paragraph (c)(1) of this section. Such amounts shall retain their character for all federal income tax purposes (including sections 902, 959, 960, 961, 1248, and 6038). For rules applicable if an adjustment under this section results in a loss for the taxable year in a separate category, see section 904(f) and the regulations thereunder. The amount of previously taxed earnings and profits as determined under section 959(c)(2) shall be adjusted (positively or negatively) by the amount taken into account under this paragraph (c)(4) as of the first day of the taxable year of change.

(5) ***Foreign tax credit.*** A United States shareholder of a CFC shall compute an amount of foreign taxes deemed paid under section 960 with respect to any positive adjustments determined under paragraph (c) of this section. The amount of foreign tax deemed paid shall be computed with reference to the full amount of the adjustment and to the post-1986 undistributed earnings determined under paragraph (b)(4) (i) and (ii) of this section and the post-1986 foreign income taxes of the CFC on the first day of the taxable year of change (i.e., without taking into account earnings and taxes for the taxable year of change). For purposes of section 960, the associated taxes in each separate category shall be allocated pro rata among, and deemed paid in, the shareholder's taxable years in which the income is taken into account. (No adjustment to foreign taxes deemed paid in prior years is required solely by reason of a negative adjustment to income under paragraph (c)(1) of this section).

(d) *QBU branches* —

(1) ***In general.*** In the case of a QBU branch, the taxpayer shall make the adjustments set forth in paragraphs (d)(2) through (d)(4) of this section. Adjustments under this section shall be taken into account by the taxpayer ratably over four taxable years beginning with the taxable year of change.

(2) ***Treatment of certain section 988 transactions*** —

(i) ***Exchange gain or loss from section 988 transactions unrealized as of the transition date.*** A QBU branch shall adjust income by the amount of any unrealized exchange gain or loss that was attributable to a section 988 transaction (as defined in sections 988(c)(1) (A), (B), and (C)) that was denominated in terms of (or determined by reference to) the dollar and was held by the QBU branch on the transition date. Such gain or loss shall be computed as if recognized on the transition date and shall be reduced by any gain and increased by any loss recognized by the QBU branch with respect to such transaction during the look-back period. The amount of such gain or loss shall be determined without regard to the limitations of section 988(b) (i.e., whether any gain or loss would be realized on the transaction as a whole). The character and source of such gain or loss shall be determined under section 988. Proper adjustments shall be made to account for gain or loss taken into account by reason of this paragraph (d)(2). See § 1.985-5(f) *Example 1, footnote 1.*

(ii) ***Treatment of a section 988 transaction entered into and terminated during the look-back period.*** A QBU branch shall reduce income by the amount of any gain, and increase income by the amount of any loss, that was recognized with respect to any dollar denominated section 988 transactions entered into and terminated during the look-back period.

(3) ***Deemed termination income adjustment.*** The taxpayer shall realize gain or loss attributable to the QBU branch's equity pool (as stated on the transition date) under the principles of section 987, computed as if the branch terminated on the transition date. Such amount shall be reduced by section 987 gain and increased by section 987 loss that was recognized by such taxpayer with respect to remittances during the look-back period.

(4) ***Branch income adjustment.*** Branch income in a separate category shall be determined under § 1.985-3 for each look-back year. For this purpose, the opening DASTM balance sheet shall be determined under § 1.985-5. The sum of the difference (positive or negative) between the amount computed pursuant to § 1.985-3 and amount taken into account for each year shall be taken into account in the taxable year of change pursuant to paragraph (d)(1) of this section. Such amounts shall retain their character for all federal income tax purposes.

(5) ***Opening balance sheet.*** The opening balance sheet of a QBU branch for the taxable year of change shall be determined as if the branch had changed its functional currency to the dollar by applying § 1.985-5(c) on the transition date and had translated its assets and liabilities acquired and incurred during the look-back period under § 1.985-3.

(e) ***Effective date.*** This section is effective for taxable years beginning after April 6, 1998. However, a taxpayer may choose to apply this section to all open taxable years beginning after December 31, 1986, provided each person, and each QBU branch of a person, that is related (within the meaning of § 1.985-2(d)(3)) to the taxpayer also applies this section.

[T.D. 8765, 63 FR 10774, Mar. 5, 1998]

§ 1.985-8 Special rules applicable to the European Monetary Union (conversion to euro).

(a) *Definitions* —

(1) ***Legacy currency.*** A legacy currency is the former currency of a Member State of the European Community which is substituted for the euro in accordance with the Treaty establishing the European Community signed February 7, 1992. The term legacy currency shall also include the European Currency Unit.

(2) ***Conversion rate.*** The conversion rate is the rate at which the euro is substituted for a legacy currency.

(b) *Operative rules* —

(1) ***Initial adoption.*** A QBU (as defined in § 1.989(a)-1(b)) whose first taxable year begins after the euro has been substituted for a legacy currency may not adopt a legacy currency as its functional currency.

(2) *QBU with a legacy currency as its functional currency* —

(i) ***Required change.*** A QBU with a legacy currency as its functional currency is required to change its functional currency to the euro beginning the first day of the first taxable year—

(A) That begins on or after the day that the euro is substituted for that legacy currency (in accordance with the Treaty on European Union); and

(B) In which the QBU begins to maintain its books and records (as described in § 1.989(a)-1(d)) in the euro.

(ii) Notwithstanding paragraph (b)(2)(i) of this section, a QBU with a legacy currency as its functional currency is required to change its functional currency to the euro no later than the last taxable year beginning on or before the first day such legacy currency is no longer valid legal tender.

(3) *QBU with a non-legacy currency as its functional currency* —

(i) ***In general.*** A QBU with a non-legacy currency as its functional currency may change its functional currency to the euro pursuant to this § 1.985-8 if—

(A) Under the rules set forth in § 1.985-1(c), the euro is the currency of the economic environment in which a significant part of the QBU's activities are conducted;

(B) After conversion, the QBU maintains its books and records (as described in § 1.989(a)-1(d)) in the euro; and

(C) The QBU is not required to use the dollar as its functional currency under § 1.985-1(b).

(ii) ***Time period for change.*** A QBU with a non-legacy currency as its functional currency may change its functional currency to the euro under this section only if it does so within the period set forth in paragraph (b)(2) of this section as if the functional currency of the QBU was a legacy currency.

(4) ***Consent of Commissioner.*** A change made pursuant to paragraph (b) of this section shall be deemed to be made with the consent of the Commissioner for purposes of § 1.985-4. A QBU changing its functional currency to the euro pursuant to paragraph (b)(2) of this section must make adjustments as provided in paragraph (c) of this section. A QBU changing its functional currency to the euro pursuant to paragraph (b)(3) must make adjustments as provided in § 1.985-5.

(5) ***Statement to file upon change.*** With respect to a QBU that changes its functional currency to the euro under paragraph (b) of this section, an affected taxpayer shall attach to its return for the taxable year of change a statement that includes the following: "TAXPAYER CERTIFIES THAT A QBU OF THE TAXPAYER HAS CHANGED ITS FUNCTIONAL CURRENCY TO THE EURO PURSUANT TO TREAS. REG. § 1.985-8." For purposes of this paragraph (b)(5), an affected taxpayer shall be in the case where the QBU is: a QBU of an individual U.S. resident (as a result of the activities of such individual), the individual; a QBU branch of a U.S. corporation, the corporation; a controlled foreign corporation (as described in section 957)(or QBU branch thereof), each United States shareholder (as described in section 951(b)); a partnership, each partner separately; a noncontrolled section 902 corporation (as described in section 904(d)(2)(E)) (or branch thereof), each domestic shareholder as described in § 1.902-1(a)(1); or a trust or estate, the fiduciary of such trust or estate.

(c) ***Adjustments required when a QBU changes its functional currency from a legacy currency to the euro pursuant to paragraph (b)(2) of this section*** —

(1) ***In general.*** A QBU that changes its functional currency from a legacy currency to the euro pursuant to paragraph (b)(2) of this section must make the adjustments described in paragraphs (c)(2) through (5) of this section. Section 1.985-5 shall not apply.

(2) ***Determining the euro basis of property and the euro amount of liabilities and other relevant items.*** The euro basis in property and the euro amount of liabilities and other relevant items shall equal the product of the legacy functional currency adjusted basis or amount of liabilities multiplied by the applicable conversion rate.

(3) ***Taking into account exchange gain or loss on legacy currency section 988 transactions*** —

(i) ***In general.*** Except as provided in paragraphs (c)(3)(iii) and (iv) of this section, a legacy currency denominated section 988 transaction (determined after applying section 988(d)) outstanding on the last day of the taxable year immediately prior to the year of change shall continue to be treated as a section 988 transaction after the change and the principles of section 988 shall apply.

(ii) ***Examples.*** The application of this paragraph (c)(3) may be illustrated by the following examples:

Example 1. X, a calendar year QBU on the cash method of accounting, uses the deutschmark as its functional currency. X is not described in section 1281(b). On July 1, 1998, X converts 10,000 deutschmarks (DM) into Dutch guilders (fl) at the spot rate of fl1 = DM1 and loans the 10,000 guilders to Y (an unrelated party) for one year at a rate of 10% with principal and interest to be paid on June 30, 1999. On January 1, 1999, X changes its functional currency to the euro pursuant to this section. Assume that the euro/deutschmark conversion rate is set by the European Council at €1= DM2. Assume further that the euro/guilder conversion rate is set at €1 = fl2.25. Accordingly, under the terms of the note, on June 30, 1999, X will receive €4444.44 (fl10,000/2.25) of principal and €444.44 (fl1,000/2.25) of interest. Pursuant to this paragraph (c)(3), X will realize an exchange loss on the principal computed under the principles of § 1.988-2(b)(5). For this purpose, the exchange rate used under § 1.988-2(b)(5)(i) shall be the guilder/euro conversion rate. The amount under § 1.988-2(b)(5)(ii) is determined by translating the fl10,000 at the guilder/deutschmark spot rate on July 1, 1998, and translating that deutschmark amount into euros at the deutschmark/euro conversion rate. Thus, X will compute an exchange loss for 1999 of €555.56 determined as follows: [€4444.44 (fl10,000/2.25)-5000 ((fl10,000/1)/2) = −€555.56]. Pursuant to this paragraph (c)(3), the character and source of the loss

are determined pursuant to section 988 and regulations thereunder. Because X uses the cash method of accounting for the interest on this debt instrument, X does not realize exchange gain or loss on the receipt of that interest.

Example 2. (i) X, a calendar year QBU on the accrual method of accounting, uses the deutschmark as its functional currency. On February 1, 1998, X converts 12,000 deutschmarks into Dutch guilders at the spot rate of fl1 = DM1 and loans the 12,000 guilders to Y (an unrelated party) for one year at a rate of 10% with principal and interest to be paid on January 31, 1999. In addition, assume the average rate (deutschmark/guilder) for the period from February 1, 1998, through December 31, 1998 is fl1.07 = DM1. Pursuant to § 1.988-2(b)(2)(ii)(C), X will accrue eleven months of interest on the note and recognize interest income of DM1028.04 (fl1100/1.07) in the 1998 taxable year.
(ii) On January 1, 1999, the euro will replace the deutschmark as the national currency of Germany pursuant to the Treaty on European Union signed February 7, 1992. Assume that on January 1, 1999, X changes its functional currency to the euro pursuant to this section. Assume that the euro/deutschmark conversion rate is set by the European Council at €1 = DM2. Assume further that the euro/guilder conversion rate is set at €1 = fl2.25. In 1999, X will accrue one month of interest equal to €44.44 (fl100/2.25). On January 31, 1999, pursuant to the note, X will receive interest denominated in euros of €533.33 (fl1200/2.25). Pursuant to this paragraph (c)(3), X will realize an exchange loss in the 1999 taxable year with respect to accrued interest computed under the principles of § 1.988-2(b)(3). For this purpose, the exchange rate used under § 1.988-2(b)(3)(i) is the guilder/euro conversion rate and the exchange rate used under § 1.988-2(b)(3)(ii) is the deutschmark/euro conversion rate. Thus, with respect to the interest accrued in 1998, X will realize exchange loss of €25.13 under § 1.988-2(b)(3) as follows: [€488.89 (fl1100/2.25) − €514.02 (DM1028.04/2) = −€25.13]. With respect to the one month of interest accrued in 1999, X will realize no exchange gain or loss since the exchange rate when the interest accrued and the spot rate on the payment date are the same.

(iii) X will realize exchange loss of €666.67 on repayment of the loan principal computed in the same manner as in Example 1 [€5333.33 (fl12,000/2.25) − €6000 fl12,000/1)/2)]. The losses with respect to accrued interest and principal are characterized and sourced under the rules of section 988.

(iii) ***Special rule for legacy nonfunctional currency.*** The QBU shall realize or otherwise take into account for all purposes of the Internal Revenue Code the amount of any unrealized exchange gain or loss attributable to nonfunctional currency (as described in section 988(c)(1)(C)(ii)) that

is denominated in a legacy currency as if the currency were disposed of on the last day of the taxable year immediately prior to the year of change. The character and source of the gain or loss are determined under section 988.

(iv) ***Legacy currency denominated accounts receivable and payable*** —

(A) ***In general.*** A QBU may elect to realize or otherwise take into account for all purposes of the Internal Revenue Code the amount of any unrealized exchange gain or loss attributable to a legacy currency denominated item described in section 988(c)(1)(B)(ii) as if the item were terminated on the last day of the taxable year ending prior to the year of change.

(B) ***Time and manner of election.*** With respect to a QBU that makes an election described in paragraph (c)(3)(iv)(A) of this section, an affected taxpayer (as described in paragraph (b)(5) of this section) shall attach a statement to its tax return for the taxable year ending immediately prior to the year of change which includes the following: "TAXPAYER CERTIFIES THAT A QBU OF THE TAXPAYER HAS ELECTED TO REALIZE CURRENCY GAIN OR LOSS ON LEGACY CURRENCY DENOMINATED ACCOUNTS RECEIVABLE AND PAYABLE UPON CHANGE OF FUNCTIONAL CURRENCY TO THE EURO." A QBU making the election must do so for all legacy currency denominated items described in section 988(c)(1)(B)(ii).

(4) ***Adjustments when a branch changes its functional currency to the euro*** —

(i) ***Branch changing from a legacy currency to the euro in a taxable year during which taxpayer's functional currency is other than the euro.*** If a branch changes its functional currency from a legacy currency to the euro for a taxable year during which the taxpayer's functional currency is other than the euro, the branch's euro equity pool shall equal the product of the legacy currency amount of the equity pool multiplied by the applicable conversion rate. No adjustment to the basis pool is required.

(ii) ***Branch changing from a legacy currency to the euro in a taxable year during which taxpayer's functional currency is the euro.*** If a branch changes its functional currency from a legacy currency to the euro for a taxable year during which the taxpayer's functional currency is the euro, the taxpayer shall realize gain or loss attributable to the branch's equity pool under the principles of section 987, computed as if the branch terminated on the last day prior to the year of change. Adjustments under this paragraph (c)(4)(ii) shall be taken into account by the taxpayer ratably over four taxable years beginning with the taxable year of change.

(5) ***Adjustments to a branch's accounts when a taxpayer changes to the euro*** —

(i) ***Taxpayer changing from a legacy currency to the euro in a taxable year during which a branch's functional currency is other than the euro.*** If a taxpayer changes its functional currency to the euro for a taxable year during which the functional currency of a branch of the taxpayer is other than the euro, the basis pool shall equal the product of the legacy currency amount of the basis pool multiplied by the applicable conversion rate. No adjustment to the equity pool is required.

(ii) ***Taxpayer changing from a legacy currency to the euro in a taxable year during which a branch's functional currency is the euro.*** If a taxpayer changes its functional currency from a legacy currency to the euro for a taxable year during which the functional currency of a branch of the taxpayer is the euro, the taxpayer shall take into account gain or loss as determined under paragraph (c)(4)(ii) of this section.

(6) ***Additional adjustments that are necessary when a corporation changes its functional currency to the euro.*** The amount of a corporation's euro currency earnings and profits and the amount of its euro paid-in capital shall equal the product of the legacy currency amounts of these items multiplied by the applicable conversion rate. The foreign income taxes and accumulated profits or deficits in accumulated profits of a foreign corporation that were maintained in foreign currency for purposes of section 902 and that are attributable to taxable years of the foreign corporation beginning before January 1, 1987, also shall be translated into the euro at the conversion rate.

(d) ***Treatment of legacy currency section 988 transactions with respect to a QBU that has the euro as its functional currency*** —

(1) ***In general.*** This § 1.985-8(d) applies to a QBU that has the euro as its functional currency and that holds a section 988 transaction denominated in, or determined by reference to, a currency that is substituted by the euro. For example, this paragraph (d) will apply to a German QBU with the euro as its functional currency if the QBU is holding Country X currency or other section 988 transactions denominated in such currency on the day in the year 2005 when the euro is substituted for the Country X currency.

(2) ***Principles of paragraph (c)(3) of this section shall apply.*** With respect to a QBU described in paragraph (d) of this section, the principles of paragraph (c)(3) of this section shall apply. For example, if a German QBU with the euro as its functional currency is holding a Country X currency denominated debt instrument on the day in the year 2005 when the euro is substituted for the Country X currency, the instrument shall continue to be treated as a section 988 transaction pursuant to the principles of paragraph (c)(3)(i) of this section. However, if such QBU holds Country X currency, the QBU shall take into account any unrealized exchange gain or loss pursuant to the principles of paragraph (c)(3)(iii) of this section as if the currency was disposed of on the day prior to the day the euro is substituted for the Country X currency. Similarly, if the QBU makes an election under the principles of paragraph (c)(3)(iv) of this section, the QBU shall take into account for all purposes of the Internal Revenue Code the amount of any unrealized exchange gain or loss attributable to a legacy currency denominated item described in section 988(c)(1)(B)(ii) as if the item were terminated on the day prior to the day the euro is substituted for the Country X currency.

(e) ***Effective date.*** This section applies to tax years ending after July 29, 1998.

[T.D. 8927, 66 FR 2216, Jan. 11, 2001; T.D. 8927, 66 FR 21447, Apr. 30, 2001]

§ 1.986(a)-1 Translation of foreign income taxes for purposes of the foreign tax credit.

(a) ***Translation of foreign income taxes taken into account when accrued*** —

(1) ***In general.*** For purposes of this section, the term *section 901 taxpayer* means the “taxpayer” described in § 1.901-2(f)(1) and so includes a partnership or a specified 10-percent owned foreign corporation (as defined in section 245A(b)) that has legal liability under foreign law for foreign income tax. Except as provided in paragraph (a)(2) of this section, in the case of a section 901 taxpayer that takes foreign income taxes (as defined in section 986(a)(4) (including taxes described in section 903)) into account when accrued, the amount of any foreign income taxes denominated in foreign currency that has been paid or accrued, including additional tax liability denominated in foreign currency, foreign income taxes withheld in foreign currency, or estimated foreign income taxes paid in foreign currency, are translated into dollars using the weighted average exchange rate (as defined in § 1.989(b)-1) (the “average exchange rate”) for the section 901 taxpayer's U.S. taxable

year (as defined in § 1.960-1(b)(37)) to which such foreign income taxes relate. *See* section 986(a)(1)(A). See section 988 and §§ 1.988-1(a)(2)(ii) and 1.988-2(c) for rules for determining whether and the extent to which there is a foreign currency gain or loss when an accrued functional currency amount of foreign income tax denominated in nonfunctional currency differs from the functional currency amount paid.

(2) *Exceptions* —

(i) ***Foreign income taxes not paid within 24 months.*** Any foreign income taxes denominated in foreign currency that are paid more than 24 months after the close of the section 901 taxpayer's U.S. taxable year to which they relate are translated into dollars using the spot rate on the date of payment of the foreign income taxes. *See* section 986(a)(1)(B)(i) and (a)(2)(A). For purposes of this section and § 1.905-3, the term *spot rate* has the meaning provided in § 1.988-1(d). To the extent any accrued foreign income taxes denominated in foreign currency remain unpaid more than 24 months after the close of the taxable year to which they relate, see § 1.905-3 and paragraph (c) of this section for the required adjustments.

(ii) ***Foreign income taxes paid before taxable year begins.*** Any foreign income taxes denominated in foreign currency that are paid before the beginning of the section 901 taxpayer's U.S. taxable year to which such taxes relate are translated into dollars using the spot rate on the date of payment of the foreign income taxes. See section 986(a)(1)(B)(ii) and (a)(2)(A).

(iii) ***Inflationary currency.*** Any foreign income taxes denominated in a foreign currency that is an inflationary currency in the section 901 taxpayer's U.S. taxable year to which the foreign income taxes relate, or in any subsequent taxable year up to and including the taxable year in which the taxes are paid, are translated into dollars using the spot rate on the date of payment of such taxes. For purposes of section 986(a)(1)(C) and this paragraph (a)(2)(iii), the term *inflationary currency* means the currency of a country in which there is cumulative inflation during the base period of at least 30 percent, as determined under the principles of § 1.985-1(b)(2)(ii)(D), where the base period, with respect to any taxable year, is the 36 months ending on the last day of such taxable year (in lieu of the base period described in § 1.985-1(b)(2)(ii)(D), which ends on the last day of the preceding calendar year). Accrued but unpaid foreign income taxes denominated in a foreign currency that is an inflationary currency in the taxable year accrued are translated into dollars at the spot rate on the last day of the section 901 taxpayer's U.S. taxable year to which such taxes relate (provisional year-end rate). However, a U.S. taxpayer that claims a foreign tax credit under section 901 may choose to translate accrued but unpaid foreign income taxes (including foreign income taxes deemed paid under section 960) denominated in a foreign currency that is an inflationary currency into dollars at the spot rate on the date of payment, in lieu of the provisional year-end rate, if such taxes are paid prior to the due date (with extensions) of the original Federal income tax return for the taxable year for which the credit is claimed and such return is timely filed. In all other cases, see § 1.905-3 and paragraph (c) of this section for required adjustments upon payment of accrued foreign income taxes denominated in an inflationary currency.

(iv) ***Election to translate foreign income taxes using the spot rate as of date of payment*** —

(A) ***Eligibility to make election.*** An individual or corporate taxpayer (including a specified 10-percent owned foreign corporation) that is otherwise required to translate foreign income taxes that are denominated in foreign currency using the average exchange rate may elect to translate foreign income taxes described in this paragraph (a)(2)(iv) into dollars using the spot rate on the date of payment of the foreign income taxes, provided

that the liability for such taxes is denominated in nonfunctional currency. For purposes of section 986(a)(1)(D) and this paragraph (a)(2)(iv), whether the currency in which a tax liability attributable to a qualified business unit (within the meaning of section 989(a)) (QBU) is denominated is a nonfunctional currency is determined by reference to the functional currency of the individual or corporate taxpayer and not that of the QBU of the taxpayer. Accrued but unpaid foreign income taxes subject to the election under this paragraph (a)(2)(iv) are translated at the provisional year-end rate. However, a taxpayer that claims a foreign tax credit under section 901 may choose to translate accrued but unpaid foreign income taxes (including foreign taxes deemed paid under section 960 with respect to a specified 10-percent owned foreign corporation that has made an election under this paragraph (a)(2)(iv)) into dollars at the spot rate on the date of payment, in lieu of the provisional year-end rate, if such taxes are paid prior to the due date (with extensions) of the original return for the taxable year for which the credit is claimed and such return is timely filed. In all other cases, see § 1.905-3 and paragraph (c) of this section for required adjustments upon payment of accrued foreign income taxes that are translated into dollars at the spot rate on the date of payment.

(B) ***Scope of election.*** In general, an individual taxpayer may make an election under this paragraph (a)(2)(iv) for all foreign income taxes denominated in nonfunctional currency, or only for those foreign income taxes that are denominated in nonfunctional currency and that are attributable to the individual's non-QBU activities and all QBUs with dollar functional currencies. A corporate taxpayer may make an election under this paragraph (a)(2)(iv) for all foreign income taxes that are denominated in nonfunctional currency, or only for those foreign income taxes that are denominated in nonfunctional currency and that are attributable to all QBUs (including the corporate taxpayer) with dollar functional currencies. Therefore, an election under this paragraph (a)(2)(iv) may not be made for foreign income taxes that are denominated in a nonfunctional currency of the taxpayer and attributable to QBUs with non-dollar functional currencies, except as part of an election to translate all taxes denominated in nonfunctional currency at the spot rate on the date of payment. For purposes of this paragraph (a)(2)(iv)(B), foreign income tax is attributable to a QBU if the tax is properly recorded on the books and records of the QBU in accordance with sections 985 through 989. An election under this paragraph (a)(2)(iv) by a domestic corporation (or an individual that has made an election under section 962) does not apply to any taxes paid or accrued by foreign corporations with respect to which the individual or corporation is a United States shareholder. However, an election may be made on behalf of a foreign corporation to translate either all of the foreign corporation's foreign income taxes denominated in nonfunctional currency, or only the foreign income taxes denominated in nonfunctional currency that are attributable to the foreign corporation's QBUs with dollar functional currencies, using the spot rate on the date of payment. Such an election is made using the procedures under § 1.964-1(c)(3) that apply to permit controlling domestic shareholders to make or change a tax accounting election on behalf of a foreign corporation.

(C) ***Time and manner of election.*** The election under this paragraph (a)(2)(iv) must be made by attaching a statement to the taxpayer's timely filed Federal income tax or information return (including extensions) for the first taxable year to which the election applies. The statement must identify whether the election under this paragraph (a)(2)(iv) is made for all foreign income taxes denominated in nonfunctional currency or only for those foreign income taxes that are denominated in nonfunctional currency and that are either

attributable to the taxpayer's QBUs with dollar functional currencies or, in the case of an individual, attributable to non-QBU activities. Once made, the election under this paragraph (a)(2)(iv) applies for the taxable year for which made and all subsequent taxable years unless revoked with the consent of the Commissioner.

(D) *Example* —

(1) ***Facts.*** USP, a domestic corporation that uses the calendar year as its taxable year, owns a partnership interest in PS, a non-hybrid partnership organized in Country X. USP also owns an equity interest in HPS, a Country X corporation that has filed an entity classification election under § 301.7701-3 of this chapter to be treated as a partnership for Federal income tax purposes. USP also owns 100% of CFC, a Country Y controlled foreign corporation that uses the U.S. dollar as its functional currency. PS and HPS each use a fiscal year ending November 30 as its taxable year both for Federal income tax purposes and for Country X tax purposes, and their functional currency is the Euro. HPS is the section 901 taxpayer of foreign income taxes denominated in Euros that it pays to Country X and properly records on its books and records. USP takes its distributive share of the HPS taxes into account under sections 702(a)(6) and 901(b)(5) and §§ 1.702-1(a)(6) and 1.704-1(b)(4)(viii) in computing its foreign tax credit. USP is the section 901 taxpayer of Euro-denominated foreign income taxes it pays to Country X with respect to its distributive share of the income of PS, and also pays Country X taxes withheld in Euros from distributions from HPS to USP and properly records these taxes on its books and records. Pursuant to § 1.985-1(b)(1)(iii), USP's functional currency is the dollar. USP timely elects under § 1.986(a)-1(a)(2)(iv) to use the spot rate on the date of payment to translate into dollars its foreign income taxes denominated in nonfunctional currency that are attributable to all QBUs with dollar functional currencies.

(2) ***Result.*** The Euro taxes paid by USP with respect to its distributive share of income from PS and the Euro taxes withheld from distributions from HPS are nonfunctional currency taxes attributable to USP, a QBU with a dollar functional currency. Accordingly, these taxes are translated into dollars at the spot rate on the date the taxes are paid. USP's distributive share of the Euro taxes paid by HPS are attributable to HPS, a Euro functional currency QBU of USP. Because these taxes are not attributable to a dollar QBU of USP, they are not covered by USP's election and so are translated into dollars at the average exchange rate for HPS's U.S. taxable year ending on November 30. See § 1.986(a)-1(a)(1). Foreign income taxes paid by CFC are not covered by USP's election; however, if USP so chooses it may make a separate election on behalf of CFC to use the spot rate on the date of payment to translate either all of CFC's nonfunctional currency taxes, or only those taxes that are attributable to CFC's dollar QBUs (which includes CFC). If instead USP had elected to use the spot rate on the date of payment to translate all of its foreign income taxes denominated in nonfunctional currency, rather than only those taxes attributable to QBUs with dollar functional currencies, then the spot rate on the date of payment would apply to translate all of the Euro taxes paid or accrued by USP, including its distributive share of taxes paid by HPS. However, this election would still not apply to taxes paid or accrued by CFC. See § 1.986(a)-1(a)(2)(iv)(B).

(v) ***Regulated investment companies.*** In the case of a regulated investment company (as defined in section 851) which takes into account income on an accrual basis, foreign income taxes paid or accrued with respect to such income are translated into dollars using the spot rate on the date the income accrues. See section 986(a)(1)(E).

(b) ***Translation of foreign income taxes taken into account when paid.*** In the case of a section 901 taxpayer that takes foreign income taxes into account when paid, the amount of any foreign income tax liability denominated in foreign currency, including additional income tax liability denominated in foreign currency or estimated foreign income taxes paid in foreign currency, are translated into dollars using the spot rate on the date of payment of such taxes. See section 986(a)(2)(A). Foreign income taxes withheld in foreign currency are translated into dollars using the spot rate on the date on which such taxes were withheld.

(c) ***Refunds or other reductions of foreign income tax liability.*** In the case of a section 901 taxpayer that takes foreign income taxes into account when accrued, a reduction in the amount of previously-accrued foreign income taxes that is attributable to a refund of foreign income taxes, a credit allowed in lieu of a refund, or a reduction in or other downward adjustment to an accrued amount, including an adjustment on account of accrued foreign income taxes that were not paid by the date 24 months after the close of the U.S. taxable year to which such taxes relate, is translated into dollars using the exchange rate that was used to translate such amount when claimed as a credit or added to PTEP group taxes (as defined in § 1.960-3(d)(1)). In the case of foreign income taxes taken into account when accrued but translated into dollars on the date of payment, see § 1.905-3(b) for required adjustments to reflect a foreign tax redetermination (as defined in § 1.905-3(a)) attributable to a reduction in the amount of previously-accrued foreign income taxes that is attributable to a difference in exchange rates between the date or taxable year of accrual and the date of payment. In the case of a section 901 taxpayer that takes foreign income taxes into account when paid, a refund or other reduction in or downward adjustment to the amount of foreign income taxes is translated into dollars using the exchange rate that was used to translate such amount when claimed as a credit. If a refund or other reduction of foreign income taxes relates to foreign income taxes paid or accrued on more than one date, then the refund or other reduction is deemed to be derived from, and reduces, the payments of foreign income taxes in order, starting with the most recent payment of foreign income taxes first, to the extent thereof.

(d) ***Allocation of refunds of foreign income taxes.*** Refunds of foreign income taxes are allocated to the same separate category as the foreign income taxes to which the refunded taxes relate. Refunds are related to foreign income taxes in a separate category if the foreign income tax that was refunded was imposed with respect to that separate category. See § 1.904-6 concerning the allocation of foreign income taxes to separate categories of income.

(e) ***Basis of foreign currency refunded*** —

(1) ***Nonfunctional currency tax liability and dollar functional currency.*** If the functional currency of the QBU that paid the tax and received the refund is the dollar or the person receiving the refund is not a QBU, then the recipient's basis in the foreign currency refunded is the dollar value of the refund determined under paragraph (c) of this section by using the exchange rate that was used to translate such amount into dollars when claimed as a credit or added to PTEP group taxes.

(2) ***Nonfunctional currency tax liability and non-dollar functional currency.*** If the functional currency of the QBU receiving the refund is not the dollar and is different from the currency in which the foreign income taxes were paid, then the recipient's basis in the refunded foreign currency is equal to the functional currency value of the nonfunctional currency refund, translated into functional currency at the appropriate exchange rate between the functional currency and the nonfunctional currency. Such exchange rate is determined under the principles of paragraph (c) of this section, substituting the

words "functional currency" for the word "dollar" and using the exchange rate that was used to translate such amount into the QBU's functional currency when claimed as a credit or added to PTEP group taxes (as defined in § 1.960-3(d)(1)). If a QBU receives a refund of nonfunctional currency tax that is denominated in a currency that was the functional currency of the QBU when the refunded tax was claimed as a credit or added to PTEP group taxes, the QBU's basis in the nonfunctional currency received in the refund is determined by using the exchange rate used under § 1.985-5(c) when the QBU's functional currency changed. See § 1.905-3(b)(1)(ii)(C) (*Example 3*).

(3) ***Functional currency tax liabilities.*** If the functional currency of the QBU receiving the refund is the currency in which the refund was made, then the recipient's basis in the currency received is the amount of the functional currency received. If the QBU receives a refund of functional currency tax that was denominated in a nonfunctional currency of the QBU when the tax was claimed as a credit or added to PTEP group taxes, the QBU will recognize the section 988 gain or loss that would have been recognized under § 1.985-5(b) if the refund had been received immediately before the QBU's functional currency changed.

(4) ***Foreign currency gain or loss.*** For rules for determining subsequent foreign currency gain or loss on the disposition of nonfunctional currency, the basis of which is determined under this paragraph (e), see section 988(c)(1)(C).

(f) ***Applicability dates.*** This section applies to taxable years ending on or after December 16, 2019, and to taxable years of foreign corporations which end with or within a taxable year of a United States shareholder ending on or after December 16, 2019.

[T.D. 9882, 84 FR 69120, Dec. 17, 2019]

§ 1.986(c)-1 Coordination with section 965.

(a) ***Amount of foreign currency gain or loss.*** Foreign currency gain or loss with respect to distributions of section 965(a) previously taxed earnings and profits (as defined in § 1.965-1(f)(39)) is determined based on movements in the exchange rate between December 31, 2017, and the time such distributions are made.

(b) ***Section 965(a) previously taxed earnings and profits.*** Any gain or loss recognized under section 986(c) with respect to distributions of section 965(a) previously taxed earnings and profits is reduced in the same proportion as the reduction by a section 965(c) deduction amount (as defined in § 1.965-1(f)(42)) of the section 965(a) inclusion amount (as defined in § 1.965-1(f)(38)) that gave rise to such section 965(a) previously taxed earnings and profits.

(c) ***Section 965(b) previously taxed earnings and profits.*** Section 986(c) does not apply with respect to distributions of section 965(b) previously taxed earnings and profits (as defined in § 1.965-1(f)(40)).

(d) ***Applicability dates.*** The section applies beginning the last taxable year of a foreign corporation that begins before January 1, 2018, and with respect to a United States person, for the taxable year in which or with which such taxable year of the foreign corporation ends.

[T.D. 9846, 84 FR 1915, Feb. 5, 2019]

§ 1.987-0 Table of contents.

This section lists the headings for §§ 1.987-1 through 1.987-15.

§ 1.987-1 Scope, definitions and special rules.

(a) In general.

(b) Scope of section 987 and certain rules relating to QBUs.

(1) Persons subject to section 987.

(i) In general.

(ii) Inapplicability to certain entities.

(2) Application of the section 987 regulations to earnings and profits.

(i) In general.

(ii) Timing.

(3) Definition of a section 987 QBU.

(i) In general.

(ii) Section 987 QBU grouping election.

(4) Definition of an eligible QBU.

(i) In general.

(ii) Qualified business unit.

(5) Definition of an owner.

(i) Direct ownership.

(ii) [Reserved]

(6) [Reserved]

(7) Examples illustrating paragraph (b) of this section.

(i) Example 1: Owner owns an eligible QBU and a DE holding company.

(ii) Example 2: Owner owns eligible QBUs through DEs.

(iii) Example 3: Section 987 grouping election.

(c) Exchange rates.

(1) Spot rate.

(i) In general.

(ii) Election to use a spot rate convention.

(2) Yearly average exchange rate.

(3) Historic rate.

(i) In general.

(ii) Date placed in service for depreciable or amortizable property.

(iii) Changed functional currency.

(d) Marked item.

(1) In general.

(2) Current rate election.

(e) Historic item.

(f) Example: Identification of marked and historic items.

(1) Facts.

(2) Analysis.

(g) Elections.

(1) Persons making the election.

(i) United States persons.

(ii) CFCs.

(iii) Consolidated groups.

(iv) Partnerships.

(2) Consistency rules.

(i) Consolidated groups.

(ii) CFCs and foreign partnerships.

(iii) Section 381(a) transactions.

(3) Manner of making or revoking elections.

(i) Statement must be attached to a return.

(ii) Election requirements.

(iii) Elections made under the 2016 and 2019 section 987 regulations.

(4) No change in method of accounting.

(5) Principles of § 1.964-1(c)(3) applicable to section 987 elections.

(h) Definitions.

§ 1.987-2 Attribution of items to eligible QBUs; definition of a transfer and related rules.

(a) In general.

(b) Attribution of items to an eligible QBU.

(1) General rules.

(2) Exceptions for non-portfolio stock, interests in partnerships, and certain acquisition indebtedness.

(i) In general.

(ii) Separate account assets.

(3) Adjustments to items reflected on the books and records.

(i) General rule.

(ii) Factors indicating no tax avoidance.

(iii) Factors indicating tax avoidance.

(iv) Section 988 transactions.

(c) Transfers to and from section 987 QBUs.

(1) In general.

(2) Disregarded transactions.

(i) General rule.

(ii) Definition of a disregarded transaction.

(iii) Items derived from disregarded transactions ignored.

(3) through (6) [Reserved]

(7) Application of general tax law principles.

(8) Interaction with § 1.988-1(a)(10).

(9) Certain disregarded transactions not treated as transfers.

(i) Combinations of section 987 QBUs.

(ii) Change in functional currency from a combination.

(iii) Separation of section 987 QBUs.

(iv) Special rules for successor suspended loss QBUs.

(10) Examples.

(i) Example 1: Loan to a section 987 QBU.

(ii) Example 2: Transfer between section 987 QBUs.

(iii) Example 3: Sale of property between two section 987 QBUs.

(iv) through (ix) [Reserved]

(x) Example 10: Contribution of a section 987 QBU's assets to a corporation.

(xi) Example 11: Circular transfers.

(xii) Example 12: Transfers without substance.

(xiii) Example 13: Offsetting positions in section 987 QBUs

(xiv) Example 14: Offsetting positions with respect to a section 987 QBU and a section 988 transaction.

(xv) Example 15: Offsetting positions with respect to a section 987 QBU and a section 988 transaction.

(xvi) Example 16: Borrowing by section 987 QBU followed by immediate distribution to owner.

(xvii) Example 17: Payment of interest by section 987 QBU on obligation of owner.

(xviii) Example 18: Sale of the interests in a DE.

(d) Translation of items transferred to a section 987 QBU.

(1) Marked items.

(2) Historic items.

(e) Cross-reference.

§ 1.987-3 Determination of section 987 taxable income or loss of an owner of a section 987 QBU.

(a) In general.

(b) Determination of each item of income, gain, deduction, or loss in the section 987 QBU's functional currency.

(1) In general.

(2) Translation of items of income, gain, deduction, or loss that are denominated in a nonfunctional currency.

(3) [Reserved]

(4) Section 988 transactions.

(i) In general.

(ii) Section 988 mark-to-market election.

(c) Translation of items of income, gain, deduction, or loss of a section 987 QBU into the owner's functional currency.

(1) In general.

(2) Exceptions.

(i) Recovery of basis with respect to historic assets.

(ii) through (iii) [Reserved]

(iv) Cost of goods sold computation.

(v) Translation of income to account for certain foreign income tax claimed as a credit.

(3) Adjustments to COGS required under the simplified inventory method.

(i) In general.

(ii) Adjustment for cost recovery deductions included in inventoriable costs.

(iii) Adjustment for beginning inventory for non-LIFO inventory.

(iv) Adjustment for year of LIFO liquidation.

(d) [Reserved]

(e) Examples.

(1) Example 1: Item of income denominated in nonfunctional currency.

(2) Example 2: Asset sold for nonfunctional currency.

(3) Example 3: Historic inventory method.

(i) Facts.

(ii) Analysis.

(4) Example 4: Simplified inventory method.

(i) Facts.

(ii) Analysis.

(5) Example 5: Depreciation expense that is not an inventoriable cost.

(6) Example 6: Translation of depreciation expense that is an inventoriable cost (historic inventory method).

(7) Example 7: Sale of land.

(8) Example 8: Current rate election.

(9) through (12) [Reserved]

(13) Example 13: Section 988 transaction.

(i) Facts.

(ii) Analysis.

(14) Example 14: Payment of foreign income tax.

(i) Facts.

(ii) Analysis.

§ 1.987-4 Determination of net unrecognized section 987 gain or loss of a section 987 QBU.

(a) In general.

(b) Calculation of net unrecognized section 987 gain or loss.

(c) Net accumulated unrecognized section 987 gain or loss for all prior taxable years.

(1) In general.

(2) Additional adjustments for certain taxable years beginning on or before December 31, 2024.

(d) Calculation of unrecognized section 987 gain or loss for a taxable year.

(1) Step 1: Determine the change in the owner functional currency net value of the section 987 QBU for the taxable year.

(i) In general.

(ii) Year section 987 QBU is terminated.

(iii) First taxable year of a section 987 QBU.

(iv) First year in which an election is in effect or ceases to be in effect.

(2) Step 2: Increase the amount determined in step 1 by the amount of assets transferred from the section 987 QBU to the owner.

(i) In general.

(ii) Assets transferred from the section 987 QBU to the owner during the taxable year.

(3) Step 3: Decrease the amount determined in steps 1 and 2 by the amount of assets transferred from the owner to the section 987 QBU.

(i) In general.

(ii) Assets transferred from the owner to the section 987 QBU during the taxable year.

(4) Step 4: Decrease the amount determined in steps 1 through 3 by the amount of liabilities transferred from the section 987 QBU to the owner.

(i) In general.

(ii) Liabilities transferred from the owner to the section 987 QBU during the taxable year.

(5) Step 5: Increase the amount determined in steps 1 through 4 by the amount of liabilities transferred from the owner to the section 987 QBU.

(6) Step 6: Decrease or increase the amount determined in steps 1 through 5 by the section 987 taxable income or loss, respectively, of the section 987 QBU for the taxable year.

(7) Step 7: Increase the amount determined in steps 1 through 6 by certain expenses or losses that are not deductible in computing the section 987 taxable income or loss of the section 987 QBU for the taxable year.

(8) Step 8: Decrease the amount determined in steps 1 through 7 by the amount of certain income or gain that is not included in taxable income in computing the section 987 taxable income or loss of the section 987 QBU for the taxable year.

(9) Step 9: Increase or decrease the amount determined in steps 1 through 8 by any income or gain, or any deduction or loss, respectively, that does not impact the adjusted balance sheet.

(10) Step 10: Decrease or increase the amount determined in steps 1 through 9 by any increase or decrease, respectively, to the section 987 QBU's net assets that is not previously taken into account under steps 2 through 9.

(i) In general.

(ii) Determining the residual increase or decrease to net assets.

(iii) Modifications for taxable years to which a current rate election or an annual recognition election applies.

(e) Determination of the owner functional currency net value of a section 987 QBU.

(1) In general.

(i) Marked item.

(ii) Historic item.

(2) Current rate election.

(i) In general.

(ii) QBU net value.

(iii) Alternative calculation of QBU net value.

(f) Combinations and separations.

(1) Combinations.

(2) Separations.

(3) Examples.

(i) Example 1: Combination of two section 987 QBUs that have the same owner.

(ii) Example 2: Separation of two section 987 QBUs that have the same owner.

(g) Examples.

(1) Example 1: Determination of net unrecognized section 987 gain or loss.

(i) Facts.

(ii) Analysis.

(2) Example 2: Determination of net unrecognized section 987 gain or loss if a current rate election in effect.

(i) Facts.

(ii) Analysis.

(iii) Alternative computation of QBU net value.

(3) Example 3: Determination of net unrecognized section 987 gain or loss when a current rate election is revoked.

(i) Facts.

(ii) Analysis.

§ 1.987-5 Recognition of section 987 gain or loss.

(a) Recognition of section 987 gain or loss by the owner of a section 987 QBU.

(b) Remittance proportion.

(1) In general.

(2) Annual recognition election.

(c) Remittance.

(1) Definition.

(2) Alternative calculation.

(i) Step 1: Determine the change in QBU net value.

(ii) Step 2: Adjust the amount determined in step 1 for income or loss of the section 987 QBU.

(iii) Step 3: Multiply the amount determined in step 2 by negative one.

(3) Day when a remittance is determined.

(4) Termination.

(d) Aggregate of all amounts transferred from the section 987 QBU to the owner for the taxable year.

(e) Aggregate of all amounts transferred from the owner to the section 987 QBU for the taxable year.

(f) Determination of owner's adjusted basis in transferred assets and amount of transferred liabilities.

(1) In general.

(2) Marked items.

(3) Historic items.

(g) Example—Calculation of section 987 gain or loss recognized.

(1) Facts.

(i) In general.

(ii) Year 1 balance sheet.

(iii) Transfers and income in year 2.

(iv) Year 2 balance sheet.

(2) Analysis.

(i) Computation of amount of remittance.

(ii) Alternative computation of remittance amount.

(iii) Computation of section 987 QBU gross assets plus remittance.

(iv) Computation of remittance proportion.

(v) Computation of section 987 gain or loss.

(3) Annual recognition election.

§ 1.987-6 Character and source of section 987 gain or loss.

(a) Ordinary income or loss.

(b) Character and source of section 987 gain or loss.

(1) Timing of source and character determination.

(2) Method for determining the character and source section 987 gain or loss.

(i) Initial assignment

(ii) Reassignment of section 987 gain or loss.

(iii) Special rule for the application of the GILTI high-tax exclusion to section 987 gain or loss.

(3) Allocation and apportionment of foreign income tax to section 987 items under section 861.

(i) The foreign gross income is an item of foreign currency gain or loss.

(ii) The same event or events give rise to both the foreign gross income and the section 987 gain or loss.

(c) Examples.

(1) Example 1: Initial assignment and reassignment of section 987 gain or loss.

(i) Facts.

(ii) Analysis.

(2) Example 2: Effect of GILTI high-tax exclusion.

(i) Facts.

(ii) Analysis.

(3) Example 3: Section 987 gain or loss treated as attributable to section 988 transactions.

(i) Facts.

(ii) Analysis.

(4) Example 4: Section 987 gain or loss assigned to passive foreign personal holding company income.

(i) Facts.

(ii) Analysis.

§ 1.987-7 Application of the section 987 regulations to partnerships and S corporations.

(a) Overview.

(b) Section 987 regulations generally do not apply to partnerships.

(c) Provisions of the section 987 regulations that apply to partnerships.

(1) In general.

(i) Eligible QBU.

(ii) Partnership.

(2) Applicable provisions.

(i) In general.

(ii) Annual recognition election.

(iii) Section 988 mark-to-market election.

(3) Modifications to applicable provisions.

(i) In general.

(ii) Controlled group.

(4) Terminating QBUs.

(d) Suspended section 987 loss.

(1) In general.

(i) Rules of § 1.987-11(c) and (d)(2) do not apply.

(ii) Suspension of section 987 loss.

(2) Exceptions.

(i) Method under which historic items do not give rise to section 987 gain or loss.

(ii) Annual recognition election.

(iii) De minimis rule.

(3) Recognition of suspended section 987 loss.

(i) In general.

(ii) Partnership that is not engaged in a trade or business.

(iii) Application of the loss-to-the-extent-of-gain rule.

(e) Adjustments to the basis of a partner's interest in the partnership.

(f) S corporations treated as partnerships.

(g) Examples.

(1) Example 1: Aggregate approach to section 987.

(i) Facts.

(ii) Analysis.

(2) Example 2: Entity approach to section 987.

(i) Facts.

(ii) Analysis.

§ 1.987-8 Termination of a section 987 QBU.

(a) Scope.

(b) In general.

(1) Trade or business ceases.

(2) Substantially all assets transferred.

(3) Owner no longer a CFC.

(4) Owner ceases to exist.

(5) Section 987 QBU ceases to be an eligible QBU with a functional currency different from its owner.

(6) Change in form of ownership.

(c) Transactions described in section 381(a).

(1) Liquidations.

(2) Reorganizations.

(d) [Reserved]

(e) Effect of terminations.

(f) Examples.

(1) Example 1: Cessation of operations.

(i) Facts.

(ii) Analysis.

(2) Example 2: Transfer of a section 987 QBU to a member of a consolidated group.

(i) Facts.

(ii) Analysis.

(3) Example 3: Cessation of controlled foreign corporation status.

(i) Facts.

(ii) Analysis.

(4) Example 4: Section 332 liquidation.

(i) Facts.

(ii) Analysis.

(5) [Reserved]

(6) Example 6: Deemed transfers to a CFC upon a check-the-box election.

(i) Facts.

(ii) Analysis.

(7) Example 7: Sale of a section 987 QBU to a member of a consolidated group.

(i) Facts.

(ii) Analysis.

§ 1.987-9 Recordkeeping requirements.

(a) In general.

(b) Supplemental information.

(c) Retention of records.

(d) Information on a dedicated section 987 form.

§ 1.987-10 Transition rules.

(a) Overview.

(1) In general.

(2) Terms defined under prior § 1.987-12.

(b) Scope.

(1) Owner of a section 987 QBU.

(2) Deferral QBU owner and owner of outbound loss QBU.

(c) Transition date.

(1) In general.

(2) Terminating QBU.

(i) In general.

(ii) Ordering rule.

(d) Application of the section 987 regulations after the transition date.

(1) Owner functional currency net value on the last day of the preceding taxable year.

(2) Determination of historic rate.

(3) Transition exchange rate.

(i) In general.

(ii) Earnings only method.

(e) Pretransition gain or loss.

(1) In general.

(2) Amount of pretransition gain or loss for an owner that applied an eligible pretransition method.

(i) Owner of a section 987 QBU

(ii) Deferral QBU owner.

(iii) Owner of an outbound loss QBU.

(3) Amount of pretransition gain or loss for an owner that did not apply an eligible pretransition method.

(i) In general.

(ii) Computation of pretransition gain or loss.

(iii) Annual unrecognized section 987 gain or loss.

(iv) Deferral QBU owner.

(v) Owner of an outbound loss QBU.

(4) Eligible pretransition method.

(i) Earnings and capital method.

(ii) Other reasonable methods.

(iii) Other earnings only methods.

(iv) Error in the application of a section 987 method.

(v) Certain consistent practices not treated as errors.

(vi) Deferral of section 987 gain or loss until termination is not reasonable.

(vii) Anti-abuse rule.

(5) Recognition of pretransition gain or loss.

(i) In general.

(ii) Election to recognize pretransition section 987 gain or loss ratably over the transition period.

(6) Predecessor of an owner.

(i) In general.

(ii) Predecessor.

(7) Small business election.

(i) Scope.

(ii) Owner threshold.

(iii) QBU threshold.

(iv) Small business election.

(f) QBUs to which the fresh start transition method was applied.

(1) In general.

(2) Application of the section 987 regulations after the transition date.

(i) Owner functional currency net value on the last day of the preceding taxable year.

(ii) Determination of historic rate.

(iii) Unrecognized section 987 gain or loss.

(3) Taxpayers that are required to transition using the fresh start transition method.

(g) [Reserved]

(h) Determination of source and character.

(1) In general.

(2) Deferral QBU or outbound loss QBU.

(i) [Reserved]

(j) Adjustments to avoid double counting or omissions.

(k) Reporting.

(1) In general.

(2) QBUs for which reporting is required.

(i) In general.

(ii) QBUs to which the fresh start transition method was applied.

(3) Attachments not required where information is reported on a form.

(4) No change in method of accounting.

(l) Examples.

(1) Example 1: Earnings and capital method.

(i) Facts.

(ii) Analysis.

(2) Example 2: Earnings only method described in paragraph (e)(4)(ii) of this section.

(i) Facts.

(ii) Analysis.

(3) Example 3: Earnings only method described in paragraph (e)(4)(iii) of this section.

(i) Facts.

(ii) Analysis.

(4) Example 4: Owner did not apply section 987(3).

(i) Facts.

(ii) Analysis.

(5) Example 5: Error in application of method.

(i) Facts.

(ii) Analysis.

(6) Example 6: Consistent practice not treated as an error.

(i) Facts.

(ii) Analysis.

§ 1.987-11 Suspended section 987 loss relating to certain elections; loss to the extent of gain rule.

(a) In general.

(b) Cumulative suspended section 987 loss in a recognition grouping.

(1) In general.

(2) Combined QBU.

(3) Separated QBU.

(c) Suspension of section 987 loss for taxable years in which a current rate election is in effect and an annual recognition election is not in effect.

(1) In general.

(2) De minimis rule.

(3) Taxable year of controlled group members.

(i) In general.

(ii) Owner is a CFC.

(d) Suspension of net unrecognized section 987 loss upon making or revoking certain elections.

(1) Making an annual recognition election.

(2) Revoking a current rate election.

(e) Loss-to-the-extent of gain rule.

(1) In general.

(2) Separate determination for each recognition grouping.

(3) Amount of suspended section 987 loss recognized.

(i) Current year gain amount.

(ii) Lookback gain amount.

(iii) Suspended section 987 loss not taken into account.

(iv) Lookback period.

(v) Anti-abuse rule.

(4) Suspended section 987 loss recognized with respect to each section 987 QBU and suspended section 987 loss QBU.

(5) Section 381(a) transactions.

(i) In general.

(ii) Limitation for inbound section 381(a) transactions.

(6) Consolidated group members.

(i) In general.

(ii) Suspended section 987 losses arising in separate return limitation years.

(f) Recognition groupings.

(1) Sourcing and section 904 category.

(2) Statutory and residual groupings for CFC owners.

(g) Examples.

(1) Example 1: Suspension of section 987 loss and recognition of suspended section 987 loss.

(i) Facts.

(ii) Analysis.

(2) Example 2: Recognition of suspended section 987 loss by reason of gain recognized during the lookback period.

(i) Facts.

(ii) Analysis.

(iii) Alternative facts.

(iv) Analysis of alternative facts.

(3) Example 3: Suspension of section 987 loss when a current rate election is revoked.

(i) Facts.

(ii) Analysis.

§ 1.987-12 Deferral of section 987 gain or loss.

(a) Overview.

(1) Scope.

(2) Exceptions.

(i) Annual recognition election.

(ii) De minimis rule.

(b) Treatment of section 987 gain and loss in connection with a deferral event.

(1) Gain or loss recognized (or suspended) in the taxable year of a deferral event.

(2) Deferred section 987 gain or loss.

(i) In general.

(ii) Deferred section 987 gain or loss attributable to a successor deferral QBU.

(c) Recognition (or suspension) of deferred section 987 gain or loss following a deferral event.

(1) Recognition upon a subsequent remittance.

(i) In general.

(ii) Amount.

(iii) Deemed remittance by a successor deferral QBU.

(2) Deferral events and outbound loss events with respect to a successor deferral QBU.

(d) Successor deferral QBU becomes a successor suspended loss QBU.

(e) Anti-abuse rule.

(f) Combinations and separations of successor deferral QBUs.

(1) Combined QBU.

(2) Separated QBU.

(g) Definitions.

(1) Deferral event.

(i) Events.

(ii) Assets on books of successor deferral QBU.

(2) Successor deferral QBU.

(3) Original deferral QBU owner.

(4) Qualified successor.

(h) Examples.

(1) Example 1: Contribution of a section 987 QBU with net unrecognized section 987 gain to a member of the controlled group.

(i) Facts.

(ii) Analysis.

(2) Example 2: Contribution of a section 987 QBU with net unrecognized section 987 loss to a member of the controlled group when a current rate election is in effect.

(i) Facts.

(ii) Analysis.

(3) Example 3: Election to be classified as a corporation.

(i) Facts.

(ii) Analysis.

(4) Example 4: Partial recognition of deferred gain or loss.

(i) Facts.

(ii) Analysis.

§ 1.987-13 Suspended section 987 loss upon terminations.

(a) Overview.

(1) In general.

(2) Ordering rule.

(b) Termination of a section 987 QBU with suspended loss.

(1) Suspended section 987 loss becomes suspended section 987 loss with respect to a successor suspended loss QBU.

(i) Successor suspended loss QBU.

(ii) Attribution of suspended section 987 loss to successor suspended loss QBU.

(2) Recognition of suspended section 987 loss.

(c) Termination of a successor suspended loss QBU.

(1) Successor to the successor suspended loss QBU.

(i) Successor suspended loss QBU.

(ii) Attribution of suspended section 987 loss to successor suspended loss QBU.

(2) Recognition of suspended section 987 loss.

(d) Transfer of successor suspended loss QBU owner.

(e) Transfer of original suspended loss QBU owner.

(f) Owner ceases to exist.

(g) Inbound nonrecognition transactions-no carryover of suspended section 987 loss.

(h) Outbound transactions-recognition or suspension of net unrecognized section 987 loss.

(1) In general.

(2) Outbound loss event.

(3) Loss recognition upon an outbound loss event

(4) Loss suspension upon outbound loss event.

(i) [Reserved]

(j) Termination of a successor suspended loss QBU.

(k) Anti-abuse.

(l) Definitions.

(1) Original suspended loss QBU owner.

(i) In general.

(ii) Successors.

(2) Successor suspended loss QBU.

(3) Successor suspended loss QBU owner.

(4) Ownership interests.

(5) Significant portion.

(m) Examples.

(1) Example 1: Trade or business of a section 987 QBU ceases.

(i) Facts.

(ii) Analysis.

(2) Example 2: Trade or business of a section 987 QBU is sold to a third party.

(i) Facts.

(ii) Analysis.

(3) Example 3: Outbound loss event.

(i) Facts.

(ii) Analysis.

§ 1.987-14 Section 987 hedging transactions.

(a) Overview.

(b) Section 987 hedging transaction.

(1) In general.

(2) Requirements.

(i) Identification.

(ii) Current rate election.

(iii) Mark-to-market method of accounting.

(iv) Treatment under U.S. generally accepted accounting principles.

(v) Hedge entered into by owner of the hedged QBU.

(3) Anti-abuse rule.

(4) Partial termination of a section 987 hedging transaction.

(c) Identification requirements.

(1) In general.

(2) Inadvertent error.

(d) Taxation of section 987 hedging transactions.

(1) Hedging gain or loss with respect to a hedged QBU.

(2) Adjustment to unrecognized section 987 gain or loss for the taxable year.

(i) Hedging loss.

(ii) Hedging gain.

(3) Termination of a hedged QBU.

(e) Examples.

(1) Example 1: Section 987 hedging transaction.

(i) Facts.

(ii) Analysis.

(2) Example 2: Excess hedging gain from a section 987 hedging transaction.

(i) Facts.

(ii) Analysis.

§ 1.987-15 Applicability date.

(a) Applicability date of section 987 regulations.

(1) In general.

(2) Applicability date for a terminating QBU.

(b) Application of the section 987 regulations to taxable years beginning on or before December 31, 2024, and ending after November 9, 2023.

(c) Application of the 2016 and 2019 section 987 regulations.

(1) In general.

(2) Application to section 987 QBUs not owned on the transition date.

(3) Modifications of defined terms for purposes of this paragraph (c).

(i) Application of § 1.987-10 in lieu of prior § 1.987-10.

(ii) Partnerships not included in section 987 electing group.

(iii) Transition date.

(d) Prior § 1.987-12.

[T.D. 10016, 89 FR 100165, Dec. 11, 2024]

§ 1.987-1 Scope, definitions, and special rules.

(a) ***In general.*** Sections 1.987-1 through 1.987-15 (the *section 987 regulations*) provide rules for determining the taxable income or loss and earnings and profits of a taxpayer with respect to a qualified business unit (QBU) that is subject to section 987. Further, the section 987 regulations provide rules for determining the timing, amount, character, and source of section 987 gain or loss recognized with respect to a section 987 QBU. This section addresses the scope of the section 987 regulations and provides certain definitions, special rules, and procedures for making elections. Section 1.987-2 provides rules for attributing assets

and liabilities and items of income, gain, deduction, and loss to an eligible QBU. It also provides rules regarding the translation of items transferred to a section 987 QBU. Section 1.987-3 provides rules for determining and translating the taxable income or loss of a taxpayer with respect to a section 987 QBU. Section 1.987-4 provides rules for determining net unrecognized section 987 gain or loss. Section 1.987-5 provides rules regarding the recognition of section 987 gain or loss. It also provides rules regarding the translation of items transferred from a section 987 QBU to its owner. Section 1.987-6 provides rules regarding the character and source of section 987 gain or loss. Section 1.987-7 provides rules relating to the application of the section 987 regulations with respect to a partnership or S corporation. Section 1.987-8 provides rules regarding the termination of a section 987 QBU. Section 1.987-9 provides rules regarding the recordkeeping required under section 987. Section 1.987-10 provides transition rules. Section 1.987-11 provides rules relating to suspended losses in connection with certain elections and the loss-to-the-extent-of-gain rule. Section 1.987-12 provides rules regarding when section 987 gain or loss is deferred, as well as when such deferred amounts are recognized. Section 1.987-13 provides rules relating to suspended section 987 loss of an owner with respect to a section 987 QBU that terminates. Section 1.987-14 provides rules relating to section 987 hedging transactions. Section 1.987-15 provides the applicability date of the section 987 regulations.

(b) ***Scope of section 987 and certain rules relating to QBUs*** —

(1) ***Persons subject to section 987*** —

(i) ***In general.*** Except as provided in paragraphs (b)(1)(ii) and (b)(6) of this section, any individual or corporation is subject to the section 987 regulations. *See* § 1.987-7 for rules relating to the application of the section 987 regulations in the case of a partnership or S corporation.

(ii) ***Inapplicability to certain entities.*** Section 987(3) and the section 987 regulations do not apply to individuals who are not United States persons and foreign corporations that either are not controlled foreign corporations or that are controlled foreign corporations in which no United States shareholders own (within the meaning of section 958(a)) stock.

(2) ***Application of the section 987 regulations to earnings and profits*** —

(i) ***In general.*** The rules and principles of the section 987 regulations also apply to the determination of earnings and profits, and any elections that apply pursuant to the section 987 regulations also apply for purposes of determining earnings and profits.

(ii) ***Timing.*** Earnings and profits are increased when section 987 gain is recognized and decreased when section 987 loss is recognized. As a result, converting net unrecognized section 987 gain or loss to deferred section 987 gain or loss or suspended section 987 loss does not affect earnings and profits because the amounts have not yet been recognized.

(3) ***Definition of a section 987 QBU*** —

(i) ***In general.*** For purposes of section 987, a *section 987 QBU* is an eligible QBU that has a functional currency different from its owner. A section 987 QBU will continue to be treated as a section 987 QBU of the owner until a sale or other termination of the section 987 QBU as described in § 1.987-8(b) and (c). *See* § 1.985-1 for rules determining the functional currency of an eligible QBU.

(ii) ***Section 987 QBU grouping election*** —

(A) ***In general.*** Solely for purposes of section 987, an owner may elect to treat all section 987 QBUs with the same functional currency as a single section 987 QBU except to the extent provided in paragraph (b)(3)(ii)(B) of this section. However, a QBU described in § 1.987-7(c)(1) may not be treated as part of the same QBU as a section 987 QBU that is not described in § 1.987-7(c)(1).

(B) [Reserved]

(4) ***Definition of an eligible QBU*** —

(i) ***In general.*** For purposes of section 987, an *eligible QBU* means a qualified business unit that is not subject to the United States dollar approximate separate transactions method rules of § 1.985-3.

(ii) ***Qualified business unit.*** For purposes of this paragraph (b)(4), a qualified business unit is defined in § 1.989(a)-1(b), except that a corporation, partnership, trust, estate, or disregarded entity is not itself a qualified business unit, but the activities of such entity may be a qualified business unit if they meet the requirements of § 1.989(a)-1(b)(1) and (b)(2)(ii). For example, if a corporation is solely engaged in activities that constitute a trade or business, and the corporation maintains only one set of books and records, the activities (but not the corporation) are a qualified business unit.

(5) ***Definition of an owner.*** For purposes of section 987, an *owner* is any person having direct ownership in an eligible QBU (including ownership through DEs). The term *owner* does not include an eligible QBU. For example, a section 987 QBU (*QBU1*) is not an owner of another section 987 QBU (*QBU2*) even if QBU1 wholly owns the DE that owns QBU2. A person that is not subject to the section 987 regulations under paragraph (b)(1)(ii) of this section can meet the definition of an owner under this paragraph (b)(5) for purposes of applying the section 987 regulations to other persons.

(i) ***Direct ownership.*** A person is a direct owner of an eligible QBU if the person is the owner for Federal income tax purposes of the assets and liabilities of the eligible QBU.

(ii) [Reserved]

(6) [Reserved]

(7) ***Examples illustrating paragraph (b) of this section.*** The following examples illustrate the principles of this paragraph (b). The following facts are assumed for purposes of the examples. U.S. Corp is a domestic corporation, has the U.S. dollar as its functional currency, and uses the calendar year as its taxable year. Except as otherwise provided: Business A and Business B are eligible QBUs and have the euro and the Japanese yen, respectively, as their functional currencies; and DE1 and DE2 are DEs, have no assets or liabilities, and conduct no activities.

(i) ***Example 1: Owner owns an eligible QBU and a DE holding company*** —

(A) ***Facts.*** U.S. Corp owns Business A and all of the interests in DE1. DE1 maintains a separate set of books and records that are kept in British pounds. DE1 owns pounds and all of the stock of a foreign corporation, FC. DE1 is liable to a lender on a pound-denominated obligation that was incurred to acquire the stock of FC. The FC stock, the pounds, and the liability incurred to acquire the FC stock are recorded on DE1's separate books and records. DE1 has no other assets or liabilities and conducts no activities (other than holding the FC stock and pounds and servicing its liability).

(B) *Analysis* —

(*1*) Pursuant to paragraph (b)(5) of this section, U.S. Corp is the owner of Business A because it has direct ownership of Business A, an eligible QBU. Because Business A is an eligible QBU with a functional currency that is different from the functional currency of its owner, U.S. Corp, Business A is a section 987 QBU under paragraph (b)(3)(i) of this section. As a result, U.S. Corp and its section 987 QBU, Business A, are subject to section 987.

(*2*) Holding the stock of FC and pounds and servicing a liability does not constitute a trade or business within the meaning of § 1.989(a)-1(c). Because the activities of DE1 do not constitute a trade or business within the meaning of § 1.989(a)-1(c), such activities are not an eligible QBU. In addition, pursuant to paragraph (b)(4)(ii) of this section, DE1 itself is not an eligible QBU. As a result, neither DE1 nor its activities qualify as a section 987 QBU of U.S. Corp. Therefore, neither the activities of DE1 nor DE1 itself is subject to section 987. For the foreign currency treatment of payments on DE1's pound-denominated liability, *see* § 1.988-2(b).

(ii) *Example 2: Owner owns eligible QBUs through DEs* —

(A) ***Facts.*** U.S. Corp owns all of the interests in DE1. DE1 owns Business A and all of the interests in DE2. The only activities of DE1 are Business A activities and holding the interests in DE2. DE2 owns Business B and Business C. For purposes of this example, Business B does not maintain books and records that are separate from DE2. Instead, the activities of Business B are reflected on the books and records of DE2, which are maintained in Japanese yen. In addition, Business C has the U.S. dollar as its functional currency, maintains books and records that are separate from the books and records of DE2, and is an eligible QBU.

(B) *Analysis* —

(*1*) Pursuant to paragraph (b)(4)(ii) of this section, DE1 and DE2 are not eligible QBUs. Moreover, pursuant to paragraph (b)(5) of this section, DE1 is not the owner of the Business A, Business B, or Business C eligible QBUs, and neither Business A nor DE2 is the owner of the Business B or Business C eligible QBUs. Instead, pursuant to paragraph (b)(5) of this section, U.S. Corp is the owner of the Business A, Business B, and Business C eligible QBUs.

(*2*) Because Business A and Business B are eligible QBUs with functional currencies that are different than the functional currency of U.S. Corp, Business A and Business B are section 987 QBUs under paragraph (b)(3)(i) of this section.

(*3*) The Business C eligible QBU has the same functional currency as U.S. Corp, the U.S. dollar. Therefore, the Business C eligible QBU is not a section 987 QBU under paragraph (b)(3)(i) of this section.

(iii) *Example 3: Section 987 grouping election* —

(A) ***Facts.*** U.S. Corp owns all of the interests in DE1. DE1 owns Business A and Business B. For purposes of this example, assume Business B has the euro as its functional currency.

(B) *Analysis* —

(1) Pursuant to paragraph (b)(4)(ii) of this section, DE1 is not an eligible QBU. Moreover, pursuant to paragraph (b)(5) of this section, DE1 is not the owner of the Business A or Business B eligible QBUs. Instead, pursuant to paragraph (b)(5) of this section, U.S. Corp is the owner of the Business A and Business B eligible QBUs.

(2) Business A and Business B constitute two separate eligible QBUs, each with the euro as its functional currency. Accordingly, Business A and Business B are section 987 QBUs of U.S. Corp under paragraph (b)(3)(i) of this section. U.S. Corp may elect to treat Business A and Business B as a single section 987 QBU pursuant to paragraph (b)(3)(ii) of this section. If such election is made, pursuant to paragraph (b)(5) of this section, U.S. Corp would be the owner of the Business AB section 987 QBU that would include the activities of both the Business A section 987 QBU and the Business B section 987 QBU. In addition, pursuant to paragraph (b)(5) of this section, DE1 would not be treated as the owner of the Business AB section 987 QBU.

(c) ***Exchange rates.*** Solely for purposes of section 987, the spot rate, the yearly average exchange rate, and the historic rate are determined as provided in paragraphs (c)(1) through (3) of this section.

(1) ***Spot rate*** —

(i) ***In general.*** Except as otherwise provided in this section, the spot rate means the rate determined under the rules of § 1.988-1(d)(1), (2), and (4) on the relevant date.

(ii) ***Election to use a spot rate convention.*** An owner may elect to use a spot rate convention that reasonably approximates the spot rate determined in paragraph (c)(1)(i) of this section. A spot rate convention may be based on the spot rate at the beginning of a reasonable period, the spot rate at the end of a reasonable period, the average of spot rates for a reasonable period, or spot and forward rates for a reasonable period. For this purpose, a reasonable period may not exceed three months. For example, in lieu of the spot rate determined in paragraph (c)(1)(i) of this section, the spot rate for all transactions during a monthly period may be determined pursuant to one of the following conventions: the spot rate at the beginning of the current month or at the end of the preceding month; the monthly average of daily spot rates for the current or preceding month; or an average of the beginning and ending spot rates for the current or preceding month. Similarly, in lieu of the spot rate determined in paragraph (c)(1)(i) of this section, the spot rate may be determined pursuant to an average of the spot rate and the 30-day forward rate on a day of the preceding month. Use of a spot rate convention that is consistent with the convention used for financial accounting purposes is generally presumed to reasonably approximate the rate in paragraph (c)(1)(i) of this section. However, the Commissioner may prescribe the spot rate as determined in paragraph (c)(1)(i) of this section or an appropriate spot rate pursuant to this paragraph (c)(1)(ii) if the Commissioner determines that the use of the convention would not clearly reflect income based on the facts and circumstances available at the time of the election. The election or revocation of a spot rate convention does not change the spot rate with respect to any day of a taxable year before the election or revocation becomes effective. *See* paragraph (g) of this section for rules relating to section 987 elections.

(2) ***Yearly average exchange rate.*** For purposes of section 987, the yearly average exchange rate is a rate that represents an average exchange rate for the taxable year (or, if the section 987 QBU existed for less than the full taxable year, the portion of the year during which the section 987 QBU existed) computed under any reasonable method. For example, an owner may determine the yearly average exchange rate based on a daily, monthly, or quarterly averaging convention, whether weighted or

unweighted, and may take into account forward rates for a period not to exceed three months. Use of an averaging convention that is consistent with the convention used for financial accounting purposes is generally presumed to be a reasonable method. However, the Commissioner may prescribe an appropriate yearly average exchange rate if the Commissioner determines that the use of the convention would not have been expected to clearly reflect income based on the facts and circumstances available at the time of the election.

(3) *Historic rate* —

(i) ***In general.*** Except as otherwise provided in the section 987 regulations, the historic rate is determined as described in paragraphs (c)(3)(i)(A) through (E) of this section.

(A) ***Assets generally.*** In the case of an asset other than inventory that is acquired by a section 987 QBU (or otherwise becomes attributable to a section 987 QBU, including through a transfer), the historic rate is the yearly average exchange rate applicable to the year of acquisition (or the year in which the asset otherwise becomes attributable to the section 987 QBU).

(B) ***Inventory under the simplified inventory method.*** If a taxpayer has not elected under § 1.987-3(c)(2)(iv)(B) to use the historic inventory method, the historic rate for inventory is determined under this paragraph (c)(3)(i)(B).

(*1*) ***LIFO inventory.*** The historic rate for LIFO inventory is the yearly average exchange rate applicable to the year in which the inventory's LIFO layer arose.

(*2*) ***Non-LIFO inventory.*** The historic rate for non-LIFO inventory is the yearly average exchange rate for the relevant taxable year. For example, in determining the owner functional currency net value of a section 987 QBU on the last day of the current taxable year under § 1.987-4(d)(1)(i)(A), the historic rate for non-LIFO inventory is the yearly average exchange rate for the current taxable year. In determining the owner functional currency net value of a section 987 QBU on the last day of the preceding taxable year under § 1.987-4(d)(1)(i)(B), the historic rate for non-LIFO inventory is the yearly average exchange rate for the preceding taxable year.

(C) ***Inventory under the historic inventory method.*** If a taxpayer has elected under § 1.987-3(c)(2)(iv)(B) to use the historic inventory method, each inventoriable cost with respect to a section 987 QBU's inventory may have a different historic rate. The historic rate for each inventoriable cost is the exchange rate at which the cost would be translated under § 1.987-3 if it were not an inventoriable cost.

(D) ***Liabilities generally.*** In the case of a liability that is incurred or assumed by a section 987 QBU, the historic rate is the yearly average exchange rate applicable to the year the liability is incurred or assumed.

(E) ***Determination of historic rates after revocation of current rate election.*** If a current rate election is revoked or otherwise ceases to be in effect, the historic rate of all historic items (other than non-LIFO inventory subject to the simplified inventory method) that were attributable to a section 987 QBU on the last day of the last taxable year in which the current rate election was in effect is the spot rate applicable to that day. Similarly, except as provided in paragraph (c)(3)(i)(B)(*2*) of this section, if a marked item becomes a

historic item (such as when an asset of an insurance company ceases to be a separate account asset), the historic rate for the historic item is equal to the spot rate applicable to the last day of the last taxable year in which it was treated as a marked item.

(ii) ***Date placed in service for depreciable or amortizable property.*** In the case of depreciable or amortizable property, an owner may determine the historic rate by reference to the date such property is placed in service by the section 987 QBU rather than the date the property was acquired, provided that this convention is consistently applied for all such property attributable to that section 987 QBU.

(iii) ***Changed functional currency.*** In the case of a section 987 QBU or an owner of a section 987 QBU that previously changed its functional currency, § 1.985-5(d)(1)(ii)(A) and (e)(4)(i)(A), respectively, are taken into account in determining the historic rate for an item reflected on the balance sheet of the section 987 QBU immediately before the year of change.

(d) ***Marked item*** —

(1) ***In general.*** Except as provided in paragraph (d)(2) of this section, a marked item is an asset (*marked asset*) or liability (*marked liability*) that is attributable to a section 987 QBU under § 1.987-2(b) and that—

(i) Is denominated in, or determined by reference to, the functional currency of the section 987 QBU and would be a section 988 transaction if such item were held or entered into directly by the owner of the section 987 QBU;

(ii) Is a prepaid expense or a liability for an advance payment of unearned income, in either case having an original term of one year or less on the date the prepaid expense or liability for an advance payment of unearned income arises;

(iii) Is a section 988 transaction of the section 987 QBU;

(iv) Is an insurance reserve; or

(v) Is a separate account asset.

(2) ***Current rate election.*** A taxpayer may elect to treat all assets and liabilities that are attributable to a section 987 QBU under § 1.987-2(b) as marked items (a *current rate election*). *See* § 1.987-11(c) for rules suspending section 987 loss if a current rate election is in effect.

(e) ***Historic item.*** A historic item is an asset (*historic asset*) or liability (*historic liability*) that is attributable to a section 987 QBU under § 1.987-2(b) and that is not a marked item.

(f) ***Example: Identification of marked and historic items.*** The following example illustrates the application of paragraphs (d) and (e) of this section.

(1) ***Facts.*** U.S. Corp is a domestic corporation with the U.S. dollar as its functional currency and is the owner of Business A, a section 987 QBU that has the pound as its functional currency. Items reflected on Business A's balance sheet include £10,000, $1,000, a building with a basis of £100,000, a light general purpose truck with a basis of £30,000, a computer with a basis of £1,000, a 60-day receivable for ¥15,000, an account payable of £5,000, and a foreign currency contract within the meaning of section 1256(g)(2) that requires Business A to exchange £100 for $125 in 90 days.

(2) *Analysis.* Under paragraph (d) of this section, the £10,000, the $1,000, the ¥15,000 receivable, the £5,000 account payable, and the £/$ section 1256 foreign currency contract are marked items. The other items are historic items under paragraph (e) of this section.

(g) *Elections.* This paragraph (g) provides rules for making and revoking elections under the section 987 regulations (the *section 987 elections*). A section 987 election is made for the owner and for a taxable year and applies to every section 987 QBU owned by the owner while the election is in effect. Once made, a section 987 election remains in effect until revoked.

(1) *Persons making the election.* A section 987 election is made or revoked by the authorized person. The authorized person is described in paragraph (g)(1)(i), (ii), (iii), or (iv) of this section. If there are multiple controlling domestic shareholders, references to "the authorized person" refer to all authorized persons acting in concert.

(i) *United States persons.* Except as provided in paragraph (g)(1)(iii) or (iv) of this section, if the owner of a section 987 QBU is a United States person, the owner is the authorized person.

(ii) *CFCs.* If the owner of a section 987 QBU is a controlled foreign corporation, the controlling domestic shareholders (determined under § 1.964-1(c)(5)(i)) of the controlled foreign corporation are treated as the authorized person.

(iii) *Consolidated groups.* If the owner is a member of a consolidated group, *see* § 1.1502-77.

(iv) *Partnerships.* If the owner of a section 987 QBU is a partnership, the election is made or revoked by the partnership. For a partnership that is not otherwise required to file a partnership return, *see* § 1.6031(a)-1(b)(5) for elections that can only be made by a partnership under section 703.

(2) *Consistency rules* —

(i) *Consolidated groups.* A section 987 election is made or revoked by a consolidated group and applies to all members of the group. Therefore, the same section 987 elections will be in effect for all members of a consolidated group at all times. If a corporation becomes a member of a consolidated group, it is deemed to make or revoke any section 987 election as necessary to be consistent with the consolidated group. If a corporation ceases to be a member of a consolidated group and does not join another group, its section 987 elections are unaffected by its departure from the group. All members of a consolidated group are treated as a single United States person for purposes of applying paragraph (g)(2)(ii) of this section.

(ii) *CFCs and foreign partnerships.* If the authorized person makes or revokes an election on behalf of any person (including the authorized person) described in paragraphs (g)(2)(ii)(A) through (C) of this section (the *section 987 electing group*), then the election must be made or revoked on behalf of all members of the section 987 electing group for the first taxable year of each entity that ends with or within the taxable year of the United States person described in paragraph (g)(2)(ii)(A) of this section in which the election or revocation became effective. If an entity that was not previously a member of the section 987 electing group becomes a member (for example, upon formation or acquisition), it is deemed to make or revoke any section 987 election as necessary to be consistent with the other members (without regard to the requirements of paragraph (g)(3)(ii) of this section). The following persons are described in this paragraph (g)(2)(ii):

(A) A United States person (the *relevant United States person*).

(B) Each controlled foreign corporation in which the relevant United States person owns (within the meaning of section 958(a)) more than fifty percent of the stock (by vote or value).

(C) In the case of an election that can be made by or for a partnership, each foreign partnership in which the relevant United States person owns (directly or indirectly) more than fifty percent of the capital and profits interest.

(iii) ***Section 381(a) transactions.*** If a corporation (*acquiring corporation*) acquires the assets of another corporation in a transaction described in section 381(a), the acquiring corporation's election status applies to all section 987 QBUs owned by the acquiring corporation after the transaction.

(3) ***Manner of making or revoking elections.*** The section 987 elections must be made in accordance with this paragraph (g)(3), except as provided in forms and instructions or other guidance as provided by the Secretary.

(i) ***Statement must be attached to a return.*** An authorized person that makes or revokes a section 987 election in accordance with this paragraph (g) must attach to its return the statement described in this paragraph (g)(3)(i) (or must provide the information described in this paragraph (g)(3)(i) in the manner prescribed in forms or instructions or other guidance). Each statement must include an identification of the election that is made or revoked (including the section and paragraph of the regulations under which the election is made); the name, address, and functional currency of each owner (or if the owner is a member of a consolidated group, the common parent of the consolidated group) for which the election is made or revoked; and the name, address, functional currency, and owner of each section 987 QBU to which the election applies. The elections provided in § 1.987-10 are made by reporting the election on the statement described in § 1.987-10(k). An election to use a spot rate convention under paragraph (c)(1)(ii) of this section must describe the convention.

(ii) ***Election requirements*** —

(A) ***Consent required.*** Except as provided in paragraph (g)(3)(ii)(B) or (C) of this section, a section 987 election may not be made or revoked without the consent of the Commissioner. A copy of the consent must be attached to the statement described in paragraph (g)(3)(i) of this section. For purposes of this paragraph (g)(3)(ii), the Commissioner's consent may be obtained only with a ruling or administrative pronouncement. *See* Revenue Procedure 2024-1, I.R.B. 2024-1 (or superseding guidance).

(B) ***Current rate election, annual recognition election, and section 988 mark-to-market election.*** Except as provided in paragraph (g)(3)(ii)(C) of this section, the authorized person may make a current rate election, an annual recognition election, or a section 988 mark-to-market election without the Commissioner's consent by filing the statement prescribed in paragraph (g)(3)(i) of this section with the Internal Revenue Service in accordance with the prescribed form or its instructions (or other guidance) on or before the first day of the taxable year to which the election applies, and attaching a copy of the statement to its return. Once made, a current rate election, annual recognition election, or section 988 mark-to-market election may not be revoked without the Commissioner's consent for any taxable year beginning within 60 months of the first day of the taxable year for which it was made. Once revoked, a new current rate election, annual recognition election, or

section 988 mark-to-market election may not be made without the Commissioner's consent for any taxable year beginning within 60 months of the first day of the taxable year for which it was revoked.

(C) ***First year to which the section 987 regulations apply.*** The authorized person may make a section 987 election without the consent of the Commissioner on its original, timely filed (including extensions) return for the first taxable year of an owner in which both—

(*1*) The section 987 regulations apply (other than by applying solely to one or more terminating QBUs pursuant to § 1.987-15(a)(2)); and

(*2*) Either the owner or any member of its consolidated group or section 987 electing group is the owner of a section 987 QBU.

(iii) ***Elections made under the 2016 and 2019 section 987 regulations.*** Each section 987 election must be made by the authorized person under the rules of this section without regard to whether the election was in effect under the 2016 and 2019 final regulations or under prior § 1.987-8T. In the first taxable year in which the section 987 regulations apply, any elections made under the 2016 and 2019 final regulations cease to be effective.

(4) ***No change in method of accounting.*** An election under section 987 is not treated as a change in method of accounting for purposes of sections 446 and 481.

(5) ***Principles of § 1.964-1(c)(3) applicable to section 987 elections.*** Except as otherwise provided in this paragraph (g), if the authorized person makes or revokes a section 987 election on behalf of a controlled foreign corporation, the authorized person must make or revoke the section 987 election in accordance with the rules and principles of § 1.964-1(c)(3).

(h) ***Definitions.*** The definitions in this paragraph (h) apply for purposes of the section 987 regulations.

1991 proposed regulations. 1991 proposed regulations means proposed §§ 1.987-1 through 1.987-3 as contained in 56 FR 48457-01 (September 25, 1991).

2006 proposed regulations. 2006 proposed regulations means: proposed §§ 1.861-9T(g)(2)(ii)(A)(*1*) and (g)(2)(vi); 1.985-5; 1.987-1 through 1.987-11; 1.988-1(a)(3) and (4), (a)(10)(ii), and (i); 1.988-4(b)(2); and 1.989(a)-1(b)(2)(i), and (b)(4) as contained in 71 FR 52876-01 (September 7, 2006).

2016 and 2019 section 987 regulations. 2016 and 2019 section 987 regulations means the following regulations:

(i) Sections 1.861-9T(g)(2)(ii)(A)(*1*) and (g)(2)(vi); 1.985-5; 1.987-1 through 1.987-10; 1.988-1(a)(4), (a)(10)(ii), and (i); 1.988-4(b)(2); and 1.989(a)-1(b)(2)(i), (b)(4), (d)(3) and (4), as contained in 26 CFR in part 1 in effect on April 1, 2017.

(ii) Sections 1.987-2T(c)(9), 1.987-4T(c)(2) and (f), and 1.987-7T, as contained in 26 CFR in part 1 in effect on April 1, 2017 (until they were revoked on May 13, 2019).

(iii) Sections 1.987-2(c)(9) and 1.987-4(c)(2) and (f), as contained in 26 CFR in part 1 in effect on April 1, 2020 (beginning on May 13, 2019).

(iv) Sections 1.987-1T (other than §§ 1.987-1T(g)(2)(i)(B) and (g)(3)(i)(H)), 1.987-3T, 1.987-6T, 1.988-1T, and 1.988-2T(i), as contained in 26 CFR in part 1 in effect on April 1, 2017 (until they expired on December 6, 2019).

Adjusted balance sheet. Adjusted balance sheet means a tax basis balance sheet in the functional currency of the eligible QBU, determined by—

(i) Preparing a balance sheet for the relevant date from the section 987 QBU's books and records (within the meaning of § 1.989(a)-1(d)) recorded in the section 987 QBU's functional currency and showing all assets and liabilities attributable to the section 987 QBU under § 1.987-2(b) (the *preliminary balance sheet*); and

(ii) Making adjustments necessary to conform the items reflected on the preliminary balance sheet to United States tax accounting principles (including adjustments to reflect items that were not reflected on the preliminary balance sheet but should be reflected under United States tax accounting principles, and adjustments to eliminate items that are reflected on the preliminary balance sheet but should not be reflected under United States tax accounting principles).

Annual recognition election. Annual recognition election has the meaning provided in § 1.987-5(b)(2).

Authorized person. Authorized person has the meaning provided in paragraph (g)(1) of this section.

Combination. Combination has the meaning provided in § 1.987-2(c)(9)(i).

Combined QBU. Combined QBU has the meaning provided in § 1.987-2(c)(9)(i).

Combining QBU. Combining QBU has the meaning provided in § 1.987-2(c)(9)(i).

Consolidated group. Consolidated group has the meaning provided in § 1.1502-1(h).

Controlled foreign corporation. Controlled foreign corporation (or *CFC*) has the meaning provided in section 957 (or, if applicable, section 953(c)(1)(B)).

Controlled group. A *controlled group* means all persons with the relationships to each other specified in section 267(b) or section 707(b).

Cumulative suspended section 987 loss. Cumulative suspended section 987 loss has the meaning provided in § 1.987-11(b).

Current rate election. Current rate election has the meaning provided in paragraph (d)(2) of this section.

Current year gain amount. Current year gain amount has the meaning provided in § 1.987-11(e)(3)(i).

Deferral event. Deferral event has the meaning provided in § 1.987-12(g)(1).

Deferred section 987 gain or loss. Deferred section 987 gain or loss has the meaning provided in § 1.987-12(b)(2). Deferred section 987 gain or loss does not include net unrecognized section 987 gain or loss or suspended section 987 loss.

Disregarded entity. Disregarded entity (or *DE*) means an entity disregarded as an entity separate from its owner for Federal income tax purposes, including an entity described in § 301.7701-2(c)(2) of this chapter, a qualified subchapter S subsidiary under section 1361(b)(3), a qualified REIT subsidiary within the meaning of section 856(i)(2), and a trust all of which is treated (under subpart E of part I of subchapter J of Chapter 1 of the Code) as owned by the grantor or another person.

Disregarded transactions. Disregarded transactions has the meaning provided in § 1.987-2(c)(2)(ii).

Earnings only method. Earnings only method means a method of applying section 987 before the transition date under which gain or loss under section 987(3) is determined only with respect to the earnings of a section 987 QBU.

ECI. ECI means income that is effectively connected with the conduct of a trade or business within the United States.

Eligible pretransition method. Eligible pretransition method has the meaning provided in § 1.987-10(e)(4).

Eligible QBU. Eligible QBU has the meaning provided in paragraph (b)(4) of this section.

Financial instrument. Financial instrument has the meaning provided in § 1.1275-6(b)(3). It includes a financial instrument entered into between related parties or unrelated parties.

Foreign source income. Foreign source income means income from sources without the United States.

Generally accepted accounting principles. Generally accepted accounting principles means United States generally accepted accounting principles described in standards established and made effective by the Financial Accounting Standards Board.

Hedge. Hedge has the meaning provided in § 1.987-14(b)(1).

Hedged QBU. Hedged QBU has the meaning provided in § 1.987-14(b)(1).

Hedging gain or loss. Hedging gain or loss has the meaning provided in § 1.987-14(d)(1).

Historic asset. Historic asset has the meaning provided in paragraph (e) of this section.

Historic item. Historic item has the meaning provided in paragraph (e) of this section.

Historic liability. Historic liability has the meaning provided in paragraph (e) of this section.

Historic rate. Historic rate has the meaning provided in paragraph (c)(3) of this section.

Insurance reserve. Insurance reserve means an item that is a reserve under section 807(c) or section 953(b) (as applicable).

LIFO. LIFO means the last-in, first-out inventory method (as described in section 472).

LIFO inventory. LIFO inventory means inventory accounted for under the LIFO inventory method.

Liability. Liability means the amount of a liability on the adjusted balance sheet (or the amount that would be on the adjusted balance sheet if an adjusted balance sheet were prepared for that day).

Lookback gain amount. Lookback gain amount has the meaning provided in § 1.987-11(e)(3)(ii).

Lookback period. Lookback period has the meaning provided in § 1.987-11(e)(3)(iv).

Loss-to-the-extent-of-gain rule. Loss-to-the-extent-of-gain rule has the meaning provided in § 1.987-11(e)(1).

Marked asset. Marked asset has the meaning provided in paragraph (d) of this section.

Marked item. Marked item has the meaning provided in paragraph (d) of this section.

Marked liability. Marked liability has the meaning provided in paragraph (d) of this section.

Net accumulated unrecognized section 987 gain or loss. Net accumulated unrecognized section 987 gain or loss has the meaning provided in § 1.987-4(c).

Net unrecognized section 987 gain or loss. Net unrecognized section 987 gain or loss has the meaning provided in § 1.987-4(b). Net unrecognized section 987 gain or loss does not include deferred section 987 gain or loss or suspended section 987 loss.

Non-LIFO inventory. Non-LIFO inventory means inventory that is not accounted for under the LIFO inventory method.

Original deferral QBU. Original deferral QBU has the meaning provided in § 1.987-12(b).

Original deferral QBU owner. Original deferral QBU owner has the meaning provided in § 1.987-12(g)(3).

Original suspended loss QBU owner. Original suspended loss QBU owner has the meaning provided in § 1.987-13(l)(1).

Outbound loss event. Outbound loss event has the meaning provided in § 1.987-13(h)(2).

Outbound loss QBU. Outbound loss QBU has the meaning provided in § 1.987-13(h)(1).

Outbound section 987 loss. Outbound section 987 loss has the meaning provided in § 1.987-13(h)(4).

Owner. Owner has the meaning provided in paragraph (b)(5) of this section.

Prior § 1.987-1. Prior § 1.987-1 means § 1.987-1, as contained in 26 CFR in part 1 in effect on April 1, 2017.

Prior § 1.987-4. Prior § 1.987-4 means § 1.987-4, as contained in 26 CFR in part 1 in effect on April 1, 2017.

Prior § 1.987-5. Prior § 1.987-5 means § 1.987-5, as contained in 26 CFR in part 1 in effect on April 1, 2017.

Prior § 1.987-8T. Prior § 1.987-8T means § 1.987-8T, as contained in 26 CFR in part 1 in effect on April 1, 2017.

Prior § 1.987-10. Prior § 1.987-10 means § 1.987-10, as contained in 26 CFR in part 1 in effect on April 1, 2017.

Prior § 1.987-12. Prior § 1.987-12 means § 1.987-12, as contained in 26 CFR in part 1 in effect on April 1, 2020.

Prior § 1.987-12T. Prior § 1.987-12T means § 1.987-12T, as contained in 26 CFR in part 1 in effect on April 1, 2017.

QBU net value. QBU net value has the meaning provided in § 1.987-4(e)(2)(ii).

Recognition grouping. Recognition grouping has the meaning provided in § 1.987-11(f).

Remittance. Remittance has the meaning provided in § 1.987-5(c).

S corporation. S corporation has the meaning provided in section 1361(a)(1).

Section 904 category. Section 904 category means a separate category of income described in § 1.904-5(a)(4)(v).

Section 987 electing group. Section 987 electing group has the meaning provided in paragraph (g)(2)(ii) of this section.

Section 987 elections. Section 987 elections has the meaning provided in paragraph (g) of this section.

Section 987 gain or loss. Section 987 gain or loss means gain or loss that is recognized under § 1.987-5, deferred section 987 gain or loss, suspended section 987 loss, and pretransition gain or loss that is recognized under § 1.987-10(e)(5)(ii).

Section 987 hedging transaction. Section 987 hedging transaction has the meaning provided in § 1.987-14(b).

Section 987 QBU. Section 987 QBU has the meaning provided in paragraph (b)(3) of this section.

Section 987 regulations. Section 987 regulations has the meaning provided in paragraph (a) of this section.

Section 987 taxable income or loss. Section 987 taxable income or loss has the meaning provided in § 1.987-3(a).

Section 988 mark-to-market election. Section 988 mark-to-market election has the meaning provided in § 1.987-3(b)(4)(ii).

Separate account. Separate account means a separate set of financial records maintained with respect to an insurance contract or group of contracts to report assets and liabilities for specific products that are separated from the insurer's general account, provided the following requirements are met—

(i) Any liability of the separate account is the liability only of that account and not the liability of any other separate account or the general account;

(ii) The separate account is not part of the company's general account and is protected from the general creditors of the company; and

(iii) The value of each contract supported by the separate account is supported proportionately by each of the assets in such account.

Separate account asset. Separate account asset means an asset that is reflected on the books and records of an eligible QBU and held in a separate account with respect to a separate account insurance contract. A separate account asset does not include an asset held in the general account.

Separate account insurance contract. Separate account insurance contract means a contract that would be treated as an insurance contract for Federal income tax purposes (except to the extent provided in this definition with respect to the requirements in section 72(s), 101(f), 817(h), or 7702) for which some or all of the assets supporting the insurance reserves are required to be held in a separate account under the insurance regulatory rules of the jurisdiction in which the contract is issued, and either—

(i) The contract qualifies as a variable contract under section 817(d) (treating foreign law as a State law or regulation); or

(ii) The contract would qualify as a variable contract under section 817(d) (treating foreign law as a State law or regulation) but for its failure to meet one or more of the requirements in section 72(s), 101(f), 817(h), or 7702, provided that the following requirements are met—

(A) The contract is regulated as a life insurance or annuity contract in the foreign jurisdiction in which it is issued;

(B) The contract reserves are computed or estimated on the basis of recognized mortality or morbidity tables and assumed rates of interest. For this purpose, the reflection of the investment return and the market value of assets in the separate account is considered an assumed rate of interest; and

(C) No policyholder, annuitant, insured, or beneficiary under the contract is a United States person.

Separated QBU. Separated QBU has the meaning provided in § 1.987-2(c)(9)(iii).

Separating QBU. Separating QBU has the meaning provided in § 1.987-2(c)(9)(iii).

Separation. Separation has the meaning provided in § 1.987-2(c)(9)(iii).

Separation fraction. In the case of a separated QBU, *separation fraction* means a fraction, the numerator of which is the aggregate adjusted basis of the gross assets attributable to the separated QBU immediately after the separation, and the denominator of which is the aggregate adjusted basis of the gross assets attributable to all separated QBUs immediately after the separation.

Spot rate. Spot rate has the meaning provided in paragraph (c)(1) of this section.

SRLY section 987 losses. SRLY section 987 losses has the meaning provided in § 1.987-11(e)(6)(ii).

Successor deferral QBU. Successor deferral QBU has the meaning provided in § 1.987-12(g)(2).

Successor deferral QBU owner. Successor deferral QBU owner has the meaning provided in § 1.987-12(c)(1).

Successor suspended loss QBU. Successor suspended loss QBU has the meaning provided in § 1.987-13(l)(2).

Successor suspended loss QBU owner. Successor suspended loss QBU owner has the meaning provided in § 1.987-13(l)(3).

Suspended section 987 loss. Suspended section 987 loss means section 987 loss that is subject to the limitations on recognition described in § 1.987-11(e). *See* §§ 1.987-10(e)(5), 1.987-11(c) and (d), 1.987-12(c), and 1.987-13(h) for rules regarding when net unrecognized section 987 loss or deferred section 987 loss becomes suspended section 987 loss. Suspended section 987 loss does not include net unrecognized section 987 loss or deferred section 987 loss.

Tentative tested income group. Tentative tested income group has the meaning provided in § 1.987-6(b)(2)(i)(D)(*1*).

Terminating QBU. Terminating QBU means a section 987 QBU, if both—

(i) The section 987 QBU terminates on any date on or after November 9, 2023, or the section 987 QBU terminates as a result of an entity classification election made under § 301.7701-3 of this chapter that is filed on or after November 9, 2023, and that is effective before November 9, 2023; and

(ii) When the section 987 QBU terminates, neither the section 987 regulations nor the 2016 and 2019 section 987 regulations would apply with respect to the section 987 QBU but for § 1.987-15(a)(2).

Termination. With respect to a section 987 QBU, *termination* has the meaning provided in § 1.987-8(b) and (c). With respect to a successor suspended loss QBU, the term *termination* has the meaning provided in § 1.987-13(j).

Trade or business. Trade or business has the meaning provided in § 1.989(a)-1(c).

Transfer. Transfer has the meaning provided in § 1.987-2(c).

Transition date. Transition date has the meaning provided in § 1.987-10(c).

United States person. United States person (or *U.S. person*) has the meaning provided in section 7701(a)(30).

United States shareholder. United States shareholder (or *U.S. shareholder*) has the meaning provided in section 951(b) (or, if applicable, section 953(c)(1)(A)).

U.S. source income. U.S. source income means income from sources within the United States.

Yearly average exchange rate. Yearly average exchange rate has the meaning provided in paragraph (c)(2) of this section.

[T.D. 10016, 89 FR 100165, Dec. 11, 2024; 90 FR 5607, Jan. 17, 2025]

§ 1.987-2 Attribution of items to eligible QBUs; definition of a transfer and related rules.

(a) ***In general.*** This section provides rules regarding when items are attributed to eligible QBUs and when they are treated as transferred to or from section 987 QBUs. Paragraph (b) of this section provides rules for attributing assets and liabilities, and items of income, gain, deduction, and loss, to an eligible QBU. Paragraph (c) of this section defines a transfer to or from a section 987 QBU. Paragraph (d) of this section provides translation rules for transfers to a section 987 QBU. Paragraph (e) of this section provides a cross-reference relating to the treatment of section 987 QBUs owned by consolidated groups.

(b) ***Attribution of items to an eligible QBU*** —

(1) ***General rules.*** Except as provided in paragraphs (b)(2) and (3) of this section, items are attributable to an eligible QBU to the extent they are reflected on the separate set of books and records, as defined in § 1.989(a)-1(d)(1) and (2), of the eligible QBU. For purposes of this section, the term *item* refers to any asset or liability, and any item of income, gain, deduction, or loss. Items that are attributed to an eligible QBU pursuant to this section must be adjusted to conform to Federal income tax principles. An item that is not taken into account for financial accounting purposes, and therefore is not reflected on the separate set of books and records of an eligible QBU, is treated as reflected on the separate set of books and records of an eligible QBU to the extent it would have been so reflected if the item were taken into account for financial accounting purposes. Except as provided in § 1.989(a)-1(d)(3), these attribution rules apply solely for purposes of section 987. For example, the allocation and apportionment of interest expense under section 864(e) is independent of these rules.

(2) ***Exceptions for non-portfolio stock, interests in partnerships, and certain acquisition indebtedness.***

(i) ***In general.*** Except as provided in paragraph (b)(2)(ii) of this section, the following items are not considered to be on the books and records of an eligible QBU:

(A) Stock of a corporation (whether domestic or foreign), other than stock of a corporation if the owner of the eligible QBU owns less than 10 percent of the total combined voting power of all classes of stock entitled to vote and less than 10 percent of the total value of all classes of stock of such corporation. For this purpose, section 958 (other than section 958(b)(1)) applies in determining ownership of a controlled foreign corporation and section 318(a) applies in determining ownership of other corporations, except that in applying section 318(a)(2)(C), the phrase "10 percent" is used instead of the phrase "50 percent."

(B) An interest in a partnership (whether domestic or foreign).

(C) A liability that was incurred to acquire stock described in paragraph (b)(2)(i)(A) of this section or that was incurred to acquire a partnership interest described in paragraph (b)(2)(i)(B) of this section.

(D) Income, gain, deduction, or loss arising from the items described in paragraphs (b)(2)(i)(A) through (C) of this section. For example, if a dividend is received with respect to stock of a corporation described in paragraph (b)(2)(i)(A) of this section, the dividend is excluded from the income of the eligible QBU. *See also* paragraph (c)(2)(ii) of this section, treating the payment as received by the owner and contributed to the eligible QBU.

(ii) ***Separate account assets.*** Paragraph (b)(2)(i) of this section does not apply to separate account assets, liabilities related to separate account assets, or income, gain, deduction, or loss arising from those assets and liabilities.

(3) ***Adjustments to items reflected on the books and records*** —

(i) ***General rule.*** If a principal purpose of recording (or not recording) an item on the books and records of an eligible QBU is the avoidance of Federal income tax under, or through the use of, section 987, the item must be allocated between or among the eligible QBU, the owner of such eligible QBU, and any other persons, entities (including DEs), or other QBUs within the meaning of § 1.989(a)-1(b) (including eligible QBUs) in a manner that reflects the substance of the transaction. For purposes of this paragraph (b)(3)(i), relevant factors for determining whether such Federal income tax avoidance is a principal purpose of recording (or not recording) an item on the books and records of an eligible QBU include the factors set forth in paragraphs (b)(3)(ii) and (iii) of this section. The presence or absence of any factor or factors is not determinative. The weight given to any factor (whether or not set forth in paragraphs (b)(3)(ii) and (iii) of this section) depends on the facts and circumstances.

(ii) ***Factors indicating no tax avoidance.*** For purposes of paragraph (b)(3)(i) of this section, factors that may indicate that recording (or not recording) an item on the books and records of an eligible QBU did not have as a principal purpose the avoidance of Federal income tax under, or through the use of, section 987 include the recording (or not recording) of an item:

(A) For a significant and bona fide business purpose;

(B) In a manner that is consistent with the economics of the underlying transaction;

(C) In accordance with generally accepted accounting principles (or a similar comprehensive accounting standard);

(D) In a manner that is consistent with the treatment of similar items from year to year;

(E) In accordance with accepted conditions or practices in the particular trade or business of the eligible QBU;

(F) In a manner that is consistent with an explanation of existing internal accounting policies that is evidenced by documentation contemporaneous with the timely filing of a return for the taxable year; and

(G) As a result of a transaction between legal entities (for example, the transfer of an asset or the assumption of a liability), even if such transaction is not regarded for Federal income tax purposes (for example, a transaction between a DE and its owner).

(iii) ***Factors indicating tax avoidance.*** For purposes of paragraph (b)(3)(i) of this section, factors that may indicate that a principal purpose of recording (or not recording) an item on the books and records of an eligible QBU is the avoidance of Federal income tax under, or through the use of, section 987 include:

(A) The presence or absence of an item on the books and records that is the result of one or more transactions that are transitory, for example, due to a circular flow of cash or other property;

(B) The presence or absence of an item on the books and records that is the result of one or more transactions that do not have substance; and

(C) The presence or absence of an item on the books and records that results in the taxpayer (or a person related to the taxpayer within the meaning of section 267(b) or section 707(b)) having offsetting positions with respect to the functional currency of a section 987 QBU.

(iv) ***Section 988 transactions.*** A section 988 transaction that is reflected on the books and records of an eligible QBU is not attributable to an eligible QBU if the transaction was entered into or was reflected on the eligible QBU's books and records with a principal purpose of generating fully or partially offsetting amounts of section 988 gain or loss and section 987 gain or loss (or if the taxpayer chose to denominate the section 988 transaction in a nonfunctional currency with such a principal purpose).

(c) ***Transfers to and from section 987 QBUs*** —

(1) ***In general.*** The following rules apply for purposes of determining whether there is a transfer of an asset or a liability from an owner to a section 987 QBU, or from a section 987 QBU to an owner. These rules apply solely for purposes of section 987.

(2) ***Disregarded transactions*** —

(i) ***General rule.*** An asset or liability is treated as transferred to a section 987 QBU from its owner if, as a result of a disregarded transaction, such asset or liability is reflected on the books and records of (or otherwise becomes attributable to) the section 987 QBU within the meaning of paragraph (b) of this section. Similarly, an asset or liability is treated as transferred from a section 987 QBU to its owner if, as a result of a disregarded transaction, such asset or liability is no longer reflected on the books and records of (or otherwise ceases to be attributable to) the section 987 QBU within the meaning of paragraph (b) of this section.

(ii) ***Definition of a disregarded transaction.*** For purposes of this section, a disregarded transaction means a transaction that is not regarded for Federal income tax purposes (for example, any transaction between separate section 987 QBUs of the same owner). For purposes of this paragraph (c), a disregarded transaction is treated as including events described in paragraphs (c)(2)(ii)(A) through (F) of this section.

(A) If the recording (or not recording) of an asset or liability on the books and records of a section 987 QBU of an owner is the result of such asset or liability being removed from (or included on) the books and records of the owner or another eligible QBU of the owner, the asset or liability is treated as transferred to (or from) the section 987 QBU in a disregarded transaction.

(B) If an asset or liability that was previously attributable to a section 987 QBU of an owner begins to be attributable to the owner (or another eligible QBU of the owner) as a result of the application of paragraph (b)(2) or (3) of this section, the asset or liability is treated as having been transferred by the section 987 QBU in a disregarded transaction. If an asset or liability that was previously attributable to the owner (or another eligible QBU of the

owner) begins to be attributable to the section 987 QBU as a result of the application of paragraph (b)(2) or (3) of this section, the asset or liability is treated as transferred to the section 987 QBU in a disregarded transaction.

(C) If an asset or liability that is attributable to a section 987 QBU is sold or exchanged (including in a nonrecognition transaction, such as an exchange under section 351) for an asset or liability that is not attributable to the section 987 QBU immediately after the sale or exchange, the sold or exchanged asset or liability that was attributable to the section 987 QBU immediately before the transaction is treated as transferred from the section 987 QBU to its owner in a disregarded transaction immediately before the sale or exchange for purposes of section 987 (including for purposes of recognizing section 987 gain or loss under § 1.987-5) and subsequently sold or exchanged by the owner.

(D) If an asset or liability of an owner of a section 987 QBU that is not attributable to a section 987 QBU is sold or exchanged (including in a nonrecognition transaction, such as an exchange under section 351) for an asset or liability that is attributable to the section 987 QBU immediately after the sale or exchange, the asset or liability that is attributable to the section 987 QBU immediately after the transaction is treated as received or assumed by the owner and transferred from the owner to the section 987 QBU in a disregarded transaction immediately after the sale or exchange for purposes of section 987 (including for purposes of recognizing section 987 gain or loss under § 1.987-5).

(E) If an asset or liability that is attributable to a section 987 QBU was received, transferred, assumed, or accrued in a regarded transaction (including the making or receiving of a payment) in which the related item of income, gain, deduction, or loss is not attributable to the section 987 QBU, the asset or liability is treated as though it was received, transferred, assumed, or accrued by the owner or another eligible QBU and transferred to or from the section 987 QBU in a disregarded transaction. Similarly, if an asset or liability that is not attributable to a section 987 QBU was received, transferred, assumed, or accrued in a regarded transaction (including the making or receiving of a payment) in which the related item of income, gain, deduction, or loss is attributable to the section 987 QBU, the asset or liability is treated as though it was received, transferred, assumed, or accrued by the section 987 QBU and transferred to or from the section 987 QBU in a disregarded transaction. For example, if a section 987 QBU receives a dividend on an interest in stock that would be attributable to the section 987 QBU but for paragraph (b)(2)(i)(A) of this section, the owner is treated as receiving the dividend and transferring to the section 987 QBU the amount of the dividend in a disregarded transaction. Similarly, if a section 987 QBU pays interest on a liability that would be attributable to the section 987 QBU but for paragraph (b)(2)(i)(C) of this section, the section 987 QBU is treated as transferring to the owner the amount of the interest expense and the owner is treated as paying the interest expense in a disregarded transaction. *See also* paragraph (c)(7) of this section (application of general tax law principles).

(F) In the first taxable year in which an eligible QBU is treated as a section 987 QBU, all assets and liabilities attributable to the eligible QBU are treated as transferred from the owner to the section 987 QBU in a disregarded transaction on the first day on which the eligible QBU is treated as a section 987 QBU.

(iii) ***Items derived from disregarded transactions ignored.*** For purposes of section 987, disregarded transactions do not give rise to items of income, gain, deduction, or loss that are taken into account in determining section 987 taxable income or loss under § 1.987-3.

(3) through (6) [Reserved]

(7) ***Application of general tax law principles.*** General tax law principles, including the circular cash flow, step-transaction, economic substance, and substance-over-form doctrines, apply for purposes of determining whether there is a transfer of an asset or liability under this paragraph (c), including a transfer of an asset or liability pursuant to a disregarded transaction.

(8) ***Interaction with § 1.988-1(a)(10).*** See § 1.988-1(a)(10) for rules regarding the treatment of an intra-taxpayer transfer of a section 988 transaction.

(9) ***Certain disregarded transactions not treated as transfers*** —

(i) ***Combinations of section 987 QBUs.*** The combination (a *combination*) of two or more separate section 987 QBUs (*combining QBUs*) that are directly owned by the same owner into one section 987 QBU (*combined QBU*) does not give rise to a transfer of any combining QBU's assets or liabilities to the owner under this paragraph (c). In addition, transactions between the combining QBUs occurring in the taxable year of the combination do not result in a transfer of the combining QBUs' assets or liabilities to the owner under this paragraph (c). For this purpose, a combination occurs when the assets and liabilities that were attributable to two or more combining QBUs begin to be attributable to a combined QBU and the separate existence of the combining QBUs ceases. A combination may result from any transaction or series of transactions in which the combining QBUs become a combined QBU. A combination may also result when an owner of two or more section 987 QBUs with the same functional currency becomes subject to a grouping election under § 1.987-1(b)(3)(ii) or when a section 987 QBU of an owner subject to a grouping election changes its functional currency to that of another section 987 QBU of the same owner. For purposes of determining net unrecognized section 987 gain or loss, deferred section 987 gain or loss, and cumulative suspended section 987 loss of a combined QBU, the combining QBUs are treated as having combined immediately before the beginning of the taxable year of combination. *See* §§ 1.987-4(f)(1), 1.987-11(b)(2), and 1.987-12(f)(1).

(ii) ***Change in functional currency from a combination.*** If, following a combination of section 987 QBUs described in paragraph (c)(9)(i) of this section, the combined section 987 QBU has a different functional currency than one or more of the combining section 987 QBUs, any such combining section 987 QBU is treated as changing its functional currency, and the owner of the combined section 987 QBU must comply with the regulations under section 985 regarding the change in functional currency. *See* §§ 1.985-1(c)(6) and 1.985-5.

(iii) ***Separation of section 987 QBUs.*** The separation (a *separation*) of a section 987 QBU (*separating QBU*) into two or more section 987 QBUs (*separated QBUs*) that, after the separation, are directly owned by the same owner does not result in a transfer of the separating QBU's assets or liabilities to the owner under this paragraph (c). Additionally, transactions that occurred between the separating QBUs in the taxable year of the separation before the completion of the separation do not result in transfers for purposes of section 987. For this purpose, a separation occurs when the assets and liabilities that were attributable to a separating QBU begin to be attributable to two or more separated QBUs and each of the separated QBUs continues to perform a significant portion of the separating QBU's activities immediately after the

separation. A separation may result from any transaction or series of transactions in which a separating QBU becomes two or more separated QBUs described in the preceding sentence. A separation may also result when a section 987 QBU that is subject to a grouping election under § 1.987-1(b)(3)(ii) changes its functional currency or when the grouping election is revoked. For purposes of determining net unrecognized section 987 gain or loss, deferred section 987 gain or loss, or cumulative suspended section 987 loss of a separated QBU, the separating QBU is treated as having separated immediately before the beginning of the taxable year of separation. *See* §§ 1.987-4(f)(2), 1.987-11(b)(3), and 1.987-12(f)(2).

(iv) ***Special rules for successor suspended loss QBUs.*** For purposes of determining whether a combination or separation has occurred with respect to a successor suspended loss QBU, the rules of paragraphs (c)(9)(i) and (iii) of this section are applied without regard to whether any of the combining QBUs, the combined QBU, the separating QBU, or the separated QBUs are section 987 QBUs. A combined QBU is a successor suspended loss QBU if either combining QBU was a successor suspended loss QBU, and a separated QBU is a successor suspended loss QBU if the separating QBU was a successor suspended loss QBU.

(10) ***Examples.*** The following examples illustrate the principles of this paragraph (c). For purposes of the examples, X and Y are domestic corporations, have the U.S. dollar as their functional currencies, and use the calendar year as their taxable years. Furthermore, except as otherwise provided, Business A and Business B are eligible QBUs that have the euro and the Japanese yen, respectively, as their functional currencies, and DE1 and DE2 are DEs. For purposes of determining whether any of the transfers in these examples result in remittances, *see* § 1.987-5.

(i) ***Example 1: Loan to a section 987 QBU*** —

(A) ***Facts.*** X owns all of the interests in DE1. DE1 owns Business A, which is a section 987 QBU of X. X owns €100 that are not reflected on the books and records of Business A. Business A is in need of additional capital and, as a result, X lends the €100 to DE1 for use in Business A in exchange for a note.

(B) ***Analysis*** —

(*1*) The loan from X to DE1 is not regarded for Federal income tax purposes (because it is an interbranch transaction) and therefore is a disregarded transaction (as defined in paragraph (c)(2)(ii) of this section). Because DE1 is a DE, the DE1 note held by X and the liability of DE1 under the note are not taken into account under this section.

(*2*) As a result of the disregarded transaction, the €100 is reflected on the books and records of Business A and is attributable to Business A under paragraph (b) of this section. Therefore, X is treated as transferring €100 to its Business A section 987 QBU for purposes of section 987. This transfer is taken into account in determining the amount of any remittance for the taxable year under § 1.987-5(c). *See* § 1.988-1(a)(10)(ii) for the application of section 988 to X as a result of the transfer of nonfunctional currency to its section 987 QBU.

(ii) ***Example 2: Transfer between section 987 QBUs*** —

(A) ***Facts.*** X owns Business A and Business B, both of which are section 987 QBUs of X. X owns equipment that is used in Business A and is reflected on the books and records of Business A. Because Business A has excess manufacturing capacity and X intends to expand the manufacturing capacity of Business B, the equipment formerly used in

Business A is transferred to Business B for use by Business B. As a result of the transfer, the equipment is removed from the books and records of Business A and is recorded on the books and records of Business B.

(B) ***Analysis.*** The transfer of the equipment from the books and records of Business A to the books and records of Business B is not regarded for Federal income tax purposes (because it is an interbranch transaction) and therefore is a disregarded transaction (as defined in paragraph (c)(2)(ii) of this section). Therefore, for purposes of section 987, the Business A section 987 QBU is treated as transferring the equipment to X, and X is subsequently treated as transferring the equipment to the Business B section 987 QBU. These transfers are taken into account in determining the amount of any remittance for the taxable year under § 1.987-5(c).

(iii) ***Example 3: Sale of property between two section 987 QBUs*** —

(A) ***Facts.*** X owns all of the interests in DE1 and DE2. DE1 and DE2 own Business A and Business B, respectively, both of which are section 987 QBUs of X. DE1 owns equipment that is used in Business A and is reflected on the books and records of Business A. For business reasons, DE1 sells a portion of the equipment used in Business A to DE2 in exchange for a fair market value amount of Japanese yen. The yen used by DE2 to acquire the equipment was generated by Business B and was reflected on Business B's books and records. Following the sale, the yen and the equipment will be used in Business A and Business B, respectively. As a result of such sale, the equipment is removed from the books and records of Business A and is recorded on the books and records of Business B. Similarly, as a result of the sale, the yen is removed from the books and records of Business B and is recorded on the books and records of Business A.

(B) ***Analysis*** —

(*1*) The sale of equipment between DE1 and DE2 is a transaction that is not regarded for Federal income tax purposes (because it is an interbranch transaction) and therefore the transaction is a disregarded transaction (as defined in paragraph (c)(2)(ii) of this section). Pursuant to paragraph (c)(2)(iii) of this section, the sale does not give rise to an item of income, gain, deduction, or loss for purposes of determining section 987 taxable income or loss under § 1.987-3. However, the yen and equipment exchanged by DE1 and DE2 in connection with the sale must be taken into account as a transfer under paragraph (c)(2)(i) of this section.

(*2*) As a result of the disregarded transaction, the equipment ceases to be reflected on the books and records of Business A and becomes reflected on the books and records of Business B. Therefore, the Business A section 987 QBU is treated as transferring the equipment to X, and X is subsequently treated as transferring the equipment to the Business B section 987 QBU.

(*3*) Additionally, as a result of the disregarded transaction, the yen currency ceases to be reflected on the books and records of Business B and becomes reflected on the books and records of Business A. Therefore, the Business B section 987 QBU is treated as transferring the yen to X, and X is subsequently treated as transferring the yen from X to the Business A section 987 QBU. The transfers among Business A, Business B and X are taken into account in determining the amount of any remittance for the taxable year under § 1.987-5(c).

(iv) through (ix) [Reserved]

(x) *Example 10: Contribution of a section 987 QBU's assets to a corporation* —

(A) ***Facts.*** X owns Business A. X forms Z, a domestic corporation, contributing 50 percent of its Business A assets and liabilities to Z in exchange for all of the stock of Z. X and Z do not file a consolidated tax return.

(B) ***Analysis.*** Pursuant to paragraph (b)(2) of this section, the Z stock received in exchange for 50 percent of Business A's assets and liabilities is not reflected on the books and records of, and therefore is not attributable to, Business A for purposes of section 987 immediately after the exchange. As a result, pursuant to paragraphs (c)(2)(i) and (ii) of this section, 50 percent of the assets and liabilities of Business A are treated as transferred from Business A to X in a disregarded transaction immediately before the exchange. *See* § 1.1502-13(j)(9) if X and Z file a consolidated return.

(xi) *Example 11: Circular transfers* —

(A) ***Facts.*** X owns Business A. On December 30, year 1, Business A purports to transfer €100 to X. On January 2, year 2, X purports to transfer €50 to Business A. On January 4, year 2, X purports to transfer another €50 to Business A. As of the end of year 1, X has net unrecognized section 987 loss with respect to Business A, such that a remittance, if respected, would result in recognition of a foreign currency loss under section 987.

(B) ***Analysis.*** Because the transfer by Business A to X is offset by the transfers from X to Business A that occurred in close temporal proximity, the purported transfers to and from Business A may be disregarded for purposes of section 987 pursuant to general tax principles under paragraph (c)(7) of this section.

(xii) *Example 12: Transfers without substance* —

(A) ***Facts.*** X owns Business A and Business B. On January 1, year 1, Business A purports to transfer €100 to X. On January 4, year 1, X purports to transfer €100 to Business B. The account in which Business B deposited the €100 is used to pay the operating expenses and other costs of Business A. As of the end of year 1, X has net unrecognized section 987 loss with respect to Business A, such that a remittance, if respected, would result in recognition of a foreign currency loss under section 987.

(B) ***Analysis.*** Because Business A continues to have use of the transferred property, the €100 purported transfer from Business A to X may be disregarded for purposes of section 987 pursuant to general tax principles under paragraph (c)(7) of this section.

(xiii) *Example 13: Offsetting positions in section 987 QBUs* —

(A) ***Facts.*** X owns Business A and Business B. Business A and Business B each have the euro as their functional currency. X has not made a grouping election under § 1.987-1(b)(3)(ii). On January 1, year 1, X borrows €1,000 from a third-party lender, records the liability with respect to the borrowing on the books and records of Business A, and records the borrowed €1,000 on the books and records of Business B. On December 31, year 2, when Business A has $100 of net unrecognized section 987 loss and Business B has $100 of net unrecognized section 987 gain resulting from the change in exchange rates with respect to the liability and the €1,000, X terminates the Business A section 987 QBU.

(B) *Analysis.* Under paragraph (b)(3) of this section, the fact that Business A and Business B have offsetting positions in the euro is a factor indicating that a principal purpose of recording the euro-denominated liability on the books and records of Business A and the borrowed euros on the books and records of Business B was the avoidance of tax under section 987. If such a principal purpose is present, the items must be reallocated (that is, the euros and the euro-denominated liability) between Business A, Business B, and X under paragraph (b)(3) of this section to reflect the substance of the transaction.

(xiv) *Example 14: Offsetting positions with respect to a section 987 QBU and a section 988 transaction* —

(A) *Facts.* X owns all of the interests in DE1, and DE1 owns Business A. On January 1, year 1, X borrows €1,000 from a third-party lender and records the liability with respect to the borrowing on its books and records. X contributes the €1,000 loan proceeds to DE1 and the €1,000 are reflected on the books and records of Business A. On December 31, year 2, when Business A has $100 of net unrecognized section 987 loss resulting from the change in exchange rates with respect to the €1,000 received from the borrowing, and when the euro-denominated borrowing, if repaid, would result in $100 of gain under section 988, X terminates the Business A section 987 QBU.

(B) *Analysis.* Under paragraph (b)(3) of this section, the fact that X and Business A have offsetting positions in the euro is a factor indicating that a principal purpose of recording the borrowed euros on the books and records of Business A, or not recording the corresponding euro-denominated liability on the books and records of Business A, was the avoidance of tax under section 987. If such a principal purpose is present, the items (that is, the euros and the euro-denominated liability) must be reallocated between Business A and X under paragraph (b)(3) of this section to reflect the substance of the transaction.

(xv) *Example 15: Offsetting positions with respect to a section 987 QBU and a section 988 transaction* —

(A) *Facts.* X owns all of the stock of Y and all of the interests in DE1. DE1 owns Business A. X and Y do not file a consolidated return. On January 1, year 1, DE1 lends €1,000 to Y. X records the receivable with respect to the loan on Business A's books and records. On December 31, year 2, when Business A has $100 of net unrecognized section 987 gain resulting from the loan, Y repays the €1,000 liability. The repayment of the euro-denominated borrowing results in $100 of loss to Y under section 988. Business A does not make any remittances to X in year 2, so the offsetting gain with respect to the loan receivable has not been recognized by X.

(B) *Analysis.* Under paragraph (b)(3) of this section, the fact that Y (a related party to X) and Business A have offsetting positions in the euro is a factor indicating that a principal purpose of recording the euro-denominated receivable on the books and records of Business A, rather than on the books and records of X, was to avoid Federal income tax under, or through the use of, section 987. If such a principal purpose is present, the euro-denominated receivable must be reallocated between Business A and X under paragraph (b)(3) of this section to reflect the substance of the transaction. Other provisions (for example, section 267) may also apply to defer or disallow the loss. *See* § 1.1502-13(j)(9) if X and Y file a consolidated return.

(xvi) *Example 16: Borrowing by section 987 QBU followed by immediate distribution to owner* —

(A) ***Facts.*** X owns all of the interests in DE1. DE1 owns Business A. On January 1, year 1, Business A borrows €1,000 from a bank. On January 2, year 1, Business A distributes the €1,000 it received from the bank to X. There are no other transfers between X and Business A during the year. At the end of the year, X has net unrecognized section 987 loss with respect to Business A such that a remittance would result in the recognition of foreign currency loss under section 987.

(B) ***Analysis.*** Under paragraph (b)(3) of this section, if a principal purpose of recording of the loan on the books and records of Business A, rather than on the books and records of X, was to avoid Federal income tax under, or through the use of, section 987, the items must be reallocated to reflect the substance of the transaction (for example, by moving the loan onto the books of X, resulting in the transfer not being taken into account for purposes of section 987).

(xvii) ***Example 17: Payment of interest by section 987 QBU on obligation of owner*** —

(A) ***Facts.*** X owns all of the interests in DE1. DE1 owns Business A. On January 1, X borrows €1,000 from a bank. On July 1, DE1 pays €20 in interest on X's €1,000 obligation to the bank, which is treated as a payment by Business A.

(B) ***Analysis.*** Under general tax law principles as provided in paragraph (c)(7) of this section, on July 1, year 1, Business A is treated for purposes of section 987 as making a transfer of €20 to X, and X is treated as making a €20 interest payment to the bank. *See also* paragraph (c)(2)(ii)(E) of this section for interest payments on loans that are not attributable to a section 987 QBU pursuant to paragraph (b)(2) or (3) of this section.

(xviii) ***Example 18: Sale of the interests in a DE*** —

(A) ***Facts.*** X owns all of the interests in DE1, a disregarded entity. DE1 owns Business A, which is a section 987 QBU of X. X has made a current rate election under § 1.987-1(d)(2) but not an annual recognition election under § 1.987-5(b)(2). On December 31, year 1, X sells all of the interests in DE1 to FC, an unrelated foreign corporation, for $150,000, when the exchange rate is €1 = $1.2. The sale proceeds are reflected on X's books and records after the sale. At the time of the sale, all of DE1's assets are used in Business A and are reflected on the books and records of Business A. The assets have a basis of €100,000 and Business A has no liabilities. In year 1, X has net unrecognized section 987 gain with respect to Business A of $20,000.

(B) ***Analysis*** —

(*1*) Under paragraph (c)(2)(ii)(C) of this section, if an asset that is attributable to a section 987 QBU is sold or exchanged for an asset that is not attributable to the section 987 QBU immediately after the sale or exchange, the sold or exchanged asset is treated as transferred from the section 987 QBU to its owner in a disregarded transaction immediately before the sale or exchange and subsequently sold or exchanged by the owner. The sale of DE1 is treated as a sale of the assets of Business A in exchange for cash that is not reflected on the books and records of the Business A section 987 QBU. Therefore, the assets of Business A are treated as transferred from the Business A section 987 QBU to X, and X is treated as selling the assets to FC.

(2) The deemed transfer of all of Business A's assets to X results in a termination of the Business A section 987 QBU under § 1.987-8(b)(2) (substantially all assets transferred). Under § 1.987-5(c)(4) and § 1.987-8(e), a termination of a section 987 QBU is treated as a remittance of all the gross assets of the section 987 QBU to the owner on the date of the termination. Therefore, the owner's remittance proportion is one, and X recognizes all of its net unrecognized section 987 gain with respect to Business A, or $20,000.

(3) Because a current rate election was in effect, all of the assets of Business A are marked items. Therefore, under § 1.987-5(f)(2), X's basis in the assets transferred from Business A is determined by translating Business A's functional currency basis in the assets into X's functional currency at the spot rate applicable to the date of the transfer, €1 = $1.2. Consequently, immediately before the sale of the interests in DE1, X's functional currency basis in Business A's assets (which Business A held with a basis of €100,000) is $120,000. X recognizes $30,000 of gain under section 1001(a) on the sale of DE1.

(d) ***Translation of items transferred to a section 987 QBU*** —

(1) ***Marked items.*** The adjusted basis of a marked asset, or the amount of a marked liability, transferred to a section 987 QBU is translated into the section 987 QBU's functional currency at the spot rate applicable to the date of transfer. If, and to the extent that, exchange gain or loss is recognized on the asset or liability transferred under § 1.988-1(a)(10)(ii), the adjusted basis of the marked asset, or the amount of the marked liability, is adjusted to take into account the exchange gain or loss recognized.

(2) ***Historic items.*** The adjusted basis of a historic asset, or the amount of a historic liability, transferred to a section 987 QBU is translated into the section 987 QBU's functional currency at the rate provided in § 1.987-1(c)(3).

(e) ***Cross-reference. See also*** § 1.1502-13(j)(9) regarding the treatment of intercompany transactions involving section 987 QBUs owned by a member of a consolidated group.

[T.D. 10016, 89 FR 100165, Dec. 11, 2024; 90 FR 5607, Jan. 17, 2025]

§ 1.987-3 Determination of section 987 taxable income or loss of an owner of a section 987 QBU.

(a) ***In general.*** This section provides rules for determining the taxable income or loss of an owner of a section 987 QBU (*section 987 taxable income or loss*). Paragraph (b) of this section provides rules for determining items of income, gain, deduction, and loss in the section 987 QBU's functional currency. Paragraph (c) of this section provides rules for translating each item determined under paragraph (b) of this section into the functional currency of the owner of the section 987 QBU. Paragraph (d) of this section is reserved. Paragraph (e) of this section provides examples illustrating the application of the rules of this section.

(b) ***Determination of each item of income, gain, deduction, or loss in the section 987 QBU's functional currency*** —

(1) ***In general.*** The owner of a section 987 QBU must determine each item of income, gain, deduction, or loss attributable to the section 987 QBU in the section 987 QBU's functional currency under Federal income tax principles.

(2) ***Translation of items of income, gain, deduction, or loss that are denominated in a nonfunctional currency.*** Except as otherwise provided in paragraph (b)(4) of this section, an item of income, gain, deduction, or loss (or the item's components and related items, such as gross receipts and amount realized) that is denominated in (or determined by reference to) a nonfunctional currency (including the functional currency of the owner) is translated into the section 987 QBU's functional currency at the spot rate on the date such item is properly taken into account. Paragraphs (e)(1) and (2) of this section (*Examples 1* and *2)* illustrate the application of this paragraph (b)(2).

(3) [Reserved]

(4) ***Section 988 transactions*** —

(i) ***In general.*** Section 988 and the regulations under section 988 apply to section 988 transactions of a section 987 QBU. The determination of whether an asset or liability of a section 987 QBU is a section 988 transaction is determined by reference to the functional currency of the section 987 QBU. Section 988 gain or loss is determined in, and by reference to, the functional currency of the section 987 QBU. The amount of section 988 gain or loss determined under this paragraph (b)(4)(i) is translated into the owner's functional currency under paragraph (c) of this section.

(ii) ***Section 988 mark-to-market election*** —

(A) ***In general.*** A taxpayer may elect to apply the section 988 mark-to-market method of accounting described in this paragraph (b)(4)(ii) with respect to all section 988 transactions that are properly attributable to a section 987 QBU and that are not otherwise accounted for under a mark-to-market method of accounting under section 475 or section 1256 (other than a section 988 transaction described in paragraph (b)(4)(ii)(B) of this section). Under the section 988 mark-to-market method of accounting, the timing of section 988 gain or loss on section 988 transactions described in the preceding sentence is determined under the principles of section 1256. Only section 988 gain or loss is taken into account under the foreign currency mark-to-market method of accounting. Appropriate adjustments must be made to prevent the section 988 gain or loss from being taken into account again after it is recognized under this paragraph (b)(4)(ii). A section 988 transaction subject to the foreign currency mark-to-market method of accounting is not subject to the netting rule of section 988(b) and § 1.988-2(b)(8) (under which exchange gain or loss is limited to overall gain or loss realized in a transaction) in taxable years before the taxable year in which section 988 gain or loss would be recognized with respect to the section 988 transaction but for this election.

(B) ***Built-in loss transactions contributed to a section 987 QBU.*** Paragraph (b)(4)(ii)(A) of this section does not apply to a section 988 transaction if—

(*1*) The transaction was transferred to the section 987 QBU from its owner (or from another eligible QBU of the owner);

(*2*) Immediately before the transfer, the transaction was a section 988 transaction in the hands of the owner (or other eligible QBU of the owner) and was not subject to a mark-to-market method of accounting;

(*3*) If the owner (or other eligible QBU) had disposed of the section 988 transaction immediately before the transfer (and § 1.988-2(b)(8) did not apply), the owner would have recognized section 988 loss; and

(4) Section 988 loss was not recognized in connection with the transfer under § 1.988-1(a)(10).

(c) ***Translation of items of income, gain, deduction, or loss of a section 987 QBU into the owner's functional currency*** —

(1) ***In general.*** Except as otherwise provided in this section, the exchange rate to be used by an owner in translating an item of income, gain, deduction, or loss attributable to a section 987 QBU (or the item's components and related items, such as gross receipts, amount realized, basis, and cost of goods sold) into the owner's functional currency, if necessary, is the yearly average exchange rate for the taxable year.

(2) ***Exceptions.*** Except as otherwise provided in paragraph (c)(2)(v) of this section, this paragraph (c)(2) applies only to taxable years for which neither the annual recognition election nor the current rate election is in effect.

(i) ***Recovery of basis with respect to historic assets.*** Except as otherwise provided in this paragraph (c)(2), the exchange rate to be used by the owner in translating any recovery of basis (whether through a sale or exchange; deemed sale or exchange; cost recovery deduction such as depreciation, depletion or amortization; or otherwise) with respect to a historic asset is the historic rate for the property to which such recovery of basis is attributable.

(ii) through (iii) [Reserved]

(iv) ***Cost of goods sold computation*** —

(A) ***General rule—simplified inventory method.*** Except as otherwise provided in paragraph (c)(2)(iv)(B) of this section, cost of goods sold (*COGS*) for a taxable year is translated into the functional currency of the owner at the yearly average exchange rate for the taxable year in which the sale of inventory occurs (or the COGS is otherwise taken into account in computing taxable income) and adjusted as provided in paragraph (c)(3) of this section.

(B) ***Election to use the historic inventory method.*** In lieu of using the simplified inventory method described in paragraph (c)(2)(iv)(A) of this section, the owner of a section 987 QBU may elect under this paragraph (c)(2)(iv)(B) to translate inventoriable costs (including current-year inventoriable costs and costs that were capitalized into inventory in prior years) that are included in COGS at the historic rate for each such cost.

(v) ***Translation of income to account for certain foreign income tax claimed as a credit.*** The owner of a section 987 QBU claiming a credit under section 901 for foreign income taxes, other than foreign income taxes deemed paid under section 960, that are properly reflected on the books and records of the section 987 QBU (the creditable tax amount) must determine section 987 taxable income or loss attributable to the section 987 QBU by reducing the amount of section 987 taxable income or loss that otherwise would be determined under this section by an amount equal to the creditable tax amount, translated into U.S. dollars using the yearly average exchange rate for the taxable year in which the creditable tax is accrued, and by increasing the resulting amount by an amount equal to the creditable tax amount, translated using the same exchange rate that is used to translate the creditable taxes into U.S. dollars under section 986(a). This paragraph (c)(2)(v) applies whether or not a current rate election or an annual recognition election is in effect. *See* paragraph (e)(14) of this section (*Example 14)* for an illustration of this rule.

(3) ***Adjustments to COGS required under the simplified inventory method.*** This paragraph (c)(3) applies only to taxable years for which neither the annual recognition election nor the current rate election is in effect.

(i) ***In general.*** An owner of a section 987 QBU that uses the simplified inventory method described in paragraph (c)(2)(iv)(A) of this section must make the adjustment described in paragraph (c)(3)(ii) of this section. In addition, the owner must make the adjustment described in paragraph (c)(3)(iii) of this section with respect to any inventory for which the section 987 QBU does not use the LIFO inventory method and must make the adjustment described in paragraph (c)(3)(iv) of this section with respect to any inventory for which the section 987 QBU uses the LIFO inventory method. An owner of a section 987 QBU that uses the simplified inventory method must make all of the applicable adjustments described in paragraphs (c)(3)(ii) through (iv) of this section with respect to the section 987 QBU even in taxable years in which the amount of COGS is zero.

(ii) ***Adjustment for cost recovery deductions included in inventoriable costs*** —

(A) ***In general.*** The translated COGS amount computed under paragraph (c)(2)(iv)(A) of this section is increased or decreased (as appropriate) by the amount described in paragraph (c)(3)(ii)(B) of this section. The adjustment is included as an adjustment to translated COGS computed under paragraph (c)(2)(iv)(A) of this section in full in the year to which the adjustment relates and is not allocated between COGS and ending inventory.

(B) ***Amount of adjustment.*** With respect to each cost recovery deduction attributable to a historic asset that is included in inventoriable costs for a taxable year, the adjustment is equal to—

(*1*) The amount of the cost recovery deduction included in inventoriable costs, translated at the historic rate for the property to which the deduction is attributable; less

(*2*) The amount of the cost recovery deduction included in inventoriable costs, translated at the yearly average exchange rate for the current taxable year.

(iii) ***Adjustment for beginning inventory for non-LIFO inventory*** —

(A) ***In general.*** In the case of non-LIFO inventory, the translated COGS amount computed under paragraph (c)(2)(iv)(A) of this section is increased or decreased (as appropriate) by the amount described in paragraph (c)(3)(iii)(B) of this section.

(B) ***Amount of adjustment.*** The adjustment is equal to—

(*1*) The ending non-LIFO inventory included on the closing balance sheet for the preceding taxable year, translated at the exchange rate described in paragraph (c)(3)(iii)(C) of this section (which is generally the yearly average exchange rate for the preceding taxable year); less

(*2*) The ending non-LIFO inventory included on the closing balance sheet for the preceding taxable year, translated at the yearly average exchange rate for the current taxable year.

(C) ***Exchange rate*** —

(1) ***In general.*** Except as provided in paragraph (c)(3)(iii)(C)(2) of this section, the exchange rate used to translate non-LIFO inventory under paragraph (c)(3)(iii)(B)(1) of this section is the yearly average exchange rate for the preceding taxable year.

(2) ***Revocation of current rate election or taxable year beginning on the transition date.*** In the first taxable year in which a current rate election is revoked or otherwise ceases to be in effect (or in the taxable year beginning on the transition date), the exchange rate used to translate non-LIFO inventory under paragraph (c)(3)(iii)(B)(1) of this section is the spot rate applicable to the last day of the preceding taxable year.

(iv) ***Adjustment for year of LIFO liquidation*** —

(A) ***In general.*** In the case of inventory with respect to which a section 987 QBU uses the LIFO inventory method, the translated COGS amount computed under paragraph (c)(2)(iv)(A) of this section is increased or decreased (as appropriate) by the amount described in paragraph (c)(3)(iv)(B) of this section.

(B) ***Amount of adjustment.*** With respect to each LIFO layer liquidated in whole or in part during the taxable year, the adjustment is equal to:

(1) The amount of the LIFO layer liquidated during the taxable year, translated at the historic rate that is used for translating the LIFO layer (which is generally the yearly average exchange rate for the year the LIFO layer arose); less

(2) The amount of the LIFO layer liquidated during the taxable year, translated at the yearly average exchange rate for the taxable year.

(d) [Reserved]

(e) ***Examples.*** The following examples illustrate the application of this section. For purposes of the examples, U.S. Corp is a domestic corporation that uses the calendar year as its taxable year and has the U.S. dollar as its functional currency. Except as otherwise indicated, U.S. Corp is the owner of Business A, a section 987 QBU with the euro as its functional currency, and U.S. Corp elects under paragraph (c)(2)(iv)(B) of this section to use the historic inventory method with respect to Business A but does not make any other elections.

(1) ***Example 1: Item of income denominated in nonfunctional currency.*** Business A accrues £100 of income from the provision of services. Under paragraph (b)(2) of this section, the £100 is translated into €90 at the spot rate on the date of accrual, without the use of a spot rate convention. In determining U.S. Corp's taxable income, the €90 of income is translated into dollars at the yearly average exchange rate under paragraph (c)(1) of this section.

(2) ***Example 2: Asset sold for nonfunctional currency.*** Business A sells a historic asset consisting of non-inventory property for £100. Under paragraph (b)(2) of this section, the £100 amount realized is translated into €85 at the spot rate on the sale date without the use of a spot rate convention. In determining U.S. Corp's taxable income, the €85 is translated into dollars at the yearly average exchange rate under paragraph (c)(1) of this section. The euro basis of the property is translated into dollars at the historic rate under paragraph (c)(2)(i) of this section.

(3) ***Example 3: Historic inventory method*** —

(i) ***Facts.*** Business A uses a first-in, first-out (*FIFO*) method of accounting for inventory. Business A sells 1,200 units of inventory in year 2 for €3 per unit. The yearly average exchange rate is €1 = $1.02 for year 1 and €1 = $1.05 for year 2.

(ii) ***Analysis*** —

(A) ***Gross sales.*** Business A's gross sales are translated under paragraph (c)(1) of this section at the yearly average exchange rate for the year of the sale. Business A's dollar gross sales will be computed as follows:

TABLE 1 TO PARAGRAPH (e)(3)(ii)(A)—GROSS SALES [YEAR 2]

Month	Number of units	Amount in €	€/$ yearly average rate	Amount in $
Jan	100	€ 300	€1 = $1.05	$315.00
Feb	200	600	€1 = $1.05	630.00
March	0	0	€1 = $1.05	0.00
April	200	600	€1 = $1.05	630.00
May	100	300	€1 = $1.05	315.00
June	0	0	€1 = $1.05	0.00
July	100	300	€1 = $1.05	315.00
Aug	100	300	€1 = $1.05	315.00
Sept	0	0	€1 = $1.05	0.00
Oct	0	0	€1 = $1.05	0.00
Nov	100	300	€1 = $1.05	315.00
Dec	300	900	€1 = $1.05	945.00

Month	Number of units	Amount in €	€/$ yearly average rate	Amount in $
	1,200			3,780.00

(B) ***Translated basis of inventory.*** The purchase price for each inventory unit was €1.50. Under § 1.987-1(c)(3)(i) and paragraph (c)(2)(iv)(B) of this section, the basis of each item of inventory is translated into dollars at the yearly average exchange rate for the year the inventory was acquired.

TABLE 2 TO PARAGRAPH (e)(3)(ii)(B)—OPENING INVENTORY AND PURCHASES [YEAR 2]

Month	Number of units	Amount in €	€/$ yearly average rate	Amount in $
Opening inventory (purchased in Dec. year 1)				
	100	€150	€1 = $1.02	$153.00
Purchases in year 2				
Jan	300	€ 450	€1 = $1.05	$472.50
Feb	0	0	€1 = $1.05	0
March	0	0	€1 = $1.05	0
April	300	450	€1 = $1.05	472.50
May	0	0	€1 = $1.05	0
June	0	0	€1 = $1.05	0
July	300	450	€1 = $1.05	472.50
Aug	0	0	€1 = $1.05	0
Sept	0	0	€1 = $1.05	0
Oct	0	0	€1 = $1.05	0
Nov	300	450	€1 = $1.05	472.50
Dec	0	0	€1 = $1.05	0
	1,200			1,890.00

(C) ***COGS.*** Because Business A uses a FIFO method for inventory, Business A is considered to have sold in year 2 the 100 units of opening inventory purchased in year 1 ($153.00), the 300 units purchased in January year 2 ($472.50), the 300 units purchased in April year 2 ($472.50), the 300 units purchased in July year 2 ($472.50), and 200 of the 300 units purchased in November year 2 ($315.00). Accordingly, Business A's translated dollar COGS for year 2 is $1,885.50. Business A's opening inventory for year 3 is 100 units of inventory with a translated dollar basis of $157.50.

(D) ***Gross sales income.*** Accordingly, for purposes of section 987, Business A has gross income in dollars of $1,894.50 ($3,780.00−$1,885.50) from the sale of inventory in year 2.

(4) ***Example 4: Simplified inventory method*** —

(i) ***Facts.*** The facts are the same as in paragraph (e)(3) of this section (*Example 3*), except that U.S. Corp does not elect to use the historic inventory method with respect to Business A.

(ii) ***Analysis.*** Because U.S. Corp does not elect to use the historic inventory method, the simplified inventory method under paragraph (c)(2)(iv)(A) of this section applies.

(A) ***Gross sales.*** Business A's dollar gross sales will be computed as described in paragraph (e)(3)(ii)(A) of this section (*Example 3*). Therefore, Business A has gross sales of $3,780.

(B) ***COGS.*** Business A sold 1,200 units of inventory in year 2, and the purchase price for each unit was €1.50. The total purchase price for the inventory sold in year 2 was €1,800. Under the simplified inventory method provided in paragraph (c)(2)(iv)(A) of this section, COGS for a taxable year is translated into the functional currency of the owner at the yearly average exchange rate for the taxable year in which the sale of inventory occurs. Therefore, before making the adjustments required under paragraph (c)(3) of this section, Business A's dollar COGS for year 2 is equal to $1,890 (the purchase price for the inventory sold in year 2 (€1,800), translated at the yearly average exchange rate of €1 = $1.05).

(C) ***Adjustments required.*** Because the simplified inventory method applies, Business A's COGS must be adjusted under paragraph (c)(3) of this section. No adjustment is required under paragraph (c)(3)(ii) of this section because no cost recovery deduction attributable to a historic asset is included in inventoriable costs for year 2. However, an adjustment for beginning inventory is required under paragraph (c)(3)(iii)(A) of this section because Business A uses a FIFO method of accounting for inventory.

(D) ***Adjustment for beginning inventory.*** The adjustment required under paragraph (c)(3)(iii)(A) of this section is equal to: the ending non-LIFO inventory included on Business A's closing balance sheet for the preceding taxable year (€150), translated at the yearly average exchange rate for year 1 (€1 = $1.02), which is $153; less the ending non-LIFO inventory included on Business A's closing balance sheet for the preceding taxable year (€150), translated at the yearly average exchange rate for year 2 (€1 = $1.05), which is $157.50. Therefore, there is a negative adjustment to COGS of $4.50. Business A's COGS for year 2 is reduced from $1,890 to $1,885.50.

(E) ***Gross sales income.*** Accordingly, for purposes of section 987, Business A has gross income in dollars of $1,894.50 ($3,780.00−$1,885.50) from the sale of inventory in year 2.

(5) ***Example 5: Depreciation expense that is not an inventoriable cost.*** The facts are the same as in paragraph (e)(3) of this section (*Example 3*) except that during year 2, Business A incurred €100 of depreciation expense with respect to a truck. No portion of the depreciation expense is an inventoriable cost. The truck was purchased on January 15, year 1. The yearly average exchange rate for year 1 was €1 = $1.02. Under paragraph (c)(2)(i) of this section, the €100 of depreciation is translated into dollars at the historic rate. The historic rate is the yearly average exchange rate for year 1. Accordingly, U.S. Corp takes into account depreciation of $102 with respect to Business A in year 2.

(6) ***Example 6: Translation of depreciation expense that is an inventoriable cost (historic inventory method).*** The facts are the same as in paragraph (e)(5) of this section (*Example 5*) except that the €100 of depreciation expense incurred during year 2 with respect to the truck is an inventoriable cost. As a result, the depreciation expense is capitalized into the 1,200 units of inventory purchased by Business A in year 2. Of those 1,200 units, 1,100 units are sold during the year, and 100 units become ending inventory. The portion of depreciation expense capitalized into inventory that is sold during year 2 is reflected in Business A's euro COGS and is translated at the €1 = $1.02 yearly average exchange rate for year 1, the year in which the truck was purchased. The portion of the depreciation expense capitalized into the 100 units of ending inventory is not taken into account in year 2 but rather, will be taken into account in the year the ending inventory is sold, translated at the €1 = $1.02 yearly average exchange rate for year 1.

(7) ***Example 7: Sale of land.*** Business A purchased raw land on October 16, year 1, for €8,000 and sold the land on November 1, year 2, for €10,000. The yearly average exchange rate was €1 = $1.02 for year 1 and €1 = $1.05 for year 2. Under paragraph (c)(1) of this section, the amount realized is translated into dollars at the yearly average exchange rate for year 2 (€10,000 × $1.05 = $10,500). Under paragraph (c)(2)(i) of this section, the basis is translated at the historic rate for year 1, which is the yearly average exchange rate under section § 1.987-1(c)(3)(i) (€8,000 × $1.02 = $8,160). Accordingly, the amount of gain reported by U.S. Corp on the sale of the land is $2,340 ($10,500−$8,160).

(8) ***Example 8: Current rate election.*** The facts are the same as in paragraph (e)(7) of this section (*Example 7*), except that U.S. Corp makes a current rate election under § 1.987-1(d)(2). Under paragraph (c)(2) of this section, the exceptions to paragraph (c)(1) of this section generally do not apply in a taxable year for which an annual recognition election or a current rate election is in effect. As a result, all items of income, gain, deduction, and loss with respect to Business A are translated into U.S Corp's functional currency at the yearly average exchange rate under paragraph (c)(1) of this section. Business A's gain on the sale of the land is determined in its functional currency and is equal to €2,000 (amount realized of €10,000 less basis of €8,000). This gain is translated at the yearly average exchange rate for year 2 of €1 = $1.05, and the amount of gain reported by U.S. Corp on the sale of the land is $2,100. The result would be the same if U.S. Corp made an annual recognition election under § 1.987-5(b)(2) (and did not make a current rate election).

(9)-(12) [Reserved]

(13) ***Example 13: Section 988 transaction*** —

(i) ***Facts.*** Business A receives and accrues $100 of income from the provision of services on January 1, 2021. Business A continues to hold the $100 as a U.S. dollar-denominated demand deposit at a bank on December 31, 2021. U.S. Corp has made a section 988 mark-to-market election under paragraph (b)(4)(ii) of this section. The euro-dollar spot rate without the use of a spot rate convention is €1 = $1 on January 1, 2021, and €1 = $2 on December 31, 2021, and the yearly average exchange rate for 2021 is €1 = $1.50.

(ii) ***Analysis*** —

(A) Under paragraph (b)(2) of this section, the $100 earned by Business A is translated into €100 at the spot rate on January 1, 2021, as defined in § 1.987-1(c)(1) without the use of a spot rate convention. In determining U.S. Corp's taxable income, the €100 of services income is translated into $150 at the yearly average exchange rate for 2021, as provided in paragraph (c)(1) of this section.

(B) Under paragraph (b)(4)(i) of this section, section 988 gain or loss for Business A's section 988 transactions is determined in, and by reference to, the euro, the functional currency of Business A. Accordingly, section 988 gain or loss must be determined on Business A's holding of the $100 demand deposit in, and by reference to, the euro. Under § 1.988-2(a)(2), Business A is treated as having an amount realized of €50 when the $100 is marked to market at the end of 2021 under paragraph (b)(4)(ii) of this section. Marking the dollars to market gives rise to a section 988 loss of €50 (€50 amount realized, less Business A's €100 basis in the $100). In determining U.S. Corp's taxable income, that €50 loss is translated into a $75 loss at the yearly average exchange rate for 2021, as provided in paragraph (c)(1) of this section.

(14) *Example 14: Payment of foreign income tax* —

(i) ***Facts.*** Business A earns €100 of revenue from the provision of services and incurs €30 of general expenses and €10 of depreciation expense during 2021. Except as otherwise provided, U.S. Corp uses the yearly average exchange rate described in § 1.987-1(c)(2) to translate items of income, gain, deduction, and loss of Business A. Business A is subject to income tax in Country X at a 25 percent rate. U.S. Corp claims a credit with respect to Business A's foreign income taxes and elects under section 986(a)(1)(D) to translate the foreign income taxes at the spot rate on the date the taxes were paid. The yearly average exchange rate for 2021 is €1 = $1.50. The historic rate used to translate the depreciation expense is €1 = $1.00. The spot rate on the date that Business A paid its foreign income taxes was €1 = $1.60.

(ii) ***Analysis.*** Because U.S. Corp has elected to translate foreign income taxes at the spot rate on the date such taxes were paid rather than at the yearly average exchange rate, U.S. Corp must make the adjustments described in paragraph (c)(2)(v) of this section. Accordingly, U.S. Corp determines its section 987 taxable income or loss by reducing the section 987 taxable income or loss that otherwise would be determined under this section by €15, translated into U.S. dollars at the yearly average exchange rate (€1 = $1.50), and increasing the resulting amount by €15, translated using the same exchange rate that is used to translate the creditable taxes into U.S. dollars under section 986(a) (€1 = $1.60). Following these adjustments, Business A's section 987 taxable income for 2021 is $96.50, computed as follows:

TABLE 3 TO PARAGRAPH (E)(14)(II)

	Amount in €	Translation rate	Amount in $
Revenue	€100	€1 = $1.50	$150.00
General Expenses	(30)	€1 = $1.50	(45.00)
Depreciation	(10)	€1 = $1.00	(10.00)
Tentative section 987 taxable income	€60		$95.00
Adjustments under paragraph (c)(2)(v) of this section:			
Decrease by €15 tax translated at yearly average exchange rate (€1 = $1.50)			($22.50)

	Amount in €	Translation rate	Amount in $
Increase by €15 tax translated at spot rate on payment date (€1 = $1.60)			24.00
Section 987 taxable income			$96.50

[T.D. 10016, 89 FR 100165, Dec. 11, 2024]

§ 1.987-3T Determination of section 987 taxable income or loss of an owner of a section 987 QBU (temporary).

(a) through (b) (2)(i) [Reserved] For further guidance, see § 1.987-3(a) through (b)

(2)

(i) .

(ii) ***No translation of basis or amount realized with respect to a specified owner functional currency transaction treated as a historic asset.*** If the acquisition of a historic asset gives rise to a specified owner functional currency transaction described in paragraph (b)(4)(ii) of this section, the basis of the historic asset, and any amount realized on a disposition of the historic asset, is not translated if the amount is denominated in the owner's functional currency.

(3) [Reserved] For further guidance, see § 1.987-3(b)(3).

(4) ***Special rule for section 988 transactions*** —

(i) ***In general.*** Section 988 and the regulations thereunder apply to section 988 transactions of a section 987 QBU. For this purpose, whether a transaction is a section 988 transaction is determined by reference to the functional currency of the section 987 QBU. (But see paragraph (b)(4)(ii) of this section, providing that specified owner functional currency transactions are not treated as section 988 transactions.) However, except as provided in paragraph (b)(4)(iii)(A) of this section, section 988 gain or loss is determined in, and by reference to, the functional currency of the owner of the section 987 QBU rather than the functional currency of the section 987 QBU. Accordingly, in determining section 988 gain or loss of a section 987 QBU with respect to a section 988 transaction of the section 987 QBU, the amounts required under section 988 and the regulations thereunder to be translated on the applicable booking date or payment date with respect to the section 988 transaction are translated into the owner's functional currency at the rate required under section 988 and the regulations thereunder.

(ii) ***Specified owner functional currency transactions not treated as section 988 transactions.*** Transactions of a section 987 QBU described in sections 988(c)(1)(B)(i), 988(c)(1)(B)(ii), and 988(c)(1)(C) (including the acquisition of nonfunctional currency as described in § 1.988-1(a)(1)), other than transactions described in paragraph (b)(4)(iii)(A) of this section, that are denominated in (or determined by reference to) the owner's functional currency (specified owner functional currency transactions) are not treated as section 988 transactions. Thus, no currency gain or loss is recognized by a section 987 QBU under section 988 with respect to such transactions.

(iii) ***Determination of section 988 gain or loss for qualified short-term section 988 transactions*** —

(A) ***Determination by reference to the section 987 QBU's functional currency for certain transactions subject to a mark-to-market method of accounting.*** Section 988 gain or loss with respect to section 988 transactions described in paragraph (b)(4)(iii)(B) of this section that are accounted for under a mark-to-market method of accounting for Federal income tax purposes or under the foreign currency mark-to-market method of accounting described in paragraph (b)(4)(iii)(C) of this section, and any hedges entered into to manage risk with respect to such transactions within the meaning of § 1.1221-2(c)(4) (related hedges), must be determined in, and by reference to, the functional currency of the section 987 QBU (rather than the functional currency of its owner).

(B) ***Qualified short-term section 988 transaction.*** A qualified short-term section 988 transaction is a section 988 transaction that occurs in the ordinary course of a section 987 QBU's business and has an original term of one year or less on the date the transaction is entered into by the section 987 QBU. The holding of currency that is nonfunctional currency (within the meaning of section 988(c)(1)(C)(ii)) to the section 987 QBU in the ordinary course of a section 987 QBU's trade or business also is treated as a qualified short-term section 988 transaction. Any transaction that is denominated in, or determined by reference to, a hyperinflationary currency, including the holding of hyperinflationary currency, is not considered a qualified short-term section 988 transaction. See §§ 1.988-2(b)(15), 1.988-2(d)(5), and 1.988-2(e)(7) for rules relating to transactions denominated in, or determined by reference to, a hyperinflationary currency.

(C) ***Election to use a foreign currency mark-to-market method of accounting.*** A taxpayer may elect under this paragraph (b)(4)(iii)(C) to apply the foreign currency mark-to-market method of accounting described in this paragraph for all qualified short-term section 988 transactions described in paragraph (b)(4)(iii)(B) of this section, and any related hedges, that are properly attributable to a section 987 QBU on or after the effective date of the election and that are not otherwise accounted for under a mark-to-market method of accounting under section 475 or section 1256. Under the foreign currency mark-to-market method of accounting, the timing of section 988 gain or loss on section 988 transactions is determined under the principles of section 1256(a)(1). Thus, only section 988 gain or loss is taken into account under the foreign currency mark-to-market method of accounting. Appropriate adjustments must be made to prevent the section 988 gain or loss from being taken into account again under section 988 or another provision of the Code or regulations. A section 988 transaction subject to this election is not subject to the "netting rule" of section 988(b) and § 1.988-2(b)(8), under which exchange gain or loss is limited to overall gain or loss realized in a transaction, in taxable years prior to the taxable year in which section 988 gain or loss would be recognized with respect to such section 988 transaction but for this election.

(iv) ***Examples.*** Examples 10 through 13 of paragraph (e) of this section illustrate the application of this paragraph (b)(4).

(c)

(1) through(c)

(2)

(i) [Reserved] For further guidance, see § 1.987-3(c)(1) through (c)(2)(i).

(ii) ***Amount realized with respect to historic assets that are section 988 transactions.*** If the acquisition of a historic asset gave rise to a section 988 transaction described in paragraph (b)(4)(i) of this section, then in computing the total gain or loss on a disposition of the historic asset (some or all of which total gain or loss may be section 988 gain or loss described in section 988(b) and paragraph (b)(4)(i) of this section), the amount realized (determined, if necessary, under § 1.987-3(b)(2)(i)) is translated into the owner's functional currency using the spot rate on the date such item is properly taken into account, subject to the limitation under § 1.987-1T(c)(1)(ii)(B) regarding the use of a spot rate convention.

(iii) through (iv) [Reserved] For further guidance, see § 1.987-3(c)(2)(iii) through (iv).

(v) ***Translation of income to account for certain foreign income tax claimed as a credit.*** The owner of a section 987 QBU claiming a credit under section 901 for foreign income taxes, other than foreign income taxes deemed paid under section 902 or section 960, that are properly reflected on the books and records of the section 987 QBU (the creditable tax amount) must determine section 987 taxable income or loss attributable to the section 987 QBU by reducing the amount of section 987 taxable income or loss that otherwise would be determined under this section by an amount equal to the creditable tax amount, translated into U.S. dollars using the yearly average exchange rate for the taxable year in which the creditable tax is accrued, and by increasing the resulting amount by an amount equal to the creditable tax amount, translated using the same exchange rate that is used to translate the creditable taxes into U.S. dollars under section 986(a). See *Example 14* of paragraph (e) of this section,, for an illustration of this rule.

(d) ***Election to translate all items at the yearly average exchange rate.*** Notwithstanding § 1.987-3(c), a taxpayer that has made the annual deemed termination election described in § 1.987-8T(d) may elect under this paragraph (d) to translate all items of income, gain, deduction, and loss with respect to a section 987 QBU determined under § 1.987-3(b) in the functional currency of the section 987 QBU into the owner's functional currency, if necessary, at the yearly average exchange rate for the taxable year. *Example 9* of paragraph (e) of this section illustrates the application of this election.

(e) ***Example 1*** through *Example 8* [Reserved] For further guidance, see § 1.987-3(e), *Example 1* through *Example 8*.

Example 9. The facts are the same as in *Example 7,* except that U.S. Corp properly elects under paragraph (d) of this section to translate all items of income, gain, deduction, and loss with respect to Business A at the yearly average exchange rate. Accordingly, Business A's €2,000 gain on the sale of the land is translated at the yearly average exchange rate for 2021 of €1 = $1.05, and the amount of gain reported by U.S. Corp on the sale of the land is $2,100.

Example 10. Business A acquires £100 on August 27, 2021, for €120 and sells the pounds on November 17, 2021, for €125. The dollar-pound spot rate (without the use of a spot rate convention) is £1 = $1 on August 27, 2021, and £1 = $1.10 on November 17, 2021. The disposition of the pounds is a section 988 transaction of Business A under paragraph (b)(4)(i) of this section, and the pounds are a historic asset under § 1.987-1(e). Section 988 gain or loss with respect to the disposition of the pounds is determined under paragraph (b)(4)(i) of this section and § 1.988-2(a)(2) by reference to the dollar functional currency of Business A's owner. The dollar amount realized for the pounds is determined under paragraph (c)(2)(ii) of this section by translating £100 into $110 using the dollar-pound spot rate on November 17, 2021, without the use of a spot rate convention. The dollar basis in the pounds is determined under § 1.987-3(c)(2)(i) by translating £100 into $100 using the historic

rate described in § 1.987-1T(c)(3)(i)(E), which is the dollar-pound spot rate on August 27, 2021, without the use of a spot rate convention. Thus, U.S. Corp takes into account $10 of section 988 gain with respect to Business A's disposition of £100.

Example 11. (i) Business A purchases a £100 2-year note for €75 on October 1, 2021, and receives a £100 repayment of principal with respect to the note on December 31, 2021. At the spot rates on October 1, 2021 (as defined in § 1.987-1(c)(1)), without the use of a spot rate convention, Business A's €75 purchase price translates into £80 and $95. At the spot rates on December 31, 2021, without the use of a spot rate convention, the £100 principal amount on the note translates into €90 and $130, and £80 translates into $104.
(ii) The acquisition of the note is a section 988 transaction of Business A under paragraph (b)(4)(i) of this section, and the note is a historic asset under § 1.987-1(e). To determine its section 987 taxable income or loss with respect to Business A, U.S. Corp must determine Business A's total gain or loss on the disposition of the note in U.S. Corp's dollar functional currency. Consistent with § 1.988-2(b)(8), U.S. Corp also must determine whether some or all of that gain or loss constitutes section 987 gain or loss described in section 988(b).

(iii) To determine Business A's total gain or loss on the disposition of the note, Business A's basis and amount realized on the note must be determined in euros under § 1.987-3(b), if necessary, and translated into dollars under § 1.987-3(c). Business A has a €75 basis in the note that is translated into $95 under § 1.987-3(c)(2)(i) at the historic rate described in § 1.987-1T(c)(3)(i)(E), which is the spot rate on the date the note was acquired without the use of a spot rate convention. Business A's £100 amount realized on the note is translated into €90 under § 1.987-3(b)(2)(i) using the spot rate on December 31, 2021, without the use of a spot rate convention. That €90 amount realized is then translated into $130 under paragraph (c)(2)(ii) of this section using the spot rate on December 31, 2021, without the use of a spot rate convention. Accordingly, the total gain with respect to the disposition of the note that is included in section 987 taxable income is $35 ($130 less $95).

(iv) U.S. Corp must determine whether some or all of the $35 total gain with respect to the note constitutes section 988 gain. The amount of section 988 gain realized with respect to the note is determined under § 1.988-2(b)(5), which requires a comparison of the functional currency value of the principal amount of the note on the booking date and payment date spot rates, respectively, and defines the principal amount of the note as Business A's purchase price in units of nonfunctional currency, which is £80. Under paragraph (b)(4)(i) of this section, section 988 gain or loss with respect to the note is determined by reference to U.S. Corp's dollar functional currency, such that the amounts required under section 988 to be translated on the booking date and payment date are translated into the dollars at the booking date and payment date spot rates. Accordingly, Business A's £80 principal amount with respect to the note is translated at the booking date and payment date spots rates into $95 and $104, respectively. Thus, $9 ($104 less $95) of the $35 total gain taken into account

by U.S. Corp as section 987 taxable income with respect to the note is section 988 gain. The remaining $26 of gain, which may be attributable to credit risk or another factor unrelated to currency fluctuations, is sourced and characterized without regard to section 988.

Example 12. The facts are the same as in *Example 11,* except that Business A is owned by a foreign corporation with a pound functional currency. Under paragraph (b)(4)(ii) of this section, the acquisition of the £100 2-year note is a specified owner functional currency transaction that is not treated as a section 988 transaction of Business A. Because the note is a historic asset under § 1.987-1(e), Business A's €75 basis in the note translates into £80 at the historic rate described in § 1.987-1T(c)(3)(i)(E), which provides that the historic rate is the spot rate for the date the note was acquired without the use of a spot rate convention. (If, instead, Business A had purchased the 5-year note for £80 rather than €75, then pursuant to paragraph (b)(2)(ii) of this section, Business A's basis in the note would have been determined without translating the £80 purchase price because it is denominated in the owner's functional currency.) Under paragraph (b)(2)(ii) of this section, the £100 amount realized with respect to the note is not translated because it is denominated in the owner's functional currency. Thus, the owner takes into account £20 (£100 less £80) of section 987 taxable income in 2021 with respect to the note.

Example 13. (i) Business A receives and accrues $100 of income from the provision of services on January 1, 2021. Business A continues to hold the $100 as a U.S. dollar-denominated demand deposit at a bank on December 31, 2021. U.S. Corp has elected under paragraph (b)(4)(iii)(C) of this section to use the foreign currency mark-to-market method of accounting for qualified short-term section 988 transactions entered into by Business A. The euro-dollar spot rate without the use of a spot rate convention is €1 = $1 on January 1, 2021, and €1 = $2 on December 31, 2021, and the yearly average exchange rate for 2021 is €1 = $1.50.
(ii) Under § 1.987-3(b)(2)(i), the $100 earned by Business A is translated into €100 at the spot rate on January 1, 2021, as defined in § 1.987-1(c)(1) without the use of a spot rate convention. In determining U.S. Corp's taxable income, the €100 of service income is translated into $150 at the yearly average exchange rate for 2021, as provided in § 1.987-3(c)(1).

(iii) The $100 demand deposit constitutes a qualified short-term section 988 transaction under paragraph (b)(4)(iii)(B) of this section because the demand deposit is treated as nonfunctional currency within the meaning of section 988(c)(1)(C)(ii). Because Business A uses the foreign currency mark-to-market method of accounting for qualified short-term section 988 transactions, under paragraph (b)(4)(iii)(A) of this section, section 988 gain or loss for such transactions is determined in, and by reference to, euros, the functional currency of Business A. Accordingly, section 988 gain or loss must be determined on Business A's holding of the $100 demand deposit in, and by reference to, the euro. Under § 1.988-2(a)(2), Business A is treated as having an amount realized of €50 when the $100 is marked to market at the end of 2021 under paragraph (b)(4)(iii)(C) of this section. Marking the dollars to

market gives rise to a section 988 loss of €50 (€50 amount realized, less Business A's €100 basis in the $100). In determining U.S. Corp's taxable income, that €50 loss is translated into a $75 loss at the yearly average exchange rate for 2021, as provided in § 1.987-3(c)(1).

Example 14. (i) *Facts.* Business A earns €100 of revenue from the provision of services and incurs €30 of general expenses and €10 of depreciation expense during 2021. Except as otherwise provided, U.S. Corp uses the yearly average exchange rate described in § 1.987-1(c)(2) to translate items of income, gain, deduction, and loss of Business A. Business A is subject to income tax in Country X at a 25 percent rate. U.S. Corp claims a credit with respect to Business A's foreign income taxes and elects under section 986(a)(1)(D) to translate the foreign income taxes at the spot rate on the date the taxes were paid. The yearly average exchange rate for 2021 is €1 = $1.50. The historic rate used to translate the depreciation expense is €1 = $1.00. The spot rate on the date that Business A paid its foreign income taxes was €1 = $1.60.
(ii) *Analysis.* Because U.S. Corp has elected to translate foreign income taxes at the spot rate on the date such taxes were paid rather than at the yearly average exchange rate, U.S. Corp must make the adjustments described in paragraph (c)(2)(v) of this section. Accordingly, U.S. Corp determines its section 987 taxable income by reducing the section 987 taxable income or loss that otherwise would be determined under this section by €15, translated into U.S. dollars at the yearly average exchange rate (€1 = $1.50), and increasing the resulting amount by €15, translated using the same exchange rate that is used to translate the creditable taxes into U.S. dollars under section 986(a) (€1 = $1.60). Following these adjustments, Business A's section 987 taxable income for 2021 is $96.50, computed as follows:

	Amount in €	Translation rate	Amount in $
Revenue	€100	€1 = $1.50	$150.00
General Expenses	(30)	€1 = $1.50	(45.00)
Depreciation	(10)	€1 = $1.00	(10.00)
Tentative section 987 taxable income	€60		$95.00
Adjustments under paragraph (c)(2)(v) of this section:			
Decrease by €15 tax translated at yearly average exchange rate (€1 = $1.50)			($22.50)
Increase by €15 tax translated at spot rate on payment date (€1 = $1.60)			24.00

	Amount in €	Translation rate	Amount in $
Section 987 taxable income			$96.50

(f) ***Effective/applicability date.*** This section applies to taxable years beginning on or after one year after the first day of the first taxable year following December 7, 2016. Notwithstanding the preceding sentence, if a taxpayer makes an election under § 1.987-11(b), then this section applies to taxable years to which §§ 1.987-1 through 1.987-10 apply as a result of such election.

(g) ***Expiration date.*** The applicability of this section expires on December 6, 2019.

[T.D. 9795, 81 FR 88870, Dec. 8, 2016]

§ 1.987-4 Determination of net unrecognized section 987 gain or loss of a section 987 QBU.

(a) ***In general.*** The net unrecognized section 987 gain or loss of a section 987 QBU is determined by the owner annually as provided in paragraph (b) of this section in the owner's functional currency. Only assets and liabilities attributable to the section 987 QBU are taken into account.

(b) ***Calculation of net unrecognized section 987 gain or loss.*** Net unrecognized section 987 gain or loss of a section 987 QBU for a taxable year equals the sum of:

(1) The section 987 QBU's net accumulated unrecognized section 987 gain or loss for all prior taxable years as determined in paragraph (c) of this section; and

(2) The section 987 QBU's unrecognized section 987 gain or loss for the current taxable year as determined in paragraph (d) of this section and § 1.987-14.

(c) ***Net accumulated unrecognized section 987 gain or loss for all prior taxable years*** —

(1) ***In general.*** A section 987 QBU's net accumulated unrecognized section 987 gain or loss for all prior taxable years is the aggregate of the amounts determined under paragraph (d) of this section for all prior taxable years to which this section applies, reduced by amounts recognized under § 1.987-5(a), amounts treated as deferred section 987 gain or loss, and amounts treated as suspended section 987 loss for all prior taxable years to which this section applies. Accordingly, net accumulated unrecognized section 987 gain or loss is not reduced under this paragraph (c)(1) when deferred section 987 gain or loss is recognized (or suspended) under § 1.987-12 or when suspended section 987 loss is recognized under § 1.987-11 or § 1.987-13.

(2) ***Additional adjustments for certain taxable years beginning on or before December 31, 2024.*** For any section 987 QBU in existence before the transition date, *see* § 1.987-10(e)(5) and (f)(2) for additional adjustments to the section 987 QBU's net accumulated unrecognized section 987 gain or loss.

(d) ***Calculation of unrecognized section 987 gain or loss for a taxable year.*** The unrecognized section 987 gain or loss of a section 987 QBU for a taxable year is generally determined under paragraphs (d)(1) through (10) of this section. However, for taxable years in which a current rate election or an annual recognition election is in effect, the unrecognized section 987 gain or loss of a section 987 QBU for a taxable year is

determined by applying only paragraphs (d)(1) through (5) and (10) of this section. *See* § 1.987-14 for additional adjustments that must be made to the unrecognized section 987 gain or loss of a section 987 QBU for a taxable year in connection with a section 987 hedging transaction.

(1) ***Step 1: Determine the change in the owner functional currency net value of the section 987 QBU for the taxable year —***

(i) ***In general.*** The change in the owner functional currency net value of the section 987 QBU for the taxable year equals—

(A) The owner functional currency net value of the section 987 QBU, determined in the functional currency of the owner under paragraph (e) of this section, on the last day of the taxable year; less

(B) The owner functional currency net value of the section 987 QBU, determined in the functional currency of the owner under paragraph (e) of this section, on the last day of the preceding taxable year.

(ii) ***Year section 987 QBU is terminated.*** If a section 987 QBU is terminated within the meaning of § 1.987-8 during an owner's taxable year, the termination date is treated as the last day of the taxable year for purposes of this section.

(iii) ***First taxable year of a section 987 QBU.*** If the owner's taxable year is the first taxable year of a section 987 QBU, the owner functional currency net value of the section 987 QBU described in paragraph (d)(1)(i)(B) of this section is zero.

(iv) ***First year in which an election is in effect or ceases to be in effect.*** Except as otherwise provided, the owner functional currency net value of the section 987 QBU described in paragraph (d)(1)(i)(B) of this section is determined based on the elections that were (or were not) in effect on the last day of the preceding taxable year.

(2) ***Step 2: Increase the amount determined in step 1 by the amount of assets transferred from the section 987 QBU to the owner —***

(i) ***In general.*** The amount determined in paragraph (d)(1) of this section is increased by the total amount of assets transferred from the section 987 QBU to the owner during the taxable year translated into the functional currency of the owner as provided in paragraph (d)(2)(ii) of this section.

(ii) ***Assets transferred from the section 987 QBU to the owner during the taxable year.*** The total amount of assets transferred from the section 987 QBU to the owner for the taxable year translated into the functional currency of the owner equals the sum of:

(A) The amount of the functional currency of the section 987 QBU and the aggregate adjusted basis of all other marked assets, after taking into account § 1.988-1(a)(10), transferred to the owner during the taxable year determined in the functional currency of the section 987 QBU and translated into the functional currency of the owner at the spot rate applicable to the date of transfer; and

(B) The aggregate adjusted basis of all historic assets transferred to the owner during the taxable year determined in the functional currency of the section 987 QBU and translated into the functional currency of the owner at the historic rate for each such asset.

(3) ***Step 3: Decrease the amount determined in steps 1 and 2 by the amount of assets transferred from the owner to the section 987 QBU*** —

(i) ***In general.*** The aggregate amount determined in paragraphs (d)(1) and (2) of this section is decreased by the total amount of assets transferred from the owner to the section 987 QBU during the taxable year determined in the functional currency of the owner as provided in paragraph (d)(3)(ii) of this section.

(ii) ***Assets transferred from the owner to the section 987 QBU during the taxable year.*** The total amount of assets transferred from the owner to the section 987 QBU for the taxable year equals the sum of:

(A) The amount of functional currency of the owner transferred to the section 987 QBU during the taxable year; and

(B) The aggregate adjusted basis of all other assets, after taking into account § 1.988-1(a)(10), transferred to the section 987 QBU during the taxable year determined in the functional currency of the owner immediately before the transfer.

(4) ***Step 4: Decrease the amount determined in steps 1 through 3 by the amount of liabilities transferred from the section 987 QBU to the owner*** —

(i) ***In general.*** The aggregate amount determined in paragraphs (d)(1) through (3) of this section is decreased by the total amount of liabilities transferred from the section 987 QBU to the owner during the taxable year translated into the functional currency of the owner as provided in paragraph (d)(4)(ii) of this section.

(ii) ***Liabilities transferred from the section 987 QBU to the owner during the taxable year.*** The total amount of liabilities transferred from the section 987 QBU to the owner for the taxable year equals the sum of:

(A) The amount of marked liabilities, after taking into account § 1.988-1(a)(10), transferred to the owner during the taxable year determined in the functional currency of the section 987 QBU and translated into the functional currency of the owner at the spot rate applicable to the date of transfer; and

(B) The amount of historic liabilities transferred to the owner during the taxable year determined in the functional currency of the section 987 QBU and translated into the functional currency of the owner at the historic rate for each such liability.

(5) ***Step 5: Increase the amount determined in steps 1 through 4 by the amount of liabilities transferred from the owner to the section 987 QBU.*** The aggregate amount determined in paragraphs (d)(1) through (4) of this section is increased by the total amount of liabilities, after taking into account § 1.988-1(a)(10), transferred from the owner to the section 987 QBU during the taxable year determined in the functional currency of the owner immediately before the transfer.

(6) ***Step 6: Decrease or increase the amount determined in steps 1 through 5 by the section 987 taxable income or loss, respectively, of the section 987 QBU for the taxable year.*** The aggregate amount determined in paragraphs (d)(1) through (5) of this section is decreased or increased by the section 987 taxable income or loss, respectively, computed under § 1.987-3 for the taxable year.

(7) ***Step 7: Increase the amount determined in steps 1 through 6 by certain expenses or losses that are not deductible in computing the section 987 taxable income or loss of the section 987 QBU for the taxable year.*** The aggregate amount determined under paragraphs (d)(1) through (6) of this section is increased by the amount of any expense or loss that reduces the basis of assets or increases the amount of liabilities attributable to the section 987 QBU for the taxable year but is not deductible in computing the section 987 QBU's taxable income or loss for the taxable year (such as business interest expense that is not deductible under section 163(j)). Items of expense or loss described in the preceding sentence are translated into the functional currency of the owner using the exchange rate that would apply under § 1.987-3(c) if they were deductible in computing the section 987 QBU's taxable income or loss for the taxable year. However, any foreign income taxes incurred by the section 987 QBU with respect to which the owner claims a credit are translated at the same rate at which such taxes were translated under section 986(a).

(8) ***Step 8: Decrease the amount determined in steps 1 through 7 by the amount of certain income or gain that is not included in taxable income in computing the section 987 taxable income or loss of the section 987 QBU for the taxable year.*** The aggregate amount determined under paragraphs (d)(1) through (7) of this section is decreased by the amount of any income or gain that increases the basis of assets or reduces the amount of liabilities attributable to the section 987 QBU for the taxable year but is not included in taxable income in computing the section 987 QBU's taxable income or loss for the taxable year. Items of income or gain described in the preceding sentence are translated into the functional currency of the owner using the exchange rate that would apply under § 1.987-3(c) if they were included in taxable income in computing the section 987 QBU's taxable income or loss for the taxable year.

(9) ***Step 9: Increase or decrease the amount determined in steps 1 through 8 by any income or gain, or any deduction or loss, respectively, that does not impact the adjusted balance sheet.*** The aggregate amount determined under paragraphs (d)(1) through (8) of this section is increased by any items of income or gain taken into account in paragraph (d)(6) of this section (step 6) that do not increase the basis of assets or reduce the amount of liabilities attributable to the section 987 QBU for the taxable year, and decreased by any items of deduction or loss taken into account in paragraph (d)(6) of this section (step 6) that do not reduce the basis of assets or increase the amount of liabilities attributable to the section 987 QBU for the taxable year. Items of income, gain, deduction, or loss described in the preceding sentence are translated into the functional currency of the owner using the exchange rate that applied under § 1.987-3(c) in computing the section 987 QBU's taxable income or loss for the taxable year.

(10) ***Step 10: Decrease or increase the amount determined in steps 1 through 9 by any increase or decrease, respectively, to the section 987 QBU's net assets that is not previously taken into account under steps 2 through 9 —***

(i) ***In general.*** Except as provided in paragraph (d)(10)(iii) of this section, the aggregate amount determined under paragraphs (d)(1) through (9) of this section is—

(A) Decreased by the residual increase to net assets (as defined in paragraph (d)(10)(ii) of this section), translated into the owner's functional currency at the yearly average exchange rate for the taxable year; or

(B) Increased by the residual decrease to net assets (as defined in paragraph (d)(10)(ii) of this section), translated into the owner's functional currency at the yearly average exchange rate for the taxable year.

(ii) ***Determining the residual increase or decrease to net assets*** —

(A) ***In general.*** The residual increase to net assets is the positive amount, if any, that would be determined under paragraphs (d)(1) through (9) of this section in the functional currency of the section 987 QBU if such amounts were determined in the functional currency of the section 987 QBU. The residual decrease to net assets is the negative amount, if any, that would be determined under paragraphs (d)(1) through (9) of this section in the functional currency of the section 987 QBU if such amounts were determined in the functional currency of the section 987 QBU.

(B) ***Application of step 1 in the functional currency of the section 987 QBU if a current rate election is in effect.*** In a taxable year in which a current rate election is in effect, for purposes of applying step 1 (paragraph (d)(1) of this section) in the functional currency of the section 987 QBU, the change in the net value of the section 987 QBU is determined by reference to the QBU net value described in paragraph (e)(2)(ii) of this section.

(C) ***Application of steps 3 and 5 in the functional currency of the section 987 QBU.*** For purposes of applying steps 3 and 5 (paragraphs (d)(3) and (5) of this section) in the functional currency of the section 987 QBU, the amount of assets and liabilities transferred from an owner to a section 987 QBU is determined by translating the basis of the assets and the amount of the liabilities under § 1.987-2(d).

(iii) ***Modifications for taxable years to which a current rate election or an annual recognition election applies.*** For any taxable year to which a current rate election or an annual recognition election applies, paragraphs (d)(10)(i) and (ii) of this section are applied by replacing "paragraphs (d)(1) through (9) of this section" with "paragraphs (d)(1) through (5) of this section."

(e) ***Determination of the owner functional currency net value of a section 987 QBU*** —

(1) ***In general.*** Except as provided in paragraph (e)(2) of this section, the owner functional currency net value of a section 987 QBU on the last day of a taxable year is equal to the aggregate amount of functional currency and the adjusted basis of each other asset on the section 987 QBU's adjusted balance sheet on that day, less the aggregate amount of each liability on the section 987 QBU's adjusted balance sheet on that day, in each case translated into the owner's functional currency as provided in paragraphs (e)(1)(i) and (ii) of this section.

(i) ***Marked item.*** A marked item is translated into the owner's functional currency at the spot rate applicable to the last day of the relevant taxable year.

(ii) ***Historic item.*** A historic item is translated into the owner's functional currency at the historic rate.

(2) ***Current rate election*** —

(i) ***In general.*** If a current rate election is in effect, the owner functional currency net value of a section 987 QBU on the last day of a taxable year is equal to the QBU net value described in paragraph (e)(2)(ii) of this section, translated into the owner's functional currency at the spot rate applicable to that day.

(ii) ***QBU net value.*** The QBU net value of a section 987 QBU on the last day of a taxable year is determined in the functional currency of the section 987 QBU and is equal to the aggregate amount of functional currency and the adjusted basis of each other asset that is attributable to the section 987 QBU on that day, less the aggregate amount of each liability that is attributable

to the section 987 QBU on that day. The QBU net value of a section 987 QBU on the last day of a taxable year may be determined either by preparing an adjusted balance sheet or by following the steps described in paragraph (e)(2)(iii) of this section (provided that the calculation is made consistently for all years in which a current rate election is in effect). However, in the first taxable year in which a current rate election ceases to be in effect, the owner functional currency net value of the section 987 QBU for the preceding taxable year must be determined by preparing an adjusted balance sheet.

(iii) ***Alternative calculation of QBU net value.*** The QBU net value of a section 987 QBU on the last day of a taxable year can be computed using the following steps (each applied in the functional currency of the section 987 QBU). *See* paragraph (g)(2)(iii) of this section (*Example 2*) for an example illustrating this rule.

(A) ***Step 1: Determine the QBU net value on the last day of the preceding taxable year.*** Determine the QBU net value on the last day of the preceding taxable year under this paragraph (e)(2). If the owner's taxable year is the first taxable year of a section 987 QBU, the QBU net value on the last day of the preceding taxable year is zero. In the first taxable year in which a current rate election is in effect (other than the taxable year beginning on the transition date or the first taxable year of a section 987 QBU), the QBU net value on the last day of the preceding taxable year is determined by preparing an adjusted balance sheet. In the taxable year beginning on the transition date (other than the first taxable year of a section 987 QBU), the QBU net value on the last day of the preceding taxable year may be determined either by preparing an adjusted balance sheet or by applying the steps described in this paragraph (e)(2)(iii) for each taxable year beginning with the first taxable year of the section 987 QBU.

(B) ***Step 2: Adjust for transfers between the section 987 QBU and its owner.*** The amount determined in paragraph (e)(2)(iii)(A) of this section is increased by the amount of each transfer described in paragraph (d)(3) or (4) of this section and decreased by the amount of each transfer described in paragraph (d)(2) or (5) of this section (in each case, after adjustment for gain or loss recognized under § 1.988-1(a)(10)). For this purpose, the amount of assets and liabilities transferred from an owner to a section 987 QBU is determined by translating the basis of the assets and the amount of the liabilities under § 1.987-2(d)(1).

(C) ***Step 3: Adjust for income or loss of the section 987 QBU.*** The amount determined in paragraph (e)(2)(iii)(B) of this section is increased by items of income and gain attributable to the section 987 QBU (including tax-exempt income described in paragraph (d)(8) of this section) for the taxable year and reduced by items of deduction and loss attributable to the section 987 QBU (including non-deductible expenses described in paragraph (d)(7) of this section) for the taxable year. However, no adjustment is made under the preceding sentence for any item of income, gain, deduction, or loss described in paragraph (d)(9) of this section.

(f) ***Combinations and separations —***

(1) ***Combinations.*** The net accumulated unrecognized section 987 gain or loss of a combined QBU for a taxable year is equal to the sum of the combining QBUs' net accumulated unrecognized section 987 gain or loss. *See* paragraph (f)(3)(i) of this section (*Example 1*) for an illustration of this rule.

(2) ***Separations.*** The net accumulated unrecognized section 987 gain or loss of a separated QBU for a taxable year is equal to the separating QBU's net accumulated unrecognized section 987 gain or loss multiplied by the separation fraction. For purposes of determining the owner functional currency net value and QBU net value of the separated QBUs on the last day of the taxable year preceding the taxable year of separation under paragraphs (d)(1)(i)(B) and (e) of this section, the assets and liabilities attributable to the separating QBU on that day are deemed to be attributable to the separated QBUs on that day, and are apportioned between the separated QBUs in a reasonable manner that takes into account the assets and liabilities attributable to the separated QBUs immediately after the separation. *See* paragraph (f)(3)(ii) of this section (*Example 2*) for an illustration of this rule.

(3) ***Examples.*** The following examples illustrate the rules of paragraphs (f)(1) and (2) of this section. For purposes of these examples, assume that no section 987 elections are in effect.

(i) ***Example 1: Combination of two section 987 QBUs that have the same owner*** —

(A) ***Facts.*** DC1, a domestic corporation, owns Entity A, a DE. Entity A conducts a manufacturing business that constitutes a section 987 QBU (*Manufacturing QBU*) that has the euro as its functional currency. Manufacturing QBU has a net accumulated unrecognized section 987 loss of $100. DC1 also owns Entity B, a DE. Entity B conducts a sales business that constitutes a section 987 QBU (*Sales QBU*) that has the euro as its functional currency. Sales QBU has a net accumulated unrecognized section 987 gain of $110. During the taxable year, Entity A merges into Entity B under local law pursuant to which Entity A ceases to exist, Entity B survives, and Entity B acquires all the assets and liabilities of Entity A. As a result, the books and records of Manufacturing QBU and Sales QBU are combined into a new single set of books and records. The combined entity has the euro as its functional currency.

(B) ***Analysis.*** Pursuant to § 1.987-2(c)(9)(i), Manufacturing QBU and Sales QBU are combining QBUs, and their combination does not give rise to a transfer that is taken into account in determining the amount of a remittance (as defined in § 1.987-5(c)). For purposes of computing net unrecognized section 987 gain or loss under this section for the year of the combination, the combination is deemed to have occurred on the last day of the owner's prior taxable year, such that the owner functional currency net value of the combined section 987 QBU at the end of that taxable year described under paragraph (d)(1)(i)(B) of this section takes into account items attributable to both Manufacturing QBU and Sales QBU at that time. Additionally, any transactions between Manufacturing QBU and Sales QBU occurring during the year of the merger will not result in transfers to or from a section 987 QBU. Pursuant to paragraph (f)(1) of this section, the combined QBU will have a net accumulated unrecognized section 987 gain of $10 (the $100 loss from Manufacturing QBU plus the $110 gain from Sales QBU).

(ii) ***Example 2: Separation of two section 987 QBUs that have the same owner*** —

(A) ***Facts.*** DC1, a domestic corporation, owns Entity A, a DE. Entity A conducts a business in the Netherlands that constitutes a section 987 QBU (*Dutch QBU*) that has the euro as its functional currency. The business of Dutch QBU consists of manufacturing and selling bicycles and scooters and is recorded on a single set of books and records. On the last day of year 1, the adjusted basis of the gross assets of Dutch QBU is €1,000. In year 2, the net accumulated unrecognized section 987 loss of Dutch QBU from all prior taxable years is $200. During year 2, Entity A separates the bicycle and scooter business such that each

business begins to have its own books and records and to meet the definition of a section 987 QBU under § 1.987-1(b)(3) (hereafter, "bicycle QBU" and "scooter QBU"). There are no transfers between DC1 and Dutch QBU before the separation. After the separation, the aggregate adjusted basis of bicycle QBU's assets is €600 and the aggregate adjusted basis of scooter QBU's assets is €400. Each section 987 QBU continues to have the euro as its functional currency.

(B) ***Analysis.*** Pursuant to § 1.987-2(c)(9)(iii), bicycle QBU and scooter QBU are separated QBUs, and the separation of Dutch QBU, a separating QBU, does not give rise to a transfer taken into account in determining the amount of a remittance. For purposes of computing net unrecognized section 987 gain or loss under this section for year 2, the separation will be deemed to have occurred on the last day of the owner's prior taxable year, year 1. Pursuant to paragraph (f)(2) of this section and § 1.987-1(h), bicycle QBU will have a separation fraction of €600/€1,000 and net accumulated unrecognized section 987 loss of $120 (€600/€1,000 × $200), and scooter QBU will have a separation fraction of €400/€1,000 and net accumulated unrecognized section 987 loss of $80 (€400/€1,000 × $200).

(g) ***Examples.*** The following examples illustrate the provisions of this section. For purposes of the examples, U.S. Corp is a domestic corporation that uses the calendar year as its taxable year and has the dollar as its functional currency. Except as otherwise indicated, no section 987 elections are in effect. The examples are not intended to demonstrate when activities constitute a trade or business within the meaning of § 1.989(a)-1(b)(2)(ii)(A) and (c) and therefore whether a section 987 QBU is considered to exist.

(1) ***Example 1: Determination of net unrecognized section 987 gain or loss*** —

(i) ***Facts.*** On July 1, year 1, U.S. Corp establishes Japan Branch, a section 987 QBU that has the yen as its functional currency, and U.S. Corp transfers to Japan Branch ¥100,000 with a basis of $1,000 and raw land with a basis of $500. On the same day, Japan Branch borrows ¥10,000 from a bank. In year 1, Japan Branch earns ¥12,000 for providing services and incurs ¥2,000 of related expenses. Japan Branch thus earns ¥10,000 of net income in year 1. The spot rate on July 1, year 1, is $1 = ¥100; the spot rate on December 31, year 1, is $1 = ¥120; and the average rate for the period of July 1, year 1, to December 31, year 1, is $1 = ¥110. Thus, the ¥12,000 of services revenue when translated under § 1.987-3(c)(1) at the yearly average exchange rate equals $109.09 (¥12,000 × ($1/¥110)) = $109.09). The ¥2,000 of expenses translated at the same yearly average exchange rate equals $18.18 (¥2,000 × ($1/¥110) = $18.18). Thus, Japan Branch's net income translated into dollars equals $90.91 ($109.09−$18.18 = $90.91).

(ii) ***Analysis.*** Under paragraph (a) of this section, U.S. Corp must compute the net unrecognized section 987 gain or loss of Japan Branch for year 1. Because this is Japan Branch's first taxable year, the net unrecognized section 987 gain or loss (as defined under paragraph (b) of this section) is equal to the branch's unrecognized section 987 gain or loss for year 1 as determined in paragraph (d) of this section. The calculations under paragraph (d) of this section are made as follows:

(A) ***Step 1.*** Under paragraph (d)(1) of this section (step 1), U.S. Corp must determine the change in the owner functional currency net value (*OFCNV*) of Japan Branch for year 1 in dollars. The change in the OFCNV of Japan Branch for year 1 is equal to the OFCNV of Japan Branch determined in dollars on the last day of year 1, less the OFCNV of Japan Branch determined in dollars on the last day of the preceding taxable year.

(*1*) The OFCNV of Japan Branch on December 31, year 1 is determined under paragraph (e) of this section as the sum of the basis of each asset on Japan Branch's adjusted balance sheet on December 31, year 1, less the sum of each liability on Japan Branch's adjusted balance sheet on that date, translated into dollars as provided in paragraphs (e)(1)(i) and (ii) of this section.

(*2*) For this purpose, Japan Branch will show the following assets and liabilities on its adjusted balance sheet for December 31, year 1: cash of ¥120,000; raw land with a basis of ¥55,000 ($500 translated under § 1.987-2(d)(2) at the historic rate of $1 = ¥110); and liabilities of ¥10,000.

(*3*) Under paragraphs (e)(1)(i) and (ii) of this section, U.S. Corp will translate these items as follows. The ¥120,000 is a marked asset and the ¥10,000 liability is a marked liability. These items are translated into dollars on December 31, year 1, using the spot rate on December 31, year 1, of $1 = ¥120. The raw land is a historic asset and is translated into dollars under paragraph (e)(1)(ii) of this section at the historic rate, which under § 1.987-1(c)(3)(i)(A) is the yearly average exchange rate of $1 = ¥110 applicable to the year the land was transferred to the QBU.

(*4*) The OFCNV of Japan Branch on December 31, year 1, in dollars is $1,416.67. The determination of the OFCNV of Japan Branch on December 31, year 1, is shown below in dollars together with the corresponding amounts in yen.

TABLE 1 TO PARAGRAPH (g)(1)(ii)(A)(*4*)—OFCNV—END OF YEAR 1

	Amount in ¥	Translation rate	Amount in $
Assets			
Yen	120,000	$1 = ¥120 (spot rate-12/31/year 1)	$1,000.00
Land	55,000	$1 = ¥110 (historic rate-yearly average rate-year 1)	500.00
Total assets	175,000		1,500.00
Liabilities			
Bank loan	10,000	$1 = ¥120 (spot rate-12/31/year 1)	83.33
Total liabilities	10,000		83.33
Year 1 ending net value	165,000		1,416.67

(*5*) Under paragraph (d)(1) of this section, the change in OFCNV of Japan Branch for year 1 is equal to the OFCNV of the branch determined in dollars on December 31, year 1, (which is $1,416.67) less the OFCNV of the branch determined in dollars on the last day of the preceding taxable year. Because this is the first taxable year of Japan

Branch, the OFCNV of Japan Branch determined in dollars on the last day of the preceding taxable year is zero under paragraph (d)(1)(iii) of this section. Accordingly, the change in OFCNV of Japan Branch for year 1 is $1,416.67.

(B) ***Step 2 (no adjustment).*** No adjustment is made under paragraph (d)(2) of this section (step 2) because no assets were transferred by Japan Branch to U.S. Corp during the taxable year.

(C) ***Step 3.*** On July 1, year 1, U.S. Corp transferred to Japan Branch ¥100,000 with a basis of $1,000.00 and raw land with a basis of $500.00 (equal to ¥55,000, translated under § 1.987-2(d)(2) at the historic rate of $1 = ¥110). The total amount of assets transferred from U.S. Corp to Japan Branch in dollars is $1,500, and the total amount of the transfer in yen is ¥155,000. Therefore, under paragraph (d)(3) of this section (step 3), the amount determined in previous steps is reduced by $1,500.00, from $1,416.67 to negative $83.33.

(D) ***Steps 4 and 5 (no adjustment).*** No adjustment is made under paragraphs (d)(4) and (5) of this section (steps 4 and 5) because no liabilities were transferred by U.S. Corp to Japan Branch or by Japan Branch to U.S. Corp during the taxable year.

(E) ***Step 6.*** Under paragraph (d)(6) of this section (step 6), the amount determined in previous steps is decreased by the section 987 taxable income of Japan Branch of $90.91, from negative $83.33 to negative $174.24.

(F) ***Steps 7 through 9 (no adjustment).*** No adjustment is made under paragraphs (d)(7) through (9) of this section (steps 7 through 9) because all of Japan Branch's items of income or deduction for the taxable year impact the basis of Japan Branch's assets or the amount of its liabilities and are taken into account in computing taxable income.

(G) ***Step 10 (no adjustment)*** —

(*1*) ***Calculation of residual increase or decrease to net assets.*** Under paragraph (d)(10)(ii) of this section, the residual increase (or decrease) to net assets is the positive (or negative) amount, if any, that would be determined under paragraphs (d)(1) through (9) of this section (steps 1 through 9) in the functional currency of the section 987 QBU if such amounts were determined in the functional currency of the section 987 QBU. In year 1, the relevant steps that must be applied in the functional currency of Japan Branch (the yen) are paragraphs (d)(1), (3), and (6) of this section (steps 1, 3, and 6). For purposes of applying paragraph (d)(1) of this section (step 1) in yen, the change in the net value of Japan Branch is ¥165,000. *See* paragraph (g)(1)(ii)(A)(*4*) of this section. For purposes of applying paragraph (d)(3) of this section (step 3) in yen, the amount of assets transferred from U.S. Corp to Japan Branch is ¥155,000. *See* paragraph (g)(1)(ii)(C) of this section. For purposes of applying paragraph (d)(6) of

this section (step 6) in yen, Japan Branch earned ¥10,000 of net income in year 1. The application of these steps results in no residual increase or decrease to the adjusted balance sheet, as shown below:

TABLE 2 TO PARAGRAPH (g)(1)(ii)(G)(*1*)—APPLICATION OF RELEVANT STEPS IN YEN

Change in net value in yen (step 1)	¥165,000
Subtract amount determined in yen under step 3 (transfers from owner to section 987 QBU)	(¥155,000)
Subtract amount determined in yen under step 6 (section 987 taxable income or loss)	(¥10,000)
Residual increase or decrease to the adjusted balance sheet	¥0

(*2*) ***No residual increase or decrease to the adjusted balance sheet.*** As explained in paragraph (g)(1)(ii)(G)(*1*) of this section, there is no residual increase or decrease to the adjusted balance sheet of Japan Branch in year 1. Therefore, no adjustment is made under paragraph (d)(10) of this section (step 10). Accordingly, the unrecognized section 987 loss of Japan Branch for year 1 is $174.24.

(2) ***Example 2: Determination of net unrecognized section 987 gain or loss if a current rate election is in effect —***

(i) ***Facts.*** The facts are the same as in paragraph (g)(1) of this section (*Example 1*), except that U.S. Corp makes a current rate election under § 1.987-1(d)(2) for year 1.

(ii) ***Analysis.*** Because a current rate election is in effect for year 1, the unrecognized section 987 gain or loss for year 1 is determined by applying only paragraphs (d)(1) through (5) and (10) of this section (steps 1 through 5 and step 10). The calculations under paragraph (d) of this section are made as follows:

(A) ***Step 1.*** The change in the OFCNV of Japan Branch for year 1 is equal to the OFCNV of Japan Branch determined in dollars on the last day of year 1, less the OFCNV of Japan Branch determined in dollars on the last day of the preceding taxable year.

(*1*) For this purpose, Japan Branch will show the same assets and liabilities on its adjusted balance sheet for December 31, year 1 as are described in paragraph (g)(1)(ii)(A)(*2*) of this section (*Example 1*), but the land is treated as a marked asset as a result of the current rate election. The adjusted balance sheet reflects cash of ¥120,000, raw land with a basis of ¥50,000 ($500 translated under § 1.987-2(d)(1) at the July 1, year 1 spot rate of $1 = ¥100), and liabilities of ¥10,000.

(*2*) Under paragraph (e)(2)(ii) of this section, because a current rate election is in effect, the OFCNV of Japan Branch at the end of year 1 is equal to the QBU net value, translated into U.S. dollars at the applicable spot rate on the last day of the taxable

year. The QBU net value of Japan Branch at the end of year 1 is ¥160,000, as shown below. The OFCNV of Japan Branch is $1,333.33, which is equal to the QBU net value of ¥160,000, translated at the applicable spot rate on December 31, year 1 of $1 = ¥120.

TABLE 3 TO PARAGRAPH (g)(2)(ii)(A)(2)—QBU NET VALUE—YEAR 1

	Amount in ¥
Assets:	
Yen	120,000
Land	50,000
Total assets	170,000
Liabilities:	
Bank loan	10,000
Total liabilities	10,000
Year 1 QBU net value	160,000

(3) Under paragraph (d)(1) of this section, the change in OFCNV of Japan Branch for year 1 is equal to the OFCNV of the branch determined in dollars on December 31, year 1, (which is $1,333.33) less the OFCNV of the branch determined in dollars on the last day of the preceding taxable year. Because this is the first taxable year of Japan Branch, the OFCNV of Japan Branch determined in dollars on the last day of the preceding taxable year is zero under paragraph (d)(1)(iii) of this section. Accordingly, the change in OFCNV of Japan Branch for year 1 is $1,333.33.

(B) ***Step 2 (no adjustment).*** No adjustment is made under paragraph (d)(2) of this section (step 2) because no assets were transferred by Japan Branch to U.S. Corp during the taxable year.

(C) ***Step 3.*** On July 1, year 1, U.S. Corp transferred to Japan Branch ¥100,000 with a basis of $1,000.00 and raw land with a basis of $500.00 (equal to ¥50,000, translated under § 1.987-2(d)(1) at the spot rate on July 31, year 1 of $1 = ¥100). The total amount of assets transferred in dollars is $1,500.00, and the amount of assets transferred in yen is ¥150,000. Therefore, under paragraph (d)(3) of this section (step 3), the amount determined in previous steps is reduced by $1,500, from $1,333.33 to negative $166.67.

(D) ***Steps 4 and 5 (no adjustment***). No adjustment is made under paragraphs (d)(4) and (5) of this section (steps 4 and 5) because no liabilities were transferred by U.S. Corp to Japan Branch or by Japan Branch to U.S. Corp during the taxable year.

(E) ***Steps 6 through 9 do not apply.*** Under paragraph (d) of this section, paragraphs (d)(6) through (9) of this section (steps 6 through 9) do not apply because a current rate election is in effect.

(F) ***Step 10*** —

(*1*) ***Application of relevant steps in Japan Branch's functional currency.*** Under paragraph (d)(10)(iii) of this section, because a current rate election is in effect, the residual increase or decrease to net assets is determined by applying paragraphs (d)(1) through (5) of this section (steps 1 through 5) in the functional currency of the section 987 QBU. The relevant steps that must be applied under paragraph (d)(10) of this section in the functional currency of Japan Branch are paragraphs (d)(1) and (3) of this section (steps 1 and 3). Under paragraph (d)(10)(ii)(B) of this section, step 1 is applied by reference to Japan Branch's QBU net value. *See* paragraphs (g)(2)(ii)(A) and (C) of this section for amounts determined in yen. The residual increase to net assets is determined as follows:

TABLE 4 TO PARAGRAPH (g)(2)(ii)(F)(*1*)—APPLICATION OF RELEVANT STEPS IN YEN

Step 1: Change in net value	¥160,000
Step 3: Subtract amount of transfers from owner to section 987 QBU	(¥150,000)
Residual increase or decrease to the adjusted balance sheet	¥10,000

(*2*) ***Residual increase or decrease to net assets.*** As explained in paragraph (g)(2)(ii)(F)(*1*) of this section, the residual increase to Japan Branch's net assets in year 1 is ¥10,000. This amount, translated at the yearly average exchange rate of $1 = ¥110, equals $90.91. Therefore, the amount determined in previous steps is reduced by $90.91, from negative $166.67 to negative $257.58. Accordingly, the unrecognized section 987 loss of Japan Branch for year 1 is $257.58.

(iii) ***Alternative computation of QBU net value.*** Alternatively, for purposes of applying steps 1 and 10 (paragraphs (d)(1) and (10) of this section), U.S. Corp can determine QBU net value using the following steps under paragraph (e)(2)(iii) of this section.

(A) ***Step 1: Determine QBU net value at the end of the preceding taxable year.*** Because year 1 is the first taxable year in which Japan Branch exists, the QBU net value at the end of the preceding taxable year is zero.

(B) ***Step 2: Adjust for transfers between the section 987 QBU and its owner.*** During year 1, U.S. Corp transferred assets to Japan Branch with an aggregate basis of ¥150,000, as described in paragraph (g)(2)(ii)(C) of this section. Therefore, the amount determined in step 1 is increased from zero to ¥150,000.

(C) ***Step 3: Adjust for income or loss of the section 987 QBU.*** During year 1, Japan Branch earned ¥10,000 of net income. Therefore, the amount determined in step 2 is increased from ¥150,000 to ¥160,000.

(D) ***QBU net value.*** Japan Branch's QBU net value at the end of the preceding taxable year is zero. This amount is increased by the transfer from U.S. Corp of ¥150,000 and by Japan Branch's taxable income of ¥10,000. Japan Branch did not have any tax-exempt income or non-deductible expenses in year 1. Accordingly, Japan Branch's QBU net value at the end of year 1 is ¥160,000.

(3) *Example 3: Determination of net unrecognized section 987 gain or loss when a current rate election is revoked* —

(i) *Facts* —

(A) ***Background.*** The facts in year 1 are the same as in paragraph (g)(2) of this section (*Example 2*). In year 9, a current rate election remains in effect, U.S. Corp has net unrecognized section 987 loss of $1,000 with respect to Japan Branch, and Japan Branch does not make a remittance. On December 31, year 9, the adjusted balance sheet of Japan Branch shows the following assets and liabilities: cash of ¥120,000; raw land with a basis of ¥50,000; and liabilities of ¥10,000. Effective for year 10, U.S. Corp revokes the current rate election.

(B) ***Operations in year 10.*** In year 10, Japan Branch earns ¥12,000 for providing services and incurs ¥2,000 of related expenses. Japan Branch thus earns ¥10,000 of net income in year 10. On December 31, year 10, the adjusted balance sheet of Japan Branch shows the following assets and liabilities: cash of ¥130,000; raw land with a basis of ¥50,000; and liabilities of ¥10,000. Assume that the spot rate on December 31, year 9, is $1 = ¥120; the spot rate on December 31, year 10, is $1 = ¥130; and the yearly average exchange rate for year 10 is $1 = ¥125. Thus, the ¥12,000 of services revenue when properly translated under § 1.987-3(c)(1) at the yearly average exchange rate equals $96.00 (¥12,000 × ($1/¥125)) = $96.00). The ¥2,000 of expenses translated at the same yearly average exchange rate equals $16.00 (¥2,000 × ($1/¥125) = $16.00). Thus, Japan Branch's net income translated into dollars equals $80. There are no transfers of assets or liabilities between U.S. Corp and Japan Branch in year 10.

(ii) *Analysis* —

(A) ***Determination of OFCNV for year 9.*** Under paragraph (d)(1)(iv) of this section, the OFCNV of a section 987 QBU on the last day of the preceding taxable year is determined based on the elections that were (or were not) in effect on the last day of that taxable year. In year 9, a current rate election was in effect. Therefore, in determining the OFCNV of Japan Branch for year 9, all assets and liabilities of Japan Branch (including the land) are treated as marked items. Under paragraph (e)(2)(ii) of this section, because a current rate election was in effect for year 9, the OFCNV of Japan Branch at the end of year 9 is equal to the QBU net value, translated into U.S. dollars at the applicable spot rate on the last day of the taxable year. The QBU net value of Japan Branch at the end of year 9 is ¥160,000, as shown below. The OFCNV of Japan Branch is $1,333.33, which is equal to the QBU net value of ¥160,000, translated at the applicable spot rate on December 31, year 9 of $1 = ¥120.

TABLE 5 TO PARAGRAPH (g)(3)(ii)(A)—QBU NET VALUE—END OF YEAR 9

	Amount in ¥
Assets:	
Yen	120,000

	Amount in ¥
Land	50,000
Total assets	170,000
Liabilities:	
Bank loan	10,000
Total liabilities	10,000
Year 9 ending net value	160,000

(B) ***Determination of OFCNV for year 10.*** In year 10, a current rate election is not in effect. Therefore, in determining the OFCNV of Japan Branch for year 10, the land owned by Japan Branch is treated as a historic item. Under § 1.987-1(c)(3)(i)(E), the historic rate applicable to historic items that were attributable to Japan Branch on the last day of the last taxable year in which a current rate election was in effect (December 31, year 9) generally is equal to the spot rate applicable to that day. Therefore, the historic rate applicable to the land is the spot rate on December 31, year 9. The OFCNV of Japan Branch for year 10 is $1,339.74, determined under paragraph (e) of this section as follows (together with the corresponding amounts in yen):

TABLE 6 TO PARAGRAPH (g)(3)(ii)(B)—OFCNV—END OF YEAR 10

	Amount in ¥	Translation rate	Amount in $
Assets:			
Yen	¥130,000	$1 = ¥130 (spot rate-12/31/year 10)	$1,000.00
Land	50,000	$1 = ¥120 (historic rate-spot rate-12/31/year 9)	416.67
Total assets	180,000		1,416.67
Liabilities:			
Bank loan	10,000	$1 = ¥130 (spot rate-12/31/year 10)	76.92
Total liabilities	10,000		76.92
Year 10 ending net value	170,000		1,339.74

(C) ***Determination of unrecognized section 987 gain or loss for year 10.*** The unrecognized section 987 gain or loss of Japan Branch for year 10 is determined under paragraph (d) of this section as follows:

(1) ***Step 1.*** The change in the OFCNV of Japan Branch for year 10 is equal to the OFCNV of Japan Branch determined in dollars on the last day of year 10, less the OFCNV of Japan Branch determined in dollars on the last day of year 9. Therefore, the change in OFCNV is equal to $6.41 ($1,339.74—$1,333.33).

(2) ***Steps 2 through 5 (no adjustment).*** No adjustment is made under paragraphs (d)(2) through (5) of this section (steps 2 through 5) because no assets or liabilities were transferred by U.S. Corp to Japan Branch or by Japan Branch to U.S. Corp during the taxable year.

(3) ***Step 6.*** Under paragraph (d)(6) of this section (step 6), the amount determined in previous steps is decreased by the section 987 taxable income of Japan Branch of $80.00, from $6.41 to negative $73.59.

(4) ***Steps 7 through 10 (no adjustment).*** No adjustment is made under paragraphs (d)(7) through (10) of this section (steps 7 through 10) because all of Japan Branch's items of income or deduction for the taxable year impact the basis of Japan Branch's assets or the amount of its liabilities and are taken into account in computing taxable income. In addition, Japan Branch does not have a residual increase or decrease to net assets (because the change in net value of ¥10,000 is equal to the amount of Japan Branch's net income in year 10). Accordingly, the unrecognized section 987 loss of Japan Branch for year 10 is negative $73.59.

(D) ***Determination of net unrecognized section 987 gain or loss.*** In year 10, Japan Branch has net accumulated section 987 loss of $1,000. Because U.S. Corp revoked the current rate election for year 10, the net accumulated section 987 loss of $1,000 becomes suspended section 987 loss under § 1.987-11(d)(2) and Japan Branch's net accumulated section 987 loss is reduced to zero. Therefore, in year 10, Japan Branch's net unrecognized section 987 loss is equal to $73.59, its unrecognized section 987 loss for year 10.

[T.D. 10016, 89 FR 100165, Dec. 11, 2024]

§ 1.987-5 Recognition of section 987 gain or loss.

(a) ***Recognition of section 987 gain or loss by the owner of a section 987 QBU.*** The taxable income of an owner of a section 987 QBU includes the owner's section 987 gain or loss recognized with respect to the section 987 QBU for the taxable year. Except as otherwise provided in the section 987 regulations (including § 1.987-11(c), § 1.987-12(b) or (e), or § 1.987-13(h) or (k)), for any taxable year the owner's section 987 gain or loss recognized with respect to a section 987 QBU is equal to:

(1) The owner's net unrecognized section 987 gain or loss with respect to the section 987 QBU determined under § 1.987-4 on the last day of such taxable year (or, if earlier, on the day the section 987 QBU is terminated under § 1.987-8); multiplied by

(2) The owner's remittance proportion for the taxable year, as determined under paragraph (b) of this section.

(b) ***Remittance proportion —***

(1) ***In general.*** Except as provided in paragraph (b)(2) of this section, the owner's remittance proportion with respect to a section 987 QBU for a taxable year is equal to:

(i) The amount of the remittance, as determined under paragraph (c) of this section, to the owner from the section 987 QBU for such taxable year; divided by

(ii) The sum of:

(A) The aggregate adjusted basis of the gross assets that are attributable to the section 987 QBU as of the end of the taxable year, determined in the functional currency of the section 987 QBU; and

(B) The amount of the remittance, as determined under paragraph (c) of this section.

(2) ***Annual recognition election.*** A taxpayer may elect to recognize its net unrecognized section 987 gain or loss with respect to the section 987 QBU on an annual basis (*annual recognition election*). For any taxable year in which the annual recognition election is in effect, the owner's remittance proportion with respect to a section 987 QBU is one. *See* paragraph (g) of this section for an example illustrating this rule. Additionally, for any taxable year of an original deferral QBU owner in which an annual recognition election is in effect, the remittance proportion with respect to any successor deferral QBU is one.

(c) ***Remittance*** —

(1) ***Definition.*** A remittance is determined in the section 987 QBU's functional currency and equals the excess, if any, of:

(i) The aggregate of all amounts transferred from the section 987 QBU to the owner during the taxable year, as determined in paragraph (d) of this section; over

(ii) The aggregate of all amounts transferred from the owner to the section 987 QBU during the taxable year, as determined in paragraph (e) of this section.

(2) ***Alternative calculation.*** The amount of a remittance described in paragraph (c)(1) of this section may alternatively be determined under the following steps (each applied in the functional currency of the section 987 QBU). If the amount determined under this paragraph (c)(2) is negative, the amount of the remittance is zero.

(i) ***Step 1: Determine the change in QBU net value.*** The change in QBU net value is equal to the QBU net value on the date provided in paragraph (c)(3) of this section, less the QBU net value on the last day of the preceding taxable year. In the first taxable year in which the section 987 QBU exists, the QBU net value on the last day of the preceding taxable year is zero.

(ii) ***Step 2: Adjust the amount determined in step 1 for income or loss of the section 987 QBU.*** The amount determined in paragraph (c)(2)(i) of this section is reduced (including below zero) by items of income and gain attributable to the section 987 QBU (including tax-exempt income described in § 1.987-4(d)(8)) for the taxable year and increased by items of deduction and loss attributable to the section 987 QBU (including non-deductible expenses described in § 1.987-4(d)(7)) for the taxable year. However, no adjustment is made under the preceding sentence for any item of income, gain, deduction, or loss described in § 1.987-4(d)(9) (items that do not impact the adjusted balance sheet).

(iii) ***Step 3: Multiply the amount determined in step 2 by negative one.*** The amount of a remittance is equal to the amount determined in paragraph (c)(2)(ii) of this section multiplied by negative one.

(3) ***Day when a remittance is determined.*** An owner's remittance from a section 987 QBU for a taxable year is determined on the last day of the taxable year (or, if earlier, on the day of the taxable year when the section 987 QBU is terminated under § 1.987-8).

(4) ***Termination.*** A termination of a section 987 QBU as determined under § 1.987-8 is treated as a remittance of all the gross assets of the section 987 QBU to the owner on the date of such termination. *See* § 1.987-8(e). Accordingly, for purposes of paragraph (b) of this section, the remittance proportion in the case of a termination is one.

(d) ***Aggregate of all amounts transferred from the section 987 QBU to the owner for the taxable year.*** For purposes of paragraph (c)(1)(i) of this section, the aggregate of all amounts transferred from the section 987 QBU to the owner for the taxable year is the aggregate amount of functional currency and the aggregate adjusted basis of the other assets transferred (after taking into account § 1.988-1(a)(10)), determined in the section 987 QBU's functional currency. Solely for this purpose, the amount of liabilities transferred from the owner to the section 987 QBU (determined in the section 987 QBU's functional currency under § 1.987-2(d) after taking into account § 1.988-1(a)(10)) is treated as a transfer of assets from the section 987 QBU to the owner with an adjusted basis equal to the amount of such liabilities.

(e) ***Aggregate of all amounts transferred from the owner to the section 987 QBU for the taxable year.*** For purposes of paragraph (c)(1)(ii) of this section, the aggregate of all amounts transferred from the owner to the section 987 QBU for the taxable year is the aggregate amount of functional currency and the aggregate adjusted basis of the assets transferred (determined in the section 987 QBU's functional currency under § 1.987-2(d) after taking into account § 1.988-1(a)(10)). Solely for this purpose, the amount of liabilities transferred from the section 987 QBU to the owner (determined in the section 987 QBU's functional currency after taking into account § 1.988-1(a)(10)) is treated as a transfer of assets from the owner to the section 987 QBU with an adjusted basis equal to the amount of such liabilities.

(f) ***Determination of owner's adjusted basis in transferred assets and amount of transferred liabilities*** —

(1) ***In general.*** The owner's adjusted basis in an asset or the amount of a liability received in a transfer from a section 987 QBU (whether or not such transfer is made in connection with a remittance) is determined in the owner's functional currency under the rules prescribed in paragraphs (f)(2) and (3) of this section.

(2) ***Marked items.*** The basis of a marked asset or amount of a marked liability is the amount determined by translating the section 987 QBU's functional currency basis of the asset or amount of the liability, after taking into account § 1.988-1(a)(10), into the owner's functional currency at the spot rate applicable to the date of transfer.

(3) ***Historic items.*** The basis of a historic asset or amount of a historic liability is the amount determined by translating the section 987 QBU's functional currency basis of the asset or amount of the liability into the owner's functional currency at the historic rate for the asset or liability.

(g) ***Example—Calculation of section 987 gain or loss recognized.*** The following example illustrates the calculation of section 987 gain or loss under this section. For purposes of this example, except as otherwise indicated, assume that no section 987 elections are in effect. Depreciation is ignored for purposes of this example.

(1) ***Facts*** —

(i) ***In general.*** U.S. Corp, a domestic corporation with the dollar as its functional currency, operates in the United Kingdom through Business A, a section 987 QBU with the pound as its functional currency. The net unrecognized section 987 gain for Business A as determined under § 1.987-4 as of the last day of year 2 is $80.

(ii) ***Year 1 balance sheet.*** At the end of year 1, the following assets are attributable to Business A: cash of £3,350; a computer with an adjusted basis of £500; and a machine with an adjusted basis of £500. Thus, the aggregate basis of Business A's assets is £4,350. Business A has no liabilities.

(iii) ***Transfers and income in year 2.*** During year 2, Business A earned income of £1,500. In addition, the following transfers took place between U.S. Corp and Business A in year 2. On January 5, year 2, U.S. Corp transferred to Business A £300 (acquired by U.S. Corp immediately before the transfer). On March 5, year 2, Business A transferred a machine (with an adjusted basis of £500) to U.S. Corp. On November 1, year 2, Business A transferred £2,300 to U.S. Corp. On December 7, year 2, U.S. Corp transferred a truck to Business A. The adjusted basis of the truck, when properly translated into pounds under § 1.987-2(d), is £2,000.

(iv) ***Year 2 balance sheet.*** At the end of year 2, the following assets are attributable to Business A: cash of £2,850, a computer with a pound adjusted basis of £500, and a truck with a pound adjusted basis of £2,000. Thus, the aggregate basis of Business A's assets is £5,350. Business A has no liabilities.

(2) ***Analysis.*** U.S. Corp's section 987 gain with respect to Business A is determined as follows:

(i) ***Computation of amount of remittance.*** Under paragraphs (c)(1) and (2) of this section, U.S. Corp must determine the amount of the remittance for year 2 in the QBU's functional currency (pounds) on the last day of year 2. The amount of the remittance for year 2 is £500, determined as follows:

TABLE 1 TO PARAGRAPH (g)(2)(i)

TRANSFERS FROM BUSINESS A TO U.S. CORP IN POUNDS	
Machine	£500
Pounds	*£2,300*
Aggregate transfers from Business A to U.S. Corp	£2,800
TRANSFERS FROM U.S. CORP TO BUSINESS A IN POUNDS	
Truck	£2,000
Pounds	*£300*
Aggregate transfers from U.S. Corp to Business A	£2,300
COMPUTATION OF AMOUNT OF REMITTANCE:	
Aggregate transfers from Business A to U.S. Corp	£2,800
Less: aggregate transfers from U.S. Corp to Business A	*(£2,300)*

Total remittance	£500

(ii) ***Alternative computation of remittance amount.*** Under paragraph (c)(2) of this section, U.S. Corp can compute the amount of the remittance for year 2 using the following steps.

(A) ***Step 1: Change in QBU net value.*** The change in Business A's QBU net value is equal to £1,000 (£5,350—£4,350).

(B) ***Step 2: Adjustment for income or loss.*** The amount determined in step 1 (£1,000) is reduced by Business A's income for year 2 of £1,500, to negative £500.

(C) ***Step 3: Multiply by negative one.*** The amount determined in step 2 (negative £500) is multiplied by negative one. The remittance for year 2 is equal to £500.

(iii) ***Computation of section 987 QBU gross assets plus remittance.*** Under paragraph (b)(1)(ii) of this section, Business A must determine the aggregate basis of its gross assets and must increase this amount by the amount of the remittance.

TABLE 2 TO PARAGRAPH (g)(2)(iii)

Computer	£500
Pounds	£2,850
Truck	*£2,000*
Aggregate gross assets	£5,350
Remittance	£500
Aggregate basis of Business A's gross assets at end of year 2, increased by amount of remittance	£5,850

(iv) ***Computation of remittance proportion.*** Under paragraph (b) of this section, Business A must compute the remittance proportion by dividing the £500 remittance amount by the £5,850 sum of the aggregate basis of Business A's gross assets and the amount of the remittance. The resulting remittance proportion is 0.085.

(v) ***Computation of section 987 gain or loss.*** The amount of U.S. Corp's section 987 gain or loss that is recognized with respect to Business A is determined under paragraph (a) of this section by multiplying the 0.085 remittance proportion by the $80 of net unrecognized section 987 gain. U.S. Corp's resulting recognized section 987 gain for year 2 is $6.80.

(3) ***Annual recognition election.*** If an annual recognition election under paragraph (b)(2) of this section were in effect for year 2, U.S. Corp's remittance proportion would be one. Accordingly, U.S. Corp would recognize all $80 of the net unrecognized section 987 gain with respect to Business A.

[T.D. 10016, 89 FR 100165, Dec. 11, 2024]

§ 1.987-6 Character and source of section 987 gain or loss.

(a) ***Ordinary income or loss.*** Section 987 gain or loss is ordinary income or loss for Federal income tax purposes.

(b) ***Character and source of section 987 gain or loss.*** With respect to each section 987 QBU, the character and source of section 987 gain or loss is determined under this paragraph (b) for all purposes of the Internal Revenue Code, including sections 904(d), 907, and 954.

(1) ***Timing of character and source determination.*** The character and source of section 987 gain or loss is determined based on the initial assignment pursuant to paragraph (b)(2)(i) of this section and may be reassigned in the year in which the section 987 gain or loss is recognized pursuant to paragraph (b)(2)(ii) of this section. The initial assignment is made in the earliest of the taxable years described in paragraphs (b)(1)(i) through (iv) of this section.

(i) The taxable year in which net unrecognized section 987 gain or loss is recognized.

(ii) The taxable year in which net unrecognized section 987 loss or pretransition loss becomes suspended section 987 loss.

(iii) The taxable year in which net unrecognized section 987 gain or loss becomes deferred section 987 gain or loss.

(iv) In the case of pretransition gain or loss that is recognized ratably over the transition period pursuant to the election under § 1.987-10(e)(5)(ii), the taxable year that includes the transition date.

(2) ***Method for determining the character and source of section 987 gain or loss —***

(i) ***Initial assignment —***

(A) ***In general.*** In the taxable year of the initial assignment, determined under paragraph (b)(1) of this section, the owner assigns gross section 987 gain or loss to the statutory and residual groupings in the same proportions as the proportions in which the tax book value of the assets of the section 987 QBU are assigned to the groupings under the asset method in §§ 1.861-9(g) and 1.861-9T(g), as modified by this paragraph (b)(2)(i). For purposes of applying the asset method, the owner takes into account only the assets that are attributable to the section 987 QBU under § 1.987-2(b). *See* § 1.987-11(e) and (f) (grouping of section 987 gain and loss and applying the loss-to-the-extent-of-gain rule on basis of the initial assignment of section 987 gain and loss under this paragraph (b)(2)(i)).

(B) ***Special rules for applying the asset method to assign section 987 gain or loss.*** For purposes of assigning gross section 987 gain or loss to the statutory and residual groupings under paragraph (b)(2)(i)(A) of this section, the proportions in which the tax book value of the assets of the section 987 QBU are assigned to the groupings described in paragraph (b)(2)(i)(A) of this section are determined without regard to section 987 gain or loss. Further, the section 987 gain or loss is assigned after any reattribution of gross income required under § 1.904-4(f)(2)(vi) or § 1.951A-2(c)(7)(ii)(B)(2) (or the principles thereof, as applicable), but before the allocation and apportionment of expenses or the application of provisions that are based on a net income computation, such as the high-tax exception to passive category income in § 1.904-4(c), the high-tax exception to foreign base company income in § 1.954-1(d), and the high-tax exclusion from tested income in § 1.951A-2(c)(7).

(C) ***Election to treat section 987 gain or loss that is assigned to subpart F income groups relating to foreign personal holding company income as attributable to section 988 transactions —***

(*1*) ***In general.*** If an election is made under this paragraph (b)(2)(i)(C)(*1*), section 987 gain or loss assigned under paragraphs (b)(2)(i)(A) and (B) of this section to any grouping of passive foreign personal holding company income, as described in § 1.960-1(d)(2)(ii)(B)(2)(i), is treated as foreign currency gain of the owner attributable to section 988 transactions not directly related to the business needs of the controlled foreign corporation, or as loss allocated and apportioned to such foreign currency gain. *See* § 1.987-1(g) for rules that apply to section 987 elections.

(*2*) ***Coordination with § 1.954-2(g).*** The rules of § 1.954-2(g)(2), (3) and (4) apply without regard to any section 987 gain treated as gain from section 988 transactions, or loss allocated and apportioned to such gain, by reason of an election under paragraph (b)(2)(i)(C)(*1*) of this section.

(D) ***Section 987 gain or loss assigned to tentative tested income rather than tested income —***

(*1*) ***In general.*** In the case of a controlled foreign corporation, section 987 gain or loss is initially assigned to tentative tested income within a section 904 category (a *tentative tested income group*) under paragraphs (b)(2)(i)(A) and (B) of this section as though the election described in § 1.951A-2(c)(7)(viii) is in effect for the taxable year. As a result, section 987 gain or loss that would have initially been characterized as tested income if no election under § 1.951A-2(c)(7)(viii) was in effect is initially characterized as tentative tested income.

(*2*) ***For purposes of the GILTI high-tax exclusion, section 987 gain or loss is not attributable to any tested unit.*** In the case of a controlled foreign corporation, the initial assignment of section 987 gain or loss is made as though the section 987 gain or loss was not attributable to any tested unit for purposes of applying § 1.951A-2(c)(7) (GILTI high-tax exclusion). *See* paragraph (b)(2)(iii) of this section (applying the GILTI high-tax exclusion by treating all section 987 gain or loss in the same tentative tested income group as composing a single tentative tested income item).

(ii) ***Reassignment of section 987 gain or loss.*** In the taxable year in which section 987 gain or loss is recognized (determined by taking into account §§ 1.987-5, 1.987-11(e), 1.987-12(c), and 1.987-13(b) through (d), if applicable), the section 987 gain or loss is sourced and characterized based on the initial assignment in paragraph (b)(2)(i) of this section, but with appropriate changes to account for the application of provisions that apply to the section 987 gain or loss based on a net income computation such as the high-tax exception to passive category income in § 1.904-4(c), the high-tax exception to foreign base company income in § 1.954-1(d), and the high-tax exclusion to tested income in § 1.951A-2(c)(7). Thus, for example, if an election under § 1.951A-2(c)(7)(viii) is in effect for the taxable year, section 987 gain or loss initially assigned to a tentative tested income group will be reassigned to a tested income group (as defined in § 1.960-1(d)(2)(ii)(C)) or to the residual income group (as defined in § 1.960-1(d)(2)(ii)(D)), as applicable, depending on whether the item of income (as described in paragraph (b)(2)(iii) of this section) is subject to a high rate of tax (as determined under § 1.951A-2(c)(7)(vi)). If no election is made under § 1.951A-2(c)(7)(viii) for a taxable year, all of the section 987 gain or

loss that is recognized in the taxable year that was initially assigned to tentative tested income under paragraph (b)(2)(i) of this section, is reassigned to the appropriate tested income group (as defined in § 1.960-1(d)(2)(ii)(C)).

(iii) ***Special rule for the application of the GILTI high-tax exclusion to section 987 gain or loss.*** Section 987 gain in a tentative tested income group that is recognized by a controlled foreign corporation in a taxable year comprises a single tentative gross tested income item (as if it were allocable to its own tested unit) within the meaning of § 1.951A-2(c)(7)(ii), and section 987 loss in a tentative tested income group that is recognized by a controlled foreign corporation in the taxable year is allocated and apportioned to the corresponding tentative gross tested income item for purposes of calculating the tentative tested income item within the meaning of § 1.951A-2(c)(7)(iii). Thus, for purposes of applying the high-tax exclusion in § 1.951A-2(c)(7), all of the section 987 gain and loss in a tentative tested income group that is recognized by the controlled foreign corporation in a taxable year is a single tentative tested income item.

(3) ***Allocation and apportionment of foreign income tax to section 987 items under section 861.*** For purposes of applying the definition of a corresponding U.S. item in § 1.861-20(b), an item of foreign gross income and an item of section 987 gain or loss are treated as arising from the same transaction or other realization event only if the requirements in both paragraphs (b)(3)(i) and (ii) of this section are satisfied.

(i) ***The foreign gross income is an item of foreign currency gain or loss.*** The owner of the section 987 QBU, original deferral QBU owner, or original suspended loss QBU owner includes the foreign gross income under the laws of the foreign country in which it is a tax resident because under that foreign law it is required to recognize foreign currency gain or loss with respect to its interest in the section 987 QBU or with respect to a successor deferral QBU or successor suspended loss QBU.

(ii) ***The same event or events give rise to both the foreign gross income and the section 987 gain or loss.*** The remittance under § 1.987-5(c) that gave rise to the item of section 987 gain or loss comprises one or more of the events that gave rise to the item of foreign gross income described in paragraph (b)(3)(i) of this section.

(c) ***Examples.*** The following examples illustrate the application of this section. For purposes of the examples, except as otherwise indicated, assume that no section 987 elections are in effect.

(1) ***Example 1: Initial assignment and reassignment of section 987 gain or loss*** —

(i) ***Facts.*** CFC is a controlled foreign corporation with the Swiss franc (*Sf*) as its functional currency. CFC is the owner of Business A, a section 987 QBU that has the euro as its functional currency. For year 1, CFC does not have an election described in § 1.951A-2(c)(7)(viii) in effect but is subject to an election under paragraph (b)(2)(i)(C) of this section. CFC recognizes section 987 gain of Sf10,000 under § 1.987-5. Business A has average total assets of Sf1,000,000 in year 1, which generate income (other than section 987 gain) as follows: Sf750,000 of assets that produce gross income in the statutory grouping for foreign source general category tested income under sections 904(d)(1)(A) and 951A; and Sf250,000 of assets that produce foreign source passive gross income in one of the groupings described in §§ 1.960-1(d)(2)(ii)(B)(*2*)(*i*) and 1.954-1(c)(1)(iii)(B) (subpart F income groups relating to passive foreign personal holding company income).

(ii) ***Analysis.*** Under paragraphs (b)(2)(i)(A), (B), and (D) of this section, Sf7,500 (Sf750,000/Sf1,000,000 x Sf10,000) of the section 987 gain is initially assigned to the statutory grouping of foreign source general category tentative tested income. Because an election under § 1.951A-2(c)(7)(viii) is not in effect for the taxable year in which the section 987 gain is recognized, the section 987 gain is reassigned under paragraph (b)(2)(ii) of this section to foreign source general category tested income. The remaining Sf2,500 (Sf250,000/Sf1,000,000 × Sf10,000) is characterized under paragraphs (b)(2)(i)(A) and (B) of this section by reference to assets that give rise to foreign source passive gross income in one of the groupings described in § 1.960-1(d)(2)(ii)(B)(*2*)(*i*) (subpart F income groups relating to passive foreign personal holding company income) and is therefore generally treated under the election in paragraph (b)(2)(i)(C) of this section as foreign source foreign currency gain of CFC attributable to section 988 transactions not directly related to the business needs of the controlled foreign corporation. All of the section 987 gain is treated as ordinary income under paragraph (a) of this section.

(2) ***Example 2: Effect of GILTI high-tax exclusion—***

(i) ***Facts.*** The facts are the same as in paragraph (c)(1) of this section (*Example 1*) except that CFC does have an election described in § 1.951A-2(c)(7)(viii) in effect. Without regard to the section 987 gain or loss, CFC has two tentative gross tested income items: Sf100,000 of gross tentative tested income attributable to a CFC tested unit (the CFC item) and Sf5,000,000 of gross tentative tested income attributable to a Business A tested unit (the Business A item). CFC accrues Sf1,010,000 of current year taxes and has no other current year deductions. CFC is not required by its country of tax residence to include in foreign gross income foreign currency gain or loss with respect to its interest in a foreign QBU. For purposes of § 1.951A-2(c)(7)(iii)(A), Sf1,000,000 of current year tax is allocated and apportioned to the Business A item and Sf10,000 is allocated and apportioned to the CFC item. At all relevant times Sf1 = $1.

(ii) ***Analysis.*** As in paragraph (c)(1)(ii) of this section (*Example 1*), Sf7,500 of section 987 gain is initially assigned to the statutory grouping of foreign source general category tentative tested income. Under paragraph (b)(2)(iii) of this section, the section 987 gain comprises a single tentative gross tested income item of the CFC (the section 987 item). Therefore, the CFC has three tentative gross tested income items: the section 987 item, the CFC item, and the Business A item. No tax is allocated and apportioned to the section 987 item. *See* paragraph (b)(3) of this section. Applying § 1.951A-2(c)(7)(vi), the effective tax rate of the section 987 item is 0% ($0/$7,500), the effective tax rate of the CFC item is 10% ($10,000/$100,000), and the effective tax rate of the Business A item is 20% ($1,000,000/$5,000,000). An election under § 1.951A-2(c)(7)(viii) is in effect; therefore, the section 987 gain is reassigned based on the application of § 1.951A-2(c)(7). Because the section 987 item was not subject to an effective tax rate of greater than 90 percent of the maximum rate of tax specified in section 11, it is reassigned under paragraph (b)(2) of this section to foreign source general category tested income. The remaining Sf2,500 of section 987 gain is foreign source foreign currency gain of CFC attributable to section 988 transactions not directly related to the business needs of the controlled foreign corporation for the reasons stated in paragraph (c)(1)(ii) of this section (*Example 1*).

(3) ***Example 3: Section 987 gain or loss treated as attributable to section 988 transactions*** —

(i) ***Facts.*** The facts are the same as in paragraph (c)(1) of this section (*Example 1*) except that CFC recognizes section 987 loss of Sf40,000, Sf5,000 of which is characterized under paragraphs (b)(2)(i)(A) and (B) of this section by reference to assets that give rise to foreign source passive gross income in a separate subpart F income group for non-related party interest income of Business A and Sf5,000 of which is characterized by reference to assets that give rise to foreign source passive gross income in a separate subpart F income group for gains from certain property transactions of Business A not derived from the active conduct of a trade or business. CFC otherwise has Sf12,000 of net foreign currency gain determined under § 1.954-2(g) that is taken into account in determining the excess of foreign currency gain over foreign currency losses characterized as foreign personal holding company income under section 954(c)(1)(D).

(ii) ***Analysis.*** Under paragraph (b)(2)(i)(C) of this section, the Sf10,000 total section 987 loss characterized by reference to assets that give rise to foreign source passive gross income in one of the groupings described in §§ 1.960-1(d)(2)(ii)(B)(*2*)(*i*) and 1.954-1(c)(1)(iii)(B) (subpart F income groups relating to passive foreign personal holding company income) is treated as foreign source foreign currency loss of CFC attributable to section 988 transactions. Accordingly, CFC will aggregate the Sf10,000 section 987 loss with the Sf12,000 net foreign currency gain and will have Sf2,000 of net foreign currency gain characterized as passive foreign personal holding company income under section 954(c)(1)(D).

(4) ***Example 4: Section 987 gain or loss assigned to passive foreign personal holding company income*** —

(i) ***Facts.*** The facts are the same as in paragraph (c)(3) of this section (*Example 3*) except that CFC is not subject to an election under paragraph (b)(2)(i)(C) of this section.

(ii) ***Analysis.*** As the CFC is not subject to an election under paragraph (b)(2)(i)(C) of this section, Sf5,000 of section 987 loss is initially assigned to the statutory grouping for foreign source passive gross income in a separate subpart F income group for non-related party interest income of Business A, and Sf5,000 is initially assigned to the statutory grouping for foreign source passive gross income in a separate subpart F income group for gains from certain property transactions of Business A not derived from the active conduct of a trade or business. The Sf12,000 net foreign currency gain is foreign source passive gross income in a separate subpart F income group for foreign currency gain of CFC attributable to section 988 transactions of CFC. As a result, if the net income in a subpart F income group to which either section 987 loss is assigned is less than zero, that loss will not reduce any other category of subpart F income, including CFC's foreign currency gain from section 988 transactions, except by reason of the earnings and profit limitation in section 952(c)(1). *See* § 1.954-1(c)(1)(ii).

[T.D. 10016, 89 FR 100165, Dec. 11, 2024]

§ 1.987-6T Character and source of section 987 gain or loss (temporary).

(a) through (b) (3) [Reserved] For further guidance, see § 1.987-6(a) through (b)(3).

(4) *Source of section 987 gain or loss with respect to a dollar QBU.* The source of section 987 gain or loss with respect to a dollar QBU (as defined in § 1.987-1T(b)(6)(i)) for which the CFC owner has elected under § 1.987-1T(b)(6)(iii) to apply section 987 is determined by reference to the residence of the CFC owner. This paragraph (b)(4) applies to any CFC that has made the election under § 1.987-1T(b)(6)(iii), including a CFC described in § 1.987-1(b)(1)(ii).

(c) [Reserved] For further guidance, see § 1.987-6(c).

(d) ***Effective/applicability date.*** This section applies to taxable years beginning on or after one year after the first day of the first taxable year following December 7, 2016. Notwithstanding the preceding sentence, if a taxpayer makes an election under § 1.987-11(b), then this section applies to taxable years to which §§ 1.987-1 through 1.987-10 apply as a result of such election.

(e) ***Expiration date.*** The applicability of this section expires on December 6, 2019.

[T.D. 9795, 81 FR 88874, Dec. 8, 2016]

§ 1.987-7 Application of the section 987 regulations to partnerships and S corporations.

(a) ***Overview.*** This section provides rules relating to the application of the section 987 regulations to partnerships and S corporations. Paragraph (b) of this section provides the general rule that the section 987 regulations do not apply to partnerships. Paragraph (c) of this section identifies certain provisions of the section 987 regulations that are applicable to partnerships, subject to certain modifications. Paragraph (d) of this section provides special rules relating to suspended section 987 loss. Paragraph (e) of this section provides rules for adjusting a partner's basis in its partnership interest. Paragraph (f) of this section provides that S corporations are treated in the same manner as partnerships for purposes of the section 987 regulations. Paragraph (g) of this section provides examples that illustrate the rules of this section.

(b) ***Section 987 regulations generally do not apply to partnerships.*** Except as otherwise provided in this section, the section 987 regulations do not apply to a partnership, and the section 987 regulations do not apply to an eligible QBU if a partnership is the owner for Federal income tax purposes of the eligible QBU's assets and liabilities. However, a taxpayer must apply sections 987 and 989(a) to partnerships and eligible QBUs of partnerships in a reasonable manner using a method that is applied consistently from year to year with respect to a particular partnership or eligible QBU. In addition, all members of the same controlled group must apply the same method consistently with respect to a particular partnership or eligible QBU.

(c) ***Provisions of the section 987 regulations that apply to partnerships*** —

(1) ***In general*** —

(i) ***Eligible QBU.*** The rules described in paragraph (c)(2) of this section apply to an eligible QBU if a partnership is the owner for Federal income tax purposes of the eligible QBU's assets and liabilities and either—

(A) The partnership (or a partner) treats the eligible QBU as a qualified business unit of the partnership that is subject to section 987 (for example, under an entity approach); or

(B) A partner in the partnership treats all or a portion of the eligible QBU as a qualified business unit of the partner that is subject to section 987 (for example, under an aggregate approach).

(ii) ***Partnership.*** The rules described in paragraph (c)(2) of this section apply to a partnership if a partner in the partnership treats the partnership itself (or an interest in the partnership) as a qualified business unit that is subject to section 987 (for example, under an entity approach).

(2) ***Applicable provisions*** —

(i) ***In general.*** Sections 1.987-6 (character and source of section 987 gain or loss), 1.987-9(d) (information on a dedicated section 987 form), §§ 1.987-11 through 1.987-13 (suspended section 987 loss, deferral of section 987 gain or loss, and suspended section 987 loss upon terminations, respectively), and § 1.987-15 (applicability dates) apply to a QBU described in paragraph (c)(1) of this section, subject to the modifications described in this paragraph (c) and in paragraph (d) of this section.

(ii) ***Annual recognition election.*** An annual recognition election under § 1.987-5(b)(2) applies to a QBU described in paragraph (c)(1) of this section, subject to the modifications described in this paragraph (c). In each taxable year of the owner of a QBU described in paragraph (c)(1) of this section in which an annual recognition election is in effect, the owner recognizes any unrecognized gain or loss with respect to the QBU under section 987(3) (other than suspended section 987 loss) as though the QBU terminated on the last day of the taxable year. Appropriate adjustments must be made to prevent the gain or loss from being taken into account again after it is recognized under this paragraph (c)(2)(ii) (for example, in the case of a taxpayer applying the 1991 proposed regulations, by adjusting the equity and basis pools to reflect the gain or loss recognized). The rules of § 1.987-1(g) apply with respect to an annual recognition election that is made by or for an owner of a QBU described in paragraph (c)(1) of this section.

(iii) ***Section 988 mark-to-market election.*** A section 988 mark-to-market election under § 1.987-3(b)(4)(ii) applies to a QBU described in paragraph (c)(1) of this section. The rules of § 1.987-1(g) apply with respect to a section 988 mark-to-market election that is made by or for an owner of a QBU described in paragraph (c)(1) of this section.

(3) ***Modifications to applicable provisions*** —

(i) ***In general.*** An owner of a QBU described in paragraph (c)(1) of this section must adapt the rules described in paragraph (c)(2) of this section as necessary to recognize section 987 gain or loss in a manner that is consistent with the principles of those rules. For purposes of applying this section and the rules described in paragraph (c)(2) of this section to a QBU described in paragraph (c)(1) of this section, the definitions provided in the section 987 regulations apply with appropriate modifications. For example, in the case of a QBU described in paragraph (c)(1) of this section, the term section 987 gain or loss means gain or loss recognized under section 987(3), the term owner means the person that recognizes gain or loss under section 987(3), and the term section 987 QBU means any qualified business unit subject to section 987 (including a QBU described in paragraph (c)(1) of this section). In addition, references to other rules of the section 987 regulations must be adapted as necessary to apply section 987 in a manner that is consistent with the principles of this section and the rules described in paragraphs (c)(2) of this section. For example, references to the recognition of section 987 gain or loss under § 1.987-5 encompass any recognition of gain or loss under section 987(3).

(ii) ***Controlled group.*** For purposes of applying §§ 1.987-12 and 1.987-13, if a partner in a partnership is treated as the owner of an eligible QBU described in paragraph (c)(1)(i) of this section (for example, under an aggregate approach) before the QBU terminates, each member of the partnership's controlled group is treated as a member of the partner's controlled group at any time that the partner (or any member of the partner's controlled group, determined without regard to this paragraph (c)(3)(ii)) continues to be a direct or indirect partner in the partnership. This paragraph (c)(3)(ii) does not apply for purposes of the de minimis rule in § 1.987-11(c)(2).

(4) ***Terminating QBUs.*** In the case of a terminating QBU described in paragraph (c)(1) of this section, the rules of this section and the rules described in paragraph (c)(2) of this section apply immediately before the termination, but § 1.987-10 does not apply because § 1.987-10 is not applicable to a QBU described in paragraph (c)(1) of this section.

(d) ***Suspended section 987 loss —***

(1) ***In general —***

(i) ***Rules of § 1.987-11(c) and (d)(2) do not apply.*** The rules of § 1.987-11(c) and (d)(2) do not apply to a QBU described in paragraph (c)(1) of this section.

(ii) ***Suspension of section 987 loss.*** Except as provided in paragraph (d)(2) of this section, any loss that would otherwise be recognized under section 987(3) (after applying § 1.987-12) with respect to a QBU described in paragraph (d)(1)(ii)(A) or (B) of this section is not recognized and becomes suspended section 987 loss.

(A) ***Eligible QBU.*** This paragraph (d)(1)(ii) applies to an eligible QBU described in paragraph (c)(1)(i) of this section.

(B) ***Partnership.*** This paragraph (d)(1)(ii) applies to a partnership (or a partnership interest) described in paragraph (c)(1)(ii) of this section if at least 95 percent of the interests in partnership capital and profits are owned, directly or indirectly, by persons related to each other within the meaning of section 267(b) or section 707(b). For this purpose, ownership of an interest in partnership capital or profits is determined in accordance with the rules for constructive ownership provided in section 267(c), other than section 267(c)(3).

(2) ***Exceptions —***

(i) ***Method under which historic items do not give rise to section 987 gain or loss.*** Paragraph (d)(1)(ii) of this section does not apply to an eligible QBU described in paragraph (d)(1)(ii)(A) of this section if section 987 is consistently applied to the QBU using a method under which historic items of the QBU do not give rise to section 987 gain or loss (for example, a method that follows the principles of §§ 1.987-3 through 1.987-5).

(ii) ***Annual recognition election.*** Paragraph (d)(1)(ii) of this section does not apply in a taxable year in which an annual recognition election is in effect.

(iii) ***De minimis rule.*** Paragraph (d)(1)(ii) of this section does not apply in a taxable year described in § 1.987-11(c)(2).

(3) ***Recognition of suspended section 987 loss —***

(i) ***In general.*** Except as provided in paragraph (d)(3)(ii) of this section, suspended section 987 loss with respect to a QBU described in paragraph (d)(1)(ii)(A) or (B) of this section is recognized under the rules of §§ 1.987-11(e) and 1.987-13.

(ii) ***Partnership that is not engaged in a trade or business.*** In the case of a partnership described in paragraph (d)(1)(ii)(B) of this section that is not engaged in a trade or business, suspended section 987 loss cannot be recognized under § 1.987-13(b) through (d) (and thus can only be recognized under § 1.987-11(e)).

(iii) ***Application of the loss-to-the-extent-of-gain rule.*** If a partner in a partnership is the owner of a section 987 QBU described in paragraph (c)(1) of this section and also owns one or more section 987 QBUs that are not described in paragraph (c)(1) of this section, the loss-to-the-extent-of-gain rule of § 1.987-11(e) is applied by taking into account all of the owner's section 987 gain and suspended section 987 loss in each recognition grouping with respect to all of its section 987 QBUs (whether or not they are described in paragraph (c)(1) of this section).

(e) ***Adjustments to the basis of a partner's interest in the partnership.*** When, and to the extent that, a partner recognizes section 987 gain or loss, defers section 987 gain or loss, or suspends section 987 loss at the partner level with respect to a partnership described in paragraph (c)(1)(ii) of this section or an eligible QBU of the partnership described in paragraph (c)(1)(i) of this section, the principles of sections 704(d) and 705 apply as though the item of income or loss was part of the partner's distributive share of partnership items. Thus, proper adjustments must be made to the partner's adjusted basis in the partnership under the principles of section 705, taking into account the principles of section 704(d).

(f) ***S corporations treated as partnerships.*** For purposes of the section 987 regulations, S corporations are treated in the same manner as partnerships and shareholders of S corporations are treated in the same manner as partners of partnerships.

(g) ***Examples.*** The following examples illustrate the principles of this section. For purposes of these examples, DC1 and DC2 are domestic corporations, and P is a foreign partnership. P is also the owner for Federal income tax purposes of the assets and liabilities of Business A, an eligible QBU that has the pound as its functional currency. DC1 and DC2 each own 50% of the capital and profits interests in P. If P is treated as a qualified business unit under section 989(a), P would have the euro as its functional currency due to activities unrelated to Business A.

(1) ***Example 1: Aggregate approach to section 987*** —

(i) ***Facts.*** DC1 and DC2 each apply section 987 using an aggregate approach, under which each partner's indirect interest in Business A is treated as a section 987 QBU of the partner. DC1 and DC2 each use the earnings and capital method described in the 1991 proposed regulations to apply section 987 with respect to Business A. Neither DC1 nor DC2 has made an annual recognition election. Under the earnings and capital method, but for the application of paragraph (d)(1)(ii) of this section, DC1 and DC2 each would recognize section 987 loss of $10 million in year 1 with respect to Business A.

(ii) ***Analysis*** —

(A) ***Application of loss suspension rule to Business A.*** Business A is an eligible QBU described in paragraph (c)(1)(i) of this section because a partnership (P) is the owner of Business A's assets and liabilities for federal income tax purposes and P's partners treat Business A as a section 987 QBU. Therefore, under paragraph (d)(1)(ii) of this section, the section 987 loss of DC1 and DC2 that would otherwise be recognized in year 1 becomes suspended section 987 loss, which DC1 and DC2 may recognize in year 1 or in future taxable years under §§ 1.987-11(e) and 1.987-13(b) through (d).

(B) ***Annual recognition election.*** If DC1 and DC2 were subject to an annual recognition election in year 1, they would recognize section 987 gain or loss with respect to Business A as though Business A terminated at the end of year 1, and the loss suspension rule of paragraph (d)(1)(ii) of this section would not apply.

(C) ***FEEP method.*** If DC1 and DC2 applied section 987 to Business A under the principles of §§ 1.987-3 through 1.987-5, such that historic items of Business A did not give rise to section 987 gain or loss, the loss suspension rule of paragraph (d)(1)(ii) of this section would not apply.

(2) ***Example 2: Entity approach to section 987*** —

(i) ***Facts.*** P applies section 987 to Business A using an entity approach, under which Business A is treated as a section 987 QBU of P. P is treated as a qualified business unit under section 989(a) and uses the euro as its functional currency. P uses the earnings and capital method described in the 1991 proposed regulations to apply section 987 with respect to Business A. Under the earnings and capital method, but for the application of paragraph (d)(1)(ii) of this section, P would recognize section 987 loss of $10 million in year 1 with respect to Business A. In addition, DC1 and DC2 apply section 987 to P using an entity approach, treating each partner's interest in P as a section 987 QBU. DC1 and DC2 each use the earnings and capital method described in the 1991 proposed regulations to apply section 987 with respect to P. Under the earnings and capital method, but for the application of paragraph (d)(1)(ii) of this section, DC1 and DC2 each would recognize section 987 loss of $10 million in year 1 with respect to P. Neither DC1 nor DC2 has made an annual recognition election.

(ii) ***Analysis*** —

(A) ***Business A treated as a QBU subject to section 987.*** Business A is an eligible QBU described in paragraph (c)(1)(i) of this section because a partnership (P) is the owner of Business A's assets and liabilities for Federal income tax purposes, and P treats Business A as a QBU subject to section 987. Therefore, the loss suspension rule in paragraph (d)(1)(ii) of this section applies to suspend P's recognition of section 987 loss with respect to Business A.

(B) ***Treatment of P as a section 987 QBU.*** P is a partnership described in paragraph (c)(1)(ii) of this section because DC1 and DC2 each treat their interest in P as a section 987 QBU. Under paragraph (d)(1)(ii)(B) of this section, if DC1 and DC2 are related within the meaning of section 267(b) or section 707(b), the loss suspension rule in paragraph (d)(1)(ii) of this section applies to suspend DC1's and DC2's recognition of section 987 loss with respect to their interest in P. However, if DC1 and DC2 are unrelated, the loss suspension rule in paragraph (d)(1)(ii) of this section does not apply.

[T.D. 10016, 89 FR 100165, Dec. 11, 2024]

§ 1.987-8 Termination of a section 987 QBU.

(a) ***Scope.*** This section provides rules regarding the termination of a section 987 QBU. Paragraph (b) of this section provides general rules for determining when a termination occurs. Paragraph (c) of this section provides exceptions to the general termination rules for certain transactions described in section 381(a). Paragraph (d) of this section is reserved. Paragraph (e) of this section describes certain effects of terminations. Paragraph (f) of this section contains examples that illustrate the principles of this section.

(b) ***In general.*** Except as provided in paragraph (c) of this section, a section 987 QBU terminates if the conditions described in any one of paragraphs (b)(1) through (6) of this section are satisfied.

(1) ***Trade or business ceases.*** A section 987 QBU ceases its trade or business. When a section 987 QBU ceases its trade or business is determined based on all the facts and circumstances, provided that an owner may continue to treat a section 987 QBU as a section 987 QBU for a reasonable period during the winding up of such trade or business, which period may in no event exceed two years from the date on which such QBU ceases its activities carried on for profit. *See* paragraph (f)(1) of this section (*Example 1*).

(2) ***Substantially all assets transferred.*** The section 987 QBU transfers substantially all (within the meaning of section 368(a)(1)(C)) of its assets to its owner. For purposes of this paragraph (b)(2), the amount of assets transferred from the section 987 QBU to its owner as a result of a transaction is reduced by the amount of assets transferred from the owner to the section 987 QBU pursuant to the same transaction. *See* paragraphs (f)(2), (6), and (7) of this section (*Examples 2, 6,* and *7*).

(3) ***Owner no longer a CFC.*** A foreign corporation that is a controlled foreign corporation that is the owner of a section 987 QBU ceases to be a controlled foreign corporation as a result of a transaction or series of transactions after which persons that were related to the corporation within the meaning of section 267(b) immediately before the transaction or series of transactions collectively own sufficient interests in the corporation such that the corporation would continue to be considered a controlled foreign corporation if such persons were United States shareholders within the meaning of section 951(b). *See* paragraph (f)(3) of this section (*Example 3*).

(4) ***Owner ceases to exist.*** The owner of the section 987 QBU ceases to exist (including in connection with a transaction described in section 381(a)). *See* paragraph (f)(4) of this section (*Example 4*).

(5) ***Section 987 QBU ceases to be an eligible QBU with a functional currency different from its owner.*** The section 987 QBU ceases to be an eligible QBU that has a functional currency different from its owner. *See* § 1.985-5(d)(2) and (e)(4)(iii) (providing that a termination resulting from a change in functional currency occurs on the last day of the last taxable year ending before the year of change).

(6) ***Change in form of ownership.*** An individual or corporation that was the direct owner of a section 987 QBU ceases to be the direct owner of the section 987 QBU (for example, because the assets of the section 987 QBU are transferred to a partnership).

(c) ***Transactions described in section 381(a)*** —

(1) ***Liquidations.*** Notwithstanding paragraph (b) of this section, a termination does not occur when the owner (*distributor*) of a section 987 QBU ceases to exist in a liquidation described in section 332 pursuant to which it transfers the section 987 QBU to another corporation (*distributee*), except in the following cases:

(i) The distributor is a domestic corporation and the distributee is a foreign corporation.

(ii) The distributor is a foreign corporation and the distributee is a domestic corporation.

(iii) The distributor and the distributee are both foreign corporations and the functional currency of the distributee is the same as the functional currency of the distributor's section 987 QBU.

(2) ***Reorganizations.*** Notwithstanding paragraph (b) of this section, a termination does not occur when the owner (*transferor*) of the section 987 QBU ceases to exist in a reorganization described in section 381(a)(2) pursuant to which it transfers the section 987 QBU to another corporation (*acquiring corporation*), except in the following cases:

(i) The transferor is a domestic corporation and the acquiring corporation is a foreign corporation.

(ii) The transferor is a foreign corporation and the acquiring corporation is a domestic corporation.

(iii) The transferor is a controlled foreign corporation immediately before the transfer, the acquiring corporation is a foreign corporation that is not a controlled foreign corporation immediately after the transfer, and the acquiring corporation was related to the transferor within the meaning of section 267(b) immediately before the transfer.

(iv) The transferor and the acquiring corporation are foreign corporations and the functional currency of the acquiring corporation is the same as the functional currency of the transferor's section 987 QBU.

(d) [Reserved]

(e) ***Effect of terminations.*** A termination of a section 987 QBU as determined in this section is treated as a remittance of all the gross assets of the section 987 QBU to its owner immediately before the section 987 QBU terminates. Thus, except as otherwise provided in the section 987 regulations, a termination generally results in the recognition of any net unrecognized section 987 gain or loss of the section 987 QBU (unless it is treated as deferred section 987 gain or loss or suspended section 987 loss). *See* § 1.987-5(c)(3) (generally recognizing section 987 gain or loss on a termination) and §§ 1.987-11 through 1.987-13 (suspending section 987 gain or loss and deferring section 987 loss in certain instances).

(f) ***Examples.*** The following examples illustrate the principles of this section. Except as otherwise provided, U.S. Corp is a domestic corporation that has the U.S. dollar as its functional currency, and Business A is a section 987 QBU.

(1) ***Example 1: Cessation of operations*** —

(i) ***Facts.*** U.S. Corp is the owner of Business A, a sales office of U.S. Corp in Country X. Business A ceases sales activities on December 31, year 1. During year 2, Business A sells all of the assets used in its sales activities and winds up its business, settling outstanding accounts.

(ii) ***Analysis.*** Business A's trade or business ceases on December 31, year 1. The cessation of Business A's trade or business causes a termination of the Business A section 987 QBU under paragraph (b)(1) of this section on December 31, year 1, unless U.S. Corp chooses to continue to treat Business A as a section 987 QBU until completion of the wind-up activities in year 2. If U.S. Corp chooses to continue to treat Business A as a section 987 QBU during the wind-up of Business A, the Business A section 987 QBU would terminate under paragraph (b)(1) of this section upon completion of the wind-up in year 2.

(2) ***Example 2: Transfer of a section 987 QBU to a member of a consolidated group*** —

(i) ***Facts.*** U.S. Corp, the owner of Business A, transfers all the assets and liabilities of Business A to DS, a domestic corporation all of the stock of which is owned by U.S. Corp, in a transaction qualifying under section 351. U.S. Corp and DS are members of the same consolidated group.

(ii) ***Analysis.*** Pursuant to § 1.987-2(c)(2)(i) and (ii), as a result of the deemed exchange of the assets and liabilities of Business A for DS stock in a section 351 transaction, Business A is treated as transferring its assets and liabilities to U.S. Corp immediately before the transfer by U.S. Corp of the assets and liabilities to DS. Because a section 351 transaction is not a transaction described in section 381(a)(2), the transfer of all of the assets of Business A to U.S. Corp causes a termination of the Business A section 987 QBU under paragraph (b)(2) of this section.

(3) *Example 3: Cessation of controlled foreign corporation status* —

(i) ***Facts.*** Foreign parent (FP) is a foreign corporation that owns all the stock of U.S. Corp, a domestic corporation. U.S. Corp owns all of the stock of FC, a controlled foreign corporation as defined in section 957. FC is the owner of Business A. U.S. Corp liquidates into FP. FC no longer constitutes a controlled foreign corporation after the liquidation.

(ii) ***Analysis.*** Because FC ceases to qualify as a controlled foreign corporation as a result of a transaction after which persons that were related to FC within the meaning of section 267(b) immediately before the transaction collectively own sufficient interests in FC such that FC would continue to be considered a controlled foreign corporation if such persons were United States shareholders within the meaning of section 951(b), the Business A section 987 QBU terminates pursuant to paragraph (b)(3) of this section.

(4) *Example 4: Section 332 liquidation* —

(i) ***Facts.*** U.S. Corp owns all of the stock of FC, a foreign corporation. FC is the owner of Business A. Pursuant to a liquidation described in section 332, FC distributes all of its assets and liabilities to U.S. Corp.

(ii) ***Analysis.*** FC's liquidation causes a termination of the Business A section 987 QBU as provided in paragraph (b)(4) of this section because FC ceases to exist as a result of the liquidation. The exception for certain section 332 liquidations provided under paragraph (c)(1) of this section does not apply because U.S. Corp is a domestic corporation and FC is a foreign corporation. *See* paragraph (c)(1)(ii) of this section.

(5) [Reserved]

(6) *Example 6: Deemed transfers to a CFC upon a check-the-box election*—

(i) ***Facts.*** In year 1, U.S. Corp forms an entity in a foreign country, Entity A. Entity A owns Business A, which has the pound as its functional currency. Entity A forms Entity B in another foreign country. Entity B owns Business B, a section 987 QBU that has the euro as its functional currency. At the time of formation, Entity A and Entity B elect to be DEs. In year 6, Entity A files an election on Form 8832 to be classified as a corporation under § 301.7701-3(g)(1)(iv) of this chapter and becomes a CFC (FC) owned directly by U.S. Corp. FC has the pound as its functional currency.

(ii) ***Analysis*** —

(A) Under § 1.987-1(b)(5), U.S. Corp is the owner of Business A and Business B. In year 6, when Entity A elects to be classified as a corporation, U.S. Corp is deemed to contribute the assets and liabilities of Business A and Business B to FC under section 351 in exchange for FC stock. Pursuant to § 1.987-2(c)(2)(i) and (ii), as a result of the deemed exchange of the assets and liabilities of Business A and Business B for FC stock in a section 351 transaction, Business A and Business B are each treated as transferring their assets and liabilities to U.S. Corp immediately before U.S. Corp's transfer of such assets and liabilities to FC. The transfer of assets from Business A and Business B to U.S. Corp causes terminations of those section 987 QBUs under paragraph (b)(2) of this section. The assets and liabilities of Business A and Business B are now owned by FC, but because FC and Business A have the same functional currency, only Business B qualifies as a section 987 QBU to which section 987 applies.

(B) Terminations also would have occurred in year 6 if U.S. Corp had contributed Entity A and Entity B to an existing foreign corporation owned by U.S. Corp or to a newly created foreign corporation owned by U.S. Corp pursuant to a section 351 exchange because the transfer of all of the assets of Business A and Business B would cause terminations of those section 987 QBUs under paragraph (b)(2) of this section.

(7) *Example 7: Sale of a section 987 QBU to a member of a consolidated group—*

(i) ***Facts.*** U.S. Corp, the owner of Business A, sells all of the assets and liabilities of Business A to DS, a domestic corporation, in exchange for cash. U.S. Corp and DS are members of the same consolidated group. The cash received on the sale is recorded on the books of U.S. Corp.

(ii) ***Analysis.*** Pursuant to § 1.987-2(c)(2)(i) and (ii), Business A is treated as transferring all of its assets and liabilities to U.S. Corp immediately before the sale by U.S. Corp to DS. As a result of this deemed transfer from Business A to U.S. Corp, the Business A section 987 QBU terminates under paragraph (b)(2) of this section.

[T.D. 10016, 89 FR 100165, Dec. 11, 2024]

§ 1.987-8T Termination of a section 987 QBU (temporary).

(a) through (c) [Reserved] For further guidance, see § 1.987-8(a) through (c).

(d) ***Annual deemed termination election.*** A taxpayer, including a taxpayer described in § 1.987-1(b)(1)(ii) to which §§ 1.987-1 through 1.987-11 generally do not apply, may elect under this paragraph (d) to deem all of the section 987 QBUs of which it is an owner to terminate on the last day of each taxable year for which the election is in effect. See § 1.987-8(e) regarding the effect of such a deemed termination. The owner of a section 987 QBU that is deemed to terminate under this paragraph is treated as having transferred all of the assets and liabilities attributable to such section 987 QBU to a new section 987 QBU on the first day of the following taxable year.

(e) through (f) [Reserved] For further guidance, see § 1.987-8(e) through (f).

(g) ***Effective/applicability date.*** This section applies to taxable years beginning on or after December 7, 2016.

(h) ***Expiration date.*** The applicability of this section expires on December 6, 2019.

[T.D. 9795, 81 FR 88875, Dec. 8, 2016]

§ 1.987-9 Recordkeeping requirements.

(a) ***In general.*** An owner (or the authorized person on behalf of an owner) must keep a copy of the statement described in § 1.987-1(g)(3)(i) for each section 987 election made by or on behalf of the owner (if not required to be made on a form published by the Commissioner) and reasonable records sufficient to establish section 987 taxable income or loss and section 987 gain or loss with respect to each section 987 QBU, successor deferral QBU, and successor suspended loss QBU, as applicable, for each taxable year.

(b) ***Supplemental information.*** A person's obligation to maintain records under section 6001 and paragraph (a) of this section is not satisfied unless the following information is maintained in those records with respect to each section 987 QBU, successor deferral QBU, and successor suspended loss QBU for each taxable year:

(1) The amount of the items of income, gain, deduction, or loss attributed to the section 987 QBU in the functional currency of the section 987 QBU and its owner.

(2) The adjusted balance sheet of the section 987 QBU in the functional currency of the section 987 QBU and its owner. If a current rate election is in effect and the owner computes QBU net value under § 1.987-4(e)(2)(iii) without preparing an adjusted balance sheet, the information needed to apply § 1.987-4(e)(2)(iii) must be maintained in lieu of an adjusted balance sheet.

(3) The exchange rates used to translate items of income, gain, deduction, or loss of the section 987 QBU into the owner's functional currency and, if a spot rate convention is used, the manner in which the convention is determined.

(4) The exchange rates used to translate the assets and liabilities of the section 987 QBU into the owner's functional currency and, if a spot rate convention is used, the manner in which the convention is determined.

(5) The amount of assets and liabilities transferred by the owner to the section 987 QBU determined in the functional currency of the owner and the section 987 QBU.

(6) The amount of assets and liabilities transferred by the section 987 QBU to the owner determined in the functional currency of the owner and the section 987 QBU.

(7) The amount of the unrecognized section 987 gain or loss for the taxable year determined under § 1.987-4(d).

(8) The amount of the net accumulated unrecognized section 987 gain or loss for the taxable year determined under § 1.987-4(c).

(9) The amount of the remittance and the remittance proportion for the taxable year.

(10) The computations required under §§ 1.861-9(g) and 1.861-9T(g) for purposes of sourcing and characterizing section 987 gain or loss, deferred section 987 gain or loss, suspended section 987 loss, or pretransition gain or loss under § 1.987-6.

(11) The cumulative suspended section 987 loss in each recognition grouping.

(12) The outstanding deferred section 987 gain or loss in each recognition grouping.

(13) The transition information required to be determined under § 1.987-10(k).

(14) The identification required under § 1.987-14(c) with respect to a section 987 hedging transaction.

(c) ***Retention of records.*** The records required by this section, or records that support the information required on a form published by the Commissioner regarding section 987, must be maintained and kept available for inspection by the Internal Revenue Service for so long as the contents thereof may become relevant in the administration of the Internal Revenue Code.

(d) ***Information on a dedicated section 987 form.*** Information necessary to determine section 987 gain or loss and section 987 taxable income or loss must be reported on a form prescribed for that purpose (or, until that form is published, on Form 8858 or its successor) in accordance with the applicable forms and instructions. A taxpayer satisfies its obligation described in paragraphs (a) and (b) of this section to the extent that the taxpayer provides the specific information required on Form 8858 (or its successor) or other form prescribed for this purpose (including the information required by the instructions accompanying those forms).

[T.D. 10016, 89 FR 100165, Dec. 11, 2024]

§ 1.987-10 Transition rules.

(a) ***Overview*** —

(1) ***In general.*** This section provides transition rules for the first taxable year in which the section 987 regulations apply. Paragraph (b) of this section describes the scope of this section's application. Paragraph (c) of this section provides rules for determining the transition date. Paragraph (d) of this section provides rules relating to the application of the section 987 regulations after the transition date. Paragraph (e) of this section provides rules relating to the determination and recognition of pretransition gain or loss. Paragraph (f) of this section provides special rules for section 987 QBUs to which the fresh start transition method was applied. Paragraph (g) of this section is reserved. Paragraph (h) of this section provides rules relating to the source and character of pretransition gain or loss. Paragraph (i) of this section is reserved. Paragraph (j) of this section provides adjustments to avoid double counting or omissions. Paragraph (k) of this section provides reporting requirements that apply in the taxable year beginning on the transition date. Paragraph (l) of this section provides examples illustrating the rules of this section.

(2) ***Terms defined under prior § 1.987-12.*** For purposes of this section, the terms *deferral QBU, deferral QBU owner, successor QBU, outbound loss QBU, outbound section 987 loss,* and *qualified successor* have the meaning provided in prior § 1.987-12.

(b) ***Scope*** —

(1) ***Owner of a section 987 QBU.*** Except as provided in paragraph (f) of this section, any person that is an owner of a section 987 QBU on the applicable transition date and any person that is the owner of a terminating QBU on the termination date must apply the rules of this section with respect to the section 987 QBU.

(2) ***Deferral QBU owner and owner of outbound loss QBU.*** Except as provided in paragraph (f) of this section, a deferral QBU owner or the owner of an outbound loss QBU must apply the rules of this section with respect to the deferral QBU or outbound loss QBU if the deferral event or outbound loss event occurred before the applicable transition date. This paragraph (b)(2) does not apply to the owner of a terminating QBU.

(c) ***Transition date*** —

(1) ***In general.*** Except as provided in paragraph (c)(2) of this section, the transition date for a section 987 QBU, deferral QBU, or outbound loss QBU is the first day of the first taxable year described in § 1.987-15(a)(1), (b), or (c) to which this section applies.

(2) ***Terminating QBU*** —

(i) ***In general.*** With respect to a terminating QBU, the transition date is the day after the termination date. Until the transition date described in paragraph (c)(1) of this section, the owner of the terminating QBU must apply the section 987 regulations with respect to the terminating QBU, and any section 987 gain or loss attributable thereto, without regard to any section 987 elections (other than the election described in § 1.987-6(b)(2)(i)(C)).

(ii) ***Ordering rule.*** In the case of a terminating QBU, the transition rules of this section are applied immediately before the termination, and the consequences of the termination are determined under the section 987 regulations after applying this section.

(d) *Application of the section 987 regulations after the transition date—*

(1) ***Owner functional currency net value on the last day of the preceding taxable year.*** Except as provided in paragraph (f) of this section, for purposes of applying § 1.987-4 in the taxable year beginning on the transition date, the owner functional currency net value of a section 987 QBU on the last day of the preceding taxable year under § 1.987-4(d)(1)(i)(B) is determined by translating the assets and liabilities that are attributable to the section 987 QBU on the day before the transition date into the owner's functional currency at the transition exchange rate described in paragraph (d)(3) of this section.

(2) ***Determination of historic rate.*** If a current rate election is not in effect for the taxable year beginning on the transition date, the historic rate for historic items that are attributable to a section 987 QBU on the day before the transition date (other than non-LIFO inventory subject to the simplified inventory method under § 1.987-3(c)(2)(iv)(A)) is the transition exchange rate described in paragraph (d)(3) of this section.

(3) *Transition exchange rate —*

(i) ***In general.*** Except as provided in paragraph (d)(3)(ii) of this section, the transition exchange rate is the spot rate applicable to the day before the transition date.

(ii) ***Earnings only method.*** If an earnings only method described in paragraph (e)(4)(ii) of this section was applied with respect to a section 987 QBU before the transition date, and a current rate election is not in effect in the taxable year beginning on the transition date, the transition exchange rate for each historic item (other than inventory subject to the simplified inventory method under § 1.987-3(c)(2)(iv)(A)) is the pretransition translation rate described in paragraph (e)(2)(i)(C) of this section. This paragraph (d)(3)(ii) does not apply with respect to a terminating QBU.

(e) *Pretransition gain or loss —*

(1) ***In general.*** Except as provided in paragraph (f) of this section, pretransition gain or loss is determined and recognized under this paragraph (e).

(2) *Amount of pretransition gain or loss for an owner that applied an eligible pretransition method —*

(i) ***Owner of a section 987 QBU.*** If an owner of a section 987 QBU described in paragraph (b)(1) of this section applied an eligible pretransition method with respect to the section 987 QBU, the amount of pretransition gain or loss with respect to the section 987 QBU is equal to the sum of the deemed termination amount described in paragraph (e)(2)(i)(A) of this section and the owner functional currency net value adjustment described in paragraph (e)(2)(i)(B) of this section. *See* paragraphs (l)(1) through (3) of this section (*Examples 1* through *3*) for an illustration of this rule.

(A) ***Deemed termination amount.*** The deemed termination amount is the amount of section 987 gain or loss that would have been recognized by the owner under the eligible pretransition method if the section 987 QBU terminated and transferred all of its assets and liabilities to the owner on the day before the transition date and §§ 1.987-12 and 1.987-13 and prior § 1.987-12 did not apply.

(B) ***Owner functional currency net value adjustment.*** The owner functional currency net value adjustment may be either positive or negative and is equal to the amount described in paragraph (e)(2)(i)(B)(*1*) of this section reduced by the amount described in paragraph (e)(2)(i)(B)(*2*) of this section.

(*1*) The basis of the assets, reduced by the amount of liabilities, that are attributable to the section 987 QBU on the day before the transition date, translated into the owner's functional currency at the transition exchange rate.

(*2*) The basis of the assets, reduced by the amount of liabilities, that are attributable to the section 987 QBU on the day before the transition date, translated into the owner's functional currency at the pretransition translation rate.

(C) ***Pretransition translation rate.*** The pretransition translation rate is the rate that would be used under the eligible pretransition method to determine the basis of an asset or the amount of a liability in the hands of the owner of a section 987 QBU if the section 987 QBU transferred all of its assets and liabilities to the owner on the day before the transition date.

(ii) ***Deferral QBU owner.*** If a deferral QBU owner described in paragraph (b)(2) of this section applied an eligible pretransition method with respect to the deferral QBU, the amount of pretransition gain or loss with respect to the deferral QBU is equal to the deferred section 987 gain or loss (determined under prior § 1.987-12) that was not recognized before the transition date with respect to the deferral QBU.

(iii) ***Owner of an outbound loss QBU.*** If the owner of an outbound loss QBU described in paragraph (b)(2) of this section applied an eligible pretransition method with respect to the outbound loss QBU, the pretransition loss with respect to the outbound loss QBU is equal to the outbound section 987 loss that was not added to the basis of stock or recognized under prior § 1.987-12 before the transition date with respect to the outbound loss QBU.

(3) ***Amount of pretransition gain or loss for an owner that did not apply an eligible pretransition method*** —

(i) ***In general.*** If the owner of a section 987 QBU described in paragraph (b)(1) of this section did not apply an eligible pretransition method with respect to the section 987 QBU, the amount of pretransition gain or loss with respect to the section 987 QBU is determined under paragraph (e)(3)(ii) of this section. *See* paragraph (l)(4) of this section (*Example 4*) for an illustration of this rule.

(ii) ***Computation of pretransition gain or loss.*** With respect to a section 987 QBU described in paragraph (e)(3)(i) of this section, pretransition gain or loss is equal to the amount described in paragraph (e)(3)(ii)(A) of this section reduced by the amount described in paragraph (e)(3)(ii)(B) of this section.

(A) The sum of the owner's annual unrecognized section 987 gain or loss determined under paragraph (e)(3)(iii) of this section with respect to the section 987 QBU for all taxable years ending before the transition date and beginning after September 7, 2006, in which it was the owner of the section 987 QBU.

(B) The total net amount of section 987 gain or loss recognized by the owner with respect to the section 987 QBU in all taxable years ending before the transition date and beginning after September 7, 2006.

(iii) ***Annual unrecognized section 987 gain or loss.*** An owner of a section 987 QBU described in paragraph (e)(3)(i) of this section determines annual unrecognized section 987 gain or loss with respect to a section 987 QBU under the rules of § 1.987-4(d), applied as though a current rate election was in effect for all relevant taxable years, and subject to the following modifications—

(A) Only § 1.987-4(d)(1) and (10) (steps 1 and 10) are applied; and

(B) Section 1.987-4(d)(10) is applied by replacing "paragraphs (d)(1) through (9) of this section" with "paragraph (d)(1) of this section."

(iv) ***Deferral QBU owner.*** If a deferral QBU owner described in paragraph (b)(2) of this section did not apply an eligible pretransition method with respect to the deferral QBU, the pretransition gain or loss with respect to the deferral QBU is equal to the amount that would be determined under paragraph (e)(3)(ii) of this section with respect to the deferral QBU if the transition date was the day of the deferral event, reduced by the amount of deferred section 987 gain or loss (determined under prior § 1.987-12) recognized before the actual transition date.

(v) ***Owner of an outbound loss QBU.*** If the owner of an outbound loss QBU described in paragraph (b)(2) of this section did not apply an eligible pretransition method with respect to the outbound loss QBU, the pretransition loss with respect to the outbound loss QBU is equal to the amount that would be determined under paragraph (e)(3)(ii) of this section with respect to the outbound loss QBU if the transition date was the day of the outbound loss event, reduced by any outbound section 987 loss recognized or added to the basis of stock under prior § 1.987-12 before the actual transition date.

(4) ***Eligible pretransition method.*** An eligible pretransition method means a method of applying section 987 before the transition date that is described in paragraphs (e)(4)(i) through (iii) of this section. An owner is treated as applying an eligible pretransition method with respect to a section 987 QBU only if it applied an eligible pretransition method with respect to the QBU on a return filed before November 9, 2023.

(i) ***Earnings and capital method.*** An earnings and capital method is an eligible pretransition method if it is applied in a reasonable manner. For purposes of this paragraph (e)(4)(i), an earnings and capital method means a method of applying section 987 that requires section 987 gain or loss to be determined and recognized with respect to both the earnings of the section 987 QBU and capital contributed to the section 987 QBU (for example, the method prescribed in the 1991 proposed regulations under section 987). *See* paragraph (l)(1) of this section (*Example 1*) for an illustration of this rule.

(ii) ***Other reasonable methods.*** Any reasonable method of applying section 987 is an eligible pretransition method if it produces the same total amount of income over the life of the owner of a section 987 QBU as the method described in paragraph (e)(4)(i) of this section (taking into account the aggregate of section 987 gain or loss, section 987 taxable income or loss, and income or loss recognized by the owner of the section 987 QBU with respect to property transferred between the section 987 QBU and the owner or any QBU of the owner). *See* paragraph (l)(2) of this section (*Example 2*) for an illustration of this rule.

(iii) ***Other earnings only methods.*** An earnings only method that does not meet the requirements of paragraph (e)(4)(ii) of this section is an eligible pretransition method, provided that—

(A) The earnings only method was first applied by the owner on a return filed before November 9, 2023;

(B) The earnings only method was applied consistently to all section 987 QBUs of the owner since the first taxable year in which the owner applied an eligible pretransition method; and

(C) The owner of the section 987 QBU otherwise applied section 987 in a reasonable manner. *See* paragraph (l)(3) of this section (*Example 3*) for an illustration of this rule.

(iv) ***Error in the application of a section 987 method.*** If an owner generally applied section 987 with respect to a section 987 QBU before the transition date under a method described in paragraph (e)(4)(i), (ii), or (iii) of this section but made errors in the application of the method or failed to apply the method to every taxable year since the QBU's inception, the owner is considered to have applied an eligible pretransition method with respect to the QBU. However, pretransition gain or loss must be determined under paragraph (e)(2) of this section as though the eligible pretransition method was applied without error since the section 987 QBU's inception. *See* paragraph (l)(5) of this section (*Example 5*) for an illustration of this rule.

(v) ***Certain consistent practices not treated as errors*** —

(A) ***In general.*** If an owner generally applied section 987 with respect to a section 987 QBU before the transition date under a method described in paragraph (e)(4)(i), (ii), or (iii) of this section and used a consistent practice described in paragraph (e)(4)(v)(B) of this section for purposes of applying that method, the owner is considered to have applied an eligible pretransition method with respect to the QBU. In addition, the consistent practice is not treated as an error under paragraph (e)(4)(iv) of this section. Therefore, the owner must take the consistent practice into account in determining pretransition gain or loss under paragraph (e)(2) of this section. *See* paragraph (l)(6) of this section (*Example 6*) for an illustration of this rule.

(B) ***Practices not treated as errors*** —

(*1*) ***Reasonable conventions.*** The use of a reasonable convention (for example, the use of a yearly average exchange rate rather than the applicable spot rate to translate frequently recurring transfers) is a practice described in this paragraph (e)(4)(v)(B).

(*2*) ***Disregarded transactions.*** If, in determining the amount of a remittance that requires the recognition of gain or loss under section 987(3), an owner of a QBU consistently disregarded certain transfers to or from the QBU (other than transfers from the QBU to the owner that would be treated as distributions if the QBU were treated as a separate corporation), the owner is considered to have applied a practice described in this paragraph (e)(4)(v)(B) with respect to the QBU, provided that the owner otherwise accounts for the disregarded transfers in a reasonable manner (for example, under the method described in the 1991 proposed regulations, by taking the disregarded transfers into account in computing equity and basis pools so as to properly reflect the owner's net equity in the QBU and its functional currency basis in the QBU).

(vi) ***Deferral of section 987 gain or loss until termination is not reasonable.*** For purposes of this paragraph (e)(4), a method under which the owner of a section 987 QBU defers the recognition of section 987 gain or loss until the section 987 QBU is terminated, sold, or liquidated is not a reasonable method.

(vii) ***Anti-abuse rule.*** If an owner changes its pretransition method of applying section 987 with a principal purpose of reducing its pretransition gain or increasing its pretransition loss, the Commissioner may redetermine pretransition gain or loss based on the owner's original method of applying section 987 or by treating the owner as not applying an eligible pretransition method.

(5) ***Recognition of pretransition gain or loss*** —

(i) ***In general.*** Except as provided in paragraph (e)(5)(ii) of this section, pretransition gain is recognized under paragraph (e)(5)(i)(A) of this section and pretransition loss is recognized under paragraph (e)(5)(i)(B) of this section.

(A) ***Pretransition gain.*** Pretransition gain with respect to a section 987 QBU is treated as net accumulated unrecognized section 987 gain (within the meaning of § 1.987-4(c)). Pretransition gain with respect to a deferral QBU is treated as deferred section 987 gain and is attributed to one or more successor deferral QBUs under the principles of § 1.987-12(b)(2) and (c)(2).

(B) ***Pretransition loss*** —

(*1*) ***In general.*** Except as provided in paragraph (e)(5)(i)(B)(*2*) of this section, pretransition loss with respect to a section 987 QBU, a deferral QBU, or an outbound loss QBU is treated as suspended section 987 loss with respect to the section 987 QBU, the deferral QBU, or the outbound loss QBU. In the case of a deferral QBU or outbound loss QBU, suspended section 987 loss is attributed to one or more successor suspended loss QBUs under the principles of § 1.987-13(b)(1) and (c)(1).

(*2*) ***Current rate election.*** If a current rate election is in effect (and an annual recognition election is not in effect) in the taxable year beginning on the transition date, pretransition loss with respect to a section 987 QBU (other than a terminating QBU) is treated as net accumulated unrecognized section 987 loss (within the meaning of § 1.987-4(c)), and pretransition loss with respect to a deferral QBU is treated as deferred section 987 loss and is attributed to one or more successor deferral QBUs under the principles of § 1.987-12(b)(2) and (c)(2).

(ii) ***Election to recognize pretransition section 987 gain or loss ratably over the transition period*** —

(A) ***In general.*** A taxpayer may elect to recognize pretransition gain or loss ratably over the transition period. If an election is made to recognize pretransition gain or loss ratably over the transition period, then paragraph (e)(5)(i) of this section does not apply, and each owner to which the election applies recognizes one tenth of its pretransition gain or loss with respect to each section 987 QBU, original deferral QBU, and outbound loss QBU in each taxable year for ten taxable years beginning with the taxable year that begins on the transition date described in paragraph (c)(1) of this section. *See* § 1.987-1(g) for rules relating to section 987 elections (including consistency rules).

(B) ***Special rules for certain transactions*** —

(1) ***Scope.*** This paragraph (e)(5)(ii)(B) applies if a corporation (*acquiring corporation*) acquires the assets of an owner that is subject to an election under paragraph (e)(5)(ii)(A) of this section in a transaction described in section 381(a), and either the owner is a foreign corporation and the acquiring corporation is a domestic corporation or the owner is a domestic corporation and the acquiring corporation is a foreign corporation. This paragraph (e)(5)(ii)(B) also applies to any transaction entered into with a principal purpose of avoiding the recognition of pretransition gain under paragraph (e)(5)(ii)(A) of this section.

(2) ***Recognition of pretransition gain or loss.*** In the case of a transaction described in paragraph (e)(5)(ii)(B)(*1*) of this section, pretransition gain or loss that has not been recognized under paragraph (e)(5)(ii)(A) of this section ceases to be subject to the election to be recognized ratably over the transition period. Any unrecognized pretransition gain is recognized immediately before the transaction, and any unrecognized pretransition loss becomes suspended section 987 loss immediately before the transaction. As a result, the suspended section 987 loss may be recognized to the extent of section 987 gain recognized in the same recognition grouping pursuant to § 1.987-11(e). *See also* § 1.987-13(g) (providing that any remaining suspended section 987 loss does not carry over to the acquiring corporation upon an inbound transaction to which section 381(a) applies).

(C) ***Terminating QBU.*** This paragraph (e)(5)(ii)(C) applies with respect to a terminating QBU if, in the taxable year beginning on the transition date described in paragraph (c)(1) of this section, the owner of the terminating QBU elects to recognize pretransition gain or loss ratably over the transition period. Any deferred section 987 gain or loss or suspended section 987 loss with respect to the terminating QBU that was not recognized before the transition date described in paragraph (c)(1) of this section is treated as pretransition gain or loss for purposes of this paragraph (e)(5)(ii) (and ceases to be treated as deferred section 987 gain or loss or suspended section 987 loss). The pretransition gain or loss is recognized ratably over ten taxable years beginning with the taxable year that begins on the transition date described in paragraph (c)(1) of this section.

(6) ***Predecessor of an owner*** —

(i) ***In general.*** For purposes of this paragraph (e), references to an owner of a section 987 QBU, a deferral QBU owner, and the owner of an outbound loss QBU include a predecessor described in paragraph (e)(6)(ii) of this section.

(ii) ***Predecessor.*** If a corporation (*acquiring corporation*) becomes the owner of a section 987 QBU in a transaction described in section 381(a) in which the section 987 QBU does not terminate, the corporation that was the owner of the section 987 QBU immediately before the transaction is a predecessor of the acquiring corporation. If a corporation (*acquiring corporation*) becomes a qualified successor of a deferral QBU owner or the owner of an outbound loss QBU (each, a *transferor corporation*), the transferor corporation is a predecessor of the acquiring corporation. A predecessor of a corporation includes the predecessor of a predecessor of the corporation.

(7) ***Small business election*** —

(i) ***Scope.*** This paragraph (e)(7) applies if the owner of a QBU meets the threshold described in paragraph (e)(7)(ii) of this section and the QBU meets the threshold described in paragraph (e)(7)(iii) of this section. This paragraph (e)(7) does not apply with respect to a terminating QBU.

(ii) ***Owner threshold.*** An owner of a QBU meets the requirements of this paragraph (e)(7)(ii) if the owner would qualify for the small business exemption provided in section 163(j)(3) for the taxable year beginning on the transition date described in paragraph (c)(1) of this section.

(iii) ***QBU threshold.*** A QBU meets the requirements of this paragraph (e)(7)(iii) if the assets attributable to the QBU have an adjusted basis (translated at the spot rate applicable to the last day of each taxable year) of $10 million or less at the end of each of the three taxable years of the owner ending before the transition date described in paragraph (c)(1) of this section (or, if the QBU was not in existence for three taxable years, each taxable year ending before the transition date in which the QBU existed). For this purpose, all QBUs owned by members of the same controlled group that have the same country of residence (as defined in section 988(a)(3)(B)) are treated as a single QBU. Solely for purposes of applying this paragraph (e)(7)(iii) in the case of a deferral QBU or outbound loss QBU described in paragraph (b)(2) of this section, the termination date is treated as the transition date.

(iv) ***Small business election.*** If the owner of a QBU meets the requirements of paragraph (e)(7)(ii) of this section, the owner may elect to treat all QBUs that meet the requirements of paragraph (e)(7)(iii) of this section as having no pretransition gain or loss.

(f) ***QBUs to which the fresh start transition method was applied*** —

(1) ***In general.*** Paragraphs (d) and (e) of this section do not apply with respect to any section 987 QBU, deferral QBU, or outbound loss QBU with respect to which the taxpayer applied the rules of prior § 1.987-10 (or applied § 1.987-10 of the 2006 proposed regulations in a reasonable manner) on a return filed before November 9, 2023 or pursuant to paragraph (f)(3) of this section.

(2) ***Application of the section 987 regulations after the transition date*** —

(i) ***Owner functional currency net value on the last day of the preceding taxable year.*** For purposes of applying § 1.987-4 with respect to a section 987 QBU described in paragraph (f)(1) of this section for the taxable year beginning on the transition date, the owner functional currency net value of the section 987 QBU on the last day of the preceding taxable year under § 1.987-4(d)(1)(i)(B) is the amount that was determined for the preceding taxable year under prior § 1.987-4(d)(1)(A) or § 1.987-4(d)(1)(A) of the 2006 proposed section 987 regulations, as applicable.

(ii) ***Determination of historic rate.*** For purposes of applying the section 987 regulations with respect to historic items (other than inventory subject to the simplified inventory method under § 1.987-3(c)(2)(iv)(A)) that are attributable to the section 987 QBU on the day before the transition date, a taxpayer must use the same historic rates as were used under the taxpayer's application of the 2016 and 2019 section 987 regulations or the 2006 proposed section 987 regulations, as applicable, in place of the historic rates that otherwise would be determined under § 1.987-1(c)(3).

(iii) ***Unrecognized section 987 gain or loss*** —

(A) ***Net accumulated unrecognized section 987 gain or loss of a section 987 QBU.*** In taxable years beginning on or after the transition date, for purposes of calculating the net accumulated unrecognized section 987 gain or loss of a section 987 QBU described in paragraph (f)(1) of this section under § 1.987-4(c)—

(*1*) Amounts determined under prior § 1.987-4(d) or under § 1.987-4(d) or § 1.987-10 of the 2006 proposed section 987 regulations, as applicable, are included in amounts determined under § 1.987-4(d) for all prior taxable years; and

(*2*) Amounts taken into account under prior § 1.987-5(a) or under § 1.987-5(a) of the 2006 proposed section 987 regulations, as applicable, are included in amounts recognized under § 1.987-5(a) for all prior taxable years. For this purpose, amounts taken into account under prior § 1.987-5(a) or under § 1.987-5(a) of the 2006 proposed section 987 regulations, as applicable, are determined without regard to prior § 1.987-12 or prior § 1.987-12T.

(B) ***Deferred section 987 gain or loss attributable to a successor deferral QBU.*** In the taxable year beginning on the transition date, the outstanding deferred section 987 gain or loss (as determined under prior § 1.987-12) of a deferral QBU described in paragraph (f)(1) of this section becomes deferred section 987 gain or loss (within the meaning of § 1.987-12). The deferred section 987 gain or loss is attributed to one or more successor deferral QBUs under the principles of § 1.987-12(b)(2) and (c)(2).

(C) ***Outbound section 987 loss attributable to a successor suspended loss QBU.*** In the taxable year beginning on the transition date, outbound section 987 loss of an outbound loss QBU described in paragraph (f)(1) of this section that has not been recognized or added to the basis of stock under prior § 1.987-12 becomes suspended section 987 loss. The suspended section 987 loss is attributed to one or more successor suspended loss QBUs under the principles of § 1.987-13(b)(1) and (c)(1).

(3) ***Taxpayers that are required to transition using the fresh start transition method.*** If a taxpayer is subject to a consent agreement under which it is required to apply the fresh start transition method with respect to a section 987 QBU, then the taxpayer must apply the transition rules of prior § 1.987-10 to that section 987 QBU for the taxable year beginning on the transition date and immediately before the taxpayer applies this section. In applying this section, the taxpayer is treated as having applied prior § 1.987-10 to the section 987 QBU.

(g) [Reserved]

(h) ***Determination of source and character*** —

(1) ***In general.*** Except as provided in paragraph (h)(2) of this section, the source and character of pretransition gain or loss is determined under the rules of § 1.987-6. *See* § 1.987-6(b)(1) (timing of source and character determination).

(2) ***Deferral QBU or outbound loss QBU.*** Notwithstanding paragraph (h)(1) of this section and § 1.987-6, the source and character of pretransition gain or loss with respect to a deferral QBU or an outbound loss QBU described in paragraph (b)(2) of this section is the same as the source and character of the outstanding deferred section 987 gain or loss (determined under prior § 1.987-12) of the deferral QBU or the outbound section 987 loss of the outbound loss QBU (determined under prior § 1.987-12(e)).

(i) [Reserved]

(j) ***Adjustments to avoid double counting or omissions.*** If a difference between the treatment of any item under the section 987 regulations and the treatment of the item under the taxpayer's prior section 987 method would result in income, gain, deduction, or loss (including section 988 gain or loss) being taken into account more than once or not being taken into account, then pretransition gain or loss, as determined under paragraphs (e)(2) and (3) of this section, is adjusted to account for the difference. In case of a QBU described in paragraph (f)(1) of this section, appropriate adjustments must be made under the principles of paragraph (e)(5) of this section. In the case of a terminating QBU, the determination as to whether an adjustment is required under this paragraph (j) is made after taking into account section 988 gain or loss recognized in connection with the termination.

(k) ***Reporting*** —

(1) ***In general.*** Except as otherwise provided in this paragraph (k), a statement titled "Section 987 Transition Information" must be attached to an owner's timely filed (including extensions) return for the taxable year beginning on the transition date providing the following information for each QBU described in paragraph (k)(2) of this section:

(i) A description of each QBU, the QBU's principal place of business, and a description of the prior method used by the taxpayer to determine its section 987 gain or loss, deferred section 987 gain or loss, or outbound section 987 loss with respect to the QBU, including an explanation as to whether such method was an eligible pretransition method.

(ii) The pretransition gain or loss with respect to each QBU and the computations used to determine pretransition gain or loss.

(iii) Whether the authorized person has elected to recognize pretransition gain or loss ratably over the transition period pursuant to paragraph (e)(5)(ii) of this section.

(iv) Whether the authorized person has made a small business election under paragraph (e)(7) of this section and the computations used to determine eligibility for the election.

(v) With respect to each QBU for which any adjustment is made under paragraph (j) of this section, a description of each adjustment and the basis for computing the adjustment.

(vi) A list of the QBUs described in paragraph (f)(1) of this section, or a statement that no QBUs are described in paragraph (f)(1) of this section.

(2) ***QBUs for which reporting is required*** —

(i) ***In general.*** Except as provided in paragraph (k)(2)(ii) of this section, the information described in paragraph (k)(1) of this section must be provided with respect to—

(A) Each section 987 QBU described in paragraph (b)(1) of this section;

(B) Each deferral QBU described in paragraph (b)(2) of this section and each of its successor deferral QBUs; and

(C) Each outbound loss QBU described in paragraph (b)(2) of this section and each of its successor suspended loss QBUs.

(ii) ***QBUs to which the fresh start transition method was applied.*** A taxpayer is not required to provide the information described in paragraphs (k)(1)(i) through (iv) of this section with respect to a QBU described in paragraph (f)(1) of this section.

(3) ***Attachments not required where information is reported on a form.*** This paragraph (k) does not apply to the extent provided on a form or instructions published by the Commissioner.

(4) ***No change in method of accounting.*** The application of this section is not treated as a change in method of accounting for purposes of sections 446 and 481.

(l) ***Examples.*** The following examples illustrate the application of this section. For purposes of the examples, DC is a domestic corporation with the U.S. dollar as its functional currency and Branch is a section 987 QBU with the euro as its functional currency. DC has a taxable year ending December 31, and the transition date is January 1, year 4. For purposes of the examples, except as otherwise indicated, assume that no section 987 elections are in effect.

(1) ***Example 1: Earnings and capital method*** —

(i) ***Facts*** —

(A) ***Formation of Branch and Branch's operations.*** DC formed Branch on November 30, year 1, with a contribution of €150. In year 1, Branch purchased a parcel of unimproved land for €100. In year 2, Branch earned €25. In year 3, Branch again earned €25. On June 30, year 3, Branch distributed €100 cash to DC, and DC immediately exchanged the €100 for $135.

(B) ***Exchange rates.*** The relevant exchange rates are shown below.

TABLE 1 TO PARAGRAPH (l)(1)(i)(B)—EXCHANGE RATES

	Spot rate	Yearly average exchange rate
November 30, Year 1	€1 = $1	
December 31, Year 1	€1 = $1.10	
December 31, Year 2	€1 = $1.20	
June 30, Year 3	€1 = $1.35	
December 31, Year 3	€1 = $1.40	
Year 1		€1 = $1.05.
Year 2		€1 = $1.15.
Year 3		€1 = $1.25.

(C) ***Pretransition method.*** DC used the method prescribed in the 1991 proposed regulations under section 987 with respect to Branch before the transition date. Under this method, DC maintains an equity pool in euros (Branch's functional currency) and a basis pool in U.S. dollars (DC's functional currency). When Branch makes a remittance (whether out of earnings or capital), DC recognizes section 987 gain or loss equal to the difference between the amount of the remittance (translated into U.S. dollars at the spot rate on the date of the remittance) and the portion of the basis pool attributable to the remittance. DC's basis in assets distributed from Branch is equal to Branch's basis in the assets, translated into U.S. dollars at the spot rate on the date of the remittance. Branch's earnings are translated into U.S. dollars at the average exchange rate for the taxable year. DC otherwise applies section 987 in a reasonable manner.

(D) ***Application of the pretransition method before the transition date.*** For purposes of determining section 987 gain or loss recognized as a result of the June 30, year 3, remittance, DC was required to determine the amount in Branch's equity and basis pools. Branch's equity pool was equal to €200, and its basis pool was equal to $210, as shown in the table below. Because the remittance was equal to 50% of the equity pool (€100), 50% of the basis pool, or $105, was attributable to the remittance. The amount of the remittance was $135 (€100 translated at the spot rate on June 30, year 3, of €1 = $1.35). Therefore, in year 3, DC recognized section 987 gain of $30, equal to the difference between the amount of the remittance ($135) and the portion of the basis pool attributable to the remittance ($105). As a result of the remittance, the equity pool was reduced by the amount distributed (€100), and the basis pool was reduced by the portion of the basis pool attributable to the remittance ($105). Therefore, after the remittance, the equity pool was equal to €100, and the basis pool was equal to $105. In the hands of DC, the euros distributed had a basis of $135 (equal to the €100 distribution translated at the spot rate on June 30, year 3, of €1 = $1.35). DC did not recognize section 988 gain or loss when it exchanged the euros for $135.

TABLE 2 TO PARAGRAPH (l)(1)(i)(D)—YEAR 3 EQUITY AND BASIS POOLS

	Equity pool	Translation rate	Basis pool
Contribution (11/30/Year 1)	€150	€1 = $1	$150
Year 2 Earnings	€25	€1 = $1.15	28.75
Year 3 Earnings	€25	€1 = $1.25	31.25
Total	€200		210

(ii) ***Analysis*** —

(A) ***DC's method is an eligible pretransition method.*** Before the transition date, DC followed the method prescribed in the 1991 proposed regulations under section 987 with respect to Branch. This method is an eligible pretransition method under paragraph (e)(4)(i) of this section. Therefore, DC determines its pretransition gain or loss with respect to Branch under paragraph (e)(2) of this section.

(B) ***Pretransition gain or loss.*** Under paragraph (e)(2) of this section, DC's pretransition gain or loss with respect to Branch is equal to the sum of the deemed termination amount described in paragraph (e)(2)(i)(A) of this section and the owner functional currency net value adjustment described in paragraph (e)(2)(i)(B) of this section. As explained in paragraphs (l)(1)(ii)(B)(*1*) and (*2*) of this section (*Example 1*), DC's deemed termination amount is $35 and its owner functional currency net value adjustment is zero. Therefore, DC has $35 of pretransition gain with respect to Branch. Under paragraph (e)(5)(i)(A) of this section, the pretransition gain is treated as Branch's net accumulated unrecognized section 987 gain. However, if DC elects to recognize its pretransition gain ratably over the transition period under paragraph (e)(5)(ii) of this section, the pretransition gain is not

treated as net accumulated unrecognized section 987 gain. Instead, DC recognizes $3.50 (one tenth of its pretransition gain) for each of the ten taxable years from year 4 through year 13.

(1) ***Deemed termination amount.*** Under paragraph (e)(2)(i)(A) of this section, the deemed termination amount is the amount of section 987 gain or loss that would have been recognized by DC under the eligible pretransition method if Branch terminated and transferred all its assets and liabilities to DC (the land with a basis of €100) on December 31, year 3. Under DC's eligible pretransition method, DC would have recognized section 987 gain of $35, determined by subtracting the remaining basis pool of $105 from the amount of the remittance of $140 (€100 translated at the spot rate on December 31, year 3, of €1 = $1.40). Therefore, the deemed termination amount is $35.

(2) ***Owner functional currency net value adjustment.*** On December 31, year 3, Branch had no liabilities and only one asset: land with a basis of €100. Under paragraph (e)(2)(i)(B) of this section, the owner functional currency net value adjustment is equal to the basis of the land, translated into U.S. dollars at the transition exchange rate, reduced by the basis of the land, translated into U.S. dollars at the pretransition translation rate. Under paragraph (d)(3)(i) of this section, the transition exchange rate is the spot rate applicable to December 31, year 3. Under paragraph (e)(2)(i)(C) of this section, the pretransition translation rate is the rate that would be used under DC's eligible pretransition method to determine the basis of the land in the hands of DC if Branch transferred the land to DC on December 31, year 3. Under DC's eligible pretransition method, if Branch transferred the land to DC, DC's basis in the land would be equal to Branch's basis (€100) translated at the spot rate on the date of the remittance. Therefore, the pretransition translation rate on December 31, year 3, is equal to the spot rate on December 31, year 3. Consequently, the owner functional currency net value adjustment is zero.

(C) ***Determination of unrecognized section 987 gain or loss in year 4.*** For purposes of determining unrecognized section 987 gain or loss in year 4 under § 1.987-4(d), the owner functional currency net value of Branch on the last day of year 3 is determined by translating the €100 basis of the land at the transition exchange rate, which is the spot rate on December 31, year 3 (€1 = $1.40). Therefore, the owner functional currency net value of Branch on the last day of year 3 is $140.

(2) ***Example 2: Earnings only method described in paragraph (e)(4)(ii) of this section —***

(i) ***Facts —***

(A) ***In general.*** The facts and exchange rates are the same as in paragraph (l)(1) of this section (*Example 1*), except that DC uses an earnings only method with respect to Branch before the transition date, as described in paragraph (l)(2)(i)(B) of this section. In addition, a current rate election is in effect for Year 4.

(B) ***Pretransition method.*** Under the earnings only method, DC maintains an equity pool in euros (Branch's functional currency) and a basis pool in U.S. dollars (DC's functional currency) with respect to Branch's earnings. DC also maintains separate equity and basis pools with respect to Branch's capital. Distributions are treated as being made first out of earnings and then out of capital. When Branch makes a remittance out of earnings, DC

recognizes section 987 gain or loss equal to the difference between the amount of the remittance (translated into U.S. dollars at the spot rate on the date of the remittance) and the portion of the earnings basis pool attributable to the remittance. No section 987 gain or loss is recognized on a distribution out of capital. DC's basis in assets distributed out of Branch's earnings is equal to Branch's basis in the assets translated at the spot rate on the date of the remittance. DC's basis in assets distributed out of Branch's capital is equal to the portion of the capital basis pool attributable to the distribution. Branch's earnings are translated into U.S. dollars at the average exchange rate for the taxable year. DC otherwise applies section 987 in a reasonable manner.

(C) ***Application of the pretransition method before the transition date.*** On June 30, year 3, Branch distributed €100 cash to DC. Of this amount, €50 represented a remittance out of earnings, and €50 represented a distribution out of capital.

(*1*) ***Remittance out of earnings.*** For purposes of determining section 987 gain or loss recognized on the remittance, Branch's earnings equity pool was equal to €50, and its earnings basis pool was equal to $60, as shown in the table below. Because Branch remitted 100% of the earnings equity pool (€50), the entire earnings basis pool, or $60, was attributable to the remittance. The value of the remittance was $67.50 (€50 translated at the spot rate on June 30, year 3, of €1 = $1.35). Therefore, in year 3, DC recognized section 987 gain of $7.50, equal to the difference between the value of the remittance ($67.50) and the portion of the basis pool attributable to the remittance ($60). As a result of the remittance, the earnings equity pool and the earnings basis pool were each reduced to zero. In the hands of DC, the €50 distributed out of earnings had a basis of $67.50 (€50 translated at the spot rate on June 30, year 3, of €1 = $1.35).

TABLE 3 TO PARAGRAPH (l)(2)(i)(C)(*1*)—EARNINGS EQUITY AND BASIS POOLS

	Equity pool	Translation rate	Basis pool
Year 2 Earnings	€25	€1 = $1.15	$28.75
Year 3 Earnings	€25	€1 = $1.25	31.25
Total	€50		60

(*2*) ***Distribution out of capital.*** The basis of the €50 distributed out of capital was equal to the portion of the capital basis pool attributable to the distribution. For this purpose, the capital equity pool was equal to €150, and the capital basis pool was equal to $150, as shown in the table below. Because Branch distributed 33% of the capital equity pool, or €50, 33% of the capital basis pool, or $50, was attributable to the

distribution. In the hands of DC, the €50 distributed out of capital had a basis of $50. As a result of the capital distribution, the capital equity pool was reduced to €100 and the capital basis pool was reduced to $100.

TABLE 4 TO PARAGRAPH (l)(2)(i)(C)(2)—CAPITAL EQUITY AND BASIS POOLS

	Equity pool	Translation rate	Basis pool
Contribution (11/30/Year 1)	€150	€1 = $1	$150
Total	€150		150

(3) ***Section 988 gain recognized.*** On June 30, year 3, DC exchanged €100 with an aggregate basis of $117.50 (equal to the sum of the $67.50 basis of the remittance out of earnings and the $50 basis of the distribution out of capital) for $135. Therefore, DC recognized $17.50 of gain under section 988.

(ii) *Analysis —*

(A) ***DC's method is an eligible pretransition method.*** Before the transition date, DC followed a reasonable method of applying section 987 that would result in the same total amount of income over the life of DC ($125) as an earnings and capital method, as explained in paragraphs (l)(2)(ii)(A)(*1*) and (*2*) of this section (*Example 2*). Therefore, this method is an eligible pretransition method under paragraph (e)(4)(ii) of this section. Consequently, DC determines its pretransition gain or loss with respect to Branch under paragraph (e)(2) of this section.

(*1*) ***DC's total amount of income under its pretransition method.*** Under DC's pretransition method, DC recognized $7.50 of section 987 gain and $17.50 of section 988 gain in year 3. In addition, on December 31, year 3, DC had $40 of embedded gain in its capital equity and basis pools (equal to the difference between its capital equity pool of €100, translated at the spot rate on December 31, year 3, of €1 = $1.40, and its capital basis pool of $100) which will be taken into account in the future (when Branch distributes property out of capital and the property is sold). DC also recognized $60 of earnings with respect to Branch ($28.75 in year 2 and $31.25 in year 3). Thus, DC's total income (recognized and unrecognized) with respect to Branch is $125.

(*2*) ***DC's total amount of income under an earnings and capital method.*** If DC had instead applied an earnings and capital method, as described in paragraph (l)(1)(i)(C) of this section (*Example 1*), DC would have recognized section 987 gain of $30 in year 3 and would not have recognized section 988 gain in year 3, as explained in paragraph (l)(1)(i)(D) of this section. On December 31, year 3, DC would have unrecognized section 987 gain in its equity and basis pools of $35 (*see* paragraph (l)(1)(ii)(B)(*1*) of this section (*Example 1*)). DC would also have recognized $60 of earnings with respect to Branch ($28.75 in year 2 and $31.25 in year 3). Thus, DC's total income (recognized and unrecognized) with respect to Branch is $125.

(B) ***Pretransition gain or loss.*** Under paragraph (e)(2) of this section, DC's pretransition gain or loss with respect to Branch is equal to sum of the deemed termination amount described in paragraph (e)(2)(i)(A) of this section and the owner functional currency net value adjustment described in paragraph (e)(2)(i)(B) of this section. As explained in paragraphs (l)(2)(ii)(B)(*1*) and (*2*) of this section (*Example 2*), the deemed termination amount is zero and the owner functional currency net value adjustment is $40. Therefore, DC has $40 of pretransition gain with respect to Branch. Under paragraph (e)(5)(i)(A) of this section, the pretransition gain is treated as Branch's net accumulated unrecognized section 987 gain. However, if DC elects to recognize its pretransition gain ratably over the transition period under paragraph (e)(5)(ii) of this section, the pretransition gain is not treated as net accumulated unrecognized section 987 gain. Instead, DC recognizes $4 (one tenth of its pretransition gain) for each of the ten taxable years from year 4 through year 13.

(*1*) ***Deemed termination amount.*** Under paragraph (e)(2)(i)(A) of this section, the deemed termination amount is the amount of section 987 gain or loss that would have been recognized by DC under the eligible pretransition method if Branch terminated and transferred all of its assets and liabilities to DC on December 31, year 3. Under DC's eligible pretransition method, if Branch had transferred all of its assets and liabilities to DC, this would have been treated as a distribution out of capital. Under its eligible pretransition method, DC would not have recognized section 987 gain or loss on a distribution out of capital. Therefore, the deemed termination amount is zero.

(*2*) ***Owner functional currency net value adjustment.*** On December 31, year 3, Branch had no liabilities and only one asset: land with a basis of €100. Under paragraph (e)(2)(i)(B) of this section, the owner functional currency net value adjustment is equal to the basis of Branch's land, translated into U.S. dollars at the transition exchange rate, reduced by the basis of Branch's land, translated into U.S. dollars at the pretransition translation rate on December 31, year 3. Under paragraph (e)(2)(i)(C) of this section, the pretransition translation rate is the rate that would be used under the eligible pretransition method to determine the basis of the land in the hands of DC if Branch transferred the land to DC. Under DC's eligible pretransition method, DC's basis in assets distributed from Branch is equal to the portion of the capital basis pool attributable to the distribution. If Branch transferred the land with a basis of €100 to DC on December 31, year 3, its remaining capital basis pool of $100 would be attributable to the distribution, and the land would have a basis of $100 in the hands of DC. Because the land had a basis of €100 in the hands of Branch, and would have a basis of $100 in the hands of DC if it were distributed on December 31, year 3, the pretransition translation rate is €1 = $1. Under paragraph (d)(3)(i) of this section, because a current rate election is in effect for year 4, the transition exchange rate is the spot rate applicable to December 31, year 3. The €100 basis of Branch's land, translated at the spot rate on December 31, year 3 of €1 = $1.40 is equal to $140. The €100 basis of Branch's land, translated at the pretransition translation rate on December 31, year 3 of €1 = $1 is equal to $100. Therefore, the owner functional currency net value adjustment is equal to $40 ($140−$100).

(C) ***Determination of unrecognized section 987 gain or loss in year 4.*** For purposes of determining unrecognized section 987 gain or loss in year 4 under § 1.987-4(d), the owner functional currency net value of Branch on the last day of year 3 is determined by

translating the €100 basis of the land at the transition exchange rate, which is the spot rate on December 31, year 3 (€1 = $1.40). Therefore, the owner functional currency net value of Branch on the last day of year 3 is $140.

(iii) ***Alternative facts*** —

(A) ***No current rate election.*** Assume the facts are the same as described in paragraph (l)(2)(i) of this section (*Example 2*), except that a current rate election is not in effect for year 4.

(B) ***Analysis.*** As explained in paragraph (l)(2)(ii)(A) of this section (*Example 2*), DC determines its pretransition gain or loss with respect to Branch under paragraph (e)(2) of this section. Because a current rate election is not in effect, the transition exchange rate is determined under paragraph (d)(3)(ii) of this section.

(*1*) ***Transition exchange rate.*** DC applied an earnings only method described in paragraph (e)(4)(ii) of this section before the transition date. Under paragraph (d)(3)(ii) of this section, because a current rate election is not in effect for year 4, the transition exchange rate for Branch's land is equal to the pretransition translation rate. As explained in paragraph (l)(2)(ii)(B)(*2*) of this section (*Example 2*), the pretransition translation rate is €1 = $1.

(*2*) ***Pretransition gain or loss.*** Because the transition exchange rate for the land (Branch's sole asset) is equal to the pretransition translation rate, the owner functional currency net value adjustment is zero. As explained in paragraph (l)(2)(ii)(B)(*1*) of this section (*Example 2*), the deemed termination amount is also zero. Therefore, DC has no pretransition gain or loss with respect to Branch.

(*3*) ***Determination of unrecognized section 987 gain or loss in year 4.*** For purposes of determining unrecognized section 987 gain or loss in year 4 under § 1.987-4(d), the owner functional currency net value of Branch on the last day of year 3 is determined by translating the €100 basis of the land at the transition exchange rate, which is the pretransition translation rate of €1 = $1. Therefore, the owner functional currency net value of Branch on the last day of year 3 is $100.

(3) ***Example 3: Earnings only method described in paragraph (e)(4)(iii) of this section*** —

(i) ***Facts*** —

(A) ***In general.*** The facts and exchange rates are the same as in paragraph (l)(1) of this section (*Example 1*), except that DC used an earnings only method with respect to Branch before the transition date, as described in paragraph (l)(3)(i)(B) of this section.

(B) ***Pretransition method.*** Under the earnings only method, DC maintains an equity pool in euros (Branch's functional currency) and a basis pool in U.S. dollars (DC's functional currency) with respect to Branch's earnings. However, DC does not maintain separate equity and basis pools with respect to Branch's capital. Distributions are treated as being made first out of earnings and then out of capital. When Branch makes a remittance out of earnings, DC recognizes section 987 gain or loss equal to the difference between the amount of the remittance (translated into U.S. dollars at the spot rate on the date of the remittance) and the portion of the earnings basis pool attributable to the remittance. No section 987 gain or loss is recognized on a distribution out of capital. Under DC's pretransition method, DC's basis in assets distributed by Branch (whether out of earnings

or capital) is equal to Branch's basis in the assets translated at the spot rate on the date of the distribution. Branch's earnings are translated into U.S. dollars at the average exchange rate for the taxable year. DC first applied its earnings only method on a return filed before November 9, 2023. In addition, DC applied its earnings only method consistently to all of its section 987 QBUs and otherwise applied section 987 in a reasonable manner.

(C) ***Application of the pretransition method before the transition date.*** On June 30, year 3, Branch distributed €100 cash to DC. Of this amount, €50 represented a remittance out of earnings, and €50 represented a distribution out of capital.

(*1*) ***Remittance out of earnings.*** For purposes of determining section 987 gain or loss recognized on the remittance, Branch's earnings equity pool was equal to €50, and its earnings basis pool was equal to $60, as shown in the table below. Because Branch remitted 100% of the earnings equity pool (€50), the entire earnings basis pool, or $60, was attributable to the remittance. The value of the remittance was $67.50 (€50 translated at the spot rate on June 30, year 3, of €1 = $1.35). Therefore, in year 3, DC recognized section 987 gain of $7.50, equal to the difference between the value of the remittance ($67.50) and the portion of the basis pool attributable to the remittance ($60). As a result of the remittance, the earnings equity pool and the earnings basis pool were each reduced to zero.

TABLE 5 TO PARAGRAPH (l)(3)(i)(C)(*1*)—EARNINGS EQUITY AND BASIS POOLS

	Equity pool	Translation rate	Basis pool
Year 2 Earnings	€25	€1 = $1.15	$28.75
Year 3 Earnings	€25	€1 = $1.25	31.25
Total	€50		60

(*2*) ***Basis of euros distributed.*** In the hands of DC, the €100 distributed had a basis of $135 (€100 translated at the spot rate on June 30, year 3, of €1 = $1.35). DC did not recognize gain or loss under section 988 when it exchanged the €100 for $135.

(ii) ***Analysis —***

(A) ***DC's method is an eligible pretransition method.*** Unlike in paragraph (l)(2) of this section (*Example 2*), DC's earnings only method would not result in the same total amount of income over the life of DC as an earnings and capital method described in paragraph (e)(4)(i) of this section because DC does not maintain capital basis and equity pools and DC translates the basis of all property distributed from Branch at the spot rate on the distribution date. However, this method is an eligible pretransition method under paragraph (e)(4)(iii) of this section because DC first applied its earnings only method on a return filed before November 9, 2023, DC applied its earnings only method consistently to all of its section 987 QBUs, and DC otherwise applied section 987 in a reasonable manner. Consequently, DC determines its pretransition gain or loss with respect to Branch under paragraph (e)(2) of this section.

(B) ***Pretransition gain or loss.*** Under paragraph (e)(2) of this section, DC's pretransition gain or loss with respect to Branch is equal to the sum of the deemed termination amount described in paragraph (e)(2)(i)(A) of this section and the owner functional currency net value adjustment described in paragraph (e)(2)(i)(B) of this section. As explained in paragraphs (l)(3)(ii)(B)(*1*) and (*2*) of this section (*Example 3*), the deemed termination amount is zero and the owner functional currency net value adjustment is zero. Therefore, DC has no pretransition gain or loss with respect to Branch.

(*1*) ***Deemed termination amount.*** Under paragraph (e)(2)(i)(A) of this section, the deemed termination amount is the amount of section 987 gain or loss that would have been recognized by DC under the eligible pretransition method if Branch terminated and transferred all of its assets and liabilities to DC on December 31, year 3. Under DC's eligible pretransition method, if Branch had transferred all of its assets and liabilities to DC, it would have been treated as a distribution out of capital. Under its eligible pretransition method, DC would not have recognized section 987 gain or loss on a distribution out of capital. Therefore, the deemed termination amount is zero.

(*2*) ***Owner functional currency net value adjustment.*** On December 31, year 3, Branch has no liabilities and only one asset: land with a basis of €100. Under paragraph (e)(2)(i)(B) of this section, the owner functional currency net value adjustment is equal to the basis of the land, translated into U.S. dollars at the transition exchange rate, reduced by the basis of the land, translated into U.S. dollars at the pretransition translation rate. Under paragraph (d)(3)(i) of this section, the transition exchange rate is the spot rate applicable to December 31, year 3. Under paragraph (e)(2)(i)(C) of this section, the pretransition translation rate is the rate that would be used under DC's eligible pretransition method to determine the basis of the land in the hands of DC if Branch transferred the land to DC on December 31, year 3. Under DC's eligible pretransition method, if Branch transferred the land to DC, DC's basis in the land would be equal to Branch's basis (€100) translated at the spot rate on the date of the distribution. Therefore, the pretransition translation rate on December 31, year 3, is equal to the spot rate on December 31, year 3. Consequently, the owner functional currency net value adjustment is zero.

(C) ***Determination of unrecognized section 987 gain or loss in year 4.*** For purposes of determining unrecognized section 987 gain or loss in year 4 under § 1.987-4(d), the owner functional currency net value of Branch on the last day of year 3 is determined by translating the €100 basis of the land at the spot rate on December 31, year 3 (€1 = $1.40). Therefore, the owner functional currency net value of Branch on the last day of year 3 is $140.

(4) ***Example 4: Owner did not apply section 987(3)*** —

(i) ***Facts.*** The facts and exchange rates are the same as in paragraph (l)(1) of this section (*Example 1*), except that DC did not apply section 987(3) with respect to Branch and did not recognize section 987 gain or loss with respect to Branch before the transition date.

(ii) ***Analysis*** —

(A) ***DC's method is not an eligible pretransition method.*** Because DC did not apply section 987(3) with respect to Branch before the transition date, DC did not apply an eligible pretransition method under paragraph (e)(4) of this section. Therefore, DC determines pretransition gain or loss under paragraph (e)(3) of this section.

(B) ***Pretransition gain or loss.*** Under paragraph (e)(3) of this section, DC's pretransition gain or loss with respect to Branch is equal to the annual unrecognized section 987 gain or loss with respect to Branch for all taxable years ending before the transition date in which DC was the owner of Branch (that is, years 1 through 3), reduced by section 987 gain or loss recognized by DC before the transition date. As explained in paragraphs (l)(4)(ii)(C) through (E) of this section (*Example 4*), DC's annual unrecognized section 987 gain for year 1 is $7.50, DC's annual unrecognized section 987 gain for year 2 is $16.25, and DC's annual unrecognized section 987 gain for year 3 is $23.75. DC did not recognize any section 987 gain or loss with respect to Branch before the transition date. Therefore, DC has $47.50 of pretransition gain with respect to Branch. Under paragraph (e)(5)(i)(A) of this section, the pretransition gain is treated as Branch's net accumulated unrecognized section 987 gain. However, if DC elects to recognize its pretransition gain ratably over the transition period under paragraph (e)(5)(ii) of this section, the pretransition gain is not treated as net accumulated unrecognized section 987 gain. Instead, DC recognizes $4.75 (one tenth of its pretransition gain) for each of the ten taxable years from year 4 through year 13.

(C) ***Annual unrecognized section 987 gain or loss for year 1.*** Under paragraph (e)(3)(iii) of this section, annual unrecognized section 987 gain or loss with respect to a section 987 QBU is determined under the rules of § 1.987-4(d), applied as though a current rate election was in effect for all relevant taxable years (such that all items are treated as marked items), but modified so that only §§ 1.987-4(d)(1) (change in owner functional currency net value) and 1.987-4(d)(10) (adjustment for residual increase or decrease to net assets) are applied. As explained in paragraphs (l)(4)(ii)(C)(*1*) and (*2*) of this section (*Example 4*), in year 1, the change in owner functional currency net value under § 1.987-4(d)(1) is an increase of $165, and there is a negative adjustment of $157.50 under § 1.987-4(d)(10). Therefore, DC's annual unrecognized section 987 gain for year 1 is $7.50.

(*1*) ***Change in owner functional currency net value for year 1.*** On December 31, year 1, Branch held land with a basis of €100 and €50 cash. Therefore, on the last day of year 1, Branch's owner functional currency net value is $165 (150 euros translated at the spot rate on December 31, year 1, of €1 = $1.10). Because Branch was formed in year 1, its owner functional currency net value on the last day of the preceding taxable year is zero. *See* § 1.987-4(d)(1)(iii). Therefore, the change in owner functional currency net value is an increase of $165.

(*2*) ***Residual increase to net assets for year 1.*** Under § 1.987-4(d)(10), unrecognized section 987 gain or loss for a taxable year is decreased by any residual increase to net assets (and increased by any residual decrease to net assets), translated into the owner's functional currency at the yearly average exchange rate for the taxable year. For this purpose, the residual increase (or decrease) to net assets is equal to the change in net value of the section 987 QBU, determined in the section 987 QBU's functional currency (that is, the QBU net value). *See* § 1.987-4(d)(10)(ii)(B) and (e)(2)(ii). On December 31, year 1, Branch held land with a basis of €100 euros and €50 cash. Therefore, on the last day of year 1, Branch has a QBU net value of €150.

Because Branch was formed in year 1, its QBU net value on the last day of the preceding taxable year is zero. *See* § 1.987-4(d)(1)(iii). Therefore, the residual increase to net assets is €150. This results in a negative adjustment to annual unrecognized section 987 gain or loss of $157.50 for year 1 (equal to €150 translated at the yearly average exchange rate for year 1 of €1 = $1.05).

(D) ***Annual unrecognized section 987 gain or loss for year 2.*** As explained in paragraphs (l)(4)(ii)(D)(*1*) and (*2*) of this section (*Example 4*), in year 2, the change in owner functional currency net value under § 1.987-4(d)(1) is an increase of $45, and there is a negative adjustment of $28.75 under § 1.987-4(d)(10). Therefore, DC's annual unrecognized section 987 gain for year 2 is $16.25.

(*1*) ***Change in owner functional currency net value for year 2.*** On December 31, year 2, Branch held land with a basis of €100 and €75 cash. Therefore, on the last day of year 2, Branch's owner functional currency net value is $210 (175 euros translated at the spot rate on December 31, year 2, of €1 = $1.20). As explained in paragraph (l)(4)(ii)(C)(*1*) of this section (*Example 4*), Branch's owner functional currency net value on the last day of year 1 was $165. Therefore, the change in owner functional currency net value is an increase of $45.

(*2*) ***Residual increase to net assets for year 2.*** On December 31, year 2, Branch held land with a basis of €100 and €75 cash. Therefore, on the last day of year 2, Branch has a QBU net value of €175. As explained in paragraph (l)(4)(ii)(C)(*2*) of this section (*Example 4*), Branch had a QBU net value of €150 on December 31, year 1. Therefore, the residual increase to net assets is €25. This results in a negative adjustment to annual unrecognized section 987 gain or loss of $28.75 for year 2 (equal to a reduction of €25, translated at the yearly average exchange rate for year 2 of €1 = $1.15).

(E) ***Annual unrecognized section 987 gain or loss for year 3.*** As explained in paragraphs (l)(4)(ii)(E)(*1*) and (*2*) of this section (*Example 4*), in year 3, the change in owner functional currency net value under § 1.987-4(d)(1) is a decrease of $70, and there is a positive adjustment of $93.75 under § 1.987-4(d)(10). Therefore, DC's annual unrecognized section 987 gain for year 3 is $23.75.

(*1*) ***Change in owner functional currency net value for year 3.*** On December 31, year 3, Branch held land with a basis of €100. Therefore, on the last day of year 3, Branch's owner functional currency net value is $140 (100 euros translated at the spot rate on December 31, year 3, of €1 = $1.40). As explained in paragraph (l)(4)(ii)(D)(*1*) of this section (*Example 4*), Branch's owner functional currency net value on the last day of year 2 was $210. Therefore, the change in owner functional currency net value is a decrease of $70.

(*2*) ***Residual decrease to net assets for year 3.*** On December 31, year 3, Branch held land with a basis of €100. Therefore, on the last day of year 3, Branch has a QBU net value of €100. As explained in paragraph (l)(4)(ii)(D)(*2*) of this section (*Example 4*), Branch had a QBU net value of €175 on December 31, year 2. Therefore, the residual decrease to net assets is €75. This results in a positive adjustment to annual unrecognized section 987 gain or loss of $93.75 for year 3 (equal to €75, translated at the yearly average exchange rate for year 3 of €1 = $1.25).

(F) ***Determination of unrecognized section 987 gain or loss in year 4.*** For purposes of determining unrecognized section 987 gain or loss in year 4 under § 1.987-4(d), the owner functional currency net value of Branch on the last day of year 3 is determined by translating the €100 basis of the land at the spot rate on December 31, year 3 (€1 = $1.40). Therefore, the owner functional currency net value of Branch on the last day of year 3 is $140.

(5) ***Example 5: Error in application of method*** —

(i) ***Facts.*** The facts are the same as described in paragraph (l)(1)(i) of this section (*Example 1*), except that DC inadvertently miscalculated the amount of the June 30, year 3, remittance as being €90 rather than €100. This reduced the amount of section 987 gain recognized by DC in year 3.

(ii) ***Analysis.*** DC committed an error in its application of the earnings and capital method to Branch. Under paragraph (e)(4)(iv)(A) of this section, DC is nonetheless treated as having applied an eligible pretransition method. However, under paragraph (e)(4)(iv)(B) of this section, DC must determine its pretransition gain or loss as though the error had not been made. Therefore, DC computes its pretransition gain or loss as described in paragraph (l)(1)(ii)(B) of this section (*Example 1*). DC has $35 of pretransition gain with respect to Branch.

(6) ***Example 6: Consistent practice not treated as an error*** —

(i) ***Facts.*** Before the transition date, DC used the earnings and capital method described in the 1991 proposed regulations under section 987 with respect to Branch, as described in paragraph (l)(1)(i) of this section (*Example 1*). In years 1, 2, and 3, Branch made recurring purchases of inventory from Owner, which Branch sold to unrelated customers. In connection with the purchase transactions, Branch transferred cash to Owner, and Owner transferred inventory to Branch. Owner did not take these transfers into account in determining the amount of any remittance and, accordingly, did not recognize section 987 gain or loss with respect to these transfers. However, Owner consistently adjusted Branch's equity and basis pools in a reasonable manner to reflect all transfers between Owner and Branch; for this purpose, the amount of each transfer made in connection with the purchase transactions was translated using the average rate for the relevant taxable year. Owner also adjusted Branch's equity and basis pools to account for Branch's income from the sale of inventory.

(ii) ***Analysis*** —

(A) ***DC's method is an eligible pretransition method.*** Before the transition date, DC followed the earnings and capital method described in the 1991 proposed regulations under section 987 with respect to Branch. This method is an eligible pretransition method under paragraph (e)(4)(i) of this section. Therefore, DC determines its pretransition gain or loss with respect to Branch under paragraph (e)(2) of this section.

(B) ***Effect of consistent practice.*** Before the transition date, Owner engaged in a consistent practice under which Owner did not account for inventory purchase transactions in determining the amount of a remittance requiring the recognition of gain or loss under section 987(3). However, Owner consistently accounted for the disregarded transfers in a reasonable manner for purposes of computing its equity and basis pools. Under paragraph (e)(4)(v) of this section, this consistent practice is not treated as an error in the application of a pretransition method and does not preclude Owner's method from being treated as an eligible pretransition method. Therefore, Owner must take this consistent

practice into account in determining pretransition gain or loss under paragraph (e)(2) of this section. In particular, Owner must use the equity and basis pools computed under its consistent practice (rather than the equity and basis pools it would have computed if it had historically taken the disregarded transfers into account in determining the amount of remittances) to determine the deemed termination amount under paragraph (e)(2)(i)(A) of this section.

[T.D. 10016, 89 FR 100165, Dec. 11, 2024]

§ 1.987-11 Suspended section 987 loss relating to certain elections; loss-to-the-extent-of-gain rule.

(a) ***In general.*** This section provides rules relating to suspended section 987 loss. Paragraph (b) of this section provides rules for computing the cumulative suspended section 987 loss with respect to a section 987 QBU or successor suspended loss QBU. Paragraph (c) of this section provides rules that suspend section 987 loss that would otherwise be recognized when a current rate election is in effect. Paragraph (d) of this section provides rules that treat net unrecognized section 987 loss and deferred section 987 loss as suspended section 987 loss when an annual recognition election is made or a current rate election is revoked. Paragraph (e) of this section describes the extent to which suspended section 987 loss is recognized under a loss-to-the-extent-of-gain rule. Paragraph (f) of this section provides rules for determining recognition groupings based on the source and character of section 987 gain or loss. Paragraph (g) of this section provides examples illustrating the rules of this section.

(b) ***Cumulative suspended section 987 loss in a recognition grouping*** —

(1) ***In general.*** The cumulative suspended section 987 loss in a recognition grouping with respect to a section 987 QBU or a successor suspended loss QBU for the current taxable year is equal to the cumulative suspended section 987 loss in the recognition grouping for the prior taxable year, decreased by the amount of suspended section 987 loss in the recognition grouping that was recognized with respect to the QBU under paragraph (e) of this section or under § 1.987-13(b) through (d) in the prior taxable year, and increased by the amount that becomes suspended section 987 loss in the recognition grouping with respect to the QBU in the current taxable year (including under § 1.987-10(e)(5)(i)(B)(*1*)). If the taxable year is the first taxable year of the section 987 QBU (or the first taxable year in which the section 987 regulations apply), the cumulative suspended section 987 loss for the prior taxable year is zero. An owner's (or original suspended loss QBU owner's) total cumulative suspended section 987 loss in a recognition grouping is equal to the sum of its cumulative suspended section 987 gain or loss with respect to each section 987 QBU and successor suspended loss QBU.

(2) ***Combined QBU.*** For purposes of paragraph (b)(1) of this section, in the taxable year of a combination, the cumulative suspended section 987 loss in a recognition grouping with respect to a combined QBU for the prior taxable year is equal to the sum of the cumulative suspended section 987 loss in the recognition grouping with respect to each combining QBU for the prior taxable year; the suspended section 987 loss in a recognition grouping with respect to a combined QBU that was recognized in the prior taxable year is equal to sum of the suspended section 987 loss in the recognition grouping with respect to each combining QBU that was recognized in the prior taxable year.

(3) ***Separated QBU.*** For purposes of paragraph (b)(1) of this section, in the taxable year of a separation, the cumulative suspended section 987 loss in a recognition grouping with respect to a separated QBU for the prior taxable year is equal to the cumulative suspended section 987 loss in the recognition grouping with respect to the separating QBU for the prior taxable year multiplied by the separation fraction; the suspended section 987 loss in a recognition grouping with respect to a separated QBU that was recognized in the prior taxable year is equal to the suspended section 987 loss in the recognition grouping with respect to the separating QBU that was recognized in the prior taxable year multiplied by the separation fraction.

(c) ***Suspension of section 987 loss for taxable years in which a current rate election is in effect and an annual recognition election is not in effect*** —

(1) ***In general.*** Except as provided in paragraph (c)(2) of this section, in a taxable year in which a current rate election is in effect and an annual recognition election is not in effect, to the extent that an owner's net unrecognized section 987 loss with respect to a section 987 QBU would otherwise be recognized under § 1.987-5 (including pursuant to § 1.987-12(b)), or its deferred section 987 loss would otherwise be recognized under § 1.987-12(c), the net unrecognized section 987 loss or deferred section 987 loss is not recognized by the owner and instead becomes suspended section 987 loss. *See* paragraph (g)(1) of this section (*Example 1*) for an illustration of this rule.

(2) ***De minimis rule.*** Paragraph (c)(1) of this section does not apply in a taxable year of an owner in which the total amount of net unrecognized section 987 loss or deferred section 987 loss of the owner and all members of the owner's controlled group that would (but for the application of this paragraph (c)(2) and § 1.987-7(d)(2)(iii)) become suspended section 987 loss under paragraph (c)(1) of this section or § 1.987-7(d) does not exceed the lesser of—

(i) $3 million; or

(ii) Two percent of the total amount of gross income of the owner and all members of the owner's controlled group for the taxable year.

(3) ***Taxable year of controlled group members*** —

(i) ***In general.*** Except as provided in paragraph (c)(3)(ii) of this section, for purposes of applying paragraph (c)(2) of this section with respect to an owner, suspended section 987 loss and gross income of a member of the owner's controlled group is determined by reference to the member's suspended section 987 loss and gross income for its taxable year ending with or within the owner's taxable year.

(ii) ***Owner is a CFC.*** For purposes of applying paragraph (c)(2) of this section with respect to an owner that is a CFC, suspended section 987 loss and gross income of a member of the owner's controlled group is determined by reference to the member's suspended section 987 loss and gross income for its taxable year ending with or within the owner's required year described in section 898(c)(1), without regard to section 898(c)(2).

(d) ***Suspension of net unrecognized section 987 loss upon making or revoking certain elections*** —

(1) ***Making an annual recognition election.*** At the beginning of the first taxable year for which an annual recognition election is in effect, an owner's net accumulated unrecognized section 987 loss and deferred section 987 loss are converted into suspended section 987 loss if either—

(i) A current rate election was in effect for the immediately preceding taxable year; or

(ii) A current rate election was not in effect for the immediately preceding taxable year and, as of the beginning of the taxable year, the sum of the owner's net accumulated unrecognized section 987 loss and deferred section 987 loss exceeds the sum of the owner's net accumulated unrecognized section 987 gain and deferred section 987 gain by more than $5 million.

(2) ***Revoking a current rate election.*** At the beginning of the first taxable year in which a current rate election ceases to be in effect, an owner's net accumulated unrecognized section 987 loss and deferred section 987 loss are converted into suspended section 987 loss. *See* paragraph (g)(3) of this section (*Example 3*) for an illustration of this rule.

(e) ***Loss-to-the-extent-of-gain rule*** —

(1) ***In general.*** An owner of a section 987 QBU (or an original suspended loss QBU owner) only recognizes suspended section 987 loss to the extent described in this paragraph (e) (the *loss-to-the-extent-of-gain rule*). *See* § 1.987-13(b) through (d) for rules requiring the recognition of additional suspended section 987 loss (after the application of the loss-to-the-extent-of-gain rule) in connection with certain transactions.

(2) ***Separate determination for each recognition grouping.*** The amount of suspended section 987 loss recognized is determined separately for the suspended section 987 loss in each recognition grouping. Because the recognition groupings generally are determined on the basis of the initial assignment of section 987 gain or loss under § 1.987-6(b)(2)(i), the loss-to-the-extent-of-gain rule generally is applied on the basis of the initial assignment of section 987 gain or loss.

(3) ***Amount of suspended section 987 loss recognized.*** Except as provided in paragraph (e)(5) or (6) of this section, the amount of suspended section 987 loss in each recognition grouping that an owner recognizes in a taxable year is equal to the sum (if positive) of the current year gain amount described in paragraph (e)(3)(i) of this section and the lookback gain amount described in paragraph (e)(3)(ii) of this section, but may not exceed the owner's total cumulative suspended section 987 loss in the recognition grouping. If the sum of the current year gain amount and the lookback gain amount is negative, then the amount of suspended section 987 loss recognized under this paragraph (e) is zero. *See* paragraphs (g)(1) and (2) of this section (*Examples 1* and *2*) for an illustration of this rule.

(i) ***Current year gain amount.*** The current year gain amount described in this paragraph (e)(3)(i) is equal to the section 987 gain in the recognition grouping that is recognized by the owner in the taxable year, reduced (including below zero) by section 987 loss (other than suspended section 987 loss) in the recognition grouping that is recognized by the owner in the taxable year.

(ii) ***Lookback gain amount.*** The lookback gain amount described in this paragraph (e)(3)(ii) is equal to the section 987 gain in the recognition grouping that was recognized by the owner in the lookback period, reduced (including below zero) by section 987 loss (other than suspended section 987 loss described in paragraph (e)(3)(iii) of this section) in the recognition grouping that was recognized by the owner in the lookback period. The total amount of suspended section 987 loss recognized by reason of the recognition of an amount of section 987 gain cannot, in any event, exceed the amount of section 987 gain recognized.

(iii) ***Suspended section 987 loss not taken into account*** —

(A) ***In general.*** For purposes of applying paragraph (e)(3)(ii) of this section in a taxable year (the *current taxable year*), suspended section 987 loss recognized during the lookback period is not taken into account if it was recognized under this paragraph (e) by reason of the recognition of section 987 gain that was recognized before the lookback period for the current taxable year.

(B) ***Ordering rule.*** For purposes of this paragraph (e)(3)(iii), suspended section 987 loss is treated as recognized by reason of the most recently recognized section 987 gain in the same recognition grouping. *See* paragraph (g)(2) of this section (*Example 2*) for an illustration of this rule.

(iv) ***Lookback period*** —

(A) ***In general.*** Except as provided in paragraph (e)(3)(iv)(B) of this section, the lookback period with respect to a taxable year of an owner means the three preceding taxable years of the owner (or, if the owner was not in existence for three preceding taxable years, each taxable year in which the owner existed), but it does not include any taxable year beginning before the transition date described in § 1.987-10(c)(1).

(B) ***Taxable years in which both a current rate election and an annual recognition election are in effect.*** In a taxable year of an owner in which both a current rate election and an annual recognition election are in effect, the lookback period includes all prior taxable years of the owner in which both a current rate election and an annual recognition election were continuously in effect.

(v) ***Anti-abuse rule.*** If an owner recognizes section 987 gain with a principal purpose of reducing the Federal income tax liability of the owner (or its U.S. shareholders or partners, as applicable), including over multiple taxable years, the section 987 gain is disregarded for purposes of this paragraph (e)(3). For example, this paragraph (e)(3)(v) may apply if an owner that is a CFC recognizes section 987 gain that is offset by a tax attribute of one of the CFC's U.S. shareholders that would not otherwise be used (such as excess foreign tax credits with respect to section 951A category income, or a tested loss). In determining whether a principal purpose described in this paragraph (e)(3)(v) exists, all relevant facts and circumstances are considered, including the extent to which the transaction giving rise to the recognition of section 987 gain resulted in a sustained economic contraction of the section 987 QBU over a period of at least twelve months.

(4) ***Suspended section 987 loss recognized with respect to each section 987 QBU and suspended section 987 loss QBU.*** The amount of suspended section 987 loss in a recognition grouping that is recognized by an owner in a taxable year is treated as attributable to each section 987 QBU or successor suspended loss QBU in proportion to the QBU's suspended section 987 loss in that recognition grouping.

(5) *Section 381(a) transactions*—

(i) ***In general.*** Except as provided in paragraph (e)(5)(ii) of this section (or to the extent that other limitations apply), if one corporation (acquiring corporation) acquires the assets of another corporation (transferor corporation) in a transaction described in section 381(a), section 987 gain or loss recognized by the transferor corporation during the lookback period is taken into account in determining the lookback gain amount of the acquiring corporation in taxable years ending after the transaction under paragraph (e)(3)(ii) of this section. If the lookback period for a taxable year of the acquiring corporation is determined under paragraph (e)(3)(iv)(A) of this

section, the lookback period includes each taxable year of the transferor corporation ending with or within the current taxable year of the acquiring corporation or during the acquiring corporation's lookback period. If the lookback period for a taxable year of the acquiring corporation is determined under paragraph (e)(3)(iv)(B) of this section, the lookback period includes only taxable years of the transferor corporation in which both an annual recognition election and a current rate election were continuously in effect before the transaction (and only if both elections were continuously in effect from the date of the transaction through the current taxable year).

(ii) ***Limitation for inbound nonrecognition transactions.*** If a foreign corporation ceases to exist in a transaction described in § 1.987-8(c)(1)(ii) (inbound section 332 liquidation) or § 1.987-8(c)(2)(ii) (inbound reorganization), section 987 gain recognized by the foreign corporation before the transaction is disregarded for purposes of applying paragraph (e)(3) of this section in taxable years ending after the transaction.

(6) ***Consolidated group members*** —

(i) ***In general.*** All members of a consolidated group are treated as a single owner for purposes of applying this paragraph (e).

(ii) ***Suspended section 987 losses arising in separate return limitation years.*** This paragraph (e)(6)(ii) applies to suspended section 987 losses arising in a separate return limitation year (SRLY, as defined in § 1.1502-1(f)) or treated as arising in a SRLY under the principles of § 1.1502-21(c) (*SRLY section 987 losses*). The aggregate of a member's SRLY section 987 losses that are included in the determination of consolidated taxable income for all consolidated return years of the group may not exceed the aggregate consolidated net income for all consolidated return years of the group determined by reference to only the member's items of section 987 gain or loss, including the member's section 987 losses actually absorbed by the group in the taxable year (whether or not absorbed by the member). For purposes of applying this paragraph (e)(6)(ii), the principles of § 1.1502-21(c) (including the SRLY subgroup principles of § 1.1502-21(c)(2)) apply with appropriate adjustments.

(f) ***Recognition groupings.*** The term *recognition grouping* means the section 987 gain or loss (including section 987 gain or loss that is recognized under § 1.987-5, deferred section 987 gain or loss, suspended section 987 loss, or pretransition gain or loss that is recognized under § 1.987-10(e)(5)(ii)) described in paragraph (f)(1) or (2) of this section, as applicable. If an owner has suspended section 987 loss with respect to a terminating QBU in a taxable year ending before the transition date described in § 1.987-10(c)(1), section 987 gain or loss of the owner (other than section 987 gain or loss with respect to the terminating QBU) is assigned to a recognition grouping based on the method that is used to determine the source and character of section 987 gain or loss for that taxable year.

(1) ***Sourcing and section 904 category.*** Except as provided in paragraph (f)(2) of this section, a recognition grouping includes only section 987 gain or loss that is initially assigned to one of the following statutory and residual groupings—

(i) U.S. source income; or

(ii) Foreign source income in a single section 904 category.

(2) ***Statutory and residual groupings for CFC owners.*** In the case of an owner that is a controlled foreign corporation, a recognition grouping includes only section 987 gain or loss that is initially assigned to one of the statutory and residual groupings described in paragraph (f)(1) of this section and that is also initially assigned to one of the following statutory and residual groupings—

(i) Tentative tested income;

(ii) Each separate subpart F income group (as defined in § 1.960-1(d)(2)(ii)(B));

(iii) Income described in section 952(b) (ECI that is excluded from subpart F income); or

(iv) Income not described in paragraphs (f)(2)(i) through (iii) of this section.

(g) ***Examples.*** The following examples illustrate the application of this section.

(1) ***Example 1: Suspension of section 987 loss and recognition of suspended section 987 loss*** —

(i) ***Facts.*** CFC is a controlled foreign corporation that has the U.S. dollar as its functional currency. CFC owns three section 987 QBUs, QBU1, QBU2, and QBU3. QBU1 has the euro as its functional currency, QBU2 has the pound as its functional currency, and QBU3 has the yen as its functional currency. CFC is subject to a current rate election but not an annual recognition election. CFC is also subject to an election under § 1.987-6(b)(2)(i)(C) (treating section 987 gain or loss relating to passive foreign personal holding company income as attributable to section 988 transactions). An election has not been made under § 1.951A-2(c)(7)(viii) (GILTI high-tax exclusion) with respect to CFC. In year 1, CFC did not have cumulative suspended section 987 loss with respect to any of its QBUs and did not have outstanding deferred section 987 gain or loss. In the three years before year 2, CFC did not recognize any section 987 gain or loss. In year 2, CFC has net unrecognized section 987 loss of $200 with respect to QBU1, net unrecognized section 987 loss of $1,000 with respect to QBU2, and net unrecognized section 987 gain of $1,000 with respect to QBU3. In year 2, each QBU makes a remittance, and CFC's remittance proportion (determined under § 1.987-5(b)(1)) is 25% with respect to QBU1, 15% with respect to QBU2, and 10% with respect to QBU3. For purposes of § 1.987-6(b)(2)(i), all of QBU1's assets generate foreign source passive category income that corresponds to one or more subpart F income groups described in § 1.960-1(d)(2)(ii)(B)(*2*)(*i*) through (*v*), and all of QBU2's and QBU3's assets generate foreign source general category tested income. Another member of CFC's controlled group owns a section 987 QBU with respect to which $10 million of net unrecognized section 987 loss becomes suspended section 987 loss under paragraph (c)(1) of this section in year 2.

(ii) ***Analysis*** —

(A) ***Application of §§ 1.987-5 and 1.987-6 and paragraph (c) of this section.*** In year 2, CFC recognizes $100 of section 987 gain with respect to QBU3 (10% of $1,000) under § 1.987-5(a). Under § 1.987-6(b)(2)(i)(A), (B), and (D), the section 987 gain is initially characterized as foreign source general category tentative tested income. If a current rate election was not in effect, in year 2 CFC would recognize $50 of section 987 loss with respect to QBU1 (25% of $200) and $150 of section 987 loss with respect to QBU2 (15% of $1,000). However, under paragraph (c) of this section, these amounts instead become suspended section 987 loss. The de minimis rule under paragraph (c)(2) of this section does not apply because a member of CFC's controlled group has more than $3 million of section 987 loss that is suspended in year 2 under paragraph (c)(1) of this section. Under § 1.987-6(b)(2)(i)(A) and (B), the $50 of suspended section 987 loss with respect to QBU1

is initially characterized as foreign source passive category income assigned to a subpart F income group described in § 1.960-1(d)(2)(ii)(B)(*2*)(*i*) through (*v*), and is treated as foreign currency loss of the CFC attributable to section 988 transactions not directly related to the business needs of the CFC because an election under § 1.987-6(b)(2)(i)(C) is in effect. Under § 1.987-6(b)(2)(i)(A), (B), and (D), the $150 of suspended section 987 loss with respect to QBU2 is initially characterized as foreign source general category tentative tested income.

(B) ***Cumulative suspended section 987 loss.*** Under paragraph (b) of this section, in year 2, CFC's cumulative suspended section 987 loss in the recognition grouping of foreign source passive category income in a separate subpart F income group for foreign currency gains of CFC with respect to QBU1 is $50, the amount that became suspended section 987 loss in the recognition grouping in year 2. In addition, CFC's total cumulative suspended section 987 loss in that recognition grouping is $50. Similarly, CFC's cumulative suspended section 987 loss in the recognition grouping of foreign source general category tentative tested income with respect to QBU2 is $150, the amount that became suspended section 987 loss in the recognition grouping in year 2. In addition, CFC's total cumulative suspended section 987 loss in that recognition grouping is $150.

(C) ***Current year gain amount and lookback gain amount.*** Under paragraph (e)(3) of this section, in year 2, CFC recognizes suspended section 987 loss in a recognition grouping to the extent of the sum of the current year gain amount described in paragraph (e)(3)(i) of this section and the lookback gain amount described in paragraph (e)(3)(ii) of this section. In the recognition grouping of foreign source general category tentative tested income, the current year gain amount described in paragraph (e)(3)(i) of this section is equal to the section 987 gain of $100 recognized by CFC in year 2 with respect to QBU3. The current year gain amount for all other recognition groupings is zero. During the lookback period (the three years before year 2), CFC did not recognize any section 987 gain or loss. Therefore, the lookback gain amount described in paragraph (e)(3)(ii) of this section is zero for all recognition groupings.

(D) ***Recognition of suspended section 987 loss.*** In year 2, CFC has $50 of total cumulative suspended section 987 loss in the recognition grouping of foreign source passive category income in a separate subpart F income group for foreign currency gains of CFC and $150 of total cumulative suspended section 987 loss in the recognition grouping of foreign source general category tentative tested income. In the recognition grouping of foreign source general category tentative tested income, CFC has a current year gain amount of $100 and a lookback gain amount of zero ($100 in total). Therefore, CFC recognizes $100 of suspended section 987 loss in that recognition grouping. Under paragraph (e)(4) of this section, the cumulative suspended section 987 loss that is recognized by CFC is attributable to QBU2, because QBU2 is CFC's only QBU with cumulative suspended section 987 loss in the recognition grouping of foreign source general category tentative tested income. Because no election under § 1.951A-2(c)(7) applies in year 2, both the $100 of recognized section 987 gain and the $100 of recognized section 987 loss are allocated to foreign source general category tested income. *See* § 1.987-6(b)(2)(ii). The amounts of suspended section 987 loss not recognized (that is, $50 of suspended section 987 loss assigned to foreign source passive

category income in the subpart F income group for foreign currency gains of CFC with respect to QBU1 and $50 of suspended section 987 loss assigned to foreign source general category tentative tested income with respect to QBU2) remain suspended.

(2) ***Example 2: Recognition of suspended section 987 loss by reason of gain recognized during the lookback period —***

(i) ***Facts.*** CFC is a controlled foreign corporation that has the U.S. dollar as its functional currency. CFC owns QBU1, a section 987 QBU with the euro as its functional currency, and CFC has no other QBUs. Assume that all section 987 gain or loss (including suspended section 987 loss) is assigned to the same recognition grouping. CFC is subject to a current rate election but not an annual recognition election. Before year 1, QBU1 does not have cumulative suspended section 987 loss. In year 1, CFC recognizes section 987 gain of $10 million with respect to QBU1. In year 3, CFC recognizes section 987 gain of $15 million with respect to QBU1. In year 4, QBU1 has net unrecognized section 987 loss, and $10 million of the net unrecognized section 987 loss becomes suspended section 987 loss under paragraph (c) of this section. In year 6, an additional $10 million of net unrecognized section 987 loss with respect to QBU1 becomes suspended section 987 loss under paragraph (c) of this section.

(ii) ***Analysis —***

(A) ***Recognition of suspended section 987 loss in year 4.*** In year 4, CFC's total cumulative suspended section 987 loss is $10 million (that is, the loss that becomes suspended in year 4). The current year gain amount under paragraph (e)(3)(i) of this section is zero, because CFC does not recognize section 987 gain in year 4. The lookback period under paragraph (e)(3)(iv)(A) of this section is three years (years 1 through 3). The lookback gain amount under paragraph (e)(3)(ii) of this section is $25 million (the sum of the $10 million of section 987 gain recognized in year 1 and the $15 million of section 987 gain recognized in year 3). Therefore, under paragraph (e)(3) of this section, CFC recognizes suspended section 987 loss of $10 million. Under paragraph (e)(3)(iii)(B) of this section, the suspended section 987 loss is considered to be recognized by reason of the section 987 gain recognized in year 3, which is the most recent taxable year in which section 987 gain was recognized.

(B) ***Recognition of suspended section 987 loss in year 6.*** In year 6, CFC's total cumulative suspended section 987 loss is $10 million (that is, the loss that becomes suspended in year 6). The current year gain amount under paragraph (e)(3)(i) of this section is zero, because CFC does not recognize section 987 gain in year 6. The lookback period under paragraph (e)(3)(iv)(A) of this section is three years (years 3 through 5). The lookback gain amount under paragraph (e)(3)(ii) of this section is $5 million (the sum of the section 987 gain of $15 million recognized in year 3 and the suspended section 987 loss of $10 million recognized in year 4 by reason of the section 987 gain recognized in year 3). Therefore, under paragraph (e)(3) of this section, CFC recognizes $5 million of suspended section 987 loss in year 6.

(iii) ***Alternative facts.*** Assume the facts are the same as described in paragraph (g)(2)(i) of this section, with the following modifications. In year 1, CFC recognizes section 987 gain of $10 million with respect to QBU1. CFC does not recognize section 987 gain in year 3. In year 4, $10 million of net unrecognized section 987 loss with respect to QBU1 becomes suspended section

987 loss under paragraph (c) of this section. In year 5, CFC recognizes section 987 gain of $15 million with respect to QBU1. In year 6, $10 million of net unrecognized section 987 loss with respect to QBU1 becomes suspended section 987 loss under paragraph (c) of this section.

(iv) *Analysis of alternative facts* —

(A) ***Recognition of suspended section 987 loss in year 4.*** In year 4, CFC's total cumulative suspended section 987 loss is $10 million (that is, the loss that becomes suspended in year 4). The current year gain amount under paragraph (e)(3)(i) of this section is zero, because CFC does not recognize section 987 gain in year 4. The lookback period under paragraph (e)(3)(iv)(A) of this section is three years (years 1 through 3). The lookback gain amount under paragraph (e)(3)(ii) of this section is $10 million (equal to the $10 million of section 987 gain recognized in year 1). Therefore, under paragraph (e)(3) of this section, CFC recognizes suspended section 987 loss of $10 million in year 4. Under paragraph (e)(3)(iii)(B) of this section, the suspended section 987 loss is considered to be recognized by reason of the section 987 gain recognized in year 1, which is the most recent taxable year in which section 987 gain was recognized.

(B) ***Recognition of suspended section 987 loss in year 6.*** In year 6, CFC's total cumulative suspended section 987 loss is $10 million (that is, the loss that becomes suspended in year 6). The current year gain amount under paragraph (e)(3)(i) of this section is zero because CFC does not recognize section 987 gain in year 6. The lookback period under paragraph (e)(3)(iv)(A) of this section is three years (years 3 through 5). The lookback gain amount under paragraph (e)(3)(ii) of this section is $15 million (equal to the section 987 gain of $15 million recognized in year 5). Under paragraph (e)(3)(iii)(A) of this section, the suspended section 987 loss recognized in year 4 is not taken into account in determining the lookback gain amount, because it was recognized by reason of the section 987 gain recognized in year 1 (before the beginning of the lookback period for year 6). Therefore, under paragraph (e)(3) of this section, CFC recognizes $10 million of suspended section 987 loss in year 6.

(3) *Example 3: Suspension of section 987 loss when a current rate election is revoked* —

(i) ***Facts.*** U.S. Corp is a domestic corporation that owns all of the interests in DE1. DE1 owns Business A, which is a section 987 QBU of U.S. Corp. In year 1, U.S. Corp made a current rate election but not an annual recognition election. In year 9, U.S. Corp has net unrecognized section 987 loss of $2 million with respect to Business A, which is not recognized or suspended in year 9. U.S. Corp revokes its current rate election effective for year 10. In year 10, before the application of this section, U.S. Corp has net accumulated unrecognized section 987 loss of $2 million.

(ii) ***Analysis.*** Under paragraph (d)(2) of this section, U.S. Corp's net accumulated unrecognized section 987 loss of $2 million with respect to Business A is converted into suspended section 987 loss at the beginning of year 10, the first taxable year in which the current rate election ceases to be in effect.

[T.D. 10016, 89 FR 100165, Dec. 11, 2024]

§ 1.987-12 Deferral of section 987 gain or loss.

(a) *Overview* —

(1) ***Scope.*** This section provides rules that defer the recognition of section 987 gain or loss and rules for recognizing (or suspending) deferred section 987 gain or loss. This paragraph (a) provides an overview of this section and certain instances when this section does not apply. Paragraph (b) of this section describes the extent to which net unrecognized section 987 gain or loss is recognized under § 1.987-5 (or in certain cases, suspended) or becomes deferred section 987 gain or loss in connection with a deferral event. Paragraph (c) of this section describes the extent to which deferred section 987 gain or loss is recognized (or in certain cases, suspended) upon the occurrence of subsequent events. Paragraph (d) of this section provides a rule relating to the treatment of a successor deferral QBU when deferred section 987 loss becomes suspended section 987 loss. Paragraph (e) of this section provides an anti-abuse rule. Paragraph (f) of this section provides rules for determining the deferred section 987 gain or loss of combined and separated QBUs. Paragraph (g) of this section provides definitions. Paragraph (h) of this section provides examples illustrating the rules of this section.

(2) ***Exceptions*** —

(i) ***Annual recognition election.*** This section does not apply to a termination of a section 987 QBU in a taxable year in which an annual recognition election is in effect.

(ii) ***De minimis rule.*** This section does not apply in a taxable year if the aggregate amount of net unrecognized section 987 gain or loss of the owner with respect to all of its section 987 QBUs that would become deferred section 987 gain or loss under this section does not exceed $5 million.

(b) ***Treatment of section 987 gain and loss in connection with a deferral event.*** Notwithstanding § 1.987-5 (general rule requiring recognition of section 987 gain or loss in the taxable year of a remittance), the owner of a section 987 QBU with respect to which a deferral event occurs (an *original deferral QBU*) includes in taxable income section 987 gain or loss in connection with the deferral event only to the extent provided in this paragraph (b).

(1) ***Gain or loss recognized (or suspended) in the taxable year of a deferral event.*** In the taxable year of a deferral event with respect to an original deferral QBU, the owner of the original deferral QBU recognizes section 987 gain or loss under § 1.987-5, except that, solely for purposes of applying § 1.987-5, all assets and liabilities of the original deferral QBU that, immediately after the deferral event, are reflected on the books and records of a successor deferral QBU are treated as not having been transferred and therefore as remaining on the books and records of the original deferral QBU notwithstanding the deferral event. Notwithstanding the prior sentence, any section 987 loss that would otherwise be recognized under this paragraph (b)(1) and § 1.987-5 may instead become suspended loss under § 1.987-11(c) if a current rate election is in effect, or under § 1.987-13(h) if the deferral event also constitutes an outbound loss event.

(2) ***Deferred section 987 gain or loss*** —

(i) ***In general.*** In the taxable year of a deferral event with respect to an original deferral QBU, any net unrecognized section 987 gain or loss that is not recognized or suspended in the taxable year of the deferral event becomes deferred section 987 gain or loss of the original deferral QBU owner. Suspended section 987 loss does not become deferred section 987 loss under this paragraph (b)(2).

(ii) ***Deferred section 987 gain or loss attributable to a successor deferral QBU.*** A portion of the deferred section 987 gain or loss described in paragraph (b)(2)(i) of this section becomes deferred section 987 gain or loss with respect to each successor deferral QBU. Such portion is

equal to the deferred section 987 gain or loss multiplied by a fraction, the numerator of which is the aggregate adjusted basis of the gross assets transferred to the successor deferral QBU in connection with the deferral event and the denominator of which is the aggregate adjusted basis of the gross assets transferred to all successor deferral QBUs in connection with the deferral event.

(c) ***Recognition (or suspension) of deferred section 987 gain or loss following a deferral event.*** An original deferral QBU owner recognizes deferred section 987 gain or loss with respect to a successor deferral QBU in the taxable year of the deferral event and in subsequent taxable years as provided in this paragraph (c).

(1) ***Recognition upon a subsequent remittance*** —

(i) ***In general.*** Except as provided in paragraph (c)(2) of this section, an original deferral QBU owner recognizes deferred section 987 gain or loss in the taxable year of the deferral event, and in subsequent taxable years, upon a remittance from a successor deferral QBU to the owner of the successor deferral QBU (*successor deferral QBU owner*) in the amount described in paragraph (c)(1)(ii) of this section. Notwithstanding the prior sentence, any deferred section 987 loss that would otherwise be recognized under this paragraph (c)(1) may instead become suspended section 987 loss under § 1.987-11(c) (if a current rate election is in effect with respect to the original deferral QBU owner) or under § 1.987-7(d)(1)(ii) (in the case of a partnership).

(ii) ***Amount.*** The amount of deferred section 987 gain or loss that is recognized (or suspended) pursuant to this paragraph (c)(1) in a taxable year of the original deferral QBU owner is the original deferral QBU owner's outstanding deferred section 987 gain or loss (that is, the amount of deferred section 987 gain or loss not previously recognized or suspended) with respect to the successor deferral QBU multiplied by the remittance proportion of the successor deferral QBU owner with respect to the successor deferral QBU for the taxable year ending with or within the taxable year of the original deferral QBU owner, as determined under § 1.987-5(b) without regard to any annual recognition election of the successor deferral QBU owner. *See* paragraph (h)(4) of this section (*Example 4*) for an illustration of this rule.

(iii) ***Deemed remittance by a successor deferral QBU.*** For purposes of this paragraph (c)(1), in a taxable year of the original deferral QBU owner in which a successor deferral QBU ceases to be owned by a member of the controlled group that includes the original deferral QBU owner, the successor deferral QBU is treated as having a remittance proportion of one. Accordingly, if a successor deferral QBU ceases to be owned by a member of the controlled group that includes the original deferral QBU owner, the original deferral QBU owner's outstanding deferred section 987 gain or loss with respect to that successor deferral QBU will be recognized (or suspended). For purposes of this paragraph (c)(1), if the original deferral QBU owner goes out of existence and there is no qualified successor, in the last taxable year of the original deferral QBU owner, each successor deferral QBU is treated as having a remittance proportion of one. This paragraph (c)(1)(iii) does not affect the application of the section 987 regulations to the successor deferral QBU owner with respect to its ownership of the successor deferral QBU.

(2) ***Deferral events and outbound loss events with respect to a successor deferral QBU.*** Notwithstanding paragraph (c)(1) of this section, if assets of the successor deferral QBU (*transferred assets*) are transferred (or deemed transferred) in a transaction that would constitute a deferral event or an outbound loss event if the original deferral QBU owner owned the successor deferral QBU directly and the original deferral QBU owner had net unrecognized section 987 gain or loss with respect to

the successor deferral QBU equal to its outstanding deferred section 987 gain or loss with respect to the successor deferral QBU (the *deemed transaction*), then, in accordance with the rules of this section and § 1.987-13(h)—

(i) The original deferral QBU owner recognizes its outstanding deferred section 987 gain or loss, or suspends its outstanding deferred section 987 loss, to the extent it would have recognized or suspended net unrecognized section 987 gain or loss as a result of the deemed transaction; and

(ii) Each section 987 QBU is a successor deferral QBU to the extent it would have been after the deemed transaction and the original deferral QBU owner has deferred section 987 gain or loss with respect to the successor deferral QBU to the extent it would have after the deemed transaction;

(iii) Each eligible QBU is a successor suspended loss QBU to the extent it would have been after the deemed transaction and the original deferral QBU owner has suspended section 987 loss with respect to the suspended loss QBU to the extent it would have after the deemed transaction.

(d) ***Successor deferral QBU becomes a successor suspended loss QBU.*** A successor deferral QBU becomes a successor suspended loss QBU, and an original deferral QBU owner becomes an original suspended loss QBU owner, if any of the original deferral QBU owner's deferred section 987 loss with respect to the successor deferral QBU becomes suspended section 987 loss. An eligible QBU may be both a successor deferral QBU and a successor suspended loss QBU and the original deferral QBU owner may also be an original suspended loss QBU owner.

(e) ***Anti-abuse rule.*** No section 987 loss is recognized under this section, § 1.987-5 or § 1.987-13 in connection with a transaction or series of transactions that are undertaken with a principal purpose of avoiding the purposes of this section.

(f) ***Combinations and separations of successor deferral QBUs.*** A combined QBU is a successor deferral QBU if either combining QBU was a successor deferral QBU. A separated QBU is a successor deferral QBU if the separating QBU was a successor deferral QBU.

(1) ***Combined QBU.*** The outstanding deferred section 987 gain or loss of a combined QBU in each recognition grouping for a taxable year is equal to the sum of the combining QBUs' outstanding deferred section 987 gain or loss in that recognition grouping.

(2) ***Separated QBU.*** The outstanding deferred section 987 gain or loss of a separated QBU in each recognition grouping for a taxable year is equal to the separating QBU's outstanding deferred section 987 gain or loss in each recognition grouping multiplied by the separation fraction.

(g) ***Definitions.*** The following definitions apply for purposes of this section.

(1) ***Deferral event.*** A deferral event with respect to a section 987 QBU means any transaction or series of transactions that satisfy the conditions described in both paragraphs (g)(1)(i) and (ii) of this section.

(i) ***Events.*** The transaction or series of transactions constitutes:

(A) A termination of the section 987 QBU under § 1.987-8(b)(2) (substantially all the assets transferred to the owner), § 1.987-8(b)(5) (section 987 QBU ceases to be a section 987 QBU), or § 1.987-8(b)(6) (individual or corporation ceases to be a direct owner of a section 987 QBU); or

(B) [Reserved]

(ii) ***Assets on books of successor deferral QBU.*** Immediately after the transaction or series of transactions, assets of the section 987 QBU are reflected on the books and records of a successor deferral QBU.

(2) ***Successor deferral QBU.*** A section 987 QBU (*potential successor deferral QBU*) is a successor deferral QBU with respect to a section 987 QBU referred to in paragraph (g)(1)(i) of this section if, immediately after the transaction or series of transactions described in that paragraph, the potential successor deferral QBU satisfies all of the conditions described in paragraphs (g)(2)(i) through (iii) of this section.

(i) The books and records of the potential successor deferral QBU reflect assets that, immediately before the transaction or series of transactions described in paragraph (g)(1)(i) of this section, were reflected on the books and records of the section 987 QBU referred to in paragraph (g)(1)(i) of this section.

(ii) The owner of the potential successor deferral QBU and the owner of the section 987 QBU referred to in paragraph (g)(1)(i) of this section immediately before the transaction or series of transactions described in paragraph (g)(1)(i) of this section are members of the same controlled group.

(iii) If the owner of the section 987 QBU referred to in paragraph (g)(1)(i) of this section immediately before the transaction or series of transactions described in paragraph (g)(1)(i) of this section was a U.S. person, the potential successor deferral QBU is owned by a U.S. person.

(3) ***Original deferral QBU owner.*** An original deferral QBU owner means, with respect to an original deferral QBU, the owner of the original deferral QBU immediately before the deferral event, or the owner's qualified successor.

(4) ***Qualified successor.*** A qualified successor with respect to a corporation (*transferor corporation*) means another corporation that acquires the assets of the transferor corporation in a transaction described in section 381(a) (*acquiring corporation*), provided that the acquiring corporation is a domestic corporation and the transferor corporation was a domestic corporation, or the acquiring corporation is a controlled foreign corporation and the transferor corporation was a controlled foreign corporation. A qualified successor of a person includes the qualified successor of a qualified successor.

(h) ***Examples.*** The following examples illustrate the application of this section. For purposes of the examples, DC1 is a domestic corporation that owns all of the stock of DC2, which is also a domestic corporation, and CFC1, a controlled foreign corporation. In addition, DC1, DC2, and CFC1 are members of a controlled group, and the de minimis rule of paragraph (a)(2)(ii) of this section is not applicable. Finally, except as otherwise provided, Business A is a section 987 QBU with the euro as its functional currency, there are no transfers between Business A and its owner, and Business A's assets are not depreciable or amortizable.

(1) ***Example 1: Contribution of a section 987 QBU with net unrecognized section 987 gain to a member of the controlled group —***

(i) ***Facts.*** DC1 owns Business A. The adjusted balance sheet of Business A reflects assets with an aggregate adjusted basis of €1,000x and no liabilities. DC1 contributes €900x of Business A's assets to DC2 in exchange for DC2 stock in a transaction to which section 351 applies. Immediately after the contribution, the remaining €100x of Business A's assets are no longer reflected on the books and records of a section 987 QBU (but are instead reflected on the

books and records of DC1's home office). DC2, which has the U.S. dollar as its functional currency, uses the Business A assets in a business (*Business B*) that constitutes a section 987 QBU. At the time of the contribution, Business A has net unrecognized section 987 gain of $100x.

(ii) ***Analysis*** —

(A) Under § 1.987-2(c)(2)(ii), DC1's contribution of €900x of Business A's assets to DC2 is treated as a transfer of all of the assets of Business A to DC1, immediately followed by DC1's contribution of €900x of Business A's assets to DC2. The contribution of Business A's assets is a deferral event within the meaning of paragraph (g)(1) of this section because:

(*1*) The transfer from Business A to DC1 is a transfer of substantially all of Business A's assets to DC1, resulting in a termination of the Business A QBU under § 1.987-8(b)(2); and

(*2*) Immediately after the transaction, assets of Business A are reflected on the books and records of Business B, a section 987 QBU owned by a member of DC1's controlled group and a successor deferral QBU within the meaning of paragraph (g)(2) of this section. Accordingly, Business A is an original deferral QBU within the meaning of paragraph (b) of this section, and DC1 is an original deferral QBU owner of Business A within the meaning of paragraph (g)(3) of this section.

(B) Under paragraph (b)(1) of this section, DC1's taxable income in the taxable year of the deferral event includes DC1's section 987 gain or loss determined with respect to Business A under § 1.987-5, except that, for purposes of applying § 1.987-5, all assets of Business A that are reflected on the books and records of Business B immediately after Business A's termination are treated as not having been transferred and therefore as though they remained on Business A's books and records (notwithstanding the deemed transfer of those assets under § 1.987-8(e)). Accordingly, in the taxable year of the deferral event, Business A is treated as making a remittance of €100x, corresponding to the assets of Business A that are no longer reflected on the books and records of a section 987 QBU, and is treated as having a remittance proportion with respect to Business A of 0.1, determined by dividing the €100x remittance by the sum of the remittance and the €900x aggregate adjusted basis of the gross assets deemed to remain on Business A's books and records at the end of the taxable year. Thus, DC1 recognizes $10x of section 987 gain in the taxable year of the deferral event. DC1's deferred section 987 gain equals $90x, which is the amount of its net unrecognized section 987 gain (which is $100x) less the amount of section 987 gain recognized by DC1 under § 1.987-5 and this section (which is $10x).

(2) ***Example 2: Contribution of a section 987 QBU with net unrecognized section 987 loss to a member of the controlled group when a current rate election is in effect*** —

(i) ***Facts.*** The facts are the same as in paragraph (h)(1) of this section (*Example 1*) except that a current rate election is in effect for the taxable year (and an annual recognition election is not in effect) and, at the time of the contribution, Business A has net unrecognized section 987 loss of $100x. Business A is engaged in the business of manufacturing Product X before the

contribution, and Business B is engaged in the same business after the contribution. After the contribution, the €100x of assets that are reflected on the books and records of DC1's home office are not used in the business of manufacturing Product X.

(ii) *Analysis* —

(A) For the reasons described in paragraph (h)(1) of this section (*Example 1*), the contribution results in a termination of the Business A QBU and a deferral event with respect to the Business A QBU, an original deferral QBU; DC1 is an original deferral QBU owner within the meaning of paragraph (g)(3) of this section; Business B is a successor deferral QBU with respect to Business A; and DC2 is a successor deferral QBU owner.

(B) Under paragraph (b)(1) of this section, for purposes of applying § 1.987-5, all the assets of Business A that are reflected on the books and records of Business B immediately after Business A's termination are treated as not having been transferred and therefore as though they remained on Business A's books and records (notwithstanding the deemed transfer of those assets under § 1.987-8(e)). Accordingly, in the taxable year of the deferral event, Business A is treated as making a remittance of €100x, corresponding to the assets of Business A that are no longer reflected on the books and records of a section 987 QBU, and DC1 is treated as having a remittance proportion with respect to Business A of 0.1, determined by dividing the €100x remittance by the sum of the remittance and the €900x aggregate adjusted basis of the gross assets deemed to remain on Business A's books and records at the end of the taxable year. Thus, but for the application of § 1.987-11(c), DC1 would recognize $10x of section 987 loss in the taxable year of the deferral event. Under § 1.987-11(c), because a current rate election is in effect (and an annual recognition election is not in effect), the loss is instead treated as suspended section 987 loss. DC1's deferred section 987 loss equals $90x, which is the amount of its net unrecognized section 987 loss less the amount of section 987 loss suspended under § 1.987-11(c) (which is $10x).

(C) Under § 1.987-13(b)(1)(i), Business B is a successor suspended loss QBU because, immediately after the termination of the Business A section 987 QBU, a significant portion of the assets of Business A was reflected on the books and records of Business B (an eligible QBU), Business B continued to carry on the trade or business of Business A, and Business B was owned by DC2, a member of the same controlled group as DC1 (which is the original suspended loss QBU owner under § 1.987-13(l)(1)). Therefore, under § 1.987-13(b)(1)(ii), all of Business A's cumulative suspended section 987 loss (including the suspended section 987 loss resulting from the termination of Business A) becomes suspended section 987 loss with respect to Business B. After the transaction, DC1 may recognize its suspended section 987 loss with respect to Business B under § 1.987-11(e) or § 1.987-13(b) through (d), as applicable.

(3) ***Example 3: Election to be classified as a corporation*** —

(i) ***Facts.*** DC1 owns all of the interests in Entity A, a DE. Entity A conducts Business A, which has net unrecognized section 987 gain of $500x. Entity A elects to be classified as a corporation under § 301.7701-3(c) of this chapter. As a result of the election and pursuant to § 301.7701-3(g)(1)(iv) of this chapter, DC1 is treated as contributing all of the assets and liabilities of Business A to newly-formed CFC1, which has the euro as its functional currency. Immediately after the contribution, the assets and liabilities of Business A are reflected on CFC1's books and records.

(ii) ***Analysis.*** Under § 1.987-2(c)(2)(ii), DC1's deemed contribution of all of the assets and liabilities of Business A to CFC1 is treated as a transfer of all of the assets and liabilities of Business A to DC1, followed immediately by DC1's contribution of those assets and liabilities to CFC1. Because the deemed transfer from Business A to DC1 is a transfer of substantially all of Business A's assets to DC1, the Business A QBU terminates under § 1.987-8(b)(2). The contribution of Business A's assets is not a deferral event within the meaning of paragraph (b) of this section because, immediately after the transaction, no assets of Business A are reflected on the books and records of a successor deferral QBU within the meaning of paragraph (g)(2) of this section due to the fact that the assets of Business A are not reflected on the books and records of a section 987 QBU immediately after the termination. In addition, the requirement of paragraph (g)(2)(iii) of this section is not met because Business A was owned by a U.S. person and the potential successor deferral QBU, which is owned by CFC1, is not owned by a U.S. person. Accordingly, DC1 recognizes section 987 gain of $500x with respect to Business A under § 1.987-5 without regard to this section. Because the requirement of paragraph (g)(2)(iii) of this section is not met, the result would be the same even if the assets of Business A were transferred in a section 351 exchange to an existing foreign corporation that had a different functional currency than Business A.

(4) ***Example 4: Partial recognition of deferred gain or loss*** —

(i) ***Facts.*** DC1 owns all of the interests in Entity A, a DE that conducts Business A in Country X. During year 1, DC1 contributes all of its interests in Entity A to DC2 in an exchange to which section 351 applies. At the time of the contribution, Business A has net unrecognized section 987 gain of $100x and cumulative suspended section 987 loss of $50x. After the contribution, Entity A continues to conduct the same trade or business in Country X (*Business B*). In year 3, as a result of a net transfer of property from Business B to DC2, DC2's remittance proportion with respect to Business B, as determined under § 1.987-5, is 0.25.

(ii) ***Analysis*** —

(A) For the reasons described in paragraph (h)(1) of this section *(Example 1)*, the contribution of all the interests in Entity A by DC1 to DC2 results in a termination of the Business A QBU and a deferral event with respect to the Business A QBU, an original deferral QBU; DC1 is an original deferral QBU owner within the meaning of paragraph (g)(3) of this section; Business B is a successor deferral QBU with respect to Business A; DC2 is a successor deferral QBU owner; and the $100x of net unrecognized section 987 gain with respect to Business A becomes deferred section 987 gain as a result of the deferral event.

(B) Under § 1.987-13(b)(1)(i), Business B is a successor suspended loss QBU because, immediately after the termination of the Business A section 987 QBU, a significant portion of the assets of Business A was reflected on the books and records of Business B (an eligible QBU), Business B continued to carry on the trade or business of Business A, and Business B was owned by DC2, a member of the same controlled group as DC1 (which is the original suspended loss QBU owner under § 1.987-13(l)(1)). Therefore, under § 1.987-13(b)(1)(ii), all of DC1's cumulative suspended section 987 loss with respect to Business A becomes suspended section 987 loss of DC1 with respect to Business B.

(C) Under paragraph (c)(1)(i) of this section, DC1 recognizes deferred section 987 gain in year 3 as a result of the remittance from Business B to DC2. Under paragraph (c)(1)(ii) of this section, the amount of deferred section 987 gain that DC1 recognizes is $25x, which is DC1's outstanding deferred section 987 gain of $100x with respect to Business A

multiplied by the remittance proportion of 0.25 of DC2 with respect to Business B for the taxable year as determined under § 1.987-5(b). In addition, under § 1.987-11(e), DC1 recognizes its cumulative suspended section 987 loss to the extent of the deferred section 987 gain recognized in the same recognition grouping.

[T.D. 10016, 89 FR 100165, Dec. 11, 2024]

§ 1.987-13 Suspended section 987 loss upon terminations.

(a) ***Overview*** —

(1) ***In general.*** This section provides rules relating to suspended section 987 loss of an owner with respect to a section 987 QBU or successor suspended loss QBU that terminates. Paragraph (b) of this section provides rules treating suspended section 987 loss as recognized or attributable to a successor when a section 987 QBU terminates. Paragraph (c) of this section provides rules treating suspended section 987 loss as recognized or attributable to a subsequent successor when a successor suspended loss QBU terminates. Paragraph (d) of this section provides rules regarding the recognition of suspended section 987 loss when interests in a successor suspended loss QBU owner are transferred. Paragraph (e) of this section provides rules that apply when interests in an original suspended loss QBU owner are transferred. Paragraph (f) of this section provides rules that apply when an original suspended loss QBU owner ceases to exist. Paragraph (g) of this section provides rules preventing the carryover of suspended section 987 loss in connection with certain inbound transactions. Paragraph (h) of this section provides rules that suspend section 987 loss in connection with certain outbound transactions. Paragraph (i) of this section is reserved. Paragraph (j) of this section provides rules relating to the termination of a successor suspended loss QBU. Paragraph (k) of this section provides an anti-abuse rule. Paragraph (l) of this section provides definitions that apply for purposes of this section. Paragraph (m) of this section provides examples illustrating the rules of this section.

(2) ***Ordering rule.*** Paragraphs (b) through (d) of this section are applied after the application of § 1.987-11(e) (loss-to-the-extent-of-gain rule).

(b) ***Termination of a section 987 QBU with suspended loss.*** If a section 987 QBU terminates, and at the time of termination, the owner has suspended section 987 loss with respect to the section 987 QBU (including because the termination was an outbound loss event or because net unrecognized section 987 loss became suspended section 987 loss upon termination as a result of a current rate election), then either paragraph (b)(1) or (2) of this section applies. However, this paragraph (b) does not apply to a termination that occurs in connection with a transaction described in paragraph (f) or (g) of this section.

(1) ***Suspended section 987 loss becomes suspended section 987 loss with respect to a successor suspended loss QBU*** —

(i) ***Successor suspended loss QBU.*** If, immediately after the termination, a significant portion of the assets of the terminating section 987 QBU are reflected on the books and records of an eligible QBU that carries on a trade or business of the section 987 QBU and is owned by the owner of the section 987 QBU or a member of its controlled group (determined immediately after the transaction), then the eligible QBU is a successor suspended loss QBU and the rules provided in paragraph (b)(1)(ii) of this section apply.

(ii) ***Attribution of suspended section 987 loss to successor suspended loss QBU.*** A portion of the cumulative suspended section 987 loss with respect to the terminating section 987 QBU that is not recognized in the taxable year of the termination under § 1.987-11(e) becomes suspended section 987 loss with respect to each successor suspended loss QBU. Such portion is equal to the suspended section 987 loss described in the preceding sentence, multiplied by a fraction, the numerator of which is the aggregate adjusted basis of the gross assets transferred to the successor suspended loss QBU in connection with the termination, and the denominator of which is the aggregate adjusted basis of the gross assets transferred to all successor suspended loss QBUs in connection with the termination.

(2) ***Recognition of suspended section 987 loss.*** If, immediately after the termination of the section 987 QBU, there is no successor suspended loss QBU under paragraph (b)(1) of this section, then the owner recognizes the cumulative suspended section 987 loss with respect to the section 987 QBU that is not recognized in the taxable year of the termination under § 1.987-11(e).

(c) ***Termination of a successor suspended loss QBU.*** If a successor suspended loss QBU terminates (as described in paragraph (j) of this section), then either paragraph (c)(1) or (2) of this section applies. However, this paragraph (c) does not apply to a termination that occurs in connection with a transaction described in paragraph (e), (f), or (g) of this section.

(1) ***Successor to the successor suspended loss QBU —***

(i) ***Successor suspended loss QBU.*** If, immediately after the termination, a significant portion of the assets of the terminating successor suspended loss QBU (*initial successor*) are reflected on the books and records of an eligible QBU (*subsequent successor*) that carries on a trade or business of the initial successor and is owned by the original suspended loss QBU owner or a member of its controlled group (determined immediately after the transaction), then the subsequent successor is a successor suspended loss QBU and the rules provided in paragraph (c)(1)(ii) of this section apply.

(ii) ***Attribution of suspended section 987 loss to successor suspended loss QBU.*** A portion of the cumulative suspended section 987 loss with respect to the initial successor that is not recognized in the taxable year of the termination under § 1.987-11(e) becomes suspended section 987 loss with respect to each subsequent successor. Such portion is equal to the suspended section 987 loss described in the preceding sentence, multiplied by a fraction, the numerator of which is the aggregate adjusted basis of the gross assets transferred to the subsequent successor in connection with the termination, and the denominator of which is the aggregate adjusted basis of the gross assets transferred to all subsequent successors in connection with the termination.

(2) ***Recognition of suspended section 987 loss.*** If, immediately after the termination of the initial successor, there is no subsequent successor that is a successor suspended loss QBU under paragraph (c)(1) of this section, then the original suspended loss QBU owner recognizes the cumulative suspended section 987 loss with respect to the initial successor that is not recognized in the taxable year of the termination under § 1.987-11(e).

(d) ***Transfer of successor suspended loss QBU owner.*** If a successor suspended loss QBU ceases to be owned by a member of the original suspended loss QBU owner's controlled group as a result of a direct or indirect transfer, or an issuance or redemption, of an ownership interest in the successor suspended loss

QBU owner, then the original suspended loss QBU owner recognizes the cumulative suspended section 987 loss with respect to the successor suspended loss QBU that is not recognized in the taxable year under § 1.987-11(e).

(e) ***Transfer of original suspended loss QBU owner.*** If an original suspended loss QBU owner ceases to be a member of the successor suspended loss QBU owner's controlled group as a result of a direct or indirect transfer, or an issuance or redemption, of an ownership interest in the original suspended loss QBU owner, the original suspended loss QBU owner's suspended section 987 loss ceases to be attributable to any successor suspended loss QBU (but it continues to be suspended section 987 loss of the original suspended loss QBU owner). As a result, the suspended section 987 loss can be recognized by the original suspended loss QBU owner under § 1.987-11(e) but cannot be recognized under paragraph (b)(2), (c)(2), or (d) of this section.

(f) ***Owner ceases to exist.*** If the owner of a section 987 QBU with suspended section 987 loss or an original suspended loss QBU owner ceases to exist and there is no successor under paragraph (l)(1)(ii) of this section (for example, as a result of a section 331 liquidation), then any suspended section 987 loss of the owner that is not recognized after application of the loss-to-the-extent-of-gain rule in § 1.987-11(e) is eliminated and cannot be recognized.

(g) ***Inbound nonrecognition transactions*** *—no carryover of suspended section 987 loss.* If an owner of a section 987 QBU with suspended section 987 loss, or an original suspended loss QBU owner, ceases to exist in a transaction described in § 1.987-8(c)(1)(ii) (inbound section 332 liquidation) or § 1.987-8(c)(2)(ii) (inbound reorganization), then any suspended section 987 loss of the owner or original suspended loss QBU owner that is not recognized after application of the loss-to-the-extent-of-gain rule in § 1.987-11(e) is eliminated and cannot be recognized. As a result, the distributee or acquiring corporation does not succeed to or take into account any suspended section 987 loss of the owner or original suspended loss QBU owner under section 381.

(h) ***Outbound transactions*** *—recognition or suspension of net unrecognized section 987 loss.* This paragraph (h) applies to taxable years in which neither a current rate election nor an annual recognition election is in effect.

(1) ***In general.*** Notwithstanding § 1.987-5, if an outbound loss event occurs with respect to a section 987 QBU (an *outbound loss QBU*), the original owner of the section 987 QBU includes in taxable income in the taxable year of the outbound loss event section 987 loss with respect to the outbound loss QBU only to the extent provided in paragraph (h)(3) of this section.

(2) ***Outbound loss event.*** An outbound loss event means, with respect to a section 987 QBU:

(i) Any termination of the section 987 QBU as a result of a transfer by a U.S. person of assets of the section 987 QBU to a foreign person that is a member of the same controlled group as the U.S. person immediately before the transaction or, if the transferee did not exist immediately before the transaction, immediately after the transaction (*related foreign person*), provided that the termination would result in the recognition of section 987 loss with respect to the section 987 QBU under § 1.987-5 but for this paragraph (h); or

(ii) [Reserved]

(3) ***Loss recognition upon an outbound loss event.*** In the taxable year of an outbound loss event with respect to an outbound loss QBU, the owner of the outbound loss QBU recognizes section 987 loss as determined under §§ 1.987-5 and 1.987-12(b), except that, solely for purposes of applying § 1.987-5, assets and liabilities of the outbound loss QBU that, immediately after the outbound loss

event, are reflected on the books and records of an eligible QBU owned by the related foreign person described in paragraph (h)(2) of this section are treated as not having been transferred and therefore as remaining on the books and records of the outbound loss QBU notwithstanding the outbound loss event.

(4) ***Loss suspension upon outbound loss event.*** Net unrecognized section 987 loss or deferred section 987 loss that, as a result of this paragraph (h), is not recognized in the taxable year of the outbound loss event (*outbound section 987 loss*) under § 1.987-5 becomes suspended section 987 loss.

(i) [Reserved]

(j) ***Termination of a successor suspended loss QBU.*** For purposes of applying paragraph (c) of this section, a successor suspended loss QBU terminates if it ceases to be an eligible QBU of its owner.

(k) ***Anti-abuse.*** No section 987 loss is recognized under this section, § 1.987-5, or § 1.987-12 in connection with a transaction or series of transactions that are undertaken with a principal purpose of avoiding the purposes of this section.

(l) ***Definitions.*** The following definitions apply for purposes of this section.

(1) ***Original suspended loss QBU owner*** —

(i) ***In general.*** An *original suspended loss QBU owner* is the person that was the owner of a section 987 QBU before its termination in a transaction to which paragraph (b)(1) of this section applies.

(ii) ***Successors.*** If an original suspended loss QBU owner is a corporation (*transferor corporation*) and another corporation acquires the assets of the transferor corporation in a transaction described in section 381(a), then the acquiring corporation becomes the original suspended loss QBU owner.

(2) ***Successor suspended loss QBU. See*** paragraphs (b)(1) and (c)(1) of this section and § 1.987-12(d) for rules regarding when an eligible QBU is a successor suspended loss QBU.

(3) ***Successor suspended loss QBU owner.*** A *successor suspended loss QBU owner* is the owner of the assets and liabilities of a successor suspended loss QBU.

(4) ***Ownership interests.*** The term ownership interests means stock in a corporation and partnership interests in a partnership.

(5) ***Significant portion.*** With respect to the assets of an eligible QBU, the term *significant portion* means a significant portion of the operating assets, determined based on all the facts and circumstances, provided that more than 30 percent of the operating assets will constitute a significant portion in all cases and less than 10 percent of the operating assets will not constitute a significant portion in all cases.

(m) ***Examples.*** The following examples illustrate the application of this section. For purposes of the examples, DC1 is a domestic corporation that owns all of the interests in Entity A, a DE. Entity A conducts Business A, a section 987 QBU that is engaged in the business of selling Product X. Business A has the euro as its functional currency.

(1) ***Example 1: Trade or business of a section 987 QBU ceases*** —

(i) ***Facts.*** Entity A's trade or business of selling Product X ceases, resulting in a termination of the Business A section 987 QBU under § 1.987-8(b)(1). After the trade or business is wound up, the remaining assets are transferred to DC1 and are not used in the trade or business of selling Product X immediately following the termination. Business A has cumulative suspended section 987 loss under § 1.987-11(b) of $500x.

(ii) ***Analysis.*** Immediately after the termination of the Business A section 987 QBU, a significant portion of Business A's assets is not reflected on the books and records of an eligible QBU that carries on a trade or business of Business A and is owned by DC1 or a member of its controlled group. Therefore, Business A has no successor suspended loss QBU under paragraph (b)(1) of this section. Consequently, DC1 recognizes the cumulative suspended section 987 loss with respect to the Business A section 987 QBU under paragraph (b)(2) of this section.

(2) ***Example 2: Trade or business of a section 987 QBU is sold to a third party*** —

(i) ***Facts.*** DC1 sells all the interests in Entity A to a third party for cash. Business A has cumulative suspended section 987 loss under § 1.987-11(b) of $500x.

(ii) ***Analysis.*** Under § 1.987-2(c)(2)(ii), the sale of the Business A assets and liabilities for cash that is reflected on the books of DC1 is treated as a transfer of all of the assets and liabilities of Business A to DC1, followed immediately by DC1's sale of those assets and liabilities. Because the deemed transfer from Business A to DC1 is a transfer of substantially all of Business A's assets to DC1, the Business A section 987 QBU terminates under § 1.987-8(b)(2). Immediately after the termination of the Business A section 987 QBU, a significant portion of Business A's assets is not reflected on the books and records of an eligible QBU that carries on a trade or business of Business A and is owned by DC1 or a member of its controlled group. Therefore, Business A has no successor suspended loss QBU under paragraph (b)(1) of this section. Consequently, DC1 recognizes the cumulative suspended section 987 loss with respect to the Business A section 987 QBU under paragraph (b)(2) of this section.

(3) ***Example 3: Outbound loss event*** —

(i) ***Facts.*** Entity A elects to be classified as a corporation under § 301.7701-3(c) of this chapter. As a result of the election and pursuant to § 301.7701-3(g)(1)(iv) of this chapter, DC1 is treated as contributing all of the assets and liabilities of Business A to newly formed CFC1, which has the euro as its functional currency. Immediately after the contribution, the assets and liabilities of Business A are reflected on CFC1's books and records (which are the only books and records maintained by CFC1). CFC1 continues to use those assets in the same trade or business after the contribution (*Business B*). Neither a current rate election nor an annual recognition election is in effect. Business A has net unrecognized section 987 loss of $500x.

(ii) ***Analysis*** —

(A) Under § 1.987-2(c)(2)(ii), DC1's contribution of all of the assets and liabilities of Business A to CFC1 is treated as a transfer of all of the assets and liabilities of Business A to DC1, followed immediately by DC1's contribution of those assets and liabilities to CFC1. Because the deemed transfer from Business A to DC1 is a transfer of substantially all of Business A's assets to DC1, the Business A section 987 QBU terminates under § 1.987-8(b)(2). The contribution of Business A's assets to CFC1 is not a deferral event within the meaning of § 1.987-12(g)(1) because, immediately after the transaction, no assets of Business A are reflected on the books and records of a successor deferral QBU within the meaning of § 1.987-12(g)(2) due to the fact that the assets of Business A are

not reflected on the books and records of a section 987 QBU immediately after the termination, as well as the fact that the requirement of § 1.987-12(g)(2)(iii) is not met because Business A was owned by a U.S. person and the potential successor deferral QBU (Business B) is not owned by a U.S. person. The termination of the Business A section 987 QBU as a result of the transfer of the assets of Business A by a U.S. person (DC1) to a foreign person (CFC1) that is a member of DC1's controlled group is an outbound loss event described in paragraph (h)(2) of this section.

(B) Under paragraphs (h)(1) and (3) of this section, in the taxable year of the outbound loss event, DC1 includes in taxable income section 987 loss recognized with respect to Business A as determined under § 1.987-5, except that, for purposes of applying § 1.987-5, all assets and liabilities of Business A that are reflected on the books and records of CFC1, a related foreign person described in paragraph (h)(2) of this section, are treated as not having been transferred. Accordingly, DC1's remittance proportion with respect to Business A is 0, and DC1 recognizes no section 987 loss with respect to Business A. DC1's outbound section 987 loss is $500x, which is the amount of section 987 loss that DC1 would have recognized under § 1.987-5 without regard to paragraph (h) of this section ($500x), less the amount of section 987 loss recognized by DC1 under paragraph (h)(3) of this section ($0). Under paragraph (h)(4) of this section, the $500x of outbound section 987 loss becomes suspended section 987 loss.

(C) Under paragraph (b)(1)(i) of this section, Business B is a successor suspended loss QBU because, immediately after the termination of the Business A section 987 QBU, the Business A assets are reflected on the books and records of Business B (which is the only set of books and records maintained by CFC1), Business B was an eligible QBU that continued to carry on the same trade or business as Business A did before the contribution, and Business B was owned by CFC1, a member of the same controlled group as DC (which is the original suspended loss QBU owner under paragraph (l)(1) of this section). *See* § 1.987-1(b)(4)(ii) (providing that, if a corporation is solely engaged in activities that constitute a trade or business, and the corporation maintains only one set of books and records, the activities (but not the corporation) are a qualified business unit). Therefore, under paragraph (b)(1)(ii) of this section, all of Business A's suspended section 987 loss (including the suspended section 987 loss resulting from the termination of Business A) is treated as suspended section 987 loss of DC1 with respect to Business B.

[T.D. 10016, 89 FR 100165, Dec. 11, 2024]

§ 1.987-14 Section 987 hedging transactions.

(a) ***Overview.*** This section provides rules relating to section 987 hedging transactions. Paragraph (b) of this section provides the definition of a section 987 hedging transaction. Paragraph (c) of this section provides identification requirements for section 987 hedging transactions. Paragraph (d) of this section provides rules relating to the taxation of section 987 hedging transactions. Paragraph (e) of this section provides examples illustrating the rules of this section.

(b) ***Section 987 hedging transaction*** —

(1) ***In general.*** A section 987 hedging transaction is a financial instrument or a combination or series of financial instruments (a *hedge*), that is entered into by the owner of a section 987 QBU as part of the normal course of the owner's trade or business for the purpose of managing exchange rate risk with

respect to all or part of the owner's net investment in the section 987 QBU (the *hedged QBU*), provided that the requirements of paragraph (b)(2) of this section are met. If only part of a financial instrument (or combination or series of financial instruments) is described in the preceding sentence, that part is treated as a section 987 hedging transaction for purposes of this section.

(2) ***Requirements.*** A transaction is a section 987 hedging transaction described in paragraph (b)(1) of this section for a taxable year only if the following requirements are met.

(i) ***Identification.*** The hedge must be identified as a section 987 hedging transaction with respect to the hedged QBU under paragraph (c) of this section. The financial instrument or instruments that comprise the hedge must not be identified as a section 987 hedging transaction with respect to any other section 987 QBU. If only part of a financial instrument (or combination or series of financial instruments) is a section 987 hedging transaction, that part must be clearly identified.

(ii) ***Current rate election.*** A current rate election must be in effect for the taxable year.

(iii) ***Mark-to-market method of accounting.*** Section 988 gain or loss of the owner with respect to the hedge must be accounted for under a mark-to-market method of accounting (for example, under section 1256). In addition, if a member of the owner's controlled group is a party to the hedge, any section 988 gain or loss of the controlled group member with respect to the hedge must be accounted for under a mark-to-market method of accounting.

(iv) ***Treatment under U.S. generally accepted accounting principles.*** Foreign currency gain or loss on the hedge must be properly accounted for under generally accepted accounting principles as a cumulative foreign currency translation adjustment to shareholders' equity.

(v) ***Hedge entered into by owner of the hedged QBU.*** The hedge must be entered into by the owner of the hedged QBU (and not by a section 987 QBU of the owner). In the case of a hedged QBU that is owned by a member of a consolidated group, the hedge must be entered into by the member that owns the hedged QBU.

(3) ***Anti-abuse rule.*** If a taxpayer enters into a hedge or a related transaction with a principal purpose of effectively converting section 987 gain or loss into section 988 gain or loss (or another type of income or loss) of the owner or a related party, the hedge is not treated as a section 987 hedging transaction.

(4) ***Partial termination of a section 987 hedging transaction.*** If only part of a financial instrument is a section 987 hedging transaction, and a part of the financial instrument is terminated or disposed of, a proportionate part of the section 987 hedging transaction is treated as terminated or disposed of.

(c) ***Identification requirements*** —

(1) ***In general.*** The owner of a hedged QBU must clearly identify the hedge as a section 987 hedging transaction with respect to the hedged QBU in its books and records on or before the close of the day on which the owner entered into the hedge. The identification must meet the requirements of § 1.1221-2(f)(4) and must include the following information—

(i) The date on which the hedge is entered into by the owner of the hedged QBU and the date on which the hedge is identified as a section 987 hedging transaction;

(ii) A description of the hedge; and

(iii) Identification of the hedged QBU.

(2) ***Inadvertent error.*** If a hedge is not identified under paragraph (c)(1) of this section, but the hedge would otherwise qualify as a section 987 hedging transaction with respect to a hedged QBU within the meaning of paragraph (b) of this section and the taxpayer can demonstrate to the satisfaction of the Commissioner that its failure to identify the hedge was due to inadvertent error, the taxpayer may treat the hedge as a section 987 hedging transaction if all of the owner's hedges described in paragraph (b) of this section in all open years are being treated on either original or, if necessary, amended returns as section 987 hedging transactions subject to the rules of paragraph (d) of this section.

(d) ***Taxation of section 987 hedging transactions*** —

(1) ***Hedging gain or loss with respect to a hedged QBU.*** If the owner of a section 987 QBU has entered into a section 987 hedging transaction with respect to the section 987 QBU, the owner's hedging gain or loss with respect to the hedged QBU for a taxable year is equal to the gain or loss that the owner would (but for the application of this paragraph (d)) recognize under section 988 with respect to the section 987 hedging transaction in the taxable year under the mark-to-market method of accounting described in paragraph (b)(2)(iii) of this section (including gain or loss that would be recognized in connection with a complete or partial disposition or termination of the section 987 hedging transaction). If only part of a financial instrument is a section 987 hedging transaction, a proportionate part of the gain or loss that would (but for the application of this paragraph (d)) be recognized under section 988 with respect to the financial instrument in the taxable year is treated as hedging gain or loss with respect to the hedged QBU. *See* paragraph (d)(3) of this section for rules relating to the determination of hedging gain or loss in the taxable year in which the hedged QBU terminates.

(2) ***Adjustment to unrecognized section 987 gain or loss for the taxable year*** —

(i) ***Hedging loss.*** In a taxable year in which an owner has hedging loss with respect to a hedged QBU and has unrecognized section 987 gain for the taxable year with respect to the hedged QBU (as determined under § 1.987-4(d), without regard to this paragraph (d)), the unrecognized section 987 gain for the taxable year is reduced (but not below zero) by the amount of the hedging loss. The amount of hedging loss that reduces unrecognized section 987 gain under this paragraph (d)(2)(i) is not recognized under section 988. Any hedging loss that does not reduce unrecognized section 987 gain under this paragraph (d)(2)(i) is recognized under section 988.

(ii) ***Hedging gain.*** In a taxable year in which an owner has hedging gain with respect to a hedged QBU and has unrecognized section 987 loss for the taxable year with respect to the hedged QBU (as determined under § 1.987-4(d), without regard to this paragraph (d)), the unrecognized section 987 loss for the taxable year is reduced (but not below zero) by the amount of the hedging gain. The amount of hedging gain that reduces unrecognized section 987 loss under this paragraph (d)(2)(ii) is not recognized under section 988. Any hedging gain that does not reduce unrecognized section 987 loss under this paragraph (d)(2)(ii) is recognized under section 988.

(3) ***Termination of a hedged QBU.*** If the owner of a section 987 QBU has entered into a section 987 hedging transaction with respect to the section 987 QBU and the hedged QBU terminates, the owner's hedging gain or loss with respect to the hedged QBU for the taxable year is equal to the hedging gain or loss that the owner would (but for the application of this paragraph (d)) recognize with respect to the section 987 hedging transaction under the mark-to-market method of accounting described in paragraph (b)(2)(iii) of this section if the taxable year ended on the termination date.

Appropriate adjustments must be made to prevent the section 988 gain or loss from being taken into account again after it is applied to reduce unrecognized section 987 gain or loss under this paragraph (d).

(e) ***Examples.*** The following examples illustrate the application of this section. For purposes of the examples, DC1 is a domestic corporation that owns Business A, a section 987 QBU that has the euro as its functional currency. A current rate election is in effect for years 1 and 2, but no other elections are in effect. In year 1, DC1 had net unrecognized section 987 loss (determined under § 1.987-4(b)) of $1,000x with respect to Business A, and Business A did not make a remittance in year 1. As a result, in year 2, DC1's net accumulated unrecognized section 987 loss from prior taxable years (determined under § 1.987-4(c)) was $1,000x. In year 2, DC1 had unrecognized section 987 loss for the taxable year (determined under § 1.987-4(d) before the application of paragraph (d) of this section) of $500x.

(1) ***Example 1: Section 987 hedging transaction*** —

(i) ***Facts.*** In year 2, DC1 entered into a six-month foreign currency forward contract with an unrelated bank in the normal course of DC1's trade or business for the purpose of managing exchange rate risk with respect to DC1's net investment in Business A. On the same day, DC1 identified the forward contract as a section 987 hedging transaction with respect to Business A under paragraph (c) of this section. Under generally accepted accounting principles, currency gain or loss from the forward contract is accounted for as a cumulative translation adjustment to shareholder's equity. For Federal income tax purposes, DC1 accounts for section 988 gain or loss with respect to the forward contract under a mark-to-market method of accounting. But for the application of paragraph (d) of this section, DC1 would recognize $400x of section 988 gain with respect to the forward contract.

(ii) ***Analysis*** —

(A) ***Qualification of the hedge as a section 987 hedging transaction.*** The forward contract qualifies as a section 987 hedging transaction under paragraph (b) of this section because it is a financial instrument that manages DC1's exchange rate risk with respect to Business A (the hedged QBU) as part of the normal course of DC1's trade or business, and the hedge meets the requirements of paragraph (b)(2) of this section.

(B) ***Treatment of the section 987 hedging transaction.*** But for the application of paragraph (d) of this section, DC1 would recognize $400x of section 988 gain with respect to the forward contract in year 2. Therefore, DC1 has $400x of hedging gain in year 2. In year 2, DC1 had unrecognized section 987 loss of $500x for the taxable year (determined under § 1.987-4(d) before the application of paragraph (d) of this section). Therefore, under paragraph (d)(2)(ii) of this section, DC1's unrecognized section 987 loss for the taxable year of $500x is reduced by the $400x of hedging gain. Accordingly, DC1 has unrecognized section 987 loss of $100x for the taxable year with respect to Business A. Under § 1.987-4(b), DC1 has $1,100x of net unrecognized section 987 loss in year 2 (equal to the sum of its net accumulated section 987 loss of $1,000x from prior taxable years and its unrecognized section 987 loss for the taxable year of $100x). DC1 does not recognize its hedging gain under section 988 because all of the hedging gain reduces unrecognized section 987 loss for the taxable year.

(2) ***Example 2: Excess hedging gain from a section 987 hedging transaction*** —

(i) ***Facts.*** The facts are the same as in paragraph (e)(1) of this section (*Example 1*) except that, but for the application of paragraph (d) of this section, DC1 would recognize $600x of section 988 gain with respect to the forward contract.

(ii) ***Analysis.*** Under paragraph (d)(2)(ii) of this section, DC1's unrecognized section 987 loss for the taxable year of $500x is reduced by the hedging gain, but not below zero. Accordingly, $500x of the hedging gain is applied to reduce DC1's unrecognized section 987 loss for the taxable year to zero. DC1 has $1,000x of net unrecognized section 987 loss in year 2 under § 1.987-4(b) (equal to its net accumulated section 987 loss of $1,000x from prior taxable years). The $500x hedging gain that reduces unrecognized section 987 loss for the taxable year is not recognized under section 988. The excess amount of hedging gain ($100x) is recognized by DC1 under section 988.

[T.D. 10016, 89 FR 100165, Dec. 11, 2024]

§ 1.987-15 Applicability date.

(a) ***Applicability date of the section 987 regulations*** —

(1) ***In general.*** Except as provided in this section, the section 987 regulations apply to taxable years beginning after December 31, 2024.

(2) ***Applicability date for a terminating QBU.*** The section 987 regulations apply to the owner of a terminating QBU immediately before the section 987 QBU terminates, but only with respect to the section 987 QBU, any successor deferral QBUs or successor suspended loss QBUs (in their capacity as such), and any net unrecognized section 987 gain or loss, deferred section 987 gain or loss, or suspended section 987 loss with respect thereto. *See* § 1.987-1(h) for the definition of a terminating QBU.

(b) ***Application of the section 987 regulations to taxable years beginning on or before December 31, 2024, and ending after November 9, 2023.*** A taxpayer (including a taxpayer that has applied the 2016 and 2019 section 987 regulations to a prior taxable year under paragraph (c) of this section) may choose to apply the section 987 regulations to a taxable year beginning on or before December 31, 2024, and ending after November 9, 2023, provided the taxpayer and each member of its consolidated group and section 987 electing group:

(1) Consistently apply the section 987 regulations in their entirety to the taxable year and all subsequent taxable years beginning on or before December 31, 2024; and

(2) Apply the section 987 regulations on their original timely filed (including extensions) returns for the first taxable year to which the taxpayer chooses to apply the section 987 regulations.

(c) ***Application of the 2016 and 2019 section 987 regulations*** —

(1) ***In general.*** A taxpayer may choose to apply the 2016 and 2019 section 987 regulations to a taxable year beginning after December 7, 2016, and beginning on or before December 31, 2024, provided the taxpayer and each member of its consolidated group and section 987 electing group:

(i) First apply the 2016 and 2019 section 987 regulations to a taxable year ending before November 9, 2023;

(ii) Consistently apply the 2016 and 2019 section 987 regulations in their entirety to all section 987 QBUs (within the meaning of prior § 1.987-1(b)(2)) directly or indirectly owned (within the meaning of prior § 1.987-1(b)(4)) by the taxpayer and each member of its consolidated group and section 987 electing group on the transition date for that taxable year and all subsequent taxable years before the taxable year in which the taxpayer and each member of its consolidated group and section 987 electing group apply the section 987 regulations pursuant to paragraph (a) or (b) of this section; and

(iii) Either—

(A) First applied the 2016 and 2019 section 987 regulations on their returns filed before November 9, 2023; or

(B) First apply the 2016 and 2019 section 987 regulations on their returns filed on or after November 9, 2023 and apply § 1.987-10 in lieu of prior § 1.987-10.

(2) ***Application to section 987 QBUs not owned on the transition date.*** For any taxable year in which a taxpayer applies the 2016 and 2019 section 987 regulations pursuant to paragraph (c)(1) of this section, the taxpayer may choose to apply the 2016 and 2019 section 987 regulations to any section 987 QBU (within the meaning of prior § 1.987-1(b)(2)) that the taxpayer did not directly or indirectly own (within the meaning of prior § 1.987-1(b)(4)) on the transition date, provided the taxpayer applies the 2016 and 2019 section 987 regulations consistently to that QBU for that taxable year and all subsequent taxable years before the taxable year in which the taxpayer applies the section 987 regulations pursuant to paragraph (a) or (b) of this section and the taxpayer either—

(i) First applied the 2016 and 2019 section 987 regulations to the section 987 QBU on its return filed before November 9, 2023; or

(ii) First applies the 2016 and 2019 section 987 regulations to the section 987 QBU on its return filed on or after November 9, 2023, and applies § 1.987-10 in lieu of prior § 1.987-10.

(3) ***Modifications of defined terms for purposes of this paragraph (c).*** Solely for purposes of this paragraph (c)—

(i) ***Application of § 1.987-10 in lieu of prior § 1.987-10.*** For any taxpayer to which paragraph (c)(1)(iii)(B) or (c)(2)(ii) of this section applies, the term *2016 and 2019 section 987 regulations* includes § 1.987-10 and not prior § 1.987-10.

(ii) ***Partnerships not included in section 987 electing group.*** The term *section 987 electing group* does not include foreign partnerships.

(iii) ***Transition date.*** The term *transition date* has the meaning provided in prior § 1.987-10.

(d) ***Prior § 1.987-12.*** For the applicability dates of prior § 1.987-12, *see* prior § 1.987-12(j). Prior § 1.987-12 applies through the end of the taxable year immediately preceding the first taxable year in which a taxpayer applies § 1.987-12 pursuant to paragraph (a) or (b) of this section.

[T.D. 10016, 89 FR 100165, Dec. 11, 2024]

§ 1.988-0 Taxation of gain or loss from a section 988 transaction; Table of Contents.

This section lists captioned paragraphs contained in §§ 1.988-1 through 1.988-6.

§ 1.988-1 Certain definitions and special rules.

(a) Section 988 transaction.

(1) In general.

(2) Description of transactions.

(3) [Reserved]

(4) Treatment of assets and liabilities of a section 987 aggregate partnership or DE that are not attributed to an eligible QBU.

(5) [Reserved]

(6) Examples.

(7) Special rules for regulated futures contracts and non-equity options.

(8) Special rules for qualified funds.

(9) Exception for certain transactions entered into by an individual.

(10) Intra-taxpayer transactions.

(11) Authority of Commissioner to include or exclude transactions from section 988.

(b) Spot contract.

(c) Nonfunctional currency.

(d) Spot rate.

(1) In general.

(2) Consistency required in valuing transactions subject to section 988.

(3) Use of certain spot rate conventions for payables and receivables denominated in nonfunctional currency.

(4) Currency where an official government established rate differs from a free market rate.

(e) Exchange gain or loss.

(f) Hyperinflationary currency.

(g) Fair market value.

(h) Interaction with sections 1092 and 1256 in examples.

(i) Effective date.

§ 1.988-2 Recognition and computation of exchange gain or loss.

(a) Disposition of nonfunctional currency.

(1) Recognition of exchange gain or loss.

(2) Computation of exchange gain or loss.

(b) Translation of interest income or expense and determination of exchange gain or loss with respect to debt instruments.

(1) Translation of interest income received with respect to a nonfunctional currency demand account.

(2) Translation of nonfunctional currency interest income or expense received or paid with respect to a debt instrument described in § 1.988-1(a)(1)(ii) and (2)(i).

(3) Exchange gain or loss recognized by the holder with respect to accrued interest income.

(4) Exchange gain or loss recognized by the obligor with respect to accrued interest expense.

(5) Exchange gain or loss recognized by the holder of a debt instrument with respect to principal.

(6) Exchange gain or loss recognized by the obligor of a debt instrument with respect to principal.

(7) Payment ordering rules.

(8) Limitation of exchange gain or loss on payment or disposition of a debt instrument.

(9) Examples.

(10) Treatment of bond premium.

(11) Market discount.

(12) Tax exempt bonds.

(13) Nonfunctional currency debt exchanged for stock of obligor.

(14) [Reserved]

(15) Debt instruments and deposits denominated in hyperinflationary currencies.

(16) [Reserved]

(17) Coordination with installment method under section 453.

(18) Interaction of section 988 and § 1.1275-2(g).

(c) Item of expense or gross income or receipts which is to be paid or received after the date accrued.

(1) In general.

(2) Determination of exchange gain or loss with respect to an item of gross income or receipts.

(3) Determination of exchange gain or loss with respect to an item of expense.

(4) Examples.

(d) Exchange gain or loss with respect to forward contracts, futures contracts and option contracts.

(1) Scope.

(2) Realization of exchange gain or loss.

(3) Recognition of exchange gain or loss.

(4) Determination of exchange gain or loss.

(5) Hyperinflationary contracts.

(e) Currency swaps and notional principal contracts.

(1) Notional principal contract denominated in a single nonfunctional currency.

(2) Special rules for currency swaps.

(3) Amortization of swap premium or discount in the case of off market swaps.

(4) Treatment of taxpayer disposing of a currency swap.

(5) Examples.

(6) Special effective date for rules regarding currency swaps.

(7) Special rules for currency swap contracts in hyperinflationary currencies.

(f) Substance over form.

(1) In general.

(2) Example.

(g) Effective date.

(h) Timing of income and deductions from notional principal contracts.

(i) [Reserved]

§ 1.988-3 Character of exchange gain or loss.

(a) In general.

(b) Election to characterize exchange gain or loss on certain identified forward contracts, futures contracts and option contracts as capital gain or loss.

(1) In general.

(2) Special rule for contracts that become part of a straddle after the election is made.

(3) Requirements for making the election.

(4) Verification.

(5) Independent verification.

(6) Effective date.

(c) Exchange gain or loss treated as interest.

(1) In general.

(2) Exchange loss realized by the holder on nonfunctional currency tax exempt bonds.

(d) Effective date.

§ 1.988-4 Source of gain or loss realized on a section 988 transaction.

(a) In general.

(b) Qualified business unit.

(1) In general.

(2) Proper reflection on the books of the taxpayer or qualified business unit.

(c) Effectively connected exchange gain or loss.

(d) Residence.

(1) In general.

(2) Exception.

(3) Partner in a partnership not engaged in a U.S. trade or business under section 864(b)(2).

(e) Special rule for certain related party loans.

(1) In general.

(2) United States person.

(3) Loans by related person.

(4) 10 percent owned foreign corporation.

(f) Exchange gain or loss treated as interest under § 1.988-3.

(g) Exchange gain or loss allocated in the same manner as interest under § 1.861-9T.

(h) Effective date.

§ 1.988-5 Section 988(d) hedging transactions.

(a) Integration of a nonfunctional currency debt instrument and a § 1.988-5(a) hedge.

(1) In general.

(2) Exception.

(3) Qualifying debt instrument.

(4) Section 1.988-5(a) hedge.

(5) Definition of integrated economic transaction.

(6) Special rules for legging in and legging out of integrated treatment.

(7) Transactions part of a straddle.

(8) Identification requirements.

(9) Taxation of qualified hedging transactions.

(10) Transition rules and effective dates.

(b) Hedged executory contracts.

(1) In general.

(2) Definitions.

(3) Identification rules.

(4) Effect of hedged executory contract.

(5) References to this paragraph (b).

(c) Hedges of period between trade date and settlement date on purchase or sale of publicly traded stock or security.

(d) [Reserved]

(e) Advance rulings regarding net hedging and anticipatory hedging systems.

(f) [Reserved]

(g) General effective date.

§ 1.988-6 Nonfunctional Currency Contingent Payment Debt Instruments

(a) In general.

(1) Scope.

(2) Exception for hyperinflationary currencies.

(b) Instruments described in paragraph (a)(1)(i) of this section.

(1) In general.

(2) Application of noncontingent bond method.

(3) Treatment and translation of amounts determined under noncontingent bond method.

(4) Determination of gain or loss not attributable to foreign currency.

(5) Determination of foreign currency gain or loss.

(6) Source of gain or loss.

(7) Basis different from adjusted issue price.

(8) Fixed but deferred contingent payments.

(c) Examples.

(d) Multicurrency debt instruments.

(1) In general.

(2) Determination of denomination currency.

(3) Issuer/holder consistency.

(4) Treatment of payments in currencies other than the denomination currency.

(e) Instruments issued for nonpublicly traded property.

(1) Applicability.

(2) Separation into components.

(3) Treatment of components consisting of one or more noncontingent payments in the same currency.

(4) Treatment of components consisting of contingent payments.

(5) Basis different from adjusted issue price.

(6) Treatment of holder on sale, exchange, or retirement.

(f) Rules for nonfunctional currency tax exempt obligations described in § 1.1275-4(d).

(g) Effective date.

[T.D. 8400, 57 FR 9177, Mar. 17, 1992, as amended by T.D. 8860, 65 FR 2028, Jan. 13, 2000; T.D. 9157, 69 FR 52818, Aug. 30, 2004; T.D. 9794, 81 FR 88850, Dec. 8, 2016; T.D. 9795, 81 FR 88879, Dec. 8, 2016]

§ 1.988-1 Certain definitions and special rules.

(a) ***Section 988 transaction*** —

(1) ***In general.*** The term "section 988 transaction" means any of the following transactions—

(i) A disposition of nonfunctional currency as defined in paragraph (c) of this section;

(ii) Any transaction described in paragraph (a)(2) of this section if any amount which the taxpayer is entitled to receive or is required to pay by reason of such transaction is denominated in terms of a nonfunctional currency or is determined by reference to the value of one or more nonfunctional currencies.

A transaction described in this paragraph (a) need not require or permit payment with a nonfunctional currency as long as any amount paid or received is determined by reference to the value of one or more nonfunctional currencies. The acquisition of nonfunctional currency is treated as a section 988 transaction for purposes of establishing the taxpayer's basis in such currency and determining exchange gain or loss thereon.

(2) ***Description of transactions.*** The following transactions are described in this paragraph (a)(2).

(i) ***Debt instruments.*** Acquiring a debt instrument or becoming an obligor under a debt instrument. The term "debt instrument" means a bond, debenture, note, certificate or other evidence of indebtedness.

(ii) ***Payables, receivables, etc.*** Accruing, or otherwise taking into account, for purposes of subtitle A of the Internal Revenue Code, any item of expense or gross income or receipts which is to be paid or received after the date on which so accrued or taken into account. A payable relating to cost of goods sold, or a payable or receivable relating to a capital expenditure or receipt, is within the meaning of this paragraph (a)(2)(ii). Generally, a payable relating to foreign taxes (whether or not claimed as a credit under section 901) is within the meaning of this paragraph (a)(2)(ii). However, a payable of a domestic person relating to accrued foreign taxes of its qualified business unit (QBU branch) is not within the meaning of this paragraph (a)(2)(ii) if the QBU branch's functional currency is the U.S. dollar and the foreign taxes are claimed as a credit under section 901.

(iii) ***Forward contract, futures contract, option contract, or similar financial instrument.*** Except as otherwise provided in this paragraph (a)(2)(iii) and paragraph (a)(4)(i) of this section, entering into or acquiring any forward contract, futures contract, option, warrant, or similar financial instrument.

(A) ***Limitation for certain derivative instruments.*** A forward contract, futures contract, option, warrant, or similar financial instrument is within this paragraph (a)(2)(iii) only if the underlying property to which the instrument ultimately relates is a nonfunctional currency or is otherwise described in paragraph (a)(1)(ii) of this section. Thus, if the underlying property of an instrument is another financial instrument (*e.g.,* an option on a futures contract), then the underlying property to which such other instrument (*e.g.,* the futures contract) ultimately relates must be a nonfunctional currency. For example, a forward contract to purchase wheat denominated in a nonfunctional currency, an option to enter into a forward contract to purchase wheat denominated in a nonfunctional currency, or a warrant to purchase stock denominated in a nonfunctional currency is not described in this paragraph (a)(2)(iii). On the other hand, a forward contract to purchase a nonfunctional currency, an option to enter into a forward contract to purchase a nonfunctional currency, an option to purchase a bond denominated in or the payments of which are determined by reference to the value of a nonfunctional currency, or a warrant to purchase nonfunctional currency is described in this paragraph (a)(2)(iii).

(B) ***Nonfunctional currency notional principal contracts*** —

(*1*) ***In general.*** The term "similar financial instrument" includes a notional principal contract only if the payments required to be made or received under the contract are determined with reference to a nonfunctional currency.

(2) ***Definition of notional principal contract.*** The term "notional principal contract" means a contract (*e.g.,* a swap, cap, floor or collar) that provides for the payment of amounts by one party to another at specified intervals calculated by reference to a specified index upon a notional principal amount in exchange for specified consideration or a promise to pay similar amounts. For this purpose, a "notional principal contract" shall only include an instrument where the underlying property to which the instrument ultimately relates is money (*e.g.,* functional currency), nonfunctional currency, or property the value of which is determined by reference to an interest rate. Thus, the term "notional principal contract" includes a currency swap as defined in § 1.988-2(e)(2)(ii), but does not include a swap referenced to a commodity or equity index.

(C) ***Effective date with respect to certain contracts.*** This paragraph (a)(2)(iii) does not apply to any forward contract, futures contract, option, warrant, or similar financial instrument entered into or acquired on or before October 21, 1988, if such instrument would have been marked to market under section 1256 if held on the last day of the taxable year.

(3) [Reserved] For further guidance, see § 1.988-1T(a)(3).

(4)-(5) {Reserved]

(6) ***Examples.*** The following examples illustrate the application of paragraph (a) of this section. The examples assume that X is a U.S. corporation on an accrual method with the calendar year as its taxable year. Because X is a U.S. corporation the U.S. dollar is its functional currency under section 985. The examples also assume that section 988(d) does not apply.

Example 1. On January 1, 1989, X acquires 10,000 Canadian dollars. On January 15, 1989, X uses the 10,000 Canadian dollars to purchase inventory. The acquisition of the 10,000 Canadian dollars is a section 988 transaction for purposes of establishing X's basis in such Canadian dollars. The disposition of the 10,000 Canadian dollars is a section 988 transaction pursuant to paragraph (a)(1) of this section.

Example 2. On January 1, 1989, X acquires 10,000 Canadian dollars. On January 15, 1989, X converts the 10,000 Canadian dollars to U.S. dollars. The acquisition of the 10,000 Canadian dollars is a section 988 transaction for purposes of establishing X's basis in such Canadian dollars. The conversion of the 10,000 Canadian dollars to U.S. dollars is a section 988 transaction pursuant to paragraph (a)(1) of this section.

Example 3. On January 1, 1989, X borrows 100,000 British pounds (£) for a period of 10 years and issues a note to the lender with a face amount of £100,000. The note provides for payments of interest at an annual rate of 10% paid quarterly in pounds and has a stated redemption price at maturity of £100,000. X's becoming the obligor under the note is a section 988 transaction pursuant to paragraphs (a)(1)(ii) and (2)(i) of this section. Because X is an accrual basis taxpayer, the accrual of interest expense under X's note is a section 988 transaction pursuant to paragraphs (a)(1)(ii) and (2)(ii) of this section. In addition, the acquisition of the British pounds to make payments under the note is a section 988 transaction for purposes of establishing X's basis in such pounds, and the disposition of such pounds is a section 988 transaction under paragraph (a)(1)(i) of this section. See § 1.988-2(b) with respect to the translation of accrued interest expense and the determination of exchange gain or loss upon payment of accrued interest expense.

Example 4. On January 1, 1989, X purchases an original issue for 74,621.54 British pounds (£) a 3-year bond maturing on December 31, 1991, at a stated redemption price of £100,000. The bond provides for no stated interest. The bond has a yield to maturity of 10% compounded semiannually and has £25,378.46 of original issue discount. The acquisition of the bond is a section 988 transaction as provided in paragraphs (a)(1)(ii) and (2)(i) of this section. The accrual of original issue discount with respect to the bond is a section 988 transaction under paragraphs (a)(1)(ii) and (2)(ii) of this section. See § 1.988-2(b) with respect to the translation of original issue discount and the determination of exchange gain or loss upon receipt of such amounts.

Example 5. On January 1, 1989, X sells and delivers inventory to Y for 10,000,000 Italian lira for payment on April 1, 1989. Under X's method of accounting, January 1, 1989 is the accrual date. Because X is an accrual basis taxpayer, the accrual of a nonfunctional currency denominated item of gross receipts on January 1, 1989, for payment after the date of accrual is a section 988 transaction under paragraphs (a)(1)(ii) and (2)(ii) of this section.

Example 6. On January 1, 1989, X agrees to purchase a machine from Y for delivery on March 1, 1990 for 1,000,000 yen. The agreement calls for X to pay Y for the machine on June 1, 1990. Under X's method of accounting, the expenditure for the machine does not accrue until delivery on March 1, 1990. The agreement to purchase the machine is not a section 988 transaction. In particular, the agreement to purchase the machine is not described in paragraph (a)(2)(ii) of this section because the agreement is not an item of expense taken into account under subtitle A (but rather is an agreement to purchase a capital asset in the future). However, the payable that will arise on the delivery date is a section 988 transaction under paragraphs (a)(1)(ii) and (2)(ii) of this section even though the payable relates to a capital expenditure. In addition, the disposition of yen to satisfy the payable on June 1, 1990, is a section 988 transaction under paragraph (a)(1)(i) of this section.

Example 7. On January 1, 1989, X purchases and takes delivery of inventory for 10,000 French francs with payment to be made on April 1, 1989. Under X's method of accounting, the expense accrues on January 1, 1989. On January 1, 1989, X also enters into a forward contract with a bank to purchase 10,000 French francs for $2,000 on April 1, 1989. Because X is an accrual basis taxpayer, the accrual of a nonfunctional currency denominated item of expense on January 1, 1989, for payment after the date of accrual is a section 988 transaction under paragraphs (a)(1)(ii) and (2)(ii) of this section. Entering into the forward contract to purchase the 10,000 French francs is a section 988 transaction under paragraphs (a)(1)(ii) and (2)(iii) of this section.

Example 8. On January 1, 1989, X acquires 100,000 Norwegian krone. On January 15, 1989, X purchases and takes delivery of 1,000 shares of common stock with the 100,000 krone acquired on January 1, 1989. On August 1, 1989, X sells the 1,000 shares of common stock and receives 120,000 krone in payment. On August 30, 1989, X converts the 120,000 krone to U.S. dollars. The acquisition of the 100,000 krone on January 1, 1989, and the acquisition of the 120,000 krone on August 1, 1989, are section 988 transactions for purposes of establishing the basis of such krone. The disposition of the 100,000 krone on January 15, 1989, and the 120,000 krone on August 30, 1989, are section 988 transactions as provided in paragraph (a)(1)(i) of this section. Neither the acquisition on January 15, 1989, nor the disposition on August 1, 1989, of the stock is a section 988 transaction.

Example 9. On May 11, 1989, X purchases a one year note at original issue for its issue price of $1,000. The note pays interest in dollars at the rate of 4 percent compounded semiannually. The amount of principal received by X upon maturity is equal to $1,000 plus the equivalent of the excess, if any, of (a) the Financial Times One Hundred Stock Index (an index of stocks traded on the London Stock Exchange hereafter referred to as the FT100) determined and translated into dollars on the last business day prior to the maturity date, over (b) £2,150, the "stated value" of the FT100, which is equal to 110% of the average value of the index for the six months prior to the issue date, translated at the exchange rate of £1 = $1.50. The purchase by X of the instrument described above is not a section 988 transaction because the index used to compute the principal amount received upon maturity is determined with reference to the value of stock and not nonfunctional currency.

Example 10. On April 9, 1989, X enters into an interest rate swap that provides for the payment of amounts by X to its counterparty based on 4% of a 10,000 yen principal amount in exchange for amounts based on yen LIBOR rates. Pursuant to paragraphs (a)(1)(ii) and (2)(iii) of this section, this yen for yen interest rate swap is a section 988 transaction.

Example 11. On August 11, 1989, X enters into an option contract for sale of a group of stocks traded on the Japanese Nikkei exchange. The contract is not a section 988 transaction within the meaning of § 1.988-1(a)(2)(iii) because the underlying property to which the option relates is a group of stocks and not nonfunctional currency.

(7) ***Special rules for regulated futures contracts and non-equity options*** —

(i) ***In general.*** Except as provided in paragraph (a)(7)(ii) of this section, paragraph (a)(2)(iii) of this section shall not apply to any regulated futures contract or non-equity option which would be marked to market under section 1256 if held on the last day of the taxable year.

(ii) ***Election to have paragraph (a)(2)(iii) of this section apply.*** Notwithstanding paragraph (a)(7)(i) of this section, a taxpayer may elect to have paragraph (a)(2)(iii) of this section apply to regulated futures contracts and non-equity options as provided in paragraphs (a)(7)(iii) and (iv) of this section.

(iii) ***Procedure for making the election.*** A taxpayer shall make the election provided in paragraph (a)(7)(ii) of this section by sending to the Internal Revenue Service Center, Examination Branch, Stop Number 92, Kansas City, MO 64999 a statement titled "Election to Treat Regulated Futures Contracts and Non-Equity Options as Section 988 Transactions Under Section 988 (c)(1)(D)(ii)" that contains the following:

(A) The taxpayer's name, address, and taxpayer identification number;

(B) The date the notice is mailed or otherwise delivered to the Internal Revenue Service Center;

(C) A statement that the taxpayer (including all members of such person's affiliated group as defined in section 1504 or in the case of an individual all persons filing a joint return with such individual) elects to have section 988(c)(1)(D)(i) and § 1.988-1(a)(7)(i) not apply;

(D) The date of the beginning of the taxable year for which the election is being made;

(E) If the election is filed after the first day of the taxable year, a statement regarding whether the taxpayer has previously held a contract described in section 988(c)(1)(D)(i) or § 1.988-1(a)(7)(i) during such taxable year, and if so, the first date during the taxable year on which such contract was held; and

(F) The signature of the person making the election (in the case of individuals filing a joint return, the signature of all persons filing such return).

The election shall be made by the following persons: in the case of an individual, by such individual; in the case of a partnership, by each partner separately; effective for taxable years beginning after March 17, 1992, in the case of tiered partnerships, each ultimate partner; in the case of an S corporation, by each shareholder separately; in the case of a trust (other than a grantor trust) or estate, by the fiduciary of such trust or estate; in the case of any corporation other than an S corporation, by such corporation (in the case of a corporation that is a member of an affiliated group that files a consolidated return, such election shall be valid and binding only if made by the common parent, as that term is used in § 1.1502-77(a)); in the case of a controlled foreign corporation, by its controlling United States shareholders under § 1.964-1(c)(3). With respect to a corporation (other than an S corporation), the election, when made by the common parent, shall be binding on all members of such corporation's affiliated group as defined in section 1504 that file a consolidated return. The election shall be binding on any income or loss derived from the partner's share (determined under the principles of section 702(a)) of all contracts described in section 988(c)(1)(D)(i) or paragraph (a)(7)(i) of this section in which the taxpayer holds a direct interest or indirect interest through a partnership or S corporation; however, the election shall not apply to any income or loss of a partnership for any taxable year if such partnership made an election under section 988(c)(1)(E)(iii)(V) for such year or any preceding year. Generally, a copy of the election must be attached to the taxpayer's income tax return for the first year it is effective. It is not required to be attached to subsequent returns. However, in the case of a partner, a copy of the election must be attached to the taxpayer's income tax return for every year during which the taxpayer is a partner in a partnership that engages in a transaction that is subject to the election.

(iv) *Time for making the election* —

(A) ***In general.*** Unless the requirements for making a late election described in paragraph (a)(7)(iv)(B) of this section are satisfied, an election under section 988 (c)(1)(D)(ii) and paragraph (a)(7)(ii) of this section for any taxable year shall be made on or before the first day of the taxable year or, if later, on or before the first day during such taxable year on which the taxpayer holds a contract described in section 988(c)(1)(D)(ii) and paragraph (a)(7)(ii) of this section. The election under section 988(c)(1)(D)(ii) and paragraph (a)(7)(ii) of this section shall apply to contracts entered into or acquired after October 21, 1988, and held on or after the effective date of the election. The election shall be effective as of the beginning of the taxable year and shall be binding with respect to all succeeding taxable years unless revoked with the prior consent of the Commissioner. In determining whether to grant revocation of the election, recapture of the tax benefit derived from the election in previous taxable years will be considered.

(B) ***Late elections.*** A taxpayer may make an election under section 988(c)(1)(D)(ii) and paragraph (a)(7)(ii) of this section within 30 days after the time prescribed in the first sentence of paragraph (a)(7)(iv)(A) of this section. Such a late election shall be effective as of the beginning of the taxable year; however, any losses recognized during the taxable

year with respect to contracts described in section 988(c)(1)(D)(ii) or paragraph (a)(7)(ii) of this section which were entered into or acquired after October 21, 1988, and held on or before the date on which the late election is mailed or otherwise delivered to the Internal Revenue Service Center shall not be treated as derived from a section 988 transaction. A late election must comply with the procedures set forth in paragraph (a)(7)(iii) of this section.

(v) ***Transition rule.*** An election made prior to September 21, 1989 which satisfied the requirements of Notice 88-124, 1988-51 I.R.B. 6, shall be deemed to satisfy the requirements of paragraphs (a)(7)(iii) and (iv) of this section.

(vi) ***General effective date provision.*** This paragraph (a)(7) shall apply with respect to futures contracts and options entered into or acquired after October 21, 1988.

(8) ***Special rules for qualified funds*** —

(i) ***Definition of qualified fund.*** The term "qualified fund" means any partnership if—

(A) At all times during the taxable year (and during each preceding taxable year to which an election under section 988(c)(1)(E)(iii)(V) applied) such partnership has at least 20 partners and no single partner owns more than 20 percent of the interests in the capital or profits of the partnership;

(B) The principa1 activity of such partnership for such taxable year (and each such preceding taxable year) consists of buying and selling options, futures, or forwards with respect to commodities;

(C) At least 90 percent of the gross income of the partnership for the taxable year (and each such preceding year) consists of income or gains described in subparagraph (A), (B), or (G) of section 7704(d)(1) or gain from the sale or disposition of capital assets held for the production of interest or dividends;

(D) No more than a de minimis amount of the gross income of the partnership for the taxable year (and each such preceding taxable year) was derived from buying and selling commodities; and

(E) An election under section 988 (c)(1)(E)(iii)(V) as provided in paragraph (a)(8)(iv) of this section applies to the taxable year.

(ii) ***Special rules relating to paragraph (a)(8)(i)(A) of this section*** —

(A) ***Certain general partners.*** The interest of a general partner in the partnership shall not be treated as failing to meet the 20 percent ownership requirement of paragraph (a)(8)(i)(A) of this section for any taxable year of the partnership if, for the taxable year of the partner in which such partnership's taxable year ends, such partner (and each corporation filing a consolidated return with such partner) had no ordinary income or loss from a section 988 transaction (other than income from the partnership) which is exchange gain or loss (as the case may be).

(B) ***Treatment of incentive compensation.*** For purposes of paragraph (a)(8)(i)(A) of this section, any income allocable to a general partner as incentive compensation based on profits rather than capital shall not be taken into account in determining such partner's interest in the profits of the partnership.

(C) ***Treatment of tax exempt partners.*** The interest of a partner in the partnership shall not be treated as failing to meet the 20 percent ownership requirements of paragraph (a)(5)(8)(A) of this section if none of the income of such partner from such partnership is subject to tax under chapter 1 of subtitle A of the Internal Revenue Code (whether directly or through one or more pass-through entities).

(D) ***Look-through rule.*** In determining whether the 20 percent ownership requirement of paragraph (a)(8)(i)(A) of this section is met with respect to any partnership, any interest in such partnership held by another partnership shall be treated as held proportionately by the partners in such other partnership.

(iii) ***Other special rules*** —

(A) ***Related persons.*** Interests in the partnership held by persons related to each other (within the meaning of section 267(b) or 707(b)) shall be treated as held by one person.

(B) ***Predecessors.*** Reference to any partnership shall include a reference to any predecessor thereof.

(C) ***Treatment of certain debt instruments.*** Solely for purposes of paragraph (a)(8)(i)(D) of this section, any debt instrument which is described in both paragraphs (a)(1)(ii) and (2)(i) of this section shall be treated as a commodity.

(iv) ***Procedure for making the election provided in section 988(c)(1)(E)(iii)(V).*** A partnership shall make the election provided in section 988(c)(1)(E)(iii)(V) by sending to the Internal Revenue Service Center, Examination Branch, Stop Number 92, Kansas City, MO 64999 a statement titled "QUALIFIED FUND ELECTION UNDER SECTION 988(c)(1)(E)(iii)(V)" that contains the following:

(A) The partnership's name, address, and taxpayer identification number;

(B) The name, address and taxpayer identification number of the general partner making the election on behalf of the partnership;

(C) The date the notice is mailed or otherwise delivered to the Internal Revenue Service Center;

(D) A brief description of the activity of the partnership;

(E) A statement that the partnership is making the election provided in section 988(c)(1)(E)(iii)(V);

(F) The date of the beginning of the taxable year for which the election is being made;

(G) If the election is filed after the first day of the taxable year, then a statement regarding whether the partnership previously held an instrument referred to in section 988(c)(1)(E)(i) during such taxable year and, if so, the first date during the taxable year on which such contract was held; and

(H) The signature of the general partner making the election.

The election shall be made by a general partner with management responsibility of the partnership's activities and a copy of such election shall be attached to the partnership's income tax return (Form 1065) for the first taxable year it is effective. It is not required to be attached to subsequent returns.

(v) ***Time for making the election.*** The election under section 988(c)(1)(E)(iii)(V) for any taxable year shall be made on or before the first day of the taxable year or, if later, on or before the first day during such year on which the partnership holds an instrument described in section 988(c)(1)(E)(i). The election under section 988(c)(1)(E)(iii)(V) shall apply to the taxable year for which made and all succeeding taxable years. Such election may only be revoked with the consent of the Commissioner. In determining whether to grant revocation of the election, recapture by the partners of the tax benefit derived from the election in previous taxable years will be considered.

(vi) ***Operative rules applicable to qualified funds*** —

(A) ***In general.*** In the case of a qualified fund, any bank forward contract or any foreign currency futures contract traded on a foreign exchange which is not otherwise a section 1256 contract shall be treated as a section 1256 contract for purposes of section 1256.

(B) ***Gains and losses treated as short-term.*** In the case of any instrument treated as a section 1256 contract under paragraph (a)(8)(vi)(A) of this section, subparagraph (A) of section 1256(a)(3) shall be applied by substituting "100 percent" for "40 percent" (and subparagraph (B) of such section shall not apply).

(vii) ***Transition rule.*** An election made prior to September 21, 1989, which satisfied the requirements of Notice 88-124, 1988-51 I.R.B. 6, shall be deemed to satisfy the requirements of § 1.988-1(a)(8)(iv) and (v).

(viii) ***General effective date rules*** —

(A) The requirements of subclause (IV) of section 988(c)(1)(E)(iii) shall not apply to contracts entered into or acquired on or before October 21, 1988.

(B) In the case of any partner in an existing partnership, the 20 percent ownership requirements of subclause (I) of section 988(c)(1)(E)(iii) shall be treated as met during any period during which such partner does not own a percentage interest in the capital or profits of such partnership greater than $33^{1}/_{3}$ percent (or, if lower, the lowest such percentage interest of such partner during any period after October 21, 1988, during which such partnership is in existence). For purposes of the preceding sentence, the term "existing partnership" means any partnership if—

(*1*) Such partnership was in existence on October 21, 1988, and principally engaged on such date in buying and selling options, futures, or forwards with respect to commodities; or

(*2*) A registration statement was filed with respect to such partnership with the Securities and Exchange Commission on or before such date and such registration statement indicated that the principal activity of such partnership will consist of buying and selling instruments referred to in paragraph (a)(8)(viii)(B)(*1*) of this section.

(9) ***Exception for certain transactions entered into by an individual*** —

(i) ***In general.*** A transaction entered into by an individual which otherwise qualifies as a section 988 transaction shall be considered a section 988 transaction only to the extent expenses properly allocable to such transaction meet the requirements of section 162 or 212 (other than the part of section 212 dealing with expenses incurred in connection with taxes).

(ii) ***Examples.*** The following examples illustrate the application of paragraph (a)(9) of this section.

Example 1. X is a U.S. citizen who therefore has the U.S. dollar as his functional currency. On January 1, 1990, X enters into a spot contract to purchase 10,000 British pounds (£) for $15,000 for delivery on January 3, 1990. Immediately upon delivery, X acquires at original issue a pound denominated bond with an issue price of £10,000. The bond matures on January 3, 1993, pays interest in pounds at a rate of 10% compounded semiannually, and has no original issue discount. Assume that all expenses properly allocable to these transactions would meet the requirements of section 212. Under § 1.988-2(d)(1)(ii), entering into the spot contract on January 1, 1990, is not a section 988 transaction. The acquisition of the pounds on January 3, 1990, under the spot contract is a section 988 transaction for purposes of establishing X's basis in the pounds. The disposition of the pounds and the acquisition of the bond by X are section 988 transactions. These transactions are not excluded from the definition of a section 988 transaction under paragraph (a)(9) of this section because expenses properly allocable to such transactions meet the requirements of section 212.

Example 2. X is a U.S. citizen who therefore has the dollar as his functional currency. In preparation for X's vacation, X purchases 1,000 British pounds (£) from a bank on June 1, 1989. During the period of X's vacation in the United Kingdom beginning June 10, 1989, and ending June 20, 1989, X spends £500 for hotel rooms, £300 for food and £200 for miscellaneous vacation expenses. The expenses properly allocable to such dispositions do not meet the requirements of section 162 or 212. Thus, the disposition of the pounds by X on his vacation are not section 988 transactions.

(10) ***Intra-taxpayer transactions*** —

(i) ***In general.*** Except as provided in paragraph (a)(10)(ii) of this section, disregarded transactions between or among the taxpayer and/or qualified business units of that taxpayer ("intra-taxpayer transactions") are not section 988 transactions. See section 987 and the regulations thereunder.

(ii) ***Certain intra-taxpayer transfers of section 988 transactions that result in the recognition of section 988 gain or loss*** —

(A) ***In general.*** Exchange gain or loss with respect to nonfunctional currency or any item described in paragraph (a)(2) of this section entered into with another taxpayer shall be realized upon a transfer (as defined under § 1.987-2(c)) of such currency or item from an owner to a section 987 QBU or from a section 987 QBU to an owner if as a result of such transfer—

(*1*) The currency or item loses its character as nonfunctional currency or as an item described in paragraph (a)(2) of this section; or

(*2*) The source of the exchange gain or loss could be altered absent the application of paragraph (a)(10)(ii)(B) of this section.

(B) ***Computation of exchange gain or loss.*** Exchange gain or loss described in section (a)(10)(ii)(A) of this section shall be computed in accordance with § 1.988-2 (without regard to § 1.988-2(b)(8)) as if the nonfunctional currency or item described in paragraph (a)(2) of this section had been sold or otherwise transferred at fair market value between unrelated taxpayers. For purposes of the preceding sentence, a taxpayer must use a

translation rate that is consistent with the translation conventions of the section 987 QBU to or from which, as the case may be, the item is being transferred. In the case of a gain or loss incurred in a transaction described in this paragraph (a)(10)(ii) that does not have a significant business purpose, the Commissioner may defer such gain or loss.

(iii) ***Example.*** The following example illustrates the provisions of this paragraph (a)(10).

> *Example.* (A) X, a corporation with the U.S. dollar as its functional currency, operates through foreign branches Y and Z. Y and Z are qualified business units as defined in section 989(a) with the LC as their functional currency. X computes Y's and Z's income under section 987 (relating to branch transactions). On November 12, 1988, Y transfers $25 to the home office of X when the fair market value of such amount equals LC120. Y has a basis of LC100 in the $25. Under paragraph (a)(10)(ii) of this section, Y realizes foreign source exchange gain of LC20 (LC120—LC100) as the result of the $25 transfer. For purposes of determining whether the transfer is a remittance resulting in additional gain or loss, see section 987 and the regulations thereunder.
> (B) If instead Y transfers the $25 to Z, exchange gain is not realized because the $25 is nonfunctional currency with respect to Z and if Z were to immediately convert the $25 into LCs, the gain would be foreign source. For purposes of determining whether the transfer is a remittance resulting in additional gain or loss, see section 987 and the regulations thereunder.

(11) ***Authority to include or exclude transactions from section 988*** —

(i) ***In general.*** The Commissioner may recharacterize a transaction (or series of transactions) in whole or in part as a section 988 transaction if the effect of such transaction (or series of transactions) is to avoid section 988. In addition, the Commissioner may exclude a transaction (or series of transactions) which in form is a section 988 transaction from the provisions of section 988 if the substance of the transaction (or series of transactions) indicates that it is not properly considered a section 988 transaction.

(ii) ***Example.*** The following example illustrates the provisions of this paragraph (a)(11).

Example. B is an individual with the U.S. dollar as its functional currency. B holds 500,000 Swiss francs which have a basis of $100,000 and a fair market value of $400,000 as of October 15, 1989. On October 16, 1989, B transfers the 500,000 Swiss francs to a newly formed U.S. corporation, X, with the dollar as its functional currency. On October 16, 1989, B sells the stock of X for $400,000. Assume the transfer to X qualified for nonrecognition under section 351. Because the sale of the stock of X is a substitute for the disposition of an asset subject to section 988, the Commissioner may recharacterize the sale of the stock as a section 988 transaction. The same result would obtain if B transferred the Swiss francs to a partnership and then sold the partnership interest.

(b) ***Spot contract.*** A spot contract is a contract to buy or sell nonfunctional currency on or before two business days following the date of the execution of the contract. See § 1.988-2 (d)(1)(ii) for operative rules regarding spot contracts.

(c) ***Nonfunctional currency.*** The term "nonfunctional currency" means with respect to a taxpayer or a qualified business unit (as defined in section 989 (a)) a currency (including the European Currency Unit) other than the taxpayer's or the qualified business unit's functional currency as defined in section 985 and the regulations thereunder. For rules relating to nonrecognition of exchange gain or loss with respect to certain dispositions of nonfunctional currency, see § 1.988-2 (a)(1)(iii).

(d) ***Spot rate*** —

(1) ***In general.*** Except as otherwise provided in this paragraph, the term "spot rate" means a rate demonstrated to the satisfaction of the District Director or the Assistant Commissioner (International) to reflect a fair market rate of exchange available to the public for currency under a spot contract in a free market and involving representative amounts. In the absence of such a demonstration, the District Director or the Assistant Commissioner (International), in his or her sole discretion, shall determine the spot rate from a source of exchange rate information reflecting actual transactions conducted in a free market. For example, the taxpayer or the District Director or the Assistant Commissioner (International) may determine the spot rate by reference to exchange rates published in the pertinent monthly issue of "International Financial Statistics" or a successor publication of the International Monetary Fund; exchange rates published by the Board of Governors of the Federal Reserve System pursuant to 31 U.S.C. section 5151; exchange rates published in newspapers, financial journals or other daily financial news sources; or exchange rates quoted by electronic financial news services.

(2) ***Consistency required in valuing transactions subject to section 988.*** If the use of inconsistent sources of spot rate quotations results in the distortion of income, the District Director or the Assistant Commissioner (International) may determine the appropriate spot rate.

(3) ***Use of certain spot rate conventions for payables and receivables denominated in nonfunctional currency.*** If consistent with the taxpayer's financial accounting, a taxpayer may utilize a spot rate convention determined at intervals of one quarter year or less for purposes of computing exchange gain or loss with respect to payables and receivables denominated in a nonfunctional currency that are incurred in the ordinary course of business with respect to the acquisition or sale of goods or the obtaining or performance of services. For example, if consistent with the taxpayer's financial accounting, a taxpayer may accrue all payables and receivables incurred during the month of January at the spot rate on December 31 or January 31 (or at an average of any spot rates occurring between these two dates) and record the payment or receipt of amounts in satisfaction of such payables and receivables consistent with such convention. The use of a spot rate convention cannot be changed without the consent of the Commissioner.

(4) ***Currency where an official government established rate differs from a free market rate*** —

(i) ***In general.*** If a currency has an official government established rate that differs from a free market rate, the spot rate shall be the rate which most clearly reflects the taxpayer's income. Generally, this shall be the free market rate.

(ii) ***Examples.*** The following examples illustrate the application of this paragraph (d)(4).

Example 1. X is an accrual method U.S. corporation with the dollar as its functional currency. X owns all the stock of a Country L subsidiary, CFC. CFC has the currency of Country L, the LC, as its functional currency. Country L imposes restrictions on the remittance of dividends. On April 1, 1990, CFC pays a dividend to X in the amount of LC100. Assume that the official governnent established rate is $1 = LC1 and the free market rate, which takes into account the remittance restrictions and which is the rate that most clearly

reflects income, is $1 = LC4. On April 1, 1990, X donates the LC100 in a transaction that otherwise qualifies as a charitable contribution under section 170 (c). Both the amount of the dividend income and the deduction under section 170 is $25 (LC100 × the free market rate, $.25).

Example 2. X, a corporation with the U.S. dollar as its functional currency, operates in foreign country L through branch Y. Y is a qualified business unit as defined in section 989 (a). X computes Y's income under the dollar approximate separate transactions method as described in § 1.985-3. The currency of L is the LC. X can purchase legally United States dollars ($) in L only from the L government. In order to take advantage of an arbitrage between the official and secondary dollar to LC exchange rates in L:
(i) X purchases LC100 for $60 in L on the secondary market when the official exchange rate is S1 = LC1;

(ii) X transfers the LC100 to Y;

(iii) Y purchases $100 for LC100; and

(iv) Y transfers $65 ($100 less an L tax withheld of $35 on the transfer) to the home office of X.

Under paragraph (a)(7) of this section, the transfer of the LC100 by X to Y is a realization event. X has a basis of $60 in the LC100. Under these facts, the appropriate dollar to LC exchange rate for computing the amount realized by X is the official exchange rate. Therefore, X realizes $40 ($100-$60) of U.S. source gain from the transfer to Y. The same result would obtain if Y rather than X purchased the LC100 on the secondary market in L with $60 supplied by X, because the substance of this transaction is that X is performing the arbitrage.

(e) ***Exchange gain or loss.*** The term “exchange gain or loss” means the amount of gain or loss realized as determined in § 1.988-2 with respect to a section 988 transaction. Except as otherwise provided in these regulations (*e.g.,* § 1.98B-5), the amount of exchange gain or loss from a section 988 transaction shall be separately computed for each section 988 transaction, and such amount shall not be integrated with gain or loss recognized on another transaction (whether or not such transaction is economically related to the section 988 transaction). See § 1.988-2 (b)(8) for a special rule with respect to debt instruments.

(f) ***Hyperinflationary currency*** —

(1) ***Definition*** —

(i) ***General rule.*** For purposes of section 988, a hyperinflationary currency means a currency described in § 1.985-1(b)(2)(ii)(D). Unless otherwise provided, the currency in any example used in §§ 1.988-1 through 1.988-5 is not a hyperinflationary currency.

(ii) ***Special rules for determining base period.*** In determining whether a currency is hyperinflationary under § 1.985-1(b)(2)(ii)(D) for purposes of this paragraph (f), the following rules will apply:

(A) The base period means the thirty-six calendar month period ending on the last day of the taxpayer's (or qualified business unit's) current taxable year. Thus, for example, if for 1996, 1997, and 1998, a country's annual inflation rates are 6 percent, 11 percent, and 90 percent, respectively, the cumulative inflation rate for the three-year base period is 124% [((1.06 × 1.11 × 1.90) − 1.0 = 1.24) × 100 = 124%]. Accordingly, assuming the QBU has a calendar year as its taxable year, the currency of the country is hyperinflationary for the 1998 taxable year. This change in the § 1.985-1(b)(2)(ii)(D) base period shall not apply to any section 988 transaction of an entity described in section 851 (regulated investment company (RIC)) or section 856 (real estate investment trust (REIT)). The Service may, by notice, provide that the foregoing change in the § 1.985-1(b)(2)(ii)(D) base period does not apply to any section 988 transaction of an entity with distribution requirements similar to a RIC or REIT.

(B) The last sentence of § 1.985-1(b)(2)(ii)(D) shall not apply to alter the base period for purposes of this paragraph (f) in determining whether a currency is hyperinflationary for purposes of section 988. Accordingly, generally accepted accounting principles may not apply to alter the base period for purposes of this paragraph (f).

(2) ***Effective date.*** Paragraph (f)(1) of this section shall apply to transactions entered into after February 14, 2000.

(g) ***Fair market value.*** The fair market value of an item shall, where relevant, reflect an appropriate premium or discount for the time value of money (*e.g.,* the fair market value of a forward contract to buy or sell nonfunctional currency shall reflect the present value of the difference between the units of nonfunctional currency times the market forward rate at the time of valuation and the units of nonfunctional currency times the forward rate set forth in the contract). However, if consistent with the taxpayer's method of financial accounting (and consistently applied from year to year), the preceding sentence shall not apply to a financial instrument that matures within one year from the date of issuance or acquisition. Unless otherwise provided, the fair market value given in any example used in §§ 1.988-1 through 1.988-5 is deemed to reflect appropriately the time value of money. If the use of inconsistent sources of forward or other market rate quotations results in the distortion of income, the District Director or the Assistant Commissioner (International) may determine the appropriate rate.

(h) ***Interaction with sections 1092 and 1256.*** Unless otherwise provided, it is assumed for purposes of §§ 1.988-1 through 1.988-5 that any contract used in any example is not a section 1256 contract and is not part of a straddle as defined in section 1092. No inference is intended regarding the application of section 1092 or 1256 unless expressly stated.

(i) ***Applicability date*** —

(1) ***In general.*** Except as otherwise provided in this section, this section applies to taxable years beginning after December 31, 1986. Thus, except as otherwise provided in this section, any payments made or received with respect to a section 988 transaction in taxable years beginning after December 31, 1986, are subject to this section.

(2) ***Paragraph (a)(10)(ii).*** Generally, paragraph (a)(10)(ii) of this section applies to taxable years beginning after December 31, 2024. However, if pursuant to § 1.987-15(b), a taxpayer chooses to apply §§ 1.987-1 through 1.987-15 to a taxable year before the first taxable year described in §

1.987-15(a)(1), then paragraph (a)(10)(ii) of this section applies to that taxable year. *See* § 1.988-1(i), as contained in 26 CFR in part 1 in effect on April 1, 2024, for a prior applicability date for paragraph (a)(10)(ii) of this section.

[T.D. 8400, 57 FR 9178, Mar. 17, 1992, as amended by T.D. 8914, 66 FR 280, Jan. 3, 2001; T.D. 9794, 81 FR 88850, Dec. 8, 2016; T.D. 9795, 81 FR 88879, Dec. 8, 2016; T.D. 10016, 89 FR 100223, Dec. 11, 2024]

Editorial Note: At 89 FR , Dec. 11, 2024, § 1.988-1 was amended by removing the language "1988" in the fourth sentence of paragraph (a)(1)(iii) and adding the language "2025" in its place. However, the amendment could not be incorporated due to an error in the amendatory instruction that misidentified the paragraph number.

§ 1.988-1T Certain definitions and special rules (temporary).

(a)

(1) through(a)

(2) [Reserved] For further guidance, see § 1.988-1(a)(1) through (2).

(3) ***Specified owner functional currency transactions of a section 987 QBU not treated as section 988 transactions.*** Specified owner functional currency transactions, as defined in § 1.987-3T(b)(4)(ii), held by a section 987 QBU are not treated as section 988 transactions. Thus, no currency gain or loss shall be recognized by a section 987 QBU under section 988 with respect to such transactions.

(4) through(i) [Reserved] For further guidance, see § 1.988-1(a)(4) through (i).

(j) *Effective/applicability date.* This section applies to taxable years beginning on or after one year after the first day of the first taxable year following December 7, 2016. Notwithstanding the preceding sentence, if a taxpayer makes an election under § 1.987-11(b), then this section applies to taxable years to which §§ 1.987-1 through 1.987-10 apply as a result of such election.

(k) *Expiration date.* The applicability of this section expires on December 6, 2019.

[T.D. 9795, 81 FR 88879, Dec. 8, 2016]

§ 1.988-2 Recognition and computation of exchange gain or loss.

(a) ***Disposition of nonfunctional currency*** —

(1) ***Recognition of exchange gain or loss*** —

(i) ***In general.*** Except as otherwise provided in this section, § 1.988-1(a)(7)(ii), and § 1.988-5, the recognition of exchange gain or loss upon the sale or other disposition of nonfunctional currency shall be governed by the recognition provisions of the Internal Revenue Code which apply to the sale or disposition of property (*e.g.,* section 1001 or, to the extent provided in regulations, section 1092). The disposition of nonfunctional currency in settlement of a forward contract, futures contract, option contract, or similar financial instrument is considered to be a sale or disposition of the nonfunctional currency for purposes of the preceding sentence.

(ii) ***Clarification of section 1031.*** An amount of one nonfunctional currency is not "property of like kind" with respect to an amount of a different nonfunctional currency.

(iii) ***Coordination with section 988(c)(1)(C)(ii).*** No exchange gain or loss is recognized with respect to the following transactions—

(A) An exchange of units of nonfunctional currency for different units of the same nonfunctional currency;

(B) The deposit of nonfunctional currency in a demand or time deposit or similar instrument (including a certificate of deposit) issued by a bank or other financial institution if such instrument is denominated in such currency;

(C) The withdrawal of nonfunctional currency from a demand or time deposit or similar instrument issued by a bank or other financial institution if such instrument is denominated in such currency;

(D) The receipt of nonfunctional currency from a bank or other financial institution from which the taxpayer purchased a certificate of deposit or similar instrument denominated in such currency by reason of the maturing or other termination of such instrument; and

(E) The transfer of nonfunctional currency from a demand or time deposit or similar instrument issued by a bank or other financial institution to another demand or time deposit or similar instrument denominated in the same nonfunctional currency issued by a bank or other financial institution.

The taxpayer's basis in the units of nonfunctional currency or other property received in the transaction shall be the adjusted basis of the units of nonfunctional currency or other property transferred. See paragraph (b) of this section with respect to the timing of interest income or expense and the determination of exchange gain or loss thereon.

(iv) ***Example.*** The following example illustrates the provisions of paragraph (a)(1)(iii) of this section.

Example. X is a corporation on the accrual method of accounting with the U.S. dollar as its functional currency. On January 1, 1989, X acquires 1,500 British pounds (£) for $2,250 (£1 = $1.50). On January 3, 1989, when the spot rate is £1 = $1.49, X deposits the £1,500 with a British financial institution in a non-interest bearing demand account. On February 1, 1989, when the spot rate is £1 = $1.45, X withdraws the £1,500. On February 5, 1989, when the spot rate is £1 = $1.42, X purchases inventory in the amount of £1,500. Pursuant to paragraph (a)(1)(iii) of this section, no exchange loss is realized until February 5, 1989, when X disposes of the £1,500 for inventory. At that time, X realizes exchange loss in the amount of $120 computed under paragraph (a)(2) of this section. The loss is not an adjustment to the cost of the inventory.

(2) ***Computation of gain or loss*** —

(i) ***In general.*** Exchange gain realized from the sale or other disposition of nonfunctional currency shall be the excess of the amount realized over the adjusted basis of such currency, and exchange loss realized shall be the excess of the adjusted basis of such currency over the amount realized.

(ii) ***Amount realized*** —

(A) ***In general.*** The amount realized from the disposition of nonfunctional currency shall be determined under section 1001(b). A taxpayer that uses a spot rate convention under § 1.988-1(d)(3) to determine exchange gain or loss with respect to a payable shall determine the amount realized upon the disposition of nonfunctional currency paid in satisfaction of the payable in a manner consistent with such convention.

(B) ***Exchange of nonfunctional currency for property.*** For purpose of paragraph (a)(2) of this section, the exchange of nonfunctional currency for property (other than nonfunctional currency) shall be treated as—

(*1*) An exchange of the units of nonfunctional currency for units of functional currency at the spot rate on the date of the exchange, and

(*2*) The purchase or sale of the property for such units of functional currency.

(C) ***Example.*** The following example illustrates the provisions of paragraph (a)(2)(ii)(B) of this section.

Example. G is a U.S. corporation with the U.S. dollar as its functional currency. On January 1, 1989, G enters into a contract to purchase a paper manufacturing machine for 10,000,000 British pounds (£) for delivery on January 1, 1991. On January 1, 1991, when G exchanges £10,000,000 (which G purchased for $12,000,000) for the machine, the fair market value of the machine is £17,000,000. On January 1, 1991, the spot exchange rate is £1 = $1.50. Under paragraph (a)(2)(ii)(B) of this section, the transaction is treated as an exchange of £10,000,000 for $15,000,000 and the purchase of the machine for $15,000,000. Accordingly, in computing G's exchange gain of $3,000,000 on the disposition of the £10,000,000, the amount realized is $15,000,000. G's basis in the machine is $15,000,000. No gain is recognized on the bargain purchase of the machine.

(iii) ***Adjusted basis*** —

(A) ***In general.*** Except as provided in paragraphs (a)(2)(iii)(B) and (C) of this section, the adjusted basis of nonfunctional currency is determined under the applicable provisions of the Internal Revenue Code (*e.g.,* sections 1011 through 1023). A taxpayer that uses a spot rate convention under § 1.988-1 (d)(3) to determine exchange gain or loss with respect to a receivable shall determine the basis of nonfunctional currency received in satisfaction of such receivable in a manner consistent with such convention.

(B) ***Determination of the basis of nonfunctional currency withdrawn from an account with a bank or other financial institution*** —

(*1*) ***In general.*** The basis of nonfunctional currency withdrawn from an account with a bank or other financial institution shall be determined under any reasonable method that is consistently applied from year to year by the taxpayer to all accounts denominated in a nonfunctional currency. For example, a taxpayer may use a first in first out method, a last in first out method, a pro rata method (as illustrated in the example below), or any other reasonable method that is consistently applied. However, a method that consistently results in units of nonfunctional currency with the highest basis being withdrawn first shall not be considered reasonable.

(2) ***Example.*** The following example illustrates the provisions of this paragraph (a)(2)(iii)(B).

Example. (i) X, a cash basis individual with the dollar as his functional currency, opens a demand account with a Swiss bank. Assume expenses associated with the demand account are deductible under section 212. The following chart indicates Swiss franc deposits to the account, Swiss franc interest credited to the account, the dollar basis of each deposit, and the determination of the aggregate dollar basis of all Swiss francs in the account. Assume that the taxpayer has properly translated all the amounts specified in the chart and that all transactions are subject to section 988.

Date	Swiss francs deposited	Interest received	U.S. dollar basis	Aggregate U.S. dollar basis
1/01/89	1000 Sf		$500	$500
3/31/89		50 Sf	25	525
6/30/89		50 Sf	24	549
9/30/89		50 Sf	25	574
12/31/89		50 Sf	26	600

(ii) On January 1, 1990, X withdraws 500 Swiss francs from the account. X may determine his basis in the Swiss francs by multiplying the aggregate U.S. dollar basis of Swiss francs in the account by a fraction the numerator of which is the number of Swiss francs withdrawn from the account and the denominator is the total number of Swiss francs in the account. Under this method, X's basis in the 500 Swiss francs is $250 computed as follows:

$$\frac{500\ \text{Sf}}{1200\ \text{Sf}} \times \$600 = \$250$$

(iii) X's basis in the Swiss francs remaining in the account is $350 ($600−$250). X must use this method consistently from year to year with respect to withdrawals of nonfunctional currency from all of X's accounts.

(C) ***Basis in refunded foreign income tax.*** See § 1.986(a)-1(e) for rules relating to the determination of basis in refunded foreign income tax denominated in nonfunctional currency.

(iv) Purchase and sale of stock or securities traded on an established securities market by cash basis taxpayer—

(A) ***Amount realized.*** If stock or securities traded on an established securities market are sold by a cash basis taxpayer for nonfunctional currency, the amount realized with respect to the stock or securities (as determined on the trade date) shall be computed by translating the units of nonfunctional currency received into functional currency at the spot rate on the settlement date of the sale. This rule applies notwithstanding that the stock or securities are treated as disposed of on a date other than the settlement date under another section of the Code. See section 453(k).

(B) ***Basis.*** If stock or securities traded on an established securities market are purchased by a cash basis taxpayer for nonfunctional currency, the basis of the stock or securities shall be determined by translating the units of nonfunctional currency paid into functional currency at the spot rate on the settlement date of the purchase.

(C) ***Example.*** The following example illustrates the provisions of this paragraph (a)(2)(iv).

Example. On November 1, 1989 (the trade date), X, a calendar year cash basis U.S. individual, purchases stock for £100 for settlement on November 5, 1989. On November 1, 1989, the spot value of the £100 is $140. On November 5, 1989, X purchases £100 for $141 which X uses to pay for the stock. X's basis in the stock is $141. On December 30, 1990 (the trade date), X sells the stock for £110 for settlement on January 5, 1991. On December 30, 1990, the spot value of £110 is $165. On January 5, 1991, X transfers the stock and receives £110 which, translated at the spot rate, equal $166. Under section 453(k), the stock is considered disposed of on December 30, 1990. The amount realized with respect to such disposition is the value of the £110 on January 5, 1991 ($166). Accordingly, X's gain realized on December 30, 1990, from the disposition of the stock is $25 ($166 amount realized less $141 basis). X's basis in the £110 received from the sale of the stock is $166.

(v) ***Purchase and sale of stock or securities traded on an established securities market by accrual basis taxpayer.*** For taxable years beginning after March 17, 1992, an accrual basis taxpayer may elect to apply the rules of paragraph (a)(2)(iv) of this section. The election shall be made by filing a statement with the taxpayer's first return in which the election is effective clearly indicating that the election has been made. A method so elected must be applied consistently from year to year and cannot be changed without the consent of the Commissioner.

(b) ***Translation of interest income or expense and determination of exchange gain or loss with respect to debt instruments —***

(1) ***Translation of interest income received with respect to a nonfunctional currency demand account.*** Interest income received with respect to a demand account with a bank or other financial institution which is denominated in (or the payments of which are determined by reference to) a nonfunctional currency shall be translated into functional currency at the spot rate on the date received or accrued or pursuant to any reasonable spot rate convention consistently applied by the taxpayer to all taxable years and to all accounts denominated in nonfunctional currency in the same financial institution. For example, a taxpayer may translate interest income received with respect to a demand account

on the last day of each month of the taxable year, on the last day of each quarter of the taxable year, on the last day of each half of the taxable year, or on the last day of the taxable year. No exchange gain or loss is realized upon the receipt or accrual of interest income with respect to a demand account subject to this paragraph (b)(1).

(2) ***Translation of nonfunctional currency interest income or expense received or paid with respect to a debt instrument described in § 1.988-1(a)(1)(ii) and (2)(i)*** —

(i) ***Scope*** —

(A) ***In general.*** Paragraph (b) of this section only applies to debt instruments described in § 1.988-1(a)(1)(ii) and (2)(i) where all payments are denominated in, or determined with reference to, a single nonfunctional currency. Except as provided in paragraph (b)(2)(i)(B) of this section, this paragraph (b) shall not apply to contingent payment debt instruments.

(B) ***Nonfunctional currency contingent payment debt instruments*** —

(*1*) ***Operative rules.*** See § 1.988-6 for rules applicable to contingent payment debt instruments for which one or more payments are denominated in, or determined by reference to, a nonfunctional currency.

(*2*) ***Certain instruments are not contingent payment debt instruments.*** For purposes of sections 163(e) and 1271 through 1275 and the regulations thereunder, a debt instrument does not provide for contingent payments merely because the instrument is denominated in, or all payments of which are determined with reference to, a single nonfunctional currency. See § 1.988-6 for the treatment of nonfunctional currency contingent payment debt instruments.

(ii) ***Determination and translation of interest income or expense*** —

(A) ***In general.*** Interest income or expense on a debt instrument described in paragraph (b)(2)(i) of this section (including original issue discount determined in accordance with sections 1271 through 1275 and 163(e) as adjusted for acquisition premium under section 1272(a)(7), and acquisition discount determined in accordance with sections 1281 through 1283) shall be determined in units of nonfunctional currency and translated into functional currency as provided in paragraphs (b)(2)(ii)(B) and (C) of this section. For purposes of sections 483, 1273(b)(5) and 1274, the nonfunctional currency in which an instrument is denominated (or by reference to which payments are determined) shall be considered money.

(B) ***Translation of interest income or expense that is not required to be accrued prior to receipt or payment.*** With respect to an instrument described in paragraph (b)(2)(i) of this section, interest income or expense received or paid that is not required to be accrued by the taxpayer prior to receipt or payment shall be translated at the spot rate on the date of receipt or payment. No exchange gain or loss is realized with respect to the receipt or payment of such interest income or expense (other than the exchange gain or loss that might be realized under paragraph (a) of this section upon the disposition of the nonfunctional currency so received or paid).

(C) ***Translation of interest income or expense that is required to be accrued prior to receipt or payment.*** With respect to an instrument described in paragraph (b)(2)(i) of this section, interest income or expense that is required to be accrued prior to receipt or payment (*e.g.*,

under section 1272, 1281 or 163(e) or because the taxpayer uses an accrual method of accounting) shall be translated at the average rate (or other rate specified in paragraph (b)(2)(iii)(B) of this section) for the interest accrual period or, with respect to an interest accrual period that spans two taxable years, at the average rate (or other rate specified in paragraph (b)(2)(iii)(B) of this section) for the partial period within the taxable year. See paragraphs (b)(3) and (4) of this section for the determination of exchange gain or loss on the receipt or payment of accrued interest income or expense.

(iii) ***Determination of average rate or other accrual convention*** —

(A) ***In general.*** For purposes of this paragraph (b), the average rate for an accrual period (or partial period) shall be a simple average of the spot exchange rates for each business day of such period or other average exchange rate for the period reasonably derived and consistently applied by the taxpayer.

(B) ***Election to use spot accrual convention.*** For taxable years beginning after March 17, 1992, a taxpayer may elect to translate interest income and expense at the spot rate on the last day of the interest accrual period (and in the case of a partial accrual period, the spot rate on the last day of the taxable year). If the last day of the interest accrual period is within five business days of the date of receipt or payment, the taxpayer may translate interest income or expense at the spot rate on the date of receipt or payment. The election shall be made by filing a statement with the taxpayer's first return in which the election is effective clearly indicating that the election has been made. A method so elected must be applied consistently to all debt instruments from year to year and cannot be changed without the consent of the Commissioner.

(3) ***Exchange gain or loss recognized by the holder with respect to accrued interest income.*** The holder of a debt instrument described in paragraph (b)(2)(i) of this section shall realize exchange gain or loss with respect to accrued interest income on the date such accrued interest income is received or the instrument is disposed of (including a deemed disposition under section 1001 that results from a material change in terms of the instrument). Except as otherwise provided in this paragraph (b) (*e.g.*, paragraph (b)(8) of this section), exchange gain or loss realized with respect to accrued interest income shall be recognized in accordance with the applicable recognition provisions of the Internal Revenue Code. The amount of exchange gain or loss so realized with respect to accrued interest income is determined for each accrual period by—

(i) Translating the units of nonfunctional currency interest income received with respect to such accrual period (as determined under the ordering rules of paragraph (b)(7) of this section) into functional currency at the spot rate on the date the interest income is received or the instrument is disposed of (or deemed disposed of), and

(ii) Subtracting from such amount the amount computed by translating the units of nonfunctional currency interest income accrued with respect to such income received at the average rate (or other rate specified in paragraph (b)(2)(iii)(B) of this section) for the accrual period.

(4) ***Exchange gain or loss recognized by the obligor with respect to accrued interest expense.*** The obligor under a debt instrument described in paragraph (b)(2)(i) of this section shall realize exchange gain or loss with respect to accrued interest expense on the date such accrued interest expense is paid or the obligation to make payments is transferred or extinguished (including a deemed disposition under section 1001 that results from a material change in terms of the instrument). Except as otherwise provided in this paragraph (b) (*e.g.*, paragraph (b)(8) of this section), exchange gain or loss

realized with respect to accrued interest expense shall be recognized in accordance with the applicable recognition provisions of the Internal Revenue Code. The amount of exchange gain or loss so realized with respect to accrued interest expense is determined for each accrual period by—

(i) Translating the units of nonfunctional currency interest expense accrued with respect to the amount of interest paid into functional currency at the average rate (or other rate specified in paragraph (b)(2)(iii)(B) of this section) for such accrual period; and

(ii) Subtracting from such amount the amount computed by translating the units of nonfunctional currency interest paid (or, if the obligation to make payments is extinguished or transferred, the units accrued) with respect to such accrual period (as determined under the ordering rules in paragraph (b)(7) of this section) into functional currency at the spot rate on the date payment is made or the obligation is transferred or extinguished (or deemed extinguished).

(5) ***Exchange gain or loss recognized by the holder of a debt instrument with respect to principal.*** The holder of a debt instrument described in paragraph (b)(2)(i) of this section shall realize exchange gain or loss with respect to the principal amount of such instrument on the date principal (determined under the ordering rules of paragraph (b)(7) of this section) is received from the obligor or the instrument is disposed of (including a deemed disposition under section 1001 that results from a material change in terms of the instrument). For purposes of computing exchange gain or loss, the principal amount of a debt instrument is the holder's purchase price in units of nonfunctional currency. See paragraph (b)(10) of this section for rules regarding the amortization of that part of the principal amount that represents bond premium and the computation of exchange gain or loss thereon. If, however, the holder acquired the instrument in a transaction in which exchange gain or loss was realized but not recognized by the transferor, the nonfunctional currency principal amount of the instrument with respect to the holder shall be the same as that of the transferor. Except as otherwise provided in this paragraph (b) (*e.g.,* paragraph (b)(8) of this section), exchange gain or loss realized with respect to such principal amount shall be recognized in accordance with the applicable recognition provisions of the Internal Revenue Code. The amount of exchange gain or loss so realized by the holder with respect to principal is determined by—

(i) Translating the units of nonfunctional currency principal at the spot rate on the date payment is received or the instrument is disposed of (or deemed disposed of); and

(ii) Subtracting from such amount the amount computed by translating the units of nonfunctional currency principal at the spot rate on the date the holder (or a transferor from whom the nonfunctional principal amount is carried over) acquired the instrument (is deemed to acquire the instrument).

(6) ***Exchange gain or loss recognized by the obligor of a debt instrument with respect to principal.*** The obligor under a debt instrument described in paragraph (b)(2)(i) of this section shall realize exchange gain or loss with respect to the principal amount of such instrument on the date principal (determined under the ordering rules of paragraph (b)(7) of this section) is paid or the obligation to make payments is transferred or extinguished (including a deemed disposition under section 1001 that results from a material change in terms of the instrument). For purposes of computing exchange gain or loss, the principal amount of a debt instrument is the amount received by the obligor for the debt instrument in units of nonfunctional currency. See paragraph (b)(10) of this section for rules regarding the amortization of that part of the principal amount that represents bond premium and the computation of exchange gain or loss thereon. If, however, the obligor became the obligor in a transaction in which exchange gain or loss was realized but not recognized by the transferor, the nonfunctional currency principal amount of the instrument with respect to such

obligor shall be the same as that of the transferor. Except as otherwise provided in this paragraph (b) (*e.g.,* paragraph (b)(8) of this section), exchange gain or loss realized with respect to such principal shall be recognized in accordance with the applicable recognition provisions of the Internal Revenue Code. The amount of exchange gain or loss so realized by the obligor is determined by—

(i) Translating the units of nonfunctional currency principal at the spot rate on the date the obligor (or a transferor from whom the principal amount is carried over) became the obligor (or is deemed to have become the obligor); and

(ii) Subtracting from such amount the amount computed by translating the units of nonfunctional currency principal at the spot rate on the date payment is made or the obligation is transferred or extinguished (or deemed extinguished).

(7) ***Payment ordering rules*** —

(i) ***Debt instruments subject to the rules of sections 163(e), or 1271 through 1288.*** In the case of a debt instrument described in paragraph (b)(2)(i) of this section that is subject to the rules of sections 163(e), or 1272 through 1288, units of nonfunctional currency (or an amount determined with reference to nonfunctional currency) received or paid with respect to such debt instrument shall be treated first as a receipt or payment of periodic interest under the principles of section 1273 and the regulations thereunder, second as a receipt or payment of original issue discount to the extent accrued as of the date of the receipt or payment, and finally as a receipt or payment of principal. Units of nonfunctional currency (or an amount determined with reference to nonfunctional currency) treated as a receipt or payment of original issue discount under the preceding sentence are attributed to the earliest accrual period in which original issue discount has accrued and to which prior receipts or payments have not been attributed. No portion thereof shall be treated as prepaid interest. These rules are illustrated by *Example 10* of paragraph (b)(9) of this section.

(ii) ***Other debt instruments.*** In the case of a debt instrument described in paragraph (b)(2)(i) of this section that is not subject to the rules of section 163(e) or 1272 through 1288, whether units of nonfunctional currency (or an amount determined with reference to nonfunctional currency) received or paid with respect to such debt instrument are treated as interest or principal shall be determined under section 163 or other applicable section of the Code.

(8) ***Limitation of exchange gain or loss on payment or disposition of a debt instrument.*** When a debt instrument described in paragraph (b)(2)(i) of this section is paid or disposed of, or when the obligation to make payments thereunder is satisfied by another person, or extinguished or assumed by another person, exchange gain or loss is computed with respect to both principal and any accrued interest (including original issue discount), as provided in paragraph (b)(3) through (7) of this section. However, pursuant to section 988(b)(1) and (2), the sum of any exchange gain or loss with respect to the principal and interest of any such debt instrument shall be realized only to the extent of the total gain or loss realized on the transaction. The gain or loss realized shall be recognized in accordance with the general principles of the Code. See *Examples 3, 4* and *6* of paragraph (b)(9) of this section.

(9) ***Examples.*** The preceding provisions are illustrated in the following examples. The examples assume that any transaction involving an individual is a section 988 transaction.

> *Example 1.* (i) X is an individual on the cash method of accounting with the dollar as his functional currency. On January 1, 1992, X converts $13,000 to 10,000 British pounds (£) at

the spot rate of £1 = $1.30 and loans the £10,000 to Y for 3 years. The terms of the loan provide that Y will make interest payments of £1,000 on December 31 of 1992, 1993, and 1994, and will repay X's £10,000 principal on December 31, 1994. Assume the spot rates for the pertinent dates are as follows:

Date	Spot rate (pounds to dollars)
Jan. 1, 1992	£1 = $1.30
Dec. 31, 1992	£1 = $1.35
Dec. 31, 1993	£1 = $1.40
Dec. 31, 1994	£1 = $1.45

(ii) Under paragraph (b)(2)(ii)(B) of this section, X will trans1ate the £1,000 interest payments at the spot rate on the date received. Accordingly, X will have interest income of $1,350 in 1992, $1,400 in 1993, and $1,450 in 1994. Because X is a cash basis taxpayer, X does not realize exchange gain or loss on the receipt of interest income.
(iii) Under paragraph (b)(5) of this section, X will realize exchange gain upon repayment of the £10,000 principal amount determined by translating the £10,000 at the spot rate on the date it is received (£10,000 × $1.45 = $14,500) and subtracting from such amount, the amount determined by translating the £10,000 at the spot rate on the date the loan was made (£10,000 × $1.30 = $13,000). Accordingly, X will realize an exchange gain of $1,500 on the repayment of the loan on December 31, 1994.

Example 2. (i) Assume the same facts as in *Example 1* except that X is an accrual method taxpayer and that average rates are as follows:

Accrual period	Average rate (pounds to dollars)
1992	£1 = $1.32
1993	£1 = $1.37
1994	£1 = $1.42

(ii) Under paragraph (b)(2)(ii)(C) of this section, X will accrue the £1,000 interest payments at the average rate for the accrual period. Accordingly, X will have interest income of $1,320 in 1992, $1,370 in 1993, and $1,420 in 1994. Because X is an accrual basis taxpayer, X determines exchange gain or loss for each interest accrual period by translating the units of nonfunctional currency interest income received with respect to such accrual period at the

spot rate on the date received and subtracting the amounts of interest income accrued for such period. Thus, X will realize $90 of exchange gain with respect to interest received under the loan, computed as follows:

Year	Spot value interest received	Accrued interest @ average rate	Exch. gain
1992	$1,350	$1,320	$30
1993	1,400	1,370	30
1994	1,450	1,420	30
Total			$90

(iii) Under paragraph (b)(5) of this section, X will realize exchange gain upon repayment of the £10,000 loan principal determined in the same manner as in *Example 1*. Accordingly, X will realize an exchange gain of $1,500 on the repayment of the loan principal on December 31, 1994.

Example 3. Assume the same facts as in *Example 1* except that X is a calendar year taxpayer on the accrual method of accounting that elects to use a spot rate convention to translate interest income as provided in § 1.988-2(b)(2)(iii)(B). Interest income is received by X on the last day of each accrual period. Under paragraph (b)(2)(ii)(C), X will translate the interest income at the spot rate on the last day of each interest accrual period. Accordingly, X will have interest income of $1,350 in 1992, and $1,400 in 1993, $1,450 in 1994. Because the rate at which the interest income is translated is the same as the rate on the day of receipt, X will not realize any exchange gain or loss with respect to the interest income. Under paragraph (b)(5) of this section, X will realize exchange gain upon repayment of the £10,000 loan principal determined in the same manner as in *Example 1*. Accordingly, X will realize an exchange gain of $1,500 on the repayment of the loan principal on December 31, 1994.

Example 4. Assume the same facts as in *Example 1* except that on December 31, 1993, X sells Y's note for 9,821.13 British pounds (£) after the interest payment. Under paragraph (b)(8) of this section, X will compute exchange gain on the £10,000 principal. The exchange gain is $1,000 [(£10,000 × $1.40)−(£10,000 × $1.30)]. This exchange gain, however, is only realized to the extent of the total gain on the disposition. X's total gain is $749.58 [(£9,821.13 × $1.40)−(£10,000 × $1.30)]. Thus, X will realize $749.58 of exchange gain (and will realize no market loss).

Example 5. (i) The facts are the same as in *Example 1* except that Y becomes insolvent and fails to repay the full £10,000 principal when due. Instead, X and Y agree to compromise the debt for a payment of £8,000 on December 31, 1994. Under paragraph (b)(8) of this section, X will compute exchange gain on the £10,000 originally booked. The exchange gain is $1,500 [(£10,000 × $1.45)−(£10,000 × $1.30) = $1,500]. This exchange gain, however, is only realized to the extent of the total gain on the disposition.

X realizes an overall loss on the disposition of $1,400 [(£8,000 × $1.45)−(£10,000 × $1.30) = ($1,400)]. Thus, X will realize no exchange gain (and a $1400 market loss).
(ii) If the exchange rate on December 31, 1994, were £1 = $1.25, rather than £1 = $1.45, X would compute exchange loss under paragraph (b)(8) of this section, on the £10,000 originally booked. The exchange loss would be $500 [(£10,000 × $1.25)−(£10,000 × $1.30) = ($500)]. X's total loss on the disposition would be $3,000 [(£8,000 × $1.25)-(£10,000 × $1.30) = ($3,000)]. Thus, X would realize $500 of exchange loss and a $2,500 market loss on the disposition.

Example 6. (i) X is an individual with the dollar as his functional currency. X is on the cash method of accounting. On January 1, 1989, X borrows 10,000 British pounds (£) from Y, an unrelated person. The terms of the loan provide that X will make interest payments of £1,200 on December 31 of 1989 and 1990 and will repay Y's £10,000 principal on December 31, 1990. The spot rates for the pertinent dates are as follows:

Date	Spot rate [1]
Jan. 1, 1989	1 = $1.50
Dec. 31, 1989	1 = 1.60
Dec. 31, 1990	1 = 1.70

[1] *Pounds to dollars.*

Assume that the basis of the £1,200 paid as interest by X on December 31, 1989, is $2,000, the basis of the £1,200 paid as interest by X on December 31, 1990, is $2,020 and the basis of the £10,000 principal paid by X on December 31, 1990, is $16,000.

(ii) Under paragraph (b)(2)(ii)(B) of this section, X translates the £1,200 interest payments at the spot rate on the day paid. Thus, X paid $1,920 (£1,200 × $1.60) of interest on December 31, 1989, and $2,040 (£1,200 × $1.70) of interest on December 31, 1990. In addition, X will realize exchange gain or loss on the disposition of the £1,200 on December 31, 1989 and 1990, under paragraph (a) of this section. Pursuant to paragraph (a)(2) of this section, X will realize an exchange loss of $80 [(£1,200 × $1.60)−$2,000] on December 31, 1989, and exchange gain of $20 [(£1,200 × $1.70)−$2,020] on December 31, 1990.
(iii) Under paragraph (b)(6) of this section, X will realize exchange loss on December 31, 1990, upon repayment of the £10,000 principal amount determined by translating the £10,000 received at the spot rate on January 1, 1989 (£10,000 × $1.50 = $15,000) and subtracting from such amount, the amount determined by translating the £10,000 paid at the spot rate on December 31, 1990 (£10,000 × $1.70 = $17,000). Thus, under

paragraph (b)(6) of this section, X has an exchange loss with respect to the £10,000 principal of $2,000. Further, under paragraph (a)(2) of this section, X will realize an exchange gain upon disposition of the £10,000 on December 31, 1990. Under paragraph (a)(2) of this section, X will subtract his adjusted basis in the £10,000 ($16,000) from the amount realized upon the disposition of the £10,000 (£10,000 × $1.70 = $17,000) resulting in a gain of $1,000. Accordingly, X's combined exchange gain and loss realized on December 31, 1990, with respect to the repayment of the £10,000 is a $1,000 exchange loss.

Example 7. (i) X is a calendar year corporation on the accrual method of accounting and with the dollar as its functional currency. On January 1, 1989, X purchases at original issue for 82.64 Canadian dollars (C$) M corporation's 2 year note maturing on December 31, 1990, at a stated redemption price of C$100. The yield to maturity in Canadian dollars is 10 percent and the accrual period is the one year period beginning January 1 and ending December 31. The note has C$17.36 of original issue discount. Assume that the spot rates are as follows: C$1 = U.S.$.72 on January 1, 1989; C$1 = U.S.$.80 on January 1, 1990; C$1 = U.S.$ .82 on December 31, 1990. Assume further that the average rate for 1989 is C$1 = U.S.$ .76 and for 1990 is C$1 = U.S. $.81.
(ii) Under paragraph (b)(2)(ii)(A) of this section, X will determine its interest income in Canadian dollars. Accordingly, under section 1272, X must take into account original issue discount in the amount of C$8.26 on December 31, 1989, and C$9.10 on December 31, 1990. Pursuant to paragraph (b)(2)(ii)(C) of this section, X will translate these amounts into U.S. dollars at the average exchange rate for the relevant accrual period. Thus, the amount of interest income taken into account in 1989 is U.S.$6.28 (C$8.26 × U.S.$.76) and in 1990 is U.S.$7.37 (C$9.10 × U.S.$.81). Pursuant to paragraph (b)(3)(ii) of this section, X will realize exchange gain or loss with respect to the accrued interest determined for each accrual period by translating the Canadian dollars received with respect to such accrual period into U.S. dollars at the spot rate on the date the interest is received and subtracting from that amount the amount accrued in U.S. dollars. Thus, the amount of exchange gain realized on December 31, 1990, is U.S.$.58 (U.S.$.49 from 1989 + U.S.$.09 from 1990). Pursuant to paragraph (b)(5) of this section, X shall realize exchange gain or loss with respect to the principal (C$82.64) on December 31, 1990, computed by translating the C$82.64 at the spot rate on December 31, 1990 (U.S.$67.76) and subtracting the C$82.64 translated at the spot rate on January 1, 1989 (U.S.$59.50) for an exchange gain of U.S.$8.26. Thus, X's combined exchange gain is U.S.$8.84 (U.S.$.49 + U.S.$.09 + U.S.$8.26).

(iii) Assume instead that on January 1, 1990, X sells the note for C$86.95, which it immediately converts to U.S. dollars. X's exchange gain is computed under paragraph (b)(8) of this section with reference to the nonfunctional currency denominated principal amount (C$82.64) and the nonfunctional currency denominated accrued original issue

discount (C$8.26). X will compute an exchange gain of U.S.$6.61 with respect to the issue price [(C$82.64 × U.S.$.80)−(C$82.64 × U.S.$.72)] and an exchange gain of U.S.$.33 with respect to the accrued original issue discount [(C$8.26 × U.S.$.80)−(C$8.26 × U.S.$ .76)]. Accordingly, prior to the application of paragraph (b)(8) of this section, X's total exchange gain is U.S.$6.94 (U.S.$6.61 + U.S.$.33), and X's market loss is U.S.$3.16 [(C$90.90−C$86.95) × U.S.$.80]. Pursuant to paragraph (b)(8) of this section, however, X's market loss on the note of U.S.$3.16 is netted against X's exchange gain of U.S.$6.94, resulting in a realized exchange gain of U.S.$3.78 and no market loss.

Example 8. (i) The facts are the same as in *Example 7* (i) except that on January 1, 1990, X contributes the M corporation note to Y, a wholly-owned U.S. subsidiary of X with the dollar as its functional currency, and Y collects C$100 from M corporation at maturity on December 31, 1990, when the spot rate is C$1 = U.S.$.82. The transfer of the note from X to Y qualifies for nonrecognition of gain under section 351(a). On December 31, 1990, Y includes C$9.10 of accrued interest in income which translated at the average exchange rate of C$1 = U.S.$.81 for the year results in U.S.$7.37 of interest income.
(ii) Y's exchange gain is computed under paragraph (b)(3) of this section with respect to accrued interest income and paragraph (b)(5) of this section with respect to the nonfunctional currency principal amount. Under paragraph (b)(3) of this section, Y will realize exchange gain or loss for each accrual period computed by translating the units of nonfunctional currency interest income received with respect to such accrual period at the spot rate on the day received and subtracting the amounts of interest income accrued for such period. Thus, Y will realize $.49 of exchange gain with respect to original issue discount accrued in 1989 [(C$8.26 × U.S.$.82)−(C$8.26 × U.S.$.76) = U.S. $.49] and $.09 of exchange gain with respect to original issue discount accrued in 1990 [(C$9.10 × U.S.$.82)−(C$9.10 × U.S.$.81) = $.09].

(iii) Pursuant to paragraph (b)(5) of this section, the nonfunctional currency principal amount of the M bond in the hands of Y is C$82.64, the amount carried over from X, the transferor. Y's exchange gain with respect to the nonfunctional currency principal amount is $8.26 [(C$82.64 × U.S.$.82)− (C$82.64 × U.S.$.72) = U.S. $8.26]. Accordingly, Y's combined exchange gain is U.S. $8.84 ($.49 + $.09 + $8.26). Because the amount realized in Canadian dollars equals the adjusted issue price (C$100) on retirement of the M note, there is no market loss, and the netting rule of paragraph (b)(8) of this section does not limit realization of the exchange gain.

Example 9. (i) X is a calendar year corporation on the accrual method of accounting and with the dollar as its functional currency. X elects to use the spot rate convention to translate interest income as provided in paragraph (b)(2)(iii)(B) of this section. On January 31, 1992, X loans £1000 to Y, an unrelated person. Under the terms of the loan, Y will pay X interest of £50 on July 31, 1992, and January 31, 1993, and will repay the

£1000 principal on January 31, 1993. Assume the following spot exchange rates:

Date	Spot rate [1]
Jan. 31, 1992	£1 = $1.50
July 31, 1992	£1 = 1.55
Dec. 31, 1992	£1 = 1.60
Jan. 31, 1993	£1 = 1.61

[1] *Pounds to dollars.*

(ii) Under paragraph (b)(2)(ii)(C) of this section, X will translate the interest income at the spot rate on the last day of each interest accrual period (and in the case of a partial accrual period, at the spot rate on the last day of the taxable year). Accordingly, X will have interest income of $77.50 (£50 × $1.55) on July 31, 1992. Assuming under X's method of accounting that interest is accrued daily, X will accrue $66.50 (153 / 184 × £50) × $1.60) of interest income on December 31, 1992. On January 31, 1993, X will have interest income of $13.60 ((31/184 × £50) × $1.61). Because the rate at which the interest income is translated is the same as the rate on the day of receipt, X will not realize any exchange gain or loss with respect to the interest income received on July 31, 1992. However, X will realize exchange gain on the £41.50 (153/184 × £50) of accrued interest income of $.41 [(£41.50 × $1.61) − (£41.50 × $1.60) = $.41].
(iii) Under paragraph (b)(5) of this section, X will realize exchange gain upon repayment of the £100 principal amount determined by translating the £100 at the spot rate on the date it is received (£100 × $1.61 = $161.00) and subtracting from such amount, the amount determined by translating the £100 at the spot rate on the date the loan was made (£100 × $1.50 = $150.00). Accordingly, X will realize an exchange gain of $11 on the repayment of the loan on January 31, 1993.

Example 10. (i) X, a cash basis taxpayer with the dollar as its functional currency, has the calendar year as its taxable year. On January 1, 1992, X purchases at original issue for 65.88 British pounds (£) M corporation's 5-year bond maturing on December 31, 1996, having a stated redemption price at maturity of £100. The bond provides for annual payments of interest in pounds of 1 pound per year on December 31 of each year. The bond has 34.12 British pounds of original issue discount. The yield to maturity is 10 percent in British pounds and the accrual period is the one year period beginning January 1 and ending December 31 of each calendar year. The amount of original issue discount is determined in pounds for each accrual period by multiplying the adjusted issue price expressed in pounds by the yield and subtracting from such amount the periodic interest payments expressed in pounds for such period. The periodic interest

> payments are translated at the spot rate on the payment date (December 31 of each year). The original issue discount is translated at the average rate for the accrual period (January 1 through December 31). The following chart describes the determination of interest income with respect to the facts presented and provides other pertinent information.

TABLE 1

Year (Dec. 31)	Periodic interest payments in pounds for the accrual period	Original issue discount in pounds for the accrual period	Issue price or adjusted issue price in pounds	Assumed spot rate on Dec. 31 (pounds to dollars)	Assumed average rate for accrual period (pounds to dollars)	Periodic interest payments in pounds multiplied by spot rate on the date of payment (column 2 times column 5)	Original issue discount in pounds multiplied by the average rate for the accrual period (column 3 times column 6)	Total interest income in dollars (column 7 plus column 8)	Adjusted issue price in dollars
1	2	3	4	5	6	7	8	9	10
Issue Date:									
			65.88	1 = $1.20					$79.06
1992	1	5.59	71.47	1 = 1.30	1 = $1.25	$1.30	$6.99	$8.29	86.05
1993	1	6.15	77.62	1 = 1.40	1 = 1.35	1.40	8.30	9.70	94.35
1994	1	6.76	84.38	1 = 1.50	1 = 1.45	1.50	9.80	11.30	104.15
1995	1	7.44	91.82	1 = 1.60	1 = 1.55	1.60	11.53	13.13	115.68
1996	1	8.18	100.00	1 = 1.70	1 = 1.65	1.70	13.50	15.20	129.18

(ii) Because X is a cash basis taxpayer, X does not realize exchange gain or loss on the receipt of the £1 periodic interest payments. However, X will realize exchange gain on December 31, 1996 totaling $7.88 with respect to the original issue discount. Exchange gain is determined for each interest accrual period by translating the units of nonfunctional currency interest income received with respect to such accrual period at the spot rate on the date received and subtracting from such amount, the amount computed by translating the units of nonfunctional currency interest income accrued for such period at the average rate for the period. The following chart illustrates this computation:

TABLE 2

Year	OID accrued in pounds for each accrual period	Assumed spot rate on date payment received (pounds to dollars)	Interest received times spot rate on the date received (col. 2 times col. 3)	Assumed average rate for accrual period (pounds to dollars)	IOD in pounds times the average rate for the accrual period (col. 2 times col. 5)	Exchange gain or loss (col. 4 less col. 6)
1	2	3	4	5	6	7
1992	5.59	1 = $1.70	$9.50	1 = $1.25	$6.99	$2.51
1993	6.15	1 = 1.70	10.46	1 = 1.35	8.30	2.16
1994	6.76	1 = 1.70	11.49	1 = 1.45	9.80	1.69
1995	7.44	1 = 1.70	12.65	1 = 1.55	11.53	1.12
1996	8.18	1 = 1.70	13.90	1 = 1.65	13.50	.40
Total						$7.88

(iii) X will also realize exchange gain with respect to the principal of the loan (*i.e.,* the issue price of 65.88 British pounds) on December 31, 1996 computed by translating the units of nonfunctional currency principal received at the spot rate on the date principal is received (65.88 British pounds × $1.70 = $112.00) and subtracting from such amount, the units of nonfunctional currency principal received translated at the spot rate on the date the instrument was acquired (65.88 British pounds × $1.20 = $79.06). Accordingly, X's exchange gain on the principal is $32.94 and X's total exchange gain with respect to the accrued interest and principal is $40.82. It should be noted that, under this fact pattern, the total exchange gain may be determined in an alternative fashion. Exchange gain may be computed by subtracting the adjusted issue price in dollars at maturity

($129.18—see column 10 of Table 1) from the amount computed by multiplying the stated redemption price at maturity in pounds times the spot rate on the maturity date (£100 × $1.70 = $170), which equals $40.82.

Example 11. (i) The facts are the same as in *Example 10* except that X makes an election under paragraph (b)(2)(iii) of this section to translate accrued interest on the last day of the accrual period. Accordingly, columns 8, 9 and 10 in Table 1 would change as follows:

Year (Dec. 31)	Original issue discount in pounds multiplied by the spot rate on last day of accrual period (Dec. 31)	Total interest income in dollars (column 7 plus column 8)	Adjusted issue price in dollars
1	8	9	10
			$79.06
1992	$7.27	$8.57	87.63
1993	8.61	10.01	97.64
1994	10.14	11.64	109.28
1995	11.90	13.50	122.78
1996	13.91	15.61	138.39

(ii) Because X is a cash basis taxpayer, X does not realize exchange gain or loss on the receipt of the £1 periodic interest payments. However, X will realize exchange gain on December 31, 1993 totaling $6.18 with respect to the original issue discount. Exchange gain is determined for each interest accrual period by translating the units of nonfunctional currency interest income received with respect to such accrual period at the spot rate on the date received and subtracting from such amount, the amount computed by translating the units of nonfunctional currency interest income accrued for such period at the spot rate on the last day of the accrual period. Accordingly, columns 5, 6 and 7 of Table 2 would change as follows:

Year	Spot rate on last day of accrual period	OID in pounds times the spot rate on the last day of the accrual period (col 2 times col. 3)	Exchange gain or loss (col. 4 less col. 6)
1	5	6	7
1992	$1.30	$7.27	$2.23
1993	1.40	8.61	1.85

Year	Spot rate on last day of accrual period	OID in pounds times the spot rate on the last day of the accrual period (col 2 times col. 3)	Exchange gain or loss (col. 4 less col. 6)
1994	1.50	10.14	1.35
1995	1.60	11.90	0.75
1996	1.70	13.90	0.00
			6.18

(iii) X will realize exchange gain with respect to the principal amount of the loan as provided in the preceding example.

Example 12. (i) C is a corporation that is a calendar year accrual method taxpayer with the dollar as its functional currency. On January 1, 1989, C lends 100 British pounds (£) in exchange for a note under the terms of which C will receive two equal payments of £57.62 on December 31, 1989, and December 31, 1990. Each payment of £57.62 represents the annual payment necessary to amortize the £100 principal amount at a rate of 10% compounded annually over a two year period. The following tables reflect the amounts of principal and interest that compose each payment and assumptions as to the relevant exchange rates:

Date	Principal	Interest
Dec. 31, 1989	£47.62	£10.00
Dec. 12, 1990	£52.38	£5.24

Date	Spot rate £1=	Average rate for year ending
Jan. 1, 1989	$1.30	
Dec. 31, 1989	1.40	1.35
Dec. 31, 1990	1.50	1.45

(ii) Because each interest payment is equal to the product of the outstanding principal balance of the obligation and a single fixed rate of interest, each stated interest payment constitutes periodic interest under the principles of section 1273. Accordingly, there is no original issue discount.

(iii) Because C is an accrual basis taxpayer, C will translate the interest income at the average rate for the annual accrual period pursuant to paragraph (b)(2)(ii)(C) of this section. Thus, C's interest income is $13.50 (£10.00 × $1.35) in 1989, and $7.60 (£5.24 × $1.45) in 1990. C will realize exchange gain or loss upon receipt of accrued interest computed in accordance with paragraph (b)(3) of this section. Thus, C will realize exchange gain in the amount of $.50 [(£10.00 × $1.40)−$13.50] in 1989, and $.26 [(£5.24 × $1.50)−$7.60] in 1990.

(iv) In addition, C will realize exchange gain or loss upon the receipt of principal each year computed under paragraph (b)(5) of this section. Thus, C will realize exchange gain in the amount of $4.76 [(£47.62 × $1.40)−(£47.62 × $1.30)] in 1989, and $10.48 [(£52.38 × $1.50)−(£52.38 × $1.30)] in 1990.

(10) ***Treatment of bond premium*** —

(i) ***In general.*** Amortizable bond premium on a bond described in paragraph (b)(2)(i) of this section shall be computed in the units of nonfunctional currency in which the bond is denominated (or in which the payments are determined). Amortizable bond premium properly taken into account under section 171 or § 1.61-12 (or the successor provision thereof) shall reduce interest income or expense in units of nonfunctional currency. Exchange gain or loss is realized with respect to bond premium described in the preceding sentence by treating the portion of premium amortized with respect to any period as a return of principal. With respect to a holder that does not elect to amortize bond premium under section 171, the amount of bond premium will constitute a market loss when the bond matures. See paragraph (b)(8) of this section. The principles set forth in this paragraph (b)(10) shall apply to determine the treatment of acquisition premium described in section 1272(a)(7).

(ii) ***Example.*** The following example illustrates the provisions of this paragraph (b)(10).

Example. (A) X is an individual on the cash method of accounting with the dollar as his functional currency. On January 1, 1989, X purchases Y corporation's note for 107.99 British pounds (£) from Z, an unrelated party. The note has an issue price of £100, a stated redemption price at maturity of £100, pays interest in pounds at the rate of 10% compounded annually, and matures on December 31, 1993. X elects to amortize the bond premium of £7.99 under the rules of section 171. Pursuant to paragraph (b)(10)(i) of this section, bond premium is determined and amortized in British pounds. Assume the amortization schedule is as follows:

Year ending 12/31	Bond premium amortized	Unamortized premium plus principal	Interest
		£107.99	

Year ending 12/31	Bond premium amortized	Unamortized premium plus principal	Interest
1989	£1.36	£106.63	£8.64
1990	£1.47	£105.16	£8.53
1991	£1.59	£103.57	£8.41
1992	£1.71	£101.86	£8.29
1993	£1.85	£100.00	£8.15

(B) The bond premium reduces X's pound interest income under the note. For example, the £10 stated interest payment made in 1989 is reduced by £1.36 of bond premium, and the resulting £8.64 interest income is translated into dollars at the spot rate on December 31, 1989. Exchange gain or loss is realized on the £1.36 bond premium based on the difference between the spot rates on January 1, 1989, the date the premium is paid to acquire the bond, and December 31, 1989, the date the bond premium is returned as part of the stated interest. The £1.36 bond premium reduces the unamortized premium plus principal to £106.63 (£107.99−£1.36). On December 31, 1993, when the bond matures and the £7.99 of bond premium has been fully amortized, X will realize exchange gain or loss with respect to the remaining purchase price of £100.

(11) ***Market discount*** —

(i) ***In general.*** Market discount as defined in section 1278(a)(2) shall be determined in units of nonfunctional currency in which the market discount bond is denominated (or in which the payments are determined). Accrued market discount (other than market discount currently included in income pursuant to section 1278(b)) shall be translated into functional currency at the spot rate on the date the market discount bond is disposed of. No part of such accrued market discount is treated as exchange gain or loss. Accrued market discount currently includible in income pursuant to section 1278(b) shall be translated into functional currency at the average exchange rate for the accrual period. Exchange gain or loss with respect to accrued market discount currently includible in income under section 1278(b) shall be determined in accordance with paragraph (b)(3) of this section relating to accrued interest income.

(ii) ***Example.*** The following example illustrates the provisions of this paragraph (b)(11).

Example. (A) X is a calendar year corporation with the U.S. dollar as its functional currency. On January 1, 1990, X purchases a bond of M corporation for 96,530 British pounds (£). The bond, which was issued on January 1, 1989, has an issue price of £100,000, a stated redemption price at maturity of £100,000, and provides for annual pound payments of interest at 8 percent. The bond matures on December 31, 1991. X purchased the bond at a market discount of 3,470 pounds and did not elect to include the market discount currently in income under section 1278(b). X holds the bond to

maturity and on December 31, 1991, receives payment of £100,000 (plus £8,000 interest) when the exchange rate is £1 = $1.50.
(B) Pursuant to paragraph (b)(11) of this section, X computes market discount in units of nonfunctional currency. Thus, the market discount as defined under section 1278(a)(2) is £3,470. Accrued market discount (other than market discount currently included in income pursuant to section 1278(b)) is translated at the spot rate on the date the market discount bond is disposed of. Accordingly, X will translate the accrued market discount of £3,470 at the spot rate on December 31, 1991 (£3,470 × $1.50 = $5,205). No exchange gain or loss is realized with respect to the £3,470 of accrued market discount. See paragraphs (b)(3) and (5) of this section for the realization and recognition of exchange gain or loss with respect to accrued interest and principal.

(12) ***Tax exempt bonds.*** See § 1.988-3(c)(2), which characterizes exchange loss realized with respect to a nonfunctional currency tax exempt bond as a reduction of interest income.

(13) ***Nonfunctional currency debt exchanged for stock of obligor*** —

(i) ***In general.*** Notwithstanding any other section of the Code other than section 267, 1091 or 1092, exchange gain or loss shall be realized and recognized by the holder and the obligor in accordance with the rules of paragraphs (b)(3) through (7) of this section with respect to the principal and accrued interest of a debt instrument described in paragraph (b)(2)(i) of this section that is acquired by the obligor in exchange for its stock, provided however, that such gain or loss shall be recognized only to the extent of the total gain or loss on the exchange (regardless of whether such gain or loss would otherwise be recognized). This rule shall apply whether the debt instrument is converted into stock according to its terms or exchanged pursuant to a separate agreement between the obligor and the holder. A debt instrument that is acquired by the obligor from a shareholder as a contribution to capital shall be treated for purposes of this section as exchanged for stock, whether or not additional stock is issued.

(ii) ***Coordination with section 108.*** Section 988 and this section shall apply before section 108. Exchange gain realized by the obligor on an exchange described in paragraph (b)(13)(i) of this section shall not be treated as discharge of indebtedness income, but shall be considered to reduce the amount of the liability for purposes of computing the obligor's income on the exchange under section 108(e)(4), section 108(e)(6) or section 108(e)(10).

(iii) ***Effective date.*** This paragraph (b)(13) shall be effective for exchanges of debt for stock effected after September 21, 1989.

(iv) ***Examples.*** The following examples illustrate the operation of this paragraph (b)(13). In each such example, assume that sections 267, 1091 and 1092 do not apply.

Example 1. (i) X is a calendar year U.S. corporation with the U.S. dollar as its functional currency. On January 1, 1990 (the issue date), X acquired a convertible bond maturing on December 31, 1998, issued by Y corporation, a U.K. corporation with the British pound (£) as its functional currency. The issue price of the bond is £100,000, the stated redemption price at maturity is £100,000, and the bond provides for annual pound interest payments at the rate of 10%. The terms of the bond also provide that at any time

prior to December 31, 1998, the holder may surrender all of his interest in the bond in exchange for 20 shares of Y common stock. On January 1, 1994, X surrenders his interest in the bond for 20 shares of Y common stock. Assume the following: (a) The spot rate on January 1, 1990, is £1 = $1.30, (b) The spot rate on January 1, 1994, is £1 = $1.50, and (c) The 20 shares of Y common stock have a market value of £200,000 on January 1, 1994.
(ii) Pursuant to paragraph (b)(13) of this section, X will realize and recognize exchange gain with respect to the issue price (£100,000) of the bond on January 1, 1994, when the bond is converted to stock. X will compute exchange gain pursuant to paragraph (b)(5) of this section by translating the issue price at the spot rate on the conversion date (£100.000 × $1.50 = $150,000) and subtracting from such amount the issue price translated at the spot rate on the date X acquired the bond (£100,000 × $1.30 = $130,000). Thus, X will realize and recognize $20,000 of exchange gain. X's basis in the 20 shares of Y common stock is $150,000 ($130,000 substituted basis + $20,000 recognized gain).

Example 2. (i) X, a foreign corporation with the British pound (£) as its functional currency, lends £100 at a market rate of interest to Y, its wholly-owned U.S. subsidiary, on January 1, 1990, on which date the spot exchange rate is £1 = $1. Y's functional currency is the U.S. dollar. On January 1, 1992, when the spot exchange rate is £1 = $.50, X cancels the debt as a contribution to capital. Pursuant to paragraph (b)(13) of this section, Y will realize and recognize exchange gain with respect to the £100 issue price of the debt instrument on January 1, 1992. Y will compute exchange gain pursuant to paragraph (b)(6) of this section by translating the issue price at the spot rate on the date Y became the obligor (£100 × $1 = $100) and subtracting from such amount the issue price translated at the spot rate on the date of extinguishment (£100 × $.50 = $50). Thus, Y will realize and recognize $50 of exchange gain.
(ii) Under section 108(e)(6), on the acquisition of its indebtedness from X as a contribution to capital Y is treated as having satisfied the debt with an amount of money equal to X's adjusted basis in the debt (£100). For purposes of section 108(e)(6), X's adjusted basis is translated into United States dollars at the spot rate on the date Y acquires the debt (£1 = $.50). Therefore, Y is treated as having satisfied the debt for $50. Pursuant to paragraph (b)(13) of this section, for purposes of section 108 the amount of the indebtedness is considered to be reduced by the exchange gain from $100 to $50. Accordingly, Y recognizes $50 of exchange gain and no discharge of indebtedness income on the extinguishment of its debt to X.

(iii) If X were a United States taxpayer with a dollar functional currency and a $100 basis in Y's obligation. X would realize and recognize an exchange loss of $50 under paragraph (b)(5) of this section on the contribution of the debt to Y. The recognized loss

would reduce X's adjusted basis in the debt from $100 to $50, so that for purposes of applying section 108(e)(6) Y is treated as having satisfied the debt for $50. Accordingly, under these facts as well Y would recognize $50 of exchange gain and no discharge of indebtedness income.

Example 3. (i) X and Y are unrelated calendar year U.S. corporations with the U.S. dollar as their functional currency. On January 1, 1990 (the issue date), X acquires Y's bond maturing on December 31, 1999. The issue price of the bond is £100,000, the stated redemption price at maturity is £100,000, and the bond provides for annual pound interest payments at the rate of 10%. On January 1, 1994, X and Y agree that Y will redeem its bond from X in exchange for 20 shares of Y common stock. Assume the following:
(a) The spot rate on January 1, 1990, is £1 = $1.00,

(b) The spot rate on January 1, 1994, is £1 = $.50,

(c) Interest rates on equivalent bonds have increased so that as of January 1, 1994, the value of Y's bond has declined to £90,000, and

(d) The 20 shares of Y common stock have a market value of £90,000 as of January 1, 1994.

(ii) Pursuant to paragraph (b)(13) of this section, X will realize and recognize exchange loss with respect to the issue price (£100,000) of the bond on January 1, 1994, when the bond is exchanged for stock. X will compute exchange loss pursuant to paragraph (b)(5) of this section by translating the issue price at the spot rate on the exchange date (£100,000 × $.50 = $50,000) and subtracting from such amount the issue price translated at the spot rate on the date X acquired the bond (£100,000 × $1.00 = $100,000). Thus, X will compute $50,000 of exchange loss, all of which will be realized and recognized because it does not exceed the total $55,000 realized loss on the exchange ($45,000 worth of stock received less $100,000 basis in the exchanged bond).

(iii) Pursuant to paragraph (b)(13) of this section, Y will realize and recognize exchange gain with respect to the issue price, computed under paragraph (b)(6) of this section by translating the issue price at the spot rate on the date Y became the obligor (£100,000 × $1.00 = $100,000) and subtracting from such amount the issue price translated at the spot rate on the exchange date (£100,000 × $.50 = $50,000). Thus, Y will realize and recognize $50,000 of exchange gain. Under section 108(e)(10), on the transfer of stock to X in satisfaction of its indebtedness Y is treated as having satisfied the indebtedness with an amount of money equal to the fair market value of the stock (£90,000 × $.50 = $45,000). Pursuant to paragraph (b)(13) of this section, for purposes of section 108 the

amount of the indebtedness is considered to be reduced by the recognized exchange gain from $100,000 to $50,000. Accordingly, Y recognizes an additional $5,000 of discharge of indebtedness income on the exchange.

Example 4. (i) The facts are the same as in *Example 3* except that interest rates on equivalent bonds have declined, rather than increased, so that the value of Y's bond on January 1, 1994, has risen to £112,500; and X and Y agree that Y will redeem its bond from X on that date in exchange for 25 shares of Y common stock worth £112,500. Pursuant to paragraphs (b)(13) and (b)(5) of this section, X will compute $50,000 of exchange loss on the exchange with respect to the £100,000 issue price of the bond. See Example 3. However, because X's total loss on the exchange is only $43,750 ($56,250 worth of stock received less $100,000 basis in the exchanged bond), under the netting rule of paragraph (b)(13) of this section the realized exchange loss is limited to $43,750.
(ii) Pursuant to paragraphs (b)(13) and (b)(6) of this section, Y will compute $50,000 of exchange gain with respect to the issue price. See *Example 3.* Under section 108(e)(10), Y is treated as having satisfied the $100,000 indebtedness with an amount of money equal to the fair market value of the stock (£112,500 × $.50 = $56,250), resulting in a total gain on the exchange of $43,750. Accordingly, under paragraph (b)(13) of this section Y's realized (and recognized) exchange gain on the exchange is limited to $43,750. Also pursuant to paragraph (b)(13) of this section, for purposes of section 108 the amount of the indebtedness is considered to be reduced by the recognized exchange gain from $100,000 to $56,250. Accordingly, Y recognizes no discharge of indebtedness income on the exchange.

(14) [Reserved]

(15) ***Debt instruments and deposits denominated in hyperinflationary currencies*** —

(i) ***In general.*** If a taxpayer issues, acquires, or otherwise enters into or holds a hyperinflationary debt instrument (as defined in paragraph (b)(15)(vi)(A) of this section) or a hyperinflationary deposit (as defined in paragraph (b)(15)(vi)(B) of this section) on which interest is paid or accrued that is denominated in (or determined by reference to) a nonfunctional currency of the taxpayer, then the taxpayer shall realize exchange gain or loss with respect to such instrument or deposit for its taxable year determined by reference to the change in exchange rates between—

(A) The later of the first day of the taxable year, or the date the instrument was entered into (or an amount deposited); and

(B) The earlier of the last day of the taxable year, or the date the instrument (or deposit) is disposed of or otherwise terminated.

(ii) ***Only exchange gain or loss is realized.*** No gain or loss is realized under paragraph (b)(15)(i) by reason of factors other than movement in exchange rates, such as the creditworthiness of the debtor.

(iii) ***Special rule for synthetic, non-hyperinflationary currency debt instruments*** —

(A) ***General rule.*** Paragraph (b)(15)(i) does not apply to a debt instrument that has interest and principal payments that are to be made by reference to a currency or item that does not reflect hyperinflationary conditions in a country (within the meaning of § 1.988-1(f)).

(B) ***Example.*** Paragraph (b)(15)(iii)(A) is illustrated by the following example:

Example. When the Turkish lira (TL) is a hyperinflationary currency, A, a U.S. corporation with the U.S. dollar as its functional currency, makes a 5 year, 100,000 TL-denominated loan to B, an unrelated corporation, at a 10% interest rate when 1,000 TL equals $1. Under the terms of the debt instrument, B must pay interest annually to A in amount of Turkish lira that is equal to $100. Also under the terms of the debt instrument, B must pay A upon maturity of the debt instrument an amount of Turkish lira that is equal to $1,000. Although the principal and interest are payable in a hyperinflationary currency, the debt instrument is a synthetic dollar debt instrument and is not subject to paragraph (b)(15)(i) of this section.

(iv) ***Source and character of gain or loss*** —

(A) ***General rule for hyperinflationary conditions.*** The rules of this paragraph (b)(15)(iv)(A) shall apply to any taxpayer that is either an issuer of (or obligor under) a hyperinflationary debt instrument or deposit and has currency gain on such debt instrument or deposit, or a holder of a hyperinflationary debt instrument or deposit and has currency loss on such debt instrument or deposit. For purposes of subtitle A of the Internal Revenue Code, any exchange gain or loss realized under paragraph (b)(15)(i) of this section is directly allocable to the interest expense or interest income, respectively, from the debt instrument or deposit (computed under this paragraph (b)), and therefore reduces or increases the amount of interest income or interest expense paid or accrued during that year with respect to that instrument or deposit. With respect to a debt instrument or deposit during a taxable year, to the extent exchange gain realized under paragraph (b)(15)(i) of this section exceeds interest expense of an issuer, or exchange loss realized under paragraph (b)(15)(i) of this section exceeds interest income of a holder or depositor, the character and source of such excess amount shall be determined under §§ 1.988-3 and 1.988-4.

(B) ***Special rule for subsiding hyperinflationary conditions.*** If the taxpayer is an issuer of (or obligor under) a hyperinflationary debt instrument or deposit and has currency loss, or if the taxpayer is a holder of a hyperinflationary debt instrument or deposit and has currency gain, then for purposes of subtitle A of the Internal Revenue Code, the character and source of the currency gain or loss is determined under §§ 1.988-3 and 1.988-4. Thus, if an issuer has both interest expense and currency loss, the currency loss is sourced and characterized under section 988, and does not affect the determination of interest expense.

(v) ***Adjustment to principal or basis.*** Any exchange gain or loss realized under paragraph (b)(15)(i) of this section is an adjustment to the functional currency principal amount of the issuer, functional currency basis of the holder, or the functional currency amount of the deposit. This adjusted amount or basis is used in making subsequent computations of exchange gain or loss, computing the basis of assets for purposes of allocating interest under §§ 1.861-9T through 1.861-12T and 1.882-5, or making other determinations that may be relevant for computing taxable income or loss.

(vi) ***Definitions*** —

(A) ***Hyperinflationary debt instrument.*** A hyperinflationary debt instrument is a debt instrument that provides for—

(*1*) Payments denominated in or determined by reference to a currency that is hyperinflationary (as defined in § 1.988-1(f)) at the time the taxpayer enters into or otherwise acquires the debt instrument; or

(*2*) Payments denominated in or determined by reference to a currency that is hyperinflationary (as defined in § 1.988-1(f)) during the taxable year, and the terms of the instrument provide for the adjustment of principal or interest payments in a manner that reflects hyperinflation. For example, a debt instrument providing for a variable interest rate based on local conditions and generally responding to changes in the local consumer price index will reflect hyperinflation.

(B) ***Hyperinflationary deposit.*** A hyperinflationary deposit is a demand or time deposit or similar instrument issued by a bank or other financial institution that provides for—

(*1*) Payments denominated in or determined by reference to a currency that is hyperinflationary (as defined in § 1.988-1(f)) at the time the taxpayer enters into or otherwise acquires the deposit; or

(*2*) Payments denominated in or determined by reference to a currency that is hyperinflationary (as defined in § 1.988-1(f)) during the taxable year, and the terms of the deposit provide for the adjustment of the deposit amount or interest payments in a manner that reflects hyperinflation.

(vii) ***Interaction with other provisions*** —

(A) ***Interest allocation rules.*** In determining the amount of interest expense, this paragraph (b)(15) applies before §§ 1.861-9T through 1.861-12T, and 1.882-5.

(B) ***DASTM.*** With respect to a qualified business unit that uses the United States dollar approximate separate transactions method of accounting described in § 1.985-3, paragraph (b)(15)(i) of this section does not apply.

(C) ***Interaction with section 988(a)(3)(C).*** Section 988(a)(3)(C) does not apply to a debt instrument subject to the rules of paragraph (b)(15)(i) of this section.

(D) ***Hedging rules.*** To the extent § 1.446-4 or 1.988-5 apply, the rules of paragraph (b)(15)(i) of this section will not apply. This paragraph (b)(15)(vii)(D) does not apply if the application of § 1.988-5 results in hyperinflationary debt instrument or deposit described in paragraph (b)(15)(vi)(A) or (B) of this section.

(viii) ***Effective date.*** This paragraph (b)(15) applies to transactions entered into after February 14, 2000.

(16) [Reserved] For further guidance, see § 1.988-2T(b)(16).

(17) ***Coordination with installment method under section 453.*** [Reserved]

(18) ***Interaction of section 988 and § 1.1275-2(g)*** —

(i) ***In general.*** If a principal purpose of structuring a debt instrument subject to section 988 and any related hedges is to achieve a result that is unreasonable in light of the purposes of section 163(e), section 988, sections 1271 through 1275, or any related section of the Internal Revenue Code, the Commissioner can apply or depart from the regulations under the applicable sections as necessary or appropriate to achieve a reasonable result. For example, if this paragraph (b)(18) applies to a multicurrency debt instrument and a hedge or hedges, the Commissioner can wholly or partially integrate transactions or treat portions of the debt instrument as separate instruments where appropriate. See also § 1.1275-2(g).

(ii) ***Unreasonable result.*** Whether a result is unreasonable is determined based on all the facts and circumstances. In making this determination, a significant fact is whether the treatment of the debt instrument is expected to have a substantial effect on the issuer's or a holder's U.S. tax liability. Another significant fact is whether the result is obtainable without the application of § 1.988-6 and any related provisions (*e.g.*, if the debt instrument and the contingency were entered into separately). A result will not be considered unreasonable, however, in the absence of an expected substantial effect on the present value of a taxpayer's tax liability.

(iii) ***Effective date.*** This paragraph (b)(18) shall apply to debt instruments issued on or after October 29, 2004.

(c) ***Item of expense or gross income or receipts which is to be paid or received after the date accrued*** —

(1) ***In general.*** Except as provided in § 1.988-5, exchange gain or loss with respect to an item described in § 1.988-1(a)(1)(ii) and (2)(ii) (other than accrued interest income or expense subject to paragraph (b) of this section) shall be realized on the date payment is made or received. Except as provided in the succeeding sentence, such exchange gain or loss shall be recognized in accordance with the applicable recognition provisions of the Internal Revenue Code. If the taxpayer's right to receive income, or obligation to pay an expense, is transferred or modified in a transaction in which gain or loss would otherwise be recognized, exchange gain or loss shall be realized and recognized only to the extent of the total gain or loss on the transaction.

(2) ***Determination of exchange gain or loss with respect to an item of gross income or receipts.*** Exchange gain or loss realized on an item of gross income or receipts described in paragraph (c)(1) of this section shall be determined by multiplying the units of nonfunctional currency received by the spot rate on the payment date, and subtracting from such amount the amount determined by multiplying the units of nonfunctional currency received by the spot rate on the booking date. The term “spot rate on the payment date” means the spot rate determined under § 1.988-1(d) on the date payment is received or otherwise taken into account. Pursuant to § 1.988-1(d)(3), a taxpayer may use a spot rate convention for purposes of determining the spot rate on the payment date. The term “spot rate on the booking date” means the spot rate determined under § 1.988-1(d) on the date the item of gross income or receipts is accrued or otherwise taken into account. Pursuant to § 1.988-1(d)(3), a taxpayer may use a spot rate convention for purposes of determining the spot rate on the booking date.

(3) ***Determination of exchange gain or loss with respect to an item of expense.*** Exchange gain or loss realized on an item of expense described in paragraph (c)(1) of this section shall be determined by multiplying the units of nonfunctional currency paid by the spot rate on the booking date and subtracting from such amount the amount determined by multiplying the units of nonfunctional currency paid by the spot rate on the payment date. The term “spot rate on the booking date” means the spot rate determined under § 1.988-1(d) on the date the item of expense is accrued or otherwise taken into account. Pursuant to § 1.988-1(d)(3), a taxpayer may use a spot rate convention for

purposes of determining the spot rate on the booking date. The term "spot rate on the payment date" means the spot rate determined under § 1.988-1(d) on the date payment is made or otherwise taken into account. Pursuant to § 1.988-1(d)(3), a taxpayer may use a spot rate convention for purposes of determining the spot rate on the date.

(4) ***Examples.*** The following examples illustrate the application of paragraph (c) of this section.

Example 1. X is a calendar year corporation with the dollar as its functional currency. X is on the accrual method of accounting. On January 15, 1989, X sells inventory for 10,000 Canadian dollars (C$). The spot rate on January 15, 1989, is C$1 = U.S. $.55. On February 23, 1989, when X receives payment of the C$10,000, the spot rate is C$1 = U.S. $.50. On February 23, 1989, X will realize exchange loss. X's loss is computed by multiplying the C$10,000 by the spot rate on the date the C$10,000 are received (C$10,000 × .50 = U.S. $5,000) and subtracting from such amount, the amount computed by multiplying the C$10,000 by the spot rate on the booking date (C$10,000 × .55 = U.S. $5,500). Thus, X's exchange loss on the transaction is U.S. $500 (U.S. $5,000–U.S. $5,500).

Example 2. The facts are the same as in *Example 1* except that X uses a spot rate convention to determine the spot rate as provided in § 1.988-1(d)(3). Pursuant to X's spot rate convention, the spot rate at which a payable or receivable is booked is determined monthly for each nonfunctional currency payable or receivable by adding the spot rate at the beginning of the month and the spot rate at the end of the month and dividing by two. All payables and receivables in a nonfunctional currency booked during the month are translated into functional currency at the rate described in the preceding sentence. Further, the translation of nonfunctional currency paid with respect to a payable, and nonfunctional currency received with respect to a receivable, is also performed pursuant to the spot rate convention. Assume the spot rate determined under the spot rate convention for the month of January is C$1 = U.S. $.54 and for the month of February is C$1 = U.S. $.51. On the last date in February, X will realize exchange loss. X's loss is computed by multiplying the C$10,000 by the spot rate convention for the month of February (C$10,000 × U.S. $.51 = U.S. $5,100) and subtracting from such amount, the amount computed by multiplying the C$10,000 by the spot rate convention for the month of January (C$10,000 × U.S. $.54 = $5,400). Thus, X's exchange loss on the transaction is U.S. $300 (U.S. $5,100-U.S. $5,400). X's basis in the C$10,000 is U.S. $5,400.

Example 3. The facts are the same as in *Example 2* except that X has a standing order with X's bank for the bank to convert any nonfunctional currency received in satisfaction of a receivable into U.S. dollars on the day received and to deposit those U.S. dollars in X's U.S. dollar bank account. X may use its convention to translate the amount booked into U.S. dollars, but must use the U.S. dollar amounts received from the bank with respect to such receivables to determine X's exchange gain or loss. Thus, if X receives payment of the C$10,000 on February 23, 1989, when the spot rate is C$1 = U.S.$ .50, X determines exchange gain or loss by subtracting the amount booked under X's convention (U.S.$5,400) from the amount of U.S. dollars received from the bank under the standing conversion order (assume $5,000). X's exchange loss is U.S.$400.

(d) ***Exchange gain or loss with respect to forward contracts, futures contracts and option contracts —***

(1) ***Scope —***

(i) ***In general.*** This paragraph (d) applies to forward contracts, futures contracts and option contracts described in § 1.988-1(a)(1)(ii) and (2)(iii). For rules applicable to currency swaps and notional principal contracts described in § 1.988-1(a) (1)(ii) and (2)(iii), see paragraph (e) of this section.

(ii) ***Treatment of spot contracts.*** Solely for purposes of this paragraph (d), a spot contract as defined in § 1.988-1(b) to buy or sell nonfunctional currency is not considered a forward contract or similar transaction described in § 1.988-1(a)(2)(iii) unless such spot contract is disposed of (or otherwise terminated) prior to making or taking delivery of the currency. For example, if a taxpayer with the dollar as its functional currency enters into a spot contract to purchase British pounds, and takes delivery of such pounds under the contract, the delivery of the pounds is not a realization event under section 988(c)(5) and paragraph (e)(4)(ii) of this section because the contract is not considered a forward contract or similar transaction described in § 1.988-1(a)(2)(iii). However, if the taxpayer sells or otherwise terminates the contract before taking delivery of the pounds, exchange gain or loss shall be realized and recognized in accordance with paragraphs (d)(2) and (3) of this section.

(2) ***Realization of exchange gain or loss*** —

(i) ***In general.*** Except as provided in § 1.988-5, exchange gain or loss on a contract described in § 1.988-2(d)(1) shall be realized in accordance with the applicable realization section of the Internal Revenue Code (*e.g.*, sections 1001, 1092, and 1256). See also section 988(c)(5). For purposes of determining the timing of the realization of exchange gain or loss, sections 1092 and 1256 shall take precedence over section 988(c)(5).

(ii) ***Realization by offset*** —

(A) ***In general.*** Except as provided in paragraphs (d)(2)(ii)(B) and (C) of this section, exchange gain or loss with respect to a transaction described in § 1.988-1(a)(1)(ii) and (2)(iii) shall not be realized solely because such transaction is offset by another transaction (or transactions).

(B) ***Exception where economic benefit is derived.*** If a transaction described in § 1.988-1(a)(1)(ii) and (2)(iii) is offset by another transaction or transactions, exchange gain shall be realized to the extent the taxpayer derives, by pledge or otherwise, an economic benefit (*e.g.*, cash, property or the proceeds from a borrowing) from any gain inherent in such offsetting positions. Proper adjustment shall be made in the amount of any gain or loss subsequently realized for gain taken into account by reason of the preceding sentence. This paragraph (d)(2)(ii)(B) shall apply to transactions creating an offset after September 21, 1989.

(C) ***Certain contracts traded on an exchange.*** If a transaction described in § 1.988-1(a)(1)(ii) and (2)(iii) is traded on an exchange and it is the general practice of the exchange to terminate offsetting contracts, entering into an offsetting contract shall be considered a termination of the contract being offset.

(iii) ***Clarification of section 988(c)(5).*** If the delivery date of a contract subject to section 988(c)(5) and paragraph (d)(4)(ii) of this section is different than the date the contract expires, then for purposes of determining the date exchange gain or loss is realized, the term delivery date shall mean expiration date.

(iv) ***Examples.*** The following examples illustrate the rules of this paragraph (d)(1) and (2).

Example 1. On August 1, 1989, X, a calendar year corporation with the dollar as its functional currency, enters into a forward contract with Bank A to buy 100 New Zealand dollars for $80 for delivery on January 31, 1990. (The forward purchase contract is not a section 1256 contract.) On November 1, 1989, the market price for the purchase of 100 New Zealand dollars for delivery on January 31, 1990, is $76. On November 1, 1989, X cancels its obligation under the forward purchase contract and pays Bank A $3.95 (the present value of $4 discounted at 12% for the period) in cancellation of such contract. Under section 1001 (a), X realizes an exchange loss of $3.95 on November 1, 1989, because cancellation of the forward purchase contract for cash results in the termination of X's contract.

Example 2. X is a corporation with the dollar as its functional currency. On January 1, 1989, X enters into a currency swap contract with Bank A under which X is obligated to make a series of Japanese yen payments in exchange for a series of dollar payments. On February 21, 1992, X has a gain of $100,000 inherent in such contract as a result of interest rate and exchange rate movements. Also on February 21, 1992, X enters into an offsetting swap with Bank A to lock in such gain. If on February 21, 1992, X pledges the gain inherent in such offsetting positions as collateral for a loan, X's initial swap contract is treated as being terminated on February 21, 1992, under paragraph (d)(2)(ii)(B) of this section. Proper adjustment is made in the amount of any gain or loss subsequently realized for the gain taken into account by reason of paragraph (d)(2)(ii)(B) of this section.

Example 3. X is a calendar year corporation with the dollar as its functional currency. On October 1, 1989, X enters into a forward contract to buy 100,000 Swiss francs (Sf) for delivery on March l, 1990, for $51,220. Assume that the contract is a section 1256 contract under section 1256(g)(2) and that section 1256(e) does not apply. Pursuant to section 1256(a)(1), the forward contract is treated as sold for its fair market value on December 31, 1989. Assume that the fair market value of the contract is $1,000 determined under § 1.988-1(g). Thus X will realize an exchange gain of $1,000 on December 31, 1989. Such gain is subject to the character rules of § 1.988-3 and the source rules of § 1.988-4.

(v) ***Extension of the maturity date of certain contracts.*** An extension of time for making or taking delivery under a contract described in paragraph (d)(1) of this section (*e.g.,* a historical rate rollover as defined in § 1.988-5(b)(2)(iii)(C)) shall be considered a sale or exchange of the contract for its fair market value on the date of the extension and the establishment of a new contract on such date. If, under the terms of the extension, the time value of any gain or loss recognized pursuant to the preceding sentence adjusts the price of the currency to be bought or sold under the new contract, the amount attributable to such time value shall be treated as interest income or expense for all purposes of the Code. However, the preceding sentence shall not apply and the amount attributable to the time value of any gain or loss recognized shall be treated as exchange gain or loss if the period beginning on the first date the contract is rolled over and ending on the date payment is ultimately made or received with respect to such contract does not exceed 183 days.

(3) ***Recognition of exchange gain or loss.*** Except as provided in § 1.988-5 (relating to section 988 hedging transactions), exchange gain or loss realized with respect to a contract described in paragraph (d)(1) of this section shall be recognized in accordance with the applicable recognition provisions of the Internal Revenue Code. For example, a loss realized with respect to a contract described in paragraph (d)(1) of this section which is part of a straddle shall be recognized in accordance with the provisions of section 1092 to the extent such section is applicable.

(4) *Determination of exchange gain or loss* —

(i) ***In general.*** Exchange gain or loss with respect to a contract described in § 1.988-2(d)(1) shall be determined by subtracting the amount paid (or deemed paid), if any, for or with respect to the contract (including any amount paid upon termination of the contract) from the amount received (or deemed received), if any, for or with respect to the contract (including any amount received upon termination of the contract). Any gain or loss determined according to the preceding sentence shall be treated as exchange gain or loss.

(ii) ***Special rules where taxpayer makes or takes delivery.*** If the taxpayer makes or takes delivery in connection with a contract described in paragraph (d)(1) of this section, any gain or loss shall be realized and recognized in the same manner as if the taxpayer sold the contract (or paid another person to assume the contract) on the date on which he took or made delivery for its fair market value on such date. See paragraph (d)(2)(iii) of this section regarding the definition of the term "delivery date." This paragraph (d)(4)(ii) shall not apply in any case in which the taxpayer makes or takes delivery before June 11, 1987.

(iii) ***Examples.*** The following examples illustrate the application of paragraph (d)(4) of this section.

Example 1. X is a calendar year corporation with the dollar as its functional currency. On October 1, 1989, when the six month forward rate is $.4907, X enters into a forward contract to buy 100,000 New Zealand dollars (NZD) for delivery on March 1, 1990. On March 1, 1990, when X takes delivery of the 100,000 NZD, the spot rate is 1NZD equals $.48. Pursuant to section 988(c)(5) and paragraph (d)(4)(ii) of this section, a taxpayer that takes delivery of nonfunctional currency under a forward contract that is subject to section 988 is treated as if the taxpayer sold the contract for its fair market value on the date delivery is taken. If X sold the contract on March 1, 1990, the transferee would require a payment of $1,070 [($.48 × 100,000NZD)−($.4907 × 100,000NZD)] to compensate him for the loss in value of the 100,000NZD. Therefore, X realizes an exchange loss of $1,070. X has a basis in the 100,000NZD of $48,000.

Example 2. Assume the same facts as in *Example 1* except that the contract is for Swiss francs and is a section 1256 contract. Assume further that on December 31, 1989, the value to X of the contract as marked to market is $1,000. Pursuant to section 1256(a), X realizes an exchange gain of $1,000. Such gain, however, is characterized as ordinary income under § 1.988-3 and will be sourced under § 1.988-4.

Example 3. X is a calendar year corporation with the dollar as its functional currency. On May 2, 1989, X enters into an option contract with Bank A to purchase 50,000 Canadian dollars (C$) for U.S. $42,500 (C$1 = U.S. $.85) for delivery on or before September 18, 1989. X pays a $285 premium to Bank A to obtain the option contract. On September 18, 1989, when X exercises the option and takes delivery of the C$50,000, the spot rate is C$1 equals U.S. $.90. Pursuant to section 988(c)(5) and paragraph (d)(4)(ii) of this section, a taxpayer that takes delivery under an option contract that is subject to section 988 is treated as if the taxpayer sold the contract for its fair market value on the date delivery is taken. If X sold the contract for its fair market value on September 18, 1989, X would receive U.S. $2,500 [(C$50,000 × U.S. $.90)−(C$50,000 × U.S. $.85)]. Accordingly, X is deemed to have received U.S. $2,500 on the sale of the contract at its fair market value. X will realize U.S. $2,215 ($2,500 deemed received less $285 paid) of exchange gain with respect to the delivery of Canadian dollars under the option contract. X's basis in the 50,000 Canadian dollars is U.S. $45,000.

(5) *Hyperinflationary contracts* —

(i) ***In general.*** If a taxpayer acquires or otherwise enters into a hyperinflationary contract (as defined in paragraph (d)(5)(ii) of this section) that has payments to be made or received that are denominated in (or determined by reference to) a nonfunctional currency of the taxpayer, then the taxpayer shall realize exchange gain or loss with respect to such contract for its taxable year determined by reference to the change in exchange rates between—

(A) The later of the first day of the taxable year, or the date the contract was acquired or entered into; and

(B) The earlier of the last day of the taxable year, or the date the contract is disposed of or otherwise terminated.

(ii) ***Definition of hyperinflationary contract.*** A hyperinflationary contract is a contract described in paragraph (d)(1) of this section that provides for payments denominated in or determined by reference to a currency that is hyperinflationary (as defined in § 1.988-1(f)) at the time the taxpayer acquires or otherwise enters into the contract.

(iii) *Interaction with other provisions* —

(A) ***DASTM.*** With respect to a qualified business unit that uses the United States dollar approximate separate transactions method of accounting described in § 1.985-3, this paragraph (d)(5) does not apply.

(B) ***Hedging rules.*** To the extent § 1.446-4 or 1.988-5 apply, this paragraph (d)(5) does not apply.

(C) ***Adjustment for subsequent transactions.*** Proper adjustments must be made in the amount of any gain or loss subsequently realized for gain or loss taken into account by reason of this paragraph (d)(5).

(iv) ***Effective date.*** This paragraph (d) (5) is applicable to transactions acquired or otherwise entered into after February 14, 2000.

(e) *Currency swaps and other notional principal contracts* —

(1) ***In general.*** Except as provided in paragraph (e)(2) of this section or in § 1.988-5, the timing of income, deduction and loss with respect to a notional principal contract that is a section 988 transaction shall be governed by section 446 and the regulations thereunder. Such income, deduction and loss is characterized as exchange gain or loss (except as provided in another section of the Internal Revenue Code (or regulations thereunder), § 1.988-5, or in paragraph (f) of this section).

(2) *Special rules for currency swaps* —

(i) ***In general.*** Except as provided in paragraph (e)(2)(iii)(B) of this section, the provisions of this paragraph (e)(2) shall apply solely for purposes of determining the realization, recognition and amount of exchange gain or loss with respect to a currency swap contract, and not for purposes of determining the source of such gain or loss, or characterizing such gain or loss as interest. Except as provided in § 1.988-3(c), any income or loss realized with respect to a currency swap contract shall be characterized as exchange gain or loss (and not as interest income or expense). Any exchange gain or loss realized in accordance with this paragraph (e)(2) shall be recognized unless otherwise provided in an applicable section of the Code. For

purposes of this paragraph (e)(2), a currency swap contract is a contract defined in paragraph (e)(2)(ii) of this section. With respect to a contract which requires the payment of swap principal prior to maturity of such contract, see paragraph (f) of this section. For purposes of this paragraph (e), the rules of paragraph (d)(2)(ii) of this section (regarding realization by offset) apply. See Example 2 of paragraph (d)(2)(iv) of this section.

(ii) ***Definition of currency swap contract*** —

(A) ***In general.*** A currency swap contract is a contract involving different currencies between two or more parties to—

(*1*) Exchange periodic interim payments, as defined in paragraph (e)(2)(ii)(C) of this section, on or prior to maturity of the contract; and

(*2*) Exchange the swap principal amount upon maturity of the contract.

A currency swap contract may also require an exchange of the swap principal amount upon commencement of the agreement.

(B) ***Swap principal amount.*** The swap principal amount is an amount of two different currencies which, under the terms of the currency swap contract, is used to determine the periodic interim payments in each currency and which is exchanged upon maturity of the contract. If such amount is not clearly set forth in the contract, the Commissioner may determine the swap principal amount.

(C) ***Exchange of periodic interim payments.*** An exchange of periodic interim payments is an exchange of one or more payments in one currency specified by the contract for one or more payments in a different currency specified by the contract where the payments in each currency are computed by reference to an interest index applied to the swap principal amount. A currency swap contract must clearly indicate the periodic interim payments, or the interest index used to compute the periodic interim payments, in each currency.

(iii) ***Timing and computation of periodic interim payments*** —

(A) ***In general.*** Except as provided in paragraph (e)(2)(iii)(B) of this section and § 1.988-5, the timing and computation of the periodic interim payments provided in a currency swap agreement shall be determined by treating—

(*1*) Payments made under the swap as payments made pursuant to a hypothetical borrowing that is denominated in the currency in which payments are required to be made (or are determined with reference to) under the swap, and

(*2*) Payments received under the swap as payments received pursuant to a hypothetical loan that is denominated in the currency in which payments are received (or are determined with reference to) under the swap.

Except as provided in paragraph (e)(2)(v) of this section, the hypothetical issue price of such hypothetical borrowing and loan shall be the swap principal amount. The hypothetical stated redemption price at maturity is the total of all payments (excluding any exchange of the swap principal amount at the inception of the contract) provided under the hypothetical borrowing or loan other than periodic interest payments under the principles of section 1273. For purposes of determining economic accrual under the

currency swap, the number of hypothetical interest compounding periods of such hypothetical borrowing and loan shall be determined pursuant to a semiannual compounding convention unless the currency swap contract indicates otherwise. For purposes of determining the timing and amount of the periodic interim payments, the principles regarding the amortization of interest (see generally, sections 1272 through 1275 and 163(e)) shall apply to the hypothetical interest expense and income of such hypothetical borrowing and loan. However, such principles shall not apply to determine the time when principal is deemed to be paid on the hypothetical borrowing and loan. See paragraph (d)(2)(iii) of this section and *Example 2* of paragraph (d)(5) of this section with respect to the time when principal is deemed to be paid. With respect to the translation and computation of exchange gain or loss on any hypothetical interest income or expense, see § 1.988-2(b). The amount treated as exchange gain or loss by the taxpayer with respect to the periodic interim payments for the taxable year shall be the amount of hypothetical interest income and exchange gain or loss attributable to such interest income from the hypothetical borrowing and loan for such year less the amount of hypothetical interest expense and exchange gain or loss attributable to the interest expense from such hypothetical borrowing and loan for such year.

(B) ***Effect of prepayment for purposes of section 956.*** For purposes of section 956, the Commissioner may treat any prepayment of a currency swap as a loan.

(iv) ***Timing and determination of exchange gain or loss with respect to the swap principal amount.*** Exchange gain or loss with respect to the swap principal amount shall be realized on the day the units of swap principal in each currency are exchanged. (See paragraph (e)(2)(ii)(A)(2) of this section which requires that the entire swap principal amount be exchanged upon maturity of the contract.) Such gain or loss shall be determined on the date of the exchange by subtracting the value (on such date) of the units of swap principal paid from the value of the units of swap principal received. This paragraph (e)(2)(iv) does not apply to an equal exchange of the swap principal amount at the commencement of the agreement at a market exchange rate.

(v) ***Anti-abuse rules*** —

(A) ***Method of accounting does not clearly reflect income.*** If the taxpayer's method of accounting for income, expense, gain or loss attributable to a currency swap does not clearly reflect income, or if the present value of the payments to be made is not equivalent to that of the payments to be received (including the swap premium or discount, as defined in paragraph (e)(3)(ii) of this section) on the day the taxpayer enters into or acquires the contract, the Commissioner may apply principles analogous to those of section 1274 or such other rules as the Commissioner deems appropriate to clearly reflect income. For example, in order to clearly reflect income the Commissioner may determine the hypothetical issue price, the hypothetical stated redemption price at maturity, and the amounts required to be taken into account within a taxable year. Further, if the present value of the payments to be made is not equivalent to that of the payments to be received (including the swap premium or discount, as defined in paragraph (e)(3)(ii) of this section) on the day the taxpayer enters into or acquires the contract, the Commissioner may integrate the swap with another transaction (or transactions) in order to clearly reflect income.

(B) ***Terms must be clearly stated.*** If the currency swap contract does not clearly set forth the swap principal amount in each currency, and the periodic interim payments in each currency (or the interest index used to compute the periodic interim payments in each currency), the Commissioner may defer any income, deduction, gain or loss with respect to such contract until termination of the contract.

(3) ***Amortization of swap premium or discount in the case of off-market currency swaps*** —

(i) ***In general.*** An "off-market currency swap" is a currency swap contract under which the present value of the payments to be made is not equal to that of the payments to be received on the day the taxpayer enters into or acquires the contract (absent the swap premium or discount, as defined in paragraph (e)(3)(ii) of this section). Generally, such present values may not be equal if the swap exchange rate (as defined in paragraph (e)(3)(iii) of this section) is not the spot rate, or the interest indices used to compute the periodic interim payments do not reflect current values, on the day the taxpayer enters into or acquires the currency swap.

(ii) ***Treatment of taxpayer entering into or acquiring an off-market currency swap.*** If a taxpayer that enters into or acquires a currency swap makes a payment (that is, the taxpayer pays a premium, "swap premium," to enter into or acquire the currency swap) or receives a payment (that is, the taxpayer enters into or acquires the currency swap at a discount, "swap discount") in order to make the present value of the amounts to be paid equal the amounts to be received, such payment shall be amortized in a manner which places the taxpayer in the same position it would have been in had the taxpayer entered into a currency swap contract under which the present value of the amounts to be paid equal the amounts to be received (absent any swap premium or discount). Thus, swap premium or discount shall be amortized as follows—

(A) The amount of swap premium or discount that is attributable to the difference between the swap exchange rate (as defined in paragraph (e)(3)(iii) of this section) and the spot rate on the date the contract is entered into or acquired shall be taken into account as income or expense on the date the swap principal amounts are taken into account; and

(B) The amount of swap premium or discount attributable to the difference in values of the periodic interim payments shall be amortized in a manner consistent with the principles of economic accrual. *Cf.,* section 171.

Any amount taken into account pursuant to this paragraph (e)(3)(ii) shall be treated as exchange gain or loss.

(iii) ***Definition of swap exchange rate.*** The swap exchange rate is the single exchange rate set forth in the contract at which the swap principal amounts are determined. If the swap exchange rate is not clearly set forth in the contract, the Commissioner may determine such rate.

(iv) ***Coordination with § 1.446-3(g)(4) regarding swaps with significant nonperiodic payments.*** The rules of § 1.446-3(g)(4) apply to any currency swap with a significant nonperiodic payment. Section 1.446-3(g)(4) applies before this paragraph (e)(3). Thus, if § 1.446-3(g)(4) applies, currency gain or loss may be realized on the loan. This paragraph (e)(3)(iv) applies to transactions entered into after February 14, 2000.

(4) ***Treatment of taxpayer disposing of a currency swap.*** Any gain or loss realized on the disposition or the termination of a currency swap is exchange gain or loss.

(5) ***Examples.*** The following examples illustrate the application of this paragraph (e).

Example 1. (i) C is an accrual method calendar year corporation with the dollar as its functional currency. On January 1, 1989, C enters into a currency swap with J with the following terms:
(1) the principal amount is $150 and 100 British pounds (£) (the equivalent of $150 on the effective date of the contract assuming a spot rate of £1 = $1.50 on January 1, 1989);

(2) C will make payments equal to 10% of the dollar principal amount on December 31, 1989, and December 31, 1990;

(3) J will make payments equal to 12% of the pound principal amount on December 31, 1989, and December 31, 1990; and

(4) on December 31, 1990, C will pay to J the $150 principal amount and J will pay to C the £100 principal amount.

Assume that the spot rate is £1 = $1.50 on January 1, 1989, £1 = $1.40 on December 31, 1989, and £1 = $1.30 on December 31, 1990. Assume further that the average rate for 1989 is £1 = $1.45 and for 1990 is £1 = $1.35.

(ii) Solely for determining the realization of gain or loss in accordance with paragraph (e)(2) of this section (and not for purposes of determining whether any payments are treated as interest), C will treat the dollar payments made by C as payments made pursuant to a dollar borrowing with an issue price of $150, a stated redemption price at maturity of $150, and yield to maturity of 10%. C will treat the pound payments received as payments received pursuant to a pound loan with an issue price of £100, a stated redemption price at maturity of £100, and a yield of 12% to maturity. Pursuant to § 1.988-2(b), C is required to compute hypothetical accrued pound interest income at the average rate for the accrual period and then determine exchange gain or loss on the day payment is received with respect to such accrued amount. Accordingly, C will accrue $17.40 (£12 × $1.45) in 1989 and $16.20 (£12 × $1.35) in 1990. C also will compute hypothetical exchange loss of $.60 on December 31, 1989 [(£12 × $1.40)−(£12 × $1.45)] and hypothetical exchange loss of $.60 on December 31, 1990 [(£12 × $1.30)−(£12 × $1.35)]. All such hypothetical interest income and exchange loss are characterized and sourced as exchange gain and loss. Further, C is treated as having paid $15 ($150 × 10%) of hypothetical interest on December 31, 1989, and again on December 31, 1990. Such hypothetical interest expense is characterized and sourced as exchange loss. Thus, C will have a net exchange gain of $1.80 ($17.40−$.60−$15.00) with respect to the periodic interim payments in 1989 and a net exchange gain of $.60 ($16.20−$.60−$15.00) with respect to the periodic interim payments in 1990. Finally, C will realize an exchange loss on December 31, 1990, with respect to the exchange of the swap principal amount. This loss is determined by subtracting the value of the units of swap principal paid ($150) from the

value of the units of swap principal received (£100 × $1.30 = $130) resulting in a $20 exchange loss.

Example 2. (i) C is an accrual method calendar year corporation with the dollar as its functional currency. On January 1, 1989, when the spot rate is £1 = $1.50, C enters into a currency swap contract with J under which C agrees to make and receive the following payments:

Date	C pays	J pays
December 31, 1989	$15.00	£12.00
December 31, 1990	41.04	12.00
December 31, 1991	0.00	12.00
December 31, 1992	150.00	112.00

(ii) Under paragraph (e)(2)(iii) of this section, C must treat the dollar periodic interim payments under the swap as made pursuant to a hypothetical dollar borrowing. The hypothetical issue price is $150 and the stated redemption price at maturity is $206.04. The amount of hypothetical interest expense must be amortized in accordance with economic accrual. Thus J must include and C must deduct periodic interim payment amounts as follows:

	Amount taken into account	Adjusted issue price
December 31, 1989	$15.00	150.00
December 31, 1990	$15.00	123.96
December 31, 1991	$12.40	136.36
December 31, 1992	$13.64	

(iii) Gain or loss with respect to the periodic interim payments of the currency swap is determined under paragraph (e)(2)(iii)(A) of this section with respect to the dollar cash flow amortized as set forth above and the corresponding pound cash flow as stated in the currency swap contract. Gain or loss with respect to the principal payments (*i.e.,* $150 and £100) exchanged on December 31, 1992, is determined under paragraph (e)(2)(iv) of this section on December 31, 1992, notwithstanding that under the principles regarding amortization of interest $26.04 would have been regarded as a payment of principal on December 31, 1990.

Example 3. (i) X is a corporation on the accrual method of accounting with the dollar as its functional currency and the calendar year as its taxable year. On January 1, 1989, X enters into a three year currency swap contract with Y with the following terms. The swap principal amount is $100 and the Swiss franc (Sf) equivalent of such amount which equals Sf200 translated at the swap exchange rate of $1 = Sf2. There is no initial exchange of the swap principal amount. The interest rates used to compute the periodic interim payments are 10% compounded annually for U.S. dollar payments and 5% compounded annually for Swiss franc payments. Thus, under the currency swap, X agrees to pay Y $10 (10% × $100) on December 31st of 1989, 1990 and 1991 and to pay Y the swap principal amount of $100 on December 31, 1991. Y agrees to pay X Sf10 (5% × Sf200) on December 31st of 1989, 1990 and 1991 and to pay X the swap principal amount of Sf200 on December 31, 1991. Assume that the average rate for 1989 and the spot rate on December 31, 1989, is $1 = Sf2.5.
(ii) Under paragraph (e)(2)(iii) of this section, on December 31, 1989, X will realize an exchange loss of $6 (the sum of $10 of loss by reason of the $10 periodic interim payment paid to Y and $4.00 of gain, the value of Sf10 on December 31, 1989, from the receipt of Sf10 on such date).

(iii) On January 1, 1990, X transfers its rights and obligations under the swap contract to Z, an unrelated corporation. Z has the dollar as its functional currency, is on the accrual method of accounting, and has the calendar year as its taxable year. On January 1, 1990, the exchange rate is $1 = Sf2.50. The relevant dollar interest rate is 8% compounded annually and the relevant Swiss franc interest rate is 5% compounded annually. Because of the movement in exchange and interest rates, the agreement between X and Z to transfer the currency swap requires X to pay Z $23.56 (the swap discount as determined under paragraph (e)(3) of this section).

(iv) Pursuant to paragraph (e)(4) of this section, X may deduct the loss of $23.56 in 1990. The loss is characterized under § 1.988-3 and sourced under § 1.988-4.

(v) Pursuant to paragraph (e)(3)(ii) of this section, Z is required to amortize the $23.56 received as follows. The amount of the $23.56 payment that is attributable to movements in exchange rates ($20) is taken into account on December 31, 1991, the date the swap principal amounts are exchanged, under paragraph (e)(3)(ii)(A) of this section. This amount is the present value (discounted at 10%, the rate under the currency swap contract used to compute the dollar periodic interim payments) of the financial asset required to compensate Z for the loss in value of the hypothetical Swiss franc loan resulting from movements in exchange rates between January 1, 1989, and January 1, 1990. This amount is determined by assuming that interest rates did not change from the date the swap originally was entered into (January 1, 1989), but that the exchange rate is $1 = Sf2.50. Under this assumption, a taxpayer undertaking the obligation to pay dollars under the currency swap on January 1, 1990, would only agree to pay $8 for Sf10 on December 31, 1990, and $88 for Sf210 on

December 31, 1991, because the exchange rates have moved from $1 = Sf2 to $1 = Sf2.50. Thus, Z requires $2 on December 31, 1990, and $22 on December 31, 1991, to compensate for the amount of dollar payments Z is required to make in exchange for the Swiss francs received on December 31, 1990 and 1991. The present value of $2 on December 31, 1990, and $22 on December 31, 1991, discounted at the rate for U.S. dollar payments of 10% is $20 ($1.82 + $18.18). This amount is discounted at the rate for U.S. dollar payments (i.e., at the historic rate) because the amount of the $23.56 payment received by Z that is attributable to movements in interest rates is computed and amortized separately as provided in the following paragraph.

(vi) Pursuant to paragraph (e)(3)(ii)(B) of this section, Z is required to amortize the portion of the $23.56 payment attributable to movements in interest rates under principles of economic accrual over the term of the currency swap agreement. The amount of the $23.56 payment that is attributable to movements in interest rates (assuming that exchange rates have not changed) is the present value ($3.56) of the excess ($2.00 in 1990 and $2.00 in 1991) of the periodic interim payments Z is required to pay under the currency swap agreement ($10 in 1990 and $10 in 1991) over the amount Z would be required to pay if the currency swap agreement reflected current interest rates on the day Z acquired the swap contract ($8 in 1990 and $8 in 1991) discounted at the appropriate dollar interest rate on January 1, 1990. Thus, under principles of economic accrual (e.g., see section 171 of the Code), Z will include in income $1.72 on December 31, 1990, the amount that, when added to the interest ($.28) on the $3.56 computed at the 8% rate on the date Z acquired the currency swap contract, will equal the $2.00 needed to compensate Z for the movement in interest rates between January 1, 1989, and January 1, 1990. Z also will include in income $1.85 on December 31, 1991, the amount that, when added to the interest ($.15) on the $1.85 (the remaining balance of the $3.56 payment) computed at the 8% rate on the date Z acquired the currency swap contract, will equal the $2.00 needed to compensate Z for the movement in interest rates between January 1, 1990, and January 1, 1991. This amount is computed assuming exchange rates have not changed because the amount attributable to movements in exchange rates is computed and amortized separately under the preceding paragraph.

(6) ***Special effective date for rules regarding currency swaps.*** Paragraph (e)(3) of this section regarding amortization of swap premium or discount in the case of off-market currency swaps shall be effective for transactions entered into after September 21, 1989, unless such swap premium or discount was paid or received pursuant to a binding contract with an unrelated party that was entered into prior to such date. For transactions entered into prior to this date, see Notice 89-21, 1989-8 I.R.B. 23.

(7) ***Special rules for currency swap contracts in hyperinflationary currencies*** —

(i) ***In general.*** If a taxpayer enters into a hyperinflationary currency swap (as defined in paragraph (e)(7)(iv) of this section), then the taxpayer realizes exchange gain or loss for its taxable year with respect to such instrument determined by reference to the change in exchange rates between—

(A) The later of the first day of the taxable year, or the date the instrument was entered into (by the taxpayer); and

(B) The earlier of the last day of the taxable year, or the date the instrument is disposed of or otherwise terminated.

(ii) ***Adjustment to principal or basis.*** Proper adjustments are made in the amount of any gain or loss subsequently realized for gain or loss taken into account by reason of this paragraph (e)(7).

(iii) ***Interaction with DASTM.*** With respect to a qualified business unit that uses the United States dollar approximate separate transactions method of accounting described in § 1.985-3, this paragraph (e)(7) does not apply.

(iv) ***Definition of hyperinflationary currency swap contract.*** A hyperinflationary currency swap contract is a currency swap contract that provides for—

(A) Payments denominated in or determined by reference to a currency that is hyperinflationary (as defined in § 1.988-1(f)) at the time the taxpayer enters into or otherwise acquires the currency swap; or

(B) Payments that are adjusted to take into account the fact that the currency is hyperinflationary (as defined in § 1.988-1(f)) during the current taxable year. A currency swap contract that provides for periodic payments determined by reference to a variable interest rate based on local conditions and generally responding to changes in the local consumer price index is an example of this latter type of currency swap contract.

(v) ***Special effective date for nonfunctional hyperinflationary currency swap contracts.*** This paragraph (e)(7) applies to transactions entered into after February 14, 2000.

(f) ***Substance over form*** —

(1) ***In general.*** If the substance of a transaction described in § 1.988-1(a)(1) differs from its form, the timing, source, and character of gains or losses with respect to such transaction may be recharacterized by the Commissioner in accordance with its substance. For example, if a taxpayer enters into a transaction that it designates a “currency swap contract” that requires the prepayment of all payments to be made or to be received (but not both), the Commissioner may recharacterize the contract as a loan. In applying the substance over form principle, separate transactions may be integrated where appropriate. See also § 1.861-9T(b)(1).

(2) ***Example.*** The following example illustrates the provisions of this paragraph (f).

> *Example.* (i) On January 1, 1990, X, a U.S. corporation with the dollar as its functional currency, enters into a contract with Y under which X will pay Y $100 and Y will pay X LC100 on January 1, 1990, and X will pay Y LC109.3 and Y will pay X $133 on December 31, 1992. On January 1, 1990, the spot exchange rate is LC1 = $1 and the 3 year forward rate is LC1 =

$.8218. X's cash flows are summarized below:

Date	Dollar	LC
1/1/90	(100)	100
12/31/90	0	0
12/31/91	0	0
12/31/92	133	(109.3)

(ii) X and Y designate this contract as a "currency swap." Notwithstanding this designation, for purposes of determining the timing, source, and character with respect to the transaction, the transaction is characterized by the Commissioner in accordance with its substance. Thus, the January 1, 1990, exchange by X of $100 for LC 100 is treated as a spot purchase of LCs by X and the December 31, 1992, exchange by X at 109.3LC for $133 is treated as a forward sale of LCs by X. Under such treatment there would be no tax consequences to X under paragraph (e)(2) of this section in 1990, 1991, and 1992 with respect to this transaction other than the realization of exchange gain or loss on the sale of the LC109.3 on December 31, 1992. Calculation of such gain or loss would be governed by the rules of paragraph (d) of this section.

(g) ***Effective date.*** Except as otherwise provided in this section, this section shall be effective for taxable years beginning after December 31, 1986. Thus, except as otherwise provided in this section, any payments made or received with respect to a section 988 transaction in taxable years beginning after December 31, 1986, are subject to this section.

(h) ***Timing of income and deductions from notional principal contracts.*** Except as otherwise provided (e.g., in § 1.988-5 or § 1.446-3(g)), income or loss from a notional principal contract described in § 1.988-1(a)(2)(iii)(B) (other than a currency swap) is exchange gain or loss. For the rules governing the timing of income and deductions with respect to notional principal contracts, see § 1.446-3. See paragraph (e)(2) of this section with respect to currency swaps.

(i) [Reserved] For further guidance, see § 1.988-2T(i).

[T.D. 8400, 57 FR 9183, Mar. 17, 1992, as amended by T.D. 8491, 58 FR 53135, Oct. 14, 1993; T.D. 8860, 65 FR 2028, Jan. 13, 2000; T.D. 9157, 69 FR 52819, Aug. 30, 2004; T.D. 9795, 81 FR 88879, Dec. 8, 2016; T.D. 9882, 84 FR 69123, Dec. 17, 2019]

§ 1.988-2T Recognition and computation of exchange gain or loss (temporary).

(a) through (b) (15) [Reserved] For further guidance, see § 1.988-2(a) through (b)(15).

(16) *Deferral of loss on certain related-party debt instruments*—(i) *Treatment of creditor.* For rules applicable to a corporation included in a controlled group that is a creditor under a debt instrument see § 1.267(f)-1(e).

(ii) ***Treatment of debtor*** —

(A) ***In general.*** Exchange loss realized under § 1.988-2(b)(4) or (b)(6) is deferred if—

(*1*) The loss is realized by a debtor with respect to a loan from a person that has a relationship to the debtor described in section 267(b) or section 707(b); and

(*2*) The transaction resulting in the realization of exchange loss has as a principal purpose the avoidance of Federal income tax.

(B) ***Recognition of deferred loss.*** Any exchange loss that is deferred under paragraph (b)(16)(ii)(A) of this section is deferred until the end of the term of the loan, determined immediately prior to the transaction.

(17) through (h) [Reserved] For further guidance, see § 1.988-2(b)(17) through (h).

(i) ***Special rules for section 988 transactions of a section 987 QBU.*** For rules regarding section 988 transactions of a section 987 QBU, see § 1.987-3T(b)(4) for section 987 QBUs in general and § 1.987-1T(b)(6) for dollar QBUs.

(j) *Effective/applicability date.* Paragraph (b)(16) of this section applies to any exchange loss realized on or after December 7, 2016. Paragraph (i) of this section applies to taxable years beginning on or after one year after the first day of the first taxable year following December 7, 2016. Notwithstanding the preceding sentence, if a taxpayer makes an election under § 1.987-11(b), then paragraph (i) of this section applies to taxable years to which §§ 1.987-1 through 1.987-10 apply as a result of such election.

(k) *Expiration date.* The applicability of this section expires on December 6, 2019.

[T.D. 9795, 81 FR 88879, Dec. 8, 2016]

§ 1.988-3 Character of exchange gain or loss.

(a) ***In general.*** The character of exchange gain or loss recognized on a section 988 transaction is governed by section 988 and this section. Except as otherwise provided in section 988(c)(1)(E), section 1092, § 1.988-5 and this section, exchange gain or loss realized with respect to a section 988 transaction (including a section 1256 contract that is also a section 988 transaction) shall be characterized as ordinary gain or loss. Accordingly, unless a valid election is made under paragraph (b) of this section, any section providing special rules for capital gain or loss treatment, such as sections 1233, 1234, 1234A, 1236 and 1256(f)(3), shall not apply.

(b) ***Election to characterize exchange gain or loss on certain identified forward contracts, futures contracts and option contracts as capital gain or loss*** —

(1) ***In general.*** Except as provided in paragraph (b)(2) of this section, a taxpayer may elect, subject to the requirements of paragraph (b)(3) of this section, to treat any gain or loss recognized on a contract described in § 1.988-2(d)(1) as capital gain or loss, but only if the contract—

(i) Is a capital asset in the hands of the taxpayer;

(ii) Is not part of a straddle within the meaning of section 1092(c) (without regard to subsections (c)(4) or (e)); and

(iii) Is not a regulated futures contract or nonequity option with respect to which an election under section 988(c)(1)(D)(ii) is in effect.

If a valid election under this paragraph (b) is made with respect to a section 1256 contract, section 1256 shall govern the character of any gain or loss recognized on such contract.

(2) ***Special rule for contracts that become part of a straddle after an election is made.*** If a contract which is the subject of an election under paragraph (b)(1) of this section becomes part of a straddle within the meaning of section 1092(c) (without regard to subsections (c)(4) or (e)) after the date of the election, the election shall be invalid with respect to gains from such contract and the Commissioner, in his sole discretion, may invalidate the election with respect to losses.

(3) ***Requirements for making the election.*** A taxpayer elects to treat gain or loss on a transaction described in paragraph (b)(1) of this section as capital gain or loss by clearly identifying such transaction on its books and records on the date the transaction is entered into. No specific language or account is necessary for identifying a transaction referred to in the preceding sentence. However, the method of identification must be consistently applied and must clearly identify the pertinent transaction as subject to the section 988(a)(1)(B) election. The Commissioner, in his sole discretion, may invalidate any purported election that does not comply with the preceding sentence.

(4) ***Verification.*** A taxpayer that has made an election under § 1.988-3(b)(3) must attach to his income tax return a statement which sets forth the following:

(i) A description and the date of each election made by the taxpayer during the taxpayer's taxable year;

(ii) A statement that each election made during the taxable year was made before the close of the date the transaction was entered into;

(iii) A description of any contract for which an election was in effect and the date such contract expired or was otherwise sold or exchanged during the taxable year;

(iv) A statement that the contract was never part of a straddle as defined in section 1092; and

(v) A statement that all transactions subject to the election are included on the statement attached to the taxpayer's income tax return.

In addition to any penalty that may otherwise apply, the Commissioner, in his sole discretion, may invalidate any or all elections made during the taxable year under § 1.988-3(b)(1) if the taxpayer fails to verify each election as provided in this § 1.988-3(b)(4). The preceding sentence shall not apply if the taxpayer's failure to verify each election was due to reasonable cause or bona fide mistake. The burden of proof to show reasonable cause or bona fide mistake made in good faith is on the taxpayer.

(5) ***Independent verification*** —

(i) ***Effect of independent verification.*** If the taxpayer receives independent verification of the election in paragraph (b)(3) of this section, the taxpayer shall be presumed to have satisfied the requirements of paragraphs (b)(3) and (4) of this section. A contract that is a part of a straddle as defined in section 1092 may not be independently verified and shall be subject to the rules of paragraph (b)(2) of this section.

(ii) ***Requirements for independent verification.*** A taxpayer receives independent verification of the election in paragraph (b)(3) of this section if—

(A) The taxpayer establishes a separate account(s) with an unrelated broker(s) or dealer(s) through which all transactions to be independently verified pursuant to this paragraph (b)(5) are conducted and reported.

(B) Only transactions entered into on or after the date the taxpayer establishes such account may be recorded in the account.

(C) Transactions subject to the election of paragraph (b)(3) of this section are entered into such account on the date such transactions are entered into.

(D) The broker or dealer provides the taxpayer a statement detailing the transactions conducted through such account and includes on such statement the following: "Each transaction identified in this account is subject to the election set forth in section 988(a)(1)(B)."

(iii) ***Special effective date for independent verification.*** The rules of this paragraph (b)(5) shall be effective for transactions entered into after March 17, 1992.

(6) ***Effective date.*** Except as otherwise provided, this paragraph (b) is effective for taxable years beginning on or after September 21, 1989. For prior taxable years, any reasonable contemporaneous election meeting the requirements of section 988(a)(1)(B) shall satisfy this paragraph (b).

(c) ***Exchange gain or loss treated as interest*** —

(1) ***In general.*** Except as provided in this paragraph (c)(1), exchange gain or loss realized on a section 988 transaction shall not be treated as interest income or expense. Exchange gain or loss realized on a section 988 transaction shall be treated as interest income or expense as provided in paragraph (c)(2) of this section with regard to tax exempt bonds, § 1.988-2(e)(2)(ii)(B), § 1.988-5, and in administrative pronouncements. See § 1.861-9T(b), providing rules for the allocation of certain items of exchange gain or loss in the same manner as interest expense.

(2) ***Exchange loss realized by the holder on nonfunctional currency tax exempt bonds.*** Exchange loss realized by the holder of a debt instrument the interest on which is excluded from gross income under section 103(a) or any similar provision of law shall be treated as an offset to and reduce total interest income received or accrued with respect to such instrument. Therefore, to the extent of total interest income, no exchange loss shall be recognized. This paragraph (c)(2) shall be effective with respect to debt instruments acquired on or after June 24, 1987.

(d) ***Effective date.*** Except as otherwise provided in this section, this section shall be effective for taxable years beginning after December 31, 1986. Thus, except as otherwise provided in this section, any payments made or received with respect to a section 988 transaction in taxable years beginning after December 31, 1986, are subject to this section. Thus, for example, a payment made prior to January 1, 1987, under a forward contract that results in the deferral of a loss under section 1092 to a taxable year beginning after December 31, 1986, is not characterized as an ordinary loss by virtue of paragraph (a) of this section because payment was made prior to January 1, 1987.

[T.D. 8400, 57 FR 9197, Mar. 17, 1992]

§ 1.988-4 Source of gain or loss realized on a section 988 transaction.

(a) ***In general.*** Except as otherwise provided in § 1.988-5 and this section, the source of exchange gain or loss shall be determined by reference to the residence of the taxpayer. This rule applies even if the taxpayer has made an election under § 1.988-3(b) to characterize exchange gain or loss as capital gain or loss. This section takes precedence over section 865.

(b) ***Qualified business unit*** —

(1) ***In general.*** The source of exchange gain or loss shall be determined by reference to the residence of the qualified business unit of the taxpayer on whose books the asset, liability, or item of income or expense giving rise to such gain or loss is properly reflected.

(2) ***Proper reflection on the books of the taxpayer or qualified business unit*** —

(i) ***In general.*** For purposes of paragraph (b)(1) of this section, the principles of § 1.987-2(b) apply in determining whether an asset, liability, or item of income, gain, deduction, or loss is reflected on the books and records of a qualified business unit.

(ii) ***Applicability date.*** Generally, paragraph (b)(2)(i) of this section applies to taxable years beginning after December 31, 2024. However, if pursuant to § 1.987-15(b), a taxpayer chooses to apply §§ 1.987-1 through 1.987-15 to a taxable year before the first taxable year described in § 1.987-15(a)(1), then paragraph (b)(2)(i) of this section applies to that taxable year.

(c) ***Effectively connected exchange gain or loss.*** Notwithstanding paragraphs (a) and (b) of this section, exchange gain or loss that under principles similar to those set forth in § 1.864-4(c) arises from the conduct of a United States trade or business shall be sourced in the United States and such gain or loss shall be treated as effectively connected to the conduct of a United States trade or business for purposes of sections 871(b) and 882 (a)(1).

(d) ***Residence*** —

(1) ***In general.*** Except as otherwise provided in this paragraph (d), for purposes of sections 985 through 989, the residence of any person shall be—

(i) In the case of an individual, the country in which such individual's tax home (as defined in section 911(d)(3)) is located;

(ii) In the case of a corporation, partnership, trust or estate which is a United States person (as defined in section 7701(a)(30)), the United States; and

(iii) In the case of a corporation, partnership, trust or estate which is not a United States person, a country other than the United States.

If an individual does not have a tax home (as defined in section 911(d)(3)), the residence of such individual shall be the United States if such individual is a United States citizen or a resident alien and shall be a country other than the United States if such individual is not a United States citizen or resident alien. If the taxpayer is a U.S. person and has no principal place of business outside the United States, the residence of the taxpayer is the United States. Notwithstanding paragraph (d)(1)(ii) of this section, if a partnership is formed or availed of to avoid tax by altering the source of exchange gain or loss, the source of such gain or loss shall be determined by reference to the residence of the partners rather than the partnership.

(2) ***Exception.*** In the case of a qualified business unit of any taxpayer (including an individual), the residence of such unit shall be the country in which the principal place of business of such qualified business unit is located.

(3) ***Partner in a partnership not engaged in a U.S. trade or business under section 864(b)(2).*** The determination of residence shall be made at the partner level (without regard to whether the partnership is a qualified business unit of the partners) in the case of partners in a partnership that are not engaged in a U.S. trade or business by reason of section 864(b)(2).

(e) ***Special rule for certain related party loans*** —

(1) ***In general.*** In the case of a loan by a United States person or a related person to a 10 percent owned foreign corporation, or a corporation that meets the 80 percent foreign business requirements test of section 861(c)(1), other than a corporation subject to § 1.861-11T(e)(2)(i), which is denominated in, or determined by reference to, a currency other than the U.S. dollar and bears interest at a rate at least 10 percentage points higher than the Federal mid-term rate (as determined under section 1274(d)) at the time such loan is entered into, the following rules shall apply—

(i) For purposes of section 904 only, such loan shall be marked to market annually on the earlier of the last business day of the United States person's (or related person's) taxable year or the date the loan matures; and

(ii) Any interest income earned with respect to such loan for the taxable year shall be treated as income from sources within the United States to the extent of any notional loss attributable to such loan under paragraph (d)(1)(i) of this section.

(2) ***United States person.*** For purposes of this paragraph (e), the term “United States person” means a person described in section 7701(a)(30).

(3) ***Loans by related foreign persons*** —

(i) ***In general.*** [Reserved]

(ii) ***Definition of related person.*** For purposes of this paragraph (e), the term “related person” has the meaning given such term by section 954(d)(3) except that such section shall be applied by substituting “United States person” for “controlled foreign corporation” each place such term appears.

(4) ***10 percent owned foreign corporation.*** For purposes of this paragraph (e), the term “10 percent owned foreign corporation” means any foreign corporation in which the United States person owns directly or indirectly (within the meaning of section 318(a)) at least 10 percent of the voting stock.

(f) ***Exchange gain or loss treated as interest under § 1.988-3.*** Notwithstanding the provisions of this section, any gain or loss realized on a section 988 transaction that is treated as interest income or expense under § 1.988-3(c)(1) shall be sourced or allocated and apportioned pursuant to section 861(a)(1), 862(a)(1), or 864(e) as the case may be.

(g) ***Exchange gain or loss allocated in the same manner as interest under § 1.861-9T.*** The allocation and apportionment of exchange gain or loss under § 1.861-9T shall not affect the source of exchange gain or loss for purposes of sections 871(a), 881, 1441, 1442 and 6049.

(h) ***Effective date.*** This section shall be effective for taxable years beginning after December 31, 1986. Thus, any payments made or received with respect to a section 988 transaction in taxable years beginning after December 31, 1986, are subject to this section.

[T.D. 8400, 57 FR 9199, Mar. 17, 1992, as amended by T.D. 9794, 81 FR 88851, Dec. 8, 2016; T.D. 10016, 89 FR 100223, Dec. 11, 2024]

§ 1.988-5 Section 988(d) hedging transactions.

(a) ***Integration of a nonfunctional currency debt instrument and a § 1.988-5(a) hedge*** —

(1) ***In general.*** This paragraph (a) applies to a qualified hedging transaction as defined in this paragraph (a)(1). A qualified hedging transaction is an integrated economic transaction, as provided in paragraph (a)(5) of this section, consisting of a qualifying debt instrument as defined in paragraph (a)(3) of this section and a § 1.988-5(a) hedge as defined in paragraph (a)(4) of this section. If a taxpayer enters into a transaction that is a qualified hedging transaction, no exchange gain or loss is recognized by the taxpayer on the qualifying debt instrument or on the § 1.988-5(a) hedge for the period that either is part of a qualified hedging transaction, and the transactions shall be integrated as provided in paragraph (a)(9) of this section. However, if the qualified hedging transaction results in a synthetic nonfunctional currency denominated debt instrument, such instrument shall be subject to the rules of § 1.988-2(b).

(2) ***Exception.*** This paragraph (a) does not apply with respect to a qualified hedging transaction that creates a synthetic asset or liability denominated in, or determined by reference to, a currency other than the U.S. dollar if the rate that approximates the Federal short-term rate in such currency is at least 20 percentage points higher than the Federal short term rate (determined under section 1274(d)) on the date the taxpayer identifies the transaction as a qualified hedging transaction.

(3) ***Qualifying debt instrument*** —

(i) ***In general.*** A qualifying debt instrument is a debt instrument described in § 1.988-1(a)(2)(i), regardless of whether denominated in, or determined by reference to, nonfunctional currency (including dual currency debt instruments, multi-currency debt instruments and contingent payment debt instruments). A qualifying debt instrument does not include accounts payable, accounts receivable or similar items of expense or income.

(ii) ***Special rule for debt instrument of which all payments are proportionately hedged.*** If a debt instrument satisfies the requirements of paragraph (a)(3)(i) of this section, and all principal and interest payments under the instrument are hedged in the same proportion, then for purposes of this paragraph (a), that portion of the instrument that is hedged is eligible to be treated as a qualifying debt instrument, and the rules of this paragraph (a) shall apply separately to such qualifying debt instrument. See Example 8 in paragraph (a)(9)(iv) of this section.

(4) ***Section 1.988-5(a) hedge*** —

(i) ***In general.*** A § 1.988-5(a) hedge (hereinafter referred to in this paragraph (a) as a “hedge”) is a spot contract, futures contract, forward contract, option contract, notional principal contract, currency swap contract, similar financial instrument, or series or combination thereof, that when integrated with a qualifying debt instrument permits the calculation of a yield to maturity (under principles of section 1272) in the currency in which the synthetic debt instrument is denominated (as determined under paragraph (a)(9)(ii)(A) of this section).

(ii) ***Retroactive application of definition of currency swap contract.*** A taxpayer may apply the definition of currency swap contract set forth in § 1.988-2(e)(2)(ii) in lieu of the definition of swap agreement in section 2(e)(5) of Notice 87-11, 1987-1 C.B. 423 to transactions entered into after December 31, 1986 and before September 21, 1989.

(5) ***Definition of integrated economic transaction.*** A qualifying debt instrument and a hedge are an integrated economic transaction if all of the following requirements are satisfied—

(i) All payments to be made or received under the qualifying debt instrument (or amounts determined by reference to a nonfunctional currency) are fully hedged on the date the taxpayer identifies the transaction under paragraph (a) of this section as a qualified hedging transaction such that a yield to maturity (under principles of section 1272) in the currency in which the synthetic debt instrument is denominated (as determined under paragraph (a)(9)(ii)(A) of this section) can be calculated. Any contingent payment features of the qualifying debt instrument must be fully offset by the hedge such that the synthetic debt instrument is not classified as a contingent payment debt instrument. See Examples 6 and 7 of paragraph (a)(9)(iv) of this section.

(ii) The hedge is identified in accordance with paragraph (a)(8) of this section on or before the date the acquisition of the financial instrument (or instruments) constituting the hedge is settled or closed.

(iii) None of the parties to the hedge are related. The term "related" means the relationships defined in section 267(b) or section 707(b).

(iv) In the case of a qualified business unit with a residence, as defined in section 988(a)(3)(B), outside of the United States, both the qualifying debt instrument and the hedge are properly reflected on the books of such qualified business unit throughout the term of the qualified hedging transaction.

(v) Subject to the limitations of paragraph (a)(5) of this section, both the qualifying debt instrument and the hedge are entered into by the same individual, partnership, trust, estate, or corporation. With respect to a corporation, the same corporation must enter into both the qualifying debt instrument and the hedge whether or not such corporation is a member of an affiliated group of corporations that files a consolidated return.

(vi) With respect to a foreign person engaged in a U.S. trade or business that enters into a qualifying debt instrument or hedge through such trade or business, all items of income and expense associated with the qualifying debt instrument and the hedge (other than interest expense that is subject to § 1.882-5), would have been effectively connected with such U.S. trade or business throughout the term of the qualified hedging transaction had this paragraph (a) not applied.

(6) ***Special rules for legging in and legging out of integrated treatment*** —

(i) ***Legging in.*** "Legging in" to integrated treatment under this paragraph (a) means that a hedge is entered into after the date the qualifying debt instrument is entered into or acquired, and the requirements of this paragraph (a) are satisfied on the date the hedge is entered into ("leg in date"). If a taxpayer legs into integrated treatment, the following rules shall apply—

(A) Exchange gain or loss shall be realized with respect to the qualifying debt instrument determined solely by reference to changes in exchange rates between—

(*1*) The date the instrument was acquired by the holder, or the date the obligor assumed the obligation to make payments under the instrument; and

(*2*) The leg in date.

(B) The recognition of such gain or loss will be deferred until the date the qualifying debt instrument matures or is otherwise disposed of.

(C) The source and character of such gain or loss shall be determined on the leg in date as if the qualifying debt instrument was actually sold or otherwise terminated by the taxpayer.

(ii) ***Legging out.*** With respect to a qualifying debt instrument and hedge that are properly identified as a qualified hedging transaction, "legging out" of integrated treatment under this paragraph (a) means that the taxpayer disposes of or otherwise terminates all or any portion of the qualifying debt instrument or the hedge before maturity of the qualified hedging transaction. For purposes of the preceding sentence, if the taxpayer changes a material term of the qualifying debt instrument (for example, exercises an option to change the interest rate or index, or the maturity date) or the hedge (for example, changes the interest or exchange rates underlying the hedge, or the expiration date) before maturity of the qualified hedging transaction, the taxpayer will be deemed to have disposed of or otherwise terminated all or any portion of the qualifying debt instrument or the hedge, as applicable. A taxpayer that disposes of or terminates a qualified hedging transaction (that is, disposes of or terminates both the qualifying debt instrument and the hedge in their entirety on the same day) is considered to have disposed of or otherwise terminated the synthetic debt instrument rather than legging out. See paragraph (a)(9)(iv) of this section, *Example 10* for an illustration of this rule. If a taxpayer legs out of integrated treatment, the following rules apply:

(A) The transaction will be treated as a qualified hedging transaction during the time the requirements of this paragraph (a) were satisfied.

(B) If all of the instruments comprising the hedge (each such instrument, a component) are disposed of or otherwise terminated, the qualifying debt instrument is treated as sold or otherwise terminated by the taxpayer for its fair market value on the date the hedge is disposed of or otherwise terminated (the leg-out date), and any gain or loss (including gain or loss resulting from factors other than movements in exchange rates) from the identification date to the leg-out date is realized and recognized on the leg-out date. The spot rate on the leg-out date is used to determine exchange gain or loss on the debt instrument for the period beginning on the leg-out date and ending on the date such instrument matures or is disposed of or otherwise terminated. Proper adjustment must be made to reflect any gain or loss taken into account. The netting rule of § 1.988-2(b)(8) applies. See paragraph (a)(9)(iv) of this section, *Example 4* and *Example 5* for an illustration of this rule.

(C) If a hedge has more than one component (and such components have been properly identified as being part of the qualified hedging transaction) and at least one but not all of the components that comprise the hedge has been disposed of or otherwise terminated, or if part of any component of the hedge has been terminated (whether a hedge consists of a single or multiple components), the date such component (or part thereof) is disposed of or terminated is considered the leg-out date and the qualifying debt instrument is treated as sold or otherwise terminated by the taxpayer for its fair market value in accordance with the rules of paragraph (a)(6)(ii)(B) of this section on such leg-out date. In addition, all of the remaining components (or parts thereof) that have not been disposed of or otherwise terminated are treated as sold by the taxpayer for their fair market value on the leg-out date, and any gain or loss from the identification date to the leg-out date is realized and recognized on the leg-out date. To the extent relevant, the spot

rate on the leg-out date is used to determine exchange gain or loss on the remaining components (or parts thereof) for the period beginning on the leg-out date and ending on the date such components (or parts thereof) are disposed of or otherwise terminated. See paragraph (a)(9)(iv) of this section, *Example 11* for an illustration of this rule.

(D) If the qualifying debt instrument is disposed of or otherwise terminated in whole or in part, the date of such disposition or termination is considered the leg-out date. Accordingly, the hedge (including all components making up the hedge in their entirety) that is part of the qualified hedging transaction is treated as sold by the taxpayer for its fair market value on the leg-out date, and any gain or loss from the identification date to the leg-out date is realized and recognized on the leg-out date. To the extent relevant, the spot rate on the leg-out date is used to determine exchange gain or loss on the hedge (including all components thereof) for the period beginning on the leg-out date and ending on the date such hedge is disposed of or otherwise terminated.

(E) Except as provided in paragraph (a)(8)(iii) of this section (regarding identification by the Commissioner), the part of the qualified hedging transaction that has not been disposed of or otherwise terminated (that is, the remaining debt instrument in its entirety even if partially hedged, or the remaining components of the hedge) cannot be part of a qualified hedging transaction for any period after the leg-out date.

(F) If a taxpayer legs out of a qualified hedging transaction and realizes a net gain with respect to the debt instrument that is disposed of or otherwise terminated, then paragraph (a)(6)(ii)(B), (C), and (D) of this section, as appropriate, will not apply if during the period beginning 30 days before the leg-out date and ending 30 days after that date the taxpayer enters into another transaction that, taken together with any remaining components of the hedge, hedges at least 50 percent of the remaining currency flow with respect to the qualifying debt instrument that was part of the qualified hedging transaction or, if appropriate, an equivalent amount under the hedge (or any remaining components thereof) that was part of the qualified hedging transaction. Similarly, in a case in which a hedge has multiple components that are part of a qualified hedging transaction, if the taxpayer legs out of a qualified hedging transaction by terminating one such component or a part of one or more such components and realizes a net gain with respect to the terminated component, components, or portions thereof, then paragraphs (a)(6)(ii)(B), (C), and (D) of this section, as appropriate, will not apply if the remaining components of the hedge (including parts thereof) by themselves hedge at least 50 percent of the remaining currency flow with respect to the qualifying debt instrument that was part of the qualified hedging transaction. See paragraph (a)(9)(iv) of this section, *Example 11* for an illustration of this rule.

(7) ***Transactions part of a straddle.*** At the discretion of the Commissioner, a transaction shall not satisfy the requirements of paragraph (a)(5) of this section if the debt instrument making up the qualified hedging transaction is part of a straddle as defined in section 1092(c) prior to the time the qualified hedging transaction is identified.

(8) ***Identification requirements*** —

(i) ***Identification by the taxpayer.*** A taxpayer must establish a record and before the close of the date the hedge is entered into, the taxpayer must enter into the record for each qualified hedging transaction the following information—

(A) The date the qualifying debt instrument and hedge were entered into;

(B) The date the qualifying debt instrument and the hedge are identified as constituting a qualified hedging transaction;

(C) The amount that must be deferred, if any, under paragraph (a)(6) of this section and the source and character of such deferred amount;

(D) A description of the qualifying debt instrument and the hedge; and

(E) A summary of the cash flow resulting from treating the qualifying debt instrument and the hedge as a qualified hedging transaction.

(ii) ***Identification by trustee on behalf of beneficiary.*** A trustee of a trust that enters into a qualified hedging transaction may satisfy the identification requirements described in paragraph (a)(8)(i) of this section on behalf of a beneficiary of such trust.

(iii) ***Identification by the Commissioner.*** If—

(A) A taxpayer enters into a qualifying debt instrument and a hedge but fails to comply with one or more of the requirements of this paragraph (a), and

(B) On the basis of all the facts and circumstances, the Commissioner concludes that the qualifying debt instrument and the hedge are, in substance, a qualified hedging transaction,

then the Commissioner may treat the qualifying debt instrument and the hedge as a qualified hedging transaction. The Commissioner may identify a qualifying debt instrument and a hedge as a qualified hedging transaction regardless of whether the qualifying debt instrument and the hedge are held by the same taxpayer.

(9) ***Taxation of qualified hedging transactions*** —

(i) ***In general*** —

(A) ***General rule.*** If a transaction constitutes a qualified hedging transaction, the qualifying debt instrument and the hedge are integrated and treated as a single transaction with respect to the taxpayer that has entered into the qualified hedging transaction during the period that the transaction qualifies as a qualified hedging transaction. Neither the qualifying debt instrument nor the hedge that makes up the qualified hedging transaction shall be subject to section 263(g), 1092 or 1256 for the period such transactions are integrated. However, the qualified hedging transaction may be subject to section 263(g) or 1092 if such transaction is part of a straddle.

(B) ***Special rule for income or expense of foreign persons effectively connected with a U.S. trade or business.*** Interest income of a foreign person resulting from a qualified hedging transaction entered into by such foreign person that satisfies the requirements of paragraph (a)(5)(vii) of this section shall be treated as effectively connected with a U.S. trade or business. Interest expense of a foreign person resulting from a qualified hedging transaction entered into by such foreign person that satisfies the requirements of paragraph (a)(5)(vii) of this section shall be allocated and apportioned under § 1.882-5 of the regulations.

(C) ***Special rule for foreign persons that enter into qualified hedging transactions giving rise to U.S. source income not effectively connected with a U.S. trade or business.*** If a foreign person enters into a qualified hedging transaction that gives rise to U.S. source interest income (determined under the source rules for synthetic asset transactions as provided in this section) not effectively connected with a U.S. trade or business of such foreign person, for purposes of sections 871(a), 881, 1441, 1442 and 6049, the provisions of this paragraph (a) shall not apply and such sections of the Internal Revenue Code shall be applied separately to the qualifying debt instrument and the hedge. To the extent relevant to any foreign person, if the requirements of this paragraph (a) are otherwise met, the provisions of this paragraph (a) shall apply for all other purposes of the Internal Revenue Code (*e.g.,* for purposes of calculating the earnings and profits of a controlled foreign corporation that enters into a qualified hedging transaction through a qualified business unit resident outside the United States, income or expense with respect to such qualified hedging transaction shall be calculated under the provisions of this paragraph (a)).

(ii) ***Income tax effects of integration.*** The effect of integrating and treating a transaction as a single transaction is to create a synthetic debt instrument for income tax purposes, which is subject to the original issue discount provisions of sections 1272 through 1288 and 163(e), the terms of which are determined as follows:

(A) ***Denomination of synthetic debt instrument.*** In the case where the qualifying debt instrument is a borrowing, the denomination of the synthetic debt instrument is the same as the currency paid under the terms of the hedge to acquire the currency used to make payments under the qualifying debt instrument. In the case where the qualifying debt instrument is a lending, the denomination of the synthetic debt instrument is the same as the currency received under the terms of the hedge in exchange for amounts received under the qualifying debt instrument. For example, if the hedge is a forward contract to acquire British pounds for dollars, and the qualifying debt instrument is a borrowing denominated in British pounds, the synthetic debt instrument is considered a borrowing in dollars.

(B) ***Term and accrual periods.*** The term of the synthetic debt instrument shall be the period beginning on the identification date and ending on the date the qualifying debt instrument matures or such earlier date that the qualifying debt instrument or hedge is disposed of or otherwise terminated. Unless otherwise clearly indicated by the payment interval under the hedge, the accrual period shall be a six month period which ends on the dates determined under section 1272(a)(5).

(C) ***Issue price.*** The issue price of the synthetic debt instrument is the adjusted issue price of the qualifying debt instrument translated into the currency in which the synthetic debt instrument is denominated at the spot rate on the identification date.

(D) ***Stated redemption price at maturity.*** In the case where the qualifying debt instrument is a borrowing, the stated redemption price at maturity shall be determined under section 1273(a)(2) on the identification date by reference to the amounts to be paid under the hedge to acquire the currency necessary to make interest and principal payments on the qualifying debt instrument. In the case where the qualifying debt instrument is a lending, the stated redemption price at maturity shall be determined under section 1273(a)(2) on

the identification date by reference to the amounts to be received under the hedge in exchange for the interest and principal payments received pursuant to the terms of the qualifying debt instrument.

(iii) ***Source of interest income and allocation of expense.*** Interest income from a synthetic debt instrument described in paragraph (a)(9)(ii) of this section shall be sourced by reference to the source of income under sections 861 (a)(1) and 862(a)(1) of the qualifying debt instrument. The character for purposes of section 904 of interest income from a synthetic debt instrument shall be determined by reference to the character of the interest income from qualifying debt instrument. Interest expense from a synthetic debt instrument described in paragraph (a)(9)(ii) of this section shall be allocated and apportioned under §§ 1.861-8T through 1.861-12T or the successor sections thereof or under § 1.882-5.

(iv) ***Examples.*** The following examples illustrate the application of this paragraph (a)(9).

Example 1. (i) K is a U.S. corporation with the U.S. dollar as its functional currency. On December 24, 1989, K agrees to close the following transaction on December 31, 1989. K will borrow from an unrelated party on December 31, 1989, 100 British pounds (£) for 3 years at a 10 percent rate of interest, payable annually, with no principal payment due until the final installment. K will also enter into a currency swap contract with an unrelated counterparty under the terms of which—
(a) K will swap, on December 31, 1989, the £100 obtained from the borrowing for $100; and

(b) K will exchange dollars for pounds pursuant to the following table in order to obtain the pounds necessary to make payments on the pound borrowing:

Date	U.S. dollars	Pounds
December 31, 1990	8	10
December 31, 1991	8	10
December 31, 1992	108	110

(ii) The interest rate on the borrowing is set and the exchange rates on the swap are fixed on December 24, 1989. On December 31, 1989, K borrows the £100 and swaps such pounds for $100. Assume x has satisfied the identification requirements of paragraph (a)(8) of this section.
(iii) The pound borrowing (which constitutes a qualifying debt instrument under paragraph (a)(3) of this section) and the currency swap contract (which constitutes a hedge under paragraph (a)(4) of this section) are a qualified hedging transaction as defined in paragraph (a)(1) of this section. Accordingly, the pound borrowing and the swap are integrated and treated as one transaction with the following consequences:

(A) The integration of the pound borrowing and the swap results in a synthetic dollar borrowing with an issue price of $100 under section 1273(b)(2).

(B) The total amount of interest and principal of the synthetic dollar borrowing is equal to the dollar payments made by K under the currency swap contract (i.e., $8 in 1990, $8 in 1991, and $108 in 1992).

(C) The stated redemption price at maturity (defined in section 1273(a)(2)) is $100. Because the stated redemption price equals the issue price, there is no OID on the synthetic dollar borrowing.

(D) K may deduct the annual interest payments of $8 under section 163(a) (subject to any limitations on deductibility imposed by other provisions of the Code) according to its regular method of accounting. K has also paid $100 as a return of principal in 1992.

(E) K must allocate and apportion its interest expense with respect to the synthetic dollar borrowing under the rules of §§ 1.861-8T through 1.861-12T.

Example 2. (i) K, a U.S. corporation, has the U.S. dollar as its functional currency. On December 24, 1989, when the spot rate for Swiss francs (Sf) is Sf1 = $1, K enters into a forward contract to purchase Sf100 in exchange for $100.04 for delivery on December 31, 1989. The Sf100 are to be used for the purchase of a franc denominated debt instrument on December 31, 1989. The instrument will have a term of 3 years, an issue price of Sf100, and will bear interest at 6 percent, payable annually, with no repayment of principal until the final installment. On December 24, 1989, K also enters into a series of forward contracts to sell the franc interest and principal payments that will be received under the terms of the franc denominated debt instrument for dollars according to the following schedule:

Date	U.S. dollars	Francs
December 31, 1990	6.12	6
December 31, 1991	6.23	6
December 31, 1992	112.16	106

(ii) On December 31, 1989, K takes delivery of the Sf100 and purchases the franc denominated debt instrument. Assume K satisfies the identification requirements of paragraph (a)(8) of this section. The purchase of the franc debt instrument (which constitutes a qualifying debt instrument under paragraph (a)(3) of this section) and the

series of forward contracts (which constitute a hedge under paragraph (a)(4) of this section) are a qualified hedging transaction under paragraph (a)(1) of this section. Accordingly, the franc debt instrument and all the forward contracts are integrated and treated as one transaction with the following consequences:
(A) The integration of the franc debt instrument and the forward contracts results in a synthetic dollar debt instrument in an amount equal to the dollars exchanged under the forward contract to purchase the francs necessary to acquire the franc debt instrument. Accordingly, the issue price is $100.04 (section 1273(b)(2) of the Code).

(B) The total amount of interest and principal received by K with respect to the synthetic dollar debt instrument is equal to the dollars received under the forward sales contracts (i.e., $6.12 in 1990, $6.23 in 1991, and $112.16 in 1992).

(C) The synthetic dollar debt instrument is an installment obligation and its stated redemption price at maturity is $106.15 (i.e., $6.12 of the payments in 1990, 1991, and 1992 are treated as periodic interest payments under the principles of section 1273). Because the stated redemption price at maturity exceeds the issue price, under section 1273(a)(1) the synthetic dollar debt instrument has OID of $6.11.

(D) The yield to maturity of the synthetic dollar debt instrument is 8.00 percent, compounded annually. Assuming K is a calendar year taxpayer, it must include interest income of $8.00 in 1990 (of which $1.88 constitutes OID), $8.15 in 1991 (of which $2.03 constitutes OID), and $8.32 in 1992 (of which $2.20 constitutes OID). The amount of the final payment received by K in excess of the interest income includible is a return of principal and a payment of previously accrued OID.

(E) The source of the interest income shall be determined by applying sections 861(a)(1) and 862(a)(1) with reference to the franc interest income that would have been received had the transaction not been integrated.

Example 3. (i) K is an accrual method U.S. corporation with the U.S. dollar as its functional currency. On January 1, 1992, K borrows 100 British pounds (£) for 3 years at a 10% rate of interest payable on December 31 of each year with no principal payment due until the final installment. The spot rate on January 1, 1992, is £1 = $1.50. On January 1, 1993, when the spot rate is £1 = $1.60, K enters into a currency swap contract with an unrelated counterparty under the terms of which K will exchange dollars for pounds pursuant to the following table in order to obtain the pounds necessary to make

the remaining payments on the pound borrowing:

Date	U.S. dollars	Pounds
December 31, 1993	12.80	10
December 31, 1994	12.80	10
December 31, 1994	160.00	100

(ii) Assume that British pound interest rates are still 10% and that K properly identifies the pound borrowing and the currency swap contract as a qualified hedging transaction as provided in paragraph (a)(8) of this section. Under paragraph (a)(6)(i) of this section, K must realize exchange gain or loss with respect to the pound borrowing determined solely by reference to changes in exchange rates between January 1, 1992 and January 1, 1993. (Thus, gain or loss from other factors such as movements in interest rates or changes in credit quality of K are not taken into account). Recognition of such gain or loss is deferred until K terminates its pound borrowing. Accordingly, K must defer exchange loss in the amount of $10 [(£100 × 1.50)−(£100 × 1.60)].
(iii) Additionally, the qualified hedging transaction is treated as a synthetic U.S. dollar debt instrument with an issue date of January 1, 1993, and a maturity date of December 31, 1994. The issue price of the synthetic debt instrument is $160 (£100 × 1.60, the spot rate on January 1, 1993) and the total amount of interest and principal is $185.60. The accrual period is the one year period beginning on January 1 and ending December 31 of each year. The stated redemption price at maturity is $160. Thus, K is treated as paying $12.80 of interest in 1993, $12.80 of interest in 1994, and $160 of principal in 1994. The interest expense from the synthetic instrument is allocated and apportioned in accordance with the rules of §§ 1.861-8T through 1.861-12T. Sections 263(g), 1092, and 1256 do not apply to the positions comprising the synthetic dollar borrowing.

Example 4. (i) K is an accrual method U.S. corporation with the U.S. dollar as its functional currency. On January 1, 2013, K borrows 100 British pounds (£) for 3 years at a 10% rate of interest payable on December 31 of each year with no principal payment due until the final installment. The spot rate on January 1, 2013, is £1 = $1.50. Also on January 1, 2013, K enters into a currency swap contract with an unrelated counterparty under the terms of which K will exchange dollars for pounds pursuant to the following table in order to obtain the pounds necessary to make the remaining payments on the

pound borrowing:

Date	U.S. dollars	Pounds
December 31, 2013	12.00	10
December 31, 2014	12.00	10
December 31, 2015	162.00	110

(ii) Assume that K properly identifies the pound borrowing and the currency swap contract as a qualified hedging transaction as provided in paragraph (a)(1) of this section.
(iii) The pound borrowing (which constitutes a qualifying debt instrument under paragraph (a)(3) of this section) and the currency swap contract (which constitutes a hedge under paragraph (a)(4) of this section) are a qualified hedging transaction as defined in paragraph (a)(1) of this section. Accordingly, the pound borrowing and the swap are integrated and treated as one transaction with the following consequences:

(A) The integration of the pound borrowing and the swap results in a synthetic dollar borrowing with an issue price of $150 under section 1273(b)(2).

(B) The total amount of interest and principal of the synthetic dollar borrowing is equal to the dollar payments made by K under the currency swap contract (i.e., $12 in 2013, $12 in 2014, and $162 in 2015).

(C) The stated redemption price at maturity (defined in section 1273(a)(2)) is $150. Because the stated redemption price equals the issue price, there is no OID on the synthetic dollar borrowing.

(D) K may deduct the annual interest payments of $12 under section 163(a) (subject to any limitations on deductibility imposed by other provisions of the Code) according to its regular method of accounting. K has also paid $150 as a return of principal in 2015.

(E) K must allocate and apportion its interest expense from the synthetic instrument under the rules of §§ 1.861-8T through 1.861-12T.

(iv) Assume that on January 1, 2014, the spot exchange rate is £1 = $1.60, interest rates have not changed since January 1, 2013, (accordingly, assume that the market value of K's bond in pounds has not changed) and that K transfers its rights and obligations under the currency swap contract in exchange for $10. Under § 1.988-2(e)(3)(iii), K will include in income as exchange gain $10 on January 1, 2014. Pursuant to paragraph

(a)(6)(ii) of this section, the pound borrowing and the currency swap contract are treated as a qualified hedging transaction for 2013. The loss inherent in the pound borrowing from January 1, 2013, to January 1, 2014, is realized and recognized on January 1, 2014. Such loss is exchange loss in the amount of $10.00 [(£100 × $1.50, the spot rate on January 1, 2013)−(£100 × $1.60, the spot rate on January 1, 2014)]. For purposes of determining exchange gain or loss on the £100 principal amount of the debt instrument for the period January 1, 2014, to December 31, 2015, the spot rate on January 1, 2014 is used rather than the spot rate on the issue date. Thus, assuming that the spot rate on December 31, 2015, the maturity date, is £1 = $1.80, K realizes exchange loss in the amount of $20 [(£100 × $1.60)−(£100 × $1.80)]. Except as provided in paragraph (a)(8)(iii) (regarding identification by the Commissioner), the pound borrowing cannot be part of a qualified hedging transaction for any period subsequent to the leg out date.

Example 5. (i) K, a U.S. corporation, has the U.S. dollar as its functional currency. On January 1, 2013, when the spot rate for Swiss francs (Sf) is Sf1 = $.50, K converts $100 to Sf200 and purchases a franc denominated debt instrument. The instrument has a term of 3 years, an adjusted issue price of Sf200, and will bear interest at 5 percent, payable annually, with no repayment of principal until the final installment. The U.S. dollar interest rate on an equivalent instrument is 8% on January 1, 2013, compounded annually. On January 1, 2013, K also enters into a series of forward contracts to sell the franc interest and principal payments that will be received under the terms of the franc denominated debt instrument for dollars according to the following schedule:

Date	U.S. dollars	Francs
December 31, 2013	5.14	10
December 31, 2014	5.29	10
December 31, 2015	114.26	210

(ii) Assume K satisfies the identification requirements of paragraph (a)(8) of this section. Assume further that on January 1, 2014, the spot exchange rate is Sf1 = U.S.$.5143, the U.S. dollar interest rate is 10%, compounded annually, and the Swiss franc interest rate is the same as on January 1, 2013 (5%, compounded annually). On January 1, 2014, K disposes of the forward contracts that were to mature on December 31, 2014, and December 31, 2015 and incurs a loss of $3.62 (the present value of $.10 with respect to the 2014 contract and $4.27 with respect to the 2015 contract).
(iii) The purchase of the franc debt instrument (which constitutes a qualifying debt instrument under paragraph (a)(3) of this section) and the series of forward contracts (which constitute a hedge under paragraph (a)(4) of this section) are a qualified hedging

transaction under paragraph (a)(1) of this section. Accordingly, the franc debt instrument and all the forward contracts are integrated for the period beginning January 1, 2013, and ending January 1, 2014.

(A) The integration of the franc debt instrument and the forward contracts results in a synthetic dollar debt instrument with an issue price of $100.

(B) The total amount of interest and principal to be received by K with respect to the synthetic dollar debt instrument is equal to the dollars to be received under the forward sales contracts (i.e., $5.14 in 2013, $5.29 in 2014, and $114.26 in 2015).

(C) The synthetic dollar debt instrument is an installment obligation and its stated redemption price at maturity is $109.27 (i.e., $5.14 of the payments in 2013, 2014, and 2015 is treated as periodic interest payments under the principles of section 1273). Because the stated redemption price at maturity exceeds the issue price, under section 1273(a)(1) the synthetic dollar debt instrument has OID of $9.27.

(D) The yield to maturity of the synthetic dollar debt instrument is 8.00 percent, compounded annually. Assuming K is a calendar year taxpayer, it must include interest income of $8.00 in 2013 (of which $2.86 constitutes OID).

(E) The source of the interest income is determined by applying sections 861(a)(1) and 862(a)(1) with reference to the franc interest income that would have been received had the transaction not been integrated.

(iv) Because K disposed of the forward contracts on January 1, 2014, the rules of paragraph (a)(6)(ii) of this section shall apply. Accordingly, the $3.62 loss from the disposition of the forward contracts is realized and recognized on January 1, 2014. Additionally, K is deemed to have sold the franc debt instrument for $102.86, its fair market value in dollars on January 1, 2014. K will compute gain or loss with respect to the deemed sale of the franc debt instrument by subtracting its adjusted basis in the instrument ($102.86—the value of the Sf200 issue price at the spot rate on the identification date plus $2.86 of original issue discount accrued on the synthetic dollar debt instrument for 2013) from the amount realized on the deemed sale of $102.86. Thus K realizes and recognizes no gain or loss from the deemed sale of the debt instrument. The dollar amount used to determine exchange gain or loss with respect to the franc debt instrument is the Sf200 issue price on January 1, 2014, translated into dollars at the spot rate on January 1, 2014, of Sf1 = U.S.$.5143. Except as provided in paragraph (a)(8)(iii) of this section (regarding identification by the Commissioner), the franc borrowing cannot be part of a qualified hedging transaction for any period subsequent to the leg out date.

Example 6. (i) K is a U.S. corporation with the dollar as its functional currency. On January 1, 1992, K issues a debt instrument with the following terms: the issue price is $1,000, the instrument pays interest annually at a rate of 8% on the $1,000 principal amount, the instrument matures on December 31, 1996, and the amount paid at maturity is the greater of zero or $2,000 less the U.S. dollar value (determined on December 31, 1996) of 150,000 Japanese yen.
(ii) Also on January 1, 1992, K enters into the following hedges with respect to the instrument described in the preceding paragraph: a forward contract under which K will sell 150,000 yen for $1,000 on December 31, 1996 (note that this forward rate assumes that interest rates in yen and dollars are equal); and an option contract that expires on December 31, 1996, under which K has the right (but not the obligation) to acquire 150,000 yen for $2,000. K will pay for the option by making payments to the writer of the option equal to $5 each December 31 from 1992 through 1996.

(iii) The net economic effect of these transactions is that K has created a liability with a principal amount and amount paid at maturity of $1,000, with an interest cost of 8.5% (8% on debt instrument, 0.5% option price) compounded annually. For example, if on December 31, 1996, the spot exchange rate is $1 = 100 yen, K pays $500 on the bond [$2,000−(150,000 yen/$100)], and $500 in satisfaction of the forward contract [$1,000−(150,000 yen/$100)]. If instead the spot exchange rate on December 31, 1996 is $1 = 200 yen, K pays $1,250 on the bond [$2,000−(150,000 yen/$200)] and K receives $250 in satisfaction of the forward contract [$1,000−(150,000 yen/$200)]. Finally, if the spot exchange rate on December 31, 1996 is $1 = 50 yen, K pays $0 on the bond [$2,000−(150,000 yen/$50), but the bond holder is not required under the terms of the instrument to pay additional principal]; K exercises the option to buy 150,000 yen for $2,000; and K then delivers the 150,000 yen as required by the forward contract in exchange for $1,000.

(iv) Assume K satisfies the identification requirements of paragraph (a)(8) of this section. The debt instrument described in paragraph (i) of this *Example 6* (which constitutes a qualifying debt instrument under paragraph (a)(3) of this section) and the forward contract and option contract described in paragraph (ii) of this example (which constitute a hedge under paragraph (a)(4) of this section and are collectively referred to hereafter as “the contracts”) together are a qualified hedging transaction under paragraph (a)(1) of this section. Accordingly, with respect to K, the debt instrument and the contracts are integrated, resulting in a synthetic dollar debt instrument with an issue price of $1000, a stated redemption price at maturity of $1000 and a yield to maturity of 8.5% compounded annually (with no original issue discount). K must allocate and apportion its annual interest expense of $85 under the rules of §§ 1.861-8T through 1.861-12T.

Example 7. (i) R is a U.S. corporation with the dollar as its functional currency. On January 1, 1995, R issues a debt instrument with the following terms: the issue price is 504 British pounds (£), the instrument pays interest at a rate of 3.7% (compounded semi-annually) on the £504 principal amount, the instrument matures on December 31, 1999, with a repayment at maturity of the £504 principal plus the proportional gain, if any, in the "Financial Times" 100 Stock Exchange (FTSE) index (determined by the excess of the value of the FTSE index on the maturity date over the value of the FTSE on the issue date, divided by the value of the FTSE index on the issue date, multiplied by the number of FTSE index contracts that could be purchased on the issue date for £504). (ii) Also on January 1, 1995, R enters into a contract with a bank under which on January 1, 1995, R will swap the £504 for $1,000 (at the current spot rate). R will make U.S. dollar payments to the bank equal to 8.15% on the notional principal amount of $1,000 (compounded semi-annually) for the period beginning January 1, 1995 and ending December 31, 1999. R will receive pound payments from the bank equal to 3.7% on the notional principal amount of £504 (compounded semi-annually) for the period beginning January 1, 1995 and ending December 31, 1999. On December 31, 1999, R will swap with the bank $1,000 for £504 plus the proportional gain, if any, in the FTSE index (computed as provided above).

(iii) Economically, both the indexed debt instrument and the hedging contract are hybrid instruments with the following components. The indexed debt instrument is composed of a par pound debt instrument that is assumed to have a 10.85% coupon (compounded semi-annually) plus an embedded FTSE equity index option for which the investor pays a premium of 7.15% (amortized semi-annually) on the pound principal amount. The combined effect is that the premium paid by the investor partially offsets the coupon payments resulting in a return of 3.7% (10.85%−7.15%). Similarly, the dollar payments under the hedging contract to be made by R are computed by multiplying the dollar notional principal amount by an 8.00% rate (compounded semi-annually) which the facts assume would be the rate paid on a conventional currency swap plus a premium of 0.15% (amortized semi-annually) on the dollar notional principal amount for an embedded FTSE equity index option.

(iv) Assume R satisfies the identification requirements of paragraph (a)(8) of this section. The indexed debt instrument described in paragraph (i) of this *Example 7* constitutes a qualifying debt instrument under paragraph (a)(3) of this section. The hedging contract described in paragraph (ii) of this *Example 7* constitutes a hedge under paragraph (a)(4) of this section. Since both the pound exposure of the indexed debt instrument and the exposure to movements of the FTSE embedded in the indexed debt instrument are hedged such that a yield to maturity can be determined in dollars, the transaction satisfies the requirement of paragraph (a)(5)(i) of this section. Assuming the transactions satisfy the other requirements of paragraph (a)(5) of this section, the

indexed debt instrument and hedge are a qualified hedging transaction under paragraph (a)(1) of this section. Accordingly, with respect to R, the debt instrument and the contracts are integrated, resulting in a synthetic dollar debt instrument with an issue price of $1000, a stated redemption price at maturity of $1000 and a yield to maturity of 8.15% compounded semi-annually (with no original issue discount). K must allocate and apportion its interest expense from the synthetic instrument under the rules §§ 1.861-8T through 1.861-12T.

Example 8. (i) K is a U.S. corporation with the U.S. dollar as its functional currency. On December 24, 1992, K agrees to close the following transaction on December 31, 1992. K will borrow from an unrelated party on December 31, 1992, 200 British pounds (£) for 3 years at a 10 percent rate of interest, payable annually, with no principal payment due until the final installment. K will also enter into a currency swap contract with an unrelated counterparty under the terms of which—
(A) K will swap, on December 31, 1992, £100 obtained from the borrowing for $100; and

(B) K will exchange dollars for pounds pursuant to the following table:

Date	U.S. dollars	Pounds
December 31, 1993	8	10
December 31, 1994	8	10
December 31, 1995	108	110

(ii) The interest rate on the borrowing is set and the exchange rates on the swap are fixed on December 24, 1992. On December 31, 1992, K borrows the £200 and swaps £100 for $100. Assume K has satisfied the identification requirements of paragraph (a)(8) of this section.
(iii) The £200 debt instrument satisfies the requirements of paragraph (a)(3)(i) of this section. Because all principal and interest payments under the instrument are hedged in the same proportion (50% of all interest and principal payments are hedged), 50% of the payments under the £200 instrument (principal amount of £100 and annual interest of £10) are treated as a qualifying debt instrument for purposes of paragraph (a) of this section. Thus, the distinct £100 borrowing and the currency swap contract (which constitutes a hedge under paragraph (a)(4) of this section) are a qualified hedging transaction as defined in paragraph (a)(1) of this section. Accordingly, £100 of the pound borrowing and the swap are integrated and treated as one synthetic dollar transaction with the following consequences:

(A) The integration of £100 of the pound borrowing and the swap results in a synthetic dollar borrowing with an issue price of $100 under section 1273(b)(2).

(B) The total amount of interest and principal of the synthetic dollar borrowing is equal to the dollar payments made by K under the currency swap contract (i.e., $8 in 1993, $8 in 1994, and $108 in 1995).

(C) The stated redemption price at maturity (defined in section 1273(a)(2)) is $100. Because the stated redemption price equals the issue price, there is no OID on the synthetic dollar borrowing.

(D) K may deduct the annual interest payments of $8 under section 163(a) (subject to any limitations on deductibility imposed by other provisions of the Code) according to its regular method of accounting. K has also paid $100 as a return of principal in 1995.

(E) K must allocate and apportion its interest expense from the synthetic instrument under the rules of §§ l.861-8T through 1.861-12T.

That portion of the £200 pound debt instrument that is not hedged (*i.e.*, £100) is treated as a separate debt instrument subject to the rules of § 1.988-2 (b) and §§ l.861-8T through 1.861-12T.

Example 9. (i) K is an accrual method U.S. corporation with the U.S. dollar as its functional currency. On January 1, 1992, K borrows 100 British pounds (£) for 3 years at a 10% rate of interest payable on December 31 of each year with no principal payment due until the final installment. On the same day, K enters into a currency swap agreement with an unrelated bank under which K agrees to the following:
(A) On January 1, 1992, K will exchange the £100 borrowed for $150.

(B) For the period beginning January 1, 1992 and ending December 31, 1994, K will pay at the end of each month an amount determined by multiplying $150 by one month LIBOR less 65 basis points and receive from the bank on December 31st of 1992, 1993, and 1994, £10.

(C) On December 31, 1994, K will exchange $150 for £100.

Assume K satisfies the identification requirements of paragraph (a)(8) of this section.

(ii) The pound borrowing (which constitutes a qualifying debt instrument under paragraph (a)(3) of this section) and the currency swap contract (which constitutes a hedge under paragraph (a)(4) of this section) are a qualified hedging transaction as

defined in paragraph (a)(1) of this section. Accordingly, the pound borrowing and the swap are integrated and treated as one transaction with the following consequences:
(A) The integration of the pound borrowing and the swap results in a synthetic dollar borrowing with an issue price of $150 under section 1273(b)(2).

(B) The total amount of interest and principal of the synthetic dollar borrowing is equal to the dollar payments made by K under the currency swap contract.

(C) The stated redemption price at maturity (defined in section 1273(a)(2)) is $150. Because the stated redemption price equals the issue price, there is no OID on the synthetic dollar borrowing.

(D) K may deduct the monthly variable interest payments under section 163(a) (subject to any limitations on deductibility imposed by other provisions of the Code) according to its regular method of accounting. K has also paid $150 as a return of principal in 1994.

(E) K must allocate and apportion its interest expense from the synthetic instrument under the rules of §§ 1.861-8T through 1.861-12T.

Example 10. (i) K is an accrual method U.S. corporation with the U.S. dollar as its functional currency. On January 1, 1992, K loans 100 British pounds (£) for 3 years at a 10% rate of interest payable on December 31 of each year with no principal payment due until the final installment. The spot rate on January 1, 1992, is £1 = $1.50. Also on January 1, 1992, K enters into a currency swap contract with an unrelated counterparty under the terms of which K will exchange pounds for dollars pursuant to the following table:

Date	Pounds	Dollars
December 31, 1992	10	12
December 31, 1993	10	12
December 31, 1994	110	162

(ii) Assume that K properly identifies the pound borrowing and the currency swap contract as a qualified hedging transaction as provided in paragraph (a)(1) of this section.
(iii) The pound loan (which constitutes a qualifying debt instrument under paragraph (a)(3) of this section) and the currency swap contract (which constitutes a hedge under paragraph (a)(4) of this section) are a qualified hedging transaction as defined in paragraph (a)(1) of this section. Accordingly, the pound loan and the swap are integrated and treated as one transaction with the following consequences:

(A) The integration of the pound loan and the swap results in a synthetic dollar loan with an issue price of $150 under section 1273(b)(2).

(B) The total amount of interest and principal of the synthetic dollar loan is equal to the dollar payments received by K under the currency swap contract (i.e., $12 in 1992, $12 in 1993, and $162 in 1994).

(C) The stated redemption price at maturity (defined in section 1273(a)(2)) is $150. Because the stated redemption price equals the issue price, there is no OID on the synthetic dollar loan.

(D) K must include in income as interest $12 in 1992, 1993, and 1994.

(E) The source of the interest income shall be determined by applying sections 861(a)(1) and 862(a)(1) with reference to the pound interest income that would have been received had the transaction not been integrated.

(iv) On January 1, 1993, K transfers both the pound loan and the currency swap to B, its wholly owned U.S. subsidiary, in exchange for B stock in a transfer that satisfies the requirements of section 351. Under paragraph (a)(6) of this section, the transfer of both instruments is not “legging out.” Rather, K is considered to have transferred the synthetic dollar loan to B in a transaction in which gain or loss is not recognized. B's basis in the loan under section 362 is $100.

Example 11. (i) K is a domestic corporation with the U.S. dollar as its functional currency. On January 1, 2013, K borrows 100 British pounds (£) for two years at a 10% rate of interest payable on December 31 of each year with no principal payment due until maturity on December 31, 2014. Assume that the spot rate on January 1, 2013, is £1=$1. On the same date, K enters into two swap contracts with an unrelated counterparty that economically results in the transformation of the fixed rate £100 borrowing to a floating rate dollar borrowing. The terms of the swaps are as follows:
(A) *Swap #1, Currency swap.* On January 1, 2013, K will exchange £100 for $100.

(*1*) On December 31 of both 2013 and 2014, K will exchange $8 for £10;

(*2*) On December 31, 2014, K will exchange $100 for £100.

(B) *Swap #2, Interest rate swap.* On December 31 of both 2013 and 2014, K will pay LIBOR times a notional principal amount of $100 and will receive 8% times the same $100 notional principal amount.

(ii) Assume that K properly identifies the pound borrowing and the swap contracts as a qualified hedging transaction as provided in paragraph (a)(8)(i) of this section and that the other relevant requirements of paragraph (a) of this section are satisfied.

(iii) On January 1, 2014, the spot exchange rate is £1=$2; the U.S. dollar LIBOR rate of interest is 9%; the market value of K's note in pounds has not changed; and K terminates swap #2. Because interest rates have increased from 8% to 9%, K will incur a loss of ($.92) (the present value of the ($1) difference between the 8% and 9% interest payments discounted at the current interest rate of 9%) with respect to the termination of such swap on January 1, 2014. Pursuant to paragraph (a)(6)(ii)(C) of this section, K must

treat swap #1 as having been sold for its fair market value on the leg-out date, which is the date swap #2 is terminated. K must realize and recognize gain of $100.92 (the present value of £110 discounted in pounds to equal £100 × $2 ($200) less the present value of $108 ($99.08)). The loss inherent in the pound borrowing from January 1, 2013 to January 1, 2014 is realized and recognized on January 1, 2014. Such loss is exchange loss in the amount of $100 (the present value of £110 that was to be paid at the end of the year discounted at pound interest rates to equal £100 times the change in exchange rates: (£100 × $1, the spot rate on January 1, 2013)−(£100 × $2, the spot rate on January 1, 2014)). Pursuant to paragraph (a)(6)(ii)(E) of this section, except as provided in paragraph (a)(8)(iii) of this section (regarding identification by the Commissioner), the pound borrowing and currency swap cannot be part of a qualified hedging transaction for any period after the leg-out date.

(iv) Assume the facts are the same as in paragraph (iii) of this *Example* except that on January 1, 2014, the U.S. dollar LIBOR rate of interest is 7% rather than 9%. When K terminates swap #2, K will realize gain of $0.93 (the present value of the ($1) difference between the 8% and 7% interest payments discounted at the current interest rate of 7%) received with respect to the termination on January 1, 2014. Fifty percent or more of the remaining pound cash flow of the pound borrowing remains hedged after the termination of swap #2. Accordingly, under paragraph (a)(6)(ii)(F) of this section, paragraphs (a)(6)(ii)(B) and (C) of this section do not apply, and the gain on swap #1 and the loss on the qualifying debt instrument are not taken into account. Thus, K will include in income $0.93 realized from the termination of swap #2.

(10) ***Transition rules and effective dates for certain provisions*** —

(i) ***Coordination with Notice 87-11.*** Any transaction entered into prior to September 21, 1989, which satisfied the requirements of Notice 87-11, 1987-1 C.B. 423, shall be deemed to satisfy the requirements of paragraph (a) of this section.

(ii) ***Prospective application to contingent payment debt instruments.*** In the case of a contingent payment debt instrument, the definition of qualifying debt instrument set forth in paragraph (a)(3)(i) of this section applies to transactions entered into after March 17, 1992.

(iii) ***Prospective application of partial hedging rule.*** Paragraph (a)(3)(ii) of this section is effective for transactions entered into after March 17, 1992.

(iv) ***Effective/applicability dates for legging in and legging out rules.***

(A) The rules of paragraph (a)(6)(i) of this section are effective for qualified hedging transactions that are legged into after March 17, 1992.

(B) The rules of paragraph (a)(6)(ii) and *Example 11* of paragraph (a)(9)(iv) of this section apply to leg-outs that occur on or after September 6, 2012.

(b) ***Hedged executory contracts*** —

(1) ***In general.*** If the taxpayer enters into a hedged executory contract as defined in paragraph (b)(2) of this section, the executory contract and the hedge shall be integrated as provided in paragraph (b)(4) of this section.

(2) ***Definitions*** —

(i) ***Hedged executory contract.*** A hedged executory contract is an executory contract as defined in paragraph (b)(2)(ii) of this section that is the subject of a hedge as defined in paragraph (b)(2)(iii) of this section, provided that the following requirements are satisfied—

(A) The executory contract and the hedge are identified as a hedged executory contract as provided in paragraph (b)(3) of this section.

(B) The hedge is entered into (*i.e.,* settled or closed, or in the case of nonfunctional currency deposited in an account with a bank or other financial institution, such currency is acquired and deposited) on or after the date the executory contract is entered into and before the accrual date as defined in paragraph (b)(2)(iv) of this section.

(C) The executory contract is hedged in whole or in part throughout the period beginning with the date the hedge is identified in accordance with paragraph (b)(3) of this section and ending on or after the accrual date.

(D) None of the parties to the hedge are related. The term related means the relationships defined in section 267(b) and section 707(c)(1).

(E) In the case of a qualified business unit with a residence, as defined in section 988(a)(3)(B), outside of the United States, both the executory contract and the hedge are properly reflected on the books of the same qualified business unit.

(F) Subject to the limitations of paragraph (b)(2)(i)(E) of this section, both the executory contract and the hedge are entered into by the same individual, partnership, trust, estate, or corporation. With respect to a corporation, the same corporation must enter into both the executory contract and the hedge whether or not such corporation is a member of an affiliated group of corporations that files a consolidated return.

(G) With respect to a foreign person engaged in a U.S. trade or business that enters into an executory contract or hedge through such trade or business, all items of income and expense associated with the executory contract and the hedge would have been effectively connected with such U.S. trade or business throughout the term of the hedged executory contract had this paragraph (b) not applied.

(ii) ***Executory contract*** —

(A) ***In general.*** Except as provided in paragraph (b)(2)(ii)(B) of this section, an executory contract is an agreement entered into before the accrual date to pay nonfunctional currency (or an amount determined with reference thereto) in the future with respect to the purchase of property used in the ordinary course of the taxpayer's business, or the acquisition of a service (or services), in the future, or to receive nonfunctional currency (or an amount determined with reference thereto) in the future with respect to the sale of property used or held for sale in the ordinary course of the taxpayer's business, or the performance of a service (or services), in the future. Notwithstanding the preceding sentence, a contract to buy or sell stock shall be considered an executory contract. (Thus, for example, a contract to sell stock of an affiliate is an executory contract for this purpose.) On the accrual date, such agreement ceases to be considered an executory contract and is treated as an account payable or receivable.

(B) ***Exceptions.*** An executory contract does not include a section 988 transaction. For example, a forward contract to purchase nonfunctional currency is not an executory contract. An executory contract also does not include a transaction described in paragraph (c) of this section.

(C) ***Effective date for contracts to buy or sell stock.*** That part of paragraph (b)(2)(ii)(A) of this section which provides that a contract to buy or sell stock shall be considered an executory contract applies to contracts to buy or sell stock entered into on or after March 17, 1992.

(iii) ***Hedge*** —

(A) ***In general.*** For purposes of this paragraph (b), the term hedge means a deposit of nonfunctional currency in a hedging account (as defined paragraph (b)(3)(iii)(D) of this section), a forward or futures contract described in § 1.988-1(a)(1)(ii) and (2)(iii), or combination thereof, which reduces the risk of exchange rate fluctuations by reference to the taxpayer's functional currency with respect to nonfunctional currency payments made or received under an executory contract. The term hedge also includes an option contract described in § 1.988-1(a)(1)(ii) and (2)(iii), but only if the option's expiration date is on or before the accrual date. The premium paid for an option that lapses shall be integrated with the executory contract.

(B) ***Special rule for series of hedges.*** A series of hedges as defined in paragraph (b)(3)(iii)(A) of this section shall be considered a hedge if the executory contract is hedged in whole or in part throughout the period beginning with the date the hedge is identified in accordance with paragraph (b)(3)(i) of this section and ending on or after the accrual date. A taxpayer that enters into a series of hedges will be deemed to have satisfied the preceding sentence if the hedge that succeeds a hedge that has been terminated is entered into no later than the business day following such termination.

(C) ***Special rules for historical rate rollovers*** —

(*1*) ***Definition.*** A historical rate rollover is an extension of the maturity date of a forward contract where the new forward rate is adjusted on the rollover date to reflect the taxpayer's gain or loss on the contract as of the rollover date plus the time value of such gain or loss through the new maturity date.

(*2*) ***Certain historical rate rollovers considered a hedge.*** A historical rate rollover is considered a hedge if the rollover date is before the accrual date.

(*3*) ***Treatment of time value component of certain historical rate rollovers that are hedges.*** Interest income or expense determined under § 1.988-2(d)(2)(v) with respect to a historical rate rollover shall be considered part of a hedge if the period beginning on the first date a hedging contract is rolled over and ending on the date payment is made or received under the executory contract does not exceed 183 days. Such interest income or expense shall not be recognized and shall be an adjustment to the income from, or expense of, the services performed or received under the executory contract, or to the amount realized or basis of the property sold or purchased under the executory contract. For the treatment of such interest income or expense that is not considered part of a hedge, see § 1.988-2(d)(2)(v).

(D) ***Special rules regarding deposits of nonfunctional currency in a hedging account.*** A hedging account is an account with a bank or other financial institution used exclusively for deposits of nonfunctional currency used to hedge executory contracts. For purposes of determining the basis of units in such account that comprise the hedge, only those units in the account as of the accrual date shall be taken into consideration. A taxpayer may adopt any reasonable convention (consistently applied to all hedging accounts) to determine which units comprise the hedge as of the accrual date and the basis of the units as of such date.

(E) ***Interest income on deposit of nonfunctional currency in a hedging account.*** Interest income on a deposit of nonfunctional currency in a hedging account may be taken into account for purposes of determining the amount of a hedge if such interest is accrued on or before the accrual date. However, such interest income shall be included in income as provided in section 61. For example, if a taxpayer with the dollar as its functional currency enters into an executory contract for the purchase and delivery of a machine in one year for 100 British pounds (£), and on such date deposits £90.91 in a properly identified bank account that bears interest at the rate of 10%, the interest that accrues prior to the accrual date shall be included in income and may be considered a hedge.

(iv) ***Accrual date.*** The accrual date is the date when the item of income or expense (including a capital expenditure) that relates to an executory contract is required to be accrued under the taxpayer's method of accounting.

(v) ***Payment date.*** The payment date is the date when payment is made or received with respect to an executory contract or the subsequent corresponding account payable or receivable.

(3) ***Identification rules*** —

(i) ***Identification by the taxpayer.*** A taxpayer must establish a record and before the close of the date the hedge is entered into, the taxpayer must enter into the record a clear description of the executory contract and the hedge and indicate that the transaction is being identified in accordance with paragraph (b)(3) of this section.

(ii) ***Identification by the Commissioner.*** If a taxpayer enters into an executory contract and a hedge but fails to satisfy one or more of the requirements of paragraph (b) of this section and, based on the facts and circumstances, the Commissioner concludes that the executory contract in substance is hedged, then the Commissioner may apply the provisions of paragraph (b) of this section as if the taxpayer had satisfied all of the requirements therein, and may make appropriate adjustments. The Commissioner may apply the provisions of paragraph (b) of this section regardless of whether the executory contract and the hedge are held by the same taxpayer.

(4) ***Effect of hedged executory contract*** —

(i) ***In general.*** If a taxpayer enters into a hedged executory contract, amounts paid or received under the hedge by the taxpayer are treated as paid or received by the taxpayer under the executory contract, or any subsequent account payable or receivable, or that portion to which the hedge relates. Also, the taxpayer recognizes no exchange gain or loss on the hedge. If an executory contract, on the accrual date, becomes an account payable or receivable, the taxpayer recognizes no exchange gain or loss on such payable or receivable for the period covered by the hedge.

(ii) ***Partially hedged executory contracts.*** The effect of integrating an executory contract and a hedge that partially hedges such contract is to treat the amounts paid or received under the hedge as paid or received under the portion of the executory contract being hedged, or any subsequent account payable or receivable. The income or expense of services performed or received under the executory contract, or the amount realized or basis of property sold or purchased under the executory contract, that is attributable to that portion of the executory contract that is not hedged shall be translated into functional currency on the accrual date. Exchange gain or loss shall be realized when payment is made or received with respect to any payable or receivable arising on the accrual date with respect to such unhedged amount.

(iii) ***Disposition of a hedge or executory contract prior to the accrual date*** —

(A) ***In general.*** If a taxpayer identifies an executory contract as part of a hedged executory contract as defined in paragraph (b)(2) of this section, and disposes of (or otherwise terminates) the executory contract prior to the accrual date, the hedge shall be treated as sold for its fair market value on the date the executory contract is disposed of and any gain or loss shall be realized and recognized on such date. Such gain or loss shall be an adjustment to the amount received or expended with respect to the disposition or termination, if any. The spot rate on the date the hedge is treated as sold shall be used to determine subsequent exchange gain or loss on the hedge. If a taxpayer identifies a hedge as part of a hedged executory contract as defined in paragraph (b)(2) of this section, and disposes of the hedge prior to the accrual date, any gain or loss realized on such disposition shall not be recognized and shall be an adjustment to the income from, or expense of, the services performed or received under the executory contract, or to the amount realized or basis of the property sold or purchased under the executory contract.

(B) ***Certain events in a series of hedges treated as a termination of the hedged executory contract.*** If the rules of paragraph (b)(2)(iii)(B) of this section are not satisfied, the hedged executory contract shall be terminated and the provisions of paragraph (b)(4)(iii)(A) of this section shall apply to any gain or loss previously realized with respect to such hedge. Any subsequent hedging contracts entered into to reduce the risk of exchange rate movements with respect to such executory contract shall not be considered a hedge as defined in paragraph (b)(2)(iii) of this section.

(C) ***Executory contracts between related persons.*** If an executory contract is between related persons as defined in sections 267(b) and 707(b), and the taxpayer disposes of the hedge or terminates the executory contract prior to the accrual date, the Commissioner may redetermine the timing, source, and character of gain or loss from the hedge or the executory contract if he determines that a significant purpose for disposing of the hedge or terminating the executory contract prior to the accrual date was to affect the timing, source, or character of income, gain, expense, or loss for Federal income tax purposes.

(iv) ***Disposition of a hedge on or after the accrual date.*** If a taxpayer identifies a hedge as part of a hedged executory contract as defined in paragraph (b)(2) of this section, and disposes of the hedge on or after the accrual date, no gain or loss is recognized on the hedge and the booking date as defined in § 1.988-2(c)(2) of the payable or receivable for purposes of computing exchange gain or loss shall be the date such hedge is disposed of. See *Example 3* of paragraph (b)(4)(iv) of this section.

(v) ***Sections 263(g), 1092, and 1256 do not apply.*** Sections 263(g), 1092, and 1256 do not apply with respect to an executory contract or hedge which comprise a hedged executory contract as defined in paragraph (b)(2) of this section. However, sections 263(g), 1092 and 1256 may apply to the hedged executory contract if such transaction is part of a straddle.

(vi) ***Examples.*** The principles set forth in paragraph (b) of this section are illustrated in the following examples. The examples assume that K is an accrual method, calendar year U.S. corporation with the dollar as its functional currency.

> *Example 1.* (i) On January 1, 1992, K enters into a contract with JPF, a Swiss machine manufacturer, to pay 500,000 Swiss francs for delivery of a machine on June 1, 1993. Also on January 1, 1992, K enters into a foreign currency forward agreement to purchase 500,000 Swiss francs for $250,000 for delivery on June 1, 1993. K properly identifies the executory contract and the hedge in accordance with paragraph (b)(3)(i) of this section. On June 1, 1993, K takes delivery of the 500,000 Swiss francs (in exchange for $250,000) under the forward contract and makes payment of 500,000 Swiss francs to JPF in exchange for the machine. Assume that the accrual date is June 1, 1993.
> (ii) Under paragraph (b)(1) of this section, the hedge is integrated with the executory contract. Therefore, K is deemed to have paid $250,000 for the machine and there is no exchange gain or loss on the foreign currency forward contract. K's basis in the machine is $250,000. Section 1256 does not apply to the forward contract.

> *Example 2.* (i) On January 1, 1992, K enters into a contract with S, a Swiss machine manufacturer, to pay 500,000 Swiss francs for delivery of a machine on June 1, 1993. Under the contract, K is not obligated to pay for the machine until September 1, 1993. On February 1, 1992, K enters into a foreign currency forward agreement to purchase 500,000 Swiss francs for $250,000 for delivery on September 1, 1993. K properly identifies the executory contract and the hedge in accordance with paragraph (b)(3) of this section. On June 1, 1993, K takes delivery of machine. Assume that under K's method of accounting the delivery date is the accrual date. On September 1, 1993, K takes delivery of the 500,000 Swiss francs (in exchange for $250,000) under the forward contract and makes payment of 500,000 Swiss francs to S.
> (ii) Under paragraph (b)(1) of this section, the hedge is integrated with the executory contract. Therefore K is deemed to have paid $250,000 for the machine and there is no exchange gain or loss on the foreign currency forward contract. Thus K's basis in the machine is $250,000. In addition, no exchange gain or loss is recognized on the payable in existence from June 1, 1993, to September 1, 1993. Section 1256 does not apply to the forward contract.

Example 3. The facts are the same as in *Example 2* except that K disposed of the forward contract on August 1, 1993 for $10,000. Pursuant to paragraph (b)(4)(iv) of this section, K does not recognize the $10,000 gain. K's basis in the machine is $250,000 (the amount fixed by the forward contract), regardless of the amount in dollars that K actually pays to

acquire the Sf500,000 when K pays for the machine. K has a payable with a booking date of August 1, 1993, payable on September 1, 1993 for 500,000 Swiss francs. Thus, K will realize exchange gain or loss on the difference between the amount booked on August 1, 1993 and the amount paid on September 1, 1993 under § 1.988-2(c).

Example 4. (i) On January 1, 1992, K enters into a contract with S, a Swiss machine repair firm, to pay 500,000 Swiss francs for repairs to be performed on June 1, 1992. Under the contract, K is not obligated to pay for the repairs until September 1, 1992. On February 1, 1992, K enters into a foreign currency forward agreement to purchase 500,000 Swiss francs for $250,000 for delivery on August 1, 1992. K properly identifies the executory contract and the hedge in accordance with paragraph (b)(3) of this section. On June 1, 1992, S performs the repair services. Assume that under K's method of accounting this date is the accrual date. On August 1, 1992, K takes delivery of the 500,000 Swiss francs (in exchange for $250,000) under the forward contract. On the same day, K deposits the Sf500,000 in a separate account with a bank and properly identifies the transaction as a continuation of the hedged executory contract. On September 1, 1992, K makes payment of the Sf500,000 in the account to S.
(ii) Under paragraph (b)(1) of this section, the hedge is integrated with the executory contract. Therefore K is deemed to have paid $250,000 for the services and there is no exchange gain or loss on the foreign currency forward contract or on the disposition of Sf500,000 in the account. Any interest on the Swiss francs in the account is included in income but is not considered part of the hedge (because the amount paid for the services must be set on or before the accrual date). In addition, no exchange gain or loss is recognized on the payable in existence from June 1, 1992, to September 1, 1992. Section 1256 does not apply to the forward contract.

Example 5. (i) On January 1, 1992, K enters into a contract with S, a Swiss machine manufacturer, to pay 500,000 Swiss francs for delivery of a machine on June 1, 1993. Under the contract, K is not obligated to pay for the machine until September 1, 1993. On February 1, 1992, K enters into a foreign currency forward agreement to purchase 250,000 Swiss francs for $125,000 for delivery on September 1, 1993. K properly identifies the executory contract and the hedge in accordance with paragraph (b)(3) of this section. On June 1, 1993, K takes delivery of the machine. Assume that under K's method of accounting the delivery date is the accrual date. Assume further that the exchange rate is Sf1 = $.50 on June 1, 1993. On August 30, 1993, K purchases Sf250,000 for $135,000. On September 1, 1993, K takes delivery of the 250,000 Swiss francs (in exchange for $125,000) under the forward contract and makes payment of 500,000 Swiss francs (the Sf250,000 received under the contract plus the Sf250,000 purchased on August 30, 1993) to S. Assume the spot rate on September 1, 1993, is 1 Sf = $.5420 (Sf250,000

equal $135,500).
(ii) Under paragraph (b)(1) of this section, the partial hedge is integrated with the executory contract. K is deemed to have paid $250,000 for the machine [$125,000 on the hedged portion of the Sf500,000 and $125,000 ($.50, the spot rate on June 1, 1993, times Sf250,000) on the unhedged portion of the Sf500,000]. K's basis in the machine therefore is $250,000. K recognizes no exchange gain or loss on the foreign currency forward contract but K will realize exchange gain of $500 on the disposition of the Sf250,000 purchased on August 30, 1993 under § 1.988-2(a). In addition, exchange loss is realized on the unhedged portion of the payable in existence from June 1, 1993, to September 1, 1993. Thus, K will realize exchange loss of $10,500 ($125,000 booked less $135,500 paid) under § 1.988-2(c) on the payable. Section 1256 does not apply to the forward contract.

Example 6. (i) On January 1, 1990, K enters into a contract with S, a Swiss steel manufacturer, to buy steel for 1,000,000 Swiss francs (Sf) for delivery and payment on December 31, 1990. On January 1, 1990, the spot rate is Sf1 = $.50, the U.S. dollar interest rate is 10% compounded annually, and the Swiss franc rate is 5% compounded annually. Under K's method of accounting, the delivery date is the accrual date.
(ii) Assume that on January 1, 1990, K enters into a foreign currency forward contract to buy Sf1,000,000 for $523,800 for delivery on December 31, 1990. K properly identifies the executory contract and the hedge in accordance with paragraph (b)(3) of this section. Pursuant to paragraph (b)(2)(iii) of this section, the forward contract constitutes a hedge. Assuming that the requirements of paragraph (b)(2)(i) of this section are satisfied, the executory contract to buy steel and the forward contract are integrated under paragraph (b)(1) of this section. Thus, K is deemed to have paid $523,800 for the steel and will have a basis in the steel of $523,800. No gain or loss is realized with respect to the forward contract and section 1256 does not apply to such contract.

(iii) Assume instead that on January 1, 1990, K enters into a foreign currency forward contract to buy Sf1,000,000 for $512,200 for delivery on July 1, 1990. K properly identifies the executory contract and the hedge in accordance with paragraph (b)(3) of this section. On July 1, 1990, when the spot rate is Sf1 = $.53, K cancels the forward contract in exchange for $17,800 ($530,000−$512,200). On July 1, 1990, K enters into a second forward agreement to buy Sf1,000,000 for $542,900 for delivery on December 31, 1990. K properly identifies the second forward agreement as a hedge in accordance with paragraph (b)(3) of this section. Pursuant to paragraph (b)(2)(iii) of this section, the forward contract entered into on January 1, 1990, and the forward contract entered into on July 1, 1990, constitute a hedge. Assuming that the requirements of paragraph (b)(2)(i) of this section are

satisfied, the executory contract to buy steel and the forward agreements are integrated under paragraph (b)(1) of this section. Thus, K is deemed to have paid $525,100 for the steel (the forward price in the second forward agreement of $542,900 less the gain on the first forward agreement of $17,800) and will have a basis in the steel of $525,100. No gain is realized with respect to the forward contracts and section 1256 does not apply to such contracts.

(iv) Assume instead that on January 1, 1990, K enters into a foreign currency forward contract to buy Sf1,000,000 for $512,200 for delivery on July 1, 1990. K properly identifies the executory contract and the hedge in accordance with paragraph (b)(3) of this section. On July 1, 1990, when the spot rate is Sf1 = $.53, K enters into a historical rate rollover of its $17,800 gain ($530,000−$512,200) on the forward agreement. Thus, K enters into a second foreign currency forward agreement to buy Sf1,000,000 for $524,210 for delivery on December 31, 1990. (The forward price of $524,210 is the market forward price on July 1, 1990, for the purchase of Sf1,000,000 for delivery on December 31, 1990, of $542,900 less the $17,800 gain on January 1, 1990, contract and less the time value of such gain of $890.) K properly identifies the second forward agreement as a hedge in accordance with paragraph (b)(3) of this section. On December 31, 1990, when the spot rate is Sf1 = $.54, K takes delivery of the Sf1,000,000 (in exchange for $524,210) and purchases the steel for Sf1,000,000. Pursuant to paragraph (b)(2)(iii) of this section, the forward contract entered into on January 1, 1990, and the forward contract entered into on July 1, 1990, which incorporates the rollover of K's gain on the January 1, 1990, contract, constitute a hedge. Assuming that the requirements of paragraph (b)(2)(i) of this section are satisfied, the executory contract to buy steel and the forward agreements are integrated under paragraph (b)(1) of this section. Because the period from the rollover date to the date payment is made under the executory contract does not exceed 183 days, the $890 of interest income is considered part of the hedge and is not recognized. Thus, K is deemed to have paid $524,210 for the steel and will have a basis in the steel of $524,210. No gain is realized with respect to the forward contracts and section 1256 does not apply to such contracts.

(v) Assume instead that on January 1, 1990, K purchases Sf952,380.95 (the present value of Sf1,000,000 to be paid on December 31, 1990) for $476,190.48 and on the same day deposits the Swiss francs in a separate bank account that bears interest at a rate of 5%, compounded annually. K properly identifies the transaction as a hedged executory contract. Over the period beginning January 1, 1990, and ending December 31, 1990, K receives Sf47,619.05 in interest on the account that is included in income and that has a basis of $25,714.29. (Assume that under § 1.988-2(b)(1), K uses the spot rate of Sf1 = $.54 to translate the interest income).

> On December 31, 1990, K makes payment of the Sf1,000,000 principal and accrued interest in the account to S. Pursuant to paragraph (b)(2)(iii) of this section, the principal in the bank account and the interest constitute a hedge. Under paragraph (b)(1) of this section, the hedge is integrated with the executory contract. Therefore K is deemed to have paid $501,904.77 (the basis of the principal deposited plus the basis of the interest) for the steel and there is no exchange gain or loss on the disposition of the Sf1,000,000. K's basis in the steel therefore is $501,904.77.

(5) ***References to this paragraph (b).*** If the rules of this paragraph (b) are referred to in another paragraph of this section (*e.g.,* paragraph (c) of this section), then the rules of this paragraph (b) shall be applied for purposes of such other paragraph by substituting terms appropriate for such other paragraph. For example, paragraph (c)(2) of this section refers to the identification rules of paragraph (b)(3) of this section. Accordingly, for purposes of paragraph (c)(2), the rules of paragraph (b)(3) will be applied by substituting the term “stock or security” for “executory contract”.

(c) ***Hedges of period between trade date and settlement date on purchase or sale of publicly traded stock or security.*** If a taxpayer purchases or sells stocks or securities which are traded on an established securities market and—

(1) Hedges all or part of such purchase or sale for any part of the period beginning on the trade date and ending on the settlement date; and

(2) Identifies the hedge and the underlying stock or securities as an integrated transaction under the rules of paragraph (b)(3) of this section;

then any gain or loss on the hedge shall be an adjustment to the amount realized or the adjusted basis of the stock or securities sold or purchased (and shall not be taken into account as exchange gain or loss). The term hedge means a deposit of nonfunctional currency in a hedging account (within the meaning of paragraph (b)(2)(iii)(D) of this section), or a forward or futures contract described in § 1.988-1(a)(1)(ii) and (2)(iii), or combination thereof, which reduces the risk of exchange rate fluctuations for any portion of the period beginning on the trade date and ending on the settlement date. The provisions of paragraphs (b)(2)(i)(D) through (G), and (b)(2)(iii)(D) and (E) of this section shall apply. Sections 263(g), 1092, and 1256 do not apply with respect to stock or securities and a hedge which are subject to this paragraph (c).

(d) [Reserved]

(e) ***Advance rulings regarding net hedging and anticipatory hedging systems.*** In his sole discretion, the Commissioner may issue an advance ruling addressing the income tax consequences of a taxpayer's system of hedging either its net nonfunctional currency exposure or anticipated nonfunctional currency exposure. The ruling may address the character, source, and timing of both the section 988 transaction(s) making up the hedge and the underlying transactions being hedged. The procedures for obtaining a ruling shall be governed by such pertinent revenue procedures and revenue rulings as the Commissioner may provide. The Commissioner will not issue a ruling regarding hedges of a taxpayer's investment in a foreign subsidiary.

(f) [Reserved]

(g) ***General effective date.*** Except as otherwise provided in this section, the rules of this section shall apply to qualified hedging transactions, hedged executory contracts and transactions described in paragraph (c) of this section entered into on or after September 21, 1989. This section shall apply even if the

transaction being hedged (*e.g.*, the debt instrument) was entered into or acquired prior to such date. The effective date regarding advance rulings for net and anticipatory hedging shall be governed by such revenue procedures that the Commissioner may publish.

[T.D. 8400, 57 FR 9199, Mar. 17, 1992, as amended at T.D. 9598, 77 FR 54809, Sept. 6, 2012; T.D. 9736, 80 FR 53733, 53735, Sept. 8, 2015]

§ 1.988-6 Nonfunctional currency contingent payment debt instruments.

(a) ***In general*** —

(1) ***Scope.*** This section determines the accrual of interest and the amount, timing, source, and character of any gain or loss on nonfunctional currency contingent payment debt instruments described in this paragraph (a)(1) and to which § 1.1275-4(a) would otherwise apply if the debt instrument were denominated in the taxpayer's functional currency. Except as provided by the rules in this section, the rules in § 1.1275-4 (relating to contingent payment debt instruments) apply to the following instruments—

(i) A debt instrument described in § 1.1275-4(b)(1) for which all payments of principal and interest are denominated in, or determined by reference to, a single nonfunctional currency and which has one or more non-currency related contingencies;

(ii) A debt instrument described in § 1.1275-4(b)(1) for which payments of principal or interest are denominated in, or determined by reference to, more than one currency and which has no non-currency related contingencies;

(iii) A debt instrument described in § 1.1275-4(b)(1) for which payments of principal or interest are denominated in, or determined by reference to, more than one currency and which has one or more non-currency related contingencies; and

(iv) A debt instrument otherwise described in paragraph (a)(1)(i), (ii) or (iii) of this section, except that the debt instrument is described in § 1.1275-4(c)(1) rather than § 1.1275-4(b)(1) (*e.g.*, the instrument is issued for non-publicly traded property).

(2) ***Exception for hyperinflationary currencies*** —

(i) ***In general.*** Except as provided in paragraph (a)(2)(ii) of this section, this section shall not apply to an instrument described in paragraph (a)(1) of this section if any payment made under such instrument is determined by reference to a hyperinflationary currency, as defined in § 1.985-1(b)(2)(ii)(D). In such case, the amount, timing, source and character of interest, principal, foreign currency gain or loss, and gain or loss relating to a non-currency contingency shall be determined under the method that reflects the instrument's economic substance.

(ii) ***Discretion as to method.*** If a taxpayer does not account for an instrument described in paragraph (a)(2)(i) of this section in a manner that reflects the instrument's economic substance, the Commissioner may apply the rules of this section to such an instrument or apply the principles of § 1.988-2(b)(15), reasonably taking into account the contingent feature or features of the instrument.

(b) ***Instruments described in paragraph (a)(1)(i) of this section*** —

(1) ***In general.*** Paragraph (b)(2) of this section provides rules for applying the noncontingent bond method (as set forth in § 1.1275-4(b)) in the nonfunctional currency in which a debt instrument described in paragraph (a)(1)(i) of this section is denominated, or by reference to which its payments are determined (the denomination currency). Paragraph (b)(3) of this section describes how amounts determined in paragraph (b)(2) of this section shall be translated from the denomination currency of the instrument into the taxpayer's functional currency. Paragraph (b)(4) of this section describes how gain or loss (other than foreign currency gain or loss) shall be determined and characterized with respect to the instrument. Paragraph (b)(5) of this section describes how foreign currency gain or loss shall be determined with respect to accrued interest and principal on the instrument. Paragraph (b)(6) of this section provides rules for determining the source and character of any gain or loss with respect to the instrument. Paragraph (b)(7) of this section provides rules for subsequent holders of an instrument who purchase the instrument for an amount other than the adjusted issue price of the instrument. Paragraph (c) of this section provides examples of the application of paragraph (b) of this section. See paragraph (d) of this section for the determination of the denomination currency of an instrument described in paragraph (a)(1)(ii) or (iii) of this section. See paragraph (e) of this section for the treatment of an instrument described in paragraph (a)(1)(iv) of this section.

(2) ***Application of noncontingent bond method*** —

(i) ***Accrued interest.*** Interest accruals on an instrument described in paragraph (a)(1)(i) of this section are initially determined in the denomination currency of the instrument by applying the noncontingent bond method, set forth in § 1.1275-4(b), to the instrument in its denomination currency. Accordingly, the comparable yield, projected payment schedule, and comparable fixed rate debt instrument, described in § 1.1275-4(b)(4), are determined in the denomination currency. For purposes of applying the noncontingent bond method to instruments described in this paragraph, the applicable Federal rate described in § 1.1275-4(b)(4)(i) shall be the rate described in § 1.1274-4(d) with respect to the denomination currency.

(ii) ***Net positive and negative adjustments.*** Positive and negative adjustments, and net positive and net negative adjustments, with respect to an instrument described in paragraph (a)(1)(i) of this section are determined by applying the rules of § 1.1275-4(b)(6) (and § 1.1275-4(b)(9)(i) and (ii), if applicable) in the denomination currency. Accordingly, a net positive adjustment is treated as additional interest (in the denomination currency) on the instrument. A net negative adjustment first reduces interest that otherwise would be accrued by the taxpayer during the current tax year in the denomination currency. If a net negative adjustment exceeds the interest that would otherwise be accrued by the taxpayer during the current tax year in the denomination currency, the excess is treated as ordinary loss (if the taxpayer is a holder of the instrument) or ordinary income (if the taxpayer is the issuer of the instrument). The amount treated as ordinary loss by a holder with respect to a net negative adjustment is limited, however, to the amount by which the holder's total interest inclusions on the debt instrument (determined in the denomination currency) exceed the total amount of the holder's net negative adjustments treated as ordinary loss on the debt instrument in prior taxable years (determined in the denomination currency). Similarly, the amount treated as ordinary income by an issuer with respect to a net negative adjustment is limited to the amount by which the issuer's total interest deductions on the debt instrument (determined in the denomination currency) exceed the total amount of the issuer's net negative adjustments treated as ordinary income on the debt instrument in prior taxable years (determined in the denomination currency). To the extent a net negative adjustment exceeds the current year's interest accrual and the amount treated

as ordinary loss to a holder (or ordinary income to the issuer), the excess is treated as a negative adjustment carryforward, within the meaning of § 1.1275-4(b)(6)(iii)(C), in the denomination currency.

(iii) ***Adjusted issue price.*** The adjusted issue price of an instrument described in paragraph (a)(1)(i) of this section is determined by applying the rules of § 1.1275-4(b)(7) in the denomination currency. Accordingly, the adjusted issue price is equal to the debt instrument's issue price in the denomination currency, increased by the interest previously accrued on the debt instrument (determined without regard to any net positive or net negative adjustments on the instrument) and decreased by the amount of any noncontingent payment and the projected amount of any contingent payment previously made on the instrument. All adjustments to the adjusted issue price are calculated in the denomination currency.

(iv) ***Adjusted basis.*** The adjusted basis of an instrument described in paragraph (a)(1)(i) of this section is determined by applying the rules of § 1.1275-4(b)(7) in the taxpayer's functional currency. In accordance with those rules, a holder's basis in the debt instrument is increased by the interest previously accrued on the debt instrument (translated into functional currency), without regard to any net positive or net negative adjustments on the instrument (except as provided in paragraph (b)(7) or (8) of this section, if applicable), and decreased by the amount of any noncontingent payment and the projected amount of any contingent payment previously made on the instrument to the holder (translated into functional currency). See paragraph (b)(3)(iii) of this section for translation rules.

(v) ***Amount realized.*** The amount realized by a holder and the repurchase price paid by the issuer on the scheduled or unscheduled retirement of a debt instrument described in paragraph (a)(1)(i) of this section are determined by applying the rules of § 1.1275-4(b)(7) in the denomination currency. For example, with regard to a scheduled retirement at maturity, the holder is treated as receiving the projected amount of any contingent payment due at maturity, reduced by the amount of any negative adjustment carryforward. For purposes of translating the amount realized by the holder into functional currency, the rules of paragraph (b)(3)(iv) of this section shall apply.

(3) ***Treatment and translation of amounts determined under noncontingent bond method*** —

(i) ***Accrued interest.*** The amount of accrued interest, determined under paragraph (b)(2)(i) of this section, is translated into the taxpayer's functional currency at the average exchange rate, as described in § 1.988-2(b)(2)(iii)(A), or, at the taxpayer's election, at the appropriate spot rate, as described in § 1.988-2(b)(2)(iii)(B).

(ii) ***Net positive and negative adjustments*** —

(A) ***Net positive adjustments.*** A net positive adjustment, as referenced in paragraph (b)(2)(ii) of this section, is translated into the taxpayer's functional currency at the spot rate on the last day of the taxable year in which the adjustment is taken into account under § 1.1275-4(b)(6), or, if earlier, the date the instrument is disposed of or otherwise terminated.

(B) ***Net negative adjustments.*** A net negative adjustment is treated and, where necessary, is translated from the denomination currency into the taxpayer's functional currency under the following rules:

(*1*) The amount of a net negative adjustment determined in the denomination currency that reduces the current year's interest in that currency shall first reduce the current year's accrued but unpaid interest, and then shall reduce the current year's interest which was accrued and paid. No translation is required.

(*2*) The amount of a net negative adjustment treated as ordinary income or loss under § 1.1275-4(b)(6)(iii)(B) first is attributable to accrued but unpaid interest accrued in prior taxable years. For this purpose, the net negative adjustment shall be treated as attributable to any unpaid interest accrued in the immediately preceding taxable year, and thereafter to unpaid interest accrued in each preceding taxable year. The amount of the net negative adjustment applied to accrued but unpaid interest is translated into functional currency at the same rate used, in each of the respective prior taxable years, to translate the accrued interest.

(*3*) Any amount of the net negative adjustment remaining after the application of paragraphs (b)(3)(ii)(B)(*1*) and (*2*) of this section is attributable to interest accrued and paid in prior taxable years. The amount of the net negative adjustment applied to such amounts is translated into functional currency at the spot rate on the date the debt instrument was issued or, if later, acquired.

(*4*) Any amount of the net negative adjustment remaining after application of paragraphs (b)(3)(ii)(B)(*1*), (*2*) and (*3*) of this section is a negative adjustment carryforward, within the meaning of § 1.1275-4(b)(6)(iii)(C). A negative adjustment carryforward is carried forward in the denomination currency and is applied to reduce interest accruals in subsequent years. In the year in which the instrument is sold, exchanged or retired, any negative adjustment carryforward not applied to interest reduces the holder's amount realized on the instrument (in the denomination currency). An issuer of a debt instrument described in paragraph (a)(1)(i) of this section who takes into income a negative adjustment carryforward (that is not applied to interest) in the year the instrument is retired, as described in § 1.1275-4(b)(6)(iii)(C), translates such income into functional currency at the spot rate on the date the instrument was issued.

(iii) ***Adjusted basis*** —

(A) ***In general.*** Except as otherwise provided in this paragraph and paragraph (b)(7) or (8) of this section, a holder determines and maintains adjusted basis by translating the denomination currency amounts determined under § 1.1275-4(b)(7)(iii) into functional currency as follows:

(*1*) The holder's initial basis in the instrument is determined by translating the amount paid by the holder to acquire the instrument (in the denomination currency) into functional currency at the spot rate on the date the instrument was issued or, if later, acquired.

(*2*) An increase in basis attributable to interest accrued on the instrument is translated at the rate applicable to such interest under paragraph (b)(3)(i) of this section.

(*3*) Any noncontingent payment and the projected amount of any contingent payments determined in the denomination currency that decrease the holder's basis in the instrument under § 1.1275-4(b)(7)(iii) are translated as follows:

(*i*) The payment first is attributable to the most recently accrued interest to which prior amounts have not already been attributed. The payment is translated into functional currency at the rate at which the interest was accrued.

(*ii*) Any amount remaining after the application of paragraph (b)(3)(iii)(A)(*3*)(*i*) of this section is attributable to principal. Such amounts are translated into functional currency at the spot rate on the date the instrument was issued or, if later, acquired.

(B) ***Exception for interest reduced by a negative adjustment carryforward.*** Solely for purposes of this § 1.988-6, any amounts of accrued interest income that are reduced as a result of a negative adjustment carryforward shall be treated as principal and translated at the spot rate on the date the instrument was issued or, if later, acquired.

(iv) ***Amount realized*** —

(A) ***Instrument held to maturity*** —

(*1*) ***In general.*** With respect to an instrument held to maturity, a holder translates the amount realized by separating such amount in the denomination currency into the component parts of interest and principal that make up adjusted basis prior to translation under paragraph (b)(3)(iii) of this section, and translating each of those component parts of the amount realized at the same rate used to translate the respective component parts of basis under paragraph (b)(3)(iii) of this section. The amount realized first shall be translated by reference to the component parts of basis consisting of accrued interest during the taxpayer's holding period as determined under paragraph (b)(3)(iii) of this section and ordering such amounts on a last in first out basis. Any remaining portion of the amount realized shall be translated by reference to the rate used to translate the component of basis consisting of principal as determined under paragraph (b)(3)(iii) of this section.

(*2*) ***Subsequent purchases at discount and fixed but deferred contingent payments.*** For purposes of this paragraph (b)(3)(iv) of this section, any amount which is required to be added to adjusted basis under paragraph (b)(7) or (8) of this section shall be treated as additional interest which was accrued on the date the amount was added to adjusted basis. To the extent included in amount realized, such amounts shall be translated into functional currency at the same rates at which they were translated for purposes of determining adjusted basis. See paragraphs (b)(7)(iv) and (b)(8) of this section for rules governing the rates at which the amounts are translated for purposes of determining adjusted basis.

(B) ***Sale, exchange, or unscheduled retirement*** —

(*1*) ***Holder.*** In the case of a sale, exchange, or unscheduled retirement, application of the rule stated in paragraph (b)(3)(iv)(A) of this section shall be as follows. The holder's amount realized first shall be translated by reference to the principal component of basis as determined under paragraph (b)(3)(iii) of this section, and then to the component of basis consisting of accrued interest as determined under paragraph (b)(3)(iii) of this section and ordering such amounts on a first in first out basis. Any gain recognized by the holder (*i.e.*, any excess of the sale price over the holder's basis, both expressed in the denomination currency) is translated into functional currency at the spot rate on the payment date.

(2) ***Issuer.*** In the case of an unscheduled retirement of the debt instrument, any excess of the adjusted issue price of the debt instrument over the amount paid by the issuer (expressed in denomination currency) shall first be attributable to accrued unpaid interest, to the extent the accrued unpaid interest had not been previously offset by a negative adjustment, on a last-in-first-out basis, and then to principal. The accrued unpaid interest shall be translated into functional currency at the rate at which the interest was accrued. The principal shall be translated at the spot rate on the date the debt instrument was issued.

(C) ***Effect of negative adjustment carryforward with respect to the issuer.*** Any amount of negative adjustment carryforward treated as ordinary income under § 1.1275-4(b)(6)(iii)(C) shall be translated at the exchange rate on the day the debt instrument was issued.

(4) ***Determination of gain or loss not attributable to foreign currency.*** A holder of a debt instrument described in paragraph (a)(1)(i) of this section shall recognize gain or loss upon sale, exchange, or retirement of the instrument equal to the difference between the amount realized with respect to the instrument, translated into functional currency as described in paragraph (b)(3)(iv) of this section, and the adjusted basis in the instrument, determined and maintained in functional currency as described in paragraph (b)(3)(iii) of this section. The amount of any gain or loss so determined is characterized as provided in § 1.1275-4(b)(8), and sourced as provided in paragraph (b)(6) of this section.

(5) ***Determination of foreign currency gain or loss*** —

(i) ***In general.*** Other than in a taxable disposition of the debt instrument, foreign currency gain or loss is recognized with respect to a debt instrument described in paragraph (a)(1)(i) of this section only when payments are made or received. No foreign currency gain or loss is recognized with respect to a net positive or negative adjustment, as determined under paragraph (b)(2)(ii) of this section (except with respect to a positive adjustment described in paragraph (b)(8) of this section). As described in this paragraph (b)(5), foreign currency gain or loss is determined in accordance with the rules of § 1.988-2(b).

(ii) ***Foreign currency gain or loss attributable to accrued interest.*** The amount of foreign currency gain or loss recognized with respect to payments of interest previously accrued on the instrument is determined by translating the amount of interest paid or received into functional currency at the spot rate on the date of payment and subtracting from such amount the amount determined by translating the interest paid or received into functional currency at the rate at which such interest was accrued under the rules of paragraph (b)(3)(i) of this section. For purposes of this paragraph, the amount of any payment that is treated as accrued interest shall be reduced by the amount of any net negative adjustment treated as ordinary loss (to the holder) or ordinary income (to the issuer), as provided in paragraph (b)(2)(ii) of this section. For purposes of determining whether the payment consists of interest or principal, see the payment ordering rules in paragraph (b)(5)(iv) of this section.

(iii) ***Principal.*** The amount of foreign currency gain or loss recognized with respect to payment or receipt of principal is determined by translating the amount paid or received into functional currency at the spot rate on the date of payment or receipt and subtracting from such amount the amount determined by translating the principal into functional currency at the spot rate on

the date the instrument was issued or, in case of the holder, if later, acquired. For purposes of determining whether the payment consists of interest or principal, see the payment ordering rules in paragraph (b)(5)(iv) of this section.

(iv) ***Payment ordering rules*** —

(A) ***In general.*** Except as provided in paragraph (b)(5)(iv)(B) of this section, payments with respect to an instrument described in paragraph (a)(1)(i) of this section shall be treated as follows:

(*1*) A payment shall first be attributable to any net positive adjustment on the instrument that has not previously been taken into account.

(*2*) Any amount remaining after applying paragraph (b)(5)(iv)(A)(*1*) of this section shall be attributable to accrued but unpaid interest, remaining after reduction by any net negative adjustment, and shall be attributable to the most recent accrual period to the extent prior amounts have not already been attributed to such period.

(*3*) Any amount remaining after applying paragraphs (b)(5)(iv)(A)(*1*) and (*2*) of this section shall be attributable to principal. Any interest paid in the current year that is reduced by a net negative adjustment shall be considered a payment of principal for purposes of determining foreign currency gain or loss.

(B) ***Special rule for sale or exchange or unscheduled retirement.*** Payments made or received upon a sale or exchange or unscheduled retirement shall first be applied against the principal of the debt instrument (or in the case of a subsequent purchaser, the purchase price of the instrument in denomination currency) and then against accrued unpaid interest (in the case of a holder, accrued while the holder held the instrument).

(C) ***Subsequent purchaser that has a positive adjustment allocated to a daily portion of interest.*** A positive adjustment that is allocated to a daily portion of interest pursuant to paragraph (b)(7)(iv) of this section shall be treated as interest for purposes of applying the payment ordering rule of this paragraph (b)(5)(iv).

(6) ***Source of gain or loss.*** The source of foreign currency gain or loss recognized with respect to an instrument described in paragraph (a)(1)(i) of this section shall be determined pursuant to § 1.988-4. Consistent with the rules of § 1.1275-4(b)(8), all gain (other than foreign currency gain) on an instrument described in paragraph (a)(1)(i) of this section is treated as interest income for all purposes. The source of an ordinary loss (other than foreign currency loss) with respect to an instrument described in paragraph (a)(1)(i) of this section shall be determined pursuant to § 1.1275-4(b)(9)(iv). The source of a capital loss with respect to an instrument described in paragraph (a)(1)(i) of this section shall be determined pursuant to § 1.865-1(b)(2).

(7) ***Basis different from adjusted issue price*** —

(i) ***In general.*** The rules of § 1.1275-4(b)(9)(i), except as set forth in this paragraph (b)(7), shall apply to an instrument described in paragraph (a)(1)(i) of this section purchased by a subsequent holder for more or less than the instrument's adjusted issue price.

(ii) ***Determination of basis.*** If an instrument described in paragraph (a)(1)(i) of this section is purchased by a subsequent holder, the subsequent holder's initial basis in the instrument shall equal the amount paid by the holder to acquire the instrument, translated into functional currency at the spot rate on the date of acquisition.

(iii) ***Purchase price greater than adjusted issue price.*** If the purchase price of the instrument (determined in the denomination currency) exceeds the adjusted issue price of the instrument, the holder shall, consistent with the rules of § 1.1275-4(b)(9)(i)(B), reasonably allocate such excess to the daily portions of interest accrued on the instrument or to a projected payment on the instrument. To the extent attributable to interest, the excess shall be reasonably allocated over the remaining term of the instrument to the daily portions of interest accrued and shall be a negative adjustment on the dates the daily portions accrue. On the date of such adjustment, the holder's adjusted basis in the instrument is reduced by the amount treated as a negative adjustment under this paragraph (b)(7)(iii), translated into functional currency at the rate used to translate the interest which is offset by the negative adjustment. To the extent related to a projected payment, such excess shall be treated as a negative adjustment on the date the payment is made. On the date of such adjustment, the holder's adjusted basis in the instrument is reduced by the amount treated as a negative adjustment under this paragraph (b)(7)(iii), translated into functional currency at the spot rate on the date the instrument was acquired.

(iv) ***Purchase price less than adjusted issue price.*** If the purchase price of the instrument (determined in the denomination currency) is less than the adjusted issue price of the instrument, the holder shall, consistent with the rules of § 1.1275-4(b)(9)(i)(C), reasonably allocate the difference to the daily portions of interest accrued on the instrument or to a projected payment on the instrument. To the extent attributable to interest, the difference shall be reasonably allocated over the remaining term of the instrument to the daily portions of interest accrued and shall be a positive adjustment on the dates the daily portions accrue. On the date of such adjustment, the holder's adjusted basis in the instrument is increased by the amount treated as a positive adjustment under this paragraph (b)(7)(iv), translated into functional currency at the rate used to translate the interest to which it relates. For purposes of determining adjusted basis under paragraph (b)(3)(iii) of this section, such increase in adjusted basis shall be treated as an additional accrual of interest during the period to which the positive adjustment relates. To the extent related to a projected payment, such difference shall be treated as a positive adjustment on the date the payment is made. On the date of such adjustment, the holder's adjusted basis in the instrument is increased by the amount treated as a positive adjustment under this paragraph (b)(7)(iv), translated into functional currency at the spot rate on the date the adjustment is taken into account. For purposes of determining the amount realized on the instrument in functional currency under paragraph (b)(3)(iv) of this section, amounts attributable to the excess of the adjusted issue price of the instrument over the purchase price of the instrument shall be translated into functional currency at the same rate at which the corresponding adjustments are taken into account under this paragraph (b)(7)(iv) for purposes of determining the adjusted basis of the instrument.

(8) ***Fixed but deferred contingent payments.*** In the case of an instrument with a contingent payment that becomes fixed as to amount before the payment is due, the rules of § 1.1275-4(b)(9)(ii) shall be applied in the denomination currency of the instrument. For this purpose, foreign currency gain or loss shall be recognized on the date payment is made or received with respect to the instrument under the principles of paragraph (b)(5) of this section. Any increase or decrease in basis required under § 1.1275-4(b)(9)(ii)(D) shall be taken into account at the same exchange rate as the corresponding net positive or negative adjustment is taken into account.

(c) ***Examples.*** The provisions of paragraph (b) of this section may be illustrated by the following examples. In each example, assume that the instrument described is a debt instrument for federal income tax purposes. No inference is intended, however, as to whether the instrument is a debt instrument for federal income tax purposes. The examples are as follows:

Example 1. Treatment of net positive adjustment. (i) *Facts.* On December 31, 2004, Z, a calendar year U.S. resident taxpayer whose functional currency is the U.S. dollar, purchases from a foreign corporation, at original issue, a zero-coupon debt instrument with a non-currency contingency for £1000. All payments of principal and interest with respect to the instrument are denominated in, or determined by reference to, a single nonfunctional currency (the British pound). The debt instrument would be subject to § 1.1275-4(b) if it were denominated in dollars. The debt instrument's comparable yield, determined in British pounds under paragraph (b)(2)(i) of this section and § 1.1275-4(b), is 10 percent, compounded annually, and the projected payment schedule, as constructed under the rules of § 1.1275-4(b), provides for a single payment of £1210 on December 31, 2006 (consisting of a noncontingent payment of £975 and a projected payment of £235). The debt instrument is a capital asset in the hands of Z. Z does not elect to use the spot-rate convention described in § 1.988-2(b)(2)(iii)(B). The payment actually made on December 31, 2006, is £1300. The relevant pound/dollar spot rates over the term of the instrument are as follows:

Date	Spot rate (pounds to dollars)
Dec. 31, 2004	£1.00 = $1.00
Dec. 31, 2005	£1.00 = $1.10
Dec. 31, 2006	£1.00 = $1.20

Accrual period	Average rate (pounds to dollars)
2005	£1.00 = $1.05
2006	£1.00 = $1.15

(ii) *Treatment in 2005*—(A) *Determination of accrued interest.* Under paragraph (b)(2)(i) of this section, and based on the comparable yield, Z accrues £100 of interest on the debt instrument for 2005 (issue price of £1000 × 10 percent). Under paragraph (b)(3)(i) of this section, Z translates the £100 at the average exchange rate for the accrual period ($1.05 × £100 = $105). Accordingly, Z has interest income in 2005 of $105.

(B) *Adjusted issue price and basis.* Under paragraphs (b)(2)(iii) and (iv) of this section, the adjusted issue price of the debt instrument determined in pounds and Z's adjusted basis in dollars in the debt instrument are increased by the interest accrued in 2005. Thus, on January 1, 2006, the adjusted issue price of the debt instrument is £1100. For purposes of determining Z's dollar basis in the debt instrument, the $1000 basis ($1.00 × £1000 original cost basis) is increased by the £100 of accrued interest, translated at the rate at which interest was accrued for 2005. See paragraph (b)(3)(iii) of this section. Accordingly, Z's adjusted basis in the debt instrument as of January 1, 2006, is $1105.

(iii) *Treatment in 2006*—(A) *Determination of accrued interest.* Under paragraph (b)(2)(i) of this section, and based on the comparable yield, Z accrues £110 of interest on the debt instrument for 2006 (adjusted issue price of £1100 × 10 percent). Under paragraph (b)(3)(i) of this section, Z translates the £110 at the average exchange rate for the accrual period ($1.15 × £110 = $126.50). Accordingly, Z has interest income in 2006 of $126.50.

(B) *Effect of net positive adjustment.* The payment actually made on December 31, 2006, is £1300, rather than the projected £1210. Under paragraph (b)(2)(ii) of this section, Z has a net positive adjustment of £90 on December 31, 2006, attributable to the difference between the amount of the actual payment and the amount of the projected payment. Under paragraph (b)(3)(ii)(A) of this section, the £90 net positive adjustment is treated as additional interest income and is translated into dollars at the spot rate on the last day of the year ($1.20 × £90 = $108). Accordingly, Z has a net positive adjustment of $108 resulting in a total interest inclusion for 2006 of $234.50 ($126.50 + $108 = $234.50).

(C) *Adjusted issue price and basis.* Based on the projected payment schedule, the adjusted issue price of the debt instrument immediately before the payment at maturity is £1210 (£1100 plus £110 of accrued interest for 2006). Z's adjusted basis in dollars, based only on the noncontingent payment and the projected amount of the contingent payment to be received, is $1231.50 ($1105 plus $126.50 of accrued interest for 2006).

(D) *Amount realized.* Even though Z receives £1300 at maturity, for purposes of determining the amount realized, Z is treated under paragraph (b)(2)(v) of this section as receiving the projected amount of the contingent payment on December 31, 2006. Therefore, Z is treated as receiving £1210 on December 31, 2006. Under paragraph (b)(3)(iv) of this section, Z translates its amount realized into dollars and computes its gain or loss on the instrument (other than foreign currency gain or loss) by breaking the amount realized into its component parts. Accordingly, £100 of the £1210 (representing the interest accrued in 2005) is translated at the rate at which it was accrued (£1 = $1.05), resulting in an amount realized of $105; £110 of the £1210 (representing the interest accrued in 2006) is translated into dollars at the rate at which it was accrued (£1 = $1.15), resulting in an amount realized of $126.50; and £1000 of the £1210 (representing a return of principal) is translated into dollars at the spot rate on the date the instrument was purchased (£1 =

$1), resulting in an amount realized of $1000. Z's total amount realized is $1231.50, the same as its basis, and Z recognizes no gain or loss (before consideration of foreign currency gain or loss) on retirement of the instrument.

(E) *Foreign currency gain or loss.* Under paragraph (b)(5) of this section Z recognizes foreign currency gain under section 988 on the instrument with respect to the consideration actually received at maturity (except for the net positive adjustment), £1210. The amount of recognized foreign currency gain is determined based on the difference between the spot rate on the date the instrument matures and the rates at which the principal and interest were taken into account. With respect to the portion of the payment attributable to interest accrued in 2005, the foreign currency gain is $15 [£100 × ($1.20−$1.05)]. With respect to interest accrued in 2006, the foreign currency gain equals $5.50 [£110 × ($1.20−$1.15)]. With respect to principal, the foreign currency gain is $200 [£1000 × ($1.20−$1.00)]. Thus, Z recognizes a total foreign currency gain on December 31, 2006, of $220.50.

(F) *Source.* Z has interest income of $105 in 2005, interest income of $234.50 in 2006 (attributable to £110 of accrued interest and the £90 net positive adjustment), and a foreign currency gain of $220.50 in 2006. Under paragraph (b)(6) of this section and section 862(a)(1), the interest income is sourced by reference to the residence of the payor and is therefore from sources without the United States. Under paragraph (b)(6) of this section and § 1.988-4, Z's foreign currency gain of $220.50 is sourced by reference to Z's residence and is therefore from sources within the United States.

Example 2. Treatment of net negative adjustment. (i) *Facts.* Assume the same facts as in *Example 1*, except that Z receives £975 at maturity instead of £1300.
(ii) *Treatment in 2005.* The treatment of the debt instrument in 2005 is the same as in *Example 1*. Thus, Z has interest income in 2005 of $105. On January 1, 2006, the adjusted issue price of the debt instrument is £1100, and Z's adjusted basis in the instrument is $1105.

(iii) *Treatment in 2006*—(A) *Determination of accrued interest.* Under paragraph (b)(2)(i) of this section and based on the comparable yield, Z's accrued interest for 2006 is £110 (adjusted issue price of £1100 × 10 percent). Under paragraph (b)(3)(i) of this section, the £110 of accrued interest is translated at the average exchange rate for the accrual period ($1.15 × £110 = $126.50).

(B) *Effect of net negative adjustment.* The payment actually made on December 31, 2006, is £975, rather than the projected £1210. Under paragraph (b)(2)(ii) of this section, Z has a net negative adjustment of £235 on December 31, 2006, attributable to the difference between the amount of the actual payment and the amount of the projected payment. Z's accrued interest income of £110 in 2006 is reduced to zero by the net negative adjustment. Under paragraph (b)(3)(ii)(B)(*1*) of this section the net negative adjustment which reduces the current year's interest is not translated into functional currency. Under paragraph (b)(2)(ii) of this section, Z treats the remaining £125 net

negative adjustment as an ordinary loss to the extent of the £100 previously accrued interest in 2005. This £100 ordinary loss is attributable to interest accrued but not paid in the preceding year. Therefore, under paragraph (b)(3)(ii)(B)(2) of this section, Z translates the loss into dollars at the average rate for such year (£1 = $1.05). Accordingly, Z has an ordinary loss of $105 in 2006. The remaining £25 of net negative adjustment is a negative adjustment carryforward under paragraph (b)(2)(ii) of this section.

(C) *Adjusted issue price and basis.* Based on the projected payment schedule, the adjusted issue price of the debt instrument immediately before the payment at maturity is £1210 (£1100 plus £110 of accrued interest for 2006). Z's adjusted basis in dollars, based only on the noncontingent payments and the projected amount of the contingent payments to be received, is $1231.50 ($1105 plus $126.50 of accrued interest for 2006).

(D) *Amount realized.* Even though Z receives £975 at maturity, for purposes of determining the amount realized, Z is treated under paragraph (b)(2)(v) of this section as receiving the projected amount of the contingent payment on December 31, 2006, reduced by the amount of Z's negative adjustment carryforward of £25. Therefore, Z is treated as receiving £1185 (£1210−£25) on December 31, 2006. Under paragraph (b)(3)(iv) of this section, Z translates its amount realized into dollars and computes its gain or loss on the instrument (other than foreign currency gain or loss) by breaking the amount realized into its component parts. Accordingly, £100 of the £1185 (representing the interest accrued in 2005) is translated at the rate at which it was accrued (£1 = $1.05), resulting in an amount realized of $105; £110 of the £1185 (representing the interest accrued in 2006) is translated into dollars at the rate at which it was accrued (£1 = $1.15), resulting in an amount realized of $126.50; and £975 of the £1185 (representing a return of principal) is translated into dollars at the spot rate on the date the instrument was purchased (£1 = $1), resulting in an amount realized of $975. Z's amount realized is $1206.50 ($105 + $126.50 + $975 = $1206.50), and Z recognizes a capital loss (before consideration of foreign currency gain or loss) of $25 on retirement of the instrument ($1206.50−$1231.50 = −$25).

(E) *Foreign currency gain or loss.* Z recognizes foreign currency gain with respect to the consideration actually received at maturity, £975. Under paragraph (b)(5)(ii) of this section, no foreign currency gain or loss is recognized with respect to unpaid accrued interest reduced to zero by the net negative adjustment resulting in 2006. In addition, no foreign currency gain or loss is recognized with respect to unpaid accrued interest from 2005, also reduced to zero by the ordinary loss. Accordingly, Z recognizes foreign currency gain with respect to principal only. Thus, Z recognizes a total foreign currency gain on December 31, 2006, of $195 [£975 × ($1.20−$1.00)].

(F) *Source.* In 2006, Z has an ordinary loss of $105, a capital loss of $25, and a foreign currency gain of $195. Under paragraph (b)(6) of this section and § 1.1275-4(b)(9)(iv), the $105 ordinary loss generally reduces Z's foreign source passive income under section 904(d) and the regulations thereunder. Under paragraph (b)(6) of this section and § 1.865-1(b)(2), the $25 capital loss is

sourced by reference to how interest income on the instrument would have been sourced. Therefore, the $25 capital loss generally reduces Z's foreign source passive income under section 904(d) and the regulations thereunder. Under paragraph (b)(6) of this section and § 1.988-4, Z's foreign currency gain of $195 is sourced by reference to Z's residence and is therefore from sources within the United States.

Example 3. Negative adjustment and periodic interest payments. (i) *Facts.* On December 31, 2004, Z, a calendar year U.S. resident taxpayer whose functional currency is the U.S. dollar, purchases from a foreign corporation, at original issue, a two-year debt instrument with a non-currency contingency for £1000. All payments of principal and interest with respect to the instrument are denominated in, or determined by reference to, a single nonfunctional currency (the British pound). The debt instrument would be subject to § 1.1275-4(b) if it were denominated in dollars. The debt instrument's comparable yield, determined in British pounds under §§ 1.988-2(b)(2) and 1.1275-4(b), is 10 percent, compounded semiannually. The debt instrument provides for semiannual interest payments of £30 payable each June 30, and December 31, and a contingent payment at maturity on December 31, 2006, which is projected to equal £1086.20 (consisting of a noncontingent payment of £980 and a projected payment of £106.20) in addition to the interest payable at maturity. The debt instrument is a capital asset in the hands of Z. Z does not elect to use the spot-rate convention described in § 1.988-2(b)(2)(iii)(B). The payment actually made on December 31, 2006, is £981.00. The relevant pound/dollar spot rates over the term of the instrument are as follows:

Date	Spot rate (pounds to dollars)
Dec. 31, 2004	£1.00 = $1.00
June 30, 2005	£1.00 = $1.20
Dec. 31, 2005	£1.00 = $1.40
June 30, 2006	£1.00 = $1.60
Dec. 31, 2006	£1.00 = $1.80

Accrual period	Average rate (pounds to dollars)
Jan.-June 2005	£1.00 = $1.10
July-Dec. 2005	£1.00 = $1.30
Jan.-June 2006	£1.00 = $1.50

Accrual period	Average rate (pounds to dollars)
July-Dec. 2006	£1.00 = $1.70

(ii) *Treatment in 2005*—(A) *Determination of accrued interest.* Under paragraph (b)(2)(i) of this section, and based on the comparable yield, Z accrues £50 of interest on the debt instrument for the January-June accrual period (issue price of £1000 × 10 percent/2). Under paragraph (b)(3)(i) of this section, Z translates the £50 at the average exchange rate for the accrual period ($1.10 × £50 = $55.00). Similarly, Z accrues £51 of interest in the July-December accrual period [(£1000 + £50−£30) × 10 percent/2], which is translated at the average exchange rate for the accrual period ($1.30 × £51 = $66.30). Accordingly, Z accrues $121.30 of interest income in 2005.
(B) *Adjusted issue price and basis*—(*1*) *January-June accrual period.* Under paragraphs (b)(2)(iii) and (iv) of this section, the adjusted issue price of the debt instrument determined in pounds and Z's adjusted basis in dollars in the debt instrument are increased by the interest accrued, and decreased by the interest payment made, in the January-June accrual period. Thus, on July 1, 2005, the adjusted issue price of the debt instrument is £1020 (£1000 + £50 − £30 = £1020). For purposes of determining Z's dollar basis in the debt instrument, the $1000 basis is increased by the £50 of accrued interest, translated, under paragraph (b)(3)(iii) of this section, at the rate at which interest was accrued for the January-June accrual period ($1.10 × £50 = $55). The resulting amount is reduced by the £30 payment of interest made during the accrual period, translated, under paragraph (b)(3)(iii) of this section and § 1.988-2(b)(7), at the rate applicable to accrued interest ($1.10 × £30 = $33). Accordingly, Z's adjusted basis as of July 1, 2005, is $1022 ($1000 + $55 − $33).

(*2*) *July-December accrual period.* Under paragraphs (b)(2)(iii) and (iv) of this section, the adjusted issue price of the debt instrument determined in pounds and Z's adjusted basis in dollars in the debt instrument are increased by the interest accrued, and decreased by the interest payment made, in the July-December accrual period. Thus, on January 1, 2006, the adjusted issue price of the instrument is £1041 (£1020 + £51 − £30 = £1041). For purposes of determining Z's dollar basis in the debt instrument, the $1022 basis is increased by the £51 of accrued interest, translated, under paragraph (b)(3)(iii) of this section, at the rate at which interest was accrued for the July-December accrual period ($1.30 × £51 = $66.30). The resulting amount is reduced by the £30 payment of interest made during the accrual period, translated, under paragraph (b)(3)(iii) of this section and § 1.988-2(b)(7), at the rate applicable to accrued interest ($1.30 × £30 = $39). Accordingly, Z's adjusted basis as of January 1, 2006, is $1049.30 ($1022 + $66.30 − $39).

(C) *Foreign currency gain or loss.* Z will recognize foreign currency gain on the receipt of each £30 payment of interest actually received during 2005. The amount of foreign currency gain in each case is determined, under paragraph (b)(5)(ii) of this section, by reference to the difference between the spot rate on the date the £30 payment was made and the average exchange rate for the accrual period during which the interest accrued. Accordingly, Z recognizes $3 of foreign currency gain on the January-June interest payment [£30 × ($1.20 − $1.10)], and $3 of foreign currency gain on the July-December interest payment [£30 × ($1.40 − $1.30)]. Z recognizes in 2005 a total of $6 of foreign currency gain.

(D) *Source.* Z has interest income of $121.30 and a foreign currency gain of $6. Under paragraph (b)(6) of this section and section 862(a)(1), the interest income is sourced by reference to the residence of the payor and is therefore from sources without the United States. Under paragraph (b)(6) of this section and § 1.988-4, Z's foreign currency gain of $6 is sourced by reference to Z's residence and is therefore from sources within the United States.

(iii) *Treatment in 2006*—(A) *Determination of accrued interest.* Under paragraph (b)(2)(i) of this section, and based on the comparable yield, Z's accrued interest for the January-June accrual period is £52.05 (adjusted issue price of £1041 × 10 percent/2). Under paragraph (b)(3)(i) of this section, Z translates the £52.05 at the average exchange rate for the accrual period ($1.50 × £52.05 = $78.08). Similarly, Z accrues £53.15 of interest in the July-December accrual period [(£1041 + £52.05−£30) × 10 percent/2], which is translated at the average exchange rate for the accrual period ($1.70 × £53.15 = $90.35). Accordingly, Z accrues £105.20, or $168.43, of interest income in 2006.

(B) *Effect of net negative adjustment.* The payment actually made on December 31, 2006, is £981.00, rather than the projected £1086.20. Under paragraph (b)(2)(ii)(B) of this section, Z has a net negative adjustment of £105.20 on December 31, 2006, attributable to the difference between the amount of the actual payment and the amount of the projected payment. Z's accrued interest income of £105.20 in 2006 is reduced to zero by the net negative adjustment. Elimination of the 2006 accrued interest fully utilizes the net negative adjustment.

(C) *Adjusted issue price and basis*—(1) *January-June accrual period.* Under paragraphs (b)(2)(iii) and (iv) of this section, the adjusted issue price of the debt instrument determined in pounds and Z's adjusted basis in dollars in the debt instrument are increased by the interest accrued, and decreased by the interest payment made, in the January-June accrual period. Thus, on July 1, 2006, the adjusted issue price of the debt instrument is £1063.05 (£1041 + £52.05 − £30 = £1063.05). For purposes of determining Z's dollar basis in the debt instrument, the $1049.30 adjusted basis is increased by the £52.05 of accrued interest, translated, under paragraph (b)(3)(iii) of this section, at the rate at which interest was accrued for the January-June accrual period ($1.50 × £52.05 = $78.08). The resulting amount is reduced by the £30 payment of interest

made during the accrual period, translated, under paragraph (b)(3)(iii) of this section and § 1.988-2(b)(7), at the rate applicable to accrued interest ($1.50 × £30 = $45). Accordingly, Z's adjusted basis as of July 1, 2006, is $1082.38 ($1049.30 + $78.08 − $45).

(2) *July-December accrual period.* Under paragraphs (b)(2)(iii) and (iv) of this section, the adjusted issue price of the debt instrument determined in pounds and Z's adjusted basis in dollars in the debt instrument are increased by the interest accrued, and decreased by the interest payment made, in the July-December accrual period. Thus, immediately before maturity on December 31, 2006, the adjusted issue price of the instrument is £1086.20 (£1063.05 + £53.15 − £30 = £1086.20). For purposes of determining Z's dollar basis in the debt instrument, the $1082.38 adjusted basis is increased by the £53.15 of accrued interest, translated, under paragraph (b)(3)(iii) of this section, at the rate at which interest was accrued for the July-December accrual period ($1.70 × £53.15 = $90.36). The resulting amount is reduced by the £30 payment of interest made during the accrual period, translated, under paragraph (b)(3)(iii) of this section and § 1.988-2(b)(7), at the rate applicable to accrued interest ($1.70 × £30 = $51). Accordingly, Z's adjusted basis on December 31, 2006, immediately prior to maturity is $1121.74 ($1082.38 + $90.36 − $51).

(D) *Amount realized.* Even though Z receives £981.00 at maturity, for purposes of determining the amount realized, Z is treated under paragraph (b)(2)(v) of this section as receiving the projected amount of the contingent payment on December 31, 2006. Therefore, Z is treated as receiving £1086.20 on December 31, 2006. Under paragraph (b)(3)(iv) of this section, Z translates its amount realized into dollars and computes its gain or loss on the instrument (other than foreign currency gain or loss) by breaking the amount realized into its component parts. Accordingly, £20 of the £1086.20 (representing the interest accrued in the January-June 2005 accrual period, less £30 interest paid) is translated into dollars at the rate at which it was accrued (£1 = $1.10), resulting in an amount realized of $22; £21 of the £1086.20 (representing the interest accrued in the July-December 2005 accrual period, less £30 interest paid) is translated into dollars at the rate at which it was accrued (£1 = $1.30), resulting in an amount realized of $27.30; £22.05 of the £1086.20 (representing the interest accrued in the January-June 2006 accrual period, less £30 interest paid) is translated into dollars at the rate at which it was accrued (£1 = $1.50), resulting in an amount realized of $33.08; £23.15 of the £1086.20 (representing the interest accrued in the July 1-December 31, 2006 accrual period, less the £30 interest payment) is translated into dollars at the rate at which it was accrued (£1 = $1.70), resulting in an amount realized of $39.36; and £1000 (representing principal) is translated into dollars at the spot rate on the date the instrument was purchased (£1 = $1), resulting in an amount realized of $1000. Accordingly, Z's total amount realized is $1121.74 ($22 + $27.30 + $33.08 + $39.36 + $1000), the same as its basis, and Z recognizes no gain or loss (before consideration of foreign currency gain or loss) on retirement of the instrument.

(E) *Foreign currency gain or loss.* Z recognizes foreign currency gain with respect to each £30 payment actually received during 2006. These payments, however, are treated as payments of principal for this purpose because all 2006 accrued interest is reduced to zero by the net negative adjustment. See paragraph (b)(5)(iv)(A)(*3*) of this section. The amount of foreign currency gain in each case is determined, under paragraph (b)(5)(iii) of this section, by reference to the difference between the spot rate on the date the £30 payment is made and the spot rate on the date the debt instrument was issued. Accordingly, Z recognizes $18 of foreign currency gain on the January-June 2006 interest payment [£30 × ($1.60 − $1.00)], and $24 of foreign currency gain on the July-December 2006 interest payment [£30 × ($1.80 − $1.00)]. Z separately recognizes foreign currency gain with respect to the consideration actually received at maturity, £981.00. The amount of such gain is determined based on the difference between the spot rate on the date the instrument matures and the rates at which the principal and interest were taken into account. With respect to the portion of the payment attributable to interest accrued in January-June 2005 (other than the £30 payments), the foreign currency gain is $14 [£20 × ($1.80 − $1.10)]. With respect to the portion of the payment attributable to interest accrued in July-December 2005 (other than the £30 payments), the foreign currency gain is $10.50 [£21 × ($1.80 − $1.30)]. With respect to the portion of the payment attributable to interest accrued in 2006 (other than the £30 payments), no foreign currency gain or loss is recognized under paragraph (b)(5)(ii) of this section because such interest was reduced to zero by the net negative adjustment. With respect to the portion of the payment attributable to principal, the foreign currency gain is $752 [£940 × ($1.80 − $1.00)]. Thus, Z recognizes a foreign currency gain of $42 on receipt of the two £30 payments in 2006, and $776.50 ($14 + $10.50 + $752) on receipt of the payment at maturity, for a total 2006 foreign currency gain of $818.50.

(F) *Source.* Under paragraph (b)(6) of this section and § 1.988-4, Z's foreign currency gain of $818.50 is sourced by reference to Z's residence and is therefore from sources within the United States.

Example 4. Purchase price greater than adjusted issue price. (i) *Facts.* On July 1, 2005, Z, a calendar year U.S. resident taxpayer whose functional currency is the U.S. dollar, purchases a debt instrument with a non-currency contingency for £1405. All payments of principal and interest with respect to the instrument are denominated in, or determined by reference to, a single nonfunctional currency (the British pound). The debt instrument would be subject to § 1.1275-4(b) if it were denominated in dollars. The debt instrument was originally issued by a foreign corporation on December 31, 2003, for an issue price of £1000, and matures on December 31, 2006. The debt instrument's comparable yield, determined in British pounds under §§ 1.988-2(b)(2) and 1.1275-4(b), is 10.25 percent, compounded semiannually, and the projected payment schedule for the debt instrument (determined as of the issue date under the rules of § 1.1275-4(b)) provides for a single payment at maturity of £1349.70 (consisting of a noncontingent payment of £1000 and a projected payment of £349.70). At the time of the purchase, the adjusted issue price of the debt instrument is £1161.76, assuming semiannual accrual periods ending on

June 30 and December 31 of each year. The increase in the value of the debt instrument over its adjusted issue price is due to an increase in the expected amount of the contingent payment. The debt instrument is a capital asset in the hands of Z. Z does not elect to use the spot-rate convention described in § 1.988-2(b)(2)(iii)(B). The payment actually made on December 31, 2006, is £1400. The relevant pound/dollar spot rates over the term of the instrument are as follows:

Date	Spot rate (pounds to dollars)
July 1, 2005	£1.00 = $1.00
Dec. 31, 2006	£1.00 = $2.00

Accrual period	Average rate (pounds to dollars)
July 1-Dec. 31, 2005	£1.00 = $1.50
Jan. 1-June 30, 2006	£1.00 = $1.50
July 1-Dec. 31, 2006	£1.00 = $1.50

(ii) *Initial basis.* Under paragraph (b)(7)(ii) of this section, Z's initial basis in the debt instrument is $1405, Z's purchase price of £1405, translated into functional currency at the spot rate on the date the debt instrument was purchased (£1 = $1).
(iii) *Allocation of purchase price differential.* Z purchased the debt instrument for £1405 when its adjusted issue price was £1161.76. Under paragraph (b)(7)(iii) of this section, Z allocates the £243.24 excess of purchase price over adjusted issue price to the contingent payment at maturity. This allocation is reasonable because the excess is due to an increase in the expected amount of the contingent payment and not, for example, to a decrease in prevailing interest rates.

(iv) *Treatment in 2005*—(A) *Determination of accrued interest.* Under paragraph (b)(2)(i) of this section, and based on the comparable yield, Z accrues £59.54 of interest on the debt instrument for the July-December 2005 accrual period (issue price of £1161.76 × 10.25 percent/2). Under paragraph (b)(3)(i) of this section, Z translates the £59.54 of interest at the average exchange rate for the accrual period ($1.50 × £59.54 = $89.31). Accordingly, Z has interest income in 2005 of $89.31.

(B) *Adjusted issue price and basis.* Under paragraphs (b)(2)(iii) and (iv) of this section, the adjusted issue price of the debt instrument determined in pounds and Z's adjusted basis in dollars in the debt instrument are increased by the interest accrued in July-December 2005. Thus, on January 1,

2006, the adjusted issue price of the debt instrument is £1221.30 (£1161.76 + £59.54). For purposes of determining Z's dollar basis in the debt instrument on January 1, 2006, the $1405 basis is increased by the £59.54 of accrued interest, translated at the rate at which interest was accrued for the July-December 2005 accrual period. Paragraph (b)(3)(iii) of this section. Accordingly, Z's adjusted basis in the instrument, as of January 1, 2006, is $1494.31 [$1405 + (£59.54 × $1.50)].

(v) *Treatment in 2006*—(A) *Determination of accrued interest.* Under paragraph (b)(2)(i) of this section, and based on the comparable yield, Z accrues £62.59 of interest on the debt instrument for the January-June 2006 accrual period (issue price of £1221.30 × 10.25 percent/2). Under paragraph (b)(3)(i) of this section, Z translates the £62.59 of accrued interest at the average exchange rate for the accrual period ($1.50 × £62.59 = $93.89). Similarly, Z accrues £65.80 of interest in the July-December 2006 accrual period [(£1221.30 + £62.59) × 10.25 percent/2], which is translated at the average exchange rate for the accrual period ($1.50 × £65.80 = $98.70). Accordingly, Z accrues £128.39, or $192.59, of interest income in 2006.

(B) *Effect of positive and negative adjustments*—(*1*) *Offset of positive adjustment.* The payment actually made on December 31, 2006, is £1400, rather than the projected £1349.70. Under paragraph (b)(2)(ii) of this section, Z has a positive adjustment of £50.30 on December 31, 2006, attributable to the difference between the amount of the actual payment and the amount of the projected payment. Under paragraph (b)(7)(iii) of this section, however, Z also has a negative adjustment of £243.24, attributable to the excess of Z's purchase price for the debt instrument over its adjusted issue price. Accordingly, Z will have a net negative adjustment of £192.94 (£50.30−£243.24 = £192.94) for 2006.

(*2*) *Offset of accrued interest.* Z's accrued interest income of £128.39 in 2006 is reduced to zero by the net negative adjustment. The net negative adjustment which reduces the current year's interest is not translated into functional currency. Under paragraph (b)(2)(ii) of this section, Z treats the remaining £64.55 net negative adjustment as an ordinary loss to the extent of the £59.54 previously accrued interest in 2005. This £59.54 ordinary loss is attributable to interest accrued but not paid in the preceding year. Therefore, under paragraph (b)(3)(ii)(B)(*2*) of this section, Z translates the loss into dollars at the average rate for such year (£1 = $1.50). Accordingly, Z has an ordinary loss of $89.31 in 2006. The remaining £5.01 of net negative adjustment is a negative adjustment carryforward under paragraph (b)(2)(ii) of this section.

(C) *Adjusted issue price and basis*—(*1*) *January-June accrual period.* Under paragraph (b)(2)(iii) of this section, the adjusted issue price of the debt instrument on July 1, 2006, is £1283.89 (£1221.30 + £62.59 = £1283.89). Under paragraphs (b)(2)(iv) and (b)(3)(iii) of this section, Z's adjusted basis as of July 1, 2006, is $1588.20 ($1494.31 + $93.89).

(*2*) *July-December accrual period.* Based on the projected payment schedule, the adjusted issue price of the debt instrument immediately before the payment at maturity is £1349.70 (£1283.89 + £65.80 accrued interest for July-December). Z's adjusted basis in dollars, based only on the noncontingent payments and the projected amount of the contingent payments to be received, is $1686.90 ($1588.20 plus $98.70 of accrued interest for July-December).

(*3*) *Adjustment to basis upon contingent payment.* Under paragraph (b)(7)(iii) of this section, Z's adjusted basis in the debt instrument is reduced at maturity by £243.24, the excess of Z's purchase price for the debt instrument over its adjusted issue price. For this purpose, the adjustment is translated into functional currency at the spot rate on the date the instrument was acquired (£1 = $1). Accordingly, Z's adjusted basis in the debt instrument at maturity is $1443.66 ($1686.90−$243.24).

(D) *Amount realized.* Even though Z receives £1400 at maturity, for purposes of determining the amount realized, Z is treated under paragraph (b)(2)(v) of this section as receiving the projected amount of the contingent payment on December 31, 2006, reduced by the amount of Z's negative adjustment carryforward of £5.01. Therefore, Z is treated as receiving £1344.69 (£1349.70−£5.01) on December 31, 2006. Under paragraph (b)(3)(iv) of this section, Z translates its amount realized into dollars and computes its gain or loss on the instrument (other than foreign currency gain or loss) by breaking the amount realized into its component parts. Accordingly, £59.54 of the £1344.69 (representing the interest accrued in 2005) is translated at the rate at which it was accrued (£1 = $1.50), resulting in an amount realized of $89.31; £62.59 of the £1344.69 (representing the interest accrued in January-June 2006) is translated into dollars at the rate at which it was accrued (£1 = $1.50), resulting in an amount realized of $93.89; £65.80 of the £1344.69 (representing the interest accrued in July-December 2006) is translated into dollars at the rate at which it was accrued (£1 = $1.50), resulting in an amount realized of $98.70; and £1156.76 of the £1344.69 (representing a return of principal) is translated into dollars at the spot rate on the date the instrument was purchased (£1 = $1), resulting in an amount realized of $1156.76. Z's amount realized is $1438.66 ($89.31 + $93.89 + $98.70 + $1156.76), and Z recognizes a capital loss (before consideration of foreign currency gain or loss) of $5 on retirement of the instrument ($1438.66 − $1443.66 = −$5).

(E) *Foreign currency gain or loss.* Z recognizes foreign currency gain under section 988 on the instrument with respect to the entire consideration actually received at maturity, £1400. While foreign currency gain or loss ordinarily would not have arisen with respect to £50.30 of the £1400, which was initially treated as a positive adjustment in 2006, the larger negative adjustment in 2006 reduced this positive adjustment to zero. Accordingly, foreign currency gain or loss is recognized with respect to the entire £1400. Under paragraph (b)(5)(ii) of this section, however, no foreign currency gain or loss is recognized with respect to unpaid accrued interest reduced to zero by the net negative adjustment resulting in 2006, and no foreign currency gain or loss is recognized with respect to unpaid accrued interest from 2005, also reduced to zero by the ordinary loss. Therefore,

the entire £1400 is treated as a return of principal for the purpose of determining foreign currency gain or loss, and Z recognizes a total foreign currency gain on December 31, 2001, of $1400 [£1400 × ($2.00−$1.00)].

(F) *Source.* Z has an ordinary loss of $89.31, a capital loss of $5, and a foreign currency gain of $1400. Under paragraph (b)(6) of this section and § 1.1275-4(b)(9)(iv), the $89.31 ordinary loss generally reduces Z's foreign source passive income under section 904(d) and the regulations thereunder. Under paragraph (b)(6) of this section and § 1.865-1(b)(2), the $5 capital loss is sourced by reference to how interest income on the instrument would have been sourced. Therefore, the $5 capital loss generally reduces Z's foreign source passive income under section 904(d) and the regulations thereunder. Under paragraph (b)(6) of this section and § 1.988-4, Z's foreign currency gain of $1400 is sourced by reference to Z's residence and is therefore from sources within the United States.

Example 5. Sale of an instrument with a negative adjustment carryforward. (i) *Facts.* On December 31, 2003, Z, a calendar year U.S. resident taxpayer whose functional currency is the U.S. dollar, purchases at original issue a debt instrument with non-currency contingencies for £1000. All payments of principal and interest with respect to the instrument are denominated in, or determined by reference to, a single nonfunctional currency (the British pound). The debt instrument would be subject to § 1.1275-4(b) if it were denominated in dollars. The debt instrument's comparable yield, determined in British poundsunder §§ 1.988-2(b)(2) and 1.1275-4(b), is 10 percent, compounded annually, and the projected payment schedule for the debt instrument provides for payments of £310 on December 31, 2005 (consisting of a noncontingent payment of £50 and a projected amount of £260) and £990 on December 31, 2006 (consisting of a noncontingent payment of £940 and a projected amount of £50). The debt instrument is a capital asset in the hands of Z. Z does not elect to use the spot-rate convention described in § 1.988-2(b)(2)(iii)(B). The payment actually made on December 31, 2005, is £50. On December 30, 2006, Z sells the debt instrument for £940. The relevant pound/dollar spot rates over the term of the instrument are as follows:

Date	Spot rate (pounds to dollars)
Dec. 31, 2003	£1.00 = $1.00
Dec. 31, 2005	£1.00 = $2.00

Date	Spot rate (pounds to dollars)
Dec. 30, 2006	£1.00 = $2.00

Accrual period	Average rate (pounds to dollars)
Jan. 1-Dec. 31, 2004	£1.00 = $2.00
Jan. 1-Dec. 31, 2005	£1.00 = $2.00
Jan. 1-Dec. 31, 2006	£1.00 = $2.00

(ii) *Treatment in 2004*—(A) *Determination of accrued interest.* Under paragraph (b)(2)(i) of this section, and based on the comparable yield, Z accrues £100 of interest on the debt instrument for 2004 (issue price of £1000 × 10 percent). Under paragraph (b)(3)(i) of this section, Z translates the £100 at the average exchange rate for the accrual period ($2.00 × £100 = $200). Accordingly, Z has interest income in 2004 of $200.
(B) *Adjusted issue price and basis.* Under paragraphs (b)(2)(iii) and (iv) of this section, the adjusted issue price of the debt instrument determined in pounds and Z's adjusted basis in dollars in the debt instrument are increased by the interest accrued in 2004. Thus, on January 1, 2005, the adjusted issue price of the debt instrument is £1100. For purposes of determining Z's dollar basis in the debt instrument, the $1000 basis ($1.00 × £1000 original cost basis) is increased by the £100 of accrued interest, translated at the rate at which interest was accrued for 2004. See paragraph (b)(3)(iii) of this section. Accordingly, Z's adjusted basis in the debt instrument as of January 1, 2005, is $1200 ($1000 + $200).

(iii) *Treatment in 2005*—(A) *Determination of accrued interest.* Under paragraph (b)(2)(i) of this section, and based on the comparable yield, Z's accrued interest for 2005 is £110 (adjusted issue price of £1100 × 10 percent). Under paragraph (b)(3)(i) of this section, the £110 of accrued interest is translated at the average exchange rate for the accrual period ($2.00 × £110 = $220).

(B) *Effect of net negative adjustment.* The payment actually made on December 31, 2005, is £50, rather than the projected £310. Under paragraph (b)(2)(ii) of this section, Z has a net negative adjustment of £260 on December 31, 2005, attributable to the difference between the amount of the actual payment and the amount of the projected payment. Z's accrued interest income of £110 in 2005 is reduced to zero by the net negative adjustment. Under paragraph (b)(3)(ii)(B)(*1*) of this section, the net negative adjustment which reduces the current year's interest is not translated into functional currency. Under paragraph (b)(2)(ii) of this section, Z treats the remaining £150 net

negative adjustment as an ordinary loss to the extent of the £100 previously accrued interest in 2004. This £100 ordinary loss is attributable to interest accrued but not paid in the preceding year. Therefore, under paragraph (b)(3)(ii)(B)(2) of this section, Z translates the loss into dollars at the average rate for such year (£1 = $2.00). Accordingly, Z has an ordinary loss of $200 in 2005. The remaining £50 of net negative adjustment is a negative adjustment carryforward under paragraph (b)(2)(ii) of this section.

(C) *Adjusted issue price and basis.* Based on the projected payment schedule, the adjusted issue price of the debt instrument on January 1, 2006 is £900, *i.e.*, the adjusted issue price of the debt instrument on January 1, 2005 (£1100), increased by the interest accrued in 2005 (£110), and decreased by the projected amount of the December 31, 2005, payment (£310). See paragraph (b)(2)(iii) of this section. Z's adjusted basis on January 1, 2006 is Z's adjusted basis on January 1, 2005 ($1200), increased by the functional currency amount of interest accrued in 2005 ($220), and decreased by the amount of the payments made in 2005, based solely on the projected payment schedule, (£310). The amount of the projected payment is first attributable to the interest accrued in 2005 (£110), and then to the interest accrued in 2004 (£100), and the remaining amount to principal (£100). The interest component of the projected payment is translated into functional currency at the rates at which it was accrued, and the principal component of the projected payment is translated into functional currency at the spot rate on the date the instrument was issued. See paragraph (b)(3)(iii) of this section. Accordingly, Z's adjusted basis in the debt instrument, following the increase of adjusted basis for interest accrued in 2005 ($1200 + $220 = $1420), is decreased by $520 ($220 + $200 + $100 = $520). Z's adjusted basis on January 1, 2006 is therefore, $900.

(D) *Foreign currency gain or loss.* Z will recognize foreign currency gain on the receipt of the £50 payment actually received on December 31, 2005. Based on paragraph (b)(5)(iv) of this section, the £50 payment is attributable to principal since the accrued unpaid interest was completely eliminated by the net negative adjustment. The amount of foreign currency gain is determined, under paragraph (b)(5)(iii) of this section, by reference to the difference between the spot rate on the date the £50 payment was made and the spot rate on the date the debt instrument was issued. Accordingly, Z recognizes $50 of foreign currency gain on the £50 payment. [($2.00—$1.00) × £50 = $50]. Under paragraph (b)(6) of this section and § 1.988-4, Z's foreign currency gain of $50 is sourced by reference to Z's residence and is therefore from sources within the United States.

(iv) *Treatment in 2006*—(A) *Determination of accrued interest.* Under paragraph (b)(2)(i) of this section, and based on the comparable yield, Z accrues £90 of interest on the debt instrument for 2006 (adjusted issue price of £900 × 10 percent). Under paragraph (b)(3)(i) of this section, Z translates the £90 at the average exchange rate for the accrual period ($2.00 × £90 = $180). Accordingly, prior to taking into account the 2005 negative adjustment carryforward, Z has interest income in 2006 of $180.

(B) *Effect of net negative adjustment.* The £50 negative adjustment carryforward from 2005 is a negative adjustment for 2006. Since there are no other positive or negative adjustments, there is a £50 negative adjustment in 2006 which reduces Z's accrued interest income by £50. Accordingly, after giving effect to the £50 negative adjustment carryforward, Z will accrue $80 of interest income. [(£90−£50) × $2.00 = $80]

(C) *Adjusted issue price.* Under paragraph (b)(2)(iii) of this section, the adjusted issue price of the debt instrument determined in pounds is increased by the interest accrued in 2006 (prior to taking into account the negative adjustment carryforward). Thus, on December 30, 2006, the adjusted issue price of the debt instrument is £990.

(D) *Adjusted basis.* For purposes of determining Z's dollar basis in the debt instrument, Z's $900 adjusted basis on January 1, 2006, is increased by the accrued interest, translated at the rate at which interest was accrued for 2006. See paragraph (b)(3)(iii)(A) of this section. Note, however, that under paragraph (b)(3)(iii)(B) of this section the amount of accrued interest which is reduced as a result of the negative adjustment carryforward, *i.e.*, £50, is treated for purposes of this section as principal, and is translated at the spot rate on the date the instrument was issued, *i.e.*, £1.00 = $1.00. Accordingly, Z's adjusted basis in the debt instrument as of December 30, 2006, is $1030 ($900 + $50 + $80).

(E) *Amount realized.* Z's amount realized in denomination currency is £940, *i.e.*, the amount of pounds Z received on the sale of the debt instrument. Under paragraph (b)(3)(iv)(B)(*1*) of this section, Z's amount realized is first translated by reference to the principal component of basis (including the amount which is treated as principal under paragraph (b)(3)(iii)(B) of this section) and then the remaining amount realized, if any, is translated by reference to the accrued unpaid interest component of adjusted basis. Thus, £900 of Z's amount realized is translated by reference to the principal component of adjusted basis. The remaining £40 of Z's amount realized is treated as principal under paragraph (b)(3)(iii)(B) of this section, and is also translated by reference to the principal component of adjusted basis. Accordingly, Z's amount realized in functional currency is $940. (No part of Z's amount realized is attributable to the interest accrued on the debt instrument.) Z realizes a loss of $90 on the sale of the debt instrument ($1030 basis−$940 amount realized). Under paragraph (b)(4) of this section and § 1.1275-4(b)(8), $80 of the loss is characterized as ordinary loss, and the remaining $10 of loss is characterized as capital loss. Under §§ 1.988-6(b)(6) and 1.1275-4(b)(9)(iv) the $80 ordinary loss is treated as a deduction that is definitely related to the interest income accrued on the debt instrument. Similarly, under §§ 1.988-6(b)(6) and 1.865-1(b)(2) the $10 capital loss is also allocated to the interest income from the debt instrument.

(F) *Foreign currency gain or loss.* Z recognizes foreign currency gain with respect to the £940 he received on the sale of the debt instrument. Under paragraph (b)(5)(iv) of this section, the £940 Z received is attributable to principal (and the amount which is treated as principal under paragraph

(b)(3)(iii)(B) of this section). Thus, Z recognizes foreign currency gain on December 31, 2006, of $940. [($2.00−$1.00) × £940]. Under paragraph (b)(6) of this section and § 1.988-4, Z's foreign currency gain of $940 is sourced by reference to Z's residence and is therefore from sources within the United States.

(d) ***Multicurrency debt instruments*** —

(1) ***In general.*** Except as provided in this paragraph (d), a multicurrency debt instrument described in paragraph (a)(1)(ii) or (iii) of this section shall be treated as an instrument described in paragraph (a)(1)(i) of this section and shall be accounted for under the rules of paragraph (b) of this section. Because payments on an instrument described in paragraph (a)(1)(ii) or (iii) of this section are denominated in, or determined by reference to, more than one currency, the issuer and holder or holders of the instrument are required to determine the denomination currency of the instrument under paragraph (d)(2) of this section before applying the rules of paragraph (b) of this section.

(2) ***Determination of denomination currency*** —

(i) ***In general.*** The denomination currency of an instrument described in paragraph (a)(1)(ii) or (iii) of this section shall be the predominant currency of the instrument. Except as otherwise provided in paragraph (d)(2)(ii) of this section, the predominant currency of the instrument shall be the currency with the greatest value determined by comparing the functional currency value of the noncontingent and projected payments denominated in, or determined by reference to, each currency on the issue date, discounted to present value (in each relevant currency), and translated (if necessary) into functional currency at the spot rate on the issue date. For this purpose, the applicable discount rate may be determined using any method, consistently applied, that reasonably reflects the instrument's economic substance. If a taxpayer does not determine a discount rate using such a method, the Commissioner may choose a method for determining the discount rate that does reflect the instrument's economic substance. The predominant currency is determined as of the issue date and does not change based on subsequent events (*e.g.*, changes in value of one or more currencies).

(ii) ***Difference in discount rate of greater than 10 percentage points.*** This § 1.988-6(d)(2)(ii) applies if no currency has a value determined under paragraph (d)(2)(i) of this section that is greater than 50% of the total value of all payments. In such a case, if the difference between the discount rate in the denomination currency otherwise determined under (d)(2)(i) of this section and the discount rate determined under paragraph (d)(2)(i) of this section with respect to any other currency in which payments are made (or determined by reference to) pursuant to the instrument is greater than 10 percentage points, then the Commissioner may determine the predominant currency under any reasonable method.

(3) ***Issuer/holder consistency.*** The issuer determines the denomination currency under the rules of paragraph (d)(2) of this section and provides this information to the holders of the instrument in a manner consistent with the issuer disclosure rules of § 1.1275-2(e). If the issuer does not determine the denomination currency of the instrument, or if the issuer's determination is unreasonable, the holder of the instrument must determine the denomination currency under the rules of paragraph (d)(2) of this section. A holder that determines the denomination currency itself must explicitly disclose this fact on a statement attached to the holder's timely filed federal income tax return for the taxable year that includes the acquisition date of the instrument.

(4) ***Treatment of payments in currencies other than the denomination currency.*** For purposes of applying the rules of paragraph (b) of this section to debt instruments described in paragraph (a)(1)(ii) or (iii) of this section, payments not denominated in (or determined by reference to) the denomination currency shall be treated as non-currency-related contingent payments. Accordingly, if the denomination currency of the instrument is determined to be the taxpayer's functional currency, the instrument shall be accounted for under § 1.1275-4(b) rather than under this section.

(e) ***Instruments issued for nonpublicly traded property*** —

(1) ***Applicability.*** This paragraph (e) applies to debt instruments issued for nonpublicly traded property that would be described in paragraph (a)(1)(i), (ii), or (iii) of this section, but for the fact that such instruments are described in § 1.1275-4(c)(1) rather than § 1.1275-4(b)(1). For example, this paragraph (e) generally applies to a contingent payment debt instrument denominated in a nonfunctional currency that is issued for non-publicly traded property. Generally the rules of § 1.1275-4(c) apply except as set forth by the rules of this paragraph (e).

(2) ***Separation into components.*** An instrument described in this paragraph (e) is not accounted for using the noncontingent bond method of § 1.1275-4(b) and paragraph (b) of this section. Rather, the instrument is separated into its component payments. Each noncontingent payment or group of noncontingent payments which is denominated in a single currency shall be considered a single component treated as a separate debt instrument denominated in the currency of the payment or group of payments. Each contingent payment shall be treated separately as provided in paragraph (e)(4) of this section.

(3) ***Treatment of components consisting of one or more noncontingent payments in the same currency.*** The issue price of each component treated as a separate debt instrument which consists of one or more noncontingent payments is the sum of the present values of the noncontingent payments contained in the separate instrument. The present value of any noncontingent payment shall be determined under § 1.1274-2(c)(2), and the test rate shall be determined under § 1.1274-4 with respect to the currency in which each separate instrument is considered denominated. No interest payments on the separate debt instrument are qualified stated interest payments (within the meaning of § 1.1273-1(c)) and the *de minimis* rules of section 1273(a)(3) and § 1.1273-1(d) do not apply to the separate debt instrument. Interest income or expense is translated, and exchange gain or loss is recognized on the separate debt instrument as provided in § 1.988-2(b)(2), if the instrument is denominated in a nonfunctional currency.

(4) ***Treatment of components consisting of contingent payments*** —

(i) ***General rule.*** A component consisting of a contingent payment shall generally be treated in the manner provided in § 1.1275-4(c)(4). However, except as provided in paragraph (e)(4)(ii) of this section, the test rate shall be determined by reference to the U.S. dollar unless the dollar does not reasonably reflect the economic substance of the contingent component. In such case, the test rate shall be determined by reference to the currency which most reasonably reflects the economic substance of the contingent component. Any amount received in nonfunctional currency from a component consisting of a contingent payment shall be translated into functional currency at the spot rate on the date of receipt. Except in the case when the payment becomes fixed more than six months before the payment is due, no foreign currency gain or loss shall be recognized on a contingent payment component.

(ii) ***Certain delayed contingent payments*** —

(A) ***Separate debt instrument relating to the fixed component.*** The rules of § 1.1275-4(c)(4)(iii) shall apply to a contingent component the payment of which becomes fixed more than 6 months before the payment is due. For this purpose, the denomination currency of the separate debt instrument relating to the fixed payment shall be the currency in which payment is to be made and the test rate for such separate debt instrument shall be determined in the currency of that instrument. If the separate debt instrument relating to the fixed payment is denominated in nonfunctional currency, the rules of § 1.988-2(b)(2) shall apply to that instrument for the period beginning on the date the payment is fixed and ending on the payment date.

(B) ***Contingent component.*** With respect to the contingent component, the issue price considered to have been paid by the issuer to the holder under § 1.1275-4(c)(4)(iii)(A) shall be translated, if necessary, into the functional currency of the issuer or holder at the spot rate on the date the payment becomes fixed.

(5) ***Basis different from adjusted issue price.*** The rules of § 1.1275-4(c)(5) shall apply to an instrument subject to this paragraph (e).

(6) ***Treatment of a holder on sale, exchange, or retirement.*** The rules of § 1.1275-4(c)(6) shall apply to an instrument subject to this paragraph (e).

(f) ***Rules for nonfunctional currency tax exempt obligations described in § 1.1275-4(d)*** —

(1) ***In general.*** Except as provided in paragraph (f)(2) of this section, section 1.988-6 shall not apply to a debt instrument the interest on which is excluded from gross income under section 103(a).

(2) ***Operative rules.*** [Reserved]

(g) ***Effective date.*** This section shall apply to debt instruments issued on or after October 29, 2004.

[T.D. 9157, 69 FR 52819, Aug. 30, 2004]

§ 1.989(a)-1 Definition of a qualified business unit.

(a) ***Applicability*** —

(1) ***In general.*** This section provides rules relating to the definition of the term “qualified business unit” (QBU) within the meaning of section 989.

(2) ***Effective date.*** These rules shall apply to taxable years beginning after December 31, 1986. However, any person may apply on a consistent basis § 1.989(a)-1T (c) of the Temporary Income Tax Regulations in lieu of § 1.989(a)-1 (c) to all taxable years beginning after December 31, 1986, and on or before February 5, 1990. For the text of the temporary regulation, see 53 FR 20612 (June 8, 1988).

(b) ***Definition of a qualified business unit*** —

(1) ***In general.*** A QBU is any separate and clearly identified unit of a trade or business of a taxpayer provided that separate books and records are maintained.

(2) ***Application of the QBU definition*** —

(i) ***Persons*** —

(A) ***Corporations.*** A corporation is a QBU.

(B) ***Individuals.*** An individual is not a QBU.

(C) [Reserved]

(D) ***Trusts and estates.*** A trust or estate is a QBU of a beneficiary.

(ii) ***Activities.*** Activities of a corporation, partnership, trust, estate, or individual qualify as a QBU if—

(A) The activities constitute a trade or business; and

(B) A separate set of books and records is maintained with respect to the activities.

(3) ***Special rule.*** Any activity (wherever conducted and regardless of its frequency) that produces income or loss that is, or is treated as, effectively connected with the conduct of a trade or business within the United States shall be treated as a separate QBU, provided the books and records requirement of paragraph (d)(2) of this section is satisfied.

(4) ***Applicability date.*** Generally, paragraph (b)(2)(i) of this section applies to taxable years beginning after December 31, 2024. However, if pursuant to § 1.987-15(b), a taxpayer chooses to apply §§ 1.987-1 through 1.987-15 to a taxable year before the first taxable year described in § 1.987-15(a)(1), then paragraph (b)(2)(i) of this section applies to that taxable year. *See* § 1.989(a)-1(b)(4), as contained in 26 CFR in part 1 in effect on April 1, 2024, for a prior applicability date for paragraph (b)(2)(i) of this section.

(c) ***Trade or business.*** The determination as to whether activities constitute a trade or business is ultimately dependent upon an examination of all the facts and circumstances. Generally, a trade or business for purposes of section 989(a) is a specific unified group of activities that constitutes (or could constitute) an independent economic enterprise carried on for profit, the expenses related to which are deductible under section 162 or 212 (other than that part of section 212 dealing with expenses incurred in connection with taxes). To constitute a trade or business, a group of activities must ordinarily include every operation which forms a part of, or a step in, a process by which an enterprise may earn income or profit. Such group of activities must ordinarily include the collection of income and the payment of expenses. It is not necessary that the activities carried out by a QBU constitute a different trade or business from those carried out by other QBUs of the taxpayer. A vertical, functional, or geographic division of the same trade or business may be a trade or business for this purpose provided that the activities otherwise qualify as trade or business under this paragraph (c). However, activities that are merely ancillary to a trade or business will not constitute a trade or business under this paragraph (c). Activities of an individual as an employee are not considered by themselves to constitute a trade or business under this paragraph (c).

(d) ***Separate books and records*** —

(1) ***General rule.*** Except as provided in paragraph (d)(2) of this section, a separate set of books and records shall include books of original entry and ledger accounts, both general and subsidiary, or similar records. For example, in the case of a taxpayer using the cash receipts and disbursements method of accounting, the books of original entry include a cash receipts and disbursements journal where each receipt and each disbursement is recorded. Similarly, in the case of a taxpayer using an accrual method of accounting, the books of original entry include a journal to record sales (accounts receivable) and a journal to record expenses incurred (accounts payable). In general, a journal represents a chronological account of all transactions entered into by an entity for an accounting period. A ledger account, on the other hand, chronicles the impact during an accounting period of the

specific transactions recorded in the journal for that period upon the various items shown on the entity's balance sheet (*i.e.,* assets, liabilities, and capital accounts) and income statement (*i.e.,* revenues and expenses).

(2) ***Special rule.*** For purposes of paragraph (b)(3) of this section, books and records include books and records used to determine income or loss that is, or is treated as, effectively connected with the conduct of a trade or business within the United States.

(3) ***Proper reflection on the books of the taxpayer or qualified business unit.*** The principles of § 1.987-2(b) apply in determining whether an asset, liability, or item of income, gain, deduction, or loss is reflected on the books of a qualified business unit (and therefore is attributable to such unit).

(4) ***Applicability date.*** Generally, paragraph (d)(3) of this section applies to taxable years beginning after December 31, 2024. However, if pursuant to § 1.987-15(b), a taxpayer applies §§ 1.987-1 through 1.987-15 to a taxable year before the first taxable year described in § 1.987-15(a)(1), then paragraph (d)(3) of this section applies to that taxable year. *See* § 1.989(a)-1(d)(4), as contained in 26 CFR in part 1 in effect on April 1, 2024, for a prior applicability date for paragraph (d)(3) of this section.

(e) ***Examples.*** The provisions of this section may be illustrated by the following examples:

Example 1. Corporation X is a domestic corporation. Corporation X manufactures widgets in the U.S. for export. Corporation X sells widgets in the United Kingdom through a branch office in London. The London office has its own employees and solicits and processes orders. Corporation X maintains in the U.S. a separate set of books and records for all transactions conducted by the London office. Corporation X is a QBU under paragraph (b)(2)(i) of this section because of its corporate status. The London branch office is a QBU under paragraph (b)(2)(ii) of this section because

(1) the sale of widgets is a trade or business as defined in paragraph (c) of this section; and

(2) a complete and separate set of books and records (as described in paragraph (d) of this section) is maintained with respect to its sales operations.

Example 2. A domestic corporation incorporates a wholly-owned subsidiary in Switzerland. The domestic corporation is a manufacturer that markets its product abroad primarily through the Swiss subsidiary. To facilitate sales of the parent's product in Europe, the Swiss subsidiary has branch offices in France and West Germany that are responsible for all marketing operations in those countries. Each branch has its own employees, solicits and processes orders, and maintains a separate set of books and records. The domestic corporation and the Swiss subsidiary are both QBUs under paragraph (b)(2)(i) of this section because of their corporate status. The French and West German branches are QBUs of the Swiss subsidiary. They satisfy paragraph (b)(2)(ii) because each constitutes a trade or business (as defined in paragraph (c) of this section) and because separate sets of books and records (as described in paragraph (d) of this section) of their respective operations is maintained. Each branch is considered to have a trade or business although each is a geographical division of the same trade or business.

Example 3. W is a domestic corporation that manufactures product X in the United States for sale worldwide. All of W's sales functions are conducted exclusively in the United States. W employs individual Q to work in France. Q's sole function is to act as a courier to deliver sales documents to customers in France. With respect to Q's activities in France, a separate set of books and records as described in paragraph (d) is maintained. Under paragraph (c) of this section, Q's activities in France do not constitute a QBU since they are merely ancillary to W's manufacturing and selling business. Q is not considered to have a QBU because an individual's activities as an employee are not considered to constitute a trade or business of the individual under paragraph (c).

Example 4. The facts are the same as in example (3) except that the courier function is the sole activity of a wholly-owned French subsidiary of W. Under paragraph (b)(2)(i) of this section, the French subsidiary is considered to be a QBU.

Example 5. A corporation incorporated in the Netherlands is a subsidiary of a domestic corporation and a holding company for the stock of one or more subsidiaries incorporated in other countries. The Dutch corporation's activities are limited to paying its directors and its administrative expenses, receiving capital contributions from its United States parent corporation, contributing capital to its subsidiaries, receiving dividend distributions from its subsidiaries, and distributing dividends to its domestic parent corporation. Under paragraph (b)(2)(i) of this section, the Netherlands corporation is considered to be a QBU.

Example 6. Taxpayer A, an individual resident of the United States, is engaged in a trade or business wholly unrelated to any type of investment activity. A also maintains a portfolio of foreign currency-denominated investments through a foreign broker. The broker is responsible for all activities necessary to the management of A's investments and maintains books and records as described in paragraph (d) of this section, with respect to all investment activities of A. A's investment activities qualify as a QBU under paragraph (b)(2)(ii) of this section to the extent the activities engaged in by A generate expenses that are deductible under section 212 (other than that part of section 212 dealing with expenses incurred in connection with taxes).

Example 7. Taxpayer A, an individual resident of the United States, is the sole shareholder of foreign corporation (FC) whose activities are limited to trading in stocks and securities. FC is a QBU under paragraph (b)(2)(i) of this section.

Example 8. Taxpayer A, an individual resident of the United States, markets and sells in Spain and in the United States various products produced by other United States manufacturers. A has an office and employs a salesman to manage A's activities in Spain, maintains a separate set of books and records with respect to his activities in Spain, and is engaged in a trade or business as defined in paragraph (c) of this section. Therefore, under paragraph (b)(2)(ii) of this section, the activities of A in Spain are considered to be a QBU.

Example 9. Foreign corporation FX is incorporated in Mexico and is wholly owned by a domestic corporation. The domestic corporation elects to treat FX as a domestic corporation under section 1504(d). FX operates entirely in Mexico and maintains a separate set of books and records with respect to its activities in Mexico. FX is a QBU under paragraph (b)(2)(i) of this section. The activities of FX in Mexico also constitute a QBU under paragraph (b)(2)(ii) of this section.

Example 10. F, a foreign corporation, computes a gain of $100 from the disposition of a United States real property interest (as defined in section 897(c)). The gain is taken into account as if F were engaged in a trade or business in the United States and as if such gain were effectively connected with such trade or business. F is a QBU under paragraph (b)(2)(i) of this section because of its corporate status. F's disposition activity constitutes a separate QBU under paragraph (b)(3) of this section.

[T.D. 8279, 55 FR 284, Jan. 4, 1990, as amended by T.D. 9794, 81 FR 88851, Dec. 8, 2016; T.D. 10016, 89 FR 100223, Dec. 11, 2024]

§ 1.989(b)-1 Definition of weighted average exchange rate.

For purposes of section 989(b)(3) and (4), the term "weighted average exchange rate" means the simple average of the daily exchange rates (determined by reference to a qualified source of exchange rates described in § 1.988-1(d)(1)), excluding weekends, holidays and any other nonbusiness days for the taxable year.

[T.D. 8263, 54 FR 38664, Sept. 20, 1989. Redesignated by T.D. 8367, 56 FR 48437, Sept. 25, 1991; 57 FR 6060, Feb. 18, 1992; T.D. 9452, 74 FR 27890, June 11, 2009]

DOMESTIC INTERNATIONAL SALES CORPORATIONS

§ 1.991-1 Taxation of a domestic international sales corporation.

(a) ***In general.*** A corporation which is a DISC for a taxable year is not subject to any tax imposed by subtitle A of the Code (sections 1 through 1564) for such taxable year, except for the tax imposed by chapter 5 thereof (sections 1491 through 1494) on certain transfers to avoid tax. Thus, for example, a corporation which is a DISC for a taxable year is not subject for such year to the corporate income tax (section 11), the minimum tax on tax preferences (sections 56 through 58), or the accumulated earnings tax (sections 531 through 537). A DISC is liable for the payment of all taxes payable by corporations under other subtitles of the Code, such as, for example, income taxes withheld at the source and other employment taxes under subtitle C and the interest equalization tax and other miscellaneous excise taxes imposed by subtitle D. In addition, a DISC is subject to the provisions of chapter 3 of subtitle A (including section 1461), relating to withholding of tax on nonresident aliens and foreign corporations and tax-free covenant bonds. See § 1.992-1 for the definition of the term "DISC."

(b) ***Determination of taxable income*** —

(1) ***In general.*** Although a DISC is not subject to tax under subtitle A of the Code (other than chapter 5 thereof), a DISC's taxable income shall be determined for each taxable year in order to determine, for example, the amount deemed distributed for that taxable year to its shareholders pursuant to § 1.995-2. Except as otherwise provided in the Code and the regulations thereunder, the taxable income of a DISC shall be determined in the same manner as if the DISC were a domestic corporation which had not elected to be treated as a DISC. Thus, for example, a DISC chooses its method of depreciation, inventory method, and annual accounting period in the same manner as if it were a corporation which had not elected to be treated as a DISC. Any elections affecting the determination of taxable income shall be made by the DISC. Thus, as a further example, a DISC which makes an installment sale described in section 453 is able to avail itself of the benefits of section 453: *Provided,* The DISC complies with the election requirements of such section. See § 1.995-2(e) and § 1.996-8 and the regulations thereunder for rules relating to the application for a taxable year of a DISC of a deduction under section 172 for a net operating loss carryback or carryover or of a capital loss carryback or carryover under section 1212.

(2) ***Choice of method of accounting.*** A DISC may, generally, choose any method of accounting permissible under section 446(c) and the regulations thereunder. However, if a DISC is a member of a controlled group (as defined in § 1.993-1(k)), the DISC may not choose a method of accounting which, when applied to transactions between the DISC and other members of the controlled group, will result in a material distortion of the income of the DISC or any other member of the controlled group. Such a material distortion of income would occur, for example, if a DISC chooses to use the cash method of accounting where the DISC acts as commission agent in a substantial volume of sales of property by a related corporation which uses the accrual method of accounting and which customarily pays commissions to the DISC more than 2 months after such sales. As a further example, a material distortion of income would occur if a DISC chooses to use the accrual method of accounting where the DISC leases a substantial amount of property from a related corporation

which uses the cash method of accounting, if the DISC customarily accrues any portion of the rent on such property more than 2 months before the rent is paid. Changes in the method of accounting of a DISC are subject to the requirements of section 446(e) and the regulations thereunder.

(3) ***Choice of annual accounting period*** —

(i) ***In general.*** A DISC may choose its annual accounting period without regard to the annual accounting period of any of its stockholders. In general, changes in the annual accounting period of a DISC are subject to the requirements of section 442 and the regulations thereunder.

(ii) ***Transition rule for change in taxable year in order to become a DISC.*** A corporation may, without the consent of the Commissioner, change its annual accounting period and adopt a new taxable year beginning on the first day of any month in 1972: *Provided,* That—

(*a*) Such change has the effect of accelerating the time as of which such corporation can become a DISC,

(*b*) The Commissioner is notified of such change by means of a statement filed (with the regional service center with which such corporation files its election to be treated as a DISC) not later than the end of the period during which such corporation may file an election to be treated as a DISC for such new taxable year, and

(*c*) The short period required to effect such change is not a taxable year in which such corporation has a net operating loss as defined in section 172.

Thus, for example, if a corporation which uses the calendar year for its taxable year does not complete arrangements to become a DISC until May 15, 1972, such corporation can, pursuant to this subdivision, change its annual accounting period and adopt a taxable year beginning on the first day of any month in 1972 after May. A change to a new annual accounting period made pursuant to this subdivision is effective only if the corporation which makes such change qualifies as a DISC for such new period. A corporation may change its annual accounting period and adopt a new taxable year pursuant to this subdivision without regard to the provisions of § 1.1502-76 (relating to the taxable year of members of a group). A copy of the statement described in (*b*) of this subdivision shall be attached to the return of a corporation for the new taxable year to which such corporation changes pursuant to this subdivision. A corporation which changes its annual accounting period pursuant to this subparagraph will not be permitted under section 442 to change its annual accounting period at any time before 1982, except with the consent of the Commissioner as provided in § 1.442-1(b)(1) or pursuant to subparagraph (4) of this paragraph.

(4) ***Transition rule for change of taxable year of certain DISC's.*** In the case of a DISC all of the shares of which are held by a single shareholder or by members of a group who file a consolidated return, such DISC may (without the consent of the Commissioner) change its annual accounting period and adopt a taxable year beginning in 1972 which is the same as the taxable year of such shareholder or the members of such group. A change to a new annual accounting period may be made by a DISC pursuant to this subparagraph even if such DISC has changed its annual accounting period pursuant to subparagraph (3)(ii) of this paragraph.

(5) ***Transition rule for beginning of first taxable year of certain corporations.*** If a corporation organized before January 1, 1972, neither acquires assets (other than cash or other property acquired as consideration for the issuance of stock) nor begins doing business prior to January 1, 1972, the first taxable year of such corporation is deemed to begin at the time such corporation acquires any asset

(other than cash or other property acquired as consideration for the issuance of stock) or begins doing business, whichever is earlier: *Provided,* That such corporation is a DISC for such first taxable year. For purposes of § 1.6012-2(a), such corporation is treated as not coming into existence until the beginning of such first taxable year.

(c) ***Effective date.*** The provisions of this section and the regulations under sections 992 through 997 apply with respect to taxable years ending after December 31, 1971, except that a corporation may not be a DISC for any taxable year beginning before January 1, 1972.

(d) ***Related statutes.*** For rules relating to the transfer, during a taxable year beginning before January 1, 1976, to a DISC of assets of an export trade corporation (as defined in section 971), where a parent owns all the outstanding stock of both such DISC and such export trade corporation, see section 505(b) of the Revenue Act of 1971 (85 Stat. 551). For rules regarding limitations on the qualification of a corporation as an export trade corporation for any taxable year beginning after October 31, 1971, see section 971(a)(3).

[T.D. 7323, 39 FR 34402, Sept. 25, 1974, as amended by T.D. 7854, 47 FR 51738, Nov. 17, 1982]

§ 1.992-1 Requirements of a DISC.

(a) ***"DISC" defined.*** The term "DISC" refers to a domestic international sales corporation. The term "DISC" means a corporation which, for a taxable year—

(1) Is duly incorporated and existing under the laws of any State or the District of Columbia,

(2) Satisfies the gross receipts test described in paragraph (b) of this section,

(3) Satisfies the assets test described in paragraph (c) of this section,

(4) Satisfies the capitalization requirement described in paragraph (d) of this section,

(5) Satisfies the requirement that an election to be treated as a DISC be in effect for such year, as described in paragraph (e) of this section,

(6) [Reserved]

(7) Maintains separate books and records, and

(8) Is not an ineligible corporation described in paragraph (f) of this section.

A corporation which satisfies the requirements described in subparagraphs (1) through (8) of this paragraph for a taxable year is treated as a separate corporation for Federal tax purposes and qualifies as a DISC, even though such corporation would not be treated (if it were not a DISC) as a corporate entity for Federal income tax purposes. An association cannot qualify as a DISC even if such association is taxable as a corporation pursuant to section 7701(a)(3). In addition, a corporation created or organized in, or under the law of, a possession of the United States cannot qualify as a DISC. The rules contained in this paragraph constitute a relaxation of the general rules of corporate substance otherwise applicable under the Code. The separate incorporation of a DISC is required under section 992(a)(1) to make it possible to keep a better record of the income which is subject to the special treatment provided by sections 991 through 996, but this does not necessitate in all other respects the separate relationships which otherwise would be required between a parent corporation and its subsidiary. However, this relaxation of the general rules of corporate substance does not apply with respect to other corporations in other

contexts. In the case of a transaction between a DISC and a person related to such DISC for purposes of section 482, see § 1.993-1(l) for rules for determining whether income is income of a DISC to which the intercompany pricing rules authorized by section 994 apply.

(b) ***Gross receipts test.*** In order for a corporation described in paragraph (a)(1) of this section to be a DISC for a taxable year, 95 percent or more of its gross receipts (as defined in § 1.993-6) for such year must consist of qualified export receipts (as defined in § 1.993-1). Gross receipts for a taxable year are determined in accordance with the method of accounting adopted by the corporation pursuant to § 1.991-1(b)(2). However, for rules regarding gross receipts in the case of a commission sale by such corporation, see § 1.993-6.

(c) ***Assets test*** —

(1) ***In general.*** In order for a corporation described in paragraph (a)(1) of this section to be a DISC for a taxable year, the adjusted basis (determined under section 1011) of its qualified export assets at the close of such year must equal or exceed 95 percent of the sum of the adjusted bases (determined under section 1011) of all assets of such corporation at the close of such year.

(2) ***Assets acquired to meet assets test.*** For purposes of determining whether the requirements of subparagraph (1) of this paragraph are satisfied by a corporation at the end of a taxable year, an asset which is a qualified export asset is treated as not being an asset of such corporation at such time if such asset is held for a total of 60 days or less and is acquired directly or indirectly through borrowing, unless the acquisition of such asset is established to the satisfaction of the Commissioner or his delegate to have been for bona fide purposes. Such acquisition is deemed to have been for bona fide purposes if, for example, it is made in the usual course of the corporation's trade or business.

(d) ***Capitalization requirement*** —

(1) ***In general.*** To qualify as a DISC for a taxable year, a corporation must have, on each day of that taxable year, only one class of stock. The par value (or, in the case of stock without par value, the stated value) of the corporation's outstanding stock must be on each day of the taxable year at least $2,500. In the case of a corporation which elects to be treated as a DISC for its first taxable year, the requirements of this paragraph (d)(1) are satisfied if the corporation has no more than one class of stock at any time during the year and if the par value (or, in the case of stock without par value, the stated value) of the corporation's outstanding stock is at least $2,500 on the last day of the period within which the election must be made and on each succeeding day of the year. For purposes of this paragraph (d)(1), the stated value of shares is the aggregate amount of the consideration paid for such shares which is not allotted to paid in surplus, or other surplus. The law of the State of incorporation of the DISC determines what consideration may be used to capitalize the DISC. A corporation will not be a qualified DISC unless at least $2,500 of valid consideration was used for this purpose. If a corporation has a realized or unrealized loss during a taxable year which results in the impairment of all or part of the capital required under this paragraph (d)(1), that impairment does not result in disqualification under this paragraph (d)(1), provided that the corporation does not take any legal or formal action under State law to reduce capital for that year below the amount required under this paragraph (d)(1).

(2) ***Treatment of debt payable to shareholders*** —

(i) ***In general.*** Purported debt of a DISC payable to any person, whether or not such person is a shareholder or a member of a controlled group (as defined in § 1.993-1(k)) of which such DISC is a member, is treated as debt for all purposes of the Code, provided that such purported debt—

(*a*) Would qualify as debt for purposes of the Code if the DISC were a corporation which did not qualify as a DISC,

(*b*) Qualifies under subdivision (ii) of this subparagraph, or

(*c*) Are trade accounts payable described in subdivision (iii) of this subparagraph.

Such debt is not treated as stock, and interest payable by the DISC on such debt is treated as interest by both the DISC and the holder of such debt. Payment of the principal of such debt by a DISC does not constitute the payment of a dividend by such DISC. The provisions of this subparagraph apply for a taxable year of a DISC, even though debt described in this subparagraph would be treated as stock of the corporation if such corporation did not qualify as a DISC for such year.

(ii) ***Safe harbor rule.*** Purported debt of a DISC will in no event be treated as other than debt for purposes of subdivision (i) of this subparagraph if—

(*a*) It is a written obligation to pay a sum certain on or before a fixed maturity date,

(*b*) Interest is payable on such purported debt at an arm's length interest rate (as determined under § 1.482-2(a)(2)), expressed as a fixed dollar amount or a fixed percentage of principal,

(*c*) Such purported debt is not convertible into stock or into other purported debt unless such other purported debt qualifies under this subparagraph as debt of the DISC,

(*d*) Such purported debt does not confer voting rights upon its holder, except in the event of default thereon, and

(*e*) Interest and principal are paid in accordance with the terms of such purported debt or with any modification of such terms consistent with (*a*) through (*d*) of this subdivision.

The determination of whether purported debt of a DISC constitutes debt described in this subdivision is made without regard to the proportion of debt of the DISC held by any of its shareholders, to the ratio of the outstanding debt of the DISC to its equity, or to the amount of outstanding debt of such DISC. The provisions of (*e*) of this subdivision do not prevent the modification of the terms of debt of a DISC where, for example, a DISC becomes unable to make timely payments of principal required under such terms, provided that such modification is consistent with (*a*) through (*d*) of this subdivision.

(iii) ***Trade accounts payable.*** Trade accounts payable of a DISC which arise in the normal course of its trade or business (such as in consideration for inventory or supplies) constitute debt of the DISC (whether or not such accounts payable are debt described in subdivision (i) (*a*) or (*b*) of this subparagraph), provided that such accounts are payable within 15 months after they arise. If such accounts are payable more than 15 months after they arise, they are debt of such DISC only if they are debt described in subdivision (i) (*a*) or (*b*) of this subparagraph.

(iv) ***Relation of subparagraph to other corporations.*** The provisions of this subparagraph generally constitute a relaxation of the ordinary rules used in determining whether purported debt of a corporation is debt or equity. This relaxation is in recognition of the principle that a corporation may qualify as a DISC even though it has relatively little capital. This relaxation does not apply with respect to purported debt of other corporations in other contexts. The provisions of subdivisions (i), (ii), and (iii) of this subparagraph apply only for taxable years for which a corporation qualifies (or is treated) as a DISC.

(3) ***Classes of stock.*** [Reserved]

(e) ***Election in effect.*** In order for a corporation to be a DISC for a taxable year, an election to be treated as a DISC must be made by such corporation pursuant to § 1.992-2 and must be in effect for such taxable year. A corporation does not become or remain a DISC solely by making such an election. A corporation is a DISC for a taxable year only if such an election is in effect for that year and the corporation also satisfies the requirements of paragraphs (a) through (d) of this section. See § 1.992-2 for rules regarding the time and manner of making such an election.

(f) ***Ineligible corporations.*** The following corporations shall not be eligible to be treated as a DISC—

(1) A corporation exempt from tax by reason of section 501,

(2) A personal holding company (as defined in section 542),

(3) A financial institution to which section 581 or 593 applies,

(4) An insurance company subject to the tax imposed by subchapter L,

(5) A regulated investment company (as defined in section 851(a)),

(6) A China Trade Act corporation receiving the special deduction provided in section 941(a), or

(7) An electing small business corporation (as defined in section 1371(b)).

(g) ***Status as DISC after having filed return as a DISC.*** Under section 992(a)(2), notwithstanding the failure of a corporation to meet the requirements of paragraph (a) of this section for a taxable year, such corporation will be treated as a DISC for purposes of the Code for such taxable year (and, thus, will not be able to claim that it is not eligible to be a DISC) if—

(1) Such corporation files a return as a DISC for such taxable year,

(2) Such corporation does not notify the district director, more than 30 days before the expiration of the period of limitation (including extensions thereof) on assessment for underpayment of tax for such taxable year (as determined under section 6501 and the regulations thereunder), that it is not a DISC for such taxable year, and

(3) The Internal Revenue Service has not issued, within such period of limitation (including extensions thereof) on assessment for underpayment of tax for such taxable year, a notice of deficiency based on a determination that such corporation is not a DISC for such taxable year.

A corporation is treated as a DISC, for all purposes, pursuant to the provisions of this paragraph for any taxable year for which it meets the requirements of this paragraph, even if such corporation is an ineligible corporation described in paragraph (f) of this section for such taxable year. Thus, for example, a corporation which is treated as a DISC for a taxable year pursuant to this paragraph is treated as a DISC for that taxable year for purposes of § 1.992-2(e)(3) (relating to the termination of a DISC election if a corporation is not a DISC for each of any 5 consecutive taxable years). If a corporation is treated as a

DISC for a taxable year pursuant to this paragraph, persons who held stock of such corporation at any time during such taxable year are treated, with respect to such stock, as holders of stock in a DISC for the period or periods during which they held such stock within such taxable year.

(h) ***Definition of "former DISC".*** Under section 992(a)(3), the term "former DISC" refers to a corporation which is not a DISC for a taxable year but which was (or was treated as) a DISC for a prior taxable year. However, a corporation is not a former DISC for a taxable year unless such corporation has, at the beginning of such taxable year, undistributed previously taxed income (as defined in § 1.996-3(c) or accumulated DISC income (as defined in § 1.996-3(b)). A corporation which is a former DISC for a taxable year is a former DISC for all purposes of the Code.

(Secs. 385 and 7805 of the Internal Revenue Code of 1954 (83 Stat. 613 and 68A Stat. 917; 26 U.S.C. 385 and 7805))

[T.D. 7323, 39 FR 34403, Sept. 25, 1974, as amended by T.D. 7420, 41 FR 20654, May 20, 1976; 41 FR 22267, June 2, 1976; T.D. 7747, 45 FR 86459, Dec. 31, 1980; T.D. 7920, 48 FR 50712, Nov. 3, 1983; T.D. 8371, 56 FR 55234, Oct. 25, 1991]

§ 1.992-2 Election to be treated as a DISC.

(a) ***Manner and time of election*** —

(1) ***Manner*** —

(i) ***In general.*** A corporation can elect to be treated as a DISC for a taxable year beginning after December 31, 1971. Except as provided in paragraph (a)(1)(ii) of this section, the election is made by the corporation filing Form 4876 with the service center with which it would file its income tax return if it were subject for such taxable year to all the taxes imposed by subtitle A of the Internal Revenue Code of 1954. The form shall be signed by any person authorized to sign a corporation return under section 6062, and shall contain the information required by such form. Except as provided in paragraphs (b)(3) and (c) of this section, such election to be treated as a DISC shall be valid only if the consent of every person who is a shareholder of the corporation as of the beginning of the first taxable year for which such election is effective is on or attached to such Form 4876 when filed with the service center.

(ii) ***Transitional rule for corporations electing during 1972.*** If the first taxable year for which an election by a corporation to be treated as a DISC is a taxable year beginning after December 31, 1971, and on or before December 31, 1972, such election may be made either in the manner prescribed in subdivision (i) of this subparagraph or by filing, at the place prescribed in subdivision (i) of this subparagraph, a statement captioned "Election to be Treated as a DISC." Such statement of election shall be valid only if the consent of each shareholder is filed with the service center in the form, and at the time, prescribed in paragraph (b) of this section. Such statement shall be signed by any person authorized to sign a corporation return under section 6062 and shall include the name, address, and employer identification number (if known) of the corporation, the beginning date of the first taxable year for which the election is effective, the number of shares of stock of the corporation issued and outstanding as of the earlier of the beginning of the first taxable year for which the election is effective or the time the statement is filed, the number of shares held by each shareholder as of the earlier of such dates, and the date and place of incorporation. As a condition of the election being effective, a corporation

which elects to become a DISC by filing a statement in accordance with this subdivision must furnish (to the service center with which the statement was filed) such additional information as is required by Form 4876 by March 31, 1973.

(2) *Time of making election* —

(i) ***In general.*** In the case of a corporation making an election to be treated as a DISC for its first taxable year, such election shall be made within 90 days after the beginning of such taxable year. In the case of a corporation which makes an election to be treated as a DISC for any taxable year beginning after March 31, 1972 (other than the first taxable year of such corporation), the election shall be made during the 90-day period immediately preceding the first day of such taxable year.

(ii) ***Transitional rules for certain corporations electing during 1972.*** In the case of a corporation which makes an election to be treated as a DISC for a taxable year beginning after December 31, 1971, and on or before March 31, 1972 (other than its first taxable year), the election shall be made within 90 days after the beginning of such taxable year.

(b) *Consent by shareholders* —

(1) *In general* —

(i) ***Time and manner of consent.*** Under paragraph (a)(1)(i) of this section, subject to certain exceptions, the election to be treated as a DISC is not valid unless each person who is a shareholder as of the beginning of the first taxable year for which the election is effective signs either the statement of consent on Form 4876 or a separate statement of consent attached to such form. A shareholder's consent is binding on such shareholder and all transferees of his shares and may not be withdrawn after a valid election is made by the corporation. In the case of a corporation which files an election to become a DISC for a taxable year beginning after December 31, 1972, if a person who is a shareholder as of the beginning of the first taxable year for which the election is effective does not consent by signing the statement of consent set forth on Form 4876, such election shall be valid (except in the case of an extension of the time for filing granted under the provisions of subparagraph (3) of this paragraph or paragraph (c) of this section) only if the consent of such shareholder is attached to the Form 4876 upon which such election is made.

(ii) ***Form of consent.*** A consent other than the statement of consent set forth on Form 4876 shall be in the form of a statement which is signed by the shareholder and which sets forth (*a*) the name and address of the corporation and of the shareholder and (*b*) the number of shares held by each such shareholder as of the time the consent is made and (if the consent is made after the beginning of the corporation's taxable year for which the election is effective) as of the beginning of such year. If the consent is made by a recipient of transferred shares pursuant to paragraph (c) of this section, the statement of consent shall also set forth the name and address of the person who held such shares as of the beginning of such taxable year and the number of such shares. Consent shall be made in the following form: “I (insert name of shareholder), a shareholder of (insert name of corporation seeking to make the election) consent to the election of (insert name of corporation seeking to make the election) to be treated as a DISC under section 992(b) of the Internal Revenue Code. The consent so made by me is irrevocable and is binding upon all transferees of my shares in (insert name of corporation seeking to make the election).” The consents of all shareholders may be incorporated in one statement.

(iii) ***Who may consent.*** Where stock of the corporation is owned by a husband and wife as community property (or the income from such stock is community property), or is owned by tenants in common, joint tenants, or tenants by the entirety, each person having a community interest in such stock or the income therefrom and each tenant in common, joint tenant, and tenant by the entirety must consent to the election. The consent of a minor shall be made by his legal guardian or by his natural guardian if no legal guardian has been appointed. The consent of an estate shall be made by the executor or administrator thereof. The consent of a trust shall be made by the trustee thereof. The consent of an estate or trust having more than one executor, administrator, or trustee, may be made by any executor, administrator, or trustee, authorized to make a return of such estate or trust pursuant to section 6012(b)(5). The consent of a corporation or partnership shall be made by an officer or partner authorized pursuant to section 6062 or 6063, as the case may be, to sign the return of such corporation or partnership. In the case of a foreign person, the consent may be signed by any individual (whether or not a U.S. person) who would be authorized under sections 6061 through 6063 to sign the return of such foreign person if he were a U.S. person.

(2) ***Transitional rule for corporations electing during 1972.*** In the case of a corporation which files an election to be treated as a DISC for a taxable year beginning after December 31, 1971, and on or before December 31, 1972, such election shall be valid only if the consent of each person who is a shareholder as of the beginning of the first taxable year for which such election is effective is filed with the service center with which the election was filed within 90 days after the first day of such taxable year or within the time granted for an extension of time for filing such consent. The form of such consent shall be the same as that prescribed in subparagraph (1) of this paragraph. Such consent shall be attached to the statement of election or shall be filed separately (with such service center) with a copy of the statement of election. An extension of time for filing a consent may be granted in the manner, and subject to the conditions, described in subparagraph (3) of this paragraph.

(3) ***Extension of time to consent.*** An election which is timely filed and would be valid except for the failure to attach the consent of any shareholder to the Form 4876 upon which the election was made or to comply with the 90-day requirement in subparagraph (2) of this paragraph or paragraph (c)(1) of this section, as the case may be, will not be invalid for such reason if it is shown to the satisfaction of the service center that there was reasonable cause for the failure to file such consent, and if such shareholder files a proper consent to the election within such extended period of time as may be granted by the Internal Revenue Service. In the case of a late filing of a consent, a copy of the Form 4876 or statement of election shall be attached to such consent and shall be filed with the same service center as the election. The form of such consent shall be the same as that set forth in paragraph (b)(1)(ii) of this section. In no event can any consent be made pursuant to this paragraph on or after the last day of the first taxable year for which a corporation elects to be treated as a DISC.

(c) ***Consent by holder of transferred shares*** —

(1) ***In general.*** If a shareholder of a corporation transfers—

(i) Prior to the first day of the first taxable year for which such corporation elects to be treated as a DISC, some or all of the shares held by him without having consented to such election, or

(ii) On or before the 90th day after the first day of the first taxable year for which such corporation elects to be treated as a DISC, some or all of the shares held by him as of the first day of such year (or if later, held by him as of the time such shares are issued) without having consented to such election, then consent may be made by any recipient of such shares on or before the 90th

day after the first day of such first taxable year. If such recipient fails to file his consent on or before such 90th day, an extension of time for filing such consent may be granted in the manner, and subject to the conditions, described in paragraph (b)(3) of this section. In addition, if the transfer occurs more than 90 days after the first day of such taxable year, an extension of time for filing such consent may be granted to such recipient only if it is determined under paragraph (b)(3) of this section that an extension of time would have been granted the transferor for the filing of such consent if the transfer had not occurred. A consent which is not attached to the original Form 4876 or statement of election (as the case may be) shall be filed with the same service center as the original Form 4876 or statement of election and shall have attached a copy of such original form or statement of election. The form of such consent shall be the same as that set forth in paragraph (b)(1)(ii) of this section. For the purposes of this paragraph, a transfer of shares includes any sale, exchange, or other disposition, including a transfer by gift or at death.

(2) ***Requirement for the filing of an amended Form 4876 or statement of election.*** In any case in which a consent to a corporation's election to be treated as a DISC is made pursuant to subparagraph (1) of this paragraph, such corporation must file an amended Form 4876 or statement of election (as the case may be) reflecting all changes in ownership of shares. Such form must be filed with the same service center with which the original Form 4876 or statement of election was filed by such corporation.

(d) ***Effect of election*** —

(1) ***Effect on corporation.*** A valid election to be treated as a DISC remains in effect (without regard to whether the electing corporation qualifies as a DISC for a particular year) until terminated by any of the methods provided in paragraph (e) of this section. While such election is in effect, the electing corporation is subject to sections 991 through 997 and other provisions of the Code applicable to DISC's for any taxable year for which it qualifies as a DISC (or is treated as qualifying as a DISC pursuant to § 1.992-1(g)). Such corporation is also subject to such provisions for any taxable year for which it is treated as a former DISC as a result of qualifying or being treated as a DISC for any taxable year for which such election was in effect.

(2) ***Effect on shareholders.*** A valid election by a corporation to be treated as a DISC subjects the shareholders of such corporation to the provisions of section 995 (relating to the taxation of the shareholders of a DISC or former DISC) and to all other provisions of the Code relating to the shareholders of a DISC or former DISC. Such provisions of the Code apply to any person who is a shareholder of a DISC or former DISC whether or not such person was a shareholder at the time the corporation elected to become a DISC.

(e) ***Termination of election*** —

(1) ***In general.*** An election to be treated as a DISC is terminated only as provided in subparagraph (2) or (3) of this paragraph.

(2) ***Revocation of election*** —

(i) ***Manner of revocation.*** An election by a corporation to be treated as a DISC may be revoked by the corporation for any taxable year of the corporation after the first taxable year for which the election is effective. Such revocation shall be made by the corporation filing a statement that the corporation revokes its election under section 992(b) to be treated as a DISC. Such statement shall indicate the corporation's name, address, employer identification number, and the first taxable year of the corporation for which the revocation is to be effective. The

statement shall be signed by any person authorized to sign a corporation return under section 6062. Such revocation shall be filed with the service center with which the corporation filed its election, except that, if it filed an annual information return under section 6011(e)(2), the revocation shall be filed with the service center with which it filed its last such return.

(ii) ***Years for which revocation is effective.*** If a corporation files a statement revoking its election to be treated as a DISC during the first 90 days of a taxable year (other than the first taxable year for which such election is effective), such revocation will be effective for such taxable year and all taxable years thereafter. If the corporation files a statement revoking its election to be treated as a DISC after the first 90 days of a taxable year, the revocation will be effective for all taxable years following such taxable year.

(3) ***Continued failure to be a DISC.*** If a corporation which has elected to be treated as a DISC does not qualify as a DISC (and is not treated as a DISC pursuant to § 1.992-1(g)) for each of any 5 consecutive taxable years, such election terminates and will not be effective for any taxable year after such fifth taxable year. Such termination will be effective automatically, without notice to such corporation or to the Internal Revenue Service. If, during any 5-year period for which an election is effective, the corporation should qualify as a DISC (or be treated as a DISC pursuant to § 1.992-1(g)) for a taxable year, a new 5-year period shall automatically start at the beginning of the following taxable year.

(4) ***Election after termination.*** If a corporation has made a valid election to be treated as a DISC and such election terminates in either manner described in subparagraph (2) or (3) of this paragraph, such corporation is eligible to reelect to be treated as a DISC at any time by following the procedures described in paragraphs (a) through (c) of this section. If a corporation terminates its election and subsequently reelects to be treated as a DISC, the corporation and its shareholders continue to be subject to sections 995 and 996 with respect to the period during which its first election was in effect. Thus, for example, distributions upon disqualification includible in the gross incomes of shareholders of a corporation pursuant to section 995(b)(2) continue to be so includible for taxable years for which a second election of such corporation is in effect without regard to the second election.

[T.D. 7323, 39 FR 34405, Sept. 25, 1974, as amended by T.D. 7420, 41 FR 20655, May 20, 1976]

§ 1.992-3 Deficiency distributions to meet qualification requirements.

(a) ***In general.*** A corporation which meets the requirements described in § 1.992-1 for treatment as a DISC for a taxable year, other than the 95 percent of gross receipts test described in § 1.992-1(b) or the 95-percent assets test described in § 1.992-1(c), or both tests, may nevertheless qualify as a DISC for such year by making deficiency distributions (attributable to its gross receipts other than qualified export receipts and its assets other than qualified export assets) if all of the following requirements are satisfied:

(1) The corporation distributes the amount determined under paragraph (b) of this section as a deficiency distribution. The amount of a deficiency distribution is determined without regard to the amount by which the corporation fails to meet either test.

(2) The reasonable cause requirements prescribed in paragraph (c)(1) of this section are satisfied with respect to both the corporation's failure to meet either test and its failure to make a deficiency distribution prior to the time the distribution is made.

(3) The corporation makes such deficiency distribution pro rata to all its shareholders.

(4) The corporation designates the distribution, at the time of the distribution, as a deficiency distribution, pursuant to section 992(c), to meet the qualification requirements to be a DISC. Such designation shall be in the form of a communication sent at the time of such distribution to each shareholder and to the service center with which the corporation has filed or will file its return for the taxable year to which the distribution relates. A corporation may not retroactively designate a prior distribution as a deficiency distribution to meet qualification requirements. Subject to the limitation described in paragraph (c)(3) of this section, a corporation may make a deficiency distribution with respect to a taxable year at any time after the close of such taxable year or, in the case of a deficiency distribution made on or before September 29, 1975, at any time during or after such taxable year.

See sections 246(d), 904(f), 995, and 996 for rules regarding the treatment of a deficiency distribution to meet qualification requirements by the shareholders and the corporation.

(b) ***Amount of deficiency distribution*** —

(1) ***In general.*** In order to meet the requirements of paragraph (a) of this section, the amount of a deficiency distribution must be, if the corporation fails to meet—

(i) The 95 percent of gross receipts test, the amount determined in subparagraph (2) of this paragraph,

(ii) The 95-percent assets test, the amount determined in subparagraph (3) of this paragraph, and

(iii) Both such tests, except as provided in subparagraph (4) of this paragraph, the sum of the amounts determined in subparagraphs (2) and (3) of this paragraph.

(2) ***Computation of deficiency distribution to meet 95 percent of gross receipts test*** —

(i) ***In general.*** If a corporation fails to meet the 95 percent of gross receipts test described in § 1.992-1(b) for its taxable year, the amount of the deficiency distribution required by this subparagraph is an amount equal to the sum of its taxable income (if any) from each transaction giving rise to gross receipts (as defined in § 1.993-6) which are not qualified export receipts (as defined in § 1.993-1). A corporation's taxable income from a transaction shall be the amount of such gross receipts from such transaction reduced only by (*a*) its cost of goods sold attributable to such gross receipts, and by (*b*) its expenses, losses, and other deductions properly apportioned or allocated thereto in a manner consistent with the rules set forth in § 1.861-8. For purposes of this subdivision, however, any expenses, losses, or other deductions which cannot definitely be allocated to some item or class of gross income in such manner shall not reduce such gross receipts. If the corporation is a commission agent for a principal in a transaction, the corporation's taxable income is the amount of the commission from such transaction reduced only by the amounts described in (*b*) of this subdivision.

(ii) ***Example.*** The provisions of this subparagraph may be illustrated by the following example:

> *Example.* (*a*) X and Y are calendar year taxpayers. X, a domestic manufacturing company, owns all the stock of Y, which seeks to qualify as a DISC for 1973. During 1973, X manufactures a machine which is eligible to be export property as defined in § 1.993-3. Y is made a commission agent with respect to exporting such machine. Thereafter, during 1973 Y is considered to receive gross receipts of $100,000, as determined under section 993(f), attributable to X's sale of the machine in a manner

which causes the gross receipts to be excluded receipts pursuant to section 993(a)(2) and, therefore, not qualified export receipts. Y's total gross receipts for 1973 are $1 million of which $900,000 (*i.e.,* 90 percent) are qualified export receipts. Therefore, Y does not satisfy the 95 percent of gross receipts test for 1973 because less than 95 percent of its gross receipts are qualified export receipts. Y has $9,000 of expenses properly apportioned or allocated to its gross income from such sale and $1,000 of other expenses which cannot definitely be allocated to some item or class of gross income, determined in a manner consistent with the rules set forth in § 1.861-8. In order to satisfy the 95 percent of gross receipts test for 1973, if the commission due from X to Y were $15,000, Y must make a deficiency distribution of $6,000 computed as follows:

Y's commission (gross income) from the transaction	$15,000
Less: Y's expenses apportioned or allocated to its gross income from the transaction	9,000
Required deficiency distribution by reason of $100,000 of gross receipts which are not qualified export receipts	6,000

(*b*) If the commission due from X to Y were $9,400, resulting in a net loss of $600 to Y ($9,400 to $10,000), Y must make a deficiency distribution of $400 computed as follows:

Y's commissions (gross income) from the transaction	$9,400
Less: Y's expenses apportioned or allocated to its gross income from the transaction	9,000
Required deficiency distribution by reason of $100,000 of gross receipts which are not qualified export receipts	400

(*c*) If the commission due from X to Y were $8,500, Y would not be required to make a deficiency distribution since, under this subparagraph, there would be no taxable income attributable to gross receipts from the sale.

(3) ***Computation of deficiency distribution to meet 95 percent assets test*** —

(i) ***In general.*** If a corporation fails to meet the 95 percent assets test described in § 1.992-1(c) for its taxable year, the amount of the deficiency distribution required by this subparagraph is an amount equal to the fair market value as of the last day of such taxable year of the assets which are not qualified export assets held by such corporation on such last day.

(ii) ***Asset held for more than 1 year.*** In the case of a corporation which holds continuously an asset which is not a qualified export asset at the close of more than 1 taxable year, it must distribute an amount equal to its fair market value (or, if greater, the amount determined under subparagraph (4) of this paragraph) only once if, at the close of the first such taxable year, such corporation reasonably believed that such asset was a qualified export asset. This subdivision shall not apply for any taxable year beginning after the date the corporation knows (or a reasonable man would have known) that an asset is not a qualified export asset and in order to qualify for each such year, the corporation must distribute the fair market value of such asset for each such year.

(4) ***Computation in the case of a failure to meet both tests as a result of a single transaction.*** If a corporation fails to meet both the 95 percent of gross receipts test and the 95 percent assets test for a taxable year, and if the corporation holds at the end of such year assets (other than cash or qualified export assets) which were received as proceeds of a sale or exchange during such year which resulted in gross receipts other than qualified export receipts, then the amount of the deficiency distribution required by this paragraph with respect to such sale or exchange and assets held is the larger of the amount required by subparagraph (2) of this paragraph with respect to the sale or exchange or the amount required by subparagraph (3) of this paragraph with respect to such assets held. Thus, for example, if a corporation sells property which is not a qualified export asset for $100, receives $85 in cash and a note for $15, and derives $25 of taxable income from the sale as determined under subparagraph (2) of this paragraph, it must distribute $25. If the provisions of this subparagraph are applied with respect to assets of a DISC (other than qualified export assets), such provisions do not apply to any property received as proceeds from a sale or exchange of such assets.

(c) ***Reasonable cause for failure*** —

(1) ***In general.*** If for a taxable year, a corporation has failed to meet the 95 percent of gross receipts test, the 95 percent assets test, or both tests, such corporation may satisfy any such test for such year by means of a deficiency distribution in the amount determined under paragraph (b) of this section only if the reasonable cause requirements of this subparagraph are satisfied. Such reasonable cause requirements are satisfied if—

(i) There is reasonable cause (as determined in accordance with subparagraph (2) of this paragraph) for such corporation's failure to satisfy such test and to make such distribution prior to the date on which it was made, the time limit in subparagraph (3) of this paragraph for making the distribution is satisfied, and interest (if required) is paid in the amount and in the manner prescribed by subparagraph (4) of this paragraph, or

(ii) The time and “70-percent” requirements of the reasonable cause test of paragraph (d) of this section are satisfied.

(2) ***Determination of reasonable cause.*** In general, whether a corporation's failure to meet the 95 percent of gross receipts test, the 95 percent assets test, or both tests for a taxable year and its failure to make a pro rata distribution prior to the date on which it was made will be considered for reasonable cause where the action or inaction which resulted in such failure occurred in good faith, such as failure to meet the 95 percent assets test resulting from blocked currency or expropriation, or failure to meet either test because of reasonable uncertainty as to what constitutes a qualified export receipt or a qualified export asset. For further examples, if a corporation's reasonable determination of the percentage of its total gross receipts that are qualified export receipts is subsequently redetermined to be less than 95 percent as a result of a price adjustment by the Internal Revenue

Service under section 482, or if the corporation has a casualty loss for which it receives an unanticipated insurance recovery which causes its qualified export receipts to be less than 95 percent of its total gross receipts, then the failure to satisfy the 95 percent of gross receipts test is considered to be due to reasonable cause.

(3) ***Time limit for deficiency distribution.*** Except as otherwise provided in this subparagraph, the time limit prescribed by this subparagraph for making a deficiency distribution is satisfied if the amount of the distribution required by paragraph (b) of this section is made within 90 days from the date of the first written notification to the corporation by the Internal Revenue Service that it had not satisfied the 95 percent of gross receipts test or the 95 percent assets test or both tests, for a taxable year. Upon a showing by the corporation that an extension of the 90-day time limit is reasonable and necessary, the Commissioner may grant such extension of such time limit. In any case in which a corporation contests the decision of the Internal Revenue Service that such corporation has not met the 95 percent of gross receipts test, the 95 percent assets test, or both tests, an extension of the 90-day time limit will be allowed until 30 days after the final determination of such contest. The date of the final determination of such contest shall, for purposes of section 992(c), be established in the manner specified in subdivisions (i) through (iv) of this subparagraph:

(i) The date of final determination by a decision of the United States Tax Court is the date upon which such decision becomes final, as prescribed in section 7481.

(ii) The date of final determination in a case which is contested in a court (and upon which there is a judgment) other than the Tax Court is the date upon which the judgment becomes final and will be determined on the basis of the facts and circumstances of each particular case. For example, ordinarily a judgment of a United States district court becomes final upon the expiration of the time allowed for taking an appeal, if no such appeal is duly taken within such time; and a judgment of the United States Court of Claims becomes final upon the expiration of the time allowed for filing a petition for certiorari if no such petition is duly filed within such time.

(iii) The date of a final determination by a closing agreement, made under section 7121, is the date such agreement is approved by the Commissioner.

(iv) A final determination under section 992(c) may be made by an agreement signed by the district director or director of the service center with which the corporation files its annual return or by such other official to which authority to sign has been delegated, and by or on behalf of the taxpayer. The agreement shall set forth the total amount of the deficiency distribution to be paid to the shareholders of the DISC for the taxable year or years. An agreement under this subdivision shall be sent to the taxpayer at his last known address by either registered or certified mail. For further guidance regarding the definition of last known address, see § 301.6212-2 of this chapter. If registered mail is used for such purpose, the date of registration is considered the date of final determination; if certified mail is used for such purpose, the date of postmark on the sender's receipt for such mail is considered the date of final determination. If the corporation makes a deficiency distribution before such registration or postmark date but on or after the date the district director or director of the service center or other official has signed the agreement, the date of signature by the district director or director of the service center or other official is considered the date of final determination. If the corporation makes a deficiency distribution before the district director or director of the service center or other official signs the agreement, the date of final determination is considered to be the date of the

making of the deficiency distribution. During any extension of time the interest charge provided in subparagraph (4) of this paragraph will continue to accrue at the rate provided for in such subparagraph.

(4) ***Payment of interest for delayed distribution*** —

(i) ***In general.*** If a corporation makes a deficiency distribution after the 15th day of the ninth month after the close of the taxable year with respect to which such distribution is made, such distribution will not be deemed to satisfy the 95 percent of gross receipts test or the 95 percent assets test for such year unless such corporation pays to the Internal Revenue Service a charge determined by multiplying (a) an amount equal to $4^{1}/_{2}$ percent of such distribution by (*b*) the number of its taxable years which begin (*1*) after the taxable year with respect to which the distribution is made and (*2*) before such distribution is made. Such charge must be paid, within the 30-day period beginning with the day on which such distribution is made, to the service center with which the corporation files its annual information return for its taxable year in which the distribution is made. For purposes of the Internal Revenue Code, such charge is considered interest.

(ii) ***Example.*** The provisions of subdivision (i) of this subparagraph may be illustrated by the following example:

Example. X corporation, which uses the calendar year as its taxable year, meets the 95 percent assets test but fails to meet the 95 percent of gross receipts test for 1972 and does not by September 15, 1973, make the deficiency distribution required by reason of its failure to meet such test. Assume that reasonable cause exists for the corporation's failure to meet the 95 percent of gross receipts test and failure to make the required deficiency distribution. If X makes the required deficiency distribution, in the amount of $10,000, on April 1, 1976, X must pay on or before April 30, 1976, to the service center with which it files its annual information return a charge of $1,800, computed as follows:

Deficiency distribution made by X	$10,000
Multiplied by 41/2 percent	.045
Intermediate product	450
Multiplied by: Number of X's taxable years beginning after 1972 and before April 1, 1976	4
Charge to be paid service center because of late deficiency distribution (which is considered interest)	1,800

(d) ***Certain distributions deemed for reasonable cause.*** If a corporation makes a distribution in the amount required by paragraph (b) of this section with respect to a taxable year on or before the 15th day of the ninth month after the close of such year, it will be deemed to have acted with reasonable cause with respect to its failure to satisfy the 95 percent of gross receipts test, the 95 percent assets test, or both tests, for such year and its failure to make such distribution prior to the date on which the distribution was made if—

(1) At least 70 percent of the gross receipts of such corporation for such taxable year consist of qualified export receipts, and

(2) The sum of the adjusted bases of the qualified export assets held by such corporation on the last day of each month of the taxable year equals or exceeds 70 percent of the sum of the adjusted bases of all assets held by the corporation on each such day.

[T.D. 7323, 39 FR 34407, Sept. 25, 1974; 39 FR 36009, Oct. 7, 1974, as amended by T.D. 7420, 41 FR 20655, May 20, 1976; T.D. 7854, 47 FR 51739, Nov. 17, 1982; T.D. 8939, 66 FR 2819, Jan. 12, 2001]

§ 1.992-4 Coordination with personal holding company provisions in case of certain produced film rents.

(a) ***In general.*** Section 992(d)(2) provides that a personal holding company is not eligible to be treated as a DISC. Section 543(a)(5)(B) provides that, for purposes of section 543, the term "produced film rents" means payments received with respect to an interest in a film for the use of, or the right to use, such film, but only to the extent that such interest was acquired before substantial completion of production of such film. Under section 992(e), if such produced film rents are included in the ordinary gross income (as defined in section 543(b)(1)) of a qualified subsidiary for a taxable year of such subsidiary, and such interest was acquired by such subsidiary from its parent, such interest is deemed (for purposes of the application of sections 541, 543(b)(1), and 992(d)(2), and § 1.992-1(f) for such taxable year) to have been acquired by such subsidiary at the time such interest was acquired by such parent. Thus, for example, if a parent acquires an interest in a film before it is substantially completed, then substantially completes such film prior to transferring an interest in such motion picture to a qualified subsidiary, the qualified subsidiary is considered as having acquired such interest prior to substantial completion of such motion picture for purposes of determining whether payments from the rental of such motion picture will be classified as produced film rents of such subsidiary. The provisions of section 992(e) and this section are not applicable in determining whether payments received with respect to an interest in a film are included in the ordinary gross income of a parent or a qualified subsidiary. Thus, even though a qualified subsidiary is treated pursuant to this section as having acquired an interest in a film at the time such interest was acquired by such subsidiary's parent, payments received by such parent with respect to such interest prior to the transfer of such interest to such subsidiary are includible in the ordinary gross income of such parent and not includible in the ordinary gross income of such subsidiary.

(b) ***Definitions*** —

(1) ***Qualified subsidiary.*** For purposes of this section, a corporation is a qualified subsidiary for a taxable year if—

(i) Such corporation was established for the purpose of becoming a DISC,

(ii) Such corporation would qualify (or be treated) as a DISC for such taxable year if it is not a personal holding company, and

(iii) On every day of such taxable year on which shares of such corporation are outstanding, at least 80 percent of such shares are held directly by a second corporation.

(2) ***Parent.*** For purposes of this section, the term "parent" means a second corporation referred to in subparagraph (1)(iii) of this paragraph.

[T.D. 7323, 39 FR 34409, Sept. 25, 1974]

§ 1.993-1 Definition of qualified export receipts.

(a) ***In general.*** For a corporation to qualify as a DISC, at least 95 percent of its gross receipts for a taxable year must consist of qualified export receipts. Under section 993(a), the term "qualified export receipts" means any of the eight amounts described in paragraphs (b) through (i) of this section, except to the extent that any of the eight amounts is an excluded receipt within the meaning of paragraph (j) of this section. For purposes of this section and §§ 1.993-2 through 1.993-6—

(1) ***DISC.*** All references to a DISC mean a DISC, except when the context indicates that such term means a corporation in the process of meeting the conditions necessary for that corporation to become a DISC, or a corporation being tested as to whether it qualifies as a DISC.

(2) ***Sale, lease, and license.*** The term "sale" includes an exchange or other disposition and the term "lease" includes a rental or a sublease. The term "license" includes a sublicense. All rules under this section and §§ 1.993-2 through 1.993-6 applicable to leases of export property apply in the same manner to licenses of export property. See § 1.993-3(f)(3) for a description of intangible property which cannot be export property.

(3) ***Gross receipts.*** The term "gross receipts" is defined by section 993(f) and § 1.993-6.

(4) ***Qualified export assets.*** The term "qualified export assets" is defined by section 993(b) and § 1.993-2.

(5) ***Export property.*** The term "export property" is defined by section 993(c) and § 1.993-3.

(6) ***Related person.*** The term "related person" means a person who is related to another person if either immediately before or after a transaction—

(i) The relationship between such persons would result in a disallowance of losses under section 267 (relating to disallowance of losses, etc., between related taxpayers), or section 707(b) (relating to losses disallowed, etc., between partners and controlled partnerships), and the regulations thereunder, or

(ii) Such persons are members of the same controlled group of corporations, as defined in section 1563(a) (relating to definition of controlled group of corporations), except that

(*a*) "more than 50 percent" shall be substituted for "at least 80 percent" each place it appears in section 1563(a) and the regulations thereunder, and

(*b*) the provisions of section 1563(b) shall not apply in determining whether such persons are members of the same controlled group.

(7) ***Related supplier.*** The term "related supplier" is defined by § 1.994-1(a)(3)(ii).

(8) ***Controlled group.*** The term "controlled group" is defined by paragraph (k) of this section.

(b) ***Sales of export property.*** Qualified export receipts of a DISC include gross receipts from the sale of export property by such DISC, or by any principal for whom such DISC acts as a commission agent (whether or not such principal is a related supplier), pursuant to the terms of a contract entered into with a purchaser by such DISC or by such principal at any time or by any other person and assigned to such DISC or such principal at any time prior to the shipment of such property to the purchaser. Any agreement, oral or written, which constitutes a contract at law, satisfies the contractual requirement of this paragraph. Gross receipts from the sale of export property, whenever received, do not constitute qualified export receipts unless the seller (or the corporation acting as commission agent for the seller) is a DISC at the time of the

shipment of such property to the purchaser. For example, if a corporation which sells export property under the installment method is not a DISC for the taxable year in which the property is shipped to the purchaser, gross receipts from such sale do not constitute qualified export receipts for any taxable year of the corporation.

(c) ***Leases of export property*** —

(1) ***In general.*** Qualified export receipts of a DISC include gross receipts from the lease of export property provided that—

(i) Such property is held by such DISC (or by a principal for whom such DISC acts as commission agent with respect to the lease) either as an owner or lessee at the beginning of the term of such lease, and

(ii) Such DISC qualified (or was treated) as a DISC for its taxable year in which the term of such lease began.

(2) ***Prepayment of lease receipts.*** If part or all of the gross receipts from a lease of property are prepaid, then—

(i) All such prepaid gross receipts are qualified export receipts of a DISC if it is reasonably expected at the time of such prepayment that throughout the term of such lease they would be qualified export receipts if received not as a prepayment; or

(ii) If it is reasonably expected at the time of such prepayment that throughout the term of such lease they would not be qualified export receipts if received not as a prepayment, then only those prepaid receipts, for the taxable years of the DISC for which they would be qualified export receipts, are qualified export receipts.

Thus, for example, if a lessee makes a prepayment of the first and last years' rent, and it is reasonably expected that the leased property will be export property for the first half of the lease period but not the second half of such period, the amount of the prepayment which represents the first year's rent will be considered qualified export receipts if it would otherwise qualify, whereas the amount of the prepayment which represents the last year's rent will not be considered qualified export receipts.

(d) ***Related and subsidiary services*** —

(1) ***In general.*** Qualified export receipts of a DISC include gross receipts from services furnished by such DISC which are related and subsidiary to any sale or lease (as described in paragraph (b) or (c) of this section) of export property by such DISC or with respect to which such DISC acts as a commission agent, provided that such DISC derives qualified export receipts from such sale or lease. Such services may be performed within or without the United States.

(2) ***Services furnished by DISC.*** Services are considered to be furnished by a DISC for purposes of this paragraph if such services are provided by—

(i) The person who sold or lease the export property to which such services are related and subsidiary, provided that the DISC acts as a commission agent with respect to the sale or lease of such property and with respect to such services,

(ii) The DISC as principal, or any other person pursuant to a contract between such person and such DISC, provided the DISC acted as principal or commission agent with respect to the sale or lease of such property, or

(iii) A member of the same controlled group as the DISC where the sale or lease of the export property is made by another member of such controlled group provided, however, that the DISC act as principal or commission agent with respect to such sale or lease and as commission agent with respect to such services.

(3) ***Related services.*** A service is related to a sale or lease of export property if—

(i) Such service is of the type customarily and usually furnished with the type of transaction in the trade or business in which such sale or lease arose and

(ii) The contract to furnish such service—

(*a*) Is expressly provided for in or is provided for by implied warranty under the contract of sale or lease,

(*b*) Is entered into on or before the date which is 2 years after the date on which the contract under which such sale or lease was entered into, provided that the person described in subparagraph (2) of this paragraph which is to furnish such service delivers to the purchaser or lessor a written offer or option to furnish such services on or before the date on which the first shipment of goods with respect to which the service is to be performed is delivered, or

(*c*) Is a renewal of the services contract described in (*a*) or (*b*) of this subdivision. Services which may be related to a sale or lease of export property include but are not limited to warranty service, maintenance service, repair service, and installation service. Transportation (including insurance related to such transportation) may be related to a sale or lease of export property, provided that the cost of such transportation is included in the sale price or rental of the property or, if such cost is separately stated, is paid by the DISC (or its principal) which sold or leased the property to the person furnishing the transportation service. Financing or the obtaining of financing for a sale or lease is not a related service for purposes of this paragraph.

(4) ***Subsidiary services*** —

(i) ***In general.*** Services related to a sale or lease of export property are subsidiary to such sale or lease only if it is reasonably expected at the time of such sale or lease that the gross receipts from all related services furnished by the DISC (as defined in subparagraphs (2) and (3) of this paragraph) will not exceed 50 percent of the sum of (a) the gross receipts from such sale or lease and (b) the gross receipts from related services furnished by the DISC (as described in subparagraph (2) of this paragraph). In the case of a sale, reasonable expectations at the time of the sale are based on the gross receipts from all related services which may reasonably be expected to be performed at any time before the end of the 10-year period following the date of such-sale. In the case of a lease, reasonable expectations at the time of the lease are based on the gross receipts from all related services which may reasonably be expected to be performed at any time before the end of the term of such lease (determined without regard to renewal options).

(ii) ***Allocation of gross receipts from services.*** In determining whether the services related to a sale or lease of export property are subsidiary to such sale or lease, the gross receipts to be treated as derived from the furnishing of services may not be less than the amount of gross receipts reasonably allocated to such services as determined under the facts and circumstances of each case without regard to whether—

(*a*) Such services are furnished under a separate contract or under the same contract pursuant to which such sale or lease occurs or

(*b*) The cost of such services is specified in the contract of sale or lease.

(iii) ***Transactions involving more than one item of export property.*** If more than one item of export property is sold or leased in a single transaction pursuant to one contract, the total gross receipts from such transaction and the total gross receipts from all services related to such transaction are each taken into account in determining whether such services are subsidiary to such transaction. However, the provisions of this subdivision apply only if such items could be included in the same product line, as determined under § 1.994-1(c)(7).

(iv) ***Renewed service contracts.*** If under the terms of a contract for related services, such contract is renewable within 10 years after a sale of export property, or during the term of a lease of export property, related services to be performed under the renewed contract are subsidiary to such sale or lease if it is reasonably expected at the time of such renewal that the gross receipts from all related services which have been and which are to be furnished by the DISC (as described in subparagraph (2) of this paragraph) will not exceed 50 percent of the sum of

(*a*) the gross receipts from such sale or lease and

(*b*) the gross receipts from related services furnished by the DISC (as so described). Reasonable expectations are determined as provided in subdivision (i) of this subparagraph.

(v) ***Parts used in services.*** In a services contract described in subparagraph (3) of this paragraph provides for the furnishing of parts in connection with the furnishing of related services, gross receipts from the furnishing of such parts are not taken into account in determining whether under this subparagraph the services are subsidiary. See paragraph (b) or (c) of this section to determine whether the gross receipts from the furnishing of parts consitute qualified export receipts. See § 1.993-3(c)(2)(iv) and (e)(3) for rules regarding the treatment of such parts with respect to the manufacture of export property and the foreign content of such property, respectively.

(5) ***Relation to leases.*** If the gross receipts for services which are related and subsidiary to a lease of property have been prepaid at any time for all such services which are to be performed before the end of the term of such lease, then as of the time of the prepayment the rules in paragraph (c)(2) of this section (relating to prepayment of lease receipts) will determine whether prepaid services under this subdivision are qualified export receipts. Thus, for example if it is reasonably expected that leased property will be export property for the first year of the term of the lease but will not be export property for the second year of the term, prepaid gross receipts for related and subsidiary services to be furnished in the first year may be qualified export receipts. However, any prepaid gross receipts for such services to be furnished in the second year cannot be qualified export receipts.

(6) ***Relation with export property determination.*** The determination as to whether gross receipts from the sale or lease of export property constitute qualified export receipts does not depend upon whether services connected with such sale or lease are related and subsidiary to such sale or lease. Thus, for example, assume that a DISC receives gross receipts of $1,000 from the sale of export property and gross, receipts of $1,100 from installation and maintenance services which are to be furnished by such DISC within 10 years after the sale and which are related to such sale. The $1,100 which the DISC receives for such services would not be qualified export receipts since the gross receipts from the services exceed 50 percent of the sum of the gross receipts from the sale and the gross receipts

from the related services furnished by such DISC. The $1,000 which the DISC receives from the sale of export property would, however, be a qualified export receipt if the sale met the requirements of paragraph (b) of this section.

(e) ***Gains from sales of certain qualified export assets.*** Qualified export receipts of a DISC include gross receipts from the sale by such DISC of any assets (wherever located) which, as of the date of such sale, are qualified export assets as defined in § 1.993-2 even though such assets are not export property (as defined in § 1.993-3). Gross receipts are derived from the sale of such assets only where such sale results in recognized gain (see § 1.993-6(a)). For purposes of this paragraph, losses from the sale of such qualified export assets shall not be taken into account for purposes of determining the DISC's qualified export receipts.

(f) ***Dividends.*** Qualified export receipts of a DISC for a taxable year include all dividends includible in the gross income of such DISC for such taxable year with respect to the stock of related foreign export corporations (as defined in § 1.993-5) and all amounts includible in the gross income of such DISC with respect to such corporations pursuant to section 951 (relating to amounts included in the gross income of U.S. shareholders of controlled foreign corporations).

(g) ***Interest on obligations which are qualified export assets.*** Qualified export receipts of a DISC include interest on any obligation which is a qualified export asset of such DISC, including any amount includible in gross income as interest (such as, for example, an amount treated as original issue discount pursuant to section 1232) or as imputed interest under section 483. Gain from the sale of obligations described in this paragraph is treated (to the extent such gain is not treated as interest on such obligations) as qualified export receipts pursuant to paragraph (e) of this section.

(h) ***Engineering and architectural services*** —

(1) ***In general.*** Qualified export receipts of a DISC include gross receipts from engineering services (as described in subparagraph (5) of this paragraph) or architectural services (as described in subparagraph (5) of this paragraph) or architectural services (as described in subparagraph (6) of this paragraph) furnished by such DISC (as described in subparagraph (7) of this paragraph) for a construction project (as defined in subparagraph (8) of this paragraph) located, or proposed for location, outside the United States. Such services may be performed within or without the United States.

(2) ***Services included.*** Engineering and architectural services include feasibility studies for a proposed construction project whether or not such project is ultimately initiated.

(3) ***Excluded services.*** Engineering and architectural services do not include—

(i) Services connected with the exploration for minerals or

(ii) Technical assistance or knowhow.

For purposes of this paragraph, the term “technical assistance or knowhow” includes activities or programs designed to enable business, commerce, industrial establishments, and governmental organizations to acquire or use scientific, architectural, or engineering information.

(4) ***Other services.*** Receipts from the performance of construction activities other than engineering and architectural services constitute qualified export receipts to the extent that such activities are related and subsidiary services (within the meaning of paragraph (d) of this section) with respect to a sale or lease of export property.

(5) ***Engineering services.*** For purposes of this paragraph, engineering services in connection with any construction project (within the meaning of subparagraph (8) of this paragraph) include any professional services requiring engineering education, training, and experience and the application of special knowledge of the mathematical, physical, or engineering sciences to such professional services as consultation, investigation, evaluation, planning, design, or responsible supervision of construction for the purpose of assuring compliance with plans, specifications, and design.

(6) ***Architectural services.*** For purposes of this paragraph, architectural services include the offering or furnishing of any professional services such as consultation, planning, aesthetic, and structural design, drawings and specifications, or responsible supervision of construction (for the purpose of assuring compliance with plans, specifications, and design) or erection, in connection with any construction project (within the meaning of subparagraph (8) of this paragraph).

(7) ***Definition of "furnished by such DISC".*** For purposes of this paragraph, architectural and engineering services are considered furnished by a DISC if such services are provided—

(i) By the DISC,

(ii) By another person (whether or not a United States person) pursuant to a contract entered into by such person with the DISC at any time prior to the furnishing of such services, provided that the DISC acts as principal with respect to the furnishing of such services, or

(iii) By another person (whether or not a United States person) pursuant to a contract for the furnishing of such services entered into at any time prior to the furnishing of such services provided that the DISC acts as commission agent with respect to such services.

(8) ***Definition of "construction project".*** For purposes of this paragraph, the term "construction project" includes the erection, expansion, or repair (but not including minor remodeling or minor repairs) of new or existing buildings or other physical facilities including, for example, roads, dams, canals, bridges, tunnels, railroad, tracks, and pipelines. The term also includes site grading and improvement and installation of equipment necessary for the construction. Gross receipts from the sale or lease of construction equipment are not qualified export receipts unless such equipment is export property (as defined in § 1.993-3).

(i) ***Managerial services*** —

(1) ***In general.*** Qualified export receipts of a first DISC for its taxable year include gross receipts from the furnishing of managerial services provided for another DISC, which is not a related person, to aid such unrelated DISC in deriving qualified export receipts, provided that at least 50 percent of the gross receipts of the first DISC for such year consists of qualified export receipts derived from the sale or lease of export property and the furnishing of related and subsidiary services, as described in paragraph (b), (c), and (d) of this section, respectively.

For purposes of this paragraph, managerial services are considered furnished by a DISC if such services are provided—

(i) By the first DISC,

(ii) By another person (whether or not a United States person) pursuant to a contract entered into by such person with the first DISC at any time prior to the furnishing of such services, provided that the first DISC acts as principal with respect to the furnishing of such services, or

(iii) By another person (whether or not a United States person) pursuant to a contract for the furnishing of such services entered into at any time prior to the furnishing of such services provided that the DISC acts as commission agent with respect to such services.

(2) ***Definition of "managerial services."*** The term "managerial services" as used in this paragraph means activities relating to the operation of another unrelated DISC which derives qualified export receipts from the sale or lease of export property and from the furnishing of services related and subsidiary to such sales or leases. Such term includes staffing and operational services necessary to operate such other DISC, but does not include legal, accounting, scientific, or technical services. Examples of managerial services are:

(i) Export market studies,

(ii) making shipping arrangements, and

(iii) contracting potential foreign purchasers.

(3) ***Status of recipient of managerial services*** —

(i) ***In general.*** Qualified export receipts of a first DISC include receipts from the furnishing of managerial services during any taxable year of a recipient if such recipient qualifies as a DISC (within the meaning of § 1.992-1(a) for such taxable year.

(ii) ***Recipient deemed to qualify as a DISC.*** For purposes of subdivision (i) of this subparagraph, a recipient is deemed to qualify as a DISC for its taxable year if the first DISC obtains from such recipient a copy of such recipient's election to be treated as a DISC as described in § 1.992-2(a) together with such recipient's sworn statement that such election has been filed with the Internal Revenue Service Center. The recipient may mark out the names of its shareholders on a copy of its election to be treated as a DISC before submitting it to the first DISC. The copy of the election and the sworn statement of such recipient must be received by the first DISC within 6 months after the beginning of the first taxable year of the recipient during which such first DISC furnishes managerial services for such recipient. The copy of the election and the sworn statement of the recipient need not be obtained by the first DISC for subsequent taxable years of the recipient.

(iii) ***Recipient not treated as a DISC.*** For purposes of subdivision (i) of this subparagraph, a recipient of managerial services is not treated as a DISC with respect to such services performed during a taxable year for which such recipient does not qualify as a DISC if the DISC performing such services does not believe or if a reasonable person would not believe (taking into account the furnishing DISC's managerial relationship with such recipient DISC) at the beginning of such taxable year that the recipient will qualify as a DISC for such taxable year.

(j) ***Excluded receipts*** —

(1) ***In general.*** Notwithstanding the provisions of paragraphs (b) through (i) of this section, qualified export receipts of a DISC do not include any of the five amounts described in subparagraphs (2) through (6) of this paragraph.

(2) ***Sales and leases of property for ultimate use in the United States.*** Property which is sold or leased for ultimate use in the United States does not constitute export property. See § 1.993-3(d)(4) (relating to determination of where the ultimate use of the property occurs). Thus, qualified export receipts of a DISC described in paragraph (b) or (c) of this section do not include gross receipts of the DISC from the sale or lease of such property.

(3) ***Sales of export property accomplished by subsidy.*** Qualified export receipts of a DISC do not include gross receipts described in paragraph (b) of this section if the sale of export property (whether or not such property consists of agricultural products) is pursuant to any of the following:

(i) The development loan program, or grants under the technical cooperation and development grants program of the Agency for International Development, or grants under the military assistance program administered by the Department of Defense, pursuant to the Foreign Assistance Act of 1961, as amended (22 U.S.C. 2151), unless the DISC shows to the satisfaction of the district director that, under the conditions existing at the time of the sale, the purchaser had a reasonable opportunity to purchase, on competitive terms and from a seller who was not a U.S. person, goods which were substantially identical to such property and which were not manufactured, produced, grown, or extracted (as described in § 1.993-3(c)) in the United States,

(ii) The Pub. L. 480 program authorized under title I of the Agricultural Trade Development and Assistance Act of 1954, as amended (7 U.S.C. 1691, 1701-1710),

(iii) For taxable years ending before January 1, 1974, the Barter program of the Commodity Credit Corporation authorized by section 4(h) of the Commodity Credit Corporation Charter Act, as amended (15 U.S.C. 714b(h)), and section 303 of the Agricultural Trade Development and Assistance Act of 1954, as amended (7 U.S.C. 1692) but only if the taxpayer treats such sales as sales giving rise to excluded receipts,

(iv) The Export Payment program of the Commodity Credit Corporation authorized by sections 5(d) and (f) of the Commodity Credit Corporation Charter Act, as amended (15 U.S.C. 714c (d) and (f)),

(v) The section 32 export payment programs authorized by section 32 of the Act of August 24, 1935, as amended (7 U.S.C. 612c), and

(vi) For taxable years beginning after November 3, 1972, the Export Sales program of the Commodity Credit Corporation authorized by sections 5 (d) and (f) of the Commodity Credit Corporation Charter Act, as amended (15 U.S.C. 714c (d) and (f)), other than the GSM-4 program provided under 7 CFR part 1488, and section 407 of the Agricultural Act of 1949, as amended (7 U.S.C. 1427), for the purpose of disposing of surplus agricultural commodities and exporting or causing to be exported agricultural commodities, except that for taxable years beginning on or before November 3, 1972, the taxpayer may treat such sales as sales giving rise to excluded receipts.

(4) ***Sales or lease of export property and furnishing of engineering or architectural services for use by the United States*** —

(i) ***In general.*** Qualified export receipts of a DISC do not include gross receipts described in paragraph (b), (c), or (h) of this section if a sale or lease of export property, or the furnishing of engineering or architectural services, is for use by the United States or an instrumentality thereof in any case in which any law or regulation requires in any manner the purchase or lease of property manufactured, produced, grown, or extracted in the United States or requires the use of engineering or architectural services performed by a U.S. person. For example, a sale by a DISC of export property to the Department of Defense for use outside the United States would not produce qualified export receipts for such DISC if the Department of Defense purchased such property from appropriated funds subject to any provisions of the Armed Services Procurement Regulations (32 CFR subchapter A, part 6, subpart A) or any appropriations act for

the Department of Defense for the applicable year which restricts the availability of such appropriated funds to the procurement of items which are grown, reprocessed, reused, or produced in the United States.

(ii) ***Direct or indirect sales or leases.*** Any sale or lease of export property is for use by the United States or an instrumentality thereof is such property is sold or leased by a DISC (or by a principal for whom such DISC acts as commission agent) to—

(*a*) A person who is a related person with respect to such DISC or such principal and who sells or leases such property for use by the United States or an instrumentality thereof or

(*b*) A person who is not a related person with respect to such DISC or such principal if, at the time of such sale or lease, there is an agreement or understanding that such property will be sold or leased for use by the United States or an instrumentality thereof (or if a reasonable person would have known at the time of such sale or lease that such property would be sold or leased for use by the United States or an instrumentality thereof) within 3 years after such sale or lease.

(iii) ***Excluded programs.*** The provisions of subdivisions (i) and (ii) of this subparagraph do not apply in the case of a purchase by the United States or an instrumentality thereof if such purchase is pursuant to—

(*a*) The Foreign Military Sales Act, as amended (22 U.S.C. 2751 *et seq.*), or a program under which the U.S. Government purchases property for resale, on commercial terms, to a foreign government or agency or instrumentality thereof, or

(*b*) A program (whether bilateral or multilateral) under which sales to the U.S. Government are open to international competitive bidding.

(5) ***Services.*** Qualified export receipts of a DISC do not include gross receipts described in paragraph (d) of this section (concerning related and subsidiary services) if the services from which such gross receipts are derived are related and subsidiary to the sale or lease of property which results in excluded receipts pursuant to this paragraph.

(6) ***Receipts within controlled group*** —

(i) ***In general.*** Gross receipts of a corporation do not constitute qualified export receipts for any taxable year of such corporation if—

(*a*) At the time of the sale, lease, or other transaction resulting in such gross receipts, such corporation and the person from whom such receipts are directly or indirectly derived (whether or not such corporation and such person are the same person) are members of the same controlled group (as defined in paragraph (k) of this section) and

(*b*) Such corporation and such person each qualifies (or is treated under section 992(a)(2)) as a DISC for its taxable year in which its receipts arise.

Thus, for example, assume that R, S, X, and Y are members of the same controlled group and that X and Y are DISC's. If R sells property to S and pays X a commission relating to that sale and if S sells the same property to an unrelated foreign party and pays Y a commission relating to that sale, the receipts received by X from the sale of such property by R to S will be considered to be derived from Y, a DISC which is a member of the same controlled group as X, and thus will not result in qualified export receipts to X. The receipts received by Y from the sale

to an unrelated foreign party may, however, result in qualified export receipts to Y. For another example, if R and S both assign the commissions to X, receipts derived from the sale from R to S will be considered to be derived from X acting as commission agent for S and will not result in qualified export receipts to X. Receipts derived by X from the sale of property by S to an unrelated foreign party, may, however, constitute qualified export receipts.

(ii) ***Leased property.*** See § 1.993-3(f)(2) regarding property not constituting export property in certain cases where such property is leased to any corporation which is a member of the same controlled group as the lessor.

(k) ***Definition of "controlled group".*** For purposes of sections 991 through 996 and the regulations thereunder, the term "controlled group" has the same meaning as is assigned to the term "controlled group of corporations" by section 1563(a), except that

(1) the phrase "more than 50 percent" is substituted for the phrase "at least 80 percent" each place the latter phrase appears in section 1563(a), and

(2) section 1563(b) shall not apply. Thus, for example, a foreign corporation subject to tax under section 881 may be a member of a controlled group. Furthermore, two or more corporations (including a foreign corporation) are members of a controlled group at any time such corporations meet the requirements of section 1563(a) (as modified by this paragraph).

(l) ***DISC's entitlement to income*** —

(1) ***Application of section 994.*** A corporation which meets the requirements of § 1.992-1(a) to be treated as a DISC for a taxable year is entitled to income, and the intercompany pricing rules of section 994(a)(1) or (2) apply, in the case of any transactions described in § 1.994-1(b) between such DISC and its related supplier (as defined in § 1.994-1(a)(3)). For purposes of this subparagraph, such DISC need not have employees or perform any specific function.

(2) ***Other transactions.*** In the case of a transaction to which the provisions of subparagraph (1) of this paragraph do not apply but from which a DISC derives gross receipts, the income to which the DISC is entitled as a result of the transaction is determined pursuant to the terms of the contract for such transaction and, if applicable, section 482 and the regulations thereunder.

(3) ***Examples.*** The provisions of this paragraph may be illustrated by the following examples:

Example 1. P Corporation forms S Corporation as a wholly-owned subsidiary. S qualifies as a DISC for its taxable year. S has no employees on its payroll. S is granted a franchise with respect to specified exports of P. P will sell such exports to S for resale by S. Such exports are of a type which produce qualified export receipts as defined in paragraph (b) of this section. P's sales force will solicit orders in the name of S using S's order forms. S places orders with P only when S itself has received orders. No inventory is maintained by S. P makes shipments directly to customers of S. Employees of P will act for S and billings and collections will be handled by P in the name of S. Under these facts, the income derived by S for such taxable year from the purchase and resale of the specified export is treated for Federal income tax purposes as the income of S, and the amount of income allocable to S will be determined under section 994 of the Code.

Example 2. P Corporation forms S Corporation as a wholly-owned subsidiary. S qualifies as a DISC for its taxable year. S has no employees on its payroll. S is granted a sales franchise with respect to specified exports of P and will receive commissions with respect to such exports. Such

exports are of a type which will produce gross receipts for S which are qualified export receipts as defined in paragraph (b) of this section. P's sales force will solicit orders in the name of P. Billings and collections are handled directly by P. Under these facts, the commissions paid to S for such taxable year with respect to the specified exports shall be treated for Federal income tax purposes as the income of S, and the amount of income allocable to S is determined under section 994 of the Code.

[T.D. 7514, 42 FR 55454, Oct. 17, 1977; 42 FR 60910, Nov. 30, 1977, as amended by T.D. 7854, 47 FR 51739, Nov. 17, 1982]

§ 1.993-2 Definition of qualified export assets.

(a) ***In general.*** For a corporation to qualify as a DISC, at the close of its taxable year it must have qualified export assets with adjusted bases equal to at least 95 percent of the sum of the adjusted bases of all its assets. An asset which is a qualified export asset under more than one paragraph of this section shall be taken into account only once in determining the sum of the adjusted bases of all qualified export assets. Under section 993(b), the qualified export assets held by a corporation are—

(1) Export property as defined in § 1.993-3 (see paragraph (b) of this section),

(2) Business assets described in paragraph (c) of this section,

(3) Trade receivables described in paragraph (d) of this section,

(4) Temporary investments to the extent described in paragraph (e) of this section,

(5) Producer's loans as defined in § 1.993-4 (see paragraph (f) of this section),

(6) Stock or securities (described in paragraph (g) of this section) of related foreign export corporations as defined in § 1.993-5,

(7) Export-Import Bank and other obligations described in paragraph (h) of this section,

(8) Financing obligations described in paragraph (i) of this section, and

(9) Funds awaiting investment described in paragraph (j) of this section.

(b) ***Export property.*** In general, export property is certain property held for sale or lease which meets the requirements of § 1.993-3.

(c) ***Business assets.*** For purposes of this section, business assets are assets used by a DISC (other than as a lessor) primarily in connection with—

(1) The sale, lease, storage, handling, transportation, packaging, assembly, or servicing of export property, or

(2) The performance of engineering or architectural services (described in § 1.993-1(h)) or managerial services (described in § 1.993-1(i)) in furtherance of the production of qualified export receipts.

Assets used primarily in the manufacture, production, growth, or extraction (within the meaning of § 1.993-3(c)) of property are not business assets.

(d) ***Trade receivables*** —

(1) ***In general.*** For purposes of this section, trade receivables are accounts receivable and evidences of indebtedness which arise by reason of transactions of such corporation or of another corporation which is a DISC and which is a member of a controlled group which includes such corporation described in subparagraph (A), (B), (C), (D), (G), or (H), of section 993(a)(1) and which are due the DISC (or, if it acts as an agent, due its principal) and held by the DISC.

(2) ***Trade receivables representing commissions.*** If a DISC acts as commission agent for a principal in a transaction described in § 1.993-1 (b), (c), (d), (e), (h), or (i) which results in qualified export receipts for the DISC, and if an account receivable or evidence of indebtedness held by the DISC and representing the commission payable to the DISC as a result of the transaction arises (and, in the case of an evidence of indebtedness, designated on its face as representing such commission), such account receivable or evidence of indebtedness shall be treated as a trade receiveable. If, however, the principal is a related supplier (as defined in § 1.994-1(a)(3)) with respect to the DISC, such account receivable or evidence of indebtedness will not be treated as a trade receivable unless it is payable and paid in a time and manner which satisfy the requirements of § 1.994-1(e)(3) or (5) (relating to initial payment of transfer price or commission and procedure for adjustments to transfer price or commission, respectively), as the case may be. However, see subparagraph (3) of this paragraph for rules regarding certain accounts receivable representing commissions payable to a DISC by its related supplier.

(3) ***Indebtedness arising under § 1.994-1(e).*** An indebtedness arising under § 1.994-1(e)(3)(iii) (relating to initial payment of transfer price or commission) in favor of a DISC is not a qualified export asset. An indebtedness arising under § 1.994-1(e)(5)(i) (relating to procedure for adjustments to transfer price or commission) in favor of a DISC is a trade receivable if it is paid in the time and manner described in § 1.994-1(e)(5)(i) and (ii) and if it otherwise satisfies the requirements of subparagraph (2) of this paragraph. If such an indebtedness is not paid in the time and manner described in § 1.994-1(e)(5)(i) and (ii), it is not a qualified export asset.

(e) ***Temporary investments*** —

(1) ***In general.*** For purposes of this section, temporary investments are money, bank deposits (not including time deposits of more than 1 year), and other similar temporary investments to the extent maintained by a DISC as reasonably necessary to meet its requirements for working capital. For purposes of this paragraph, a temporary investment is an obligation, including an evidence of indebtedness as defined in paragraph (d)(1) of this section, which is a demand obligation or has a period remaining to maturity of not more than 1 year at the date it is acquired by the DISC. A temporary investment does not include trade receivables.

(2) ***Determination of amount of working capital maintained.*** For purposes of this paragraph—

(i) The working capital of a DISC is the excess of its current assets over current liabilities.

(ii) Current assets are cash and other assets (other than trade receivables) which may reasonably be expected to be converted into cash or sold or consumed during the current normal operating cycle of the DISC's trade or business.

(iii) Current liabilities are obligations (or portions of obligations) due within the current normal operating cycle of the trade or business of the DISC whose satisfaction when due is reasonably expected to require the use of current assets.

(iv) Generally accepted financial accounting treatments will be accepted, and

(v) Current assets (other than temporary investments) are taken into account before temporary investments, and trade receivables are never taken into account, in determining whether such temporary investments are maintained by the DISC as reasonably necessary to meet his current liabilities and its requirements for working capital.

(3) ***Determination of amount of working capital reasonably required.*** For purposes of this paragraph, a determination of the amount of money, bank deposits, and other similar temporary investments reasonably necessary to meet the requirements of the DISC for working capital will depend upon the nature and volume of the activities of the DISC existing at the end of the DISC's taxable year for which such determination is made, such as, for example—

(i) In the case of a DISC which purchases and sells inventory, the amount of working capital reasonably required is limited to an amount reasonably necessary to meet the ordinary operating expenses during the current normal operating cycle of the trade or business of the DISC, an amount reasonably needed to meet specific and definite plans for expansion and any amounts necessary for reasonably anticipated extraordinary business expenses.

(ii) In the case of a DISC which actively conducts a trade or business (including the employment of a sales force) and receives commissions in respect of goods to which such DISC does not have title, the amount of working capital required will depend upon the nature and volume of the activities of the DISC which produce such income as they exist on the applicable determination date. In determining the amount of working capital which is reasonably required for the production of such income, the anticipated future needs of the business will be taken into account to the extent that such needs relate to the year of the DISC following the applicable determination date. Anticipated future needs relating to a later period will not be taken into account unless it is clearly established that such needs are reasonably related to the production of such income as of the applicable determination date.

(iii) In the case of a DISC which does not actively conduct a trade or business, and which receives commissions solely by reason of section 994(a)(1), (a)(2), or (b) with respect to goods to which such DISC does not have title, no working capital would be required beyond a de minimis amount unless it appears from the facts and circumstances that additional working capital will be required.

(iv) In the case of a DISC deriving income from the leasing of property, the amount of working capital required will be determined on the basis of the facts and circumstances in such case.

(4) ***Relationship of working capital to other qualified export assets.*** If a temporary investment is a qualified export asset under any provision of this section (other than this paragraph), this paragraph shall not affect its status as a qualified export asset. However, any such temporary investment is taken into account before other temporary investments in determining whether such other temporary investments are maintained by a DISC as reasonably necessary to meet its requirements for working capital. Current assets (other than temporary investments) are taken into account before temporary investments, and trade receivables are never taken into account, in determining whether such temporary investments are maintained by the DISC as reasonably necessary requirements for working capital. An obligation issued or incurred by a member of a controlled group (as defined in § 1.993-1(k)) of which the DISC is a member is not a qualified export asset under this paragraph. For rules regarding working capital as of the end of each month of a taxable year for purposes of the 70-percent reasonableness standard with respect to certain deficiency distributions, see paragraph (j)(3) of this section.

(f) ***Producer's loans.*** For purposes of this section, a producer's loan is an evidence of indebtedness arising in connection with producer's loans which are made by a DISC and which meet the requirements of § 1.993-4. If a producer's loan is a qualified export asset, interest accrued with respect to the producer's loan will also be treated as a qualified export asset provided that payment is made in the form of money, property (valued at its fair market value on its date of transfer and including accounts receivable for sales by or through a DISC), a written obligation which qualifies as a debt under the safe harbor rule of § 1.992-1(d)(2)(ii), or an accounting entry offsetting the account receivable against an existing debt owed by the person in whose favor the account receivable was established to the person with whom it engaged in the transaction and that payment is made no later than 60 days following the close of the taxable year of accrual of the interest. This paragraph (f) is effective for taxable years beginning after January 10, 1985 except that the taxpayer may at its option apply the provisions of this paragraph to taxable years ending after December 31, 1971.

(g) ***Stock or securities of related foreign corporations.*** For purposes of this section, the term "stock or securities", with respect to a related foreign export corporation (as defined in § 1.993-5), has the same meaning as such term has as used in section 351 (relating to transfers to controlled corporations), except that the term "securities" does not include obligations which are repaid, in whole or in part, at any time during the taxable year of the DISC following the taxable year of the DISC during which such obligations were acquired by the DISC or were issued, unless the DISC demonstrates to the satisfaction of the district director that the repayment was for bona fide business purposes and not for the purpose of avoidance of Federal income taxes.

(h) ***Export-Import Bank obligations.*** For purposes of this section, the term "Export-Import Bank obligations" means obligations issued, guaranteed, insured, or reinsured (in whole or in part) by the Export-Import Bank of the United States or by the Foreign Credit Insurance Association, but only if such obligations are acquired by the DISC—

(1) From the Export-Import Bank of the United States,

(2) From the Foreign Credit Insurance Association, or

(3) From the person selling or purchasing the goods or services by reason of which such obligations arose, or from any corporation which is a member of the same controlled group (as defined in § 1.993-1(k)) as such person.

For purposes of this paragraph, obligations issued by a person described in subparagraphs (1), (2), and (3) of this paragraph are treated as acquired from such person by the DISC if acquired from any person not more than 90 days after the date of original issue (as defined in § 1.1232-3(b)(3)). Examples of specific types of Export-Import Bank obligations include debentures issued by such bank and certificates of loan participation.

(i) ***Financing obligations.*** For purposes of this section, financing obligations are obligations (held by a DISC) of a domestic corporation organized solely for the purpose of financing sales of export property pursuant to an agreement with the Export-Import Bank of the United States under which such corporation makes export loans guaranteed by such Bank.

(j) ***Funds awaiting investment*** —

(1) ***In general.*** For purposes of this section, subject to the limitation descibed in subparagraph (2) of this paragraph, if, at the close of a DISC's taxable year, the sum of the DISC's money, bank deposits, and other similar temporary investments is determined under paragraph (e) of this section to exceed an

amount reasonably necessary to meet the DISC's requirements for working capital, the amount of the DISC's bank deposits in the United States to the extent of the amount of this excess are funds awaiting investment at the close of such taxable year.

(2) ***Limitation.*** Bank deposits described in subparagraph (1) of this paragraph are funds awaiting investment only if, by the last day of each of the sixth, seventh, and eighth months after the close of such taxable year, the sum of the adjusted bases of the qualified export assets of the DISC (other than such bank deposits) equals or exceeds 95 percent of the sum of the adjusted bases of all assets of the DISC (including such bank deposits) it held on the last day of such taxable year. For purposes of this subparagraph, the adjusted bases of assets of a DISC are determined as of the end of each of the months referred to in this subparagraph. Funds awaiting investment as described in this paragraph need not be traceable to any of the qualified export assets held by the DISC at the end of any of the months referred to in this subparagraph.

(3) ***Coordination with certain deficiency distribution provisions.*** Under section 992(c)(3) and § 1.992-3(d) a deficiency distribution made on or before the 15th day of the ninth month after the end of a corporation's taxable year is deemed to be for reasonable cause if certain requirements are met, including the requirement (described in section 992(c)(3)(B) and § 1.992-3(d)(2)) that the sum of the adjusted bases of the qualified export assets held by the corporation on the last day of each month of such year equals or exceeds 70 percent of the sum of the adjusted bases of all assets held by the corporation on each such last day. If, on any such last day, the sum or a DISC's money, bank deposits, and other similar temporary investments is determined under paragraph (e) of this section to exceed an amount reasonably necessary to meet the DISC's requirements for working capital, the amount of the DISC's bank deposits to the extent of the amount of this excess are funds awaiting investment on such last day, if either—

(i) The requirements of subparagraph (2) of this paragraph are satisfied with respect to the taxable year of the DISC which includes such month or

(ii) At the close of such taxable year the sum of the DISC's money, bank deposits, and other similar temporary investments is determined under paragraph (e) of this section not to exceed an amount reasonably necessary to meet the DISC's requirements for working capital.

(Secs. 995(e)(7), (8) and (10), 995(g) and 7805 of the Internal Revenue Code of 1954 (90 Stat. 1655, 26 U.S.C. 995 (e)(7), (8) and (10); 90 Stat. 1659, 26 U.S.C. 995(g); and 68A Stat 917, 26 U.S.C. 7805))

[T.D. 7514, 42 FR 55459, Oct. 17, 1977; 42 FR 60910, Nov. 30, 1977, as amended by T.D. 7854, 47 FR 51740, Nov. 17, 1982; T.D. 7984, 49 FR 40018, Oct. 12, 1984]

§ 1.993-3 Definition of export property.

(a) ***General rule.*** Under section 993(c), except as otherwise provided with respect to excluded property in paragraph (f) of this section and with respect to certain short supply property in paragraph (i) of this section, export property is property in the hands of any person (whether or not a DISC)—

(1) Manufactured, produced, grown, or extracted in the United States by any person or persons other than a DISC (see paragraph (c) of this section),

(2) Held primarily for sale or lease in the ordinary course of a trade or business to any person for direct use, consumption, or disposition outside the United States (see paragraph (d) of this section),

(3) Not more than 50 percent of the fair market value of which is attributable to articles imported into the United States (see paragraph (e) of this section), and

(4) Which is not sold or leased by a DISC, or with a DISC as commission agent, to another DISC which is a member of the same controlled group (as defined in § 1.993-1(k)) as the DISC.

(b) ***Services.*** For purposes of this section, services (including the written communication of services in any form) are not export property. Whether an item is property or services shall be determined on the basis of the facts and circumstances attending the development and disposition of the item. Thus, for example, the preparation of a map of a particular construction site would constitute services and not export property, but standard maps prepared for sale to customers generally would not constitute services and would be export property if the requirements of this section were otherwise met.

(c) ***Manufacture, production, growth, or extraction of property*** —

(1) ***By a person other than a DISC.*** Export property may be manufactured, produced, grown, or extracted in the United States by any person, provided that such person does not qualify (and is not treated) as a DISC. Property held by a DISC which was manufactured, produced, grown, or extracted by it at a time when it did not qualify (and was not treated) as a DISC is not export property of the DISC. Property which sustains further manufacture or production outside the United States prior to sale or lease by a person but after manufacture or production in the United States will not be considered as manufactured, produced, grown, or extracted in the United States by such person.

(2) ***Manufactured or produced*** —

(i) ***In general.*** For purposes of this section, property which is sold or leased by a person is considered to be manufactured or produced by such person if such property is manufactured or produced (within the meaning of either subdivision (ii), (iii), or (iv) of this subparagraph) by such person or by another person pursuant to a contract with such person. Except as provided in subdivision (iv) of this subparagraph, manufacture or production of property does not include assembly or packaging operations with respect to property.

(ii) ***Substantial transformation.*** Property is manufactured or produced by a person if such property is substantially transformed by such person. Examples of substantial transformation of property would include the conversion of woodpulp to paper, steel rods to screws and bolts, and the canning of fish.

(iii) ***Operations generally considered to constitute manufacturing.*** Property is manufactured or produced by a person if the operations performed by such person in connection with such property are substantial in nature and are generally considered to constitute the manufacture or production of property.

(iv) ***Value added to property.*** Property is manufactured or produced by a person if with respect to such property conversion costs (direct labor and factory burden including packaging or assembly) of such person account for 20 percent of more of—

(*a*) The cost of goods sold or inventory amount of such person for such property is such property is sold or held for sale, or

(*b*) The adjusted basis of such person for such property, as determined in accordance with the provisions of section 1011, if such property is held for lease or leased.

The value of parts provided pursuant to a services contract, as described in § 1.993-1 (d)(4)(v), is not taken into account in applying this subdivision.

(d) ***Primary purpose of which property is held*** —

(1) ***In general*** —

(i) ***General rule.*** Under paragraph (a)(2) of this section, export property

(*a*) must be held primarily for the purpose of sale or lease in the ordinary course of trade or business to a DISC, or to any other person, and

(*b*) such sale or lease must be for direct use, consumption, or disposition outside the United States. Thus, property cannot qualify as export property unless it is sold or leased for direct use, consumption or disposition outside the United States. Property is sold or leased for direct use, consumption, or disposition outside the United States if such sale or lease satisfies the destination test described in subparagraph (2) of this paragraph, the proof of compliance requirements described in subparagraph (3) of this paragraph, and the use outside the United States test described in subparagraph (4) of this paragraph.

(ii) ***Factors not taken into account.*** In determining whether property which is sold or leased to a DISC is sold or leased for direct use consumption, or disposition outside the United States, the fact that the acquiring DISC holds the property in inventory or for lease prior to the time it sells or leases it for direct use, consumption, or disposition outside the United States will not affect the characterization of the property as export property. Export property need not be physically segregated from other property.

(2) ***Destination test.***

(i) For purposes of subparagraph (1) of this paragraph the destination test in this subparagraph is satisfied with respect to property sold or leased by a seller or lessor only if it is delivered by such seller or lessor (or an agent of such seller or lessor) regardless of the F.O.B. point or the place at which title passes or risk of loss shifts from the seller or lessor—

(*a*) Within the United States to a carrier or freight forwarder for ultimate delivery outside the United States to a purchaser or lessee (or to a subsequent purchaser or sublessee),

(*b*) Within the United States to a purchaser or lessee, if such property is ultimately delivered, directly used, or directly consumed outside the United States (including delivery to a carrier or freight forwarder for delivery outside the United States) by the purchaser or lessee (or a subsequent purchaser or sublessee) within 1 year after such sale or lease,

(*c*) Within or outside the United States to a purchaser or lessee which, at the time of the sale or lease, is a DISC and is not a member of the same controlled group (as defined in § 1.993-1(k)) as the seller or lessor,

(*d*) From the United States to the purchaser or lessee (or a subsequent purchaser or sublessee) at a point outside the United States by means of a ship, aircraft, or other delivery vehicle, owned, leased, or chartered by the seller or lessor,

(*e*) Outside the United States to a purchaser or lessee from a warehouse, a storage facility, or assembly site located outside the United States, if such property was previously shipped by such seller or lessor from the United States, or

(*f*) Outside the United States to a purchaser or lessee if such property was previously shipped by such seller or lessor from the United States and if such property is located outside the United States pursuant to a prior lease by the seller or lessor, and either

(*1*) such prior lease terminated at the expiration of its term (or by the action of the prior lessee acting alone),

(*2*) the sale occurred or the term of the subsequent lease began after the time at which the term of the prior lease would have expired, or

(*3*) the lessee under the subsequent lease is not a related person (as defined in § 1.993-1(a)(6)) with respect to the lessor and the prior lease was terminated by the action of the lessor (acting alone or together with the lessee).

(ii) For purposes of this subparagraph (other than (*c*) and (*f*)(*3*) of subdivision (i) thereof), any relationship between the seller or lessor and any purchaser, subsequent purchaser, lessee, or sublessee is immaterial.

(iii) In no event is the destination test of this subparagraph satisfied with respect to property which is subject to any use (other than a resale or sublease), manufacture, assembly, or other processing (other than packaging) by any person between the time of the sale or lease by such seller or lessor and the delivery or ultimate delivery outside the United States described in this subparagraph.

(iv) If property is located outside the United States at the time it is purchased by a person or leased by a person as lessee, such property may be export property in the hands of such purchaser or lessee only if it is imported into the United States prior to its further sale or lease (including a sublease) outside the United States. Paragraphs (a)(3) and (e) of this section (relating to 50 percent foreign content test) are applicable in determining whether such property is export property. Thus, for example, if such property is not subjected to manufacturing or production (as defined in paragraph (c) of this section) within the United States after such importation, it does not qualify as export property.

(3) ***Proof of compliance with destination test*** —

(i) ***Delivery outside the United States.*** For purposes of subparagraph (2) of this paragraph (other than subdivision (i)(*c*) thereof), a seller or lessor shall establish ultimate delivery, use, or consumption of property outside the United States by providing—

(*a*) A facsimile or carbon copy of the export bill of lading issued by the carrier who delivers the property,

(*b*) A certificate of an agent or representative of the carrier disclosing delivery of the property outside the United States,

(*c*) A facsimile or carbon copy of the certificate of lading for the property executed by a customs officer of the country to which the property is delivered,

(*d*) If such country has no customs administration, a written statement by the person to whom delivery outside the United States was made,

(*e*) A facsimile or carbon copy of the shipper's export declaration, a monthly shipper's summary declaration filed with the Bureau of Customs, or a magnetic tape filed in lieu of the Shipper's Export Declaration, covering the property,

(*f*) Any other proof (including evidence as to the nature of the property or the nature of the transaction) which establishes to the satisfaction of the Commissioner that the property was ultimately delivered, or directly sold, or directly consumed outside the United States within 1 year after the sale or lease.

(ii) The requirements of subdivision (i) (*a*), (*b*), (*c*), or (*e*) of this subparagraph will be considered satisfied even though the name of the ultimate consignee and the price paid for the goods is marked out provided that, in the case of a Shipper's Export Declaration or other document listed in such subdivision (*e*) or a document such as an export bill of lading such document still indicates the country in which delivery to the ultimate consignee is to be made and, in the case of a certificate of an agent or representative of the carrier, that such document indicates that the property was delivered outside the United States.

(iii) A seller or lessor shall also establish the meeting of the requirement of subparagraph (2)(i) of this paragraph (other than subdivision (*c*) thereof), that the property was delivered outside the United States without further use, manufacture, assembly, or other processing within the United States.

(iv) ***Sale or lease to an unrelated DISC.*** For purposes of subparagraph (2)(i)(*c*) of this paragraph, a purchaser or lessee of property is deemed to qualify as a DISC for its taxable year if the seller or lessor obtains from such purchaser or lessee a copy of such purchaser's or lessee's election to be treated as a DISC as described in § 1.992-2(a) together with such purchaser's or lessee's sworn statement that such election has been filed with the Internal Revenue Service Center. The copy of the election and the sworn statement of such purchaser or lessee must be received by the seller or lessor within 6 months after the sale or lease. A purchaser or lessee is not treated as a DISC with respect to a sale or lease during a taxable year for which such purchaser or lessee does not qualify as a DISC if the seller or lessor does not believe or if a reasonable person would not believe at the time such sale or lease is made that the purchaser or lessee will qualify as a DISC for such taxable year.

(v) ***Failure of proof.*** If a seller or lessor fails to provide proof of compliance with the destination test as required by this subparagraph, the property sold or leased is not export property.

(4) ***Sales and leases of property for ultimate use in the United States*** —

(i) ***In general.*** For purposes of subparagraph (1) of this paragraph, the use test in this subparagraph is satisfied with respect to property which—

(*a*) Under subdivisions (ii) through (iv) of this subparagraph is not sold for ultimate use in the United States or

(*b*) Under subdivision (v) of this subparagraph is leased for ultimate use outside the United States.

(ii) ***Sales of property for ultimate use in the United States.*** For purposes of subdivision (i) of this subparagraph, a purchaser of property (including components, as defined in subdivision (vii) of this subparagraph) is deemed to use such property ultimately in the United States if any of the following conditions exists:

(*a*) Such purchaser is a related person (as defined in § 1.993-1(a)(6)) with respect to the seller and such purchaser ultimately uses such property, or a second product into which such property is incorporated as a component, in the United States.

(*b*) At the time of the sale, there is an agreement or understanding that such property, or a second product into which such property is incorporated as a component, will be ultimately used by the purchaser in the United States.

(*c*) At the time of the sale, a reasonable person would have believed that such property or such second product would be ultimately used by such purchaser in the United States unless, in the case of a sale of components, the fair market value of such components at the time of delivery to the purchaser constitutes less than 20 percent of the fair market value of the second product into which such components are incorporated (determined at the time of completion of the production, manufacture or assembly of such second product).

For purposes of (b) of this subdivision, there is an agreement or understanding that property will ultimately be used in the United States if, for example, a component is sold abroad under an express agreement with the foreign purchaser that the component is to be incorporated into a product to be sold back to the United States. As a further example there would also be such an agreement or understanding if the foreign purchaser indicated at the time of the sale or previously that the component is to be incorporated into a product which is designed principally for the United States market. However, such an agreement or understanding does not result from the mere fact that a second product, into which components exported from the United States have been incorporated and which is sold on the world market, is sold in substantial quantities in the United States.

(iii) ***Use in the United States.*** For purposes of subdivision (ii) of this subparagraph, property (including components incorporated into a second product) is or would be ultimately used in the United States by such purchaser if, at any time within 3 years after the purchase of such property or components, either such property or components (or the second product into which such components are incorporated) is resold by such purchaser for use by a subsequent purchaser within the United States or such purchaser or subsequent purchaser fails, for any period of 365 consecutive days, to use such property or second product predominantly outside the United States as defined in subdivision (vi) of this subparagraph).

(iv) ***Sales to retailers.*** For purposes of subdivision (ii)(*c*) of this subparagraph, property sold to any person whose principal business consists of selling from inventory to retail customers at retail outlets ouside the United States will be considered as property for ultimate use outside the United States.

(v) ***Leases of property for ultimate use outside the United States.*** For purposes of subdivision (i) of this subparagraph a lessee of property is deemed to use such property ultimately outside the United States during a taxable year of the lessor if such property is used predominantly outside the United States (as defined in subdivision (vi) of this subparagraph) by the lessee during the portion of the lessor's taxable year which is included within the term of the lease. A determination as to whether the ultimate use of leased property satisfies the requirements of this subdivision is made for each taxable year of the lessor. Thus, leased property may be used predominantly outside the United States for a taxable year of the lessor (and thus, constitute export property if the remaining requirements of this section are met) even if the property is not used predominantly outside the United States in earlier taxable years or later taxable years of the lessor.

(vi) ***Predominant use outside the United States.*** For purposes of this subparagraph, property is used predominantly outside the United States for any period if, during such period, such property is located outside the United States more than 50 percent of the time. An aircraft, railroad rolling stock, vessel, motor vehicle, container, or other property used for transportation purposes in deemed to be used predominantly outside the United States for any period if, during such period, either such property is located outside the United States more than 50 percent of the time or more than 50 percent of the miles traversed in the use of such property are traversed in outside the United States. However, any such property is deemed to be within the United States at all times during which it is engaged in transport between any two points within the United States, except where such transport constitutes uninterrupted international air transportation within the meaning of section 4262(c)(3) and the regulations thereunder (relating to tax on air transportation of persons). For purposes of applying section 4262(c)(3) to this subdivision, the term "United States" has the same meaning as in § 1.993-7.

(vii) ***Component.*** For purposes of this subparagraph, a component is property which is (or is reasonably expected to be) incorporated into a second product by the purchaser of such component by means of production, manufacture, or assembly.

(e) ***Foreign content of property*** —

(1) ***The 50 percent test.*** Under paragraph (a)(3) of this section, no more than 50 percent of the fair market value of export property may be attributable to the fair market value of articles which were imported into the United States. For purposes of this paragraph, articles imported into the United States are referred to as "foreign content". The fair market value of the foreign content of export property is computed in accordance with subparagraph (4) of this paragraph. The fair market value of export property which is sold to a person who is not a related person with respect to the seller is the sale price for such property (not including interest finance or carrying charges, or similar charges)

(2) ***Application of 50 percent test.*** The 50 percent test described in subparagraph (1) of this paragraph is applied on an item-by-item basis If, however, a person sells or leases a substantial volume of substantially identical export property in a taxable year and if all of such property contains substantially identical foreign content is substantially the same proportion, such person may determine the portion of foreign content contained in such property on an aggregate basis.

(3) ***Parts and services.*** If, at the time property is sold or leased the seller or lessor agrees to furnish parts pursuant to a services contract (as provided in § 1.993-1(d)(4)(v)) and the price for the parts is not separately stated, the 50 percent test described in subparagraph (1) of this paragraph is applied on an aggregate basis to the property and parts. If the price for the parts is described in subparagraph (1) of this paragraph is applied separately to the property and to the parts.

(4) ***Computation of foreign content*** —

(i) ***Valuation.*** For purposes of applying the 50 percent test described in subparagraph (1) of this paragraph, it is necessary to determine the fair market value of all articles which constitute foreign content of the property being tested to determine if it is export property. The fair market value of such imported articles is determined as of the time such articles are imported into the United States. With respect to articles imported into the United States before July 1, 1980, the fair market value of such articles is their appraised value as determined under section 402 or 402a of the Tariff Act of 1930 (19 U.S.C. 1401a or 1402) in connection with their importation. With respect to articles imported into the United States on or after July 1, 1980, the fair market

value of such articles is their appraised value as determined under section 402 of the Tariff Act of 1930 (19 U.S.C. 1401a) in connection with their importation. The appraised value of such articles is the full dutiable value of such articles, determined, however, without regard to any special provision in the United States tariff laws which would result in a lower dutiable value. Thus, an article which is imported into the United States is treated as entirely imported even if all or a portion of such article was originally manufactured, produced, grown, or extracted in the United States.

(ii) ***Evidence of fair market value.*** For purposes of subdivision (i) of this subparagraph, the fair market value of imported articles constituting foreign content may be evidenced by the customs invoice issued on the importation of such articles into the United States. If the holder of such articles is not the importer (or a related person with respect to the importer), the fair market value of such articles may be evidenced by a certificate based upon information contained in the customs invoice and furnished to the holder by the person from whom such articles (or property incorporating such articles) were purchased. If a customs invoice or certificate described in the preceding sentence is not available to a person purchasing property, such person shall establish that no more than 50 percent of the fair market value of such property is attributable to the fair market value of articles which were imported into the United States.

(iii) ***Interchangeable component articles.***

(*a*) Where identical or similar component articles can be incorporated interchangeably into property and a person acquires some such component articles that are imported into the United States and other such component articles that are not imported into the United States, the determination whether imported component articles were incorporated in such property as is exported from the United States shall be made on a substitution basis as in the case of the rules relating to drawback accounts under the customs laws. See section 313(b) of the Tariff Act of 1930, as amended (19 U.S.C. 1313(b)).

(*b*) The provisions of (*a*) of this subdivision may be illustrated by the following example:

Example. Assume that a manufacturer produces a total of 20,000 electronic devices. The manufacturer exports 5,000 of the devices and subsequently sells 11,000 of the devices to a DISC which exports the 11,000 devices. The major single component article in each device is a tube which represents 60 percent of the fair market value of the device at the time the device is sold by the manufacturer. The manufacturer imports 8,000 of the tubes and produces the remaining 12,000 tubes. For purposes of this subdivision, in accordance with the substitution principle used in the customs drawback laws, the 5,000 devices exported by the manufacturer are each treated as containing an imported tube because the devices were exported prior to the sale to the DISC. The remaining 3,000 imported tubes are treated as being contained in the first 3,000 devices purchased and exported by the DISC. Thus, since the 50 percent test is not met with respect to the first 3,000 devices purchased and exported by the DISC, those devices are not export property. The remaining 8,000 devices purchased and exported by the DISC are treated as containing tubes produced in United States, and those devices are export property (if they otherwise meet the requirements of this section).

(f) ***Excluded property*** —

(1) ***In general.*** Notwithstanding any other provision of this section, the following property is not export property—

(i) Property described in subparagraph (2) of this paragraph (relating to property leased to a member of a controlled group),

(ii) Property described in subparagraph (3) of this paragraph (relating to certain types of intangible property),

(iii) Products described in paragraph (g) of this section (relating to depletable products), and

(iv) Products described in paragraph (h) of this section (relating to certain export controlled products).

(2) ***Property leased to member of controlled group*** —

(i) ***In general.*** Property leased to a person (whether or not a DISC) which is a member of the same controlled group (as defined in § 1.993-1(k)) as the lessor constitutes export property for any period of time only if during the period—

(*a*) Such property is held for sublease, or is subleased, by such person to a third person for the ultimate use of such third person;

(*b*) Such third person is not a member of the same controlled group; and

(*c*) Such property is used predominantly outside the United States by such third person.

(ii) ***Predominant use.*** The provisions of paragraph (d)(4)(vi) of this section apply in determining under subdivision (i)(*c*) of this subparagraph whether such property is used predominently outside the United States by such third person.

(iii) ***Leasing rule.*** For purposes of this subparagraph, leased property is deemed to be ultimately used by a member of the same controlled group as the lessor if such property is leased to a person which is not a member of such controlled group but which subleases such property to a person which is a member of such controlled group. Thus, for example, if X, a DISC for the taxable year, leases a movie film to Y, a foreign corporation which is not a member of the same controlled group as X, and Y then subleases the film to persons which are members of such group for showing to the general public, the film is not export property. On the other hand, if X, a DISC for the taxable year, leases a movie film to Z, a foreign corporation which is a member of the same controlled group as X, and Z then subleases the film to Y, another foreign corporation, which is not a member of the same controlled group for showing to the general public, the film is not disqualified under this subparagraph from being export property.

(iv) ***Certain copyrights.*** With respect to a copyright which is not excluded by subparagraph (3) of this paragraph from being export property, the ultimate use of such property is the sale or exhibition of such property to the general public. Thus, if A, a DISC for the taxable year, leases recording tapes to B, a foreign corporation which is a member of the same controlled group as A, and if B makes records from the recording tape and sells the records to C, another foreign corporation, which is not a member of the same controlled group, for sale by C to the general public, the recording tape is not disqualified under this subparagraph from being export property, notwithstanding the leasing of the recording tape by A to a member of the same controlled group, since the ultimate use of the tape is the sale of the records (*i.e.,* property produced from the recording tape).

(3) ***Intangible property.*** Export property does not include any patent, invention, model, design, formula, or process, whether or not patented, or any copyright (other than films, tapes, records, or similar reproductions, for commercial or home use), goodwill, trademark, tradebrand, franchise, or other like property. Although a copyright such as a copyright on a book does not constitute export property, a copyrighted article (such as a book) if not accompanied by a right to reproduce it is export property if the requirements of this section are otherwise satisfied. However, a license of a master recording tape for reproduction outside the United States is not disqualified under this subparagraph from being export property.

(g) ***Depletable products*** —

(1) ***In general.*** Under section 993(c)(2)(C), a product or commodity which is a depletable product (as defined in subparagraph (2) of this paragraph) or contains a depletable product is not export property if—

(i) It is a primary product from oil, gas, coal, or uranium (as described in subparagraph (3) of this paragraph), or

(ii) It does not qualify as a 50-percent manufactured or processed product (as described in subparagraph (4) of this paragraph).

(2) ***Definition of "depletable product".*** For purposes of this paragraph, the term "depletable product" means any product or commodity of a character with respect to which a deduction for depletion is allowable under section 613 or 613A. Thus, the term depletable product includes any mineral extracted from a mine, an oil or gas well, or any other natural deposit, whether or not the DISC or related supplier is allowed a deduction, or is eligible to take a deduction, for depletion with respect to the mineral in computing its taxable income. Thus, for example, iron ore purchased by a DISC from a broker is a depletable product in the hands of the DISC for purposes of this paragraph even though the DISC is not eligible to take a deduction for depletion under section 613 or 613A.

(3) ***Primary product from oil, gas, coal, or uranium.*** A primary product from oil, gas, coal, or uranium is not export property. For purposes of this paragraph—

(i) ***Primary product from oil.*** The term "primary product from oil" means crude oil and all products derived from the destructive distillation of crude oil, including—

(*a*) Volatile products,

(*b*) Light oils such as motor fuel and kerosene,

(*c*) Distillates such as naphtha,

(*d*) Lubricating oils,

(*e*) Greases and waxes, and

(*f*) Residues such as fuel oil.

For purposes of this paragraph, a product or commodity derived from shale oil which would be a primary product from oil if derived from crude oil is considered a primary product from oil.

(ii) ***Primary product from gas.*** The term "primary product from gas" means all gas and associated hydrocarbon components from gas wells or oil wells, whether recovered at the lease or upon further processing, including—

(*a*) Natural gas,

(*b*) Condensates,

(*c*) Liquefied petroleum gases such as ethane, propane, and butane, and

(*d*) Liquid products such as natural gasoline.

(iii) ***Primary product from coal.*** The term "primary product from coal" means coal and all products recovered from the carbonization of coal including—

(*a*) Coke,

(*b*) Coke-oven gas,

(*c*) Gas liquor,

(*d*) Crude light oil, and

(*e*) Coal tar.

(iv) ***Primary product from uranium.*** The term "primary product from uranium" means uranium ore and uranium concentrates (known in the industry as "yellow cake"), and nuclear fuel materials derived from the refining of uranium ore and uranium concentrates, or produced in a nuclear reaction, including—

(*a*) Uranium hexafluoride,

(*b*) Enriched uranium hexafluoride,

(*c*) Uranium metal,

(*d*) Uranium compounds, such as uranium carbide,

(*e*) Uranium dioxide, and

(*f*) Plutonium fuels.

(v) ***Primary products and changing technology.*** The primary products from oil, gas, coal, or uranium described in subdivisions (i) through (iv) of this subparagraph and the processes described in those subdivisions are not intended to represent either the only primary products from oil, gas, coal, or uranium, or the only processes from which primary products may be derived under existing and future technologies, such as the gasification and liquefaction of coal.

(vi) ***Petrochemicals.*** For purposes of this paragraph, petrochemicals are not considered primary products from oil, gas, or coal.

(4) ***50-percent manufactured or processed product*** —

(i) ***In general.*** A product or commodity (other than a primary product from oil, gas, coal, or uranium) which is or contains a depletable product is not excluded from the term "export property" by reason of section 993(c)(2)(C) if it is a 50-percent manufactured or processed product. Such a product or commodity is a "50-percent manufactured or processed product" if, after the cutoff point of the depletable product, it is manufactured or processed (as defined in subdivision (ii) of this subparagraph) and either the cost test described in subdivision (iv) of this subparagraph or the fair market value test described in subdivision (v) of this subparagraph is satisfied. To determine cutoff point, see subdivisions (vi) and (vii) of this subparagraph.

(ii) ***Manufactured or processed.*** A product is manufactured or processed if it is manufactured or produced within the meaning of paragraph (c)(2) of this section, except that for purposes of this subdivision the term manufacturing or processing does not include any excluded process (as defined in subdivision (iii) of this subparagraph) and the term conversion costs (as used in subdivision (iv) of such paragraph (c)(2)) does not include any costs attributable to any excluded process.

(iii) ***Excluded processes.*** For purposes of this paragraph, excluded processes are extracting (*i.e.,* all processes which are applied before the cutoff point of the mineral to which such processes are applied), and handling, packing, packaging, grading, storing, and transporting.

(iv) ***Cost test.*** A product or commodity will qualify as a 50-percent manufactured or processed product if—

(*a*) Its manufacturing and processing costs (that is, the portion of the cost of goods sold or inventory amount of the product or commodity attributable to the aggregate cost of manufacturing or processing each mineral contained therein) equal or exceed—

(*b*) An amount equal to either of the following:

(*1*) 50 percent of its cost of goods sold or inventory amount (decreased, at the DISC's option, by the portion of such cost or amount the DISC establishes is allocable to the difference between each prior owner's selling price for each depletable product contained in such product or commodity and such prior owner's cost of goods sold with respect thereto).

(*2*) The aggregate of the cost at the cutoff point (see subdivisions (vi) and (vii) of this subparagraph) properly attributable to each mineral contained in such product or commodity. However, if this subdivision (*2*) is applied, then the amount in (*a*) of this subparagraph (iv) shall be decreased and the amount in this subdivision (*2*) shall be increased, by so much of the cost of goods sold or inventory amount of the product or commodity as is properly allocable to any process other than transportation applied after the cutoff point of such mineral which would be a mining process (within the meaning of § 1.613-4) were it applied before such point.

(v) ***Fair market value test.*** A product or commodity will qualify as a 50-percent manufactured or processed product if—

(*a*) The excess of its fair market value on the date it is sold, exchanged, or otherwise disposed of (or, if not sold, exchanged, or otherwise disposed of, the last day of the DISC's taxable year) over the portion thereof properly allocable to excluded processes other than extracting is equal to or greater than

(*b*) Twice the aggregate of the fair market value at the cutoff point for each mineral contained in such product or commodity.

For purposes of this subdivision (v), the fair market value of a product or commodity on the date it is sold, exchanged, or otherwise disposed of is the price at which it is disposed of, subject to any adjustment that may be required under the arm's length standard of section 482 and the regulations thereunder. If such product or commodity is not sold, exchanged, or otherwise disposed of, then, for purposes of section 992(a)(1)(B) (relating to the 95-percent test with respect to qualified export assets), the fair market value of a product or commodity on

the last day of the DISC's taxable year is the arm's length price at which such product or commodity would have been sold on such date, determined by applying the principles of section 482 and the regulations thereunder.

(vi) ***Cutoff point of a mineral.*** For purposes of this subparagraph:

(*a*) The cutoff point is the point at which gross income from the property (within the meaning of section 613(a)) was in fact determined.

(*b*) The cost at the cutoff point is deemed to be the amount of the gross income from the property of the taxpayer eligible for a depletion deduction with respect to the mineral.

(*c*) The fair market value at the cutoff point is deemed to be the amount of the gross income from the property of the taxpayer eligible for a depletion deduction with respect to the mineral, except that, if (*1*) the fair market value of a product or commodity on the date specified in subdivision (v)(*a*) of this subparagraph exceeds the aggregate of the fair market value at the cutoff point for each mineral contained therein and (*2*) 10 percent or more of such excess is attributable to a net increase in the fair market values of such minerals by reason of factors other than manufacturing or processing or the application of excluded processes (such as, for example, increases in the fair market values of some minerals by reason of inflation or speculation exceed decreases in such values of other minerals by reason of deflation or speculation), then the aggregate of the fair market value at the cutoff point for each such mineral shall be increased to reflect the net excess so attributable.

(*d*) The provisions of this subdivision (vi) are illustrated by the following example.

Example. An integrated manufacturer, X, on February 1, 1976, had gross income from the property (within the meaning of section 613(a)) of $50 with respect to a specified volume of a mineral. Thus, the cost at the cutoff point of the mineral was $50. X converted the mineral into a product which it sold on July 15, 1976, for $75. Of the $25 excess of the selling price over the gross income from the property, $23 was attributable to manufacturing, processing, and the application or excluded processes, and $2 was attributable to an increase in the fair market value of the mineral due to inflation between February 1 and July 15, 1976. Since only 8 percent of such excess ($2/$25) was attributable to factors other than manufacturing, processing, and the application of excluded processes, the fair market value at the cutoff point of the mineral is $50. However, had $3 of the $25 excess, or 12 percent, been attributable to an increase in the fair market value of the mineral due to inflation, then the fair market value at the cutoff point of the mineral would be $53.

(vii) [Reserved]

(viii) ***Special rule for certain used products and scrap products.*** If a product or commodity is a used 50-percent manufactured or processed product, or is recovered as scrap from a 50-percent manufactured or processed product, such product or commodity will be treated as a 50-percent manufactured or processed product.

(ix) ***Special rule for byproducts and waste products.*** For purposes of applying the cost test or fair market value test of subdivision (iv) or (v) of this subparagraph if a depletable product is recovered from a manufacturing process as a byproduct or waste product, then the cost and fair market value at the cutoff point are each deemed to be the lesser of—

(*a*) The fair market value of the waste product or byproduct containing the depletable product, determined as of the date the byproduct or waste product is recovered, or

(*b*) The amount the cost at the cut-off point would be for a depletable product of like kind and grade which is extracted, determined as of the date the byproduct or waste product is recovered.

For purposes of (*b*) of this subdivision the cutoff point for the depletable product of like kind and grade is deemed to be the point at which gross income from the property would be determined if such depletable product were sold by the taxpayer eligible to take a deduction for depletion after the completion of all mining processes applied to the depletable product and before the application of any nonmining process.

(x) ***Proof of satisfaction of 50-percent manufactured or processed test.***

(*a*) No substantiation is required to establish that either the cost test or the fair market value test of subdivisions (iv) or (v) of this subparagraph is satisfied or that a product or commodity qualifies under (viii) of this subdivision as either a used 50-percent manufactured or processed product or as scrap from a 50-percent manufactured or processed product as long as it is reasonably obvious, on the basis of all relevant facts and circumstances, that either the cost test or fair market value test is satisfied, or that the product or commodity qualifies as either as used 50-percent manufactured or processed product or as scrap from a 50-percent manufactured or processed product. Thus, for example, in the case of a DISC exporting a high precision lens at least 50 percent of the fair market value of which is obviously attributable to grinding, no substantiation of gross income from the property properly allocable to the depletable products contained in the lens, cost, or fair market values will be required.

(*b*) In cases in which satisfaction of either the cost test or the fair market value test is not reasonably obvious, a DISC will be required to substantiate the gross income from the property properly allocable to each depletable product in a product or commodity and either all costs or fair market values relied upon the DISC.

(*c*) For purposes of substantiating

(*1*) gross income from the property properly allocable to a depletable product,

(*2*) costs, and

(*3*) fair market values, the DISC and related supplier shall each identify items in (or that were in) inventory in the same manner each used to identify items in inventory for purposes of computing Federal income tax.

(xi) ***Application of 50-percent test.*** The 50-percent test described in this subparagraph is applied on an item-by-item basis. If, however, a DISC sells a substantial volume of substantially identical products or commodities and if all or a group of such products or commodities contain substantially identical depletable products in substantially the same proportions and have cost or fair market value relationships (as the case may be) that are in substantially the same proportions, such DISC may apply the 50-percent test on an aggregate basis with respect to all such products or commodities, or group, as the case may be.

(5) ***Effective dates.*** Except as provided in subparagraph (6) of this paragraph, section 993(c)(2)(C) applies—

(i) With respect to any product or commodity not owned by a DISC, to sales, exchanges, or other dispositions made after March 18, 1975, with respect to which the DISC derives gross receipts.

(ii) With respect to any product or commodity acquired by a DISC after March 18, 1975.

(iii) With respect to any product or commodity owned by a DISC on March 18, 1975, to sales, exchanges, or other dispositions made after March 18, 1976, and to owning such product or commodity after such date.

For purposes of this paragraph and subparagraph (6) of this paragraph, the date of a sale, exchange, or other disposition of a product or commodity is the date as of which title to such product or commodity passes. The accounting method of a person is not determinative of the date of a sale, exchange, or other disposition.

(6) ***Fixed contracts.*** Section 1101(f) of the Tax Reform Act of 1976 provides an exception to the effective date rules in this paragraph and in paragraph (h) of this section. Section 1101(f)(2) of the Act provides that section 993(c)(2)(C) and (D) shall not apply to sales, exchanges, and other dispositions made after March 18, 1975, but before March 19, 1980, if they are made pursuant to a fixed contract. Section 1101(f)(2) also defines fixed contract. Under that definition, if the seller can vary the price of the product for unspecified cost increases (which could include tax cost increases), or if the quantity of products or commodities to be sold can be increased or decreased under the contract by the seller without penalty, the contract is not to be considered a fixed contract with respect to the amount over which the seller has discretion. For example, if a contract calls for a minimum delivery of *x* amount of a product but allows the seller to refuse to deliver goods beyond that minimum amount (or allows a renegotiation of the sales price of goods beyond that amount), then with respect to the amount above the minimum the contract is not a fixed quantity contract.

(h) ***Export controlled products*** —

(1) ***In general.*** An export controlled product is not export property. A product or commodity may be an export controlled product at one time but not an export controlled product at another time. For purposes of this paragraph, a product or commodity is an “export controlled product” at a particular time if at that time the export of such product or commodity is prohibited or curtailed under section 4(b) of the Export Administration Act of 1969 or section 7(a) of the Export Administration Act of 1979, to effectuate the policy relating to the protection of the domestic economy set forth in such Acts (paragraph (2)(A) of section 3 of the Export Administration Act of 1969 and paragraph (2)(C) of section 3 of the Export Administration Act of 1979). Such policy is to use export controls to the extent necessary “to protect the domestic economy from the excessive drain of scarce materials and to reduce the serious inflationary impact of foreign demand.”

(2) ***Products considered export controlled products*** —

(i) ***In general.*** For purposes of this paragraph, an export controlled product is a product or commodity which is subject to short supply export controls under 15 CFR part 377. A product or commodity is considered an export controlled product for the duration of each control period which applies to such product or commodity. A control period of a product or commodity begins on and includes the initial control date (as defined in subdivision (ii) of this subparagraph) and ends on and includes the final control date (as defined in subdivision (iii) of this subparagraph).

(ii) ***Initial control date.*** The initial control date of a product or commodity which was subject to short supply export controls on March 19, 1975, is March 19, 1975. The initial control date of a product or commodity which is subject to short supply export controls after March 19, 1975, is the effective date stated in the regulations to 15 CFR part 377 which subjects such product or commodity to short supply export controls. If there is no effective date stated in such regulations, the initial control date of such product or commodity is the date on which such regulations are filed for publications in the FEDERAL REGISTER.

(iii) ***Final control date.*** The final control date of a product or commodity is the effective date stated in the regulations to 15 CFR part 377 which removes such product or commodity from short supply export controls. If there is no effective date stated in such regulations, the final control date of such product or commodity is the date on which such regulations are filed for publication in the FEDERAL REGISTER.

(iv) ***Expiration of Export Administration Act.*** An initial control date and a final control date cannot occur after the expiration date of the Export Administration Act under the authority of which the short supply export controls were issued.

(3) ***Effective dates*** —

(i) ***Products controlled on March 19, 1975.*** Except as provided in paragraph (g)(6) of this section, if a product or commodity was subject to short supply export controls on March 19, 1975, this paragraph applies—

(*a*) With respect to any such product or commodity not owned by a DISC, to sales, exchanges, other dispositions, or leases made after March 18, 1975, with respect to which the DISC derives gross receipts.

(*b*) With respect to any such product or commodity acquired by a DISC after March 18, 1975, and

(*c*) With respect to any such product or commodity owned by a DISC on March 18, 1975, to sales, exchanges, other dispositions, and leases made after March 18, 1976, and to owning such product or commodity after such date.

(ii) ***Products first controlled after March 19, 1975.*** If a product or commodity becomes subject to short supply export controls after March 19, 1975, this paragraph applies to sales, exchanges, other dispositions, or leases of such product or commodity made on or after the initial control date of such product or commodity, and to owning such product or commodity on or after such date.

(iii) ***Date of sale, exchange, lease, or other disposition.*** For purposes of this subparagraph, the date of sale, exchange, or other disposition of a product or commodity is the date as of which title to such product or commodity passes. The date of a lease is the date as of which the lessee takes possession of a product or commodity. The accounting method of a person is not determinative of the date of sale, exchange, other disposition, or lease.

(iv) ***Property in short supply.*** If the President determines that the supply of any property which is otherwise export property as defined in this section is insufficient to meet the requirements of the domestic economy, he may by Executive order designate such property as in short supply. Any property so designated will be treated as property which is not export property during the

period beginning with the date specified in such Executive order and ending with the date specified in an Executive order setting forth the President's determination that such property is no longer in short supply.

[T.D. 7514, 42 FR 55461, Oct. 17, 1977, as amended by T.D. 7513, 42 FR 57309, Nov. 2, 1977; T.D. 7854, 47 FR 51740, Nov. 17, 1982]

§ 1.993-4 Definition of producer's loans.

(a) ***General rule*** —

(1) ***Definition.*** Under section 993(d), a loan made by a DISC to a person, referred to in this section as the "borrower," is a producer's loan if—

(i) The loan is made out of accumulated DISC income within the meaning of subparagraph (3) of this paragraph.

(ii) The loan is evidenced by an obligation described in subparagraph (4) of this paragraph.

(iii) The requirement as to the trade or business of the borrower described in subparagraph (5) of this paragraph is satisfied.

(iv) At the time the loan is made, the obligation referred to in subdivision (ii) of this subparagraph bears a legend stating "This Obligation Is Designated A Producer's Loan Within The Meaning of section 993(d) of the Internal Revenue Code" or words of substantially the same meaning.

(v) The limitation as to the export-related assets of the borrower described in paragraph (b) of this section is satisfied.

(vi) The requirement as to the increased investment of the borrower in export-related assets described in paragraph (c) of this section is satisfied, and

(vii) The requirement of paragraph (d) of this section as to proof of compliance with paragraphs (b) and (c) of this section is satisfied.

(2) ***Application of this section*** —

(i) ***In general.*** A loan which is a producer's loan is a qualified export asset of the DISC (see § 1.993-2(a)(5) and (F)). The interest on a producer's loan is a qualified export receipt of the DISC (see § 1.993-1(g)). A producer's loan is not a dividend to a borrower which is also a shareholder of the DISC making the loan. For rules with respect to deemed distributions by reason of the amount of foreign investment attributable to producer's loans, see section 995(b)(1)(G) and (d) and the regulations thereunder.

(ii) ***No tracing of loan proceeds.*** For purposes of applying this section, in order to qualify as a producer's loan, the proceeds of the loan need not be traced to an investment in any specific asset.

(iii) ***Unrelated borrower.*** For purposes of applying this section, it is not necessary for a borrower to be a related person with respect to the DISC from which it receives a producer's loan, or a member of the same controlled group as the DISC.

(iv) ***Unpaid balance of producer's loans.*** For purposes of applying this section, the unpaid balance of producer's loans does not include the unpaid balance of any producer's loan to the extent the loan has been deducted or charged off by the DISC as totally or partially worthless under section 165 or 166.

(v) ***Refinancing, renewal, and extension.*** For purposes of applying this section, the refinancing, renewal, or extension of a producer's loan shall be treated as the making of a new loan which may qualify as a producer's loan only if the requirements of subparagraph (1) of this paragraph are met.

(vi) ***Events subsequent to time loan is made.*** The determination as to whether a loan qualifies as a producer's loan is made on the basis of the relevant facts taken into account for purposes of determining whether the loan was a producer's loan when made. Thus, for example, if the accumulated DISC income of the lender is later reduced below the unpaid balance of all producer's loans previously made by the DISC, such subsequent decrease in the amount of accumulated DISC income will not result in later disqualification of such loan (or part thereof) as a producer's loan. Similarly, if a loan (or part of a loan) does not qualify as a producer's loan because of an insufficient amount of accumulated DISC income at the time the loan is made, a subsequent increase in the amount of accumulated DISC income will not result in later qualification of such loan (or part thereof) as a producer's loan. As a further example, for purposes of applying the borrower's export related assets limitation described in paragraph (b) of this section, a loan which qualifies as a producer's loan when made will not later be disqualified if property, the gross receipts from the sale or lease of which were includible in the numerator of the fraction described in paragraph (b)(3)(i) of this section at the time of sale or lease by the borrower, is later characterized as excluded property (as defined in § 1.993-3(f)).

(vii) ***Application of tests under paragraphs (b) and (c) on controlled group bases.*** If the borrower is a member of a controlled group (as defined in § 1.993-1(k)) at the time a loan is made, all amounts that must be determined for purposes of applying the limitation and increased investment requirement with respect to the export-related assets of the borrower (described in paragraphs (b) and (c), respectively, of this section) may be determined at the election of the borrower by aggregating such amounts for all members of the controlled group, determined for the taxable year of each member of the controlled group during which the loan is made, excluding only such members of the group as are DISC's or foreign corporations for such year. However, such amounts may be included only to the extent that such amounts have not already been taken into account in applying the limitation and increased investment requirement with respect to any other borrower. Amounts to be aggregated for all such members if such election is made include, for example, gross receipts (described in paragraphs (b)(3)(i) and (ii) of this section) and export-related assets (described in paragraph (b)(2) of this section). The borrower may make such election by causing its written statement of election to be attached to the lending DISC's return under section 6011(e)(2) for the first taxable year of the lending DISC within which or with which the borrower's taxable year for which the election is to apply ends. An election once made is binding on all members of the controlled group which includes the borrower with respect to all taxable years of the borrower beginning with its first taxable year for which the election is made. A borrower who makes such election may revoke it only if it secures the consent of the Commissioner to such revocation upon application made through the lending DISC.

(3) ***Loan out of accumulated DISC income —***

(i) ***In general.*** A loan is a producer's loan only to the extent that it is made out of accumulated DISC income. A loan is made out of accumulated DISC income only if the amount of the loan, when added to the unpaid balance at the time such loan is made of all other producer's loans made by a DISC, does not exceed the amount of accumulated DISC income of the DISC at the beginning of the month in which the loan is made. The amount of accumulated DISC income at the beginning of any month is determined as if the DISC's taxable year closed at the end of the immediately preceding month.

(ii) ***Presumption.*** A loan made during a taxable year shall be deemed under subdivision (i) of this subparagraph to have been made out of accumulated DISC income if the balance of producer's loans at the beginning of the year and those made during the year do not exceed accumulated DISC income at the end of the year.

(iii) ***Deemed distributions.*** For purposes of this subparagraph, accumulated DISC income as of the end of any taxable year (or month) shall be determined without regard to deemed distributions under section 995(b)(1)(G) for the amount of foreign investment attributable to producer's loans for such year (or for the taxable year for which such month is a part) but actual distributions shall be taken into account.

(4) ***Evidence and terms of obligation.*** A loan is a producer's loan only if the loan is evidenced by a note or other evidence of indebtedness which is made by the borrower and which has a stated maturity date not more than 5 years from the date the loan is made. Accordingly, a loan which does not have a stated maturity date or which has a stated maturity date more than 5 years from the date such loan is made can never meet the 5-year requirement of this subparagraph. Thus, for example, even if there is a period of less than 5 years remaining to the stated maturity date of a loan, the loan can never be a producer's loan if it had a stated maturity date more than 5 years from the date it was made. For a further example, if a loan having a period remaining to maturity of 2 years is extended for a further period of 3 years (making a total of 5 years to maturity from the date of the extension), the extension of the loan would under subparagraph (2)(v) of this paragraph constitute the making of a new producer's loan and the original producer's loan would terminate. If, however, a loan having a period remaining to maturity of 2 years is extended for a further period of 4 years (making a total of 6 years to maturity from the date of the extension), the original producer's loan will terminate and the new loan will not be a producer's loan. If a producer's loan is not paid in full at its maturity date and is not formally refinanced, renewed, or extended, such loan shall be deemed to be a new loan which does not have a stated maturity date and, thus, will not be a producer's loan. For purposes of this subparagraph, an evidence of indebtedness is a written instrument of indebtedness. Section 482 and the regulations thereunder are applicable to determine, in the case of a loan by the DISC to a borrower which is owned or controlled directly or indirectly by the same interests as the DISC within the meaning of section 482, whether the interest charged on such loan is at an arm's length rate.

(5) ***Borrower's trade or business.*** A loan is a producer's loan only if the loan is made to a person engaged in the United States in the manufacture, production, growth, or extraction (within the meaning of § 1.993-3(c)) of export property determined without regard to § 1.993-3(f)(1)(iii) and (iv). The borrower may also be engaged in other trades or businesses and the loan need not be traceable to specific investments in export property.

(b) ***Borrower's export related assets limitation*** —

(1) ***General rule.*** A loan to a borrower is a producer's loan only to the extent that the amount of the loan, when added to the unpaid balance of all other producer's loans made by all DISC's to the borrower which are outstanding at the time the loan is made, does not exceed an amount equal to the amount of the borrower's export-related assets (determined under subparagraph (2) of this paragraph) multiplied by the fraction set forth in subparagraph (3) of this paragraph.

(2) ***Amount of export-related assets*** —

(i) ***In general.*** For purposes of subparagraph (1) of this paragraph, the amount of the borrower's export-related assets is the sum of the amounts described in subdivisions (ii), (iii), and (iv) of this subparagraph.

(ii) ***Borrower's plant and equipment.*** The amount described in this subdivision is the sum of the borrower's adjusted bases (determined as of the beginning of the borrower's taxable year in which a loan is made to it) for plant, machinery, equipment, and supporting production facilities, which are located in the United States. Supporting production facilities are all property used primarily in connection with the manufacture, production, growth, or extraction (within the meaning of § 1.993-3(c)) or storage, handling, transportation, or assembly of property by the borrower.

(iii) ***Borrower's property held primarily for sale or lease.*** The amount described in this subdivision is the amount of the borrower's property (at the beginning of the taxable year of the borrower in which a loan is made to it) held primarily for sale or lease to customers in the ordinary course of its trade or business. The amount of such property held for sale is determined under the methods of identifying and valuing inventory normally used by the borrower. The amount of such property held for lease or leased is the borrower's adjusted bases, determined under section 1011, for such property.

(iv) ***Borrower's research and experimental expenditures.*** The amount described in this subdivision is the aggregate amount, whether or not charged to capital account, of research and experimental expenditures (within the meaning of section 174) incurred in the United States by the borrower during each of its taxable years which begin after December 31, 1971, and precede the taxable year in which the loan is made to the borrower. Such research and experimental expenditures need bear no relationship to export property (as defined in § 1.993-3) of the borrower. The aggregate amount of all such expenditures for each of such preceding taxable years is taken into account for purposes of this subparagraph, regardless of whether all or any portion of the aggregate amount has been taken into account with respect to producer's loans made to the borrower by any DISC in preceding taxable years. The aggregate amount of all such expenditures shall include such expenditures of a corporation, the assets of which were acquired by the borrower in a distribution or a transfer described in section 381(a)(1) or (2) (relating to carryovers in certain corporate acquisitions).

(3) ***Fraction referred to in subparagraph (1) of this paragraph*** —

(i) ***Numerator of fraction.*** The numerator of the fraction set forth in this subparagraph is the sum of the borrower's gross receipts for each of its 3 taxable years immediately preceding the taxable year in which the loan is made (but not including any taxable year beginning before January 1, 1972) from the sale or lease of export property (determined without regard to § 1.993-3(f)(1)(iii) and (iv)) which is manufactured, produced, grown, or extracted (within the meaning of § 1.993-3(c)) by the borrower whether or not sold or leased directly or through a related domestic person (notwithstanding § 1.993-3(a)(4) and (f)(2)). For purposes of the

preceding sentence, with respect to a sale or lease to a related DISC in which the transfer price is determined under section 994(a)(1) or (2), the rules under § 1.994-1(c)(5) (relating to incomplete transactions) shall be applied, and with respect to all other sales and leases the rules under § 1.994-1(c)(5) other than subdivision (i)(*d*) thereof shall be applied.

(ii) ***Denominator of fraction.*** The denominator of the fraction set forth in this subparagraph is the sum of the amount included in the numerator and all other gross receipts of the borrower, for each of its taxable years for which gross receipts are included in the numerator of the fraction, from all sales or leases of all property held by the borrower primarily for sale or lease to customers in the ordinary course of its trade or business. For purposes of subdivision (i) of this subparagraph and this subdivision, if such property is sold or leased to a domestic related person which resells or subleases such property, the borrower's gross receipts shall be the gross receipts derived by the domestic related person from the resale or sublease of the export property.

(iii) ***Taxable years.*** If the borrower has not engaged in the sale or lease of property (as described in this subparagraph) for the 3 immediately preceding taxable years, or if 3 taxable years beginning after December 31, 1971, have not elapsed, the fraction will be computed on the basis of such gross receipts for its taxable years immediately preceding the loan and beginning after December 31, 1971, during which the borrower has so engaged. No producer's loans can be made to a borrower until after the end of the first taxable year of the borrower beginning after December 31, 1971.

(c) ***Requirement for increased investment in export-related assets*** —

(1) ***In general.*** A loan to a borrower is a producer's loan only to the extent that the amount of the loan, when added to the unpaid balance of all other producer's loans made by all DISC's to the borrower during the borrower's taxable year during which such loan is made, does not exceed the amount of the borrower's increase for the year in investment in export-related assets. Such increase for any taxable year is the sum of—

(i) The increase (if any) in the borrowers adjusted basis of certain types of assets as determined under subparagraph (2) of this paragraph and

(ii) The amount (if any) during the year of its research and experimental expenditures as determined under paragraph (b)(2)(iv) of this section.

(2) ***Increase in adjusted basis.*** The amount under this subparagraph is the amount (not less than zero) by which—

(i) The borrower's adjusted basis (determined as of the end of its taxable year in which the producer's loan is made) in all of its property which is described in paragraph (b)(2)(ii) (plant and equipment), and (iii) (property held primarily for sale or lease) of this section, including any such property acquired by it during such taxable year, exceeds

(ii) Its adjusted bases in all such property (determined as of the beginning of such year).

(3) ***Ordering rule.*** If during the borrower's taxable year the amount of increase in investment in export-related assets determined under this subparagraph is exceeded by amounts loaned to the borrower during such year that would otherwise qualify as producer's loans, such loans shall be applied in the order made against the amount of such increase in order to determine which loans qualify as producer's loans.

(d) ***Proof of borrower's compliance with paragraphs (b) and (c) of this section.*** For purposes of paragraphs (b) and (c) of this section, a DISC shall be prepared to establish initially the compliance of the borrower with the requirements of such paragraphs by providing the written statement of the borrower, certified by a certified public accountant, stating that the borrower has complied with the limitation and increased investment requirement in section 993(d)(2) and (3) of the Internal Revenue Code of 1954. In lieu of certification by a certified public accountant, the DISC may attach to its return a statement signed by the borrower under penalties of perjury on a form provided by the Internal Revenue Service certifying that the borrower has complied with the limitation and increased investment requirement in section 993(d)(2) and (3) of the Internal Revenue Code of 1954. For taxable years ending after October 17, 1977, the DISC must attach either the certification by the certified public accountant or the certification by the borrower to its return. Additional full substantiation of the borrower's compliance with the requirements of such paragraphs may be required by the district director. If full substantiation of such compliance is not provided by the DISC (or the borrower) when required, the loan shall be deemed not to be a producer's loan.

(e) ***Special limitation in the case of domestic film maker*** —

(1) ***General rule.*** The limitation of paragraph (b) of this section as to the export-related assets of the borrower will be considered satisfied if the DISC—

(i) Is engaged in the trade or business of selling or leasing films which are export property, or is acting as a commission agent for a person who is so engaged,

(ii) Makes a loan to a borrower which is a domestic film maker (as defined in subparagraph (5) of this paragraph) for the purpose of making a film, and

(iii) The amount of such loan, when added to the unpaid balance of all other producer's loans made by all DISC's to the borrower which are outstanding at the time the loan is made, does not exceed an amount determined by multiplying—

(*a*) The sum of

(*1*) the amount of the export-related assets of the borrower (determined under paragraph (b)(2)(i) of this section as of the beginning of the borrower's taxable year in which the loan is made), plus

(*2*) the amount of a reasonable estimate of the amount of such export related assets obtained or to be obtained by the borrower during such year and subsequent years with respect to films as to which filming begins within such year by

(*b*) The percentage which, based on the experience of other film makers of similar films for the 5 calendar years preceding the calendar year in which the loan is made, the annual gross receipts (as described in § 1.993-6(a)(1), whether or not such films constitute property described therein) of such other film makers from the sale or lease of such films outside the United States is of the annual gross receipts of such other film makers from all sales or leases of such films.

(2) ***Purpose of loan.*** A loan by a DISC will be deemed to be for the making of a film if there exists a written agreement between the DISC and the borrower, executed at or before the time the loan is made, stating that the loan is made or to be made to enable the borrower to make such film.

(3) ***Reasonable estimate of amounts.*** For purposes of subparagraph (1)(iii)(*a*)(*2*) of this paragraph, a reasonable estimate shall be based on the conditions known by the DISC and borrower to exist at the time a loan is made (or which the DISC and borrower have reason to know to exist at such time).

(4) ***Experience of film makers.*** For purposes of subparagraph (1)(iii)(*b*) of this paragraph, the experience of other film makers of similar films for the 5 calendar years preceding the calendar year in which the loan is made shall be derived from such records and statistics as are acknowledged in the trade as reasonably reliable.

(5) ***Domestic film maker.*** For purposes of this section, a borrower is a domestic film maker with respect to a film if—

(i) The borrower is a U.S. person within the meaning of section 7701(a)(30), except that

(*a*) with respect to a partnership all of the partners must be U.S. persons and

(*b*) with respect to a corporation all of its officers and at least a majority of its directors must be U.S. persons,

(ii) The borrower is engaged in the trade or business of making the film with respect to which the loan is made,

(iii) Each studio, if any, used or to be used for filming or for recording sound incorporated into such film is located in the United States (as defined in section 7701(a)(9)),

(iv) At least 80 percent of the aggregate playing time of the film is or will be photographed within the United States (as defined in section 7701(a)(9)), and

(v) At least 80 percent of the total amount (not including any amount which is contingent upon receipts or profits of such film and which is fully taxable by the United States) paid or to be paid for services performed in the making of the film is either paid or to be paid to persons who are U.S. persons at the time such services are performed or consists of amounts which are fully taxable by the United States.

(6) ***Amounts as fully taxable.*** For purposes of subparagraph (5)(v) of this paragraph, an amount is considered fully taxable by the United States if the entire amount is included in gross income under section 61 or is subject to withholding under any provision of U.S. law or treaty to which the U.S. is a party and is not exempt from taxation under any provision of such law or treaty. Where a nonresident alien individual is engaged for the making of a film or where a foreign corporation is engaged to furnish the services of one of its officers or employees for the making of a film, the amount paid such individual or corporation will be considered as fully taxable by the United States only if it meets the test of this subparagraph.

[T.D. 7514, 42 FR 55464, Oct. 17, 1977, as amended by T.D. 7513, 42 FR 57311, Nov. 2, 1977; T.D. 7514, 42 FR 60910, Nov. 30, 1977; T.D. 7854, 47 FR 51741, Nov. 17, 1982]

§ 1.993-5 Definition of related foreign export corporation.

(a) ***General rule*** —

(1) ***Definition.*** Under section 993(e), a foreign corporation is a related foreign export corporation with respect to a DISC if—

(i) It is a foreign international sales corporation described in paragraph (b) of this section,

(ii) It is a real property holding company described in paragraph (c) of this section, or

(iii) It is an associated foreign corporation described in paragraph (d) of this section.

(2) ***Application of this section.*** It is necessary to determine whether a foreign corporation is a related foreign export corporation with respect to a DISC for the following two purposes:

(i) ***Qualified export assets.*** Under § 1.993-2(g), the stock or securities of a related foreign export corporation held by the DISC are qualified export assets.

(ii) ***Qualified export receipts.*** Under § 1.993-1 (e), (f), and (g), certain receipts of the DISC with respect to stock or securities of a related foreign export corporation held by the DISC are qualified export receipts.

(b) ***Foreign international sales corporation*** —

(1) ***In general.*** A foreign corporation is a foreign international sales corporation with respect to a taxable year of a DISC if—

(i) On each day during such taxable year of the DISC on which the foreign corporation has stock issued and outstanding, the DISC owns directly stock of the foreign corporation possessing more than 50 percent of the total combined voting power of all classes of stock of the foreign corporation entitled to vote as determined under the principles of § 1.957-1(b) (relating to definition of controlled foreign corporation),

(ii) 95 percent or more of such foreign corporation's gross receipts (as defined in § 1.993-6) for its taxable year ending with or within such taxable year of the DISC consists of qualified export receipts described in § 1.993-1 (b) through (e) or interest described in § 1.993-1(g) derived from any obligations described in § 1.993-2 (d) or (e), and

(iii) The sum of the adjusted bases of the assets of the foreign corporation which are qualified export assets described in § 1.993-2 (b) through (e) and which are held by the foreign corporation at the close of its taxable year which ends with or within such taxable year of the DISC equals or exceeds 95 percent of the sum of the adjusted bases of all assets held by the foreign corporation at the close of such taxable year.

(2) ***Certain determinations.*** The determinations as to whether gross receipts are qualified export receipts described in subparagraph (1)(ii) of this paragraph and as to whether assets are qualified export assets described in subparagraph (1)(iii) of this paragraph are made by applying the requirements of §§ 1.993-1 and 1.993-2 to the foreign corporation as if it were a domestic corporation being tested to determine whether it is a DISC. For purposes of making either of such determinations, the principles of accounting applicable for purposes of computing earnings and profits under § 1.964-1 (relating to a controlled foreign corporation's earnings and profits) shall apply.

(c) ***Real property holding company*** —

(1) ***In general.*** A foreign corporation is a real property holding company with respect to a taxable year of a DISC if—

(i) On each day during such taxable year of the DISC on which the foreign corporation has stock issued and outstanding, the DISC owns directly stock of the foreign corporation possessing more than 50 percent of the total combined voting power of all classes of stock of the foreign corporation entitled to vote as determined under the principles of § 1.957-1(b) and

(ii) The sole function of the foreign corporation is to hold title to real property situated outside the United States for the exclusive use of the DISC, title to which may not be held by the DISC (and, if the DISC subleases such property to a related supplier, as described in subparagraph (3) of this paragraph, by such related supplier) under the law of the country in which such property is situated.

(2) ***Activities of the foreign corporation.*** For purposes of subparagraph (1)(ii) of this paragraph, a foreign corporation which holds title to real property situated outside the United States may also perform activities with respect to such property (such as management, maintenance, and payment of taxes) which are ancillary to its function of holding title to such property.

(3) ***Exclusive use by the DISC.*** Real property held by the foreign corporation must be used exclusively by the DISC whether under a lease or any other arrangement. Real property is not so used by the DISC if the DISC subleases such property to any other person. If, however, during a taxable year of the DISC—

(i) 90 percent or more of the qualified export receipts of the DISC for such year are derived from transactions with respect to which it is a commission agent for a related supplier (as defined in § 1.994-1(a)(3)(ii)), and

(ii) The DISC subleases such property to such related supplier

then such property will be considered as used exclusively by the DISC during such year if such related supplier does not sublease such property.

(d) ***Associated foreign corporation*** —

(1) ***In general.*** A foreign corporation is an associated foreign corporation with respect to a taxable year of the DISC if—

(i) On each day during such taxable year of the DISC on which the foreign corporation has stock issued and outstanding, the DISC, or one or more members of the same controlled group of corporations (as defined in subparagraph (2) of this paragraph) as the DISC, owns (within the meaning of section 1563 (d) and (e)) stock of the foreign corporation possessing less than 10 percent of the total combined voting power of all classes of stock of the foreign corporation entitled to vote, as determined under the principles of § 1.957-1(b), or owns no stock of such corporation, and

(ii) The ownership of stock, or of securities (as defined in § 1.993-2(g)), of the foreign corporation by the DISC or by one or more members of such controlled group of corporations reasonably furthers a transaction or transactions giving rise to qualified export receipts for the DISC.

(2) ***Controlled group of corporations.*** For purposes of this paragraph, the term “controlled group of corporations” has the same meaning assigned to the term in section 1563(a) and not section 993(a)(3) and § 1.993-1(k). Thus, for purposes of this paragraph, the test of control is 80 percent control and, since the rules of section 1563(b) apply, only domestic members are considered to be members of the controlled group.

(3) ***Furtherance of qualified export receipts.*** Ownership of stock or securities of a foreign corporation will be considered as reasonably furthering a transaction or transactions giving rise to qualified export receipts for a DISC if—

(i) The ownership is necessary to obtain or maintain the foreign corporation as a customer of the DISC or of a related supplier, as defined in § 1.994-1(a)(3)(ii) of the DISC or to aid the sales distribution system of the DISC or of such related supplier, and

(ii) The amount of the investment in the foreign corporation bears a reasonable relationship to the amount of the DISC's annual net profit from transactions in its trade or business which it may reasonably expect to derive on account of such ownership.

In determining whether the amount of the investment is reasonable, there shall be taken into account any stock or securities of the foreign corporation owned by any other foreign corporation which, if it were a domestic corporation, would be a member of the same controlled group of corporations as the DISC.

[T.D. 7514, 42 FR 55467, Oct. 17, 1977; 42 FR 60910, Nov. 30, 1977]

§ 1.993-6 Definition of gross receipts.

(a) ***General rule.*** Under section 993(f), for purposes of sections 991 through 996, the gross receipts of a person for a taxable year are—

(1) The total amounts received or accrued by the person from the sale or lease of property held primarily for sale or lease in the ordinary course of a trade or business, and

(2) Gross income recognized from all other sources, such as, for example, from—

(i) The furnishing of services (whether or not related to the sale or lease of property described in subparagraph (1) of this paragraph),

(ii) Dividends and interest,

(iii) The sale at a gain of any property not described in subparagraph (1) of this paragraph, and

(iv) Commission transactions as and to the extent described in paragraph (e) of this section.

(b) ***Nongross receipts items.*** For purposes of paragraph (a) of this section, gross receipts do not include amounts received or accrued by a person from—

(1) The proceeds of a loan or of the repayment of a loan, or

(2) A receipt of property in a transaction to which section 118 (relating to contribution to capital) or 1032 (relating to exchange of stock for property) applies.

(c) ***Nonreduction of total amounts.*** For purposes of paragraph (a) of this section, the total amounts received or accrued by a person are not reduced by returns and allowances, costs of goods sold, expenses, losses, a deduction for dividends received under section 243, or any other deductible amounts.

(d) ***Method of accounting.*** For purposes of paragraph (a) of this section, the total amounts received or accrued by a person shall be determined under the method of accounting used in computing its taxable income. If, for example, a DISC receives advance or installment payments for the sale or lease of property described in paragraph (a)(1) of this section, for the furnishing of services, or which represent recognized gain from the sale of property not described in paragraph (a)(1) of this section, any amount of such advance payments is considered to be gross receipts of the DISC for the taxable year for which such amount is included in the gross income of the DISC.

(e) ***Commission transactions.***

(1) In the case of transactions which give rise to a commission on the sale or lease of property or the furnishing of services by a principal, the amount recognized by the commission agent as gross income from all such transactions shall be the gross receipts derived by the principal from the sale or lease of the property, or the gross income derived by the principal from the furnishing of services, with respect to which the commissions are derived. In the case of a commission agent for a related supplier (as defined in § 1.994-1(a)(3)(ii)), the gross receipts or gross income of such agent shall be determined as if it used the same method of accounting as its related supplier. In the case of a commission agent for a principal other than a related supplier, the gross receipts or gross income of such principal shall be determined as if such principal used the same method of accounting as its agent.

(2) If the commission arrangement provides that the commission agent will receive a commission only with respect to sales or leases of export property, or the furnishing of services, which result in qualified export receipts, the commission agent will not take into account the gross receipts or gross income, as the case may be, derived by the principal from any transaction for which the commission agent would not be entitled to a commission under the commission arrangement.

(f) ***Example.*** The provisions of this section may be illustrated by the following example:

Example. During 1973, M, a related supplier (as defined in § 1.994-1(a)(3)(ii)) of N, is engaged in the manufacture of machines in the United States. N, a calendar year taxpayer, is engaged in the sale and lease of such machines in foreign countries. N furnishes services which are related and subsidiary to its sale and lease of such machines. N also acts as a commission agent in foreign countries for Z, an unrelated supplier, with respect to Z's sale of products. N receives dividends on stock owned by it in a related foreign export corporation (as defined in § 1.993-5), interest on producer's loans made to M, and proceeds from sales of business assets located outside the United States resulting in a recognized gains and losses. N's gross receipts for 1973 are $3,550, computed on the basis of the additional facts assumed in the table below:

(1) N's sales receipts for machines manufactured by M (without reduction for cost of goods sold and selling expenses)	$1,500
(2) N's lease receipts for machines manufactured by M (without reduction for depreciation and leasing expenses)	500
(3) N's gross income from services for machines manufactured by M (without reduction for service expenses)	400
(4) Z's sale receipts for products manufactured by Z (without reduction for Z's cost of goods sold, commissions on sales, and commission sales expenses)	550
(5) Dividends received by N	150
(6) Interest received by N on producer's loans	200
(7) Proceeds received by N representing recognized gain (but not losses) from sales of business assets located outside the United States	250

(8) N's gross receipts	3,550

[T.D. 7514, 42 FR 55468, Oct. 17, 1977]

§ 1.993-7 Definition of United States.

Under section 993(g), the term "United States" includes the States, the District of Columbia, the Commonwealth of Puerto Rico, and possessions of the United States. For the requirement that a DISC must be incorporated and existing under the laws of a State or the District of Columbia, see § 1.992-1(a)(1).

[T.D. 7514, 42 FR 55468, Oct. 17, 1977]

§ 1.994-1 Inter-company pricing rules for DISC's.

(a) ***In general*** —

(1) ***Scope.*** In the case of a transaction described in paragraph (b) of this section, section 994 permits a person related to a DISC to determine the allowable transfer price charged the DISC (or commission paid the DISC) by its choice of three methods described in paragraph (c)(2), (3), and (4) of this section: The "4 percent" gross receipts method, the "50-50" combined taxable income method, and the section 482 method. Under the first two methods, the DISC is entitled to 10 percent of its export promotion expenses as additional taxable income. When the gross receipts method or combined taxable income method is applied to a transaction, the Commissioner may not make distributions, apportionments, or allocations as provided by section 482 and the regulations thereunder. For rules as to certain "incomplete transactions" and for computing combined taxable income, see paragraph (c)(5) and (6) of this section. Grouping of transactions for purposes of applying the method chosen is provided by paragraph (c)(7) of this section. The rules in paragraph (c) of this section are directly applicable only in the case of sales or exchanges of export property to a DISC for resale, and are applicable by analogy to leases, commissions, and services as provided in paragraph (d) of this section. For rules limiting the application of the gross receipts method and combined taxable income method so that the supplier related to the DISC will not incur a loss on transactions, see paragraph (e)(1) of this section. Paragraph (e)(2) of this section provides for the applicability of section 482 to resales by the DISC to related persons. Paragraph (e)(3) of this section provides for the time by which a reasonable estimate of the transfer price (including commissions and other payments) should be paid. The subsequent determination and further adjustments to transfer prices are set forth in paragraph (e)(4) of this section. Export promotion expenses are defined in paragraph (f) of this section. Paragraph (g) of this section has several examples illustrating the provisions of this section. Section 1.994-2 prescribes the marginal costing rules authorized by section 994(b)(2).

(2) ***Performance of substantial economic functions.*** The application of section 994(a)(1) or (2) does not depend on the extent to which the DISC performs substantial economic functions (except with respect to export promotion expenses). See paragraph (l) of § 1.993-1.

(3) ***Related party and related supplier.*** For the purposes of this section—

(i) The term "related party" means a person which is owned or controlled directly or indirectly by the same interests as the DISC within the meaning of section 482 and § 1.482-1(a).

(ii) The term "related supplier" means a related party which singly engages in a transaction directly with the DISC which is subject to the rules of section 994 and this section. However, a DISC may have different related suppliers with respect to different transactions. If, for example, X owns all the stock of Y, a corporation, and of Z, a DISC, and sells a product to Y which is resold to Z, only Y is the related supplier of Z, and, thus, only the resale from Y to Z is subject to section 994 and this section. If, however, X sells directly to Z and Y also sells directly to Z, then, as to the transactions involving direct sales to Z, each of X and Y is a related supplier of Z.

(b) ***Transactions to which section 994 applies.*** Section 994(a)(3) may be applied, as described in paragraph (a) of this section, to any transaction between a related supplier and a DISC. Section 994(a)(1) or (2) may be applied, as described in paragraph (a) of this section, to a transaction between a related supplier and a DISC only in the following cases:

(1) Where the related supplier sells export property to the DISC for resale or where the DISC is commission agent for the related supplier on sales by the related supplier of export property to third parties whether or not related parties. For purposes of this section, references to sales include exchanges.

(2) Where the related supplier leases export property to the DISC for sublease for a comparable period with comparable terms of payment or where the DISC is commission agent for the related supplier on leases by the related supplier of export property to third parties whether or not related parties.

(3) Where services are furnished by a related supplier which are related and subsidiary to any sale or lease by the DISC, acting as principal or commission agent, of export property under subparagraph (1) or (2) of this paragraph.

(4) Where engineering or architectural services for construction projects located (or proposed for location) outside of the United States are furnished by a related supplier where the DISC is acting as principal or commission agent with respect to the furnishing of such services to a third party whether or not a related party.

(5) Where the related supplier furnishes managerial services in furtherance of the production of qualified export receipts of an unrelated DISC where the related DISC is acting as principal or commission agent with respect to the furnishing of such services to an unrelated DISC.

Transactions are included, for purposes of this paragraph, only if they give rise to qualified export receipts (within the meaning of section 993(a)) in the hands of the related DISC. If a transaction is not included in subparagraph (1), (2), (3), (4), or (5) of this paragraph, the rules of section 994(a)(1) or (2) do not apply. Thus, for example, the rules of section 994(a)(1) or (2) would not apply if a DISC purchased export property from its related supplier and leased such property to a third party.

(c) ***Transfer price for sales of export property*** —

(1) ***In general.*** Under this paragraph, rules are prescribed for computing the allowable price for a transfer from a related supplier to a DISC in the case of a sale of export property described in paragraph (b)(1) of this section.

(2) ***The "4-percent" gross receipts method.*** Under the gross receipts method of pricing, the transfer price for a sale by the related supplier to the DISC is the price as a result of which the taxable income derived by the DISC from the sale will not exceed the sum of (i) 4 percent of the qualified export

receipts of the DISC derived from the sale of the export property (as defined in section 993 (c)) and (ii) 10 percent of the export promotion expenses (as defined in paragraph (f) of this section) of the DISC attributable to such qualified export receipts.

(3) ***The "50-50" combined taxable income method.*** Under the combined taxable income method of pricing, the transfer price for a sale by the related supplier to the DISC is the price as a result of which the taxable income derived by the DISC from the sale will not exceed the sum of (i) 50 percent of the combined taxable income (as defined in subparagraph (6) of this paragraph) of the DISC and its related supplier attributable to the qualified export receipts from such sale and (ii) 10 percent of the export promotion expenses (as defined in paragraph (f) of this section) of the DISC attributable to such qualified export receipts.

(4) ***Section 482 method.*** If the rules of subparagraphs (2) and (3) of this paragraph are inapplicable to a sale or a taxpayer does not choose to use them, the transfer price for a sale by the related supplier to the DISC is to be determined on the basis of the sale price actually charged but subject to the rules provided by section 482 and the regulations thereunder.

(5) ***Incomplete transactions.***

(i) For purposes of the gross receipts and combined taxable income methods, where property (encompassed within a transaction or group chosen under subparagraph (7) of this paragraph) is transferred by a related supplier to a DISC during a taxable year of either the DISC or related supplier, but some or all of such property is not sold by the DISC during such year—

(*a*) The transfer price of such property sold by the DISC during such year shall be computed separately from the transfer price of the property not sold by the DISC during such year,

(*b*) With respect to such property not sold by the DISC during such year, the transfer price paid by the DISC for such year shall be the related supplier's cost of goods sold (see subparagraph (6)(ii) of this paragraph) with respect to the property, except that, with respect to such taxable years ending on or before August 15, 1975, the transfer price paid by the DISC shall be at least (but need not exceed) the related supplier's cost of goods sold with respect to the property.

(*c*) For the subsequent taxable year during which such property is resold by the DISC, an additional amount shall be paid by the DISC (to be treated as income for such year by the related supplier) equal to the excess of the amount which would have been the transfer price under this section had the transfer to the DISC by the related supplier and the resale by the DISC taken place during the taxable year of the DISC during which it resold the property over the amount already paid under (*b*) of this subdivision.

(*d*) The time and manner of payment of transfer prices required by (*b*) and (*c*) of this subdivision shall be determined under paragraphs (e)(3), (4), and (5) of this section.

(ii) For purposes of this paragraph, a DISC may determine the year in which it receives property from a related supplier and the year in which it sells property in accordance with the method of identifying goods in its inventory properly used under section 471 or 472 (relating respectively to general rule for inventories and to LIFO inventories). Transportation expense of the related supplier in connection with a transaction to which this subparagraph applies shall be treated as an item of cost of goods sold with respect to the property if the related supplier includes the cost of intracompany transportation between its branches, divisions, plants, or other units in its cost of goods sold (see subparagraph (6)(ii) of this paragraph).

(6) *Combined taxable income.* For purposes of this section, the combined taxable income of a DISC and its related supplier from a sale of export property is the excess of the gross receipts (as defined in section 993(f)) of the DISC from such sale over the total costs of the DISC and related supplier which relate to such gross receipts. Gross receipts from a sale do not include interest with respect to the sale. Combined taxable income under this paragraph shall be determined after taking into account under paragraph (e)(2) of this section all adjustments required by section 482 with respect to transactions to which such section is applicable. In determining the gross receipts of the DISC and the total costs of the DISC and related supplier which relate to such gross receipts, the following rules shall be applied:

(i) Subject to subdivisions (ii) through (v) of this subparagraph, the taxpayer's method of accounting used in computing taxable income will be accepted for purposes of determining amounts and the taxable year for which items of income and expense (including depreciation) are taken into account. See § 1.991-1(b)(2) with respect to the method of accounting which may be used by a DISC.

(ii) Cost of goods sold shall be determined in accordance with the provisions of § 1.61-3. See sections 471 and 472 and the regulations thereunder with respect to inventories. With respect to property to which an election under section 631 applies (relating to cutting of timber considered as a sale or exchange), cost of goods sold shall be determined by applying § 1.631-1(d)(3) and (e) (relating to fair market value as of the beginning of the taxable year of the standing timber cut during the year considered as its cost).

(iii) Costs (other than cost of goods sold) which shall be treated as relating to gross receipts from sales of export property are

(*a*) the expenses, losses, and other deductions definitely related, and therefore allocated and apportioned, thereto, and

(*b*) a ratable part of any other expenses, losses, or other deductions which are not definitely related to a class of gross income, determined in a manner consistent with the rules set forth in § 1.861-8.

(iv) The taxpayer's choice in accordance with subparagraph (7) of this paragraph as to the grouping of transactions shall be controlling, and costs deductible in a taxable year shall be allocated and apportioned to the items or classes of gross income of such taxable year resulting from such grouping.

(v) If an account receivable arising with respect to a sale of export property is transferred by the related supplier to a DISC which is a member of the same controlled group within the meaning of § 1.993-1(k) for an amount reflecting a discount from the selling price taken into account in computing (without regard to this subdivision) combined taxable income of the DISC and its related supplier, then the combined taxable income from such sale shall be reduced by the amount of the discount.

(7) *Grouping transactions.*

(i) Generally, the determinations under this section are to be made on a transaction-by-transaction basis. However, at the annual choice of the taxpayer some or all of these determinations may be made on the basis of groups consisting of products or product lines.

(ii) A determination by a taxpayer as to a product or a product line will be accepted by a district director if such determination conforms to any one of the following standards:

(*a*) A recognized industry or trade usage, or

(*b*) the 2-digit major groups (or any inferior classifications or combinations thereof, within a major group) of the Standard Industrial Classification as prepared by the Statistical Policy Division of the Office of Management and Budget, Executive Office of the President.

(iii) A choice by the taxpayer to group transactions for a taxable year on a product or product line basis shall apply to all transactions with respect to that product or product line consummated during the taxable year. However, the choice of a product or product line grouping applies only to transactions covered by the grouping and, as to transactions not encompassed by the grouping, the determinations are made on a transaction-by-transaction basis. For example, the taxpayer may choose a product grouping with respect to one product and use the transaction-by-transaction method for another product within the same taxable year.

(iv) For rules as to grouping certain related and subsidiary services, see paragraph (d)(3)(ii) of this section.

(d) ***Rules under section 994(a)(1) and (2) for transactions other than sales.*** The following rules are prescribed for purposes of applying the gross receipts method or combined taxable income method to transactions other than sales:

(1) ***Leases.*** In the case of a lease of export property by a related supplier to a DISC for sublease by the DISC to produce gross receipts, for any taxable year the amount of rent the DISC must pay to the related supplier shall be determined under the DISC's lease with its related supplier but must be computed in a manner consistent with the rules in paragraph (c) of this section for computing the transfer price in the case of sales and resales of export property under the gross receipts method or combined taxable income method. For purposes of applying this subparagraph, transactions may not be so grouped on a product or product line basis under the rules of paragraph (c)(7) of this section as to combine in any one group of transactions both lease transactions and sale transactions involving the same product or product line.

(2) ***Commissions.*** If any transaction to which section 994 applies is handled on a commission basis for a related supplier by a DISC and such commissions give rise to qualified export receipts under section 993(a)—

(i) The amount of the income that may be earned by the DISC in any year is the amount, computed in a manner consistent with paragraph (c) of this section, which the DISC would have been permitted to earn under the gross receipts method, the combined taxable income method, or section 482 method if the related supplier had sold (or leased) the property or service to the DISC and the DISC in turn sold (or subleased) to a third party, whether or not a related party, and

(ii) The maximum commission the DISC may charge the related supplier is the sum of the amount of income determined under subdivision (i) of this subparagraph plus the DISC's total costs for the transaction as determined under paragraph (c)(6) of this section.

(3) ***Receipts from services*** —

(i) ***Related and subsidiary services attributable to the year of the export transaction.*** The gross receipts for related and subsidiary services described in paragraph (b)(3) of this section shall be treated as part of the receipts from the export transaction to which such services are related

and subsidiary, but only if, under the arrangement between the DISC and its related supplier and the accounting method otherwise employed by the DISC, the income from such services is includible for the same taxable year as income from such export transaction.

(ii) ***Other services.*** In the case of related and subsidiary services to which subdivision (i) of this subparagraph does not apply and other services described in paragraph (b)(4) or (5) of this section performed by a related supplier (relating respectively to engineering and architectural services and certain managerial services), the amount of taxable income which the DISC may derive for any taxable year shall be determined under the arrangement between the DISC and its related supplier and shall be computed in a manner consistent with the rules in paragraph (c) of this section for computing the transfer price in the case of sales for resale of export property under the gross receipts method or combined taxable income method. Related and subsidiary services to which subdivision (i) of this subparagraph does not apply may be grouped, under the rules for grouping of transactions in paragraph (c)(7) of this section, with the products or product lines to which they are related and subsidiary, so long as the grouping of services chosen is consistent with the grouping of products or product lines chosen for the taxable year in which either the product or product lines were sold or in which payment for such services is received or accrued. The rules for grouping of transactions in paragraph (c)(7) of this section shall not apply with respect to the determination of taxable income which the DISC may derive from other services described in paragraph (b)(4) or (5) of this section performed by a related supplier or commissions on such services, and such determination shall be made only on a transaction-by-transaction basis.

(e) ***Methods of applying paragraphs (c) and (d) of this section —***

(1) ***Limitation on DISC income ("no loss" rule) —***

(i) ***In general.*** Except as otherwise provided in this subparagraph, neither the gross receipts method nor the combined taxable income method may be applied to cause in any taxable year a loss to the related supplier, but either method may be applied to the extent it does not cause a loss. A loss to a related supplier would result if the taxable income of the DISC would exceed the combined taxable income of the related supplier and the DISC. If, however, there is no combined taxable income of the DISC and the related supplier (because, for example, a combined loss is incurred), a transfer price (or commission) will not be deemed to cause a loss to the related supplier if it allows the DISC to recover an amount not in excess of its costs (if any).

(ii) ***Special rule for applying "4 percent" gross receipts method to sales.*** A transfer price or commission, determined under the "4 percent" gross receipts method (determined without regard to subdivision (i) of this subparagraph), for a sale of export property referred to in paragraph (b)(1) of this section, will not be considered to cause a loss for the related supplier if for the DISC's taxable year, the ratio that (a) the taxable income of the DISC derived from such sale by using such price or commission bears to (*b*) the DISC's gross receipts from such sale is not greater than the ratio that (*c*) all of the taxable income of the related supplier and the DISC from all sales of the same product or product line (domestic and foreign) to third parties whether or not related parties bears to (*d*) the total gross receipts of the related supplier and the DISC from such sales. For purposes of the preceding sentence, sales between the DISC and its related suppliers shall not be taken into account under (*c*) or (*d*) of this subdivision. For example, assume that for a taxable year of a DISC the total costs of the related supplier and the DISC with respect to all sales ($150 for domestic and $44 for foreign) of a product line are

$194 and the total gross receipts of the related supplier and the DISC with respect to such sales are $200 so that the total taxable income of the related supplier and the DISC with respect to such sales is $6. The parties would thus be entitled to compute a transfer price determined under the gross receipts method on any given sale of product A of such product line by the related supplier to the DISC which would allocate to the DISC taxable income equal to not more than 3 percent (*i.e.,* $6/$200) of its gross receipts derived from its resale of such product. If the DISC were to resell an item of product A for $10, the transfer price paid by the DISC to the related supplier determined under the gross receipts method could be as low as $9.70.

(iii) ***Grouping transactions.*** For purposes of subdivision (i) of this subparagraph, the basis for grouping transactions chosen by the taxpayer under paragraph (c)(7) of this section for the taxable year shall be applied. For purposes of making the computations of subdivision (ii) (*c*) and (*d*) of this subparagraph, however, the taxpayer may choose any basis for grouping transactions permissible under paragraph (c)(7) of this section, even though it may not be the same basis as that already chosen under paragraph (c)(7) of this section for computing transfer prices or commissions to a DISC. If, for example, the taxpayer has chosen to group transactions on a product basis for computing transfer prices or commissions to a DISC for a taxable year, the taxpayer may still group transactions on a product line basis for purposes of computing taxable income and total gross receipts under subdivision (ii) (*c*) and (*d*) of this subparagraph. For a further example, if the taxpayer computes taxable income for one group of transactions under the gross receipts method and computes taxable income for a second group of transactions under the combined taxable income method, the taxpayer may aggregate these transactions for purposes of computing taxable income and total gross receipts under subdivision (ii) (*c*) and (*d*) of this subparagraph.

(2) ***Relationship to section 482.*** In applying the rules under section 994, it may be necessary to first take into account the price of a transfer (or other transaction) between the DISC (or related supplier) and a related party which is subject to the arm's length standard of section 482. Thus, for example, where a related supplier sells export property to a DISC which the related supplier purchased from related parties, the costs taken into account in computing the combined taxable income of the DISC and the related supplier are determined after any necessary adjustment under section 482 of the price paid by the related supplier to the related parties. In applying section 482 to a transfer by a DISC, however, the DISC and its related supplier are treated as if they were a single entity carrying on all the functions performed by the DISC and the related supplier with respect to the transaction and the DISC shall be allowed to receive under the section 482 standard the amount the related supplier would have received had there been no DISC.

(3) ***Initial payment of transfer price or commission.***

(i) The amount of a transfer price (or reasonable estimate thereof) actually charged by a related supplier to a DISC, or a sales commission (or reasonable estimate thereof) actually charged by a DISC to a related supplier, in a transaction to which section 994 applies must be paid no later than 60 days following the close of the taxable year of the DISC during which the transaction occurred.

(ii) Payment must be in the form of money, property (including accounts receivable from sales by or through the DISC), a written obligation which qualifies as debt under the safe harbor rule of § 1.992-1(d)(2)(ii), or an accounting entry offsetting the account receivable against an existing debt owed by the person in whose favor the account receivable was established to the person

with whom it engaged in the transaction. The form of the payment to a DISC need not be a qualified export asset under § 1.993-2. However, for the requirement that the adjusted basis of the qualified export assets of the DISC at the close of its taxable year must equal or exceed 95 percent of the sum of the adjusted bases of all assets of the DISC at the close of its taxable year, see section 992(a)(1)(B).

(iii) If the district director can demonstrate, based upon the data available as of the 60th day after the close of such taxable year, that the amount actually paid did not represent a reasonable estimate of the transfer price or commission (as the case may be) to be determined under section 994 and this section, an indebtedness will be deemed to arise, from the person required to make the payment in favor of the person to whom the payment is required to be made, in an amount equal to the difference between the amount of the transfer price or commission determined under section 994 and this section and the amount (if any) actually paid and received. Such indebtedness will be deemed to arise as of the date the transaction occurred which gave rise to the indebtedness, except that, if such transaction occurred in a taxable year of the DISC ending on or before August 15, 1975, at the taxpayer's option, the indebtedness will be deemed to arise as of the date by which payment was required under subdivision (i) of this paragraph (e)(3). Such indebtedness owed to a DISC shall be treated as an asset but shall not be treated as a trade receivable or other qualified export asset (see § 1.993-2(d)(3)) as of the end of the taxable year of the DISC in which the indebtedness is deemed to arise.

(iv)

(*a*) Except with respect to incomplete transactions to which paragraph (c)(5)(i)(*b*) of this section applies, if the amount actually paid results in the DISC realizing at least 50 percent of the DISC's taxable income from the transaction as reported in its tax return for the taxable year the transaction is completed, then the amount actually paid shall be deemed to be a reasonable estimate of such transfer price or commission.

(*b*) With respect to incomplete transactions to which paragraph (c)(5)(i)(*b*) of this section applies and which were initiated during a taxable year ending after August 15, 1975, the amount actually paid shall be deemed to be a reasonable estimate of such transfer price if any one of the following three tests is met:

(*1*) The amount actually paid by the DISC to the related supplier in respect of the property does not exceed the related supplier's cost of goods sold (see paragraph (c)(6)(ii) of this section) with respect to the property.

(*2*) If the transaction is completed by the date on which the DISC's return is required to be filed for the year in which the transaction was initiated, the amount actually paid by the DISC to the related supplier in respect of the property results in the DISC realizing at least 50 percent of the DISC's taxable income from the transaction when completed.

(*3*) The percentage that (*i*) an amount equal to (*a*) the amount actually paid by the DISC to the related supplier in respect of the property minus (*b*) the related supplier's cost of goods sold with respect to the property, bears to (*ii*) the related supplier's cost of goods sold in respect of the property, is not greater than 50 percent of the percentage that (*iii*) the combined taxable income for completed transactions of the

same group as the property during the DISC's taxable year in which the incomplete transaction was initiated, bears to (*iv*) the cost of goods sold of the related supplier and DISC with respect to such transactions.

(*c*) For purposes of this subdivision (iv), whether the transfer price or commission actually paid is deemed a reasonable estimate may be determined on the basis for grouping transactions chosen by the taxpayer under paragraph (c)(5) and (7) of this section.

(v) An indebtedness arising under subdivision (iii) of this subparagraph shall bear interest at an arm's length rate, computed in the manner provided by § 1.482-2(a)(2) from the 61st day after the close of the DISC's taxable year in which the transaction occurred which gave rise to the indebtedness to the date of payment. The interest so computed shall be accrued and included in the taxable income of the person to whom the indebtedness is owed for each taxable year during which the indebtedness is unpaid.

(4) ***Subsequent determination of transfer price or commission.*** The DISC and its related supplier would ordinarily determine under section 994 and this section the transfer price payable by the DISC (or the commission payable to the DISC) for a transaction before the DISC files its return for the taxable year of the transaction. After the DISC has filed its return, a redetermination of the transfer price (or commission) may only be made if permitted by the Code and the regulations thereunder. Such a redetermination would include a redetermination by reason of an adjustment under section 482 and the regulations thereunder or section 861 and § 1.861-8 which affects the amounts which entered into the determination of the transfer price or commission.

(5) ***Procedure for adjustments to transfer price or commission*** —

(i)

(*a*) If the transfer price (or commission) for a transaction determined under section 994 is different from the price (or commission) actually charged, the person who received too small a transfer price (or commission) or paid too large a transfer price (or commission) shall establish (or be deemed to have established), at the date of the determination or redetermination under subparagraph (4) of this paragraph of the transfer price (or commission) under section 994, an account receivable due the DISC from the person with whom it engaged in the transaction equal to the difference in amount between the transfer price (or commission) so determined and the transfer price (or commission) previously paid and received. If the account receivable is paid within 90 days after the date it is established (or deemed established), then as of the end of the taxable year of the DISC in which the transaction occurred which gave rise to the indebtedness, the account receivable shall be treated as an asset and, under § 1.993-2(d)(3) as a trade receivable, and thus as a qualified export asset.

(*b*) If, for example, during 1972, a DISC which uses the calendar year as its taxable year sold a product which it purchased that year from its related supplier and paid a price of $10,000 which price is a reasonable estimate under subparagraph (3)(iii) of this paragraph but is later determined under section 994 to be $8,000 immediately before the DISC filed its return for 1972, the DISC must be paid $2,000 (i.e., $10,000−$8,000) by its related supplier or establish an account receivable from its related supplier of $2,000. The account receivable may be paid without tax consequences, provided that such account receivable is paid within 90 days after the date it is established (or deemed established). Such

account receivable paid within such 90 days will be considered to relate to the taxable year in which the transaction occurred which gave rise thereto rather than the taxable year during which it is established or paid.

(ii) Payment must be in a form specified in subparagraph (3) of this paragraph.

(iii) If an account receivable of a DISC described in subdivision (i) of this paragraph (e)(5) is not paid within 90 days of the date it is established (or deemed established), then, as of the end of the taxable year of the DISC in which the transaction occurred which gives rise to the indebtedness, the account receivable shall be treated as an asset except that, if the account receivable is established (or deemed established) in a taxable year of the DISC ending on or before August 15, 1975, at the taxpayer's option, the account receivable shall be treated as an asset as of the end of such taxable year. However, under § 1.993-2(d)(3), an account receivable referred to in the preceding sentence shall not be treated as a trade receivable or other qualified export asset.

(iv) An account receivable established in accordance with subdivision (i) of this subparagraph shall bear interest at an arm's length rate, computed in the manner provided by § 1.482-2(a)(2) from the day after the date the account receivable is deemed established to the date of payment. The interest so computed shall be accrued and included in the taxpayer's taxable income for each taxable year during which the account receivable is outstanding.

(v)

(*a*) In lieu of establishing an account receivable in accordance with subdivision (i) of this subparagraph for all or part of an amount due a related supplier, the related supplier and DISC are permitted to treat all or part of any distribution which was made by the DISC out of its previously taxed income with respect to the year to which the determination or redetermination relates as an additional payment of transfer price or repayment of commission (and not as a distribution) made as of the date the distribution was made. Any additional amount arising on the determination or redetermination due the related supplier after this treatment shall be represented by an account receivable established under subdivision (i) of this subparagraph. To the extent that a distribution is so treated under this subdivision (v), it shall cease to qualify as distribution for any Federal income tax purpose, and the DISC's account for previously taxed income shall be adjusted accordingly. If all or part of any distribution made to a shareholder other than the related supplier is recharacterized under this subdivision (v), the related supplier shall establish an account receivable from that shareholder for the amount so recharacterized. Such account receivable shall be paid in the time and manner set forth in this paragraph (e)(5). In order to obtain the relief provided by this subdivision (v), the conditions and procedures prescribed by Revenue Procedure 84-3 must be met. The provisions of this paragraph (e)(5)(v) shall apply to all open taxable years ending after December 31, 1971.

(*b*) If, for example, during 1982, a DISC commission from a related supplier with respect to a transaction completed in 1980 was redetermined to be $1,000 less than the commission actually charged by, and paid to, the DISC, the amount of any distribution previously made by the DISC from its 1980 previously taxed income to the related supplies as a shareholder may, to the extent of $1,000, be treated not as a distribution but as a repayment of the commission.

(vi) The procedure for adjustments to transfer price provided by this subparagraph does not apply to incomplete transactions described in paragraph (c)(5)(i)(*b*) of this section. Such procedure will, however, be applied to any such transaction with respect to the taxable year in which the transaction is completed.

(6) ***Examples.*** The provisions of this paragraph may be illustrated by the following examples:

> *Example 1.* (i) During 1975, a DISC which uses the calendar year as its taxable year purchased a product from its related supplier and made an initial payment of $8,500. If $8,500 were determined to be the transfer price under section 994, the DISC's taxable income from the transaction would be $1,000. Immediately before the DISC filed its return for 1975, under section 994 it is determined that the transfer price is $8,000 and the DISC's taxable income is $1,500. Thus, the requirement of a reasonable estimate under subparagraph (3) of this paragraph was met because the amount ($8,500) actually paid resulted in the DISC realizing taxable income of $1,000 which is not less than 50 percent of the DISC's taxable income ($1,500) from the transaction as determined under section 994.
> (ii) Pursuant to subparagraph (5) of this paragraph, an account receivable due the DISC for $500, i.e., $8,500−$8,000, is established on September 15, 1976, the date the DISC files its return for 1975, and is paid on December 1, 1976. The account receivable for $500 will be considered to relate to the taxable year (1975) in which the transaction occurred which gave rise thereto and will be a qualified export asset under § 1.993-2(d)(3) for the last day of such year.

Example 2. Assume the same facts as in example 1 except that the account receivable for $500 is paid on January 1, 1977. The account receivable for $500 will still be considered to relate to the taxable year (1975) in which the transaction occurred which gave rise thereto. However, such account receivable will be treated as an asset which is not a qualified export asset under § 1.993-2(d)(3) for the last day of such year.

(f) ***Export promotion expenses*** —

(1) ***Purpose of expense.***

(i) In order for an expense or cost of a type described in subparagraph (2) of this paragraph to be an export promotion expense, the expense or cost must be incurred or treated as incurred by the DISC (under subparagraph (7) of this paragraph) to advance the sale, lease, or other distribution of export property for use, consumption, or distribution outside the United States. Costs of services in performing installation (but not assembly) on the site and for meeting warranty commitments if such services are related and subsidiary (within the meaning of § 1.993-1(d)) to any qualified sale, lease, or other distribution of export property by the DISC (or with respect to which the DISC received a commission) will be considered to advance the sale, lease, or other distribution of export property. General and administrative expenses attributable to billing customers, other clerical functions of the DISC, or generally operating the DISC, will also be considered to advance the sale, lease, or other distribution of export property.

(ii) Where an expense or cost incurred or treated as incurred by the DISC qualifies only in part as an export promotion expense, such expense or cost must be allocated between the qualified portion and such other portion on a reasonable basis. See § 1.994-2(b)(2) for the option of the related supplier not to claim expenses as export promotion expenses.

(2) ***Types of expenses.*** The only expenses or costs which may be export promotion expenses are those expenses or costs meeting the test of subparagraph (1) of this paragraph which constitute—

(i) Ordinary and necessary expenses of the DISC paid or incurred during the DISC's taxable year in carrying on any trade or business, allowable as deductions under section 162, such as expenses for market studies, advertising, salaries and wages (including contributions or compensations deductible under section 404) of sales, clerical, and other personnel, rentals on property, sales commissions, warehousing, and other selling expenses,

(ii) A reasonable allowance under section 167 for exhaustion, wear and tear, or obsolescence of the property of the DISC,

(iii) Costs of freight (subject to the limitations of subparagraph (4) of this paragraph),

(iv) Costs of packaging for export (as defined in subparagraph (5) of this paragraph), or

(v) Costs of designing and labeling packages exclusively for export markets (under subparagraph (6) of this paragraph).

(3) ***Ineligible expenses.*** Items ineligible to be export promotion expenses include, for example, interest expenses, bad debt expenses, freight insurance, State and local income and franchise taxes, the cost of manufacture or assembly operations, and items of cost of goods sold (except as otherwise provided in this paragraph in the case of certain freight, packaging, and designing and labeling expenses). Income or similar taxes eligible for a foreign tax credit under sections 901 and 903 are also not eligible to be export promotion expenses.

(4) ***Freight expenses*** —

(i) ***In general.*** Export promotion expenses include one-half of the freight expense (not including insurance) for shipping export property aboard a U.S.-flag carrier in those cases where law or regulation of the United States or of any State or political subdivision thereof or of any agency or instrumentality of any of these does not require that the export property be shipped aboard a U.S.-flag carrier. For purposes of this paragraph, the term “freight expense” includes charges paid for c.o.d. service, miscellaneous ground charges, such as charges incurred for services normally performed by U.S.-flag carriers, charges for services of loading aboard U.S.-flag carriers normally performed by such carriers, freight forwarders, or independent contractors engaged in loading property, and charges attributable to a freight consolidation function normally performed by freight forwarders. In order for one-half of freight expenses paid to the owner (or the agent of the owner) of a U.S.-flag carrier to be claimed as an export promotion expense, the DISC must obtain a written statement (such as, for example, a bill of lading) from the owner (or the agent) disclosing that the export property was shipped aboard the owner's U.S.-flag carrier or another U.S.-flag carrier, and the DISC must have no reasonable basis for disbelieving such statement of the owner (or the agent). For the requirement of a written statement from a freight forwarder, see subdivision (iv) of this subparagraph.

(ii) ***U.S.-flag carrier defined.*** For purposes of this paragraph, the term "U.S.-flag carrier" is an airplane owned and operated by a U.S. person or persons (as defined in section 7701(a)(30)) or a ship documented under the laws of the United States. Shipment initiated by delivery to the U.S. Postal Service shall be considered shipment aboard a U.S.-flag carrier, but not if shipped to a place to which mail shipments from the United States are ordinarily accomplished by land transportation, such as to Canada or Mexico, unless airmail is specified.

(iii) ***Shipment pursuant to law or regulation.*** Shipment pursuant to law or regulation includes instances where a U.S.-flag carrier must be used in order to obtain permission from the Government to make the export. If the law or regulation requires a fixed portion of the export property to be shipped aboard a U.S.-flag carrier, the freight expense on that portion of such export property that was so shipped in order to satisfy such requirement cannot qualify as an export promotion expense.

(iv) ***Freight forwarders.*** A payment to a freight forwarder shall be considered freight expense within the meaning of this paragraph to the extent the forwarder utilizes a U.S.-flag carrier. For purposes of this paragraph, the term "freight forwarder" includes air freight consolidators and carriers owned and operated by U.S. persons utilizing U.S.- flag carriers such as non-vessel-owning common carriers. In order for one-half of freight expenses paid to a freight forwarder to be claimed as export promotion expenses, the DISC must obtain a written statement (such as, for example, a bill of lading) from the freight forwarder disclosing that the export property was shipped aboard a U.S.-flag carrier, and the DISC must have no reasonable basis for disbelieving such statement of the freight forwarder.

(v) ***Freight within the United States.*** A DISC may not claim as export promotion expense any amount that is attributable to carriage of export property between points within the United States. If, however, export property is carried from the United States to a foreign country on a through shipment pursuant to a single bill of lading or similar document aboard one or more U.S.-flag carriers, the freight expense of such carriage shall not be apportioned between the domestic and foreign portions of such carriage, even though a carrier may stop en route within the United States or the export property may be shifted from one carrier to another, and one-half of such freight expense may be claimed as an export promotion expense. Freight expense does not include the cost of transporting the export property to the depot of the U.S.-flag carrier or freight forwarder for shipment abroad. The expense of shipment of export property initiated by delivery to the U.S. Postal Service for ultimate delivery outside the United States shall be considered as attributable entirely to carriage of such property outside the United States.

(5) ***Packaging for export.***

(i) Export promotion expenses include the direct and indirect cost of packaging export property (including the cost of the package) for export whether or not the packaging is the same as domestic packaging. Such packaging costs do not include costs of manufacturing (as defined in the regulations under section 993) and assembly. Thus, if a DISC buys and packages export property for resale, its costs of packaging the export property are export promotion expenses. If, however, the process of such packaging by the DISC is physically integrated with the process of manufacturing the export property by the related supplier, the costs of such packaging are not export promotion expenses.

(ii) The cost of containers leased from a shipping company to which the DISC also pays freight for the property packaged is not a cost of packaging. However, in such circumstances, one-half of the rental charge may be allowable as a freight expense if permitted under subparagraph (4) of this paragraph.

(6) ***Designing and labeling packages.*** Export promotion expenses include the direct and indirect costs of designing and labeling packages, including bottles, cans, jars, boxes, cartons, or containers, to the extent incurred for export markets. Thus, for example, to the extent incurred for supplying export markets, the cost of designing labels in a foreign language and the cost of printing such labels are export promotion expenses.

(7) ***DISC must incur export promotion expenses*** —

(i) ***In general.*** In order for an expense to be an export promotion expense it must be incurred or treated as incurred under this subparagraph by the DISC. For example, an expense is incurred by a DISC if the expense results from

(*a*) the DISC incurring an obligation to pay compensation to its employees,

(*b*) depreciation of property owned by the DISC and used by its employees,

(*c*) the DISC incurring an obligation to pay for office supplies used by its employees,

(*d*) the DISC incurring an obligation to pay space costs for use by its employees, or

(*e*) the DISC incurring an obligation to pay other costs supporting efforts by its employees.

(ii) ***Payments to independent contractors.*** A payment to an independent contractor, directly or indirectly, is treated as incurred by the DISC if the cost of performing the function performed by the independent contractor would be considered an export promotion expense described in subparagraphs (1) and (2) of this paragraph if performed by the DISC, and if, in a case where the services of the independent contractor were engaged by a party related to the DISC, such related party and such DISC agreed in writing before the contract was entered into that a specified portion or all of the contract was for the benefit of the DISC and that all of the expenses of the contract (eligible to be considered as export promotion expenses) with respect to such portion would be borne by the DISC.

(iii) ***Expenses incurred by related parties.*** Reimbursements or other payments by a DISC to a related party are export promotion expenses only if the expenses of the related party for which reimbursement is made are for space in a building actually used by employees of the DISC or for export property owned by the DISC. Except as otherwise provided in the preceding sentence, expenses incurred by a foreign international sales corporation (FISC) or a real property holding company (as defined in section 993(e)(1) and (2), respectively) shall not be treated as export promotion expenses of its DISC.

(iv) ***Selling commissions paid by a DISC.*** A commission paid by a DISC to a person other than a related person, with respect to a transaction which gives rise to qualified export receipts of the DISC, is an export promotion expense of the DISC. A commission paid by a DISC to a related person is not an export promotion expense.

(v) ***Sales of promotional material.*** If a DISC sells promotional material to a buyer of export property from the DISC at a price which is greater than the costs of the DISC for such material, such costs are not export promotion expenses. If, however, the DISC sells promotional material at a

price which is less than its costs for such material, the excess of such costs over such price is an export promotion expense. For rules relating to the status of promotional material as qualified export assets and export property, see §§ 1.993-2 and 1.993-3, respectively.

(vi) An expense may be incurred by the DISC under subdivisions (i) through (v) of this subparagraph even if the accounting for and payment of such expense is handled by a related party and the DISC reimburses the related party for such expenses.

(8) ***Incomplete transactions.*** Expenses eligible to be treated as export promotion expenses which are attributable to the sale, lease, or other distribution of export property and which are incurred prior to the taxable year of sale, lease, or other distribution by the DISC are not treated as export promotion expenses until the taxable year of sale, lease, or other distribution or until the taxable year in which it is first determined that no transaction is reasonably expected to result from the expense incurred (whether or not a transaction subsequently results). Thus, for example, if a DISC incurs a packaging cost which is otherwise eligible to be treated as an export promotion expense, the DISC may not include such charge as an export promotion expense until the year in which the export property with respect to which the packaging cost was incurred is actually sold by the DISC. If no transaction is reasonably expected to result from the packaging cost, such cost should be allocated as an export promotion expense to the group of transactions to which such cost is most closely related.

(g) ***Examples.*** The provisions of this section may be illustrated by the following examples:

Example 1. J and K are calendar year taxpayers. J, a domestic manufacturing company, owns all the stock of K, a DISC for the taxable year. During 1972, J manufactures only 100 units of a product (which is eligible to be export property as defined in section 993(c)). J enters into a written agreement with K whereby K is granted a sales franchise with respect to exporting such property and K will receive commissions with respect to such exports equal to the maximum amount permitted to be received under the intercompany pricing rules of section 994. Thereafter, the 100 units are sold for $1,000. J's cost of goods sold attributable to the 100 units is $650. J's direct selling expenses so attributable are $100. Although J has other deductible expenses, for purposes of this example assume that J has no other deductible expenses. K pays $230 to independent contractors which qualify as export promotion expenses under paragraph (f)(7)(ii) of this section. K does not perform functions substantial enough to entitle it to an allocation of income which meets the arm's length standard of section 482. The income which K may earn under section 994 under the franchise is $20, computed as follows:

(1) Combined taxable income:		
(a) K's sales price		$1,000
(b) Less deductions:		
J's cost of goods sold	$650	
J's direct selling expenses	100	
K's export promotion expenses	230	
Total deductions		980

(c) Combined taxable income	20
(2) K's profit under combined taxable income method (before application of loss limitation):	
(a) 50 percent of combined taxable income	10
(b) Plus: 10 percent of K's export promotion expenses (10% of $230)	23
(c) K's profit	33
(3) K's profit under gross receipts method (before application of loss limitation):	
(a) 4 percent of K's sales price (4% of $1,000)	40
(b) Plus: 10 percent of K's export promotion expenses (10% of $230)	23
(c) K's profit	63

Since combined taxable income ($20) is lower than both K's profit under the combined taxable income method ($33) and under the gross receipts method ($63), the maximum income K may earn is $20. Accordingly, the commissions K may receive from J are $250, *i.e.,* K's expenses ($230) plus K's profit ($20).

Example 2. M and N are calendar year taxpayers. M, a domestic manufacturing company, owns all the stock of N, a DISC for the taxable year. During 1972, M produces and sells a particular product line of export property to N for $75, a price which can be justified as satisfying the standard of arm's length price of section 482. N performs substantial functions with respect to the transaction and resells the export property for $100. M's cost of goods sold attributable to the export property is $60. M's direct selling expenses so attributable (relating to advertising of the product line in foreign markets) are $12. Although M has other deductible expenses, for purposes of this example, assume that M has no other deductible expenses. N's expenses attributable to resale of the export property are $22 of which $20 are export promotion expenses. The maximum profit which N may earn with respect to the product line is $6, computed as follows:

(1) Combined taxable income:		
(a) N's sales price		$100
(b) Less deductions:		
M's cost of goods sold	$60	
M's direct selling expenses	12	
N's expenses	22	
Total deductions		94
(c) Combined taxable income		6
(2) N's profit under combined taxable income method (before application of loss limitation):		
(a) 50 percent of combined taxable income		3

(b) Plus: 10 percent of N's export promotion expenses (10% of $20)		2
(c) N's profit		5
(3) N's profit under gross receipts method (before application of loss limitation):		
(a) 4 percent of N's sales price (4% of $100)		4
(b) Plus: 10 percent of N's export promotion expenses (10% of $20)		2
(c) N's profit		6
(4) N's profit under section 482 method:		
(a) N's sales price		100
(b) Less deductions:		
N's cost of goods sold (price paid by N to M)	75	
N's expenses	22	
Total deductions		97
(c) N's profit		3

Since the gross receipts method results in greater profit to N ($6) than does the combined taxable income method ($5) or section 482 method ($3), and does not exceed combined taxable income ($6), N may earn a maximum profit of $6. Accordingly, the transfer price from M to N may be readjusted as long as the transfer price is not readjusted below $72, computed as follows:

(5) Transfer price from M to N:		
(a) N's sales price		$100
(b) Less:		
N's expenses	$22	
N's profit	6	
Total subtractions		28
(c) Transfer price		72

Example 3. Q and R are calendar year taxpayers. Q, a domestic manufacturing company, owns all the stock of R, a DISC for the taxable year. During 1972, Q produces and sells a product line of export property to R for $170, a price which can be justified as satisfying the standards of arm's length price of section 482, and R resells the export property for $200. Q's cost of goods sold attributable to the export property is $115 so that the combined gross income from the sale of the export property is $85 (*i.e.,* $200 minus $115). Q's expenses incurred in connection with the property sold are $35. Q's deductible overhead and other supportive expenses allocable to all gross income are $6. Apportionment of these supportive expenses on the basis of gross income does not result in a material distortion of income and is a reasonable method of apportionment. Q's gross income from sources other than the transaction is $170

making total gross income of Q and R (excluding the transfer price paid by R) $255 (i.e., $85 plus $170). R's expenses attributable to resale of the export property are $20, all of which are export promotion expenses. The maximum profit which R may earn with respect to the product line is $16, computed as follows:

(1) Combined taxable income:			
(a) R's sales price			$200
(b) Less deductions:			
(i) Q's cost of goods sold		115	
(ii) Q's expenses incurred in connection with the property sold		35	
(iii) Apportionment of Q's supportive expenses:			
Q's supportive expenses	$6		
Combined gross income from sale of export property	85		
Total gross income of Q and R	255		
Apportionment	(6 × 85)/255	2	
(iv) R's expenses		20	
Total deductions			172
(c) Combined taxable income			28
(2) R's profit under combined taxable income method (before application of loss limitation):			
(a) 50 percent of combined taxable income			14
(b) Plus: 10 percent of R's export promotion expenses (10% of $20)			2
(c) R's profit			16
(3) R's profit under gross receipts method (before application of loss limitation):			
(a) 4 percent of R's sales price (4% of $200)			8
(b) Plus: 10 percent of R's export promotion expenses (10% of $20)			2
(c) R's profit			10
(4) R's profit under section 482 method:			
(a) R's sales price			200
(b) Less deductions:			
R's cost of goods sold (price paid by R to Q)		170	
R's expenses		20	
Total deductions			190
(c) R's profit			10

Since the combined taxable income method results in greater profit to R ($16) than does the gross receipts method ($10) or section 482 method ($10), and does not exceed combined taxable income ($28), R may earn a maximum profit of $16. Accordingly, the transfer price from Q to R may be readjusted as long

as the transfer price is not readjusted below $164 computed as follows:

(5) Transfer price from Q to R:		
(a) R's sales price		$200
(b) Less:		
R's expenses	$20	
R's profit	16	
Total		36
(c) Transfer price		164

Example 4. S and T are calendar year taxpayers. S, a domestic manufacturing company, owns all the stock of T, a DISC for the taxable year. During 1972, S produces and sells 100 units of a particular product to T under a written agreement which provides that the transfer price between S and T shall be that price which allocates to T the maximum permitted to be received under the intercompany pricing rules of section 994. Thereafter, the 100 units are sold by T for $950. S's cost of goods sold attributable to the 100 units is $650. S's other deductible expenses so attributable are $300. Although S has other deductible expenses, for purposes of this example, assume that S has no deductible expenses not definitely allocable to any item of gross income. T's expenses attributable to the resale of the 100 units are $50. S chooses not to apply the section 482 method. T may not earn any income under the gross receipts or combined taxable income method with respect to resale of the 100 units because combined taxable income is a negative figure, computed as follows:

(1) Combined taxable income:		
(a) T's sales price		$950
(b) Less deductions:		
S's cost of goods sold	$650	
S's expenses	300	
T's expenses	50	
Total deductions		1,000
(c) Combined taxable income (loss)		($50)

Under paragraph (e)(1)(i) of this section, T is permitted to recover its expenses attributable to the 100 units ($50) even though such recovery results in a loss or increased loss to the related supplier. Accordingly, the transfer price from S to T may be readjusted as long as the transfer price is not readjusted

below $900, computed as follows:

(2) Transfer price from S to T:	
(a) T's sales price	$950
(b) Less: T's expenses	50
(c) Transfer price	900

Example 5. Assume the same facts as in example 4 except that S chooses to apply the section 482 method and that under arm's length dealings T would have derived $10 of income. Accordingly, the transfer price from S to T may be set at an amount not less than $890, computed as follows:

(1) Transfer price from S to T:		
(a) T's sales price		$950
(b) Less:		
T's expenses	$50	
T's profit	10	
Total deductions		60
(c) Transfer price		890

Example 6. X and Y are calendar year taxpayers. X, a domestic manufacturing company, owns all the stock of Y, a DISC for the taxable year. During March 1972, X manufactures a particular product of export property which it leases on April 1, 1972, to Y for a term of 1 year at a monthly rental of $1,000, a rent which satisfies the standard of arm's length rental under section 482. Y subleases the product on April 1, 1972, for a term of 1 year at a monthly rental of $1,200. X's cost for the product leased is $40,000. X's other deductible expenses attributable to the product are $900, all of which are incurred in 1972. Although X has other deductible expenses, for purposes of this example, assume that X has no other deductible expenses. Y's expenses attributable to sublease of the export property are $450, all of which are incurred in 1972 and are export promotion expenses. X depreciates the property on a straight line basis without the use of an averaging convention, assuming a useful life of 8 years and no salvage value. The profit which Y may earn with respect to the transaction is $2,895 for 1972 and $1,175 for 1973, computed as follows:

computation for 1972

(1) Combined taxable income:

(a) Y's sublease rental receipts for year ($1,200 × 9 months)		$10,800
(b) Less deductions:		
X's depreciation ($40,000 × 1/8 × 9/12)	$3,750	
X's other expenses	900	
Y's expenses	450	
Total deductions		5,100
(c) Combined taxable income		5,700
(2) Y's profit under combined taxable income method (before application of loss limitation):		
(a) 50 percent of combined taxable income		2,850
(b) Plus: 10 percent of Y's export promotion expenses (10% of $450)		45
(c) Y's profit		2,895
(3) Y's profit under gross receipts method (before application of loss limitation):		
(a) 4 percent of Y's sublease rental receipts for year (4% of $10,800)		432
(b) Plus: 10 percent of Y's export promotion expenses (10% of $450)		45
(c) Y's profit		477
(4) Y's profit under section 482 method:		
(a) Y's sublease rental receipts for year		$10,800
(b) Less deductions:		
Y's lease rental payments for year	$9,000	
Y's expenses	450	
Total deductions		9,450
(c) Y's profit		1,350

Since the combined taxable income method results in greater profit to Y ($2,895) than does the gross receipts method ($477) or section 482 method ($1,350), Y may earn a profit of $2,895 for 1972. Accordingly, the monthly rental payable by Y to X for 1972 may be readjusted as long as the monthly rental payable is not readjusted below $828.33, computed as follows:

(5) Monthly rental payable by Y to X for 1972:		
(a) Y's sublease rental receipts for year		$10,800.00
(b) Less:		
Y's expenses	450.00	
Y's profit	2,895.00	
Total		3,345.00
(c) Rental payable for 1972		7,455.00
(d) Rental payable each month ($7,455 ÷ 9 months)		828.33

computation for 1973	
(1) Combined taxable income:	
(a) Y's sublease rental receipts for year ($1,200 × 3 months)	$3,600
(b) Less: X's depreciation ($40,000 × 1/8 × 3/12)	1,250
(c) Combined taxable income	2,350
(2) Y's profit under combined taxable income method (before application of loss limitation):	
(a) 50 percent of combined taxable income	$1,175
(b) Y's profit	1,175
(3) Y's profit under gross receipts method (before application of loss limitation):	
(a) 4 percent of Y's sublease rental receipts for year (4% of $3,600)	144
(b) Y's profit	144
(4) Y's profit under section 482 method:	
(a) Y's sublease rental receipts for year	3,600
(b) Less: Y's lease rental payments for year	3,000
(c) Y's profit	600

Since the combined taxable income method results in greater profit to Y ($1,175) than does the gross receipts method ($144) or section 482 method ($600), Y may earn a profit of $1,175 for 1973. Accordingly, the monthly rental payable by Y to X for 1973 may be readjusted as long as the monthly rental payable is not readjusted below $808.33, computed as follows:

(5) Monthly rental payable by Y to X for 1973:	
(a) Y's sublease rental receipts for year	$3,600.00
(b) Less: Y's profit	1,175.00
(c) Rental payable for 1973	2,425.00
(d) Rental payable for each month ($2,425 ÷ 3 months)	808.33

(Secs. 995(e)(7), (8) and (10), 995(g) and 7805 of the Internal Revenue Code of 1954 (90 Stat. 1655, 26 U.S.C. 995(e)(7), (8) and (10); 90 Stat. 1659, 26 U.S.C. 995(g); and 68A Stat 917, 26 U.S.C. 7805))

[T.D. 7364, 40 FR 29827, July 16, 1975, as amended by T.D. 7435, 41 FR 43142, Sept. 30, 1976; T.D. 7854, 47 FR 51741, Nov. 17, 1982; T.D. 7984, 49 FR 40018, Oct. 12, 1984]

§ 1.994-2 Marginal costing rules.

(a) ***In general.*** This section prescribes the marginal costing rules authorized by section 994(b)(2). If under paragraph (c)(1) of this section a DISC is treated for its taxable year as seeking to establish or maintain a foreign market for sales of an item, product, or product line of export property (as defined in § 1.993-3) from which qualified export receipts are derived, the marginal costing rules prescribed in paragraph (b) of this section may be applied to allocate costs between gross receipts derived from such sales and other gross receipts for purposes of computing, under the "50-50" combined taxable income method of § 1.994-1(c)(3), the combined taxable income of the DISC and related supplier derived from such sales. Such marginal costing rules may be applied whether or not the related supplier manufactures, produces, grows, or extracts (within the meaning of § 1.993-3(c)) the export property sold. Such marginal costing rules do not apply to sales of export property which in the hands of a purchaser related under section 954(d)(3) to the seller give rise to foreign base company sales income as described in section 954(d) unless, for the purchaser's year in which it resells the export property, section 954(b)(3)(A) is applicable or such income is under the exceptions in section 954(b)(4). Such marginal costing rules do not apply to leases of property or the performance of any services whether or not related and subsidiary services (as defined in § 1.994-1(b)(3).

(b) ***Marginal costing rules for allocations of costs*** —

(1) ***In general.*** Marginal costing is a method under which only marginal or variable costs of producing and selling a particular item, product, or product line are taken into account for purposes of section 994. Where this section is applicable, costs attributable to deriving qualified export receipts for the DISC's taxable year from sales of an item, product, or product line may be determined in any manner the related supplier (as defined in § 1.994-1(a)(3)(ii)) chooses, provided that the requirements of both subparagraphs (2) and (3) of this paragraph are met.

(2) ***Variable costs taken into account.*** There are taken into account in computing the combined taxable income of the DISC and its related supplier from sales of an item, product, or product line the following costs:

(i) Direct production costs (as defined in § 1.471-11(b)(2)(i)) and

(ii) Costs which are export promotion expenses, but only if they are claimed as export promotion expenses in determining taxable income derived by the DISC under the combined taxable income method of § 1.994-1(c)(3).

At the taxpayer's option, all, a part, or none of the costs which qualify as export promotion expenses may be so claimed as export promotion expenses.

(3) ***Overall profit percentage limitation.*** As a result of such determination of costs attributable to such qualified export receipts for the DISC's taxable year, the combined taxable income of the DISC and its related supplier from sales of such item, product, or product line for the DISC's taxable year does not exceed gross receipts (determined under § 1.993-6) of the DISC derived from such sales, multiplied by the overall profit percentage (determined under paragraph (c)(2) of this section).

(c) ***Definitions*** —

(1) ***Establishing or maintaining a foreign market.*** A DISC shall be treated for its taxable year as seeking to establish or maintain a foreign market with respect to sales of an item, product, or product line of export property from which qualified export receipts are derived if the combined taxable income computed under paragraph (b) of this section is greater than the combined taxable income computed under § 1.994-1(c)(6).

(2) ***Overall profit percentage.***

(i) For purposes of this section, the overall profit percentage for a taxable year of the DISC for a product or product line is the percentage which—

(*a*) The combined taxable income of the DISC and its related supplier plus all other taxable income of its related supplier from all sales (domestic and foreign) of such product or product line during the DISC's taxable year, computed under the full costing method, is of

(*b*) The total gross receipts (determined under § 1.993-6) from all such sales.

(ii) At the annual option of the related supplier, the overall profit percentage for the DISC's taxable year for all products and product lines may be determined by aggregating the amounts described in subdivision (i) (*a*) and (*b*) of this subparagraph of the DISC, and all domestic members of the controlled group (as defined in § 1.993-1(k)) of which the DISC is a member, for the DISC's taxable year and for taxable years of such members ending with or within the DISC's taxable year.

(iii) For purposes of determining the amounts in subdivisions (i) (*b*) and (ii) of this subparagraph, a sale of property between a DISC and its related supplier or between domestic members of the controlled group shall be taken into account only during the DISC's taxable year (or taxable year of the member ending within the DISC's taxable year) during which the property is ultimately sold to a person which is neither the DISC nor such a domestic member.

(3) ***Grouping of transactions.***

(i) In general, for purposes of this section, an item, product, or product line is the item or group consisting of the product or product line pursuant to § 1.994-1(c)(7) used by the taxpayer for purposes of applying the intercompany pricing rules of § 1.994-1.

(ii) However, for purposes of determining the overall profit percentage under subparagraph (2) of this paragraph, any product or product line grouping permissible under § 1.994-1(c)(7) may be used at the annual choice of the taxpayer, even though it may not be the same item or grouping referred to in subdivision (i) of this subparagraph, as long as the grouping chosen for determining the overall profit percentage is at least as broad as the grouping referred to in such subdivision (i).

(4) ***Full costing method.*** For purposes of this section, the term "full costing method" is the method for determining combined taxable income set forth in § 1.994-1(c)(6).

(d) ***Application of limitation on DISC income ("no loss" rule).*** If the marginal costing rules of this section are applied, the combined taxable income method of § 1.994-1(c)(3) may not be applied to cause in any taxable year a loss to the related supplier, but such method may be applied to the extent it does not cause a loss. For purposes of the preceding sentence, a loss to a related supplier would result if the taxable income of the DISC would exceed the combined taxable income of the related supplier and the DISC determined in accordance with paragraph (b) of this section. If, however, there is no combined taxable income (so determined), see the last sentence of § 1.994-1(e)(1)(i).

(e) ***Examples.*** The provisions of this section may be illustrated by the following examples:

Example 1. X and Y are calendar year taxpayers. X, a domestic manufacturing company, owns all the stock of Y, a DISC for the taxable year. During 1973, X manufactures a product line which is eligible to be export property (as defined in § 1.993-3). X enters into a written agreement with Y whereby Y is granted a sales franchise with respect to exporting such product line from which qualified export receipts will be derived and Y will receive commissions with respect to such exports equal to the maximum amount permitted to be received under the intercompany pricing rules of section 994. Commissions are computed using the combined taxable income method under § 1.994-1(c)(3). For purposes of applying the combined taxable income method, X and Y compute their combined taxable income attributable to the product line of export property under the marginal costing rules in accordance with the additional facts assumed in the table below:

(1) Maximum combined taxable income (determined under paragraph (b)(2) of this section):		
(a) Y's gross receipts from export sales		$95.00
(b) Less:		
(i) Direct materials	40.00	
(ii) Direct labor	20.00	
(iii) Y's export promotion expenses claimed in determining Y's DISC taxable income	5.00	
(iv) Total deductions	65.00	
(c) Maximum combined taxable income		30.00
(2) Overall profit percentage limitation (determined under paragraph (b)(3) of this section):		
(a) Gross receipts of X and Y from all domestic and foreign sales		400.00
(b) Less deductions:		
(i) Direct materials	160.00	
(ii) Direct labor	80.00	
(iii) Other costs (of which $8 are costs of the DISC including $5 of export promotion expenses claimed in determining Y's taxable income)	40.00	
(c) Total deductions		280.00
(d) Total taxable income from all sales computed on a full costing method		120.00
(e) Overall profit percentage (line (d) ($120) divided by line (a) ($400)) (percent)		30%
(f) Multiply by gross receipts from Y's export sales (line (1)(a))		$95.00
(g) Overall profit percentage limitations		28.50

Since the overall profit percentage limitation under line (2)(g) ($28.50) is less than maximum combined taxable income under line (1)(c) ($30), combined taxable income under marginal costing is limited to $28.50. Since under the franchise agreement Y is to earn the maximum commission permitted under the intercompany pricing rules of section 994, combined taxable income on the transactions is $28.50.

Accordingly, the costs attributable to export sales (other than for direct material, direct labor, and export promotion expenses) are $1.50, *i.e.,* line (1)(c) ($30) minus line (2)(g) ($28.50). Under the combined taxable income method of § 1.994-1 (c)(3), Y will have taxable income attributable to the sales of $14.75, i.e., the sum of 1/2 of combined taxable income (1/2 of $28.50) and 10 percent of Y's export promotion expenses claimed in determining Y's taxable income (10 percent of $5). Accordingly, the commissions Y receives from X are $22.75, i.e., Y's costs ($8, see line (2)(b)(iii)) plus Y's profit ($14.75).

Example 2. (1) Assume the same facts as in example 1, except that gross receipts from export sales are only $85 and gross receipts from all sales remain at $400. For purposes of applying the combined taxable income method, X and Y may compute their combined taxable income attributable to the product line of export property under the marginal costing rules as follows:

(1) Maximum combined taxable income (determined under paragraph (b)(2) of this section):		
(a) Y's gross receipts from export sales		$85.00
(b) Less:		
(i) Direct materials	40.00	
(ii) Direct labor	20.00	
(iii) Y's export promotion expenses claimed in determining Y's taxable income	5.00	
(iv) Total deductions		65.00
(c) Maximum combined taxable income		20.00
(2) Overall profit percentage limitation (determined under paragraph (b)(3) of this section):		
(a) Gross receipts from Y's export sales (line (1)(a))		85.00
(b) Multiply by overall profit percentage (as determined in example 1) (percent)		30%
(c) Overall profit percentage limitation		25.50

Since maximum combined taxable income under line (1)(c) ($20) is less than the overall profit percentage limitation under line (2)(c) ($25.50), combined taxable income under marginal costing is limited to $20. Since under the franchise agreement Y is to earn the maximum commission permitted under the intercompany pricing rules of section 994, combined taxable income on the transactions is $20. Accordingly, no costs (other than for direct material, direct labor, and export promotion expenses) will be attributed to export sales. Under the combined taxable income method of § 1.994-1(c)(3), Y will have taxable income attributable to the sales of $10.50, i.e., the sum of 1/2 of combined taxable income (1/2 of $20) and 10 percent of Y's export promotion expenses claimed in determining Y's taxable income (10 percent of $5). Accordingly, the Commissions Y receives from X are $18.50, *i.e.,* Y's costs ($8, see line (2)(b)(iii) of example 1) plus Y's profit ($10.50).

(2) If export promotion expenses are not claimed in determining taxable income of Y under the combined

taxable income method, the taxable income of Y would be increased to $12.50 and commissions payable to Y would be increased to $20.50, computed as follows:

(3) Maximum combined taxable income (determined under paragraph (b)(2) of this section):		
(a) Y's gross receipts from export sales	$85.00	
(b) Less:		
(i) Direct materials	40.00	
(ii) Direct labor	20.00	
(iii) Total deductions		60.00
(c) Maximum combined taxable income		25.00
(4) Overall profit percentage limitation (line (2)(c))		25.50

Since maximum combined taxable income under line (3)(c) ($25) is less than the overall profit percentage under line (4) ($25.50), combined taxable income under marginal costing is limited to $25. Since under the franchise agreement Y is to earn the maximum commission permitted under the intercompany pricing rules of section 994, combined taxable income on the transactions is $25. Accordingly, no costs (other than for direct material and direct labor) will be attributed to export sales. Under the combined taxable income method of § 1.994-1(c)(3), Y will have taxable income attributable to the sales of $12.50, i.e., $^1/_2$ of combined taxable income ($^1/_2$ of $25). Accordingly, the commissions Y receives from X are $20.50, *i.e.,* Y's costs ($8, see line (2)(b)(iii) of example 1) plus Y's profit ($12.50).

Example 3. (1) Assume the same facts as in example 1, except that gross receipts from export sales are only $85, gross receipts from all sales remain at $400, and Y has costs of $40 consisting of Y's export promotion expenses of $35 and costs of $5 other than for direct material, direct labor, or export promotion expenses. For purposes of applying the combined taxable income method, X and Y may compute their combined taxable income attributable to the product line of export property under the marginal costing rules as follows:

(1) Maximum combined taxable income (determined under paragraph (b)(2) of this section):	
(a) Y's gross receipts from export sales	$85.00
(b) Less:	
(i) Direct materials	40.00
(ii) Direct labor	20.00
(iii) Y's export promotion expenses claimed in determining Y's taxable income	35.00

(iv) Total deductions	95.00
(c) Maximum combined taxable income (loss)	(10.00)
(2) Overall profit percentage limitation (as determined in example 2)	25.50

Since maximum combined taxable income under line (1)(c) (which is a loss of $10) is less than the overall profit percentage limitation under line (2)(c) ($25.50), combined taxable income under marginal costing is a loss of $10 and, under the combined taxable income method of § 1.994-1(c)(3), Y will have no taxable income or loss attributable to the sales. Accordingly, the commissions Y receives from X are $40, *i.e.,* Y's costs ($40).

(2) If export promotion expenses are not claimed in determining Y's taxable income under the combined taxable income method, the taxable income of Y would be increased to $12.50 and commissions payable to Y would be increased to $52.50 computed as follows:

(3) Maximum combined taxable income (determined under paragraph (b)(2) of this section) (line (3)(c) of example 2)	$25.00
(4) Overall profit percentage limitation (as determined in example 2)	25.50

The results would be the same as in part (2) of example 2, except that the commissions Y receives from X are $52.50, *i.e.,* Y's costs ($40) plus Y's profit ($12.50).

[T.D. 7364, 40 FR 29836, July 16, 1975; 40 FR 33972, Aug. 13, 1975]

§ 1.995-1 Taxation of DISC income to shareholders.

(a) ***In general.***

(1) Under § 1.991-1(a), a corporation which is a DISC for a taxable year is not subject to any tax imposed by subtitle A of the Code (sections 1 through 1564) for the taxable year, except for the tax imposed by chapter 5 thereof (sections 1491 through 1494) on certain transfers to avoid tax.

(2) Under section 995(a), the shareholders of a DISC, or a former DISC, are subject to taxation on the earnings and profits of the DISC in accordance with the provisions of chapter 1 of the Code generally applicable to shareholders, but subject to the modifications provided in sections 995, 996, and 997.

(3) Under § 1.996-3, three divisions of earnings and profits of a DISC, or former DISC, are defined: “accumulated DISC income”, “previously taxed income”, and “other earnings and profits”. Under § 1.995-2, certain amounts of the DISC's earnings and profits are deemed to be distributed as dividends to shareholders of the DISC at the close of the DISC's taxable year in which such earnings were derived. Such deemed distributions do not cause a reduction in the DISC's earnings and profits,

but are taken into account in § 1.996-3(c) as an increase in previously taxed income. To the extent the DISC's earnings and profits are paid out in a subsequent distribution which is, under § 1.996-1, treated as made out of such "previously taxed income," they will not be taxable to the shareholders a second time.

(4) In general, "accumulated DISC income" is the earnings and profits of the DISC which have not been deemed distributed and which may be deferred from taxation so long as they are not actually distributed with respect to its stock. However, deferral of taxation on "accumulated DISC income" may be terminated, in whole or in part, in the event of:

(i) Certain foreign investment attributable to producer's loans (see § 1.995-2(a)(5) and § 1.995-5);

(ii) revocation of the election to be treated as a DISC or other disqualification (see § 1.995-3); and

(iii) certain dispositions of DISC stock in which gain is realized (see § 1.995-4).

(5) Since a DISC is not taxed on its taxable income, section 246(d) and § 1.246-4 provide that the deduction otherwise allowed under section 243 shall not be allowed with respect to a dividend from a DISC, or former DISC, paid or treated as paid out of accumulated DISC income or previously taxed income or with respect to a deemed distribution in a qualified year under § 1.995-2(a).

(b) ***Amounts and character of amounts includible in shareholder's gross income.*** Each shareholder of a corporation which is a DISC, or former DISC, shall include in his gross income—

(1) Amounts actually distributed to him that are includible in his gross income in accordance with paragraph (c) of this section.

(2) Amounts which, pursuant to § 1.995-2, he is deemed to receive as a distribution taxable as a dividend on the last day of each of the corporation's taxable years for which it qualifies as a DISC,

(3) Amounts which, pursuant to § 1.995-3, he is deemed to receive as a distribution taxable as a dividend in the event the corporation revokes its election to be treated as a DISC or otherwise is disqualified as a DISC, and

(4) Gain realized on certain dispositions of stock in the corporation which, under § 1.995-4, is includible in his gross income as a dividend.

(c) ***Treatment of actual distributions.***

(1) Except as provided in subparagraph (3) of this paragraph, amounts actually distributed to a shareholder of a DISC, or former DISC, with respect to his stock are includible in his gross income in accordance with section 301.

(2) Since a deemed distribution does not reduce the earnings and profits of a DISC, it does not affect the determination as to whether a subsequent actual distribution is a "dividend" under section 316(a). Since, however, the amount of a deemed distribution increases "previously taxed income", it does affect the determination as to whether a subsequent actual distribution is excluded (as described in subparagraph (3) of this paragraph) from gross income.

(3) Under § 1.996-1(c), the amount of any actual distribution (including a deficiency distribution made pursuant to § 1.992-3), with respect to stock in a DISC, or former DISC, which is treated under § 1.996-1 as made out of previously taxed income, is excluded by the distributee from gross income, but only to the extent that such amount does not exceed the adjusted basis of the distributee's stock. Under § 1.996-5(b), that portion of any actual distribution which is treated as made out of

previously taxed income shall be applied against and reduce the adjusted basis of the stock and, to the extent that it exceeds the adjusted basis of the stock, it shall be treated as gain from the sale or exchange of property.

(4) A deficiency distribution pursuant to § 1.992-3 may be made after the close of the DISC's taxable year with respect to which it is made. The determinations as to whether such deficiency distribution is a dividend under section 301 and as to which division of earnings and profits is the source thereof depend upon the status of the DISC's earnings and profits account and divisions thereof at the time the distribution is actually made. See § 1.996-1(d) for the priority of such deficiency distribution over other actual distributions made during the same taxable year.

(d) ***Personal holding company income.***

(1) Any amount includible in a shareholder's gross income as a dividend with respect to the stock of a DISC, or former DISC, pursuant to paragraph (b) of this section shall be treated as a dividend for all purposes of the Code, except that for purposes of determining whether such shareholder is a personal holding company within the meaning of section 542 any amount deemed distributed for qualified years under § 1.995-2 or upon disqualification under § 1.995-3, any amount of gain on certain dispositions of DISC stock to which § 1.995-4 applies, and any amount treated under § 1.996-1 as distributed out of accumulated DISC income or previously taxed income shall not be treated as a dividend or any other kind of income described in section 543(a).

(2) Notwithstanding subparagraph (1) of this paragraph, the shareholder may treat as an item of income described under section 543 (for example, rents) any amount to which the exception in such subparagraph (1) applies, if it establishes to the satisfaction of the district director that such amount is attributable to earnings and profits derived from such item of income.

[T.D. 7324, 39 FR 35109, Sept. 30, 1974]

§ 1.995-2 Deemed distributions in qualified years.

(a) ***General rule.*** Under section 995 (b)(1), each shareholder of a DISC shall be treated as having received a distribution taxable as a dividend with respect to his stock on the last day of each taxable year of the DISC, in an amount which is equal to his pro rata share of the sum (as limited by paragraph (b) of this section), of the following seven items:

(1) An amount equal to the gross interest derived by the DISC during such year from producer's loans (as defined in § 1.993-4).

(2) An amount equal to the lower of—

(i) Any gain recognized by the DISC during such year on the sale or exchange of property (other than property which in the hands of the DISC is a qualified export asset) which was previously transferred to it in a transaction in which the transferor realized gain which was not recognized in whole or in part, or

(ii) The amount of the transferor's gain which was not recognized on the previous transfer of the property to the DISC.

For purposes of this subparagraph, each item of property shall be considered separately. See paragraph (d) of this section for special rules with respect to certain tax-free acquisitions of property by the DISC.

(3) An amount equal to the lower of—

(i) Any gain recognized by the DISC during such year on the sale or exchange of property which in the hands of the DISC is a qualified export asset (other than stock in trade or property described in section 1221(1)) and which was previously transferred to the DISC in a transaction in which the transferor realized gain which was not recognized in whole or in part, or

(ii) The amount of the transferor's gain which was not recognized on the previous transfer of the property to the DISC and which would have been includible in the transferor's gross income as ordinary income if its entire realized gain had been recognized upon the transfer.

For purposes of this subparagraph, each item of property shall be considered separately. See paragraph (d) of this section for special rules with respect to certain tax-free acquisitions of property by the DISC.

(4) For taxable years beginning after December 31, 1975, an amount equal to 50 percent of the taxable income of the DISC for the taxable years attributable to military property (as defined in § 1.995-6).

(5) For taxable years beginning after December 31, 1975, the taxable income for the taxable year attributable to base period export gross receipts (as defined in § 1.995-7).

(6) The sum of—

(i)

(A) In the case of a corporate share holder, an amount equal to 57.5 percent of the excess (if any) (one-half for DISCs' taxable years beginning before January 1, 1983) of the taxable income of the DISC for such year (computed as provided in § 1.991-1(b)(1)) over the sum of the amounts deemed distributed for the taxable year in accordance with subparagraphs (1), (2), (3), (4) and (5) of this paragraph, or

(B) In the case of a non-corporate share holder, an amount equal to one-half of the excess (if any) of the taxable income of the DISC for such year (computed as provided in § 1.991-1(b)(1)) over the sum of the amounts deemed distributed for the taxable year in accordance with subparagraphs (1), (2), (3), (4), and (5) of this paragraph.

(ii)

(A) An amount equal to the amount under subdivision (i) of paragraph (a)(6) of this section multiplied by the international boycott factor as determined under section 999 (c)(1) , or

(B) In lieu of the amount determined under subdivision (ii)(A) of paragraph (a)(6) of this section, the amount described under section 999 (c)(2) of such international boycott income, and

(iii) An amount equal to the sum of any illegal bribes, kickbacks, or other payments paid by or on behalf of the DISC directly or indirectly to an official, employee, or agent in fact of a government. An amount is paid by a DISC where it is paid by any officer, director, employee, shareholder, or agent of the DISC for the benefit of such DISC. For purposes of this section, the principles of section 162 (c) and the regulations thereunder shall apply. The fair market value of an illegal payment made in the form of property or services shall be considered the amount of such illegal payment.

(7) The amount of foreign investment attributable to producer's loans of the DISC, as of the close of the "group taxable year" ending with such taxable year of the DISC, determined in accordance with § 1.995-5. The amount of such foreign investment attributable to producer's loans so determined for any taxable year of a former DISC shall be deemed distributed as a dividend to the shareholders of such former DISC on the last day of such taxable year. See § 1.995-3(e) for the effect that such deemed distribution has on scheduled installments of deemed distributions of accumulated DISC income under § 1.995-3(a) upon disqualification.

(b) ***Limitation on amount of deemed distributions under section 995(b)(1).***

(1) The sum of the amounts described in paragraph (a)(1) through (a)(6) of this section which is deemed distributed pro rata to the DISC's shareholders a dividend for any taxable year of the corporation shall not exceed the DISC's earnings and profits for such year.

(2) The amount of foreign investment attributable to producer's loans of the DISC (as described in paragraph (a)(7) of this section) which is deemed to be distributed pro rata to the DISC's shareholders as dividends for any taxable year of the corporation shall not exceed the lower of the corporation's accumulated DISC income at the beginning of such year or the corporation's accumulated earnings and profits at the beginning of such year (but not less than zero)—

(i) Increased by any DISC income of the corporation for such year as defined in § 1.996-3(b)(2) (*i.e.,* any excess of the DISC's earnings and profits for such year over the sum of the amounts described in paragraph (a)(1) through (a)(6) of this section), or

(ii) Decreased by any deficit in the corporation's earnings and profits for such year.

Thus, for example, if a DISC has a deficit in accumulated earnings and profits at the beginning of a taxable year of $10,000, current earnings and profits of $12,000, no amounts described in paragraphs (a)(1) through (a)(6) of this section for the year, and foreign investment attributable to producer's loans for the taxable year of $5,000, the DISC would have a deemed distribution described in paragraph (a)(7) of this section of $5,000 for the taxable year. On the other hand, suppose the DISC had accumulated earnings and profits of $13,000 at the beginning of the taxable year, accumulated DISC income of $10,000 at the beginning of the taxable year, a deficit in earnings and profits for the taxable year of $12,000, no amounts described in paragraphs (a)(1) through (a)(6) of this section for the taxable year, and foreign investment attributable to producer's loans for the taxable year of $5,000. Under these facts the DISC would have no deemed distribution described in paragraph (a)(7) of this section because the corporation had no DISC income for the taxable year and the current year's deficit in earnings and profits subtracted from the DISC's accumulated DISC income at the beginning of the year produces a negative amount. For rules relating to the carryover to a subsequent year of the $5,000 of foreign investment attributable to producer's loans, see § 1.995-5(a)(6).

(3) If, by reason of the limitation in subparagraph (1) of this paragraph, less than the sum of the amounts described in paragraphs (a)(1) through (a)(6) of this section is deemed distributed, then the portion of such sum which is deemed distributed shall be attributed first to the amount described in subparagraph (1) of such paragraph, to the extent thereof; second to the amount described in subparagraph (2) of such paragraph, to the extent thereof; third to the amount described in subparagraph (3) of such paragraph, to the extent thereof; and so forth, and finally to the amount described in paragraph (b)(6) of this paragraph.

(c) ***Examples.*** Paragraphs (a) and (b) of this section may be illustrated by the following examples:

Example 1. Y is a corporation which uses the calendar year as its taxable year and which elects to be treated as a DISC beginning with 1972. X is its sole shareholder. In 1972, X transfers certain property to Y in exchange for Y's stock in a transaction in which X does not recognize gain or loss by reason of the application of section 351(a). Included in the property transferred to Y is depreciable property described in paragraph (a)(3) of this section on which X realizes, but does not recognize by reason of the application of section 1245(b)(3), a gain of $20,000. If X had sold such property for cash, the $20,000 gain would have been recognized as ordinary income under section 1245. Also included in the transfer to Y is 100 shares of stock in a third corporation (which is not a related foreign export corporation) on which X realizes, but does not recognize, a gain of $5,000. In 1973, Y sells such property and recognizes a gain of $25,000 on the depreciable property and $8,000 on the 100 shares of stock. Y has accumulated earnings and profits at the beginning of 1973 of $5,000, earnings and profits for 1973 of $72,000, and taxable income for 1973 of $100,000. At the beginning of 1973, Y has $6,000 of accumulated DISC income, no previously taxed income, and a deficit of $1,000 of other earnings and profits. Under these facts and the additional facts assumed in the table below, X is treated as having received a deemed distribution taxable as a dividend of $76,000 on December 31, 1973, determined as follows:

(1) Gross interest derived by Y in 1973 from producer's loans	$7,000
(2) Amount of gain on depreciable property (lower of Y's recognized gain ($25,000) or X's gain not recognized on section 1245 property ($20,000))	20,000
(3) Amount of gain on stock (lower of X's gain not recognized or Y's recognized gain ($8,000) ($5,000))	5,000
(4) One-half excess of taxable income for 1973 over the sum of lines (1), (2), and (3) (1/2 of ($100,000 minus $32,000))	34,000
(5) Limitation on lines (1) through (4):	
(a) Sum of lines (1) through (4)	66,000
(b) Earnings and profits for 1973	72,000
(c) Lower of lines (a) and (b)	66,000
(6) Amount under paragraph (a)(5) of this section:	
(a) Foreign investment attributable to producer's loans under § 1.995-5	10,000
(b) Sum of the lower of accumulated earnings and profits at beginning of 1973 ($5,000) or accumulated DISC income at beginning of 1973 ($6,000) and excess of earnings and profits for 1973 over line (5)(c) ($72,000 minus $66,000)	11,000
(c) Lower of lines (a) and (b)	10,000
(7) Total deemed distribution (sum of lines (5)(c) and (6)(c))	76,000

Example 2. Assume the facts are the same as in example 1, except that earnings and profits for 1973 amount to only $60,000. Under these facts, X is treated as receiving a deemed distribution

taxable as a dividend of $65,000 on December 31, 1973, determined as follows:

(5) Limitation on lines (1) through (4):	
(a) Line (5)(a) of example 1	$66,000
(b) Earnings and profits for 1973	60,000
(c) Lower of lines (a) and (b)	60,000
(6) Amount under paragraph (a)(5) of this section:	
(a) Line (6)(a) of example 1	10,000
(b) Sum of the lower of accumulated earnings and profits at beginning of 1973 ($5,000) or accumulated DISC income at beginning of 1973 ($6,000) plus excess of earnings and profits for 1973 over line (5)(c) ($60,000 minus $60,000)	5,000
(c) Lower of lines (a) and (b)	5,000
(7) Total deemed distribution (sum of lines (5)(c) and (6)(c))	65,000

Example 3. Assume the facts are the same as in example 1, except that Y has a deficit in accumulated earnings and profits at the beginning of 1973 of $4,000. Such deficit is comprised of accumulated DISC income of $1,000, no previously taxed income, and a deficit in other earnings and profits of $5,000. Under these facts, X is treated as receiving a deemed distribution taxable as a dividend in the amount of $72,000 on December 31, 1973, determined as follows:

(5) Limitation on lines (1) through (4):	
(a) Line (5)(a) of example 1	$66,000
(b) Earnings and profits for 1973	72,000
(c) Lower of lines (a) and (b)	66,000
(6) Amount under paragraph (a)(5) of this section:	
(a) Line (6)(a) of example 1	10,000
(b) Sum of accumulated earnings and profits at beginning of 1973 (not less than $0), and excess of earnings and profits for 1973 over amount in line (5)(c) ($72,000 minus $66,000)	6,000
(c) Lower of lines (a) and (b)	6,000
(7) Total deemed distribution sum of lines (5)(c) and (6)(c)	72,000

(d) ***Special rules for certain tax-free acquisitions of property by the DISC.***

(1) For purposes of paragraph (a)(2)(i) and (3)(i) of this section, if—

(i) A DISC acquires property in a first transaction and in a second transaction it disposes of such property in exchange for other property, and

(ii) By reason of the application of section 1031 (relating to like-kind exchanges) or section 1033 (relating to involuntary conversions), the basis in the DISC's hands of the other property acquired in such second transaction is determined in whole or in part with reference to the basis of the property acquired in the first transaction,

then upon a disposition of such other property in a third transaction by the DISC such other property shall be treated as though it had been transferred to the DISC in the first transaction. Thus, if the first transaction is a purchase of the property for cash, then paragraphs (a)(2) and (3) of this section will not apply to a sale by the DISC of the other property acquired in the second transaction.

(2) For purposes of paragraphs (a)(2)(i) and (3)(i) of this section, if a DISC acquires property in a first transaction and it transfers such property to a transferee DISC in a second transaction in which the transferor DISC's gain is not recognized in whole or in part, then such property shall be treated as though it had been transferred to the transferee DISC in the same manner in which it was acquired in the first transaction by the transferor DISC. For example, if X and Y both qualify as DISC's and X transfers property to Y in a second transaction in which gain or loss is not recognized, paragraph (a)(2) or (3) of this section does not apply to a sale of such property by Y in a third transaction if X had acquired the property in a first transaction by a purchase for cash. If, however, X acquired the property from a transferor other than a DISC in the first transaction in which the transferor's realized gain was not recognized, then paragraph (a)(2) or (3) of this section may apply to the sale by Y if the other conditions of such paragraph (a)(2) or (3) are met.

(3) If a DISC acquires property in a second transaction described in subparagraph (1) or (2) of this paragraph in which it (or, in the case of a second transaction described in subparagraph (2) of this paragraph, the transferor DISC) recognizes a portion (but not all) of the realized gain, then the amount described in paragraph (a)(2)(ii) or (a)(3)(ii) of this section with respect to a disposition by the DISC of such acquired property in a third transaction shall not exceed the transferor's gain which was not recognized on the first transaction minus the amount of gain recognized by the DISC (or transferor DISC) on the second transaction.

(4) The provisions of this paragraph may be illustrated by the following examples:

Example 1. X and Y are corporations each of which qualifies as a DISC and uses the calendar year as its taxable year. In 1972, X acquires section 1245 property in a first transaction in which the transferor's entire realized gain of $17 is not recognized. In 1973, X transfers such property to Y in a second transaction in which X realizes a gain of $20 of which only $4 is recognized. (On December 31, 1973, X's shareholders are treated as having received a deemed distribution of a dividend which includes such $4 under paragraph (a)(3) of this section, provided the limitation in paragraph (b) of this section is met.) In a third transaction in 1974, Y sells such property and recognizes a gain of $25. With respect to Y's shareholders on December 31, 1974, the amount described in paragraph (a)(3)(ii) of this section would be limited to $13, which is the amount of the transferor's gain which was not recognized on the first transaction ($17) minus the amount of gain recognized by X on the second transaction ($4).

Example 2. Z is a DISC using the calendar year as its taxable year. In a first transaction in 1972, in exchange for its stock, Z acquires section 1245 property from A, an individual who is its sole shareholder, in a transaction in which A's realized gain of $30 is not recognized by reason of the application of section 351(a). In a second transaction in 1973, Z exchanges such property for other property in a like-kind exchange to which section 1031(b) applies and recognizes $10 of a realized gain of $35. (On December 31, 1973, A is treated as having received a deemed distribution of a dividend which includes such $10 under paragraph (a)(3) of this section, provided the limitation in paragraph (b) of

this section is met.) In a third transaction in 1974, Z sells the property acquired in the like-kind exchange and recognizes a gain of $25. With respect to A on December 31, 1974, the amount described in paragraph (a)(3)(ii) of this section is limited to $20, which is the amount of A's gain which was not recognized on the first transaction ($30) minus the amount of gain recognized by Z on the second transaction ($10).

(e) ***Carry back of net operating loss and capital loss to prior DISC taxable year.*** For purposes of sections 991, 995, and 996, the amount of the deduction for the taxable year under section 172 for a net operating loss carryback or carryover or under section 1212 for a capital loss carryback or carryover shall be determined in the same manner as if the DISC were a domestic corporation which had not elected to be treated as a DISC. Thus, the amount of the deduction will be the same whether or not the corporation was a DISC in the year of the loss or in the year to which the loss is carried. For provisions setting forth adjustments to the DISC's, or former DISC's, deemed distributions, adjustments to its divisions of earnings and profits, and other tax consequences arising from such carrybacks, see § 1.996-8.

(Secs. 995(e)(7), (8) and (10), 995(g) and 7805 of the Internal Revenue Code of 1954 (90 Stat. 1655, 26 U.S.C. 995 (e)(7), (8) and (10); 90 Stat. 1659, 26 U.S.C. 995(g); and 68A Stat 917, 26 U.S.C. 7805))

[T.D. 7324, 39 FR 35110, Sept. 30, 1974, as amended by T.D. 7862, 47 FR 56492, Dec. 17, 1982; T.D. 7984, 49 FR 40018, Oct. 12, 1984]

§ 1.995-3 Distributions upon disqualification.

(a) ***General rule.*** Under section 995 (b)(2), a shareholder of a corporation which is disqualified from being a DISC, either because pursuant to § 1.992-2(e)(2) it revoked its election to be treated as a DISC or because it has failed to satisfy the requirements as set forth in § 1.992-1 to be a DISC for a taxable year, shall be deemed to have received (at the times specified in paragraph (b) of this section) distributions taxable as dividends aggregating an amount equal to his pro rata share of the accumulated DISC income (as defined in § 1.996-3(b)) of such corporation which was accumulated during the immediately preceding consecutive taxable years for which the corporation was a DISC. The pro rata share referred to in the preceding sentence shall be determined as of the close of the last of such consecutive taxable years for which the corporation was a DISC. See § 1.996-7(c) for rules relating to the carryover of, and maintaining a separate account for, such accumulated DISC income in certain reorganizations.

(b) ***Time of receipt of deemed distributions.*** Distributions described in paragraph (a) of this section shall be deemed to be received in equal installments on the last day of each of the 10 taxable years of the corporation following the year of the disqualification described in paragraph (a) of this section, except that in no case may the number of equal installments exceed the number of the immediately preceding consecutive taxable years for which the corporation was a DISC.

(c) ***Transfer of shares.*** Deemed distributions are includible under paragraphs (a) and (b) of this section in a shareholder's gross income as a dividend only so long as he continues to hold the shares with respect to which the distribution is deemed made. Thus, the transferee of such shareholder will include in his gross income under paragraphs (a) and (b) of this section the remaining installments of the deemed distribution which the transferor would have included in his gross income as a dividend had he not transferred the shares. However, if the transferee acquires the shares in a transaction in which the transferor's gain is treated under § 1.995-4 in whole or in part as a dividend, then under § 1.996-4(a) such transferee does not include subsequent installments in his gross income to the extent that the transferee treats such subsequent installments as made out of previously taxed income.

(d) ***Effect of requalification.*** Deemed distributions under paragraphs (a) and (b) of this section continue and are includible in gross income as dividends by the shareholders whether or not the corporation subsequently requalifies and is treated as a DISC.

(e) ***Effect of actual distributions and deemed distributions under section 995(b)(1)(G).*** If, during the period a shareholder of a DISC, or former DISC, is taking into account deemed distributions under paragraphs (a) and (b) of this section, an actual distribution is made to him out of accumulated DISC income or a deemed distribution because of foreign investment attributable to producer's loans is made under § 1.995-2(a)(5) out of accumulated DISC income, such actual or deemed distribution shall first reduce the last installment of the deemed distributions scheduled to be included in the shareholder's gross income as a dividend, and then the preceding scheduled installments in reverse order. If deemed distributions are scheduled to be included in gross income for two or more disqualifications, an actual distribution or a deemed distribution under § 1.995-2 (a)(5) which is treated as made out of accumulated DISC income reduces the deemed distributions resulting from the earlier disqualification first.

(f) ***Examples.*** This section may be illustrated by the following examples:

Example 1. X Corporation, which uses the calendar year as its taxable year, elects to be treated as a DISC beginning with 1972. X qualifies as a DISC for taxable years 1972 through 1975, but, pursuant to § 1.992-2(e)(2), revokes its election as of January 1, 1976, and is disqualified as a DISC. On that date, X has $24,000 of accumulated DISC income. X's shareholders will be deemed to receive $6,000 in distributions taxable as a dividend on the last day of each of X's four succeeding taxable years (1977, 1978, 1979, and 1980).

Example 2. Assume the same facts as in example 1, except that in 1978 X makes an actual distribution of $22,000 to its shareholders of which $10,000 is treated under § 1.996-1 as made out of accumulated DISC income. (The remaining $12,000 of such distribution is treated as made out of previously taxed income.) The actual distribution would first reduce the $6,000 deemed distribution scheduled for 1980 to zero and then reduce the $6,000 deemed distribution scheduled for 1979 to $2,000. Thus, X's shareholders include in 1978 $16,000 is gross income as dividends ($10,000 of actual distributions and the $6,000 deemed distribution scheduled for that year) and $2,000 as a dividend in 1979.

Example 3. Assume the same facts as in example 2, except that X requalifies as a DISC for taxable year 1977 during which it derives $7,000 of DISC income (computed after taking into account a deemed distribution under § 1.995-2(a)(4) of $7,000), but is again disqualified in 1978. In addition X makes an actual distribution in 1977 equal to the deemed distribution of $7,000. Such actual distribution is excluded from gross income under § 1.996-1(c). In 1977. X's shareholders include in gross income as dividends the $6,000 deemed distribution upon disqualification (in addition to the deemed distributions of $7,000 under § 1.995-2 for 1977 when it was treated as a DISC). The actual distribution in 1978 still reduces the installments resulting from the earlier disqualification. Thus, in 1978, X's shareholders include $16,000 in gross income as dividends. In 1979, X's shareholders include $9,000 in gross income as dividends (the final installment of $2,000 from the earlier disqualification plus the single deemed distribution of $7,000 resulting from the later disqualification).

[T.D. 7324, 39 FR 35112, Sept. 30, 1974, as amended by T.D. 7854, 47 FR 51741, Nov. 17, 1982]

§ 1.995-4 Gain on disposition of stock in a DISC.

(a) *Disposition in which gain is recognized* —

(1) ***In general.*** If a shareholder disposes, or is treated as disposing, of stock in a DISC, or former DISC, then any gain recognized on such disposition shall be included in the shareholder's gross income as a dividend, notwithstanding any other provision of the Code, to the extent of the accumulated DISC income amount (described in paragraph (d) of this section). To the extent the recognized gain exceeds the accumulated DISC income amount, it is taxable as gain from the sale or exchange of the stock.

(2) ***Nonapplication of subparagraph (1).*** The provisions of subparagraph (1) of this paragraph do not apply (i) to the extent gain is not recognized (such as, for example, in the case of a gift or an exchange of stock to which section 354 applies) and (ii) to the amount of any recognized gain which is taxable as a dividend (such as, for example, under section 301 or 356(a)(2)) or as gain from the sale or exchange of property which is not a capital asset. The amount taxable as a dividend under section 301 or 356(a)(2) is subject to the rules provided in § 1.995-1(c) for the treatment of actual distributions by a DISC.

(b) *Disposition in which separate corporate existence of DISC is terminated* —

(1) ***General.*** If stock in a corporation that is a DISC, or former DISC, is disposed of in a transaction in which its separate corporate existence as a DISC, or former DISC, is terminated, then, notwithstanding any other provision of the Code, an amount of realized gain shall be recognized and included in the transferor's gross income as a dividend. The realized gain shall be recognized to the extent that such gain—

(i) Would not have been recognized but for the provisions of this paragraph, and

(ii) Does not exceed the accumulated DISC income amount (described in paragraph (d) of this section).

(2) ***Cessation of separate corporate existence as a DISC, or former DISC.*** For purposes of subparagraph (1) of this paragraph, separate corporate existence as a DISC, or former DISC, will be treated as having ceased if, as a result of the transaction, there is no separate entity which is a DISC and to which is carried over the accumulated DISC income and other tax attributes of the DISC, or former DISC, the stock of which is disposed of. Thus, for example, if stock in a DISC, or former DISC, is exchanged in a transaction described in section 381(a) (relating to carryovers in certain corporate acquisitions), the gain realized on the transfer of such stock will not be recognized under subparagraph (1) of this paragraph if the assets of such DISC, or former DISC, are acquired by a corporation which immediately after the acquisition qualifies as a DISC. For a further example, if a DISC, or former DISC, is liquidated in a transaction to which section 332 (relating to complete liquidations of subsidiaries) applies, the transaction will be subject to subparagraph (1) of this paragraph if the basis to the transferee corporation of the assets acquired on the liquidation is determined under section 334(b)(2) (as in effect prior to amendment by the Tax Equity and Fiscal Responsibility Act of 1982) or if immediately after such liquidation the transferee of such assets does not qualify as a DISC. However, separate corporate existence as a DISC, or former DISC, will not be treated as having ceased in the case of a mere change in place of organization, however effected. See § 1.996-7 for rules for the carryover of the divisions of a DISC's earnings and profits to one or more DISC's.

(c) *Disposition to which section 311, 336, or 337 applies* —

(1) ***In general.*** If, after December 31, 1976, a shareholder distributes, sells, or exchanges stock in a DISC, or former DISC, in a transaction to which section 311, 336, or 337 applies, then an amount equal to the excess of the fair market value of such stock over its adjusted basis in the hands of the shareholder shall, notwithstanding any other provision of the Code, be included in gross income of the shareholder as a dividend to the extent of the accumulated DISC income amount (described in paragraph (d) of this section).

(2) ***Nonapplication of subparagraph (1).*** Subparagraph (1) shall not apply if the person receiving the stock in the disposition has a holding period for the stock which includes the period for which the stock was held by the shareholder disposing of such stock.

(d) ***Accumulated DISC income amount*** —

(1) ***General.*** For purposes of this section, the accumulated DISC income amount is the accumulated DISC income of the DISC or former DISC which is attributable to the stock disposed of and which was accumulated in taxable years of such DISC or former DISC during the period or periods such stock was held by the shareholder who disposed of such stock.

(2) ***Period during which a shareholder has held stock.*** For purposes of this section, the period during which a shareholder has held stock includes the period he is considered to have held it by reason of the application of section 1223 and, if his basis is determined in whole or in part under the provisions of section 1014(d) (relating to special rule for DISC stock acquired from decedent) or section 1022 (relating to property acquired from certain decedents who died in 2010), the holding period of the decedent. Such holding period is to exclude the day of acquisition but include the day of disposition. Thus, for example, if A purchases stock in a DISC on December 31, 1972, and makes a gift of such stock to B on June 30, 1973, then on December 31, 1974, B will be treated as having held the stock for 2 full years. If the basis of the stock in C's hands is determined under section 1014(d) upon a transfer from B's estate on December 31, 1976, by reason of B's death on June 30, 1974, then on December 31, 1976, C will be treated as having held the stock for 4 full years.

(e) ***Accumulated DISC income allocable to shareholder under section 995(c)(2)*** —

(1) ***In general.*** Under this paragraph, rules are prescribed for purposes of paragraph (d) of this section as to the manner of determining, with respect to the stock of a DISC, or former DISC, disposed of, the amount of accumulated DISC income which is attributable to such stock and which was accumulated in taxable years of the corporation during the period or periods the stock disposed of was held or treated under paragraph (d)(2) of this section as held by the transferor. Subparagraphs (2), (3), and (4) of this paragraph set forth a method of computation which may be employed to determine such amount. Any other method may be employed so long as the result obtained would be the same as the result obtained under such method.

(2) ***Step 1.*** Determine the increase (or decrease) in accumulated DISC income for each taxable year of the DISC, or former DISC, by subtracting from the amount of accumulated DISC income (as defined in § 1.996-3(b)) at the close of each taxable year the amount thereof as of the close of the immediately preceding taxable year.

(3) ***Step 2.***

(i) Determine for each taxable year of the DISC, or former DISC, the increase (or decrease) in accumulated DISC income per share by dividing such increase (or decrease) for the year by the number of shares outstanding or deemed outstanding on each day of such year.

(ii) If the number of shares of stock in the corporation outstanding on each day of a taxable year of the DISC, or former DISC, is not constant, then the number of such shares deemed outstanding on each day of such year shall be the sum of the fractional amounts in respect of each share which was outstanding on any day of the taxable year. The fractional amount in respect of a share shall be determined by dividing the number of days in the taxable year on which such share was outstanding (excluding the day the share became outstanding, but including the day the share ceased to be outstanding), by the total number of days in such taxable year.

(iii) If for any taxable year of a DISC, or former DISC, the share disposed of was not held (or treated under paragraph (d)(2) of this section as held) by the disposing shareholder for the entire year, then the amount of increase (or decrease) in accumulated DISC income attributable to such share for such year is the amount determined as if he held the share until the end of such year multiplied by a fraction the numerator of which is the number of days in the taxable year on which the shareholder held (or under paragraph (d)(2) of this section is treated as having held) such share and the denominator of which is the total number of days in the taxable year.

(4) ***Step 3.*** Add the amounts computed in step 2 for each taxable year of the DISC, or former DISC, in which the shareholder held such share of stock.

(5) ***Examples.*** This paragraph may be illustrated by the following examples:

Example 1. X Corporation uses the calendar year as its taxable year and elects to be a DISC for the first time for 1973. On January 1, 1973, X has 20 shares issued and outstanding. A and B each own 10 shares. On July 1, 1976, X issues 10 shares to C. On December 31, 1977, A sells his 10 shares to D and recognizes a gain of $120. Under these facts and other facts assumed in the table below, A includes in his gross income for 1977 a dividend under paragraph (b) of this section of $61.30 and long-term capital gain of $58.70.

Year	(a)—Year end accumulated DISC income	(b)—Increase (decrease) in accumulated DISC income	(c)—Shares outstanding	(d)—Increase (decrease) per share (column (b) divided by column (c))
1973	$80	$80	20	$4.00
1974	50	(30)	20	(1.50)
1975	80	30	20	1.50
1976	100	20	[1] 25	.80
1977	140	40	30	1.33
(1) Total increase in accumulated DISC				6.13

[1] *Under subparagraph (3)(ii) of this paragraph, the aggregate fractional amounts of the 10 shares issued on July 1, 1976, is 5 shares, i.e., 10 shares, multiplied by (183 days/366 days). Thus, the number of shares deemed outstanding for 1976 is 25 shares, i.e., 20 shares plus 5 shares.*

Year	(a)—Year end accumulated DISC income	(b)—Increase (decrease) in accumulated DISC income	(c)—Shares outstanding	(d)—Increase (decrease) per share (column (b) divided by column (c))
income for each share disposed of (sum of amounts in column (d))				
Multiply by number of shares disposed of				10
(2) Total amount of accumulated DISC income attributable to A's shares disposed of				61.30
(3) A's gain				120.00
(4) Portion of A's gain taxable as a dividend (lower of lines (2) and (3))				61.30
(5) Portion of A's gain taxable as long-term capital gain (line (3) minus line (4))				58.70

[1] *Under subparagraph (3)(ii) of this paragraph, the aggregate fractional amounts of the 10 shares issued on July 1, 1976, is 5 shares, i.e., 10 shares, multiplied by (183 days/366 days). Thus, the number of shares deemed outstanding for 1976 is 25 shares, i.e., 20 shares plus 5 shares.*

Example 2. Assume the same facts as in example 1, except that A sells his 10 shares to D on July 1, 1977. Under subparagraph (3)(iii) of this paragraph, the amount of increase in accumulated DISC income for 1977 which is attributable to each share disposed of is limited to $.67, *i.e.,* $1.33 multiplied by 182 days/365 days. Therefore, the sum of the yearly increases (and decreases) in accumulated DISC income for each share is reduced by $.66 (*i.e.,* $1.33 minus $.67). The total increase in accumulated DISC income for each share disposed of is $5.47 (i.e., $6.13 minus $.66). Under these facts, A would include in his gross income for 1977 a dividend of $54.70 and long-term capital gain of $65.30 determined as follows:

(1) Total increase in accumulated DISC income for each share disposed of	$5.47
Multiplied by number of shares disposed of	10

(2) Total amount of accumulated DISC income attributable of to all shares disposed of	54.70
(3) A's gain	120.00
(4) Portion of A's gain taxable as a dividend (lower of lines (2) and (3))	54.70
(5) Portion of A's gain taxable as long-term capital gain (line (3) minus line (4))	65.30

(f) ***Effective/applicability date.*** This section applies on and after January 19, 2017. For rules before January 19, 2017, see § 1.995-4 as contained in 26 CFR part 1 revised as of April 1, 2016.

[T.D. 7324, 39 FR 35112, Sept. 30, 1974, as amended by T.D. 7854, 47 FR 51741, Nov. 17, 1982; T.D. 9811, 82 FR 6240, Jan. 19, 2017]

§ 1.995-5 Foreign investment attributable to producer's loans.

(a) ***In general*** —

(1) ***Limitation.*** Under section 995(d), the amount as of the close of a "group taxable year" (as defined in subparagraph (3) of this paragraph) of foreign investment attributable to producer's loans of a DISC for purposes of section 995(b)(1)(G) shall be the excess (as of the close of such year) of—

(i) The smallest of—

(*a*) The amount of the net increase in foreign assets (as defined in paragraph (b) of this section) by domestic and foreign members of the controlled group which includes the DISC,

(*b*) The amount of the actual foreign investment by the domestic members of such group (as determined under paragraph (c) of this section), or

(*c*) The amount of outstanding producer's loans (as determined under § 1.993-4) by such DISC to members of such controlled group, over

(ii) The amount (determined under § 1.995-2 (a)(5) and (b)(2)) of foreign investment attributable to producer's loans treated under section 995(b)(1)(G) as deemed distributions by the particular DISC taxable as dividends for prior taxable years of that particular DISC.

Thus, for example, if the shareholders of a DISC which uses the calendar year as its taxable year (and which is a member of a controlled group in which all of the members use the calendar year as their taxable year) are treated under section 995(b)(1)(G) as receiving foreign investment attributable to producer's loans of a DISC of $0 in 1972, $10 in 1973, and $30 in 1974, or a total of $40, and if the smallest of the amounts described in subdivision (i) of this subparagraph at the end of 1975 is $90, then the amount of the foreign investment attributable to producer's loans of a DISC at the end of 1975 is $50, *i.e.,* the excess (as of the close of 1975) of the smallest of the amounts described in subdivision (i) of this subparagraph ($90) over the sum of the amounts of foreign investment attributable to producer's loans treated under section 995(b)(1)(G) as deemed distributions by the DISC taxable as dividends for prior taxable years of the DISC ($40). If the separate corporate existence of the DISC as to which the amount described in subdivision (ii) of this

subparagraph relates ceases to exist within the meaning of § 1.995-4(c)(2), then such amount shall no longer be taken into account by the group for any purpose. For inclusion of amounts because of certain corporate acquisitions, see paragraph (d) of this section.

(2) ***Controlled group; domestic and foreign member.*** For purposes of this section—

(i) The term "controlled group" has the meaning assigned to such term by § 1.993-1(k).

(ii) The term *domestic member* means a domestic corporation which is a member of a controlled group, and the term *foreign member* means a foreign corporation which is a member of a controlled group.

(3) ***Group taxable year.***

(i) The term *group taxable year* refers collectively to the taxable year of the DISC and to the taxable year of each corporation in the controlled group which includes the DISC ending with or within the taxable year of the DISC. Thus, for example, if a corporation has a subsidiary which uses the calendar year as its taxable year and which elects to be treated as a DISC, and if the parent has a taxable year ending on October 31, the "group taxable year" for 1973 would refer to calendar year 1973 for the DISC and to the parent's taxable year ending October 31, 1973.

(ii) In cases in which the DISC makes a return for a short taxable year, that is, for a taxable year consisting of a period of less than 12 months, pursuant to section 443 and the regulations thereunder, or § 1.991-1(b)(3), the following rules shall apply—

(*a*) In the case of a change in the annual accounting period of the DISC resulting in a short taxable year, the *group taxable year* refers collectively to the short taxable year and to the taxable year of each corporation in the controlled group which includes the DISC ending with or within the short taxable year.

(*b*) In the case of a DISC which is in existence during only part of what would otherwise be its taxable year, the *group taxable year* refers collectively to the short period during which the DISC was in existence and to the taxable year of each corporation in the controlled group which includes the DISC ending with or within the 12-month period ending on the last day of the short period.

(iii) With respect to periods prior to the first taxable year for which a member of the group qualified (or is treated) as a DISC, each group taxable year shall be determined under subdivision (i) of this subparagraph as if such member was in existence, it qualified as a DISC, and its taxable year ended on that date corresponding to the date such member's first taxable year ended after it qualified (or is treated) as a DISC whether or not the corporation which qualifies (or is treated) as a DISC used the same taxable year before it so qualified (or is so treated). Thus, for example, if a corporation which is organized on March 3, 1975, uses the calendar year as its taxable year, and is a member of a controlled group which does not include a DISC, first qualifies (or is treated) as a DISC for calendar year 1975, then the term "group taxable year" with respect to years prior to 1975 refers collectively to such prior calendar years and to the taxable year of each corporation in the group ending with or within such prior calendar years.

(iv) For special rules in the case of a group which includes more than one DISC, see paragraph (g) of this section.

(4) ***Amounts determined for prior years.*** Unless the 3-year limitation is properly elected under subparagraph (5) of this paragraph, the amounts described in paragraphs (b) (relating to net increase in foreign assets) and (c) (relating to actual foreign investments by domestic members) of this section reflect, as of the close of a group taxable year, amounts for all taxable years of members of the group beginning after December 31, 1971 (and amounts arising after December 31, 1971, or such other date prescribed in paragraph (b)(7) of this section), provided that such amounts relate to such group taxable year and preceding group taxable years. Thus, for example, if all members of a controlled group use the calendar year as the taxable year, and 1980 is the first taxable year for which any member of the group qualifies (or is treated) as a DISC, then, unless the 3-year limitation is elected under subparagraph (5) of this paragraph, the amounts described in paragraphs (b) and (c) of this section will be taken into account beginning with the dates specified in the preceding sentence. For rules as to carryovers on certain corporate acquisitions and reorganizations, see paragraph (d) of this section.

(5) ***Three-year elective limitation.***

(i) A DISC may elect to take into account only amounts described in paragraphs (b) (relating to net increase in foreign assets) and (c) (relating to actual foreign investment by domestic members) of this section for the 3 taxable years of each member immediately preceding its taxable year included in that first group taxable year which includes a member's first taxable year during which it qualifies (or is treated) as a DISC. For purposes of the preceding sentence, determinations shall be made by reference to the taxable year of the issuer or transferor (as the case may be). If an election is made under this subdivision, the offset for uncommitted transitional funds under paragraph (b)(7) of this section is not allowed. If an election is made under this subdivision, the 3-year limitation applies to amounts described in paragraphs (b)(4) and (c)(1) and (2) of this section.

(ii) An election under subdivision (i) of this subparagraph shall not apply with respect to amounts which must be carried over under paragraph (d) of this section in the case of certain corporate acquisitions and reorganizations.

(iii) An election under subdivision (i) of this subparagraph shall be made by the DISC attaching to its first return, filed under section 6011(e)(2), a statement to the effect that the 3-year limitation is being elected under § 1.995-5(a)(5)(i).

(6) ***Cumulative basis.*** Pursuant to section 995(d)(5), all determinations of amounts specified in this section are to be made on a cumulative basis from the 1st year (or date) provided for in this section. Thus, each such determination shall take into account a net increase or a net decrease during the year, as the case may be. However, if the 3-year limitation is elected under subparagraph (5) of this paragraph, then only amounts with respect to periods specified in such subparagraph (5) are amounts taken into account for years before a member of the group qualifies (or is treated) as a DISC. The computations described in this section may be made in any way chosen by the DISC (including a corporation being tested as to whether it qualifies as a DISC), provided such method results in the amount prescribed by this section.

(7) ***Example.*** The provisions of this paragraph may be illustrated by the following example:

> *Example.* X Corporation, which uses the calendar year as its taxable year, is a member of a controlled group (within the meaning of subparagraph (2) of this paragraph). X elects to be treated as a DISC beginning with 1972. The amount of foreign investment attributable to X's

producer's loans treated under section 995(b)(1)(G) as a distribution taxable as a dividend as of the close of each group taxable year with respect to each taxable year of X from 1972 through 1975 are set forth in the table below, computed on the basis of the facts assumed (the amounts on lines (1), (2), (3), and (5) being running balances):

Taxable year of X	1972	1973	1974	1975
(1) Net increase (or decrease) in foreign assets since January 1, 1972, at close of group taxable year	($30)	$10	$100	$150
(2) Actual foreign investment at close of group taxable year	20	60	80	140
(3) Outstanding producer's loans of X (the DISC) as of the close of group taxable year	0	40	90	120
(4) Smallest of lines (1), (2), or (3) (not less than zero)	0	10	80	120
(5) Less section 995(b)(1)(G) deemed distributions for prior taxable years (sum of lines (5) and (6) from prior year)	0	0	10	80
(6) Section 995(b)(1)(G) deemed distribution as of close of taxable year	0	10	70	40

(b) ***Net increase in foreign assets*** —

(1) ***In general.***

(i) The term *net increase in foreign assets* when used in this section means the excess for the controlled group (as of the close of the group taxable year) of

(*a*) the investment in foreign assets to be taken into account under subparagraph (2) of this paragraph over

(*b*) the aggregate of the five offsets allowed by subparagraphs (3) through (7) of this paragraph.

(ii) No amount described in this paragraph (other than amounts described in subparagraphs (4) and (7) of this paragraph) with respect to a member of the group (or foreign branch of a member) shall be taken into account unless it is attributable to a taxable year of such member beginning after December 31, 1971. For a 3-year elective limitation with respect to the first taxable year for which a member qualifies (or is treated) as a DISC, see paragraph (a)(5) of this section. For manner of determining amounts on a cumulative basis, see paragraph (a)(6) of this section.

(2) ***Investments made in foreign assets.***

(i) For purposes of subparagraph (1) of this paragraph, there shall be taken into account as investment in foreign assets the aggregate of the amounts expended (within the meaning of subdivision (ii) of this subparagraph) during the period described in subparagraph (1)(ii) of this paragraph by all members of the controlled group which includes the DISC to acquire assets described in section 1231(b) (determined without regard to any holding period therein provided) which are located outside the United States (as defined in § 1.993-7) reduced by the

aggregate of the amounts received by all such members of the controlled group from the sale, exchange, or involuntary conversion of such assets described in section 1231(b) which are located outside the United States. For purposes of this section, amounts expended for assets which are qualified export assets (as defined in § 1.993-2) of a DISC (or which would be qualified export assets if owned by a DISC) shall not be taken into account. Thus, for example, if a DISC acquires a qualified export asset located outside the United States, the asset is not to be taken into account for purposes of determining the net increase in foreign assets.

(ii) As used in subdivision (i) of this subparagraph, the term *amounts expended* (or amounts received) means the amount of any money or the fair market value (on the date of acquisition, sale, exchange, or involuntary conversion) of any property (other than money) used to acquire (or received for) the assets described in such subdivision (i).

(iii) For purposes of this subparagraph, an asset (other than an aircraft or vessel) is considered as located outside the United States if it was used predominantly outside the United States during the group taxable year. The determination as to whether such an asset is used predominantly outside the United States during the group taxable year in which it was acquired or sold, exchanged, or involuntarily converted shall be made by applying the rules of § 1.993-3(d) except that an aircraft described in section 48(a)(2)(B)(i) or a vessel described in section 48(a)(2)(B)(iii) shall be considered located in the United States and all other aircraft or vessels shall be considered located outside the United States. Thus, for example, if a member of a controlled group which includes a DISC acquires a vessel which is documented under the laws of a foreign country, the amount expended to acquire that vessel is an amount described in subdivision (i) of this subparagraph.

(iv) ***Examples.*** The provisions of this subparagraph may be illustrated by the following examples:

Example 1. X Corporation, which uses the calendar year as its taxable year, is a domestic member of a controlled group (within the meaning of paragraph (a)(2) of this section). During 1972, in a transaction to which section 1031 applies, X acquires a warehouse located outside the United States and having a fair market value of $100. As consideration, X transfers $20 in cash and a warehouse located within the United States and having a fair market value of $80. Under these facts, $100 will be taken into account as investment in foreign assets.

Example 2. The facts are the same as in example 1, except that the warehouse transferred by X as consideration is located outside the United States. Under these facts, only $20 will be taken into account as investment in foreign assets because the amount expended for such assets (*i.e.,* $100) is reduced by the fair market value of any property located outside the United States received in exchange for such assets (*i.e.,* $80).

(3) ***Depreciation with respect to all foreign assets of a controlled group.***

(i) An offset allowed by this subparagraph is the depreciation (determined under subdivision (ii) of this subparagraph) or depletion (determined under subdivision (iii) of this subparagraph) attributable to taxable years of the member beginning after December 31, 1971, with respect to all of the group's foreign assets described in subparagraph (2) of this paragraph including such assets acquired prior to the date provided in such subparagraph (2), and without regard to whether the 3-year election in paragraph (a)(5) of this section is made. Thus, for example, depreciation for a taxable year of a member beginning after December 31, 1971, with respect to an asset described in section 1231(b) which is located outside of the United States and which

was acquired during a taxable year of the member beginning before January 1, 1972, is an offset allowed by this subparagraph. For a further example, depreciation with respect to a qualified export asset is not such an offset.

(ii) The depreciation taken into account under subdivision (i) of this subparagraph shall be—

(*a*) In the case of an asset owned by a domestic member, only the amount allowed under section 167(b)(1) (relating to the allowance of the straight-line method of depreciation) and § 1.162-11 (b) (relating to amortization in lieu of depreciation), but not the amount allowed under section 179 (relating to the additional first-year depreciation allowance).

(*b*) In the case of an asset owned by a foreign member, the depreciation and amortization (referred to in (*a*) of this subdivision) allowable for purposes of computing earnings and profits under subparagraph (5)(i) of this paragraph.

(iii) The depletion taken into account under subdivision (i) of this subparagraph shall be limited to cost depletion computed under sections 611 and 612 and the regulations thereunder. Thus, percentage depletion is not to be taken into account in computing the offset under this subparagraph.

(4) ***Amount of outstanding stock or debt.***

(i) An offset allowed by this subparagraph is the outstanding amount of stock (including treasury stock) or debt obligations of any member of the group issued, sold, or exchanged after December 31, 1971, by any member (whether or not the same member) to persons who (on the date of such issuance, sale, or exchange) were neither United States persons (within the meaning of section 7701(a)(30)) nor members of the group: *Provided,* That, in the case of a debt obligation, such obligation is not repaid within 12 months after such issuance, sale, or exchange. Thus, for example, if stock is issued to a member of the group before January 1, 1972, and after December 31, 1971, it is sold to a person who is neither a United States person nor a member of the group, an offset allowed by this subparagraph includes the outstanding amount of such stock. For purposes of this subparagraph, foreign branches of United States banks are not considered to be United States persons.

(ii) The outstanding amount of stock or debt obligations shall be determined in accordance with the following provisions:

(*a*) The outstanding amount of stock or debt obligations described in subdivision (i) of this subparagraph is equal to the net amount described in (*b*) of this subdivision reduced (but not below zero) by the amount described in (*c*) of this subdivision.

(*b*) The net amount described in this subdivision (*b*) is the excess of

(*1*) the aggregate of the amount of money and the fair market value of property (other than money) transferred by persons who are not members of the group and who are not U.S. persons as consideration for such stock and debt obligations over

(*2*) fees and commission expenses borne by the issuer or transferror with respect to their issuance, sale, or exchange.

(*c*) The amount described in this subdivision (*c*) is the aggregate amount of money and fair market value of property (other than money) distributed to such persons on distributions in respect of such stock from other than earnings and profits or on distributions in redemption of such stock and the amount of principal paid pursuant to such debt obligations.

(*d*) For purposes of this subdivision (ii), in the case of a redemption, the stock or debt redeemed shall be charged against the earliest of such stock or debt issued, sold, or exchanged in order to determine the amount by which the balance of outstanding stock or debt is to be reduced. For purposes of this subparagraph, the fair market value of property received as consideration shall be determined as of the date the transaction occurs, and a contribution to capital within the meaning of section 118 shall be treated as the issuance of stock.

(iii) The provisions of subdivision (i) of this subparagraph apply regardless of the treatment under the Code of the transaction in which the stock or debt was issued, sold, or exchanged. Thus, for example, if X Corporation, a member of a controlled group which includes a DISC, acquires from a nonresident alien individual in exchange solely for X's voting stock all of the stock of Y Corporation pursuant to a reorganization as defined in section 368(a)(1)(B), the fair market value of the Y stock on the date of the exchange would be an offset allowed by this subparagraph.

(iv) The provisions of this subparagraph may be illustrated by the following example:

Example. X Corporation is a member of a controlled group (within a meaning of paragraph (a)(2) of this section) every member of which uses the calendar year as its taxable year. On January 1, 1972, X issues in a public offering its stock to persons described in subdivision (i) of this subparagraph who, in the aggregate, pay $1,000 as consideration. X pays $100 in underwriting fees. On the same date, X receives $425 upon issuing a $500 debt obligation to such persons at a discount of $75 and pays $25 in underwriting fees. On December 31, 1972, the offset allowed under this subparagraph is $1,300, i.e., ($1,000 minus $100) plus ($425 minus $25). If, during 1973, X makes a distribution of $150 (not in redemption) from other than earnings and profits with respect to such stock, then the offset is reduced to $1,150.

(5) ***Earnings and profits.***

(i) An offset allowed by this subparagraph is one-half the aggregate of the earnings and profits accumulated for all taxable years beginning after December 31, 1971, computed (without regard to any distributions from earnings and profits by a foreign corporation to a domestic corporation in accordance with § 1.964-1 (relating to a controlled foreign corporation's earnings and profits), of each foreign member of the group which is controlled directly or indirectly (as determined under the principles of section 958 and the regulations thereunder) by a domestic member of the group and each foreign branch of a domestic member of the group (computed as if the branch were a foreign corporation). The DISC is bound by any action on behalf of a foreign member that was taken pursuant to § 1.964-1(c)(3) or by any failure to take action by or on behalf of a foreign member within the time specified in § 1.964-1(c)(6). With respect to a foreign member for which action was not previously required under § 1.964-1(c)(6) to be taken, the DISC may take action on behalf of such member by attaching a statement to that effect to the return of the DISC under section 6011(e)(2) for the first taxable year during which it qualifies (or is treated) as a DISC and there is outstanding a producer's loan made by such DISC to a member of the controlled group which includes the DISC.

(ii) If the aggregate of the accumulated earnings and profits described in subdivision (i) of this subparagraph is a deficit, the amount allowable as an offset under this subparagraph is zero.

(6) ***Royalties and fees.*** An offset allowed by this subparagraph is one-half the royalties and fees paid by foreign members of the group to domestic members of the group and by foreign branches of domestic members of the group to domestic members of the group during the taxable years of such members beginning after December 31, 1971.

(7) ***Uncommitted transitional funds.***

(i) An offset allowed by this subparagraph for the uncommitted transitional funds of the group is the sum described in subdivision (ii) of this subparagraph of the amount of certain capital raised under the foreign direct investment program and the amounts described in subdivision (iv) of this subparagraph of certain foreign excess working capital held on October 31, 1971.

(ii) The amount described in this subdivision of certain capital raised under the foreign direct investment program is the excess (if any) of—

(*a*) The amount of the offset allowed by subparagraph (4) of this paragraph, determined, however, with respect to the stock and debt obligations of domestic members of the group outstanding on December 31, 1971 (including amounts treated as stock outstanding by reason of a contribution to capital), whether or not outstanding after such date, which were issued, sold, or exchanged on or after January 1, 1968, by any member (whether or not the same member) to persons who (on the date of such issuance, sale, or exchange) were neither United States persons (within the meaning of section 7701(a)(30)) nor members of the group, but only to the extent the taxpayer establishes that such amount constitutes a long-term borrowing (see 15 CFR 1000.324[1]) for purposes of the foreign direct investment program (see 15 CFR part 1000[1]), over

(*b*) The amount (determined under paragraph (c) of this section) of actual foreign investment by the domestic members of the group during the portion of the period such stock or debt obligations have been outstanding prior to January 1, 1972, such determination to be made by substituting January 1, 1968, for the December 31, 1971, date specified in such paragraph (c) and by not taking into account the earnings and profits described in paragraph (c)(3) of this section.

For purposes of this subparagraph, foreign branches of United States banks are not considered to be United States persons.

(iii)

(*a*) A taxpayer may establish that an amount under subdivision (ii) (*a*) of this subparagraph constitutes a long-term borrowing for purposes of the foreign direct investment program by keeping records sufficient to demonstrate that appropriate reports were filed with the Office of Foreign Direct Investment of the Department of Commerce with respect to the foreign borrowing or by any other method satisfactory to the district director.

[1] EDITORIAL NOTE: 15 CFR part 1000 was removed at 39 FR 30481, Aug. 23, 1974.

(*b*) The amounts described in subdivision (ii) (*a*) of this subparagraph include amounts with respect to which an election under section 4912(c), to subject certain obligations of a United States person to the interest equalization tax, has been made: *Provided,* That the obligations to which such amounts relate were issued by an "overseas financing subsidiary" described in 15 CFR part 1000[1] and were assumed by a United States person from such overseas financing subsidiary. Thus, for example, if an overseas financing subsidiary issues its notes to a foreign person in 1968, and such notes are assumed by its United States parent in 1973, which parent elects under section 4912(c) to have the notes subject to the interest equalization tax, then the amount of money received by the subsidiary is an amount described in subdivision (ii)(*a*) of this subparagraph.

(iv) The amount described in this subdivision of foreign excess working capital is the amount of liquid assets held by the foreign members of such group and foreign branches of domestic members of such group on October 31, 1971 (whether or not so held after such date) in excess of their reasonable working capital needs (as defined in § 1.993-2 (e)) on that date, but only to the extent not included in subdivision (ii) of this subparagraph. For purposes of this subdivision, the term *liquid assets* means money, bank deposits (not including time deposits), and indebtedness of any kind (including time deposits) which on the day acquired had a maturity of 2 years or less.

(8) ***Example.*** The provisions of this paragraph may be illustrated by the following example:

Example. X Corporation, which uses the calendar year as its taxable year is a member of a controlled group (within the meaning of paragraph (a)(2) of this section). X elects to be treated as a DISC beginning with 1972. The amount of net increase in foreign assets of the group at the close of each group taxable year with respect to each taxable year of X from 1972 through 1975 are set forth in the table below, computed on the basis of the facts assumed (the amounts on each line being running balances):

Taxable year of X	1972	1973	1974	1975
(1) Investment in foreign assets	$150	$165	$260	$300
(2) Depreciation with respect to foreign assets of group	20	40	60	80
(3) Amount of stock or debt outstanding issued after December 31, 1971	30	30	30	30
(4) One-half earnings and profits of foreign members	40	70	100	130
(5) Royalties and fees paid by foreign members to domestic members	10	15	20	20
(6) Uncommitted transitional funds	10	10	10	10
(7) Sum of lines (2) through (6)	110	165	220	270

Taxable year of X	1972	1973	1974	1975
(8) Net increase in foreign assets (line (1) minus line (6))	40	0	40	30

(c) ***Actual foreign investment by domestic members.*** For purposes of determining the limitation in paragraph (a) of this section, the amount of the actual foreign investment by domestic members of a controlled group is the sum (as of the close of the group taxable year) determined on a cumulative basis (see paragraph (a)(6) of this section) of—

(1) ***Outstanding stock or debt (including contributions to capital).*** The outstanding amount (determined in accordance with the principles of paragraph (b)(4)(ii) of this section, applied with respect to stock or debt obligations described in this subparagraph) of stock (including treasury stock) or debt obligations (other than normal trade indebtedness) of foreign members of the group issued, sold, or exchanged after December 31, 1971, by any person (whether or not a member) which is not a domestic member to domestic members of the group: *Provided,* That the outstanding amount of debt obligations of any foreign member shall be the greater of such amount outstanding at the close of the taxable year of such member or the highest such amount outstanding at any time during the immediately preceding 90 days,

(2) ***Transfers to foreign branches.*** The amount of money or the fair market value of property (other than money) transferred by domestic members of the group after December 31, 1971, to foreign branches of such members in transactions which would, if the branch were a corporation, be in consideration for the sale of stock or debt obligations of (or a contribution of capital to) such foreign branches (as determined under subparagraph (1) of this paragraph), and

(3) ***Earnings and profits of foreign members.*** One-half of the earnings and profits (computed in accordance with paragraph (b)(5) of this section for purposes of computing net increase in foreign assets) of foreign members of the group which are controlled directly or indirectly (as determined under the principles of section 958 and the regulations thereunder) by a domestic member of the group and foreign branches (treated for this purpose as a corporation) of domestic members of the group accumulated during the taxable years of such foreign members (or branches) beginning after December 31, 1971, or, if later, the taxable year referred to in paragraph (a)(5)(i) of this section if the 3-year election provided for in such paragraph (a)(5)(i) is made.

(d) ***Carryovers on certain corporate acquisitions and reorganizations*** —

(1) ***Certain corporate acquisitions.***

(i) If—

(*a*) A member of a controlled group (“first controlled group”) acquires in a transaction to which section 381 applies the assets of a corporation which is a member of a second controlled group or acquires stock in such a corporation pursuant to a reorganization as defined in section 368(a)(1)(B) to which section 361 applies, or

(*b*) A member or combination of members of the first controlled group acquire in a transaction not described in (*a*) of this subdivision a majority interest (as defined in paragraph (e)(2) of this section) in the stock of a corporation which is a member of a second controlled group which includes a DISC so that such DISC after the acquisition is a member of the new controlled group,

then, for purposes of computing foreign investment attributable to producer's loans with respect to the new controlled group as constituted after such acquisition, all amounts described in paragraphs (a) through (c) of this section, including the amount specified in paragraph (a)(1)(ii) of this section (relating to amounts treated under section 995(b)(1)(G) as deemed distributions by the DISC taxable as dividends for prior taxable years of the DISC), with respect to members of the second controlled group which become members of the new controlled group shall carry over to such new controlled group. For purposes of this subdivision (i), a controlled group may consist of only one member. With respect to certain transactions involving foreign corporations, see section 367.

(ii) If a member or combination of members of a controlled group, immediately after an acquisition of stock to which subdivision (i) of this subparagraph applies, do not control the total combined voting power (determined under § 1.957-1(b)) of the corporation whose stock was acquired, proper apportionment consistent with the principles of paragraph (e)(5) of this section shall be made with respect to amounts to which paragraphs (a) through (c) of this section apply.

(iii)

(*a*) If subdivision (i) of this subparagraph applies, then for purposes of determining the application of the 3-year elective limitation provided for in paragraph (a)(5) of this section, the rules in (*b*), (*c*), and (*d*) of this subdivision (iii) apply.

(*b*) If both the “first controlled group” and the “second controlled group” (as those terms are defined in subdivision (i) of this subparagraph) include a DISC, and a DISC in either group has elected the 3-year limitation provided in paragraph (a)(5) of this section, then only those amounts taken into account under such paragraph (a)(5) by the electing DISC or DISC's shall be taken into account.

(*c*) If one of the groups includes a DISC and the other does not, and if the DISC has elected the 3-year limitation provided in paragraph (a)(5) of this section, then, for purposes of computing foreign investment attributable to producer's loans with respect to the new controlled group as constituted after the acquisition, all amounts described in paragraphs (a) through (c) of this section with respect to members of the controlled group which did not include the DISC shall carry over to such new controlled group, but only to the extent provided in such paragraph (a)(5), computed as if the group taxable year in which the acquisition occurred was the first group taxable year which includes a member's first taxable year during which it qualifies (or is treated) as a DISC.

(*d*) If (*c*) of this subdivision (iii) applies, except that the DISC has not elected the 3-year limitation provided in paragraph (a)(5) of this section, then the DISC in the new controlled group as constituted after the acquisition may, with respect to members of the controlled group which did not include the DISC, make the election provided in such paragraph (a)(5), and treat the year in which the acquisition occurred as if it were the first group taxable year which includes a member's first taxable year during which it qualifies (or is treated) as a DISC.

(iv) If a majority interest, or an interest in addition to a majority interest, is acquired in a transaction other than a transaction described in subdivision (i) of this subparagraph, then the rules in paragraph (e) of this section (relating to the acquisition of the foreign assets of a corporation) apply.

(2) ***Corporation ceasing to be a member.*** As of the date a corporation which is a member of a controlled group ceases to be a member of such group, the amounts of such group described in paragraphs (a) through (c) of this section will be reduced by such amounts which are attributable to the corporation which is no longer a member of the group.

(e) ***Acquisition of a majority interest in a corporation*** —

(1) ***In general.*** If paragraph (d)(1)(i) of this section (relating to certain corporate acquisitions in which all amounts described in paragraphs (a) through (c) of this section carry over) does not apply, then, for purposes of determining under paragraph (b)(2) of this section the investments made in foreign assets by a controlled group, the acquisition of a majority interest (as defined in subparagraph (2) of this paragraph) or an interest in addition to a majority interest in a corporation by any member or combination of members of the controlled group is considered an acquisition of the assets (to the extent provided in subparagraph (5) of this paragraph) of the acquired corporation by the group, including the assets of any foreign corporation in which the acquired corporation owns a majority interest (to the extent provided in subparagraph (5) of this paragraph). For the rules concerning the date upon which an acquisition of a majority interest is considered to have occurred, see subparagraph (3) of this paragraph.

(2) ***Majority interest.*** For purposes of this section, a majority interest is more than 50 percent of the total combined voting power of all classes of a corporation's stock entitled to vote, as determined under § 1.957-1(b).

(3) ***Acquisition date.*** For purposes of this paragraph, an acquisition of a majority interest shall be considered to have occurred on the day on which the combined voting power of the group first reached the percentage required in subparagraph (2) of this paragraph.

(4) ***Valuation of assets.*** For purposes of this section, the amount of a corporation's assets deemed acquired is the fair market value of the assets on the date a majority interest, or an interest in addition to a previously held majority interest, is acquired.

(5) ***Apportionment in the case of the acquisition of less than all of the voting stock.***

(i) If the acquisition described in subparagraph (1) of this paragraph of a majority interest is of less than 100 percent of the total combined voting power of all classes of stock of the acquired corporation entitled to vote, then for purposes of subparagraph (1) of this paragraph the amount of the foreign assets of the corporation deemed acquired as of the day the majority interest is considered acquired shall be an amount equal to the fair market value of all of the corporation's foreign assets described in paragraph (b)(2) of this section as of such day multiplied by the percentage of the total combined voting power (determined under § 1.957-1(b)) held by members of the group on the day the majority interest is considered acquired.

(ii) If any member or combination of members of the controlled group hold a majority interest in a corporation, then for purposes of subparagraph (1) of this paragraph the acquisition of additional combined voting power by members of the controlled group shall be considered an acquisition of its foreign assets described in paragraph (b)(2) of this section in an amount

equal to the fair market value of all such assets held by the foreign corporation on the date of the acquisition, multiplied by the increase (expressed in percentage points) in total combined voting power (as determined under § 1.957-1(b)) which occurred.

(6) ***Examples.*** The application of this paragraph may be illustrated by the following examples:

Example 1. M Corporation uses the calendar year as its taxable year. On November 18, 1973, M acquires from A, an individual United States person, for $1 million cash all 10,000 shares of the voting stock of N, a foreign corporation. N's only asset is a warehouse located in France with a fair market value on the date of acquisition of $1 million. Under subparagraph (1) of this paragraph, the controlled group of which M is a member is considered to have expended $1 million for the acquisition of foreign assets described in paragraph (b)(2) of this section.

Example 2. The facts are the same as in example 1, except that on November 18, 1973, M acquires only 80 percent of N's voting stock. M is considered to have expended $800,000 for the acquisition of assets described in paragraph (b)(2) of this section, computed as follows:

(1) Fair market value of N's foreign assets described in paragraph (b)(2) of this section	$1,000,000
(2) Multiply by percentage of total combined voting power of all classes of N stock entitled to vote acquired by M	.8
(3) Amount considered expended	$800,000

Example 3. The facts are the same as in example 2, except that individual A is not a United States person, and M acquires the 80 percent of N voting stock in exchange for cash of $100,000 and M stock having a fair market value on the date of the acquisition of $700,000. M is considered to have acquired assets described in paragraph (b)(2) of this section in the amount of $800,000 (see computations in example 2) and to have an offset under paragraph (b)(4) of this section (relating to outstanding stock or debt) of $700,000 (the fair market value of the M stock transferred to A who is not a United States person). However, the controlled group of which M is a member is not considered to have acquired any other amounts described in paragraphs (a) through (c) of this section with respect to N for taxable years prior to the taxable year of N during which the acquisition occurred.

Example 4. P Corporation, which uses the calendar year as its taxable year, is a member of a controlled group which includes a DISC. During 1973, P acquires from B, an individual United States person, for cash, 30 percent of the total combined voting power of all classes of stock entitled to vote of Q, a foreign corporation. All of Q's assets are assets described in paragraph (b)(2) of this section. No additional interest in Q is acquired by members of the group during 1973. The controlled group of which Q is a member is not considered to have made any investments in foreign assets described in such paragraph (b)(2) as of the close of 1973.

Example 5. Assume the same facts as in example 4. Assume further that during 1974,

R Corporation, a member of the controlled group which includes P, acquires for cash 40 percent of the total combined voting power of all classes of stock of Q entitled to vote as follows: 20 percent on July 31, and 20 percent on December 31. Thus, on December 31, 1974, members of the controlled group own 70 percent of Q's voting power (30 + 20 + 20) and on that date are considered to have acquired a majority interest in Q. The fair market value of Q's assets on December 31, 1974, is $5 million. The group is considered to have expended $3,500,000 for the acquisition of assets described in paragraph (b)(2) of this section computed as follows:

(1) Fair market value of Q's foreign assets described in paragraph (b)(2) of this section as of the date the acquisition is deemed to have occurred under subparagraph (3) of this paragraph (December 31, 1974)	$5,000,000
(2) Multiply by percentage of total combined voting power of all classes of Q stock entitled to vote held by members of the group on such date	.7
	$3,500,000

Example 6. The facts are the same as in example 5. Assume further that on July 15, 1975, P acquires the remaining 30 percent of the total combined voting power of all classes of Q stock entitled to vote, and on such date the fair market value of Q's assets is $5,500,000. The group is considered to have expended $5,150,000 for the acquisition of assets described in paragraph (b)(2) of this section as of the close of 1975, computed as follows:

(1) Amount of prior years' investment	$3,500,000
(2) Investment during 1975:	
(a) Fair market value of Q's foreign assets described in paragraph (b)(2) of this section on July 15, 1975	$5,500,000
(b) Multiply by additional percentage acquired of total combined voting power of all classes of Q stock entitled to vote	.3
(c) Investment during 1975	$1,650,000
(3) Amount considered expended for foreign assets described in	$5,150,000

> paragraph (b)(2) of this section by reason of the acquisition of Q stock

(f) ***Records.*** A DISC shall keep or be readily able to produce such permanent books of account or records as are sufficient to establish the transactions and amounts described in this section. Where applicable, such books of account or records shall be cumulative and shall show transactions and amounts of the members of the controlled group which includes the DISC which occurred prior to the date the DISC qualified (or is treated) as a DISC.

(g) ***Multiple DISC's*** —

(1) ***Allocation among DISC's.*** In the case of a controlled group which includes more than one DISC, the amounts described in paragraphs (b) and (c) of this section shall be allocated among the DISC's in order to determine the limitation in paragraph (a) of this section. Each DISC's allocable portion of these amounts shall be equal to the total of such amounts multiplied by a fraction the numerator of which is the individual DISC's outstanding producer's loans to members of the group, and the denominator of which is the aggregate amounts of outstanding producer's loans to members of the group by all DISC's which are members of the group.

(2) ***Different taxable years.*** If all of the DISC's which are members of the controlled group do not have the same taxable year, then one such DISC shall on behalf of all such DISC's elect to make all computations under section 995(d) as if all DISC's that are members of the group use the same taxable year as the actual taxable year of any one of the DISC's. The election as to which DISC's taxable year is to be used shall be made by the electing DISC attaching to its first return, filed under section 6011(e)(2), a statement indicating which such taxable year will be used. Once such an election is made it may not be revoked until such time as all of the DISC's which are members of the group use the same taxable year. If this subparagraph applies, books and records must be kept by the group which are adequate to show the necessary computations under section 995(d).

(3) This paragraph may be illustrated by the following example:

Example. Corporation X and corporation Y are members of the same controlled group and each has elected to be treated as a DISC. X uses a taxable year ending March 31, and Y uses a taxable year ending November 30. Notwithstanding the fact that all other members of the group use the calendar year as their taxable year, all computations for purposes of determining the amount of foreign investment attributable to producer's loans under section 995(d) must be made as if both DISC's use a taxable year ending either March 31 (X's taxable year) or November 30 (Y's taxable year).

[T.D. 7324, 39 FR 35114, Sept. 30, 1974, as amended by T.D. 7420, 41 FR 20655, May 20, 1976; T.D. 7854, 47 FR 51742, Nov. 17, 1982]

§ 1.995-6 Taxable income attributable to military property.

(a) ***Gross income attributable to military property.*** For purposes of section 995(b)(3)(A)(i), the term “gross income which is attributable to military property” includes income from the sale, exchange, lease, or rental of military property (as described in paragraph (c) of this section). The term also includes gross income from the performance of services which are related and subsidiary (as defined in § 1.993-1(d)) to any qualified sale, exchange, lease, or rental of military property. Where gross income cannot be determined

on an item by item basis, the gross income with respect to those items not so determinable shall be apportioned. Such apportionment shall be accomplished using appropriate facts and circumstances, so that the gross income apportioned to sale of military property bears a reasonably close factual relationship to the actual gross income earned on such sales. The apportionment shall be based on methods which include the fair market value of property sold or exchanged, the fair rental value of any leaseholds granted, the fair market value of any related or subsidiary services performed in connection with such sale or leases or methods based on gross receipts or costs of goods sold, where appropriate.

(b) ***Deductions.*** For purposes of section 995(b)(3)(A)(ii), deductions shall be properly allocated and apportioned to gross income, described in paragraph (a) of this section, in accordance with the rules of § 1.861-8. These deductions include all applicable deductions from gross income provided under part VI of subchapter B of chapter 1 of the Code.

(c) ***Military property.*** For purposes of this section, the term *military property* means any property which is an arm, ammunition, or implement of war designated in the munitions list published pursuant to section 38 of the International Security Assistance and Arms Export Control Act of 1976 (22 U.S.C. 2778 which superseded 22 U.S.C. 1934) and the regulations thereunder (22 CFR 121.01).

(d) ***Illustration.*** The principles of this section may be illustrated by the following example:

Example. X Corporation elects to be a DISC for the first time in 1976. X has taxable income of $50,000, of which $30,000 is attributable to military property and $10,000 to interest on producer's loans. The total deemed distributions with respect to X are as follows:

(1) Gross interest from Producer's loans in 1976	$10,000
(2) 50 percent of the taxable income of the DISC attributable to military property in 1976	15,000
(3) One-half of the excess of taxable income for 1976 over the sum of lines (1) and (2) (1/2 of ($50,000 minus $25,000))	12,500
(4) Total deemed distributions (sum of total lines (1), (2), and (3))	37,500

(Secs. 995(e)(7), (8) and (10), 995(g) and 7805 of the Internal Revenue Code of 1954 (90 Stat. 1655, 26 U.S.C. 995 (e)(7), (8) and (10); 90 Stat. 1659, 26 U.S.C. 995(g); and 68A Stat 917, 26 U.S.C. 7805))

[T.D. 7984, 49 FR 40019, Oct. 12, 1984]

§ 1.996-1 Rules for actual distributions and certain deemed distributions.

(a) ***General rule.*** Under section 996(a)(1), any actual distribution (other than a distribution described in paragraph (b) of this section or to which § 1.995-4 applies) to a shareholder by a DISC, or former DISC, which is made out of earnings and profits shall be treated as made—

(1) First, out of "previously taxed income" (as defined in § 1.996-3(c)) to the extent thereof,

(2) Second, out of "accumulated DISC income" (as defined in § 1.996-3(b)) to the extent thereof, and

(3) Third, out of "other earnings and profits" (as defined in § 1.996-3(d)) to the extent thereof.

(b) ***Rules for qualifying distributions and deemed distributions under section 995(b)(1)(G)*** —

(1) ***In general.*** Except as provided in subparagraph (2), any actual distribution to meet qualification requirements made pursuant to § 1.992-3 and any deemed distribution pursuant to § 1.995-2(a)(5) (relating to foreign investment attributable to producer's loans) which is made out of earnings and profits shall be treated as made—

(i) First, out of "accumulated DISC income" (as defined in § 1.996-3(b)) to the extent thereof.

(ii) Second, out of "other earnings and profits" (as defined in § 1.996-3(d)) to the extent thereof, and

(iii) Third, out of "previously taxed income" (as defined in § 1.996-3(c)) to the extent thereof.

(2) ***Special rule.*** For taxable years beginning after December 31, 1975, paragraph (b)(1) of this section shall apply to one-half of the amount of an actual distribution made pursuant to § 1.992-3 to satisfy the condition of § 1.992-1(b) (the gross receipts test) and paragraph (a) of this section shall apply to the remaining one-half of such amount.

(c) ***Exclusion from gross income.*** Under section 996(a)(3), amounts distributed out of previously taxed income shall be excluded by the distributee from gross income. However, see § 1.996-5(b) for treatment as gain from the sale or exchange of property of the portion of an actual distribution out of previously taxed income to the extent it exceeds the adjusted basis of the stock with respect to which the distribution is made.

(d) ***Priority of distributions.*** Under section 996(c), for purposes of determining their treatment under paragraphs (a), (b), and (c) of this section, distributions made during a taxable year shall be treated as being made in the following order—

(1) Deemed distributions under §§ 1.995-2 and 1.995-3.

(2) Actual distributions to meet qualification requirements made pursuant to § 1.992-3 in the order in which they are made, and

(3) Other actual distributions in the order in which they are made.

Thus, the treatment of any distribution shall be determined after the divisions of earnings and profits have been properly adjusted by taking into account distributions of higher priority which are made or deemed made during the same taxable year.

(e) ***Examples.*** The provisions of this section may be illustrated by the following examples:

Example 1. Y Corporation, which uses the calendar year as its taxable year elects to be treated as a DISC beginning with 1972. During 1973, Y makes a cash distribution of $100 to X Corporation, Y's sole shareholder. For 1973, Y has no earnings and profits. As of the beginning of 1973, Y has $300 of accumulated earnings and profits, which consist of $70 of accumulated DISC income, $40 of previously taxed income, and $190 of other earnings and profits. The entire $100 distribution is a dividend under section 316. However, $40 thereof is treated as made out of previously taxed income and is thus excluded from gross income. Accordingly, only $60 is treated as distributed out of accumulated DISC income and includible in gross income. See § 1.246-4 for the inapplicability of the dividend received deduction with respect to the entire distribution of $100.

Example 2. Assume the same facts as in example 1, except that the cash distribution is designated as a distribution to meet qualification requirements made pursuant to § 1.992-3. Under these facts, X includes the entire distribution in its gross income as a dividend. Of the $100 distributed, $70 is

treated as made out of accumulated DISC income and the remaining $30 is treated as made out of other earnings and profits. The dividend received deduction under section 243 is available only with respect to such $30.

Example 3. Y Corporation, which uses the calendar year as its taxable year, elects to be treated as a DISC beginning with 1972. As of the end of 1975, Y had failed to meet the gross receipts test for that year. In 1975 Y had $100 of taxable income, $80 of which was attributable to qualified export receipts and $20 of which was attributable to receipts that did not qualify as qualified export receipts. As of the beginning of 1976, Y had $300 of accumulated earnings and profits, which consisted of $70 of accumulated DISC income, $40 of previously taxed income, and $190 of other earnings and profits. In 1976 Y makes a cash distribution of $20 pursuant to § 1.992-3 in order to satisfy the gross receipts test for 1975. For 1976 Y has no earnings and profits and no deemed distributions. The entire $20 distribution is a dividend under section 316. Under § 1.996-1(b)(2), half of the $20 cash distribution is treated pursuant to § 1.996-1(b)(1) and half is treated pursuant to § 1.996-1(a). Thus, $10 is treated as distributed out of accumulated DISC income and is includible in gross income. The other $10 is treated as made out of previously taxed income and is thus excluded from gross income. As of the beginning of 1977, Y has $280 of accumulated earnings and profits, which consists of $60 of accumulated DISC income, $30 of previously taxed income, and $190 of other earnings and profits.

[T.D. 7324, 39 FR 35120, Sept. 30, 1974, as amended by T.D. 7854, 47 FR 51742, Nov. 17, 1982]

§ 1.996-2 Ordering rules for losses.

(a) ***In general.*** Under section 996(b), if for any taxable year a DISC, or a former DISC, incurs a deficit in earnings and profits, such deficit shall be charged—

(1) First, to other earnings and profits (as defined in § 1.996-3(d)) to the extent thereof,

(2) Second, to accumulated DISC income (as defined in § 1.996-3(b)) to the extent thereof, subject to the special rule in paragraph (b) of this section,

(3) Third, to previously taxed income (as defined in § 1.996-3(c)) to the extent thereof, and

(4) To the extent that the amount of such deficit exceeds the sum of the amounts charged in accordance with subparagraphs (1), (2), and (3) of this paragraph, to other earnings and profits (as defined in § 1.996-3(d)).

Thus, the excess deficit charged to other earnings and profits under subparagraph (4) of this paragraph will create a deficit therein in the amount of such excess. To determine the amount of any division of earnings and profits for the purpose of determining under § 1.996-1 the treatment of any actual and certain deemed distributions, the portion of a deficit in earnings and profits chargeable under this paragraph to such division prior to such distribution shall be determined in a manner consistent with the rules in § 1.316-2(b) for determining the amount of earnings and profits available on the date of any distribution.

(b) ***Deficits subsequent to a disqualification.*** A deficit in earnings and profits of a DISC, or former DISC, shall not be charged to accumulated DISC income which has been determined is to be deemed distributed to the shareholders pursuant to § 1.995-3 as a result of a revocation of election or other disqualification. Thus, in accordance with paragraph (a) of this section as modified by this paragraph, a deficit incurred by a former DISC following such a revocation or disqualification shall be charged first to other earnings and

profits and then to previously taxed income with any balance being charged to other earnings and profits and creating a deficit therein. The preceding sentence shall also apply in the case of a deficit incurred by a DISC which has no accumulated DISC income accumulated during its current taxable year and all immediately preceding consecutive taxable years for which it was a DISC. If as a result of the application of this paragraph the amount of a deficit in other earnings and profits exceeds the amount of a deficit in accumulated earnings and profits, then upon any subsequent actual distribution the deficit in other earnings and profits shall be reduced by the lower of

(1) the amount of such actual distribution chargeable to accumulated DISC income or previously taxed income or

(2) the amount of such excess.

(c) ***Examples.*** The provisions of this section may be illustrated by the following examples:

Example 1. X Corporation, which uses the calendar year as its taxable year, becomes a DISC beginning with 1976. In addition to other facts assumed in the table below, X incurs a deficit in earnings and profits for 1979 of $70. Such deficit is charged to the divisions of X's earnings and profits pursuant to paragraph (a) of this section in the manner set forth in such table.

	Accumulated DISC income	Previously taxed income	Other earnings and profits
Balance January 1, 1976			$50
Increase for 1976	$10	$8	
Increase for 1977	10	8	
Increase for 1978	10	8	
Balance January 1, 1979	30	24	50
Deficit for 1979 of $70:			
Charge No. 1			(50)
Charge No. 2	(20)		
Balance January 1, 1980	10		0

Example 2. Assume the same facts as in example 1, except that effective for taxable years beginning with 1979, X revokes its election to be treated as a DISC. Under § 1.995-3, X has $30 of accumulated DISC income which is to be deemed distributed $10 per year in 1980, 1981, and 1982. The deficit in earnings and profits for 1979 is charged to the divisions of X's earnings and

profits pursuant to paragraph (b) of this section in the manner set forth in the table below:

	Accumulated DISC income	Previously taxed income	Other earnings and profits
Balance January 1, 1979	$30	$24	$50
Deficit for 1979 of $70:			
Charge No. 1			(50)
Charge No. 2		(20)	
Balance January 1, 1980	30	4	0

Example 3. Assume the same facts as in example 2, except that the deficit in earnings and profits for 1979 is $120. Assume further that for 1980, 1981, and 1982, during which years X's shareholders are receiving scheduled installments of the deemed distributions of accumulated DISC income under § 1.995-3, X, a former DISC, has neither earnings and profits nor a deficit in earnings and profits. The $120 deficit for 1979 is charged to the divisions of X's earnings and profits pursuant to paragraph (b) of this section in the manner set forth in the table below:

	Accumulated DISC income	Previously taxed income	Other earnings and profits	Accumulated earnings and profits
Balance January 1, 1979	$30	$24	$50	$104
Deficit for 1979 of $120				(120)
Charge No. 1			(50)	
Charge No. 2		(24)		
Charge No. 3			(46)	
Balance January 1, 1980	30	0	(46)	(16)
Deemed distributions in 1980 under § 1.995-3	(10)	10		
Balance January 1, 1981	20	10	(46)	(16)

Example 4. Assume the same facts as in example 3, except that on December 31, 1980, X makes an actual distribution of $10 out of previously taxed income. On January 1, 1981, X has $20 of accumulated DISC income, no previously taxed income, and a deficit of $36 in other earnings and profits. The deficit of $16 in accumulated earnings and profits remains the same.

[T.D. 7324, 39 FR 35120, Sept. 30, 1974]

§ 1.996-3 Divisions of earnings and profits.

(a) ***In general.*** For purposes of sections 991 through 997, the earnings and profits of a DISC, or former DISC, shall be treated as composed of the following three divisions:

(1) Accumulated DISC income (as defined in paragraph (b) of this section),

(2) Previously taxed income (as defined in paragraph (c) of this section), and

(3) Other earnings and profits (as defined in paragraph (d) of this section),

(b) ***Accumulated DISC income defined.***

(1) Accumulated DISC income is that portion of a corporation's earnings and profits which were derived during taxable years for which it qualified as a DISC and which were deferred from taxation. Accumulated DISC income as of the close of each taxable year of the corporation is—

(i) The amount of accumulated DISC income as of the close of the immediately preceding taxable year increased by,

(ii) The amount of DISC income for the year (as determined in subparagraph (2) of this paragraph) and reduced (but not below zero) by,

(iii) The items enumerated in subparagraph (3) of this paragraph.

(2) Under section 996(f)(1), DISC income is

(i) the earnings and profits derived by the corporation during a taxable year for which such corporation is a DISC minus

(ii) amounts deemed distributed under § 1.995-2 other than the amount of foreign investment attributable to producer's loans described in § 1.995-2(a)(5). For example, the earnings and profits of a DISC for a taxable year include any amounts includible in such DISC's gross income pursuant to section 951(a) (relating to controlled foreign corporations). Deemed distributions under § 1.995-2(a)(5) are taken into account under subparagraph (3) of this paragraph as a reduction in computing accumulated DISC income.

(3) The accumulated DISC income (as increased by DISC income for the year determined under subparagraph (2) of this paragraph) is reduced by each of the following items in the following order:

(i) Any amount deemed distributed for such year under § 1.995-3 (relating to deemed distributions upon disqualification),

(ii) Any amount of foreign investment attributable to producer's loans deemed distributed for such year under § 1.995-2(a)(5) to the extent it is charged to accumulated DISC income under § 1.996-1(b)(1)(i),

(iii) The amount of any adjustment to accumulated DISC income for such year under § 1.966-4(b)(1), and

(iv) To the extent they are treated, under § 1.996-1 (a) or (b) (relating to ordering rules for distributions), as made out of accumulated DISC income, the amounts of any actual qualifying distributions pursuant to § 1.992-3 in the order in which they are made, and thereafter by the amounts of any other actual distributions in the order in which they are made, except that, prior

to each actual distribution, accumulated DISC income shall be reduced by the portion of any deficit in earnings and profits for the taxable year chargeable at that time under § 1.996-2(a)(2) to accumulated DISC income.

(4) Every distribution or other reduction in accumulated DISC income pursuant to subparagraph (3) of this paragraph shall be charged to the most recently accumulated DISC income.

(c) ***Previously taxed income.*** Under section 996(f)(2), previously taxed income as of the close of each taxable year of the corporation is an amount equal to—

(1) The sum of—

(i) The amount of previously taxed income as of the close of the immediately preceding taxable year,

(ii) Amounts deemed distributed for the current year under § 1.995-2 (relating to deemed distributions in qualified years),

(iii) Amounts deemed distributed for the current year under § 1.995-3 (relating to deemed distributions upon disqualification),

(iv) With respect to a distribution in redemption to which § 1.996-4(b)(1) applies, an amount equal to the excess (if any) of (*a*) the amount of the reduction under § 1.996-4(b)(1) in accumulated DISC income over (*b*) the reduction in the corporation's earnings and profits (see section 312(e)), and

(v) Any amount by which accumulated DISC income is reduced under paragraph (b)(3)(ii) of this section by reason of a deemed distribution as a dividend, under § 1.995-2(a)(5), of an amount of foreign investment attributable to producer's loans,

(2) Decreased (but not below zero), to the extent they are treated, under § 1.996-1 (a) or (b) (relating to ordering rules for distributions), as made out of previously taxed income, by the amounts of any actual qualifying distributions pursuant to § 1.992-3 in the order in which they are made, and thereafter by the amounts of any other actual distributions in the order in which they are made, except that, prior to any actual distribution, previously taxed income shall be reduced by the portion of any deficit in earnings and profits for the taxable year chargeable at that time under § 1.996-2(a)(3) to previously taxed income.

(d) ***Other earnings and profits.*** Under section 996(f)(3), other earnings and profits consist of earnings and profits other than accumulated DISC income and previously taxed income described respectively in paragraphs (b) and (c) of this section. Other earnings and profits as of the close of each taxable year of the corporation is (subject to paragraph (e) of this section) an amount equal to the amount of other earnings and profits as of the close of the immediately preceding taxable year decreased (if necessary, below zero) in the following order by—

(1) To the extent they are treated, under § 1.996-1 (a) or (b) (relating to ordering rules for distributions), as made out of other earnings and profits, the amounts of any actual qualifying distributions pursuant to § 1.992-3 in the order in which they are made, and thereafter the amounts of any other actual distributions in the order in which they are made, except that, prior to any actual distribution, other earnings and profits shall be reduced by the portion of any deficit in earnings and profits for the taxable year chargeable at that time under § 1.996-2(a)(1) to other earnings and profits, and

(2) With respect to a distribution in redemption to which § 1.996-4(b)(1) applies, an amount equal to the excess (if any) of (*a*) the reduction in the corporation's earnings and profits (see section 312(e)) over (*b*) the amount of the reduction under § 1.996-4(b)(1) in accumulated DISC income.

(e) ***Distributions in kind.***

(1) For purposes of determining, under paragraphs (b), (c), and (d) of this section, the amount by which any division of earnings and profits is reduced by reason of a distribution of property (other than money or the DISC's, or former DISC's, own obligations), the amount of such distribution is the fair market value of such property at the time of the distribution.

(2) For any taxable year in which the DISC makes a distribution of such property, the amount of other earnings and profits determined under paragraph (d) of this section (without regard to this subparagraph) shall be—

(i) Increased by the excess (if any) of the amount of such distribution treated as a dividend under section 316(a) over the adjusted basis of such property, and

(ii) Decreased by the excess (if any) of the adjusted basis of such property over the amount of such distribution treated as a dividend under section 316 (a).

Each item of property shall be considered separately for purposes of making the adjustment under this subparagraph.

(f) ***Examples.*** The provisions of §§ 1.996-1, 1.996-2, and this section may be illustrated by the following examples:

Example 1. M Corporation, which uses the calendar year as its taxable year, elects to be treated as a DISC beginning with 1974. During 1975, M derives no earnings and profits and makes no deemed or actual distributions, except that on December 31, 1975, M's shareholders are treated as having received a dividend distribution of $100 under § 1.995-2 (a)(5) (relating to foreign investment attributable to producer's loans). M's earnings and profits are adjusted as shown on line (2) of the table below on the basis of facts assumed therein.

	Accumulated earnings and profits	Accumulated DISC income	Previously taxed income	Other earnings and profits
(1) Balance January 1, 1975	$450	$100	$250	$100
(2) Adjustments (see paragraphs (b)(3)(ii) and (c)(1)(v) of this section)	0	(100)	100	0
(3) Balance January 1, 1976	450	0	350	100

Example 2. N Corporation, which uses the calendar year as its taxable year, elects to be treated as a DISC beginning with 1972. During 1973, N derives no earnings and profits for the year and

makes no deemed or actual distributions, except that A, a shareholder, realized $200 of gain upon receiving an actual cash distribution of $300 in redemption of N stock having an adjusted basis of $100 in his hands. The redemption is treated as an exchange under section 302(a) but, under section 995(c), A includes the $200 of gain in his gross income as a dividend. Assuming that, under section 312(e), $240 is properly chargeable to capital account of N and that, under § 1.996-4(b), accumulated DISC income is reduced by $200, N's accounts are adjusted on line (2) of the table below on the basis of facts assumed therein.

	Capital	Accumulated earnings and profits	Accumulated DISC income	Previously taxed income	Other earnings and profits
(1) Balance January 1, 1973	$2,000	$400	$300	$100	0
(2) Adjustments (see § 1.996-4(b) and paragraph (c)(1)(iv) of this section)	(240)	(60)	(200)	140	0
(3) Balance January 1, 1974	1,760	340	100	240	0

Example 3. P Corporation, which uses the calendar year as its taxable year, elects to be treated as a DISC beginning with 1973. During 1974, P derives no earnings and profits for the year and makes no deemed or actual distributions, except for a distribution to B, its sole shareholder, of property with a fair market value of $100 and an adjusted basis in P's hands of $40. Under § 1.996-1(a)(1), B treats the entire amount of the distribution as being made out of previously taxed income and, under § 1.996-1(c), excludes it from his gross income. P's earnings and profits, divisions are adjusted on lines (2) and (3) of the table below on the basis of facts assumed therein.

	Accumulated earnings and profits	Accumulated DISC income	Previously taxed income	Other earnings and profits
(1) Balance January 1, 1974	$200	$80	$120	0
(2) Adjustment under paragraphs (c)(2) and (e)(1) this section	(40)	0	(100)	0
(3) Adjustment under paragraph (e)(2)(i) of this section	0	0	0	$60

	Accumulated earnings and profits	Accumulated DISC income	Previously taxed income	Other earnings and profits
(4) Balance January 1, 1975	160	80	20	60

Example 4. Q Corporation, which uses the calendar year as its taxable year, elects to be treated as a DISC beginning with 1974. On January 1, 1975, Q has accumulated earnings and profits of $1,200 and, during 1975, Q incurs a deficit in earnings and profits of $365. The amount of such deficit incurred as of any date before the close of 1975 cannot be shown. On July 1, 1975, Q makes a cash distribution of $650, with respect to its stock to C, Q's sole shareholder. C subsequently transfers by gift all of his Q stock to D. On December 31, 1975, Q makes a cash distribution of $650, with respect to its stock, to D. Under these facts and additional facts assumed in the table below, C is treated as having received a dividend of $650 of which $320 is treated as distributed out of previously taxed income and excluded from gross income. D is treated as receiving a dividend of $186. Adjustments to Q's earnings and profits accounts are illustrated in the table below:

	Accumulated earnings and profits	Accumulated DISC income	Previously taxed income	Other earnings and profits
(1) Balance January 1, 1975	$1,200	$800	$320	$80
(2) Portion of 1975 deficit of $365 chargeable as of June 30, 1975, pursuant to § 1.996-2(a)	(181)	(101)	0	(80)
(3) Balance July 1, 1975	1,019	699	320	0
(4) $650 distributed to C on July 1, 1975	(650)	(330)	(320)	0
(5) Portion of 1975 deficit of $365 chargeable as of December 30, 1975, pursuant to § 1.996-2(a)	(183)	(183)	0	0
(6) Balance December 31, 1975	$186	$186	0	0
(7) $650 distributed to D on December 31, 1975 [1]	(186)	(186)	0	0

[1] *$60 treated as return of capital pursuant to section 301(c)(2).*

	Accumulated earnings and profits	Accumulated DISC income	Previously taxed income	Other earnings and profits
(8) Balance January 1, 1976	0	0	0	0

[1] *$60 treated as return of capital pursuant to section 301(c)(2).*

Example 5. (1) *Facts.* R Corporation, which uses the calendar year as its taxable year elects to be treated as a DISC beginning with 1972. X Corporation is its sole shareholder. At the beginning of 1974, R has a deficit in earnings and profits of $60 all of which is composed of "other earnings and profits". For 1974, R has earnings and profits of $80 before reduction for any distributions and taxable income of $70. On June 15, 1974, R makes a cash distribution to X of $60, with respect to its stock, to which section 301 applies. On August 15, 1974, R makes a cash distribution to X of $30 designated as a distribution to meet qualification requirements pursuant to § 1.992-3. Under § 1.995-2(a), X is deemed to receive, on December 31, 1974, a distribution of a dividend of $35, i.e., one-half of R's taxable income of $70. The tax consequences of these facts to X and their effect on R's earnings and profits are set forth in the subsequent subparagraphs of this example.
(2) *Dividend treatment of actual distributions.* Since R had $80 of earnings and profits for 1974 and a deficit in accumulated earnings and profits at the beginning of 1974, only $80 of the actual distributions ($90) are treated as dividends under sections 301(c)(1) and 316(a)(2). ($10 of the actual distribution, which is not treated as a dividend is treated in the manner specified in section 301(c) (2) and (3).) Thus, under § 1.316-2(b), $26.67 of the actual qualifying distribution made on August 15, 1974 ($30 × $80/$90), and $53.33 of the actual distribution made on June 15, 1974 ($60 × $80/$90), are considered made out of earnings and profits.

(3) *Priority of distributions.* Under § 1.996-1(d), for purposes of adjusting the divisions of R's earnings and profits and determining the treatment of subsequent distributions, the sequence in which each distribution is treated as having been made is—

(i) First, the deemed distribution of $35,

(ii) Second, the actual qualifying distribution of $30 made on August 15, 1974, pursuant to § 1.992-3, and

(iii) Finally, the actual distribution of $60 made on June 15, 1974.

(4) *Treatment and effect of deemed distribution.* Under § 1.995-2(a), on December 31, 1974, X includes the deemed distribution of $35 in its gross income as a dividend. Under paragraph (c)(1)(ii) of this section, R's previously taxed income is increased by $35 as shown on line (3) of

the table in subparagraph (7) of this example. Under paragraph (b)(1)(ii) and (2) of this section, accumulated DISC income is increased by $45 of DISC income, i.e., R's earnings and profits for 1974, $80, minus the deemed distribution of $35, as shown on line (4) of the table.

(5) *Treatment and effect of actual qualifying distribution of $30.* As indicated in subparagraph (2) of this example, $26.67 of the $30 qualifying distribution on August 15, 1974, is treated as made out of earnings and profits for 1974. Under § 1.996-1(b)(1)(i), the entire $26.67 is treated as distributed out of accumulated DISC income. Thus, on August 15, 1974, X includes $26.67 in its gross income as a dividend. No deduction is allowable under section 243. Under paragraph (b)(3)(iv) of this section, R's accumulated DISC income is reduced by $26.67 as shown on line (6) of the table in subparagraph (7) of this example.

(6) *Treatment and effect of actual distribution of $60.* As indicated in subparagraph (2) of this example, $53.33 of the $60 distribution on June 15, 1974, is treated as made out of earnings and profits for 1974. Under § 1.996-1(a), the $53.33 is treated as distributed out of previously taxed income to the extent thereof, $35, and then out of accumulated DISC income, $18.33. Thus, on June 15, 1974, X includes $18.33 in its gross income as a dividend. Under § 1.996-1(c), the distribution of $35 out of previously taxed income is excluded from gross income. No deduction is allowable under section 243 with respect to the actual distribution of $53.33. Under paragraph (b)(3)(iv) of this section, accumulated DISC income is reduced by $18.33 and, under paragraph (c)(2) of this section, previously taxed income is reduced by $35, as shown on line (7) of the table in subparagraph (7) of this example.

(7) *Summary.* The effects on earnings and profits and the divisions of earnings and profits are summarized in the following table:

	Earnings and profits for year	Accumulated earnings and profits	Accumulated DISC income	Previously taxed income	Other earnings and profits
(1) Balance January 1, 1974		($60.00)			($60.00)
(2) Earnings and profits for year before reduction for distributions	$80.00				
(3) Deemed distribution of $35 to X on December 31, 1974, under § 1.995-2(a)				$35.00	
(4) DISC income for 1974 of $45 as defined in paragraph (b)(2) of this section (line 2			$45.00		

	Earnings and profits for year	Accumulated earnings and profits	Accumulated DISC income	Previously taxed income	Other earnings and profits
($80) minus line 3 ($35))					
(5) Balance before actual distributions	80.00	(60.00)	45.00	35.00	(60.00)
(6) Qualifying distribution of $30 to X on August 15, 1974, pursuant to § 1.992-3	(26.67)		(26.67)		
(7) Actual distribution to P of $60 on June 15, 1974	(53.33)		(18.33)	(35.00)	
(8) Balance January 1, 1975	0	(60.00)	0		(60.00)

Example 6. Assume the facts are the same as in example 5, except that at the beginning of 1974 R's accumulated earnings and profits amount to $60 consisting of accumulated DISC income of $20, previously taxed income of $10, and other earnings and profits of $30. In addition, on August 1, 1974, X transfers all R's stock to Y Corporation in a reorganization described in section 368(a)(1)(B) in which under section 354 X recognizes no gain or loss. Under these facts, X includes in its gross income for 1974 a dividend of $15 which is attributable to the actual distribution of $60 paid out of earnings and profits on June 15, 1974. X excludes from gross income the balance of the $60 distribution ($45) paid out of earnings and profits because, under § 1.996-1(a), it is treated as paid out of previously taxed income. Y includes in its gross income for 1974 a dividend of $65 of which $35 is attributable to the deemed distribution of a dividend to Y on December 31, 1974, under § 1.995-2(a) and $30 is attributable to the qualifying distribution paid out of earnings and profits to Y on August 15, 1974. The adjustments to R's earnings and profits are summarized in the following table:

	Earnings and profits for year	Accumulated earnings and profits	Accumulated DISC income	Previously taxed income	Other earnings and profits
(1) Balance January 1, 1974		$60	$20	$10	$30
(2) Earnings and profits for year before reduction for distributions	$80				
(3) Deemed distribution of $35 to Y on December 31,				35	

	Earnings and profits for year	Accumulated earnings and profits	Accumulated DISC income	Previously taxed income	Other earnings and profits
1974, under § 1.995-2(a)					
(4) DISC income for 1974 of $45 as defined in paragraph (b)(2) of this section (line 2 ($80) minus line 3 ($35))			45		
(5) Balance before actual distributions	80	60	65	45	30
(6) Qualifying distribution of $30 to Y on August 15, 1974, pursuant to § 1.992-3	(26.67)	(3.33)	(30)		
(7) Actual distribution to X of $60 on June 15, 1974	(53.33)	(6.67)	(15)	(45)	
(8) Balance January 1, 1975		50	20	0	30

(g) ***DISCs having corporate and noncorporate shareholders.*** In the case of a DISC having one or more corporate shareholders but less than all of its shareholders subject to the special rules of section 291(a)(4), relating to certain deferred DISC income as a corporate preference item, accumulated DISC income and previously taxed income of the DISC are divided between the corporate shareholders, as a class, and the other shareholders, as a class, in proportion to amounts of DISC income not deemed distributed and amounts deemed distributed to each class. Subsequent taxation of actual and qualifying distributions shall be based upon this division. Thus, if a DISC is owned 50 percent by corporate shareholders and 50 percent by individual shareholders and has undistributed taxable income of $2,000 for its year, the division is made as follows:

Corporate shareholders:	
Previously taxed income (57.5% of $2,000 ÷ 2)	$575
Accumulated DISC income (42.5% of $2,000 ÷ 2)	425
Individual shareholders:	
Previously taxed income (50% of $2,000 ÷ 2)	500
Accumulated DISC income (50% of $2,000 ÷ 2)	500

(Secs. 995(e)(7), (8) and (10), 995(g) and 7805 of the Internal Revenue Code of 1954 (90 Stat. 1655, 26 U.S.C. 995 (e)(7), (8) and (10); 90 Stat. 1659, 26 U.S.C. 995(g); and 68A Stat. 917, 26 U.S.C. 7805))

[T.D. 7324, 39 FR 35121, Sept. 30, 1974, as amended by T.D. 7854, 47 FR 51742, Nov. 17, 1982; T.D. 7984, 49 FR 40024, Oct. 12, 1984]

§ 1.996-4 Subsequent effect of previous disposition of DISC stock.

(a) ***Shareholder adjustment for previously taxed income.***

(1) Under section 996(d)(1), except as provided in subparagraph (2) of this paragraph, if—

(i) Gain with respect to a share of stock of a DISC, or former DISC, is treated under § 1.995-4 as a dividend, and

(ii) With respect to such share, any person subsequently receives an actual distribution made out of accumulated DISC income, or a deemed distribution made, pursuant to § 1.995-3, by reason of disqualification, out of accumulated DISC income,

then such person shall treat such distribution in the same manner as a distribution from previously taxed income (and thus excludable from gross income under § 1.996-1(c)) to the extent that the gain referred to in subdivision (i) of this subparagraph exceeds the aggregate amount of any other distributions with respect to such share which were treated under this subparagraph as made from previously taxed income.

(2) In applying subparagraph (1) of this paragraph with respect to a share of stock in a DISC, or former DISC, the gain referred to in subparagraph (1)(i) of this paragraph does not include any gain to a shareholder on a redemption of such share which qualifies as an exchange under section 302(a) or any gain on a disposition of such share prior to such redemption. Distributions described in subparagraph (1)(ii) of this paragraph do not include a distribution in a redemption which qualifies as an exchange under section 302(a). For adjustments to accumulated DISC income by reason of dividend treatment under § 1.995-4 with respect to gain upon a redemption of DISC stock to which section 302(a) applies and upon a prior disposition of such stock, see paragraph (b) of this section.

(3) ***Example.*** The provisions of this paragraph may be illustrated by the following example:

Example. In 1974, under § 1.995-4, A, a shareholder of a DISC, on the sale of his DISC stock to B, is required to treat $20 of his gain as a dividend. The DISC has no previously taxed income and $40 of accumulated DISC income. Subsequently in the same year, B, the purchaser of the stock, receives an actual dividend distribution of $15 with respect to such stock which, under § 1.996-1(a), is treated as made out of accumulated DISC income. The amounts of the DISC's previously taxed income and accumulated DISC income were not adjusted by reason of the $20 treated as a dividend on the prior sale. However, even though the DISC had no previously taxed income, the purchaser would treat the $15 as though it had been paid out of previously taxed income and, therefore would not include the $15 in gross income. If in 1975, B receives another actual distribution of $9 with respect to such stock, $5 (*i.e.,* $20 dividend on A's sale less the $15 distribution to B in 1974 which was treated under subparagraph (1) of this paragraph as made from previously taxed income) is treated as made from previously taxed income and excluded from gross income. The result would be the same if, on January 1, 1975, B had transferred such stock to C by gift and the $9 distribution had been made to C.

(b) ***Corporate adjustment upon redemption.***

(1) Under section 996(d)(2), if by reason of § 1.995-4 gain on a redemption of stock in a DISC, or former DISC, is included in the shareholder's gross income as a dividend, then the accumulated DISC income shall be reduced by an amount equal to the sum of—

(i) The amount of gain on such redemption which, under § 1.995-4, is treated as a dividend, and

(ii) The amount of any gain with respect to such redeemed stock which, under § 1.995-4, was treated as a dividend on a disposition prior to such redemption minus the amount of distributions with respect to such stock which have been treated as made out of previously taxed income by reason of the application of paragraph (a)(1) of this section.

(2) The provisions of this paragraph may be illustrated by the following examples:

Example 1. The entire stock of a DISC, which uses the calendar year as its taxable year, has been owned equally by A, B, C, and D since it was organized. At the close of 1976, when the DISC has $100 of accumulated DISC income, it redeems all of A's shares in a transaction qualifying as an exchange under section 302(a) and A, under § 1.995-4, includes $25 in his gross income as a dividend. The redemption has the effect of reducing accumulated DISC income by $25 to $75.

Example 2. Assume the same facts as in example 1 except that the stock of the DISC has not been held equally by A, B, C, and D since its organization. A purchased his shares from X in 1974 in a transaction in which X, under § 1.995-4, included in his gross income $30 as a dividend. In 1975, A receives a distribution of $10 out of accumulated DISC income which, under paragraph (a)(1) of this section, is treated as made out of previously taxed income. Under these facts, the redemption of A's stock in 1976 has the effect of reducing accumulated DISC income by $45 to $55 determined as follows:

(a) Accumulated DISC income		$100
(b) Minus sum of:		
(1) Dividend on redemption of A's stock	$25	
(2) Excess of dividend on X's sale ($30) over distribution to A treated as made out of previously taxed income ($10)	$20	
Total		45
(c) Accumulated DISC income on 12/31/76		55

[T.D. 7324, 39 FR 35121, Sept. 30, 1974]

§ 1.996-5 Adjustment to basis.

(a) ***Addition to basis.*** Under section 996(e)(1) amounts representing deemed distributions as provided in section 995(b) shall increase the basis of the stock with respect to which the distribution is made.

(b) ***Reductions of basis.*** Under section 996(e)(2), the portion of an actual distribution treated as made out of previously taxed income shall reduce the basis of the stock with respect to which it is made and, to the extent that it exceeds the adjusted basis of such stock, shall be treated as gain from the sale or exchange of property. In the case of stock includible in the gross estate of a decedent for which an election is made under section 2032 (relating to alternate valuation), this paragraph shall not apply to any distribution made after the date of the decendent's death and before the alternate valuation date provided by section 2032. See section 1014(d) for a special rule for determining the basis of stock in a DISC, or former DISC, acquired from a decedent.

[T.D. 7324, 39 FR 35124, Sept. 30, 1974]

§ 1.996-6 Effectively connected income.

In the case of a shareholder who is a nonresident alien individual or a foreign corporation, trust, or estate, amounts taxable as dividends by reason of the application of § 1.995-4 (relating to gain on disposition of stock in a DISC), amounts treated under § 1.996-1 as distributed out of accumulated DISC income, and amounts deemed distributed under § 1.995-2(a) (1) through (4) shall be treated as gains and distributions which are effectively connected with the conduct of a trade or business conducted through a permanent establishment of such shareholder within the United States, and shall be subject to tax in accordance with the provisions of section 871(b) and the regulations thereunder in the case of nonresident alien individuals, trusts, or estates, or section 882 and the regulations thereunder in the case of foreign corporations. In no case, however shall other income of such shareholder be taxable as effectively connected with the conduct of a trade or business through a permanent establishment in the United States solely because of the application of this section.

[T.D. 7324, 39 FR 35124, Sept. 30, 1974]

§ 1.996-7 Carryover of DISC tax attributes.

(a) ***In general.*** Carryover of a DISC's divisions of earnings and profits to acquiring corporations in nontaxable transactions shall be subject to rules generally applicable to other corporate tax attributes. For example, a DISC which acquires the assets of another DISC in a transaction to which section 381(a) applies shall succeed to, and take into account, the divisions of the earnings and profits of the transferor DISC in accordance with section 381(c)(2).

(b) ***Allocation of divisions of earnings and profits in corporate separations.***

(1) If one DISC transfers part of its assets to a controlled DISC in a transaction to which section 368(a)(1)(D) applies and immediately thereafter the stock of the controlled DISC is distributed in a distribution or exchange to which section 355 (or so much of section 356 as relates to section 355) applies, then—

(i) The earnings and profits of the distributing DISC immediately before the transaction shall be allocated between the distributing DISC and the controlled DISC in accordance with the provisions of § 1.312-10.

(ii) Each of the divisions of such earnings and profits, namely previously taxed income, accumulated DISC income, and other earnings and profits, shall be allocated between the distributing DISC and the controlled DISC on the same basis as the earnings and profits are allocated.

(iii) Any assets of the distributing DISC whose status as qualified export assets is limited by its accumulated DISC income (e.g., producer's loans described in § 1.993-4, Export-Import Bank and other obligations described in § 1.993-2(h), and financing obligations described in § 1.993-2(i)) shall be treated as having been allocated, for the purpose of determining the classification of such assets in the hands of the distributing DISC or the controlled DISC, on the same basis as the earnings and profits are allocated regardless of how such assets are actually allocated.

(2) ***Example.*** The provisions of this paragraph may be illustrated by the following example:

Example. On January 1, 1974, P Corporation transfers part of its assets to S Corporation, a newly organized subsidiary of P, in a transaction described in section 368(a)(1)(D) and distributes all the S stock in a transaction which qualifies under section 355. Immediately before such transfer, P had earnings and profits of $120,000 of which $100,000 constitutes accumulated DISC income. The unpaid balance of P's producer's loans is $80,000 all of which is retained by P. Pursuant to § 1.312-10, 25 percent of P's accumulated DISC income is allocated to S (*i.e.,* $25,000). P's producer's loans will be treated as allocated to S in the same proportion. Accordingly, for purposes of determining, under § 1.993-4(a)(3), the amount of producer's loans which S is entitled to make, S is treated as having an unpaid balance of producer's loans of $20,000 (*i.e.,* 25% × $80,000) and P is treated as having an unpaid balance of $60,000 (*i.e.,* 75% × $80,000).

(c) ***Accumulated DISC income accounts of separate DISC's maintained after corporate combination.*** If two or more DISC's combine to form a new DISC, or if the assets of one DISC are acquired by another DISC, in a transaction described in section 381(a), accumulated DISC income of the acquired DISC or DISC's shall carry over and be taken into account by the acquiring or new DISC, except that a separate account shall be maintained for the accumulated DISC income of any DISC scheduled to be received as a deemed distribution by its shareholders under § 1.995-3 (relating to deemed distributions upon disqualification). If, as a part of such transaction, the stock of the DISC which has accumulated DISC income scheduled to be deemed distributed is exchanged for stock of the acquiring or new DISC to which such accumulated DISC income is carried over and which maintains a separate account, then such accumulated DISC income shall be deemed distributed pro rata to shareholders of the acquiring or new DISC on the basis of stock ownership immediately after the exchange.

[T.D. 7324, 39 FR 35125, Sept. 30, 1974]

§ 1.996-8 Effect of carryback of capital loss or net operating loss to prior DISC taxable year.

(a) Under § 1.995-2(e), the deduction under section 172 for a net operating loss carryback or under section 1212 for a capital loss carryback is determined as if the DISC were a domestic corporation which had not elected to be treated as a DISC. A carryback of a net operating loss or of a capital loss of any corporation which reduces its taxable income for a preceding taxable year for which it qualified as a DISC will have the consequences enumerated in paragraphs (b) through (e) of this section.

(b) For such preceding taxable year, the amount of a deemed distribution of one-half of certain taxable income described in § 1.995-2(a)(4) will ordinarily be reduced in effect (but not below zero) by one-half of the sum of the amount of the deduction under section 172 for such year for net operating loss carrybacks and the amount of the deduction under section 1212 for such year for capital loss carrybacks.

(c) The amount of reduction in the deemed distribution under paragraph (b) of this section will have the effect of increasing the limitation, provided in § 1.995-2(b)(2), on the amount of foreign investment attributable to producer's loans which is deemed distributed under § 1.995-2(a)(5).

(d) If the amount of a deemed distribution for a preceding taxable year is reduced as described in paragraph (b) of this section, then for such preceding taxable year the previously taxed income (as defined in § 1.996-3(c)) shall be decreased by the amount of such reduction and the accumulated DISC income (as defined in § 1.996-3(b)) shall be increased by the amount of such reduction. Such adjustments shall be made as of the time the deemed distribution for such preceding taxable year is treated as having occurred. See § 1.996-1(d) for the priority of such deemed distribution in relation to other distributions made in that preceding taxable year.

(e) The amount and treatment of any actual distribution made in such preceding taxable year or a year subsequent to such preceding year, and the treatment of gain on a disposition (in any such year) of the DISC's stock to which § 1.995-4 applies, shall be properly adjusted to reflect the adjustments to previously taxed income and accumulated DISC income described in paragraph (d) of this section.

[T.D. 7324, 39 FR 35125, Sept. 30, 1974]

§ 1.997-1 Special rules for subchapter C of the Code.

(a) For purposes of applying the provisions of sections 301 through 395 of the Code, any distribution in property to a corporation by a DISC, or former DISC, which is made out of previously taxed income or accumulated DISC income shall be treated as a distribution in the same amount as if such distribution of property were made to an individual, and have a basis, in the hands of the recipient corporation, equal to such amount treated as having been distributed.

(b) This section may be illustrated by the following example:

Example. X Corporation is the sole shareholder of Y Corporation which is a DISC. Y makes an actual distribution of property to X with respect to X's stock in Y. The property has a basis of $50 and a fair market value of $100. The distribution is treated as made out of accumulated DISC income under section 996(a) and is taxable as a dividend under section 301(c)(1). Even though X is a corporation, the amount of the distribution is $100 notwithstanding the provisions of section 301(b)(1)(B) and the basis the property in X's hands is $100 notwithstanding the provisions of section 301(d)(2).

[T.D. 7324, 39 FR 35125, Sept. 30 1974]

§§ 1.998-1.1000 [Reserved]

GAIN OR LOSS ON DISPOSITION OF PROPERTY

DETERMINATION OF AMOUNT OF AND RECOGNITION OF GAIN OR LOSS

§ 1.1001-1 Computation of gain or loss.

(a) ***General rule.*** Except as otherwise provided in subtitle A of the Code, the gain or loss realized from the conversion of property into cash, or from the exchange of property for other property differing materially either in kind or in extent, is treated as income or as loss sustained. The amount realized from a sale or other disposition of property is the sum of any money received plus the fair market value of any property (other than money) received. The fair market value of property is a question of fact, but only in rare and extraordinary cases will property be considered to have no fair market value. The general method of computing such gain or loss is prescribed by section 1001 (a) through (d) which contemplates that from the amount realized upon the sale or exchange there shall be withdrawn a sum sufficient to restore the adjusted basis prescribed by section 1011 and the regulations thereunder (i.e., the cost or other basis adjusted for receipts, expenditures, losses, allowances, and other items chargeable against and applicable to such cost or other basis). The amount which remains after the adjusted basis has been restored to the taxpayer constitutes the realized gain. If the amount realized upon the sale or exchange is insufficient to restore to the taxpayer the adjusted basis of the property, a loss is sustained to the extent of the difference between such adjusted basis and the amount realized. The basis may be different depending upon whether gain or loss is being computed. For example, see section 1015(a) and the

regulations thereunder. Section 1001(e) and paragraph (f) of this section prescribe the method of computing gain or loss upon the sale or other disposition of a term interest in property the adjusted basis (or a portion) of which is determined pursuant, or by reference, to section 1014 (relating to the basis of property acquired from a decedent), section 1015 (relating to the basis of property acquired by gift or by a transfer in trust), or section 1022 (relating to the basis of property acquired from certain decedents who died in 2010). For rules determining the amount realized for purposes of computing the gain or loss upon the sale, exchange, or other disposition of digital assets, as defined in § 1.6045-1(a)(19), other than a digital asset not required to be reported as a digital asset pursuant to § 1.6045-1(c)(8)(ii), (iii), or (iv), *see* § 1.1001-7.

(b) ***Real estate taxes as amounts received.***

(1) Section 1001(b) and section 1012 state rules applicable in making an adjustment upon a sale of real property with respect to the real property taxes apportioned between seller and purchaser under section 164(d). Thus, if the seller pays (or agrees to pay) real property taxes attributable to the real property tax year in which the sale occurs, he shall not take into account, in determining the amount realized from the sale under section 1001(b), any amount received as reimbursement for taxes which are treated under section 164(d) as imposed upon the purchaser. Similarly, in computing the cost of the property under section 1012, the purchaser shall not take into account any amount paid to the seller as reimbursement for real property taxes which are treated under section 164(d) as imposed upon the purchaser. These rules apply whether or not the contract of sale calls for the purchaser to reimburse the seller for such real property taxes paid or to be paid by the seller.

(2) On the other hand, if the purchaser pays (or is to pay) an amount representing real property taxes which are treated under section 164(d) as imposed upon the seller, that amount shall be taken into account both in determining the amount realized from the sale under section 1001(b) and in computing the cost of the property under section 1012. It is immaterial whether or not the contract of sale specifies that the sale price has been reduced by, or is in any way intended to reflect, the taxes allocable to the seller. See also paragraph (b) of § 1.1012-1.

(3) Subparagraph (1) of this paragraph shall not apply to a seller who, in a taxable year prior to the taxable year of sale, pays an amount representing real property taxes which are treated under section 164(d) as imposed on the purchaser, if such seller has elected to capitalize such amount in accordance with section 266 and the regulations thereunder (relating to election to capitalize certain carrying charges and taxes).

(4) The application of this paragraph may be illustrated by the following examples:

Example 1. Assume that the contract price on the sale of a parcel of real estate is $50,000 and that real property taxes thereon in the amount of $1,000 for the real property tax year in which occurred the date of sale were previously paid by the seller. Assume further that $750 of the taxes are treated under section 164(d) as imposed upon the purchaser and that he reimburses the seller in that amount in addition to the contract price. The amount realized by the seller is $50,000. Similarly, $50,000 is the purchaser's cost. If, in this example, the purchaser made no payment other than the contract price of $50,000, the amount realized by the seller would be $49,250, since the sales price would be deemed to include $750 paid to the seller in reimbursement for real property taxes imposed upon the purchaser. Similarly, $49,250 would be the purchaser's cost.

Example 2. Assume that the purchaser in example (1), above, paid all of the real property taxes. Assume further that $250 of the taxes are treated under section 164(d) as imposed upon the seller. The amount realized by the seller is $50,250. Similarly, $50,250 is the purchaser's cost, regardless of the taxable year in which the purchaser makes actual payment of the taxes.

Example 3. Assume that the seller described in the first part of example (1), above, paid the real property taxes of $1,000 in the taxable year prior to the taxable year of sale and elected under section 266 to capitalize the $1,000 of taxes. In such a case, the amount realized is $50,750. Moreover, regardless of whether the seller elected to capitalize the real property taxes, the purchaser in that case could elect under section 266 to capitalize the $750 of taxes treated under section 164(d) as imposed upon him, in which case his adjusted basis would be $50,750 (cost of $50,000 plus capitalized taxes of $570).

(c) ***Other rules.***

(1) Even though property is not sold or otherwise disposed of, gain is realized if the sum of all the amounts received which are required by section 1016 and other applicable provisions of subtitle A of the Code to be applied against the basis of the property exceeds such basis. Except as otherwise provided in section 301(c)(3)(B) with respect to distributions out of increase in value of property accrued prior to March 1, 1913, such gain is includible in gross income under section 61 as "income from whatever source derived". On the other hand, a loss is not ordinarily sustained prior to the sale or other disposition of the property, for the reason that until such sale or other disposition occurs there remains the possibility that the taxpayer may recover or recoup the adjusted basis of the property. Until some identifiable event fixes the actual sustaining of a loss and the amount thereof, it is not taken into account.

(2) The provisions of subparagraph (1) of this paragraph may be illustrated by the following example:

Example: A, an individual on a calendar year basis, purchased certain shares of stock subsequent to February 28, 1913, for $10,000. On January 1, 1954, A's adjusted basis for the stock had been reduced to $1,000 by reason of receipts and distributions described in sections 1016(a)(1) and 1016(a)(4). He received in 1954 a further distribution of $5,000, being a distribution covered by section 1016(a)(4), other than a distribution out of increase of value of property accrued prior to March 1, 1913. This distribution applied against the adjusted basis as required by section 1016(a)(4) exceeds that basis by $4,000. The $4,000 excess is a gain realized by A in 1954 and is includible in gross income in his return for that calendar year. In computing gain from the stock, as in adjusting basis, no distinction is made between items of receipts or distributions described in section 1016. If A sells the stock in 1955 for $5,000, he realizes in 1955 a gain of $5,000, since the adjusted basis of the stock for the purpose of computing gain or loss from the sale is zero.

(d) ***Installment sales.*** In the case of property sold on the installment plan, special rules for the taxation of the gain are prescribed in section 453.

(e) ***Transfers in part a sale and in part a gift.***

(1) Where a transfer of property is in part a sale and in part a gift, the transferor has a gain to the extent that the amount realized by him exceeds his adjusted basis in the property. However, no loss is sustained on such a transfer if the amount realized is less than the adjusted basis. For the determination of basis of property in the hands of the transferee, see § 1.1015-4. For the allocation of the adjusted basis of property in the case of a bargain sale to a charitable organization, see § 1.1011-2.

(2) ***Examples.*** The provisions of subparagraph (1) may be illustrated by the following examples:

Example 1. A transfers property to his son for $60,000. Such property in the hands of A has an adjusted basis of $30,000 (and a fair market value of $90,000). A's gain is $30,000, the excess of $60,000, the amount realized, over the adjusted basis, $30,000. He has made a gift of $30,000, the excess of $90,000, the fair market value, over the amount realized, $60,000.

Example 2. A transfers property to his son for $30,000. Such property in the hands of A has an adjusted basis of $60,000 (and a fair market value of $90,000). A has no gain or loss, and has made a gift of $60,000, the excess of $90,000, the fair market value, over the amount realized, $30,000.

Example 3. A transfers property to his son for $30,000. Such property in A's hands has an adjusted basis of $30,000 (and a fair market value of $60,000). A has no gain and has made a gift of $30,000, the excess of $60,000, the fair market value, over the amount realized, $30,000.

Example 4. A transfers property to his son for $30,000. Such property in A's hands has an adjusted basis of $90,000 (and a fair market value of $60,000). A has sustained no loss, and has made a gift of $30,000, the excess of $60,000, the fair market value, over the amount realized, $30,000.

(f) ***Sale or other disposition of a term interest in property*** —

(1) ***General rule.*** Except as otherwise provided in paragraph (f)(3) of this section, for purposes of determining gain or loss from the sale or other disposition after October 9, 1969, of a term interest in property (as defined in paragraph (f)(2) of this section), a taxpayer shall not take into account that portion of the adjusted basis of such interest that is determined pursuant, or by reference, to section 1014 (relating to the basis of property acquired from a decedent), section 1015 (relating to the basis of property acquired by gift or by a transfer in trust), or section 1022 (relating to the basis of property acquired from certain decedents who died in 2010) to the extent that such adjusted basis is a portion of the adjusted uniform basis of the entire property (as defined in § 1.1014-5). Where a term interest in property is transferred to a corporation in connection with a transaction to which section 351 applies and the adjusted basis of the term interest:

(i) Is determined pursuant to sections 1014, 1015, or 1022; and

(ii) Is also a portion of the adjusted uniform basis of the entire property, a subsequent sale or other disposition of such term interest by the corporation will be subject to the provisions of section 1001(e) and this paragraph (f) to the extent that the basis of the term interest so sold or otherwise disposed of is determined by reference to its basis in the hands of the transferor as provided by section 362(a). See paragraph (f)(2) of this section for rules relating to the characterization of stock received by the transferor of a term interest in property in connection with a transaction to which section 351 applies. That portion of the adjusted uniform basis of the entire property that is assignable to such interest at the time of its sale or other disposition shall be determined under the rules provided in § 1.1014-5. Thus, gain or loss realized from a sale or other disposition of a term interest in property shall be determined by comparing the amount of the proceeds of such sale with that part of the adjusted basis of such interest that is not a portion of the adjusted uniform basis of the entire property.

(2) ***Term interest defined.*** For purposes of section 1001(e) and this paragraph, a *term interest in property* means—

(i) A life interest in property,

(ii) An interest in property for a term of years, or

(iii) An income interest in a trust.

Generally, subdivisions (i), (ii), and (iii) refer to an interest, present or future, in the income from property or the right to use property which will terminate or fail on the lapse of time, on the occurrence of an event or contingency, or on the failure of an event or contingency to occur. Such divisions do not refer to remainder or reversionary interests in the property itself or other interests in the property which will ripen into ownership of the entire property upon termination or failure of a preceding term interest. A *term interest in property* also includes any property received upon a sale or other disposition of a life interest in property, an interest in property for a term of years, or an income interest in a trust by the original holder of such interest, but only to the extent that the adjusted basis of the property received is determined by reference to the adjusted basis of the term interest so transferred.

(3) ***Exception.*** Paragraph (1) of section 1001(e) and subparagraph (1) of this paragraph shall not apply to a sale or other disposition of a term interest in property as a part of a single transaction in which the entire interest in the property is transferred to a third person or to two or more other persons, including persons who acquire such entire interest as joint tenants, tenants by the entirety, or tenants in common. See § 1.1014-5 for computation of gain or loss upon such a sale or other disposition where the property has been acquired from a decedent or by gift or transfer in trust.

(4) ***Illustrations.*** For examples illustrating the application of this paragraph, see paragraph (d) of § 1.1014-5.

(g) ***Debt instruments issued in exchange for property*** —

(1) ***In general.*** If a debt instrument is issued in exchange for property, the amount realized attributable to the debt instrument is the issue price of the debt instrument as determined under § 1.1273-2 or § 1.1274-2, whichever is applicable. If, however, the issue price of the debt instrument is determined under section 1273(b)(4), the amount realized attributable to the debt instrument is its stated principal amount reduced by any unstated interest (as determined under section 483).

(2) ***Certain debt instruments that provide for contingent payments*** —

(i) ***In general.*** Paragraph (g)(1) of this section does not apply to a debt instrument subject to either § 1.483-4 or § 1.1275-4(c) (certain contingent payment debt instruments issued for nonpublicly traded property).

(ii) ***Special rule to determine amount realized.*** If a debt instrument subject to § 1.1275-4(c) is issued in exchange for property, and the income from the exchange is not reported under the installment method of section 453, the amount realized attributable to the debt instrument is the issue price of the debt instrument as determined under § 1.1274-2(g), increased by the fair market value of the contingent payments payable on the debt instrument. If a debt instrument subject to § 1.483-4 is issued in exchange for property, and the income from the exchange is not reported under the installment method of section 453, the amount realized attributable to the debt instrument is its stated principal amount, reduced by any unstated interest (as determined under section 483), and increased by the fair market value of the contingent payments payable on the debt instrument. This paragraph (g)(2)(ii), however, does not apply to a debt instrument if the fair market value of the contingent payments is not reasonably ascertainable. Only in rare and extraordinary cases will the fair market value of the contingent payments be treated as not reasonably ascertainable.

(3) ***Coordination with section 453.*** If a debt instrument is issued in exchange for property, and the income from the exchange is not reported under the installment method of section 453, this paragraph (g) applies rather than § 15a.453-1(d)(2) to determine the taxpayer's amount realized attributable to the debt instrument.

(4) ***Effective date.*** This paragraph (g) applies to sales or exchanges that occur on or after August 13, 1996.

(h) ***Severances of trusts*** —

(1) ***In general.*** The severance of a trust (including without limitation a severance that meets the requirements of § 26.2642-6 or of § 26.2654-1(b) of this chapter) is not an exchange of property for other property differing materially either in kind or in extent if—

(i) An applicable state statute or the governing instrument authorizes or directs the trustee to sever the trust; and

(ii) Any non-pro rata funding of the separate trusts resulting from the severance (including non-pro rata funding as described in § 26.2642-6(d)(4) or § 26.2654-1(b)(1)(ii)(C) of this chapter), whether mandatory or in the discretion of the trustee, is authorized by an applicable state statute or the governing instrument.

(2) ***Effective/applicability date.*** This paragraph (h) applies to severances occurring on or after August 2, 2007. Taxpayers may apply this paragraph (h) to severances occurring on or after August 24, 2004, and before August 2, 2007.

(i) ***Effective/applicability date.*** Except as provided in paragraphs (g) and (h) of this section, this section applies on and after January 19, 2017. For rules before January 19, 2017, see § 1.1001-1 as contained in 26 CFR part 1 revised as of April 1, 2016.

[T.D. 6500, 25 FR 11910, Nov. 26, 1960, as amended by T.D. 7142, 36 FR 18950, Sept. 24, 1971; T.D. 7207, 37 FR 20797, Oct. 5, 1972; T.D. 7213, 37 FR 21992, Oct. 18, 1972; T.D. 8517, 59 FR 4807, Feb. 2, 1994; T.D. 8674, 61 FR 30139, June 14, 1996; T.D. 9348, 72 FR 42293, Aug. 2, 2007; T.D. 9729, 80 FR 48250, Aug. 12, 2015; T.D. 9811, 82 FR 6240, Jan. 19, 2017; T.D. 10000, 89 FR 56543, July 9, 2024]

§ 1.1001-2 Discharge of liabilities.

(a) ***Inclusion in amount realized*** —

(1) ***In general.*** Except as provided in paragraph (a) (2) and (3) of this section, the amount realized from a sale or other disposition of property includes the amount of liabilities from which the transferor is discharged as a result of the sale or disposition.

(2) ***Discharge of indebtedness.*** The amount realized on a sale or other disposition of property that secures a recourse liability does not include amounts that are (or would be if realized and recognized) income from the discharge of indebtedness under section 61(a)(12). For situations where amounts arising from the discharge of indebtedness are not realized and recognized, see section 108 and § 1.61-12(b)(1).

(3) ***Liability incurred on acquisition.*** In the case of a liability incurred by reason of the acquisition of the property, this section does not apply to the extent that such liability was not taken into account in determining the transferor's basis for such property.

(4) ***Special rules.*** For purposes of this section—

(i) The sale or other disposition of property that secures a nonrecourse liability discharges the transferor from the liability;

(ii) The sale or other disposition of property that secures a recourse liability discharges the transferor from the liability if another person agrees to pay the liability (whether or not the transferor is in fact released from liability);

(iii) A disposition of property includes a gift of the property or a transfer of the property in satisfaction of liabilities to which it is subject;

(iv) Contributions and distributions of property between a partner and a partnership are not sales or other dispositions of property; and

(v) The liabilities from which a transferor is discharged as a result of the sale or disposition of a partnership interest include the transferor's share of the liabilities of the partnership.

(b) ***Effect of fair market value of security.*** The fair market value of the security at the time of sale or disposition is not relevant for purposes of determining under paragraph (a) of this section the amount of liabilities from which the taxpayer is discharged or treated as discharged. Thus, the fact that the fair market value of the property is less than the amount of the liabilities it secures does not prevent the full amount of those liabilities from being treated as money received from the sale or other disposition of the property. However, see paragraph (a)(2) of this section for a rule relating to certain income from discharge of indebtedness.

(c) ***Examples.*** The provisions of this section may be illustrated by the following examples. In each example assume the taxpayer uses the cash receipts and disbursements method of accounting, makes a return on the basis of the calendar year, and sells or disposes of all property which is security for a given liability.

Example 1. In 1976 A purchases an asset for $10,000. A pays the seller $1,000 in cash and signs a note payable to the seller for $9,000. A is personally liable for repayment with the seller having full recourse in the event of default. In addition, the asset which was purchased is pledged as security. During the years 1976 and 1977, A takes depreciation deductions on the asset in the amount of $3,100. During this same time period A reduces the outstanding principal on the note to $7,600. At the beginning of 1978 A sells the asset. The buyer pays A $1,600 in cash and assumes personal liability for the $7,600 outstanding liability. A becomes secondarily liable for repayment of the liability. A's amount realized is $9,200 ($1,600 + $7,600). Since A's adjusted basis in the asset is $6,900 ($10,000 − $3,100) A realizes a gain of $2,300 ($9,200 − $6,900).

Example 2. Assume the same facts as in example (1) except that A is not personally liable on the $9,000 note given to the seller and in the event of default the seller's only recourse is to the asset. In addition, on the sale of the asset by A, the purchaser takes the asset subject to the liability. Nevertheless, A's amount realized is $9,200 and A's gain realized is $2,300 on the sale.

Example 3. In 1975 L becomes a limited partner in partnership GL. L contributes $10,000 in cash to GL and L's distributive share of partnership income and loss is 10 percent. L is not entitled to receive any guaranteed payments. In 1978 M purchases L's entire interest in partnership GL. At the time of the sale L's adjusted basis in the partnership interest is $20,000. At that time L's proportionate share of liabilities, of which no partner has assumed personal liability, is $15,000. M pays $10,000 in cash for L's interest in the partnership. Under section 752(d) and this section, L's share of partnership

liabilities, $15,000, is treated as money received. Accordingly, L's amount realized on the sale of the partnership interest is $25,000 ($10,000 + $15,000). L's gain realized on the sale is $5,000 ($25,000 − $20,000).

Example 4. In 1976 B becomes a limited partner in partnership BG. In 1978 B contributes B's entire interest in BG to a charitable organization described in section 170(c). At the time of the contribution all of the partnership liabilities are liabilities for which neither B nor G has assumed any personal liability and B's proportionate share of which is $9,000. The charitable organization does not pay any cash or other property to B, but takes the partnership interest subject to the $9,000 of liabilities. Assume that the contribution is treated as a bargain sale to a charitable organization and that under section 1011(b) $3,000 is determined to be the portion of B's basis in the partnership interest allocable to the sale. Under section 752(d) and this section, the $9,000 of liabilities is treated by B as money received, thereby making B's amount realized $9,000. B's gain realized is $6,000 ($9,000 − $3,000).

Example 5. In 1975 C, an individual, creates T, an irrevocable trust. Due to certain powers expressly retained by C, T is a "grantor trust" for purposes of subpart E of part 1 of subchapter J of the code and therefore C is treated as the owner of the entire trust. T purchases an interest in P, a partnership. C, as owner of T, deducts the distributive share of partnership losses attributable to the partnership interest held by T. In 1978, when the adjusted basis of the partnership interest held by T is $1,200, C renounces the powers previously and expressly retained that initially resulted in T being classified as a grantor trust. Consequently, T ceases to be a grantor trust and C is no longer considered to be the owner of the trust. At the time of the renunciation all of P's liabilities are liabilities on which none of the partners have assumed any personal liability and the proportionate share of which of the interest held by T is $11,000. Since prior to the renunciation C was the owner of the entire trust, C was considered the owner of all the trust property for Federal income tax purposes, including the partnership interest. Since C was considered to be the owner of the partnership interest, C not T, was considered to be the partner in P during the time T was a "grantor trust". However, at the time C renounced the powers that gave rise to T's classification as a grantor trust, T no longer qualified as a grantor trust with the result that C was no longer considered to be the owner of the trust and trust property for Federal income tax purposes. Consequently, at that time, C is considered to have transferred ownership of the interest in P to T, now a separate taxable entity, independent of its grantor C. On the transfer, C's share of partnership liabilities ($11,000) is treated as money received. Accordingly, C's amount realized is $11,000 and C's gain realized is $9,800 ($11,000 − $1,200).

Example 6. In 1977 D purchases an asset for $7,500. D pays the seller $1,500 in cash and signs a note payable to the seller for $6,000. D is not personally liable for repayment but pledges as security the newly purchased asset. In the event of default, the seller's only recourse is to the asset. During the years 1977 and 1978 D takes depreciation deductions on the asset totaling $4,200 thereby reducing D's basis in the asset to $3,300 ($7,500 − $4,200). In 1979 D transfers the asset to a trust which is not a "grantor trust" for purposes of subpart E of part 1 of subchapter J of the Code. Therefore D is not treated as the owner of the trust. The trust takes the asset subject to the liability and in addition pays D $750 in cash. Prior to the transfer D had reduced the amount outstanding on the liability to $4,700. D's amount realized on the transfer is $5,450 ($4,700 + $750). Since D's adjusted basis is $3,300, D's gain realized is $2,150 ($5,450 − $3,300).

Example 7. In 1974 E purchases a herd of cattle for breeding purposes. The purchase price is $20,000 consisting of $1,000 cash and a $19,000 note. E is not personally liable for repayment of the liability and the seller's only recourse in the event of default is to the herd of cattle. In 1977 E transfers the herd back to the original seller thereby satisfying the indebtedness pursuant to a provision in the original sales agreement. At the time of the transfer the fair market value of the herd is $15,000 and

the remaining principal balance on the note is $19,000. At that time E's adjusted basis in the herd is $16,500 due to a deductible loss incurred when a portion of the herd died as a result of disease. As a result of the indebtedness being satisfied, E's amount realized is $19,000 notwithstanding the fact that the fair market value of the herd was less than $19,000. E's realized gain is $2,500 ($19,000 − $16,500).

Example 8. In 1980, F transfers to a creditor an asset with a fair market value of $6,000 and the creditor discharges $7,500 of indebtedness for which F is personally liable. The amount realized on the disposition of the asset is its fair market value ($6,000). In addition, F has income from the discharge of indebtedness of $1,500 ($7,500 − $6,000).

[T.D. 7741, 45 FR 81744, Dec. 12, 1980]

§ 1.1001-3 Modifications of debt instruments.

(a) ***Scope*** —

(1) ***In general.*** This section provides rules for determining whether a modification of the terms of a debt instrument results in an exchange for purposes of § 1.1001-1(a). This section applies to any modification of a debt instrument, regardless of the form of the modification. For example, this section applies to an exchange of a new instrument for an existing debt instrument, or to an amendment of an existing debt instrument. This section also applies to a modification of a debt instrument that the issuer and holder accomplish indirectly through one or more transactions with third parties. This section, however, does not apply to exchanges of debt instruments between holders.

(2) ***Tax-exempt bonds.*** For special rules governing whether tax-exempt bonds are retired for purposes of sections 103 and 141 through 150 of the Internal Revenue Code, *see* § 1.150-3.

(b) ***General rule.*** For purposes of § 1.1001-1(a), a significant modification of a debt instrument, within the meaning of this section, results in an exchange of the original debt instrument for a modified instrument that differs materially either in kind or in extent. A modification that is not a significant modification is not an exchange for purposes of § 1.1001-1(a). Paragraphs (c) and (d) of this section define the term *modification* and contain examples illustrating the application of the rule. Paragraphs (e) and (f) of this section provide rules for determining when a modification is a significant modification. Paragraph (f) of this section also provides rules for determining whether the modified instrument received in an exchange will be classified as an instrument or property right that is not debt for federal income tax purposes. Paragraph (g) of this section contains examples illustrating the application of the rules in paragraphs (e) and (f) of this section.

(c) ***Modification defined*** —

(1) ***In general*** —

(i) ***Alteration of terms.*** A *modification* means any alteration, including any deletion or addition, in whole or in part, of a legal right or obligation of the issuer or a holder of a debt instrument, whether the alteration is evidenced by an express agreement (oral or written), conduct of the parties, or otherwise.

(ii) ***Alterations occurring by operation of the terms of a debt instrument.*** Except as provided in paragraph (c)(2) of this section, an alteration of a legal right or obligation that occurs by operation of the terms of a debt instrument is not a modification. An alteration that occurs by

operation of the terms may occur automatically (for example, an annual resetting of the interest rate based on the value of an index or a specified increase in the interest rate if the value of the collateral declines from a specified level) or may occur as a result of the exercise of an option provided to an issuer or a holder to change a term of a debt instrument.

(2) ***Exceptions.*** The alterations described in this paragraph (c)(2) are modifications, even if the alterations occur by operation of the terms of a debt instrument.

(i) ***Change in obligor or nature of instrument.*** An alteration that results in the substitution of a new obligor, the addition or deletion of a co-obligor, or a change (in whole or in part) in the recourse nature of the instrument (from recourse to nonrecourse or from nonrecourse to recourse) is a modification.

(ii) ***Property that is not debt.*** An alteration that results in an instrument or property right that is not debt for Federal income tax purposes is a modification unless the alteration occurs pursuant to a holder's option under the terms of the instrument to convert the instrument into equity of the issuer (notwithstanding paragraph (c)(2)(iii) of this section). The rules of paragraph (f)(7) of this section apply to determine whether an alteration or modification results in an instrument or property right that is not debt.

(iii) ***Certain alterations resulting from the exercise of an option.*** An alteration that results from the exercise of an option provided to an issuer or a holder to change a term of a debt instrument is a modification unless—

(A) The option is unilateral (as defined in paragraph (c)(3) of this section); and

(B) In the case of an option exercisable by a holder, the exercise of the option does not result in (or, in the case of a variable or contingent payment, is not reasonably expected to result in) a deferral of, or a reduction in, any scheduled payment of interest or principal.

(3) ***Unilateral option.*** For purposes of this section, an option is unilateral only if, under the terms of an instrument or under applicable law—

(i) There does not exist at the time the option is exercised, or as a result of the exercise, a right of the other party to alter or terminate the instrument or put the instrument to a person who is related (within the meaning of section 267(b) or section 707(b)(1)) to the issuer;

(ii) The exercise of the option does not require the consent or approval of—

(A) The other party;

(B) A person who is related to that party (within the meaning of section 267(b) or section 707(b)(1)), whether or not that person is a party to the instrument; or

(C) A court or arbitrator; and

(iii) The exercise of the option does not require consideration (other than incidental costs and expenses relating to the exercise of the option), unless, on the issue date of the instrument, the consideration is a de minimis amount, a specified amount, or an amount that is based on a formula that uses objective financial information (as defined in § 1.446-3(c)(4)(ii)).

(4) ***Failure to perform*** —

(i) ***In general.*** The failure of an issuer to perform its obligations under a debt instrument is not itself an alteration of a legal right or obligation and is not a modification.

(ii) ***Holder's temporary forbearance.*** Notwithstanding paragraph (c)(1) of this section, absent a written or oral agreement to alter other terms of the debt instrument, an agreement by the holder to stay collection or temporarily waive an acceleration clause or similar default right (including such a waiver following the exercise of a right to demand payment in full) is not a modification unless and until the forbearance remains in effect for a period that exceeds—

(A) Two years following the issuer's initial failure to perform; and

(B) Any additional period during which the parties conduct good faith negotiations or during which the issuer is in a title 11 or similar case (as defined in section 368(a)(3)(A)).

(5) ***Failure to exercise an option.*** If a party to a debt instrument has an option to change a term of an instrument, the failure of the party to exercise that option is not a modification.

(6) ***Time of modification*** —

(i) ***In general.*** Except as provided in this paragraph (c)(6), an agreement to change a term of a debt instrument is a modification at the time the issuer and holder enter into the agreement, even if the change in the term is not immediately effective.

(ii) ***Closing conditions.*** If the parties condition a change in a term of a debt instrument on reasonable closing conditions (for example, shareholder, regulatory, or senior creditor approval, or additional financing), a modification occurs on the closing date of the agreement. Thus, if the reasonable closing conditions do not occur so that the change in the term does not become effective, a modification does not occur.

(iii) ***Bankruptcy proceedings.*** If a change in a term of a debt instrument occurs pursuant to a plan of reorganization in a title 11 or similar case (within the meaning of section 368(a)(3)(A)), a modification occurs upon the effective date of the plan. Thus, unless the plan becomes effective, a modification does not occur.

(d) ***Examples.*** The following examples illustrate the provisions of paragraph (c) of this section:

Example 1. Reset bond. A bond provides for the interest rate to be reset every 49 days through an auction by a remarketing agent. The reset of the interest rate occurs by operation of the terms of the bond and is not an alteration described in paragraph (c)(2) of this section. Thus, the reset of the interest rate is not a modification.

Example 2. Obligation to maintain collateral. The original terms of a bond provide that the bond must be secured by a certain type of collateral having a specified value. The terms also require the issuer to substitute collateral if the value of the original collateral decreases. Any substitution of collateral that is required to maintain the value of the collateral occurs by operation of the terms of the bond and is not an alteration described in paragraph (c)(2) of this section. Thus, such a substitution of collateral is not a modification.

Example 3. Alteration contingent on an act of a party. The original terms of a bond provide that the interest rate is 9 percent. The terms also provide that, if the issuer files an effective registration statement covering the bonds with the Securities and Exchange Commission, the interest rate will decrease to 8 percent. If the issuer registers the bond, the resulting decrease in the interest rate occurs by operation of the terms of the bond and is not an alteration described in paragraph (c)(2) of this section. Thus, such a decrease in the interest rate is not a modification.

Example 4. Substitution of a new obligor occurring by operation of the terms of the debt instrument. Under the original terms of a bond issued by a corporation, an acquirer of substantially all of the corporation's assets may assume the corporation's obligations under the bond. Substantially all of the corporation's assets are acquired by another corporation and the acquiring corporation becomes the new obligor on the bond. Under paragraph (c)(2)(i) of this section, the substitution of a new obligor, even though it occurs by operation of the terms of the bond, is a modification.

Example 5. Defeasance with release of covenants. (i) A corporation issues a 30-year, recourse bond. Under the terms of the bond, the corporation may secure a release of the financial and restrictive covenants by placing in trust government securities as collateral that will provide interest and principal payments sufficient to satisfy all scheduled payments on the bond. The corporation remains obligated for all payments, including the contribution of additional securities to the trust if necessary to provide sufficient amounts to satisfy the payment obligations. Under paragraph (c)(3) of this section, the option to defease the bond is a unilateral option.
(ii) The alterations occur by operation of the terms of the debt instrument and are not described in paragraph (c)(2) of this section. Thus, such a release of the covenants is not a modification.

Example 6. Legal defeasance. Under the terms of a recourse bond, the issuer may secure a release of the financial and restrictive covenants by placing in trust government securities that will provide interest and principal payments sufficient to satisfy all scheduled payments on the bond. Upon the creation of the trust, the issuer is released from any recourse liability on the bond and has no obligation to contribute additional securities to the trust if the trust funds are not sufficient to satisfy the scheduled payments on the bond. The release of the issuer is an alteration described in paragraph (c)(2)(i) of this section, and thus is a modification.

Example 7. Exercise of an option by a holder that reduces amounts payable. (i) A financial institution holds a residential mortgage. Under the original terms of the mortgage, the financial institution has an option to decrease the interest rate. The financial institution anticipates that, if market interest rates decline, it may exercise this option in lieu of the mortgagor refinancing with another lender.
(ii) The financial institution exercises the option to reduce the interest rate. The exercise of the option results in a reduction in scheduled payments and is an alteration described in paragraph (c)(2)(iii) of this section. Thus, the change in interest rate is a modification.

Example 8. Conversion of adjustable rate to fixed rate mortgage. (i) The original terms of a mortgage provide for a variable interest rate, reset annually based on the value of an objective index. Under the terms of the mortgage, the mortgagor may, upon the payment of a fee equal to a specified percentage of the outstanding principal amount of the mortgage, convert to a fixed rate of interest as determined based on the value of a second objective index. The exercise of the option does not require the consent or approval of any person or create a right

of the holder to alter the terms of, or to put, the instrument.
(ii) Because the required consideration to exercise the option is a specified amount fixed on the issue date, the exercise of the option is unilateral as defined in paragraph (c)(3) of this section. The conversion to a fixed rate of interest is not an alteration described in paragraph (c)(2) of this section. Thus, the change in the type of interest rate occurs by operation of the terms of the instrument and is not a modification.

Example 9. Holder's option to increase interest rate. (i) A corporation issues an 8-year note to a bank in exchange for cash. Under the terms of the note, the bank has the option to increase the rate of interest by a specified amount if certain covenants in the note are breached. The bank's right to increase the interest rate is a unilateral option as described in paragraph (c)(3) of this section.
(ii) A covenant in the note is breached. The bank exercises its option to increase the rate of interest. The increase in the rate of interest occurs by operation of the terms of the note and does not result in a deferral or a reduction in the scheduled payments or any other alteration described in paragraph (c)(2) of this section. Thus, the change in interest rate is not a modification.

(iii) *Applicability date.* This *Example 9* applies to modifications occurring on or after July 6, 2011.

Example 10. Issuer's right to defer payment of interest. A corporation issues a 5-year note. Under the terms of the note, interest is payable annually at the rate of 10 percent. The corporation, however, has an option to defer any payment of interest until maturity. For any payments that are deferred, interest will compound at a rate of 12 percent. The exercise of the option, which results in the deferral of payments, does not result from the exercise of an option by the holder. The exercise of the option occurs by operation of the terms of the debt instrument and is not a modification.

Example 11. Holder's option to grant deferral of payment. (i) A corporation issues a 10-year note to a bank in exchange for cash. Interest on the note is payable semi-annually. Under the terms of the note, the bank may grant the corporation the right to defer all or part of the interest payments. For any payments that are deferred, interest will compound at a rate 150 basis points greater than the stated rate of interest.
(ii) The corporation encounters financial difficulty and is unable to satisfy its obligations under the note. The bank exercises its option under the note and grants the corporation the right to defer payments. The exercise of the option results in a right of the corporation to defer scheduled payments and, under paragraph (c)(3)(i) of this section, is not a unilateral option. Thus, the alteration is described in paragraph (c)(2)(iii) of this section and is a modification.

Example 12. Alteration requiring consent. The original terms of a bond include a provision that the issuer may extend the maturity of the bond with the consent of the holder. Because any extension pursuant to this term requires the consent of both parties, such an extension does not occur by the exercise of a unilateral option (as defined in paragraph (c)(3) of this section) and is a modification.

Example 13. Waiver of an acceleration clause. Under the terms of a bond, if the issuer fails to make a scheduled payment, the full principal amount of the bond is due and payable immediately. Following the issuer's failure to make a scheduled payment, the holder temporarily waives its right to receive the full principal for a period ending one year from the date of the issuer's default to allow the issuer to obtain additional financial resources. Under paragraph (c)(4)(ii) of this section, the temporary waiver in this situation is not a modification. The result would be the same if the terms provided the holder with the right to demand the full principal amount upon the failure of the issuer to make a scheduled payment and, upon such a failure, the holder exercised that right and then waived the right to receive the payment for one year.

(e) ***Significant modifications.*** Whether the modification of a debt instrument is a significant modification is determined under the rules of this paragraph (e). Paragraph (e)(1) of this section provides a general rule for determining the significance of modifications not otherwise addressed in this paragraph (e). Paragraphs (e) (2) through (6) of this section provide specific rules for determining the significance of certain types of modifications. Paragraph (f) of this section provides rules of application, including rules for modifications that are effective on a deferred basis or upon the occurrence of a contingency.

(1) ***General rule.*** Except as otherwise provided in paragraphs (e)(2) through (e)(6) of this section, a modification is a significant modification only if, based on all facts and circumstances, the legal rights or obligations that are altered and the degree to which they are altered are economically significant. In making a determination under this paragraph (e)(1), all modifications to the debt instrument (other than modifications subject to paragraphs (e) (2) through (6) of this section) are considered collectively, so that a series of such modifications may be significant when considered together although each modification, if considered alone, would not be significant.

(2) ***Change in yield*** —

(i) ***Scope of rule.*** This paragraph (e)(2) applies to debt instruments that provide for only fixed payments, debt instruments with alternative payment schedules subject to § 1.1272-1(c), debt instruments that provide for a fixed yield subject to § 1.1272-1(d) (such as certain demand loans), and variable rate debt instruments. Whether a change in the yield of other debt instruments (for example, a contingent payment debt instrument) is a significant modification is determined under paragraph (e)(1) of this section.

(ii) ***In general.*** A change in the yield of a debt instrument is a significant modification if the yield computed under paragraph (e)(2)(iii) of this section varies from the annual yield on the unmodified instrument (determined as of the date of the modification) by more than the greater of—

(A) $^{1}/_{4}$ of one percent (25 basis points); or

(B) 5 percent of the annual yield of the unmodified instrument (.05 × annual yield).

(iii) ***Yield of the modified instrument*** —

(A) ***In general.*** The yield computed under this paragraph (e)(2)(iii) is the annual yield of a debt instrument with—

(1) An issue price equal to the adjusted issue price of the unmodified instrument on the date of the modification (increased by any accrued but unpaid interest and decreased by any accrued bond issuance premium not yet taken into account, and increased or decreased, respectively, to reflect payments made to the issuer or to the holder as consideration for the modification); and

(2) Payments equal to the payments on the modified debt instrument from the date of the modification.

(B) ***Prepayment penalty.*** For purposes of this paragraph (e)(2)(iii), a commercially reasonable prepayment penalty for a pro rata prepayment (as defined in § 1.1275-2(f)) is not consideration for a modification of a debt instrument and is not taken into account in determining the yield of the modified instrument.

(iv) ***Variable rate debt instruments.*** For purposes of this paragraph (e)(2), the annual yield of a variable rate debt instrument is the annual yield of the equivalent fixed rate debt instrument (as defined in § 1.1275-5(e)) which is constructed based on the terms of the instrument (either modified or unmodified, whichever is applicable) as of the date of the modification.

(3) ***Changes in timing of payments*** —

(i) ***In general.*** A modification that changes the timing of payments (including any resulting change in the amount of payments) due under a debt instrument is a significant modification if it results in the material deferral of scheduled payments. The deferral may occur either through an extension of the final maturity date of an instrument or through a deferral of payments due prior to maturity. The materiality of the deferral depends on all the facts and circumstances, including the length of the deferral, the original term of the instrument, the amounts of the payments that are deferred, and the time period between the modification and the actual deferral of payments.

(ii) ***Safe-harbor period.*** The deferral of one or more scheduled payments within the safe-harbor period is not a material deferral if the deferred payments are unconditionally payable no later than at the end of the safe-harbor period. The safe-harbor period begins on the original due date of the first scheduled payment that is deferred and extends for a period equal to the lesser of five years or 50 percent of the original term of the instrument. For purposes of this paragraph (e)(3)(ii), the term of an instrument is determined without regard to any option to extend the original maturity and deferrals of de minimis payments are ignored. If the period during which payments are deferred is less than the full safe-harbor period, the unused portion of the period remains a safe-harbor period for any subsequent deferral of payments on the instrument.

(4) ***Change in obligor or security*** —

(i) ***Substitution of a new obligor on recourse debt instruments*** —

(A) ***In general.*** Except as provided in paragraph (e)(4)(i) (B), (C), or (D) of this section, the substitution of a new obligor on a recourse debt instrument is a significant modification.

(B) ***Section 381(a) transaction.*** The substitution of a new obligor is not a significant modification if the acquiring corporation (within the meaning of section 381) becomes the new obligor pursuant to a transaction to which section 381(a) applies, the transaction

does not result in a change in payment expectations, and the transaction (other than a reorganization within the meaning of section 368(a)(1)(F)) does not result in a significant alteration.

(C) ***Certain asset acquisitions.*** The substitution of a new obligor is not a significant modification if the new obligor acquires substantially all of the assets of the original obligor, the transaction does not result in a change in payment expectations, and the transaction does not result in a significant alteration.

(D) ***Tax-exempt bonds.*** The substitution of a new obligor on a tax-exempt bond is not a significant modification if the new obligor is a related entity to the original obligor as defined in section 168(h)(4)(A) and the collateral securing the instrument continues to include the original collateral.

(E) ***Significant alteration.*** For purposes of this paragraph (e)(4), a significant alteration is an alteration that would be a significant modification but for the fact that the alteration occurs by operation of the terms of the instrument.

(F) ***Section 338 election.*** For purposes of this section, an election under section 338 following a qualified stock purchase of an issuer's stock does not result in the substitution of a new obligor.

(G) ***Bankruptcy proceedings.*** For purposes of this section, the filing of a petition in a title 11 or similar case (as defined in section 368(a)(3)(A)) by itself does not result in the substitution of a new obligor.

(ii) ***Substitution of a new obligor on nonrecourse debt instruments.*** The substitution of a new obligor on a nonrecourse debt instrument is not a significant modification.

(iii) ***Addition or deletion of co-obligor.*** The addition or deletion of a co-obligor on a debt instrument is a significant modification if the addition or deletion of the co-obligor results in a change in payment expectations. If the addition or deletion of a co-obligor is part of a transaction or series of related transactions that results in the substitution of a new obligor, however, the transaction is treated as a substitution of a new obligor (and is tested under paragraph (e)(4)(i)) of this section rather than as an addition or deletion of a co-obligor.

(iv) ***Change in security or credit enhancement*** —

(A) ***Recourse debt instruments.*** A modification that releases, substitutes, adds or otherwise alters the collateral for, a guarantee on, or other form of credit enhancement for a recourse debt instrument is a significant modification if the modification results in a change in payment expectations.

(B) ***Nonrecourse debt instruments.***

(*1*) A modification that releases, substitutes, adds or otherwise alters a substantial amount of the collateral for, a guarantee on, or other form of credit enhancement for a nonrecourse debt instrument is a significant modification. A substitution of collateral is not a significant modification, however, if the collateral is fungible or otherwise of a type where the particular units pledged are unimportant (for example, government securities or financial instruments of a particular type and credit quality).

In addition, the substitution of a similar commercially available credit enhancement contract is not a significant modification, and an improvement to the property securing a nonrecourse debt instrument does not result in a significant modification.

(2) ***Applicability date.*** Paragraph (e)(4)(iv)(B)(*1*) of this section applies to modifications occurring on or after July 6, 2011.

(v) ***Change in priority of debt.*** A change in the priority of a debt instrument relative to other debt of the issuer is a significant modification if it results in a change in payment expectations.

(vi) ***Change in payment expectations*** —

(A) ***In general.*** For purposes of this section, a change in payment expectations occurs if, as a result of a transaction—

(*1*) There is a substantial enhancement of the obligor's capacity to meet the payment obligations under a debt instrument and that capacity was primarily speculative prior to the modification and is adequate after the modification; or

(2) There is a substantial impairment of the obligor's capacity to meet the payment obligations under a debt instrument and that capacity was adequate prior to the modification and is primarily speculative after the modification.

(B) ***Obligor's capacity.*** The obligor's capacity includes any source for payment, including collateral, guarantees, or other credit enhancement.

(5) ***Changes in the nature of a debt instrument*** —

(i) ***Property that is not debt.*** A modification of a debt instrument that results in an instrument or property right that is not debt for Federal income tax purposes is a significant modification. The rules of paragraph (f)(7) of this section apply to determine whether a modification results in an instrument or property right that is not debt.

(ii) ***Change in recourse nature*** —

(A) ***In general.*** Except as provided in paragraph (e)(5)(ii)(B) of this section, a change in the nature of a debt instrument from recourse (or substantially all recourse) to nonrecourse (or substantially all nonrecourse) is a significant modification. Thus, for example, a legal defeasance of a debt instrument in which the issuer is released from all liability to make payments on the debt instrument (including an obligation to contribute additional securities to a trust if necessary to provide sufficient funds to meet all scheduled payments on the instrument) is a significant modification. Similarly, a change in the nature of the debt instrument from nonrecourse (or substantially all nonrecourse) to recourse (or substantially all recourse) is a significant modification. If an instrument is not substantially all recourse or not substantially all nonrecourse either before or after a modification, the significance of the modification is determined under paragraph (e)(1) of this section.

(B) ***Exceptions*** —

(*1*) ***Defeasance of tax-exempt bonds.*** A defeasance of a tax-exempt bond is not a significant modification even if the issuer is released from any liability to make payments under the instrument if the defeasance occurs by operation of the terms of

the original bond and the issuer places in trust government securities or tax-exempt government bonds that are reasonably expected to provide interest and principal payments sufficient to satisfy the payment obligations under the bond.

(2) ***Original collateral.***

(*i*) A modification that changes a recourse debt instrument to a nonrecourse debt instrument is not a significant modification if the instrument continues to be secured only by the original collateral and the modification does not result in a change in payment expectations. For this purpose, if the original collateral is fungible or otherwise of a type where the particular units pledged are unimportant (for example, government securities or financial instruments of a particular type and credit quality), replacement of some or all units of the original collateral with other units of the same or similar type and aggregate value is not considered a change in the original collateral.

(*ii*) ***Applicability date.*** Paragraph (e)(5)(ii)(B)(*2*)(*i*) of this section applies to modifications occurring on or after July 6, 2011.

(6) ***Accounting or financial covenants.*** A modification that adds, deletes, or alters customary accounting or financial covenants is not a significant modification.

(f) ***Rules of application*** —

(1) ***Testing for significance*** —

(i) ***In general.*** Whether a modification of any term is a significant modification is determined under each applicable rule in paragraphs (e) (2) through (6) of this section and, if not specifically addressed in those rules, under the general rule in paragraph (e)(1) of this section. For example, a deferral of payments that changes the yield of a fixed rate debt instrument must be tested under both paragraphs (e) (2) and (3) of this section.

(ii) ***Contingent modifications.*** If a modification described in paragraphs (e) (2) through (5) of this section is effective only upon the occurrence of a substantial contingency, whether or not the change is a significant modification is determined under paragraph (e)(1) of this section rather than under paragraphs (e) (2) through (5) of this section.

(iii) ***Deferred modifications.*** If a modification described in paragraphs (e) (4) and (5) of this section is effective on a substantially deferred basis, whether or not the change is a significant modification is determined under paragraph (e)(1) of this section rather than under paragraphs (e) (4) and (5) of this section.

(2) ***Modifications that are not significant.*** If a rule in paragraphs (e) (2) through (4) of this section prescribes a degree of change in a term of a debt instrument that is a significant modification, a change of the same type but of a lesser degree is not a significant modification under that rule. For example, a 20 basis point change in the yield of a fixed rate debt instrument is not a significant modification under paragraph (e)(2) of this section. Likewise, if a rule in paragraph (e)(4) of this section requires a change in payment expectations for a modification to be significant, a modification of the same type that does not result in a change in payment expectations is not a significant modification under that rule.

(3) ***Cumulative effect of modifications.*** Two or more modifications of a debt instrument over any period of time constitute a significant modification if, had they been done as a single change, the change would have resulted in a significant modification under paragraph (e) of this section. Thus, for example, a series of changes in the maturity of a debt instrument constitutes a significant modification if, combined as a single change, the change would have resulted in a significant modification. The significant modification occurs at the time that the cumulative modification would be significant under paragraph (e) of this section. In testing for a change of yield under paragraph (e)(2) of this section, however, any prior modification occurring more than 5 years before the date of the modification being tested is disregarded.

(4) ***Modifications of different terms.*** Modifications of different terms of a debt instrument, none of which separately would be a significant modification under paragraphs (e) (2) through (6) of this section, do not collectively constitute a significant modification. For example, a change in yield that is not a significant modification under paragraph (e)(2) of this section and a substitution of collateral that is not a significant modification under paragraph (e)(4)(iv) of this section do not together result in a significant modification. Although the significance of each modification is determined independently, in testing a particular modification it is assumed that all other simultaneous modifications have already occurred.

(5) ***Definitions.*** For purposes of this section:

(i) ***Issuer*** and *obligor* are used interchangeably and mean the issuer of a debt instrument or a successor obligor.

(ii) ***Variable rate debt instrument*** and *contingent payment debt instrument* have the meanings given those terms in section 1275 and the regulations thereunder.

(iii) ***Tax-exempt bond*** means a state or local bond that satisfies the requirements of section 103(a).

(iv) ***Conduit loan*** and *conduit borrower* have the same meanings as in § 1.150-1(b).

(6) ***Certain rules for tax-exempt bonds*** —

(i) ***Conduit loans.*** For purposes of this section, the obligor of a tax-exempt bond is the entity that actually issues the bond and not a conduit borrower of bond proceeds. In determining whether there is a significant modification of a tax-exempt bond, however, transactions between holders of the tax-exempt bond and a borrower of a conduit loan may be an indirect modification under paragraph (a)(1) of this section. For example, a payment by the holder of a tax-exempt bond to a conduit borrower to waive a call right may result in an indirect modification of the tax-exempt bond by changing the yield on that bond.

(ii) ***Recourse nature*** —

(A) ***In general.*** For purposes of this section, a tax-exempt bond that does not finance a conduit loan is a recourse debt instrument.

(B) ***Proceeds used for conduit loans.*** For purposes of this section, a tax-exempt bond that finances a conduit loan is a recourse debt instrument unless both the bond and the conduit loan are nonrecourse instruments.

(C) ***Government securities as collateral.*** Notwithstanding paragraphs (f)(6)(ii) (A) and (B) of this section, for purposes of this section a tax-exempt bond that is secured only by a trust holding government securities or tax-exempt government bonds that are reasonably expected to provide interest and principal payments sufficient to satisfy the payment obligations under the bond is a nonrecourse instrument.

(7) ***Rules for determining whether an alteration or modification results in an instrument or property right that is not debt —***

(i) ***In general.*** Except as provided in paragraph (f)(7)(ii) of this section, the determination of whether an instrument resulting from an alteration or modification of a debt instrument will be recharacterized as an instrument or property right that is not debt for Federal income tax purposes shall take into account all of the factors relevant to such a determination.

(ii) ***Financial condition of the obligor —***

(A) ***Deterioration in financial condition of the obligor generally disregarded.*** Except as provided in paragraph (f)(7)(ii)(B) of this section, in making a determination as to whether an instrument resulting from an alteration or modification of a debt instrument will be recharacterized as an instrument or property right that is not debt, any deterioration in the financial condition of the obligor between the issue date of the debt instrument and the date of the alteration or modification (as it relates to the obligor's ability to repay the debt instrument) is not taken into account. For example, any decrease in the fair market value of a debt instrument (whether or not the debt instrument is publicly traded) between the issue date of the debt instrument and the date of the alteration or modification is not taken into account to the extent that the decrease in fair market value is attributable to the deterioration in the financial condition of the obligor and not to a modification of the terms of the instrument.

(B) ***Substitution of a new obligor; addition or deletion of co-obligor.*** If there is a substitution of a new obligor or the addition or deletion of a co-obligor, the rules in paragraph (f)(7)(ii)(A) of this section do not apply.

(g) ***Examples.*** The following examples illustrate the provisions of paragraphs (e) and (f) of this section:

> *Example 1. Modification of call right.* (i) Under the terms of a 30-year, fixed-rate bond, the issuer can call the bond for 102 percent of par at the end of ten years or for 101 percent of par at the end of 20 years. At the end of the eighth year, the holder of the bond pays the issuer to waive the issuer's right to call the bond at the end of the tenth year. On the date of the modification, the issuer's credit quality is approximately the same as when the bond was issued, but market rates of interest have declined from that date.
> (ii) The holder's payment to the issuer changes the yield on the bond. Whether the change in yield is a significant modification depends on whether the yield on the modified bond varies from the yield on the original bond by more than the change in yield as described in paragraph (e)(2)(ii) of this section.

(iii) If the change in yield is not a significant modification, the elimination of the issuer's call right must also be tested for significance. Because the specific rules of paragraphs (e)(2) through (e)(6) of this section do not address this modification, the significance of the modification must be determined under the general rule of paragraph (e)(1) of this section.

(iv) *Applicability date.* This *Example 1* applies to modifications occurring on or after July 6, 2011.

Example 2. Extension of maturity and change in yield. (i) A zero-coupon bond has an original maturity of ten years. At the end of the fifth year, the parties agree to extend the maturity for a period of two years without increasing the stated redemption price at maturity (i.e., there are no additional payments due between the original and extended maturity dates, and the amount due at the extended maturity date is equal to the amount due at the original maturity date).
(ii) The deferral of the scheduled payment at maturity is tested under paragraph (e)(3) of this section. The safe-harbor period under paragraph (e)(3)(ii) of this section starts with the date the payment that is being deferred is due. For this modification, the safe-harbor period starts on the original maturity date, and ends five years from this date. All payments deferred within this period are unconditionally payable before the end of the safe-harbor period. Thus, the deferral of the payment at maturity for a period of two years is not a material deferral under the safe-harbor rule of paragraph (e)(3)(ii) of this section and thus is not a significant modification.

(iii) Even though the extension of maturity is not a significant modification under paragraph (e)(3)(ii) of this section, the modification also decreases the yield of the bond. The change in yield must be tested under paragraph (e)(2) of this section.

Example 3. Change in yield resulting from reduction of principal. (i) A debt instrument issued at par has an original maturity of ten years and provides for the payment of $100,000 at maturity with interest payments at the rate of 10 percent payable at the end of each year. At the end of the fifth year, and after the annual payment of interest, the issuer and holder agree to reduce the amount payable at maturity to $80,000. The annual interest rate remains at 10 percent but is payable on the reduced principal.
(ii) In applying the change in yield rule of paragraph (e)(2) of this section, the yield of the instrument after the modification (measured from the date that the parties agree to the modification to its final maturity date) is computed using the adjusted issue price of $100,000. With four annual payments of $8,000, and a payment of $88,000 at maturity, the yield on the instrument after the modification for purposes of determining if there has been a significant modification under paragraph (e)(2)(i) of this section is 4.332 percent. Thus, the reduction in principal is a significant modification.

Example 4. Deferral of scheduled interest payments. (i) A 20-year debt instrument issued at par provides for the payment of $100,000 at maturity with annual interest payments at the rate of 10 percent. At the beginning of the eleventh year, the issuer and holder agree to defer all remaining

interest payments until maturity with compounding. The yield of the modified instrument remains at 10 percent.
(ii) The safe-harbor period of paragraph (e)(3)(ii) of this section begins at the end of the eleventh year, when the interest payment for that year is deferred, and ends at the end of the sixteenth year. However, the payments deferred during this period are not unconditionally payable by the end of that 5-year period. Thus, the deferral of the interest payments is not within the safe-harbor period.

(iii) This modification materially defers the payments due under the instrument and is a significant modification under paragraph (e)(3)(i) of this section.

Example 5. Assumption of mortgage with increase in interest rate. (i) A recourse debt instrument with a 9 percent annual yield is secured by an office building. Under the terms of the instrument, a purchaser of the building may assume the debt and be substituted for the original obligor if the purchaser is equally or more creditworthy than the original obligor and if the interest rate on the instrument is increased by one-half percent (50 basis points). The building is sold, the purchaser assumes the debt, and the interest rate increases by 50 basis points.
(ii) If the purchaser's acquisition of the building does not satisfy the requirements of paragraph (e)(4)(i)(B) or paragraph (e)(4)(i)(C) of this section, the substitution of the purchaser as the obligor is a significant modification under paragraph (e)(4)(i)(A) of this section.

(iii) If the purchaser acquires substantially all of the assets of the original obligor, the assumption of the debt instrument will not result in a significant modification if there is not a change in payment expectations and the assumption does not result in a significant alteration.

(iv) The change in the interest rate, if tested under the rules of paragraph (e)(2) of this section, would result in a significant modification. The change in interest rate that results from the transaction is a significant alteration. Thus, the transaction does not meet the requirements of paragraph (e)(4)(i)(C) of this section and is a significant modification under paragraph (e)(4)(i)(A) of this section.

(v) *Applicability date.* This *Example 5* applies to modifications occurring on or after July 6, 2011.

Example 6. Assumption of mortgage. (i) A recourse debt instrument is secured by a building. In connection with the sale of the building, the purchaser of the building assumes the debt and is substituted as the new obligor on the debt instrument. The purchaser does not acquire substantially all of the assets of the original obligor.
(ii) The transaction does not satisfy any of the exceptions set forth in paragraph (e)(4)(i) (B) or (C) of this section. Thus, the substitution of the purchaser as the obligor is a significant modification under paragraph (e)(4)(i)(A) of this section.

(iii) Section 1274(c)(4), however, provides that if a debt instrument is assumed in connection with the sale or exchange of property, the assumption is not taken into account in determining if section 1274 applies to the debt instrument unless the terms and conditions of the debt instrument are modified in connection with the sale or exchange. Because the purchaser assumed the debt instrument in connection with the sale of property and the debt instrument was not otherwise modified, the debt instrument is not retested to determine whether it provides for adequate stated interest.

Example 7. Substitution of a new obligor in section 381(a) transaction. (i) The interest rate on a 30-year debt instrument issued by a corporation provides for a variable rate of interest that is reset annually on June 1st based on an objective index.
(ii) In the tenth year, the issuer merges (in a transaction to which section 381(a) applies) into another corporation that becomes the new obligor on the debt instrument. The merger occurs on June 1st, at which time the interest rate is also reset by operation of the terms of the instrument. The new interest rate varies from the previous interest rate by more than the greater of 25 basis points and 5 percent of the annual yield of the unmodified instrument. The substitution of a new obligor does not result in a change in payment expectations.

(iii) The substitution of the new obligor occurs in a section 381(a) transaction and does not result in a change in payment expectations. Although the interest rate changed by more than the greater of 25 basis points and 5 percent of the annual yield of the unmodified instrument, this alteration did not occur as a result of the transaction and is not a significant alteration under paragraph (e)(4)(i)(E) of this section. Thus, the substitution meets the requirements of paragraph (e)(4)(i)(B) of this section and is not a significant modification.

Example 8. Substitution of credit enhancement contract. (i) Under the terms of a recourse debt instrument, the issuer's obligations are secured by a letter of credit from a specified bank. The debt instrument does not contain any provision allowing a substitution of a letter of credit from a different bank. The specified bank, however, encounters financial difficulty. The issuer and holder agree that the issuer will substitute a letter of credit from another bank.
(ii) Under paragraph (e)(4)(iv)(A) of this section, the substitution of a different credit enhancement contract is not a significant modification of a recourse debt instrument unless the substitution results in a change in payment expectations. While the substitution of a new letter of credit by a different bank does not itself result in a change in payment expectations, such a substitution may result in a change in payment expectations under certain circumstances (for example, if the obligor's capacity to meet payment obligations is dependent on the letter of credit and the substitution substantially enhances that capacity from primarily speculative to adequate).

(iii) *Applicability date.* This *Example 8* applies to modifications occurring on or after July 6, 2011.

Example 9. Improvement to collateral securing nonrecourse debt. A parcel of land and its improvements, a shopping center, secure a nonrecourse debt instrument. The obligor expands the shopping center with the construction of an additional building on the same parcel of land. After the construction, the improvements that secure the nonrecourse debt include the new building. The building is an improvement to the property securing the nonrecourse debt instrument and its inclusion in the collateral securing the debt is not a significant modification under paragraph (e)(4)(iv)(B) of this section.

(h) ***Effective/applicability date*** —

(1) ***In general.*** Except as otherwise provided in paragraph (h)(2) of this section, this section applies to alterations of the terms of a debt instrument on or after September 24, 1996. Taxpayers, however, may rely on this section for alterations of the terms of a debt instrument after December 2, 1992, and before September 24, 1996.

(2) ***Exception.*** Paragraph (f)(7) of this section applies to an alteration of the terms of a debt instrument on or after January 7, 2011. A taxpayer, however, may rely on paragraph (f)(7) of this section for alterations of the terms of a debt instrument occurring before that date.

[T.D. 8675, 61 FR 32930, June 26, 1996; 61 FR 47822, Sept. 11, 1996; 76 FR 1064, Jan. 7, 2011; T.D. 9533, 76 FR 39282, July 6, 2011; T.D. 9637, 78 FR 54760, Sept. 6, 2013; T.D. 10020, 89 FR 106320, Dec. 30, 2024]

§ 1.1001-4 Modifications of certain derivative contracts.

(a) ***Certain assignments.*** For purposes of § 1.1001-1(a), the transfer or assignment of a derivative contract is not treated by the nonassigning counterparty as a deemed exchange of the original contract for a modified contract that differs materially either in kind or in extent if—

(1) Both the party transferring or assigning its rights and obligations under the derivative contract and the party to which the rights and obligations are transferred or assigned are either a dealer or a clearinghouse;

(2) The terms of the derivative contract permit the transfer or assignment of the contract, whether or not the consent of the nonassigning counterparty is required for the transfer or assignment to be effective; and

(3) The terms of the derivative contract are not otherwise modified in a manner that results in a taxable exchange under section 1001.

(b) ***Definitions*** —

(1) ***Dealer.*** For purposes of this section, a *dealer* is a taxpayer who meets the definition of a dealer in securities in section 475(c)(1) or is a dealer in commodities derivative contracts.

(2) ***Clearinghouse.*** For purposes of this section, a *clearinghouse* is a derivatives clearing organization (as such term is defined in section 1a of the Commodity Exchange Act (7 U.S.C. 1a)) or a clearing agency (as such term is defined in section 3 of the Securities Exchange Act of 1934 (15 U.S.C. 78c(a))) that is registered, or exempt from registration, under each respective Act.

(3) ***Derivative contract.*** For purposes of this section, a *derivative contract* is a contract described in—

(i) Section 475(c)(2)(D), 475(c)(2)(E), or 475(c)(2)(F) without regard to the last sentence of section 475(c)(2) referencing section 1256;

(ii) Section 475(e)(2)(B), 475(e)(2)(C), or 475(e)(2)(D); or

(iii) Section 1.446-3(c)(1).

(c) ***Consideration for the assignment.*** Any payment between a party transferring or assigning its rights and obligations under the contract and the party to which the rights and obligations are transferred or assigned pursuant to a transfer or assignment described in paragraph (a) of this section will not affect the treatment of the nonassigning counterparty for purposes of this section. A payment described in the preceding sentence made or received to transfer or assign rights and obligations under a notional principal contract (as defined in § 1.446-3(c)(1)) is not subject to § 1.446-3(g)(4).

(d) ***Effective/applicability date.*** This section applies to transfers or assignments of derivative contracts on or after July 22, 2011.

[T.D. 9639, 78 FR 66640, Nov. 6, 2013]

§ 1.1001-5 European Monetary Union (conversion to the euro).

(a) ***Conversion of currencies.*** For purposes of § 1.1001-1(a), the conversion to the euro of legacy currencies (as defined in § 1.985-8(a)(1)) is not the exchange of property for other property differing materially in kind or extent.

(b) ***Effect of currency conversion on other rights and obligations.*** For purposes of § 1.1001-1(a), if, solely as the result of the conversion of legacy currencies to the euro, rights or obligations denominated in a legacy currency become rights or obligations denominated in the euro, that event is not the exchange of property for other property differing materially in kind or extent. Thus, for example, when a debt instrument that requires payments of amounts denominated in a legacy currency becomes a debt instrument requiring payments of euros, that alteration is not a modification within the meaning of § 1.1001-3(c).

(c) ***Effective date.*** This section applies to tax years ending after July 29, 1998.

[T.D. 8927, 66 FR 2218, Jan. 11, 2001]

§ 1.1001-6 Transition from certain interbank offered rates.

(a) ***In general.*** This section provides rules relating to the modification of the terms of a contract as part of the transition away from the London Interbank Offered Rate and certain other interbank offered rates. In general, paragraphs (b) through (g) of this section provide the operative rules for a covered modification. Paragraph (h) of this section defines certain terms that are used in these operative rules, such as *covered modification, qualified rate, discontinued IBOR, associated modification,* and *qualified one-time payment.* Paragraph (j) of this section describes certain modifications that are not covered modifications and provides examples that illustrate the operation of the rules in paragraph (j) of this section. For rules regarding original issue discount on certain debt instruments that provide for a rate referencing a discontinued IBOR, see § 1.1275-2(m). For rules regarding certain interests in a REMIC that provide for a rate referencing a discontinued IBOR, see § 1.860G-1(e).

(b) ***Treatment under section 1001*** —

(1) ***Covered modifications.*** A covered modification of a contract is not treated as the exchange of property for other property differing materially in kind or in extent for purposes of § 1.1001-1(a). For example, if the terms of a debt instrument that pays interest at a rate referencing the U.S.-dollar London Interbank Offered Rate (USD LIBOR) are modified to provide that the debt instrument pays

interest at a qualified rate referencing the Secured Overnight Financing Rate published by the Federal Reserve Bank of New York (SOFR) and the modification is not described in paragraph (j) of this section, the modification is not treated as the exchange of property for other property differing materially in kind or in extent for purposes of § 1.1001-1(a).

(2) ***Contemporaneous noncovered modifications.*** If a covered modification is made at the same time as a noncovered modification, § 1.1001-1(a) or § 1.1001-3, as appropriate, applies to determine whether the noncovered modification results in the exchange of property for other property differing materially in kind or in extent. In applying § 1.1001-1(a) or § 1.1001-3 for this purpose, the covered modification is treated as part of the terms of the contract prior to the noncovered modification. For example, if the parties to a debt instrument modify the interest rate in a manner that is a covered modification and contemporaneously extend the final maturity date of the debt instrument, which is a noncovered modification, only the extension of the final maturity date is analyzed under § 1.1001-3 and, for purposes of that analysis, the modified interest rate is treated as a term of the instrument prior to the extension of the final maturity date.

(c) ***Effect of a covered modification on integrated transactions and hedging transactions*** —

(1) ***In general.*** Except as otherwise provided in paragraph (c)(2) of this section, the rules in paragraphs (c)(1)(i) through (iv) of this section determine the effect of a covered modification on an integrated transaction under § 1.1275-6, a qualified hedging transaction under § 1.988-5(a), a hedging transaction under § 1.446-4, or a qualified hedging transaction under § 1.148-4(h).

(i) A covered modification of one or more contracts that are part of an integrated transaction under § 1.1275-6 is treated as not legging out of the integrated transaction, provided that, no later than the end of the 90-day period beginning on the date of the first covered modification of any such contract, the financial instrument that results from any such covered modifications satisfies the requirements to be a § 1.1275-6 hedge (as defined in § 1.1275-6(b)(2)) with respect to the qualifying debt instrument that results from any such covered modification. If a taxpayer enters into a financial instrument intended to mitigate the economic effect of a temporary mismatch of the legs of the integrated transaction during that 90-day period (a *§ 1.1275-6 interim hedge*), the integration of the § 1.1275-6 interim hedge with the other components of the integrated transaction during the 90-day period is treated as not legging into a new integrated transaction and the termination of the § 1.1275-6 interim hedge before the end of the 90-day period is treated as not legging out of the existing integrated transaction.

(ii) A covered modification of one or more contracts that are part of a qualified hedging transaction under § 1.988-5(a) is treated as not legging out of the qualified hedging transaction, provided that, no later than the end of the 90-day period beginning on the date of the first covered modification of any such contract, the financial instrument or series or combination of financial instruments that results from any such covered modifications satisfies the requirements to be a § 1.988-5(a) hedge (as defined in § 1.988-5(a)(4)) with respect to the qualifying debt instrument that results from any such covered modification. If a taxpayer enters into a financial instrument intended to mitigate the economic effect of a temporary mismatch of the legs of the qualified hedging transaction during that 90-day period (a *§ 1.988-5(a) interim hedge*), the integration of the § 1.988-5(a) interim hedge with the other components of the qualified hedging transaction during the 90-day period is treated as not legging into a new qualified hedging transaction and the termination of the § 1.988-5(a) interim hedge before the end of the 90-day period is treated as not legging out of the existing qualified hedging transaction.

(iii) A covered modification of one leg of a transaction subject to the hedge accounting rules in § 1.446-4 is not treated as a disposition or termination (within the meaning of § 1.446-4(e)(6)) of either leg of the transaction.

(iv) A covered modification of a qualified hedge or of the tax-advantaged bonds with which the qualified hedge is integrated under § 1.148-4(h)(1) is treated as not terminating the qualified hedge under § 1.148-4(h)(3)(iv)(B), provided that, no later than the end of the 90-day period beginning on the date of the first covered modification of either the qualified hedge or the hedged bonds, the qualified hedge that results from any such covered modification satisfies the requirements to be a qualified hedge (determined by applying the special rules for certain modifications of qualified hedges under § 1.148-4(h)(3)(iv)(C)) with respect to the hedged bonds that result from any such covered modification. Solely for purposes of determining whether the qualified hedge that results from a covered modification satisfies the requirements to be a qualified hedge with respect to the hedged bonds that result from any such covered modification in the preceding sentence, a qualified one-time payment with respect to the hedge or the hedged bonds (or both) is allocated in a manner consistent with the allocation of a termination payment for a variable yield issue under § 1.148-4(h)(3)(iv)(H) and treated as a series of periodic payments. This paragraph (c)(1)(iv) does not apply if, prior to any covered modifications, the qualified hedge and the tax-advantaged bond are integrated under § 1.148-4(h)(4).

(2) ***Fallback rates.*** If a covered modification of a contract that is part of an integrated transaction under § 1.1275-6 is described in paragraph (h)(1)(ii) or (iii) of this section, that covered modification is treated as not legging out of the integrated transaction. If a covered modification of a contract that is part of a qualified hedging transaction under § 1.988-5(a) is described in paragraph (h)(1)(ii) or (iii) of this section, that covered modification is treated as not legging out of the qualified hedging transaction. If a covered modification of a qualified hedge or of the tax-advantaged bonds with which the qualified hedge is integrated under § 1.148-4(h) is described in paragraph (h)(1)(ii) or (iii) of this section, that covered modification is treated as not terminating the qualified hedge under § 1.148-4(h)(3)(iv)(B).

(d) ***Coordination with provision for existing obligations under chapter 4.*** A modification of a contract is not a material modification of that contract for purposes of § 1.1471-2(b)(2)(iv) to the extent the modification is a covered modification. See paragraph (b)(2) of this section for rules that apply for purposes of § 1.1471-2(b)(2)(iv) when a modification to a contract includes both a covered modification and a contemporaneous noncovered modification.

(e) ***Coordination with fast-pay stock rules.*** A covered modification of stock is not a significant modification in the terms of the stock or the related agreements or a significant change in the relevant facts and circumstances for purposes of § 1.7701(l)-3(b)(2)(ii). If a covered modification is made at the same time as, or as part of a plan that includes, a noncovered modification and the noncovered modification is a significant modification in the terms of the stock or the related agreements or a significant change in the relevant facts and circumstances, then § 1.7701(l)-3(b)(2)(ii) applies to determine whether the stock is fast-pay stock, taking into account all the facts and circumstances (including both the covered and noncovered modification).

(f) ***Coordination with rules for investment trusts.*** A covered modification of a contract held by an investment trust does not manifest a power to vary the investment of the certificate holders for purposes of § 301.7701-4(c)(1) of this chapter. Further, a covered modification of an ownership interest in an investment trust does not manifest a power to vary the investment of the certificate holder for purposes of § 301.7701-4(c)(1) of this chapter.

(g) [Reserved]

(h) ***Definitions*** —

(1) ***Covered modification.*** A *covered modification* is a modification or portion of a modification of the terms of a contract that is described in one or more of paragraphs (h)(1)(i) through (iii) of this section and that is not described in any of paragraphs (j)(1) through (5) of this section. Any modification of the terms of a contract described in section 4.02 of Rev. Proc. 2020-44, 2020-45 I.R.B. 991, or described in other guidance published in the Internal Revenue Bulletin that supplements the list of modifications described in section 4.02 of Rev. Proc. 2020-44 or the definitions on which that section relies (see § 601.601(d)(2)(ii)(a) of this chapter) is treated as a covered modification. For purposes of this section, a modification of the terms of a contract includes any modification of the terms of the contract, regardless of the form of the modification (for example, a modification may be an exchange of one contract for another, an amendment to the existing contract, or a modification accomplished indirectly through one or more transactions with third parties) and regardless of whether the modification is evidenced by an express agreement (oral or written), conduct of the parties, or otherwise. For purposes of this section, a contract includes but is not limited to a debt instrument, a derivative contract, stock, an insurance contract, and a lease agreement.

(i) The terms of the contract are modified to replace an operative rate that references a discontinued IBOR with a qualified rate, to add an obligation for one party to make a qualified one-time payment (if any), and to make associated modifications (if any).

(ii) The terms of the contract are modified to include a qualified rate as a fallback to an operative rate that references a discontinued IBOR and to make associated modifications (if any).

(iii) The terms of the contract are modified to replace a fallback rate that references a discontinued IBOR with a qualified rate and to make associated modifications (if any).

(2) ***Noncovered modification.*** A *noncovered modification* is any modification or portion of a modification of the terms of a contract that is not a covered modification.

(3) ***Qualified rate*** —

(i) ***In general.*** A *qualified rate* is any of the rates described in paragraph (h)(3)(ii) of this section, provided that the interest rate benchmark to which the rate refers and the discontinued IBOR identified in paragraph (h)(1)(i), (ii), or (iii) of this section are based on transactions conducted in the same currency or are otherwise reasonably expected to measure contemporaneous variations in the cost of newly borrowed funds in the same currency. For purposes of paragraphs (h)(1)(ii) and (iii) of this section, a single qualified rate may be comprised of one or more fallback rates (for example, a waterfall of fallback rates). Paragraph (h)(3)(iii) of this section provides additional rules for determining whether one or more fallback rates constitute a qualified rate, and paragraph (h)(3)(iv) of this section provides examples illustrating the operation of those rules.

(ii) ***Rates.*** The following rates are described in this paragraph (h)(3)(ii):

(A) A qualified floating rate, as defined in § 1.1275-5(b), but without regard to the limitations on multiples set forth in § 1.1275-5(b) (examples of qualified floating rates generally include SOFR, the Sterling Overnight Index Average, the Tokyo Overnight Average Rate, the Swiss Average Rate Overnight, and the euro short-term rate administered by the European Central Bank);

(B) An alternative, substitute, or successor rate selected, endorsed, or recommended by the central bank, reserve bank, monetary authority, or similar institution (including any committee or working group thereof) as a replacement for a discontinued IBOR or its local currency equivalent in that jurisdiction;

(C) A rate selected, endorsed, or recommended by the Alternative Reference Rates Committee as a replacement for USD LIBOR, provided that the Federal Reserve Bank of New York is an ex officio member of the Alternative Reference Rates Committee at the time of the selection, endorsement, or recommendation;

(D) A rate that is determined by reference to a rate described in paragraph (h)(3)(ii)(A), (B), or (C) of this section, including a rate determined by adding or subtracting a specified number of basis points to or from the rate or by multiplying the rate by a specified number; and

(E) A rate identified for purposes of this section as a qualified rate in guidance published in the Internal Revenue Bulletin (see § 601.601(d)(2)(ii)(a) of this chapter).

(iii) ***Rules for fallback rates*** —

(A) ***Multiple fallback rates.*** If the rate being tested as a qualified rate is comprised of more than one fallback rate, the rate is a qualified rate only if each individual fallback rate separately satisfies the requirements to be a qualified rate.

(B) ***Indeterminable fallback rate.*** Except as provided in paragraph (h)(3)(iii)(C) of this section, if it is not possible to determine at the time of the modification being tested as a covered modification whether a fallback rate satisfies the requirements set forth in the first sentence of paragraph (h)(3)(i) of this section (for example, the calculation agent will determine the fallback rate at the time that the fallback rate is triggered based on factors that are not guaranteed to produce a rate described in paragraph (h)(3)(ii) of this section), the fallback rate is treated as not satisfying the requirements to be a qualified rate.

(C) ***Fallback rate is a remote contingency.*** If the likelihood that any value will ever be determined under the contract by reference to a fallback rate is remote (determined at the time of the modification being tested as a covered modification), that fallback rate is treated as satisfying the requirements to be a qualified rate.

(iv) ***Examples.*** The following examples illustrate the application of the rules in paragraphs (h)(3)(i) through (iii) of this section to qualified rates comprised of one or more fallback rates.

(A) ***Example 1: Addition of a single fallback rate*** —

(*1*) ***Facts.*** B is the issuer and L is the holder of a debt instrument that pays interest semiannually in U.S. dollars at a rate of six-month USD LIBOR and that contains no fallback provisions to address the pending discontinuation of six-month USD LIBOR.

On July 1, 2022, B and L modify the debt instrument to add such fallback provisions (the *new fallbacks*). The new fallbacks provide that, upon the discontinuation of six-month USD LIBOR, six-month USD LIBOR will be replaced by a fallback rate equal to CME Group's forward-looking SOFR term rate of a six-month tenor (*six-month CME Term SOFR*) plus a fixed spread that will be determined at the time of six-month USD LIBOR's discontinuation. Six-month USD LIBOR will be discontinued on June 30, 2023.

(2) ***Analysis.*** The fallback rate is a qualified floating rate and is, therefore, described in paragraph (h)(3)(ii)(A) of this section. Moreover, because both six-month USD LIBOR and six-month CME Term SOFR are based on transactions conducted in U.S. dollars, the fallback rate satisfies the currency requirement in paragraph (h)(3)(i) of this section. As further provided in paragraph (h)(3)(i) of this section, B and L must also apply the rules in paragraph (h)(3)(iii)(A), (B), and (C) of this section to determine if the fallback rate is a qualified rate. Because the rate being tested as a qualified rate (*i.e.,* the fallback rate) is comprised of only one fallback rate, paragraph (h)(3)(iii)(A) of this section has no effect. As discussed elsewhere in this paragraph (h)(3)(iv)(A)(*2*), it is evident at the time of the fallback rate's addition that the fallback rate satisfies the requirements set forth in the first sentence of paragraph (h)(3)(i) of this section, so paragraph (h)(3)(iii)(B) of this section has no effect. Because it appears likely at the time of the modification that the fallback rate will be used to determine interest on the debt instrument, paragraph (h)(3)(iii)(C) of this section has no effect. In summary, the fallback rate is described in paragraph (h)(3)(ii)(A) of this section and satisfies the currency requirement in paragraph (h)(3)(i) of this section, and none of the rules in paragraph (h)(3)(iii) of this section affect the analysis. Therefore, the fallback rate is a qualified rate.

(B) ***Example 2: Addition of a single indeterminable fallback rate*** —

(*1*) ***Facts.*** The facts are the same as in paragraph (h)(3)(iv)(A)(*1*) of this section (*Example 1*), except that the new fallbacks provide that, upon the discontinuation of six-month USD LIBOR, B will select a replacement for six-month USD LIBOR based on the industry standard at the time of selection.

(2) ***Analysis.*** As provided in paragraph (h)(3)(i) of this section, B and L must apply the rule in paragraph (h)(3)(iii)(B) of this section to determine whether the fallback rate is a qualified rate. Because it is not possible to determine at the time of the fallback rate's addition in 2022 whether the fallback rate (*i.e.,* the replacement rate that B will select in 2023) satisfies the requirements set forth in the first sentence of paragraph (h)(3)(i) of this section, the fallback rate is treated as not satisfying the requirements to be a qualified rate under paragraph (h)(3)(iii)(B) of this section. Therefore, the fallback rate is not a qualified rate.

(C) ***Example 3: Addition of a fallback waterfall that is a qualified rate*** —

(*1*) ***Facts.*** The facts are the same as in paragraph (h)(3)(iv)(A)(*1*) of this section (*Example 1*), except that the new fallbacks provide for a fallback waterfall. The first tier of the fallback waterfall provides that, upon the discontinuation of six-month USD LIBOR, six-month USD LIBOR will be replaced by a fallback rate equal to six-month CME Term SOFR plus a fixed spread that will be determined at the time of six-month USD LIBOR's discontinuation. The second tier of the fallback waterfall provides that, upon

the discontinuation of six-month CME Term SOFR, B will select a replacement for the fallback rate in the first tier of the fallback waterfall based on the industry standard at the time of selection. At the time of the fallback waterfall's addition, the likelihood that six-month CME Term SOFR will be discontinued is remote.

(2) ***Analysis of the fallback waterfall.*** As provided in paragraph (h)(3)(i) of this section, B and L must apply the rules in paragraphs (h)(3)(iii)(A), (B) and (C) of this section to determine whether the fallback waterfall is a qualified rate. Under paragraph (h)(3)(iii)(A) of this section, because the rate being tested as a qualified rate (*i.e.,* the fallback waterfall) is comprised of more than one fallback rate, the fallback waterfall is a qualified rate only if each individual fallback rate (*i.e.,* fallback rates in the first and second tiers of the fallback waterfall) separately satisfies the requirements to be a qualified rate. As concluded in paragraphs (h)(3)(iv)(C)(*3*) and (*4*) of this section, the fallback rates in the first and second tiers of the fallback waterfall separately satisfy the requirements to be a qualified rate. Therefore, the fallback waterfall is a qualified rate.

(3) ***Analysis of the first tier of the fallback waterfall.*** Because the fallback rate in the first tier of the fallback waterfall is the same as the fallback rate in paragraph (h)(3)(iv)(A)(*1*) of this section (*Example 1*), the analysis of the fallback rate in the first tier of the fallback waterfall is the same as the analysis of the fallback rate in paragraph (h)(3)(iv)(A)(*2*) of this section (*Example 1*). Accordingly, the fallback rate in the first tier of the fallback waterfall separately satisfies the requirements to be a qualified rate.

(4) ***Analysis of the second tier of the fallback waterfall.*** The fallback rate in the second tier of the fallback waterfall is the same as the fallback rate in paragraph (h)(3)(iv)(B)(*1*) of this section (*Example 2*). However, unlike the fallback rate in paragraph (h)(3)(iv)(B)(*1*) of this section (*Example 2*), the likelihood that the amount of interest on the debt instrument will ever be determined by reference to the fallback rate in the second tier of the fallback waterfall is remote. Accordingly, under paragraph (h)(3)(iii)(C) of this section, the fallback rate in the second tier of the fallback waterfall is treated as satisfying the requirements to be a qualified rate.

(D) ***Example 4: Addition of a fallback waterfall that is not a qualified rate*** —

(1) ***Facts.*** The facts are the same as in paragraph (h)(3)(iv)(A)(*1*) of this section (*Example 1*), except that the new fallbacks provide for a fallback waterfall. The first tier of the fallback waterfall provides that, upon the discontinuation of six-month USD LIBOR, six-month USD LIBOR will be replaced by a stated fallback rate (*Fallback Rate X*). Fallback Rate X, which is equal to an interest rate benchmark (*Benchmark X*) plus a fixed spread, satisfies the requirements set forth in the first sentence of paragraph (h)(3)(i) of this section. The second tier of the fallback waterfall provides that, upon the discontinuation of Benchmark X, B will select a replacement for Fallback Rate X based on the industry standard at the time of selection. At the time of the fallback waterfall's addition, the likelihood that Benchmark X will be discontinued is not remote.

(2) ***Analysis of the fallback waterfall.*** As provided in paragraph (h)(3)(i) of this section, B and L must apply the rules in paragraphs (h)(3)(iii)(A), (B) and (C) of this section to determine whether the fallback waterfall is a qualified rate. Under paragraph

(h)(3)(iii)(A) of this section, because the rate being tested as a qualified rate (*i.e.,* the fallback waterfall) is comprised of more than one fallback rate, the fallback waterfall is a qualified rate only if each individual fallback rate (*i.e.,* the fallback rates in the first and second tiers of the fallback waterfall) separately satisfies the requirements to be a qualified rate. As concluded in paragraph (h)(3)(iv)(D)(*3*) of this section, the fallback rate in the second tier of the fallback waterfall is treated as not satisfying the requirements to be a qualified rate. Therefore, the fallback waterfall is not a qualified rate.

(*3*) ***Analysis of the second tier of the fallback waterfall.*** As provided in paragraphs (h)(3)(i) and (h)(3)(iii)(A) of this section, B and L must apply the rules in paragraphs (h)(3)(iii)(B) and (C) of this section to determine whether the fallback rate in the second tier of the fallback waterfall is a qualified rate. Because the likelihood that Benchmark X will be discontinued is not remote, paragraph (h)(3)(iii)(C) of this section has no effect on the analysis of the fallback rate in the second tier of the fallback waterfall. Under paragraph (h)(3)(iii)(B) of this section, because it is not possible to determine at the time of the fallback waterfall's addition in 2022 whether the fallback rate in the second tier of the fallback waterfall (*i.e.,* the replacement rate that B will select in 2023) satisfies the requirements set forth in the first sentence of paragraph (h)(3)(i) of this section, the fallback rate in the second tier of the fallback waterfall is treated as not satisfying the requirements to be a qualified rate.

(4) ***Discontinued IBOR.*** A *discontinued IBOR* is any interbank offered rate described in paragraph (h)(4)(i) or (ii) of this section but only during the period beginning on the date of the announcement described in paragraph (h)(4)(i) or (ii) of this section and ending on the date that is one year after the date on which the administrator of the interbank offered rate ceases to provide the interbank offered rate.

(i) The administrator of the interbank offered rate announces that the administrator has ceased or will cease to provide the interbank offered rate permanently or indefinitely, and no successor administrator is expected as of the time of the announcement to continue to provide the interbank offered rate; or

(ii) The regulatory supervisor for the administrator of the interbank offered rate, the central bank for the currency of the interbank offered rate, an insolvency official with jurisdiction over the administrator for the interbank offered rate, a resolution authority with jurisdiction over the administrator for the interbank offered rate, a court, or an entity with similar insolvency or resolution authority over the administrator for the interbank offered rate announces that the administrator of the interbank offered rate has ceased or will cease to provide the interbank offered rate permanently or indefinitely, and no successor administrator is expected as of the time of the announcement to continue to provide the interbank offered rate.

(5) ***Associated modification.*** An *associated modification* is a modification of the technical, administrative, or operational terms of a contract that is reasonably necessary to adopt or to implement the modifications described in paragraph (h)(1)(i), (ii), or (iii) of this section other than associated modifications. An associated modification also includes an incidental cash payment intended to compensate a counterparty for small valuation differences resulting from a modification of the administrative terms of a contract, such as the valuation differences resulting from a change in observation period. Examples of associated modifications include a change to the definition of

interest period or a change to the timing and frequency of determining rates and making payments of interest (for example, delaying payment dates on a debt instrument by two days to allow sufficient time to compute and pay interest at a qualified rate computed in arrears).

(6) ***Qualified one-time payment.*** A *qualified one-time payment* is a single cash payment that is intended to compensate the other party or parties for all or part of the basis difference between the discontinued IBOR identified in paragraph (h)(1)(i), (ii), or (iii) of this section and the interest rate benchmark to which the qualified rate refers.

(i) [Reserved]

(j) ***Modifications excluded from the definition of covered modification.*** A modification or portion of a modification described in any of paragraphs (j)(1) through (5) of this section is excluded from the definition of covered modification in paragraph (h)(1) of this section and therefore is a noncovered modification.

(1) The terms of the contract are modified to change the amount or timing of contractual cash flows and that change is intended to induce one or more parties to perform any act necessary to consent to a modification to the contract described in paragraph (h)(1)(i), (ii), or (iii) of this section. See paragraph (j)(6)(iii) of this section (*Example 3*).

(2) The terms of the contract are modified to change the amount or timing of contractual cash flows and that change is intended to compensate one or more parties for a modification to the contract not described in paragraph (h)(1)(i), (ii), or (iii) of this section. See paragraph (j)(6)(v) of this section (*Example 5*).

(3) The terms of the contract are modified to change the amount or timing of contractual cash flows and that change is either a concession granted to a party to the contract because that party is experiencing financial difficulty or a concession secured by a party to the contract to account for the credit deterioration of another party to the contract. See paragraph (j)(6)(vi) of this section (*Example 6*).

(4) The terms of the contract are modified to change the amount or timing of contractual cash flows and that change is intended to compensate one or more parties for a change in rights or obligations that are not derived from the contract being modified. See paragraph (j)(6)(vii) of this section (*Example 7*). If each contract in a given portfolio of contracts has the same parties, those parties modify more than one contract in the portfolio (each such contract is a *modified portfolio contract*), and those modifications provide for a single, aggregate qualified one-time payment with respect to all modified portfolio contracts, then the portion of the qualified one-time payment allocable to any one modified portfolio contract is treated for purposes of this paragraph (j)(4) as not intended to compensate for a change in rights or obligations derived from any other modified portfolio contract.

(5) The terms of the contract are modified to change the amount or timing of contractual cash flows and the modification is identified for purposes of this paragraph (j)(5) in guidance published in the Internal Revenue Bulletin (see § 601.601(d)(2)(ii)(a) of this chapter) as having a principal purpose of achieving a result that is unreasonable in light of the purpose of this section.

(6) ***Examples.*** The following examples illustrate the operation of the rules in paragraphs (j)(1) through (4) of this section.

(i) ***Example 1: Covered modification —***

(A) ***Facts.*** B is the issuer and L is the holder of a debt instrument that pays interest semiannually at a rate of six-month USD LIBOR plus 100 basis points. On July 1, 2022, B and L modify the debt instrument to replace that original rate with CME Group's forward-looking SOFR term rate of a six-month tenor (*six-month CME Term SOFR*) plus an adjustment spread of 42.826 basis points plus 100 basis points (the whole modification is the *LIBOR replacement modification with basis adjustment spread*). B and L chose the adjustment spread of 42.826 basis points because that is the adjustment spread used or recommended by the International Swaps and Derivatives Association and the Alternative Reference Rates Committee for similar substitutions or replacements of six-month USD LIBOR with a tenor-adjusted variant of SOFR.

(B) ***Analysis.*** The parties have modified the terms of the debt instrument to replace a rate referencing a discontinued IBOR (*i.e.,* six-month USD LIBOR plus 100 basis points) with a qualified rate (*i.e.,* six-month CME Term SOFR plus 142.826 basis points). The LIBOR replacement modification with basis adjustment spread is described in paragraph (h)(1)(i) of this section and not described in any of paragraphs (j)(1) through (5) of this section. Therefore, the LIBOR replacement modification with basis adjustment spread is a covered modification of the debt instrument.

(ii) ***Example 2: Covered modification with qualified one-time payment*** —

(A) ***Facts.*** The facts are the same as in paragraph (j)(6)(i)(A) of this section (*Example 1*), except that, instead of the LIBOR replacement modification with basis adjustment spread, B and L modify the debt instrument by replacing the original rate of six-month USD LIBOR plus 100 basis points with six-month CME Term SOFR plus 100 basis points and by obligating B to make a cash payment to L equal to the present value of the adjustment spread of 42.826 basis points with respect to the debt instrument (this payment is the *basis adjustment payment,* and the whole modification is the *LIBOR replacement modification with basis adjustment payment*).

(B) ***Analysis.*** The parties have modified the terms of the debt instrument to replace a rate referencing a discontinued IBOR (*i.e.,* six-month USD LIBOR plus 100 basis points) with a qualified rate (*i.e.,* six-month CME Term SOFR plus 100 basis points) and have added an obligation for B to make the basis adjustment payment, which is a single cash payment that is intended to compensate L for the basis difference between the discontinued IBOR identified in paragraph (h)(1)(i) of this section (*i.e.,* six-month USD LIBOR) and the interest rate benchmark to which the qualified rate refers (*i.e.,* six-month CME Term SOFR). Accordingly, the basis adjustment payment is a qualified one-time payment as defined in paragraph (h)(6) of this section, and the LIBOR replacement modification with basis adjustment payment is described in paragraph (h)(1)(i) of this section. Because it is described in paragraph (h)(1)(i) of this section and not described in any of paragraphs (j)(1) through (5) of this section, the LIBOR replacement modification with basis adjustment payment is a covered modification of the debt instrument.

(iii) ***Example 3: Inducement spread*** —

(A) ***Facts.*** The facts are the same as in paragraph (j)(6)(i)(A) of this section (*Example 1*), except that the debt instrument is part of a widely held issue of debt with identical terms. Under the trust indenture applicable to the debt instrument, if B proposes a modification of the terms of the debt and all holders of the debt consent to that modification, the terms of the debt are modified as B proposed. In accordance with the trust indenture, B

proposes the LIBOR replacement modification with basis adjustment spread on January 1, 2022. To induce holders such as L to perform the acts necessary to consent to the LIBOR replacement modification with basis adjustment spread, B also proposes to increase the interest rate paid to each consenting holder by an additional spread of 10 basis points (the *inducement spread*). All holders, including L, consent to B's proposed modifications by June 1, 2022. On July 1, 2022, the debt instrument is modified to implement the LIBOR replacement modification with basis adjustment spread and to increase the interest rate by the inducement spread. Once all modifications are effective, the debt instrument pays interest at a rate of six-month CME Term SOFR plus 152.826 basis points.

(B) ***Analysis.*** As concluded in paragraph (j)(6)(i)(B) of this section (*Example 1*), the portion of these modifications that implements the LIBOR replacement modification with basis adjustment spread is a covered modification of L's debt instrument. However, the portion of these modifications that increases the interest rate by the inducement spread changes the amount of cash flows on L's debt instrument, and that change is intended to induce L to perform the acts necessary to consent to a modification to the debt instrument described in paragraph (h)(1)(i) of this section (*i.e.,* the LIBOR replacement modification with basis adjustment spread). Therefore, the portion of the modification that increases the interest rate by the inducement spread is described in paragraph (j)(1) of this section and, consequently, is a noncovered modification of L's debt instrument. See paragraph (b)(2) of this section for the treatment of a contemporaneous noncovered modification.

(iv) ***Example 4: Consent fee*** —

(A) ***Facts.*** The facts are the same as in paragraph (j)(6)(iii)(A) of this section (*Example 3*), except that, instead of proposing to increase the interest rate paid to each consenting holder by the inducement spread, B proposes to make a cash payment to each consenting holder (the *consent fee*) at the time of the modification. Thus, when the proposed modification occurs on July 1, 2022, B pays all holders, including L, the consent fee. Once all modifications are effective, the debt instrument pays interest at a rate of six-month CME Term SOFR plus 142.826 basis points.

(B) ***Analysis.*** As concluded in paragraph (j)(6)(i)(B) of this section (*Example 1*), the LIBOR replacement modification with basis adjustment spread is a covered modification of L's debt instrument. However, B's obligation to pay the consent fee is also a modification of L's debt instrument but is not a covered modification because it is not described in paragraph (h)(1)(i) of this section. In particular, B's obligation to pay the consent fee is not an associated modification because it is not a modification of the technical, administrative, or operational terms of L's debt instrument and is not intended to compensate for valuation differences resulting from a modification of the administrative terms of L's contract. Nor is the consent fee a qualified one-time payment because it is not intended to compensate L for any part of the basis difference between the discontinued IBOR identified in paragraph (h)(1)(i) of this section (*i.e.,* six-month USD LIBOR) and the interest rate benchmark to which the qualified rate refers (*i.e.,* six-month CME Term SOFR). See paragraph (b)(2) of this section for the treatment of a contemporaneous noncovered modification.

(v) ***Example 5: Compensation for a modification to a customary financial covenant*** —

(A) ***Facts.*** The facts are the same as in paragraph (j)(6)(i)(A) of this section (*Example 1*), except that, at the same time as and for reasons unrelated to the LIBOR replacement modification with basis adjustment spread, B and L also modify customary financial covenants in the debt instrument in a manner that benefits B. In exchange for the modification of customary financial covenants, B agrees to add another 30 basis points to the rate such that, once all modifications are effective, the debt instrument pays interest at a rate of six-month CME Term SOFR plus 172.826 basis points.

(B) ***Analysis.*** As concluded in paragraph (j)(6)(i)(B) of this section (*Example 1*), the portion of these modifications that implements the LIBOR replacement modification with basis adjustment spread is a covered modification of the debt instrument. However, the portion of these modifications that modifies customary financial covenants is not related to the replacement of LIBOR and, therefore, is not described in any of paragraphs (h)(1)(i), (ii), or (iii) of this section and, therefore, is a noncovered modification of the debt instrument. Moreover, the portion of these modifications that adds 30 basis points to the rate changes the amount of cash flows on the debt instrument, and the parties intend that change to compensate L for a modification to the debt instrument not described in paragraph (h)(1)(i), (ii), or (iii) of this section (*i.e.,* the modification of customary financial covenants). Therefore, the portion of these modifications that adds those 30 basis points to the rate is described in paragraph (j)(2) of this section and, consequently, is a noncovered modification of the debt instrument. See paragraph (b)(2) of this section for the treatment of a contemporaneous noncovered modification.

(vi) ***Example 6: Workout of distressed debt*** —

(A) ***Facts.*** The facts are the same as in paragraph (j)(6)(i)(A) of this section (*Example 1*), except that B's financial condition has deteriorated since the issue date of the debt instrument and, to decrease the risk of B's default or bankruptcy, L agrees to subtract 50 basis points from the rate such that, once all modifications are effective, the debt instrument pays interest at a rate of six-month CME Term SOFR plus 92.826 basis points.

(B) ***Analysis.*** As concluded in paragraph (j)(6)(i)(B) of this section (*Example 1*), the portion of these modifications that implements the LIBOR replacement modification with basis adjustment spread is a covered modification of the debt instrument. However, the portion of these modifications that subtracts 50 basis points from the rate changes the amount of cash flows on the debt instrument, and that change is a concession granted to B because B is experiencing financial difficulty. Therefore, the portion of these modifications that subtracts those 50 basis points from the rate is described in paragraph (j)(3) of this section and, consequently, is a noncovered modification of the debt instrument. See paragraph (b)(2) of this section for the treatment of a contemporaneous noncovered modification.

(vii) ***Example 7: Change in rights or obligations not derived from the modified contract*** —

(A) ***Facts.*** B is the issuer and L is the holder of a debt instrument (*Debt X*) with respect to which the facts are the same as in paragraph (j)(6)(i)(A) of this section (*Example 1*). In addition, B and L are the issuer and holder, respectively, of a second debt instrument (*Debt Y*). At the same time that the LIBOR replacement modification with basis adjustment spread occurs with respect to Debt X, B and L also modify customary financial covenants in Debt Y in a manner that benefits B. In exchange for the modification of customary

financial covenants in Debt Y, B agrees to add another 30 basis points to the rate on Debt X such that, once all modifications are effective, Debt X pays interest at a rate of six-month CME Term SOFR plus 172.826 basis points.

(B) ***Analysis.*** As concluded in paragraph (j)(6)(i)(B) of this section (*Example 1*), the portion of these modifications that implements the LIBOR replacement modification with basis adjustment spread is a covered modification of Debt X. However, the portion of these modifications that adds 30 basis points to the rate on Debt X changes the amount of cash flows on Debt X, and the parties intend that change to compensate L for a change in rights or obligations that are not derived from Debt X (*i.e.,* the modification of customary financial covenants in Debt Y). Therefore, the portion of these modifications that adds those 30 basis points to the rate on Debt X is described in paragraph (j)(4) of this section and, consequently, is a noncovered modification of Debt X. See paragraph (b)(2) of this section for the treatment of a contemporaneous noncovered modification.

(k) ***Applicability date.*** This section applies to a modification of the terms of a contract that occurs on or after March 7, 2022. A taxpayer may choose to apply this section to modifications of the terms of contracts that occur before March 7, 2022, provided that the taxpayer and all related parties (within the meaning of section 267(b) or section 707(b)(1) or within the meaning of § 1.150-1(b) for a taxpayer that is a State or local governmental unit (as defined in § 1.103-1(a)) or a 501(c)(3) organization (as defined in section 150(a)(4))) apply this section to all modifications of the terms of contracts that occur before that date. See section 7805(b)(7).

[T.D. 9961, 87 FR 176, Jan. 4, 2022]

§ 1.1001-7 Computation of gain or loss for digital assets.

(a) ***In general.*** This section provides rules to determine the amount realized for purposes of computing the gain or loss upon the sale, exchange, or other disposition of digital assets, as defined in § 1.6045-1(a)(19) other than a digital asset not required to be reported as a digital asset pursuant to § 1.6045-1(c)(8)(ii), (iii), or (iv).

(b) ***Amount realized in a sale, exchange, or other disposition of digital assets for cash, other property, or services —***

(1) ***Computation of amount realized —***

(i) ***In general.*** If digital assets are sold or otherwise disposed of for cash, other property differing materially in kind or in extent, or services, the amount realized is the excess of:

(A) The sum of:

(*1*) Any cash received;

(*2*) The fair market value of any property received or, in the case of a debt instrument described in paragraph (b)(1)(iv) of this section, the amount determined under paragraph (b)(1)(iv) of this section; and

(*3*) The fair market value of any services received; reduced by

(B) The amount of digital asset transaction costs, as defined in paragraph (b)(2)(i) of this section, allocable to the sale or disposition of the transferred digital asset, as determined under paragraph (b)(2)(ii) of this section.

(ii) ***Digital assets used to pay digital asset transaction costs.*** If digital assets are used or withheld to pay digital asset transaction costs, as defined in paragraph (b)(2)(i) of this section, such use or withholding is a disposition of the digital assets for services.

(iii) ***Application of general rule to certain sales, exchanges, or other dispositions of digital assets.*** The following paragraphs (b)(1)(iii)(A) through (C) of this section apply the rules of this section to certain sales, exchanges, or other dispositions of digital assets.

(A) ***Sales or other dispositions of digital assets for cash.*** The amount realized from the sale of digital assets for cash is the sum of the amount of cash received plus the fair market value of services received as described in paragraph (b)(1)(ii) of this section, reduced by the amount of digital asset transaction costs allocable to the disposition of the transferred digital assets, as determined under paragraph (b)(2)(ii) of this section.

(B) ***Exchanges or other dispositions of digital assets for services, or certain property.*** The amount realized on the exchange or other disposition of digital assets for services or property differing materially in kind or in extent, other than digital assets or debt instruments described in paragraph (b)(1)(iv) of this section, is the sum of the fair market value of such property and services received (including services received as described in paragraph (b)(1)(ii) of this section), reduced by the amount of digital asset transaction costs allocable to the disposition of the transferred digital assets, as determined under paragraph (b)(2)(ii) of this section.

(C) ***Exchanges of digital assets.*** The amount realized on the exchange of one digital asset for another digital asset differing materially in kind or in extent is the sum of the fair market value of the digital asset received plus the fair market value of services received as described in paragraph (b)(1)(ii) of this section, reduced by the amount of digital asset transaction costs allocable to the disposition of the transferred digital asset, as determined under paragraph (b)(2)(ii) of this section.

(iv) ***Debt instrument issued in exchange for digital assets.*** For purposes of this section, if a debt instrument is issued in exchange for digital assets and the debt instrument is subject to § 1.1001-1(g), the amount attributable to the debt instrument is determined under § 1.1001-1(g) (in general, the issue price of the debt instrument).

(2) ***Digital asset transaction costs*** —

(i) ***Definition.*** The term *digital asset transaction costs* means the amounts paid in cash or property (including digital assets) to effect the sale, disposition or acquisition of a digital asset. Digital asset transaction costs include transaction fees, transfer taxes, and commissions.

(ii) ***Allocation of digital asset transaction costs.*** This paragraph (b)(2)(ii) provides the rules for allocating digital asset transaction costs to the sale or disposition of a digital asset. Accordingly, any other allocation or specific assignment of digital asset transaction costs is disregarded.

(A) ***In general.*** Except as provided in paragraph (b)(2)(ii)(B) of this section, the total digital asset transaction costs paid by the taxpayer in connection with the sale or disposition of digital assets are allocable to the sale or disposition of the digital assets.

(B) ***Special rule for allocation of certain cascading digital asset transaction costs.*** This paragraph (b)(2)(ii)(B) provides a special rule in the case of a transaction described in paragraph (b)(1)(iii)(C) of this section (original transaction) and for which digital assets are withheld from digital assets acquired in the original transaction to pay the digital asset transaction costs to effect the original transaction. The total digital asset transaction costs paid by the taxpayer to effect both the original transaction and any disposition of the withheld digital assets are allocable exclusively to the disposition of digital assets in the original transaction.

(3) ***Time for determining fair market value of digital assets.*** Generally, the fair market value of a digital asset is determined as of the date and time of the sale or disposition of the digital asset.

(4) ***Special rule when the fair market value of property or services cannot be determined.*** If the fair market value of the property (including digital assets) or services received in exchange for digital assets cannot be determined with reasonable accuracy, the fair market value of such property or services must be determined by reference to the fair market value of the digital assets transferred as of the date and time of the exchange. This paragraph (b)(4), however, does not apply to a debt instrument described in paragraph (b)(1)(iv) of this section.

(5) ***Examples.*** The following examples illustrate the application of paragraphs (b)(1) through (3) of this section. Unless the facts specifically state otherwise, the transactions described in the following examples occur after the applicability date set forth in paragraph (c) of this section. For purposes of the examples under this paragraph (b)(5), assume that TP is a digital asset investor, and each unit of digital asset A, B, and C is materially different in kind or in extent from the other units. *See* § 1.1012-1(h)(4) for examples illustrating the determination of basis of digital assets.

(i) ***Example 1: Exchange of digital assets for services*** —

(A) ***Facts.*** TP owns a total of 20 units of digital asset A, and each unit has an adjusted basis of $0.50. X, an unrelated person, agrees to perform cleaning services for TP in exchange for 10 units of digital asset A, which together have a fair market value of $10. The fair market value of the services performed by X also equals $10. X then performs the services, and TP transfers 10 units of digital asset A to X. Additionally, TP pays $1 in cash of transaction fee to dispose of digital asset A.

(B) ***Analysis.*** Under paragraph (b)(1) of this section, TP has a disposition of 10 units of digital asset A for services received. Under paragraphs (b)(2)(i) and (b)(2)(ii)(A) of this section, TP has digital asset transaction costs of $1, which must be allocated to the disposition of digital asset A. Under paragraph (b)(1)(i) of this section, TP's amount realized on the disposition of the units of digital asset A is $9, which is the fair market value of the services received, $10, reduced by the digital asset transaction costs allocated to the disposition of digital asset A, $1. TP recognizes a gain of $4 on the exchange ($9 amount realized reduced by $5 adjusted basis in 10 units).

(ii) ***Example 2: Digital asset transaction costs paid in cash in an exchange of digital assets*** —

(A) ***Facts.*** TP owns a total of 10 units of digital asset A, and each unit has an adjusted basis of $0.50. TP uses BEX, an unrelated third party, to effect the exchange of 10 units of digital asset A for 20 units of digital asset B. At the time of the exchange, each unit of digital asset A has a fair market value of $2 and each unit of digital asset B has a fair market value of $1. BEX charges $2 per transaction, which BEX requires its customers to pay in cash. At the time of the transaction, TP pays BEX $2 in cash.

(B) ***Analysis.*** Under paragraph (b)(2)(i) of this section, TP has digital asset transaction costs of $2. Under paragraph (b)(2)(ii)(A) of this section, TP must allocate such costs ($2) to the disposition of the 10 units of digital asset A. Under paragraphs (b)(1)(i) and (b)(3) of this section, TP's amount realized from the exchange is $18, which is the fair market value of the 20 units of digital asset B received ($20) as of the date and time of the transaction, reduced by the digital asset transaction costs allocated to the disposition of digital asset A ($2). TP recognizes a gain of $13 on the exchange ($18 amount realized reduced by $5 adjusted basis in the 10 units of digital asset A).

(iii) ***Example 3: Digital asset transaction costs paid with other digital assets*** —

(A) ***Facts.*** The facts are the same as in paragraph (b)(5)(ii)(A) of this section (the facts in *Example 2*), except that BEX requires its customers to pay transaction fees using units of digital asset C. TP has an adjusted basis in each unit of digital asset C of $0.50. TP transfers 2 units of digital asset C to BEX to effect the exchange of digital asset A for digital asset B. TP also pays to BEX an additional unit of digital asset C for services rendered by BEX to effect the disposition of digital asset C for payment of the transaction costs. The fair market value of each unit of digital asset C is $1.

(B) ***Analysis.*** TP disposes of 3 units of digital asset C for services described in paragraph (b)(1)(ii) of this section. Therefore, under paragraph (b)(2)(i) of this section, TP has digital asset transaction costs of $3. Under paragraph (b)(2)(ii)(A) of this section, TP must allocate $2 of such costs to the disposition of the 10 units of digital asset A. TP must also allocate $1 of such costs to the disposition of the 3 units of digital asset C. None of the digital asset transaction costs are allocable to the acquired units of digital asset B. Under paragraphs (b)(1)(i) and (b)(3) of this section, TP's amount realized on the disposition of digital asset A is $18, which is the excess of the fair market value of the 20 units of digital asset B received ($20) as of the date and time of the transaction over the allocated digital asset transaction costs ($2). Also, under paragraphs (b)(1)(i) and (b)(3) of this section, TP's amount realized on the disposition of the 3 units of digital asset C is $2, which is the excess of the gross proceeds determined as of the date and time of the transaction over the allocated digital asset transaction costs of $1. TP recognizes a gain of $13 on the disposition of 10 units of digital asset A ($18 amount realized over $5 adjusted basis) and a gain of $0.50 on the disposition of the 3 units of digital asset C ($2 amount realized over $1.50 adjusted basis).

(iv) ***Example 4: Digital asset transaction costs withheld from the transferred digital assets in an exchange of digital assets*** —

(A) ***Facts.*** The facts are the same as in paragraph (b)(5)(ii)(A) of this section (the facts in *Example 2*), except that BEX requires its payment be withheld from the units of the digital asset transferred. At the time of the transaction, BEX withholds 1 unit of digital asset A. TP exchanges the remaining 9 units of digital asset A for 18 units of digital asset B.

(B) ***Analysis.*** The withholding of 1 unit of digital asset A is a disposition of a digital asset for services within the meaning of paragraph (b)(1)(ii) of this section. Under paragraph (b)(2)(i) of this section, TP has digital asset transaction costs of $2. Under paragraph (b)(2)(ii)(A) of this section, TP must allocate such costs to the disposition of the 10 units of digital asset A. Under paragraphs (b)(1)(i) and (b)(3) of this section, TP's amount realized on the 10 units of digital asset A is $18, which is the excess of the fair market value of the 18 units of digital asset B received ($18) and the fair market value of services

received ($2) as of the date and time of the transaction over the allocated digital asset transaction costs ($2). TP recognizes a gain on the 10 units of digital asset A transferred of $13 ($18 amount realized reduced by $5 adjusted basis in the 10 units).

(v) ***Example 5: Digital asset transaction fees withheld from the acquired digital assets in an exchange of digital assets*** —

(A) ***Facts.*** The facts are the same as in paragraph (b)(5)(iv)(A) of this section (the facts in *Example 4*), except that BEX requires its payment be withheld from the units of the digital asset acquired. At the time of the transaction, BEX withholds 3 units of digital asset B, 2 units of which effect the exchange of digital asset A for digital asset B and 1 unit of which effects the disposition of digital asset B for payment of the transaction fees. TP does not make an identification to BEX identifying other units of B as the units disposed.

(B) ***Analysis.*** The withholding of 3 units of digital asset B is a disposition of digital assets for services within the meaning of paragraph (b)(1)(ii) of this section. Under paragraph (b)(2)(i) of this section, TP has digital asset transaction costs of $3. Under paragraph (b)(2)(ii)(B) of this section, TP must allocate such costs to the disposition of the 10 units of digital asset A in the original transaction. Under paragraphs (b)(1)(i) and (b)(3) of this section, TP's amount realized on the 10 units of digital asset A is $17, which is the excess of the fair market value of the 20 units of digital asset B received ($20) as of the date and time of the transaction over the allocated digital asset transaction costs ($3). TP's amount realized on the disposition of the 3 units of digital asset B used to pay digital asset transaction costs is $3, which is the fair market value of services received at the time of the transaction. TP recognizes a gain on the 10 units of digital asset A transferred of $12 ($17 amount realized reduced by $5 adjusted basis in the 10 units). TP recognizes $0 in gain or loss on the 3 units of digital asset B withheld ($3 amount realized reduced by $3 (adjusted basis in the 3 units)). *See* § 1.1012-1(j)(3)(iii) for the special rule for identifying the basis and holding period of the 3 units withheld.

(c) ***Applicability date.*** This section applies to all sales, exchanges, and dispositions of digital assets on or after January 1, 2025.

[T.D. 10000, 89 FR 56543, July 9, 2024]

§ 1.1002-1 Sales or exchanges.

(a) ***General rule.*** The general rule with respect to gain or loss realized upon the sale or exchange of property as determined under section 1001 is that the entire amount of such gain or loss is recognized except in cases where specific provisions of subtitle A of the code provide otherwise.

(b) ***Strict construction of exceptions from general rule.*** The exceptions from the general rule requiring the recognition of all gains and losses, like other exceptions from a rule of taxation of general and uniform application, are strictly construed and do not extend either beyond the words or the underlying assumptions and purposes of the exception. Nonrecognition is accorded by the Code only if the exchange is one which satisfies both

(1) the specific description in the Code of an excepted exchange, and

(2) the underlying purpose for which such exchange is excepted from the general rule. The exchange must be germane to, and a necessary incident of, the investment or enterprise in hand. The relationship of the exchange to the venture or enterprise is always material, and the surrounding facts and circumstances must be shown. As elsewhere, the taxpayer claiming the benefit of the exception must show himself within the exception.

(c) ***Certain exceptions to general rule.*** Exceptions to the general rule are made, for example, by sections 351(a), 354, 361(a), 371(a)(1), 371(b)(1), 721, 1031, 1035 and 1036. These sections describe certain specific exchanges of property in which at the time of the exchange particular differences exist between the property parted with and the property acquired, but such differences are more formal than substantial. As to these, the Code provides that such differences shall not be deemed controlling, and that gain or loss shall not be recognized at the time of the exchange. The underlying assumption of these exceptions is that the new property is substantially a continuation of the old investment still unliquidated; and, in the case of reorganizations, that the new enterprise, the new corporate structure, and the new property are substantially continuations of the old still unliquidated.

(d) ***Exchange.*** Ordinarily, to constitute an exchange, the transaction must be a reciprocal transfer of property, as distinguished from a transfer of property for a money consideration only.

BASIS RULES OF GENERAL APPLICATION

§ 1.1011-1 Adjusted basis.

The adjusted basis for determining the gain or loss from the sale or other disposition of property is the cost or other basis prescribed in section 1012 or other applicable provisions of subtitle A of the code, adjusted to the extent provided in sections 1016, 1017, and 1018 or as otherwise specifically provided for under applicable provisions of internal revenue laws.

§ 1.1011-2 Bargain sale to a charitable organization.

(a) ***In general.***

(1) If for the taxable year a charitable contributions deduction is allowable under section 170 by reason of a sale or exchange of property, the taxpayer's adjusted basis of such property for purposes of determining gain from such sale or exchange must be computed as provided in section 1011(b) and paragraph (b) of this section. If after applying the provisions of section 170 for the taxable year, including the percentage limitations of section 170(b), no deduction is allowable under that section by reason of the sale or exchange of the property, section 1011(b) does not apply and the adjusted basis of the property is not required to be apportioned pursuant to paragraph (b) of this section. In such case the entire adjusted basis of the property is to be taken into account in determining gain from the sale or exchange, as provided in § 1.1011-1(e). In ascertaining whether or not a charitable contributions deduction is allowable under section 170 for the taxable year for such purposes, that section is to be applied without regard to this section and the amount by which the contributed portion of the property must be reduced under section 170(e)(1) is the amount determined by taking into account the amount of gain which would have been ordinary income or long-term capital gain if the contributed portion of the property had been sold by the donor at its fair market value at the time of the sale or exchange.

(2) If in the taxable year there is a sale or exchange of property which gives rise to a charitable contribution which is carried over under section 170(b)(1)(D)(ii) or section 170(d) to a subsequent taxable year or is postponed under section 170(a)(3) to a subsequent taxable year, section 1011(b) and paragraph (b) of this section must be applied for purposes of apportioning the adjusted basis of the property for the year of the sale or exchange, whether or not such contribution is allowable as a deduction under section 170 in such subsequent year.

(3) If property is transferred subject to an indebtedness, the amount of the indebtedness must be treated as an amount realized for purposes of determining whether there is a sale or exchange to which section 1011(b) and this section apply, even though the transferee does not agree to assume or pay the indebtedness.

(4)

(i) Section 1011(b) and this section apply where property is sold or exchanged in return for an obligation to pay an annuity and a charitable contributions deduction is allowable under section 170 by reason of such sale or exchange.

(ii) If in such case the annuity received in exchange for the property is nonassignable, or is assignable but only to the charitable organization to which the property is sold or exchanged, and if the transferor is the only annuitant or the transferor and a designated survivor annuitant or annuitants are the only annuitants, any gain on such exchange is to be reported as provided in example (8) in paragraph (c) of this section. In determining the period over which gain may be reported as provided in such example, the life expectancy of the survivor annuitant may not be taken into account. The fact that the transferor may retain the right to revoke the survivor's annuity or relinquish his own right to the annuity will not be considered, for purposes of this subdivision, to make the annuity assignable to someone other than the charitable organization. Gain on an exchange of the type described in this subdivision pursuant to an agreement which is entered into after December 19, 1969, and before May 3, 1971, may be reported as provided in example (8) in paragraph (c) of this section, even though the annuity is assignable.

(iii) In the case of an annuity to which subdivision (ii) of this subparagraph applies, the gain unreported by the transferor with respect to annuity payments not yet due when the following events occur is not required to be included in gross income of any person where—

(*a*) The transferor dies before the entire amount of gain has been reported and there is no surviving annuitant, or

(*b*) The transferor relinquishes the annuity to the charitable organization.

If the transferor dies before the entire amount of gain on a two-life annuity has been reported, the unreported gain is required to be reported by the surviving annuitant or annuitants with respect to the annuity payments received by them.

(b) ***Apportionment of adjusted basis.*** For purposes of determining gain on a sale or exchange to which this paragraph applies, the adjusted basis of the property which is sold or exchanged shall be that portion of the adjusted basis of the entire property which bears the same ratio to the adjusted basis as the amount realized bears to the fair market value of the entire property. The amount of such gain which shall be treated as ordinary income (or long-term capital gain) shall be that amount which bears the same ratio to the ordinary income (or long-term capital gain) which would have been recognized if the entire property had been sold by the donor at its fair market value at the time of the sale or exchange as the amount realized on the sale or exchange bears to the fair market value of the entire property at such time. The

terms *ordinary income* and *long-term capital gain,* as used in this section, have the same meaning as they have in paragraph (a) of § 1.170A-4. For determining the portion of the adjusted basis, ordinary income, and long- term capital gain allocated to the contributed portion of the property for purposes of applying section 170(e)(1) and paragraph (a) of § 1.170A-4 to the contributed portion of the property, and for determining the donee's basis in such contributed portion, see paragraph (c) (2) and (4) of § 1.170A-4. For determining the holding period of such contributed portion, see section 1223(2) and the regulations thereunder.

(c) ***Illustrations.*** The application of this section may be illustrated by the following examples, which are supplemented by other examples in paragraph (d) of § 1.170A-4:

Example 1. In 1970, A, a calendar-year individual taxpayer, sells to a church for $4,000 stock held for more than 6 months which has an adjusted basis of $4,000 and a fair market value of $10,000. A's contribution base for 1970, as defined in section 170(b)(1)(F), is $100,000, and during that year he makes no other charitable contributions. Thus, A makes a charitable contribution to the church of $6,000 ($10,000 value −$4,000 amount realized). Without regard to this section, A is allowed a deduction under section 170 of $6,000 for his charitable contribution to the church, since there is no reduction under section 170(e)(1) with respect to the long-term capital gain. Accordingly, under paragraph (b) of this section the adjusted basis for determining gain on the bargain sale is $1,600 ($4,000 adjusted basis × $4,000 amount realized / $10,000 value of property). A has recognized long-term capital gain of $2,400 ($4,000 amount realized − $1,600 adjusted basis) on the bargain sale.

Example 2. The facts are the same as in example (1) except that A also makes a charitable contribution in 1970 of $50,000 cash to the church. By reason of section 170(b)(1)(A), the deduction allowed under section 170 for 1970 is $50,000 for the amount of cash contributed to the church; however, the $6,000 contribution of property is carried over to 1971 under section 170(d). Under paragraphs (a)(2) and (b) of this section the adjusted basis for determining gain for 1970 on the bargain sale in that year is $1,600 ($4,000 × $4,000 / $10,000). A has a recognized long-term capital gain for 1970 of $2,400 ($4,000 − $1,600) on the sale.

Example 3. In 1970, C, a calendar-year individual taxpayer, makes a charitable contribution of $50,000 cash to a church. In addition, he sells for $4,000 to a private foundation not described in section 170(b)(1)(E) stock held for more than 6 months which has an adjusted basis of $4,000 and a fair market value of $10,000. Thus, C makes a charitable contribution of $6,000 of such property to the private foundation ($10,000 value − $4,000 amount realized). C's contribution base for 1970, as defined in section 170(b)(1)(F), is $100,000, and during that year he makes no other charitable contributions. By reason of section 170(b)(1)(A), the deduction allowed under section 170 for 1970 is $50,000 for the amount of cash contributed to the church. Under section 170(e)(1)(B)(ii) and paragraphs (a)(1) and (c)(2)

(i) of § 1.170A-4, the $6,000 contribution of stock is reduced to $4,800 ($6,000 − [50% × ($6,000 value of contributed portion of stock − $3,600 adjusted basis)]). However, by reason of section 170(b)(1)(B)(ii), applied without regard to section 1011(b), no deduction is allowed under section 170 for 1970 or any other year for the reduced contribution of $4,800 to the private foundation. Accordingly, paragraph (b) of this section does not apply for purposes of apportioning the adjusted basis of the stock sold to the private foundation, and under section 1.1011-1(e) the recognized gain on the bargain sale is $0 ($4,000 amount realized − $4,000 adjusted basis).

Example 4. In 1970, B, a calendar-year individual taxpayer, sells to a church for $2,000 stock held for not more than 6 months which has an adjusted basis of $4,000 and a fair market value of $10,000. B's contribution base for 1970, as defined in section 170(b)(1)(F), is $20,000 and during such year B makes no other charitable contributions. Thus, he makes a charitable contribution to the church of $8,000 ($10,000 value − $2,000 amount realized). Under paragraph (b) of this section the adjusted basis for determining gain on the bargain sale is $800 ($4,000 adjusted basis × $2,000 amount realized / $10,000 value of stock). Accordingly, B, has a recognized short-term capital gain of $1,200 ($2,000 amount realized − $800 adjusted basis) on the bargain sale. After applying section 1011(b) and paragraphs (a)(1) and (c)(2)

(i) of § 1.170A-4, B is allowed a charitable contributions deduction for 1970 of $3,200 ($8,000 value of gift − [$8,000 − ($4,000 adjusted basis of property × $8,000 value of gift / $10,000 value of property)]).

Example 5. The facts are the same as in Example 4 except that B sells the property to the church for $4,000. Thus, B makes a charitable contribution to the church of $6,000 ($10,000 value −$4,000 amount realized). Under paragraph (b) of this section the adjusted basis for determining gain on the bargain sale is $1,600 ($4,000 adjusted basis × $4,000 amount realized / $10,000 value of stock). Accordingly, B has a recognized short-term capital gain of $2,400 ($4,000 amount realized − $1,600 adjusted basis) on the bargain sale. After applying section 1011(b) and paragraphs (a)(1) and (c)(2)

(i) of § 1.170A-4, B is allowed a charitable contributions deduction for 1970 of $2,400 ($6,000 value of gift − [$6,000 − ($4,000 adjusted basis of property × $6,000 value of gifts / $10,000 value of property)]).

Example 6. The facts are the same as in Example 4 except that B sells the property to the church for $6,000. Thus, B makes a charitable contribution to the church of $4,000 ($10,000 value −$6,000 amount realized). Under paragraph (b) of this section the adjusted basis for determining gain on the bargain sale is $2,400 ($4,000 adjusted basis × $6,000 amount realized/$10,000 value of stock). Accordingly, B has a recognized short-term capital gain of $3,600 ($6,000 amount realized −$2,400 adjusted basis) on the bargain sale. After applying section 1011(b) and paragraphs (a)(1) and (c)(2)

(i) of § 1.170A-4, B is allowed a charitable contributions deduction for 1970 of $1,600 ($4,000 value of gift −[$4,000 −($4,000 adjusted basis of property × $4,000 value of gift/$10,000 value of property]).

Example 7. In 1970, C, a calendar-year individual taxpayer, sells to a church for $4,000 tangible personal property used in his business for more than 6 months which has an adjusted basis of $4,000 and a fair market value of $10,000. Thus, C makes a charitable contribution to the church of $6,000 ($10,000 value −$4,000 adjusted basis). C's contribution base for 1970, as defined in section 170(b)(1)(F) is $100,000 and during such year he makes no other charitable contributions. If C had sold the property at its fair market value at the time of its contribution, it is assumed that under section 1245 $4,000 of the gain of $6,000 ($10,000 value −$4,000 adjusted basis) would have been treated as ordinary icome. Thus, there would have been long-term capital gain of $2,000. It is also assumed that the church does not put the property to an unrelated use, as defined in paragraph (b)(3) of § 1.170A-4. Under paragraph (b) of this section the adjusted basis for determining gain on the bargain sale is $1,600 ($4,000 adjusted basis × $4,000 amount realized/$10,000 value of property). Accordingly, C has a recognized gain of $2,400 ($4,000 amount realized −$1,600 adjusted basis) on the bargain sale, consisting of ordinary income of $1,600 ($4,000 ordinary income × $4,000

amount realized/$10,000 value of property) and of long-term capital gain of $800 ($2,000 long-term gain × $4,000 amount realized/$10,000 value of property). After applying section 1011(b) and paragraphs (a) and (c)(2)

(i) of § 1.170A-4, C is allowed a charitable contributions deduction for 1970 of $3,600 ($6,000 gift −[$4,000 ordinary income × $6,000 value of gift/$10,000 value of property]).

Example 8. (a) On January 1, 1970, A, a male of age 65, transfers capital assets consisting of securities held for more than 6 months to a church in exchange for a promise by the church to pay A a nonassignable annuity of $5,000 per year for life. The annuity is payable monthly with the first payment to be made on February 1, 1970. A's contribution base for 1970, as defined in section 170(b)(1)(F), is $200,000, and during that year he makes no other charitable contributions. On the date of transfer the securities have a fair market value of $100,000 and an adjusted basis to A of $20,000. (b) The present value of the right of a male age 65 to receive a life annuity of $5,000 per annum, payable in equal installments at the end of each monthly period, is $59,755 ($5,000 × [11.469 + 0.482]), determined in accordance with section 101(b) of the Code, paragraph (e)(1)(iii)(b)(2) of § 1.101-2, and section 3 of Rev. Rul. 62-216, C.B. 1962-2, 30. Thus, A makes a charitable contribution to the church of $40,245 ($100,000 −$59,755). See Rev. Rul. 84-162, 1984-2 C.B. 200, for transfers for which the valuation date falls after November 23, 1984. (See § 601.601(d)(2)(ii)(*b*) of this chapter). For the applicable valuation tables in connection therewith, see § 20.2031-7(d)(6) of this chapter. See, however, § 1.7520-3(b) (relating to exceptions to the use of standard actuarial factors in certain circumstances).

(c) Under paragraph (b) of this section, the adjusted basis for determining gain on the bargain sale is $11,951 ($20,000 × $59,755 / $100,000). Accordingly, A has a recognized long-term capital gain of $47,804 ($59,755 − $11,951) on the bargain sale. Such gain is to be reported by A ratably over the period of years measured by the expected return multiple under the contract, but only from that portion of the annual payments which is a return of his investment in the contract under section 72 of the Code. For such purposes, the investment in the contract is $59,755, that is, the present value of the annuity.

(d) The computation and application of the exclusion ratio, the gain, and the ordinary annuity income are as follows, determined by using the expected return multiple of 15.0 applicable under table I of § 1.72-9:

A's expected return (annual payments of $5,000 × 15)	$75,000.00
Exclusion ratio ($59,755 investment in contract divided by expected return of $75,000)	79.7%

Annual exclusion (annual payments of $5,000 × 79.7%)	$3,985.00
Ordinary annuity income ($5,000−$3,985)	$1,015.00
Long-term capital gain per year ($47,804/15) with respect to the annual exclusion	$3,186.93

(e) The exclusion ratio of 79.7 percent applies throughout the life of the contract. During the first 15 years of the annuity, A is required to report ordinary income of $1,015 and long-term capital gain of $3,186.93 with respect to the annuity payments he receives. After the total long-term capital gain of $47,804 has been reported by A, he is required to report only ordinary income of $1,015.00 per annum with respect to the annuity payments he receives.

(d) ***Effective date.*** This section applies only to sales and exchanges made after December 19, 1969.

(e) ***Cross reference.*** For rules relating to the treatment of liabilities on the sale or other disposition or encumbered property, see § 1.1001-2.

[T.D. 7207, 37 FR 20798, Oct. 5, 1972, as amended by T.D. 7741, 45 FR 81745, Dec. 12, 1980; T.D. 8176, 53 FR 5570, Feb. 25, 1988; 53 FR 11002, Apr. 4, 1988; T.D. 8540, 59 FR 30148, June 10, 1994]

§ 1.1012-1 Basis of property.

(a) ***General rule.*** In general, the basis of property is the cost thereof. The cost is the amount paid for such property in cash or other property. This general rule is subject to exceptions stated in subchapter O (relating to gain or loss on the disposition of property), subchapter C (relating to corporate distributions and adjustments), subchapter K (relating to partners and partnerships), and subchapter P (relating to capital gains and losses), chapter 1 of the code.

(b) ***Real estate taxes as part of cost.*** In computing the cost of real property, the purchaser shall not take into account any amount paid to the seller as reimbursement for real property taxes which are treated under section 164(d) as imposed upon the purchaser. This rule applies whether or not the contract of sale calls for the purchaser to reimburse the seller for such real estate taxes paid or to be paid by the seller. On the other hand, where the purchaser pays (or assumes liability for) real estate taxes which are treated under section 164(d) as imposed upon the seller, such taxes shall be considered part of the cost of the property. It is immaterial whether or not the contract of sale specifies that the sale price has been reduced by, or is in any way intended to reflect, real estate taxes allocable to the seller under section 164(d). For illustrations of the application of this paragraph, see paragraph (b) of § 1.1001-1.

(c) ***Sale of stock*** —

(1) ***In general.***

(i) Except as provided in paragraph (e)(2) of this section (dealing with stock for which the average basis method is permitted), if a taxpayer sells or transfers shares of stock in a corporation that the taxpayer purchased or acquired on different dates or at different prices and the taxpayer does not adequately identify the lot from which the stock is sold or transferred, the stock sold

or transferred is charged against the earliest lot the taxpayer purchased or acquired to determine the basis and holding period of the stock. If the earliest lot purchased or acquired is held in a stock certificate that represents multiple lots of stock, and the taxpayer does not adequately identify the lot from which the stock is sold or transferred, the stock sold or transferred is charged against the earliest lot included in the certificate. See paragraphs (c)(2), (c)(3), and (c)(4) of this section for rules on what constitutes an adequate identification.

(ii) A taxpayer must determine the basis of identical stock (within the meaning of paragraph (e)(4) of this section) by averaging the cost of each share if the stock is purchased at separate times on the same calendar day in executing a single trade order and the broker executing the trade provides a single confirmation that reports an aggregate total cost or an average cost per share. However, the taxpayer may determine the basis of the stock by the actual cost per share if the taxpayer notifies the broker in writing of this intent. The taxpayer must notify the broker by the earlier of the date of the sale of any of the stock for which the taxpayer received the confirmation or one year after the date of the confirmation. A broker may extend the one-year period but the taxpayer must notify the broker no later than the date of sale of any of the stock.

(2) ***Identification of stock.*** An adequate identification is made if it is shown that certificates representing shares of stock from a lot which was purchased or acquired on a certain date or for a certain price were delivered to the taxpayer's transferee. Except as otherwise provided in subparagraph (3) or (4) of this paragraph, such stock certificates delivered to the transferee constitute the stock sold or transferred by the taxpayer. Thus, unless the requirements of subparagraph (3) or (4) of this paragraph are met, the stock sold or transferred is charged to the lot to which the certificates delivered to the transferee belong, whether or not the taxpayer intends, or instructs his broker or other agent, to sell or transfer stock from a lot purchased or acquired on a different date or for a different price.

(3) ***Identification on confirmation document.***

(i) Where the stock is left in the custody of a broker or other agent, an adequate identification is made if—

(*a*) At the time of the sale or transfer, the taxpayer specifies to such broker or other agent having custody of the stock the particular stock to be sold or transferred, and

(*b*) Within a reasonable time thereafter, confirmation of such specification is set forth in a written document from such broker or other agent.

Stock identified pursuant to this subdivision is the stock sold or transferred by the taxpayer, even though stock certificates from a different lot are delivered to the taxpayer's transferee.

(ii) Where a single stock certificate represents stock from different lots, where such certificate is held by the taxpayer rather than his broker or other agent, and where the taxpayer sells a part of the stock represented by such certificate through a broker or other agent, an adequate identification is made if—

(*a*) At the time of the delivery of the certificate to the broker or other agent, the taxpayer specifies to such broker or other agent the particular stock to be sold or transferred, and

(*b*) Within a reasonable time thereafter, confirmation of such specification is set forth in a written document from such broker or agent.

Where part of the stock represented by a single certificate is sold or transferred directly by the taxpayer to the purchaser or transferee instead of through a broker or other agent, an adequate identification is made if the taxpayer maintains a written record of the particular stock which he intended to sell or transfer.

(4) ***Stock held by a trustee, executor, or administrator.***

(i) A trustee or executor or administrator of an estate holding stock (not left in the custody of a broker) makes an adequate identification if the trustee, executor, or administrator—

(*a*) Specifies in writing in the books and records of the trust or estate the particular stock to be sold, transferred, or distributed;

(*b*) In the case of a distribution, furnishes the distributee with a written document identifying the particular stock distributed; and

(*c*) In the case of a sale or transfer through a broker or other agent, specifies to the broker or agent the particular stock to be sold or transferred, and within a reasonable time thereafter the broker or agent confirms the specification in a written document.

(ii) The stock the trust or estate identifies under paragraph (c)(4)(i) of this section is the stock treated as sold, transferred, or distributed, even if the trustee, executor, or administrator delivers stock certificates from a different lot.

(5) ***Subsequent sales.*** If stock identified under subparagraph (3) or (4) of this paragraph as belonging to a particular lot is sold, transferred, or distributed, the stock so identified shall be deemed to have been sold, transferred, or distributed, and such sale, transfer, or distribution will be taken into consideration in identifying the taxpayer's remaining stock for purposes of subsequent sales, transfers, or distributions.

(6) ***Bonds.*** Paragraphs (1) through (5), (8), and (9) of this section apply to the sale or transfer of bonds.

(7) ***Book-entry securities.***

(i) In applying the provisions of subparagraph (3)(i)(*a*) of this paragraph in the case of a sale or transfer of a book-entry security (as defined in subdivision (iii) (*a*) of this subparagraph) which is made after December 31, 1970, pursuant to a written instruction by the taxpayer, a specification by the taxpayer of the unique lot number which he has assigned to the lot which contains the securities being sold or transferred shall constitute specification as required by such subparagraph. The specification of the lot number shall be made either—

(*a*) In such written instruction, or

(*b*) In the case of a taxpayer in whose name the book entry by the Reserve Bank is made, in a list of lot numbers with respect to all book-entry securities on the books of the Reserve Bank sold or transferred on that date by the taxpayer, provided such list is mailed to or received by the Reserve Bank on or before the Reserve Bank's next business day.

This subdivision shall apply only if the taxpayer assigns lot numbers in numerical sequence to successive purchases of securities of the same loan title (series) and maturity date, except that securities of the same loan title (series) and maturity date which are purchased at the same price on the same date may be included within the same lot.

(ii) In applying paragraph (c)(3)(i)(*b*) of this section to a sale or transfer of a book-entry security pursuant to a taxpayer's written instruction, a confirmation is made by furnishing to the taxpayer a written advice of transaction from the Reserve Bank or other person through whom the taxpayer sells or transfers the securities. The confirmation document must describe the securities and specify the date of the transaction and amount of securities sold or transferred.

(iii) For purposes of this paragraph (c)(7):

(*a*) The term *book-entry security* means a transferable Treasury bond, note, certificate of indebtedness, or bill issued under the Second Liberty Bond Act (31 U.S.C. 774(2)), as amended, or other security of the United States (as defined in paragraph (c)(7)(iii)(*b*) of this section) in the form of an entry made as prescribed in 31 CFR Part 306, or other comparable Federal regulations, on the records of a Reserve Bank.

(*b*) The term *other security of the United States* means a bond, note, certificate of indebtedness, bill, debenture, or similar obligation which is subject to the provisions of 31 CFR part 306 or other comparable Federal regulations and which is issued by (*1*) any department or agency of the Government of the United States, or (*2*) the Federal National Mortgage Association, the Federal Home Loan Banks, the Federal Home Loan Mortgage Corporation, the Federal Land Banks, the Federal Intermediate Credit Banks, the Banks for Cooperatives, or the Tennessee Valley Authority;

(*c*) The term *serially-numbered advice of transaction* means the confirmation (prescribed in 31 CFR 306.116) issued by the Reserve Bank which is identifiable by a unique number and indicates that a particular written instruction to the Reserve Bank with respect to the deposit or withdrawal of a specified book-entry security (or securities) has been executed; and

(*d*) The term *Reserve Bank* means a Federal Reserve Bank and its branches acting as Fiscal Agent of the United States.

(8) ***Time for making identification.*** For purposes of this paragraph (c), an adequate identification of stock is made at the time of sale, transfer, delivery, or distribution if the identification is made no later than the earlier of the settlement date or the time for settlement required by Rule 15c6-1 under the Securities Exchange Act of 1934, 17 CFR 240.15c6-1 (or its successor). A standing order or instruction for the specific identification of stock is treated as an adequate identification made at the time of sale, transfer, delivery, or distribution.

(9) ***Method of writing.***

(i) A written confirmation, record, document, instruction, notification, or advice includes a writing in electronic format.

(ii) A broker or agent may include the written confirmation required under this paragraph (c) in an account statement or other document the broker or agent periodically provides to the taxpayer if the broker or agent provides the statement or other document within a reasonable time after the sale or transfer.

(10) ***Method for determining basis of stock.*** A method of determining the basis of stock, including a method of identifying stock sold under this paragraph (c) and the average basis method described in paragraph (e) of this section, is not a method of accounting. Therefore, a change in a method of determining the basis of stock is not a change in method of accounting to which sections 446 and 481 apply.

(11) ***Effective/applicability date.*** Paragraphs (c)(1), (c)(4), (c)(6), (c)(7)(ii), (c)(7)(iii)(*a*), (c)(8), (c)(9), and (c)(10) of this section apply for taxable years beginning after October 18, 2010.

(d) ***Obligations issued as part of an investment unit.*** For purposes of determining the basis of the individual elements of an investment unit (as defined in paragraph (b)(2)(ii)(*a*) of § 1.1232-3) consisting of an obligation and an option (which is not an excluded option under paragraph (b)(1)(iii)(*c*) of § 1.1232-3), security, or other property, the cost of such investment unit shall be allocated to such individual elements on the basis of their respective fair market values. In the case of the initial issuance of an investment unit consisting of an obligation and an option, security, or other property, where neither the obligation nor the option, security, or other property has a readily ascertainable fair market value, the portion of the cost of the unit which is allocable to the obligation shall be an amount equal to the issue price of the obligation as determined under paragraph (b)(2)(ii)(*a*) of § 1.1232-3.

(e) ***Election to use average basis method*** —

(1) ***In general.*** Notwithstanding paragraph (c) of this section, and except as provided in paragraph (e)(8) of this section, a taxpayer may use the average basis method described in paragraph (e)(7) of this section to determine the cost or other basis of identical shares of stock if—

(i) The taxpayer leaves shares of stock in a regulated investment company (as defined in paragraph (e)(5) of this section) or shares of stock acquired after December 31, 2010, in connection with a dividend reinvestment plan (as defined in paragraph (e)(6) of this section) with a custodian or agent in an account maintained for the acquisition or redemption, sale, or other disposition of shares of the stock; and

(ii) The taxpayer acquires identical shares of stock at different prices or bases in the account.

(2) ***Determination of method.***

(i) If a taxpayer places shares of stock described in paragraph (e)(1)(i) of this section acquired on or after January 1, 2012, in the custody of a broker (as defined by section 6045(c)(1)), including by transfer from an account with another broker, the basis of the shares is determined in accordance with the broker's default method, unless the taxpayer notifies the broker that the taxpayer elects another permitted method. The taxpayer must report gain or loss using the method the taxpayer elects or, if the taxpayer fails to make an election, the broker's default method. *See* paragraphs (e)(9)(i) and (e)(9)(v), *Example 2,* of this section.

(ii) The provisions of this paragraph (e)(2) are illustrated by the following example:

> *Example.* (i) In connection with a dividend reinvestment plan, Taxpayer B acquires 100 shares of G Company in 2012 and 100 shares of G Company in 2013, in an account B maintains with R Broker. B notifies R in writing that B elects to use the average basis method to compute the basis of the shares of G Company. In 2014, B transfers the shares of G Company to an account with S Broker. B does not notify S of the basis determination method B chooses to use for the shares of G Company, and S's default

> method is first-in, first-out. In 2015, B purchases 200 shares of G Company in the account with S. In 2016, B instructs S to sell 150 shares of G Company.
> (ii) Because B does not notify S of a basis determination method for the shares of G Company, under paragraph (e)(2)(i) of this section, the basis of the 150 shares of G Company S sells for B in 2016 must be determined under S's default method, first-in, first-out.

(3) ***Shares of stock.*** For purposes of this paragraph (e), securities issued by unit investment trusts described in paragraph (e)(5) of this section are treated as shares of stock and the term *share* or *shares* includes fractions of a share.

(4) ***Identical stock.*** For purposes of this paragraph (e), *identical shares of stock* means stock with the same Committee on Uniform Security Identification Procedures (CUSIP) number or other security identifier number as permitted in published guidance of general applicability, *see* § 601.601(d)(2) of this chapter.

(5) ***Regulated investment company.***

(i) For purposes of this paragraph, a *regulated investment company* means any domestic corporation (other than a personal holding company as defined in section 542) which meets the limitations of section 851(b) and § 1.851-2, and which is registered at all times during the taxable year under the Investment Company Act of 1940, as amended (15 U.S.C. 80a-1 to 80b-2), either as a management company, or as a unit investment trust.

(ii) Notwithstanding subdivision (i), this paragraph shall not apply in the case of a unit investment trust unless it is one—

(*a*) Substantially all of the assets of which consist (*1*) of securities issued by a single management company (as defined in such Act) and securities acquired pursuant to subdivision (*b*) of this subdivision (ii), or (*2*) securities issued by a single other corporation, and

(*b*) Which has no power to invest in any other securities except securities issued by a single other management company, when permitted by such Act or the rules and regulations of the Securities and Exchange Commission.

(6) ***Dividend reinvestment plan*** —

(i) ***In general.*** For purposes of this paragraph (e), the term *dividend reinvestment plan* means any written plan, arrangement, or program under which at least 10 percent of every dividend (within the meaning of section 316) on any share of stock is reinvested in stock identical to the stock on which the dividend is paid. A plan is a dividend reinvestment plan if the plan documents require that at least 10 percent of any dividend paid is reinvested in identical stock even if the plan includes stock on which no dividends have ever been declared or paid or on which an issuer ceases paying dividends. A plan that holds one or more different stocks may permit a taxpayer to reinvest a different percentage of dividends in the stocks held. A dividend reinvestment plan may reinvest other distributions on stock, such as capital gain distributions, non-taxable returns of capital, and cash in lieu of fractional shares. The term dividend reinvestment plan includes both issuer administered dividend reinvestment plans and non-issuer administered dividend reinvestment plans.

(ii) ***Acquisition of stock.*** Stock is acquired in connection with a dividend reinvestment plan if the stock is acquired under that plan, arrangement, or program, or if the dividends and other distributions paid on the stock are subject to that plan, arrangement, or program. Shares of stock acquired in connection with a dividend reinvestment plan include the initial purchase of stock in the dividend reinvestment plan, transfers of identical stock into the dividend reinvestment plan, additional periodic purchases of identical stock in the dividend reinvestment plan, and identical stock acquired through reinvestment of the dividends or other distributions paid on the stock held in the plan.

(iii) ***Dividends and other distributions paid after reorganization.*** For purposes of this paragraph (e)(6), dividends and other distributions declared or announced before or pending a corporate action (such as a merger, consolidation, acquisition, split-off, or spin-off) involving the issuer and subsequently paid and reinvested in shares of stock in the successor entity or entities are treated as reinvested in shares of stock identical to the shares of stock of the issuer.

(iv) ***Withdrawal from or termination of plan.*** If a taxpayer withdraws stock from a dividend reinvestment plan or the plan administrator terminates the dividend reinvestment plan, the shares of identical stock the taxpayer acquires after the withdrawal or termination are not acquired in connection with a dividend reinvestment plan. The taxpayer may not use the average basis method after the withdrawal or termination but may use any other permissible basis determination method. See paragraph (e)(7)(v) of this section for the basis of the shares after withdrawal or termination.

(7) ***Computation of average basis*** —

(i) ***In general.*** Average basis is determined by averaging the basis of all shares of identical stock in an account regardless of holding period. However, for this purpose, shares of stock in a dividend reinvestment plan are not identical to shares of stock with the same CUSIP number that are not in a dividend reinvestment plan. The basis of each share of identical stock in the account is the aggregate basis of all shares of that stock in the account divided by the aggregate number of shares. Unless a single-account election is in effect, see paragraph (e)(11) of this section, a taxpayer may not average together the basis of identical stock held in separate accounts that the taxpayer sells, exchanges, or otherwise disposes of on or after January 1, 2012.

(ii) ***Order of disposition of shares sold or transferred.*** In the case of the sale or transfer of shares of stock to which the average basis method election applies, shares sold or transferred are deemed to be the shares first acquired. Thus, the first shares sold or transferred are those with a holding period of more than 1 year (long-term shares) to the extent that the account contains long-term shares. If the number of shares sold or transferred exceeds the number of long-term shares in the account, the excess shares sold or transferred are deemed to be shares with a holding period of 1 year or less (short-term shares). Any gain or loss attributable to shares held for more than 1 year constitutes long-term gain or loss, and any gain or loss attributable to shares held for 1 year or less constitutes short-term gain or loss. For example, if a taxpayer sells 50 shares from an account containing 100 long-term shares and 100 short-term shares, the shares sold or transferred are all long-term shares. If, however, the account contains 40 long-term shares and 100 short-term shares, the taxpayer has sold 40 long-term shares and 10 short-term shares.

(iii) ***Transition rule from double-category method.*** This paragraph (e)(7)(iii) applies to stock for which a taxpayer uses the double-category method under § 1.1012-1(e)(3) (April 1, 2010), that the taxpayer acquired before April 1, 2011, and that the taxpayer sells, exchanges, or otherwise disposes of on or after that date. The taxpayer must calculate the average basis of this stock by averaging together all identical shares of stock in the account on April 1, 2011, regardless of holding period.

(iv) ***Wash sales.*** A taxpayer must apply section 1091 and the associated regulations (dealing with wash sales of substantially identical securities) in computing average basis regardless of whether the stock or security sold or otherwise disposed of and the stock acquired are in the same account or in different accounts.

(v) ***Basis after change from average basis method.*** Unless a taxpayer revokes an average basis method election under paragraph (e)(9)(iii) of this section, if a taxpayer changes from the average basis method to another basis determination method (including a change resulting from a withdrawal from or termination of a dividend reinvestment plan), the basis of each share of stock immediately after the change is the same as the basis immediately before the change. *See* paragraph (e)(9)(iv) of this section for rules for changing from the average basis method.

(vi) The provisions of this paragraph (e)(7) are illustrated by the following examples:

> *Example 1.* (i) In 2011, Taxpayer C acquires 100 shares of H Company and enrolls them in a dividend reinvestment plan administered by T Custodian. C elects to use the average basis method for the shares of H Company enrolled in the dividend reinvestment plan. T also acquires for C's account 50 shares of H Company and does not enroll these shares in the dividend reinvestment plan.
> (ii) Under paragraph (e)(7)(i) of this section, the 50 shares of H Company not in the dividend reinvestment plan are not identical to the 100 shares of H Company enrolled in the dividend reinvestment plan, even if they have the same CUSIP number. Accordingly, under paragraphs (e)(1) and (e)(7)(i) of this section, C may not average the basis of the 50 shares of H Company with the basis of the 100 shares of H Company. Under paragraph (e)(1)(i) of this section, C may not use the average basis method for the 50 shares of H Company because the shares are not acquired in connection with a dividend reinvestment plan.

> *Example 2.* (i) Taxpayer D enters into an agreement with W Custodian establishing an account for the periodic acquisition of shares of L Company, a regulated investment company. W acquires for D's account shares of L Company stock on the following dates and amounts:

Date	Number of shares	Cost
January 8, 2010	25	$200

Date	Number of shares	Cost
February 8, 2010	24	200
March 8, 2010	20	200
April 8, 2010	20	200

(ii) At D's direction, W sells 40 shares from the account on January 15, 2011, for $10 per share or a total of $400. D elects to use the average basis method for the shares of L Company. The average basis for the shares sold on January 15, 2011, is $8.99 (total cost of shares, $800, divided by the total number of shares, 89).
(iii) Under paragraph (e)(7)(ii) of this section, the shares sold are the shares first acquired. Thus, D realizes $25.25 ($1.01 * 25) long-term capital gain for the 25 shares acquired on January 8, 2010, and $15.15 ($1.01 * 15) short-term capital gain for 15 of the shares acquired on February 8, 2010.

Example 3. (i) The facts are the same as in *Example 2,* except that on February 8, 2011, D changes to the first-in, first-out basis determination method. W purchases 25 shares of L Company for D on March 8, 2011, at $12 per share. D sells 40 shares on May 8, 2011, and 34 shares on July 8, 2012.
(ii) Because D uses the first-in, first-out method, the 40 shares sold on May 8, 2011 are 9 shares purchased on February 8, 2010, 20 shares purchased on March 8, 2010, and 11 shares purchased on April 8, 2010. Because, under paragraph (e)(7)(v) of this section, the basis of the shares D owns when D changes from the average basis method remains the same, the basis of the shares sold on May 8, 2011, is $8.99 per share, not the original cost of $8.33 per share for the shares purchased on February 8, 2010, or $10 per share for the shares purchased on March 8, 2010, and April 8, 2010. The basis of the shares sold on July 8, 2012, is $8.99 per share for 9 shares purchased on April 8, 2010, and $12 per share for 25 shares purchased on March 8, 2011.

Example 4. (i) The facts are the same as in *Example 2,* except that D uses the first-in, first-out method for the 40 shares sold on January 15, 2011. W purchases 25 shares of L Company for D on March 8, 2011, at $12 per share. D sells 40 shares on May 8, 2011, and elects the average basis method.
(ii) Because D uses the first-in, first-out method for the sale on January 15, 2011, the 40 shares sold are the 25 shares acquired on January 8, 2010, for $200 (basis $8 per share) and 15 of the 24 shares purchased on February 8, 2010, for $200 (basis $8.33 per share).

(iii) Under paragraph (e)(7)(i) of this section, under the average basis method, the basis of all of the shares of identical stock in D's account is averaged. Thus, the basis of each share D sells on May 8, 2011, after electing the average basis method, is $10.47. This figure is the total cost of the shares in D's account ($74.97 for the 9 shares acquired on February 8, 2010, $200 for the 20 shares acquired on March 8, 2010, $200 for the 20 shares acquired on April 8, 2010, and $300 for the 25 shares acquired on March 8, 2011) divided by 74, the total number of shares ($774.97/74).

(8) ***Limitation on use of average basis method for certain gift shares.***

(i) Except as provided in paragraph (e)(8)(ii) of this section, a taxpayer may not use the average basis method for shares of stock a taxpayer acquires by gift after December 31, 1920, if the basis of the shares (adjusted for the period before the date of the gift as provided in section 1016) in the hands of the donor or the last preceding owner by whom the shares were not acquired by gift was greater than the fair market value of the shares at the time of the gift. This paragraph (e)(8)(i) does not apply to shares the taxpayer acquires as a result of a taxable dividend or capital gain distribution on the gift shares.

(ii) Notwithstanding paragraph (e)(8)(i) of this section, a taxpayer may use the average basis method if the taxpayer states in writing that the taxpayer will treat the basis of the gift shares as the fair market value of the shares at the time the taxpayer acquires the shares. The taxpayer must provide this statement when the taxpayer makes the election under paragraph (e)(9) of this section or when transferring the shares to an account for which the taxpayer has made this election, whichever occurs later. The statement must be effective for any gift shares identical to the gift shares to which the average basis method election applies that the taxpayer acquires at any time and must remain in effect as long as the election remains in effect.

(iii) The provisions of this paragraph (e)(8) are illustrated by the following examples:

Example 1. (i) Taxpayer E owns an account for the periodic acquisition of shares of M Company, a regulated investment company. On April 15, 2010, E acquires identical shares of M Company by gift and transfers those shares into the account. These shares had an adjusted basis in the hands of the donor that was greater than the fair market value of the shares on that date. On June 15, 2010, E sells shares from the account and elects to use the average basis method.
(ii) Under paragraph (e)(8)(ii) of this section, E may elect to use the average basis method for shares sold or transferred from the account if E includes a statement with E's election that E will treat the basis of the gift shares in the account as the fair market value of the shares at the time E acquired them. *See* paragraph (e)(9)(ii) of this section.

Example 2. (i) The facts are the same as in *Example 1,* except E acquires the gift shares on April 15, 2012, transfers those shares into the account, and used the average basis method for sales of shares of M Company before acquiring the gift shares. E sells shares of M Company on June 15, 2012.

(ii) Under paragraph (e)(8)(ii) of this section, the basis of the gift shares may be averaged with the basis of the other shares of M Company in E's account if, when E transfers the gift shares to the account, E provides a statement to E's broker that E will treat the basis of the gift shares in the account as the fair market value of the shares at the time E acquired them. *See* paragraph (e)(9)(i) of this section.

(9) ***Time and manner for making the average basis method election*** —

(i) ***In general.*** A taxpayer makes an election to use the average basis method for shares of stock described in paragraph (e)(1)(i) of this section that are covered securities (within the meaning of section 6045(g)(3)) by notifying the custodian or agent in writing by any reasonable means. For purposes of this paragraph (e), a writing may be in electronic format. A taxpayer has not made an election within the meaning of this section if the taxpayer fails to notify a broker of the taxpayer's basis determination method and basis is determined by the broker's default method under paragraph (e)(2) of this section. A taxpayer may make the average basis method election at any time, effective for sales or other dispositions of stock occurring after the taxpayer notifies the custodian or agent. The election must identify each account with that custodian or agent and each stock in that account to which the election applies. The election may specify that it applies to all accounts with a custodian or agent, including accounts the taxpayer later establishes with the custodian or agent. If the election applies to gift shares, the taxpayer must provide the statement required by paragraph (e)(8)(ii) of this section, if applicable, to the custodian or agent with the taxpayer's election.

(ii) ***Average basis method election for securities that are noncovered securities.*** A taxpayer makes an election to use the average basis method for shares of stock described in paragraph (e)(1)(i) of this section that are noncovered securities (as described in § 1.6045-1(a)(16)) on the taxpayer's income tax return for the first taxable year for which the election applies. A taxpayer may make the election on an amended return filed no later than the time prescribed (including extensions) for filing the original return for the taxable year for which the election applies. The taxpayer must indicate on the return that the taxpayer used the average basis method in reporting gain or loss on the sale or other disposition. A taxpayer must attach to the return the statement described in paragraph (e)(8)(ii) of this section, if applicable. A taxpayer making the election must maintain records necessary to substantiate the average basis reported.

(iii) ***Revocation of election.*** A taxpayer may revoke an election under paragraph (e)(9)(i) of this section by the earlier of one year after the taxpayer makes the election or the date of the first sale, transfer, or disposition of that stock following the election. A custodian or agent may extend the one-year period but a taxpayer may not revoke an election after the first sale, transfer, or disposition of the stock. A revocation applies to all stock the taxpayer holds in an account that is identical to the shares of stock for which the taxpayer revokes the election. A revocation is effective when the taxpayer notifies, in writing by any reasonable means, the custodian or agent holding the stock to which the revocation applies. After revocation, the taxpayer's basis in the shares of stock to which the revocation applies is the basis before averaging.

(iv) ***Change from average basis method.*** A taxpayer may change basis determination methods from the average basis method to another method prospectively at any time. A change from the average basis method applies to all identical stock the taxpayer sells or otherwise disposes of before January 1, 2012, that was held in any account. A change from the average basis method

applies on an account by account basis (within the meaning of paragraph (e)(10) of this section) to all identical stock the taxpayer sells or otherwise disposes of on or after January 1, 2012. The taxpayer must notify, in writing by any reasonable means, the custodian or agent holding the stock to which the change applies. Unless paragraph (e)(9)(iii) of this section applies, the basis of each share of stock to which the change applies remains the same as the basis immediately before the change. *See* paragraph (e)(7)(v) of this section.

(v) ***Examples.*** The provisions of this paragraph (e)(9) are illustrated by the following examples:

Example 1. (i) Taxpayer F enters into an agreement with W Custodian establishing an account for the periodic acquisition of shares of N Company, a regulated investment company. W acquires for F's account shares of N Company on the following dates and amounts:

Date	Number of shares	Cost
January 8, 2012	25	$200
February 8, 2012	24	200
March 8, 2012	20	200

(ii) F notifies W that F elects, under paragraph (e)(9)(i) of this section, to use the average basis method for the shares of N Company. On May 8, 2012, under paragraph (e)(9)(iii) of this section, F notifies W that F revokes the average basis method election. On June 1, 2012, F sells 60 shares of N Company using the first-in, first-out basis determination method.
(iii) Under paragraph (e)(9)(iii) of this section, the basis of the N Company shares upon revocation, and for purposes of determining gain on the sale, is $8.00 per share for each of the 25 shares purchased on January 8, 2012, $8.34 per share for each of the 24 shares purchased on February 8, 2012, and $10 per share for the remaining 11 shares purchased on March 8, 2012.

Example 2. (i) The facts are the same as in *Example 1,* except that F does not notify W that F elects a basis determination method. W's default basis determination method is the average basis method and W maintains an averaged basis for F's shares of N Company on W's books and records.
(ii) F has not elected the average basis method under paragraph (e)(9)(i) of this section. Therefore, F's notification to W on May 8, 2012, is not an effective revocation under paragraph (e)(9)(iii) of this section. F's attempted revocation is, instead, notification of a change from the average basis method under paragraph (e)(9)(iv) of this section.

Accordingly, the basis of each share of stock F sells on June 1, 2012, is the basis immediately before the change, $8.70 (total cost of shares, $600, divided by the total number of shares, 69).

(10) *Application of average basis method account by account* —

(i) ***In general.*** For sales, exchanges, or other dispositions on or after January 1, 2012, of stock described in paragraph (e)(1)(i) of this section, the average basis method applies on an account by account basis. A taxpayer may use the average basis method for stock in a regulated investment company or stock acquired in connection with a dividend reinvestment plan in one account but use a different basis determination method for identical stock in a different account. If a taxpayer uses the average basis method for a stock described in paragraph (e)(1)(i) of this section, the taxpayer must use the average basis method for all identical stock within that account. The taxpayer may use different basis determination methods for stock within an account that is not identical. Except as provided in paragraph (e)(10)(ii) of this section, a taxpayer must make separate elections to use the average basis method for stock held in separate accounts.

(ii) ***Account rule for stock sold before 2012.*** A taxpayer's election to use the average basis method for shares of stock described in paragraph (e)(1)(i) of this section that a taxpayer sells, exchanges, or otherwise disposes of before January 1, 2012, applies to all identical shares of stock the taxpayer holds in any account.

(iii) ***Separate account.*** Unless the single-account election described in paragraph (e)(11)(i) of this section applies, stock described in paragraph (e)(1)(i) of this section that is a covered security (within the meaning of section 6045(g)(3)) is treated as held in a separate account from stock that is a noncovered security (as described in § 1.6045-1(a)(16)), regardless of when acquired.

(iv) ***Examples.*** The provisions of this paragraph (e)(10) are illustrated by the following examples:

Example 1. (i) In 2012, Taxpayer G enters into an agreement with Y Broker establishing three accounts (G-1, G-2, and G-3) for the periodic acquisition of shares of P Company, a regulated investment company. Y makes periodic purchases of P Company for each of G's accounts. G elects to use the average basis method for account G-1. On July 1, 2013, G sells shares of P Company from account G-1.
(ii) G is not required to use the average basis method for the shares of P Company that G holds in accounts G-2 and G-3 because, under paragraph (e)(10)(i) of this section, the average basis method election applies to shares sold after 2011 on an account by account basis.

Example 2. The facts are the same as in *Example 1,* except that G also instructs Y to acquire shares of Q Company, a regulated investment company, for account G-1. Under paragraph (e)(10)(i) of this section, G may use any permissible basis determination method for the shares of Q Company because, under paragraph (e)(4) of this section, the shares of Q Company are not identical to the shares of P Company.

Example 3. (i) The facts are the same as in *Example 1,* except that G establishes

the accounts in 2011 and Y sells shares of P Company from account G-1 on July 1, 2011.
(ii) For sales before 2012, under paragraph (e)(10)(ii) of this section, G's election applies to all accounts in which G holds identical stock. G must average together the basis of the shares in all accounts to determine the basis of the shares sold from account G-1.

Example 4. (i) In 2011, Taxpayer H acquires 80 shares of R Company and enrolls them in R Company's dividend reinvestment plan. In 2012, H acquires 50 shares of R Company in the dividend reinvestment plan. H elects to use the average basis method for the shares of R Company in the dividend reinvestment plan. R Company does not make the single-account election under paragraph (e)(11)(i) of this section.
(ii) Under section 6045(g)(3) and § 1.6045-1(a)(16), the 80 shares acquired in 2011 are noncovered securities and the 50 shares acquired in 2012 are covered securities. Therefore, under paragraph (e)(10)(iii) of this section, the 80 shares are treated as held in a separate account from the 50 shares. H must make a separate average basis method election for each account and must average the basis of the shares in each account separately from the shares in the other account.

Example 5. (i) B Broker maintains an account for Taxpayer J for the periodic acquisition of shares of S Company, a regulated investment company. In 2013, B purchases shares of S Company for J's account that are covered securities within the meaning of section 6045(g)(3). On April 15, 2014, J inherits shares of S Company that are noncovered securities and transfers the shares into the account with B.
(ii) Under paragraph (e)(10)(iii) of this section, J must treat the purchased shares and the inherited shares of S Company as held in separate accounts. J may elect to apply the average basis method to all the shares of S Company, but must make a separate election for each account, and must average the basis of the shares in each account separately from the shares in the other account.

Example 6. (i) In 2010, Taxpayer K purchases stock in T Company in an account with C Broker. In 2012, K purchases additional T Company stock and enrolls that stock in a dividend reinvestment plan maintained by C. K elects the average basis method for the T Company stock. In 2013, K transfers the T Company stock purchased in 2010 into the dividend reinvestment plan.

(ii) Under paragraphs (e)(1)(i) and (e)(6)(ii) of this section, the stock purchased in 2010 is not stock acquired after December 31, 2010, in connection with a dividend reinvestment plan before transfer into the dividend reinvestment plan. Therefore, the stock is not eligible for the average basis method at that time.

(iii) Once transferred into the dividend reinvestment plan in 2013, the stock K purchased in 2010 is acquired after December 31, 2010, in connection with a dividend reinvestment plan within the meaning of paragraph (e)(6)(ii) of this section and is eligible for the average basis method. Because stock purchased in 2010 is a noncovered security under § 1.6045-1(a)(16), under paragraph (e)(10)(iii) of this section, the 2010 stock and the 2012 stock must be treated as held in separate accounts. Under paragraph (e)(7)(i) of this section, the basis of the 2010 shares may not be averaged with the basis of the 2012 shares.

Example 7. The facts are the same as in *Example 6,* except that K purchases the initial T Company stock in January 2011. Because this stock is a covered security under section 6045(g)(3) and § 1.6045-1(a)(15)(iv)(A), the 2011 stock and the 2012 stock are not required under paragraph (e)(10)(iii) of this section to be treated as held in separate accounts. Under paragraph (e)(7)(i) of this section, the basis of the 2011 shares must be averaged with the basis of the 2012 shares.

Example 8. (i) The facts are the same as in *Example 7,* except that K purchases the additional T Company stock and enrolls in the dividend reinvestment plan in March 2011. In September 2011, K transfers the T Company stock purchased in January 2011 into the dividend reinvestment plan. K sells some of the T Company stock in 2012.
(ii) Under section 6045(g)(3) and § 1.6045-1(a)(16), the stock K purchases in January 2011 is a covered security at the time of purchase but the stock K purchases and enrolls in the dividend reinvestment plan in March 2011 is a noncovered security. However, under § 1.6045-1(a)(15)(iv)(A), the stock purchased in January 2011 becomes a noncovered security after it is transferred to the dividend reinvestment plan. Because all the shares in the dividend reinvestment plan in September 2011 are noncovered securities, when K sells stock in 2012, the January 2011 stock and the March 2011 stock are not required under paragraph (e)(10)(iii) of this section to be treated as held in separate accounts. Under paragraph (e)(7)(i) of this section, the basis of the January 2011 shares must be averaged with the basis of the March 2011 shares.

(11) ***Single-account election*** —

(i) ***In general.*** Paragraph (e)(10)(iii) of this section does not apply if a regulated investment company or dividend reinvestment plan elects to treat all identical shares of stock described in paragraph (e)(1)(i) of this section as held in a single account (single-account election). The

single-account election applies only to stock for which a taxpayer elects to use the average basis method that is held in separate accounts or treated as held in separate accounts maintained for the taxpayer and only to accounts with the same ownership. If a broker (as defined by section 6045(c)(1)) holds the stock as a nominee, the broker, and not the regulated investment company or dividend reinvestment plan, makes the election. The single-account election is irrevocable, but is void if the taxpayer revokes the average basis election under paragraph (e)(9)(iii) of this section.

(ii) ***Scope of election.*** A company, plan, or broker may make a single-account election for one or more taxpayers for which it maintains an account, and for one or more stocks it holds for a taxpayer. The company, plan, or broker may make the election only for the shares of stock for which it has accurate basis information. A company, plan, or broker has accurate basis information if the company, plan, or broker neither knows nor has reason to know that the basis information is inaccurate. *See* also section 6724 and the associated regulations regarding standards for relief from information reporting penalties. Stock for which accurate basis information is unavailable may not be included in the single-account election and must be treated as held in a separate account.

(iii) ***Effect of single-account election.*** If a company, plan, or broker makes the single-account election, the basis of all identical shares of stock to which the election applies must be averaged together regardless of when the taxpayer acquires the shares, and all the shares are treated as covered securities. The single-account election applies to all identical stock a taxpayer later acquires in the account that is a covered security (within the meaning of section 6045(g)(3)). A company, plan, or broker may make another single-account election if, for example, the broker later acquires accurate basis information for a stock, or a taxpayer acquires identical stock in the account that is a noncovered security (as described in § 1.6045-1(a)(16)) for which the company, plan, or broker has accurate basis information.

(iv) ***Time and manner for making the single-account election.*** A company, plan, or broker makes the single-account election by clearly noting it on its books and records. The books and records must reflect the date of the election; the taxpayer's name, account number, and taxpayer identification number; the stock subject to the election; and the taxpayer's basis in the stock. The company, plan, or broker must provide copies of the books and records regarding the election to the taxpayer upon request. A company, plan, or broker may make the single-account election at any time.

(v) ***Notification to taxpayer.*** A company, plan, or broker making the single-account election must use reasonable means to notify the taxpayer of the election. Reasonable means include mailings, circulars, or electronic mail sent separately to the taxpayer or included with the taxpayer's account statement, or other means reasonably calculated to provide actual notice to the taxpayer. The notice must identify the securities subject to the election and advise the taxpayer that the securities will be treated as covered securities regardless of when acquired.

(vi) ***Examples.*** The provisions of this paragraph (e)(11) are illustrated by the following examples:

> *Example 1.* (i) E Broker maintains Accounts A and B for Taxpayer M for the acquisition and disposition of shares of T Company, a regulated investment company. In 2011, E purchases 100 shares of T Company for M's Account A. E has accurate basis information for these shares. In 2012, E purchases 150 shares of T Company for M's

Account A and 80 shares of T Company for M's Account B. M elects to use the average basis method for all shares of T Company. E makes a single-account election for M's T Company stock.
(ii) The shares of T Company in Accounts A and B are held in separate accounts. Under section 6045(g)(3) and § 1.6045-1(a)(16), of the shares purchased in Account A, the 100 shares purchased in 2011 are noncovered securities and the 150 shares purchased in 2012 are covered securities. Under paragraph (e)(10)(iii) of this section, the 100 shares are treated as held in a separate account from the 150 shares. Under paragraph (e)(11)(i) of this section, the single-account election applies to all 330 shares of T Company in Accounts A and B. Thus, under paragraph (e)(11)(iii) of this section, the basis of the 330 shares of stock is averaged together and all the shares are treated as covered securities.

Example 2. The facts are the same as in *Example 1,* except that M owns Account B jointly with Taxpayer N. E may make a single-account election for the 250 shares of stock in M's Account A. However, under paragraph (e)(11)(i) of this section, E may not make a single-account election for Accounts A and B because the accounts do not have the same ownership.

Example 3. (i) C Broker maintains an account for Taxpayer K for the acquisition and disposition of shares of T Company, a regulated investment company, and shares of V Company that K enrolls in C's dividend reinvestment plan. In 2011, C purchases for K's account 100 shares of T Company in multiple lots and 80 shares of V Company in multiple lots that are enrolled in the dividend reinvestment plan. C has accurate basis information for all 100 shares of T Company and 80 shares of V Company. In 2012, C acquires for K's account 150 shares of T Company and 160 shares of V Company that are enrolled in the dividend reinvestment plan. K elects to use the average basis method for all the shares of T Company and V Company.
(ii) Under paragraphs (e)(11)(i) and (ii) of this section, C may make a single-account election for the T Company stock or the V Company stock, or both. After making a single-account election for each stock, under paragraph (e)(11)(iii) of this section, the basis of all T Company stock is averaged together and the basis of all V Company stock is averaged together, regardless of when acquired, and all the shares of T Company and V Company are treated as covered securities.

Example 4. The facts are the same as in *Example 3,* except that K transfers the 100 shares of T Company acquired in 2011 from an account with another broker into K's account with C. C does not have accurate basis information for 30 of the 100 shares of T Company, which K had acquired in two lots. Under paragraph (e)(11)(ii) of this section, C may make the single-account election only for the 70 shares of T Company stock for which C has accurate basis information. C must treat the 30 shares of T Company for which C does not have accurate basis information as held in a separate account. K may use the average

basis method for the 30 shares of T Company, but must make a separate average basis method election for these shares and must average the basis of these shares separately from the 70 shares subject to C's single-account election.

Example 5. The facts are the same as in *Example 3,* except that C has made the single-account election and in 2013 K acquires additional shares of T Company that are covered securities in K's account with C. Under paragraph (e)(11)(iii) of this section, these shares of T Company are subject to C's single-account election.

Example 6. The facts are the same as in *Example 3,* except that C has made the single-account election and in 2013 K inherits shares of T Company that are noncovered securities and transfers the shares into the account with C. C has accurate basis information for these shares. Under paragraph (e)(11)(iii) of this section, C may make a second single-account election to include the inherited T Company shares.

Example 7. (i) Between 2002 and 2011, Taxpayer L acquires 1,500 shares of W Company, a regulated investment company, in an account with D Broker, for which L uses the average basis method, and sells 500 shares. On January 5, 2012, based on accurate basis information, the averaged basis of L's remaining 1,000 shares of W Company is $24 per share. On January 5, 2012, L acquires 100 shares of W Company for $28 per share and makes an average basis election for those shares under paragraph (e)(9)(i) of this section.
(ii) On February 1, 2012, D makes a single-account election that includes all 1,100 of L's shares in W Company. Thereafter, the basis of L's shares of W Company is $24.36 per share (($24,000 + $2,800)/1,100). On September 12, 2012, under paragraph (e)(9)(iii) of this section, L revokes the average basis election for the 100 shares acquired on January 5, 2012.

(iii) Under paragraph (e)(11)(i) of this section, D's single-account election is void. Therefore, the basis of the 1,000 shares of W Company that L acquires before 2012 is $24 per share and the basis of the 100 shares of W Company that L acquires in 2012 is $28 per share.

(12) ***Effective/applicability date.*** Except as otherwise provided in paragraphs (e)(1), (e)(2), (e)(7), (e)(9), and (e)(10) of this section, this paragraph (e) applies for taxable years beginning after October 18, 2010.

(f) ***Special rules.*** For special rules for determining the basis for gain or loss in the case of certain vessels acquired through the Maritime Commission (or its successors) or pursuant to an agreement with the Secretary of Commerce, see sections 510, 511, and 607 of the Merchant Marine Act, 1936, as amended (46 U.S.C. 1160, 1161) and parts 2 and 3 of this chapter. For special rules for determining the unadjusted basis of property recovered in respect of war losses, see section 1336. For special rules with respect to taxable years beginning before January 1, 1964, for determining the basis for gain or loss in the case of a disposition of a share of stock acquired pursuant to the timely exercise of a restricted stock option where the option price was between 85 percent and 95 percent of the fair market value of the stock at the time the option was granted, see paragraph (b) of § 1.421-5. See section 423(c)(1) or 424(c)(1), whichever is

applicable, for special rules with respect to taxable years ending after December 31, 1963, for determining the basis for gain or loss in the case of the disposition of a share of stock acquired pursuant to the timely exercise of a stock option described in such sections. See section 422(c)(1) for special rules with respect to taxable years ending after December 31, 1963, for determining the basis for gain or loss in the case of an exercise of a qualified stock option.

(g) ***Debt instruments issued in exchange for property*** —

(1) ***In general.*** For purposes of paragraph (a) of this section, if a debt instrument is issued in exchange for property, the cost of the property that is attributable to the debt instrument is the issue price of the debt instrument as determined under § 1.1273-2 or § 1.1274-2, whichever is applicable. If, however, the issue price of the debt instrument is determined under section 1273(b)(4), the cost of the property attributable to the debt instrument is its stated principal amount reduced by any unstated interest (as determined under section 483).

(2) ***Certain tax-exempt obligations.*** This paragraph (g)(2) applies to a tax-exempt obligation (as defined in section 1275(a)(3)) that is issued in exchange for property and that has an issue price determined under § 1.1274-2(j) (concerning tax-exempt contingent payment obligations and certain tax-exempt variable rate debt instruments subject to section 1274). Notwithstanding paragraph (g)(1) of this section, if this paragraph (g)(2) applies to a tax-exempt obligation, for purposes of paragraph (a) of this section, the cost of the property that is attributable to the obligation is the sum of the present values of the noncontingent payments (as determined under § 1.1274-2(c)).

(3) ***Effective date.*** This paragraph (g) applies to sales or exchanges that occur on or after August 13, 1996.

(h) ***Determination of basis of digital assets*** —

(1) ***Overview and general rule.*** This paragraph (h) provides rules to determine the basis of digital assets, as defined in § 1.6045-1(a)(19) other than a digital asset not required to be reported as a digital asset pursuant to § 1.6045-1(c)(8)(ii), (iii), or (iv), received in a purchase for cash, a transfer in connection with the performance of services, an exchange for digital assets or other property differing materially in kind or in extent, an exchange for a debt instrument described in paragraph (h)(1)(v) of this section, or in a part sale and part gift transfer described in paragraph (h)(1)(vi) of this section. Except as provided in paragraph (h)(1)(ii), (v), and (vi) of this section, the basis of digital assets received in a purchase or exchange is generally equal to the cost thereof at the date and time of the purchase or exchange, plus any allocable digital asset transaction costs as determined under paragraph (h)(2)(ii) of this section.

(i) ***Basis of digital assets purchased for cash.*** The basis of digital assets purchased for cash is the amount of cash used to purchase the digital assets plus any allocable digital asset transaction costs as determined under paragraph (h)(2)(ii)(A) of this section.

(ii) ***Basis of digital assets received in connection with the performance of services.*** For rules regarding digital assets received in connection with the performance of services, *see* §§ 1.61-2(d)(2) and 1.83-4(b).

(iii) ***Basis of digital assets received in exchange for property other than digital assets.*** The basis of digital assets received in exchange for property differing materially in kind or in extent, other than digital assets or debt instruments described in paragraph (h)(1)(v) of this section, is the cost as described in paragraph (h)(3) of this section of the digital assets received plus any allocable digital asset transaction costs as determined under paragraph (h)(2)(ii)(A) of this section.

(iv) ***Basis of digital assets received in exchange for other digital assets.*** The basis of digital assets received in an exchange for other digital assets differing materially in kind or in extent is the cost as described in paragraph (h)(3) of this section of the digital assets received.

(v) ***Basis of digital assets received in exchange for the issuance of a debt instrument.*** If a debt instrument is issued in exchange for digital assets, the cost of the digital assets attributable to the debt instrument is the amount determined under paragraph (g) of this section, plus any allocable digital asset transaction costs as determined under paragraph (h)(2)(ii)(A) of this section.

(vi) ***Basis of digital assets received in a part sale and part gift transfer.*** To the extent digital assets are received in a transfer, which is in part a sale and in part a gift, *see* § 1.1012-2.

(2) ***Digital asset transaction costs*** —

(i) ***Definition.*** The term *digital asset transaction costs* under this paragraph (h) has the same meaning as in § 1.1001-7(b)(2)(i).

(ii) ***Allocation of digital asset transaction costs.*** This paragraph (h)(2)(ii) provides the rules for allocating digital asset transaction costs, as defined in paragraph (h)(2)(i) of this section, for transactions described in paragraph (h)(1) of this section. Any other allocation or specific assignment of digital asset transaction costs is disregarded.

(A) ***Allocation of digital asset transaction costs on a purchase or exchange for digital assets.*** Except as provided in paragraphs (h)(2)(ii)(B) and (C) of this section, the total digital asset transaction costs paid by the taxpayer in connection with an acquisition of digital assets are allocable to the digital assets received.

(B) ***Special rule for the allocation of digital asset transaction costs paid to effect an exchange of digital assets for other digital assets.*** Except as provided in paragraph (h)(2)(ii)(C) of this section, the total digital asset transaction costs paid by the taxpayer, to effect an exchange described in paragraph (h)(1)(iv) of this section are allocable exclusively to the disposition of the transferred digital assets.

(C) ***Special rule for allocating certain cascading digital asset transaction costs.*** This paragraph (h)(2)(ii)(C) provides a special rule for an exchange described in paragraph (h)(1)(iv) of this section (original transaction) and for which digital assets are withheld from digital assets acquired in the original transaction to pay the digital asset transaction costs to effect the original transaction. The total digital asset transaction costs paid by the taxpayer, to effect both the original transaction and any disposition of the withheld digital assets, are allocable exclusively to the disposition of digital assets in the original transaction.

(3) ***Determining the cost of the digital assets received.*** In the case of an exchange described in either paragraph (h)(1)(iii) or (iv) of this section, the cost of the digital assets received is the same as the fair market value used in determining the amount realized on the sale or disposition of the transferred property for purposes of section 1001 of the Code. Generally, the cost of a digital asset received is determined at the date and time of the exchange. The special rule in § 1.1001-7(b)(4) also applies in this section for purposes of determining the fair market value of a received digital asset when it cannot be determined with reasonable accuracy.

(4) ***Examples.*** The following examples illustrate the application of paragraphs (h)(1) through (3) of this section. Unless the facts specifically state otherwise, the transactions described in the following examples occur after the applicability date set forth in paragraph (h)(5) of this section. For purposes of the examples under this paragraph (h)(4), assume that TP is a digital asset investor, and that digital assets A, B, and C are materially different in kind or in extent from each other. *See* § 1.1001-7(b)(5) for examples illustrating the determination of the amount realized and gain or loss in a sale or disposition of a digital asset for cash, other property differing materially in kind or in extent, or services.

(i) ***Example 1: Transaction fee paid in cash*** —

(A) ***Facts.*** TP uses BEX, an unrelated third party, to exchange 10 units of digital asset A for 20 units of digital asset B. At the time of the exchange, a unit of digital asset A has a fair market value of $2, and a unit of digital asset B has a fair market value of $1. BEX charges TP a transaction fee of $2, which TP pays to BEX in cash at the time of the exchange.

(B) ***Analysis.*** Under paragraph (h)(2)(i) of this section, TP has digital asset transaction costs of $2. Under paragraph (h)(2)(ii)(B) of this section, TP allocates the digital asset transaction costs ($2) to the disposition of the 10 units of digital asset A. Under paragraphs (h)(1)(iv) and (h)(3) of this section, TP's basis in the 20 units of digital asset B received is $20, which is the sum of the fair market value of the 20 units of digital asset B received ($20).

(ii) ***Example 2: Transaction fee paid in other property*** —

(A) ***Facts.*** The facts are the same as in paragraph (h)(4)(i)(A) of this section (the facts in *Example 1*), except that BEX requires its customers to pay transaction fees using units of digital asset C. TP pays the transaction fees using 2 units of digital asset C that TP holds. At the time TP pays the transaction fees, each unit of digital asset C has a fair market value of $1. TP acquires 20 units of digital asset B with a fair market value of $20 in the exchange.

(B) ***Analysis.*** Under paragraph (h)(2)(i) of this section, TP has digital asset transaction costs of $2. Under paragraph (h)(2)(ii)(B) of this section, TP must allocate the digital asset transaction costs ($2) to the disposition of the 10 units of digital asset A. Under paragraphs (h)(1)(iv) and (h)(3) of this section, TP's basis in the 20 units of digital asset B is $20, which is the sum of the fair market value of the 20 units of digital asset B received ($20).

(iii) ***Example 3: Digital asset transaction costs withheld from the transferred digital assets*** —

(A) ***Facts.*** The facts are the same as in paragraph (h)(4)(i)(A) of this section (the facts in *Example 1*), except that BEX withholds 1 unit of digital asset A in payment of the transaction fees and TP receives 18 units of digital asset B.

(B) ***Analysis.*** Under paragraph (h)(2)(i) of this section, TP has digital asset transaction costs of $2. Under paragraph (h)(2)(ii)(B) of this section, TP must allocate the digital asset transaction costs ($2) to the disposition of the 10 units of digital asset A. Under paragraphs (h)(1)(iv) and (h)(3) of this section, TP's total basis in the digital asset B units is $18, which is the sum of the fair market value of the 18 units of digital asset B received ($18).

(5) ***Applicability date.*** This paragraph (h) is applicable to all acquisitions and dispositions of digital assets on or after January 1, 2025.

(i) [Reserved]

(j) ***Sale, disposition, or transfer of digital assets.*** Paragraphs (j)(1) and (2) of this section apply to digital assets not held in the custody of a broker, such as digital assets that are held in an unhosted wallet. Paragraph (j)(3) of this section applies to digital assets held in the custody of a broker. For the definitions of the terms *wallet, hosted wallet, unhosted wallet,* and *held in a wallet or account,* as used in this paragraph (j), *see* § 1.6045-1(a)(25)(i) through (iv). For the definition of the term *broker, see* § 1.6045-1(a)(1). For the definition of the term *digital asset, see* § 1.6045-1(a)(19); however, a digital asset not required to be reported as a digital asset pursuant to § 1.6045-1(c)(8)(ii), (iii), or (iv) is not subject to the rules of this section.

(1) ***Digital assets not held in the custody of a broker.*** If a taxpayer sells, disposes of, or transfers less than all units of the same digital asset not held in the custody of the broker, such as in a single unhosted wallet or in a hosted wallet provided by a person other than a broker, the basis and holding period of the units sold, disposed of, or transferred are determined by making a specific identification of the units in the wallet that are sold, disposed of, or transferred, as provided in paragraph (j)(2) of this section. If a specific identification is not made, the basis and holding period of the units sold, disposed of, or transferred are determined by treating the units not held in the custody of a broker as sold, disposed of, or transferred in order of time from the earliest date on which units of the same digital asset not held in the custody of a broker were acquired by the taxpayer. For purposes of the preceding sentence, the date any units were transferred into the taxpayer's wallet is disregarded.

(2) ***Specific identification of digital assets not held in the custody of a broker.*** A specific identification of the units of a digital asset sold, disposed of, or transferred is made if, no later than the date and time of the sale, disposition, or transfer, the taxpayer identifies on its books and records the particular units to be sold, disposed of, or transferred by reference to any identifier, such as purchase date and time or the purchase price for the unit, that is sufficient to identify the units sold, disposed of, or transferred. A specific identification can be made only if adequate records are maintained for the unit of a specific digital asset not held in the custody of a broker to establish that a unit sold, disposed of, or transferred is removed from the wallet.

(3) ***Digital assets held in the custody of a broker.*** This paragraph (j)(3) applies to digital assets held in the custody of a broker.

(i) ***Unit of a digital asset sold, disposed of, or transferred.*** Except as provided in paragraph (j)(3)(iii) of this section, where multiple units of the same digital asset are held in the custody of a broker, as defined in § 1.6045-1(a)(1), and the taxpayer does not provide the broker with an adequate identification of which units are sold, disposed of, or transferred by the date and time of the sale, disposition, or transfer, as provided in paragraph (j)(3)(ii) of this section, the basis and holding period of the units sold, disposed of, or transferred are determined by treating the units held in the custody of the broker as sold, disposed of, or transferred in order of time from

the earliest date on which units of the same digital asset held in the custody of a broker were acquired by the taxpayer. For purposes of the preceding sentence, the date any units were transferred into the custody of the broker is disregarded.

(ii) ***Adequate identification of units held in the custody of a broker.*** Except as provided in paragraph (j)(3)(iii) of this section, where multiple units of the same digital asset are held in the custody of a broker, as defined in § 1.6045-1(a)(1), an adequate identification occurs if, no later than the date and time of the sale, disposition, or transfer, the taxpayer specifies to the broker having custody of the digital assets the particular units of the digital asset to be sold, disposed of, or transferred by reference to any identifier, such as purchase date and time or purchase price, that the broker designates as sufficiently specific to identify the units sold, disposed of, or transferred. The taxpayer is responsible for maintaining records to substantiate the identification. A standing order or instruction for the specific identification of digital assets is treated as an adequate identification made at the time of sale, disposition, or transfer. In addition, a taxpayer's election to use average basis for a covered security for which average basis reporting is permitted and that is also a digital asset is also an adequate identification. In the case of a broker offering only one method of making a specific identification, such method is treated as a standing order or instruction.

(iii) ***Special rule for the identification of certain units withheld.*** Notwithstanding paragraph (j)(3)(i) or (ii) of this section, in the case of a transaction described in paragraph (h)(1)(iv) of this section (digital assets exchanged for different digital assets) and for which the broker withholds units of the same digital asset received for either the broker's backup withholding obligations under section 3406 of the Code, or for payment of services described in § 1.1001-7(b)(1)(ii) (digital asset transaction costs), the taxpayer is deemed to have made an adequate identification, within the meaning of paragraph (j)(3)(ii) of this section, for such withheld units regardless of any other adequate identification within the meaning of paragraph (j)(3)(ii) of this section designating other units of the same digital asset as the units sold, disposed of, or transferred.

(4) ***Method for specifically identifying units of a digital asset.*** A method of specifically identifying the units of a digital asset sold, disposed of, or transferred under this paragraph (j), for example, by the earliest acquired, the latest acquired, or the highest basis, is not a method of accounting. Therefore, a change in the method of specifically identifying the digital asset sold, disposed of, or transferred, for example, from the earliest acquired to the latest acquired, is not a change in method of accounting to which sections 446 and 481 of the Code apply.

(5) ***Examples.*** The following examples illustrate the application of paragraphs (j)(1) through (j)(3) of this section. Unless the facts specifically state otherwise, the transactions described in the following examples occur after the applicability date set forth in paragraph (j)(6) of this section. For purposes of the examples under this paragraph (j)(5), assume that TP is a digital asset investor and that the units of digital assets in the examples are the only digital assets owned by TP.

(i) ***Example 1: Identification of digital assets not held in the custody of a broker*** —

(A) ***Facts.*** On September 1, Year 2, TP transfers two lots of digital asset DE to a new digital asset address generated and controlled by an unhosted wallet, as defined in § 1.6045-1(a)(25)(iii). The first lot transferred into TP's wallet consists of 10 units of digital asset DE, with a purchase date of January 1, Year 1, and a basis of $2 per unit. The second lot transferred into TP's wallet consists of 20 units of digital asset DE, with a purchase date of January 1, Year 2, and a basis of $5 per unit. On September 2, Year 2, when the DE units have a fair market value of $10 per unit, TP purchases $100 worth of consumer

goods from Merchant M. To make payment, TP transfers 10 units of digital asset DE from TP's wallet to CPP, a processor of digital asset payments as defined in § 1.6045-1(a)(22), that then pays $100 to M, in a transaction treated as a sale by TP of the 10 units of digital asset DE. Prior to making the transfer to CPP, TP keeps a record that the 10 units of DE sold in this transaction were from the second lot of units transferred into TP's wallet.

(B) ***Analysis.*** Under the facts in paragraph (j)(5)(i)(A) of this section, TP's notation in its records on the date of sale, prior to the time of the sale, specifying that the 10 units sold were from the 20 units TP acquired on January 1, Year 2, is a specific identification within the meaning of paragraph (j)(2) of this section. TP's notation is sufficient to identify the 10 units of digital asset DE sold. Accordingly, TP has identified the units disposed of for purposes of determining the basis ($5 per unit) and holding period (one year or less) of the units sold in order to purchase the merchandise.

(ii) ***Example 2: Identification of digital assets not held in the custody of a broker*** —

(A) ***Facts.*** The facts are the same as in paragraph (j)(5)(i)(A) of this section (the facts in *Example 1*), except in making the transfer to CPP, TP did not keep a record at or prior to the time of the sale of the specific 10 units of digital asset DE that TP intended to sell.

(B) ***Analysis.*** TP did not make a specific identification within the meaning of paragraph (j)(2) of this section for the 10 units of digital asset DE that were sold. Pursuant to the ordering rule provided in paragraph (j)(1) of this section, the units disposed of are determined by treating the units held in the unhosted wallet as disposed of in order of time from the earliest date on which units of the same digital asset held in the unhosted wallet were acquired by the taxpayer. Accordingly, TP must treat the 10 units sold as the 10 units with a purchase date of January 1, Year 1, and a basis of $2 per unit, transferred into the wallet.

(iii) ***Example 3: Identification of digital assets held in the custody of a broker*** —

(A) ***Facts.*** On August 1, Year 1, TP opens a custodial account at CRX, a broker within the meaning of § 1.6045-1(a)(1), and purchases through CRX 10 units of digital asset DE for $9 per unit. On January 1, Year 2, TP opens a custodial account at BEX, an unrelated broker, and purchases through BEX 20 units of digital asset DE for $5 per unit. On August 1, Year 3, TP transfers the digital assets TP holds with CRX into TP's custodial account with BEX. BEX has a policy that purchase or transfer date and time, if necessary, is a sufficiently specific identifier for customers to determine the units sold, disposed of, or transferred. On September 1, Year 3, TP directs BEX to sell 10 units of digital asset DE for $10 per unit and specifies that BEX sell the units that were purchased on January 1, Year 2. BEX effects the sale.

(B) ***Analysis.*** No later than the date and time of the sale, TP specified to BEX the particular units of digital assets to be sold. Accordingly, under paragraph (j)(3)(ii) of this section, TP provided an adequate identification of the 10 units of digital asset DE sold. Accordingly, the 10 units of digital asset DE that TP sold are the 10 units that TP purchased on January 1, Year 2.

(iv) ***Example 4: Identification of digital assets held in the custody of a broker*** —

(A) ***Facts.*** The facts are the same as in paragraph (j)(5)(iii)(A) of this section (the facts in *Example 3*) except that TP directs BEX to sell 10 units of digital asset DE but does not make any identification of which units to sell. Additionally, TP does not provide purchase date information to BEX with respect to the units transferred into TP's account with BEX.

(B) ***Analysis.*** Because TP did not specify to BEX no later than the date and time of the sale the particular units of digital assets to be sold, TP did not make an adequate identification within the meaning of paragraph (j)(3)(ii) of this section. Thus, the ordering rule provided in paragraph (j)(3)(i) of this section applies to determine the units of digital asset DE sold. Pursuant to this rule, the units sold must be determined by treating the units held in the custody of the broker as disposed of in order of time from the earliest date on which units of the same digital asset held in the custody of a broker were acquired by the taxpayer. The 10 units of digital asset DE sold must be attributed to the 10 units of digital asset DE acquired on August 1, Year 1, which are the earliest units of digital asset DE acquired by TP that are held in TP's account with BEX. In addition, because TP did not provide to BEX customer-provided acquisition information as defined in § 1.6045-1(d)(2)(ii)(B)(*4*) with respect to the units transferred into TP's account with BEX (or adopt a standing order to follow the ordering rule applicable to BEX under § 1.6045-1(d)(2)(ii)(B)(*2*)), the units determined as sold by BEX under § 1.6045-1(d)(2)(ii)(B)(*1*) and that BEX will report as sold under § 1.6045-1 are not the same units that TP must treat as sold under this section. *See* § 1.6045-1(d)(2)(vii)(C) (*Example 3*).

(v) ***Example 5: Identification of the digital asset used to pay certain digital asset transaction costs*** —

(A) ***Facts.*** On January 1, Year 1, TP purchases 10 units of digital asset AB and 30 units of digital asset CD in a custodial account with DRX, a broker within the meaning of § 1.6045-1(a)(1). DRX has a policy that purchase or transfer date and time, if necessary, is a sufficiently specific identifier by which its customers may identify the units sold, disposed of, or transferred. On June 30, Year 2, TP directs DRX to purchase 10 additional units of digital asset AB with 10 units of digital asset CD. DRX withholds one unit of the digital asset AB received for transaction fees. TP does not make any identification of the 1 unit of digital asset AB withheld by DRX. TP engages in no other transactions.

(B) ***Analysis.*** DRX's withholding of 1 unit of digital asset AB from the 10 units acquired by TP is a disposition by TP of the 1 unit as of June 30, Year 2. *See* §§ 1.1001-7 and 1.1012-1(h) for determining the amount realized and basis of the disposed unit, respectively. Despite TP not making an adequate identification, within the meaning of paragraph (j)(3)(ii) of this section to DRX of the 1 unit withheld, under the special rule of paragraph (j)(3)(iii) of this section, the withheld unit of AB must be attributed to the units of AB acquired on June 30, Year 2 and held in TP's account with DRX.

(vi) ***Example 6: Identification of the digital asset used to pay certain digital asset transaction costs*** —

(A) ***Facts.*** The facts are the same as in paragraph (j)(5)(v)(A) of this section (the facts in *Example 5*) except that TP has a standing order with BEX to treat the earliest unit purchased in TP's account as the unit sold, disposed of, or transferred.

(B) ***Analysis.*** The transaction is an exchange of digital assets for different digital assets and for which the broker withholds units of the same digital asset received in order to pay digital asset transaction costs. Accordingly, although TP's standing order to treat the earliest unit purchased in TP's account (that is, the units purchased by TP on January 1,

Year 1) as the units sold is an adequate identification under paragraph (j)(3)(ii) of this section, TP is deemed to have made an adequate identification for such withheld units pursuant to paragraph (j)(3)(iii) of this section regardless of TP's adequate identification designating other units as the units sold. Thus, the results are the same as provided in paragraph (j)(5)(v)(B) of this section (the analysis in *Example 5*).

(6) ***Applicability date.*** This paragraph (j) is applicable to all acquisitions and dispositions of digital assets on or after January 1, 2025.

[T.D. 6500, 25 FR 11910, Nov. 26, 1960]

Editorial Note: For FEDERAL REGISTER citations affecting § 1.1012-1, see the List of CFR Sections Affected, which appears in the Finding Aids section of the printed volume and at *www.govinfo.gov.*

§ 1.1012-2 Transfers in part a sale and in part a gift.

For rules relating to basis of property acquired in a transfer which is in part a gift and in part a sale, see §§ 1.170A-4(c), 1.1011-2(b), and § 1.105-4.

[T.D. 7207, 37 FR 20799, Oct. 5, 1972]

§ 1.1013-1 Property included in inventory.

The basis of property required to be included in inventory is the last inventory value of such property in the hands of the taxpayer. The requirements with respect to the valuation of an inventory are stated in subpart D (section 471 and following), part II, subchapter E, chapter 1 of the Code, and the regulations thereunder.

§ 1.1014-0 Table of contents.

This section lists the captions contained in §§ 1.1014-1 through 1.1014-10.

§ 1.1014-1 Basis of property acquired from a decedent.

(a) General rule.

(b) Scope and application.

(c) Property to which section 1014 does not apply.

(d) Applicability date.

§ 1.1014-2 Property acquired from a decedent.

(a) In general.

(b) Property acquired from a decedent dying after December 31, 1953.

(1) In general.

(2) Rules for the application of paragraph (b)(1) of this section.

(3) Exceptions to application of this paragraph.

(c) Special basis rules with respect to certain property acquired from a decedent.

(1) Stock or securities of a foreign personal holding company.

(2) Spouse's interest in community property of decedent dying after October 21, 1942, and on or before December 31, 1947.

§ 1.1014-3 Other basis rules.

(a) Fair market value.

(b) Property acquired from a decedent dying before March 1, 1913.

(c) Reinvestments by a fiduciary.

(d) Reinvestments of property transferred during life.

(e) Alternate valuation dates.

§ 1.1014-4 Uniformity of basis; adjustment to basis.

(a) In general.

(b) Multiple interests.

(c) Records.

(d) Effective/applicability date.

§ 1.1014-5 Gain or loss.

(a) Sale or other disposition of a life interest, remainder interest, or other interest in property acquired from a decedent.

(b) Sale or other disposition of certain term interests.

(1) In general.

(2) Effective/applicability date.

(c) Sale or other disposition of a term interest in a tax-exempt trust.

(1) In general.

(2) Tax-exempt trust defined.

(3) Taxable beneficiary defined.

(4) Effective/applicability date.

(d) Illustrations.

§ 1.1014-6 Special rule for adjustments to basis where property is acquired from a decedent prior to his death.

(a) In general.

(b) Multiple interests in property described in section 1014(b)(9) and acquired from a decedent prior to his death.

(c) Adjustments for deductions allowed prior to the decedent's death.

§ 1.1014-7 Example applying rules §§ 1.1014-4 through 1.1014-6 to case involving multiple interests.

§ 1.1014-8 Bequest, devise, or inheritance of a remainder interest.

§ 1.1014-9 Special rule with respect to DISC stock.

(a) In general.

(b) Portion of property acquired from decedent before his death included in decedent's gross estate.

(1) In general.

(2) Example.

(c) Estate tax valuation date.

(d) Examples.

§ 1.1014-10 Basis of property acquired from a decedent must be consistent with property's Federal estate tax value.

(a) Consistent basis requirement.

(1) General rule.

(2) Initial basis in consistent basis property and effect of basis adjustments.

(3) Duration of consistent basis requirement.

(b) Final value and reported value.

(1) Final value.

(2) Reported value if no final value yet determined.

(3) Special rules.

(c) Consistent basis property.

(1) Property subject to the consistent basis requirement.

(2) Property excepted from or not subject to the consistent basis requirement.

(d) Definitions.

(e) Examples.

(f) Applicability date.

[T.D. 9991, 89 FR 76375, Sept. 17, 2024]

§ 1.1014-1 Basis of property acquired from a decedent.

(a) ***General rule.*** The purpose of section 1014 is, in general, to provide a basis for property acquired from a decedent that is equal to the value placed upon such property for purposes of the federal estate tax. Accordingly, the general rule is that the basis of property acquired from a decedent is the fair market value of such property at the date of the decedent's death, or, if the decedent's executor so elects, at the alternate valuation date prescribed in section 2032, or in section 811(j) of the Internal Revenue Code (Code) of 1939. However, the basis of property acquired from certain decedents who died in 2010 is determined under section 1022, if the decedent's executor made an election under section 301(c) of the Tax Relief, Unemployment Insurance Reauthorization, and Job Creation Act of 2010, Public Law 111-312 (124 Stat. 3296, 3300 (2010)). See section 1022. Property acquired from a decedent includes, principally, property acquired by bequest, devise, or inheritance, and, in the case of decedents dying after December 31, 1953, property required to be included in determining the value of the decedent's gross estate under any provision of the Code of 1954 or the Code of 1939. For certain property acquired from a decedent, the initial basis of the property must not exceed the property's final value for Federal estate tax purposes. *See* section 1014(f) and § 1.1014-10 for rules relating to the consistent basis requirement. The general rule governing basis of property acquired from a decedent, as well as other rules prescribed elsewhere in this section, shall have no application if the property is sold, exchanged, or otherwise disposed of before the decedent's death by the person who acquired the property from the decedent. For general rules on the applicable valuation date where the executor of a decedent's estate elects under section 2032, or under section 811(j) of the Code of 1939, to value the decedent's gross estate at the alternate valuation date prescribed in such sections, see § 1.1014-3(e).

(b) ***Scope and application.*** With certain limitations, the general rule described in paragraph (a) of this section is applicable to the classes of property described in paragraphs (a) and (b) of § 1.1014-2, including stock in a DISC or former DISC. In the case of stock in a DISC or former DISC, the provisions of this section and §§ 1.1014-2 through 1.1014-8 are applicable, except as provided in § 1.1014-9. Special basis rules with respect to the basis of certain other property acquired from a decedent are set forth in paragraph (c) of § 1.1014-2. These special rules concern certain stock or securities of a foreign personal holding company and the surviving spouse's one-half share of community property held with a decedent dying after October 21, 1942, and on or before December 31, 1947. In §§ 1.1014-1 to 1.1014-6, inclusive, and § 1.1014-10, whenever the words *property acquired from a decedent* are used, they also mean *property passed from a decedent,* and the phrase *person who acquired it from the decedent* includes the *person to whom it passed from the decedent.* The consistent basis rules in § 1.1014-10 apply to property subject to the consistent basis requirement, as described in § 1.1014-10(c)(1). For property subject to the consistent basis requirement, the rules in § 1.1014-10 modify the rules set forth in paragraphs (a) and (c) of this section and in §§ 1.1014-2 through 1.1014-9.

(c) ***Property to which section 1014 does not apply.*** Section 1014 has no application to property that constitutes a right to receive an item of income in respect of a decedent under section 691.

(d) ***Applicability date.*** This section applies after September 17, 2024. For rules on and before September 17, 2024, *see* § 1.1014-1 as contained in 26 CFR part 1 revised as of January 19, 2017.

[T.D. 6500, 25 FR 11910, Nov. 26, 1960, as amended by T.D. 6527, 26 FR 413, Jan. 19, 1961; T.D. 6887, 31 FR 8812, June 24, 1966; T.D. 7283, 38 FR 20825, Aug. 3, 1973; T.D. 9811, 82 FR 6240, Jan. 19, 2017; T.D. 9991, 89 FR 76375, Sept. 17, 2024]

§ 1.1014-2 Property acquired from a decedent.

(a) ***In general.*** The following property, except where otherwise indicated, is considered to have been acquired from a decedent and the basis thereof is determined in accordance with the general rule in § 1.1014-1:

(1) Without regard to the date of the decedent's death, property acquired by bequest, devise, or inheritance, or by the decedent's estate from the decedent, whether the property was acquired under the decedent's will or under the law governing the descent and distribution of the property of decedents. However, see paragraph (c)(1) of this section if the property was acquired by bequest or inheritance from a decedent dying after August 26, 1937, and if such property consists of stock or securities of a foreign personal holding company.

(2) Without regard to the date of the decedent's death, property transferred by the decedent during his lifetime in trust to pay the income for life to or on the order or direction of the decedent, with the right reserved to the decedent at all times before his death to revoke the trust.

(3) In the case of decedents dying after December 31, 1951, property transferred by the decedent during his lifetime in trust to pay the income for life to or on the order or direction of the decedent with the right reserved to the decedent at all times before his death to make any change in the enjoyment thereof through the exercise of a power to alter, amend, or terminate the trust.

(4) Without regard to the date of the decedent's death, property passing without full and adequate consideration under a general power of appointment exercised by the decedent by will. (See section 2041(b) for definition of general power of appointment.)

(5) In the case of decedents dying after December 31, 1947, property which represents the surviving spouse's one-half share of community property held by the decedent and the surviving spouse under the community property laws of any State, Territory, or possession of the United States or any foreign country, if at least one-half of the whole of the community interest in that property was includible in determining the value of the decedent's gross estate under part III, chapter 11 of the Internal Revenue Code of 1954 (relating to the estate tax) or section 811 of the Internal Revenue Code of 1939. It is not necessary for the application of this subparagraph that an estate tax return be required to be filed for the estate of the decedent or that an estate tax be payable.

(6) In the case of decedents dying after December 31, 1950, and before January 1, 1954, property which represents the survivor's interest in a joint and survivor's annuity if the value of any part of that interest was required to be included in determining the value of the decedent's gross estate under section 811 of the Internal Revenue Code of 1939. It is necessary only that the value of a part of the survivor's interest in the annuity be includible in the gross estate under section 811. It is not necessary for the application of this subparagraph that an estate tax return be required to be filed for the estate of the decedent or that an estate tax be payable.

(b) ***Property acquired from a decedent dying after December 31, 1953*** —

(1) ***In general.*** In addition to the property described in paragraph (a) of this section, and except as otherwise provided in subparagraph (3) of this paragraph, in the case of a decedent dying after December 31, 1953, property shall also be considered to have been acquired from the decedent to the extent that both of the following conditions are met:

(i) The property was acquired from the decedent by reason of death, form of ownership, or other conditions (including property acquired through the exercise or non-exercise of a power of appointment), and

(ii) the property is includible in the decedent's gross estate under the provisions of the Internal Revenue Code of 1954, or the Internal Revenue Code of 1939, because of such acquisition. The basis of such property in the hands of the person who acquired it from the decedent shall be determined in accordance with the general rule in § 1.1014-1. See, however, § 1.1014-6 for special adjustments if such property is acquired before the death of the decedent. See also subparagraph (3) of this paragraph for a description of property not within the scope of this paragraph.

(2) ***Rules for the application of subparagraph (1) of this paragraph.*** Except as provided in subparagraph (3) of this paragraph, this paragraph generally includes all property acquired from a decedent, which is includible in the gross estate of the decedent if the decedent died after December 31, 1953. Except as provided in § 1.1014-10, it is not necessary for the application of this paragraph (b)(2) that an estate tax return be required to be filed for the estate of the decedent or that an estate tax be payable. Property acquired prior to the death of a decedent which is includible in the decedent's gross estate, such as property transferred by a decedent in contemplation of death, and property held by a taxpayer and the decedent as joint tenants or as tenants by the entireties is within the scope of this paragraph. Also, this paragraph includes property acquired through the exercise or nonexercise of a power of appointment where such property is includible in the decedent's gross estate. It does not include property not includible in the decedent's gross estate such as property not situated in the United States acquired from a nonresident who is not a citizen of the United States.

(3) ***Exceptions to application of this paragraph.*** The rules in this paragraph are not applicable to the following property:

(i) Annuities described in section 72;

(ii) Stock or securities of a foreign personal holding company as described in section 1014(b)(5) (see paragraph (c)(1) of this section);

(iii) Property described in any paragraph other than paragraph (9) of section 1014(b). See paragraphs (a) and (c) of this section.

In illustration of subdivision (ii), assume that A acquired by gift stock of a character described in paragraph (c)(1) of this section from a donor and upon the death of the donor the stock was includible in the donor's estate as being a gift in contemplation of death. A's basis in the stock would not be determined by reference to its fair market value at the donor's death under the general rule in section 1014(a). Furthermore, the special basis rules prescribed in paragraph (c)(1) of this section are not applicable to such property acquired by gift in contemplation of death. It will be necessary to refer to the rules in section 1015(a) to determine the basis.

(c) ***Special basis rules with respect to certain property acquired from a decedent*** —

(1) ***Stock or securities of a foreign personal holding company.*** The basis of certain stock or securities of a foreign corporation which was a foreign personal holding company with respect to its taxable year next preceding the date of the decedent's death is governed by a special rule. If such stock was acquired from a decedent dying after August 26, 1937, by bequest or inheritance, or by the decedent's estate from the decedent, the basis of the property in the hands of the person who so acquired it (notwithstanding any other provision of section 1014) shall be the fair market value of such property at the date of the decedent's death or the adjusted basis of the stock in the hands of the decedent, whichever is lower.

(2) ***Spouse's interest in community property of decedent dying after October 21, 1942, and on or before December 31, 1947.*** In the case of a decedent dying after October 21, 1942, and on or before December 31, 1947, a special rule is provided for determining the basis of such part of any property, representing the surviving spouse's one-half share of property held by the decedent and the surviving spouse under the community property laws of any State, Territory, or possession of the United States or any foreign country, as was included in determining the value of the decedent's gross estate, if a tax under chapter 3 of the Internal Revenue Code of 1939 was payable upon the decedent's net estate. In such case the basis shall be the fair market value of such part of the property at the date of death (or the optional valuation elected under section 811(j) of the Internal Revenue Code of 1939) or the adjusted basis of the property determined without regard to this subparagraph, whichever is the higher.

[T.D. 6500, 25 FR 11910, Nov. 26, 1960, as amended by T.D. 9991, 89 FR 76375, Sept. 17, 2024]

§ 1.1014-3 Other basis rules.

(a) ***Fair market value.*** For purposes of this section and § 1.1014-1, the value of property as of the date of the decedent's death as appraised for the purpose of the Federal estate tax or the alternate value as appraised for such purpose, whichever is applicable, shall be deemed to be its fair market value. If no estate tax return is required to be filed under section 6018 (or under section 821 or 864 of the Internal Revenue Code of 1939), the value of the property appraised as of the date of the decedent's death for the purpose of State inheritance or transmission taxes shall be deemed to be its fair market value and no alternate valuation date shall be applicable.

(b) ***Property acquired from a decedent dying before March 1, 1913.*** If the decedent died before March 1, 1913, the fair market value on that date is taken in lieu of the fair market value on the date of death, but only to the same extent and for the same purposes as the fair market value on March 1, 1913, is taken under section 1053.

(c) ***Reinvestments by a fiduciary.*** The basis of property acquired after the death of the decedent by a fiduciary as an investment is the cost or other basis of such property to the fiduciary, and not the fair market value of such property at the death of the decedent. For example, the executor of an estate purchases stock of X company at a price of $100 per share with the proceeds of the sale of property acquired from a decedent. At the date of the decedent's death the fair market value of such stock was $98 per share. The basis of such stock to the executor or to a legatee, assuming the stock is distributed, is $100 per share.

(d) ***Reinvestments of property transferred during life.*** Where property is transferred by a decedent during life and the property is sold, exchanged, or otherwise disposed of before the decedent's death by the person who acquired the property from the decedent, the general rule stated in paragraph (a) of § 1.1014-1 shall not apply to such property. However, in such a case, the basis of any property acquired by such donee in exchange for the original property, or of any property acquired by the donee through reinvesting the proceeds of the sale of the original property, shall be the fair market value of the property thus acquired at the date of the decedent's death (or applicable alternate valuation date) if the property thus acquired is properly included in the decedent's gross estate for Federal estate tax purposes. These rules also apply to property acquired by the donee in any further exchanges or in further reinvestments. For example, on January 1, 1956, the decedent made a gift of real property to a trust for the benefit of his children, reserving to himself the power to revoke the trust at will. Prior to the decedent's death, the trustee sold the real property and invested the proceeds in stock of the Y company at $50 per share. At the time of the decedent's death, the value of such stock was $75 per share. The corpus of the trust was required to be included in the decedent's gross estate owing to his reservation of the power of revocation. The basis of the Y company stock following the decedent's death is $75 per share. Moreover, if the trustee sold the Y Company stock before the decedent's death for $65 a share and reinvested the proceeds in Z company stock which increased in value to $85 per share at the time of the decedent's death, the basis of the Z company stock following the decedent's death would be $85 per share.

(e) ***Alternate valuation dates.*** Section 1014(a) provides a special rule applicable in determining the basis of property described in § 1.1014-2 where—

(1) The property is includible in the gross estate of a decedent who died after October 21, 1942, and

(2) The executor elects for estate tax purposes under section 2032, or section 811(j) of the Internal Revenue Code of 1939, to value the decedent's gross estate at the alternate valuation date prescribed in such sections.

In those cases, the value applicable in determining the basis of the property is not the value at the date of the decedent's death but (with certain limitations) the value at the date one year after his death if not distributed, sold, exchanged, or otherwise disposed of in the meantime. If such property was distributed, sold, exchanged, or otherwise disposed of within one year after the date of the decedent's death by the person who acquired it from the decedent, the value applicable in determining the basis is its value as of the date of such distribution, sale, exchange, or other disposition. For illustrations of the operation of this paragraph, see the estate tax regulations under section 2032.

§ 1.1014-4 Uniformity of basis; adjustment to basis.

(a) ***In general.***

(1) The basis of property acquired from a decedent, as determined under section 1014(a) or section 1022, is uniform in the hands of every person having possession or enjoyment of the property at any time under the will or other instrument or under the laws of descent and distribution. The principle of uniform basis means that the basis of the property (to which proper adjustments must, of course, be made) will be the same, or uniform, whether the property is possessed or enjoyed by the executor or administrator, the heir, the legatee or devisee, or the trustee or beneficiary of a trust created by a will or an inter vivos trust. In determining the amount allowed or allowable to a taxpayer in computing taxable income as deductions for depreciation or depletion under section 1016(a)(2), the uniform basis of the property shall at all times be used and adjusted. The sale, exchange, or other disposition by a life tenant or remainderman of his interest in property will, for purposes of this section, have no effect upon the uniform basis of the property in the hands of those who acquired it from the decedent. Thus, gain or loss on sale of trust assets by the trustee will be determined without regard to the prior sale of any interest in the property. Moreover, any adjustment for depreciation shall be made to the uniform basis of the property without regard to such prior sale, exchange, or other disposition.

(2) Under the law governing wills and the distribution of the property of decedents, all titles to property acquired by bequest, devise, or inheritance relate back to the death of the decedent, even though the interest of the person taking the title was, at the date of death of the decedent, legal, equitable, vested, contingent, general, specific, residual, conditional, executory, or otherwise. Accordingly, there is a common acquisition date for all titles to property acquired from a decedent within the meaning of section 1014 or section 1022, and, for this reason, a common or uniform basis for all such interests. For example, if distribution of personal property left by a decedent is not made until one year after his death, the basis of such property in the hands of the legatee is its fair market value at the time when the decedent died, and not when the legatee actually received the property. If the bequest is of the residue to trustees in trust, and the executors do not distribute the residue to such trustees until five years after the death of the decedent, the basis of each piece of property left by the decedent and thus received, in the hands of the trustees, is its fair market value at the time when the decedent dies. If the bequest is to trustees in trust to pay to A during his lifetime the income of the property bequeathed, and after his death to distribute such property to the survivors of a class, and upon A's death the property is distributed to the taxpayer as the sole survivor, the basis of such property, in the hands of the taxpayer, is its fair market value at the time when the decedent died. The purpose of the Code in prescribing a general uniform basis rule for property acquired from a decedent is, on the one hand, to tax the gain, in respect of such property, to him who realizes it (without regard to the circumstances that at the death of the decedent it may have been quite uncertain whether the taxpayer would take or gain anything); and, on the other hand, not to recognize as gain any element of value resulting solely from the circumstance that the possession or enjoyment of the taxpayer was postponed. Such postponement may be, for example, until the administration of the decedent's estate is completed, until the period of the possession or enjoyment of another has terminated, or until an uncertain event has happened. It is the increase or decrease in the value of property reflected in a sale or other disposition which is recognized as the measure of gain or loss.

(3) The principles stated in subparagraphs (1) and (2) of this paragraph do not apply to property transferred by an executor, administrator or trustee, to an heir, legatee, devisee or beneficiary under circumstances such that the transfer constitutes a sale or exchange. In such a case, gain or loss must be recognized by the transferor to the extent required by the revenue laws, and the transferee acquires a basis equal to the fair market value of the property on the date of the transfer. Thus, for example, if the trustee of a trust created by will transfers to a beneficiary, in satisfaction of a specific

bequest of $10,000, securities which had a fair market value of $9,000 on the date of the decedent's death (the applicable valuation date) and $10,000 on the date of the transfer, the trust realizes a taxable gain of $1,000 and the basis of the securities in the hands of the beneficiary would be $10,000. As a further example, if the executor of an estate transfers to a trust property worth $200,000, which had a fair market value of $175,000 on the date of the decedent's death (the applicable valuation date), in satisfaction of the decedent's bequest in trust for the benefit of his wife of cash or securities to be selected by the executor in an amount sufficient to utilize the marital deduction to the maximum extent authorized by law (after taking into consideration any other property qualifying for the marital deduction), capital gain in the amount of $25,000 would be realized by the estate and the basis of the property in the hands of the trustees would be $200,000. If, on the other hand, the decedent bequeathed a fraction of his residuary estate to a trust for the benefit of his wife, which fraction will not change regardless of any fluctuations in value of property in the decedent's estate after his death, no gain or loss would be realized by the estate upon transfer of property to the trust, and the basis of the property in the hands of the trustee would be its fair market value on the date of the decedent's death or on the alternate valuation date.

(b) ***Multiple interests.*** Where more than one person has an interest in property acquired from a decedent, the basis of such property shall be determined and adjusted without regard to the multiple interests. The basis of computing gain or loss on the sale of any one of such multiple interests shall be determined under § 1.1014-5. Thus, the deductions for depreciation and for depletion allowed or allowable, under sections 167 and 611, to a legal life tenant as if the life tenant were the absolute owner of the property, constitute an adjustment to the basis of the property not only in the hands of the life tenant, but also in the hands of the remainderman and every other person to whom the same uniform basis is applicable. Similarly, the deductions allowed or allowable under sections 167 and 611, both to the trustee and to the trust beneficiaries, constitute an adjustment to the basis of the property not only in the hands of the trustee, but also in the hands of the trust beneficiaries and every other person to whom the uniform basis is applicable. See, however, section 262. Similarly, adjustments in respect of capital expenditures or losses, tax-free distributions, or other distributions applicable in reduction of basis, or other items for which the basis is adjustable are made without regard to which one of the persons to whom the same uniform basis is applicable makes the capital expenditures or sustains the capital losses, or to whom the tax-free or other distributions are made, or to whom the deductions are allowed or allowable. See § 1.1014-6 for adjustments in respect of property acquired from a decedent prior to his death.

(c) ***Records.*** The executor or other legal representative of the decedent, the fiduciary of a trust under a will, the life tenant and every other person to whom a uniform basis under this section is applicable, shall maintain records showing in detail all deductions, distributions, or other items for which adjustment to basis is required to be made by sections 1016 and 1017, and shall furnish to the district director such information with respect to those adjustments as he may require.

(d) ***Effective/applicability date.*** This section applies on and after January 19, 2017. For rules before January 19, 2017, see § 1.1014-4 as contained in 26 CFR part 1 revised as of April 1, 2016.

[T.D. 6500, 25 FR 11910, Nov. 26, 1960; 25 FR 14021, Dec. 31, 1960, as amended by T.D. , 45 FR 6089, 1980; T.D. 9811, 82 FR 6241, Jan. 19, 2017]

§ 1.1014-5 Gain or loss.

(a) ***Sale or other disposition of a life interest, remainder interest, or other interest in property acquired from a decedent.***

(1) Except as provided in paragraph (b) or (c) of this section with respect to the sale or other disposition after October 9, 1969, of a term interest in property, gain or loss from a sale or other disposition of a life interest, remainder interest, or other interest in property acquired from a decedent is determined by comparing the amount of the proceeds with the amount of that part of the adjusted uniform basis which is assignable to the interest so transferred. The adjusted uniform basis is the uniform basis of the entire property adjusted to the date of sale or other disposition of any such interest as required by sections 1016 and 1017. The uniform basis is the unadjusted basis of the entire property determined immediately after the decedent's death under the applicable sections of part II of subchapter O of chapter 1 of the Code.

(2) Except as provided in paragraph (b) of this section, the proper measure of gain or loss resulting from a sale or other disposition of an interest in property acquired from a decedent is so much of the increase or decrease in the value of the entire property as is reflected in such sale or other disposition. Hence, in ascertaining the basis of a life interest, remainder interest, or other interest which has been so transferred, the uniform basis rule contemplates that proper adjustments will be made to reflect the change in relative value of the interests on account of the passage of time.

(3) The factors set forth in the tables contained in § 20.2031-7 or, for certain prior periods, § 20.2031-7A, of part 20 of this chapter (Estate Tax Regulations) shall be used in the manner provided therein in determining the basis of the life interest, the remainder interest, or the term certain interest in the property on the date such interest is sold. The basis of the life interest, the remainder interest, or the term certain interest is computed by multiplying the uniform basis (adjusted to the time of the sale) by the appropriate factor. In the case of the sale of a life interest or a remainder interest, the factor used is the factor (adjusted where appropriate) which appears in the life interest or the remainder interest column of the table opposite the age (on the date of the sale) of the person at whose death the life interest will terminate. In the case of the sale of a term certain interest, the factor used is the factor (adjusted where appropriate) which appears in the term certain column of the table opposite the number of years remaining (on the date of sale) before the term certain interest will terminate.

(b) ***Sale or other disposition of certain term interests*** —

(1) ***In general.*** In determining gain or loss from the sale or other disposition after October 9, 1969, of a term interest in property (as defined in § 1.1001-1(f)(2)) the adjusted basis of which is determined pursuant, or by reference, to section 1014 (relating to the basis of property acquired from a decedent), section 1015 (relating to the basis of property acquired by gift or by a transfer in trust), or section 1022 (relating to the basis of property acquired from certain decedents who died in 2010), that part of the adjusted uniform basis assignable under the rules of paragraph (a) of this section to the interest sold or otherwise disposed of shall be disregarded to the extent and in the manner provided by section 1001(e) and § 1.1001-1(f).

(2) ***Effective/applicability date.*** The provisions of paragraph (b)(1) of this section relating to section 1022 are effective on and after January 19, 2017. For rules before January 19, 2017, see § 1.1014-5 as contained in 26 CFR part 1 revised as of April 1, 2016.

(c) ***Sale or other disposition of a term interest in a tax-exempt trust*** —

(1) ***In general.*** In the case of any sale or other disposition by a taxable beneficiary of a term interest (as defined in § 1.1001-1(f)(2)) in a tax-exempt trust (as defined in paragraph (c)(2) of this section) to which section 1001(e)(3) applies, the taxable beneficiary's share of adjusted uniform basis, determined as of (and immediately before) the sale or disposition of that interest, is—

(i) That part of the adjusted uniform basis assignable to the term interest of the taxable beneficiary under the rules of paragraph (a) of this section reduced, but not below zero, by

(ii) An amount determined by applying the same actuarial share applied in paragraph (c)(1)(i) of this section to the sum of—

(A) The trust's undistributed net ordinary income within the meaning of section 664(b)(1) and § 1.664-1(d)(1)(ii)(*a*)(*1*) for the current and prior taxable years of the trust, if any; and

(B) The trust's undistributed net capital gains within the meaning of section 664(b)(2) and § 1.664-1(d)(1)(ii)(*a*)(*2*) for the current and prior taxable years of the trust, if any.

(2) ***Tax-exempt trust defined.*** For purposes of this section, the term *tax-exempt trust* means a charitable remainder annuity trust or a charitable remainder unitrust as defined in section 664.

(3) ***Taxable beneficiary defined.*** For purposes of this section, the term *taxable beneficiary* means any person other than an organization described in section 170(c) or exempt from taxation under section 501(a).

(4) ***Effective/applicability date.*** This paragraph (c) and paragraph (d) *Example 7* and *Example 8* of this section apply to sales and other dispositions of interests in tax-exempt trusts occurring on or after January 16, 2014, except for sales or dispositions occurring pursuant to a binding commitment entered into before January 16, 2014.

(d) ***Illustrations.*** The application of this section may be illustrated by the following examples, in which references are made to the actuarial tables contained in part 20 of this chapter (Estate Tax Regulations):

Example 1. Securities worth $500,000 at the date of decedent's death on January 1, 1971, are bequeathed to his wife, W, for life, with remainder over to his son, S. W is 48 years of age when the life interest is acquired. The estate does not elect the alternate valuation allowed by section 2032. By reference to § 20.2031-7A(c), the life estate factor for age 48, female, is found to be 0.77488 and the remainder factor for such age is found to be 0.22512. Therefore, the present value of the portion of the uniform basis assigned to W's life interest is $387,440 ($500,000 × 0.77488), and the present value of the portion of the uniform basis assigned to S's remainder interest is $112,560 ($500,000 × 0.22512). W sells her life interest to her nephew, A, on February 1, 1971, for $370,000, at which time W is still 48 years of age. Pursuant to section 1001(e), W realizes no loss; her gain is $370,000, the amount realized from the sale. A has a basis of $370,000 which he can recover by amortization deductions over W's life expectancy.

Example 2. The facts are the same as in example (1) except that W retains the life interest for 12 years, until she is 60 years of age, and then sells it to A on February 1, 1983, when the fair market value of the securities has increased to $650,000. By reference to § 20.2031-7A(c), the life estate factor for age 60, female, is found to be 0.63226 and the remainder factor for such age is found to be 0.36774. Therefore, the present value on February 1, 1983, of the portion of the uniform basis assigned to W's life interest is $316,130 ($500,000 × 0.63226) and the present value on that date of the portion of the uniform basis assigned to S's remainder interest is $183,870 ($500,000 × 0.36774). W sells her life interest for $410,969, that being the commuted value of her remaining life interest in the securities as appreciated ($650,000 × 0.63226). Pursuant to section 1001(e), W's gain is $410,969, the amount realized. A has a basis of $410,969 which he can recover by amortization deductions over W's life expectancy.

Example 3. Unimproved land having a fair market value of $18,800 at the date of the decedent's death on January 1, 1970, is devised to A, a male, for life, with remainder over to B, a female. The estate does not elect the alternate valuation allowed by section 2032. On January 1, 1971, A sells his life interest to S for

$12,500. S is not related to A or B. At the time of the sale, A is 39 years of age. By reference to § 20.2031-7A(c), the life estate factor for age 39, male, is found to be 0.79854. Therefore, the present value of the portion of the uniform basis assigned to A's life interest is $15,012.55 ($18,800 × 0.79854). This portion is disregarded under section 1001(e). A realizes no loss; his gain is $12,500, the amount realized. S has a basis of $12,500 which he can recover by amortization deductions over A's life expectancy.

Example 4. The facts are the same as in example (3) except that on January 1, 1971, A and B jointly sell the entire property to S for $25,000 and divide the proceeds equally between them. A and B are not related, and there is no element of gift or compensation in the transaction. By reference to § 20.2031-7A(c), the remainder factor for age 39, male, is found to be 0.20146. Therefore, the present value of the uniform basis assigned to B's remainder interest is $3,787.45 ($18,800 × 0.20146). On the sale A realizes a loss of $2,512.55 ($15,012.55 less $12,500), the portion of the uniform basis assigned to his life interest not being disregarded by reason of section 1001(e)(3). B's gain on the sale is $8,712.55 ($12,500 less $3,787.45). S has a basis in the entire property of $25,000, no part of which, however, can be recovered by amortization deductions over A's life expectancy.

Example 5. (a) Nondepreciable property having a fair market value of $54,000 at the date of decedent's death on January 1, 1971, is devised to her husband, H, for life and, after his death, to her daughter, D, for life, with remainder over to her grandson, G. The estate does not elect the alternate valuation allowed by section 2032. On January 1, 1973, H sells his life interest to D for $32,000. At the date of the sale, H is 62 years of age, and D is 45 years of age. By reference to § 20.2031-7A(c), the life estate factor for age 62, male, is found to be 0.52321. Therefore, the present value on January 1, 1973, of the portion of the adjusted uniform basis assigned to H's life interest is $28,253 ($54,000 × 0.52321). Pursuant to section 1001(e), H realizes no loss; his gain is $32,000, the amount realized from the sale. D has a basis of $32,000 which she can recover by amortization deductions over H's life expectancy.

(b) On January 1, 1976, D sells both life estates to G for $40,000. During each of the years 1973 through 1975, D is allowed a deduction for the amortization of H's life interest. At the date of the sale H is 65 years of age, and D is 48 years of age. For purposes of determining gain or loss on the sale by D, the portion of the adjusted uniform basis assigned to H's life interest and the portion assigned to D's life interest are not taken into account under section 1001(e). However, pursuant to § 1.1001-1(f)(1), D's cost basis in H's life interest, minus deductions for the amortization of such interest, is taken into account. On the sale, D realizes gain of $40,000 minus an amount which is equal to the $32,000 cost basis (for H's life estate) reduced by amortization deductions. G is entitled to amortize over H's life expectancy that part of the $40,000 cost which is attributable to H's life interest. That part of the $40,000 cost which is attributable to D's life interest is not amortizable by G until H dies.

Example 6. Securities worth $1,000,000 at the date of decedent's death on January 1, 1971, are bequeathed to his wife, W, for life, with remainder over to his son, S. W is 48 years of age when the life interest is acquired. The estate does not elect the alternate valuation allowed by section 2032. By reference to § 20.2031-7A(c), the life estate factor for age 48, female, is found to be 0.77488, and the remainder factor for such age is found to be 0.22512. Therefore, the present value of the portion of the uniform basis assigned to W's life interest is $774,880 ($1,000,000 × 0.77488), and the present value of the portion of

the uniform basis assigned to S's remainder interest is $225,120 ($1,000,000 × 0.22512). On February 1, 1971, W transfers her life interest to corporation X in exchange for all of the stock of X pursuant to a transaction in which no gain or loss is recognized by reason of section 351. On February 1, 1972, W sells all of her stock in X to S for $800,000. Pursuant to section 1001(e) and § 1.1001-1(f)(2), W realizes no loss; her gain is $800,000, the amount realized from the sale. On February 1, 1972, X sells to N for $900,000 the life interest transferred to it by W. Pursuant to section 1001(e) and § 1.1001-1(f)(1), X realizes no loss; its gain is $900,000, the amount realized from the sale. N has a basis of $900,000 which he can recover by amortization deductions over W's life expectancy.

Example 7. (a) Grantor creates a charitable remainder unitrust (CRUT) on Date 1 in which Grantor retains a unitrust interest and irrevocably transfers the remainder interest to Charity. Grantor is an individual taxpayer subject to income tax. CRUT meets the requirements of section 664 and is exempt from income tax.
(b) Grantor's basis in the shares of X stock used to fund CRUT is $10x. On Date 2, CRUT sells the X stock for $100x. The $90x of gain is exempt from income tax under section 664(c)(1). On Date 3, CRUT uses the $100x proceeds from its sale of the X stock to purchase Y stock. On Date 4, CRUT sells the Y stock for $110x. The $10x of gain on the sale of the Y stock is exempt from income tax under section 664(c)(1). On Date 5, CRUT uses the $110x proceeds from its sale of Y stock to buy Z stock. On Date 5, CRUT's basis in its assets is $110x and CRUT's total undistributed net capital gains are $100x.

(c) Later, when the fair market value of CRUT's assets is $150x and CRUT has no undistributed net ordinary income, Grantor and Charity sell all of their interests in CRUT to a third person. Grantor receives $100x for the retained unitrust interest, and Charity receives $50x for its interest. Because the entire interest in CRUT is transferred to the third person, section 1001(e)(3) prevents section 1001(e)(1) from applying to the transaction. Therefore, Grantor's gain on the sale of the retained unitrust interest in CRUT is determined under section 1001(a), which provides that Grantor's gain on the sale of that interest is the excess of the amount realized, $100x, over Grantor's adjusted basis in the interest.

(d) Grantor's adjusted basis in the unitrust interest in CRUT is that portion of CRUT's adjusted uniform basis that is assignable to Grantor's interest under § 1.1014-5, which is Grantor's actuarial share of the adjusted uniform basis. In this case, CRUT's adjusted uniform basis in its sole asset, the Z stock, is $110x. However, paragraph (c) of this section applies to the transaction. Therefore, Grantor's actuarial share of CRUT's adjusted uniform basis (determined by applying the factors set forth in the tables contained in § 20.2031-7 of this chapter) is reduced by an amount determined by applying the same factors to the sum of CRUT's $0 of undistributed net ordinary income and its $100x of undistributed net capital gains.

(e) In determining Charity's share of the adjusted uniform basis, Charity applies the factors set forth in the tables contained in § 20.2031-7 of this chapter to the full $110x of basis.

Example 8. (a) Grantor creates a charitable remainder annuity trust (CRAT) on Date 1 in which Grantor retains an annuity interest and irrevocably transfers the remainder interest to Charity. Grantor is an individual taxpayer subject to income tax. CRAT meets the requirements of section 664 and is exempt

from income tax.
(b) Grantor funds CRAT with shares of X stock having a basis of $50x. On Date 2, CRAT sells the X stock for $150x. The $100x of gain is exempt from income tax under section 664(c)(1). On Date 3, CRAT distributes $10x to Grantor, and uses the remaining $140x of net proceeds from its sale of the X stock to purchase Y stock. Grantor treats the $10x distribution as capital gain, so that CRAT's remaining undistributed net capital gains amount described in section 664(b)(2) and § 1.664-1(d) is $90x.

(c) On Date 4, when the fair market value of CRAT's assets, which consist entirely of the Y stock, is still $140x, Grantor and Charity sell all of their interests in CRAT to a third person. Grantor receives $126x for the retained annuity interest, and Charity receives $14x for its remainder interest. Because the entire interest in CRAT is transferred to the third person, section 1001(e)(3) prevents section 1001(e)(1) from applying to the transaction. Therefore, Grantor's gain on the sale of the retained annuity interest in CRAT is determined under section 1001(a), which provides that Grantor's gain on the sale of that interest is the excess of the amount realized, $126x, over Grantor's adjusted basis in that interest.

(d) Grantor's adjusted basis in the annuity interest in CRAT is that portion of CRAT's adjusted uniform basis that is assignable to Grantor's interest under § 1.1014-5, which is Grantor's actuarial share of the adjusted uniform basis. In this case, CRAT's adjusted uniform basis in its sole asset, the Y stock, is $140x. However, paragraph (c) of this section applies to the transaction. Therefore, Grantor's actuarial share of CRAT's adjusted uniform basis (determined by applying the factors set forth in the tables contained in § 20.2031-7 of this chapter) is reduced by an amount determined by applying the same factors to the sum of CRAT's $0 of undistributed net ordinary income and its $90x of undistributed net capital gains.

(e) In determining Charity's share of the adjusted uniform basis, Charity applies the factors set forth in the tables contained in § 20.2031-7 of this chapter to determine its actuarial share of the full $140x of basis.

[T.D. 7142, 36 FR 18951, Sept. 24, 1971, as amended by T.D. 8540, 59 FR 30102, June 10, 1994; T.D. 9729, 80 FR 48250, Aug. 12, 2015; T.D. 9811, 82 FR 6241, Jan. 19, 2017]

§ 1.1014-6 Special rule for adjustments to basis where property is acquired from a decedent prior to his death.

(a) ***In general.***

(1) The basis of property described in section 1014(b)(9) which is acquired from a decedent prior to his death shall be adjusted for depreciation, obsolescence, amortization, and depletion allowed the taxpayer on such property for the period prior to the decedent's death. Thus, in general, the adjusted basis of such property will be its fair market value at the decedent's death, or the applicable alternate valuation date, less the amount allowed (determined with regard to section 1016(a)(2)(B)) to the taxpayer as deductions for exhaustion, wear and tear, obsolescence, amortization, and depletion for the period held by the taxpayer prior to the decedent's death. The deduction allowed for a taxable year in which the decedent dies shall be an amount properly allocable to that part of the year prior to his death. For a discussion of the basis adjustment required by section 1014(b)(9) where property is held in trust, see paragraph (c) of this section.

(2) Where property coming within the purview of subparagraph (1) of this paragraph was held by the decedent and his surviving spouse as tenants by the entirety or as joint tenants with right of survivorship, and joint income tax returns were filed by the decedent and the surviving spouse in which the deductions referred to in subparagraph (1) were taken, there shall be allocated to the surviving spouse's interest in the property that proportion of the deductions allowed for each period for which the joint returns were filed which her income from the property bears to the total income from the property. Each spouse's income from the property shall be determined in accordance with local law.

(3) The application of this paragraph may be illustrated by the following examples:

Example 1. The taxpayer acquired income-producing property by gift on January 1, 1954. The property had a fair market value of $50,000 on the date of the donor's death, January 1, 1956, and was included in his gross estate at that amount for estate tax purposes as a transfer in contemplation of death. Depreciation in the amount of $750 per year was allowable for each of the taxable years 1954 and 1955. However, the taxpayer claimed depreciation in the amount of $500 for each of these years (resulting in a reduction in his taxes) and his income tax returns were accepted as filed. The adjusted basis of the property as of the date of the decedent's death is $49,000 ($50,000, the fair market value at the decedent's death, less $1,000, the total of the amounts actually allowed as deductions).

Example 2. On July 1, 1952, H purchased for $30,000 income-producing property which he conveyed to himself and W, his wife, as tenants by the entirety. Under local law each spouse was entitled to one-half of the income therefrom. H died on January 1, 1955, at which time the fair market value of the property was $40,000. The entire value of the property was included in H's gross estate. H and W filed joint income tax returns for the years 1952, 1953, and 1954. The total depreciation allowance for the year 1952 was $500 and for each of the other years 1953 and 1954 was $1,000. One-half of the $2,500 depreciation will be allocated to W. The adjusted basis of the property in W's hands of January 1, 1955, was $38,750 ($40,000, value on the date of H's death, less $1,250, depreciation allocated to W for periods before H's death). However, if, under local law, all of the income from the property was allocable to H, no adjustment under this paragraph would be required and W's basis for the property as of the date of H's death would be $40,000.

(b) ***Multiple interests in property described in section 1014(b)(9) and acquired from a decedent prior to his death.***

(1) Where more than one person has an interest in property described in section 1014(b)(9) which was acquired from a decedent before his death, the basis of such property and of each of the several interests therein shall, in general, be determined and adjusted in accordance with the principles contained in §§ 1.1014-4 and 1.1014-5, relating to the uniformity of basis rule. Application of these principles to the determination of basis under section 1014(b)(9) is shown in the remaining subparagraphs of this paragraph in connection with certain commonly encountered situations involving multiple interests in property acquired from a decedent before his death.

(2) Where property is acquired from a decedent before his death, and the entire property is subsequently included in the decedent's gross estate for estate tax purposes, the uniform basis of the property, as well as the basis of each of the several interests in the property, shall be determined by taking into account the basis adjustments required by section 1014(a) owing to such inclusion of the entire property in the decedent's gross estate. For example, suppose that the decedent transfers property in trust, with a life estate to A, and the remainder to B or his estate. The transferred property consists of 100 shares of the common stock of X Corporation, with a basis of $10,000 at the time of the transfer. At the time of the decedent's death the value of the stock is $20,000. The transfer is held to

have been made in contemplation of death and the entire value of the trust is included in the decedent's gross estate. Under section 1014(a), the uniform basis of the property in the hands of the trustee, the life tenant, and the remainderman, is $20,000. If immediately prior to the decedent's death, A's share of the uniform basis of $10,000 was $6,000, and B's share was $4,000, then, immediately after the decedent's death, A's share of the uniform basis of $20,000 is $12,000, and B's share is $8,000.

(3)

(i) In cases where, due to the operation of the estate tax, only a portion of property acquired from a decedent before his death is included in the decedent's gross estate, as in cases where the decedent retained a reversion to take effect upon the expiration of a life estate in another, the uniform basis of the entire property shall be determined by taking into account any basis adjustments required by section 1014(a) owing to such inclusion of a portion of the property in the decedent's gross estate. In such cases the uniform basis is the adjusted basis of the entire property immediately prior to the decedent's death increased (or decreased) by an amount which bears the same relation to the total appreciation (or diminution) in value of the entire property (over the adjusted basis of the entire property immediately prior to the decedent's death) as the value of the property included in the decedent's gross estate bears to the value of the entire property. For example, assume that the decedent creates a trust to pay the income to A for life, remainder to B or his estate. The trust instrument further provides that if the decedent should survive A, the income shall be paid to the decedent for life. Assume that the decedent predeceases A, so that, due to the operation of the estate tax, only the present value of the remainder interest is included in the decedent's gross estate. The trust consists of 100 shares of the common stock of X Corporation with an adjusted basis immediately prior to the decedent's death of $10,000 (as determined under section 1015). At the time of the decedent's death, the value of the stock is $20,000, and the value of the remainder interest in the hands of B is $8,000. The uniform basis of the entire property following the decedent's death is $14,000, computed as follows:

Uniform basis prior to decedent's death	$10,000
plus	
Increase in uniform basis (determined by the following formula)	4,000
[Increase in uniform basis (to be determined)/$10,000 (total appreciation)]=	
[$8,000 (value of property included in gross estate)/$20,000 (value of entire property)]	
Uniform basis under section 1014(a)	14,000

(ii) In cases of the type described in subdivision (i) of this subparagraph, the basis of any interest which is included in the decedent's gross estate may be ascertained by adding to (or subtracting from) the basis of such interest determined immediately prior to the decedent's death the increase (or decrease) in the uniform basis of the property attributable to the inclusion of the interest in the decedent's gross estate. Where the interest is sold or otherwise disposed of at any time after the decedent's death, proper adjustment must be made in order to

reflect the change in value of the interest on account of the passage of time, as provided in § 1.1014-5. For an illustration of the operation of this subdivision, see step 6 of the example in § 1.1014-7.

(iii) In cases of the type described in subdivision (i) of this subparagraph (cases where, due to the operation of the estate tax, only a portion of the property is included in the decedent's gross estate), the basis for computing the depreciation, amortization, or depletion allowance shall be the uniform basis of the property determined under section 1014(a). However, the manner of taking into account such allowance computed with respect to such uniform basis is subject to the following limitations:

(*a*) In cases where the value of the life interest is not included in the decedent's gross estate, the amount of such allowance to the life tenant under section 167(h) (or section 611(b)) shall not exceed (or be less than) the amount which would have been allowable to the life tenant if no portion of the basis of the property was determined under section 1014(a). Proper adjustment shall be made for the amount allowable to the life tenant, as required by section 1016. Thus, an appropriate adjustment shall be made to the uniform basis of the property in the hands of the trustee, to the basis of the life interest in the hands of the life tenant, and to the basis of the remainder in the hands of the remainderman.

(*b*) Any remaining allowance (that is, the increase in the amount of depreciation, amortization, or depletion allowable resulting from any increase in the uniform basis of the property under section 1014(a)) shall not be allowed to the life tenant. The remaining allowance shall, instead, be allowed to the trustee to the extent that the trustee both

(*1*) is required or permitted, by the governing trust instrument (or under local law), to maintain a reserve for depreciation, amortization, or depletion, and

(*2*) actually maintains such a reserve. If, in accordance with the preceding sentence, the trustee does maintain such a reserve, the remaining allowance shall be taken into account, under section 1016, in adjusting the uniform basis of the property in the hands of the trustee and in adjusting the basis of the remainder interest in the hands of the remainderman, but shall not be taken into account, under section 1016, in determining the basis of the life interest in the hands of the life tenant. For an example of the operation of this subdivision, see paragraph (b) of § 1.1014-7.

(4) In cases where the basis of any interest in property is not determined under section 1014(a), as where such interest

(i) is not included in the decedent's gross estate, or

(ii) is sold, exchanged or otherwise disposed of before the decedent's death, the basis of such interest shall be determined under other applicable provisions of the Code. To illustrate, in the example shown in subparagraph (3)(i) of this paragraph the basis of the life estate in the hands of A shall be determined under section 1015, relating to the basis of property acquired by gift. If, on the other hand, A had sold his life interest prior to the decedent's death, the basis of the life estate in the hands of A's transferee would be determined under section 1012.

(c) ***Adjustments for deductions allowed prior to the decedent's death.***

(1) As stated in paragraph (a) of this section, section 1014(b)(9) requires a reduction in the uniform basis of property acquired from a decedent before his death for certain deductions allowed in respect of such property during the decedent's lifetime. In general, the amount of the reduction in basis required by section 1014(b)(9) shall be the aggregate of the deductions allowed in respect of the property, but shall not include deductions allowed in respect of the property to the decedent himself. In cases where, owing to the operation of the estate tax, only a part of the value of the entire property is included in the decedent's gross estate, the amount of the reduction required by section 1014(b)(9) shall be an amount which bears the same relation to the total of all deductions (described in paragraph (a) of this section) allowed in respect of the property as the value of the property included in the decedent's gross estate bears to the value of the entire property.

(2) The application of this paragraph may be illustrated by the following examples:

Example 1. The decedent creates a trust to pay the income to A for life, remainder to B or his estate. The property transferred in trust consists of an apartment building with a basis of $50,000 at the time of the transfer. The decedent dies 2 years after the transfer is made and the gift is held to have been made in contemplation of death. Depreciation on the property was allowed in the amount of $1,000 annually. At the time of the decedent's death the value of the property is $58,000. The uniform basis of the property in the hands of the trustee, the life tenant, and the remainderman, immediately after the decedent's death is $56,000 ($58,000, fair market value of the property immediately after the decedent's death, reduced by $2,000, deductions for depreciation allowed prior to the decedent's death).

Example 2. The decedent creates a trust to pay the income to A for life, remainder to B or his estate. The trust instrument provides that if the decedent should survive A, the income shall be paid to the decedent for life. The decedent predeceases A and the present value of the remainder interest is included in the decedent's gross estate for estate tax purposes. The property transferred consists of an apartment building with a basis of $110,000 at the time of the transfer. Following the creation of the trust and during the balance of the decedent's life, deductions for depreciation were allowed on the property in the amount of $10,000. At the time of decedent's death the value of the entire property is $150,000, and the value of the remainder interest is $100,000. Accordingly, the uniform basis of the property in the hands of the trustee, the life tenant, and the remainderman, as adjusted under section 1014(b)(9), is $126,666, computed as follows:

Uniform basis prior to decedent's death	$100,000
plus	
Increase in uniform basis—before reduction (determined by the following formula)	33,333
[Increase in uniform basis (to be determined)/$50,000 (total appreciation of property since time of transfer)]=	
[$100,000 (value of property included in gross estate)/$150,000 (value of entire property)]	
less	133,333
Deductions allowed prior to decedent's death—taken into account under section 1014(b)(9) (determined by the following formula)	6,667

[Prior deductions taken into account (to be determined) $10,000 (total deductions allowed prior to decedent's death)]=	
[$100,000 (value of property included in gross estate) $150,000 (value of entire property)]	
Uniform basis under section 1014	126,666

[T.D. 6500, 25 FR 11910, Nov. 26, 1960, as amended by T.D. 6712, 29 FR 3656, Mar. 24, 1964; T.D. 7142, 36 FR 18952, Sept. 24, 1971]

§ 1.1014-7 Example applying rules of §§ 1.1014-4 through 1.1014-6 to case involving multiple interests.

(a) On January 1, 1950, the decedent creates a trust to pay the income to A for life, remainder to B or his estate. The trust instrument provides that if the decedent should survive A, the income shall be paid to the decedent for life. The decedent, who died on January 1, 1955, predeceases A, so that, due to the operation of the estate tax, only the present value of the remainder interest is included in the decedent's gross estate. The trust consists of an apartment building with a basis of $30,000 at the time of transfer. Under the trust instrument the trustee is required to maintain a reserve for depreciation. During the decedent's lifetime depreciation is allowed in the amount of $800 annually. At the time of the decedent's death the value of the apartment building is $45,000. A, the life tenant, is 43 years of age at the time of the decedent's death. Immediately after the decedent's death, the uniform basis of the entire property under section 1014(a) is $32,027; A's basis for the life interest is $15,553; and B's basis for the remainder interest is $16,474, computed as follows:

Step 1. Uniform basis (adjusted) immediately prior to decedent's death:	
Basis at time of transfer	$30,000
less	
Depreciation allowed under section 1016 before decedent's death ($800 × 5)	4,000
	26,000
Step 2. Value of property included in decedent's gross estate:	
0.40180 (remainder factor, age 43) × $45,000 (value of entire property)	$18,081
Step 3. Uniform basis of property under section 1014(a), before reduction required by section 1014(b)(9):	
Uniform basis (adjusted) prior to decedent's death	26,000
Increase in uniform basis (determined by the following formula)	7,634
Increase in uniform basis (to be determined) $19,000 (total appreciation, $45,000−$26,000)]=	
$18,081 (value of property included in gross estate) $45,000 (value of entire property)]	
	33,634
Step 4. Uniform basis reduced as required by section 1014(b)(9) for deductions allowed	

prior to death:		
Uniform basis before reduction		$33,634
less		
Deductions allowed prior to decedent's death—taken into account under section 1014(b)(9) (determined by the following formula)		1,607
Prior deductions taken into account (to be determined) $4,000 (total deductions allowed prior to decedent's death)]=		
$18,081 (value of property included in gross estate) $45,000 (value of entire property)		
		32,027
Step 5. A's basis for the life interest at the time of the decedent's death, determined under section 1015: 0.59820 (life factor, age 43) × $26,000		15,553
Step 6. B's basis for the remainder interest, determined under section 1014(a): Basis prior to the decedent's death:		
0.40180 (remainder factor, age 43) × $26,000		10,447
plus		
Increase in uniform basis owing to decedent's death:		
Increase in uniform basis	$7,634	
plus		
Reduction required by section 1014(b)(9)	1,607	
		6,027
		16,474

(b) Assume the same facts as in paragraph (a) of this section. Assume further, that following the decedent's death depreciation is allowed in the amount of $1,000 annually. As of January 1, 1964, when A's age is 52, the adjusted uniform basis of the entire property is $23,027; A's basis for the life interest is $9,323; and B's basis for the remainder interest is $13,704, computed as follows:

Step 7. Uniform basis (adjusted) as of January 1, 1964:	
Uniform basis determined under section 1014(a), reduced as required by section 1014(b)(9)	$32,027
less	
Depreciation allowed since decedent's death ($1,000 × 9)	9,000
	23,027
Step 8. Allocable share of adjustment for depreciation allowable in the nine years since the decedent's death:	
A's interest	
0.49587 (life factor, age 52) × $7,200 ($800, depreciation attributable to uniform basis before increase under section 1014(a), × 9)	3,570
B's interest	
0.50413 (remainder factor, age 52) × $7,200 ($800, depreciation attributable to uniform	3,630

basis before increase under section 1014(a), × 9)	
plus	
$200 (annual depreciation attributable to increase in uniform basis under section 1014(a)) × 9	1,800
	5,430

Step 9. Tentative bases of A's and B's interests as of January 1, 1964 (before adjustment for depreciation).

A's interest	
0.49587 (life factor, age 52) × $26,000 (adjusted uniform basis immediately before decedent's death)	12,893
B's interest	
0.50413 (remainder factor, age 52) × $26,000 (adjusted uniform basis immediately before decedent's death)	13,107
plus	
Increase in uniform basis owing to inclusion of remainder in decedent's gross estate	6,027
	19,134

Step 10. Bases of A's and B's interests as of January 1, 1964.

A	
Tentative basis (Step 9)	12,893
less	
Allocable depreciation (Step 8)	3,570
	9,323
B	
Tentative basis (Step 9)	19,134
less	
Allocable depreciation (Step 8)	5,430
	13,704

§ 1.1014-8 Bequest, devise, or inheritance of a remainder interest.

(a)

(1) Where property is transferred for life, with remainder in fee, and the remainderman dies before the life tenant, no adjustment is made to the uniform basis of the property on the death of the remainderman (see paragraph (a) of § 1.1014-4). However, the basis of the remainderman's heir, legatee, or devisee for the remainder interest is determined by adding to (or subtracting from) the part of the adjusted uniform basis assigned to the remainder interest (determined in accordance with the principles set forth in §§ 1.1014-4 through 1.1014-6) the difference between—

(i) The value of the remainder interest included in the remainderman's estate, and

(ii) The basis of the remainder interest immediately prior to the remainderman's death.

(2) The basis of any property distributed to the heir, legatee, or devisee upon termination of a trust (or legal life estate) or at any other time (unless included in the gross income of the legatee or devisee) shall be determined by adding to (or subtracting from) the adjusted uniform basis of the property thus distributed the difference between—

(i) The value of the remainder interest in the property included in the remainderman's estate, and

(ii) The basis of the remainder interest in the property immediately prior to the remainderman's death.

(b) The provisions of paragraph (a) of this section are illustrated by the following examples:

Example 1. Assume that, under the will of a decedent, property consisting of common stock with a value of $1,000 at the time of the decedent's death is transferred in trust, to pay the income to A for life, remainder to B or to B's estate. B predeceases A and bequeaths the remainder interest to C. Assume that B dies on January 1, 1956, and that the value of the stock originally transferred is $1,600 at B's death. A's age at that time is 37. The value of the remainder interest included in B's estate is $547 (0.34185, remainder factor age 37, × $1,600), and hence $547 is C's basis for the remainder interest immediately after B's death. Assume that C sells the remainder interest on January 1, 1961, when A's age is 42. C's basis for the remainder interest at the time of such sale is $596, computed as follows:

Basis of remainder interest computed with respect to uniform basis of entire property (0.39131, remainder factor age 42, × $1,000, uniform basis of entire property)		$391
plus		
Value of remainder interest included in B's estate	$547	
less		
Basis of remainder interest immediately prior to B's death (0.34185, remainder factor age 37, × $1,000)	342	
		205
Basis of C's remainder interest at the time of sale		596

Example 2. Assume the same facts as in example (1), except that C does not sell the remainder interest. Upon A's death terminating the trust, C's basis for the stock distributed to him is computed as follows:

Uniform basis of the property, adjusted to date of termination of the trust		$1,000
plus		
Value of remainder interests in the property at the time of B's death	$547	

less		
B's share of uniform basis of the property at the time of his death	342	
	—	205
C's basis for the stock distributed to him upon the termination of the trust		1,205

Example 3. Assume the same facts as in example (2), except that the property transferred is depreciable. Assume further that $100 of depreciation was allowed prior to B's death and that $50 of depreciation is allowed between the time of B's death and the termination of the trust. Upon A's death terminating the trust, C's basis for the property distributed to him is computed as follows:

Uniform basis of the property, adjusted to date of termination of the trust:		
Uniform basis immediately after decedent's death	$1,000	
Depreciation allowed following decedent's death	150	
		$350
plus		
Value of remainder interest in the property at the time of B's death	547	
less		
B's share of uniform basis of the property at the time of his death (0.34185 × $900, uniform basis at B's death)	308	
	—	239
C's basis for the property distributed to him upon the termination of the trust		1,089

(c) The rules stated in paragraph (a) of this section do not apply where the basis of the remainder interest in the hands of the remainderman's transferee is determined by reference to its cost to such transferee. See also paragraph (a) of § 1.1014-4. Thus, if, in example (*1*) of paragraph (b) of this section B sold his remainder interest to C for $547 in cash, C's basis for the stock distributed to him upon the death of A terminating the trust is $547.

§ 1.1014-9 Special rule with respect to DISC stock.

(a) ***In general.*** If property consisting of stock of a DISC or former DISC (as defined in section 992(a) (1) or (3) as the case may be) is considered to have been acquired from a decedent (within the meaning of paragraph (a) or (b) of § 1.1014-2), the uniform basis of such stock under section 1014, as determined pursuant to §§ 1.1014-1 through 1.1014-8 shall be reduced as provided in this section. Such uniform basis shall be reduced by the amount (hereinafter referred to in this section as the amount of reduction), if any, which the decedent would have included in his gross income under section 995(c) as a dividend if the decedent had lived and sold such stock at its fair market value on the estate tax valuation date. If the alternate valuation date for Federal estate tax purposes is elected under section 2032, in computing the gain which the decedent would have had if he had lived and sold the stock on the alternate valuation date, the decedent's basis shall be determined with reduction for any distributions with respect to the stock

which may have been made, after the date of the decedent's death and on or before the alternate valuation date, from the DISC's previously taxed income (as defined in section 996(f)(2)). For this purpose, the last sentence of section 996(e)(2) (relating to reductions of basis of DISC stock) shall not apply. For purposes of this section, if the corporation is not a DISC or former DISC at the date of the decedent's death but is a DISC for a taxable year which begins after such date and on or before the alternate valuation date, the corporation will be considered to be a DISC or former DISC only if the alternate valuation date is elected. The provisions of this paragraph apply with respect to stock of a DISC or former DISC which is included in the gross estate of the decedent, including but not limited to property which—

(1) Is acquired from the decedent before his death, and the entire property is subsequently included in the decedent's gross estate for estate tax purposes, or

(2) Is acquired property described in paragraph (d) of § 1.1014-3.

(b) ***Portion of property acquired from decedent before his death included in decedent's gross estate*** —

(1) ***In general.*** In cases where, due to the operation of the estate tax, only a portion of property which consists of stock of a DISC or former DISC and which is acquired from a decedent before his death is included in the decedent's gross estate, the uniform basis of such stock under section 1014, as determined pursuant to §§ 1.1014-1 through 1.1014-8, shall be reduced by an amount which bears the same ratio to the amount of reduction which would have been determined under paragraph (a) of this section if the entire property consisting of such stock were included in the decedent's gross estate as the value of such property included in the decedent's gross estate bears to the value of the entire property.

(2) ***Example.*** The provisions of this paragraph may be illustrated by the following example:

> *Example:* The decedent creates a trust during his lifetime to pay the income to A for life, remainder to B or his estate. The trust instrument further provides that if the decedent shall survive A, the income shall be paid to the decedent for life. The decedent predeceases A, so that, due to the operation of the estate tax, only the present value of the remainder interest is included in the decedent's gross estate. The trust consists of 100 shares of the stock of X corporation (which is a DISC at the time the shares are transferred to the trust and at the time of the decedent's death) with an adjusted basis immediately prior to the decedent's death of $10,000 (as determined under section 1015). At the time of the decedent's death the value of the stock is $20,000, and the value of the remainder interest in the hands of B is $8,000. Applying the principles of paragraph (b)(3)(i) of § 1.1014-6, the uniform basis of the entire property following the decedent's death, prior to reduction pursuant to this paragraph, is $14,000. The amount of reduction which would have been determined under paragraph (a) of this section if the entire property consisting of such stock of X corporation were included in the decedent's gross estate is $5,000. The uniform basis of the entire property following the decedent's death, as reduced pursuant to this paragraph, is $12,000, computed as follows:

Uniform basis under section 1014(a), prior to reduction pursuant to this	$14,000

paragraph	
Less decrease in uniform basis (determined by the following formula)	2,000
[Reduction in uniform basis (to be determined)/ $5,000 (amount of reduction if paragraph (a) applied)] =	
[$8,000 (value of property included in gross estate/$20,000 (value of entire property)]	
Uniform basis under section 1014(a) reduced pursuant to this paragraph	12,000

(c) ***Estate tax valuation date.*** For purposes of section 1014(d) and this section, the estate tax valuation date is the date of the decedent's death or, in the case of an election under section 2032, the applicable valuation date prescribed by that section.

(d) ***Examples.*** The provisions of this section may be illustrated by the following examples:

Example 1. At the date of A's death, his DISC stock has a fair market value of $100. The estate does not elect the alternate valuation allowed by section 2032, and A's basis in such stock is $60 at the date of his death. The person who acquires such stock from the decedent will take as a basis for such stock its fair market value at A's death ($100), reduced by the amount which would have been included in A's gross income under section 995(c) as a dividend if A had sold stock on the date he died. Thus, if the amount that would have been treated as a dividend under section 995(c) were $30, such person will take a basis of $70 for such stock ($100, reduced by $30). If such person were immediately to sell the DISC stock so received for $100, $30 of the proceeds from the sale would be treated as a dividend by such person under section 995(c).

Example 2. Assume the same facts as in example (1) except that the estate elects the alternate valuation allowed by section 2032, the DISC stock has a fair market value of $140 on the alternate valuation date, the amount that would have been treated as a dividend under section 995(c) in the event of a sale on such date is $50 and the DISC has $20 of previously taxed income which accrued after the date of the decedent's death and before the alternate valuation date. The basis of the person who acquires such stock will be $90 determined as follows:

(1) Fair market value of DISC stock at alternate valuation date	$140
(2) Less: Amount which would have been treated as a dividend under section 995(c)	50
(3) Basis of person who acquires DISC stock	90

If a distribution of $20 attributable to such previously taxed income had been made by the DISC on or before the alternate valuation date (with the DISC stock having a fair market value of $120 after such

distribution), the basis of the person who acquires such stock will be $70 determined as follows:

(1) Fair market value of DISC stock at alternate valuation date	$120
(2) Less: Amount which would have been treated as a dividend under section 995(c)	50
(3) Basis of person who acquires DISC stock	70

[T.D. 7283, 38 FR 20825, Aug. 3, 1973]

§ 1.1014-10 Basis of property acquired from a decedent must be consistent with property's Federal estate tax value.

(a) ***Consistent basis requirement*** —

(1) ***General rule.*** The consistent basis requirement is the requirement that the initial basis in certain property be equal to or less than the property's final value as determined under paragraph (b)(1) of this section or, if no final value has yet been determined, the property's reported value for Federal estate tax purposes as described in paragraph (b)(2) of this section. The property subject to the consistent basis requirement is referred to in this section as consistent basis property and is described in paragraph (c)(1) of this section.

(2) ***Initial basis in consistent basis property and effect of basis adjustments.*** The initial basis in consistent basis property is the final value of the property, as determined under paragraph (b)(1) of this section, and, until the final value of this property is determined, the property's initial basis is the reported value, as described in paragraph (b)(2) of this section. The initial basis in consistent basis property may be adjusted pursuant to the operation of section 1014 or other provisions of the Internal Revenue Code (Code) governing basis, as applicable, and those adjustments will not violate the consistent basis requirement in paragraph (a)(1) of this section. For example, the initial basis in consistent basis property may be adjusted for gain recognized by the estate upon distribution of the property and for post-death capital improvements and depreciation. It also may be adjusted in the manner provided in section 1014(d) in the case of DISC stock and in the manner provided under subchapter K or S of chapter 1 of the Code, respectively, in the case of an interest in a partnership or S corporation.

(3) ***Duration of consistent basis requirement.*** The consistent basis requirement applies as long as the initial basis in consistent basis property is related, in whole or in part, to the property's final value, as determined under paragraph (b)(1) of this section, or, if applicable, the property's reported value, as determined under paragraph (b)(2) of this section. Therefore, regardless of the number of successive owners, the consistent basis requirement continues to apply until the entire property is sold, exchanged, or otherwise disposed of in one or more transactions that result in a recognition event for income tax purposes (whether or not resulting in a gain or loss) or until the entire property becomes includible in another decedent's gross estate. The consistent basis requirement applies whenever there is a taxable event with respect to the property, such as, but not limited to, a sale or exchange, depreciation, or amortization of the property. The expiration of the period of limitations on assessment for an income tax return that uses an incorrect basis in reporting a taxable event with

respect to consistent basis property has no effect on the duty to determine basis under the rules of this section for purposes of reporting any subsequent taxable event with respect to the property if the consistent basis requirement continues to apply under the rule of this paragraph (a)(3).

(b) ***Final value and reported value*** —

(1) ***Final value.*** The final value of consistent basis property is its fair market value as finally determined for Federal estate tax purposes. That value is—

(i) The value reported on an estate tax return filed with the IRS, once the period of limitations on assessment (*see* section 6501) of estate tax has expired without that value having been timely adjusted by the IRS; or

(ii) The value determined or specified by the IRS that differs from the value reported on an estate tax return filed with the IRS and the value specified by the IRS for other included property, as defined in paragraph (d)(4) of this section, once the period of limitations on assessment applicable to the estate tax has expired without that value having been timely contested by the executor, as defined in paragraphs (d)(1) and (2) of this section, respectively; or

(iii) The value determined in a written agreement with the IRS, (whether entered into in the course of the administrative proceedings between the estate and the IRS or after the commencement of litigation), once that written agreement has been executed by both the executor and the IRS and is binding on all parties (including, but not limited to, the executor, the IRS, and the beneficiaries); or

(iv) The value determined by a court for the purpose of determining the estate tax liability of the estate, as defined in paragraph (d)(3) of this section, once the court's determination no longer can be appealed to any court.

(2) ***Reported value if no final value yet determined*** —

(i) ***In general.*** Prior to the determination of the final value in accordance with paragraph (b)(1) of this section, a taxpayer may not claim an initial basis in consistent basis property in excess of the property's value as reported on the Statement described in § 1.6035-1(c)(2) and required under § 1.6035-1 (as supplemented). This value is referred to in this section as the reported value. A value reported on a Statement (or a supplement to the Statement) that either reports a value from an estate tax return filed after the expiration of the period of limitations on assessment applicable to that return, or a value reported for property not reported on the estate tax return, is not a reported value for purposes of this section. *See* § 1.6035-1(d) regarding an executor's duty to supplement the Statement.

(ii) ***Limit on reliance on Statement not reporting final value.*** If the final value of consistent basis property is determined (as described in paragraph (b)(1) of this section) before the expiration of the period of limitations on assessment for a taxpayer's income tax return that reports a taxable event with regard to the property, the taxpayer's reliance on a Statement (or a supplement to the Statement) that does not report the final value of the property may result in an income tax deficiency and underpayment. *See,* however, section 6664 and the corresponding regulations for rules relating to waivers of penalties for certain failures due to reasonable cause.

(3) ***Special rules*** —

(i) ***Property subject to debt.*** The final value or, if applicable, the reported value of property subject to recourse or non-recourse debt is determined based on the gross value of that property undiminished by the debt, regardless of whether the estate tax return reports the net value (equity of redemption value) of the property or separately reports the gross value of the property and the outstanding debt.

(ii) ***Special use property.*** The final value or, if applicable, the reported value of special use property with regard to which a recapture event (described in section 2032A(c)(1)) has occurred is increased as provided in section 1016(c) if the qualified heir makes the election under section 1016(c) and pays the amounts required under that section.

(c) ***Consistent basis property*** —

(1) ***Property subject to the consistent basis requirement*** —

(i) ***In general.*** Except as provided in paragraph (c)(2) of this section, consistent basis property is any property—

(A) To which section 1014(a) applies;

(B) That is included property, as defined in paragraph (d)(4) of this section, if the decedent's Federal estate tax return is filed after July 31, 2015, and any other property the basis of which is determined, in whole or in part, by reference to the basis of included property (for example, property acquired in a like-kind exchange or an involuntary conversion); and

(C) Whose value increases the estate tax liability, as defined in paragraph (d)(3) of this section, that is payable after the application of allowable credits, as defined in paragraph (d)(5) of this section.

(ii) ***Application.*** If the decedent's Federal estate tax return is filed on or before July 31, 2015, no included property and no other property described in paragraph (c)(1)(i) of this section is subject to the consistent basis requirement, even if the due date of that return is after July 31, 2015, or if one or more supplements to that return are filed with the IRS after July 31, 2015. If an estate tax liability is payable after the application of allowable credits, all property described in paragraphs (c)(1)(i)(A) and (B) of this section is considered property whose value increases the estate tax liability for purposes of paragraph (c)(1)(i)(C) of this section and, therefore, is subject to the consistent basis requirement, except as provided in paragraph (c)(2) of this section. If, after the application of allowable credits, no estate tax liability is payable, no such property is subject to the consistent basis requirement.

(2) ***Property excepted from or not subject to the consistent basis requirement.*** Notwithstanding paragraph (c)(1) of this section, the following property either is excepted from or is not subject to the consistent basis requirement—

(i) United States dollars (as defined in paragraph (d)(6) of this section).

(ii) United States dollar-denominated demand deposits.

(iii) Certificates of deposit denominated in United States dollars.

(iv) Cash collateral denominated in United States dollars held by a third party to secure a liability (such as a deposit of purchase money or a security deposit).

(v) Shares of a registered investment company priced in United States dollars that is a money market fund under Rule 2a-7 under the Investment Company Act of 1940 (17 CFR 270.2).

(vi) Life insurance proceeds on the life of the decedent payable in a lump sum in United States dollars.

(vii) Federal, State, and local tax refunds and other refunds payable entirely in United States dollars.

(viii) Notes that are forgiven in full by the decedent upon death, whether or not denominated in United States dollars.

(ix) Household and personal effects for which an appraisal is not required under § 20.2031-6(b) of this chapter.

(x) Property the initial basis of which is not in any way determined with regard to or derived from the property's final value as determined under paragraph (b)(1) of this section or its reported value as determined under paragraph (b)(2) of this section, if applicable. Such property includes but is not limited to—

(A) Annuity contracts subject to section 72 and amounts received as an annuity subject to section 72;

(B) An interest in property that consists entirely of the right to receive an item of income in respect of a decedent as defined in section 691;

(C) Amounts received under installment obligations arising from a transaction for which the installment method for determining gain under section 453 applies;

(D) Appreciated property described in section 1014(e) that is acquired by the decedent within 1 year of death;

(E) Stock of a passive foreign investment company subject to section 1296(i), but only if the basis of such stock is the adjusted basis in the hands of the decedent immediately before the decedent's death; and

(F) Interests in and distributions from retirement plans and deferred compensation plans, including individual retirement arrangements as defined in sections 408 and 408A, that are expressed entirely in United States dollars.

(xi) Any interest in property that qualified for an estate tax marital deduction under section 2056, 2056A, or 2106(a)(3) for which such a deduction was properly claimed, and/or any interest in property that qualified for an estate tax charitable deduction under section 2055 or 2106(a)(2) for which such a deduction was properly claimed, provided that the value of the decedent's entire interest in the included property is wholly deductible and equal to the total amount qualifying for those deductions.

(xii) Property that represents the surviving spouse's one-half share of community property to which section 1014(b)(6) applies, regardless of whether this property is included property as defined in paragraph (d)(4) of this section.

(xiii) Property the basis of which is adjusted in a manner similar to section 1014(a) on the occurrence of a taxable termination that occurs on the death of a trust beneficiary pursuant to section 2654(a)(2) (to the extent the property is not then includible in the gross estate of any person).

(xiv) Any other property that is not described in paragraph (c)(1)(i) of this section or that is identified as excepted property in published guidance in the FEDERAL REGISTER or in the Internal Revenue Bulletin (*see* § 601.601(d)(2)(ii)(*b*) of this chapter).

(d) ***Definitions.*** The following definitions apply for purposes of this section—

(1) ***Contested.*** The term *contested* means to put at issue the value of property in a written communication to the IRS that identifies the specific property, states that the executor does not accept as correct the value of that property as determined or specified by the IRS, and provides the executor's claimed value for that property as determined in accordance with the requirements of section 2031, the corresponding regulations, and other applicable guidance. An issue cannot be contested by a general statement or written communication that does not include each of these specified elements.

(2) ***Executor.*** The term *executor* includes any person described in section 2203, as expanded to include all persons required under section 6018(b) to file an estate tax return.

(3) ***Estate tax liability.*** The term *estate tax liability* means the amount of tax imposed under chapter 11 of the Code (chapter 11).

(4) ***Included property.*** The term *included property* means property the value of which is included in the value of the decedent's gross estate as defined in section 2031 or 2103. Generally, this refers to property whose value is reported on an estate tax return, but it also refers to property whose value otherwise is included in the total value of the gross estate (for example, during examination by the IRS) so that a final value is or will be determined for that property under chapter 11. However, solely for purposes of this section, included property does not refer to unreported property whose value is not reported on an estate tax return and whose value is not otherwise included in the value of the decedent's gross estate as finally determined for Federal estate tax purposes.

(5) ***Allowable credits.*** The term *allowable credits* includes any credit against the estate tax liability allowable by any section of the Code or by reason of any treaty obligation of the United States, provided the estate qualifies for and properly claims the credit by complying with all applicable rules for claiming the credit. For instance, the prorated unified credit under section 2102(b)(3) is an allowable credit for qualifying estates if the estate files all necessary forms or statements required by the IRS to claim that credit.

(6) ***United States dollars.*** The term *United States dollars* means the official currency of the United States. The term United States dollars includes physical bills and coins for which the value of each bill or coin is equivalent to the face amount of that bill or coin. This definition does not include other physical United States bills or coins with numismatic value because these bills and coins typically do not have a value equal to their face value.

(e) ***Examples.*** The following examples illustrate the application of this section. In each case, the decedent D was a citizen of the United States, the estate does not elect the alternate valuation method under section 2032, and an estate tax liability is payable after the application of all allowable credits.

(1) ***Example 1*** —

(i) ***Final value determined by value on estate tax return.*** At D's death, D owned (among other assets) a private residence not subject to any debt. D's sole beneficiary is D's child C. The value of the residence is reported on the estate tax return at $300,000. The IRS accepts the return as filed and the period of limitations on assessment of estate tax expires. For purposes of the

consistent basis requirement applicable to C, the final value of D's residence is $300,000, and therefore, C's initial basis in the residence is $300,000. See paragraphs (a)(2) and (b)(1)(i) of this section.

(ii) ***Adjustment of initial basis pursuant to other Code provisions.*** Several years later, C adds a master suite to the private residence at a cost of $45,000. Pursuant to section 1016(a), C's basis in the residence is increased by $45,000 to $345,000. Subsequently, C sells the residence to an unrelated third party for $450,000. C claims a basis in the residence of $345,000 and reports a gain of $105,000 ($450,000 less $345,000). C has complied with the consistent basis requirement, and C's adjustment to C's initial basis does not violate the consistent basis requirement. See paragraphs (a)(1) and (2) of this section.

(2) ***Example 2*** —

(i) ***Final value determined on examination.*** The facts are the same as in paragraph (e)(1)(i) of this section (*Example 1*) except that, on examination, the IRS adjusts the value of the residence to $290,000 and that value is not contested before the period of limitations on assessment of estate tax expires. For purposes of the consistent basis requirement applicable to C, the final value of the residence is $290,000, and therefore, C's initial basis in the residence, before taking into account C's subsequent renovations, is $290,000. See paragraphs (a)(2) and (b)(1)(ii) of this section.

(ii) ***Reported value if no final value yet determined and reliance on Statement required under § 1.6035-1.*** Prior to the determination of final value, C sells the residence for $375,000. C reports a gain of $75,000 on C's income tax return, relying on the reported value in a Statement required under § 1.6035-1 and claiming an initial basis of $300,000. C has complied with the consistent basis requirement because C did not claim an initial basis in the residence in excess of its reported value before the final value was determined. However, because C claimed an initial basis in the residence that exceeds the final value, C may have an income tax deficiency and underpayment for the year of the sale if the applicable period of limitations on assessment for C's income tax return has not expired when the final value is determined. See paragraphs (b)(2)(i) and (ii) of this section.

(3) ***Example 3*** —

(i) ***Final value determined by agreement.*** At D's death, D owned 50% of Partnership P, whose sole asset was a rental building with a fair market value of $10 million subject to non-recourse debt of $2 million. D's sole beneficiary is D's child C. The value of D's interest in Partnership P is reported on the estate tax return at $4 million (50% of ($10 million less $2 million)). On examination, the IRS timely adjusts the value of the partnership interest to $5.25 million and the executor of D's estate timely contests that value before the period of limitations on assessment of estate tax expires. Subsequently, the IRS and the executor of D's estate enter into a settlement agreement that provides that the value of D's interest in Partnership P for purposes of the estate tax is $4.5 million. For purposes of the consistent basis requirement applicable to C, the final value of the partnership interest is $4.5 million, and therefore, C's initial basis in the partnership interest is $4.5 million. See paragraphs (a)(2) and (b)(1)(iii) of this section.

(ii) ***Adjustment of initial basis pursuant to other Code provisions.*** C's share of Partnership P's liabilities at the date of D's death is $1 million. Under section 742 of the Internal Revenue Code and § 1.742-1 of this part, C's basis in the partnership interest is $5.5 million ($4.5 million initial basis plus C's $1 million share of Partnership P's debt). C later sells the partnership interest for

$5 million at a time when C's basis has not changed and C's share of the debt remains $1 million. Under section 752(d), C's amount realized on the sale includes $1 million for the reduction in C's share of partnership liabilities. Therefore, C's total amount realized is $6 million. C reports taxable gain of $0.5 million ($6 million amount realized less $5.5 million basis). C has complied with the consistent basis requirement because C did not claim an initial basis in the partnership interest that exceeds the final value of the interest, as determined under paragraph (b)(1) of this section, and C's adjustment of the initial basis in the partnership interest as reported does not violate the consistent basis requirement. See paragraphs (a)(1) and (2) of this section.

(4) ***Example 4*** —

(i) ***Final value determined by court decision.*** At D's death, D owned (among other assets) a rental property. D's sole beneficiary is D's child C. The value of the rental property is reported on the estate tax return at $1 million. On examination, the IRS determines the value of the rental property to be $1.5 million. A court subsequently determines that the fair market value of the rental property for purposes of the estate tax is $1.3 million and the court's decision becomes final. For purposes of the consistent basis requirement, the final value of the rental property is $1.3 million, and therefore, C's initial basis is $1.3 million. See paragraphs (a)(2) and (b)(1)(iv) of this section.

(ii) ***Reliance on Statement required under § 1.6035-1 and duration of consistent basis requirement.*** After the estate tax return is filed and before the final value is determined, C receives a Statement required under § 1.6035-1 showing a reported value of $1 million for the rental property. C claims a depreciation deduction on the first income tax return C files after acquiring the property, relying on the reported value in the Statement required under § 1.6035-1. C has complied with the consistent basis requirement on that return because C did not claim an initial basis in the rental property in excess of its reported value before the final value was determined. C may claim a credit or refund of income tax that may result from the increased depreciation deduction based on the final value of the rental property, but only if the period of limitations for a claim for a credit or refund of income tax for that year has not expired. C must use the final value of $1.3 million to determine C's unadjusted basis in the rental property for all open taxable years. In this case and pursuant to section 1016(a)(2), C's adjusted basis is determined by reducing the rental property's final value of $1.3 million by the greater of the depreciation deductions allowed or allowable based on the final value of $1.3 million for all prior tax years (open and closed). See paragraphs (a)(3), (b)(2)(i) and (ii) of this section.

(5) ***Example 5*** —*Final value for property subject to debt.* At D's death, D's gross estate includes a yacht valued at $750,000, subject to $150,000 non-recourse debt. D's sole beneficiary is D's child C. Pursuant to the rule in § 20.2053-7 of this chapter, the executor of D's estate reports the $600,000 net value of the yacht on the estate tax return ($750,000 less $150,000 debt) and claims no other deduction for the debt. The IRS accepts the return as filed and the period of limitations on assessment of estate tax expires. For purposes of the consistent basis requirement applicable to C, the final value of the yacht is $750,000, and therefore, C's initial basis in the yacht is $750,000. See paragraph (b)(3) of this section.

(6) ***Example 6*** —*Included property subject to the consistent basis requirement.* After exercising due diligence to discover estate assets, the executor of D's estate reports the value of all known property includible in D's gross estate on a timely filed estate tax return and pays the estate tax liability. During examination of the return, the IRS becomes aware of a piece of artwork in the possession of

D's child C, the value of which is includible in D's gross estate but is not reported on the estate tax return. The value of the artwork for Federal estate tax purposes is $500,000. Pursuant to the examination, the IRS includes the value of the artwork in the value of D's gross estate, which causes an increase in D's estate tax liability. Neither the inclusion of the artwork in D's gross estate nor the value at which the artwork is included in D's estate is contested by the executor of D's estate before the period of limitation on assessment of estate tax expires. The artwork is subject to the consistent basis requirement and the final value of the artwork is $500,000. Therefore, C's initial basis in the artwork is $500,000. See paragraphs (a)(2) and (c)(1)(i) of this section.

(7) *Example 7* —

(i) ***Partially deductible property subject to the consistent basis requirement.*** Pursuant to a bequest in D's will, Trust is established and funded with certain property, the value of which is includible in the gross estate under section 2031. Trust is a charitable remainder annuity trust described in section 664(d)(1). Trust provides that, in each taxable year during the lifetime of D's surviving child C, the trustee must pay to C an annuity of 5% of the initial net fair market value of all property passing to Trust as finally determined for Federal estate tax purposes. Upon the death of C, the trustee must distribute all of the then principal and income of Trust to organizations described in sections 170(c), 2055(a), and 2522(a) of the Code as the trustee selects, in the trustee's sole discretion. Although the executor of D's estate properly claims an estate tax charitable deduction under section 2055(e)(2)(A) for the value of the remainder interest in Trust, D's estate has an estate tax liability after application of all allowable credits. The property passing to Trust is subject to the consistent basis requirement because the value of the property is included in D's gross estate, an estate tax liability is payable after the application of all allowable credits, and the property is not described in paragraph (c)(2) of this section (in particular, the property is not wholly deductible property within the meaning of paragraph (c)(2)(xi) of this section).

(ii) ***Wholly deductible property not subject to the consistent basis requirement.*** The facts are the same as in paragraph (e)(7)(i) of this section (*Example 7*), except that the sole annuity beneficiary of Trust is D's surviving spouse S, and the executor of D's estate properly claims a deduction under section 2056(b)(8) for the value of S's annuity interest. Because the value of D's entire interest in the property passing to Trust qualified for either a charitable deduction under section 2055(e)(2) or a marital deduction under section 2056(b)(8), none of the property passing to Trust will be subject to the consistent basis requirement. See paragraph (c)(2)(xi) of this section.

(iii) ***Property not wholly deductible property if the sum of marital and charitable deductions allowed for that property is less than the value of the decedent's entire interest in the property.*** At the time of D's death, D owned 80 shares of voting stock in a closely-held corporation that has 100 shares of voting stock outstanding. D's will directed the executor of D's estate to distribute 40 shares of D's stock to a marital trust and 40 shares of D's stock to a charitable trust. D's executor included the value of D's 80 shares of stock in D's gross estate at $8,000,000 for purposes of the estate tax. Because of discounts applicable in valuing each of the two blocks of only 40 shares of the stock, D's executor correctly claimed a charitable deduction under section 2055(e)(2) of only $3,000,000, and correctly claimed a marital deduction under section 2056(b)(7) of only $3,000,000. D's executor determined that an estate tax was due on D's estate after the application of all allowable credits. The IRS accepted the return as filed and the period of limitations on assessment of estate tax expired. The 40 shares of stock owned by charitable

trust and the 40 shares of stock owned by marital trust are not wholly deductible property within the meaning of paragraph (c)(2)(xi) of this section and are subject to the consistent basis requirement.

(f) ***Applicability date.*** This section applies to property described in paragraph (c)(1) of this section that is acquired from a decedent or by reason of the death of a decedent if the decedent's Federal estate tax return is filed after September 17, 2024.

[T.D. 9991, 89 FR 76376, Sept. 17, 2024]

§ 1.1015-1 Basis of property acquired by gift after December 31, 1920.

(a) ***General rule.***

(1) In the case of property acquired by gift after December 31, 1920 (whether by a transfer in trust or otherwise), the basis of the property for the purpose of determining gain is the same as it would be in the hands of the donor or the last preceding owner by whom it was not acquired by gift. The same rule applies in determining loss unless the basis (adjusted for the period prior to the date of gift in accordance with sections 1016 and 1017) is greater than the fair market value of the property at the time of the gift. In such case, the basis for determining loss is the fair market value at the time of the gift.

(2) The provisions of subparagraph (1) of this paragraph may be illustrated by the following example.

Example: A acquires by gift income-producing property which has an adjusted basis of $100,000 at the date of gift. The fair market value of the property at the date of gift is $90,000. A later sells the property for $95,000. In such case there is neither gain nor loss. The basis for determining loss is $90,000; therefore, there is no loss. Furthermore, there is no gain, since the basis for determining gain is $100,000.

(3) If the facts necessary to determine the basis of property in the hands of the donor or the last preceding owner by whom it was not acquired by gift are unknown to the donee, the district director shall, if possible, obtain such facts from such donor or last preceding owner, or any other person cognizant thereof. If the district director finds it impossible to obtain such facts, the basis in the hands of such donor or last preceding owner shall be the fair market value of such property as found by the district director as of the date or approximate date at which, according to the best information the district director is able to obtain, such property was acquired by such donor or last preceding owner. See paragraph (e) of this section for rules relating to fair market value.

(b) ***Uniform basis; proportionate parts of.*** Property acquired by gift has a single or uniform basis although more than one person may acquire an interest in such property. The uniform basis of the property remains fixed subject to proper adjustment for items under sections 1016 and 1017. However, the value of the proportionate parts of the uniform basis represented, for instance, by the respective interests of the life tenant and remainderman are adjustable to reflect the change in the relative values of such interest on account of the lapse of time. The portion of the basis attributable to an interest at the time of its sale or other disposition shall be determined under the rules provided in § 1.1014-5. In determining gain or loss from the sale or other disposition after October 9, 1969, of a term interest in property (as defined in § 1.1001-1(f)(2)) the adjusted basis of which is determined pursuant, or by reference, to section 1015, that part of the adjusted uniform basis assignable under the rules of § 1.1014-5(a) to the interest sold or otherwise disposed of shall be disregarded to the extent and in the manner provided by section 1001(e) and § 1.1001-1(f).

(c) ***Time of acquisition.*** The date that the donee acquires an interest in property by gift is when the donor relinquishes dominion over the property and not necessarily when title to the property is acquired by the donee. Thus, the date that the donee acquires an interest in property by gift where he is a successor in interest, such as in the case of a remainderman of a life estate or a beneficiary of the distribution of the corpus of a trust, is the date such interests are created by the donor and not the date the property is actually acquired.

(d) ***Property acquired by gift from a decedent dying after December 31, 1953.*** If an interest in property was acquired by the taxpayer by gift from a donor dying after December 31, 1953, under conditions which required the inclusion of the property in the donor's gross estate for estate tax purposes, and the property had not been sold, exchanged, or otherwise disposed of by the taxpayer before the donor's death, see the rules prescribed in section 1014 and the regulations thereunder.

(e) ***Fair market value.*** For the purposes of this section, the value of property as appraised for the purpose of the Federal gift tax, or, if the gift is not subject to such tax, its value as appraised for the purpose of a State gift tax, shall be deemed to be the fair market value of the property at the time of the gift.

(f) ***Reinvestments by fiduciary.*** If the property is an investment by the fiduciary under the terms of the gift (as, for example, in the case of a sale by the fiduciary of property transferred under the terms of the gift, and the reinvestment of the proceeds), the cost or other basis to the fiduciary is taken in lieu of the basis specified in paragraph (a) of this section.

(g) ***Records.*** To insure a fair and adequate determination of the proper basis under section 1015, persons making or receiving gifts of property should preserve and keep accessible a record of the facts necessary to determine the cost of the property and, if pertinent, its fair market value as of March 1, 1913, or its fair market value as of the date of the gift.

[T.D. 6500, 25 FR 11910, Nov. 26, 1960, as amended by T.D. 6693, 28 FR 12818, Dec. 3, 1963; T.D. 7142, 36 FR 18952, Sept. 24, 1971]

§ 1.1015-2 Transfer of property in trust after December 31, 1920.

(a) ***General rule.***

(1) In the case of property acquired after December 31, 1920, by transfer in trust (other than by a transfer in trust by a gift, bequest, or devise) the basis of property so acquired is the same as it would be in the hands of the grantor increased in the amount of gain or decreased in the amount of loss recognized to the grantor upon such transfer under the law applicable to the year in which the transfer was made. If the taxpayer acquired the property by a transfer in trust, this basis applies whether the property be in the hands of the trustee, or the beneficiary, and whether acquired prior to the termination of the trust and distribution of the property, or thereafter.

(2) The principles stated in paragraph (b) of § 1.1015-1 concerning the uniform basis are applicable in determining the basis of property where more than one person acquires an interest in property by transfer in trust after December 31, 1920.

(b) ***Reinvestment by fiduciary.*** If the property is an investment made by the fiduciary (as, for example, in the case of a sale by the fiduciary of property transferred by the grantor, and the reinvestment of the proceeds), the cost or other basis to the fiduciary is taken in lieu of the basis specified in paragraph (a) of this section.

§ 1.1015-3 Gift or transfer in trust before January 1, 1921.

(a) In the case of property acquired by gift or transfer in trust before January 1, 1921, the basis of such property is the fair market value thereof at the time of the gift or at the time of the transfer in trust.

(b) The principles stated in paragraph (b) of § 1.1015-1 concerning the uniform basis are applicable in determining the basis of property where more than one person acquires an interest in property by gift or transfer in trust before January 1, 1921. In addition, if an interest in such property was acquired from a decedent and the property had not been sold, exchanged, or otherwise disposed of before the death of the donor, the rules prescribed in section 1014 and the regulations thereunder are applicable in determining the basis of such property in the hands of the taxpayer.

§ 1.1015-4 Transfers in part a gift and in part a sale.

(a) ***General rule.*** Where a transfer of property is in part a sale and in part a gift, the unadjusted basis of the property in the hands of the transferee is the sum of—

(1) Whichever of the following is the greater:

(i) The amount paid by the transferee for the property, or

(ii) The transferor's adjusted basis for the property at the time of the transfer, and

(2) The amount of increase, if any, in basis authorized by section 1015(d) for gift tax paid (see § 1.1015-5).

For determining loss, the unadjusted basis of the property in the hands of the transferee shall not be greater than the fair market value of the property at the time of such transfer. For determination of gain or loss of the transferor, see § 1.1001-1(e) and § 1.1011-2. For special rule where there has been a charitable contribution of less than a taxpayer's entire interest in property, see section 170(e)(2) and § 1.170A-4(c).

(b) ***Examples.*** The rule of paragraph (a) of this section is illustrated by the following examples:

Example 1. If A transfers property to his son for $30,000, and such property at the time of the transfer has an adjusted basis of $30,000 in A's hands (and a fair market value of $60,000), the unadjusted basis of the property in the hands of the son is $30,000.

Example 2. If A transfers property to his son for $60,000, and such property at the time of transfer has an adjusted basis of $30,000 in A's hands (and a fair market value of $90,000), the unadjusted basis of such property in the hands of the son is $60,000.

Example 3. If A transfers property to his son for $30,000, and such property at the time of transfer has an adjusted basis in A's hands of $60,000 (and a fair market value of $90,000), the unadjusted basis of such property in the hands of the son is $60,000.

Example 4. If A transfers property to his son for $30,000 and such property at the time of transfer has an adjusted basis of $90,000 in A's hands (and a fair market value of $60,000), the unadjusted basis of the property in the hands of the son ins $90,000. However, since the adjusted basis of the property in A's hands at the time of the transfer was greater than the fair market value at that time, for the purpose of determining any loss on a later sale or other disposition of the property by the son its unadjusted basis in his hands is $60,000.

[T.D. 6500, 25 FR 11910, Nov. 26, 1960, as amended by T.D. 6693, 28 FR 12818, Dec. 3, 1963; T.D. 7207, 37 FR 20799, Oct. 5, 1972]

§ 1.1015-5 Increased basis for gift tax paid.

(a) *General rule in the case of gifts made on or before December 31, 1976.*

(1)

(i) Subject to the conditions and limitations provided in section 1015(d), as added by the Technical Amendments Act of 1958, the basis (as determined under section 1015(a) and paragraph (a) of § 1.1015-1) of property acquired by gift is increased by the amount of gift tax paid with respect to the gift of such property. Under section 1015(d)(1)(A), such increase in basis applies to property acquired by gift on or after September 2, 1958 (the date of enactment of the Technical Amendments Act of 1958). Under section 1015(d)(1)(B), such increase in basis applies to property acquired by gift before September 2, 1958, and not sold, exchanged, or otherwise disposed of before such date. If section 1015(d)(1)(A) applies, the basis of the property is increased as of the date of the gift regardless of the date of payment of the gift tax. For example, if the property was acquired by gift on September 8, 1958, and sold by the donee on October 15, 1958, the basis of the property would be increased (subject to the limitation of section 1015(d)) as of September 8, 1958 (the date of the gift), by the amount of gift tax applicable to such gift even though such tax was not paid until March 1, 1959. If section 1015(d)(1)(B) applies, any increase in the basis of the property due to gift tax paid (regardless of date of payment) with respect to the gift is made as of September 2, 1958. Any increase in basis under section 1015(d) can be no greater than the amount by which the fair market value of the property at the time of the gift exceeds the basis of such property in the hands of the donor at the time of the gift. See paragraph (b) of this section for rules for determining the amount of gift tax paid in respect of property transferred by gift.

(ii) With respect to property acquired by gift before September 2, 1958, the provisions of section 1015(d) and this section do not apply if, before such date, the donee has sold, exchanged, or otherwise disposed of such property. The phrase *sold, exchanged, or otherwise disposed of* includes the surrender of a stock certificate for corporate assets in complete or partial liquidation of a corporation pursuant to section 331. It also includes the exchange of property for property of a like kind such as the exchange of one apartment house for another. The phrase does not, however, extend to transactions which are mere changes in form. Thus, it does not include a transfer of assets to a corporation in exchange for its stock in a transaction with respect to which no gain or loss would be recognizable for income tax purposes under section 351. Nor does it include an exchange of stock or securities in a corporation for stock or securities in the same corporation or another corporation in a transaction such as a merger, recapitalization, reorganization, or other transaction described in section 368(a) or 355, with respect to which no gain or loss is recognizable for income tax purposes under section 354 or 355. If a binding contract for the sale, exchange, or other disposition of property is entered into, the property is considered as sold, exchanged, or otherwise disposed of on the effective date of the contract, unless the contract is not subsequently carried out substantially in accordance with its terms. The effective date of a contract is normally the date it is entered into (and not the date it is consummated, or the date legal title to the property passes) unless the contract specifies a different effective date. For purposes of this subdivision, in determining whether a transaction comes within the phrase *sold, exchanged, or otherwise disposed of,* if a transaction would be treated as a mere change in the form of the property if it occurred in a taxable year subject to the Internal Revenue Code of 1954, it will be so treated if the transaction occurred in a taxable year subject to the Internal Revenue Code of 1939 or prior revenue law.

(2) Application of the provisions of subparagraph (1) of this paragraph may be illustrated by the following examples:

Example 1. In 1938, A purchased a business building at a cost of $120,000. On September 2, 1958, at which time the property had an adjusted basis in A's hands of $60,000, he gave the property to his nephew, B. At the time of the gift to B, the property had a fair market value of $65,000 with respect to which A paid a gift tax in the amount of $7,545. The basis of the property in B's hands at the time of the gift, as determined under section 1015(a) and § 1.1015-1, would be the same as the adjusted basis in A's hands at the time of the gift, or $60,000. Under section 1015(d) and this section, the basis of the building in B's hands as of the date of the gift would be increased by the amount of the gift tax paid with respect to such gift, limited to an amount by which the fair market value of the property at the time of the gift exceeded the basis of the property in the hands of A at the time of gift, or $5,000. Therefore, the basis of the property in B's hands immediately after the gift, both for determining gain or loss on the sale of the property, would be $65,000.

Example 2. C purchased property in 1938 at a cost of $100,000. On October 1, 1952, at which time the property had an adjusted basis of $72,000 in C's hands, he gave the property to his daughter, D. At the date of the gift to D, the property had a fair market value of $85,000 with respect to which C paid a gift tax in the amount of $11,745. On September 2, 1958, D still held the property which then had an adjusted basis in her hands of $65,000. Since the excess of the fair market value of the property at the time of the gift to D over the adjusted basis of the property in C's hands at such time is greater than the amount of gift tax paid, the basis of the property in D's hands would be increased as of September 2, 1958, by the amount of the gift tax paid, or $11,745. The adjusted basis of the property in D's hands, both for determining gain or loss on the sale of the property, would then be $76,745 ($65,000 plus $11,745).

Example 3. On December 31, 1951, E gave to his son, F, 500 shares of common stock of the X Corporation which shares had been purchased earlier by E at a cost of $100 per share, or a total cost of $50,000. The basis in E's hands was still $50,000 on the date of the gift to F. On the date of the gift, the fair market value of the 500 shares was $80,000 with respect to which E paid a gift tax in the amount of $10,695. In 1956, the 500 shares of X Corporation stock were exchanged for 500 shares of common stock of the Y Corporation in a reorganization with respect to which no gain or loss was recognized for income tax purposes under section 354. F still held the 500 shares of Y Corporation stock on September 2, 1958. Under such circumstances, the 500 shares of X Corporation stock would not, for purposes of section 1015(d) and this section, be considered as having been *sold, exchanged, or otherwise disposed of* by F before September 2, 1958. Therefore, the basis of the 500 shares of Y Corporation stock held by F as of such date would, by reason of section 1015(d) and this section, be increased by $10,695, the amount of gift tax paid with respect to the gift to F of the X Corporation stock.

Example 4. On November 15, 1953, G gave H property which had a fair market value of $53,000 and a basis in the hands of G of $20,000. G paid gift tax of $5,250 on the transfer. On November 16, 1956, H gave the property to J who still held it on September 2, 1958. The value of the property on the date of the gift to J was $63,000 and H paid gift tax of $7,125 on the transfer. Since the property was not sold, exchanged, or otherwise disposed of by J before September 2, 1958, and the gift tax paid on the transfer to J did not exceed $43,000 ($63,000, fair market value of property at time of gift to J, less $20,000, basis of property in H's hands at that time), the basis of property in his hands is increased on September 2, 1958, by $7,125, the amount of gift tax paid by H on the transfer. No increase in basis is allowed for the $5,250 gift tax paid by G on the transfer to H, since H had sold, exchanged, or otherwise disposed of the property before September 2, 1958.

(b) ***Amount of gift tax paid with respect to gifts made on or before December 31, 1976.***

(1)

(i) If only one gift was made during a certain *calendar period* (as defined in § 25.2502-1(c)(1)), the entire amount of the gift tax paid under chapter 12 or the corresponding provisions of prior revenue laws for that calendar period is the amount of the gift tax paid with respect to the gift.

(ii) If more than one gift was made during a certain calendar period, the amount of the gift tax paid under chapter 12 or the corresponding provisions of prior revenue laws with respect to any specified gift made during that calendar period is an amount, A, which bears the same ratio to B (the total gift tax paid for that calendar period) as C (the *amount of the gift,* computed as described in this paragraph (b)(1)(ii)) bears to D (the total taxable gifts for the calendar period computed without deduction for the gift tax specific exemption under section 2521 (as in effect prior to its repeal by the Tax Reform Act of 1976) or the corresponding provisions of prior revenue laws). Stated algebraically, the amount of the gift tax paid with respect to a gift equals:

[*Amount of the gift* (C) / Total taxable gifts, plus specific exemption allowed (D)] × Total gift tax paid (B)

For purposes of the ratio stated in the preceding sentence, the *amount of the gift* referred to as factor "C" is the value of the gift reduced by any portion excluded or deducted under section 2503(b) (annual exclusion), 2522 (charitable deduction), or 2523 (marital deduction) of the Code or the corresponding provisions of prior revenue laws. In making the computations described in this paragraph, the values to be used are those finally determined for purposes of the gift tax.

(iii) If a gift consists of more than one item of property, the gift tax paid with respect to each item shall be computed by allocating to each item a proportionate part of the gift tax paid with respect to the gift, computed in accordance with the provisions of this paragraph.

(2) For purposes of this paragraph, it is immaterial whether the gift tax is paid by the donor or the donee. Where more than one gift of a present interest in property is made to the same donee during a *calendar period* (as defined in § 25.2502-1(c)(1)), the annual exclusion shall apply to the earliest of such gifts in point of time.

(3) Where the donor and his spouse elect under section 2513 or the corresponding provisions of prior law to have any gifts made by either of them considered as made one-half by each, the amount of gift tax paid with respect to such a gift is the sum of the amounts of tax (computed separately) paid with respect to each half of the gift by the donor and his spouse.

(4) The method described in section 1015(d)(2) and this paragraph for computing the amount of gift tax paid in respect of a gift may be illustrated by the following examples:

> *Example 1.* Prior to 1959 H made no taxable gifts. On July 1, 1959, he made a gift to his wife, W, of land having a value for gift purposes of $60,000 and gave to his son, S, certain securities valued at $60,000. During the year 1959, H also contributed $5,000 in cash to a charitable organization described in section 2522. H filed a timely gift tax return for 1959 with

respect to which he paid gift tax in the amount of $6,000, computed as follows:

Value of land given to W		$60,000	
Less: Annual exclusion	$3,000		
Marital deduction	30,000	33,000	
Included amount of gift			$27,000
Value of securities given to S		60,000	
Less: Annual exclusion		3,000	
Included amount of gift			57,000
Gift to charitable organization		5,000	
Less: Annual exclusion	3,000		
Charitable deduction	2,000	5,000	
Included amount of gift			0
Total included gifts			84,000
Less: Specific exemption allowed			30,000
Taxable gifts for 1959			54,000
Gift tax on $54,000			6,000

In determining the gift tax paid with respect to the land given to W, amount C of the ratio set forth in subparagraph (1)(ii) of this paragraph is $60,000, value of property given to W, less $33,000 (the sum of $3,000, the amount excluded under section 2503(b), and $30,000, the amount deducted under section 2523), or $27,000. Amount D of the ratio is $84,000 (the amount of taxable gifts, $54,000, plus the gift tax specific exemption, $30,000). The gift tax paid with respect to the land given to W is $1,928.57, computed as follows:

$27,000(C) ÷ $84,000(D) × $6,000(B)

Example 2. The facts are the same as in example (1) except that H made his gifts to W and S on July 1, 1971, and that prior to 1971, H made no taxable gifts. Furthermore, H made his charitable contribution on August 12, 1971. These were the only gifts made by H during 1971. H filed his gift tax return for the third quarter of 1971 on November 15, 1971, as required by section 6075(b). With respect to the above gifts H paid a gift tax in the amount of $6,000 on total taxable gifts of $54,000 for the third quarter of 1971. The gift tax paid with respect to the land given to W is $1,928.57. The computations for these figures are identical to those used in example (1).

Example 3. On January 15, 1956, A made a gift to his nephew, N, of land valued at $86,000, and on June 30, 1956, gave N securities valued at $40,000. On July 1, 1956, A gave to his sister, S, $46,000 in cash. A and his wife, B, were married during the entire calendar year 1956. The amount of A's taxable gifts for prior years was zero although in arriving at that amount A had used in full the specific exemption authorized by section 2521. B did not make any gifts

before 1956. A and B elected under section 2513 to have all gifts made by either during 1956 treated as made one-half by A and one-half by B. Pursuant to that election, A and B each filed a gift tax return for 1956. A paid gift tax of $11,325 and B paid gift tax of $5,250, computed as follows:

	A	B
Value of land given to N	$43,000	$43,000
Less: exclusion	3,000	3,000
Included amount of gift	40,000	40,000
Value of securities given to N	20,000	20,000
Less: exclusion	None	None
Included amount of gift	20,000	20,000
Cash gift to S	23,000	23,000
Less: exclusion	3,000	3,000
Included amount of gift	20,000	20,000
Total included gifts	80,000	80,000
Less: specific exemption	None	30,000
Taxable gifts for 1956	80,000	50,000
Gift tax for 1956	11,325	5,250

The amount of the gift tax paid by A with respect to the land given to N is computed as follows:

$40,000(C) / $80,000(D) × $11,325(B) = $5,662.50

The amount of the gift tax paid by B with respect to the land given to N is computed as follows:

$40,000(C) / $80,000(D) × $5,250(B) = $2,625

The amount of the gift tax paid with respect to the land is $5,662.50 plus $2,625, or $8,287.50. Computed in a similar manner, the amount of gift tax paid by A with respect to the securities given to N is $2,831.25, and the amount of gift tax paid by B with respect thereto is $1,312.50, or a total of $4,143.75.

Example 4. The facts are the same as in example (3) except that A gave the land to N on January 15, 1972, the securities to N on February 3, 1972, and the cash to S on March 7, 1972. As in example (3), the amount of A's taxable gifts for taxable years prior to 1972 was zero, although in arriving at that amount A had used in full the specific exemption authorized by section 2521. B did not make any

gifts before 1972. Pursuant to the election under section 2513, A and B treated all gifts made by either during 1972 as made one-half by A and one-half by B. A and B each filed a gift tax return for the first quarter of 1972 on May 15, 1972, as required by section 6075(b). A paid gift tax of $11,325 on taxable gifts of $80,000 and B paid gift tax of $5,250 on taxable gifts of $50,000. The amount of the gift tax paid by A and B with respect to the land given to N is $5,662.50 and $2,625, respectively. The computations for these figures are identical to those used in example (3).

(c) ***Special rule for increased basis for gift tax paid in the case of gifts made after December 31, 1976*** —

(1) ***In general.*** With respect to gifts made after December 31, 1976 (other than gifts between spouses described in section 1015(e)), the increase in basis for gift tax paid is determined under section 1015(d)(6). Under section 1015(d)(6)(A), the increase in basis with respect to gift tax paid is limited to the amount (not in excess of the amount of gift tax paid) that bears the same ratio to the amount of gift tax paid as the net appreciation in value of the gift bears to the amount of the gift.

(2) ***Amount of gift.*** In general, for purposes of section 1015(d)(6)(A)(ii), the amount of the gift is determined in conformance with the provisions of paragraph (b) of this section. Thus, the amount of the gift is the amount included with respect to the gift in determining (for purposes of section 2503(a)) the total amount of gifts made during the calendar year (or calendar quarter in the case of a gift made on or before December 31, 1981), reduced by the amount of any annual exclusion allowable with respect to the gift under section 2503(b), and any deductions allowed with respect to the gift under section 2522 (relating to the charitable deduction) and section 2523 (relating to the marital deduction). Where more than one gift of a present interest in property is made to the same donee during a calendar year, the annual exclusion shall apply to the earliest of such gifts in point of time.

(3) ***Amount of gift tax paid with respect to the gift.*** In general, for purposes of section 1015(d)(6), the amount of gift tax paid with respect to the gift is determined in conformance with the provisions of paragraph (b) of this section. Where more than one gift is made by the donor in a calendar year (or quarter in the case of gifts made on or before December 31, 1981), the amount of gift tax paid with respect to any specific gift made during that period is the amount which bears the same ratio to the total gift tax paid for that period (determined after reduction for any gift tax unified credit available under section 2505) as the amount of the gift (computed as described in paragraph (c)(2) of this section) bears to the total taxable gifts for the period.

(4) ***Qualified domestic trusts.*** For purposes of section 1015(d)(6), in the case of a qualified domestic trust (QDOT) described in section 2056A(a), any distribution during the noncitizen surviving spouse's lifetime with respect to which a tax is imposed under section 2056A(b)(1)(A) is treated as a transfer by gift, and any estate tax paid on the distribution under section 2056A(b)(1)(A) is treated as a gift tax. The rules under this paragraph apply in determining the extent to which the basis in the assets distributed is increased by the tax imposed under section 2056A(b)(1)(A).

(5) ***Examples.*** Application of the provisions of this paragraph (c) may be illustrated by the following examples:

> *Example 1.* (i) Prior to 1995, X exhausts X's gift tax unified credit available under section 2505. In 1995, X makes a gift to X's child Y, of a parcel of real estate having a fair market value of $100,000. X's adjusted basis in the real estate immediately before making the gift was $70,000. Also in 1995, X makes a gift to X's child Z, of a painting having a fair market

value of $70,000. X timely files a gift tax return for 1995 and pays gift tax in the amount of $55,500, computed as follows:

Value of real estate transferred to Y	$100,000	
Less: Annual exclusion	10,000	
Included amount of gift (C)		$90,000
Value of painting transferred to Z	$70,000	
Less: annual exclusion	10,000	
Included amount of gift		60,000
Total included gifts (D)		$150,000
Total gift tax liability for 1995 gifts (B)		$55,500

(ii) The gift tax paid with respect to the real estate transferred to Y, is determined as follows:

$$\frac{\$90{,}000\ (C)}{\$150{,}000\ (D)} \times \$55{,}500\ (B) = \$33{,}300$$

(iii)(A) The amount by which Y's basis in the real property is increased is determined as follows:

$$\frac{\$30{,}000\ (\text{net appreciation})}{\$90{,}000\ (\text{amount of gift})} \times \$33{,}300 = \$11{,}100$$

(B) Y's basis in the real property is $70,000 plus $11,100, or $81,100. If X had not exhausted any of X's unified credit, no gift tax would have been paid and, as a result, Y's basis would not be increased.

Example 2. (i) X dies in 1995. X's spouse, Y, is not a United States citizen. In order to obtain the marital deduction for property passing to X's spouse, X established a QDOT in X's will. In 1996, the trustee of the QDOT makes a distribution of principal from the QDOT in the form of shares of stock having a fair market value of $70,000 on the date of distribution. The trustee's basis in the stock (determined under section 1014) is $50,000. An estate tax is imposed on the distribution under section 2056A(b)(1)(A) in the amount $38,500, and is paid. Y's basis in the shares of stock is increased by a portion of the section 2056A estate tax paid determined as follows:

$$\frac{\$20{,}000\ (\text{net appreciation})}{\$70{,}000\ (\text{distribution})} \times \$38{,}500\ (\text{section 2056A estate tax}) = \$11{,}000$$

(ii) Y's basis in the stock is $50,000 plus $11,000, or $61,000.

(6) ***Effective date.*** The provisions of this paragraph (c) are effective for gifts made after August 22, 1995.

(d) ***Treatment as adjustment to basis.*** Any increase in basis under section 1015(d) and this section shall, for purposes of section 1016(b) (relating to adjustments to a substituted basis), be treated as an adjustment under section 1016(a) to the basis of the donee's property to which such increase applies. See paragraph (p) of § 1.1016-5.

[T.D. 6693, 28 FR 12818, Dec. 3, 1963, as amended by T.D. 7238, 37 FR 28715, Dec. 29, 1972; T.D. 7910, 48 FR 40372, Sept. 7, 1983; T.D. 8612, 60 FR 43537, Aug. 22, 1995]

§ 1.1016-1 Adjustments to basis; scope of section.

Section 1016 and §§ 1.1016-2 to 1.1016-10, inclusive, contain the rules relating to the adjustments to be made to the basis of property to determine the adjusted basis as defined in section 1011. However, if the property was acquired from a decedent before his death, see § 1.1014-6 for adjustments on account of certain deductions allowed the taxpayer for the period between the date of acquisition of the property and the date of death of the decedent. If an election has been made under the Retirement-Straight Line Adjustment Act of 1958 (26 U.S.C. 1016 note), see § 1.9001-1 for special rules for determining adjusted basis in the case of a taxpayer who has changed from the retirement to the straight-line method of computing depreciation allowances.

§ 1.1016-2 Items properly chargeable to capital account.

(a) The cost or other basis shall be properly adjusted for any expenditure, receipt, loss, or other item, properly chargeable to capital account, including the cost of improvements and betterments made to the property. No adjustment shall be made in respect of any item which, under any applicable provision of law or regulation, is treated as an item not properly chargeable to capital account but is allowable as a deduction in computing net or taxable income for the taxable year. For example, in the case of oil and gas wells no adjustment may be made in respect of any intangible drilling and development expense allowable as a deduction in computing net or taxable income. See the regulations under section 263(c).

(b) The application of the foregoing provisions may be illustrated by the following example:

Example: A, who makes his returns on the calendar year basis, purchased property in 1941 for $10,000. He subsequently expended $6,000 for improvements. Disregarding, for the purpose of this example, the adjustments required for depreciation, the adjusted basis of the property is $16,000. If A sells the property in 1954 for $20,000, the amount of his gain will be $4,000.

(c) Adjustments to basis shall be made for carrying charges such as taxes and interest, with respect to property (whether real or personal, improved or unimproved, and whether productive or unproductive), which the taxpayer elects to treat as chargeable to capital account under section 266, rather than as an allowable deduction. The term *taxes* for this purpose includes duties and excise taxes but does not include income taxes.

(d) Expenditures described in section 173 to establish, maintain, or increase the circulation of a newspaper, magazine, or other periodical are chargeable to capital account only in accordance with and in the manner provided in the regulations under section 173.

§ 1.1016-3 Exhaustion, wear and tear, obsolescence, amortization, and depletion for periods since February 28, 1913.

(a) ***In general*** —

(1) *Adjustment where deduction is claimed.*

(i) For taxable periods beginning on or after January 1, 1952, the cost or other basis of property shall be decreased for exhaustion, wear and tear, obsolescence, amortization, and depletion by the greater of the following two amounts:

(*a*) The amount allowed as deductions in computing taxable income, to the extent resulting in a reduction of the taxpayer's income taxes, or

(*b*) The amount allowable for the years involved.

See paragraph (b) of this section. Where the taxpayer makes an appropriate election the above rule is applicable for periods since February 28, 1913, and before January 1, 1952. See paragraph (d) of this section. For rule for such periods where no election is made, see paragraph (c) of this section.

(ii) The determination of the amount properly allowable for exhaustion, wear and tear, obsolescence, amortization, and depletion must be made on the basis of facts reasonably known to exist at the end of the taxable year. A taxpayer is not permitted to take advantage in a later year of the taxpayer's prior failure to take any such allowance or the taxpayer's taking an allowance plainly inadequate under the known facts in prior years. In the case of depreciation, if in prior years the taxpayer has consistently taken proper deductions under one method, the amount allowable for such prior years may not be increased, even though a greater amount would have been allowable under another proper method. For rules governing losses on retirement or disposition of depreciable property, including rules for determining basis, see § 1.167(a)-8, 1.168(i)-1(e), or 1.168(i)-8, as applicable. The application of this paragraph is illustrated by the following example (for purposes of this example, assume section 167(f)(1) as in effect on September 19, 2013, applies to taxable years beginning on or after January 1, 2014):

> ***Example.*** On July 1, 2014, A, a calendar-year taxpayer, purchased and placed in service "off-the-shelf" computer software at a cost of $36,000. This computer software is not an amortizable section 197 intangible. Pursuant to section 167(f)(1), the useful life of the computer software is 36 months. It has no salvage value. Computer software placed in service in 2014 is not eligible for the additional first year depreciation deduction provided by section 168(k). A did not deduct any depreciation for the computer software for 2014 and deducted depreciation of $12,000 for the computer software for 2015. As a result, the total amount of depreciation allowed for the computer software as of December 31, 2015, was $12,000. However, the total amount of depreciation allowable for the computer software as of December 31, 2015, is $18,000 ($6,000 for 2014 + $12,000 for 2015). As a result, the unrecovered cost of the computer software as of December 31, 2015, is $18,000 (cost of $36,000 less the depreciation allowable of $18,000 as of December 31, 2015). Accordingly, depreciation for 2016 for the computer software is $12,000 (unrecovered cost of $18,000 divided by the remaining useful life of 18 months as of January 1, 2016, multiplied by 12 full months in 2016).

(2) *Adjustment for amount allowable where no depreciation deduction claimed.*

(i) If the taxpayer has not taken a depreciation deduction either in the taxable year or for any prior taxable year, adjustments to basis of the property for depreciation allowable shall be determined by using the straight-line method of depreciation. (See § 1.1016-4 for adjustments in the case of persons exempt from income taxation.)

(ii) For taxable years beginning after December 31, 1953, and ending after August 16, 1954, if the taxpayer with respect to any property has taken a deduction for depreciation properly under one of the methods provided in section 167(b) for one or more years but has omitted the deduction in other years, the adjustment to basis for the depreciation allowable in such a case will be the deduction under the method which was used by the taxpayer with respect to that property. Thus, if A acquired property in 1954 on which he properly computed his depreciation deduction under the method described in section 167(b)(2) (the declining-balance method) for the first year of its useful life but did not take a deduction in the second and third year of the asset's life, the adjustment to basis for depreciation allowable for the second and third year will be likewise computed under the declining-balance method.

(3) ***Adjustment for depletion deductions with respect to taxable years before 1932.*** Where for any taxable year before the taxable year 1932 the depletion allowance was based on discovery value or a percentage of income, then the adjustment for depletion for such year shall not exceed a depletion deduction which would have been allowable for such year if computed without reference to discovery value or a percentage of income.

(b) ***Adjustment for periods beginning on or after January 1, 1952.*** The decrease required by paragraph (a) of this section for deductions in respect of any period beginning on or after January 1, 1952, shall be whichever is the greater of the following amounts:

(1) The amount allowed as deductions in computing taxable income under subtitle A of the Code or prior income tax laws and resulting (by reason of the deductions so allowed) in a reduction for any taxable year of the taxpayer's taxes under subtitle A of the Code (other than chapter 2, relating to tax on self-employment income) or prior income, war-profits, or excess-profits tax laws; or

(2) The amount properly allowable as deductions in computing taxable income under subtitle A of the Code or prior income tax laws (whether or not the amount properly allowable would have caused a reduction for any taxable year of the taxpayer's taxes).

(c) ***Adjustment for periods since February 28, 1913, and before January 1, 1952, where no election made.*** If no election has been properly made under section 1020, or under section 113(d) of the Internal Revenue Code of 1939 (see paragraph (d) of this section), the decrease required by paragraph (a) of this section for deductions in respect of any period since February 28, 1913, and before January 1, 1952, shall be whichever of the following amounts is the greater:

(1) The amount allowed as deductions in computing net income under chapter 1 of the Internal Revenue Code of 1939 or prior income tax laws;

(2) The amount properly allowable in computing net income under chapter 1 of the Internal Revenue Code of 1939 or prior income tax laws.

For the purpose of determining the decrease required by this paragraph, it is immaterial whether or not the amount under subparagraph (1) of this paragraph or the amount under subparagraph (2) of this paragraph would have resulted in a reduction for any taxable year of the taxpayer's taxes.

(d) ***Adjustment for periods since February 28, 1913, and before January 1, 1952, where election made.*** If an election has been properly made under section 1020, or under section 113(d) of the Internal Revenue Code of 1939, the decrease required by paragraph (a) of this section for deductions in respect of any period since February 28, 1913, and before January 1, 1952, shall be whichever is the greater of the following amounts:

(1) The amount allowed as deductions in computing net income under chapter 1 of the Internal Revenue Code of 1939 or prior income tax laws and resulting (by reason of the deductions so allowed) in a reduction for any taxable year of the taxpayer's taxes under such chapter 1 (other than subchapter E, relating to tax on self-employment income), subchapter E, chapter 2, of the Internal Revenue Code of 1939, or prior income, war-profits, or excess-profits tax laws;

(2) The amount properly allowable as deductions in computing net income under chapter 1 of the Internal Revenue Code of 1939 or prior income tax laws (whether or not the amount properly allowable would have caused a reduction for any taxable year of the taxpayer's taxes).

(e) ***Determination of amount allowed which reduced taxpayer's taxes.***

(1) As indicated in paragraphs (b) and (d) of this section, there are situations in which it is necessary to determine (for the purpose of ascertaining the basis adjustment required by paragraph (a) of this section) the extent to which the amount allowed as deductions resulted in a reduction for any taxable year of the taxpayer's taxes under subtitle A (other than chapter 2 relating to tax on self-employment income) of the Code, or prior income, war-profits, or excess-profits tax laws. This amount (amount allowed which resulted in a reduction of the taxpayer's taxes) is hereinafter referred to as the *tax-benefit amount allowed.* For the purpose of determining whether the tax-benefit amount allowed exceeded the amount allowable, a determination must be made of that portion of the excess of the amount allowed over the amount allowable which, if disallowed, would not have resulted in an increase in any such tax previously determined. If the entire excess of the amount allowed over the amount allowable could be disallowed without any such increase in tax, the tax-benefit amount allowed shall not be considered to have exceeded the amount allowable. In such a case (if paragraph (b) or (d) of this section is applicable) the reduction in basis required by paragraph (a) of this section would be the amount properly allowable as a deduction. If only part of such excess could be disallowed without any such increase in tax, the tax-benefit amount allowed shall be considered to exceed the amount allowable to the extent of the remainder of such excess. In such a case (if paragraph (b) or (d) of this section is applicable), the reduction in basis required by paragraph (a) of this section would be the amount of the tax-benefit amount allowed.

(2) For the purpose of determining the tax-benefit amount allowed the tax previously determined shall be determined under the principles of section 1314. The only adjustments made in determining whether there would be an increase in tax shall be those resulting from the disallowance of the amount allowed. The taxable years for which the determination is made shall be the taxable year for which the deduction was allowed and any other taxable year which would be affected by the disallowance of such deduction. Examples of such other taxable years are taxable years to which there was a carryover or carryback of a net operating loss from the taxable year for which the deduction was allowed, and taxable years for which a computation under section 111 or section 1333 was made by reference to the taxable year for which the deduction was allowed. In determining whether the disallowance of any part of the deduction would not have resulted in an increase in any tax previously determined, proper adjustment must be made for previous determinations under section 1311, or section 3801 of the Internal Revenue Code of 1939, and for any previous application of section 1016(a)(2)(B), or section 113(b) (1)(B)(ii) of the Internal Revenue Code of 1939.

(3) If a determination under section 1016(a)(2)(B) must be made with respect to several properties for each of which the amount allowed for the taxable year exceeded the amount allowable, the tax-benefit amount allowed with respect to each of such properties shall be an allocated portion of the tax-benefit amount allowed determined by reference to the sum of the amounts allowed and the sum of the amounts allowable with respect to such several properties.

(4) In the case of property held by a partnership or trust, the computation of the tax-benefit amount allowed shall take into account the tax benefit of the partners or beneficiaries, as the case may be, from the deduction by the partnership or trust of the amount allowed to the partnership or the trust. For this purpose, the determination of the amount allowed which resulted in a tax benefit to the partners or beneficiaries shall be made in the same manner as that provided above with respect to the taxes of the person holding the property.

(5) A taxpayer seeking to limit the adjustment to basis to the tax-benefit amount allowed for any period, in lieu of the amount allowed, must establish the tax-benefit amount allowed. A failure of adequate proof as to the tax-benefit amount allowed with respect to one period does not preclude the taxpayer from limiting the adjustment to basis to the tax-benefit amount allowed with respect to another period for which adequate proof is available. For example, a corporate transferee may have available adequate records with respect to the tax effect of the deduction of erroneous depreciation for certain taxable years, but may not have available adequate records with respect to the deduction of excessive depreciation for other taxable years during which the property was held by its transferor. In such case the corporate transferee shall not be denied the right to apply this section with respect to the erroneous depreciation for the period for which adequate proof is available.

(f) ***Determination of amount allowable in prior taxable years.***

(1) One of the factors in determining the adjustment to basis as of any date is the amount of depreciation, depletion, etc., allowable for periods prior to such date. The amount allowable for such prior periods is determined under the law applicable to such prior periods; all adjustments required by the law applicable to such periods are made in determining the adjusted basis of the property for the purpose of determining the amount allowable. Provisions corresponding to the rules in section 1016(a)(2)(B) described in paragraphs (d) and (e) of this section, which limit adjustments to the *tax-benefit amount allowed* where an election is properly exercised, were first enacted by the Act of July 14, 1952 (66 Stat. 629). That law provided that corresponding rules are deemed to be includible in all revenue laws applicable to taxable years ending after December 31, 1931. Accordingly, those rules shall be taken into account in determining the amount of depreciation, etc., allowable for any taxable year ending after December 31, 1931. For example, if the adjusted basis of property held by the taxpayer since January 1, 1930, is determined as of January 1, 1955, and if an election was properly made under section 1020, or section 113(d) of the Internal Revenue Code of 1939, then the amount allowable which is taken into account in computing the adjusted basis as of January 1, 1955, shall be determined by taking those rules into account for all taxable years ending after December 31, 1931. The Act of July 14, 1952, made no change in the law applicable in determining the amount allowable for taxable years ending before January 1, 1932. If there was a final decision of a court prior to the enactment of the Act of July 14, 1952, determining the amount allowable for a particular taxable year, such determination shall be adjusted. In such case the adjustment shall be made only for the purpose of taking the provision of that law into account and only to the extent made necessary by such provisions.

(2) Although the Act of July 14, 1952, amended the law applicable to all taxable years ending after December 31, 1931, the amendment does not permit refund, credit, or assessment of a deficiency for any taxable year for which such refund, credit, or assessment was barred by any law or rule of law.

(g) ***Property with transferred basis.*** The following rules apply in the determination of the adjustments to basis of property in the hands of a transferee, donee, or grantee which are required by section 1016(b), or section 113(b)(2) of the Internal Revenue Code of 1939, with respect to the period the property was held by the transferor, donor, or grantor:

(1) An election or a revocation of an election under section 1020, or section 113(d) of the Internal Revenue Code of 1939, by a transferor, donor, or grantor, which is made after the date of the transfer, gift, or grant of the property shall not affect the basis of such property in the hands of the transferee, donee, or grantee. An election or a revocation of an election made before the date of the transfer, gift, or grant of the property shall be taken into account in determining under section 1016(b) the adjustments to basis of such property as of the date of the transfer, gift, or grant, whether or not an election or a revocation of an election under section 1020, or section 113(d) of the Internal Revenue Code of 1939, was made by the transferee, donee, or grantee.

(2) An election by the transferee, donee, or grantee or a revocation of such an election shall be applicable in determining the adjustments to basis for the period during which the property was held by the transferor, donor, or grantor, whether or not the transferor, donor, or grantor had made an election or a revocation of an election, provided that the property was held by the transferee, donee, or grantee at any time on or before the date on which the election or revocation was made.

(h) ***Application to a change in method of accounting.*** For purposes of determining whether a change in depreciation or amortization for property subject to section 167, 168, 197, 1400I, 1400L(c), to section 168 prior to its amendment by the Tax Reform Act of 1986 (100 Stat. 2121) (former section 168), or to an additional first year depreciation deduction provision of the Internal Revenue Code (for example, section 168(k), 1400L(b), or 1400N(d)) is a change in method of accounting under section 446(e) and the regulations under section 446(e), section 1016(a)(2) does not permanently affect a taxpayer's lifetime income.

(i) ***Examples.*** The application of section 1016(a) (1) and (2) may be illustrated by the following examples:

> *Example 1.* The case of Corporation A discloses the following facts:
> The cost or other basis is to be adjusted by $16,500 with respect to the years 1952-54, that is, by the amount allowable but not less than the amount allowed which reduced the taxpayer's taxes. An adjustment must also be made with respect to the years 1949-1951, the amount of such adjustment depending upon whether an election was properly made under section 1020, or section 113(d) of the Internal Revenue Code of 1939. If no such election was made, the amount of the adjustment with respect to the years 1949-1951 is $19,500, that is, the amount allowed but not

less than the amount allowable. If an election was properly made, the amount of the adjustment with respect to the years 1949-1951 is $19,000, that is, the amount allowable but not less than the amount allowed which reduced the taxpayer's taxes.

(1)—Year	(2)—Amount allowed	(3)—Amount allowed which reduced taxpayer's taxes	(4)—Amount allowable	(5)—Amount allowable but not less than amount allowed	(6)—Amount allowable but not less than amount allowed which reduced taxpayer's taxes
1949	$6,000	$5,500	$5,000	$6,000	$5,500
1950	7,000	7,000	6,500	7,000	7,000
1951	5,000	4,000	6,500	6,500	6,500
Total, 1949-1951				19,500	19,000
1952	6,500	6,500	6,000		6,500
1953	5,000	4,000	4,000		4,000
1954	4,500	4,500	6,000		6,000
Total, 1952-1954					16,500

Example 2. Corporation A, which files its returns on the basis of a calendar year, purchased a building on January 1, 1950, at a cost of $100,000. On the basis of the facts reasonably known to exist at the end of 1950, a period of 50 years should have been used as the correct useful life of the building; nevertheless, depreciation was computed by Corporation A on the basis of a useful life of 25 years, and was allowed for 1950 through 1953 as a deduction in an annual amount of $4,000. The building was sold on January 1, 1954. Corporation A did not make an election under section 1020, or section 113(d) of the Internal Revenue Code of 1939. No part of the amount allowed Corporation A for any of the years 1950 through 1953 resulted in a reduction of Corporation A's taxes. The adjusted basis of the building as of January 1, 1954, is $88,166, computed as follows:

Taxable year	Adjustments to basis as of beginning of taxable year	Adjusted basis on January 1	Remaining life on January 1	Depreciation allowable	Depreciation allowed
1950		$100,000	50	$2,000	$4,000
1951	$4,000	96,000	49	1,959	4,000

Taxable year	Adjustments to basis as of beginning of taxable year	Adjusted basis on January 1	Remaining life on January 1	Depreciation allowable	Depreciation allowed
1952	8,000	92,000	48	1,917	4,000
1953	9,917	90,083	47	1,917	4,000
1954	11,834	88,166			

Example 3. The facts are the same as in example (2), except that Corporation A made a proper election under section 1020. In such case, the adjusted basis of the building as of January 1, 1954, is $92,000 computed as follows:

Taxable year	Adjustments to basis as of beginning of taxable year	Adjusted basis on January 1	Remaining life on January 1	Depreciation allowable	Depreciation allowed
1950		$100,000	50	$2,000	$4,000
1951	$2,000	98,000	49	2,000	4,000
1952	4,000	96,000	48	2,000	4,000
1953	6,000	94,000	47	2,000	4,000
1954	8,000	92,000			

Example 4. If it is assumed that in example (2), or in example (3), all of the deduction allowed Corporation A for 1953 had resulted in a reduction of A's taxes, the adjustment to the basis of the building for depreciation for 1953 would reflect the entire $4,000 deduction. In such case, the adjusted basis of the building as of January 1, 1954, would be $86,083 in example (2), and $90,000 in example (3).

Example 5. The facts are the same as in example (2), except that for the year 1950 all of the $4,000 amount allowed Corporation A as a deduction for depreciation for that year resulted in a reduction of A's taxes. In such case, the adjustments to the basis of the building remain the same as those set forth in example (2).

Example 6. The facts are the same as in example (3), except that for the year 1950 all of the $4,000 amount allowed Corporation A as a deduction for depreciation resulted in a reduction of A's taxes. In such case, the adjusted basis of the building as of January 1, 1954, is $90,123,

computed as follows:

Taxable year	Adjustments to basis as of beginning of taxable year	Adjusted basis on January 1	Remaining life on January 1	Depreciation allowable	Depreciation allowed
1950		$100,000	50	$2,000	$4,000
1951	$4,000	96,000	49	1,959	4,000
1952	5,959	94,041	48	1,959	4,000
1953	7,918	92,082	47	1,959	4,000
1954	9,877	90,123			

(j) *Effective/applicability dates* —

(1) ***In general.*** Except as provided in paragraphs (j)(2) and (j)(3) of this section, this section applies on or after December 30, 2003. For the applicability of regulations before December 30, 2003, see § 1.1016-3 in effect prior to December 30, 2003 (§ 1.1016-3 as contained in 26 CFR part 1 edition revised as of April 1, 2003).

(2) ***Depreciation or amortization changes.*** Paragraph (h) of this section applies to a change in depreciation or amortization for property subject to section 167, 168, 197, 1400I, 1400L(c), to former section 168, or to an additional first year depreciation deduction provision of the Internal Revenue Code (for example, section 168(k), 1400L(b), or 1400N(d)) for taxable years ending on or after December 30, 2003.

(3) *Application of § 1.1016-3T(a)(1)(ii)* —

(i) ***In general.*** Paragraph (a)(1)(ii) of this section applies to taxable years beginning on or after January 1, 2014. Except as provided in paragraphs (j)(3)(ii) and (j)(3)(iii) of this section, § 1.1016-3(a)(1)(ii) as contained in 26 CFR part 1 edition revised as of April 1, 2011, applies to taxable years beginning before January 1, 2014.

(ii) ***Early application of § 1.1016-3(a)(1)(ii).*** A taxpayer may choose to apply paragraph (a)(1)(ii) of this section to taxable years beginning on or after January 1, 2012.

(iii) ***Optional application of TD 9564.*** A taxpayer may choose to apply § 1.1016-3T(a)(1)(ii) as contained in TD 9564 (76 FR 81060) December 27, 2011, to taxable years beginning on or after January 1, 2012, and before January 1, 2014.

[T.D. 6500, 25 FR 11910, Nov. 26, 1960; 25 FR 14021, Dec. 31, 1960, as amended by T.D. 9105, 69 FR 12, Jan. 2, 2004; T.D. 9307, Dec. 28, 2006; T.D. 9564, 76 FR 81126, Dec. 27, 2011; T.D. 9636, 78 FR 57746, Sept. 19, 2013; T.D. 9689, 79 FR 48684, Aug. 18, 2014]

§ 1.1016-4 Exhaustion, wear and tear, obsolescence, amortization, and depletion; periods during which income was not subject to tax.

(a) Adjustments to basis must be made for exhaustion, wear and tear, obsolescence, amortization, and depletion to the extent actually sustained in respect of:

(1) Any period before March 1, 1913,

(2) Any period since February 28, 1913, during which the property was held by a person or organization not subject to income taxation under chapter 1 of the Code or prior income tax laws,

(3) Any period since February 28, 1913, and before January 1, 1958, during which the property was held by a person subject to tax under part I, subchapter L, chapter 1 of the Code, or prior income tax law, to the extent that section 1016(a)(2) does not apply, and

(4) Any period since February 28, 1913, during which such property was held by a person subject to tax under part II of subchapter L, chapter 1 of the Code, or prior income tax law, to the extent that section 1016(a)(2) does not apply.

(b) The amount of the adjustments described in paragraph (a) of this section actually sustained is that amount charged off on the books of the taxpayer where such amount is considered by the Commissioner to be reasonable. Otherwise, the amount actually sustained will be the amount that would have been allowable as a deduction:

(1) During the period described in paragraph (a) (1) or (2) of this section, had the taxpayer been subject to income tax during those periods, or

(2) During the period described in paragraph (a) (3) or (4) of this section, with respect to property held by a taxpayer described in that paragraph, to the extent that section 1016(a)(2) was inapplicable to such property during that period.

In the case of a taxpayer subject to the adjustment required by subparagraph (1) or (2) of this paragraph, depreciation shall be determined by using the straight line method.

[T.D. 6681, 28 FR 11131, Oct. 17, 1963]

§ 1.1016-5 Miscellaneous adjustments to basis.

(a) ***Certain stock distributions.***

(1) In the case of stock, the cost or other basis must be diminished by the amount of distributions previously made which, under the law applicable to the year in which the distribution was made, either were tax free or were applicable in reduction of basis (not including distributions made by a corporation which was classified as a personal service corporation under the provisions of the Revenue Act of 1918 (40 Stat. 1057) or the Revenue Act of 1921 (42 Stat. 227), out of its earnings or profits which were taxable in accordance with the provisions of section 218 of the Revenue Act of 1918 or the Revenue Act of 1921). For adjustments to basis in the case of certain corporate distributions, see section 301 and the regulations thereunder.

(2) The application of subparagraph (1) of this paragraph may be illustrated by the following example:

Example: A, who makes his returns upon the calendar year basis, purchased stock in 1923 for $5,000. He received in 1924 a distribution of $2,000 paid out of earnings and profits of the corporation accumulated before March 1, 1913. The adjusted basis for determining the gain or loss from the sale or other disposition of the stock in 1954 is $5,000 less $2,000, or $3,000, and the amount of the gain or loss from the sale or other disposition of the stock is the difference between $3,000 and the amount realized from the sale or other disposition.

(b) ***Amortizable bond premium —***

(1) ***In general.*** A holder's basis in a bond is reduced by the amount of bond premium used to offset qualified stated interest income under § 1.171-2. This reduction occurs when the holder takes the qualified stated interest into account under the holder's regular method of accounting.

(2) ***Special rules for taxable bonds.*** A holder's basis in a taxable bond is reduced by the amount of bond premium allowed as a deduction under § 1.171-3(c)(5)(ii) (relating to the issuer's call of a taxable bond) or under § 1.171-2(a)(4)(i)(A) (relating to excess bond premium).

(3) ***Special rule for tax-exempt obligations.*** A holder's basis in a tax-exempt obligation is reduced by the amount of excess bond premium that is treated as a nondeductible loss under § 1.171-2(a)(4)(ii).

(c) ***Municipal bonds.*** In the case of a municipal bond (as defined in section 75(b)), basis shall be adjusted to the extent provided in section 75 or as provided in section 22(o) of the Internal Revenue Code of 1939, and the regulations thereunder.

(d) ***Sale or exchange of residence.*** Where the acquisition of a new residence results in the nonrecognition of any part of the gain on the sale, or exchange, or involuntary conversion of the old residence, the basis of the new residence shall be reduced by the amount of the gain not so recognized pursuant to section 1034(a), or section 112(n) of the Internal Revenue Code of 1939, and the regulations thereunder. See section 1034(e) and the regulations thereunder.

(e) ***Loans from Commodity Credit Corporation.*** In the case of property pledged to the Commodity Credit Corporation, the basis of such property shall be increased by the amount received as a loan from such corporation and treated by the taxpayer as income for the year in which received under section 77, or under section 123 of the Internal Revenue Code of 1939. The basis of such property shall be reduced to the extent of any deficiency on such loan with respect to which the taxpayer has been relieved from liability.

(f) ***Deferred development and exploration expenses.*** Expenditures for development and exploration of mines or mineral deposits treated as deferred expenses under sections 615 and 616, or under the corresponding provisions of prior income tax laws, are chargeable to capital account and shall be an adjustment to the basis of the property to which they relate. The basis so adjusted shall be reduced by the amount of such expenditures allowed as deductions which results in a reduction for any taxable year of the taxpayer's taxes under subtitle A (other than chapter 2 relating to tax on self-employment income) of the Code, or prior income, war-profits, or excess-profits tax laws, but not less than the amounts allowable under such provisions for the taxable year and prior years. This amount is considered as the *tax-benefit amount allowed* and shall be determined in accordance with paragraph (e) of § 1.1016-3. For example, if a taxpayer purchases unexplored and undeveloped mining property for $1,000,000 and at the close of the development stage has incurred exploration and development costs of $9,000,000 treated as deferred expenses, the basis of such property at such time for computing gain or loss will be $10,000,000. Assuming that the taxpayer in this example has operated the mine for several years and has deducted allowable percentage depletion in the amount of $2,000,000 and has deducted allowable deferred exploration and development expenditures of $2,000,000, the basis of the property in the taxpayer's hands for purposes of determining gain or loss from a sale will be $6,000,000.

(g) ***Sale of land with unharvested crop.*** In the case of an unharvested crop which is sold, exchanged, or involuntarily converted with the land and which is considered as property used in the trade or business under section 1231, the basis of such crop shall be increased by the amount of the items which are attributable to the production of such crop and which are disallowed, under section 268, as deductions in computing taxable income. The basis of any other property shall be decreased by the amount of any such items which are attributable to such other property, notwithstanding any provisions of section 1016 or of

this section to the contrary. For example, if the items attributable to the production of an unharvested crop consist only of fertilizer costing $100 and $50 depreciation on a tractor used only to cultivate such crop, and such items are disallowed under section 268, the adjustments to the basis of such crop shall include an increase of $150 for such items and the adjustments to the basis of the tractor shall incude a reduction of $50 for depreciation.

(h) ***Consent dividends.***

(1) In the case of amounts specified in a shareholder's consent to which section 28 of the Internal Revenue Code of 1939 applies, the basis of the consent stock shall be increased to the extent provided in subsection (h) of such section.

(2) In the case of amounts specified in a shareholder's consent to be treated as a consent dividend to which section 565 applies, the basis of the consent stock shall be increased by the amount which, under section 565(c)(2), is treated as contributed to the capital of the corporation.

(i) ***Stock in foreign personal holding company.*** In the case of the stock of a United States shareholder in a foreign personal holding company, basis shall be adjusted to the extent provided in section 551(f) or corresponding provisions of prior income tax laws.

(j) ***Research and experimental expenditures.*** Research and experimental expenditures treated as deferred expenses under section 174(b) are chargeable to capital account and shall be an adjustment to the basis of the property to which they relate. The basis so adjusted shall be reduced by the amount of such expenditures allowed as deductions which results in a reduction for any taxable year of the taxpayer's taxes under subtitle A (other than chapter 2 relating to tax on self-employment income) of the Code, or prior income, war-profits, or excess-profits tax laws, but not less than the amounts allowable under such provisions for the taxable year and prior years. This amount is considered as the *tax-benefit amount allowed* and shall be determined in accordance with paragraph (e) of § 1.1016-3.

(k) ***Deductions disallowed in connection with disposal of coal or domestic iron ore.*** Basis shall be adjusted by the amount of the deductions disallowed under section 272 with respect to the disposal of coal or domestic iron ore covered by section 631.

(l) ***Expenditures attributable to grants or loans covered by section 621.*** In the case of expenditures attributable to a grant or loan made to a taxpayer by the United States for the encouragement of exploration for, or development or mining of, critical and strategic minerals or metals, basis shall be adjusted to the extent provided in section 621, or in section 22(b)(15) of the Internal Revenue Code of 1939.

(m) ***Trademark and trade name expenditures.*** Trademark and trade name expenditures treated as deferred expenses under section 177 are chargeable to capital account and shall be an adjustment to the basis of the property to which they relate. The basis so adjusted shall be reduced by the amount of such expenditures allowed as deductions which results in a reduction for any taxable year of the taxpayer's taxes under subtitle A (other than chapter 2, relating to tax on self-employment income) of the Code, but not less than the amounts allowable under such section for the taxable year and prior years. This amount is considered as the *tax-benefit amount allowed* and shall be determined in accordance with paragraph (e) of § 1.1016-3.

(n) ***Life insurance companies.*** In the case of any evidence of indebtedness referred to in section 818(b), the basis shall be adjusted to the extent of the adjustments required under section 818(b) (or the corresponding provisions of prior income tax laws) for the taxable year and all prior taxable years. The basis of any such evidence of indebtedness shall be reduced by the amount of the adjustment required

under section 818(b) (or the corresponding provision of prior income tax laws) on account of amortizable premium and shall be increased by the amount of the adjustment required under section 818(b) on account of accruable discounts.

(o) ***Stock and indebtedness of electing small business corporation.*** In the case of a shareholder of an electing small business corporation, as defined in section 1371(b), the basis of the shareholder's stock in such corporation, and the basis of any indebtedness of such corporation owing to the shareholder, shall be adjusted to the extent provided in §§ 1.1375-4, 1.1376-1, and 1.1376-2.

(p) ***Gift tax paid on certain property acquired by gift.*** Basis shall be adjusted by that amount of the gift tax paid in respect of property acquired by gift which, under section 1015(d), is an increase in the basis of such property.

(q) ***Section 38 property.*** In the case of property which is or has been section 38 property (as defined in section 48(a)), the basis shall be adjusted to the extent provided in section 48(g) and in section 203(a)(2) of the Revenue Act of 1964.

(r) ***Stock in controlled foreign corporations and other property.*** In the case of stock in controlled foreign corporations (or foreign corporations which were controlled foreign corporations) and of property by reason of which a person is considered as owning such stock, the basis shall be adjusted to the extent provided in section 961.

(s) ***Original issue discount.*** In the case of certain corporate obligations issued at a discount after May 27, 1969, the basis shall be increased under section 1232(a)(3)(E) by the amount of original issue discount included in the holder's gross income pursuant to section 1232(a)(3).

(t) ***Section 23 credit.*** In the case of property with respect to which a credit has been allowed under section 23 or former section 44C (relating to residential energy credit), basis shall be adjusted as provided in paragraph (k) of § 1.23-3.

(u) ***Gas guzzler tax.*** In the case of an automobile upon which the gas guzzler tax was imposed, the basis shall be reduced as provided in section 1016 (d).

[T.D. 6500, 25 FR 11910, Nov. 26, 1960]

Editorial Note: For FEDERAL REGISTER citations affecting § 1.1016-5, see the List of CFR Sections Affected, which appears in the Finding Aids section of the printed volume and at *www.govinfo.gov*.

§ 1.1016-6 Other applicable rules.

(a) Adjustments must always be made to eliminate double deductions or their equivalent. Thus, in the case of the stock of a subsidiary company, the basis thereof must be properly adjusted for the amount of the subsidiary company's losses for the years in which consolidated returns were made.

(b) In determining basis, and adjustments to basis, the principles of estoppel apply, as elsewhere under the Code, and prior internal revenue laws.

§ 1.1016-10 Substituted basis.

(a) Whenever it appears that the basis of property in the hands of the taxpayer is a substituted basis, as defined in section 1016(b), the adjustments indicated in §§ 1.1016-1 to 1.1016-6, inclusive, shall be made after first making in respect of such substituted basis proper adjustments of a similar nature in respect of

the period during which the property was held by the transferor, donor, or grantor, or during which the other property was held by the person for whom the basis is to be determined. In addition, whenever it appears that the basis of property in the hands of the taxpayer is a substituted basis, as defined in section 1016(b)(1), the adjustments indicated in §§ 1.1016-7 to 1.1016-9, inclusive, and in section 1017 shall also be made, whenever necessary, after first making in respect of such substituted basis a proper adjustment of a similar nature in respect of the period during which the property was held by the transferor, donor, or grantor. Similar rules shall also be applied in the case of a series of substituted bases.

(b) cation of this section may be illustrated by the following example:

Example: A, who makes his returns upon the calendar year basis, in 1935 purchased the X Building and subsequently gave it to his son B. B exchanged the X Building for the Y Building in a tax-free exchange, and then gave the Y Building to his wife C. C, in determining the gain from the sale or disposition of the Y Building in 1954, is required to reduce the basis of the building by deductions for depreciation which were successively allowed (but not less than the amount allowable) to A and B upon the X Building and to B upon the Y Building, in addition to the deductions for depreciation allowed (but not less than the amount allowable) to herself during her ownership of the Y Building.

§ 1.1017-1 Basis reductions following a discharge of indebtedness.

(a) ***General rule for section 108(b)(2)(E).*** This paragraph (a) applies to basis reductions under section 108(b)(2)(E) that are required by section 108(a)(1) (A) or (B) because the taxpayer excluded discharge of indebtedness (COD income) from gross income. A taxpayer must reduce in the following order, to the extent of the excluded COD income (but not below zero), the adjusted bases of property held on the first day of the taxable year following the taxable year that the taxpayer excluded COD income from gross income (in proportion to adjusted basis):

(1) Real property used in a trade or business or held for investment, other than real property described in section 1221(1), that secured the discharged indebtedness immediately before the discharge;

(2) Personal property used in a trade or business or held for investment, other than inventory, accounts receivable, and notes receivable, that secured the discharged indebtedness immediately before the discharge;

(3) Remaining property used in a trade or business or held for investment, other than inventory, accounts receivable, notes receivable, and real property described in section 1221(1);

(4) Inventory, accounts receivable, notes receivable, and real property described in section 1221(1); and

(5) Property not used in a trade or business nor held for investment.

(b) ***Operating rules*** —

(1) ***Prior tax-attribute reduction.*** The amount of excluded COD income applied to reduce basis does not include any COD income applied to reduce tax attributes under sections 108(b)(2) (A) through (D) and, if applicable, section 108(b)(5). For example, if a taxpayer excludes $100 of COD income from gross income under section 108(a) and reduces tax attributes by $40 under sections 108(b)(2) (A) through (D), the taxpayer is required to reduce the adjusted bases of property by $60 ($100−$40) under section 108(b)(2)(E).

(2) ***Multiple discharged indebtednesses.*** If a taxpayer has COD income attributable to more than one discharged indebtedness resulting in the reduction of tax attributes under sections 108(b)(2) (A) through (D) and, if applicable, section 108(b)(5), paragraph (b)(1) of this section must be applied by

allocating the tax-attribute reductions among the indebtednesses in proportion to the amount of COD income attributable to each discharged indebtedness. For example, if a taxpayer excludes $20 of COD income attributable to secured indebtedness A and excludes $80 of COD income attributable to unsecured indebtedness B (a total exclusion of $100), and if the taxpayer reduces tax attributes by $40 under sections 108(b)(2) (A) through (D), the taxpayer must reduce the amount of COD income attributable to secured indebtedness A to $12 ($20 − ($20 / $100 × $40)) and must reduce the amount of COD income attributable to unsecured indebtedness B to $48 ($80 − ($80 / $100 × $40)).

(3) ***Limitation on basis reductions under section 108(b)(2)(E) in bankruptcy or insolvency.*** If COD income arises from a discharge of indebtedness in a title 11 case or while the taxpayer is insolvent, the amount of any basis reduction under section 108(b)(2)(E) shall not exceed the excess of—

(i) The aggregate of the adjusted bases of property and the amount of money held by the taxpayer immediately after the discharge; over

(ii) The aggregate of the liabilities of the taxpayer immediately after the discharge.

(4) ***Transactions to which section 381 applies.*** If a taxpayer realizes COD income that is excluded from gross income under section 108(a) either during or after a taxable year in which the taxpayer is the distributor or transferor of assets in a transaction described in section 381(a), the basis of property acquired by the acquiring corporation in the transaction must reflect the reductions required by section 1017 and this section. For this purpose, the basis of property of the distributor or transferor corporation immediately prior to the transaction described in section 381(a), but after the determination of tax for the year of the distribution or transfer of assets, will be available for reduction under section 108(b)(2). However, the basis of stock or securities of the acquiring corporation, if any, received by the taxpayer in exchange for the transferred assets shall not be available for reduction under section 108(b)(2). *See* § 1.108-7. This paragraph (b)(4) applies to discharges of indebtedness occurring on or after May 10, 2004.

(c) ***Modification of ordering rules for basis reductions under sections 108(b)(5) and 108(c)*** —

(1) ***In general.*** The ordering rules prescribed in paragraph (a) of this section apply, with appropriate modifications, to basis reductions under sections 108(b)(5) and (c). Thus, a taxpayer that elects to reduce basis under section 108(b)(5) may, to the extent that the election applies, reduce only the adjusted basis of property described in paragraphs (a) (1), (2), and (3) of this section and, if an election is made under paragraph (f) of this section, paragraph (a) (4) of this section. Within paragraphs (a) (1), (2), (3) and (4) of this section, such a taxpayer may reduce only the adjusted bases of depreciable property. A taxpayer that elects to apply section 108(c) may reduce only the adjusted basis of property described in paragraphs (a) (1) and (3) of this section and, within paragraphs (a)(1) and (3) of this section, may reduce only the adjusted bases of depreciable real property. Furthermore, for basis reductions under section 108(c), a taxpayer must reduce the adjusted basis of the qualifying real property to the extent of the discharged qualified real property business indebtedness before reducing the adjusted bases of other depreciable real property. The term *qualifying real property* means real property with respect to which the indebtedness is qualified real property business indebtedness within the meaning of section 108(c)(3). See paragraphs (f) and (g) of this section for elections relating to section 1221(1) property and partnership interests.

(2) ***Partial basis reductions under section 108(b)(5).*** If the amount of basis reductions under section 108(b)(5) is less than the amount of the COD income excluded from gross income under section 108(a), the taxpayer must reduce the balance of its tax attributes, including any remaining adjusted

bases of depreciable and other property, by following the ordering rules under section 108(b)(2). For example, if a taxpayer excludes $100 of COD income from gross income under section 108(a) and elects to reduce the adjusted bases of depreciable property by $10 under section 108(b)(5), the taxpayer must reduce its remaining tax attributes by $90, starting with net operating losses under section 108(b)(2).

(3) ***Modification of fresh start rule for prior basis reductions under section 108(b)(5).*** After reducing the adjusted bases of depreciable property under section 108(b)(5), a taxpayer must compute the limitation on basis reductions under section 1017(b)(2) using the aggregate of the remaining adjusted bases of property. For example, if, immediately after the discharge of indebtedness in a title 11 case, a taxpayer's adjusted bases of property is $100 and its undischarged indebtedness is $70, and if the taxpayer elects to reduce the adjusted bases of depreciable property by $10 under section 108(b)(5), section 1017(b)(2) limits any further basis reductions under section 108(b)(2)(E) to $20 (($100 − $10) − $70).

(d) ***Changes in security.*** If any property is added or eliminated as security for an indebtedness during the one-year period preceding the discharge of that indebtedness, such addition or elimination shall be disregarded where a principal purpose of the change is to affect the taxpayer's basis reductions under section 1017.

(e) ***Depreciable property.*** For purposes of this section, the term *depreciable property* means any property of a character subject to the allowance for depreciation or amortization, but only if the basis reduction would reduce the amount of depreciation or amortization which otherwise would be allowable for the period immediately following such reduction. Thus, for example, a lessor cannot reduce the basis of leased property where the lessee's obligation in respect of the property will restore to the lessor the loss due to depreciation during the term of the lease, since the lessor cannot take depreciation in respect of such property.

(f) ***Election to treat section 1221(1) real property as depreciable*** —

(1) ***In general.*** For basis reductions under section 108(b)(5) and basis reductions relating to qualified farm indebtedness, a taxpayer may elect under sections 1017(b) (3)(E) and (4)(C), respectively, to treat real property described in section 1221(1) as depreciable property. This election is not available, however, for basis reductions under section 108(c).

(2) ***Time and manner.*** To make an election under section 1017(b) (3)(E) or (4)(C), a taxpayer must enter the appropriate information on Form 982, *Reduction of Tax Attributes Due to Discharge of Indebtedness (and Section 1082 Basis Adjustment),* and attach the form to a timely filed (including extensions) Federal income tax return for the taxable year in which the taxpayer has COD income that is excluded from gross income under section 108(a). An election under this paragraph (f) may be revoked only with the consent of the Commissioner.

(g) ***Partnerships*** —

(1) ***Partnership COD income.*** For purposes of paragraph (a) of this section, a taxpayer must treat a distributive share of a partnership's COD income as attributable to a discharged indebtedness secured by the taxpayer's interest in that partnership.

(2) ***Partnership interest treated as depreciable property*** —

(i) ***In general.*** For purposes of making basis reductions, if a taxpayer makes an election under section 108(b)(5) (or 108(c)), the taxpayer must treat a partnership interest as depreciable property (or depreciable real property) to the extent of the partner's proportionate share of the partnership's basis in depreciable property (or depreciable real property), provided that the partnership consents to a corresponding reduction in the partnership's basis (inside basis) in depreciable property (or depreciable real property) with respect to such partner.

(ii) ***Request by partner and consent of partnership*** —

(A) ***In general.*** Except as otherwise provided in this paragraph (g)(2)(ii), a taxpayer may choose whether or not to request that a partnership reduce the inside basis of its depreciable property (or depreciable real property) with respect to the taxpayer, and the partnership may grant or withhold such consent, in its sole discretion. A request by the taxpayer must be made before the due date (including extensions) for filing the taxpayer's Federal income tax return for the taxable year in which the taxpayer has COD income that is excluded from gross income under section 108(a).

(B) ***Request for consent required.*** A taxpayer must request a partnership's consent to reduce inside basis if, at the time of the discharge, the taxpayer owns (directly or indirectly) a greater than 50 percent interest in the capital and profits of the partnership, or if reductions to the basis of the taxpayer's depreciable property (or depreciable real property) are being made with respect to the taxpayer's distributive share of COD income of the partnership.

(C) ***Granting of request required.*** A partnership must consent to reduce its partners' shares of inside basis with respect to a discharged indebtedness if consent is requested with respect to that indebtedness by partners owning (directly or indirectly) an aggregate of more than 80 percent of the capital and profits interests of the partnership or five or fewer partners owning (directly or indirectly) an aggregate of more than 50 percent of the capital and profits interests of the partnership. For example, if there is a cancellation of partnership indebtedness that is secured by real property used in a partnership's trade or business, and if partners owning (in the aggregate) 90 percent of the capital and profits interests of the partnership elect to exclude the COD income under section 108(c), the partnership must make the appropriate reductions in those partners' shares of inside basis.

(iii) ***Partnership consent statement*** —

(A) ***Partnership requirement.*** A consenting partnership must include with the Form 1065, U.S. Partnership Return of Income, for the taxable year following the year that ends with or within the taxable year the taxpayer excludes COD income from gross income under section 108(a), and must provide to the taxpayer on or before the due date of the taxpayer's return (including extensions) for the taxable year in which the taxpayer excludes COD income from gross income, a statement that—

(*1*) Contains the name, address, and taxpayer identification number of the partnership; and

(*2*) States the amount of the reduction of the partner's proportionate interest in the adjusted bases of the partnership's depreciable property or depreciable real property, whichever is applicable.

(B) ***Taxpayer's requirement.*** For taxable years beginning before January 1, 2003, statements described in § 1.1017-1(g)(2)(iii)(A) must be attached to a taxpayer's timely filed (including extensions) Federal income tax return for the taxable year in which the taxpayer has COD income that is excluded from gross income under section 108(a). For taxable years beginning after December 31, 2002, taxpayers must retain the statements and keep them available for inspection in the manner required by § 1.6001-1(e), but are not required to attach the statements to their returns.

(iv) ***Partner's share of partnership basis*** —

(A) ***In general.*** For purposes of this paragraph (g), a partner's proportionate share of the partnership's basis in depreciable property (or depreciable real property) is equal to the sum of—

(1) The partner's section 743(b) basis adjustments to items of partnership depreciable property (or depreciable real property); and

(2) The common basis depreciation deductions (but not including remedial allocations of depreciation deductions under § 1.704-3(d)) that, under the terms of the partnership agreement effective for the taxable year in which the discharge of indebtedness occurs, are reasonably expected to be allocated to the partner over the property's remaining useful life. The assumptions made by a partnership in determining the reasonably expected allocation of depreciation deductions must be consistent for each partner. For example, a partnership may not treat the same depreciation deductions as being reasonably expected by more than one partner.

(B) ***Effective date.*** This paragraph (g)(2)(iv) applies to elections made under sections 108(b)(5) and 108(c) on or after December 15, 1999.

(v) ***Treatment of basis reduction*** —

(A) ***Basis adjustment.*** The amount of the reduction to the basis of depreciable partnership property constitutes an adjustment to the basis of partnership property with respect to the partner only. No adjustment is made to the common basis of partnership property. Thus, for purposes of income, deduction, gain, loss, and distribution, the partner will have a special basis for those partnership properties the bases of which are adjusted under section 1017 and this section.

(B) ***Recovery of adjustments to basis of partnership property.*** Adjustments to the basis of partnership property under this section are recovered in the manner described in § 1.743-1.

(C) ***Effect of basis reduction.*** Adjustments to the basis of partnership property under this section are treated in the same manner and have the same effect as an adjustment to the basis of partnership property under section 743(b). The following example illustrates this paragraph (g)(2)(v):

> *Example.* (i) A, B, and C are equal partners in partnership PRS, which owns (among other things) Asset 1, an item of depreciable property with a basis of $30,000. A's basis in its partnership interest is $20,000. Under the terms of the partnership agreement, A's share of the depreciation deductions from Asset 1 over

its remaining useful life will be $10,000. Under section 1017, A requests, and PRS agrees, to decrease the basis of Asset 1 with respect to A by $10,000.
(ii) In the year following the reduction of basis under section 1017, PRS amends its partnership agreement to provide that items of depreciation and loss from Asset 1 will be allocated equally between B and C. In that year, A's distributive share of the partnership's common basis depreciation deductions from Asset 1 is now $0. Under § 1.743-1(j)(4)(ii)(B), the amount of the section 1017 basis adjustment that A recovers during the year is $1,000. A will report $1,000 of ordinary income because A's distributive share of the partnership's common basis depreciation deductions from Asset 1 ($0) is insufficient to offset the amount of the section 1017 basis adjustment recovered by A during the year ($1,000).

(iii) In the following year, PRS sells Asset 1 for $15,000 and recognizes a $12,000 loss. This loss is allocated equally between B and C, and A's share of the loss is $0. Upon the sale of Asset 1, A recovers its entire remaining section 1017 basis adjustment ($9,000). A will report $9,000 of ordinary income.

(D) ***Effective date.*** This paragraph (g)(2)(v) applies to elections made under sections 108(b)(5) and 108(c) on or after December 15, 1999.

(3) ***Partnership basis reduction.*** The rules of this section (including this paragraph (g)) apply in determining the properties to which the partnership's basis reductions must be made.

(h) ***Special allocation rule for cases to which section 1398 applies.*** If a bankruptcy estate and a taxpayer to whom section 1398 applies (concerning only individuals under Chapter 7 or 11 of title 11 of the United States Code) hold property subject to basis reduction under section 108(b) (2)(E) or (5) on the first day of the taxable year following the taxable year of discharge, the bankruptcy estate must reduce all of the adjusted bases of its property before the taxpayer is required to reduce any adjusted bases of property.

(i) ***Effective date.*** This section applies to discharges of indebtedness occurring on or after October 22, 1998.

[T.D. 8787, 63 FR 56563, Oct. 22, 1998, as amended by T.D. 8847, 64 FR 69921, Dec. 15, 1999; T.D. 9080, 68 FR 42593, July 18, 2003; T.D. 9100, 68 FR 70705, Dec. 19, 2003; T.D. 9100, 69 FR 5017, Feb. 3, 2004; T.D. 9127, 69 FR 26039, May 11, 2004; T.D. 9300, 71 FR 71042, Dec. 8, 2006]

§ 1.1019-1 Property on which lessee has made improvements.

In any case in which a lessee of real property has erected buildings or made other improvements upon the leased property and the lease is terminated by forfeiture or otherwise resulting in the realization by such lessor of income which, were it not for the provisions of section 109, would be includible in gross income of the lessor, the amount so excluded from gross income shall not be taken into account in determining the basis or the adjusted basis of such property or any portion thereof in the hands of the lessor. If, however, in any taxable year beginning before January 1, 1942, there has been included in the gross income of the lessor an amount representing any part of the value of such property attributable to such buildings or improvements, the basis of each portion of such property shall be properly adjusted for the amount so included in gross income. For example, A leased in 1930 to B for a period of 25 years unimproved real property and in accordance with the terms of the lease B erected a building on the property. It was estimated that upon expiration of the lease the building would have a depreciated value of $50,000, which

value the lessor elected to report (beginning in 1931) as income over the term of the lease. This method of reporting was used until 1942. In 1952 B forfeits the lease. The amount of $22,000 reported as income by A during the years 1931 to 1941, inclusive, shall be added to the basis of the property represented by the improvements in the hands of A. If in such case A did not report during the period of the lease any income attributable to the value of the building erected by the lessee and the lease was forfeited in 1940 when the building was worth $75,000, such amount, having been included in gross income under the law applicable to that year, is added to the basis of the property represented by the improvements in the hands of A. As to treatment of such property for the purposes of capital gains and losses, see subchapter P (section 1201 and following), chapter 1 of the Code.

§ 1.1020-1 Election as to amounts allowed in respect of depreciation, etc., before 1952.

(a) ***In general.***

(1) Any person may elect to have the adjustments to the cost or other basis of property under section 1016(a)(2) determined in accordance with subparagraph (B) of such section by filing a statement of election in accordance with the requirements set forth in paragraph (b) of this section. Any election made after 1952 shall be irrevocable when made. Any election made after 1952 shall apply with respect to all property held by the person making the election at any time on or before December 31, 1952, and shall apply to all periods since February 28, 1913, and before January 1, 1952, during which such person held such property or for which adjustments must be made under section 1016(b). For rules with respect to an election made on or before December 31, 1952, see paragraph (c) of this section.

(2) An election by a partner on his own behalf is not an election for the partnership of which he is a member. A separate election must be made on behalf of the partnership. (See section 703(b) (relating to elections of the partnership).) An election on behalf of the partnership applies only with respect to the partnership, and does not apply to the separate property of the partners. A similar rule applies with respect to elections by trusts and beneficiaries of trusts. These rules also apply with respect to a revocation of an election where such election was made on or before December 31, 1952.

(b) ***Rules applicable to making of election.*** The following rules are applicable to the making of an election under section 1020:

(1) ***Form of election.*** The election shall be in the form of a statement in writing, shall state the name and address of the taxpayer making the election, and shall contain a statement that such taxpayer elects to have the provisions of section 1016(a)(2)(B) apply in respect of all periods since February 28, 1913, and before January 1, 1952.

(2) ***Signature.*** The statement shall be signed by the taxpayer making the election, if an individual, or, if the taxpayer making the election is not an individual, the statement shall be signed by the person or persons required to sign the income return of such taxpayer.

(3) ***Filing.*** The statement must be filed on or before December 31, 1954, in the office of the district director for the internal revenue district in which the income tax return for the year of the election is required to be filed. For rules as to when timely mailing will be treated as timely filing of the statement see section 7502.

(4) ***Filing of duplicate.*** A copy of the statement of election must be filed with the first return, amended return, or claim for refund filed on or after the date on which the election is made.

(c) ***Election made on or before December 31, 1952.*** An election made on or before December 31, 1952, in accordance with the provisions of section 113(d) of the Internal Revenue Code of 1939, may be revoked by filing on or before December 31, 1954, in the same office in which the election was filed, a statement of revocation signed in the same manner as the election. Such statement made by any person is irrevocable when made with respect to such person, and no new election may thereafter be made by such person. A copy of the revocation must be filed with the first return, amended return, or claim for refund, filed after the date of the revocation. For additional rules with respect to election made on or before December 31, 1952, see 26 CFR (1939) 39.113(b)(1)-1 (Regulations 118).

(d) ***Validity of elections or revocation of elections.*** An election or revocation of an election which conforms in substance to the provisions of this section will not be deemed invalid solely because it was filed before the date on which the regulations in this section were promulgated.

(e) ***Effect of election.*** For rules relating to the effect of an election under this section, see section 1016(a)(2) and the regulations thereunder.

§ 1.1021-1 Sale of annuities.

In the case of a transfer for value of an annuity contract to which section 72(g) and paragraph (a) of § 1.72-10 apply, the transferor shall adjust his basis in such contract as of the time immediately prior to such transfer by subtracting from the premiums or other consideration he has paid or is deemed to have paid for such contract all amounts he has received or is deemed to have received under such annuity contract to the extent that such amounts were not includible in the gross income of the transferor or other recipient under the applicable income tax law. In any case where the amounts which were not includible in the gross income of the recipient were received or deemed to have been received by such transferor exceed the amounts paid or deemed paid by him, the adjusted basis of the contract shall be zero. The income realized by the transferor on such a transfer shall not exceed the total of the amounts received as consideration for the transfer.

COMMON NONTAXABLE EXCHANGES

§ 1.1031-0 Table of contents.

This section lists the captions that appear in the regulations under section 1031.

§ 1.1031(a)-1 Property held for productive use in a trade or business or for investment.

(a) In general.

(b) Definition of “like kind.”

(c) Examples of exchanges of property of a “like kind.”

(d) Examples of exchanges not solely in kind.

(e) Applicability dates.

§ 1.1031(a)-2 Additional rules for exchanges of personal property.

(a) Introduction.

(b) Depreciable tangible personal property.

(c) Intangible personal property and nondepreciable personal property.

§ 1.1031(a)-3 Definition of real property.

(a) Real property.

(b) Examples.

(c) Applicability date.

§ 1.1031(b)-1 Receipt of other property or money in tax-free exchange.

§ 1.1031(b)-2 Safe harbor for qualified intermediaries.

§ 1.1031(c)-1 Nonrecognition of loss.

§ 1.1031(d)-1 Property acquired upon a tax-free exchange.

§ 1.1031(d)-1T Coordination of section 1060 with section 1031 (temporary).

§ 1.1031(d)-2 Treatment of assumption of liabilities.

§ 1.1031(e)-1 Exchanges of livestock of different sexes.

§ 1.1031(j)-1 Exchanges of multiple properties.

(a) Introduction.

(b) Computation of gain recognized.

(c) Computation of basis of properties received.

(d) Examples.

(e) Effective date.

§ 1.1031(K)-1 Treatment of deferred exchanges.

(a) Overview.

(b) Identification and receipt requirements.

(c) Identification of replacement property before the end of the identification period.

(d) Receipt of identified replacement property.

(e) Special rules for identification and receipt of replacement property to be produced.

(f) Receipt of money or other property.

(g) Safe harbors.

(h) Interest and growth factors.

(i) [Reserved]

(j) Determination of gain or loss recognized and the basis of property received in a deferred exchange.

(k) Definition of disqualified person.

(l) [Reserved]

(m) Definition of fair market value.

(n) No inference with respect to actual or constructive receipt rules outside of section 1031.

(o) Effective date.

[T.D. 8346, 56 FR 19937, May 1, 1991, as amended by T.D. 9935, 85 FR 77378, Dec. 2, 2020]

§ 1.1031(a)-1 Property held for productive use in trade or business or for investment.

(a) ***In general*** —

(1) ***Exchanges of property solely for property of a like kind.*** Section 1031(a)(1) provides an exception from the general rule requiring the recognition of gain or loss upon the sale or exchange of property. Under section 1031(a)(1), no gain or loss is recognized if property held for productive use in a trade or business or for investment is exchanged solely for property of a like kind to be held either for productive use in a trade or business or for investment. Under section 1031(a)(1), property held for productive use in a trade or business may be exchanged for property held for investment. Similarly, under section 1031(a)(1), property held for investment may be exchanged for property held for productive use in a trade or business. However, section 1031(a)(2) provides that section 1031(a)(1) does not apply to any exchange of—

(i) Stock in trade or other property held primarily for sale;

(ii) Stocks, bonds, or notes;

(iii) Other securities or evidences of indebtedness or interest;

(iv) Interests in a partnership;

(v) Certificates of trust or beneficial interests; or

(vi) Choses in action.

Section 1031(a)(1) does not apply to any exchange of interests in a partnership regardless of whether the interests exchanged are general or limited partnership interests or are interests in the same partnership or in different partnerships. An interest in a partnership that has in effect a valid election under section 761(a) to be excluded from the application of all of subchapter K is treated as an interest in each of the assets of the partnership and not as an interest in a partnership for purposes of section 1031(a)(2)(D) and paragraph (a)(1)(iv) of this section. An exchange of an interest in such a partnership does not qualify for nonrecognition of gain or loss under section 1031 with respect to any asset of the partnership that is described in section 1031(a)(2) or to the extent the exchange of assets of the partnership does not otherwise satisfy the requirements of section 1031(a).

(2) ***Exchanges of property not solely for property of a like kind.*** A transfer is not within the provisions of section 1031(a) if, as part of the consideration, the taxpayer receives money or property which does not meet the requirements of section 1031(a), but the transfer, if otherwise qualified, will be within the provisions of either section 1031 (b) or (c). Similarly, a transfer is not within the provisions of section 1031(a) if, as part of the consideration, the other party to the exchange assumes a liability of the taxpayer (or acquires property from the taxpayer that is subject to a liability), but the transfer, if otherwise qualified, will be within the provisions of either section 1031 (b) or (c). A transfer of property meeting the requirements of section 1031(a) may be within the provisions of section 1031(a) even though the taxpayer transfers in addition property not meeting the requirements of section 1031(a) or money. However, the nonrecognition treatment provided by section 1031(a) does not apply to the property transferred which does not meet the requirements of section 1031(a).

(3) ***Exchanges after 2017.*** Pursuant to section 13303 of Public Law 115-97 (131 Stat. 2054), for exchanges beginning after December 31, 2017, section 1031 and §§ 1.1031(a)-1, 1.1031(b)-2, 1.1031(d)-1T, 1.1031(d)-2, 1.1031(j)-1, 1.1031(k)-1, and references to section 1031 in §§ 1.1031(b)-1, 1.1031(c)-1, and 1.1031(d)-1, apply only to qualifying exchanges of real property (within the meaning of § 1.1031(a)-3) that is held for productive use in a trade or business, or for investment, and that is not held primarily for sale.

(b) ***Definition of "like kind."*** As used in section 1031(a), the words *like kind* have reference to the nature or character of the property and not to its grade or quality. One kind or class of property may not, under that section, be exchanged for property of a different kind or class. The fact that any real estate involved is improved or unimproved is not material, for that fact relates only to the grade or quality of the property and not to its kind or class. Unproductive real estate held by one other than a dealer for future use or future realization of the increment in value is held for investment and not primarily for sale. For additional rules for exchanges of personal property, see § 1.1031 (a)-2.

(c) ***Examples of exchanges of property of a "like kind."*** No gain or loss is recognized if

(1) a taxpayer exchanges property held for productive use in his trade or business, together with cash, for other property of like kind for the same use, such as a truck for a new truck or a passenger automobile for a new passenger automobile to be used for a like purpose; or

(2) a taxpayer who is not a dealer in real estate exchanges city real estate for a ranch or farm, or exchanges a leasehold of a fee with 30 years or more to run for real estate, or exchanges improved real estate for unimproved real estate; or

(3) a taxpayer exchanges investment property and cash for investment property of a like kind.

(d) ***Examples of exchanges not solely in kind.*** Gain or loss is recognized if, for instance, a taxpayer exchanges

(1) Treasury bonds maturing March 15, 1958, for Treasury bonds maturing December 15, 1968, unless section 1037(a) (or so much of section 1031 as relates to section 1037(a)) applies to such exchange, or

(2) a real estate mortgage for consolidated farm loan bonds.

(e) ***Applicability dates*** —

(1) ***Exchanges of partnership interests.*** The provisions of paragraph (a)(1) of this section relating to exchanges of partnership interests apply to transfers of property made by taxpayers on or after April 25, 1991.

(2) ***Exchanges after 2017.*** The provisions of paragraph (a)(3) of this section apply to exchanges beginning after December 2, 2020.

[T.D. 6500, 25 FR 11910, Nov. 26, 1960, as amended by T.D. 6935, 32 FR 15822, Nov. 17, 1967; T.D. 8343, 56 FR 14854, Apr. 12, 1991; T.D. 8346, 56 FR 19937, May 1, 1991; T.D. 9935, 85 FR 77378, Dec. 2, 2020]

§ 1.1031(a)-2 Additional rules for exchanges of personal property.

(a) ***Introduction.*** Section 1.1031(a)-1(b) provides that the nonrecognition rules of section 1031 do not apply to an exchange of one kind or class of property for property of a different kind or class. This section contains additional rules for determining whether personal property has been exchanged for property of a like kind or like class. Personal properties of a like class are considered to be of a “like kind” for purposes of section 1031. In addition, an exchange of properties of a like kind may qualify under section 1031 regardless of whether the properties are also of a like class. In determining whether exchanged properties are of a like kind, no inference is to be drawn from the fact that the properties are not of a like class. Under paragraph (b) of this section, depreciable tangible personal properties are of a like class if they are either within the same General Asset Class (as defined in paragraph (b)(2) of this section) or within the same Product Class (as defined in paragraph (b)(3) of this section). Paragraph (c) of this section provides rules for exchanges of intangible personal property and nondepreciable personal property.

(b) ***Depreciable tangible personal property*** —

(1) ***General rule.*** Depreciable tangible personal property is exchanged for property of a “like kind” under section 1031 if the property is exchanged for property of a like kind or like class. Depreciable tangible personal property is of a like class to other depreciable tangible personal property if the exchanged properties are either within the same General Asset Class or within the same Product Class. A single property may not be classified within more than one General Asset Class or within more than one Product Class. In addition, property classified within any General Asset Class may not be classified within a Product Class. A property's General Asset Class or Product Class is determined as of the date of the exchange.

(2) ***General Asset Classes.*** Except as provided in paragraphs (b)(4) and (b)(5) of this section, property within a General Asset Class consists of depreciable tangible personal property described in one of asset classes 00.11 through 00.28 and 00.4 of Rev. Proc. 87-56, 1987-2 C.B. 674. These General Asset Classes describe types of depreciable tangible personal property that frequently are used in many businesses. The General Asset Classes are as follows:

(i) Office furniture, fixtures, and equipment (asset class 00.11),

(ii) Information systems (computers and peripheral equipment) (asset class 00.12),

(iii) Data handling equipment, except computers (asset class 00.13),

(iv) Airplanes (airframes and engines), except those used in commercial or contract carrying of passengers or freight, and all helicopters (airframes and engines) (asset class 00.21),

(v) Automobiles, taxis (asset class 00.22),

(vi) Buses (asset class 00.23),

(vii) Light general purpose trucks (asset class 00.241),

(viii) Heavy general purpose trucks (asset class 00.242),

(ix) Railroad cars and locomotives, except those owned by railroad transportation companies (asset class 00.25),

(x) Tractor units for use over-the-road (asset class 00.26),

(xi) Trailers and trailer-mounted containers (asset class 00.27),

(xii) Vessels, barges, tugs, and similar water-transportation equipment, except those used in marine construction (asset class 00.28), and

(xiii) Industrial steam and electric generation and/or distribution systems (asset class 00.4).

(3) ***Product classes.*** Except as provided in paragraphs (b)(4) and (5) of this section, or as provided by the Commissioner in published guidance of general applicability, property within a product class consists of depreciable tangible personal property that is described in a 6-digit product class within Sectors 31, 32, and 33 (pertaining to manufacturing industries) of the North American Industry Classification System (NAICS), set forth in Executive Office of the President, Office of Management and Budget, *North American Industry Classification System*, United States, 2002 (NAICS Manual), as periodically updated. Copies of the NAICS Manual may be obtained from the National Technical Information Service, an agency of the U.S. Department of Commerce, and may be accessed on the internet. Sectors 31 through 33 of the NAICS Manual contain listings of specialized industries for the manufacture of described products and equipment. For this purpose, any 6-digit NAICS product class with a last digit of 9 (a miscellaneous category) is not a product class for purposes of this section. If a property is listed in more than one product class, the property is treated as listed in any one of those product classes. A property's 6-digit product class is referred to as the property's NAICS code.

(4) ***Modifications of NAICS product classes.*** The product classes of the NAICS Manual may be updated or otherwise modified from time to time as the manual is updated, effective on or after the date of the modification. The NAICS Manual generally is modified every five years, in years ending in a 2 or 7 (such as 2002, 2007, and 2012). The applicability date of the modified NAICS Manual is announced in the FEDERAL REGISTER and generally is January 1 of the year the NAICS Manual is modified.

Taxpayers may rely on these modifications as they become effective in structuring exchanges under this section. Taxpayers may rely on the previous NAICS Manual for transfers of property made by a taxpayer during the one-year period following the effective date of the modification. For transfers of property made by a taxpayer on or after January 1, 1997, and on or before January 1, 2003, the NAICS Manual of 1997 may be used for determining product classes of the exchanged property.

(5) ***Administrative procedures for revising general asset classes and product classes.*** The Commissioner may, through published guidance of general applicability, supplement, modify, clarify, or update the guidance relating to the classification of properties provided in this paragraph (b). (See § 601.601(d)(2) of this chapter.) For example, the Commissioner may determine not to follow (in whole or in part) a general asset class for purposes of identifying property of like class, may determine not to follow (in whole or in part) any modification of product classes published in the NAICS Manual, or may determine that other properties not listed within the same or in any product class or general asset class nevertheless are of a like class. The Commissioner also may determine that two items of property that are listed in separate product classes or in product classes with a last digit of 9 are of a like class, or that an item of property that has a NAICS code is of a like class to an item of property that does not have a NAICS code.

(6) ***No inference outside of section 1031.*** The rules provided in this section concerning the use of general asset classes or product classes are limited to exchanges under section 1031. No inference is intended with respect to the classification of property for other purposes, such as depreciation.

(7) ***Examples.*** The application of this paragraph (b) may be illustrated by the following examples:

Example 1. Taxpayer A transfers a personal computer (asset class 00.12) to B in exchange for a printer (asset class 00.12). With respect to A, the properties exchanged are within the same General Asset Class and therefore are of a like class.

Example 2. Taxpayer C transfers an airplane (asset class 00.21) to D in exchange for a heavy general purpose truck (asset class 00.242). The properties exchanged are not of a like class because they are within different General Asset Classes. Because each of the properties is within a General Asset Class, the properties may not be classified within a Product Class. The airplane and heavy general purpose truck are also not of a like kind. Therefore, the exchange does not qualify for nonrecognition of gain or loss under section 1031.

Example 3. Taxpayer E transfers a grader to F in exchange for a scraper. Neither property is within any of the general asset classes. However, both properties are within the same product class (NAICS code 333120). The grader and scraper are of a like class and deemed to be of a like kind for purposes of section 1031.

Example 4. Taxpayer G transfers a personal computer (asset class 00.12), an airplane (asset class 00.21) and a sanding machine (NAICS code 333210), to H in exchange for a printer (asset class 00.12), a heavy general purpose truck (asset class 00.242) and a lathe (NAICS code 333210). The personal computer and the printer are of a like class because they are within the same general asset class. The sanding machine and the lathe are of a like class because they are within the same product class (although neither property is within any of the general asset classes). The airplane and the heavy general purpose truck are neither within the same general asset class nor within the same product class, and are not of a like kind.

(8) ***Transition rule.*** Properties within the same product classes based on the 4-digit codes contained in Division D of the Executive Office of the President, Office of Management and Budget, Standard Industrial Classification Manual (1987), will be treated as property of a like class for transfers of property made by taxpayers on or before May 19, 2005.

(c) ***Intangible personal property and nondepreciable personal property*** —

(1) ***General rule.*** An exchange of intangible personal property of nondepreciable personal property qualifies for nonrecognition of gain or loss under section 1031 only if the exchanged properties are of a like kind. No like classes are provided for these properties. Whether intangible personal property is of a like kind to other intangible personal property generally depends on the nature or character of the rights involved (e.g., a patent or a copyright) and also on the nature or character of the underlying property to which the intangible personal property relates.

(2) ***Goodwill and going concern value.*** The goodwill or going concern value of a business is not of a like kind to the goodwill or going concern value of another business.

(3) ***Examples.*** The application of this paragraph (c) may be illustrated by the following examples:

Example 1. Taxpayer K exchanges a copyright on a novel for a copyright on a different novel. The properties exchanged are of a like kind.

Example 2. Taxpayer J exchanges a copyright on a novel for a copyright on a song. The properties exchanged are not of a like kind.

(d) ***Effective date.*** Except as otherwise provided in this paragraph (d), this section applies to exchanges occurring on or after April 11, 1991. Paragraphs (b)(3) through (b)(6), *Example 3* and *Example 4* of paragraph (b)(7), and paragraph (b)(8) of this section apply to transfers of property made by taxpayers on or after August 12, 2004. However, taxpayers may apply paragraphs (b)(3) through (b)(6), and *Example 3* and *Example 4* of paragraph (b)(7) of this section to transfers of property made by taxpayers on or after January 1, 1997, in taxable years for which the period of limitation for filing a claim for refund or credit under section 6511 has not expired.

[T.D. 8343, 56 FR 14854, Apr. 12, 1991, as amended by T.D. 9151, 69 FR 50068, Aug. 13, 2004; T.D. 9202, 70 FR 28819, May 19, 2005]

§ 1.1031(a)-3 Definition of real property.

(a) ***Real property*** —

(1) ***In general.*** The term *real property* under section 1031 and §§ 1.1031(a)-1 through 1.1031(k)-1 means land and improvements to land, unsevered natural products of land, and water and air space superjacent to land. Under paragraph (a)(5) of this section, an intangible interest in real property of a type described in this paragraph (a)(1) is real property for purposes of section 1031 and this section. Property that is real property under State or local law as provided in paragraph (a)(6) of this section is real property for purposes of section 1031 and this section.

(2) ***Improvements to land*** —

(i) ***In general.*** The term *improvements to land* means inherently permanent structures and the structural components of inherently permanent structures.

(ii) ***Inherently permanent structures*** —

(A) ***In general.*** The term *inherently permanent structure* means any building or other structure that is a distinct asset within the meaning of paragraph (a)(4) of this section and is permanently affixed to real property and that will ordinarily remain affixed for an indefinite period of time. Affixation is considered permanent if it is reasonably expected to last indefinitely based on all the facts and circumstances.

(B) ***Building.*** A building is any structure or edifice enclosing a space within its walls, and covered by a roof, the purpose of which is, for example, to provide shelter or housing, or to provide working, office, parking, display, or sales space. Buildings include the following distinct assets if permanently affixed: Houses, apartments, hotels, motels, enclosed stadiums and arenas, enclosed shopping malls, factories and office buildings, warehouses, barns, enclosed garages, enclosed transportation stations and terminals, and stores.

(C) ***Other inherently permanent structures.*** Inherently permanent structures under paragraph (a)(2)(ii) of this section include the following distinct assets, if permanently affixed: In-ground swimming pools; roads; bridges; tunnels; paved parking areas, parking facilities, and other pavements; special foundations; stationary wharves and docks; fences; inherently permanent advertising displays for which an election under section 1033(g)(3) is in effect; inherently permanent outdoor lighting facilities; railroad tracks and signals; telephone poles; power generation and transmission facilities; permanently installed telecommunications cables; microwave transmission, cell, broadcasting, and electric transmission towers; oil and gas pipelines; offshore platforms, derricks, oil and gas storage tanks; and grain storage bins and silos. Affixation to real property may be accomplished by weight alone. If property is not listed as an inherently permanent structure in paragraph (a)(2)(ii)(B) or (C) of this section, the determination of whether the property is an inherently permanent structure under paragraph (a)(2)(ii) of this section is based on the following factors—

(*1*) The manner in which the distinct asset is affixed to real property;

(*2*) Whether the distinct asset is designed to be removed or to remain in place;

(*3*) The damage that removal of the distinct asset would cause to the item itself or to the real property to which it is affixed;

(*4*) Any circumstances that suggest the expected period of affixation is not indefinite; and

(*5*) The time and expense required to move the distinct asset.

(iii) ***Structural components*** —

(A) ***In general.*** The term *structural component* means any distinct asset, within the meaning of paragraph (a)(4) of this section, that is a constituent part of, and integrated into, an inherently permanent structure. If interconnected assets work together to serve an inherently permanent structure (for example, systems that provide a building with electricity, heat, or water), the assets are analyzed together as one distinct asset that may be a structural component. A structural component may qualify as real property only if the taxpayer holds its interest in the structural component together with a real property interest in the space in the inherently permanent structure served by the structural component. If a distinct asset is customized, the customization does not affect whether

the distinct asset is a structural component. Tenant improvements to a building that are inherently permanent or otherwise classified as real property within the meaning of this paragraph (a)(2)(iii) are real property under this section. However, property produced for sale, such as bricks, nails, paint, and windowpanes, that is not real property in the hands of the producing taxpayer or a related person, as defined in section 1031(f)(3), but that may be incorporated into real property by an unrelated buyer, is not treated as real property by the producing taxpayer.

(B) ***Examples of structural components.*** Structural components include the following items, provided the item is a constituent part of, and integrated into, an inherently permanent structure: Walls; partitions; doors; wiring; plumbing systems; central air conditioning and heating systems; pipes and ducts; elevators and escalators; floors; ceilings; permanent coverings of walls, floors, and ceilings; insulation; chimneys; fire suppression systems, including sprinkler systems and fire alarms; fire escapes; security systems; humidity control systems; and other similar property. If a component of a building or inherently permanent structure is a distinct asset and is not listed as a structural component in this paragraph (a)(2)(iii)(B), the determination of whether the component is a structural component under this paragraph (a)(2)(iii) is based on the following factors—

(*1*) The manner, time, and expense of installing and removing the component;

(*2*) Whether the component is designed to be moved;

(*3*) The damage that removal of the component would cause to the item itself or to the inherently permanent structure to which it is affixed; and

(*4*) Whether the component is installed during construction of the inherently permanent structure.

(3) ***Unsevered natural products of land.*** Unsevered natural products of land, including growing crops, plants, and timber; mines; wells; and other natural deposits, generally are treated as real property for purposes of this section. Natural products and deposits, such as crops, timber, water, ores, and minerals, cease to be real property when they are severed, extracted, or removed from the land.

(4) ***Distinct asset*** —

(i) ***In general.*** For this section, a distinct asset is analyzed separately from any other assets to which the asset relates to determine if the asset is real property, whether as land, an inherently permanent structure, or a structural component of an inherently permanent structure. Buildings and other inherently permanent structures are distinct assets. Assets and systems listed as a structural component in paragraph (a)(2)(iii)(B) of this section are treated as distinct assets.

(ii) ***Facts and circumstances.*** The determination of whether a particular separately identifiable item of property is a distinct asset is based on all the facts and circumstances. In particular, the following factors must be taken into account—

(A) Whether the item is customarily sold or acquired as a single unit rather than as a component part of a larger asset;

(B) Whether the item can be separated from a larger asset, and if so, the cost of separating the item from the larger asset;

(C) Whether the item is commonly viewed as serving a useful function independent of a larger asset of which it is a part; and

(D) Whether separating the item from a larger asset of which it is a part impairs the functionality of the larger asset.

(5) *Intangible assets* —

(i) ***In general.*** Intangible assets that are real property for purposes of section 1031 and this section include the following items: Fee ownership; co-ownership; a leasehold; an option to acquire real property; an easement; stock in a cooperative housing corporation; shares in a mutual ditch, reservoir, or irrigation company described in section 501(c)(12)(A) of the Code if, at the time of the exchange, such shares have been recognized by the highest court of the State in which the company was organized, or by a State statute, as constituting or representing real property or an interest in real property; and land development rights. Similar interests are real property for purposes of section 1031 and this section if the intangible asset derives its value from real property or an interest in real property and is inseparable from that real property or interest in real property. The following intangible assets are not real property for purposes of section 1031 and this section, regardless of the classification of such property under State or local law—

(A) Stock not described in paragraph (a)(5)(i) of this section, bonds, or notes;

(B) Other securities or evidences of indebtedness or interest;

(C) Interests in a partnership (other than an interest in a partnership that has in effect a valid election under section 761(a) to be excluded from the application of all of subchapter K);

(D) Certificates of trust or beneficial interests; and

(E) Choses in action.

(ii) ***Licenses and permits.*** A license, permit, or other similar right that is solely for the use, enjoyment, or occupation of land or an inherently permanent structure and that is in the nature of a leasehold, easement, or other similar right, generally is an interest in real property under this section. However, a license or permit to engage in or operate a business on real property is not real property or an interest in real property, regardless of its classification under State or local law.

(6) ***State or local law.*** Except as otherwise provided in paragraph (a)(5) of this section, property is real property within the meaning of paragraph (a)(1) of this section under State or local law if, on the date it is transferred in an exchange, the property is real property under the law of the State or local jurisdiction in which that property is located.

(7) ***No inference outside of section 1031.*** The rules provided in this section concerning the definition of real property apply only for purposes of section 1031. No inference is intended with respect to the classification or characterization of property for other purposes of the Code, such as depreciation and sections 1245 and 1250. For example, a structure or a portion of a structure may be section 1245 property for depreciation purposes and for determining gain under section 1245, notwithstanding that the structure or the portion of the structure is real property under this section. Also, a taxpayer transferring relinquished property that is section 1245 property in a section 1031 exchange is subject to the gain recognition rules under section 1245 and the regulations under section 1245, notwithstanding that the relinquished property or replacement property is real property under this section. In addition, the taxpayer must follow the rules of section 1245 and the regulations

under section 1245, and section 1250 and the regulations under section 1250, based on the determination of the relinquished property and replacement property being, in whole or in part, section 1245 property or section 1250 property under those Code sections and not under this section.

(b) ***Examples.*** The following examples illustrate the provisions of this section. In each example, unless otherwise provided, the State or local law of the applicable jurisdiction in which the property at issue is located does not address whether the property is real property.

(1) ***Example 1: Natural products of land.*** A owns land with perennial fruit-bearing plants that A harvests annually. The unsevered plants are natural products of the land within the meaning of paragraph (a)(3) of this section and thus are real property for purposes of section 1031. A annually harvests fruit from the plants. Upon severance from the land, the harvested fruit ceases to be part of the land and therefore is not real property. Storage of the harvested fruit upon or within real property does not cause the harvested fruit to be real property.

(2) ***Example 2: Water space superjacent to land.*** B owns a marina comprised of U-shaped boat slips and end ties. The U-shaped boat slips are spaces on the water that are surrounded by a dock on three sides. The end ties are spaces on the water at the end of a slip or on a long, straight dock. B rents the boat slips and end ties to boat owners. The boat slips and end ties are water space superjacent to land and thus are real property within the meaning of paragraph (a)(1) of this section.

(3) ***Example 3: Indoor sculpture.***

(i) C owns an office building and a large sculpture in the atrium of the building. The sculpture measures 30 feet tall by 18 feet wide and weighs five tons. The building was specifically designed to support the sculpture, which is permanently affixed to the building by supports embedded in the building's foundation. The sculpture was constructed within the building. Removal would be costly and time consuming and would destroy the sculpture. The sculpture is reasonably expected to remain in the building indefinitely.

(ii) The sculpture is not an inherently permanent structure listed in paragraph (a)(2)(ii)(C) of this section, and, therefore, C must use the factors provided in paragraphs (a)(2)(ii)(C)(*1*) through (*5*) of this section to determine whether the sculpture is an inherently permanent structure. The sculpture—

(A) Is permanently affixed to the building by supports embedded in the building's foundation;

(B) Is not designed to be removed and is designed to remain in place indefinitely;

(C) Would be damaged if removed and would damage the building to which it is affixed;

(D) Is expected to remain in the building indefinitely; and

(E) Would require significant time and expense to move.

(iii) The factors described in paragraphs (a)(2)(ii)(C)(*1*) through (*5*) of this section all support the conclusion that the sculpture is an inherently permanent structure within the meaning of paragraph (a)(2)(ii)(A) of this section. Therefore, the sculpture is real property.

(4) ***Example 4: Bus shelters.***

(i) D owns 400 bus shelters, each of which consists of four posts, a roof, and panels enclosing two or three sides. D enters into a long-term lease with a local transit authority for use of the bus shelters. Each bus shelter is prefabricated from steel and is bolted to the sidewalk. Bus shelters are disassembled and moved when bus routes change. Moving a bus shelter takes less than a day and does not significantly damage either the bus shelter or the real property to which it was affixed.

(ii) The bus shelters are not permanently affixed enclosed transportation stations or terminals, are not buildings under paragraph (a)(2)(ii)(B) of this section, nor are they listed as types of other inherently permanent structures in paragraph (a)(2)(ii)(C) of this section. Therefore, the bus shelters must be analyzed to determine whether they are inherently permanent structures using the factors provided in paragraphs (a)(2)(ii)(C)(*1*) through (*5*) of this section. The bus shelters—

(A) Are not permanently affixed to the land or an inherently permanent structure;

(B) Are designed to be removed and not remain in place indefinitely;

(C) Would not be damaged if removed and would not damage the sidewalks to which they are affixed;

(D) Will not remain affixed indefinitely; and

(E) Would not require significant time and expense to move.

(iii) The factors described in paragraphs (a)(2)(ii)(C)(*1*) through (*5*) of this section all support the conclusion that the bus shelters are not inherently permanent structures within the meaning of paragraph (a)(2)(ii) of this section. Thus, the bus shelters are not inherently permanent structures within the meaning of paragraph (a)(2)(ii) of this section and, therefore, are not real property.

(5) ***Example 5: Industrial 3D printer and generator.***

(i) E owns a building that it uses in its trade or business of manufacturing airplane parts. The building includes an industrial 3D printer that can print airplane wings and an electrical generator that serves the building and the 3D printer in a backup capacity. The 3D printer weighs 12 tons, is designed to remain in place indefinitely once installed in the building, and its removal would be time-consuming and very costly, and would cause significant damage to the building. The 3D printer was installed during the building's construction. The generator also was installed during construction and is designed to remain in place indefinitely once installed. Although costly and time-consuming to remove, removal of the generator will not result in substantial damage to the generator or the building.

(ii) The 3D printer is not listed as an example of a structural component under paragraph (a)(2)(iii)(B) of this section. Therefore, the 3D printer must be analyzed to determine whether it is a structural component using the factors provided in paragraphs (a)(2)(iii)(B)(*1*) through (*4*) of this section. The 3D printer—

(A) Is time-consuming and costly to move;

(B) Is not designed to be moved;

(C) If removed, would cause significant damage to the building in which it is located; and

(D) Was installed during construction of the building.

(iii) The factors described in paragraphs (a)(2)(iii)(B)(*1*) through (*4*) of this section support the conclusion that the 3D printer is a structural component of E's building and real property under this section. Thus, the 3D printer is real property.

(iv) The electrical generator also is not listed as an example of a structural component under paragraph (a)(2)(iii)(B) of this section and must be analyzed to determine whether it is a structural component using the factors provided in paragraphs (a)(2)(iii)(B)(*1*) through (*4*) of this section. The generator—

(A) Is time-consuming and costly to move;

(B) Is not designed to be moved;

(C) If removed, would not result in significant damage to the generator or the building in which it is located; and

(D) Was installed during construction of the building.

(v) The factors described in paragraphs (a)(2)(iii)(B)(*1*) through (*4*) of this section, considered in the aggregate, support the conclusion that the generator is a structural component of E's building. Although the generator's removal would not result in significant damage to the generator or to E's building, that factor does not outweigh the factors supporting the conclusion that it is a structural component. Consequently, the generator is a structural component of E's building and real property under this section.

(6) ***Example 6: Raised flooring for industrial 3D printer.***

(i) The facts are the same as in paragraph (b)(5), *Example 5,* except that E, when installing its 3D printer, also installed a raised flooring system for the purpose of facilitating the operation of the 3D printer. The raised flooring system is not designed or constructed to remain permanently in place. Rather, the raised flooring system can be removed, without any substantial damage to the system itself or to the building, and then reused. The raised flooring was installed during the building's construction.

(ii) Although floors are listed as an example of a structural component under paragraph (a)(2)(iii)(B) of this section, the raised flooring system installed to facilitate the operation of E's 3D printer is not a constituent part of, and integrated into, an inherently permanent structure as required by paragraph (a)(2)(iii)(A) of this section and, therefore, is not flooring as listed in paragraph (a)(2)(iii)(B) of this section. Thus, the raised flooring must be analyzed to determine whether it is a structural component of E's building (within the meaning of paragraph (a)(2)(iii) of this section) using the factors provided in paragraphs (a)(2)(iii)(B)(*1*) through (*4*) of this section. The raised flooring—

(A) Is installed and removed quickly and with little expense;

(B) Is designed to be moved and is not designed specifically for the particular building of which it is a part;

(C) Is not damaged, and the building is not damaged, upon its removal; and

(D) Was installed during construction of the building.

(iii) The factors described in paragraphs (a)(2)(iii)(B)(*1*) through (*4*) of this section, considered in the aggregate, support the conclusion that the raised flooring is not a structural component of E's building within the meaning of paragraph (a)(2)(iii) of this section. Although the raised flooring was installed during construction of the building, that factor does not outweigh the factors supporting the conclusion that the flooring is not a structural component. Therefore, the raised flooring is not real property.

(7) ***Example 7: Steam turbine.***

(i) F owns a building with a large steam turbine attached as a fixture to the building. The steam turbine is a component of a system used for the commercial production of electricity for sale to customers in the ordinary course of F's business as an electric utility. The steam turbine also generates electricity for F's building. The steam turbine takes up a substantial portion of the building and is designed to remain in place indefinitely once installed in F's building. The steam turbine was installed during the construction of the building and its removal would be costly and cause damage to the building.

(ii) The steam turbine is not listed as an example of a structural component under paragraph (a)(2)(iii)(B) of this section and must be analyzed to determine whether it is a structural component using the factors provided in paragraphs (a)(2)(iii)(B)(*1*) through (*4*) of this section. The steam turbine—

(A) Is costly to remove from the building in which it is located;

(B) Is not designed to be moved;

(C) If removed, would cause damage to the building; and

(D) Was installed during construction of the building.

(iii) The factors described in paragraphs (a)(2)(iii)(B)(*1*) through (*4*) of this section support the conclusion that the steam turbine is a structural component of F's building and real property under this section. Thus, the steam turbine is real property.

(8) ***Example 8: Partitions.***

(i) G owns an office building that it leases to tenants. The building includes partitions owned by G that are used to delineate space within the building. The office building has two types of interior, non-load-bearing drywall partition systems: A conventional drywall partition system (Conventional Partition System) and a modular drywall partition system (Modular Partition System). Neither the Conventional Partition System nor the Modular Partition System was installed during construction of the office building. Conventional Partition Systems are comprised of fully integrated gypsum board partitions, studs, joint tape, and covering joint compound. Modular Partition Systems are comprised of assembled panels, studs, tracks, and exposed joints. Both the Conventional Partition System and the Modular Partition System reach from the floor to the ceiling. In addition, both are distinct assets as described in paragraph (a)(4) of this section.

(ii) Depending on the needs of a new tenant, the Conventional Partition System may remain in place when a tenant vacates the premises. The Conventional Partition System is integrated into the office building and is designed and constructed to remain in areas not subject to reconfiguration or expansion. The Conventional Partition System can be removed only by

demolition, and, once removed, neither the Conventional Partition System nor its components can be reused. Removal of the Conventional Partition System causes substantial damage to the Conventional Partition System itself, but does not cause substantial damage to the building.

(iii) Modular Partition Systems are typically removed when a tenant vacates the premises. Modular Partition Systems are not designed or constructed to remain permanently in place. Modular Partition Systems are designed and constructed to be movable. Each Modular Partition System can be readily removed, remains in substantially the same condition as before, and can be reused. Removal of a Modular Partition System does not cause any substantial damage to the Modular Partition System itself or to the building. The Modular Partition System may be moved to accommodate the reconfigurations of the interior space within the office building for various tenants that occupy the building.

(iv) The Conventional Partition System is comprised of walls that are integrated into an inherently permanent structure and are listed as structural components in paragraph (a)(2)(iii)(B) of this section. Thus, the Conventional Partition System is real property.

(v) The Modular Partition System is not integrated into the building as required by paragraph (a)(2)(iii)(A) of this section and, therefore, is not listed in paragraph (a)(2)(iii)(B) of this section. Thus, the Modular Partition System must be analyzed to determine whether it is a structural component using the factors provided in paragraphs (a)(2)(iii)(B)(*1*) through (*4*) of this section. The Modular Partition System—

(A) Is installed and removed quickly and with little expense;

(B) Is designed to be moved and is not designed specifically for the particular building of which it is a part;

(C) Is not damaged, and the building is not damaged, upon its removal; and

(D) Was not installed during construction of the building.

(vi) The factors described in paragraphs (a)(2)(iii)(B)(*1*) through (*4*) of this section support the conclusion that the Modular Partition System is not a structural component of G's office building within the meaning of paragraph (a)(2)(iii) of this section. Therefore, the Modular Partition System is not real property.

(9) ***Example 9: Pipeline transmission system.***

(i) H owns a natural gas pipeline transmission system that provides a conduit to transport natural gas from unrelated third-party producers and gathering facilities to unrelated third-party distributors and end users. The pipeline transmission system is comprised of underground pipelines, isolation valves and vents, pressure control and relief valves, meters, and compressors. Each of these distinct assets was installed during construction of the pipeline transmission system and each was designed to remain permanently in place.

(ii) The pipelines are permanently affixed and are listed as other inherently permanent structures in paragraph (a)(2)(ii)(C) of this section. Thus, the pipelines are real property.

(iii) Isolation valves and vents are placed at regular intervals along the pipelines to isolate and evacuate sections of the pipelines in case there is need for a shut-down or maintenance of the pipelines. Pressure control and relief valves are installed at regular intervals along the pipelines

to provide overpressure protection. The isolation valves and vents and pressure control and relief valves are not listed in paragraph (a)(2)(iii)(B) of this section and, therefore, must be analyzed to determine whether they are structural components using the factors provided in paragraphs (a)(2)(iii)(B)(*1*) through (*4*) of this section. The isolation valves and vents and pressure control and relief valves—

(A) Are time consuming and expensive to install and remove from the pipelines;

(B) Are designed specifically for the particular pipelines for which they are a part;

(C) Will sustain damage and will damage the pipelines if removed; and

(D) Were installed during construction of the pipelines.

(iv) The factors in paragraphs (a)(2)(iii)(B)(*1*) through (*4*) of this section support the conclusion that the isolation valves and vents and pressure control and relief valves are structural components of H's pipelines within the meaning of paragraph (a)(2)(iii) of this section. Therefore, the isolation valves and vents and pressure control and relief valves are real property.

(v) Meters are used to measure the natural gas passing into or out of the pipeline transmission system for purposes of determining the end users' consumption. Over long distances, pressure is lost due to friction in the pipeline transmission system. Compressors are required to add pressure to transport natural gas through the entirety of the pipeline transmission system. H installed meters and compressors during the construction of the pipelines. However, unlike other types of such meters and compressors, these particular meters and compressors are not time consuming and expensive to install and remove from the pipelines; are not designed specifically for the particular pipelines for which they are a part; and their removal does not cause damage to the asset or the pipelines if removed. Therefore, the meters and compressors installed by H are not structural components within the meaning of paragraph (a)(2)(iii) of this section and, therefore, are not real property.

(10) ***Example 10: State or local law determination of property.***

(i) J owns water pipeline in State X that it wants to exchange for cell phone towers located in State Y. On the date that J transfers the water pipeline in an exchange for the cell phone towers, the water pipeline is classified as real property under the law of State X, the jurisdiction in which the water pipeline is located.

(ii) The water pipeline is real property under paragraphs (a)(1) and (a)(6) of this section, regardless of whether the water pipeline is listed as an inherently permanent structure or a structural component of an inherently permanent structure, or is real property under the factors listed in paragraph (a)(2)(ii)(C) or (a)(2)(iii)(B) of this section.

(iii) Cell phone towers are listed as an inherently permanent structure under paragraph (a)(2)(ii)(C) of this section. Thus, the cell phone towers that J acquires in the exchange for the water pipeline are real property under this section, regardless of the State or local characterization of the cell phone towers or whether the cell phone towers are real property under the factors in paragraph (a)(2)(ii)(C) or (a)(2)(iii)(B) of this section.

(11) ***Example 11: Land use permit.*** K receives a special use permit from the government to place a cell tower on Federal Government land that abuts a Federal highway. Government regulations provide that the permit is not a lease of the land, but is a permit to use the land for a cell tower. Under the permit, the government reserves the right to cancel the permit and compensate K if the site is

needed for a higher public purpose. The permit is in the nature of a leasehold that allows K to place a cell tower in a specific location on government land. Therefore, the permit is an interest in real property under paragraph (a)(5) of this section.

(12) ***Example 12: License to operate a business.*** L owns a building and receives a license from State A to operate a casino in the building. The license applies only to K's building and cannot be transferred to another location. L's building is an inherently permanent structure under paragraph (a)(2)(ii)(A) of this section and, therefore, is real property. However, L's license to operate a casino is not a right for the use, enjoyment, or occupation of L's building, but is rather a license to engage in or operate the casino business in the building. Therefore, the casino license is not real property or an interest in real property under paragraph (a)(5)(ii) of this section.

(c) ***Applicability date.*** This section applies to exchanges beginning after December 2, 2020.

[T.D. 9935, 85 FR 77378, Dec. 2, 2020]

§ 1.1031(b)-1 Receipt of other property or money in tax-free exchange.

(a) If the taxpayer receives other property (in addition to property permitted to be received without recognition of gain) or money—

(1) In an exchange described in section 1031(a) of property held for investment or productive use in trade or business for property of like kind to be held either for productive use or for investment,

(2) In an exchange described in section 1035(a) of insurance policies or annuity contracts,

(3) In an exchange described in section 1036(a) of common stock for common stock, or preferred stock for preferred stock, in the same corporation and not in connection with a corporate reorganization, or

(4) In an exchange described in section 1037(a) of obligations of the United States, issued under the Second Liberty Bond Act (31 U.S.C. 774 (2)), solely for other obligations issued under such Act, the gain, if any, to the taxpayer will be recognized under section 1031(b) in an amount not in excess of the sum of the money and the fair market value of the other property, but the loss, if any, to the taxpayer from such an exchange will not be recognized under section 1031(c) to any extent.

(b) The application of this section may be illustrated by the following examples:

Example 1. A, who is not a dealer in real estate, in 1954 exchanges real estate held for investment, which he purchased in 1940 for $5,000, for other real estate (to be held for productive use in trade or business) which has a fair market value of $6,000, and $2,000 in cash. The gain from the transaction is $3,000, but is recognized only to the extent of the cash received of $2,000.

> *Example 2.* (a) B, who uses the cash receipts and disbursements method of accounting and the calendar year as his taxable year, has never elected under section 454(a) to include in gross income currently the annual increase in the redemption price of non-interest-bearing obligations issued at a discount. In 1943, for $750 each, B purchased four $1,000 series E U.S. savings bonds bearing an issue date of March 1, 1943.
> (b) On October 1, 1963, the redemption value of each such bond was $1,396, and the total redemption value of the four bonds was $5,584. On that date B submitted the four $1,000 series E bonds to the United States in a transaction in which one of such $1,000 bonds was

reissued by issuing four $100 series E U.S. savings bonds bearing an issue date of March 1, 1943, and by considering six $100 series E bonds bearing an issue date of March 1, 1943, to have been issued. The redemption value of each such $100 series E bond was $139.60 on October 1, 1963. Then, as part of the transaction, the six $100 series E bonds so considered to have been issued and the three $1,000 series E bonds were exchanged, in an exchange qualifying under section 1037(a), for five $1,000 series H U.S. savings bonds plus $25.60 in cash.

(c) The gain realized on the exchange qualifying under section 1037(a) is $2,325.60, determined as follows:

Amount realized:		
Par value of five series H bonds		$5,000.00
Cash received		25.60
Total realized		5,025.60
Less: Adjusted basis of series E bonds surrendered in the exchange:		
Three $1,000 series E bonds	$2,250.00	
Six $100 series E bonds at $75 each	450.00	
		2,700.00
Gain realized		2,325.60

(d) Pursuant to section 1031(b), only $25.60 (the money received) of the total gain of $2,325.60 realized on the exchange is recognized at the time of exchange and must be included in B's gross income for 1963. The $2,300 balance of the gain ($2,325.60 less $25.60) must be included in B's gross income for the taxable year in which the series H bonds are redeemed or disposed of, or reach final maturity, whichever is earlier, as provided in paragraph (c) of § 1.454-1.
(e) The gain on the four $100 series E bonds, determined by using $75 as a basis for each such bond, must be included in B's gross income for the taxable year in which such bonds are redeemed or disposed of, or reach final maturity, whichever is earlier.

Example 3. (a) The facts are the same as in example (2), except that, as part of the transaction, the $1,000 series E bond is reissued by considering ten $100 series E bonds bearing an issue date of March 1, 1943, to have been issued. Six of the $100 series E bonds so considered to have been issued are surrendered to the United States as part of the exchange qualifying under section 1037(a) and the other four are immediately redeemed.

(b) Pursuant to section 1031(b), only $25.60 (the money received) of the total gain of $2,325.60 realized on the exchange qualifying under section 1037(a) is recognized at the time of the exchange and must be included in B's gross income for 1963. The $2,300 balance of the gain ($2,325.60 less $25.60) realized on such exchange must be included in B's gross income for the taxable year in which the series H bonds are redeemed or disposed of, or reach final maturity, whichever is earlier, as provided in paragraph (c) of § 1.454-1.

(c) The redemption on October 1, 1963, of the four $100 series E bonds considered to have been issued at such time results in gain of $258.40, which is then recognized and must be included in B's gross income for 1963. This gain of $258.40 is the difference between the $558.40 redemption value of such bonds on the date of the exchange and the $300 (4 × $75) paid for such series E bonds in 1943.

Example 4. On November 1, 1963, C purchased for $91 a marketable U.S. bond which was originally issued at its par value of $100 under the Second Liberty Bond Act. On February 1, 1964, in an exchange qualifying under section 1037(a), C surrendered the bond to the United States for another marketable U.S. bond, which then had a fair market value of $92, and $1.85 in cash, $0.85 of which was interest. The $0.85 interest received is includible in gross income for the taxable year of the exchange, but the $2 gain ($93 less $91) realized on the exchange is recognized for such year under section 1031(b) to the extent of $1 (the money received). Under section 1031(d), C's basis in the bond received in exchange is $91 (his basis of $91 in the bond surrendered, reduced by the $1 money received and increased by the $1 gain recognized).

(c) Consideration received in the form of an assumption of liabilities (or a transfer subject to a liability) is to be treated as *other property or money* for the purposes of section 1031(b). Where, on an exchange described in section 1031(b), each party to the exchange either assumes a liability of the other party or acquires property subject to a liability, then, in determining the amount of *other property or money* for purposes of section 1031(b), consideration given in the form of an assumption of liabilities (or a receipt of property subject to a liability) shall be offset against consideration received in the form of an assumption of liabilities (or a transfer subject to a liability). See § 1.1031(d)-2, examples (1) and (2).

[T.D. 6500, 25 FR 11910, Nov. 26, 1960, as amended by T.D. 6935, 32 FR 15822, Nov. 17, 1967]

§ 1.1031(b)-2 Safe harbor for qualified intermediaries.

(a) In the case of simultaneous transfers of like-kind properties involving a qualified intermediary (as defined in § 1.1031(k)-1(g)(4)(iii)), the qualified intermediary is not considered the agent of the taxpayer for purposes of section 1031(a). In such a case, the transfer and receipt of property by the taxpayer is treated as an exchange.

(b) In the case of simultaneous exchanges of like-kind properties involving a qualified intermediary (as defined in § 1.1031(k)-1(g)(4)(iii)), the receipt by the taxpayer of an evidence of indebtedness of the transferee of the qualified intermediary is treated as the receipt of an evidence of indebtedness of the person acquiring property from the taxpayer for purposes of section 453 and § 15a.453-1(b)(3)(i) of this chapter.

(c) Paragraph (a) of this section applies to transfers of property made by taxpayers on or after June 10, 1991.

(d) Paragraph (b) of this section applies to transfers of property made by taxpayers on or after April 20, 1994. A taxpayer may choose to apply paragraph (b) of this section to transfers of property made on or after June 10, 1991.

[T.D. 8346, 56 FR 19937, May 1, 1991, as amended by T.D. 8535, 59 FR 18749, Apr. 20, 1994]

§ 1.1031(c)-1 Nonrecognition of loss.

Section 1031(c) provides that a loss shall not be recognized from an exchange of property described in section 1031(a), 1035(a), 1036(a), or 1037(a) where there is received in the exchange other property or money in addition to property permitted to be received without recognition of gain or loss. See example (4) of paragraph (a)(3) of § 1.1037-1 for an illustration of the application of this section in the case of an exchange of U.S. obligations described in section 1037(a).

[T.D. 6935, 32 FR 15822, Nov. 17, 1967]

§ 1.1031(d)-1 Property acquired upon a tax-free exchange.

(a) If, in an exchange of property solely of the type described in section 1031, section 1035(a), section 1036(a), or section 1037(a), no part of the gain or loss was recognized under the law applicable to the year in which the exchange was made, the basis of the property acquired is the same as the basis of the property transferred by the taxpayer with proper adjustments to the date of the exchange. If additional consideration is given by the taxpayer in the exchange, the basis of the property acquired shall be the same as the property transferred increased by the amount of additional consideration given (see section 1016 and the regulations thereunder).

(b) If, in an exchange of properties of the type indicated in section 1031, section 1035(a), section 1036(a), or section 1037(a), gain to the taxpayer was recognized under the provisions of section 1031(b) or a similar provision of a prior revenue law, on account of the receipt of money in the transaction, the basis of the property acquired is the basis of the property transferred (adjusted to the date of the exchange), decreased by the amount of money received and increased by the amount of gain recognized on the exchange. The application of this paragraph may be illustrated by the following example:

> *Example:* A, an individual in the moving and storage business, in 1954 transfers one of his moving trucks with an adjusted basis in his hands of $2,500 to B in exchange for a truck (to be used in A's business) with a fair market value of $2,400 and $200 in cash. A realizes a gain of $100 upon the exchange, all of which is recognized under section 1031(b). The basis of the truck acquired by A is determined as follows:

Adjusted basis of A's former truck	$2,500
Less: Amount of money received	200
Difference	2,300
Plus: Amount of gain recognized	100

Basis of truck acquired by A	2,400

(c) If, upon an exchange of properties of the type described in section 1031, section 1035(a), section 1036(a), or section 1037(a), the taxpayer received other property (not permitted to be received without the recognition of gain) and gain from the transaction was recognized as required under section 1031(b), or a similar provision of a prior revenue law, the basis (adjusted to the date of the exchange) of the property transferred by the taxpayer, decreased by the amount of any money received and increased by the amount of gain recognized, must be allocated to and is the basis of the properties (other than money) received on the exchange. For the purpose of the allocation of the basis of the properties received, there must be assigned to such other property an amount equivalent to its fair market value at the date of the exchange. The application of this paragraph may be illustrated by the following example:

Example: A, who is not a dealer in real estate, in 1954 transfers real estate held for investment which he purchased in 1940 for $10,000 in exchange for other real estate (to be held for investment) which has a fair market value of $9,000, an automobile which has a fair market value of $2,000, and $1,500 in cash. A realizes a gain of $2,500, all of which is recognized under section 1031(b). The basis of the property received in exchange is the basis of the real estate A transfers ($10,000) decreased by the amount of money received ($1,500) and increased in the amount of gain that was recognized ($2,500), which results in a basis for the property received of $11,000. This basis of $11,000 is allocated between the automobile and the real estate received by A, the basis of the automobile being its fair market value at the date of the exchange, $2,000, and the basis of the real estate received being the remainder, $9,000.

(d) Section 1031(c) and, with respect to section 1031 and section 1036(a), similar provisions of prior revenue laws provide that no loss may be recognized on an exchange of properties of a type described in section 1031, section 1035(a), section 1036(a), or section 1037(a), although the taxpayer receives other property or money from the transaction. However, the basis of the property or properties (other than money) received by the taxpayer is the basis (adjusted to the date of the exchange) of the property transferred, decreased by the amount of money received. This basis must be allocated to the properties received, and for this purpose there must be allocated to such other property an amount of such basis equivalent to its fair market value at the date of the exchange.

(e) If, upon an exchange of properties of the type described in section 1031, section 1035(a), section 1036(a), or section 1037(a), the taxpayer also exchanged other property (not permitted to be transferred without the recognition of gain or loss) and gain or loss from the transaction is recognized under section 1002 or a similar provision of a prior revenue law, the basis of the property acquired is the total basis of the properties transferred (adjusted to the date of the exchange) increased by the amount of gain and decreased by the amount of loss recognized on the other property. For purposes of this rule, the taxpayer is deemed to have received in exchange for such other property an amount equal to its fair market value on the date of the exchange. The application of this paragraph may be illustrated by the following example:

Example: A exchanges real estate held for investment plus stock for real estate to be held for investment. The real estate transferred has an adjusted basis of $10,000 and a fair market value of $11,000. The stock transferred has an adjusted basis of $4,000 and a fair market value of $2,000. The real

estate acquired has a fair market value of $13,000. A is deemed to have received a $2,000 portion of the acquired real estate in exchange for the stock, since $2,000 is the fair market value of the stock at the time of the exchange. A $2,000 loss is recognized under section 1002 on the exchange of the stock for real estate. No gain or loss is recognized on the exchange of the real estate since the property received is of the type permitted to be received without recognition of gain or loss. The basis of the real estate acquired by A is determined as follows:

Adjusted basis of real estate transferred	$10,000
Adjusted basis of stock transferred	4,000
	14,000
Less: Loss recognized on transfer of stock	2,000
Basis of real estate acquired upon the exchange	12,000

[T.D. 6500, 25 FR 11910, Nov. 26, 1960, as amended by T.D. 6935, 32 FR 15823, Nov. 17, 1967]

§ 1.1031(d)-1T Coordination of section 1060 with section 1031 (temporary).

If the properties exchanged under section 1031 are part of a group of assets which constitute a trade or business under section 1060, the like-kind property and other property or money which are treated as transferred in exchange for the like-kind property shall be excluded from the allocation rules of section 1060. However, section 1060 shall apply to property which is not like-kind property or other property or money which is treated as transferred in exchange for the like-kind property. For application of the section 1060 allocation rules to property which is not part of the like-kind exchange, see § 1.1060-1(b), (c), and (d) *Example 1 in § 1.338-6(b), to which reference is made by § 1.1060-1(c)(2).*

[T.D. 8215, 53 FR 27044, July 18, 1988, as amended by T.D. 8858, 65 FR 1237, Jan. 7, 2000; T.D. 8940, 66 FR 9929, Feb. 13, 2001]

§ 1.1031(d)-2 Treatment of assumption of liabilities.

For the purposes of section 1031(d), the amount of any liabilities of the taxpayer assumed by the other party to the exchange (or of any liabilities to which the property exchanged by the taxpayer is subject) is to be treated as money received by the taxpayer upon the exchange, whether or not the assumption resulted in a recognition of gain or loss to the taxpayer under the law applicable to the year in which the exchange was made. The application of this section may be illustrated by the following examples:

Example 1. B, an individual, owns an apartment house which has an adjusted basis in his hands of $500,000, but which is subject to a mortgage of $150,000. On September 1, 1954, he transfers the apartment house to C, receiving in exchange therefor $50,000 in cash and another apartment house with a fair market value on that date of $600,000. The transfer to C is made subject to the $150,000 mortgage. B

realizes a gain of $300,000 on the exchange, computed as follows:

Value of property received		$600,000
Cash		50,000
Liabilities subject to which old property was transferred		150,000
Total consideration received		800,000
Less: Adjusted basis of property transferred		500,000
Gain realized		300,000
Under section 1031(b), $200,000 of the $300,000 gain is recognized. The basis of the apartment house acquired by B upon the exchange is $500,000, computed as follows:		500,000
Adjusted basis of property transferred		
Less: Amount of money received:		
Cash	$50,000	
Amount of liabilities subject to which property was transferred	150,000	
		200,000
Difference		300,000
Plus: Amount of gain recognized upon the exchange		200,000
Basis of property acquired upon the exchange		500,000

Example 2. (a) D, an individual, owns an apartment house. On December 1, 1955, the apartment house owned by D has an adjusted basis in his hands of $100,000, a fair market value of $220,000, but is subject to a mortgage of $80,000. E, an individual, also owns an apartment house. On December 1, 1955, the apartment house owned by E has an adjusted basis of $175,000, a fair market value of $250,000, but is subject to a mortgage of $150,000. On December 1, 1955, D transfers his apartment house to E, receiving in exchange therefore $40,000 in cash and the apartment house owned by E. Each apartment house is transferred subject to the mortgage on it.
(b) D realizes a gain of $120,000 on the exchange, computed as follows:

Value of property received		$250,000
Cash		40,000
Liabilities subject to which old property was transferred		80,000
Total consideration received		370,000
Less:		
Adjusted basis of property transferred	$100,000	
Liabilities to which new property is subject	150,000	
		250,000

Gain realized		120,000

For purposes of section 1031(b), the amount of *other property or money* received by D is $40,000. (Consideration received by D in the form of a transfer subject to a liability of $80,000 is offset by consideration given in the form of a receipt of property subject to a $150,000 liability. Thus, only the consideration received in the form of cash, $40,000, is treated as *other property or money* for purposes of section 1031(b).) Accordingly, under section 1031(b), $40,000 of the $120,000 gain is recognized. The basis of the apartment house acquired by D is $170,000, computed as follows:

Adjusted basis of property transferred		$100,000
Liabilities to which new property is subject		150,000
Total		250,000
Less: Amount of money received: Cash	$40,000	
Amount of liabilities subject to which property was transferred	80,000	
	___	120,000
Difference		130,000
Plus: Amount of gain recognized upon the exchange		40,000
Basis of property acquired upon the exchange		170,000

(c) E realizes a gain of $75,000 on the exchange, computed as follows:

Value of property received		$220,000
Liabilities subject to which old property was transferred		150,000
Total consideration received		370,000
Less:		
Adjusted basis of property transferred	$175,000	
Cash	40,000	
Liabilities to which new property is subject	80,000	
	___	295,000
Gain realized		75,000

For purposes of section 1031(b), the amount of *other property or money* received by E is $30,000. (Consideration received by E in the form of a transfer subject to a liability of $150,000 is offset by consideration given in the form of a receipt of property subject to an $80,000 liability and by the $40,000

cash paid by E. Although consideration received in the form of cash or other property is not offset by consideration given in the form of an assumption of liabilities or a receipt of property subject to a liability, consideration given in the form of cash or other property is offset against consideration received in the form of an assumption of liabilities or a transfer of property subject to a liability.) Accordingly, under section 1031(b), $30,000 of the $75,000 gain is recognized. The basis of the apartment house acquired by E is $175,000, computed as follows:

Adjusted basis of property transferred		$175,000
Cash		40,000
Liabilities to which new property is subject		80,000
Total		295,000
Less: Amount of money received: Amount of liabilities subject to which property was transferred	$150,000	
	___	150,000
Difference		145,000
Plus: Amount of gain recognized upon the exchange		30,000
Basis of property acquired upon the exchange		175,000

§ 1.1031(e)-1 Exchange of livestock of different sexes.

Section 1031(e) provides that livestock of different sexes are not property of like kind. Section 1031(e) and this section are applicable to taxable years to which the Internal Revenue Code of 1954 applies.

[T.D. 7141, 36 FR 18792, Sept. 22, 1971]

§ 1.1031(j)-1 Exchanges of multiple properties.

(a) ***Introduction*** —

(1) ***Overview.*** As a general rule, the application of section 1031 requires a property-by-property comparison for computing the gain recognized and basis of property received in a like-kind exchange. This section provides an exception to this general rule in the case of an exchange of multiple properties. An exchange is an exchange of multiple properties if, under paragraph (b)(2) of this section, more than one exchange group is created. In addition, an exchange is an exchange of multiple properties if only one exchange group is created but there is more than one property being transferred or received within that exchange group. Paragraph (b) of this section provides rules for computing the amount of gain recognized in an exchange of multiple properties qualifying for nonrecognition of gain or loss under section 1031. Paragraph (c) of this section provides rules for computing the basis of properties received in an exchange of multiple properties qualifying for nonrecognition of gain or loss under section 1031.

(2) ***General approach.***

(i) In general, the amount of gain recognized in an exchange of multiple properties is computed by first separating the properties transferred and the properties received by the taxpayer in the exchange into exchange groups in the manner described in paragraph (b)(2) of this section. The separation of the properties transferred and the properties received in the exchange into exchange groups involves matching up properties of a like kind of like class to the extent possible. Next, all liabilities assumed by the taxpayer as part of the transaction are offset by all liabilities of which the taxpayer is relieved as part of the transaction, with the excess liabilities assumed or relieved allocated in accordance with paragraph (b)(2)(ii) of this section. Then, the rules of section 1031 and the regulations thereunder are applied separately to each exchange group to determine the amount of gain recognized in the exchange. See §§ 1.1031(b)-1 and 1.1031(c)-1. Finally, the rules of section 1031 and the regulations thereunder are applied separately to each exchange group to determine the basis of the properties received in the exchange. See §§ 1.1031(d)-1 and 1.1031(d)-2.

(ii) For purposes of this section, the exchanges are assumed to be made at arms' length, so that the aggregate fair market value of the property received in the exchange equals the aggregate fair market value of the property transferred. Thus, the amount realized with respect to the properties transferred in each exchange group is assumed to equal their aggregate fair market value.

(b) *Computation of gain recognized* —

(1) ***In general.*** In computing the amount of gain recognized in an exchange of multiple properties, the fair market value must be determined for each property transferred and for each property received by the taxpayer in the exchange. In addition, the adjusted basis must be determined for each property transferred by the taxpayer in the exchange.

(2) ***Exchange groups and residual group.*** The properties transferred and the properties received by the taxpayer in the exchange are separated into exchange groups and a residual group to the extent provided in this paragraph (b)(2).

(i) ***Exchange groups.*** Each exchange group consists of the properties transferred and received in the exchange, all of which are of a like kind or like class. If a property could be included in more than one exchange group, the taxpayer may include the property in any of those exchange groups. Property eligible for inclusion within an exchange group does not include money or property described in section 1031(a)(2) (i.e., stock in trade or other property held primarily for sale, stocks, bonds, notes, other securities or evidences of indebtedness or interest, interests in a partnership, certificates of trust or beneficial interests, or choses in action). For example, an exchange group may consist of all exchanged properties that are within the same General Asset Class or within the same Product Class (as defined in § 1.1031(a)-2(b)). Each exchange group must consist of at least one property transferred and at least one property received in the exchange.

(ii) ***Treatment of liabilities.***

(A) All liabilities assumed by the taxpayer as part of the exchange are offset against all liabilities of which the taxpayer is relieved as part of the exchange, regardless of whether the liabilities are recourse or nonrecourse and regardless of whether the liabilities are secured by or otherwise relate to specific property transferred or received as part of the exchange. See §§ 1.1031 (b)-1(c) and 1.1031(d)-2. For purposes of this section, liabilities assumed by the taxpayer as part of the exchange consist of liabilities of the other party to

the exchange assumed by the taxpayer and liabilities subject to which the other party's property is transferred in the exchange. Similarly, liabilities of which the taxpayer is relieved as part of the exchange consist of liabilities of the taxpayer assumed by the other party to the exchange and liabilities subject to which the taxpayer's property is transferred.

(B) If there are excess liabilities assumed by the taxpayer as part of the exchange (i.e., the amount of liabilities assumed by the taxpayer exceeds the amount of liabilities of which the taxpayer is relieved), the excess is allocated among the exchange groups (but not to the residual group) in proportion to the aggregate fair market value of the properties received by the taxpayer in the exchange groups. The amount of excess liabilities assumed by the taxpayer that are allocated to each exchange group may not exceed the aggregate fair market value of the properties received in the exchange group.

(C) If there are excess liabilities of which the taxpayer is relieved as part of the exchange (i.e., the amount of liabilities of which the taxpayer is relieved exceeds the amount of liabilities assumed by the taxpayer), the excess is treated as a Class I asset for purposes of making allocations to the residual group under paragraph (b)(2)(iii) of this section.

(D) Paragraphs (b)(2)(ii) (A), (B), and (C) of this section are applied in the same manner even if section 1031 and this section apply to only a portion of a larger transaction (such as a transaction described in section 1060(c) and § 1.1060-1T(b)). In that event, the amount of excess liabilities assumed by the taxpayer or the amount of excess liabilities of which the taxpayer is relieved is determined based on all liabilities assumed by the taxpayer and all liabilities of which the taxpayer is relieve as part of the larger transaction.

(iii) ***Residual group.*** If the aggregate fair market value of the properties transferred in all of the exchange groups differs from the aggregate fair market value of the properties received in all of the exchange groups (taking liabilities into account in the manner described in paragraph (b)(2)(ii) of this section), a residual group is created. The residual group consists of an amount of money or other property having an aggregate fair market value equal to that difference. The residual group consists of either money or other property transferred in the exchange or money or other property received in the exchange, but not both. For this purpose, other property includes property described in section 1031(a)(2) (i.e., stock in trade or other property held primarily for sale, stocks, bonds, notes, other securities or evidences of indebtedness or interest, interests in a partnership, certificates of trust or beneficial interests, or choses in action), property transferred that is not of a like kind or like class with any property received, and property received that is not of a like kind or like class with any property transferred. The money and properties that are allocated to the residual group are considered to come from the following assets in the following order: first from Class I assets, then from Class II assets, then from Class III assets, and then from Class IV assets. The terms Class I assets, Class II assets, Class III assets, and Class IV assets have the same meanings as in § 1.338-6(b), to which reference is made by § 1.1060-1(c)(2). Within each Class, taxpayers may choose which properties are allocated to the residual group.

(iv) ***Exchange group surplus and deficiency.*** For each of the exchange groups described in this section, an “exchange group surplus” or “exchange group deficiency,” if any, must be determined. An exchange group surplus is the excess of the aggregate fair market value of the properties received (less the amount of any excess liabilities assumed by the taxpayer that are allocated to that exchange group), in an exchange group over the aggregate fair market value of the properties transferred in that exchange group. An exchange group deficiency is the excess

of the aggregate fair market value of the properties transferred in an exchange group over the aggregate fair market value of the properties received (less the amount of any excess liabilities assumed by the taxpayer that are allocated to that exchange group) in that exchange group.

(3) ***Amount of gain recognized.***

(i) For purposes of this section, the amount of gain or loss realized with respect to each exchange group and the residual group is the difference between the aggregate fair market value of the properties transferred in that exchange group or residual group and the properties' aggregate adjusted basis. The gain realized with respect to each exchange group is recognized to the extent of the lesser of the gain realized and the amount of the exchange group deficiency, if any. Losses realized with respect to an exchange group are not recognized. See section 1031 (a) and (c). The total amount of gain recognized under section 1031 in the exchange is the sum of the amount of gain recognized with respect to each exchange group. With respect to the residual group, the gain or loss realized (as determined under this section) is recognized as provided in section 1001 or other applicable provision of the Code.

(ii) The amount of gain or loss realized and recognized with respect to properties transferred by the taxpayer that are not within any exchange group or the residual group is determined under section 1001 and other applicable provisions of the Code, with proper adjustments made for all liabilities not allocated to the exchange groups or the residual group.

(c) ***Computation of basis of properties received.*** In an exchange of multiple properties qualifying for nonrecognition of gain or loss under section 1031 and this section, the aggregate basis of properties received in each of the exchange groups is the aggregate adjusted basis of the properties transferred by the taxpayer within that exchange group, increased by the amount of gain recognized by the taxpayer with respect to that exchange group, increased by the amount of the exchange group surplus or decreased by the amount of the exchange group deficiency, and increased by the amount, if any, of excess liabilities assumed by the taxpayer that are allocated to that exchange group. The resulting aggregate basis of each exchange group is allocated proportionately to each property received in the exchange group in accordance with its fair market value. The basis of each property received within the residual group (other than money) is equal to its fair market value.

(d) ***Examples.*** The application of this section may be illustrated by the following examples:

Example 1. (i) K exchanges computer A (asset class 00.12) and automobile A (asset class 00.22), both of which were held by K for productive use in its business, with W for printer B (asset class 00.12) and automobile B (asset class 00.22), both of which will be held by K for productive use in its business. K's adjusted basis and the fair market value of the exchanged properties are as follows:

	Adjusted basis	Fair market value
Computer A	$375	$1,000
Automobile A	1,500	4,000
Printer B		2,050

	Adjusted basis	Fair market value
Automobile B		2,950

(ii) Under paragraph (b)(2) of this section, the properties exchanged are separated into exchange groups as follows:
(A) The first exchange group consists of computer A and printer B (both are within the same General Asset Class) and, as to K, has an exchange group surplus of $1050 because the fair market value of printer B ($2050) exceeds the fair market value of computer A ($1000) by that amount.

(B) The second exchange group consists of automobile A and automobile B (both are within the same General Asset Class) and, as to K, has an exchange group deficiency of $1050 because the fair market value of automobile A ($4000) exceeds the fair market value of automobile B ($2950) by that amount.

(iii) K recognizes gain on the exchange as follows:

(A) With respect to the first exchange group, the amount of gain realized is the excess of the fair market value of computer A ($1000) over its adjusted basis ($375), or $625. The amount of gain recognized is the lesser of the gain realized ($625) and the exchange group deficiency ($0), or $0.

(B) With respect to the second exchange group, the amount of gain realized is the excess of the fair market value of automobile A ($4000) over its adjusted basis ($1500), or $2500. The amount of gain recognized is the lesser of the gain realized ($2500) and the exchange group deficiency ($1050), or $1050.

(iv) The total amount of gain recognized by K in the exchange is the sum of the gains recognized with respect to both exchange groups ($0 + $1050), or $1050.

(v) The bases of the property received by K in the exchange, printer B and automobile B, are determined in the following manner:

(A) The basis of the property received in the first exchange group is the adjusted basis of the property transferred within the exchange group ($375), increased by the amount of gain recognized with respect to that exchange group ($0), increased by the amount of the exchange group surplus ($1050), and increased by the amount of excess liabilities assumed allocated to that exchange group ($0), or $1425. Because printer B was the only property received within the first exchange group, the entire basis of $1425 is allocated to printer B.

(B) The basis of the property received in the second exchange group is the adjusted basis of the property transferred within that exchange group ($1500), increased by the amount of gain recognized with respect to that exchange group ($1050), decreased by the amount of the exchange group deficiency ($1050), and increased by the amount of excess liabilities assumed allocated to that exchange group ($0), or $1500. Because automobile B was the only property received within the second exchange group, the entire basis of $1500 is allocated to automobile B.

Example 2. (i) F exchanges computer A (asset class 00.12) and automobile A (asset class 00.22), both of which were held by F for productive use in its business, with G for printer B (asset class 00.12) and automobile B (asset class 00.22), both of which will be held by F for productive use in its business, and corporate stock and $500 cash. The adjusted basis and fair market value of the properties are as follows:

	Adjusted basis	Fair market value
Computer A	$375	$1,000
Automobile A	3,500	4,000
Printer B		800
Automobile B		2,950
Corporate stock		750
Cash		500

(ii) Under paragraph (b)(2) of this section, the properties exchanged are separated into exchange groups as follows:
(A) The first exchange group consists of computer A and printer B (both are within the same General Asset Class) and, as to F, has an exchange group deficiency of $200 because the fair market value of computer A ($1000) exceeds the fair market value of printer B ($800) by that amount.

(B) The second exchange group consists of automobile A and automobile B (both are within the same General Asset Class) and, as to F, has an exchange group deficiency of $1050 because the fair market value of automobile A ($4000) exceeds the fair market value of automobile B ($2950) by that amount.

(C) Because the aggregate fair market value of the properties transferred by F in the exchange groups ($5,000) exceeds the aggregate fair market value of the properties received by F in the exchange groups ($3750) by $1250, there is a residual group in that amount consisting of the $500 cash and the $750 worth of corporate stock.

(iii) F recognizes gain on the exchange as follows:

(A) With respect to the first exchange group, the amount of gain realized is the excess of the fair market value of computer A ($1000) over its adjusted basis ($375), or $625. The amount of gain recognized is the lesser of the gain realized ($625) and the exchange group deficiency ($200), or $200.

(B) With respect to the second exchange group, the amount of gain realized is the excess of the fair market value of automobile A ($4000) over its adjusted basis ($3500), or $500. The amount of gain recognized is the lesser of the gain realized ($500) and the exchange group deficiency ($1050), or $500.

(C) No property transferred by F was allocated to the residual group. Therefore, F does not recognize gain or loss with respect to the residual group.

(iv) The total amount of gain recognized by F in the exchange is the sum of the gains recognized with respect to both exchange groups ($200 + $500), or $700.

(v) The bases of the properties received by F in the exchange (printer B, automobile B, and the corporate stock) are determined in the following manner:

(A) The basis of the property received in the first exchange group is the adjusted basis of the property transferred within that exchange group ($375), increased by the amount of gain recognized with respect to that exchange group ($200), decreased by the amount of the exchange group deficiency ($200), and increased by the amount of excess liabilities assumed allocated to that exchange group ($0), or $375. Because printer B was the only property received within the first exchange group, the entire basis of $375 is allocated to printer B.

(B) The basis of the property received in the second exchange group is the adjusted basis of the property transferred within that exchange group ($3500), increased by the amount of gain recognized with respect to that exchange group ($500), decreased by the amount of the exchange group deficiency ($1050), and increased by the amount of excess liabilities assumed allocated to that exchange group ($0), or $2950. Because automobile B was the only property received within the second exchange group, the entire basis of $2950 is allocated to automobile B.

(C) The basis of the property received within the residual group (the corporate stock) is equal to its fair market value or $750. Cash of $500 is also received within the residual group.

Example 3. (i) J and H enter into an exchange of the following properties. All of the property (except for the inventory) transferred by J was held for productive use in J's business. All of the

property received by J will be held by J for productive use in its business.

J Transfers:		*H Transfers:*		
Property	**Adjusted basis**	**Fair market value**	**Property**	**Fair market value**
Computer A	$1,500	$5,000	Computer Z	$4,500
Computer B	500	3,000	Printer Y	2,500
Printer C	2,000	1,500	Real Estate X	1,000
Real Estate D	1,200	2,000	Real Estate W	4,000
Real Estate E	0	1,800	Grader V	2,000
Scraper F	3,300	2,500	Truck T	1,700
Inventory	1,000	1,700	Cash	1,800
Total	9,500	17,500		17,500

(ii) Under paragraph (b)(2) of this section, the properties exchanged are separated into exchange groups as follows:
(A) The first exchange group consists of computer A, computer B, printer C, computer Z, and printer Y (all are within the same General Asset Class) and, as to J, has an exchange group deficiency of $2500 (($5000 + $3000 + $1500) − ($4500 + $2500)).

(B) The second exchange group consists of real estate D, E, X and W (all are of a like kind) and, as to J, has an exchange group surplus of $1200 (($1000 + $4000) − ($2000 + $1800)).

(C) The third exchange group consists of scraper F and grader V (both are within the same Product Class (NAICS code 333120)) and, as to J, has an exchange group deficiency of $500 ($2500 − $2000).

(D) Because the aggregate fair market value of the properties transferred by J in the exchange groups ($15,800) exceeds the aggregate fair market value of the properties received by J in the exchange groups ($14,000) by $1800, there is a residual group in that amount consisting of the $1800 cash (a Class I asset).

(E) The transaction also includes a taxable exchange of inventory (which is property described in section 1031 (a)(2)) for truck T (which is not of a like kind or like class to any property transferred in the exchange).

(iii) J recognizes gain on the transaction as follows:

(A) With respect to the first exchange group, the amount of gain realized is the excess of the aggregate fair market value of the properties transferred in the exchange group ($9500) over the aggregate adjusted basis ($4000), or $5500. The amount of gain recognized is the lesser of the gain realized ($5500) and the exchange group deficiency ($2500), or $2500.

(B) With respect to the second exchange group, the amount of gain realized is the excess of the aggregate fair market value of the properties transferred in the exchange group ($3800) over the aggregate adjusted basis ($1200), or $2600. The amount of gain recognized is the lesser of the gain realized ($2600) and the exchange group deficiency ($0), or $0.

(C) With respect to the third exchange group, a loss is realized in the amount of $800 because the fair market value of the property transferred in the exchange group ($2500) is less than its adjusted basis ($3300). Although a loss of $800 was realized, under section 1031 (a) and (c) losses are not recognized.

(D) No property transferred by J was allocated to the residual group. Therefore, J does not recognize gain or loss with respect to the residual group.

(E) With respect to the taxable exchange of inventory for truck T, gain of $700 is realized and recognized by J (amount realized of $1700 (the fair market value of truck T) less the adjusted basis of the inventory ($1000)).

(iv) The total amount of gain recognized by J in the transaction is the sum of the gains recognized under section 1031 with respect to each exchange group ($2500 + $0 + $0) and any gain recognized outside of section 1031 ($700), or $3200.

(v) The bases of the property received by J in the exchange are determined in the following manner:

(A) The aggregate basis of the properties received in the first exchange group is the adjusted basis of the properties transferred within that exchange group ($4000), increased by the amount of gain recognized with respect to that exchange group ($2500), decreased by the amount of the exchange group deficiency ($2500), and increased by the amount of excess liabilities assumed allocated to that exchange group ($0), or $4000. This $4000 of basis is allocated proportionately among the assets received within the first exchange group in accordance with their fair market values: Computer Z's basis is $2571 ($4000 × $4500/$7000); printer Y's basis is $1429 ($4000 × $2500/$7000).

(B) The aggregate basis of the properties received in the second exchange group is the adjusted basis of the properties transferred within that exchange group ($1200), increased by the amount of gain recognized with respect to that exchange group ($0), increased by the amount of the exchange group surplus ($1200), and increased by the amount of excess liabilities assumed

allocated to that exchange group ($0), or $2400. This $2400 of basis is allocated proportionately among the assets received within the second exchange group in accordance with their fair market values: Real estate X's basis is $480 ($2400 × $1000/$5000); real estate W's basis is $1920 ($2400 × $4000/$5000).

(c) The basis of the property received in the third exchange group is the adjusted basis of the property transferred within that exchange group ($3300), increased by the amount of gain recognized with respect to that exchange group ($0), decreased by the amount of the exchange group deficiency ($500), and increased by the amount of excess liabilities assumed allocated to that exchange group ($0), or $2800. Because grader V was the only property received within the third exchange group, the entire basis of $2800 is allocated to grader V.

(D) Cash of $1800 is received within the residual group.

(E) The basis of the property received in the taxable exchange (truck T) is equal to its cost of $1700.

Example 4. (i) B exchanges computer A (asset class 00.12), automobile A (asset class 00.22) and truck A (asset class 00.241), with C for computer R (asset class 00.12), automobile R (asset class 00.22), truck R (asset class 00.241) and $400 cash. All properties transferred by either B or C were held for productive use in the respective transferor's business. Similarly, all properties to be received by either B or C will be held for productive use in the respective recipient's business. Automobile A, automobile R and truck R are each secured by a nonrecourse liability and are transferred subject to such liability. The adjusted basis, fair market value, and liability secured by each property, if any, are as follows:

	Adjusted basis	Fair market value	Liability
B transfers:			
Computer A	$800	$1,500	$0
Automobile A	900	2,500	500
Truck A	700	2,000	0
C transfers:			
Computer R	1,100	1,600	0
Automobile R	2,100	3,100	750
Truck R	600	1,400	250
Cash		400	

(ii) The tax treatment to B is as follows:

(A)(*1*) The first exchange group consists of computers A and R (both are within the same General Asset Class).

(*2*) The second exchange group consists of automobiles A and R (both are within the same General Asset Class).

(*3*) The third exchange group consists of trucks A and R (both are in the same General Asset Class).

(B) Under paragraph (b)(2)(ii) of this section, all liabilities assumed by B ($1000) are offset by all liabilities of which B is relieved ($500), resulting in excess liabilities assumed of $500. The excess liabilities assumed of $500 is allocated among the exchange groups in proportion to the fair market value of the properties received by B in the exchange groups as follows:

(*1*) $131 of excess liabilities assumed ($500 × $1600/$6100) is allocated to the first exchange group. The first exchange group has an exchange group deficiency of $31 because the fair market value of computer A ($1500) exceeds the fair market value of computer R less the excess liabilities assumed allocated to the exchange group ($1600-$131) by that amount.

(*2*) $254 of excess liabilities assumed ($500 × $3100/$6100) is allocated to the second exchange group. The second exchange group has an exchange group surplus of $346 because the fair market value of automobile R less the excess liabilities assumed allocated to the exchange group ($3100-$254) exceeds the fair market value of automobile A ($2500) by that amount.

(*3*) $115 of excess liabilities assumed ($500 × $1400/$6100) is allocated to the third exchange group. The third exchange group has an exchange group deficiency of $715 because the fair market value of truck A ($2000) exceeds the fair market value of truck R less the excess liabilities assumed allocated to the exchange group ($1400-$115) by that amount.

(*4*) The difference between the aggregate fair market value of the properties transferred in all of the exchange groups, $6000, and the aggregate fair market value of the properties received in all of the exchange groups (taking excess liabilities assumed into account), $5600, is $400. Therefore there is a residual group in that amount consisting of $400 cash received.

(C) B recognizes gain on the exchange as follows:

(*1*) With respect to the first exchange group, the amount of gain realized is the excess of the fair market value of computer A ($1500) over its adjusted basis ($800), or $700. The amount of gain recognized is the lesser of the gain realized ($700) and the exchange group deficiency ($31), or $31.

(*2*) With respect to the second exchange group, the amount of gain realized is the excess of the fair market value of automobile A ($2500) over its adjusted basis ($900), or $1600.

The amount of gain recognized is the lesser of the gain realized ($1600) and the exchange group deficiency ($0), or $0.

(*3*) With respect to the third exchange group, the amount of gain realized is the excess of the fair market value of truck A ($2000) over its adjusted basis ($700), or $1300. The amount of gain recognized is the lesser of gain realized ($1300) and the exchange group deficiency ($715), or $715.

(*4*) No property transferred by B was allocated to the residual group. Therefore, B does not recognize gain or loss with respect to the residual group.

(D) The total amount of gain recognized by B in the exchange is the sum of the gains recognized under section 1031 with respect to each exchange group ($31 + $0 + $715), or $746.

(E) the bases of the property received by B in the exchange (computer R, automobile R, and truck R) are determined in the following manner:

(*1*) The basis of the property received in the first exchange group is the adjusted basis of the property transferred within that exchange group ($800), increased by the amount of gain recognized with respect to that exchange group ($31), decreased by the amount of the exchange group deficiency ($31), and increased by the amount of excess liabilities assumed allocated to that exchange group ($131), or $931. Because computer R was the only property received within the first exchange group, the entire basis of $931 is allocated to computer R.

(*2*) The basis of the property received in the second exchange group is the adjusted basis of the property transferred within that exchange group ($900), increased by the amount of gain recognized with respect to that exchange group ($0), increased by the amount of the exchange group surplus ($346), and increased by the amount of excess liabilities assumed allocated to that exchange group ($254), or $1500. Because automobile R was the only property received within the second exchange group, the entire basis of $1500 is allocated to automobile R.

(*3*) The basis of the property received in the third exchange group is the adjusted basis of the property transferred within that exchange group ($700), increased by the amount of gain recognized with respect to that exchange group ($715), decreased by the amount of the exchange group deficiency ($715), and increased by the amount of excess liabilities assumed allocated to that exchange group ($115), or $815. Because truck R was the only property received within the third exchange group, the entire basis of $815 is allocated to truck R.

(F) Cash of $400 is also received by B.

(iii) The tax treatment to C is as follows:

(A) (*1*) The first exchange group consists of computers R and A (both are within the same General Asset Class).

(*2*) The second exchange group consists of automobiles R and A (both are within the same General Asset Class).

(*3*) The third exchange group consists of trucks R and A (both are in the same General Asset Class).

(B) Under paragraph (b)(2)(ii) of this section, all liabilities of which C is relieved ($1000) are offset by all liabilities assumed by C ($500), resulting in excess liabilities relieved of $500. This excess liabilities relieved is treated as cash received by C.

(*1*) The first exchange group has an exchange group deficiency of $100 because the fair market value of computer R ($1600) exceeds the fair market value of computer A ($1500) by that amount.

(*2*) The second exchange group has an exchange group deficiency of $600 because the fair market value of automobile R ($3100) exceeds the fair market value of automobile A ($2500) by that amount.

(*3*) The third exchange group has an exchange group surplus of $600 because the fair market value of truck A ($2000) exceeds the fair market value of truck R ($1400) by that amount.

(*4*) The difference between the aggregate fair market value of the properties transferred by C in all of the exchange groups, $6100, and the aggregate fair market value of the properties received by C in all of the exchange groups, $6000, is $100. Therefore, there is a residual group in that amount, consisting of excess liabilities relieved of $100, which is treated as cash received by C.

(*5*) The $400 cash paid by C and $400 of the excess liabilities relieved which is treated as cash received by C are not within the exchange groups of the residual group.

(C) C recognizes gain on the exchange as follows:

(*1*) With respect to the first exchange group, the amount of gain realized is the excess of the fair market value of computer R ($1600) over its adjusted basis ($1100), or $500. The amount of gain recognized is the lesser of the gain realized ($500) and the exchange group deficiency ($100), or $100.

(*2*) With respect to the second exchange group, the amount of gain realized is the excess of the fair market value of automobile R ($3100) over its adjusted basis ($2100), or $1000. The amount of gain recognized is the lesser of the gain realized ($1000) and the exchange group deficiency ($600), or $600.

(*3*) With respect to the third exchange group, the amount of gain realized is the excess of the fair market value of truck R ($1400) over its adjusted basis ($600), or $800. The amount of gain recognized is the lesser of gain realized ($800) and the exchange group deficiency ($0), or $0.

(*4*) No property transferred by C was allocated to the residual group. Therefore, C does not recognize any gain with respect to the residual group.

(D) The total amount of gain recognized by C in the exchange is the sum of the gains recognized under section 1031 with respect to each exchange group ($100 + $600 + $0), or $700.

(E) The bases of the properties received by C in the exchange (computer A, automobile A, and truck A) are determined in the following manner:

(*1*) The basis of the property received in the first exchange group is the adjusted basis of the property transferred within that exchange group ($1100), increased by the amount of gain recognized with respect to that exchange group ($100), decreased by the amount of the exchange group deficiency ($100), and increased by the amount of excess liabilities assumed allocated to that exchange group ($0), or $1100. Because computer A was the only property received within the first exchange group, the entire basis of $1100 is allocated to computer A.

(*2*) The basis of the property received in the second exchange group is the adjusted basis of the property transferred within that exchange group ($2100), increased by the amount of gain recognized with respect to that exchange group ($600), decreased by the amount of the exchange group deficiency ($600), and increased by the amount of excess liabilities assumed allocated to that exchange group ($0), or $2100. Because automobile A was the only property received within the second exchange group, the entire basis of $2100 is allocated to automobile A.

(*3*) The basis of the property received in the third exchange group is the adjusted basis of the property transferred within that exchange group ($600), increased by the amount of gain recognized with respect to that exchange group ($0), increased by the amount of the exchange group surplus ($600), and increased by the amount of excess liabilities assumed allocated to that exchange group ($0), or $1200. Because truck A was the only property received within the third exchange group, the entire basis of $1200 is allocated to truck A.

Example 5. (i) U exchanges real estate A, real estate B, and grader A (NAICS code 333120) with V for real estate R and railroad car R (General Asset Class 00.25). All properties transferred by either

U or V were held for productive use in the respective transferor's business. Similarly, all properties to be received by either U or V will be held for productive use in the respective recipient's business. Real estate R is secured by a recourse liability and is transferred subject to that liability. The adjusted basis, fair market value, and liability secured by each property, if any, are as follows:

	Adjusted basis	Fair market value	Liability
U Transfers:			
Real Estate A	$2000	$5000	
Real Estate B	8000	13,500	
Grader A	500	2000	
V Transfers:			
Real Estate R	$20,000	$26,500	$7000
Railroad car R	1200	1000	

(ii) The tax treatment to U is as follows:
(A) The exchange group consists of real estate A, real estate B, and real estate R.

(B) Under paragraph (b)(2)(ii) of this section, all liabilities assumed by U ($7000) are excess liabilities assumed. The excess liabilities assumed of $7000 is allocated to the exchange group.

(*1*) The exchange group has an exchange group surplus of $1000 because the fair market value of real estate R less the excess liabilities assumed allocated to the exchange group ($26,500-$7000) exceeds the aggregate fair market value of real estate A and B ($18,500) by that amount.

(*2*) The difference between the aggregate fair market value of the properties received in the exchange group (taking excess liabilities assumed into account), $19,500, and the aggregate fair market value of the properties transferred in the exchange group, $18,500, is $1000. Therefore, there is a residual group in that amount consisting of $1000 (or 50 percent of the fair market value) of grader A.

(*3*) The transaction also includes a taxable exchange of the 50 percent portion of grader A not allocated to the residual group (which is not of a like kind or like class to any property received by U in the exchange) for railroad car R (which is not of a like kind or like class to any property transferred by U in the exchange).

(C) U recognizes gain on the exchange as follows:

(*1*) With respect to the exchange group, the amount of the gain realized is the excess of the aggregate fair market value of real estate A and B ($18,500) over the aggregate adjusted basis ($10,000), or $8500. The amount of the gain recognized is the lesser of the gain realized ($8500) and the exchange group deficiency ($0), or $0.

(*2*) With respect to the residual group, the amount of gain realized and recognized is the excess of the fair market value of the 50 percent portion of grader A that is allocated to the residual group ($1000) over its adjusted basis ($250), or $750.

(*3*) With respect to the taxable exchange of the 50 percent portion of grader A not allocated to the residual group for railroad car R, gain of $750 is realized and recognized by U (amount realized of $1000 (the fair market value of railroad car R) less the adjusted basis of the 50 percent portion of grader A not allocated to the residual group ($250)).

(D) The total amount of gain recognized by U in the transaction is the sum of the gain recognized under section 1031 with respect to the exchange group ($0), any gain recognized with respect to the residual group ($750), and any gain recognized with respect to property transferred that is not in the exchange group or the residual group ($750), or $1500.

(E) The bases of the property received by U in the exchange (real estate R and railroad car R) are determined in the following manner:

(*1*) The basis of the property received in the exchange group is the aggregate adjusted basis of the property transferred within that exchange group ($10,000), increased by the amount of gain recognized with respect to that exchange group ($0), increased by the amount of the exchange group surplus ($1000), and increased by the amount of excess liabilities assumed allocated to that exchange group ($7000), or $18,000. Because real estate R is the only property received within the exchange group, the entire basis of $18,000 is allocated to real estate R.

(*2*) The basis of railroad car R is equal to its cost of $1000.

(iii) The tax treatment to V is as follows:

(A) The exchange group consists of real estate R, real estate A, and real estate B.

(B) Under paragraph (b)(2)(ii) of this section, the liabilities of which V is relieved ($7000) results in excess liabilities relieved of $7000 and is treated as cash received by V.

(*1*) The exchange group has an exchange group deficiency of $8000 because the fair market value of real estate R ($26,500) exceeds the aggregate fair market value of real estate A and B ($18,500) by that amount.

(*2*) The difference between the aggregate fair market value of the properties transferred by V in the exchange group, $26,500, and the aggregate fair market value of the properties received by V in the exchange group, $18,500, is $8000. Therefore, there is a residual group in that amount, consisting of the excess liabilities relieved of $7000, which is treated as cash received by V, and $1000 (or 50 percent of the fair market value) of grader A.

(*3*) The transaction also includes a taxable exchange of railroad car R (which is not of a like kind or like class to any property received by V in the exchange) for the 50 percent portion of grader A (which is not of a like kind or like class to any property transferred by V in the exchange) not allocated to the residual group.

(C) V recognizes gain on the exchange as follows:

(*1*) With respect to the exchange group, the amount of the gain realized is the excess of the fair market value of real estate R ($26,500) over its adjusted basis ($20,000), or $6500. The amount of the gain recognized is the lesser of the gain realized ($6500) and the exchange group deficiency ($8000), or $6500.

(*2*) No property transferred by V was allocated to the residual group. Therefore, V does not recognize gain or loss with respect to the residual group.

(*3*) With respect to the taxable exchange of railroad car R for the 50 percent portion of grader A not allocated to the exchange group or the residual group, a loss is realized and recognized in the amount of $200 (the excess of the $1200 adjusted basis of railroad car R over the amount realized of $1000 (fair market value of the 50 percent portion of grader A)).

(D) The basis of the property received by V in the exchange (real estate A, real estate B, and grader A) are determined in the following manner:

(*1*) The basis of the property received in the exchange group is the adjusted basis of the property transferred within that exchange group ($20,000), increased by the amount of gain recognized with respect to that exchange group ($6500), and decreased by the amount of the exchange group deficiency ($8000), or $18,500. This $18,500 of basis is allocated proportionately among the assets received within the exchange group in accordance with their fair market values: real estate A's basis is $5000 ($18,500 × $5000/$18,500); real estate B's basis is $13,500 ($18,500 × $13,500/$18,500).

(*2*) The basis of grader A is $2000.

(e) ***Effective date.*** Section 1.1031 (j)-1 is effective for exchanges occurring on or after April 11, 1991.

[T.D. 8343, 56 FR 14855, Apr. 12, 1991, as amended by T.D. 8858, 65 FR 1237, Jan. 7, 2000; T.D. 8940, 66 FR 9929, Feb. 13, 2001; T.D. 9202, 70 FR 28820, May 19, 2005]

§ 1.1031(k)-1 Treatment of deferred exchanges.

(a) ***Overview.*** This section provides rules for the application of section 1031 and the regulations thereunder in the case of a "deferred exchange." For purposes of section 1031 and this section, a deferred exchange is defined as an exchange in which, pursuant to an agreement, the taxpayer transfers property held for productive use in a trade or business or for investment (the "relinquished property") and subsequently receives property to be held either for productive use in a trade or business or for investment (the "replacement property"). In the case of a deferred exchange, if the requirements set forth in paragraphs (b), (c), and (d) of this section (relating to identification and receipt of replacement property) are not satisfied, the replacement property received by the taxpayer will be treated as property which is not of a like kind to the relinquished property. In order to constitute a deferred exchange, the transaction must be an exchange (i.e., a transfer of property for property, as distinguished from a transfer of property for money). For example, a sale of property followed by a purchase of property of a like kind does not qualify for nonrecognition of gain or loss under section 1031 regardless of whether the identification and receipt requirements of section 1031(a)(3) and paragraphs (b), (c), and (d) of this section are satisfied. The transfer of relinquished property in a deferred exchange is not within the provisions of section 1031(a) if, as part of the consideration, the taxpayer receives money or property which does not meet the requirements of section 1031(a), but the transfer, if otherwise qualified, will be within the provisions of either section 1031 (b) or (c). See § 1.1031(a)-1(a)(2). In addition, in the case of a transfer of relinquished property in a deferred exchange, gain or loss may be recognized if the taxpayer actually or constructively receives money or property which does not meet the requirements of section 1031(a) before the taxpayer actually receives like-kind replacement property. If the taxpayer actually or constructively receives money or property which does not meet the requirements of section 1031(a) in the full amount of the consideration for the relinquished property, the transaction will constitute a sale, and not a deferred exchange, even though the taxpayer may ultimately receive like-kind replacement property. For purposes of this section, property which does not meet the requirements of section 1031(a) (whether by being described in section 1031(a)(2) or otherwise) is referred to as "other property." For rules regarding actual and constructive receipt, and safe harbors therefrom, see paragraphs (f) and (g), respectively, of this section. For rules regarding the determination of gain or loss recognized and the basis of property received in a deferred exchange, see paragraph (j) of this section.

(b) ***Identification and receipt requirements*** —

(1) ***In general.*** In the case of a deferred exchange, any replacement property received by the taxpayer will be treated as property which is not of a like kind to the relinquished property if—

(i) The replacement property is not "identified" before the end of the "identification period," or

(ii) The identified replacement property is not received before the end of the "exchange period."

(2) ***Identification period and exchange period.***

(i) The identification period begins on the date the taxpayer transfers the relinquished property and ends at midnight on the 45th day thereafter.

(ii) The exchange period begins on the date the taxpayer transfers the relinquished property and ends at midnight on the earlier of the 180th day thereafter or the due date (including extensions) for the taxpayer's return of the tax imposed by chapter 1 of subtitle A of the Code for the taxable year in which the transfer of the relinquished property occurs.

(iii) If, as part of the same deferred exchange, the taxpayer transfers more than one relinquished property and the relinquished properties are transferred on different dates, the identification period and the exchange period are determined by reference to the earliest date on which any of the properties are transferred.

(iv) For purposes of this paragraph (b)(2), property is transferred when the property is disposed of within the meaning of section 1001(a).

(3) ***Example.*** This paragraph (b) may be illustrated by the following example.

> *Example:* (i) M is a corporation that files its Federal income tax return on a calendar year basis. M and C enter into an agreement for an exchange of property that requires M to transfer property X to C. Under the agreement, M is to identify like-kind replacement property which C is required to purchase and to transfer to M. M transfers property X to C on November 16, 1992.
> (ii) The identification period ends at midnight on December 31, 1992, the day which is 45 days after the date of transfer of property X. The exchange period ends at midnight on March 15, 1993, the due date for M's Federal income tax return for the taxable year in which M transferred property X. However, if M is allowed the automatic six-month extension for filing its tax return, the exchange period ends at midnight on May 15, 1993, the day which is 180 days after the date of transfer of property X.

(c) ***Identification of replacement property before the end of the identification period*** —

(1) ***In general.*** For purposes of paragraph (b)(1)(i) of this section (relating to the identification requirement), replacement property is identified before the end of the identification period only if the requirements of this paragraph (c) are satisfied with respect to the replacement property. However, any replacement property that is received by the taxpayer before the end of the identification period will in all events be treated as identified before the end of the identification period.

(2) ***Manner of identifying replacement property.*** Replacement property is identified only if it is designated as replacement property in a written document signed by the taxpayer and hand delivered, mailed, telecopied, or otherwise sent before the end of the identification period to either—

(i) The person obligated to transfer the replacement property to the taxpayer (regardless of whether that person is a disqualified person as defined in paragraph (k) of this section); or

(ii) Any other person involved in the exchange other than the taxpayer or a disqualified person (as defined in paragraph (k) of this section).

Examples of persons involved in the exchange include any of the parties to the exchange, an intermediary, an escrow agent, and a title company. An identification of replacement property made in a written agreement for the exchange of properties signed by all parties thereto before the end of the identification period will be treated as satisfying the requirements of this paragraph (c)(2).

(3) ***Description of replacement property.*** Replacement property is identified only if it is unambiguously described in the written document or agreement. Real property generally is unambiguously described if it is described by a legal description, street address, or distinguishable name (e.g., the Mayfair Apartment Building). Personal property generally is unambiguously described if it is described by a specific description of the particular type of property. For example, a truck generally is unambigously described if it is described by a specific make, model, and year.

(4) ***Alternative and multiple properties.***

(i) The taxpayer may identify more than one replacement property. Regardless of the number of relinguished properties transferred by the taxpayer as part of the same deferred exchange, the maximum number of replacement properties that the taxpayer may identify is—

(A) Three properties without regard to the fair market values of the properties (the "3-property rule"), or

(B) Any number of properties as long as their aggregate fair market value as of the end of the identification period does not exceed 200 percent of the aggregate fair market value of all the relinguished properties as of the date the relinguished properties were transferred by the taxpayer (the "200-percent rule").

(ii) If, as of the end of the identification period, the taxpayer has identified more properties as replacement properties than permitted by paragraph (c)(4)(i) of this section, the taxpayer is treated as if no replacement property had been identified. The preceding sentence will not apply, however, and an identification satisfying the requirements of paragraph (c)(4)(i) of this section will be considered made, with respect to—

(A) Any replacement property received by the taxpayer before the end of the identification period, and

(B) Any replacement property identified before the end of the identification period and received before the end of the exchange period, but only if the taxpayer receives before the end of the exchange period identified replacement property the fair market vlaue of which is at least 95 percent of the aggregate fair market value of all identified replacement properties (the "95-percent rule").

For this purpose, the fair market value of each identified replacement property is determined as of the earlier of the date the property is received by the taxpayer or the last day of the exchange period.

(iii) For purposes of applying the 3-property rule, the 200-percent rule, and the 95-percent rule, all identifications of replacement property, other than identifications of replacement property that have been revoked in the manner provided in paragraph (c)(6) of this section, are taken into account. For example, if, in a deferred exchange, B transfers property X with a fair market value of $100,000 to C and B receives like-kind property Y with a fair market value of $50,000 before the end of the identification period, under paragraph (c)(1) of this section, property Y is treated as identified by reason of being received before the end of the identification period. Thus, under paragraph (c)(4)(i) of this section, B may identify either two additional replacement properties of any fair market value or any number of additional replacement properties as long as the aggregate fair market value of the additional replacement properties does not exceed $150,000.

(5) ***Incidental property disregarded.***

(i) Solely for purposes of applying this paragraph (c), property that is incidental to a larger item of property is not treated as property that is separate from the larger item of property. Property is incidental to a larger item of property if—

(A) In standard commercial transactions, the property is typically transferred together with the larger item of property, and

(B) The aggregate fair market value of all of the incidental property does not exceed 15 percent of the aggregate fair market value of the larger item of property.

(ii) This paragraph (c)(5) may be illustrated by the following examples.

Example 1. For purposes of paragraph (c) of this section, a spare tire and tool kit will not be treated as separate property from a truck with a fair market value of $10,000, if the aggregate fair market value of the spare tire and tool kit does not exceed $1,500. For purposes of the 3-property rule, the truck, spare tire, and tool kit are treated as 1 property. Moreover, for purposes of paragraph (c)(3) of this section (relating to the description of replacement property), the truck, spare tire, and tool kit are all considered to be unambiguously described if the make, model, and year of the truck are specified, even if no reference is made to the spare tire and tool kit.

Example 2. For purposes of paragraph (c) of this section, furniture, laundry machines, and other miscellaneous items of personal property will not be treated as separate property from an apartment building with a fair market value of $1,000,000, if the aggregate fair market value of the furniture, laundry machines, and other personal property does not exceed $150,000. For purposes of the 3-property rule, the apartment building, furniture, laundry machines, and other personal property are treated as 1 property. Moreover, for purposes of paragraph (c)(3) of this section (relating to the description of replacement property), the apartment building, furniture, laundry machines, and other personal property are all considered to be unambiguously described if the legal description, street address, or distinguishable name of the apartment building is specified, even if no reference is made to the furniture, laundry machines, and other personal property.

(6) ***Revocation of identification.*** An identification of replacement property may be revoked at any time before the end of the identification period. An identification of replacement property is revoked only if the revocation is made in a written document signed by the taxpayer and hand delivered, mailed, telecopied, or othewise sent before the end of the identification period to the person to whom the identification of the replacement property was sent. An identification of replacement property that is made in a written agreement for the exchange of properties is treated as revoked only if the revocation is made in a written amendment to the agreement or in a written document signed by the taxpayer and hand delivered, mailed, telecopied, or othewise sent before the end of the identification period to all of the parties to the agreement.

(7) ***Examples.*** This paragraph (c) may be illustrated by the following examples. Unless otherwise provided in an example, the following facts are assumed: B, a calendar year taxpayer, and C agree to enter into a deferred exchange. Pursuant to their agreement, B transfers real property X to C on May 17, 1991. Real property X, which has been held by B for investment, is unencumbered and has a fair market value on May 17, 1991, of $100,000. On or before July 1, 1991 (the end of the identification period), B is to identify replacement property that is of a like kind to real property X. On or before November 13, 1991 (the end of the exchange period), C is required to purchase the property identified by B and to transfer that property to B. To the extent the fair market value of the

replacement property transferred to B is greater or less than the fair market value of real property X, either B or C, as applicable, will make up the difference by paying cash to the other party after the date the replacement property is received by B. No replacement property is identified in the agreement. When subsequently identified, the replacement property is described by legal description and is of a like kind to real property X (determined without regard to section 1031(a)(3) and this section). B intends to hold the replacement property received for investment.

Example 1. (i) On July 2, 1991, B identifies real property E as replacement property by designating real property E as replacement property in a written document signed by B and personally delivered to C.
(ii) Because the identification was made after the end of the identification period, pursuant to paragraph (b)(1)(i) of this section (relating to the identification requirement), real property E is treated as property which is not of a like kind to real property X.

Example 2. (i) C is a corporation of which 20 percent of the outstanding stock is owned by B. On July 1, 1991, B identifies real property F as replacement property by designating real property F as replacement property in a written document signed by B and mailed to C.
(ii) Because C is the person obligated to transfer the replacement property to B, real property F is identified before the end of the identification period. The fact that C is a "disqualified person" as defined in paragraph (k) of this section does not change this result.

(iii) Real property F would also have been treated as identified before the end of the identification period if, instead of sending the identification to C, B had designated real property F as replacement property in a written agreement for the exchange of properties signed by all parties thereto on or before July 1, 1991.

Example 3. (i) On June 3, 1991, B identifies the replacement property as "unimproved land located in Hood County with a fair market value not to exceed $100,000." The designation is made in a written document signed by B and personally delivered to C. On July 8, 1991, B and C agree that real property G is the property described in the June 3, 1991 document.
(ii) Because real property G was not unambiguously described before the end of the identification period, no replacement property is identified before the end of the identification period.

Example 4. (i) On June 28, 1991, B identifies real properties H, J, and K as replacement properties by designating these properties as replacement properties in a written document signed by B and personally delivered to C. The written document provides that by August 1, 1991, B will orally inform C which of the identified properties C is to transfer to B. As of July 1, 1991, the fair market values of real properties H, J, and K are $75,000, $100,000, and $125,000, respectively.

(ii) Because B did not identify more than three properties as replacement properties, the requirements of the 3-property rule are satisfied, and real properties H, J, and K are all identified before the end of the identification period.

Example 5. (i) On May 17, 1991, B identifies real properties L, M, N, and P as replacement properties by designating these properties as replacement properties in a written document signed by B and personally delivered to C. The written document provides that by July 2, 1991, B will orally inform C which of the identified properties C is to transfer to B. As of July 1, 1991, the fair market values of real properties L, M, N, and P are $30,000, $40,000, $50,000, and $60,000, respectively.
(ii) Although B identified more than three properties as replacement properties, the aggregate fair market value of the identified properties as of the end of the identification period ($180,000) did not exceed 200 percent of the aggregate fair market value of real property X (200% × $100,000 = $200,000). Therefore, the requirements of the 200-percent rule are satisfied, and real properties L, M, N, and P are all identified before the end of the identification period.

Example 6. (i) On June 21, 1991, B identifies real properties Q, R, and S as replacement properties by designating these properties as replacement properties in a written document signed by B and mailed to C. On June 24, 1991, B identifies real properties T and U as replacement properties in a written document signed by B and mailed to C. On June 28, 1991, B revokes the identification of real properties Q and R in a written document signed by B and personally delivered to C.
(ii) B has revoked the identification of real properties Q and R in the manner provided by paragraph (c)(6) of this section. Identifications of replacement property that have been revoked in the manner provided by paragraph (c)(6) of this section are not taken into account for purposes of applying the 3-property rule. Thus, as of June 28, 1991, B has identified only replacement properties S, T, and U for purposes of the 3-property rule. Because B did not identify more than three properties as replacement properties for purposes of the 3-property rule, the requirements of that rule are satisfied, and real properties S, T, and U are all identified before the end of the identification period.

Example 7. (i) On May 20, 1991, B identifies real properties V and W as replacement properties by designating these properties as replacement properties in a written document signed by B and personally delivered to C. On June 4, 1991, B identifies real properties Y and Z as replacement properties in the same manner. On June 5, 1991, B telephones C and orally revokes the identification of real properties V and W. As of July 1, 1991, the fair market values of real properties V, W, Y, and Z are $50,000, $70,000, $90,000, and $100,000, respectively. On July 31, 1991, C purchases real property Y and Z and transfers them to B.

(ii) Pursuant to paragraph (c)(6) of this section (relating to revocation of identification), the oral revocation of the identification of real properties V and W is invalid. Thus, the identification of real properties V and W is taken into account for purposes of determining whether the requirements of paragraph (c)(4) of this section (relating to the identification of alternative and multiple properties) are satisfied. Because B identified more than three properties and the aggregate fair market value of the identified properties as of the end of the identification period ($310,000) exceeds 200 percent of the fair market value of real property X (200% × $100,000 = $200,000), the requirements of paragraph (c)(4) of this section are not satisfied, and B is treated as if B did not identify any replacement property.

(d) ***Receipt of identified replacement property*** —

(1) ***In general.*** For purposes of paragraph (b)(1)(ii) of this section (relating to the receipt requirement), the identified replacement property is received before the end of the exchange period only if the requriements of this paragraph (d) are satisfied with respect to the replacement property. In the case of a deferred exchange, the identified replacement property is received before the end of the exchange period if—

(i) The taxpayer receives the replacement property before the end of the exchange period, and

(ii) The replacement property received is substantially the same property as identified.

If the taxpayer has identified more than one replacement property, section 1031(a)(3)(B) and this paragraph (d) are applied separately to each replacement property.

(2) ***Examples.*** This paragraph (d) may be illustrated by the following examples. The following facts are assumed: B, a calendar year taxpayer, and C agree to enter into a deferred exchange. Pursuant to their agreement, B transfers real property X to C on May 17, 1991. Real property X, which has been held by B for investment, is unencumbered and has a fair market value on May 17, 1991, of $100,000. On or before July 1, 1991 (the end of the identification period), B is to identify replacement property that is of a like kind to real property X. On or before November 13, 1991 (the end of the exchange period), C is required to purchase the property identified by B and to transfer that property to B. To the extent the fair market value of the replacement property transferred to B is greater or less than the fair market value of real property X, either B or C, as applicable, will make up the difference by paying cash to the other party after the date the replacement property is received by B. The replacement property is identified in a manner that satisfies paragraph (c) of this section (relating to identification of replacement property) and is of a like kind to real property X (determined without regard to section 1031(a)(3) and this section). B intends to hold any replacement property received for investment.

Example 1. (i) In the agreement, B identifies real properties J, K, and L as replacement properties. The agreement provides that by July 26, 1991, B will orally inform C which of the properties C is to transfer to B.
(ii) As of July 1, 1991, the fair market values of real properties J, K, and L are $75,000, $100,000, and $125,000, respectively. On July 26, 1991, B instructs C to acquire real property K. On October 31, 1991, C purchases real property K for $100,000 and transfers the property to B.

(iii) Because real property K was identified before the end of the identification period and was received before the end of the exchange period, the identification and receipt requirements of section 1031(a)(3) and this section are satisfied with respect to real property K.

Example 2. (i) In the agreement, B identifies real property P as replacement property. Real property P consists of two acres of unimproved land. On October 15, 1991, the owner of real property P erects a fence on the property. On November 1, 1991, C purchases real property P and transfers it to B.
(ii) The erection of the fence on real property P subsequent to its identification did not alter the basic nature or character of real property P as unimproved land. B is considered to have received substantially the same property as identified.

Example 3. (i) In the agreement, B identifies real property Q as replacement property. Real property Q consists of a barn on two acres of land and has a fair market value of $250,000 ($187,500 for the barn and underlying land and $62,500 for the remaining land). As of July 26, 1991, real property Q remains unchanged and has a fair market value of $250,000. On that date, at B's direction, C purchases the barn and underlying land for $187,500 and transfers it to B, and B pays $62,500 to C.
(ii) The barn and underlying land differ in basic nature or character from real property Q as a whole, B is not considered to have received substantially the same property as identified.

Example 4. (i) In the agreement, B identifies real property R as replacement property. Real property R consists of two acres of unimproved land and has a fair market value of $250,000. As of October 3, 1991, real property R remains unimproved and has a fair market value of $250,000. On that date, at B's direction, C purchases $1^1/_2$ acres of real property R for $187,500 and transfers it to B, and B pays $62,500 to C.
(ii) The portion of real property R that B received does not differ from the basic nature or character of real property R as a whole. Moreover, the fair market value of the portion of real property R that B received ($187,500) is 75 percent of the fair market value of real property R as of the date of receipt. Accordingly, B is considered to have received substantially the same property as identified.

(e) ***Special rules for identification and receipt of replacement property to be produced*** —

(1) ***In general.*** A transfer of relinquished property in a deferred exchange will not fail to qualify for nonrecognition of gain or loss under section 1031 merely because the replacement property is not in existence or is being produced at the time the property is identified as replacement property. For purposes of this paragraph (e), the terms “produced” and “production” have the same meanings as provided in section 263A(g)(1) and the regulations thereunder.

(2) ***Identification of replacement property to be produced.***

(i) In the case of replacement property that is to be produced, the replacement property must be identified as provided in paragraph (c) of this section (relating to identification of replacement property). For example, if the identified replacement property consists of improved real property where the improvements are to be constructed, the description of the replacement property satisfies the requirements of paragraph (c)(3) of this section (relating to description of replacement property) if a legal description is provided for the underlying land and as much detail is provided regarding construction of the improvements as is practicable at the time the identification is made.

(ii) For purposes of paragraphs (c)(4)(i)(B) and (c)(5) of this section (relating to the 200-percent rule and incidental property), the fair market value of replacement property that is to be produced is its estimated fair market value as of the date it is expected to be received by the taxpayer.

(3) ***Receipt of replacement property to be produced.***

(i) For purposes of paragraph (d)(1)(ii) of this section (relating to receipt of the identified replacement property), in determining whether the replacement property received by the taxpayer is substantially the same property as identified where the identified replacement property is property to be produced, variations due to usual or typical production changes are not taken into account. However, if substantial changes are made in the property to be produced, the replacement property received will not be considered to be substantially the same property as identified.

(ii) If the identified replacement property is personal property to be produced, the replacement property received will not be considered to be substantially the same property as identified unless production of the replacement property received is completed on or before the date the property is received by the taxpayer.

(iii) If the identified replacement property is real property to be produced and the production of the property is not completed on or before the date the taxpayer receives the property, the property received will be considered to be substantially the same property as identified only if, had production been completed on or before the date the taxpayer receives the replacement property, the property received would have been considered to be substantially the same property as identified. Even so, the property received is considered to be substantially the same property as identified only to the extent the property received constitutes real property under local law.

(4) ***Additional rules.*** The transfer of relinquished property is not within the provisions of section 1031(a) if the relinquished property is transferred in exchange for services (including production services). Thus, any additional production occurring with respect to the replacement property after the property is received by the taxpayer will not be treated as the receipt of property of a like kind.

(5) ***Example.*** This paragraph (e) may be illustrated by the following example.

> *Example:* (i) B, a calendar year taxpayer, and C agree to enter into a deferred exchange. Pursuant to their agreement, B transfers improved real property X and personal property Y to C on May 17, 1991. On or before November 13, 1991 (the end of the exchange period), C is required to transfer to B real property M, on which C is constructing improvements, and personal property N, which C is producing. C is obligated to complete the improvements and

production regardless of when properties M and N are transferred to B. Properties M and N are identified in a manner that satisfies paragraphs (c) (relating to identification of replacement property) and (e)(2) of this section. In addition, properties M and N are of a like kind, respectively, to real property X and personal property Y (determined without regard to section 1031(a)(3) and this section). On November 13, 1991, when construction of the improvements to property M is 20 percent completed and the production of property N is 90 percent completed, C transfers to B property M and property N. If construction of the improvements had been completed, property M would have been considered to be substantially the same property as identified. Under local law, property M constitutes real property to the extent of the underlying land and the 20 percent of the construction that is completed.
(ii) Because property N is personal property to be produced and production of property N is not completed before the date the property is received by B, property N is not considered to be substantially the same property as identified and is treated as property which is not of a like kind to property Y.

(iii) Property M is considered to be substantially the same property as identified to the extent of the underlying land and the 20 percent of the construction that is completed when property M is received by B. However, any additional construction performed by C with respect to property M after November 13, 1991, is not treated as the receipt of property of a like kind.

(f) ***Receipt of money or other property*** —

(1) ***In general.*** A transfer of relinquished property in a deferred exchange is not within the provisions of section 1031(a) if, as part of the consideration, the taxpayer receives money or other property. However, such a transfer, if otherwise qualified, will be within the provisions of either section 1031 (b) or (c). See § 1.1031(a)-1(a)(2). In addition, in the case of a transfer of relinquished property in a deferred exchange, gain or loss may be recognized if the taxpayer actually or constructively receives money or other property before the taxpayer actually receives like-kind replacement property. If the taxpayer actually or constructively receives money or other property in the full amount of the consideration for the relinquished property before the taxpayer actually receives like-kind replacement property, the transaction will constitute a sale and not a deferred exchange, even though the taxpayer may ultimately receive like-kind replacement property.

(2) ***Actual and constructive receipt.*** Except as provided in paragraph (g) of this section (relating to safe harbors), for purposes of section 1031 and this section, the determination of whether (or the extent to which) the taxpayer is in actual or constructive receipt of money or other property before the taxpayer actually receives like-kind replacement property is made under the general rules concerning actual and constructive receipt and without regard to the taxpayer's method of accounting. The taxpayer is in actual receipt of money or property at the time the taxpayer actually receives the money or property or receives the economic benefit of the money or property. The taxpayer is in constructive receipt of money or property at the time the money or property is credited to the taxpayer's account, set apart for the taxpayer, or otherwise made available so that the taxpayer may draw upon it at any time or so that the taxpayer can draw upon it if notice of intention to draw is given. Although the taxpayer is not in constructive receipt of money or property if the taxpayer's

control of its receipt is subject to substantial limitations or restrictions, the taxpayer is in constructive receipt of the money or property at the time the limitations or restrictions lapse, expire, or are waived. In addition, actual or constructive receipt of money or property by an agent of the taxpayer (determined without regard to paragraph (k) of this section) is actual or constructive receipt by the taxpayer.

(3) ***Example.*** This paragraph (f) may be illustrated by the following example.

> *Example:* (i) B, a calendar year taxpayer, and C agree to enter into a deferred exchange. Pursuant to the agreement, on May 17, 1991, B transfers real property X to C. Real property X, which has been held by B for investment, is unencumbered and has a fair market value on May 17, 1991, of $100,000. On or before July 1, 1991 (the end of the identification period), B is to identify replacement property that is of a like kind to real property X. On or before November 13, 1991 (the end of the exchange period), C is required to purchase the property identified by B and to transfer that property to B. At any time after May 17, 1991, and before C has purchased the replacement property, B has the right, upon notice, to demand that C pay $100,000 in lieu of acquiring and transferring the replacement property. Pursuant to the agreement, B identifies replacement property, and C purchases the replacement property and transfers it to B.
> (ii) Under the agreement, B has the unrestricted right to demand the payment of $100,000 as of May 17, 1991. B is therefore in constructive receipt of $100,000 on that date. Because B is in constructive receipt of money in the full amount of the consideration for the relinquished property before B actually receives the like-kind replacement property, the transaction constitutes a sale, and the transfer of real property X does not qualify for nonrecognition of gain or loss under section 1031. B is treated as if B received the $100,000 in consideration for the sale of real property X and then purchased the like-kind replacement property.
>
> (iii) If B's right to demand payment of the $100,000 were subject to a substantial limitation or restriction (e.g., the agreement provided that B had no right to demand payment before November 14, 1991 (the end of the exchange period)), then, for purposes of this section, B would not be in actual or constructive receipt of the money unless (or until) the limitation or restriction lapsed, expired, or was waived.

(g) ***Safe harbors*** —

(1) ***In general.*** Paragraphs (g)(2) through (g)(5) of this section set forth four safe harbors the use of which will result in a determination that the taxpayer is not in actual or constructive receipt of money or other property for purposes of section 1031 and this section. More than one safe harbor can be used in the same deferred exchange, but the terms and conditions of each must be separately satisfied. For purposes of the safe harbor rules, the term “taxpayer” does not include a person or entity utilized in a safe harbor (e.g., a qualified intermediary). See paragraph (g)(8), *Example 3(v),* of this section.

(2) ***Security or guarantee arrangements.***

(i) In the case of a deferred exchange, the determination of whether the taxpayer is in actual or constructive receipt of money or other property before the taxpayer actually receives like-kind replacement property will be made without regard to the fact that the obligation of the taxpayer's transferee to transfer the replacement property to the taxpayer is or may be secured or guaranteed by one or more of the following—

(A) A mortgage, deed of trust, or other security interest in property (other than cash or a cash equivalent),

(B) A standby letter of credit which satisfies all of the requirements of § 15A.453-1 (b)(3)(iii) and which may not be drawn upon in the absence of a default of the transferee's obligation to transfer like-kind replacement property to the taxpayer, or

(C) A guarantee of a third party.

(ii) Paragraph (g)(2)(i) of this section ceases to apply at the time the taxpayer has an immediate ability or unrestricted right to receive money or other property pursuant to the security or guarantee arrangement.

(3) ***Qualified escrow accounts and qualified trusts.***

(i) In the case of a deferred exchange, the determination of whether the taxpayer is in actual or constructive receipt of money or other property before the taxpayer actually receives like-kind replacement property will be made without regard to the fact that the obligation of the taxpayer's transferee to transfer the replacement property to the taxpayer is or may be secured by cash or a cash equivalent if the cash or cash equivalent is held in a qualified escrow account or in a qualified trust.

(ii) A qualified escrow account is an escrow account wherein—

(A) The escrow holder is not the taxpayer or a disqualified person (as defined in paragraph (k) of this section), and

(B) The escrow agreement expressly limits the taxpayer's rights to receive, pledge, borrow, or otherwise obtain the benefits of the cash or cash equivalent held in the escrow account as provided in paragraph (g)(6) of this section.

(iii) A qualified trust is a trust wherein—

(A) The trustee is not the taxpayer or a disqualified person (as defined in paragraph (k) of this section, except that for this purpose the relationship between the taxpayer and the trustee created by the qualified trust will not be considered a relationship under section 267(b)), and

(B) The trust agreement expressly limits the taxpayer's rights to receive, pledge, borrow, or otherwise obtain the benefits of the cash or cash equivalent held by the trustee as provided in paragraph (g)(6) of this section.

(iv) Paragraph (g)(3)(i) of this section ceases to apply at the time the taxpayer has an immediate ability or unrestricted right to receive, pledge, borrow, or otherwise obtain the benefits of the cash or cash equivalent held in the qualified escrow account or qualified trust. Rights conferred upon the taxpayer under state law to terminate or dismiss the escrow holder of a qualified escrow account or the trustee of a qualified trust are disregarded for this purpose.

(v) A taxpayer may receive money or other property directly from a party to the exchange, but not from a qualified escrow account or a qualified trust, without affecting the application of paragraph (g)(3)(i) of this section.

(4) *Qualified intermediaries.*

(i) In the case of a taxpayer's transfer of relinquished property involving a qualified intermediary, the qualified intermediary is not considered the agent of the taxpayer for purposes of section 1031(a). In such a case, the taxpayer's transfer of relinquished property and subsequent receipt of like-kind replacement property is treated as an exchange, and the determination of whether the taxpayer is in actual or constructive receipt of money or other property before the taxpayer actually receives like-kind replacement property is made as if the qualified intermediary is not the agent of the taxpayer.

(ii) Paragraph (g)(4)(i) of this section applies only if the agreement between the taxpayer and the qualified intermediary expressly limits the taxpayer's rights to receive, pledge, borrow, or otherwise obtain the benefits of money or other property held by the qualified intermediary as provided in paragraph (g)(6) of this section.

(iii) A qualified intermediary is a person who—

(A) Is not the taxpayer or a disqualified person (as defined in paragraph (k) of this section), and

(B) Enters into a written agreement with the taxpayer (the “exchange agreement”) and, as required by the exchange agreement, acquires the relinquished property from the taxpayer, transfers the relinquished property, acquires the replacement property, and transfers the replacement property to the taxpayer.

(iv) Regardless of whether an intermediary acquires and transfers property under general tax principals, solely for purposes of paragraph (g)(4)(iii)(B) of this section—

(A) An intermediary is treated as acquiring and transferring property if the intermediary acquires and transfers legal title to that property,

(B) An intermediary is treated as acquiring and transferring the relinquished property if the intermediary (either on its own behalf or as the agent of any party to the transaction) enters into an agreement with a person other than the taxpayer for the transfer of the relinquished property to that person and, pursuant to that agreement, the relinquished property is transferred to that person, and

(C) An intermediary is treated as acquiring and transferring replacement property if the intermediary (either on its own behalf or as the agent of any party to the transaction) enters into an agreement with the owner of the replacement property for the transfer of that property and, pursuant to that agreement, the replacement property is transferred to the taxpayer.

(v) Solely for purposes of paragraphs (g)(4)(iii) and (g)(4)(iv) of this section, an intermediary is treated as entering into an agreement if the rights of a party to the agreement are assigned to the intermediary and all parties to that agreement are notified in writing of the assignment on or before the date of the relevent transfer of property. For example, if a taxpayer enters into an agreement for the transfer of relinquished property and thereafter assigns its rights in that agreement to an intermediary and all parties to that agreement are notified in writing of the

assignment on or before the date of the transfer of the relinquished property, the intermediary is treated as entering into that agreement. If the relinquished property is transferred pursuant to that agreement, the intermediary is treated as having acquired and transferred the relinquished property.

(vi) Paragraph (g)(4)(i) of this section ceases to apply at the time the taxpayer has an immediate ability or unrestricted right to receive, pledge, borrow, or otherwise obtain the benefits of money or other property held by the qualified intermediary. Rights conferred upon the taxpayer under state law to terminate or dismiss the qualified intermediary are disregarded for this purpose.

(vii) A taxpayer may receive money or other property directly from a party to the transaction other than the qualified intermediary without affecting the application of paragraph (g)(4)(i) of this section.

(5) ***Interest and growth factors.*** In the case of a deferred exchange, the determination of whether the taxpayer is in actual or constructive receipt of money or other property before the taxpayer actually receives the like-kind replacement property will be made without regard to the fact that the taxpayer is or may be entitled to receive any interest or growth factor with respect to the deferred exchange. The preceding sentence applies only if the agreement pursuant to which the taxpayer is or may be entitled to the interest or growth factor expressly limits the taxpayer's rights to receive the interest or growth factor as provided in paragragh (g)(6) of this section. For additional rules concerning interest or growth factors, see paragraph (h) of this section.

(6) ***Additional restrictions on safe harbors under paragraphs (g)(3) through (g)(5).***

(i) An agreement limits a taxpayer's rights as provided in this paragraph (g)(6) only if the agreement provides that the taxpayer has no rights, except as provided in paragraph (g)(6)(ii) and (g)(6)(iii) of this section, to receive, pledge, borrow, or otherwise obtain the benefits of money or other property before the end of the exchange period.

(ii) The agreement may provide that if the taxpayer has not identified replacement property by the end of the identification period, the taxpayer may have rights to receive, pledge, borrow, or othewise obtain the benefits of money or other property at any time after the end of the identification period.

(iii) The agreement may provide that if the taxpayer has identified replacement property, the taxpayer may have rights to receive, pledge, borrow, or otherwise obtain the benefits of money or other property upon or after—

(A) The receipt by the taxpayer of all of the replacement property to which the taxpayer is entitled under the exchange agreement, or

(B) The occurrence after the end of the identification period of a material and substantial contingency that—

(*1*) Relates to the deferred exchange,

(*2*) Is provided for in writing, and

(*3*) Is beyond the control of the taxpayer and of any disqualified person (as defined in paragraph (k) of this section), other than the person obligated to transfer the replacement property to the taxpayer.

(7) ***Items disregarded in applying safe harbors under paragraphs (g)(3) through (g)(5).*** In determining whether a safe harbor under paragraphs (g)(3) through (g)(5) of this section ceases to apply and whether the taxpayer's rights to receive, pledge, borrow, or otherwise obtain the benefits of money or other property are expressly limited as provided in paragraph (g)(6) of this section, the taxpayer's receipt of or right to receive any of the following items will be disregarded—

(i) Items that a seller may receive as a consequence of the disposition of property and that are not included in the amount realized from the disposition of property (e.g., prorated rents);

(ii) Transactional items that relate to the disposition of the relinquished property or to the acquisition of the replacement property and appear under local standards in the typical closing statements as the responsibility of a buyer or seller (e.g., commissions, prorated taxes, recording or transfer taxes, and title company fees); and

(iii) Personal property generally resulting in gain recognition under section 1031(b) that is incidental to real property acquired in an exchange. For purposes of this paragraph (g)(7), personal property is incidental to real property acquired in an exchange if—

(A) In standard commercial transactions, the personal property is typically transferred together with the real property; and

(B) The aggregate fair market value of the property described in paragraph (g)(7)(iii)(A) of this section transferred with the real property does not exceed 15 percent of the aggregate fair market value of the replacement real property or properties received in the exchange.

(8) ***Examples.*** This paragraph (g) may be illustrated by the following examples. Unless otherwise provided in an example, the following facts are assumed: B, a calendar year taxpayer, and C agree to enter into a deferred exchange. Pursuant to their agreement, B is to transfer real property X to C on May 17, 1991. Real property X, which has been held by B for investment, is unencumbered and has a fair market value on May 17, 1991, of $100,000. On or before July 1, 1991 (the end of the identification period), B is to identify replacement property that is of a like kind to real property X. On or before November 13, 1991 (the end of the exchange period), C is required to purchase the property identified by B and to transfer that property to B. To the extent the fair market value of the replacement property transferred to B is greater or less than the fair market value property X, either B or C, as applicable, will make up the difference by paying cash to the other party after the date the replacement property is received by B. The replacement property is identified as provided in paragraph (c) of this section (relating to identification of replacement property) and is of a like kind to real property X (determined without regard to section 1031(a)(3) and this section). B intends to hold any replacement property received for investment.

(i) ***Example 1.***

(A) On May 17, 1991, B transfers real property X to C. On the same day, C pays $10,000 to B and deposits $90,000 in escrow as security for C's obligation to perform under the agreement. The escrow agreement provides that B has no rights to receive, pledge, borrow, or otherwise obtain the benefits of the money in escrow before November 14, 1991, except that:

(*1*) if B fails to identify replacement property on or before July 1, 1991, B may demand the funds in escrow at any time after July 1, 1991; and

(2) if B identifies and receives replacement property, then B may demand the balance of the remaining funds in escrow at any time after B has received the replacement property.

(3) The funds in escrow may be used to purchase the replacement property. The escrow holder is not a disqualified person as defined in paragraph (k) of this section. Pursuant to the terms of the agreement, B identifies replacement property, and C purchases the replacement property using the funds in escrow and tranfers the replacement property to B.

(B) C's obligation to transfer the replacement property to B was secured by cash held in a qualified escrow account because the escrow holder was not a disqualified person and the escrow agreement expressly limited B's rights to receive, pledge, borrow, or otherwise obtain the benefits of the money in escrow as provided in paragraph (g)(6) of this section. In addition, B did not have the immediate ability or unrestricted right to receive money or other property in escrow before B actually received the like-kind replacement property. Therefore, for purposes of section 1031 and this section, B is determined not to be in actual or constructive receipt of the $90,000 held in escrow before B received the like-kind replacement property. The transfer of real property X by B and B's acquisition of the replacement property qualify as an exchange under section 1031. See paragraph (j) of this section for determining the amount of gain or loss recognized.

(ii) *Example 2.*

(A) On May 17, 1991, B transfers real property X to C, and C deposits $100,000 in escrow as security for C's obligation to perform under the agreement. Also on May 17, B identifies real property J as replacement property. The escrow agreement provides that no funds may be paid out without prior written approval of both B and C. The escrow agreement also provides that B has no rights to receive, pledge, borrow, or otherwise obtain the benefits of the money in escrow before November 14, 1991, except that:

(1) B may demand the funds in escrow at any time after the later of July 1, 1991, and the occurrence of any of the following events—

(*i*) real property J is destroyed, seized, requisitioned, or condemned, or

(*ii*) a determination is made that the regulatory approval necessary for the transfer of real property J cannot be obtained in time for real property J to be transferred to B before the end of the exchange period;

(2) B may demand the funds in escrow at any time after August 14, 1991, if real property J has not been rezoned from residential to commercial use by that date; and

(3) B may demand the funds in escrow at the time B receives real property J or any time thereafter.

(4) Otherwise, B is entitled to all funds in escrow after November 13, 1991. The funds in escrow may be used to purchase the replacement property. The escrow holder is not a disqualified person as described in paragraph (k) of this section. Real property J is not rezoned from residential to commercial use on or before August 14, 1991.

(B) C's obligation to transfer the replacement property to B was secured by cash held in a qualified escrow account because the escrow holder was not a disqualified person and the escrow agreement expressly limited B's rights to receive, pledge, borrow, or otherwise obtain the benefits of the money in escrow as provided in paragraph (g)(6) of this section. From May 17, 1991, until August 15, 1991, B did not have the immediate ability or unrestricted right to receive money or other property before B actually received the like-kind replacement property. Therefore, for purposes of section 1031 and this section, B is determined not to be in actual or constructive receipt of the $100,000 in escrow from May 17, 1991, until August 15, 1991. However, on August 15, 1991, B had the unrestricted right, upon notice, to draw upon the $100,000 held in escrow. Thus, the safe harbor ceased to apply and B was in constructive receipt of the funds held in escrow. Because B constructively received the full amount of the consideration ($100,000) before B actually received the like-kind replacement property, the transaction is treated as a sale and not as a deferred exchange. The result does not change even if B chose not to demand the funds in escrow and continued to attempt to have real property J rezoned and to receive the property on or before November 13, 1991.

(C) If real property J had been rezoned on or before August 14, 1991, and C had purchased real property J and transferred it to B on or before November 13, 1991, the transaction would have qualified for nonrecognition of gain or loss under section 1031(a).

(iii) *Example 3.*

(A) On May 1, 1991, D offers to purchase real property X for $100,000. However, D is unwilling to participate in a like-kind exchange. B thus enters into an exchange agreement with C whereby B retains C to facilitate an exchange with respect to real property X. C is not a disqualified person as described in paragraph (k) of this section. The exchange agreement between B and C provides that B is to execute and deliver a deed conveying real property X to C who, in turn, is to execute and deliver a deed conveying real property X to D. The exchange agreement expressly limits B's rights to receive, pledge, borrow, or otherwise obtain the benefits of money or other property held by C as provided in paragraph (g)(6) of this section. On May 3, 1991, C enters into an agreement with D to transfer real property X to D for $100,000. On May 17, 1991, B executes and delivers to C a deed conveying real property X to C. On the same date, C executes and delivers to D a deed conveying real property X to D, and D deposits $100,000 in escrow. The escrow holder is not a disqualified person as defined in paragraph (k) of this section and the escrow agreement expressly limits B's rights to receive, pledge, borrow, or otherwise obtain the benefits of money or other property in escrow as provided in paragraph (g)(6) of this section. However, the escrow agreement provides that the money in escrow may be used to purchase replacement property. On June 3, 1991, B identifies real property K as replacement property. On August 9, 1991, E executes and delivers to C a deed conveying real property K to C and $80,000 is released from the escrow and paid to E. On the same date, C executes and delivers to B a deed conveying real property K to B, and the escrow holder pays B $20,000, the balance of the $100,000 sale price of real property X remaining after the purchase of real property K for $80,000.

(B) B and C entered into an exchange agreement that satisfied the requirements of paragraph (g)(4)(iii)(B) of this section. Regardless of whether C may have acquired and transferred real property X under general tax principles, C is treated as having acquired and transferred real property X because C acquired and transferred legal title to real property

X. Similarly, C is treated as having acquired and transferred real property K because C acquired and transferred legal title to real property K. Thus, C was a qualified intermediary. This result is reached for purposes of this section regardless of whether C was B's agent under state law.

(C) Because the escrow holder was not a disqualified person and the escrow agreement expressly limited B's rights to receive, pledge, borrow, or otherwise obtain the benefits of money or other property in escrow as provided in paragraph (g)(6) of this section, the escrow account was a qualified escrow account. For purposes of section 1031 and this section, therefore, B is determined not to be in actual or constructive receipt of the funds in escrow before B received real property K.

(D) The exchange agreement between B and C expressly limited B's rights to receive, pledge, borrow, or otherwise obtain the benefits of any money held by C as provided in paragraph (g)(6) of this section. Because C was a qualified intermediary, for purposes of section 1031 and this section B is determined not to be in actual or constructive receipt of any funds held by C before B received real property K. In addition, B's transfer of real property X and acquisition of real property K qualify as an exchange under section 1031. See paragraph (j) of this section for determining the amount of gain or loss recognized.

(E) If the escrow agreement had expressly limited C's rights to receive, pledge, borrow, or otherwise obtain the benefits of money or other property in escrow as provided in paragraph (g)(6) of this section, but had not expressly limited B's rights to receive, pledge, borrow, or otherwise obtain the benefits of that money or other property, the escrow account would not have been a qualified escrow account. Consequently, paragraph (g)(3)(i) of this section would not have been applicable in determining whether B was in actual or constructive receipt of that money or other property before B received real property K.

(iv) *Example 4.*

(A) On May 1, 1991, B enters into an agreement to sell real property X to D for $100,000 on May 17, 1991. However, D is unwilling to participate in a like-kind exchange. B thus enters into an exchange agreement with C whereby B retains C to facilitate an exchange with respect to real property X. C is not a disqualified person as described in paragraph (k) of this section. In the exchange agreement between B and C, B assigns to C all of B's rights in the agreement with D. The exchange agreement expressly limits B's rights to receive, pledge, borrow, or otherwise obtain the benefits of money or other property held by C as provided in paragraph (g)(6) of this section. On May 17, 1991, B notifies D in writing of the assignment. On the same date, B executes and delivers to D a deed conveying real property X to D. D pays $10,000 to B and $90,000 to C. On June 1, 1991, B identifies real property L as replacement property. On July 5, 1991, B enters into an agreement to purchase real property L from E for $90,000, assigns its rights in that agreement to C, and notifies E in writing of the assignment. On August 9, 1991, C pays $90,000 to E, and E executes and delivers to B a deed conveying real property L to B.

(B) The exchange agreement entered into by B and C satisfied the requirements of paragraph (g)(4)(iii)(B) of this section. Because B's rights in its agreements with D and E were assigned to C, and D and E were notified in writing of the assignment on or before the transfer of real properties X and L, respectively, C is treated as entering into those agreements. Because C is treated as entering into an agreement with D for the transfer of

real property X and, pursuant to that agreement, real property X was transferred to D, C is treated as acquiring and transferring real property X. Similarly, because C is treated as entering into an agreement with E for the transfer of real property K and, pursuant to that agreement, real property K was transferred to B, C is treated as acquiring and transferring real property K. This result is reached for purposes of this section regardless of whether C was B's agent under state law and regardless of whether C is considered, under general tax principles, to have acquired title or beneficial ownership of the properties. Thus, C was a qualified intermediary.

(C) The exchange agreement between B and C expressly limited B's rights to receive, pledge, borrow, or otherwise obtain the benefits of the money held by C as provided in paragraph (g)(6) of this section. Thus, B did not have the immediate ability or unrestricted right to receive money or other property held by C before B received real property L. For purposes of section 1031 and this section, therefore, B is determined not to be in actual or constructive receipt of the $90,000 held by C before B received real property L. In addition, the transfer of real property X by B and B's acquisition of real property L qualify as an exchange under section 1031. See paragraph (j) of this section for determining the amount of gain or loss recognized.

(v) *Example 5.*

(A) On May 1, 1991, B enters into an agreement to sell real property X to D for $100,000. However, D is unwilling to participate in a like-kind exchange. B thus enters into an agreement with C whereby B retains C to facilitate an exchange with respect to real property X. C is not a disqualified person as described in paragraph (k) of this section. The agreement between B and C expressly limits B's rights to receive, pledge, borrow, or otherwise obtain the benefits of money or other property held by C as provided in paragraph (g)(6) of this section. C neither enters into an agreement with D to transfer real property X to D nor is assigned B's rights in B's agreement to sell real property X to D. On May 17, 1991, B transfers real property X to D and instructs D to transfer the $100,000 to C. On June 1, 1991, B identifies real property M as replacement property. On August 9, 1991, C purchases real property L from E for $100,000, and E executes and delivers to C a deed conveying real property M to C. On the same date, C executes and delivers to B a deed conveying real property M to B.

(B) Because B transferred real property X directly to D under B's agreement with D, C did not acquire real property X from B and transfer real property X to D. Moreover, because C did not acquire legal title to real property X, did not enter into an agreement with D to transfer real property X to D, and was not assigned B's rights in B's agreement to sell real property X to D, C is not treated as acquiring and transferring real property X. Thus, C was not a qualified intermediary and paragraph (g)(4))(i) of this section does not apply.

(C) B did not exchange real property X for real property M. Rather, B sold real property X to D and purchased, through C, real property M. Therefore, the transfer of real property X does not qualify for nonrecognition of gain or loss under section 1031.

(vi) *Example 6.*

(A) In 2020, B transfers to C real property with a fair market value of $1,100,000 and an adjusted basis of $400,000. B's replacement property is an office building and, as a part of the exchange, B also will acquire certain office furniture in the building that is not real

property, which is industry practice in a transaction of this type. The fair market value of the real property B will acquire is $1,000,000 and the fair market value of the personal property is $100,000.

(B) In a standard commercial transaction, the buyer of an office building typically also acquires some or all of the office furniture in the building. The fair market value of the personal property B will acquire does not exceed 15 percent of the fair market value of the office building B will acquire. Accordingly, under paragraph (g)(7)(iii) of this section, the personal property is incidental to the real property in the exchange and is disregarded in determining whether the taxpayer's rights to receive, pledge, borrow or otherwise obtain the benefits of money or non-like-kind property are expressly limited as provided in paragraph (g)(6) of this section. Upon the receipt of the personal property, B recognizes gain of $100,000 under section 1031(b), the lesser of the realized gain on the disposition of the relinquished property, $700,000, and the fair market value of the non-like-kind property B acquired in the exchange, $100,000.

(9) ***Applicability date.*** Paragraphs (g)(7)(iii) and (g)(8)(vi) of this section apply to exchanges beginning after December 2, 2020.

(h) ***Interest and growth factors*** —

(1) ***In general.*** For purposes of this section, the taxpayer is treated as being entitled to receive interest or a growth factor with respect to a deferred exchange if the amount of money or property the taxpayer is entitled to receive depends upon the length of time elapsed between transfer of the relinquished property and receipt of the replacement property.

(2) ***Treatment as interest.*** If, as part of a deferred exchange, the taxpayer receives interest or a growth factor, the interest or growth factor will be treated as interest, regardless of whether it is paid to the taxpayer in cash or in property (including property of a like kind). The taxpayer must include the interest or growth factor in income according to the taxpayer's method of accounting. For rules under section 468B(g) relating to the current taxation of qualified escrow accounts, qualified trusts, and other escrow accounts, trusts, and funds used during deferred exchanges of like-kind property, see § 1.468B-6.

(i) [Reserved]

(j) ***Determination of gain or loss recognized and the basis of property received in a deferred exchange*** —

(1) ***In general.*** Except as otherwise provided, the amount of gain or loss recognized and the basis of property received in a deferred exchange is determined by applying the rules of section 1031 and the regulations thereunder. See §§ 1.1031(b)-1, 1.1031(c)-1, 1.1031(d)-1, 1.1031(d)-1T, 1.1031(d)-2, and 1.1031(j)-1.

(2) ***Coordination with section 453*** —

(i) ***Qualified escrow accounts and qualified trusts.*** Subject to the limitations of paragraphs (j)(2) (iv) and (v) of this section, in the case of a taxpayer's transfer of relinquished property in which the obligation of the taxpayer's transferee to transfer replacement property to the taxpayer is or may be secured by cash or a cash equivalent, the determination of whether the taxpayer has received a payment for purposes of section 453 and § 15a.453-1(b)(3)(i) of this chapter will be

made without regard to the fact that the obligation is or may be so secured if the cash or cash equivalent is held in a qualified escrow account or a qualified trust. This paragraph (j)(2)(i) ceases to apply at the earlier of—

(A) The time described in paragraph (g)(3)(iv) of this section; or

(B) The end of the exchange period.

(ii) ***Qualified intermediaries.*** Subject to the limitations of paragraphs (j)(2) (iv) and (v) of this section, in the case of a taxpayer's transfer of relinquished property involving a qualified intermediary, the determination of whether the taxpayer has received a payment for purposes of section 453 and § 15a.453-1(b)(3)(i) of this chapter is made as if the qualified intermediary is not the agent of the taxpayer. For purposes of this paragraph (j)(2)(ii), a person who otherwise satisfies the definition of a qualified intermediary is treated as a qualified intermediary even though that person ultimately fails to acquire identified replacement property and transfer it to the taxpayer. This paragraph (j)(2)(ii) ceases to apply at the earlier of—

(A) The time described in paragraph (g)(4)(vi) of this section; or

(B) The end of the exchange period.

(iii) ***Transferee indebtedness.*** In the case of a transaction described in paragraph (j)(2)(ii) of this section, the receipt by the taxpayer of an evidence of indebtedness of the transferee of the qualified intermediary is treated as the receipt of an evidence of indebtedness of the person acquiring property from the taxpayer for purposes of section 453 and § 15a.453-1(b)(3)(i) of this chapter.

(iv) ***Bona fide intent requirement.*** The provisions of paragraphs (j)(2) (i) and (ii) of this section do not apply unless the taxpayer has a bona fide intent to enter into a deferred exchange at the beginning of the exchange period. A taxpayer will be treated as having a bona fide intent only if it is reasonable to believe, based on all the facts and circumstances as of the beginning of the exchange period, that like-kind replacement property will be acquired before the end of the exchange period.

(v) ***Disqualified property.*** The provisions of paragraphs (j)(2) (i) and (ii) of this section do not apply if the relinquished property is disqualified property. For purposes of this paragraph (j)(2), *disqualified property* means property that is not held for productive use in a trade or business or for investment or is property described in section 1031(a)(2).

(vi) ***Examples.*** This paragraph (j)(2) may be illustrated by the following examples. Unless otherwise provided in an example, the following facts are assumed: B is a calendar year taxpayer who agrees to enter into a deferred exchange. Pursuant to the agreement, B is to transfer real property X. Real property X, which has been held by B for investment, is unencumbered and has a fair market value of $100,000 at the time of transfer. B's adjusted basis in real property X at that time is $60,000. B identifies a single like-kind replacement property before the end of the identification period, and B receives the replacement property before the end of the exchange period. The transaction qualifies as a like-kind exchange under section 1031.

> *Example 1.* (i) On September 22, 1994, B transfers real property X to C and C agrees to acquire like-kind property and deliver it to B. On that date B has a bona fide intent to enter into a deferred exchange. C's obligation, which is not payable on demand or readily

tradable, is secured by $100,000 in cash. The $100,000 is deposited by C in an escrow account that is a qualified escrow account under paragraph (g)(3) of this section. The escrow agreement provides that B has no rights to receive, pledge, borrow, or otherwise obtain the benefits of the cash deposited in the escrow account until the earlier of the date the replacement property is delivered to B or the end of the exchange period. On March 11, 1995, C acquires replacement property having a fair market value of $80,000 and delivers the replacement property to B. The $20,000 in cash remaining in the qualified escrow account is distributed to B at that time.
(ii) Under section 1031(b), B recognizes gain to the extent of the $20,000 in cash that B receives in the exchange. Under paragraph (j)(2)(i) of this section, the qualified escrow account is disregarded for purposes of section 453 and § 15a.453-1(b)(3)(i) of this chapter in determining whether B is in receipt of payment. Accordingly, B's receipt of C's obligation on September 22, 1994, does not constitute a payment. Instead, B is treated as receiving payment on March 11, 1995, on receipt of the $20,000 in cash from the qualified escrow account. Subject to the other requirements of sections 453 and 453A, B may report the $20,000 gain in 1995 under the installment method. See section 453(f)(6) for special rules for determining total contract price and gross profit in the case of an exchange described in section 1031(b).

Example 2. (i) D offers to purchase real property X but is unwilling to participate in a like-kind exchange. B thus enters into an exchange agreement with C whereby B retains C to facilitate an exchange with respect to real property X. On September 22, 1994, pursuant to the agreement, B transfers real property X to C who transfers it to D for $100,000 in cash. On that date B has a bona fide intent to enter into a deferred exchange. C is a qualified intermediary under paragraph (g)(4) of this section. The exchange agreement provides that B has no rights to receive, pledge, borrow, or otherwise obtain the benefits of the money held by C until the earlier of the date the replacement property is delivered to B or the end of the exchange period. On March 11, 1995, C acquires replacement property having a fair market value of $80,000 and delivers it, along with the remaining $20,000 from the transfer of real property X to B.
(ii) Under section 1031(b), B recognizes gain to the extent of the $20,000 cash B receives in the exchange. Under paragraph (j)(2)(ii) of this section, any agency relationship between B and C is disregarded for purposes of section 453 and § 15a.453-1(b)(3)(i) of this chapter in determining whether B is in receipt of payment. Accordingly, B is not treated as having received payment on September 22, 1994, on C's receipt of payment from D for the relinquished property. Instead, B is treated as receiving payment on March 11, 1995, on receipt of the $20,000 in cash from C. Subject to the other requirements of sections 453 and 453A, B may report the $20,000 gain in 1995 under the installment method.

Example 3. (i) D offers to purchase real property X but is unwilling to participate in a like-kind exchange. B enters into an exchange agreement with C whereby B retains C as a qualified intermediary to facilitate an exchange with respect to real property X. On December 1, 1994, pursuant to the agreement, B transfers real property X to C who transfers it to D for $100,000 in cash. On that date B has a bona fide intent to enter into a deferred exchange. The exchange agreement provides that B has no rights to receive, pledge, borrow, or otherwise obtain the benefits of the cash held by C until the earliest of the end of the identification period if B has not identified replacement property, the date the replacement property is delivered to B, or the end of the exchange period. Although B has a bona fide intent to enter into a deferred exchange at the beginning of the exchange period, B does not identify or acquire any replacement property. In 1995, at the end of the identification period, C delivers the entire $100,000 from the sale of real property X to B.
(ii) Under section 1001, B realizes gain to the extent of the amount realized ($100,000) over the adjusted basis in real property X ($60,000), or $40,000. Because B has a bona fide intent at the beginning of the exchange period to enter into a deferred exchange, paragraph (j)(2)(iv) of this section does not make paragraph (j)(2)(ii) of this section inapplicable even though B fails to acquire replacement property. Further, under paragraph (j)(2)(ii) of this section, C is a qualified intermediary even though C does not acquire and transfer replacement property to B. Thus, any agency relationship between B and C is disregarded for purposes of section 453 and § 15a.453-1(b)(3)(i) of this chapter in determining whether B is in receipt of payment. Accordingly, B is not treated as having received payment on December 1, 1994, on C's receipt of payment from D for the relinquished property. Instead, B is treated as receiving payment at the end of the identification period in 1995 on receipt of the $100,000 in cash from C. Subject to the other requirements of sections 453 and 453A, B may report the $40,000 gain in 1995 under the installment method.

Example 4. (i) D offers to purchase real property X but is unwilling to participate in a like-kind exchange. B thus enters into an exchange agreement with C whereby B retains C to facilitate an exchange with respect to real property X. C is a qualified intermediary under paragraph (g)(4) of this section. On September 22, 1994, pursuant to the agreement, B transfers real property X to C who then transfers it to D for $80,000 in cash and D's 10-year installment obligation for $20,000. On that date B has a bona fide intent to enter into a deferred exchange. The exchange agreement provides that B has no rights to receive, pledge, borrow, or otherwise obtain the benefits of the money or other property held by C until the earlier of the date the replacement property is delivered to B or the end of the exchange period. D's obligation bears adequate stated interest and is not payable on demand or readily tradable. On March 11, 1995, C acquires replacement property having a fair market value of $80,000 and delivers it, along with the $20,000

installment obligation, to B.
(ii) Under section 1031(b), $20,000 of B's gain (i.e., the amount of the installment obligation B receives in the exchange) does not qualify for nonrecognition under section 1031(a). Under paragraphs (j)(2) (ii) and (iii) of this section, B's receipt of D's obligation is treated as the receipt of an obligation of the person acquiring the property for purposes of section 453 and § 15a.453-1(b)(3)(i) of this chapter in determining whether B is in receipt of payment. Accordingly, B's receipt of the obligation is not treated as a payment. Subject to the other requirements of sections 453 and 453A, B may report the $20,000 gain under the installment method on receiving payments from D on the obligation.

Example 5. (i) B is a corporation that has held real property X to expand its manufacturing operations. However, at a meeting in November 1994, B's directors decide that real property X is not suitable for the planned expansion, and authorize a like-kind exchange of this property for property that would be suitable for the planned expansion. B enters into an exchange agreement with C whereby B retains C as a qualified intermediary to facilitate an exchange with respect to real property X. On November 28, 1994, pursuant to the agreement, B transfers real property X to C, who then transfers it to D for $100,000 in cash. The exchange agreement does not include any limitations or conditions that make it unreasonable to believe that like-kind replacement property will be acquired before the end of the exchange period. The exchange agreement provides that B has no rights to receive, pledge, borrow, or otherwise obtain the benefits of the cash held by C until the earliest of the end of the identification period, if B has not identified replacement property, the date the replacement property is delivered to B, or the end of the exchange period. In early January 1995, B's directors meet and decide that it is not feasible to proceed with the planned expansion due to a business downturn reflected in B's preliminary financial reports for the last quarter of 1994. Thus, B's directors instruct C to stop seeking replacement property. C delivers the $100,000 cash to B on January 12, 1995, at the end of the identification period. Both the decision to exchange real property X for other property and the decision to cease seeking replacement property because of B's business downturn are recorded in the minutes of the directors' meetings. There are no other facts or circumstances that would indicate whether, on November 28, 1994, B had a bona fide intent to enter into a deferred like-kind exchange.
(ii) Under section 1001, B realizes gain to the extent of the amount realized ($100,000) over the adjusted basis of real property X ($60,000), or $40,000. The directors' authorization of a like-kind exchange, the terms of the exchange agreement with C, and the absence of other relevant facts, indicate that B had a bona fide intent at the beginning of the exchange period to enter into a deferred like-kind exchange. Thus, paragraph (j)(2)(iv) of this section does not make paragraph (j)(2)(ii) of this section

inapplicable, even though B fails to acquire replacement property. Further, under paragraph (j)(2)(ii) of this section, C is a qualified intermediary, even though C does not transfer replacement property to B. Thus, any agency relationship between B and C is disregarded for purposes of section 453 and § 15a.453-1(b)(3)(i) of this chapter in determining whether B is in receipt of payment. Accordingly, B is not treated as having received payment until January 12, 1995, on receipt of the $100,000 cash from C. Subject to the other requirements of sections 453 and 453A, B may report the $40,000 gain in 1995 under the installment method.

Example 6. (i) B has held real property X for use in its trade or business, but decides to transfer that property because it is no longer suitable for B's planned expansion of its commercial enterprise. B and D agree to enter into a deferred exchange. Pursuant to their agreement, B transfers real property X to D on September 22, 1994, and D deposits $100,000 cash in a qualified escrow account as security for D's obligation under the agreement to transfer replacement property to B before the end of the exchange period. D's obligation is not payable on demand or readily tradable. The agreement provides that B is not required to accept any property that is not zoned for commercial use. Before the end of the identification period, B identifies real properties J, K, and L, all zoned for residential use, as replacement properties. Any one of these properties, rezoned for commercial use, would be suitable for B's planned expansion. In recent years, the zoning board with jurisdiction over properties J, K, and L has rezoned similar properties for commercial use. The escrow agreement provides that B has no rights to receive, pledge, borrow, or otherwise obtain the benefits of the money in the escrow account until the earlier of the time that the zoning board determines, after the end of the identification period, that it will not rezone the properties for commercial use or the end of the exchange period. On January 5, 1995, the zoning board decides that none of the properties will be rezoned for commercial use. Pursuant to the exchange agreement, B receives the $100,000 cash from the escrow on January 5, 1995. There are no other facts or circumstances that would indicate whether, on September 22, 1994, B had a bona fide intent to enter into a deferred like-kind exchange.
(ii) Under section 1001, B realizes gain to the extent of the amount realized ($100,000) over the adjusted basis of real property X ($60,000), or $40,000. The terms of the exchange agreement with D, the identification of properties J, K, and L, the efforts to have those properties rezoned for commercial purposes, and the absence of other relevant facts, indicate that B had a bona fide intent at the beginning of the exchange period to enter into a deferred exchange. Moreover, the limitations imposed in the exchange agreement on acceptable replacement property do not make it unreasonable to believe that like-kind replacement property would be acquired before the end of the exchange period. Therefore, paragraph (j)(2)(iv) of this section does not make paragraph (j)(2)(i) of this section inapplicable even though B fails to acquire replacement property.

Thus, for purposes of section 453 and § 15a.453-1(b)(3)(i) of this chapter, the qualified escrow account is disregarded in determining whether B is in receipt of payment. Accordingly, B is not treated as having received payment on September 22, 1994, on D's deposit of the $100,000 cash into the qualified escrow account. Instead, B is treated as receiving payment on January 5, 1995. Subject to the other requirements of sections 453 and 453A, B may report the $40,000 gain in 1995 under the installment method.

(vii) ***Effective date.*** This paragraph (j)(2) is effective for transfers of property occurring on or after April 20, 1994. Taxpayers may apply this paragraph (j)(2) to transfers of property occurring before April 20, 1994, but on or after June 10, 1991, if those transfers otherwise meet the requirements of § 1.1031(k)-1. In addition, taxpayers may apply this paragraph (j)(2) to transfers of property occurring before June 10, 1991, but on or after May 16, 1990, if those transfers otherwise meet the requirements of § 1.1031(k)-1 or follow the guidance of IA-237-84 published in 1990-1, C.B. See § 601.601(d)(2)(ii)(*b*) of this chapter.

(3) ***Examples.*** This paragraph (j) may be illustrated by the following examples. Unless otherwise provided in an example, the following facts are assumed: B, a calendar year taxpayer, and C agree to enter into a deferred exchange. Pursuant to their agreement, B is to transfer real property X to C on May 17, 1991. Real property X, which has been held by B for investment, is unencumbered and has a fair market value on May 17, 1991, of $100,000. B's adjusted basis in real property X is $40,000. On or before July 1, 1991 (the end of the identification period), B is to identify replacement property that is of a like kind to real property X. On or before November 13, 1991 (the end of the exchange period), C is required to purchase the property identified by B and to transfer that property to B. To the extent the fair market value of the replacement property transferred to B is greater or less than the fair market value of real property X, either B or C, as applicable, will make up the difference by paying cash to the other party after the date the replacement property is received. The replacement property is identified as provided in paragraph (c) of this section and is of a like kind to real property X (determined without regard to section 1031(a)(3) and this section). B intends to hold any replacement property received for investment.

Example 1. (i) On May 17, 1991, B transfers real property X to C and identifies real property R as replacement property. On June 3, 1991, C transfers $10,000 to B. On September 4, 1991, C purchases real property R for $90,000 and transfers real property R to B.
(ii) The $10,000 received by B is “money or other property” for purposes of section 1031 and the regulations thereunder. Under section 1031(b), B recognizes gain in the amount of $10,000. Under section 1031(d), B's basis in real property R is $40,000 (i.e., B's basis in real property X ($40,000), decreased in the amount of money received ($10,000), and increased in the amount of gain recognized ($10,000) in the deferred exchange).

Example 2. (i) On May 17, 1991, B transfers real property X to C and identifies real property S as replacement property, and C transfers $10,000 to B. On September 4, 1991, C purchases real property S for $100,000 and transfers real property S to B. On the same day, B transfers $10,000 to C.

(ii) The $10,000 received by B is "money or other property" for purposes of section 1031 and the regulations thereunder. Under section 1031(b), B recognizes gain in the amount of $10,000. Under section 1031(d), B's basis in real property S is $50,000 (i.e., B's basis in real property X ($40,000), decreased in the amount of money received ($10,000), increased in the amount of gain recognized ($10,000), and increased in the amount of the additional consideration paid by B ($10,000) in the deferred exchange).

Example 3. (i) Under the exchange agreement, B has the right at all times to demand $100,000 in cash in lieu of replacement property. On May 17, 1991, B transfers real property X to C and identifies real property T as replacement property. On September 4, 1991, C purchases real property T for $100,000 and transfers real property T to B.
(ii) Because B has the right on May 17, 1991, to demand $100,000 in cash in lieu of replacement property, B is in constructive receipt of the $100,000 on that date. Thus, the transaction is a sale and not an exchange, and the $60,000 gain realized by B in the transaction (i.e., $100,000 amount realized less $40,000 adjusted basis) is recognized. Under section 1031(d), B's basis in real property T is $100,000.

Example 4. (i) Under the exchange agreement, B has the right at all times to demand up to $30,000 in cash and the balance in replacement propertry instead of receiving replacement property in the amount of $100,000. On May 17, 1991, B transfers real property X to C and identifies real property U as replacement property. On September 4, 1991, C purchases real property U for $100,000 and transfers real property U to B.
(ii) The transaction qualifies as a deferred exchange under section 1031 and this section. However, because B had the right on May 17, 1991, to demand up to $30,000 in cash, B is in constructive receipt of $30,000 on that date. Under section 1031(b), B recognizes gain in the amount of $30,000. Under section 1031(d), B's basis in real property U is $70,000 (i.e., B's basis in real property X ($40,000), decreased in the amount of money that B received ($30,000), increased in the amount of gain recognized ($30,000), and increased in the amount of additional consideration paid by B ($30,000) in the deferred exchange).

Example 5. (i) Assume real property X is encumbered by a mortgage of $30,000. On May 17, 1991, B transfers real property X to C and identifies real property V as replacement property, and C assumes the $30,000 mortgage on real property X. Real property V is encumbered by a $20,000 mortgage. On July 5, 1991, C purchases real property V for $90,000 by paying $70,000 and assuming the mortgage and transfers real property V to B with B assuming the mortgage.
(ii) The consideration received by B in the form of the liability assumed by C ($30,000) is offset by the consideration given by B in the form of the liability assumed by B ($20,000). The excess of the liability assumed by C over the liability assumed by B, $10,000, is treated as "money or other property." See § 1.1031(b)-1(c). Thus, B recognizes gain under section 1031(b) in the amount of $10,000. Under section 1031(d), B's basis in real property V is

$40,000 (i.e., B's basis in real property X ($40,000), decreased in the amount of money that B is treated as receiving in the form of the liability assumed by C ($30,000), increased in the amount of money that B is treated as paying in the form of the liability assumed by B ($20,000), and increased in the amount of the gain recognized ($10,000) in the deferred exchange).

(k) ***Definition of disqualified person.***

(1) For purposes of this section, a disqualified person is a person described in paragraph (k)(2), (k)(3), or (k)(4) of this section.

(2) The person is the agent of the taxpayer at the time of the transaction. For this purpose, a person who has acted as the taxpayer's employee, attorney, accountant, investment banker or broker, or real estate agent or broker within the 2-year period ending on the date of the transfer of the first of the relinquished properties is treated as an agent of the taxpayer at the time of the transaction. Solely for purposes of this paragraph (k)(2), performance of the following services will not be taken into account—

(i) Services for the taxpayer with respect to exchanges of property intended to qualify for nonrecognition of gain or loss under section 1031; and

(ii) Routine financial, title insurance, escrow, or trust services for the taxpayer by a financial institution, title insurance company, or escrow company.

(3) The person and the taxpayer bear a relationship described in either section 267(b) or section 707(b) (determined by substituting in each section “10 percent” for “50 percent” each place it appears).

(4)

(i) Except as provided in paragraph (k)(4)(ii) of this section, the person and a person described in paragraph (k)(2) of this section bear a relationship described in either section 267(b) or 707(b) (determined by substituting in each section “10 percent” for “50 percent” each place it appears).

(ii) In the case of a transfer of relinquished property made by a taxpayer on or after January 17, 2001, paragraph (k)(4)(i) of this section does not apply to a bank (as defined in section 581) or a bank affiliate if, but for this paragraph (k)(4)(ii), the bank or bank affiliate would be a disqualified person under paragraph (k)(4)(i) of this section solely because it is a member of the same controlled group (as determined under section 267(f)(1), substituting “10 percent” for “50 percent' where it appears) as a person that has provided investment banking or brokerage services to the taxpayer within the 2-year period described in paragraph (k)(2) of this section. For purposes of this paragraph (k)(4)(ii), a bank affiliate is a corporation whose principal activity is rendering services to facilitate exchanges of property intended to qualify for nonrecognition of gain under section 1031 and all of whose stock is owned by either a bank or a bank holding company (within the meaning of section 2(a) of the Bank Holding Company Act of 1956 (12 U.S.C. 1841(a)).

(5) This paragraph (k) may be illustrated by the following examples. Unless otherwise provided, the following facts are assumed: On May 1, 1991, B enters into an exchange agreement (as defined in paragraph (g)(4)(iii)(B) of this section) with C whereby B retains C to facilitate an exchange with

respect to real property X. On May 17, 1991, pursuant to the agreement, B executes and delivers to C a deed conveying real property X to C. C has no relationship to B described in paragraph (k)(2), (k)(3), or (k)(4) of this section.

Example 1. (i) C is B's accountant and has rendered accounting services to B within the 2-year period ending on May 17, 1991, other than with respect to exchanges of property intended to qualify for nonrecognition of gain or loss under section 1031.
(ii) C is a disqualified person because C has acted as B's accountant within the 2-year period ending on May 17, 1991.

(iii) If C had not acted as B's accountant within the 2-year period ending on May 17, 1991, or if C had acted as B's accountant within that period only with respect to exchanges intended to qualify for nonrecognition of gain or loss under section 1031, C would not have been a disqualified person.

Example 2. (i) C, which is engaged in the trade or business of acting as an intermediary to facilitate deferred exchanges, is a wholly owned subsidiary of an escrow company that has performed routine escrow services for B in the past. C has previously been retained by B to act as an intermediary in prior section 1031 exchanges.
(ii) C is not a disqualified person notwithstanding the intermediary services previously provided by C to B (see paragraph (k)(2)(i) of this section) and notwithstanding the combination of C's relationship to the escrow company and the escrow services previously provided by the escrow company to B (see paragraph (k)(2)(ii) of this section).

Example 3. (i) C is a corporation that is only engaged in the trade or business of acting as an intermediary to facilitate deferred exchanges. Each of 10 law firms owns 10 percent of the outstanding stock of C. One of the 10 law firms that owns 10 percent of C is M. J is the managing partner of M and is the president of C. J, in his capacity as a partner in M, has also rendered legal advice to B within the 2-year period ending on May 17, 1991, on matters other than exchanges intended to qualify for nonrecognition of gain or loss under section 1031.
(ii) J and M are disqualified persons. C, however, is not a disqualified person because neither J nor M own, directly or indirectly, more than 10 percent of the stock of C. Similarly, J's participation in the management of C does not make C a disqualified person.

(l) [Reserved]

(m) ***Definition of fair market value.*** For purposes of this section, the fair market value of property means the fair market value of the property without regard to any liabilities secured by the property.

(n) ***No inference with respect to actual or constructive receipt rules outside of section 1031.*** The rules provided in this section relating to actual or constructive receipt are intended to be rules for determining whether there is actual or constructive receipt in the case of a deferred exchange. No inference is intended regarding the application of these rules for purposes of determining whether actual or constructive receipt exists for any other purpose.

(o) ***Effective date.*** This section applies to transfers of property made by a taxpayer on or after June 10, 1991. However, a transfer of property made by a taxpayer on or after May 16, 1990, but before June 10, 1991, will be treated as complying with section 1031 (a)(3) and this section if the deferred exchange satisfies either the provision of this section or the provisions of the notice of proposed rulemaking published in the FEDERAL REGISTER on May 16, 1990 (55 FR 20278).

[T.D. 8346, 56 FR 19938, May 1, 1991, as amended by T.D. 8535, 59 FR 18749, Apr. 20, 1994; T.D. 8982, 67 FR 4909, Feb. 1, 2002; T.D. 9413, 73 FR 39622, July 10, 2008; T.D. 9935, 85 FR 77383, Dec. 2, 2020]

§ 1.1032-1 Disposition by a corporation of its own capital stock.

(a) The disposition by a corporation of shares of its own stock (including treasury stock) for money or other property does not give rise to taxable gain or deductible loss to the corporation regardless of the nature of the transaction or the facts and circumstances involved. For example, the receipt by a corporation of the subscription price of shares of its stock upon their original issuance gives rise to neither taxable gain nor deductible loss, whether the subscription or issue price be equal to, in excess of, or less than, the par or stated value of such stock. Also, the exchange or sale by a corporation of its own shares for money or other property does not result in taxable gain or deductible loss, even though the corporation deals in such shares as it might in the shares of another corporation. A transfer by a corporation of shares of its own stock (including treasury stock) as compensation for services is considered, for purposes of section 1032(a), as a disposition by the corporation of such shares for money or other property.

(b) Section 1032(a) does not apply to the acquisition by a corporation of shares of its own stock except where the corporation acquires such shares in exchange for shares of its own stock (including treasury stock). See paragraph (e) of § 1.311-1, relating to treatment of acquisitions of a corporation's own stock. Section 1032(a) also does not relate to the tax treatment of the recipient of a corporation's stock.

(c) Where a corporation acquires shares of its own stock in exchange for shares of its own stock (including treasury stock) the transaction may qualify not only under section 1032(a), but also under section 368(a)(1)(E) (recapitalization) or section 305(a) (distribution of stock and stock rights).

(d) For basis of property acquired by a corporation in connection with a transaction to which section 351 applies or in connection with a reorganization, see section 362. For basis of property acquired by a corporation in a transaction to which section 1032 applies but which does not qualify under any other nonrecognition provision, see section 1012.

§ 1.1032-2 Disposition by a corporation of stock of a controlling corporation in certain triangular reorganizations.

(a) ***Scope.*** This section provides rules for certain triangular reorganizations described in § 1.358-6(b) when the acquiring corporation (*S*) acquires property or stock of another corporation (*T*) in exchange for stock of the corporation (*P*) in control of *S*.

(b) ***General nonrecognition of gain or loss.*** For purposes of § 1.1032-1(a), in the case of a forward triangular merger, a triangular C reorganization, or a triangular B reorganization (as described in § 1.358-6(b)), *P* stock provided by *P* to *S,* or directly to *T* or *T*'s shareholders on behalf of *S,* pursuant to the plan of reorganization is treated as a disposition by *P* of shares of its own stock for *T*'s assets or stock, as applicable. For rules governing the use of *P* stock in a reverse triangular merger, see section 361.

(c) ***Treatment of S. S*** must recognize gain or loss on its exchange of *P* stock as consideration in a forward triangular merger, a triangular C reorganization, or a triangular B reorganization (as described in § 1.358-6(b)), if *S* did not receive the *P* stock from *P* pursuant to the plan of reorganization. See § 1.358-6(d) for the effect on *P*'s basis in its *S* or *T* stock, as applicable. For rules governing *S*'s use of *P* stock in a reverse triangular merger, see section 361.

(d) ***Examples.*** The rules of this section are illustrated by the following examples. For purposes of these examples, *P, S,* and *T* are domestic corporations, *P* and *S* do not file consolidated returns, *P* owns all of the only class of *S* stock, the *P* stock exchanged in the transaction satisfies the requirements of the applicable reorganization provisions, and the facts set forth the only corporate activity.

> *Example 1. Forward triangular merger solely for P stock.* (a) *Facts. T* has assets with an aggregate basis of $60 and fair market value of $100 and no liabilities. Pursuant to a plan, *P* forms *S* by transferring $100 of *P* stock to *S* and *T* merges into *S.* In the merger, the *T* shareholders receive, in exchange for their *T* stock, the *P* stock that *P* transferred to *S.* The transaction is a reorganization to which sections 368(a)(1)(A) and (a)(2)(D) apply.
> (b) *No gain or loss recognized on the use of P stock.* Under paragraph (b) of this section, the *P* stock provided by *P* pursuant to the plan of reorganization is treated for purposes of § 1.1032-1(a) as disposed of by *P* for the *T* assets acquired by *S* in the merger. Consequently, neither *P* nor *S* has taxable gain or deductible loss on the exchange.

> *Example 2. Forward triangular merger solely for P stock provided in part by S.* (a) *Facts. T* has assets with an aggregate basis of $60 and fair market value of $100 and no liabilities. *S* is an operating company with substantial assets that has been in existence for several years. *S* also owns *P* stock with a $20 adjusted basis and $30 fair market value. *S* acquired the *P* stock in an unrelated transaction several years before the reorganization. Pursuant to a plan, *P* transfers additional *P* stock worth $70 to *S* and *T* merges into *S.* In the merger, the *T* shareholders receive $100 of *P* stock ($70 of *P* stock provided by *P* to *S* as part of the plan and $30 of *P* stock held by *S* previously). The transaction is a reorganization to which sections 368(a)(1)(A) and (a)(2)(D) apply.
> (b) *Gain or loss recognized by S on the use of its P* stock. Under paragraph (b) of this section, the $70 of *P* stock provided by *P* pursuant to the plan of reorganization is treated as disposed of by *P* for the *T* assets acquired by *S* in the merger. Consequently, neither *P* nor *S* has taxable gain or deductible loss on the exchange of those shares. Under paragraph (c) of this section, however, *S* recognizes $10 of gain on the exchange of its *P* stock in the reorganization because *S* did not receive the *P* stock from *P* pursuant to the plan of reorganization. See § 1.358-6(d) for the effect on *P*'s basis in its *S* stock.

(e) ***Stock options.*** The rules of this section shall apply to an option to buy or sell P stock issued by P in the same manner as the rules of this section apply to P stock.

(f) ***Effective dates.*** This section applies to triangular reorganizations occurring on or after December 23, 1994, except for paragraph (e) of this section, which applies to transfers of stock options occurring on or after May 16, 2000.

[T.D. 8648, 60 FR 66081, Dec. 21, 1995, as amended by T.D. 8883, 65 FR 31076, May 16, 2000]

§ 1.1032-3 Disposition of stock or stock options in certain transactions not qualifying under any other nonrecognition provision.

(a) ***Scope.*** This section provides rules for certain transactions in which a corporation or a partnership (the acquiring entity) acquires money or other property (as defined in § 1.1032-1) in exchange, in whole or in part, for stock of a corporation (the issuing corporation).

(b) ***Nonrecognition of gain or loss*** —

(1) ***General rule.*** In a transaction to which this section applies, no gain or loss is recognized on the disposition of the issuing corporation's stock by the acquiring entity. The transaction is treated as if, immediately before the acquiring entity disposes of the stock of the issuing corporation, the acquiring entity purchased the issuing corporation's stock from the issuing corporation for fair market value with cash contributed to the acquiring entity by the issuing corporation (or, if necessary, through intermediate corporations or partnerships). For rules that may apply in determining the issuing corporation's adjustment to basis in the acquiring entity (or, if necessary, in determining the adjustment to basis in intermediate entities), see sections 358, 722, and the regulations thereunder.

(2) ***Special rule for actual payment for stock of the issuing corporation.*** If the issuing corporation receives money or other property in payment for its stock, the amount of cash deemed contributed under paragraph (b)(1) of this section is the difference between the fair market value of the issuing corporation stock and the amount of money or the fair market value of other property that the issuing corporation receives as payment.

(c) ***Applicability.*** The rules of this section apply only if, pursuant to a plan to acquire money or other property—

(1) The acquiring entity acquires stock of the issuing corporation directly or indirectly from the issuing corporation in a transaction in which, but for this section, the basis of the stock of the issuing corporation in the hands of the acquiring entity would be determined, in whole or in part, with respect to the issuing corporation's basis in the issuing corporation's stock under section 362(a) or 723 (provided that, in the case of an indirect acquisition by the acquiring entity, the transfers of issuing corporation stock through intermediate entities occur immediately after one another);

(2) The acquiring entity immediately transfers the stock of the issuing corporation to acquire money or other property (from a person other than an entity from which the stock was directly or indirectly acquired);

(3) The party receiving stock of the issuing corporation in the exchange specified in paragraph (c)(2) of this section from the acquiring entity does not receive a substituted basis in the stock of the issuing corporation within the meaning of section 7701(a)(42); and

(4) The issuing corporation stock is not exchanged for stock of the issuing corporation.

(d) ***Stock options.*** The rules of this section shall apply to an option issued by a corporation to buy or sell its own stock in the same manner as the rules of this section apply to the stock of an issuing corporation.

(e) ***Examples.*** The following examples illustrate the application of this section:

> *Example 1.* (i) *X,* a corporation, owns all of the stock of *Y* corporation. *Y* reaches an agreement with *C,* an individual, to acquire a truck from *C* in exchange for 10 shares of *X* stock with a fair market value of $100. To effectuate *Y*'s agreement with *C,X* transfers to *Y* the *X* stock in a transaction in which, but for this section, the basis of the *X* stock in the hands of *Y* would be determined with respect to *X*'s basis in the *X* stock under section 362(a). *Y* immediately transfers the *X* stock to *C* to acquire the truck.
> (ii) In this *Example 1,* no gain or loss is recognized on the disposition of the *X* stock by *Y.* Immediately before *Y*'s disposition of the *X* stock, *Y* is treated as purchasing the *X* stock from *X* for $100 of cash contributed to *Y* by *X.* Under section 358, *X*'s basis in its *Y* stock is increased by $100.

> *Example 2.* (i) Assume the same facts as *Example 1,* except that, rather than *X* stock, *X* transfers an option with a fair market value of $100 to purchase *X* stock.
> (ii) In this *Example 2,* no gain or loss is recognized on the disposition of the *X* stock option by *Y.* Immediately before *Y*'s disposition of the *X* stock option, *Y* is treated as purchasing the *X* stock option from *X* for $100 of cash contributed to *Y* by *X.* Under section 358, *X*'s basis in its *Y* stock is increased by $100.

> *Example 3.* (i) *X,* a corporation, owns all of the outstanding stock of *Y* corporation. *Y* is a partner in partnership *Z. Z* reaches an agreement with *C,* an individual, to acquire a truck from *C* in exchange for 10 shares of *X* stock with a fair market value of $100. To effectuate *Z*'s agreement with *C, X* transfers to *Y* the *X* stock in a transaction in which, but for this section, the basis of the *X* stock in the hands of *Y* would be determined with respect to *X*'s basis in the *X* stock under section 362(a). *Y* immediately transfers the *X* stock to *Z* in a transaction in which, but for this section, the basis of the *X* stock in the hands of *Z* would be determined under section 723. *Z* immediately transfers the *X* stock to *C* to acquire the truck.
> (ii) In this *Example 3,* no gain or loss is recognized on the disposition of the *X* stock by *Z.* Immediately before *Z*'s disposition of the *X* stock, *Z* is treated as purchasing the *X* stock from *X* for $100 of cash indirectly contributed to *Z* by *X* through an intermediate corporation, *Y.* Under section 722, *Y*'s basis in its *Z* partnership interest is increased by $100, and, under section 358, *X*'s basis in its *Y* stock is increased by $100.

> *Example 4.* (i) *X,* a corporation, owns all of the outstanding stock of *Y* corporation. *B,* an individual, is an employee of *Y.* Pursuant to an agreement between *X* and *Y* to compensate *B* for services provided to *Y, X* transfers to *B* 10 shares of *X* stock with a fair market value of $100. Under § 1.83-6(d), but for this section, the transfer of *X* stock by *X* to *B* would be treated as a contribution

of the *X* stock by *X* to the capital of *Y,* and immediately thereafter, a transfer of the *X* stock by *Y* to *B.* But for this section, the basis of the *X* stock in the hands of *Y* would be determined with respect to *X*'s basis in the *X* stock under section 362(a).
(ii) In this *Example 4,* no gain or loss is recognized on the deemed disposition of the *X* stock by *Y.* Immediately before *Y*'s deemed disposition of the *X* stock, *Y* is treated as purchasing the *X* stock from *X* for $100 of cash contributed to *Y* by *X.* Under section 358, *X*'s basis in its *Y* stock is increased by $100.

Example 5. (i) *X,* a corporation, owns all of the outstanding stock of *Y* corporation. *B,* an individual, is an employee of *Y.* To compensate *B* for services provided to *Y, B* is offered the opportunity to purchase 10 shares of *X* stock with a fair market value of $100 at a reduced price of $80. *B* transfers $80 and *Y* transfers $10 to *X* as partial payment for the *X* stock.
(ii) In this *Example 5,* no gain or loss is recognized on the deemed disposition of the *X* stock by *Y.* Immediately before *Y*'s deemed disposition of the *X* stock, *Y* is treated as purchasing the *X* stock from *X* for $100, $80 of which *Y* is deemed to have received from *B,* $10 of which originated with *Y,* and $10 of which is deemed to have been contributed to *Y* by *X.* Under section 358, *X*'s basis in its *Y* stock is increased by $10.

Example 6. (i) *X,* a corporation, owns stock of *Y.* To compensate *Y*'s employee, *B,* for services provided to *Y, X* issues 10 shares of *X* stock to *B,* subject to a substantial risk of forfeiture. *B* does not have an election under section 83(b) in effect with respect to the *X* stock. *X* retains the only reversionary interest in the *X* stock in the event that *B* forfeits the right to the stock. Several years after *X*'s transfer of the *X* shares, the stock vests. At the time the stock vests, the 10 shares of *X* stock have a fair market value of $100. Under § 1.83-6(d), but for this section, the transfer of the *X* stock by *X* to *B* would be treated, at the time the stock vests, as a contribution of the *X* stock by *X* to the capital of *Y,* and immediately thereafter, a disposition of the *X* stock by *Y* to *B.* The basis of the *X* stock in the hands of *Y,* but for this section, would be determined with respect to *X*'s basis in the *X* stock under section 362(a).
(ii) In this *Example 6,* no gain or loss is recognized on the deemed disposition of *X* stock by *Y* when the stock vests. Immediately before *Y*'s deemed disposition of the *X* stock, *Y* is treated as purchasing *X*'s stock from *X* for $100 of cash contributed to *Y* by *X.* Under section 358, *X*'s basis in its *Y* stock is increased by $100.

Example 7. (i) Assume the same facts as in *Example 6,* except that *Y* (rather than *X*) retains a reversionary interest in the *X* stock in the event that *B* forfeits the right to the stock. Several years after *X*'s transfer of the *X* shares, the stock vests.
(ii) In this *Example 7,* this section does not apply to *Y*'s deemed disposition of the *X* shares because *Y* is not deemed to have transferred the *X* stock to *B* immediately after receiving the stock from *X.* For the tax consequences to *Y* on the deemed disposition of the *X* stock, see § 1.83-6(b).

Example 8. (i) *X,* a corporation, owns all of the outstanding stock of *Y* corporation. In Year 1, *X* issues to *Y*'s employee, *B,* a nonstatutory stock option to purchase 10 shares of *X* stock as compensation for services provided to *Y.* The option is exercisable against *X* and does not have a readily ascertainable fair market value (determined under § 1.83-7(b)) at the time the option is granted. In *Y*ear 2, *B* exercises the option by paying *X* the strike price of $80 for the *X* stock, which then has a fair market value of $100.
(ii) In this *Example 8,* because, under section 83(e)(3), section 83(a) does not apply to the grant of the option, paragraph (d) of this section also does not apply to the grant of the option. Section 83 and § 1.1032-3 apply in Year 2 when the option is exercised; thus, no gain or loss is recognized on the deemed disposition of *X* stock by *Y* in Year 2. Immediately before *Y*'s deemed disposition of the *X* stock in Year 2, *Y* is treated as purchasing the *X* stock from *X* for $100, $80 of which *Y* is deemed to have received from B and the remaining $20 of which is deemed to have been contributed to *Y* by *X.* Under section 358, *X*'s basis in its *Y* stock is increased by $20.

Example 9. (i) *A,* an individual, owns a majority of the stock of *X. X* owns stock of *Y* constituting control of *Y* within the meaning of section 368(c). *A* transfers 10 shares of its *X* stock to B, a key employee of *Y.* The fair market value of the 10 shares on the date of transfer was $100.
(ii) In this *Example 9, A* is treated as making a nondeductible contribution of the 10 shares of *X* to the capital of *X,* and no gain or loss is recognized by *A* as a result of this transfer. See *Commissioner v. Fink,* 483 U.S. 89 (1987). *A* must allocate his basis in the transferred shares to his remaining shares of *X* stock. No gain or loss is recognized on the deemed disposition of the *X* stock by *Y.* Immediately before *Y*'s disposition of the *X* stock, *Y* is treated as purchasing the *X* stock from *X* for $100 of cash contributed to *Y* by *X.* Under section 358, *X*'s basis in its *Y* stock is increased by $100.

Example 10. (i) In Year 1, *X,* a corporation, forms a trust which will be used to satisfy deferred compensation obligations owed by *Y, X*'s wholly owned subsidiary, to *Y*'s employees. *X* funds the trust with *X* stock, which would revert to *X* upon termination of the trust, subject to the employees' rights to be paid the deferred compensation due to them. The creditors of *X* can reach all the trust assets upon the insolvency of *X.* Similarly, *Y*'s creditors can reach all the trust assets upon the insolvency of *Y.* In Year 5, the trust transfers *X* stock to the employees of *Y* in satisfaction of the deferred compensation obligation.
(ii) In this *Example 10, X* is considered to be the grantor of the trust, and, under section 677, *X* is also the owner of the trust. Any income earned by the trust would be reflected on *X*'s income tax return. *Y* is not considered a grantor or owner of the trust corpus at the time *X* transfers *X* stock to the trust. In Year 5, when employees of *Y* receive X stock in satisfaction of the deferred compensation obligation, no gain or loss is recognized on the deemed disposition of the *X* stock by *Y.* Immediately before *Y*'s deemed disposition of the *X* stock, *Y* is treated as purchasing the *X* stock from *X* for fair market value using cash contributed to *Y* by *X.* Under section 358, *X*'s basis in its *Y* stock increases by the amount of cash deemed contributed.

(f) ***Effective date.*** This section applies to transfers of stock or stock options of the issuing corporation occurring on or after May 16, 2000.

[T.D. 8883, 65 FR 31076, May 16, 2000; 65 FR 37482, June 15, 2000]

§ 1.1033(a)-1 Involuntary conversions; nonrecognition of gain.

(a) ***In general.*** Section 1033 applies to cases where property is compulsorily or involuntarily converted. An *involuntary conversion* may be the result of the destruction of property in whole or in part, the theft of property, the seizure of property, the requisition or condemnation of property, or the threat or imminence of requisition or condemnation of property. An *involuntary conversion* may be a conversion into similar property or into money or into dissimilar property. Section 1033 provides that, under certain specified circumstances, any gain which is realized from an involuntary conversion shall not be recognized. In cases where property is converted into other property similar or related in service or use to the converted property, no gain shall be recognized regardless of when the disposition of the converted property occurred and regardless of whether or not the taxpayer elects to have the gain not recognized. In other types of involuntary conversion cases, however, the proceeds arising from the disposition of the converted property must (within the time limits specified) be reinvested in similar property in order to avoid recognition of any gain realized. Section 1033 applies only with respect to gains; losses from involuntary conversions are recognized or not recognized without regard to this section.

(b) ***Special rules.*** For rules relating to the application of section 1033 to involuntary conversions of a principal residence with respect to which an election has been made under section 121 (relating to gain from sale or exchange of residence of individual who has attained age 65), see paragraph (g) of § 1.121-5. For rules applicable to involuntary conversions of a principal residence occurring before January 1, 1951, see § 1.1033(a)-3. For rules applicable to involuntary conversions of a principal residence occurring after December 31, 1950, and before January 1, 1954, see paragraph (h)(1) of § 1.1034-1. For rules applicable to involuntary conversions of a personal residence occurring after December 31, 1953, see § 1.1033(a)-3. For special rules relating to the election to have section 1034 apply to certain involuntary conversions of a principal reisdence occurring after December 31, 1957, see paragraph (h)(2) of § 1.1034-1. For special rules relating to certain involuntary conversions of real property held either for productive use in trade or business or for investment and occurring after December 31, 1957, see § 1.1033(g)-1. See also special rules applicable to involuntary conversions of property sold pursuant to reclamation laws, livestock destroyed by disease, and livestock sold on account of drought provided in §§ 1.1033(c)-1, 1.1033(d)-1, and 1.1033(e)-1, respectively. For rules relating to basis of property acquired through involuntary conversions, see § 1.1033(b)-1. For determination of the period for which the taxpayer has held property acquired as a result of certain involuntary conversions, see section 1223 and regulations issued thereunder. For treatment of gains from involuntary conversions as capital gains in certain cases, see section 1231(a) and regulations issued thereunder. For portion of war loss recoveries treated as gain on involuntary conversion, see section 1332(b)(3) and regulations issued thereunder.

(Secs. 1033 (90 Stat. 1920, 26 U.S.C. 1033), and 7805 (68A Stat. 917, 26 U.S.C. 7805))

[T.D. 6500, 25 FR 11910, Nov. 26, 1960, as amended by T.D. 6856, 30 FR 13318, Oct. 20, 1965; T.D. 7625, 44 FR 31013, May 30, 1979; T.D. 7758, 46 FR 6925, Jan. 22, 1981]

§ 1.1033(a)-2 Involuntary conversion into similar property, into money or into dissimilar property.

(a) ***In general.*** The term *disposition of the converted property* means the destruction, theft, seizure, requisition, or condemnation of the converted property, or the sale or exchange of such property under threat or imminence of requisition or condemnation.

(b) ***Conversion into similar property.*** If property (as a result of its destruction in whole or in part, theft, seizure, or requisition or condemnation or threat or imminence thereof) is compulsorily or involuntarily converted only into property similar or related in service or use to the property so converted, no gain shall be recognized. Such nonrecognition of gain is mandatory.

(c) ***Conversion into money or into dissimilar property.***

(1) If property (as a result of its destruction in whole or in part, theft, seizure, or requisition or condemnation or threat or imminence thereof) is compulsorily or involuntarily converted into money or into property not similar or related in service or use to the converted property, the gain, if any, shall be recognized, at the election of the taxpayer, only to the extent that the amount realized upon such conversion exceeds the cost of other property purchased by the taxpayer which is similar or related in service or use to the property so converted, or the cost of stock of a corporation owning such other property which is purchased by the taxpayer in the acquisition of control of such corporation, if the taxpayer purchased such other property, or such stock, for the purpose of replacing the property so converted and during the period specified in subparagraph (3) of this paragraph. For the purposes of section 1033, the term *control* means the ownership of stock possessing at least 80 percent of the total combined voting power of all classes of stock entitled to vote and at least 80 percent of the total number of shares of all other classes of stock of the corporation.

(2) All of the details in connection with an involuntary conversion of property at a gain (including those relating to the replacement of the converted property, or a decision not to replace, or the expiration of the period for replacement) shall be reported in the return for the taxable year or years in which any of such gain is realized. An election to have such gain recognized only to the extent provided in subparagraph (1) of this paragraph shall be made by including such gain in gross income for such year or years only to such extent. If, at the time of filing such a return, the period within which the converted property must be replaced has expired, or if such an election is not desired, the gain should be included in gross income for such year or years in the regular manner. A failure to so include such gain in gross income in the regular manner shall be deemed to be an election by the taxpayer to have such gain recognized only to the extent provided in subparagraph (1) of this paragraph even though the details in connection with the conversion are not reported in such return. If, after having made an election under section 1033(a)(2), the converted property is not replaced within the required period of time, or replacement is made at a cost lower than was anticipated at the time of the election, or a decision is made not to replace, the tax liability for the year or years for which the election was made shall be recomputed. Such recomputation should be in the form of an *amended return.* If a decision is made to make an election under section 1033(a)(2) after the filing of the return and the payment of the tax for the year or years in which any of the gain on an involuntary conversion is realized and before the expiration of the period within which the converted property must be replaced, a claim for credit or refund for such year or years should be filed. If the replacement of the converted property occurs in a year or years in which none of the gain on the conversion is realized, all of the details in connection with such replacement shall be reported in the return for such year or years.

(3) The period referred to in subparagraphs (1) and (2) of this paragraph is the period of time commencing with the date of the disposition of the converted property, or the date of the beginning of the threat or imminence of requisition or condemnation of the converted property, whichever is earlier, and ending 2 years (or, in the case of a disposition occurring before December 31, 1969, 1 year) after the close of the first taxable year in which any part of the gain upon the conversion is realized, or at the close of such later date as may be designated pursuant to an application of the taxpayer. Such application shall be made prior to the expiration of 2 years (or, in the case of a disposition occurring before December 31, 1969, 1 year) after the close of the first taxable year in which any part of the gain from the conversion is realized, unless the taxpayer can show to the satisfaction of the district director—

(i) Reasonable cause for not having filed the application within the required period of time, and

(ii) The filing of such application was made within a reasonable time after the expiration of the required period of time. The application shall contain all of the details in connection with the involuntary conversion. Such application shall be made to the district director for the internal revenue district in which the return is filed for the first taxable year in which any of the gain from the involuntary conversion is realized. No extension of time shall be granted pursuant to such application unless the taxpayer can show reasonable cause for not being able to replace the converted property within the required period of time.

See section 1033(g)(4) and § 1.1033(g)-1 for the circumstances under which, in the case of the conversion of real property held either for productive use in trade or business or for investment, the 2-year period referred to in this paragraph (c)(3) shall be extended to 3 years.

(4) Property or stock purchased before the disposition of the converted property shall be considered to have been purchased for the purpose of replacing the converted property only if such property or stock is held by the taxpayer on the date of the disposition of the converted property. Property or stock shall be considered to have been purchased only if, but for the provisions of section 1033(b), the unadjusted basis of such property or stock would be its cost to the taxpayer within the meaning of section 1012. If the taxpayers unadjusted basis of the replacement property would be determined, in the absence of section 1033(b), under any of the exceptions referred to in section 1012, the unadjusted basis of the property would not be its cost within the meaning of section 1012. For example, if property similar or related in service or use to the converted property is acquired by gift and its basis is determined under section 1015, such property will not qualify as a replacement for the converted property.

(5) If a taxpayer makes an election under section 1033(a)(2), any deficiency, for any taxable year in which any part of the gain upon the conversion is realized, which is attributable to such gain may be assessed at any time before the expiration of three years from the date the district director with whom the return for such year has been filed is notified by the taxpayer of the replacement of the converted property or of an intention not to replace, or of a failure to replace, within the required period, notwithstanding the provisions of section 6212(c) or the provisions of any other law or rule of law which would otherwise prevent such assessment. If replacement has been made, such notification shall contain all of the details in connection with such replacement. Such notification should be made in the return for the taxable year or years in which the replacement occurs, or the intention not to replace is formed, or the period for replacement expires, if this return is filed with such district director. If this return is not filed with such district director, then such notification shall be made to such district director at the time of filing this return. If the taxpayer so desires, he may, in either event, also notify such district director before the filing of such return.

(6) If a taxpayer makes an election under section 1033(a)(2) and the replacement property or stock was purchased before the beginning of the last taxable year in which any part of the gain upon the conversion is realized, any deficiency, for any taxable year ending before such last taxable year, which is attributable to such election may be assessed at any time before the expiration of the period within which a deficiency for such last taxable year may be assessed, notwithstanding the provisions of section 6212(c) or 6501 or the provisions of any law or rule of law which would otherwise prevent such assessment.

(7) If the taxpayer makes an election under section 1033(a)(2), the gain upon the conversion shall be recognized to the extent that the amount realized upon such conversion exceeds the cost of the replacement property or stock, regardless of whether such amount is realized in one or more taxable years.

(8) The proceeds of a use and occupancy insurance contract, which by its terms insured against actual loss sustained of net profits in the business, are not proceeds of an involuntary conversion but are income in the same manner that the profits for which they are substituted would have been.

(9) There is no investment in property similar in character and devoted to a similar use if—

(i) The proceeds of unimproved real estate, taken upon condemnation proceedings, are invested in improved real estate.

(ii) The proceeds of conversion of real property are applied in reduction of indebtedness previously incurred in the purchase or a leasehold.

(iii) The owner of a requisitioned tug uses the proceeds to buy barges.

(10) If, in a condemnation proceeding, the Government retains out of the award sufficient funds to satisfy special assessments levied against the remaining portion of the plot or parcel of real estate affected for benefits accruing in connection with the condemnation, the amount so retained shall be deducted from the gross award in determining the amount of the net award.

(11) If, in a condemnation proceeding, the Government retains out of the award sufficient funds to satisfy liens (other than liens due to special assessments levied against the remaining portion of the plot or parcel of real estate affected for benefits accruing in connection with the condemnation) and mortgages against the property, and itself pays the same, the amount so retained shall not be deducted from the gross award in determining the amount of the net award. If, in a condemnation proceeding, the Government makes an award to a mortgagee to satisfy a mortgage on the condemned property, the amount of such award shall be considered as a part of the *amount realized* upon the conversion regardless of whether or not the taxpayer was personally liable for the mortgage debt. Thus, if a taxpayer has acquired property worth $100,000 subject to a $50,000 mortgage (regardless of whether or not he was personally liable for the mortgage debt) and, in a condemnation proceeding, the Government awards the taxpayer $60,000 and awards the mortgagee $50,000 in satisfaction of the mortgage, the entire $110,000 is considered to be the *amount realized* by the taxpayer.

(12) An amount expended for replacement of an asset, in excess of the recovery for loss, represents a capital expenditure and is not a deductible loss for income tax purposes.

(Secs. 1033 (90 Stat. 1920, 26 U.S.C. 1033), and 7805 (68A Stat. 917, 26 U.S.C. 7805)

[T.D. 6500, 25 FR 11910, Nov. 26, 1960, as amended by T.D. 6679, 28 FR 10515, Oct. 1, 1963; T.D. 7075, 35 FR 17996, Nov. 24, 1970; T.D. 7625, 44 FR 31013, May 30, 1979; T.D. 7758, 46 FR 6925, Jan. 22, 1981]

§ 1.1033(a)-3 Involuntary conversion of principal residence.

Section 1033 shall apply in the case of property used by the taxpayer as his principal residence if the destruction, theft, seizure, requisition, or condemnation of such residence, or the sale or exchange of such residence under threat or imminence thereof, occurs before January 1, 1951, or after December 31, 1953. However, section 1033 shall not apply to the seizure, requisition, or condemnation (but not destruction), or the sale or exchange under threat or imminence thereof, of such residence property if the seizure, requisition, condemnation, sale, or exchange occurs after December 31, 1957, and if the taxpayer properly elects under section 1034(i) to treat the transaction as a sale (see paragraph (h)(2)(ii) of § 1.1034-1). See section 121 and paragraphs (d) and (g) of § 1.121-5 for special rules relating to the involuntary conversion of a principal residence of individuals who have attained age 65.

[T.D. 6856, 30 FR 13319, Oct. 20, 1965. Redesignated and amended by T.D. 7625, 44 FR 31013, May 30, 1979]

§ 1.1033(b)-1 Basis of property acquired as a result of an involuntary conversion.

(a) The provisions of the first sentence of section 1033(b) may be illustrated by the following example:

Example: A's vessel which has an adjusted basis of $100,000 is destroyed in 1950 and A receives in 1951 insurance in the amount of $200,000. If A invests $150,000 in a new vessel, taxable gain to the extent of $50,000 would be recognized. The basis of the new vessel is $100,000; that is, the adjusted basis of the old vessel ($100,000) minus the money received by the taxpayer which was not expended in the acquisition of the new vessel ($50,000) plus the amount of gain recognized upon the conversion ($50,000). If any amount in excess of the proceeds of the conversion is expended in the acquisition of the new property, such amount may be added to the basis otherwise determined.

(b) The provisions of the last sentence of section 1033(b) may be illustrated by the following example:

Example: A taxpayer realizes $22,000 from the involuntary conversion of his barn in 1955; the adjusted basis of the barn to him was $10,000, and he spent in the same year $20,000 for a new barn which resulted in the nonrecognition of $10,000 of the $12,000 gain on the conversion. The basis of the new barn to the taxpayer would be $10,000—the cost of the new barn ($20,000) less the amount of the gain not recognized on the conversion ($10,000). The basis of the new barn would not be a substituted basis in the hands of the taxpayer within the meaning of section 1016(b)(2). If the replacement of the converted barn had been made by the purchase of two smaller barns which, together, were similar or related in service or use to the converted barn and which cost $8,000 and $12,000, respectively, then the basis of the two barns would be $4,000 and $6,000, respectively, the total basis of the purchased property ($10,000) allocated in proportion to their respective costs (8,000/ 20,000 of $10,000 or $4,000; and 12,000/20,000 of $10,000, or $6,000).

[T.D. 6500, 25 FR 11910, Nov. 26, 1960; 25 FR 14021, Dec. 31, 1960. Redesignated and amended by T.D. 7625, 44 FR 31013, May 30, 1979]

§ 1.1033(c)-1 Disposition of excess property within irrigation project deemed to be involuntary conversion.

(a) The sale, exchange, or other disposition occurring in a taxable year to which the Internal Revenue Code of 1954 applies, of excess lands lying within an irrigation project or division in order to conform to acreage limitations of the Federal reclamation laws effective with respect to such project or division shall be treated as an involuntary conversion to which the provisions of section 1033 and the regulations thereunder shall be applicable. The term *excess lands* means irrigable lands within an irrigation project or

division held by one owner in excess of the amount of irrigable land held by such owner entitled to receive water under the Federal reclamation laws applicable to such owner in such project or division. Such excess lands may be either

(1) lands receiving no water from the project or division, or

(2) lands receiving water only because the owner thereof has executed a valid recordable contract agreeing to sell such lands under terms and conditions satisfactory to the Secretary of the Interior.

(b) If a disposition in order to conform to the acreage limitation provisions of Federal reclamation laws includes property other than excess lands (as, for example, where the excess lands alone do not constitute a marketable parcel) the provisions of section 1033(d) shall apply only to the part of the disposition that relates to excess lands.

(c) The provisions of § 1.1033(a)-2 shall be applicable in the case of dispositions treated as involuntary conversions under this section. The details in connection with such a disposition required to be reported under paragraph (c)(2) of § 1.1033(a)-2 shall include the authority whereby the lands disposed of are considered *excess lands,* as defined in this section, and a statement that such disposition is not part of a plan contemplating the disposition of all or any nonexcess land within the irrigation project or division.

(d) The term *involuntary conversion,* where it appears in subtitle A of the Code or the regulations thereunder, includes dispositions of excess property within irrigation projects described in this section. (See, e.g., section 1231 and the regulations thereunder.)

[T.D. 6500, 25 FR 11910, Nov. 26, 1960; 25 FR 14021, Dec. 31, 1960. Redesignated and amended by T.D. 7625, 44 FR 31013, May 30, 1979]

§ 1.1033(d)-1 Destruction or disposition of livestock because of disease.

(a) The destruction occurring in a taxable year to which the Internal Revenue Code of 1954 applies, of livestock by, or on account of, disease, or the sale or exchange, in such a year, of livestock because of disease, shall be treated as an involuntary conversion to which the provisions of section 1033 and the regulations thereunder shall be applicable. Livestock which are killed either because they are diseased or because of exposure to disease shall be considered destroyed on account of disease. Livestock which are sold or exchanged because they are diseased or have been exposed to disease, and would not otherwise have been sold or exchanged at that particular time shall be considered sold or exchanged because of disease.

(b) The provisions of § 1.1033(a)-2 shall be applicable in the case of a disposition treated as an involuntary conversion under this section. The details in connection with such a disposition required to be reported under paragraph (c)(2) of § 1.1033(a)-2 shall include a recital of the evidence that the livestock were destroyed by or on account of disease, or sold or exchanged because of disease.

(c) The term *involuntary conversion,* where it appears in subtitle A of the Code or the regulations thereunder, includes disposition of livestock described in this section. (See, e.g., section 1231 and the regulations thereunder.)

[T.D. 6500, 25 FR 11910, Nov. 26, 1960; 25 FR 14021, Dec. 31, 1960. Redesignated by T.D. 7625, 44 FR 31013, May 30, 1979]

§ 1.1033(e)-1 Sale or exchange of livestock solely on account of drought.

(a) The sale or exchange of livestock (other than poultry) held for draft, breeding, or dairy purposes in excess of the number the taxpayer would sell or exchange during the taxable year if he followed his usual business practices shall be treated as an involuntary conversion to which section 1033 and the regulations thereunder are applicable if the sale or exchange of such livestock by the taxpayer is solely on account of drought. Section 1033(e) and this section shall apply only to sales and exchanges occurring after December 31, 1955.

(b) To qualify under section 1033(e) and this section, the sale or exchange of the livestock need not take place in a drought area. While it is not necessary that the livestock be held in a drought area, the sale or exchange of the livestock must be solely on account of drought conditions the existence of which affected the water, grazing, or other requirements of the livestock so as to necessitate their sale or exchange.

(c) The total sales or exchanges of livestock held for draft, breeding, or dairy purposes occurring in any taxable year which may qualify as an involuntary conversion under section 1033(e) and this section is limited to the excess of the total number of such livestock sold or exchanged during the taxable year over the number that the taxpayer would have sold or exchanged if he had followed his usual business practices, that is, the number he would have been expected to sell or exchange under ordinary circumstances if there had been no drought. For example, if in the past it has been a taxpayer's practice to sell or exchange annually one-half of his herd of dairy cows, only the number sold or exchanged solely on account of drought conditions which is in excess of one-half of his herd, may qualify as an involuntary conversion under section 1033(e) and this section.

(d) The replacement requirements of section 1033 will be satisfied only if the livestock sold or exchanged is replaced within the prescribed period with livestock which is similar or related in service or use to the livestock sold or exchanged because of drought, that is, the new livestock must be functionally the same as the livestock involuntarily converted. This means that the new livestock must be held for the same useful purpose as the old was held. Thus, although dairy cows could be replaced by dairy cows, a taxpayer could not replace draft animals with breeding or dairy animals.

(e) The provisions of § 1.1033(a)-2 shall be applicable in the case of a sale or exchange treated as an involuntary conversion under this section. The details in connection with such a disposition required to be reported under paragraph (c)(2) of § 1.1033(a)-2 shall include:

(1) Evidence of the existence of the drought conditions which forced the sale or exchange of the livestock;

(2) A computation of the amount of gain realized on the sale or exchange;

(3) The number and kind of livestock sold or exchanged; and

(4) The number of livestocks of each kind that would have been sold or exchanged under the usual business practice in the absence of the drought.

(f) The term *involuntary conversion,* where it appears in subtitle A of the Code or the regulations thereunder, includes the sale or exchange of livestock described in this section.

(g) The provisions of section 1033(e) and this section apply to taxable years ending after December 31, 1955, but only in the case of sales or exchange of livestock after December 31, 1955.

[T.D. 6500, 25 FR 11910, Nov. 26, 1960; 25 FR 14021, Dec. 31, 1960. Redesignated by T.D. 7625, 44 FR 31013, May 30, 1979]

§ 1.1033(g)-1 Condemnation of real property held for productive use in trade or business or for investment.

(a) ***Special rule in general.*** This section provides special rules for applying section 1033 with respect to certain dispositions, occurring after December 31, 1957, of real property held either for productive use in trade or business or for investment (not including stock in trade or other property held primarily for sale). For this purpose, disposition means the seizure, requisition, or condemnation (but not destruction) of the converted property, or the sale or exchange of such property under threat or imminence of seizure, requisition, or condemnation. In such cases, for purposes of applying section 1033, the replacement of such property with property of like kind to be held either for productive use in trade or business or for investment shall be treated as property similar or related in service or use to the property so converted. For principles in determining whether the replacement property is property of like kind, see paragraph (b) of § 1.1031(a)-1.

(b) ***Election to treat outdoor advertising displays as real property*** —

(1) ***In general.*** Under section 1033(g)(3) of the Code, a taxpayer may elect to treat property which constitutes an outdoor advertising display as real property for purposes of chapter 1 of the Code. The election is available for taxable years beginning after December 31, 1970. In the case of an election made on or before July 21, 1981, the election is available whether or not the period for filing a claim for credit or refund under section 6511 has expired. No election may be made with respect to any property for which

(i) the investment credit under section 38 has been claimed, or

(ii) an election to expense certain depreciable business assets under section 179(a) is in effect. The election once made applies to all outdoor advertising displays of the taxpayer which may be made the subject of an election under this paragraph, including all outdoor advertising displays acquired or constructed by the taxpayer in a taxable year after the taxable year for which the election is made. The election applies with respect to dispositions during the taxable year for which made and all subsequent taxable years (unless an effective revocation is made pursuant to paragraph (b)(2) (ii) or (iii)).

(2) ***Election*** —

(i) ***Time and manner of making election*** —

(A) ***In general.*** Unless otherwise provided in the return or in the instructions for a return for a taxable year, any election made under section 1033(g)(3) shall be made by attaching a statement to the return (or amended return if filed on or before July 21, 1981) for the first taxable year to which the election is to apply. Any election made under this paragraph must be made not later than the time, including extensions thereof, prescribed by law for filing the income tax return for such taxable year or July 21, 1981, whichever occurs last. If a taxpayer makes an election (or revokes an election under subdivision (ii) or (iii) of this subparagraph (b) (2)) for a taxable year for which he or she has previously filed a return, the return for that taxable year and all other taxable years affected by the election (or revocation) must be amended to reflect any tax consequences of the election (or revocation). However, no return for a taxable year for which the period for filing a claim for credit or refund under section 6511 has expired may be amended to make any changes other than those resulting from the election (or revocation). In order for the election (or revocation) to be effective, the taxpayer must remit with the amended return any

additional tax due resulting from the election (or revocation), notwithstanding the provisions of section 6212(c) or 6501 or the provisions of any other law which would prevent assessment or collection of such tax.

(B) ***Statement required when making election.*** The statement required when making the election must clearly indicate that the election to treat outdoor advertising displays as real property is being made.

(ii) ***Revocation of election by Commissioner's consent.*** Except as otherwise provided in paragraph (b)(2)(iii) of this section, an election under section 1033(g)(3) shall be irrevocable unless consent to revoke is obtained from the Commissioner. In order to secure the Commissioner's consent to revoke an election, the taxpayer must file a request for revocation of election with the Commissioner of Internal Revenue, Washington, DC 20224. The request for revocation shall include—

(A) The taxpayer's name, address, and taxpayer identification number,

(B) The date on which and taxable year for which the election was made and the Internal Revenue Service office with which it was filed,

(C) Identification of all outdoor advertising displays of the taxpayer to which the revocation would apply (including the location, date of purchase, and adjusted basis in such property),

(D) The effective date desired for the revocation, and

(E) The reasons for requesting the revocation.

The Commissioner may require such other information as may be necessary in order to determine whether the requested revocation will be permitted. The Commissioner may prescribe administrative procedures (subject to such limitations, terms and conditions as he deems necessary) to obtain his consent to permit the taxpayer to revoke the election. The taxpayer may submit a request for revocation for any taxable year for which the period of limitations for filing a claim for credit or refund or overpayment of tax has not expired.

(iii) ***Revocation where election was made on or before December 11, 1979.*** In the case of an election made on or before December 11, 1979, the taxpayer may revoke such election provided such revocation is made not later than March 23, 1981. The request for revocation shall be made in conformity with the requirements of paragraph (b)(2)(ii), except that, in lieu of the information required by paragraph (b)(2)(ii)(E), the taxpayer shall state that the revocation is being made pursuant to this paragraph. In addition, the taxpayer must forward, with the statement of revocation, copies of his or her tax returns, including both the original return and any amended returns, for the taxable year in which the original election was made and for all subsequent years and must remit any additional tax due as a result of the revocation.

(3) ***Definition of outdoor advertising display.*** The term *outdoor advertising display* means a rigidly assembled sign, display, or device that constitutes, or is used to display, a commercial or other advertisement to the public and is permanently affixed to the ground or permanently attached to a building or other inherently permanent structure. The term includes highway billboards affixed to the ground with wood or metal poles, pipes, or beams, with or without concrete footings.

(4) ***Character of replacement property.*** For purposes of section 1033(g), an interest in real property purchased as replacement property for a compulsorily or involuntarily converted outdoor advertising display (with respect to which an election under this section is in effect) shall be considered property of a like kind as the property converted even though a taxpayer's interest in the replacement property is different from the interest held in the property converted. Thus, for example, a fee simple interest in real estate acquired to replace a converted billboard and a 5-year leasehold interest in the real property on which the billboard was located qualifies as property of a like kind under this section.

(c) ***Special rule for period within which property must be replaced.*** In the case of a disposition described in paragraph (a) of this section, section 1033(a)(2)(B) and § 1.1033(a)-2(c)(3) (relating to the period within which the property must be replaced) shall be applied by substituting 3 years for 2 years. This paragraph shall apply to any disposition described in section 1033(f)(1) and paragraph (a) of this section occurring after December 31, 1974, unless a condemnation proceeding with respect to the property was begun before October 4, 1976. Thus, regardless of when the property is disposed of, the taxpayer will not be eligible for the 3-year replacement period if a condemnation proceeding was begun before October 4, 1976. However, if the property is disposed of after December 31, 1974, and the condemnation proceeding was begun (if at all) after October 4, 1976, then the taxpayer is eligible for the 3-year replacement period. For the purposes of this paragraph, whether a condemnation proceeding is considered as having begun is determined under the applicable State or Federal procedural law.

(d) ***Limitation on application of special rule.*** This section shall not apply to the purchase of stock in the acquisition of control of a corporation described in section 1033(a)(2)(A).

(Secs. 1033 (90 Stat. 1920, 26 U.S.C. 1033), and 7805 (68A Stat. 917, 26 U.S.C. 7805))

[T.D. 6500, 25 FR 11910, Nov. 26, 1960; 25 FR 14021, Dec. 31, 1960. Redesignated and amended by T.D. 7625, 44 FR 31013, May 30, 1979; 44 FR 38458, July 2, 1979. Further redesignated and amended by T.D. 7758, 46 FR 6925, Jan. 22, 1981; T.D. 7758, 46 FR 23235, Apr. 24, 1981; T.D. 8121, 52 FR 414, Jan. 6, 1987]

§ 1.1033(h)-1 Effective date.

Except as provided otherwise in § 1.1033(e)-1 and § 1.1033(g)-1, the provisions of section 1033 and the regulations thereunder are effective for taxable years beginning after December 31, 1953, and ending after August 16, 1954.

(Secs. 1033 (90 Stat. 1920, 26 U.S.C. 1033), and 7805 (68A Stat. 917, 26 U.S.C. 7805))

[T.D. 6500, 25 FR 11910, Nov. 26, 1960; 25 FR 14021, Dec. 31, 1960. Redesignated and amended by T.D. 7625, 44 FR 31013, May 30, 1979. Further redesignated and amended by T.D. 7758, 46 FR 6925, Jan. 22, 1981]

§ 1.1035-1 Certain exchanges of insurance policies.

Under the provisions of section 1035 no gain or loss is recognized on the exchange of:

(a) A contract of life insurance for another contract of life insurance or for an endowment or annuity contract (section 1035(a)(1));

(b) A contract of endowment insurance for another contract of endowment insurance providing for regular payments beginning at a date not later than the date payments would have begun under the contract exchanged, or an annuity contract (section 1035(a)(2)); or

(c) An annuity contract for another annuity contract (section 1035(a)(3)), but section 1035 does not apply to such exchanges if the policies exchanged to not relate to the same insured. The exchange, without recognition of gain or loss, of an annuity contract for another annuity contract under section 1035(a)(3) is limited to cases where the same person or persons are the obligee or obligees under the contract received in exchange as under the original contract. This section and section 1035 do not apply to transactions involving the exchange of an endowment contract or annuity contract for a life insurance contract, nor an annuity contract for an endowment contract. In the case of such exchanges, any gain or loss shall be recognized. In the case of exchanges which would be governed by section 1035 except for the fact that the property received in exchange consists not only of property which could otherwise be received without the recognition of gain or loss, but also of other property or money, see section 1031 (b) and (c) and the regulations thereunder. Such an exchange does not come within the provisions of section 1035. Determination of the basis of property acquired in an exchange under section 1035(a) shall be governed by section 1031(d) and the regulations thereunder.

§ 1.1036-1 Stock for stock of the same corporation.

(a) Section 1036 permits the exchange, without the recognition of gain or loss, of common stock for common stock, or of preferred stock for preferred stock, in the same corporation. Section 1036 applies even though voting stock is exchanged for nonvoting stock or nonvoting stock is exchanged for voting stock. It is not limited to an exchange between two individual stockholders; it includes a transaction between a stockholder and the corporation. However, a transaction between a stockholder and the corporation may qualify not only under section 1036(a), but also under section 368(a)(1)(E) (recapitalization) or section 305(a) (distribution of stock and stock rights). The provisions of section 1036(a) do not apply if stock is exchanged for bonds, or preferred stock is exchanged for common stock, or common stock is exchanged for preferred stock, or common stock in one corporation is exchanged for common stock in another corporation. See paragraph (l) of section 1301-1 for certain transactions treated as distributions under section 301. See paragraph (e)(5) of § 1.368-2 for certain transactions which result in deemed distributions under section 305(c) to which sections 305(b)(4) and 301 apply.

(b) For rules relating to recognition of gain or loss where an exchange is not wholly in kind, see subsections (b) and (c) of section 1031. For rules relating to the basis of property acquired in an exchange described in paragraph (a) of this section, see subsection (d) of section 1031.

(c) A transfer is not within the provisions of section 1036(a) if as part of the consideration the other party to the exchange assumes a liability of the taxpayer (or if the property transferred is subject to a liability), but the transfer, if otherwise qualified, will be within the provisions of section 1031(b).

(d) ***Nonqualified preferred stock.*** See § 1.356-7(a) for the applicability of the definition of nonqualified preferred stock in section 351(g)(2) for stock issued prior to June 9, 1997, and for stock issued in transactions occurring after June 8, 1997, that are described in section 1014(f)(2) of the Taxpayer Relief Act of 1997, Public Law 105-34 (111 Stat. 788, 921).

[T.D. 6500, 25 FR 11910, Nov. 26, 1960, as amended by T.D. 7281, 38 FR 18540, July 12, 1973; T.D. 8904, 65 FR 58652, Oct. 2, 2000]

§ 1.1037-1 Certain exchanges of United States obligations.

(a) ***Nonrecognition of gain or loss*** —

(1) ***In general.*** Section 1037(a) provides for the nonrecognition of gain or loss on the surrender to the United States of obligations of the United States issued under the Second Liberty Bond Act (31 U.S.C. 774(2)) when such obligations are exchanged solely for other obligations issued under that

Act and the Secretary provides by regulations promulgated in connection with the issue of such other obligations that gain or loss is not to be recognized on such exchange. It is not necessary that at the time of the exchange the obligation which is surrendered to the United States be a capital asset in the hands of the taxpayer. For purposes of section 1037(a) and this subparagraph, a circular of the Treasury Department which offers to exchange obligations of the United States issued under the Second Liberty Bond Act for other obligations issued under that Act shall constitute regulations promulgated by the Secretary in connection with the issue of the obligations offered to be exchanged if such circular contains a declaration by the Secretary that no gain or loss shall be recognized for Federal income tax purposes on the exchange or grants the privilege of continuing to defer the reporting of the income of the bonds exchanged until such time as the bonds received in the exchange are redeemed or disposed of, or have reached final maturity, whichever is earlier. See, for example, regulations of the Bureau of the Public Debt, 31 CFR part 339, or Treasury Department Circular 1066, 26 FR 8647. The application of section 1037(a) and this subparagraph will not be precluded merely because the taxpayer is required to pay money on the exchange. See section 1031 and the regulations thereunder if the taxpayer receives money on the exchange.

(2) ***Recognition of gain or loss postponed.*** Gain or loss which has been realized but not recognized on the exchange of a U.S. obligation for another such obligation because of the provisions of section 1037(a) (or so much of section 1031 (b) or (c) as related to section 1037(a)) shall be recognized at such time as the obligation received in the exchange is disposed of, or redeemed, in a transaction other than an exchange described in section 1037(a) (or so much of section 1031 (b) or (c) as relates to section 1037(a)) or reaches final maturity, whichever is earlier, to the extent gain or loss is realized on such later transaction.

(3) ***Illustrations.*** The application of this paragraph may be illustrated by the following examples, in which it is assumed that the taxpayer uses the cash receipts and disbursements method of accounting and has never elected under section 454(a) to include in gross income currently the annual increase in the redemption price of non-interest-bearing obligations issued at a discount. In addition, it is assumed that the old obligations exchanged are capital assets transferred in an exchange in respect of which regulations are promulgated pursuant to section 1037(a):

Example 1. A, the owner of a $1,000 series E U.S. savings bond purchased for $750 and bearing an issue date of May 1, 1945, surrenders the bond to the United States in exchange solely for series H U.S. savings bonds on February 1, 1964, when the series E bond has a redemption value of $1,304.80. In the exchange A pays an additional $195.20 and obtains three $500 series H bonds. None of the $554.80 gain ($1,304.80 less $750) realized by A on the series E bond is recognized at the time of the exchange.

Example 2. In 1963, B purchased for $97 a marketable U.S. bond which was originally issued at its par value of $100. In 1964 he surrenders the bond to the United States in exchange solely for another marketable U.S. bond which then has a fair market value of $95. B's loss of $2 on the old bond is not recognized at the time of the exchange, and his basis for the new bond is $97 under section 1031(d). If it has been necessary for B to pay $1 additional consideration in the exchange, his basis in the new bond would be $98.

Example 3. The facts are the same as in example (2) except that B also receives $1 interest on the old bond for the period which has elapsed since the last interest payment date and that B does not pay any additional consideration on the exchange. As in example (2), B has a loss of $2 which is not recognized at the time of the exchange and his basis in the new bond is $97. In addition, the $1 of interest received on the old bond is includible in gross income. B holds the new bond 1 year and sells

it in the market for $99 plus interest. At this time he has a gain of $2, the difference between his basis of $97 in the new bond and the sales price of such bond. In addition, the interest received on the new bond is includible in gross income.

Example 4. The facts are the same as in example (2), except that in addition to the new bond B also receives $1.85 in cash, $0.85 of which is interest. The $0.85 interest received is includible in gross income. B's loss of $1 ($97 less $96) on the old bond is not recognized at the time of the exchange by reason of section 1031(c). Under section 1031(d) B's basis in the new bond is $96 (his basis of $97 in the old bond, reduced by the $1 cash received in the exchange).

Example 5. (a) For $975 D subscribes to a marketable U.S. obligation which has a face value of $1,000. Thereafter, he surrenders this obligation to the United States in exchange solely for a 10-year marketable $1,000 obligation which at the time of exchange has a fair market value of $930, at which price such obligation is initially offered to the public. At the time of issue of the new obligation there was no intention to call it before maturity. Five years after the exchange D sells the new obligation for $960.
(b) On the exchange of the old obligation for the new obligation D sustains a loss of $45 ($975 less $930), none of which is recognized pursuant to section 1037(a).

(c) The basis of the new obligation in D's hands, determined under section 1031(d), is $975 (the same basis as that of the old obligation).

(d) On the sale of the new obligation D sustains a loss of $15 ($975 less $960), all of which is recognized by reason of section 1002.

Example 6. (a) The facts are the same as in example (5), except that five years after the exchange D sells the new obligation for $1,020.
(b) On the exchange of the old obligation for the new obligation D sustains a loss of $45 ($975 less $930), none of which is recognized pursuant to section 1037(a).

(c) The basis of the new obligation in D's hands, determined under section 1031(d), is $975 (the same basis as that of the old obligation). The issue price of the new obligation under section 1232(b)(2) is $930.

(d) On the sale of the new obligation D realizes a gain of $45 ($1,020 less $975), all of which is recognized by reason of section 1002. Of this gain of $45, the amount of $35 is treated as ordinary income and $10 is treated as long-term capital gain, determined as follows:

(1) Ordinary income under first sentence of section 1232(a)(2)(B) on sale of new obligation:

Stated redemption price of new obligation at maturity	$1,000
Less: Issue price of new obligation under section 1232(b)(2)	930
Original issue discount on new obligation	70
Proration under section 1232(a)(2)(B)(ii): ($70 × 60 months/120 months)	35
(2) Long-term capital gain ($45 less $35)	10

Example 7. (a) The facts are the same as in example (5), except that D retains the new obligation and redeems it at maturity for $1,000.
(b) On the exchange of the old obligation for the new obligation D sustains a loss of $45 ($975 less $930), none of which is recognized pursuant to section 1037(a).

(c) The basis of the new obligation in D's hands, determined under section 1031(d), is $975 (the same basis as that of the old obligation). The issue price of the new obligation is $930 under section 1232(b)(2).

(d) On the redemption of the new obligation D realizes a gain of $25 ($1,000 less $975), all of which is recognized by reason of section 1002. Of this gain of $25, the entire amount is treated as ordinary income, determined as follows:

Ordinary income under first sentence of section 1232(a)(2)(B) on redemption of new obligation:	
Stated redemption price of new obligation at maturity	$1,000
Less: Issue price of new obligation under section 1232(b)(2)	930
Original issue discount on new obligation	70
Proration under section 1232(a)(2)(B)(ii): ($70 × 120 months/120 months), but such amount not to exceed the $25 gain recognized on redemption	25

(b) ***Application of section 1232 upon disposition or redemption of new obligation*** —

(1) ***Exchanges involving nonrecognition of gain on obligations issued at a discount.*** If an obligation, the gain on which is subject to the first sentence of section 1232(a)(2)(B), because the obligation was originally issued at a discount, is surrendered to the United States in exchange for another obligation and any part of the gain realized on the exchange is not then recognized because of the provisions of section 1037(a) (or because of so much of section 1031(b) as relates to section 1037(a)), the first sentence of section 1232(a)(2)(B) shall apply to so much of such unrecognized gain as is later recognized upon the disposition or redemption of the obligation which is received in the exchange as though the obligation so disposed of or redeemed were the obligation surrendered, rather than the obligation received, in such exchange. See the first sentence of section 1037(b)(1). Thus, in effect

that portion of the gain which is unrecognized on the exchange but is recognized upon the later disposition or redemption of the obligation received from the United States in the exchange shall be considered as ordinary income in an amount which is equal to the gain which, by applying the first sentence of section 1232(a)(2)(B) upon the earlier surrender of the old obligation to the United States, would have been considered as ordinary income if the gain had been recognized upon such earlier exchange. Any portion of the gain which is recognized under section 1031(b) upon the earlier exchange and is treated at such time as ordinary income shall be deducted from the gain which is treated as ordinary income by applying the first sentence of section 1232(a)(2)(B) pursuant to this subparagraph upon the disposition or redemption of the obligation which is received in the earlier exchange. This subparagraph shall apply only in a case where on the exchange of United States obligations there was some gain not recognized by reason of section 1037(a) (or so much of section 1031(b) as relates to section 1037(a)); it shall not apply where, only loss was unrecognized by reason of section 1037(a).

(2) ***Rules to apply when a nontransferable obligation is surrendered in the exchange.*** For purposes of applying both section 1232(a)(2)(B) and subparagraph (1) of this paragraph to the total gain realized on the obligation which is later disposed of or redeemed, if the obligation surrendered to the United States in the earlier exchange is a nontransferable obligation described in section 454 (a) or (c)—

(i) The aggregate amount considered, with respect to the obligation so surrendered in the earlier exchange, as ordinary income shall not exceed the difference between the issue price of the surrendered obligation and the stated redemption price of the surrendered obligation which applied at the time of the earlier exchange, and

(ii) The issue price of the obligation which is received from the United States in the earlier exchange shall be considered to be the stated redemption price of the surrendered obligation which applied at the time of the earlier exchange, increased by the amount of other consideration (if any) paid to the United States as part of the earlier exchange.

If the obligation received in the earlier exchange is a nontransferable obligation described in section 454(c) and such obligation is partially redeemed before final maturity or partially disposed of by being partially reissued to another owner, the amount determined by applying subdivision (i) of this subparagraph shall be determined on a basis proportional to the total denomination of obligations redeemed or disposed of. See paragraph (c) of § 1.454-1.

(3) ***Long-term capital gain.*** If, in a case where both subparagraphs (1) and (2) of this paragraph are applied, the total gain realized on the redemption or disposition of the obligation which is received from the United States in the exchange to which section 1037(a) (or so much of section 1031(b) as related to section 1037(a)) applies exceeds the amount of gain which, by applying such subparagraphs, is treated as ordinary income, the gain in excess of such amount shall be treated as long-term capital gain.

(4) ***Illustrations.*** The application of this paragraph may be illustrated by the following examples, in which it is assumed that the taxpayer uses the cash receipts and disbursements method of accounting and has never elected under section 454(a) to include in gross income currently the annual increase in the redemption price of non-interest-bearing obligations issued at a discount. In addition, it is assumed that the old obligations exchanged are capital assets transferred in an exchange in respect of which regulations are promulgated pursuant to section 1037(a):

Example 1. (a) A purchased a noninterest-bearing nontransferable U.S. bond for $74 which

was issued after December 31, 1954, and redeemable in 10 years for $100. Several years later, when the stated redemption value of such bond is $94.50, A surrenders it to the United States in exchange for $1 in cash and a 10-year marketable bond having a face value of $100. On the date of exchange the bond received in the exchange has a fair market value of $96. Less than one month after the exchange, A sells the new bond for $96.

(b) On the exchange of the old bond for the new bond A realizes a gain of $23, determined as follows:

Amount realized (a new bond worth $96 plus $1 cash)	$97
Less: Adjusted basis of old bond	74
Gain realized	23

Pursuant to so much of section 1031(b) as applies to section 1037(a), the amount of such gain which is recognized is $1 (the money received). Such recognized gain of $1 is treated as ordinary income. On the exchange of the old bond a gain of $22 ($23 less $1) is not recognized.

(c) The basis of the new bond in A's hands, determined under section 1031(d) is $74 (the basis of the old bond, decreased by the $1 received in cash and increased by the $1 gain recognized on the exchange).

(d) On the sale of the new bond A realizes a gain of $22 ($96 less $74), all of which is recognized by reason of section 1002. Of this gain of $22, the amount of $19.50 is treated as ordinary income and $2.50 is treated as long-term capital gain, determined as follows:

(1) Ordinary income, treating sale of new bond as though a sale of old bond and applying section 1037(b)(1)(A):		
Stated redemption price of old bond		$94.50
Less: Issue price of old bond		74.00
Aggregate gain under section 1037(b)(1)(A) (not to exceed $22 not recognized at time of exchange)		20.50
Less: Amount of such gain recognized at time of exchange		1.00
Ordinary income		19.50
(2) Ordinary income under first sentence of section 1232(a)(2)(B), applying section 1037(b)(1)(B) to sale of new bond:		
Stated redemption price of new bond at maturity	$100.00	
Less: Issue price of new bond under section 1037(b)(1)(B) ($94.50 plus $0 additional consideration paid on exchange)	94.50	

Original issue discount on new bond	5.50	
Proration under section 1232(a)(2)(B)(ii): ($5.50 × 0 months/120 months)		0
(3) Total ordinary income (sum of subparagraphs (1) and (2))		19.50
(4) Long-term capital gain ($22 less $19.50)		2.50

Example 2. (a) The facts are the same as in example (1), except that, less than one month after the exchange of the old bond, the new bond is sold for $92.
(b) On the sale of the new bond A realizes a gain of $18 ($92 less $74), all of which is recognized by reason of section 1002. Of this gain, the entire amount of $18 is treated as ordinary income. This amount is determined as provided in paragraph (d)(1) of example (1) except that the ordinary income of $19.50 is limited to the $18 recognized on the sale of the new bond.

Example 3. (a) The facts are the same as in example (1), except that 2 years after the exchange of the old bond A sells the new bond for $98.
(b) On the sale of the new bond A realizes a gain of $24 ($98 less $74), all of which is recognized by reason of section 1002. Of this gain of $24, the amount of $20.60 is treated as ordinary income and $3.40 is treated as long-term capital gain, determined as follows:

(1) Ordinary income applicable to old bond (determined as provided in paragraph (d)(1) of example (1))	$19.50
(2) Ordinary income applicable to new bond (determined as provided in paragraph (d)(2) of example (1), except that the proration of the original issue discount under section 1232(a)(2)(B)(ii) amounts to $1.10 ($5.50 × 24 months/120 months)	1.10
(3) Total ordinary income (sum of subparagraphs (1) and (2))	20.60
(4) Long-term capital gain ($24 less $20.60)	3.40

Example 4. (a) The facts are the same as in example (1), except that A retains the new bond and redeems it at maturity for $100.

(b) On the redemption of the new bond A realizes a gain of $26 ($100 less $74), all of which is recognized by reason of section 1002. Of this gain of $26, the amount of $25 is treated as ordinary income and $1 is treated as long-term capital gain, determined as follows:

(1) Ordinary income applicable to old bond (determined as provided in paragraph (d)(1) of example (1))	$19.50
(2) Ordinary income applicable to new bond (determined as provided in paragraph (d)(2) of example (1), except that the proration of the original issue discount under section 1232(a)(2)(B)(ii) amounts to $5.50 ($5.50 × 120 months/120 months))	5.50
(3) Total ordinary income (sum of subparagraphs (1) and (2))	25.00
(4) Long-term capital gain ($26 less $25)	1.00

Example 5. (a) In 1958 B purchased for $7,500 a series E United States savings bond having a face value of $10,000. In 1965 when the stated redemption value of the series E bond is $9,760, B surrenders it to the United States in exchange solely for a $10,000 series H U.S. savings bond, after paying $240 additional consideration. B retains the series H bond and redeems it at maturity in 1975 for $10,000, after receiving all the semiannual interest payments thereon.
(b) On the exchange of the series E bond for the series H bond, B realizes a gain of $2,260 ($9,760 less $7,500), none of which is recognized at such time by reason of section 1037(a).

(c) The basis of the series H bond in B's hands, determined under section 1031(d), is $7,740 (the $7,500 basis of the series E bond, plus $240 additional consideration paid for the series H bond).

(d) On the redemption of the series H bond, B realizes a gain of $2,260 ($10,000 less $7,740), all of which is recognized by reason of section 1002. This entire gain is treated as ordinary income by treating the redemption of the series H bond as though it were a redemption of the series E bond and by applying section 1037(b)(1)(A).

(e) Under section 1037(b)(1)(B) the issue price of the series H bonds is $10,000 ($9,760 stated redemption price of the series E bond at time of exchange, plus $240 additional consideration paid). Thus, with respect to the series H bond, there is no original issue discount to which section 1232(a)(2)(B) might apply.

Example 6. (a) The facts are the same as in example (5), except that in 1970 B submits the $10,000 series H bond to the United States for partial redemption in the amount of $3,000 and for reissuance of the remainder in $1,000 series H savings bonds registered in his name.

On this transaction B receives $3,000 cash and seven $1,000 series H bonds, bearing the original issue date of the $10,000 bond which is partially redeemed. The $1,000, series H bonds are redeemed at maturity in 1975 for $7,000.
(b) On the partial redemption of the $10,000 series H bond in 1970 B realizes a gain of $678 ($3,000 less $2,322 [$7,740 × $3,000/$10,000]), all of which is recognized at such time by reason of section 1002 and paragraph (c) of § 1.454-1. This entire gain is treated as ordinary income, by treating the partial redemption of the series H bond as though it were a redemption of the relevant denominational portion of the series E bond and by applying section 1037(b)(1)(A).

(c) On the redemption at maturity in 1975 of the seven $1,000 series H bonds B realizes a gain of $1,582 ($7,000 less $5,418 [$7,740 × $7,000/$10,000]), all of which is recognized at such time by reason of section 1002 and paragraph (c) of § 1.454-1. This entire gain is treated as ordinary income, determined in the manner described in paragraph (b) of this example.

Example 7. (a) The facts are the same as in example (5), except that in 1970 B requests the United States to reissue the $10,000 series H bond by issuing two $5,000 series H bonds bearing the original issue date of such $10,000 bond. One of such $5,000 bonds is registered in B's name, and the other is registered in the name of C, who is B's son. Each $5,000 series H bond is redeemed at maturity in 1975 for $5,000.
(b) On the issuing in 1970 of the $5,000 series H bond to C, B realizes a gain of $1,130 ($5,000 less $3,870 [$7,740 × $5,000/$10,000]), all of which is recognized at such time by reason of section 1002 and paragraph (c) of § 1.454-1. This entire gain is treated as ordinary income by treating the transaction as though it were a redemption of the relevant denominational portion of the series E bond and by applying section 1037(b)(1)(A).

(c) On the redemption at maturity in 1975 of the $5,000 series H bond registered in his name B realizes a gain of $1,130 ($5,000 less $3,870 [$7,740 × $5,000/$10,000]), all of which is recognized at such time by reason of section 1002 and paragraph (c) of § 1.454-1. This entire gain is treated as ordinary income, determined in the manner described in paragraph (b) of this example.

(d) On the redemption at maturity in 1975 of the $5,000 series H bond registered in his name C does not realize any gain, since the amount realized on redemption does not exceed his basis in the property, determined as provided in section 1015.

(5) ***Exchanges involving nonrecognition of gain or loss on transferable obligations issued at not less than par —***

(i) ***In general.*** If a transferable obligation of the United States which was originally issued at not less than par is surrendered to the United States for another transferable obligation in an exchange to which the provisions of section 1037(a) (or so much of section 1031 (b) or (c) as relates to section 1037(a)) apply, the issue price of the obligation received from the United States in the exchange shall be considered for purposes of applying section 1232 to gain realized on the disposition or redemption of the obligation so received, to be the same as the issue price of the obligation which is surrendered to the United States in the exchange, increased by the amount of other consideration, if any, paid to the United States as part of the exchange. This subparagraph shall apply irrespective of whether there is gain or loss unrecognized on the exchange and irrespective of the fair market value, at the time of the exchange, of either the obligation surrendered to, or the obligation received from, the United States in the exchange.

(ii) ***Illustrations.*** The application of this subparagraph may be illustrated by the following examples, in which it is assumed that the taxpayer uses the cash receipts and disbursements method of accounting and that the old obligations exchanged are capital assets transferred in an exchange in respect of which regulations are promulgated pursuant to section 1037(a):

Example 1. (a) A purchases in the market for $85 a marketable U.S. bond which was originally issued at its par value of $100. Three months later, A surrenders this bond to the United States in exchange solely for another $100 marketable U.S. bond which then has a fair market value of $88. He holds the new bond for 5 months and then sells it on the market for $92.
(b) On the exchange of the old bond for the new bond A realizes a gain of $3 ($88 less $85), none of which is recognized by reason of section 1037(a).

(c) The basis of the new bond in A's hands, determined under section 1031(d), is $85 (the same as that of the old bond). The issue price of the new bond for purposes of section 1232(a)(2)(B) is considered under section 1037(b)(2) to be $100 (the same issue price as that of the old bond).

(d) On the sale of the new bond A realizes a gain of $7 ($92 less $85), all of which is recognized by reason of section 1002. Of this gain of $7, the entire amount is treated as long-term capital gain, determined as follows:

(1) Ordinary income under first sentence of section 1232(a)(2)(B), applicable to old bond:		
Stated redemption price of old bond at maturity	$100	
Less: Issue price of old bond	100	
Original issue discount on old bond		0
(2) Ordinary income under first sentence of section 1232(a)(2)(B), applying section 1037(b)(2) to sale of new bond:		

Stated redemption price of new bond at maturity	100	
Less: Issue price of new bond under section 1037(b)(2)	100	
Original issue discount on new bond		0
(3) Long-term capital gain ($7 less sum of subparagraphs (1) and (2))		$7

Example 2. The facts are the same as in example (1), except that A retains the new bond and redeems it at maturity for $100. On the redemption of the new bond, A realizes a gain of $15 ($100 less $85), all of which is recognized under section 1002. This entire gain is treated as long-term capital gain, determined in the same manner as provided in paragraph (d) of example (1).

Example 3. (a) For $1,000 B subscribes to a marketable U.S. bond which has a face value of $1,000. Thereafter, he surrenders this bond to the United States in exchange solely for a 10-year marketable $1,000 bond which at the time of exchange has a fair market value of $930, at which price such bond is initially offered to the public. Five years after the exchange, B sells the new bond for $950.
(b) On the exchange of the old bond for the new bond, B sustains a loss of $70 ($1,000 less $930), none of which is recognized pursuant to section 1037(a).

(c) The basis of the new bond in A's hands, determined under section 1031(d), is $1,000 (the same basis as that of the old bond).

(d) On the sale of the new bond B sustains a loss of $50 ($1,000 less $950), all of which is recognized by reason of section 1002.

Example 4. (a) The facts are the same as in example (3), except that 5 years after the exchange B sells the new bond for $1,020.
(b) On the exchange of the old bond for the new bond B sustains a loss of $70 ($1,000 less $930), none of which is recognized pursuant to section 1037(a).

(c) The basis of the new bond in B's hands, determined under section 1031(d), is $1,000 (the same basis as that of the old bond). The issue price of the new bond for purposes of section 1232(a)(2)(B) is considered under section 1037(b)(2) to be $1,000 (the same issue price as that of the old bond).

(d) On the sale of the new bond B realizes a gain of $20 ($1,020 less $1,000), all of which is recognized by reason of section 1002. This entire gain is treated as long-term capital gain, determined in the same manner as provided in paragraph (d) of example (1).

(6) ***Other rules for applying section 1232.*** To the extent not specifically affected by the provisions of section 1037(b) and subparagraphs (1) through (5) of this paragraph, any gain realized on the disposition or redemption of any obligation received from the United States in an exchange to which section 1037(a) (or so much of section 1031 (b) or (c) as relates to section 1037(a)) applies shall be treated in the manner provided by section 1232 if the facts and circumstances relating to the acquisition and disposition or redemption of such obligation require the application of section 1232.

(c) ***Holding period of obligation received in the exchange.*** The holding period of an obligation received from the United States in an exchange to which the provisions of section 1037(a) (or so much of section 1031 (b) or (c) as relates to section 1037(a)) apply shall include the period for which the obligation which was surrendered to the United States in the exchange was held by the taxpayer, but only if the obligation so surrendered was at the time of the exchange a capital asset in the hands of the taxpayer. See section 1223 and the regulations thereunder.

(d) ***Basis.*** The basis of an obligation received from the United States in an exchange to which the provisions of section 1037(a) (or so much of section 1031 (b) or (c) as relates to section 1037(a)) apply shall be determined as provided in section 1031(d) and the regulations thereunder.

(e) ***Effective date.*** Section 1.1037 and this section shall apply only for taxable years ending after September 22, 1959.

[T.D. 6935, 32 FR 15824, Nov. 17, 1967, as amended by T.D. 7154, 36 FR 24998, Dec. 28, 1971]

§ 1.1038-1 Reacquisitions of real property in satisfaction of indebtedness.

(a) ***Scope of section 1038*** —

(1) ***General rule on gain or loss.*** If a sale of real property gives rise to indebtedness to the seller which is secured by the real property which is sold, and the seller of such property reacquires such property in a taxable year beginning after September 2, 1964, in partial or full satisfaction of such indebtedness, then, except as provided in paragraphs (b) and (f) of this section, no gain or loss shall result to the seller from such reacquisition. The treatment so provided is mandatory; however, see § 1.1038-3 for an election to apply the provisions of this section to certain taxable years beginning after December 31, 1957. It is immaterial, for purposes of applying this subparagraph, whether the seller realized a gain or sustained a loss on the sale of the real property, or whether it can be ascertained at the time of the sale whether gain or loss occurs as a result of the sale. It is also immaterial what method of accounting the seller used in reporting gain or loss from the sale of the real property or whether at the time of reacquisition such property has depreciated or appreciated in value since the time of the original sale. Moreover, the character of the gain realized on the original sale of the property is immaterial for purposes of applying this subparagraph. The provisions of this section shall apply, except as provided in § 1.1038-2, to the reacquisition of real property which was used by the seller as his principal residence and with respect to the sale of which an election under section 121 is in effect or with respect to the sale of which gain was not recognized under section 1034.

(2) ***Sales giving rise to indebtedness*** —

(i) ***Sale defined.*** For purposes of this section, it is not necessary for title to the property to have passed to the purchaser in order to have a sale. Ordinarily, a sale of property has occurred in a transaction in which title to the property has not passed to the purchaser, if the purchaser has a contractual right to retain possession of the property so long as he performs his obligations

under the contract and to obtain title to the property upon the completion of the contract. However, a sale may have occurred even if the purchaser does not have the right to possession until he partially or fully satisfies the terms of the contract. For example, if S contracts to sell real property to P, and if S promises to convey title to P upon the completion of all of the payments due under the contract and to allow P to obtain possession of the property after 10 percent of the purchase price has been paid, there has been a sale on the date of the contract for purposes of this section. This section shall not apply to a disposition of real property which constituted an exchange of property or was treated as a sale under section 121(d)(4) or section 1034(i); nor shall it apply to a sale of stock in a cooperative housing corporation described in section 121(d)(3) or section 1034(f).

(ii) ***Secured indebtedness defined.*** An indebtedness to the seller is secured by the real property for purposes of this section whenever the seller has the right to take title or possession of the property or both if there is a default with respect to such indebtedness. A sale of real property may give rise to an indebtedness to the seller although the seller is limited in his recourse to the property for payment of the indebtedness in the case of a default.

(3) ***Reacquisitions in partial or full satisfaction of indebtedness*** —

(i) ***Purpose of reacquisition.*** This section applies only where the seller reacquires the real property in partial or full satisfaction of the indebtedness to him that arose from the sale of the real property and was secured by the property. That is, the reacquisition must be in furtherance of the seller's security rights in the property with respect to indebtedness to him that arose at the time of the sale. Accordingly, if the seller in reacquiring the real property does not pay consideration in addition to discharging the purchaser's indebtedness to him that arose from the sale and was secured by such property, this section shall apply to the reacquisition even though the purchaser has not defaulted in his obligations under the contract or such a default is not imminent. If in addition to discharging the purchaser's indebtedness to him that arose from the sale the seller pays consideration in reacquiring the real property, this section shall generally apply to the reacquisition if the reacquisition and the payment of additional consideration is provided for in the original contract for the sale of the property. This section generally shall apply to a reacquisition of real property if the seller reacquires the property either when the purchaser has defaulted in his obligations under the contract or when such a default is imminent. This section generally shall not apply to a reacquisition of real property where the seller pays consideration in addition to discharging the purchaser's indebtedness to him that arose from the sale if the reacquisition and payment of additional consideration was not provided for in the original contract for the sale of the property and if the purchaser has not defaulted in his obligations under the contract or such a default is not imminent. Thus, for example, if the purchaser is in arrears on the payment of interest or principal or has in any other way defaulted on his contract for the purchase of the property, or if the facts of the case indicate that the purchaser is unable satisfactorily to perform his obligations under the contract, and the seller reacquires the property from the purchaser in a transaction in which the seller pays consideration in addition to discharging the purchaser's indebtedness to him that arose from the sale and was secured by the property, this section shall apply to the reacquisition. Additional consideration paid by the seller includes money and other property paid or transferred by the seller. Also, the reacquisition by the seller of real property subject to an indebtedness (or the assumption, upon the reacquisition, of indebtedness) which arose subsequent to the original sale shall be considered as a payment by the seller of additional consideration. However, the reacquisition by the seller of real property subject to an

indebtedness (or the assumption, upon the reacquisition, of an indebtedness) which arose prior to or arose out of the original sale shall not be considered as a payment by the seller of additional consideration.

(ii) ***Manner of reacquisition.*** For purposes of applying section 1038 and this section there must be a reacquisition by the seller of the real property itself, but the manner in which the seller so reduces the property to ownership or possession, as the case may be, shall generally be immaterial. Thus, the seller may reduce the real property to ownership or possession or both, as the case may require, by agreement or by process of law. The reduction of the real property to ownership or possession by agreement includes, where valid under local law, such methods as voluntary conveyance from the purchaser and abandonment to the seller. The reduction of the real property to ownership or possession by process of law includes foreclosure proceedings in which a competitive bid is entered, such as foreclosure by judicial sale or by power of sale contained in the loan agreement without recourse to the courts, as well as those types of foreclosure proceedings in which a competitive bid is not entered, such as strict foreclosure and foreclosure by entry and possession, by writ of entry, or by publication or notice.

(4) ***Persons from whom real property may be reacquired.*** The real property reacquired in satisfaction of the indebtedness need not be reacquired from the purchaser but may be reacquired from the purchaser's transferee or assignee, or from a trustee holding title to such property pending the purchaser's satisfaction of the terms of the contract, so long as the indebtedness that is partially or completely satisfied in the reacquisition of such property arose in the original sale of the property and was secured by the property so reacquired. In such a case, a reference in this section to the purchaser shall, where appropriate, include the purchaser's transferee or assignee. Thus, for example, this section will apply if the seller reacquires the property from a purchaser from the original purchaser and either the property is subject to, or the subsequent purchaser assumes, the liability to the seller on the indebtedness.

(5) ***Reacquisitions not included.*** This section shall not apply to reacquisitions of real property by mutual savings banks, domestic building and loan associations, and cooperative banks, described in section 593(a).

(b) ***Amount of gain resulting from a reacquisition*** —

(1) ***Determination of amount*** —

(i) ***In general.*** As a result of a reacquisition to which paragraph (a) of this section applies gain shall be derived by the seller to the extent that the amount of money and the fair market value of other property (other than obligations of the purchaser arising with respect to the sale) which are received by the seller, prior to such reacquisition, with respect to the sale of the property exceed the amount of the gain derived by the seller on the sale of such property which is returned as income for periods prior to the reacquisition. However, the amount of gain so determined shall in no case exceed the amount determined under paragraph (c) of this section with respect to such reacquisition.

(ii) ***Amount of gain returned as income for prior periods.*** For purposes of this subparagraph and paragraph (c)(1) of this section, the amount of gain on the sale of the property which is returned as income for periods prior to the reacquisition of the real property does not include any amount of income determined under paragraph (f)(2) of this section which is considered to be received at the time of the reacquisition of the property. However, the amount of gain on the

sale of the property which is returned as income for such periods does include gain on the sale resulting from payments received in the taxable year in which the date of reacquisition occurs if such payments are received prior to such reacquisition. The application of this subdivision may be illustrated by the following example:

Example: In 1965 S, who uses the calendar year as the taxable year, sells to P for $10,000 real property which has an adjusted basis of $3,000. S properly elects under section 453 to report the income from the sale on the installment method. In 1965 and 1966, S receives a total of $4,000 on the contract. On May 15, 1967, S receives $1,000 on the contract. Because of P's default, S reacquires the property on August 31, 1967. The gain on the sale which is returned as income for periods prior to the reacquisition is $3,500 ($5,000 × $7,000/$10,000).

(2) ***Amount of money and other property received with respect to the sale*** —

(i) ***In general.*** Amounts of money and other property received by the seller with respect to the sale of the property include payments made by the purchaser for the seller's benefit, as well as payments made and other property transferred directly to the seller. If the purchaser of the real property makes payments on a mortgage or other indebtedness to which the property is subject at the time of the sale of such property to him, or on which the seller was personally liable at the time of such sale, such payments are considered amounts received by the seller with respect to the sale. However, if after the sale the purchaser borrows money and uses the property as security for the loan, payments by the purchaser in satisfaction of the indebtedness are not considered as amounts received by the seller with respect to the sale, although the seller does in fact receive some indirect benefit when the purchaser makes such payments.

(ii) ***Payments by purchaser at time of reacquisition.*** All payments made by the purchaser at the time of the reacquisition of the real property that are with respect to the original sale of the property shall be treated, for purposes of subparagraph (1) of this paragraph, by the seller as having been received prior to the reacquisition with respect to such sale. For example, if the purchaser, at the time of the reacquisition by the seller, pays money or other property to the seller in partial or complete satisfaction of the purchaser's indebtedness on the original sale, the seller shall treat such amounts as having been received prior to the reacquisition with respect to the sale.

(iii) ***Interest received.*** For purposes of this subparagraph and paragraph (c)(1) of this section any amounts received by the seller as interest, stated or unstated, are excluded from the computation of gain on the sale of the property and are not considered amounts of money or other property received with respect to the sale.

(iv) ***Amounts received on sale of purchaser's indebtedness.*** Money or other property received by the seller on the sale of the purchaser's indebtedness that arose at the time of the sale of the real property are amounts received by the seller with respect to the sale of such real property, except that the amounts so received from the sale of such indebtedness shall be reduced by the amount of money and the fair market value of other property paid or transferred by the seller, before the reacquisition of the real property, to reacquire such indebtedness. For example, if S sells real property to P for $25,000, and under the contract receives $10,000 down and a note from P for $15,000, S would receive $22,000 with respect to the sale if he were to discount the note for $12,000. If before the reacquisition of the real property S were to reacquire the discounted note for $8,000, he would receive $14,000 with respect to the sale.

(3) ***Obligations of the purchaser arising with respect to the sale.*** The term *obligations of the purchaser arising with respect to the sale* of the real property includes, for purposes of subparagraph (1) of this paragraph, only that indebtedness on which the purchaser is liable to the seller and which arises out of the sale of such property. Thus, the term does not include any indebtedness in respect of the property that the seller owes to a third person which the purchaser assumes, or to which the property is subject, at the time of the sale of the property to the purchaser. Nor does the term include any indebtedness on which the purchaser is liable to the seller if such indebtedness arises subsequent to the sale of such property.

(c) ***Limitation upon amount of gain*** —

(1) ***In general.*** Except as provided by subparagraph (2) of this paragraph, the amount of gain on a reacquisition of real property, as determined under paragraph (b) of this section, shall in no case exceed—

(i) The amount by which the price at which the real property was sold exceeded its adjusted basis at the time of the sale, as determined under § 1.1011-1, reduced by

(ii) The amount of gain on the sale of such real property which is returned as income for periods prior to the reacquisition, and by

(iii) The amount of money and the fair market value of other property (other than obligations of the purchaser to the seller which are secured by the real property) paid or transferred by the seller in connection with the reacquisition of such real property.

(2) ***Cases where limitation does not apply.*** The limitation provided by subparagraph (1) of this paragraph shall not apply in a case where the selling price of property is indefinite in amount and cannot be ascertained at the time of the reacquisition of such property, as, for example, where the selling price is stated as a percentage of the profits to be realized from the development of the property which is sold. Moreover, the limitation so provided shall not apply to a reacquisition of real property occurring in a taxable year beginning before September 3, 1964, to which the provisions of this section are applied pursuant to an election under § 1.1038-3.

(3) ***Determination of sales price.*** The price at which the real property was sold shall be, for purposes of subparagraph (1) of this paragraph, the gross sales price reduced by the selling commissions, legal fees, and other expenses incident to the sale of such property which are properly taken into account in determining gain or loss on the sale. For example, the amount of selling commissions paid by a nondealer will be deducted from the gross sales price in determining the price at which the real property was sold; on the other hand, selling commissions paid by a real estate dealer will be deducted as a business expense. Examples of other expenses incident to the sale of the property are expenses for appraisal fees, advertising expense, cost of preparing maps, recording fees, and documentary stamp taxes. Payments on indebtedness to the seller which are for interest, stated or unstated, are not included in determining the price at which the property was sold. See paragraph (b)(2)(iii) of this section.

(4) ***Determination of amounts paid or transferred in connection with a reacquisition*** —

(i) ***In general.*** Amounts of money or property paid or transferred by the seller of the real property in connection with the reacquisition of such property include payments of money, or transfers of property, to persons from whom the real property is reacquired as well as to other persons. Payments or transfers in connection with the reacquisition of the property do not include money or property paid or transferred by the seller to reacquire obligations of the purchaser to

the seller which were received by the seller with respect to the sale of the property or which arose subsequent to the sale. Amounts of money or property paid or transferred by the seller in connection with the reacquisition of the property include payments or transfers for such items as court costs and fees for services of an attorney, master, trustee, or auctioneer, or for publication, acquiring title, clearing liens, or filing and recording.

(ii) ***Assumption of indebtedness.*** The assumption by the seller, upon reacquisition of the real property, of any indebtedness to another person which at such time is secured by such property will be considered a payment of money by the seller in connection with the reacquisition. Also, if at the time of reacquisition such property is subject to an indebtedness which is not an indebtedness of the purchaser to the seller, the seller shall be considered to have paid money, in an amount equal to such indebtedness, in connection with the reacquisition of the property. Thus, for example, if at the time of the sale the purchaser executes in connection with the sale a first mortgage to a bank and a second mortgage to the seller and at the time of reacquisition the seller reacquires the property subject to the first mortgage which he does not assume, the seller will be considered to have paid money, in an amount equal to the unpaid amount of the first mortgage, in connection with the reacquisition.

(d) ***Character of gain resulting from a reacquisition.*** Paragraphs (b) and (c) of this section set forth the extent to which gain shall be derived from a reacquisition to which paragraph (a) of this section applies, but the rule provided by section 1038 and this section do not affect the character of the gain so derived. The character of the gain resulting from such a reacquisition is determined on the basis of whether the gain on the original sale was returned on the installment method or, if not, on the basis of whether title to the real property was transferred to the purchaser; and, if title was transferred to the purchaser in a deferred-payment sale, whether the reconveyance of the property to the seller was voluntary. For example, if the gain on the original sale of the reacquired property was returned on the installment method, the character of the gain on reacquisition by the seller shall be determined in accordance with the rules provided in paragraph (a) of § 1.453-9. If the original sale was not on the installment method but was a deferred-payment sale, as described in § 1.453-6(a), where title to the real property was transferred to the purchaser and the seller accepts a voluntary reconveyance of the property, the gain on the reacquisition shall be ordinary income; however, if the obligations satisfied are securities (as defined in section 165(g)(2)(C)), any gain resulting from the reacquisition is capital gain subject to the provisions of subchapter P of chapter 1 of the Code.

(e) ***Recognition of gain.*** The entire amount of the gain determined under paragraphs (b) and (c) of this section with respect to a reacquisition to which paragraph (a) of this section applies shall be recognized notwithstanding any other provisions of subtitle A (relating to income taxes) of the Code.

(f) ***Special rules applicable to worthless indebtedness*** —

(1) ***Worthlessness resulting from reacquisition.*** No debt of the purchaser to the seller which was secured by the reacquired real property shall be considered as becoming worthless or partially worthless as a result of a reacquisition of such real property to which paragraph (a) of this section applies. Accordingly, no deduction for a bad debt and no charge against a reserve for bad debts shall be allowed, as a result of the reacquisition, in order to reflect the noncollectibility of any indebtedness of the purchaser to the seller which at the time of reacquisition was secured by such real property.

(2) ***Indebtedness treated as worthless prior to reacquisition*** —

(i) ***Prior taxable years.*** If for any taxable year ending before the taxable year in which occurs a reacquisition of real property to which paragraph (a) of this section applies the seller of such property has treated any indebtedness of the purchaser which is secured by such property as having become worthless or partially worthless by taking a bad debt deduction under section 166(a), he shall be considered as receiving, at the time of such reacquisition, income in an amount equal to the amount of such indebtedness previously treated by him as having become worthless. The amount so treated as income received shall be treated as a recovery of a bad debt previously deducted as worthless or partially worthless. Accordingly, the amount of such income shall be excluded from gross income, as provided in § 1.111-1, to the extent of the *recovery exclusion* with respect to such item. For purposes of § 1.111-1, if the indebtedness was treated as partially worthless in a prior taxable year, the amount treated under this subparagraph as a recovery shall be considered to be with respect to the part of the indebtedness that was previously deducted as worthless. The seller shall not be considered to have treated an indebtedness as worthless in any taxable year for which he took the standard deduction under section 141 or paid the tax imposed by section 3 if a deduction in respect of such indebtedness was not allowed in determining adjusted gross income for such year under section 62.

(ii) ***Current taxable year.*** No deduction shall be allowed under section 166 (a), for the taxable year in which occurs a reacquisition of real property to which paragraph (a) of this section applies, in respect of any indebtedness of the purchaser secured by such property which has been treated by the seller as having become worthless or partially worthless in such taxable year but prior to the date of such reacquisition.

(3) ***Basis adjustment.*** The basis of any indebtedness described in subparagraph (2)(i) of this paragraph shall be increased (as of the date of the reacquisition) by an amount equal to the amount which, under such subparagraph of this paragraph, is treated as income received by the seller with respect to such indebtedness, but only to the extent the amount so treated as received is not excluded from gross income by reason of the application of § 1.111-1.

(g) ***Rules for determining gain or loss on disposition of reacquired property*** —

(1) ***Basis of reacquired real property.*** The basis of any real property acquired in a reacquisition to which paragraph (a) of this section applies shall be the sum of the following amounts, determined as of the date of such reacquisition:

(i) The amount of the adjusted basis, determined under sections 453 and 1011, and the regulations thereunder, of all indebtedness of the purchaser to the seller which at the time of reacquisition was secured by such property, including any increase by reason of paragraph (f)(3) of this section,

(ii) The amount of gain determined under paragraphs (b) and (c) of this section with respect to such reacquisition, and

(iii) The amount of money and the fair market value of other property (other than obligations of the purchaser to the seller which are secured by the real property) paid or transferred by the seller in connection with the reacquisition of such real property, determined as provided in paragraph (c) of this section even though such paragraph does not apply to the reacquisition.

(2) ***Basis of undischarged indebtedness.*** The basis of any indebtedness of the purchaser to the seller which was secured by the reacquired real property described in subparagraph (1) of this paragraph, to the extent that such indebtedness is not discharged upon the reacquisition of such property, shall

be zero. Therefore, to the extent not discharged upon the reacquisition of the real property, indebtedness on the original obligation of the purchaser, a substituted obligation of the purchaser, a deficiency judgment entered in a court of law into which the purchaser's obligation has merged, or any other obligation of the purchaser to the seller, shall be zero if such indebtedness constitutes an indebtedness to the seller which was secured by such property.

(3) ***Holding period of reacquired property.*** Since the reacquisition described in subparagraph (1) of this paragraph is in a sense considered a nullification of the original sale of the real property, for purposes of determining gain or loss on a disposition of such property after its reacquisition the period for which the seller has held the real property at the time of such disposition shall include the period for which such property is held by him prior to the original sale. However, the holding period shall not include the period of time commencing with the date following the date on which the property is originally sold to the purchaser and ending with the date on which the property is reacquired by the seller. The period for which the property was held by the seller prior to the original sale shall be determined as provided in § 1.1223-1. For example, if under paragraph (a) of § 1.1223-1 real property, which was acquired as the result of an involuntary conversion, has been held for five months on January 1, 1965, the date of its sale, and such property is reacquired on July 2, 1965, and resold on July 3, 1965, the seller will be considered to have held such property for five months and one day for purposes of this subparagraph.

(h) ***Illustrations.*** The application of this section may be illustrated by the following examples in which it is assumed that the reacquisition is in satisfaction of secured indebtedness arising out of the sale of the real property:

Example 1. (a) S purchases real property for $20 and sells it to P for $100, the property not being mortgaged at the time of sale. Under the contract P pays $10 down and executes a note for $90, with stated interest at 6 percent, to be paid in nine annual installments. S properly elects to report the gain on the installment method. After the second $10 annual payment P defaults and S accepts a voluntary reconveyance of the property in complete satisfaction of the indebtedness. S pays $5 in connection with the reacquisition of the property. The fair market value of the property at the time of the reacquisition is $110.

(b) The gain derived by S on the reacquisition of the property is $6, determined as follows:

Gain before application of limitation:		
Money with respect to the sale received by S prior to the reacquisition		$30
Less: Gain returned by S as income for periods prior to the reacquisition ($30 × [($100−$20)/$100])		24
Gain before application of limitation		6
Limitation on amount of gain:		
Sales price of real property		100
Less:		
Adjusted basis of the property at the time of sale	$20	
Gain returned by S as income for periods prior to the reacquisition	24	

Amount of money paid by S in connection with the reacquisition	5	49
Limitation on amount of gain		51
Gain resulting from the reacquisition of the property		6

(c) The basis of the reacquired real property at the date of the reacquisition is $25, determined as follows:

Adjusted basis of P's indebtedness to S ($70−[$70 × $80/$100])	$14
Gain resulting from the reacquisition of the property	6
Amount of money paid by S in connection with the reacquisition	5
Basis of reacquired property	25

Example 2. (a) The facts are the same as in example (1) except that S purchased the property for $80.
(b) The gain derived by S on the reacquisition of the property is $9, determined as follows:

Gain before application of limitation:		
Money with respect to the sale received by S prior to the reacquisition		$30
Less: Gain returned by S as income for periods prior to the reacquisition ($30 × [($100−$80)/$100])		$6
Gain before application of limitation		24
Limitation on amount of gain:		
Sales price of real property		100
Less:		
Adjusted basis of the property at the time of sale	$80	
Gain returned by S as income for periods prior to the reacquisition	6	
Amount of money paid by S in connection with the reacquisition	5	91
Limitation on amount of gain		9
Gain resulting from the reacquisition of the property		9

(c) The basis of the reacquired real property at the date of the reacquisition is $70, determined as follows:

Adjusted basis of P's indebtedness to S ($70−[$70 × $20/$100])	$56
Gain resulting from the reacquisition of the property	9

Amount of money paid by S in connection with the reacquisition	5
Basis of reacquired property	70

Example 3. (a) S purchases real property for $70 and sells it to P for $100, the property not being mortgaged at the time of sale. Under the contract P pays $10 down and executes a note for $90, with stated interest at 6 percent, to be paid in nine annual installments. S properly elects to report the gain on the installment method. After the first $10 annual payment P defaults and S accepts a voluntary reconveyance of the property in complete satisfaction of the indebtedness. S pays $5 in connection with the reacquisition of the property. The fair market value of the property at the time of the reacquisition is $50.

(b) The gain derived by S on the reacquisition of the property is $14, determined as follows:

Gain before application of limitation:		
Money with respect to the sale received by S prior to the reacquisition		$20
Less: Gain returned by S as income for periods prior to the reacquisition ($20 × [($100−$70)/$100])		6
Gain before application of limitation		14
Limitation on amount of gain:		
Sales price of real property		100
Less:		
Adjusted basis of the property at time of sale	$70	
Gain returned by S as income for periods prior to the reacquisition	6	
Amount paid by S in connection with the reacquisition	5	81
Limitation on amount of gain		19
Gain resulting from the reacquisition of the property		14

(c) The basis of the reacquired real property at the date of the reacquisition is $75, determined as follows:

Adjusted basis of P's indebtedness to S ($80−[$80 × $30/$100])	$56
Gain resulting from the reacquisition of the property	14
Amount of money paid by S in connection with the reacquisition	5
Basis of reacquired property	75

Example 4. (a) S purchases real property for $20 and sells it to P for $100, the property not being

mortgaged at the time of sale. Under the contract P pays $10 down and executes a note for $90, with stated interest at 6 percent, to be paid in nine annual installments. S properly elects to report gain on the installment method. After the second $10 annual payment P defaults and S accepts from P in complete satisfaction of the indebtedness a voluntary reconveyance of the property plus cash in the amount of $20. S does not pay any amount in connection with the reacquisition of the property. The fair market value of the property at the time of the reacquisition is $30.

(b) The gain derived by S on the reacquisition of the property is $10, determined as follows:

Gain before application of the limitation:		
Money with respect to the sale received by S prior to the reacquisition ($30 + $20)		$50
Less: Gain returned by S as income for periods prior to the reacquisition ($50 × [($100−$20)/$100])		40
Gain before application of limitation		10
Limitation on amount of gain:		
Sales price of real property		100
Less:		
Adjusted basis of the property at time of sale	$20	
Gain returned by S as income for periods prior to the reacquisition	40	60
Limitation on amount of gain		40
Gain resulting from the reacquisition of the property		10

(c) The basis of the reacquired real property at the date of the reacquisition is $20, determined as follows:

Adjusted basis of P's indebtedness to S ($50−[$50 × $80/$100])	$10
Gain resulting from the reacquisition of the property	10
Basis of reacquired property	20

Example 5. (a) S purchases real property for $80 and sells it to P for $100, the property not being mortgaged at the time of sale. Under the contract P pays $10 down and executes a note for $90, with stated interest at 6 percent, to be paid in nine annual installments. At the time of sale P's note has a fair market value of $90. S does not elect to report the gain on the installment method but treats the transaction as a deferred-payment sale. After the third $10 annual payment P defaults and S forecloses. Under the foreclosure sale S bids in the property at $70, cancels P's obligation of $60, and pays $10 to P. There are no other amounts paid by S in connection with the reacquisition of the property. The fair market value of the property at the time of the reacquisition is $70.

(b) The gain derived by S on the reacquisition of the property is $0, determined as follows:

Gain before application of the limitation:		
Money with respect to the sale received by S prior to the reacquisition		$40
Less: Gain returned by S as income for periods prior to the reacquisition ([$10 + $90]−$80)		20
Gain before application of limitation		20
Limitation on amount of gain:		
Sales price of real property		100
Less:		
Adjusted basis of the property at the time of sale	$80	
Gain returned by S as income for periods prior to the reacquisition	20	
Amount of money paid by S in connection with the reacquisition	10	110
Limitation on amount of gain (not to be less than zero)		0
Gain resulting from the reacquisition of the property		0

(c) The basis of the reacquired real property at the date of the reacquisition is $70, determined as follows:

Adjusted basis of P's indebtedness to S (face value at time of reacquisition)	$60
Gain resulting from the reacquisition of the property	0
Amount of money paid by S in connection with the reacquisition	10
Basis of reacquired property	70

[T.D. 6916, 32 FR 5925, Apr. 13, 1967; 32 FR 6971, May 6, 1967; T.D. 9849, 84 FR 9237, Mar. 14, 2019]

§ 1.1038-2 Reacquisition and resale of property used as a principal residence.

(a) ***Application of special rules*** —

(1) ***In general.*** If paragraph (a) of § 1.1038-1 applies to the reacquisition of real property which was used by the seller as his principal residence and with respect to the sale of which an election under section 121 is in effect or with respect to the sale of which gain was not recognized under section 1034, the provisions of § 1.1038-1 (other than paragraph (a) thereof) shall not, and this section shall, apply to the reacquisition of such property if the property is resold by the seller within one year after the date of the reacquisition. For purposes of this section an election under section 121 shall be considered to be in effect with respect to the sale of the property if, at the close of the last day for making such an election under section 121(c) with respect to such sale, an election under section 121 has been made and not revoked. Thus, a taxpayer who properly elects, subsequent to the reacquisition, to have section 121 apply to a sale of his residence may be eligible for the treatment

provided in this section. The treatment provided by this section is mandatory; however, see § 1.1038-3 for an election to apply the provisions of this section to certain taxable years beginning after December 31, 1957.

(2) ***Sale and resale treated as one transaction.*** In the case of a reacquisition to which this section applies, the resale of the reacquired property shall be treated, for purposes of applying sections 121 and 1034, as part of the transaction constituting the original sale of such property. In effect, the reacquisition is generally disregarded pursuant to this section and, for purposes of applying sections 121 and 1034, the resale of the property is considered to constitute a sale of such property occurring on the date of the original sale of such property.

(b) ***Transactions not included.***

(1) If with respect to the original sale of the property there was no nonrecognition of gain under section 1034 and an election under section 121 is not in effect, the provisions of § 1.1038-1, and not this section, shall apply to the reacquisition. Thus, for example, if in the case of a taxpayer not entitled to the benefit of section 121 there is no gain on the original sale of the property, the provisions of § 1.1038-1, and not this section, shall apply even though a redetermination of gain under this section would result in the nonrecognition of gain on the sale under section 1034. Also, if in the case of such a taxpayer there was gain on the original sale of the property but after the application of section 1034 all of such gain was recognized, the provisions of § 1.1038-1, and not this section, shall apply to the reacquisition.

(2) If the original sale of the property was not eligible for the treatment provided by section 121 and section 1034, the provisions of § 1.1038-1, and not this section, shall apply to the reacquisition of the property even though the resale of such property is eligible for the treatment provided by either or both of sections 121 and 1034.

(c) ***Redetermination of gain required*** —

(1) ***Sale of old residence.*** The amount of gain excluded under section 121 on the sale of the property and the amount of gain recognized under section 1034 on the sale of the property shall be redetermined under this section by recomputing the adjusted sales price and the adjusted basis of the property, and any adjustments resulting from the redetermination of the gain on the sale of such property shall be reflected in the income of the seller for his taxable year in which the resale of the property occurs.

(2) ***Sale of new residence.*** If gain was not recognized under section 1034 on the original sale of the property, the adjusted basis of the new residence shall be redetermined under this section. If the new residence has been sold, the amount of gain returned on such sale of the new residence which is affected by the redetermination of the recognized gain on the sale of the old residence shall be redetermined under this section, and any adjustments resulting from the redetermination of the gain on the sale of the new residence shall be reflected in income of the seller for his taxable year in which the resale of the old residence occurs.

(d) ***Redetermination of adjusted sales price.*** For purposes of applying sections 121 and 1034 pursuant to this section, the adjusted sales price of the reacquired real property shall be redetermined by taking into account both the sale and the resale of the property and shall be—

(1) The amount realized, which for purposes of section 1001 shall be—

(i) The amount realized on the resale of the property, as determined under paragraph (b)(4) of § 1.1034-1, plus

(ii) The amount realized on the original sale of the property, determined as provided in paragraph (b)(4) of § 1.1034-1, less that portion of any obligations of the purchaser arising with respect to such sale which at the time of reacquisition is secured by such property and is unpaid, less

(iii) The amount of money and the fair market value of other property (other than obligations of the purchaser to the seller secured by the real property) paid or transferred by the seller in connection with the reacquisition of such real property,

reduced by

(2) The total of the fixing-up expenses (as defined in par. (b)(6) of § 1.1034-1) incurred for work performed on such real property to assist in both its original sale and its resale.

For purposes of applying paragraph (b)(6) of § 1.1034-1, there shall be two 90-day periods, the first ending on the day on which the contract to sell is entered into in connection with the original sale of the property, and the second ending on the day on which the contract to sell is entered into in connection with the resale of the property. There shall also be two 30-day periods for such purposes, the first ending on the 30th day after the date of the original sale, and the second ending on the 30th day after the date of the resale. For determination of the obligations of the purchaser arising with respect to the original sale of the property, see paragraph (b)(3) of § 1.1038-1. For determination of amounts paid or transferred by the seller in connection with the reacquisition of the property, see paragraph (c)(4) of § 1.1038-1.

(e) ***Determination of adjusted basis at time of resale.*** For purposes of applying sections 121 and 1034 pursuant to this section, the adjusted basis of the reacquired real property at the time of its resale shall be—

(1) The sum of—

(i) The adjusted basis of such property at the time of the original sale, with proper adjustment under section 1016(a) in respect of such property for the period occurring after the reacquisition of such property, and

(ii) Any indebtedness of the purchaser to the seller which arose subsequent to the original sale of such property and which at the time of reacquisition was secured by such property,

reduced by

(2) Any indebtedness of the purchaser to the seller which at the time of reacquisition was secured by the reacquired real property and which, for any taxable year ending before the taxable year in which occurs the reacquisition to the seller which was secured by the seller as having become worthless or partially worthless by taking a bad debt deduction under section 166(a).

The reduction under the preceding sentence by reason of having treated indebtedness as worthless or partially worthless shall not exceed the amount by which there would be an increase in the basis of such indebtedness under paragraph (f)(3) of § 1.1038-1 if section 1038(d) had been applicable to the reacquisition of such property.

(f) ***Treatment of indebtedness secured by the property*** —

(1) ***Year of reacquisition.*** No debt of the purchaser to the seller which was secured by the reacquired real property shall be considered as becoming worthless or partially worthless as a result of a reacquisition of such real property to which this section applies. Accordingly, no deduction for a bad debt shall be allowed, as a result of the reacquisition, in order to reflect the noncollectibility of any indebtedness of the purchaser to the seller which at the time of reacquisition was secured by such real property. In addition, no deduction shall be allowed, for the taxable year in which occurs a reacquisition of real property to which this section applies, in respect of any indebtedness of the purchaser secured by such property which has been treated by the seller as having become worthless or partially worthless in such taxable year but prior to the date of such reacquisition.

(2) ***Prior taxable years.*** For reduction of the basis of the real property for indebtedness treated as worthless or partially worthless for taxable years ending before the taxable year in which occurs the reacquisition, see paragraph (e) of this section.

(3) ***Basis of indebtedness.*** The basis of any indebtedness of the purchaser to the seller which was secured by the reacquired real property, to the extent that such indebtedness is not discharged upon the reacquisition of such property, shall be zero.

(g) ***Date of sale.*** Since the resale of the property, by being treated as part of the transaction constituting the original sale of the property, is treated as having occurred on the date of the original sale, in determining whether any of the time requirements of section 121 or section 1034 are satisfied for purposes of this section the date of the original sale is used, except to the extent provided in paragraph (d)(2) of this section.

(h) ***Illustrations.*** The application of this section may be illustrated by the following examples:

> *Example 1.* (a) On June 30, 1964, S, a single individual over 65 years of age, sells his principal residence to P for $25,000, the property not being mortgaged at the time of sale. S properly elects to apply the provisions of section 121 to the sale. Under the contract, P pays $5,000 down and executes a note for $20,000 with stated interest at 6 percent, the principal being payable in installments of $5,000 each on January 1 of each year and the note being secured by the real property which is sold. At the time of sale P's note has a fair market value of $20,000. S does not elect to report the gain on the installment method but treats the transaction as a deferred-payment sale, title to the property being transferred to P at the time of sale. S uses the calendar year as the taxable year and the cash receipts and disbursements method of accounting. After making two annual payments of $5,000 each on the note, P defaults on the contract, and on March 1, 1967, S reacquires the real property in full satisfaction of P's indebtedness, title to the property being voluntarily reconveyed to S. On November 1, 1967, S sells the property to T for $35,000. The assumption is made that no fixing-up expenses are incurred for work performed on the principal residence in order to assist in the sale of the property in 1964 or in the resale of the property in 1967. At the time of sale in 1964 the property has an adjusted basis of $15,000. S does not treat any indebtedness with respect to the sale in 1964 as being worthless or partially worthless or make any capital expenditures with respect to the property after such sale. In his return for 1964, S includes in income $2,000 capital gain from the sale of his residence.

(b) The results obtained before and after the reacquisition of the property are as follows:

	Before reacquisition	After reacquisition
Adjusted sales price:		
$5,000 + $20,000	$25,000	
$15,000 + $35,000		$50,000
Less: Adjusted basis of property at time of sale	15,000	15,000
Gain on sale	10,000	35,000
Gain excluded from income under section 121:		
$10,000 × $20,000/$25,000	8,000	
$35,000 × $20,000/$50,000		14,000
Gain included in income after applying section 121:		
$10,000−$8,000	2,000	
$35,000−$14,000		21,000

(c) S is required to show the additional inclusion of $19,000 capital gain ($21,000 −$2,000) in income on his return for 1967.

Example 2. (a) The facts are the same as in example (1) except that on April 1, 1965, S purchases a new residence at a cost of $30,000 and qualifies for the nonrecognition of gain under section 1034 in respect of the sale of his principal residence on June 30, 1964. In his return for 1964, S does not include any capital gain in income as a result of the sale of the old residence.
(b) The results obtained before and after the reacquisition of the property are as follows:

	Before reacquisition	After reacquisition
Application of section 121 (see example (1)):		
Adjusted sales price	$25,000	$50,000
Less: Adjusted basis of property at time of sale	15,000	15,000
Gain on sale	10,000	35,000
Gain excluded from income under section 121	8,000	14,000
Gain not excluded from income under section 121	2,000	21,000
Application of section 1034: Adjusted sales price:		
$25,000−$8,000	17,000	
$50,000−$14,000		36,000
Less: Cost of new residence	30,000	30,000

	Before reacquisition	After reacquisition
Gain recognized under section 1034 on sale of old residence	0	6,000
Gain not recognized under section 1034 on sale of old residence:		
($10,000−[$8,000 + $0])	2,000	
($35,000−[$14,000 + $6,000])		15,000
Adjusted basis of new residence on April 1, 1965:		
$30,000−$2,000	28,000	
$30,000−$15,000		15,000

(c) The $6,000 of capital gain on the sale of the old residence is required to be included in income on the return for 1967. The adjusted basis on April 1, 1965, for determining gain on a sale or exchange of the new residence at any time on or after that date is $15,000, after taking into account the reacquisition and resale of the old residence.

Example 3. The facts are the same as in example (2) except that S sells the new residence on June 20, 1965, for $40,000 and includes $12,000 of capital gain ($40,000− $28,000) on its sale in his income on the return for 1965. S is required to include the additional capital gain of $13,000 ([$40,000− $15,000]−$12,000) on the sale of the new residence in his income on the return for 1967. For this purpose, the assumption is also made that there are no additional adjustments to the basis of the new residence after April 1, 1965.

[T.D. 6916, 32 FR 5929, Apr. 13, 1967; 32 FR 6971, May 6, 1967]

§ 1.1038-3 Election to have section 1038 apply for taxable years beginning after December 31, 1957.

(a) ***In general.*** If an election is made in the manner provided by paragraph (b) of this section, the applicable provisions of §§ 1.1038-1 and 1.1038-2 shall apply to all reacquisitions of real property occurring in each and every taxable year beginning after December 31, 1957, and before September 3, 1964, for which the assessment of a deficiency, or the credit or refund of an overpayment, is not prevented on September 2, 1964, by the operation of any law or rule of law. The election so made shall apply to all taxable years beginning after December 31, 1957, and before September 3, 1964, for which the assessment of a deficiency, or the credit or refund of an overpayment, is not prevented on September 2, 1964, by the operation of any law or rule of law and shall apply to every reacquisition occurring in such taxable years. The fact that the assessment of a deficiency, or the credit or refund of an overpayment, is prevented for any other taxable year or years affected by the election will not prohibit the making of an election under this section. For example, if an individual who uses the calendar year as the taxable year were to sell in 1960 real property used as his principal residence in respect of the sale of which gain is not recognized under section 1034, and if such property were reacquired by the seller in 1962 and resold within 1 year, he

would be permitted to make an election under this section with respect to such reacquisition even though on September 2, 1964, the period of limitations on assessment or refund has run for 1960. An election under this section shall be deemed a consent to the application of the provisions of this section.

(b) *Time and manner of making election* —

(1) *In general.*

(i) An election to have the provisions of § 1.1038-2 apply to reacquisitions of real property occurring in taxable years beginning after December 31, 1957, and before September 3, 1964, shall be made by filing on or before September 3, 1965, a return, an amended return, or a claim for refund, whichever is proper, for each taxable year in which the resale of such real property occurs. If the return for any such year is not due on or before such date and has not been filed, the election with respect to such taxable year shall be made by filing on or before such date the statement described in subparagraph (2) of this paragraph.

(ii) An election to have the provisions of § 1.1038-1 apply to reacquisitions of real property occurring in taxable years beginning after December 31, 1957, and before September 3, 1964, shall be made by filing on or before September 3, 1965, a return, an amended return, or a claim for refund, whichever is proper, for each taxable year in which such reacquisitions occur. If the return for any such year is not due on or before such date and has not been filed, the election with respect to such taxable year shall be made by filing on or before such date the statement described in subparagraph (2) of this paragraph.

(iii) If the facts are such that § 1.1038-2 applies to a reacquisition of property except that the reacquisition occurs in a taxable year beginning after December 31, 1957, and before September 3, 1964, an election may not be made under this paragraph to have the provisions of § 1.1038-1 apply to such reacquisition.

(iv) Once made, an election under this paragraph may not be revoked after September 3, 1965. To any return, amended return, or claim for refund filed under this subparagraph there shall be attached the statement described in subparagraph (2) of this paragraph.

(2) *Statement to be attached.* The statement described in subparagraph (1) of this paragraph shall indicate—

(i) The name, address and account number of the taxpayer, and the fact that the taxpayer is electing to have the provisions of section 1038 apply to the reacquisitions of real property,

(ii) The taxable years in which the reacquisitions of property occur and any other taxable year or years the tax for which is affected by the application of section 1038 to such reacquisitions,

(iii) The office of the district director where the return or returns for such taxable year or years were or will be filed,

(iv) The dates on which such return or returns were filed and on which the tax for such taxable year or years was paid,

(v) The type of real property reacquired, the terms under which such property was sold and reacquired, and an indication of whether the taxpayer is applying the provisions of § 1.1038-2 to the reacquisition of such property,

(vi) If § 1.1038-2 is being applied to the reacquisition, the terms under which the old residence was resold and, if applicable, the terms under which the new residence was sold, and

(vii) The office where, and the date when, the election to apply section 121 in respect to any sale of such property was or will be made.

(3) ***Place for filing.*** Any claim for refund, amended return, or statement, filed under this paragraph in respect of any taxable year, whether the taxable year in which occurs the reacquisition of property or the taxable year in which occurs the resale of the old residence, shall be filed in the office of the district director in which the return for such taxable year was or will be filed.

(c) ***Extension of period of limitations on assessment or refund*** —

(1) ***Assessment of tax.*** If an election is properly made under paragraph (b) of this section and the assessment of a deficiency for the taxable years to which such election applies is not prevented on September 2, 1964, by the operation of any law or rule of law, the period within which a deficiency for such taxable years may be assessed shall, to the extent such deficiency is attributable to the application of section 1038, not expire prior to one year after the date on which such election is made.

(2) ***Refund of tax.*** If an election is properly made under paragraph (b) of this section and the credit or refund of any overpayment for the taxable years to which such election applies is not prevented on September 2, 1964, by the operation of any law or rule of law, the period within which a claim for credit or refund of an overpayment for such taxable years may be filed shall, to the extent such overpayment is attributable to the application of section 1038, not expire prior to one year after the date on which such election is made.

(d) ***Payment of interest for period prior to September 2, 1964.*** No interest shall be payable with respect to any deficiency attributable to the application of the provisions of section 1038, and no interest shall be allowed with respect to any credit or refund of any overpayment attributable to the application of such section, for any period prior to September 2, 1964. See section 2(c)(3) of the Act of September 2, 1964 (Pub. L. 88-750, 78 Stat. 856).

[T.D. 6916, 32 FR 5930, Apr. 13, 1967]

§ 1.1039-1 Certain sales of low-income housing projects.

(a) ***Nonrecognition of gain.*** Section 1039 provides rules under which the taxpayer may elect not to recognize gain in certain cases where a qualified housing project is sold or disposed of after October 9, 1969, in an approved disposition and another such qualified housing project or projects (referred to as the *replacement project*) is acquired, constructed, or reconstructed within a specified reinvestment period. If the requirements of section 1039 are met, and if the taxpayer makes an election in accordance with the provisions of paragraph (b)(4) of this section, then the gain realized upon the sale or disposition is recognized only to the extent that the net amount realized on such sale or disposition exceeds the cost of the replacement project. However, notwithstanding section 1039, gain may be recognized by reason of the application of section 1245 or 1250 to the sale or disposition. (See § 1.1245-6(b) and § 1.1250-3(h). The terms *qualified housing project, approved disposition, reinvestment period,* and *net amount realized* are defined in paragraph (c) of this section.

(b) ***Rules of application*** —

(1) ***In general.*** The election under section 1039(a) may be made only by the taxpayer owning the qualified housing project disposed of. Thus, if the qualified housing project disposed of is owned by a partnership, the partnership must make the election. (See section 703(b).) Similarly, if the qualified

housing project disposed of is owned by a corporation or trust, the corporation or trust must make the election. In addition, the reinvestment of the taxpayer must be in such a manner that the taxpayer would be entitled to a deduction for depreciation on the replacement project. Thus, if the qualified housing project disposed of is owned by individual A, the purchase by A of stock in a corporation owning or constructing such a project or of an interest in a partnership owning or constructing such a project will not be considered as the purchase or construction by A of such a project.

(2) ***Special rules.***

(i) The cost of a replacement project acquired before the approved disposition of a qualified housing project shall be taken into account under section 1039 only if such property is held by the taxpayer on the date of the approved disposition.

(ii) Except as provided in section 1039 (d), no property acquired by the taxpayer shall be taken into account for purposes of section 1039(a)(2) unless the unadjusted basis of such property is its cost within the meaning of section 1012. For example, if a qualified housing project is acquired in an exchange under section 1031, relating to exchange of property held for productive use or investment, such property will not be taken into account under section 1039(a)(2) because its basis is determined by reference to the basis of the property exchanged. (See section 1031(d).)

(3) ***Cost of replacement project.*** The taxpayer's cost for the replacement project includes only amounts properly treated as capital expenditures by the taxpayer that are attributable to acquisition, construction, or reconstruction made within the reinvestment period (as defined in paragraph (c)(4) of this section). See section 263 for rules as to what constitutes capital expenditures. Thus, assume that a calendar year taxpayer realizes gain in 1970 upon the approved disposition of a qualified housing project occurring on January 1, 1970. If the taxpayer had begun construction of another qualified housing project on January 1, 1969, and completes such construction on June 1, 1972, only that portion of the cost attributable to the period before January 1, 1972, constitutes the cost of the replacement project for purposes of section 1039. For purposes of determining the cost of a replacement project attributable to a particular period, the total cost of the project may be allocated to such period on the basis of the portion of the total project actually constructed during such period.

(4) ***Election.***

(i) An election not to recognize the gain realized upon an approved disposition of a qualified housing project to the extent provided in section 1039(a) may be made by attaching a statement to the income tax return filed for the first taxable year in which any portion of the gain on such disposition is realized. Such a statement shall contain the information required by subdivision (iii) of this subparagraph. If the taxpayer does not file such a statement for the first taxable year in which any portion of the gain is realized, but fails to report a portion of the gain realized upon the approved disposition as income for such year or for any subsequent taxable year, then an election shall be deemed to be made under section 1039 (a) with respect to that portion of the gain not reported as income.

(ii) An election may be made under section 1039(a) even though the replacement project has not been acquired or constructed at the time of election. However, if an election has been made and

(*a*) a replacement project is not constructed, reconstructed, or acquired,

(*b*) the cost of the replacement project is lower than the net amount realized from the approved disposition, or

(*c*) a decision is made not to construct, reconstruct, or acquire a replacement project, then the tax liability for the year or years for which the election was made shall be recomputed and an amended return filed. An election may be made even though the taxpayer has filed his return and recognized gain upon the disposition provided that the period of limitation on filing claims for credit or refund prescribed by section 6511 has not expired. In such case, a statement containing the information required by subdivision (iii) of this subparagraph should be filed together with a claim for credit or refund for the taxable year or years in which gain was recognized.

(iii) The statement referred to in subdivisions (i) and (ii) of this subparagraph shall contain the following information:

(*a*) The date of the approved disposition;

(*b*) If a replacement project has been acquired, the date of acquisition and cost of the project;

(*c*) If a replacement project has been constructed or reconstructed by or for the taxpayer, the date construction was begun, the date construction was completed, and the percentage of construction completed within the reinvestment period;

(*d*) If no replacement project has been constructed, reconstructed, or acquired prior to the time of filing of the statement, the estimated cost of such construction, reconstruction, or acquisition;

(*e*) The adjusted basis of the project disposed of; and

(*f*) The amount realized upon the approved disposition and a description of the expenses directly connected with the disposition and the taxes (other than income taxes) attributable to the disposition.

(c) ***Definitions*** —

(1) ***General.*** The definitions contained in subparagraphs (2) through (5) of this paragraph shall apply for purposes of this section.

(2) ***Qualified housing project.*** The term *qualified housing project* means a rental or cooperative housing project for lower income families that has been constructed, reconstructed, or rehabilitated pursuant to a mortgage which is insured under section 221(d)(3) or 236 of the National Housing Act, provided that with respect to the housing project disposed of and the replacement project constructed, reconstructed, or acquired, the owner of the project at the time of the approved disposition and prior to the close of the reinvestment period is, under such sections or regulations issued thereunder,

(i) Limited as to rate of return on his investment in the project, and

(ii) Limited as to rentals or occupancy charges for units in the project.

If the owner of the project is organized and operated as a nonprofit cooperative or other nonprofit organization, then such owner shall be considered to meet the requirement of subdivision (i) of this subparagraph.

(3) ***Approved disposition.*** The term *approved disposition* means a sale or other disposition of a qualified housing project to the tenants or occupants of units in such project, or to a nonprofit cooperative or other nonprofit organization formed and operated solely for the benefit of such tenants or occupants, provided that it is approved by the Secretary of Housing and Urban Development or his delegate under section 221 (d)(3) or 236 of the National Housing Act or regulations issued under such sections. Evidence of such approval should be attached to the tax return or statement in which the election under section 1039 is made.

(4) ***Reinvestment period.***

(i) The term *reinvestment period* means the period beginning 1 year before the date of the disposition and ending 1 year after the close of the first taxable year in which any part of the gain from such disposition is realized, or at such later date as may be designated pursuant to an application made by the taxpayer. Such application shall be made before the expiration of one year after the close of the first taxable year in which any part of the gain from such disposition is realized, unless the taxpayer can show to the satisfaction of the district director that—

(*a*) Reasonable cause exists for not having filed the application within the required period, and

(*b*) The filing of such application was made within a reasonable time after the expiration of the required period.

The application shall contain all the information required by paragraph (b)(4) of this section and shall be made to the district director for the internal revenue district in which the return is filed for the first taxable year in which any of the gain from the approved disposition is realized.

(ii) Ordinarily, requests for extension of the reinvestment period will not be granted until near the end of such period and any extension will usually be limited to a period not exceeding one year. Although granting of an extension depends upon the facts and circumstances of a particular case, if a predominant portion of the construction of the replacement project has been completed or is reasonably expected to be completed within the reinvestment period (determined without regard to any extension thereof), an extension of the reinvestment period will ordinarily be granted. The fact that there is a scarcity of replacement property for acquisition will not be considered sufficient grounds for granting an extension.

(5) ***Net amount realized.***

(i) The *net amount realized* from the approved disposition of a qualified housing project is the amount realized from such disposition, reduced by—

(*a*) The expenses paid or incurred by the taxpayer which are directly connected with the approved disposition, and

(*b*) The amount of taxes (other than income taxes) paid or incurred by the taxpayer which are attributable to the approved disposition.

(ii) Examples of expenses directly connected with an approved disposition of a qualified housing project include amounts paid for sales or other commissions, advertising, and for the preparation of a deed or other legal services in connection with the disposition. An amount paid for a repair to the building will be considered as an expense directly connected with the

approved disposition under subdivision (i)(*a*) of this subparagraph only if such repair is required as a condition of sale, or is required by the Secretary of Housing and Urban Development or his delegate as a condition of approval of the disposition.

(iii) Examples of taxes that are attributable to the approved disposition include local property transfer taxes and stamp taxes. A local real property tax is not so attributable.

(d) ***Basis and holding period of replacement project*** —

(1) ***Basis.*** If the taxpayer makes an election under section 1039, the basis of the replacement housing project shall be its cost (including costs incurred subsequent to the reinvestment period) reduced by the amount of gain not recognized under section 1039 (a). If the replacement consists of more than one housing project, the basis determined under this subparagraph shall be allocated to the properties in proportion to their respective costs.

(2) ***Holding period.*** The holding period of the replacement housing project shall begin on the date the taxpayer acquires such project, that is, on the date the taxpayer first acquires possession or control of such project and bears the burdens and enjoys the benefits of ownership of the replacement project. (For special rule regarding the holding period of property for purposes of section 1250, see section 1250(e)(4).)

(e) ***Assessment of deficiencies*** —

(1) ***Deficiency attributable to gain.*** If a taxpayer makes an election under section 1039(a) with respect to an approved disposition, any deficiency attributable to the gain on such disposition, for any taxable year in which any part of such gain is realized, may be assessed at any time before the expiration of 3 years after the date the district director or director of the regional service center with whom the return for such year has been filed is notified by the taxpayer of the acquisition or the completion of construction or reconstruction of the replacement qualified housing project or of the failure to acquire, construct, or reconstruct a replacement qualified housing project, as the case may be. Such a deficiency may be assessed before the expiration of such 3-year period notwithstanding the provisions of section 6212(c) or the provisions of any other law or rule of law which would otherwise prevent such assessment. If replacement has been made, such notification shall contain the information required by paragraph (b)(4)(iii) of this section. Such notification shall be attached to the return filed for the taxable year or years in which the replacement occurs, or in which the period for the replacement expires, and a copy of such notification shall be filed with the district director or director of regional service center with whom the election under section 1039(a) was required to be filed, if the return is not filed with such director.

(2) ***Deficiency attributable to election.*** If gain upon an approved disposition is realized in two (or more) taxable years, and the replacement qualified housing project was acquired, constructed, or reconstructed before the beginning of the last such year, any deficiency, for any taxable year before such last year, which is attributable to an election by the taxpayer under section 1039(a) may be assessed at any time before the expiration of the period within which a deficiency for such last taxable year may be assessed, notwithstanding the provisions of section 6212(c) or 6501 or the provisions of any law or rule of law which would otherwise prevent such assessment. Thus, if gain upon an approved disposition is realized in 1971 and 1975, and if a replacement project is purchased in 1971, any deficiency for 1971 may be assessed within the period for assessing a deficiency for 1975.

[T.D. 7191, 37 FR 12951, June 30, 1972; 37 FR 14385, July 20, 1972, as amended by T.D. 7400, 41 FR 5101, Feb. 4, 1976]

§ 1.1041-1T Treatment of transfer of property between spouses or incident to divorce (temporary).

Q-1: How is the transfer of property between spouses treated under section 1041?

A-1: Generally, no gain or loss is recognized on a transfer of property from an individual to (or in trust for the benefit of) a spouse or, if the transfer is incident to a divorce, a former spouse. The following questions and answers describe more fully the scope, tax consequences and other rules which apply to transfers of property under section 1041.

(a) ***Scope of section 1041 in general.***

Q-2: Does section 1041 apply only to transfers of property incident to divorce?

A-2: No. Section 1041 is not limited to transfers of property incident to divorce. Section 1041 applies to any transfer of property between spouses regardless of whether the transfer is a gift or is a sale or exchange between spouses acting at arm's length (including a transfer in exchange for the relinquishment of property or marital rights or an exchange otherwise governed by another nonrecognition provision of the Code). A divorce or legal separation need not be contemplated between the spouses at the time of the transfer nor must a divorce or legal separation ever occur.

Example 1. A and B are married and file a joint return. A is the sole owner of a condominium unit. A sale or gift of the condominium from A to B is a transfer which is subject to the rules of section 1041.

Example 2. A and B are married and file separate returns. A is the owner of an independent sole proprietorship, X Company. In the ordinary course of business, X Company makes a sale of property to B. This sale is a transfer of property between spouses and is subject to the rules of section 1041.

Example 3. Assume the same facts as in example (2), except that X Company is a corporation wholly owned by A. This sale is not a sale between spouses subject to the rules of section 1041. However, in appropriate circumstances, general tax principles, including the step-transaction doctrine, may be applicable in recharacterizing the transaction.

Q-3: Do the rules of section 1041 apply to a transfer between spouses if the transferee spouse is a nonresident alien?

A-3: No. Gain or loss (if any) is recognized (assuming no other nonrecognition provision applies) at the time of a transfer of property if the property is transferred to a spouse who is a nonresident alien.

Q-4: What kinds of transfers are governed by section 1041?

A-4: Only transfers of property (whether real or personal, tangible or intangible) are governed by section 1041. Transfers of services are not subject to the rules of section 1041.

Q-5: Must the property transferred to a former spouse have been owned by the transferor spouse during the marriage?

A-5: No. A transfer of property acquired after the marriage ceases may be governed by section 1041.

(b) *Transfer incident to the divorce.*

Q-6: When is a transfer of property *incident to the divorce*?

A-6: A transfer of property is *incident to the divorce* in either of the following 2 circumstances—

(1) The transfer occurs not more than one year after the date on which the marriage ceases, or

(2) The transfer is related to the cessation of the marriage.

Thus, a transfer of property occurring not more than one year after the date on which the marriage ceases need not be related to the cessation of the marriage to qualify for section 1041 treatment. (See A-7 for transfers occurring more than one year after the cessation of the marriage.)

Q-7: When is a transfer of property *related to the cessation of the marriage*?

A-7: A transfer of property is treated as related to the cessation of the marriage if the transfer is pursuant to a divorce or separation instrument, as defined in section 71(b)(2), and the transfer occurs not more than 6 years after the date on which the marriage ceases. A divorce or separation instrument includes a modification or amendment to such decree or instrument. Any transfer not pursuant to a divorce or separation instrument and any transfer occurring more than 6 years after the cessation of the marriage is presumed to be not related to the cessation of the marriage. This presumption may be rebutted only by showing that the transfer was made to effect the division of property owned by the former spouses at the time of the cessation of the marriage. For example, the presumption may be rebutted by showing that

(a) the transfer was not made within the one- and six-year periods described above because of factors which hampered an earlier transfer of the property, such as legal or business impediments to transfer or disputes concerning the value of the property owned at the time of the cessation of the marriage, and

(b) the transfer is effected promptly after the impediment to transfer is removed.

Q-8: Do annulments and the cessations of marriages that are void *ab initio* due to violations of state law constitute divorces for purposes of section 1041?

A-8: Yes.

(c) *Transfers on behalf of a spouse.*

Q-9: May transfers of property to third parties on behalf of a spouse (or former spouse) qualify under section 1041?

A-9: Yes. There are three situations in which a transfer of property to a third party on behalf of a spouse (or former spouse) will qualify under section 1041, provided all other requirements of the section are satisfied. The first situation is where the transfer to the third party is required by a divorce or separation instrument. The second situation is where the transfer to the third party is pursuant to the written request of the other spouse (or former spouse). The third situation is where the transferor receives from the other spouse (or former spouse) a written consent or ratification of the transfer to the third party. Such consent or ratification must state that the parties intend the transfer to be treated as a transfer to the nontransferring spouse (or former spouse) subject to the rules of section 1041 and must be received by the transferor prior to the date of filing of the transferor's first return of tax for the taxable year in which the transfer was made. In the three situations described above, the transfer of property will be treated as made directly to the nontransferring spouse (or former spouse) and the nontransferring spouse will be treated as immediately transferring the property to the third party. The deemed transfer from the nontransferring spouse (or former spouse) to the third party is not a transaction that qualifies for nonrecognition of gain under section 1041. This A-9 shall not apply to transfers to which § 1.1041-2 applies.

(d) *Tax consequences of transfers subject to section 1041.*

Q-10: How is the transferor of property under section 1041 treated for income tax purposes?

A-10: The transferor of property under section 1041 recognizes no gain or loss on the transfer even if the transfer was in exchange for the release of marital rights or other consideration. This rule applies regardless of whether the transfer is of property separately owned by the transferor or is a division (equal or unequal) of community property. Thus, the result under section 1041 differs from the result in *United States* v. *Davis,* 370 U.S. 65 (1962).

Q-11: How is the transferee of property under section 1041 treated for income tax purposes?

A-11: The transferee of property under section 1041 recognizes no gain or loss upon receipt of the transferred property. In all cases, the basis of the transferred property in the hands of the transferee is the adjusted basis of such property in the hands of the transferor immediately before the transfer. Even if the transfer is a bona fide sale, the transferee does not acquire a basis in the transferred property equal to the transferee's cost (the fair market value). This carryover basis rule applies whether the adjusted basis of the transferred property is less than, equal to, or greater than its fair market value at the time of transfer (or the value of any consideration provided by the transferee) and applies for purposes of determining loss as well as gain upon the subsequent disposition of the property by the transferee. Thus, this rule is different from the rule applied in section 1015(a) for determining the basis of property acquired by gift.

Q-12: Do the rules described in A-10 and

A-11 apply even if the transferred property is subject to liabilities which exceed the adjusted basis of the property?

A-12: Yes. For example, assume A owns property having a fair market value of $10,000 and an adjusted basis of $1,000. In contemplation of making a transfer of this property incident to a divorce from B, A borrows $5,000 from a bank, using the property as security for the borrowing. A then transfers the property to B and B assumes, or takes the property subject to, the liability to pay the $5,000 debt. Under section 1041, A recognizes no gain or loss upon the transfer of the property, and the adjusted basis of the property in the hands of B is $1,000.

Q-13: Will a transfer under section 1041 result in a recapture of investment tax credits with respect to the property transferred?

A-13: In general, no. Property transferred under section 1041 will not be treated as being disposed of by, or ceasing to be section 38 property with respect to, the transferor. However, the transferee will be subject to investment tax credit recapture if, upon or after the transfer, the property is disposed of by, or ceases to be section 38 property with respect to, the transferee. For example, as part of a divorce property settlement, B receives a car from A that has been used in A's business for two years and for which an investment tax credit was taken by A. No part of A's business is transferred to B and B's use of the car is solely personal. B is subject to recapture of the investment tax credit previously taken by A.

(e) *Notice and recordkeeping requirement with respect to transactions under section 1041.*

Q-14: Does the trasnsferor of property in a transaction described in section 1041 have to supply, at the time of the transfer, the transferee with records sufficient to determine the adjusted basis and holding period of the property at the time of the transfer and (if applicable) with notice that the property transferred under section 1041 is potentially subject to recapture of the investment tax credit?

A-14: Yes. A transferor of property under section 1041 must, at the time of the transfer, supply the transferee with records sufficient to determine the adjusted basis and holding period of the property as of the date of the transfer. In addition, in the case of a transfer of property which carries with it a potential liability for

investment tax credit recapture, the transferor must, at the time of the transfer, supply the transferee with records sufficient to determine the amount and period of such potential liability. Such records must be preserved and kept accessible by the transferee.

(f) *Property settlements—effective dates, transitional periods and elections.*

Q-15: When does section 1041 become effective?

A-15: Generally, section 1041 applies to all transfers after July 18, 1984. However, it does not apply to transfers after July 18, 1984 pursuant to instruments in effect on or before July 18, 1984. (See A-16 with respect to exceptions to the general rule.)

Q-16: Are there any exceptions to the general rule stated in

A-15 above?

A-16: Yes. Two transitional rules provide exceptions to the general rule stated in A-15. First, section 1041 will apply to transfers after July 18, 1984 under instruments that were in effect on or before July 18, 1984 if both spouses (or former spouses) elect to have section 1041 apply to such transfers. Second, section 1041 will apply to all transfers after December 31, 1983 (including transfers under instruments in effect on or before July 18, 1984) if both spouses (or former spouses) elect to have section 1041 apply. (See A-18 relating to the time and manner of making the elections under the first or second transitional rule.)

Q-17: Can an election be made to have section 1041 apply to some, but not all, transfers made after December 31, 1983, or some but not all, transfers made after July 18, 1984 under instruments in effect on or before July 18, 1984?

A-17: No. Partial elections are not allowed. An election under either of the two elective transitional rules applies to all transfers governed by that election whether before or after the election is made, and is irrevocable.

(g) *Property settlements—time and manner of making the elections under section 1041.*

Q-18: How do spouses (or former spouses) elect to have section 1041 apply to transfers after December 31, 1983, or to transfers after July 18, 1984 under instruments in effect on or before July 18, 1984?

A-18: In order to make an election under section 1041 for property transfers after December 31, 1983, or property transfers under instruments that were in effect on or before July 18, 1984, both spouses (or former spouses) must elect the application of the rules of section 1041 by attaching to the transferor's first filed income tax return for the taxable year in which the first transfer occurs, a statement signed by both spouses (or former spouses) which includes each spouse's social security number and is in substantially the form set forth at the end of this answer.

In addition, the transferor must attach a copy of such statement to his or her return for each subsequent taxable year in which a transfer is made that is governed by the transitional election. A copy of the signed statment must be kept by both parties.

The election statements shall be in substantially the following form:

In the case of an election regarding transfers after 1983:

> ## Section 1041 Election
>
> The undersigned hereby elect to have the provisions of section 1041 of the Internal Revenue Code apply to all qualifying transfers of property after December 31, 1983. The undersigned understand that section 1041 applies to all property transferred between spouses, or former spouses incident to divorce. The parties further understand that the effects for Federal income tax purposes of having section 1041 apply are that (1) no gain or loss is recognized by the transferor spouse or former spouse as a result of this transfer; and (2) the basis of the transferred property in the hands of the transferee is the adjusted basis of the property in the hands of the transferor immediately before the transfer, whether or not the adjusted basis of the transferred property is less than, equal to, or greater than its fair market value at the time of the transfer. The undersigned understand that if the transferee spouse or former spouse disposes of the property in a transaction in which gain is recognized, the amount of gain which is taxable may be larger than it would have been if this election had not been made.

In the case of an election regarding preexisting decrees:

> ## Section 1041 Election
>
> The undersigned hereby elect to have the provisions of section 1041 of the Internal Revenue Code apply to all qualifying transfers of property after July 18, 1984 under any instrument in effect on or before July 18, 1984. The undersigned understand that section 1041 applies to all property transferred between spouses, or former spouses incident to the divorce. The parties further understand that the effects for Federal income tax purposes of having section 1041 apply are that (1) no gain or loss is recognized by the transferor spouse or former spouse as a result of this transfer; and (2) the basis of the transferred property in the hands of the transferee is the adjusted basis of the property in the hands of the transferor immediately before the transfer, whether or not the adjusted basis of the transferred property is less than, equal to, or greater than its fair market value at the time of the transfer. The undersigned understand that if the transferee spouse or former spouse disposes of the property in a transaction in which gain is recognized, the amount of gain which is taxable may be larger than it would have been if this election had not been made.

(Secs. 1041(d)(4), (98 Stat. 798, 26 U.S.C. 1041(d)(4)), 152(e)(2)(A) (98 Stat. 802, 26 U.S.C. 152(e)(2)(A)), 215(c) (98 Stat. 800, 26 U.S.C. 215(c)) and 7805 (68A Stat. 917, 26 U.S.C. 7805) of the Internal Revenue Code of 1954))

[T.D. 7973, 49 FR 34452, Aug. 31, 1984; T.D. 9035, 68 FR 1536, Jan. 13, 2003]

§ 1.1041-2 Redemptions of stock.

(a) ***In general*** —

(1) ***Redemptions of stock not resulting in constructive distributions.*** Notwithstanding Q&A-9 of § 1.1041-1T(c), if a corporation redeems stock owned by a spouse or former spouse (transferor spouse), and the transferor spouse's receipt of property in respect of such redeemed stock is not treated, under applicable tax law, as resulting in a constructive distribution to the other spouse or former spouse (nontransferor spouse), then the form of the stock redemption shall be respected for Federal income tax purposes. Therefore, the transferor spouse will be treated as having received a distribution from the corporation in redemption of stock.

(2) ***Redemptions of stock resulting in constructive distributions.*** Notwithstanding Q&A-9 of § 1.1041-1T(c), if a corporation redeems stock owned by a transferor spouse, and the transferor spouse's receipt of property in respect of such redeemed stock is treated, under applicable tax law,

as resulting in a constructive distribution to the nontransferor spouse, then the redeemed stock shall be deemed first to be transferred by the transferor spouse to the nontransferor spouse and then to be transferred by the nontransferor spouse to the redeeming corporation. Any property actually received by the transferor spouse from the redeeming corporation in respect of the redeemed stock shall be deemed first to be transferred by the corporation to the nontransferor spouse in redemption of such spouse's stock and then to be transferred by the nontransferor spouse to the transferor spouse.

(b) *Tax consequences* —

(1) ***Transfers described in paragraph (a)(1) of this section.*** Section 1041 will not apply to any of the transfers described in paragraph (a)(1) of this section. See section 302 for rules relating to the tax consequences of certain redemptions; redemptions characterized as distributions under section 302(d) will be subject to section 301 if received from a Subchapter C corporation or section 1368 if received from a Subchapter S corporation.

(2) ***Transfers described in paragraph (a)(2) of this section.*** The tax consequences of each deemed transfer described in paragraph (a)(2) of this section are determined under applicable provisions of the Internal Revenue Code as if the spouses had actually made such transfers. Accordingly, section 1041 applies to any deemed transfer of the stock and redemption proceeds between the transferor spouse and the nontransferor spouse, provided the requirements of section 1041 are otherwise satisfied with respect to such deemed transfer. Section 1041, however, will not apply to any deemed transfer of stock by the nontransferor spouse to the redeeming corporation in exchange for the redemption proceeds. *See* section 302 for rules relating to the tax consequences of certain redemptions; redemptions characterized as distributions under section 302(d) will be subject to section 301 if received from a Subchapter C corporation or section 1368 if received from a Subchapter S corporation.

(c) *Special rules in case of agreements between spouses or former spouses* —

(1) ***Transferor spouse taxable.*** Notwithstanding applicable tax law, a transferor spouse's receipt of property in respect of the redeemed stock shall be treated as a distribution to the transferor spouse in redemption of such stock for purposes of paragraph (a)(1) of this section, and shall not be treated as resulting in a constructive distribution to the nontransferor spouse for purposes of paragraph (a)(2) of this section, if a divorce or separation instrument, or a valid written agreement between the transferor spouse and the nontransferor spouse, expressly provides that—

(i) Both spouses or former spouses intend for the redemption to be treated, for Federal income tax purposes, as a redemption distribution to the transferor spouse; and

(ii) Such instrument or agreement supersedes any other instrument or agreement concerning the purchase, sale, redemption, or other disposition of the stock that is the subject of the redemption.

(2) ***Nontransferor spouse taxable.*** Notwithstanding applicable tax law, a transferor spouse's receipt of property in respect of the redeemed stock shall be treated as resulting in a constructive distribution to the nontransferor spouse for purposes of paragraph (a)(2) of this section, and shall not be treated as a distribution to the transferor spouse in redemption of such stock for purposes of paragraph (a)(1) of this section, if a divorce or separation instrument, or a valid written agreement between the transferor spouse and the nontransferor spouse, expressly provides that—

(i) Both spouses or former spouses intend for the redemption to be treated, for Federal income tax purposes, as resulting in a constructive distribution to the nontransferor spouse; and

(ii) Such instrument or agreement supersedes any other instrument or agreement concerning the purchase, sale, redemption, or other disposition of the stock that is the subject of the redemption.

(3) ***Execution of agreements.*** For purposes of this paragraph (c), a divorce or separation instrument must be effective, or a valid written agreement must be executed by both spouses or former spouses, prior to the date on which the transferor spouse (in the case of paragraph (c)(1) of this section) or the nontransferor spouse (in the case of paragraph (c)(2) of this section) files such spouse's first timely filed Federal income tax return for the year that includes the date of the stock redemption, but no later than the date such return is due (including extensions).

(d) ***Examples.*** The provisions of this section may be illustrated by the following examples:

Example 1. Corporation X has 100 shares outstanding. A and B each own 50 shares. A and B divorce. The divorce instrument requires B to purchase A's shares, and A to sell A's shares to B, in exchange for $100x. Corporation X redeems A's shares for $100x. Assume that, under applicable tax law, B has a primary and unconditional obligation to purchase A's stock, and therefore the stock redemption results in a constructive distribution to B. Also assume that the special rule of paragraph (c)(1) of this section does not apply. Accordingly, under paragraphs (a)(2) and (b)(2) of this section, A shall be treated as transferring A's stock of Corporation X to B in a transfer to which section 1041 applies (assuming the requirements of section 1041 are otherwise satisfied), B shall be treated as transferring the Corporation X stock B is deemed to have received from A to Corporation X in exchange for $100x in an exchange to which section 1041 does not apply and sections 302(d) and 301 apply, and B shall be treated as transferring the $100x to A in a transfer to which section 1041 applies.

Example 2. Assume the same facts as *Example 1,* except that the divorce instrument provides as follows: “A and B agree that the redemption will be treated for Federal income tax purposes as a redemption distribution to A.” The divorce instrument further provides that it “supersedes all other instruments or agreements concerning the purchase, sale, redemption, or other disposition of the stock that is the subject of the redemption.” By virtue of the special rule of paragraph (c)(1) of this section and under paragraphs (a)(1) and (b)(1) of this section, the tax consequences of the redemption shall be determined in accordance with its form as a redemption of A's shares by Corporation X and shall not be treated as resulting in a constructive distribution to B. See section 302.

Example 3. Assume the same facts as *Example 1,* except that the divorce instrument requires A to sell A's shares to Corporation X in exchange for a note. B guarantees Corporation X's payment of the note. Assume that, under applicable tax law, B does not have a primary and unconditional obligation to purchase A's stock, and therefore the stock redemption does not result in a constructive distribution to B. Also assume that the special rule of paragraph (c)(2) of this section does not apply. Accordingly, under paragraphs (a)(1) and (b)(1) of this section, the tax consequences of the redemption shall be determined in accordance with its form as a redemption of A's shares by Corporation X. See section 302.

Example 4. Assume the same facts as *Example 3,* except that the divorce instrument provides as follows: “A and B agree the redemption shall be treated, for Federal income tax purposes, as resulting in a constructive distribution to B.” The divorce instrument further provides that it “supersedes any other instrument or agreement concerning the purchase, sale, redemption, or other disposition of the

stock that is the subject of the redemption." By virtue of the special rule of paragraph (c)(2) of this section, the redemption is treated as resulting in a constructive distribution to B for purposes of paragraph (a)(2) of this section. Accordingly, under paragraphs (a)(2) and (b)(2) of this section, A shall be treated as transferring A's stock of Corporation X to B in a transfer to which section 1041 applies (assuming the requirements of section 1041 are otherwise satisfied), B shall be treated as transferring the Corporation X stock B is deemed to have received from A to Corporation X in exchange for a note in an exchange to which section 1041 does not apply and sections 302(d) and 301 apply, and B shall be treated as transferring the note to A in a transfer to which section 1041 applies.

(e) ***Effective date.*** Except as otherwise provided in this paragraph, this section is applicable to redemptions of stock on or after January 13, 2003, except for redemptions of stock that are pursuant to instruments in effect before January 13, 2003. For redemptions of stock before January 13, 2003 and redemptions of stock that are pursuant to instruments in effect before January 13, 2003, see § 1.1041-1T(c), A-9. However, these regulations will be applicable to redemptions described in the preceding sentence of this paragraph (e) if the spouses or former spouses execute a written agreement on or after August 3, 2001 that satisfies the requirements of one of the special rules in paragraph (c) of this section with respect to such redemption. A divorce or separation instrument or valid written agreement executed on or after August 3, 2001, and before May 13, 2003 that meets the requirements of the special rule in Regulations Project REG-107151-00 published in 2001-2 C.B. 370 (*see* § 601.601(d)(2) of this chapter) will be treated as also meeting the requirements of the special rule in paragraph (c)(2) of this section.

[T.D. 9035, 68 FR 1536, Jan. 13, 2003]

§ 1.1042-1T Questions and answers relating to the sales of stock to employee stock ownership plans or certain cooperatives (temporary).

Q-1: What does section 1042 provide?

A-1:

(a) Section 1042 provides rules under which a taxpayer may elect not to recognize gain in certain cases where *qualified securities* are sold to a qualifying employee stock ownership plan or worker-owned cooperative in taxable years of the seller beginning after July 18, 1984, and *qualified replacement property* is purchased by the taxpayer within the *replacement period.* If the requirements of Q&A-2 of this section are met, and if the taxpayer makes an election under section 1042(a) in accordance with Q&A-3 of this section, the gain realized by the taxpayer on the sale of the qualified securities is recognized only to the extent that the amount realized on such sale exceeds the cost to the taxpayer of the qualified replacement property.

(b) Under section 1042, the term *qualified securities* means employer securities (as defined in section 409(l)) with respect to which each of the following requirements is satisfied:

(1) The employer securities were issued by a domestic corporation;

(2) for at least one year before and immediately after the sale, the domestic corporation that issued the employer securities (and each corporation that is a member of a *controlled group of corporations* with such corporation for purposes of section 409(l)) has no stock outstanding that is readily tradeable on an established market;

(3) as of the time of the sale, the employer securities have been held by the taxpayer for more than 1 year; and

(4) the employer securities were not received by the taxpayer in a distribution from a plan described in section 401(a) or in a transfer pursuant to an option or other right to acquire stock to which section 83, 422, 422A, 423, or 424 applies.

(c) The term *replacement period* means the period which begins 3 months before the date on which the sale of qualified securities occurs and which ends 12 months after the date of such sale. A replacement period may include any period which occurs prior to July 19, 1984.

(d) The term *qualified replacement property* means any securities (as defined in section 165(g)(2)) issued by a domestic corporation which does not, for the taxable year of such corporation in which the securities are purchased by the taxpayer, have passive investment income (as defined in section 1362(d)(3)(D)) that exceeds 25 percent of the gross receipts of such corporation for the taxable year preceding the taxable year of purchase. In addition, securities of the domestic corporation that issued the employer securities qualifying under section 1042 (and of any corporation that is a member of a *controlled group of corporations* with such corporation for purposes of section 409(l)) will not qualify as *qualified replacement property.*

(e) For purposes of section 1042(a), there is a *purchase* of qualified replacement property only if the basis of such property is determined by reference to its cost to the taxpayer. If the basis of the qualified replacement property is determined by reference to its basis in the hands of the transferor thereof or another person, or by reference to the basis of property (other than cash or its equivalent) exchanged for such property, then the basis of such property is not determined solely by reference to its cost to the taxpayer.

Q-2: What is a sale of qualified securities for purposes of section 1042(b)?

A-2:

(a) Under section 1042(b), a sale of qualified securities is one under which all of the following requirements are met:

(1) The qualified securities are sold to an employee stock ownership plan (as defined in section 4975(e)(7)) maintained by the corporation that issued the qualified securities (or by a member of the *controlled group of corporations* with such corporation for purposes of section 409(l)) or to an eligible worker-owned cooperative (as defined in section 1042(c)(2));

(2) The employee stock ownership plan or eligible worker-owned cooperative owns, immediately after the sale, 30 percent or more of the total value of the employer securities (within the meaning of section 409(l) outstanding as of such time;

(3) No portion of the assets of the employee stock ownership plan or eligible worker-owned cooperative attributable to qualified securities that are sold to the plan or cooperative by the taxpayer or by any other person in a sale with respect to which an election under section 1042(a) is made accrue under the plan or are allocated by the cooperative, either directly or indirectly and either concurrently with or at any time thereafter, for the benefit of

(i) the taxpayer;

(ii) any person who is a member of the family of the taxpayer (within the meaning of section 267(c)(4)); or

(iii) any person who owns (after the application of section 318(a)), at any time after July 18, 1984, and until immediately after the sale, more than 25 percent of in value of the outstanding portion of any class of stock of the corporation that issued the qualified securities (or of any member of the *controlled group of corporations* with such corporation for purposes of section 409(l)). For purposes of this calculation, stock that is owned, directly or indirectly, by or for a qualified plan shall not be treated as outstanding.

(4) The taxpayer files with the Secretary (as part of the required election described in Q&A-3 of this section) a verified written statement of the domestic corporation (or corporations) whose employees are covered by the plan acquiring the qualified securities or of any authorized officer of the eligible workerowned cooperative, consenting to the application of section 4978(a) with respect to such corporation or cooperative.

(b) For purposes of determining whether paragraph (a)(2) of this section is satisfied, sales of qualified securities by two or more taxpayers may be treated as a single sale if such sales are made as part of a single, integrated transaction under a prearranged agreement between the taxpayers.

(c) For purposes of determining whether paragraph (a)(3) of this section is satisfied with respect to the prohibition against an accrual or allocation of qualified securities, the accrual or allocation of any benefits or contributions or other assets that are not attributable to qualified securities sold to the employee stock ownership plan or eligible worker-owned cooperative in a sale with respect to which an election under section 1042(a) is made (including any accrual or allocation under any other plan or arrangement maintained by the corporation or any member of *the controlled group of corporations* with such corporation for purposes of section 409(l)) must be made without regard to the allocation of such qualified securities. Paragraph (a)(3) of this section above may be illustrated in part by the following example: Individuals A, B, and C own 50, 25, and 25, respectively, of the 100 outstanding shares of common stock of Corporation X. Such shares constitute qualified securities as defined in Q&A-1 of this section. A and B, but not C, are employees of Corporation X. For the benefit of all its employees, Corporation X establishes an employee stock ownership plan that obtains a loan meeting the exemption requirements of section 4975(d)(3). The loan proceeds are used by the plan to purchase the 100 shares of qualified securities from A, B, and C, all of whom elect nonrecognition treatment under section 1042(a) with respect to the gain realized on their sale of such securities. Under the requirements of paragraph (a)(3) of this section, no part of the assets of the plan attributable to the 100 shares of qualified securities may accrue under the plan (or under any other plan or arrangement maintained by Corporation X) for the benefit of A or B or any person who is a member of the family of A or B (as determined under section 267(c)(4)). Furthermore, no other assets of the plan or assets of the employer may accrue for the benefit of such individuals in lieu of the receipt of assets attributable to such qualified securities.

(d) A sale under section 1042(a) shall not include any sale of securities by a dealer or underwriter in the ordinary course of its trade or business as a dealer or underwriter, whether or not guaranteed.

Q-3: What is the time and manner for making the election under section 1042(a)?

A-3:

(a) The election not to recognize the gain realized upon the sale of qualified securities to the extent provided under section 1042(a) shall be made in a *statement of election* attached to the taxpayer's income tax return filed on or before the due date (including extensions of time) for the taxable year in which the sale occurs. If a taxpayer does not make a timely election under this section to obtain

section 1042(a) nonrecognition treatment with respect to the sale of qualified securities, it may not subsequently make an election on an amended return or otherwise. Also, an election once made is irrevocable.

(b) The statement of election shall provide that the taxpayer elects to treat the sale of securities as a sale of qualified securities under section 1042(a), and shall contain the following information:

(1) A description of the qualified securities sold, including the type and number of shares;

(2) The date of the sale of the qualified securities;

(3) The adjusted basis of the qualified securities;

(4) The amount realized upon the sale of the qualified securities;

(5) The identity of the employee stock ownership plan or eligible worker-owned cooperative to which the qualified securities were sold; and

(6) If the sale was part of a single, interrelated transaction under a prearranged agreement between taxpayers involving other sales of qualified securities, the names and taxpayer identification numbers of the other taxpayers under the agreement and the number of shares sold by the other taxpayers. See Q&A-2 of this section.

If the taxpayer has purchased qualified replacement property at the time of the election, the taxpayer must attach as part of the statement of election a *statement of purchase* describing the qualified replacement property, the date of the purchase, and the cost of the property, and declaring such property to be the qualified replacement property with respect to the sale of qualified securities. Such statement of purchase must be notarized by the later of thirty days after the purchase or March 6, 1986. In addition, the statement of election must be accompanied by the verified written statement of consent required under Q&A-2 of this section with respect to the qualified securities sold.

(c) If the taxpayer has not purchased qualified replacement property at the time of the filing of the statement of election, a timely election under this Q&A shall not be considered to have been made unless the taxpayer attaches the notarized statement of purchase described above to the taxpayer's income tax return filed for the taxable year following the year for which the election under section 1042(a) was made. Such notarized statement of purchase shall be filed with the district director or the director of the regional service center with whom such election was originally filed, if the return is not filed with such director.

Q-4: What is the basis of qualified replacement property?

A-4: If a taxpayer makes an election under section 1042(a), the basis of the qualified replacement property purchased by the taxpayer during the replacement period shall be reduced by an amount equal to the amount of gain which was not recognized. If more than one item of qualified replacement property is purchased, the basis of each of such items shall be reduced by an amount determined by multiplying the total gain not recognized by reason of the application of section 1042(a) by a fraction, the numerator of which is the cost of such item of property and the denominator of which is the total cost of all such items of property. For the rule regarding the holding period of qualified replacement property, see section 1223(13).

Q-5: What is the statute of limitations for the assessment of a deficiency relating to the gain on the sale of qualified securities?

A-5:

(a) If any gain is realized by the taxpayer on the sale of any qualified securities and such gain has not been recognized under section 1042(a) in accordance with the requirements of this section, the statutory period provided in section 6501(a) for the assessment of any deficiency with respect to such gain shall not expire prior to the expiration of 3 years from the date of receipt, by the district director or director of regional service center with whom the statement of election under 1042(a) was originally filed, of:

(1) A notarized statement of purchase as described in Q&A-3;

(2) A written statement of the taxpayer's intention not to purchase qualified replacement property within the replacement period; or

(3) A written statement of the taxpayer's failure to purchase qualified replacement property within the replacement period.

In those situations when a taxpayer is providing a written statement of an intention not to purchase or of a failure to purchase qualified replacement property, the statement shall be accompanied, where appropriate, by an amended return for the taxable year in which the gain from the sale of the qualified securities was realized, in order to reflect the inclusion in gross income for that year of gain required to be recognized in connection with such sale.

(b) Any gain from the sale of qualified securities which is required to be recognized due to a failure to meet the requirements under section 1042 shall be included in the gross income for the taxable year in which the gain was realized. If any gain from the sale of qualified securities is not recognized under section 1042(a) in accordance with the requirements of this section, any deficiency attributable to any portion of such gain may be assessed at any time before the expiration of the 3-year period described in this Q&A, notwithstanding the provision of any law or rule of law which would otherwise prevent such assessment.

Q-6: When does section 1042 become effective?

A-6: Section 1042 applies to sales of qualified securities in taxable years of sellers beginning after July 18, 1984.

[T.D. 8073, 51 FR 4333, Feb. 4, 1986]

§ 1.1044(a)-1 Time and manner for making election under the Omnibus Budget Reconciliation Act of 1993.

(a) ***Description.*** Section 1044(a), as added by section 13114 of the Omnibus Budget Reconciliation Act of 1993 (Pub. L. 103-66, 107 Stat. 430), generally allows individuals and C corporations that sell publicly traded securities after August 9, 1993, to elect not to recognize certain gain from the sale if the taxpayer purchases common stock or a partnership interest in a specialized small business investment company (SSBIC) within the 60-day period beginning on the date the publicly traded securities are sold.

(b) ***Time and manner for making the election.*** The election under section 1044(a) must be made on or before the due date (including extensions) for the income tax return for the year in which the publicly traded securities are sold. The election is to be made by reporting the entire gain from the sale of publicly traded securities on Schedule D of the income tax return in accordance with instructions for Schedule D, and by attaching a statement to Schedule D showing—

(1) How the nonrecognized gain was calculated;

(2) The SSBIC in which common stock or a partnership interest was purchased;

(3) The date the SSBIC stock or partnership interest was purchased; and

(4) The basis of the SSBIC stock or partnership interest.

(c) ***Revocability of election.*** The election described in this section is revocable with the consent of the Commissioner.

(d) ***Effective date.*** The rules set forth in this section are effective December 12, 1996.

[T.D. 8688, 61 FR 65322, Dec. 12, 1996]

§ 1.1045-1 Application to partnerships.

(a) ***Overview of section.*** A partnership that holds qualified small business stock (QSB stock) (as defined in paragraph (g)(1) of this section) for more than 6 months, sells such QSB stock, and purchases replacement QSB stock (as defined in paragraph (g)(2) of this section) may elect to apply section 1045. An eligible partner (as defined in paragraph (g)(3) of this section) of a partnership that sells QSB stock, may elect to apply section 1045 if the eligible partner purchases replacement QSB stock directly or through a purchasing partnership (as defined in paragraph (c)(1)(i) of this section). A taxpayer (other than a C corporation) that holds QSB stock for more than 6 months, sells such QSB stock and purchases replacement QSB stock through a purchasing partnership may elect to apply section 1045. A section 1045 election is revocable only with the prior written consent of the Commissioner. To obtain the Commissioner's prior written consent, the person who made the section 1045 election must submit a request for a private letter ruling. (For further guidance, see Rev. Proc. 2007-1, 2007-1 CB 1 (or any applicable successor) and § 601.601(d)(2)(ii)(*b*) of this chapter.) Paragraph (b) of this section provides rules for partnerships that elect to apply section 1045. Paragraph (c) of this section provides rules for certain taxpayers other than C corporations and for eligible partners that elect to apply section 1045. Paragraph (d) of this section provides a limitation on the amount of gain that an eligible partner does not recognize under section 1045. Paragraph (e) of this section provides rules for partnership distributions of QSB stock to an eligible partner. Paragraph (f) of this section provides rules for contributions of QSB stock or replacement QSB stock to a partnership. Paragraph (g) of this section provides definitions of certain terms used in section 1045 and this section. Paragraph (h) of this section provides reporting rules for partnerships and partners that elect to apply section 1045. Paragraph (i) of this section provides examples illustrating the provisions of this section. Paragraph (j) of this section contains the effective/applicability date.

(b) ***Partnership election —***

(1) ***Partnership purchase of replacement QSB stock.*** A partnership that holds QSB stock for more than 6 months, sells such QSB stock, and purchases replacement QSB stock may elect in accordance with paragraph (h) of this section to apply section 1045. If the partnership elects to apply section 1045, then, subject to the provisions of paragraphs (b)(4) and (d) of this section, each eligible partner shall not recognize its distributive share of any partnership section 1045 gain (as determined under paragraph (b)(2) of this section). For this purpose, partnership section 1045 gain equals the partnership's gain from the sale of the QSB stock reduced by the greater of—

(i) The amount of the gain from the sale of the QSB stock that is treated as ordinary income; or

(ii) The excess of the amount realized by the partnership on the sale over the total cost of all replacement QSB stock purchased by the partnership (excluding the cost of any replacement QSB stock purchased by the partnership that is otherwise taken into account under section 1045).

(2) ***Partner's distributive share of partnership section 1045 gain.*** A partner's distributive share of partnership section 1045 gain shall be in the same proportion as the partner's distributive share of the partnership's gain from the sale of the QSB stock. For this purpose, the partnership's gain from the sale of QSB stock and the partner's distributive share of that gain are determined without regard to basis adjustments under section 743(b) and paragraph (b)(3)(ii) of this section.

(3) ***Basis adjustments*** —

(i) ***Partner's interest in a partnership.*** The adjusted basis of an eligible partner's interest in a partnership shall not be increased under section 705(a)(1) by gain from a partnership's sale of QSB stock that is not recognized by the partner as the result of a partnership election under paragraph (b)(1) of this section.

(ii) ***Partnership's replacement QSB stock*** —

(A) ***Rule.*** The basis of a partnership's replacement QSB stock is reduced (in the order acquired) by the amount of gain from the partnership's sale of QSB stock that is not recognized by an eligible partner as a result of the partnership's election under section 1045. The basis adjustment with respect to any amount described in this paragraph (b)(3)(ii) constitutes an adjustment to the basis of the partnership's replacement QSB stock with respect to that partner only. The effect of such a basis adjustment is determined under the principles of § 1.743-1(g), (h), and (j) except as modified in this paragraph (b)(3)(ii)(A). If a partnership sells QSB stock with respect to which a basis adjustment has been made under this paragraph (b)(3)(ii), and the partnership makes an election under paragraph (b)(1) of this section with respect to the sale and purchases replacement QSB stock, the basis adjustment shall carry over to the replacement QSB stock except to the extent otherwise provided in this paragraph (b)(3)(ii). The basis adjustment that carries over to the replacement QSB stock shall be reduced (but not below zero) by the eligible partner's distributive share of the excess, if any, of the greater of the amount determined under paragraph (b)(1)(i) or (ii) of this section from the sale of the QSB stock, over the partnership's gain from the sale of the QSB stock (determined without regard to basis adjustments under section 743 or paragraph (b)(3)(ii) of this section). The excess amount that reduces the basis adjustment shall be accounted for as gain in accordance with § 1.743-1(j)(3). See *Example 5* of paragraph (i) of this section. For purposes of this paragraph (b)(3)(ii), a partnership must presume that a partner did not recognize that partner's distributive share of the partnership section 1045 gain as a result of the partnership's section 1045 election unless the partner notifies the partnership to the contrary as described in paragraph (b)(5)(ii) of this section. However, if a partnership knows that a particular partner is classified, for Federal tax purposes, as a C corporation, then the partnership may presume that the partner did not defer recognition of its distributive share of the partnership section 1045 gain, even in the absence of a notification by the partner. If a partnership makes an election under section 1045, but an eligible partner opts out of the election under paragraph (b)(4) of this section and provides

to the partnership the notification required under paragraph (b)(5)(ii) of this section, no basis adjustments under this paragraph (b)(3)(ii) are required with respect to that partner as a result of the section 1045 election by the partnership.

(B) ***Tiered-partnership rule.*** If a partnership (upper-tier partnership) holds an interest in another partnership (lower-tier partnership) that makes an election under section 1045, the portion of the lower-tier partnership's basis adjustment as provided in paragraph (b)(3)(ii)(A) of this section in the replacement QSB stock must be segregated and allocated to the upper-tier partnership and any eligible partner as defined in paragraph (g)(3)(iii) of this section. Similarly, that portion of the basis of the upper-tier partnership's interest in the lower-tier partnership attributable to the basis adjustment as provided in paragraph (b)(3)(ii)(A) of this section in the lower-tier partnership's replacement QSB stock must be segregated and allocated solely to any eligible partner as defined in paragraph (g)(2)(iii) of this section.

(C) ***Statement of adjustments.*** A partnership that must adjust the basis of replacement QSB stock under this paragraph (b) must attach a statement to the partnership return for the taxable year in which the partnership purchases replacement QSB stock setting forth the computation of the adjustment, the replacement QSB stock to which the adjustment has been made, the date(s) on which such QSB stock was acquired by the partnership, and the amount of the adjustment that is allocated to each partner.

(4) ***Eligible partners may opt out of partnership's section 1045 election.*** An eligible partner may opt out of the partnership's section 1045 election with respect to QSB stock either by recognizing the partner's distributive share of the partnership section 1045 gain, or by making a partner section 1045 election under paragraph (c) of this section with respect to the partner's distributive share of the partnership section 1045 gain. See paragraph (b)(5)(ii) of this section for applicable notification requirements. Opting out of a partnership's section 1045 election under this paragraph (b)(4) does not constitute a revocation of the partnership's election, and such election shall continue to apply to other partners of the partnership.

(5) ***Notice requirements*** —

(i) ***Partnership notification to partners.*** A partnership that makes an election under paragraph (b)(1) of this section must notify all of its partners of the election and the purchase of replacement QSB stock, in accordance with the applicable forms and instructions, and separately state each partner's distributive share of partnership section 1045 gain from the sale of QSB stock under section 702. Each partner shall determine whether the partner is an eligible partner within the meaning of paragraph (g)(3) of this section and report the partner's distributive share of partnership section 1045 gain from the partnership's sale of QSB stock, including gain not recognized, in accordance with the applicable forms and instructions.

(ii) ***Partner notification to partnership.*** Any partner that must recognize all or part of the partner's distributive share of partnership section 1045 gain must notify the partnership, in writing, of the amount of partnership section 1045 gain that is recognized by the partner. Similarly, an eligible partner that opts out of a partnership's section 1045 election under paragraph (b)(4) of this section must notify the partnership, in writing, that the partner is opting out of the partnership's section 1045 election.

(c) ***Partner election*** —

(1) ***In general*** —

(i) ***Rule.*** An eligible partner of a partnership that sells QSB stock (selling partnership) may elect in accordance with paragraph (h) of this section to apply section 1045 if replacement QSB stock is purchased by the eligible partner. An eligible partner of a selling partnership may elect in accordance with paragraph (h) of this section to apply section 1045 if replacement QSB stock is purchased by a partnership in which the taxpayer is a partner (directly or through an upper-tier partnership) on the date on which the partnership acquires the replacement QSB stock (purchasing partnership). A taxpayer other than a C corporation that sells QSB stock held for more than 6 months at the time of the sale may elect in accordance with paragraph (h) of this section to apply section 1045 if replacement QSB stock is purchased by a purchasing partnership (including a selling partnership).

(ii) ***Partner purchase of replacement QSB stock.*** Subject to paragraph (d) of this section, an eligible partner of a selling partnership that elects to apply section 1045 with respect to the eligible partner's purchase of replacement QSB stock must recognize its distributive share of gain from the sale of QSB stock by the selling partnership only to the extent of the greater of—

(A) The amount of the eligible partner's distributive share of the selling partnership's gain from the sale of the QSB stock that is treated as ordinary income; or

(B) The excess of the eligible partner's share of the selling partnership's amount realized (as determined under paragraph (c)(2) of this section) on the sale by the selling partnership of the QSB stock (excluding the cost of any replacement QSB stock purchased by the selling partnership) over the cost of any replacement QSB stock purchased by the eligible partner (excluding the cost of any replacement QSB stock that is otherwise taken into account under section 1045).

(iii) ***Partnership purchase of replacement QSB stock—***

(A) ***Partner of a selling partnership.*** Subject to paragraph (d) of this section, an eligible partner that treats its interest in QSB stock purchased by a purchasing partnership as a purchase of replacement QSB stock by the eligible partner and that elects to apply section 1045 with respect to such purchase must recognize its total gain (the eligible partner's distributive share of gain from the selling partnership's sale of QSB stock and any gain taken into account under paragraph (c)(5) of this section from the sale of replacement QSB stock) only to the extent of the greater of—

(*1*) The amount of the eligible partner's distributive share of the selling partnership's gain from the sale of the QSB stock that is treated as ordinary income; or

(*2*) The excess of the eligible partner's share of the selling partnership's amount realized (as determined under paragraph (c)(2) of this section) on the sale by the selling partnership of the QSB stock (excluding the cost of any replacement QSB stock purchased by the selling partnership) over the eligible partner's share of the purchasing partnership's cost of the replacement QSB stock, as determined under paragraph (c)(3) of this section (excluding the cost of any QSB stock that is otherwise taken into account under section 1045).

(B) ***Taxpayer other than a C corporation.*** Subject to paragraph (d) of this section, a taxpayer other than a C corporation that treats its interest in QSB stock purchased by a purchasing partnership with respect to which the taxpayer is a partner as a purchase of replacement QSB stock by the taxpayer must recognize its gain from the sale of the QSB stock only to the extent of the greater of—

(*1*) The amount of gain from the sale of the QSB stock that is treated as ordinary income; or

(*2*) The excess of the amount realized by the taxpayer on the sale of the QSB stock over the partner's share of the purchasing partnership's cost of the replacement QSB stock, as determined under paragraph (c)(3) of this section (excluding the cost of any QSB stock that is otherwise taken into account under section 1045).

(2) ***Eligible partner's share of amount realized by partnership*** —

(i) ***General rule.*** The eligible partner's share of the amount realized by the selling partnership is the amount realized by the partnership on the sale of the QSB stock (excluding the cost of any replacement QSB stock otherwise taken into account under section 1045) multiplied by the following fraction—

(A) The numerator of which is the eligible partner's distributive share of the partnership's realized gain from the sale of the QSB stock; and

(B) The denominator of which is the partnership's realized gain on the sale of the QSB stock.

(ii) ***General rule modified for determining eligible partner's share of amount realized by purchasing partnership upon a sale of replacement QSB stock in certain situations*** —

(A) ***No gain realized or loss realized on sale of replacement QSB stock.*** If a purchasing partnership does not realize a gain or realizes a loss from the sale of replacement QSB stock for which an election under this section was made for purposes of applying paragraph (c)(1)(iii)(A) of this section, the eligible partner's share of the amount realized is—

(*1*) The greater of—

(*i*) The amount determined in paragraph (c)(2)(i) of this section from a prior sale of QSB stock (that is not otherwise taken into account under paragraph (c)(2) of this section) in which the eligible partner had a distributive share of gain allocated to the eligible partner that was not recognized under paragraph (c)(1)(iii)(A) of this section; or

(*ii*) The amount realized by a taxpayer other than a C corporation from a prior sale of QSB stock (that is not otherwise taken into account under paragraph (c)(2) of this section) in which the taxpayer realized gain that was not recognized under paragraph (c)(1)(iii)(B) of this section; less

(*2*) The eligible partner's distributive share of any loss recognized on the sale of replacement QSB stock, if applicable.

(B) ***Eligible partner's interest in purchasing partnership is reduced and gain realized on sale of replacement QSB stock.*** If an eligible partner's interest in a purchasing partnership is reduced subsequent to the sale of QSB stock and the purchasing partnership realizes a gain from the sale of the replacement QSB stock, the eligible partner's share of the amount realized upon a sale of replacement QSB stock must be determined under paragraph (c)(2)(i) of this section based on the distributive share of the partnership's realized gain that would have been allocated to the eligible partner if the eligible partner's interest in the partnership had not been reduced.

(iii) ***Eligible partner's share of the amount realized.*** For purposes of determining the eligible partner's share of the amount realized by the partnership, the partnership's realized gain from the sale of QSB stock and the eligible partner's distributive share of that gain are determined without regard to basis adjustments under section 743(b) and paragraphs (b)(3)(ii) and (c) of this section.

(3) ***Partner's share of the cost of QSB stock purchased by a purchasing partnership.*** The partner's share of the cost (adjusted basis) of replacement QSB stock purchased by a purchasing partnership is the percentage of the partnership's future income and gain, if any, that is reasonably expected to be allocated to the partner (determined without regard to any adjustment under section 1045) with respect to the replacement QSB stock that was purchased by the partnership, multiplied by the cost of that replacement QSB stock. The assumptions made by a partnership in determining the reasonably expected allocation of income and gain must be consistent for each partner. For example, a partnership may not treat the same item of income or gain as being reasonably expected to be allocated to more than one partner.

(4) ***Basis adjustments*** —

(i) ***Eligible partner's interest in selling partnership.*** Under section 705(a)(1), the adjusted basis of an eligible partner's interest in a selling partnership that sells QSB stock is increased by the partner's distributive share of gain without regard to paragraph (c)(1) of this section. However, if the selling partnership is also a purchasing partnership, the adjusted basis of an eligible partner's interest in a partnership that sells QSB stock may be reduced under paragraph (c)(4)(iii) of this section.

(ii) ***Replacement QSB stock.*** A partner's basis in any replacement QSB stock that is purchased by the partner, as well as the adjusted basis of any replacement QSB stock that is purchased by a purchasing partnership and that is treated as the partner's replacement QSB stock must be reduced (in the order replacement QSB stock is acquired by the partner and purchasing partnership, as applicable) by the partner's distributive share of the gain on the sale of the selling partnership's QSB stock that is not recognized by the partner under paragraph (c)(1) of this section, or by the gain on a sale of QSB stock by the partner that is not recognized by the partner under section 1045, as applicable. If replacement QSB stock is purchased by the purchasing partnership, the purchasing partnership shall maintain its adjusted basis in the replacement QSB stock without regard to any basis adjustments required by this paragraph (c)(4)(ii). The eligible partner, however, shall in computing its distributive share of income, gain, loss and deduction from the purchasing partnership with respect to the replacement QSB stock take into account the variation between the adjusted basis in the QSB stock as determined under this paragraph (c)(4)(ii) and the adjusted basis determined without regard to this paragraph (c)(4)(ii). A partner must retain records setting forth the computation of this basis adjustment, the replacement QSB stock to which the adjustment has been made, and the date(s) on which such stock was acquired. See *Examples 7* and *8* of paragraph (i) of this section.

(iii) ***Partner's basis in purchasing partnership interest.*** A partner that treats the partner's interest in QSB stock purchased by a purchasing partnership as the partner's replacement QSB stock must reduce (in the order replacement QSB stock is acquired) the adjusted basis of the partner's interest in the purchasing partnership by the partner's distributive share of the gain on the sale of the selling partnership's QSB stock that is not recognized by the partner pursuant to paragraph (c)(1) of this section, or by the gain on a sale of QSB stock by the partner that is not

recognized by the partner under section 1045, as applicable. Similarly, a partner of an upper-tier partnership that treats the partner's interest in QSB stock purchased by a lower-tier purchasing partnership as the partner's replacement QSB stock must reduce (in the order replacement QSB stock is acquired) the adjusted basis of the partner's interest in the upper-tier partnership by the partner's distributive share of the gain on the sale of the selling partnership's QSB stock that is not recognized by the partner pursuant to paragraph (c)(1) of this section, or by the gain on a sale of QSB stock by the partner that is not recognized by the partner under section 1045, as applicable.

(iv) ***Increase in basis on sale of QSB stock by purchasing partnership.*** A partner that recognizes gain under paragraph (c)(5) of this section must increase the adjusted basis of the partner's interest in the purchasing partnership under section 705(a)(1) by the amount of the gain recognized by that partner. Similarly, a partner in an upper-tier partnership that recognizes gain under paragraph (c)(5) of this section must increase the adjusted basis of the partner's interest in the upper-tier partnership under section 705(a)(1) by the amount of the gain recognized by that partner.

(5) ***Partner recognition of gain.*** At the time that either the partner or the purchasing partnership (whichever applies) sells or exchanges replacement QSB stock, the amount recognized by the partner is determined by taking into account the basis adjustments described in paragraph (c)(4)(ii) of this section. Similarly, a partner of an upper-tier partnership that owns an interest in a lower-tier partnership that holds replacement QSB stock must take into account the basis adjustments described in paragraph (c)(4)(ii) of this section in determining the amount recognized by the partner on a sale of the interest in the lower-tier partnership by the upper-tier partnership or the partner's distributive share of gain from the upper-tier partnership. See paragraph (e)(4) of this section for rules applicable to certain distributions of replacement QSB stock.

(d) ***Nonrecognition limitation*** —

(1) ***In general.*** For purposes of this section, the amount of gain that an eligible partner does not recognize under paragraphs (b)(1) and (c)(1) of this section cannot exceed the nonrecognition limitation. Except as otherwise provided in paragraph (d)(2) of this section, the nonrecognition limitation is equal to the product of—

(i) The partnership's realized gain from the sale of the QSB stock, determined without regard to any basis adjustment under section 734(b) or section 743(b) (other than basis adjustments described in paragraph (b)(3)(ii) of this section); and

(ii) The eligible partner's smallest percentage interest in partnership capital as determined in paragraph (d)(2) of this section. See *Example 9* of paragraph (i) of this section.

(2) ***Eligible partner's smallest percentage interest in partnership capital.*** An eligible partner's smallest percentage interest in partnership capital is the eligible partner's percentage share of capital determined at the time of the acquisition of the QSB stock as adjusted prior to the time the QSB stock is sold to reflect any reduction in the capital of the eligible partner including a reduction as a result of a disproportionate capital contribution by other partners, a disproportionate capital distribution to the eligible partner or the transfer of an interest by the eligible partner, but excluding income and loss allocations.

(3) ***Special rule for tiered partnerships.*** For purposes of paragraph (d)(1)(ii) of this section, if an eligible partner is treated as owning an interest in a lower-tier purchasing partnership through an upper-tier partnership, the eligible partner's percentage interest in the purchasing partnership shall be proportionately adjusted to reflect the eligible partner's percentage interest in the upper-tier partnership.

(e) ***Partnership distribution of QSB stock to a partner*** —

(1) ***In general.*** Subject to paragraphs (e)(2) and (3) of this section, in the case of a partnership distribution of QSB stock to a partner, the partner shall be treated for purposes of this section as—

(i) Having acquired such stock in the same manner as the partnership; and

(ii) Having held such stock during any continuous period immediately preceding the distribution during which it was held by the partnership. See *Examples 10* and *11* of paragraph (i) of this section.

(2) ***Eligibility under section 1202(c).*** Paragraph (e)(1) of this section does not apply unless all eligibility requirements with respect to QSB stock as defined in section 1202(c) are met by the distributing partnership with respect to its investment in QSB stock.

(3) ***Distribution nonrecognition limitation*** —

(i) ***Generally.*** The amount of gain that an eligible partner does not recognize under this section on the sale of QSB stock that was distributed by the partnership to the partner cannot exceed the distribution nonrecognition limitation. For this purpose, the distribution nonrecognition limitation is—

(A) The partner's section 1045 amount realized (determined under paragraph (e)(3)(ii) of this section); reduced by

(B) The partner's section 1045 adjusted basis (determined under paragraph (e)(3)(iii) of this section).

(ii) ***Section 1045 amount realized*** —

(A) ***QSB stock received in liquidation of partner's interest and in certain nonliquidating distributions.*** If a partner receives QSB stock from the partnership in a distribution in liquidation of the partner's interest in the partnership or as part of a series of related distributions by the partnership in which the partnership distributes all of the partnership's QSB stock of a particular type, then the partner's section 1045 amount realized is the partner's amount realized from the sale of the distributed QSB stock, multiplied by a fraction—

(*1*) The numerator of which is the partner's smallest percentage interest in partnership capital determined under paragraph (e)(3)(ii)(B) of this section; and

(*2*) The denominator of which is the partner's percentage interest in that type of QSB stock immediately after the distribution (determined under paragraph (e)(3)(iv) of this section).

(B) ***Partner's smallest percentage interest in partnership capital.*** A partner's smallest percentage interest in partnership capital is the partner's percentage share of capital determined at the time of the acquisition of the QSB stock as adjusted prior to the time

the QSB stock is distributed to the partner to reflect any reduction in the capital of the partner including a reduction as a result of a disproportionate capital contribution by other partners, a disproportionate capital distribution to the partner, or the transfer of a capital interest by the partner, but excluding income and loss allocations.

(C) ***QSB stock received in other distributions.*** If a partner receives QSB stock in a distribution from the partnership that is not described in paragraph (e)(3)(ii)(A) of this section, the partner's section 1045 amount realized is the partner's amount realized from the sale of the distributed QSB stock multiplied by the partner's smallest percentage interest in partnership capital determined under paragraph (e)(3)(ii)(B) of this section.

(iii) ***Section 1045 adjusted basis*** —

(A) ***QSB stock received in liquidation of partner's interest and in certain nonliquidating distributions.*** If a partner receives QSB stock from the partnership in a distribution in liquidation of the partner's interest in the partnership or as part of a series of related distributions by the partnership in which the partnership distributes all of the partnership's QSB stock of a particular type, then the partner's section 1045 adjusted basis is the product of—

(*1*) The partnership's basis in all of the QSB stock of the type distributed (without regard to basis adjustments under section 734(b) or section 743(b), other than basis adjustments described in paragraphs (b)(3)(ii) and (c)(4)(ii) of this section);

(*2*) The partner's smallest percentage interest in partnership capital determined under paragraph (e)(3)(ii)(B) of this section; and

(*3*) The proportion of the distributed QSB stock that was sold by the partner.

(B) ***QSB stock received in other distributions.*** If a partner receives QSB stock in a distribution from the partnership that is not described in paragraph (e)(3)(iii)(A) of this section, the partner's section 1045 adjusted basis is the product of—

(*1*) The partnership's basis in the QSB stock sold by the partner (without regard to basis adjustments under section 734(b) or section 743(b), other than basis adjustments described in paragraphs (b)(3)(ii) and (c)(4)(ii) of this section); and

(*2*) The partner's smallest percentage interest in partnership capital determined under paragraph (e)(3)(ii)(B) of this section.

(iv) ***Partner's percentage interest in distributed QSB stock.*** For purposes of this paragraph (e)(3), a partner's percentage interest in a type of QSB stock immediately after a partnership distribution is the value (as of the date of the distribution) of the QSB stock distributed to the partner divided by the value (as of the date of the distribution) of all of that type of QSB stock that was acquired by the partnership.

(v) ***QSB stock of the same type.*** For purposes of this paragraph (e)(3), QSB stock will be of the same type as the distributed QSB stock if it has the same issuer and the same rights and preferences as the distributed QSB stock and was acquired by the partnership at original issue.

(4) ***Distribution of replacement QSB stock to a partner that reduces another partner's interest in the replacement QSB stock.*** For purposes of this section, a partner must recognize gain upon a distribution of replacement QSB stock to another partner that reduces the partner's share of the

replacement QSB stock held by a partnership. The amount of gain that the partner must recognize is determined based on the amount of gain that the partner would recognize upon a sale of the distributed replacement QSB stock for its fair market value on the date of the distribution but not to exceed the amount that was previously not recognized by the partner under section 1045 with respect to the distributed replacement QSB stock. Any gain recognized by a partner whose interest is reduced must be taken into account in determining the adjusted basis of the partner's interest in the partnership and also taken into account in determining the partnership's adjusted basis in the QSB stock distributed to another partner under paragraph (e)(3) of this section.

(f) ***Contribution of QSB stock or replacement QSB stock to a partnership.*** Section 721 applies to a contribution of QSB stock to a partnership. Except as provided in section 721(b), any gain that was not recognized by the taxpayer under section 1045 is not recognized when the taxpayer contributes QSB stock to a partnership in exchange for a partnership interest. Stock that is contributed to a partnership is not QSB stock in the hands of the partnership. See *Example 12* of paragraph (i) of this section.

(g) ***Definitions.*** For purposes of section 1045 and this section, the following terms are defined as follows:

(1) ***Qualified small business stock.*** The term *qualified small business stock* (QSB stock) has the meaning provided in section 1202(c). The term "QSB stock" does not include an interest in a partnership that purchases or holds QSB stock. See *Example 1* of paragraph (i) of this section.

(2) ***Replacement QSB stock.*** The term *replacement QSB stock* is any QSB stock purchased within 60 days beginning on the date of a sale of QSB stock.

(3) ***Eligible partner*** —

(i) ***In general.*** Except as provided in paragraphs (e)(1), (g)(3)(ii), (iii) and (iv) of this section, an eligible partner with respect to QSB stock is a taxpayer other than a C corporation that holds an interest in a partnership on the date the partnership acquires the QSB stock and at all times thereafter for more than 6 months until the partnership sells or distributes the QSB stock.

(ii) ***Acquisition by gift or at death.*** For purposes of paragraph (g)(3)(i) of this section, a taxpayer who acquires from a partner (other than a C corporation) by gift or at death an interest in a partnership that holds QSB stock is treated as having held the acquired interest in the partnership during the period the partner (other than a C corporation) held the interest in the partnership.

(iii) ***Tiered partnership.*** For purposes of paragraph (g)(3)(i) of this section, if a partnership (upper-tier partnership) holds an interest in another partnership (lower-tier partnership) that holds QSB stock, then the upper-tier partnership's ownership of the lower-tier partnership is disregarded and each partner of the upper-tier partnership is treated as owning the interest in the lower-tier partnership directly. The partner of the upper-tier partnership is treated as owning the interest in the lower-tier partnership during the period in which both—

(A) The partner of the upper-tier partnership held an interest in the upper-tier partnership; and

(B) The upper-tier partnership held an interest in the lower-tier partnership. See *Examples 3* and *4* of paragraph (i) of this section.

(iv) ***Multiple tiers of partnerships.*** Principles similar to those described in paragraph (g)(3)(iii) of this section apply where a taxpayer holds an interest in a lower-tier partnership through multiple tiers of partnerships.

(4) ***Month(s).*** For purposes of this section, the term *month(s)* means a period commencing on the same numerical day of any calendar month as the day on which the QSB stock is sold and ending with the close of the day preceding the numerically corresponding day of the succeeding calendar month or, if there is no corresponding day, with the last day of the succeeding calendar month.

(h) ***Reporting and election rules*** —

(1) ***Time and manner of making election.*** A partnership making an election under section 1045 (as described under paragraph (b)(1) of this section) must do so on the partnership's timely filed (including extensions) Federal income tax return for the taxable year during which the sale of QSB stock occurs. A partner making an election under section 1045 (as described under paragraph (c)(1) of this section) must do so on the partner's timely filed (including extensions) Federal income tax return for the taxable year during which the partner's distributive share of the partnership's gain from the sale of the QSB stock is taken into account by such partner under section 706. In addition, a partnership or partner making an election under section 1045 must make such election in accordance with the applicable forms and instructions.

(2) ***Purchases, distributions, and sales of QSB stock or replacement QSB stock by partnerships.*** A partnership that purchases, distributes to a partner, or sells or exchanges QSB stock or replacement QSB stock must provide information to the Commissioner and to the partnership's partners to the extent provided by the applicable forms and instructions.

(3) ***Nonrecognition of gain by eligible partners.*** An eligible partner that does not recognize gain under section 1045 must provide information to the Commissioner to the extent provided by the applicable forms and instructions.

(i) ***Examples.*** The provisions of this section are illustrated by the following examples:

Example 1. Sale of a partnership interest. On January 1, 2008, A, an individual, X, a C corporation, and Y, a C corporation, form PRS, a partnership. A, X, and Y each contribute $250 to PRS and agree to share all partnership items equally. PRS purchases QSB stock for $750 on February 1, 2008. On November 4, 2008, A sells A's interest in PRS for $500, realizing $250 of capital gain. Under paragraph (g)(1) of this section, an interest in a partnership that holds QSB stock is not treated as QSB stock. Therefore, the sale of an interest in a partnership that holds QSB stock is not treated as a sale of QSB stock, and A may not elect to apply section 1045 with respect to A's $250 gain from the sale of A's interest in PRS.

Example 2. Election by partner; replacement by partnership. (i) Assume the same facts as in *Example 1*, except that A does not sell A's interest in PRS. Instead, PRS sells the QSB stock (QSB1 stock) for $1,500 on November 3, 2008. PRS realizes $750 of gain from the sale of the QSB1 stock (none of which is treated as ordinary income) and allocates $250 of gain to each of A, X, and Y. PRS does not make a section 1045 election. On November 30, 2008, A contributes $500 to ABC, a partnership, in exchange for a 10 percent interest in ABC. ABC then purchases QSB stock (QSB2 stock) for $5,000 on December 1, 2008. ABC has no other assets. A makes an election under paragraph (c)(1) of this section and treats A's percentage interest in ABC's QSB2 stock as replacement QSB stock under paragraph (c)(1)(iii) of this section with respect to the $250 gain PRS allocated to A. Under paragraph (c)(3) of this section, A's share of the cost of QSB2 stock purchased by ABC is $500 (A's reasonably

expected income and gain with respect to QSB2 stock, or 10 percent multiplied by the cost of the QSB2 stock, $5,000). Under paragraph (c)(1)(iii) of this section, A will not recognize the $250 gain PRS allocated to A, because A's share of the amount realized by PRS, $500 (the total amount realized by the partnership on the sale of the QSB1 stock ($1,500) multiplied by A's share of the gain from the sale of the QSB1 stock ($250) over the total gain realized by the partnership on the sale of the QSB1 stock ($750)), does not exceed A's share of ABC's cost of the QSB2 stock acquired by ABC, $500. Under paragraph (c)(4)(ii) of this section, A must reduce A's share of ABC's basis in the QSB2 stock by $250. Under paragraph (c)(4)(iii) of this section, A must reduce A's basis in A's interest in ABC by $250. Under paragraph (c)(4)(i) of this section, A's basis in A's interest in PRS is increased by $250.
(ii) Assume the same facts as in paragraph (i) of this *Example 2*, except that A does not contribute $500 to ABC in exchange for a partnership interest. Instead, on November 30, 2008, EFG, a partnership in which A has an existing 10 percent partnership interest, purchases QSB stock for $5,000. Under paragraph (c)(1) of this section, A may treat A's 10 percent interest in EFG's QSB stock as replacement QSB stock with respect to the $250 of gain PRS allocated to A.

(iii) Assume the same facts as in paragraph (i) of this *Example 2*, except that ABC owns QSB stock that ABC purchased on November 10, 2008, and ABC does not purchase QSB stock on December 1, 2008. Under paragraph (c)(1) of this section, ABC is not a purchasing partnership with respect to A for the QSB stock ABC purchased on November 10, 2008. A may not treat A's percentage interest in ABC's QSB stock as replacement QSB stock to defer the $250 gain PRS allocated to A, because A acquired its interest in ABC after ABC acquired the QSB stock.

(iv) Assume the same facts as in paragraph (i) of this *Example 2*, except that ABC sells QSB2 stock on July 30, 2009, for $5,000. ABC realizes no gain or loss on the sale of QSB2 stock. A desires to continue to rollover the $250 gain from the sale of QSB1 stock. Under paragraph (c)(2)(ii)(A) of this section, A's share of the amount realized is $500, which was A's share of the amount realized on the prior sale of QSB1 stock. Accordingly, A must elect to apply section 1045 and purchase $500 of replacement QSB stock either directly or through a purchasing partnership to continue to defer the $250 gain from the sale of QSB1 stock.

Example 3. Tiered partnerships; partnership election. (i) On January 1, 2008, A, an individual, and B, an individual, each contribute $500 to UTP (upper-tier partnership) for equal partnership interests. On February 1, 2008, UTP and C, an individual, each contribute $1,000 to LTP (lower-tier partnership) for equal partnership interests. On March 1, 2008, LTP purchases QSB stock for $500. On April 1, 2008, D, an individual, joins UTP by contributing $500 to UTP for a $^1/_3$ interest in UTP. On December 1, 2008, LTP sells the QSB stock for $2,000. Under paragraph (g)(3)(iii) of this section, A, B, and D are treated as owning an

interest in LTP during the period in which each of the partners held an interest in UTP and UTP held an interest in LTP. Therefore, under paragraphs (g)(3)(i) and (iii) of this section, A and B are eligible partners, and D and UTP are not eligible partners with respect to the QSB stock sold by LTP. Under paragraph (g)(3)(i) of this section, C is also an eligible partner with respect to the QSB stock sold by LTP.

(ii) Assume the same facts as in paragraph (i) of this *Example 3*. LTP realizes a gain of $1,500 on the December 1, 2008, sale of QSB stock. LTP allocates $750 of gain to each of UTP and C. UTP, in turn, allocates $250 (of the $750 of gain allocated to UTP) to each of A, B, and D. LTP makes a section 1045 election. On January 1, 2009, LTP purchases replacement QSB stock for $2,000. Under paragraph (b)(5)(ii) of this section, D notifies UTP that it recognizes $250 of gain and UTP notifies LTP. Because A, B, and C are eligible partners with respect to the QSB stock sold by LTP, A and B may each defer $250 of LTP's section 1045 gain and C may defer $750 of LTP's section 1045 gain. LTP must decrease its basis in the replacement QSB stock by the $750 of partnership section 1045 gain that was allocated to C and by $500 of the partnership section 1045 gain that was allocated to UTP. These basis reductions are with respect to UTP (A and B) and C only. Under paragraph (b)(3)(ii)(B) of this section, the basis of UTP's interest in LTP attributable to the LTP's replacement QSB stock must be segregated and allocated to A and B. In addition, A and B each have a $250 negative basis adjustment in their respective interests in UTP. If UTP sells its interest in LTP for $1,250, A and B would each recognize $250 of gain from the sale of the LTP interest. D would not recognize any gain or loss from the sale.

Example 4. Tiered partnerships; partner election. (i) On January 1, 2008, A, an individual, and X, a C corporation, form UTP, a partnership. A and X each contribute $250 to UTP and agree to share all partnership items equally. Also, on January 1, 2008, UTP and Y, a C corporation, form LTP, a partnership. UTP and Y contribute $500 and $250, respectively, to LTP. UTP and Y agree to share all partnership items equally. LTP purchases QSB stock for $750 on February 1, 2008. On November 3, 2008, LTP sells the QSB stock for $1,500. LTP realizes $750 of gain from the sale of the QSB stock (none of which is treated as ordinary income) and allocates $250 gain to Y and $500 gain to UTP. Of the $500 gain allocated to UTP from the sale of QSB stock, $250 is allocated to A and $250 is allocated to X. LTP purchases replacement QSB stock (replacement QSB1 stock) for $1,350 on December 15, 2008. LTP does not make an election under section 1045. Under the rules provided in paragraph (c) of this section, A makes an election under section 1045 on its timely filed return for the taxable year for which the distributive share of gain from the sale of QSB stock is taken into account by A under section 706. Under paragraph (c)(1)(iii) of this section, A treats A's interest in replacement QSB1 stock as replacement stock with respect to A's distributive share of LTP's section 1045 gain. On March 30, 2009, LTP sells replacement QSB1 stock for $1,650. LTP realizes $300 of gain from the sale of replacement QSB1 stock (none of which is treated as ordinary income) and allocates $100 to Y and $200 to UTP.

(ii) Under paragraph (c)(1)(iii) of this section, A must recognize its distributive share of gain from LTP's sale of QSB stock ($250) only to the extent of the greater of A's distributive share of LTP's gain from the sale of QSB stock that is treated as ordinary income ($0) or the amount by which A's share of the amount realized by LTP's sale of QSB stock exceeds A's share of LTP's cost of the replacement QSB1 stock, $50 ($^1/_3$ of $1,500, or $500, minus $^1/_3$ of $1,350, or $450). Because Y is not an eligible partner of LTP under paragraph (g)(3) of this section, Y must recognize its $250 distributive share of partnership gain from the sale of the QSB stock. Also, X is not an eligible partner under paragraph (g)(3) of this section, and it must recognize its $250 distributive share of gain from UTP attributable to UTP's distributive share of $500 of LTP's gain from the sale of QSB stock.

(iii) Under section 705(a)(1), the adjusted basis of Y's interest in LTP is increased by $250, and the adjusted basis of UTP's interest in LTP is increased by $500. Under section 705(a)(1), the adjusted basis of X's interest in UTP is increased by $250, and the adjusted basis of A's interest in UTP is increased by $250. However, under paragraph (c)(4)(iii) of this section, the adjusted basis of A's interest in UTP is reduced by the $200 of partnership section 1045 gain that was not recognized by A.

(iv) Under paragraph (c)(4)(ii) of this section, the LTP's adjusted basis in replacement QSB1 stock is reduced by the $200 of gain from the sale of QSB stock that is not recognized by A, as a result of A's election under section 1045. A must retain records setting forth the computation of this basis adjustment, the replacement QSB stock to which the adjustment is made, and dates the stock was acquired. LTP's adjusted basis in the replacement QSB1 stock is maintained without regard to the eligible partner's adjustment provided in paragraph (c)(4)(ii) of this section.

(v) On the sale of replacement QSB1 stock, LTP realizes a gain of $300, $100 of which is allocated to Y and $200 of which is allocated to UTP. UTP allocates $100 of this gain to A. Under paragraph (c)(5) of this section, in determining A's amount recognized upon the sale of replacement QSB1 stock by LTP, A must take into account A's basis adjustment of $200. Accordingly, A recognizes a total gain of $300 upon the sale of replacement QSB1 stock, absent an additional section 1045 election by A or LTP. Under paragraph (c)(4)(iv) of this section, the adjusted basis of A's interest in UTP is increased by $300 under section 705(a)(1).

(vi) Assume the same facts as in paragraph (i) of this *Example 4*, except that UTP sells its entire interest in LTP on March 30, 2009, for $1,200. UTP realizes a gain of $200 on the sale of its interest in LTP ($1,200 amount realized less $1,000 adjusted basis) and allocates $100 of this gain to A. Under paragraph (c)(5) of this section, in determining A's amount recognized upon the sale of UTP's interest in LTP, A must take into account A's basis adjustment of $200.

Accordingly, A recognizes a total gain of $300 upon the sale of the interest in LTP. Under paragraph (c)(4)(iv) of this section, the adjusted basis in A's interest in UTP is increased by $300 under section 705(a)(1).

Example 5. Partnership sale of QSB stock and purchase and sale of replacement QSB stock.
(i) On January 1, 2008, A, an individual, X, a C corporation, and Y, a C corporation, form PRS, a partnership. A, X, and Y each contribute $250 to PRS and agree to share all partnership items equally. PRS purchases QSB stock for $750 on February 1, 2008. On November 3, 2008, PRS sells the QSB stock for $1,500. PRS realizes $750 of gain from the sale of the QSB stock (none of which is treated as ordinary income) and allocates $250 of gain to each of A, X, and Y. PRS purchases replacement QSB stock (replacement QSB1 stock) for $1,350 on December 15, 2008. On its timely filed return for the taxable year during which the sale of the QSB stock occurs, PRS makes an election to apply section 1045. A does not make an election to apply section 1045 with respect to the November 3, 2008, sale of QSB stock. PRS knows that X and Y are C corporations. On March 30, 2009, PRS sells replacement QSB1 stock for $1,650. PRS realizes $300 of gain from the sale of replacement QSB1 stock (none of which is treated as ordinary income) and allocates $100 of gain to each of A, X, and Y. A does not make an election to apply section 1045 with respect to the March 30, 2009, sale of replacement QSB1 stock.
(ii) Under paragraph (b)(1) of this section, the partnership section 1045 gain from the November 3, 2008, sale of QSB stock is $600 ($750 gain less $150 ($1,500 amount realized on the sale of QSB stock less $1,350 cost of replacement QSB1 stock)). This amount must be allocated among the partners in the same proportions as the entire gain from the sale of QSB stock is allocated to the partners, $^1/_3$ ($200) to A, $^1/_3$ ($200) to X, and $^1/_3$ ($200) to Y.

(iii) Because neither X nor Y is an eligible partner under paragraph (g)(3) of this section, X and Y must each recognize its $250 distributive share of partnership gain from the sale of QSB stock. Because A is an eligible partner under paragraph (g)(3) of this section, A may defer recognition of A's $200 distributive share of partnership section 1045 gain. A is not required to separately elect to apply section 1045. A must recognize A's remaining $50 distributive share of the partnership's gain from the sale of QSB stock.

(iv) Under section 705(a)(1), the adjusted bases of X's and Y's interests in PRS are each increased by $250. Under section 705(a)(1) and paragraph (b)(3)(i) of this section, the adjusted basis of A's interest in PRS is not increased by the $200 of partnership section 1045 gain that was not recognized by A, but is increased by A's remaining $50 distributive share of gain.

(v) PRS must decrease its basis in the replacement QSB1 stock by the $200 of partnership section 1045 gain that was allocated to A. This basis reduction is a reduction with respect to A only. PRS then adjusts A's distributive share of gain from the sale of replacement QSB1 stock to reflect the effect of A's basis adjustment under paragraph (b)(3)(ii) of this section. In accordance with the principles of § 1.743-1(j)(3), the amount of A's gain from the March 30, 2009, sale of replacement QSB1 stock in which A has a $200 negative basis adjustment equals $300 (A's share of PRS' gain from the sale of replacement QSB1 stock ($100), increased by the amount of A's negative basis adjustment for replacement QSB1 stock ($200)). Accordingly, upon the sale of replacement QSB1 stock, A recognizes $300 of gain, and X and Y each recognize $100 of gain.

(vi) Assume the same facts as in paragraph (i) of this *Example 5*, except that PRS purchases replacement QSB stock (replacement QSB2 stock) on April 15, 2009, for $1,150 and PRS makes an election to apply section 1045 with respect to the March 30, 2009, sale of replacement QSB1 stock. Under paragraph (b)(3)(ii)(A) of this section, PRS' $200 basis adjustment in QSB1 stock relating to the November 3, 2008, sale of QSB stock carries over to the basis adjustment for QSB2 stock. This basis adjustment is an adjustment with respect to A only. The $200 basis adjustment is reduced by A's distributive share of the excess of $500 (the greater of the amount determined under paragraph (b)(1)(i), $0, or (ii) of this section, $500 ($1,650 amount realized on the sale of QSB1 stock less $1,150 cost of replacement QSB2 stock)) over $300 (PRS' gain from the sale of QSB1 stock), or $67 ($200 ($500 minus $300) divided by 3). Under paragraph (b)(3)(ii)(A), A must account for the $67 excess amount that reduces PRS' basis adjustment in QSB2 stock as gain in accordance with § 1.743-1(j)(3). Therefore, A now has a $133 negative basis adjustment with respect to replacement QSB2 stock (($200) negative basis adjustment from the November 3, 2008, sale of QSB stock plus $67 positive basis adjustment from the March 30, 2009, sale of QSB1 stock). A also recognizes the $100 of gain allocated by PRS to A from the March 30, 2009, sale of replacement QSB1 stock for total gain recognition of $167 ($100 plus $67).

Example 6. Partnership sale of QSB stock; election by eligible partner; replacement QSB stock purchased by purchasing partnership. (i) Assume the same facts as in *Example 5* except that PRS does not make an election under section 1045 with respect to the sale of either the QSB stock on November 3, 2008, or the QSB1 stock on March 30, 2009. However, A makes an election under section 1045 with respect to the sale of QSB stock and treats the purchase of QSB1 stock on December 15, 2008, by PRS, as the purchase of replacement QSB stock. Additionally, A makes an election under section 1045 with respect to the sale of QSB1 stock and treats the purchase of QSB2 stock on April 15, 2009, by PRS, as the purchase of replacement QSB stock.

(ii) A's distributive share of gain from the November 3, 2008, sale of QSB stock is $250 (A's 1/3 interest in $750 of total PRS gain). Under paragraph (c)(1)(iii) of this section, A must recognize only $50 of A's distributive share of PRS' gain of $250, that is the excess of A's share of the amount realized on the sale of QSB stock, or $500 (the total amount realized by PRS on the sale of QSB stock ($1,500) multiplied by A's share of the gain from the sale of QSB stock ($250) over the total gain realized by PRS on the sale of QSB stock ($750)), minus A's share of PRS' cost of QSB1 stock, or $450 (1/3 of $1,350). Under section 705(a)(1) and paragraph (c)(4)(i) of this section, A's adjusted basis in its interest in PRS is increased by $250. However, under paragraph (c)(4)(iii) of this section, because PRS is a purchasing partnership, A's adjusted basis of its interest in PRS is then reduced by the deferred gain of $200. Also under paragraph (c)(4)(ii) of this section, PRS' adjusted basis in QSB1 stock is reduced by the gain not recognized of $200 and A must take into account such adjusted basis in computing A's income, gain, loss or deduction with respect to QSB1 stock. A must retain records setting forth the computation of this basis adjustment, the replacement QSB stock to which the adjustment is made, and dates the stock was acquired.

(iii) A's distributive share of gain from the March 30, 2009, sale of QSB1 stock is $100 (A's 1/3 interest in $300 of total PRS gain) and under paragraph (c)(5) of this section, A must take into account A's $200 basis adjustment with respect to the QSB1 stock that was sold. Accordingly, A's total gain from the sale of QSB1 stock is $300. Under paragraph (c)(1)(iii) of this section, A must recognize only $167 of A's total gain of $300, that is, the excess of A's share of the amount realized on the sale of QSB1 stock, or $550 (the total amount realized by PRS on the sale of QSB1 stock ($1,650) multiplied by A's share of the gain from the sale of QSB1 stock ($100) over the total gain realized by PRS on the sale of QSB1 stock ($300)) minus A's share of PRS' cost of QSB2 stock, or $383 (1/3 of $1,150). Under section 705(a)(1), A's adjusted basis in A's interest in PRS is increased by A's $100 distributive share of gain from the sale of QSB1 stock. Under paragraph (c)(4)(iv) of this section, A's adjusted basis of A's interest in PRS is increased by the additional $67 of gain recognized under paragraph (c)(5) of this section. Also, under paragraph (c)(4)(ii) of this section, PRS' adjusted basis in QSB2 stock is reduced by the gain not recognized of $133 ($300 minus $167) and A must take into account such adjusted basis in computing A's income, gain, loss or deduction with respect to QSB2 stock. A must retain records setting forth the computation of this basis adjustment, the replacement QSB stock to which the adjustment is made, and dates the stock was acquired.

Example 7. Partnership sale of QSB stock and partner purchase of replacement QSB stock. (i) Assume the same facts as in paragraph (i) of *Example 5*, except that PRS does not make an election under section 1045 with respect to the sale of the QSB stock and does not purchase replacement QSB stock. On November 30, 2008, A, an eligible partner under paragraph (g)(3) of this section, purchases replacement QSB stock for $500. A elects

pursuant to paragraph (c) of this section to apply section 1045 on A's timely filed return for the taxable year that A is required to include A's distributive share of PRS' gain from the sale of the QSB stock.
(ii) Under paragraph (c)(2) of this section, A's share of the amount realized from PRS' sale of the QSB stock is $500 (the total amount realized by the partnership on the sale of the QSB stock ($1,500) multiplied by A's share of the gain from the sale of the QSB stock ($250) over the total gain realized by the partnership on the sale of the QSB stock ($750)). Because A purchased, within 60 days of PRS' sale of the QSB stock, replacement QSB stock for a cost equal to A's share of the partnership's amount realized on the sale of the QSB stock, and because A made an election pursuant to paragraph (c) of this section to apply section 1045, A defers recognition of A's $250 distributive share of gain from PRS' sale of the QSB stock. Under section 705(a)(1) and paragraph (c)(4)(i) of this section, the adjusted basis of A's interest in PRS is increased by $250. Under paragraph (c)(4)(ii) of this section, A's adjusted basis in the replacement QSB stock is $250 ($500 cost minus $250 nonrecognition amount).

Example 8. Partial replacement by partnership; partial replacement by partner. (i) On January 1, 2008, A, an individual, and X, a C corporation, form PRS, a partnership. A and X each contribute $500 to PRS and agree to share all partnership items equally. PRS purchases QSB stock on February 1, 2008, for $1,000 and subsequently sells the QSB stock on January 31, 2010, for $3,000. PRS realizes $2,000 of gain from the sale of the QSB stock (none of which is treated as ordinary income) and allocates $1,000 of gain to each of A and X. On February 10, 2010, PRS purchases replacement QSB stock for $2,200. On March 20, 2010, A purchases replacement QSB stock for $400. PRS makes an election to apply section 1045 under paragraph (b)(1) of this section with respect to the partnership section 1045 gain from the sale of QSB stock and A does not opt out of PRS' section 1045 election under paragraph (b)(4) of this section. Also, A makes an election under paragraph (c)(1) of this section with respect to the remaining gain from the sale of the QSB stock.
(ii) Under paragraph (b)(1) of this section, partnership section 1045 gain is $1,200 ($2,000 less $800 ($3,000 amount realized on the sale of the QSB stock minus $2,200 cost of the replacement QSB stock)). This amount is allocated among the partners in the same proportions as the entire gain from the sale of the QSB stock is allocated to the partners, $^1/_2$ to A ($600), and $^1/_2$ to X ($600). Because A is an eligible partner, A defers recognition of A's $600 distributive share of partnership section 1045 gain.

(iii) A also made an election under section 1045 and purchased, within 60 days of PRS' sale of the QSB stock, replacement QSB stock for $400. Therefore, under paragraph (c)(1) of this section, A may defer a portion of A's distributive share of the remaining gain from the partnership's sale of the QSB stock. A must recognize that remaining gain to the extent that A's share of the amount realized by PRS on the sale of the QSB stock (excluding the cost of the QSB stock that was replaced by PRS) exceeds the cost of the replacement QSB stock

purchased by A during the 60-day period following the sale of the QSB stock. The amount realized by PRS on the sale of the QSB stock (excluding the cost of the QSB stock that was replaced by PRS) is $800 ($3,000 minus $2,200). Under paragraph (c)(2) of this section, A's share of that amount realized is $400 ($1,000 (A's share of the realized gain from the sale of the QSB stock) ÷ $2,000 (PRS total realized gain from the sale of the QSB stock) multiplied by $800). Because the replacement QSB stock purchased by A cost $400, A defers recognition of all of the remaining gain from the sale of the QSB stock.

(iv) The adjusted basis of A's interest in PRS is not increased by the $600 gain that was not recognized pursuant to paragraph (b)(1) of this section, but is increased by the $400 gain that was not recognized pursuant to paragraph (c)(1) of this section. See paragraphs (b)(3)(i) and (c)(4)(i) of this section. PRS must decrease its basis in the replacement QSB stock by the $600 of partnership section 1045 gain that was allocated to A. See paragraph (b)(3)(ii) of this section. A must decrease A's basis in the replacement QSB stock purchased by A by the $400 not recognized pursuant to paragraph (c)(1) of this section. See paragraph (c)(4)(ii) of this section.

Example 9. Change in partner's interest in partnership while partnership holds QSB stock.
(i) On January 1, 2008, A, an individual, and X, a C corporation, form PRS, a partnership. A and X each contribute $500 to PRS and agree to share all partnership items equally. PRS purchases QSB stock on February 1, 2008, for $1,000. On August 2, 2008, A sells a 25 percent interest in PRS to Z. On July 10, 2009, A repurchases the 25 percent interest from Z for $500. PRS makes a timely election under section 754 for the 2008 taxable year. Under section 743(b), A has a positive basis adjustment of $250. On January 31, 2011, PRS sells the QSB stock for $3,000. PRS realizes $2,000 of gain from the sale of the QSB stock (none of which is treated as ordinary income) and allocates $1,000 of gain to each of A and X. On February 10, 2010, PRS purchases replacement QSB stock for $3,000. PRS makes an election to apply section 1045 under paragraph (b)(1) of this section with respect to the partnership section 1045 gain from the sale of QSB stock.
(ii) Of the $2,000 of realized gain from the sale of the QSB stock, PRS allocates $1,000 to A and $1,000 to X. However, A has a positive basis adjustment of $250 under section 743(b) as a result of the purchase of the 25 percent interest in PRS from Z; therefore, A's share of the gain is reduced to $750. Because A is an eligible partner under paragraph (g)(3) of this section, A may defer recognition of A's distributive share of gain from the sale of the QSB stock subject to the nonrecognition limitation described in paragraph (d) of this section. The smallest percentage interest that A held in PRS capital during the time that PRS held the QSB stock is 25 percent. Under the nonrecognition limitation, A may not defer more than 25 percent of the partnership gain realized from the sale of the QSB stock (determined without regard to any basis adjustment under section 734(b) or section 743(b), other than a basis adjustment described in paragraph (b)(3)(ii) of this section). Because the partnership's

realized gain determined without regard to A's basis adjustment under section 743(b) is $2,000, A may defer recognition of $500 (25 percent of $2,000) of the gain from the sale of the QSB stock. A must recognize the remaining $250 of that gain.

Example 10. Sale by partner of QSB stock received in a liquidating distribution. (i) On January 1, 2008, A, an individual, and X, a C corporation, form PRS, a partnership. A and X each contribute $1,500 to PRS and agree to share all partnership items equally. PRS purchases QSB stock on February 1, 2008, for $3,000. On May 1, 2008, when the QSB stock has appreciated in value to $4,000, A contributes $1,000 to PRS, increasing A's interest in PRS capital to 60 percent. On June 1, 2011, when the QSB stock is still worth $4,000, PRS makes a liquidating distribution of $3,000 worth of QSB stock to A. Under section 732, A's basis in the distributed QSB stock is $2,500. A sells the QSB stock on August 4, 2011, for $6,000, realizing a gain of $3,500 (none of which is treated as ordinary income). A purchases replacement QSB stock on August 30, 2011, for $5,500, and makes an election under section 1045 with respect to the August 4, 2011, sale of QSB stock.
(ii) A is an eligible partner under paragraph (g)(3) of this section. Therefore, under paragraph (e)(1) of this section, A is treated as having acquired the distributed QSB stock in the same manner as PRS and as having held the QSB stock since February 1, 2008, its original issue date. Because A purchased, within 60 days of A's sale of the QSB stock, replacement QSB stock, A is eligible to defer a portion of A's gain from the sale of the QSB stock. A must recognize gain, however, to the extent that A's amount realized on the sale of the QSB stock, $6,000, exceeds the cost of the replacement QSB stock purchased by A during the 60-day period beginning on the date of the sale of the QSB stock, $5,500. Accordingly, A must recognize $500 of the gain from the sale of the QSB stock. A defers recognition of the remaining $3,000 of gain to the extent that such gain does not exceed the distribution nonrecognition limitation under paragraph (e)(3) of this section.

(iii) Under paragraph (e)(3)(i) of this section, A's nonrecognition limitation with respect to the sale of the QSB stock is A's section 1045 amount realized with respect to the stock, reduced by A's section 1045 adjusted basis with respect to the stock. A's amount realized from the sale is the product of A's amount realized from the sale, $6,000; and a fraction—

(*1*) The numerator of which is A's smallest percentage interest in PRS capital with respect to such stock, 50 percent; and

(*2*) The denominator of which is A's percentage interest in that type of partnership QSB stock immediately after the distribution, 75 percent (the value of the stock distributed to A, $3,000, divided by the value of all QSB stock of that type acquired by PRS, $4,000).

(iv) Therefore, A's section 1045 amount realized is $4,000 ($6,000 multiplied by 50/75). Because PRS distributed the QSB stock to A in liquidation of A's interest in PRS, A's section 1045 adjusted basis is the product of PRS' basis in all of the QSB stock of the type distributed, $3,000; A's smallest percentage interest in PRS capital with respect to QSB stock of the type distributed, 50 percent; and the percentage of the distributed QSB stock that was sold by A, 100 percent. Therefore, A's section 1045 adjusted basis is $1,500 (the product of $3,000, 50 percent, and 100 percent)) and A's nonrecognition limitation amount on the sale of the QSB stock is $2,500 ($4,000 section 1045 amount realized minus $1,500 section 1045 adjusted basis). Accordingly, A defers recognition of $2,500 of the remaining $3,000 gain from the sale of the QSB stock and must recognize $500 of the remaining $3,000 gain. Accordingly, A's total gain recognized from the sale of the QSB stock is $1,000.

(v) A's basis in the replacement QSB stock is $3,000 (cost of the replacement QSB stock, $5,500, reduced by the gain not recognized under section 1045, $2,500).

Example 11. Sale by partner of QSB stock received in a nonliquidating distribution. (i) The facts are the same as in *Example 10,* except that, on June 1, 2011, PRS distributes only $2,000 of the QSB stock to A, reducing A's interest in PRS capital from 60 percent to 33 percent. PRS' basis in the distributed QSB stock is $1,500. On November 1, 2011, A sells for $2,500 the QSB stock distributed by PRS to A and purchases, within 60 days of the date of sale of the QSB stock, replacement QSB stock for $2,500. A makes a timely election to apply section 1045 with respect to A's sale of the distributed QSB stock.
(ii) Under section 732, A's basis in the distributed QSB stock is $1,500. Therefore, A realizes a gain on the sale of the distributed QSB stock of $1,000. Because A made an election to apply section 1045 to the sale, and because A purchased, within 60 days of A's sale of the QSB stock, replacement QSB stock at a cost equal to the amount realized on the sale of the distributed QSB stock, A defers recognition of the gain from the sale of the QSB stock to the extent that such gain does not exceed the distribution nonrecognition limitation.

(iii) Under paragraph (e)(3) of this section, the nonrecognition limitation with respect to A's sale of the QSB stock is A's section 1045 amount realized reduced by A's section 1045 adjusted basis. Because PRS did not distribute all of the particular type of QSB stock and the distribution of the QSB stock to A was not in liquidation of A's interest in PRS, under paragraph (e)(3)(ii)(C) of this section A's section 1045 amount realized is $1,250 (A's amount realized from the sale of the distributed QSB stock, $2,500, multiplied by A's smallest percentage interest in PRS capital with respect to such stock, 50 percent). Under paragraph (e)(3)(iii)(B) of this section, A's section 1045 adjusted basis is the product of the partnership's basis in the QSB stock sold by the partner, $1,500, and A's smallest percentage interest in the partnership capital with respect to such stock, 50 percent. Therefore, A's section 1045 adjusted basis is $750 (50 percent of $1,500), and A's nonrecognition limitation amount on the sale of the QSB stock is $500 ($1,250 section 1045 amount realized minus $750 section 1045 adjusted basis). As this amount is less than the amount of gain that A is eligible to defer under section 1045, $1,000, A defers recognition of only $500 of the gain from the sale of the QSB stock. A must recognize the remaining $500 of that gain.

(iv) A's basis in the replacement QSB stock is $2,000 (cost of the replacement QSB stock, $2,500, reduced by the gain not recognized under section 1045, $500).

Example 12. Contribution of replacement QSB stock to a partnership. (i) On January 1, 2008, A, an individual, B, an individual, and X, a C corporation, form PRS, a partnership. A, B, and X each contribute $250 to PRS and agree to share all partnership items equally. On February 1, 2008, PRS purchases QSB stock for $750. PRS sells the QSB stock on November 3, 2008, for $1,050. PRS realizes $300 of gain from the sale of the QSB stock (none of which is treated as ordinary income) and allocates $100 of gain to each of its partners. PRS informs the partners that it does not intend to make an election under section 1045 with respect to the sale of the QSB stock. Each partner's share of the amount realized from the sale of the QSB stock is $350. On November 30, 2008, A, an eligible partner within the meaning of paragraph (g)(3) of this section, purchases replacement QSB stock for $350 and makes a section 1045 election under paragraph (c)(1) of this section. Subsequently, A transfers the replacement QSB stock to ABC, a partnership, in exchange for an interest in ABC.
(ii) Because A purchased within 60 days of PRS' sale of the QSB stock, replacement QSB stock for a cost equal to A's share of the partnership's amount realized on the sale of the QSB stock, and because A made a valid election to apply section 1045 with respect to A's share of the gain from PRS' sale of the QSB stock, A does not recognize A's $100 distributive share of the gain from PRS' sale of the QSB stock. Before the contribution of the replacement QSB stock to ABC, A's adjusted basis in the replacement QSB stock is $250 ($350 cost minus $100 nonrecognition amount). A does not recognize gain upon the contribution of QSB stock to ABC under section 721(a). Upon the contribution of the replacement QSB stock to ABC, A's basis in the ABC partnership interest is $250, and ABC's basis in the replacement QSB stock is $250. However, the replacement QSB stock does not qualify as QSB stock in ABC's hands. Neither A nor ABC will be eligible to defer gain under section 1045 on a subsequent sale of the replacement QSB stock.

(j) ***Effective date/applicability—In general.*** This section applies to sales of QSB stock on or after August 14, 2007.

[T.D. 9353, 72 FR 45349, Aug. 14, 2007, as amended by T.D. 9353, 72 FR 57487, Oct. 10, 2007]

SPECIAL RULES

§ 1.1051-1 Basis of property acquired during affiliation.

(a)

(1) The basis of property acquired by a corporation during a period of affiliation from a corporation with which it was affiliated shall be the same as it would be in the hands of the corporation from which acquired. This rule is applicable if the basis of the property is material in determining tax liability for any year, whether a separate return or a consolidated return is made in respect of such year. For the purpose of this section, the term *period of affiliation* means the period during which such corporations were affiliated (determined in accordance with the law applicable thereto), but does not include any taxable year beginning on or after January 1, 1922, unless a consolidated return was made, nor any taxable year after the taxable year 1928.

(2) The application of subparagraph (1) of this paragraph may be illustrated by the following example:

Example: The X Corporation, the Y Corporation, and the Z Corporation were affiliated for the taxable year 1920. During that year the X Corporation transferred assets to the Y Corporation for $120,000 cash, and the Y Corporation in turn transferred the assets during the same year to the Z Corporation for $130,000 cash. The assets were acquired by the X Corporation in 1916 at a cost of $100,000. The basis of the assets in the hands of the Z Corporation is $100,000.

(b) The basis of property acquired by a corporation during any period, in the taxable year 1929 or any subsequent taxable year, in respect of which a consolidated return was made or was required under the regulations governing the making of consolidated returns, shall be determined in accordance with such regulations. The basis in the case of property held by a corporation during any period, in the taxable year 1929 or any subsequent taxable year, in respect of which a consolidated return is made or is required under the regulations governing the making of consolidated returns, shall be adjusted in respect of any items relating to such period in accordance with such regulations.

(c) Except as otherwise provided in the regulations promulgated under section 1502 of the Internal Revenue Code of 1954 or the regulations under section 141 of the Internal Revenue Code of 1939 or the Revenue Act of 1938 (52 Stat. 447), 1936 (49 Stat. 1652), 1934 (48 Stat. 683), 1932 (47 Stat. 169), or 1928 (45 Stat. 791), the basis of property after a consolidated return period shall be the same as the basis immediately prior to the close of such period.

§ 1.1052-1 Basis of property established by Revenue Act of 1932.

Section 1052(a) provides that if property was acquired after February 28, 1913, in any taxable year beginning before January 1, 1934, and the basis of the property, for the purposes of the Revenue Act of 1932 (47 Stat. 169), was prescribed by section 113(a) (6), (7), or (9) of that act, then for purposes of subtitle A of the Code, the basis shall be the same as the basis prescribed in the Revenue Act of 1932. For the rules applicable in determining the basis of stocks or securities under section 113(a)(9) of the Revenue Act of 1932 in case of certain distributions after December 31, 1923, and in any taxable year beginning before January 1, 1934, see 26 CFR (1939) 39.113 (a)(12)-1 (Regulations 118).

§ 1.1052-2 Basis of property established by Revenue Act of 1934.

Section 1052(b) provides that if property was acquired after February 28, 1913, in any taxable year beginning before January 1, 1936, and the basis of the property for the purposes of the Revenue Act of 1934 (48 Stat. 683) was prescribed by section 113(a) (6), (7), or (8) of that act, then for purposes of subtitle A of the Code, the basis shall be the same as the basis prescribed in the Revenue Act of 1934. For example, if after December 31, 1920, and in any taxable year beginning before January 1, 1936, property was acquired by a corporation by the issuance of its stock or securities in connection with a transaction which is not described in section 112(b)(5) of the Internal Revenue Code of 1939 but which is described in section 112(b)(5) of the Revenue Act of 1934, the basis of the property so acquired shall be the same as it would be in the hands of the transferor, with proper adjustments to the date of the exchange.

§ 1.1052-3 Basis of property established by the Internal Revenue Code of 1939.

Section 1052(c) provides that if property was acquired after February 28, 1913, in a transaction to which the Internal Revenue Code of 1939 applied and the basis thereof was prescribed by section 113(a) (6), (7), (8), (13), (15), (18), (19) or (23) of such Code, then for purposes of subtitle A of the Internal Revenue Code of 1954, the basis shall be the same as the basis prescribed in the Internal Revenue Code of 1939. In such cases, see section 113(a) of the Internal Revenue Code of 1939 and the regulations thereunder.

§ 1.1053-1 Property acquired before March 1, 1913.

(a) ***Basis for determining gain.*** In the case of property acquired before March 1, 1913, the basis as of March 1, 1913, for determining gain is the cost or other basis, adjusted as provided in section 1016 and other applicable provisions of chapter 1 of the Code, or its fair market value as of March 1, 1913, whichever is greater.

(b) ***Basis for determining loss.*** In the case of property acquired before March 1, 1913, the basis as of March 1, 1913, for determining loss is the basis determined in accordance with part II (section 1011 and following), subchapter O, chapter 1 of the Code, or other applicable provisions of chapter 1 of the Code, without reference to the fair market value as of March 1, 1913.

(c) ***Example.*** The application of paragraphs (a) and (b) of this section may be illustrated by the following example:

> *Example:* (i) On March 1, 1908, a taxpayer purchased for $100,000, property having a useful life of 50 years. Assuming that there were no capital improvements to the property, the depreciation sustained on the property before March 1, 1913, was $10,000 (5 years @ $2,000), so that the original cost adjusted, as of March 1, 1913, for depreciation sustained prior to that date is $90,000. On that date the property had a fair market value of $94,500 with a remaining life of 45 years.
> (ii) For the purpose of determining gain from the sale or other disposition of the property on March 1, 1954, the basis of the property is the fair market value of $94,500 as of March 1, 1913, adjusted for depreciation allowed or allowable after February 28, 1913, computed on $94,500. Thus, the substituted basis, $94,500, is reduced by the depreciation adjustment from March 1, 1913, to February 28, 1954, in the aggregate of $86,100 (41 years @ $2,100), leaving an adjusted basis for determining gain of $8,400 ($94,500 less $86,100).
>
> (iii) For the purpose of determining loss from the sale or other disposition of such property on March 1, 1954, the basis of the property is its cost, adjusted for depreciation sustained before March 1, 1913, computed on cost, and the amount of depreciation allowed or allowable after February 28, 1913, computed on the fair market value of $94,500 as of March 1, 1913. In this example, the amount of depreciation sustained before March 1, 1913, is $10,000 and the amount of depreciation determined for the period after February 28, 1913, is $86,100. Therefore, the aggregate amount of depreciation for which the cost ($100,000) should be adjusted is $96,100 ($10,000 plus $86,100), and the adjusted basis for determining loss on March 1, 1954, is $3,900 ($100,000 less $96,100).

(d) ***Fair market value.*** The determination of the fair market value of property on March 1, 1913, is generally a question of fact and shall be established by competent evidence. In determining the fair market value of stock or other securities, due regard shall be given to the fair market value of the corporate assets as of such date, and other pertinent factors. In the case of property traded in on public exchanges, actual sales on or near the basic date afford evidence of value. In general, the fair market value of a block or aggregate of a particular kind of property is not to be determined by a forced-sale price, or by an estimate of what a

whole block or aggregate would bring if placed upon the market at one and the same time. In such a case the value should be determined by ascertaining as the basis the fair market value of each unit of the property. All relevant facts and elements of value as of the basic date should be considered in each case.

§ 1.1054-1 Certain stock of Federal National Mortgage Association.

(a) ***In general.*** The basis in the hands of the initial holder of a share of stock which is issued pursuant to section 303(c) of the Federal National Mortgage Association Charter Act (12 U.S.C., section 1718) in a taxable year beginning after December 31, 1959, shall be an amount equal to the issuance price of the stock reduced by the amount, if any, required by section 162(d) to be treated (with respect to such share) as an ordinary and necessary business expense. See section 162(d) and § 1.162-19. For purposes of this section the initial holder is the original purchaser who is issued stock of the Federal National Mortgage Association (FNMA) pursuant to section 303(c) of the Act and who appears on the books of FNMA as the initial holder. See § 1.162-19.

(b) ***Example.*** The provisions of this section may be illustrated by the following example:

Example: Pursuant to section 303(c) of the Federal National Mortgage Association Charter Act a certificate of FNMA stock is issued to A as of January 1, 1961. The issuance price of the stock was $100 and the fair market value of the stock on the date of issue was $69. A was required by section 162(d) to treat $31 as a business expense for the year 1961. The basis of the share of stock in the hands of A, the initial holder, shall be $69, the amount paid for the stock ($100) reduced by $31.

[T.D. 6690, 28 FR 12254, Nov. 19, 1963]

§ 1.1055-1 General rule with respect to redeemable ground rents.

(a) ***Character of a redeemable ground rent.*** For purposes of subtitle A of the Code

(1) a redeemable ground rent (as defined in section 1055(c) and paragraph (b) of this section) shall be treated as being in the nature of a mortgage, and

(2) real property held subject to liabilities under such a redeemable ground rent shall be treated as held subject to liabilities under a mortgage. Thus, under section 1055(a) and this paragraph, the transfer of property subject to a redeemable ground rent has the same effect as the transfer of property subject to a mortgage, the acquisition of property subject to a redeemable ground rent is to be treated the same as the acquisition of property subject to a mortgage, and the holding of property subject to a redeemable ground rent is to be treated in the same manner as the holding of property subject to a mortgage. See section 163(c) for the treatment of any annual or periodic rental payment under a redeemable ground rent as interest.

(b) ***Definition of redeemable ground rent.*** For purposes of subtitle A of the Code, the term *redeemable ground rent* means only a ground rent with respect to which all the following conditions are met:

(1) There is a lease of land which is assignable by the lessee without the consent of the lessor.

(2) The term of the lease is for a period in excess of 15 years, taking into account all periods for which the lease may be renewed at the option of the lessee.

(3) The lessee has a present or future right to terminate the lease and to acquire the lessor's interest in the land (i.e., to redeem the ground rent) by the payment of a determined or determinable amount, which amount is referred to in §§ 1.1055-2, 1.1055-3, and 1.1055-4 as a *redemption price.* Such right

must exist by virtue of State or local law. If the lessee's right to terminate the lease and to acquire the lessor's interest is not granted by State or local law but exists solely by virtue of a private agreement or privately created condition, the ground rent is not a *redeemable ground rent*.

(4) The lessor's interest in the land subject to the lease is primarily a security interest to protect the payment to him of the annual or periodic rental payments due under the lease.

(c) ***Effective date.*** In general, the provisions of section 1055 and paragraph (a) of this section take effect on April 11, 1963, and apply with respect to taxable years ending on or after such date. See § 1.1055-3 for rules for determining the basis of real property acquired subject to liabilities under a redeemable ground rent regardless of when such property was acquired. See also § 1.1055-4 for rules for determining the basis of a redeemable ground rent in the hands of a holder who reserved or created such ground rent in connection with a transfer, occurring before April 11, 1963, of the right to hold real property subject to liabilities under such ground rent.

[T.D. 6821, 30 FR 6216, May 4, 1965]

§ 1.1055-2 Determination of amount realized on the transfer of the right to hold real property subject to liabilities under a redeemable ground rent.

In determining the amount realized from a transfer, occurring on or after April 11, 1963, of the right to hold real property subject to liabilities under a redeemable ground rent, such ground rent shall be accounted for in the same manner as a mortgage for an amount of money equal to the redemption price of the ground rent. The provisions of this section apply in respect of any such transfer even though such ground rent was created prior to April 11, 1963. For provisions relating to the determination of the amount of and recognition of gain or loss from the sale or other disposition of property, see section 1001 and the regulations thereunder.

[T.D. 6821, 30 FR 6217, May 4, 1965]

§ 1.1055-3 Basis of real property held subject to liabilities under a redeemable ground rent.

(a) ***In general.*** The provisions of section 1055(a) and paragraph (a) of § 1.1055-1 are applicable in determining the basis of real property held on or after April 11, 1963, in any case where the property at the time of acquisition was subject to liabilities under a redeemable ground rent. (See section 1055(b)(2).) Thus, if on or after April 11, 1963, a taxpayer holds real property which was subject to liabilities under a redeemable ground rent at the time he acquired it, the basis of such property in the hands of such taxpayer, regardless of when the property was acquired, will include the redeemable ground rent in the same manner as if it were a mortgage in an amount equal to the redemption price of such ground rent. Likewise, if on or after April 11, 1963, a taxpayer holds real property which was subject to liabilities under a redeemable ground rent at the time he acquired it and which has a substituted basis in his hands, the basis of the property in the hands of the taxpayer's predecessor in interest is to be determined by treating the redeemable ground rent in the same manner as a mortgage in an amount equal to the redemption price of such ground rent.

(b) ***Illustrations.*** The provisions of this section may be illustrated by the following examples:

Example 1. On April 11, 1963, taxpayer A held residential property which he acquired on January 15, 1963, for a purchase price of $10,000 and which, at the time he acquired it, was subject to a ground rent redeemable for a redemption price of $1,600. A's basis for the property includes the purchase price ($10,000) plus the redeemable ground rent in the same manner as if it were a mortgage for $1,600.

Example 2. In 1962, taxpayer X, a corporation, acquired real property subject to a redeemable ground rent in a transfer to which section 351 (relating to transfer of property to corporation controlled by transferor) applied and in which the basis of the property to X was the transferor's basis. X still held the property on April 11, 1963. The transferor's basis in the property is to be determined by treating the redeemable ground rent to which it was subject in the transferor's hands as if it were a mortgage.

[T.D. 6821, 30 FR 6217, May 4, 1965]

§ 1.1055-4 Basis of redeemable ground rent reserved or created in connection with transfers of real property before April 11, 1963.

(a) ***In general.*** In the case of a redeemable ground rent created or reserved in connection with a transfer, occurring before April 11, 1963, of the right to hold real property subject to liabilities under such ground rent, the basis of such ground rent on or after April 11, 1963, in the hands of the person who reserved or created the ground rent is the amount which was taken into account in respect of such ground rent in computing the amount realized from the transfer of such real property. Thus, if no such amount was taken into account, such basis shall be determined without regard to section 1055. (See section 1055(b)(3).)

(b) The provisions of this section may be illustrated by the following examples:

Example 1. The taxpayer, who was in the business of building houses, purchased an undeveloped lot of land for $500 and built a house thereon at a cost of $10,000. Subsequently, he transferred the right to hold the lot improved by the house for a consideration of $12,000, and an annual ground rent for such property of $120 which was redeemable for a redemption price of $2,000. The taxpayer reported a $2,000 gain on the transfer, treating the amount realized as $12,000 and his cost allocable to the interest transferred as $10,000. Since the builder did not take the redeemable ground rent into account in computing gain on the transfer, his basis for such ground rent is $500 (the cost of the land not offset against the consideration received for the transfer). Thus, if he subsequently sells the redeemable ground rent (or if it is redeemed from him) for $2,000, he has no gain of $1,500 in the year of sale (or redemption).

Example 2. Assume the same facts as in Example 1 except that the builder reported a gain of $3,500 on the transfer, treating the amount realized as $14,000 ($12,000 cash plus $2,000 for the redeemable ground rent) and his costs as $10,500 ($10,000 for the house and $500 for the lot). Since the taxpayer took the entire amount of the redeemable ground rent into account in computing his gain, his basis for such ground rent is $2,000. Thus, if he subsequently sells the redeemable ground rent (or if it is redeemed from him) for $2,000, he has no gain or loss on the transaction.

Example 3. Assume the same facts as in Example 1 except that the builder reported a gain of $3,000 on the transfer. He computed this gain by treating the amount realized as $12,000 but treating his cost allocable to the interest transferred as $12,000/$14,000ths of his total $10,500 cost, or $9,000. Since the builder still has remaining $1,500 of unallocated cost, his basis for the redeemable ground rent is $1,500. Thus, if he subsequently sells the redeemable ground rent (or if it is redeemed from him) for $2,000, he has a gain of $500 in the year of sale (or redemption).

[T.D. 6821, 30 FR 6217, May 4, 1965]

§ 1.1059(e)-1 Non-pro rata redemptions.

(a) ***In general.*** Section 1059(d)(6) (exception where stock held during entire existence of corporation) and section 1059(e)(2) (qualifying dividends) do not apply to any distribution treated as an extraordinary dividend under section 1059(e)(1). For example, if a redemption of stock is not pro rata as to all shareholders, any amount treated as a dividend under section 301 is treated as an extraordinary dividend regardless of whether the dividend is a qualifying dividend.

(b) ***Reorganizations.*** For purposes of section 1059(e)(1), any exchange under section 356 is treated as a redemption and, to the extent any amount is treated as a dividend under section 356(a)(2), it is treated as a dividend under section 301.

(c) ***Effective date.*** This section applies to distributions announced (within the meaning of section 1059(d)(5)) on or after June 17, 1996.

[T.D. 8724, 62 FR 38028, July 16, 1997]

§ 1.1059A-1 Limitation on taxpayer's basis or inventory cost in property imported from related persons.

(a) ***General rule.*** In the case of property imported into the United States in a transaction (directly or indirectly) by a controlled taxpayer from another member of a controlled group of taxpayers, except for the adjustments permitted by paragraph (c) (2) of this section, the amount of any costs taken into account in computing the basis or inventory cost of the property by the purchasing U.S. taxpayer and which costs are also taken into account in computing the valuation of the property for customs purposes may not, for purposes of the basis or inventory cost, be greater than the amount of the costs used in computing the customs value. For purposes of this section, the terms *controlled taxpayer* and *group of controlled taxpayers* shall have the meaning set forth in § 1.482-1(a).

(b) ***Definitions*** —

(1) ***Import.*** For purposes of section 1059A and this section only, the term *import* means the filing of the entry documentation required by the U.S. Customs Service to secure the release of imported merchandise from custody of the U.S. Customs Service.

(2) ***Indirectly.*** For purposes of this section, *indirectly* refers to a transaction between a controlled taxpayer and another member of the controlled group whereby property is imported through a person acting as an agent of, or otherwise on behalf of, either or both related persons, or as a middleman or conduit for transfer of the property between a controlled taxpayer and another member of the controlled group. In the case of the importation of property indirectly, an adjustment shall be permitted under paragraph (c)(2) of this section for a commission or markup paid to the person acting as agent, middleman, or conduit, only to the extent that the commission or markup: is otherwise properly included in cost basis or inventory cost; was actually incurred by the taxpayer and not remitted, directly or indirectly, to the taxpayer or related party; and there is a substantial business reason for the use of a middleman, agent, or conduit.

(c) ***Customs value*** —

(1) ***Definition.*** For purposes of this section only, the term *customs value* means the value required to be taken into account for purposes of determining the amount of any customs duties or any other duties which may be imposed on the importation of any property. Where an item or a portion of an item is not subject to any customs duty or is subject to a free rate of duty, such item or portion of

such item shall not be subject to the provisions of section 1059A or this section. Thus, for example, the portion of an item that is an American good returned and not subject to duty (items 806.20 and 806.30, Tariff Schedules of the United States, 19 U.S.C. 1202); imports on which no duty is imposed that are valued by customs for statistical purposes only; and items subject to a zero rate of duty (19 U.S.C. 1202, General Headnote 3) are not subject to section 1059A or this section. Also, items subject only to the user fee under 19 U.S.C. 58(c), or the harbor maintenance tax imposed by 26 U.S.C. 4461, or only to both, are not subject to section 1059A or this section. This section imposes no limitation on a claimed basis or inventory cost in property which is less than the value used to compute the customs duty with respect to the same property. Section 1059A and this section have no application to imported property not subject to any customs duty based on value, including property subject only to a per item duty or a duty based on volume, because there is no customs value, within the meaning of this paragraph, with respect to such property.

(2) ***Adjustments to customs value.*** To the extent not otherwise included in customs value, a taxpayer, for purposes of determining the limitation on claimed basis or inventory cost of property under this section, may increase the customs value of imported property by the amounts incurred by it and properly included in inventory cost for—

(i) Freight charges,

(ii) Insurance charges,

(iii) The construction, erection, assembly, or technical assistance provided with respect to, the property after its importation into the United States, and

(iv) Any other amounts which are not taken into account in determining the customs value, which are not properly includible in customs value, and which are appropriately included in the cost basis or inventory cost for income tax purposes. See § 1.471-11 and section 263A.

Appropriate adjustments may also be made to customs values when the taxpayer has not allocated the value of assists to individual articles but rather has reported the value of assists on a periodic basis in accordance with 19 CFR 152.103(e). When 19 CFR 152.103(e) has been utilized for customs purposes, the taxpayer may adjust his customs values by allocating the value of the assists to all imported articles to which the assists relate. To the extent that an amount attributable to an adjustment permitted by this section is paid by a controlled taxpayer to another member of the group of controlled taxpayers, an adjustment is permitted under this section only to the extent that the amount incurred represents an arm's length charge within the meaning of § 1.482-1(d)(3).

(3) ***Offsets to adjustments.*** To the extent that a customs value is adjusted under paragraph (c)(2) of this section for purposes of calculating the limitation on claimed cost basis or inventory cost under this section, the amount of the adjustments must be offset (reduced) by amounts that properly reduce the cost basis of inventory and that are not taken into account in determining customs value, such as rebates and other reductions in the price actually incurred, effected between the purchaser and related seller after the date of importation of the property.

(4) ***Application of section 1059A to property having dutiable and nondutiable portions.*** When an item of imported property is subiect to a duty upon the full value of the imported article, less the cost or value of American goods returned, and the taxpayer claims a basis or inventory cost greater than the customs value reported for the item, the claimed tax basis or inventory cost in the dutiable portion of the item is limited under section 1059A and this section to the customs value of the dutiable portion under paragraph (c)(1). The claimed tax basis or inventory cost in the nondutiable portion of the item is determined by multiplying the customs value of the nondutiable portion by a fraction the

numerator of which is the amount by which the claimed basis or inventory cost of the item exceeds the customs value of the item and the denominator of which is the customs value of the item and adding this amount to the customs value of the nondutiable portion of the item. The claimed tax basis or inventory cost in the dutiable portion is determined by multiplying the customs value of the dutiable portion by a fraction the numerator of which is the amount by which the claimed basis or inventory cost of the item exceeds the customs value of the item and the denominator of which is the customs value of the item and adding this amount to the customs value of the dutiable portion of the item. However, the taxpayer may not claim a tax basis or inventory cost in the dutiable portion greater than the customs value of this portion of the item.

(5) ***Allocation of adjustments to property having dutiable and nondutiable portions.*** When an item of imported property is subject to a duty upon the full value of the imported article, less the cost or value of American goods returned, and the taxpayer establishes that the customs value may be increased by adjustments permitted under paragraph (c)(2) of this section for purposes of the section 1059A limitation, the taxpayer's basis or inventory cost of the dutiable portion of the item is determined by multiplying the customs value of the dutiable portion times the percentage that the adjustments represent of the total customs value of the item and adding this amount to the customs value of the dutiable portion of the item. The taxpayer's basis or inventory cost of the nondutiable portion of the item is determined in the same manner. The amount so determined for the dutiable portion of the item is the section 1059A limitation for this portion of the item.

(6) ***Alternative method of demonstrating compliance.*** In lieu of calculating all adjustments and offsets to adjustments to customs value for an item of property pursuant to paragraph (c) (2) and (3) of this section, a taxpayer may demonstrate compliance with this section and section 1059A by comparing costs taken into account in computing basis or inventory costs of the property and the costs taken into account in computing customs value at any time after importation, provided that in any such comparison the same costs are included both in basis or inventory costs and in customs value. If, on the basis of such comparison, the basis or inventory cost is equal to or less than the customs value, the taxpayer shall be deemed to have met the requirements of this section and section 1059A.

(7) ***Relationship of section 1059A to section 482.*** Neither this section nor section 1059A limits in any way the authority of the Commissioner to increase or decrease the claimed basis or inventory cost under section 482 or any other appropriate provision of law. Neither does this section or section 1059A permit a taxpayer to adjust upward its cost basis or inventory cost for property appropriately determined under section 482 because such basis or inventory cost is less than the customs value with respect to such property.

(8) ***Illustrations.*** The application of this section may be illustrated by the following examples:

Example 1. Corporation X, a United States taxpayer, and Y Corporation are members of a group of controlled corporations. X pays $2,000 to Y for merchandise imported into the United States and an additional $150 for ocean freight and insurance. The customs value of the shipment is determined to be the amount actually paid by X ($2,000) and does not include the charges for ocean freight and insurance. For purposes of computing the limitation on its inventory cost for the merchandise under section 1059A and this section, X is permitted, under paragraph (c)(2) of this section, to increase the customs value ($2,000) by amounts it paid for ocean freight and insurance charges ($150). Thus, the inventory cost claimed by X in the merchandise may not exceed $2,150.

Example 2. Assume the same facts as in Example 1 except that, subsequent to the date of importation of the merchandise, Y grants to X a rebate of $200 of the purchase price. At the time of sale, the rebate was contingent upon the volume of merchandise ultimately bought by X from Y. The value of the merchandise, for customs purposes, is not decreased by the rebate paid to X by Y. Therefore, the customs value, for customs purposes, of the merchandise remains the same ($2,000). For purposes of computing its inventory cost, X was permitted, under paragraph (c)(2) of this section, to increase the customs value for purposes of section 1059A of $2,000 by the amounts it paid for ocean freight and insurance charges ($150). However, under paragraph (c)(3) of this section, X is required to reduce the amount of the customs value by the lesser of the amount of the rebate or the amount of any positive adjustments to the original customs value. The inventory price claimed by X may not exceed $2,000 ($2,000 customs value, plus $150 transportation adjustment, less $150 offsetting rebate adjustment). While X's limitation under section 1059A is $2,000, X may not claim a basis or inventory cost in the merchandise in excess of $1,950. *See* I.R.C. section 1012; and section 1.471-2.

Example 3. Corporation X, a United States taxpayer, and Y Corporation are members of a group of controlled corporations. X pays $10,000 to Y for merchandise imported into the United States. The merchandise is composed, in part, of American goods returned. The customs value of the merchandise, on which a customs duty is imposed, is determined to be $8,000 ($10,000, the amount declared by X, less $2,000, the value of the American goods returned). For income tax purposes, X claims a cost basis in the merchandise of $11,000. None of the adjustments permitted by paragraph (c)(2) of this section is applicable. The portion of the merchandise constituting American goods returned represented 20 percent of the total customs value of the merchandise. Since the cost basis claimed by X for income tax purposes represents a 10 percent increase over the customs valuation (before reduction for American goods returned), the claimed tax basis in the dutiable content is considered to be $8,800 and in the portion constituting American goods returned is $2,200. Since a customs duty was imposed only on the dutiable content of the merchandise, the limitation in section 1059A and this section is applicable only to the claimed tax basis in this portion of the merchandise. Accordingly, under paragraph (a) of this section, X is limited to a cost basis of $10,200 in the merchandise. This amount represents a cost basis of $8,000 in the dutiable content and of $2,200 in the portion of the merchandise constituting American goods returned.

Example 4. Assume the same facts as in Example 3 except that X establishes that it is entitled to increase its customs value by $1,000 in adjustments permitted by paragraph (c)(2) of this section. Since the adjustments to customs value that X is entitled to under paragraph (c)(2) of this section are 10 percent of the customs value, for purposes of determining the limitation under section 1059A and this section, both the dutiable content and the portion of the merchandise constituting American goods returned shall be increased to an amount 10 percent greater than the respective values determined for customs purposes, or $8,800 for the dutiable content and $2,200 for the portion of the merchandise constituting American goods returned. Accordingly, under paragraph (a) of this section, X is limited to a cost basis of $11,000 in the merchandise.

Example 5. Corporation X, a United States taxpayer, and Y Corporation are members of a group of controlled corporations. X pays $10,000 to Y for merchandise imported into the United States. The customs value of the merchandise, on which a customs duty is imposed, is determined to be $10,000. Subsequent to the date of importation of the merchandise, Y grants to X a rebate of

$1,000 of the purchase price. The value of the merchandise, for customs purposes, is not decreased by the rebate paid to X by Y. Notwithstanding the fact that X correctly reported and paid customs duty on a value of $10,000 and that its limitation on basis or inventory cost under this section is $10,000, X may not claim a basis or inventory cost in the merchandise in excess of $9,000. *See* I.R.C. section 1012; and section 1.471-2.

Example 6. Corporation X, a United States taxpayer, and Y Corporation are members of a group of controlled corporations. X pays $5,000 to Y for merchandise imported into the United States. The merchandise is not subject to a customs duty or is subject to a free rate of duty and is valued by customs solely for statistical purposes. Accordingly, pursuant to paragraph (c)(1) of this section, the merchandise is not subject to the provisions of section 1059A or this section.

Example 7. Assume the same facts as in Example 6, except that the merchandise is subject to a customs duty based on value and that the customs value (taking into account no costs other than the value of the goods) is determined to be $5,000. Assume further that the $5,000 payment is only for the value of the goods, no other cost is reflected in that payment, and only the $5,000 payment to Y is reflected in X's inventory cost or basis prior to inclusion of any other amounts properly included in inventory or cost basis. Pursuant to paragraph (c)(6) of this section, X, by demonstrating these facts is deemed to meet the requirements of this section and section 1059A.

Example 8. Corporation X, a United States taxpayer, and Y Corporation are members of a group of controlled corporations. X pays $9 to Y for merchandise imported into the United States and an additional $1 for ocean freight. The customs value of the article does not include the $l paid for ocean freight. Furthermore, for customs purposes the value is calculated pursuant to computed value and is determined to be $8. For purposes of computing the limitation on its inventory cost for the article under section 1059A and this section, X is permitted, under paragraph (c)(2) of this section, to increase the customs value ($8) by the amount it paid for ocean freight ($1). Thus, the inventory cost claimed by X in the article may not exceed $9.

(9) ***Averaged customs values.*** In cases of transactions in which

(i) an appropriate transfer price is properly determined for tax purposes by reference to events occurring after importation,

(ii) the value for customs purposes of one article is higher and of a second article is lower than the actual transaction values,

(iii) the relevant articles have been appraised on the basis of a value estimated at the time of importation in accordance with customs regulations, and

(iv) the entries have been liquidated upon importation, the section 1059A limitation on the undervalued article may be increased up to the amount of actual transaction value by the amount of the duty overpaid on the overvalued article times a fraction the numerator of which is "1" and the denominator of which is the rate of duty on the undervalued article. This paragraph (c)(9) applies exclusively to cases of property imported in transactions that are open for tax purposes in which the actual transaction value cannot be determined and the entry has been liquidated for customs purposes on the basis of a value estimated at the time of importation in accordance with customs regulations; in these cases, the property is appropriately valued for tax purposes by reference to a formula, in existence at the time of importation, based on subsequent events and valued for customs purposes by a different formula. This paragraph (c)(9) does not apply where customs value is correctly determined for

purposes of liquidating the entry and where the customs value is subsequently adjusted for tax purposes, for example by a rebate, under paragraph (c)(2) of this section. The application of paragraph (c)(9) may be illustrated by the following example:

Example: Corporation X, a United States taxpayer, and Y Corporation are members of a group of controlled corporations. X purchases Articles A and B from Y on consignment and imports the Articles into the United States. The purchase price paid by X will be determined as a percentage of the sale prices that X realizes. Rather than deferring liquidation, customs liquidates the entry on the basis of estimated values and the customs duties are paid by X. Ultimately, it is determined that Article A was undervalued and Article B was overvalued by X for customs purposes. The section 1059A limitation for Article A is computed as follows:

	Article A	Article B
Finally-determined customs value	$9	$9
Transaction value	$10	$5
Duty rate	10%	5%
Customs duty paid	$.90	$.45
Duty overpaid or (underpaid)	($.10)	$.20

The section 1059A limitation on Article A may be increased by the amount of the duty over-paid on Article B, $.20, times 1/.10, up to the amount of the transaction value. Therefore, the section 1059A limitation on Article A is $9.00 plus $1.00, or a total of $10.00. The section 1059A limitation on Article B is reduced (but never below transaction value) by $2.00 to $7.00.

(d) ***Finality of customs value and of other determinations of the U.S. Customs Service.*** For purposes of section 1059A and this section, a taxpayer is bound by the finally-determined customs value and by every final determination made by the U.S. Customs Service, including, but not limited to, dutiable value, the value attributable to the cost or value of products of the United States, and classification of the product for purposes of imposing any duty. The customs value is considered to be finally determined, and all U.S. Customs Service determinations are considered final, when liquidation of the entry becomes final. For this purpose, the term *liquidation* means the ascertainment of the customs duties occurring on the entry of the property, and liquidation of the entry is considered to become final after 90 days following notice of liquidation to the importer, unless a protest is filed. If the importer files a protest, the customs value will be considered finally determined and all other U.S. Customs Service determinations will be considered final either when a decision by the Customs Service on the protest is not contested after expiration of the period allowed to contest the decision or when a judgment of the Court of International Trade becomes final. For purposes of this section, any adjustments to the customs value resulting from a petition under 19 U.S.C. section 1516 (requests by interested parties unrelated to the importer for redetermination of the appraised value, classification, or the rate of duty imposed on imported merchandise) or reliquidation

under 19 U.S.C. section 1521 (reliquidation by the Customs Service upon a finding that fraud was involved in the original liquidation) will not be taken into account. However, reliquidation under 19 U.S.C. section 1501 (voluntary reliquidation by the Customs Service within 90 days of the original liquidation to correct errors in appraisement, classification, or any element entering into a liquidation or reliquidation) or reliquidation under 19 U.S.C. section 1520(c)(1) (to correct a clerical error, mistake of fact, or other inadvertance within one year of a liquidation or reliquidation) will be taken into account in the same manner as, and take the place of, the original liquidation in determining customs value.

(e) ***Drawbacks.*** For purposes of this section, a drawback, that is, a refund or remission (in whole or in part) of a customs duty because of a particular use made (or to be made) of the property on which the duty was assessed or collected, shall not affect the determination of the customs value of the property.

(f) ***Effective date.*** Property imported by a taxpayer is subject to section 1059A and this section if the entry documentation required to be filed to obtain the release of the property from the custody of the United States Customs Service was filed after March 18, 1986. Section 1059A and this section will not apply to imported property where

(1) the entry documentation is filed prior to September 3, 1987; and

(2) the importation was liquidated under the circumstances described in paragraph (c)(9) of this section.

[T.D. 8260, 54 FR 37311, Sept. 8, 1989]

§ 1.1060-1 Special allocation rules for certain asset acquisitions.

(a) ***Scope*** —

(1) ***In general.*** This section prescribes rules relating to the requirements of section 1060, which, in the case of an applicable asset acquisition, requires the transferor (the seller) and the transferee (the purchaser) each to allocate the consideration paid or received in the transaction among the assets transferred in the same manner as amounts are allocated under section 338(b)(5) (relating to the allocation of adjusted grossed-up basis among the assets of the target corporation when a section 338 election is made). In the case of an applicable asset acquisition described in paragraph (b)(1) of this section, sellers and purchasers must allocate the consideration under the residual method as described in §§ 1.338-6 and 1.338-7 in order to determine, respectively, the amount realized from, and the basis in, each of the transferred assets. For rules relating to distributions of partnership property or transfers of partnership interests which are subject to section 1060(d), see § 1.755-2T.

(2) ***Effective dates*** —

(i) ***In general.*** The provisions of this section apply to any asset acquisition occurring after March 15, 2001. However, paragraphs (b)(9) and (c)(5) of this section apply only to applicable asset acquisitions occurring on or after April 10, 2006. A purchaser or a seller may make an irrevocable election to apply the rules in §§ 1.338-11 (including the applicable provisions in §§ 1.197-2(g)(5), 1.381(c)(22)-1, 846 and 1060) to an applicable asset acquisition occurring before April 10, 2006. Paragraph (a)(2)(ii) of this section describes the time and manner of the election for the purchaser and paragraph (a)(2)(iii) of this section prescribes the time and manner of the election for the seller. The seller may make the election to apply the regulations retroactively

without regard to whether the purchaser also makes the election. For rules applicable to asset acquisitions on or before March 15, 2001, *see* § 1.1060-1T in effect before March 16, 2001 (*see* 26 CFR part 1 revised April 1, 2000).

(ii) ***Time and manner of making the election for the purchaser.*** The purchaser may make an election described in this paragraph (a)(2) by attaching a statement to its original or amended income tax return for the taxable year that includes the applicable asset sale. The statement must be entitled "Election to Retroactively Apply the Rules in § 1.338-11 (Including the Applicable Provisions in §§ 1.197-2(g)(5), 1.381(c)(22)-1, 846 and 1060) to an Applicable Asset Acquisition Completed Before April 10, 2006" and must include the following information—

(A) The name and E.I.N. for the purchaser; and

(B) The following declaration (or a substantially similar declaration): The purchaser has amended its income tax returns for the taxable year that includes the applicable asset acquisition and for all affected subsequent years to reflect the rules in § 1.338-11 (Including the Applicable Provisions in §§ 1.197-2(g)(5), 1.381(c)(22)-1,846 and 1060).

(iii) ***Time and manner of making the election for the seller.*** The seller may make an election described in this paragraph (a)(2) by attaching a statement to its original or amended income tax return for the taxable year that includes the applicable asset sale. The statement must be entitled "Election to retroactively apply the rules in § 1.338-11 (including the applicable provisions in §§ 1.197-2(g)(5), 1.381(c)(22)-1, 846 and 1060) to an applicable asset acquisition completed before April 10, 2006" and must include the following information—

(A) The name and E.I.N. for the seller; and

(B) The following declaration (or a substantially similar declaration): The seller has amended its income tax returns for the taxable year that includes the applicable asset acquisition and for all affected subsequent years to reflect the rules in § 1.338-11 (including the applicable provisions in §§ 1.197-2(g)(5), 1.381(c)(22)-1, 846 and 1060).

(3) ***Outline of topics.*** In order to facilitate the use of this section, this paragraph (a)(3) lists the major paragraphs in this section as follows:

(a) Scope.

(1) In general.

(2) Effective date.

(3) Outline of topics.

(b) Applicable asset acquisition.

(1) In general.

(2) Assets constituting a trade or business.

(i) In general.

(ii) Goodwill or going concern value.

(iii) Factors indicating goodwill or going concern value.

(3) Examples.

(4) Asymmetrical transfers of assets.

(5) Related transactions.

(6) More than a single trade or business.

(7) Covenant entered into by the seller.

(8) Partial non-recognition exchanges.

(9) Insurance business.

(c) Allocation of consideration among assets under the residual method.

(1) Consideration.

(2) Allocation of consideration among assets.

(3) Certain costs.

(4) Effect of agreement between parties.

(5) Insurance business.

(d) Examples.

(e) Reporting requirements.

(1) Applicable asset acquisitions.

(i) In general.

(ii) Time and manner of reporting.

(A) In general.

(B) Additional reporting requirement.

(C) Election described in § 1.338-6(c)(5).

(2) Transfers of interests in partnerships.

(b) ***Applicable asset acquisition*** —

(1) ***In general.*** An applicable asset acquisition is any transfer, whether direct or indirect, of a group of assets if the assets transferred constitute a trade or business in the hands of either the seller or the purchaser and, except as provided in paragraph (b)(8) of this section, the purchaser's basis in the transferred assets is determined wholly by reference to the purchaser's consideration.

(2) ***Assets constituting a trade or business*** —

(i) ***In general.*** For purposes of this section, a group of assets constitutes a trade or business if—

(A) The use of such assets would constitute an active trade or business under section 355; or

(B) Its character is such that goodwill or going concern value could under any circumstances attach to such group.

(ii) ***Goodwill or going concern value.*** Goodwill is the value of a trade or business attributable to the expectancy of continued customer patronage. This expectancy may be due to the name or reputation of a trade or business or any other factor. Going concern value is the additional value that attaches to property because of its existence as an integral part of an ongoing business activity. Going concern value includes the value attributable to the ability of a trade or business (or a part of a trade or business) to continue functioning or generating income without interruption notwithstanding a change in ownership. It also includes the value that is attributable to the immediate use or availability of an acquired trade or business, such as, for example, the use of the revenues or net earnings that otherwise would not be received during any period if the acquired trade or business were not available or operational.

(iii) ***Factors indicating goodwill or going concern value.*** In making the determination in this paragraph (b)(2), all the facts and circumstances surrounding the transaction are taken into account. Whether sufficient consideration is available to allocate to goodwill or going concern value after the residual method is applied is not relevant in determining whether goodwill or going concern value could attach to a group of assets. Factors to be considered include—

(A) The presence of any intangible assets (whether or not those assets are section 197 intangibles), provided, however, that the transfer of such an asset in the absence of other assets will not be a trade or business for purposes of section 1060;

(B) The existence of an excess of the total consideration over the aggregate book value of the tangible and intangible assets purchased (other than goodwill and going concern value) as shown in the financial accounting books and records of the purchaser; and

(C) Related transactions, including lease agreements, licenses, or other similar agreements between the purchaser and seller (or managers, directors, owners, or employees of the seller) in connection with the transfer.

(3) ***Examples.*** The following examples illustrate paragraphs (b)(1) and (2) of this section:

Example 1. S is a high grade machine shop that manufactures microwave connectors in limited quantities. It is a successful company with a reputation within the industry and among its customers for manufacturing unique, high quality products. Its tangible assets consist primarily of ordinary machinery for working metal and plating. It has no secret formulas or patented

drawings of value. P is a company that designs, manufactures, and markets electronic components. It wants to establish an immediate presence in the microwave industry, an area in which it previously has not been engaged. P is acquiring assets of a number of smaller companies and hopes that these assets will collectively allow it to offer a broad product mix. P acquires the assets of S in order to augment its product mix and to promote its presence in the microwave industry. P will not use the assets acquired from S to manufacture microwave connectors. The assets transferred are assets that constitute a trade or business in the hands of the seller. Thus, P's purchase of S's assets is an applicable asset acquisition. The fact that P will not use the assets acquired from S to continue the business of S does not affect this conclusion.

Example 2. S, a sole proprietor who operates a car wash, both leases the building housing the car wash and sells all of the car wash equipment to P. S's use of the building and the car wash equipment constitute a trade or business. P begins operating a car wash in the building it leases from S. Because the assets transferred together with the asset leased are assets which constitute a trade or business, P's purchase of S's assets is an applicable asset acquisition.

Example 3. S, a corporation, owns a retail store business in State X and conducts activities in connection with that business enterprise that meet the active trade or business requirement of section 355. P is a minority shareholder of S. S distributes to P all the assets of S used in S's retail business in State X in complete redemption of P's stock in S held by P. The distribution of S's assets in redemption of P's stock is treated as a sale or exchange under sections 302(a) and 302(b)(3), and P's basis in the assets distributed to it is determined wholly by reference to the consideration paid, the S stock. Thus, S's distribution of assets constituting a trade or business to P is an applicable asset acquisition.

Example 4. S is a manufacturing company with an internal financial bookkeeping department. P is in the business of providing a financial bookkeeping service on a contract basis. As part of an agreement for P to begin providing financial bookkeeping services to S, P agrees to buy all of the assets associated with S's internal bookkeeping operations and provide employment to any of S's bookkeeping department employees who choose to accept a position with P. In addition to selling P the assets associated with its bookkeeping operation, S will enter into a long term contract with P for bookkeeping services. Because assets transferred from S to P, along with the related contract for bookkeeping services, are a trade or business in the hands of P, the sale of the bookkeeping assets from S to P is an applicable asset acquisition.

(4) ***Asymmetrical transfers of assets.*** A purchaser is subject to section 1060 if—

(i) Under general principles of tax law, the seller is not treated as transferring the same assets as the purchaser is treated as acquiring;

(ii) The assets acquired by the purchaser constitute a trade or business; and

(iii) Except as provided in paragraph (b)(8) of this section, the purchaser's basis in the transferred assets is determined wholly by reference to the purchaser's consideration.

(5) ***Related transactions.*** Whether the assets transferred constitute a trade or business is determined by aggregating all transfers from the seller to the purchaser in a series of related transactions. Except as provided in paragraph (b)(8) of this section, all assets transferred from the seller to the purchaser in a series of related transactions are included in the group of assets among which the consideration

paid or received in such series is allocated under the residual method. The principles of § 1.338-1(c) are also applied in determining which assets are included in the group of assets among which the consideration paid or received is allocated under the residual method.

(6) ***More than a single trade or business.*** If the assets transferred from a seller to a purchaser include more than one trade or business, then, in applying this section, all of the assets transferred (whether or not transferred in one transaction or a series of related transactions and whether or not part of a trade or business) are treated as a single trade or business.

(7) ***Covenant entered into by the seller.*** If, in connection with an applicable asset acquisition, the seller enters into a covenant (e.g., a covenant not to compete) with the purchaser, that covenant is treated as an asset transferred as part of a trade or business.

(8) ***Partial non-recognition exchanges.*** A transfer may constitute an applicable asset acquisition notwithstanding the fact that no gain or loss is recognized with respect to a portion of the group of assets transferred. All of the assets transferred, including the non-recognition assets, are taken into account in determining whether the group of assets constitutes a trade or business. The allocation of consideration under paragraph (c) of this section is done without taking into account either the non-recognition assets or the amount of money or other property that is treated as transferred in exchange for the non-recognition assets (together, the non-recognition exchange property). The basis in and gain or loss recognized with respect to the non-recognition exchange property are determined under such rules as would otherwise apply to an exchange of such property. The amount of the money and other property treated as exchanged for non-recognition assets is the amount by which the fair market value of the non-recognition assets transferred by one party exceeds the fair market value of the non-recognition assets transferred by the other (to the extent of the money and the fair market value of property transferred in the exchange). The money and other property that are treated as transferred in exchange for the non-recognition assets (and which are not included among the assets to which section 1060 applies) are considered to come from the following assets in the following order: first from Class I assets, then from Class II assets, then from Class III assets, then from Class IV assets, then from Class V assets, then from Class VI assets, and then from Class VII assets. For this purpose, liabilities assumed (or to which a non-recognition exchange property is subject) are treated as Class I assets. See *Example 1* in paragraph (d) of this section for an example of the application of section 1060 to a single transaction which is, in part, a non-recognition exchange.

(9) ***Insurance business.*** The mere reinsurance of insurance contracts by an insurance company is not an applicable asset acquisition, even if it enables the reinsurer to establish a customer relationship with the owners of the reinsured contracts. However, a transfer of an insurance business is an applicable asset acquisition if the purchaser acquires significant business assets, in addition to insurance contracts, to which goodwill and going concern value could attach. For rules regarding the treatment of an applicable asset acquisition of an insurance business, see paragraph (c)(5) of this section.

(c) ***Allocation of consideration among assets under the residual method*** —

(1) ***Consideration.*** The seller's consideration is the amount, in the aggregate, realized from selling the assets in the applicable asset acquisition under section 1001(b). The purchaser's consideration is the amount, in the aggregate, of its cost of purchasing the assets in the applicable asset acquisition that is properly taken into account in basis.

(2) ***Allocation of consideration among assets.*** For purposes of determining the seller's amount realized for each of the assets sold in an applicable asset acquisition, the seller allocates consideration to all the assets sold by using the residual method under §§ 1.338-6 and 1.338-7, substituting consideration for ADSP. For purposes of determining the purchaser's basis in each of the assets purchased in an applicable asset acquisition, the purchaser allocates consideration to all the assets purchased by using the residual method under §§ 1.338-6 and 1.338-7, substituting consideration for AGUB. In allocating consideration, the rules set forth in paragraphs (c)(3) and (4) of this section apply in addition to the rules in §§ 1.338-6 and 1.338-7.

(3) ***Certain costs.*** The seller and purchaser each adjusts the amount allocated to an individual asset to take into account the specific identifiable costs incurred in transferring that asset in connection with the applicable asset acquisition (e.g., real estate transfer costs or security interest perfection costs). Costs so allocated increase, or decrease, as appropriate, the total consideration that is allocated under the residual method. No adjustment is made to the amount allocated to an individual asset for general costs associated with the applicable asset acquisition as a whole or with groups of assets included therein (e.g., non-specific appraisal fees or accounting fees). These latter amounts are taken into account only indirectly through their effect on the total consideration to be allocated. If an election described in § 1.338-6(c)(5) is made with respect to an applicable asset acquisition, any allocation of costs pursuant to this paragraph (c)(3) shall be made as if such election had not been made. The preceding sentence applies to applicable asset acquisitions occurring on or after September 11, 2007. For applicable asset acquisitions occurring before September 11, 2007, and on or after September 15, 2004, see § 1.1060-1T as contained in 26 CFR Part 1 in effect on April 1, 2007. For applicable asset acquisitions occurring before September 15, 2004, see §§ 1.338-6 and 1.1060-1 as contained in 26 CFR Part 1 in effect on April 1, 2004.

(4) ***Effect of agreement between parties.*** If, in connection with an applicable asset acquisition, the seller and purchaser agree in writing as to the allocation of any amount of consideration to, or as to the fair market value of, any of the assets, such agreement is binding on them to the extent provided in this paragraph (c)(4). Nothing in this paragraph (c)(4) restricts the Commissioner's authority to challenge the allocations or values arrived at in an allocation agreement. This paragraph (c)(4) does not apply if the parties are able to refute the allocation or valuation under the standards set forth in *Commissioner* v. *Danielson,* 378 F.2d 771 (3d Cir.), *cert. denied,* 389 U.S. 858 (1967) (a party wishing to challenge the tax consequences of an agreement as construed by the Commissioner must offer proof that, in an action between the parties to the agreement, would be admissible to alter that construction or show its unenforceability because of mistake, undue influence, fraud, duress, etc.).

(5) ***Insurance business.*** If the trade or business transferred is an insurance business, the rules of this paragraph (c) are modified by the principles of § 1.338-11(a) through (d). However, in transactions governed by section 1060, such principles apply even if the transfer of the trade or business is effected in whole or in part through indemnity reinsurance rather than assumption reinsurance, and, for the insurer or reinsurer, an insurance contract (including an annuity or reinsurance contract) is a Class VI asset regardless of whether it is a section 197 intangible. In addition, the principles of § 1.338-11(f) through (h) apply if the transfer occurs in connection with the complete liquidation of the transferor.

(d) ***Examples.*** The following examples illustrate this section:

> *Example 1.* (i) On January 1, 2001, A transfers assets X, Y, and Z to B in exchange for assets D, E, and F plus $1,000 cash.

(ii) Assume the exchange of assets constitutes an exchange of like-kind property to which section 1031 applies. Assume also that goodwill or going concern value could under any circumstances attach to each of the DEF and XYZ groups of assets and, therefore, each group constitutes a trade or business under section 1060.

(iii) Assume the fair market values of the assets and the amount of money transferred are as follows:

Asset	Fair market value
By A:	
X	$ 400
Y	400
Z	200
Total	1,000
By B:	
D	40
E	30
F	30
Cash (amount)	1,000
Total	1,100

(iv) Under paragraph (b)(8) of this section, for purposes of allocating consideration under paragraph (c) of this section, the like-kind assets exchanged and any money or other property that are treated as transferred in exchange for the like-kind property are excluded from the application of section 1060.

(v) Since assets X, Y, and Z are like-kind property, they are excluded from the application of the section 1060 allocation rules.

(vi) Since assets D, E, and F are like-kind property, they are excluded from the application of the section 1060 allocation rules. Thus, the allocation rules of section 1060 do not apply in determining B's gain or loss with respect to the disposition of assets D, E, and F, and the allocation rules of section 1060 and paragraph (c) of this section are not applied to determine A's bases of assets D, E, and F. In addition, $900 of the $1,000 cash B gave to A for A's like-kind assets (X, Y, and Z) is treated as transferred in exchange for the like-kind property in order to equalize the fair market values of the like-kind assets. Therefore, $900 of the cash is excluded from the application of the section 1060 allocation rules.

(vii) $100 of the cash is allocated under section 1060 and paragraph (c) of this section.

(viii) A received $100 that must be allocated under section 1060 and paragraph (c) of this section. Since A transferred no Class I, II, III, IV, V, or VI assets to which section 1060 applies, in determining its amount realized for the part of the exchange to which section 1031 does not apply, the $100 is allocated to Class VII assets (goodwill and going concern value).

(ix) B gave A $100 that must be allocated under section 1060 and paragraph (c) of this section. Since B received from A no Class I, II, III, IV, V, or VI assets to which section 1060 applies, the $100 consideration is allocated by B to Class VII assets (goodwill and going concern value).

Example 2. (i) On January 1, 2001, S, a sole proprietor, sells to P, a corporation, a group of assets that constitutes a trade or business under paragraph (b)(2) of this section. S, who plans to retire immediately, also executes in P's favor a covenant not to compete. P pays S $3,000 in cash and assumes $1,000 in liabilities. Thus, the total consideration is $4,000.
(ii) On the purchase date, P and S also execute a separate agreement that states that the fair market values of the Class II, Class III, Class V, and Class VI assets S sold to P are as follows:

Asset class	Asset	Fair market value
II	Actively traded securities	$500
	Total Class II	500
III	Accounts receivable	200
	Total Class III	200
V	Furniture and fixtures	800
	Building	800
	Land	200
	Equipment	400
	Total Class V	2,200
VI	Covenant not to compete	900
	Total Class VI	900

(iii) P and S each allocate the consideration in the transaction among the assets transferred under paragraph (c) of this section in accordance with the agreed upon fair market values of the assets, so that $500 is allocated to Class II assets, $200 is allocated to the Class III asset, $2,200 is allocated to Class V assets, $900 is allocated to Class VI assets, and $200 ($4,000 total consideration less $3,800 allocated to assets in Classes II, III, V, and VI) is allocated to the Class VII assets (goodwill and going concern value).

(iv) In connection with the examination of P's return, the Commissioner, in determining the fair market values of the assets transferred, may disregard the parties' agreement. Assume that the Commissioner correctly determines that the fair market value of the covenant not to compete was $500. Since the allocation of consideration among Class II, III, V, and VI assets results in allocation up to the fair market value limitation, the $600 of unallocated consideration resulting from the Commissioner's redetermination of the value of the covenant not to compete is allocated to Class VII assets (goodwill and going concern value).

(e) *Reporting requirements* —

(1) *Applicable asset acquisitions* —

(i) ***In general.*** Unless otherwise excluded from this requirement by the Commissioner, the seller and the purchaser in an applicable asset acquisition each must report information concerning the amount of consideration in the transaction and its allocation among the assets transferred. They also must report information concerning subsequent adjustments to consideration.

(ii) *Time and manner of reporting* —

(A) ***In general.*** The seller and the purchaser each must file asset acquisition statements on Form 8594, "Asset Allocation Statement," with their income tax returns or returns of income for the taxable year that includes the first date assets are sold pursuant to an applicable asset acquisition. This reporting requirement applies to all asset acquisitions described in this section. For reporting requirements relating to asset acquisitions occurring before March 16, 2001, as described in paragraph (a)(2) of this section, see the temporary regulations under section 1060 in effect prior to March 16, 2001 (see 26 CFR part 1 revised April 1, 2000).

(B) ***Additional reporting requirement.*** When an increase or decrease in consideration is taken into account after the close of the first taxable year that includes the first date assets are sold in an applicable asset acquisition, the seller and the purchaser each must file a supplemental asset acquisition statement on Form 8594 with the income tax return or return of income for the taxable year in which the increase (or decrease) is properly taken into account.

(C) *Election described in § 1.338-6(c)(5)* —

(*1*) ***Availability.*** The election described in § 1.338-6(c)(5) is available in respect of an applicable asset acquisition provided that the requirements of that section are satisfied. Such election may be made by the seller, regardless of whether the purchaser also makes the election, and may be made by the purchaser, regardless of whether the seller also makes the election.

(*2*) ***Time and manner of making election.*** The election described in § 1.338-6(c)(5) is made by taking a position on a timely filed original tax return for the taxable year of the applicable asset acquisition that is consistent with having made the election.

(*3*) ***Irrevocability of election.*** The election described in § 1.338-6(c)(5) is irrevocable.

(4) ***Effective/applicability date.*** This paragraph (e)(1)(ii)(C) applies to applicable asset acquisitions occurring on or after September 11, 2007. For applicable asset acquisitions occurring before September 11, 2007 and on or after September 15, 2004, see § 1.1060-1T as contained in 26 CFR Part 1 in effect on April 1, 2007. For applicable asset acquisitions occurring before September 15, 2004, see §§ 1.338-6 and 1.1060-1 as contained in 26 CFR Part 1 in effect on April 1, 2004.

(2) ***Transfers of interests in partnerships.*** For reporting requirements relating to the transfer of a partnership interest, *see* § 1.755-1(d).

[T.D. 8940, 66 FR 9954, Feb. 13, 2001, as amended by T.D. 9059, 68 FR 34299, June 9, 2003; T.D. 9158, 69 FR 55742, Sept. 16, 2004; T.D. 9257, 71 FR 18006, Apr. 10, 2006; T.D. 9358, 72 FR 51706, Sept. 11, 2007; T.D. 9377, 73 FR 3874, Jan. 23, 2008; T.D. 9377, 73 FR 14386, Mar. 18, 2008]

§ 1.1061-0 Table of contents.

This section lists the captions that appear in §§ 1.1061-1 through 1.1061-6.

§ 1.1061-1 Section 1061 definitions.

(a) Definitions.

(b) Applicability date.

§ 1.1061-2 Applicable partnership interests and applicable trades or businesses.

(a) API rules and examples.

(1) Rules.

(i) An API remains an API.

(ii) Application of section 1061 to Unrealized API Gains and Losses.

(iii) API Gains and Losses retain their character.

(iv) Substantial services by the Owner Taxpayer, Passthrough Taxpayer or any Related Person.

(v) Grantor trusts and entities disregarded as separate from their owners.

(2) Examples.

(b) Application of the ATB Activity Test.

(1) In general.

(i) Rules for applying the ATB Activity Test.

(A) Aggregate Specified Actions taken into account.

(B) Raising or Returning Capital Actions and Investing or Developing Actions are not both required to be taken in each taxable year.

(C) Combined conduct by multiple related entities taken into account.

(ii) Developing Specified Assets.

(iii) Partnerships.

(2) Examples.

(c) Applicability date.

§ 1.1061-3 Exceptions to the definition of an API.

(a) A partnership interest held by an employee of another entity not conducting an ATB.

(b) Partnership interest held by a corporation.

(1) In general.

(2) Treatment of interests held by an S corporation or a qualified electing fund.

(c) Capital Interest Gains and Losses.

(1) In general.

(2) Capital Interest Gains and Losses defined.

(3) General rules for determining Capital Interest Allocations.

(i) Commensurate with capital contributed.

(ii) In a similar manner.

(A) Relevant factors.

(B) Clear identification requirement.

(iii) Reinvestment of API Gain.

(iv) Unrelated Non-Service Partner requirement.

(v) Proceeds of certain loans not taken into account for Capital Interest Allocation purposes.

(A) General rule.

(B) Recourse liability.

(vi) Items that are not included in Capital Interest Allocations.

(4) Capital Interest Disposition Amounts.

(i) In general.

(ii) Determination of the Capital Interest Disposition Amount.

(5) Capital Interest Allocations made by a Passthrough Entity that is an API Holder.

(6) Examples.

(d) Partnership interest acquired by purchase by an unrelated person.

(1) Acquirer not a Related Person.

(2) Section 1061(d) not applicable.

(3) Acquirer not a service provider.

(e) [Reserved]

(f) Applicability date.

(1) General rule.

(2) Partnership interest held by an S corporation.

(3) Partnership interest held by a PFIC with respect to which the shareholder has a QEF election in effect.

§ 1.1061-4 Section 1061 computations.

(a) Computations.

(1) Recharacterization Amount.

(2) One Year Gain Amount and Three Year Gain Amount.

(i) One Year Gain Amount.

(ii) Three Year Gain Amount.

(3) API One Year Distributive Share Amount and API Three Year Distributive Share Amount.

(i) API One Year Distributive Share Amount.

(ii) API Three Year Distributive Share Amount.

(4) API One Year Disposition Amount and API Three Year Disposition Amount.

(i) API One Year Disposition Amount.

(ii) API Three Year Disposition Amount.

(b) Special rules for calculating the One Year Gain Amount and the Three Year Gain Amount.

(1) One Year Gain Amount equals zero or less.

(2) Three Year Gain Amount equals zero or less.

(3) One Year Gain Amount less than Three Year Gain Amount.

(4) Installment sale gain.

(5) Special rules for capital gain dividends from regulated investment companies (RICs) and real estate investment trusts (REITs).

(i) API One Year Distributive Share Amount.

(ii) API Three Year Distributive Share Amount.

(iii) Loss on sale or exchange of stock.

(6) Pro rata share of qualified electing fund (QEF) net capital gain.

(i) One year QEF net capital gain.

(ii) Three year QEF net capital gain adjustment.

(7) Items not taken into account for purposes of section 1061.

(8) Holding period determination.

(i) Determination of holding period for purposes of the Three Year Gain Amount.

(ii) Relevant holding period.

(9) Lookthrough Rule for certain API dispositions.

(i) Determination that the Lookthrough Rule applies.

(A) In general.

(B) Determination that the Lookthrough Rule applies to the disposition of a Passthrough Interest.

(ii) Application of the Lookthrough Rule.

(10) Section 83.

(c) Examples.

(1) Recharacterization rules.

(2) Special rules examples.

(d) Applicability date.

§ 1.1061-5 Section 1061(d) transfers to related persons.

(a) In general.

(b) Transfer.

(c) Section 1061(d) Recharacterization Amount.

(d) Special rules.

(e) Section 1061(d) Related Person.

(f) Examples.

(g) Applicability date.

§ 1.1061-6 Reporting rules.

(a) Owner Taxpayer filing requirements.

(1) In general.

(2) Failure to obtain information.

(b) Passthrough Entity filing requirements and reporting.

(1) Requirement to file information with the IRS and to furnish information to API Holder.

(2) Requirement to request, furnish, and file information in tiered structures.

(i) Requirement to request information.

(ii) Requirement to furnish and file information.

(iii) Timing of requesting and furnishing information.

(A) Requesting information.

(B) Furnishing information.

(iv) Manner of requesting information.

(v) Recordkeeping requirement.

(vi) Passthrough Entity is not furnished information to meet its reporting obligations under paragraph (b)(1) of this section.

(vii) Filing requirements.

(viii) Penalties.

(c) Regulated investment company (RIC) and real estate investment trust (REIT) reporting.

(1) Section 1061 disclosures.

(i) One Year Amounts Disclosure.

(ii) Three Year Amounts Disclosure.

(2) Pro rata disclosures.

(3) Report to shareholders.

(d) Qualified electing fund (QEF) reporting.

(e) Applicability date.

[T.D. 9945, 86 FR 5480, Jan. 19, 2021]

§ 1.1061-1 Section 1061 definitions.

(a) ***Definitions.*** The following definitions apply solely for purposes of this section and §§ 1.1061-2 through 1.1061-6.

API Gains and Losses are any long-term capital gains and capital losses with respect to an API and include:

(i) The *API One Year Distributive Share Amount* as defined in § 1.1061-4(a)(3)(i);

(ii) The *API Three Year Distributive Share Amount* as defined in § 1.1061-4(a)(3)(ii);

(iii) The *API One Year Disposition Amount* as defined in § 1.1061-4(a)(4)(i);

(iv) The *API Three Year Disposition Amount* as defined in § 1.1061-4(a)(4)(ii); and

(v) Capital gains or losses from the disposition of Distributed API Property.

API Holder is a person who holds an API.

Applicable Partnership Interest (API) means any interest in a partnership which, directly or indirectly, is transferred to (or is held by) an Owner Taxpayer or Passthrough Taxpayer in connection with the performance of substantial services by the Owner Taxpayer or by a Passthrough Taxpayer, or by any Related Person, including services performed as an employee, in any ATB unless an exception in § 1.1061-3 applies. For purposes of defining an API under this section and section 1061 of the Internal Revenue Code (Code), an interest in a partnership also includes any financial instrument or contract, the value of which is determined in whole or in part by reference to the partnership (including the amount of partnership distributions, the value of partnership assets, or the results of partnership operations). An Owner Taxpayer and a Passthrough Taxpayer can hold an API directly or indirectly through one or more Passthrough Entities.

Applicable Trade or Business (ATB) means any activity for which the ATB Activity Test with respect to Specified Actions is met, and includes all Specified Actions taken by Related Persons, including combining activities occurring in separate partnership tiers or entities as one ATB.

ATB Activity Test has the meaning provided in § 1.1061-2(b)(1).

Capital account means a capital account maintained under § 1.704-1(b)(2)(iv) or similar principles.

Capital Interest Allocations means, with respect to a partnership, allocations of long-term capital gain or loss made under the partnership agreement to an API Holder and to Unrelated Non-Service Partners based on such partners' capital contributed with respect to the partnership to the extent such allocations otherwise meet the requirements of § 1.1061-3(c). With respect to other Passthrough Entities, the principles of this definition apply.

Capital Interest Disposition Amount has the meaning provided in § 1.1061-3(c)(4).

Capital Interest Gains and Losses has the meaning provided in § 1.1061-3(c)(2).

Distributed API Property means property distributed by a Passthrough Entity to an API Holder with respect to an API if the holding period, as determined under sections 735 and 1223, in the API Holder's hands is three years or less at the time of disposition of the property by the API Holder.

Indirect API means an API that is held through one or more Passthrough Entities.

Investing or Developing Actions means actions involving either—

(i) Investing in (or disposing of) Specified Assets (or identifying Specified Assets for such investing or disposition); or

(ii) Developing Specified Assets (see § 1.1061-2(b)(1)(ii)).

Lookthrough Rule means the recharacterization rule described in § 1.1061-4(b)(9).

One Year Gain Amount has the meaning provided in § 1.1061-4(a)(2)(i).

Owner Taxpayer means the person subject to Federal income tax on net gain with respect to an API or an Indirect API during the taxable year, including an owner of a Passthrough Taxpayer unless the owner of the Passthrough Taxpayer is a Passthrough Entity itself or is excepted under § 1.1061-3(a), (b), or (d).

Passthrough Entity means a partnership, trust, estate, S corporation described in § 1.1061-3(b)(2)(i), or a passive foreign investment company described in § 1.1061-3(b)(2)(ii).

Passthrough Interest means an interest in a Passthrough Entity that represents in whole or in part an API.

Passthrough Taxpayer means a Passthrough Entity that is treated as a taxpayer for the purpose of determining the existence of an API.

Raising or Returning Capital Actions means actions involving raising or returning capital but does not include Investing or Developing Actions.

Recharacterization Amount has the meaning provided in § 1.1061-4(a)(1).

Related Person means a person or entity who is treated as related to another person or entity under sections 707(b) or 267(b).

Relevant ATB means the ATB in which services were provided and in connection with which an API is held or was transferred.

Section 1061(d) Recharacterization Amount has the meaning provided in § 1.1061-5(c).

Section 1061(d) Related Person has the meaning provided in § 1.1061-5(e).

Section 1061 Regulations means the provisions of this section and §§ 1.1061-2 through 1.1061-6.

Specified Actions means the combination of Raising or Returning Capital Actions and Investing or Developing Actions.

Specified Assets means—

(i) Securities, including interests in partnerships qualifying as securities (as defined in section 475(c)(2) without regard to the last sentence thereof);

(ii) Commodities (as defined in section 475(e)(2));

(iii) Real estate held for rental or investment;

(iv) Cash or cash equivalents; and

(v) An interest in a partnership to the extent that the partnership holds Specified Assets. See § 1.1061-2(b)(1)(iii).

(vi) Specified Assets include options or derivative contracts with respect to any of the items provided in paragraphs (i) through (v) of this definition.

Three Year Gain Amount has the meaning provided in § 1.1061-4(a)(2)(ii).

Unrealized API Gains and Losses means, with respect to a Passthrough Entity's assets, all unrealized capital gains and losses that would be:

(i) Realized if those assets were disposed of for fair market value in a taxable transaction on the relevant date; and

(ii) Allocated to an API Holder with respect to its API, taking into account the principles of section 704(c).

Unrelated Non-Service Partners means partners who do not (and did not) provide services in the Relevant ATB and who are not (and were not) Related Persons with respect to any API Holder in the partnership or any person who provides or has provided services in the Relevant ATB.

(b) ***Applicability date.*** The provisions of this section apply to taxable years of Owner Taxpayers and Passthrough Entities beginning on or after January 19, 2021. An Owner Taxpayer or Passthrough Entity may choose to apply this section to a taxable year beginning after December 31, 2017, provided that they consistently apply the Section 1061 Regulations in their entirety to that year and all subsequent years.

[T.D. 9945, 86 FR 5480, Jan. 19, 2021, as amended by T.D. 9945, 89 FR 50525, June 14, 2024]

§ 1.1061-2 Applicable partnership interests and applicable trades or businesses.

(a) ***API rules and examples —***

(1) ***Rules —***

(i) ***An API remains an API.*** Once a partnership interest qualifies as an API, the partnership interest remains an API unless and until the requirements of one of the exceptions to qualification of a partnership interest as an API, set forth in § 1.1061-3, are satisfied.

(ii) ***Application of section 1061 to Unrealized API Gains and Losses.*** Unrealized API Gains and Losses are API Gains and Losses subject to section 1061 when the gains and losses are realized and recognized. Unrealized API Gains and Losses do not lose their character as such until they are recognized.

(iii) ***API Gains and Losses retain their character.*** API Gains and Losses retain their character as API Gains and Losses as they are allocated from one Passthrough Entity to another Passthrough Entity and then to the Owner Taxpayer.

(iv) ***Substantial services by an Owner Taxpayer, Passthrough Taxpayer, or any Related Person.*** If an interest in a partnership is transferred to or held by an Owner Taxpayer, Passthrough Taxpayer, or any Related Person in connection with the performance of services, the Owner Taxpayer, the Passthrough Taxpayer, or the Related Person is presumed to have provided substantial services for purposes of section 1061.

(v) ***Grantor trusts and entities disregarded as separate from their owners.*** A trust wholly described in subpart E, part I, subchapter J, chapter 1 of the Internal Revenue Code (that is, a grantor trust), a qualified subchapter S subsidiary described in section 1361(b)(3), and an entity with a single owner that is treated as disregarded as an entity separate from its owner under any provision of the Internal Revenue Code or any part of 26 CFR (including § 301.7701-3 of this chapter) are disregarded for purposes of the Section 1061 Regulations.

(2) ***Examples.*** The following examples illustrate the provisions of this paragraph (a).

(i) ***Example 1: API.***

(A) A is the general partner of PRS, a partnership, and provides services to PRS. A is engaged in an ATB as defined in § 1.1061-1(a). PRS transfers a PRS profits interest to A in connection with A's performance of substantial services with respect to PRS's ATB. A's interest in PRS is an API.

(B) After 6 years, A retires and is no longer engaged in an ATB and does not perform any services with respect to its ATB and with respect to PRS. However, A retains the API in PRS. PRS continues to acquire new capital assets and to allocate gain to A from the disposition of those assets. Under paragraph (a)(1)(i) of this section, A's interest in PRS remains an API after A retires.

(ii) ***Example 2: Contribution of an API to a partnership.*** Individuals A, B, and C each directly hold APIs in PRS, a partnership. A and B form a new partnership, GP, and contribute their APIs in PRS to GP. Following the contribution, each of A and B holds an Indirect API because each of A and B now indirectly holds an API in PRS through GP, a Passthrough Entity. Each of A's and B's interests in GP is a Passthrough Interest because each of A's and B's interest in GP represents an Indirect API.

(iii) ***Example 3: Passthrough Interest, Indirect API, Passthrough Taxpayer.*** Each of A, B, and C provides services to, and is an equal partner in, GP. GP is engaged in an ATB as defined in § 1.1061-1(a), is the general partner of PRS, and provides substantial management services to PRS. In connection with GP's performance of substantial services in an ATB, PRS issues a profits interest to GP. Because GP's PRS interest was received in connection with GP's providing services in an ATB, GP is a Passthrough Taxpayer and GP's interest in PRS is an API. Because A, B, and C are partners in GP, they each hold a Passthrough Interest in GP and an Indirect API in PRS. Each of A, B, and C is treated as an Owner Taxpayer because each is a partner in GP and because each holds an Indirect API in PRS in connection with the performance of its services to GP's ATB.

(iv) ***Example 4: S corporation, Passthrough Interest, Indirect API, and Passthrough Taxpayer.*** A owns all of the stock of S Corp, an S corporation. S Corp is engaged in an ATB, as defined in § 1.1061-1(a). S Corp is the general partner of PRS, a partnership, and provides substantial management services to PRS. A provides substantial services in S Corp's ATB. In connection with S Corp providing substantial services to PRS, PRS issues a profits interest to S Corp. S Corp's interest in PRS is its only asset. Because S Corp's profits interest in PRS was issued to S Corp in connection with substantial services in an ATB, S Corp is a Passthrough Taxpayer and its interest in PRS is an API. Because A is a shareholder in S Corp, A holds a Passthrough Interest in S Corp and an Indirect API in PRS as a result of S Corp's API in PRS. A is treated as an Owner Taxpayer because A holds an interest in S Corp, a Passthrough Taxpayer, and also indirectly holds an API in PRS in connection with A's services in S Corp's ATB.

(v) ***Example 5: Indirect API, Related Person, and Passthrough Taxpayer.*** Each of A, B, and C is an equal partner in partnership GP, the general partner of PRS. GP's Specified Actions do not satisfy the ATB Activity Test under § 1.1061-1(a) and as a result, GP's actions do not establish an ATB. Management Company is a Related Person with respect to GP within the meaning of sections 267(b) and 707(b), is engaged in an ATB, and provides substantial management services to PRS that are sufficient to satisfy the ATB Activity Test. Management Company's actions are attributed to GP under paragraphs (a)(1)(iv) and (b)(1)(i)(C) of this section because Management Company is a Related Person to GP. In connection with Management Company's services to PRS, PRS issues a profits interest to GP. Because its PRS profits interest is issued to GP in connection with services provided by Management Company, a Related Person, GP is a Passthrough Taxpayer and its interest in PRS is an API. Unless an exception described in § 1.1061-3 applies, because A, B, and C are partners in GP, they each hold a Passthrough Interest in GP and an Indirect API in PRS. A, B, and C are treated as Owner Taxpayers because they hold an interest in GP, a Passthrough Taxpayer.

(b) *Application of the ATB Activity Test* —

(1) ***In general.*** The ATB Activity Test is satisfied if both Raising and Returning Actions and Investing or Developing Actions are conducted by an Owner Taxpayer, Passthrough Taxpayer, or one or more Related Persons with respect to an Owner Taxpayer or Passthrough Taxpayer, and the total level of activity, including the combined activities of all Related Persons, satisfies the level of activity that would be required to establish a trade or business under section 162.

(i) *Rules for applying the ATB Activity Test* —

(A) ***Aggregate Specified Actions taken into account.*** The determination of whether the ATB Activity Test is satisfied is based on the combined activities conducted that qualify as either Raising or Returning Capital Actions and Investing or Developing Actions. The fact that either Raising or Returning Capital Actions or Investing or Developing Actions are only infrequently taken does not preclude the test from being satisfied if the combined Specified Actions meet the test.

(B) ***Raising or Returning Capital Actions and Investing or Developing Actions are not both required to be taken in each taxable year.*** Raising or Returning Capital Actions and Investing or Developing Actions are not both required to be taken in each taxable year in order to satisfy the ATB Activity Test. For example, the ATB Activity Test will be satisfied if Investing or Developing Actions are not taken in the current taxable year, but sufficient Raising or Returning Capital Actions are taken in anticipation of future Investing or Developing Actions. Additionally, the ATB Activity Test will be satisfied if no Raising or Returning Capital Actions are taken in the current taxable year, but have been taken in a prior taxable year (regardless of whether the ATB Activity Test was met in the prior year), and sufficient Investing or Developing Actions are undertaken by the taxpayer in the current taxable year.

(C) *Combined conduct by multiple related entities taken into account* —

(*1*) ***Related Entities.*** If a Related Person(s) (within the meaning of § 1.1061-1(a)) solely or primarily performs Raising or Returning Capital Actions and one or more other Related Person(s) solely or primarily performs Investing or Developing Actions, the combination of the activities performed by these Related Persons will be taken into account in determining whether the ATB Activity Test is satisfied.

(*2*) ***Actions taken by an agent or delegate.*** Specified Actions taken by an agent or a delegate in its capacity as an agent or a delegate of a principal will be taken into account by the principal in determining whether the ATB Activity Test is satisfied with respect to the principal. These Specified Actions are also taken into account in determining whether the ATB Activity test is satisfied with respect to the agent or the delegate.

(ii) ***Developing Specified Assets.*** Developing Specified Assets takes place if it is represented to investors, lenders, regulators, or other interested parties that the value, price, or yield of a portfolio business may be enhanced or increased in connection with choices or actions of a service provider. Merely exercising voting rights with respect to shares owned or similar activities do not amount to developing Specified Assets.

(iii) ***Partnerships.*** Investing or Developing Actions directly conducted with respect to Specified Assets held by a partnership are counted towards the ATB Activity Test. Additionally, a portion of the Investing or Developing Actions conducted with respect to the interests in a partnership that holds Specified Assets is counted towards the ATB Activity Test. This portion is the value of the partnership's Specified Assets over the value of all of the partnership's assets. Actions taken to manage a partnership's working capital will not be taken into account in determining the portion of Investing or Developing Actions conducted with respect to the interests in the partnership.

(2) ***Examples.*** The following examples illustrate the application of the ATB Activity Test described in paragraph (b)(1) of this section.

(i) ***Example 1: Combined activities of Raising or Returning Capital Actions and Investing or Developing Actions.*** During the taxable year, B takes a small number of actions to raise capital for new investments. B takes numerous actions to develop Specified Assets. B's actions with respect to raising capital and B's actions with respect to developing Specified Assets are combined for the purpose of determining whether the ATB Activity Test is satisfied. These actions cumulatively rise to the level required to establish a trade or business under section 162. Thus, B satisfies the ATB Activity Test.

(ii) ***Example 2: Combining Specified Actions in multiple entities.*** GP, a partnership, conducts Raising or Returning Capital Actions. Management Company, a partnership that is a Related Person to GP, conducts Investing or Developing Actions. When GP's and Management Company's activities are combined, the ATB Activity Test is satisfied. Accordingly, both GP and Management Company are engaged in an ATB, and services performed by either GP or Management Company are performed in an ATB under paragraph (b)(1) of this section.

(iii) ***Example 3: Investing or Developing Actions taken after Raising or Returning Capital Actions that do not meet the ATB Activity Test.*** In year 1, PRS engaged in Raising or Returning Capital Actions to fund PRS's investment in Specified Assets. However, PRS' Specified Actions during year 1 did not satisfy the ATB Activity Test because they did not satisfy the level of activity required to establish a trade or business under section 162. Therefore, PRS was not engaged in an ATB in year 1. In year 2, PRS engaged in significant Investing or Developing Actions but did not engage in any Raising or Returning Capital Actions. In year 2, PRS's Investing or Developing Actions rise to the level required to establish a trade or business under section 162. Because PRS has cumulatively engaged in both Investing or Developing Actions and Raising or Returning Capital Actions and because the Specified Actions rise to the level of activity required to establish a trade or business under section 162, PRS is engaged in an ATB in year 2.

(iv) ***Example 4: Raising or Returning Capital Actions taken in anticipation of Investing or Developing Actions.*** In year 1, A only conducted Raising or Returning Capital Actions. A's Raising or Returning Capital Actions were undertaken to raise capital to invest in Specified Assets with the goal of increasing their value through Investing or Developing Actions and rise to the level of activity required to establish a trade or business under section 162. A did not take Investing or Developing Actions during the taxable year. A's Raising or Returning Capital Actions satisfy the ATB Activity Test because they were undertaken in anticipation of also engaging in Investing or Developing Actions. Therefore, the ATB Activity Test is satisfied, and A is engaged in an ATB in year 1.

(v) ***Example 5: Attribution of delegate's actions.*** GP is the general partner of PRS. GP is responsible for providing management services to PRS. GP contracts with Management Company to provide management services on GP's behalf to PRS. GP and Management Company are not Related Persons. The Specified Actions taken by Management Company on behalf of GP are attributed to GP for purposes of the ATB Activity Test because the Management Company is operating as a delegate of GP. Additionally, those Specified Actions are taken into account by Management Company for purposes of the ATB Activity Test and whether it is engaged in an ATB.

(vi) ***Example 6: ATB Activity Test not satisfied.*** A is the manager of a hardware store. Partnership owns the hardware store, including the building in which the hardware business is conducted. In connection with A's services as the manager of the hardware store, a profits interest in Partnership is transferred to A. Partnership's business involves buying hardware from wholesale suppliers and selling it to customers. The hardware is not a Specified Asset. Although real estate is a Specified Asset if it is held for rental or investment purposes, Partnership holds the building for the purpose of conducting its hardware business and not for rental or investment purposes. Therefore, the building is not a Specified Asset as to Partnership. Partnership also maintains and manages a certain amount of working capital for its business, but actions with respect to working capital are not taken into account for the purpose of determining whether the ATB Activity Test is met. Partnership is not a Related Person with respect to any person who takes Specified Actions. Partnership is not engaged in an ATB because the ATB Activity Test is not satisfied. Although Partnership raises capital, its Raising or Returning Capital Actions alone do not satisfy the ATB Activity Test. Further, Partnership takes no Investing or Developing Actions because it holds no Specified Assets other than working capital. Partnership is not in an ATB and the profits interest transferred to A is not an API.

(c) ***Applicability date.*** The provisions of this section apply to taxable years of Owner Taxpayers and Passthrough Entities beginning on or after January 19, 2021. An Owner Taxpayer or Passthrough Entity may choose to apply this section to a taxable year beginning after December 31, 2017, provided that they apply the Section 1061 Regulations in their entirety to that year and all subsequent years.

[T.D. 9945, 86 FR 5480, Jan. 19, 2021]

§ 1.1061-3 Exceptions to the definition of an API.

(a) ***A partnership interest held by an employee of another entity not conducting an ATB.*** An API does not include any interest transferred to a person in connection with the performance of substantial services by that person as an employee of another entity that is conducting a trade or business (other than an ATB) and the person provides services only to such other entity.

(b) ***Partnership interest held by a corporation*** —

(1) ***In general.*** An API does not include any interest directly or indirectly held by a corporation.

(2) ***Treatment of interests held by an S corporation or a qualified electing fund.*** For purposes of this section, a corporation does not include an entity for which an election was made to treat the entity as a Passthrough Entity. Thus, the following entities are not treated as corporations for purposes of section 1061—

(i) An S corporation for which an election under section 1362(a) is in effect; and

(ii) A passive foreign investment company (PFIC) with respect to which the shareholder has a qualified electing fund (QEF) election under section 1295 in effect.

(c) *Capital Interest Gains and Losses* —

(1) ***In general.*** Capital Interest Gains and Losses are not subject to section 1061 and, therefore, are not included in calculating an Owner Taxpayer's Recharacterization Amount.

(2) ***Capital Interest Gains and Losses defined.*** For purposes of paragraph (c)(1) of this section, Capital Interest Gains and Losses are Capital Interest Allocations that meet the requirements of paragraph (c)(3) of this section and Capital Interest Disposition Amounts that meet the requirements of paragraph (c)(4) of this section.

(3) *General rules for determining Capital Interest Allocations* —

(i) ***Commensurate with capital contributed.*** An allocation will be considered a Capital Interest Allocation if the allocation to the API Holder with respect to its capital interest is determined and calculated in a similar manner as the allocations with respect to capital interests held by similarly situated Unrelated Non-Service Partners who have made significant aggregate capital contributions as described in paragraph (c)(3)(iv) of this section. For purposes of this paragraph (c)(3), a capital interest is an interest that would give the holder a share of the proceeds if the partnership's assets were sold at fair market value at the time the interest was received and the proceeds were then distributed in a complete liquidation of the partnership.

(ii) ***In a similar manner.*** For purposes of paragraph (c)(3)(i) of this section, a Capital Interest Allocation to an API Holder will be treated as made in a similar manner if allocations and distribution rights with respect to the capital contributed by an API Holder to which the API Holder's Capital Interest Allocation relates are reasonably consistent with allocation and distribution rights with respect to capital contributed by Unrelated Non-Service Partners where the Unrelated Non-Service Partner requirement is met. For purposes of this paragraph (c)(3)(ii), allocation and distribution rights for an API Holder that are limited to a particular class of partnership capital interests or that are determined with respect to capital contributions invested in a particular partnership investment will be considered as made in a similar manner to allocations and distribution rights of Unrelated Non-Service Partners where the Unrelated Non-Service Partner requirement is met for the applicable interest class or partnership investment.

(A) ***Relevant factors.*** For purposes of this paragraph (c)(3)(ii), the following factors are not exclusive, but are relevant factors in determining whether allocation and distribution rights with respect to capital contributed by an API Holder are reasonably consistent with allocation and distribution rights of persons meeting the Unrelated Non-Service Partner requirement: The amount and timing of capital contributed, the rate of return on capital contributed, the terms, priority, type and level of risk associated with capital contributed, and the rights to cash or property distributions during the partnership's operations and on liquidation. Accordingly, an allocation to an API Holder will not fail to qualify solely because the allocation is subordinated to allocations made to Unrelated Non-Service Partners, because an allocation to an API Holder is not reduced by the cost of services provided by the API Holder or a Related Person to the partnership, where the cost of services provided includes management fees or API allocations, or because an API Holder has a right to receive tax distributions while Unrelated Non-Service Partners do not, where such distributions are treated as advances against future distributions.

(B) ***Clear identification requirement.*** For purposes of this paragraph (c)(3)(ii), allocations will be considered made in a similar manner only if the allocations to the API Holder and the Unrelated Non-Service Partners are allocations with respect to, and corresponding to, such partners' contributed capital that are separate and apart from allocations made to the API Holder with respect to its API and where both the partnership agreement and the partnership's contemporaneous books and records clearly demonstrate that the requirements of paragraph (c)(3) of this section have been met.

(iii) ***Reinvestment of API Gain.*** If an API Holder is allocated API Gain by a Passthrough Entity, to the extent that an amount equal to the API Gain is reinvested in the Passthrough Entity by the API Holder (either as the result of an actual distribution and recontribution of the API Gain amount or the retention of the API Gain amount by the Passthrough Entity), the amount will be treated as a contribution to the Passthrough Entity for a capital interest that may produce Capital Interest Allocations for the API Holder, provided such allocations meet the requirements of this paragraph (c)(3).

(iv) ***Unrelated Non-Service Partner requirement.*** For purposes of paragraph (c)(3) of this section, the Unrelated Non-Service Partner requirement means that Unrelated Non-Service Partners must have made significant aggregate capital contributions in relation to total capital contributions of all partners. Unrelated Non-Service Partners will be treated as having made significant aggregate capital contributions provided such partners possess five percent or more of the aggregate capital contributed to the partnership at the time the allocations are made. With respect to an API Holder with allocation and distribution rights that are attributable to a particular interest class or partnership investment, the Unrelated Non-Service requirement must be met with respect to that particular interest class or partnership investment.

(v) ***Proceeds of certain loans not taken into account for Capital Interest Allocation purposes*** —

(A) ***General rule.*** For purposes of the Section 1061 Regulations, an allocation is not a Capital Interest Allocation to the extent the allocation is attributable to the contribution of an amount of capital to a partnership that, directly or indirectly, results from, or is attributable to, any loan or other advance made or guaranteed, directly or indirectly, by the partnership or another partner in the partnership (or any Related Person with respect to such persons), except to the extent a loan or advance is described in paragraph (c)(3)(v)(B) of this section. However, the repayments on a loan described in the preceding sentence are taken into account as capital contributed (and may therefore generate Capital Interest Allocations) as those amounts are paid by the partner, provided that the loan is not repaid with the proceeds of another loan described in the preceding sentence.

(B) ***Recourse liability.*** Paragraph (c)(3)(v)(A) of this section does not apply with respect to an allocation attributable to a contribution made by an individual service provider that, directly or indirectly, results from, or is attributable to, a loan or advance from another partner in the partnership (or any Related Person with respect to such other partner, other than the partnership) to such individual service provider if the individual service provider is personally liable for the repayment of such loan or advance. A contribution made by an individual service provider includes a contribution made by an entity that is wholly owned by, and disregarded as separate from, the individual service provider as described in § 1.1061-2(a)(1)(v), including a contribution attributable to a loan or advance made to the disregarded entity by another partner in the partnership (or any Related Person with respect to such other partner, other than the partnership) if the individual service provider

is personally liable for the repayment of any and all borrowed amounts that are not repaid by the disregarded entity. For purposes of this paragraph (c)(3)(v)(B), an individual service provider is personally liable for the repayment of a loan or advance made by another partner (or any Related Person with respect to such other partner, other than the partnership) if—

(1) The loan or advance is fully recourse to the individual service provider;

(2) The individual service provider has no right to reimbursement from any other person; and

(3) The loan or advance is not guaranteed by any other person.

(vi) ***Items that are not included in Capital Interest Allocations.*** Capital Interest Allocations do not include—

(A) Amounts that are treated as API Gains and Losses and Unrealized API Gains and Losses; or

(B) Items that are not taken into account for purposes of section 1061 under § 1.1061-4(b)(7).

(4) ***Capital Interest Disposition Amounts*** —

(i) ***In general.*** The term *Capital Interest Disposition Amount* means the amount of long-term capital gain or loss recognized on the sale or disposition of all or a portion of a Passthrough Interest that is treated as Capital Interest Gain or Loss. In general, long-term capital gain or loss recognized on the sale or disposition of a Passthrough Interest is deemed to be API Gain or Loss unless it is determined under paragraph (c)(4)(ii) of this section to be a Capital Interest Disposition Amount.

(ii) ***Determination of the Capital Interest Disposition Amount.*** If a Passthrough Interest that includes a right to allocations of Capital Interest Gains and Losses is disposed of, the amount of long-term capital gain or loss that is treated as a Capital Interest Disposition Amount is determined under the rules provided in this paragraph (c)(4)(ii).

(A) First, determine the amount of long-term capital gain or loss that would be allocated to the Passthrough Interest (or the portion of the Passthrough Interest sold) if all the assets of the Passthrough Entity (including gain or loss with respect to assets described in § 1.1061-4(b)(7)) were sold for their fair market value in a fully taxable transaction immediately before the disposition of the Passthrough Interest (hypothetical asset sale). For purposes of this paragraph (c)(4)(ii), the assets of the Passthrough Entity include any assets held by a lower-tier Passthrough Entity in which the Passthrough Entity has a direct or indirect interest.

(B) Second, determine the amount from the hypothetical asset sale that would be allocated to the Passthrough Interest (or the portion of the Passthrough Interest sold) as Capital Interest Allocations under paragraph (c)(3) of this section.

(C) Third, if the transferor recognized long-term capital gain upon disposition of the Passthrough Interest and only net short-term capital losses, net long-term capital losses, or both, are allocated to the Passthrough Interest under paragraph (c)(4)(ii)(B) of this section from the hypothetical asset sale, all of the long-term capital gain is API Gain. If the transferor recognized long-term capital loss on the disposition of the Passthrough Interest

and only net short-term capital gains, net long-term capital gains, or both, are allocated to the Passthrough Interest under paragraph (c)(4)(ii)(B) of this section, then all the long-term capital loss is API Loss.

(D) If paragraph (c)(4)(ii)(C) of this section does not apply and long-term capital gain is recognized on the disposition of the Passthrough Interest, the amount of long-term capital gain that the transferor of the Passthrough Interest recognizes that is treated as a Capital Interest Disposition Amount is determined by multiplying long-term capital gain recognized on the disposition of the Passthrough Interest by a fraction, the numerator of which is the amount of long-term capital gain determined under paragraph (c)(4)(ii)(B) of this section, and the denominator of which is the amount of long-term capital gain determined under paragraph (c)(4)(ii)(A) of this section, with the percentage represented by the fraction limited to 100 percent. Alternatively, if paragraph (c)(4)(ii)(C) of this section does not apply and long-term capital loss is recognized on the disposition of the Passthrough Interest, the amount of long-term capital loss treated as a Capital Interest Disposition Amount is determined by multiplying the transferor's capital loss by a fraction, the numerator of which is the amount of long-term capital loss determined under paragraph (c)(4)(ii)(B) of this section, and the denominator of which is the amount of long-term capital loss determined under paragraph (c)(4)(ii)(A) of this section, with the percentage represented by the fraction limited to 100 percent.

(E) In applying this paragraph (c)(4)(ii), allocations of amounts that are not included in determining the amount of long-term capital gain or loss recognized on the sale or disposition of the Passthrough Interest are not included. See, for example, section 751(a).

(5) ***Capital Interest Allocations made by a Passthrough Entity that is an API Holder.*** An allocation made to a Passthrough Entity that holds an API in a lower-tier Passthrough Entity will be considered a Capital Interest Allocation if it meets the principles set forth in paragraphs (c)(3) and (4) of this section (other than paragraph (c)(3)(iv) of this section). For purposes of applying the Capital Interest Allocation rules in this paragraph (c)(5) to a tiered partnership structure, to the extent that a Capital Interest Allocation that is made by a lower-tier partnership to an upper-tier partnership is properly allocated to the upper-tier partnership's partners with respect to their capital interests in the upper-tier partnership in a manner that is respected under 704(b) (taking into account the principles of section 704(c)), such allocation is a Capital Interest Allocation.

(6) ***Examples.*** The rules of this paragraph (c) are illustrated by the following examples.

(i) ***Example 1: Capital Interest Allocations*** —

(A) ***Facts.*** Each of A, B, and C contributes $100 to GP and is an equal partner in GP, a partnership that is the general partner of PRS, a partnership. The contributions are not attributable to loans or advances described in paragraph (c)(3)(v)(A) of this section. PRS's other partners are Unrelated Non-Service Partners. Each of GP and PRS makes allocations to its partners in accordance with its partners' interests in that partnership, as described in § 1.704-1(b)(3). GP holds a 20% profits interest in PRS that is an API that GP received in exchange for providing substantial services to PRS in an ATB. GP's API is an Indirect API to each of A, B, and C. GP contributes the $300 of capital contributed by A, B and C to PRS. GP's $300 contribution equals 2% of the contributed capital made by all of PRS's partners ($15,000). PRS's partnership agreement describes its partners' economic distribution rights with respect to its liquidating proceeds as follows: First, liquidating proceeds are proportionately distributed to each of GP and the Unrelated Non-Service Partners equal to

the amount necessary to return each of those partners' unreturned capital; second, liquidating proceeds are distributed to GP with respect to its API in PRS; and, finally, any residual liquidating proceeds are distributed, proportionately, 98% to the Unrelated Non-Service Partners and 2% to GP. During its initial taxable year, PRS has $10,000 of net capital gain, causing an increase in PRS's distributable proceeds of $10,000. In accordance with the partners' economic rights as described in PRS's partnership agreement, PRS allocates $2,160 of net capital gain to GP (a $2,000 API allocation plus $160 ($8,000 ($10,000−$2,000) × 2%), with respect to GP's contributed capital) and $7,840 of net capital gain to the Unrelated Non-Service Partners with respect to their contributed capital. GP allocates $720 ($2,160/3) of this net capital gain to each of A, B, and C in accordance with their interests in GP.

(B) ***PRS's Capital Interest Allocation Analysis.*** Because PRS's partnership agreement provides for no differences as to the amount and timing of capital contributed, the rate of return on capital contributed, the type and level of risk associated with capital contributed, or the rights to cash or property distributions during the PRS's operations and on liquidation, the allocations and distribution rights with respect the capital contributed by GP are reasonably consistent with the allocation and distribution rights with respect to capital contributed by Unrelated Non-Service Partners. Accordingly, GP's allocation of $160 is a Capital Interest Allocation that is treated as made in a similar manner as the allocations made to the Unrelated Non-Service Partners.

(C) ***GP's Capital Interest Allocation Analysis.*** GP is allocated $2,160 from PRS, consisting of a $2,000 API allocation and a $160 Capital Interest Allocation. The $160 Capital Interest Allocation is allocated equally to A, B, and C based on their capital contributions to GP. Therefore, they qualify as Capital Interest Allocations by GP. See paragraph (c)(5) of this section. The $2,000 of gain allocated by PRS to GP with respect to GP's API cannot be treated as a Capital Interest Allocation by GP and therefore is subject to section 1061. In summary, A, B, and C are each allocated $720 of capital gain from PRS ($2,160/3). Of this amount, $667 is API Gain ($2,000/3) and $53 is a Capital Interest Allocation ($160/3).

(ii) ***Example 2: Sale of a Passthrough Interest*** —

(A) ***Facts.*** In Year 1, A, B, and C form GP, a partnership. Each of A, B, and C contributes $100 to GP and is an equal partner in GP. The contributions are not attributable to loans or advances described in paragraph (c)(3)(v)(A) of this section. GP invests the $300 in Asset X in Year 1. GP is also the general partner of PRS, a partnership. PRS's other partners are Unrelated Non-Service Partners. GP holds a 20% profits interest in PRS that is an API that GP received in exchange for providing substantial services to PRS in an ATB. GP's API is an Indirect API to each of A, B, and C. Each of GP and PRS makes allocations to its partners in accordance with its partners' interests in that partnership, as described in § 1.704-1(b)(3). In Year 3, A sells A's interest in GP to an unrelated third party for $800 and recognizes $700 of capital gain on the sale. If PRS had sold its assets in a hypothetical asset sale as required by paragraph (c)(4)(ii)(A) of this section and liquidated immediately before A sold its interest in GP, GP would have been allocated $1,800 of long-term capital gain with respect to GP's API in PRS, and GP would have allocated $600 of this $1,800 to A. If GP sold Asset X for its fair market value and liquidated immediately before A sold its interest in GP, A would have been allocated $100 of long-term capital gain.

(B) ***Analysis.*** GP does not have a capital interest in PRS. Therefore, its allocations from PRS are allocations with respect to its API which are subject to section 1061. The total gain allocable to A as a result of the hypothetical liquidations would be $700. Under paragraph (c)(4)(ii)(D) of this section, $100 of the $700 of A's interest sale gain is A's Capital Interest Disposition Amount, and is not subject to section 1061.

(iii) ***Example 3: Reinvestment of Realized API Gain.*** A, B, and C are partners in PRS, a partnership. At the beginning of Year 1, A is issued an API in PRS in exchange for providing substantial services to PRS in an ATB. A has no capital interest in PRS. During Year 1, PRS's assets appreciate by $100. At the end of Year 1, under the terms of its partnership agreement, if PRS were to sell all of its assets at their fair market value and distribute the proceeds in a complete liquidation, A would receive $20 with respect to its API. Thus, at the end of Year 1, A has $20 of Unrealized API Gain. In Year 2, PRS sells Asset X, an asset that PRS owned in Year 1, and allocates $8 of the long-term capital gain to A as API Gain. As a result, $8 of A's $20 of Unrealized API Gain becomes API Gain that is subject to section 1061. A reinvests A's share of the proceeds from the Asset X sale in PRS. As a result, under paragraph (c)(3)(iii) of this section, A has an $8 capital interest in PRS and, provided the requirements of paragraph (c)(3) of this section are met, A may receive future Capital Interest Allocations with respect to the capital interest.

(d) ***Partnership interest acquired by purchase by an unrelated person.*** If a person (acquirer) acquires an interest in a partnership (target partnership) by taxable purchase for fair market value that, but for the exception set forth in this paragraph (d), would be an API, the transferor of the interest will be treated as selling an API but the acquirer will not be treated as acquiring an API if—

(1) ***Acquirer not a Related Person.*** Immediately before the purchase, the acquirer is not a Related Person with respect to—

(i) Any person who provides services in the Relevant ATB; or

(ii) Any service providers who provide services to, or for the benefit of, the target partnership or a lower-tier partnership in which the target partnership holds an interest, directly or indirectly.

(2) ***Section 1061(d) not applicable.*** Section 1061(d) does not apply to the transaction (as provided in § 1.1061-5).

(3) ***Acquirer not a service provider.*** At the time of the purchase, the acquirer has not provided, does not provide, and does not anticipate providing services to, or for the benefit of, the target partnership, directly or indirectly, or any lower-tier partnership in which the target partnership directly or indirectly holds an interest.

(e) [Reserved]

(f) ***Applicability date*** —

(1) ***General rule.*** Except as provided in paragraphs (f)(2) and (3) of this section, the provisions of this section apply to taxable years of Owner Taxpayers and Passthrough Entities beginning on or after January 19, 2021. An Owner Taxpayer or Passthrough Entity may choose to apply this section to a taxable year beginning after December 31, 2017, provided that they apply the Section 1061 Regulations in their entirety to that year and all subsequent years.

(2) ***Partnership interest held by an S corporation.*** Paragraph (b)(2)(i) of this section, which provides that the exception under section 1061(c)(1) to the definition of an API does not apply to a partnership interest held by an S corporation with an election under section 1362(a) in effect, applies to taxable years beginning after December 31, 2017.

(3) ***Partnership interest held by a PFIC with respect to which the shareholder has a QEF election in effect.*** Paragraph (b)(2)(ii) of this section, which provides that the exception under section 1061(c)(1) to the definition of an API does not apply to a partnership interest held by a PFIC with respect to which the shareholder has a QEF election in effect under section 1295, applies to taxable years of an Owner Taxpayer and Passthrough Entity beginning after August 14, 2020.

[T.D. 9945, 86 FR 5480, Jan. 19, 2021, as amended by T.D. 9945, 89 FR 50525, June 14, 2024]

§ 1.1061-4 Section 1061 computations.

(a) ***Computations*** —

(1) ***Recharacterization Amount.*** The Recharacterization Amount is the amount that an Owner Taxpayer must treat as short-term capital gain under section 1061(a). The Recharacterization Amount equals—

(i) The Owner Taxpayer's One Year Gain Amount; less

(ii) The Owner Taxpayer's Three Year Gain Amount.

(2) ***One Year Gain Amount and Three Year Gain Amount*** —

(i) ***One Year Gain Amount.*** The Owner Taxpayer's One Year Gain Amount is the sum of—

(A) The Owner Taxpayer's combined net API One Year Distributive Share Amount from all APIs held during the taxable year; and

(B) The Owner Taxpayer's API One Year Disposition Amount.

(ii) ***Three Year Gain Amount.*** The Owner Taxpayer's Three Year Gain Amount is the sum of—

(A) The Owner Taxpayer's combined net API Three Year Distributive Share Amount from all APIs held during the taxable year; and

(B) The Owner Taxpayer's API Three Year Disposition Amount.

(3) ***API One Year Distributive Share Amount and API Three Year Distributive Share Amount*** —

(i) ***API One Year Distributive Share Amount.*** The API One Year Distributive Share Amount equals—

(A) The API Holder's distributive share of net long-term capital gain or loss from the partnership for the taxable year (including capital gain or loss on the disposition of Distributed API Property by an API Holder that is a Passthrough Entity or the disposition of all or a part of an API by an API Holder that is a Passthrough Entity), with respect to the partnership interest held by the API Holder calculated without the application of section 1061; less

(B) To the extent included in the amount determined under paragraph (a)(3)(i)(A) of this section, the aggregate of—

(1) Amounts that are not taken into account for purposes of section 1061 under paragraph (b)(7) of this section; and

(2) Capital Interest Gains and Losses as determined under § 1.1061-3(c)(2).

(ii) ***API Three Year Distributive Share Amount.*** The API Three Year Distributive Share Amount equals the API One Year Distributive Share Amount, less—

(A) Items included in the API One Year Distributive Share Amount that would not be treated as a long-term gain or loss if three years is substituted for one year in paragraphs (3) and (4) of section 1222; and

(B) Any adjustments resulting from the application of the Lookthrough Rule under paragraph (b)(9)(ii) of this section when an API is disposed of by an API Holder that is a Passthrough Entity.

(4) ***API One Year Disposition Amount and API Three Year Disposition Amount*** —

(i) ***API One Year Disposition Amount.*** The API One Year Disposition Amount is the combined net amount of—

(A) Long-term capital gains and losses recognized during the taxable year by an Owner Taxpayer, including long-term capital gain computed under the installment method that is taken into account for the taxable year, on the disposition of all or a portion of an API that has been held for more than one year, including a disposition to which the Lookthrough Rule applies;

(B) Long-term capital gain and loss recognized by an Owner Taxpayer due to a distribution with respect to an API during the taxable year that is treated under section 731(a) as gain or loss from the sale or exchange of a partnership interest held for more than one year; and,

(C) Long-term capital gains and losses recognized by an Owner Taxpayer on the disposition of Distributed API Property (taking into account deemed exchanges under section 751(b)) during the taxable year that has a holding period of more than one year but not more than three years to the distributee Owner Taxpayer on the date of disposition, excluding items described in paragraph (b)(7) of this section.

(ii) ***API Three Year Disposition Amount.*** The API Three Year Disposition Amount is the combined net amount of—

(A) Long-term capital gains and losses recognized during the taxable year by an Owner Taxpayer, including long-term capital gain computed under the installment method that is taken into account for the taxable year, on the disposition of all or a portion of an API that has been held for more than three years and to which the Lookthrough Rule does not apply;

(B) Long-term capital gains and losses recognized by an Owner Taxpayer on the disposition during the taxable year of all or a portion of an API that has been held for more than three years in a transaction to which the Lookthrough Rule in paragraph (b)(9) of this section applies, less any adjustments required under the Lookthrough Rule in paragraph (b)(9)(ii) of this section; and

(C) Long-term capital gains and losses recognized on a distribution with respect to an API during the taxable year that is treated under sections 731(a) as gain or loss from the sale or exchange of a partnership interest held for more than three years.

(b) ***Special rules for calculating the One Year Gain Amount and the Three Year Gain Amount*** —

(1) ***One Year Gain Amount equals zero or less.*** If an Owner Taxpayer's One Year Gain Amount is zero or results in a loss, the Recharacterization Amount for the taxable year is zero and section 1061(a) does not apply.

(2) ***Three Year Gain Amount equals zero or less.*** If an Owner Taxpayer's Three Year Gain Amount is less than or equal to $0, the Three Year Gain Amount is zero for purposes of calculating the Recharacterization Amount.

(3) ***One Year Gain Amount less than Three Year Gain Amount.*** If the One Year Gain Amount and the Three Year Gain Amount are both greater than zero but the One Year Gain Amount is less than the Three Year Gain Amount, none of the One Year Gain Amount is included in the Recharacterization Amount for the taxable year.

(4) ***Installment sale gain.*** The One Year Gain Amount under paragraph (a)(2)(i) of this section and the Three Year Gain Amount, as determined under paragraph (a)(2)(ii) of this section include long-term capital gains from installment sales. This includes long-term capital gain or loss recognized with respect to an API after December 31, 2017, with respect to an installment sale that occurred on or before December 31, 2017. The holding period of the asset upon the date of disposition is used for purposes of determining whether capital gain is included in the taxpayer's One Year Gain Amount or the Three Year Gain Amount.

(5) ***Special rules for capital gain dividends from regulated investment companies (RICs) and real estate investment trusts (REITs)*** —

(i) ***API One Year Distributive Share Amount.*** If a RIC or REIT reports or designates a dividend as a capital gain dividend and provides the One Year Amounts Disclosure as defined in § 1.1061-6(c)(1)(i), the amount provided in the One Year Amounts Disclosure is included in the calculation of an API One Year Distributive Share Amount. If the RIC or REIT does not provide the One Year Amounts Disclosure, the full amount of the RIC's or REIT's capital gain dividend must be included in the calculation of an API One Year Distributive Share Amount.

(ii) ***API Three Year Distributive Share Amount.*** If a RIC or REIT reports or designates a dividend as a capital gain dividend and provides the Three Year Amounts Disclosure as defined in § 1.1061-6(c)(1)(ii), the amount provided in the Three Year Amounts Disclosure is used for the calculation of an API Three Year Distributive Share Amount. If the RIC or REIT does not provide the Three Year Amounts Disclosure, no amount of the RIC's or REIT's capital gain dividend may be used for the calculation of an API Three Year Distributive Share Amount.

(iii) ***Loss on sale or exchange of stock.*** If a RIC or REIT provides the Three Year Amounts Disclosure as provided in paragraph (b)(5)(ii) of this section, any loss on the sale or exchange of shares of a RIC or REIT held for six months or less is treated as a capital loss on an asset held for more than three years, to the extent of the amount of the Three Year Amounts Disclosure from that RIC or REIT.

(6) ***Pro rata share of qualified electing fund (QEF) net capital gain*** —

(i) ***One year QEF net capital gain.*** The calculation of an API One Year Distributive Share Amount includes an Owner Taxpayer's inclusion under section 1293(a)(1)(B) as limited by section 1293(e)(2) with respect to a passive foreign investment company (as defined in section 1297(a)) for which a QEF election (as described in section 1295(a)) is in effect for the taxable year. The amount of the inclusion may be reduced by the amount of long-term capital gain that is not taken into account for purposes of section 1061 as provided in paragraph (b)(7) of this section and may be reduced by the Owner Taxpayer's share of the excess, if any, of the Capital Interest Gain over Capital Interest Loss with respect to the QEF, provided in each case that the relevant information is provided by the QEF. See § 1.1061-6 for reporting rules.

(ii) ***Three year QEF net capital gain adjustment.*** For purposes of calculating an Owner Taxpayer's API Three Year Distributive Share Amount, the entire amount determined under paragraph (b)(6)(i) of this section, after any allowed reduction, is included as an item in paragraph (a)(3)(ii)(A) of this section unless the QEF provides information to determine the amount of the inclusion that would constitute net capital gain (as defined in § 1.1293-1(a)(2), as limited by section 1293(e)(2)) if the QEF's net capital gain for the taxable year were calculated under section 1222(11) applying paragraphs (3) and (4) of section 1222 by substituting three years for one year. If such information is provided, the amount included as an item in paragraph (a)(3)(ii)(A) of this section is the amount determined under paragraph (b)(6)(i) of this section that would not be treated as long-term gain if three years were substituted for one year in paragraphs (3) and (4) of section 1222. See § 1.1061-6 for reporting rules.

(7) ***Items not taken into account for purposes of section 1061.*** The following items of long-term capital gain and loss are excluded from the calculation of the API One Year Distributive Share Amount in paragraph (a)(3)(i) of this section and the API Three Year Distributive Share Amount in paragraph (a)(3)(ii) of this section—

(i) Long-term capital gain and long-term capital loss determined under section 1231;

(ii) Long-term capital gain and long-term capital loss determined under section 1256;

(iii) Qualified dividends included in net capital gain for purposes of section 1(h)(11)(B); and

(iv) Capital gains and losses that are characterized as long-term or short-term without regard to the holding period rules in section 1222, such as certain capital gains and losses characterized under the mixed straddle rules described in section 1092(b) and §§ 1.1092(b)-3T, 1.1092(b)-4T, and 1.1092(b)-6.

(8) ***Holding period determination*** —

(i) ***Determination of holding period for purposes of the Three Year Gain Amount.*** For purposes of computing the Three Year Gain Amount, the relevant holding period of either an asset or an API is determined under all provisions of the Code or regulations that are relevant to determining whether the asset or the API has been held for the long-term capital gain holding period by applying those provisions as if the holding period were three years instead of one year.

(ii) ***Relevant holding period.*** The relevant holding period is the direct owner's holding period in the asset sold. Accordingly, for purposes of determining an API Holder's Taxpayer's API One Year Distributive Share Amount and API Three Year Distributive Share Amount for the taxable year under paragraph (a)(3) of this section, the partnership's holding period in the asset being sold or disposed of (whether a directly held asset or a partnership interest) is the relevant holding period for purposes of section 1061.

(9) *Lookthrough Rule for certain API dispositions* —

(i) *Determination that the Lookthrough Rule applies* —

(A) ***In general.*** The Lookthrough Rule will apply if, at the time of disposition of an API held for more than three years—

(*1*) The API would have a holding period of three years or less if the holding period of such API were determined by not including any period before the date that an Unrelated Non-Service Partner is legally obligated to contribute substantial money or property directly or indirectly to the Passthrough Entity to which the API relates. This paragraph (b)(9)(i)(A) does not apply to the disposition of an API to the extent that the gain recognized upon the disposition of the API is attributable to any asset not held for portfolio investment on behalf of third party investors (as defined in section 1061(c)(5)). Solely for the purpose of this paragraph (b)(9)(i)(A), a substantial legal obligation to contribute money or property is an obligation to contribute a value that is at least 5 percent of the partnership's total capital contributions as of the time of the API disposition; or

(*2*) A transaction or series of transactions has taken place with a principal purpose of avoiding potential gain recharacterization under section 1061(a).

(B) ***Determination that the Lookthrough Rule applies to the disposition of a Passthrough Interest.*** Paragraph (b)(9)(i)(A) of this section similarly applies with respect to a Passthrough Interest issued by an S corporation or a PFIC to the extent that the Passthrough Interest is treated as an API.

(ii) ***Application of the Lookthrough Rule.*** If the Lookthrough Rule applies, for purposes of computing an Owner Taxpayer's Recharacterization Amount, as described in paragraph (a) of this section—

(A) The Owner Taxpayer must include the entire amount of capital gain recognized on the disposition of an API by the Owner Taxpayer in the Owner Taxpayer's API One Year Disposition Amount; and

(B) The Owner Taxpayer must include in its Three Year Disposition Amount an amount equal its One Year Disposition Amount (determined under paragraph (b)(9)(ii)(A) of this section) reduced by the Owner Taxpayer's share of the amount of any gain, directly or indirectly, from assets held for three years or less that would have been allocated to the Owner Taxpayer (to the extent attributable to the transferred API) by the partnership if the partnership had sold all of its property in a fully taxable transaction for cash in an amount equal to the fair market value of such property (taking into account section 7701(g)) immediately prior to the Owner Taxpayer's transfer of the API.

(C) In the case of an API disposition by an API Holder that is a Passthrough Entity and not an Owner Taxpayer, the principles set forth in paragraph (b)(9)(ii)(A) of this section must be applied to determine the amount to include in the Owner Taxpayer's One Year Distributive Amount and in paragraph (b)(9)(ii)(B) of this section to determine the amounts included in the Owner Taxpayer's Three Year Distributive Share Amount.

(10) ***Section 83.*** Except with respect to any portion of the interest that is a capital interest under § 1.1061-3(c), this section applies regardless of whether an Owner Taxpayer or Passthrough Entity has made an election under section 83(b) or included amounts in gross income under section 83.

(c) *Examples* —

(1) ***Recharacterization rules.*** The rules of paragraph (a) of this section are illustrated by the following examples. Unless otherwise stated, all gains and losses are long-term capital gains and losses, none of the long-term capital gain or loss in this section is capital gain or loss not taken into account for purposes of section 1061 under paragraph (b)(7) of this section, and neither the Lookthrough Rule nor section 751 is applicable.

(i) ***Example 1: Determination of API One Year and Three Year Distributive Share Amounts*** —

(A) ***Facts.*** A holds an API in PRS but has no capital interest in PRS and is not entitled to a Capital Interest Allocation with respect to PRS. During the taxable year, PRS allocates to A $20 of long-term capital gain from the sale of capital asset X (which had been held by PRS for two years) and $40 of long-term capital gain from the sale of capital asset Y (which had held by PRS for five years). A has no other items of long-term capital gain or loss with respect to its interest in PRS during the taxable year. A has no other long-term capital gains or losses with respect to any other API during the taxable year.

(B) ***Determination of A's API One Year Distributive Share Amount.*** Under paragraph (a)(3)(i) of this section, A has an API One Year Distributive Share Amount of $60. This amount is the sum of the $20 of the long-term capital gain allocated to A from PRS's sale of capital asset X and the $40 of long-term capital gain allocated to A from PRS's sale of capital asset Y.

(C) ***Determination of A's API Three Year Distributive Share Amount.***

(*1*) Under paragraph (a)(3)(ii) of this section, A's API Three Year Distributive Share Amount is equal to A's API One Year Distributive Amount, $60, less the sum of:

(*i*) The items included in the API One Year Distributive Share Amount that would not be treated as a long-term gain or loss if three years is substituted for one year in paragraphs (3) and (4) of section 1222, $20; and

(*ii*) Adjustments resulting from the application of the Lookthrough Rule under paragraph (b)(9)(ii) of this section, which under the facts in paragraph (c)(1)(i)(A) of this section, is inapplicable.

(*2*) Thus, A's API Three Year Distributive Share Amount is $40.

(D) ***Determination of A's Recharacterization Amount.*** Under paragraph (a)(2)(i) of this section, A's One Year Gain Amount is equal to A's API One Year Distributive Share Amount, $60. A's Three Year Gain Amount is equal to A's API Three Year Distributive Share Amount, $40. Under paragraph (a)(1) of this section, A's Recharacterization Amount is A's One Year Gain Amount, minus A's Three Year Gain Amount, or $20.

(ii) ***Example 2: API One Year and Three Year Disposition Amounts*** —

(A) ***Facts.*** During the taxable year, A disposes of an API that A has held for four years for a $100 gain. Additionally, A sells Distributed API Property for a $300 gain at a time when A has a two-year holding period in such property. A has no other items of long-term capital gain or loss with respect to any API in the year.

(B) ***Determination of A's API One Year and Three Year Disposition Amounts.*** Under paragraph (a)(4)(i) of this section, A's API One Year Disposition Amount is $400. This amount is the sum of A's $300 of long-term capital gain on A's disposition of the Distributed API Property and A's $100 of long-term capital gain on the disposition of the API. Under paragraph (a)(4)(ii) of this section, A's API Three Year Disposition Amount is $100, which is the amount of long-term capital gain that A recognized upon disposition of the API held for more than three years. Under paragraph (a)(2) of this section, A's One Year Gain Amount is $400 and A's Three Year Gain Amount is $100.

(C) ***Determination of A's Recharacterization Amount.*** Under paragraph (a)(1) of this section, A's Recharacterization Amount is $300, which is the difference between A's One Year Gain Amount and Three Year Gain Amount.

(iii) ***Example 3: Determination of One Year Gain Amount, Three Year Gain Amount, and Recharacterization Amount*** —

(A) ***Facts.*** A holds an API in each of PRS1 and PRS2. With respect to PRS1, A's API One Year Distributive Share Amount is $100 and A's API Three Year Distributive Share Amount is ($200). With respect to PRS2, A's API One Year Distributive Share Amount is $600 and A's API Three Year Distributive Share Amount is $300. During the taxable year, A also has an API One Year Disposition Amount of $200 of gain. A has no other items of long-term capital gain or loss with respect to an API for the taxable year.

(B) ***Determination of A's One Year Gain Amount.*** Under paragraph (a)(2) of this section, A's One Year Gain Amount is $900, which is an amount equal to A's $100 API One Year Distributive Share Amount from PRS1 and A's $600 API One Year Distributive Share Amount from PRS2 (a combined net API One Year Distributive Share Amount of $700) plus A's $200 API One Year Disposition Amount.

(C) ***Determination of A's Three Year Gain Amount.*** Under paragraph (a)(2) of this section, A's Three Year Gain Amount is $100, which is equal to A's combined net API Three Year Distributive Share Amount for the taxable year (A's $200 API Three Year Distributive Share Amount loss from PRS1 plus A's API Three Year Distributive Share Amount of $300 from PRS2). A does not have an API Three Year Disposition Amount.

(D) ***Determination of A's Recharacterization Amount.*** Under paragraph (a)(1) of this section, A's Recharacterization Amount is $800. (A's One Year Gain Amount of $900 less A's Three Year Gain Amount of $100.)

(2) ***Special rules examples.*** The principles of paragraph (b) of this section are illustrated by the following examples.

(i) ***Example 1: Lookthrough Rule.*** On July 1, 2021, A and B form partnership PRS. At the time of PRS's formation, A agrees to provide substantial services to PRS in exchange for a 20% profits interest in PRS, and B, a partner that is an Unrelated Non-Service Partner, contributes $1 million in exchange for an interest in PRS and PRS immediately uses the capital to purchase marketable securities. On July 1, 2023, C, another Unrelated Non-Service Partner becomes legally obligated to contribute capital to PRS ($75 million) for the purposes of investing in and developing Specified Assets and is admitted into PRS. On July 3, 2023, and after C makes a contribution of $75 million, PRS uses this capital to acquire stock in portfolio company Z. On July 1, 2025, when Z has a value of $500 million and the value of the marketable securities is $2 million, A sells its API in PRS for $85.2 million. As a result of this sale, the Lookthrough Rule

applies because B's contribution was non-substantial under paragraph (b)(9)(i)(A)(*1*) of this section. Therefore, A includes $85.2 million in its API One Year Disposition Amount and under paragraph (b)(9)(ii)(B) of this section, $200,000 (20% share of $1 million gain in marketable securities) in its API Three Year Disposition Amount. Accordingly, under paragraph (a)(1) of this section, A's Recharacterization Amount is $85 million.

(ii) ***Example 2: Installment sale gain.*** On December 22, 2021, A disposed of A's API in an installment sale. At the time of the disposition, A had held its API for two years. A received a payment with respect to the installment sale during A's 2022 taxable year, causing A to recognize $200 of long-term capital gain. The $200 long-term capital gain recognized in 2022 is subject to section 1061 because it is recognized after December 31, 2017. Accordingly, the $200 of long-term capital gain recognized by A in 2022 is included in A's API One Year Disposition Amount. The $200 of long-term capital gain is not in A's API Three Year Disposition Amount because the API was not held for more than three years at the time of its disposition.

(iii) ***Example 3: REIT capital gain dividend.*** During the taxable year, A holds an API in PRS. PRS holds an interest in REIT. During the taxable year, REIT distributes a $1,000 capital gain dividend to PRS of which 50% is allocable to A's API. Part of the capital gain dividend for the year results from section 1231 gain. In accordance with § 1.1061-6(c)(1)(i), REIT discloses to PRS the One Year Amounts Disclosure of $400, which is the $1,000 capital gain dividend reduced by the $600 of section 1231 capital gain dividend included in that amount. Part of the One Year Amounts Disclosure for the year results from gain from property held for three years or less. In accordance with § 1.1061-6(c)(1)(ii), REIT also discloses the Three Year Amounts Disclosure of $150, which is the $400 One Year Amounts Disclosure reduced by the $250 of gain attributable to property held for three years or less. PRS includes a $200 gain in determining A's API One Year Distributive Share Amount and a $75 gain in determining A's API Three Year Distributive Share Amount. See paragraphs (b)(5)(i) and (ii) of this section.

(d) ***Applicability date.*** The provisions of this section apply to taxable years of Owner Taxpayers and Passthrough Entities beginning on or after January 19, 2021. An Owner Taxpayer or Passthrough Entity may choose to apply this section to a taxable year beginning after December 31, 2017, provided that they apply the Section 1061 Regulations in their entirety to that year and all subsequent years.

[T.D. 9945, 86 FR 5480, Jan. 19, 2021, as amended by T.D. 9945, 89 FR 50525, June 14, 2024]

§ 1.1061-5 Section 1061(d) transfers to related persons.

(a) ***In general.*** If an Owner Taxpayer transfers any API or Distributed API Property, directly or indirectly, to a Section 1061(d) Related Person (as defined in paragraph (e) of this section), the Owner Taxpayer must include in gross income as short-term capital gain, an amount equal to—

(1) The short-term capital gain recognized upon the API transfer without regard to this paragraph (a); and

(2) The lesser of—

(i) The amount of net long-term capital gain recognized by the Owner Taxpayer upon the transfer of such interest; or

(ii) The amount treated as short-term capital gain under paragraph (c) of this section (Section 1061(d) Recharacterization Amount).

(b) ***Transfer.*** For purposes of this section, the term *transfer* means a sale or exchange in which gain is recognized by the Owner Taxpayer under chapter 1 of the Internal Revenue Code.

(c) ***Section 1061(d) Recharacterization Amount.*** To the extent an Owner Taxpayer recognizes long-term capital gain upon a transfer of an API to a Section 1061(d) Related Person, the Owner Taxpayer's Section 1061(d) Recharacterization Amount is the amount of net long-term capital gain (excluding amounts not taken into account for purposes of section 1061 under § 1.1061-4(b)(7)) from assets held for three years or less that would have been allocated to the Owner Taxpayer (to the extent attributable to the transferred API) by the partnership if the partnership had sold all of its property in a fully taxable transaction for cash in an amount equal to the fair market value of such property (taking into account section 7701(g)) immediately prior to the Owner Taxpayer's transfer of the API. If only a portion of an Owner Taxpayer's API is transferred, this paragraph (c) shall apply with respect to the portion of gain attributable to the transferred interest.

(d) ***Special rules.*** For purposes of this section, the following rules are applicable.

(1) An Owner Taxpayer will be treated as transferring the Owner Taxpayer's share of any Indirect API or Distributed API Property if the Indirect API or Distributed API Property is transferred by the API Holder to a person that is a Section 1061(d) Related Person with respect to the Owner Taxpayer.

(2) The rules set forth in paragraphs (a), (b), and (c) of this section apply upon the transfer of a Passthrough Interest issued by an S corporation or PFIC to the extent the Passthrough Interest is treated as an API.

(e) ***Section 1061(d) Related Person.*** For purposes of this section, the term Section 1061(d) Related Person means—

(1) A person that is a member of the taxpayer's family within the meaning of section 318(a)(1);

(2) A person that performed a service within the current calendar year or the preceding three calendar years in a Relevant ATB to the API transferred by taxpayer; or

(3) A Passthrough Entity to the extent that a person described in paragraph (e)(1) or (2) of this section owns an interest, directly or indirectly.

(f) ***Examples.*** The following examples illustrate the rules of this section.

(1) ***Example 1: Transfer to child by gift.*** A, an individual, performs services in an ATB and has held an API in connection with those services for 10 years. The API has a fair market value of $1,000 and a tax basis of $0, and no debt is associated with the API. A transfers all of the API to A's daughter as a gift. A's daughter is a section 1061(d) Related Person but A's gift is not a transfer as described in paragraph (b) of this section; thus section 1061(d) does not apply to A's gift. However, the API remains an API in the hands of A's daughter under § 1.1061-2(a)(1)(i).

(2) ***Example 2: Transfer of an API to a partnership owned by Section 1061(d) Related Persons*** —

(i) ***Facts.*** A, B, and C are equal partners in GP, a partnership. GP holds only one asset, an API in PRS1 which is an Indirect API as to each of A, B, and C. Each of A, B, and C provides services in the ATB in connection with which GP was transferred its API in PRS1. A and B contribute their interests in GP to PRS2 in a section 721(a) exchange for interests in PRS2.

(ii) ***Application of section 1061(d).*** Because the contribution by each of A and B of its interest in GP to PRS2 is an exchange in which no gain is recognized by either A or B, the contribution is not a transfer as described in paragraph (b) of this section; thus section 1061(d) does not apply to A's and B's contribution. However, the API remains an API in the hands of PRS2 under § 1.1061-2(a)(1)(i).

(3) ***Example 3: Transfer of an API to a Section 1061(d) Related Person.*** A has held an API in GP, a partnership, for four years. A transfers the API to a Section 1061(d) Related Person described in paragraph (e) of this section in exchange for $100 of cash, resulting in A recognizing long-term capital gain of $100. Because this is a transfer described in paragraph (b) of this section, section 1061(d) applies to the transfer of A's API and A must determine its Section 1061(d) Recharacterization Amount under paragraph (c) of this section. If, immediately prior to A's transfer of the API, the partnership had sold all of its assets in a fully taxable transaction for cash equal to the fair market value of the assets, A's share of the net long-term capital gain (excluding amounts not taken into account for purposes of section 1061 under § 1.1061-4(b)(7)) from assets held for three years or less would have been $120. Thus, A's Section 1061(d) Recharacterization Amount is $120. As a result, A's $100 long-term capital gain is recharacterized as short-term capital gain under paragraph (a) of this section. The API remains an API in the hands of the Section 1061(d) Related Person under § 1.1061-2(a)(1)(i).

(g) ***Applicability date.*** The provisions of this section apply to taxable years of Owner Taxpayers and Passthrough Entities beginning on or after January 19, 2021. An Owner Taxpayer or Passthrough Entity may choose to apply this section to a taxable year beginning after December 31, 2017, provided that they apply the Section 1061 Regulations in their entirety to that year and all subsequent years.

[T.D. 9945, 86 FR 5480, Jan. 19, 2021, as amended by T.D. 9945, 89 FR 50525, June 14, 2024]

§ 1.1061-6 Reporting rules.

(a) ***Owner Taxpayer filing requirements*** -(1) *In general.* An Owner Taxpayer must file such information with the IRS as the Commissioner of Internal Revenue or the Commissioner's delegate (Commissioner) may require in forms, instructions, or other guidance as is necessary for the Commissioner to determine that the Owner Taxpayer has properly complied with section 1061 and the Section 1061 Regulations. If an Owner Taxpayer requires information from a Passthrough Entity to determine the Capital Interest Disposition Amount or the Section 1061(d) Recharacterization Amount, the Owner Taxpayer must request such information from that entity.

(2) ***Failure to obtain information.*** Paragraph (b)(1) of this section requires certain Passthrough Entities to furnish an Owner Taxpayer with certain amounts necessary to determine its Recharacterization Amount and meet its reporting requirements under paragraph (a)(1) of this section. To the extent that an Owner Taxpayer is not furnished the information required to be furnished under paragraph (b)(1) of this section in such time and in such manner as required by the Commissioner and the Owner Taxpayer is not otherwise able to substantiate all or a part of these amounts to the satisfaction of the Commissioner, then if the information with respect to the determination of the—

(i) API One Year Distributive Share Amount under § 1.1061-4(a)(3)(i) is not furnished, the API One Year Distributive Share Amount will not be reduced by—

(A) Amounts not taken into account for purposes of section 1061 under § 1.1061-4(b)(7); or

(B) Capital Interest Gains and Losses as determined under § 1.1061-3(c)(2).

(ii) API Three Year Distributive Share Amount determined under § 1.1061-4(a)(3)(ii) is not furnished, all items included in the API One Year Distributive Share Amount are treated as items that would not be treated as long-term capital gain or loss, if three years is substituted for one year in paragraphs (3) and (4) of section 1222.

(b) *Passthrough Entity filing requirements and reporting* —

(1) ***Requirement to file information with the IRS and to furnish information to API Holder.*** A Passthrough Entity must file such information with the IRS as the Commissioner may require in forms, instructions, or other guidance as is necessary for the Commissioner to determine that it and its partners have complied with section 1061 and the Section 1061 Regulations. A Passthrough Entity that has issued an API must furnish to the API Holder, including an Owner Taxpayer, such information at such time and in such manner as the Commissioner may require in forms, instructions, or other guidance as is necessary to determine the One Year Gain Amount and the Three Year Gain Amount with respect to an Owner Taxpayer that directly or indirectly holds the API. A Passthrough Entity that has furnished information to the API Holder must file such information with the IRS, at such time and in such manner as the Commissioner may require in forms, instructions, or other guidance. This information includes:

(i) The API One Year Distributive Share Amount and the API Three Year Distributive Share Amount (as determined under § 1.1061-4);

(ii) Capital gains and losses allocated to the API Holder that are excluded from section 1061 under § 1.1061-4(b)(7);

(iii) Capital Interest Gains and Losses allocated to the API Holder (as determined under § 1.1061-3(c)); and

(iv) In the case of a disposition by an API Holder of an interest in the Passthrough Entity during the taxable year, upon the request of an API Holder, any information required by the API Holder to properly take the disposition into account under section 1061, including—

(A) Information necessary to apply the Lookthrough Rule and to determine the API Holder's Capital Interest Disposition Amount; and

(B) Information necessary to determine an Owner Taxpayer's Section 1061(d) Recharacterization Amount.

(2) *Requirement to request, furnish, and file information in tiered structures* —

(i) ***Requirement to request information.*** If a Passthrough Entity requires information to meet its reporting and filing requirements under this section (in addition to any information required to be furnished to the Passthrough Entity under paragraph (b)(1) of this section) from a lower-tier entity in which it holds an interest, the Passthrough Entity must request such information from that entity.

(ii) ***Requirement to furnish and file information.*** If information is requested of a Passthrough Entity under paragraph (b)(2)(i) of this section, the Passthrough Entity must furnish the requested information to the person making the request but only to the extent the information is necessary for the requesting Passthrough Entity to meet its reporting and filing requirements under this section or is required by the Commissioner in forms, instructions, or other guidance. If the person requesting the information is an API Holder in the Passthrough Entity, the information is furnished under paragraph (b)(1) of this section. If the Passthrough Entity

requesting the information is not an API Holder, the Passthrough Entity must furnish the information to the requesting Passthrough Entity as required by the Commissioner in forms, instructions, or other guidance.

(iii) ***Timing of requesting and furnishing information*** —

(A) ***Requesting information.*** A Passthrough Entity described in paragraph (b)(2)(i) of this section must request information under paragraph (b)(2)(i) of this section by the later of the 30th day after the close of the taxable year to which the information request relates or 14 days after the date of a request for information from an upper-tier Passthrough Entity.

(B) ***Furnishing information*** —

(1) ***In general.*** Except as provided in paragraph (b)(2)(iii)(B)(2) of this section, requested information must be furnished by the date on which the entity is required to furnish information under section 6031(b) or under section 6037(b), as applicable.

(2) ***Late requests.*** Information with respect to a taxable year that is requested by an upper-tier Passthrough Entity after the date that is 14 days prior to the due date for a lower-tier Passthrough Entity to furnish and file information under section 6031(b) or section 6037(b), as applicable, must be furnished and filed in the time and manner prescribed by forms, instructions and other guidance.

(iv) ***Manner of requesting information.*** Information may be requested electronically or in any manner that is agreed to by the parties.

(v) ***Recordkeeping requirement.*** Any Passthrough Entity receiving a request for information must retain a copy of the request and the date received in its books and records.

(vi) ***Passthrough Entity is not furnished information to meet its reporting obligations under paragraph (b)(1) of this section.*** If an upper-tier Passthrough Entity holds an interest in a lower-tier Passthrough Entity and it is not furnished the information described in paragraph (b)(1) of this section, or, alternatively, if it has not been furnished information after having properly requested the information under this paragraph (b)(2), the upper-tier Passthrough Entity must take actions to otherwise determine and substantiate the missing information. To the extent that the upper-tier Passthrough Entity is not able to otherwise substantiate and determine the missing information to the satisfaction of the Commissioner, the upper-tier Passthrough Entity must treat these amounts as provided under paragraph (a)(2) of this section. The upper-tier Passthrough Entity must provide notice to the API Holder and the IRS regarding the application of this paragraph (b)(2) to the information being reported as required in forms, instructions, and other guidance.

(vii) ***Filing requirements.*** Both the Passthrough Entity requesting the information and the Passthrough Entity furnishing the information must file all information with the IRS as the Commissioner may require in forms, instructions, or other guidance.

(viii) ***Penalties.*** In addition to the requirement in section 1061(e) that the Secretary shall require reporting (at the time and in the manner prescribed by the Secretary) as is necessary to carry out the purposes of this section, the information required to be furnished under this paragraph (b) is also required to be furnished under sections 6031(b) and 6037(b). Failure to report as required under this paragraph (b) will be subject to penalties under section 6722.

(c) ***Regulated investment company (RIC) and real estate investment trust (REIT) reporting*** —

(1) ***Section 1061 disclosures.*** A RIC or REIT that reports or designates a dividend, or part thereof, as a capital gain dividend, may, in addition to the information otherwise required to be furnished to a shareholder, disclose two amounts for purposes of section 1061—

(i) ***One Year Amounts Disclosure.*** The *One Year Amounts Disclosure* of a RIC or REIT is a disclosure by the RIC or REIT of an amount that is attributable to a computation of the RIC's or REIT's net capital gain, excluding capital gain and capital loss not taken into account for purposes of section 1061 under § 1.1061-4(b)(7). The aggregate amounts provided in the One Year Amounts Disclosures with respect to a taxable year of a RIC or REIT must equal the lesser of the RIC's or REIT's net capital gain, excluding any capital gains and capital losses not taken into account for purposes of section 1061 under § 1.1061-4(b)(7), for the taxable year or the RIC's or REIT's aggregate capital gain dividends for the taxable year.

(ii) ***Three Year Amounts Disclosure.*** The *Three Year Amounts Disclosure* of a RIC or REIT is a disclosure by the RIC or REIT of an amount that is attributable to a computation of the RIC's or REIT's One Year Amounts Disclosure substituting "three years" for "one year" in applying section 1222. The aggregate amounts provided in the Three Year Amounts Disclosures with respect to a taxable year of a RIC or REIT must equal the lesser of the aggregate amounts provided in the RIC's or REIT's One Year Amounts Disclosures substituting "three years" for "one year" in applying section 1222 for the taxable year or the RIC's or REIT's aggregate capital gain dividends for the taxable year.

(2) ***Pro rata disclosures.*** The One Year Amounts Disclosure and Three Year Amounts Disclosure made to each shareholder of a RIC or REIT must be proportionate to the share of capital gain dividends reported or designated to that shareholder for the taxable year.

(3) ***Report to shareholders.*** A RIC or REIT that provides the section 1061 disclosures described in paragraphs (c)(1)(i) and (ii) of this section must provide those section 1061 disclosures in writing to its shareholders with the statement described in section 852(b)(3)(C)(i) or the notice described in section 857(b)(3)(B) in which the capital gain dividend is reported or designated.

(d) ***Qualified electing fund (QEF) reporting.*** A passive foreign investment company with respect to which the shareholder has a QEF election (as described in section 1295(a)) in effect for the taxable year that determines net capital gain as provided in § 1.1293-1(a)(2)(i)(A), as limited by section 1293(e)(2), may provide some or all of the information listed in paragraph (b)(1) of this section (and any other relevant information) to its shareholders to enable API Holders to determine the amount of their inclusion under section 1293(a)(1) that would be included in the API One Year Distributive Share Amounts and API Three Year Distributive Share Amounts. To the extent that such information is not provided, paragraph (a)(2) of this section will apply except that Owner Taxpayers are not permitted to separately substantiate the information. An API Holder who receives the additional information described in this paragraph (d) must retain such information as required by § 1.1295-1(f)(2)(ii).

(e) ***Applicability date.*** The provisions of this section apply to taxable years of Owner Taxpayers and Passthrough Entities beginning on or after January 19, 2021. An Owner Taxpayer or Passthrough Entity may choose to apply this section to a taxable year beginning after December 31, 2017, provided that they apply the Section 1061 Regulations in their entirety to that year and all subsequent years.

[T.D. 9945, 86 FR 5480, Jan. 19, 2021, as amended by T.D. 9945, 89 FR 50526, June 14, 2024]

Changes To Effectuate F.C.C. Policy

§ 1.1071-1 Gain from sale or exchange to effectuate policies of Federal Communications Commission.

(a)

(1) At the election of the taxpayer, section 1071 postpones the recognition of the gain upon the sale or exchange of property if the Federal Communications Commission grants the taxpayer a certificate with respect to the ownership and control of radio broadcasting stations which is in accordance with subparagraph (2) of this paragraph. Any taxpayer desiring to obtain the benefits of section 1071 shall file such certificate with the Commissioner of Internal Revenue, or the district director for the internal revenue district in which the income tax return of the taxpayer is required to be filed.

(2)

(i) In the case of a sale or exchange before January 1, 1958, the certificate from the Federal Communications Commission must clearly identify the property and show that the sale or exchange is necessary or appropriate to effectuate the policies of such Commission with respect to the ownership and control of radio broadcasting stations.

(ii) In the case of a sale or exchange after December 31, 1957, the certificate from the Federal Communications Commission must clearly identify the property and show that the sale or exchange is necessary or appropriate to effectuate a change in a policy of, or the adoption of a new policy by, such Commission with respect to the ownership and control of radio broadcasting stations.

(3) The certificate shall be accompanied by a detailed statement showing the kind of property, the date of acquisition, the cost or other basis of the property, the date of sale or exchange, the name and address of the transferee, and the amount of money and the fair market value of the property other than money received upon such sale or exchange.

(b) Section 1071 applies only in the case of a sale or exchange made necessary by reason of the Federal Communications Commission's policies as to ownership or control of radio facilities. Section 1071 does not apply in the case of a sale or exchange made necessary as a result of other matters, such as the operation of a broadcasting station in a manner determined by the Commission to be not in the public interest or in violation of Federal or State law.

(c) An election to have the benefits of section 1071 shall be made in the manner prescribed in § 1.1071-4.

(d) For purposes of section 1071, the term *radio broadcasting* includes telecasting.

§ 1.1071-2 Nature and effect of election.

(a) ***Alternative elections.***

(1) A taxpayer entitled to the benefits of section 1071 in respect of a sale or exchange of property may elect—

(i) To treat such sale or exchange as an involuntary conversion under the provisions of section 1033; or

(ii) To treat such sale or exchange as an involuntary conversion under the provisions of section 1033, and in addition elect to reduce the basis of property, in accordance with the regulations prescribed in § 1.1071-3, by all or part of the gain that would otherwise be recognized under section 1033; or

(iii) To reduce the basis of property, in accordance with the regulations prescribed in § 1.1071-3, by all or part of the gain realized upon the sale or exchange.

(2) The effect of the provisions of subparagraph (1) of this paragraph is, in general, to grant the taxpayer an election to treat the proceeds of the sale or exchange as the proceeds of an involuntary conversion subject to the provisions of section 1033, and a further election to reduce the basis of certain property owned by the taxpayer by the amount of the gain realized upon the sale or exchange to the extent of that portion of the proceeds which is not treated as the proceeds of an involuntary conversion.

(3) An election in respect to a sale or exchange under section 1071 shall be irrevocable and binding for the taxable year in which the sale or exchange takes place and for all subsequent taxable years.

(b) ***Application of section 1033.***

(1) If the taxpayer elects, under either paragraph (a)(1) (i) or (ii) of this section, to treat the sale or exchange as an involuntary conversion, the provisions of section 1033, as modified by section 1071, together with the regulations prescribed under such sections, shall be applicable in determining the amount of recognized gain and the basis of property required as a result of such sale or exchange. For the purposes of section 1071 and the regulations thereunder, stock of a corporation operating a radio broadcasting station shall be treated as property similar or related in service or use to the property sold or exchanged. Securities of such a corporation other than stock, or securities of a corporation not operating a radio broadcasting station, do not constitute property similar or related in service or use to the property sold or exchanged. If the taxpayer exercises the election referred to in paragraph (a)(1)(i) of this section, the gain realized upon such sale or exchange shall be recognized to the extent of that part of the money received upon the sale or exchange which is not expended in the manner prescribed in section 1033 and the regulations thereunder. If, however, the taxpayer exercises the elections referred to in paragraph (a)(1)(ii) of this section, the amount of the gain which would be recognized, determined in the same manner as in the case of an election under paragraph (a)(1)(i) of this section, shall not be recognized but shall be applied to reduce the basis of property, remaining in the hands of the taxpayer after such sale or exchange or acquired by him during the same taxable year, which is of a character subject to the allowance for depreciation under section 167. Such reduction of basis shall be made in accordance with and under the conditions prescribed by § 1.1071-3.

(2) In the application of section 1033 to determine the recognized gain and the basis of property acquired as a result of a sale or exchange pursuant to an election under paragraph (a)(1) (i) or (ii) of this section, the entire amount of the proceeds of such sale or exchange shall be taken into account.

(c) ***Example.*** The application of the provisions of section 1071 may be illustrated by the following example:

> *Example:* A, who makes his return on a calendar year basis, sold in 1954, for $100,000 cash, stock of X Corporation, which operates a radio broadcasting station. A's basis of this stock was $75,000. The sale was certified by the Federal Communications Commission as provided in section 1071. Soon after, in the same taxable year, A used $50,000 of the proceeds of the sale to purchase stock in Y Corporation, which operates a radio broadcasting station. A elected in his 1954 return to treat such sale and purchase as an involuntary conversion subject to the provisions of section 1033. He also elected at the same time to reduce the basis of depreciable property by the amount of the gain that otherwise would be recognized under the provisions of section 1033, as made applicable by section 1071. The sale results in a recognized

gain of $25,000 under section 1033. However, this gain is not recognized in this case because the taxpayer elected to reduce the basis of other property by the amount of the gain. This may be shown as follows:

(1) Sale price of X Corporation stock	$100,000
Basis for gain or loss	75,000
Gain realized	25,000
Proceeds of sale	100,000
Amount expended to replace property sold	50,000
Amount not expended in manner prescribed in section 1033	50,000
Realized gain, recognized under section 1033 (not to exceed the unexpended portion of proceeds of sale)	25,000
Less: Amount applied as a reduction of basis of depreciable property	25,000
Recognized gain for tax purposes	None

(2) The basis of Y Corporation stock in the hands of A is $50,000, computed in accordance with section 1033 and the regulations prescribed under that section. The $50,000 basis is computed as follows:

Basis of property sold (converted)	$75,000
Less: Amount of proceeds not expended	50,000
Balance	25,000
Plus amount of gain recognized under section 1033	25,000
Basis of Y Corporation stock in A's hands	50,000

§ 1.1071-3 Reduction of basis of property pursuant to election under section 1071.

(a) ***General rule.***

(1) In addition to the adjustments provided in section 1016 and other applicable provisions of chapter 1 of the Code which adjustments are required to be made with respect to the cost or other basis of property, a further adjustment shall be made in the amount of the unrecognized gain under section 1071, if the taxpayer so elects. Such further adjustment shall be made only with respect to the cost or other basis of property which is of a character subject to the allowance for depreciation under section 167 (whether or not used in connection with a broadcasting business), and which remains in the hands of the taxpayer immediately after the sale or exchange in respect of which the election is made, or which is acquired by the taxpayer in the same taxable year in which such sale or exchange occurs. If the property is in the hands of the taxpayer immediately after the sale or exchange, the time of reduction of the basis is the date of the sale or exchange; in all other cases the time of reduction of the basis is the date of acquisition.

(2) The reduction of basis under section 1071 in the amount of the unrecognized gain shall be made in respect of the cost or other basis, as of the time prescribed, of all units of property of the specified character. The cost or other basis of each unit shall be decreased in an amount equal to such proportion of the unrecognized gain as the adjusted basis (for determining gain, determined without regard to this section) of such unit bears to the aggregate of such adjusted bases of all units of such property, but the amount of the decrease shall not be more than the amount of such adjusted basis. If in the application of such rule the adjusted basis of any unit is reduced to zero, the process shall be repeated to reduce the adjusted basis of the remaining units of property by the portion of the unrecognized gain which is not absorbed in the first application of the rule. For such purpose the *adjusted basis* of the remaining units shall be the adjusted basis for determining gain reduced by the amount of the adjustment previously made under this section. The process shall be repeated until the entire amount of the unrecognized gain has been absorbed.

(3) The application of the provisions of this section may be illustrated by the following example:

Example: Using the facts given in the example set forth in § 1.1071-2(c), except that the taxpayer elects to reduce the basis of depreciable property in accordance with paragraph (a)(1)(iii) of § 1.1071-2, the computation may be illustrated as follows:

Sale price of X Corporation stock	$100,000
Basis for gain or loss	75,000
Realized gain (recognized except for the election under § 1.1071-1)	$25,000
Adjusted basis of other depreciable property in hands of A immediately after sale:	
Building	80,000
Transmitter	16,000
Fixtures	4,000
Total	100,000
Computation of reduction:	
Building (80,000/100,000) × $25,000 (gain)	20,000
Transmitter (16,000/100,000) × $25,000	4,000
Fixtures (4,000/100,000) × $25,000	1,000
Total reduction	25,000
New basis of assets:	
Building ($80,000 minus $20,000)	60,000
Transmitter ($16,000 minus $4,000)	12,000
Fixtures ($4,000 minus $1,000)	3,000
Total adjusted basis after reduction under section 1071	75,000
Realized gain upon sale of X Corporation stock	25,000
Less: Amount applied as a reduction to basis of depreciable property	25,000

Recognized gain for tax purposes	None

(b) *Special cases.* With the consent of the Commissioner, the taxpayer may, however, have the basis of the various units of property of the class specified in section 1071 and this section adjusted in a manner different from the general rule set forth in paragraph (a) of this section. Variations from such general rule may, for example, involve adjusting the basis of only certain units of such property. The request for variations from such general rule should be filed by the taxpayer with his return for the taxable year in which he elects to have the basis of property reduced under section 1071. Agreement between the taxpayer and the Commissioner as to any variations from such general rule shall be effective only if incorporated in a closing agreement entered into under the provisions of section 7121.

§ 1.1071-4 Manner of election.

(a) An election under the provisions of section 1071 shall be in the form of a written statement and shall be executed and filed in duplicate. Such statement shall be signed by the taxpayer or his authorized representative. In the case of a corporation, the statement shall be signed with the corporate name, followed by the signature and title of an officer of the corporation empowered to sign for the corporation, and the corporate seal must be affixed. An election under section 1071 to reduce the basis of property and an election under such section to treat the sale or exchange as an involuntary conversion under section 1033 may be exercised independently of each other. An election under section 1071 must be filed with the return for the taxable year in which the sale or exchange occurs. Where practicable, the certificate of the Federal Communications Commission required by § 1.1071-1 should be filed with the election.

(b) If, in pursuance of an election to have the basis of its property adjusted under section 1071, the taxpayer desires to have such basis adjusted in any manner different from the general rule set forth in paragraph (a) of § 1.1071-3, the precise method (including allocation of amounts) should be set forth in detail on separate sheets accompanying the election. Consent by the Commissioner to any departure from such general rule shall be effected only by a closing agreement entered into under the provisions of section 7121.

EXCHANGES IN OBEDIENCE TO S.E.C. ORDERS

§ 1.1081-1 Terms used.

The following terms, when used in this section and §§ 1.1081-2 to 1.1083-1, inclusive, shall have the meanings assigned to them in section 1083: *Order of the Securities and Exchange Commission*; *registered holding company*; *holding company system*; *associate company*; *majority-owned subsidiary company*; *system group*; *nonexempt property*; and *stock or securities.* Any other term used in this section and §§ 1.1081-2 to 1.1083-1, inclusive, which is defined in the Internal Revenue Code of 1954, shall be given the respective definition contained in such Code.

§ 1.1081-2 Purpose and scope of exception.

(a) The general rule is that the entire amount of gain or loss from the sale or exchange of property is to be recognized (see section 1002) and that the entire amount received as a dividend is to be included in gross income. (See sections 61 and 301.) Exceptions to the general rule are provided elsewhere in subchapters

C and O, chapter 1 of the Code, one of which is that made by section 1081 with respect to exchanges, sales, and distributions specifically described in section 1081. Section 1081 provides the extent to which gain or loss is not to be recognized on

(1) the receipt of a distribution described in section 1081(c)(2), or

(2) an exchange or sale, or the receipt of a distribution, made in obedience to an order of the Securities and Exchange Commission, which is issued to effectuate the provisions of section 11 (b) of the Public Utility Holding Company Act of 1935 (15 U.S.C. 79k (b)). Section 331 provides that a distribution in liquidation of a corporation shall be treated as an exchange. Such distribution is to be treated as an exchange under the provisions of sections 1081 to 1083, inclusive. The order of the Securities and Exchange Commission must be one requiring or approving action which the Commission finds to be necessary or appropriate to effect a simplification or geographical integration of a particular public utility holding company system. For specific requirements with respect to an order of the Securities and Exchange Commission, see section 1081 (f).

(b) The requirements for nonrecognition of gain or loss as provided in section 1081 are precisely stated with respect to the following general types of transactions:

(1) The exchange that is provided for in section 1081 (a), in which stock or securities in a registered holding company or a majority-owned subsidiary company are exchanged for stock or securities.

(2) The exchange that is provided for in section 1081 (b), in which a registered holding company or an associate company of a registered holding company exchanges property for property.

(3) The distribution that is provided for in section 1081 (c)(1), in which stock or securities are distributed to a shareholder in a corporation which is a registered holding company or a majority-owned subsidiary company, or the distribution that is provided for in section 1081 (c)(2), in which a corporation distributes to a shareholder, rights to acquire common stock in a second corporation.

(4) The transfer that is provided for in section 1081 (d), in which a corporation which is a member of a system group transfers property to another member of the same system group.

Certain rules with respect to the receipt of nonexempt property on an exchange described in section 1081 (a) are prescribed in section 1081 (e).

(c) These exceptions to the general rule are to be strictly construed. Unless both the purpose and the specific requirements of sections 1081 to 1083, inclusive, are clearly met, the recognition of gain or loss upon the exchange, sale, or distribution will not be postponed under those sections. Moreover, even though a taxable transaction occurs in connection or simultaneously with a realization of gain or loss to which nonrecognition is accorded, nevertheless, nonrecognition will not be accorded to such taxable transaction. In other words, the provisions of section 1081 do not extend in any case to gain or loss other than that realized from and directly attributable to a disposition of property as such, or the receipt of a corporate distribution as such, in an exchange, sale, or distribution specifically described in section 1081.

(d) The application of the provisions of part VI (section 1081 and following), subchapter O, chapter 1 of the Code, is intended to result only in postponing the recognition of gain or loss until a disposition of property is made which is not covered by such provisions, and, in the case of an exchange or sale subject to the provisions of section 1081 (b), in the reduction of basis of certain property. The provisions of section 1082 with respect to the continuation of basis and the reduction in basis are designed to effect these

results. Although the time of recognition may be shifted, there must be a true reflection of income in all cases, and it is intended that the provisions of such part VI, shall not be construed or applied in such a way as to defeat this purpose.

§ 1.1081-3 Exchanges of stock or securities solely for stock or securities.

The exchange, without the recognition of gain or loss, that is provided for in section 1081 (a) must be one in which stock or securities in a corporation which is a registered holding company or a majority-owned subsidiary company are exchanged solely for stock or securities other than stock or securities which constitute nonexempt property. An exchange is not within the provisions of section 1081 (a) unless the stock or securities transferred and those received are stock or securities as defined by section 1083 (f). The stock or securities which may be received without the recognition of gain or loss are not limited to stock or securities in the corporation from which they are received. An exchange within the provisions of section 1081 (a) may be a transaction between the holder of stock or securities and the corporation which issued the stock or securities. Also the exchange may be made by a holder of stock or securities with an associate company (i.e., a corporation in the same holding company system with the issuing corporation) which is a registered holding company or a majority-owned subsidiary company. In either case, the nonrecognition provisions of section 1081 (a) apply only to the holder of the stock or securities. However, the transferee corporation must be acting in obedience to an order of the Securities and Exchange Commission directed to such corporation, if no gain or loss is to be recognized to the holder of the stock or securities who makes the exchange with such corporation. See also section 1081(b), in case the holder of the stock or securities is a registered holding company or an associate company of a registered holding company. An exchange is not within the provisions of section 1081(a) if it is within the provisions of section 1081(d), relating to transfers within a system group. For treatment when nonexempt property is received, see section 1081(e); for further limitations, see section 1081(f).

§ 1.1081-4 Exchanges of property for property by corporations.

(a) ***Application of section 1081(b).*** Section 1081(b) applies only to the transfers specified therein with respect to which section 1081(d) is inapplicable, and deals only with such transfers if gain is realized upon the sale or other disposition effected by such transfers. If loss is realized section 1081(b) is inapplicable and the application of other provisions of subtitle A of the Code must be determined. See section 1081(g). If section 1081(b) is applicable, the other provisions of subchapters C and O, chapter 1 of the Code, relating to the nonrecognition of gain are inapplicable, and the conditions under which, and the extent to which, the realized gain is not recognized are set forth in paragraphs (b), (c), (d), (e), and (f) of this section.

(b) ***Nonrecognition of gain; no nonexempt proceeds.*** No gain is recognized to a transferor corporation upon the sale or other disposition of property transferred by such transferor corporation in exchange solely for property other than nonexempt property, as defined in section 1083(e), but only if all of the following requirements are satisfied:

(1) The transferor corporation is, under the definition in section 1083 (b), a registered holding company or an associate company of a registered holding company;

(2) Such transfer is in obedience to an order of the Securities and Exchange Commission (as defined in section 1083 (a)) and such order satisfies the requirements of section 1081 (f);

(3) The transferor corporation has filed the required consent to the regulations under section 1082(a)(2) (see paragraph (g) of this section); and

(4) The entire amount of the gain, as determined under section 1001, can be applied in reduction of basis under section 1082(a)(2).

(c) ***Nonrecognition of gain; nonexempt proceeds.*** If the transaction would be within the provisions of paragraph (b) of this section if it were not for the fact that the property received in exchange consists in whole or in part of nonexempt property (as defined in section 1083 (e)), then no gain is recognized if such nonexempt property, or an amount equal to the fair market value of such nonexempt property at the time of the transfer.

(1) Is expended within the required 24-month period for property other than nonexempt property; or

(2) Is invested within the required 24-month period as a contribution to the capital, or as paid-in surplus, of another corporation;

but only if the expenditure or investment is made

(3) In accordance with an order of the Securities and Exchange Commission (as defined in section 1083 (a)) which satisfies the requirements of section 1081 (f) and which recites that such expenditure or investment by the transferor corporation is necessary or appropriate to the integration or simplification of the holding company system of which the transferor corporation is a member; and

(4) The required consent, waiver, and bond have been executed and filed. See paragraphs (g) and (h) of this section.

(d) ***Recognition of gain in part; insufficient expenditure or investment in case of nonexempt proceeds.*** If the transaction would be within the provisions of paragraph (c) of this section if it were not for the fact that the amount expended or invested is less than the fair market value of the nonexempt property received in exchange, then the gain, if any, is recognized, but in an amount not in excess of the amount by which the fair market value of such nonexempt property at the time of the transfer exceeds the amount so expended and invested.

(e) ***Items treated as expenditures for the purpose of paragraphs (c) and (d) of this section.*** For the purposes of paragraphs (c) and (d) of this section, the following are treated as expenditures for property other than nonexempt property:

(1) A distribution in cancellation or redemption (except a distribution having the effect of a dividend) of the whole or a part of the transferor's own stock (not acquired on the transfer);

(2) A payment in complete or partial retirement or cancellation of securities representing indebtedness of the transferor or a complete or partial retirement or cancellation of such securities which is a part of the consideration for the transfer; and

(3) If, on the transfer, a liability of the transferor is assumed, or property of the transferor is transferred subject to a liability, the amount of such liability.

(f) ***Recognition of gain in part; inability to reduce basis.*** If the transaction would be within the provisions of paragraph (b) or (c) of this section, if it were not for the fact that an amount of gain cannot be applied in reduction of basis under section 1082(a)(2), then the gain, if any, is recognized, but in an amount not in excess of the amount which cannot be so applied in reduction of basis. If the transaction would be within the provisions of paragraph (d) of this section, if it were not for the fact that an amount of gain cannot be applied in reduction of basis under section 1082(a)(2), then the gain, if any, is recognized, but in an amount not in excess of the aggregate of—

(1) The amount of gain which would be recognized under paragraph (d) of this section if there were no inability to reduce basis under section 1082(a)(2); and

(2) The amount of gain which cannot be applied in reduction of basis under section 1082(a)(2).

(g) ***Consent to regulations under section 1082(a)(2).*** To be entitled to the benefits of the provisions of section 1081(b), a corporation must file with its return for the taxable year in which the transfer occurs a consent to have the basis of its property adjusted under section 1082(a)(2) (see § 1.1082-3), in accordance with the provisions of the regulations in effect at the time of filing of the return for the taxable year in which the transfer occurs. Such consent shall be made on Form 982 in accordance with these regulations and instructions on the form or issued therewith.

(h) ***Requirements with respect to expenditure or investment.*** If the full amount of the expenditure or investment required for the application of paragraph (c) of this section has not been made by the close of the taxable year in which such transfer occurred, the taxpayer shall file with the return for such year an application for the benefit of the 24-month period for expenditure and investment, reciting the nature and time of the proposed expenditure or investment. When requested by the district director, the taxpayer shall execute and file (at such time and in such form) such waiver of the statute of limitations with respect to the assessment of deficiencies (for the taxable year of the transfer and for all succeeding taxable years in any of which falls any part of the period beginning with the date of the transfer and ending 24 months thereafter) as the district director may specify, and such bond with such surety as the district director may require, in an amount not in excess of double the estimated maximum income tax which would be payable if the corporation does not make the required expenditure or investment within the required 24-month period.

[T.D. 6500, 25 FR 11910, Nov. 26, 1960, as amended by T.D. 6751, 29 FR 11356, Aug. 6, 1964; T.D. 7517, 42 FR 58935, Nov. 14, 1977]

§ 1.1081-5 Distribution solely of stock or securities.

(a) ***In general.*** If, without any surrender of his stock or securities as defined in section 1083(f), a shareholder in a corporation which is a registered holding company or a majority-owned subsidiary company receives stock or securities in such corporation or owned by such corporation, no gain to the shareholder will be recognized with respect to the stock or securities received by such shareholder which do not constitute nonexempt property, if the distribution to such shareholder is made by the distributing corporation in obedience to an order of the Securities and Exchange Commission directed to such corporation. A distribution is not within the provisions of section 1081(c)(1) if it is within the provisions of section 1081(d), relating to transfers within a system group. A distribution is also not within the provisions of section 1081(c)(1) if it involves a surrender by the shareholder of stock or securities or a transfer by the shareholder of property in exchange for the stock or securities received by the shareholder. For further limitations, see section 1081(f).

(b) ***Special rule.***

(1) If there is distributed to a shareholder in a corporation rights to acquire common stock in a second corporation, no gain to the shareholder from the receipt of the rights shall be recognized, but only if all the following requirements are met:

(i) The rights are received by the shareholder without the surrender by the shareholder of any stock in the distributing corporation,

(ii) Such distribution is in accordance with an arrangement forming a ground for an order of the Securities and Exchange Commission issued pursuant to section 3 of the Public Utility Holding Company Act of 1935 (15 U. S. C. 79c) that the distributing corporation is exempt from any provision or provisions of such act, and

(iii) Before January 1, 1958, the distributing corporation disposes of all the common stock in the second corporation which it owns.

(2) The distributing corporation shall, as soon as practicable, notify the district director in whose district the corporation's income tax return and supporting data was filed (see paragraph (g) of § 1.1081-11), as to whether or not the requirement of subparagraph (1)(iii) of this paragraph has been met. If such requirement has not been met, the periods of limitation (sections 6501 and 6502) with respect to any deficiency, including interest and additions to the tax, resulting solely from the receipt of such rights to acquire stock, shall include one year immediately following the date of such notification; and assessment and collection shall be made notwithstanding any provisions of law or rule of law which would otherwise prevent such assessment and collection.

§ 1.1081-6 Transfers within system group.

(a) The nonrecognition of gain or loss provided for in section 1081(d)(1) is applicable to an exchange of property for other property (including money and other nonexempt property) between corporations which are all members of the same system group. The term *system group* is defined in section 1083 (d).

(b) Section 1081 (d)(1) also provides for nonrecognition of gain to a corporation which is a member of a system group if property (including money or other nonexempt property) is distributed to such corporation as a shareholder in a corporation which is a member of the same system group, without the surrender by such shareholder of stock or securities in the distributing corporation.

(c) As stated in § 1.1081-2, nonrecognition of gain or loss will not be accorded to a transaction not clearly provided for in part VI (section 1081 and following), subchapter O, chapter 1 of the Code, even though such transaction occurs simultaneously or in connection with an exchange, sale, or distribution to which nonrecognition is specifically accorded. Therefore, nonrecognition will not be accorded to any gain or loss realized from the discharge, or the removal of the burden, of the pecuniary obligations of a member of a system group, even though such obligations are acquired upon a transfer or distribution specifically described in section 1081 (d)(1); but the fact that the acquisition of such obligations was upon a transfer or distribution specifically described in section 1081 (d)(1) will, because of the basis provisions of section 1082 (d), affect the cost to the member of such discharge or its equivalent. Thus, section 1081 (d)(1) does not provide for the nonrecognition of any gain or loss realized from the discharge of the indebtedness of a member of a system group as the result of the acquisition in exchange, sale, or distribution of its own bonds, notes, or other evidences of indebtedness which were acquired by another member of the same system group for a consideration less or more than the issuing price thereof (with proper adjustments for amortization of premiums or discounts).

(d) The provisions of paragraph (c) of this section may be illustrated by the following example:

Example: Suppose that the A Corporation and the B Corporation are both members of the same system group; that the A Corporation holds at a cost of $900 a bond issued by the B Corporation at par, $1,000; and that the A Corporation and the B Corporation enter into an exchange subject to the provisions of section 1081 (d)(1) in which the $1,000 bond of the B Corporation is transferred from the A Corporation to the B Corporation. The $900 basis reflecting the cost to the A Corporation which would have been the basis available to the B Corporation if the property transferred to it had been something other than its own securities (see § 1.1082-6) will, in this type of transaction, reflect the cost to the B Corporation of effecting a retirement of its own $1,000 bond. The $100 gain of the B Corporation reflected in the retirement will therefore be recognized.

(e) No exchange or distribution may be made without the recognition of gain or loss as provided for in section 1081 (d)(1), unless all the corporations which are parties to such exchange or distribution are acting in obedience to an order of the Securities and Exchange Commission. If an exchange or distribution is within the provisions of section 1081 (d)(1) and also may be considered to be within some other provisions of section 1081, it shall be considered that only the provisions of section 1081 (d)(1) apply and that the nonrecognition of gain or loss upon such exchange or distribution is by virtue of that section.

§ 1.1081-7 Sale of stock or securities received upon exchange by members of system group.

(a) Section 1081(d)(2) provides that to the extent that property received upon an exchange by corporations which are members of the same system group consists of stock or securities issued by the corporation from which such property was received, such stock or securities may, under certain specifically described circumstances, be sold to a party not a member of the system group, without the recognition of gain or loss to the selling corporation. The nonrecognition of gain or loss is limited, in the case of stock, to a sale of stock which is preferred as to both dividends and assets. The stock or securities must have been received upon an exchange with respect to which section 1081(d)(1) operated to prevent recognition of gain or loss to any party to the exchange. Nonrecognition of gain or loss upon the sale of such stock or securities is permitted only if the proceeds derived from the sale are applied in retirement or cancellation of stock or securities of the selling corporation which were outstanding at the time the exchange was made. It is also essential to nonrecognition of gain or loss upon the sale that both the sale of the stock or securities and the application of the proceeds derived therefrom be made in obedience to an order of the Securities and Exchange Commission. If any part of the proceeds derived from the sale is not applied in making the required retirement or cancellation of stock or securities and if the sale is otherwise within the provisions of section 1081 (d)(2), the gain resulting from the sale shall be recognized, but in an amount not in excess of the proceeds which are not so applied. In any event, if the proceeds derived from the sale of the stock or securities exceed the fair market value of such stock or securities at the time of the exchange through which they were acquired by the selling corporation, the gain resulting from the sale is to be recognized to the extent of such excess. Section 1081 (d)(2) does not provide for the nonrecognition of any gain resulting from the retirement of bonds, notes, or other evidences of indebtedness for a consideration less than the issuing price thereof. Also, that section does not provide for the nonrecognition of gain or loss upon the sale of any stock or securities received upon a distribution or otherwise than upon an exchange.

(b) The application of paragraph (a) of this section may be illustrated by the following example:

Example: The X Corporation and the Y Corporation, both of which make their income tax returns on a calendar year basis, are members of the same system group. As part of an exchange to which section 1081 (d)(1) is applicable the Y Corporation on June 1, 1954, issued to the X Corporation 1,000 shares of class A stock, preferred as to both dividends and assets. The fair market value of such stock at the time of issuance was $90,000 and its basis to the X Corporation was $75,000. On December 1, 1954, in obedience to an appropriate order of the Securities and Exchange Commission, the X Corporation sells all of such stock to the public for $100,000 and applies $95,000 of this amount to the retirement of its own bonds, which were outstanding on June 1, 1954. The remaining $5,000 is not used to retire any of the X Corporation's stock or securities. Of the total gain of $25,000 realized on the disposition of the Y Corporation stock, only $10,000 is recognized (the difference between the fair market value of the stock when acquired and the amount for which it was sold), since such amount is greater than the portion ($5,000) of the proceeds not applied to the retirement of the X Corporation's stock or securities. If in this example the stock acquired by the X Corporation had not been stock of the Y Corporation issued to the X

Corporation or if it had been stock not preferred as to both dividends and assets, the full amount of the gain ($25,000) realized upon its disposition would have been recognized, regardless of what was done with the proceeds.

§ 1.1081-8 Exchanges in which money or other nonexempt property is received.

(a) Under section 1081(e)(1), if in any exchange (not within any of the provisions of section 1081(d)) in which stock or securities in a corporation which is a registered holding company or a majority-owned subsidiary are exchanged for stock or securities as provided for in section 1081 (a), there is received by the taxpayer money or other nonexempt property (in addition to property permitted to be received without recognition of gain), then—

(1) The gain, if any, to the taxpayer is to be recognized in an amount not in excess of the sum of the money and the fair market value of the other nonexempt property, but

(2) The loss, if any, to the taxpayer from such an exchange is not to be recognized to any extent.

(b) If money or other nonexempt property is received from a corporation in an exchange described in paragraph (a) of this section and if the distribution of such money or other nonexempt property by or on behalf of such corporation has the effect of the distribution of a taxable dividend, then, as provided in section 1081 (e)(2), there shall be taxed to each distributee

(1) as a dividend, such an amount of the gain recognized on the exchange as is not in excess of the distributee's ratable share of the undistributed earnings and profits of the corporation accumulated after February 28, 1913, and

(2) the remainder of the gain so recognized shall be taxed as a gain from the exchange of property.

§ 1.1081-9 Requirements with respect to order of Securities and Exchange Commission.

The term *order of the Securities and Exchange Commission* is defined in section 1083(a). In addition to the requirements specified in that definition, section 1081(f) provides that, except in the case of a distribution described in section 1081(c)(2), the provisions of section 1081 shall not apply to an exchange, expenditure, investment, distribution, or sale unless each of the following requirements is met:

(a) The order of the Securities and Exchange Commission must recite that the exchange, expenditure, investment, distribution, or sale is necessary or appropriate to effectuate the provisions of section 11(b) of the Public Utility Holding Company Act of 1935 (15 U. S. C. 79k (b)).

(b) The order shall specify and itemize the stocks and securities and other property (including money) which are ordered to be acquired, transferred, received, or sold upon such exchange, acquisition, expenditure, distribution, or sale and, in the case of an investment, the investment to be made, so as clearly to identify such property.

(c) The exchange, acquisition, expenditure, investment, distribution, or sale shall be made in obedience to such order and shall be completed within the time prescribed in such order.

These requirements were not designed merely to simplify the administration of the provisions of section 1081, and they are not to be considered as pertaining only to administrative matters. Each one of the three requirements is essential and must be met if gain or loss is not to be recognized upon the transaction.

§ 1.1081-10 Nonapplication of other provisions of the Internal Revenue Code of 1954.

The effect of section 1081(g) is that an exchange, sale, or distribution which is within section 1081 shall, with respect to the nonrecognition of gain or loss and the determination of basis, be governed only by the provisions of part VI (section 1081 and following), subchapter O, chapter 1 of the Code, the purpose being to prevent overlapping of those provisions and other provisions of subtitle A of the Code. In other words, if by virtue of section 1081 any portion of a person's gain or loss on any particular exchange, sale, or distribution is not to be recognized, then the gain or loss of such person shall be nonrecognized only to the extent provided in section 1081, regardless of what the result might have been if part VI (section 1081 and following), subchapter O, chapter 1 of the Code, had not been enacted; and similarly, the basis in the hands of such person of the property received by him in such transaction shall be the basis provided by section 1082, regardless of what the basis of such property might have been under section 1011 if such part VI had not been enacted. On the other hand, if section 1081 does not provide for the nonrecognition of any portion of a person's gain or loss (whether or not such person is another party to the same transaction referred to above), then the gain or loss of such person shall be recognized or nonrecognized to the extent provided for by other provisions of subtitle A of the Code as if such part VI had not been enacted; and similarly, the basis in his hands of the property received by him in such transaction shall be the basis provided by other provisions of subtitle A of the Code as if such part VI had not been enacted.

§ 1.1081-11 Records to be kept and information to be filed with returns.

(a) ***Distributions and exchanges; significant holders of stock or securities.*** Every significant holder must include a statement entitled, "STATEMENT PURSUANT TO § 1.1081-11(a) BY [INSERT NAME AND TAXPAYER IDENTIFICATION NUMBER (IF ANY) OF TAXPAYER], A SIGNIFICANT HOLDER," on or with such holder's income tax return for the taxable year in which the distribution or exchange occurs. If a significant holder is a controlled foreign corporation (within the meaning of section 957), each United States shareholder (within the meaning of section 951(b)) with respect thereto must include this statement on or with its return. The statement must include—

(1) The name and employer identification number (if any) of the corporation from which the stock, securities, or other property (including money) was received by such significant holder;

(2) The aggregate basis, determined immediately before the exchange, of any stock or securities transferred by the significant holder in the exchange, and the aggregate fair market value, determined immediately before the distribution or exchange, of the stock, securities or other property (including money) received by the significant holder in the distribution or exchange; and

(3) The date of the distribution or exchange.

(b) ***Distributions and exchanges; corporations subject to Commission orders.*** Each corporation which is a party to a distribution or exchange made pursuant to an order of the Commission must include on or with its income tax return for its taxable year in which the distribution or exchange takes place a statement entitled, "STATEMENT PURSUANT TO § 1.1081-11(b) BY [INSERT NAME AND EMPLOYER IDENTIFICATION NUMBER (IF ANY) OF TAXPAYER], A DISTRIBUTING OR EXCHANGING CORPORATION." If the distributing or exchanging corporation is a controlled foreign corporation (within the meaning of section 957), each United States shareholder (within the meaning of section 951(b)) with respect thereto must include this statement on or with its return. The statement must include—

(1) The date and control number of the Commission order, pursuant to which the distribution or exchange was made;

(2) The names and taxpayer identification numbers (if any) of the significant holders;

(3) The aggregate fair market value and basis, determined immediately before the distribution or exchange, of the stock, securities, or other property (including money) transferred in the distribution or exchange; and

(4) The date of the distribution or exchange.

(c) ***Sales by members of system groups.*** Each system group member must include a statement entitled, "STATEMENT PURSUANT TO § 1.1081-11(c) BY [INSERT NAME AND EMPLOYER IDENTIFICATION NUMBER (IF ANY) OF TAXPAYER], A SYSTEM GROUP MEMBER," on or with its income tax return for the taxable year in which the sale is made. If any system group member is a controlled foreign corporation (within the meaning of section 957), each United States shareholder (within the meaning of section 951(b)) with respect thereto must include this statement on or with its return. The statement must include—

(1) The dates and control numbers of all relevant Commission orders;

(2) The aggregate fair market value and basis, determined immediately before the sale, of all stock or securities sold; and

(3) The date of the sale.

(d) ***Definitions.***

(1) For purposes of this section, *Commission* means the Securities and Exchange Commission.

(2) For purposes of this section, *significant holder* means a person that receives stock or securities from a corporation (the distributing corporation) pursuant to an order of the Commission, if, immediately before the transaction, such person—

(i) In the case of stock—

(A) Owned at least five percent (by vote or value) of the total outstanding stock of the distributing corporation if the stock owned by such person is publicly traded, or

(B) Owned at least one percent (by vote or value) of the total outstanding stock of the distributing corporation if the stock owned by such person is not publicly traded; or

(ii) In the case of securities, owned securities of the distributing corporation with a basis of $1,000,000 or more.

(3) ***Publicly traded stock*** means stock that is listed on—

(i) A national securities exchange registered under section 6 of the Securities Exchange Act of 1934 (15 U.S.C. 78f); or

(ii) An interdealer quotation system sponsored by a national securities association registered under section 15A of the Securities Exchange Act of 1934 (15 U.S.C. 78o-3).

(4) For purposes of paragraph (b) of this section, exchange means exchange, expenditure, or investment.

(5) For purposes of paragraph (c) of this section, *system group member* means each corporation which is a member of a system group and which, pursuant to an order of the Commission, sells stock or securities received upon an exchange (pursuant to an order of the Commission) and applies the proceeds derived therefrom in retirement or cancellation of its own stock or securities.

(e) ***Substantiation information.*** Under § 1.6001-1(e), taxpayers are required to retain their permanent records and make such records available to any authorized Internal Revenue Service officers and employees. In connection with the distribution or exchange described in this section, these records should specifically include information regarding the amount, basis, and fair market value of all property distributed or exchanged, and relevant facts regarding any liabilities assumed or extinguished as part of such distribution or exchange.

(f) ***Effective/applicability date.*** This section applies to any taxable year beginning on or after May 30, 2006. However, taxpayers may apply this section to any original Federal income tax return (including any amended return filed on or before the due date (including extensions) of such original return) timely filed on or after May 30, 2006. For taxable years beginning before May 30, 2006, see § 1.1081-11 as contained in 26 CFR part 1 in effect on April 1, 2006.

[T.D. 9329, 72 FR 32803, June 14, 2007]

§ 1.1082-1 Basis for determining gain or loss.

(a) For determining the basis of property acquired in a taxable year beginning before January 1, 1942, in any manner described in section 372 of the Internal Revenue Code of 1939 prior to its amendment by the Revenue Act of 1942 (56 Stat. 798), see such section (before its amendment by such Act).

(b) If the property was acquired in a taxable year beginning after December 31, 1941, in any manner described in section 1082 (other than subsection (a)(2)), or section 372 (other than subsection (a)(2)) of the Internal Revenue Code of 1939 after its amendments, the basis shall be that prescribed in section 1082 with respect to such property. However, in the case of property acquired in a transaction described in section 1081(c)(2), this paragraph is applicable only if the property was acquired in a distribution made in a taxable year subject to the Internal Revenue Code of 1954.

(c) Section 1082 makes provisions with respect to the basis of property acquired in a transfer in connection with which the recognition of gain or loss is prohibited by the provisions of section 1081 with respect to the whole or any part of the property received. In general, and except as provided in § 1.1082-3, it is intended that the basis for determining gain or loss pertaining to the property prior to its transfer, as well as the basis for determining the amount of depreciation or depletion deductible and the amount of earnings or profits available for distribution, shall continue notwithstanding the nontaxable conversion of the asset in form or its change in ownership. The continuance of the basis may be reflected in a shift thereof from one asset to another in the hands of the same owner, or in its transfer with the property from one owner into the hands of another. See also § 1.1081-2.

§ 1.1082-2 Basis of property acquired upon exchanges under section 1081 (a) or (e).

(a) In the case of an exchange of stock or securities for stock or securities as described in section 1081 (a), if no part of the gain or loss upon such exchange was recognized under section 1081, the basis of the property acquired is the same as the basis of the property transferred by the taxpayer with proper adjustments to the date of the exchange.

(b) If, in an exchange of stock or securities as described in section 1081 (a), gain to the taxpayer was recognized under section 1081 (e) on account of the receipt of money, the basis of the property acquired is the basis of the property transferred (adjusted to the date of the exchange), decreased by the amount of money received and increased by the amount of gain recognized upon the exchange. If, upon such exchange, there were received by the taxpayer money and other nonexempt property (not permitted to be received without the recognition of gain), and gain from the transaction was recognized under section

1081 (e), the basis (adjusted to the date of the exchange) of the property transferred by the taxpayer, decreased by the amount of money received and increased by the amount of gain recognized, must be apportioned to and is the basis of the properties (other than money) received on the exchange. For the purpose of the allocation of such basis to the properties received, there must be assigned to the nonexempt property (other than money) an amount equivalent to its fair market value at the date of the exchange.

(c) Section 1081(e) provides that no loss may be recognized on an exchange of stock or securities for stock or securities as described in section 1081(a), although the taxpayer receives money or other nonexempt property from the transaction. However, the basis of the property (other than money) received by the taxpayer is the basis (adjusted to the date of the exchange) of the property transferred, decreased by the amount of money received. This basis must be apportioned to the properties received, and for this purpose there must be allocated to the nonexempt property (other than money) an amount of such basis equivalent to the fair market value of such nonexempt property at the date of the exchange.

(d) Section 1082 (a) does not apply in ascertaining the basis of property acquired by a corporation by the issuance of its stock or securities as the consideration in whole or in part for the transfer of the property to it. For the rule in such cases, see section 1082 (b).

(e) For purposes of this section, any reference to section 1081 shall be deemed to include a reference to corresponding provisions of prior internal revenue laws.

§ 1.1082-3 Reduction of basis of property by reason of gain not recognized under section 1081(b).

(a) ***Introductory.*** In addition to the adjustments provided in section 1016 and other applicable provisions of chapter 1 of the Code, and the regulations relating thereto, which are required to be made with respect to the cost or other basis of property, section 1082(a)(2) provides that a further adjustment shall be made in any case in which there shall have been a nonrecognition of gain under section 1081(b). Such further adjustment shall be made with respect to the basis of the property in the hands of the transferor immediately after the transfer and of the property acquired within 24 months after such transfer by an expenditure or investment to which section 1081(b) relates, and on account of which expenditure or investment gain is not recognized. If the property is in the hands of the transferor immediately after the transfer, the time of reduction is the day of the transfer; in all other cases the time of reduction is the date of acquisition. The effect of applying an amount in reduction of basis of property under section 1081 (b) is to reduce by such amount the basis for determining gain upon sale or other disposition, the basis for determining loss upon sale or other disposition, the basis for depreciation and for depletion, and any other amount which the Code prescribes shall be the same as any of such bases. For the purposes of the application of an amount in reduction of basis under section 1081(b), property is not considered as having a basis capable of reduction if—

(1) It is money, or

(2) If its adjusted basis for determining gain at the time the reduction is to be made is zero, or becomes zero at any time in the application of section 1081 (b).

(b) ***General rule.***

(1) Section 1082 (a)(2) sets forth seven categories of property, the basis of which for determining gain or loss shall be reduced in the order stated.

(2) If any of the property in the first category has a basis capable of reduction, the reduction must first be made before applying an amount in reduction of the basis of any property in the second or in a succeeding category, to each of which in turn a similar rule is applied.

(3) In the application of the rule to each category, the amount of the gain not recognized shall be applied to reduce the cost or other basis of all the property in the category as follows: The cost or other basis (at the time immediately after the transfer or, if the property is not then held but is thereafter acquired, at the time of such acquisition) of each unit of property in the first category shall be decreased (but the amount of the decrease shall not be more than the amount of the adjusted basis at such time for determining gain, determined without regard to this section) in an amount equal to such proportion of the unrecognized gain as the adjusted basis (for determining gain, determined without regard to this section) at such time of each unit of property of the taxpayer in that category bears to the aggregate of the adjusted basis (for determining gain, computed without regard to this section) at such time of all the property of the taxpayer in that category. When such adjusted basis of the property in the first category has been thus reduced to zero, a similar rule shall be applied, with respect to the portion of such gain which is unabsorbed in such reduction of the basis of the property in such category, in reducing the basis of the property in the second category. A similar rule with respect to the remaining unabsorbed gain shall be applied in reducing the basis of the property in the next succeeding category.

(c) *Special cases.*

(1) With the consent of the Commissioner, the taxpayer may, however, have the basis of the various units of property within a particular category specified in section 1082(a)(2) adjusted in a manner different from the general rule set forth in paragraph (b) of this section. Variations from such general rule may, for example, involve adjusting the basis of only certain units of the taxpayer's property within a given category. A request for variations from the general rule should be filed by the taxpayer with its income tax return for the taxable year in which the transfer of property has occurred.

(2) Agreement between the taxpayer and the Commissioner as to any variations from such general rule shall be effective only if incorporated in a closing agreement entered into under the provisions of section 7121. If no such agreement is entered into by the taxpayer and the Commissioner, then the consent filed on Form 982 shall (except as otherwise provided in this subparagraph) be deemed to be a consent to the application of such general rule, and such general rule shall apply in the determination of the basis of the taxpayer's property. If, however, the taxpayer specifically states on such form that it does not consent to the application of the general rule, then, in the absence of a closing agreement, the document filed shall not be deemed a consent within the meaning of section 1081(b)(4).

[T.D. 6500, 25 FR 11910, Nov. 26, 1960, as amended by T.D. 7517, 42 FR 58935, Nov. 14, 1977]

§ 1.1082-4 Basis of property acquired by corporation under section 1081(a), 1081(b), or 1081(e) as contribution of capital or surplus, or in consideration for its own stock or securities.

If, in connection with an exchange of stock or securities for stock or securities as described in section 1081(a), or an exchange of property for property as described in section 1081(b), or an exchange as described in section 1081(e), property is acquired by a corporation by the issuance of its stock or securities, the basis of such property shall be determined under section 1082(b). If the corporation issued its stock or securities as part or sole consideration for the property acquired, the basis of the property in the hands of the acquiring corporation is the basis (adjusted to the date of the exchange) which the property would have had in the hands of the transferor if the

transfer had not been made, increased in the amount of gain or decreased in the amount of loss recognized under section 1081 to the transferor upon the transfer. If any property is acquired by a corporation from a shareholder as paid-in surplus, or from any person as a contribution to capital, the basis of the property to the corporation is the basis (adjusted to the date of acquisition) of the property in the hands of the transferor.

§ 1.1082-5 Basis of property acquired by shareholder upon tax-free distribution under section 1081(c) (1) or (2).

(a) ***Stock or securities.*** If there was distributed to a shareholder in a corporation which is a registered holding company or a majority-owned subsidiary company, stock or securities (other than stock or securities which are nonexempt property), and if by virtue of section 1081 (c)(1) no gain was recognized to the shareholder upon such distribution, then the basis of the stock in respect of which the distribution was made must be apportioned between such stock and the stock or securities so distributed to the shareholder. The basis of the old shares and the stock or securities received upon the distribution shall be determined in accordance with the following rules:

(1) If the stock or securities received upon the distribution consist solely of stock in the distributing corporation and the stock received is all of substantially the same character and preference as the stock in respect of which the distribution is made, the basis of each share will be the quotient of the cost or other basis of the old shares of stock divided by the total number of the old and the new shares.

(2) If the stock or securities received upon the distribution are in whole or in part stock in a corporation other than the distributing corporation, or are in whole or in part stock of a character or preference materially different from the stock in respect of which the distribution is made, or if the distribution consists in whole or in part of securities other than stock, the cost or other basis of the stock in respect of which the distribution is made shall be apportioned between such stock and the stock or securities distributed in proportion, as nearly as may be, to the respective values of each class of stock or security, old and new, at the time of such distribution, and the basis of each share of stock or unit of security will be the quotient of the cost or other basis of the class of stock or security to which such share or unit belongs, divided by the number of shares or units in the class. Within the meaning of this subparagraph, stocks or securities in one corporation are different in class from stocks or securities in another corporation, and, in general, any material difference in character or preference or terms sufficient to distinguish one stock or security from another stock or security, so that different values may properly be assigned thereto, will constitute a difference in class.

(b) ***Stock rights.*** If there was distributed to a shareholder in a corporation rights to acquire common stock in a second corporation, and if by virtue of section 1081 (c)(2) no gain was recognized to the shareholder upon such distribution, then the basis of the stock in respect of which the distribution was made must be apportioned between such stock and the stock rights so distributed to the shareholder. The basis of such stock and the stock rights received upon the distribution shall be determined in accordance with the following:

(1) The cost or other basis of the stock in respect of which the distribution is made shall be apportioned between such stock and the stock rights distributed, in proportion to the respective values thereof at the time the rights are issued.

(2) The basis for determining gain or loss from the sale of a right, or from the sale of a share of stock in respect of which the distribution is made, will be the quotient of the cost or other basis, properly adjusted, assigned to the rights or the stock, divided, as the case may be, by the number of rights acquired or by the number of shares of such stock held.

(c) *Cross reference.* As to the basis of stock or securities distributed by one member of a system group to another member of the same system group, see § 1.1082-6.

§ 1.1082-6 Basis of property acquired under section 1081(d) in transactions between corporations of the same system group.

(a) If property was acquired by a corporation which is a member of a system group, from a corporation which is a member of the same system group, upon a transfer or distribution described in section 1081 (d)(1), then as a general rule the basis of such property in the hands of the acquiring corporation is the basis which such property would have had in the hands of the transferor if the transfer or distribution had not been made. Except as otherwise indicated in this section, this rule will apply equally to cases in which the consideration for the property acquired consists of stock or securities, money, and other property, or any of them, but it is contemplated that an ultimate true reflection of income will be obtained in all cases, notwithstanding any peculiarities in form which the various transactions may assume. See the example in § 1.1081-6.

(b) An exception to the general rule is provided for in case the property acquired consists of stock or securities issued by the corporation from which such stock or securities were received. If such stock or securities were the sole consideration for the property transferred to the corporation issuing such stock or securities, then the basis of the stock or securities shall be

(1) the same as the basis (adjusted to the time of the transfer) of the property transferred for such stock or securities, or

(2) the fair market value of such stock or securities at the time of their receipt, whichever is the lower. If such stock or securities constituted only part consideration for the property transferred to the corporation issuing such stock or securities, then the basis shall be an amount which bears the same ratio to the basis of the property transferred as the fair market value of such stock or securities on their receipt bears to the total fair market value of the entire consideration received, except that the fair market value of such stock or securities at the time of their receipt shall be the basis therefor, if such value is lower than such amount.

(c) The application of paragraph (b) of this section may be illustrated by the following examples:

Example 1. Suppose the A Corporation has property with an adjusted basis of $600,000 and, in an exchange in which section 1081 (d)(1) is applicable, transfers such property to the B Corporation in exchange for a total consideration of $1,000,000, consisting of

(1) cash in the amount of $100,000,

(2) tangible property having a fair market value of $400,000 and an adjusted basis in the hands of the B Corporation of $300,000, and

(3) stock or securities issued by the B Corporation with a par value and a fair market value as of the date of their receipt in the amount of $500,000. The basis to the B Corporation of the property received by it is $600,000, which is the adjusted basis of such property in the hands of the A Corporation. The basis to the A Corporation of the assets (other than cash) received by it is as

follows: Tangible property, $300,000, the adjusted basis of such property to the B Corporation, the former owner; stock or securities issued by the B Corporation, $300,000, an amount equal to 550,000/ 1,000,000ths of $600,000.

Example 2. Suppose that in example (1) the property of the A Corporation transferred to the B Corporation had an adjusted basis of $1,100,000 instead of $600,000, and that all other factors in the example remain the same. In such case, the basis to the A Corporation of the stock or securities in the B Corporation is $500,000, which was the fair market value of such stock or securities at the time of their receipt by the A Corporation, because this amount is less than the amount established as 500,000/1,000,000ths of $1,100,000 or $550,000.

§ 1.1083-1 Definitions.

(a) ***Order of the Securities and Exchange Commission.***

(1) An order of the Securities and Exchange Commission as defined in section 1083(a) must be issued after May 28, 1938 (the date of the enactment of the Revenue Act of 1938 (52 Stat. 447)), and must be issued under the authority of section 11(b) or 11(e) of the Public Utility Holding Company Act of 1935 (15 U.S.C. 79k (b), (e)), to effectuate the provisions of section 11(b) of such Act. In all cases the order must become or have become final in accordance with law; i.e., it must be valid, outstanding, and not subject to further appeal. See further sections 1083(a) and 1081(f).

(2) Section 11 (b) of the Public Utility Holding Company Act of 1935 provides:

Sec. 11. *Simplification of holding company systems.* * * *

(b) It shall be the duty of the Commission, as soon as practicable after January 1, 1938:

(1) To require by order, after notice and opportunity for hearing, that each registered holding company, and each subsidiary company thereof, shall take such action as the Commission shall find necessary to limit the operations of the holding-company system of which such company is a part to a single integrated public-utility system, and to such other businesses as are reasonably incidental, or economically necessary or appropriate to the operations of such integrated public-utility system: *Provided, however,* That the Commission shall permit a registered holding company to continue to control one or more additional integrated public-utility systems, if, after notice and opportunity for hearing, it finds that—

(A) Each of such additional systems cannot be operated as an independent system without the loss of substantial economies which can be secured by the retention of control by such holding company of such system;

(B) All of such additional systems are located in one State, or in adjoining States, or in a contiguous foreign country; and

(C) The continued combination of such systems under the control of such holding company is not so large (considering the state of the art and the area or region affected) as to impair the advantages of localized management, efficient operation, or the effectiveness of regulation.

The Commission may permit as reasonably incidental, or economically necessary or appropriate to the operations of one or more integrated public-utility systems the retention of an interest in any business (other than the business of a public-utility company as such) which the Commission shall find necessary or appropriate in the public interest or for the protection of investors or consumers and not detrimental to the proper functioning of such system or systems.

(2) To require by order, after notice and opportunity for hearing, that each registered holding company, and each subsidiary company thereof, shall take such steps as the Commission shall find necessary to ensure that the corporate structure or continued existence of any company in the holding-company system does not unduly or unnecessarily complicate the structure, or unfairly or inequitably distribute voting power among security holders, of such holding-company system. In carrying out the provisions of this paragraph the Commission shall require each registered holding company (and any company in the same holding-company system with such holding company) to take such action as the Commission shall find necessary in order that such holding company shall cease to be a holding company with respect to each of its subsidiary companies which itself has a subsidiary company which is a holding company. Except for the purpose of fairly and equitably distributing voting power among the security holders of such company, nothing in this paragraph shall authorize the Commission to require any change in the corporate structure or existence of any company which is not a holding company, or of any company whose principal business is that of a public-utility company. The Commission may by order revoke or modify any order previously made under this subsection, if, after notice and opportunity for hearing, it finds that the conditions upon which the order was predicated do not exist. Any order made under this subsection shall be subject to judicial review as provided in section 24.

(3) Section 11(e) of the Public Utility Holding Company Act of 1935 provides:

Sec. 11. *Simplification of holding company systems.* * * *

(e) In accordance with such rules and regulations or order as the Commission may deem necessary or appropriate in the public interest or for the protection of investors or consumers, any registered holding company or any subsidiary company of a registered holding company may, at any time after January 1, 1936, submit a plan to the Commission for the divestment of control, securities, or other assets, or for other action by such company or any subsidiary company thereof for the purpose of enabling such company or any subsidiary company thereof to comply with the provisions of subsection (b). If, after notice and opportunity for hearing, the Commission shall find such plan, as submitted or as modified, necessary to effectuate the provisions of subsection (b) and fair and equitable to the persons affected by such plan, the Commission shall make an order approving such plan; and the Commission, at the request of the company, may apply to a court, in accordance with the provisions of subsection (f) of section 18, to enforce and carry out the terms and provisions of such plan. If, upon any such application, the court, after notice and opportunity for hearing, shall approve such plan as fair and equitable and as appropriate to effectuate the provisions of section 11, the court as a court of equity may, to such extent as it deems necessary for the purpose of carrying out the terms and provisions of such plan, take exclusive jurisdiction and possession of the company or companies and the assets thereof, wherever located; and the court shall have jurisdiction to appoint a trustee, and the court may constitute and appoint the Commission as sole trustee, to hold or administer, under the direction of the court and in accordance with the plan theretofore approved by the court and the Commission, the assets so possessed.

(b) ***Registered holding company, holding-company system, and associate company.***

(1) Under section 5 of the Public Utility Holding Company Act of 1935 (15 U.S.C. 79e), any holding company may register by filing with the Securities and Exchange Commission a notification of registration, in such form as the Commission may by rules and regulations prescribe as necessary or appropriate in the public interest or for the protection of investors or consumers. A holding company shall be deemed to be registered upon receipt by the Securities and Exchange Commission of such notification of registration. As used in this part, the term *registered holding company* means a holding company whose notification of registration has been so received and whose registration is still in effect under section 5 of the Public Utility Holding Company Act of 1935. Under section 2 (a)(7) of the Public Utility Holding Company Act of 1935 (15 U.S.C. 79b (a)(7)), a corporation is a holding company (unless it is declared not to be such by the Securities and Exchange Commission), if such corporation directly or indirectly owns, controls, or holds with power to vote 10 percent or more of the outstanding voting securities of a public-utility company (i.e., an electric utility company or a gas utility company as defined by such act) or of any other holding company. A corporation is also a holding company if the Securities and Exchange Commission determines, after notice and opportunity for hearing, that such corporation directly or indirectly exercises (either alone or pursuant to an arrangement or understanding with one or more other persons) such a controlling influence over the management or policies of any public-utility company (i.e., an electric utility company or a gas utility company as defined by such act) or holding company as to make it necessary or appropriate in the public interest or for the protection of investors or consumers that such corporation be subject to the obligations, duties, and liabilities imposed upon holding companies by the Public Utility Holding Company Act of 1935 (15 U.S.C. ch. 2C). An electric utility company is defined by section 2 (a)(3) of the Public Utility Holding Company Act of 1935 (15 U.S.C. 79b (a)(3)) to mean a company which owns or operates facilities used for the generation, transmission, or distribution of electrical energy for sale, other than sale to tenants or employees of the company operating such facilities for their own use and not for resale; and a gas utility company is defined by section 2 (a)(4) of such act (15 U.S.C. 79b (a)(4)), to mean a company which owns or operates facilities used for the distribution at retail (other than distribution only in enclosed portable containers, or distribution to tenants or employees of the company operating such facilities for their own use and not for resale) of natural or manufactured gas for heat, light, or power. However, under certain conditions the Securities and Exchange Commission may declare a company not to be an electric utility company or a gas utility company, as the case may be, in which event the company shall not be considered an electric utility company or a gas utility company.

(2) The term *holding company system* has the meaning assigned to it by section 2 (a)(9) of the Public Utility Holding Company Act of 1935 (15 U.S.C. 79b (a)(9)), and hence means any holding company, together with all its subsidiary companies (i.e., subsidiary companies within the meaning of section 2(a)(8) of such act (15 U.S.C. 79b (a)(8)), which in general include all companies 10 percent of whose outstanding voting securities is owned directly or indirectly by such holding company) and all mutual service companies of which such holding company or any subsidiary company thereof is a member company. The term *mutual service company* means a company approved as a mutual service company under section 13 of the Public Utility Holding Company Act of 1935 (15 U.S.C. 79m). The term *member company* is defined by action 2 (a)(14) of such act (15 U.S.C. 79b (a)(14)), to mean a company which is a member of an association or group of companies mutually served by a mutual service company.

(3) The term *associate company* has the meaning assigned to it by section 2 (a)(10) of the Public Utility Holding Company Act of 1935 (15 U.S.C. 79b (a)(10)), and hence an associate company of a company is any company in the same holding-company system with such company.

(c) ***Majority-owned subsidiary company.*** The term *majority-owned subsidiary company* is defined in section 1083 (c). Direct ownership by a registered holding company of more than 50 percent of the specified stock of another corporation is not necessary to constitute such corporation a majority-owned subsidiary company. To illustrate, if the H Corporation, a registered holding company, owns 51 percent of the common stock of the A Corporation and 31 percent of the common stock of the B Corporation, and the A Corporation owns 20 percent of the common stock of the B Corporation (the common stock in each case being the only stock entitled to vote), both the A Corporation and the B Corporation are majority-owned subsidiary companies.

(d) ***System group.*** The term *system group* is defined in section 1083 (d) to mean one or more chains of corporations connected through stock ownership with a common parent corporation, if at least 90 percent of each class of stock (other than

(1) stock which is preferred as to both dividends and assets, and

(2) stock which is limited and preferred as to dividends but which is not preferred as to assets but only if the total value of such stock is less than 1 percent of the aggregate value of all classes of stock which are not preferred as to both dividends and assets) of each of the corporations (except the common parent corporation) is owned directly by one or more of the other corporations, and if the common parent corporation owns directly at least 90 percent of each class of stock (other than stock preferred as to both dividends and assets) of at least one of the other corporations; but no corporation is a member of a system group unless it is either a registered holding company or a majority-owned subsidiary company. While the type of stock which must, for the purpose of this definition, be at least 90 percent owned may be different from the voting stock which must be more than 50 percent owned for the purpose of the definition of a majority-owned subsidiary company under section 1083(c), as a general rule both types of ownership tests must be met under section 1083(d), since a corporation, in order to be a member of a system group, must also be a registered holding company or a majority-owned subsidiary company.

(e) ***Nonexempt property.*** The term *nonexempt property* is defined by section 1083(e) to include—

(1) The amount of any consideration in the form of a cancellation or assumption of debts or other liabilities of the transferor (including a continuance of encumbrances subject to which the property was transferred). To illustrate, if in obedience to an order of the Securities and Exchange Commission the X Corporation, a registered holding company, transfers property to the Y Corporation in exchange for property (not nonexempt property) with a fair market value of $500,000, the X Corporation receives $100,000 of nonexempt property, if for example—

(i) The Y Corporation cancels $100,000 of indebtedness owed to it by the X Corporation;

(ii) The Y Corporation assumes an indebtedness of $100,000 owed by the X Corporation to another company, the A Corporation; or

(iii) The Y Corporation takes over the property conveyed to it by the X Corporation subject to a mortgage of $100,000.

(2) Short-term obligations (including notes, drafts, bills of exchange, and bankers' acceptances) having a maturity at the time of issuance of not exceeding 24 months, exclusive of days of grace.

(3) Securities issued or guaranteed as to principal or interest by a government or subdivision thereof (including those issued by a corporation which is an instrumentality of a government or subdivision thereof).

(4) Stock or securities which were acquired from a registered holding company which acquired such stock or securities after February 28, 1938, or an associate company of a registered holding company which acquired such stock or securities after February 28, 1938, unless such stock or securities were acquired in obedience to an order of the Securities and Exchange Commission (as defined in section 1083 (a)) or were acquired with the authorization or approval of the Securities and Exchange Commission under any section of the Public Utility Holding Company Act of 1935, and are not nonexempt property within the meaning of section 1083(e) (1), (2), or (3).

(5) Money, and the right to receive money not evidenced by a security other than an obligation described as nonexempt property in section 1083 (e) (2) or (3). The term *the right to receive money* includes, among other items, accounts receivable, claims for damages, and rights to refunds of taxes.

(f) ***Stock or securities.*** The term *stock or securities* is defined in section 1083(f) for the purposes of part VI (section 1081 and following), subchapter O, chapter 1 of the Code. As therein defined, the term includes voting trust certificates and stock rights or warrants.

WASH SALES OF STOCK OR SECURITIES

§ 1.1091-1 Losses from wash sales of stock or securities.

(a) A taxpayer cannot deduct any loss claimed to have been sustained from the sale or other disposition of stock or securities if, within a period beginning 30 days before the date of such sale or disposition and ending 30 days after such date (referred to in this section as the 61-day period), he has acquired (by purchase or by an exchange upon which the entire amount of gain or loss was recognized by law), or has entered into a contract or option so to acquire, substantially identical stock or securities. However, this prohibition does not apply

(1) in the case of a taxpayer, not a corporation, if the sale or other disposition of stock or securities is made in connection with the taxpayer's trade or business, or

(2) in the case of a corporation, a dealer in stock or securities, if the sale or other disposition of stock or securities is made in the ordinary course of its business as such dealer.

(b) Where more than one loss is claimed to have been sustained within the taxable year from the sale or other disposition of stock or securities, the provisions of this section shall be applied to the losses in the order in which the stock or securities the disposition of which resulted in the respective losses were disposed of (beginning with the earliest disposition). If the order of disposition of stock or securities disposed of at a loss on the same day cannot be determined, the stock or securities will be considered to have been disposed of in the order in which they were originally acquired (beginning with the earliest acquisition).

(c) Where the amount of stock or securities acquired within the 61-day period is less than the amount of stock or securities sold or otherwise disposed of, then the particular shares of stock or securities the loss from the sale or other disposition of which is not deductible shall be those with which the stock or securities acquired are matched in accordance with the following rule: The stock or securities acquired will be matched in accordance with the order of their acquisition (beginning with the earliest acquisition) with an equal number of the shares of stock or securities sold or otherwise disposed of.

(d) Where the amount of stock or securities acquired within the 61-day period is not less than the amount of stock or securities sold or otherwise disposed of, then the particular shares of stock or securities the acquisition of which resulted in the nondeductibility of the loss shall be those with which the stock or securities disposed of are matched in accordance with the following rule: The stock or securities sold or

otherwise disposed of will be matched with an equal number of the shares of stock or securities acquired in accordance with the order of acquisition (beginning with the earliest acquisition) of the stock or securities acquired.

(e) The acquisition of any share of stock or any security which results in the nondeductibility of a loss under the provisions of this section shall be disregarded in determining the deductibility of any other loss.

(f) The word *acquired* as used in this section means acquired by purchase or by an exchange upon which the entire amount of gain or loss was recognized by law, and comprehends cases where the taxpayer has entered into a contract or option within the 61-day period to acquire by purchase or by such an exchange.

(g) For purposes of determining under this section the 61-day period applicable to a short sale of stock or securities, the principles of paragraph (a) of § 1.1233-1 for determining the consummation of a short sale shall generally apply except that the date of entering into the short sale shall be deemed to be the date of sale if, on the date of entering into the short sale, the taxpayer owns (or on or before such date has entered into a contract or option to acquire) stock or securities identical to those sold short and subsequently delivers such stock or securities to close the short sale.

(h) The following examples illustrate the application of this section:

Example 1. A, whose taxable year is the calendar year, on December 1, 1954, purchased 100 shares of common stock in the M Company for $10,000 and on December 15, 1954, purchased 100 additional shares for $9,000. On January 3, 1955, he sold the 100 shares purchased on December 1, 1954, for $9,000. Because of the provisions of section 1091, no loss from the sale is allowable as a deduction.

Example 2. A, whose taxable year is the calendar year, on September 21, 1954, purchased 100 shares of the common stock of the M Company for $5,000. On December 21, 1954, he purchased 50 shares of substantially identical stock for $2,750, and on December 27, 1954, he purchased 25 additional shares of such stock for $1,125. On January 3, 1955, he sold for $4,000 the 100 shares purchased on September 21, 1954. There is an indicated loss of $1,000 on the sale of the 100 shares. Since, within the 61-day period, A purchased 75 shares of substantially identical stock, the loss on the sale of 75 of the shares ($3,750−$3,000, or $750) is not allowable as a deduction because of the provisions of section 1091. The loss on the sale of the remaining 25 shares ($1,250−$1,000, or $250) is deductible subject to the limitations provided in sections 267 and 1211. The basis of the 50 shares purchased December 21, 1954, the acquisition of which resulted in the nondeductibility of the loss ($500) sustained on 50 of the 100 shares sold on January 3, 1955, is $2,500 (the cost of 50 of the shares sold on January 3, 1955) + $750 (the difference between the purchase price ($2,750) of the 50 shares acquired on December 21, 1954, and the selling price ($2,000) of 50 of the shares sold on January 3, 1955), or $3,250. Similarly, the basis of the 25 shares purchased on December 27, 1954, the acquisition of which resulted in the nondeductibility of the loss ($250) sustained on 25 of the shares sold on January 3, 1955, is $1,250 + $125, or $1,375. See § 1.1091-2.

Example 3. A, whose taxable year is the calendar year, on September 15, 1954, purchased 100 shares of the stock of the M Company for $5,000. He sold these shares on February 1, 1956, for $4,000. On each of the four days from February 15, 1956, to February 18, 1956, inclusive, he purchased 50 shares of substantially identical stock for $2,000. There is an indicated loss of $1,000 from the sale of the 100 shares on February 1, 1956, but, since within the 61-day period A purchased not less than 100 shares of substantially identical stock, the loss is not deductible. The particular shares of stock the purchase of which resulted in the nondeductibility of the loss are the first 100 shares purchased within such period, that is, the 50 shares purchased on February 15, 1956, and the 50 shares purchased on February 16, 1956.

In determining the period for which the 50 shares purchased on February 15, 1956, and the 50 shares purchased on February 16, 1956, were held, there is to be included the period for which the 100 shares purchased on September 15, 1954, and sold on February 1, 1956, were held.

[T.D. 6500, 25 FR 11910, Nov. 26, 1960, as amended by T.D. 6926, 32 FR 11468, Aug. 9, 1967]

§ 1.1091-2 Basis of stock or securities acquired in "wash sales".

(a) ***In general.*** The application of section 1091(d) may be illustrated by the following examples:

Example 1. A purchased a share of common stock of the X Corporation for $100 in 1935, which he sold January 15, 1955, for $80. On February 1, 1955, he purchased a share of common stock of the same corporation for $90. No loss from the sale is recognized under section 1091. The basis of the new share is $110; that is, the basis of the old share ($100) increased by $10, the excess of the price at which the new share was acquired ($90) over the price at which the old share was sold ($80).

Example 2. A purchased a share of common stock of the Y Corporation for $100 in 1935, which he sold January 15, 1955, for $80. On February 1, 1955, he purchased a share of common stock of the same corporation for $70. No loss from the sale is recognized under section 1091. The basis of the new share is $90; that is, the basis of the old share ($100) decreased by $10, the excess of the price at which the old share was sold ($80) over the price at which the new share was acquired ($70).

(b) ***Special rule.*** For a special rule as to the adjustment to basis required under section 1091(d) in the case of wash sales involving certain regulated investment company stock for which there is an average basis, see paragraph (e)(3)(iii) (*c*) and (*d*) of § 1.1012-1.

[T.D. 6500, 25 FR 11910, Nov. 26, 1960, as amended by T.D. 7129, 36 FR 12738, July 7, 1971]

§ 1.1092(b)-1T Coordination of loss deferral rules and wash sale rules (temporary).

(a) ***In general.*** Except as otherwise provided, in the case of the disposition of a position or positions of a straddle, the rules of paragraph (a)(1) of this section apply before the application of the rules of paragraph (a)(2) of this section.

(1) Any loss sustained from the disposition of shares of stock or securities that constitute positions of a straddle shall not be taken into account for purposes of this subtitle if, within a period beginning 30 days before the date of such disposition and ending 30 days after such date, the taxpayer has acquired (by purchase or by an exchange on which the entire amount of gain or loss was recognized by law), or has entered into a contract or option so to acquire, substantially identical stock or securities.

(2) Except as otherwise provided, if a taxpayer disposes of less than all of the positions of a straddle, any loss sustained with respect to the disposition of that position or positions (hereinafter referred to as *loss position*) shall not be taken into account for purposes of this subtitle to the extent that the amount of unrecognized gain as of the close of the taxable year in one or more of the following positions—

(i) Successor positions,

(ii) Offsetting positions to the loss position, or

(iii) Offsetting positions to any successor position,

exceeds the amount of loss disallowed under paragraph (a)(1) of this section. See § 1.1092(b)-5T relating to definitions.

(b) ***Carryover of disallowed loss.*** Any loss that is disallowed under paragraph (a) of this section shall, subject to any further application of paragraph (a)(1) of this section and the limitations under paragraph (a)(2) of this section, be treated as sustained in the succeeding taxable year. However, a loss disallowed in Year 1, for example, under paragraph (a)(1) of this section will not be allowed in Year 2 unless the substantially identical stock or securities, the acquisition of which caused the loss to be disallowed in Year 1, are disposed of during Year 2 and paragraphs (a)(1) and (a)(2) of this section do not apply in Year 2 to disallow the loss.

(c) ***Treatment of disallowed loss*** —

(1) ***Character.*** If the disposition of a loss position would (but for the application of this section) result in a capital loss, the loss allowed under paragraph (b) of this section with respect to the disposition of the loss position shall be treated as a capital loss. In any other case, a loss allowed under paragraph (b) of this section shall be treated as an ordinary loss. For example, if the disposition of a loss position would, but for the application of paragraph (a) of this section, give rise to a capital loss, that loss when allowed pursuant to paragraph (b) of this section will be treated as a capital loss on the date the loss is allowed regardless of whether any gain or loss with respect to one or more successor positions would be treated as ordinary income or loss.

(2) ***Section 1256 contracts.*** If the disposition of a loss position would (but for the application of this section) result in 60 percent long-term capital loss and 40 percent short-term capital loss, the loss allowed under paragraph (b) of this section with respect to the disposition of the loss position shall be treated as 60 percent long-term capital loss and 40 percent short-term capital loss regardless of whether any gain or loss with respect to one or more successor positions would be treated as 100 percent long-term or short-term capital gain or loss.

(d) ***Exceptions.***

(1) This section shall not apply to losses sustained—

(i) With respect to the disposition of one or more positions that constitute part of a hedging transaction;

(ii) With respect to the disposition of a loss position included in a mixed straddle account (as defined in paragraph (b) of § 1.1092(b)-4T); and

(iii) With respect to the disposition of a position that is part of a straddle consisting only of section 1256 contracts.

(2) Paragraph (a)(1) of this section shall not apply to losses sustained by a dealer in stock or securities if such losses are sustained in a transaction made in the ordinary course of such business.

(e) ***Coordination with section 1091.*** Section 1092(b) applies in lieu of section 1091 to losses sustained from the disposition of positions in a straddle. See example (18) of paragraph (g) of this section.

(f) ***Effective date.*** The provisions of this section apply to dispositions of loss positions on or after January 24, 1985.

(g) ***Examples.*** This section may be illustrated by the following examples. It is assumed in each example that the following positions are the only positions held directly or indirectly (through a related person or flowthrough entity) by an individual calendar year taxpayer during the taxable year and none of the exceptions contained in paragraph (d) of this section apply.

Example 1. On December 1, 1985, A enters into offsetting long and short positions. On December 10, 1985, A disposes of the short position at an $11 loss, at which time there is $5 of unrealized gain in the offsetting long position. At year-end there is still $5 of unrecognized gain in the offsetting long position. Under these circumstances, $5 of the $11 loss will be disallowed for 1985 because there is $5 of unrecognized gain in the offsetting long position; the remaining $6 of loss, however, will be taken into account in 1985.

Example 2. Assume the facts are the same as in example (1), except that at year-end there is $11 of unrecognized gain in the offsetting long position. Under these circumstances, the entire $11 loss will be disallowed for 1985 because there is $11 of unrecognized gain at year-end in the offsetting long position.

Example 3. Assume the facts are the same as in example (1), except that at year-end there is no unrecognized gain in the offsetting long position. Under these circumstances, the entire $11 loss will be allowed for 1985.

Example 4. On November 1, 1985, A enters into offsetting long and short positions. On November 10, 1985, A disposes of the long position at a $10 loss, at which time there is $10 of unrealized gain in the short position. On November 11, 1985, A enters into a new long position (successor position) that is offsetting with respect to the retained short position but is not substantially identical to the long position disposed of on November 10, 1985. A holds both positions through year-end, at which time there is $10 of unrecognized gain in the successor long position and no unrecognized gain in the offsetting short position. Under these circumstances, the entire $10 loss will be disallowed for 1985 because there is $10 of unrecognized gain in the successor long position.

Example 5. Assume the facts are the same as in example (4), except that at year-end there is $4 of unrecognized gain in the successor long position and $6 of unrecognized gain in the offsetting short position. Under these circumstances, the entire $10 loss will be disallowed for 1985 because there is a total of $10 of unrecognized gain in both the successor long position and offsetting short position.

Example 6. Assume the facts are the same as in example (4), except that at year-end A disposes of the offsetting short position at a $2 loss. Under these circumstances, $10 of the total $12 loss will be disallowed because there is $10 of unrecognized gain in the successor long position.

Example 7. Assume the facts are the same as in example (4), and on January 10, 1986, A disposes of the successor long position at no gain or loss. A holds the offsetting short position until year-end, at which time there is $10 of unrecognized gain. Under these circumstances, the $10 loss will be disallowed for 1986 because there is $10 of unrecognized gain in an offsetting position at year-end.

Example 8. Assume the facts are the same as in example (4), except at year-end there is $8 of unrecognized gain in the successor long position and $8 of unrecognized loss in the offsetting short position. Under these circumstances, $8 of the total $10 realized loss will be disallowed because there is $8 of unrecognized gain in the successor long position.

Example 9. On October 1, 1985, A enters into offsetting long and short positions. Neither the long nor the short position is stock or securities. On October 2, 1985, A disposes of the short position at a $10 loss and the long position at a $10 gain. On October 3, 1985, A enters into a long position identical to

the original long position. At year-end there is $10 of unrecognized gain in the second long position. Under these circumstances, the $10 loss is allowed because the second long position is not a successor position or offsetting position to the short loss position.

Example 10. On November 1, 1985, A enters into offsetting long and short positions. On November 10, 1985, there is $20 of unrealized gain in the long position and A disposes of the short position at a $20 loss. By November 15, 1985, the value of the long position has declined eliminating all unrealized gain in the position. On November 15, 1985, A establishes a second short position (successor position) that is offsetting with respect to the long position but is not substantially identical to the short position disposed of on November 10, 1985. At year-end there is no unrecognized gain in the offsetting long position or in the successor short position. Under these circumstances, the $20 loss sustained with respect to the short loss position will be allowed for 1985 because at year-end there is no unrecognized gain in the successor short position or the offsetting long position.

Example 11. Assume the facts are the same as in example (10), except that the second short position was established on November 8, 1985, and there is $20 of unrecognized gain in the second short position at year-end. Since the second short position was entered into within 30 days before the disposition of the loss position, the second short position is considered a successor position to the loss position. Under these circumstances, the $20 loss will be disallowed because there is $20 of unrecognized gain in a successor position.

Example 12. Assume the facts are the same as in example (10), except that at year-end there is $18 of unrecognized gain in the offsetting long position and $18 of unrecognized gain in the successor short position. Under these circumstances, the entire loss will be disallowed because there is more than $20 of unrecognized gain in both the successor short position and offsetting long position.

Example 13. Assume the facts are the same as in example (10), except that there is $20 of unrecognized gain in the successor short position and no unrecognized gain in the offsetting long position at year-end. Under these circumstances, the entire $20 loss will be disallowed because there is $20 of unrecognized gain in the successor short position.

Example 14. On January 2, 1986, A enters into offsetting long and short positions. Neither the long nor the short position is stock or securities. On March 3, 1986, A disposes of the long position at a $10 gain. On March 10, 1986, A disposes of the short position at a $10 loss. On March 14, 1986, A enters into a new short position. On April 10, 1986, A enters into an offsetting long position. A holds both positions to year-end, at which time there is $10 of unrecognized gain in the offsetting long position and no unrecognized gain or loss in the short position. Under these circumstances, the $10 loss will be allowed because

(1) the rules of paragraph (a)(1) of this section are not applicable; and

(2) the rules of paragraph (a)(2) of this section do not apply, since all positions of the straddle that contained the loss position were disposed of.

Example 15. On December 1, 1985, A enters into offsetting long and short positions. On December 4, 1985, A disposes of the short position at a $10 loss. On December 5, 1985, A establishes a new short position that is offsetting to the long position, but is not substantially identical to the short position disposed of on December 4, 1985. On December 6, 1985, A disposes of the long position at a $10 gain. On December 7, 1985, A enters into a second long position that is offsetting to the new short position, but is not substantially identical to the long position disposed of on December 6, 1985. A holds both positions to year-end at which time there is no unrecognized gain in the second short

position and $10 of unrecognized gain in the offsetting long position. Under these circumstances, the entire $10 loss will be disallowed for the 1985 taxable year because the second long position is an offsetting position with respect to the second short position which is a successor position.

Example 16. On September 1, 1985, A enters into offsetting positions consisting of a long section 1256 contract and short non-section 1256 position. No elections under sections 1256(d)(1) or 1092(b)(2)(A), relating to mixed straddles, are made. On November 1, 1985, at which time there is $20 of unrecognized gain in the short non-section 1256 position, A disposes of the long section 1256 contract at a $20 loss and on the same day acquires a long non-section 1256 position (successor position) that is offsetting with respect to the short non-section 1256 position. But for the application of this section, A's disposition of the section 1256 contract would give rise to a capital loss. At year-end there is a $20 of unrecognized gain in the offsetting short non-section 1256 position and no unrecognized gain in the successor long position. Under these circumstances, the entire $20 loss will be disallowed for 1985 because there is $20 unrecognized gain in the offsetting short position. In 1986, A disposes of the successor long non-section 1256 position and there is no unrecognized gain at year-end in the offsetting short position. Under these circumstances, the $20 loss disallowed in 1985 with respect to the section 1256 contract will be treated in 1986 as 60 percent long-term capital loss and 40 percent short-term capital loss.

Example 17. On January 2, 1986, A, not a dealer in stock or securities, acquires stock in X Corporation (X stock) and an offsetting put option. On March 3, 1986, A disposes of the X stock at a $10 loss. On March 10, 1986, A disposes of the put option at a $10 gain. On March 14, 1986, A acquires new X stock that is substantially identical to the X stock disposed of on March 3, 1986. A holds the X stock to year-end. Under these circumstances, the $10 loss will be disallowed for 1986 under paragraph (a)(1) of this section because A, within a period beginning 30 days before March 3, 1986 and ending 30 days after such date, acquired stock substantially identical to the X stock disposed of.

Example 18. On June 2, 1986, A, not a dealer in stock or securities, acquires stock in X Corporation (X stock). On September 2, 1986, A disposes of the X stock at a $100 loss. On September 15, 1986, A acquires new X stock that is substantially identical to the X stock disposed of on September 2, 1986, and an offsetting put option. A holds these straddle positions to year-end. Under these circumstances, section 1091, rather than section 1092(b), will apply to disallow the $100 loss for 1986 because the loss was not sustained from the disposition of a position that was part of a straddle. See paragraph (e) of this section.

Example 19. On November 1, 1985, A, not a dealer in stock or securities, acquires stock in Y Corporation (Y stock) and an offsetting put option. On November 12, 1985, there is $20 of unrealized gain in the put option and A disposes of the Y stock at a $20 loss. By November 15, 1985, the value of the put option has declined eliminating all unrealized gain in the position. On November 15, 1985, A acquires a second Y stock position that is substantially identical to the Y stock disposed of on November 12, 1985. At year-end there is no unrecognized gain in the put option or the Y stock. Under these circumstances, the $20 loss will be disallowed for 1985 under paragraph (a)(1) of this section because A, within a period beginning 30 days before November 12, 1985 and ending 30 days after such date, acquired stock substantially identical to the Y stock disposed of.

Example 20. Assume the facts are the same as in Example 19 and that on December 31, 1986, A disposes of the put option at a $40 gain and there is $20 of unrecognized loss in the Y stock. Under these circumstances, the $20 loss which was disallowed in 1985 also will be disallowed for 1986 under the rules of paragraph (a)(1) of this section because A has not disposed of the stock substantially identical to the Y stock disposed of on November 12, 1985.

Example 21. Assume the facts are the same as in example (19), except that on December 31, 1986, A disposes of the Y stock at a $20 loss and there is $40 of unrecognized gain in the put option. Under these circumstances, A will not recognize in 1986 either the $20 loss disallowed in 1985 or the $20 loss sustained with respect to the December 31, 1986 disposition of Y stock. Paragraph (a)(1) of this section does not apply to disallow the losses in 1986 since the substantially identical Y stock was disposed of during the year (and no substantially identical stock or securities was acquired by A within the 61 day period). However, paragraph (a)(2) of this section applies to disallow for 1986 the $40 of losses sustained with respect to the dispositions of positions in the straddle because there is $40 of unrecognized gain in the put option, an offsetting position to the loss positions.

Example 22. On January 2, 1986, A, not a dealer in stock or securities, acquires stock in X Corporation (X stock) and an offsetting put option. On March 3, 1986, A disposes of the X stock at a $10 loss. On March 17, 1986, A acquires new X stock that is substantially identical to the X stock disposed of on March 3, 1986. On December 31, 1986, A disposes of the X stock at a $5 gain, at which time there is $5 of unrecognized gain in the put option. Under these circumstances, the $10 loss sustained with respect to the March 3, 1986, disposition of X stock will be allowed under paragraph (a) (1) of this section since the substantially identical X stock acquired on March 17, 1986, was disposed of by year-end (and no substantially identical stock or securities were acquired by A within the 61 day period). However, $5 of the $10 loss will be disallowed under paragraph (a)(2) of this section because there is $5 of unrecognized gain in the put option, an offsetting position to the loss position.

Example 23. Assume the facts are the same as in example (22), except that on December 31, 1986, A disposes of the offsetting put option at a $5 loss and there is $5 of unrecognized gain in the X stock acquired on March 17, 1986. Under these circumstances, the $10 loss sustained with respect to the X stock disposed of on March 3, 1986, will be disallowed for 1986 under paragraph (a)(1) of this section. The $5 loss sustained upon the disposition of the put option will be allowed because

(1) the rules of paragraph (a)(1) of this section are not applicable; and

(2) the rules of paragraph (a)(2) of this section allow the loss, since the unrecognized gain in the X stock ($5) is not in excess of the loss ($10) disallowed under paragraph (a)(1) of this section.

Example 24. On January 2, 1986, A, not a dealer in stock or securities, acquires 200 shares of Z Corporation stock (Z stock) and 2 put options on Z stock (giving A the right to sell 200 shares of Z stock). On September 2, 1986, there is $200 of unrealized gain in the put option positions and A disposes of the 200 shares of Z stock at a $200 loss. On September 10, 1986, A acquires 100 shares of Z stock (substantially identical to the Z stock disposed of on September 2, 1986), and a call option that is offsetting to the put options on Z stock and that is not an option to acquire property substantially identical to the Z stock disposed of on September 2, 1986. At year-end, there is $80 of unrecognized gain in the Z stock position, $80 of unrecognized gain in the call option position, and no unrecognized gain or loss in the offsetting put option positions. Under these circumstances, $40 of the $200 loss sustained with respect to the September 2, 1986 disposition of Z stock will be recognized by A in 1986 under paragraph (a) of this section, as set forth below. Paragraph (a)(1) of this section applies first to disallow $100 of the loss ($^1/_2$ of the loss), since 100 shares of substantially identical Z stock ($^1/_2$ of the stock) were acquired within the 61 day period. Paragraph (a)(2) of this section then applies to disallow that portion of the loss allowed under paragraph (a)(1) of this section ($200−$100 = $100) equal to the excess of the total unrecognized gain in the Z stock and call option positions (successor positions to the loss position) ($80 + $80 = $160) over the $100 loss disallowed under paragraph (a)(1) of this section ($160−$100 = $60; $100−$60 = $40).

Example 25. Assume the facts are the same as in example (24), except that at year-end there is $110 of unrecognized gain in the Z stock position, $78 of unrecognized gain in the call option position, and $10 of unrecognized gain in the offsetting put option positions. Under these circumstances, $2 of the $200 loss sustained with respect to the September 2, 1986 disposition of Z stock will be allowed in 1986 under paragraph (a) of this section, as set forth below. Paragraph (a)(1) of this section applies first to disallow $100 of the loss ($^1/_2$ of the loss) since 100 shares of substantially identical Z stock ($^1/_2$ of the stock) were acquired within the 61 day period. Paragraph (a)(2) of this section then applies to disallow that portion of the loss allowed under paragraph (a)(1) of this section ($200−$100 = $100) equal to the excess of the total unrecognized gain in the Z stock and call option positions (successor positions to the loss position) and the put option positions (offsetting positions to the loss position) ($110 + $78 + $10 = $198) over the $100 loss disallowed under paragraph (a)(1) of this section ($198−$100 = $98; $100−$98 = $2).

Example 26. Assume the facts are the same as in example (24), except that at year-end there is $120 of unrecognized gain in the Z stock position, $88 of unrecognized gain in the call option position, and $10 of unrecognized loss in one of the offsetting put option positions. At year-end A disposes of the other put option position at a $10 loss. Under these circumstances, $2 of the $210 loss sustained with respect to the September 2, 1986 disposition of Z stock ($200) and the year-end disposition of a put option ($10) will be allowed in 1986 under paragraph (a) of this section, as set forth below. Paragraph (a)(1) of this section applies first to disallow $100 of the loss from the disposition of Z stock ($^1/_2$ of the loss), since 100 shares of substantially identical Z stock ($^1/_2$ of the stock) were acquired within the 61 day period. Paragraph (a)(2) of this section then applies to disallow that portion of the loss allowed under paragraph (a)(1) of this section ($210−$100 = $110) equal to the excess of the total unrecognized gain in the Z stock and call option positions (successor positions to the Z stock loss position, and offsetting positions to the put option loss position) ($120 + $88 = $208) over the $100 loss disallowed under paragraph (a)(1) of this section ($208−$100 = $108; $110−$108 = $2).

Example 27. On January 27, 1986, A enters into offsetting long (L1) and short (S1) positions. Neither L1 nor S1 nor any other positions entered into by A in 1986 are stock or securities. On February 3, 1986, A disposes of L1 at a $10 loss. On February 5, 1986, A enters into a new long position (L2) that is offsetting to S1. On October 15, 1986, A disposes of S1 at an $11 loss. On October 17, 1986, A enters into a new short position (S2) that is offsetting to L2. On December 30, 1986, A disposes of L2 at a $12 loss. On December 31, 1986, A enters into a new long position (L3) that is offsetting to S2. At year-end, S2 has an unrecognized gain of $33. Paragraph (a)(1) of this section does not apply since none of the positions were shares of stock or securities. However, all $33 ($10 + $11 + $12) of the losses sustained with respect to L1, S1 and L2 will be disallowed under paragraph (a)(2) because there is $33 of unrecognized gain in S2 at year-end. The $10 loss from the disposition of L1 is disallowed because S2 is or was an offsetting position to a successor long position (L2 or L3). The $11 loss from the disposition of S1 is disallowed because S2 is a successor position to S1. The $12 loss from the disposition of L2 is disallowed because S2 was an offsetting position to L2.

(Secs. 1092(b) and 7805 of the Internal Revenue Code of 1954 (68A Stat. 917, 95 Stat. 324, 26 U.S.C. 1092(b), 7805) and sec. 102(h) of the Tax Reform Act of 1984 (98 Stat. 625))

[T.D. 8007, 50 FR 3319, Jan. 24, 1985, as amended by T.D. 8070, 51 FR 1786, Jan. 15, 1986; 51 FR 3773, Jan. 30, 1986; 51 FR 5516, Feb. 14, 1986]

§ 1.1092(b)-2T Treatment of holding periods and losses with respect to straddle positions (temporary).

(a) *Holding period* —

(1) ***In general.*** Except as otherwise provided in this section, the holding period of any position that is part of a straddle shall not begin earlier than the date the taxpayer no longer holds directly or indirectly (through a related person or flowthrough entity) an offsetting position with respect to that position. See § 1.1092(b)-5T relating to definitions.

(2) ***Positions held for the long-term capital gain holding period (or longer) prior to establishment of the straddle.*** Paragraph (a)(1) of this section shall not apply to a position held by a taxpayer for the long-term capital gain holding period (or longer) before a straddle that includes such position is established. The determination of whether a position has been held by a taxpayer for the long-term capital gain holding period (or longer) shall be made by taking into account the application of paragraph (a)(1) of this section. See section 1222(3) relating to the holding period for long-term capital gains.

(b) *Treatment of loss* —

(1) ***In general.*** Except as provided in paragraph (b)(2) of this section, loss on the disposition of one or more positions (*loss position*) of a straddle shall be treated as a long-term capital loss if—

(i) On the date the taxpayer entered into the loss position the taxpayer held directly or indirectly (through a related person or flowthrough entity) one or more offsetting positions with respect to the loss position; and

(ii) All gain or loss with respect to one or more positions in the straddle would be treated as long-term capital gain or loss if such positions were disposed of on the day the loss position was entered into.

(2) ***Special rules for non-section 1256 positions in a mixed straddle.*** Loss on the disposition of one or more positions (*loss position*) that are part of a mixed straddle and that are non-section 1256 positions shall be treated as 60 percent long-term capital loss and 40 percent short-term capital loss if—

(i) Gain or loss from the disposition of one or more of the positions of the straddle that are section 1256 contracts would be considered gain or loss from the sale or exchange of a capital asset;

(ii) The disposition of no position in the straddle (other than a section 1256 contract) would result in a long-term capital gain or loss; and

(iii) An election under section 1092(b)(2)(A)(i)(I) (relating to straddle-by-straddle identification) or 1092(b)(2)(A)(i)(II) (relating to mixed straddle accounts) has not been made.

(c) *Exceptions* —

(1) ***In general.*** This section shall not apply to positions that—

(i) Constitute part of a hedging transaction;

(ii) Are included in a straddle consisting only of section 1256 contracts; or

(iii) Are included in a mixed straddle account (as defined in paragraph (b) of § 1.1092(b)-4T).

(2) ***Straddle-by-straddle identification.*** Paragraphs (a)(2) and (b) of this section shall not apply to positions in a section 1092(b)(2) identified mixed straddle. See § 1.1092(b)-3T.

(d) ***Special rule for positions held by regulated investment companies.*** For purposes of section 851(b)(3) (relating to the definition of a regulated investment company), the holding period rule of paragraph (a) of this section shall not apply to positions of a straddle. However, if section 1233(b) (without regard to sections 1233(e)(2)(A) and 1092(b)) would have applied to such positions, then for purposes of section 851(b)(3) the rules of section 1233(b) shall apply. Similarly, the effect of daily marking-to-market provided under § 1.1092(b)-4T(c) will be disregarded for purposes of section 851(b)(3).

(e) ***Effective date*** —

(1) ***In general.*** Except as provided in paragraph (e)(2) of this section, the provisions of this section apply to positions in a straddle established after June 23, 1981, in taxable years ending after such date.

(2) ***Special effective date for mixed straddle positions.*** The provisions of paragraph (b)(2) of this section shall apply to positions in a mixed straddle established on or after January 1, 1984.

(f) ***Examples.*** Paragraphs (a) through (e) may be illustrated by the following examples. It is assumed in each example that the following positions are the only positions held directly or indirectly (through a related person or flowthrough entity) by an individual calendar year taxpayer during the taxable year and none of the exceptions in paragraph (c) of this section apply.

Example 1. On October 1, 1984, A acquires gold. On January 1, 1985, A enters into an offsetting short gold forward contract. On April 1, 1985, A disposes of the short gold forward contract at no gain or loss. On April 10, 1985, A sells the gold at a gain. Since the gold had not been held for more than 6 months before the offsetting short position was entered into, the holding period for the gold begins no earlier than the time the straddle is terminated. Thus, the holding period of the original gold purchased on October 1, 1984, and sold on April 10, 1985, begins on April 1, 1985, the date the straddle was terminated. Consequently, gain recognized with respect to the gold will be treated as short-term capital gain.

Example 2. On January 1, 1985, A enters into a long gold forward contract. On May 1, 1985, A enters into an offsetting short gold regulated futures contract. A does not make an election under section 1256(d) or 1092(b)(2)(A). On August 1, 1985, A disposes of the gold forward contract at a gain. Since the forward contract had not been held by A for more than 6 months prior to the establishment of the straddle, the holding period for the forward contract begins no earlier than the time the straddle is terminated. Thus, the gain recognized on the closing of the gold forward contract will be treated as short-term capital gain.

Example 3. Assume the facts are the same as in example (2), except that A disposes of the short gold regulated futures contract on July 1, 1985, at no gain or loss and the forward contract on November 1, 1985. Since the forward contract had not been held for more than 6 months before the mixed straddle was established, the holding period for the forward contract begins July 1, 1985, the date the straddle terminated. Thus, the gain recognized on the closing of the forward contract will be treated as short-term capital gain.

Example 4. On January 1, 1985, A enters into a long gold forward contract and on August 4, 1985, A enters into an offsetting short gold forward contract. On September 1, 1985, A disposes of the short position at a loss. Since an offsetting long position had been held by A for more than 6 months prior to the acquisition of the offsetting short position, the loss with respect to the closing of the short position will be treated as long-term capital loss.

Example 5. On March 1, 1985, A enters into a long gold forward contract and on July 17, 1985, A enters into an offsetting short gold regulated futures contract. A does not make an election under section 1256(d) or 1092(b)(2)(A). On August 10, 1985, A disposes of the long gold forward contract at a loss. Since the gold forward contract was part of a mixed straddle, and the disposition of no position in the straddle (other than the regulated futures contract) would give rise to a long-term capital loss, the loss recognized on the termination of the gold forward contract will be treated as 40 percent short-term capital loss and 60 percent long-term capital loss.

Example 6. Assume the facts are the same as in example (5), except that on August 11, 1985, A disposes of the short gold regulated futures contract at a gain. Under these circumstances, the gain will be treated as 60 percent long-term capital gain and 40 percent short-term capital gain since the holding period rules of paragraph (a) of this section are not applicable to section 1256 contracts.

Example 7. Assume the facts are the same as in example (5), except that A enters into the long gold forward contract on January 1, 1985, and does not dispose of the long gold forward contract but instead on August 10, 1985, disposes of the short gold regulated futures contract at a loss. Under these circumstances, the loss will be treated as a long-term capital loss since A held an offsetting non-section 1256 position for more than 6 months prior to the establishment of the straddle. However, such loss may be subject to the rules of § 1.1092(b)-1T.

(Secs. 1092(b) and 7805 of the Internal Revenue Code of 1954 (68A Stat. 917, 95 Stat. 324, 26 U.S.C. 1092(b), 7805) and sec. 102(h) of the Tax Reform Act of 1984 (98 Stat. 625))

[T.D. 8007, 50 FR 3320, Jan. 24, 1985, as amended by T.D. 8070, 51 FR 1788, Jan. 15, 1986]

§ 1.1092(b)-3T Mixed straddles; straddle-by-straddle identification under section 1092(b)(2)(A)(i)(I) (Temporary).

(a) ***In general.*** Except as otherwise provided, a taxpayer shall treat in accordance with paragraph (b) of this section gains and losses on positions that are part of a mixed straddle for which the taxpayer has made an election under paragraph (d) of this section (hereinafter referred to as a *section 1092(b)(2) identified mixed straddle*). No election may be made under this section for any straddle composed of one or more positions that are includible in a mixed straddle account (as defined in paragraph (b) of § 1.1092(b)-4T) or for any straddle for which an election under section 1256(d) has been made. See § 1.1092(b)-5T relating to definitions.

(b) ***Treatment of gains and losses from positions included in a section 1092(b)(2) identified mixed straddle*** —

(1) ***In general.*** Gains and losses from positions that are part of a section 1092(b)(2) identified mixed straddle shall be determined and treated in accordance with the rules of paragraph (b) (2) through (7) of this section.

(2) ***All positions of a section 1092(b)(2) identified mixed straddle are disposed of on the same day.*** If all positions of a section 1092(b)(2) identified mixed straddle are disposed of (or deemed disposed of) on the same say, gains and losses from section 1256 contracts in the straddle shall be netted, and gains and losses from non-section 1256 positions in the straddle shall be netted. Net gain or loss from the section 1256 contracts shall then be offset against net gain or loss from the non-section 1256 positions to determine the net gain or loss from the straddle. If net gain or loss from the straddle is attributable to the positions of the straddle that are section 1256 contracts, such gain or loss shall be treated as 60 percent long-term capital gain or loss and 40 percent short-term capital gain or loss. If net gain or loss from the straddle is attributable to the positions of the straddle that

are non-section 1256 positions, such gain or loss shall be treated as short-term capital gain or loss. This paragraph (b)(2) may be illustrated by the following examples. It is assumed in each example that the positions are the only positions held directly or indirectly (through a related person or flowthrough entity) by an individual calendar year taxpayer during the taxable year.

Example 1. On April 1, 1985, A enters into a non-section 1256 position and an offsetting section 1256 contract and makes a valid election to treat such straddle as a section 1092(b)(2) identified mixed straddle. On April 10, 1985, A disposes of the non-section 1256 position at a $600 loss and the section 1256 contract at a $600 gain. Under these circumstances, the $600 loss on the non-section 1256 position will be offset against the $600 gain on the section 1256 contract and the net gain or loss from the straddle will be zero.

Example 2. Assume the facts are the same as in example (1), except that the gain on the section 1256 contract is $800. Under these circumstances, the $600 loss on the non-section 1256 position will be offset against the $800 gain on the section 1256 contract. The net gain of $200 from the straddle will be treated as 60 percent long-term capital gain and 40 percent short-term capital gain because it is attributable to the section 1256 contract.

Example 3. Assume the facts are the same as in example (1), except that the loss on the non-section 1256 position is $800. Under these circumstances, the $600 gain on the section 1256 contract will be offset against the $800 loss on the non-section 1256 position. The net loss of $200 from the straddle will be treated as short-term capital loss because it is attributable to the non-section 1256 position.

Example 4. On May 1, 1985, A enters into a straddle consisting of two non-section 1256 positions and two section 1256 contracts and makes a valid election to treat the straddle as a section 1092(b)(2) identified mixed straddle. On May 10, 1985, A disposes of the non-section 1256 positions, one at a $700 loss and the other at a $500 gain, and disposes of the section 1256 contracts, one at a $400 gain and the other at a $300 loss. Under these circumstances, the gain and losses from the section 1256 contracts and non-section 1256 positions will first be netted, resulting in a net gain of $100 ($400-$300) on the section 1256 contracts and a net loss of $200 ($700-$500) on the non-section 1256 positions. The net gain of $100 from the section 1256 contracts will then be offset against the $200 net loss on the non-section 1256 positions. The net loss of $100 from the straddle will be treated as short-term capital loss because it is attributable to the non-section 1256 positions.

Example 5. On December 30, 1985, A enters into a section 1256 contract and an offsetting non-section 1256 position and makes a valid election to treat such straddle as a section 1092(b)(2) identified mixed straddle. On December 31, 1985, A disposes of the non-section 1256 position at a $2,000 gain. A also realizes a $2,000 loss on the section 1256 contract because it is deemed disposed of under section 1256(a)(1). Under these circumstances, the $2,000 gain on the non-section 1256 position will be offset against the $2,000 loss on the section 1256 contract, and the net gain or loss from the straddle will be zero.

Example 6. Assume the facts are the same as in example (5), except that the section 1092(b)(2) identified mixed straddle was entered into on November 12, 1985, A realizes a $2,200 loss on the section 1256 contract, and on December 15, 1985, A enters into a non-section 1256 position that is offsetting to the non-section 1256 gain position of the section 1092(b)(2) identified mixed straddle. At year-end there is $200 of unrecognized gain in the non-section 1256 position that was entered into on December 15. Under these circumstances, the $2,200 loss on the section 1256 contract will be offset against the $2,000 gain on the non-section

1256 position. The net $200 loss from the straddle will be treated as 60 percent long-term capital loss and 40 percent short-term capital loss because it is attributable to the section 1256 contract. The net loss of $200 from the straddle will be disallowed in 1985 under the loss deferral rules of section 1092(a) because there is $200 of unrecognized gain in a successor position (as defined in paragraph (n) of § 1.1092(b)-5T) at year-end. See paragraph (c) of this section.

(3) ***All of the non-section 1256 positions of a section 1092(b)(2) identified mixed straddle disposed of on the same day.*** This paragraph (b)(3) applies if all of the non-section 1256 positions of a section 1092(b)(2) identified mixed straddle are disposed of on the same day or if this paragraph (b)(3) is made applicable by paragraph (b)(5) of this section. In the case to which this paragraph (b)(3) applies, gain and loss realized from non-section 1256 positions shall be netted. Realized and unrealized gain and loss with respect to the section 1256 contracts of the straddle also shall be netted on that day. Realized net gain or loss from the non-section 1256 positions shall then be offset against net gain or loss from the section 1256 contracts to determine the net gain or loss from the straddle on that day. Net gain or loss from the straddle that is attributable to the non-section 1256 positions shall be realized and treated as short-term capital gain or loss on that day. Net gain or loss from the straddle that is attributable to realized gain or loss with respect to section 1256 contracts shall be realized and treated as 60 percent long-term capital gain or loss and 40 percent short-term capital gain or loss. Any gain or loss subsequently realized on the section 1256 contracts shall be adjusted (through an adjustment to basis or otherwise) to take into account the extent to which gain or loss was offset by unrealized gain or loss on the section 1256 contracts on that day. This paragraph (b)(3) may be illustrated by the following examples. It is assumed in each example that the positions are the only positions held directly or indirectly (through a related person or flowthrough entity) by an individual calendar year taxpayer during the taxable year.

Example 1. On July 20, 1985, A enters into a section 1256 contract and an offsetting non-section 1256 position and makes a valid election to treat such straddle as a section 1092(b)(2) identified mixed straddle. On July 27, 1985, A disposes of the non-section 1256 position at a $1,500 loss, at which time there is $1,500 of unrealized gain in the section 1256 contract. A holds the section 1256 contract at year-end at which time there is $1,800 of gain. Under these circumstances, on July 27, 1985, A offsets the $1,500 loss on the non-section 1256 position against the $1,500 gain on the section 1256 contract and realizes no gain or loss. On December 31, 1985, A realizes a $300 gain on the section 1256 contract because the position is deemed disposed of under section 1256(a)(1). The $300 gain is equal to $1,800 of gain less a $1,500 adjustment for unrealized gain offset against the loss realized on the non-section 1256 position on July 27, 1985, and the gain will be treated as 60 percent long-term capital gain and 40 percent short-term capital gain.

Example 2. Assume the facts are the same as in example (1), except that on July 27, 1985, A realized a $1,700 loss on the non-section 1256 position. Under these circumstances, on July 27, 1985, A offsets the $1,700 loss on the non-section 1256 position against the $1,500 gain on the section 1256 contract. A realizes a $200 loss from the straddle on July 27, 1985, which will be treated as short-term capital loss because it is attributable to the non-section 1256 position. On December 31, 1985, A realizes a $300 gain on the section 1256 contract, computed as in example (1), which will be treated as 60 percent long-term capital gain and 40 percent short-term capital gain.

Example 3. On March 1, 1985, A enters into a straddle consisting of two non-section 1256 positions and two section 1256 contracts and makes a valid election to treat such straddle as a section 1092(b)(2) identified mixed straddle. On March 11, 1985, A disposes of the non-section 1256 positions, one at a $100 loss and the other at a $150 loss, and disposes of one section 1256 contract at a $100 loss. On that day there is $100 of unrealized gain on the section 1256 contract retained by A. A holds the remaining section 1256 contract at year-end, at which time there is $150 of gain. Under these circumstances, on March 11, 1985, A will first net the gains and losses from the section 1256 contracts and net the gains and losses from the non-section 1256 positions resulting in no gain or loss on the section 1256 contracts and a net loss of $250 on the non-section 1256 positions. Since there is no gain or loss to offset against the non-section 1256 positions, the net loss of $250 will be treated as short-term capital loss because it is attributable to the non-section 1256 positions. On December 31, 1985, A realizes a $50 gain on the remaining section 1256 contract because the position is deemed disposed of under section 1256(a)(1). The $50 gain is equal to $150 gain less a $100 adjustment to take into account the $100 unrealized gain that was offset against the $100 loss realized on the section 1256 contract on March 11, 1985.

Example 4. Assume the facts are the same as in example (3), except that A disposes of the section 1256 contract at a $500 gain. As in example (3), A has a net loss of $250 on the non-section 1256 positions disposed of. In this example, however, A has net gain of $600 ($500 + $100) on the section 1256 contracts on March 11, 1985. Therefore, of the net gain from the straddle of $350 ($600-$250), $250 ($500-$250) is treated as 60 percent long-term capital gain and 40 percent short-term capital gain because only $250 is attributable to the realized gain from the section 1256 contract. In addition, because none of the $100 unrealized gain from the remaining section 1256 contract was offset against gain or loss on the non-section 1256 positions, no adjustment is made under paragraph (b)(3) of this section and the entire $150 gain on December 31 with respect to that contract is realized on that date.

(4) ***All of the section 1256 contracts of a section 1092(b)(2) identified mixed straddle disposed of on the same day.*** This paragraph (b)(4) applies if all of the section 1256 contracts of a section 1092(b)(2) identified mixed straddle are disposed of (or deemed disposed of) on the same day or if this paragraph (b)(4) is made applicable by paragraph (b)(5) of this section. In the case to which this paragraph (b)(4) applies, gain and loss realized from section 1256 contracts shall be netted. Realized and unrealized gain and loss with respect to the non-section 1256 positions of the straddle also shall be netted on that day. Realized net gain or loss from the section 1256 contracts shall be treated as short-term capital gain or loss to the extent of net gain or loss on the non-section 1256 positions on that day. Net gain or loss with respect to the section 1256 contracts that exceeds the net gain or loss with respect to the non-section 1256 positions of the straddle shall be treated as 60 percent long-term capital gain or loss and 40 percent short-term capital gain or loss. See paragraph (b)(7) of this section relating to the gain or loss on such non-section 1256 positions. This paragraph (b)(4) may be illustrated by the following examples. It is assumed in each example that the positions are the only positions held directly or indirectly (through a related person or flowthrough entity) by an individual calendar year taxpayer during the taxable year.

Example 1. On December 30, 1985, A enters into a section 1256 contract and an offsetting non-section 1256 position and makes a valid election to treat such straddle as a section 1092(b)(2) identified mixed straddle. On December 31, 1985, A disposes of the section 1256 contract at a

$1,000 gain, at which time there is $1,000 of unrealized loss in the non-section 1256 position. Under these circumstances, the $1,000 gain realized on the section 1256 contract will be treated as short-term capital gain because there is a $1,000 loss on the non-section 1256 position.

Example 2. Assume the facts are the same as in example (1), except that A realized a $1,500 gain on the disposition of the section 1256 contract. Under these circumstances, $1,000 of the gain realized on the section 1256 contract will be treated as short-term capital gain because there is a $1,000 loss on the non-section 1256 position. The net gain of $500 from the straddle will be treated as 60 percent long-term capital gain and 40 percent short-term capital gain because it is attributable to the section 1256 contract.

Example 3. Assume the facts are the same as in example (1), except that A realized a $1,000 loss on the section 1256 contract and there is $1,000 of unrecognized gain on the non-section 1256 position. Under these circumstances, the $1,000 loss on the section 1256 contract will be treated as short-term capital loss because there is a $1,000 gain on the non-section 1256 position. Such loss, however, will be disallowed in 1985 under the loss deferral rules of section 1092(a) because there is $1,000 of unrecognized gain in an offsetting position at year-end. See paragraph (c) of this section.

Example 4. Assume the facts are the same as in example (1), except that the section 1256 contract and non-section 1256 position were entered into on December 1, 1985, and the section 1256 contract is disposed of on December 19, 1985, for a $1,000 gain, at which time there is $1,000 of unrealized loss on the non-section 1256 position. At year-end there is only $800 of unrealized loss in the non-section 1256 position. Under these circumstances, the result is the same as in example (1) because there was $1,000 of unrealized loss on the non-section 1256 position at the time of the disposition of the section 1256 contract.

Example 5. On July 15, 1985, A enters into a straddle consisting of two non-section 1256 positions and two section 1256 contracts and makes a valid election to treat such straddle as a section 1092(b)(2) identified mixed straddle. On July 20, 1985, A disposes of one non-section 1256 position at a gain of $1,000 and both section 1256 contracts at a net loss of $1,000. On the same day there is $200 of unrealized loss on the non-section 1256 position retained by A. Under these circumstances, realized and unrealized gain and loss with respect to the non-section 1256 positions is netted, resulting in a net gain of $800. Thus, $800 of the net loss on the section 1256 contracts disposed of will be treated as short-term capital loss because there is $800 of net gain on the non-section 1256 positions. In addition, the net loss of $200 from the straddle will be treated as 60 percent long-term capital loss and 40 percent short-term capital loss because it is attributable to the section 1256 contract.

(5) ***Disposition of one or more, but not all, positions of a section 1092(b)(2) identified mixed straddle on the same day.*** If one or more, but not all, of the positions of a section 1092(b)(2) identified mixed straddle are disposed of on the same day, and paragraphs (b) (3) and (4) of this section are not applicable (without regard to this paragraph (b)(5)), the gain and loss from the non-section 1256 positions that are disposed of on that day shall be netted, and the gain and loss from the section 1256 contracts that are disposed of on that day shall be netted. In order to determine whether the rules of paragraph (b)(3) or (b)(4) of this section apply, net gain or loss from the section 1256 contracts disposed of shall then be offset against net gain or loss from the non-section 1256 positions disposed of to determine net gain or loss from such positions of the straddle. If net gain or loss from the disposition of such positions of the straddle is attributable to the non-section 1256

positions disposed of, the rules prescribed in paragraph (b)(3) of this section apply. If net gain or loss from the disposition of such positions is attributable to the section 1256 contracts disposed of, the rules prescribed in paragraph (b)(4) of this section apply. If the net gain or loss from the netting of non-section 1256 positions disposed of and the netting of section 1256 contracts disposed of are either both gains or losses, the rules prescribed in paragraph (b)(3) of this section shall apply to net gain or loss from such non-section 1256 positions, and the rules prescribed in paragraph (b)(4) of this section shall apply to net gain or loss from such section 1256 contracts. However, for purposes of determining the treatment of gain or loss subsequently realized on a position of such straddle, to the extent that unrealized gain or loss on other positions was used to offset realized gain or loss on a non-section 1256 position under paragraph (b)(3) of this section, or was used to treat realized gain or loss on a section 1256 contract as short-term capital gain or loss under paragraph (b)(4) of this section, such amount shall not be used for such purposes again. This paragraph (b)(5) may be illustrated by the following examples. It is assumed that the positions are the only positions held directly or indirectly (through a related person or flowthrough entity) by an individual calendar year taxpayer during the taxable year.

Example 1. On July 15, 1985, A enters into a straddle consisting of four non-section 1256 positions and four section 1256 contracts and makes a valid election to treat such straddle as a section 1092(b)(2) identified mixed straddle. On July 20, 1985, A disposes of one non-section 1256 position at a gain of $800 and one section 1256 contract at a loss of $300. On the same day there is $400 of unrealized net loss on the section 1256 contracts retained by A and $100 of unrealized net loss on the non-section 1256 positions retained by A. Under these circumstances, the loss of $300 on the section 1256 contract disposed of will be offset against the gain of $800 on the non-section 1256 position disposed of. The net gain of $500 is attributable to the non-section 1256 position. Therefore, the rules of paragraph (b)(3) of this section apply. Under the rules of paragraph (b)(3) of this section, the net loss of $700 on the section 1256 contracts is offset against the net gain of $800 attributable to the non-section 1256 position disposed of. The net gain of $100 will be treated as short-term capital gain because it is attributable to the non-section 1256 position disposed of. Gain or loss subsequently realized on the section 1256 contracts will be adjusted to take into account the unrealized loss of $400 that was offset against the $800 gain attributable to the non-section 1256 position disposed of.

Example 2. Assume the facts are the same as in Example 1, except that A disposes of the non-section 1256 position at a gain of $300 and the section 1256 contract at a loss of $800, and there is $200 of unrealized net gain in the non-section 1256 positions retained by A. Under these circumstances, the gain of $300 on the non-section 1256 position disposed of will be offset against the loss of $800 on the section 1256 contract disposed of. The net loss of $500 is attributable to the section 1256 contract. Therefore, the rules of paragraph (b)(4) of this section apply. Under the rules of paragraph (b)(4) of this section, $500 of the net loss realized on the section 1256 contract will be treated as short-term capital loss because there is $500 of realized and unrealized gain in the non-section 1256 positions. The remaining net loss of $300 will be treated as 60 percent long-term capital loss and 40 percent short-term capital loss because it is attributable to a section 1256 contract disposed of. In addition, A realizes a $300 short-term capital gain attributable to the disposition of the non-section 1256 position.

> *Example 3.* (i) Assume the facts are the same as in example (1), except that the section 1256 contract was disposed of at a $500 gain. Under these circumstances, there

is gain of $500 attributable to the section 1256 contact disposed of and a gain of $800 attributable to the non-section 1256 position. Therefore, the rules of both paragraphs (b)(3) and (4) of this § 1.1092(b)-3T apply.
(ii) Under paragraph (b)(3) of this section, the realized and unrealized gains and losses on the section 1256 contracts are netted, resulting in a net gain of $100 ($500-$400). The section 1256 contract net gain does not offset the gain on the non-section 1256 position disposed of. Therefore, the gain of $800 on the non-section 1256 position disposed of will be treated as a short-term capital gain because there is no net loss on the section 1256 contracts.

(iii) Under paragraph (b)(4) of this section, the realized and unrealized gains and losses on the non-section 1256 positions are netted, resulting in a non-section 1256 position net gain of $700 ($800-$100). Because there is no net loss on the non-section 1256 positions, the $500 gain realized on the section 1256 contract will be treated as 60 percent long-term capital gain and 40 percent short-term capital gain.

(6) ***Accrued gain and loss with respect to positions of a section 1092(b)(2) identified mixed straddle established on or before August 18, 2014.*** The rules of this paragraph (b)(6) apply to all section 1092(b)(2) identified mixed straddles established on or before *August 18, 2014*; see § 1.1092(b)-6 for section 1092(b)(2) identified mixed straddles established after August 18, 2014. If one or more positions of a section 1092(b)(2) identified mixed straddle were held by the taxpayer on the day prior to the day the section 1092(b)(2) identified mixed straddle is established, such position or positions shall be deemed sold for their fair market value as of the close of the last business day preceding the day such straddle is established. See §§ 1.1092(b)-1T and 1.1092(b)-2T for application of the loss deferral and wash sale rules and for treatment of holding periods and losses with respect to such positions. An adjustment (through an adjustment to basis or otherwise) shall be made to any subsequent gain or loss realized with respect to such to such position or positions for any gain or loss recognized under this paragraph (b)(6). This paragraph (b)(6) may be illustrated by the following examples. It is assumed in each example that the positions are the only positions held directly or indirectly (through a related person or flowthrough entity) by an individual calendar year taxpayer during the taxable year.

Example 1. On January 1, 1985, A enters into a non-section 1256 position. As of the close of the day on July 9, 1985, there is $500 of unrealized long-term capital gain in the non-section 1256 position. On July 10, 1985, A enters into an offsetting section 1256 contract and makes a valid election to treat the straddle as a section 1092(b)(2) identified mixed straddle. Under these circumstances, on July 9, 1985, A will recognize $500 of long-term capital gain on the non-section 1256 position.

Example 2. On February 1, 1985, A enters into a section 1256 contract. As of the close of the day on February 4, 1985, there is $500 of unrealized gain on the section 1256 contract. On February 5, 1985, A enters into an offsetting non-section 1256 position and makes a valid election to treat the straddle as a section 1092(b)(2) identified mixed straddle. Under these circumstances, on February 4, 1985, A will recognize a $500 gain on the section 1256 contract, which will be treated as 60 percent long-term capital gain and 40 percent short-term capital gain.

Example 3. Assume the facts are the same as in example (2) and that on February 10, 1985, there is $2,000 of unrealized gain in the section 1256 contract. A disposes of the section 1256 contract at a $2,000 gain and disposes of the offsetting non-section 1256 position at a $1,000 loss. Under these circumstances, the $2,000 gain on the section 1256 contract will be reduced to $1,500 to take into account the $500 gain recognized when the section 1092(b)(2) identified mixed straddle was established. The $1,500 gain on the section 1256 contract will be offset against the $1,000 loss on the non-section 1256 position. The net $500 gain from the straddle will be treated as 60 percent long-term capital gain and 40 percent short-term capital gain because it is attributable to the section 1256 contract.

Example 4. On March 1, 1985, A enters into a non-section 1256 position. As of the close of the day on March 2, 1985, there is $400 of unrealized short-term capital gain in the non-section 1256 position. On March 3, 1985, A enters into an offsetting section 1256 contract and makes a valid election to treat the straddle as a section 1092(b)(2) identified mixed straddle. On March 10, 1985, A disposes of the section 1256 contract at a $500 loss and the non-section 1256 position at a $500 gain. Under these circumstances, on March 2, 1985, A will recognize $400 of short-term capital gain attributable to the gain accrued on the non-section 1256 position prior to the day the section 1092(b)(2) identified mixed straddle was established. On March 10, 1985, the gain of $500 on the non-section 1256 position will be reduced to $100 to take into account the $400 of gain recognized when the section 1092(b)(2) identified mixed straddle was established. The $100 gain on the non-section 1256 position will be offset against the $500 loss on the section 1256 contract. The net loss of $400 from the straddle will be treated as 60 percent long-term capital loss and 40 percent short-term capital loss because it is attributable to the section 1256 contract.

(7) ***Treatment of gain and loss from non-section 1256 positions after disposition of all section 1256 contracts.*** Gain or loss on a non-section 1256 position that is part of a section 1092(b)(2) identified mixed straddle and that is held after all section 1256 contracts in the straddle are disposed of shall be treated as short-term capital gain or loss to the extent attributable to the period when the positions were part of such straddle. See § 1.1092(b)-2T for rules concerning the holding period of such positions. This paragraph (b)(7) may be illustrated by the following example. It is assumed that the positions are the only positions held directly or indirectly (through a related person or flowthrough entity) during the taxable years.

Example: On December 1, 1985, A, an individual calendar year taxpayer, enters into a section 1256 contract and an offsetting non-section 1256 position and makes a valid election to treat such straddle as a section 1092(b)(2) identified mixed straddle. On December 31, 1985, A disposes of the section 1256 contract at a $1,000 loss. On the same day, there is $1,000 of unrecognized gain in the non-section 1256 position. The $1,000 loss on the section 1256 contract is treated as short-term capital loss because there is a $1,000 gain on the non-section 1256 position, but the $1,000 loss is disallowed in 1985 because there is $1,000 of unrecognized gain in the offsetting nonsection 1256 position. See section 1092(a) and § 1.1092(b)-1T. On July 10, 1986, A disposes of the non-section 1256 position at a $1,500 gain, $500 of which is attributable to the post-straddle period. Under these circumstances, $1,000 of the gain on the non-section 1256 position will be treated as short-term capital gain because that amount of the gain is attributable to the period when the position was part of a section 1092(b)(2) identified mixed straddle. The remaining $500 of the gain will be treated as long-term capital gain because the position was held for more than six months after the straddle was terminated. In addition, the $1,000 short-term capital loss disallowed in 1985 will be taken into account at this time.

(c) ***Coordination with loss deferral and wash sale rules of § 1.1092(b)-1T.*** This section shall apply prior to the application of the loss deferral and wash sale rules of § 1.1092(b)-1T.

(d) ***Identification required —***

(1) ***In general.*** To elect the provisions of this section, a taxpayer must clearly identify on a reasonable and consistently applied economic basis each position that is part of the section 1092(b)(2) identified mixed straddle before the close of the day on which the section 1092(b)(2) identified mixed straddle is established. If the taxpayer disposes of a position that is part of a section 1092(b)(2) identified mixed straddle before the close of the day on which the straddle is established, such identification must be made at or before the time that the taxpayer disposes of the position. In the case of a taxpayer who is an individual, the close of the day is midnight (local time) in the location of the taxpayer's principal residence. In the case of all other taxpayers, the close of the day is midnight (local time) in the location of the taxpayer's principal place of business. Only the person or entity that directly holds all positions of a straddle may make the election under this section.

(2) ***Presumptions.*** A taxpayer is presumed to have identified a section 1092(b)(2) identified mixed straddle by the time prescribed in paragraph (d)(1) of this section if the taxpayer receives independent verification of the identification (within the meaning of paragraph (d)(4) of this section). The presumption referred to in this paragraph (d)(2) may be rebutted by clear and convincing evidence to the contrary.

(3) ***Corroborating evidence.*** If the presumption of paragraph (d)(2) of this section does not apply, the burden shall be on the taxpayer to establish that an election under paragraph (d)(1) of this section was made by the time specified in paragraph (d)(1) of this section. If the taxpayer has no evidence of the time when the identification required by paragraph (d)(1) of this section is made, other than the taxpayer's own testimony, the election is invalid unless the taxpayer shows good cause for failure to have evidence other than the taxpayer's own testimony.

(4) ***Independent verification.*** For purposes of this section, the following constitute independent verification:

(i) ***Separate account.*** Placement of one or more positions of a section 1092(b)(2) identified mixed straddle in a separate account designated as a *section 1092(b)(2) identified mixed straddle account* that is maintained by a broker (as defined in § 1.6045-1(a)(1)), futures commission merchant (as defined in 7 U.S.C. 2 and 17 CFR 1.3(p)), or similar person and in which notations are made by such person identifying all positions of the section 1092(b)(2) identified mixed straddle and stating the date the straddle is established.

(ii) ***Confirmation.*** A written confirmation from a person referred to in paragraph (d)(4)(i) of this section, or from the party from which one or more positions of the section 1092(b)(2) identified mixed straddle are acquired, stating the date the straddle is established and identifying the other positions of the straddle.

(iii) ***Other methods.*** Such other methods of independent verification as the Commissioner may approve at the Commissioner's discretion.

(5) ***Section 1092 (b)(2) identified mixed straddles established before February 25, 1985.*** Notwithstanding the provisions of paragraph (d)(1) of this section, relating to the time of identification of a section 1092(b)(2) identified mixed straddle, a taxpayer may identify straddles that were established before

February 25, 1985 as section 1092(b)(2) identified mixed straddles after the time specified in paragraph (d)(1) of this section if the taxpayer adopts a reasonable and consistent economic basis for identifying the positions of such straddles.

(e) ***Effective date*** —

(1) ***In general.*** The provisions of this section shall apply to straddles established on or after January 1, 1984.

(2) ***Pre-1984 accrued gain.*** If the last business day referred to in paragraph (b)(6) of this section is contained in a period to which paragraph (b)(6) does not apply, the gains and losses from the deemed sale shall be included in the first period to which paragraph (b)(6) applies.

(Secs. 1092(b)(1), 1092(b)(2) and 7805 of the Internal Revenue Code of 1954 (68A Stat. 917, 98 Stat. 627; 26 U.S.C. 1092(b)(1), 1092(b)(2), 7805))

[T.D. 8008, 50 FR 3325, Jan. 24, 1985; 50 FR 12243, Mar. 28, 1985; 50 FR 19344, May 8, 1985; T.D. 9627, 78 FR 46808, Aug. 2, 2013; 78 FR 64397, Oct. 29, 2013; T.D. 9678, 79 FR 41888, July 18, 2014]

§ 1.1092(b)-4T Mixed straddles; mixed straddle account (temporary).

(a) ***In general.*** A taxpayer may elect (in accordance with paragraph (f) of this section) to establish one or more mixed straddle accounts (as defined in paragraph (b) of this section). Gains and losses from positions includible in a mixed straddle account shall be determined and treated in accordance with the rules set forth in paragraph (c) of this section. A mixed straddle account is treated as established as of the first day of the taxable year for which the taxpayer makes the election or January 1, 1984, whichever is later. See § 1.1092(b)-5T relating to definitions.

(b) ***Mixed straddle account defined*** —

(1) ***In general.*** The term *mixed straddle account* means an account for determining gains and losses from all positions held as capital assets in a designated class of activities by the taxpayer at the time the taxpayer elects to establish a mixed straddle account. A separate mixed straddle account must be established for each separate designated class of activities.

(2) ***Permissible designations.*** Except as otherwise provided in this section, a taxpayer may designate as a class of activities the types of positions that a reasonable person, on the basis of all the facts and circumstances, would ordinarily expect to be offsetting positions. This paragraph (b)(2) may be illustrated by the following example. It is assumed in the example that the positions are the only positions held directly or indirectly (through a related person or flowthrough entity) during the taxable year, and that gain or loss from the positions is treated as gain or loss from a capital asset.

Example: B engages in transactions in dealer equity options on XYZ Corporation stock, stock in XYZ Corporation, dealer equity options on UVW Corporation stock, and stock in UVW Corporation. A reasonable person, on the basis of all the facts and circumstances, would not expect dealer equity options on XYZ Corporation stock and stock in XYZ Corporation to offset any dealer equity options on UVW Corporation stock or any stock in UVW Corporation. If B makes the mixed straddle account election under this section for all such positions, B must designate two separate classes of activities, one consisting of transactions in dealer equity options on XYZ Corporation stock and stock in XYZ Corporation, and the other consisting of transactions in dealer equity options on UVW Corporation stock and stock in UVW Corporation, and maintain two separate mixed straddle accounts.

(3) ***Positions that offset positions in more than one mixed straddle account.*** Gains and losses from positions that a reasonable person, on the basis of all the facts and circumstances, ordinarily would expect to be offsetting with respect to positions in more than one mixed straddle account shall be allocated among such accounts under a reasonable and consistent method that clearly reflects income. This paragraph (b)(2) may be illustrated by the following example. It is assumed that the positions are the only positions held directly or indirectly (through a related person or flowthrough entity) during the taxable year, and that gain or loss from the positions is treated as gain or loss from a capital asset.

Example: B holds stock in XYZ Corporation, UVW Corporation, and RST Corporation, and options on a broad based stock index future. A reasonable person, on the basis of all the facts and circumstances, would expect the stock in XYZ Corporation, UVW Corporation, and RST Corporation to be offsetting positions with respect to the options on the broad based stock index future. A reasonable person, on the basis of all the facts and circumstances, would not expect that stock in XYZ Corporation, UVW Corporation, or RST Corporation would be offsetting positions with respect to each other. If B makes the mixed straddle account election under this section for all such positions, B must designate three separate classes of activities: one consisting of stock in XYZ Corporation; one consisting of stock in UVW Corporation; and one consisting of stock in RST Corporation, and maintain three separate mixed straddle accounts. Options on the broad based stock index future must be designated as part of all three classes of activities and gains and losses from such options must be allocated among such accounts under a reasonable and consistent method that clearly reflects income, because such options are a type of position expected to be offsetting with respect to the positions in all three mixed straddle accounts.

(4) ***Impermissible designations*** —

(i) ***Types of positions that are not offsetting included in designated class of activities.*** If the Commissioner determines, on the basis of all the facts and circumstances, that a class of activities designated by a taxpayer includes types of positions that a reasonable person, on the basis of all the facts and circumstances, ordinarily would not expect to be offsetting positions with respect to other types of positions in the account, the Commissioner may—

(A) Amend the class of activities designated by the taxpayer and remove positions from the account that are not within the amended designated class of activities; or

(B) Amend the class of activities designated by the taxpayer to establish two or more mixed straddle accounts.

(ii) ***Types of positions that are offsetting not included in designated class of activities.*** If the Commissioner determines, on the basis of all the facts and circumstances, that a designated class of activities does not include types of positions that are offsetting with respect to types of positions within the designated class, the Commissioner may—

(A) Amend the class of activities designated by the taxpayer to include types of positions that are offsetting with respect to the types of positions within the designated class and place such positions in the account; or

(B) Amend the class of activities designated by the taxpayer to exclude types of positions that are offsetting with respect to the types of positions that are not in the account.

(iii) ***Treatment of positions removed from or included in the account.***

(A) Positions removed from a mixed straddle account will be subject to the rules of taxation generally applicable to such positions. Thus, for example, if the positions removed from the account are offsetting positions with respect to other positions outside the account, the rules of §§ 1.1092(b)-1T and 1.1092(b)-2T apply.

(B) If the taxpayer acted consistently and in good faith in designating the class of activities of the account and in placing positions in the account, the rules of § 1.1092(b)-2T(b)(2) shall not apply to any mixed straddles resulting from the removal of such positions from the account and the Commissioner, at the Commissioner's discretion, may identify such mixed straddles as section 1092(b)(2) identified mixed straddles and apply the rules of § 1.1092(b)-3T(b) to such straddles.

(C) If positions are placed in a mixed straddle account, such positions shall be treated as if they were originally included in the mixed straddle account in which they are placed.

(5) ***Positions included in a mixed straddle account that are not within the designated class of activities.*** The Commissioner may remove one or more positions from a mixed straddle account if, on the basis of all the facts and circumstances, the Commissioner determines that such positions are not within the designated class of activities of the account. See paragraph (b)(4)(iii) of this section for rules concerning the treatment of such positions.

(6) ***Positions outside a mixed straddle account that are within the designated class of activities.*** If a taxpayer holds types of positions outside of a mixed straddle account (including positions in another mixed straddle account) that are within the designated class of activities of a mixed straddle account, the Commissioner may require the taxpayer to include such types of positions in the mixed straddle account, move positions from one account to another, or remove from the mixed straddle account types of positions that are offsetting with respect to the types of positions held outside the account. See paragraph (b)(4)(iii) of this section for the treatment of such positions.

(c) ***Treatment of gains and losses from positions in a mixed straddle account*** —

(1) ***Daily account net gain or loss.*** Except as provided in paragraphs (d) and (e) of this section (relating to positions in a mixed straddle account before January 1, 1985) as of the close of each business day of the taxable year, gain or loss shall be determined for each position in a mixed straddle account that is disposed of during the day. Positions in a mixed straddle account that have not been disposed of as of the close of the day shall be treated as if sold for their fair market value at the close of each business day. Gains and losses for each business day from non-section 1256 positions in each mixed straddle account shall be netted to determine *net non-section 1256 position gain or loss* for the account, and gains and losses for each business day from section 1256 contracts in each mixed straddle account shall be netted to determine *net section 1256 contract gain or loss* for the account. Net non-section 1256 position gain or loss from the account is then offset against net section 1256 contract gain or loss from the same mixed straddle account to determine the *daily account net gain or loss* for the account. If daily account net gain or loss is attributable to the net non-section 1256 position gain or loss, daily account net gain or loss for such account shall be treated as short-term capital gain or loss. If daily account net gain or loss is attributable to the net section 1256 contract gain or loss, daily account net gain or loss for such account shall be treated as 60 percent long-term capital gain or loss and 40 percent short-term capital gain or loss. If net non-section 1256 position gain or loss and net section 1256 contract gain or loss are either both gains or both losses, that portion of the daily account net gain or loss attributable to net non-section 1256 position gain or loss shall be treated as short-term capital gain or loss and that portion of the daily account net gain or loss attributable to net section 1256 contract gain or loss shall be treated

as 60 percent long-term capital gain or loss and 40 percent short-term capital gain or loss. An adjustment (through an adjustment to basis or otherwise) shall be made to any subsequent gain or loss determined under this paragraph (c)(1) to take into account any gain or loss determined for prior business days under this paragraph (c)(1).

(2) ***Annual account net gain or loss; total annual account net gain or loss.*** On the last business day of the taxable year, the *annual account net gain or loss* for each mixed straddle account established by the taxpayer shall be determined by netting the daily account net gain or loss for each business day in the taxable year for each account. Annual account net gain or loss for each mixed straddle account shall be adjusted pursuant to paragraph (c)(3) of this section. The *total annual account net gain or loss* shall be determined by netting the annual account net gain or loss for all mixed straddle accounts established by the taxpayer, as adjusted pursuant to paragraph (c)(3) of this section. Total annual account net gain or loss is subject to the limitations of paragraph (c)(4) of this section. See paragraphs (d) and (e) of this section for determining the annual account net gain or loss for mixed straddle accounts established for taxable years beginning before January 1, 1985.

(3) ***Application of section 263(g) to mixed straddle accounts.*** No deduction shall be allowed for interest and carrying charges (as defined in section 263(g)(2)) properly allocable to a mixed straddle account. Interest and carrying charges properly allocable to a mixed straddle account means the excess of—

(i) The sum of—

(A) Interest on indebtedness incurred or continued during the taxable year to purchase or carry any position in the account; and

(B) All other amounts (including charges to insure, store or transport the personal property) paid or incurred to carry any position in the account; over

(ii) The sum of—

(A) The amount of interest (including original issue discount) includible in gross income for the taxable year with respect to all positions in the account;

(B) Any amount treated as ordinary income under section 1271(a)(3)(A), 1278, or 1281(a) with respect to any position in the account for the taxable year; and

(C) The excess of any dividends includible in gross income with respect to positions in the account for the taxable year over the amount of any deduction allowable with respect to such dividends under section 243, 244, or 245.

For purposes of paragraph (c)(3)(i) of this section, the term *interest* includes any amount paid or incurred in connection with positions in the account used in a short sale. Any interest and carrying charges disallowed under this paragraph (c)(3) shall be capitalized by treating such charges as an adjustment to the annual account net gain or loss and shall be allocated pro rata between net short-term capital gain or loss and net long-term capital gain or loss.

(4) ***Limitation on total annual account net gain or loss.*** No more than 50 percent of total annual account net gain for the taxable year shall be treated as long-term capital gain. Any long-term capital gain in excess of the 50 percent limit shall be treated as short-term capital gain. No more than 40 percent of total annual account net loss for the taxable year shall be treated as short-term capital loss. Any short-term capital loss in excess of the 40 percent limit shall be treated as long-term capital loss.

(5) ***Accrued gain and loss with respect to positions includible in a mixed straddle account.*** Positions includable in a mixed straddle account that are held by a taxpayer on the day prior to the day the mixed straddle account is established shall be deemed sold for their fair market value as of the close of the last business day preceding the day such mixed straddle account is established. See §§ 1.1092(b)-1T and 1.1092(b)-2T for application of the loss deferral and wash sale rules and for treatment of holding periods and losses with respect to such positions. An adjustment (through an adjustment to basis or otherwise) shall be made to any subsequent gain or loss realized with respect to such positions for any gain or loss recognized under this paragraph (c)(5).

(6) ***Examples.*** This paragraph (c) may be illustrated by the following examples. It is assumed in each example that the positions are the only positions held directly or indirectly (through a related person or flowthrough entity) by an individual calendar year taxpayer during the taxable year, and that gain or loss from the positions is treated as gain or loss from a capital asset.

Example 1. A establishes a mixed straddle account for a class of activities consisting of transactions in stock of XYZ Corporation and dealer equity options on XYZ Corporation stock. Assume that A enters into no transactions in XYZ Corporation stock or dealer equity options on XYZ Corporation stock prior to December 26, 1985. Thus, the net non-section 1256 position gain or loss and the net section 1256 contract gain or loss for the account are zero for each business day except the following days:

	Net non-section 1256 position gain or loss (XYZ corporation stock)	**Net section 1256 contract gain or loss (XYZ corporation dealer equity options)**
December 26, 1985	$1,000	$20,000
December 27, 1985	(9,000)	3,000
December 30, 1985	(5,000)	15,000
December	7,000	(2,000)

	Net non-section 1256 position gain or loss (XYZ corporation stock)	Net section 1256 contract gain or loss (XYZ corporation dealer equity options)
31, 1985		

The daily account net gain or loss is as follows:

	Daily account net gain or loss	Treatment of daily account net gain or loss	Long-term	Short-term
December 26, 1985	$21,000	$1,000 short-term capital gain, $20,000 60 percent long-term capital gain and 40 percent short-term capital gain	$12,000	$9,000
December 27, 1985	(6,000)	Short-term capital loss		(6,000)
December 30, 1985	10,000	60 percent long-term capital gain and 40 percent short-term capital gain	6,000	4,000
December 31, 1985	5,000	Short-term capital gain		5,000

The annual account net gain or loss is $18,000 of long-term capital gain and $12,000 of short-term capital gain. Because A has no other mixed straddle accounts, total annual account net gain or loss is also $18,000 long-term capital gain and $12,000 short-term capital gain. Because more than 50 percent of the total annual account net gain is long-term capital gain, $3,000 of the $18,000 long-term capital gain will be treated as short-term capital gain.

Example 2. Assume the facts are the same as in example (1), except that interest and carrying charges in the amount of $6,000 are allocable to the mixed straddle account and are capitalized under paragraph (c)(3) of this section. Under these circumstances, $3,600 (($18,000/$30,000) × $6,000) of the interest and carrying charges will reduce the $18,000 long-term capital gain to $14,400 long-term capital gain and $2,400 (($12,000/$30,000) × $6,000) of the interest and carrying charges will reduce the $12,000 short-term capital gain to $9,600 short-term capital gain. Because more than 50 percent of the total annual account net gain is long-term capital gain, $2,400 of the $14,400 long-term capital gain will be treated as short-term capital gain.

Example 3. Assume the facts are the same as in example (1), except that A has a second mixed straddle account, which has an annual account net loss of $14,000 of long-term capital loss and $6,000 of short-term capital loss. Under these circumstances, the total annual account net gain is $4,000 ($18,000−$14,000) of long-term capital gain and $6,000 ($12,000−$6,000) of short-term capital gain. Because not more than 50 percent of the total annual account net gain is long-term capital gain, none of the long-term capital gain will be treated as short-term capital gain.

Example 4. Assume the facts are the same as in example (3), except that interest and carrying charges in the amount of $4,000 are allocable to the second mixed straddle account and are capitalized under paragraph (c)(3) of this section. Under these circumstances, $2,800 (($14,000/$20,000) × $4,000)) of the interest and carrying charges will increase the $14,000 long-term capital loss to $16,800 of long-term capital loss and $1,200 (($6,000/$20,000) × $4,000)) of the interest and carrying charges will increase the $6,000 short-term capital loss to $7,200 short-term capital loss. The total annual account net gain is $1,200 of long-term capital gain ($18,000 $16,800) and $4,800 ($12,000−$7,200) of short-term capital gain. Because not more than 50 percent of the total annual account net gain is long-term capital gain, none of the $1,200 long-term capital gain will be treated as short-term capital gain.

Example 5. Assume the facts are the same as in example (1), except that A has a second mixed straddle account, which has an annual account net loss of $20,000 of long-term capital loss and $15,000 of short-term capital loss. Under these circumstances, the total annual account net loss is $2,000 ($20,000−$18,000) of long-term capital loss and $3,000 ($15,000−$12,000) of short-term capital loss. Because more than 40 percent of the total annual account net loss is short-term capital loss, $1,000 of the short-term capital loss will be treated as long-term capital loss.

Example 6. A establishes two mixed straddle accounts. Account 1 has an annual account net gain of $5,000 short-term capital gain, which results from netting $5,000 of long-term capital loss and $10,000 of short-term capital gain. Account 2 has an annual account net loss of $2,000 long-term capital loss, which results from netting $3,000 of long-term capital loss against $1,000 of short-term capital gain. The total annual account net gain is $3,000 short-term capital gain, which results from netting the annual account net gain of $5,000 short-term capital gain from Account 1 against the annual account net loss of $2,000 long-term capital loss from Account 2.

(d) ***Treatment of gains and losses from positions in a mixed straddle account established on or before December 31, 1984, in taxable years ending after December 31, 1984; pre-1985 account net gain or loss.*** For mixed straddle accounts established on or before December 31, 1984, in taxable years ending after December 31, 1984, the taxpayer on December 31, 1984, shall determine gain or loss for each position in the mixed straddle account that has been disposed of on any day during the period beginning on the first day of the taxpayer's taxable year that includes December 31, 1984, and ending on December 31, 1984. Positions in the mixed straddle account that have not been disposed of as of the close of December 31, 1984, shall be treated as if sold for their fair market value as of the close of December 31, 1984. Gains and losses for such period from non-section 1256 positions in each mixed straddle account shall be netted to determine *pre-1985 net non-section 1256 position gain or loss* and gains and losses for such period from section 1256 contracts in each mixed straddle account shall be netted to determine *pre-1985 net section 1256 contract gain or loss.* Pre-1985 net non-section 1256 position gain or loss is then offset against pre-1985 net section 1256 contract gain or loss from the same mixed straddle account to determine the *pre-1985 account net gain or loss* for the period. If the pre-1985 account net gain or loss is attributable to pre-1985 net non-section 1256 position gain or loss, the pre-1985 account net gain or loss

from such account shall be treated as short-term capital gain or loss. If the pre-1985 account net gain or loss is attributable to pre-1985 net section 1256 contract gain or loss, the pre-1985 account net gain or loss from such account shall be treated as 60 percent long-term capital gain or loss and 40 percent short-term capital gain or loss. If pre-1985 net non-section 1256 position gain or loss and pre-1985 net section 1256 contract gain or loss are either both gains or losses, that portion of the pre-1985 account net gain or loss attributable to pre-1985 net non-section 1256 position gain or loss shall be treated as short-term capital gain or loss and that portion of the pre-1985 account net gain or loss attributable to pre-1985 net section 1256 contract gain or loss shall be treated as 60 percent long-term capital gain or loss and 40 percent short-term capital gain or loss. An adjustment (through an adjustment to basis or otherwise) shall be made to any subsequent gain or loss realized with respect to such positions for any gain or loss recognized under this paragraph (d). To determine the annual account net gain or loss for such account, the pre-1985 account net gain or loss shall be treated as daily account net gain or loss for purposes of paragraph (c)(2) of this section. See paragraph (c)(5) of this section for treatment of accrued gain or loss with respect to positions includible in a mixed straddle account.

(e) ***Treatment of gains and losses from positions in a mixed straddle account for taxable years ending on or before December 31, 1984*** —

(1) ***In general.*** For mixed straddle accounts established on or before December 31, 1984, in taxable years ending on or before December 31, 1984, the taxpayer at the close of the taxable year shall determine gain or loss for each position in the mixed straddle account that has been disposed of on any day during the period beginning on the later of the first day of the taxable year or January 1, 1984, and ending on the last day of the taxable year. Positions in the mixed straddle account that have not been disposed of as of the close of the last business day of the taxable year shall be treated as if sold for their fair market value at the close of such day. Gains and losses from non-section 1256 positions in each mixed straddle account shall be netted to determine *1984 net non-section 1256 position gain or loss* for the account and gains and losses from section 1256 contracts shall be netted to determine *1984 net section 1256 contract gain or loss* for the account. The 1984 net non-section 1256 position gain or loss is then offset against 1984 net section 1256 contract gain or loss from the same mixed straddle account to determine *annual account net gain or loss* for the account. If annual account net gain or loss is attributable to 1984 net non-section 1256 position gain or loss, annual account net gain or loss shall be treated as short-term capital gain or loss. If annual account net gain or loss is attributable to 1984 net section 1256 contract gain or loss, annual account net gain or loss shall be treated as 60 percent long-term capital gain or loss and 40 percent short-term capital gain or loss. If 1984 net non-section 1256 position gain or loss and 1984 net section 1256 contract gain or loss are either both gains or both losses, that portion of annual account net gain or loss attributable to 1984 net non-section 1256 position gain or loss shall be treated as short-term capital gain or loss and that portion of annual account net gain or loss attributable to 1984 net section 1256 contract gain or loss shall be treated as 60 percent long-term capital gain or loss and 40 percent short-term capital gain or loss. An adjustment (through an adjustment to basis or otherwise) shall be made to any subsequent gain or loss realized with respect to such positions for any gain or loss recognized under this paragraph (e). See paragraph (c) (2) through (5) of this section relating to determining the total annual account net gain or loss, application of section 263(g) to mixed straddle accounts, the limitation on the total annual account net gain or loss, and treatment of accrued gain or loss with respect to positions includible in a mixed straddle account.

(2) ***Pre-1984 accrued gain.*** If the last business day referred to in paragraph (c)(5) of this section is contained in a period to which such paragraph (c)(5) does not apply, the gains and losses from the deemed sale shall be included in the first period to which paragraph (c)(5) applies.

(f) *Election* —

(1) ***Time for making the election.*** Except as otherwise provided, the election under this section to establish one or more mixed straddle accounts for a taxable year must be made by the due date (without regard to automatic and discretionary extensions) of the taxpayer's income tax return for the immediately preceding taxable year (or part thereof). For example, an individual taxpayer on a calendar year basis must make the election by April 15, 1986, to establish one or more mixed straddle accounts for taxable year 1986. Similarly, a calendar year corporate taxpayer must make its election by March 15, 1986, to establish one or more mixed straddle accounts for 1986. If a taxpayer begins trading or investing in positions in a new class of activities during a taxable year, the election under this section with respect to the new class of activities must be made by the taxpayer by the later of the due date of the taxpayer's income tax return for the immediately preceding taxable year (without regard to automatic and discretionary extensions), or 60 days after the first mixed straddle in the new class of activities is entered into. Similarly, if on or after the date the election is made with respect to an account, the taxpayer begins trading or investing in positions that are includible in such account but were not specified in the original election, the taxpayer must make an amended election as prescribed in paragraph (f)(2)(ii) of this section by the later of the due date of the taxpayer's income tax return for the immediately preceding taxable year (without regard to automatic and discretionary extensions), or 60 days after the acquisition of the first of the positions. If an election is made after the times specified in this paragraph (f)(1), the election will be permitted only if the Commissioner concludes that the taxpayer had reasonable cause for failing to make a timely election. For example, if a calendar year taxpayer holds few positions in one class of activities prior to April 15 of a taxable year, and the taxpayer greatly increases trading activity with respect to positions in the class of activities after April 15, then the Commissioner may conclude that the taxpayer had reasonable cause for failing to make a timely election and allow the taxpayer to make a mixed straddle account election for the taxable year. See paragraph (f)(2) of this section for rules relating to the manner for making these elections.

(2) *Manner for making the election* —

(i) ***In general.*** A taxpayer must make the election on Form 6781 in the manner prescribed by such Form, and by attaching the Form to the taxpayer's income tax return for the immediately preceding taxable year (or request for an automatic extension). In addition, the taxpayer must attach a statement to Form 6781 designating with specificity the class of activities for which a mixed straddle account is established. The designation must describe the class of activities in sufficient detail so that the Commissioner may determine, on the basis of the designation, whether specific positions are includible in the mixed straddle account. In the case of a taxpayer who elects to establish more than one mixed straddle account, the Commissioner must be able to determine, on the basis of the designations, that specific positions are placed in the appropriate account. The election applies to all positions in the designated class of activities held by the taxpayer during the taxable year.

(ii) ***Elections for new classes of activities and expanded elections.*** Amended elections and elections made with respect to a new class of activities that the taxpayer has begun trading or investing in during a taxable year, shall be made on Form 6781 within the times prescribed in paragraph (f)(1) of this section. A statement must be attached to the Form containing the information required in paragraph (f)(2)(i) of this section, with respect to the new or expanded designated class of activities.

(iii) ***Special rule.*** The Commissioner may disregard a mixed straddle account election if the Commissioner determines, on the basis of all the facts and circumstances, that the principal purpose for making the mixed straddle account election with respect to a class of activities was to avoid the rules of § 1.1092(b)-1T (a). For example, if a taxpayer holds stock that is not part of a straddle and that would generate a loss if sold or otherwise disposed of, and the taxpayer both acquires offsetting option positions with respect to the stock and makes a mixed straddle account election with respect to the stock and stock options near the end of a taxable year, the Commissioner may disregard the mixed straddle account election.

(3) ***Special rule for taxable years ending after 1983 and before September 1, 1986.*** An election under this section to establish one or more mixed straddle accounts for any taxable year that includes July 17, 1984, and any taxable year that ends before September 1, 1986 (or, in the case of a corporation, October 1, 1986), must be made by the later of—

(i) December 31, 1985, or

(ii) The due date (without regard to automatic and discretionary extensions) of the return for the taxpayer's taxable year that begins in 1984 if the due date of the taxpayer's return for such year (without regard to automatic and discretionary extensions) is after December 31, 1985.

The election shall be made by attaching Form 6781 together with a statement to the taxpayer's income tax return, amended return, or other appropriate form that is filed on or before the deadline determined in the preceding sentence. The attached statement must designate with specificity, in accordance with paragraph (f)(2)(i) of this section, the class of activities for which a mixed straddle account is established. For example, if a fiscal year taxpayer's return (for its taxable year ending September 30, 1985) is due (without regard to extensions) on January 15, 1986, and the taxpayer intends to obtain an automatic extension to file the return, the election under this section for any or all of the fiscal years ending in 1984, 1985 or 1986 must be made on or before January 15, 1986, with the request for an automatic extension. Similarly, a calendar year taxpayer (whether or not such taxpayer has obtained an automatic extension of time to file) who has filed its 1984 income tax return before October 15, 1985, without making a mixed straddle account election for either 1984 or 1985, or both, may make the mixed straddle account election under this section for either or for both of such years with an amended return filed on or before December 31, 1985. The mixed straddle account elected on this amended return will be effective for all positions in the designated class of activities even if the taxpayer had elected straddle-by-straddle identification as provided under § 1.1092(b)-3T for purposes of the previously filed 1984 income tax return. For taxable years beginning in 1984 and 1985, the election under this paragraph (f)(3) is effective for the entire taxable year. For taxable years beginning in 1983, an election shall be effective for that part of the year beginning after December 31, 1983, for which the election under § 1.1256(h)-1T or 1.1256(h)-2T is made. See § 1.6081-1T regarding an extension of time to file certain individual income tax returns.

(4) ***Period for which election is effective.*** For taxable years beginning on or after January 1, 1984, an election under this section, including an amendment to the election pursuant to paragraph (f)(1) of this section, shall be effective only for the taxable year for which the election is made. This election may be revoked during the taxable year for the remainder of the taxable year only with the consent of the Commissioner. An application for consent to revoke the election shall be filed with the service center with which the election was filed and shall—

(i) Contain the name, address, and taxpayer identification number of the taxpayer;

(ii) Show that the volume or nature of the taxpayer's activities has changed substantially since the election was made, and that the taxpayer's activities no longer warrant the use of such mixed straddle account; and

(iii) Any other relevant information.

If a taxpayer's election for a taxable year is revoked, the taxpayer may not make a new election for the same class of activities under paragraph (f)(1) of this section during the same taxable year.

(g) ***Effective date.*** The provisions of this section apply to positions held on or after January 1, 1984.

(Secs. 1092(b)(1), 1092(b)(2) and 7805 of the Internal Revenue Code of 1954 (68A Stat. 917, 98 Stat. 627; 26 U.S.C. 1092(b)(1), 1092(b)(2), 7805))

[T.D. 8008, 50 FR 3329, Jan. 24, 1985; 50 FR 12243, Mar. 28, 1985, as amended by T.D. 8058, 50 FR 42013, Oct. 17, 1985]

§ 1.1092(b)-5T Definitions (temporary).

The following definitions apply for purposes of §§ 1.1092(b)-1T through 1.1092(b)-4T.

(a) ***Disposing, disposes, or disposed.*** The term *disposing, disposes,* or *disposed* includes the sale, exchange, cancellation, lapse, expiration, or other termination of a right or obligation with respect to personal property (as defined in section 1092(d)(1)).

(b) ***Hedging transaction.*** The term *hedging transaction* means a hedging transaction as defined in section 1256(e).

(c) ***Identified straddle.*** The term *identified straddle* means an identified straddle as defined in section 1092(a)(2)(B).

(d) ***Loss.*** The term *loss* means a loss otherwise allowable under section 165(a) (without regard to the limitation contained in section 165(f)) and includes a write-down in inventory.

(e) ***Mixed straddle.*** The term *mixed straddle* means a straddle—

(1) All of the positions of which are held as capital assets;

(2) At least one (but not all) of the positions of which is a section 1256 contract;

(3) For which an election under section 1256(d) has not been made; and

(4) Which is not part of a larger straddle.

(f) ***Non-section 1256 position.*** The term *non-section 1256 position* means a position that is not a section 1256 contract.

(g) ***Offsetting position.*** The term *offsetting position* means an offsetting position as defined in section 1092(c)(2).

(h) ***Position.*** The term *position* means a position as defined in section 1092(d)(2).

(i) [Reserved]

(j) ***Related person or flowthrough entity.*** The term *related person or flowthrough entity* means a related person or flowthrough entity as defined in sections 1092(d)(4) (B) and (C) respectively.

(k) ***Section 1256 contract.*** The term *section 1256 contract* means a section 1256 contract as defined in section 1256(b).

(l) [Reserved]

(m) ***Straddle.*** The term *straddle* means a straddle as defined in section 1092(c)(1).

(n) ***Successor position.*** The term *successor position* means a position ("P") that is or was at any time offsetting to a second position if—

(1) The second position was offsetting to any loss position disposed of; and

(2) P is entered into during a period commencing 30 days prior to, and ending 30 days after, the disposition of the loss position referred to in paragraph (n)(1) of this section.

(o) ***Unrecognized gain.*** The term *unrecognized gain* means unrecognized gain as defined in section 1092(a)(3)(A).

(p) ***Substantially identical.*** The term *substantially identical* has the same meaning as substantially identical in section 1091(a).

(q) ***Securities.*** The term *security* means a security as defined in section 1236(c).

(Secs. 1092(b) and 7805 of the Internal Revenue Code of 1954 (68A Stat. 917, 95 Stat. 324, 26 U.S.C. 1092(b), 7805) and sec. 102(h) of the Tax Reform Act of 1984 (98 Stat. 625))

[T.D. 8007, 50 FR 3321, Jan. 24, 1985, as amended by T.D. 8070, 51 FR 1788, Jan. 15, 1986]

§ 1.1092(b)-6 Mixed straddles; accrued gain and loss associated with a position that becomes part of a section 1092(b)(2) identified mixed straddle that is established after August 18, 2014.

(a) ***Treatment of unrealized gain or loss that arose before a position becomes part of an identified mixed straddle.*** Except as otherwise provided, if one or more positions of a straddle that is an identified mixed straddle described in section 1092(b)(2)(A)(i)(I) (identified mixed straddle) were held by the taxpayer on the day prior to the day the identified mixed straddle is established, any unrealized gain or loss on the day prior to the day the identified mixed straddle is established with respect to such position or positions is taken into account at the time, and has the character, provided by the provisions of the Internal Revenue Code that would apply to the gain or loss if the identified mixed straddle were not established. Thus, if a non-section 1256 capital asset was held for the long-term capital gain holding period before the identified mixed straddle was established, any unrealized gain or loss on that asset on the day prior to the day the identified mixed straddle was established will be long-term capital gain or loss when that asset is sold or otherwise disposed of in a taxable transaction. Unrealized gain or loss on a section 1256 contract that accrued prior to the day the contract became part of an identified mixed straddle will be recognized no later than the last business day of the taxpayer's taxable year. For each position, unrealized gain or loss is the difference between the fair market value of the position at the close of the day before the day the identified mixed straddle is established and the taxpayer's basis in that position. See § 1.1092(b)-2T and paragraph (b) of this section for the treatment of holding periods with respect to such positions. Changes in value of the position or positions that occur on or after the identified mixed straddle is established are accounted for under the provisions of § 1.1092(b)-3T (other than § 1.1092(b)-3T(b)(6)). The definitions in § 1.1092(b)-5T apply for purposes of this section.

(b) ***Holding period after a position becomes part of an identified mixed straddle.*** Section 1.1092(b)-2T(a)(1) applies to any position that becomes part of an identified mixed straddle, and the long-term or short-term character of any gain or loss on that position that arises on or after the day the position has become a position in an identified mixed straddle will be determined by beginning the taxpayer's holding period on the day after the identified mixed straddle ceases to exist.

(c) ***Application of the loss deferral rules of section 1092(a).*** When applying section 1092(a) and § 1.1092(b)-3T(b) (other than § 1.1092(b)-3T(b)(6)) to any loss that arises while a position is part of an identified mixed straddle, the amount of unrecognized gain includes both unrecognized gains described in paragraph (a) of this section that accrued prior to the day the identified mixed straddle is established and unrecognized gains that arise on or after the day the identified mixed straddle identification was made for the position.

(d) ***Examples.*** The rules of this section may be illustrated by the following examples. It is assumed in each example that the positions described are the only positions held directly or indirectly (through a related person or flowthrough entity) by an individual calendar year taxpayer during the taxable year, and no successor positions are acquired or entered into. It is also assumed that gain or loss recognized on any position in the straddle would be capital gain or loss. The following examples assume that the identified mixed straddle is established after the applicability date of this section.

> *Example 1.* (i) *Facts.* On January 13, Year 1, A enters into a section 1256 contract. As of the close of the day on January 15, Year 1, there is $500 of unrealized loss on the section 1256 contract. On January 16, Year 1, A enters into an offsetting non-section 1256 position and makes a valid election to treat the straddle as an identified mixed straddle. A continues to hold both positions of the identified mixed straddle on January 1, Year 2, and there are no further changes to the value of either position in Year 1.
> (ii) *Analysis.* On the last business day of Year 1, A recognizes the $500 loss on the section 1256 contract that accrued prior to establishing the identified mixed straddle because the section 1256 contract is treated as sold on December 31, Year 1 (the last business day of the taxable year) under section 1256(a). The loss recognized in Year 1 will be treated as 60% long-term capital loss and 40% short-term capital loss. All gains and losses that arise on or after the identified mixed straddle is established are accounted for under the rules of §§ 1.1092(b)-2T (and paragraph (b) of this section), 1.1092(b)-3T(b) (other than § 1.1092(b)-3T(b)(6)), and paragraph (c) of this section.

> *Example 2.* (i) *Facts.* On December 3, Year 1, A purchases a non-section 1256 position for $100. As of the close of the day on January 22, Year 2, the non-section 1256 position has a fair market value of $500. On January 23, Year 2, A enters into an offsetting section 1256 contract and makes a valid election to treat the straddle as an identified mixed straddle. On February 10, Year 2, A closes out the section 1256 contract at a $500 loss and disposes of the non-section 1256 position for $975.
> (ii) *Analysis of pre-straddle gain.* A has $400 of unrealized short-term capital gain attributable to the non-section 1256 position prior to the day the identified mixed straddle was established. This $400 gain is recognized on February 10, Year 2, when the non-section 1256 position is disposed

of. Under paragraph (a) of this section, the gain is short-term capital gain because that would have been the character of the gain if the non-section 1256 position had been disposed of on the day prior to establishing the identified mixed straddle.

(iii) *Analysis of straddle gain and loss.* On February 10, Year 2, the gain of $475 ($975 proceeds minus $500 fair market value on the day prior to entering into the identified mixed straddle) on the non-section 1256 position attributable to the identified mixed straddle period is offset by the $500 loss on the section 1256 contract. The net loss of $25 from the identified mixed straddle is recognized and treated as 60% long-term capital loss and 40% short-term capital loss because it is attributable to the section 1256 contract. See § 1.1092(b)-3T(b)(4).

Example 3. (i) *Facts.* On January 3, Year 1, A purchases 100 shares of Index Fund for $1,000 ($10 per share). The Index Fund shares are actively traded personal property and are not section 1256 contracts. As of the close of the day on June 24, Year 2, the fair market value of 100 shares of Index Fund is $1,200. On June 25, Year 2, A enters into a short regulated futures contract (Futures Contract) referenced to the same index referenced by Index Fund. Futures Contract is a section 1256 contract and A makes a valid election to treat the shares of Index Fund and Futures Contract as an identified mixed straddle. On December 31, Year 2, the fair market value of A's shares of Index Fund is $1,520 and Futures Contract has lost $300. On January 10, Year 3, A closes out Futures Contract at a loss of $400 when the fair market value of 100 shares of Index Fund is $1,590. On November 20, Year 3, A disposes of all 100 shares of Index Fund for $1,600.
(ii) *Year 2 analysis.* On June 24, Year 2, A has held the Index Fund shares for longer than the long-term holding period, and the $200 of unrecognized gain on the Index Fund shares as of June 24, Year 2, will be characterized as long-term gain under paragraph (a) of this section when the gain is recognized. On December 31, Year 2, Futures Contract is marked to market under section 1256(a)(1). Under paragraph (a) of this section and § 1.1092(b)-3T(b)(4), the loss on Futures Contract of $300 is netted with the $320 unrecognized gain on the Index Fund shares that arose while the identified mixed straddle was in place. Because this unrecognized gain is greater than the deemed realized section 1256 loss, the loss on Futures Contract is treated as a short-term capital loss. The loss, however, will be disallowed in Year 2 under paragraph (c) of this section and the loss deferral rules of section 1092(a) because the unrecognized gain in the Index Fund shares that arose while the identified mixed straddle was in place exceeds the deemed realized loss. Even if this gain were only $250 on December 31, Year 2, the deemed realized loss on Futures Contract would be disallowed because there is $200 of unrecognized gain in the Index Fund shares from the time A held the shares prior to establishing the identified mixed straddle.

(iii) *Year 3 analysis.* When A closes out the Futures Contract on January 10, Year 3, the entire amount of the section 1256 $300 loss that was disallowed on December 31, Year 2, continues to be deferred under paragraph (c) of this section. On November 20, Year 3, A recognizes $200 long-term capital gain from the pre-identified mixed straddle period, and $400 short-term capital gain, $390 of which arose during the identified mixed straddle period and $10 of which arose after the

identified mixed straddle was closed. See § 1.1092(b)-2T(a)(1) and paragraph (b) of this section. In Year 3, A recognizes the $300 short-term capital loss from Futures Contract disallowed in Year 2 and the $100 loss accrued on Futures Contract in Year 3 because A no longer holds any positions that were part of an identified mixed straddle.

Example 4. (i) *Facts.* On March 1, Year 1, A purchases a 10-year U.S. Treasury Note (Note) at original issue for $100, which is the stated redemption price at maturity of Note. As of the close of the day on March 1, Year 3, Note has a fair market value of $105. On March 2, Year 3, A enters into a regulated futures contract (Futures Contract) that provides A with a short position in U.S. Treasury Notes and A makes a valid election to treat Note and Futures Contract as an identified mixed straddle. A closes her position in Futures Contract on April 15, Year 3, at a $2 loss. On April 15, Year 3, Note has a fair market value of $108. On December 31, Year 3, Note has a fair market value of $106. A holds Note until it matures on February 28, Year 10.
(ii) *Year 3 analysis.* A has $5 of unrealized gain attributable to Note prior to the day the identified mixed straddle was established. Because A acquired a long-term holding period in Note by March 1, Year 3, the $5 of gain will be characterized as long-term capital gain under paragraph (a) of this section when it is recognized. Under § 1.1092(b)-3T(b)(4), when A closes out Futures Contract on April 15, Year 3, the loss of $2 on Futures Contract is netted with the gain of $3 on Note that arose while the identified mixed straddle was in place. Because this gain on Note exceeds the realized loss on Futures Contract, the loss on Futures Contract is disallowed in Year 3 under paragraph (c) of this section. Further, under paragraph (c) of this section and section 1092(a)(1), on December 31, Year 3, the disallowed loss of $2 on Futures Contract cannot be recognized because it is less than the total unrecognized gain of $6 on Note on December 31, Year 3.

(iii) *Year 10 analysis.* When Note matures in Year 10, the $5 of unrecognized long-term capital gain that arose prior to the identified mixed straddle is recognized. Because A receives $100 upon the maturity of Note, A also recognizes a $5 long-term capital loss on Note, for a net gain of $0 (zero). In addition, the termination of all positions in the identified mixed straddle releases the $2 loss disallowed in Year 3 on Futures Contract. The loss on Futures Contract is treated as short-term capital loss in Year 10 under § 1.1092(b)-3T(b)(4).

(e) ***Effective/applicability date.*** The rules of this section apply to all section 1092(b)(2) identified mixed straddles established after August 18, 2014.

[T.D. 9678, 79 FR 41888, July 18, 2014]

§ 1.1092(c)-1 Qualified covered calls.

(a) ***In general.*** Section 1092(c) defines a straddle as offsetting positions with respect to personal property. Under section 1092(d)(3)(B)(i)(I), stock is personal property if the stock is part of a straddle that involves an option on that stock or substantially identical stock or securities. Under section 1092(c)(4), however, writing a qualified covered call option and owning the optioned stock is not treated as a straddle under

section 1092 if certain conditions, described in section 1092(c)(4)(B), are satisfied. Section 1092(c)(4)(H) authorizes the Secretary to modify these conditions to carry out the purposes of section 1092(c)(4) in light of changes in the marketplace.

(b) *Term limitation* —

(1) ***General rule.*** Except as provided in paragraph (b)(2) of this section, an option is not a qualified covered call unless it is granted not more than 12 months before the day on which the option expires or satisfies term limitation and qualified benchmark requirements established by the Commissioner in guidance published in the Internal Revenue Bulletin (*see* § 601.601(d)(2)(ii)(*b*) of this chapter).

(2) ***Special benchmark rule for an option granted not more than 33 months before the day on which the option expires*** —

(i) ***In general.*** The 12-month limitation described in paragraph (b)(1) of this section is extended to 33 months provided the lowest qualified benchmark is determined using the adjusted applicable stock price, as defined in § 1.1092(c)-4(e).

(ii) ***Examples.*** The following examples illustrate the rules set out in paragraph (b)(2)(i) of this section:

Example 1. Taxpayer owns stock in Corporation X. Taxpayer writes an equity option with standardized terms on Corporation X stock through a national securities exchange with a term of 21 months. The applicable stock price for Corporation X stock is $100. The bench marks for a 21-month equity option with standardized terms with an applicable stock price of $100 will be based upon the adjusted applicable stock price. Using the table at § 1.1092(c)-4(e), the applicable stock price of $100 is multiplied by the adjustment factor 1.12, resulting in an adjusted applicable stock price of $112. Using the bench marks for an equity option with standardized terms with an adjusted applicable stock price of $112, the highest available strike price less than the adjusted applicable stock price is $110, and the second highest strike price less than the adjusted applicable stock price is $105. Therefore, a 21-month equity call option with standardized terms on Corporation X stock will not be deep in the money if the strike price is not less than $105.

Example 2. Taxpayer owns stock in Corporation Y. Taxpayer writes an equity option with standardized terms on Corporation Y stock through a national securities exchange with a term of 21 months. The applicable stock price for Corporation Y stock is $13.25. The bench marks for a 21-month equity option with standardized terms with an applicable stock price of $13.25 will be based upon the adjusted applicable stock price. Using the table at § 1.1092(c)-4(e), the applicable stock price of $13.25 is multiplied by the adjustment factor 1.12, resulting in an adjusted applicable stock price of $14.84. Using the bench marks for an equity option with standardized terms with an adjusted applicable stock price of $14.84, the highest available strike price less than the adjusted applicable stock price is $12.50. However, under section 1092(c)(4)(D), the lowest qualified bench mark can be no lower than 85% of the applicable stock price, which for Corporation Y stock is $12.61 (85% of the adjusted applicable stock price of $14.84). Thus, because the highest available strike price less than the adjusted applicable stock price for an equity option with standardized terms is lower than the lowest qualified bench mark under section 1092(c)(4)(D), the lowest strike price at which a qualified covered call option can

be written is the next higher strike price, or $15.00. Therefore, a 21-month equity call option with standardized terms on Corporation Y stock will not be deep in the money if the strike price is not less than $15.

(c) ***Effective date.*** This section applies to qualified covered call options entered into on or after July 29, 2002.

[67 FR 20899, Apr. 29, 2002]

§ 1.1092(c)-2 Equity options with flexible terms.

(a) ***In general.*** Section 1092(c)(4) provides an exception to the general rule that a straddle exists if a taxpayer holds stock and writes a call option on that stock. Under section 1092(c)(4), the ownership of stock and the issuance of a call option meeting certain requirements result in a qualified covered call, which is exempted from the general straddle rules of section 1092. This section addresses the consequences of the availability of equity options with flexible terms under the qualified covered call rules.

(b) ***No effect on lowest qualified bench mark for standardized options.*** The availability of strike prices for equity options with flexible terms does not affect the determination of the lowest qualified bench mark, as defined in section 1092(c)(4)(D), for an equity option with standardized terms.

(c) ***Qualified covered call option status*** —

(1) ***Requirements.*** An equity option with flexible terms is a qualified covered call option only if—

(i) The option meets the requirements of section 1092(c)(4)(B) and § 1.1092(c)-1 (taking into account paragraph (c)(2) of this section);

(ii) The only payments permitted with respect to the option are a single fixed premium paid not later than 5 business days after the day on which the option is granted, and a single fixed strike price, as defined in § 1.1092(c)-4(d), that is payable entirely at (or within 5 business days of) exercise;

(iii) An equity option with standardized terms is outstanding for the underlying equity; and

(iv) The underlying security is stock in a single corporation.

(2) ***Lowest qualified bench mark*** —

(i) ***In general.*** For purposes of determining whether an equity option with flexible terms is deep in the money within the meaning of section 1092(c)(4)(C), the lowest qualified bench mark under section 1092(c)(4)(D) is the same for an equity option with flexible terms as the lowest qualified bench mark for an equity option with standardized terms on the same stock having the same applicable stock price.

(ii) ***Examples.*** The following examples illustrate the rules set out in paragraph (c)(2)(i) of this section:

Example 1. Taxpayer owns stock in Corporation X. Taxpayer writes an equity call option with flexible terms on Corporation X stock through a national securities exchange for a term of not more than 12 months. The applicable stock price for Corporation X stock is $73.75. Using the bench marks for an equity option with standardized terms with an applicable stock price of $73.75, the highest available strike price less than the applicable stock price is $70, and the second highest strike price less than the applicable stock price is $65. Therefore, an equity call option with flexible terms on Corporation X stock with a term of

90 days or less will not be deep in the money if the strike price is not less than $70. If the term is greater than 90 days, an equity call option with flexible terms on Corporation X will not be deep in the money if the strike price is not less than $65.

Example 2. Taxpayer owns stock in Corporation Y. Taxpayer writes a 9-month equity call option with flexible terms on Corporation Y stock through a national securities exchange. The applicable stock price for Corporation Y stock is $14.75. Using the bench marks for an equity option with standardized terms with an applicable stock price of $14.75, the highest available strike price less than the applicable stock price is $12.50. However, under section 1092(c)(4)(D), the lowest qualified bench mark can be no lower than 85% of the applicable stock price, which for Corporation Y stock is $12.54. Thus, because the highest available strike price less than the applicable stock price for an equity option with standardized terms is lower than the lowest qualified bench mark under section 1092(c)(4)(D), the lowest strike price at which a qualified covered call option can be written is the next higher strike price, or $15.00. This $15.00 strike price requirement for a qualified covered call option applies to equity options with flexible terms, equity options with standardized terms, and qualifying over-the-counter options.

Example 3. Taxpayer owns stock in Corporation Z. On May 8, 2003, Taxpayer writes a 21-month equity call option with flexible terms on Corporation Z stock through a national securities exchange. The applicable stock price for Corporation Z stock is $100. The bench marks for a 21-month equity option with standardized terms with an applicable stock price of $100 will be based upon the adjusted applicable stock price. Using the table at § 1.1092(c)-4(e), the applicable stock price of $100 is multiplied by the adjustment factor 1.12, resulting in an adjusted applicable stock price of $112. The highest available strike price less than the adjusted applicable stock price is $110, and the second highest strike price less than the adjusted applicable stock price is $105. Therefore, a 21-month equity call option with flexible terms on Corporation Z stock will not be deep in the money if the strike price is not less than $105.

(d) ***Effective date*** —

(1) ***In general.*** Except as provided in paragraph (d)(2) of this section, this section applies to equity options with flexible terms entered into on or after January 25, 2000.

(2) ***Effective date for paragraphs (b) and (c) of this section.*** Paragraphs (b) and (c) of this section apply to equity options with flexible terms entered into on or after July 29, 2002.

[T.D. 8866, 65 FR 3813, Jan. 25, 2000; Redesignated at 67 FR 20899, Apr. 29, 2002]

§ 1.1092(c)-3 Qualifying over-the-counter options.

(a) ***In general.*** Under section 1092(c)(4)(B)(i), an equity option is not a qualified covered call option unless it is traded on a national securities exchange that is registered with the Securities and Exchange Commission or other market that the Secretary determines has rules adequate to carry out the purposes of section 1092(c)(4). In accordance with section 1092(c)(4)(H), this requirement is modified as provided in paragraph (b) of this section.

(b) ***Qualified covered call option status.*** A qualifying over-the-counter option, as defined in § 1.1092(c)-4(c), is a qualified covered call option if it meets the requirements of §§ 1.1092(c)-1 and 1.1092(c)-2(c) after using the language "qualifying over-the-counter option" in place of "equity option with flexible terms". For purposes of this paragraph (b), a qualifying over-the-counter option is deemed to satisfy the requirements of section 1092(c)(4)(B)(i).

(c) ***Effective date.*** This section applies to qualifying over-the-counter options entered into on or after July 29, 2002.

[67 FR 20900, Apr. 29, 2002]

§ 1.1092(c)-4 Definitions.

The following definitions apply for purposes of §§ 1.1092(c)-1 through 1.1092(c)-3:

(a) ***Equity option with flexible terms*** means an equity option—

(1) That is described in any of the following Securities Exchange Act Releases—

(i) Self-Regulatory Organizations; Order Approving Proposed Rule Changes and Notice of Filing and Order Granting Accelerated Approval of Amendments by the Chicago Board Options Exchange, Inc. and the Pacific Stock Exchange, Inc., Relating to the Listing of Flexible Equity Options on Specified Equity Securities, Securities Exchange Act Release No. 34-36841 (Feb. 21, 1996); or

(ii) Self-Regulatory Organizations; Order Approving Proposed Rule Changes and Notice of Filing and Order Granting Accelerated Approval of Amendment Nos. 2 and 3 to the Proposed Rule Change by the American Stock Exchange, Inc., Relating to the Listing of Flexible Equity Options on Specified Equity Securities, Securities Exchange Act Release No. 34-37336 (June 27, 1996); or

(iii) Self-Regulatory Organizations; Order Approving Proposed Rule Change and Notice of Filing and Order Granting Accelerated Approval of Amendment Nos. 2, 4 and 5 to the Proposed Rule Change by the Philadelphia Stock Exchange, Inc., Relating to the Listing of Flexible Exchange Traded Equity and Index Options, Securities Exchange Act Release No. 34-39549 (Jan. 23, 1998); or

(iv) Any changes to the Security Exchange Act Releases described in paragraphs (a)(1)(i) through (iii) of this section that are approved by the Securities and Exchange Commission; or

(2) That is traded on any national securities exchange that is registered with the Securities and Exchange Commission (other than those described in the Security Exchange Act Releases set forth in paragraph (a)(1) of this section) and is—

(i) Substantially identical to the equity options described in paragraph (a)(1) of this section; and

(b) ***Equity option with standardized terms*** means an equity option—

(1) That is traded on a national securities exchange registered with the Securities and Exchange Commission;

(2) That, on the date the option is written, expires on the Saturday following the third Friday of the month of expiration;

(3) That has a strike price that is set at a uniform minimum strike price interval, that is established by the applicable national securities exchange registered with the Securities and Exchange Commission, and that is not less than $1.00; and

(4) That has stock in a single corporation as its underlying security.

(c) ***Qualifying over-the-counter option*** means an equity option that—

(1) Is not traded on a national securities exchange registered with the Securities and Exchange Commission; and

(2) Is entered into with—

(i) A broker-dealer, acting as principal or agent, who is registered with the Securities and Exchange Commission under section 15 of the Securities Act of 1934 (15 U.S.C. 78a through 78mm) and the regulations thereunder and who must comply with the recordkeeping requirements of 17 CFR 240.17a-3; or

(ii) An alternative trading system under 17 CFR 242.300 through 17 CFR 242.303; or

(iii) A person, acting as principal or agent, who must comply with the recordkeeping requirements for securities transactions described in 12 CFR 12.3, 12 CFR 208.34, or 12 CFR 344.4.

(d) ***Single fixed strike price*** means a strike price that is fixed, determinable, and stated as a dollar amount on the date the option is written. An option will not fail to have a single fixed strike price if, after the date the option is written, the strike price is adjusted to account for the effects of a dividend, stock dividend, stock distribution, stock split, reverse stock split, rights offering, distribution, reorganization, recapitalization, or reclassification with respect to the underlying security, or a merger, consolidation, dissolution, or liquidation of the issuer of the underlying security.

(e) ***Adjusted applicable stock price*** means the applicable stock price, as defined in section 1092(c)(4)(G), adjusted for time. To determine the adjusted applicable stock price, the applicable stock price, which is determined in accordance with the rules in section 1092(c)(4)(G), is multiplied by an adjustment factor. The adjustment factor table is as follows:

Option term (in months)		Adjustment factor
Greater than	Not more than	
12	15	1.08
15	18	1.10
18	21	1.12
21	24	1.14
24	27	1.16
27	30	1.18
30	33	1.20

(f) ***Securities Exchange Act Release*** means a release issued by the Securities and Exchange Commission. To determine identifying information for releases referenced in paragraph (d)(1) of this section, including release titles, identification numbers, and issue dates, contact the Office of the Secretary, Securities and

Exchange Commission, 450 5th Street, NW., Washington, DC 20549. To obtain a copy of a Securities Exchange Act Release, submit a written request, including the specific release identification number, title, and issue date, to Securities and Exchange Commission, Attention Public Reference, 450 5th Street, NW., Washington, DC 20549.

(g) ***Effective dates.***

(1) Except for paragraph (a)(2) of this section, paragraph (a) of this section applies to equity options with flexible terms entered into on or after January 25, 2000. Paragraph (a)(2) of this section applies to equity options with flexible terms entered into on or after July 29, 2002.

(2) Paragraphs (b), (c), (d), and (e) of this section apply to equity options entered into on or after July 29, 2002.

(3) Paragraph (f) of this section applies to equity options entered into on or after January 25, 2000.

[67 FR 20900, 20901, Apr. 29, 2002]

§ 1.1092(d)-1 Definitions and special rules.

(a) ***Actively traded.*** Actively traded personal property includes any personal property for which there is an established financial market.

(b) ***Established financial market*** —

(1) ***In general.*** For purposes of this section, an established financial market includes—

(i) A national securities exchange that is registered under section 6 of the Securities Exchange Act of 1934 (15 U.S.C. 78f);

(ii) An interdealer quotation system sponsored by a national securities association registered under section 15A of the Securities Exchange Act of 1934;

(iii) A domestic board of trade designated as a contract market by the Commodities Futures Trading Commission;

(iv) A foreign securities exchange or board of trade that satisfies analogous regulatory requirements under the law of the jurisdiction in which it is organized (such as the London International Financial Futures Exchange, the Marche a Terme International de France, the International Stock Exchange of the United Kingdom and the Republic of Ireland, Limited, the Frankfurt Stock Exchange, and the Tokyo Stock Exchange);

(v) An interbank market;

(vi) An interdealer market (as defined in paragraph (b)(2)(i) of this section); and

(vii) Solely with respect to a debt instrument, a debt market (as defined in paragraph (b)(2)(ii) of this section).

(2) ***Definitions*** —

(i) ***Interdealer market.*** An interdealer market is characterized by a system of general circulation (including a computer listing disseminated to subscribing brokers, dealers, or traders) that provides a reasonable basis to determine fair market value by disseminating either recent price quotations (including rates, yields, or other pricing information) of one or more identified

brokers, dealers, or traders or actual prices (including rates, yields, or other pricing information) of recent transactions. An interdealer market does not include a directory or listing of brokers, dealers, or traders for specific contracts (such as yellow sheets) that provides neither price quotations nor actual prices of recent transactions.

(ii) ***Debt market.*** A debt market exists with respect to a debt instrument if price quotations for the instrument are readily available from brokers, dealers, or traders. A debt market does not exist with respect to a debt instrument if—

(A) No other outstanding debt instrument of the issuer (or of any person who guarantees the debt instrument) is traded on an established financial market described in paragraph (b)(1)(i), (ii), (iii), (iv), (v), or (vi) of this section (other traded debt);

(B) The original stated principal amount of the issue that includes the debt instrument does not exceed $25 million;

(C) The conditions and covenants relating to the issuer's performance with respect to the debt instrument are materially less restrictive than the conditions and covenants included in all of the issuer's other traded debt (e.g., the debt instrument is subject to an economically significant subordination provision whereas the issuer's other traded debt is senior); or

(D) The maturity date of the debt instrument is more than 3 years after the latest maturity date of the issuer's other traded debt.

(c) ***Notional principal contracts.*** For purposes of section 1092(d)—

(1) A notional principal contract (as defined in § 1.446-3(c)(1)) constitutes personal property of a type that is actively traded if contracts based on the same or substantially similar specified indices are purchased, sold, or entered into on an established financial market within the meaning of paragraph (b) of this section; and

(2) The rights and obligations of a party to a notional principal contract are rights and obligations with respect to personal property and constitute an interest in personal property.

(d) ***Debt instrument linked to the value of personal property.*** If a taxpayer is the obligor under a debt instrument one or more payments on which are linked to the value of personal property or a position with respect to personal property, then the taxpayer's obligation under the debt instrument is a position with respect to personal property and may be part of a straddle.

(e) ***Effective/applicability dates*** —

(1) Paragraphs (a) and (b) of this section apply to positions entered into on or after October 14, 1993.

(2) Paragraph (c) of this section applies to positions entered into on or after July 8, 1991.

(3) Paragraph (d) of this section applies to straddles established on or after January 17, 2001.

[T.D. 8491, 58 FR 53135, Oct. 14, 1993, as amended by T.D. 9635, 78 FR 54569, Sept. 5, 2013; T.D. 9691, 79 FR 51091, Aug. 27, 2014]

§ 1.1092(d)-2 Personal property.

(a) ***Special rules for stock.*** Under section 1092(d)(3)(B), personal property includes any stock that is part of a straddle, at least one of the offsetting positions of which is a position with respect to substantially similar or related property (other than stock). For purposes of this rule, the term *substantially similar or related property* is defined in § 1.246-5 (other than § 1.246-5(b)(3)). The rule in § 1.246-5(c)(6) does not narrow the related party rule in section 1092(d)(4).

(b) ***Effective date*** —

(1) ***In general.*** This section applies to positions established on or after March 17, 1995.

(2) ***Special rule for certain straddles.*** This section applies to positions established after March 1, 1984, if the taxpayer substantially diminished its risk of loss by holding substantially similar or related property involving the following types of transactions—

(i) Holding offsetting positions consisting of stock and a convertible debenture of the same corporation where the price movements of the two positions are related; or

(ii) Holding a short position in a stock index regulated futures contract (or alternatively an option on such a regulated futures contract or an option on the stock index) and stock in an investment company whose principal holdings mimic the performance of the stocks included in the stock index (or alternatively a portfolio of stocks whose performance mimics the performance of the stocks included in the stock index).

[T.D. 8590, 60 FR 14641, Mar. 20, 1995]

capital gains and losses

Treatment of Capital Gains

§ 1.1201-1 Alternative tax.

(a) ***Corporations*** —

(1) ***In general.***

(i) If for any taxable year a corporation has net capital gain (net section 1201 gain for taxable years beginning before January 1, 1977) (as defined in section 1222(11)) section 1201(a) imposes an alternative tax in lieu of the tax imposed by sections 11 and 511, but only if such alternative tax is less than the tax imposed by sections 11 and 511. The alternative tax is not in lieu of the personal holding company tax imposed by section 541 or of any other tax not specifically set forth in section 1201(a).

(ii) In the case of an insurance company, the alternative tax imposed by section 1201(a) is also in lieu of the tax imposed by sections 821 (a) or (c) and 831 (a), except that for taxable years beginning before January 1, 1963, the reference to section 821 (a) or (c) is to be read as reference to section 821 (a)(1) or (b). For taxable years beginning after December 31, 1954, and before January 1, 1958, the alternative tax imposed by section 1201(a) shall also be in lieu of the tax imposed by section 802(a), as amended by the Life Insurance Company Tax Act for 1955 (70 Stat. 38), if such alternative tax is less than the tax imposed by such section. See

section 802(e), as added by the Life Insurance Company Tax Act for 1955 (70 Stat. 39). However, for taxable years beginning after December 31, 1958, and before January 1, 1962, section 802(a)(2), as amended by the Life Insurance Company Income Tax Act of 1959 (73 Stat. 115), imposes a separate tax equal to 25 percent of the amount by which the net long-term capital gain of any life insurance company (as defined in section 801(a) and paragraph (b) of § 1.801-3) exceeds its net short-term capital loss. See paragraph (f) of § 1.802-3. For alternative tax for life insurance companies in the case of taxable years beginning after December 31, 1961, see section 802(a)(2) and the regulations thereunder.

(iii) See section 56 and the regulations thereunder for provisions relating to the minimum tax for tax preferences.

(2) ***Alternative tax.*** The alternative tax is the sum of:

(i) A partial tax computed at the rates provided in sections 11, 511, 821 (a) or (c), and 831(a), on the taxable income of the taxpayer reduced by the amount of the net capital gain (net section 1201 gain for taxable years beginning before January 1, 1977), and

(ii) An amount equal to the tax determined under subparagraph (3) of this paragraph.

For taxable years beginning after December 31, 1954, and before January 1, 1958, the partial tax under subdivision (i) of this subparagraph shall also be computed at the rates provided in section 802(a). For taxable years beginning before January 1, 1963, the reference in such subdivision to section 821 (a) or (c) is to be read as a reference to section 821 (a) or (b).

(3) ***Tax on capital gains.*** For purposes of subparagraph (2)(ii) of this paragraph, the tax shall be:

(i) In the case of a taxable year beginning after December 31, 1974, a tax of 30 percent of the net section 1201 gain (net capital gain for taxable years beginning after December 31, 1976),

(ii) In the case of a taxable year beginning after December 31, 1969, and before January 1, 1975:

(*a*) A tax of 25 percent of the lesser of the amount of the subsection (d) gain (as defined in section 1201(d) and paragraph (f) of this section) or the amount of the net section 1201 gain (net capital gain for taxable years beginning after December 31, 1976), plus

(*b*) A tax of 30 percent (28 percent in the case of a taxable year beginning after December 31, 1969, and before January 1, 1971) of the excess, if any, of the net section 1201 gain (net capital gain for taxable years beginning after December 31, 1976) over the subsection (d) gain,

(iii) In the case of a taxable year beginning before January 1, 1970, and after March 31, 1954, a tax of 25 percent of the net section 1201 gain (net capital gain for taxable years beginning after December 31, 1976), or

(iv) In the case of a taxable year beginning before April 1, 1954, a tax of 26 percent of the net section 1201 gain (net capital gain for taxable years beginning after December 31, 1976).

(4) ***Determination of special deductions.*** In the computation of the partial tax described in subparagraph (2)(i) of this paragraph the special deductions provided for in sections 243, 244, 245, 247, 922, and 941 shall not be recomputed as the result of the reduction of taxable income by the net capital gain (net section 1201 gain for taxable years beginning before January 1, 1977).

(b) ***Other taxpayers*** —

(1) ***In general.*** If for any taxable year a taxpayer (other than a corporation) has net capital gain (net section 1201 gain for taxable years beginning before January 1, 1977) (as defined in section 1222(11)) section 1201(b) imposes an alternative tax in lieu of the tax imposed by sections 1 and 511, but only if such alternative tax is less than the tax imposed by sections 1 and 511. The alternative tax is not in lieu of any other tax not specifically set forth in section 1201(b). See section 56 and the regulations thereunder for provisions relating to the minimum tax for tax preferences.

(2) ***Alternative tax.*** The alternative tax is the sum of:

(i) A partial tax computed at the rates provided by sections 1 and 511 on the taxable income reduced by an amount equal to 50 percent of the net capital gain (net section 1201 gain for taxable years beginning before January 1, 1977), and

(ii) In the case of a taxable year beginning after December 31, 1969:

(*a*) A tax of 25 percent of the lesser of the amount of the subsection (d) gain (as defined in section 1201(d) and paragraph (f) of this section) or the amount of the net capital gain (net section 1201 gain for taxable years beginning before January 1, 1977), plus

(*b*) A tax computed as provided in section 1201(c) and paragraph (e) of this section on the excess, if any, of the net capital gain (net section 1201 gain for taxable years beginning before January 1, 1977) over the subsection (d) gain, or

(iii) In the case of a taxable year beginning before January 1, 1970, a tax of 25 percent of the net section 1201 gain (net capital gain for taxable years beginning after December 31, 1976).

(3) ***Cross references.*** See § 1.1-2(a) for rule relating to the computation of the limitation on tax in cases where the alternative tax is imposed. See § 1.34-2 (a) for rule relating to the computation of the dividend received credit under section 34 (for dividends received on or before December 31, 1964), and § 1.35-1 (a) for rule relating to the computation of credit for partially tax-exempt interest under section 35 in cases where the alternative tax is imposed.

(c) ***Tax-exempt trusts and organizations.*** In applying section 1201 in the case of tax-exempt trusts or organizations subject to the tax imposed by section 511, the only amount which is taken into account as capital gain or loss is that which is taken into account in computing unrelated business taxable income under section 512. Under section 512, the only amount taken into account as capital gain or loss is that resulting from the application of section 631(a), relating to the election to treat the cutting of timber as a sale or exchange.

(d) ***Joint returns.*** In the case of a joint return, the excess of any net long-term capital gain over any net short-term capital loss is to be determined by combining the long-term capital gains and losses and the short-term capital gains and losses of the spouses.

(e) ***Computation of tax on capital gain in excess of subsection (d) gain*** —

(1) ***In general.*** The tax computed for purposes of section 1201(b)(3) and paragraph (b) (2)(ii)(*b*) of this section shall be the amount by which a tax determined under section 1 or 511 on an amount equal to the taxable income (but not less than 50 percent of the net capital gain (net section 1201 gain for taxable years beginning before January 1, 1977)) for the taxable year exceeds a tax determined under section 1 or 511 on an amount equal to the sum of

(i) the amount subject to tax under section 1201 (b)(1) and paragraph (b)(2)(i) of this section for such year plus

(ii) an amount equal to 50 percent of the subsection (d) gain for such year.

(2) ***Limitation.*** Notwithstanding subparagraph (1) of this paragraph, the tax computed for purposes of section 1201(b)

(3) and paragraph (b)(2)(ii)(*b*) of this section shall not exceed an amount equal to the following percentage of the excess of the net capital gain (net section 1201 gain for taxable years beginning before January 1, 1977) over the subsection (d) gain for the taxable year:

(i) $29^1/_2$ percent, in the case of a taxable year beginning after December 31, 1969, and before January 1, 1971, or

(ii) $32^1/_2$ percent, in the case of a taxable year beginning after December 31, 1970, and before January 1, 1972.

(f) ***Definition of subsection (d) gain*** —

(1) ***In general.*** For purposes of section 1201 and this section, the term *subsection (d) gain* means the sum of the long-term capital gains for the taxable year arising:

(i) In the case of amounts received or accrued, as the case may be, before January 1, 1975 (other than any gain from a transaction described in section 631 or 1235), from:

(*a*) Sales or other dispositions on or before October 9, 1969, including sales or other dispositions the income from which is returned as provided in section 453 (a)(1) or (b)(1), or

(*b*) Sales or other dispostions after October 9, 1969, pursuant to binding contracts entered into on or before that date, including sales or other dispositions the income from which is returned as provided in section 453 (a)(1) or (b)(1),

(ii) From liquidating distributions made by a corporation which are made (a) before October 10, 1970, and (b) pursuant to a plan of complete liquidation adopted on or before October 9, 1969, or

(iii) In the case of a taxpayer (other than a corporation), from any other source not described in subdivision (i) or (ii) of this subparagraph, but the amount taken into account from such other sources shall be limited to the amount, if any, by which $50,000 ($25,000 in the case of a married individual filing a separate return) exceeds the sum of the gains to which subdivisions (i) and (ii) of this subparagraph apply.

(2) ***Special rules.*** For purposes of subparagraph (1) of this paragraph:

(i) A binding contract entered into on or before October 9, 1969, means a contract, whether written or unwritten, which on or before that date was legally enforceable against the taxpayer under applicable law. If on or before October 9, 1969, a taxpayer grants an irrevocable option or irrevocable contractual right to another party to buy certain property and such other party exercises that option or right after October 9, 1969, the sale of such property is a sale pursuant to a binding contract entered into on or before October 9, 1969. The application of this subdivision may be illustrated by the following example:

Example: During 1964, A, B, and C formed a closely held corporation, and A was appointed as president of the organization. On July 1, 1964, A received for consideration 100 shares of common stock in the corporation subject to the agreement that, if A should retire from the

management of the corporation or die, A or his estate would first offer his shares of stock to the corporation for purchase and that, if the corporation did not buy the stock within 60 days, the stock could be sold to any party other than the corporation. On September 1, 1970, A retired from the management of the corporation and offered his shares to the corporation for purchase. Pursuant to the agreement, the corporation purchased A's stock on September 30, 1970. A's sale of such stock was pursuant to a binding contract entered into on or before October 9, 1969.

(ii) A contract which pursuant to subdivision (i) of this subparagraph constitutes a binding contract entered into on or before October 9, 1969, does not cease to qualify as such a contract by reason of the fact that after October 9, 1969, there is a modification of the terms of the contract such as a change in the time of performance, or in the amount of the debt or in the terms and mode of payment, or in the rate of interest, or there is a change in the form or nature of the obligation or the character of the security, so long as the taxpayer is at all times on and after October 9, 1969, legally bound by such contract. The application of this subdivision may be illustrated by the following examples:

Example 1. On August 1, 1969, A sold certain capital assets to B on the installment plan and elected to return the gain therefrom under section 453, the agreement providing for payments over a period of 2 years. At the time of the sale these assets had been held by A for more than 6 months. On July 31, 1970, A and B agreed to a modification of the terms of payment under the sales agreement, the only change in the contract being that the installment payments due after July 31, 1970, would be paid over a 3-year period. For purposes of this paragraph the payments received by A after July 31, 1970, are considered amounts received from the sale on August 1, 1969. (See section 483 for rules with respect to interest on deferred payments.)

Example 2. On April 1, 1969, A sold certain capital assets to B on the installment plan and elected to return the gain therefrom under section 453, the agreement providing for payments over a period of 3 years. At the time of the sale these assets had been held by A for more than 6 months. On March 31, 1970, C assumed B's obligation to pay the balance of the installments which were due after that date. For purposes of this paragraph any installment payments received by A after March 31, 1970, from C are considered amounts received from a sale made on or before October 9, 1969.

Example 3. On May 1, 1969, A offers to sell certain capital assets to B if B accepts the offer within 1 year, unless it is previously withdrawn by A. B accepts the offer on November 1, 1969, and the transaction is consummated shortly thereafter. For purposes of this paragraph, any payment received by A pursuant to the sale is not considered an amount received from a sale made on or before October 9, 1969, or from a sale pursuant to a binding contract entered into on or before that date.

(iii) An amount which is considered under section 402(a)(2) or 403(a)(2) as gain of the taxpayer from the sale or exchange of a capital asset held for more than 6 months shall be treated as gain subject to the provisions of section 1201 (d)(1) and subdivision (i) of such subparagraph, but only if on or before October 9, 1969,

(*a*) the employee with respect to whom such amount is distributed or paid, died or was otherwise separated from the service, and

(*b*) the terms of the plan required, or the employee elected, that total distributions or amounts payable be paid to the taxpayer within 1 taxable year.

(iv) Gain described in section 1201(d) (1) or (2) with respect to a partnership, estate, or trust, which is required to be included in the gross income of a partner in such partnership, or of a beneficiary of such estate or trust, shall be treated as such gain with respect to such partner or beneficiary. Thus, for example, if during 1974 a partnership which uses the calendar year as its taxable year receives amounts which give rise to section 1201(d)(1) gain, a partner who uses the fiscal year ending June 30 as his taxable year shall treat his distributive share of such gain as subsection (d) gain for his taxable year ending June 30, 1975, even though such share is distributed to him after December 31, 1974. See § 1.706-1.

(v) An individual shall be considered married for purposes of subdivision (iii) of such subparagraph if for the taxable year he may elect with his spouse to make a joint return under section 6013(a).

(vi) In applying such subparagraph for purposes of section 21(a) (1) long-term capital gains arising from amounts received before January 1, 1970, shall be taken into account if such amounts are received during the taxable year.

(g) ***Illustrations.*** The application of this section may be illustrated by the following examples in which the assumption is made that section 56 (relating to minimum tax for tax preferences) does not apply:

Example 1. A, a single individual, has for the calendar year 1954 taxable income (exclusive of capital gains and losses) of $99,400. He realizes in 1954 a gain of $50,000 on the sale of a capital asset held for 19 months and sustains a loss of $20,000 on the sale of a capital asset held for 5 months. He had no other capital gains or losses. Since the alternative tax is less than the tax otherwise computed under section 1, the tax payable is the alternative tax, that is $74,298. The tax is computed as follows:

Tax Under Section 1		
Taxable income exclusive of capital gains and losses		$99,400
Net long-term capital gain (100 percent of $50,000)	$50,000	
Net short-term capital loss (100 percent of $20,000)	20,000	
Excess of net long-term capital gain over the net short-term capital loss		30,000
		129,400
Deduction of 50 percent of excess of net long-term capital gain over the net short-term capital loss (section 1202)		15,000
Taxable income		114,400
Tax under section 1		80,136
Alternative Tax Under Section 1201(b)		
Taxable income		$114,400
Less 50 percent of excess of net long-term capital gain over net short-term capital loss (section 1201(b)(1))		15,000
Taxable income exclusive of capital gains and losses		99,400

Partial tax (tax on $99,400)	66,798
Plus 25 percent of $30,000	7,500
Alternative tax under section 1201(b)	74,298

Example 2. A husband and wife, who file a joint return for the calendar year 1970, have taxable income (exclusive of capital gains and losses) of $100,000. In 1970 they realize $200,000 of net long-term capital gain in excess of net short-term capital loss, including long-term capital gains of $100,000 arising from sales consummated in 1968 the income from which is returned on the installment method under section 453, and long-term capital gains of $50,000, arising in respect of distributions from X corporation made before October 10, 1970, which were pursuant to a plan of complete liquidation adopted on October 9, 1969. Since the alternative tax under section 1201(b) is less than the tax otherwise computed under section 1, the tax payable for 1970 is the alternative tax, that is, $97,430 plus the tax surcharge under section 51. The tax (without regard to the tax surcharge) is computed as follows:

Tax Under Section 1		
Taxable income exclusive of capital gains and losses		$100,000
Net section 1201 gain (net capital gain for taxable years beginning after December 31, 1976) (excess of net long-term capital gain over the net short-term capital loss)		200,000
Total		300,000
Deduction of 50 percent of net section 1201 (net capital gain for taxable years beginning after December 31, 1976) gain (section 1202)		100,000
Taxable income		200,000
Tax under section 1		110,980
Alternative Tax Under Section 1201(b)		
(1) Net section 1201 gain (net capital gain for taxable years beginning after December 31, 1976)		$200,000
(2) Subsection (d) gain:		
Section 1201(d)(1)		100,000
Section 1201(d)(2)		50,000
Total subsection (d) gain		150,000
(3) Net section 1201 (net capital gain for taxable years beginning after December 31, 1976) gain in excess of subsection (d) gain ($200,000 less $150,000)		50,000
(4) Tax under section 1201(b)(1):		
(i) Taxable income	$200,000	
(ii) Less: 50% of item (1)	100,000	
(iii) Amount subject to tax under section 1201(b)(1)	100,000	
Partial tax (computed under section 1)		45,180

(5) Tax under section 1201(b)(2): (25% of item (1) or of item (2), whichever is lesser [25% of $150,000])		37,500
(6) Tax under section 1201(b)(3) on item (3):		
Tax under section 1 on taxable income ($200,000)	$110,980	
Less: Tax under section 1 on sum of item (4)(iii)(c) ($100,000) plus 50% of item (2) ($75,000) (Total $175,000)	93,780	
Tax under section 1201(c)(1)	17,200	
Limitation under section 1201(c)(2)(A) (29 1/2% of item (3))	14,750	14,750
(7) Alternative tax under section 1201(b)		97,430

Example 3. A husband and wife, who file a joint return for the calendar year 1971, have taxable income (exclusive of capital gains and losses) of $80,000. In 1971 they realize long-term capital gain of $30,000 arising from a sale consummated on July 1, 1969, the income from which is returned on the installment method under section 453. From securities transactions in 1971 they have long-term capital gains of 60,000 and a short-term capital loss of $10,000. Since the alternative tax under section 1201(b) is less than the tax otherwise computed under section 1, the tax payable is the alternative tax, that is, $55,140. The tax is computed as follows:

Tax Under Section 1		
Taxable income exclusive of capital gains and losses		$80,000
Net long-term capital gains (100% of $90,000)	$90,000	
Net short-term capital loss (100% of $10,000)	10,000	
Net section 1201 gain (net capital gain for taxable years beginning after December 31, 1976)		80,000
Total		160,000
Deduction of 50% of net section 1201 gain (net capital gain for taxable years beginning after December 31, 1976) (section 1202)		40,000
Taxable income		120,000
Tax under section 1		57,580
Alternative Tax Under Section 1201(b)		
(1) Net section 1201 gain (net capital gain for taxable years beginning after December 31, 1976)		$80,000
(2) Subsection (d) gain:		
Section 1201(d)(1)		30,000
Section 1201(d)(2)		
Section 1201(d)(3) ($50,000 less $30,000)		20,000

Total subsection (d) gain		50,000
(3) Net section 1201 (net capital gain for taxable years beginning after December 31, 1976) gain in excess of subsection (d) gain ($80,000 less $50,000)		30,000
(4) Tax under section 1201(b)(1):		
(i) Taxable income	$120,000	
(ii) Less: 50% of item (1)	40,000	
(iii) Amount subject to tax under section 1201(b)(1)	80,000	
Partial tax (computed under section 1)		33,340
(5) Tax under section 1201(b)(2): (25% of item (1) or of item (2), whichever is lesser [25% of $50,000])		12,500
(6) Tax under section 1201 (b)(3) on item (3):		
Tax under section 1 on taxable income ($120,000)	$57,580	
Less: Tax under sec. 1 on sum of item (4) (iii) ($80,000) plus 50% of item (2) ($25,000) (Total $105,000)	$48,280	
Tax under section 1201(c)(1)	9,300	
Limitation under section 1201(c) (2)(B) (32 1/2% of item (3))	9,750	$9,300
(7) Alternative tax under section 1201(b)		55,140

Example 4. A husband and wife, who file a joint return for the calendar year 1973, have taxable income (exclusive of capital gains and losses) of $250,000. In 1973 they realize long-term capital gains (not described in section 1201(d) (1) or (2)) of $140,000 and a short-term capital loss of $50,000. Since the alternative tax under section 1201(b) is less than the tax otherwise computed under section 1, the tax payable is the alternative tax, that is, $172,480. The tax is computed as follows:

Tax Under Section 1		
Taxable income exclusive of capital gains and losses		$250,000
Net long-term capital gains (100% of $140,000)	$140,000	
Net short-term capital loss (100% of $50,000)	50,000	
Net section 1201 gain (net capital gain for taxable years beginning after December 31, 1976)		90,000
Total		340,000
Deduction of 50% of net section 1201 gain (net capital gain for taxable years beginning after December 31, 1976) (section 1202)		45,000
Taxable income		295,000
Tax under section 1		177,480
Alternative Tax Under Section 1201(b)		
(1) Net section 1201 gain (net capital gain for taxable years beginning after December		$90,000

31, 1976)		
(2) Subsection (d) gain:		
Section 1201(d)(1)		
Section 1201(d)(2)		
Section 1201(d)(3)		50,000
Total subsection (d) gain		50,000
(3) Net section 1201 gain (net capital gain for taxable years beginning after December 31, 1976) in excess of subsection (d) gain ($90,000 less $50,000)		40,000
(4) Tax under section 1201(b)(1):		
(i) Taxable income	$295,000	
(ii) Less: 50% of item (1)	45,000	
(iii) Amount subject to tax under section 1201(b)(1)	250,000	
Partial tax (computed under section 1)		145,980
(5) Tax under section 1201(b)(2): (25% of item (1) or of item (2), whichever is lesser [25% of $50,000])		$12,500
(6) Tax under section 1201(b)(3) on item (3):		
Tax under section 1 on taxable income ($295,000)	$177,480	
Less: Tax under section 1 on sum of item (4) (iii) ($250,000) plus 50% of item (2) ($25,000) (Total $275,000)	163,480	14,000
(7) Alternative tax under section 1201(b)		172,480

[T.D. 7337, 39 FR 44975, Dec. 30, 1974, as amended by T.D. 7728, 45 FR 72651, Nov. 3, 1980]

§ 1.1202-0 Table of contents.

This section lists the major captions that appear in the regulations under § 1.1202-2.

§ 1.1202-2 Qualified small business stock; effect of redemptions.

(a) Redemptions from taxpayer or related person.

(1) In general.

(2) De minimis amount.

(b) Significant redemptions.

(1) In general.

(2) De minimis amount.

(c) Transfers by shareholders in connection with the performance of services not treated as purchases.

(d) Exceptions for termination of services, death, disability or mental incompetency, or divorce.

(1) Termination of services.

(2) Death.

(3) Disability or mental incompetency.

(4) Divorce.

(e) Effective date.

[T.D. 8749, 62 FR 68166, Dec. 31, 1997]

§ 1.1202-1 Deduction for capital gains.

(a) In computing gross income, adjusted gross income, taxable income, capital gain net income (net capital gain for taxable years beginning before January 1, 1977) and net capital loss, 100 percent of any gain or loss (computed under section 1001, recognized under section 1002, and taken into account without regard to subchapter P (section 1201 and following), chapter 1 of the Code) upon the sale or exchange of a capital asset shall be taken into account regardless of the period for which the capital asset has been held. Nevertheless, the net short-term capital gain or loss and the net long-term capital gain or loss must be separately computed. In computing the adjusted gross income or the taxable income of a taxpayer other than a corporation, if for any taxable year the net long-term capital gain exceeds the net short-term capital loss, 50 percent of the amount of the excess is allowable as a deduction from gross income under section 1202.

(b) For the purpose of computing the deduction allowable under section 1202 in the case of an estate or trust, any long-term or short-term capital gains which, under sections 652 and 662, are includible in the gross income of its income beneficiaries as gains derived from the sale or exchange of capital assets must be excluded in determining whether, for the taxable year of the estate or trust, its net long-term capital gain exceeds its net short-term capital loss. To determine the extent to which such gains are includible in the gross income of a beneficiary, see the regulations under sections 652 and 662. For example, during 1954 a trust realized a gain of $1,000 upon the sale of stock held for 10 months. Under the terms of the trust instrument all of such gain must be distributed during the taxable year to A, the sole income beneficiary. Assuming that under section 652 or 662 A must include all of such gain in his gross income, the trust is not entitled to any deduction with respect to such gain under section 1202. Assuming A had no other capital gains or losses for 1954, he would be entitled to a deduction of $500 under section 1202. For purposes of this section, an income beneficiary shall be any beneficiary to whom an amount is required to be distributed, or is paid or credited, which is includible in his gross income.

(c) The provisions of this section may be illustrated by the following example:

Example: A, an individual, had the following transactions in 1954:

Long-term capital gain	$6,000	
Long-term capital loss	4,000	
Net long-term capital gain		$2,000
Short-term capital loss	1,800	
Short-term capital gain	300	
Net short-term capital loss		1,500
Excess of net long-term capital gain over net short-term capital loss		500

Since the net long-term capital gain exceeds the net short-term capital loss by $500, 50 percent of the excess, or $250, is allowable as a deduction under section 1202.

[T.D. 6500, 25 FR 12001, Nov. 26, 1960, as amended by T.D. 7728, 45 FR 72650, Nov. 3, 1980]

§ 1.1202-2 Qualified small business stock; effect of redemptions.

(a) ***Redemptions from taxpayer or related person*** —

(1) ***In general.*** Stock acquired by a taxpayer is not qualified small business stock if, in one or more purchases during the 4-year period beginning on the date 2 years before the issuance of the stock, the issuing corporation purchases (directly or indirectly) more than a de minimis amount of its stock from the taxpayer or from a person related (within the meaning of section 267(b) or 707(b)) to the taxpayer.

(2) ***De minimis amount.*** For purposes of this paragraph (a), stock acquired from the taxpayer or a related person exceeds a de minimis amount only if the aggregate amount paid for the stock exceeds $10,000 and more than 2 percent of the stock held by the taxpayer and related persons is acquired. The following rules apply for purposes of determining whether the 2-percent limit is exceeded. The percentage of stock acquired in any single purchase is determined by dividing the stock's value (as of the time of purchase) by the value (as of the time of purchase) of all stock held (directly or indirectly) by the taxpayer and related persons immediately before the purchase. The percentage of stock acquired in multiple purchases is the sum of the percentages determined for each separate purchase.

(b) ***Significant redemptions*** —

(1) ***In general.*** Stock is not qualified small business stock if, in one or more purchases during the 2-year period beginning on the date 1 year before the issuance of the stock, the issuing corporation purchases more than a de minimis amount of its stock and the purchased stock has an aggregate value (as of the time of the respective purchases) exceeding 5 percent of the aggregate value of all of the issuing corporation's stock as of the beginning of such 2-year period.

(2) ***De minimis amount.*** For purposes of this paragraph (b), stock exceeds a de minimis amount only if the aggregate amount paid for the stock exceeds $10,000 and more than 2 percent of all outstanding stock is purchased. The following rules apply for purposes of determining whether the

2-percent limit is exceeded. The percentage of the stock acquired in any single purchase is determined by dividing the stock's value (as of the time of purchase) by the value (as of the time of purchase) of all stock outstanding immediately before the purchase. The percentage of stock acquired in multiple purchases is the sum of the percentages determined for each separate purchase.

(c) ***Transfers by shareholders in connection with the performance of services not treated as purchases.*** A transfer of stock by a shareholder to an employee or independent contractor (or to a beneficiary of an employee or independent contractor) is not treated as a purchase of the stock by the issuing corporation for purposes of this section even if the stock is treated as having first been transferred to the corporation under § 1.83-6(d)(1) (relating to transfers by shareholders to employees or independent contractors).

(d) ***Exceptions for termination of services, death, disability or mental incompetency, or divorce.*** A stock purchase is disregarded if the stock is acquired in the following circumstances:

(1) ***Termination of services*** —

(i) ***Employees and directors.*** The stock was acquired by the seller in connection with the performance of services as an employee or director and the stock is purchased from the seller incident to the seller's retirement or other bona fide termination of such services;

(ii) ***Independent contractors.*** [Reserved]

(2) ***Death.*** Prior to a decedent's death, the stock (or an option to acquire the stock) was held by the decedent or the decedent's spouse (or by both), by the decedent and joint tenant, or by a trust revocable by the decedent or the decedent's spouse (or by both), and—

(i) The stock is purchased from the decedent's estate, beneficiary (whether by bequest or lifetime gift), heir, surviving joint tenant, or surviving spouse, or from a trust established by the decedent or decedent's spouse; and

(ii) The stock is purchased within 3 years and 9 months from the date of the decedent's death;

(3) ***Disability or mental incompetency.*** The stock is purchased incident to the disability or mental incompetency of the selling shareholder; or

(4) ***Divorce.*** The stock is purchased incident to the divorce (within the meaning of section 1041(c)) of the selling shareholder.

(e) ***Effective date.*** This section applies to stock issued after August 10, 1993.

[T.D. 8749, 62 FR 68166, Dec. 31, 1997]

TREATMENT OF CAPITAL LOSSES

§ 1.1211-1 Limitation on capital losses.

(a) ***Corporations*** —

(1) ***General rule.*** In the case of a corporation, there shall be allowed as a deduction an amount equal to the sum of:

(i) Losses sustained during the taxable year from sales or exchanges of capital assets, plus

(ii) The aggregate of all losses sustained in other taxable years which are treated as a short-term capital loss in such taxable year pursuant to section 1212(a)(1),

but only to the extent of gains from such sales or exchanges of capital assets in such taxable year.

(2) ***Banks.*** See section 582(c) for modification of the limitation under section 1211(a) in the case of a bank, as defined in section 581.

(b) ***Taxpayers other than corporations*** —

(1) ***General rule.*** In the case of a taxpayer other than a corporation, there shall be allowed as a deduction an amount equal to the sum of:

(i) Losses sustained during the taxable year from sales or exchanges of capital assets, plus

(ii) The aggregate of all losses sustained in other taxable years which are treated either as a short-term capital loss or as a long-term capital loss in such taxable year pursuant to section 1212(b), but only to the extent of gains from sales or exchanges of capital assets in such taxable year, plus (if such losses exceed such gains) the additional allowance or transitional additional allowance deductible under section 1211(b) from ordinary income for such taxable year. The additional allowance deductible under section 1211(b) shall be determined by application of subparagraph (2) of this paragraph, and the transitional additional allowance by application of subparagraph (3) of this paragraph.

(2) ***Additional allowance.*** Except as otherwise provided by subparagraph (3) of this paragraph, the additional allowance deductible under section 1211(b) for taxable years beginning after December 31, 1969, shall be the least of:

(i) The taxable income for the taxable year reduced, but not below zero, by the zero bracket amount (in the case of taxable years beginning before January 1, 1977, the taxable income for the taxable year);

(ii) $3,000 ($2,000 for taxable years beginning in 1977; $1,000 for taxable years beginning before January 1, 1977); or

(iii) The sum of the excess of the net short-term capital loss over the net long-term capital gain, plus one-half of the excess of the net long-term capital loss over the net short-term capital gain.

(3) ***Transitional additional allowance*** —

(i) ***In general.*** If, pursuant to the provisions of § 1.1212-1(b) and subdivision (iii) of this subparagraph, there is carried to the taxable year from a taxable year beginning before January 1, 1970, a long-term capital loss, and if for the taxable year there is an excess of net long-term capital loss over net short-term capital gain, then, in lieu of the additional allowance provided by subparagraph (2) of this paragraph, the transitional additional allowance deductible under section 1211(b) shall be the least of:

(*a*) The taxable income for the taxable year reduced, but not below zero, by the zero bracket amount (in the case of taxable years beginning before January 1, 1977, the taxable income for the taxable year);

(*b*) $3,000 ($2,000 for taxable years beginning in 1977; $1,000 for taxable years beginning before January 1, 1977); or

(*c*) The sum of the excess of the net short-term capital loss over the net long-term capital gain; that portion of the excess of the net long-term capital loss over the net short-term capital gain computed as provided in subdivision (ii) of this subparagraph; plus one-half of the remaining portion of the excess of the net long-term capital loss over the net short-term capital gain.

(ii) ***Computation of specially treated portion of excess long-term capital loss over net short-term capital gain.*** In determining the transitional additional allowance deductible as provided by this subparagraph, there shall be applied thereto in full on a dollar-for-dollar basis the excess of net long-term capital loss over net short-term capital gain (computed with regard to capital losses carried to the taxable year) to the extent that the long-term capital losses carried to the taxable year from taxable years beginning before January 1, 1970, as provided by § 1.1212-1(b) and subdivision (iii) of this subparagraph, exceed the sum of (*a*) the portion of the capital gain net income (net capital gain for taxable years beginning before January 1, 1977) actually realized in the taxable year (i.e., computed without regard to capital losses carried to the taxable year) which consists of net long-term capital gain actually realized in the taxable year, plus (*b*) the amount by which the portion of the capital gain net income (net capital gain for taxable years beginning before January 1, 1977) actually realized in the taxable year (i.e., computed without regard to capital losses carried to the taxable year) which consists of net short-term capital gain actually realized in the taxable year exceeds the total of short-term capital losses carried to the taxable year from taxable years beginning before January 1, 1970, as provided by § 1.1212-1(b) and subdivision (iv) of this subparagraph.

The amount by which the net long-term capital losses carried to the taxable year from taxable years beginning before January 1, 1970, exceeds the sum of (*a*) plus (*b*) shall constitute the *transitional net long-term capital loss component* for the taxable year for the purpose of this subparagraph.

(iii) ***Carryover of certain long-term capital losses not utilized in computation of transitional additional allowance.*** If for a taxable year beginning after December 31, 1969, the transitional net long-term capital loss component determined as provided in subdivision (ii) of this subparagraph exceeds the amount of such component applied to the transitional additional allowance for the taxable year as provided by subdivision (i) of this subparagraph and subparagraph (4)(ii) of this paragraph, then such excess shall for the purposes of this subparagraph be carried to the succeeding taxable year as long-term capital losses from taxable years beginning before January 1, 1970, for utilization in the computation of the transitional additional allowance in the succeeding taxable year as provided in subdivisions (i) and (ii) of this subparagraph. In no event, however, shall the amount of such component carried to the following taxable year as otherwise provided by this subdivision exceed the total of net long-term capital losses actually carried to such succeeding taxable year pursuant to section 1212(b) and § 1.1212-1(b).

(iv) ***Carryover of certain short-term capital losses not utilized in computation of additional allowance or transitional additional allowance.*** If for a taxable year beginning after December 31, 1969, the total short-term capital losses carried to such year from taxable years beginning before January 1, 1970, as provided by § 1.1212-1(b) and this subdivision exceed the sum of:

(*a*) The portion of the capital gain net income (net capital gain for taxable years beginning before January 1, 1977) actually realized in the taxable year (i.e., computed without regard to capital losses carried to the taxable year) which consists of net short-term capital gain actually realized in the taxable year, plus

(*b*) The amount by which the portion of the capital gain net income (net capital gain for taxable years beginning before January 1, 1977) actually realized in the taxable year (i.e., computed without regard to capital losses carried to the taxable year) which consists of net long-term capital gain actually realized in the taxable year exceeds the total long-term capital losses carried to the taxable year from taxable years beginning before January 1, 1970, as provided in § 1.1212-1(b) and subdivision (iii) of this subparagraph,

then such excess shall constitute the *transitional net short-term capital loss component* for the taxable year, and to the extent such component also exceeds the net short-term capital loss applied to the additional allowance (as provided in subparagraphs (2) and (4)(i) of this paragraph) or the transitional additional allowance (as provided by subdivision (i) of this subparagraph and subparagraph (4)(i) of this paragraph) for the taxable year shall be carried to the succeeding taxable year as short-term capital losses from taxable years beginning before January 1, 1970, for utilization in such succeeding taxable year in the computation of the additional allowance (as provided by subparagraph (2) of this paragraph) or the transitional additional allowance (as provided by subdivision (i) and (ii) of this subparagraph). In no event, however, shall the amount of such component so carried to the following taxable year as otherwise provided by this subdivision exceed the total of net short-term capital losses actually carried to such succeeding taxable year pursuant to section 1212(b) and § 1.1212-1(b).

(v) ***Scope of rules.*** The rules provided by this subparagraph are for the purpose of computing the amount of the transitional additional allowance deductible for the taxable year pursuant to the provisions of section 1212(b)(3) and this subparagraph. More specifically, their operation permits the limited use of a long-term capital loss carried to the taxable year from a taxable year beginning before December 31, 1969, in full on a dollar-for-dollar basis in computing the transitional additional allowance deductible for the taxable year. These rules have no application to, or effect upon, a determination of the character or amount of capital gain net income (net capital gain for taxable years beginning before January 1, 1977) reportable in the taxable year. See paragraph (b)(1) of this section and § 1.1212-1 for the determination of the amount and character of capital gains and losses reportable in the taxable year. Further, except to the extent that their application may affect the amount of the transitional additional allowance deductible for the taxable year and thus the amount to be treated as short-term capital loss for carryover purposes under section 1212(b) and § 1.1212-1(b)(2), these rules have no effect upon a determination of the character or amount of capital losses carried to or from the taxable year pursuant to section 1212(b) and § 1.1212-1(b).

(4) ***Order of application of capital losses to additional allowance or transitional additional allowance.*** In applying the excess of the net short-term capital loss over the net long-term capital gain and the excess of the net long-term capital loss over the net short-term capital gain to the additional allowance or transitional additional allowance deductible under section 1211(b) and this paragraph, such excesses shall, subject to the limitations of subparagraph (2) or (3) of this paragraph, be used in the following order:

(i) First, there shall be applied to the additional allowance or transitional additional allowance the excess, if any, of the net short-term capital loss over the net long-term capital gain.

(ii) Second, if such transitional additional allowance exceeds the amount so applied thereto as provided in subdivision (i) of this subparagraph, there shall next be applied thereto as provided in subparagraph (3) of this paragraph the excess, if any, of the net long-term capital loss over

the net short-term capital gain to the extent of the transitional net long-term capital loss component for the taxable year computed as provided by subdivision (ii) of subparagraph (3) of this paragraph.

(iii) Third, if such additional allowance or transitional additional allowance exceeds the sum of the amounts so applied thereto as provided in subdivisions (i) and (ii) of this subparagraph, there shall be applied thereto one-half of the balance, if any, of the excess net long-term capital loss not applied pursuant to the provisions of subdivision (ii) of this subparagraph.

(5) ***Taxable years beginning prior to January 1, 1970.*** For any taxable year beginning prior to January 1, 1970, subparagraphs (2) and (3) of this paragraph shall not apply and losses from sales or exchanges of capital assets shall be allowed as a deduction only to the extent of gains from such sales or exchanges, plus (if such losses exceed such gains) the taxable income of the taxpayer or $1,000, whichever is smaller.

(6) ***Special rules.***

(i) For purposes of section 1211(b) and this paragraph, taxable income is to be computed without regard to gains or losses from sales or exchanges of capital assets and without regard to the deductions provided in section 151 (relating to personal exemptions) or any deduction in lieu thereof. For example, the deductions available to estates and trusts under section 642(b) are in lieu of the deductions allowed under section 151, and, in the case of estates and trusts, are to be added back to taxable income for the purposes of section 1211(b) and this paragraph.

(ii) For taxable years beginning before January 1, 1976, in case the tax is computed under section 3 and the regulations thereunder (relating to optional tax tables for individuals), the term *taxable income* as used in section 1211(b) and this paragraph shall be read as *adjusted gross income*.

(iii) In the case of a joint return, the limitation under section 1211(b) and this paragraph, relating to the allowance of losses from sales or exchanges of capital assets, is to be computed and the net capital loss determined with respect to the combined taxable income and the combined capital gains and losses of the spouses.

(7) ***Married taxpayers filing separate returns*** —

(i) ***In general.*** In the case of a husband or a wife who files a separate return for a taxable year beginning after December 31, 1969, the $3,000, $2,000, and $1,000 amounts specified in subparagraphs (2)(ii) and (3)(i)(*b*) of this paragraph shall instead be $1,500, $1,000, and $500, respectively.

(ii) ***Special rule.*** If, pursuant to the provisions of § 1.1212-1(b) and subparagraph (3) (iii) or (iv) of this paragraph, there is carried to the taxable year from a taxable year beginning before January 1, 1970, a short-term capital loss or a long-term capital loss, the $1,500, $1,000 and $500 amounts specified in subdivision (i) of this subparagraph shall instead be maximum amounts of $3,000, $2,000, and $1,000 respectively, equal to $1,500, $1,000, and $500, respectively, plus the total of the transitional net long-term capital loss component for the taxable year computed as provided by subparagraph (3)(ii) of this paragraph and the transitional net short-term capital loss component for the taxable year computed as provided by subparagraph (3)(iv) of this paragraph.

(8) ***Examples.*** The provisions of section 1211(b) may be illustrated by the following examples:

Example 1. A, an unmarried individual with one exemption allowable as a deduction under section 151, has the following transactions in 1970:

Taxable income exclusive of capital gains and losses		$4,400
Deduction provided by section 151		625
Taxable income for purposes of section 1211(b)		5,025
Long-term capital gain	$1,200	
Long-term capital loss	(5,300)	
Net long-term capital loss	(4,100)	
Losses to the extent of gains	(1,200)	
Additional allowance deductible under section 1211(b)		1,000

The net long-term capital loss of $4,100 is deductible in 1970 only to the extent of an additional allowance of $1,000 which is smaller than the taxable income of $5,025. Under section 1211(b) and subparagraph (2) of this paragraph, $2,000 of excess net long-term capital loss was required to produce the $1,000 additional allowance. Therefore, a net long-term capital loss of $2,100 ($4,100 minus $2,000) is carried over under section 1212(b) to the succeeding taxable year. If A had the same taxable income for purposes of section 1211(b) (after reduction by the zero bracket amount) and the same transactions in 1977, the additional allowance would be $2,000, and a net long-term capital loss of $100 would be carried over. For a taxable year beginning in 1978 or thereafter, these facts would give rise to a $2,050 additional allowance and no carryover.

Example 2. B, an unmarried individual with one exemption allowable as a deduction under section 151, has the following transactions in 1970:

Taxable income exclusive of capital gains and losses	$90
Deduction provided by section 151	625
Taxable income for purposes of section 1211(b)	715
Long-term capital gain	$1,200
Long-term capital loss	(5,200)
Net long-term capital loss	(4,000)
Losses to the extent of gains	(1,200)

Additional allowance deductible under section 1211(b)	715

The net long-term capital loss of $4,000 is deductible in 1970 only to the extent of an additional allowance of $715, since the $715 of taxable income for purposes of section 1211(b) is smaller than $1,000. Under section 1211(b) and subparagraph (2) of this paragraph, $1,430 of net long-term capital loss was required to produce the $715 additional allowance. Therefore, a net long-term capital loss of $2,570 ($4,000 minus $1,430) is carried over under section 1212(b) to the succeeding taxable year. For illustration of the result if the net capital loss for the taxable year is smaller than both $1,000 and taxable income for the purposes of section 1211(b), see examples (3) and (4) of this subparagraph. For carryover of a net capital loss, see § 1.1212-1. Assuming the same taxable income for purposes of section 1211(b) (after reduction by the zero bracket amount) and the same transations for taxable years beginning in 1977 or thereafter, the same result would be reached.

Example 3. A, an unmarried individual with one exemption allowable as a deduction under section 151, has the following transactions in 1971:

Taxable income exclusive of capital gains and losses	$13,300	
Deduction provided by section 151	675	
Taxable income for purposes of section 1211(b)	13,975	
Long-term capital gain	$400	
Long-term capital loss	($600)	
Net long-term capital loss	(200)	
Short-term capital gain	900	
Short-term capital loss	(1,400)	
Net short-term capital loss	(500)	
Losses to extent of gains	(1,300)	
Additional allowance deductible under section 1211(b)		$600

The $600 additional allowance deductible under section 1211(b) is the least of: (i) Taxable income of $13,975, (ii) $1,000, or (iii) the sum of the excess of the net short-term capital loss of $500 over the net long-term capital gain, plus one-half of the excess of the net long-term capital loss of $200 over the net short-term capital gain. The $600 additional allowance, therefore, consists of the net short-term capital loss of $500, plus $100 (one-half of the net long-term capital loss of $200), the total of which is smaller than both $1,000 and taxable

income for purposes of section 1211(b). No amount of net capital loss remains to be carried over under section 1212(b) to the succeeding taxable year since the entire amount of the net short-term capital loss of $500 plus the entire amount of the net long-term capital loss of $200 required to produce $100 of the deduction was absorbed by the additional allowance deductible under section 1211(b) for 1971. Assuming the same taxable income for purposes of section 1211(b) (after reduction by the zero bracket amount) and the same transactions for taxable years beginning in 1977 or thereafter, the result would remain unchanged.

Example 4. A, a married individual filing a separate return with one exemption allowable as a deduction under section 151, has the following transactions in 1971:

Taxable income exclusive of capital gains and losses	$12,000	
Deduction provided by section 151	675	
Taxable income for purposes of section 1211(b)	12,675	
Long-term capital loss	($800)	
Long-term capital gain	300	
Net long-term capital loss	(500)	
Short-term capital loss	(500)	
Short-term capital gain	600	
Net short-term capital gain	100	
Losses to the extent of gains		(900)
Additional allowance deductible under section 1211(b)		200

The excess net long-term capital loss of $400 (net long-term capital loss of $500 minus net short-term capital gain of $100) is deductible in 1971 only to the extent of an additional allowance of $200 (one-half of $400) which is smaller than both $500 (married taxpayer filing a separate return for a taxable year beginning after December 31, 1969) and taxable income for purposes of section 1211(b). Since there is no net short-term capital loss in excess of net long-term capital gains for the taxable year, the $200 additional allowance deductible under section 1211(b) consists entirely of excess net long-term capital loss. No amount of net capital loss remains to be carried over under section 1212(b) to the succeeding taxable year. Assuming the same taxable income for purposes of section 1211(b) (after reduction by the zero bracket amount) and the same transactions for taxable years beginning in 1977 or thereafter, the result would remain unchanged.

Example 5. A, an unmarried individual with one exemption allowable as a deduction under

section 151, has the following transactions in 1970:

Taxable income exclusive of capital gains and losses	$13,300
Deduction provided by section 151	625
Taxable income for purposes of section 1211(b)	13,925
Long-term capital loss	($6,000)
Long-term capital gain	2,000
Net long-term capital loss	(4,000)
Short-term capital gain	3,000
Short-term capital loss carried to 1970 from 1969 under section 1212(b)(1)	(3,000)
Net short-term capital loss	0
Losses to the extent of gains	(5,000)
Additional allowance deductible under section 1211(b)	1,000

The $1,000 additional allowance deductible under section 1211(b) is the least of (i) taxable income of $13,925, (ii) $1,000, or (iii) the sum of the net short-term capital loss ($0) plus one-half of the net long-term capital loss of $4,000. The $1,000 additional allowance, therefore, consists of net long-term capital loss. Since $2,000 of the net long-term capital loss of $4,000 was required to produce the $1,000 additional allowance, the $2,000 balance of the net long-term capital loss is carried over under section 1212(b) to 1971. Assuming the same taxable income for purposes of section 1211(b) (after reduction by the zero bracket amount) and the same transactions for taxable years beginning in 1977 or thereafter, the additional allowance would be $2,000, and there would be no carryover.

Example 6. A, an unmarried individual with one exemption allowable as a deduction under section 151, has the following transactions in 1970:

Taxable income exclusive of capital gains and losses		$13,300
Deduction provided by section 151		625
Taxable income for purposes of section 1211(b)		13,925
Long-term capital gain	$5,000	
Long-term capital loss	(7,000)	
Long-term capital loss carried to 1970 from 1969 under section 1212 (b)(1)	(500)	
Net long-term capital Loss	(2,500)	
Short-term capital gain	1,100	

Short-term capital loss	(1,400)
Net short-term capital loss	(300)
Losses to extent of gains	(6,100)
Transitional additional allowance deductible under section 1211(b)	1,000

Because a component of the net long-term capital loss for 1970 is a $500 long-term capital loss carried to 1970 from 1969, the transitional additional allowance deductible under section 1211(b) and subparagraph (3) of this paragraph is the least of (i) taxable income of $13,925, (ii) $1,000 or (iii) the sum of the net short-term capital loss of $300, plus the net long-term capital loss for 1970, to the extent of the $500 long-term capital loss carried to 1970 from 1969 and one-half of the $2,000 balance of the net long-term capital loss. The entire $500 long-term capital loss carried to 1970 from 1969 is applicable in full to the transitional additional allowance because there was no net capital gain (capital gain net income for taxable years beginning after December 31, 1976) actually realized in 1970. The $1,000 transitional additional allowance, therefore, consists of the net short-term capital loss of $300, the $500 long-term capital loss carried to 1970 from 1969, plus one-half of enough of the balance of the 1970 net long-term capital loss ($400) to make up the $200 balance of the $1,000 transitional additional allowance. A long-term capital loss of $1,600 ($2,500 minus $900), all of which is attributable to 1970, is carried over under section 1212(b) to 1971. Assuming the same taxable income for purposes of section 1211(b) (after reduction by the zero bracket amount) and the same transactions for taxable years beginning in 1977 or thereafter, the transitional additional allowance would be $1,800. No amount would remain to be carried over to the succeeding taxable year.

Example 7. A, an unmarried individual with one exemption allowable as a deduction under section 151, has the following transactions in 1970:

Taxable income exclusive of capital gains and losses		$13,300
Deduction provided by section 151		625
Taxable income for purposes of section 1211(b)		13,925
Long-term capital loss	($2,000)	
Long-term capital loss carried to 1970 from 1969 under section 1212 (b)(1)	(500)	
Net long-term capital loss	(2,500)	
Short-term capital gain	2,600	
Short-term capital loss carried to 1970 from 1969 under section	(3,000)	

1212 (b)(1)	
Net short-term capital loss	(400)
Losses to the extent of gains	(2,600)
Transitional additional allowance deductible under section 1211(b)	1,000

Because a component of the net long-term capital loss for 1970 is a $500 long-term capital loss carried to 1970 from 1969, the transitional additional allowance deductible under section 1211(b) and subparagraph (3) of this paragraph is the least of (i) taxable income of $13,925, (ii) $1,000, or (iii) the sum of the net short-term capital loss of $400, plus the net long-term capital loss for 1970 to the extent of the $500 long-term capital loss carried to 1970 from 1969, and one-half of the $2,000 balance of the net long-term capital loss. The entire $500 long-term capital loss carried to 1970 from 1969 is applicable in full to the transitional additional allowance because the net capital gain (capital gain net income for taxable years beginning after December 31, 1976) for the taxable year (computed without regard to capital losses carried to the taxable year) consisted entirely of net short-term capital gain not in excess of the short-term capital loss carried to 1970 from 1969. The $1,000 transitional additional allowance, therefore, consists of the net short-term capital loss of $400, the $500 long-term capital loss carried to 1970 from 1969, plus one-half of enough of the balance of the 1970 net long-term capital loss ($200) to make up the $100 balance of the $1,000 transitional additional allowance. A long-term capital loss of $1,800 ($2,500 minus $700), all of which is attributable to 1970, is carried over under section 1212(b) to 1971. Assuming the same taxable income for purposes of section 1211(b) (after reduction by the zero bracket amount) and the same transactions for taxable years beginning in 1977 or thereafter, the transitional additional allowance would be $1,900. No amount would remain to be carried over to the succeeding taxable year.

Example 8. Assume the facts in Example (7) but assume that the individual with one exemption allowable as a deduction under section 151 is married and files a separate return for 1970. The maximum transitional additional allowance to which the individual would be entitled for 1970 pursuant to subparagraph (7)(ii) of this paragraph would be the sum of $500 plus (i) $2,400 of the short-term capital loss of $3,000 carried to 1970 from 1969 (the amount by which such carryover exceeds the $600 net capital gain (capital gain net income for taxable years beginning after December 31, 1976) actually realized in 1970, all of which is net short-term capital gain) and (ii) the $500 long-term capital loss carried to 1970 from 1969. However, since this sum ($3,400) exceeds $1,000, the maximum transitional additional allowance to which the individual is entitled for 1970 is limited to $1,000. If for 1971, the same married individual had taxable income of $13,925 for purposes of section 1211(b) and no capital transactions, and filed a separate return, the additional allowance deductible under section 1211(b) for 1971 would be limited to $500 by reason of subdivision (i) of subparagraph (7) of this paragraph, since, as illustrated in Example 7, no part of the capital loss carried over to 1971 under section

1212 (b) is attributable to 1969. Assuming the same taxable income for purposes of section 1211(b) (after reduction by the zero bracket amount) and the same transactions as in example (7) for a married individual filing a separate return for a taxable year beginning in 1977 or thereafter, the transitional additional allowance would be $1,900. No amount would remain to be carried over to the succeeding taxable year.

Example 9. B, an unmarried individual with one exemption allowable as a deduction under section 151, has the following transactions in 1971:

Taxable income exclusive of capital gains and losses		$10,000
Deductions provided by section 151		675
Taxable income for purposes of section 1211(b)		10,675
Long-term capital gain	$2,500	
Long-term capital loss treated under § 1.1211-1 (b)(3)(iii) as carried over from 1969	(5,000)	
Net long-term capital loss	(2,500)	
Short-term capital gain	2,700	
Short-term capital loss carried to 1971 from 1970 under section 1212 (b)(1)	(1,000)	
Short-term capital loss treated under § 1.1211-1 (b)(3)(iv) as carried over from 1969	($2,000)	
Net short-term capital loss	(300)	
Losses to extent of gain	(5,200)	
Transitional additional allowance deductible under section 1211(b)	1,000	

Because a component of the net long-term capital loss for 1971 is a long-term capital loss treated under subparagraph (3)(iii) of this paragraph as carried over from 1969, the rules for computation of the transitional additional allowance under subparagraph (3) (i) and (ii) of this paragraph apply. The *transitional net long-term capital loss component* for 1971 under subparagraph (3)(ii) of this paragraph is $1,800, that is, the amount by which the $5,000 long-term loss treated as carried over from 1969 to 1971 exceeds (a) the net long-term capital gain of $2,500 actually realized in 1971 plus (b) the $700 excess of the $2,700 net short-term capital gain actually realized in 1971 over the $2,000 short-term capital loss treated as carried over to 1971 from 1969. The transitional additional allowance for 1971 consists of the $300 net short-term capital loss plus $700 of the net long-term capital loss attributable to 1969. A net long-term capital loss of $1,800 ($2,500 minus $700) is carried over to 1972 under section 1212(b). Only $1,100 of the $1,800 will be treated in 1972 as carried over from 1969 since under subparagraph (3)(iii) of this paragraph the *transitional net long-term capital loss component* of $1,800 is reduced by the amount ($700) applied to the transitional additional allowance for 1971. Assuming the same taxable income for purposes of section 1211(b) (after reduction by the zero bracket amount) and the same transactions for a taxable year beginning in 1977, the transitional additional allowance would be $2,000. A net long-term capital loss of

> $800 would remain to be carried over. Of this amount $100 would be treated as carried over from 1969. Assuming the original facts for a taxable year beginning in 1978, the transitional additional allowance would be $2,450. No amount would remain to be carried over to the succeeding taxable year.

[T.D. 7301, 39 FR 964, Jan. 4, 1974; 39 FR 2758, Jan. 24, 1974, as amended by T.D. 7597, 44 FR 12419, Mar. 7, 1979; T.D. 7728, 45 FR 72650, Nov. 3, 1980]

§ 1.1212-1 Capital loss carryovers and carrybacks.

(a) ***Corporations; other taxpayers for taxable years beginning before January 1, 1964 —***

(1) ***Regular net capital loss sustained for taxable years beginning before January 1, 1970.***

(i) A corporation sustaining a net capital loss for any taxable year beginning before January 1, 1970, and a taxpayer other than a corporation sustaining a net capital loss for any taxable year beginning before January 1, 1964, shall carry over such net loss to each of the 5 succeeding taxable years and treat it in each of such 5 succeeding taxable years as a short-term capital loss to the extent not allowed as a deduction against any net capital gains (capital gain net income for taxable years beginning after December 31, 1976) of any taxable years intervening between the taxable year in which the net capital loss was sustained and the taxable year to which carried. The carryover is thus applied in each succeeding taxable year to offset any net capital gain in such succeeding taxable year. The amount of the capital loss carryover may not be included in computing a new net capital loss of a taxable year which can be carried over to the next 5 succeeding taxable years. For purposes of this subparagraph, a net capital gain (capital gain net income for taxable years beginning after December 31, 1976) shall be computed without regard to capital loss carryovers or carrybacks. In the case of nonresident alien individuals, see section 871 for special rules on capital loss carryovers. For the rules applicable to the portion of a net capital loss of a corporation which is attributable to a foreign expropriation capital loss sustained in taxable years beginning after December 31, 1958, see subparagraph (2) of this paragraph. For the rules applicable to a taxpayer other than a corporation in the treatment of that amount of a net capital loss which may be carried over under section 1212 and this subparagraph as a short-term capital loss to the first taxable year beginning after December 31, 1963, see paragraph (b) of this section.

(ii) The practical operation of the provisions of this subparagraph may be illustrated by the following example:

> *Example:* (a) For the taxable years 1952 to 1956, inclusive, an individual with one exemption allowable under section 151 (or corresponding provision of prior law) is assumed to have a net short-term capital loss, net short-term capital gain, net long-term capital loss, net long-term capital gain, and taxable income (net income for 1952 and

1953) as follows:

	1952	1953	1954	1955	1956
Carryover from prior years:					
From 1952		($50,000)	($29,500)	($29,500)	
From 1954				(19,500)	($13,000)
Net short-term loss (computed without regard to the carryovers)	($30,000)	(5,000)	(10,000)		
Net short-term gain (computed without regard to the carryovers)				40,000	
Net long-term loss	(20,500)		(10,000)	(5,000)	
Net long-term gain		25,000			15,000
Net income or taxable income, computed without regard to capital gains and losses, and, after 1953, without regard to the deduction provided by section 151	500	500	500	1,000	500
Net capital gain (capital gain net income for taxable years beginning after December 31, 1976) (computed without regard to the carryovers)		20,500		36,000	
Net capital loss	(50,000)		(19,500)		
Deduction allowable under section 1202					1,000
Taxable income (after deductions allowable under sections 151 and 1202)					900

(b) *Net capital loss of 1952.* The net capital loss is $50,000. This figure is the excess of the losses from sales or exchanges of capital assets over the sum of (1) gains (in this case, none) from sales or exchanges of capital assets, and (2) net income (computed without regard to capital gains and losses) of $500. This amount may be carried forward in full as a short-term loss to 1953. However, in 1953 there was a net capital gain (capital gain net income for taxable years beginning after December 31, 1976) of $20,500, as

defined by section 117(a)(10)(B) of the Internal Revenue Code of 1939, and limited by section 117(e)(1) of the 1939 Code, against which this net capital loss of $50,000 is allowed in part. The remaining portion—$29,500—may be carried forward to 1954 and 1955 since there was no net capital gain (capital gain net income for taxable years beginning after December 31, 1976) in 1954. In 1955 this $29,500 is allowed in full against net capital gain of $36,000, as defined by paragraph (d) of § 1.1222-1 and limited by subdivision (i) of this subparagraph.

(c) *Net capital loss of 1954.* The net capital loss is $19,500. This figure is the excess of the losses from sales or exchanges of capital assets over the sum of (1) gains (in this case, none) from sales or exchanges of capital assets and (2) taxable income (computed without regard to capital gains and losses and the deductions provided in section 151) of $500. This amount may be carried forward in full as a short-term loss to 1955. The net capital gain (capital gain net income for taxable years beginning after December 31, 1976) in 1955, before deduction of any carryovers, is $36,000. (See sections 1222(9)(B) and 1212 of the Internal Revenue Code of 1954, as it existed prior to the enactment of the Revenue Act of 1964.) The $29,500 balance of the 1952 loss is first applied against the $36,000, leaving a balance of $6,500. Against this amount the $19,500 loss arising in 1954 is applied, leaving a loss of $13,000, which may be carried forward to 1956. Since this amount is treated as a short-term capital loss in 1956 under subdivision (i) of this subparagraph, the excess of the net long-term capital gain over the net short-term capital loss is $2,000 ($15,000 minus $13,000). Half of this excess is allowable as a deduction under section 1202. Thus, after also deducting the exemption allowed as a deduction under section 151 ($600), the taxpayer has a taxable income of $900 ($2,500 minus $1,600) for 1956.

(2) ***Corporations sustaining foreign expropriation capital losses for taxable years ending after December 31, 1958*** —

(i) ***In general.*** A corporation sustaining a net capital loss for any taxable year ending after December 31, 1958, any portion of which is attributable to a foreign expropriation capital loss, shall carry over such portion of the loss to each of the ten succeeding taxable years and treat it in each of such succeeding taxable years as a short-term capital loss to the extent and consistent with the manner provided in subparagraph (1) of this paragraph. For such purposes, the portion of any net capital loss for any taxable year which is attributable to a foreign expropriation capital loss is the amount, not in excess of the net capital loss for such year, of the foreign expropriation capital loss for such year. The portion of a net capital loss for any taxable year which is attributable to a foreign expropriation capital loss shall be treated as a separate net capital loss for that year and shall be applied, after first applying the remaining portion of such net capital loss, to offset any capital gain net income (net capital gain for taxable years beginning before January 1, 1977) in a succeeding taxable year. In applying net capital losses of two or more taxable years to offset the capital gain net income (net capital gain(s) for taxable years beginning before January 1, 1977) of a subsequent taxable year, such net capital losses shall be offset against such capital gain net income (net capital gain(s) for taxable years beginning before January 1, 1977) in the order of the taxable years in which the

losses were sustained, beginning with the loss for the earliest preceding taxable year, even though one or more of such net capital losses are attributable in whole or in part to a foreign expropriation capital loss.

(ii) ***Foreign expropriation capital loss defined.*** For purposes of this subaparagraph the term *foreign expropriation capital loss* means, for any taxable year, the sum of the losses taken into account in computing the net capital loss for such year which are:

(*a*) Losses sustained directly by reason of the expropriation, intervention, seizure, or similar taking of property by the government of any foreign country, any political subdivision thereof, or any agency or instrumentality of the foregoing, or

(*b*) Losses (treated under section 165 (g)(1) as losses from the sale or exchange of capital assets) from securities which become worthless by reason of the expropriation, intervention, seizure, or similar taking of property by the government of any foreign country, any political subdivision thereof, or any agency or instrumentality of the foregoing.

(iii) ***Illustrations.*** The application of this subparagraph may be illustrated by the following examples:

Example 1. X, a domestic corporation which uses the calendar year as the taxable year, owns as a capital asset 75 percent of the outstanding stock of Y, a foreign corporation operating in a foreign country. In 1961, the foreign country seizes all of the assets of Y, rendering X's stock in Y worthless and thus causing X to sustain a $40,000 foreign expropriation capital loss for such year. In 1961, X has $30,000 of other losses from the sale or exchange of capital assets and $50,000 of gains from the sale or exchange of capital assets. X's net capital loss for 1961 is $20,000 ($70,000−$50,000). Since the foreign expropriation capital loss exceeds this amount, the entire $20,000 is a foreign expropriation capital loss for 1961.

Example 2. Z, a domestic corporation which uses the calendar year as the taxable year, has a net capital loss of $50,000 for 1961, $30,000 of which is attributable to a foreign expropriation capital loss. Pursuant to the provisions of this paragraph, $30,000 of such net capital loss shall be carried over as a short-term capital loss to each of the 10 taxable years succeeding 1961, and the remaining $20,000 of the net capital loss shall be carried over as a short-term capital loss to each of the 5 taxable years succeeding 1961. Z has a $35,000 net capital gain (capital gain net income for taxable years beginning after December 31, 1976) (determined without regard to any capital loss carryover) for 1962. In offsetting the $50,000 capital loss carryover from 1961 against the $35,000 net capital gain (capital gain net income for taxable years beginning after December 31, 1976) for 1962, the $30,000 portion of such carryover which is attributable to the foreign expropriation capital loss for 1961 is applied against the 1962 net capital gain (capital gain net income for taxable years beginning after December 31, 1976) after applying the $20,000 remaining portion of the carryover. Thus, there is a capital loss carryover of $15,000 to 1963, all of which is attributable to the foreign expropriation capital loss for 1961. Z has a net capital loss for 1963 of $10,000, no portion of which is attributable to a foreign expropriation capital loss. For 1964, Z has a net capital gain (capital gain net income for taxable years beginning after December 31, 1976) of $22,000 (determined without regard to the capital loss carryovers from 1961 and 1963). In offsetting the capital loss carryovers from 1961 and 1963 against Z's $22,000 net capital gain (capital gain net income for taxable years beginning after December 31, 1976) for 1964, the $15,000 carryover from 1961 is applied

against the 1964 net capital gain (capital gain net income for taxable years beginning after December 31, 1976) before the $10,000 capital loss carryover from 1963 is applied against such gain. Thus, $3,000 of the 1963 net capital loss remains to be carried over to 1965.

(3) ***Regular net capital loss sustained by a corporation for taxable years beginning after December 31, 1969*** —

(i) ***General rule.*** A corporation sustaining a net capital loss for any taxable year beginning after December 31, 1969 (hereinafter in this paragraph referred to as the *loss year*), shall:

(*a*) Carry back such net capital loss to each of the 3 taxable years preceding the loss year, but only to the extent that such net capital loss is not attributable to a foreign expropriation capital loss and the carryback of such net capital loss does not increase or produce a net operating loss (as defined in section 172(c)) for the taxable year to which it is carried back; and

(*b*) Carry over such net capital loss to each of the 5 taxable years succeeding the loss year,

and, subject to subdivision (ii) of this subparagraph, treat such net capital loss in each of such 3 preceding and 5 succeeding taxable years as a short-term capital loss.

(ii) ***Amount treated as a short-term capital loss in each year.*** The entire amount of the net capital loss for any loss year shall be carried to the earliest of the taxable years to which such net capital loss may be carried, and the portion of such net capital loss which shall be carried to each of the other taxable years to which such net capital loss may be carried shall be the excess, if any, of such net capital loss over the total of the capital gain net income (net capital gain for taxable years beginning before January 1, 1977) (computed without regard to the capital loss carryback from the loss year or any taxable year thereafter) for each of the prior taxable years to which such net capital loss may be carried.

(iii) ***Special rules.***

(a) In the case of a net capital loss which is not a foreign expropriation capital loss and which cannot be carried back in full to a preceding taxable year by reason of section 1212(a)(1)(A)(ii) and subdivision (i)(*a*) of this subparagraph because such loss would produce or increase a net operating loss in such preceding taxable year, the capital gain net income (net capital gain for taxable years beginning before January 1, 1977) for such preceding taxable year shall in no case be treated as greater than the amount of such net capital loss which can be carried back to such preceding taxable year upon the application of section 1212(a)(1)(A)(ii) and subdivision (i)(*a*) of this subparagraph.

(*b*) For the rules applicable to the portion of a net capital loss of a corporation which is attributable to a foreign expropriation capital loss sustained in a taxable year beginning after December 31, 1958, see section 1212(a)(2) and subparagraph (2) of this paragraph.

(*c*) Section 1212(a)(1)(A) and subdivision (*i*)(*a*) of this subparagraph shall not apply to (and no carryback shall be allowed with respect to) the net capital loss of a corporation for any taxable year for which such corporation is an electing small business corporation under subchapter S. See § 1.1372-1.

(*d*) A net capital loss of a corporation for a year for which it is not an electing small business corporation under subchapter S shall not be carried back under section 1212(a)(1)(A) and subdivision (i)(*a*) of this subparagraph to a taxable year for which such corporation is an electing small business corporation. See section 1212(a)(3).

(*e*) A net capital loss of a corporation shall not be carried back under section 1212(a)(1)(A) and subdivision (i)(*a*) of this subparagraph to a taxable year for which the corporation was a foreign personal holding company, a regulated investment company, or a real estate investment trust, or for which an election made by the corporation under section 1247 is applicable. See section 1212(a)(4).

(*f*) A taxable year to which a net capital loss of a corporation cannot, by reason of (*d*) or (*e*) of this subdivision, be carried back under section 1212(a) (1)(A) and subdivision (i)(*a*) of this subparagraph shall nevertheless be treated as 1 of the 3 taxable years preceding the loss year for purposes of section 1212(a)(1)(A) and such subdivision (i)(*a*); but any capital gain net income (net capital gain for taxable years beginning before January 1, 1977) for such taxable year to which such net capital loss cannot be carried back shall be disregarded for purposes of subdivision (ii) of this subparagraph.

(*g*) A regulated investment company (as defined in section 851) sustaining a net capital loss shall carry over that loss to each of the 8 taxable years succeeding the loss year. However, the 8-year period prescribed in the preceding sentence shall be reduced (but not to less than 5 years) by the sum of (*1*) the number of taxable years to which the net capital loss must be carried back pursuant to subdivision (i)(*a*) of this subparagraph (as limited by subdivision (iii)(*e*) of this subparagraph) and (*2*) the number of taxable years, of the 8 taxable year succeeding the loss year, that the corporation failed to qualify as a regulated investment company as defined in section 851. This subdivision shall not extend the carryover period prescribed in subdivision (i)(*b*) of this subparagraph to a year in which a corporation is not a regulated investment company as defined in section 851.

(iv) The application of this subparagraph may be illustrated by the following examples, in each of which it is assumed that the corporation is not, and never has been, a corporation described in subdivision (iii) (*c*) or (*d*) of this subparagraph, that the corporation files its tax returns on a calendar year basis, and that no capital loss sustained is a foreign expropriation capital loss:

Example 1. A corporation has a net capital loss for 1970 which section 1212(a)(1)(A) permits to be carried back. The entire net capital loss for 1970 may be carried back to 1967, but only to the extent that a net operating loss for 1967 would not be produced or increased. The amount of the carryback to 1968 is the excess of the net capital loss for 1970 over the net capital gain (capital gain net income for taxable years beginning after December 31, 1976) for 1967, computed without regard to a capital loss carryback from 1970 or any taxable year thereafter. The amount of the carryback to 1969 is the excess of the net capital loss for 1970 over the sum of the net capital gains (capital gain net income for taxable years beginning after December 31, 1976) for 1967 and 1968, computed without regard to a capital loss carryback from 1970 or any taxable year thereafter. The amount of the carryover to 1971 is the excess of the net capital loss for 1970 over the sum of the net capital gains (capital gain net income for taxable years beginning after December 31, 1976) for 1967, 1968, and 1969, computed without regard to a capital loss carryback from 1970 or any taxable year thereafter. Similarly, the amount of the carryover to 1972, 1973, 1974, and 1975, respectively, is the excess of the net capital loss for 1970 over the sum of the net capital gains (capital gain net income for

taxable years beginning after December 31, 1976) for taxable years prior to 1972, 1973, 1974, or 1975, as the case may be, to which the net capital loss for 1970 may be carried, computed without regard to a capital loss carryback from 1970 or any year thereafter.

> *Example 2.* For the taxable years 1967 to 1975, inclusive, a corporation is assumed to have net capital loss, net capital gain (capital gain net income for taxable years beginning after December 31, 1976), and taxable income (computed without regard to capital gains and losses) as follows:

	1967	1968	1969	1970	1971	1972	1973	1974	1975
Taxable income (computed without regard to capital gains or losses)	$25,000	$25,000	$25,000	$25,000	$25,000	$25,000	$25,000	$25,000	$25,000
Net capital loss			(1,000)	(29,500)	(16,000)	(500)			
Net capital gain (capital gain net income for taxable years beginning after December 31, 1976) (computed without regard to carrybacks or carryovers)	14,000	16,000					8,000	7,500	6,500
Carryback or carryover:									
From 1969							(1,000)		
From 1970	(14,000)	(15,500)							
From 1971		(500)					(7,000)	(7,500)	(1,000)
From 1972									(500)

The net capital loss of 1969, under the rules of subparagraph (1) of this paragraph, may not be carried back. Thus, the net capital loss for 1970 is carried back and partially absorbed by the net capital gain (capital gain net income for taxable years beginning after December 31, 1976) for 1967, and a portion of the net capital losses of both 1970 and 1971 are carried back to 1968. The net capital loss for 1969 is the oldest that may be carried to 1973, and thus, it is the first carried over and absorbed by the net capital gain for 1973. The net capital loss for 1972 (which is not carried back because of the net capital losses in the 3 years preceding 1972) may be carried over to 1973.

Example 3. For the taxable years 1967 to 1970, inclusive, a corporation which was organized on January 1, 1967, realized operating income and net capital gains (capital gain net income for taxable years beginning after December 31, 1976) and sustained operating losses and net capital losses as follows:

	Operating income or loss (exclusive of capital gain or loss)	Capital gain or loss
1967	$20,000	$24,000
1968	20,000	0
1969	20,000	0
1970	(25,000)	(20,000)

The net capital loss of $20,000 for 1970 is carried back to 1967 and applied against the $24,000 net capital gain (capital gain net income for taxable years beginning after December 31, 1976) realized in that year, reducing such net capital gain (capital gain net income for taxable years beginning after December 31, 1976) to $4,000. The net operating loss of $25,000 for 1970 is then carried back to 1967 and applied first to eliminate the $20,000 of operating income for that year and then to eliminate the net capital gain (capital gain net income for taxable years beginning after December 31, 1976) for that year of $4,000 (as reduced by the 1970 capital loss carryback).

Example 4. Assume the same facts as in Example 3 but substitute the following figures:

	Operating income or loss (exclusive of capital gain or loss)	Capital gain or loss
1967	($20,000)	$24,000
1968	20,000	0

	Operating income or loss (exclusive of capital gain or loss)	Capital gain or loss
1969	20,000	0
1970	(25,000)	(20,000)

The net capital loss of $20,000 for 1970 is carried back to 1967 and applied against the $24,000 net capital gain (capital gain net income for taxable years beginning after December 31, 1976) realized in that year only to the extent of $4,000, the maximum amount to which the 1970 capital loss carryback can be applied without producing a net operating loss for 1967. The unused $16,000 balance of the 1970 net long-term capital loss can be carried forward to 1971 and subsequent taxable years to the extent provided in subdivision (i)(*b*) of this subparagraph.

Example 5. Assume the same facts as in Example 3 but substitute the following figures:

	Operating income or loss (exclusive of capital gain or loss)	Capital gain or loss
1967	0	0
1968	($20,000)	0
1969	0	$24,000
1970	20,000	(24,000)

The net capital loss of $24,000 for 1970 is carried back to 1969 and applied against the $24,000 net capital gain (capital gain net income for taxable years beginning after December 31, 1976) realized in that year to the extent of $24,000. The application of the capital loss carryback is not limited as it was in Example 4 because such carryback neither increases nor produces a net operating loss, as such, for 1969. The $20,000 net operating loss for 1968 is then carried forward to 1970 to eliminate the $20,000 of operating income for that year.

Example 6. Assume the same facts as in Example 3 but substitute the following figures:

	Operating income or loss (exclusive of capital gain or loss)	Capital gain or loss
1967	0	0
1968	0	0
1969	($20,000)	($24,000)

	Operating income or loss (exclusive of capital gain or loss)	Capital gain or loss
1970	20,000	20,000

The net capital loss of $24,000 for 1969 is carried forward to 1970 and applied against the $20,000 net capital gain (capital gain net income for taxable years beginning after December 31, 1976) realized in that year. The unused $4,000 balance of the 1969 net capital loss can be carried forward to 1971 and subsequent taxable years to the extent provided in subdivision (i)(*b*) of this subparagraph.

(b) ***Taxpayers other than corporations for taxable years beginning after December 31, 1963*** —

(1) ***In general.*** If a taxpayer other than a corporation sustains a net capital loss for any taxable year beginning after December 31, 1963, the portion thereof which is a short-term capital loss carryover shall be carried over to the succeeding taxable year and treated as a short-term capital loss sustained in such succeeding taxable year, and the portion thereof which constitutes a long-term capital loss carryover shall be carried over to the succeeding taxable year and treated as a long-term capital loss sustained in such succeeding taxable year. The carryovers are included in the succeeding taxable year in the determination of the amount of the short-term capital loss, the net short-term capital gain or loss, the long-term capital loss, and the net long-term capital gain or loss in such year, the net capital loss in such year, and the capital loss carryovers from such year. For purposes of this subparagraph:

(i) A short-term capital loss carryover is the excess of the net short-term capital loss for the taxable year over the net long-term capital gain for such year, and

(ii) A long-term capital loss carryover is the excess of the net long-term capital loss for the taxable year over the net short-term capital gain for such year.

(2) ***Special rules for determining a net short-term capital gain or loss for purposes of carryover*** —

(i) ***Taxable years beginning after December 31, 1963, and before January 1, 1970.*** In determining a net short-term capital gain or loss of a taxable year beginning after December 31, 1963, and before January 1, 1970, for purposes of computing a short-term or long-term capital loss carryover to the succeeding taxable year, an amount equal to the additional allowance deductible under section 1211(b) for the taxable year (determined as provided in section 1211(b), as in effect for taxable years beginning before January 1, 1970, and § 1.1211-1(b)(5)) is treated as a short-term capital gain occurring in such year.

(ii) ***Taxable years beginning after December 31, 1969.*** In determining a net short-term capital gain or loss of a taxable year beginning after December 31, 1969:

(*a*) For purposes of computing a short-term capital loss carryover to the succeeding taxable year, an amount equal to the additional allowance for the taxable year (determined as provided in section 1211(b) and § 1.1211-1(b)(2)) is treated as a short-term capital gain occurring in such year, and

(*b*) For purposes of computing a long-term capital loss carryover to the succeeding taxable year, an amount equal to the sum of the additional allowance for the taxable year (determined as provided in section 1211(b) and § 1.1211-1(b)(2)), plus the excess of such additional allowance over the net short-term capital loss (determined without regard to section 1212(b)(2) for such year) is treated as a short-term capital gain in such year.

The rules provided in this subdivision are for the purpose of taking into account the additional allowance deductible for the current taxable year under section 1211(b) and § 1.1211-1(b)(2) in determining the amount and character of capital loss carryovers from the current taxable year to the succeeding taxable year. Their practical application to a determination of the amount and character of capital loss carryovers from the current taxable year to the succeeding taxable year involves identification of the net long-term and net short-term capital loss components of the additional allowance deductible in the current taxable year as provided by § 1.1211-1(b)(2)(iii). To the extent that the additional allowance is composed of net short-term capital losses, such losses are treated as a short-term capital gain in the current taxable year in determining the capital loss carryovers to the succeeding year. To the extent that the additional allowance is composed of net long-term capital losses applied pursuant to the provisions of § 1.1211-1(b)(2)(iii), an amount equal to twice the amount of such component of the additional allowance is treated as a short-term capital gain in the current taxable year. See paragraph (4) of this section for transitional rules if any part of the additional allowance is composed of net long-term capital losses carried to the current taxable year from a taxable year beginning before January 1, 1970.

(3) ***Transitional rule for net capital losses sustained in a taxable year beginning before January 1, 1964.*** A taxpayer other than a corporation sustaining a net capital loss for any taxable year beginning before January 1, 1964, shall treat as a short-term capital loss in the first taxable year beginning after December 31, 1963, any amount which would be treated as a short-term capital loss in such year under subchapter P of chapter 1 of the Code as in effect immediately before the enactment of the Revenue Act of 1964.

(4) ***Transitional rule for net long-term capital losses sustained in a taxable year beginning before January 1, 1970.*** In the case of a net long-term capital loss sustained by a taxpayer other than a corporation in a taxable year beginning prior to January 1, 1970 (referred to in this section as a *pre-1970 taxable year*) which is carried over and treated as a long-term capital loss in the first taxable year beginning after December 31, 1969 (referred to in this section as a *post-1969 taxable year*), the transitional additional allowance deductible under section 1211(b) for the taxable year shall be determined by application of section 1211(b) as in effect for pre-1970 taxable years and § 1.1211-1(b)(3), and the amount of such long-term capital loss carried over and treated as a long-term capital loss in the succeeding taxable year shall be determined by application of section 1212(b)(1) as in effect for pre-1970 taxable years and subparagraph (2)(i) of this paragraph (instead of under sections 1211(b) and 1212(b)(1) as in effect for post-1969 taxable years and § 1.1211-1(b)(2) and subparagraph (2)(ii) of this paragraph, respectively) but only to the extent that such pre-1970 long-term capital loss constitutes a *transitional net long-term capital loss component* (determined as provided in § 1.1211-1(b)(3)(ii)) in the taxable year to which such pre-1970 long-term capital loss is carried. Thus, for purposes of paragraph (2) of this section, to the extent that a component of the transitional additional allowance deductible for a post-1969 taxable year under section 1211(b) and § 1.1211-1(b)(3)(i) is a transitional net long-term capital loss component carried over to such post-1969 taxable year, such component shall be treated as a short-term capital gain in determining the amount and character of capital loss carryovers from such post-1969 taxable year to the

succeeding taxable year. Such component shall be so treated as a short-term capital gain in full on a dollar-for-dollar basis and shall not be doubled for this purpose as is provided by subdivision (ii) of paragraph (2) of this section in the case of a component of the additional allowance made up of net long-term capital losses applied pursuant to the provisions of § 1.1211-1(b)(2)(iii). The transitional rule provided in this paragraph does not apply to a determination of the character of capital losses (as long-term or short-term) actually deductible for the current taxable year under section 1211(b) and § 1.1211-1(b).

(5) ***Examples.*** The application of this paragraph can be illustrated by the following examples:

Example 1. For the taxable year 1971, an unmarried individual has taxable income for purposes of section 1211(b) of $8,000, a long-term capital loss of $2,000, and no other capital gains or losses. $1,000 (one-half) of the net long-term capital loss is deductible in 1971 as the additional allowance deductible under section 1211(b). No amount of capital loss remains to be carried over to the succeeding taxable year.

Example 2. For the taxable year 1972, the same unmarried individual has taxable income for purposes of section 1211(b) of $8,000, a long-term capital loss of $3,000 and no other capital gains or losses. $1,500 (one-half of the excess net capital loss) is deductible in 1972, but limited to the $1,000 maximum additional allowance deductible under section 1211(b). By application of section 1212(b)(1), he will carry over to 1973 a long-term capital loss of $1,000 determined as follows:

Net long-term capital loss		($3,000)
Additional allowance deductible under section 1211(b)	$1,000	
Excess of additional allowance over net short-term capital loss (determined without regard to section 1212(b)(2)(B)(i))	1,000	
Total amount treated as short-term capital gain under 1212(b)(2)(B) for purposes of determining carryover		2,000
Long-term capital loss carryover to 1973		(1,000)

If, in 1973, he had taxable income for purposes of section 1211(b) of $8,000, but no capital gains or losses, $500 (one-half) of the net long-term capital loss carryover from 1972 would be deductible in 1973 as the additional allowance deductible under section 1211(b). No amount of capital loss would be carried over to 1974.

Example 3. For the taxable year 1971, an unmarried individual has taxable income for purposes of section 1211(b) of $9,000, a $500 short-term capital gain, a $700 short-term capital loss, a $1,000 long-term capital gain and a $1,700 long-term capital loss. He will offset $1,500 of capital losses against capital gains. The excess net capital loss of $900 is deductible in 1971 to the extent of a $550 additional allowance deductible under 1211(b) which is smaller than both $1,000 and taxable income for purposes of section

1211(b), determined as follows:

Losses allowed to the extent of gains	($1,500)
Amount allowed under section 1211(b)(1)(C):	
(i) Excess of net short-term capital loss over net long-term capital gain	(200)
(ii) One-half of the excess of net long-term capital loss over net short-term capital gain	(350)
Additional allowance deductible under section 1211(b)	550

The total amount treated as short-term capital gain under section 1212(b)(2)(B) for purposes of determining any carryover to the succeeding taxable year exceeds $900. No amount of net capital loss remains to be carried over to the succeeding taxable year.

Example 4. If in example (3) above, the long-term capital loss had been $2,800, the taxpayer would carry over $200 of long-term capital loss to 1972, determined as follows:

Losses allowed to extent of gains	($1,500)
Amount allowed under section 1211(b)(1) (B) and (C):	
(i) Excess of net short-term capital loss over net long-term capital gain	(200)
(ii) One-half the excess of net long-term capital loss over net short-term capital gain	(900)

as limited by 1211(b)(1)(B) to an additional allowance of $1,000.

Carryover under section 1212(b)(1):	
Net long-term capital loss for 1971	($1,800)
Additional allowance under section 1211(b)(1)(B)	1,000
Excess of additional allowance deductible under section 1211(b) over net short-term capital loss determined without regard to section 1212(b)(2)(B)(i) ($1,000 less $200)	800
Total amount treated as short-term capital gain under section 1212(b)(2)(B) for purposes of determining carryover	1,800
Short-term capital gain for 1971	500
Total short-term capital gain	2,300
Short-term capital loss for 1971	(700)

Net short-term capital gain	1,600
Long-term capital loss carryover ($1,800 less $1,600)	200

Example 5. For 1969, an unmarried individual has taxable income for purposes of section 1211(b) of $8,000, a long-term capital loss of $3,000, and no other capital gains or losses. He is allowed to deduct in 1969 $1,000 as the additional allowance deductible under section 1211(b) (as in effect for pre-1970 taxable years) and to carry over to 1970, a long-term capital loss of $2,000 under section 1212(b) (as in effect for pre-1970 taxable years). If, in 1970, the same unmarried individual with taxable income for purposes of section 1211(b) of $8,000, has no capital gains or losses, he would deduct $1,000 of his pre- 1970 capital loss carryover as the transitional additional allowance deductible under section 1211(b) (as in effect for pre-1970 years) and carry over under section 1212(b)(1) (as in effect for pre-1970 taxable years) to 1971 the remaining $1,000 as a pre-1970 long-term capital loss.If, in 1970, the same individual instead has a long-term capital gain of $2,500, and a long-term capital loss of $1,500, he would net these two items with the $2,000 carried to 1970 as a long-term capital loss. Thus, he would have a net long-term capital loss for 1970 of $1,000 which is deductible in 1970 as the transitional additional allowance deductible under section 1211(b). He would have no amount to carry over under section 1212(b)(1) to 1971.If, in 1970, the same individual instead has a long-term capital loss of $1,200, and a long-term capital gain of $200, resulting in a net long-term capital loss of $3,000 when netted with the $2,000 carried to 1970 as a long-term capital loss, he would deduct $1,000 in respect of his pre-1970 long-term capital loss carryover as the transitional additional allowance deductible under section 1211(b) (as in effect for pre-1970 taxable years) and carry over under section 1212(b)(1) (as in effect for pre-1970 taxable years) to 1971 the remaining $1,000 of the pre-1970 component of his long-term capital loss carryover, and the $1,000 net long-term capital loss actually sustained in 1970 as the second component of his long-term capital loss carryover.

Example 6. For 1970 a married individual filing a separate return has taxable income of $8,000, a long-term capital loss of $3,500 and a short-term capital gain of $3,000. He also has a pre-1970 short-term capital loss of $2,000 which is carried to 1970. The $3,000 short-term capital gain realized in 1970 would first be reduced by the $2,000 short-term capital loss carryover, and then the remaining $1,000 balance of the short-term capital gain would be offset against the $3,500 long-term capital loss, producing a net long-term capital loss of $2,500, no part of which is a net long-term capital loss carried over from 1969. However, under the special rule of § 1.1211-1(b)(7)(ii) in 1970, the taxpayer would deduct as the additional allowance deductible under section 1211(b), the $500 limitation in § 1.1211-1(b)(2)(ii) in the case of a married taxpayer filing a separate return in a taxable year ending after December 31, 1969, plus the *transitional net short-term capital loss component* of $2,000 computed under § 1.1211-1(b)(3)(iv), but limited to a total deduction of $1,000. The $1,000 additional allowance deductible under section 1211(b) would absorb $2,000 of the $2,500 net long-term capital loss, and he would carry the unused $500 balance of such loss to 1971 for use in that year.

Example 7. For 1970, an unmarried individual filing a separate return has taxable income for purposes of section 1211(b) of $8,000, and a long-term capital loss of $2,000. He also has a pre-1970 long-term capital loss of $2,500 which is carried to 1970. In 1970, the taxpayer would deduct as

the transitional additional allowance deductible under section 1211(b) $1,000, absorbing $1,000 of the pre-1970 long-term capital loss of $2,500. He would carry to 1971 the unused $1,500 balance of his pre-1970 long-term capital loss plus the 1970 long-term capital loss of $2,000, or a total of $3,500, for use in 1971. For 1971, the same taxpayer filing a separate return with taxable income for purposes of section 1211(b) of $8,000, has a $3,600 long-term capital gain and a $2,200 long-term capital loss. When these gains and losses are combined with the long-term capital loss carryover from 1970 of $3,500, a net long-term capital loss of $2,100 results. He would deduct $1,000 as the transitional additional allowance deductible under section 1211(b). The $1,000 additional allowance would absorb $100 of the unused pre-1970 long-term capital loss carryover of $1,500 plus $1,800 of the unused post-1969 long-term capital loss carryover of $2,100 (the amount of the 1971 net long-term capital loss necessary to make up the remaining $900 balance of the additional allowance). Although a component of the 1971 net long-term capital loss is the unused pre-1970 long-term capital loss carryover of $1,500, only $100 of this carryover is available for use in full on a dollar-for-dollar basis in computing the transitional additional allowance for 1971 since it only exceeds by that amount the $1,400 net capital gain (capital gain net income for taxable years beginning after December 31, 1976) actually realized in 1971 all of which is net long-term capital gain (long-term capital gain of $3,600 reduced by long-term capital loss of $2,200). See § 1.1221-1(b)(3)(ii). The taxpayer would carry over to 1972 as a long-term capital loss the remaining $200 of the 1971 long-term capital loss.

Example 8. For 1970, an unmarried individual has taxable income for purposes of section 1211(b) of $8,000 and a short-term capital loss of $700. He also has a pre-1970 long-term capital loss carryover of $1,200. He would deduct $1,000 as the transitional additional allowance deductible under section 1211(b). The $1,000 transitional additional allowance would be composed of the 1970 short-term capital loss of $700 and $300 of the pre-1970 long-term capital loss carryover. He would carry over to 1971 the unused $900 balance of his $1,200 pre-1970 long-term capital loss carryover for use in 1971.

(c) ***Husband and wife.***

(1) The following rules shall be applied in computing capital loss carryovers by husband and wife:

(i) If a husband and wife making a joint return for any taxable year made separate returns for the preceding year, any capital loss carryovers of each spouse from such preceding taxable year may be carried forward to the taxable year in accordance with paragraph (a) or (b) of this section.

(ii) If a joint return was made for the preceding taxable year, any capital loss carryover from such preceding taxable year may be carried forward to the taxable year in accordance with paragraph (a) or (b) of this section.

(iii) If a husband and wife make separate returns for the first taxable year beginning after December 31, 1963, or any prior taxable year, and they made a joint return for the preceding taxable year, any capital loss carryover from such preceding taxable year shall be allocated to the spouses on the basis of their individual net capital loss which gave rise to such capital loss carryover. The capital loss carryover so allocated to each spouse may be carried forward by such spouse to the taxable year in accordance with paragraph (a) or (b) of this section.

(iv) If a husband and wife making separate returns for any taxable year following the first taxable year beginning after December 31, 1963, made a joint return for the preceding taxable year, any long-term or short-term capital loss carryovers shall be allocated to the spouses on the basis of their individual net long-term and net short-term capital losses for the preceding taxable year which gave rise to such capital loss carryovers, and the portions of the long-term or short-term capital loss carryovers so allocated to each spouse may be carried forward by such spouse to the taxable year in accordance with paragraph (b) of this section.

(v) If separate returns are made both for the taxable year and the preceding taxable year, any capital loss carryover of each spouse may be carried forward by such spouse in accordance with paragraph (a) or (b) of this section.

(2) The provisions of subparagraph (1) (i), (iii), and (iv) of this paragraph may be illustrated by the following examples:

Example 1. If H and W, husband and wife, make a joint return for 1955, having made separate returns for 1954 in which H had a net capital loss of $3,000 and W had a net capital loss of $2,000, in their joint return for 1955 they would have a short-term capital loss of $5,000 (the sum of their separate capital loss carryovers from 1954), allowable in accordance with paragraph (a) of this section. If, on the other hand, they make separate returns in 1955 following a joint return in 1954 in which their net capital loss was $5,000 allocable $3,000 to H and $2,000 to W, the carryover of H as a short-term capital loss for the purpose of his 1955 separate return would be $3,000 and that of W for her separate return would be $2,000, each allowable in accordance with paragraph (a) of this section.

Example 2. H and W, husband and wife, make separate returns for 1966 following a joint return for 1965. The capital gains and losses incurred by H and W in 1965, including those carried over by them to 1965, were as follows:

	H	W
Long-term capital gains	$8,000	$9,000
Long-term capital losses	(15,000)	(6,000)
Short-term capital gains	10,000	4,000
Short-term capital losses	(19,000)	(5,000)

Thus, in 1965 H and W had a net capital loss of $14,000 on their joint return. Of this amount, $4,000 was a long-term capital loss carryover, and $10,000 was a short-term capital loss carryover, determined in accordance paragraph (b) of this section. H's net long-term capital loss was $7,000 for 1965. This amount was offset on the joint return by W's net long-term capital gain of $3,000. Thus, H may carry over to his separate return for 1966, a long-term capital loss carryover of $4,000. H and W may carry over to their separate returns for 1966, as short-term capital loss carryovers, the amounts of their respective net short-term losses from 1965, $9,000 and $1,000.

[T.D. 6828, 30 FR 7806, June 17, 1965, as amended by T.D. 6867, 30 FR 15095, Dec. 7, 1965; T.D. 7301, 39 FR 968, Jan. 4, 1974; 39 FR 2758, Jan. 24, 1974; T.D. 7659, 44 FR 73019, Dec. 17, 1979; T.D. 7728, 45 FR 72650, Nov. 3, 1980]

GENERAL RULES FOR DETERMINING CAPITAL GAINS AND LOSSES

§ 1.1221-1 Meaning of terms.

(a) The term *capital assets* includes all classes of property not specifically excluded by section 1221. In determining whether property is a *capital asset,* the period for which held is immaterial.

(b) Property used in the trade or business of a taxpayer of a character which is subject to the allowance for depreciation provided in section 167 and real property used in the trade or business of a taxpayer is excluded from the term *capital assets.* Gains and losses from the sale or exchange of such property are not treated as gains and losses from the sale or exchange of capital assets, except to the extent provided in section 1231. See § 1.1231-1. Property held for the production of income, but not used in a trade or business of the taxpayer, is not excluded from the term *capital assets* even though depreciation may have been allowed with respect to such property under section 23(l) of the Internal Revenue Code of 1939 before its amendment by section 121(c) of the Revenue Act of 1942 (56 Stat. 819). However, gain or loss upon the sale or exchange of land held by a taxpayer primarily for sale to customers in the ordinary course of his business, as in the case of a dealer in real estate, is not subject to the provisions of subchapter P (section 1201 and following), chapter 1 of the Code.

(c)

(1) A copyright, a literary, musical, or artistic composition, and similar property are excluded from the term *capital assets* if held by a taxpayer whose personal efforts created such property, or if held by a taxpayer in whose hands the basis of such property is determined, for purposes of determining gain from a sale or exchange, in whole or in part by reference to the basis of such property in the hands of a taxpayer whose personal efforts created such property. For purposes of this subparagraph, the phrase *similar property* includes for example, such property as a theatrical production, a radio program, a newspaper cartoon strip, or any other property eligible for copyright protection (whether under statute or common law), but does not include a patent or an invention, or a design which may be protected only under the patent law and not under the copyright law.

(2) In the case of sales and other dispositions occurring after July 25, 1969, a letter, a memorandum, or similar property is excluded from the term *capital asset* if held by

(i) a taxpayer whose personal efforts created such property,

(ii) a taxpayer for whom such property was prepared or produced, or

(iii) a taxpayer in whose hands the basis of such property is determined, for purposes of determining gain from a sale or exchange, in whole or in part by reference to the basis of such property in the hands of a taxpayer described in subdivision (i) or (ii) of this subparagraph. In the case of a collection of letters, memorandums, or similar property held by a person who is a taxpayer described in subdivision (i), (ii), or (iii) of this subparagraph as to some of such letters, memorandums, or similar property but not as to others, this subparagraph shall apply only to those letters, memorandums, or similar property as to which such person is a taxpayer described in such subdivision. For purposes of this subparagraph, the phrase *similar property* includes, for example, such property as a draft of a speech, a manuscript, a research paper, an oral recording of any type, a transcript of an oral recording, a transcript of an oral interview or of

dictation, a personal or business diary, a log or journal, a corporate archive, including a corporate charter, office correspondence, a financial record, a drawing, a photograph, or a dispatch. A letter, memorandum, or property similar to a letter or memorandum, addressed to a taxpayer shall be considered as prepared or produced for him. This subparagraph does not apply to property, such as a corporate archive, office correspondence, or a financial record, sold or disposed of as part of a going business if such property has no significant value separate and apart from its relation to and use in such business; it also does not apply to any property to which subparagraph (1) of this paragraph applies (i.e., property to which section 1221(3) applied before its amendment by section 514(a) of the Tax Reform Act of 1969 (83 Stat. 643)).

(3) For purposes of this paragraph, in general, property is created in whole or in part by the personal efforts of a taxpayer if such taxpayer performs literary, theatrical, musical, artistic, or other creative or productive work which affirmatively contributes to the creation of the property, or if such taxpayer directs and guides others in the performance of such work. A taxpayer, such as corporate executive, who merely has administrative control of writers, actors, artists, or personnel and who does not substantially engage in the direction and guidance of such persons in the performance of their work, does not create property by his personal efforts. However, for purposes of subparagraph (2) of this paragraph, a letter or memorandum, or property similar to a letter or memorandum, which is prepared by personnel who are under the administrative control of a taxpayer, such as a corporate executive, shall be deemed to have been prepared or produced for him whether or not such letter, memorandum, or similar property is reviewed by him.

(4) For the application of section 1231 to the sale or exchange of property to which this paragraph applies, see § 1.1231-1. For the application of section 170 to the charitable contribution of property to which this paragraph applies, see section 170(e) and the regulations thereunder.

(d) Section 1221(4) excludes from the definition of *capital asset* accounts or notes receivable acquired in the ordinary course of trade or business for services rendered or from the sale of stock in trade or inventory or property held for sale to customers in the ordinary course of trade or business. Thus, if a taxpayer acquires a note receivable for services rendered, reports the fair market value of the note as income, and later sells the note for less than the amount previously reported, the loss is an ordinary loss. On the other hand, if the taxpayer later sells the note for more than the amount originally reported, the excess is treated as ordinary income.

(e) Obligations of the United States or any of its possessions, or of a State or Territory, or any political subdivision thereof, or of the District of Columbia, issued on or after March 1, 1941, on a discount basis and payable without interest at a fixed maturity date not exceeding one year from the date of issue, are excluded from the term *capital assets.* An obligation may be issued on a discount basis even though the price paid exceeds the face amount. Thus, although the Second Liberty Bond Act (31 U.S.C. 754) provides that United States Treasury bills shall be issued on a discount basis, the issuing price paid for a particular bill may, by reason of competitive bidding, actually exceed the face amount of the bill. Since the obligations of the type described in this paragraph are excluded from the term *capital assets,* gains or losses from the sale or exchange of such obligations are not subject to the limitations provided in such subchapter P. It is, therefore, not necessary for a taxpayer (other than a life insurance company taxable under part I (section 801 and following), subchapter L, chapter 1 of the Code, as amended by the Life Insurance Company Tax Act of 1955 (70 Stat. 36), and, in the case of taxable years beginning before January 1, 1955, subject to taxation only on interest, dividends, and rents) to segregate the original discount accrued and the gain or loss realized upon the sale or other disposition of any such obligation. See section 454(b) with respect to the original discount accrued. The provisions of this paragraph may be illustrated by the following examples:

Example 1. A (not a life insurance company) buys a $100,000, 90-day Treasury bill upon issuance for $99,998. As of the close of the forty-fifth day of the life of such bill, he sells it to B (not a life insurance company) for $99,999.50. The entire net gain to A of $1.50 may be taken into account as a single item of income, without allocating $1 to interest and $0.50 to gain. If B holds the bill until maturity his net gain of $0.50 may similarly be taken into account as a single item of income, without allocating $1 to interest and $0.50 to loss.

Example 2. The facts in this example are the same as in example (1) except that the selling price to B is $99,998.50. The net gain to A of $0.50 may be taken into account without allocating $1 to interest and $0.50 to loss, and, similarly, if B holds the bill until maturity his entire net gain of $1.50 may be taken into account as a single item of income without allocating $1 to interest and $0.50 to gain.

[T.D. 6500, 25 FR 12003, Nov. 26, 1960, as amended by T.D. 7369, 40 FR 29840, July 16, 1975]

§ 1.1221-2 Hedging transactions.

(a) ***Treatment of hedging transactions*** —

(1) ***In general.*** This section governs the treatment of hedging transactions under section 1221(a)(7). Except as provided in paragraph (g)(2) of this section, the term capital asset does not include property that is part of a hedging transaction (as defined in paragraph (b) of this section).

(2) ***Short sales and options.*** This section also governs the character of gain or loss from a short sale or option that is part of a hedging transaction. Except as provided in paragraph (g)(2) of this section, gain or loss on a short sale or option that is part of a hedging transaction (as defined in paragraph (b) of this section) is ordinary income or loss.

(3) ***Exclusivity.*** If a transaction is not a hedging transaction as defined in paragraph (b) of this section, gain or loss from the transaction is not made ordinary on the grounds that property involved in the transaction is a surrogate for a noncapital asset, that the transaction serves as insurance against a business risk, that the transaction serves a hedging function, or that the transaction serves a similar function or purpose.

(4) ***Coordination with section 988.*** This section does not apply to determine the character of gain or loss realized on a section 988 transaction as defined in section 988(c)(1) or realized with respect to any qualified fund as defined in section 988(c)(1)(E)(iii).

(b) ***Hedging transaction defined.*** Section 1221(b)(2)(A) provides that a hedging transaction is any transaction that a taxpayer enters into in the normal course of the taxpayer's trade or business primarily—

(1) To manage risk of price changes or currency fluctuations with respect to ordinary property (as defined in paragraph (c)(2) of this section) that is held or to be held by the taxpayer;

(2) To manage risk of interest rate or price changes or currency fluctuations with respect to borrowings made or to be made, or ordinary obligations incurred or to be incurred, by the taxpayer; or

(3) To manage such other risks as the Secretary may prescribe in regulations (see paragraph (d)(6) of this section).

(c) ***General rules*** —

(1) ***Normal course.*** Solely for purposes of paragraph (b) of this section, if a transaction is entered into in furtherance of a taxpayer's trade or business, the transaction is entered into in the normal course of the taxpayer's trade or business. This rule includes managing risks relating to the expansion of an existing business or the acquisition of a new trade or business.

(2) ***Ordinary property and obligations.*** Property is ordinary property to a taxpayer only if a sale or exchange of the property by the taxpayer could not produce capital gain or loss under any circumstances. Thus, for example, property used in a trade or business within the meaning of section 1231(b) (determined without regard to the holding period specified in that section) is not ordinary property. An obligation is an ordinary obligation if performance or termination of the obligation by the taxpayer could not produce capital gain or loss. For purposes of this paragraph (c)(2), the term termination has the same meaning as it does in section 1234A.

(3) ***Hedging an aggregate risk.*** The term hedging transaction includes a transaction that manages an aggregate risk of interest rate changes, price changes, and/or currency fluctuations only if all of the risk, or all but a de minimis amount of the risk, is with respect to ordinary property, ordinary obligations, or borrowings.

(4) ***Managing risk*** —

(i) ***In general.*** Whether a transaction manages a taxpayer's risk is determined based on all of the facts and circumstances surrounding the taxpayer's business and the transaction. Whether a transaction manages a taxpayer's risk may be determined on a business unit by business unit basis (for example by treating particular groups of activities, including the assets and liabilities attributable to those activities, as separate business units), provided that the business unit is within a single entity or consolidated return group that adopts the single-entity approach. A taxpayer's hedging strategies and policies as reflected in the taxpayer's minutes or other records are evidence of whether particular transactions were entered into primarily to manage the taxpayer's risk.

(ii) ***Limitation of risk management transactions to those specifically described.*** Except as otherwise determined by published guidance or by private letter ruling, a transaction that is not treated as a hedging transaction under paragraph (d) does not manage risk. Moreover, a transaction undertaken for speculative purposes will not be treated as a hedging transaction.

(d) ***Transactions that manage risk*** —

(1) ***Risk reduction transactions*** —

(i) ***In general.*** A transaction that is entered into to reduce a taxpayer's risk, manages a taxpayer's risk.

(ii) ***Micro and macro hedges*** —

(A) ***In general.*** A taxpayer generally has risk of a particular type only if it is at risk when all of its operations are considered. Nonetheless, a hedge of a particular asset or liability generally will be respected as reducing risk if it reduces the risk attributable to the asset or liability and if it is reasonably expected to reduce the overall risk of the taxpayer's operations. If a taxpayer hedges particular assets or liabilities, or groups of assets or liabilities, and the hedges are undertaken as part of a program that, as a whole, is

reasonably expected to reduce the overall risk of the taxpayer's operations, the taxpayer generally does not have to demonstrate that each hedge that was entered into pursuant to the program reduces its overall risk.

(B) ***Example.*** The following example illustrates the rules stated in paragraph (d)(1)(ii)(A) of this section:

Example. Corporation X manages its business operations by treating particular groups of activities, including the assets and liabilities attributable to those assets, as separate business units. A separate set of books and records is maintained with respect to the activities, assets and liabilities of separate business unit *y.* As part of a risk management program that Corporation X reasonably expects to reduce the overall risks of its business operations, Corporation X enters into hedges to reduce the risks of separate business unit *y.* Corporation X may demonstrate that the hedges reduce risk by taking into account only the activities, assets and liabilities of business unit *y.*

(iii) ***Written options.*** A written option may reduce risk. For example, in appropriate circumstances, a written call option with respect to assets held by a taxpayer or a written put option with respect to assets to be acquired by a taxpayer may be a hedging transaction. See also paragraph (d)(3) of this section.

(iv) ***Fixed-to-floating price hedges.*** Under the principles of paragraph (d)(1)(ii)(A) of this section, a transaction that economically converts a price from a fixed price to a floating price may reduce risk. For example, a taxpayer with a fixed cost for its inventory may be at risk if the price at which the inventory can be sold varies with a particular factor. Thus, for such a taxpayer a transaction that converts its fixed price to a floating price may be a hedging transaction.

(2) ***Interest rate conversions.*** A transaction that economically converts an interest rate from a fixed rate to a floating rate or that converts an interest rate from a floating rate to a fixed rate manages risk.

(3) ***Transactions that counteract hedging transactions.*** If a transaction is entered into primarily to offset all or any part of the risk management effected by one or more hedging transactions, the transaction is a hedging transaction. For example, if a written option is used to reduce or eliminate the risk reduction obtained from another position such as a purchased option, then it may be a hedging transaction.

(4) ***Recycling.*** A taxpayer may enter into a hedging transaction by using a position that was a hedge of one asset or liability as a hedge of another asset or liability (recycling).

(5) ***Transactions not entered into primarily to manage risk*** —

(i) ***Rule.*** Except as otherwise determined in published guidance or private letter ruling, the purchase or sale of a debt instrument, an equity security, or an annuity contract is not a hedging transaction even if the transaction limits or reduces the taxpayer's risk with respect to ordinary property, borrowings, or ordinary obligations. In addition, the Commissioner may determine in published guidance that other transactions are not hedging transactions.

(ii) ***Examples.*** The following examples illustrate the rule stated in paragraph (d)(5)(i) of this section:

Example 1. Taxpayer borrows money and agrees to pay a floating rate of interest. Taxpayer purchases debt instruments that bear a comparable floating rate. Although taxpayer's interest rate risk from the floating rate borrowing may be reduced by the purchase of the debt instruments, the acquisition of the debt instruments is not a hedging transaction, because the transaction is not entered into primarily to manage the taxpayer's risk.

Example 2. Taxpayer undertakes obligations to pay compensation in the future. The amount of the future compensation payments is adjusted as if amounts were invested in a specified mutual fund and were increased or decreased by the earnings, gains and losses that would result from such an investment. Taxpayer invests funds in the shares of the mutual fund. Although the investment in shares of the mutual fund reduces the taxpayer's risk of fluctuation in the amount of its obligation to employees, the investment was not made primarily to manage the taxpayer's risk. Accordingly, the transaction is not a hedging transaction.

Example 3. Taxpayer provides a nonqualified retirement plan for employees that is structured like a defined contribution plan. Based on a schedule that takes into account an employee's monthly salary and years of service with the taxpayer, the taxpayer makes monthly credits to an account for each employee. Each employee may designate that the account will be treated as if it were used to pay premiums on a variable annuity contract issued by the M insurance company with a value that reflects a specified investment option. M offers a number of investment options for its variable annuity contracts. Taxpayer invests funds in M company variable annuity contracts that parallel the investment options selected by the employees. The investment is not made primarily to manage the taxpayer's risk and is not a hedging transaction.

(6) ***Hedges of other risks.*** The Commissioner may, by published guidance, determine that hedging transactions include transactions entered into to manage risks other than interest rate or price changes, or currency fluctuations.

(7) ***Miscellaneous provision*** —

(i) ***Extent of risk management.*** A taxpayer may hedge all or any portion of its risk for all or any part of the period during which it is exposed to the risk.

(ii) ***Number of transactions.*** The fact that a taxpayer frequently enters into and terminates positions (even if done on a daily or more frequent basis) is not relevant to whether these transactions are hedging transactions. Thus, for example, a taxpayer hedging the risk associated with an asset or liability may frequently establish and terminate positions that hedge that risk, depending on the extent the taxpayer wishes to be hedged. Similarly, if a taxpayer maintains its level of risk exposure by entering into and terminating a large number of transactions in a single day, its transactions may nonetheless qualify as hedging transactions.

(e) ***Hedging by members of a consolidated group*** —

(1) ***General rule: single-entity approach.*** For purposes of this section, the risk of one member of a consolidated group is treated as the risk of the other members as if all of the members of the group were divisions of a single corporation. For example, if any member of a consolidated group hedges the risk of another member of the group by entering into a transaction with a third party, that transaction may potentially qualify as a hedging transaction. Conversely, intercompany transactions are not hedging transactions because, when considered as transactions between divisions of a single corporation, they do not manage the risk of that single corporation.

(2) ***Separate-entity election.*** In lieu of the single-entity approach specified in paragraph (e)(1) of this section, a consolidated group may elect separate-entity treatment of its hedging transactions. If a group makes this separate-entity election, the following rules apply:

(i) ***Risk of one member not risk of other members.*** Notwithstanding paragraph (e)(1) of this section, the risk of one member is not treated as the risk of other members.

(ii) ***Intercompany transactions.*** An intercompany transaction is a hedging transaction (an intercompany hedging transaction) with respect to a member of a consolidated group if and only if it meets the following requirements—

(A) The position of the member in the intercompany transaction would qualify as a hedging transaction with respect to the member (taking into account paragraph (e)(2)(i) of this section) if the member had entered into the transaction with an unrelated party; and

(B) The position of the other member (the marking member) in the transaction is marked to market under the marking member's method of accounting.

(iii) ***Treatment of intercompany hedging transactions.*** An intercompany hedging transaction (that is, a transaction that meets the requirements of paragraphs (e)(2)(ii)(A) and (B) of this section) is subject to the following rules—

(A) The character and timing rules of § 1.1502-13 do not apply to the income, deduction, gain, or loss from the intercompany hedging transaction; and

(B) Except as provided in paragraph (g)(3) of this section, the character of the marking member's gain or loss from the transaction is ordinary.

(iv) ***Making and revoking the election.*** Unless the Commissioner otherwise prescribes, the election described in paragraph (e)(2) of this section must be made in a separate statement that provides, "[INSERT NAME AND EMPLOYER IDENTIFICATION NUMBER OF COMMON PARENT] HEREBY ELECTS THE APPLICATION OF § 1.1221-2(e)(2) (THE SEPARATE-ENTITY APPROACH)." The statement must also indicate the date as of which the election is to be effective. The election must be filed by including the statement on or with the consolidated group's income tax return for the taxable year that includes the first date for which the election is to apply. The election applies to all transactions entered into on or after the date so indicated. The election may only be revoked with the consent of the Commissioner.

(3) ***Definitions.*** For definitions of consolidated group, divisions of a single corporation, group, intercompany transactions, and member, see section 1502 and the regulations thereunder.

(4) ***Examples. General Facts.*** In these examples, *O* and *H* are members of the same consolidated group. *O*'s business operations give rise to interest rate risk "*A*," which *O* wishes to hedge. *O* enters into an intercompany transaction with *H* that transfers the risk to *H*. *O*'s position in the intercompany transaction is "*B*," and *H*'s position in the transaction is "*C*." *H* enters into position "*D*" with a third party to reduce the interest rate risk it has with respect to its position *C*. *D* would be a hedging transaction with respect to risk *A* if *O*'s risk *A* were *H*'s risk. The following examples illustrate this paragraph (e):

> *Example 1. Single-entity treatment.* (i) *General rule.* Under paragraph (e)(1) of this section, *O*'s risk *A* is treated as *H*'s risk, and therefore *D* is a hedging transaction with respect to risk *A*. Thus, the character of *D* is determined under the rules of this section, and the income,

deduction, gain, or loss from *D* must be accounted for under a method of accounting that satisfies § 1.446-4. The intercompany transaction *B-C* is not a hedging transaction and is taken into account under § 1.1502-13.

(ii) *Identification. D* must be identified as a hedging transaction under paragraph (f)(1) of this section, and *A* must be identified as the hedged item under paragraph (f)(2) of this section. Under paragraph (f)(5) of this section, the identification of *A* as the hedged item can be accomplished by identifying the positions in the intercompany transaction as hedges or hedged items, as appropriate. Thus, substantially contemporaneous with entering into *D, H* may identify *C* as the hedged item and *O* may identify *B* as a hedge and *A* as the hedged item.

Example 2. Separate-entity election; counterparty that does not mark to market. In addition to the *General Facts* stated above, assume that the group makes a separate-entity election under paragraph (e)(2) of this section. If *H* does not mark *C* to market under its method of accounting, then *B* is not a hedging transaction, and the *B-C* intercompany transaction is taken into account under the rules of section 1502. *D* is not a hedging transaction with respect to *A,* but *D* may be a hedging transaction with respect to *C* if *C* is ordinary property or an ordinary obligation and if the other requirements of paragraph (b) of this section are met. If *D* is not part of a hedging transaction, then *D* may be part of a straddle for purposes of section 1092.

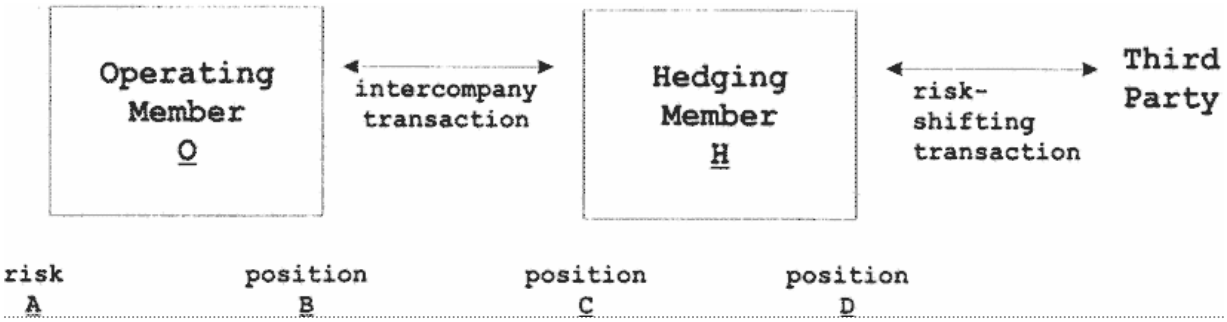

Example 3. Separate-entity election; counterparty that marks to market. The facts are the same as in *Example 2* above, except that *H* marks *C* to market under its method of accounting. Also assume that *B* would be a hedging transaction with respect to risk *A* if *O* had entered into that transaction with an unrelated party. Thus, for *O,* the *B-C* transaction is an intercompany hedging transaction with respect to *O*'s risk *A,* the character and timing rules of § 1.1502-13 do not apply to the *B-C* transaction, and *H*'s income, deduction, gain, or loss from *C* is ordinary. However, other attributes of the items from the *B-C* transaction are determined under § 1.1502-13. *D* is a hedging transaction with respect to *C* if it meets the requirements of paragraph (b) of this section.

(f) ***Identification and recordkeeping*** —

(1) ***Same-day identification of hedging transactions.*** Under section 1221(a)(7), a taxpayer that enters into a hedging transaction (including recycling an existing hedging transaction) must clearly identify it as a hedging transaction before the close of the day on which the taxpayer acquired, originated, or entered into the transaction (or recycled the existing hedging transaction).

(2) *Substantially contemporaneous identification of hedged item* —

(i) ***Content of the identification.*** A taxpayer that enters into a hedging transaction must identify the item, items, or aggregate risk being hedged. Identification of an item being hedged generally involves identifying a transaction that creates risk, and the type of risk that the transaction creates. For example, if a taxpayer is hedging the price risk with respect to its June purchases of corn inventory, the transaction being hedged is the June purchase of corn and the risk is price movements in the market where the taxpayer buys its corn. For additional rules concerning the content of this identification, see paragraph (f)(3) of this section.

(ii) ***Timing of the identification.*** The identification required by this paragraph (f)(2) must be made substantially contemporaneously with entering into the hedging transaction. An identification is not substantially contemporaneous if it is made more than 35 days after entering into the hedging transaction.

(3) ***Identification requirements for certain hedging transactions.*** In the case of the hedging transactions described in this paragraph (f)(3), the identification under paragraph (f)(2) of this section must include the information specified.

(i) ***Anticipatory asset hedges.*** If the hedging transaction relates to the anticipated acquisition of assets by the taxpayer, the identification must include the expected date or dates of acquisition and the amounts expected to be acquired.

(ii) ***Inventory hedges.*** If the hedging transaction relates to the purchase or sale of inventory by the taxpayer, the identification is made by specifying the type or class of inventory to which the transaction relates. If the hedging transaction relates to specific purchases or sales, the identification must also include the expected dates of the purchases or sales and the amounts to be purchased or sold.

(iii) *Hedges of debt of the taxpayer* —

(A) ***Existing debt.*** If the hedging transaction relates to accruals or payments under an issue of existing debt of the taxpayer, the identification must specify the issue and, if the hedge is for less than the full issue price or the full term of the debt, the amount of the issue price and the term covered by the hedge.

(B) ***Debt to be issued.*** If the hedging transaction relates to the expected issuance of debt by the taxpayer or to accruals or payments under debt that is expected to be issued by the taxpayer, the identification must specify the following information: the expected date of issuance of the debt; the expected maturity or maturities; the total expected issue price; and the expected interest provisions. If the hedge is for less than the entire expected issue price of the debt or the full expected term of the debt, the identification must also include the amount or the term being hedged. The identification may indicate a range of dates, terms, and amounts, rather than specific dates, terms, or amounts. For example, a taxpayer might identify a transaction as hedging the yield on an anticipated issuance of fixed rate debt during the second half of its fiscal year, with the anticipated amount of the debt between $75 million and $125 million, and an anticipated term of approximately 20 to 30 years.

(iv) *Hedges of aggregate risk* —

(A) ***Required identification.*** If a transaction hedges aggregate risk as described in paragraph (c)(3) of this section, the identification under paragraph (f)(2) of this section must include a description of the risk being hedged and of the hedging program under which the hedging transaction was entered. This requirement may be met by placing in the taxpayer's records a description of the hedging program and by establishing a system under which individual transactions can be identified as being entered into pursuant to the program.

(B) ***Description of hedging program.*** A description of a hedging program must include an identification of the type of risk being hedged, a description of the type of items giving rise to the risk being aggregated, and sufficient additional information to demonstrate that the program is designed to reduce aggregate risk of the type identified. If the program contains controls on speculation (for example, position limits), the description of the hedging program must also explain how the controls are established, communicated, and implemented.

(v) ***Transactions that counteract hedging transactions.*** If the hedging transaction is described in paragraph (d)(3) of this section, the description of the hedging transaction must include an identification of the risk management transaction that is being offset and the original underlying hedged item.

(4) ***Manner of identification and records to be retained*** —

(i) ***Inclusion of identification in tax records.*** The identification required by this paragraph (f) must be made on, and retained as part of, the taxpayer's books and records.

(ii) ***Presence of identification must be unambiguous.*** The presence of an identification for purposes of this paragraph (f) must be unambiguous. The identification of a hedging transaction for financial accounting or regulatory purposes does not satisfy this requirement unless the taxpayer's books and records indicate that the identification is also being made for tax purposes. The taxpayer may indicate that individual hedging transactions, or a class or classes of hedging transactions, that are identified for financial accounting or regulatory purposes are also being identified as hedging transactions for purposes of this section.

(iii) ***Manner of identification.*** The taxpayer may separately and explicitly make each identification, or, so long as paragraph (f)(4)(ii) of this section is satisfied, the taxpayer may establish a system pursuant to which the identification is indicated by the type of transaction or by the manner in which the transaction is consummated or recorded. An identification under this system is made at the later of the time that the system is established or the time that the transaction satisfies the terms of the system by being entered, or by being consummated or recorded, in the designated fashion.

(iv) ***Principles of paragraph (f)(4)(iii) of this section illustrated.*** Paragraphs (f)(4)(iv)(A) through (C) of this section illustrate the principles of paragraph (f)(4)(iii) of this section and assume that the other requirements of this paragraph (f) are satisfied.

(A) A taxpayer can make an identification by designating a hedging transaction for (or placing it in) an account that has been identified as containing only hedges of a specified item (or of specified items or specified aggregate risk).

(B) A taxpayer can make an identification by including and retaining in its books and records a statement that designates all future transactions in a specified derivative product as hedges of a specified item, items, or aggregate risk.

(C) A taxpayer can make an identification by designating a certain mark, a certain form, or a certain legend as meaning that a transaction is a hedge of a specified item (or of specified items or a specified aggregate risk). Identification can be made by placing the designated mark on a record of the transaction (for example, trading ticket, purchase order, or trade confirmation) or by using the designated form or a record that contains the designated legend.

(5) *Identification of hedges involving members of the same consolidated group* —

(i) ***General rule: single-entity approach.*** A member of a consolidated group must satisfy the requirements of this paragraph (f) as if all of the members of the group were divisions of a single corporation. Thus, the member entering into the hedging transaction with a third party must identify the hedging transaction under paragraph (f)(1) of this section. Under paragraph (f)(2) of this section, that member must also identify the item, items, or aggregate risk that is being hedged, even if the item, items, or aggregate risk relates primarily or entirely to other members of the group. If the members of a group use intercompany transactions to transfer risk within the group, the requirements of paragraph (f)(2) of this section may be met by identifying the intercompany transactions, and the risks hedged by the intercompany transactions, as hedges or hedged items, as appropriate. Because identification of the intercompany transaction as a hedge serves solely to identify the hedged item, the identification is timely if made within the period required by paragraph (f)(2) of this section. For example, if a member transfers risk in an intercompany transaction, it may identify under the rules of this paragraph (f) both its position in that transaction and the item, items, or aggregate risk being hedged. The member that hedges the risk outside the group may identify under the rules of this paragraph (f) both its position with the third party and its position in the intercompany transaction. Paragraph (e)(4) *Example 1* of this section illustrates this identification.

(ii) ***Rule for consolidated groups making the separate-entity election.*** If a consolidated group makes the separate-entity election under paragraph (e)(2) of this section, each member of the group must satisfy the requirements of this paragraph (f) as though it were not a member of a consolidated group.

(6) ***Consistency with section 1256(e)(2).*** Any identification for purposes of section 1256(e)(2) is also an identification for purposes of paragraph (f)(1) of this section.

(g) *Effect of identification and non-identification* —

(1) *Transactions identified* —

(i) ***In general.*** If a taxpayer identifies a transaction as a hedging transaction for purposes of paragraph (f)(1) of this section, the identification is binding with respect to gain, whether or not all of the requirements of paragraph (f) of this section are satisfied. Thus, gain from that transaction is ordinary income. If the transaction is not in fact a hedging transaction described in paragraph (b) of this section, however, paragraphs (a)(1) and (2) of this section do not apply and the character of loss is determined without reference to whether the transaction is a

surrogate for a noncapital asset, serves as insurance against a business risk, serves a hedging function, or serves a similar function or purpose. Thus, the taxpayer's identification of the transaction as a hedging transaction does not itself make loss from the transaction ordinary.

(ii) ***Inadvertent identification.*** Notwithstanding paragraph (g)(1)(i) of this section, if the taxpayer identifies a transaction as a hedging transaction for purposes of paragraph (f) of this section, the character of the gain is determined as if the transaction had not been identified as a hedging transaction if—

(A) The transaction is not a hedging transaction (as defined in paragraph (b) of this section);

(B) The identification of the transaction as a hedging transaction was due to inadvertent error; and

(C) All of the taxpayer's transactions in all open years are being treated on either original or, if necessary, amended returns in a manner consistent with the principles of this section.

(2) ***Transactions not identified*** —

(i) ***In general.*** Except as provided in paragraphs (g)(2)(ii) and (iii) of this section, the absence of an identification that satisfies the requirements of paragraph (f)(1) of this section is binding and establishes that a transaction is not a hedging transaction. Thus, subject to the exceptions, the rules of paragraphs (a)(1) and (2) of this section do not apply, and the character of gain or loss is determined without reference to whether the transaction is a surrogate for a noncapital asset, serves as insurance against a business risk, serves a hedging function, or serves a similar function or purpose.

(ii) ***Inadvertent error.*** If a taxpayer does not make an identification that satisfies the requirements of paragraph (f) of this section, the taxpayer may treat gain or loss from the transaction as ordinary income or loss under paragraph (a)(1) or (2) of this section if—

(A) The transaction is a hedging transaction (as defined in paragraph (b) of this section);

(B) The failure to identify the transaction was due to inadvertent error; and

(C) All of the taxpayer's hedging transactions in all open years are being treated on either original or, if necessary, amended returns as provided in paragraphs (a)(1) and (2) of this section.

(iii) ***Anti-abuse rule.*** If a taxpayer does not make an identification that satisfies all the requirements of paragraph (f) of this section but the taxpayer has no reasonable grounds for treating the transaction as other than a hedging transaction, then gain from the transaction is ordinary. The reasonableness of the taxpayer's failure to identify a transaction is determined by taking into consideration not only the requirements of paragraph (b) of this section but also the taxpayer's treatment of the transaction for financial accounting or other purposes and the taxpayer's identification of similar transactions as hedging transactions.

(3) ***Transactions by members of a consolidated group*** —

(i) ***Single-entity approach.*** If a consolidated group is under the general rule of paragraph (e)(1) of this section (the single-entity approach), the rules of this paragraph (g) apply only to transactions that are not intercompany transactions.

(ii) ***Separate-entity election.*** If a consolidated group has made the election under paragraph (e)(2) of this section, then, in addition to the rules of paragraphs (g)(1) and (2) of this section, the following rules apply:

(A) If an intercompany transaction is identified as a hedging transaction but does not meet the requirements of paragraphs (e)(2)(ii)(A) and (B) of this section, then, notwithstanding any contrary provision in § 1.1502-13, each party to the transaction is subject to the rules of paragraph (g)(1) of this section with respect to the transaction as though it had incorrectly identified its position in the transaction as a hedging transaction.

(B) If a transaction meets the requirements of paragraphs (e)(2)(ii) (A) and (B) of this section but the transaction is not identified as a hedging transaction, each party to the transaction is subject to the rules of paragraph (g)(2) of this section. (Because the transaction is an intercompany hedging transaction, the character and timing rules of § 1.1502-13 do not apply. See paragraph (e)(2)(iii)(A) of this section.)

(h) ***Effective date.*** The rules of this section apply to transactions entered into on or after March 20, 2002.

(i) [Reserved]. For further guidance, see § 1.1221-2T(i) through (j)(1).

(j) ***Effective/applicability date.*** Paragraph (e)(2)(iv) of this section applies to any original consolidated Federal income tax return due (without extensions) after June 14, 2007. For original consolidated Federal income tax returns due (without extensions) after May 30, 2006, and on or before June 14, 2007, see § 1.1221-2T as contained in 26 CFR part 1 in effect on April 1, 2007. For original consolidated Federal income tax returns due (without extensions) on or before May 30, 2006, see § 1.1221-2 as contained in 26 CFR part 1 in effect on April 1, 2006.

[T.D. 8985, 67 FR 12865, Mar. 20, 2002, as amended by T.D. 9264, 71 FR 30602, May 30, 2006; T.D. 9329, 72 FR 32804, June 14, 2007]

§ 1.1221-3 Time and manner for electing capital asset treatment for certain self-created musical works.

(a) ***Description.*** Section 1221(b)(3) allows an electing taxpayer to treat the sale or exchange of a musical composition or a copyright in a musical work created by the taxpayer's personal efforts (or having a basis determined by reference to the basis of such property in the hands of a taxpayer whose personal efforts created such property) as the sale or exchange of a capital asset. As a consequence, gain or loss from the sale or exchange is treated as capital gain or loss.

(b) ***Time and manner for making the election.*** An election described in this section is made separately for each musical composition (or copyright in a musical work) sold or exchanged during the taxable year. An election must be made on or before the due date (including extensions) of the income tax return for the taxable year of the sale or exchange. The election is made on Schedule D, “Capital Gains and Losses,” of the appropriate income tax form (for example, Form 1040, “U.S. Individual Income Tax Return;” Form 1065, “U.S. Return of Partnership Income;” Form 1120, “U.S. Corporation Income Tax Return”) by treating the sale or exchange as the sale or exchange of a capital asset, in accordance with the form and its instructions.

(c) ***Revocability of election.*** The election described in this section is revocable with the consent of the Commissioner. To seek consent to revoke the election, a taxpayer must submit a request for a letter ruling under the applicable administrative procedures. Alternatively, an automatic extension of 6 months from

the due date of the taxpayer's income tax return (excluding extensions) is granted to revoke the election, provided the taxpayer timely filed the taxpayer's income tax return and, within this 6-month extension period, the taxpayer files an amended income tax return that treats the sale or exchange as the sale or exchange of property that is not a capital asset.

(d) ***Effective/applicability date.*** This section applies to elections under section 1221(b)(3) in taxable years beginning after May 17, 2006.

[T.D. 9514, 76 FR 6554, Feb. 7, 2011]

§ 1.1222-1 Other terms relating to capital gains and losses.

(a) The phrase *short-term* applies to the category of gains and losses arising from the sale or exchange of capital assets held for 1 year (6 months for taxable years beginning before 1977; 9 months for taxable years beginning in 1977) or less; the phrase *long-term* to the category of gains and losses arising from the sale or exchange of capital assets held for more than 1 year (6 months for taxable years beginning before 1977; 9 months for taxable years beginning in 1977). The fact that some part of a loss from the sale or exchange of a capital asset may be finally disallowed because of the operation of section 1211 does not mean that such loss is not *taken into account in computing taxable income* within the meaning of that phrase as used in sections 1222(2) and 1222(4).

(b)

(1) In the definition of *net short-term capital gain,* as provided in section 1222(5), the amounts brought forward to the taxable year under section 1212 (other than section 1212(b)(1)(B)) are short-term capital losses for such taxable year.

(2) In the definition of *net long-term capital gain,* as provided in section 1222(7), the amounts brought forward to the taxable year under section 1212(b)(1)(B) are long-term capital losses for such taxable year.

(c) Gains and losses from the sale or exchange of capital assets held for not more than 1 year (6 months for taxable years beginning before 1977; 9 months for taxable years beginning in 1977) (described as short-term capital gains and short-term capital losses) shall be segregated from gains and losses arising from the sale or exchange of such assets held for more than 1 year (6 months for taxable years beginning before 1977; 9 months for taxable years beginning in 1977) (described as long-term capital gains and long-term capital losses).

(d)

(1) The term capital gain net income (net capital gain for taxable years beginning before January 1, 1977) means the excess of the gains from sales or exchanges of capital assets over the losses from sales or exchanges of capital assets, which losses include any amounts carried to the taxable year pursuant to section 1212(a) or section 1212(b).

(2) Notwithstanding subparagraph (1) of this paragraph, in the case of a taxpayer other than a corporation for taxable years beginning before January 1, 1964, the term *net capital gain* means the excess of

(i) the sum of the gains from sales or exchanges of capital assets, plus the taxable income (computed without regard to gains and losses from sales or exchanges of capital assets and without regard to the deductions provided by section 151, relating to personal exemptions, or any deductions in lieu thereof) of the taxpayer or $1,000, whichever is smaller, over

(ii) the losses from sales or exchanges of capital assets, which losses include amounts carried to the taxable year by such taxpayer under paragraph (a)(1) of § 1.1212-1. Thus, in the case of estates and trusts for taxable years beginning before January 1, 1964, taxable income for the purposes of this paragraph shall be computed without regard to gains and losses from sales or exchanges of capital assets and without regard to the deductions allowed by section 642(b) to estates and trusts in lieu of personal exemptions. The term *net capital gain* is not applicable in the case of a taxpayer other than a corporation for taxable years beginning after December 31, 1963, and before January 1, 1970. In the case of a taxpayer whose tax liability is computed under section 3 for taxable years beginning before January 1, 1964, the term *taxable income,* for purposes of this paragraph, shall be read as *adjusted gross income.*

(e) The term *net capital loss* means the excess of the losses from sales or exchanges of capital assets over the sum allowed under section 1211. However, in the case of a corporation, amounts which are short-term capital losses under § 1.1212-1(a) are excluded in determining such *net capital loss.*

(f) See section 165(g) and section 166(e), under which losses from worthless stocks, bonds, and other securities (if they constitute capital assets) are required to be treated as losses under subchapter P (section 1201 and following), chapter 1 of the Code, from the sale or exchange of capital assets, even though such securities are not actually sold or exchanged. See also section 1231 and § 1.1231-1 for the determination of whether or not gains and losses from the involuntary conversion of capital assets and from the sale, exchange, or involuntary conversion of certain property used in the trade or business shall be treated as gains and losses from the sale or exchange of capital assets. See also section 1236 and § 1.1236-1 for the determination of whether or not gains from the sale or exchange of securities by a dealer in securities shall be treated as capital gains, or whether losses from such sales or exchanges shall be treated as ordinary losses.

(g) In the case of nonresident alien individuals not engaged in trade or business within the United States, see section 871 and the regulations thereunder for the determination of the net amount of capital gains subject to tax.

(h) The term net capital gain (net section 1201 gain for taxable years beginning before January 1, 1977) means the excess of the net long-term capital gain for the taxable year over the net short-term capital loss for such year.

[T.D. 6500, 25 FR 12004, Nov. 26, 1960, as amended by T.D. 6828, 30 FR 7808, June 17, 1965; T.D. 6867, 30 FR 15096, Dec. 7, 1965; T.D. 7301, 39 FR 971, Jan. 4, 1974; T.D. 7337, 39 FR 44978, Dec. 30, 1974; T.D. 7728, 45 FR 72650, Nov. 3, 1980]

§ 1.1223-1 Determination of period for which capital assets are held.

(a) The holding period of property received in an exchange by a taxpayer includes the period for which the property which he exchanged was held by him, if the property received has the same basis in whole or in part for determining gain or loss in the hands of the taxpayer as the property exchanged. However, this rule shall apply, in the case of exchanges after March 1, 1954, only if the property exchanged was at the

time of the exchange a capital asset in the hands of the taxpayer or property used in his trade or business as defined in section 1231(b). For the purposes of this paragraph, the term *exchange* includes the following transactions:

(1) An involuntary conversion described in section 1033, and

(2) A distribution to which section 355 (or so much of section 356 as relates to section 355) applies.

Thus, if property acquired as the result of a compulsory or involuntary conversion of other property of the taxpayer has under section 1033(c) the same basis in whole or in part in the hands of the taxpayer as the property so converted, its acquisition is treated as an exchange and the holding period of the newly acquired property shall include the period during which the converted property was held by the taxpayer. Thus, also, where stock of a controlled corporation is received by a taxpayer pursuant to a distribution to which section 355 (or so much of section 356 as relates to section 355) applies, the distribution is treated as an exchange and the period for which the taxpayer has held the stock of the controlled corporation shall include the period for which he held the stock of the distributing corporation with respect to which such distribution was made.

(b) The holding period of property in the hands of a taxpayer shall include the period during which the property was held by any other person, if such property has the same basis in whole or in part in the hands of the taxpayer for determining gain or loss from a sale or exchange as it would have in the hands of such other person. For example, the period for which property acquired by gift after December 31, 1920, was held by the donor must be included in determining the period for which the property was held by the taxpayer if, under the provisions of section 1015, such property has, for the purpose of determining gain or loss from the sale or exchange, the same basis in the hands of the taxpayer as it would have in the hands of the donor. Similarly, the period for which property acquired from a decedent who died in 2010 was held by the decedent must be included in determining the period during which the property was held by the recipient, if the recipient's basis in the property is determined under section 1022.

(c) In determining the period for which the taxpayer has held stock or securities received upon a distribution where no gain was recognized to the distributee under section 1081(c) (or under section 112(g) of the Revenue Act of 1928 (45 Stat. 818) or the Revenue Act of 1932 (47 Stat. 197)), there shall be included the period for which he held the stock or securities in the distributing corporation before the receipt of the stock or securities on such distribution.

(d) If the acquisition of stock or securities resulted in the nondeductibility (under section 1091, relating to wash sales) of the loss from the sale or other disposition of substantially identical stock or securities, the holding period of the newly acquired securities shall include the period for which the taxpayer held the securities with respect to which the loss was not allowable.

(e) The period for which the taxpayer has held stock, or stock subscription rights, received on a distribution shall be determined as though the stock dividend, or stock right, as the case may be, were the stock in respect of which the dividend was issued if the basis for determining gain or loss upon the sale or other disposition of such stock dividend or stock right is determined under section 307. If the basis of stock received by a taxpayer pursuant to a spin-off is determined under so much of section 1052(c) as refers to section 113(a)(23) of the Internal Revenue Code of 1939, and such stock is sold or otherwise disposed of in a taxable year which is subject to the Internal Revenue Code of 1954, the period for which the taxpayer has held the stock received in such spin-off shall include the period for which he held the stock of the distributing corporation with respect to which such distribution was made.

(f) The period for which the taxpayer has held stock or securities issued to him by a corporation pursuant to the exercise by him of rights to acquire such stock or securities from the corporation will, in every case and whether or not the receipt of taxable gain was recognized in connection with the distribution of the rights, begin with and include the day upon which the rights to acquire such stock or securities were exercised. A taxpayer will be deemed to have exercised rights received from a corporation to acquire stock or securities therein where there is an expression of assent to the terms of such rights made by the taxpayer in the manner requested or authorized by the corporation.

(g) The period for which the taxpayer has held a residence, the acquisition of which resulted under the provisions of section 1034 in the nonrecognition of any part of the gain realized on the sale or exchange of another residence, shall include the period for which such other residence had been held as of the date of such sale or exchange. For purposes of this paragraph, the term *sale or exchange* includes an involuntary conversion occurring after December 31, 1950, and before January 1, 1954.

(h) If a taxpayer accepts delivery of a commodity in satisfaction of a commodity futures contract, the holding period of the commodity shall include the period for which the taxpayer held the commodity futures contract, if such futures contract was a capital asset in his hands.

(i) If shares of stock in a corporation are sold from lots purchased at different dates or at different prices and the identity of the lots cannot be determined, the rules prescribed by the regulations under section 1012 for determining the cost or other basis of such stocks so sold or transferred shall also apply for the purpose of determining the holding period of such stock.

(j) In the case of a person acquiring property, or to whom property passed, from a decedent (within the meaning of section 1014(b)) dying after December 31, 1970, such person shall be considered to have held the property for more than 1 year (6 months for taxable years beginning before 1977; 9 months for taxable years beginning in 1977) if the property:

(1) Has a basis in the hands of such person which is determined in whole or in part under section 1014, and

(2) Is sold or otherwise disposed of by such person within 6 months after the decedent's death.

The provisions of this paragraph apply to sales of such property included in the decedent's gross estate for the purposes of the estate tax by the executor or administrator of the estate and to sales of such property by other persons who have acquired property from the decedent. The provisions of this paragraph may also be applicable to cases involving joint tenancies, community property, and properties transferred in contemplation of death. Thus, if a surviving joint tenant, who acquired property by right of survivorship, sells or otherwise disposes of such property within 6 months after the date of the decedent's death, and the basis of the property in his hands is determined in whole or in part under section 1014, the property shall be considered to have been held by the surviving joint tenant for more than 6 months. Similarly, a surviving spouse's share of community property shall be considered to have been held by her for more than 6 months if it is sold or otherwise disposed of within 6 months after the date of the decedent's death, regardless of when the property was actually acquired by the marital community. For the purposes of this paragraph, it is immaterial that the sale or other disposition produces gain or loss. If property is considered to have been held for more than 6 months by reason of this paragraph, it also is considered to have been held for that period for purposes of section 1231 (if that section is otherwise applicable).

(k) Any reference in section 1223 or this section to another provision of the Internal Revenue Code of 1954 is, where applicable, to be deemed a reference to the corresponding provision of the Internal Revenue Code of 1939, or prior internal revenue laws. The provisions of prior internal revenue laws here intended are the

sections referred to in the sections of the Internal Revenue Code of 1939 which correspond to the sections of the Internal Revenue Code of 1954 referred to in section 1223. Thus, the sections corresponding to section 1081(c) are section 371(c) of the Revenue Act of 1938 (52 Stat. 553) and section 371(c) of the Internal Revenue Code of 1939. The sections corresponding to section 1091 are section 118 of each of the following: The Revenue Acts of 1928 (45 Stat. 826), 1932 (47 Stat. 208), 1934 (48 Stat. 715), 1936 (49 Stat. 1692), 1938 (52 Stat. 503), and the Internal Revenue Code of 1939.

(l) ***Effective/applicability date.*** This section applies January 19, 2017. For rules before January 19, 2017, see § 1.1223-1 as contained in 26 CFR part 1 revised as of April 1, 2016.

[T.D. 6500, 25 FR 12005, Nov. 26, 1960, as amended by T.D. 7238, 37 FR 28717, Dec. 29, 1972; T.D. 7728, 45 FR 72650, Nov. 3, 1980; T.D. 9811, 82 FR 6241, Jan. 19, 2017; T.D. 9849, 84 FR 9237, Mar. 14, 2019]

§ 1.1223-3 Rules relating to the holding periods of partnership interests.

(a) ***In general.*** A partner shall not have a divided holding period in an interest in a partnership unless—

(1) The partner acquired portions of an interest at different times; or

(2) The partner acquired portions of the partnership interest in exchange for property transferred at the same time but resulting in different holding periods (*e.g.,* section 1223).

(b) ***Accounting for holding periods of an interest in a partnership*** —

(1) ***General rule.*** The portion of a partnership interest to which a holding period relates shall be determined by reference to a fraction, the numerator of which is the fair market value of the portion of the partnership interest received in the transaction to which the holding period relates, and the denominator of which is the fair market value of the entire partnership interest (determined immediately after the transaction).

(2) ***Special rule.*** For purposes of applying paragraph (b)(1) of this section to determine the holding period of a partnership interest (or portion thereof) that is sold or exchanged (or with respect to which gain or loss is recognized upon a distribution under section 731), if a partner makes one or more contributions of cash to the partnership and receives one or more distributions of cash from the partnership during the one-year period ending on the date of the sale or exchange (or distribution with respect to which gain or loss is recognized under section 731), the partner may reduce the cash contributions made during the year by cash distributions received on a last-in-first-out basis, treating all cash distributions as if they were received immediately before the sale or exchange (or at the time of the distribution with respect to which gain or loss is recognized under section 731).

(3) ***Deemed contributions and distributions.*** For purposes of paragraphs (b)(1) and (2) of this section, deemed contributions of cash under section 752(a) and deemed distributions of cash under section 752(b) shall be disregarded to the same extent that such amounts are disregarded under § 1.704-1(b)(2)(iv)(c).

(4) ***Adjustment with respect to contributed section 751 assets.*** For purposes of applying paragraph (b)(1) of this section to determine the holding period of a partnership interest (or portion thereof) that is sold or exchanged, if a partner receives a portion of the partnership interest in exchange for property described in section 751(c) or (d) (section 751 assets) within the one-year period ending on the date of the sale or exchange of all or a portion of the partner's interest in the partnership, and the partner recognizes ordinary income or loss on account of such a section 751 asset in a fully taxable transaction (either as a result of the sale of all or part of the partner's interest in the partnership or

the sale by the partnership of the section 751 asset), the contribution of the section 751 asset during the one-year period shall be disregarded. However, if, in the absence of this paragraph, a partner would not be treated as having held any portion of the interest for more than one year (*e.g.,* because the partner's only contributions to the partnership are contributions of section 751 assets or section 751 assets and cash within the prior one-year period), this adjustment is not available.

(5) ***Divided holding period if partnership interest comprises in whole or in part one or more profits interests*** —

(i) ***In general.*** If a partnership interest is comprised in whole or in part of one or more profits interests (as defined in paragraph (b)(5)(ii) of this section), then, for purposes of applying paragraph (b)(1) of this section, the portion of the holding period to which a profits interest relates is determined based on the fair market value of the profits interest upon the disposition of all, or part, of the interest (and not at the time that the profits interest is acquired). Paragraph (b)(1) of this section continues to apply to the extent that a partner acquires portions of a partnership interest that are not comprised of a profits interest and the value of the profits interest is not included for purposes of determining the value of the entire partnership interest under paragraph (b)(1).

(ii) ***Definition of capital interest and profits interest.*** For purposes of this paragraph (b)(5), a profits interest is a partnership interest other than a capital interest. A capital interest is an interest that would give the holder a share of the proceeds if the partnership's assets were sold at fair market value at the time the interest was received and then the proceeds were distributed in a complete liquidation of the partnership. A profits interest, for purposes of this paragraph (b)(5), is received in connection with the performance of services to or for the benefit of a partnership in a partner capacity or in anticipation of being a partner, and the receipt of the interest is not treated as a taxable event for the partner or the partnership under applicable Federal income tax guidance.

(6) ***Exception.*** The Commissioner may prescribe by guidance published in the Internal Revenue Bulletin (see § 601.601(d)(2) of this chapter) a rule disregarding certain cash contributions (including contributions of a de minimis amount of cash) in applying paragraph (b)(1) of this section to determine the holding period of a partnership interest (or portion thereof) that is sold or exchanged.

(c) ***Sale or exchange of all or a portion of an interest in a partnership*** —

(1) ***Sale or exchange of entire interest in a partnership.*** If a partner sells or exchanges the partner's entire interest in a partnership, any capital gain or loss recognized shall be divided between long-term and short-term capital gain or loss in the same proportions as the holding period of the interest in the partnership is divided between the portion of the interest held for more than one year and the portion of the interest held for one year or less.

(2) ***Sale or exchange of a portion of an interest in a partnership*** —

(i) ***Certain publicly traded partnerships.*** A selling partner in a publicly traded partnership (as defined under section 7704(b)) may use the actual holding period of the portion of a partnership interest transferred if—

(A) The ownership interest is divided into identifiable units with ascertainable holding periods;

(B) The selling partner can identify the portion of the partnership interest transferred; and

(C) The selling partner elects to use the identification method for all sales or exchanges of interests in the partnership after September 21, 2000. The selling partner makes the election referred to in this paragraph (c)(2)(i)(C) by using the actual holding period of the portion of the partner's interest in the partnership first transferred after September 21, 2000 in reporting the transaction for Federal income tax purposes.

(ii) ***Other partnerships.*** If a partner has a divided holding period in a partnership interest, and paragraph (c)(2)(i) of this section does not apply, then the holding period of the transferred interest shall be divided between long-term and short-term capital gain or loss in the same proportions as the long-term and short-term capital gain or loss that the transferor partner would realize if the entire interest in the partnership were transferred in a fully taxable transaction immediately before the actual transfer.

(d) ***Distributions*** —

(1) ***In general.*** Except as provided in paragraph (b)(2) of this section, a partner's holding period in a partnership interest is not affected by distributions from the partnership.

(2) ***Character of capital gain or loss recognized as a result of a distribution from a partnership.*** If a partner is required to recognize capital gain or loss as a result of a distribution from a partnership, then the capital gain or loss recognized shall be divided between long-term and short-term capital gain or loss in the same proportions as the long-term and short-term capital gain or loss that the distributee partner would realize if such partner's entire interest in the partnership were transferred in a fully taxable transaction immediately before the distribution.

(e) ***Section 751(c) assets.*** For purposes of this section, properties and potential gain treated as unrealized receivables under section 751(c) shall be treated as separate assets that are not capital assets as defined in section 1221 or property described in section 1231.

(f) ***Examples.*** The provisions of this section are illustrated by the following examples:

(1) ***Example 1.*** Division of holding period—contribution of money and a capital asset.

(i) *A* contributes $5,000 of cash and a nondepreciable capital asset *A* has held for two years to a partnership (*PRS*) for a 50 percent interest in *PRS*. *A*'s basis in the capital asset is $5,000, and the fair market value of the asset is $10,000. After the exchange, *A*'s basis in *A*'s interest in *PRS* is $10,000, and the fair market value of the interest is $15,000. *A* received one-third of the interest in *PRS* for a cash payment of $5,000 ($5,000/$15,000). Therefore, *A*'s holding period in one-third of the interest received (attributable to the contribution of money to the partnership) begins on the day after the contribution. *A* received two-thirds of the interest in *PRS* in exchange for the capital asset ($10,000/$15,000). Accordingly, pursuant to section 1223(1), *A* has a two-year holding period in two-thirds of the interest received in *PRS*.

(ii) Six months later, when *A*'s basis in *PRS* is $12,000 (due to a $2,000 allocation of partnership income to *A*), *A* sells the interest in *PRS* for $17,000. Assuming *PRS* holds no inventory or unrealized receivables (as defined under section 751(c)) and no collectibles or section 1250 property, *A* will realize $5,000 of capital gain. As determined above, one-third of *A*'s interest in *PRS* has a holding period of one year or less, and two-thirds of *A*'s interest in *PRS* has a holding period equal to two years and six months. Therefore, one-third of the capital gain will be short-term capital gain, and two-thirds of the capital gain will be long-term capital gain.

(2) ***Example 2.*** Division of holding period—contribution of section 751 asset and a capital asset.

A contributes inventory with a basis of $2,000 and a fair market value of $6,000 and a capital asset which *A* has held for more than one year with a basis of $4,000 and a fair market value of $6,000, and *B* contributes cash of $12,000 to form a partnership (*AB*). As a result of the contribution, one-half of *A*'s interest in *AB* is treated as having been held for more than one year under section 1223(1). Six months later, *A* transfers one-half of *A*'s interest in *AB* to *C* for $6,000, realizing a gain of $3,000. If *AB* were to sell all of its section 751 property in a fully taxable transaction immediately before *A*'s transfer of the partnership interest, *A* would be allocated $4,000 of ordinary income on account of the inventory. Accordingly, *A* will recognize $2,000 of ordinary income and $1,000 of capital gain ($3,000-$2,000) on account of the transfer to *C*. Because *A* recognizes ordinary income on account of the inventory that was contributed to *AB* within the one year period ending on the date of the sale, the inventory will be disregarded in determining the holding period of *A*'s interest in *AB*. All of the capital gain will be long-term.

(3) ***Example 3.*** Netting of cash contributions and distributions.

(i) On January 1, 2000, *A* holds a 50 percent interest in the capital and profits of a partnership (*PS*). The value of *A*'s *PS* interest is $900, and *A*'s holding period in the entire interest is long-term. On January 2, 2000, when the value of *A*'s *PS* interest is still $900, *A* contributes $100 to *PS*. On June 1, 2000, *A* receives a distribution of $40 cash from the partnership. On September 1, 2000, when the value of *A*'s interest in *PS* is $1,350, *A* contributes an additional $230 cash to *PS*, and on October 1, 2000, *A* receives another $40 cash distribution from *PS*. *A* sells *A*'s entire partnership interest on November 1, 2000, for $1,600. *A*'s adjusted basis in the *PS* interest at the time of the sale is $1,000.

(ii) For purposes of netting cash contributions and distributions in determining the holding period of *A*'s interest in *PS*, *A* is treated as having received a distribution of $80 on November 1, 2000. Applying that distribution on a last-in-first-out basis to reduce prior contributions during the year, the contribution made on September 1, 2000, is reduced to $150 ($230-$80). The holding period then is determined as follows: Immediately after the contribution of $100 on January 2, 2000, *A*'s holding period in *A*'s *PS* interest is 90 percent long-term ($900/($900 + $100)) and 10 percent short-term ($100/($900 + $100)). The contribution of $150 on September 1, 2000, causes 10 percent of *A*'s partnership interest ($150/($1,350 + $150)) to have a short-term holding period. Accordingly, immediately after the contribution on September 1, 2000, *A*'s holding period in *A*'s *PS* interest is 81 percent long-term (.90 × .90) and 19 percent short-term ((.10 × .90) + .10). Accordingly, $486 ($600 × .81) of the gain from *A*'s sale of the *PS* interest is long-term capital gain, and $114 ($600 × .19) is short-term capital gain.

(4) ***Example 4.*** Division of holding period when capital account is increased by contribution.

A, B, C, and *D* are equal partners in a partnership (*PRS*), and the fair market value of a 25 percent interest in *PRS* is $100. *A, B, C,* and *D* each contribute an additional $100 to partnership capital, thereby increasing the fair market value of each partner's interest to $200. As a result of the contribution, each partner has a new holding period in the portion of the partner's interest in *PRS* that is attributable to the contribution. That portion equals 50 percent ($100/$200) of each partner's interest in *PRS*.

(5) ***Example 5.*** Sale or exchange of a portion of an interest in a partnership.

(i) ***A, B,*** and *C* form an equal partnership (*PRS*). In connection with the formation, *A* contributes $5,000 in cash and a capital asset (capital asset 1) with a fair market value of $5,000 and a basis of $2,000; *B* contributes $7,000 in cash and a capital asset (capital asset 2) with a fair

market value of $3,000 and a basis of $3,000; and *C* contributes $10,000 in cash. At the time of the contribution, *A* had held the contributed property for two years. Six months later, when *A*'s basis in *PRS* is $7,000, A transfers one-half of *A*'s interest in *PRS* to *T* for $7,000 at a time when *PRS*'s balance sheet (reflecting a cash receipts and disbursements method of accounting) is as follows:

	ASSETS				
	Adjusted basis	Market value			
Cash	$22,000	$22,000			
Unrealized Receivables	0	6,000			
Capital Asset 1	2,000	5,000	Capital Asset 2	3,000	9,000
Capital Assets	5,000	14,000			
Total	27,000	42,000			

(ii) Although at the time of the transfer *A* has not held *A*'s interest in *PRS* for more than one year, 50 percent of the fair market value of *A*'s interest in *PRS* was received in exchange for a capital asset with a long-term holding period. Therefore, 50 percent of *A*'s interest in *PRS* has a long-term holding period.

(iii) If *PRS* were to sell all of its section 751 property in a fully taxable transaction immediately before *A*'s transfer of the partnership interest, *A* would be allocated $2,000 of ordinary income. One-half of that amount ($1,000) is attributable to the portion of *A*'s interest in *PRS* transferred to *T.* Accordingly, *A* will recognize $1,000 oridnary income and $2,500 ($3,500-$1,000) of capital gain on account of the transfer to *T* of one-half of *A*'s interest in *PRS.* Fifty percent ($1,250) of that gain is long-term capital gain and 50 percent ($1,250) is short-term capital gain.

(6) ***Example 6.*** Sale of units of interests in a partnership.

A publicly traded partnership (*PRS*) has ownership interests that are segregated into identifiable units of interest. *A* owns 10 limited partnership units in *PRS* for which *A* paid $10,000 on January 1, 1999. On August 1, 2000, *A* purchases five additional units for $10,000. At the time of purchase, the fair market value of each unit has increased to $2,000. *A*'s holding period for one-third ($10,000/$30,000) of the interest in *PRS* begins on the day after the purchase of the five additional units. Less than one year later, *A* sells five units of ownership in *PRS* for $11,000. At the time, *A*'s basis in the 15 units of *PRS* is $20,000, and *A*'s capital gain on the sale of 5 units is $4,333 (amount realized of $11,000–one-third of the adjusted basis or $6,667). For purposes of determining the holding period, *A* can designate the specific units of *PRS* sold. If *A* properly identifies the five units sold as five of the ten units for which *A* has a long-term holding period and elects to use the identification method for all subsequent sales or exchanges of interests in the partnership by using the actual holding period in reporting the transaction on *A*'s Federal income tax return, the capital gain realized will be long-term capital gain.

(7) ***Example 7.*** Disproportionate distribution.

In 1997, *A* and *B* each contribute cash of $50,000 to form and become equal partners in a partnership (*PRS*). More than one year later, *A* receives a distribution worth $22,000 from *PRS,* which reduces *A*'s interest in *PRS* to 36 percent. After the distribution, *B* owns 64 percent of *PRS.* The holding periods of *A* and *B* in their interests in *PRS* are not affected by the distribution.

(8) ***Example 8.*** Gain or loss as a result of a distribution.

(i) On January 1, 1996, *A* contributes property with a basis of $10 and a fair market value of $10,000 in exchange for an interest in a partnership (*ABC*). On September 30, 2000, when *A*'s interest in *ABC* is worth $12,000 (and the basis of *A*'s partnership interest is still $10), *A* contributes $12,000 cash in exchange for an additional interest in *ABC. A* is allocated a loss equal to $10,000 by *ABC* for the taxable year ending December 31, 2000, thereby reducing the basis of *A*'s partnership interest to $2,010. On February 1, 2001, *ABC* makes a cash distribution to *A* of $10,000. *ABC* holds no inventory or unrealized receivables. (assume that *A* is allocated no gain or loss for the taxable year ending December 31, 2001, so that the basis of *A*'s partnership interest does not increase or decrease as a result of such allocations.)

(ii) The netting rule contained in paragraph (b)(2) of this section provides that, in determining the holding period of *A*'s interest in *ABC,* the cash contribution made on September 30, 2000, must be reduced by the distribution made on February 1, 2001. Accordingly, for purposes of determining the holding period of *A*'s interest in *ABC, A* is treated as having made a cash contribution of $2,000 ($12,000-$10,000) to *ABC* on September 30, 2000. *A*'s holding period in one-seventh of *A*'s interest in *ABC* ($2,000 cash contributed over the $14,000 value of the entire interest (determined as if only $2,000 were contributed rather than $12,000)) begins on the day after the cash contribution. *A* recognizes $7,990 of capital gain as a result of the distribution. See section 731(a)(1). One-seventh of the capital gain recognized as a result of the distribution is short-term capital gain, and six-sevenths of the capital gain is long-term capital gain. After the distribution, *A*'s basis in the interest in *PRS* is $0, and the holding period for the interest in *PRS* continues to be divided in the same proportions as before the distribution.

(9) ***Example 9.*** On June 1, 2020, GP contributes $10,000 to PRS for a partnership interest in PRS. On June 30, 2023, GP receives a 20% interest in the profits of PRS that is an Applicable Partnership Interest (API) as defined in § 1.1061-1(a). On June 30, 2025, GP sells its interest in PRS for $30,000. At the time of GP's sale of its interest, the API has a fair market value of $15,000. GP has a divided holding period in its interest in PRS; 50% of the partnership interest has a holding period beginning on June 1, 2020, and 50% has a holding period that begins on June 30, 2023.

(10) ***Example 10.*** Assume the same facts as in paragraph (f)(9) of this section (*Example 9*), except that on June 30, 2024, GP contributes an additional $5,000 cash to GP prior to GP's sale of its interest in 2025. Immediately after the contribution of the $5,000 on June 30, 2024, GP's interest in PRS has a value of $15,000, not taking into account the value of GP's profits interest in PRS. GP calculates its holding period in the portions not comprised by the profits interest and two-thirds of its holding period runs from June 1, 2020, and one-third runs from June 30, 2024. On June 30, 2025, GP sells its interest for $30,000 and the API has a fair market value of $15,000. Accordingly, on the date of disposition, one-third of GP's interest has a five year holding period from its interest received in 2020 for its $10,000 contribution, one-half of GP's interest has a two year holding period from the profits interest issued on June 30, 2023, and one-sixth of GP's interest has a one year holding period from the contribution of the $5,000.

(g) ***Applicability dates.*** This section applies to transfers of partnership interests and distributions of property from a partnership that occur on or after September 21, 2000. Paragraphs (b)(5) and (f)(9) and (10) of this section apply to taxable years beginning on or after January 19, 2021.

[T.D. 8902, 65 FR 57099, Sept. 21, 2000, as amended by T.D. 9945, 86 FR 5494, Jan. 19, 2021; T.D. 9945, 89 FR 50526, June 14, 2024]

SPECIAL RULES FOR DETERMINING CAPITAL GAINS AND LOSSES

§ 1.1231-1 Gains and losses from the sale or exchange of certain property used in the trade or business.

(a) ***In general.*** Section 1231 provides that, subject to the provisions of paragraph (e) of this section, a taxpayer's gains and losses from the disposition (including involuntary conversion) of assets described in that section as *property used in the trade or business* and from the involuntary conversion of capital assets held for more than 6 months shall be treated as long-term capital gains and losses if the total gains exceed the total losses. If the total gains do not exceed the total losses, all such gains and losses are treated as ordinary gains and losses. Therefore, if the taxpayer has no gains subject to section 1231, a recognized loss from the condemnation (or from a sale or exchange under threat of condemnation) of even a capital asset held for more than 1 year (6 months for taxable years beginning before 1977; 9 months for taxable years beginning in 1977) is an ordinary loss. Capital assets subject to section 1231 treatment include only capital assets involuntarily converted. The noncapital assets subject to section 1231 treatment are

(1) depreciable business property and business real property held for more than 1 year (6 months for taxable years beginning before 1977; 9 months for taxable years beginning in 1977) other than stock in trade and certain copyrights and artistic property and, in the case of sales and other dispositions occurring after July 25, 1969, other than a letter, memorandum, or property similar to a letter or memorandum;

(2) timber, coal, and iron ore which do not otherwise meet the requirements of section 1231 but with respect to which section 631 applies; and

(3) certain livestock and unharvested crops. See paragraph (c) of this section.

(b) ***Treatment of gains and losses.*** For the purpose of applying section 1231, a taxpayer must aggregate his recognized gains and losses from:

(1) The sale, exchange, or involuntary conversion of property used in the trade or business (as defined in section 1231(b)), and

(2) The involuntary conversion (but not sale or exchange) of capital assets held for more than 1 year (6 months for taxable years beginning before 1977; 9 months for taxable years beginning in 1977).

If the gains to which section 1231 applies exceed the losses to which the section applies, the gains and losses are treated as long-term capital gains and losses and are subject to the provisions of parts I and II (section 1201 and following), subchapter P, chapter 1 of the Code, relating to capital gains and losses. If the gains to which section 1231 applies do not exceed the losses to which the section applies, the gains and losses are treated as ordinary gains and losses. Therefore, in the latter case, a loss from the involuntary conversion of a capital asset held for more than 1 year (6 months for taxable years beginning

before 1977; 9 months for taxable years beginning in 1977) is treated as an ordinary loss and is not subject to the limitation on capital losses in section 1211. The phrase *involuntary conversion* is defined in paragraph (e) of this section.

(c) ***Transactions to which section applies.*** Section 1231 applies to recognized gains and losses from the following:

(1) The sale, exchange, or involuntary conversion of property held for more than 1 year (6 months for taxable years beginning before 1977; 9 months for taxable years beginning in 1977) and used in the taxpayer's trade or business, which is either real property or is of a character subject to the allowance for depreciation under section 167 (even though fully depreciated), and which is not:

(i) Property of a kind which would properly be includible in the inventory of the taxpayer if on hand at the close of the taxable year, or property held by the taxpayer primarily for sale to customers in the ordinary course of business;

(ii) A copyright, a literary, musical, or artistic composition, or similar property, or (in the case of sales and other dispositions occurring after July 25, 1969) a letter, memorandum, or property similar to a letter or memorandum, held by a taxpayer described in section 1221(3); or

(iii) Livestock held for draft, breeding, dairy, or sporting purposes, except to the extent included under paragraph (4) of this paragraph, or poultry.

(2) The involuntary conversion of capital assets held for more than 1 year (6 months for taxable years beginning before 1977; 9 months for taxable years beginning in 1977).

(3) The cutting or disposal of timber, or the disposal of coal or iron ore, to the extent considered arising from a sale or exchange by reason of the provisions of section 631 and the regulations thereunder.

(4) The sale, exchange, or involuntary conversion of livestock if the requirements of § 1.1231-2 are met.

(5) The sale, exchange, or involuntary conversion of unharvested crops on land which is

(i) used in the taxpayer's trade or business and held for more than 1 year (6 months for taxable years beginning before 1977; 9 months for taxable years beginning in 1977), and

(ii) sold or exchanged at the same time and to the same person. See paragraph (f) of this section.

For purposes of section 1231, the phrase *property used in the trade or business* means property described in this paragraph (other than property described in subparagraph (2) of this paragraph). Notwithstanding any of the provisions of this paragraph, section 1231(a) does not apply to gains and losses under the circumstances described in paragraph (e) (2) or (3) of this section.

(d) ***Extent to which gains and losses are taken into account.*** All gains and losses to which section 1231 applies must be taken into account in determining whether and to what extent the gains exceed the losses. For the purpose of this computation, the provisions of section 1211 limiting the deduction of capital losses do not apply, and no losses are excluded by that section. With that exception, gains are included in the computations under section 1231 only to the extent that they are taken into account in computing gross income, and losses are included only to the extent that they are taken into account in computing taxable income. The following are examples of gains and losses not included in the computations under section 1231:

(1) Losses of a personal nature which are not deductible by reason of section 165 (c) or (d), such as losses from the sale of property held for personal use;

(2) Losses which are not deductible under section 267 (relating to losses with respect to transactions between related taxpayers) or section 1091 (relating to losses from wash sales);

(3) Gain on the sale of property (to which section 1231 applies) reported for any taxable year on the installment method under section 453, except to the extent the gain is to be reported under section 453 for the taxable year; and

(4) Gains and losses which are not recognized under section 1002, such as those to which sections 1031 through 1036, relating to common nontaxable exchanges, apply.

(e) *Involuntary conversion* —

(1) ***General rule.*** For purposes of section 1231, the terms *compulsory or involuntary conversion* and *involuntary conversion* of property mean the conversion of proeprty into money or other property as a result of complete or partial destruction, theft or seizure, or an exercise of the power of requisition or condemnation, or the threat or imminence thereof. Losses upon the complete or partial destruction, theft, seizure, requisition, or condemnation of property are treated as losses upon an involuntary conversion whether or not there is a conversion of the property into other property or money and whether or not the property is uninsured, partially insured, or totally insured. For example, if a capital asset held for more than 1 year (6 months for taxable years beginning before 1977; 9 months for taxable years beginning in 1977), with an adjusted basis of $400, but not held for the production of income, is stolen, and the loss which is sustained in the taxable year 1956 is not compensated for by insurance or otherwise, section 1231 applies to the $400 loss. For certain exceptions to this subparagraph, see subparagraphs (2) and (3) of this paragraph.

(2) ***Certain uninsured losses.*** Notwithstanding the provisions of subparagraph (1) of this paragraph, losses sustained during a taxable year beginning after December 31, 1957, and before January 1, 1970, with respect to both property used in the trade or business and any capital asset held for more than 6 months and held for the production of income, which losses arise from fire, storm, shipwreck, or other casualty, or from theft, and which are not compensated for by insurance in any amount, are not losses to which section 1231(a) applies. Such losses shall not be taken into account in applying the provisions of this section.

(3) ***Exclusion of gains and losses from certain involuntary conversions.*** Notwithstanding the provisions of subparagraph (1) of this paragraph, if for any taxable year beginning after December 31, 1969, the recognized losses from the involuntary conversion as a result of fire, storm, shipwreck, or other casualty, or from theft, of any property used in the trade or business or of any capital asset held for more than 1 year (6 months for taxable years beginning before 1977; 9 months for taxable years beginning in 1977) exceed the recognized gains from the involuntary conversion of any such property as a result of fire, storm, shipwreck, or other casualty, or from theft, such gains and losses are not gains and losses to which section 1231 applies and shall not be taken into account in applying the provisions of this section. The net loss, in effect, will be treated as an ordinary loss. This subparagraph shall apply whether such property is uninsured, partially insured, or totally insured and, in the case of a capital asset held for more than 1 year (6 months for taxable years beginning before 1977; 9 months for taxable years beginning in 1977), whether the property is property used in the trade or business, property held for the production of income, or a personal asset.

(f) ***Unharvested crops.*** Section 1231 does not apply to a sale, exchange, or involuntary conversion of an unharvested crop if the taxpayer retains any right or option to reacquire the land the crop is on, directly or indirectly (other than a right customarily incident to a mortgage or other security transaction). The length of time for which the crop, as distinguished from the land, is held is immaterial. A leasehold or estate for years is not *land* for the purpose of section 1231.

(g) ***Examples.*** The provisions of this section may be illustrated by the following examples:

Example 1. A, an individual, makes his income tax return on the calendar year basis. A's recognized gains and losses for 1957 of the kind described in section 1231 are as follows:

	Gains	***Losses***
1. Gain on sale of machinery, used in the business and subject to an allowance for depreciation, held for more than 6 months	$4,000	
2. Gain reported in 1957 (under section 453) on installment sale in 1956 of factory premises used in the business (including building and land, each held for more than 6 months)	6,000	
3. Gain reported in 1957 (under section 453) on installment sale in 1957 of land held for more than 6 months, used in the business as a storage lot for trucks	2,000	
4. Gain on proceeds from requisition by Government of boat, held for more than 6 months, used in the business and subject to an allowance for depreciation	500	
5. Loss upon the destruction by fire of warehouse, held for more than 6 months and used in the business (excess of adjusted basis of warehouse over compensation by insurance, etc.)		$3,000
6. Loss upon theft of unregistered bearer bonds, held for more than 6 months		5,000
7. Loss in storm of pleasure yacht, purchased in 1950 for $1,800 and having a fair market value of $1,000 at the time of the storm		1,000
8. Total gains	12,500	___
9. Total losses		9,000
10. Excess of gains over losses	3,500	

Since the aggregate of the recognized gains ($12,500) exceeds the aggregate of the recognized losses ($9,000), such gains and losses are treated under section 1231 as gains and losses from the sale or exchange of capital assets held for more than 6 months. For any taxable year beginning after December 31, 1957, and before January 1, 1970, the $5,000 loss upon theft of bonds (item 6) would not be taken into account under section 1231. See paragraph (e)(2) of this section.

Example 2. If in example (1), A also had a loss of $4,000 from the sale under threat of condemnation of a capital asset acquired for profit and held for more than six months, then the gains ($12,500) would not exceed the losses ($9,000 plus $4,000, or $13,000). Neither the loss on that sale nor any of the other items set forth in example (1) would then be treated as gains and losses from the sale or exchanges of capital assets, but all of such items would be treated as ordinary gains and losses. Likewise, if A had no other gain or loss, the $4,000 loss would be treated as an ordinary loss.

Example 3. A's yacht, used for pleasure and acquired for that use in 1945 at a cost of $25,000, was requisitioned by the Government in 1957 for $15,000. A sustained no loss deductible under section 165(c) and since no loss with respect to the requisition is recognizable, the loss will not be included in the computations under section 1231.

Example 4. A, an individual, makes his income tax return on a calendar year basis. During 1970 trees on A's residential property which were planted in 1950 after the purchase of such property were destroyed by fire. The loss, which was in the amount of $2,000 after applying section 165(c)(3), was not compensated for by insurance or otherwise. During the same year A also recognized a $1,500 gain from insurance proceeds compensating him for the theft sustained in 1970 of a diamond brooch purchased in 1960 for personal use. A has no other gains or losses for 1970 from the involuntary conversion of property. Since the recognized losses exceed the recognized gains from the involuntary conversion for 1970 as a result of fire, storm, shipwreck, or other casualty, or from theft, of any property used in the trade or business or of any capital asset held for more than 6 months, neither the gain nor the loss is included in making the computations under section 1231.

Example 5. The facts are the same as in example (4), except that A also recognized a gain of $1,000 from insurance proceeds compensating him for the total destruction by fire of a truck, held for more than 6 months, used in A's business and subject to an allowance for depreciation. A has no other gains or losses for 1970 from the involuntary conversion of property. Since the recognized losses ($2,000) do not exceed the recognized gains ($2,500) from the involuntary conversion for 1970 as a result of fire, storm, shipwreck, or other casualty, or from theft, of any property used in the trade or business or of any capital asset held for more than 6 months, such gains and losses are included in making the computations under section 1231. Thus, if A has no other gains or losses for 1970 to which section 1231 applies, the gains and losses from these involuntary conversions are treated under section 1231 as gains and losses from the sale or exchange of capital assets held for more than 6 months.

Example 6. The facts are the same as in example (5) except that A also has the following recognized gains and losses for 1970 to which section 1231 applies:

	Gains	*Losses*
Gain on sale of machinery, used in the business and subject to an allowance for depreciation, held for more than 6 months	$4,000	
Gain reported in 1970 (under section 453) on installment sale in 1969 of factory premises used in the business (including building and land, each held for more than 6 months)	6,000	
Gain reported in 1970 (under section 453) on installment sale in 1970 of land held for more than 6 months, used in the business as a storage	$2,000	

	Gains	*Losses*
lot for trucks		
Loss upon the sale in 1970 of warehouse, used in the business and subject to an allowance for depreciation, held for more than 6 months		$5,000
Total gains	12,000	
Total losses		5,000

Since the aggregate of the recognized gains ($14,500) exceeds the aggregate of the recognized losses ($7,000), such gains and losses are treated under section 1231 as gains and losses from the sale or exchange of capital assets held for more than 6 months.

Example 7. B, an individual, makes his income tax return on the calendar year basis. During 1970 furniture used in his business and held for more than 6 months was destroyed by fire. The recognized loss, after compensation by insurance, was $2,000. During the same year B recognized a $1,000 gain upon the sale of a parcel of real estate used in his business and held for more than 6 months, and a $6,000 loss upon the sale of stock held for more than 6 months. B has no other gains or losses for 1970 from the involuntary conversion, or the sale or exchange of, property. The $6,000 loss upon the sale of stock is not a loss to which section 1231 applies since the stock is not property used in the trade or business, as defined in section 1231(b). The $2,000 loss upon the destruction of the furniture is not a loss to which section 1231 applies since the recognized losses ($2,000) exceed the recognized gains ($0) from the involuntary conversion for 1970 as a result of fire, storm, shipwreck, or other casualty, or from theft, of any property used in the trade or business or of any capital asset held for more than 6 months. Accordingly, the $1,000 gain upon the sale of real estate is considered to be gain from the sale or exchange of a capital asset held for more than 6 months since the gains ($1,000) to which section 1231 applies exceed the losses ($0) to which such section applies.

Example 8. The facts are the same as in example (7) except that B also recognized a gain of $4,000 from insurance proceeds compensating him for the total destruction by fire of a freighter, held for more than 6 months, used in B's business and subject to an allowance for depreciation. Since the recognized losses ($2,000) do not exceed the recognized gains ($4,000) from the involuntary conversion for 1970 as a result of fire, storm, shipwreck, or other casualty, or from theft, of any property used in the trade or business or of any capital asset held for more than 6 months, such gains and losses are included in making the computations under section 1231. Since the aggregate of the recognized gains to which section 1231 applies ($5,000) exceeds the aggregate of the recognized losses to which such section applies ($2,000), such gains and losses are treated under section 1231 as gains and losses from the sale or exchange of capital assets held for more than 6 months. The $6,000 loss upon the sale of stock is not taken into account in making such computation since it is not a loss to which section 1231 applies.

[T.D. 6500, 25 FR 12006, Nov. 26, 1960, as amended by T.D. 6841, 30 FR 9309, July 27, 1965; T.D. 7369, 40 FR 29841, July 16, 1975; T.D. 7728, 45 FR 72650, Nov. 3, 1980; T.D. 7829, 47 FR 38515, Sept. 1, 1982]

§ 1.1231-2 Livestock held for draft, breeding, dairy, or sporting purposes.

(a)

(1) In the case of cattle, horses, or other livestock acquired by the taxpayer after December 31, 1969, section 1231 applies to the sale, exchange, or involuntary conversion of such cattle, horses, or other livestock, regardless of age, held by the taxpayer for draft, breeding, dairy, or sporting purposes, and held by him:

(i) For 24 months or more from the date of acquisition in the case of cattle or horses, or

(ii) For 12 months or more from the date of acquisition in the case of such other livestock.

(2) In the case of livestock (including cattle or horses) acquired by the taxpayer on or before December 31, 1969, section 1231 applies to the sale, exchange, or involuntary conversion of such livestock, regardless of age, held by the taxpayer for draft, breeding, or dairy purposes, and held by him for 12 months or more from the date of acquisition.

(3) For the purposes of section 1231, the term *livestock* is given a broad, rather than a narrow, interpretation and includes cattle, hogs, horses, mules, donkeys, sheep, goats, fur-bearing animals, and other mammals. However, it does not include poultry, chickens, turkeys, pigeons, geese, other birds, fish, frogs, reptiles, etc.

(b)

(1) Whether or not livestock is held by the taxpayer for draft, breeding, dairy, or sporting purposes depends upon all of the facts and circumstances in each case. The purpose for which the animal is held is ordinarily shown by the taxpayer's actual use of the animal. However, a draft, breeding, dairy, or sporting purpose may be present if an animal is disposed of within a reasonable time after its intended use for such purpose is prevented or made undesirable by reason of accident, disease, drought, unfitness of the animal for such purpose, or a similar factual circumstance. Under certain circumstances, an animal held for ultimate sale to customers in the ordinary course of the taxpayer's trade or business may be considered as held for draft, breeding, dairy, or sporting purposes. However, an animal is not held by the taxpayer for draft, breeding, dairy, or sporting purposes merely because it is suitable for such purposes or merely because it is held by the taxpayer for sale to other persons for use by them for such purposes. Furthermore, an animal held by the taxpayer for other purposes is not considered as held for draft, breeding, dairy, or sporting purposes merely because of a negligible use of the animal for such purposes or merely because of the use of the animal for such purposes as an ordinary or necessary incident to the other purposes for which the animal is held. See paragraph (c) of this section for the rules to be used in determining when horses are held for racing purposes and, therefore, are considered as held for sporting purposes.

(2) The application of this paragraph is illustrated by the following examples:

Example 1. An animal intended by the taxpayer for use by him for breeding purposes is discovered to be sterile or unfit for the breeding purposes for which it was held, and is disposed of within a reasonable time thereafter. This animal is considered as held for breeding purposes.

Example 2. The taxpayer retires from the breeding or dairy business and sells his entire herd, including young animals which would have been used by him for breeding or dairy purposes if he had remained in business. These young animals are considered as held for breeding or dairy purposes.

The same would be true with respect to young animals which would have been used by the taxpayer for breeding or dairy purposes but which are sold by him in reduction of his breeding or dairy herd, because of, for example, drought.

Example 3. A taxpayer in the business of raising hogs for slaughter customarily breeds sows to obtain a single litter to be raised by him for sale, and sells these brood sows after obtaining the litter. Even though these brood sows are held for ultimate sale to customers in the ordinary course of the taxpayer's trade or business, they are considered as held for breeding purposes.

Example 4. A taxpayer in the business of raising horses for sale to others for use by them as draft horses uses them for draft purposes on his own farm in order to train them. This use is an ordinary or necessary incident to the purpose of selling the animals, and, accordingly, these horses are not considered as held for draft purposes.

Example 5. The taxpayer is in the business of raising registered cattle for sale to others for use by them as breeding cattle. It is the business practice of this particular taxpayer to breed the offspring of his herd which he is holding for sale to others prior to sale in order to establish their fitness for sale as registered breeding cattle. In such case, the taxpayer's breeding of such offspring is an ordinary and necessary incident to his holding them for the purpose of selling them as bred heifers or proven bulls and does not demonstrate that the taxpayer is holding them for breeding purposes. However, those cattle held by the taxpayer as additions or replacements to his own breeding herd to produce calves are considered to be held for breeding purposes, even though they may not actually have produced calves.

Example 6. A taxpayer, engaged in the business of buying cattle and fattening them for slaughter, purchased cows with calf. The calves were born while the cows were held by the taxpayer. These cows are not considered as held for breeding purposes.

(c)

(1) For purposes of paragraph (b) of this section, a horse held for racing purposes shall be considered as held for sporting purposes. Whether a horse is held for racing purposes shall be determined in accordance with the following rules:

(i) A horse which has actually been raced at a public race track shall, except in rare and unusual circumstances, be considered as held for racing purposes.

(ii) A horse which has not been raced at a public track shall be considered as held for racing purposes if it has been trained to race and other facts and circumstances in the particular case also indicate that the horse was held for this purpose. For example, assume that the taxpayer maintains a written training record on all horses he keeps in training status, which shows that a particular horse does not meet objective standards (including, but not limited to, such considerations as failure to achieve predetermined standards of performance during training, or the existence of a physical or other defect) established by the taxpayer for determining the fitness and quality of horses to be retained in his racing stable. Under such circumstances, if the taxpayer disposes of the horse within a reasonable time after he determined that it did not meet his objective standards for retention, the horse shall be considered as held for racing purposes.

(iii) A horse which has neither been raced at a public track nor trained for racing shall not, except in rare and unusual circumstances, be considered as held for racing purposes.

(2) This paragraph may be illustrated by the following examples:

Example 1. The taxpayer breeds, raises, and trains horses for the purpose of racing. Every year he culls some horses from his racing stable. In 1971, the taxpayer decided that in order to prevent his racing stable from getting too large to be effectively operated he must cull six horses from it. All six of the horses culled by the taxpayer had been raced at public tracks in 1970. Under subparagraph (1)(i) of this paragraph, all these horses are considered as held for racing purposes.

Example 2. Assume the same facts as in example (1). Assume further that the taxpayer decided to cull four more horses from his racing stable in 1971. All these horses had been trained to race but had not been raced at public tracks. The taxpayer culled these four horses because the training log which the taxpayer maintains on all the horses he trains showed these horses to be unfit to remain in his racing stable. Horse A was culled because it developed shin splints during training. Horses B and C were culled because of poor temperament. B bolted every time a rider tried to mount it, and C became extremely nervous when it was placed in the starting gate. Horse D was culled because it did not qualify for retention under one of the objective standards the taxpayer had established for determining which horses to retain since it was unable to run a specified distance in a minimum time. These four horses were disposed of within a reasonable time after the taxpayer determined that they were unfit to remain in his stable. Under subparagraph (1)(ii) of this paragraph, all these horses are considered as held for racing purposes.

[T.D. 7141, 36 FR 18792, Sept. 22, 1971]

§ 1.1232-1 Bonds and other evidences of indebtedness; scope of section.

(a) ***In general.*** Section 1232 applies to any bond, debenture, note, or certificate or other evidence of indebtedness (referred to in this section and §§ 1.1232-3 and 1.1232-3A as an obligation) which is a capital asset in the hands of the taxpayer, and which is issued by any corporation, or by any government or political subdivision thereof. In general, section 1232(a)(1) provides that the retirement of an obligation, other than certain obligations issued before January 1, 1955, is considered to be an exchange and, therefore, is usually subject to capital gain or loss treatment. In general, section 1232(a)(2)(B) provides that in the case of a gain realized on the sale or exchange of certain obligations issued at a discount after December 31, 1954, which are either corporate bonds issued on or before May 27, 1969, or government bonds, the amount of gain equal to such discount or, under certain circumstances, the amount of gain equal to a specified portion of such discount, constitutes ordinary income. In the case of certain corporate obligations issued after May 27, 1969, in general, section 1232(a)(3) provides for the inclusion as interest in gross income of a ratable portion of original issue discount for each taxable year over the life of the obligation, section 1232(a)(3)(E) provides for an increase in basis equal to the original issue discount included in gross income, and section 1232(a)(2)(A) provides that any gain realized on such an obligation held more than 1 year (6 months for taxable years beginning before 1977; 9 months for taxable years beginning in 1977) shall be considered gain from the sale or exchange of a capital asset held more than 1 year (6 months for taxable years beginning before 1977; 9 months for taxable years beginning in 1977). For the requirements for reporting original issue discount on certain obligations issued after May 27, 1969, see section 6049(a) and the regulations thereunder. Section 1232(c) treats as ordinary income a portion of any gain realized upon the disposition of coupon obligations which were acquired after August 16, 1954, and before January 1, 1958, without all coupons maturing more than 12 months after purchase attached, and coupon obligations which were acquired after December 31, 1957, without all coupons maturing after the date of purchase attached.

(b) ***Requirement that obligations be capital assets.*** In order for section 1232 to be applicable, an obligation must be a capital asset in the hands of the taxpayer. See section 1221 and the regulations thereunder. Obligations held by a dealer in securities (except as provided in section 1236) or obligations arising from the sale of inventory or personal services by the holder are not capital assets. However, obligations held by a financial institution, as defined in section 582(c) (relating to treatment of losses and gains on bonds of certain financial institutions) for investment and not primarily for sale to customers in the ordinary course of the financial institution's trade or business, are capital assets. Thus, with respect ot obligations held as capital assets by such a financial institution which are corporate obligations to which section 1232(a)(3) applies, there is ratable inclusion of original issue discount as interest in gross income under paragraph (a) of § 1.1232-3A, and gain on a sale or exchange (including retirement) may be subject to ordinary income treatment under section 582(c) and paragraph (a)(1) of § 1.1232-3.

(c) ***Face-amount certificates*** —

(1) ***In general.*** For purposes of section 1232, this section and §§ 1.1232-3 and 1.1232-3A, the term *other evidence of indebtedness* includes *face amount certificates* as defined in section 2(a)(15) and 4 of the Investment Company Act of 1940 (15 U.S.C. 80a-2 and 80a-4).

(2) ***Amounts received in taxable years beginning prior to January 1, 1964.*** Amounts received in taxable years beginning prior to January 1, 1964 under face amount certificates which were issued after December 31, 1954, are subject to the limitation on tax under section 72(e)(3). See paragraph (g) of § 1.72-11 (relating to limit on tax attributable to receipt of a lump sum received as an annuity payment). However, section 72(e)(3) does not apply to any such amounts received in taxable years beginning after December 31, 1963.

(3) ***Certificates issued after December 31, 1975.*** In the case of a face-amount certificate issued after December 31, 1975 (other than such a certificate issued pursuant to a written commitment which was binding on such date and at all times thereafter), the provisions of section 1232(a)(3) (relating to the ratable inclusion of original issue discount in gross income) shall apply. See section 1232-3A(f). For treatment of any increase in basis under section 1232(a)(3)(A) as consideration paid for purposes of computing the investment in the contract under section 72, see § 1.72-6(c)(4).

(d) ***Certain deposits in financial institutions.*** For purposes of section 1232, this section and §§ 1.1232-3 and 1.1232-3A, the term *other evidence of indebtedness* includes certificates of deposit, time deposits, bonus plans, and other deposit arrangements with banks, domestic building and loan associations, and similar financial institutions. For application of section 1232 to such deposits, see paragraph (e) of § 1.1232-3A. However, section 1232, this section, and §§ 1.1232-2 through 1.1232-4 shall not apply to such deposits made prior to January 1, 1971. For treatment of renewable certificates of deposit, see paragraph (e)(4) of § 1.1232-3A.

[T.D. 7154, 36 FR 25000, Dec. 28, 1971, as amended by T.D. 7311, 39 FR 11880, Apr. 1, 1974; T.D. 7365, 40 FR 27936, July 2, 1975; T.D. 7728, 45 FR 72650, Nov. 3, 1980; T.D. 9849, 84 FR 9237, Mar. 14, 2019]

§ 1.1232-2 [Reserved]

§ 1.1232-3 Gain upon sale or exchange of obligations issued at a discount after December 31, 1954.

(a) ***General rule; sale or exchange*** —

(1) ***Obligations issued by a corporation after May 27, 1969*** —

(i) ***General rule.*** Under section 1232(a)(2)(A), in the case of gain realized upon the sale or exchange of an obligation issued at a discount by a corporation after May 27, 1969 (other than an obligation subject to the transitional rule of subparagraph (4) of this paragraph), and held by the taxpayer for more than 1 year (6 months for taxable years beginning before 1977; 9 months for taxable years beginning in 1977):

(*a*) If at the time of original issue there was no intention to call the obligation before maturity, such gain shall be considered as long-term capital gain, or

(*b*) If at the time of original issue there was an intention to call the obligation before maturity, such gain shall be considered ordinary income to the extent it does not exceed the excess of:

(*1*) An amount equal to the entire *original issue discount,* over

(*2*) An amount equal to the entire *original issue discount* multiplied by a fraction the numerator of which is the sum of the number of complete months and any fractional part of a month elapsed since the date of original issue and the denominator of which is the number of complete months and any fractional part of a month from the date of original issue to the stated maturity date.

The balance, if any, of the gain shall be considered as long-term capital gain. The amount described in (*2*) of this subdivision (*b*) in effect reduces the amount of original issue discount to be treated as ordinary income under this subdivision (*b*) by the amounts previously includible (regardless of whether included) by all holders (computed, however, as to any holder without regard to any purchase allowance under paragraph (a)(2)(ii) of § 1.1232-3A and without regard to whether any holder purchased at a premium as defined in paragraph (d)(2) of § 1.1232-3).

(ii) ***Cross references.*** For definition of the terms *original issue discount* and *intention to call before maturity,* see paragraphs (b) (1) and (4) respectively of this section. For definition of the term *date of original issue,* see paragraph (b)(3) of this section. For computation of the number of complete months and any fractional portion of a month, see paragraph (a)(3) of § 1.1232-3A.

(iii) ***Effect of section 582(c).*** Gain shall not be considered to be long-term capital gain under subdivision (i) of this subparagraph if section 582(c) (relating to treatment of losses and gains on bonds of certain financial institutions) applies.

(2) ***Examples.*** The provisions of subparagraph (1) of this paragraph may be illustrated by the following examples:

Example 1. On January 1, 1970, A, a calendar-year taxpayer, purchases at original issue for cash of $7,600, M Corporation's 10-year, 5 percent bond which has a stated redemption price at maturity of $10,000. On January 1, 1972, A sells the bond to B, for $9,040. A has previously included $480 of the original issue discount in his gross income (see example (1) of paragraph (d) of § 1.1232-3A) and increased his basis in the bond by that amount to $8,080 (see paragraph (c) of § 1.1232-3A). Thus, if at the time of original issue there was no intention to call the bond before maturity, A's gain of $960 (amount realized, $9,040, less adjusted basis, $8,080) is considered long-term capital gain.

Example 2. (i) Assume the same facts as in example (1), except that at the time of original issue there was an intention to call the bond before maturity. The amount of the

entire gain includible by A as ordinary income under subparagraph (1)(i) of this paragraph is determined as follows:

(1) Entire original issue discount (stated redemption price at maturity, $10,000, minus issue price, $7,600)	$2,400
(2) Less: Line (1), $2,400, multiplied by months elapsed since date of original issue, 24, divided by months from such date to stated maturity date, 120	$480
(3) Maximum amount includible by A as ordinary income	$1,920

Since the amount in line (3) is greater than A's gain, $960, A's entire gain is includible as ordinary income.

(ii) On January 1, 1979, B, a calendar-year taxpayer, sells the bond to C for $10,150. Assume that B has included $120 of original issue discount in his gross income for each taxable year he held the bond (see example (2) of paragraph (d) of § 1.1232-3A) and therefore increased his basis by $840 (i.e., $120 each year × 7 years) to $9,880. B's gain is therefore $270 (amount realized, $10,150, less basis, $9,880). The amount of such gain includible by B as ordinary income under subparagraph (1)(i) of this paragraph is determined as follows:

(1) Entire original issue discount (as determined in part (i) of this example)	$2,400
(2) Less: Line (1), $2,400, multiplied by months elapsed since date of original issue, 108, divided by months from such date to stated maturity date, 120	$2,160
(3) Maximum amount includible by B as ordinary income	$240

Since the amount in line (3) is less than B's gain, $270, only $240 of B's gain is includible as ordinary income. The remaining portion of B's gain, $30, is considered long-term capital gain.

(3) ***Obligations issued by a corporation on or before May 27, 1969, and government obligations.*** Under section 1232(a)(2)(B), if gain is realized on the sale or exchange after December 31, 1957, of an obligation held by the taxpayer more than 6 months, and if the obligation either was issued at a discount after December 31, 1954, and on or before May 27, 1969, by a corporation or was issued at a discount after December 31, 1954, by or on behalf of the United States or a foreign country, or a political subdivision of either, then such gain shall be considered ordinary income to the extent it does not exceed:

(i) An amount equal to the entire *original issue discount,* or

(ii) If at the time of original issue there was no intention to call the obligation before maturity, a portion of the *original issue discount* determined in accordance with paragraph (c) of this section,

And the balance, if any, of the gain shall be considered as long-term capital gain. For the definition of the terms *original issue discount* and *intention to call before maturity,* see paragraphs (b) (1) and (4) respectively of this section. See section 1037(b) and paragraph (b) of § 1.1037-1 for special rules which are applicable in applying section 1232(a)(2)(B) and this subparagraph to gain realized on the disposition or redemption of obligations of the United States which were received from the United States in an exchange upon which gain or loss is not recognized because of section 1037(a) (or so much of section 1031 (b) or (c) as relates to section 1037(a)).

(4) ***Transitional rule.*** Subparagraph (3) of this paragraph (in lieu of subparagraph (1) of this paragraph) shall apply to an obligation issued by a corporation pursuant to a written commitment which was binding on May 27, 1969, and at all times thereafter.

(5) ***Obligations issued after December 31, 1954, and sold or exchanged before January 1, 1958.*** Gain realized upon the sale or exchange before January 1, 1958, of an obligation issued at a discount after December 31, 1954, and held by the taxpayer for more than 6 months, shall be considered ordinary income to the extent it equals a specified portion of the *original issue discount,* and the balance, if any, of the gain shall be considered as long-term capital gain. The term *original issue discount* is defined in paragraph (b)(1) of this section. The computation of the amount of gain which constitutes ordinary income is illustrated in paragraph (c) of this section.

(6) ***Obligations issued before January 1, 1955.*** Whether gain representing original issue discount realized upon the sale or exchange of obligations issued at a discount before January 1, 1955, is capital gain or ordinary income shall be determined without reference to section 1232.

(b) ***Definitions*** —

(1) ***Original issue discount*** —

(i) ***In general.*** For purposes of section 1232, the term *original issue discount* means the difference between the issue price and the stated redemption price at maturity. The stated redemption price is determined without regard to optional call dates.

(ii) ***De minimis rule.*** If the original issue discount is less than one-fourth of 1 percent of the stated redemption price at maturity multiplied by the number of full years from the date of original issue to maturity, then the discount shall be considered to be zero. For example, a 10-year bond with a stated redemption price at maturity of $100 issued at $98 would be regarded as having an original issue discount of zero. Thus, any gain realized by the holder would be a long-term capital gain if the bond was a capital asset in the hands of the holder and held by him for more than 1 year (6 months for taxable years beginning before 1977; 9 months for taxable years beginning in 1977). However, if the bond were issued at $97.50 or less, the original issue discount would not be considered zero.

(iii) ***Stated redemption price at maturity*** —

(*a*) Definition. Except as otherwise provided in this subdivision (iii), the term *stated redemption price at maturity* means the amount fixed by the last modification of the purchase agreement, including dividends, interest, and any other amounts, however designated,

payable at that time. If any amount based on a fixed rate of simple or compound interest is actually payable or will be treated as constructively received under section 451 and the regulations thereunder either:

(*1*) At fixed periodic intervals of one year or less during the entire term of an obligation, or

(*2*) except as provided in subdivision (*e*) of this paragraph (b)(1)(iii), at maturity in the case of an obligation with a term of one year or less, any such amount payable at maturity shall not be included in determining the stated redemption price at maturity. For purposes of subdivision (*a*)(*2*) of this paragraph (b)(1)(iii), the term of an obligation shall include any renewal period with respect to which, under the terms of the obligation, the holder may either take action or refrain from taking action which would prevent the actual or constructive receipt of any interest on such obligation until the expiration of any such renewal period. To illustrate this paragraph (b)(1)(iii), assume that a note which promises to pay $1,000 at the end of three years provides for additional amounts labeled as interest to be paid at the rate of $50 at the end of the first year, $50 at the end of the second year, and $120 at the end of the third year. The stated redemption price at maturity will be $1,070 since only $50 of the $120 payable at the end of the third year is based on a fixed rate of simple or compound interest. If, however, the $120 were payable at the end of the second year, so that only $50 in addition to principal would be payable at the end of the third year, then under the rule for serial obligations contained in subparagraph (2)(iv)(*c*) of this paragraph, the $1,000 note is treated as consisting of two series. The first series is treated as maturing at the end of the second year at a stated redemption price of $70. The second series is treated as maturing at the end of the third year at a stated redemption price of $1,000. For the calculation of issue price and the allocation of original issue discount with respect to each such series, see example (3) of subparagraph (2)(iv)(*f*) of this paragraph.

(*b*) ***Special rules.*** In the case of face -amount certificates, the redemption price at maturity is the price as modified through changes such as extensions of the purchase agreement and includes any dividends which are payable at maturity. In the case of an obligation issued as part of an investment unit consisting of such obligation and an option (which is not excluded by (*c*) of this subdivision (iii)), security, or other property, the term *stated redemption price at maturity* means the amount payable on maturity in respect of the obligation, and does not include any amount payable in respect of the option, security, or other property under a repurchase agreement or option to buy or sell the option, security, or other property. For application of this subdivision to certain deposits in financial institutions, see paragraph (e) of § 1.1232-3A.

(*c*) ***Excluded option.*** An option is excluded by this subdivision (c) if it is an option to which paragraph (a) of § 1.61-15 applies or if it is an option, referred to in paragraph (a) of § 1.83-7, granted in connection with performance of services to which section 421 does not apply.

(*d*) ***Obligation issued in installments.*** If an obligation is issued by a corporation under terms whereby the holder makes installment payments, then the stated redemption price for each installment payment shall be computed in a manner consistent with the rules

contained in subparagraph (2)(iv) of this paragraph for computing the issue price for each series of a serial obligation. For application of this subdivision (*d*) to certain open account deposit arrangements, see examples (1) and (2) of paragraph (e)(5)(ii) of § 1.1232-3A.

(*e*) ***Application of definition.*** Subdivision (*a*)(*2*) of this paragraph (b)(1)(iii) shall not apply:

(*1*) For taxable years beginning before September 19, 1979, if for the issuer's last taxable year beginning before September 19, 1978, the rules of § 1.163-4 were properly applied by the issuer, or

(*2*) In the case of an obligation with a term of six months or less held by a nonresident alien individual or foreign corporation, but only for purposes of the appliction of sections 871 and 881.

(iv) ***Carryover of original issue discount.*** If in pursuance of a plan of reorganization an obligation is received in an exchange for another obligation, and if gain or loss is not recognized in whole or in part on such exchange of obligations by reason, for example, of section 354 or 356, then the obligation received shall be considered to have the same original issue discount as the obligation surrendered reduced by the amount of gain (if any) recognized as ordinary income upon such exchange of obligations, and by the amount of original issue discount with respect to the obligation surrendered which was included as interest income under the ratable inclusion rules of sections 1232(a)(3) and 1.1232-3A. If inclusion as interest of the ratable monthly portion of original issue discount is required under section 1232(a)(3) with respect to the obligation received, see paragraph (a)(2)(iii) of § 1.1232-3A for computation of the ratable monthly portion of original issue discount. For special rules in connection with certain exchanges of U.S. obligations, see section 1037.

(2) ***Issue price defined*** —

(i) ***In general.*** The term *issue price* in the case of obligations registered with the Securities and Exchange Commission means the initial offering price to the public at which price a substantial amount of such obligations were sold. For this purpose, the term *the public* does not include bond houses and brokers, or similar persons or organizations acting in the capacity of underwriters or wholesalers. Ordinarily, the issue price will be the first price at which the obligations were sold to the public, and the issue price will not change if, due to market developments, part of the issue must be sold at a different price. When obligations are privately placed, the issue price of each obligation is the price paid by the first buyer of the particular obligation, irrespective of the issue price of the remainder of the issue. In the case of an obligation issued by a foreign obligor, the issue price shall be increased by the amount, if any, of interest equalization tax paid under section 4911 (and not credited, refunded, or reimbursed) on the acquisition of the obligation by the first buyer. In the case of an obligation which is convertible into stock or another obligation, the issue price includes any amount paid in respect of the conversion privilege. However, in the case of an obligation issued as part of an investment unit (as defined in subdivision (ii)(*a*) of this subparagraph), the issue price of the obligation includes only that portion of the initial offering price or price paid by the first buyer properly allocable to the obligation under the rules prescribed in subdivision (ii) of this subparagraph. The terms *initial offering price* and *price paid by the first buyer* include the aggregate payments made by the purchaser under the purchase agreement, including modifications thereof. Thus, all amounts paid by the purchaser under the purchase agreement or a modification of it are included in the issue price (but in the case of an obligation issued as part of an investment unit, only to the extent allocable to such obligation under subdivision (ii)

of this subparagraph), such as amounts paid upon face-amount certificates or installment trust certificates in which the purchaser contracts to make a series of payments which will be returnable to the holder with an increment at a later date.

(ii) ***Investment units consisting of obligations and property—***

(a) ***In general.*** An investment unit, within the meaning of this subdivision (ii) and for purposes of section 1232, consists of an obligation and an option, security, or other property. For purposes of this subparagraph, the initial offering price of an investment unit shall be allocated to the individual elements of the unit on the basis of their respective fair market values. However, if the fair market value of the option, security, or other property is not readily ascertainable (within the meaning of paragraph (c) of § 1.421-6), then the portion of the initial offering price or price paid by the first buyer of the unit which is allocable to the obligation issued as part of such unit shall be ascertained as of the time of acquisition of such unit by reference to the assumed price at which such obligation would have been issued had it been issued apart from such unit. The assumed price of the obligation shall be ascertained by comparison to the yields at which obligations of a similar character which are not issued as part of an investment unit are sold in arm's length transactions, and by adjusting the price of the obligation in question to this yield. The adjustment may be made by subtracting from the face amount of the obligation the total present value of the interest foregone by the purchaser as a result of purchasing the obligation at a lower yield as part of an investment unit. In most cases, assumed price may also be determined in a similar manner through the use of standard bond tables. Any reasonable method may be used in selecting an obligation for comparative purposes. Obligations of the same grade and classification shall be used to the extent possible, and proper regard shall be given, with respect to both the obligation in question and the comparative obligation, to the solvency of the issuer, the nature of the issuer's trade or business, the presence and nature of security for the obligation, the geographic area in which the loan is made, and all other factors relevant to the circumstances. An obligation which is convertible into stock or another obligation must not be used as a comparative obligation (except where the investment unit contains an obligation convertible into stock or another obligation), since such an obligation would not reflect the yield attributable solely to the obligation element of the investment unit.

(*b*) ***Agreement as to assumed price.*** In the case of an investment unit which is privately placed, the assumed price at which the obligation would have been issued had it been issued apart from such unit may be agreed to by the issuer and the original purchaser of the investment unit in writing on or before the date of purchase. Alternatively, an agreement between the issuer and original purchaser may specify the rate of interest which would have been paid on the obligation if the transaction were one not involving the issuance of options, and an assumed issue price may be determined (in the manner described in (*a*) of this subdivision) from such agreed assumed rate of interest. An assumed price based upon such an agreement between the parties will generally be presumed to be the issue price of the obligation with respect to the issuer, original purchaser, and all subsequent holders: *Provided,* That the agreement was made in arm's length negotiations between parties having adverse interests: *And, provided further,* That such price does not, under the rules stated in (*a*) of this subdivision, appear to be clearly erroneous. An assumed issue price agreed to by the parties as provided herein will not be considered clearly erroneous if it is not less than the face value adjusted (in the manner described in (*a*) of this

subdivision) to a yield which is one percentage point greater than the actual rate of interest payable on the obligation. Similarly, if the agreement between the parties specifies an agreed assumed rate of interest (in lieu of an agreed assumed issue price) and such agreed rate is not more than 1 percentage point greater than the actual rate payable on the obligation, an adjusted issue price based upon such agreed assumed rate of interest will not be considered clearly erroneous.

(*c*) ***Cross references.*** For rules relating to the deductibility by the issuing corporation of bond discount resulting from an allocation under the rule stated in (*a*) of this subdivision, see §§ 1.163-3 and 1.163-4. For rules relating to the basis of obligations and options, securities, or other property acquired in investment units, see § 1.1012-1(d). For rules relating to certain reporting requirements with respect to options acquired in connection with evidences of indebtedness and for the tax treatment of such options, see § 1.61-15, and section 1234 and the regulations thereunder. With respect to the tax consequences to the issuing corporation upon the exercise of options issued in connection with evidences of indebtedness to which this section applies, see section 1032 and the regulations thereunder.

(*d*) ***Examples.*** The application of the principles set forth in this subdivision (ii) may be illustrated by the following examples in each of which it is assumed that there was no intention to call the note before maturity:

Example 1. M Corporation is a small manufacturer of electronic components located in the southwestern United States. On January 1, 1969, in consideration for the payment of $41,500, M issues to X its unsecured note for $40,000 together with warrants to purchase 3,000 shares of M stock at $10 per share at any time during the term of the note. The note is payable in 4 years and provides for interest at the rate of 5 percent per year, payable semiannually. The fair market values of the note and the warrants are not readily ascertainable. Assume that companies in the same industry as M Corporation, and similarly situated both financially and geographically, are generally able to borrow money on their unsecured notes at an annual interest rate of 6 percent. Using a present value table, the calculation of the issue price of a 5 percent, 4 year, $40,000 note, discounted to yield 6 percent compounded semiannually is made as follows:

(1)	(2)	(3)	(2) × (3)
Semiannual interest period	**Amount payable at 5 percent**	**Factor for present value discounted at 3 percent per period**	**Present value of payment**
1	$1,000	0.9709	$970.90
2	1,000	.9426	942.60
3	1,000	.9151	915.10

(1)	(2)	(3)	(2) × (3)
Semiannual interest period	**Amount payable at 5 percent**	**Factor for present value discounted at 3 percent per period**	**Present value of payment**
4	1,000	.8885	888.50
5	1,000	.8626	862.60
6	1,000	.8375	837.50
7	1,000	.8131	813.10
8	1,000	.7894	789.40
8	40,000	.7804	31,576.00
Total present value of note discounted at 6 percent, compounded semiannually			38,595.70

The same result may be reached through the use of a standard bond table or by the following present value calculation:

Present value of annuity of $1,000 payable over 8 periods at 3 percent per period = 1000 × 7.0197 =	$7,019.70
Add: Present value of principal (as calculated above)	31,576.00
Total	$38,595.70

Accordingly, the assumed price at which M's note would have been issued had it been issued without stock purchase warrants, i.e., that portion of the $41,500 price paid by X which is allocable to M's note, is $38,596 (rounded). Since the price payable on redemption of M's note at maturity is $40,000, the original issue discount on M's note is $1,404 ($40,000 minus $38,596). Under the rules stated in § 1.163-3, M is entitled to a deduction, to be prorated or amortized over the life of the note, equal to this original issue discount on the note. The excess of the price for the unit over the portion of such price allocable to the note, $2,904 ($41,500 minus $38,596), is allocable to and is the basis of the stock purchase warrants acquired by X in connection with M's note. Upon the exercise of X's warrants, M will be allowed no deduction and will have no income. Upon maturity of the note X will receive $40,000 from M, of which $1,404, the amount of the original issue discount, will be taxable as ordinary income. If X were to transfer the note at its face amount to A 2 years after the issue date, X would realize, under section 1232(a)(2)(B), ordinary income of $702 (one-half of $1,404).

Example 2. (1) On January 1, 1969, N Corporation negotiates with Y, a small business investment company, for a loan in the amount of $51,500 in consideration of which N Corporation issues to Y its unsecured 5-year note for $50,000, together with warrants to purchase 2,000 shares of N stock at $5 per share at any time during the term of the note. The note provides for interest of 6 percent, payable semiannually. The fair market values of the note and warrants are not readily ascertainable. The loan agreement between Y and N contains a provision, agreed to in arms-length bargaining between the parties, that a rate of 7 percent payable semiannually would have been applied to the loan if warrants were not issued as part of the consideration for the loan. The issue price of the note is $47,921 (rounded), determined with the use of a standard bond table, or computed in the manner illustrated in Example 1 or in the following alternative manner:

(1)	(2)	(3)	(4)	(5)	(4) × (5)
Interest period	**Interest rate differential**	**Principal**	**Interest foregone for period ($^1/_2$%)**	**Factor for present value discounted at $3^1/_2$ percent per period**	**Present value of interest foregone**
1	1%(7%-6%)	$50,000	250	0.9662	$241.53
2	1%	50,000	250	.9335	233.38
3	1%	50,000	250	.9019	225.48
4	1%	50,000	250	.8714	217.85
5	1%	50,000	250	.8420	210.50
6	1%	50,000	250	.8135	203.38
7	1%	50,000	250	.7860	196.50
8	1%	50,000	250	.7594	189.85
9	1%	50,000	250	.7337	183.43
10	1%	50,000	250	.7089	177.25
Total present value of interest foregone					$2,079.15
Principal					50,000.00
Less: Total present value of interest foregone					2,079.15
Issue price					47,920.85

The calculation of present value of interest foregone may also be made as follows: Present value of annuity of $250 discounted for 10 periods at $3^1/_2$ percent per period = $250 × 8.3166 = $2,079.15.

The total present value of interest foregone, $2,079, is also the original issue discount attributable to the note ($50,000 −$47,921). Under (*b*) of this subdivision, since the agreed assumed rate of interest of 7 percent is not more than 1 percentage point greater than the actual rate payable on the note, determination of the issue price of the note (and original issue discount) based upon such assumed rate will be presumed to be correct and will not be considered clearly erroneous, provided that both N and Y adhere to such determination. Under the rules in § 1.163-3, N is entitled to a deduction, to be prorated or amortized over the life of the note, equal to the original issue discount on the note. The excess of the price paid for the unit over the portion of such price allocable to the note, $3,579 ($51,500−$47,921) is allocable to and is the basis of the stock purchase warrants acquired by Y in connection with N's note. Upon the exercise or sale of the warrants by Y, N will be allowed no deduction and will have no income. Upon maturity of the note Y will receive $50,000 from N, of which $2,079, the amount of the original issue discount, will be taxable as ordinary income. If Y were to transfer the note at its face value to B $2^1/_2$ years after the issue date, Y would realize, under section 1232(a)(2)(B), ordinary income of $1,039.50 (one-half of $2,079).

(2) Assume that instead of the parties agreeing on an assumed interest rate at which the obligation would have been issued without the warrants, the parties agreed that the obligation at the actual 6 percent rate would have been issued without the warrants at a discounted price of $48,000. In this situation the agreed assumed issue price is presumed to be correct since it is not less than the face value adjusted (in the manner illustrated in part (*1*) of this example) to a yield which is one percentage point greater than the actual rate of interest payable on the obligation ($47,921).

Example 3. O Corporation is a small advertising company located in the northeastern United States. Z is a tax-exempt organization. In consideration for the payment of $60,000, O issues to Z, in a transaction not within the scope of section 503(b), its unsecured 5-year note for $60,000, together with warrants to purchase 6,000 shares of O stock at $10 per share at any time during the term of the note. The note is subject to quarterly amortization at the rate of $3,000 per quarter, and provides for interest on the outstanding unpaid balance at an annual rate of 6 percent payable quarterly ($1^1/_2$ percent per quarter). The fair market values of the notes and warrants are not readily ascertainable. The loan agreement between O and Z contains a recital that if the $60,000 note had been issued without the warrants only $45,000 would have been paid for it. An examination of relevant facts indicates that companies in the same industry as O Corporation, and similarly situated both financially and geographically, are able to borrow money on their

unsecured notes at an annual interest cost of $8^1/_2$ percent payable quarterly ($2^1/_8$ percent per quarter). By reference to a present value table, it is found that the present value of O's note discounted to yield $8^1/_2$ percent compounded quarterly is $56,608 (rounded). The computation is as follows:

(1)	(2)	(3)	(4)	(5)	(6)
Quarterly interest period	**Principal payable**	**Interest payable ($1^1/_2$ percent)**	**Total amount payable (2) + (3)**	**Factor for present value discounted at $2^1/_8$ percent per quarter**	**Present value of total payment (4) × (5)**
1	$3,000	$900	$3,900	0.9792	$3,818.88
2	3,000	855	3,855	.9588	3,696.17
3	3,000	810	3,810	.9389	3,577.21
4	3,000	765	3,765	.9193	3,461.16
5	3,000	720	3,720	.9002	3,348.74
6	3,000	675	3,675	.8815	3,239.51
7	3,000	630	3,630	.8631	3,133.05
8	3,000	585	3,585	.8452	3,030.04
9	3,000	540	3,540	.8276	2,929.70
10	3,000	495	3,495	.8104	2,832.35
11	3,000	450	3,450	.7935	2,737.58
12	3,000	405	3,405	.7770	2,645.69
13	3,000	360	3,360	.7608	2,556.29
14	3,000	315	3,315	.7450	2,469.68
15	3,000	270	3,270	.7295	2,385.47
16	3,000	225	3,225	.7143	2,303.62
17	3,000	180	3,180	.6994	2,224.09
18	3,000	135	3,135	.6849	2,147.16
19	3,000	90	3,090	.6706	2,072.15
20	3,000	45	3,045	.6567	1,999.65
Total					56,608.19

This amount ($56,608) is the assumed price at which the note would have been issued had it been issued without stock purchase warrants. The assumed price of $45,000 agreed to by the parties is not presumed to be correct since it is less than the face value adjusted to a yield which is one percentage point greater than the actual rate of interest payable on the obligation. The parties did not have adverse interests in agreeing upon an assumed price (since an excessively large amount of

original issue discount would benefit O, the borrower, without adversely affecting Z, an exempt organization which would pay no tax on original issue discount income), and the price agreed to appears to be clearly erroneous when compared to the $56,608 assumed issue price determined under the principles of (*a*) of this subdivision. Since the maturity value of O's note is $60,000, the original issue discount on O's note is $3,392 ($60,000 minus $56,608). Under the rules in § 1.163-3, O is entitled to a deduction, to be prorated or amortized over the life of the note, equal to this original issue discount on the note. The excess of the price paid for the unit over the portion of such price allocable to the note, $3,392 ($60,000 minus $56,608), is allocable to and is the basis of the stock purchase warrants acquired by Z in connection with O's note. Upon the exercise or sale of the warrants by Z, O will be allowed no deduction and will have no income.

(iii) ***Issuance for property after May 27, 1969*** —

(*a*) ***In general.*** Except as provided in (*b*) of this subdivision, if an obligation or an investment unit is issued for property other than money, the issue price of such obligation shall be the stated redemption price at maturity and, therefore, no original issue discount is created as a result of the exchange. However, in such case, there may be an amount treated as interest under section 483. In the case of certain exchanges of obligations of the United States for other such obligations, see section 1037 for the determination of the amount of original issue discount on the obligation acquired in the exchange. For carryover of original issue discount in the case of certain exchanges of obligations, see subparagraph (1)(iv) of this paragraph.

(*b*) ***Exceptions for original issue discount.*** If an obligation or investment unit is issued for property in an exchange which is not pursuant to a plan of reorganization referred to in (*d*) of this subdivision, and if:

(*1*) The obligation, investment unit, or an element of the investment unit is part of an issue a portion of which is traded on an established securities market, or

(*2*) The property for which such obligation or investment unit is issued is stock or securities which are traded on an established securities market

then the issue price of the obligation or investment unit shall be the fair market value of the property for which such obligation or investment unit is issued, as determined under (*c*) of this subdivision. Such issue price shall control for purposes of determining the amount realized by the person exchanging the property for the obligation or unit issued and the bases of the property acquired by the holder and issuer.

An obligation which is not traded on an established securities market and which is not part of an issue or investment unit a portion of which is so traded shall not be treated as property described in (*1*) of this (*b*) even though the obligation is convertible into property so traded. For purposes of this (*b*), an obligation, investment unit, or element of an investment unit shall be treated as traded on an established securities market if it is so traded on or within 10 *trading* days after the date it is issued. *Trading* days shall mean those days on which an established securities market is open. For purposes of this

subdivision (iii), the term *established securities market* shall have the same meaning as in paragraph (d)(4) of § 1.453-3 (relating to limitations on installment method for purchaser evidences of indebtedness payable on demand or readily tradable).

(*c*) ***Determination of fair market value in cases to which (b) of this subdivision applies.*** In general, for purposes of (*b*) of this subdivision, the fair market value of property for which an obligation or investment unit is issued shall be deemed to be the same as the fair market value of such obligation or investment unit, determined by reference to the fair market value of that portion of the issue, of which such obligation or unit is a part, which is traded on an established securities market. The fair market value of such obligation or unit shall be determined as of the first date after the date of issue (within the meaning of section 1232(b)(3)) that such obligation or unit is traded on an established securities market. If, however, the obligation or investment unit is not part of an issue a portion of which is traded on an established securities market, but the property for which the obligation or investment unit is issued is stock or securities which are traded on an established securities market, the fair market value of such property shall be the fair market value of such stock or securities on the date such obligation or unit is issued for such property. The fair market value of property for purposes of this (*c*) shall be determined as provided in § 20.2031-2 of this chapter (Estate Tax Regulations) but without applying the blockage and other special rules contained in paragraph (e) thereof.

(*d*) ***Not in reorganization.*** An exchange which is not pursuant to a reorganization referred to in this subdivision (*d*) is an exchange in which the obligation or investment unit is not issued pursuant to a plan of reorganization within the meaning of section 368(a)(1) or pursuant to an insolvency reorganization within the meaning of section 371, 373, or 374. Thus, for example, no original issue discount is created on an obligation issued in a recapitalization within the meaning of section 368(a)(1)(E). Similarly, no original issue discount is created on an obligation issued in an exchange, pursuant to a plan of reorganization, to which section 361 applies regardless of the income tax consequences to any person who pursuant to such plan is the ultimate recipient of the obligation. The application of section 351 shall not preclude the creation of original issue discount. For carryover of original issue discount in the case of an exchange of obligations pursuant to a plan of reorganization, see subparagraph (1)(iv) of this paragraph.

(*e*) ***Effective date.*** Determinations with respect to obligations issued on or before May 27, 1969, or pursuant to a written commitment which was binding on that date and at all times thereafter, shall be made without regard to this subdivision (iii).

(iv) ***Serial obligations—***

(a) ***In general.*** If an issue of obligations which matures serially is issued by a corporation, and if on the basis of the facts and circumstances in such case an independent issue price for each particular maturity can be established, then the obligations with each particular maturity shall be considered a separate series, and the obligations of each such series shall be treated as a separate issue with a separate issue price, maturity date, and stated redemption price at maturity. The ratable monthly portion of original issue discount attributable to each obligation within a particular series shall be determined and ratably included as interest in gross income under the rules of § 1.1232-3A.

(*b*) ***Issue price not independently established.*** If a separate issue price cannot be established with respect to each series of an issue of obligations which matures serially, the issue price for each obligation of each series shall be its stated redemption price at maturity minus the amount of original issue discount allocated thereto in accordance with (*d*) of this subdivision. The amount of original issue discount so allocated shall be ratably included as interest in gross income under rules of § 1.1232-3A.

(*c*) ***Single obligation rule.*** If a single corporate obligation provides for payments (other than payments which would not be included in the stated redemption price at maturity under subparagraph (1)(iii) of this paragraph) in two or more installments, the provisions of (*b*) of this subdivision shall be applied by treating such obligation as an issue of obligations consisting of more than one series each of which matures on the due date of each such installment payment.

(*d*) ***Allocation of discount.*** For purposes of (*b*) and (*c*) of this subdivision, the original issue discount with respect to each series of an issue shall be the total original issue discount for the issue multiplied by a fraction:

(*1*) The numerator of which is the product of

(*i*) the stated redemption price of such series and

(*ii*) the number of complete years (and any fraction thereof) constituting the period for such series from the date of original issue (as defined in paragraph (b)(3) of this section) to its stated maturity date, and

(*2*) The denominator of which is the sum of the products determined in (*1*) of this subdivision (*d*) with respect to each such series.

If a series consists of more than one obligation, the original issue discount allocated to such series shall be apportioned to such obligations in proportion to the stated redemption price of each. Computations under this subdivision (*d*) may be made using periods other than years, such as, for example, months or periods of 3 months.

(*e*) ***Effective date.*** The provisions of this subdivision (iv) shall apply with respect to corporate obligations issued after July 22, 1971. However, no inference shall be drawn from the preceding sentence with respect to serial obligations issued prior to such date.

(*f*) ***Examples.*** The provisions of this subdivision (iv) may be illustrated by the following examples:

> *Example 1.* On January 1, 1972, P Corporation issued a note with a total face value of $100,000 to B for cash of $94,000. The terms of the note provide that $50,000 is payable on December 31, 1973, and the other $50,000 on December 31, 1975. Each payment is treated as the stated redemption price of a series, and the total original issue discount with respect to the note, $6,000, is allocated to each such series as

follows:

Year of maturity	1973	1975	Total
(1) Stated redemption price	$50,000	$50,000	
(2) Multiply by years outstanding	2	4	
(3) Product of bond years	$100,000	$200,000	
(4) Sum of products			$300,000
(5) Fractional portion of discount	$100,000	$200,000	
	$300,000	$300,000	
(6) Multiply line (5) by discount for entire issue	$6,000	$6,000	
(7) Discount for each series	$2,000	$4,000	
(8) Issue price (line (1), minus line (7))	$48,000	$46,000	

Example 2. Assume the same facts as in example (1) except that a separate note is issued for each payment. The result is the same as in example (1).

Example 3. On January 1, 1971, Y Bank, a corporation, issues a note to C for $1,000 cash. The terms of the note provide that $50 will be paid at the end of the first year, $120 at the end of the second year, and $1,050 at the end of the third year. Under (*c*) of this subdivision (iv), the $1,000 note is treated as consisting of two series, the first of which matures at the end of the second year, and the second of which matures at the end of the third year. The issue price and the allocation of original issue discount with respect to each series is computed as follows:

Year of maturity	1972	1973	Total
(1) Stated redemption price	$70	$1,000	
(2) Multiply by years outstanding	2	3	
(3) Product of bond years	$140	$3,000	
(4) Sum of products			$3,140
(5) Fractional portion of discount	$140	$3,000	
	$3,140	$3,140	
(6) Multiply line (5) by discount for entire issue	$70	$70	
(7) Discount for each series	$3.12	$66.88	

Year of maturity	1972	1973	Total
(8) Issue price (line 1 minus line (7))	$66.88	$933.12	

(3) ***Date of original issue.*** In the case of issues of obligations which are registered with the Securities and Exchange Commission, the term *date of original issue* means the date on which the issue was first sold to the public at the issue price. In the case of issues which are privately placed, the term *date of original issue* means the date on which each obligation was sold to the original purchaser.

(4) ***Intention to call before maturity*** —

(i) ***Meaning of term.*** For purposes of section 1232, the term *intention to call the bond or other evidence of indebtedness before maturity* means an understanding between

(*a*) the issuing corporation (such corporation is hereinafter referred to as the *issuer*), and

(*b*) the original purchaser of such obligation (or, in the case of obligations constituting part of an issue, any of the original purchasers of such obligations) that the issuer will redeem the obligation before maturity. For purposes of this subparagraph, the term *original purchaser* does not include persons or organizations acting in the capacity of underwriters or dealers, who purchased the obligation for resale in the ordinary course of their trade or business. It is not necessary that the issuer's intention to call the obligation before maturity be communicated directly to the original purchaser by the issuer. The understanding to call before maturity need not be unconditional; it may, for example, be dependent upon the financial condition of the issuer on the proposed early call date.

(ii) ***Proof of intent*** —

(*a*) ***In general.*** Ordinarily, the existence or non-existance of an understanding at the time of original issue that the obligation will be redeemed before maturity shall be determined by an examination of all of the circumstances under which the obligation was issued and held. The fact that the obligation is issued with provisions on its face giving the issuer the privilege of redeeming the obligation before maturity is not determinative of an intention to call before maturity; likewise, the absence of such provision is not determinative of the absence of an intention to call before maturity. However, such provision, or the absence of such provision, is one of the circumstances to be given consideration along with other factors in determining whether an understanding existed. If the obligation was part of an issue registered with the Securities and Exchange Commission and was sold to the public (whether or not sold directly to the public by the obligor) without representation to the public that the obligor intends to call the obligation before maturity, there shall be a presumption that no intention to call the obligation before maturity was in existence at the time of original issue. The existence of a provision on the face of an obligation giving the issuer the privilege of redeeming the obligation before maturity shall not in and of itself overcome the presumption set forth in the preceding sentence.

(*b*) ***Circumstances indicating absence of understanding.*** Examples of circumstances which would be evidence that there was no understanding at the time of original issue to redeem the obligation before maturity are:

(*1*) The issue price and term of the obligation appear to be reasonable, taking into account the interest rate, if any, on the obligation, for a corporation in the financial condition of the issuer at the time of issue.

(*2*) The original purchaser and the issuer are not related within the meaning of section 267(b) and have not engaged in transactions with each other (other than concerning the obligation).

(*3*) The original purchaser is not related within the meaning of section 267(b) to any of the officers or directors of the issuer, and he has not engaged in transactions with such officers or directors (other than concerning the obligation).

(*4*) The officers and directors of the issuer at the time of issue of the obligation are different from those in control at the time the obligation is called or the taxpayer disposes of it.

(*c*) ***Gain treated as ordinary income in certain cases; computation.*** The amount of gain treated as ordinary income under paragraph (a) (3)(ii) or (5) of this section is computed by multiplying the original issue discount by a fraction, the numerator of which is the number of full months the obligation was held by the holder and the denominator of which is the number of full months from the date of original issue to the date specified as the redemption date at maturity. (See paragraph (b)(3) of this section for definition of *date of original issue.*) The period that the obligation was held by the taxpayer shall include any period that it was held by another person if, under chapter 1 of the Code, for the purpose of determining gain or loss from a sale or exchange, the obligation has the same basis, in whole or in part, in the hands of the taxpayer as it would have in the hands of such other person. This computation is illustrated by the following examples:

Example 1. An individual purchases a 10-year, 3-percent coupon bond for $900 on original issue on February 1, 1955, and sells it on February 20, 1960, for $940. The redemption price is $1,000. At the time of original issue, there was no intention to call the bond before maturity. The bond has been held by the taxpayer for 60 full months. (The additional days amounting to less than a full month are not taken into account.) The number of complete months from date of issue to date of maturity is 120 (10 years). The fraction $^{60}/_{120}$ multiplied by the discount of $100 is equal to $50, which represents the proportionate part of the original issue discount attributable to the period of ownership by the taxpayer. Accordingly, any part of the gain up to $50 will be treated as ordinary income. Therefore, in this case the entire gain of $40 is treated as ordinary income.

Example 2. Assume the same facts in the preceding example, except that the selling price of the bond is $970. In this case $50 of the gain of $70 is treated as ordinary income and the balance of $20 is treated as long-term capital gain.

Example 3. Assume the same facts as in example (1), except that the selling price of the bond is $800. In this case, the individual has a long-term capital loss of $100.

Example 4. Assume the same facts as in example (1), except that the bond is purchased by the second holder February 1, 1960, for $800. The second holder keeps it to the maturity date (February 1, 1965) when it is redeemed for $1,000. Since that holder has held the bond for 60 full months, he will, upon redemption, have $50 in ordinary income and $150 in long-term capital gain.

(*d*) ***Exceptions to the general rule*** —

(*1*) ***In general.*** Section 1232(a)(2)(C) provides that section 1232(a)(2) does not apply (i) to obligations the interest on which is excluded from gross income under section 103 (relating to certain government obligations), or (ii) to any holder who purchases an obligation at a premium.

(*2*) ***Premium.*** For purposes of section 1232, this section, and § 1.1232-3A, *premium* means a purchase price which exceeds the stated redemption price of an obligation at its maturity. For purposes of the preceding sentence, if an obligation is acquired as part of an investment unit consisting of an option, security, or other property and an obligation, the purchase price of the obligation is that portion of the price paid or payable for the unit which is allocable to the obligation. The price paid for the unit shall be allocated to the individual elements of the unit on the basis of their respective fair market values. However, if the fair market value of the option, security, or other property is not readily ascertainable (within the meaning of paragraph (c) of § 1.421-6), then the price paid for the unit shall be allocated in accordance with the rules under paragraph (b)(2)(ii) of this section for allocating the initial offering price of an investment unit to its elements. If, under chapter 1 of the Code, the basis of an obligation in the hands of the holder is the same, in whole or in part, for the purposes of determining gain or loss from a sale or exchange, as the basis of the obligation in the hands of another person who purchased the obligation at a premium, then the holder shall be considered to have purchased the obligation at a premium. Thus, the donee of an obligation purchased at a premium by the doner will be considered a holder who purchased the obligation at a premium.

(*e*) ***Amounts previously includible in income.*** Nothing in section 1232(a)(2) shall require the inclusion of any amount previously includible in gross income. Thus, if an amount was previously includible in a taxpayer's income on account of obligations issued at a discount and redeemable for fixed amounts increasing at stated intervals, or, under section 818(b) (relating to accrual of discount on bonds and other evidences of indebtedness held by life insurance companies), such amount is not again includible in the taxpayer's gross income under section 1232(a)(2). For example, amounts includible in gross income by a cash receipts and disbursements method taxpayer who has made an election under section 454 (a) or (c) (relating to accounting rules for certain obligations issued at a discount to which section 1232(a)(3) does not apply) are not includible in gross income under section 1232(a)(2). In the case of a gain which would include, under section 1232(a)(2), an amount considered to be ordinary income and a further amount considered long-term capital gain, any amount to which this paragraph applies is first used to offset the amount considered ordinary income. For example, on January 1, 1955, A purchases a 10-year bond which is redeemable for fixed amounts increasing at stated intervals. At the time of original issue, there was no intention to call the bond before maturity. The purchase price of the bond is $75, which is also the issue price. The stated redemption price at maturity of the bond is $100. A elects to treat the annual increase in the redemption price of the bond as income pursuant to section 454(a). On January 1, 1960, A sells the bond for $90. The total stated increase in the redemption price of the bond which A has reported annually as income for the taxable years 1955 through 1959 is $7. The portion of the original issue discount of $25 attributable to this period is $12.50, computed as follows:

> 60 (months bond is held by A)/120 (months from date of original issue to redemption date) × $25 (original issue discount)

However, $7, which represents the annual stated increase taken into income, is offset against the amount of $12.50, leaving $5.50 of the gain from the sale to be treated as ordinary income.

(*f*) ***Recordkeeping requirements.*** In the case of any obligation held by a taxpayer which was issued at an original issue discount after December 31, 1954, the taxpayer shall keep a record of the issue price and issue date upon or with each obligation (if known to or reasonably ascertainable by him). If the obligation held by the taxpayer is an obligation of the United States received from the United States in an exchange upon which gain or loss is not recognized because of section 1037 (a) (or so much of section 1031 (b) or (c) as relates to section 1037(a)), the taxpayer shall keep sufficient records to determine the issue price of such obligation for purposes of applying section 1037(b) and paragraphs (a) and (b) of § 1.1037-1 upon the disposition or redemption of such obligation. The issuer (or in the case of obligations first sold to the public through an underwriter or wholesaler, the underwriter or wholesaler) shall mark the issue price and issue date upon every obligation which is issued at an original issue discount after September 26, 1957, but only if the period between the date of original issue (as defined in paragraph (b)(3) of this section) and the stated maturity date is more than 6 months.

[T.D. 6500, 25 FR 12008, Nov. 26, 1960, as amended by T.D. 6984, 33 FR 19176, Dec. 21, 1968; T.D. 7154, 36 FR 25000, Dec. 28, 1971; 37 FR 527, Jan. 13, 1972; T.D. 7213, 37 FR 21992, Oct. 18, 1972; 37 FR 22863, Oct. 26, 1972; T.D. 7663, 44 FR 76782, Dec. 28, 1979; T.D. 7728, 45 FR 72650, Nov. 3, 1980]

§ 1.1232-3A Inclusion as interest of original issue discount on certain obligations issued after May 27, 1969.

(a) ***Ratable inclusion as interest*** —

(1) ***General rule.*** Under section 1232(a)(3), the holder of any obligation issued by a corporation after May 27, 1969 (other than an obligation issued by or on behalf of the United States or a foreign country, or a political subdivision of either) shall include as interest in his gross income an amount equal to the ratable monthly portion of original issue discount multiplied by the sum of the number of complete months and any fractional part of a month such holder held the obligation during the taxable year. For increase in basis for amounts included as interest in gross income pursuant to this paragraph, see paragraph (c) of this section. For requirements for reporting original issue discount, see section 6049(a) and the regulations thereunder.

(2) ***Ratable monthly portion of original issue discount*** —

(i) ***General rule.*** Except when subdivision (ii) of this subparagraph applies, the term *ratable monthly portion of original issue discount* means an amount equal to the original issue discount divided by the sum of the number of complete months (plus any fractional part of a month) beginning on the date of original issue and ending the day before the stated maturity date of such obligation.

(ii) ***Reduction for purchase allowance.*** With respect to an obligation which has been acquired by purchase (within the meaning of subparagraph (4) of this paragraph), the term *ratable monthly portion of original issue discount* means the lesser of the amount determined under subdivision (i) of this subparagraph or an amount equal to:

(*a*) The excess (if any) of the stated redemption price of the obligation at maturity over its cost to the purchaser divided by

(*b*) The sum of the number of complete months (plus any fractional part of a month) beginning on the date of such purchase and ending the day before the stated maturity date of such obligation.

The amount of the ratable monthly portion within the meaning of this subdivision reflects a purchase allowance provided under section 1232(a)(3)(B) where a purchase is made at a price in excess of the sum of the issue price plus the portion of original issue discount previously includible (regardless of whether included) in the gross income of all previous holders (computed, however, as to such previous holders without regard to any purchase allowance under this subdivision and without regard to whether any previous holder purchased at a premium).

(iii) ***Ratable monthly portion upon carryover to new obligation.*** In any case in which there is a carryover of original issue discount under paragraph (b)(1)(iv) of § 1.1232-3 from an obligation exchanged to an obligation received in such exchange, the ratable monthly portion of original issue discount in respect of the obligation received shall be computed by dividing the amount of original issue discount carried over by the sum of the number of complete months (plus any fractional part of a month) beginning on the date of the exchange and ending the day before the stated maturity date of the obligation received.

(iv) ***Cross references.*** For definitions of the terms *original issue discount* and *date of original issue,* see subparagraphs (1) and (3) respectively, of § 1.1232-3(b). For definition of the term *premium,* see paragraph (d)(2) of § 1.1232-3.

(3) ***Determination of number of complete months*** —

(i) ***In general.*** For purposes of this section:

(*a*) A complete month and a fractional part of a month commence with the date of original issue and the corresponding day of each succeeding calendar month (or the last day of a calendar month in which there is no corresponding day),

(*b*) If an obligation is acquired on any day other than the date a complete month commences, the ratable monthly portion of original issue discount for the complete month in which the acquisition occurs shall be allocated between the transferor and the transferee in accordance with the number of days in such complete month each held the obligation,

(*c*) In determining the allocation under (*b*) of this subdivision, any holder may treat each month as having 30 days,

(*d*) The transferee, and not the transferor, shall be deemed to hold the obligation during the entire day on the date of acquisition, and

(*e*) The obligor will be treated as the transferee on the date of redemption.

(ii) ***Example.*** The provisions of this subparagraph may be illustrated by the following example:

Example: On February 22, 1970, A acquires an obligation of X Corporation for which February 1, 1970, is the date of original issue. B acquires the obligation on June 16, 1970. A does not choose to treat each month as having 30 days. Thus, A held the obligation for $3^{3}/_{4}$ months during 1970, i.e., one-fourth of February ($^{7}/_{28}$ days), March, April, May, one-half of June ($^{15}/_{30}$ days). The ratable monthly portion of original issue discount for the obligation is multiplied by $3^{3}/_{4}$ months to determine the amount included in A's gross income for 1970 pursuant to this paragraph.

(4) ***Purchase.*** For purposes of this section, the term *purchase* means any acquisition (including an acquisition upon original issue) of an obligation to which this section applies, but only if the basis of such obligation is not determined in whole or in part by reference to the adjusted basis of such obligation in the hands of the person from whom it was acquired or under section 1014(a) (relating to property acquired from a decedent).

(b) ***Exceptions*** —

(1) ***Binding commitment.*** Section 1232(a)(3) shall not apply to any obligation issued pursuant to a written commitment which was binding on May 27, 1969, and at all times thereafter.

(2) ***Exception for 1-year obligations.*** Section 1232(a)(3) shall not apply to any obligation in respect of which the period between the date of original issue (as defined in paragraph (b)(3) of § 1.1232-3) and the stated maturity date is 1 year or less. In such case, gain on the sale or exchange of such obligation shall be included in gross income as interest to the extent the gain does not exceed an amount equal to the ratable monthly portion of original issue discount multiplied by the sum of the number of complete months and any fractional part of a month such taxpayer held such obligation.

(3) ***Purchase at a premium.*** Section 1232(a)(3) shall not apply to any holder who purchased the obligation at a premium (within the meaning of paragraph (d)(2) of § 1.1232-3).

(4) ***Life insurance companies.*** Section 1232(a)(3) shall not apply to any holder which is a life insurance company to which section 818(b) applies. However, ratable inclusion of original issue discount as interest under section 1232(a)(3) is required by an insurance company which is subject to the tax imposed by section 821 or 831.

(c) ***Basis adjustment.*** The basis of an obligation in the hands of the holder thereof shall be increased by any amount of original issue discount with respect thereto included as interest in his gross income pursuant to paragraph (a) of this section. See section 1232(a)(3)(E). However, the basis of an obligation shall not be increased by any amount that was includible as interest in gross income under paragraph (a) of this section, but was not actually included by the holder in his gross income.

(d) ***Examples.*** The provisions of paragraphs (a) through (c) of this section may be illustrated by the following examples:

> *Example 1.* On January 1, 1970, A, a calendar-year taxpayer, purchases at original issue, for cash of $7,600, M Corporation's 10-year, 5-percent bond which has a stated redemption price of $10,000. The ratable monthly portion of original issue discount, as determined under section 1232(a)(3) and this section, to be included as interest in A's gross income for each month he holds

such bond is $20, computed as follows:

Original issue discount (stated redemption price, $10,000, minus issue price, $7,600)	$2,400	
Divide by: Number of months from date of original issue to stated maturity date	120	months
Ratable monthly portion	$20	

Assume that A holds the bond for all of 1970 and 1971 and includes as interest in his gross income for each such year an amount equal to the ratable monthly portion, $20, multiplied by the number of months he held the bond each such year, 12 months, or $240. Accordingly, on January 1, 1972, A's basis in the bond will have increased under paragraph (c) of this section by the amount so included, $480 (i.e., $240 × 2), from his cost, $7,600, to $8,080. For results if A sells the bond on that date, see examples (1) and (2) of paragraph (a)(2) of § 1.1282-3.

Example 2. Assume the same facts as in example (1). Assume further that on January 1, 1972, A sells the bond to B, a calendar-year taxpayer for $9,040.
Since B purchased the bond, he determines under paragraph (a)(2)(ii) of this section the amount of the ratable monthly portion he must include as interest in his gross income in order to reflect the amount of his purchase allowance (if any). B determines that his ratable monthly portion is $10, computed as follows:

(1) Stated redemption price at maturity	$10,000	
(2) Minus: B's cost	$9,040	
(3) Excess	$960	
(4) Divide by: Number of months from date of purchase to stated maturity date	96	months
(5) Tentative ratable monthly portion	$10	
(6) Ratable monthly portion as computed in example (1)	$20	

Since line (5) is lower than line (6), B's ratable monthly portion is $10. Accordingly, if B holds the bond for all of 1972, he must include $120 (i.e., ratable monthly portion, $10 × 12 months) as interest in his gross income.

Example 3. (1) Assume the same facts as in example (1). Assume further that on January 1, 1975, A sells the bond to B for $10,150. Under the exception of paragraph (b)(3) of this section, B is not required to include any amount in respect of original issue discount as interest in his gross

income since he has purchased the bond at a premium.
(2) On January 1, 1979, B sells the bond to C, a calendar-year taxpayer, for $9,940. Since C is now the holder of the bond (and no exception applies to him), he must include as interest in his gross income the ratable monthly portion of original issue determined under section 1232(a)(3) and this section. Since C purchased the bond he determines under paragraph (a)(2)(ii) of this section the amount of the ratable monthly portion he must include as interest in his gross income in order to reflect the amount of his purchase allowance (if any). C determines that his ratable monthly portion is $5, computed as follows:

(1) Stated redemption price at maturity	$10,000	
(2) Minus: C's cost	$9,940	
(3) Excess	$60	
(4) Divide by: Number of months from date of purchase to stated maturity date	12	months
(5) Tentative ratable monthly portion	$5	
(6) Ratable monthly portion as computed in example (1)	$20	

Since line (5) is lower than line (6), C's ratable monthly portion is $5. Accordingly, if C holds the bond for all of 1979, he must include $60 (i.e., ratable monthly portion, $5, × 12 months) as interest in his gross income. Upon maturity of the bond on January 1, 1980, C will receive $10,000 from M, which under paragraph (c) of this section will equal his adjusted basis (the sum of his cost, $9,940, plus original issue discount included as interest in his gross income, $60).

Example 4. On January 1, 1968, D, a calendar-year taxpayer, purchases at original issue, for cash of $8,000, P Corporation's 20-year, 6 percent bond which has a stated redemption price of $10,000 and which will mature on January 1, 1988. The original issue discount with respect to such bond is $2,000. However, the ratable inclusion rules of section 1232(a)(3) do not apply to D, since the bond was issued by P before May 28, 1969. On January 1, 1973, pursuant to a plan of reorganization as defined in section 368(a)(1)(E), and in which no gain or loss is recognized by D under section 354, D's 20-year bond is exchanged for a 10-year, 6 percent bond which also has a stated redemption price of $10,000 but will mature on January 1, 1983. Under paragraph (b)(1)(iv) of § 1.1232-3, the $2,000 of original issue discount is carried over to the new 10-year bond received in such exchange. Since the new bond is an obligation issued after May 27, 1969, D is required to begin ratable inclusion of the $2,000 of discount as interest in his gross income for 1973. The ratable monthly portion of original issue discount, as determined under section 1232(a)(3) to be included

as interest in gross income is computed as follows:

Amount of original issue discount carried over	$2,000	
Divide by: Number of complete months beginning on January 1, 1973, and ending on December 31, 1982	120	months
Ratable monthly portion	$16.67	

(e) ***Application of section 1232 to certain deposits in financial institutions and similar arrangements*** —

(1) ***In general.*** Under paragraph (d) of § 1.1232-1, the term *other evidence of indebtedness* includes certificates of deposit, time deposits, bonus plans, and other deposit arrangements with banks, domestic building and loan associations, and similar financial institutions.

(2) ***Adjustments where obligation redeemed before maturity*** —

(i) ***In general.*** If an obligation described in subparagraph (1) of this paragraph is redeemed for a price less than the stated redemption price at maturity from a taxpayer who acquired the obligation upon original issue, such taxpayer shall be allowed as a deduction, in computing adjusted gross income, the amount of the original issue discount he included in gross income but did not receive (as determined under subdivision (ii) of this subparagraph). The taxpayer's basis of such obligation (determined after any increase in basis for the taxable year under section 1232(a)(3)(E) by the amount of original issue discount included in the holder's gross income under section 1232(a)(3)) shall be decreased by the amount of such adjustment.

(ii) ***Computation.*** The amount of the adjustment under subdivision (i) of this subparagraph shall be an amount equal to the excess (if any) of

(*a*) the ratable monthly portion of the original issue discount included in the holder's gross income under section 1232(a)(3) for the period he held the obligation, over

(*b*) the excess (if any) of the amount received upon the redemption over the issue price. Under paragraph (b)(1)(iii)(*a*) of § 1.1232-3, if any amount based on a fixed rate of simple or compound interest is actually payable or will be treated as constructively received under section 451 and the regulations thereunder at fixed periodic intervals of 1 year or less during the term of the obligation, any such amount payable upon redemption shall not be included in determining the amount received upon such redemption.

(iii) ***Partial redemption.***

(a) In the case of an obligation (other than a single obligation having serial maturity dates), if a portion of the obligation is redeemed prior to the stated maturity date of the entire obligation, the provisions of this subdivision shall be applied and not the provisions of subdivision (ii) of this subparagraph. In such case, the adjusted basis of the unredeemed portion of the obligation on the date of the partial redemption shall be an amount equal to the adjusted basis of the entire obligation on that date minus the amount paid upon the redemption.

(*b*) If the adjusted basis of the unredeemed portion (as computed under (*a*) of this subdivision) is equal to or in excess of the amount to be received for the unredeemed portion at maturity, no gain or loss shall be recognized at the time of the partial redemption but the holder shall be allowed a deduction, in computing adjusted gross income for the taxable year during which such partial redemption occurs, equal to the amount of such excess (if any), and no further original issue discount will be includible in the holder's gross income under section 1232(a)(3) over the remaining term of the unredeemed portion. In such case, the holder shall decrease his basis in the unredeemed portion (as computed under (a) of this subdivision) by the amount of such adjustment.

(*c*) If the adjusted basis of the unredeemed portion (as computed under (*a*) of this subdivision) is less than the redemption price of the unredeemed portion at maturity, a new computation shall be made under paragraph (a) of this section (without regard to the exception for one-year obligations in paragraph (b)(2) of this section) of the ratable monthly portion of original issue discount to be included as interest in the gross income of the holder over the remaining term of the unredeemed portion. For purposes of such computation, the adjusted basis of the unredeemed portion shall be treated as the issue price, the date of the partial redemption shall be treated as the issue date, and the amount to be paid for the unredeemed portion at maturity shall be treated as the stated redemption price.

(3) ***Examples.*** The application of section 1232 to obligations to which this paragraph applies may be illustrated by the following examples:

Example 1. A is a cash method taxpayer who uses the calendar year as his taxable year. On January 1, 1971, he purchases a certificate of deposit from X Bank, a corporation, for $10,000. The certificate of deposit is not redeemable until December 31, 1975, except in an emergency as defined in, and subject to the qualifications provided by, Regulation Q of the Board of Governors of the Federal Reserve. See 12 CFR 217.4(d). The stated redemption price at maturity is $13,382.26. The terms of the certificate do not expressly refer to any amount as interest. A's certificate of deposit is an obligation to which section 1232 and this paragraph apply. A shall include the ratable portion of original issue discount in gross income for 1971 as determined under section 1232(a)(3). Thus, if A holds the certificate of deposit for the full calendar year 1971, the amount to be included in A's gross income for 1971 is $676.45, that is, $^{12}/_{60}$ months, multiplied by the excess of the stated redemption price ($13,382.26) over the issue price ($10,000).

Example 2. Assume the same facts as in example (1), except that the certificate of deposit provides for payment upon redemption at December 31, 1975, of an amount equal to "$10,000, plus 6 percent compound interest from January 1, 1971, to December 31, 1975." Thus, the total amount payable upon redemption in both example (1) and this example is $13,382.26. The certificate of deposit is an obligation to which section 1232 and this paragraph apply and, since the substance of the deposit arrangement is identical to that contained in example (1), A must include the same amount in gross income.

Example 3. Assume the same facts as in example (1), except that the certificate provides for the payment of interest in the amount of $200 on December 31, of each year and $2,000 plus $10,000 (the original amount) payable upon redemption at December 31, 1975. Thus, if A holds the certificate of deposit for the full calendar year 1971, A must include in his gross income for

1971 the $200 interest payable on December 31, 1971, and $400 of original issue discount, that is, $^{12}/_{60}$ months multiplied by the excess of the stated redemption price ($12,000) over the issue price ($10,000).

Example 4. B is a cash method taxpayer who uses the calendar year as his taxable year. On January 1, 1971, B purchases a 4-year savings certificate from the Y Building and Loan Corporation for $4,000, redeemable on December 31, 1974, for $5,000. On December 31, 1973, Y redeems the certificate for $4,660. Under section 1232(a)(3), B included $250 of original issue discount in his gross income for 1971, $250 for 1972, and includes $250 in his gross income for 1973 for a total of $750. Since the excess of (i) the amount received upon the redemption, $4,660, over (ii) the issue price, $4,000, or $660, is lower than the total amount of original issue discount ($750) included in B's gross income for the period he held the certificate by $90, the $90 will be treated under subparagraph (2) of this paragraph as a deduction in computing adjusted gross income, and accordingly, will decrease the basis of his certificate by such amount. B has no gain or loss upon the redemption, as determined in accordance with the following computation:

Adjusted basis January 1, 1973	$4,500
Increase under section 1232(a)(3)(E)	250
Subtotal	4,750
Decrease under subparagraph (b)(2) of this paragraph	90
Basis upon redemption	4,660
Amount realized upon redemption	4,660
Gain or loss	0

Example 5. On January 1, 1971, C, a cash method taxpayer who uses the calendar year as his taxable year, opens a savings account in Z bank with a $10,000 deposit. Under the terms of the account, interest is made available semiannually at 6 percent annual interest, compounded semiannually. Since all of the interest on C's account in Z Bank is made available semiannually, the stated redemption price at maturity under paragraph (b)(1)(iii)(*a*) of § 1.1232-3 equals the issue price, and, therefore, no original issue discount is reportable by C under section 1232(a)(3). However, C must include the sum of $300 (i.e., $^{1}/_{2}$ × 6% × $10,000) plus $309 (i.e., $^{1}/_{2}$ × 6% × $10,300) or $609, of interest made available during 1971 in his gross income for 1971.

Example 6. (i) D is a cash method taxpayer who uses the calendar year as his taxable year. On January 1, 1971, D purchases a $10,000 deferred income certificate from M Bank. Under the terms of the certificate, interest accrues at 6 percent per annum, compounded quarterly. The period of the account is 10 years. In addition, the holder is

permitted to withdraw the entire amount of the purchase price at any time (but not interest prior to the expiration of the 10 year term), and upon such a withdrawal of the purchase price, no further interest accrues. If the certificate is held to maturity, the issue price plus accrued interest will aggregate $18,140.18.
(ii) In respect of the certificate, the original issue discount is $8,140.18, determined by subtracting the issue price of the certificate ($10,000) from the stated redemption price at maturity ($18,140.18). Thus, under section 1232(a)(3) the ratable monthly portion of original issue discount is $67.835 (i.e., $^{1}/_{20}$ months, multiplied by $8,140.18). Under section 1232(a)(3), D includes $814.02 (i.e., 12 months, multiplied by $67.835) in his gross income for each calendar year the certificate remains outstanding and under section 1232(a)(3)(E) increases his basis by that amount. Thus, on December 31, 1975, D's basis for the certificate is $14,070.10 (i.e., issue price, $10,000, increased by product of $814.02 × 5 years).

(iii) On December 31, 1975, D withdraws the $10,000. Under the terms of the certificate $3,468.55 cannot be withdrawn until December 31, 1980. Under the provisions of subparagraph (2)(iii) of this paragraph, the $10,000 partial redemption shall be treated as follows:

(1) Adjusted basis of obligation at time of partial redemption	$14,070.10
(2) Amount paid upon redemption	10,000.00
(3) Adjusted basis of unredeemed portion (line (1) less line (2))	4,070.10
(4) Amount to be paid for unredeemed portion at maturity (December 31, 1980)	3,468.55
(5) Adjustment in computing adjusted gross income (excess of line (3) over line (4))	601.55

Since the adjusted basis of the unredeemed portion exceeds the amount to be received for the unredeemed portion at maturity, D is allowed a deduction, in computing adjusted gross income, of $601.25 in 1975 and no further original issue discount is includible as interest in his gross income. In addition, D will decrease his basis in the unredeemed portion by $601.55, the amount of such adjustment, from $4,070.10 to $3,468.55.

Example 7. E is a cash method taxpayer who uses the calendar year as his taxable year. On January 1, 1971, E purchases a $10,000 "Bonus Savings Certificate" from N Building and Loan Corporation. Under the terms of the certificate, interest is payable at 5 percent per annum, compounded quarterly, and the period of the account is 3 years. In addition, the certificate provides that if the holder makes no withdrawals of principal or interest during the term of the certificate, a bonus payment equal to 5 percent of the purchase price of the certificate will be paid to the holder of the certificate at maturity. Thus, the amount of the bonus payment is $500

(i.e., 5 percent multiplied by $10,000). Since the 5 percent annual interest is payable quarterly, the amount of such interest is not included in determining the stated redemption price at maturity under paragraph (b)(1)(iii) of § 1.1232-3. However, since the bonus payment is only payable at maturity, the amount of such bonus is included as part of the stated redemption price at maturity. Thus, the stated redemption price at maturity equals $10,500 (purchase price, $10,000, plus bonus payment $500). Accordingly, the original issue discount attributable to such certificate equals $500 (stated redemption price at maturity. $10,500, minus issue price, $10,000). Therefore, E must include as interest $166.67 (i.e., $^{12}/_{36}$ months, multiplied by the original issue discount, $500) in his gross income for each taxable year he holds the certificate.

(4) ***Renewable certificates of deposit*** —

(i) ***In general.*** The renewal of a certificate of deposit shall be treated as a purchase of the certificate on the date the renewal period begins regardless of any requirement pursuant to the terms of the certificate that the holder give notice of an intention to renew or not to renew. Thus, for example, in the case of a certificate of deposit for which a renewal period begins after December 31, 1970, such renewal shall be treated as a purchase after such date whether or not the initial period began before such date.

(ii) ***Computation.*** For purposes of computing the amount of original issue discount to be ratably included as interest in gross income under section 1232(a)(3) in respect of a renewable certificate of deposit for the initial period or any renewal period, the following rules apply:

(*a*) The issue price on the date any renewal period begins is considered to be in the case of a certificate of deposit initially purchased:

(*1*) After December 31, 1970, the adjusted basis of the certificate on the date such period begins,

(*2*) Before January 1, 1971, the amount the adjusted basis would have been on the date such period begins had the holder included all amounts of original issue discount as interest in gross income that would have been includible if section 1232(a)(3) had applied to the certificate from the date of original purchase.

Thus, if under the terms of the certificate, no amount is forfeited upon a failure to renew, then the issue price on the date any renewal period begins is considered to be the amount which would have been received by the holder on such date had it not been renewed.

(*b*) The date of original issue for any renewal period shall be considered to be the date it begins.

(*c*) The date of maturity for the initial period or any renewal period shall be considered to be the date it ends.

(*d*) The stated redemption price at maturity for the initial period or any renewal period shall be considered to be the maximum amount which would be received at the end of any such period, without regard to any reduction resulting from withdrawal prior to maturity or failure to renew at any renewal date.

(iii) ***Application of 1-year rule.*** For purposes of paragraph (b)(2) of this section (relating to nonapplication of section 1232(a)(3) to any obligation having a term of 1 year or less), the period between the date of original issue (as defined in paragraph (b)(3) of § 1.1232-3) of a renewable certificate of deposit and its stated maturity date shall include all renewal periods

with respect to which, under the terms of the certificate, the holder may either take action or refrain from taking action which would prevent the actual or constructive receipt of any interest on such certificate until the expiration of any such renewal period whether or not the original date of issue is prior to January 1, 1971.

(iv) ***Example.*** The provisions of this subparagraph may be illustrated by the following example:

Example: (a) On May 1, 1969, A purchases a 2-year renewable certificate of deposit from M bank, a corporation, for $10,000. Interest will be compounded semiannually at 6 percent on May 1 and November 1. The terms of the certificate provide that such certificate will be automatically renewed on the anniversary date every 2 years if the holder does not notify M of an intention not to renew prior to 60 days before the particular anniversary date. Thus, on May 1, 1971, and May 1, 1973, the certificate may be redeemed for $11,255.09 and $12,667.60, respectively. However, in no event shall the initial period and the renewal periods exceed 10 years. A does not notify M of an intention not to renew by March 1, 1971, and the certificate is automatically renewed for an additional 2-year period on May 1, 1971.
(b) Under subdivision (i) of this subparagraph, the May 1, 1971, renewal shall be treated as the purchase of a certificate of deposit on that date, i.e., after December 31, 1970. Under subdivision (ii) of this subparagraph, the issue price is considered to be $11,255.09 and the date of maturity is considered to be May 1, 1973. Since the stated redemption price at maturity is $12,667.60. A must include $58.85 as interest in gross income for each month he holds the certificate during the renewal period beginning May 1, 1971, computed as follows:

Original issue discount (stated redemption price, $12,667.60, minus issue price, $11,255.09)	$1,412.51
Divided by: Number of months from renewal to maturity date	24 months
Ratable monthly portion	$58.85

(5) ***Time deposit open account arrangements*** —

(i) ***In general.*** The term *time deposit open account arrangement* means an arrangement with a fixed maturity date where deposits may be made from time to time and ordinarily no interest will be paid or constructively received until such fixed maturity date. All deposits pursuant to such an arrangement constitute parts of a single obligation. The amount of original issue discount to be ratably included as interest in the gross income of the depositor for any taxable year shall be the sum of the amounts separately computed for each deposit. For this purpose, the issue price for a deposit is the amount thereof and the stated redemption price at maturity is computed under paragraph (b)(1)(iii)(*d*) of § 1.1232-3.

(ii) ***Obligations redeemed before maturity.*** In the event of a partial redemption of a time deposit open account before maturity, the following rules, in addition to subparagraph (2) of this paragraph, shall apply:

(*a*) If, pursuant to the terms of the withdrawal, the amount received by the depositor is determined with reference to the principal amount of a specific deposit and interest earned from the date of such deposit, then such terms shall control for the purpose of determining which deposit was withdrawn.

(*b*) If (*a*) of this subdivision (ii) does not apply, then the withdrawal shall be deemed to be of specific deposits together with interest earned from the date of such deposits, on a first-in, first-out basis.

(iii) ***Examples.*** The provisions of this subparagraph may be illustrated by the following examples:

Example 1. (i) F is a cash method taxpayer who uses the calendar year as his taxable year. On December 1, 1970, F enters into a 5-year deposit open account arrangement with M Savings and Loan Corp. The terms of the arrangement provide that F will deposit $100 each month for a period of 5 years, and that interest will be compounded semiannually (on June 1 and December 1) at 6 percent, but will be paid only at maturity. Thus, assuming F makes deposits of $100 on the first of each month beginning with December 1, 1970, the account will have a stated redemption price of $6,998.20 at maturity on December 1, 1975. Since, however, section 1232 applies only to deposits made after December 31, 1970 (see paragraph (d) of § 1.1232-1), the $34.39 of compound interest to be earned on the first deposit of $100 over the term of the arrangement will not be subject to the ratable inclusion rules of section 1232(a)(3). F must include such $34.39 of interest in his gross income on December 1, 1975, the date it is paid.
(ii) For 1971, F must include $44.19 of original issue discount as interest in gross income, to be computed as follows:

(1)	(2)	(3)	(4)	(5)	(6)	(7)
Date of $100 deposit	**Months to maturity**	**Redemption price at maturity**	**Original issue discount (Col.3−$100)**	**Ratable monthly portion (Col.4 ÷ Col.2)**	**Months on deposit in 1971**	**1971 original issue discount (Col.5 × Col.6)**
1-1-71	59	$133.73	$33.73	$0.5717	12	$6.86
2-1-71	58	133.07	33.07	.5702	11	6.27
3-1-71	57	132.42	32.42	.5688	10	5.69
4-1-71	56	131.77	31.77	.5673	9	5.11

(1)	(2)	(3)	(4)	(5)	(6)	(7)
Date of $100 deposit	**Months to maturity**	**Redemption price at maturity**	**Original issue discount (Col.3−$100)**	**Ratable monthly portion (Col.4 ÷ Col.2)**	**Months on deposit in 1971**	**1971 original issue discount (Col.5 × Col.6)**
5-1-71	55	131.12	31.12	.5658	8	4.53
6-1-71	54	130.48	30.48	.5644	7	3.95
7-1-71	53	129.84	29.84	.5630	6	3.38
8-1-71	52	129.20	29.20	.5615	5	2.81
9-1-71	51	128.56	28.56	.5600	4	2.24
10-1-71	50	127.93	27.93	.5586	3	1.68
11-1-71	49	127.30	27.30	.5571	2	1.11
12-1-71	48	126.68	26.68	.5558	1	0.56
Total original issue discount to be included as interest in F's gross income for 1971						44.19

Example 2. (i) G is a cash method taxpayer who uses the calendar year as his taxable year. On February 1, 1971, G enters into a 4-year deposit open account arrangement with T Bank, a corporation. The terms of the deposit arrangement provide that G may deposit any amount from time to time in multiples of $50 for a period of 4 years. The terms also provide that G may not redeem any amount until February 1, 1975, except in an emergency as defined in, and subject to the qualifications provided by, Regulation Q of the Board of Governors of the Federal Reserve System. See 12 CFR 217.4(d). Interest will be compounded semiannually (on February 1 and August 1) at 6 percent, providing there is no redemption prior to February 1, 1975. However, if there is a redemption prior to such date, interest will be compounded semiannually at $5^1/_2$ percent.

(ii) The schedule of deposits made by G pursuant to the arrangement, and computation of ratable monthly portion for each deposit, is set forth in the table below:

(1)	(2)	(3)	(4)	(5)	(6)
Date of deposit	**Months to maturity**	**Amount of deposit**	**Redemption price at maturity**	**Original issue discount (Col.4−Col.3)**	**Ratable monthly portion (Col.5 ÷ Col.2)**
2-1-71	48	100	$126.68	$26.68	0.5558
6-1-71	44	200	248.42	48.42	1.1005

(1)	(2)	(3)	(4)	(5)	(6)
Date of deposit	Months to maturity	Amount of deposit	Redemption price at maturity	Original issue discount (Col.4−Col.3)	Ratable monthly portion (Col.5 ÷ Col.2)
12-1-71	38	500	602.95	102.95	2.7092
2-1-72	36	800	955.24	155.24	4.3122
3-1-72	35	800	950.56	150.56	4.3017
7-1-72	31	600	699.00	99.00	3.1935
8-1-72	30	250	289.82	39.82	1.3273

(iii) With respect to amounts on deposit pursuant to the arrangement, the amounts of original issue discount G must include as interest in his gross income for 1971 and 1972 are computed in the table below:

(1)	(2)	(3)	(4)	(5)	(6)
Date of deposit	Ratable monthly portion	Months on deposit in 1971	1971 original issue discount (Col.2 × Col.3)	Months on deposit in 1972	1972 original issue discount (Col.2 × Col.5)
2-1-71	$0.5558	11	$6.11	12	$6.67
6-1-71	1.1005	7	7.70	12	13.21
12-1-71	2.7092	1	2.71	12	32.51
2-1-72	4.3122			11	47.43
3-1-72	4.3017			10	43.02
7-1-72	3.1935			6	19.16
8-1-72	1.3273			5	6.64
Total original issue discount includible as interest in gross income for taxable year			16.52		168.64

(6) *Certain contingent interest arrangement* —

(i) ***In general.*** If under the terms of a deposit arrangement:

(*a*) The holder cannot receive payment of any interest or constructively receive any interest prior to a fixed maturity date,

(*b*) Interest is earned at a guaranteed minimum rate of compound interest,

(c) Additional contingent interest may be earned for any year at a rate not to exceed one percentage point above such guaranteed minimum rate, and

(d) Any additional contingent interest is credited at least annually to the depositor's account,

Then any contingent interest credited to the depositor shall be treated as creating a separate obligation subject to the rules of subdivision (ii) of this subparagraph.

(ii) ***Computation.*** For purposes of computing the original issue discount to be included as interest in the depositor's gross income under section 1232(a)(3) with respect to such separate obligation:

(a) The issue price shall be zero,

(b) The date of original issue shall be the date on which the contingent interest is credited to the depositor's account and begins to earn interest,

(c) The date of maturity shall be the fixed maturity date of the deposit, and

(d) The stated redemption price at maturity is the sum of the amount of such contingent interest plus any interest to be earned thereon at the guaranteed minimum rate of compound interest between such dates of original issue and maturity.

(7) ***Contingent interest arrangements other than those described in subparagraph (6)*** —

(i) ***In general.*** If under the terms of a deposit arrangement, contingent interest may be earned and credited to a depositor's account, but is neither actually or constructively received before a fixed maturity date nor treated under subparagraph (6)(i) of this paragraph as creating a separate obligation, then the redemption price shall include the amount which would be credited to such account assuming the issuer, during the term of such account, credits contingent interest at the greater of the rate:

(a) Last credited on a similar account, or

(b) Equal to the average rate credited for the preceding 5 calendar years on a similar account.

(ii) ***Adjustments for additional interest.*** The rate taken into account under this subparagraph in computing the redemption price shall be treated as the guaranteed minimum rate for purposes of applying subparagraph (6) of this paragraph in the event the rate at which contingent interest is actually credited to the depositor's account exceeds such rate previously taken into account. If for any period the actual rate at which contingent interest is credited to the account exceeds by more than 1 percentage point the rate for the previous period taken into account under this subparagraph in computing the redemption price, a new computation shall be made to determine the ratable monthly portion of original issue discount to be included as interest in the gross income of the depositor over the remaining term of the account. For purposes of such computation, the date that interest is first so credited to the account shall be treated as the issue date, the adjusted basis of the account on such date shall be the issue price, and the redemption price shall equal the amount actually on deposit in the account on such date plus the amount which would be credited to such account assuming the issuer, during the remaining term of such account, continues to credit contingent interest at the new rate.

(iii) ***Adjustment for reduced interest.*** If for any period the actual rate of interest at which contingent interest is credited to the depositor's account is less than the rate for the previous period taken into account under this subparagraph in computing the redemption price, the difference

between the amount of interest which would have been credited to the account at the rate for such previous period and the amount actually credited shall be allowed as a deduction against the amount of original issue discount with respect to such account required to be included in the gross income of the depositor. If an account is redeemed for a price less than the adjusted basis of the account, the depositor shall be allowed as a deduction, in computing adjusted gross income, the amount of the original issue discount he included in gross income but did not receive.

(f) *Application of section 1232(a)(3) to face-amount certificates* —

(1) ***In general.*** Under paragraph (c)(3) of § 1.1232-1, the provisions of section 1232(a)(3) and this section apply in the case of a face-amount certificate issued after December 31, 1975 (other than such a certificate issued pursuant to a written commitment which was binding on such date and at all times thereafter).

(2) ***Relationship with paragraph (e) of this section.*** Determinations with regard to the inclusion as interest of original issue discount on, and certain adjustments with respect to, face-amount certificates to which this section applies shall be made in a manner consistent with the rules of paragraph (e) of this section (relating to the application of section 1232 to certain deposits in financial institutions and similar arrangements). Thus, for example, if a face-amount certificate is redeemed before maturity, the holder shall be allowed a deduction in computing adjusted gross income computed in a manner consistent with the rules of paragraph (e)(2) of this section. For a further example, if under the terms of a face-amount certificate, the issuer may grant additional credits to be paid at a fixed maturity date, computations with respect to such additional credits shall be made in a manner consistent with the rules of paragraphs (e) (6) and (7) of this section (as applicable) relating to contingent interest arrangements.

[T.D. 7154, 36 FR 25005, Dec. 28, 1971; 37 FR 527, Jan. 13, 1972, as amended by T.D. 7213, 37 FR 21993, Oct. 18, 1972; 37 FR 22863, Oct. 26, 1972; T.D. 7311, 39 FR 11880, Apr. 1, 1974; T.D. 7365, 40 FR 27936, July 2, 1975]

§ 1.1233-1 Gains and losses from short sales.

(a) ***General.***

(1) For income tax purposes, a short sale is not deemed to be consummated until delivery of property to close the short sale. Whether the recognized gain or loss from a short sale is capital gain or loss or ordinary gain or loss depends upon whether the property so delivered constitutes a capital asset in the hands of the taxpayer.

(2) Thus, if a dealer in securities makes a short sale of X Corporation stock, ordinary gain or loss results on closing of the short sale if the stock used to close the short sale was stock which he held primarily for sale to customers in the ordinary course of his trade or business. If the stock used to close the short sale was a capital asset in his hands, or if the taxpayer in this example was not a dealer, a capital gain or loss would result.

(3) Generally, the period for which a taxpayer holds property delivered to close a short sale determines whether long-term or short-term capital gain or loss results.

(4) Thus, if a taxpayer makes a short sale of shares of stock and covers the short sale by purchasing and delivering shares which he held for not more than 1 year (6 months for taxable years beginning before 1977; 9 months for taxable years beginning in 1977), the recognized gain or loss would be

considered short-term capital gain or loss. If the short sale is made through a broker and the broker borrows property to make a delivery, the short sale is not deemed to be consummated until the obligation of the seller created by the short sale is finally discharged by delivery of property to the broker to replace the property borrowed by the broker.

(5) For rules for determining the date of sale for purposes of applying under section 1091 the 61-day period applicable to a short sale of stock or securities at a loss, see paragraph (g) of § 1.1091-1.

(b) ***Hedging transactions.*** Under section 1233(g), the provisions of section 1233 and this section shall not apply to any bona fide hedging transaction in commodity futures entered into by flour millers, producers of cloth, operators of grain elevators, etc., for the purpose of their business. Gain or loss from a short sale of commodity futures which does not qualify as a hedging transaction shall be considered gain or loss from the sale or exchange of a capital asset if the commodity future used to close the short sale constitutes a capital asset in the hands of the taxpayer as explained in paragraph (a) of this section.

(c) ***Special short sales*** —

(1) ***General.*** Section 1233 provides rules as to the tax consequences of a short sale of property if gain or loss from the short sale is considered as gain or loss from the sale or exchange of a capital asset under section 1233(a) and paragraph (a) of this section and if, at the time of the short sale or on or before the date of the closing of the short sale, the taxpayer holds property substantially identical to that sold short. The term *property* is defined for purposes of such rules to include only stocks and securities (including stocks and securities dealt with on a *when issued* basis) and commodity futures, which are capital assets in the hands of the taxpayer. Certain restrictions on the application of the section to commodity futures are provided in section 1233(e) and paragraph (d)(2) of this section. Section 1233(f) contains special provisions governing the operation of rule (2) in subparagraph (2) of this paragraph in the case of a purchase and short sale of stock (as defined in subparagraph (3) qualifying as an arbitrage operation. See paragraph (f) of this section for detailed rules relating to arbitrage operations in stocks and securities.

(2) ***Treatment of special short sales.*** The first two rules, which are set forth in section 1233(b), are applicable whenever property substantially identical to that sold short has been held by the taxpayer on the date of the short sale for not more than 1 year (6 months for taxable years beginning before 1977; 9 months for taxable years beginning in 1977) (determined without regard to rule (2), contained in this subparagraph, relating to the holding period) or is acquired by him after the short sale and on or before the date of the closing thereof. These rules are:

Rule (1). Any gain upon the closing of such short sale shall be considered as a gain upon the sale or exchange of a capital asset held for not more than 1 year (6 months for taxable years beginning before 1977; 9 months for taxable years beginning in 1977) (notwithstanding the period of time any property used to close such short sale has been held); and

Rule (2). The holding period of such substantially identical property shall be considered to begin (notwithstanding the provisions of section 1223) on the date of the closing of such short sale or on the date of a sale, gift, or other disposition of such property, whichever date occurs first.

(3) ***Options to sell.*** For the purpose of rule (1) and rule (2) in subparagraph (2) of this paragraph, the acquisition of an option to sell property at a fixed price shall be considered a short sale, and the exercise or failure to exercise such option shall be considered as a closing of such short sale, except that any option to sell property at a fixed price acquired on or after August 17, 1954 (the day after

enactment of the Internal Revenue Code of 1954), shall not be considered a short sale and the exercise or failure to exercise such option shall not be considered as the closing of a short sale provided that the option and property identified as intended to be used in its exercise are acquired on the same date. This exception shall not apply, if the option is exercised, unless it is exercised by the sale of the property so identified. In the case of any option not exercised which falls within this exception, the cost of such option shall be added to the basis of the property with which such option is identified. If the option itself does not specifically identify the property intended to be used in exercising the option, then the identification of such property shall be made by appropriate entries in the taxpayer's records within 15 days after the date such property is acquired or before November 17, 1956, whichever expiration date later occurs.

(4) ***Treatment of losses.*** The third rule, which is set forth in section 1233(d), is applicable whenever property substantially identical to that sold short has been held by the taxpayer on the date of the short sale for more than 1 year (6 months for taxable years beginning before 1977; 9 months for taxable years beginning in 1977). This rule is:

Rule (3). Any loss upon the closing of such short sale shall be considered as a loss upon the sale or exchange of a capital asset held for more than 1 year (6 months for taxable years beginning before 1977; 9 months for taxable years beginning in 1977), not withstanding the period of time any property used to close such short sale has been held. For the purpose of this rule, the acquisition of an option to sell property at a fixed price is not considered a short sale, and the exercise or failure to exercise such option is not considered as a closing of a short sale.

(5) ***Application of rules.*** Rules (1) and (3) contained in subparagraphs (2) and (4) of this paragraph do not apply to the gain or loss attributable to so much of the property sold short as exceeds in quantity the substantially identical property referred to in section 1233 (b) and (d), respectively. Except as otherwise provided in section 1233(f), rule (2) in subparagraph (2) of this paragraph applies to the substantially identical property referred to in section 1233(b) in the order of the dates of the acquisition of such property, but only to so much of such property as does not exceed the quantity sold short. If property substantially identical to that sold short has been held by the taxpayer on the date of the short sale for not more than 1 year (6 months for taxable years beginning before 1977; 9 months for taxable years beginning in 1977), or is acquired by him after the short sale and on or before the date of the closing thereof, and if property substantially identical to that sold short has been held by the taxpayer on the date of the short sale for more than 1 year (6 months for taxable years beginning before 1977; 9 months for taxable years beginning in 1977), all three rules are applicable.

(6) ***Examples.*** The following examples illustrate the application of these rules to short sales of stock in the case of a taxpayer who makes his return on the basis of the calendar year:

Example 1. A buys 100 shares of X stock at $10 per share on February 1, 1955, sells short 100 shares of X stock at $16 per share on July 1, 1955, and closes the short sale on August 2, 1955, by delivering the 100 shares of X stock purchased on February 1, 1955, to the lender of the stock used to effect the short sale. Since 100 shares of X stock had been held by A on the date of the short sale for not more than 6 months, the gain of $600 realized upon the closing of the short sale is, by application of rule (1) in subparagraph (2) of this paragraph, a short-term capital gain.

Example 2. A buys 100 shares of X stock at $10 per share on February 1, 1955, sells short 100 shares of X stock at $16 per share on July 1, 1955, closes the short sale on August 1, 1955, with 100 shares of X stock purchased on that date at $18 per share, and on August 2, 1955, sells at $18 per share the 100 shares of X stock purchased on February 1, 1955. The $200 loss sustained upon the closing of the short sale is a short-term capital loss to which section 1233(d) has no application. By application of rule (2) in subparagraph (2) of this paragraph, however, the holding period of the 100 shares of X stock purchased on February 1, 1955, and sold on August 2, 1955 is considered to begin on August 1, 1955, the date of the closing of the short sale. The $800 gain realized upon the sale of such stock is, therefore, a short-term capital gain.

Example 3. A buys 100 shares of X stock at $10 per share on February 1, 1955, sells short 100 shares of X stock at $16 per share on September 1, 1955, sells on October 1, 1955, at $18 per share the 100 shares of X stock purchased on February 1, 1955, and closes the short sale on October 1, 1955, with 100 shares of X stock purchased on that date at $18 per share. The $800 gain realized upon the sale of the 100 shares of X stock purchased on February 1, 1955, is a long-term capital gain to which section 1233(b) has no application. Since A had held 100 shares of X stock on the date of the short sale for more than 6 months, the $200 loss sustained upon the closing of the short sale is, by application of rule (3) in subparagraph (4) of this paragraph, a long-term capital loss. If, instead of purchasing 100 shares of X stock on October 1, 1955, A closed the short sale with the 100 shares of stock purchased on February 1, 1955, the $600 gain realized on the closing of the short sale would be a long-term capital gain to which section 1233(b) has no application.

Example 4. A sells short 100 shares of X stock at $16 per share on February 1, 1955. He buys 250 shares of X stock on March 1, 1955, at $10 per share and holds the latter stock until September 2, 1955 (more than 6 months), at which time, 100 shares of the 250 shares of X stock are delivered to close the short sale made on February 1, 1955. Since substantially identical property was acquired by A after the short sale and before it was closed, the $600 gain realized on the closing of the short sale is, by application of rule (1) in subparagraph (2) of this paragraph, a short-term capital gain. The holding period of the remaining 150 shares of X stock is not affected by section 1233 since this amount of the substantially identical property exceeds the quantity of the property sold short.

Example 5. A buys 100 shares of X stock at $10 per share on February 1, 1955, buys an additional 100 shares of X stock at $20 per share on July 1, 1955, sells short 100 shares of X stock at $30 per share on September 1, 1955, and closes the short sale on February 1, 1956, by delivering the 100 shares of X stock purchased on February 1, 1955, to the lender of the stock used to effect the short sale. Since 100 shares of X stock had been held by A on the date of the short sale for not more than 6 months, the gain of $2,000 realized upon the closing of the short sale is, by application of rule (1) in subparagraph (2) of this paragraph, a short-term capital gain and the holding period of the 100 shares of X stock purchased on July 1, 1955, is considered, by application of rule (2) in subparagraph (2) of this paragraph to begin on February 1, 1956, the date of the closing of the short sale. If, however, the 100 shares of X stock purchased on July 1, 1955, had been used by A to close the short sale, then, since 100 shares of X stock had been held by A on the date of the short sale for not more than 6 months, the gain of $1,000 realized upon the closing of the short sale would be, by application of rule (1) in subparagraph (2) of this paragraph, a short-term capital gain, but the holding period of the 100 shares of X stock purchased on February 1, 1955, would not be affected by section 1233. If, on the other hand, A purchased an additional 100 shares of X stock at $40 per share on February 1, 1956, and used

such shares to close the short sale at that time, then, since 100 shares of X stock had been held by A on the date of the short sale for more than 6 months, the loss of $1,000 sustained upon the closing of the short sale would be, by application of rule (3) in subparagraph (4) of this paragraph, a long-term capital loss, and since 100 shares of X stock had been held by A on the date of the short sale for not more than 6 months, the holding period of the 100 shares of X stock purchased on July 1, 1955, would be considered, by application of rule (2) in subparagraph (2) of this paragraph, to begin on February 1, 1956, but the holding period of the 100 shares of X stock purchased on February 1, 1955, would not be affected by section 1233.

Example 6. A buys 100 shares of X preferred stock at $10 per share on February 1, 1955. On July 1, 1955, he enters into a contract to sell 100 shares of XY common stock at $16 per share when, as, and if issued pursuant to a particular plan of reorganization. On August 2, 1955, he receives 100 shares of XY common stock in exchange for the 100 shares of X preferred stock purchased on February 1, 1955, and delivers such common shares in performance of his July 1, 1955, contract. Assume that the exchange of the X preferred stock for the XY common stock is a tax-free exchange pursuant to section 354(a)(1), and that on the basis of all of the facts and circumstances existing on July 1, 1955, the *when issued* XY common stock is substantially identical to the X preferred stock. Since 100 shares of substantially identical property had been held by A for not more than 6 months on the date of entering into the July 1, 1955, contract of sale, the gain of $600 realized upon the closing of the contract of sale is, by application of rule (1) in subparagraph (2) of this paragraph, a short-term capital gain.

(d) ***Other rules for the application of section 1233*** —

(1) ***Substantially identical property.*** The term *substantially identical property* is to be applied according to the facts and circumstances in each case. In general, as applied to stocks or securities, the term has the same meaning as the term *substantially identical stock or securities* used in section 1091, relating to wash sales of stocks or securities. For certain restrictions on the term as applied to commodity futures see subparagraph (2) of this paragraph. Ordinarily, stocks or securities of one corporation are not considered substantially identical to stocks or securities of another corporation. In certain situations they may be substantially identical; for example, in the case of a reorganization the facts and circumstances may be such that the stocks and securities of predecessor and successor corporations are substantially identical property. Similarly, bonds or preferred stock of a corporation are not ordinarily considered substantially identical to the common stock of the same corporation. However, in certain situations, as, for example, where the preferred stock or bonds are convertible into common stock of the same corporation, the relative values, price changes, and other circumstances may be such as to make such bonds or preferred stock and the common stock substantially identical property. Similarly, depending on the facts and circumstances, the term may apply to the stocks and securities to be received in a corporate reorganization or recapitalization, traded in on a when issued basis, as compared with the stocks or securities to be exchanged in such reorganization or recapitalization.

(2) ***Commodity futures.***

(i) As provided in section 1233(e)(2)(B), in the case of futures transactions in any commodity on or subject to the rules of a board of trade or commodity exchange, a commodity future requiring delivery in one calendar month shall not be considered as property substantially identical to another commodity future requiring delivery in a different calendar month. For example, commodity futures in May wheat and July wheat are not considered, for the purpose of section 1233, substantially identical property. Similarly, futures in different commodities which are not

generally through custom of the trade used as hedges for each other (such as corn and wheat, for example) are not considered substantially identical property. If commodity futures are otherwise substantially identical property, the mere fact that they were procured through different brokers will not remove them from the scope of the term *substantially identical property.* Commodity futures procured on different markets may come within the term *substantially identical property* depending upon the facts and circumstances in the case, with the historical similarity in the price movements in the two markets as the primary factor to be considered.

(ii) Section 1233(e)(3), relating to so-called *arbitrage* transactions in commodity futures, provides that where a taxpayer enters into two commodity futures transactions on the same day, one requiring delivery by him in one market and the other requiring delivery to him of the same (or substantially identical) commodity in the same calendar month in a different market, and the taxpayer subsequently closes both such transactions on the same day, section 1233 shall have no application to so much of the commodity involved in either such transaction as does not exceed in quantity the commodity involved in the other. Section 1233(f), relating to arbitrage operations in stocks or securities, has no application to arbitrage transactions in commodity futures.

(iii) The following example indicates the application of section 1233 to a commodity futures transaction:

Example: A, who makes his return on the basis of the calendar year, on February 1, 1955, enters into a contract through broker X to purchase 10,000 bushels of December wheat on the Chicago market at $2 per bushel. On July 1, 1955, he enters into a contract through broker Y to sell 10,000 bushels of December wheat on the Chicago market at $2.25 per bushel. On August 2, 1955, he closes both transactions at $2.50 per bushel. The $2,500 loss sustained on the closing of the short sale is a short-term capital loss to which section 1233(d) has no application. By application of rule (2) in paragraph (c)(2) of this section, however, the holding period of the futures contract entered into on February 1, 1955, is considered to begin on August 2, 1955, the date of the closing of the short sale. The $5,000 gain realized upon the closing of such contract is, therefore, a short-term capital gain.

(3) ***Husband and wife.*** Section 1233(e)(2)(C) provides that, in the case of a short sale of property by an individual, the term *taxpayer* in the application of subsections (b), (d), and (e) shall be read as *taxpayer or his spouse.* Thus, if the spouse of a taxpayer holds or acquires property substantially identical to that sold short by the taxpayer, and other conditions of subsections (b), (d), and (e) are met, then the rules set forth therein are applicable to the same extent as if the taxpayer held or acquired the substantially identical property. For this purpose, an individual who is legally separated from the taxpayer under a decree of divorce or of separate maintenance shall not be considered as the spouse of the taxpayer.

(e) ***Special rule for short sales by dealers in securities under certain circumstances.*** In the case of a short sale of stock (as defined in subparagraph (3) of this paragraph) after December 31, 1957, by a dealer in securities, section 1233(e)(4)(A) provides that the holding period of substantially identical stock which he has held as an investment for not more than 1 year (6 months for taxable years beginning before 1977; 9 months for taxable years beginning in 1977) shall be determined in accordance with section 1233(b)(2) unless such short sale is closed within 20 days of the date on which it was made. See rule (2) in paragraph (c)(2) of this section for the purpose of determining the holding period of such substantially identical stock. In addition, section 1233(e)(4)(B) provides that for the purpose of the special rule of

section 1233(e)(4)(A), the acquisition of an option to sell property at a fixed price shall be considered a short sale, and the exercise or failure to exercise such option shall be considered a closing of such short sale. For purposes of this paragraph:

(1) Whether or not a taxpayer is a *dealer in securities* shall be determined in accordance with the meaning of the term for purposes of section 1236;

(2) Whether or not stock is *substantially identical* with other property shall be determined in accordance with the provisions of paragraph (d)(1) of this section; and

(3) The term *stock* means:

(i) Any share or certificate of stock,

(ii) Any bond or other evidence of indebtedness which is convertible into a share or certificate of stock, and

(iii) Any evidence of an interest in, or right to subscribe to or purchase, any of the items described in subdivision (i) or (ii) of this subparagraph.

(f) ***Arbitrage operations in stocks and securities and holding periods*** —

(1) ***General rule.***

(i) In the case of a short sale entered into as part of an arbitrage operation, rule (2) of paragraph (c)(2) of this section shall apply first to substantially identical property acquired for arbitrage operations and held by the taxpayer at the close of business on the day of the short sale. The holding period of substantially identical property not acquired for arbitrage operations shall be affected only to the extent that the amount of property sold short exceeds the amount of substantially identical property acquired for arbitrage operations and held by the tapayer at the close of business on the day of the short sale.

(ii) If the substantially identical property acquired for arbitrage operations is disposed of without closing the short sale so that a net short position in assets acquired for arbitrage operations is created, a short sale in the amount of such net short position will be deemed to have been made on the day such net short position is created. Rule (2) of paragraph (c)(2) of this section will then apply to substantially identical property not acquired for arbitrage operations to the same extent as if the taxpayer, on the day such net short position is created, sold short an amount equal to the amount of the net short position in a transaction not entered into as part of an arbitrage operation.

(iii) The following examples illustrate the application of rule (2) of paragraph (c)(2) of this section to arbitrage operations:

Example 1. On August 13, 1957, A buys 100 bonds of X Corporation for purposes other than arbitrage operations. The bonds are convertible at the option of the bondholders into common stock of X Corporation on the basis of one bond for one share of stock. On November 1, 1957, A sells short 100 shares of common stock of X Corporation in a transaction identified and intended to be part of an arbitrage operation and on the same day buys another 100 bonds of X Corporation in a transaction identified and intended to be part of the same arbitrage operation. The bonds acquired on both August 13, 1957, and November 1, 1957, are, on the basis of all the facts and circumstances, substantially identical to the common stock of X Corporation. On December 1, 1957, A closes the short sale with 100 shares of common stock of X Corporation

acquired on that day. The holding period of the bonds acquired on November 1, by application of rule (2) of paragraph (c)(2) of this section, will be deemed to begin on December 1 and the holding period of the bonds acquired on August 13 will be unaffected. If, instead of purchasing the 100 shares of common stock of X Corporation on December 1, 1957, A had converted the bonds acquired on November 1 into common stock and, on December 1, 1957, used the stock so acquired to close the short sale, rule (2) of paragraph (c)(2) of this section would similarly have no effect on the holding period of the bonds acquired on August 13.

Example 2. Assume the same facts as in example (1), except that A, on December 1, sells the bonds acquired on November 1 (or converts such bonds into common stock and sells the stock), but does not close the short sale. The sale of the bonds (or stock) creates a net short position in assets acquired for arbitrage operations which is deemed to be a short sale made on December 1. Accordingly, the holding period of the bonds acquired on August 13 will, by application of rule (2) of paragraph (c)(2) of this section, begin on the date such short sale is closed or on the date of sale, gift, or other disposition of such bonds, whichever date occurs first.

(2) ***Right to receive or acquire property.***

(i) For purposes of section 1233(f) (1) and (2) and subparagraph (1) of this paragraph, a taxpayer will be deemed to hold substantially identical property acquired for arbitrage operations at the close of any business day if, by virtue of the ownership of other property acquired for arbitrage operations (whether or not substantially identical) or because of any contract entered into by the taxpayer in an arbitrage operation, he then has the right to receive or acquire such substantially identical property.

(ii) The application of section 1233(f)(3) and subdivision (i) of this subparagraph may be illustrated by the following example:

Example: A acquires on August 13, 1957, 100 shares of common stock of X Corporation for purposes other than arbitrage operations. On November 1, A sells short, in a transaction identified and intended to be part of an arbitrage operation, 100 shares of X common stock. On the same day, in a transaction also identified and intended to be part of the same arbitrage operation, A contracts to purchase 100 shares of preferred stock of X. The preferred stock of X may be converted into common stock of X on the basis of one share of preferred stock for one share of common stock. The preferred stock is not actually delivered to A until November 3. Since A has contracted before the close of business on the date of the short sale, as part of an arbitrage operation, to purchase property by virtue of which he has the right to receive or acquire substantially identical property to that sold short, he will be deemed, for purposes of section 1233(f) (1) and (2), to hold such substantially identical property at the close of business on the date of the short sale. For purposes of this subparagraph, it is immaterial whether, on the basis of all the facts and circumstances, the preferred stock of X is substantially identical to the common stock of X. The short sale on November 1 does not affect the holding period of the 100 shares of X Corporation common stock purchased on August 13, 1957. Because of the operation of rule (2) of paragraph (c)(2) of this section, the holding period of the preferred stock acquired as the result of A's contract to purchase it as part of an arbitrage operation (or the common stock which A acquires by conversion of such preferred stock into common stock) will not begin until the short sale entered into in the arbitrage operation is closed.

(3) ***Definition of arbitrage operations.*** For the purpose of section 1233(f), arbitrage operations are transactions involving the purchase and sale of property entered into for the purpose of profiting from a current difference between the price of the property purchased and the price of the property sold. Assets acquired for arbitrage operations include only stocks and securities and rights to acquire stocks and securities. The property purchased may be either identical to the property sold or, if not so identical, such that its acquisition will entitle the taxpayer to acquire property which is so identical. Thus, the purchase of bonds or preferred stock convertible, at the holder's option, into common stock and the short sale of the common stock which may be acquired therefor, or the purchase of stock rights and the short sale of the stock to be acquired on the exercise of such rights, may qualify as arbitrage operations. A transaction will qualify as an arbitrage operation under section 1233(f) only if the taxpayer properly identifies the transaction as an arbitrage operation on his records as soon as he is able to do so. Such identification must ordinarily be entered in the taxpayer's records on the day of the transaction. Property acquired in a transaction properly identified as part of an arbitrage operation is the only property which will be deemed acquired for an arbitrage operation. The provisions of section 1233(f) and this paragraph shall continue to apply to property acquired in a transaction properly identified as an arbitrage operation although, because of subsequent events, e.g., a change in the value of bonds so acquired or of stock into which such bonds may be converted, the taxpayer sells such property outright rather than using it to complete the arbitrage operation.

(4) ***Effective date of section 1233(f).*** Section 1233(f), relating to arbitrage operations involving short sales of property, is effective only with respect to taxable years ending after August 12, 1955, and only with respect to short sales made after such date.

[T.D. 6500, 25 FR 12011, Nov. 26, 1960, as amended by T.D. 6494, 25 FR 9372, Sept. 30, 1960; T.D. 6926, 32 FR 11468, Aug. 9, 1967; T.D. 7728, 45 FR 72650, Nov. 3, 1980]

§ 1.1233-2 Hedging transactions.

The character of gain or loss on a short sale that is (or is identified as being) part of a hedging transaction is determined under the rules of § 1.1221-2.

[T.D. 8555, 59 FR 36367, July 18, 1994]

§ 1.1234-1 Options to buy or sell.

(a) ***Sale or exchange*** —

(1) ***Capital assets.*** Gain or loss from the sale or exchange of an option (or privilege) to buy or sell property which is (or if acquired would be) a capital asset in the hands of the taxpayer holding the option is considered as gain or loss from the sale or exchange of a capital asset (unless, under the provisions of subparagraph (2) of this paragraph, the gain or loss is subject to the provisions of section 1231). The period for which the taxpayer has held the option determines whether the capital gain or loss is short-term or long-term.

(2) ***Section 1231 transactions.*** Gain or loss from the sale or exchange of an option to buy or sell property is considered a gain or loss subject to the provisions of section 1231 if, had the sale or exchange been of the property subject to the option, held by the taxpayer for the length of time he held the option, the sale or exchange would have been subject to the provisions of section 1231.

(3) ***Other property.*** Gain or loss from the sale or exchange of an option to buy or sell property which is not (or if acquired would not be) a capital asset in the hands of the taxpayer holding the option is considered ordinary income or loss (unless under the provisions of subparagraph (2) of this paragraph, the gain or loss is subject to the provisions of section 1231).

(b) ***Failure to exercise option.*** If the holder of an option to buy or sell property incurs a loss on failure to exercise the option, the option is deemed to have been sold or exchanged on the date that it expired. Any such loss to the holder of an option is treated under the general rule provided in paragraph (a) of this section. In general, any gain to the grantor of an option arising from the failure of the holder to exercise it, and any gain or loss realized by the grantor of an option as a result of a closing transaction, such as repurchasing the option from the holder, is considered ordinary income or loss. However, for the treatment of gain or loss from a closing transaction with respect to or gain on the lapse of an option granted in stock, securities, commodities or commodity futures, see section 1234(b) and § 1.1234-3. For special rules for grantors of straddles applicable to certain options granted on or before September 1, 1976, see § 1.1234-2.

(c) ***Certain options to sell property at a fixed price.*** Section 1234 does not apply to a loss on the failure to exercise an option to sell property at a fixed price which is acquired on the same day on which the property identified as intended to be used in exercising the option is acquired. Such a loss is not recognized, but the cost of the option is added to the basis of the property with which it is identified. See section 1233(c) and the regulations thereunder.

(d) ***Dealers in options to buy or sell.*** Any gain or loss realized by a dealer in options from the sale or exchange or an option to buy or sell property is considered ordinary income or loss under paragraph (a)(3) of this section. A dealer in options to buy or sell property is considered a dealer in the property subject to the option.

(e) ***Other exceptions.*** Section 1234 does not apply to gain resulting from the sale or exchange of an option:

(1) To the extent that the gain is in the nature of compensation (see sections 61 and 421, and the regulations thereunder, relating to employee stock options);

(2) If the option is treated as section 306 stock (see section 306 and the regulations thereunder, relating to dispositions of certain stock); or

(3) To the extent that the gain is a distribution of earnings or profits taxable as a dividend (see section 301 and the regulations thereunder, relating to distributions of property).

(4) Acquired by the taxpayer before March 1, 1954, if in the hands of the taxpayer such option is a capital asset (whether or not the property to which the option relates is, or would be if acquired by the taxpayer, a capital asset in the hands of the taxpayer).

(f) ***Limitations on effect of section.*** Losses to which section 1234 applies are subject to the limitations on losses under sections 165(c) and 1211 when applicable. Section 1234 does not permit the deduction of any loss which is disallowed under any other provision of law. In addition, section 1234 does not apply to an option to lease property, but does apply to an option to buy or sell a lease. Thus, an option to obtain all the right, title, and interest of a lessee in leased property is subject to the provisions of section 1234, but an option to obtain a sublease from the lessee is not. Furthermore, if section 1234 applies to an option to buy or sell a lease, it is the character the lease itself, if acquired, would have in the hands of the taxpayer, and not the character of the property leased, which determines the treatment of gain or loss experienced by the taxpayer with respect to such an option.

(g) ***Examples.*** The rules set forth in this section may be illustrated by the following examples:

Example 1. A taxpayer is considering buying a new house for his residence and acquires an option to buy a certain house at a fixed price. Although the property goes up in value, the taxpayer decides he does not want the house for his residence and sells the option for more than he paid for it. The gain which taxpayer realized is a capital gain since the property, if acquired, would have been a capital asset in his hands.

Example 2. Assume the same facts as in example (1), except that the property goes down in value, and the taxpayer decides not to purchase the house. He sells the option at a loss. While this is a capital loss under section 1234, it is not a deductible loss because of the provisions of section 165(c).

Example 3. A dealer in industrial property acquires an option to buy an industrial site and fails to exercise the option. The loss is an ordinary loss since he would have held the property for sale to customers in the ordinary course of his trade or business if he had acquired it.

[T.D. 6500, 25 FR 12013, Nov. 26, 1960, as amended by T.D. 7652, 44 FR 62282, Oct. 30, 1979]

§ 1.1234-2 Special rule for grantors of straddles applicable to certain options granted on or before September 1, 1976.

(a) ***In general.*** Section 1234(c)(1) provides a special rule applicable in the case of gain on the lapse of an option granted by the taxpayer as part of a straddle. In such a case, the gain shall be deemed to be gain from the sale or exchange of a capital asset held for not more than 1 year (6 months for taxable years beginning before 1977; 9 months for taxable years beginning in 1977) on the day that the option expired. Thus, such gain shall be treated as a short-term capital gain, as defined in section 1222(1). Section 1234(c)(1) does not apply to any person who holds securities (including options to acquire or sell securities) for sale to customers in the ordinary course of his trade or business.

(b) ***Definitions.*** The following definitions apply for purposes of section 1234(c) and this section.

(1) ***Straddle.*** The term *straddle* means a simultaneously granted combination of an option to buy (i.e., a *call*) and an option to sell (i.e., a *put*) the same quantity of a security at the same price during the same period of time.

(2) ***Security.*** The term *security* has the meaning assigned to such term by section 1236(c) and the regulations thereunder. Thus, for example, the term *security* does not include commodity futures.

(3) ***Grantor.*** The term *grantor* means the writer or issuer of the option contracts making up the straddle.

(4) ***Multiple option.*** The term *multiple option* means a simultaneously granted combination of an option to buy plus an option to sell plus one or more additional options to buy or sell a security.

(c) ***Special rules in the case of a multiple option.***

(1) If, in the case of a multiple option, the number of the options to sell and the number of the options to buy are the same and if the terms of all of the options are identical (as to the quantity of the security, price, and period of time), then each of the options contained in the multiple option shall be deemed to be a component of a straddle for purposes of section 1234(c)(1) and paragraph (a) of this section.

(2) If, in the case of a multiple option, the number of the options to sell and the number of the options to buy are not the same or if the terms of all of the options are not identical (as to the quantity of the security, price, and period of time), then section 1234(c)(1) applies to gain on the lapse of an option granted as part of the multiple option only if:

(i) The grantor of the multiple option identifies the two options which comprise each straddle contained in the multiple option in the manner prescribed in subparagraph (3) of this paragraph; or

(ii) It is clear from the facts and circumstances that the lapsed option was part of a straddle. See example (6) of paragraph (f) of this section. A multiple option to which this subdivision applies may not be regarded as consisting of a number of straddles which exceeds the lesser of the options to sell or the options to buy as the case may be. For example, if a multiple option of five puts and four calls is granted it may not be regarded as consisting of more than four straddles, although the particular facts and circumstances could dictate that the option consists of less than four straddles.

(3) The identification required under subparagraph (2)(i) of this paragraph shall be made by the grantor indicating in his records, to the extent feasible, the individual serial number of, or other characteristic symbol imprinted upon, each of the two individual options which comprise the straddle, or by adopting any other method of identification satisfactory to the Commissioner. Such identification must be made before the expiration of the 15th day after the day on which the multiple option is granted. The preceding sentence shall apply only with respect to multiple options granted after January 24, 1972. In computing the 15-day period prescribed by this paragraph, the first day of such period is the day following the day on which the multiple option is granted.

(d) ***Allocation of premium.*** The allocation of a premium received for a straddle or a multiple option between or among the component options thereof shall be made on the basis of the relative market value of such component options at the time of their issuance or on any other reasonable and consistently applied basis which is acceptable to the Commissioner.

(e) ***Effective date*** —

(1) ***In general.*** This section, relating to special rules for grantors of straddles, shall apply only with respect to straddle transactions entered into after January 25, 1965, and before September 2, 1976.

(2) ***Special rule.*** For a special rule with respect to the identification of a straddle granted as part of a multiple option, see paragraph (c).

(f) ***Illustrations.*** The application of section 1234(c) and this section may be illustrated by the following examples:

Example 1. On February 1, 1971, taxpayer A, who files his income tax returns on a calendar year basis, issues a straddle for 100 shares of X Corporation stock and receives a premium of $1,000. The options comprising the straddle were to expire on August 10, 1971. A has allocated $450 (45 percent of $1,000) of the premium to the put and $550 (55 percent of $1,000) to the call. On March 1, 1971, B, the holder of the put, exercises his option. C, the holder of the call, fails to exercise his option prior to its expiration. As a result of C's failure to exercise his option, A realizes a short-term capital gain of $550 (that part of the premium allocated to the call) on August 10, 1971.

Example 2. Assume the same facts as in example (1), except that C exercises his call on March 1, 1971, and B fails to exercise his put prior to its expiration. As a result of B's failure to exercise his option, A realizes a short-term capital gain of $450 (that part of the premium allocated to the put) on August 10, 1971.

Example 3. Assume the same facts as in example (1), except that both B and C fail to exercise their respective options. As a result of the failure of B and C to exercise their options, A realizes short-term capital gains of $1,000 (the premium for granting the straddle) on August 10, 1971.

Example 4. On March 1, 1971, taxpayer D issues a multiple option containing five puts and five calls. Each put and each call is for the same number of shares of Y Corporation stock, at the same price, and for the same period of time. Thus, each of the puts and calls is deemed to be a component part of a straddle. The puts and calls comprising the multiple option were to expire on September 10, 1971. All of the puts are exercised, and all of the calls lapse. As a result of the lapse of the calls, D realizes a short-term capital gain on September 10, 1971, in the amount of that part of the premium for the multiple option which is allocable to all of the calls.

Example 5. Assume the same facts as in example (4) except that one of the puts and two of the calls lapse and the remaining puts and calls are exercised. As a result, on September 10, 1971, D realizes a short-term capital gain in the amount of that part of the premium for the multiple option which is allocable to both of the lapsed calls and the lapsed put.

Example 6. On March 1, 1971, taxpayer E issues a multiple option containing five puts and four calls. Each put and call is for the same number of shares of Y Corporation stock at the same price and for the same period of time, E does not identify the puts and calls as parts of straddles in the manner prescribed in paragraph (c)(3) of this section. However, because the terms of all of the puts and all of the calls are identical four of the puts and four of the calls are deemed to be a component part of a straddle. The puts and calls comprising the multiple option were to expire on September 10, 1971. Four of the puts are exercised and the four calls and one of the puts lapse. As a result, on September 10, 1971, E realizes short-term capital gain in the amount of that part of the premium for the multiple option which is allocable to the four lapsed calls and realizes ordinary income in the amount of that part of such premium which is allocable to the lapsed put. If E had identified four of the puts and four of the calls as constituting parts of straddles in the manner prescribed in paragraph (c)(3) of this section and the put that lapsed constituted part of a straddle, then the gain on the lapse of the put would also be short-term capital gain.

Example 7. Assume the same facts as in example (6) except that two of the puts are for Y Corporation stock at a price which is greater than that of the other puts and the other calls and that two of the calls expire on October 10, 1971. Additionally, assume that the put which lapses is at the lower price. The two puts offering the Y Corporation stock at the greater price and the two calls with the later expiration date cannot be deemed to be component parts of a straddle. Thus, only two of the puts and two of the calls are deemed to be a component part of a straddle. As a result, E realizes income as follows:
(i) On September 10, 1971, short-term capital gain in the amount of that part of the premium for the multiple option which is allocable to the two lapsed calls with the expiration date of September 10, 1971, and ordinary income in the amount of that part of such premium which is allocable to the lapsed put. If E had identified two of the puts at the lower price and the two calls with the expiration date of September 10, 1971, as constituting parts of straddles in the manner prescribed in paragraph (c)(3) of this section and if the put that lapsed was one of those identified as constituting a part of a straddle, then the gain on the lapse of that put would also be short-term capital gain.

(ii) On October 10, 1971, ordinary income in the amount of that part of the premium for the multiple option which is allocable to the lapsed calls with an expiration date of October 10, 1971.

[T.D. 7152, 36 FR 24801, Dec. 23, 1971, as amended by T.D. 7210, 37 FR 20688, Oct. 3, 1972; T.D. 7652, 44 FR 62282, Oct. 30, 1979; 44 FR 67657, Nov. 27, 1979; T.D. 7728, 45 FR 72650, Nov. 3, 1980]

§ 1.1234-3 Special rules for the treatment of grantors of certain options granted after September 1, 1976.

(a) ***In general.*** In the case of the grantor of an option (including an option granted as part of a straddle or multiple option), gain of loss from any closing transaction with respect to, and gain on the lapse of, an option in property shall be treated as a gain or loss from the sale or exchange of a capital asset held not more than 1 year. (6 months for taxable years beginning before 1977; 9 months for taxable years beginning in 1977).

(b) ***Definitions.*** The following definitions apply for purposes of this section.

(1) The term *closing transaction* means any termination of a grantor's obligation under an option to buy property (a *call*) or an option to sell property (a *put*) other than through the exercise or lapse of the option. For example, the grantor of a call may effectively terminate his obligation under the option by either:

(i) Repurchasing the option from the holder or

(ii) Purchasing from an options exchange a call with terms identical to the original option granted and designating the purchase as a closing transaction.

A put or call purchased to make a closing transaction is identical as to striking price and expiration date. Such put or call need not match the granted option in time of creation, date of acquisition, cost of the entire option or units therein, or number of units subject to the option. If such put or call terminates only part of a grantor's obligation under the granted option, a closing transaction is made as to that part.

(2) The term *property* means stocks and securities (including stocks and securities dealt with on a *when issued* basis), commodities, and commodity futures.

(3) The term *grantor* means the writer or issuer of an option.

(4) The term *straddle* means a simultaneously granted combination of an option to buy and an option to sell the same quantity of property at the same price during the same period of time.

(5) The term *multiple option* means a simultaneously granted combination of an option to buy plus an option to sell plus one or more additional options to buy or sell property.

(c) ***Nonapplicability to broker-dealers.*** The provisions of this section do not apply to any option granted in the ordinary course of the taxpayer's trade or business of granting options. However, the provisions of this section do apply to:

(1) Gain from any closing transaction with respect to an option and gain on lapse of an option if gain on the sale or exchange of the option would be considered capital gain by a dealer in securities under section 1236(a) and the regulations thereunder, and

(2) Loss from any closing transaction with respect to an option if loss on the sale or exchange of the option would not be considered ordinary loss by a dealer in securities under section 1236(b) and the regulations thereunder.

The preceding sentence shall be applied with respect to dealers in *property* (as defined in paragraph (b)(2) of this section) and without regard to the limitation of the applicability of section 1236 to dealers in securities.

(d) ***Nonapplicability to compensatory options.*** Section 1234 does not apply to options to purchase stock or other property which are issued as compensation for services, as described in sections 61, 83, and 421 and the regulations thereunder.

(e) ***Premium allocation for simultaneously granted options.*** The allocation of a premium received for a straddle or multiple option between or among the component options thereof shall be made on the basis of the relative market value of the component options at the time of their issuance or on any other reasonable and consistently applied basis which is acceptable to the Commissioner.

(f) ***Effective date.*** This section, relating to special rules for the treatment of grantors of certain options, shall apply to options granted after September 1, 1976.

[T.D. 7652, 44 FR 62282, Oct. 30, 1979; 44 FR 67657, Nov. 27, 1979]

§ 1.1234-4 Hedging transactions.

The character of gain or loss on an acquired or a written option that is (or is identified as being) part of a hedging transaction is determined under the rules of § 1.1221-2.

[T.D. 8555, 59 FR 36367, July 18, 1994]

§ 1.1235-1 Sale or exchange of patents.

(a) ***General rule.*** Section 1235 provides that a transfer (other than by gift, inheritance, or devise) of all substantial rights to a patent, or of an undivided interest in all such rights to a patent, by a holder to a person other than a related person constitutes the sale or exchange of a capital asset held for more than 1 year (6 months for taxable years beginning before 1977; 9 months for taxable years beginning in 1977), whether or not payments therefor are:

(1) Payable periodically over a period generally coterminous with the transferee's use of the patent, or

(2) Contingent on the productivity, use, or disposition of the property transferred.

(b) ***Scope of section 1235.*** If a transfer is not one described in paragraph (a) of this section, section 1235 shall be disregarded in determining whether or not such transfer is the sale or exchange of a capital asset. For example, a transfer by a person other than a holder or a transfer by a holder to a related person is not governed by section 1235. The tax consequences of such transfers shall be determined under other provisions of the internal revenue laws.

(c) ***Special rules*** —

(1) ***Payments for infringement.*** If section 1235 applies to the transfer of all substantial rights to a patent (or an undivided interest therein), amounts received in settlement of, or as the award of damages in, a suit for compensatory damages for infringement of the patent shall be considered payments

attributable to a transfer to which section 1235 applies to the extent that such amounts relate to the interest transferred. For taxable years beginning before January 1, 1964, see section 1304, as in effect before such date, and § 1.1304A-1 for treatment of compensatory damages for patent infringement.

(2) ***Payments to an employee.*** Payments received by an employee as compensation for services rendered as an employee under an employment contract requiring the employee to transfer to the employer the rights to any invention by such employee are not attributable to a transfer to which section 1235 applies. However, whether payments received by an employee from his employer (under an employment contract or otherwise) are attributable to the transfer by the employee of all substantial rights to a patent (or an undivided interest therein) or are compensation for services rendered the employer by the employee is a question of fact. In determining which is the case, consideration shall be given not only to all the facts and circumstances of the employment relationship but also to whether the amount of such payments depends upon the production, sale, or use by, or the value to, the employer of the patent rights transferred by the employee. If it is determined that payments are attributable to the transfer of patent rights, and all other requirements under section 1235 are met, such payments shall be treated as proceeds derived from the sale of a patent.

(3) ***Successive transfers.*** The applicability of section 1235 to transfers of undivided interest in patents, or to successive transfers of such rights, shall be determined separately with respect to each transfer. For example, X, who is a holder, and Y, who is not a holder, transfer their respective two-thirds and one-third undivided interests in a patent to Z. Assume the transfer by X qualifies under section 1235 and that X in a later transfer acquires all the rights with respect to Y's interest, including the rights to payments from Z. One-third of all the payments thereafter received by X from Z are not attributable to a transfer to which section 1235 applies.

(d) ***Payor's treatment of payments in a transfer under section 1235.*** Payments made by the transferee of patent rights pursuant to a transfer satisfying the requirements of section 1235 are payments of the purchase price for the patent rights and are not the payment of royalties.

(e) ***Effective date.*** Amounts received or accrued, and payments made or accrued, during any taxable year beginning after December 31, 1953 and ending after August 16, 1954, pursuant to a transfer satisfying the requirements of section 1235, whether such transfer occurred in a taxable year to which the Internal Revenue Code of 1954 applies, or in a year prior thereto, are subject to the provisions of section 1235.

(f) ***Nonresident aliens.*** For the special rule relating to nonresident aliens who have gains arising from a transfer to which section 1235 applies, see section 871 and the regulations thereunder. For withholding of tax from income of nonresident aliens, see section 1441 and the regulations thereunder.

[T.D. 6500, 25 FR 12014, Nov. 26, 1960, as amended by T.D. 6885, 31 FR 7803, June 2, 1966; T.D. 7728, 45 FR 72650, Nov. 3, 1980]

§ 1.1235-2 Definition of terms.

For the purposes of section 1235 and § 1.1235-1:

(a) ***Patent.*** The term *patent* means a patent granted under the provisions of title 35 of the United States Code, or any foreign patent granting rights generally similar to those under a United States patent. It is not necessary that the patent or patent application for the invention be in existence if the requirements of section 1235 are otherwise met.

(b) ***All substantial rights to a patent.***

(1) The term *all substantial rights to a patent* means all rights (whether or not then held by the grantor) which are of value at the time the rights to the patent (or an undivided interest therein) are transferred. The term *all substantial rights to a patent* does not include a grant of rights to a patent:

(i) Which is limited geographically within the country of issuance;

(ii) Which is limited in duration by the terms of the agreement to a period less than the remaining life of the patent;

(iii) Which grants rights to the grantee, in fields of use within trades or industries, which are less than all the rights covered by the patent, which exist and have value at the time of the grant; or

(iv) Which grants to the grantee less than all the claims or inventions covered by the patent which exist and have value at the time of the grant.

The circumstances of the whole transaction, rather than the particular terminology used in the instrument of transfer, shall be considered in determining whether or not all substantial rights to a patent are transferred in a transaction.

(2) Rights which are not considered substantial for purposes of section 1235 may be retained by the holder. Examples of such rights are:

(i) The retention by the transferor of legal title for the purpose of securing performance or payment by the transferee in a transaction involving transfer of an exclusive license to manufacture, use, and sell for the life of the patent;

(ii) The retention by the transferor of rights in the property which are not inconsistent with the passage of ownership, such as the retention of a security interest (such as a vendor's lien), or a reservation in the nature of a condition subsequent (such as a provision for forfeiture on account of nonperformance).

(3) Examples of rights which may or may not be substantial, depending upon the circumstances of the whole transaction in which rights to a patent are transferred, are:

(i) The retention by the transferor of an absolute right to prohibit sublicensing or subassignment by the transferee;

(ii) The failure to convey to the transferee the right to use or to sell the patent property.

(4) The retention of a right to terminate the transfer at will is the retention of a substantial right for the purposes of section 1235.

(c) ***Undivided interest.*** A person owns an *undivided interest* in all substantial rights to a patent when he owns the same fractional share of each and every substantial right to the patent. It does not include, for example, a right to the income from a patent, or a license limited geographically, or a license which covers some, but not all, of the valuable claims or uses covered by the patent. A transfer limited in duration by the terms of the instrument to a period less than the remaining life of the patent is not a transfer of an undivided interest in all substantial rights to a patent.

(d) ***Holder.***

(1) The term *holder* means any individual:

(i) Whose efforts created the patent property and who would qualify as the *original and first* inventor, or joint inventor, within the meaning of title 35 U.S.C., or

(ii) Who has acquired his interest in the patent property in exchange for a consideration paid to the inventor in money or money's worth prior to the actual reduction of the invention to practice (see paragraph (e) of this section), provided that such individual was neither the employer of the inventor nor related to him (see paragraph (f) of this section). The requirement that such individual is neither the employer of the inventor nor related to him must be satisfied at the time when the substantive rights as to the interest to be acquired are determined, and at the time when the consideration in money or money's worth to be paid is definitely fixed. For example, if prior to the actual reduction to practice of an invention an individual who is neither the employer of the inventor nor related to him agrees to pay the inventor a sum of money definitely fixed as to amount in return for an undivided one-half interest in rights to a patent and at a later date, when such individual has become the employer of the inventor, he pays the definitely fixed sum of money pursuant to the earlier agreement, such individual will not be denied the status of a holder because of such employment relationship.

(2) Although a partnership cannot be a holder, each member of a partnership who is an individual may qualify as a holder as to his share of a patent owned by the partnership. For example, if an inventor who is a member of a partnership composed solely of individuals uses partnership property in the development of his invention with the understanding that the patent when issued will become partnership property, each of the inventor's partners during this period would qualify as a holder. If, in this example, the partnership were not composed solely of individuals, nevertheless, each of the individual partners' distributive shares of income attributable to the transfer of all substantial rights to the patent or an undivided interest therein, would be considered proceeds from the sale or exchange of a capital asset held for more than 1 year (6 months for taxable years beginning before 1977; 9 months for taxable years beginning in 1977).

(3) An individual may qualify as a holder whether or not he is in the business of making inventions or in the business of buying and selling patents.

(e) ***Actual reduction to practice.*** For the purposes of determining whether an individual is a holder under paragraph (d) of this section, the term *actual reduction to practice* has the same meaning as it does under section 102(g) of title 35 of the United States Code. Generally, an invention is reduced to actual practice when it has been tested and operated successfully under operating conditions. This may occur either before or after application for a patent but cannot occur later than the earliest time that commercial exploitation of the invention occurs.

(f) ***Related person.***

(1) The term *related person* means one whose relationship to another person at the time of the transfer is described in section 267(b), except that the term does not include a brother or sister, whether of the whole or the half blood. Thus, if a holder transfers all his substantial rights to a patent to his brother or sister, or both, such transfer is not to a related person.

(2) If, prior to September 3, 1958, a holder transferred all his substantial rights to a patent to a corporation in which he owned more than 50 percent in value of the outstanding stock, he is considered as having transferred such rights to a related person for the purpose of section 1235. On the other hand, if a holder, prior to September 3, 1958, transferred all his substantial rights to a

patent to a corporation in which he owned 50 percent or less in value of the outstanding stock and his brother owned the remaining stock, he is not considered as having transferred such rights to a related person since the brother relationship is to be disregarded for purposes of section 1235.

(3) If, subsequent to September 2, 1958, a holder transfers all his substantial rights to a patent to a corporation in which he owns 25 percent or more in value of the outstanding stock, he is considered as transferring such rights to a related person for the purpose of section 1235. On the other hand if a holder, subsequent to September 2, 1958, transfers all his substantial rights to a patent to a corporation in which he owns less than 25 percent in value of the outstanding stock and his brother owns the remaining stock, he is not considered as transferring such rights to a related person since the brother relationship is to be disregarded for purposes of section 1235.

(4) If a relationship described in section 267(b) exists independently of family status, the brother-sister exception, described in subparagraphs (1), (2), and (3) of this paragraph, does not apply. Thus, if a holder transfers all his substantial rights to a patent to the fiduciary of a trust of which the holder is the grantor, the holder and the fiduciary are related persons for purposes of section 1235(d). (See section 267(b)(4).) The transfer, therefore, would not qualify under section 1235(a). This result obtains whether or not the fiduciary is the brother or sister of the holder since the disqualifying relationship exists because of the grantor-fiduciary status and not because of family status.

[T.D. 6500, 25 FR 12014, Nov. 26, 1960, as amended by T.D. 6852, 30 FR 12730, Oct. 6, 1965; T.D. 7728, 45 FR 72650, Nov. 3, 1980]

§ 1.1236-1 Dealers in securities.

(a) ***Capital gains.*** Section 1236(a) provides that gain realized by a dealer in securities from the sale or exchange of a security (as defined in paragraph (c) of this section) shall not be considered as gain from the sale or exchange of a capital asset unless:

(1) The security is, before the expiration of the thirtieth day after the date of its acquisition, clearly identified in the dealer's records as a security held for investment or, if acquired before October 20, 1951, was so identified before November 20, 1951; and

(2) The security is not held by the dealer primarily for sale to customers in the ordinary course of his trade or business at any time after the identification referred to in subparagraph (1) of this paragraph has been made.

Unless both of these requirements are met, the gain is considered as gain from the sale of assets held by the dealer primarily for sale to customers in the course of his business.

(b) ***Ordinary losses.*** Section 1236(b) provides that a loss sustained by a dealer in securities from the sale or exchange of a security shall not be considered a loss from the sale or exchange of property which is not a capital asset if at any time after November 19, 1951, the security has been clearly identified in the dealer's records as a security held for investment. Once a security has been identified after November 19, 1951, as being held by the dealer for investment, it shall retain that character for purposes of determining loss on its ultimate disposition, even though at the time of its disposition the dealer holds it primarily for sale to his customers in the ordinary course of his business. However, section 1236 has no application to the extent that section 582(c) applies to losses of banks.

(c) ***Definitions —***

(1) ***Security.*** For the purposes of this section, the term *security* means any share of stock in any corporation, any certificate of stock or interest in any corporation, any note, bond, debenture, or other evidence of indebtedness, or any evidence of any interest in, or right to subscribe to or purchase, any of the foregoing.

(2) ***Dealer in securities.*** For definition of a *dealer in securities,* see the regulations under section 471.

(d) ***Identification of security in dealer's records.***

(1) A security is clearly identified in the dealer's records as a security held for investment when there is an accounting separation of the security from other securities, as by making appropriate entries in the dealer's books of account to distinguish the security from inventories and to designate it as an investment and by

(i) indicating with such entries, to the extent feasible, the individual serial number of, or other characteristic symbol imprinted upon, the individual security, or

(ii) adopting any other method of identification satisfactory to the Commissioner.

(2) In computing the 30-day period prescribed by section 1236(a), the first day of the period is the day following the date of acquisition. Thus, in the case of a security acquired on March 18, 1957, the 30-day period expires at midnight on April 17, 1957.

[T.D. 6500, 25 FR 12015, Nov. 26, 1960, as amended by T.D. 6726, 29 FR 5667, Apr. 29, 1964]

§ 1.1237-1 Real property subdivided for sale.

(a) ***General rule —***

(1) ***Introductory.*** This section provides a special rule for determining whether the taxpayer holds real property primarily for sale to customers in the ordinary course of his business under section 1221(1). This rule is to permit taxpayers qualifying under it to sell real estate from a single tract held for investment without the income being treated as ordinary income merely because of subdividing the tract or of active efforts to sell it. The rule is not applicable to dealers in real estate or to corporations, except a corporation making such sales in a taxable year beginning after December 3l, 1954, if such corporation qualifies under the provisions of paragraph (c)(5)(iv) of this section.

(2) ***When subdividing and selling activities are to be disregarded.*** When its conditions are met, section 1237 provides that if there is no other substantial evidence that a taxpayer holds real estate primarily for sale to customers in the ordinary course of his business, he shall not be considered a real estate dealer holding it primarily for sale merely because he has (i) subdivided the tract into lots (or parcels) and (ii) engaged in advertising, promotion, selling activities or the use of sales agents in connection with the sale of lots in such subdivision. Such subdividing and selling activities shall be disregarded in determining the purpose for which the taxpayer held real property sold from a subdivision whenever it is the only substantial evidence indicating that the taxpayer has ever held the real property sold primarily for sale to customers in the ordinary course of his business.

(3) ***When subdividing and selling activities are to be taken into account.*** When other substantial evidence tends to show that the taxpayer held real property for sale to customers in the ordinary course of his business, his activities in connection with the subdivision and sale of the property sold shall be taken into account in determining the purpose for which the taxpayer held both the subdivided property and any other real property. For example, such other evidence may consist of the taxpayer's

selling activities in connection with other property in prior years during which he was engaged in subdividing or selling activities with respect to the subdivided tract, his intention in prior years (or at the time of acquiring the property subdivided) to hold the tract primarily for sale in his business, his subdivision of other tracts in the same year, his holding other real property for sale to customers in the same year, or his construction of a permanent real estate office which he could use in selling other real property. On the other hand, if the only evidence of the taxpayer's purpose in holding real property consisted of not more than one of the following, in the year in question, such fact would not be considered substantial other evidence:

(i) Holding a real estate dealer's license;

(ii) Selling other real property which was clearly investment property;

(iii) Acting as a salesman for a real estate dealer, but without any financial interest in the business; or

(iv) Mere ownership of other vacant real property without engaging in any selling activity whatsoever with respect to it.

If more than one of the above exists, the circumstances may or may not constitute substantial evidence that the taxpayer held real property for sale in his business, depending upon the particular facts in each case.

(4) ***Section 1237 not exclusive.***

(i) The rule in section 1237 is not exclusive in its application. Section 1237 has no application in determining whether or not real property is held by a taxpayer primarily for sale in his business if any requirement under the section is not met. Also, even though the conditions of section 1237 are met, the rules of section 1237 are not applicable if without regard to section 1237 the real property sold would not have been considered real property held primarily for sale to customers in the ordinary course of his business. Thus, the district director may at all times conclude from convincing evidence that the taxpayer held the real property solely as an investment. Furthermore, whether or not the conditions of section 1237 are met, the section has no application to losses realized upon the sale of realty from subdivided property.

(ii) If, owing solely to the application of section 1237, the real property sold is deemed not to have been held primarily for sale in the ordinary course of business, any gain realized upon such sale shall be treated as ordinary income to the extent provided in section 1237(b) (1) and (2) and paragraph (e) of this section. Any additional gain realized upon the sale shall be treated as gain arising from the sale of a capital asset or, if the circumstances so indicate, as gain arising from the sale of real property used in the trade or business as defined in section 1231 (b)(1). For the relationship between sections 1237 and 1231, see paragraph (f) of this section.

(5) ***Principal conditions of qualification.*** Before section 1237 applies, the taxpayer must meet three basic conditions, more fully explained later: He cannot have held any part of the tract at any time previously for sale in the ordinary course of his business, nor in the year of sale held any other real estate for sale to customers; he cannot make substantial improvements on the tract which increase the value of the lot sold substantially; and he must have owned the property 5 years, unless he inherited it. However, the taxpayer may make certain improvements if they are necessary to make the property marketable if he elects neither to add their cost to the basis of the property, or of any

other property, nor to deduct the cost as an expense, and he has held the property at least 10 years. If the requirements of section 1237 are met, gain (but not more than 5 percent of the selling price of each lot) shall be treated as ordinary income in and after the year in which the sixth lot or parcel is sold.

(b) ***Disqualification arising from holding real property primarily for sale*** —

(1) ***General rule.*** Section 1237 does not apply to any transaction if the taxpayer either:

(i) Held the lot sold (or the tract of which it was a part) primarily for sale in the ordinary course of his business in a prior year, or

(ii) Holds other real property primarily for sale in the ordinary course of his business in the same year in which such lot is sold.

Where either of these elements is present, section 1237 shall be disregarded in determining the proper treatment of any gain arising from such sale.

(2) ***Method of applying general rule.*** For purposes of this paragraph, in determining whether the lot sold was held primarily for sale in the ordinary course of business in a prior year, the principles of section 1237 shall be applied, whether or not section 1237 was effective for such prior year, if the sale of the lot occurs after December 31, 1953, or, in the case of a corporation meeting the requirements of paragraph (c)(5)(iv) of this section, if the sale of the lot occurs in a taxable year beginning after December 31, 1954. Whether, on the other hand, the taxpayer holds other real property for sale in the ordinary course of his business in the same year such lot was sold shall be determined without regard to the application of section 1237 to such other real property.

(3) ***Attribution rules with respect to the holding of property.*** The taxpayer is considered as holding property which he owns individually, jointly, or as a member of a partnership. He is not generally considered as holding property owned by members of his family, an estate or trust, or a corporation. See, however, paragraph (c)(5) (iv)(c) of this section for an exception to this rule. The purpose for which a prior owner held the lot or tract, or his activities, are immaterial except to the extent they indicate the purpose for which the taxpayer has held the lot or tract. See paragraph (d) of this section for rules relating to the determination of the period for which the property is held. The principles of this subparagraph may be illustrated by the following example:

Example: A dealer in real property held a tract of land for sale to customers in the ordinary course of his business for 5 years. He then made a gift of it to his son. As a result of the operation of section 1223(2) the son will have held the property for the period of time required by section 1237. However, he will not qualify for the benefits of section 1237 because, there being no evidence to the contrary, the circumstances involved establish that the son holds the property for sale to customers, as did his father.

(c) ***Disqualification arising from substantial improvements*** —

(1) ***General rule.*** Section 1237 will not apply if the taxpayer or certain others make improvements on the tract which are substantial and which substantially increase the value of the lot sold. Certain improvements are not substantial within the meaning of section 1237(a)(2) if they are necessary to make the lot marketable at the prevailing local price and meet the other conditions of section 1237(b)(3). See subparagraph (5) of this paragraph.

(2) ***Improvements made or deemed to be made by the taxpayer.*** Certain improvements made by the taxpayer or made under a contract of sale between the taxpayer and the buyer make section 1237 inapplicable.

(i) For the purposes of section 1237 (a)(2) the taxpayer is deemed to have made any improvements on the tract while he held it which are made by:

(*a*) The taxpayer's whole or half brothers and sisters, spouse, ancestors and lineal descendants.

(*b*) A corporation controlled by the taxpayer. A corporation is controlled by the taxpayer if he controls, as the result of direct ownership, constructive ownership, or otherwise, more than 50 percent of the corporation's voting stock.

(*c*) A partnership of which the taxpayer was a member at the time the improvements were made.

(*d*) A lessee if the improvement takes the place of a payment of rental income. See section 109 and the regulations thereunder.

(*e*) A Federal, State, or local government, or political subdivision thereof, if the improvement results in an increase in the taxpayer's basis for the property, as it would, for example, from a special tax assessment for paving streets.

(ii) The principles of subdivision (i) of this subparagraph may be illustrated by the following example:

Example: A held a tract of land for 3 years during which he made substantial improvements thereon which substantially enhanced the value of every lot on the tract. A then made a gift of the tract to his son. The son made no further improvements on the tract but held it for 3 years and then sold several lots therefrom. The son is not entitled to the benefits of section 1237 since under section 1237(a)(2) he is deemed to have made the substantial improvements made by his father, and under section 1223(2) he is treated as having held the property for the period during which his father held it. Thus, the disqualifying improvements are deemed to have been made by the son while the tract was held by him. See paragraph (d) of this section for rules relating to the determination of the period for which the property is held.

(iii) The taxpayer is also charged with making any improvements made pursuant to a contract of sale entered into between the taxpayer and the buyer. Therefore, the buyer, as well as the taxpayer, may make improvements which prevent the application of section 1237.

(*a*) If a contract of sale obligates either the taxpayer or the buyer to make a substantial improvement which would substantially increase the value of the lot, the taxpayer may not claim the application of section 1237 unless the obligation to improve the lot ceases (for any reason other than that the improvement has been made) before or within the period, prescribed by section 6511, within which the taxpayer may file a claim for credit or refund of an overpayment of his tax on the gain from the sale of the lot. The following example illustrates this rule:

Example: In 1956, A sells several lots from a tract he has subdivided for sale. Section 1237 would apply to the sales of these lots except that in the contract of sale, A agreed to install sewers, hard surface roads, and other utilities which would increase the value

of the lots substantially. If in 1957, instead of requiring the improvements, the buyer releases A from this obligation, A may then claim the application of section 1237 to the sale of lots in 1956 in computing his income tax for 1956, since the period of limitations in which A may file a claim for credit or refund of an overpayment of his 1956 income tax has not expired.

(*b*) An improvement is made pursuant to a contract if the contract imposes an obligation on either party to make the improvement, but not if the contract merely places restrictions on the improvements, if any, either party may make. The following example illustrates this rule:

Example: B sells several lots from a tract which he has subdivided. Each contract of sale prohibits the purchaser from building any structure on his lot except a personal residence costing $15,000 or more. Even if the purchasers build such residences, that does not preclude B from applying section 1237 to the sales of such lots, since the contracts did not obligate the purchasers to make any improvements.

(iv) Improvements made by a bona fide lessee (other than as rent) or by others not described in section 1237(a) (2) do not preclude the use of section 1237.

(3) ***When improvements substantially enhance the value of the lot sold.*** Before a substantial improvement will preclude the use of section 1237, it must substantially enhance the value of the lot sold.

(i) The increase in value to be considered is only the increase attributable to the improvement or improvements. Other changes in the market price of the lot, not arising from improvements made by the taxpayer, shall be disregarded. The difference between the value of the lot, including improvements, when the improvement has been completed and an appraisal of its value if unimproved at that time, will disclose the value added by the improvements.

(ii) Whether improvements have substantially increased the value of a lot depends upon the circumstances in each case. If improvements increase the value of a lot by 10 percent or less, such increase will not be considered as substantial, but if the value of the lot is increased by more than 10 percent, then all relevant factors must be considered to determine whether, under such circumstances, the increase is substantial.

(iii) Improvement may increase the value of some lots in a tract without equally affecting other lots in the same tract. Only the lots whose value was substantially increased are ineligible for application of the rule established by section 1237.

(4) ***When an improvement is substantial.*** To prevent the application of section 1237, the improvement itself must be substantial in character. Among the improvements considered substantial are shopping centers, other commercial or residential buildings, and the installation of hard surface roads or utilities such as sewers, water, gas, or electric lines. On the other hand a temporary structure used as a field office, surveying, filling, draining, leveling and clearing operations, and the construction of minimum all-weather access roads, including gravel roads where required by the climate, are not substantial improvements.

(5) ***Special rules relating to substantial improvements.*** Under certain conditions a taxpayer, including a corporation to which subdivision (iv) of this subparagraph applies, may obtain the benefits of section 1237 whether or not substantial improvements have been made. In addition, an individual taxpayer may, under certain circumstances elect to have substantial improvements treated as necessary and not substantial.

(i) ***When an improvement is not considered substantial.*** An improvement will not be considered substantial if all of the following conditions are met:

(*a*) The taxpayer has held the property for 10 years. The full 10-year period must elapse, whether or not the taxpayer inherited the property. Although the taxpayer must hold the property 10 years, he need not hold it for 10 years after subdividing it. See paragraph (d) of this section for rules relating to the determination of the period for which the property is held.

(*b*) The improvement consists of the building or installation of water, sewer, or drainage facilities (either surface, sub-surface, or both) or roads, including hard surface roads, curbs, and gutters.

(*c*) The district director with whom the taxpayer must file his return is satisfied that, without such improvement, the lot sold would not have brought the prevailing local price for similar building sites.

(*d*) The taxpayer elects, as provided in subdivision (iii) of this subparagraph, not to adjust the basis of the lot sold or any other property held by him for any part of the cost of such improvement attributable to such lot and not to deduct any part of such cost as an expense.

(ii) ***Meaning of similar building site.*** A *similar building site* is any real property in the immediate vicinity whose size, terrain, and other characteristics are comparable to the taxpayer's property. For the purpose of determining whether a tract is marketable at the prevailing local price for similar building sites, the taxpayer shall furnish the district director with sufficient evidence to enable him to compare

(*a*) the value of the taxpayer's property in an unimproved state with

(*b*) the amount for which similar building sites, improved by the installation of water, sewer, or drainage facilities or roads, have recently been sold, reduced by the present cost of such improvements. Such comparison may be made and expressed in terms of dollars per square foot, dollars per acre, or dollars per front foot, or in any other suitable terms depending upon the practice generally followed by real estate dealers in the taxpayer's locality. The taxpayer shall also furnish evidence, where possible, of the best bona fide offer received for the tract or a lot thereof just before making the improvement, to assist the district director in determining the value of the tract or lot if it had been sold in its unimproved state. The operation of this subdivision and subdivision (i) of this subparagraph may be illustrated by the following examples:

Example 1. A has been offered $500 per acre for a tract without roads, water, or sewer facilities which he has owned for 15 years. The adjacent tract has been subdivided and improved with water facilities and hard surface roads, and has sold for $4,000 per acre. The estimated cost of roads and water facilities on the adjacent tract is $2,500 per acre. The prevailing local price for similar building sites in the vicinity would be $1,500 per acre (i.e., $4,000 less $2,500). If A installed roads and water facilities at a cost of $2,500 per acre, his tract would sell for approximately $4,000 per acre. Under section 1237(b)(3) the installation of roads and water facilities does not constitute a substantial improvement if A elects to disregard the cost of such improvements ($2,500 per acre) in computing his cost or other basis for the lots sold from the tract, and in computing his basis for any other property owned by him.

Example 2. Assume the same facts as in example (1) of this subdivision, except that A can obtain $1,600 per acre for his property without improvements. The installation of any substantial improvements would not constitute a necessary improvement under section 1237(b)(3), since the prevailing local price could have been obtained without any improvement.

Example 3. Assume the same facts as in example (1) of this subdivision, except that the adjacent tract has also been improved with sewer facilities, the present cost of which is $1,200 per acre. The installation of the substantial improvements would not constitute a necessary improvement under section 1237(b)(3) on A's part, since the prevailing local price ($4,000 less the sum of $1,200 plus $2,500, or $300) could have been obtained by A without any improvement.

(iii) ***Manner of making election.*** The election required by section 1237(b) (3)(C) shall be made as follows:

(*a*) The taxpayer shall submit:

(*1*) A plat showing the subdivision and all improvements attributable to him.

(*2*) A list of all improvements to the tract, showing:

(*i*) The cost of such improvements.

(*ii*) Which of the improvements, without regard to the election, he considers *substantial* and which he considers not *substantial*.

(*iii*) Those improvements which are substantial to which the election is to apply, with a fair allocation of their cost to each lot they affect, and the amount by which they have increased the values of such lots.

(*iv*) The date on which each lot was acquired and its basis for determining gain or loss, exclusive of the cost of any improvements listed in subdivision (iii) of this subdivision.

(*3*) A statement that he will neither deduct as an expense nor add to the basis of any lot sold, or of any other property, any portion of the cost of any substantial improvement which substantially increased the value of any lot in the tract and which either he listed pursuant to (*a*)(*2*)(iii) of this subdivision or which the district director deems substantial.

(*b*) The election and the information required under (*a*) of this subdivision shall be submitted to the district director:

(*1*) With the taxpayer's income tax return for the taxable year in which the lots subject to the election were sold, or

(*2*) In the case of a return filed prior to August 14, 1957, either with a timely claim for refund, where the benefits of section 1237 have not been claimed on such return, or, independently, before November 13, 1957, where such benefits have been claimed, or

(*3*) If there is an obligation to make disqualifying improvements outstanding when the taxpayer files his return, with a formal claim for refund at the time of the release of the obligation, if it is then still possible to file a timely claim.

(*c*) Once made, the election as to the necessary improvement costs attributable to any lot sold shall be irrevocable and binding on the taxpayer unless the district director assesses an income tax as to such lot as if it were held for sale in the ordinary course of taxpayer's business. Under such circumstances, in computing gain, the cost or other basis shall be computed without regard to section 1237.

(iv) ***Exceptions with respect to necessary*** improvements and certain corporations. For taxable years beginning after December 31, 1954, individual taxpayers and certain corporations may obtain the benefits of section 1237 without complying with the provisions of subdivisions (i) (*c*) and (*d*), (ii), and (iii) of this subparagraph if the requirements of section 1237 are otherwise met and if:

(*a*) The property in question was acquired by the taxpayer through the foreclosure of a lien thereon,

(*b*) The lien foreclosed secured the payment of an indebtedness to the taxpayer or (in the case of a corporation) secured the payment of an indebtedness to a creditor who has transferred the foreclosure bid to the taxpayer in exchange for all of the stock of the corporation and other consideration, and

(*c*) In the case of a corporate taxpayer, no shareholder of the corporation holds real property for sale to customers in the ordinary course of his trade or business or holds a controlling interest in another corporation which actually so holds real property, or which, but for the application of this subdivision, would be considered to so hold real property.

Thus, in the case of such property, it is not necessary for the taxpayer to satisfy the district director that the property would not have brought the prevailing local price without improvements or to elect not to add the cost of the improvements to his basis. In addition, if 80 percent or more of the real property owned by a taxpayer is property to which this subdivision applies, the requirements of (*a*) and (*b*) of this subdivision need not be met with respect to property adjacent to such property which is also owned by the taxpayer.

(d) ***Holding period required*** —

(1) ***General rules.*** To apply section 1237, the taxpayer must either have inherited the lot sold or have held it for 5 years. Generally, the provisions of section 1223 are applicable in determining the period for which the taxpayer has held the property. The provisions of this subparagraph may be illustrated by the following examples:

Example 1. A held a tract of land for 3 years under circumstances otherwise qualifying for section 1237 treatment. He made a gift of the tract to B at a time when the fair market value of the tract exceeded A's basis for the tract. B held the tract for 2 more years under similar circumstances. B then sold 4 lots from the tract. B is entitled to the benefits of section 1237 since under section 1223(2) he held the lots for 5 years and all the other requirements of section 1237 are met.

Example 2. C purchased all the stock in a corporation in 1955. The corporation purchased an unimproved tract of land in 1957. In 1961 the corporation was liquidated under section 333 and C acquired the tract of land. For purposes of section 1237, C's holding period commenced on the date the corporation actually acquired the land in 1957 and not on the date C purchased the stock.

(2) ***Rules relating to property acquired upon death.*** If the taxpayer inherited the property there is no 5-year holding period required under section 1237. However, any holding period required by any other provision of the Code, such as section 1222, is nevertheless applicable. For purposes of section 1237, neither the survivor's one-half of community property, nor property acquired by survivorship in a joint tenancy, is property acquired by devise or inheritance. The holding period for the surviving joint tenant begins on the date the property was originally acquired.

(e) ***Tax consequences if section 1237 applies —***

(1) ***Introductory.*** Where there is no substantial evidence other than subdivision and related selling activities that real property is held for sale in the ordinary course of taxpayer's business and section 1237 applies, section 1237(b)(1) provides a special rule for computing taxable gain. For the relationship between sections 1237 and 1231, see paragraph (f) of this section.

(2) ***Characterization of gain and its relation to selling expenses.***

(i) When the taxpayer has sold less than 6 lots or parcels from the same tract up to the end of his taxable year, the entire gain will be capital gain. (Where the land is used in a trade or business, see paragraph (f) of this section.) In computing the number of lots or parcels sold, two or more contiguous lots sold to a single buyer in a single sale will be counted as only one parcel. The following example illustrates this rule:

Example: A meets all the conditions of section 1237 in subdividing and selling a single tract. In 1956 he sells 4 lots to B, C, D, and E. In the same year F buys 3 adjacent lots. Since A has sold only 5 lots or parcels from the tract, any gain A realizes on the sales will be capital gain.

(ii) If the taxpayer has sold the sixth lot or parcel from the same tract within the taxable year, then the amount, if any, by which 5 percent of the selling price of each lot exceeds the expenses incurred in connection with its sale or exchange, shall, to the extent it represents gain, be ordinary income. Any part of the gain not treated as ordinary income will be treated as capital gain. (Where the land is used in a trade or business, see paragraph (f) of this section.) Five percent of the selling price of each lot sold from the tract in the taxable year the sixth lot is sold and thereafter is, to the extent it represents gain, considered ordinary income. However, all expenses of sale of the lot are to be deducted first from the 5 percent of the gain which would otherwise be considered ordinary income, and any remainder of such expenses shall reduce the gain upon the sale or exchange which would otherwise be considered capital gain. Such expenses cannot be deducted as ordinary business expenses from other income. The 5-percent rule applies to all lots sold from the tract in the year the sixth lot or parcel is sold. Thus, if the taxpayer sells the first 6 lots of a single tract in one year, 5 percent of the selling price of each lot sold shall be treated as ordinary income and reduced by the selling expenses. On the other hand, if the taxpayer sells the first 3 lots of a single tract in 1955, and the next 3 lots in 1956, only the gain realized from the sales made in 1956 shall be so treated. For the effect of a 5-year interval between sales, see paragraph (g)(2) of this section. The operation of this subdivision may be illustrated by the following examples:

> *Example 1.* Assume the selling price of the sixth lot of a tract is $10,000, the basis of the lot in the hands of the taxpayer is $5,000, and the expenses of sale are $750. The amount of gain realized by the taxpayer is $4,250, of which the amount of ordinary

income attributable to the sale is zero, computed as follows:

Selling price		$10,000
Basis		5,000
Excess over basis		5,000
5 percent of selling price	500	
Expenses of sale	750	
Amount of gain realized treated as ordinary income		0
Excess over basis		5,000
5 percent of selling price	500	
Excess of expenses over 5 percent of selling price	250	
		750
Amount of gain realized from sale of property not held for sale in ordinary course of business		4,250

Example 2. Assume the same facts as in Example 1, except that the expenses of sale of such sixth lot are $300. The amount of gain realized by the taxpayer is $4,700, of which the amount of ordinary income attributable to the sale is $200, computed as follows:

Selling price		$10,000
Basis		5,000
Excess over basis		5,000
5 percent of selling price	$500	
Expenses of sale	300	
Amount of gain realized treated as ordinary income		200
Excess over basis		5,000
5 percent of selling price	500	
Excess of expenses over 5 percent of selling price	0	
		500
Amount of gain realized from sale of property not held for sale in ordinary course of business		4,500

(iii) In the case of an exchange, the term *selling price* shall mean the fair market value of property received plus any sum of money received in exchange for the lot. See section 1031 for those exchanges in which no gain is recognized. For the purpose of subsections (b) and (c) of section 1237 and paragraphs (e) and (g) of this section, an exchange shall be treated as a sale or exchange whether or not gain or loss is recognized with respect to such exchange.

(f) ***Relationship of section 1237 and section 1231.*** Application of section 1237 to a sale of real property may, in some cases, result in the property being treated as real property used in the trade or business, as described in section 1231(b)(1). Thus, assuming section 1237 is otherwise applicable, if the lot sold would be considered property described in section 1231(b)(1) except for the fact that the taxpayer subdivided the tract of which it was a part, then evidence of such subdivision and connected sales activities shall be disregarded and the lot sold shall be considered real property used in the trade or business. Under such circumstances, any gain or loss realized from the sale shall be treated as gain or loss arising from the sale of real property used in the trade or business.

(g) ***Definition of tract*** —

(1) ***Aggregation of properties.*** For the purposes of section 1237, the term *tract* means either

(i) a single piece of real property or

(ii) two or more pieces of real property if they were contiguous at any time while held by the taxpayer, or would have been contiguous but for the interposition of a road, street, railroad, stream, or similar property. Properties are contiguous if their boundaries meet at one or more points. The single piece of contiguous properties need not have been conveyed by a single deed. The taxpayer may have assembled them over a period of time and may hold them separately, jointly, or as a partner, or in any combination of such forms of ownership.

(2) ***When a subdivision will be considered a new tract.*** If the taxpayer sells or exchanges no lots from the tract for a period of 5 years after the sale or exchange of at least 1 lot in the tract, then the remainder of the tract shall be deemed a new tract for the purpose of counting the number of lots sold from the same tract under section 1237(b)(1). The pieces in the new tract need not be contiguous. The 5-year period is measured between the dates of the sales or exchanges.

(h) ***Effective date.*** This section shall apply only to gain realized on sales made after December 31, 1953, or, in the case of a person meeting the requirements of paragraph (c)(5)(iv) of this section, if the sale of the lot occurs in a taxable year beginning after December 31, 1954. Pursuant to section 7851(a)(1)(C), the regulations prescribed in this section (other than subdivision (iv) of paragraph (c)(5)) shall also apply to taxable years beginning before January 1, 1954, and ending after December 31, 1953, and to taxable years beginning after December 31, 1953, and ending before August 17, 1954, although such years are subject to the Internal Revenue Code of 1939. Irrespective of whether the taxable year involved is subject to the Internal Revenue Code of 1939 or the Internal Revenue Code of 1954, sales or exchanges made before January 1, 1954, shall be taken into account to determine whether:

(1) No sales or exchanges have been made for 5 years, under section 1237(c), and

(2) more than 5 lots or parcels have been sold or exchanged from the same tract, under section 1237(b)(1). Thus, if the taxpayer sold 5 lots from a single tract in 1950, and another lot is sold in 1954, the lot sold in 1954 constitutes the *sixth lot* sold from the original tract. On the other hand, if the first 5 lots were sold in 1948, the sale made in 1954 shall be deemed to have been made from a new tract.

[T.D. 6500, 25 FR 12016, Nov. 26, 1960]

§ 1.1238-1 Amortization in excess of depreciation.

(a) ***In general.*** Section 1238 provides that if a taxpayer is entitled to a deduction for amortization of an emergency facility under section 168, and if the facility is later sold or exchanged, any gain realized shall be considered as ordinary income to the extent that the amortization deduction exceeds normal depreciation. Thus, under section 1238 gain from a sale or exchange of property shall be considered as ordinary income to the extent that its adjusted basis is less than its adjusted basis would be if it were determined without regard to section 168. If an entire facility is certified under section 168(e), the taxpayer may use allowances for depreciation based on any rate and method which would have been proper if the basis of the facility were not subject to amortization under section 168, in determining what the adjusted basis of the facility would be if it were determined without regard to section 168. If only a portion of a facility is certified under section 168(e), allowances for depreciation based on the rate and method properly used with respect to the uncertified part of the facility are used in determining what the adjusted basis of the facility would be if it were determined without regard to section 168. The principles of this paragraph may be illustrated by the following examples:

Example 1. On December 31, 1954, a taxpayer making his income tax returns on a calendar year basis acquires at a cost of $20,000 an emergency facility (used in his business) 50 percent of the adjusted basis of which has been certified under section 168(e). The facility would normally have a useful life of 20 years and a salvage value of $2,000 allocable equally between the certified and uncertified portions. Under section 168 the taxpayer elects to begin the 60-month amortization period on January 1, 1955. He takes amortization deductions with respect to the certified portion in the amount of $4,000 for the years 1955 and 1956 (24 months). On December 31, 1956, he sells the facility for a price of $19,000 which is allocable equally between the certified and uncertified portions. The adjusted basis of the certified portion on that date is $6,000 ($10,000 cost, less $4,000 amortization). With respect to the uncertified portion, the straight line method of depreciation is used and a deduction for depreciation in the amount of $450 is claimed and allowed for the year 1955. The adjusted basis of the uncertified portion on January 1, 1956, is $9,550 ($10,000 cost, less $450 depreciation). The depreciation allowance for the uncertified portion for the year 1956 would be limited to $50, the amount by which the adjusted basis of such portion at the beginning of the year exceeded its aliquot portion of the sales price. Thus, on December 31, 1956, the adjusted basis of the uncertified portion would be $9,500. Without regard to section 168, and using the rate and method the taxpayer properly applied to the uncertified portion of the facility, the adjusted basis of the certified portion on December 31, 1956, would be $9,500, computed in the same manner as the adjusted basis of the uncertified portion. The difference between the facility's actual adjusted basis ($15,500) and its adjusted basis determined without regard to section 168 ($19,000), is $3,500. Accordingly, the entire $3,500 gain on the sale of the facility ($19,000 sale price, less $15,500 adjusted basis) is treated as ordinary income.

Example 2. Assume that the entire facility in example (1) had been certified under section 168(e) and that, therefore, the adjusted basis of the facility on December 31, 1956, is $12,000. Assume further that the taxpayer adopts straight line depreciation as a proper method of depreciation for determining the adjusted basis of the facility without regard to section 168. Thus, the adjusted basis, without regard to section 168, would be $19,000. This amount is $7,000 more than the $12,000 adjusted basis under section 168. Hence, the entire $7,000 gain on the sale of the facility ($19,000 sale price less $12,000 adjusted basis) is treated as ordinary income.

(b) ***Substituted basis.*** If a taxpayer acquires other property in an exchange for an emergency facility with respect to which amortization deductions have been allowed or allowable, and if the basis in his hands of the other property is determined by reference to the basis of the emergency facility, then the basis of the other property is determined with regard to section 168, and therefore the provisions of section 1238 apply with respect to gain realized on a subsequent sale or exchange of the other property. The provisions of section 1238 also apply to gain realized on the sale or exchange of an emergency facility (or other property acquired, as described in the preceding sentence, in exchange for an emergency facility) by a taxpayer in whose hands the basis of the facility (or other property) is determined by reference to its basis in the hands of another person to whom deductions were allowable or allowed with respect to the facility under section 168.

[T.D. 6500, 25 FR 12020, Nov. 26, 1960, as amended by T.D. 6825, 30 FR 7281, June 2, 1965]

§ 1.1239-1 Gain from sale or exchange of depreciable property between certain related taxpayers after October 4, 1976.

(a) ***In general.*** In the case of a sale or exchange of property, directly or indirectly, between related persons after October 4, 1976 (other than a sale or exchange made under a binding contract entered into on or before that date), any gain recognized by the transferor shall be treated as ordinary income if such property is, in the hands of the transferee, subject to the allowance for depreciation provided in section 167. This rule also applies to property which would be subject to the allowance for depreciation provided in section 167 except that the purchaser has elected a different form of deduction, such as those allowed under sections 169, 188, and 191.

(b) ***Related persons.*** For purposes of paragraph (a) of this section, the term *related persons* means:

(1) A husband and wife,

(2) An individual and a corporation 80 percent or more in value of the outstanding stock of which is owned, directly or indirectly, by or for such individual, or

(3) Two or more corporations 80 percent or more in value of the outstanding stock of each of which is owned, directly or indirectly, by or for the same individual.

(c) ***Rules of construction*** —

(1) ***Husband and wife.*** For purposes of paragraph (b)(1) of this section, if on the date of the sale or exchange a taxpayer is legally separated from his spouse under an interlocutory decree of divorce, the taxpayer and his spouse shall not be treated as husband and wife, provided the sale or exchange is made pursuant to the decree and the decree subsequently becomes final. Thus, if pursuant to an interlocutory decree of divorce, an individual transfers depreciable property to his spouse and, because of this section, the gain recognized on the transfer of the property is treated as ordinary income, the individual may, if the interlocutory decree becomes final after his tax return has been filed, file a claim for a refund.

(2) ***Sales between commonly controlled corporations.*** In general, in the case of a sale or exchange of depreciable property between related corporations (within the meaning of paragraph (b)(3) of this section), gain which is treated as ordinary income by reason of this section shall be taxable to the transferor corporation rather than to a controlling shareholder. However, such gain shall be treated as ordinary income taxable to a controlling shareholder rather than the transferor corporation if the transferor corporation is used by a controlling shareholder as a mere conduit to make a sale to

another controlled corporation, or the entity of the corporate transferor is otherwise properly disregarded for tax purposes. Sales between two or more corporations that are related within the meaning of paragraph (b)(3) of this section may also be subject to the rules of section 482 (relating to allocation of income between or among organizations, trades, or businesses which are commonly owned or controlled), and to rules requiring constructive dividend treatment to the controlling shareholder in appropriate circumstances.

(3) ***Relationship determination for transfers made after January 6, 1983—taxpayer and an 80-percent owned entity.*** For purposes of paragraph (b)(2) of this section with respect to transfers made after January 6, 1983—

(i) If the transferor is an entity, the transferee and such entity are related if the entity is an 80-percent owned entity with respect to such transferee either immediately before or immediately after the sale or exchange of depreciable property, and

(ii) If the transferor is not an entity, the transferee and such transferor are related if the transferee is an 80-percent owned entity with respect to such transferor immediately after the sale or exchange of depreciable property.

(4) ***Relationship determination for transfers made after January 6, 1983—two 80-percent owned entities.*** For purposes of paragraph (b)(3) of this section, with respect to transfers made after January 6, 1983, two entities are related if the same shareholder both owns 80 percent or more in value of the stock of the transferor before the sale or exchange of depreciable property and owns 80 percent or more in value of the stock of the transferee immediately after the sale or exchange of depreciable property.

(5) ***Ownership of stock.*** For purposes of determining the ownership of stock under this section, the constructive ownership rules of section 318 shall be applied, except that section 318(a)(2)(C) (relating to attribution of stock ownership from a corporation) and section 318(a)(3)(C) (relating to attribution of stock ownership to a corporation) shall be applied without regard to the 50-percent limitation contained therein. The application of the constructive ownership rules of section 318 to section 1239 is illustrated by the following examples:

Example 1. A, an individual, owns 79 percent of the stock (by value) of Corporation X, and a trust for A's children owns the remaining 21 percent of the stock. A's children are deemed to own the stock owned for their benefit by the trust in proportion to their actuarial interests in the trust (section 318(a)(2)(B)). A, in turn, constructively owns the stock so deemed to be owned by his children (section 318(a)(1)(A)(ii)). Thus, A is treated as owning all the stock of Corporation X, and any gain A recognizes from the sale of depreciable property to Corporation X is treated under section 1239 as ordinary income.

Example 2. Y Corporation owns 100 percent in value of the stock of Z Corporation. Y Corporation sells depreciable property at a gain to Z Corporation. P and his daughter, D, own 80 percent in value of the Y Corporation stock. Under the constructive ownership rules of section 318, as applied to section 1239, P and D are each considered to own the stock in Z Corporation owned by Y Corporation. Also, P and D are each considered to own the stock in Y Corporation owned by the other. As a result, both P and D constructively own 80 percent or more in value of the stock of both Y and Z Corporations. Thus, the sale between Y and Z is governed by section 1239 and produces ordinary income to Y.

[T.D. 7569, 43 FR 51388, Nov. 3, 1978, as amended by T.D. 8106, 51 FR 42835, Nov. 26, 1986]

§ 1.1239-2 Gain from sale or exchange of depreciable property between certain related taxpayers on or before October 4, 1976.

Section 1239 provides in general that any gain from the sale or exchange of depreciable property between a husband and wife or between an individual and a controlled corporation on or before October 4, 1976 (and in the case of a sale or exchange occurring after that date if made under a binding contract entered into on or before that date), shall be treated as ordinary income. Thus, any gain recognized to the transferor from a sale or exchange after May 3, 1951, and on or before October 4, 1976 (or thereafter if pursuant to a binding contract entered into on or before that date), directly or indirectly, between a husband and wife or between an individual and a controlled corporation, of property which, in the hands of the transferee, is property of a character subject to an allowance for depreciation provided in section 167 (including such property on which a deduction for amortization is allowable under sections 168 and 169) shall be considered as gain from the sale or exchange of property which is neither a capital asset nor property described in section 1231. For the purpose of section 1239, a corporation is controlled when more than 80 percent in value of all outstanding stock of the corporation is beneficially owned by the taxpayer, his spouse, and his minor children and minor grandchildren. For the purpose of this section, the terms *children* and *grandchildren* include legally adopted children and their children. The provisions of section 1239(a)(2) are applicable whether property is transferred from a corporation to a shareholder or from a shareholder to a corporation.

[T.D. 6500, 25 FR 12021, Nov. 26, 1960, as amended by T.D. 7569, 43 FR 51388, Nov. 3, 1978]

§ 1.1240-1 Capital gains treatment of certain termination payments.

Any amounts received by an employee for the assignment or release of all his rights to receive, after termination of his employment and for a period of not less than five years or for a period ending with his death, a percentage of the profits or receipts of his employer attributable to a time subsequent to such termination, are considered received from the sale or exchange of a capital asset held for more than six months if the following requirements are met:

(a) The employee was employed by the employer, in whose future profits or receipts the employee had an interest, for a period of more than 20 years before the assignment or release by the employee of his rights in such future profits or receipts,

(b) The full rights of the employee to the percentage of the future profits or receipts on such employer, which rights are the subject of the assignment or release, were incorporated in the terms of the contract of employment between the employee and the employer for a period of at least 12 years, and were so incorporated before August 16, 1954,

(c) The assignment or release was made after the termination of the employee's employment with such employer,

(d) The assignment or release conveyed all the rights of the employee in the future profits or receipts of such employer and conveyed no other rights of the employee, and

(e) The total amount to which the employee became entitled pursuant to the assignment or release was received by the employee after the termination of his employment with such employer and in one taxable year of the employee.

The requirement that the assignment or release be made after the termination of the employee's employment contemplates a complete and bona fide termination of the relationship of employer and employee. This requires more than a mere termination of such relationship under the particular contract or contracts of employment pursuant to which the employee acquired his rights in the future profits or receipts of the employer. The contract need not expressly provide that the employee shall share in the future profits or receipts of the employer for a

minimum period of five years. However, if the contract does not expressly so provide and the assignment or release is made before the expiration of five years following the termination of employment, the terms of the contract considered in conjunction with the facts in the particular situation must establish that the rights of the employee to a percentage of future profits or receipts, in all probability, will extend to a period of not less than five years from the date of termination of employment or for a period ending with his death. Section 1240 has application only to an assignment or release made by the employee who acquired the right to a percentage of future profits or receipts of the employer, and has no application to amounts received other than as payment for assignment or release of such right. Section 1240 has no effect upon the determination of the income tax of the employer making the payment to the employee.

[T.D. 6500, 25 FR 12021, Nov. 26, 1960]

§ 1.1241-1 Cancellation of lease or distributor's agreement.

(a) ***In general.*** Section 1241 provides that proceeds received by lessees or distributors from the cancellation of leases or of certain distributorship agreements are considered as amounts received in exchange therefor. Section 1241 applies to leases of both real and personal property. Distributorship agreements to which section 1241 applies are described in paragraph (c) of this section. Section 1241 has no application in determining whether or not a cancellation not qualifying under that section is a sale or exchange. Further, section 1241 has no application in determining whether or not a lease or a distributorship agreement is a capital asset, even though its cancellation qualifies as an exchange under section 1241.

(b) ***Definition of cancellation.*** The term *cancellation* of a lease or a distributor's agreement, as used in section 1241, means a termination of all the contractual rights of a lessee or distributor with respect to particular premises or a particular distributorship, other than by the expiration of the lease or agreement in accordance with its terms. A payment made in good faith for a partial cancellation of a lease or a distributorship agreement is recognized as an amount received for cancellation under section 1241 if the cancellation relates to a severable economic unit, such as a portion of the premises covered by a lease, a reduction in the unexpired term of a lease or distributorship agreement, or a distributorship in one of several areas or of one of several products. Payments made for other modifications of leases or distributorship agreements, however, are not recognized as amounts received for cancellation under section 1241.

(c) ***Amounts received upon cancellation of a distributorship agreement.*** Section 1241 applies to distributorship agreements only if they are for marketing or marketing and servicing of goods. It does not apply to agreements for selling intangible property or for rendering personal services as, for example, agreements establishing insurance agencies or agencies for the brokerage of securities. Further, it applies to a distributorship agreement only if the distributor has made a substantial investment of capital in the distributorship. The substantial capital investment must be reflected in physical assets such as inventories of tangible goods, equipment, machinery, storage facilities, or similar property. An investment is not considered substantial for purposes of section 1241 unless it consists of a significant fraction or more of the facilities for storing, transporting, processing, or otherwise dealing with the goods distributed, or consists of a substantial inventory of such goods. The investment required in the maintenance of an office merely for clerical operations is not considered substantial for purposes of this section. Furthermore, section 1241 shall not apply unless a substantial amount of the capital or assets needed for carrying on the operations of a distributorship are acquired by the distributor and actually used in carrying on the distributorship at some time before the cancellation of the distributorship agreement. It is immaterial for the purposes of section 1241 whether the distributor acquired the assets used in

performing the functions of the distributorship before or after beginning his operations under the distributorship agreement. It is also immaterial whether the distributor is a retailer, wholesaler, jobber, or other type of distributor. The application of this paragraph may be illustrated by the following examples:

Example 1. Taxpayer is a distributor of various food products. He leases a warehouse including cold storage facilities and owns a number of motor trucks. In 1955 he obtains the exclusive rights to market certain frozen food products in his State. The marketing is accomplished by using the warehouse and trucks acquired before he entered into the agreement and entails no additional capital. Payments received upon the cancellation of the agreement are treated under section 1241 as though received upon the sale or exchange of the agreement.

Example 2. Assume that the taxpayer in example (1) entered into an exclusive distributorship agreement with the producer under which the taxpayer merely solicits orders through his staff of salesmen, the goods being shipped direct to the purchasers. Payments received upon the cancellation of the agreement would not be treated under section 1241 as though received upon the sale or exchange of the agreement.

Example 3. Taxpayer is an exclusive distributor for M city of certain frozen food products which he distributes to frozen-food freezer and locker customers. The terms of his distributorship do not make it necessary for him to have any substantial investment in inventory. Taxpayer rents a loading platform for a nominal amount, but has no warehouse space. Orders for goods from customers are consolidated by the taxpayer and forwarded to the producer from time to time. Upon receipt of these goods, taxpayer allocates them to the individual orders of customers and delivers them immediately by truck. Although it would require a fleet of fifteen or twenty trucks to carry out this operation, the distributor uses only one truck of his own and hires cartage companies to deliver the bulk of the merchandise to the customers. Payments received upon the cancellation of the distributorship agreement in such a case would not be considered received upon the sale or exchange of the agreement under section 1241 since the taxpayer does not have facilities for the physical handling of more than a small fraction of the goods involved in carrying on the distributorship and, therefore, does not have a substantial capital investment in the distributorship. On the other hand, if the taxpayer had acquired and used a substantial number of the trucks necessary for the deliveries to his customers, payments received upon the cancellation of the agreement would be considered received in exchange therefor under section 1241.

[T.D. 6500, 25 FR 12021, Nov. 26, 1960]

§ 1.1242-1 Losses on small business investment company stock.

(a) ***In general.*** Any taxpayer who sustains a loss for a taxable year beginning after September 2, 1958, as a result of the worthlessness, or from the sale or exchange, of the stock of a small business investment company (whether or not such stock was originally issued to such taxpayer) shall treat such loss as a loss from the sale or exchange of property which is not a capital asset, if at the time of such loss:

(1) The company which issued the stock is licensed to operate as a small business investment company pursuant to regulations promulgated by the Small Business Administration (13 CFR part 107), and

(2) Such loss would, but for the provisions of section 1242, be a loss from the sale or exchange of a capital asset.

(b) ***Treatment of losses for purposes of section 172.*** For the purposes of section 172 (relating to the net operating loss deduction), any amount of loss treated by reason of section 1242 as a loss from the sale or exchange of property which is not a capital asset shall be treated as attributable to the trade or business of the taxpayer. Accordingly, the limitation of section 172(d)(4) on the allowance of nonbusiness

deductions in computing a net operating loss shall not apply to any loss with respect to the stock of a small business investment company as described in paragraph (a) of this section. See section 172(d) and § 1.172-3.

(c) ***Statement to be filed with return.*** A taxpayer claiming a deduction for a loss on the stock of a small business investment company shall file with his income tax return a statement containing: The name and address of the small business investment company which issued the stock, the number of shares, basis, and selling price of the stock with respect to which the loss is claimed, the respective dates of purchase and sale of such stock, or the reason for its worthlessness and approximate date thereof. For the rules applicable in determining the worthlessness of securities, see section 165 and the regulations thereunder.

[T.D. 6500, 25 FR 12022, Nov. 26, 1960]

§ 1.1243-1 Loss of small business investment company.

(a) ***In general*** —

(1) ***Taxable years beginning after July 11, 1969.*** For taxable years beginning after July 11, 1969, a small business investment company to which section 582(c) applies, and which sustains a loss as a result of the worthlessness, or on the sale or exchange, of the stock of a small business concern (as defined in section 103(5) of the Small Business Investment Act of 1958, as amended (15 U.S.C. 662(5)) and in 13 CFR 107.3), shall treat such loss as a loss from the sale or exchange of property which is not a capital asset if:

(i) The stock was issued pursuant to the conversion privilege of the convertible debentures acquired in accordance with the provisions of section 304 of the Small Business Investment Act of 1958 (15 U.S.C. 684) and the regulations thereunder.

(ii) Such loss would, but for the provisions of section 1243, be a loss from the sale or exchange of a capital asset, and

(iii) At the time of the loss, the company is licensed to operate as a small business investment company pursuant to regulations promulgated by the Small Business Administration (13 CFR part 107).

If section 582(c) does not apply for the taxable year, see subparagraph (2) of this paragraph.

(2) ***Taxable years beginning before July 11, 1974.*** For taxable years beginning after September 2, 1958, but before July 11, 1974, a small business investment company to which section 582(c) does not apply, and which sustains a loss as a result of the worthlessness, or on the sale or exchange, of the securities of a small business concern (as defined in section 103(5) of the Small Business Investment Act of 1958, as amended (15 U.S.C. 662(5)) and in 13 CFR 107.3), shall treat such loss as a loss from the sale or exchange of property which is not a capital asset if:

(i) The securities are either the convertible debentures, or the stock issued pursuant to the conversion privilege thereof, acquired in accordance with the provisions of section 304 of the Small Business Investment Act of 1958 (15 U.S.C. 684) and the regulations thereunder.

(ii) Such loss would, but for the provisions of this subparagraph, be a loss from the sale or exchange of a capital asset, and

(iii) At the time of the loss, the company is licensed to operate as a small business investment company pursuant to regulations promulgated by the Small Business Administration (13 CFR part 107).

If section 582(c) applies for the taxable year, see subparagraph (1) of this paragraph.

(b) ***Material to be filed with return.*** A small business investment company which claims a deduction for a loss on the convertible debentures (pursuant to paragraph (a)(2) of this section) or stock (pursuant to paragraph (a) (1) or (2) of this section) of a small business concern shall submit with its income tax return a statement that it is a Federal licensee under the Small Business Investment Act of 1958 (15 U.S.C. chapter 14B). The statement shall also set forth: the name and address of the small business concern with respect to whose securities the loss was sustained, the number of shares of stock or the number and denomination of debentures with respect to which the loss is claimed, the basis and selling price thereof, and the respective dates of purchase and sale of the securities, or the reason for their worthlessness and the approximate date thereof. For the rules applicable in determining the worthlessness of securities, see section 165 and the regulations thereunder.

[T.D. 7171, 37 FR 5621, Mar. 17, 1972]

§ 1.1244(a)-1 Loss on small business stock treated as ordinary loss.

(a) ***In general.*** Subject to certain conditions and limitations, section 1244 provides that a loss on the sale or exchange (including a transaction treated as a sale or exchange, such as worthlessness) of *section 1244 stock* which would otherwise be treated as a loss from the sale or exchange of a capital asset shall be treated as a loss from the sale or exchange of an asset which is not a capital asset (referred to in this section and §§ 1.1244(b)-1 to 1.1244(e)-1, inclusive, as an *ordinary loss*). Such a loss shall be allowed as a deduction from gross income in arriving at adjusted gross income. The requirements that must be satisfied in order that stock may be considered section 1244 stock are described in §§ 1.1244(c)-1 and 1.1244(c)-2. These requirements relate to the stock itself and the corporation issuing such stock. In addition, the taxpayer who claims an ordinary loss deduction pursuant to section 1244 must satisfy the requirements of paragraph (b) of this section.

(b) ***Taxpayers entitled to ordinary loss.*** The allowance of an ordinary loss deduction for a loss of section 1244 stock is permitted only to the following two classes of taxpayers:

(1) An individual sustaining the loss to whom the stock was issued by a small business corporation, or

(2) An individual who is a partner in a partnership at the time the partnership acquired the stock in an issuance from a small business corporation and whose distributive share of partnership items reflects the loss sustained by the partnership. The ordinary loss deduction is limited to the lesser of the partner's distributive share at the time of the issuance of the stock or the partner's distributive share at the time the loss is sustained. In order to claim a deduction under section 1244 the individual, or the partnership, sustaining the loss must have continuously held the stock from the date of issuance. A corporation, trust, or estate is not entitled to ordinary loss treatment under section 1244 regardless of how the stock was acquired. An individual who acquires stock from a shareholder by purchase, gift, devise, or in any other manner is not entitled to an ordinary loss under section 1244 with respect to this stock.

Thus, ordinary loss treatment is not available to a partner to whom the stock is distributed by the partnership. Stock acquired through an investment banking firm, or other person, participating in the sale of an issue may qualify for ordinary loss treatment only if the stock is not first issued to the firm or

person. Thus, for example, if the firm acts as a selling agent for the issuing corporation the stock may qualify. On the other hand, stock purchased by an investment firm and subsequently resold does not qualify as section 1244 stock in the hands of the person acquiring the stock from the firm.

(c) ***Examples.*** The provisions of paragraph (b) of this section may be illustrated by the following examples:

Example 1. A and B, both individuals, and C, a trust, are equal partners in a partnership to which a small business corporation issues section 1244 stock. The partnership sells the stock at a loss. A's and B's distributive share of the loss may be treated as an ordinary loss pursuant to section 1244, but C's distributive share of the loss may not be so treated.

Example 2. The facts are the same as in example (1) except that the section 1244 stock is distributed by the partnership to partner A and he subsequently sells the stock at a loss. Section 1244 is not applicable to the loss since A did not acquire the stock by issuance from the small business corporation.

[T.D. 6495, 25 FR 9675, Oct. 8, 1960, as amended by T.D. 7779, 46 FR 29467, June 2, 1981]

§ 1.1244(b)-1 Annual limitation.

(a) ***In general.*** Subsection (b) of section 1244 imposes a limitation on the aggregate amount of loss that for any taxable year may be treated as an ordinary loss by a taxpayer by reason of that section. In the case of a partnership, the limitation is determined separately as to each partner. Any amount of loss in excess of the applicable limitation is treated as loss from the sale or exchange of a capital asset.

(b) ***Amount of loss*** —

(1) ***Taxable years beginning after December 31, 1978.*** For any taxable year beginning after December 31, 1978, the maximum amount that may be treated as an ordinary loss under section 1244 is:

(i) $50,000, or

(ii) $100,000, if a husband and wife file a joint return under section 6013.

These limitations on the maximum amount of ordinary loss apply whether the loss or losses are sustained on pre-November 1978 stock (as defined in § 1.1244 (c)-1 (a)(1)), post-November 1978 stock (as defined in § 1.1244 (c)-1 (a)(2)), or on any combination of pre-November 1978 stock and post-November 1978 stock. The limitation referred to in (ii) applies to a joint return whether the loss or losses are sustained by one or both spouses.

(2) ***Taxable years ending before November 6, 1978.*** For any taxable year ending before November 6, 1978, the maximum amount that may be treated as an ordinary loss under section 1244 is:

(i) $25,000 or

(ii) $50,000, if a husband and wife file a joint return under section 6013.

The limitation referred to in (ii) applies to a joint return whether the loss or losses are sustained by one or both spouses.

(3) ***Taxable years including November 6, 1978.*** For a taxable year including November 6, 1978, the maximum amount that may be treated as ordinary loss under section 1244 is the sum of:

(i) The amount calculated by applying the limitations described in subparagraph (1) of this paragraph (b) to the amount of loss, if any, sustained during the taxable year on post-November 1978 stock, plus

(ii) The amount calculated by applying the limitations described in subparagraph (2) of this paragraph (b) to the amount of loss, if any, sustained during the taxable year on pre-November 1978 stock,

To the extent this sum does not exceed $50,000, or, if a husband and wife file a joint return under section 6013 for the taxable year, $100,000.

(4) ***Examples.*** The provisions of this section may be illustrated by the following examples:

Example 1. A, a married taxpayer who files a joint return for the taxable year ending December 31, 1977, sustains a $50,000 loss qualifying under section 1244 on pre-November 1978 stock in Corporation X and an equal amount of loss qualifying under section 1244 on pre-November 1978 stock in Corporation Y. A is limited to $50,000 of ordinary loss under paragraph (b)(2)(ii). The remaining $50,000 of loss is treated as loss from the sale or exchange of a capital asset.

Example 2. For the taxable year ending December 31, 1979, B, a married taxpayer who files a joint return, sustains a $90,000 loss on post-November 1978 stock in Corporation X. In the same taxable year, C, B's spouse, sustains a $25,000 loss on post-November 1978 stock in Corporation Y. Both losses qualify under section 1244. B and C's ordinary loss is limited to $100,000 under paragraph (b)(1)(ii). The remaining $15,000 of loss is treated as loss from the sale or exchange of a capital asset.

Example 3. D, a married taxpayer who files a joint return and reports income on a fiscal year basis for the taxable year ending November 30, 1978, sustains a $60,000 loss qualifying under section 1244 on pre-November 1978 stock and a $40,000 loss qualifying under section 1244 on post-November 1978 stock. D's ordinary loss on pre-November 1978 stock is limited to $50,000 under subparagraph (3)(ii) of this paragraph (b). D's $40,000 loss on post-November 1978 stock is within the limit of subparagraph (3)(i) of this paragraph (b). The total of these losses, $90,000, is the aggregate amount deductible by D as ordinary loss under section 1244. The remaining $10,000 of loss is treated as loss from the sale or exchange of a capital asset.

Example 4. E, a married taxpayer who files a joint return for the taxable year ending December 31, 1980, sustains a $75,000 loss qualifying under section 1244 on pre-November 1978 stock and a $10,000 loss qualifying under section 1244 on post-November 1978 stock. E may deduct the total of these losses, $85,000, as ordinary loss under paragraph (b)(1)(ii).

Example 5. Assume the same facts as in the preceding example, except that the losses are sustained in the taxable year beginning January 1, 1978, and ending December 31, 1978. E is limited to $60,000 of ordinary loss ($50,000 on pre-November 1978 stock plus $10,000 on post-November 1978 stock) under paragraph (b)(3). The remaining $25,000 of loss is treated as loss from the sale or exchange of a capital asset.

Example 6. F, a married taxpayer who files a joint return for the taxable year beginning January 1, 1978, and ending December 31, 1978, sustains a $75,000 loss qualifying under section 1244 on pre-November 1978 stock and a $125,000 loss qualifying under section 1244 on post-November 1978 stock. F's loss on pre-November 1978 stock is limited to $50,000 of ordinary loss under subparagraph (3)(ii) of this paragraph (b). F's loss on post-November 1978 stock is limited to $100,000 of ordinary loss under subparagraph (3)(i) of this paragraph (b). The total of

these losses, $150,000, is limited to $100,000 of ordinary loss under paragraph (b)(3). F's aggregate amount of ordinary loss under section 1244 is $100,000. The remaining $100,000 of loss is treated as loss from the sale or exchange of a capital asset.

[T.D. 7779, 46 FR 29467, June 2, 1981]

§ 1.1244(c)-1 Section 1244 stock defined.

(a) ***In general.*** For purposes of §§ 1.1244(a)-1 to 1.1244(e)-1, inclusive:

(1) The term *pre-November 1978 stock* means stock issued after June 30, 1958, and on or before November 6, 1978.

(2) The term *post-November 1978 stock* means stock issued after November 6, 1978.

In order that stock may qualify as section 1244 stock, the requirements described in paragraphs (b) through (e) of this section must be satisfied. In addition, the requirements of paragraph (f) of this section must be satisfied in the case of pre-November 1978 stock. Whether these requirements have been met is determined at the time the stock is issued, except for the requirement in paragraph (e) of this section. Whether the requirement in paragraph (e) of this section, relating to gross receipts of the corporation, has been satisfied is determined at the time a loss is sustained. Therefore, at the time of issuance it cannot be said with certainty that stock will qualify for the benefits of section 1244.

(b) ***Common stock.*** Only common stock, either voting or nonvoting, in a domestic corporation may qualify as section 1244 stock. For purposes of section 1244, neither securities of the corporation convertible into common stock nor common stock convertible into other securities of the corporation are treated as common stock. An increase in the basis of outstanding stock as a result of a contribution to capital is not treated as an issuance of stock under section 1244. For definition of domestic corporation, see section 7701(a)(4) and the regulations under that section.

(c) ***Small business corporation.*** At the time the stock is issued (or, in the case of pre-November 1978 stock, at the time of adoption of the plan described in paragraph (f)(1) of this section) the corporation must be a *small business corporation.* See § 1.1244(c)-2 for the definition of a small business corporation.

(d) ***Issued for money or other property.***

(1) The stock must be issued to the taxpayer for money or other property transferred by the taxpayer to the corporation. However, stock issued in exchange for stock or securities, including stock or securities of the issuing corporation, cannot qualify as section 1244 stock, except as provided in § 1.1244(d)-3, relating to certain cases where stock is issued in exchange for section 1244 stock. Stock issued for services rendered or to be rendered to, or for the benefit of, the issuing corporation does not qualify as section 1244 stock. Stock issued in consideration for cancellation of indebtedness of the corporation shall be considered issued in exchange for money or other property unless such indebtedness is evidenced by a security, or arises out of the performance of personal services.

(2) The following examples illustrate situations where stock fails to qualify as section 1244 stock as a result of the rules in subparagraph (1) of this paragraph:

Example 1. A taxpayer owns stock of Corporation X issued to him prior to July 1, 1958. Under a plan adopted in 1977, he exchanges his stock for a new issuance of stock of Corporation X. The stock received by the taxpayer in the exchange may not qualify as section 1244 stock even if the corporation has adopted a valid plan and is a small business corporation.

Example 2. A taxpayer owns stock in Corporation X. Corporation X merges into Corporation Y. In exchange for his stock, Corporation Y issues shares of its stock to the taxpayer. The stock in Corporation Y does not qualify as section 1244 stock even if the stock exchanged by the taxpayer did qualify.

Example 3. Corporation X transfers part of its business assets to Corporation Y, a new corporation, and all of the stock of Corporation Y is issued directly to the shareholders of Corporation X. Since the Corporation Y stock was not issued to the shareholders for a transfer by them of money or other property, none of the Corporation Y stock in the hands of the shareholders can qualify.

(e) ***Gross receipts.***

(1)

(i)

(*a*) Except as provided in subparagraph (2) of this paragraph, stock will not qualify under section 1244, if 50 percent or more of the gross receipts of the corporation, for the period consisting of the five most recent taxable years of the corporation ending before the date the loss on such stock is sustained by the shareholders, is derived from royalties, rents, dividends, interest, annuities, and sales or exchanges of stock or securities. If the corporation has not been in existence for five taxable years ending before such date, the percentage test referred to in the preceding sentence applies to the period of the taxable years ending before such date during which the corporation has been in existence; and if the loss is sustained during the first taxable year of the corporation such test applies to the period beginning with the first day of such taxable year and ending on the day before the loss is sustained. The test under this paragraph shall be made on the basis of total gross receipts, except that gross receipts from the sales or exchanges of stock or securities shall be taken into account only to the extent of gains therefrom. The term *gross receipts* as used in section 1244(c)(1)(C) is not synonymous with *gross income.* Gross receipts means the total amount received or accrued under the method of accounting used by the corporation in computing its taxable income. Thus, the total amount of receipts is not reduced by returns and allowances, cost, or deductions. For example, gross receipts will include the total amount received or accrued during the corporation's taxable year from the sale or exchange (including a sale or exchange to which section 337 applies) of any kind of property, from investments, and for services rendered by the corporation. However, gross receipts does not include amounts received in nontaxable sales or exchanges (other than those to which section 337 applies), except to the extent that gain is recognized by the corporation, nor does that term include amounts received as a loan, as a repayment of a loan, as a contribution to capital, or on the issuance by the corporation of its own stock.

(*b*) The meaning of the term *gross receipts* as used in section 1244(c)(1)(C) may be further illustrated by the following examples:

Example 1. A corporation on the accrual method sells property (other than stock or securities) and receives payment partly in money and partly in the form of a note payable at a future time. The amount of the money and the face amount of the note would be considered gross receipts in the taxable year of the sale and would not be reduced by the adjusted basis of the property, the costs of sale, or any other amount.

Example 2. A corporation has a long-term contract as defined in paragraph (a) of § 1.451-3 with respect to which it reports income according to the percentage-of-completion method as described in paragraph (b)(1) of § 1.451-3. The portion of the gross contract price which corresponds to the percentage of the entire contract which has been completed during the taxable year shall be included in gross receipts for such year.

Example 3. A corporation which regularly sells personal property on the installment plan elects to report its taxable income from the sale of property (other than stock or securities) on the installment method in accordance with section 453. The installment payments actually received in a given taxable year of the corporation shall be included in gross receipts for such year.

(ii) The term *royalties* as used in subdivision (i) of this subparagraph means all royalties, including mineral, oil, and gas royalties (whether or not the aggregate amount of such royalties constitutes 50 percent or more of the gross income of the corporation for the taxable year), and amounts received for the privilege of using patents, copyrights, secret processes and formulas, good will, trademarks, trade brands, franchises, and other like property. The term *royalties* does not include amounts received upon the disposal of timber, coal, or domestic iron ore with a retained economic interest to which the special rules of section 631 (b) and (c) apply or amounts received from the transfer of patent rights to which section 1235 applies. For the definition of *mineral, oil, or gas royalties,* see paragraph (b)(11) (ii) and (iii) of § 1.543-1. For purposes of this subdivision, the gross amount of royalties shall not be reduced by any part of the cost of the rights under which they are received or by any amount allowable as a deduction in computing taxable income.

(iii) The term *rents* as used in subdivision (i) of this subparagraph means amounts received for the use of, or right to use, property (whether real or personal) of the corporation, whether or not such amounts constitute 50 percent or more of the gross income of the corporation for the taxable year. The term *rents* does not include payments for the use or occupancy of rooms or other space where significant services are also rendered to the occupant, such as for the use or occupancy of rooms or other quarters in hotels, boarding houses, or apartment houses furnishing hotel services, or in tourist homes, motor courts, or motels. Generally, services are considered rendered to the occupant if they are primarily for his convenience and are other than those usually or customarily rendered in connection with the rental of rooms or other space for occupancy only. The supplying of maid service, for example, constitutes such services; whereas the furnishing of heat and light, the cleaning of public entrances, exits, stairways, and lobbies, the collection of trash, etc., are not considered as services rendered to the occupant. Payments for the use or occupancy of entire private residences or living quarters in duplex or multiple housing units, of offices in an office building, etc., are generally *rents* under section 1244(c)(1)(C). Payments for the parking of automobiles ordinarily do not constitute rents. Payments for the warehousing of goods or for the use of personal property do not constitute rents if significant services are rendered in connection with such payments.

(iv) The term *dividends* as used in subdivision (i) of this subparagraph includes dividends as defined in section 316, amounts required to be included in gross income under section 551 (relating to foreign personal holding company income taxed to United States shareholders), and consent dividends determined as provided in section 565.

(v) The term *interest* as used in subdivision (i) of this subparagraph means any amounts received for the use of money (including tax-exempt interest).

(vi) The term *annuities* as used in subdivision (i) of this subparagraph means the entire amount received as an annuity under an annuity, endowment, or life insurance contract, regardless of whether only part of such amount would be includible in gross income under section 72.

(vii) For purposes of subdivision (i) of this subparagraph, gross receipts from the sales or exchanges of stock or securities are taken into account only to the extent of gains therefrom. Thus, the gross receipts from the sale of a particular share of stock will be the excess of the amount realized over the adjusted basis of such share. If the adjusted basis should equal or exceed the amount realized on the sale or exchange of a certain share of stock, bond, etc., there would be no gross receipts resulting from the sale of such security. Losses on sales or exchanges of stock or securities do not offset gains on the sales or exchanges of other stock or securities for purposes of computing gross receipts from such sales or exchanges. Gross receipts from the sale or exchange of stocks and securities include gains received from such sales or exchanges by a corporation even though such corporation is a regular dealer in stocks and securities. For the meaning of the term *stocks or securities,* see paragraph (b)(5)(i) of § 1.543-1.

(2) The requirement of subparagraph (1) of this paragraph need not be satisfied if for the applicable period the aggregate amount of deductions allowed to the corporation exceeds the aggregate amount of its gross income. But for this purpose the deductions allowed by section 172, relating to the net operating loss deduction, and by sections 242, 243, 244, and 245, relating to certain special deductions for corporations, shall not be taken into account. Notwithstanding the provisions of this subparagraph and of subparagraph (1) of this paragraph, pursuant to the specific delegation of authority granted in section 1244(e) to prescribe such regulations as may be necessary to carry out the purposes of section 1244, ordinary loss treatment will not be available with respect to stock of a corporation which is not largely an operating company within the five most recent taxable years (or such lesser period as the corporation is in existence) ending before the date of the loss. Thus, for example, assume that a person who is not a dealer in real estate forms a corporation which issues stock to him which meets all the formal requirements of section 1244 stock. The corporation then acquires a piece of unimproved real estate which it holds as an investment. The property declines in value and the stockholder sells his stock at a loss. The loss does not qualify for ordinary loss treatment under section 1244 but must be treated as a capital loss.

(3) In applying subparagraphs (1) and (2) of this paragraph to a successor corporation in a reorganization described in section 368(a)(1)(F), such corporation shall be treated as the same corporation as its predecessor. See paragraph (d)(2) of § 1.1244(d)-3.

(f) ***Special rules applicable to pre-November 1978 stock.***

(1)

(i) Pre-November 1978 common stock must have been issued under a written plan adopted by the corporation after June 30, 1958, and on or before November 6, 1978, to offer only this stock during a period specified in the plan ending not later than 2 years after the date the plan is

adopted. The 2-year requirement referred to in the preceding sentence is met if the period specified in the plan is based upon the date when, under the rules or regulations of a Government agency relating to the issuance of the stock, the stock may lawfully be sold, and it is clear that this period will end, and in fact does end, within 2 years after the plan is adopted. The plan must specifically state, in terms of dollars, the maximum amount to be received by the corporation in consideration for the stock to be issued under the plan. See § 1.1244(c)-2 for the limitation on the amount that may be received by the corporation under the plan.

(ii) To qualify, the pre-November 1978 stock must be issued during the period of the offer, which period must end not later than two years after the date the plan is adopted. Pre-November 1978 stock which is subscribed for during the period of the plan but not issued during this period cannot qualify as section 1244 stock. Pre-November 1978 stock issued on the exercise of a stock right, stock warrant, or stock option (which right, warrant, or option was not outstanding at the time the plan was adopted) will be treated as issued under a plan only if the right, warrant, or option is applicable solely to unissued stock offered under the plan and is exercised during the period of the plan.

(iii) Pre-November 1978 stock subscribed for prior to the adoption of the plan, including stock subscribed for prior to the date the corporation comes into existence, may be considered issued under a plan adopted by the corporation if the stock is not in fact issued prior to the adoption of the plan.

(iv) Pre-November 1978 stock issued for a payment which, alone or together with prior payments, exceeds the maximum amount that may be received under the plan, is not considered issued under the plan, and none of the stock can qualify as section 1244 stock. See § 1.1244(c)-2(b) for a different rule with respect to post-November 1978 stock.

(2) Pre-November 1978 stock does not qualify as section 1244 stock if at the time of the adoption of the plan under which it is issued there remains unissued any portion of a prior offering of stock. Thus, if any portion of an outstanding offering of common or preferred stock is unissued at the time of the adoption of the plan, stock issued under the plan will not qualify as section 1244 stock. An offer is outstanding unless and until it is withdrawn by affirmative action before the plan is adopted. Stock rights, stock warrants, stock options, or securities convertible into stock, that are outstanding at the time the plan is adopted, are considered prior offerings. The authorization in the corporate charter to issue stock different from stock offered under the plan or in excess of stock offered under the plan is not of itself a prior offering.

(3)

(i) Even though the plan satisfies the requirements of subparagraph (1) of this paragraph (f), if another offering of pre-November 1978 stock is made by the corporation subsequent to, or simultaneous with, the adoption of the plan, pre-November 1978 stock issued under the plan after the other offering does not qualify as section 1244 stock. The issuance of stock options, stock rights, or stock warrants at any time during the period of the plan, that are exercisable on stock other than stock offered under the plan, is considered a subsequent offering. Similarly, the issuance of pre-November 1978 stock other than that offered under the plan is considered a subsequent offering. Because stock issued upon exercise of a converson privilege is stock issued for a security, and stock issued under a stock option granted in whole or in part for services is not issued for money or other property, the issuance of securities with a conversion privilege and the issuance of such a stock option are subsequent offerings, because the conversion privilege and the stock option are exercisable with respect to stock other than that

which may properly be offered under the plan. Pre-November 1978 stock issued under the plan before a subsequent offering is not disqualified because of the subsequent offering. The rule of the subparagraph, together with the rule of subparagraph (2) of this paragraph (f), relating to offers prior to the adoption of the plan, limits pre-November 1978 section 1244 stock to stock issued by the corporation during a period when any stock issued by it must have been issued under the plan.

(ii) Any modification of a plan that changes the offering to include preferred stock, or that increases the amount of pre-November 1978 stock that may be issued under the plan to such an extent that the requirements of paragraph (c) of this section would not have been satisfied if determined with reference to this amount as of the date the plan was initially adopted, or that extends the period of time during which stock may be issued under the plan to more than 2 years from the date the plan was initially adopted, is considered a subsequent offering, and no stock issued after this offering may qualify. However, a corporation may withdraw a plan and adopt a new plan to issue stock. To determine whether stock issued under this new plan may qualify, this paragraph (f) must be applied with respect to the new plan as of the date of its adoption. For example, amounts received for stock under the prior plan must be taken into account in determining whether the statutory requirements relating to definition of small business corporation are satisfied. In applying the requirements of paragraph (c) of this section, reference should be made to equity capital as of the date the new plan is adopted. The same principles apply if the period of the initial plan expires and the corporation adopts a new plan.

[T.D. 7779, 46 FR 29468, June 2, 1981]

§ 1.1244(c)-2 Small business corporation defined.

(a) ***In general.*** A corporation is treated as a small business corporation if it is a domestic corporation that satisfies the requirements described in paragraph (b) or (c) of this section. The requirements of paragraph (b) of this section apply if a loss is sustained on post-November 1978 stock. The requirements of paragraph (c) of this section apply if a loss is sustained on pre-November 1978 stock. If losses are sustained on both pre-November 1978 stock and post-November 1978 stock in the same taxable year, the requirements of paragraph (b) of this section are applied to the corporation at the time of the issuance of the stock (as required by paragraph (b) in the case of a loss on post-November 1978 stock) in order to determine whether the loss on post-November 1978 stock qualifies as a section 1244 loss, and the requirements of paragraph (c) of this section are applied to the corporation at the time of the adoption of the plan (as required by paragraph (c) in the case of a loss on pre-November 1978 stock) in order to determine whether the loss on pre-November 1978 stock qualifies as a section 1244 loss. For definition of domestic corporation, see section 7701 (a)(4) and the regulations under that section.

(b) ***Post-November 1978 stock*** —

(1) ***Amount received by corporation for stock.*** Capital receipts of a small business corporation may not exceed $1,000,000. For purposes of this paragraph the term *capital receipts* means the aggregate dollar amount received by the corporation for its stock, as a contribution to capital, and as paid-in surplus. If the $1,000,000 limitation is exceeded, the rules of subparagraph (2) of this paragraph (b) apply. In making these determinations,

(i) property is taken into account at its adjusted basis to the corporation (for determining gain) as of the date received by the corporation, and

(ii) this aggregate amount is reduced by the amount of any liability to which the property was subject and by the amount of any liability assumed by the corporation at the time the property was received. Capital receipts are not reduced by distributions to shareholders, even though the distributions may be capital distributions.

(2) ***Requirement of designation in event $1,000,000 limitation exceeded.***

(i) If capital receipts exceed $1,000,000, the corporation shall designate as section 1244 stock certain shares of post-November 1978 common stock issued for money or other property in the transitional year. For purposes of this paragraph, the term *transitional year* means the first taxable year in which capital receipts exceed $1,000,000 and in which the corporation issues stock. This designation shall be made in accordance with the rules of subdivision (iii) of this paragraph (b)(2). The amount received for designated stock shall not exceed $1,000,000 less amounts received—

(A) In exchange for stock in years prior to the transitional year;

(B) As contributions to capital in years prior to the transitional year; and

(C) As paid-in surplus in years prior to the transitional year.

(ii) Post-November 1978 common stock issued for money or other property before the transitional year qualifies as section 1244 stock without affirmative designation by the corporation. Post-November 1978 common stock issued after the transitional year does not qualify as section 1244 stock.

(iii) The corporation shall make the designation required by subdivision (i) of this paragraph (b)(2) not later than the 15th day of the third month following the close of the transitional year. However, in the case of post-November 1978 common stock issued on or before June 2, 1981 the corporation shall make the required designation by August 3, 1981 or by the 15th day of the 3rd month following the close of the transitional year, whichever is later. The designation shall be made by entering the numbers of the qualifying share certificates on the corporation's records. If the shares do not bear serial numbers or other identifying numbers or letters, or are not represented by share certificates, the corporation shall make an alternative designation in writing at the time of issuance, or, in the case of post-November 1978 common stock issued on or before June 2, 1981 by August 3, 1981. This alternative designation may be made in any manner sufficient to identify the shares qualifying for section 1244 treatment. If the corporation fails to make a designation by share certificate number or an alternative written designation as described, the rules of subparagraph (3) of this paragraph (b) apply.

(3) ***Allocation of section 1244 benefit in event corporation fails to designate qualifying shares.*** If a corporation issues post-November 1978 stock in the transitional year and fails to designate certain shares of post-November 1978 common stock as section 1244 stock in accordance with the rules of subparagraph (2) of this paragraph (b), the following rules apply:

(i) Section 1244 treatment is extended to losses sustained on post-November 1978 common stock issued for money or other property in taxable years before the transitional year and is withheld from losses sustained on post-November 1978 stock issued in taxable years after the transitional year.

(ii) Post-1958 capital received before the transitional year is subtracted from $1,000,000.

(iii) Subject to the annual limitation described in § 1.1244(b)-1, an ordinary loss on post-November 1978 common stock issued for money or other property in the transitional year is allowed in an amount which bears the same ratio to the total loss sustained by the individual as:

(A) The amount described in § 1.1244(c)-2(b) (3) (ii) bears to

(B) The total amount of money and other property received by the corporation in exchange for stock, as a contribution to capital, and as paid-in surplus in the transitional year.

(4) ***Examples.*** The provisions of this paragraph (b) may be illustrated by the following examples:

Example 1. On December 1, 1978, Corporation W, a newly-formed corporation, issues 10,000 shares of common stock at $125 a share for an amount (determined under subparagraph (1) of this paragraph (b)) of money and other property totaling $1,250,000. The board of directors specifies that 8,000 shares are section 1244 stock and records the certificate numbers of the qualifying shares in its minutes. Because Corporation W issued post-November 1978 common stock in exchange for money and other property exceeding $1,000,000, but has designated shares of stock as section 1244 stock and the designated shares were issued in exchange for money and other property not exceeding $1,000,000 (8,000 shares × $125 price per share = $1,000,000), the 8,000 designated shares qualify as section 1244 stock.

Example 2. Corporation X comes into existence on June 1, 1979. On June 10, 1979, Corporation X issues 2,500 shares of common stock at $250 per share to shareholder A and 2,500 shares of common stock at $250 per share to shareholder B. By written agreement dated September 1, 1981, shareholder A and shareholder B determine that 1,500 of shareholder A's shares and all of shareholder B's shares will be treated as section 1244 stock. Although shareholder A's 1,500 shares and shareholder B's 2,500 shares were issued for money and other property not exceeding $1,000,000 (4,000 shares × $250 price per share = $1,000,000, these 4,000 shares do not qualify as section 1244 stock under the rules of subparagraph (2) of this paragraph (b) for three reasons: The agreement of September 1, 1979,

(i) did not identify which 1,500 of shareholder A's 2,500 shares were intended to qualify for section 1244 treatment,

(ii) was made by the shareholders and not by Corporation X, and

(iii) was made later than the 15th day of the third month following the close of the transitional year. However, certain of the shares issued by Corporation X may qualify as section 1244 stock under the rules of subparagraph (3) of this paragraph (b). See example (4).

Example 3. On December 1, 1980, Corporation Y issues common stock to shareholder A in exchange for $500,000 in cash. On August 1, 1981, Corporation Y issues common stock to shareholder B in exchange for property having an adjusted basis to Corporation Y of $500,000. On December 1, 1981, B transfers a tract of land having a basis in B's hands of $250,000 to Corporation Y as a contribution to capital. Under section 362(a)(2) of the Code, Corporation Y takes a basis of $250,000 in the tract of land. Corporation Y is a calendar year corporation. On February 15, 1982, it designates all of shareholder B's stock as section 1244 stock by entering the numbers of the qualifying certificates on the corporation's records. The designation made by Corporation Y is effective because it identifies which shares of its stock qualify for section 1244 treatment, was made in writing before the 15th day of the 3rd month following the close of the transitional year (1981), and because the amount received for designated stock does not exceed $1,000,000, less amounts received

(i) in exchange for stock in years prior to the transitional year;

(ii) as contributions to capital in years prior to the transitional year; and

(iii) as paid-in surplus in years prior to the transitional year. Nevertheless, in the event of B's sale of his stock at a loss, the increase in basis attributable to his December, 1981, contribution to capital will be treated as allocable to stock that is not section 1244 stock under § 1.1244(d)-2.

Example 4. Corporation Z, a newly-formed corporation, issues 10,000 shares of common stock at $200 per share on July 1, 1979. In exchange for its stock Corporation Z receives property (other than stock or securities) having a basis to the corporation of $400,000, and $1,600,000 in cash, for a total of $2,000,000. Corporation Z fails to designate any of the issued shares as section 1244 stock. Shareholder C purchases 2,500 shares of the 10,000 shares of Corporation Z stock for $500,000 on July 1, 1979. Subsequently, shareholder C sells the 2,500 shares for $400,000. Shareholder C may treat $50,000 of the $100,000 loss as an ordinary loss under section 1244. The amount of that loss is computed under the rule of subparagraph (3) of this paragraph (b) as follows:

$$\frac{\textbf{X [C's section 1244 loss]}}{\textbf{\$100,000 [C's total loss]}} = \frac{\textbf{\$1,000,000 [\$1,000,000 −0 = \$1,000,000]}}{\textbf{\$2,000,000 [total amount received by Corporation Z]}}$$

X = $50,000

The remaining $50,000 is not treated as an ordinary loss under section 1244.

Example 5. (i) Corporation V, a newly-formed corporation, issues common stock to shareholder A and shareholder B on June 15, 1980, in exchange for $800,000 in cash ($400,000 from A and $400,000 from B). On September 15, 1981, the corporation issues common stock to shareholder C in exchange for $600,000 in cash. On January 1, 1982, common stock is issued to shareholder D in exchange for $100,000 in cash. Corporation V fails to designate any of the issued shares as section 1244 stock. A, B, C, and D subsequently sell their Corporation Y stock at a loss.

(ii) Subject to the annual limitation discussed in § 1.1244(b)-1, A and B may treat their entire loss as an ordinary loss under section 1244. D may not treat any part of his loss as an ordinary loss under section 1244. Subject to the annual limitation, one-third of the loss sustained by shareholder C is treated as an ordinary loss under

> section 1244. These results are calculated under the rules of subparagraph (3) of this paragraph (b) as follows: First, section 1244 treatment is extended to post-November 1978 stock issued to A and B in 1980, a taxable year before the transitional year (1981); section 1244 treatment is withheld from the stock issued to D in 1982, a taxable year after the transitional year. Second $800,000 the amount of post-1958 capital received in taxable years before the transitional year, is subtracted from $1,000,000 to leave $200,000. Third, subject to the annual limitation, an ordinary loss is allowed to C in an amount which bears the same ratio to his total loss as the amount calculated in the preceding sentence ($200,000) bears to the total amount received by the corporation in the transitional year in exchange for stock, as a contribution to capital, or as paid-in surplus ($600,000).

Example 6. Corporation V comes into existence on July 1, 1982. On that date it issues 10 shares of voting common stock to shareholder A in exchange for $500,000 and 5 shares of voting common stock to shareholder B in exchange for $250,000, designating the shares issued to both A and B as section 1244 stock. On September 15, 1982, Corporation V receives a contribution to capital from shareholders A and B having a basis in their hands of $225,000. On February 1, 1983, Corporation V issues one share of stock to shareholder C in exchange for $50,000. Corporation V may designate one-half of the share issued to shareholder C as section 1244 stock under § 1.1244(c)-2 (b)(2). In 1982 the corporation received $750,000 for stock ($500,000 from A and $250,000 from B) and $225,000 as a capital contribution, totaling $975,000 in capital receipts. The receipt of $50,000 from shareholder C in exchange for stock in 1983 causes capital receipts to exceed $1,000,000 and 1983 thus becomes Corporation V's transitional year. Corporation V may receive only $25,000 for designated stock in 1983 under the rule set forth in § 1.1244 (c)-2 (b)(2)(i), which states that the amount received for designated stock shall not exceed $1,000,000, less amounts received

(i) in exchange for stock in years prior to the transitional year ($750,000 from A and B),

(ii) as contributions to capital in years prior to the transitional year ($225,000), and

(iii) as paid-in surplus in years prior to the transitional year ($0). Thus, one-half of C's share (representing the receipt of $25,000) may be designated as section 1244 stock by Corporation V. In the event of the sale of A's stock or B's stock at a loss, the increase in basis attributable to their contribution to capital will be treated as allocable to stock that is not section 1244 stock under § 1.1244(d)-2.

(c) ***Pre-November 1978 stock*** —

(1) ***Amount received by corporation for stock.*** At the time of the adoption of the plan, the sum of the aggregate dollar amount to be paid for pre-November 1978 stock that may be offered under the plan plus the aggregate amount of money and other property that has been received by the corporation after June 30, 1958, and on or before November 6, 1978, for its stock, as a contribution to capital by its shareholders, and as paid-in surplus must not exceed $500,000. In making these determinations

(i) property is taken into account at its adjusted basis to the corporation (for determining gain) as of the date received by the corporation, and

(ii) this aggregate amount is reduced by the amount of any liability to which the property was subject and by the amount of any liability assumed by the corporation at the time the property was received. For purposes of the $500,000 test, the total amount of money and other property received for stock, as a contribution to capital, and as paid-in surplus is not reduced by distributions to shareholders, even though the distributions may be capital distributions. Thus, once the total amount of money and other property received after June 30, 1958, reaches $500,000, the corporation is precluded from subsequently issuing pre-November 1978 stock. For a different rule that applies to post-November 1978 stock see § 1.1244(c)-2(b).

(2) ***Equity capital.*** The sum of the aggregate dollar amount to be paid for pre-November 1978 stock that may be offered under the plan plus the equity capital of the corporation (determined on the date of the adoption of the plan) may not exceed $1,000,000. For this purpose, equity capital is the sum of the corporation's money and other property (in an amount equal to its adjusted basis for determining gain) less the amount of the corporation's indebtedness to persons other than its shareholders.

(3) ***Examples.*** The provisions of this paragraph (c) may be illustrated by the following examples:

Example 1. Corporation W comes into existence on December 1, 1958. On that date the corporation may adopt a plan to issue common stock for an amount (determined under subparagraph (1) of this paragraph (c)) not in excess of $500,000 during a period ending not later than November 30, 1960. Such corporation will qualify as a small business corporation as of the date that the plan is adopted. However, if the corporation adopts a plan to issue stock for an amount in excess of $500,000 it is not a small business corporation at the time the plan is adopted and no stock issued under the plan may qualify as section 1244 stock. If the cost of organizing corporation W amounted to $1,000 and constituted paid-in surplus or a contribution to capital, such amount must be taken into account in determining the amount that may be received under the plan, with the result that only $499,000 may be so received.

Example 2. On December 1, 1958, Corporation X, a newly formed corporation, adopts a plan to issue common stock for an amount (determined under subparagraph (1) of this paragraph (c)) not in excess of $500,000 during a period ending not later than November 30, 1960. By January 1, 1960, the corporation has, pursuant to the plan, issued at par, stock having an aggregate par value of $400,000, $200,000 of which was issued for $200,000 cash, and $200,000 of which was issued for property (other than stock or securities) having a basis to the corporation of $100,000 and a fair market value of $200,000. The corporation may, prior to November 30, 1960, issue stock for an amount not in excess of $200,000 cash or property having a basis to it not in excess of $200,000. Stock issued for any payment which, alone or together with any payments received after January 1, 1960, exceeds such $200,000 amount would not qualify as section 1244 stock because it would not be issued pursuant to the plan.

Example 3. Assume that on December 1, 1958, Corporation Y, a newly formed corporation, adopts a plan to issue common stock for an amount (determined under subparagraph (1) of this paragraph (c)) not in excess of $500,000 during a period ending not later than November 30, 1960. By January 1960 the corporation has received $400,000 cash for stock issued pursuant to the plan, but due to business successes the equity capital of the corporation exceeds $1,000,000. Since the equity capital test is made as of the date that the plan is adopted, the corporation may still, prior to November 30, 1960, issue section 1244 stock pursuant to the plan until the full amount specified in the plan has been received.

Example 4. Subsequent to June 30, 1958, Corporation Z receives a total of $600,000 cash on the issuance of its stock. In 1960 Corporation Z redeems shares of its stock for the total amount of $300,000 and the redemptions reduce Corporation Z's capital to substantially less than $500,000. Notwithstanding the redemptions, pre-November 1978 stock subsequently issued by Corporation Z will not qualify as section 1244 stock because the $500,000 limitation has been previously exceeded.

[T.D. 7779, 46 FR 29470, June 2, 1981, as amended by T.D. 7837, 47 FR 42729, Sept. 29, 1982; 60 FR 16575, Mar. 31, 1995]

§ 1.1244(d)-1 Contributions of property having basis in excess of value.

(a) ***In general.***

(1) Section 1244(d)(1) (A) provides a special rule which limits the amount of loss on section 1244 stock that may be treated as an ordinary loss. This rule applies only when section 1244 stock is issued by a corporation in exchange for property that, immediately before the exchange, has an adjusted basis (for determining loss) in excess of its fair market value. If section 1244 stock is issued in exchange for such property and the basis of such stock in the hands of the taxpayer is determined by reference to the basis of such property, then for purposes of section 1244, the basis of such stock shall be reduced by an amount equal to the excess, at the time of the exchange, of the adjusted basis of the property over its fair market value.

(2) The provisions of section 1244(d) (1)(A) do not affect the basis of stock for purposes other than section 1244. Such provisions are to be used only in determining the portion of the total loss sustained that may be treated as an ordinary loss pursuant to section 1244.

(b) ***Transfer of more than one item.*** If a taxpayer exchanges several items of property for stock in a single transaction so that the basis of the property transferred is allocated evenly among the shares of stock received, the computation under this section should be made by reference to the aggregate fair market value and the aggregate basis of the property transferred.

(c) ***Examples.*** The provisions of this section may be illustrated by the following examples:

Example 1. B transfers property with an adjusted basis of $1,000 and a fair market value of $250 to a corporation for 10 shares of section 1244 stock in an exchange that qualifies under section 351. The basis of B's stock is $1,000 ($100 per share), but, solely for purposes of section 1244, the total basis of the stock must be reduced by $750, the excess of the adjusted basis of the property exchanged over its fair market value. Thus, the basis of such stock for purposes of section 1244 is $250 and the basis of each share for such purposes is $25. If B sells his 10 shares for $250, he will recognize a loss of $750, all of which must be treated as a capital loss. If he sells the 10 shares for $200, then $50 of his total loss of $800 will be treated as an ordinary loss under section 1244, assuming the various requirements of such section are satisfied, and the remaining $750 will be a capital loss.

Example 2. B owns property with a basis of $20,000. The fair market value of the property unencumbered is $15,000 but the property is subject to a $2,000 mortgage. B transfers the encumbered property to a corporation for 100 shares of section 1244 stock in an exchange that qualifies under section 351. The basis of the shares, determined in accordance with section 358, is $18,000 or $180 per share, but solely for purposes of section 1244 the basis is $13,000 ($130 per share), which is its basis for purposes other than section 1244, reduced by $5,000, the excess of the adjusted basis, immediately before the exchange, of the property transferred over its fair market value.

Example 3. C transfers business assets to a corporation for 100 shares of section 1244 stock in an exchange that qualifies under section 351. The assets transferred are as follows:

	Basis	Fair market value
Cash	$10,000	$10,000
Inventory	15,000	30,000
Depreciable property	50,000	20,000
Land	25,000	10,000
	100,000	70,000

The basis for the shares received by C is $100,000, which is applied $1,000 to each share. However, the basis of the shares for purposes of section 1244 is $70,000 ($700 per share), the basis for general purposes reduced by $30,000, the excess of the aggregate adjusted basis of the property transferred over the aggregate fair market value of such property.

[T.D. 6495, 25 FR 9679, Oct. 8, 1960]

§ 1.1244(d)-2 Increases in basis of section 1244 stock.

(a) ***In general.*** If subsequent to the time of its issuance there is for any reason, including the operation of section 1376(a), an increase in the basis of section 1244 stock, such increase shall be treated as allocable to stock which is not section 1244 stock. Therefore, a loss on stock, the basis of which has been increased subsequent to its issuance, must be apportioned between the part that qualifies as section 1244 stock and the part that does not so qualify. Only the loss apportioned to the part that so qualifies may be treated as an ordinary loss pursuant to section 1244. The amount of loss apportioned to the part that qualifies is the amount which bears the same ratio to the total loss as the basis of the stock which is treated as allocated to section 1244 stock bears to the total basis of the stock.

(b) ***Example.*** The provisions of paragraph (a) of this section may be illustrated by the following example:

Example: For $10,000 a corporation issues 100 shares of section 1244 stock to X. X later contributes $2,000 to the capital of the corporation and this increases the total basis of his 100 shares to $12,000. Subsequently, he sells the 100 shares for $9,000. Of the $3,000 loss, $2,500 is allocated to the portion of the stock that qualifies as section 1244 stock ($10,000/$12,000 of $3,000), and the remaining $500 is allocated to the portion of the stock that does not so qualify. Therefore, to the extent of $2,500, the loss may be treated as an ordinary loss assuming the various requirements of section 1244 stock are satisfied. However, the remaining $500 loss must be treated as a capital loss.

[T.D. 6495, 25 FR 9680, Oct. 8, 1960]

§ 1.1244(d)-3 Stock dividend, recapitalizations, changes in name, etc.

(a) ***In general.*** Section 1244(c)(1) provides that stock may not qualify for the benefits of section 1244 unless it is issued to the taxpayer for money or other property not including stock or securities. However, section 1244(d)(2) authorizes exceptions to this rule. The exceptions may apply in three situations:

(1) The receipt of a stock dividend;

(2) the exchange of stock for stock pursuant to a reorganization described in section 368(a)(1)(E); and

(3) the exchange of stock for stock pursuant to a reorganization described in section 368(a)(1)(F).

(b) ***Stock dividends.***

(1) If common stock is received by an individual or partnership in a nontaxable distribution under section 305(a) made solely with respect to stock owned by such individual or partnership which meets the requirements of section 1244 stock determinable at the time of the distribution, then the common stock so received will also be treated as meeting such requirements. For purposes of this paragraph and paragraphs (c) and (d) of this section, the requirements of section 1244 stock determinable at the time of the distribution or exchange are all of the requirements of section 1244(c)(1) other than the one described in subparagraph (C) thereof, relating to the gross receipts test.

(2) If, however, such stock dividend is received by such individual or partnership partly with respect to stock meeting the requirements of section 1244 stock determinable at the time of the distribution, and partly with respect to stock not meeting such requirements, then only part of the stock received as a stock dividend will be treated as meeting such requirements. Assuming all the shares with respect to which the dividend is received have equal rights to dividends, such part is the number of shares which bears the same ratio to the total number of shares received as the number of shares owned immediately before the stock dividend which meets such qualifications bears to the total number of shares with respect to which the stock dividend is received. In determining the basis of shares received in the stock dividend and of the shares held before the stock dividend, section 307 shall apply as if two separate nontaxable stock dividends were made, one with respect to the shares that meet the requirements and the other with respect to shares that do not meet the requirements.

(3) The provisions of subparagraphs (1) and (2) of this paragraph may be illustrated by the following examples:

Example 1. Corporation X issues 100 shares of its common stock to B for $1,000. Subsequently, in a nontaxable stock dividend B receives 5 more shares of common stock of Corporation X. If the 100 shares meet all the requirements of section 1244 stock determinable at the time of the distribution of the stock dividend, the 5 additional shares shall also be treated as meeting such requirements.

Example 2. In 1959, Corporation Y issues 100 shares of its common stock to C for $1,000 and these shares meet the requirements of section 1244 stock determinable at the time of the issuance. In 1960, C purchases an additional 200 shares of such stock from another shareholder for $3,000; however, these shares do not meet the requirements of section 1244 stock because they were not originally issued to C by the corporation. In 1961, C receives 15 shares of Corporation Y common stock as a stock dividend. Of the shares received, 5 shares, the number received with respect to the 100 shares of stock which met the requirements of section 1244 at the time of the distribution, i.e., 100/300 × 15, shall also be treated as meeting such requirements. The remaining 10 shares do not meet such requirements as they are not received with respect to section 1244 stock. The basis of such 5

shares is determined by applying section 307 as if the 5 shares were received as a separate stock dividend made solely with respect to shares that meet the requirements of section 1244 stock at the time of the distribution. Thus, the basis of the 5 shares is $47.61 ($^{5}/_{105}$ of $1,000).

(c) ***Recapitalizations.***

(1) If, pursuant to a recapitalization described in section 368(a)(1)(E), common stock of a corporation is received by an individual or partnership in exchange for stock of such corporation meeting the requirements of section 1244 stock determinable at the time of the exchange, such common stock shall be treated as meeting such requirements.

(2) If common stock is received pursuant to such a recapitalization partly in exchange for stock meeting the requirements of section 1244 stock determinable at the time of the exchange and partly in exchange for stock not meeting such requirements, then only part of such common stock will be treated as meeting such requirements. Such part is the number of shares which bears the same ratio to the total number of shares of common stock so received as the basis of the shares transferred which meet such requirements bears to the basis of all the shares transferred for such common stock. The basis allocable, pursuant to section 358, to the common stock which is treated as meeting such requirements is limited to the basis of stock that meets such requirements transferred in the exchange.

(3) The provisions of subparagraphs (1) and (2) of this paragraph may be illustrated by the following examples:

Example 3. A owns 500 shares of voting common stock of Corporation X. Corporation X revises its capital structure to provide for two classes of common stock: Class A voting and Class B nonvoting. In a recapitalization described in subparagraph (E) of section 368(a)(1). A exchanges his 500 shares for 750 shares of Class B nonvoting stock. If the 500 shares meet all the requirements of section 1244 stock determinable at the time of the exchange, the 750 shares received in the exchange are treated as meeting such requirements.

Example 4. B owns 500 shares of common stock of Corporation X with a basis of $5,000, and 100 shares of preferred stock of that corporation with a basis of $2,500. Pursuant to a recapitalization described in section 368(a)(1)(E), B exchanges all of his shares for 900 shares of common stock of Corporation X. The 500 common shares meet the requirements of section 1244 stock determinable at the time of the exchange, but the 100 preferred shares do not meet such requirements since only common stock may qualify. Of the 900 common shares received, 600 shares ($5,000/$7,500 × 900 shares) are treated as meeting the requirements of section 1244 stock at the time of the exchange, because they are deemed to be received in exchange for the 500 common shares which met such requirements. The remaining 300 shares do not meet such requirements as they are not deemed to be received in exchange for section 1244 stock. The basis of the 600 shares is $5,000, the basis of the relinquished shares meeting the requirements of section 1244.

(d) ***Change of name, etc.***

(1) If, pursuant to a reorganization described in section 368(a)(1)(F), common stock of a successor corporation is received by an individual or partnership in exchange for stock of the predecessor corporation meeting the requirements of section 1244 stock determinable at the time of the exchange, such common stock shall be treated as meeting such requirements. If common stock is received pursuant to such a reorganization partly in exchange for stock meeting the requirements of section 1244 stock determinable at the time of the exchange and partly in exchange for stock not

meeting such requirements, the principles of paragraph (c)(2) of this section apply in determinating the number of shares received which are treated as meeting the requirements of section 1244 stock and the basis of those shares.

(2) For purposes of paragraphs (1)(C) and (3)(A) of section 1244(c), a successor corporation in a reorganization described in section 368(a)(1)(F) shall be treated as the same corporation as its predecessor.

[T.D. 7779, 46 FR 29472, June 2, 1981]

§ 1.1244(d)-4 Net operating loss deduction.

(a) ***General rule.*** For purpose of section 172, relating to the net operating loss deduction, any amount of loss that is treated as an ordinary loss under section 1244 (taking into account the annual dollar limitation of that section) shall be treated as attributable to the trade or business of the taxpayer. Therefore, this loss is allowable in determining the taxpayer's net operating loss for a taxable year and is not subject to the application of section 172(d)(4), relating to nonbusiness deductions. A taxpayer may deduct the maximum of ordinary loss permitted under section 1244(b) even though all or a portion of the taxpayer's net operating loss carryback or carryover for the taxable year was, when incurred, a loss on section 1244 stock.

(b) ***Example.*** The provisions of this section may be illustrated by the following example:

Example: A, a single individual, computes a net operating loss of $15,000 for 1980 in accordance with the rules of § 1.172-3, relating to net operating loss in case of a taxpayer other than a corporation. Included within A's computation of this net operating loss is a deduction arising under section 1244 for a loss on small business stock. A had no taxable income in 1977, 1978, or 1979. Assume that A can carry over the entire $15,000 loss under the rules of section 172. In 1981 A has gross income of $75,000 and again sustains a loss on section 1244 stock. The amount of A's 1981 loss on section 1244 stock is $50,000. A may deduct the full $50,000 as an ordinary loss under section 1244 and the full $15,000 as a net operating loss carryover in 1981.

[T.D. 7779, 46 FR 29473, June 2, 1981]

§ 1.1244(e)-1 Records to be kept.

(a) ***By the corporation*** —

(1) ***Mandatory records.*** A plan to issue pre-November 1978 stock must appear upon the records of the corporation. Any designation of post-November 1978 stock under § 1.1244(c)-2(b)(2) also must appear upon the records of the corporation.

(2) ***Discretionary records.*** In order to substantiate an ordinary loss deduction claimed by its shareholders, the corporation should maintain records showing the following:

(i) The persons to whom stock was issued, the date of issuance to these persons, and a description of the amount and type of consideration received from each;

(ii) If the consideration received is property, the basis in the hands of the shareholder and the fair market value of the property when received by the corporation;

(iii) The amount of money and the basis in the hands of the corporation of other property received for its stock, as a contribution to capital, and as paid-in surplus;

(iv) Financial statements of the corporation, such as its income tax returns, that identify the source of the gross receipt of the corporation for the period consisting of the five most recent taxable years of the corporation, or, if the corporation has not been in existence for 5 taxable years, for the period of the corporation's existence;

(v) Information relating to any tax-free stock dividend made with respect to section 1244 stock and any reorganization in which stock is transferred by the corporation in exchange for section 1244 stock; and

(vi) With respect to pre-November 1978 stock;

(A) Which certificates represent stock issued under the plan;

(B) The amount of money and the basis in the hands of the corporation of other property received after June 30, 1958, and before the adoption of the plan, for its stock, as a contribution to capital, and as paid-in surplus; and

(C) The equity capital of the corporation on the date of adoption of the plan.

(b) ***By the taxpayer.*** A person who claims an ordinary loss with respect to stock under section 1244 must have records sufficient to establish that the taxpayer is entitled to the loss and satisfies the requirements of section 1244. See also section 6001, requiring records to be maintained.

In addition, a person who owns section 1244 stock in a corporation shall maintain records sufficient to distinguish such stock from any other stock he may own in the corporation.

[T.D. 6495, 25 FR 9681, Oct. 8, 1960, as amended by T.D. 7779, 46 FR 29473, June 2, 1981; 46 FR 31881, June 18, 1981; T.D. 8594, 60 FR 20898, Apr. 28, 1995]

§ 1.1245-1 General rule for treatment of gain from dispositions of certain depreciable property.

(a) ***General.***

(1) In general, section 1245(a)(1) provides that, upon a disposition of an item of section 1245 property, the amount by which the lower of

(i) the *recomputed basis* of the property, or

(ii) the amount realized on a sale, exchange, or involuntary conversion (or the fair market value of the property on any other disposition), exceeds the adjusted basis of the property shall be treated as gain from the sale or exchange of property which is neither a capital asset nor property described in section 1231 (that is, shall be recognized as ordinary income). The amount of such gain shall be determined separately for each item of section 1245 property. In general, the term *recomputed basis* means the adjusted basis of property plus all adjustments reflected in such adjusted basis on account of depreciation allowed or allowable for all periods after December 31, 1961. See section 1245(a)(2) and § 1.1245-2. Generally, the ordinary income treatment applies even though in the absence of section 1245 no gain would be recognized under the Code. For example, if a corporation distributes section 1245 property as a dividend, gain may be recognized as ordinary income to the corporation even though, in the absence of section 1245, section 311(a) would preclude any recognition of gain to the

corporation. For the definition of *section 1245 property,* see section 1245(a)(3) and § 1.1245-3. For exceptions and limitations to the application of section 1245(a)(1), see section 1245(b) and § 1.1245-4.

(2) Section 1245(a)(1) applies to dispositions of section 1245 property in taxable years beginning after December 31, 1962, except that:

(i) In respect of section 1245 property which is an elevator or escalator, section 1245(a)(1) applies to dispositions after December 31, 1963, and

(ii) In respect of section 1245 property which is livestock (described in subparagraph (4) of § 1.1245-3(a)), section 1245(a)(1) applies to dispositions made in taxable years beginning after December 31, 1969, and

(iii) [Reserved].

(3) For purposes of this section and §§ 1.1245-2 through 1.1245-6, the term *disposition* includes a sale in a sale-and-leaseback transaction and a transfer upon the foreclosure of a security interest, but such term does not include a mere transfer of title to a creditor upon creation of a security interest or to a debtor upon termination of a security interest. Thus, for example, a disposition occurs upon a sale of property pursuant to a conditional sales contract even though the seller retains legal title to the property for purposes of security but a disposition does not occur when the seller ultimately gives up his security interest following payment by the purchaser.

(4) For purposes of applying section 1245, the facts and circumstances of each disposition shall be considered in determining what is the appropriate item of section 1245 property. A taxpayer may treat any number of units of section 1245 property in any particular depreciation account (as defined in § 1.167(a)-7) as one item of section 1245 property as long as it is reasonably clear, from the best estimates obtainable on the basis of all the facts and circumstances, that the amount of gain to which section 1245(a)(1) applies is not less than the total of the gain under section 1245(a)(1) which would be computed separately for each unit. Thus, for example, if 50 units of section 1245 property X, 25 units of section 1245 property Y, and other property are accounted for in one depreciation account, and if each such unit is sold at a gain in one transaction in which the total gain realized on the sale exceeds the sum of the adjustments reflected in the adjusted basis (as defined in paragraph (a)(2) of § 1.1245-2) of each such unit on account of depreciation allowed or allowable for periods after December 31, 1961, all 75 units may be treated as one item of section 1245 property. If, however, 5 such units of section 1245 property Y were sold at a loss, then only 70 of such units (50 of X plus the 20 of Y sold at a gain) may be treated as one item of section 1245 property.

(5) In case of a sale, exchange, or involuntary conversion of section 1245 and non-section 1245 property in one transaction, the total amount realized upon the disposition shall be allocated between the section 1245 property and the non-section 1245 property in proportion to their respective fair market values. In general, if a buyer and seller have adverse interests as to the allocation of the amount realized between the section 1245 property and the non-section 1245 property, any arm's length agreement between the buyer and the seller will establish the allocation. In the absence of such an agreement, the allocation shall be made by taking into account the appropriate facts and circumstances. Some of the facts and circumstances which shall be taken into account to the extent appropriate include, but are not limited to, a comparison between the section 1245 property and all the property disposed of in such transaction of

(i) the original cost and reproduction cost of construction, erection, or production,

(ii) the remaining economic useful life,

(iii) state of obsolescence, and

(iv) anticipated expenditures to maintain, renovate, or to modernize.

(b) ***Sale, exchange, or involuntary conversion.***

(1) In the case of a sale, exchange, or involuntary conversion of section 1245 property, the gain to which section 1245(a)(1) applies is the amount by which

(i) the lower of the amount realized upon the disposition of the property or the recomputed basis of the property, exceeds

(ii) the adjusted basis of the property.

(2) The provisions of this paragraph may be illustrated by the following examples:

Example 1. On January 1, 1964, Brown purchases section 1245 property for use in his manufacturing business. The property has a basis for depreciation of $3,300. After taking depreciation deductions of $1,300 (the amount allowable), Brown realizes after selling expenses the amount of $2,900 upon sale of the property on January 1, 1969. Brown's gain is $900 ($2,900 amount realized minus $2,000 adjusted basis). Since the amount realized upon disposition of the property ($2,900) is lower than its recomputed basis ($3,300, i.e., $2,000 adjusted basis plus $1,300 in depreciation deductions), the entire gain is treated as ordinary income under section 1245(a)(1) and not as gain from the sale or exchange of property described in section 1231.

Example 2. Assume the same facts as in example (1) except that Brown exchanges the section 1245 property for land which has a fair market value of $3,700, thereby realizing a gain of $1,700 ($3,700 amount realized minus $2,000 adjusted basis). Since the recomputed basis of the property ($3,300) is lower than the amount realized upon its disposition ($3,700), the excess of recomputed basis over adjusted basis, or $1,300, is treated as ordinary income under section 1245(a)(1). The remaining $400 of the gain may be treated as gain from the sale or exchange of property described in section 1231.

(c) ***Other dispositions.***

(1) In the case of a disposition of section 1245 property other than by way of a sale, exchange, or involuntary conversion, the gain to which section 1245(a)(1) applies is the amount by which

(i) the lower of the fair market value of the property on the date of disposition or the recomputed basis of the property, exceeds

(ii) the adjusted basis of the property. If property is transferred by a corporation to a shareholder for an amount less than its fair market value in a sale or exchange, for purposes of applying section 1245 such transfer shall be treated as a disposition other than by way of a sale, exchange, or involuntary conversion.

(2) The provisions of this paragraph may be illustrated by the following examples:

Example 1. X Corporation distributes section 1245 property to its shareholders as a dividend. The property has an adjusted basis of $2,000 to the corporation, a recomputed basis of $3,300, and a fair market value of $3,100. Since the fair market value of the property ($3,100) is lower than its recomputed

basis ($3,300), the excess of fair market value over adjusted basis, or $1,100, is treated under section 1245(a)(1) as ordinary income to the corporation even though, in the absence of section 1245, section 311(a) would preclude recognition of gain to the corporation.

Example 2. Assume the same facts as in example (1) except that X Corporation distributes the section 1245 property to its shareholders in complete liquidation of the corporation. Assume further that section 1245(b)(3) does not apply and that the fair market value of the property is $3,800 at the time of the distribution. Since the recomputed basis of the property ($3,300) is lower than its fair market value ($3,800), the excess of recomputed basis over adjusted basis, or $1,300, is treated under section 1245(a)(1) as ordinary income to the corporation even though, in the absence of section 1245, section 336 would preclude recognition of gain to the corporation.

(d) ***Losses.*** Section 1245(a)(1) does not apply to losses. Thus, section 1245(a)(1) does not apply if a loss is realized upon a sale, exchange, or involuntary conversion of property, all of which is considered section 1245 property, nor does the section apply to a disposition of such property other than by way of sale, exchange, or involuntary conversion if at the time of the disposition the fair market value of such property is not greater than its adjusted basis.

(e) ***Treatment of partnership and partners.***

(1) The manner of determining the amount of gain recognized under section 1245(a)(1) to a partnership may be illustrated by the following example:

Example: A partnership sells for $63 section 1245 property which has an adjusted basis to the partnership of $30 and a recomputed basis to the partnership of $60. The partnership recognizes under section 1245(a)(1) gain of $30, i.e., the lower of the amount realized ($63) or recomputed basis ($60), minus adjusted basis ($30). This result would not be changed if one or more partners had, in respect of the property, a special basis adjustment described in section 743(b) or had taken depreciation deductions in respect of such special basis adjustment.

(2)

(i) Unless paragraph (e)(3) of this section applies, a partner's distributive share of gain recognized under section 1245(a)(1) by the partnership is equal to the lesser of the partner's share of total gain from the disposition of the property (gain limitation) or the partner's share of depreciation or amortization with respect to the property (as determined under paragraph (e)(2)(ii) of this section). Any gain recognized under section 1245(a)(1) by the partnership that is not allocated under the first sentence of this paragraph (e)(2)(i) (excess depreciation recapture) is allocated among the partners whose shares of total gain from the disposition of the property exceed their shares of depreciation or amortization with respect to the property. Excess depreciation recapture is allocated among those partners in proportion to their relative shares of the total gain (including gain recognized under section 1245(a)(1)) from the disposition of the property that is allocated to the partners who are not subject to the gain limitation. See *Example 2* of paragraph (e)(2)(iii) of this section.

(ii)

(A) Subject to the adjustments described in paragraphs (e)(2)(ii)(B) and (e)(2)(ii)(C) of this section, a partner's share of depreciation or amortization with respect to property equals the total amount of allowed or allowable depreciation or amortization previously allocated to that partner with respect to the property.

(B) If a partner transfers a partnership interest, a share of depreciation or amortization must be allocated to the transferee partner as it would have been allocated to the transferor partner. If the partner transfers a portion of the partnership interest, a share of depreciation or amortization proportionate to the interest transferred must be allocated to the transferee partner.

(C)

(*1*) A partner's share of depreciation or amortization with respect to property contributed by the partner includes the amount of depreciation or amortization allowed or allowable to the partner for the period before the property is contributed.

(*2*) A partner's share of depreciation or amortization with respect to property contributed by a partner is adjusted to account for any curative allocations. (See § 1.704-3(c) for a description of the traditional method with curative allocations.) The contributing partner's share of depreciation or amortization with respect to the contributed property is decreased (but not below zero) by the amount of any curative allocation of ordinary income to the contributing partner with respect to that property and by the amount of any curative allocation of deduction or loss (other than capital loss) to the noncontributing partners with respect to that property. A noncontributing partner's share of depreciation or amortization with respect to the contributed property is increased by the noncontributing partner's share of any curative allocation of ordinary income to the contributing partner with respect to that property and by the amount of any curative allocation of deduction or loss (other than capital loss) to the noncontributing partner with respect to that property. The partners' shares of depreciation or amortization with respect to property from which curative allocations of depreciation or amortization are taken is determined without regard to those curative allocations. See *Example 3(iii)* of paragraph (e)(2)(iii) of this section.

(*3*) A partner's share of depreciation or amortization with respect to property contributed by a partner is adjusted to account for any remedial allocations. (See § 1.704-3(d) for a description of the remedial allocation method.) The contributing partner's share of depreciation or amortization with respect to the contributed property is decreased (but not below zero) by the amount of any remedial allocation of income to the contributing partner with respect to that property. A noncontributing partner's share of depreciation or amortization with respect to the contributed property is increased by the amount of any remedial allocation of depreciation or amortization to the noncontributing partner with respect to that property. See *Example 3(iv)* of paragraph (e)(2)(iii) of this section.

(*4*) If, under paragraphs (e)(2)(ii)(C)(*2*) and (e)(2)(ii)(C)(*3*) of this section, the partners' shares of depreciation or amortization with respect to a contributed property exceed the adjustments reflected in the adjusted basis of the property under § 1.1245-2(a) at the partnership level, then the partnership's gain recognized under section 1245(a)(1) with respect to that property is allocated among the partners in proportion to their relative shares of depreciation or amortization (subject to any gain limitation that might apply).

(5) This paragraph (e)(2)(ii)(C) also applies in determining a partner's share of depreciation or amortization with respect to property for which differences between book value and adjusted tax basis are created when a partnership revalues partnership property pursuant to § 1.704-1(b)(2)(iv)(*f*).

(iii) ***Examples.*** The application of this paragraph (e)(2) may be illustrated by the following examples:

Example 1. Recapture allocations. (i) *Facts.* A and B each contribute $5,000 cash to form AB, a general partnership. The partnership agreement provides that depreciation deductions will be allocated 90 percent to A and 10 percent to B, and, on the sale of depreciable property, A will first be allocated gain to the extent necessary to equalize A's and B's capital accounts. Any remaining gain will be allocated 50 percent to A and 50 percent to B. In its first year of operations, AB purchases depreciable equipment for $5,000. AB depreciates the equipment over its 5-year recovery period and elects to use the straight-line method. In its first year of operations, AB's operating income equals its expenses (other than depreciation). (To simplify this example, AB's depreciation deductions are determined without regard to any first-year depreciation conventions.)
(ii) *Year 1.* In its first year of operations, AB has $1,000 of depreciation from the partnership equipment. In accordance with the partnership agreement, AB allocates 90 percent ($900) of the depreciation to A and 10 percent ($100) of the depreciation to B. At the end of the year, AB sells the equipment for $5,200, recognizing $1,200 of gain ($5,200 amount realized less $4,000 adjusted tax basis). In accordance with the partnership agreement, the first $800 of gain is allocated to A to equalize the partners' capital accounts, and the remaining $400 of gain is allocated $200 to A and $200 to B.

(iii) *Recapture allocations.* $1,000 of the gain from the sale of the equipment is treated as section 1245(a)(1) gain. Under paragraph (e)(2)(i) of this section, each partner's share of the section 1245(a)(1) gain is equal to the lesser of the partner's share of total gain recognized on the sale of the equipment or the partner's share of total depreciation with respect to the equipment. Thus, A's share of the section 1245(a)(1) gain is $900 (the lesser of A's share of the total gain ($1,000) and A's share of depreciation ($900)). B's share of the section 1245(a)(1) gain is $100 (the lesser of B's share of the total gain ($200) and B's share of depreciation ($100)). Accordingly, $900 of the $1,000 of total gain allocated to A is treated as ordinary income and $100 of the $200 of total gain allocated to B is treated as ordinary income.

Example 2. Recapture allocation subject to gain limitation. (i) *Facts.* A, B, and C form general partnership ABC. The partnership agreement provides that depreciation deductions will be allocated equally among the partners, but that gain from the sale of depreciable property will be allocated 75 percent to A and 25 percent to B. ABC purchases depreciable personal property for $300 and subsequently allocates $100 of depreciation deductions each to A, B, and C, reducing the adjusted tax basis of the

property to $0. ABC then sells the property for $440. ABC allocates $330 of the gain to A (75 percent of $440) and allocates $110 of the gain to B (25 percent of $440). No gain is allocated to C.

(ii) *Application of gain limitation.* Each partner's share of depreciation with respect to the property is $100. C's share of the total gain from the disposition of the property, however, is $0. As a result, under the gain limitation provision in paragraph (e)(2)(i) of this section, C's share of section 1245(a)(1) gain is limited to $0.

(iii) *Excess depreciation recapture.* Under paragraph (e)(2)(i) of this section, the $100 of section 1245(a)(1) gain that cannot be allocated to C under the gain limitation provision (excess depreciation recapture) is allocated to A and B (the partners not subject to the gain limitation at the time of the allocation) in proportion to their relative shares of total gain from the disposition of the property. A's relative share of the total gain allocated to A and B is 75 percent ($330 of $440 total gain). B's relative share of the total gain allocated to A and B is 25 percent ($110 of $440 total gain). However, under the gain limitation provision of paragraph (e)(2)(i) of this section, B cannot be allocated 25 percent of the excess depreciation recapture ($25) because that would result in a total allocation of $125 of depreciation recapture to B (a $100 allocation equal to B's share of depreciation plus a $25 allocation of excess depreciation recapture), which is in excess of B's share of the total gain from the disposition of the property ($110). Therefore, only $10 of excess depreciation recapture is allocated to B and the remaining $90 of excess depreciation recapture is allocated to A. A is not subject to the gain limitation because A's share of the total gain ($330) still exceeds A's share of section 1245(a)(1) gain ($190). Accordingly, all $110 of the total gain allocated to B is treated as ordinary income ($100 share of depreciation allocated to B plus $10 of excess depreciation recapture) and $190 of the total gain allocated to A is treated as ordinary income ($100 share of depreciation allocated to A plus $90 of excess depreciation recapture).

Example 3. Determination of partners' shares of depreciation with respect to contributed property. (i) *Facts.*C and D form partnership CD as equal partners. C contributes depreciable personal property C1 with an adjusted tax basis of $800 and a fair market value of $2,800. Prior to the contribution, C claimed $200 of depreciation from C1. At the time of the contribution, C1 is depreciable under the straight-line method and has four years remaining on its 5-year recovery period. D contributes $2,800 cash, which CD uses to purchase depreciable personal property D1, which is depreciable over seven years under the straight-line method. (To simplify the example, all depreciation is determined without regard to any first-year depreciation conventions.)

(ii) *Traditional method.* C1 generates $700 of book depreciation ($^1/_4$ of $2,800 book value) and $200 of tax depreciation ($^1/_4$ of $800 adjusted tax basis) each year. C and D will each be allocated $350 of book depreciation from C1 in year 1. Under the traditional

method of making section 704(c) allocations, D will be allocated the entire $200 of tax depreciation from C1 in year 1. D1 generates $400 of book and tax depreciation each year ($^1/_7$ of $2,800 book value and adjusted tax basis). C and D will each be allocated $200 of book and tax depreciation from D1 in year 1. As a result, after the first year of partnership operations, C's share of depreciation with respect to C1 is $200 (the depreciation taken by C prior to contribution) and D's share of depreciation with respect to C1 is $200 (the amount of tax depreciation allocated to D). C and D each have a $200 share of depreciation with respect to D1. At the end of four years, C's share of depreciation with respect to C1 will be $200 (the depreciation taken by C prior to contribution) and D's share of depreciation with respect to C1 will be $800 (four years of $200 depreciation per year). At the end of four years, C and D will each have an $800 share of depreciation with respect to D1 (four years of $200 depreciation per year).

(iii) *Effect of curative allocations.* (A) *Year 1.* If the partnership elects to make curative allocations under § 1.704-3(c) using depreciation from D1, the results will be the same as under the traditional method, except that $150 of the $200 of tax depreciation from D1 that would be allocated to C under the traditional method will be allocated to D as additional depreciation with respect to C1. As a result, after the first year of partnership operations, C's share of depreciation with respect to C1 will be reduced to $50 (the total depreciation taken by C prior to contribution ($200) decreased by the amount of the curative allocation to D ($150)). D's share of depreciation with respect to C1 will be $350 (the depreciation allocated to D under the traditional method ($200) increased by the amount of the curative allocation to D ($150)). C and D will each have a $200 share of depreciation with respect to D1.

(B) *Year 4.* At the end of four years, C's share of depreciation with respect to C1 will be reduced to $0 (the total depreciation taken by C prior to contribution ($200) decreased, but not below zero, by the amount of the curative allocations to D ($600)), and D's share of depreciation with respect to C1 will be $1,400 (the total depreciation allocated to D under the traditional method ($800) increased by the amount of the curative allocations to D ($600)). However, CD's section 1245(a)(1) gain with respect to C1 will not be more than $1,000 (CD's tax depreciation ($800) plus C's tax depreciation prior to contribution ($200)). Under paragraph (e)(2)(ii)(C)(*4*) of this section, because the partners' shares of depreciation with respect to C1 exceed the adjustments reflected in the property's adjusted basis, CD's section 1245(a)(1) gain will be allocated in proportion to the partners' relative shares of depreciation with respect to C1. Because C's share of depreciation with respect to C1 is $0, and D's share of depreciation with respect to C1 is $1,400, all of CD's $1,000 of section 1245(a)(1) gain will be allocated to D. At the end of four years, C and D will each have an $800 share of depreciation with respect to D1 (four years of $200 depreciation per year).

(iv) *Effect of remedial allocations.* (A) *Year 1.* If the partnership elects to make remedial allocations under § 1.704-3(d), there will be $600 of book depreciation from C1 in year 1. (Under the remedial allocation method, the amount by which C1's book basis ($2,800) exceeds its tax basis ($800) is depreciated over a 5-year life, rather than a 4-year life.) C and D will each be allocated one-half ($300) of the total book depreciation. As under the traditional method, D will be allocated all $200 of tax depreciation from C1. Because the ceiling rule would cause a disparity of $100 between D's book and tax allocations of depreciation, D will also receive a $100 remedial allocation of depreciation with respect to C1, and C will receive a $100 remedial allocation of income with respect to C1. As a result, after the first year of partnership operations, D's share of depreciation with respect to C1 is $300 (the depreciation allocated to D under the traditional method ($200) increased by the amount of the remedial allocation ($100)). C's share of depreciation with respect to C1 is $100 (the total depreciation taken by C prior to contribution ($200) decreased by the amount of the remedial allocation of income ($100)). C and D will each have a $200 share of depreciation with respect to D1.

(B) *Year 5.* At the end of five years, C's share of depreciation with respect to C1 will be $0 (the total depreciation taken by C prior to contribution ($200) decreased, but not below zero, by the total amount of the remedial allocations of income to C ($600)). D's share of depreciation with respect to C1 will be $1,400 (the total depreciation allocated to D under the traditional method ($800) increased by the total amount of the remedial allocations of depreciation to D ($600)). However, CD's section 1245(a)(1) gain with respect to C1 will not be more than $1,000 (CD's tax depreciation ($800) plus C's tax depreciation prior to contribution ($200)). Under paragraph (e)(2)(ii)(C)(*4*) of this section, because the partners' shares of depreciation with respect to C1 exceed the adjustments reflected in the property's adjusted basis, CD's section 1245(a)(1) gain will be allocated in proportion to the partners' relative shares of depreciation with respect to C1. Because C's share of depreciation with respect to C1 is $0, and D's share of depreciation with respect to C1 is $1,400, all of CD's $1,000 of section 1245(a)(1) gain will be allocated to D. At the end of five years, C and D will each have a $1,000 share of depreciation with respect to D1 (five years of $200 depreciation per year).

(iv) ***Effective date.*** This paragraph (e)(2) is effective for properties acquired by a partnership on or after August 20, 1997. However, partnerships may rely on this paragraph (e)(2) for properties acquired before August 20, 1997 and disposed of on or after August 20, 1997.

(3)

(i) If (*a*) a partner had a special basis adjustment under section 743(b) in respect of section 1245 property, or (*b*) on the date he acquired his partnership interest by way of a sale or exchange (or upon death of another partner) the partnership owned section 1245 property and an election under section 754 (relating to optional adjustment to basis of partnership property) was in

effect with respect to the partnership, then the amount of gain recognized under section 1245(a)(1) by him upon a disposition by the partnership of such property shall be determined under this subparagraph.

(ii) There shall be allocated to such partner, in the same proportion as the partnership's total gain is allocated to him as his distributive share under section 704, a portion of (*a*) the common partnership adjusted basis for the property, and (*b*) the amount realized by the partnership upon the disposition, or, if nothing is realized, the fair market value of the property. There shall also be allocated to him, in the same proportion as the partnership's gain recognized under section 1245(a)(1) is allocated under subparagraph (2) of this paragraph as his distributive share of such gain, a portion of *the adjustments reflected in the adjusted basis* (as defined in paragraph (a)(2) of § 1.1245-2) of such property. If on the date he acquired his partnership interest by way of a sale or exchange the partnership owned such property and an election under section 754 was in effect, then for purposes of the preceding sentence the amount of the adjustments reflected in the adjusted basis of such property on such date shall be deemed to be zero. For special rules relating to the amount of adjustments reflected in the adjusted basis of property after partnership transactions, see paragraph (c)(6) of § 1.1245-2.

(iii) The partner's adjusted basis in respect of the property shall be deemed to be (*a*) the portion of the partnership's adjusted basis for the property allocated to the partner under subdivision (ii) of this subparagraph, (*b*) increased by the amount of any special basis adjustment described in section 743(b)(1) (or decreased by the amount of any special basis adjustment described in section 743(b)(2) which the partner may have in respect of the property on the date the partnership disposed of the property.

(iv) The partner's recomputed basis in respect of the property shall be deemed to be (*a*) the sum of the partner's adjusted basis for the property, as determined in subdivision (iii) of this subparagraph, plus the amount of *the adjustments reflected in the adjusted basis* (as defined in paragraph (a)(2) of § 1.1245-2) for the property allocated to the partner under subdivision (ii) of this subparagraph, (*b*) increased by the amount by which any special basis adjustment described in section 743(b)(1) (or decreased by the amount by which any special basis adjustment described in section 743(b)(2)) in respect of the property was reduced, but only to the extent such amount was applied to adjust the amount of the deductions allowed or allowable to the partner for depreciation or amortization of section 1245 property attributable to periods referred to in paragraph (a)(2) of § 1.1245-2. The terms *allowed or allowable, depreciation or amortization,* and *attributable to periods* shall have the meanings assigned to these terms in paragraph (a) of § 1.1245-2.

(4) The application of subparagraph (3) of this paragraph may be illustrated by the following example:

> *Example:* A, B, and C each hold a one-third interest in calendar year partnership ABC. On December 31, 1962, the firm holds section 1245 property which has an adjusted basis of $30,000 and a recomputed basis of $33,000. Depreciation deductions in respect of the property for 1962 were $3,000. On January 1, 1963, when D purchases C's partnership interest, the election under section 754 is in effect and a $5,000 special basis adjustment is made in respect of D to his one-third share of the common partnership adjusted basis for the property. For 1963 and 1964 the partnership deducts $6,000 as depreciation in respect of the property, thereby reducing its adjusted basis to $24,000, and D deducts $2,800, i.e., his distributive share of partnership depreciation ($2,000) plus depreciation in respect of his special basis

adjustment ($800). On March 15, 1965, the partnership sells the property for $48,000. Since the partnership's recomputed basis for the property ($33,000, i.e., $24,000 adjusted basis plus $9,000 in depreciation deductions) is lower than the amount realized upon the sale ($48,000), the excess of recomputed basis over adjusted basis, or $9,000, is treated as partnership gain under section 1245(a)(1). D's distributive share of such gain is $3,000 ($^1/_3$ of $9,000). However, the amount of gain recognized by D under section 1245 (a)(1) is only $2,800, determined as follows:

(1) Adjusted basis:		
D's portion of partnership adjusted basis ($^1/_3$ of $24,000)	$8,000	
D's special basis adjustment as of December 31, 1964 ($5,000 minus $800)	4,200	
D's adjusted basis		$12,200
(2) Recomputed basis:		
D's adjusted basis	12,200	
D's portion of partnership depreciation for 1963 and 1964, i.e., for periods after he acquired his partnership interest ($^1/_3$ of $6,000)	2,000	
Depreciation for 1963 and 1964 in respect of D's special basis adjustment	800	
D's recomputed basis		15,000
(3) D's portion of amount realized by partnership ($^1/_3$ of $48,000)		16,000
(4) Gain recognized to D under section 1245(a)(1), i.e., the lower of (2) or (3), minus (1)		2,800

[T.D. 6832, 30 FR 8576, July 7, 1965, as amended by T.D. 7084, 36 FR 268, Jan. 8, 1971; T.D. 7141, 36 FR 18793, Sept. 22, 1971; T.D. 8730, 62 FR 44216, Aug. 20, 1997]

§ 1.1245-2 Definition of recomputed basis.

(a) ***General rule*** —

(1) ***Recomputed basis defined.*** The term *recomputed basis* means, with respect to any property, an amount equal to the sum of:

(i) The adjusted basis of the property, as defined in section 1011, plus

(ii) The amount of the adjustments reflected in the adjusted basis.

(2) ***Definition of adjustments reflected in adjusted basis.*** The term *adjustments reflected in the adjusted basis* means:

(i) With respect to any property other than property described in subdivision (ii), (iii), or (iv) of this subparagraph, the amount of the adjustments attributable to periods after December 31, 1961,

(ii) With respect to an elevator or escalator, the amount of the adjustments attributable to periods after June 30, 1963,

(iii) With respect to livestock (described in subparagraph (4) of § 1.1245-3(a)), the amount of the adjustments attributable to periods after December 31, 1969, or

(iv) [Reserved]

which are reflected in the adjusted basis of such property on account of deductions allowed or allowable for depreciation or amortization (within the meaning of subparagraph (3) of this paragraph). For cases where the taxpayer can establish that the amount allowed for any period was less than the amount allowable, see subparagraph (7) of this paragraph. For determination of adjusted basis of property in a multiple asset account, see paragraph (c)(3) of § 1.167(a)-8.

(3) ***Meaning of depreciation or amortization.***

(i) For purposes of subparagraph (2) of this paragraph, the term *depreciation or amortization* includes allowances (and amounts treated as allowances) for depreciation (or amortization in lieu thereof), and deductions for amortization of emergency facilities under section 168. Thus, for example, such term includes a reasonable allowance for exhaustion, wear and tear (including a reasonable allowance for obsolescence) under section 167, an expense allowance (additional first-year depreciation allowance for property placed in service before January 1, 1981), under section 179, an expenditure treated as an amount allowed under section 167 by reason of the application of section 182(d)(2)(B) (relating to expenditures by farmers for clearing land), and a deduction for depreciation of improvements under section 611 (relating to depletion). For further examples, the term *depreciation or amortization* includes periodic deductions referred to in § 1.162-11 in respect of a specified sum paid for the acquisition of a leasehold and in respect of the cost to a lessee of improvements on property of which he is the lessee. However, such term does not include deductions for the periodic payment of rent.

(ii) The provisions of this subparagraph may be illustrated by the following example:

Example: On January 1, 1966, Smith purchases for $1,000, and places in service, an item of property described in section 1245(a) (3)(A). Smith deducts an additional first-year allowance for depreciation under section 179 of $200. Accordingly, the basis of the property for purposes of depreciation is $800 on January 1, 1966. Between that date and January 1, 1974, Smith deducts $640 in depreciation (the amount allowable) with respect to the property, thereby reducing its adjusted basis to $160. Since this adjusted basis reflects deductions for depreciation and amortization (within the meaning of this subparagraph) amounting to $840 ($200 plus $640), the recomputed basis of the property is $1,000 ($160 plus $840).

(4) ***Adjustments of other taxpayers or in respect of other property.***

(i) For purposes of subparagraph (2) of this paragraph, the adjustments reflected in adjusted basis on account of depreciation or amortization which must be taken into account in determining recomputed basis are not limited to those adjustments on account of depreciation or amortization with respect to the property disposed of, nor are such adjustments limited to those on account of depreciation or amortization allowed or allowable to the taxpayer disposing of such property. Except as provided in subparagraph (7) of this paragraph, all such adjustments are taken into account, whether the deductions were allowed or allowable in respect of the same or other property and whether to the taxpayer or to any other person. For manner of determining the amount of adjustments reflected in the adjusted basis of property immediately after certain dispositions, see paragraph (c) of this section.

(ii) The provisions of this subparagraph may be illustrated by the following example:

Example: On January 1, 1966, Jones purchases machine X for use in his trade or business. The machine, which is section 1245 property, has a basis for depreciation of $10,000. After taking depreciation deductions of $2,000 (the amount allowable), Jones transfers the machine to his son as a gift on January 1, 1968. Since the exception for gifts in section 1245(b)(1) applies, Jones does not recognize gain under section 1245(a)(1). The son's adjusted basis for the machine is $8,000. On January 1, 1969, after taking a depreciation deduction of $1,000 (the amount allowable), the son exchanges machine X for machine Y in a like kind exchange described in section 1031. Since the exception for like kind exchanges in section 1245(b)(4) applies, the son does not recognize gain under section 1245(a)(1). The son's adjusted basis for machine Y is $7,000. In 1969, the son takes a depreciation deduction of $1,000 (the amount allowable) in respect of machine Y. The son sells machine Y on June 30, 1970. No depreciation was allowed or allowable for 1970, the year of the sale. The recomputed basis of machine Y on June 30, 1970, is determined in the following manner:

Adjusted basis	$6,000	
Adjustments reflected in the adjusted basis:		
Depreciation deducted by Jones for 1966 and 1967 on machine X	2,000	
Depreciation deducted by son for 1968 on machine X	1,000	
Depreciation deducted by son for 1969 on machine Y	1,000	
Total adjustments reflected in the adjusted basis		$4,000
Recomputed basis		10,000

(5) ***Adjustments reflected in adjusted basis of property described in section 1245(a)(3)(B).*** For purposes of subparagraph (2) of this paragraph, the adjustments reflected in the adjusted basis of property described in section 1245(a)(3)(B), on account of depreciation or amortization which must be taken into account in determining recomputed basis, may include deductions attributable to periods during which the property is not used as an integral part of an activity, or does not constitute a facility, specified in section 1245(a)(3)(B) (i) or (ii). Thus, for example, if depreciation deductions taken with respect to such property after December 31, 1961, amount to $10,000 (the amount allowable), of which $6,000 is attributable to periods during which the property is used as an integral part of a specified activity or constitutes a specified facility, then the entire $10,000 of depreciation deductions are adjustments reflected in the adjusted basis for purposes of determining recomputed basis. Moreover, if the property was never so used but was acquired in a transaction to which section 1245(b)(4) (relating to like kind exchanges and involuntary conversions) applies, and if by reason of the application of paragraph (d)(3) of § 1.1245-4 the property is considered as section 1245 property described in section 1245(a)(3)(B), then the entire $10,000 of depreciation deductions would also be adjustments reflected in the adjusted basis for purposes of determining recomputed basis.

(6) ***Allocation of adjustments attributable to periods after certain dates.***

(i) For purposes of determining recomputed basis, the amount of adjustments reflected in the adjusted basis of property other than property described in subparagraph (2) (ii), (iii), or (iv) of this paragraph are limited to adjustments attributable to periods after December 31, 1961. Accordingly, if depreciation deducted with respect to such property of a calendar year taxpayer is $1,000 a year (the amount allowable) for each of 10 years beginning with 1956, only the depreciation deducted in 1962 and succeeding years shall be treated as reflected in the adjusted basis for purposes of determining recomputed basis. With respect to a taxable year beginning in 1961 and ending in 1962, the deduction for depreciation or amortization shall be ascertained by applying the principles stated in paragraph (c)(3) of § 1.167(a)-8 (relating to determination of adjusted basis of retired asset). The amount of the deduction, determined in such manner, shall be allocated on a daily basis in order to determine the portion thereof which is attributable to a period after December 31, 1961. Thus, for example, if a taxpayer, whose fiscal year ends on May 31, 1962, acquires section 1245 property on November 12, 1961, and the deduction for depreciation attributable to the property for such fiscal year is ascertained (under the principles of paragraph (c)(3) of § 1.167(a)-8) to be $400, then the portion thereof attributable to a period after December 31, 1961, is $302 ($^{151}/_{200}$ of $400). If, however, the property were acquired by such taxpayer after December 31, 1961, the entire deduction for depreciation attributable to the property for such fiscal year would be allocable to a period after December 31, 1961. For treatment of certain normal retirements described in paragraph (e)(2) of § 1.167(a)-8, see paragraph (c) of § 1.1245-6. For principles of determining the amount of adjustments for depreciation or amortization reflected in the adjusted basis of property upon an abnormal retirement of property in a multiple asset account, see paragraph (c)(3) of § 1.167(a)-8.

(ii) For purposes of determining recomputed basis, the amount of adjustments reflected in the adjusted basis of an elevator or escalator are limited to adjustments attributable to periods after June 30, 1963.

(iii) For purposes of determining recomputed basis, the amount of adjustments reflected in the adjusted basis of livestock (described in subparagraph (2)(iii) of this paragraph) are limited to adjustments attributable to periods after December 31, 1969.

(7) ***Depreciation or amortization allowed or allowable.*** For purposes of determining recomputed basis, generally all adjustments (for periods after Dec. 31, 1961, or, in the case of property described in subparagraph (2) (ii), (iii), or (iv) of this paragraph, for periods after the applicable date) attributable to allowed or allowable depreciation or amortization must be taken into account. See section 1016(a)(2) and the regulations thereunder for the meaning of *allowed* and *allowable.* However, if a taxpayer can establish by adequate records or other sufficient evidence that the amount allowed for depreciation or amortization for any period was less than the amount allowable for such period, the amount to be taken into account for such period shall be the amount allowed. No adjustment is to be made on account of the tax imposed by section 56 (relating to the minimum tax for tax preferences). See paragraph (b) of this section (relating to records to be kept and information to be filed). For example, assume that in the year 1967 it becomes necessary to determine the recomputed basis of property, the $500 adjusted basis of which reflects adjustments of $1,000 with respect to depreciation deductions allowable for periods after December 31, 1961. If the taxpayer can establish by adequate records or other sufficient evidence that he had been allowed deductions amounting to only $800 for the period, then in determining recomputed basis the amount added to adjusted basis with respect to the $1,000 adjustments to basis for the period will be only $800.

(8) ***Exempt organizations.*** In respect of property disposed of by an organization which is or was exempt from income taxes (within the meaning of section 501(a)), adjustments reflected in the adjusted basis (within the meaning of subparagraph (2) of this paragraph) shall include only depreciation or amortization allowed or allowable

(i) in computing unrelated business taxable income (as defined in section 512(a), or

(ii) in computing taxable income of the organization (or a predecessor organization) for a period during which it was not exempt or, by reason of the application of section 502, 503, or 504, was denied its exemption.

(b) ***Records to be kept.*** In any case in which it is necessary to determine recomputed basis of an item of section 1245 property, the taxpayer shall have available permanent records of all the facts necessary to determine with reasonable accuracy the amount of such recomputed basis, including the following:

(1) The date, and the manner in which, the property was acquired,

(2) The taxpayer's basis on the date the property was acquired and the manner in which the basis was determined,

(3) The amount and date of all adjustments to the basis of the property allowed or allowable to the taxpayer for depreciation or amortization and the amount and date of any other adjustments by the taxpayer to the basis of the property,

(4) In the case of section 1245 property which has an adjusted basis reflecting adjustments for depreciation or amortization taken by the taxpayer with respect to other property, or by another taxpayer with respect to the same or other property, the information described in subparagraphs (1), (2), and (3) of this paragraph with respect to such other property or such other taxpayer.

(c) ***Adjustments reflected in adjusted basis immediately after certain acquisitions*** —

(1) ***Zero.***

(i) If on the date a person acquires property his basis for the property is determined solely by reference to its cost (within the meaning of section 1012), then on such date the amount of the adjustments reflected in his adjusted basis for the property is zero.

(ii) If on the date a person acquires property his basis for the property is determined solely by reason of the application of section 301(d) (relating to basis of property received in corporate distribution) or section 334(a) (relating to basis of property received in a liquidation in which gain or loss is recognized), then on such date the amount of the adjustments reflected in his adjusted basis for the property is zero.

(iii) If on the date a person acquires property his basis for the property is determined solely under the rules of section 334 (b)(2) or (c) relating to basis of property received in certain corporate liquidations), then on such date the amount of the adjustments reflected in his adjusted basis for the property is zero.

(iv) If as of the date a person acquires property from a decedent such person's basis is determined, by reason of the application of section 1014(a), solely by reference to the fair market value of the property on the date of the decedent's death or on the applicable date provided in section 2032 (relating to alternate valuation date), then on such date the amount of the adjustments reflected in his adjusted basis for the property is zero.

(2) *Gifts and certain tax-free transactions.*

(i) If property is disposed of in a transaction described in subdivision (ii) of this subparagraph, then the amount of the adjustments reflected in the adjusted basis of the property in the hands of a transferee immediately after the disposition shall be an amount equal to:

(*a*) The amount of the adjustments reflected in the adjusted basis of the property in the hands of the transferor immediately before the disposition, minus

(*b*) The amount of any gain taken into account under section 1245(a)(1) by the transferor upon the disposition.

(ii) The transactions referred to in paragraph (c)(2)(i) of this section are:

(A) A disposition that is in part a sale or exchange and in part a gift (see § 1.1245-4(a)(3));

(B) A disposition (other than a disposition to which section 1245(b)(6)(A) applies) that is described in section 1245(b)(3) (relating to certain tax-free transactions);

(C) An exchange described in § 1.1245-4(e)(2) (relating to transfers described in section 1081(d)(1)(A)); or

(D) A transfer at death where the basis of property in the hands of the transferee is determined under section 1022.

(iii) The provisions of this subparagraph may be illustrated by the following example:

Example: Jones transfers section 1245 property to a corporation in exchange for stock of the corporation and $1,000 cash in a transaction which qualifies under section 351 (relating to transfer to a corporation controlled by transferor). Before the exchange the amount of the adjustments reflected in the adjusted basis of the property is $3,000. Upon the exchange $1,000 gain is recognized under section 1245(a)(1). Immediately after the exchange, the amount of the adjustments reflected in the adjusted basis of the property in the hands of the corporation is $2,000 (that is, $3,000 minus $1,000).

(3) *Certain transfers at death.*

(i) If property is acquired in a transfer at death to which section 1245(b)(2) applies, the amount of the adjustments reflected in the adjusted basis of property in the hands of the transferee immediately after the transfer shall be the amount (if any) of depreciation or amortization deductions allowed the transferee before the decedent's death, to the extent that the basis of the property (determined under section 1014(a)) is required to be reduced under the second sentence of section 1014(b)(9) (relating to adjustments to basis where property is acquired from a decedent prior to his death).

(ii) The provisions of this subparagraph may be illustrated by the following example:

Example: H purchases section 1245 property in 1965 which he immediately conveys to himself and W, his wife, as tenants by the entirety. Under local law each spouse is entitled to one-half the income from the property. H and W file joint income tax returns for calendar years 1965, 1966, and 1967. Over the 3 years, depreciation deductions amounting to $4,000 (the amount allowable) are allowed in respect of the property of which one-half thereof, or $2,000, is allocable to W. On January 1, 1968, H dies and the entire value of the property at the date of death is included in H's gross estate. Since W's basis for the property (determined under

section 1014(a)) is reduced (under the second sentence of section 1014(b)(9)) by the $2,000 depreciation deductions allowed W before H's death, the adjustments reflected in the adjusted basis of the property in the hands of W immediately after H's death amount to $2,000.

(4) ***Property received in a like kind exchange, involuntary conversion, or F.C.C. transaction.***

(i) If property is acquired in a transaction described in subdivision

(ii) of this subparagraph then immediately after the acquisition (and before applying subparagraph (5) of this paragraph, if applicable) the amount of the adjustments reflected in the adjusted basis of the property acquired shall be an amount equal to:

(*a*) The amount of the adjustments reflected in the adjusted basis of the property disposed of immediately before the disposition, minus

(*b*) The sum of (*1*) the amount of any gain recognized under section 1245(a)(1) upon the disposition, plus (*2*) the amount of gain (if any) referred to in subparagraph (5)(ii) of this paragraph.

(ii) The transactions referred to in subdivision (i) of this subparagraph are:

(*a*) A disposition which is a like kind exchange or an involuntary conversion to which section 1245(b)(4) applies, or

(*b*) A disposition to which the provisions of section 1071 and paragraph (e)(1) of § 1.1245-4 apply.

(iii) The provisions of subdivisions (i) and (ii) of this subparagraph may be illustrated by the following examples:

Example 1. Smith exchanges machine A for machine B and $1,000 cash in a like kind exchange. Gain of $1,000 is recognized under section 1245(a)(1). If before the exchange the amount of the adjustments reflected in the adjusted basis of machine A was $5,000, the amount of adjustments reflected in the adjusted basis of machine B after the exchange is $4,000 (that is, $5,000 minus $1,000).

Example 2. Assume the same facts as in example (1) except that machine A is destroyed by fire, that $5,000 in insurance proceeds are received of which $4,000 is used to purchase machine B, and that Smith properly elects under section 1033(a)(3)(A) to limit recognition of gain. The result is the same as in example (1), that is, the amount of adjustments reflected in the adjusted basis of machine B is $4,000 ($5,000 minus $1,000).

(iv) If more than one item of section 1245 property is acquired in a transaction referred to in subdivision (i) of this subparagraph, the total amount of the adjustments reflected in the adjusted bases of the items acquired shall be allocated to such items in proportion to their respective adjusted bases.

(5) ***Property after a reduction in basis pursuant to election under section 1071 or application of section 1082(a)(2).*** If the basis of section 1245 property is reduced pursuant to an election under section 1071 (relating to gain from sale or exchange to effectuate policies of F.C.C.), or the application of section 1082(a)(2) (relating to sale or exchange in obedience to order of S.E.C.), then immediately after the basis reduction the amount of the adjustments reflected in the adjusted basis of the property shall be the sum of:

(i) The amount of the adjustments reflected in the adjusted basis of the property immediately before the basis reduction (but after applying subparagraph (4) of this paragraph, if applicable), plus

(ii) The amount of gain which was not recognized under section 1245(a)(1) by reason of the reduction in the basis of the property. See paragraph (e)(1) of § 1.1245-4.

(6) ***Partnership property after certain transactions.***

(i) For the amount of adjustments reflected in the adjusted basis of property immediately after certain distributions of the property by a partnership to a partner, see section 1245(b)(6)(B).

(ii) If under paragraph (b)(3) of § 1.751-1 (relating to certain distributions of partnership property other than section 751 property treated as sales or exchanges) a partnership is treated as purchasing section 1245 property (or a portion thereof) from a distributee who relinquishes his interest in such property (or portion), then on the date of such purchase the amount of adjustments reflected in the adjusted basis of such purchased property (or portion) shall be zero.

(iii) See paragraph (e)(3)(ii) of § 1.1245-1 for the amount of adjustments reflected in the adjusted basis of partnership property in respect of a partner who acquired his partnership interest in certain transactions when an election under section 754 (relating to optional adjustments to basis of partnership property) was in effect.

(d) ***Effective/applicability date.*** This section applies on and after January 19, 2017. For rules before January 19, 2017, see § 1.1245-2 as contained in 26 CFR part 1 revised as of April 1, 2016.

[T.D. 6832, 30 FR 8578, July 7, 1965, as amended by T.D. 7084, 36 FR 268, Jan. 8, 1971; T.D. 7141, 36 FR 18793, Sept. 22, 1971; 36 FR 19160, Sept. 30, 1971; T.D. 7564, 43 FR 40496, Sept. 12, 1978; T.D. 8121, 52 FR 414, Jan. 6, 1987; T.D. 9811, 82 FR 6241, Jan. 19, 2017]

§ 1.1245-3 Definition of section 1245 property.

(a) ***In general.***

(1) The term *section 1245 property* means any property (other than livestock excluded by the effective date limitation in subparagraph (4) of this paragraph) which is or has been property of a character subject to the allowance for depreciation provided in section 167 and which is either:

(i) Personal property (within the meaning of paragraph (b) of this section),

(ii) Property described in section 1245(a)(3)(B) (see paragraph (c) of this section), or

(iii) An elevator or an escalator within the meaning of subparagraph (C) of section 48(a)(1) (relating to the definition of *section 38 property* for purposes of the investment credit), but without regard to the limitations in such subparagraph (C).

(2) If property is section 1245 property under a subdivision of subparagraph (1) of this paragraph, a leasehold of such property is also section 1245 property under such subdivision. Thus, for example, if A owns personal property which is section 1245 property under subparagraph (1)(i) of this paragraph, and if A leases the personal property to B, B's leasehold is also section 1245 property under such provision. For a further example, if C owns and leases to D for a single lump-sum payment of $100,000 property consisting of land and a fully equipped factory building thereon, and if

40 percent of the fair market value of such property is properly allocable to section 1245 property, then 40 percent of D's leasehold is also section 1245 property. A leasehold of land is not section 1245 property.

(3) Even though property may not be of a character subject to the allowance for depreciation in the hands of the taxpayer, such property may nevertheless be section 1245 property if the taxpayer's basis for the property is determined by reference to its basis in the hands of a prior owner of the property and such property was of a character subject to the allowance for depreciation in the hands of such prior owner, or if the taxpayer's basis for the property is determined by reference to the basis of other property that in the hands of the taxpayer was property of a character subject to the allowance for depreciation, or if the taxpayer's basis for the property is determined under section 1022 and such property was of a character subject to the allowance for depreciation in the hands of the decedent. Thus, for example, if a father uses an automobile in his trade or business during a period after December 31, 1961, and then gives the automobile to his son as a gift for the son's personal use, the automobile is section 1245 property in the hands of the son.

(4) Section 1245 property includes livestock, but only with respect to taxable years beginning after December 31, 1969. For purposes of section 1245, the term *livestock* includes horses, cattle, hogs, sheep, goats, and mink and other furbearing animals, irrespective of the use to which they are put or the purpose for which they are held.

(b) ***Personal property defined.*** The term *personal property* means:

(1) Tangible personal property (as defined in paragraph (c) of § 1.48-1, relating to the definition of *section 38 property* for purposes of the investment credit), and

(2) Intangible personal property.

(c) ***Property described in section 1245(a)(3)(B).***

(1) The term *property described in section 1245(a)(3)(B)* means tangible property of the requisite depreciable character other than personal property (and other than a building and its structural components), but only if there are adjustments reflected in the adjusted basis of the property (within the meaning of paragraph (a)(2) of § 1.1245-2) for a period during which such property (or other property):

(i) Was used as an integral part of manufacturing, production, or extraction, or as an integral part of furnishing transportation, communications, electrical energy, gas, water, or sewage disposal services by a person engaged in a trade or business of furnishing any such service, or

(ii) Constituted a research or storage facility used in connection with any of the foregoing activities.

Thus, even though during the period immediately preceding its disposition the property is not used as an integral part of an activity specified in subdivision (i) of this subparagraph and does not constitute a facility specified in subdivision (ii) of this subparagraph, such property is nevertheless property described in section 1245(a)(3)(B) if, for example, there are adjustments reflected in the adjusted basis of the property for a period during which the property was used as an integral part of manufacturing by the taxpayer or another taxpayer, or for a period during which other property (which was involuntarily converted into, or exchanged in a like kind exchange for, the property) was so used by the taxpayer or another taxpayer. For rules applicable to involuntary conversions and like kind exchanges, see paragraph (d)(3) of § 1.1245-4.

(2) The language used in subparagraph (1) (i) and (ii) of this paragraph shall have the same meaning as when used in paragraph (a) of § 1.48-1, and the terms *building* and *structural components* shall have the meanings assigned to those terms in paragraph (e) of § 1.48-1.

(d) ***Effective/applicability date.*** This section applies on and after January 19, 2017. For rules before January 19, 2017, see § 1.1245-3 as contained in 26 CFR part 1 revised as of April 1, 2016.

[T.D. 6832, 30 FR 8580, July 7, 1965, as amended by T.D. 7141, 36 FR 18794, Sept. 22, 1971; T.D. 9811, 82 FR 6241, Jan. 19, 2017]

§ 1.1245-4 Exceptions and limitations.

(a) ***Exception for gifts*** —

(1) ***General rule.*** Section 1245(b)(1) provides that no gain shall be recognized under section 1245(a)(1) upon a disposition by gift. For purposes of this paragraph (a), the term *gift* means, except to the extent that paragraph (a)(3) of this section applies, a transfer of property that, in the hands of the transferee, has a basis determined under the provisions of section 1015(a) or 1015(d) (relating to basis of property acquired by gifts) or section 1022 (relating to basis of property acquired from certain decedents who died in 2010). For reduction in amount of charitable contribution in case of a gift of section 1245 property, see section 170(e) and the regulations thereunder.

(2) ***Examples.*** The provisions of subparagraph (1) of this paragraph may be illustrated by the following examples:

Example 1. A places section 1245 property in trust to pay the income from the property to B for his life, and after B's death to distribute the property to C. If the basis of the property to the fiduciary and to C is determined under the uniform basis rules prescribed in paragraph (b) of § 1.1015-1, and under paragraph (c) of § 1.1015-1 the time the fiduciary and C acquire their interests in the property is the time the donor relinquished dominion over the property, then section 1245(a)(1) does not apply to the transfer by A to the trust or to the distribution to C.

Example 2. Assume the same facts as in example (1), except that the fiduciary sells the section 1245 property and reinvests the proceeds in other section 1245 property which is distributed to C upon B's death. Assume further that under paragraph (f) of § 1.1015-1 C's basis for the distributed property is the cost or other basis to the fiduciary. Section 1245(a)(1) applies to the sale but not to the distribution.

(3) ***Disposition in part a sale or exchange and in part a gift.*** Where a disposition of property is in part a sale or exchange and in part a gift, the gain to which section 1245(a)(1) applies is the amount by which

(i) the lower of the amount realized upon the disposition of the property or the recomputed basis of the property, exceeds

(ii) the adjusted basis of the property. For determination of the recomputed basis of the property in the hands of the transferee, see paragraph (c)(2) of § 1.1245-2.

(4) ***Example.*** The provisions of subparagraph (3) of this paragraph may be illustrated by the following example:

> *Example:* (i) Smith transfers section 1245 property, which he has held in excess of 1 year (6 months for taxable years beginning before 1977; 9 months for taxable years beginning in

1977), to his son for $60,000. Immediately before the transfer the property in the hands of Smith has an adjusted basis of $30,000, a fair market value of $90,000, and a recomputed basis of $110,000. Since the amount realized upon disposition of the property ($60,000) is lower than its recomputed basis ($110,000), the excess of the amount realized over adjusted basis, or $30,000, is treated as ordinary income under section 1245(a)(1) and not as gain from the sale or exchange of property described in section 1231. Smith has made a gift of $30,000 ($90,000 fair market value minus $60,000 amount realized) to which section 1245(a)(1) does not apply.

(ii) Immediately before the transfer, the amount of adjustments reflected in the adjusted basis of the property was $80,000. Under paragraph (c)(2) of § 1.1245-2, $50,000 of adjustments are reflected in the adjusted basis of the property immediately after the transfer, that is, $80,000 of such adjustments immediately before the transfer, minus $30,000 gain taken into account under section 1245(a)(1) upon the transfer. Thus, the recomputed basis of the property in the hands of the son is $110,000.

(b) ***Exception for transfers at death*** —

(1) ***General rule.*** Section 1245(b)(2) provides that, except as provided in section 691 (relating to income in respect of a decedent), no gain shall be recognized under section 1245(a)(1) upon a transfer at death. For purposes of this paragraph, the term *transfer at death* means a transfer of property which, in the hands of the transferee, has a basis determined under the provisions of section 1014(a) (relating to basis of property acquired from a decedent) because of the death of the transferor. For recomputed basis of property acquired in a transfer at death, see paragraph (c)(1)(iv) of § 1.1245-2.

(2) ***Examples.*** The provisions of this paragraph may be illustrated by the following examples:

Example 1. Smith owns section 1245 property which, upon Smith's death, is inherited by his son. Since the property is described in section 1014(b)(1), its basis in the hands of the son is determined under the provisions of section 1014(a). Therefore, section 1245(a)(1) does not apply to the transfer at Smith's death.

Example 2. H purchases section 1245 property which he conveys to himself and W, his wife, as tenants by the entirety. Upon H's death in 1970 the property (including W's share) is included in his gross estate. Since the entire property is described in section 1014(b) (1) and (9), its basis in the hands of W is determined under the provisions of section 1014(a). Therefore, section 1245(a)(1) does not apply to the transfer at H's death. For determination of the recomputed basis of the property in the hands of W, see paragraph (c)(3) of § 1.1245-2.

Example 3. Green's will provides for the bequest of section 1245 property to trustees to pay the income from the property to his wife for her lifetime, and upon her death to distribute the property to his son. If under paragraph (a)(2) of § 1.1014-4 the son's unadjusted basis for the property is its fair market value at the time the decedent died, section 1245(a)(1) does not apply to the distribution of the property to the son.

Example 4. The trustee of a trust created by will transfers section 1245 property to a beneficiary in satisfaction of a specific bequest of $10,000. If under the principles of paragraph (a)(3) of § 1.1014-4 the trust realizes a taxable gain upon the transfer, section 1245(a)(1) applies to the transfer.

(c) *Limitation for certain tax-free transactions* —

(1) ***Limitation on amount of gain.*** Section 1245(b)(3) provides that upon a transfer of property described in subparagraph (2) of this paragraph, the amount of gain taken into account by the transferor under section 1245(a)(1) shall not exceed the amount of gain recognized to the transferor on the transfer (determined without regard to section 1245). For purposes of this subparagraph, in case of a transfer of both section 1245 property and non-section 1245 property in one transaction, the amount realized from the disposition of the section 1245 property (as determined under paragraph (a)(5) of § 1.1245-1) shall be deemed to consist of that portion of the fair market value of each property acquired which bears the same ratio to the fair market value of such acquired property as the amount realized from the disposition of the section 1245 property bears to the total amount realized. The preceding sentence shall be applied solely for purposes of computing the portion of the total gain (determined without regard to section 1245) which shall be recognized as ordinary income under section 1245(a)(1). For determination of the recomputed basis of the section 1245 property in the hands of the transferee, see paragraph (c)(2) of § 1.1245-2. Section 1245(b)(3) does not apply to a disposition of property to an organization (other than a cooperative described in section 521) which is exempt from the tax imposed by chapter 1 of the Code.

(2) ***Transfers covered.*** The transfers referred to in subparagraph (1) of this paragraph are transfers of property in which the basis of the property in the hands of the transferee is determined by reference to its basis in the hands of the transferor by reason of the application of any of the following provisions:

(i) Section 332 (relating to distributions in complete liquidation of an 80-percent-or-more controlled subsidiary corporation). See subparagraph (3) of this paragraph.

(ii) Section 351 (relating to transfer to a corporation controlled by transferor).

(iii) Section 361 (relating to exchanges pursuant to certain corporate reorganizations).

(iv) Section 371(a) (relating to exchanges pursuant to certain receivership and bankruptcy proceedings).

(v) Section 374(a) (relating to exchanges pursuant to certain railroad reorganizations).

(vi) Section 721 (relating to transfers to a partnership in exchange for a partnership interest).

(vii) Section 731 (relating to distributions by a partnership to a partner). For special carryover basis rule, see section 1245(b)(6)(A) and paragraph (f)(1) of this section.

(3) ***Complete liquidation of subsidiary.*** In the case of a distribution in complete liquidation of an 80-percent-or-more controlled subsidiary to which section 332 applies, the limitation provided in section 1245(b)(3) is confined to instances in which the basis of the property in the hands of the transferee is determined, under section 334(b)(1), by reference to its basis in the hands of the transferor. Thus, for example, the limitation of section 1245(b)(3) may apply in respect of a liquidating distribution of section 1245 property by an 80-percent-or-more controlled corporation to the parent corporation, but does not apply in respect of a liquidating distribution of section 1245 property to a minority shareholder. Section 1245(b)(3) does not apply to a liquidating distribution of property by an 80-percent-or-more controlled subsidiary to its parent if the parent's basis for the property is determined, under section 334(b)(2), by reference to its basis for the stock of the subsidiary.

(4) ***Examples.*** The provisions of this paragraph may be illustrated by the following examples:

Example 1. Section 1245 property, which is owned by Smith, has a fair market value of $10,000, a recomputed basis of $8,000, and an adjusted basis of $4,000. Smith transfers the property to a corporation in exchange for stock in the corporation worth $9,000 plus $1,000 in cash in a transaction qualifying under section 351. Without regard to section 1245, Smith would recognize $1,000 gain under section 351(b), and the corporation's basis for the property would be determined under section 362(a) by reference to its basis in the hands of Smith. Since the recomputed basis of the property disposed of ($8,000) is lower than the amount realized ($10,000), the excess of recomputed basis over adjusted basis ($4,000), or $4,000, would be treated as ordinary income under section 1245(a)(1) if the provisions of section 1245(b)(3) did not apply. However, section 1245(b)(3) limits the gain taken into account by Smith under section 1245(a)(1) to $1,000. If, instead, Smith transferred the property to the corporation solely in exchange for stock of the corporation worth $10,000, then, because of the application of section 1245(b)(3), Smith would not take any gain into account under section 1245(a)(1). If, however, Smith transferred the property to the corporation for stock worth $5,000 and $5,000 cash, only $4,000 of the $5,000 gain under section 351(b) would be treated as ordinary income under section 1245(a)(1).

Example 2. Assume the same facts as in example (1) except that Smith contributes the property to a new partnership in which he has a one-half interest. Since, without regard to section 1245, no gain would be recognized to Smith under section 721, and by reason of the application of section 721 the partnership's basis for the property would be determined under section 723 by reference to its basis in the hands of Smith, the application of section 1245(b)(3) results in no gain being taken into account by Smith under section 1245(a)(1).

Example 3. Assume the same facts as in example (2) except that the property is subject to a $9,000 mortgage. Since under section 752(b) (relating to decrease in partner's liabilities) Smith is treated as receiving a distribution in money of $4,500 (one-half of liability assumed by partnership), and since the basis of Smith's partnership interest is $4,000 (the adjusted basis of the contributed property), the $4,500 distribution results in his realizing $500 gain under section 731(a) (relating to distributions by a partnership), determined without regard to section 1245. Accordingly, the application of section 1245(b)(3) limits the gain taken into account by Smith under section 1245(a)(1) to $500.

(d) ***Limitation for like kind exchanges and involuntary conversions*** —

(1) ***General rule.*** Section 1245(b)(4) provides that if property is disposed of and gain (determined without regard to section 1245) is not recognized in whole or in part under section 1031 (relating to like kind exchanges) or section 1033 (relating to involuntary conversions), then the amount of gain taken into account by the transferor under section 1245(a)(1) shall not exceed the sum of:

(i) The amount of gain recognized on such disposition (determined without regard to section 1245), plus

(ii) The fair market value of property acquired which is not section 1245 property and which is not taken into account under subdivision (i) of this subparagraph (that is, the fair market value of non-section 1245 property acquired which is qualifying property under section 1031 or 1033, as the case may be).

(2) ***Examples.*** The provisions of subparagraph (1) of this paragraph may be illustrated by the following examples:

Example 1. Smith exchanges machine A for machine B in a like kind exchange as to which no gain is recognized under section 1031(a). Both machines are section 1245 property. No gain is recognized under section 1245(a)(1) because of the limitation contained in section 1245(b)(4). The result would be the same if machine A were involuntarily converted into machine B in a transaction as to which no gain is recognized under section 1033(a)(1).

Example 2. Jones owns property A, which is section 1245 property, with an adjusted basis of $100,000 and a recomputed basis of $116,000. The property is destroyed by fire and Jones receives $117,000 of insurance proceeds. Thus, the amount of gain under section 1245(a)(1), determined without regard to section 1245(b)(4), would be $16,000. He uses $105,000 of the proceeds to purchase section 1245 property similar or related in service or use to property A, and $9,000 of the proceeds to purchase stock in the acquisition of control of a corporation owning property similar or related in service or use to property A. Both acquisitions qualify under section 1033(a)(3)(A). Jones properly elects under section 1033(a)(3)(A) and the regulations thereunder to limit recognition of gain to the amount by which the amount realized from the conversion exceeds the cost of the stock and other property acquired to replace the converted property. Since $3,000 of the gain is recognized (without regard to section 1245) under section 1033(a)(3) (that is, $117,000 minus $114,000), and since the stock purchased for $9,000 is not section 1245 property and was not taken into account in determining the gain under section 1033, section 1245(b)(4) limits the amount of the gain taken into account under section 1245(a)(1) to $12,000 (that is, $3,000 plus $9,000). If, instead of purchasing $9,000 in stock, Jones purchases $9,000 worth of property which is section 1245 property similar or related in use to the destroyed property, section 1245(b)(4) would limit the amount of gain taken into account under section 1245(a)(1) to $3,000.

(3) ***Certain tangible property.*** If:

(i) A person disposes of section 1245 property in a transaction to which section 1245(b)(4) applies,

(ii) Adjustments are reflected in the adjusted basis (within the meaning of paragraph (a)(2) of § 1.1245-2) of such property which are attributable to the use of such property (or other property) as an integral part of an activity, or as a facility, specified in section 1245(a)(3)(B) (i) or (ii), and

(iii) Property is acquired in the transaction which would be considered as section 1245 property described in section 1245(a)(3)(B) if such person used the acquired property as an integral part of such an activity, or as such a facility, then (regardless of the use of the acquired property) the acquired property shall be considered as section 1245 property described in section 1245(a)(3)(B). For definition of property described in section 1245(a)(3)(B), see paragraph (c) of § 1.1245-3. Thus, for example, if a person's section 1245 property (which is personal property) is involuntarily converted into property A which would qualify as section 1245 property only if it were devoted to a specified use, and if the person had so devoted the section 1245 property disposed of, then the acquired property is considered as section 1245 property described in section 1245(a)(3)(B) and therefore its fair market value is not taken into account under subparagraph (1)(ii) of this paragraph. For recomputed basis of property A, see paragraph (a)(5) of § 1.1245-2. Moreover, if property A is not devoted to a specified use and is subsequently involuntarily converted into property B which would qualify as section 1245 property only if it were so devoted, then property B is also considered as section 1245 property described in section 1245(a)(3)(B).

(4) ***Application to disposition of section 1245 property and nonsection 1245 property in one transaction.*** For purposes of this paragraph, if both section 1245 property and nonsection 1245 property are acquired as the result of one disposition in which both section 1245 property and nonsection 1245 property are disposed of, then except as provided in subparagraph (7) of this paragraph:

(i) The total amount realized upon the disposition shall be allocated (in a manner consistent with the principles of paragraph (a)(5) of § 1.1245-1) between the section 1245 property and the nonsection 1245 property disposed of in proportion to their respective fair market values.

(ii) The amount realized upon the disposition of the section 1245 property shall be deemed to consist of so much of the fair market value of the section 1245 property acquired as is not in excess of the amount realized from the section 1245 property disposed of, and the remaining portion (if any) of the amount realized upon the disposition of the section 1245 property shall be deemed to consist of so much of the fair market value of the non-section 1245 property acquired as is not in excess of the amount of such remaining portion, and

(iii) The amount realized upon the disposition of the non-section 1245 property shall be deemed to consist of so much of the fair market value of all the property acquired which was not taken into account in subdivision (ii) of this subparagraph.

(5) ***Example.*** The provisions of subparagraph (4) of this paragraph may be illustrated by the following example:

> *Example:* (i) Smith owns section 1245 property A with a fair market value of $30,000, and non-section 1245 property X with a fair market value of $20,000. Properties A and X are destroyed by fire and Smith receives insurance proceeds of $40,000. He uses all the proceeds, plus additional cash of $10,000, to purchase in a single transaction properties B and Y which qualify under section 1033(a)(3)(A), and he properly elects under section 1033(a)(3)(A) and the regulations thereunder to limit recognition of gain to the excess of the amount realized from the conversion over the costs of the qualifying properties acquired. Thus no gain would be recognized (without regard to section 1245) under section 1033(a)(3)(A). Property B is section 1245 property with a fair market value of $15,000, and property Y is non-section 1245 property with a fair market value of $35,000.
> (ii) The amount realized upon the disposition of A and X ($40,000) is allocated between A and X in proportion to their respective fair market values. Thus, the amount considered realized in respect of A is $24,000 (that is, $^{30}/_{50}$ of $40,000). (The amount considered realized in respect of X is $16,000 (that is, $^{20}/_{50}$ of $40,000).)
>
> (iii) The $24,000 realized upon the disposition of A is deemed to consist of the fair market value of B ($15,000) and $9,000 of the fair market value of Y. (The $16,000 realized upon the disposition of X is deemed to consist of $16,000 of the fair market value of Y. Also, $10,000 of the fair market value of Y is attributable to the additional cash of $10,000.)

(iv) Assume that A has an adjusted basis of $5,000, and a recomputed basis of $40,000. Since the amount considered realized upon the disposition of A ($24,000) is lower than its recomputed basis ($40,000), the amount of gain which would be recognized under section 1245(a)(1), determined without regard to section 1245(b)(4), is $19,000, that is, the amount realized ($24,000) minus the adjusted basis ($5,000). Since no gain is recognized (without regard to section 1245) under section 1033(a)(3), and since $9,000 of the property acquired in exchange for section 1245 property A is non-section 1245 property Y, section 1245(b)(4) limits the amount of gain taken into account under section 1245(a)(1) to $9,000.

(6) ***Cross references.*** For the manner of determining the recomputed basis of property acquired in a transaction to which section 1245(b)(4) applies, see paragraph (c)(4) of § 1.1245-2. For the manner of determining the basis of such property, see paragraph (a) of § 1.1245-5.

(7) ***Coordination with section 1250.*** For purposes of this paragraph, if section 1245 property and section 1250 property are disposed of in one transaction in which the property acquired includes section 1250 property, the allocation rules of paragraph (d)(6) of § 1.1250-3 shall apply.

(e) ***Limitation for section 1071 and 1081 transactions*** —

(1) ***Section 1071 and 1081(b) transactions.*** If property is disposed of and gain (determined without regard to section 1245) is not recognized in whole or in part because of the application of section 1071 (relating to gain from sale or exchange to effectuate policies of F.C.C.) or section 1081(b) (relating to gain from sale or exchange in obedience to order of S.E.C.), then the amount of gain taken into account by the transferor under section 1245(a)(1) shall not exceed the sum of:

(i) The amount of gain recognized on such disposition (determined without regard to section 1245),

(ii) In the case of a transaction to which section 1071 applies, the fair market value of property acquired which is not section 1245 property and which is not taken into account under subdivision (i) of this subparagraph, plus

(iii) The amount by which the basis of property, other than section 1245 property, is reduced (pursuant to an election under section 1071 or pursuant to the application of section 1082(a)(2)), and which is not taken into account under subdivision (i) or (ii) of this subparagraph.

(2) ***Section 1081(d)(1)(A) transaction.*** No gain shall be recognized under section 1245(a)(1) upon an exchange of property as to which gain would not be recognized (without regard to section 1245) because of the application of section 1081(d)(1)(A) (relating to transfers within system group). For recomputed basis of property acquired in a transaction referred to in this subparagraph, see paragraph (c)(2) of § 1.1245-2.

(3) ***Examples.*** The provisions of this paragraph may be illustrated by the following examples:

Example 1. Corporation X elects under section 1071 to treat a sale of section 1245 property for $100,000 as an involuntary conversion subject to the provisions of section 1033, but does not elect to reduce the basis of depreciable property pursuant to an election under section 1071. The corporation uses $35,000 of the proceeds to purchase section 1245 property and $40,000 to purchase other property. Both properties qualify as replacement property under section 1033. Assuming that the amount of gain under section 1245(a)(1) (determined without regard

to this paragraph) would be $70,000, and that $25,000 of gain would be recognized (without regard to section 1245) upon the application of section 1071, the amount of gain taken into account under section 1245(a)(1) is $65,000 ($25,000 plus $40,000).

> *Example 2.* (i) Assume the same facts as in example (1) except that the corporation elects under section 1071 to reduce its basis for property of a character subject to the allowance for depreciation under section 167 by the amount of gain which would be recognized without regard to the application of section 1245, that is, by $25,000. Assume further that under section 1071 the corporation may reduce the basis of depreciable property consisting of property A, which is section 1245 property with an adjusted basis of $30,000, and property B, which is property other than section 1245 property with an adjusted basis of $20,000. Under paragraph (a)(2) of § 1.1071-3, the $25,000 of unrecognized gain is applied to reduce the basis of property A by $15,000 (30,000/50,000 of $25,000) and the basis of property B by $10,000 (20,000/50,000 of $25,000).
> (ii) The amount of gain which would be recognized (determined without regard to section 1245) under section 1071 is zero, i.e., the amount determined in example (1) ($25,000), minus the amount of the reduction in basis of depreciable property pursuant to the election ($25,000). The amount of gain taken into account under section 1245(a)(1) is $50,000, i.e., the sum of (*a*) the gain which would be recognized without regard to section 1245 (zero), (*b*) the cost of property acquired which is not section 1245 property ($40,000), plus (c) the amount by which the basis of property B is reduced ($10,000). For method of increasing basis of property B, see paragraph (b)(2) of § 1.1245-5, and for recomputed basis of property A, see paragraph (c)(5) of § 1.1245-2.

(f) ***Limitation for property distributed by a partnership*** —

(1) ***In general.*** For purposes of section 1245(b)(3) (relating to certain tax-free transactions), the basis of section 1245 property distributed by a partnership to a partner shall be deemed to be determined by reference to the adjusted basis of such property to the partnership.

(2) ***Adjustments reflected in the adjusted basis.*** If section 1245 property is distributed by a partnership to a partner, then, for purposes of determining the recomputed basis of the property in the hands of the distributee, the amount of the adjustments reflected in the adjusted basis of the property immediately after the distribution shall be an amount equal to:

(i) The potential section 1245 income (as defined in paragraph (c)(4) of § 1.751-1) of the partnership in respect of the property immediately before the distribution, reduced by

(ii) The portion of such potential section 1245 income which is recognized as ordinary income to the partnership under paragraph (b)(2)(ii) of § 1.751-1.

(3) ***Examples.*** The provisions of this paragraph may be illustrated by the following examples:

> *Example 1.* (i) A machine, which is section 1245 property owned by partnership ABC, has an adjusted basis of $9,000, a recomputed basis of $18,000, and a fair market value of $15,000.

Since the fair market value of the machine is lower than its recomputed basis, the potential section 1245 income in respect of the machine is the excess of fair market value over adjusted basis, or $6,000. The partnership distributes the machine to C in a complete liquidation of his partnership interest to which section 736(a) does not apply. C, who had originally contributed the machine to the partnership, has a basis for his partnership interest of $10,000. Since section 751(b)(2)(A) provides that section 751(b)(1) does not apply to a distribution of property to the partner who contributed the property, no gain would be recognized to the partnership under section 731(b) (without regard to the application of section 1245). By reason of the application of section 731, C's basis for the property would, under section 732(b), be equal to his basis for his interest in the partnership, or $10,000.
(ii) Since section 731 applies to the distribution, and since subparagraph (1) of this paragraph provides that, for purposes of section 1245(b)(3), C's basis for the property is deemed to be determined by reference to the adjusted basis of the property to the partnership, the gain taken into account under section 1245(a)(1) by the partnership is limited by section 1245(b)(3) so as not to exceed the amount of gain which would be recognized to the partnership if section 1245 did not apply. Accordingly, the partnership does not recognize any gain under section 1245(a)(1) upon the distribution.

(iii) Immediately after the distribution, the amount of the adjustments reflected in the adjusted basis of the property is equal to $6,000 (that is, the potential section 1245 income of the partnership in respect of the property before the distribution, $6,000, minus the gain recognized by the partnership under section 751(b), zero). Accordingly, C's recomputed basis for the property is $16,000 (that is, adjusted basis, $10,000, plus adjustments reflected in the adjusted basis, $6,000).

Example 2. Assume the same facts as in example (1) except that the machine had been purchased by the partnership. Assume further that upon the distribution, the partnership recognizes $4,000 gain as ordinary income under section 751(b). Under section 1245(b)(3), gain to be taken into account under section 1245(a)(1) by the partnership is limited to $4,000. Immediately after the distribution, the amount of adjustments reflected in the adjusted basis of the property is $2,000 (that is, potential section 1245 income of the partnership, $6,000, minus gain recognized to the partnership under section 751(b), $4,000). Thus, if the adjusted basis of the machine in the hands of C were $11,333 (see, for example, the computation in paragraph (d)(2) of example (6) of paragraph (g) of § 1.751-1), the recomputed basis of the machine would be $13,333 ($11,333 plus $2,000).

(g) [Reserved]

(h) ***Timber property subject to amortization under section 194*** —

(1) ***In general.*** For purposes of section 1245(a)(2), in determining the recomputed basis of property with respect to which a deduction under section 194 was allowed for any taxable year, a taxpayer shall not take into account amortization deductions claimed under section 194 to the extent such

deductions are attributable to the amortizable basis (within the meaning of section 194(c)(2)) of the taxpayer acquired before the tenth taxable year preceding the taxable year in which gain with respect to the property is recognized.

(2) ***Example.*** The principles of paragraph (h)(1) of this section are illustrated by the following example:

Example: Assume A owns qualified timber property (as defined in section 194(c)(1)) with a basis of $30,000. In 1981, A incurs $12,000 of qualifying reforestation expenditures and elects to amortize the maximum $10,000 of such expenses under section 194. The $10,000 of deductions are taken during the 8-year period from 1981 to 1988. If A sells the property in 1990 for $60,000 a gain of $28,000 ($60,000—adjusted basis of $32,000) is recognized on the sale. Since the sale took place within 10 years of the taxable year in which the reforestation expenditures were made, $10,000 of the gain is treated as ordinary income, and the remaining $18,000 of gain would be capital gain, if it otherwise qualifies for capital gain treatment. In order to avoid ordinary income treatment of the gain attributable to the reforestation expenditures incurred in 1981, A would have to wait until 1992 to dispose of the property.

(i) ***Effective/applicability date.*** This section applies on and after January 19, 2017. For rules before January 19, 2017, see § 1.1245-4 as contained in 26 CFR part 1 revised as of April 1, 2016.

[T.D. 6832, 30 FR 8581, July 7, 1965, as amended by T.D. 7084, 36 FR 268, Jan. 8, 1971; T.D. 7207, 37 FR 20799, Oct. 14, 1972; T.D. 7728, 45 FR 72650, Nov. 3, 1980; T.D. 7927, 48 FR 55851, Dec. 16, 1983; T.D. 9811, 82 FR 6241, Jan. 19, 2017]

§ 1.1245-5 Adjustments to basis.

In order to reflect gain recognized under section 1245(a)(1), the following adjustments to the basis of property shall be made:

(a) ***Property acquired in like kind exchange or involuntary conversion.***

(1) If property is acquired in a transaction to which section 1245(b)(4) applies, its basis shall be determined under the rules of section 1031(d) or 1033(c).

(2) The provisions of this paragraph may be illustrated by the following example:

Example: Jones exchanges property A, which is section 1245 property with an adjusted basis of $10,000, for property B, which has a fair market value of $9,000, and property C, which has a fair market value of $3,500, in a like kind exchange as to which no gain would be recognized under section 1031(a). Upon the exchange $2,500 gain is recognized under section 1245(a)(1), since property C is not section 1245 property. See section 1245(b)(4). Under the rules of section 1031(d), the basis of the properties received in the exchange is $12,500 (i.e., the basis of property transferred, $10,000, plus the amount of gain recognized, $2,500), of which the amount allocated to property C is $3,500 (the fair market value thereof), and the residue, $9,000, is allocated to property B.

(b) ***Sections 1071 and 1081 transactions.***

(1) If property is acquired in a transaction to which section 1071 and paragraph (e)(1) of § 1.1245-4 (relating to limitation for section 1071 transactions, etc.) apply, its basis shall be determined in accordance with the principles of paragraph (a) of this section.

(2) If the basis of property, other than section 1245 property, is reduced pursuant to either an election under section 1071 or the application of section 1082(a)(2), then the basis of the property shall be increased to the extent of the gain recognized under section 1245(a)(1) by reason of the application of paragraph (e)(1)(iii) of § 1.1245-4.

[T.D. 6832, 30 FR 8584, July 7, 1965]

§ 1.1245-6 Relation of section 1245 to other sections.

(a) ***General.*** The provisions of section 1245 apply notwithstanding any other provision of subtitle A of the Code. Thus, unless an exception or limitation under section 1245(b) applies, gain under section 1245(a)(1) is recognized notwithstanding any contrary nonrecognition provision or income characterizing provision. For example, since section 1245 overrides section 1231 (relating to property used in the trade or business), the gain recognized under section 1245(a)(1) upon a disposition will be treated as ordinary income and only the remaining gain, if any, from the disposition may be considered as gain from the sale or exchange of a capital asset if section 1231 is applicable. See example (2) of paragraph (b)(2) of § 1.1245-1. For effect of section 1245 on basis provisions of the Code, see § 1.1245-5.

(b) ***Nonrecognition sections overridden.*** The nonrecognition provisions of subtitle A of the Code which section 1245 overrides include, but are not limited to, sections 267(d), 311(a), 336, 337, 501(a), 512(b)(5), and 1039. See section 1245(b) for the extent to which section 1245(a)(1) overrides sections 332, 351, 361, 371(a), 374(a), 721, 731, 1031, 1033, 1071, and 1081 (b)(1) and (d)(1)(A). For limitation on amount of adjustments reflected in adjusted basis of property disposed of by an organization exempt from income taxes (within the meaning of section 501(a)), see paragraph (a)(8) of § 1.1245-2.

(c) ***Normal retirement of asset in multiple asset account.*** Section 1245(a)(1) does not require recognition of gain upon normal retirements of section 1245 property in a multiple asset account as long as the taxpayer's method of accounting, as described in paragraph (e)(2) of § 1.167(a)-8 (relating to accounting treatment of asset retirements), does not require recognition of such gain.

(d) ***Installment method.***

(1) Gain from a disposition to which section 1245(a)(1) applies may be reported under the installment method if such method is otherwise available under section 453 of the Code. In such case, the income (other than interest) on each installment payment shall be deemed to consist of gain to which section 1245(a)(1) applies until all such gain has been reported, and the remaining portion (if any) of such income shall be deemed to consist of gain to which section 1245(a)(1) does not apply. For treatment of amounts as interest on certain deferred payments, see section 483.

(2) The provisions of this paragraph may be illustrated by the following example:

Example: Jones contracts to sell an item of section 1245 property for $10,000 to be paid in 10 equal payments of $1,000 each, plus a sufficient amount of interest so that section 483 does not apply. He properly elects under section 453 to report under the installment method gain of $2,000 to which section 1245(a)(1) applies and gain of $1,000 to which section 1231 applies. Accordingly, $300 of each of the first 6 installment payments and $200 of the seventh installment payment is ordinary income under section 1245(a)(1), and $100 of the seventh installment payment and $300 of each of the last 3 installment payments is gain under section 1231.

(e) ***Exempt income.*** The fact that section 1245 provides for recognition of gain as ordinary income does not change into taxable income any income which is exempt under section 115 (relating to income of states, etc.), 892 (relating to income of foreign governments), or 894 (relating to income exempt under treaties).

(f) ***Treatment of gain not recognized under section 1245.*** Section 1245 does not prevent gain which is not recognized under section 1245 from being considered as gain under another provision of the Code, such as, for example, section 311(c) (relating to liability in excess of basis), section 341(f) (relating to collapsible corporations), section 357(c) (relating to liabilities in excess of basis), section 1238 (relating to amortization in excess of depreciation), or section 1239 (relating to gain from sale of depreciable property between certain related persons). Thus, for example, if section 1245 property, which has an adjusted basis of $1,000 and a recomputed basis of $1,500, is sold for $1,750 in a transaction to which section 1239 applies, $500 of the gain would be recognized under section 1245(a)(1) and the remaining $250 of the gain would be treated as ordinary income under section 1239.

[T.D. 6832, 30 FR 8584, July 7, 1965, as amended by T.D. 7084, 36 FR 269, Jan. 8, 1971; T.D. 7400, 41 FR 5101, Feb. 4, 1976]

§ 1.1248-1 Treatment of gain from certain sales or exchanges of stock in certain foreign corporations.

(a) ***In general.***

(1) If a United States person (as defined in section 7701(a)(30)) recognizes gain on a sale or exchange after December 31, 1962, of stock in a foreign corporation, and if in respect of such person the conditions of subparagraph (2) of this paragraph are satisfied, then the gain shall be included in the gross income of such person as a dividend to the extent of the earnings and profits of such corporation attributable to such stock under § 1.1248-2 or 1.1248-3, whichever is applicable, which were accumulated in taxable years of such foreign corporation beginning after December 31, 1962, during the period or periods such stock was held (or was considered as held by reason of the application of section 1223, taking into account § 1.1248-8) by such person while such corporation was a controlled foreign corporation. See section 1248(a). See § 1.1248-8 for additional rules regarding the attribution of earnings and profits to the stock of a foreign corporation following certain nonrecognition transactions. For computation of earnings and profits attributable to such stock if there are any *lower tier* corporations, see paragraph (a) (3) and (4) of § 1.1248-2 or paragraph (a) of § 1.1248-3, whichever is applicable. In general, the amount of gain to be included in a person's gross income as a dividend under section 1248(a) shall be determined separately for each share of stock sold or exchanged. However, such determination may be made in respect of a block of stock if earnings and profits attributable to the block are computed under § 1.1248-2 or 1.1248-3. See paragraph (b) of § 1.1248-2 and paragraph (a)(5) of § 1.1248-3. For the limitation on the tax attributable to an amount included in an individual's gross income as a dividend under section 1248(a), see section 1248(b) and § 1.1248-4. For the treatment, under certain circumstances, of the sale or exchange of stock in a domestic corporation as the sale or exchange of stock held by the domestic corporation in a foreign corporation, see section 1248(e) and § 1.1248-6. For the nonapplication of section 1248 in certain circumstances, see section 1248(g) and paragraph (e) of this section. For the requirement that the person establish the amount of earnings and profits attributable to the stock sold or exchanged and, for purposes of section 1248(b), the amount of certain taxes, see section 1248(h) and § 1.1248-7. *See* § 1.1411-10(c)(3) for additional rules concerning the application of section 1248 for purposes of section 1411.

(2) In respect of a United States person who sells or exchanges stock in a foreign corporation, the conditions referred to in subparagraph (1) of this paragraph are satisfied only if

(i) such person owned, within the meaning of section 958(a), or was considered as owning by applying the rules of ownership of section 958(b), 10 percent or more of the total combined voting power of all classes of stock entitled to vote of such foreign corporation at any time during the 5-year period ending on the date of the sale or exchange, and

(ii) at such time such foreign corporation was a controlled foreign corporation (as defined in section 957).

(3) For purposes of subparagraph (2) of this paragraph,

(i) a foreign corporation shall not be considered to be a controlled foreign corporation at any time before the first day of its first taxable year beginning after December 31, 1962, and

(ii) the percentage of the total combined voting power of stock of a foreign corporation owned (or considered as owned) by a United States person shall be determined in accordance with the principles of section 951(b) and the regulations thereunder.

(4) For purposes of paragraph (a)(1) of this section, if a foreign partnership sells or exchanges stock of a corporation, the partners in such foreign partnership shall be treated as selling or exchanging their proportionate share of the stock of such corporation. Stock which is considered to have been sold or exchanged by a partner by reason of the application of this paragraph (a)(4) shall for purposes of applying such sentence be treated as actually sold or exchanged by such partner.

(5) The application of this paragraph may be illustrated by the following examples:

Example 1. Corporation F is a foreign corporation which has outstanding 100 shares of one class of stock. F was a controlled foreign corporation for the period beginning on January 1, 1963, and ending on June 30, 1965, but was not a controlled foreign corporation at any time thereafter. On December 31, 1965, Brown, a United States person who has owned 15 shares of F stock since 1962, sells 7 of his 15 shares and recognizes gain with respect to each share sold. Since Brown owned stock representing at least 10 percent of the total combined voting power of F at a time during the 5-year period ending on December 31, 1965, while F was a controlled foreign corporation, the conditions of subparagraph (2) of this paragraph are satisfied. Therefore, section 1248(a) applies to the gain recognized by Brown to the extent of the earnings and profits attributable under § 1.1248-3 to such shares.

Example 2. Assume the same facts as in example (1). Assume further that on February 1, 1970, Brown sells the remainder of his shares in F Corporation and recognizes gain with respect to each share sold. Even though Brown did not own stock representing at least 10 percent of the total combined voting power of F on February 1, 1970, nevertheless, in respect of each of the 8 shares of F stock which he sold on such date, the conditions of subparagraph (2) of this paragraph are satisfied since Brown owned stock representing at least 10 percent of such voting power at a time during the 5-year period ending on February 1, 1970, while F was a controlled foreign corporation. Therefore, section 1248(a) applies to the gain recognized by Brown to the extent of the earnings and profits attributable under § 1.1248-3 to such shares. If, however, Brown had sold the reminder of his shares in F on July 1, 1970, since the last date on which Brown owned stock representing at least 10 percent of the total combined voting power of F while F was a controlled foreign corporation was June 30, 1965, a date which is not within the 5-year period ending July 1, 1970, the conditions of subparagraph (2) of this paragraph would not be satisfied and section 1248(a) would not apply.

Example 3. Corporation G, a foreign corporation created in 1950, has outstanding 100 shares of one class of stock and uses the calendar year as its taxable year. Corporation X, a United States person, owns 60 shares of G stock and has owned such stock since G was created. Corporation Y, a United States person, owned 15 shares of the G stock from 1950 until December 1, 1962, on which date it sold 10 of such shares. On December 31, 1963, Y sells its remaining 5 shares of the G stock and recognizes gain on the sale. Since G is not considered to be a controlled foreign corporation at any time before January 1, 1963, and since Y did not own stock representing at least 10 percent of the total combined voting power of G at any time on or after such date, the conditions of subparagraph (2) of this paragraph are not satisfied and section 1248(a) does not apply.

Example 4. (i) *Facts.* X, a domestic corporation, and Y, a foreign corporation that is not a controlled foreign corporation, are partners in foreign partnership Z. X has a 60% interest in Z, and Y has a 40% interest in Z. All parties are calendar year taxpayers. On January 1, year 1, Z forms foreign corporation H, a controlled foreign corporation that conducts a business in Country C. Z and H's functional currency is the United States dollar. In years 1 and 2, H did not earn subpart F income as defined in section 952(a). On December 31, year 2, Z sells all of the H stock for $600 when Z's adjusted basis in the stock is $100. Therefore, Z recognizes a gain of $500 on the sale, of which $300 is allocable to X as a 60% partner. At the time of the sale, H had $300 of earnings and profits, $180 of which (that is, 60% of $300) is attributable to X's 60% share of the H stock.
(ii) *Result.* Pursuant to section 1248(a) and paragraphs (a)(1) and (4) of this section, X and Y are treated as selling 60% and 40%, respectively, of the H stock. X includes in its gross income as a dividend $180 of the gain recognized on the sale. Because Y is a foreign corporation that is not a CFC, neither section 1248 nor section 964 applies to the sale of Y's 40% share of the H stock.

(iii) *Alternative facts.* If, instead, X owned its 60% interest in Z through another foreign partnership, the result would be the same.

(b) ***Sale or exchange.*** For purposes of section 1248(a), the term sale or exchange includes the receipt of a distribution which is treated as in exchange for stock under section 302(a) (relating to distributions in redemption of stock) or section 331(a) (relating to distributions in complete liquidation of a corporation). For purposes of section 1248(a), gain recognized by a shareholder under section 301(c)(3) in connection with a distribution of property by a corporation with respect to its stock shall be treated as gain from the sale or exchange of stock of such corporation.

(c) ***Gain recognized.*** Section 1248(a) applies to a sale or exchange of stock in a foreign corporation only if gain is recognized in whole or in part upon the sale or exchange. Thus, for example, if a United States person exchanges stock in a foreign corporation and no gain is recognized on the exchange under section 332, 351, 354, 355, 356, or 361, taking into account the application of section 367, then no amount is includible in the gross income of the person as a dividend under section 1248(a). But see §§ 1.1248(f)-1 and 1.1248(f)-2, providing that a domestic distributing corporation must include in gross income amounts under section 1248(f) as a result of certain foreign stock distributed pursuant to section 337, 355(c)(1), or 361(c)(1) (in certain cases without regard to the amount of gain realized by the domestic distributing corporation in the distribution).

(d) *Credit for foreign taxes.*

(1) If a domestic corporation includes an amount in its gross income as a dividend under section 1248(a) upon a sale or exchange of stock in a foreign corporation (referred to as a *first tier* corporation), and if on the date of the sale or exchange the domestic corporation owns directly at least 10 percent of the voting stock of the first tier corporation:

(i) The foreign tax credit provisions of sections 901 through 908 shall apply in the same manner and subject to the same conditions and limitations as if the first tier corporation on such date distributed to the domestic corporation as a dividend that portion of the amount included in gross income under section 1248(a) which does not exceed the earnings and profits of the first tier corporation attributable to the stock under § 1.1248-2 or § 1.1248-3, as the case may be, and

(ii) If on such date such first tier corporation owns directly 50 percent or more of the voting stock of a *lower tier* corporation described in paragraph (a)(3) of § 1.1248-2 or paragraph (a)(3) of § 1.1248-3, as the case may be (referred to as a *second tier* corporation), then the foreign tax credit provisions of sections 901 through 905 shall apply in the same manner and subject to the same conditions and limitations as if on such date (*a*) the domestic corporation owned directly that percentage of the stock in the second tier corporation which such domestic corporation is considered to own by reason of the application of section 958(a)(2), and (*b*) the second tier corporation had distributed to the domestic corporation as a dividend that portion of the amount included in gross income under section 1248(a) which does not exceed the earnings and profits of the second tier corporation attributable to such stock under § 1.1248-2 or § 1.1248-3, as the case may be.

(2) A credit shall not be allowed under subparagraph (1) of this paragraph in respect of taxes which are not actually paid or accrued. For the inclusion as a dividend in the gross income of a domestic corporation of an amount equal to the taxes deemed paid by such corporation under section 902(a)(1), see section 78.

(3) If subparagraph (1)(ii) of this paragraph applies, and if the amount included in gross income under section 1248(a) upon the sale or exchange of the stock in a first tier corporation described in subparagraph (1)(ii) of this paragraph is less than the sum of the earnings and profits of the first tier corporation attributable to such stock under § 1.1248-2 or § 1.1248-3, as the case may be, plus the earnings and profits of the second tier corporation attributable to such stock under § 1.1248-2 or § 1.1248-3, as the case may be, then the amount considered distributed to the domestic corporation as a dividend shall be determined by multiplying the amount included in gross income under section 1248(a) by:

(i) For purposes of applying subparagraph (1)(i) of this paragraph, the percentage that (*a*) the earnings and profits of the first tier corporation attributable to such stock under § 1.1248-2 or § 1.1248-3, as the case may be, bears to (*b*) the sum of the earnings and profits of the first tier corporation attributable to such stock under § 1.1248-2 or § 1.1248-3, as the case may be, plus the earnings and profits of the second tier corporation attributable to such stock under § 1.1248-2 or § 1.1248-3, as the case may be, and

(ii) For purposes of applying subparagraph (1)(ii) of this paragraph, the percentage that (*a*) the earnings and profits of the second tier corporation attributable to such stock under § 1.1248-2 or § 1.1248-3, as the case may be, bears to (*b*) the sum referred to in subdivision (i)(*b*) of this subparagraph.

(4) The provisions of this paragraph may be illustrated by the following examples:

Example 1. On June 30, 1964, domestic corporation D owns 10 percent of the voting stock of controlled foreign corporation X. On such date, D sells a share of X stock and includes $200 of the gain on the sale in its gross income as a dividend under section 1248(a). X does not own any stock of a lower tier corporation referred to in paragraph (a)(3) of § 1.1248-3. D uses the calendar year as its taxable year and instead of deducting foreign taxes under section 164, D chooses the benefits of the foreign tax credit provisions for 1964. If D had included $200 in its gross income as a dividend with respect to a distribution from X on June 30, 1964, the amount of the foreign income taxes paid by X which D would be deemed to have paid under section 902(a) in respect of such distribution would be $60. Thus, in respect of the $200 included in D's gross income as a dividend under section 1248(a), and subject to the applicable limitations and conditions of sections 901 through 905, D is entitled under this paragraph to a foreign tax credit of $60 for 1964.

Example 2. On June 30, 1965, domestic corporation D owns all of the voting stock of foreign corporation Y, and Y (the first tier corporation) owns all of the voting stock of foreign corporation Z (a second tier corporation). On such date, D sells a block of Y stock and includes $400 of the gain on the sale in its gross income as a dividend under section 1248(a). The earnings and profits attributable under § 1.1248-3 to the block are $600 from Y and $1,800 from Z. D uses the calendar year as its taxable year and instead of deducting foreign taxes under section 164, D chooses the benefits of the foreign tax credit provisions for 1965. For purposes of applying the foreign tax credit provisions, Y is considered under subparagraph (3) of this paragraph to have distributed to D a dividend of $100 ($400 × 600/2400) and Z is considered to have so distributed to D a dividend of $300 ($400 × 1800/2400). If D had included $100 in its gross income as a dividend with respect to a distribution from Y on June 30, 1965, the amount of foreign income taxes paid by Y which D would be deemed to have paid under section 902(a) in respect of such distribution is $80. If D had owned the stock in Z directly, and if D had included $300 in its gross income as a dividend with respect to a distribution from Z, the amount of foreign income taxes paid by Z which D would be deemed to have paid under section 902(a) in respect of such distribution is $120. Thus, in respect of the $400 included in D's gross income as a dividend under section 1248(a), and subject to the applicable limitations and conditions of sections 901 through 905, D is entitled under this paragraph to a foreign tax credit of $200 ($80 plus $120) for 1965.

(e) ***Exceptions.*** Under section 1248(g), this section and §§ 1.1248-2 through 1.1248-8 do not apply to:

(1) Distributions to which section 303 (relating to distributions in redemption of stock to pay death taxes) applies; or

(2) Any amount to the extent that the amount is, under any other provision of the Internal Revenue Code (Code), treated as—

(i) A dividend;

(ii) Gain from the sale of an asset which is not a capital asset; or

(iii) Gain from the sale of an asset held for not more than 1 year.

(f) ***Installment method.***

(1) Gain from a sale or exchange to which section 1248 applies may be reported under the installment method if such method is otherwise available under section 453 of the Code. In such case, the income (other than interest) on each installment payment shall be deemed to consist of gain which

is included in gross income under section 1248 as a dividend until all such gain has been reported, and the remaining portion (if any) of such income shall be deemed to consist of gain to which section 1248 does not apply. For treatment of amounts as interest on certain deferred payments, see section 483.

(2) The application of this paragraph may be illustrated by the following example:

Example: Jones contracts to sell stock in a controlled foreign corporation for $5,000 to be paid in 10 equal payments of $500 each, plus a sufficient amount of interest so that section 483 does not apply. He properly elects under section 453 to report under the installment method gain of $1,000 which is includible in gross income under section 1248 as a dividend and gain of $500 which is a long-term capital gain. Accordingly, $150 of each of the first 6 installment payments and $100 of the seventh installment payment are included in gross income under section 1248 as a dividend, and $50 of the seventh installment payment and $150 of each of the last 3 installment payments are long-term capital gain.

(g) ***Effective/applicability date.***

(1) The third sentence in paragraph (a)(1), paragraph (a)(4), and paragraph (a)(5), *Example 4*, of this section apply to income inclusions that occur on or after July 30, 2007. A taxpayer may elect to apply paragraph (a)(4) of this section to income inclusions in open taxable years provided that it consistently applies paragraph (a)(4) of this section for income inclusions in the first year for which the election is applicable and in all subsequent years.

(2) Paragraph (b) of this section applies to distributions that occur on or after February 10, 2009.

(3) Paragraphs (c) and (e) of this section apply to transactions occurring on or after April 18, 2013.

[T.D. 6779, 29 FR 18130, Dec. 22, 1964, as amended by T.D. 7728, 45 FR 72650, Nov. 3, 1980; T.D. 7961, 49 FR 26225, June 27, 1984; T.D. 9345, 72 FR 41444, July 30, 2007; T.D. 9444, 74 FR 6828, Feb. 11, 2009; T.D. 9585, 77 FR 24381, Apr. 24, 2012; T.D. 9614, 78 FR 17041, Mar. 19, 2013; T.D. 10004, 89 FR 58285, July 18, 2024]

§ 1.1248-2 Earnings and profits attributable to a block of stock in simple cases.

(a) ***General*** —

(1) ***Manner of computation.*** For purposes of paragraph (a)(1) of § 1.1248-1, if a United States person sells or exchanges a block of stock (as defined in paragraph (b) of this section) in a foreign corporation, and if the conditions of paragraph (c) of this section are satisfied in respect of the block, then the earnings and profits attributable to the block which were accumulated in taxable years of the corporation beginning after December 31, 1962, during the period such block was held (or was considered to be held by reason of the application of section 1223, taking into account § 1.1248-8) by such person while such corporation was a controlled foreign corporation, shall be computed in accordance with the steps set forth in subparagraphs (2), (3), and (4) of this paragraph.

(2) ***Step 1.***

(i) For each taxable year of the corporation beginning after December 31, 1962, the earnings and profits accumulated for each such taxable year by the corporation shall be computed in the manner prescribed in paragraph (d) of this section, and

(ii) for the period the person held (or is considered to have held by reason of the application of section 1223, taking into account § 1.1248-8) the block, the amount of earnings and profits attributable to the block shall be computed in the manner prescribed in paragraph (e) of this section.

(3) ***Step 2.*** If the conditions of paragraph (c)(5)(ii) of this section must be satisfied in respect of stock in a *lower tier* foreign corporation which such person owns within the meaning of section 958(a)(2), then

(i) the earnings and profits accumulated for each such taxable year by such lower tier corporation shall be computed in the manner prescribed in paragraph (d) of this section, and

(ii) for the period the person held (or is considered to have held by reason of the application of section 1223, taking into account § 1.1248-8) the block, the amount of earnings and profits of the lower tier corporation attributable to the block shall be computed in the manner prescribed in paragraph (e) of this section applied as if such person owned directly the percentage of such stock in such lower tier corporation which such person owns within the meaning of section 958(a)(2).

(4) ***Step 3.*** The amount of earnings and profits attributable to the block shall be the sum of the amounts computed under steps 1 and 2.

(b) ***Block of stock.*** For purposes of this section, the term *block of stock* means a group of shares sold or exchanged in one transaction, but only if:

(1) The amount realized, basis, and holding period are identical for each such share, and

(2) In case, during the period the person held (or is considered to have held by reason of the application of section 1223) such shares, any amount was included under section 951 in the gross income of the person (or another person) in respect of the shares, the excess under paragraph (e)(3)(ii) of this section (computed as if each share were a block) is identical for each such share.

(c) ***Conditions to application.*** This section shall apply only if the following conditions are satisfied:

(1)

(i) On each day of the period during which the block of stock was held (or is considered as held by reason of the application of section 1223) by the person during taxable years of the corporation beginning after December 31, 1962, the corporation is a controlled foreign corporation, and

(ii) On no such day is the corporation a foreign personal holding company (as defined in section 552) or a foreign investment company (as defined in section 1246(b)).

(2) The corporation had only one class of stock, and the same number of shares of such stock were outstanding, on each day of each taxable year of the corporation beginning after December 31, 1962, any day of which falls within the period referred to in subparagraph (1) of this paragraph.

(3) For each taxable year referred to in subparagraph (2) of this paragraph, the corporation is not a less developed country corporation (as defined in section 902(d)).

(4) For each taxable year referred to in subparagraph (2) of this paragraph, the corporation does not make any distributions out of its earnings and profits other than distributions which, under section 316 (as modified by section 959), are considered to be out of earnings and profits accumulated in

taxable years beginning after December 31, 1962, during the period such person held (or is considered to have held by reason of the application of section 1223, taking into account § 1.1248-8) the block while such corporation was a controlled foreign corporation.

(5)

(i) If

(*a*) on the date of the sale or exchange such person, by reason of his ownership of such block, owns within the meaning of section 958(a)(2) stock in another foreign corporation (referred to as a *lower tier* corporation), and

(*b*) the conditions of paragraph (a)(2) of § 1.1248-1 would be satisfied by such person in respect of such stock in the lower tier corporation if such person were deemed to have sold or exchanged such stock in the lower tier corporation on the date he actually sold or exchanged such block in the first tier corporation, then the conditions of subdivision (ii) of this subparagraph must be satisfied.

(ii) In respect of stock in such lower tier corporation,

(*a*) the conditions set forth in subparagraphs (1) through (4) of this paragraph (applied as if such person owned directly such stock in such lower tier corporation) must be met and

(*b*) such person must own within the meaning of section 958(a)(2) the same percentage of the shares of such stock on each day which falls within the period referred to in subparagraph (1) of this paragraph.

(d) ***Earnings and profits accumulated for a taxable year*** —

(1) ***General.*** For purposes of this section, the earnings and profits accumulated for a taxable year of a foreign corporation shall be the earnings and profits for such year computed in accordance with the rules prescribed in § 1.964-1 (relating to determination of earnings and profits for a taxable year of a controlled foreign corporation) and reduced by any distributions therefrom. If the stock in the corporation is sold or exchanged before any action is taken by or on behalf of the corporation under paragraph (c) of § 1.964-1, the computation of earnings and profits under § 1.964-1 for purposes of this section shall be made as if no elections had been made and no accounting method had been adopted.

(2) ***Special rules.***

(i) The earnings and profits of the corporation accumulated:

(*a*) For any taxable year beginning before January 1, 1967 (computed without any reduction for distributions), shall not include the excess of any item includible in gross income of the foreign corporation under section 882(b) as gross income derived from sources within the United States, and

(*b*) For any taxable year beginning after December 31, 1966 (computed without any reduction for distributions), shall not include the excess of any item includible in gross income of the foreign corporation under section 882(b)(2) as income effectively connected for that year with the conduct by such corporation of a trade or business in the United States, whether derived from sources within or from sources without the United States,

Over any deductions allocable to such item under section 882(c). However, if the sale or exchange of stock in the foreign corporation by the United States person occurs before January 1, 1967, the provisions of (*a*) of this subdivision apply with respect to such sale or exchange even though the taxable year begins after December 31, 1966. See section 1248(d)(4). Any item which is required to be excluded from gross income, or which is taxed at a reduced rate, under an applicable treaty obligation of the United States shall not be excluded under this subdivision from earnings and profits accumulated for a taxable year (computed without any reduction for distributions).

(ii) If a foreign corporation adopts a plan of complete liquidation in a taxable year of the corporation beginning after December 31, 1962, and if because of the application of section 337(a) gain or loss would not be recognized by the corporation from the sale or exchange of property if the corporation were a domestic corporation, then the earnings and profits of the corporation accumulated for the taxable year (computed without any reduction for distributions) shall be determined without regard to the amount of such gain or loss. See section 1248(d)(2). For the nonapplication of section 337(a) to a liquidation by a collapsible corporation (as defined in section 341) and to certain other liquidations, see section 337(c).

(e) ***Earnings and profits attributable to block*** —

(1) ***General.*** Except as provided in subparagraph (3) of this paragraph, the earnings and profits attributable to a block of stock of a controlled foreign corporation for the period a United States person held (or is considered to have held by reason of the application of section 1223, taking into account § 1.1248-8) the block are an amount equal to:

(i) The sum of the earnings and profits accumulated for each taxable year of the corporation beginning after December 31, 1962 (computed under paragraph (d) of this section) during such period, multiplied by

(ii) The percentage that

(*a*) the number of shares in the block, bears to

(*b*) the total number of shares of the corporation outstanding during such period.

(2) ***Special rule.*** For purposes of computing the sum referred to in subparagraph (1)(i) of this paragraph, in case the block was held (or is considered as held by reason of the application of section 1223, taking into account § 1.1248-8) during a taxable year beginning after December 31, 1962, but not on each day of such taxable year, there shall be included in such sum only that portion which bears the same ratio to

(i) the total earnings and profits for such taxable year (computed under paragraph (d) of this section), as

(ii) the number of days during such taxable year the block was held (or is considered as so held), bears to

(iii) the total number of days in such taxable year.

(3) ***Amounts included in gross income under section 951.***

(i) If, during the period the person held (or is considered to have held by reason of the application of section 1223, taking into account § 1.1248-8) the block, any amount was included under section 951 in the gross income of such person (or of another person whose holding of the

stock sold or exchanged is, by reason of the application of section 1223, attributed to such person) in respect of the block, then the earnings and profits attributable to the block for such period shall be an amount equal to

(*a*) the earnings and profits attributable to the block which would have been computed under subparagraph (1) of this paragraph if this subparagraph did not apply, reduced by

(*b*) the excess computed under subdivision (ii) of this subparagraph. See section 1248(d)(1).

(ii) The excess computed under this subdivision is the excess (if any) of

(*a*) amounts included under section 951 in the gross income of such person (or such other person) in respect of the block during such period, over

(*b*) the portion of such amounts which, in any taxable year of such person (or such other person), resulted in an exclusion from the gross income of such person (or such other person) under section 959(a)(1) (relating to exclusion from gross income of distributions of previously taxed earnings and profits).

(iii) This subparagraph shall apply notwithstanding an election under section 962 by such person to be subject to tax at corporate rates.

(4) ***Examples.*** The application of this paragraph may be illustrated by the following examples:

Example 1. On May 26, 1965, Green, a United States person, purchases at its fair market value a block of 25 of the 100 outstanding shares of the only class of stock of controlled foreign corporation F. He sells the block on January 1, 1968. In respect of the block, Green did not include any amount in his gross income under section 951. F uses the calendar year as its taxable year and does not own stock in any lower tier corporation referred to in paragraph (c)(5)(i) of this section. All of the conditions of paragraph (c) of this section are satisfied in respect of the block. The earnings and profits accumulated by F (computed under paragraph (d) of this section) are $10,000 for 1965, $13,000 for 1966, and $11,000 for 1967. The earnings and profits of F attributable to the block are $7,500, determined as follows:

Sum of earnings and profits accumulated by F during period block was held:	
For 1965 (219/365 × $10,000)	$6,000
For 1966	$13,000
For 1967	$11,000
Sum	$30,000
Multiplied by:	
Number of shares in block (25), divided by total number of shares outstanding (100)	25%
Earnings and profits attributable to block	$7,500

Example 2. Assume the same facts as in example (1) except that in respect of the block Green includes in his gross income under section 951 the total amount of $2,800 for 1965 and 1966, and because of such

inclusion the amount of $2,800 which was distributed to Green by F on January 15, 1967, is excluded from his gross income under section 959(a)(1). Accordingly, the earnings and profits of F attributable to the block are $7,000, determined as follows:

Earnings and profits attributable to the block, as computed in example (1)	$7,500
Minus:	
Excess of amount included in Green's gross income under section 951 ($2,800), over portion thereof which resulted in an exclusion under section 959(a)(1) ($2,300)	500
Earnings and profits attributable to block	7,000

Example 3. Assume the same facts as in example (1) except that on each day beginning on January 1, 1966 (the date controlled foreign corporation G was organized) through January 1, 1968, F owns 80 of the 100 outstanding shares of the only class of G stock. Since, by reason of his ownership of 25 shares of F stock, Green owns within the meaning of section 958(a)(2) the equivalent of 20 shares of G stock ($^{25}/_{100}$ of 80 shares), G is a lower tier corporation referred to in paragraph (c)(5)(i)(*a*) of this section. If Green had sold the 20 shares of G stock on January 1, 1968, the date he actually sold the block of F stock, the conditions of paragraph (a)(2) of § 1.1248-1 would be satisfied in respect of the G stock, and, accordingly, the conditions of paragraph (c)(5)(ii) of this section must be satisfied. Assume further that such conditions are satisfied, that G uses the calendar year as its taxable year, and that the earnings and profits accumulated by G (computed under paragraph (d) of this section) are $19,000 for 1966 and $21,000 for 1967. The earnings and profits of F and of G attributable to the block are $15,500, determined as follows:

Sum of earnings and profits accumulated by G for period Green owned G stock within the meaning of section 958(a)(2) ($19,000 plus $21,000)	$40,000
Multiplied by:	
Number of G shares deemed owned within the meaning of section 958(a)(2) by Green (20), divided by total number of G shares outstanding (100)	20%
Earnings and profits of G attributable to block	$8,000
Earnings and profits of F attributable to block, as determined in example (1)	$7,500
Total earnings and profits attributable to block	$15,000

[T.D. 6779, 29 FR 18131, Dec. 22, 1964, as amended by T.D. 7293, 38 FR 32803, Nov. 28, 1973; T.D. 9345, 72 FR 41445, July 30, 2007]

§ 1.1248-3 Earnings and profits attributable to stock in complex cases.

(a) ***General*** —

(1) ***Manner of computation.*** For purposes of paragraph (a)(1) of § 1.1248-1, if a United States person sells or exchanges stock in a foreign corporation, and if the provisions of § 1.1248-2 do not apply, then the earnings and profits attributable to the stock which were accumulated in taxable years of the corporation beginning after December 31, 1962, during the period or periods such stock was held (or was considered to be held by reason of the application of section 1223, taking into account § 1.1248-8) by such person while such corporation was a controlled foreign corporation, shall be computed in accordance with the steps set forth in subparagraphs (2), (3), and (4) of this paragraph.

(2) ***Step 1.*** For each taxable year of the corporation beginning after December 31, 1962,

(i) the earnings and profits accumulated for such taxable year by the corporation shall be computed in the manner prescribed in paragraph (b) of this section,

(ii) the person's *tentative ratable share* of such earnings and profits shall be computed in the manner prescribed in paragraph (c) or (d) (whichever is applicable) of this section, and

(iii) the person's *ratable share* of such earnings and profits shall be computed by adjusting the tentative ratable share in the manner prescribed in paragraph (e) of this section.

(3) ***Step 2.*** If the provisions of paragraph (f) of this section (relating to earnings and profits of *lower tier* foreign corporations) apply, the amount of the person's ratable share of the earnings and profits accumulated by each *lower tier* corporation attributable to any such taxable year

(i) shall be computed in the manner prescribed by paragraph (f) of this section, and

(ii) shall be added to such person's ratable share for such taxable year determined in step 1.

(4) ***Step 3.*** The amount of earnings and profits attributable to the share shall be the sum of the ratable shares computed for each such taxable year in the manner prescribed in steps 1 and 2.

(5) ***Share or block.*** In general, the computation under this paragraph shall be made separately for each share of stock sold or exchanged, except that if a group of shares constitute a block of stock the computation may be made in respect of the block. For purposes of this section, the term *block of stock* means a group of shares sold or exchanged in one transaction, but only if

(i) the amount realized, basis, and holding period are identical for each such share, and

(ii) the adjustments (if any) under paragraphs (e) and (f)(5) of this section of the tentative ratable shares would be identical for each such share if such adjustments were computed separately for each such share.

(6) ***Deficit in earnings and profits.*** For purposes of this section and §§ 1.1248-2 through 1.1248-8, in respect of a taxable year, the term *earnings and profits accumulated* for a taxable year (but only if computed under paragraph (b) of this section) includes a deficit in earnings and profits accumulated for such taxable year. Similarly, a tentative ratable share, or a ratable share, may be a deficit.

(7) ***Examples.*** The application of the provisions of this paragraph may be illustrated by the following examples:

> *Example 1.* On December 31, 1967, Brown sells 10 shares of stock in foreign corporation X, which uses the calendar year as its taxable year. The 10 shares constitute a block of stock under subparagraph (5) of this paragraph. Under step 1, Brown's ratable shares of the

earnings and profits of X attributable to the block are as follows:

Taxble year of X	Ratable shares
1963	$100
1964	150
1965	[1] 50
1966	50
1967	100
Sum	350

[1] *Deficit.*

The amount of the earnings and profits attributable to such block under step 3 is $350.

Example 2. Assume the same facts as in example (1), except that in respect of X there are *lower tier* corporations Y and Z to which the provisions of paragraph (f) of this section apply. Brown's ratable shares of the earnings and profits of X, Y, and Z attributable to the block under steps 1 and 2 for each taxable year of X are as follows:

Taxable year of X	Ratable shares			
	X	Y	Z	Total
1963	$100	$40	$20	$160
1964	150	40	−60	130
1965	−50	30	50	30
1966	50	50	30	130
1967	100	−40	40	100
Sum	350	120	80	550

The amount of the earnings and profits attributable to such block under step 3 is $550.

(b) ***Earnings and profits accumulated for a taxable year*** —

(1) ***General.*** For purposes of this section, the earnings and profits accumulated for a taxable year of a foreign corporation shall be the earnings and profits for such year, computed in accordance with the rules prescribed in § 1.964-1 (relating to determination of earnings and profits for a taxable year of a controlled foreign corporation), except that

(i) the special rules of subparagraph (2) of this paragraph shall apply, and

(ii) adjustments shall be made under subparagraph (3) of this paragraph for distributions made by the corporation during such taxable year. If the stock in the corporation is sold or exchanged before any action is taken by or on behalf of the corporation under paragraph (c) of § 1.964-1, the computation of earnings and profits under § 1.964-1 for purposes of this section shall be made as if no elections had been made and no accounting method had been adopted. The amount of earnings and profits accumulated for a taxable year of a foreign corporation, as computed under this paragraph, is not necessarily the same amount as the earnings and profits of the taxable year computed under section 316(a)(1) or paragraph (d) of § 1.1248-2. Thus, for example, if a distribution with respect to stock is in excess of the amount of earnings and profits of the taxable year computed under section 316(a)(2), such excess is treated under section 316(a)(2), or paragraph (d) of § 1.1248-2 as made out of any earnings and profits accumulated in prior taxable years, whereas the amount of such excess may create, or increase, a deficit in the earnings and profits accumulated for the taxable year as computed under this paragraph. See subparagraph (3) of this paragraph.

(2) *Special rules.*

(i) The earnings and profits of the corporation accumulated:

(*a*) For any taxable year beginning before January 1, 1967, shall not include the excess of any item includible in gross income of the foreign corporation under section 882(b) as gross income derived from sources within the United States, and

(*b*) For any taxable year beginning after December 31, 1966, shall not include the excess of any item includible in gross income of the foreign corporation under section 882(b)(2) as income effectively connected for that year with the conduct by such corporation of a trade or business in the United States, whether derived from sources within or from sources without the United States,

Over any deductions allocable to such item under section 882(c). However, if the sale or exchange of stock in the foreign corporation by the U.S. person occurs before January 1, 1967, the provisions of (*a*) of this subdivision apply with respect to such sale or exchange even though the taxable year begins after December 31, 1966. See section 1248(d)(4). Any item which is required to be excluded from gross income, or which is taxed at a reduced rate, under an applicable treaty obligation of the United States shall not be excluded under this subdivision from earnings and profits accumulated for a taxable year.

(ii) If a foreign corporation adopts a plan of complete liquidation in a taxable year of the corporation beginning after December 31, 1962, and if because of the application of section 337(a) gain or loss would not be recognized by the corporation from the sale or exchange of property if the corporation were a domestic corporation, then the earnings and profits of the corporation accumulated for the taxable year shall be determined without regard to the amount of such gain or loss. See section 1248(d)(2). For the nonapplication of section 337(a) to a liquidation by a collapsible corporation (as defined in section 341) and to certain other liquidations, see section 337(c).

(3) *Adjustment for distributions.*

(i) The earnings and profits of a foreign corporation accumulated for a taxable year (computed without regard to this subparagraph) shall be reduced (if necessary below zero so as to create a deficit), or a deficit in such earnings and profits shall be increased, by the amount of the distributions (other than in redemption of stock under section 302(a) or 303) made by the corporation in respect of its stock during such taxable year

(*a*) out of such earnings and profits, or

(*b*) out of earnings and profits accumulated for prior taxable years beginning after December 31, 1962 (computed under this paragraph). Except for purposes of applying this subparagraph, the application of the preceding sentence shall not affect the amount of earnings and profits accumulated for any such prior taxable year.

(ii) The application of this subparagraph may be illustrated by the following examples:

Example 1. X Corporation, which uses the calendar year as its taxable year, was organized on January 1, 1965, and was a controlled foreign corporation on each day of 1965. The amount of X's earnings and profits accumulated for 1965 (computed under this paragraph without regard to the adjustment for distributions under this subparagraph) is $400,000, of which $100,000 is distributed by X as dividends during 1965. The amount of X's earnings and profits accumulated for 1965 (computed under this paragraph) is $300,000 (that is, $400,000 minus $100,000). The result would be the same even if X was not a controlled foreign corporation on each day of 1965.

Example 2. Assume the same facts as in example (1). Assume further that the amount of X's earnings and profits accumulated for 1966 (computed under this paragraph without regard to the adjustment for distributions under this subparagraph) is $150,000, and that X distributes the amount of $260,000 as dividends during 1966. Since $150,000 of the distribution is from earnings and profits accumulated for 1966 (computed without regard to the adjustment for distributions under this subparagraph), and since $110,000 is from earnings and profits accumulated for 1965, the earnings and profits of X accumulated for 1966 are a deficit of $110,000 (that is, $150,000 minus $260,000). However, the earnings and profits accumulated for 1965 are still $300,000 for purposes of computing in the manner prescribed in paragraph (c) of this section a person's tentative ratable share.

(c) ***Tentative ratable share if earnings and profits accumulated for a taxable year not less than zero*** —

(1) ***General rule.*** For purposes of paragraph (a)(2)(ii) of this section, in respect of a share (or block) of stock in a foreign corporation, if the amount of the earnings and profits accumulated for a taxable year of the corporation (computed under paragraph (b) of this section), beginning after December 31, 1962, is not less than zero, then the person's tentative ratable share for such taxable year shall be equal to:

(i)

(*a*) Such amount (if the computation is made in respect of a block, multiplied by the number of shares in the block), divided by

(*b*) the number of shares in the corporation outstanding, or deemed under subparagraph (2) of this paragraph to be outstanding, on each day of such taxable year, multiplied by

(ii) The percentage that

(*a*) the number of days in such taxable year of the corporation during the period the person held (or was considered to have held by reason of the application of section 1223, taking into account § 1.1248-8) the share (or block) while the corporation was a controlled foreign corporation, bears to

(*b*) the total number of days in such taxable year.

(2) ***Shares deemed outstanding for a taxable year.*** For purposes of this section and §§ 1.1248-4 through 1.1248-7, if the number of shares of stock in a foreign corporation outstanding on each day of a taxable year of the corporation is not constant, then the number of such shares deemed outstanding on each such day shall be the sum of the fractional amounts in respect of each share outstanding on any day of the taxable year. The fractional amount in respect of a share shall be determined by dividing

(i) the number of days in the taxable year during which such share was outstanding (excluding the day the share became outstanding, but including the day the share ceased to be outstanding), by

(ii) the total number of days in such taxable year.

(3) ***Examples.*** The application of subparagraphs (1) and (2) of this paragraph may be illustrated by the following examples:

Example 1. On each day of 1964, S owns a block consisting of 30 of the 100 shares of the only class of stock outstanding in F Corporation, and on each such day F is a controlled foreign corporation. F uses the calendar year as its taxable year and F's earnings and profits accumulated for 1964 (computed under paragraph (b) of this section) are $10,000. S's tentative ratable share with respect to the block is $3,000, computed as follows:

Earnings and profits accumulated for taxable year	$10,000
Multiplied by:	
Number of shares in block (30), divided by number of shares outstanding (100)	30%
Multiplied by:	
Number of days in 1964 S held block while F was a controlled foreign corporation (365), divided by number of days in 1964 (365)	100%
Tentative ratable share for block	$3,000

Example 2. On December 31, 1964, X Corporation, a controlled foreign corporation which uses the calendar year as its taxable year, had 100 shares of one class of stock outstanding, 15 of which were owned by T. T's 15 shares were redeemed by X on March 14, 1965. On December 31, 1965, in addition to the remaining 85 shares, 10 new shares of stock (which were issued on May 26, 1965) were outstanding. Thus, during 1965, 15 shares were outstanding for 73 days, 10 for 219 days, and 85 for 365 days. The earnings and profits (computed under paragraph (b) of this section) accumulated for X's taxable year ending on

December 31, 1965, are $18,800. T's tentative ratable share with respect to one share of stock is $40, computed as follows:

Earnings and profits accumulated for taxable year		$18,800
Divided by:		
Number of shares deemed outstanding each day of 1965:		
15 for 73 days (15 × 73/365)	3	
10 for 219 days (10 × 219/365)	6	
85 for 365 days (35 × 365/365)	85	
Total number of shares deemed outstanding each day of 1965		94
Earnings and profits accumulated per share		$200
Multiplied by:		
Number of days in 1965 T held his share while X was a controlled foreign corporation (73), divided by number of days in 1965 (365)		20%
T's tentative ratable share per share of stock		$40

Example 3. Assume the same facts as in example (2) except that X was not a controlled foreign corporation after January 31, 1965. T's tentative ratable share with respect to one share of stock for 1965 is $17, computed as follows:

Earnings and profits accumulated per share, determined in example (2)	$200
Multiplied by:	
Number of days in 1965 T held X stock while X was a controlled foreign corporation (31), divided by number of days in 1965 (365)	8.5%
Tentative ratable share	$17

(4) ***More than one class of stock.*** If a foreign corporation for a taxable year has more than one class of stock outstanding, then before applying subparagraphs (1) and (2) of this paragraph the earnings and profits accumulated for the taxable year of the corporation (computed under paragraph (b) of this section) shall be allocated to each class of stock in accordance with the principles of paragraph (e) (2) and (3) of § 1.951-1, applied as if the corporation were a controlled foreign corporation on each day of such taxable year.

(d) ***Tentative ratable share if deficit in earnings and profits accumulated for taxable year*** —

(1) ***General rule.*** For purposes of paragraph (a)(2)(ii) of this section, in respect of a share (or block) of stock in a foreign corporation, if there is a deficit in the earnings and profits accumulated for a taxable year of the corporation (computed under paragraph (b) of this section) beginning after

December 31, 1962, the person's tentative ratable share for such taxable year shall be an amount equal to the sum of the partial tentative ratable shares computed under subparagraphs (2) and (3) of this paragraph.

(2) ***Operating deficit.*** The partial tentative ratable share under this subparagraph is computed in 2 steps. First, compute (under paragraph (b) of this section without regard to the adjustment for distributions under subparagraph (3) thereof) the deficit (if any) in earnings and profits accumulated for such taxable year. Second, compute the partial tentative ratable share in the same manner as the tentative ratable share for such taxable year would be computed under paragraph (c) of this section if such deficit were the amount referred to in paragraph (c)(1)(i)(*a*) of this section.

(3) ***Deficit from distributions.*** The partial tentative ratable share under this subparagraph is computed in 2 steps. First, compute and treat as a deficit only that portion of the adjustment for distributions under paragraph (b)(3) of this section for such taxable year which is attributable under subparagraph (4) of this paragraph to distributions out of earnings and profits accumulated during prior taxable years of the corporation beginning after December 31, 1962, during the period or periods the corporation was a controlled foreign corporation and the share (or block) of stock was owned by a United States shareholder (as defined in section 951(b) and the regulations thereunder). Second, compute the partial tentative ratable share for such taxable year in the same manner as the tentative ratable share for such taxable year would be computed under paragraph (c) of this section if

(i) such deficit were the amount referred to in paragraph (c)(1)(i)(*a*) of this section, and

(ii) the corporation were a controlled foreign corporation on each day of such taxable year.

(4) ***Order of distributions.*** For purposes of applying subparagraph (3) of this paragraph only, the adjustment for distributions under paragraph (b)(3) of this section for a taxable year of a foreign corporation shall be treated as attributable first to distributions of earnings and profits for the taxable year (computed under paragraph (b) of this section without regard to such adjustment) to the extent thereof, and then to distributions out of the most recent of earnings and profits accumulated during prior taxable years beginning after December 31, 1962 (computed under paragraph (b) of this section). If the foreign corporation was a controlled foreign corporation during a prior taxable year for a period or periods which was only part of such prior taxable year, then for purposes of the preceding sentence

(i) such taxable year shall be divided into periods the corporation was or was not a controlled foreign corporation,

(ii) distributions of the earnings and profits accumulated during such prior taxable year shall be considered made from the most recent period first, and

(iii) the earnings and profits accumulated during such prior taxable year shall be allocated to a period during such year in the same proportion as the number of days in the period bears to the number of days in such year. Except for purposes of applying subparagraph (3) of this paragraph, the application of this subparagraph shall not affect the amount of earnings and profits accumulated for any such prior taxable year (computed under paragraph (b) of this section).

(5) ***Examples.*** The application of this paragraph may be illustrated by the following examples:

Example 1. On each day of 1965 X Corporation, which uses the calendar year as its taxable year, was a controlled foreign corporation having 100 shares of one class of stock outstanding, a block of 25 of which were owned by T, who acquired them in 1962 and sold them in 1967. The deficit in X's earnings and profits accumulated for 1965 (computed under paragraph (b) of this section without regard to the adjustment for distributions under subparagraph (3) thereof) is $100,000, and thus in respect of the block T's partial tentative ratable share computed under subparagraph (2) of this paragraph is a deficit of $25,000 (that is, $100,000 × 25/100). During 1965 X does not make any distributions in respect of its stock, and thus in respect of the block T's partial tentative ratable share computed under subparagraph (3) of this paragraph is zero. Accordingly, T's tentative ratable share in respect of the block of X stock for 1965 is a deficit of $25,000. If, however, X was a controlled foreign corporation for only 292 days during 1965, T's tentative ratable share in respect of the block for 1965 would be a deficit of $20,000 (that is, $25,000 × 292/365).

Example 2. (i) Assume the same facts as in example (1) except that at no time during 1965 is X a controlled foreign corporation and that during 1965 X distributes $80,000 with respect to its stock. Assume further that X was a controlled foreign corporation on each day of 1964, but only for the first 146 days of 1963, and that X's earnings and profits accumulated for prior taxable years computed under paragraph (b) of this section are $70,000 for 1964 and $20,000 for 1963.
(ii) Since X was not a controlled foreign corporation on any day of 1965, in respect of the block T's partial tentative ratable share computed under subparagraph (2) of this paragraph is zero.

(iii) The partial tentative ratable share under subparagraph (3) of this paragraph is computed in the following manner: For 1965 the adjustment for distributions under paragraph (b)(3) of this section is $80,000. Under subparagraph (4) of this paragraph $70,000 of such adjustment is attributable to the distribution of all of the earnings and profits accumulated during 1964, on every day of which X was a controlled foreign corporation, and $10,000 of the adjustment is attributable to the distribution of $10,000 of the earnings and profits accumulated for 1963. The portion of the earnings and profits accumulated by X in 1963 attributable to the first 146 days in 1963 during which X was a controlled foreign corporation is $8,000 (that is, $20,000 × 146/365), and the portion attributable to the period in 1963 during which X was not a controlled foreign corporation is $12,000 (that is, $20,000 × 219/365). Under subparagraph (4)(ii) of this paragraph, the distribution in 1965 of $10,000 of earnings and profits accumulated during 1963 is attributable to the more recent period in 1963, that is, the period X was not a controlled foreign corporation. Accordingly, the portion of the adjustment for distributions under paragraph (b)(3) of this section attributable to earnings and profits accumulated during periods X was a controlled foreign corporation is $70,000, and in respect of the block T's partial tentative ratable share under subparagraph (3) of this paragraph is a deficit of $17,500 (that is, $70,000 × 25/100).

(iv) T's tentative ratable share in respect of the block of X stock for 1965 is a deficit of $17,500 (that is, the sum of the partial tentative ratable share for the block computed under subparagraph (2) of this paragraph, zero, plus the partial tentative ratable share for the block computed under subparagraph (3) of this paragraph, a deficit of $17,500).

(v) Assume that X had 100 shares of one class of stock outstanding on each day of 1964 and 1963. Notwithstanding the distributions in 1965 of earnings and profits accumulated during 1964 and 1963 (computed under paragraph (b) of this section), nevertheless, in respect of the block T's tentative ratable share for 1964 is $17,500 (that is, earnings and profits accumulated during 1964 so computed of $70,000, multiplied by 25 shares/100 shares) and in respect of the block T's tentative ratable share for 1963 is $2,000 (that is, earnings and profits accumulated during 1963 so computed of $20,000, multiplied by 25 shares/100 shares, and multiplied by the percentage that the number of days in 1963 on which X was a controlled foreign corporation bears to the total number of days in 1963, 146/365).

Example 3. Assume the same facts as in example (2) except that X was a controlled foreign corporation on each day of 1965. The tentative ratable share with respect to the block of stock for 1965 is a deficit of $42,500, that is, the sum of the partial tentative ratable share under subparagraph (2) of this paragraph (as determined in example (1)), a deficit of $25,000, plus the partial tentative ratable share under subparagraph (3) of this paragraph (as determined in example (2)), a deficit of $17,500.

(6) ***More than one class of stock.*** If a foreign corporation for a taxable year has more than one class of stock outstanding, then before applying subparagraph (1) of this paragraph the earnings and profits accumulated for the taxable year of the corporation (computed under paragraph (b) of this section) shall be allocated to each class of stock in accordance with the principles of paragraph (e) (2) and (3) of § 1.951-1, applied as if the corporation were a controlled foreign corporation on each day of such taxable year.

(e) ***Ratable share of earnings and profits accumulated for a taxable year*** —

(1) ***In general.*** For purposes of paragraph (a)(2)(iii) of this section, in respect of a share (or block) of stock in a foreign corporation, the person's ratable share of the earnings and profits accumulated for a taxable year beginning after December 31, 1962, shall be an amount equal to the tentative ratable share computed under paragraph (c) or (d) (as the case may be) of this section, adjusted in the manner prescribed in subparagraphs (2) through (6) of this paragraph.

(2) ***Amounts included in gross income under section 951.***

(i) In respect of a share (or block) of stock in a foreign corporation, a person's tentative ratable share for a taxable year of the corporation (computed under paragraph (c) of this section) shall be reduced (but not below zero) by the excess of

(*a*) the amount, if any, included (in respect of such corporation for such taxable year) under section 951 in the gross income of such person or (during the period such share, or block, was considered to be held by such person by reason of the application of section 1223, taking into account § 1.1248-8) in the gross income of any other person who held such share (or block), over

(*b*) the portion of such amount which, in any taxable year of such person or such other person, resulted in an exclusion from the gross income of such person or such other person of an amount under section 959(a)(1) (relating to exclusion from gross income of distributions of previously taxed earnings and profits). See section 1248(d)(1). This subdivision shall apply notwithstanding an election under section 962 by such person to be subject to tax at corporate rates.

(ii) The application of this subparagraph may be illustrated by the following example:

Example: On December 31, 1975, Brown sells one share of stock in X Corporation, a controlled foreign corporation which has never been a less developed country corporation (as defined in section 902(d)). Both Brown and X use the calendar year as the taxable year. In respect of his share, Brown's tentative ratable share for 1971 (computed under paragraph (c) of this section) is $35. In respect of his share, Brown included $4 in his gross income for 1971 under section 951, and the amount of $3, which was distributed to him by X on January 15, 1972, is excluded from Brown's gross income under section 959(a)(1). In respect of the stock, Brown's ratable share for 1971 is $34, determined as follows:

Tentative ratable share	$35
Minus:	
Excess of amount of tentative ratable share included in Brown's gross income under section 951 ($4), over portion thereof which resulted in exclusion under section 959(a)(1) ($3)	1
Ratable share	34

(3) ***Amounts included in gross income under section 551.*** In respect of a share (or block) of stock in a foreign corporation, a person's tentative ratable share for a taxable year of the corporation (computed under paragraph (c) of this section) shall be reduced (but not below zero) by the amount, if any, included (in respect of such corporation for such taxable year) under section 551 in the gross income of such person or (during the period such share, or block, was considered to be held by such person by reason of the application of section 1223, taking into account § 1.1248-8) in the gross income of any other person who held such share (or block).

(4) ***Less developed country corporations.***

(i) If the foreign corporation was a less developed country corporation as defined in section 902(d) for a taxable year of the corporation, and if the person who sold or exchanged a share (or block) of stock in such corporation satisfies the requirements of paragraph (a) of § 1.1248-5 in respect of such stock, then his ratable share for such taxable year shall be zero. See section 1248(d)(3).

(ii) The application of this subparagraph may be illustrated by the following example:

Example: Assume the same facts as in the example in subparagraph (2)(ii) of this paragraph except that X was a less developed country corporation for 1971. Assume further that Brown satisfies the requirements of paragraph (a) of § 1.1248-5. Brown's ratable share in respect of the stock for 1971 is zero.

(5) ***Qualified shareholder of foreign investment company.*** In respect of a share (or block) of stock in a foreign corporation which was a foreign investment company described in section 1246 (b)(1), if the election under section 1247(a) to distribute income currently was in effect for a taxable year of the company, and if the person who sold or exchanged the stock (or another person who actually owned the stock during such taxable year and whose holding of the stock is attributed by reason of the application of section 1223, taking into account § 1.1248-8, to the person who sold or exchanged the stock) was a qualified shareholder (as defined in section 1247(c)) for his taxable year in which or with which such taxable year of the company ends, then the ratable share in respect of the share (or block) for such taxable year of the company shall be zero. See section 1248(d)(5). In case gain is recognized under section 1246 in respect of a share (or block), see section 1248(f)(3)(B).

(6) ***Adjustment for certain distributions.*** If

(i) the person who sold or exchanged the share or block (or another person who actually owned the share or block and whose holding of the share or block is attributed by reason of the application of section 1223 to such person, taking into account § 1.1248-8) received a distribution during a taxable year of the corporation, and

(ii) such distribution was not included in the gross income of such person (or such other person) by reason of the application of section 959(a)(1) to amounts which were included under section 951(a)(1) in the gross income of a United States shareholder whose holding of the share or block is not attributed by reason of the application of section 1223 to such person, taking into account § 1.1248-8 (or such other person), then the amount of such distribution shall be added to such person's tentative ratable share for such taxable year. Thus, for example, such tentative ratable share may be increased, or a deficit reduced, by the amount of such distribution.

(f) ***Earnings and profits of subsidiaries of foreign corporations*** —

(1) ***Application of paragraph.***

(i) In respect of a person who sells or exchanges stock in a foreign corporation (referred to as a *first tier* corporation), the provisions of this paragraph shall apply if the following 3 conditions exist:

(*a*) The conditions of paragraph (a)(2) of § 1.1248-1 are satisfied by the person in respect of such stock;

(*b*) By reason of his ownership of such stock, on the date of such sale or exchange such person owned, within the meaning of section 958(a)(2), stock in another foreign corporation (referred to as a *lower tier* corporation); and

(*c*) The conditions of paragraph (a)(2) of § 1.1248-1 would be satisfied by such person in respect of such stock in the lower tier corporation if such person were deemed to have sold or exchanged such stock in the lower tier corporation on the date he actually sold or exchanged such stock in the first tier corporation.

(ii) If the provisions of this paragraph apply,

(*a*) the person's tentative ratable share (or shares) of the earnings and profits accumulated by the lower tier corporation attributable to a taxable year of the first tier corporation shall be computed under subparagraph (2) or (4) of this paragraph, whichever is applicable, and

(*b*) such person's ratable share (or shares) for the lower tier corporation attributable to a taxable year of the first tier corporation shall be computed under subparagraph (5) of this paragraph. For the manner of taking into account the ratable share for a lower tier corporation, see paragraph (a)(3) of this section.

(iii) The application of this subparagraph may be illustrated by the following example:

Example: On each day of 1964 and 1965 corporations X and Y are controlled foreign corporations, and each has outstanding 100 shares of one class of stock. On January 15, 1965, T, a United States person, owns one share of stock in X and X directly owns 20 shares of stock in Y. Thus, T owns, within the meaning of section 958(a)(2), stock in Y. On that date, T sells his share in X and satisfies the conditions of paragraph (a)(2) of § 1.1248-1 in respect of his stock in X. Assuming that the conditions of paragraph (a)(2) of § 1.1248-1 would be satisfied by T in respect of the stock he indirectly owns in Y if, on January 15, 1965, he were deemed to have sold such stock in Y, the provisions of this paragraph apply.

(2) ***Tentative ratable share (of lower tier corporation attributable to a taxable year of first tier corporation) not less than zero.*** If the provisions of this paragraph apply to a sale or exchange by a United States person of a share (or block) of stock in a first tier corporation, and if the amount of earnings and profits accumulated (computed under paragraph (b) of this section) for a taxable year (beginning after December 31, 1962) of the lower tier corporation is not less than zero, then in respect of the share (or block) such person's tentative ratable share of the earnings and profits accumulated for such taxable year of the lower tier corporation attributable to any taxable year (beginning after December 31, 1962) of such first tier corporation shall be an amount equal to:

(i)

(*a*) Such amount of earnings and profits accumulated for such taxable year of the lower tier corporation (if the computation is made in respect of a block in the first tier corporation, multiplied by the number of shares in the block), divided by

(*b*) the number of shares in the first tier corporation outstanding, or deemed under paragraph (c)(2) of this section to be outstanding, on each day of such taxable year of the first tier corporation, multiplied by

(ii) The percentage that

(*a*) the number of days during the period or periods in such taxable year of the first tier corporation on which such person held (or was considered to have held by reason of the application of section 1223, taking into account § 1.1248-8) the share (or block) in the first tier corporation while the first tier corporation owned (within the meaning of section 958(a)) stock of such lower tier corporation at times while such lower tier corporation was a controlled foreign corporation, bears to

(*b*) the total number of days in such taxable year of the first tier corporation, multiplied by

(iii) The percentage that

(*a*) the average number of shares in the lower tier corporation which were owned within the meaning of section 958(a) by the first tier corporation during such period or periods (referred to in subdivision (ii)(*a*) of this subparagraph), bears to

(*b*) the total number of such shares outstanding, or deemed under the principles of paragraph (c)(2) of this section to be outstanding, during such period or periods, multiplied by

(iv) The percentage that

(*a*) the number of days in such taxable year of the lower tier corporation which fall within the taxable year of the first tier corporation, bears to

(*b*) the total number of days in such taxable year of the lower tier corporation.

(3) ***Examples.*** The application of subparagraph (2) of this paragraph may be illustrated by the following examples:

Example 1. In a year subsequent to 1969, Brown, a United States person, sells 5 of his shares of stock in X Corporation in a transaction as to which the provisions of this paragraph apply. Brown had purchased the 5 shares prior to 1969. On each day of 1969 X Corporation actually had 100 shares of one class of stock outstanding. On each such day X Corporation directly owned all of the shares of stock in Y Corporation, and Y Corporation directly owned all of the shares of stock in Z Corporation. Z Corporation on each such day was a controlled foreign corporation. Both X and Z use the calendar year as the taxable year. Z's earnings and profits accumulated for 1969 (computed under paragraph (b) of this section) are $2,000. Brown's tentative ratable share of the earnings and profits accumulated by Z attributable to the 1969 calendar year of X is $20 per share, computed as follows:

(i) Z's earnings and profits for 1969 ($2,000), divided by the number of shares in X deemed outstanding each day of 1969 (100)	$20
Multiplied by:	
(ii) Since on each day of 1969 Brown (by reason of owning directly his shares in X) owned, within the meaning of section 958(a)(2), stock in Z while Z was a controlled foreign corporation, the percentage determined under subparagraph (2)(ii) of this paragraph equals	100%

Multiplied by:	
(iii) Since on each day of 1969 X owned 100 percent of the stock of Y while Y owned 100 percent of the stock in Z, the percentage determined under subparagraph (2)(iii) of this paragraph equals	100%
Multiplied by:	
(iv) Since X and Z each use the same taxable year, the percentage determined under subparagraph (2)(iv) of this paragraph equals	100%
Total	$20

Example 2. Assume the same facts as in example (1), except that Brown sold his stock in X on October 19, 1969. Brown's tentative ratable share of the earnings and profits accumulated by Z attributable to the 1969 calendar year of X is $16 per share, computed as follows:

(i) The amount determined in subdivision (i) of example (1)	$20
Multiplied by:	
(ii) The number of days in the period during 1969 Brown (by reason of owning directly his stock in X) owned, within the meaning of section 958(a)(2), his stock in Z while Z was a controlled foreign corporation (292), divided by the number of days in 1969 (365), equals	80%
Multiplied by:	
(iii) The percentage determined in subdivision	
(iii) of example (1)	100%
Multiplied by:	
(iv) The percentage determined in subdivision	
(iv) of example (1)	100%
Total	$16

Example 3. Assume the same facts as in examples (1) and (2), except that on each day during 1969 Y owned (within the meaning of section 958(a)(2)) 81 of the 100 shares of Z's outstanding stock. Brown's tentative ratable share of the earnings and profits accumulated by Z attributable to the 1969 calendar year of X is $12.96 per share, computed as follows:

(i) The amount determined in subdivision (i) of example (1)	$20
Multiplied by:	
(ii) The percentage determined in subdivision (ii) of example (2)	80%

Multiplied by:	
(iii) The average number of shares in Z which were owned (within the meaning of section 958(a)) by X during the applicable period (81), divided by the total number of shares in Z during such period (100)	81%
Multiplied by:	
(iv) The percentage determined in subdivision (iv) of example (1)	100%
Total	$12.96

The result would be the same if X owned (within the meaning of section 958(a)(2)) 81 percent of the stock in Y while Y so owned 100 percent of the stock in X, or if X so owned 90 percent of the stock in Y while Y so owned 90 percent of the stock in Z.

Example 4. Assume the same facts as in example (3), except that Z Corporation uses a fiscal year ending June 30 as its taxable year. Assume further that Z's earnings and profits accumulated for its fiscal year ending June 30, 1969, and for its fiscal year ending June 30, 1970, are $3,000 and $2,000, respectively. Brown's tentative ratable share of the earnings and profits accumulated by Z attributable to the 1969 calendar year of X is $16.17 per share, computed as follows:

	In respect of Z's taxable year ending	
	June 30, 1969	**June 30, 1970**
(i) Z's earnings and profits, divided by the number of shares in X deemed outstanding on each day of 1969:		
$3,000/100	$30	
$2,000/100		$20
Multiplied by:		
(ii) The percentage determined in subdivision (ii) of example (2)	80%	80%
Multiplied by:		
(iii) The percentage determined in subdivision (iii) of example (3)	81%	81%
Multiplied by:		
(iv) Number of days in Z's taxable year which fall within 1969, divided by total number of days in Z's taxable year:		
181/365	49.6%	
184/365		50.4%
Totals	$9.64	$6.53
(v) Sum of tentative ratable shares of Z attributable to X's 1969		

	In respect of Z's taxable year ending	
	June 30, 1969	June 30, 1970
calendar year:		
For Z's taxable year ending		
June 30, 1969		$9.64
June 30, 1970		$6.53
Sum		$16.17

(4) ***Deficit in tentative ratable share of lower tier corporation attributable to a taxable year of first tier corporation.***

(i) If there is a deficit in the earnings and profits accumulated for a taxable year of a lower tier corporation beginning after December 31, 1962 (computed under paragraph (b) of this section), the person's tentative ratable share for such taxable year of such lower tier corporation attributable to a taxable year of a first tier corporation shall not be computed under subparagraph (2) of this paragraph but shall be an amount equal to the sum of the partial tentative ratable shares computed under subdivisions (ii) and (iii) of this subparagraph.

(ii) The partial tentative ratable share under this subdivision is computed in 2 steps. First, compute (under paragraph (b) of this section without regard to the adjustments for distributions under subparagraph (3) thereof) the deficit (if any) in earnings and profits accumulated for such taxable year of such lower tier corporation. Second, compute the partial tentative ratable share in the same manner as such tentative ratable share would be computed under subparagraph (2) of this paragraph if such deficit were the amount referred to in subparagraph (2)(i)(a) of this paragraph.

(iii) The partial tentative ratable share under this subdivision is computed in 2 steps. First, compute and treat as a deficit the portion of the adjustment for distributions under paragraph (b)(3) of this section for such taxable year which is attributable under paragraph (d)(4) of this section to distributions of earnings and profits accumulated during prior taxable years of the lower tier corporation beginning after December 31, 1962, during the period or periods such lower tier corporation was a controlled foreign corporation and the percentage of the stock of such lower tier corporation (which the person owns within the meaning of section 958(a)(2)) was owned within the meaning of section 958(a) by a United States shareholder (as defined in section 951(b) and the regulations thereunder). Second, compute the partial tentative ratable share in the same manner as such tentative ratable share would be computed under subparagraph (2) of this paragraph if (a) such deficit were the amount referred to in subparagraph (2)(i)(a) of this paragraph, and (b) such lower tier corporation were a controlled foreign corporation on each day of such taxable year.

(5) ***Ratable share of lower tier corporation attributable to a first tier corporation.***

(i) If the provisions of this paragraph apply in respect of a share of stock in a first tier corporation, a person's ratable share of the earnings and profits accumulated by the lower tier corporation attributable to a taxable year of the first tier corporation shall be an amount equal to the tentative ratable share computed under subparagraph (2) or (4) of this paragraph, adjusted in the manner prescribed in this subparagraph.

(ii) If the first tier corporation and the lower tier corporation use the same taxable year, then in respect of a share (or block) of stock in the first tier corporation the person's tentative ratable share of the accumulated earnings and profits of the lower tier corporation attributable to the taxable year of the first tier corporation (computed under subparagraph (2) of this paragraph) shall be reduced (but not below zero) by the excess of (*a*) the amount, if any, included (in respect of such lower tier corporation for its taxable year) under section 951 in the gross income of such person or (during the period such stock was considered to be held by such person by reason of the application of section 1223, taking into account § 1.1248-8) in the gross income of any other person who held such stock, over (b) the portion of such amount which, in any taxable year of such person or such other person, resulted in an exclusion from the gross income of such person or such other person of an amount under section 959(a)(1). For an illustration of the principles in the preceding sentence, see the example in paragraph (e)(2)(ii) of this section.

(iii) If the first tier corporation and the lower tier corporation do not use the same taxable year, and if there would be an excess computed under subdivision (ii) of this subparagraph in respect of a taxable year of the lower tier corporation (were the taxable years of such corporations the same), then such person's tentative ratable share of the accumulated earnings and profits for a taxable year of the lower tier corporation attributable to such taxable year of the first tier corporation shall be reduced (but not below zero) by an amount which bears the same ratio to

(*a*) such excess, as

(*b*) the number of days in the taxable year of the lower tier corporation which fall within the taxable year of the first tier corporation, bears to

(*c*) the total number of days in the taxable year of the first tier corporation.

(iv) If the first tier corporation and the lower tier corporation use the same taxable year, then in respect of a share (or block) of stock in the first tier corporation the person's tentative ratable share of the accumulated earnings and profits of the lower tier corporation attributable to the taxable year of the first tier corporation (computed under subparagraph (2) of this paragraph) shall be reduced (but not below zero) by the amount, if any, included (in respect of such corporation for such taxable year) under section 551, by reason of the application of section 555(b), in the gross income of such person or (during the period such share (or block) was considered to be held by such person by reason of the application of section 1223, taking into account § 1.1248-8) in the gross income of any other person who held such share (or block).

(v) If the first tier corporation and the lower tier corporation do not use the same taxable year, and if there would be a reduction in the person's tentative ratable share of the accumulated earnings and profits of the lower tier corporation attributable to the taxable year of the first tier corporation by an amount computed under subdivision (iv) of this subparagraph in respect of a taxable year of the lower tier corporation (were the taxable years of such corporations the

same), then such person's tentative ratable share of the accumulated earnings and profits for a taxable year of the lower tier corporation attributable to such taxable year of the first tier corporation shall be reduced by an amount which bears the same ratio to

(*a*) such amount, as

(*b*) the number of days in the taxable year of the lower tier corporation which fall within the taxable year of the first tier corporation, bears to

(*c*) the total number of days in the taxable year of the first tier corporation.

(vi) If the lower tier corporation was a less developed country corporation as defined in section 902(d) for a taxable year of the corporation, see paragraph (g) of this section.

(g) ***Lower tier corporation a less developed country corporation*** —

(1) ***General.*** If the lower tier corporation was a less developed country corporation as defined in section 902(d) for a taxable year of such corporation, and if the person who sold or exchanged a share (or block) of stock in the first tier corporation satisfies on the date of such sale or exchange:

(i) The requirements of paragraph (a)(1) of § 1.1248-5 with respect to such stock, and

(ii) The requirements of paragraph (d)(1) of § 1.1248-5 with respect to any stock of the lower tier corporation which such person, by reason of his direct ownership of such stock in the first tier corporation, owned within the meaning of section 958(a)(2),

Then such person's ratable share (or a deficit in such ratable share) for such taxable year of the lower tier corporation attributable to a taxable year of the first tier corporation (determined without regard to this paragraph) shall be reduced by an amount computed by multiplying such ratable share (so determined without regard to this paragraph) by the percentage computed under either subparagraph (2) or (4) of this paragraph, whichever is applicable.

(2) ***Percentage for second tier corporation.*** For purposes of subparagraph (1) of this paragraph, if stock of a lower tier corporation (hereinafter referred to as a *second tier* corporation) is owned directly by the first tier corporation on the date of the sale or exchange referred to in such subparagraph (1), the percentage under this subparagraph shall be computed by dividing

(i) the number of shares of stock of the second tier corporation which the first tier corporation has owned directly for an uninterrupted 10-year period ending on such date, by

(ii) the total number of shares of the stock of such second tier corporation owned directly by such first tier corporation on such date.

(3) ***Examples.*** The provisions of subparagraph (2) of this paragraph may be illustrated by the following examples:

Example 1. On January 1, 1966, Smith, a United States person, recognizes gain upon the sale of one share of the only class of stock of F Corporation, which he has owned continuously since 1955. He includes a portion of the gain in his gross income as a dividend under section 1248(a). On January 1, 1966, F owns directly 60 shares of the 100 outstanding shares of the only class of stock of G Corporation, which F acquired in 1955 and owned continuously until such sale. F uses a taxable year ending June 30, and G uses the calendar year as the taxable year. For 1964, G was a less developed country corporation, and on each day of 1964 G was a controlled foreign corporation. Smith's ratable share for G's taxable year ending December 31, 1964,

attributable to F's taxable year ending June 30, 1965 (determined without regard to this paragraph) is $6.00. Since the percentage computed under subparagraph (2) of this paragraph is 100 percent (60 shares divided by 60 shares), Smith's ratable share for G's taxable year ending December 31, 1964, attributable to F's taxable year ending June 30, 1965 (after the application of subparagraph (2) of this paragraph) is zero (that is, $6.00 reduced by 100 percent of $6.00).

Example 2. Assume the same facts as in example (1) except that of the 60 shares of G Corporation which F Corporation owned on January 1, 1966, 20 shares were acquired in 1961. The percentage computed under subparagraph (2) of this paragraph is $66^{2}/_{3}$ percent (40 shares divided by 60 shares). Accordingly, Smith's ratable share for G's taxable year ending December 31, 1964, attributable to F's taxable year ending June 30, 1965 (after the application of subparagraph (2) or this paragraph) is $2.00 (that is, $6.00 reduced by $66^{2}/_{3}$ percent of $6.00).

(4) ***Percentage for lower tier corporations other than second tier corporation.*** For purposes of subparagraph (1) of this paragraph, if stock of a lower tier corporation (other than a second tier corporation) is owned within the meaning of section 958(a)(2) by the first tier corporation on the date of the sale or exchange referred to in such subparagraph (1), the percentage under this subparagraph shall be computed in the following manner:

(i) First, determine the percentage for the second tier corporation in accordance with subparagraph (2) of this paragraph.

(ii) Second, determine a partial percentage for each other lower tier corporation in the same manner as the percentage for the second tier corporation is determined. Thus, for example, the partial percentage for a third tier corporation is determined by dividing

(*a*) the number of shares of stock of the third tier corporation which the second tier corporation has owned directly for an uninterrupted 10-year period ending on the date of the sale or exchange referred to in subparagraph (1) of this paragraph, by

(*b*) the total number of shares of stock of such third tier corporation owned directly by such second tier corporation on such date.

(iii) Third, the percentage for a third tier corporation is the percentage for the second tier corporation multiplied by the partial percentage for the third tier corporation. The percentage for a fourth tier corporation is the percentage for the third tier corporation (as determined in the preceding sentence) multiplied by the partial percentage for the fourth tier corporation. In a similar manner, the percentage for any other lower tier corporation may be determined.

(5) ***Example.*** The application of subparagraph (4) of this paragraph may be illustrated by the following example:

> *Example:* On January 1, 1967, Brown, a United States person recognizes gain upon the sale of one share of the only class of stock of W Corporation, which he has owned continuously since 1955. He includes a portion of the gain in his gross income as a dividend under section 1248(a). W is the first tier corporation of a chain of foreign corporations W, X, Y, and Z. W and Z each use the calendar year as the taxable year. For 1964, Z was a less developed country corporation and on each day of 1964 Z was a controlled foreign corporation. Additional facts

are set forth in the table below:

Corporation—(1)	Shares directly owned by preceding tier—		Column (2) divided by column (3) (percent)—(4)
	For uninterrupted 10-year period ending Jan. 1, 1967—(2)	On Jan. 1, 1967—(3)	
X	40	60	$66^{2}/_{3}$
Y	30	40	75
Z	20	30	$66^{2}/_{3}$

For 1964, the percentage referred to in subparagraph (4) of this paragraph for Z is $33^{1}/_{3}$ percent ($66^{2}/_{3}\% \times 75\% \times 66^{2}/_{3}\%$).

(6) ***Special rule.*** For purposes of applying the provisions of this paragraph, a lower tier corporation may be treated as a second tier corporation with respect to any of its stock which is owned directly by a first tier corporation whereas such lower tier corporation may be treated as a lower tier corporation other than a second tier corporation with respect to other stock in such lower tier corporation which is owned (within the meaning of section 958(a)(2)) by such first tier corporation. Thus, for example, if corporations X, Y, and Z are foreign corporations, X is a first tier corporation owning directly 100 percent of the stock of Y and 40 percent of the stock of Z, and in addition Y owns directly 60 percent of the stock of Z, then the 40 percent of the Z stock (which X owns directly) is considered to be stock in a second tier corporation and the 60 percent of the Z stock (which Y owns directly and which X is considered to own within the meaning of section 958(a)(2)) is considered to be stock in a third tier corporation.

[T.D. 6779, 29 FR 18133, Dec. 22, 1964, as amended by T.D. 7293, 38 FR 32803, Nov. 28, 1973; T.D. 7545, 43 FR 19652, May 8, 1978; T.D. 9345, 72 FR 41445, July 30, 2007; T.D. 9614, 78 FR 17041, Mar. 19, 2013]

§ 1.1248-4 Limitation on tax applicable to individuals.

(a) ***General rule*** —

(1) ***Limitation on tax.*** Under section 1248(b), if during a taxable year an individual sells or exchanges stock in a foreign corporation, then in respect of the stock the increase in the individual's income tax liability for such taxable year which is attributable (under paragraph (b) of this section) to the amount included in his gross income as a dividend under section 1248(a) shall not be greater than an amount equal to the sum of:

(i) The excess, computed under paragraph (c) of this section in respect of the stock of the United States taxes which would have been paid by the corporation over the taxes (including United States taxes) actually paid by the corporation, plus.

(ii) An amount equal to the increase in the individual's income tax liability which would be attributable to the inclusion in his gross income for such taxable year, as long-term capital gain, of an amount equal to the excess of (*a*) the amount included in the individual's gross income as a dividend under section 1248(a) in respect of such stock, over (*b*) the excess referred to in subdivision (i) of this subparagraph.

(2) ***Share or block.*** In general, the limitation on tax attributable (under paragraph (b) of this section) to the amount included in an individual's gross income as a dividend under section 1248(a) shall be determined separately for each share of stock sold or exchanged. However, such determination may be made in respect of a block of stock if earnings and profits attributable to the block are computed under § 1.1248-2 or 1.1248-3. See paragraph (b) of § 1.1248-2 and paragraph (a)(5) of § 1.1248-3.

(3) ***Application of limitation.*** The provisions of subparagraph (1) of this paragraph shall not apply unless the individual establishes:

(i) In the manner prescribed in § 1.1248-7, the amount of the earnings and profits of the corporation attributable under paragraph (a)(1) of § 1.1248-2 or under paragraph (a)(1) of § 1.1248-3, whichever is applicable, to the stock, and

(ii) The amount equal to the sum described in subparagraph (1) of this paragraph, computed in accordance with the provisions of this section.

(4) ***Example.*** The provisions of this paragraph may be illustrated by the following example:

Example: On December 31, 1966, Smith, a United States person, sells a share of stock of X Corporation which he has owned continuously since December 31, 1965, and includes $100 of the gain on the sale in his gross income as a dividend under section 1248(a). Both X and Smith use the calendar year as the taxable year. The increase in Smith's income tax liability for 1966 which is attributable (under paragraph (b) of this section) to the inclusion of the $100 in his gross income as a dividend is $70. X was a controlled foreign corporation on each day of 1966. The excess computed under paragraph (c) of this section in respect of the share, of the United States taxes which X would have paid over the taxes (including United States taxes) actually paid by X is $49. Under section 1248(b), the limitation on the tax attributable to the $100 included by Smith in his gross income as a dividend under section 1248(a) is $61.75, computed as follows:

(i) Excess, computed under paragraph (c) of this section, of United States taxes which X Corporation would have paid in 1966 over the taxes actually paid by X in 1966		$49.00
(ii) The amount determined under subparagraph (1)(ii) of this paragraph:		
The amount Smith included in his gross income as a dividend under section 1248(a)	$100.00	
Less the excess referred to in subdivision (i) of this example	49.00	

Difference	51.00	
Increase in Smith's tax liability attributable to including $51 in his gross income as long-term capital gain (25 percent of $51)		12.75
(iii) Limitation on tax		61.75

(b) ***Tax attributable to amount treated as dividend*** —

(1) ***General.*** For purposes of paragraph (a)(1) of this section, in respect of a share (or block) of stock in a foreign corporation sold or exchanged by an individual during a taxable year, the tax attributable to the amount included in his gross income as a dividend under section 1248(a) shall be the amount which bears the same ratio to (i) the excess of (*a*) his income tax liability for the taxable year determined without regard to section 1248(b) over (*b*) such tax liability determined as if the portion of the total gain recognized during the taxable year which is treated as a dividend under section 1248(a) had not been recognized, as (ii) the amount included as a dividend under section 1248(a) in respect of the share (or block), bears to (iii) the total amount included as a dividend under section 1248(a) in the individual's gross income for such taxable year.

(2) ***Examples.*** The application of this paragraph may be illustrated by the following examples:

Example 1. (i) During 1963, Brown, an unmarried United States person, sells a block of stock in a controlled foreign corporation. On the sale, he recognizes $22,000 gain, of which $18,000 is treated as a dividend under section 1248(a) and $4,000 as long-term capital gain. Brown computes his income tax liability for his taxable year ending December 31, 1963, under section 1201 (relating to alternative tax) in accordance with the additional facts assumed in the following table:

	Computation of income tax liability without regard to section 1248(b)	**Computation of income tax liability as if the gain treated as a divided under section 1248(a) had not been recognized**
Income from salary	$300,000	$300,000
Long-term capital gain resulting from sale of stock, less deduction for capital gains under section 1202 ($4,000 less $2,000)	2,000	2,000
Amount treated as a dividend under section 1248(a)	18,000	0
Adjusted gross income	320,000	302,000
Charitable contribution of	(96,000)	(90,600)

	Computation of income tax liability without regard to section 1248(b)	Computation of income tax liability as if the gain treated as a divided under section 1248(a) had not been recognized
$100,000 to church (limited under section 170(b) to 30 percent of adjusted gross income)		
Other itemized deductions and personal exemption	(7,700)	(7,700)
Taxable income	216,300	203,700
Less 50 percent of $4,000	2,000	2,000
Amount subject to partial tax under section 1201(b)(1)	214,300	201,700
Partial tax	169,833	158,367
25 percent of $4,000	1,000	1,000
Tax liability	170,833	159,367

(ii) The tax attributable to the $18,000 treated as a dividend under section 1248(a) is $11,466 ($170,833 minus $159,367).

Example 2. Assume the same facts as in example (1) except that the $18,000 treated as a dividend under section 1248(a) is attributable to the sale of a block of stock in X Corporation and a block of stock in Y Corporation. Assume further that $10,000 of the gain on the block of X stock was treated as a dividend and that $8,000 of the gain on the block of Y stock was treated as a dividend. Thus, the tax attributable to the amount treated as a dividend in respect of the block of X stock is $6,370 ($10,000/$18,000 of $11,466) and the amount in respect of the block of Y stock is $5,096 ($8,000/$18,000 of $11,466). The result would be the same if both blocks of stock were blocks of stock in the same corporation.

(c) ***Excess (of United States taxes which would have been paid over taxes actually paid) attributable to a share (or block)*** —

(1) ***General.*** For purposes of paragraph (a)(1)(i) of this section:

(i) The term *taxes* means income, war profits, or excess profits taxes, and

(ii) The excess (and the portion of such excess attributable to an individual's share or block of stock in a foreign corporation) of the United States taxes which would have been paid by the corporation over the taxes (including United States taxes) actually paid by the corporation, for the period or periods the stock was held (or was considered to be held by reason of the application of section 1223) by the individual in taxable years of the corporation beginning after December 31, 1962, while the corporation was a controlled foreign corporation, shall be computed in accordance with the steps set forth in subparagraphs (2), (3), and (4) of this paragraph.

(2) ***Step 1.*** For each taxable year of the corporation beginning after December 31, 1962, in respect of the individual's share (or block) of such stock

(i) the taxable income of the corporation shall be computed in the manner prescribed in paragraph (d) of this section, and

(ii) the excess (and the portion of such excess attributable to the stock of the United States taxes which would have been paid by the corporation on such taxable income over the taxes (including United States taxes) actually paid by the corporation shall be computed in the manner prescribed in paragraph (e) of this section.

(3) ***Step 2.*** If during such taxable year the corporation is a first tier corporation to which paragraph (f) of this section applies,

(i) the excess (and the portion of such excess attributable to the individual's share, or block, of stock in the first tier corporation) of the United States taxes which would have been paid by any lower tier corporation over the taxes (including United States taxes) actually paid by such lower tier corporation shall be computed under paragraph (f) of this section, and

(ii) such portion shall be added to the portion of the excess attributable to the individual's share (or block) of such stock as determined in step 1 for such taxable year.

(4) ***Step 3.*** The excess, in respect of the individual's share (or block), of the United States taxes which would have been paid by the corporation over the taxes actually paid by the corporation shall be the sum of the portions computed for each such taxable year in the manner prescribed in steps 1 and 2.

(d) ***Taxable income.*** For purposes of paragraph (c)(2)(i) of this section, taxable income shall be computed in respect of an individual's share (or block) in accordance with the following rules:

(1) ***Application of principles of § 1.952-2.*** Except as otherwise provided in this paragraph, the principles of paragraphs (a)(1), (b)(1), and (c) of § 1.952-2 (other than subparagraphs (2)(iii)(*b*), (2)(v), (5)(i), and (6) of such paragraph (c)) shall apply.

(2) ***Effect of elections.*** In respect of a taxable year of a foreign corporation, no effect shall be given to an election or an adoption of accounting method unless for such taxable year effect is given to such election or adoption of accounting method under paragraph (d)(1) of § 1.1248-2 or paragraph (b)(1) of § 1.1248-3, whichever is applicable.

(3) The deductions for certain dividends received provided in sections 243, 244, and 245 shall not be allowed.

(4) ***Deduction for taxes.*** In computing the amount of the deduction allowed under section 164, there shall be excluded income, war profits, or excess profits taxes paid or accrued which are imposed by the authority of any foreign country or possession of the United States.

(5) ***Capital loss carryover.*** In determining the amount of a net capital loss to be carried forward under section 1212 to the taxable year:

(i) No net capital loss shall be carried forward from a taxable year beginning before January 1, 1963.

(ii) The portion of a net capital loss or a capital gain net income (net capital gain for taxable years beginning before January 1, 1977) for a taxable year beginning after December 31, 1962, which shall be taken into account shall be the amount of such loss or gain (as the case may be),

multiplied by the percentage which (*a*) the number of days in such taxable year during which the individual held (or was considered to have held by reason of the application of section 1223) the share (or block) of stock sold or exchanged while the corporation was a controlled foreign corporation, bears to (*b*) the total number of days in such taxable year.

(iii) The application of this subparagraph may be illustrated by the following examples:

Example 1. Corporation X is a foreign corporation which was created on January 1, 1963, and which uses the calendar year as its taxable year. X was a controlled foreign corporation on each day of the period March 15, 1963, through December 31, 1965, but was not a controlled foreign corporation on any day during the period January 1, 1963, through March 14, 1963. On December 31, 1965, Smith, a United States person, sells a share of X stock which he has owned continuously since January 1, 1963. A portion of the gain recognized on the sale is includible in Smith's gross income as a dividend under section 1248(a). X had a net capital loss (determined without regard to subchapter N, chapter 1 of the Code) of $200 for 1963. Since, however, X was a controlled foreign corporation for only 292 days in 1963, for purposes of determining the net capital loss carryover to 1964 the portion of the net capital loss of $200 for 1963 which Smith takes into account under subdivision (ii) of this subparagraph is $160 (292/365 of $200), and, accordingly, the amount of the net capital loss carryover to 1964 is $160.

Example 2. Assume the same facts as in example (1), except that X was not a controlled foreign corporation on any day of the period May 26, 1964, through June 30, 1965. Assume further that X had a net capital gain (capital gain net income for taxable years beginning after December 31, 1976) (determined without regard to subchapter N, chapter 1, of the Code) of $160 for 1964. In computing X's taxable income for 1964 under this paragraph, Smith applies the net capital loss carryover of $160 from 1963 to reduce the net capital gain of $160 for 1964 to zero. Since, however, X was a controlled foreign corporation for only 146 days in 1964, for purposes of computing the portion of the 1963 capital loss of $160 which is a net capital loss carryover to 1965, the portion of the 1964 capital gain which Smith takes into account under subdivision (ii) of this subparagraph is $63.83 ($^{146}/_{366}$ of $160). Thus, the net capital loss carryover to 1965 is $96.17 ($160 minus $63.83).

(6) ***Net operating loss deduction.***

(i) The individual shall reduce the taxable income (computed under subparagraphs (1) through (5) of this paragraph) of the corporation for the taxable year by the amount of the net operating loss deduction of the corporation computed under section 172, as modified in the manner prescribed in this subparagraph.

(ii) The rules of subparagraphs (1) through (5) of this paragraph shall apply for purposes of determining the excess referred to in section 172(c) and the taxable income referred to in section 172(b)(2).

(iii) A net operating loss shall not be carried forward from, or carried back to, a taxable year beginning before January 1, 1963.

(iv) The portion of a net operating loss incurred, or of taxable income earned, in a taxable year beginning after December 31, 1962, which shall be taken into account under section 172(b)(2) shall be the amount of such loss or income (as the case may be), multiplied by the percentage which (*a*) the number of days in such taxable year during which the individual held (or was

considered to have held by reason of the application of section 1223) the share (or block) of stock sold or exchanged while the corporation was a controlled foreign corporation, bears to (*b*) the total number of days in such taxable year.

(v) For illustrations of the principles of this subparagraph, see the examples relating to net capital loss carryovers in subparagraph (5)(iii) of this paragraph.

(7) ***Adjustment for amount previously included in gross income of United States shareholders.*** In respect of the individual's share (or block) of stock sold or exchanged, the taxable income of the corporation for the taxable year (determined without regard to this subparagraph and subparagraph (8) of this paragraph) shall be reduced (but not below zero) by an amount equal to the sum of the amounts included under section 951 in the gross income of United States shareholders (as defined in section 951(b)) of the corporation for the taxable year.

(8) ***Adjustment for distributions.*** In respect of the individual's share (or block) of stock sold or exchanged, the taxable income of the corporation for the taxable year (determined without regard to this subparagraph) shall be reduced (but not below zero) by the amount of the distributions (other than in redemption of stock under section 302(a) or 303) made by the corporation out of earnings and profits of such taxable year (within the meaning of section 316(a)(2)). For purposes of the preceding sentence, distributions shall be taken into account only to the extent not excluded from the gross income of the United States shareholders of the corporation under section 959.

(e) ***Excess attributable to a share (or block) of stock*** —

(1) ***Excess of United States taxes which would have been paid over taxes actually paid.*** For purposes of paragraph (c)(2)(ii) of this section, in respect of a taxable year of a foreign corporation, the portion of the excess under this subparagraph which is attributable to an individual's share (or block) of such stock shall be an amount equal to:

(i) The excess (if any) of (*a*) the United States taxes which would have been paid by the corporation on its taxable income (computed under paragraph (d) of this section) for the taxable year had it been taxed as a domestic corporation under chapter 1 of the Code (but without regard to subchapters F, G, H, L, M, N, S, and T thereof) for such taxable year, over (*b*) the income, war profits, or excess profits taxes actually paid by the corporation during such taxable year (including such taxes paid to the United States),

(ii) Multiplied by the percentage that (*a*) the number of days in such taxable year of the corporation during the period or periods the share (or block) was held (or was considered as held by reason of the application of section 1223) by the individual while the corporation was a controlled foreign corporation, bears to (*b*) the total number of days in such taxable year,

(iii) If the computation is made in respect of a block, multiplied by the number of shares in the block, and

(iv) Divided by the number of shares in the corporation outstanding, or deemed under paragraph (c)(2) of § 1.1248-3 to be outstanding, on each day of such taxable year.

(2) ***Example.*** The provisions of this paragraph may be illustrated by the following example:

> *Example:* (i) Jones, a United States person, owns on each day of 1963 10 shares of the 100 shares of the only class of outstanding stock of X corporation. He sells one of such shares on December 31, 1963. X corporation is a controlled foreign corporation on each day of 1963

and Jones and X each use the calendar year as the taxable year. For 1963, the excess of the United States taxes which would have been paid by X had it been taxable as a domestic corporation over the taxes (including United States taxes) actually paid by X is $23,500, computed as follows:

Amount subject to partial tax under section 1201(a)(1), as computed by Jones:		
Taxable income		$300,000
Less excess of net long-term capital gain over net short-term capital loss		100,000
Amount subject to partial tax		200,000
Excess determined under subparagraph (1)(i) of this paragraph:		
30 percent × $25,000	$7,500	
52 percent × $175,000	91,000	
Partial tax		98,500
25 percent × $100,000		25,000
United States taxes X would have paid (alternative tax computed under section 1201(a))		123,500
Less income taxes X actually paid to:		
United States	$10,000	
Foreign countries	90,000	
Total		$100,000
Excess		23,500
Multiplied by:		
Percentage determined under subparagraph (1)(ii) of this paragraph:		
Since on each day of 1963, Jones held the share of X stock while X was a controlled foreign corporation, the percentage equals		100%
Total		$23,500

(ii) The portion of the excess determined in subdivision (i) of this example which is attributable to the share held by Jones is $235, that is, the amount of such excess ($23,500), divided by the number of shares of X deemed to be outstanding on each day of 1963 (100).

(3) ***More than one class of stock.*** If a foreign corporation for a taxable year has more than one class of stock outstanding, then before applying subparagraph (1) of this paragraph the excess (if any) which would be determined under subparagraph (1)(i) of this paragraph shall be allocated to each class of stock in accordance with the principles of paragraph (e) (2) and (3) of § 1.951-1, applied as if the corporation were a controlled foreign corporation on each day of such taxable year.

(f) ***Subsidiaries of foreign corporations*** —

(1) ***Excess for lower tier corporation attributable to taxable year of first tier corporation.*** For purposes of paragraph (c)(3) of this section, if the provisions of paragraph (a)(3) of § 1.1248-2 or paragraph (f) of § 1.1248-3 apply in the case of the sale or exchange by an individual of a share (or block) of stock in a first tier corporation, then in respect of a taxable year of a lower tier corporation (beginning after December 31, 1962) which includes at least one day which falls within a taxable year of the first tier corporation (beginning after December 31, 1962), the portion of the excess under this subparagraph attributable to the share shall be an amount equal to:

(i) The excess (if any) of (*a*) the United States taxes which would have been paid by the lower tier corporation on its taxable income (computed under paragraph (g) of this section) for such taxable year of the lower tier corporation had it been taxed as a domestic corporatin under chapter 1 of the Code (but without regard to subchapters F, G, H, L, M, N, and T thereof) for such taxable year of the lower tier corporation, over (*b*) the income, war profits, or excess profits taxes actually paid by the lower tier corporation during such taxable year (including such taxes paid to the United States),

(ii) Multiplied by each of the percentages described under paragraph (f)(2)(ii), (iii), and (iv) of § 1.1248-3 in respect of such taxable year of the first tier corporation,

(iii) If the computation is made in respect of a block of stock, multiplied by the number of shares in the block, and

(iv) Divided by the number of shares in the first tier corporation outstanding, or deemed under paragraph (c)(2) of § 1.1248-3 to be outstanding, on each day of such taxable year of the first tier corporation.

(2) ***More than one class of stock.*** If a foreign corporation for a taxable year has more than one class of stock outstanding, then before applying subparagraph (1) of this paragraph the principles of paragraph (e)(3) of this section shall apply.

(g) ***Taxable income of lower tier corporations*** —

(1) ***General.*** For purposes of paragraph (f)(1)(i) of this section, in respect of the individual's share (or block) the taxable income of a lower tier corporation shall be computed in the manner provided in paragraph (d) of this section, except as provided in this paragraph.

(2) ***Capital loss carryover.*** For purposes of subparagraph (1) of this paragraph, the provisions of paragraph (d)(5)(ii) of this section shall not apply. In determining the amount of a net capital loss to be carried forward under section 1212 to the taxable year of a lower tier corporation, the portion of a net capital loss or a capital gain net income (net capital gain for taxable years beginning before January 1, 1977) for a taxable year of the lower tier corporation beginning after December 31, 1962, which shall be taken into account shall be the amount of such loss or gain (as the case may be), multiplied by the percentage which

(i) the number of days in such taxable year during the period or periods the individual held (or was considered to have held by reason of the application of section 1223) the share (or block) of stock in the first tier corporation sold or exchanged while the first tier corporation owned (within the meaning of section 958 (a)) stock in the lower tier corporation while the lower tier corporation was a controlled foreign corporation, bears to

(ii) the total number of days in such taxable year.

(3) ***Net operating loss deduction.*** For purposes of subparagraph (1) of this paragraph, the provisions of paragraph (d)(6)(iv) of this section shall not apply. In determining the amount of the net operating loss deduction for a taxable year of a lower tier corporation, the portion of a net operating loss incurred, or of taxable income earned, in a taxable year of the lower tier corporation beginning after December 31, 1962, which shall be taken into account under section 172(b)(2) shall be the amount of such loss or income (as the case may be) multiplied by the percentage described in subparagraph (2) of this paragraph for such taxable year.

[T.D. 6779, 29 FR 18139, Dec. 22, 1964, as amended by T.D. 7545, 43 FR 19653, May 8, 1978; T.D. 7728, 45 FR 72650, Nov. 3, 1980]

§ 1.1248-5 Stock ownership requirements for less developed country corporations.

(a) ***General rule*** —

(1) ***Requirements.*** For purposes of paragraph (e)(4) of § 1.1248-3, a United States person shall be considered as satisfying the requirements of this paragraph with respect to a share (or block) of stock of a foreign corporation if on the date he sells or exchanges such share (or block):

(i) The 10-year stock ownership requirement of paragraph (b) of this section is met with respect to such share (or block), and

(ii) In the case of a United States person which is a domestic corporation, the requirement of paragraph (c) of this section, if applicable, is met.

(2) ***Ownership of stock.*** For purposes of this section:

(i) The rules for determining ownership of stock prescribed by section 958 (a) and (b) shall apply.

(ii) Stock owned by a United States person who is an individual, estate, or trust which was acquired by reason of the death of the predecessor in interest of such United States person shall be considered as owned by such United States persons during the period such stock was owned by such predecessor in interest, and during the period such stock was owned by any other predecessor in interest if between such United States person and such other predecessor in interest there was no transfer other than by reason of the death of an individual.

(b) ***10-year stock ownership requirement*** —

(1) ***General.*** A United States person meets the 10-year stock ownership requirement with respect to a share (or block) of stock in a foreign corporation which he sells or exchanges only if the share (or block) was owned (under the rules of paragraph (a)(2) of this section) by such person for a continuous period of at least 10 years ending on the date of the sale or exchange. See the first sentence of section 1248(d)(3). Thus, for example, if Jones, a United States person, sells a share of stock in a foreign corporation on January 1, 1965, the 10-year stock ownership requirement is met with respect to a share only if the share was owned (under the rules of paragraph (a)(2) of this section) by Jones continuously from January 1, 1955, to January 1, 1965. If a foreign corporation has not been in existence for at least 10 years on the date of the sale or exchange of the share, the 10-year stock ownership requirement cannot be met.

(2) ***Special rule.*** For purposes of this paragraph, a United States person shall be considered to have owned stock during the period he was considered to have held the stock by reason of the application of section 1223.

(c) ***Disqualification of domestic corporation as a result of changes in ownership of its stock*** —

(1) ***General.***

(i) For purposes of paragraph (a)(1)(ii) of this section, the requirement of this paragraph must be met only if, on at least one day during the 10-year period ending on the date of the sale or exchange by a domestic corporation of a share of stock in a foreign corporation, one or more noncorporate United States shareholders (as defined in subdivision (iii) of this subparagraph) own more than 50 percent of the total combined voting power of all classes of stock entitled to vote of the domestic corporation.

(ii) The requirement of this paragraph is that if one or more persons are noncorporate United States shareholders on the first such day (referred to in subdivision (i) of this subparagraph), such person or persons continue after such first day, at all times during the remainder of such 10-year period, to own in the aggregate more than 50 percent of the total combined voting power of all classes of stock entitled to vote of the domestic corporation. For purposes of determining whether a domestic corporation meets the requirement of this paragraph, the stock owned by a United States person who is a noncorporate United States shareholder of a domestic corporation on such first day shall not be counted at any time after he ceases during such 10-year period to be a noncorporate United States shareholder of such corporation.

(iii) For purposes of this paragraph, the term *noncorporate United States shareholder* means, with respect to a domestic corporation, a United States person who is an individual, estate, or trust and who owns 10 percent or more of the total combined voting power of all classes of stock of such domestic corporation.

(iv) For purposes of this paragraph, the percentage of the total combined voting power of stock of a foreign corporation owned by a United States person shall be determined in accordance with the principles of section 951(b) and the regulations thereunder.

(2) ***Examples.*** The application of this paragraph may be illustrated by the following examples:

Example 1. During the entire period beginning December 31, 1954, and ending December 31, 1964, domestic corporation N owns all the stock of controlled foreign corporation X, a less developed country corporation. On December 31, 1964, N recognizes gain upon the sale of all its X stock. A, B, and C, who are unrelated individuals, were the only United States persons owning, or considered as owning, 10 percent or more of the total combined voting power of all classes of stock entitled to vote of N at any time during the 10-year period December 31, 1954, through December 31, 1964. The percentages of the total combined voting power in N, which A, B, and C owned during such 10-year period, are as follows:

Owner	Dec. 31, 1954-Apr. 1, 1957 (*Percent*)	Apr. 2, 1957-Oct. 1, 1959 (*Percent*)	Oct. 2, 1959-Dec. 31, 1964 (*Percent*)
A	20	20	20
B	9	30	30

Owner	Dec. 31, 1954-Apr. 1, 1957 (*Percent*)	Apr. 2, 1957-Oct. 1, 1959 (*Percent*)	Oct. 2, 1959-Dec. 31, 1964 (*Percent*)
C	30	15	9

Domestic corporation N does not meet the requirement of this paragraph with respect to the stock of controlled foreign corporation X for the following reasons:

(i) April 2, 1957, is the first day (during the 10-year period ending on December 31, 1964, the date N sells the X stock) on which noncorporate United States shareholders of N own more than 50 percent of the total combined voting power in N, and thus the requirement of this paragraph must be met. See subparagraph (1)(i) of this paragraph. Although A, B, and C did own, in the aggregate, more than 50 percent of such voting power before April 2, 1957, the voting power owned by B is not counted because B was not a noncorporate United States shareholder of N before such date.
(ii) Although C is a noncorporate United States shareholder on April 2, 1957, C ceases to own 10 percent or more of the total combined voting power in N on October 2, 1959. Thus, after October 1, 1959, the N stock which C owns is not counted for purposes of determining whether the more-than-50-percent stock ownership test is met. See subparagraph (1)(ii) of this paragraph. Accordingly, after October 1, 1959, the requirement of this paragraph is not met.

Example 2. Assume the same facts as in example (1), except that B's wife owns directly 5 percent of the total combined voting power in N from December 31, 1954, to December 31, 1964. On the basis of the assumed facts, N meets the requirement of this paragraph with respect to the stock of controlled foreign corporation X for the following reasons:
(i) December 31, 1954, is the first day (of the 10-year period ending on the date N sells the X stock) on which noncorporate United States shareholders of N own more than 50 percent of the total combined voting power in N. B is a noncorporate United States shareholder on such date because he owns, and is considered as owning, 14 percent of the total combined voting power in N (9 percent directly, and, under section 958(b), 5 percent constructively). Thus, on December 31, 1954, noncorporate United States shareholders A, B, and C own, in the aggregate, more than 50 percent of the total combined voting power in N.

(ii) A, B, and C, the noncorporate United States shareholders of N on December 31, 1954, own, and are considered as owning, more than 50 percent of the total voting power of N from December 31, 1954, to October 1, 1959. Since beginning on October 2, 1959, A owns 20 percent and B owns, and is considered as owning, 35 percent of the total combined voting

power in N, A and B owns, and are considered as owning, more than 50 percent of the total combined voting power in N from October 2, 1959, to December 31, 1964. Therefore, the requirement of this paragraph is met.

(d) *Application of section to lower tier corporation* —

(1) ***General.*** For purposes of paragraph (g)(1)(ii) of § 1.1248-3, a United States person satisfies the requirements of this subparagraph in respect of stock of a lower tier corporation which such person, by reason of his direct ownership of the share (or block) of the first tier corporation sold or exchanged, owned within the meaning of section 958(a)(2) on the date he sold or exchanged such share (or block), if on such date:

(i) The 10-year stock ownership requirement of paragraph (b) of this section is met by such person with respect to any stock in the lower tier corporation which such person so owned, and

(ii) In the case of a United States person which is a domestic corporation, the requirement of paragraph (c) of this section, if applicable, is met.

(2) ***Special rule.*** For purposes of this paragraph, in applying paragraphs (b) and (c) of this section, the sale or exchange of a share (or block) of stock in a first tier corporation by a United States person shall be deemed to be the sale or exchange of any stock in a lower tier corporation which the person, by reason of his direct ownership of such share (or block) of the first tier corporation, owned within the meaning of section 958(a)(2) on the date he actually sold or exchanged such share (or block) in the first tier corporation.

[T.D. 6779, 29 FR 18142, Dec. 22, 1964]

§ 1.1248-6 Sale or exchange of stock in certain domestic corporations.

(a) ***General rule.*** If a United States person recognizes gain upon the sale or exchange of a share (or block) of stock of a domestic corporation which was formed or availed of principally for the holding, directly or indirectly, of stock of one or more foreign corporations, and if the conditions of paragraph (a)(2) of § 1.1248-1 would be met by such person in respect of the share (or block) if the domestic corporation were a foreign corporation, then section 1248 shall apply in respect of such gain in accordance with the rules provided in paragraph (b) of this section. See paragraph (d) of this section for a rule suspending the application of this section in certain circumstances.

(b) ***Application.***

(1) The gain referred to in paragraph (a) of this section shall be included in the gross income of the United States person as a dividend under section 1248(a) to the extent of the earnings and profits attributable under § 1.1248-2 or § 1.1248-3, whichever is applicable, to the share (or block), computed, however, in accordance with the following rules:

(i) The domestic corporation shall be treated as if it were a first tier foreign corporation;

(ii) If, after the application of subdivision (i) of this subparagraph, the provisions of paragraph (a)(3) of § 1.1248-2 or paragraph (f) of § 1.1248-3 (as the case may be) would apply in respect of a foreign corporation the stock of which is owned (within the meaning of section 958(a)) by the domestic corporation treated as the first tier corporation, such foreign corporation shall be considered a lower tier corporation;

(iii) Except to the extent provided in subdivision (iv) of this subparagraph, the earnings and profits of the domestic corporation treated as the first tier corporation accumulated for a taxable year, as computed under paragraph (d) of § 1.1248-2 or paragraph (b) of § 1.1248-3 (as the case may be), shall be considered to be zero; and

(iv) If, during a taxable year, a domestic corporation treated as the first tier corporation realizes gain upon the sale or exchange of stock in a foreign corporation, and solely by reason of the application of section 337 (relating to certain liquidations) the gain was not recognized, then the earnings and profits of such domestic corporation accumulated for the taxable year, as computed under paragraph (d) of § 1.1248-2 or paragraph (b) of § 1.1248-3 (as the case may be), shall be considered to be an amount equal to the portion of such gain realized during the taxable year which, if section 337 had not applied, would have been treated as a dividend under section 1248(a).

(2) If the person selling or exchanging the stock in the domestic corporation is an individual, the limitation on tax attributable to the amount included in his gross income as a dividend under subparagraph (1) of this paragraph shall be determined, in accordance with the principles of paragraph (f) of § 1.1248-4, by treating the domestic corporation as a first tier corporation.

(3)

(i) If the earnings and profits of the foreign corporation or corporations (or of the domestic corporation treated as a first tier corporation) to be taken into account under subparagraph (1) of this paragraph are not established in the manner provided in paragraph (a)(1) of § 1.1248-7, all of the gain from the sale or exchange of the share (or block) of the domestic corporation shall be treated as a dividend.

(ii) To the extent that the person does not establish, in the manner provided in paragraph (c) of § 1.1248-7, the foreign taxes paid by such foreign corporation or corporations to be taken into account for purposes of computing the limitation on tax attributable to a share, such foreign taxes shall not be taken into account for purposes of such computation.

(c) ***Corporation formed or availed of principally for holding stock of foreign corporations.*** Whether or not a domestic corporation is formed or availed of principally for the holding, directly or indirectly, of stock of one or more foreign corporations shall be determined on the basis of all the facts and circumstances of each particular case.

(d) ***Temporary suspension of section 1248(e).*** Section 1248(e) and the rules of this section do not apply to a sale, exchange, or other disposition of the stock of a domestic corporation during a period when capital gains are taxed at a rate that equals or exceeds the rate at which ordinary income is taxed.

(e) ***Effective/applicability date.*** Paragraph (d) of this section applies to a sale, exchange, or other disposition of the stock of a domestic corporation on or after September 21, 1987.

[T.D. 6779, 29 FR 18143, Dec. 22, 1964, as amended by T.D. 9614, 78 FR 17042, Mar. 19, 2013]

§ 1.1248-7 Taxpayer to establish earnings and profits and foreign taxes.

(a) ***In general.***

(1) If a taxpayer sells or exchanges stock in a foreign corporation which was a controlled foreign corporation and the Commissioner determines that the taxpayer has not established the amount of the earnings and profits of the corporation attributable to the stock under § 1.1248-2 or § 1.1248-3, whichever is applicable, all the gain from such sale or exchange shall be treated as a dividend under section 1248(a). See section 1248(h). A taxpayer shall be considered to have established such amount if:

(i) He attaches to his income tax return, filed on or before the last day prescribed by law (including extensions thereof) for his taxable year in which he sold or exchanged the stock, the schedule prescribed by paragraph (b) of this section or, if such last day is before April 1, 1965, he files such schedule before such date with the district director with whom such return was filed, and

(ii) He establishes in the manner prescribed by paragraph (d) of this section the correctness of each amount shown on such schedule.

(2) Notwithstanding an omission of information from, or an error with respect to an amount shown on, the schedule referred to in subparagraph (1)(i) of this paragraph, a taxpayer shall be considered to have complied with such subparagraph (1)(i) if:

(i) He establishes that such omission or error was inadvertent, or due to reasonable cause and not due to willful neglect, and that he has substantially complied with the requirements of this section, and

(ii) The taxpayer corrects such omission or error at the time when he complies with paragraph (d) of this section.

(3) For the requirement to establish the amount of foreign taxes to be taken into account for purposes of section 1248(b), see paragraph (c) of this section.

(b) *Schedule attached to return.*

(1) The taxpayer shall attach to his income tax return for his taxable year in which he sold or exchanged the stock, a schedule showing his name, address, and identifying number. Except to the extent provided in paragraph (e) of this section, the schedule shall also show the amount of the earnings and profits attributable under paragraph (a) of § 1.1248-2 or paragraph (a) of § 1.1248-3 (as the case may be) to the stock, and, in order to support the computation of such amount, any additional information required by subparagraphs (2), (3), (4), and (5) of this paragraph.

(2) The schedule shall also show for the first tier corporation, and for each lower tier corporation as to which information is required under subparagraph (4) of this paragraph,

(i) the name of the corporation,

(ii) the country under whose laws the corporation is created or organized, and

(iii) the last day of the taxable year which the corporation regularly uses in computing its income.

(3) If the amount of earnings and profits attributable to a block of stock sold or exchanged are computed under § 1.1248-2, the schedule shall also show:

(i) For each taxable year of the corporation, beginning after December 31, 1962, during the period the taxpayer held (or was considered to have held by reason of the application of section 1223, taking into account § 1.1248-8) the block, (a) the earnings and profits accumulated for each such taxable year computed under paragraph (d) of § 1.1248-2, and (b) the sum thereof computed under paragraph (e) (1)(i) and (2) of § 1.1248-2,

(ii) The number of shares in the block and the total number of shares of the corporation outstanding during such period,

(iii) If during the period the person held (or is considered to have held by reason of the application of section 1223, taking into account § 1.1248-8) the block any amount was included under section 951 in the gross income of such person (or another person) in respect of the block, the computation of the excess referred to in paragraph (e)(3)(ii) of § 1.1248-2, and

(iv) If the amount of earnings and profits of a lower tier corporation attributable to the block are computed under paragraph (a)(3) of § 1.1248-2, (a) the number of shares in the lower tier corporation which the taxpayer owns within the meaning of section 958(a)(2)(b) the total number of shares of such lower tier corporation outstanding during such period, and (c) in respect of such lower tier corporation, the information prescribed in subdivisions (i) and (iii) of this subparagraph.

(4) If the amount of earnings and profits attributable to a share (or block) sold or exchanged are computed under § 1.1248-3, the schedule shall also show for each taxable year of the corporation beginning after December 31, 1962, any day of which falls in a period or periods the taxpayer held (or was considered to have held by reason of the application of section 1223, taking into account § 1.1248-8) the stock while the corporation was a controlled foreign corporation:

(i) The number of days in such period or periods, but only if such number is less than the total number of days in such taxable year,

(ii) The earnings and profits accumulated for the taxable year computed under paragraph (b) of § 1.1248-3,

(iii) The number of shares in the corporation outstanding, or deemed under paragraph (c)(2) of § 1.1248-3 to be outstanding, on each day of the taxable year,

(iv) The taxpayer's tentative ratable share computed under paragraph (c) or (d) (as the case may be) of § 1.1248-3,

(v) The amount of, and a short description of each adjustment to, the tentative ratable share under paragraph (e) of § 1.1248-3, and

(vi) The amount of the ratable share referred to in paragraph (e)(1) of § 1.1248-3.

(5) In respect of a taxable year referred to in subparagraph (4) of this paragraph of a first tier corporation, if the taxpayer is required to compute under paragraph (f)(5) of § 1.1248-3 his ratable share of the earnings and profits for a taxable year of the lower tier corporation attributable to such taxable year of such first tier corporation, then for such taxable year of the lower tier corporation the schedule shall show:

(i) The earnings and profits accumulated for the taxable year of the lower tier corporation, computed under paragraph (b) of § 1.1248-3,

(ii) Each percentage described in paragraph (f)(2) (ii), (iii), and (iv) of § 1.1248-3,

(iii) The amount of the taxpayer's tentative ratable share computed under paragraph (f) (2) or (4) (as the case may be) of § 1.1248-3,

(iv) The amount of, and a short description of each adjustment to, the tentative ratable share under paragraph (f)(5) of § 1.1248-3, and

(v) The amount of the ratable share referred to in paragraph (f)(5)(i) of § 1.1248-3.

(c) ***Foreign taxes.***

(1) If the taxpayer fails to establish any portion of the amount of any foreign taxes which he is required to establish by subparagraph (2) of this paragraph, then such portion shall not be taken into account under section 1248(b)(1)(B):

(2) The taxpayer shall establish in respect of the stock he sells or exchanges the amount of the foreign taxes described in section 1248(b)(1)(B) paid by the first tier corporation for each taxable year of such corporation for which the information is required under paragraph (b) (3) or (4) of this section, and the amount of such taxes paid by each lower tier corporation for each taxable year (as to which information is required under paragraph (b) (3)(iv) or (5) of this section) of each such lower tier corporation. A taxpayer shall be considered to have established the amount of such foreign taxes if:

(i) He attaches to the schedule described in paragraph (b) of this section a supplementary schedule which, except to the extent provided in paragraph (e) of this section, sets forth the amount of such foreign taxes for each taxable year (of the first tier corporation and of each such lower tier corporation) as to which such amount must be established under this subparagraph, and

(ii) He establishes in the manner prescribed by paragraph (d)(2) of this section the correctness of each amount shown on such supplementary schedule.

(d) ***Establishing amounts on schedules.***

(1) A taxpayer shall be considered to have established, in respect of the stock he sold or exchanged, the correctness of an amount shown on a schedule described in paragraph (b) of this section only if he produces or provides within 180 days after demand by the district director (or within such longer period to which such director consents):

(i) The books of original entry, or similar systematic accounting records maintained by any person or persons on a current basis as supplements to such books, which establish to the satisfaction of the district director the correctness of each such amount, and

(ii) In respect of any such books or records which are not in the English language, either an accurate English translation of any such records as are demanded, or the services of a qualified interpreter satisfactory to such director.

(2) A shareholder shall be considered to have established in respect of such stock the correctness of an amount shown on a supplementary schedule described in paragraph (c) of this section only if he produces or provides within 180 days after demand by the district director (or within such longer period to which such director consents):

(i) Evidence described in paragraph (a)(2) of § 1.905-2 of such amount, or

(ii) Secondary evidence of such amount, in the same manner and to the same extent as would be permissible under paragraph (b) of § 1.905-2 in the case of a taxpayer who claimed the benefits of the foreign tax credit in respect of such amount.

(e) ***Insufficient information at time return is filed.*** If stock in a foreign corporation, which was a controlled foreign corporation, is sold or exchanged by a taxpayer during a taxable year of the corporation (or of a lower tier corporation) which ends after the last day of the taxpayer's taxable year in which the sale or exchange occurs, and if:

(1) For the taxpayer's taxable year, the last day referred to in paragraph (a)(1) of this section for filing his income tax return with a schedule prescribed in paragraph (b) of this section, and, if applicable, with a supplemental schedule prescribed in paragraph (c) of this section, or

(2) The last day referred to in paragraph (a)(1) of this section (that is, April 1, 1965) for filing any such schedule or schedules with the district director with whom such return was filed,

Is not later than 90 days after the close of such taxable year of any such corporation, then such return with such schedule or schedules may be filed, or any such schedule or schedules may be filed, on the basis of estimates of amounts or percentages (for any such taxable year of any such corporation) required to be shown on any such schedule or schedules. If any such estimate differs from the actual amount or percentage, the taxpayer shall, within 90 days after the close of any such taxable year of any such corporation, file (or attach to a claim for refund or amended return filed) at the office of the district director with whom he filed the return a new schedule or schedules showing the actual amounts or percentages.

[T.D. 6779, 29 FR 18143, Dec. 22, 1964, as amended by T.D. 9345, 72 FR 41445, July 30, 2007: T.D. 9614, 78 FR 17041, Mar. 19, 2013]

§ 1.1248-8 Earnings and profits attributable to stock following certain non-recognition transactions.

(a) ***Scope.*** This section sets forth rules for the attribution of earnings and profits for purposes of section 1248 and § 1.1248-1(a)(1) and to supplement the rules in §§ 1.1248-2 and 1.1248-3 with respect to—

(1) ***Stock that an exchanging shareholder receives, or an acquiring corporation receives, in restructuring transactions.*** Except as otherwise provided in this paragraph (a), stock of a foreign corporation that an exchanging shareholder receives, or an acquiring corporation receives, pursuant to a restructuring transaction (as defined in paragraph (b)(1)(vii) of this section) in which the holding period of such stock is determined by application of section 1223(1) or 1223(2), whichever is appropriate. This section shall not apply to an exchange otherwise described in this paragraph (a)(1) if, as a result of the exchange, the exchanging shareholder is required to include in income as a deemed dividend the section 1248 amount pursuant to § 1.367(b)-4(b). See paragraphs (b)(2) and (3) of this section;

(2) ***Nonexchanging shareholders.*** Stock of a foreign corporation that participates in a restructuring transaction that is held by a non-exchanging shareholder (as defined in paragraph (b)(1)(vi) of this section) in the restructuring transaction. See paragraph (b)(4) of this section;

(3) ***Section 381 transactions.*** Stock of a foreign corporation that receives assets in a transfer to which section 361(a) or (b) applies in connection with a reorganization described in section 368(a)(1)(A), (C), (D), (F), or (G), or in a distribution to which section 332 applies, and to which section 381(c)(2)(A) and § 1.381(c)(2)-1(a) apply. See paragraph (b)(6) of this section; or

(4) ***Section 332 liquidations.*** Stock of a foreign corporation that receives the assets and liabilities of a foreign corporation in a complete liquidation described in section 332 if the foreign distributee is a foreign corporate shareholder (as defined in paragraph (b)(1)(v) of this section) of the liquidating corporation. See paragraph (c) of this section.

(b) ***Earnings and profits attributable to stock following a restructuring transaction*** —

(1) ***Definitions.*** The following definitions apply for purposes of this section:

(i) ***Acquired corporation*** is a corporation whose stock or assets are acquired in exchange for stock in (or stock in and other property of) either the acquiring corporation or a foreign corporation that controls, within the meaning of section 368(c), the acquiring corporation in a restructuring transaction.

(ii) ***Acquiring corporation*** is a corporation that acquires the stock or assets of an acquired corporation in a restructuring transaction.

(iii) ***Controlled foreign corporation*** is a corporation described in either section 953(c)(1)(B) or section 957.

(iv) ***Exchanging shareholder*** is a person that exchanges—

(A) In a restructuring transaction qualifying as a nonrecognition transaction within the meaning of section 7701(a)(45) and described in section 354, 356, or 361(a) or (b), stock in an acquired corporation for stock in either a foreign acquiring corporation or a foreign corporation that is in control, within the meaning of section 368(c), of an acquiring corporation (whether domestic or foreign); or

(B) In a restructuring transaction qualifying as a nonrecognition transaction within the meaning of section 7701(a)(45) and described in section 351, property (including stock) for stock in a foreign acquiring corporation.

(v) ***Foreign corporate shareholder*** is a foreign corporation that—

(A) Owns stock of another foreign corporation; and

(B) Has a section 1248 shareholder that is also a section 1248 shareholder of the other foreign corporation.

(vi) ***Non-exchanging shareholder*** is, at the time the acquiring corporation participates in a restructuring transaction, either a section 1248 shareholder or a foreign corporate shareholder of the acquiring corporation that is not an exchanging shareholder with respect to that corporation.

(vii) ***Restructuring transaction*** is a transaction qualifying as a nonrecognition transaction within the meaning of section 7701(a)(45) and described in section 351, 354, 356, or 361.

(viii) ***Section 1248 shareholder*** is any United States person that satisfies the ownership requirements of section 1248(a)(2) and § 1.1248-1(a)(2) with respect to a foreign corporation.

(2) ***Earnings and profits attributable to stock that an exchanging shareholder receives in a restructuring transaction.*** Where, in a restructuring transaction, an exchanging shareholder receives stock in a foreign corporation, the holding period of which is determined under section 1223(1), and the exchanging shareholder is either a section 1248 shareholder or a foreign corporate shareholder with

respect to that foreign corporation immediately after the restructuring transaction, the earnings and profits attributable to the stock the exchanging shareholder receives shall be determined pursuant to the rules in paragraphs (b)(2)(i), (ii), and (iii) of this section.

(i) ***Exchanging shareholder exchanges property that is not stock of a foreign acquired corporation with respect to which the exchanging shareholder is a section 1248 shareholder or a foreign corporate shareholder.*** Except as provided in paragraph (b)(2)(iv) of this section, where the exchanging shareholder exchanges in a restructuring transaction property that is not stock of a foreign acquired corporation with respect to which the exchanging shareholder is a section 1248 shareholder or a foreign corporate shareholder immediately before the transaction, the earnings and profits attributable to the stock that the exchanging shareholder receives in the restructuring transaction will be determined in accordance with § 1.1248-2 or § 1.1248-3, whichever is applicable, without regard to any portion of the section 1223(1) holding period in that stock that is before the restructuring transaction. See paragraph (b)(7), *Example 1* of this section.

(ii) ***Exchanging shareholder exchanges stock of a foreign corporation with respect to which the exchanging shareholder is either a section 1248 shareholder or a foreign corporate shareholder.*** Except as provided in paragraph (b)(2)(iii) of this section, where the exchanging shareholder exchanges in a restructuring transaction stock of a foreign acquired corporation with respect to which the exchanging shareholder is either a section 1248 shareholder or a foreign corporate shareholder immediately before such restructuring transaction, the earnings and profits attributable to the stock that the exchanging shareholder receives in the restructuring transaction shall be the sum of the earnings and profits attributable to—

(A) The stock of the foreign acquired corporation exchanged (determined in accordance with § 1.1248-2 or § 1.1248-3, whichever is applicable, and this section, if applicable) that was accumulated before the restructuring transaction; and

(B) The stock of the foreign corporation that the exchanging shareholder receives in the restructuring transaction (determined in accordance with § 1.1248-2 or § 1.1248-3, whichever is applicable, and this section, if applicable), without regard to any portion of the section 1223(1) holding period in that stock that is prior to the restructuring transaction. See paragraph (b)(7) *Example 2, Example 4,* and *Example 6* of this section.

(iii) ***Exchanging shareholder receives stock in a foreign corporation that controls a domestic acquiring corporation.*** Where the acquiring corporation is a domestic corporation and the exchanging shareholder receives in a restructuring transaction stock in a foreign corporation that controls (within the meaning of section 368(c)) the domestic acquiring corporation, the earnings and profits attributable to the stock that the exchanging shareholder receives in the restructuring transaction shall consist solely of the amount of earnings and profits attributable to such stock (determined in accordance with § 1.1248-2 or § 1.1248-3, whichever is applicable, and this section, if applicable) without regard to any portion of the section 1223(1) holding period in that stock that is prior to the restructuring transaction. See paragraph (b)(7) *Example 5* of this section.

(iv) ***Exchanging shareholder exchanges stock of a domestic acquired corporation for stock of a foreign corporation with respect to which the exchanging shareholder is a section 1248 shareholder after the exchange.*** If there is a restructuring transaction described in § 1.1248(f)-1(b)(3) to which the exception provided by § 1.1248(f)-2(c) applies with respect to a distribution by a domestic acquired corporation of stock of a foreign corporation to one or more

exchanging shareholders, the earnings and profits attributable to a portion of a share of stock as provided under § 1.1248(f)-2(c)(2) (or a whole share, if no division is required) will be determined pursuant to paragraphs (b)(2)(iv)(A) and (b)(2)(iv)(B) of this section.

(A) The earnings and profits attributable to a portion of a share of stock as provided under § 1.1248(f)-2(c)(2)(i) (or a whole share, if no division is required) will be determined in accordance with § 1.1248-2 or § 1.1248-3 (and this section, as applicable), without regard to any portion of the section 1223(1) holding period in that portion of a share (or whole share) that is before the restructuring transaction.

(B) The earnings and profits attributable to a portion of a share of stock as provided under § 1.1248(f)-2(c)(2)(ii) (or whole share, if no division is required) is the amount in paragraph (b)(2)(iv)(B)(*1*) of this section, increased by the amounts described in paragraph (b)(2)(iv)(B)(*2*) of this section.

(*1*) The amount equal to the product of the ratio of the value of the share of stock to the value of all shares of stock received by the exchanging shareholder multiplied by the amount in paragraph (b)(2)(iv)(B)(*1*)(*i*) of this section, reduced by the amount in paragraph (b)(2)(iv)(B)(*1*)(*ii*) of this section.

(*i*) The amount equal to the product of the exchanging shareholder's ownership interest percentage (within the meaning of § 1.367(a)-7(f)(7)) in the domestic acquired corporation multiplied by the earnings and profits attributable to the block of stock of the foreign corporation transferred in the section 361 exchange that relates to the portion (or whole share), determined in accordance with § 1.1248-2 or § 1.1248-3 (and this section, as applicable) immediately before the restructuring transaction (and without taking into account the application of sections 367 and 1248 to the transfer of the stock of the foreign corporation in the section 361 exchange).

(*ii*) The amount of any dividend included in the domestic acquiring corporation's gross income under section 1248(a) on the transfer of the block of stock of the foreign corporation, which relates to the portion or whole share, in the section 361 exchange by reason of gain recognized under §§ 1.367(a)-6 or 1.367(a)-7(c)(2) attributable to the exchanging shareholder.

(*2*) The earnings and profits determined in accordance with § 1.1248-2 or § 1.1248-3 (and this section, as applicable), without regard to any portion of the section 1223(1) holding period in that stock that is before the restructuring transaction. See § 1.1248(f)-2(e), *Example 2* and *Example 3*.

(3) ***Earnings and profits attributable to stock in a foreign corporation certain acquiring corporations receive in a restructuring transaction.*** Where an acquiring corporation receives, in a restructuring transaction, stock in a foreign acquired corporation, the holding period of which is determined under section 1223(2), and the acquiring corporation is either a section 1248 shareholder or a foreign corporate shareholder with respect to that foreign acquired corporation immediately after the restructuring transaction, the earnings and profits attributable to the foreign acquired corporation stock that the acquiring corporation receives shall be determined pursuant to the rules in paragraphs (b)(3)(i) and (ii) of this section.

(i) ***Stock of a foreign corporation with respect to which the exchanging shareholder is neither a section 1248 shareholder nor a foreign corporate shareholder.*** The earnings and profits attributable to the stock of the foreign acquired corporation that the acquiring corporation receives in a restructuring transaction where the exchanging shareholder is neither a section 1248 shareholder nor a foreign corporate shareholder with respect to that foreign acquired corporation immediately before the restructuring transaction shall be determined in accordance with § 1.1248-2 or § 1.1248-3, whichever is applicable, without regard to any portion of the section 1223(2) holding period in that stock that is prior to the restructuring transaction.

(ii) ***Stock of a foreign corporation with respect to which the exchanging shareholder is either a section 1248 shareholder or a foreign corporate shareholder.*** The earnings and profits attributable to the stock of a foreign acquired corporation that the acquiring corporation receives in the restructuring transaction where the exchanging shareholder is either a section 1248 shareholder or a foreign corporate shareholder with respect to that foreign corporation immediately before the restructuring transaction shall be determined in accordance with § 1.1248-2 or § 1.1248-3, whichever is applicable, with regard to the portion of the section 1223(2) holding period of the stock that the exchanging shareholder took into account for purposes of attributing earnings and profits to that stock (determined in accordance with this section). See paragraph (b)(7) *Example 3, Example 5,* and *Example 7* of this section.

(4) ***Earnings and profits attributable to stock held by a non-exchanging shareholder in a foreign acquiring corporation.***

(i) Except to the extent paragraph (b)(4)(ii) of this section applies, the earnings and profits attributable to stock of a foreign acquiring corporation held by a non-exchanging shareholder immediately prior to a restructuring transaction continue to be attributed to such stock, and the earnings and profits of the acquired corporation accumulated prior to the restructuring transaction attributable to the stock of an acquired corporation are not attributed to the non-exchanging shareholder's stock in the foreign acquiring corporation. See § 1.1248-2 or § 1.1248-3 (whichever is applicable) and, as applicable, paragraph (b)(6) of this section; see also paragraph (b)(7) *Example 2* and *Example 4* of this section.

(ii) Where a non-exchanging shareholder holds stock in a foreign corporation that is also an exchanging shareholder and a foreign acquiring corporation in the same restructuring transaction—

(A) The earnings and profits attributable to such stock shall be the sum of the earnings and profits attributable to the stock of such foreign corporation immediately before the restructuring transaction (including amounts attributed under section 1248(c)(2)) and the earnings and profits attributable to the stock of the foreign acquiring corporation accumulated after the restructuring transaction (including amounts attributed under section 1248(c)(2)); and

(B) Paragraph (b)(6) of this section applies. See paragraph (b)(7) *Example 8* of this section.

(iii) Where the acquiring corporation is a foreign corporate shareholder with respect to stock of a foreign acquired corporation, paragraph (b)(3) of this section shall not apply for purposes of determining the earnings and profits attributable to stock in the foreign acquiring corporation owned by a non-exchanging shareholder thereof (see section 1248(c)(2)). See paragraph (b)(7) *Example 6* of this section.

(5) ***Reduction in earnings and profits attributable to stock to prevent multiple inclusions with respect to the same earnings and profits.*** To the extent consistent with the principles of section 1248, adjustments to earnings and profits attributable to stock shall be made such that section 1223(1) and (2) and this section are applied in a manner that results in earnings and profits being taken into account only once. Thus, for example, when a controlled foreign corporation sells or exchanges all or part of the stock of another foreign corporation to which earnings and profits are attributable pursuant to this paragraph (b) or paragraph (c) of this section, proportionate reductions shall be made to the earnings and profits attributed to the stock of the selling foreign corporate shareholder owned by a section 1248 shareholder. See paragraph (b)(7) *Example 7* of this section.

(6) ***Special rule regarding section 381.*** Solely for purposes of determining the earnings and profits (or deficit in earnings and profits) attributable to stock pursuant to this paragraph (b), the earnings and profits of a corporation shall not include earnings and profits that are treated as received or incurred under section 381(c)(2)(A) and § 1.381(c)(2)-1(a). See paragraph (b)(7) *Example 4* of this section.

(7) ***Examples.*** The application of this paragraph (b) is illustrated by the following examples. Unless otherwise indicated, in the following examples assume that—

(i) There is no immediate gain recognition pursuant to section 367(a)(1) and the regulations under that section (either through operation of the rules or because the appropriate parties have entered into a gain recognition agreement under §§ 1.367(a)-3(b) and 1.367(a)-8);

(ii) There is no income inclusion required pursuant to section 367(b) and the regulations under that section, and all reporting requirements in those regulations are complied with;

(iii) References to earnings and profits are to earnings and profits that would be includible in income as a dividend under section 1248 and the regulations under that section if stock to which the earnings and profits are attributable were sold or exchanged by its shareholder;

(iv) Each corporation has only a single class of stock outstanding and uses the calendar year as its taxable year; and

(v) Each transaction is unrelated to all other transactions.

> *Example 1. A section 351 exchange of property other than stock in a foreign corporation with respect to which the exchanging shareholder is either a section 1248 shareholder or a foreign corporate shareholder.* (i) *Facts.* DC1, a domestic corporation, has owned all the stock of CFC, a foreign corporation, since CFC's formation on January 1, year 3. On December 31, year 5, DC2, a domestic corporation unrelated to DC1, contributes property it has held since January 1, year 1, to CFC in exchange for voting stock of CFC in a restructuring transaction that is an exchange under section 351. The property that DC2 contributes is not stock in a foreign corporation with respect to which DC2 was either a section 1248 shareholder or a foreign corporate shareholder. DC2 receives 80% of the voting stock of CFC in the restructuring transaction and its holding period in that CFC stock, determined pursuant to section 1223(1), began on January 1, year 1. CFC has $100 of accumulated earnings and profits on December 31, year 5. On December 31, year 7, when the accumulated earnings and profits of CFC are $200, DC2, a section 1248 shareholder with respect to CFC, sells its CFC stock.

(ii) *Result.* Under paragraph (b)(2)(i) of this section, the earnings and profits attributable to the CFC stock sold by DC2 are $80. This amount consists of none of the $100 of earnings and profits accumulated by CFC before the restructuring transaction, and 80% of the $100 of earnings and profits of CFC accumulated after the restructuring transaction.

Example 2. A section 351 exchange of controlled foreign corporation stock by a United States person for stock in a controlled foreign corporation in a restructuring transaction. (i) *Facts.* The facts are the same as in *Example 1* except as follows. The property that DC2 contributes is 100% of the stock in CFC2, a foreign corporation. DC2 has owned all the stock of CFC2 since CFC2's formation on January 1, year 2, and CFC2 has $200 of earnings and profits as of December 31, year 5. CFC2 does not accumulate any additional earnings and profits from December 31, year 5, to December 31, year 7. On December 31, year 7, when the accumulated earnings and profits of CFC are $200, DC2, a section 1248 shareholder with respect to CFC, sells its CFC stock. Also on that date, DC1 sells its CFC stock.
(ii) *Result.* (A) *DC2 sale.* Pursuant to paragraph (b)(2)(ii) of this section, the earnings and profits attributable to the CFC stock sold by DC2 are $280. This amount consists of all of the $200 of earnings and profits of CFC2 accumulated before the restructuring transaction (see also section 1248(c)(2)), none of the $100 of earnings and profits accumulated by CFC before the restructuring transaction, and 80% of the $100 of earnings and profits of CFC accumulated after the restructuring transaction.

(B) *DC1 sale.* Pursuant to paragraph (b)(4) of this section, the earnings and profits attributable to the CFC stock sold by DC1, a non-exchanging shareholder in the restructuring transaction, are $120. This amount consists of all of the $100 of earnings and profits of CFC accumulated before the restructuring transaction, none of the $200 of earnings and profits of CFC2 accumulated before the restructuring transaction, and 20% of the $100 of earnings and profits of CFC accumulated after the restructuring transaction.

Example 3. A section 351 exchange of controlled foreign corporation stock by a United States person for stock in a domestic corporation in a restructuring transaction. (i) *Facts.* DC1, a domestic corporation, has owned all of the stock of CFC, a foreign corporation, since CFC's formation on January 1, year 1. DC1 has also owned all the stock of DC2, a domestic corporation, since DC2's formation on January 1, year 1. On December 31, year 2, DC1 contributes the stock of CFC to DC2 in exchange for stock in DC2 in a restructuring transaction that is an exchange described in section 351. On December 31, year 2, CFC has $100 of accumulated earnings and profits. DC2 has a basis in the CFC stock determined under section 362, and is considered to have held the

CFC stock since January 1, year 1, pursuant to section 1223(2). On December 31, year 4, when the accumulated earnings and profits of CFC are still $100, DC2 sells its CFC stock.
(ii) *Result.* Under paragraph (b)(3)(ii) of this section, $100 of accumulated earnings and profits of CFC is attributable to the stock of CFC sold by DC2, even though DC2 did not hold the stock of CFC during the time CFC accumulated the earnings and profits.

Example 4. Acquisition of a controlled foreign corporation by a controlled foreign corporation in a reorganization described in section 368(a)(1)(C) (or section 368(a)(1)(B)). (i) *Facts.* DC1, a domestic corporation, has owned all the stock of CFC1, a foreign corporation, since its formation on January 1, year 1. DC2, a domestic corporation unrelated to DC1, has owned all of the stock of CFC2, a foreign corporation, since its formation on January 1, year 2. On December 31, year 3, pursuant to a restructuring transaction that is a reorganization described in section 368(a)(1)(C), CFC1 transfers all of its assets to CFC2 in exchange for 25% of the voting stock of CFC2. CFC1 distributes the CFC2 stock to DC1 and the CFC1 stock is cancelled. DC1's holding period in the CFC2 stock, determined under section 1223(1), begins on January 1, year 1. On December 31, year 3, CFC1 has $100 of accumulated earnings and profits and CFC2 has $200 of accumulated earnings and profits. CFC2 succeeds to the $100 of CFC1 accumulated earnings and profits in the reorganization under section 381. From January 1, year 4 to December 31, year 5, CFC2 incurred a deficit in earnings and profits in the amount of ($200). On December 31, year 5, both DC1 and DC2 sell their stock in CFC2.
(ii) *Result.* (A) *DC1.* Pursuant to paragraph (b)(2)(ii) of this section, $50 of earnings and profits is attributable to the CFC2 stock sold by DC1. This amount consists of $100 of CFC1's earnings and profits accumulated before the restructuring transaction, reduced by 25% of CFC2's ($200) post-restructuring transaction deficit in earnings and profits. None of the $200 of CFC2's earnings and profits accumulated by CFC2 prior to the reorganization is attributed to the CFC2 stock sold by DC1. Also, none of the earnings and profits CFC2 succeeded to under section 381 is attributed to the CFC2 stock sold by DC1, pursuant to paragraph (b)(6) of this section.

(B) *DC2.* Pursuant to paragraph (b)(4) of this section, there is $50 of accumulated earnings and profits attributable to the CFC2 stock sold by DC2. This amount consists of all of the $200 of CFC2's earnings and profits accumulated by CFC2 prior to the reorganization, reduced by 75% of CFC2's deficit in earnings and profits in the amount of ($200) incurred after the restructuring transaction. None of the $100 of CFC1 accumulated earnings and profits succeeded to under section 381 is attributable to the CFC2 stock sold by DC2, pursuant to paragraph (b)(6) of this section.

(C) *Section 368(a)(1)(B) reorganization.* If, instead of DC1 acquiring its 25% interest in CFC2 pursuant to a reorganization described in section 368(a)(1)(C), DC1 had transferred the stock of CFC1 to CFC2 in exchange for 25% of the voting stock of CFC2 in a reorganization described in section 368(a)(1)(B), the results would be the same as described in paragraphs (ii) (A) and (B) of this *Example 4*.

Example 5. Acquisition of the stock of a foreign corporation that controls a domestic acquiring corporation in a triangular reorganization described in section 368(a)(1)(C).
(i) *Facts.* DC1, a domestic corporation, has owned all the stock of CFC1, a foreign corporation, since its formation on January 1, year 1. CFC1 has owned all the stock of CFC2, a foreign corporation, since its formation on January 1, year 1. FC, a foreign corporation that is not a controlled foreign corporation, has owned all of the stock of DC2, a domestic corporation, since its formation on January 1, year 2. On December 31, year 3, pursuant to a restructuring transaction that was a triangular reorganization described in section 368(a)(1)(C), CFC1 transfers all of its assets, including the CFC2 stock, to DC2 in exchange for 60% of the voting stock of FC. CFC1 transfers the voting stock of FC to DC1 and the CFC1 stock is cancelled. Pursuant to section 1223(1), DC1 is considered to have held the stock of FC since January 1, year 1. Under section 1223(2), DC2 is considered to have held the stock of CFC2 since January 1, year 1. On December 31, year 3, CFC1 has $100 of earnings and profits, CFC2 has $300 of earnings and profits, and FC has $200 of earnings and profits. DC1 includes the $100 all earnings and profits amount attributable to its CFC1 stock in income as a deemed dividend under § 1.367(b)-3 upon the exchange of CFC1 stock for FC stock. Pursuant to the lower-tier earnings exclusion of § 1.367(b)-2(d)(3)(ii), that amount does not include the $300 of earnings and profits of CFC2. From January 1, year 4, until December 31, year 5, FC (now a controlled foreign corporation) accumulates an additional $50 of earnings and profits. From January 1, year 4 until December 31, year 5, CFC2 accumulates an additional $100 of earnings and profits. On December 31, year 5, DC1 sells its stock in FC and DC2 sells its stock in CFC2.
(ii) *Result.* (A) *DC1.* Pursuant to paragraph (b)(2)(iii) of this section, there is $30 of earnings and profits attributable to the stock of FC sold by DC1. This amount consists of 60% of the $50 of earnings and profits accumulated by FC after the restructuring transaction, and none of the earnings and profits accumulated by CFC1, CFC2, or FC before the restructuring transaction.

(B) *DC2.* Pursuant to paragraph (b)(3)(ii) of this section, there is $400 of earnings and profits attributable to the stock of CFC2 sold by DC2. This amount consists of all of the earnings and profits accumulated by CFC2 during DC2's section 1223(2) holding period.

Example 6. Acquisition of the stock of a foreign corporation that controls a foreign

acquiring corporation in a reorganization described in section 368(a)(1)(C). (i) *Facts.* DC1, a domestic corporation, has owned all the stock of CFC1, a foreign corporation, since its formation on January 1, year 1. CFC1 has owned all the stock of CFC2, a foreign corporation, since its formation on January 1, year 1. FC, a foreign corporation that is not a controlled foreign corporation, has owned all of the stock of FC2, a foreign corporation, since its formation on January 1, year 2. On December 31, year 3, pursuant to a restructuring transaction that was a triangular reorganization described in section 368(a)(1)(C), CFC1 transfers all of its assets, including the CFC2 stock, to FC2 in exchange for 60% of the voting stock of FC. CFC1 transfers the voting stock of FC to DC1 and the CFC1 stock is cancelled. Pursuant to section 1223(1), DC1 is considered to have held the stock of FC since January 1, year 1. Under section 1223(2), FC2 is considered to have held the stock of CFC2 since January 1, year 1. On December 31, year 3, CFC1 has $100 of earnings and profits, CFC2 has $300 of earnings and profits, FC has $200 of earnings and profits, and FC2 has no earnings and profits. From January 1, year 4, until December 31, year 5, FC (now a controlled foreign corporation) accumulates an additional $50 of earnings and profits. From January 1, year 4 until December 31, year 5, CFC2 accumulates an additional $100 of earnings and profits. FC2, a controlled foreign corporation after the restructuring transaction, accumulates $100 of earnings and profits from January 1, year 4, until December 31, year 5. On December 31, year 5, DC1 sells its stock in FC.
(ii) *Result.* Pursuant to paragraphs (b)(2)(ii) and (b)(4)(iii) of this section, there is $550 of earnings and profits attributable to the stock of FC sold by DC1. This amount consists of all $400 of the CFC1 and CFC2 earnings and profits accumulated before the restructuring transaction (see also section 1248(c)(2)), and 60% of the $250 of the earnings and profits accumulated by FC, FC2, and CFC2 after the restructuring transaction.

Example 7. Acquisition of controlled foreign corporation stock by a controlled foreign corporation in a reorganization described in section 368(a)(1)(B), followed by a sale of the acquired stock by the acquiring controlled foreign corporation. (i) *Facts.* DC1, a domestic corporation, has owned all of the outstanding stock of CFC1, a foreign corporation, since its formation on January 1, year 1. CFC1 has owned all of the outstanding stock of CFC3, a foreign corporation, since its formation on January 1, year 1. DC2, a domestic corporation unrelated to DC1, has owned all of the outstanding stock of CFC2, a foreign corporation, since its formation on January 1, year 2. On December 31, year 3, pursuant to a restructuring transaction that is a reorganization described in section 368(a)(1)(B), CFC1 transfers all of the stock of CFC3 to CFC2 in exchange for 40% of CFC2's stock. On December 31, year 3, CFC2 and CFC3 have, respectively, $40 and $20 of earnings and profits. On December 31, year 5, when the accumulated earnings and profits of CFC3 are $50 ($20 of earnings and profits as of December 31,

year 3, plus $30 of earnings and profits generated from January 1, year 4, through December 31, year 5), CFC2 sells the stock of CFC3 in a transaction to which section 964(e) applies.
(ii) *Result.* (A) *CFC2.* Pursuant to paragraph (b)(3)(ii) of this section, there is $50 of earnings and profits attributable to the CFC3 stock sold by CFC2. This amount consists of the accumulated earnings and profits attributable to CFC2's entire section 1223(2) holding period in the CFC3 stock.

(B) *CFC1, DC2, and DC1.* Under paragraph (b)(5) of this section, the earnings and profits attributable to the CFC2 stock held by CFC1 and DC2, and the earnings and profits attributable to the CFC1 stock held by DC1, will be reduced (regardless of whether CFC2 recognizes gain on its sale of CFC3 stock).

(*1*) *CFC1.* The earnings and profits attributable to the CFC2 stock held by CFC1 will be reduced by $32, or the amount of earnings and profits as of December 31, year 5, that would have been attributable to the CFC2 stock held by CFC1 pursuant to paragraph (b)(2)(ii) of this section. This amount consists of all of the $20 of earnings and profits accumulated by CFC3 before the restructuring transaction and 40% of the $30 of earnings and profits accumulated by CFC3 after the restructuring transaction (.40 × $30 = $12).

(*2*) *DC1.* The earnings and profits attributable to the CFC1 stock held by DC1 will also be reduced by $32, or the amount of earnings and profits that would have been attributable to the CFC1 stock held by DC1 as of December 31, year 5.

(*3*) *DC2.* The earnings and profits attributable to the CFC2 stock held by DC2 will be reduced by $18, or the amount of earnings and profits that would have been attributable to the CFC2 stock held by DC2 as of December 31, year 5, under paragraph (b)(4) of this section. This amount consists of 60% of the $30 (.60 × $30 = $18) of earnings and profits accumulated by CFC3 after the restructuring transaction.

(C) *Partial sale by CFC2.* If, instead of selling 100% of the CFC3 stock, on December 31, year 5, CFC2 sells only 50% of its CFC3 stock, paragraph (b)(5) of this section requires CFC1 to reduce the earnings and profits of CFC3 attributable to its CFC2 stock to $16. Similarly, DC1 would be required to reduce the earnings and profits of CFC3 attributable to its CFC1 stock by $16. Paragraph (b)(5) of this section also requires DC2 to reduce the CFC3 earnings and profits attributable to its CFC2 stock by $9. These reductions occur without regard to whether CFC2 recognizes gain on its sale of CFC3 stock.

Example 8. Acquisition of the assets of a lower-tier controlled foreign corporation by an upper-tier controlled foreign corporation in a restructuring transaction described in

section 368(a)(1)(C). (i) *Facts.* DC, a domestic corporation, has owned all the stock of CFC1, a controlled foreign corporation, since its formation on January 1, year 1. CFC1 is a holding company that has owned 79% of the stock of CFC2, a controlled foreign corporation, since its formation on January 1, year 1. The other 21% of CFC2 stock is owned by X, an unrelated party. On December 31, year 1, CFC2 has $200 of earnings and profits. On December 31, year 1, CFC1 has no accumulated earnings and profits. On December 31, year 1, pursuant to a restructuring transaction described in section 368(a)(1)(C), CFC2 transfers all its properties to CFC1. In exchange, CFC1 assumes the liabilities of CFC2 and transfers to CFC2 voting stock representing 21% of the stock of CFC1. CFC2 distributes the voting stock to X and liquidates. The liabilities assumed do not exceed 20% of the value of the properties of CFC2. From January 1, year 2, to December 31, year 3, CFC1 accumulates $100 of earnings and profits. On December 31, year 3, DC sells its CFC1 stock.
(ii) *Result.* Pursuant to paragraph (b)(4)(ii) of this section, there is $237 of earnings and profits attributable to DC's CFC1 stock. This amount consists of 79% of CFC2's $200 of earnings and profits accumulated before the restructuring transaction (see section 1248(c)(2)), and 79% of CFC1's $100 of earnings and profits accumulated after the restructuring transaction. Pursuant to paragraph (b)(6) of this section, none of CFC2's $200 of earnings and profits to which CFC1 succeeded under section 381 would be attributable to DC's CFC1 stock.

(c) ***Earnings and profits attributable to stock of a foreign distributee corporation that is a foreign corporate shareholder with respect to a foreign liquidating corporation*** —

(1) ***General rule.*** If a foreign corporation (liquidating corporation) makes a distribution of property in complete liquidation under section 332 to a foreign corporation (distributee), and immediately before the liquidation the distributee was a foreign corporate shareholder with respect to the liquidating foreign corporation, the amount of earnings and profits attributable to the distributee stock upon its subsequent sale or exchange will be determined under this paragraph (c)(1). The earnings and profits attributable will be the sum of the earnings and profits attributable to the stock of the distributee immediately before the liquidation (including amounts attributed under section 1248(c)(2)) and the earnings and profits attributable to the stock of the distributee accumulated after the liquidation (including amounts attributed under section 1248(c)(2)).

(2) ***Special rule regarding section 381.*** Solely for purposes of determining the earnings and profits (or deficit in earnings and profits) attributable to stock under this paragraph (c), the attributed earnings and profits of a corporation shall not include earnings and profits that are treated as received or incurred pursuant to section 381(c)(2)(A) and § 1.381(c)(2)-1(a).

(3) ***Example—***

(i) ***Facts.*** DC, a domestic corporation, has owned all of the stock of CFC1, a foreign corporation, since its formation on January 1, year 1. CFC1 is an operating company that has owned all of the stock of CFC2, a foreign corporation, since its formation on January 1, year 1. On December 31, year 2, CFC1 has $200 of accumulated earnings and profits and CFC2 has a ($200) deficit in earnings and profits. On December 31, year 2, CFC2 distributes all of its assets and liabilities to

CFC1 in a liquidation to which section 332 applies. From January 1, year 3, until December 31, year 4, CFC1 accumulates no additional earnings and profits. On December 31, year 4, DC sells its stock in CFC1.

(ii) ***Result.*** Pursuant to paragraph (c)(1) of this section, there are no earnings and profits attributable to DC's CFC1 stock. This amount consists of the sum of the earnings and profits attributable to the CFC1 stock immediately before the liquidation (100% of the $200 accumulated earnings and profits of CFC1 and 100% of CFC2's ($200) deficit in earnings and profits) and the amount of earnings and profits accumulated after the section 332 liquidation (see also section 1248(c)(2)).

(d) ***Effective/applicability dates*** —

(1) ***General rule.*** Except as provided in paragraph (d)(2) of this section, this section applies to income inclusions that occur on or after July 30, 2007.

(2) ***Exception.*** Paragraph (b)(2)(iv) of this section applies to restructuring transactions occurring on or after April 18, 2013.

[T.D. 9345, 72 FR 41446, July 30, 2007, as amended by T.D. 9614, 78 FR 17042, Mar. 19, 2013; T.D. 9803, 81 FR 91030, Dec. 16, 2016]

§ 1.1248(f)-1 Certain nonrecognition distributions.

(a) ***Scope and purpose.*** This section and §§ 1.1248(f)-2 and 1.1248(f)-3 provide rules under section 1248(f) that apply when a domestic corporation (domestic distributing corporation) distributes stock of a foreign corporation (foreign distributed corporation) in a distribution to which section 337, 355(c)(1), or 361(c)(1) applies. Paragraph (b) of this section provides the general rule that requires the domestic distributing corporation, depending on the type of distribution, to include in gross income either the section 1248 amount or the total section 1248(f) amount. Paragraph (c) of this section provides definitions that apply for purposes of this section and §§ 1.1248(f)-2 and 1.1248(f)-3. Section 1.1248(f)-2 provides exceptions to the general rule contained in paragraph (b) of this section that apply, depending on the type of distribution. Section 1.1248(f)-3 provides reasonable cause relief procedures for failures to timely comply with certain filing requirements and effective/applicability dates.

(b) ***General rule*** —

(1) ***Section 337 distribution.*** This paragraph (b)(1) applies if a domestic distributing corporation that is a section 1248 shareholder of a foreign distributed corporation distributes stock of the foreign distributed corporation in a distribution to which section 337 applies (section 337 distribution). Except as provided in § 1.1248(f)-2(a), the domestic distributing corporation must, notwithstanding any other provision of subtitle A of the Internal Revenue Code (Code), include in gross income as a dividend the section 1248 amount with respect to the stock of the foreign distributed corporation. This paragraph (b)(1) applies only to the extent the domestic distributing corporation does not recognize gain with respect to the stock of the foreign distributed corporation as a result of the section 337 distribution under another provision of subtitle A of the Code.

(2) ***Existing stock distribution under section 355 or 361.*** This paragraph (b)(2) applies to the extent a domestic distributing corporation distributes stock of the foreign distributed corporation that is not received in a section 361 exchange that is part of the plan of distribution, provided the distribution is described in section 355(c)(1) or section 361(c)(1) (existing stock distribution). Except as provided

in § 1.1248(f)-2(b), the domestic distributing corporation must, notwithstanding any other provision of subtitle A of the Code, include in gross income as a dividend the section 1248 amount with respect to the stock of the foreign distributed corporation. This paragraph (b)(2) only applies to the extent the domestic distributing corporation does not recognize gain with respect to the stock of the foreign distributed corporation as a result of the existing stock distribution under another provision of subtitle A of the Code.

(3) ***New stock distribution under section 361.*** This paragraph (b)(3) applies to the extent a domestic distributing corporation distributes stock of the foreign distributed corporation that is received in a section 361 exchange that is part of the plan of distribution (and, to the extent applicable, also distributes any cash or other property), provided the distribution is described in section 361(c)(1) (new stock distribution). Except as provided in § 1.1248(f)-2(c), the domestic distributing corporation must, notwithstanding any other provision of subtitle A of the Code, include in gross income as a dividend the total section 1248(f) amount with respect to the stock of each foreign corporation transferred in the section 361 exchange. This paragraph (b)(3) applies without regard to the amount of gain realized by the domestic distributing corporation in the new stock distribution.

(c) ***Definitions.*** Except as otherwise provided, the following definitions apply for purposes of this section and §§ 1.1248(f)-2 and 1.1248(f)-3:

(1) ***80-percent distributee*** is a corporation described in section 337(c).

(2) ***Block of stock*** has the meaning provided in § 1.1248-2(b).

(3) ***Distributee*** is a shareholder of the domestic distributing corporation that receives one or more shares of stock of a foreign distributed corporation in an existing stock distribution (as defined in paragraph (b)(2) of this section) or a new stock distribution (as defined in paragraph (b)(3) of this section).

(4) ***Hypothetical section 1248 amount*** is, with respect to each distributee or non-stock distributee, the amount in paragraph (c)(4)(i) of this section, reduced by the amount in paragraph (c)(4)(ii) of this section computed with respect to the stock of each foreign corporation transferred in the section 361 exchange by the domestic distributing corporation for which there is not an income inclusion under § 1.367(b)-4(b)(1)(i).

(i) The amount that the domestic distributing corporation would have included in income as a deemed dividend under § 1.367(b)-4(b)(1)(i) if the requirements of § 1.367(b)-4(b)(1)(ii)(A) (involving the receipt of foreign stock in an exchange to which § 1.367(a)-7(c) applies) had not been satisfied and that would have been attributable to such distributee or non-stock distributee under § 1.367(a)-7(e)(4) (providing rules to attribute deemed income inclusions under § 1.367(b)-4 to persons described in § 1.367(a)-3(e)(3)(iii)(A).

(ii) The amount of gain recognized by the domestic distributing corporation under § 1.367(a)-7(c)(2) attributable to such distributee or non-stock distributee and allocable to the stock of such foreign corporation under § 1.367(a)-7(e)(1), but only to the extent such gain is treated as a dividend under section 1248(a).

(5) ***Non-stock distributee*** is a shareholder of the domestic distributing corporation that receives cash or other property but no shares of stock of the foreign distributed corporation in a new stock distribution (as defined in paragraph (b)(3) of this section).

(6) ***Postdistribution amount*** is the section 1248 amount with respect to the stock (or a portion of a share of stock) of the foreign distributed corporation received by a distributee, computed immediately after the distribution, but without taking into account any adjustments to the basis of the stock under § 1.1248(f)-2(b)(3) (in the case of an existing stock distribution) or adjustments to the basis of stock or income inclusions under § 1.1248(f)-2(c)(3) (in the case of a new stock distribution). The postdistribution amount in the stock of a foreign distributed corporation received in an existing stock distribution is determined based on the distributee's holding period in the stock as adjusted under § 1.1248(f)-2(b)(2). The postdistribution amount in the stock (or a portion of a share of stock, as applicable) of a foreign distributed corporation received in a new stock distribution is determined after applying the rules in §§ 1.1248-8(b)(2)(iv) and 1.1248(f)-2(c)(2).

(7) ***Section 358 basis*** is the basis in stock as determined under section 358.

(8) ***Section 361 exchange*** is an exchange described in section 361(a) or (b).

(9) ***Section 1248 amount*** is the net positive earnings and profits (if any) attributable to the stock of the foreign distributed corporation, determined in accordance with § 1.1248-2 or § 1.1248-3 (taking into account § 1.1248-8, if applicable), and that would be included in gross income as a dividend under section 1248(a) if the stock were sold by the domestic distributing corporation in a transaction in which all realized gain is recognized.

(10) ***Section 1248(f) amount*** is the amount in paragraph (c)(10)(i) of this section, reduced by the amount in paragraph (c)(10)(ii) of this section computed with respect to the stock of each foreign corporation transferred in the section 361 exchange by the domestic distributing corporation for which the domestic distributing corporation does not have an income inclusion under § 1.367(b)-4(b)(1)(i).

(i) The amount that the domestic distributing corporation would have included in income as a dividend under § 1.367(b)-4(b)(1)(i) if the requirements of § 1.367(b)-4(b)(1)(ii)(A) (involving the receipt of foreign stock in an exchange to which § 1.367(a)-7(c) applies) had not been satisfied.

(ii) The amount of gain recognized by the domestic distributing corporation under § 1.367(a)-7(c)(2) and allocable to the stock of such foreign corporation under § 1.367(a)-7(e)(1), but only to the extent such gain is treated as a dividend under section 1248(a).

(11) ***Section 1248(f) block amount*** is the portion of the section 1248(f) amount, as defined in paragraph (c)(10) of this section, that relates to a block of stock of the foreign corporation if more than a single block of stock of the foreign corporation is transferred in the section 361 exchange.

(12) ***Section 1248 shareholder*** is a domestic corporation that satisfies the ownership requirements of section 1248(a)(2) with respect to a foreign corporation, except that a domestic corporation, other than a domestic distributing corporation, that is a regulated investment company (as defined in section 851(a)), a real estate investment trust (as defined in section 856(a)), or an S corporation (as defined in section 1361(a)) cannot be a section 1248 shareholder.

(13) ***Timely filed return*** is a U.S. income tax return filed on or before the due date set forth in section 6072(b), including any extensions of time to file the return granted under section 6081.

(14) ***Total section 1248(f) amount*** is the sum of each section 1248(f) amount (as defined in paragraph (c)(10) of this section).

[T.D. 9614, 78 FR 17043, Mar. 19, 2013, as amended by T.D. 9760, 81 FR 15169, Mar. 22, 2016]

§ 1.1248(f)-2 Exceptions for certain distributions and attribution rules.

(a) ***Section 337 stock distribution*** —

(1) ***General exception.*** In the case of a section 337 distribution (as defined in § 1.1248-1(b)(1)), § 1.1248(f)-1(b)(1) shall not apply to the distribution of stock of the foreign distributed corporation to the 80-percent distributee if the conditions of paragraphs (a)(1)(i), (a)(1)(ii) and (a)(1)(iii) of this section are satisfied.

(i) ***80-percent distributee is a section 1248 shareholder.*** Immediately after the section 337 distribution, the 80-percent distributee is a section 1248 shareholder with respect to the foreign distributed corporation.

(ii) ***Holding period.*** The 80-percent distributee is treated as holding the stock of the foreign distributed corporation received in the section 337 distribution for the period during which the stock was held by the domestic distributing corporation.

(iii) ***Basis.*** The 80-percent distributee's basis in the stock of the foreign distributed corporation received in the section 337 distribution does not exceed the domestic distributing corporation's basis in such stock at the time of the section 337 distribution.

(2) ***Elective exception.*** If the conditions of paragraph (a)(1)(ii) or (a)(1)(iii) of this section are not otherwise satisfied, the domestic distributing corporation and the 80-percent distributee may elect to make adjustments to the 80-percent distributee's holding period or basis in the stock of the foreign distributed corporation, as appropriate, such that the conditions described in paragraphs (a)(1)(ii) and (iii) of this section are satisfied. The conditions and procedures for making the election are described in paragraph (a)(3) of this section. See paragraphs (a)(4) and (5) of this section for adjustments that are required as a result of making the election.

(3) ***Election and reporting*** —

(i) ***Statement required by domestic distributing corporation and 80-percent distributee*** —

(A) ***In general.*** The domestic distributing corporation and the 80-percent distributee make the election described in paragraph (a)(2) of this section by each including a statement, described in paragraph (a)(3)(i)(B) of this section, with a timely filed return for the taxable year during which the section 337 distribution occurs, and by entering into a written agreement described in paragraph (a)(3)(ii) of this section. If the domestic distributing corporation or the 80-percent distributee are members of a consolidated group at the time of the section 337 distribution but not the common parent, the common parent of the consolidated group makes the election on behalf of the domestic distributing corporation or the 80-percent distributee. The election described in paragraph (a)(2) of this section and made pursuant to this paragraph (a)(3) is irrevocable.

(B) ***Form and content.*** The statement of election must be entitled, “STATEMENT TO ELECT TO APPLY EXCEPTION UNDER § 1.1248(f)-2(a)(2),” state that the domestic distributing corporation and the 80-percent distributee have entered into a written agreement described in paragraph (a)(3)(ii) of this section, set forth the date of the agreement and the names of the parties to the agreement, and the adjustments to the 80-percent

distributee's holding period and/or basis determined under section 334 in the stock of the foreign distributed corporation received in the section 337 distribution required under paragraphs (a)(4) and (a)(5) of this section.

(ii) ***Written agreement.*** The domestic distributing corporation and the 80-percent distributee must enter into a written agreement described in this paragraph (a)(3)(ii) on or before the due date (including extensions) of the domestic distributing corporation's U.S. income tax return for the taxable year during which the section 337 distribution occurs. Both the domestic distributing corporation and the 80-percent distributee must retain the original or a copy of the agreement as part of its records in the manner specified by § 1.6001-1(e). Both the domestic distributing corporation and the 80-percent distributee must provide a copy of the agreement to the Internal Revenue Service within 30 days of the receipt of a request for the agreement in connection with an examination of the taxable year during which the section 337 distribution occurs. The written agreement must—

(A) State the document is an agreement under paragraph (a)(3)(ii) of this section;

(B) Provide the name and taxpayer identification number (if any) of the domestic distributing corporation, the 80-percent distribute, and the foreign distributed corporation;

(C) With respect to the 80-percent distributee, state the holding period in the stock of the foreign distributed corporation received in the section 337 distribution as adjusted under paragraph (a)(4) of this section; and

(D) With respect to the 80-percent distributee, identify the basis as determined under section 334 of the stock of the foreign distributed corporation received in the section 337 distribution and the adjustment (if any) to such basis under paragraph (a)(5) of this section.

(4) ***Holding period adjustment.*** For purposes of section 1248, immediately after the section 337 distribution, the 80-percent distributee's holding period in the stock of the foreign distributed corporation received in the section 337 distribution shall equal the domestic distributing corporation's holding period in such stock at the time of the section 337 distribution.

(5) ***Basis adjustments.*** If the domestic distributing corporation's section 1248 amount with respect to the stock of the foreign distributed corporation received by the 80-percent distributee in the section 337 distribution exceeds the 80-percent distributee's postdistribution amount with respect to such stock (excess amount), the 80-percent distributee's basis as determined under section 334 in such stock shall be reduced by the excess amount.

(b) ***Existing stock distribution under sections 355 or 361.*** In the case of an existing stock distribution (as defined in § 1.1248(f)-1(b)(2)), § 1.1248(f)-1(b)(2) shall not apply to the distribution of stock of the foreign distributed corporation to a distributee that is a section 1248 shareholder with respect to the foreign distributed corporation immediately after the distribution if the domestic distributing corporation and all distributees that are section 1248 shareholders elect to apply the provisions of this paragraph (b) in accordance with paragraph (b)(1) of this section. See paragraphs (b)(2) and (3) of this section for adjustments that may be required if an election is made to apply the provisions of this paragraph (b).

(1) ***Election and reporting*** —

(i) ***Statement required by domestic distributing corporation and section 1248 shareholders*** —

(A) ***In general.*** The domestic distributing corporation and all distributees that are section 1248 shareholders elect to apply the provisions of paragraph (b) of this section by each including a statement, described in paragraph (b)(1)(i)(B) of this section, with a timely filed return for the taxable year during which the existing stock distribution occurs and by entering into a written agreement described in paragraph (b)(1)(ii) of this section. If the domestic distributing corporation or a section 1248 shareholder is a member of a consolidated group but not the common parent, the common parent of the consolidated group makes the election on behalf of the domestic distributing corporation or section 1248 shareholder. The election made under this paragraph (b)(1) is irrevocable.

(B) ***Form and content.*** The statement of election must be entitled, "ELECTION TO APPLY EXCEPTION UNDER § 1.1248(f)-2(b)," state that the domestic distributing corporation and all distributees that are section 1248 shareholders have entered into a written agreement described in paragraph (b)(1)(ii) of this section, the date of the agreement and the names of the parties to the agreement, and set forth any required adjustment to each section 1248 shareholder's holding period or section 358 basis (if any) in the stock of the foreign distributed corporation received in the existing stock distribution under paragraph (b)(2) or (b)(3) of this section, respectively.

(ii) ***Written agreement.*** The domestic distributing corporation and the section 1248 shareholders must enter into a written agreement described in this paragraph (b)(1)(ii) on or before the due date (including extensions) of the domestic distributing corporation's U.S. income tax return for the taxable year during which the existing stock distribution occurs. Each party to the agreement must retain the original or a copy of the agreement as part of its records in the manner specified by § 1.6001-1(e). Each party to the agreement must provide a copy of the agreement to the Internal Revenue Service within 30 days of the receipt of a request for the agreement in connection with an examination of the taxable year during which the existing stock distribution occurs. The written agreement must—

(A) State the document is an agreement under paragraph (b)(1)(ii) of this section;

(B) Provide the name and taxpayer identification number (if any) of the domestic distributing corporation, the foreign distributed corporation, and each section 1248 shareholder;

(C) With respect to each section 1248 shareholder, state the holding period in the stock of the foreign distributed corporation received in the existing stock distribution as adjusted under paragraph (b)(2) of this section; and

(D) With respect to each section 1248 shareholder, identify the basis under section 358 of the stock of the foreign distributed corporation received in the existing stock distribution and the adjustment (if any) to the basis under paragraph (b)(3) of this section.

(2) ***Holding period adjustments.*** For purposes of section 1248, immediately after the existing stock distribution, each section 1248 shareholder's holding period in each share of stock of the foreign distributed corporation received in the existing stock distribution will be equal to the domestic distributing corporation's holding period in the share of stock at the time of the existing stock distribution.

(3) ***Basis adjustments.*** If the domestic distributing corporation's section 1248 amount with respect to a share of stock of the foreign distributed corporation received by a section 1248 shareholder in the existing stock distribution exceeds the section 1248 shareholder's postdistribution amount with

respect to the share of stock (excess amount), the section 1248 shareholder's section 358 basis in the share of stock is reduced by the excess amount. For an illustration of the rule in this paragraph (b)(3), see paragraph (e) of this section, *Example 1* and *Example 3*.

(c) ***New stock distribution under section 361.*** In the case of a new stock distribution (as defined in § 1.1248(f)-1(b)(3)), the amount that the domestic distributing corporation is required to include in gross income as a dividend under § 1.1248(f)-1(b)(3) (total section 1248(f) amount) is reduced by the sum of the portions of any section 1248(f) amount attributable under paragraph (d) of this section to stock of the foreign distributed corporation distributed to distributees that are section 1248 shareholders, but only if the domestic distributing corporation and all the distributees that are section 1248 shareholders elect to apply the provisions of this paragraph (c) in accordance with paragraph (c)(1) of this section. See paragraphs (c)(2), (c)(3), and (c)(4) of this section for adjustments or income inclusions that are required if an election is made to apply the provisions of this paragraph (c). The adjustments or income inclusions provided in paragraphs (c)(2), (c)(3), and (c)(4) of this section apply after any adjustments required under section 367(a)(5) and § 1.367(a)-7(c). For illustrations of this exception, see paragraph (e) of this section, *Example 2* and *Example 3* and § 1.367(a)-3(e)(8), *Example 3*.

(1) ***Election and reporting —***

(i) ***Statement required by domestic distributing corporation and section 1248 shareholders —***

(A) ***In general.*** The domestic distributing corporation and all distributees that are section 1248 shareholders elect to apply the provisions of paragraph (c) of this section by each including a statement, in the form and containing the information listed in paragraph (c)(1)(i)(B) of this section, with a timely filed return for the taxable year during which the new stock distribution occurs and by entering into a written agreement described in paragraph (c)(1)(ii) of this section. If the domestic distributing corporation or a section 1248 shareholder is a member of a consolidated group at the time of the new stock distribution but is not the common parent, the common parent of the consolidated group makes the election on behalf of the domestic distributing corporation or section 1248 shareholder. The election made under this paragraph (c)(1) is irrevocable.

(B) ***Form and content.*** The statement of election must be entitled, "ELECTION TO APPLY EXCEPTION UNDER § 1.1248(f)-2(c)," state that the domestic distributing corporation and each distributee that is a section 1248 shareholder have entered into a written agreement described in paragraph (c)(1)(ii) of this section, the date of the agreement and the names of the parties to the agreement, and describe, with respect to each section 1248 shareholder, the extent to which the shares of stock of the foreign distributed corporation received in the new stock distribution are divided into portions under paragraph (c)(2) of this section, any adjustments to the section 358 basis of the stock under paragraph (c)(3) of this section, and the amount the domestic distributing corporation must include in gross income as a dividend under paragraph (c)(3) of this section.

(ii) ***Written agreement.*** The domestic distributing corporation and all distributees that are section 1248 shareholders must enter into a written agreement described in this paragraph (c)(1)(ii) on or before the due date (including extensions) of the domestic distributing corporation's U.S. income tax return for the taxable year during which the new stock distribution occurs. Each party to the agreement must retain the original or a copy of the agreement as part of its records in the manner specified by § 1.6001-1(e). Each party to the agreement must provide a copy of

the agreement to the Internal Revenue Service within 30 days of the receipt of a request for the agreement in connection with an examination of the taxable year during which the new stock distribution occurs. The written agreement must—

(A) State the document is an agreement under paragraph (c)(1)(ii) of this section;

(B) Provide the name and taxpayer identification number (if any) of the domestic distributing corporation, the foreign distributed corporation, and each section 1248 shareholder;

(C) With respect to each section 1248 shareholder, describe the extent to which the shares of stock of the foreign distributed corporation are divided into portions under paragraph (c)(2) of this section;

(D) With respect to each section 1248 shareholder, state the amount of earnings and profits attributable to the stock (or each block of stock, as applicable) of each foreign corporation transferred in the section 361 exchange that is attributable under § 1.1248-8(b)(2)(iv) to the stock of the foreign distributed corporation received in the new stock distribution;

(E) With respect to each section 1248 shareholder, state the amount of the section 1248(f) amount with respect to the stock (or each block of stock, as applicable) of each foreign corporation transferred in the section 361 exchange that is attributable under § 1.1248(f)-2(d) to the stock of the foreign distributed corporation received in the new stock distribution;

(F) With respect to each section 1248 shareholder, state the amount of the adjustment to the section 358 basis of the stock of the foreign distributed corporation under paragraph (c)(3) of this section; and

(G) With respect to each section 1248 shareholder, state the amount the domestic distributing corporation must include in gross income as a dividend under paragraph (c)(3) of this section.

(2) ***Portions.*** If the domestic distributing corporation transfers property, other than a single block of stock of a foreign corporation with respect to which the domestic distributing corporation is a section 1248 shareholder immediately before the section 361 exchange, to the foreign distributed corporation in the section 361 exchange that precedes the new stock distribution, then each share of stock of the foreign distributed corporation received by a distributee that is a section 1248 shareholder must be divided into portions as follows:

(i) One portion attributable to all property transferred in the section 361 exchange, other than property that is stock of a foreign corporation with respect to which the domestic distributing corporation is a section 1248 shareholder immediately before the section 361 exchange; and

(ii) One portion attributable to each block of stock of each foreign corporation transferred in the section 361 exchange with respect to which the domestic distributing corporation is a section 1248 shareholder immediately before the section 361 exchange. For the determination of the earnings and profits attributable to the stock (or block of stock, as applicable) of each foreign corporation transferred in the section 361 exchange that are attributable to a portion of a share of stock of the foreign distributed corporation, see § 1.1248-8(b)(2)(iv). For the determination

of the section 1248(f) amount with respect to the stock (or block of stock, as applicable) of each foreign corporation transferred in the section 361 exchange that is attributable to a portion of a share of stock of the foreign distributed corporation, see paragraph (d)(2) of this section.

(3) ***Basis adjustments and income inclusions.*** If the section 1248(f) amount attributable to a portion of a share of stock (or whole share, if no division is required) (as determined under paragraph (d) of this section) of the foreign distributed corporation received by a distributee that is a section 1248 shareholder in the new stock distribution exceeds the section 1248 shareholder's postdistribution amount in the portion (or whole share, if no division is required) (excess amount), then the section 1248 shareholder's section 358 basis in the portion as determined under paragraph (c)(4) of this section (or whole share, if no division is required), as adjusted under § 1.367(a)-7(c)(3), is reduced by the excess amount, but not below zero. To the extent the excess amount exceeds the section 358 basis in the portion (or whole share, if no division is required), the domestic distributing corporation must include that portion of the section 1248(f) amount attributable to the portion of the share (or whole share, if no division is required) in gross income as a dividend. For an illustration of this rule, see paragraph (e) of this section, *Example 2,* and § 1.367(a)-3(e)(8), *Example 3*.

(4) ***Divided shares of stock*** —

(i) ***Basis.*** The basis of a portion of a share of stock of the foreign distributed corporation created under paragraph (c)(2) of this section is the product of the section 1248 shareholder's section 358 basis, as adjusted under § 1.367(a)-7(c)(3), in the share of stock multiplied by the ratio of the basis determined under section 362 (taking into account any gain or deemed dividends recognized under section 367) of the property (section 362 basis) to which the portion relates, to the aggregate section 362 basis of all property received by the foreign distributed corporation in the section 361 exchange. For illustrations of this rule, see paragraph (e) of this section, *Example 2,* and § 1.367(a)-3(e)(8), *Example 3*.

(ii) ***Fair market value.*** The fair market value of a portion of a share of stock of the foreign distributed corporation created under paragraph (c)(2) of this section is the product of the fair market value of the share of stock multiplied by the ratio of the fair market value of the property to which the portion relates to the aggregate fair market value of all property received by the foreign distributed corporation in the section 361 exchange. For illustrations of this rule, see paragraph (e) of this section, *Example 2,* and § 1.367(a)-3(e)(8), *Example 3*.

(iii) ***Subsequent exchanges.*** For purposes of determining the gain realized on the sale or exchange of a share of stock of the foreign distributed corporation that has divided portions under paragraph (c)(2) of this section, the amount realized on the sale or exchange of the share will be allocated to each divided portion based on the relative fair market value of the property to which the portion relates as determined at the time of the reorganization.

(iv) ***Duration of divided shares.*** Shares of stock of the foreign distributed corporation that are divided into portions under paragraph (c)(2) of this section must be divided so long as section 1248(a) would apply to a sale or exchange of the shares.

(d) ***Attribution of all or a portion of section 1248(f) amount to certain stock of the foreign distributed corporation.*** This paragraph (d) applies if there is a new stock distribution for which an election under § 1.1248(f)-2(c)(1) is made. This paragraph (d) provides rules for attributing all or a portion, as applicable, of the section 1248(f) amount with respect to the stock of each foreign corporation transferred in the section 361 exchange by the domestic distributing corporation to shares of stock, or to portions of shares

of stock, as applicable, received in the foreign distributed corporation and distributed to one or more distributees that are section 1248 shareholders with respect to the foreign distributed corporation. Paragraph (d)(1) of this section provides rules to attribute the applicable section 1248(f) amount among shares of stock of the foreign distributed corporation received by one or more distributees that are section 1248 shareholders. If shares of stock are divided into portions under paragraph (c)(2) of this section, paragraph (d)(2) of this section provides additional rules to attribute the applicable section 1248 amount to portions of shares of stock received by one or more distributees that are section 1248 shareholders.

(1) ***Attribution of all or a portion of section 1248(f) amount among shares of stock.*** With respect to one or more shares of stock of the foreign distributed corporation distributed to a distributee that is a section 1248 shareholder, the portion of the section 1248(f) amount with respect to the stock of the foreign corporation transferred in the section 361 exchange that is equal to the distributee's hypothetical section 1248 amount is attributed among those shares of stock of the foreign distributed corporation based on the ratio of the value of a share distributed to the distributee to the value of all shares of stock distributed to the distributee (attributable share amount).

(2) ***Attribution of all or a portion of section 1248(f) amount to portions of a share of stock*** —

(i) ***Single block of stock.*** If a single block of stock of the foreign corporation is transferred in the section 361 exchange, the attributable share amount (as determined under paragraph (d)(1) of this section) is attributed to the portion of the share that relates to the single block of stock of the foreign corporation.

(ii) ***Multiple blocks of stock.*** If multiple blocks of stock of the foreign corporation are transferred in the section 361 exchange, the attributable share amount (as determined under paragraph (d)(1) of the section) is attributed among the portions of the share that relate to such multiple blocks of stock of the foreign corporation. The portion of the attributable share amount that is attributable to a portion to which a block of stock relates is that amount that bears the same ratio that the section 1248(f) block amount with respect to that block of stock bears to the section 1248(f) amount with respect to the stock of the foreign corporation.

(e) ***Examples.*** The rules of this section are illustrated by the following examples. See also § 1.367(a)-3(e)(8), *Example 3.* For purposes of the examples, unless otherwise indicated: DP and DC are domestic corporations; X is a United States citizen; FP is a foreign corporation; CFC1, CFC2, and FA are controlled foreign corporations; each corporation has a single class of stock outstanding and uses the calendar year as its taxable year; each shareholder of a corporation owns a single block of stock in the corporation; DC owns Business A, which consists solely of property whose fair market value exceeds its basis and could satisfy the requirements of the active foreign trade or business exception under section 367(a)(3) and § 1.367(a)-2; DC owns no other assets and has no liabilities; the requirements in § 1.367(a)-7(c)(5) are satisfied; no earnings and profits of a foreign corporation are described in section 1248(d); and none of the foreign corporations in the examples is a surrogate foreign corporation (within the meaning of section 7874) as a result of the transactions described in the examples because one or more of the conditions of section 7874(a)(2)(B) is not satisfied.

> *Example 1. Existing stock distribution under section 355(c)(1); gain recognition and adjustment to stock basis.* (i) *Facts.* DP, FP, and X own 80%, 10%, and 10%, respectively, of the outstanding stock of DC. DP's DC stock has a $140x basis, $160x fair market value, and a 2-year holding period. DC wholly owns CFC1. DC's CFC1 stock has a $50x basis, $100x fair market value (therefore a gain of

$50x), $25x of earnings and profits attributable to it for purposes of section 1248, and a $25x section 1248 amount (computed as the lesser of $50x gain in the CFC1 stock and $25x of section 1248 earnings and profits), and a 3-year holding period. On December 31, year 3, DC distributes all of the CFC1 stock to DP, FP, and X on a pro-rata basis in a distribution to which section 355 applies. The fair market value of the CFC1 stock received by DP, FP, and X is $80x, $10x, and $10x, respectively. After the distribution, DP's stock in DC has a fair market value of $80x and DP's section 358 basis in the CFC1 stock is $70x (a pro rata portion, or 50%, of DP's $140x basis in the DC stock immediately before the distribution). See § 1.358-2(a)(iv).
(ii) *Result.* (A) Under § 1.367(e)-1(b)(1), DC must recognize $5x gain on the distribution of CFC1 stock to FP (10% of the $50x gain in the CFC1 stock). Under § 1.367(b)-5(b)(1)(ii), DC must also recognize $5x gain on the distribution of CFC1 stock to X (10% of the $50x gain in the CFC1 stock). Of the aggregate $10x gain recognized by DC, $5x is recharacterized as a dividend under section 1248(a), computed as 20% of the $25x section 1248 amount with respect to the CFC1 stock. See § 1.1248-1 for additional consequences.

(B) DC's distribution of CFC1 stock to DP is described in section 1248(f)(1) and § 1.1248(f)-1(b)(2) because the distribution is pursuant to section 355(c)(1) (an existing stock distribution). As a result, the general rule is that DC must include in gross income as a dividend the section 1248 amount with respect to the CFC1 stock distributed to DP, or $20x (computed as 80% of the $25x section 1248 amount). However, if DP and DC make the election under paragraph (b)(1) of this section, § 1.1248(f)-1(b)(2) will not apply to DC's distribution of CFC1 stock to DP. If DP and DC make the election, then:

(*1*) Under paragraph (b)(2) of this section, for purposes of section 1248, immediately after the distribution DP will have a 3-year holding period in the CFC1 stock, the same holding period DC had in the CFC1 stock at the time of the distribution.

(*2*) Under paragraph (b)(3) of this section, DP's section 358 basis in the CFC1 stock ($70x) is reduced by $10x, the amount by which DC's section 1248 amount with respect to the CFC1 stock ($20x) distributed to DP exceeds DP's postdistribution amount with respect to the CFC1 stock ($10x). Under § 1.1248(f)-1(c)(6), DP's postdistribution amount equals the amount that DP would include in gross income as a dividend under section 1248(a) if DP sold the CFC1 stock immediately after the distribution, or $10x, which is computed as the lesser of the $10x gain in the CFC1 stock ($80x fair market value, less $70x basis) and $20x of section 1248 earnings and profits attributable to the CFC1 stock, taking into account DP's 3-year holding period in the stock as required by paragraph (b)(2) of this section. As adjusted under paragraph (b)(3) of this section, DP's basis in the CFC1 stock is $60x ($70x basis, less $10x required basis reduction).

Example 2. New stock distribution under section 361(c)(1); adjustment to stock basis. (i) *Facts.* DP wholly owns DC. DP's DC stock has a $180x basis and $200x fair market value. DC wholly owns CFC1 and CFC2. DC's CFC1 stock has a $70x basis, $100x fair market value (therefore a gain

of $30x), $40x of earnings and profits attributable to it for purposes of section 1248, and a section 1248 amount of $30x (computed as the lesser of the $30x gain in CFC1 stock and $40x section 1248 earnings and profits). DC's CFC2 stock has a $130x basis, $100x fair market value (therefore a loss of $30x), $80x of earnings and profits attributable to it for purposes of section 1248, and a section 1248 amount of $0x (computed as the lesser of the $0x gain and $80x section 1248 earnings and profits). On December 31, Year 1, in a reorganization described in section 368(a)(1)(F), DC transfers the CFC1 stock and the CFC2 stock to FA, a newly formed corporation, in exchange for 100 shares of FA stock. DC distributes the 100 shares of FA stock to DP. DC's transfer of the CFC1 stock and CFC2 stock to FA in exchange for FA stock qualifies as a section 361 exchange, and DC's distribution of the 100 shares of FA stock to DP is pursuant to section 361(c)(1). DP exchanges its DC stock for the 100 shares of FA stock pursuant to section 354. Immediately after the transaction, DP wholly owns FA. DP and DC elect to apply the provisions of § 1.367(a)-7(c) in accordance with § 1.367(a)-7(c)(5). Pursuant to § 1.367(a)-3(e)(3)(iii)(A), DP properly files a gain recognition agreement with respect to the CFC1 stock that satisfies the conditions of §§ 1.367(a)-3(e)(6) and 1.367(a)-8.

(ii) *Result.* (A) DC does not recognize gain under § 1.367(a)-3(e)(2) with respect to the transfer of the CFC1 stock to FA because the three conditions in § 1.367(a)-3(e)(3)(i), (e)(3)(ii), and (e)(3)(iii) are satisfied. First, § 1.367(a)-3(e)(3)(i) is satisfied because the requirements of § 1.367(a)-7(c) are satisfied, including that an election is made to apply § 1.367(a)-7(c). Second, the requirements under § 1.367(a)-3(e)(3)(ii) related to transfers of domestic stock are not applicable because CFC1 is a foreign corporation. Third, because DC owns all the stock of FA immediately after DC's receipt of the FA stock in the section 361 exchange but prior to, and without taking into account, DC's distribution of the FA stock to DP, for purposes of satisfying the requirements of § 1.367(a)-3(e)(3)(iii), DP properly files a gain recognition agreement with respect to the CFC1 stock that satisfies the conditions of §§ 1.367(a)-3(e)(6) and 1.367(a)-8. Furthermore, DC is not required to recognize gain under § 1.367(a)-7(c)(2)(ii), and DP is not required to reduce its $180x section 358 basis in the FA stock under § 1.367(a)-7(c)(3), because the inside gain (within the meaning of § 1.367(a)-7(f)(5)) is $0x ($200x aggregate fair market value of CFC1 stock and CFC2 stock, less $200x aggregate basis of CFC1 stock and CFC2 stock). In addition, DC is not required to include in income as a deemed dividend the $30x section 1248 amount with respect to the CFC1 stock under § 1.367(b)-4(b)(1)(i) because immediately after DC's receipt of the FA stock in the section 361 exchange but prior to, and without taking into account, DC's distribution of the FA stock to DP, CFC1 and FA are controlled foreign corporations as to which DC is a section 1248 shareholder. See § 1.367(b)-4(b)(1)(ii)(A). With respect to the transfer of the CFC2 stock to FA, DC's section 1248 amount with respect to the CFC2 stock is $0x; therefore, § 1.367(b)-4(b)(1)(i) has no application.

(B) Under § 1.1248(f)-1(b)(3), as a result of the section 361(c)(1) distribution of the FA stock to DP (a new stock distribution), the general rule is that DC must include in gross income as a dividend the total section 1248(f) amount (defined in § 1.1248(f)-1(c)(14)). The total section 1248(f) amount is $30x, the sum of the section 1248(f) amount (defined in § 1.1248(f)-1(c)(10)) with

respect to the CFC1 stock ($30x) and CFC2 stock ($0x). The section 1248(f) amount with respect to the CFC1 stock is the amount that DC would have included in income as a deemed dividend under § 1.367(b)-4(b)(1)(i) with respect to the CFC1 stock if the requirements under § 1.367(b)-4(b)(1)(ii)(A) had not been satisfied ($30x), less the amount of gain recognized by DC under § 1.367(a)-7(c)(2) that is allocable to the CFC1 stock under § 1.367(a)-7(e)(1) and treated as a dividend under section 1248(a) ($0x). Similarly, the section 1248(f) amount with respect to the CFC2 stock is the amount that DC would have included in income as a deemed dividend under § 1.367(b)-4(b)(1)(i) with respect to the CFC2 stock if the requirements under § 1.367(b)-4(b)(1)(ii)(A) had not been satisfied ($0x), less the amount of gain recognized by DC under § 1.367(a)-7(c)(2) that is allocable to the CFC2 stock under § 1.367(a)-7(e)(1) and treated as a dividend under section 1248(a) ($0x).

(C) If, however, DP and DC make the election provided in paragraph (c)(1) of this section, the amount that DC is required to include in gross income as a dividend under § 1.1248(f)-1(b)(3) (the total section 1248(f) amount of $30x) is reduced to the extent the section 1248(f) amount with respect to the CFC1 stock ($30x) and CFC2 stock ($0x) is attributable under paragraph (d) of this section to the shares of FA stock distributed to one or more distributees that are section 1248 shareholders of FA. The only distributee is DP, and DP is a section 1248 shareholder with respect to FA. If DP and DC elect to apply paragraph (c) of this section, then:

(*1*) Under paragraph (d)(1) of this section, the portion of the section 1248(f) amount with respect to the CFC1 stock that is attributed to the shares of FA stock distributed to DP is equal to DP's hypothetical section 1248 amount (as defined in § 1.1248(f)-1(c)(4)) with respect to the CFC1 stock. Because DP is the only shareholder of DC, DP's hypothetical section 1248 amount equals the section 1248(f) amount with respect to the CFC1 stock ($30x). The $30x hypothetical section 1248 amount is attributed pro rata (based on relative values) among the 100 shares of FA stock distributed to DP, and the attributable share amount (as defined in paragraph (d)(1) of this section) is $.30x. Paragraph (d)(1) of this section has no application with respect to the CFC2 stock because there is no section 1248(f) amount with respect to the CFC2 stock.

(*2*) If the shares of FA stock are divided into portions, the rules of paragraph (d)(2) of this section apply to attribute the attributable share amount ($.30x) to portions of shares of FA stock distributed to DP. Under paragraph (c)(2)(ii) of this section, the 100 shares of FA stock are divided into two portions, one portion related to the single block of CFC1 stock and one portion related to the single block of CFC2 stock. Under paragraph (d)(2)(i) of this section, the attributable share amount of $.30x is attributed to the portion of the 100 shares of FA stock that relates to the single block of CFC1 stock. Thus, all of the $30x section 1248(f) amount with respect to the CFC1 stock is attributable to the 100 shares of FA stock.

(*3*) Because the election under paragraph (c)(1) of this section is made, the total section 1248(f) amount ($30x) that DC is otherwise required to include in gross income as a dividend under § 1.1248(f)-1(b)(3) is reduced by $30x, the portion of the section 1248(f) amount with respect to the CFC1 stock that is attributable under paragraph (d) of this section to the shares of FA stock distributed to DP. Thus, the amount DC is required to include in gross income as a dividend under § 1.1248(f)-1(b)(3) is $0x ($30x less $30x).

(*4*) Under paragraph (c)(4)(i) of this section, the basis of each portion is the product of DP's section 358 basis in the share of FA stock multiplied by the ratio of the section 362 basis of the property (CFC1 stock or CFC2 stock, as applicable) to which the portion relates, to the aggregate section 362 basis of all property (CFC1 stock and CFC2 stock) received by FA in the section 361 exchange. Under paragraph (c)(4)(ii) of this section, the fair market value of each portion is the product of the fair market value of the share of FA stock multiplied by the ratio of the fair market value of the property (CFC1 stock or CFC2 stock, as applicable) to which the portion relates, to the aggregate fair market value of all property (CFC1 stock and CFC2 stock) received by FA in the section 361 exchange. The section 362 basis of the CFC1 stock and CFC2 stock is $70x and $130x, respectively, for a total section 362 basis of $200x. The CFC1 stock and CFC2 stock each has a fair market value of $100x, for a total fair market value of $200x. Therefore, the portions attributable to the CFC1 stock have an aggregate basis of $63x ($180x multiplied by $70x/$200x) and fair market value of $100x ($200x multiplied by $100x/$200x), resulting in aggregate gain in such portions of $37x (or $.37x per portion in each of the 100 shares). The portions attributable to the CFC2 stock have an aggregate basis of $117x ($180x multiplied by $130x/$200x) and fair market value of $100x ($200x multiplied by $100x/$200x), resulting in aggregate losses in such portions of $17x (or $.17x per portion in each of the 100 shares).

(*5*) Under § 1.1248-8(b)(2)(iv), the $40x earnings and profits attributable to the single block of CFC1 stock are attributed to the portions of the 100 shares of FA stock that relate to the CFC1 stock. Similarly, the $80x of earnings and profits attributable to the single block of CFC2 stock are attributed to the portions of the 100 shares of the FA stock that relate to the CFC2 stock. Thus, DP's postdistribution amount (defined in § 1.1248(f)-1(c)(6)) with respect to the portions of the shares of FA attributable to the CFC1 stock is $37x, the lesser of the aggregate gain in the portions attributable to the CFC1 stock of $37x (computed in paragraph (ii)(C)(*4*) of this *Example 2*) and the $40x earnings and profits attributable to such portions. Furthermore, DP's postdistribution amount with respect to the portions of the shares of FA attributable to the CFC2 stock is $0x, the lesser of the aggregate gain in the portions attributable to the CFC2 stock of $0x (computed in paragraph (ii)(C)(*4*) of this *Example 2* to be an aggregate loss of $17x) and the $80x earnings and profits attributable to such portions.

(*6*) Under paragraph (c)(3) of this section, DP's section 358 basis in the portions of the 100 shares of FA stock attributable to the CFC1 stock ($63x, computed in paragraph (ii)(C)(*4*) of this *Example 2*) is reduced by the amount (if any) by which the section 1248(f) amount attributable to such

portions under paragraph (d) of this section ($30x, as computed in paragraph (ii)(C)(*2*) of this *Example 2*) exceeds DP's postdistribution amount with respect to such portions ($37x, computed in paragraph (ii)(C)(*5*) of this *Example 2*). Thus, there is no basis reduction in the portions of the 100 shares of FA stock attributable to the CFC1 stock. DP's section 358 basis in the portions of the 100 shares of FA stock attributable to the CFC2 stock is not reduced because the section 1248(f) amount attributable to such portions under paragraph (d) of this section is $0x (computed in paragraph (ii)(C)(*2*) of this *Example 2*), which equals DP's postdistribution amount with respect to such portions of $0x (as computed in paragraph (ii)(C)(*5*) of this *Example 2*).

Example 3. Combined existing stock distribution and new stock distribution under sections 355(c)(1) and 361(c)(1). (i) *Facts.* DP owns all 100 outstanding shares of stock of DC. DP's DC stock has a $180x basis (each of the 100 shares having a basis of $18), $200x fair market value, and 2-year holding period. DC owns all 60 shares of the outstanding stock of CFC1; all such shares constitute a single block of stock. DC's CFC1 stock has a $50x basis, $60x fair market value, $30x of earnings and profits attributable to it for purposes of section 1248, a $10x section 1248 amount (computed as the lesser of $10x gain and $30x of section 1248 earnings and profits), and a 3-year holding period. DC also owns all 40 shares of the outstanding stock of CFC2; all such shares constitute a single block of stock. DC's CFC2 stock has a $30x basis, $40x fair market value, $20x of earnings and profits attributable to it for purposes of section 1248, and a $10x section 1248 amount (computed as the lesser of $10x gain and $20x of section 1248 earnings and profits). DC also owns Business A, which has a fair market value of $100x. On December 31, year 4, in a divisive reorganization described in section 368(a)(1)(D), DC transfers the CFC2 stock to CFC1 in exchange for 40 shares of newly issued CFC1 stock. DC's transfer of the CFC2 stock to CFC1 qualifies as a section 361 exchange. DC then distributes the 100 shares of CFC1 stock (60 shares held prior to the transaction and 40 shares received in the section 361 exchange) to DP in a transaction that qualifies under section 355. DP properly files a gain recognition agreement with respect to the CFC2 stock that satisfies the conditions of §§ 1.367(a)-3(e)(6) and 1.367(a)-8. DP and DC properly make the elections provided in § 1.367(a)-7(c)(5) and paragraphs (b) and (c) of this section.
(ii) *Result.* (A) DC does not recognize gain under § 1.367(a)-3(e)(2) with respect to the transfer of the CFC2 stock to CFC1 because the three conditions in § 1.367(a)-3(e)(3)(i), (e)(3)(ii), and (e)(3)(iii) are satisfied. First, § 1.367(a)-3(e)(3)(i) is satisfied because the requirements of § 1.367(a)-7(c) are satisfied, including that an election is made to apply § 1.367(a)-7(c). Second, the requirements under § 1.367(a)-3(e)(3)(ii) related to transfers of domestic stock are not applicable because CFC2 is a foreign corporation. Third, because DC and DP own all the stock of CFC1 for purposes of satisfying the requirements of § 1.367(a)-3(e)(3)(iii), DP properly files a gain recognition agreement with respect to the CFC2 stock that satisfies the conditions of §§ 1.367(a)-3(e)(6) and 1.367(a)-8. See paragraph (ii)(G) of this example for the computation of the amount of gain subject to the gain recognition agreement. In addition, DC is not required to include in income as a dividend the $10x section 1248 amount with respect to the CFC2 stock under §

1.367(b)-4(b)(1)(i) because immediately after DC's receipt of the CFC1 stock in the section 361 exchange but prior to, and without taking into account, DC's distribution of the CFC1 stock to DP, CFC1 and CFC2 are controlled foreign corporations as to which DC is a section 1248 shareholder. See § 1.367(b)-4(b)(1)(ii)(A).

(B) DC is not required to recognize gain under § 1.367(a)-7(c)(2)(i) because DP, a control group member (as defined in § 1.367(a)-7(f)(1)), owns 100% of DC. DC is not required to recognize gain under § 1.367(a)-7(c)(2)(ii) because the amount described in § 1.367(a)-7(c)(2)(ii)(A) ($10x) does not exceed the amount described in § 1.367(a)-7(c)(2)(ii)(B) ($40x). The $10x described in § 1.367(a)-7(c)(2)(ii)(A) equals the product of the inside gain (as defined in § 1.367(a)-7(f)) ($10x) multiplied by DP's ownership interest percentage (as defined in § 1.367(a)-7(f)) (100%), reduced by the sum of the amounts in § 1.367(a)-7(c)(2)(ii)(A)(*1*), (c)(2)(ii)(A)(*2*), and (c)(2)(ii)(A)(*3*) ($0x). Under § 1.367(a)-7(f)(5), the $10x of inside gain is the amount by which the aggregate fair market value of the section 367(a) property (CFC2 stock with a fair market value of $40x) exceeds the sum of the inside basis ($30x) of such property, and $0x (the product of the section 367(a) percentage (100%) multiplied by DC's deductible liabilities assumed by CFC1 ($0x)). Under § 1.367(a)-7(f)(4), the $30x inside basis equals the aggregate basis of the section 367(a) property transferred in the section 361 exchange ($30x), increased by any gain or deemed dividends recognized by DC with respect to the section 367(a) property under section 367 ($0x). The $40x described in § 1.367(a)-7(c)(2)(ii)(B) is the product of the section 367(a) percentage (100%) multiplied by the fair market value of the 40 shares of CFC1 stock received by DC in the section 361 exchange and distributed to DP ($40x).

(C) Under section 358, DP must allocate the $180x basis in its 100 shares of DC stock between the 100 shares of DC stock (fair market value of $100x) and the 100 shares of CFC1 stock (fair market value of $100x) held after the distribution based on the relative fair market values of the shares. Accordingly, after the allocation of the basis under section 358, but prior to the application of § 1.367(a)-7(c)(3), the basis of DP's DC stock is $90x and the basis of DP's CFC1 stock is $90x. With respect to the $90x basis in the 100 shares of CFC1 stock, $36x is attributable to the 40 shares of CFC1 stock received by DC in the section 361 exchange ($90x multiplied by 40/100), and $54x is attributable to the 60 shares of CFC1 stock owned by DC prior to the section 361 exchange ($90x multiplied by 60/100). See § 1.358-2(a)(2)(iv).

(D) Pursuant to § 1.367(a)-7(c)(3)(ii), any adjustment to DP's basis in the CFC1 stock required under § 1.367(a)-7(c)(3)(i) can only be made with respect to the 40 shares of CFC1 stock received by DC in the section 361 exchange. Under § 1.367(a)-7(c)(3)(i)(A), DP must reduce its section 358 basis ($36x) in the 40 shares of CFC1 stock by $6x, the amount by which DP's attributable inside gain ($10x), reduced by the sum of the amounts in § 1.367(a)-7(c)(2)(ii)(A)(*1*), (c)(2)(ii)(A)(*2*), and (c)(2)(ii)(A)(*3*) ($0x) (as computed in paragraph (ii)(B) of this *Example 3*) exceeds DP's outside gain (as defined in § 1.367(a)-7(f)) ($4x). DP's $4x outside gain equals the product of the section 367(a) percentage (as defined in § 1.367(a)-7(f)) (100%) multiplied by the amount by which the fair

market value ($40x) of the 40 shares of CFC1 stock is greater than DP's section 358 basis in the stock ($36x). After the $6x reduction to stock basis required under § 1.367(a)-7(c)(3), but before the application of § 1.1248(f)-2(c)(3), DP's basis in the 40 shares of CFC1 stock is $30x.

(E) DC's distribution of the 40 shares of newly issued CFC1 stock is subject to § 1.1248(f)-1(b)(3) (a new stock distribution). Except as provided in § 1.1248(f)-2(c), under § 1.1248(f)-1(b)(3) DC must include in gross income as a dividend the total section 1248(f) amount (as defined in § 1.1248(f)-1(c)(14)). The total section 1248(f) amount is $10x, the sum of the section 1248(f) amount (as defined in § 1.1248(f)-1(c)(10)) with respect to the stock of each foreign corporation transferred in the section 361 exchange. Only the CFC2 stock is transferred in the section 361 exchange; therefore, the total section 1248(f) amount is equal to the section 1248(f) amount with respect to the CFC2 stock ($10x). The $10x section 1248(f) amount with respect to the CFC2 stock is the amount that DC would have included in income as a deemed dividend under § 1.367(b)-4(b)(1)(i) with respect to the CFC2 stock if the requirements of § 1.367(b)-4(b)(1)(ii)(A) had not been satisfied ($10x), reduced by the amount of gain recognized by DC under § 1.367(a)-7(c)(2) allocable to the CFC2 stock and treated as a dividend under section 1248(a) (in this case, $0x, as described in paragraph (ii)(B) of this *Example 3*).

(F) However, because DC and DP (a section 1248 shareholder of CFC1 immediately after the distribution) elect to apply the provisions of § 1.1248(f)-2(c) (as provided in § 1.1248(f)-2(c)(1)), the amount that DC is required to include in income as a dividend under § 1.1248(f)-1(b)(3) ($10x total section 1248(f) amount as computed in paragraph (ii)(E) of this *Example 3*) is reduced by the sum of the portions of the section 1248(f) amount with respect to the CFC2 stock that is attributable (under the rules of § 1.1248(f)-2(d)) to the 40 shares of CFC1 stock distributed to DP. As stated in the facts, the election is made to apply § 1.1248(f)-2(c).

(*1*) Under paragraph (d)(1) of this section, the portion of the section 1248(f) amount with respect to the CFC2 stock that is attributed to the 40 shares of CFC1 stock distributed to DP is equal to DP's hypothetical section 1248 amount (as defined in § 1.1248(f)-1(c)(4)) with respect to the CFC2 stock. Because DP is the only shareholder of DC, DP's hypothetical section 1248 amount equals the section 1248(f) amount with respect to the CFC2 stock ($10x). The $10x hypothetical section 1248 amount is attributed pro rata (based on relative values) among the 40 shares of CFC1 stock distributed to DP, and the attributable share amount (as defined in paragraph (d)(1) of this section) is $.25x.

(*2*) The 40 shares of CFC1 stock are not divided into portions under paragraph (c)(2) of this section because the only property transferred by DC to CFC1 is a single block of stock of CFC2. If the 40 shares of CFC1 stock were required to be divided into portions, however, the rules of paragraph (d)(2) of this section apply to attribute the attributable share amount ($.25x) to portions of shares of CFC1 stock distributed to DP.

(*3*) Because the election under paragraph (c)(1) of this section is made, the total section 1248(f) amount ($10x) that DC is otherwise required to include in gross income as a dividend under § 1.1248(f)-1(b)(3) is reduced by $10x, the portion of the section 1248(f) amount with respect to the CFC2 stock that is attributable under paragraph (d) of this section to the 40 shares of CFC1 stock distributed to DP. Thus, the amount DC is required to include in gross income as a dividend under § 1.1248(f)-1(b)(3) is $0x ($30x less $30x).

(*4*) Under § 1.1248-8(b)(2)(iv), the $20x earnings and profits attributable to the single block of CFC2 stock are attributed pro rata to the 40 shares of CFC1 stock. Thus, DP's postdistribution amount (defined in § 1.1248(f)-1(c)(6)) with respect to the 40 shares of CFC1 stock attributable to the CFC2 stock is $10x, the lesser of the aggregate gain in the 40 shares of CFC1 stock of $10x ($40x fair market value, less $30x section 358 basis, as described in paragraph (ii)(D) of this *Example 3*) and the $20x earnings and profits attributable to such shares.

(*5*) Under paragraph (c)(3) of this section, DP's section 358 basis in the 40 shares of CFC1 stock ($30x) is reduced by the amount (if any) by which the section 1248(f) amount attributable to such shares under paragraph (d) of this section ($10x, as computed in paragraph (ii)(E) of this *Example 3*) exceeds DP's postdistribution amount with respect to such shares ($10x). Thus, there is no basis reduction in the 40 shares of CFC1 stock.

(G) Pursuant § 1.367(a)-3(e)(6), the amount of gain subject to the gain recognition agreement entered into by DP with respect to the CFC2 stock is $10x, which is the product of DP's ownership interest percentage (100%) multiplied by the gain realized by DC in the 361 exchange prior to taking into account the application of any other provision of section 367 ($10x), reduced by the sum of the amounts described in § 1.367(a)-3(e)(6)(i)(A), (e)(6)(i)(B), (e)(6)(i)(C), and (e)(6)(i)(D) ($0x).

(H) DC's distribution of the 60 shares of CFC1 stock it held before the section 361 exchange is subject to § 1.1248(f)-1(b)(2) (an existing stock distribution); however, because DC and DP make the election provided in paragraph (b)(1) of this section, § 1.1248(f)-1(b)(2) does not apply to the distribution.

(*1*) Under paragraph (b)(2) of this section, for purposes of section 1248, DP will have a 3-year holding period in the 60 shares of CFC1 stock received, the same holding period that DC had in the 60 shares of CFC1 stock.

(*2*) Under paragraph (b)(3) of this section, DP's section 358 basis in the 60 shares of CFC1 stock received ($54x, as computed in paragraph (ii)(C) of this *Example 3*) is reduced by $4x, the amount by which DC's section 1248 amount ($10x) with respect to the 60 shares of CFC1 stock exceeds DP's postdistribution amount ($6x) with respect to the 60 shares of CFC1 stock. Under § 1.1248(f)-1(c)(6), DP's postdistribution amount with respect to the 60 shares of CFC1 stock equals

the amount that DP would include in gross income as a dividend under section 1248(a) if DP sold the 60 shares of CFC1 stock immediately after the distribution, or $6x, which is computed as the lesser of the $6x gain in the such shares of CFC1 stock ($60x fair market value, less $54x basis) and $30x of section 1248 earnings and profits attributable to the CFC1 stock, taking into account DP's 3-year holding period in the stock as required by paragraph (b)(2) of this section. As adjusted under paragraph (b)(3) of this section, DP's basis in the 60 shares of CFC1 stock is $50x ($54x basis, less $4x basis reduction).

(f) ***Applicable cross-references.*** For rules relating to the attribution of earnings and profits to the stock of a foreign corporation following certain nonrecognition transactions, see § 1.1248-8. For rules relating to a transfer of property by a domestic corporation to a foreign corporation in a section 361 exchange that precedes a new stock distribution, see § 1.367(a)-7. If the property transferred includes stock of a corporation, see also §§ 1.367(a)-3(e) and 1.367(b)-4. For other rules that may apply if a domestic corporation distributes the stock of a foreign corporation in a new stock distribution or an existing stock distribution satisfying the requirements of section 355, see §§ 1.367(b)-5(b)(1) and 1.367(e)-1.

[T.D. 9614, 78 FR 17044, Mar. 19, 2013, as amended by T.D. 9760, 81 FR 15169, Mar. 22, 2016; T.D. 9803, 81 FR 91031, Dec. 16, 2016]

§ 1.1248(f)-3 Reasonable cause and effective/applicability dates.

(a) ***Reasonable cause for failure to comply*** —

(1) ***Request for relief.*** If an 80-percent distributee, a distributee that is a section 1248 shareholder, or the domestic distributing corporation (reporting person) fails to timely comply with any requirement under § 1.1248(f)-2, the failure shall be deemed not to have occurred if the reporting person is able to demonstrate that the failure was due to reasonable cause and not willful neglect using the procedure set forth in paragraph (a)(2) of this section. Whether the failure to timely comply was due to reasonable cause and not willful neglect will be determined by the Director of Field Operations, Cross Border Activities Practice Area of Large Business & International (Director) based on all the facts and circumstances.

(2) ***Procedures for establishing that a failure to timely comply was due to reasonable cause and not willful neglect*** —

(i) ***Time of submission.*** A reporting person's statement that the failure to timely comply was due to reasonable cause and not willful neglect will be considered only if, promptly after the reporting person becomes aware of the failure, an amended return is filed for the taxable year to which the failure relates that includes the information that should have been included with the original return for such taxable year or that otherwise complies with the rules of this section, and that includes a written statement explaining the reasons for the failure to timely comply.

(ii) ***Notice requirement.*** In addition to the requirements of paragraph (a)(2)(i) of this section, the reporting person must comply with the notice requirements of this paragraph (a)(2)(ii). If any taxable year of the reporting person is under examination when the amended return is filed, a copy of the amended return and any information required to be included with such return must be delivered to the Internal Revenue Service personnel conducting the examination. If no

taxable year of the reporting person is under examination when the amended return is filed, a copy of the amended return and any information required to be included with such return must be delivered to the Director.

(b) ***Effective/applicability date*** —

(1) ***General rule.*** Except as provided in paragraph (b)(2)(ii) of this section, §§ 1.1248(f)-1 and 1.1248(f)-2 apply to distributions occurring on or after April 18, 2013. The provisions of § 1.1248(f)-3(a) apply to distributions occurring on or after April 17, 2013.

(2) ***Transactions described in Notice 87-64*** —

(i) ***Gain not otherwise recognized.*** For distributions occurring on or after September 21, 1987, and before April 18, 2013, section 1248(f)(1) shall not apply to the extent the domestic distributing corporation recognizes gain with respect to the stock of the foreign distributed corporation as a result of the distribution under another provision of subtitle A of the Internal Revenue Code.

(ii) ***Section 355 distributions.*** Taxpayers may apply the provisions of § 1.1248(f)-2(b) to distributions occurring on or after September 21, 1987.

[T.D. 9614, 78 FR 17050, Mar. 19, 2013, as amended by T.D. 9760, 81 FR 15169, Mar. 22, 2016]

§ 1.1249-1 Gain from certain sales or exchanges of patents, etc., to foreign corporations.

(a) ***General rule.*** Section 1249 provides that if gain is recognized from the sale or exchange after December 31, 1962, of a patent, an invention, model, or design (whether or not patented), a copyright, a secret formula or process, or any other similar property right (not including property such as goodwill, a trademark, or a trade brand) to any foreign corporation by any United States person (as defined in section 7701(a)(30)) which controls such foreign corporation, and if such gain would (but for the provisions of section 1249) be gain from the sale or exchange of a capital asset or of property described in section 1231, then such gain shall be considered as gain from the sale or exchange of property which is neither a capital asset nor property described in section 1231. Section 1249 applies only to gain recognized in taxable years beginning after December 31, 1962.

(b) ***Control.*** For purposes of paragraph (a) of this section, the term *control* means, with respect to any foreign corporation, the ownership, directly or indirectly, of stock possessing more than 50 percent of the total combined voting power of all classes of stock entitled to vote. For purposes of the preceding sentence, the rules for determining ownership of stock provided by section 958 (a) and (b), and the principles for determining percentage of total combined voting power owned by United States shareholders provided by paragraphs (b) and

(c) of § 1.957-1, shall apply.

[T.D. 6765, 29 FR 14879, Nov. 3, 1964]

§ 1.1250-1 Gain from dispositions of certain depreciable realty.

(a) ***Dispositions after December 31, 1969*** —

(1) ***Ordinary income.***

(i) In general, section 1250(a)(1) provides that, upon a disposition of an item of section 1250 property after December 31, 1969, the applicable percentage of the lower of:

(*a*) The additional depreciation (as defined in § 1.1250-2) attributable to periods after December 31, 1969 in respect of the property, or

(*b*) The excess of the amount realized on a sale, exchange, or involuntary conversion (or the fair market value of the property on any other disposition) over the adjusted basis of the property,

Shall be treated as gain from the sale or exchange of property which is neither a capital asset nor property described in section 1231 (that is, shall be recognized as ordinary income). The amount of such gain shall be determined separately for each item (see subparagraph (2)(ii) of this paragraph) of section 1250 property. If the amount determined under (*b*) of this subdivision exceeds the amount determined under (*a*) of this subdivision, then such excess shall be treated as provided in subdivision (ii) of this subparagraph. For relation of section 1250 to other provisions, see paragraph (c) of this section.

(ii) If the amount determined under subdivision (i)(*b*) of this subparagraph exceeds the amount determined under subdivision (i)(*a*) of this subparagraph, then the applicable percentage of the lower of:

(*a*) The additional depreciation attributable to periods before January 1, 1970, or

(*b*) Such excess,

shall also be recognized as ordinary income.

(iii) If gain would be recognized upon a disposition of an item of section 1250 property under subdivisions (i) and (ii) of this subparagraph, and if section 1250(d) applies, then the gain recognized shall be considered as recognized first under subdivision (i) of this subparagraph. (See example (3)(i) of paragraph (c)(4) of § 1.1250-3.)

(2) ***Meaning of terms.***

(i) For purposes of section 1250, the term *disposition* shall have the same meaning as in paragraph (a)(3) of § 1.1245-1. *Section 1250 property* is, in general, depreciable real property other than section 1245 property. See paragraph (e) of this section. See paragraph (d)(1) of this section for meaning of the term *applicable percentage.* If, however, the property is considered to have two or more elements with separate periods (for example, because units thereof are placed in service on different dates, improvements are made to the property, or because of the application of paragraph (h) of § 1.1250-3), see the special rules of § 1.1250-5.

(ii) For purposes of applying section 1250, the facts and circumstances of each disposition shall be considered in determining what is the appropriate item of section 1250 property. In general, a building is an item of section 1250 property, but in an appropriate case more than one building may be treated as a single item. For example, if two or more buildings or structures on a single tract or parcel (or contiguous tracts or parcels) of land are operated as an integrated unit (as evidenced by their actual operation, management, financing, and accounting), they may be treated as a single item of section 1250 property. For the manner of determining whether an expenditure shall be treated as an addition to capital account of an item of section 1250 property or as a separate item of section 1250 property, see paragraph (d)(2)(iii) of § 1.1250-5.

(3) ***Sale, exchange, or involuntary conversion after December 31, 1969.***

(i) In the case of a disposition of section 1250 property by a sale, exchange, or involuntary conversion after December 31, 1969, the gain to which section 1250(a)(1) applies is the applicable percentage for the property (determined under paragraph (d)(1) of this section)

multiplied by the lower of (*a*) the additional depreciation in respect of the property attributable to periods after December 31, 1969, or (*b*) the excess (referred to as *gain realized*) of the amount realized over the adjusted basis of the property.

(ii) In addition to gain recognized under section 1250(a)(1) and subdivision (i) of this subparagraph, gain may also be recognized under section 1250(a)(2) and this subdivision if the gain realized exceeds the additional depreciation attributable to periods after December 31, 1969. In such a case, the amount of gain recognized under section 1250(a)(2) and this subdivision is the applicable percentage for the property (determined under paragraph (d)(2) of this section) multiplied by the lower of (*a*) the additional depreciation attributable to periods before January 1, 1970, or (*b*) the excess (referred to as *remaining gain*) of the gain realized over the additional depreciation attributable to periods after December 31, 1969.

(iii) The provisions of this subparagraph may be illustrated by the following examples:

Example 1. Section 1250 property which has an adjusted basis of $500,000 is sold for $650,000 after December 31, 1969, and thus the gain realized is $150,000. At the time of the sale the additional depreciation in respect of the property attributable to periods after December 31, 1969, is $190,000 and the applicable percentage is 100 percent (paragraph (d)(1)(i)(*e*) of this section). Since the gain realized ($150,000), is lower than the additional depreciation ($190,000), the amount of gain recognized as ordinary income under section 1250(a)(1) is $150,000 (that is, 100 percent of $150,000). No gain is recognized under section 1250(a)(2).

Example 2. Section 1250 property which has an adjusted basis of $440,000 is sold for $500,000 on December 31, 1974, and thus the gain realized is $60,000. The property was acquired on March 31, 1966. At the time of the sale, the additional depreciation attributable to periods after December 31, 1969, is $20,000, and the additional depreciation attributable to periods before January 1, 1970, is $60,000. The property qualified as residential rental property for each taxable year ending after December 31, 1969, and the applicable percentage is 95 percent (paragraph (d)(1)(i)(*c*) of this section). The applicable percentage under paragraph (d)(2) of this section is 15 percent. Since the additional depreciation attributable to periods after December 31, 1969 ($20,000), is lower than the gain realized ($60,000), the amount of gain recognized as ordinary income under section 1250(a)(1) is $19,000 (that is, 95 percent of $20,000). In addition, gain is recognized under section 1250(a)(2) since there is remaining gain of $40,000 (that is, the gain realized ($60,000) minus the additional depreciation attributable to periods after December 31, 1969 ($20,000)). Since the remaining gain of $40,000 is lower than the additional depreciation attributable to periods before January 1, 1970 ($60,000), the amount of gain recognized as ordinary income under section 1250(a)(2) is $6,000 (that is, 15 percent of $40,000). The remaining $35,000 (that is, gain realized $60,000, minus gain recognized under section 1250(a), $25,000) of the gain may be treated as gain from the sale or exchange of property described in section 1231.

(4) ***Other dispositions after December 31, 1969.***

(i) In the case of a disposition of section 1250 property after December 31, 1969, other than by way of a sale, exchange, or involuntary conversion, the gain to which section 1250(a)(1) applies is the applicable percentage for the property (determined under paragraph (d)(1) of this section) multiplied by the lower of (*a*) the additional depreciation in respect of the property attributable to periods after December 31, 1969, or (*b*) the excess (referred to as *potential gain*) of the fair market value of the property over its adjusted basis. In addition, if the potential gain exceeds the additional depreciation attributable to periods after December 31, 1969, then the

gain to which section 1250(a)(2) applies is the applicable percentage for the property (determined under paragraph (d)(2) of this section) multiplied by the lower of (*c*) the additional depreciation attributable to periods before January 1, 1970, or (*d*) the excess (referred to as *remaining potential gain*) of the potential gain over the additional depreciation attributable to periods after December 31, 1969. If property is transferred by a corporation to a shareholder for an amount less than its fair market value in a sale or exchange, for purposes of applying section 1250 such transfer shall be treated as a disposition other than by way of a sale, exchange, or involuntary conversion.

(ii) The provisions of this subparagraph may be illustrated by the following examples:

Example 1. Section 1250 property having an adjusted basis of $500,000 and a fair market value of $550,000 is distributed by a corporation to a stockholder in complete liquidation of the corporation after December 31, 1969, and thus the potential gain is $50,000. At the time of the liquidation, the additional depreciation for the property attributable to periods after December 31, 1969, is $80,000 and the applicable percentage is 100 percent (paragraph (d)(1)(i)(*e*) of this section). Since the potential gain of $50,000 is lower than the additional depreciation attributable to periods after December 31, 1969 ($80,000), the amount of gain recognized as ordinary income under section 1250(a)(1) is $50,000 (that is, 100 percent of $50,000) even though in the absence of section 1250, section 336 would preclude recognition of gain to the corporation.

Example 2. The facts are the same as in example (1) except that the fair market value of the property is $650,000, and thus the potential gain is $150,000. Since the additional depreciation attributable to periods after December 31, 1969 ($80,000), is lower than the potential gain of $150,000, the amount of gain recognized as ordinary income under section 1250(a)(1) is $80,000 (that is, 100 percent of $80,000). In addition, section 1250(a)(2) applies since there is remaining potential gain of $70,000, that is, potential gain ($150,000) minus additional depreciation attributable to periods after December 31, 1969 ($80,000). The additional depreciation attributable to periods before January 1, 1970, is $90,000 and the applicable percentage under paragraph (d)(2) of this section is 50 percent. Since the remaining potential gain of $70,000 is lower than the additional depreciation attributable to periods before January 1, 1970 ($90,000), the amount of gain recognized as ordinary income under section 1250(a)(2) is $35,000 (that is, 50 percent of $70,000). Thus under section 1250(a), $115,000 (that is, $80,000 under section 1250(a)(1), plus $35,000 under section 1250(a)(2)) is recognized as ordinary income, even though in the absence of section 1250, section 336 would preclude recognition of gain to the corporation.

(5) ***Instances of nonapplication.***

(i) Section 1250(a)(1) does not apply to losses. Thus, section 1250(a)(1) does not apply if a loss is realized upon a sale, exchange, or involuntary conversion of property, all of which is considered section 1250 property, nor does the section apply to a disposition of such property other than by way of sale, exchange, or involuntary conversion if at the time of the disposition the fair market value of such property is not greater than its adjusted basis.

(ii) In general, in the case of section 1250 property with a holding period under section 1223 of more than 1 year, section 1250(a)(1) does not apply if for periods after December 31, 1969, there are no *depreciation adjustments in excess of straight line* (as computed under section 1250(b) and paragraph (b) of § 1.1250-2).

(6) *Allocation rules.*

(i) In the case of a sale, exchange, or involuntary conversion of section 1250 property and nonsection 1250 property in one transaction after December 31, 1969, the total amount realized upon the disposition shall be allocated between the section 1250 property and the other property in proportion to their respective fair market values. Such allocation shall be made in accordance with the principles set forth in paragraph (a)(5) of § 1.1245-1 (relating to allocation between section 1245 property and nonsection 1245 property).

(ii) If an item of section 1250 property has two (or more) applicable percentages because one subdivision of paragraph (d)(1)(i) of this section applies to one portion of the taxpayer's holding period (determined under § 1.1250-4) and another subdivision of such paragraph applies with respect to another such portion, then the gain realized on a sale, exchange, or involuntary conversion, or the potential gain in the case of any other disposition, shall be allocated to each such portion of the taxpayer's holding period after December 31, 1969, in the same proportion as the additional depreciation with respect to such item for such portion bears to the additional depreciation with respect to such item for the entire holding period after December 31, 1969.

(b) *Dispositions before January 1, 1970* —

(1) *Ordinary income.* In general, section 1250(a)(2) provides that, upon a disposition of an item of section 1250 property after December 31, 1963, and before January 1, 1970, the applicable percentage of the lower of:

(i) The additional depreciation (as defined in § 1.1250-2) attributable to periods before January 1, 1970, in respect of the property, or

(ii) The excess of the amount realized on a sale, exchange, or involuntary conversion (or the fair market value of the property on any other disposition) over the adjusted basis of the property,

shall be treated as gain from the sale or exchange of property which is neither a capital asset nor property described in section 1231 (that is, shall be recognized as ordinary income). The amount of such gain shall be determined separately for each item (see subparagraph (2)(ii) of this paragraph) of section 1250 property. For relation of section 1250 to other provisions, see paragraph (c) of this section.

(2) *Meaning of terms.*

(i) For purposes of section 1250, the term *disposition* shall have the same meaning as in paragraph (a)(3) of § 1.1245-1. *Section 1250 property* is, in general, depreciable real property other than section 1245 property. See paragraph (e) of this section. For purposes of this paragraph, the term *applicable percentage* means 100 percent minus 1 percentage point for each full month the property was held after the date on which the property was held 20 full months. See paragraph (d)(2) of this section. If, however, the property is considered to have two or more elements with separate holding periods (for example, because units thereof are placed in service on different dates, or improvements are made to the property), see the special rules of § 1.1250-5.

(ii) For purposes of applying section 1250, the facts and circumstances of each disposition shall be considered in determining what is the appropriate item of section 1250 property. In general, a building is an item of section 1250 property, but in an appropriate case more than one

building may be treated as a single item. For manner of determining whether an expenditure shall be treated as an addition to the capital account of an item of section 1250 property or as a separate item of section 1250 property, see paragraph (d)(2)(iii) of § 1.1250-5.

(3) ***Sale, exchange, or involuntary conversion before January 1, 1970.***

(i) In the case of a disposition of section 1250 property by a sale, exchange, or involuntary conversion before January 1, 1970, the gain to which section 1250(a)(2) applies is the applicable percentage for the property multiplied by the lower of (*a*) the additional depreciation in respect of the property or (*b*) the excess (referred to as *gain realized*) of the amount realized over the adjusted basis of the property.

(ii) The provisions of this subparagraph may be illustrated by the following example:

Example: Section 1250 property, which has an adjusted basis of $200,000, is sold for $290,000 before January 1, 1970. At the time of the sale the additional depreciation in respect of the property is $130,000 and the applicable percentage is 60 percent. Since the gain realized ($90,000, that is, amount realized, $290,000, minus adjusted basis, $200,000) is lower than the additional depreciation ($130,000), the amount of gain recognized as ordinary income under section 1250(a)(2) is $54,000 (that is, 60 percent of $90,000). The remaining $36,000 ($90,000 minus $54,000) of the gain may be treated as gain from the sale or exchange of property described in section 1231.

(4) ***Other dispositions before January 1, 1970.***

(i) In the case of a disposition of section 1250 property before January 1, 1970, other than by way of a sale, exchange, or involuntary conversion, the gain to which section 1250(a)(2) applies is the applicable percentage for the property multiplied by the lower of (*a*) the additional depreciation in respect of the property, or (*b*) the excess (referred to as *potential gain*) of the fair market value of the property on the date of disposition over its adjusted basis. If property is transferred by a corporation to a shareholder for an amount less than its fair market value in a sale or exchange, for purposes of applying section 1250 such transfer shall be treated as a disposition other than by way of a sale, exchange, or involuntary conversion.

(ii) The provisions of this subparagraph may be illustrated by the following example:

Example: Assume the same facts as in the example in subparagraph (3)(ii) of this paragraph except that the property is distributed by a corporation to a stockholder before January 1, 1970, in complete liquidation of the corporation, and that at the time of the distribution the fair market value of the property is $370,000. Since the additional depreciation ($130,000) is lower than the potential gain of $170,000 (that is, fair market value, $370,000, minus adjusted basis, $200,000), the amount of gain recognized as ordinary income under section 1250(a)(2) is $78,000 (that is, 60 percent of $130,000) even though, in the absence of section 1250, section 336 would preclude recognition of gain to the corporation.

(5) ***Instances of nonapplication.***

(i) Section 1250(a)(2) does not apply to losses. Thus, section 1250(a)(2) does not apply if a loss is realized upon a sale, exchange, or involuntary conversion of property, all of which is considered section 1250 property, nor does the section apply to a disposition of such property other than by way of sale, exchange, or involuntary conversion if at the time of the disposition the fair market value of such property is not greater than its adjusted basis.

(ii) In general, in the case of section 1250 property with a holding period under section 1223 of more than one year, section 1250(a)(2) does not apply if for periods after December 1, 1963, there are no *depreciation adjustments in excess of straight line* (as computed under section 1250(b) and paragraph (b) of § 1.1250-2).

(iii) In a case in which section 1250 property (including each element thereof, if any) has a holding period under § 1.1250-4 (or paragraph (a)(2)(ii) of § 1.1250-5) of at least 10 years, section 1250(a)(2) does not apply. If within the 10-year period preceding the date the property is disposed of, an element is added to the property by reason, for example, of an addition to capital account, see § 1.1250-5.

(6) ***Allocation rule.*** In the case of a sale, exchange, or involuntary conversion of section 1250 property and nonsection 1250 property in one transaction before January 1, 1970, the total amount realized upon the disposition shall be allocated between the section 1250 property and the other property in proportion to their respective fair market values. Such allocation shall be made in accordance with the principles set forth in paragraph (a)(5) of § 1.1245-1 (relating to allocation between section 1245 property and nonsection 1245 property).

(c) ***Relation of section 1250 to other provisions*** —

(1) ***General.*** The provisions of section 1250 apply notwithstanding any other provision of subtitle A of the Code. See section 1250(i). Thus, unless an exception or limitation under section 1250(d) and § 1.1250-3 applies, gain under section 1250(a) is recognized notwithstanding any contrary nonrecognition provision or income characterizing provision. For example, since section 1250 overrides section 1231 (relating to property used in the trade or business), the gain recognized under section 1250(a) upon a disposition will be treated as ordinary income and only the remaining gain, if any, from the disposition may be considered as gain from the sale or exchange of a capital asset if section 1231 is applicable. See the example in paragraph (b)(3)(ii) of this section.

(2) ***Nonrecognition sections overridden.*** The nonrecognition provisions of subtitle A of the Code which section 1250 overrides include, but are not limited to, sections 267(d), 311(a), 336, 337, 501(a), and 512(b)(5). See section 1250(d) for the extent to which section 1250(a) overrides sections 332, 351, 361, 371(a), 374(a), 721, 731, 1031, 1033, 1039, 1071, and 1081 (b)(1) and (d)(1)(A). For amount of additional depreciation in respect of property disposed of by an organization exempt from income taxes (within the meaning of section 501(a)), see paragraph (d)(6) of § 1.1250-2.

(3) ***Exempt income.*** The fact that section 1250 provides for recognition of gain as ordinary income does not change into taxable income any income which is exempt under section 115 (relating to income of States, etc.), 892 (relating to income of foreign governments), or 894 (relating to income exempt under treaties).

(4) ***Treatment of gain not recognized under section 1250.*** Section 1250 does not prevent gain which is not recognized under section 1250 from being considered as gain under another provision of the Code, such as, for example, section 1239 (relating to gain from sale of depreciable property between certain related persons). Thus, for example, if section 1250 property which has an adjusted basis of $10,000 is sold for $17,500 in a transaction to which section 1239 applies, and if $5,000 of the gain would be recognized under section 1250(a) then the remaining $2,500 of the gain would be treated as ordinary income under section 1239.

(5) ***Normal retirement of asset in multiple asset account.*** Section 1250(a) does not require recognition of gain upon normal retirements of section 1250 property in a multiple asset account as long as the taxpayer's method of accounting, as described in paragraph (e)(2) of § 1.167(a)-8 (relating to accounting treatment of asset retirements), does not require recognition of such gain.

(6) ***Installment method.*** Gain from a disposition to which section 1250(a) applies may be reported under the installment method if such method is otherwise available under section 453 of the Code. In such case, the income (other than interest) on each installment payment shall be deemed to consist of gain to which section 1250(a) applies until all such gain has been reported, and the remaining portion (if any) of such income shall be deemed to consist of other gain. For treatment of amounts as interest on certain deferred payments, see section 483.

(d) ***Applicable percentage*** —

(1) ***Definition for purposes of section 1250(a)(1).***

(i) For purposes of section 1250(a)(1), the term *applicable percentage* means:

(*a*) In the case of property disposed of pursuant to a written contract which was, on July 24, 1969, and at all times thereafter binding on the owner of the property, 100 percent minus 1 percentage point for each full month the property was held after the date on which the property was held 20 full months;

(*b*) In the case of property constructed, reconstructed, or acquired by the taxpayer before January 1, 1975, with respect to which a mortgage is insured under section 221(d)(3) or 236 of the National Housing Act, or housing is financed or assisted by direct loan or tax abatement under similar provisions of State or local laws, and with respect to which the owner is subject to the restrictions described in section 1039(b)(1)(B) (relating to approved dispositions of certain Government-assisted housing projects), 100 percent minus 1 percentage point for each full month of the taxpayer's holding period for the property (determined under § 1.1250-4) during which the property qualified under this sentence, beginning after the date on which the property so qualified for 20 full months.

(*c*) In the case of residential rental property (as defined in section 167(j)(2)(B)) other than that covered by (*a*) and (*b*) of this subdivision, 100 percent minus 1 percentage point for each full month of the taxpayer's holding period for the property (determined under § 1.1250-4) included within a taxable year for which the property qualified as residential rental property, beginning after the date on which the property so qualified for 100 full months.

(*d*) In the case of property with respect to which a deduction was allowed under section 167(k) (relating to the depreciation of expenditures to rehabilitate low-income rental housing), 100 percent minus 1 percentage point for each full month of the taxpayer's holding period (determined under § 1.1250-4) beginning 100 full months after the date on which the property was placed in service.

(*e*) In the case of all other property, 100 percent.

The provisions of (a), (b), and (c) of this subdivision shall not apply with respect to additional depreciation described in section 1250(b)(4). If the taxpayer's holding period under § 1.1250-4 includes a period before January 1, 1970, such period shall be taken into account in applying each provision of this subdivision.

(ii) A single item of property may have two (or more) applicable percentages under the provisions of subdivision (i) of this subparagraph. For example, if the provision of subdivision (i) of this subparagraph which applies to an item of section 1250 property (or to an element of such property if the property is treated as consisting of more than one element under § 1.1250-5) in the taxable year in which the item (or element) is disposed of did not apply to the item (or element) in a prior taxable year which is included within the taxpayer's holding period under § 1.1250-4 and which ends after December 31, 1969, then each provision of subdivision (i) of this subparagraph shall apply only for the period during which the property qualified under such provision.

(iii) If the taxpayer makes rehabilitation expenditures and elects to compute depreciation under section 167(k) with respect to the property attributable to the rehabilitation expenditures, such property will generally constitute a separate improvement under paragraph (c) of § 1.1250-5 and therefore will constitute an element of section 1250 property. For computation of applicable percentage and gain recognized under section 1250(a) in such a case, see paragraph (a) of § 1.1250-5.

(iv) The principles of this subparagraph may be illustrated by the following examples:

Example 1. Section 1250 property is sold on December 31, 1970, pursuant to a written contract which was binding on the owner of the property on July 24, 1969, and at all times thereafter. The property was acquired on July 31, 1968. The applicable percentage for the property under subdivision (i)(*a*) of this subparagraph is 91 percent, since the property was held 29 full months.

Example 2. Section 1250 property is sold on June 30, 1978. The property was acquired by a calendar year taxpayer on June 30, 1966. Subdivision (i)(*e*) of this subparagraph applies to the property in 1977 and 1978. However, subdivision (i)(*c*) of this subparagraph applied to the property for the taxable years of 1970 through 1976. Thus, the property has two applicable percentages under this subparagraph. The period before January 1, 1970 (42 full months), and the period from 1970 through 1976 (84 full months) are both taken into account in determining the applicable percentage under subdivision (i)(*c*) of this subparagraph. Thus, the applicable percentage is 74 percent (that is, 100 percent minus the excess of the holding period taken into account (126 full months) over 100 full months). The applicable percentage for the years 1977 and 1978 is 100 percent under subdivision (i)(*e*) of this subparagraph.

Example 3. Section 1250 property is sold on December 31, 1978. The property was acquired by a calendar year taxpayer on December 31, 1969. The taxpayer made rehabilitation expenditures in 1973 and properly elected to compute depreciation under section 167(k) on the property attributable to the expenditures for the 60-month period beginning on January 1, 1974, the date such property was placed in service. Subdivision (i)(*c*) applies to the property (other than the property with respect to which a deduction was allowed under section 167(k)) for the taxable years of 1970 through 1978 (108 full months) and the applicable percentage for such property is 92 percent. The applicable percentage for the property with respect to which a deduction under section 167(k) was allowed is 100 percent under subdivision (i)(*d*) of this subparagraph, since the holding period for purposes of such subdivision begins on the date such property is placed in service.

Example 4. Section 1250 property is sold by a calendar year taxpayer on March 31, 1974. The property was transferred to the taxpayer by gift on December 31, 1970, and under section 1250(e)(2), the taxpayer's holding period for the property for purposes of computing the applicable percentage

includes the transferor's holding period of 80 full months. Subdivision (i)(*c*) of this subparagraph applies to the property in the years 1970 through 1974. The applicable percentage under subdivision (i) (*c*) of this subparagraph is 81 percent, since the period before January 1, 1970 (68 full months), and that portion of the period after December 31, 1969, during which such subdivision applied (51 full months) are taken into account.

(2) ***Definition for purposes of section 1250(a)(2).*** For purposes of section 1250(a)(2), the term *applicable percentage* means:

(i) In case of property with a holding period of 20 full months or less, 100 percent;

(ii) In case of property with a holding period of more than 20 full months but less than 10 years, 100 percent minus 1 percentage point for each full month the property is held after the date on which the property is held 20 full months; and

(iii) In case of property with a holding period of at least 10 years, zero.

(3) ***Holding period.*** For purposes of this paragraph, the holding period of property shall be determined under the rules of § 1.1250-4, and not under the rules of section 1223, notwithstanding that the property was acquired on or before December 31, 1963. In the case of a disposition of section 1250 property which consists of 2 or more elements (within the meaning of paragraph (c) of § 1.1250-5), the holding period for each element shall be determined under the rules of paragraph (a)(2)(ii) of § 1.1250-5.

(4) ***Full month.*** For purposes of this paragraph, the term *full month* (or *full months*) means the period beginning on a date in 1 month and terminating on the date before the corresponding date in the next succeeding month (or in another succeeding month), or, if a particular succeeding month does not have such a corresponding date, terminating on the last day of such particular succeeding month.

(5) ***Examples.*** The provisions of this paragraph may be illustrated by the following examples:

Example 1. Property is purchased on January 17, 1959. Under paragraph (b)(1) of § 1.1250-4, its holding period begins on January 18, 1959, and thus at any time during the period beginning on October 17, 1960, and ending on November 16, 1960, the property is considered held 21 full months and has an applicable percentage under section 1250(a)(2) of 99 percent. On and after January 17, 1969, the property has a holding period of at least 120 full months (10 years) and, therefore, the applicable percentage under section 1250(a)(2) for the property is zero. Accordingly, no gain would be recognized under section 1250(a)(2) upon disposition of the property. If, however, the property consists of two or more elements, see the special rules of § 1.1250-5.

Example 2. Property is purchased on January 31, 1968. Under paragraph (b)(1) of § 1.1250-4 its holding period begins on February 1, 1968, and thus at any time during the period beginning on February 29, 1968, and ending on March 30, 1968, the property is considered held 1 full month. At any time during the period beginning on March 31, 1970, and ending on April 29, 1970, the property is considered held 26 full months. At any time during the period beginning on April 30, 1970, and ending on May 30, 1970, the property is considered held 27 full months.

(e) ***Section 1250 property*** —

(1) ***Definition.*** The term *section 1250 property* means any real property (other than section 1245 property, as defined in section 1245(a)(3) and § 1.1245-3) which is or has been property of a character subject to the allowance for depreciation provided in section 167. See section 1250(c).

(2) ***Character of property.*** For purposes of subparagraph (1) of this paragraph, the term *is or has been property of a character subject to the allowance for depreciation provided in section 167* shall have the same meaning as when used in paragraph (a) (1) and (3) of § 1.1245-3. Thus, if a father uses a house in his trade or business during a period after December 31, 1963, and then gives the house to his son as a gift for the son's personal use, the house is section 1250 property in the hands of the son. For exception to the application of section 1250(a) upon disposition of a principal residence, see section 1250(d)(7).

(3) ***Real property.***

(i) For purposes of subparagraph (1) of this paragraph, the term *real property* means any property which is not personal property within the meaning of paragraph (b) of § 1.1245-3. The term section 1250 property includes three types of depreciable real property. The first type is intangible real property. For purposes of this paragraph, a leasehold of land or of section 1250 property is intangible real property, and accordingly such a leasehold is section 1250 property. However, a fee simple interest in land is not depreciable, and therefore is not section 1250 property. The second type is a building or its structural components within the meaning of paragraph (c) of § 1.1245-3. The third type is all other tangible real property except (*a*) property described in section 1245(a)(3)(B) as defined in paragraph (c)(1) of § 1.1245-3 (relating to property used as an integral part of a specified activity or as a specified facility), and (*b*) property described in section 1245(a)(3)(D). An elevator or escalator (within the meaning of section 1245(a)(3)(C)) is not section 1250 property.

(ii) The provisions of this subparagraph may be illustrated by the following example:

Example: A owns and leases to B for a single lump-sum payment of $100,000 property consisting of land and a fully equipped factory building thereon. If 30 percent of the fair market value of such property is properly allocable to the land, 25 percent to section 1250 property (the building and its structural components), and 45 percent to section 1245 property (the equipment), then 55 percent of B's leasehold is section 1250 property.

(4) ***Coordination with definition of section 1245 property.*** (i) Property may lose its character as section 1250 property and become section 1245 property. Thus, for example, if section 1250 property of the third type described in subparagraph (3)(i)(*a*) of this paragraph is converted to use as an integral part of manufacturing, the property would lose its character as section 1250 property and would become section 1245 property. However, once property in the hands of a taxpayer is section 1245 property, it can never become section 1250 property in the hands of such taxpayer. See also paragraph (a) (4) and

(5) of § 1.1245-2.

(f) ***Treatment of partnerships and partners.*** If a partnership disposes of section 1250 property, the amount of gain recognized under section 1250(a) by the partnership and by a partner shall be determined in a manner consistent with the principles provided in paragraph (e) of § 1.1245-1. Thus, for example, a partner's distributive share of gain recognized by the partnership under section 1250(a) shall be determined in the same manner as his distributive share of gain recognized by the partnership under section 1245(a)(1) is determined, and, if required, additional depreciation in respect of section 1250 property shall be allocated to the partner in the same manner as the adjustments reflected in the adjusted

basis of section 1245 property are allocated to the partner. For a further example, if on the date a partner acquires his partnership interest by way of a sale or exchange the partnership owns section 1250 property and an election under section 754 (relating to optional adjustment to basis of partnership property) is in effect with respect to the partnership, then such partner's additional depreciation in respect of such property on such date is deemed to be zero. For limitation on the amount of gain recognized under section 1250(a) in respect of a partnership and for the amount of additional depreciation in respect of partnership property after certain transactions, see paragraph (f) of § 1.1250-3. For treatment of section 1250 property as an unrealized receivable, see section 751(c).

(g) ***Examples.*** The principles of this section may be illustrated by the following examples:

Example 1. Section 1250 property which has an adjusted basis of $350,000 is sold for $630,000 on December 31, 1984. The property was acquired by a calendar year taxpayer on December 31, 1969. For the taxable years from 1970 through 1980, the property qualified as residential rental property and the applicable percentage for those years is 68 percent (paragraph (d)(1)(i)(*c*) of this section). For taxable years from 1981 through 1984, the property did not qualify as residential rental property and the applicable percentage for those years is 100 percent (paragraph (d)(1)(i)(*e*) of this section). The additional depreciation for the years from 1970 through 1980 is $120,000. The additional depreciation for the years from 1981 through 1984 is $20,000. The gain realized is $280,000 (that is, amount realized, $630,000, minus adjusted basis $350,000). The gain recognized as ordinary income under section 1250(a)(1) is computed in two steps. First, since the additional depreciation attributable to the years 1970 through 1980 ($120,000) is lower than the gain realized attributable to such years determined under paragraph (a)(6) of this section ($240,000, that is, gain realized, $280,000, multiplied by $^{12}/_{14}$), the gain recognized as ordinary income under section 1250(a)(1) in the first step is $81,600, that is, 68 percent of $120,000. Second, since the additional depreciation attributable to the years 1981 through 1984 ($20,000) is lower than the gain realized attributable to those years ($40,000, that is, gain realized, $280,000, multiplied by $^{2}/_{14}$), the gain recognized as ordinary income under section 1250(a)(1) for the years from 1981 through 1984 is $20,000 (that is, 100 percent of $20,000). The total gain recognized under section 1250(a)(1) is $101,600 (that is, $81,600 plus $20,000).

Example 2. Section 1250 property which has an adjusted basis of $400,000 is sold for $472,000 on December 31, 1978. The property was acquired on December 31, 1966. The additional depreciation attributable to periods before January 1, 1970, is $40,000 and the applicable percentage under paragraph (d)(2) of this section is zero percent. The property qualifies as residential rental property for the years 1970 through 1976, but fails to qualify for 1977 and 1978. Under paragraph (d)(1) of this section, the applicable percentage for the years 1970 through 1976 is 80 percent (paragraph (d)(1)(i)(*c*) of this section), and the applicable percentage for the years 1977 and 1978 is 100 percent (paragraph (d)(1)(i)(*e*) of this section). The additional depreciation attributable to the years 1970 through 1976 is $50,000, and the additional depreciation attributable to the years 1977 and 1978 is $10,000. The gain recognized as ordinary income under section 1250(a)(1) is computed in two steps. First, since the additional depreciation attributable to the years 1970 through 1976 ($50,000) is lower than the gain realized attributable to such years ($60,000, that is, $72,000 multiplied by $^{5}/_{6}$), the gain recognized under section 1250(a)(1) in the first step is $40,000 (that is, 80 percent of $50,000). Second, since the additional depreciation attributable to 1977 and 1978 ($10,000) is lower than the gain realized attributable to such years ($12,000, that is, $72,000 multiplied by $^{1}/_{6}$), the gain recognized under section 1250(a)(1) in the second step is $10,000 (that is, 100 percent of $10,000). In addition, section 1250(a)(2) applies. However, since the applicable percentage is zero percent, none of the gain is recognized as ordinary income under section

1250(a)(2). Thus, the remaining $22,000 (that is, gain realized, $72,000, minus gain recognized under section 1250(a), $50,000) of the gain may be treated as gain from the sale or exchange of property described in section 1231.

Example 3. The facts are the same as in example (2) except that the property is disposed of on December 31, 1980. The property qualifies as residential rental property for the years 1979 and 1980. Thus, the applicable percentage for years 1970 through 1976, 1979, and 1980 is 56 percent (paragraph (d)(1)(i)(c) of this section). The applicable percentage for the years 1977 and 1978 is 100 percent (paragraph (d)(1)(i)(e) of this section). The additional depreciation for the years 1979 and 1980 is $8,000. The gain recognized under section 1250(a)(1) is computed in two steps. First, since the additional depreciation attributable to the years 1970 through 1976, 1979, and 1980 ($58,000) is lower than the gain realized attributable to such years ($61,412, that is, $72,000 multiplied by $58,000/$68,000), the gain recognized under section 1250(a)(1) in the first step is $32,480 (that is, 56 percent of $58,000). Second, since the additional depreciation attributable to 1977 and 1978 ($10,000) is lower than the gain realized attributable to such years ($10,588, that is, $72,000 multiplied by $10,000/$68,000) the gain recognized under section 1250(a)(1) in the second step is $10,000 (that is, 100 percent of $10,000). In addition section 1250(a)(2) applies. However, since the applicable percentage is zero percent, none of the gain is recognized as ordinary income under section 1250(a)(2). Thus, the remaining $29,520 (that is, gain realized, $72,000, minus gain recognized under section 1250(a), $42,480) of the gain may be treated as gain from the sale or exchange of property described in section 1231.

[T.D. 7084, 36 FR 271, Jan. 8, 1971, as amended by T.D. 7193, 37 FR 12953, June 30, 1972]

§ 1.1250-2 Additional depreciation defined.

(a) ***In general*** —

(1) ***Definition for purposes of section 1250(b)(1).*** Except as otherwise provided in paragraph (e) of this section, for purposes of section 1250(b)(1), the term *additional depreciation* means:

(i) In the case of property which at the time of disposition has a holding period under section 1223 of not more than 1 year, the *depreciation adjustments* (as defined in paragraph (d) of this section) in respect of such property for periods after December 31, 1963, and

(ii) In the case of property which at the time of disposition has a holding period under section 1223 of more than 1 year, the depreciation adjustments in excess of straight line for periods after December 31, 1963, computed under paragraph (b)(1) of this section.

(2) ***Definition for purposes of section 1250(b)(4).*** Except as otherwise provided in paragraph (e) of this section, for purposes of section 1250(b)(4), the term *additional depreciation* means:

(i) In the case of property with respect to which a deduction under section 167(k) (relating to depreciation of expenditures to rehabilitate low-income rental housing) was allowed, which at the time of disposition has a holding period under section 1223 of not more than 1 year from the time the rehabilitation expenditures were incurred, the *depreciation adjustments* (as defined in paragraph (d) of this section) in respect of the property, and

(ii) In the case of property with respect to which a deduction under section 167(k) (relating to depreciation of expenditures to rehabilitate low-income rental housing) was allowed, which at the time of disposition has a holding period under section 1223 of more than 1 year from the time the rehabilitation expenditures were incurred, the depreciation adjustments in excess of straight line for the property, computed under paragraph (b)(2) of this section.

For purposes of this subparagraph, all rehabilitation expenditures which are incurred in connection with the rehabilitation of an element of section 1250 property shall be considered incurred on the date the last such expenditure is considered incurred under the accrual method of accounting, regardless of the method of accounting used by the taxpayer with regard to other items of income and expense. If the property consists of two or more elements (for example, if the property is placed in service at different times), then each element shall be treated as if it were a separate property and the expenditures attributable to each such element shall be considered incurred on the date the last such expenditure is considered incurred.

(3) ***Allocation to certain periods.*** With respect to a taxable year beginning in 1963 and ending in 1964, or beginning in 1969 and ending in 1970, the amount of depreciation adjustments or of depreciation adjustments in excess of straight line (as the case may be) shall be ascertained by applying the principles of paragraph (c)(3) of § 1.167(a)-8 (relating to determination of adjusted basis of retired asset), and the amount determined in such manner shall be allocated on a daily basis in order to determine the portion thereof which is attributable to a period after December 31, 1963, or after December 31, 1969, as the case may be.

(b) ***Computation of depreciation adjustments in excess of straight line*** —

(1) ***General rule.*** For purposes of paragraph (a)(1) of this section, depreciation adjustments in excess of straight line shall be, in the case of any property, the excess of

(i) the sum of the *depreciation adjustments* (as defined in paragraph (d) of this section) in respect of the property attributable to periods after December 31, 1963, over

(ii) the sum such adjustments would have been for such periods if such adjustments had been determined for the entire period the property was held under the straight line method of depreciation (or, if applicable, under the lease-renewal-period provision in paragraph (c) of this section). Depreciation in excess of straight line may arise, for example, if the declining balance method, the sum of the years-digits method, or the units of production method is used, or for another example, if the cost of a leasehold improvement or of a leasehold is depreciated over a period which does not take into account certain renewal periods referred to in paragraph (c) of this section. For computations of depreciation adjustments in excess of straight line (or a deficit therein) both on an annual basis and on the basis of the entire period the property was held, see subparagraph (6) of this paragraph.

(2) ***Depreciation under section 167(k).*** For purposes of paragraph (a)(2) of this section, depreciation adjustments in excess of straight line shall be, in the case of any property with respect to which a deduction was allowed under section 167(k) (relating to depreciation of expenditures to rehabilitate low-income rental housing), the excess of

(i) the sum of the *depreciation adjustments* (as defined in paragraph (d) of this section) allowed in respect of the property, over

(ii) the sum such adjustments would have been if such adjustments had been determined for the entire period the property was held under the straight line method of depreciation permitted by section 167(b)(1).

(3) ***General rule for computing useful life and salvage value.*** For purposes of computing under subparagraph (1)(ii) of this paragraph the sum of the depreciation adjustments would have been under the straight line method, if a useful life (or salvage value) was used in determining the amount allowed as a depreciation adjustment for any taxable year, such life (or value) shall be used in determining the amount such depreciation adjustment would have been for such taxable year under the straight line method. If, however, for any taxable year a method of depreciation was used as to which a useful life was not taken into account such as, for example, the units of production method, or as to which salvage value was not taken into account in determining the annual allowances, such as, for example, the declining balance method or the amortization of a leasehold improvement over the term of a lease, then, for the purpose of determining the amount such depreciation adjustment would have been under the straight line method for such taxable year:

(i) There shall be used the useful life (or salvage value) which would have been proper if depreciation had actually been determined under the straight line method throughout the period the property was held, and

(ii) Such useful life (or such salvage value) shall be determined by taking into account for each taxable year the same facts and circumstances as would have been taken into account if the taxpayer had used such method throughout the period the property was held.

(4) ***Special rule for computing useful life and salvage value (section 167(k)).*** For purposes of computing under subparagraph (2)(ii) of this paragraph the sum the depreciation adjustments would have been under the straight line method, the useful life and salvage value permitted under section 167(k) shall not apply, the useful life of the property shall be determined under paragraph (b) of § 1.167(a)-1 (or, if applicable, under the lease-renewal-period provision of paragraph (c) of this section), and the salvage value of the property shall be determined under paragraph (c) of § 1.167(a)-1. Such useful life or salvage value shall be determined by taking into account for each taxable year the same facts and circumstances as would have been taken into account if the taxpayer had used the straight line method permitted under section 167(b)(1) throughout the period the property was held.

(5) ***Property held before January 1, 1964.*** In the case of property held before January 1, 1964:

(i) For purposes of computing under subparagraph (1)(ii) of this paragraph the sum the depreciation adjustments would have been under the straight line method, the adjusted basis of the property on such date shall be the amount such adjusted basis would have been if depreciation deductions allowed or allowable before such date had been determined under the straight line method computed in accordance with subparagraph (3) of this paragraph, and

(ii) The depreciation adjustments in excess of straight line in respect of the property computed under subparagraph (1) of this paragraph, but without regard to this subdivision, shall be reduced by the amount of depreciation adjustments less than straight line for periods before January 1, 1964, that is, by the excess (if any) of the sum the depreciation adjustments would have been for periods before January 1, 1964, under the straight line method, over the sum of the depreciation adjustments attributable to periods before such date.

(6) ***Determination of additional depreciation in certain cases.*** If an item of section 1250 property is subject to two (or more) applicable percentages, a separate computation of additional depreciation shall be made for the portion of the taxpayer's holding period subject to each such percentage. That is, a separate computation shall be made to determine the excess of

(i) the depreciation adjustments (as defined in paragraph (d) of this section) for each such portion of the taxpayer's holding period after December 31, 1963, over

(ii) the amount such adjustments would have been for each such portion if such adjustments were determined under the straight line method of depreciation (or, if applicable, under the lease-renewal-period provision in paragraph (c) of this section). Thus, for example, in the case of an item of section 1250 property acquired on January 1, 1968, and disposed of on January 1, 1973, if the applicable percentage for the period before January 1, 1970, were determined under paragraph (d)(2) of § 1.1250-1 and the applicable percentage for the period after December 31, 1969, were determined under paragraph (d)(1)(i)(e) of § 1.1250-1, the additional depreciation would be computed separately for the period before January 1, 1970, and for the period after December 31, 1969. If the additional depreciation attributable to any such portion of the taxpayer's holding period is a deficit (that is, if the depreciation adjustments for that portion are less than the amount such adjustments would have been for that portion if depreciation adjustments were determined for the entire period the property was held under the straight line method of depreciation, or, if applicable, under the lease-renewal-period provision in paragraph (c) of this section), then such deficit will be applied to reduce the additional depreciation for other portion (or portions) of the taxpayer's holding period. (See examples (4) and (5) of subparagraph (7) of this paragraph.)

(7) ***Examples.*** The provisions of this paragraph may be illustrated by the following examples:

Example 1. A calendar year taxpayer sells section 1250 property on January 1, 1968, which he purchased for $10,000 on January 1, 1963. For the period of 1963 through 1967 he computed depreciation deductions in respect of the property under the declining balance method using a rate of 200 percent of the straight line rate and a proper useful life of 10 years. Under such method salvage value is not taken into account in computing annual allowances. For purposes of applying subparagraph (3) of this paragraph, if the taxpayer had used the straight line method for such period, he would have used a salvage value of $1,000, and the depreciation under the straight line method would have been $900 each year, that is, one-tenth of $10,000 minus $1,000. As of January 1, 1968, the additional depreciation for the property is $1,123, as computed in the table below:

Year	Actual depreciation	Straight line	Additional depreciation (deficit)
1963	$2,000	$900	
1964	1,600	900	$700
1965	1,280	900	380

Year	Actual depreciation	Straight line	Additional depreciation (deficit)
1966	1,024	900	124
1967	819	900	(81)
Sum for periods after Dec. 31, 1963	4,723	3,600	1,123

Example 2. Assume the same facts as in example (1) except that the taxpayer sells the section 1250 property on January 1, 1970. Assume further that as of January 1, 1968, the taxpayer elects under section 167(e)(1) to change to the straight line method. On that date the adjusted basis of the property is $3,277 ($10,000 minus $6,723). He redetermines the remaining useful life of the property to be 8 years and its salvage value to be $77, and thus takes depreciation deductions for 1968 and 1969 of $400 (the amount allowable) for each such year, that is, one-eighth of $3,200 (that is, $3,277 minus $77). For purposes of applying subparagraph (3) of this paragraph, if he had used the straight line method throughout the period he held the property, the adjusted basis of the property on January 1, 1968, would have been $5,500 ($10,000 minus $4,500), and the depreciation which would have resulted under such method for 1968 and 1969 would have been $678 for each such year, that is, one-eighth of $5,423 ($5,500 minus $77). As of January 1, 1970, the additional depreciation for the property is $567, as computed in the table below:

Years	Depreciation	Straight line	Additional depreciation (deficit)
1964 through 1967	$4,723	$3,600	$1,123
1968	400	678	(278)
1969	400	678	(278)
Sum for periods after Dec. 31, 1963	5,523	4,956	567

Example 3. On January 1, 1978, a calendar year taxpayer sells section 1250 property. The property, which is attributable to rehabilitation expenditures of $50,000 incurred in 1970, was placed in service on January 1, 1971. The taxpayer elected to compute depreciation for the period of 1971 through 1975 under section 167(k). Under such section salvage value is not taken into account in computing annual allowances, and the useful life of the property is deemed to be 5 years. For purposes of applying subparagraph (4) of this paragraph, if the taxpayer had used the straight line method permitted under section 167(b)(1) for such period,

he would have used a salvage value of $5,000 and a useful life of 15 years. Depreciation under the straight line method would thus have been $3,000 each year, 1/15 of $45,000 (that is, $50,000 minus $5,000). As of January 1, 1978, the additional depreciation for the property is $29,000, as computed in the table below:

Year	Actual depreciation	Straight line	Additional depreciation (deficit)
1971	$10,000	$3,000	$7,000
1972	10,000	3,000	7,000
1973	10,000	3,000	7,000
1974	10,000	3,000	7,000
1975	10,000	3,000	7,000
1976		3,000	(3,000)
1977		3,000	(3,000)
Total	50,000	21,000	29,000

Example 4. Section 1250 property which has an adjusted basis of $108,000 is sold for $146,000 on December 31, 1972, and thus the gain realized is $38,000. The property was acquired on December 31, 1963. The applicable percentage for the period before January 1, 1970, is 12 percent (paragraph (d)(2) of § 1.1250-1) and the applicable percentage for the period after December 31, 1969, is 100 percent (paragraph (d)(1)(i)(e) of § 1.1250-1). The additional depreciation must be computed separately for the period before January 1, 1970, and for the period after December 31, 1969. Assume that the additional depreciation for the period before January 1, 1970, is $32,000 and that there is a deficit in additional depreciation of $2,000 for the period after December 31, 1969. Accordingly, the additional depreciation for the period before January 1, 1970 ($32,000) is reduced to $30,000 by the $2,000 deficit in additional depreciation for the period after December 31, 1969. Although section 1250(a)(1) applies to the property, none of the gain is recognized as ordinary income under that section since there is a deficit in additional depreciation for the period after December 31, 1969. Gain is recognized under section 1250(a)(2) since there is remaining gain of $38,000 (that is, gain realized, $38,000, minus the additional depreciation attributable to periods after December 31, 1969, zero). Since the additional depreciation attributable to the period before January 1, 1970 ($30,000), is lower than the gain realized ($38,000), the amount of gain recognized under section 1250(a)(2) is $3,600 (that is, 12 percent of $30,000).

Example 5. Section 1250 property which has an adjusted basis of $207,000 is sold for $267,000 on February 24, 1988, and thus the gain realized is $60,000. The property was acquired on April 30, 1970. The applicable percentage for the period from April 30, 1970, through December 31, 1981, is 60 percent (paragraph (d)(1)(i)(c) of § 1.1250-1) and the applicable percentage for the period from January 1, 1982, through February 24, 1988, is 100 percent (paragraph (d)(1)(i)(e) of § 1.1250-1). The additional depreciation must be computed separately for the period before January 1, 1982, and for the period after December 31, 1981. Assume that the additional depreciation for the period before January 1, 1982, is $43,000 and that there is a deficit in additional depreciation of $6,000 for the period after December 31, 1981. Accordingly, the

additional depreciation for the period before January 1, 1982 ($43,000), is reduced to $37,000 by the $6,000 deficit for the period after December 31, 1981. There is no gain recognized under section 1250(a)(1) for the period after December 31, 1981, since there is a deficit in additional depreciation for that period. The gain recognized under section 1250(a)(1) for the period before January 1, 1982, is $22,200, that is, the lower of the gain realized attributable to that period ($60,000) or the additional depreciation attributable to that period ($37,000), or $37,000, multiplied by 60 percent, the applicable percentage.

(c) ***Property held by lessee*** —

(1) ***Amount depreciation would have been.*** For purposes of paragraph (b) of this section, in case of a leasehold which is section 1250 property, in determining the amount the depreciation adjustments would have been under the straight line method in respect of any building or other improvement (which is section 1250 property) erected or made on the leased property, or in respect of any cost of acquiring the lease, the lease period shall be treated as including all renewal periods. See section 1250(b)(2). For determination of the extent to which a leasehold is section 1250 property, see paragraph (e)(3) of § 1.1250-1.

(2) ***Renewal period.***

(i) For purposes of this paragraph, the term *renewal period* means any period for which the lease may be renewed, extended, or continued pursuant to an option or options exercisable by the lessee (whether or not specifically provided for in the lease) except that the inclusion of one or more renewal periods shall not extend the period taken into account by more than two-thirds of the period on the basis of which the depreciation adjustments were allowed.

(ii) In respect of the cost of any building erected (or other improvement made) on the leased property by the lessee, or in respect of the portion of the cost of acquiring a leasehold which is attributable to an existing building (or other improvement) on the leasehold at the time the lessee acquires the leasehold, the inclusion of one or more renewal periods shall not extend the period taken into account to a period which exceeds the useful life remaining, at the time the leasehold is disposed of, of such building (or such other improvement). Determinations under this subdivision shall be made without regard to the proper period under section 167 or 178 for depreciating or amortizing a leasehold acquisition cost or improvement.

(iii) The provisions of this subparagraph may be illustrated by the following example:

Example: Assume that a leasehold improvement with a useful life of 30 years is properly amortized on the basis of a 10-year initial lease term. The lease is renewable for an additional 9 years. The period taken into account is $16^{2}/_{3}$ years, that is, 10 years plus two-thirds of 10 years. If, however, the leasehold improvement were disposed of at the end of 12 years, and if its remaining useful life were only 3 years, then the period taken into account would be 15 years.

(d) ***Depreciation adjustments*** —

(1) ***General.*** For purposes of this section, the term *depreciation adjustments* means, in respect of any property, all adjustments reflected in the adjusted basis of such property on account of deductions described in subparagraph (2) of this paragraph allowed or allowable (whether in respect of the same or other property) to the taxpayer or to any other person. For cases where the taxpayer can establish that the amount allowed for any period was less than the amount allowable, see subparagraph (4) of this paragraph. For determination of adjusted basis of property in a multiple

asset account, see paragraph (c)(3) of § 1.167(a)-8. The term *depreciation adjustments* as used in this section does not have the same meaning as the term *adjustments reflected in the adjusted basis* as defined in paragraph (a)(2) of § 1.1245-2.

(2) ***Deductions.*** The deductions described in this subparagraph are allowances (and amounts treated as allowances) for depreciation or amortization (other than amortization under section 168, 169 (as enacted by section 704(a), Tax Reform Act of 1969 (83 Stat. 667)), or 185). Thus, for example, such deductions include a reasonable allowance for exhaustion, wear, and tear (including a reasonable allowance for obsolesence) under section 167, the periodic deductions referred to in § 1.162-11 in respect of a specified sum paid for the acquisition of a leasehold and in respect of the cost to a lessee of improvements on property of which he is the lessee. However, such deductions do not include deductions for the periodic payment of rent.

(3) ***Depreciation of other taxpayers or in respect of other property.***

(i) The depreciation adjustments (reflected in the adjusted basis) referred to in subparagraph (1) of this paragraph (*a*) are not limited to adjustments with respect to the property disposed of, nor to those allowed or allowable to the taxpayer disposing of such property, and (*b*) except as provided in subparagraph (4) of this paragraph, are taken into account, whether allowed or allowable in respect of the same or other property and whether to the taxpayer or to any other person. For manner of determining the amount of additional depreciation after certain dispositions, see paragraph (e) of this section.

(ii) The provisions of this subparagraph may be illustrated by the following example:

Example: On January 1, 1966, a calendar year taxpayer purchases for $100,000 a building for use in his trade or business. He takes depreciation deductions of $20,000 (the amount allowable), of which $3,000 is additional depreciation, and transfers the building to his son as a gift on January 1, 1968. Since the exception for gifts in section 1250(d)(1) applies, the taxpayer does not recognize gain under section 1250(a)(2). In the son's adjusted basis of $80,000 for the building there is reflected $3,000 of additional depreciation. On January 1, 1969, after taking a depreciation deduction of $10,000 (the amount allowable), of which $1,000 is additional depreciation, the son sells the building. At the time of the sale the additional depreciation is $4,000 ($3,000 allowed the father plus $1,000 allowed the son).

(4) ***Depreciation allowed or allowable.***

(i) For purposes of subparagraph (1) of this paragraph, generally all deductions (described in subparagraph (2) of this paragraph) allowed or allowable shall be taken into account. See section 1016(a)(2) and the regulations thereunder for the meaning of *allowed* and *allowable*. However, if a taxpayer can establish by adequate records or other sufficient evidence that the amount allowed for any period was less than the amount allowable for such period, the amount to be taken into account for such period shall be the amount allowed. The preceding sentence shall not apply for purposes of computing under paragraph (b)(1)(ii) of this section the amount such deductions would have been under the straight line method.

(ii) The provisions of subdivision (i) of this subparagraph may be illustrated by the following example:

Example: In the year 1969 it becomes necessary to determine the additional depreciation in respect of section 1250 property, the adjusted basis of which reflects a depreciation adjustment of $1,000 with respect to depreciation deductions allowable for the calendar year 1965 under the sum of

the years-digits method. Under paragraph (b)(1)(ii) of this section, the depreciation which would have resulted under the straight line method for 1965 is $800. If the taxpayer can establish by adequate records or other sufficient evidence that he did not take, and was not allowed, any deduction for depreciation in respect of the property in 1965, then, for purposes of computing the depreciation adjustments in excess of straight line in respect of the property, the amount to be taken into account for 1965 as allowed or allowable is zero, and the amount to be taken into account in computing deductions which would have resulted under the straight line method in 1965 is $800. Thus, in effect, there is a deficit in additional depreciation for 1965 of $800.

(5) ***Retired or demolished property.*** Depreciation adjustments referred to in subparagraph (1) of this paragraph generally do not include adjustments in respect of retired or demolished portions of an item of section 1250 property. If a retired or demolished portion is replaced in a disposition described in section 1250(d)(4)(A) (relating to like kind exchanges and involuntary conversions), see paragraph (d)(7) of § 1.1250-3.

(6) ***Exempt organization.*** In respect of property disposed of by an organization which is or was exempt from income taxes (within the meaning of section 501(a), the depreciation adjustments (reflected in the adjusted basis) referred to in subparagraph (1) of this paragraph shall include only adjustments allowed or allowable

(i) in computing unrelated business taxable income (as defined in section 512(a)), or

(ii) in computing taxable income of the organization for a period during which it was not exempt or, by reason of the application of section 502, 503, or 504, was denied its exemption.

(e) ***Additional depreciation immediately after certain acquisitions*** —

(1) ***Zero.*** If on the date a person acquires property his basis for the property is determined solely

(i) by reference to its cost (within the meaning of section 1012),

(ii) by reason of the application of section 301(d) (relating to basis of property received in corporate distribution) or section 334(a) (relating to basis of property received in a liquidation in which gain or loss is recognized), or

(iii) under the rules of section 334 (b)(2) or (c) (relating to basis of property received in certain corporate liquidations), then on such date the additional depreciation for the property is zero.

(2) ***Transactions referred to in section 1250(d).*** In the case of property acquired in a disposition described in section 1250(d) (relating to exceptions and limitations to application of section 1250), additional depreciation shall be computed in accordance with the rules prescribed in § 1.1250-3.

(f) ***Records to be kept and information to be filed*** —

(1) ***Records to be kept.*** In any case in which it is necessary to determine the additional depreciation of an item of section 1250 property, the taxpayer shall have available permanent records of all the facts necessary to determine with reasonable accuracy the amount of such additional depreciation, including the following:

(i) The date, and the manner in which, the property was acquired,

(ii) The taxpayer's basis on the date the property was acquired and the manner in which the basis was determined,

(iii) The amount and date of all adjustments to the basis of the property allowed or allowable to the taxpayer for depreciation adjustments referred to in paragraph (d)(1) of this section and the amount and date of any other adjustments by the taxpayer to the basis of the property, and

(iv) In the case of section 1250 property which has an adjusted basis reflecting depreciation adjustments referred to in paragraph (d)(1) of this section taken by the taxpayer with respect to other property, or by another taxpayer with respect to the same or other property, the information described in subdivisions (i), (ii), and (iii) of this subparagraph with respect to such other property or such other taxpayer.

(2) ***Information to be filed.*** If a taxpayer acquires in a transaction (other than a like kind exchange or involuntary conversion described in section 1250(d)(4)) section 1250 property which has a basis reflecting depreciation adjustments referred to in paragraph (d)(1) of this section allowed or allowable to another taxpayer, then the taxpayer shall file with its income tax return or information return for the taxable year in which the property is acquired a statement showing all information described in subparagraph (1) of this paragraph. See section 6012 (relating to persons required to make returns of income) and part III of subchapter A of chapter 61 of the Code (relating to information returns).

[T.D. 7084, 36 FR 273, Jan. 8, 1971, as amended by T.D. 7193, 37 FR 12956, June 30, 1972]

§ 1.1250-3 Exceptions and limitations.

(a) ***Exception for gifts*** —

(1) ***General rule.*** Section 1250(d)(1) provides that no gain shall be recognized under section 1250(a) upon a disposition by gift. For purposes of this paragraph, the term *gift* shall have the same meaning as in paragraph (a) of § 1.1245-4. For reduction in amount of charitable contribution in case of a gift of section 1250 property, see section 170(e) and paragraph (c)(3) of § 1.170-1.

(2) ***Disposition in part a sale or exchange and in part a gift.*** Where a disposition of property is in part a sale or exchange and in part a gift, the disposition shall be subject to the provisions of § 1.1250-1 and the gain to which section 1250(a) applies, shall be computed under that section.

(3) ***Treatment of property in hands of transferee.*** If property is disposed of in a transaction which is a gift:

(i) The additional depreciation for the property in the hands of the transferee immediately after the disposition shall be an amount equal to (a) the amount of the additional depreciation for the property in the hands of the transferor immediately before the disposition, minus (b) the amount of any gain (in case the disposition is in part a sale or exchange and in part a gift) which would have been taken into account under section 1250(a) by the transferor upon the disposition if the applicable percentage had been 100 percent.

(ii) For purposes of computing the applicable percentage, the holding period under section 1250(e)(2) of property received as a gift in the hands of the transferee includes the transferor's holding period,

(iii) In case of a disposition which is in part a sale or exchange and in part a gift, if the adjusted basis of the property in the hands of the transferee exceeds its adjusted basis immediately before the transfer, the excess is an addition to capital account under paragraph (d)(2)(ii) of § 1.1250-5 (relating to property with 2 or more elements), and

(iv) If the property disposed of consists of two or more elements within the meaning of paragraph (c) of § 1.1250-5, see paragraph (e)(1) of § 1.1250-5 for the amount of additional depreciation and holding period for each element in the hands of the transferee.

(4) ***Examples.*** The provisions of this paragraph may be illustrated by the following examples:

Example 1. (i) On May 15, 1967, Smith transfers section 1250 property to his son for $45,000. In the hands of Smith the property had an adjusted basis of $40,000 and a fair market value of $70,000. Thus, the gain realized is $5,000 (amount realized, $45,000, minus adjusted basis, $40,000), and Smith has made a gift of $25,000 (fair market value, $70,000, minus amount realized, $45,000).
(ii) Smith's holding period for the property is 80 full months and, thus, the applicable percentage under section 1250(a)(2) is 40 percent. The additional depreciation for the property is $10,000. Since the gain realized ($5,000) is lower than the additional depreciation ($10,000), Smith recognized as ordinary income under section 1250(a)(2) gain of $2,000 (that is, applicable percentage, 40 percent, multiplied by gain realized, $5,000) and the $3,000 remaining portion of the gain realized may be treated as gain from the sale of property described in section 1231.

(iii) On the date the son receives the property, the additional depreciation for the property in his hands is $5,000, that is, the additional depreciation for the property in the hands of the father immediately before the transfer ($10,000), minus the gain which would have been recognized under section 1250(a)(2) upon the transfer if the applicable percentage had been 100 percent ($5,000); for purposes of computing applicable percentage his holding period is his father's holding period of 80 full months; and under § 1.1015-4 his unadjusted basis for the property is $45,000, that is, the amount he paid ($45,000) plus the excess (zero) of his father's adjusted basis over such amount.

(iv) The son sells the property for $80,000 on March 15, 1968, 10 full months after he received it from his father. Thus, his holding period is 90 full months (his father's holding period of 80 full months plus the 10 full months the son actually owned the property) and the applicable percentage under section 1250(a)(2) is 30 percent. Assume that no depreciation was allowed or allowable to the son. Thus, the son's adjusted basis and additional depreciation for the property on the date of the sale is the same as on the date he received it. Accordingly, the gain realized is $35,000 (selling price of $80,000, minus adjusted basis of $45,000). Since the additional depreciation ($5,000) is lower than the gain realized ($35,000), the son recognizes as ordinary income under section 1250(a)(2) gain of $1,500, that is, applicable percentage (30 percent) multiplied by additional depreciation ($5,000).

Example 2. Assume the same facts as in example (1), except that the son sells the property on June 15, 1969, 25 full months after he received it from his father. Thus, his holding period is 105 full months (his father's holding period of 80 full months plus the 25 full months the son actually owned the property) and the applicable percentage under section 1250(a)(2) is 15 percent.

Assume further that on the date of the sale the adjusted basis of the property is $39,000, and that for the period the son actually owned the property there is a deficit in additional depreciation of $2,000. Accordingly, the gain realized is $41,000 (selling price of $80,000, minus adjusted basis of $39,000), and the additional depreciation for the property is $3,000 (that is, the additional depreciation for the property in the hands of the son on the date he received it, as determined in example (1), $5,000, minus the amount of the deficit in additional depreciation for the period the son actually owned the property, ($2,000). Since the additional depreciation ($3,000) is lower than the gain realized ($41,000), the son recognizes as ordinary income under section 1250(a)(2) gain of $450, that is, applicable percentage (15 percent) multiplied by additional depreciation ($3,000).

(b) ***Exception for transfers at death*** —

(1) ***General rule.*** Section 1250(d)(2) provides that, except as provided in section 691 (relating to income in respect of a decedent), no gain shall be recognized under section 1250(a) upon a transfer at death. For purposes of this paragraph, the term *transfer at death* shall have the same meaning as in paragraph (b) of § 1.1245-4.

(2) ***Treatment of transferee.***

(i) If as of the date a person acquires property from a decedent such person's basis is determined, by reason of the application of section 1014(a), solely by reference to the fair market value of the property on the date of the decedent's death or on the applicable date provided in section 2032 (relating to alternate valuation date), then

(*a*) on the date of death the additional depreciation for the property is zero, and

(*b*) for purposes of computing applicable percentage the holding period of the property under section 1250(e)(1)(A) is deemed to begin on the day after the date of death.

(ii) If property is acquired in a transfer at death to which section 1250(d)(2) applies, the amount of the additional depreciation for the property in the hands of the transferee immediately after the transfer shall be the amount (if any) of the additional depreciation in respect of the property allowed the transferee before the decedent's death, but only to the extent that the basis of the property (determined under section 1014(a)) is required to be reduced under the second sentence of section 1014(b)(9) (relating to adjustments to basis where property is acquired from a decedent prior to his death) by depreciation adjustments referred to in paragraph (d)(1) of § 1.1250-2 which give rise to such additional depreciation. For treatment of such property as having a special element with additional depreciation so computed, see paragraph (c)(5)(i) of § 1.1250-5 (relating to property with two or more elements). For purposes of determining applicable percentage, such special element shall have a holding period which includes the transferee's holding period for such property for the period before the decedent's death.

(3) ***Examples.*** The provisions of this paragraph may be illustrated by the following examples:

Example 1. On March 6, 1966, Smith dies owning an item of section 1250 property. On March 7, 1968, the executor distributes the property to Smith's son pursuant to a specific bequest of the property in Smith's will. Under section 1014(a)(2) and paragraph (a)(2) of § 1.1014-4, the unadjusted basis of the property in the hands of the son is its fair market value on March 6, 1966 (the date Smith died), and the son is considered to have acquired the property on such date. Under section 1250(e)(1)(A), the son's holding period for the property begins on March 7, 1966 (the day after the day he is considered to have acquired the property). Thus, on March 7,

1968 (the date the property was distributed to the son), the holding period for the property is 24 full months, and the applicable percentage under section 1250(a)(2) is 96 percent. On such date, the additional depreciation for the property includes any additional depreciation in respect of the property for the period the property was possessed by the estate.

Example 2. H purchases section 1250 property in 1965 which he immediately conveys to himself and W, his wife, as tenants by the entirety. Under local law each spouse is entitled to one-half the income from the property. H and W file joint income tax returns for calendar years 1965, 1966, and 1967. Over the 3 years, depreciation allowed in respect of the property was $4,000 (the amount allowable) of which $500 is additional depreciation. One-half of these amounts are allocable to W. Thus, depreciation deductions of $2,000, of which $250 is additional depreciation, are allowable to W. On January 1, 1968, H dies and the entire value of the property at the date of death is included in H's gross estate. Since W's basis for the property (determined under section 1014(a)) is reduced (under the second sentence of section 1014(b)(9)) by the $2,000 depreciation deductions allowed W before H's death of which $250 is additional depreciation, the additional depreciation for the property in the hands of W immediately after H's death is $250.

(c) ***Limitation for certain tax-free transactions*** —

(1) ***General.*** Section 1250(d)(3) provides that upon a transfer of property described in subparagraph (2) of this paragraph, the amount of gain taken into account by the transferor under section 1250(a) shall not exceed the amount of gain recognized to the transferor on the transfer (determined without regard to section 1250). For purposes of this subparagraph, in case of a transfer of both section 1250 property and nonsection 1250 property in one transaction, the amount realized from the disposition of the section 1250 property shall be deemed to consist of that portion of the fair market value of each property acquired which bears the same ratio to the fair market value of such acquired property as the amount realized from the disposition of the section 1250 property bears to the total amount realized. The preceding sentence shall be applied solely for purposes of computing the portion of the total gain (determined without regard to section 1250) which shall be recognized as ordinary income under section 1250(a). Section 1250(d)(3) does not apply to a disposition of property to an organization (other than a cooperative described in section 521) which is exempt from the tax imposed by chapter 1 of the Code.

(2) ***Transfers covered.*** The transfers described in this subparagraph are transfers of property in which the basis of the property in the hands of the transferee is determined by reference to its basis in the hands of the transferor by reason of the application of any of the following provisions:

(i) Section 332 (relating to distributions in complete liquidation of an 80 percent or more controlled subsidiary corporation). For application of section 1250(d)(3) to such a complete liquidation, the principles of paragraph (c)(3) of § 1.1245-4 shall apply.

(ii) Section 351 (relating to transfer to a corporation controlled by transferor).

(iii) Section 361 (relating to exchanges pursuant to certain corporate reorganizations).

(iv) Section 371(a) (relating to exchanges pursuant to certain receivership and bankruptcy proceedings).

(v) Section 374(a) (relating to exchanges pursuant to certain railroad reorganizations).

(vi) Section 721 (relating to transfers to a partnership in exchange for a partnership interest).

(vii) Section 731 (relating to distributions by a partnership to a partner). For special carryover basis rule, see section 1250(d)(6)(A) and paragraph (f)(1) of this section.

(3) ***Treatment of property in hands of transferee.*** In the case of a transfer described in subparagraph (2) (other than subdivision (vii) thereof) of this paragraph:

(i) The additional depreciation for the property in the hands of the transferee immediately after the disposition shall be an amount equal to

(*a*) the amount of the additional depreciation for the property in the hands of the transferor immediately before the disposition, minus

(*b*) the amount of additional depreciation necessary to produce an amount equal to the gain taken into account under section 1250(a) by the transferor upon the disposition (taking into account the applicable percentage for the property),

(ii) For purposes of computing applicable percentage, the holding period under section 1250(e)(2) of the property in the hands of the transferee includes the transferor's holding period,

(iii) If the adjusted basis of the property in the hands of the transferee exceeds its adjusted basis immediately before the transferee, the excess is an addition to capital account under paragraph (d)(2)(ii) of § 1.1250-5 (relating to property with 2 or more elements), and

(iv) If the property disposed of consists of 2 or more elements within the meaning of paragraph (c) of § 1.1250-5, see paragraph (e)(1) of § 1.1250-5 for the amount of additional depreciation and the holding period for each element in the hands of the transferee.

(4) ***Examples.*** The provisions of this paragraph may be illustrated by the following examples:

Example 1. (i) Green transfers section 1250 property on March 1, 1968, to a corporation, which is not exempt from taxation, in exchange for cash of $9,000 and stock in the corporation worth $91,000, in a transaction qualifying under section 351. Thus, the amount realized is $100,000 ($9,000 plus $91,000). The property has an applicable percentage under section 1250(a)(2) of 60 percent, an adjusted basis of $40,000, and additional depreciation of $20,000. The gain realized is $60,000, that is, amount realized ($100,000) minus adjusted basis ($40,000). Since the additional depreciation ($20,000) is lower than the gain realized ($60,000), the amount of gain which would be treated as ordinary income under section 1250(a)(2) would be $12,000 (60 percent of $20,000) if the limitation provided in section 1250(d)(3) did not apply. Since under section 351(b) gain in the amount of $9,000 would be recognized to the transferor without regard to section 1250, the limitation provided in section 1250(d)(3) limits the gain taken into account by the transferor under section 1250(a)(2) to $9,000.

(ii) The amount of additional depreciation for the property in the hands of the transferee immediately after the transfer is $5,000, that is, the amount of additional depreciation before the transfer ($20,000) minus the amount of additional depreciation necessary to produce an amount equal to the gain recognized under section 1250(a)(2) upon the transfer ($15,000, that is, $9,000 of gain recognized divided by 60 percent, the applicable percentage). (If the property is subsequently disposed of, and for the period after the initial transfer there is

additional depreciation in respect of the property, then at the time of the subsequent disposition the additional depreciation will exceed $5,000. If, however, for the period after the initial transfer there was a deficit in additional depreciation, then at the time of the subsequent disposition the additional depreciation would be less than $5,000.)

Example 2. (i) Assume the same facts as in example (1) except that the additional depreciation is $10,000. Since additional depreciation ($10,000) is lower than the gain realized ($60,000), the amount of gain which would be treated as ordinary income under section 1250(a)(2) would be $6,000 (60 percent of $10,000) if the limitation provided in section 1250(d)(3) did not apply. Since under section 351(b) gain in the amount of $9,000 would be recognized to the transferor without regard to section 1250, the limitation under section 1250(d)(3) does not prevent treatment of the entire $6,000 as ordinary income under section 1250(a)(2). The $3,000 remaining portion of the $9,000 gain may be treated as gain from the sale of property described in section 1231.
(ii) Immediately after the transfer, the amount of additional depreciation is zero, that is, the amount of additional depreciation before the transfer ($10,000) minus the amount of additional depreciation necessary to produce an amount equal to the gain taken into account under section 1250(a)(2) upon the transfer ($10,000) that is, $6,000 divided by 60 percent.

Example 3. (i) Miller transfers section 1250 property after December 31, 1969, to a corporation, which is not exempt from taxation, in exchange for cash of $9,000 and stock in the corporation worth $31,000, in a transaction qualifying under section 351. Thus, the amount realized is $40,000 ($9,000 plus $31,000). The property has an applicable percentage under paragraph (d)(1)(i)(*e*) of this section of 100 percent and an applicable percentage under paragraph (d)(2) of this section of 50 percent. The adjusted basis of the property on the date of the transfer is $24,000, and the gain realized is $16,000 (that is, amount realized, $40,000, minus adjusted basis, $24,000). The additional depreciation attributable to periods after December 31, 1969, is $8,000 and the additional depreciation attributable to periods before January 1, 1970, is $12,000. Since the additional depreciation attributable to periods after December 31, 1969 ($8,000), is lower than the gain realized ($16,000), the amount of gain which would be recognized as ordinary income under section 1250(a)(1) would be $8,000 (100 percent of $8,000) if the limitation provided in section 1250(d)(3) did not apply. In addition, gain is recognized under section 1250(a)(2) since there is a remaining potential gain of $8,000 (that is, gain realized, $16,000, minus additional depreciation attributable to periods after December 31, 1969 ($8,000)). Since the remaining potential gain ($8,000) is lower than the additional depreciation attributable to periods before January 1, 1970 ($12,000), the amount of gain which would be recognized under section 1250(a)(2) would be $4,000 (50 percent of $8,000) if the limitation in section 1250(d)(3) did not apply. Since under section 351(b) gain in the amount of $9,000 would be recognized to the transferor without regard to section 1250, the limitation in section 1250(d)(3) limits the gain taken into account

by the transferor under section 1250(a) to $9,000. Since the section 1250(a)(1) gain is considered as recognized first under paragraph (a)(1)(iii) of § 1.1250-1, of the $9,000 of gain recognized, $8,000 is recognized under section 1250(a)(1) and $1,000 is recognized under section 1250(a)(2).
(ii) The amount of additional depreciation for the property in the hands of the transferee immediately after the transfer is $10,000, the amount of additional depreciation immediately before the transfer ($20,000), minus the sum of (*a*) the amount of additional depreciation necessary to produce an amount equal to the gain recognized under section 1250(a)(1) upon the transfer, $8,000 (that is, gain recognized under section 1250(a)(1), $8,000, divided by 100 percent, the applicable percentage under section 1250(a)(1)), plus (*b*) the amount of additional depreciation necessary to produce an amount equal to the gain recognized under section 1250(a)(2) upon the transfer, $2,000 (that is, gain recognized under section 1250(a)(2), $1,000, divided by 50 percent, the applicable percentage under section 1250(a)(2)). Of this amount, zero (that is, $8,000 minus $8,000) is attributable to periods after December 31, 1969, and $10,000 ($12,000 minus $2,000) is attributable to periods before January 1, 1970.

(d) ***Limitation for like kind exchanges and involuntary conversions*** —

(1) ***Limitation on gain.***

(i) Under section 1250(d)(4)(A), if property is disposed of and gain (determined without regard to section 1250) is not recognized in whole or in part under section 1031 (relating to like kind exchanges) or section 1033 (relating to involuntary conversions), then the amount of gain taken into account by the transferor under section 1250(a) shall not exceed the greater of the two limitations set forth in subdivisions (ii) and (iii) of this subparagraph. Immediately after the transfer the basis of the acquired property shall be determined under subparagraph (2), (3), or (4) (whichever is applicable) of this paragraph, and its additional depreciation shall be computed under subparagraph (5) of this paragraph. The holding period of the acquired property for purposes of computing applicable percentage, which is determined under section 1250(e)(1), does not include the holding period of the property disposed of. In the case of a disposition of section 1250 property and other property in one transaction, see subparagraph (6) of this paragraph. In case of a disposition described in section 1250(d)(4)(A) of a portion of this item of property, see subparagraph (7) of this paragraph.

(ii) For purposes of this subparagraph, the first limitation is the sum of:

(*a*) The amount of gain recognized on the disposition under section 1031 or 1033 (determined without regard to section 1250), plus

(*b*) An amount equal to the cost of any stock purchased in a corporation which (without regard to section 1250) would result in nonrecognition of gain under section 1033(a)(3)(A).

(iii) For purposes of this subparagraph, the second limitation is the excess (if any) of:

(*a*) The amount of gain which would (without regard to section 1250(d)(4)) be taken into account under section 1250(a), over

(*b*) The fair market value (or cost in the case of a transaction described in section 1033(a)(3)) of the section 1250 property acquired in the transaction.

(iv) The provisions of this subparagraph may be illustrated by the following example:

Example: A taxpayer receives $96,000 of insurance proceeds upon the destruction of section 1250 property by fire. If section 1250(d)(4)(A) did not apply to the disposition, $16,000 of gain would be recognized under section 1250(a). In acquisitions qualifying under section 1033(a)(3)(A), he uses $90,000 of the proceeds to purchase property similar or related in service or use to the property destroyed, of which $42,000 is for one item of section 1250 property and $48,000 is for one piece of land, and $5,000 of the proceeds to purchase stock in the acquisition of control of a corporation owning property similar or related in service or use to the property destroyed. The taxpayer properly elects under section 1033(a)(3)(A) and the regulations thereunder to limit recognition of gain (determined without regard to section 1250) to $1,000, that is, the excess of the amount realized from the conversion ($96,000) over the cost of the property acquired in acquisitions qualifying under section 1033(a)(3)(A) ($95,000, that is, $90,000 plus $5,000). The amount of gain recognized under section 1250(a) is $6,000, determined in the following manner:

The first limitation:	
(*a*) Amount of gain recognized under section 1033(a)(3), determined without regard to section 1250(a)	$1,000
(*b*) Fair market value of stock in a corporation which qualifies under section 1033(a)(3)(A)	5,000
(*c*) Sum of (*a*) plus (*b*)	6,000
The second limitation:	
(*d*) Amount of gain which would be recognized under section 1250(a) if section 1250(d)(4) did not apply	16,000
(*e*) Cost of section 1250 property acquired in transaction	42,000
(*f*) Excess of (*d*) over (*e*)	0

Since the first limitation ($6,000) exceeds the second limitation (zero), the amount of gain recognized under section 1250(a) is $6,000. The balance ($10,000) of the gain realized ($16,000) is not recognized.

(2) ***Basis of property purchased upon involuntary conversion into money.***

(i) If section 1250 property is purchased in a compulsory or involuntary conversion to which section 1033(a)(3) applies, and if by reason of the application of section 1250(d)(4)(A) all or part of the gain computed under section 1250(a) is not taken into account, then the basis of the section 1250 property and other purchased property shall be determined under the rules prescribed in this subparagraph. See section 1250(d)(4)(D).

(ii) The total basis of all purchased property, the acquisition of which results in the nonrecognition of any part of the gain realized upon the transaction, shall be

(*a*) its cost, reduced by

(*b*) the portion of the total gain realized which was not recognized. To the extent that section 1250(d)(4)(A)(i) prevents the purchase of stock from resulting in nonrecognition of gain, the basis of purchased stock is its cost.

(iii) If purchased property consists of both section 1250 property and other property, the total basis computed under subdivision (ii) of this subparagraph shall be allocated between the section 1250 property (treated as a class) and the other property (treated as a class) in proportion to their respective costs, except that for purposes of this subdivision (but not subdivision (iv) of this subparagraph) the cost of the section 1250 property shall be deemed to be the excess of

(*a*) its actual cost, over

(*b*) the gain not taken into account under section 1250(a) by reason of the application of section 1250(d)(4)(A).

(iv) If the property acquired consists of more than one item of section 1250 property (or of more than one item of other property), the total basis of the section 1250 property (or of the other property), as computed under subdivisions (ii) and (iii) of this subparagraph, shall be allocated to each item of section 1250 property (or other property) in proportion to their respective actual costs.

(v) The provisions of this subparagraph may be illustrated by the following examples:

> *Example 1.* Assume the same facts as in the example in subparagraph (1)(iv) of this paragraph. Assume further that the portion of the gain realized which was not recognized under section 1033(a)(3) or 1250(a) upon the transaction is $60,000, of which the gain computed under section 1250(a) which is not taken into account by reason of the application of section 1250(d)(4)(A) is $10,000, that is, the excess of the gain which would have been recognized under section 1250(a) if section 1250(d)(4)(A) did not apply ($16,000) over the gain recognized under section 1250(a) ($6,000). In such example $95,000 of proceeds were used to purchase property in acquisitions qualifying under section 1033(a)(3)(A) of which $42,000 was for section 1250 property, $48,000 for land, and $5,000 for stock in a corporation. The basis of each acquired property is determined in the following manner:

(*a*) Under subdivision (ii) of this subparagraph, the total basis of the acquired properties (other than the stock) is $30,000, that is, their cost ($90,000, of which $42,000 is for section 1250 property and $48,000 is for land), reduced by the portion of the total gain realized which was not recognized ($60,000).

(*b*) Under subdivision (iii) of this subparagraph, such total basis is allocated between the section 1250 property and the land in proportion to their respective costs, and for this purpose the cost of the section 1250 property is considered to be $32,000, that is, its actual cost ($42,000) minus the gain not recognized under section 1250(a) by reason of the application of section 1250(d)(4)(A) ($10,000). Thus, the basis of the section 1250 property is $12,000 (32/80 of $30,000), and the basis of the land is $18,000 (48/80 of $30,000).

(*c*) The basis of the purchased stock is its cost of $5,000. See last sentence of subdivision (ii) of this subparagraph.

Example 2. Assume the same facts as in example (1) except that the section 1250 property purchased for $42,000 consists of 2 items of such property ($10,500 for C, and $31,500 for D), and that the land purchased for $48,000 consists of 2 pieces of land ($12,000 for X, and $36,000 for Y). Under subdivision (iv) of this subparagraph, the total basis for each class of property is allocated between the individual properties of such class in proportion to their respective actual costs. Thus, the total basis of $12,000, as determined in example (1), for the section 1250 property is allocated as follows:

To C: $12,000 × ($10,500/$42,000)	$3,000
To D: $12,000 × ($31,500/$42,000)	9,000
Total	12,000

The total basis of $18,000, as determined in example (1), for the land is allocated as follows:

To X: $18,000 × ($12,000/$48,000)	$4,500
To Y: $18,000 × ($36,000/$48,000)	13,500

Total	18,000

(3) ***Basis of property acquired upon involuntary conversion into similar property.*** If property is involuntarily converted into property similar or related in service or use in a transaction to which section 1033(a)(1) applies, and if by reason of the application of section 1250(d)(4)(A) all or part of the gain computed under section 1250(a) is not taken into account, then:

(i) The total basis of the acquired property shall be determined under the first sentence of section 1033(c), and

(ii) If more than one item of property is acquired, such total basis shall be allocated to the individual items of property acquired in accordance with the principles prescribed in subparagraph (2) (iii) and (iv) of this paragraph, except that an amount equivalent to the fair market value of each item of property on the date acquired shall be treated as its actual cost.

(4) ***Basis of property acquired in like kind exchange.*** If section 1250 property is transferred in an exchange described in section 1031 (a) or (b), and if by reason of the application of section 1250(d)(4)(A) all or part of the gain computed under section 1250(a) is not taken into account, then:

(i) The total basis of the property (including nonsection 1250 property) acquired of the type permitted to be received under section 1031 without recognition of gain or loss shall be determined under section 1031(d), and

(ii) If more than one item of property of such type was received, such total basis shall be allocated to the individual items of property of such type in accordance with the principles prescribed in subparagraph (2) (iii) and (iv) of this paragraph, except that an amount equivalent to the fair market value of each such item of property on the date received shall be treated as its actual cost.

(5) ***Additional depreciation for property acquired in like kind exchange or involuntary conversion.***

(i) If property is disposed of in a transaction described in section 1031 or 1033, and if by reason of the application of section 1250(d)(4)(A) all or part of the gain computed under section 1250(a) is not taken into account, then the additional depreciation for the acquired property immediately after the transaction (as computed under section 1250(d)(4)(E)) shall be an amount equal to the amount of gain computed under section 1250(a) which was not taken into account by reason of the application of section 1250(d)(4)(A).

(ii) In case more than one item of section 1250 property is acquired in the transaction, the additional depreciation computed under subdivision (i) of this subparagraph shall be allocated to each such item of section 1250 property in proportion to their respective adjusted bases.

(iii) The provisions of this subparagraph may be illustrated by the following examples:

Example 1. (a) On January 15, 1969, section 1250 property X is condemned and proceeds of $100,000 are received. On such date, X's adjusted basis is $25,000, the additional depreciation is $10,000, and the applicable percentage under section 1250(a)(2) is 70 percent. Since the additional depreciation ($10,000) is less than the

gain realized ($75,000, that is, $100,000 minus $25,000) the amount of gain computed under section 1250(a)(2) (without regard to section 1250(d)(4)(A)) is $7,000, that is, 70 percent of $10,000.
(b) On March 1, 1969, all the proceeds are used to purchase section 1250 property Y in a transaction qualifying under section 1033(a)(3)(A) for nonrecognition of gain. Accordingly, the gain not recognized by reason of the application of section 1033(a)(3)(A) is $75,000, of which $7,000 is gain computed under section 1250(a)(2) which is not taken into account by reason of the application of section 1250(d)(4)(A). See subparagraph (1) of this paragraph.

(c) Immediately after the transaction, Y's basis is $25,000, that is, its cost ($100,000) minus the total gain realized which was not recognized ($75,000), and the additional depreciation (as computed under section 1250(d)(4)(E)) is $7,000, that is, the amount of gain not taken into account under section 1250(a)(2) by reason of the application of section 1250(d)(4)(A).

(d) On December 15, 1969, before any depreciation deductions were allowed or allowable in respect of Y, Y is sold for $90,000. Under section 1250(e)(1), the holding period of Y is 9 months, and thus, under section 1250(a)(2), the applicable percentage is 100 percent. Since the additional depreciation ($7,000) is less than the gain realized ($65,000, that is $90,000 minus $25,000), the amount of gain recognized under section 1250(a)(2) as ordinary income is $7,000, that is, 100 percent of $7,000.

Example 2. Assume the same facts as in example (1), except that property Y was purchased on June 15, 1962, and that 90 full months thereafter, or December 15, 1969, it is sold for $35,000. Thus the applicable percentage under section 1250(a)(2) is 30 percent. Assume further that at the time of such sale Y's adjusted basis is $5,000 and additional depreciation in respect of Y for periods after it was acquired is $2,500. Thus, the additional depreciation at the time of the sale is $9,500, that is, the sum of the additional depreciation in respect of Y attributable to X as computed under section 1250(d)(4)(E) in (*c*) of example (1) ($7,000), plus the additional depreciation attributable to periods after Y was acquired ($2,500). Since the additional depreciation ($9,500) is less than the gain realized ($30,000, that is, $35,000 minus $5,000), the gain recognized under section 1250(a)(2) as ordinary income is $2,850, that is, 30 percent of $9,500.

(6) ***Single disposition of section 1250 property and property of different class.***

(i) For purposes of this subparagraph:

(*a*) Section 1250 property, section 1245 property (as defined in section 1245(a)(3)), and other property shall each be treated as a separate class of property, and

(*b*) The term *qualifying property* means property which may be acquired without recognition of gain under the applicable provision of section 1031 or 1033 (applied without regard to section 1250 or 1245) upon the disposition of property.

(ii) If upon a sale of section 1250 property gain would be recognized under section 1250(a) and if such section 1250 property together with property of a different class or classes are disposed of in one transaction in which gain is not recognized in whole or in part under section 1031 or 1033 (without regard to sections 1245 and 1250), then:

(*a*) The total amount realized shall be allocated between the different classes of property disposed of in proportion to their respective fair market values,

(*b*) The amount realized upon the disposition of property of a class shall be deemed to consist of so much of the fair market value of qualifying property of the same class acquired as is not in excess of the amount realized from the property of such class disposed of,

(*c*) The remaining portion (if any) of the amount realized upon the disposition of property of such class shall be deemed to consist of so much of the fair market value of any other property acquired as is not in excess of such remaining portion, and

(*d*) For purposes of applying (*c*) of this subdivision, the fair market value of acquired property shall be taken into account only once and in such manner as the taxpayer determines.

(iii) The amounts determined under this subparagraph in respect of property shall apply for all purposes of the Code.

(iv) The application of this subparagraph may be illustrated by the following example:

Example: (a) Green owns property consisting of land and a fully equipped factory building thereon. The property is condemned and proceeds of $100,000 are received. If the property were sold for $100,000, gain of $40,000 would be recognized of which $10,000 would be recognized as ordinary income under section 1250(a). Proceeds of $95,000 are used to purchase property similar or related in service or use to the condemned property and under section 1033(a)(3)(A) (without regard to sections 1245 and 1250) recognition of gain is limited to $5,000. The fair market values by classes of the property disposed of, and of the property acquired, are summarized in the table below:

	Fair market value of property	
	Disposed of	**Acquired**
Section 1245 property	$35,000	$55,000
Section 1250 property	45,000	28,000
Land	20,000	12,000
Cash		5,000
	100,000	100,000

(*b*) The allocations under subdivision (ii) of this subparagraph are summarized in the

table below:

Property disposed of	Property acquired			Cash Remaining
	Sec. 1245 Property	Sec. 1250 Property	Land	
$35,000 of section 1245 property	$35,000			
$45,000 of section 1250 property	[1] 17,000	$28,000		
$20,000 of land	[1] 3,000		$12,000	[1] $5,000
Total	55,000	28,000	12,000	5,000

[1] *Determined by taxpayer pursuant to subdivision (ii)(d) of this subparagraph.*

(*c*) Upon the disposition of the section 1245 property, only section 1245 property is acquired, and thus gain (if any) would not be recognized under section 1245(a)(1). See section 1245(b)(4). Upon the disposition of the section 1250 property gain under section 1250(a) would not be recognized by reason of the application of section 1250(d)(4)(A). See subparagraph (1) of this paragraph. If the gain realized on the disposition of the land is not less than $5,000, then under section 1033(a)(3)(A) the gain recognized would be $5,000, that is, an amount equal to the portion of the proceeds from the disposition of the land ($5,000) not invested in qualifying property.

(7) ***Disposition of portion of property.*** A disposition described in section 1250(d)(4)(A) of a portion of an item of property gives rise to an addition to capital account described in the last sentence of paragraph (d)(2)(i) of § 1.1250-5 (relating to property with 2 or more elements). If the addition to capital account is a separate improvement within the meaning of paragraph (d) of § 1.1250-5, and thus an element, then immediately after the addition is made the amount of additional depreciation for such separate improvement shall be computed under subparagraph (5) of this paragraph by treating such portion and such addition as separate properties. If the addition is not a separate improvement, then immediately after the addition is made such property is considered under paragraph (c)(5)(ii) of § 1.1250-5 as having a special element with the same amount of additional depreciation so computed. For purposes of computing applicable percentage, the holding period of the separate improvement or special element (as the case may be), which is determined under section 1250(e)(1), does not include the holding period of the property disposed of.

(e) ***Sections 1071 and 1081 transactions*** —

(1) ***General.*** This paragraph prescribes regulations under section 1250(d)(5) which apply in the case of a disposition of section 1250 property in a transaction in which gain (determined without regard to section 1250) is not recognized in whole or in part by reason of the application of section 1071 (relating to gain from sale or exchange to effectuate policies of FCC) or section 1081 (relating to gain from sale or exchange in obedience to order of SEC).

(2) ***Involuntary conversion treatment under section 1071.*** If section 1250 property is disposed of and gain (determined without regard to section 1250) is not recognized in whole or in part solely by reason of an election under the first sentence of section 1071(a) to treat the transaction as an involuntary conversion, the consequences of the transaction shall be determined under the principles of paragraph (d) of this section.

(3) ***Basis reduction under sections 1071 or 1082(a)(2).***

(i) If section 1250 property is disposed of and gain (determined without regard to section 1250) is not recognized in whole or in part by reason of a reduction in basis of property pursuant to an election under section 1071(a) or the application of section 1082(a)(2), then the amount of gain taken into account by the transferor under section 1250(a) shall not exceed the sum of:

(*a*) The amount of gain recognized on such disposition (determined without regard to section 1250), plus

(*b*) In case involuntary conversion treatment was also elected under section 1071(a), an amount equal to the cost of any stock purchased in a corporation which (without regard to section 1250) would result in nonrecognition of gain under section 1033(a)(3), as modified by section 1071(a), plus

(*c*) The portion of the gain computed under section 1250(a) (without regard to this paragraph) which is neither taken into account under (*a*) or (*b*) of this subdivision nor applied under subdivision (ii) of this subparagraph to reduce the basis of section 1250 property.

(ii)

(*a*) The amount of gain computed under section 1250(a) (without regard to this paragraph) which is not taken into account under subdivision (i) (*a*) or (*b*) of this subparagraph shall be applied to the amount by which the basis of the section 1250 property was reduced under section 1071(a) or 1082(a)(2), as the case may be, before other gain (which is not gain computed under section 1250(a)) is so applied.

(*b*) If the basis of more than one item of section 1250 property was so reduced, the gain applied under (*a*) of this subdivision to all such section 1250 properties shall be applied to such items in proportion to the amounts of their respective basis reductions.

(*c*) Any gain not applied under (*a*) of this subdivision shall be applied to the amount by which the basis of the nonsection 1250 property was reduced.

(iii) If gain computed under section 1250 is applied under subdivision (ii) of this subparagraph to reduce the basis of section 1250 property, the amount so applied shall be treated as additional depreciation in respect of such section 1250 property. For treatment of such section 1250 property as having a special element with additional depreciation consisting of such amount, see paragraph (c)(5)(i) of § 1.1250-5. For purposes of computing applicable percentage, such special element shall have a holding period beginning on the day after the date as of which the property's basis was so reduced.

(4) ***Section 1081(d)(1)(A) transaction.*** No gain shall be recognized under section 1250(a) upon an exchange of property as to which gain is not recognized (without regard to section 1250) because of the application of section 1081(d)(1)(A) (relating to transfers within system group). For treatment of property in the hands of a transferee, the principles of paragraph (c)(3) of this section shall apply.

(f) ***Property distributed by a partnership to a partner —***

(1) ***General.*** For purposes of section 1250 (d)(3) and (e)(2), the basis of section 1250 property distributed by a partnership to a partner shall be determined by reference to the adjusted basis of such property to the partnership. Thus, if section 731 applies to a distribution of section 1250 property by a partnership to a partner, then even though the partner's basis is not determined for other purposes by reference to the partnership's basis,

(i) the amount of gain taken into account by the partnership under section 1250(a) is limited by section 1250(d)(3) to the amount of gain recognized to the partnership upon the distribution (determined without regard to section 1250), and

(ii) the holding period of the property in the hands of the partner shall, under section 1250(e)(2), include the holding period of the property in the hands of the partnership. For nonapplication of section 1250(d)(3) to a disposition to an organization (other than a cooperative described in section 521) which is exempt from the tax imposed by chapter 1 of the Code, see paragraph (c)(1) of this section.

(2) ***Treatment of property distributed by partnership.***

(i) If section 1250 property is distributed by a partnership to a partner in a distribution in which no part of the partnership's *potential section 1250 income* in respect of the property was recognized as ordinary income to the partnership under paragraph (b)(2)(ii) of § 1.751-1, the additional depreciation for the property in the hands of the distributee attributable to periods before the distribution shall be an amount equal to the total potential section 1250 income of the partnership in respect of the property immediately before the distribution, recomputed as if the applicable percentage for the property had been 100 percent. Under paragraph (c)(4) of § 1.751-1, the potential section 1250 income is, in effect, the gain to which section 1250(a) would have applied if the property had been sold by the partnership immediately before the distribution at its fair market value at such time.

(ii) If upon the distribution any potential section 1250 income in respect of the property was recognized to the partnership under paragraph (b)(2)(ii) of § 1.751-1, then after the distribution the additional depreciation shall be an amount equal to

(*a*) the total potential section 1250 income in respect of the property, as recomputed in subdivision (i) of this subparagraph, minus

(*b*) the amount of potential section 1250 income which would have been recognized to the partnership under paragraph (b)(2)(ii) of § 1.751-1 if the applicable percentage for the property had been 100 percent.

(iii) If the partner's basis for the property immediately after the transaction exceeds the partnership's adjusted basis for the property immediately before the transaction, the excess may be an addition to capital account under paragraph (d)(2)(ii) of § 1.1250-5 (relating to property with two or more elements).

(3) ***Examples.*** The provisions of subparagraphs (1) and (2) of this paragraph may be illustrated by the following examples:

> *Example 1.* (i) A partnership distributes a building to Smith on January 1, 1969, in a complete liquidation of his partnership interest to which section 736(a) does not apply. On

the date of the distribution, the partnership's holding period for the property is 40 full months and, accordingly, the applicable percentage under section 1250(a)(2) is 80 percent. On such date, the partnership's additional depreciation for the building ($6,250) is lower than the excess ($40,000) of its fair market value ($140,000) over adjusted basis ($100,000). Thus, under paragraph (c)(4) of § 1.751-1, the partnership's potential section 1250 income in respect of the building is $5,000 (80 percent of $6,250). Assume that section 751(b) does not apply to the distribution. Accordingly, no gain would be recognized to the partnership under section 731(b) (without regard to the application of section 1250). Smith's basis for his partnership interest was $150,000, and under section 732(b) Smith's basis for the building is equal to his basis for his partnership interest. Thus, Smith's basis for the building is not determined by reference to the partnership's basis for the building. Nevertheless, under subparagraph (1) of this paragraph, no gain is recognized to the partnership under section 1250(a)(2) and Smith's holding period for the property includes the partnership's holding period.

(ii) Six full months after Smith received the building in the distribution, or July 1, 1969, he sells it for $153,000. Assume that no depreciation was allowed or allowable to Smith for the building, and that the special rules under § 1.1250-5 for property with two or more elements do not apply. Since Smith's holding period for the building includes its holding period in the hands of the partnership, his holding period is 46 full months (40 full months for the partnership plus 6 full months for Smith) and the applicable percentage under section 1250(a)(2) is 74 percent.

(iii) Since no potential section 1250 income was recognized to the partnership under paragraph (b)(2)(ii) of § 1.751-1, the additional depreciation for the building attributable to periods before the distribution is determined under the provisions of subparagraph (2)(i) of this paragraph. Under such provisions, the potential section 1250 income to the partnership, which was actually $5,000 (that is, 80 percent of $6,250), is recomputed as if the applicable percentage were 100 percent, and thus such additional depreciation is $6,250 (that is, 100 percent of $6,250). Since no depreciation was allowed or allowable for the building in Smith's hands, the additional depreciation for the building attributable to Smith's total holding period (46 full months) is $6,250. Since the gain realized ($3,000, that is, amount realized, $153,000, minus adjusted basis, $150,000), is lower than the additional depreciation ($6,250), the gain recognized to Smith under section 1250(a)(2) is $2,220 (that is, 74 percent of $3,000).

Example 2. Assume the facts as in example (1) except that as a result of the distribution the partnership recognizes under paragraph (b)(2)(ii) of § 1.751-1 potential section 1250 income of $1,000 (that is, 80 percent of $1,250). The additional depreciation attributable to periods before the distribution, as determined under the provisions of subparagraph (2)(ii) of this paragraph, is $5,000, that is,

(*a*) the total potential section 1250 income in respect of the property, recomputed in example (1) as if the applicable percentage were 100 percent ($6,250), minus

(*b*) the amount of potential section 1250 income which would have been recognized to the partnership under paragraph (b)(2)(ii) of § 1.751-1 if the applicable percentage for the property had been 100 percent ($1,250, that is, 100 percent of $1,250).

(4) ***Treatment of partnership property after certain transactions.*** If under paragraph (b)(3) of § 1.751-1 (relating to certain distributions of partnership property other than section 751 property treated as sales or exchanges) a partnership is treated as purchasing section 1250 property (or a portion thereof) from a distributee who relinquishes his interest in such property (or portion), then after the date of such purchase the following rules shall apply:

(i) If only a portion of the property is treated as purchased, there shall be excluded from the additional depreciation for the remaining portion any additional depreciation in respect of the purchased portion for periods before such purchase.

(ii) In respect of the purchased property (or portion),

(*a*) as of the date of purchase the amount of additional depreciation shall be zero, and

(*b*) for purposes of computing applicable percentage the holding period shall begin on the day after the date of such purchase.

(5) ***Cross reference.*** See paragraph (f) of § 1.1250-1 for the amount of additional depreciation for partnership property in respect of a partner who acquired his partnership interest in certain transactions when an election under section 754 (relating to optional adjustments to basis of partnership property) was in effect.

(g) ***Disposition of principal residence*** —

(1) ***In general.***

(i) Section 1250(d)(7)(A) provides that section 1250(a) shall not apply to a disposition of property by a taxpayer to the extent the property is used by the taxpayer as his principal residence (within the meaning of section 1034(a) and the regulations thereunder, relating to a sale or exchange of residence). Thus, for example, if a doctor sells a house, of which one portion was used as his principal residence within the meaning of section 1034(a) and the other portion was properly subject to the allowance for depreciation as property used in his trade or business, then, by reason of the application of section 1250(d)(7)(A), section 1250(a) does not apply in respect of the disposition of the portion used as his principal residence. The provisions of this subparagraph shall apply regardless of whether section 1034 applies. Thus, for example, if section 1034 did not apply to the sale because the doctor did not invest in a new principal residence within the period specified in section 1034, nevertheless section 1250(a) would not apply to the disposition of the portion used as a principal residence.

(ii) Section 1250(d)(7)(B) provides that section 1250(a) shall not apply to a disposition of section 1250 property by a taxpayer who, in respect of the property, satisfies the age and ownership requirements of section 121 (relating to exclusion from gross income of gain on sale or exchange of residence of individual who has attained age 65), but only to the extent the taxpayer satisfies the use requirements of section 121 in respect of such property. Thus, if a taxpayer has attained the age of 65 before the date on which he disposes of section 1250 property, and if during the 8-year period ending on the date of the disposition the property has been owned and used by the taxpayer solely as his principal residence for periods aggregating 5 years or more, then section 1250(a) does not apply in respect to the disposition. This result

would not be changed even if the taxpayer does not or cannot make the election provided for in section 121 and even if section 121 applies to only a portion of the gain because the adjusted sales price exceeds the $20,000 limitation in section 121(b)(1). If, however, only a portion of the property has been used as his principal residence for such periods aggregating 5 years or more, then, by reason of the application of section 1250(d)(7)(B), section 1250(a) is inapplicable only to the portion so used. For special rules for determining whether the age, ownership, and use requirements of section 121 are treated as satisfied, and for the manner of applying such requirements, see section 121(d) and the regulations thereunder.

(2) ***Concurrent operation of section 1250(d)(7) with other provisions.*** Upon the disposition of a principal residence, gain computed under section 1250(a) may not be recognized in whole or in part by reason of the application of both the provisions of section 1250(d)(7) and the provisions of one of the other exceptions or limitations enumerated in section 1250(d). Thus, for example, if an entire house is transferred as a gift, and if section 1250(d)(7) applies to only a portion of the house, then section 1250(d)(1) excepts the disposition of the entire house from the application of section 1250(a).

(3) ***Special rule.*** If by reason of section 1250(d)(7) a disposition is partially excepted from the application of section 1250(a), and if no other paragraph of section 1250(d) excepts the disposition entirely from such application, then the gain to which section 1250(a) applies shall be an amount which bears the same ratio to

(i) the gain computed under section 1250(a) (without regard to section 1250(d)(7)), as

(ii) the fair market value of the portion of the property to which the exception in section 1250(d)(7) does not apply, bears to

(iii) the total fair market value of the property. Thus, for example, if under paragraph (a)(2) of this section gain of $300 would be recognized as ordinary income under section 1250(a) (without regard to section 1250(d)(7)) upon a combined sale and gift of section 1250 property, and if the property has a fair market value of $25,000 of which $10,000 is properly allocable to a portion not used as a principal residence, then the amount of gain recognized as ordinary income under section 1250(a) would be $120 (10/25 of $300).

(4) ***Treatment of property in hands of transferee.*** If property is disposed of in a transaction to which section 1250(d)(7) applies, and if its basis in the hands of the transferee is determined by reference to its basis in the hands of the transferor by reason of the application of section 1250(d)(1) (relating to gifts) or section 1250(d)(3) (relating to certain tax-free transactions), then the treatment of the property in the hands of the transferee shall be determined under paragraph (a)(3) or (c)(3) (whichever is applicable) of this section

(5) ***Treatment of property acquired in like kind exchange or involuntary conversion.*** If property is disposed of in a transaction to which section 1250(d)(7) (relating to principal residence) and section 1250(d)(4) (relating to like kind exchanges and involuntary conversions) apply, then:

(i) The basis of the property acquired shall be determined under the applicable provisions of paragraph (d) (2), (3), or (4) of this section, applied as if all gain computed under section 1250(a) (except any gain not recognized solely by reason of the application of section 1250(d)(7)) were not taken into account by reason of section 1250(d)(4)(A),

(ii) The additional depreciation for the property acquired shall be determined in the manner prescribed in paragraph (d)(5) of this section, so applied, and

(iii) For purposes of computing the applicable percentage, the holding period of the acquired property shall be determined under section 1250(e)(1).

(6) ***Treatment of property acquired in section 1034 transaction.*** If a principal residence is disposed of in a transaction to which section 1250(d)(7) applies, and if by reason of the application of section 1034 (relating to sale or exchange of residence) the basis of property acquired in the transaction is determined by reference to the basis in the hands of the taxpayer of the property disposed of, then:

(i) The additional depreciation for the acquired property immediately after the transaction shall be an amount equal to

(*a*) the amount of the additional depreciation for the property disposed of, minus

(*b*) the amount of any gain which would have been taken into account under section 1250(a) by the transferor upon the disposition if the applicable percentage for the property had been 100 percent,

(ii) For purposes of computing the applicable percentage, the holding period of the acquired property includes the holding period of the disposed of property (see section 1250(e)(3)),

(iii) If the adjusted basis of the acquired property exceeds the adjusted basis immediately before the transfer of the property disposed of, the excess is an addition to capital account under paragraph (d)(2)(ii) of § 1.1250-5 (relating to property with more than one element), and

(iv) If the property disposed of consisted of two or more elements within the meaning of paragraph (c) of § 1.1250-5, see paragraph (e)(3) of § 1.1250-5 for the amount of additional depreciation and the holding period for each element in the hands of the transferee.

(h) ***Limitation for disposition of qualified low-income housing*** —

(1) ***Limitation on gain.***

(i) Under section 1250(d)(8)(A), if section 1250 property is disposed of and gain (determined without regard to section 1250) is not recognized in whole or in part under section 1039 (relating to certain sales of low-income housing projects), then the amount of gain recognized by the transferor under section 1250(a) shall not exceed the greater of:

(*a*) The amount of gain recognized under section 1039 (determined without regard to section 1250), or

(*b*) The excess, if any, of the amount of gain which would, but for section 1250(d)(8)(A), be taken into account under section 1250(a), over the cost of the section 1250 property acquired in the transaction.

For purposes of this paragraph the term *qualified housing project, approved disposition, reinvestment period,* and *net amount realized* shall have the same meaning as in section 1039 and § 1.1039-1.

(ii) The principles of this subparagraph may be illustrated by the following examples:

> *Example 1.* (i) Taxpayer A owns a qualified housing project and makes an approved disposition of the project on January 1, 1971. The net amount realized upon the disposition is $550,000, of which $475,000 is attributable to section 1250 property. The

adjusted basis of the section 1250 property is $250,000 and the gain realized on the disposition of section 1250 property is $225,000. The additional depreciation for the property is $100,000, the applicable percentage is 48 percent, and if section 1250(d)(8)(A) did not apply to the disposition, $48,000 of gain would be recognized under section 1250(a). Within the reinvestment period, A purchases a replacement qualified housing project at a cost of $525,000, of which $425,000 is attributable to section 1250 property. A properly elects under section 1039(a) and the regulations thereunder to limit the recognition of gain (determined without regard to section 1250) to $25,000, that is, the excess of the net amount realized ($550,000) over the cost of the replacement housing project ($525,000).
(ii) The amount of gain recognized under section 1250(a) is limited to $25,000, that is, the greater of (*a*) the amount of gain recognized without regard to section 1250(a) ($25,000), or (*b*) the excess of (*1*) the amount of gain which would be taken into account under section 1250(a) if section 1250(d)(8)(A) did not apply ($225,000), over (*2*) the cost of the replacement section 1250 property ($425,000), or zero.

Example 2. The facts are the same as in example (1) except that only $180,000 of the cost of the replacement housing project is attributable to section 1250 property. Thus, the gain recognized under section 1250(a) is limited to $45,000, the greater of

(*a*) the excess of

(*1*) the amount of gain which would be taken into account under section 1250(a) if section 1250(d)(8)(A) did not apply ($225,000), over

(*2*) the cost of the replacement section 1250 property ($180,000), or

(*b*) the amount of gain recognized without regard to section 1250 ($25,000).

(2) ***Replacement project consisting of more than one element.***

(i) If

(*a*) section 1250 property is disposed of,

(*b*) any portion of the gain which would have been recognized under section 1250(a) is not recognized by reason of section 1250(d)(8)(A), and

(*c*) the cost of the replacement section 1250 property constructed, reconstructed, or acquired during the reinvestment period exceeds the net amount realized attributable to the section 1250 property disposed of, then the section 1250 property shall consist of two elements. For purposes of this paragraph, the *reinvestment element* is that portion of the section 1250 property constructed, reconstructed, or acquired during the reinvestment period the cost of which does not exceed the net amount realized attributable to the section 1250 property disposed of, reduced by any gain recognized with respect to such property. The *additional cost element* is that portion of the section 1250 property constructed, reconstructed, or acquired during the reinvestment period whose cost exceeds the net amount realized attributable to the section 1250 property disposed of.

(ii) The principles of this subparagraph may be illustrated by the following example:

> *Example 1.* (i) Taxpayer B disposes of a qualified housing project consisting of section 1250 property with an adjusted basis of $500,000 and land with a basis of $100,000. The amount realized on the disposition is $750,000 of which $650,000 is attributable to the section 1250 property. B constructs a replacement housing project at a cost of $1,000,000 of which $850,000 is attributable to section 1250 property. B elects in accordance with the provisions of section 1039(a) and the regulations there under not to recognize the $150,000 gain realized.
> (ii) Under section 1250(d)(8)(A) no gain is recognized under section 1250(a). The replacement section 1250 property consists of the two elements. The reinvestment element has a cost of $650,000, i.e., that portion of the replacement section 1250 property the cost of which does not exceed the amount realized attributable to the section 1250 property disposed of ($650,000), reduced by any gain recognized with respect to such property (zero). The additional cost element has a cost of $200,000, that is, the excess of the cost of the replacement section 1250 property ($850,000) over the amount realized attributable to the section 1250 property disposed of ($650,000).

(3) ***Basis of property acquired.***

(i) If section 1250 property is disposed of and gain (determined without regard to section 1250) is not recognized in whole or in part under section 1039 (relating to certain sales of low-income housing projects), then the basis of the section 1250 property and other property acquired in the transaction shall be determined in accordance with the rules of this subparagraph. Generally, the basis of the property acquired in a transaction to which section 1039(a) applies is its cost reduced by the amount of any gain not recognized attributable to the property disposed of (see section 1039(d)). In a case where the replacement section 1250 property constructed, reconstructed, or acquired within the reinvestment period is treated as consisting of more than one element under section 1250(d)(8)(e), the aggregate basis of the property determined under section 1039(d) shall be allocated as follows: first, to the reinvestment element of the section 1250 property, in an amount equal to the amount determined under section 1250(d)(8)(E)(i) reduced by the amount of any gain not recognized attributable to the section 1250 property disposed of; second, to the other replacement property (other than section 1250 property) in an amount equal to the amount of its cost reduced (but not below zero) by any remaining amount of gain not recognized; and finally, to the additional cost element of the section 1250 property, in an amount equal to the amount determined under section 1250(d)(8)(E)(ii) reduced by any amount of gain not recognized which has not been taken into account in determining the basis of the reinvestment element and the other replacement property that is not section 1250 property. See paragraph (h)(2) of this section for definition of the terms *reinvestment element* and *additional cost element*.

(ii) The principles of this subparagraph may be illustrated by the following examples:

Example 1. The facts are the same as in example (1) of subparagraph (1)(ii) of this paragraph. The basis of the replacement section 1250 property is $225,000, the amount of the reinvestment element ($425,000) minus the gain not recognized attributable to the section 1250 property disposed of ($200,000).

Example 2. Taxpayer C disposes of a qualified housing project on January 1, 1971. The adjusted basis for the project is $3,800,000, of which $3,000,000 is attributable to section 1250 property and $800,000 is attributable to land. The amount realized on the disposition is $5,000,000, of which $4,000,000 is attributable to the section 1250 property and $1,000,000 is attributable to the land. The gain realized upon the disposition is $1,200,000, that is, amount realized ($5,000,000) minus adjusted basis ($3,800,000), of which $1,000,000 is attributable to the section 1250 property disposed of. Within the reinvestment period, C purchases another qualified housing project at a cost of $5,500,000, of which $4,000,000 is attributable to section 1250 property and $1,500,000 is attributable to other property. C makes an election under section 1039(a) and the regulations thereunder and none of the $1,200,000 gain realized on the disposition is recognized (determined without regard to section 1250). Under section 1250(d)(8)(A), none of the gain realized is recognized under section 1250(a). The basis of the replacement section 1250 property is $3,000,000, that is, the amount of the reinvestment element ($4,000,000) less the amount of gain not recognized attributable to section 1250 property disposed of ($1,000,000). The basis of the other property acquired is $1,300,000, that is, its cost ($1,500,000) reduced by the remaining gain not recognized ($200,000).

Example 3. The facts are the same as in example (2) except that the cost of the replacement section 1250 property is $4,500,000 and the cost of the other property is $1,000,000. Thus, the replacement section 1250 property consists of two elements under section 1250(d)(8)(E). The reinvestment element (section 1250(d)(8)(E)(i)) has a basis of $3,000,000, that is $4,000,000 (that portion of the section 1250 property acquired the cost of which does not exceed the net amount realized attributable to the section 1250 property disposed of), reduced by $1,000,000 (the gain not recognized attributable to the section 1250 property disposed of). The basis of the other property is $800,000, that is, its cost ($1,000,000) reduced by the remaining gain not recognized ($200,000). The additional cost element (section 1250(d)(8)(E)(ii)) has a basis of $500,000, that is, the portion of the section 1250 property acquired the cost of which exceeds the net amount realized attributable to the section 1250 property disposed of. This amount ($500,000) is not reduced by any amount of gain not recognized because all of the gain not recognized has already been taken into account in determining the basis of the reinvestment element and the other replacement property that is not section 1250 property.

(4) ***Additional depreciation for property acquired.***

(i) If a qualified housing project is disposed of in a transaction to which section 1039(a) applies, the additional depreciation for the replacement property immediately after the transaction shall be an amount equal to

(*a*) the amount of additional depreciation for the property disposed of, minus

(*b*) the amount of additional depreciation necessary to produce the amount of gain recognized under section 1250(a). Thus, if no gain is recognized upon a disposition of a qualified housing project, the additional depreciation for the property acquired will be the same as for the property disposed of. On the other hand, if upon disposition of a project, gain of $40,000 was recognized under section 1250(a), and if the additional depreciation for the project and the applicable percentage were $100,000 and 80 percent, respectively,

the additional depreciation for the replacement housing project would be $50,000, that is, $100,000 minus $50,000, the amount of additional depreciation necessary to produce $40,000 of recognized gain where the applicable percentage is 80 percent.

(ii) If the property acquired in the transaction consists of more than one element of section 1250 property by reason of section 1250(d)(8)(E), the additional depreciation under subdivision (i) of this subparagraph shall be allocated solely to the reinvestment element.

(5) ***Additional limitation.*** If, in a transaction to which section 1039(a) applies, gain is recognized by the taxpayer, the amount of gain recognized which is attributable to section 1250 property disposed of is, under section 1250(d)(8)(F)(i), limited to an amount equal to the net amount realized attributable to the section 1250 property disposed of reduced by the greater of (i) the adjusted basis of the section 1250 property disposed of, or (ii) the cost of the section 1250 property acquired. The limitation of section 1250(d)(8)(F)(i) may be illustrated by the following example:

Example: Taxpayer D owns property constituting a qualified housing project under section 1039(b)(1). In an approved disposition, the project is sold for $225,000. The net amount realized on the disposition is $225,000 of which $175,000 is attributable to the section 1250 property disposed of. The adjusted basis of such property is $150,000 and thus the gain realized upon the disposition of the section 1250 property is $25,000. Assume that the total gain realized upon disposition of the project is $45,000. Within the reinvestment period, D purchases another qualified housing project at a cost of $200,000, of which $160,000 is attributable to section 1250 property. D elects, in accordance with section 1039(a) and the regulations thereunder, to limit the recognition of gain to $25,000, that is, the net amount realized ($225,000), minus the cost of the replacement housing project ($200,000). Under this subparagraph, $15,000 of the $25,000 gain recognized is attributable to the section 1250 property disposed of, that is, the net amount realized attributable to the section 1250 property disposed of ($175,000), reduced by $160,000, the greater of the adjusted basis of the section 1250 property disposed of ($150,000) or the cost of the section 1250 property acquired ($160,000).

(6) ***Allocation rule.***

(i) If, in a transaction to which paragraph (h)(1) of this section applies, the section 1250 property disposed of is treated as consisting of more than one element by reason of the application of section 1250(d)(8)(E) with respect to a prior transaction, then the amount of gain recognized, the net amount realized, and the additional depreciation with respect to each such element shall be allocated to the elements of the replacement section 1250 property in accordance with the provisions of this subparagraph.

(ii) The portion of the net amount realized upon such a disposition which shall be allocated to each element of the section 1250 property disposed of is that amount which bears the same ratio to the net amount realized attributable to all the section 1250 property disposed of in the transaction as the additional depreciation for that element bears to the total additional depreciation for all elements disposed of. If any gain is recognized upon disposition of the section 1250 property, such gain shall be allocated to each element in the same proportion as the gain realized for that element bears to the gain realized for all elements disposed of. The additional depreciation for each reinvestment element of the replacement section 1250 property shall be the same as for the corresponding element of the property disposed of, decreased by the amount of additional depreciation necessary to produce the amount of gain recognized for such element. The additional depreciation for any additional cost element shall be zero.

(iii) The principles of this subparagraph may be illustrated by the following example:

Example: Taxpayer E disposes of a qualified housing project in an approved disposition. The net amount realized is $1,090,000 of which $900,000 is attributable to section 1250 property. The section 1250 property consists of (1) a reinvestment element with an adjusted basis of $300,000, additional depreciation of $100,000, and an applicable percentage of 50 percent, and (2) an additional cost element with an adjusted basis of $200,000, additional depreciation of $50,000, and an applicable percentage of 80 percent. Gain of $400,000 is realized on the disposition of the section 1250 property, that is, amount realized ($900,000) minus adjusted basis ($500,000). Within the reinvestment period, E purchases another qualified housing project at a cost of $1,000,000 of which $840,000 is attributable to section 1250 property. E elects, in accordance with section 1039 and the regulations thereunder, to limit recognition of gain (determined without regard to section 1250) to $90,000, that is, the excess of the net amount realized ($1,090,000) over the cost of the replacement project ($1,000,000). Under section 1250(d)(8)(A), the amount of gain recognized under section 1250(a) is limited to $90,000 (see subparagraph (1) of this paragraph). Under section 1250(d)(8)(F)(ii) and this subparagraph, $600,000 of the $900,000 net amount realized attributable to the section 1250 property is allocated to the reinvestment element, that is, additional depreciation for the element ($100,000) over total additional depreciation ($150,000) times the net amount realized ($900,000). The remaining $300,000 is allocated to the additional cost element. Thus, the gain realized attributable to the reinvestment element is $300,000, that is, net amount realized ($600,000) minus adjusted basis ($300,000). The gain realized attributable to the additional cost element is $100,000, that is, net amount realized ($300,000) minus adjusted basis ($200,000). Under subparagraph (5) of this paragraph, the gain recognized attributable to the section 1250 property is limited to $60,000, that is, the net amount realized attributable to the section 1250 property disposed of ($900,000) minus the greater of the adjusted basis of such property ($500,000) or the cost of the section 1250 property acquired in the transaction ($840,000). Under section 1250(d)(8)(F)(ii) and this subparagraph, $45,000 of the $60,000 gain recognized is attributable to the reinvestment element, that is, $60,000 multiplied by a fraction whose numerator is the gain realized attributable to the reinvestment element ($300,000) and whose denominator is the total gain realized attributable to all the section 1250 property ($400,000). The remaining $15,000 of the gain recognized is attributable to the additional cost element. The new property acquired has no additional cost element. The reinvestment element of the new property acquired consists of 2 subelements corresponding to the reinvestment element and additional cost element of the property disposed of. The subelement corresponding to the reinvestment element has additional depreciation of $10,000, that is, its additional depreciation immediately before the disposition ($100,000), minus $90,000, the amount of additional depreciation necessary to produce $45,000 of section 1250(a) gain where the applicable percentage is 50 percent. The subelement corresponding to the additional cost element has additional depreciation of $31,250, that is, its additional depreciation immediately before the disposition ($50,000), minus $18,750, the amount of additional depreciation necessary to produce $15,000 of section 1250(a) gain where the applicable percentage is 80 percent.

[T.D. 7084, 36 FR 275, Jan. 8, 1971, as amended by T.D. 7193, 37 FR 12957, June 30, 1972; T.D. 7400, 41 FR 5101, Feb. 4, 1976; 41 FR 7095, Feb. 17, 1976]

§ 1.1250-4 Holding period.

(a) ***General.*** In general, for purposes only of determining the applicable percentage (as defined in section 1250 (1)(C) and (2)(B)) of section 1250 property, the holding period of the property shall be determined under the rules of section 1250(e) and this section and not under the rules of section 1223. If the property is treated as consisting of two or more elements (within the meaning of paragraph (c)(1) of § 1.1250-5),

see paragraph (a)(2)(ii) of § 1.1250-5 for application of this section to determination of holding period of each element. Section 1250(e) does not affect the determination of the amount of additional depreciation in respect of section 1250 property.

(b) ***Beginning of holding period.***

(1) For the purpose of determining the applicable percentage, in the case of property acquired by the taxpayer (other than by means of a transaction referred to in paragraph (c) or (d) of this section), the holding period of the property shall begin on the day after the date of its acquisition. See section 1250(e)(1)(A). Thus, for example, if a taxpayer purchases section 1250 property on January 1, 1965, the holding period of the property begins on January 2, 1965. If he sells the property on October 1, 1966, the holding period on the day of the sale is 21 full months, and, accordingly, the applicable percentage is 99 percent. This result would not be changed even if the property initially had been used solely as the taxpayer's residence for a portion of the 21-month period. If, however, the property were sold on September 30, 1966, the holding period would be only 20 full months.

(2) For the purpose of determining the applicable percentage in the case of property constructed, reconstructed, or erected by the taxpayer, the holding period of the property shall begin on the first day of the month during which the property is placed in service. See section 1250(e)(1)(B). Thus, for example, if a taxpayer constructs section 1250 property and places it in service on January 15, 1965, its holding period begins on January 1, 1965. If the taxpayer sells the property on December 31, 1966, its holding period on the day of sale is 24 full months, and, accordingly, the applicable percentage is 96 percent. For purposes of this subparagraph, property is placed in service on the date on which it is first used, whether in a trade or business, in the production of income, or in a personal activity. Thus, for example, a residence constructed by a taxpayer for his personal use is placed in service on the date it is occupied as a residence. For purposes of determining the date property is placed in service, it is immaterial when the period begins for depreciation with respect to the property under any depreciation practice under which depreciation begins in any month other than the month in which the property is placed in service. If one or more units of a single property are placed in service on different dates before the completion of the property, see paragraph (c)(3) of § 1.1250-5 (relating to treatment of each such unit as an element).

(c) ***Property with transferred basis.*** Under section 1250(e)(2), if the basis of property acquired in a transaction described in this subparagraph is determined by reference to its basis in the hands of the transferor, then the holding period of the property in the hands of the transferee shall include the holding period of the property in the hands of the transferor. The transactions described in this subparagraph are:

(1) A gift described in section 1250(d)(1).

(2) Certain transfers at death to the extent provided in paragraph (b)(2)(ii) of § 1.1250-3.

(3) Certain tax-free transactions to which section 1250(d)(3) applies. For application of section 1250 (d)(3) and (e)(2) to a distribution by a partnership to a partner, see paragraph (f)(1) of § 1.1250-3.

(4) A transfer described in paragraph (e)(4) of § 1.1250-3 (relating to transaction under section 1081(d)(1)(A)).

(5) A transfer at death where the basis of the property in the hands of the transferee is determined under section 1022.

(d) ***Principal residence acquired in certain transactions.*** The holding period of a principal residence acquired in a transaction to which section 1034 and paragraph (g)(6) of § 1.1250-3 apply includes the holding period of the principal residence disposed of in such transaction. See section 1250(e)(3). The holding period of a principal residence acquired does not include the period beginning on the day after the date of the disposition and ending on the date of the acquisition.

(e) ***Application of transferred basis and principal residence rules.*** The determination of holding period under this section shall be made without regard to whether a transaction occurred prior to the effective date of section 1250 and without regard to whether there was any gain upon the transaction. Thus, for example, under paragraph (c) of this section a donee's holding period for property includes his donor's holding period notwithstanding that the gift occurred on or before December 31, 1963, or that there was no additional depreciation in respect of the property at the time of the gift.

(f) ***Qualified low-income housing project acquired in certain transactions.*** The holding period of a *reinvestment element* (and of subelements thereof) of section 1250 property (as defined in paragraph (h) (2) of § 1.1250-3) acquired in a transaction to which sections 1039(a) and 1250(d)(8)(A) apply includes the holding period of the corresponding element of the section 1250 property disposed of. See section 1250(e)(4). The holding period of the *additional cost element* (as defined in paragraph (h)(2) of § 1.1250-3) begins on the date the replacement project is acquired. The holding period of a *reinvestment element* of section 1250 property does not include the period beginning on the day after the date of the disposition and ending

(1) on the date of the acquisition of the replacement housing project, or

(2) on the date the replacement housing project constructed or reconstructed by the taxpayer is placed in service.

(g) ***Cross reference.*** If the adjusted basis of the property in the hands of the transferee immediately after a transaction to which paragraph (c) or (d) of this section applies exceeds its adjusted basis in the hands of the transferor immediately before the transaction, the excess is an addition to capital account under paragraph (d)(2)(ii) of § 1.1250-5 (relating to property with two or more elements).

(h) ***Effective/applicability date.*** This section applies on and after January 19, 2017. For rules before January 19, 2017, see § 1.1250-4 as contained in 26 CFR part 1 revised as of April 1, 2016.

[T.D. 7084, 36 FR 281, Jan. 8, 1971, as amended by T.D. 7400, 41 FR 5103, Feb. 4, 1976; T.D. 9811, 82 FR 6241, Jan. 19, 2017]

§ 1.1250-5 Property with two or more elements.

(a) ***Dispositions before January 1, 1970 —***

(1) ***Amount treated as ordinary income.*** If section 1250 property consisting of two or more elements (described in paragraph (c) of this section) is disposed of before January 1, 1970, the amount of gain taken into account under section 1250(a)(2) shall be the sum, determined in three steps under subparagraphs (2), (3), and (4) of this paragraph, of the amounts of gain for each element.

(2) ***Step 1.*** The first step is to make the following computations:

(i) In respect of the property as a whole, compute the additional depreciation (as defined in section 1250(b)), and the gain realized. For purposes of this paragraph, in the case of a transaction other than a sale, exchange or involuntary conversion, the gain realized shall be considered to be the excess of the fair market value of the property over its adjusted basis.

(ii) In respect of each element as if it were a separate property, compute the additional depreciation for the element, and the applicable percentage (as defined in section 1250(a)(2)) for the element. For additional depreciation in respect of an element of property acquired in certain transactions, see paragraph (e) of this section. For purposes of determining additional depreciation, the holding period of an element shall be determined under section 1223, applied by treating the element as a separate property. However, for the purpose of determining applicable percentage, the holding period for an element shall, except to the extent provided in paragraphs (c)(5), (e), and (f) of this section, be determined in accordance with the rules prescribed in § 1.1250-4.

(3) ***Step 2.*** The second step is to determine the amount of gain for each element in the following manner:

(i) If the amount of additional depreciation in respect of the property as a whole is equal to the sum of the additional depreciation in respect of each element having additional depreciation, and if such amount is not more than the gain realized, then the amount of gain to be taken into account for an element is the product of the additional depreciation for the element, multiplied by the applicable percentage for the element.

(ii) If subdivision (i) of this subparagraph does not apply, the amount of gain to be taken into account for an element is the product of:

(*a*) The additional depreciation for the element, multiplied by

(*b*) The applicable percentage for the element, and multiplied by

(*c*) A ratio, computed by dividing

(*1*) the lower of the additional depreciation in respect of the property as a whole or the gain realized, by

(*2*) the sum of the additional depreciation in respect of each element having additional depreciation.

(4) ***Step 3.*** The third step is to compute the sum of the amounts of gain for each element, as determined in step 2.

(5) ***Examples.*** The provisions of this subparagraph may be illustrated by the following examples:

> *Example 1.* Gain of $35,000 is realized upon a sale, before January 1, 1970, of section 1250 property which consists of four elements (W, X, Y, and Z). Since on the date of the sale the amount of additional depreciation in respect of the property as a whole ($24,000) is equal to the sum of the additional depreciation in respect of each element having additional depreciation and is less than the gain realized, the additional depreciation for each element is determined under subparagraph (3)(i) of this paragraph. The amount of gain taken into account under section. 1250(a)(2) is $7,500, as determined in the following table in

accordance with the additional facts assumed.

Element	Additional depreciation ×	Applicable percentage=	Gain for element
W	$12,000 ×	0=	0
X	6,000 ×	50=	$3,000
Y	0 ×	63=	0
Z	6,000 ×	75=	4,500
Totals	24,000		7,500

Example 2. Assume the same facts as in example (1), except that in respect of the property as a whole the additional depreciation is $20,000 because with respect to element Y additional depreciation allowed was $4,000 less than straight line. Accordingly, the sum of the additional depreciation for each element having additional depreciation is $24,000, that is, $4,000 greater than the additional depreciation in respect of the property as a whole. Thus, the additional depreciation for each element is determined under subparagraph (3)(ii) of this paragraph. The ratio referred to in subparagraph (3)(ii)(c) of this paragraph is twenty twenty-fourths, that is, the lower of additional depreciation in respect of the property as a whole ($20,000) or the gain realized ($35,000), divided by the sum of the additional depreciation in respect of each element having additional depreciation ($24,000). The amount of gain taken into account under section 1250(a)(2) is $6,250, as determined in the following table:

Element	Additional depreciation ×	Applicable percentage ×	Ratio=	Gain for element
W	$12,000 ×	0 ×	20:24=	0
X	6,000 ×	50 ×	20:24=	$2,500
Y	0 ×	63 ×	20:24=	0
Z	6,000 ×	75 ×	20:24=	3,750
Totals	24,000			6,250

(b) ***Dispositions after December 31, 1969 —***

(1) ***Amount treated as ordinary income.*** If section 1250 property consisting of two or more elements (described in paragraph (c) of this section) is disposed of after December 31, 1969, the amount of gain taken into account under section 1250(a) shall be the sum, determined in 5 steps under subparagraphs (2), (3), (4), (5), and (6) of this paragraph, of the amount of gain for each element. Steps 3 and 4 are used only if the gain realized exceeds the additional depreciation attributable to periods after December 31, 1969, in respect of the property as a whole.

(2) *Step 1.* The first step is to make the following computations:

(i) In respect of the property as a whole, compute the additional depreciation (as defined in section 1250(b)) attributable to periods after December 31, 1969, and the gain realized. For purposes of this paragraph, in the case of a transaction other than a sale, exchange, or involuntary conversion, the gain realized shall be considered to be the excess of the fair market value of the property over its adjusted basis.

(ii) In respect of each element as if it were a separate property, compute the additional depreciation for the element attributable to periods after December 31, 1969, and the applicable percentage (as defined in section 1250(a)(1)) for the element. For additional depreciation in respect of an element of property acquired in certain transactions, see paragraph (e) of this section. For purposes of determining additional depreciation, the holding period of an element shall be determined under section 1223, applied by treating the element as a separate property. However, for the purpose of determining applicable percentage, the holding period for an element shall, except to the extent provided in paragraphs (c)(5), (e), and (f) of this section, be determined in accordance with the rules prescribed in § 1.1250-4.

(3) *Step 2.* The second step is to determine the amount of gain recognized for each element under section 1250(a) (1) in the following manner:

(i) If the amount of additional depreciation in respect of the property as a whole attributable to periods after December 31, 1969, is equal to the sum of the additional depreciation in respect of each element having such additional depreciation, and if such amount is not more than the gain realized, then the amount of gain to be taken into account for an element under section 1250(a)(1) is the product of the additional depreciation attributable to periods after December 31, 1960, for the element, multiplied by the applicable percentage for the element determined under section 1250(a)(1).

(ii) If subdivision (i) of this subparagraph does not apply, the amount of gain to be taken into account under section 1250(a)(1) for an element is the product of:

(*a*) The additional depreciation attributable to periods after December 31, 1969, for the element multiplied by

(*b*) The applicable percentage for the element determined under section 1250(a)(1) for the element, and multiplied by

(*c*) A ratio, computed by dividing

(*1*) the lower of the additional depreciation in respect of the property as a whole which is attributable to periods after December 31, 1969, or the gain realized, by

(*2*) the sum of the additional depreciation attributable to periods after December 31, 1969, in respect of each element having such additional depreciation.

(4) *Step (3).* If the gain realized exceeds the additional depreciation in respect of the property as a whole attributable to periods after December 31, 1969.

(i) Compute the additional depreciation attributable to periods before January 1, 1970, and the remaining gain (or remaining potential gain in the case of a transaction other than a sale, exchange, or involuntary conversion), in respect of the property as a whole.

(ii) Compute the additional depreciation attributable to periods before January 1, 1970, and the applicable percentage determined under section 1250(a)(2) in respect of each element as if it were a separate property. For additional depreciation in respect of an element of property acquired in certain transactions, see paragraph (e) of this section. For purposes of determining additional depreciation, the holding period of an element shall be determined under section 1223, applied by treating the element as a separate property. However, for the purpose of determining applicable percentage, the holding period of an element shall, except to the extent provided in paragraphs (c)(5), (e), and (f) of this section, be determined in accordance with the rules prescribed in § 1.1250-4.

(5) ***Step (4).*** The fourth step is to compute the gain recognized under section 1250(a)(2) for each element (if computation was required under step (3)) in the following manner:

(i) If the amount of additional depreciation in respect of the property as a whole attributable to periods before January 1, 1970, is equal to the sum of the additional depreciation in respect of each element having such additional depreciation, and if such amount is not more than the remaining gain (or remaining potential gain), then the amount of gain to be taken into account for an element under section 1250(a)(2) is the product of the additional depreciation attributable to periods before January 1, 1970, for the element, multiplied by the applicable percentage determined under section 1250(a)(2) for the element.

(ii) If subdivision (i) of this subparagraph does not apply, the amount of gain to be taken into account for an element under section 1250(a)(2) is the product of:

(*a*) The additional depreciation attributable to periods before January 1, 1970, for the element, multiplied by,

(*b*) The applicable percentage for the element determined under section 1250(a)(2), and multiplied by,

(*c*) A ratio, computed by dividing (*1*) the lower of the additional depreciation in respect of the property as a whole which is attributable to periods before January 1, 1970,

or the remaining gain (or remaining potential gain), by (*2*) the sum of the additional depreciation attributable to periods before January 1, 1970, in respect of each element having additional depreciation.

(6) ***Step (5).*** The fifth step is to compute the sum of the amount of gain for each element, as determined in steps (2) and (4).

(7) ***Examples.*** The provisions of this subparagraph may be illustrated by the following examples:

> *Example 1.* Gain of $60,000 is realized upon a sale, after the December 31, 1969, of section 1250 property which was constructed by the taxpayer after such date. The property consists of four elements (W, X, Y, and Z). Since on the date of sale the amount of additional depreciation attributable to periods after December 31, 1969, in respect of the property as a whole ($32,000), is equal to the sum of the additional depreciation in respect of each element having such additional depreciation and is less than the gain realized, the gain recognized for each element is determined under subparagraph (3)(i) of this paragraph. The amount of gain taken into account under section 1250(a)(1) is $28,500, as determined in the following table

in accordance with the additional facts assumed:

Element	Additional depreciation after Dec. 31, 1969 ×	Applicable percentage= (1250(a)(1))	Gain for element
W	$14,000 ×	80=	$11,200
X	6,000 ×	90=	5,400
Y	2,000 ×	95=	1,900
Z	10,000 ×	100=	10,000
Total	32,000		28,500

Example 2. Assume the same facts as in example (1), except that the property was acquired by the taxpayer before January 1, 1970. Since the gain realized ($60,000) exceeds the additional depreciation attributable to periods after December 31, 1969 ($32,000), section 1250(a)(2) applies to the remaining gain of $28,000. Since the additional depreciation in respect of the property as a whole attributable to periods before January 1, 1970 ($21,000), is equal to the sum of the additional depreciation in respect of each element having such additional depreciation and is less than the remaining gain ($28,000), the amount of gain recognized for each element under section 1250(a)(2) is determined under subparagraph (5)(i) of this paragraph. The amount of gain taken into account under section 1250(a)(1) is $28,500 the same as in example (1). The amount of gain taken into account under section 1250(a)(2) is $3,900, as determined in the following table in accordance with the additional facts assumed:

Element	Additional depreciation before Jan. 1, 1970 ×	Applicable percentage= (1250(a)(2))	Gain for element (1250)(a)(2))
W	$8,000 ×	0=	$0
X	6,000 ×	10=	600
Y	2,000 ×	15=	300
Z	5,000 ×	60=	3,000
Total	21,000		3,900

Example 3. (i) The facts are the same as in example (2) except that element Y has a deficit in additional depreciation attributable to periods after December 31, 1969, of $6,000 and thus the additional depreciation attributable to periods after December 31, 1969, in respect of the

property as a whole is $24,000. The sum of the additional depreciation for each element having additional depreciation is $30,000, or $6,000 more than the additional depreciation in respect of the property as a whole. Thus, the gain recognized for each element under section 1250(a)(1) is determined under subparagraph (3)(ii) of this paragraph. The ratio referred to in subparagraph (3)(ii) (c) of this paragraph is 24:30, that is, the lower of the additional depreciation in respect of the property as a whole attributable to periods after December 31, 1969 ($24,000), or the gain realized ($60,000), divided by the sum of the additional depreciation in respect of each element having such additional depreciation ($30,000). The amount of gain taken into account under section 1250(a)(1) is $21,280, as determined in the following table:

Element	Additional depreciation ×	Applicable percentage × (1250(a)(1))	Ratio=	Gain for element
W	$14,000 ×	80 ×	24:30=	$8,960
X	6,000 ×	90 ×	24:30=	4,320
Y	(6,000) ×	95 ×	24:30=	0
Z	10,000 ×	100 ×	24:30=	8,000
Total	24,000			21,280

(ii) In addition, gain is recognized under section 1250(a)(2) since there is a remaining potential gain of $36,000, that is, gain realized ($60,000) minus the additional depreciation attributable to periods after December 31, 1969 ($24,000). The gain recognized in respect of each element and the gain recognized under section 1250(a)(2) ($3,900) are the same as in example (2), since the additional depreciation attributable to periods before January 1, 1970 ($21,000) is less than the remaining gain ($36,000).

(c) *Element* —

(1) ***General.*** For purposes of this section, in the case of section 1250 property there shall be treated as separate elements the separate improvements, units, remaining property, special elements, and low-income housing elements which are respectively referred to in paragraphs (c) (2), (3), (4), (5), and (6) of this section.

(2) ***Separate improvements.*** There shall be treated as an element each *separate improvement* (as defined in paragraph (d)(1) of this section) to the property.

(3) ***Units.*** If before completion of section 1250 property one or more units thereof are placed in service, each such unit of the section 1250 property shall be treated as an element.

(4) ***Remaining property.*** The remaining property which is not taken into account under subparagraph (2) or (3) of this paragraph shall be treated as an element.

(5) ***Special elements.***

(i) If the basis of section 1250 property is reduced in the manner described in paragraph (b)(2)(ii) of § 1.1250-3 (relating to property acquired from a decedent prior to his death) or in paragraph (e)(3)(iii) of § 1.1250-3 (relating to basis reduction under section 1071 or 1082(a)(2)), then such property shall be considered as having a special element with additional depreciation equal to the amount of additional depreciation included in the depreciation adjustments (referred to in paragraph (d)(1) of § 1.1250-2) to which the basis reduction is attributable. For purposes of computing applicable percentage, the holding period of a special element under this subdivision shall be determined under paragraph (b)(2)(ii) or (e)(3)(iii) (whichever is applicable) of § 1.1250-3.

(ii) If a disposition described in section 1250(d)(4)(A) (relating to like kind exchanges and involuntary conversions) of a portion of an item of property gives rise to an addition to capital account (described in the last sentence of paragraph (d)(2)(i) of this section) which is not a separate improvement, then such property shall be considered as having a special element with additional depreciation and, for purposes of computing applicable percentage, a holding period determined under paragraph (d)(7) of § 1.1250-3.

(6) ***Low-income housing elements.*** If, in an approved disposition of a qualified housing project, a replacement qualified housing project is treated as consisting of more than one element of section 1250 property by reason of section 1250(d)(8)(E) (see paragraph (h)(2) of § 1.1250-3), the elements determined under such section shall be treated as elements for purposes of this section. For definition of the terms *qualified housing project* and *approved disposition,* see section 1039(b) and the regulations thereunder.

(7) ***Examples.*** The provisions of this paragraph may be illustrated by the following examples:

Example 1. A taxpayer constructs an apartment house which he places in service in three stages. The total cost is $1 million, of which $350,000 is allocable to the first stage, $500,000 to the second stage, and $150,000 to the third stage. The first stage, which is placed in service on January 1, 1965, consists of 300 apartments and certain facilities including a central heating system and a common lobby. The second stage, which is placed in service on July 15, 1965, consists of 550 apartments and certain facilities including the motor for a central air-conditioning system. The third stage, which is placed in service on January 19, 1966, consists of the residue of the apartment house. On December 31, 1968, the taxpayer disposes of the apartment house. On such date, the apartment house has three elements which are described in the table below:

Stage	Kind of element	Cost	Full months in holding period	Applicable percentage
1	Unit	$350,000	48	72
2	Unit	500,000	42	78
3	Remaining	150,000	36	84

Stage	Kind of element	Cost	Full months in holding period	Applicable percentage
	property			

Example 2. Assume the same facts as in example (1) except that on January 1, 1969, two new floors, which were added after the apartment house was completed, are placed in service and that on July 1, 1972, the taxpayer disposes of the building. Assume further that the two new floors are one separate improvement (within the meaning of paragraph (d) of this section). On the date disposed of, the property consists of four elements, that is, the three elements described in example (1) and the separate improvement.

(d) ***Separate improvement*** —

(1) ***Definition.*** For purposes of this section, with respect to any section 1250 property, the term *separate improvement* means an *addition to capital account* described in subparagraph (2) of this paragraph which qualifies as an *improvement* under the 1-year test prescribed in subparagraph (3) of this paragraph and which satisfies the 36-month test prescribed in subparagraph (4) of this paragraph.

(2) ***Addition to capital account.***

(i) In the case of any section 1250 property, an addition to capital account described in this subparagraph is any addition to capital account in respect of such property after its initial acquisition or completion by the taxpayer or by any person who held the property during a period included in the taxpayer's holding period (see § 1.1250-4) for the property. An addition to the capital account of section 1250 property may arise, for example, if there is an expenditure for section 1250 property which is an improvement, replacement, addition, or alteration to such property (regardless of whether the cost thereof is capitalized or charged against the depreciation reserve). In such a case, the *addition to capital account* is the gross addition, unreduced by amounts attributable to replaced property, to the net capital account and not the net addition to such account. Thus, if a roof has an adjusted basis of $20,000, and is replaced by constructing a new roof at a cost of $50,000, the gross addition of $50,000 is an addition to capital account. (The adjusted basis of the old roof is no longer included in the capital account for the property.) For purposes of this section, the status of an addition to capital account is not affected by whether or not it is treated as a separate property for purposes of determining depreciation adjustments. In case of an addition to the capital account of property arising after December 31, 1963, upon a disposition referred to in section 1250(d)(4) (relating to like kind exchanges and involuntary conversions) of a portion of an item of such property, the amount of such addition (and its basis for all purposes of the Code) shall be the basis thereof determined under paragraph (d) (2), (3), or (4) (whichever is applicable) of § 1.1250-3, applied by treating such portion and such addition as separate properties.

(ii) An addition to capital account may be attributable to an excess of the adjusted basis of section 1250 property in the hands of a transferee immediately after a transaction referred to in section 1250(e)(2) (relating to holding period of property with transferred basis) over its adjusted basis in the hands of the transferor immediately before the transaction. Thus, for example, such excess may arise from a gift which is in part a sale or exchange (see paragraph (a)(2) of § 1.1250-3), from an increase in basis due to gift tax paid (see section 1015(d)), from a transfer

referred to in paragraph (c)(2) of § 1.1250-3 (relating to certain tax-free transactions) in which gain is partially recognized, or from a distribution by a partnership to a partner in which no gain is recognized by reason of the application of section 731. Similarly, an addition to capital account may be attributable to an excess of the adjusted basis of a principal residence acquired in a transaction referred to in section 1250(e)(3) over the adjusted basis of the principal residence disposed of, as well as to any increase in the adjusted basis of section 1250 property of a partnership by reason of an optional basis adjustment under section 734(b) or 743(b).

(iii) Whether or not an expenditure shall be treated as an addition to capital account described in this subparagraph, as distinguished from a separate item of property, may depend on how the property or properties are disposed of. Thus, for example, if a taxpayer, who owns a motel consisting of 10 buildings with common heating and plumbing systems, adds to the motel three new buildings which are connected to the common systems, and if the taxpayer sells the motel to one person in one transaction, then for purposes of this subparagraph the cost of the three new buildings shall be treated as an addition to the capital account of the motel and, if the 1-year and 36-month tests of subparagraphs (3) and (4) of this paragraph are satisfied, the motel consists of at least two elements. If, however, the 10-building group and the three-building group were individually sold in separate transactions to two different people each of whom would operate his group as a separate business, the motel would consist of two items of property.

(3) ***One-year test for improvement.***

(i) An addition to capital account of section 1250 property for any taxable year (including a short taxable year and the entire taxable year in which the disposition occurs) shall be treated as an improvement only if the sum of all additions to the capital account of such property for such taxable year exceeds the greater of:

(*a*) $2,000, or

(*b*) One percent of the unadjusted basis of the property, determined as of the beginning

(*1*) of such taxable year, or

(*2*) of the holding period (within the meaning of § 1.1250-4) of the property, whichever is the later.

(ii) For purposes of this section, the term *unadjusted basis* means the adjusted basis of the property, determined without regard to the adjustments provided in section 1016(a) (2) and (3) (relating to adjustments for depreciation, amortization, and depletion). For purposes of this paragraph, as of any particular date the unadjusted basis of section 1250 property

(*a*) includes the cost of any addition to capital account for the property which arises prior to such date (regardless of whether such addition qualified under this subparagraph as an improvement), and

(*b*) does not include the cost of a component retired before such date.

(iii) In respect of a particular disposition of section 1250 property by a person:

(*a*) There shall not be taken into account under the 1-year test for improvements in this subparagraph any addition to capital account which arises by reason of (or after) such disposition or which arises before the beginning of the holding period under § 1.1250-4 of such person for the property, and

(*b*) Such test shall be made in respect of each taxable year of such person (and of any prior transferor) any day of which is included under § 1.1250-4 in such person's holding period for the property, except that

(*1*) such test shall be made for a taxable year of such person only if such person actually owned the property on at least 1 day of such taxable year, and

(*2*) such test shall be made for a taxable year of such prior transferor only if such prior transferor actually owned the property on at least 1 day of such taxable year.

(iv) The provisions of this subparagraph may be illustrated by the following examples:

Example 1. The unadjusted basis of section 1250 property as of the beginning of January 1, 1960, is $300,000. During the taxable year ending on December 31, 1960, the only additions to the capital account for the property are addition A on January 1, 1960, costing $1,000, and addition B on July 1, 1960, costing $600. Since the sum of the amounts added to capital account for such taxable year is less than $2,000, A and B are not treated as improvements. This result would not be changed if addition C, costing $600, were added on December 15, 1960, since although the sum of the additions ($1,000 plus $600 plus $600, or $2,200) exceeds $2,000, such sum is less than 1 percent of the unadjusted basis of the property as of the beginning of 1960 ($3,000, that is, 1 percent of $300,000). If however, C cost $1,500, then A, B, and C would each be considered an improvement since the sum of the amounts added to capital account $3,100) would exceed $3,000.

Example 2. Green and his son both use the calendar year as the taxable year. On February 1, 1965, Green makes addition A to a piece of section 1250 property. On June 15, 1965, Green transfers such property to his son as a gift which is in part a sale (see paragraph (a) of § 1.1250-3). Addition B arises by reason of the transfer. On August 1, 1965, the son makes addition C to the property. For purposes of determining the amount of gain recognized under section 1250(a) to Green upon the transfer, the determination of whether addition A is an improvement is made without taking into account additions B and C. For purposes of determining the amount of gain recognized under section 1250(a) upon a subsequent disposition of the property by the son, additions B and C would be taken into account in the determination of whether A is an improvement, and A would be taken into account in the determination of whether B and C are improvements.

Example 3. Assume the same facts as in example (2). Assume further that on September 15, 1965, the son transfers the property to a corporation in exchange for cash and stock in the corporation in a transaction qualifying under section 351 (see paragraph (c) of § 1.1250-3), and that the corporation uses a fiscal year ending November 30. For purposes of determining the amount of gain recognized under section 1250(a) upon a subsequent disposition by the corporation, the one-year test under subdivision (i) of this subparagraph is made for the entire taxable year of Green and of the son ending on December 31, 1965, and in respect of the corporation's taxable year ending November 30, 1965. Accordingly, if on December 7, 1965, addition D is made by the corporation, then, upon a subsequent disposition by the corporation, D is taken into account for purposes of the determination in respect of the entire taxable year of

Green and of the son ending on December 31, 1965, and for the corporation's taxable year ending November 30, 1966, but not for purposes of the corporation's taxable year ending November 30, 1965. If D were made on January 3, 1966, D would still be taken into account for purposes of the determination in respect of the corporation's taxable year ending November 30, 1966. However, since neither Green nor his son actually owned the property on any day of the taxable year ending December 31, 1966, no determination is made in respect of such taxable year of Green or of the son.

(4) ***36-month test for separate improvement.***

(i) If, during the 36-month period ending on the last day of any taxable year (including a short taxable year and the entire taxable year in which the disposition occurs), the sum of the amounts treated under subparagraph (3) of this paragraph as improvements for such period exceeds the greatest of:

(*a*) 25 percent of the adjusted basis of the property,

(*b*) 10 percent of the unadjusted basis (determined under subparagraph (3)(ii) of this paragraph) of the property, or

(*c*) $5,000,

Then each such improvement during such period shall be treated as a separate improvement, and thus as an element. For purposes of (*a*) and (*b*) of this subdivision, the adjusted basis (or unadjusted basis) of section 1250 property shall be determined as of the beginning of the 36-month period, or as of the beginning of the holding period of the property (within the meaning of § 1.1250-4), whichever is the later.

(ii) In respect of a particular disposition of section 1250 property by a person:

(*a*) There shall not be taken into account under the 36-month test for separate improvements in this subparagraph any amount treated under subparagraph (3) of this paragraph as an improvement which arises by reason of (or after) the disposition or which arises before the beginning of the holding period under § 1.1250-4 of such person for the property, and

(*b*) Such test shall be made in respect of each 36-month period ending on the last day of each taxable year of such person (and of any prior transferor) if at least 1 day of such period is included under § 1.1250-4 in such person's holding period for the property, except that

(*1*) such test shall be made for a 36-month period ending on the last day of a taxable year of such person only if such person actually owned the property on at least 1 day of such period, and

(*2*) such test shall be made for a 36-month period ending on the last day of a taxable year of such prior transferor only if such prior transferor actually owned the property on at least 1 day of such period.

(iii) For illustration of the principles of subdivision (ii) of this subparagraph, see examples (2) and (3) in subparagraph (3)(iv) of this paragraph.

(5) ***Example.*** The application of this paragraph may be illustrated by the following example:

> *Example:* (i) On December 31, 1967, X, a calendar year taxpayer, purchases an item of

section 1250 property at a cost of $100,000. In the table below, the adjusted basis and unadjusted basis of the property are shown for the beginning of January 1 of each taxable year and it is assumed that each addition to capital was added on January 1 of the year shown.

Year	Adjusted basis	Unadjusted basis	1 percent of unadjusted basis	Addition
1969	$94,000	$100,000	$1,000	A-$10,000
1970	97,030	110,000	1,100	B-4,000
1971	94,041	114,000	1,140	C-6,000
1972	92,799	120,000	1,200	
1973	86,158	120,000	1,200	D-18,000

(ii) Since each addition to capital account for the property exceeds the greater of $2,000 or one percent of unadjusted basis, determined as of the beginning of the taxable year in which made, each addition to capital account qualifies as an improvement under subparagraph (2) of this paragraph.
(iii) Since the beginning of the holding period of the property under § 1.1250-4 (Jan. 1, 1968) is later than the beginning of the 36-month period ending on December 31, 1969, the determination as to whether there are any separate improvements on the property as of December 31, 1969, is made by examining the adjusted basis (or unadjusted basis) of the property as of the beginning of January 1, 1968. As of December 31, 1969, there were no separate improvements on the property since the only amount treated as an improvement for the period beginning on January 1, 1968, and ending on December 31, 1969, in addition A (costing $10,000), which is less than $25,000, that is, 25 percent of the adjusted basis ($100,000) of the property as of the beginning of January 1, 1968.

(iv) As of December 31, 1970, there were no separate improvements on the property since the sum of the amounts treated as improvements for the 36-month period ending on December 31, 1970, is $14,000 (that is, $10,000 for A, plus $4,000 for B), and this sum is less than $25,000, that is, 25 percent of the adjusted basis ($100,000) of the property as of the beginning of January 1, 1968.

(v) As of December 31, 1971, there were no separate improvements on the property since the sum of the amounts treated as improvements for the 36-month period ending on December 31, 1971, is $20,000 (that is, $10,000 for A, plus $4,000 for B, plus $6,000 for C), and this sum is less than $23,500, that is, 25 percent of the adjusted basis ($94,000) of the property as of the beginning of January 1, 1969.

(vi) As of December 31, 1972, there were no separate improvements on the property since the sum of the amounts treated as improvements for the 36-month period ending on December 31, 1972, is $10,000 (that is, $4,000 for B plus $6,000 for C), and this sum is less than $24,258 that is, 25 percent of the adjusted basis ($97,030) of the property as of the beginning of January 1, 1970.

(vii) As of December 31, 1973, C and D are separate improvements (notwithstanding that as of December 31, 1971 and 1972, C was not a separate improvement) since the sum of the amounts added for the 36-month period ending December 31, 1973, is $24,000 (that is, $6,000 for C plus $18,000 for D), and this sum exceeds the greatest of:

(*a*) $23,510, that is, 25 percent of the adjusted basis ($94,041) of the section 1250 property as of the beginning of January 1, 1971,

(*b*) $11,400, that is, 10 percent of the unadjusted basis ($114,000) of the property as of the beginning of such first day, or

(*c*) $5,000.

(e) ***Additional depreciation and holding period of property acquired in certain transactions*** —

(1) ***Transferred basis.*** If property consisting of two or more elements is disposed of, and if the holding period of the property in the hands of the transferee for purposes of computing applicable percentage includes the holding period of the transferor by reason of the application of paragraph (c) (other than subparagraph (2) thereof) of § 1.1250-4, then the additional depreciation for each element of the property in the hands of the transferee immediately after the transfer shall be computed in the manner set forth in this subparagraph. First, any element having a deficit in additional depreciation in the hands of the transferor immediately before such transfer shall be considered to have the same deficit in the hands of the transferee. Second, elements having additional depreciation in the hands of the transferor immediately before the transfer shall be considered to have additional depreciation in the hands of the transferee. The sum of the transferee's additional depreciation for all elements of the property having additional depreciation in the hands of the transferor shall be an amount equal to the additional depreciation in respect of the property as a whole immediately after the transfer increased by the sum of the deficits in addition depreciation for all elements having such deficits. In case there is more than one element having additional depreciation, the additional depreciation for any such element in the hands of the transferee shall be computed by multiplying

(i) the amount computed under the preceding sentence by

(ii) the additional depreciation for such element in the hands of the transferor divided by the sum of the additional depreciation for all such elements having additional depreciation in the hands of the transferor. For purposes of computing applicable percentage, the holding period for an element of such property in the hands of the transferee shall include the holding period of such element in the hands of the transferor.

(2) ***Example.*** The provisions of subparagraph (1) of this paragraph may be illustrated by the following example:

Example: Section 1250 property has additional depreciation of $16,000 of which $12,000 is additional depreciation for element X and $4,000 for element Y. The property is transferred to a corporation in exchange for cash of $6,000 and for stock in the corporation. Assume that recognition of gain under section 1250(a) is limited to $6,000 (the amount of cash received) by reason of the application of section 351(b) (relating to transfer to corporation controlled by transferor) and section 1250(d)(3) (relating to limitation on application of section 1250 in certain tax-free transactions). Under paragraph (c)(3)(i) of § 1.1250-3, the additional depreciation for the property in the hands of the corporation immediately after the transfer is $10,000, that is, the additional depreciation for the property in the hands of the transferor immediately before the transfer ($16,000) minus the gain under section 1250(a) recognized upon the transfer ($6,000). Under subparagraph (1) of this paragraph, in the hands of the corporation immediately after the transfer element X has additional depreciation of $7,500 ($^{12}/_{16}$ of $10,000) and element Y as additional depreciation of $2,500 ($^{4}/_{16}$ of $10,000). Under paragraph (d)(2)(ii) of this section there is an addition of $6,000 to the capital account for the property.

(3) ***Principal residence.*** If a principal residence consisting of two or more elements is disposed of, and if for purposes of computing applicable percentage the holding period of the principal residence acquired includes the holding period of the principal residence disposed of by reason of the application of paragraph (d) of § 1.1250-4, then the additional depreciation (or a deficit in additional depreciation) for an element of the principal residence acquired immediately after the transaction shall be determined in a manner consistent with the principles of subparagraph (1) of this paragraph. For purposes of computing applicable percentage, the holding period for an element of the principal residence acquired includes the holding period of such element of the principal residence disposed of, but not the period beginning on the day after the date of the disposition and ending on the date of the acquisition.

(f) ***Holding period for small separate improvements*** —

(1) ***General.*** This paragraph prescribes a special holding period solely for the purpose of computing the applicable percentage of a separate improvement (as defined in paragraph (d) of this section) which is treated as an element. See paragraph (a)(2)(ii) of this section for determination of holding period under section 1223 for purposes of computing additional depreciation. In respect of section 1250 property, if the amount of a separate improvement does not exceed the greater of:

(i) $2,000, or

(ii) One percent of the unadjusted basis (within the meaning of paragraph (d)(3)(ii) of this section) of such property, determined as of the beginning of the taxable year in which such separate improvement was made,

Then such separate improvement shall be treated for purposes of computing applicable percentage as placed in service on the first day, of a calendar month, which is the closest such first day to the middle of the taxable year. See the last sentence of section 1250(f)(4)(B). If two such first days are equally close to the middle of the taxable year, the earliest of such days is the applicable day.

(2) ***Example.*** The application of this paragraph may be illustrated by the following example:

> *Example:* (i) The unadjusted basis of section 1250 property as of the beginning of January 1, 1960, is $100,000. During the taxable year ending on December 31, 1960, the only additions to the capital account for the property are addition A on March 10, 1960, costing $1,200 and addition B on September 16, 1960, costing $1,400. Since the sum of the additions ($2,600) exceeds the greater of $2,000 and 1 percent of unadjusted basis ($1,000, that is, 1 percent of $100,000), each addition is an improvement under the 1-year test of paragraph (d)(3) of this section. Assume that the 36-month test of paragraph (d)(4) of this section is satisfied and, therefore, each addition is a separate improvement treated as an element.
> (ii) Since each element is less than $2,000, the provisions of this paragraph apply. Since there are 366 days in 1960, the middle of the year is at the end of 183 days, or July 1. Thus, that first day of a calendar month in 1960, which is the closest first day (of a calendar month) to the middle of the taxable year, is July 1, 1960. Accordingly, for purposes of computing applicable percentage, elements A and B are each treated as placed in service on July 1, 1960.

[T.D. 7084, 36 FR 275, Jan. 8, 1971, as amended by T.D. 7193, 37 FR 12957, June 30, 1972; T.D. 7400, 41 FR 5103, Feb. 4, 1976]

§ 1.1251-1 General rule for treatment of gain from disposition of property used in farming where farm losses offset nonfarm income.

(a) ***Applicability.*** The provisions of section 1251, this section, and §§ 1.1251-2 through 1.1251-4 shall apply with respect to any taxable year beginning after December 31, 1969, but only if

(1) there is a farm net loss (as defined in section 1251(e)(2) and paragraph (b) of § 1.1251-3) for the taxable year, or

(2) there is a balance in the excess deductions account (as described in § 1251-2) as of the close of the taxable year before subtracting any amount under paragraph (c)(1)(i) of § 1251-2. See section 1251(a). In general, a taxpayer who has a farm net loss and certain other taxpayers are required to establish and maintain an excess deductions account as provided in section 1251(b). Certain additions and subtractions are made to the excess deductions account, and upon the disposition of *farm recapture property* any gain to the extent of the balance in the excess deductions account is recognized as ordinary income under section 1251(c)(1). See paragraph (b)(1) of this section. *Farm recapture property* is, in general, certain farming property (other than section 1250 property) described in paragraph (1), (3), or (4) of section 1231(b). See paragraph (a) of § 1.1251-3.

(b) ***Ordinary income*** —

(1) ***General rule.*** In general, subject to the provisions of subparagraphs (2), (3), (4), and (5) of this paragraph, upon a disposition of an item of farm recapture property during a taxable year beginning after December 31, 1969, the amount of which:

(i) In the case of a sale, exchange, or involuntary conversion, the amount realized, or

(ii) In the case of any other disposition, the fair market value of such property

exceeds the adjusted basis of such property shall be recognized under section 1251(c)(1) as gain from the sale or exchange of property which is neither a capital asset nor property described in section 1231 (that is, shall be recognized as ordinary income). The amount of gain recognized as ordinary income under section 1251(c)(1) shall be determined separately for each item of farm recapture property in a manner consistent with the principles of subparagraphs (4) and (5) of §

1.1245-1(a) (relating to gain from dispositions of certain depreciable property). Generally, such ordinary income treatment applies even though in the absence of section 1251(c)(1) no gain would be recognized under the Code. For example, if a corporation distributes farm recapture property as a dividend gain may be recognized as ordinary income to the corporation even though, in the absence of section 1251(c)(1), section 311(a) would preclude any recognition of gain to the corporation. For purposes of section 1251, the term *disposition* shall have the same meaning as in paragraph (a)(3) of § 1.1245-1. For the relation of section 1251 to other provisions of the Code, see paragraph (e) of this section.

(2) ***Limitation as to dispositions of land*** —

(i) ***In general.*** In the case of a disposition of land, gain shall be recognized as ordinary income under section 1251(c)(1) only to the extent of the land's *potential gain.* See section 1251(c)(2)(C).

(ii) ***Potential gain.*** For purposes of section 1251, the term *potential gain* means in respect of land an amount equal to the excess of its fair market value over its adjusted basis, but limited to the extent of the deductions allowable in respect to such land pursuant to an election (if any) under sections 175 (relating to soil and water conservation expenditures) and 182 (relating to expenditures by farmers for clearing land) for the taxable year of disposition and the four immediately preceding taxable years regardless of whether any such preceding taxable year begins before December 31, 1969. See section (e)(5).

(iii) ***Cross reference.*** For additional recapture of certain deductions allowed under sections 175 and 182 in respect of farm land, see section 1252.

(3) ***Exceptions and special rules.*** The amount of gain to be recognized as ordinary income under section 1251(c)(1) after applying subparagraph (2) of this paragraph, if applicable, shall be subject to the exceptions and special rules of section 1251(d) and § 1.1251-4.

(4) ***Limitation as to amount in excess deductions account*** —

(i) ***In general.*** The aggregate of the amount of gain recognized as ordinary income under section 1251(c)(1) (after applying subparagraphs (2) and (3) of this paragraph, if applicable) shall not exceed the amount in the excess deductions account at the close of the taxable year after subtracting from the account the amount specified in section 1251(b)(3)(A) and paragraph (c)(1)(i) of § 1.1251-2. See section 1251(c)(2)(A). For transfer of amount in an excess deductions account, see section 1251(b)(5).

(ii) ***Dispositions taken into account.*** If the aggregate of the amount to which section 1251(c)(1) applies is limited for any taxable year by the application of subdivision (i) of this subparagraph, section 1251(c)(1) shall apply in respect of dispositions of items of farm recapture property in the order made. See section 1251(c)(2)(B).

(5) ***Relationship to section 1245.*** If property is disposed of which qualifies as both section 1245 property (as defined in section 1245(a)(3)) as well as farm recapture property, then gain shall be recognized as ordinary income under section 1251(c)(1) only to the extent that the amount of any gain realized (in the case of a sale, exchange, or involuntary conversion), or to the extent that the excess of the fair market value of the property over its adjusted basis (in the case of any other disposition), was not recognized as ordinary income under section 1245(a)(1). The amount of gain recognized as ordinary income under section 1245(a)(1) upon a disposition of farm recapture property (i) is taken

into account under paragraph (b)(2) of § 1.1251-3 for purposes of computing farm net loss (or farm net income) and (ii) is not under paragraph (c)(1)(ii) of § 1.1251-2 subtracted from the excess deductions account.

(6) ***Examples.*** The principles of this paragraph may be illustrated by the following examples:

Example 1. A, an unmarried individual who uses the calendar year as his taxable year, makes one disposition of farm recapture property during 1970. On June 30, 1970, he sells for $75,000 farm recapture property (other than land) with an adjusted basis of $43,000 for a realized gain of $32,000 none of which is recognized under section 1245. The balance in A's excess deductions account is $39,000 at the close of 1970 (after making the applicable additions and subtractions under section 1251(b) (2) and (3)(A)). Hence, the entire gain of $32,000 is recognized as ordinary income under section 1251(c)(1), and the balance remaining in A's excess deductions account is $7,000. If, however, the original balance in the excess deductions account were only $15,000, then only $15,000 would be recognized as ordinary income under section 1251(c)(1) and A's excess deductions account balance would be reduced to zero. The remaining gain of $17,000 may be treated as gain from the sale or exchange of property described in section 1231.

Example 2. M, a calendar year corporation makes one disposition of farm recapture property during 1975. On January 15, 1975, M distributes as a dividend to its shareholders land which it had acquired on March 3, 1970. On that date, the excess of the fair market value ($67,500) over the adjusted basis of land ($45,000) is $22,500 and the sum of the deductions allowable in respect of such land under sections 175 and 182 is $5,000 for 1970 and $13,000 for the taxable year of disposition and the four immediately preceding taxable years. Thus, the potential gain (as defined in subparagraph (2)(ii) of this paragraph) is limited to $13,000. At the end of M's taxable year (after making the applicable additions and subtractions under section 1251(b) (2) and (3)(A) there is a balance of $25,000 in the excess deductions account of M. Since such balance exceeds the potential gain, M recognizes $13,000 as ordinary income under section 1251(c)(1) even though, in the absence of that provision, section 311(a) would preclude recognition of gain to M. The balance in M's excess deductions account is reduced by $13,000, from $25,000 to $12,000. With respect to the treatment of the remaining gain ($9,500) from the disposition of the land, see section 1252 and example (2) of paragraph (e) § 1.1252-1.

Example 3. Assume the same facts as in example (2), except that M makes a second disposition of farm recapture property during 1975. On June 5, 1975. M sells for $55,000 a breeding herd of cattle having an adjusted basis of $35,000 for a realized gain of $20,000. M had acquired the herd on April 1, 1971. Assume further that $6,000 of the $20,000 gain realized is treated as ordinary income under section 1245(a)(1). Thus, the amount of gain M would recognize as ordinary income under section 1251(c)(1), computed before applying the excess deductions account limitation, is $14,000. In accordance with the computation in example (1) of paragraph (c)(2) of § 1.1251-2, the excess deductions account limitations limit the maximum amount of gain which can be recognized as ordinary income under section 1251(c)(1) upon the disposition of the land and the breeding herd to $25,000. Under subparagraph (4)(ii) of this paragraph, the amount of such limitation, $25,000, is assigned to each property in the order of disposition. Thus, the amount of gain recognized as ordinary income under section 1251 is $13,000 (as in example (1) of this subparagraph) on the disposition of the land and $12,000 on the disposition of the breeding herd. The remaining gain of $2,000 (i.e., $14,000 minus $12,000) on the disposition of the breeding herd may be treated as gain from the sale or exchange of property described in section 1231.

(c) *Instances of nonapplication* —

(1) ***In general.*** Section 1251 does not apply with respect to dispositions of farm recapture property by a taxpayer during a taxable year if at the close of such year after making the necessary additions and subtractions under section 1251(b) (2) and (3)(A), there is no balance in the taxpayer's excess deductions account.

(2) ***Losses.*** Section 1251(c)(1) does not apply to losses. Thus, section 1251(c)(1) does not apply if a loss is realized upon a sale, exchange or involuntary conversion of property, all of which is farm recapture property, nor does the section apply to a disposition of such property other than by way of sale, exchange, or involuntary conversion if at the time of the disposition the fair market value of such property is not greater than its adjusted basis.

(3) ***Certain dispositions of interests in land.*** Section 1251(c)(1) does not apply to dispositions of interests in land with respect to which no deductions were allowable pursuant to an election under section 175 (relating to soil and water conservation expenditures) and 182 (relating to expenditures by farmers for clearing land) for the taxable year of disposition and the four immediately preceding taxable years. For possible application of section 1252 in such a case, see example (1) of paragraph (e) of § 1.1252-1.

(d) ***Partnerships.*** [Reserved]

(e) *Relation of section 1251 to other provisions* —

(1) ***General.*** The provisions of section 1251 apply (after applying paragraph (b)(5) of this section, relating to section 1245 property) notwithstanding any other provision of subtitle A of the Code. Thus, unless an exception or special rule under section 1251(d) and § 1.1251-4 applies, gain under section 1251(c)(1) is recognized notwithstanding any contrary nonrecognition provision or income characterizing provision. For example, section 1251 overrides section 1231 (relating to property used in a trade or business). Accordingly, gain recognized under section 1251(c)(1) upon a disposition of farm recapture property will be treated as ordinary income to the extent of the balance in the taxpayer's excess deductions account, and only the remaining gain, if any, from the disposition may be considered as gain from the sale or exchange of a capital asset if section 1231 is applicable. See example (3) of paragraph (d)(6) of this section.

(2) ***Nonrecognition sections overridden.*** The nonrecognition of gain provisions of subtitle A of the Code which section 1251 overrides include, but are not limited to, sections 267(d), 311(a), 336, 337, and 512(b)(5). See section 1251(d) and § 1.1251-4 for the extent to which 1251(c)(1) overrides sections 332, 351, 361, 371(a), 374(a), 721, 1031, and 1033.

(3) ***Treatment of gain not recognized under section 1251(c)(1).*** For treatment of gain not recognized under section 1251(c)(1), the principles of paragraph (f) § 1.1251-6 shall be applicable. Thus section 1251 does not prevent gain which is not recognized under section 1251 from being considered as gain under another provision of the Code, such as for example, section 1252(a)(1) (relating to treatment of gain from disposition of farm land). See example (1) of paragraph (e) of § 1.1252-1.

(4) ***Exempt income.*** With regard to exempt income, the principles of paragraph (e) of § 1.1245-6 shall be applicable.

(5) ***Normal retirement of asset in multiple asset account.*** Section 1251(c)(1) does not require recognition of gain upon normal retirements of farm recapture property in a multiple asset account as long as the taxpayer's method of accounting, as described in paragraph (e)(2) of § 1.167(a)-8 (relating to accounting treatment of asset retirements), does not require recognition of such gain.

(6) ***Installment method*** —

(i) ***In general.*** Gain from a disposition to which section 1251(c)(1) applies may be reported under the installment method if such method is otherwise available under section 453 of the Code. In such case, the income (other than interest) on each installment payment shall be deemed to consist of gain to which section 1251(c)(1) applies until all such gain has been reported, and the remaining portion (if any) of such income shall be deemed to consist of gain to which section 1251(c)(1) does not apply. For treatment of amounts as interest on certain deferred payments, see section 483. For adjustments in the excess deductions account, see paragraph (c)(1)(ii) of § 1.1251-2.

(ii) ***Special rule.*** If a taxpayer disposes of property used in the trade or business of farming which qualifies as both section 1245 property as well as farm recapture property and elects to report the gain from such disposition under the installment method, then the income (other than interest) on each installment payment shall (*a*) first be deemed to consist of gain to which section 1245(a)(1) applies until all such gain has been reported, (*b*) The remaining portion (if any) of such income shall be deemed to consist of gain to which section 1251(e)(1) applies until all such gain has been reported, and (*c*) finally the remaining portion (if any) of such income shall be deemed to consist of gain to which neither section 1245(a)(1) nor 1251 (c)(1) applies. See paragraph (d)(3) of § 1.1252-1 with respect to the installment method in regard to the disposition of property which is both farm recapture property as well as farm land (as defined in section 1252(a)(2) and paragraph (a)(3)(i) of § 1.1252-1).

[T.D. 7418, 41 FR 18814, May 7, 1976; 41 FR 23669, June 11, 1976]

§ 1.1251-2 Excess deductions account.

(a) ***Establishment and maintenance of account*** —

(1) ***General rule.*** With respect to any taxable year beginning after December 31, 1969, any taxpayer who:

(i) Has a farm net loss (as defined in section 1251(e)(2) and in paragraph (b) of § 1.1251-3) for such a taxable year, or

(ii) Has an excess deductions account balance as of the close of such a taxable year

shall establish (if not previously established) and maintain for purposes of section 1251 an excess deductions account. See section 1251(b)(1). Once an excess deductions account is established (or succeeded to under paragraph (e) of this section in the case of certain corporate transactions and gifts) all entries (including the entries prescribed by paragraph (f) of this section with respect to married taxpayers who file joint returns) with respect to the account must be part of the taxpayer's permanent records for all taxable years for which the account must be maintained. For purposes of applying section 1251 and this section, the term *taxpayer* in the case of a partnership means each partner of such partnership and in the case of an estate or trust means the estate or trust regardless of whether it is taxable under subpart A or E, subchapter J, chapter 1 of the Code.

(2) ***Distributions from estate or trust.*** If farm recapture property is distributed from an estate or trust in a transaction to which section 1251(d) (1) or (2) (relating to exceptions for gifts and transfers at death) applies, then the excess deductions account balance of the estate or trust shall be succeeded to by the distributee in the amount, if any, and manner prescribed in paragraph (e)(2) of this section. For purposes of the preceding sentence only, the rules of paragraph (e)(2) of this section shall be applied by treating each distribution as a gift at the time made. Thus; for example, if all of the farm recapture property of an estate or trust is distributed to a distributee on the date the estate or trust terminates, the distributee will succeed on that date to the excess deductions account balance of the estate or trust.

(3) ***Exception.*** A taxpayer is not required to maintain an excess deductions account under subparagraph (1) of this paragraph for a taxable year if:

(i) For such taxable year there would be no additions to the taxpayer's excess deductions account, and

(ii) For the immediately preceding taxable year the balance in the taxpayer's excess deductions account was reduced to zero by reason of section 1251 (b)(3) (relating to subtractions from the account) or section 1251(b)(5) (relating to transfer of account).

(b) ***Additions to account*** —

(1) ***General rule.*** For each taxable year, there shall be added to the excess deductions account an amount equal to the taxpayer's farm net loss. See section 1251(b)(2)(A).

(2) ***Exceptions.*** In the case of an individual and, in the case of an electing small business corporation (as defined in section 1371(b)), subparagraph (1) of this paragraph shall apply for a taxable year:

(i) Only if the taxpayer's nonfarm adjusted gross income (as defined in paragraph (d) of § 1.1251-3) for such year exceeds $50,000, and

(ii) Only to the extent the taxpayer's farm net loss for such year exceeds $25,000.

The limitations of this subparagraph apply to a person (other than a trust) to whom the tax rates set forth in section 1 are applicable and as prescribed in subparagraph (3) of this paragraph in respect of an electing small business corporation.

(3) ***Electing small business corporation*** —

(i) ***Taxable years ending before December 11, 1971.*** For taxable years ending before December 11, 1971, in the case of an electing small business corporation (as defined in section 1371(b):

(*a*) For purposes of subparagraph (2) of this paragraph, the term *the taxpayer* means such corporation or any one of its shareholders, and the term *such year,* in the case of a shareholder, means his taxable year with which or within which the taxable year of the corporation ends (see paragraph (d)(2) of § 1.1251-3 for special rules relating to the computation of nonfarm adjusted gross income of a shareholder of an electing small business corporation), and

(*b*) The limitations in subparagraph (2) of this paragraph shall not apply to the corporation for a taxable year if on any day of such year there is a taxpayer who is a shareholder having, for his taxable year with which or within which the taxable year of such corporation ends, a farm net loss (as defined in paragraph (b) of § 1.1251-3).

For purposes of determining whether a shareholder of such corporation has a farm net loss, there shall not be taken into account his pro rata share of farm net income or loss of any other electing small business corporation for such corporation's taxable year ending with or within his taxable year.

(*c*) The provisions of this subdivision (i) do not apply for purposes of determining whether the shareholder must make an addition to his excess deductions account and the amount of such addition.

(ii) ***Taxable years ending after December 10, 1971.*** [Reserved]

(4) ***Married individuals*** —

(i) ***Lower limitations for separate returns.*** If married taxpayers file separate returns, then for purposes of this paragraph each spouse shall be treated as a separate individual. However, in such case,

(*a*) the amount specified in subparagraph (2)(i) of this paragraph shall be $25,000 in lieu of $50,000, and

(*b*) the amount specified in subparagraph (2)(ii) of this paragraph shall be $12,500 in lieu of $25,000. The lower limitations in the preceding sentence shall not apply if the spouse of the taxpayer does not have any nonfarm adjusted gross income for the taxable year. See section 1251(b)(2)(C).

(ii) ***Joint return.*** If married taxpayers for a taxable year file a joint return under section 6013, then for purposes of this paragraph they shall for such taxable year be treated as a single taxpayer. For rules applicable to establishing, maintaining, and allocating a joint excess deductions account, see paragraph (f) of this section.

(5) ***Examples.*** The provisions of this paragraph may be illustrated by the following examples:

Example 1. For 1971, the M Corporation which uses the claendar year as its taxable year and which is not an electing small business corporation has a farm net loss of $40,000 and nonfarm taxable income of $45,000. Since subparagraph (2) of this paragraph does not apply to M, it is required to make a $40,000 addition to its excess deductions account.

Example 2. For 1971, A, an unmarried individual who uses the calendar year as his taxable year, has a farm net loss of $33,000 and nonfarm adjusted gross income of $65,000. Under subparagraph (2) of this paragraph, A is required to make an addition of $8,000 to his excess deductions account (that is, the excess of the farm net loss, $33,000, over the $25,000 amount referred to in subparagraph (2)(ii) of this paragraph). If, however, A were a trust, the limitation in subparagraph (2) of this paragraph would not apply and such trust would be required to add $33,000 (the amount of the entire farm net loss) to its excess deductions account.

Example 3. H and W each use the calendar year as the taxable year. For 1971, H, a married taxpayer who files a separate return, has a farm net loss of $45,000 and nonfarm adjusted gross income of $60,000. H's spouse W does not have any nonfarm adjusted gross income for 1971. Thus, the lower limitations in subparagraph (4)(i) of this paragraph do not apply. Accordingly, H is required to make an addition of $20,000 to his excess deductions account (that is, the excess of the farm net loss, $45,000, over the $25,000 amount referred to in subparagraph (2)(ii) of this paragraph).

Example 4. Assume the same facts as in example (3), except that for 1971 W has a farm net loss of $10,000 and nonfarm adjusted gross income of $30,000. Thus, the lower limitations in subparagraph (4)(i) of this paragraph do apply and H is required to make an addition of $32,500 to his excess deductions account (that is, the excess of his farm net loss, $45,000, over the $12,500 amount referred to in subparagraph (4)(i)(*b*) of this paragraph). Since, however, W did not have a farm net loss in excess of $12,500, she would not be required to make an addition to her excess deductions account. For the result if H and W were to file a joint return, see example (1) of paragraph (f)(6) of this section.

Example 5. For 1970, the M Corporation, which uses the calendar year as its taxable year and which is an electing small business corporation, has a farm net loss of $35,000 and nonfarm adjusted gross income of $60,000. A, B, and C, the sole equal shareholders of M, are cash method taxpayers and each uses a fiscal year ending on March 31. For the taxable year ending March 31, 1971, A has a farm net loss of $5,000. Thus, as M's taxable year ends within the taxable year of A during which A has a farm net loss, the limitations in subparagraph (2) of this paragraph do not apply with respect to M for 1970. See subparagraph (1) of this paragraph, to add $35,000 to its excess deductions account.

Example 6. Assume the same facts as in example (5), except that A's farm net loss occurred in his fiscal year ending March 31, 1970, and no shareholder of M has a farm net loss for the fiscal year ending March 31, 1971. Thus, the limitations in subparagraph (2) of this paragraph do apply with respect to M for 1970, and accordingly M is required to add $10,000 to its excess deductions account for 1970 (that is, the excess of M's farm net loss $35,000, over the $25,000 amount referred to in subparagraph (2)(ii) of this paragraph).

Example 7. Assume the same facts as in example (6), except that M has $45,000 of nonfarm adjusted gross income for 1970 and A, for his taxable year ending March 31, 1971, has $40,000 of nonfarm adjusted gross income, computed without regard to his interest in M. Assume the M paid no dividends. Since, under paragraph (d)(2) of § 1.1251-3, A's income from M under section 1373(b) is computed on the basis of M's nonfarm adjusted gross income, A's gross income from M is $15,000 ($^1/_3$ of $45,000), and A's total nonfarm adjusted gross income is $55,000. Accordingly, M would be required to add $10,000 to its excess deductions account for 1970 for the reasons stated in example (6).

Example 8. Assume the same facts as in example (7). Assume further that A is one of two equal shareholders in N, another electing small business corporation with a taxable year ending on January 31, and that N for its taxable year ending on January 31, 1971, has a $42,000 nonfarm loss and farm net income of $23,000. Assume that N paid no dividends. Thus, A for purposes of subparagraph (2)(i) of this paragraph, would only have a total of $34,000 of nonfarm adjusted gross income ($55,000) computed per example (7) minus $21,000 (A's share of N's nonfarm net operating loss ($^1/_2$ of $42,000) computed in accordance with paragraph (d)(2) of § 1.1251-3)). Assuming that no other shareholder of M has nonfarm adjusted gross income in excess of $50,000, by reason of the $50,000 limitation in subparagraph (2)(i) of this paragraph, M makes no addition for 1971 to its excess deductions account. (N would make no addition to its excess deductions account as it does not have a farm net loss.) If, however, N were to have a nonfarm loss of only $8,000, A for purposes of subparagraph (2)(i) of this paragraph would have a total of $51,000 of nonfarm adjusted gross income ($51,000 of nonfarm adjusted gross income ($55,000, minus $^1/_2$ of N's nonfarm loss of $8,000)). Hence, with respect to M the result would be the same as in example (7) (and N would make no addition to its excess deductions account since it does not have a farm net loss).

Example 9. D and E are equal individual shareholders in corporations X, Y, and Z, the stock of each corporation having recently been purchased from a different unrelated person. X, Y, and Z are electing small business corporations. D, E, and the corporations all use the calendar year as the taxable year. For 1970, the farm net income of D and E (determined without regard to their respective pro rata shares of the farm net income or loss of X, Y, and Z) are $100,000 and zero, respectively. For 1970, the farm net income or loss of the corporations are losses of $80,000 and $20,000 for X and Z, respectively, and income of $60,000 for Y. For 1970, the determinations under subparagraph (3)(ii) of this paragraph as to whether a shareholder of corporation X or Z (no determination is necessary with respect to Y since Y does not have a farm net loss) has a farm net loss are made as follows:

DETERMINATIONS AS TO WHETHER D OR E HAS A FARM NET LOSS

	As to X		As to Z	
	D	E	D	E
Farm net income (determined without regard to X, Y, and Z)	$100,000	$0	$100,000	$0
Pro rata ($^1/_2$) share of corporation's farm net income (or loss):				
Of X			(40,000)	(40,000)
Of Y	30,000	30,000	30,000	30,000
Of Z	(10,000)	(10,000)		
Farm net income (or loss) for purposes of determination	$120,000	$20,000	$90,000	($10,000)

Accordingly, since the determination as to X indicates that neither D nor E has a farm net loss, the limitations of subparagraph (2) of this paragraph apply to X. Thus, assuming that X, D, or E has nonfarm adjusted gross income in excess of $50,000, X will add $55,000 to its excess deductions account, i.e., the excess of the farm net loss, $80,000, over the $25,000 amount referred to in subparagraph (2)(ii) of this paragraph. Since, however, the determination as to Z indicates that E has a farm net loss, such limitations do not apply to Z. Thus, the addition for 1970 to Z's excess deductions account is the entire amount of its farm net loss, $20,000.

(c) *Subtractions from account* —

(1) ***General rule.*** Under section 1251(b)(3), if there is any amount in the excess deductions account at the close of a taxable year (determined after making any addition required under paragraph (b) of this section for such year but before making any reduction under this paragraph for such year), then the excess deductions account shall be reduced (but not below zero) by subtracting:

(i) An amount equal to

(*a*) the farm net income (as defined in section 1251 (e)(3) and in paragraph (c) of § 1.1251-3) for such year, plus

(*b*) the amount (as determined in subparagraph (3) of this paragraph) necessary to adjust the account for deductions for any taxable year which did not result in a reduction of the taxpayer's tax under subtitle A of the Code for such taxable year or any preceding taxable year, and

(ii) After making any addition to the excess deductions account under paragraph (b) of this section and any reduction under subdivision (i) of this subparagraph for the taxable year, an amount equal to the sum of the amounts recognized as ordinary income solely by reason of the application of section 1251(c)(1). See section 1251(b)(3)(B). Thus, no amount shall be subtracted under this subdivision for gain recognized by reason of the application of section 1245(a)(1) or 1252(a)(1). For effect on computation of farm net loss or income of gain recognized under section 1245(a)(1) upon a disposition of farm recapture property, see paragraph (b)(2) of § 1.1251-3. In the case of an installment sale of farm recapture property, the taxpayer's excess deductions account shall be reduced under this subdivision in the year of such sale by an amount equal to the gain (computed in the year of sale) to be recognized as ordinary income under section 1251(c)(1).

(2) ***Examples.*** The provisions of subparagraph (1) of this paragraph may be illustrated by the following examples in which it is assumed that there is no subtraction for lack of tax benefit under subparagraph (3) of this paragraph:

Example 1. Assume the same facts as in example (3) of paragraph (b)(6) of § 1.1251-1. M's excess deductions account balance as of the close of 1975 is computed, in accordance with the additional facts assumed, in the table below:

M's Excess Deductions Account

(1) Balance January 1, 1975	$26,000
(2) Additions for 1975	0
(3) Subtotal	26,000
(4) Subtractions for 1975 (farm net income [1])	1,000
(5) Excess deductions account limitation on gain recognized as ordinary income under section 1251(c)(1) for 1975	25,000

[1] *Computed by treating the section 1245 gain of $6,000 under paragraph (b)(1)(ii) of § 1.1251-3 as gross income derived from the trade or business of farming.*

(6) Subtraction for disposition of farm recapture property:		
(a) Gain from disposition of land to which section 1251(c)(1) applies (computed before applying limitation	$13,000	
(b) Gain from disposition of breeding herd to which section 1251(c)(1) applies (computed before applying limitation)	14,000	
(c) Sum of lines (a) and (b)	27,000	
(d) Excess deductions account limitation (amount in line (5))	25,000	
(e) Gain recognized as ordinary income under section 1251(c)(1) (lower of line (6)(c) or line (6)(d)		25,000
(7) Balance December 31, 1975		0

[1] *Computed by treating the section 1245 gain of $6,000 under paragraph (b)(1)(ii) of § 1.1251-3 as gross income derived from the trade or business of farming.*

For allocation of the $25,000 of gain recognized as ordinary income to the land and herd, and for treatment of the gain recognized in excess of $25,000 see example (3) of paragraph (b)(6) of § 1.1251-1.

Example 2. A is an unmarried individual who uses the calendar year as his taxable year. In 1971, A makes a single disposition of farm recapture property (other than land) realizing a gain of $46,000 of which $15,000 is recognized as ordinary income under section 1245(a)(1). The gain to which section 1251(c)(1) applies (computed before applying the excess deductions account limitation in section 1251(c)(2)(A) and paragraph (b)(4)(i) of § 1.1251-1) is $31,000 (i.e., $46,000 minus $15,000). The treatment of the gain realized on the disposition in excess of the $15,000 recognized as ordinary income under section 1245(a)(1) and the balance in A's excess deductions account as of the close of 1971 is computed, in accordance with the facts assumed, in the table below:

A's Excess Deductions Account

(1) Balance January 1, 1971		$50,000
(2) Additions for 1971:		
(a) Farm net loss for 1971 [1]	$5,000	
(b) Less amount in paragraph (b)(2)(ii) of this section	25,000	
(c) Total additions for 1971		0

[1] *Computed by treating the section 1245 gain of $15,000 under paragraph (b)(1)(ii) of § 1.1251-3 as gross income derived from the trade or business of farming.*

(3) Subtotal		50,000
(4) Subtractions for 1971		0
(5) Excess deductions account limitation on gain recognized as ordinary income under section 1251(c)(1) for 1971		50,000
(6) Subtraction for dispositions of farm recapture property:		
(a) Gain to which section 1251(c)(1) applies (computed before applying limitation)	31,000	
(b) Limitation (amount in line (5)	50,000	
(c) Gain recognized as ordinary income under section 1251(c)(1) lower of line 6(a) or line 6(b)		31,000
(7) Balance December 31, 1971	19,000	

[1] *Computed by treating the section 1245 gain of $15,000 under paragraph (b)(1)(ii) of § 1.1251-3 as gross income derived from the trade or business of farming.*

(3) ***Amount necessary to adjust the excess deductions account with respect to deductions which did not result in a reduction of the taxpayer's tax —***

(i) ***In general.*** Under section 1251(b)(3)(A), a subtraction is made from the excess deductions account to adjust the account for deductions that did not result in a reduction of the taxpayer's tax for the taxable year or any preceding taxable year. The amounts to be subtracted are determined under subdivisions (ii) and (iii) of this subparagraph in accordance with the rules in subdivision (iv) of this subparagraph. This subtraction shall be made before determining the amount of gain to which section 1251(c) applies. The amount subtracted under subdivision (ii) of this subparagraph is a temporary subtraction made solely to determine the amount in the excess deductions account for purposes of the limitation in section 1251(c)(2).

(ii) ***Temporary subtraction.*** The amount temporarily subtracted from the excess deductions account for a taxable year is the sum of the farm portion of

(*a*) any net operating loss for such taxable year which does not reduce taxable income (computed without regard to the deduction under section 172(a)) in a prior year, and

(*b*) any net operating loss from a prior taxable year which is carried to such taxable year but which does not reduce taxable income (computed without regard to the deduction under section 172(a)) in such taxable year.

(iii) ***Permanent subtraction.*** The amount permanently subtracted from the excess deductions account for a taxable year is the excess of the farm portion of any net operating loss which may be carried to the preceding year (reducing by the portion of such loss which reduced taxable income (computed without regard to the deduction under section 172(a)) for such preceding year) over the amount of such loss which may be carried to the taxable year, but the subtraction shall not be made earlier than the taxable year in which the excess deductions account is increased by reason of such loss.

(iv) ***Rules of application.*** For purposes of this subparagraph, the following rules shall apply:

(*a*) The farm portion of a net operating loss is that portion of such loss attributable to the trade or business of farming. Such portion and the remaining portion (hereinafter referred to as the nonfarm loss) shall be absorbed pro rata. If a farm net loss is not added to the excess deductions account in the year in which such loss occurs, the net operating loss (if any) for such year shall be treated as a nonfarm loss.

(*b*) In the case of an individual (other than a trust), the farm portion of a net operating loss shall be decreased by an amount, if any, equal to the excess of $25,000 (or the amount determined under paragraph (b)(2)(ii) of this section) over the nonfarm adjusted gross income. Such amount shall be added to the nonfarm portion of such net operating loss.

(*c*) The amounts considered as reducing taxable income under subdivision (ii) of this subparagraph in the taxable year shall be determined on the basis of a tentative computation of taxable income for such year in which the gain realized from the disposition of property to which section 1251(c)(1) applied shall be computed without regard to the excess deductions account limitation.

(v) ***Example.*** The provisions of this subparagraph may be illustrated by the following example:

Example: A is an unmarried individual who uses the calendar year as his taxable year. For the years 1970 through 1974, A's items of income and deductions are as shown in the table below. A's personal deductions are disregarded. A had no income or loss for any year prior to 1970. Based upon such amounts and the computations shown below, A must recognize as ordinary income under section 1251(c)(1), $35,325 for 1971, $10,000 for 1972, $3,925 for 1973, and $150,000 for 1974.

Amounts assumed	1970	1971	1972	1973	1974
(a) Farm net income	($250,000)	$20,000	$5,000	($75,000)	($10,000)
(b) Nonfarm income	55,000	(82,000)	30,000	10,000	200,000
(c) Gain which would be recognized as ordinary income under 1251(c) (computed without regard to the EDA limitation) (hereinafter referred to as *farm property disposition*)		88,000	10,000	2,000	150,000
(d) Personal exemption	625	675	750	750	750
(e) Net operating loss (NOL) (computed per section 172(c))	(195,000)			(45,000)	

I. COMPUTATIONS FOR 1971

1. Excess Deductions Account (EDA) Limitation for 1971:

Amounts assumed	1970	1971	1972	1973	1974
a. EDA on December 31, 1970:					
1970 Farm net loss				250,000	
Less				(25,000)	
				225,000	225,000
b. Less farm net income for 1971					(20,000)
c. EDA before temporary subtraction					205,000
d. Less temporary subtraction per subdivision (ii)(*b*):					
Aggregate farm NOL carryover to 1971				195,000	
Less tentative farm NOL deduction for 1971:					
Farm net income			20,000		
Nonfarm income			(82,000)		
Farm property disposition			88,000		
Exemption			(675)		
Tentative taxable income			25,325		
Tentative NOL reducing taxable income			25,325	(25,325)	
				169,675	(169,675)
e. EDA limitation for 1971					35,325
2. 1971 Taxable Income:					
a. Farm net income					20,000
b. Nonfarm income					($82,000)
c. Farm property disposition					88,000
d. Exemption					(675)
e. Section 1202 deduction:					
Farm property disposition				$88,000	
Less amount treated as ordinary income under section 1251(c) (lesser of amount of gain on line 1(e))				35,325	
Capital gain				52,675	
Less 50 percent deduction				26,337	(26,338)
f. 1971 Taxable income					(1,013)
II. COMPUTATIONS FOR 1972					
1. Excess Deductions Account Limitation for 1972:					
a. EDA (line 1(c) above)					205,000
b. Less recapture in 1971					(35,325)
c. Less farm net income for 1972					(5,000)
d. Less permanent subtraction per subdivision (iii):					
1970 Farm NOL carryover to 1971				195,000	
Less 1970 farm NOL carryover to 1972 (computed per section 172(b)(2)):					
Farm NOL to 1971			$195,000		
Less 1971 taxable income computed					

Amounts assumed	1970	1971	1972	1973	1974
per section 172(b)(2):					
Farm net income		$20,000			
Nonfarm income		(82,000)			
Farm property disposition		88,000			
		26,000	(26,000)		
Farm NOL carryover to 1972		169,000	($169,000)		
				26,000	($26,000)
e. EDA before making temporary subtractions					138,675
f. Less temporary subtraction per subdivision (ii)(*b*):					
Farm NOL carryover to 1972				169,000	
Farm net income			5,000		
Nonfarm income			30,000		
Farm recapture disposition			10,000		
Exemption			(750)		
Tentative taxable income			44,250		
Tentative NOL reducing taxable income			44,250	(44,250)	
				124,750	(124,750)
g. EDA limitation for 1972					13,925
2. Taxable Income for 1972:					
a. Farm net income					5,000
b. Nonfarm income					30,000
c. Farm property disposition					10,000
d. Exemption					(750)
e. Section 1202 deduction:					
Farm property disposition				10,000	
Less amount treated as ordinary income under section 1251(c) (lesser of amount of gain on line 1(g))				10,000	0
f. Taxable income before NOL deduction					44,250
g. Net operating loss deduction					(44,250)
h. Taxable income for 1972					0
III. COMPUTATIONS FOR 1973					
1. Excess Deductions Account Limitation for 1973:					
a. Line 1(e) above					138,675
b. Less recapture in 1972					(10,000)
c. Less permanent subtraction per subdivision (iii):					
1970 Farm NOL carryover to 1972			169,000		
Less 1970 Farm NOL reducing taxable income in 1972			(44,250)		
			124,750	124,750	

Amounts assumed	1970	1971	1972	1973	1974
Less 1970 Farm NOL carryover to 1973 computed per section 172(b)(2):					
Farm NOL to 1972			169,000		
1972 Taxable income computed per section 172(b)(2):					
Farm net income		$5,000			
Nonfarm income		30,000			
Farm recapture disposition		10,000			
		45,000	($45,000)		
Farm NOL carryover to 1973			124,000	($124,000)	
				750	($750)
d. EDA before making temporary subtractions					$127,925
e. Less temporary subtraction per subdivision (ii)(*a*)-zero (since 1973 farm loss treated as nonfarm addition to NOL per subdivision (iv)(*a*))					0
f. Less temporary subtraction per subdivision (ii)(*b*): Aggregate farm NOL carryover to 1973				$124,000	
Less tentative farm NOL deduction for 1973:					
Farm net income			($75,000)		
Nonfarm income			10,000		
Farm property disposition			30,000		
Exemption			(750)		
Tentative taxable income			(44,250)		
Tentative NOL reducing taxable income			0	0	
				124,000	(124,000)
g. EDA limitation for 1973					3,925
2. Taxable Income 1973:					
a. Farm net income					(75,000)
b. Nonfarm income					10,000
c. Farm property disposition					20,000
d. Exemption					(750)
e. Section 1202 deduction:					
Farm property disposition				20,000	
Less amount treated as ordinary income under section 1251(c) (lesser of amount of gain on line 1(g))				3,925	
Capital gain				16,075	

Amounts assumed	1970	1971	1972	1973	1974
Less 50 percent deduction				8,038	(8,037)
f. Taxable income for 1973					(53,787)
IV. COMPUTATIONS FOR 1974					
1. Excess Deductions Account Limitation for 1974:					
a. Line 1(d) above					127,925
b. Less recapture in 1973					(13,925)
c. Farm loss for 1974			10,000		
Plus farm NOL deduction (see § 1.1251-3(b)(3))			45,000		
			55,000	55,000	
Less				25,000	
				30,000	30,000
d. Less permanent subtraction per subdivision (iii):					
1970 Farm NOL carryover to 1973				124,000	
Less 1970 farm NOL carryover to 1974 per section 172(b)(2)				124,000	
				0	0
e. EDA before making temporary subtractions					154,000
f. Less temporary subtraction per subdivision (ii)(*b*):					
Aggregrate farm NOL carryover to 1974				124,000	
Less tentative farm NOL deduction in 1974:					
Farm net income			(10,000)		
Nonfarm income			200,000		
Farm property disposition			150,000		
Exemption			(750)		
Tentative taxable income			339,250		
Tentative NOL deduction			169,000		
Farm portion of tentative NOL deduction				124,000	
				0	0
g. EDA limitation for 1974					$154,000
2. Taxable Income 1974:					
a. Farm net income					(10,000)
b. Nonfarm income					200,000
c. Farm property disposition					150,000
d. Exemption					(750)
e. Section 1202 deduction:					
Farm property disposition				$150,000	
Less amount treated as ordinary income under section 1251(c) (lesser of amount of gain on line 1(g))				150,000	0
f. Taxable income before NOL deduction					339,250
g. Net operating loss deduction					(169,000)

Amounts assumed	1970	1971	1972	1973	1974
h. Taxable income					170,250

(vi) ***Electing small business corporation.***

(a) In the case of an electing small business corporation, the amounts to be subtracted under subdivisions (ii) and (iii) of this subparagraph, shall be the sum of the amounts under such subdivisions computed with respect to each shareholder of the corporation for the taxable year of the shareholder with which or within which the taxable year of the corporation ends, by applying (*b*) of this subdivision (vi), in lieu of subdivision (iv)(*a*) of this subparagraph.

(*b*) For purposes of (*a*) of this subdivision, the farm portion of a shareholder's net operating loss is that portion of the net operating loss of such shareholder attributable to the corporation's farm net loss, and such portion and the remaining portion shall be considered to be absorbed pro rata. If a corporation's farm net loss is not added to its excess deduction account in the year in which such loss occurs, no portion of a shareholder's net operating loss for the taxable year of the shareholder with which or within which such taxable year of the corporation ends shall be attributable to such corporation's farm net loss.

(d) ***Exception for taxpayers using certain accounting methods*** —

(1) ***General rule.*** Under section 1251(b)(4), except to the extent that a taxpayer has succeeded to an excess deductions account as provided in paragraph (e) of this section (relating to receipt of farm recapture property in certain corporate and gift transactions), additions to the account shall not be required by a taxpayer who elects to compute taxable income from the trade or business of farming (as defined in paragraph (e)(1) of § 1.1251-3:

(i) By using inventories for all property which may be inventoried except as to property to which subdivision (ii) of this subparagraph applies, and

(ii) In accordance with subparagraph (3) of this paragraph, by charging to capital account all expenditures paid or incurred which are properly chargeable to capital account including such expenditures which the taxpayer may, under chapter 1 of the Code or regulations prescribed thereunder, otherwise treat or elect to treat as expenditures which are not chargeable to capital account.

For rules as to procedure of making the election, effect of a change in method of accounting upon making the election, and conditions for revoking the election, see subparagraphs (4), (5), and (6), respectively, of this paragraph.

(2) ***Inventories.*** The absence of property which may be inventories shall not preclude a taxpayer from making an election under section 3251(b)(4). Any acceptable inventory method will satisfy the requirement of subparagraph (1)(i) of this paragraph.

(3) ***Property chargeable to capital account*** —

(i) ***In general.*** Property subject to the capitalization requirement prescribed in subparagraph (1)(ii) of this paragraph includes all property described in section 1231(b) (1) and (3), without regard to any holding period therein provided, which is used in the trade or business of farming. Thus, for example, property subject to the capitalization requirement includes property used in the trade or business of farming of a character subject to the allowance for depreciation and real property so used regardless of the period held, and livestock used in the trade or business of farming which is held for draft, breeding, dairy, or sporting purposes regardless of the period held.

(ii) ***Expenditures which must be capitalized.*** Expenditures subject to the requirement of subparagraph (1)(ii) of this paragraph are all expenditures, whether direct or indirect, paid or incurred, which are properly chargeable to capital account. For examples of the meaning of the term *properly chargeable to capital account,* see §§ 1.61-4, 1.162-12, 1.263(a)-1, and 1.263(a)-2, and paragraph (a)(4) (ii) and (iii) of § 1.446-1. Other examples of expenditures referred to in subparagraph (1)(ii) of this paragraph are expenditures under sections 175 (relating to soil and water conservation), 180 (relating to fertilizer, etc.), 182 (relating to land clearing), and 266 (relating to certain carrying charges) which (without regard to section 1251) a taxpayer may treat or elect to treat as expenditures which are not chargeable to capital account. Thus, for example, with respect to developing a farm, ranch, orchard, or grove, amounts properly chargeable to capital account include amounts paid or incurred for upkeep, taxes, interest, and other carrying charges, water for irrigation, fertilizing, controlling undergrowth, and the cultivating and spraying of trees. For a further example, with respect to a produced animal, amounts properly chargeable to capital account for the animal include all expenditures paid or incurred for producing the animal, such as for stud, breeding, and veterinary services, as well as all amounts paid or incurred with respect to the brood animal during the gestation period of the produced animal including all amounts paid or incurred for feed, maintenance, utilities, indirect overhead, depreciation, insurance, and carrying charges. Direct and indirect expenditures properly chargeable to capital account with respect to raising an animal may include, in addition to expenditures for feed, maintenance, etc., expenditures for training. Direct and indirect expenditures with respect to feed may include, in the case of a grazing operation, fees for the rental of grazing land, and the portion of all labor, taxes, interest, fencing costs, and carrying charges paid or incurred by the taxpayer allocable to grazing. For purposes of this subparagraph, reasonable allocations shall be made by the taxpayer of items between animals held for different purposes and as to each animal held. However, all amounts allocated to a brood animal during the period of gestation are, for purposes of this subparagraph, entirely chargeable to the capital of the produced animal.

(iii) ***Unharvested crops.*** With respect to unharvested crops to which section 1231(b)(4) applies, see section 268 and paragraph (g) of § 1.1016-5 (relating, respectively, to disallowance of certain deductions and to adjustments to basis).

(iv) ***Changes in character of property.*** If, in a taxable year subsequent to the first taxable year to which an election under section 1251(b)(4) applies, property which was not subject to the requirements of subparagraph (1)(ii) of this paragraph becomes subject to such requirements, then the following rules shall apply:

(*a*) The adjusted basis of such property at the beginning of the taxable year in which it becomes subject to the requirements of subparagraph (1)(ii) of this paragraph shall be equal to the amount its adjusted basis would have been on such date had it been

accounted for in accordance with such requirements (taking into account, if applicable, the depreciation which would have been allowed as determined by the taxpayer using a period, salvage value, and methods that would have been proper).

(*b*) At the beginning of the taxable year in which such property becomes subject to the requirements of subparagraph (1)(ii) of this paragraph:

(*1*) If such property was not included in the opening inventory, the amount equal to the excess of its adjusted basis as computed in (*a*) of this subdivision over its adjusted basis as of the close of the preceding taxable year, or

(*2*) If such property was included in the opening inventory, such opening inventory shall be reduced by the inventory value of such property included therein and the amount of the difference between the adjusted basis for the property computed in (*a*) of this subdivision and such inventory value,

Shall be added to gross income for such taxable year and shall be treated as gross income derived from the trade or business of farming under paragraph (b)(1)(ii) of § 1.1251-3, except that if the difference in (*b)(2*) of this subdivision represents an excess of such inventory value over the adjusted basis for the property computed in (*a*) of this subdivision then such excess shall be subtracted from gross income for such taxable year and shall be treated as a deduction allowed which is directly connected with carrying on the trade or business of farming under paragraph (b)(1)(i) of § 1.1251-3.

(*c*) If any deductions for depreciation are treated as amounts which would have been allowed in a prior taxable year or years for purposes of (*a*) of this subdivision, such deduction shall be treated as having been allowed for purposes of applying sections 1245 and 1250 in the same taxable year or years and thus included in the amount of adjustments reflected in adjusted basis within the meaning of paragraph (a)(1)(ii) of § 1.1245-2 or depreciation adjustments within the meaning of paragraph (d)(1) of § 1.1250-2 (as the case may be).

(*d*) For purposes of this subparagraph (3), if during a taxable year property becomes subject to the requirements of subparagraph (1)(ii) of this paragraph, it shall be considered subject to such requirements on each day it is held during such year.

(*e*) The adjusted basis under (*a*) of this subdivision of property of a character subject to the allowance for depreciation shall be its basis for which deductions may be computed under section 167.

(v) ***Example.*** The provisions of subdivision (iv) of this subparagraph may be illustrated by the following example:

Example: On January 1, 1974, A, an individual taxpayer who in a previous year had elected under section 1251(b)(4) to compute income from the trade or business of farming by using inventories and by charging to capital account all items properly chargeable to capital under the rules of subdivision (ii) of this subparagraph, purchases a herd of six-month-old feeder calves for $13,000. During 1974, in connection with such herd, A incurred raising costs of $4,000 and carrying charges of $1,600 which would have been properly chargeable to capital account within the meaning of subparagraph (1)(ii) of this paragraph if the herd had not been included in inventory. A determines under his unit-livestock method that on December 31, 1974, the inventory value of the herd is $17,000. On March 1, 1975, A decides to use one-half of the herd for breeding purposes with such part of the

herd becoming subject to the capitalization requirements. On January 1, 1975, the adjusted basis for the animals held for breeding purposes, computed under the provisions of subdivision (iv)(a) of this subparagraph, is $9,300 (that is, the aggregate of one-half of the purchase price of $13,000 for the entire herd of feeder calves, $6,500, one-half of the carrying charges of $1,600 incurred during 1974 in connection with the entire herd, $800, and one-half of the $4,000 of raising costs incurred during 1974 for the entire herd, $2,000). There is no adjustment for the depreciation which would have been allowed since no animal in the herd had reached an acceptable breeding age. Therefore, A as of January 1, 1975, must under the provisions of subdivision (iv)(*b*)(*2*) of this subparagraph subtract $8,500 from his opening inventory value of $17,000. However, A has not changed his method of accounting with respect to such animals. Under the provisions of subdivision (iv)(*b*)(*2*) of this subparagraph, A for 1975 will add $800 to his gross income (that is, the difference between the adjusted basis for the calves to be used for breeding purposes, $9,300, over the inventory value of such animals, $8,500). Such amount under the provisions of subdivision (iv)(*b*) shall be treated as gross income derived from the trade or business of farming under paragraph (b)(1) of § 1.1251-3.

(4) ***Time and manner of making election*** —

(i) ***In general.*** The election under section 1251(b)(4) for any taxable year beginning after December 31, 1969, shall be filed within the time prescribed by law (including extensions thereof) for filing the return for such taxable year. Such election shall be made and filed by attaching a statement of such election signed by the taxpayer to the return for the first taxable year for which the election is made. The statement shall contain a declaration that the taxpayer is making an election under section 1251(b)(4) of the Code and that taxable income from the trade or business of farming is computed by using inventories for all property, which may be inventoried and by charging to capital account all expenditures paid or incurred which are properly chargeable to capital account (including such expenditures which the taxpayer may, under chapter 1 of the Code or regulations prescribed thereunder, otherwise treat or elect to treat as expenditures which are not properly chargeable to capital account). Additionally, the statement must contain the information prescribed by subparagraph (5) of this paragraph, if applicable.

(ii) ***Joint return.*** If for a taxable year taxpayers file a joint return under section 6013, the election referred to in subparagraph (1) of this paragraph must be made by both such taxpayers in accordance with the provisions of subdivision (i) of this subparagraph. If, however, in such case either of such taxpayers has for a previous taxable year made such an election, then only the taxpayer who has not made such election is required to comply with the provisions of subdivision (i) of this subparagraph. The taxpayer who previously made such an election shall attach a statement to the return specifying the taxable year for which the election was made and with whom the election was filed.

(5) ***Change in method of accounting, etc.*** —

(i) ***In general.*** If, in order to comply with an election made under section 1251(b)(4), a taxpayer must change his method of accounting (in computing taxable income from the trade or business of farming) by placing in inventory a class of items not previously treated as in an inventory or by charging to capital account a class of items which had been consistently treated as an expense or as part of inventory (see paragraph (e)(2)(ii)(*b*) of § 1.446-1), the taxpayer will be deemed to have obtained the consent of the Commissioner as to such change in method of accounting solely as to such items and there shall be taken into account in

accordance with section 481 of the Code and the regulations thereunder those adjustments which are determined to be necessary by reason of such change solely as to such items in order to prevent amounts from being duplicated or omitted. For purposes of section 481(a)(2), such change in method of accounting with respect to only such items shall be treated as a change not initiated by the taxpayer and, thus, under paragraph (a)(2) of § 1.481-1, no part of the adjustments required under section 481 with respect to such items shall be based on amounts which are taken into account in computing income (or which should have been taken into account had the new method of accounting been used) for taxable years beginning before January 1, 1954, or ending before August 17, 1954.

(ii) ***Additional information.*** If, in order to comply with an election made under subparagraph (1) of this paragraph a taxpayer (or in the case of a joint return one or both taxpayers) changes his method of accounting, then in addition to the information required to be filed under subparagraph (4) of this paragraph the taxpayer must file on Form 3115 as part of such election all the information described in paragraph (e)(3) of § 1.446-1 (relating to change in method of accounting), but the time prescribed in paragraph (e)(3) of § 1.446-1 for filing Form 3115 shall not apply.

(iii) ***Election made before May 7, 1976.*** If an election referred to in subparagraph (1) of this paragraph was made before May 7, 1976, the taxpayer shall file not later than August 5, 1976, such information referred to in subparagraph (4) of this paragraph not previously required by applicable regulations to be filed in order to make such election, and, in addition, if subdivision (ii) of this subparagraph applies, the taxpayer shall file not later than August 5, 1976, on Form 3115 the information referred to in subdivision (ii) of this subparagraph with the district director, or the director of the internal revenue service center, with whom the election was filed. For this purpose, Form 3115 shall be attached to a statement clearly identifying the election referred to in subparagraph (1) of this paragraph and the first taxable year to which it applied.

(6) ***Revocability of election*** —

(i) ***In general.*** An election referred to in subparagraph (1) of this paragraph is binding on the taxpayer or in the case of a joint return both taxpayers) for the taxable year of such election and for all subsequent taxable years (regardless of whether they continue to file a joint return) and may not be revoked except with the consent of the Commissioner. Since revocation would constitute a change in method of accounting, in order to secure the Commissioner's consent to the revocation of such an election and to a change of the taxpayer's method of accounting, all the provisions of paragraph (e)(3) of § 1.446-1 must be met including the requirement that Form 3115 must be filed within 180 days after the beginning of the taxable year in which it is desired to make the change. See section 481 and the regulations thereunder (relating to certain adjustments required by such changes).

(ii) ***Revocation of elections made prior to May 7, 1976.*** If on or before May 7, 1976, an election under section 1251(b)(4) has been made, such election may be revoked without permission of the Commissioner by filing on or before August 5, 1976, with the district director or the director of the internal revenue service center with whom the election was filed a statement of revocation of an election under section 1251(b)(4). If such election to revoke is for a period which falls within one or more taxable years for which an income tax returns shall be filed for any such taxable years for which the computation of taxable income is affected by reason of such revocation.

(e) ***Transfer of excess deductions account*** —

(1) *Certain corporate transactions* —

(i) ***In general.*** Under section 1251(b)(5)(A), in the case of a transfer described in section 1251(d)(3) and paragraph (c)(2) of § 1.1251-4 to which section 371(a) (relating to exchanges pursuant to certain receivership and bankruptcy proceedings), 374(a) (relating to exchanges pursuant to certain railroad reorganizations), or 381 (relating to carryovers in certain corporate acquisitions) applies, the acquiring corporation shall succeed to and take into account as of the close of the day of distribution or transfer the excess deductions account of the transferor. Determinations under this subdivision shall be made under subdivisions (ii), (iii), and (iv) of this subparagraph regardless of whether section 381 applies. For treatment as farm recapture property of stock or securities received in certain transfers to controlled corporations to which section 1251(d)(3) (but not section 1251(b)(5)(A)) applies, see section 1251(d)(6) and paragraph (f) of § 1.1251-4.

(ii) ***Acquiring corporation.*** For purposes of subdivision (i) of this subparagraph, determinations as to which corporation is the acquiring corporation shall be made under paragraph (b)(2) of § 1.381(a)-1.

(iii) ***Certain operating rules.*** For purposes of subdivision (i) of this subparagraph, the operating rules of section 381(b) and § 1.381(b)-1 shall apply. Thus, for example, except in the case of a reorganization qualifying under section 368(a)(1)(F) (whether or not such reorganization also qualifies under any other provision of section 368(a)(1)), the amount of the excess deductions account of the transferor shall be computed, as of the close of the date of distribution or transfer (as determined under paragraph (b) of § 1.381(b)-1), as if the taxable year of the transferor closed on such date (regardless of whether the taxable year actually closed). In the case of a reorganization qualifying under section 368(a)(1)(F) (whether or not such reorganization also qualifies under any other provision of section 368(a)(1)), the acquiring corporation's excess deductions account shall be treated for purposes of section 1251 just as the transferor corporation's excess deductions account would have been treated if there had been no reorganization.

(iv) ***Excess deductions account balance.*** For purposes of subdivision (i) of this subparagraph, the amount in the transferor's excess deductions account as of the close of the date of distribution or transfer referred to in subdivision (iii) of this subparagraph shall be the amount in such account determined after making all the applicable additions and subtractions under section 1251(b) (other than subtractions under paragraph (5)(A) of section 1251(b) and this subparagraph) for the taxable year ending (or considered ending) on such date including a subtraction by reason of gain (if any) recognized under section 1251(c)(1) by reason of a disposition which is in part a sale or exchange and in part a gift transaction to which section 1251(d)(1) and paragraph (a)(2) of § 1.1251-4 apply.

(2) *Certain gifts* —

(i) ***In general.*** If farm recapture property is disposed of by gift (including for purposes of this paragraph in a transaction which is in part a sale or exchange and in part a gift or a transaction treated under paragraph (a)(2) of this section as a gift), and if such gift is made during any *1-year period* (described in subdivision (ii) of this subparagraph) for which the *potential gain limitation percentage* (as computed in subdivision (iii) of this subparagraph) exceeds 25 percent, then the provisions of subdivision (iv) of this subparagraph shall apply in respect of such gift.

(ii) ***One-year period.*** For purposes of this subparagraph, a *1-year period* is a period of 365 days beginning on the date a gift is made by the donor.

(iii) ***Potential gain limitation percentage.*** Under this subdivision, the *potential gain limitation percentage* for any such 1-year period is a percentage equal to

(*a*) the sum of the potential gains (determined as of the first day of such period) on each item of farm recapture property held by such taxpayer on such first day disposed of by gift by the taxpayer during such period, divided by

(*b*) the sum of the potential gains (determined as of the first day of such period) on all farm recapture property held by such taxpayer on such first day.

(iv) ***Allocation ratio.*** With respect to each gift of property (to which the provisions of this subdivision apply) made during a taxable year, each donee shall succeed (at the time the first of such gifts is made during such taxable year) to the same proportion of

(*a*) the donor's excess deductions account determined, as of the close of such taxable year of the donor, after making all the applicable additions and subtractions under section 1251(b) (other than subtractions under section 1251(b)(5) and this paragraph), as

(*b*) the potential gain (determined immediately prior to the time the first of such gifts is made during such taxable year) on the property (held by the donor immediately prior to such time) received by such donee bears to

(*c*) The aggregate potential gain (determined immediately prior to such time) on all farm recapture property held by the donor immediately prior to such time.

(v) ***Definitions and certain special rules.*** For purposes of this subparagraph:

(*a*) The term *potential gain* means an amount equal to the excess of the fair market value of property over its adjusted basis, but, in the case of land, limited under paragraph (b)(2)(ii) of § 1.1251-1 to the extent of the deductions allowable in respect of such land pursuant to an election (if any) under sections 175 (relating to soil and water conservation expenditures) and 182 (relating to expenditures by farmers for clearing land) for the taxable year of disposition and the four immediately preceding taxable years regardless of whether any such preceding taxable year begins before December 31, 1969. See section 1251(e)(5).

(*b*) Property held on the first day of a one-year period shall include property received by gift during such one-year period and the potential gain with respect to such property, for purposes of making the computations under this subparagraph, shall be the potential gain in the hands of the donor reduced by the amount of gain (in the case of an exchange which is part a sale and part a gift) taken into account by the donor.

(*c*) Property held by a taxpayer on the first day of a one-year period which property becomes farm recapture property in the hands of such taxpayer during such one-year period shall be considered to be farm recapture property on each day of such one-year period.

(vi) ***Part-sale-part-gift transaction.*** If property is disposed of in a transaction which is in part a sale or exchange and in part a gift, then for purposes of subdivisions (iii)(*a*) and (iv)(*b*) of this subparagraph the potential gain with respect to the property transferred shall be reduced by the amount of gain taken into account by the transferor.

(vii) ***Joint return.*** For application of the provisions of this subparagraph with respect to a taxable year for which a joint return is filed, see paragraph (f)(4) of this section.

(3) ***Examples.*** The provisions of subparagraph (2) of this paragraph may be illustrated by the following examples in which it is assumed that all taxpayers are unmarried individuals.

Example 1. The only farm recapture property A owns is a farm, consisting of farm land and certain farm equipment which is farm recapture property. During the period involved, there was no deduction allowable under section 175 or 182 to any person owning an interest in the farm. A, who uses the calendar year as his taxable year, makes a series of gifts of undivided interests in the farm. In these circumstances, computations may be made by reference to percentages of undivided interests in the farm. The potential gain limitation percentages for each applicable 1-year period are computed, in accordance with the additional facts assumed, in the table below:

Date Gift to donee	9/1/70	8/1/71	3/1/72	5/1/73
	C	D	E	F
(1) Percent of undivided interest in entire farm given as gift by A on date indicated	20%	10%	10%	60%
(2) Percent of undivided interest in entire farm held by A immediately before gift	100%	80%	70%	60%
(3) Potential gain:				
(a) On all property held by A on date of gift	$100,000	$96,000	$140,000	$125,000
(b) Limitation percentage (sum of amounts in line (1) during 1-year period beginning on date of gift divided by line (2))	30%	25%	14.28%	100%

(ii) Under subparagraph (2)(iv) of this paragraph, C, D, and F each succeed to the proportion of A's excess deductions account at each applicable time as computed in accordance with the additional facts assumed, in the table below:

	Taxable year ending—			
	Dec. 31, 1970	Dec. 31, 1971	Dec. 32, 1972	Dec. 31, 1973
Gift to donee to which subparagraph (2)(iv) of this paragraph applies during taxable year	C	D	E	F
(4) Potential gain (determined immediately				

	Taxable year ending—			
	Dec. 31, 1970	Dec. 31, 1971	Dec. 32, 1972	Dec. 31, 1973
prior to time first gift to which subparagraph (2)(iv) of this paragraph applies is made):				
(a) On property received by donee to which such subparagraph (2)(iv) applies (line (3)(a) multiplied by line (1) divided by line (2))	$20,000	$12,000		$125,000
(b) Aggregate potential gain on all farm recapture property held by donor (line (3)(a))	$100,000	$96,000		$125,000
(5) Allocation ratio (line (4)(a), divided by line (4)(b))	20%	12.5%		100%
(6) Excess deductions account of A:				
(a) At end of previous taxable year	0	$160,000	$210,000	$200,000
(b) Net increase (decrease) for taxable year (determined before making any subtractions under section 1251(b)(5) and this paragraph)	$200,000	$80,000	($10,000)	$36,000
(c) At 12/31 (so determined)	$200,000	$240,000	$200,000	$236,000
(d) Less: Portion to which donee succeeds (line (5), multiplied by line (6)(c))	$40,000	$30,000	$0	$236,000
(e) At 12/31 (to line (6)(a) following taxable year)	$160,000	$210,000	$200,000	$0

Since the potential gain limitation percentage for the 1-year period beginning on September 1, 1970, exceeds 25 percent, a portion of A's excess deductions account, under the provisions of subparagraph (2)(iv) of this paragraph, is succeeded to by C and D. Similarly, since such percentage for the 1-year period beginning May 1, 1973, exceeds 25 percent, such provisions apply to the gift made to F. Since, however, such percentage is 25 percent or less for all 1-year periods in which the gift to E falls (i.e., 25 percent and 14.28 percent for the 1-year periods beginning, respectively, on August 1, 1971, and March 1, 1972) such provisions do not apply to the gift to E.

Example: 2. (i) G uses the calendar year as his taxable year and H uses a taxable year ending June 30. As of the close of 1972, G has $100,000 in his excess deductions account, determined before any subtractions under section 1251(b)(5) and this paragraph. G owns only three items of farm recapture property, none of which is land. On May 1, 1972, G makes a gift of farm recapture property No. 1 to his son and on September 1, 1972, G sells to H for

$80,000 farm recapture property No. 2 in a transaction which is in part a sale and in part a gift. G owns throughout all relevant periods farm recapture property No. 3. The potential gain limitation percentage for G's one-year period beginning May 1, 1972, is computed in accordance with the additional facts assumed in the table below:

Farm Recapture Property				Total
No. 1	No. 2	No. 3		
(1) Fair market value 5/1/72	$25,000	$100,000	$800,000	
(2) Adjusted basis 5/1/72	$10,000	$60,000	$795,000	
(3) Potential gain (line (1), minus line (2))	$15,000	$40,000	$5,000	$60,000
(4) Sum of potential gains on properties disposed of by gift during period less gain taken into account by transferor on part-sale-part-gift	$15,000	$20,000		$35,000
(5) Potential gain limitation percentage (total line (4), divided by total line (3))				$58^1/_3$%

Since the potential gain limitation percentage for the one-year period beginning on May 1, 1972, exceeds 25 percent, the provisions of subparagraph (2)(iv) of this paragraph apply to the gift to the son and that portion of the disposition to H which is a gift.

(ii) The portion of G's excess deductions account determined, as of the close of 1972, before any subtraction under section 1251(b)(5) and this paragraph, allocated to the son and to H as of May 1, 1972, is computed in the table below:

	Property			Total
	No. 1	No. 2	No. 3	
(1) Potential gain under part (i) of this example (since the first day of the one-year period is the same as the time as of which the first gift was made during the taxable year)	$15,000	$40,000	$5,000	$60,000
(2) Potential gain less amount taken into account by transfer on part-sale-part-gift	15,000	20,000		
(3) Allocation percentage (line (2), divided by $60,000)	25%	$33^1/_3$%		
(4) Excess deductions account at close of taxable year (determine before making any subtractions under section 1251(b)(5) and this paragraph)				100,000

	Property			Total
	No. 1	No. 2	No. 3	
(5) Portion to which donee succeeds on 5/1/72	25,000	33,333		58,333
(6) G's excess deductions account 12/31/72				$41,667

Accordingly, the amount of G's excess deduction account succeeded to as of May 1, 1972, is $25,000 by the son and $33,333 by H.

(f) *Joint return* —

(1) ***Joint excess deductions account.*** If for a taxable year a taxpayer and his spouse file a joint return under section 6013, then for such taxable year each taxpayer shall (if necessary) establish and maintain a joint excess deductions account. Such joint excess deductions account shall consist of the aggregate of the separately maintained excess deductions account of each spouse. A separately maintained excess deductions account shall be computed under the rules of paragraphs (b) and (c) of this section, except that for each taxable year a joint return is filed:

(i) The $50,000 amount in the nonfarm adjusted gross income limitation in paragraph (b)(2)(i) of this section shall be considered satisfied if the combined nonfarm adjusted gross income of both spouses exceeds $50,000,

(ii) The $25,000 amount in the farm net loss exclusion in paragraph (b)(2)(ii) of this section shall be allocated between the two spouses in proportion to the farm net loss of each spouse having a farm net loss, and

(iii) The separately maintained excess deductions account of each spouse shall be reduced, if necessary, below zero, by the amount of such spouse's farm net income (computed as if a separate return were filed) plus the amount of gain (computed under subparagraph (3) of this paragraph) which is recognized as ordinary income under section 1251(c)(1) in respect of a disposition of farm recapture property owned by the taxpayer.

(2) ***Surviving spouse.*** For purposes of this paragraph, a joint return does not include a return of a surviving spouse (as defined in section 2 relating to a spouse who died during either of his two taxable years immediate preceding the taxable year) which is treated as a joint return of a husband and wife under section 6013.

(3) ***Application of excess deductions account limitation in joint return year.*** In the case of a taxable year for which a joint return is filed, the aggregate of the amount of gain recognized as ordinary income under section 1251(c)(1) (after applying paragraph (b) (2)(o) and (3) of § 1.125-1, if applicable) shall not exceed the amount in the joint excess deductions account (that is, the aggregate of the separately maintained excess deductions account of each spouse) at the close of the taxable year after subtracting from each such separately maintained account the amount specified in section 1251(b) (3) (A) and paragraph (c) (1) (i) of this section as modified by the rules of this paragraph. For the amount of limitation for a taxable year for which a separate return is filed, see paragraph (b)(4) of this section. For determinations as to which dispositions are taken into account for any taxable year, see paragraph (b)(4) of § 1.1251-1.

(4) *Certain gifts* —

(i) ***In general.*** If farm recapture property is transferred as a gift by a spouse to a person other than a spouse during a taxable year for which a joint return is filed, the spouses shall for purposes of applying the provisions of section 1251(b) (5) (B) and paragraph (e)(2) of this section be treated as a single taxpayer. Thus, under paragraph (e)(2) of § 1.1251-2, the potential gain limitation percentage and the proportion for allocating the amount in the joint excess deductions account to one or more donees shall be determined by treating the spouses as a single taxpayer. However, with respect to each gift by a spouse, such spouse's separately maintained excess deductions account shall be reduced (below zero, if necessary) by the amount of the joint excess deductions account balance to which the donee of such gift succeeded under paragraph (e)(2)(iv) of this section.

(ii) ***Gift between spouses.*** If farm recapture property is transferred by gift by one spouse to another spouse during a taxable year for which a joint return is filed, such gift shall not affect the balance in the joint excess deductions account but its effect on the separately maintained excess deductions account of each spouse shall be determined as if separate returns were filed, but only after applying subdivision (i) of this subparagraph.

(5) *Allocation of joint excess deductions account upon filing separate returns* —

(i) ***In general.*** If for any reason a taxpayer and his spouse cease to file a joint return, then except as provided in this subparagraph the amount of the separately maintained excess deductions account of each spouse as of the close of the last taxable year for which a joint return was filed shall be the amount of such spouse's excess deductions account as of the beginning of the first taxable year for which they cease filing a joint return.

(ii) ***Deficit.*** If under subparagraph (4)(i) of this paragraph one of the spouses has a deficit in his separately maintained excess deductions account as of the close of the last taxable year for which a joint return was filed, then as of the beginning of the first taxable year for which they cease filing a joint return:

(*a*) The spouse who had such deficit shall have an excess deductions account of zero, and

(*b*) The other spouse shall have an excess deductions account equal to the amount prescribed in subdivision (i) of this subparagraph minus the amount of such deficit.

(6) ***Examples.*** The provisions of this paragraph may be illustrated by the following examples:

Example 3. Assume the same facts as in example (4) of paragraph (b)(5) of this section, except that H and W file a joint return under section 6013 and that H has a farm net loss of only $40,000. Thus, since the nonfarm adjusted gross income for calendar year 1971 was $60,000 for H and $30,000 for W, their combined nonfarm adjusted gross income exceeds $50,000, thereby satisfying under subparagraph (1)(i) of this paragraph the $50,000 limitation of paragraph (b)(2)(i) of this section. Assume further that for 1971 only W makes a dispostion of farm recapture property (other than land and section 1245 property). As a result of such disposition, W realizes a gain of $14,000. Accordingly, for 1971, the separately maintained excess deductions accounts of H and W, their joint excess deductions account, and the treatment of the gain realized by W on the disposition of the farm recapture property are computed, in accordance with the

facts assumed in the table below:

EXCESS DEDUCTIONS ACCOUNTS

		H's		W's		Joint
(1) Balance Jan. 1, 1971		$10,000		$5,000		$15,000
(2) Additions for 1971:						
(a) Farm net loss for 1971	$40,000		$10,000		$50,000	
(b) Less amount in paragraph (b)(2)(ii) of this section as allocated under subparagraph (1)(ii) of this paragraph	20,000		5,000		25,000	
(c) Total additions for 1971		20,000		5,000		25,000
(3) Subtotal		30,000		10,000		40,000
(4) Subtractions for 1971		0		0		
(5) Excess deductions account limitation on gain recognized as ordinary income under section 1251(e)(1) for 1971		30,000		10,000		40,000
(6) Subtraction for dispositions of farm recapture property:						
(a) Gain to which section 1251(c)(1) applies (computed before applying limitation)	0		14,000		14,000	
(b) Limitation (amount in line (5))	30,000		10,000		40,000	
(c) Gain recognized as ordinary income under section 1251(c)(1), computed for joint account (lower of line 6(a) or line 6(b) subject to provisions as to separately maintained accounts of subparagraph (1)(iii)				14,000		14,000
(7) Balance Dec. 31, 1971		30,000		(4,000)		26,000

If for 1972, H and W were to file separate returns, then the separately maintained excess deductions account balances as of January 1, 1972, would be $26,000 and zero respectively. See subparagraph (5)(ii) of this paragraph.

[T.D. 7418, 41 FR 18816, May 7, 1976; 41 FR 23669, June 11, 1976]

§ 1.1251-3 Definitions relating to section 1251.

(a) *Farm recapture property* —

(1) ***In general.***

(i) The term *farm recapture property* means any property (other than section 1250 property as defined in section 1250(c)) which, in the hands of the taxpayer is or was property:

(*a*) Which is described in section 1231(b)(1) (relating to business property held for more than 1 year (6 months for taxable years beginning before 1977; 9 months for taxable years beginning in 1977), section 1231(b)(3) (relating to livestock), or section 1231(b)(4) (relating to an unharvested crop), and

(*b*) Which, at the time the property qualifies under (*a*) of this subdivision, is used in the trade or business of farming (as defined in paragraph (e) of this section).

(ii) The term *farm recapture property* also includes:

(*a*) Property acquired by gift and property acquired in a transaction to which section 1251(b)(5)(A) applies, if such property was farm recapture property within the meaning of subdivision (i) of this subparagraph in the hands of the transferor, and

(*b*) Property the basis of which in the hands of the taxpayer holding such property is determined by reference to the basis of other property which in the hands of such taxpayer was farm recapture property within the meaning of subdivision (i) of this paragraph. For purposes of (*b*) of this subdivison (ii) property whose basis is determined in accordance with the last sentence of section 1033(c) shall be considered as having as basis determined by reference to the property whose conversion gave rise to the application of such section.

(iii) ***Leasehold of farm recapture property.*** If property is farm recapture property under this subparagraph, a leasehold of such property is also farm recapture property is also farm recapture property to the same extent as described in, and in accordance with the principles of paragraph (a)(2) of § 1.1245-3.

(iv) If property described in subdivision (ii) of this subparagraph is stock or securities received in certain corporate transactions described in section 1251(d)(6), see paragraph (f) of § 1.1251-4 for determination as to extent such stock or securities is farm recapture property.

(2) ***Examples.*** The provisions of subparagraph (1) of this paragraph may be illustrated by the following example:

Example: On December 15, 1971, A, an individual calendar year taxpayer engaged in the trade or business of farming (as defined in paragraph (e) of this section) exchanges in a transaction which qualifies under section 1031(a) (relating to an exchange of property held for productive use or investment) tractor No. 1 which A acquired on March 1, 1971, for tractor No. 2. Under subparagraph (1)(i) of this paragraph, tractor No. 1 is farm recapture property as the tractor was used in the trade or business of farming and was held for a period in excess of 6 months. Under subparagraph (1)(ii) of this paragraph, tractor No. 2 is farm recapture property as the basis of tractor No. 2 in the hands of A is determined with reference to the adjusted basis of tractor No. 1.

(b) ***Farm net loss*** —

(1) ***In general.*** The term *farm net loss* means the amount by which:

(i) The deductions allowed or allowable for the taxable year by chapter 1 of subtitle A of the Code which are directly connected with the carrying on of the trade or business of farming, exceed

(ii) The gross income derived from such trade or business.

(2) ***Disposition of farm recapture property.*** For purposes of subparagraph (1) of this paragraph, no gain or loss (regardless of how treated) resulting from the disposition of farm recapture property shall be taken into account, except that under subparagraph (1)(ii) of this paragraph gain upon disposition of such property which is recognized as ordinary income by reason of section 1245(a)(1) shall be taken into account. Thus, for example, if land used in the trade or business of farming were disposed of and gain of $3,000 was realized, then none of such gain would be taken into account in computing farm net loss and farm net income even if all or a portion of such gain is recognized as ordinary income by reason of section 1251(c)(1), section 1252(a)(1), or both. If such land were disposed of at a loss, the result would be the same. See paragraph (d)(1)(ii) of this section with respect to the exclusion of gain or loss from the disposition of farm recapture property from the computation of nonfarm adjusted gross income.

(3) ***Amount of deduction under section 172(a) attributable to farm net loss.***

(i) If all or a portion of a net operating loss (within the meaning of section 172(c)) for a taxable year is absorbed in another taxable year as a carryover or carry back, then for purposes of determining the amount of deductions referred to in subparagraph (1)(i) of this paragraph for such other taxable year the portion of the amount absorbed in such other taxable year which is attributable to amounts directly connected with the carrying on of the trade or business of farming shall be an amount equal to the amount absorbed, multiplied by a fraction the numerator of which is the amount of the farm net loss for the taxable year the net operating loss arose (but not in excess of the net operating loss for such year) and the denominator of which is the amount of the net operating loss for such year.

(ii) No portion of a farm net loss added to the excess deductions account in the year a net operating loss arose (or which would have been added to such account but for the application of the $25,000 or $12,500 farm net loss exclusion under paragraph (b) (2)(ii) or (4)(i)(*b*) of § 1.1251-2) shall be taken into account under subparagraph (1)(i) of this paragraph in any other taxable year. Accordingly the same farm net loss shall not be added to the excess deductions account more than once and a farm net loss for any taxable year shall not be subject to the $25,000 or $12,500 exclusion more than once.

(iii) If a net operating loss for a current taxable year attributable in whole or part to a farm net loss is carried back and absorbed in a preceding taxable year no redetermination shall be made with respect to

(*a*) the amount of gain recognized as ordinary income under section 1251(c)(1) and paragraph (b) of § 1.1251-1 in any taxable year preceding the current taxable year, and

(*b*) the amount of the taxpayer's excess deductions account allocated under paragraph (e)(2) of § 1.1251-2 to a donee as of the close of any taxable year preceding the current taxable year.

(4) ***Special rules as to estates and trusts.*** In the case of an estate or trust, computations of amounts under this paragraph shall be made without regard to any deductions under section 651 or 661. If on the termination of an estate or trust the beneficiaries succeeding to its property are allowed a deduction under section 642(h) (relating to unused loss carryovers and excess deductions on

termination available to beneficiaries), to the extent the carryover or excess deduction is attributable to a farm loss it shall have the same character in the hands of the beneficiary as in the hands of the estate or trust. The amount of a carryover or of excess deductions from a particular taxable year of an estate or trust succeeded to under section 642(h) shall be allocated between amounts attributable to a farm net loss and other amounts in the same proportion as the farm net loss for such year bears to the amount of such carryover or of excess deductions. If there is more than one beneficiary, the total farm net loss succeeded to by all the beneficiaries shall be allocated to each beneficiary in proportion to the deduction of each under section 642(h).

(c) ***Farm net income.*** The term *farm net income* means the amount by which the amount referred to in paragraph (b)(1)(ii) of this section exceeds the amount referred to in paragraph (b)(1)(i) of this section.

(d) ***Nonfarm adjusted gross income*** —

(1) ***In general.*** The term *nonfarm adjusted gross income* means adjusted gross income (taxable income in the case of a taxpayer other than an individual) computed without regard to:

(i) Income or deductions taken into account in computing farm net loss and farm net income,

(ii) Gains and losses (regardless of how treated) resulting from the disposition of farm recapture property, and

(iii) In the case of an estate or trust, the principles of paragraph (b)(4) of this section, to the extent applicable, shall apply.

(2) ***Special rules.*** The following rules in addition to the rules of subparagraph (1) of this paragraph, shall apply in computing the adjusted gross income of a shareholder of an electing small business corporation:

(i) The amount of any distribution described in section 1373 (c)(2) made by the corporation shall be disregarded,

(ii) For purposes of computing the amount includible in the gross income of a shareholder under section 1373(b), the corporation's undistributable taxable income shall equal the corporation's nonfarm adjusted gross income (as defined in subparagraph (1) of this paragraph) minus the amount described in section 1373(c)(1), and

(iii) For purposes of computing a shareholder's deduction under section 1374, the corporation's net operating loss shall be computed without regard to the items referred to in subparagraph (1) (i) and (ii) of this paragraph.

(e) ***Trade or business of farming*** —

(1) ***In general.*** For purposes of section 1251, the term *trade or business of farming* includes any trade or business with respect to which the taxpayer may compute gross income under § 1.61-4, expenses under § 1.162-12, make an election under section 175, 180, or 182, or use an inventory method referred to in § 1.471-6. Such term does not include any activity not engaged in for profit within the meaning of section 183 and section 183-2.

(2) ***Horse racing.*** If a taxpayer is engaged in the raising of horses, including horses which are bred or purchased, then for purposes of section 1251 the term *trade or business of farming* also includes the racing of such horses by the taxpayer. Thus, for example, if a taxpayer purchases a yearling and develops it to the racing stage, the term *trade or business of farming* includes the racing of such horse.

(3) ***Several businesses of farming.*** If a taxpayer is engaged in more than one trade or business of farming, all such trades and businesses shall be treated as one trade or business.

[T.D. 7418, 41 FR 18826, May 7, 1976, as amended by T.D. 7728, 45 FR 72650, Nov. 3, 1980]

§ 1.1251-4 Exceptions and limitations.

(a) ***Exception for gifts*** —

(1) ***General rule.*** Section 1251(d)(1) provides that no gain shall be recognized under section 1251(c)(1) upon a disposition by gift. For purposes of this paragraph, the term *gift* shall have the same meaning as in paragraph (a) of § 1.1245-4 and, with respect to the application of this paragraph, principles illustrated by the examples of paragraph (a)(2) of § 1245-4 shall apply. For reduction in amount of charitable contribution in case of a gift of farm recapture property, see section 170(e) and § 1.170A-4.

(2) ***Disposition in part a sale or exchange and in part a gift.*** Where a disposition of farm recpature property is in part a sale or exchange and in part a gift, the amount of gain recognized as ordinary income under section 1251(c)(1) shall not exceed:

(i) In the case of farm recapture property other than land, the excess of the amount realized over adjusted basis, and

(ii) In the case of land, the lower of the amount in subdivision (i) of this subparagraph or the potential gain (as defined in paragraph (b)(2)(ii) of § 1.1251-1.

(3) ***Treatment of land in hand of transferee.*** See paragraph (g) of this section for treatment of transferee in the case of a disposition of land to which this paragraph applies.

(4) ***Examples.*** The provisions of this paragraph may be illustrated by the following examples:

Example 1. A, a calendar year taxpayer, makes one disposition of farm recapture property during 1976. On March 2, 1976, A makes a gift to B (also a calendar year taxpayer) of a parcel of land which he had on January 15, 1971. On the date of such disposition, the excess of the fair market value ($65,000) over the adjusted basis of the land ($40,000) is $25,000 and the sum of the deductions allowable in respect of such land under sections 175 and 182 is $21,000 for 1971 and $3,000 (attributable to 1975) for the taxable year of disposition and the four immediately preceding taxable years. Thus, the potential gain (as defined in paragraph (b)(2)(ii) of § 1.1251-1) is limited to $3,000. At the end of 1976 (after making the applicable additions and subtractions under section 1251(b) (2) and (3)(A)), there is a balance in A's excess deductions account of $25,000. However, upon making the gift, A recognizes no gain under section 1251(c)(1) or section 1252(a)(1). See subparagraph (a)(1) of this paragraph and paragraph (a)(1) of § 1.1252-2. For treatment of the land in the hands of B, see example (1) of paragraph (g)(3) of this section. For effect of the gift on the excess deductions accounts of A and B, see paragraph (e)(2) of § 1.1251-2.

Example 2. Assume the same facts as in example (1), except that A transfers the land to B for $50,000. Thus, the gain realized is $10,000 (amount realized, $50,000, minus adjusted basis $40,000), and A has made a gift of $15,000 (fair market value, $65,000, minus amount realized, $50,000). Since under subparagraph (2)(ii) of this paragraph, the potential gain ($3,000) is lower than the gain realized ($10,000), the gain to which section 1251(c)(1) could apply is limited by subparagraph (2)(ii) of this paragraph to $3,000. Thus, as A has $25,000 in his

excess deductions account, $3,000 is recognized as ordinary income under section 1251(c)(1). See example (2) of paragraph (a)(4) of § 1.1252-2 for computation of gain of $7,000 which is recognized as ordinary income by A under section 1252(a)(1). For treatment of the land in the hands of B, see example (2) of paragraph (g)(3) of this section.

(b) ***Exception for transfers at death*** —

(1) ***General rule.*** Section 1251(d)(2) provides that, except as provided in section 691 (relating to income in respect of a decedent), no gain shall be recognized under section 1251(c)(1) upon a transfer at death. For purposes of this paragraph, the term *transfer at death* shall have the same meaning as in paragraph (b) of § 1.1245-4 and, with respect to the application of this paragraph, principles illustrated by the examples of paragraph (b)(2) of § 1.1245-4 shall apply.

(2) ***Treatment of land in hands of transferee.*** If as of the date a person acquires land which is farm recapture property from a decedent such person's basis is determined, by reason of the application of section 1014(a), solely by reference to the fair market value of the property on the date of the decedent's death or on the applicable date provided in section 2032 (relating to alternate valuation date), then on such date the potential gain in respect to such land is zero.

(c) ***Certain corporate transactions*** —

(1) ***Limitation on amount of gain.*** Under section 1251(d)(3), upon a transfer of property described in subparagraph (2) of this paragraph, the amount of gain recognized as ordinary income by the transferor under section 1251(c)(1) shall not exceed an amount equal to the excess (if any) of

(i) the amount of gain recognized to the transferor on the transfer (determined without regard to section 1251) over

(ii) the amount (if any) of gain recognized as ordinary income under section 1245(a)(1). For purposes of this subparagraph, the principles of paragraph (c)(1) of § 1.1245-4 shall apply. Thus, in case of a transfer of both farm recapture property and property other than farm recapture property in a single transaction, the amount realized from the disposition of the farm recapture property (as determined in a manner consistent with the principles of paragraph (a)(5) of § 1.1245-1) shall be deemed to consist of that portion of the fair market value of each property acquired which bears the same ratio to the fair market value of such acquired property as the amount realized from the disposition of farm recapture property bears to the total amount realized. The preceding sentence shall be applied solely for purposes of computing the portion of the total gain (determined without regard to section 1251) which is eligible to be recognized as ordinary income under section 1251(c)(1). Section 1251(d)(3) does not apply to a disposition of property to an organization (other than a cooperative described in section 521) which is exempt from the tax imposed by chapter 1 of the Code.

(2) ***Transfers covered.*** The transfers referred to in subparagraphs (1) of this paragraph are transfers of farm recapture property in which the basis of such property in the hands of the transferee is determined by reference to its basis in the hands of the transferor by reason of the application of any of the following provisions:

(i) Section 332 (relating to distributions in complete liquidation of an 80-percent-or-more controlled subsidiary corporation). For the application of section 1251(d)(3) to such a complete liquidation, the principles of paragraph (c)(3) of § 1.1245-4 shall apply. Thus, for example, the provisions of subparagraph (1) of this paragraph do not apply to a liquidating distribution of

farm recapture property by an 80-percent-or-more controlled subsidiary to its parent if the parent's basis for the property is determined, under section 334(b)(2), by reference to its basis for the stock of the subsidiary.

(ii) Section 351 (relating to transfer to corporation controlled by transferor).

(iii) Section 351 (relating to exchanges pursuant to certain corporate reorganizations).

(iv) Section 371(a) (relating to exchanges pursuant to certain receivership and bankruptcy proceedings).

(v) Section 374(a) (relating to exchanges pursuant to certain railroad reorganizations).

(3) ***Partnerships.*** For the application of section 1251 to partnerships, see paragraph (e) of this section.

(4) ***Treatment of land in hands of transferee.*** See paragraph (g) of this section for treatment of transferee in the case of a disposition of land to which this paragraph applies.

(5) ***Examples.*** The provisions of this paragraph may be illustrated by the following examples:

Example 1. (i) A, an individual calendar year taxpayer, makes one disposition of farm recapture property during 1971. On January 20, 1971. A transfers farm recapture property (other than land and section 1245 property), having an adjusted basis of $22,000, to corporation M in exchange for stock in M worth $35,000 plus $15,000 in cash in a transaction qualifying under section 351. Thus, the amount realized is $50,000, and the gain realized is the excess of the amount realized, $50,000, over the adjusted basis, $22,000, or $28,000. Without regard to section 1251, A would recognize gain of $15,000 under section 351(b), and M's basis for the farm recapture property would be determined under section 362(a) by reference to its basis in the hands of A. Assume further that the balance in A's excess deductions account (after making the applicable additions and subtractions under section 1251(b) (2) and (3)(A)) at the close of 1971 is $20,000. Thus, since such balance in the excess deductions account ($20,000) is lower than the gain realized ($28,000), is subparagraph (1) of this paragraph did not apply, gain of $20,000 would be recognized as ordinary income under section 1251(c)(1). However, subparagraph (1) of this paragraph limits the amount of gain to be recognized as ordinary income under section 1251(c)(1) to $15,000. (ii) If, however, A transferred the farm recapture property to M solely in exchange for stock worth $50,000, then, because of the application of subparagraph (1) of this paragraph he would not recognize any gain under section 1251(c)(1). If, instead, A transferred the farm recapture property to M in exchange for stock worth $25,000 and $25,000 cash, only $20,000 (the amount of such balance in the excess deductions account) of the gain of $25,000 recognized under section 351(b) would be recognized as ordinary income under section 1251(c)(1). The remaining $5,000 of gain recognized under section 351(b) may be treated as gain from the sale or exchange of property described in section 1231. In the hands of M, the property received from A is farm recapture property under the provisions of paragraph (a)(11)(ii) of § 1.1251-3. For treatment of the property received by A in such transaction; see section 1251(d)(6) and paragraph (f) of this section.

Example 2. Assume the same facts as in subdivision (i) of example (1), except that the farm recapture property is section 1245 property. Assume further than $5,000 is recognized as ordinary income under section 1245(a)(1), and that as of the close of 1971, A has a balance of $15,000 in his excess deductions account (after making the applicable additions and subtractions under section 1251(b) (2) and (3)(A) which, under paragraph (b) of § 1.1251-3, is computed by treating the $5,000 of gain to which section 1245 applies as gross income derived from the trade or business of farming). The amount of gain recognized as ordinary income under section 1251(c)(1) is $10,000, computed as follows:

(1) Amount of gain under section 1251(c)(1) (determined without regard to subparagraph (1) of this paragraph):	
(a) Portion of gain realized ($28,000) in excess of amount recognized as ordinary income under section 1245(a)(1) ($5,000)	$23,000
(b) Excess deductions account balance	15,000
(c) Lower of (a) or (b)	15,000
(2) Limitation in subparagraph (1) of this paragraph:	
(a) Gain recognized (determined without regard to section 1251)	15,000
(b) Minus: Gain recognized as ordinary income under section 1245(a)(1)	5,000
(c) Difference	10,000
(3) Lower of line (1)(c) or line (2)(c)	10,000

(d) ***Limitation for like kind exchanges and involuntary conversions*** —

(1) ***General rule.*** Under section 1251(d)(4), if farm recapture property is disposed of and gain (determined without regard to section 1251) is not recognized in whole or in part under section 1031 (relating to like kind exchanges) or section 1033 (relating to involuntary conversions), then the amount of gain recognized as ordinary income by the transferor under section 1251(c)(1) shall not exceed an amount equal to the excess (if any) of

(i) the amount of gain recognized on such disposition (determined without regard to section 1251) or

(ii) the amount (if any) of gain recognized as ordinary income under section 1245(a)(1).

(2) ***Examples.*** The provisions of subparagraph (1) of this paragraph may be illustrated by the following examples:

Example 1. (i) A, an individual calendar year taxpayer, owns a herd of breeding cattle having an adjusted basis of $75,000 which he acquired on March 30, 1970, A receives insurance proceeds of $90,000. Thus, the gain realized is $15,000 (that is, the excess of the amount realized, $75,000), A makes no other disposition of farm recapture property during 1970. Assume that had the herd been sold at its fair market value on March 15, 1970, no gain would

have been recognized as ordinary income under section 1245(a)(1). As of the close of 1970, A has a balance of $12,000 in his excess deductions account (after making the applicable additions and subtractions under section 1251(b) (2) and (3)(A)). Thus, since the balance in the excess deductions account, $12,000, is lower than the gain realized, $15,000, the amount of gain which would be recognized under section 1251(c)(1) (determined without regard to subparagraph (1) of this paragraph) would be $12,000.

(ii) Assume further that A spends $72,000 of the insurance proceeds to purchase another breeding herd, $10,000 to purchase stock in the acquisition of control of a corporation which owns property similar or related in service or use to the destroyed breeding herd, and retains cash of $8,000. Both of the acquisitions by A qualify under section 1033(a)(3)(A), and A properly elects under section 1033(a)(3)(A) and the regulations thereunder to limit recognition of gain to $8,000 (that is, the amount by which the amount realized from the conversion, $90,000 exceeds the cost of the stock and other property acquired to replace the converted property, $72,000 plus $10,000). Thus, since $8,000 is the amount of gain which would be recognized under section 1033(a)(3) (determined without regard to section 1251), and since that amount is lower than the gain of $12,000 which would be recognized under section 1251(c)(1) (determined without regard to subparagraph (1) of this paragraph), under subparagraph (1) of this paragraph the amount of gain recognized under section 1251(c)(1) is limited to $8,000. The stock purchased for $10,000 qualifies under paragraph (a)(1)(ii)(*b*) of § 1.1251-3 as farm recapture property.

Example 2. (i) A, an individual calendar year taxpayer, owns land which he had acquired on March 7, 1970, having an adjusted basis of $48,000, and a fair market value of $67,500. On January 15, 1975, A, as a result of a condemnation action, receives $67,500 (its fair market value) for the land. The aggregate of the deductions allowable in respect of such land under sections 175 and 182 is $18,000, with $5,000 of such aggregate attributable to 1970 and $13,000 of such aggregate attributable to 1970 and $13,000 of such aggregate attributable to 1975 and the four preceding taxable years. Thus, the potential gain (as defined in paragraph (b)(2)(ii) of § 1.1251-1) is limited to $13,000, since that amount is lower than $19,500 (the excess of the fair market value of the land, $67,500, over its adjusted basis, $48,000). The gain realized by A is also $19,500. At the end of A's taxable year (after making the applicable additions and subtractions under section 1251(b) (2) and (3)(A)) there is a balance of $21,000 in the excess deductions account of A. Since the potential gain, $13,000, is lower than both the excess deductions account balance, $21,000, and the gain realized, $19,500, A would recognize $13,000 as ordinary income under section 1251(c)(1) (determined without regard to subparagraph (1) of this paragraph).

(ii) Assume further that A spends the entire amount received, $67,500, to purchase stock in the acquisition of control of a corporation which owns property similar or related in service or use to A's condemned land which qualifies under section 1033(a)(3)(A), and A properly elects under section 1033(a)(3)(A) and the regulations thereunder to limit recognition of gain to zero

(that is, the amount by which the amount realized from the conversion, $67,500, exceeds the cost of the stock acquired to replace the converted land, $67,500). Thus, since no gain would be recognized under section 1033(a)(3) (determined without regard to section 1251), under subparagraph (1) of this paragraph, no gain is recognized under section 1251(c)(1). The stock purchased for $67,500 qualifies under paragraph (a)(1)(ii)(*b*) of § 1.1251-3 as farm recapture property. See example (1) of paragraph (d)(2) of § 1.1252-2 for a computation of gain recognized as ordinary income under section 1252(a)(1).

Example 3. B, an individual calendar year taxpayer, owns a herd of breeding cattle having an adjusted basis of $25,000 which he acquired on March 30, 1970. On March 15, 1976, the entire herd is destroyed by a blizzard and on March 20, 1976, B receives insurance proceeds of $90,000. Thus, the gain realized is $65,000 (that is, the excess of the amount realized, $90,000, over the adjusted basis, $25,000). B makes no other disposition of farm recapture property during 1976. B spends $60,000 of the insurance proceeds to purchase another breeding herd and retains cash of $30,000. The acquisition by B qualifies under section 1033(a)(3)(A), and B properly elects under section 1033(a)(3)(A) and the regulations thereunder to limit recognition of gain to $30,000 (that is, the amount by which the amount realized from the conversion, $90,000, exceeds the cost of the property acquired to replace the converted property, $60,000). Assume that the amount of gain recognized under section 1245(a)(1) is $20,000, and that as of the close of 1976 B has a balance of $100,000 in his excess deductions account (after making the applicable additions and subtractions under section 1251(b) (2) and (3)(A) which, under paragraph (b) of § 1.1251-3, is computed by treating the $20,000 of gain to which section 1245 applies as gross income derived from the trade or business of farming). The amount of gain recognized as ordinary income under section 1251(c)(1) is $10,000, computed as follows:

(1) Amount of gain under section 1251(c)(1) (determined without regard to subparagraph (1) of this paragraph):	
(a) Portion of gain realized ($65,000) in excess of amount recognized as ordinary income under section 1245(a)(1) ($20,000)	$45,000
(b) Excess deductions account balance	100,000
(c) Lower of (a) or (b)	45,000
(2) Limitation in subparagraph (1) of this paragraph:	
(a) Gain recognized (determined without regard to section 1251)	30,000
(b) Minus: Gain recognized as ordinary income under section 1245(a)(1)	$20,000
(c) Difference	10,000

(3) Lower of line (1)(c) or line (2)(c)	10,000

(3) ***Application to single disposition of farm recapture property of one class and property of different class.***

(i) If upon a sale of farm recapture property of one class gain would be recognized under section 1251(c)(1), and if such farm recapture property together with property of a different class or classes is disposed of in a single transaction in which gain is not recognized in whole or in part under section 1031 (without regard to section 1251(c)(1), then rules consistent with the principles of paragraph (d)(6) of § 1.1250-3 (relating to gain from disposition of certain depreciable realty) shall apply for purposes of allocating the amount realized to each of the classes of property disposed of and for purposes of determining what property the amount realized for each class consists of.

(ii) For purposes of this subparagraph, the classes of property other than farm recapture property are (*a*) section 1245 property, (*b*) section 1250 property, and (*c*) other property.

(iii) For purposes of this subparagraph, the classes of farm recapture property are (*a*) hand, (*b*) farm recapture property other than land which is section 1245 property and (*c*) farm recapture property other than land which is not section 1245 property.

(4) ***Treatment of land received in like kind exchange or involuntary conversion.*** The aggregate of the deductions allowed under sections 175 and 182 in respect of land acquired in a transaction described in subparagraph (1) of this paragraph shall include the aggregate of the deductions allowable under sections 175 and 182 in respect of the land transferred or converted (as the case may be) in such transaction minus the amount of gain taken into account under sections 1251(c) and 1252(a) with respect to the land transferred or converted. Upon a subsequent disposition of such land, such deductions shall be treated as having been allowable in the same taxable year as they were allowable with respect to the land transferred or converted.

(e) ***Partnerships.*** [Reserved]

(f) ***Property transferred to controlled corporation.*** [Reserved]

(g) ***Treatment of land received by a transferee in a disposition by gift and certain tax-free transactions*** —

(1) ***General rule.*** If farm recapture property which is land is disposed of in a transaction which is either a gift to which paragraph (a)(1) of this section applies or a completely tax-free transfer to which section 1251(b)(5)(A) applies, then for purposes of section 1251:

(i) The aggregate of the deductions allowable under sections 175 and 182 in respect of the land in the hands of the transferee immediately after the disposition shall be an amount equal to the aggregate of such deductions for the taxable year and the four preceding taxable years in the hands of the transferor immediately before the disposition,

(ii) Upon a subsequent disposition by the transferee (including a computation of potential gain as defined in paragraph (b)(2)(ii) of § 1.1251-1), such deductions in the hands of the transferee shall be treated as having been allowable with respect to the transferee in the same taxable year they were allowable to the transferor, and

(iii) If the taxable years of the transferor and transferee regularly end on different dates, then the aggregate of such deductions allowable for taxable year with respect to the transferor shall be treated in the hands of the transferee as allowable in the transferee's taxable year in which the taxable year of the transferor regularly ends.

(2) ***Certain partially tax-free transfers.*** If farm recapture property which is land is disposed of in a transaction which either is in part a sale or exchange and in part a gift to which paragraph (a)(2) of this section applies, or is a partially tax-free transfer to which section 1251(b)(5)(A) applies, then for purposes of section 1251:

(i) The amount determined under subparagraph (1)(i) of this paragraph shall be reduced by the amount of gain taken into account under sections 1251(c) and 1252(a) to the extent such gain is attributable to the sections 175 and 182 deductions for the taxable year and the preceding four taxable years (determined by attributing gain under section 1252(a) to the oldest years first) by the transferor upon the disposition, and

(ii) For purposes of subparagraph (1)(ii) of this paragraph, the amount of such gain recognized under sections 1251(c) and 1252(a) shall reduce the aggregate of deductions allowable under sections 175 and 182 for the taxable year and each of the preceding four taxable years on a pro rata basis.

(3) ***Examples.*** The provisions of subparagraphs (1) and (2) of this paragraph may be illustrated by the following examples:

Example 1. Assume the same facts as in example (1) of paragraph (a)(4) of this section. Therefore, on the date B receives the land in the gift transaction, under subparagraph (1) (i) and (ii) of this paragraph, the aggregate of the deductions allowable under sections 175 and 182 in respect of the land in the hands of B is the amount in the hands of A, $24,000, and for purposes of applying section 1251 upon a subsequent disposition by B (including the computation of potential gain) such deductions in the hands of B shall be treated as allowable in the same year as they were allowable to A. Thus, in respect to the land in the hands of B, the allowable section 175 and 182 deductions of $3,000 shall be treated as allowable in 1975.

Example 2. Assume the same facts as in example (2) of Paragraph (a)(4) of this section. Under paragraph (2) of this paragraph, the aggregate of the allowable sections 175 and 182 deductions with respect to the land which pass over to B for purposes of section 1251 is zero ($3,000 deduction allowable under sections 175 and 182 for the taxable year and the four preceding taxable years minus $3,000 gain taken into account by A in accordance with example (2) of paragraph (a)(4) of this section).

[T.D. 7818, 41 FR 18828, May 7, 1976; 41 FR 23669, June 11, 1976]

§ 1.1252-1 General rule for treatment of gain from disposition of farm land.

(a) ***Ordinary income —***

(1) ***General rule.***

(i) Except as otherwise provided in this section and § 1.1252-2, if farm land is disposed of during a taxable year beginning after December 31, 1969, then under section 1252(a)(1) there shall be treated as gain from the sale or exchange of property which is neither a capital asset nor property described in section 1231 (that is, shall be recognized as ordinary income) the lower of:

(*a*) The applicable percentage of the amount computed in subdivision (ii) of this subparagraph, or

(*b*) The amount computed in subdivision (iii) of this subparagraph.

(ii) The amount computed in this subdivision is an amount equal to:

(*a*) The aggregate of the deductions allowed, in any taxable year any day of which falls within the period the taxpayer held (or is considered to have held) the farm land, under sections 175 (relating to soil and water conservation expenditures) and 182 (relating to expenditures by farmers for clearing land) for expenditures paid or incurred after December 31, 1969, with respect to the farm land disposed of, minus

(*b*) The amount of gain recognized as ordinary income under section 1251(c)(1) (relating to gain from disposition of property used in farming where farm losses offset nonfarm income) upon such disposition of such land.

(iii) The amount computed in this subdivision is an amount equal to:

(*a*) The gain realized, that is, the excess of the amount realized (in the case of a sale, exchange, or involuntary conversion) or the fair market value of the farm land (in the case of any other disposition), over the adjusted basis of the farm land, minus

(*b*) The amount of gain recognized as ordinary income under section 1251(c)(1) upon such disposition of such land.

(iv) If a deduction under section 175 is allowed in respect of the farm land disposed of for a taxable year every day of which falls within the period after the taxpayer held (or is considered to have held) the farm land, and if the deduction is attributable to expenditures paid or incurred after December 31, 1969, with respect to such land during the period the taxpayer held (or is considered to have held) the land, then the amount of such deduction shall be applied to increase the amount computed (without regard to this subdivision) under subdivision (ii)(*a*) of this subparagraph.

(2) ***Application of section.*** Any gain treated as ordinary income under section 1252(a)(1) shall be recognized as ordinary income notwithstanding any other provision of subtitle A of the Code. For special rules with respect to the application of section 1252, see § 1.1252-2. For the relation of section 1252 to other provisions see paragraph (d) of this section.

(3) ***Meaning of terms.*** For purposes of section 1252:

(i) The term *farm land* means any land with respect to which deductions have been allowed under section 175 or 182. See section 1252(a)(2).

(ii) The period for which farm land shall be considered to be held shall be determined under section 1223.

(iii) The term *disposition* shall have the same meaning as in paragraph (a)(3) of § 1.1245-1.

(iv) The applicable percentage shall be determined as follows:

If the farm land is disposed of—	The applicable percentage is—
Within 5 years after the date it was acquired	100 percent.
Within the sixth year after it was acquired	80 percent.
Within the seventh year after it was acquired	60 percent.
Within the eighth year after it was acquired.	40 percent.
Within the ninth year after it was acquired.	20 percent.
Within the 10th year after it was acquired and thereafter.	0 percent.

(4) ***Portion of parcel.*** The amount of gain to be recognized as ordinary income under section 1252(a)(1) shall be determined separately for each parcel of farm land in a manner consistent with the principles of subparagraphs (4) and

(5) of § 1.1245-1(a) (relating to gain from disposition of certain depreciable property). If

(i) only a portion of a parcel of farm land is disposed of in a transaction, or if two or more portions of a single parcel are disposed of in one transaction, and

(ii) the aggregate of the deductions allowed under sections 175 and 182 with respect to any such portion cannot be established to the satisfaction of the Commissioner or his delegate, then the aggregate of the deductions in respect of the entire parcel shall be allocated to each portion in proportion to the fair market value of each at the time of the disposition.

(b) ***Instances of non-application*** —

(1) ***In general.*** Section 1252 does not apply if a taxpayer disposes of farm land for which the holding period is in excess of 9 years or with respect to which no deductions have been allowed under sections 175 and 182.

(2) ***Losses.*** Section 1252(a)(1) does not apply to losses. Thus, section 1252(a)(1) does not apply if a loss is realized upon a sale, exchange, or involuntary conversion of property, all of which is farm land, nor does the section apply to a disposition of such property other than by way of sale, exchange, or involuntary conversion if at the time of the disposition the fair market value of such property is not greater than its adjusted basis.

(c) ***Treatment of partnerships and partners.*** [Reserved]

(d) ***Relation of section 1252 to other provisions*** —

(1) ***General.*** The provisions of section 1252 apply notwithstanding any other provisions of subtitle A of the Code. Thus, unless an exception or limitation under § 1.1252-2 applies, gain under section 1252(a)(1) is recognized notwithstanding any contrary nonrecognition provision or income characterizing provision. For example, since section 1252 overrides section 1231 (relating to property used in the trade or business), the gain recognized under section 1252(a)(1) upon a

disposition of farm land will be treated as ordinary income and only the remaining gain, if any, from the disposition may be considered as gain from the sale or exchange of a capital asset if section 1231 is applicable. See example (1) of paragraph (e) of this section.

(2) ***Nonrecognition sections overridden.*** The nonrecognition of gain provisions of subtitle A of the Code which section 1252 overrides include, but are not limited to, sections 267(d), 311(a), 336, 337, and 512(b)(5). See § 1.1252-2 for the extent to which section 1252(a)(1) overrides sections 332, 351, 361, 371(a), 374(a), 721, 731, 1031, and 1033.

(3) ***Installment method.*** Gain from a disposition to which section 1252(a)(1) applies may be reported under the installment method if such method is otherwise available under section 453 of the Code. In such case, the income (other than interest) on each installment payment shall

(i) first be deemed to consist of gain to which section 1251(c)(1) applies (if applicable) until all such gain has been reported,

(ii) the next portion (if any) of such income shall be deemed to consist of gain to which section 1252(a)(1) applies until all such gain has been reported, and

(iii) finally the remaining portion (if any) of such income shall be deemed to consist of gain to which neither section 1251(c)(1) nor 1252(a)(1) applies. For treatment of amounts as interest on certain deferred payments, see section 483.

(4) ***Exempt income.*** With regard to exempt income, the principles of paragraph (e) of § 1.1245-6 shall be applicable.

(5) ***Treatment of gain not recognized under section 1252(a)(1).*** For treatment of gain not recognized under this section, the principles of paragraph (f) of § 1.1245-6 shall be applicable.

(e) ***Examples.*** The provisions of this section may be illustrated by the following examples:

Example 1. Individual A uses the calendar year as his taxable year. On April 10, 1975, he sells for $75,000 a parcel of farm land which he had acquired on January 5, 1970, with an adjusted basis of $52,500 for a realized gain of $22,500. The aggregate of the deductions allowed under sections 175 and 182 with respect to such land is $18,000 and all of such amount was allowed for 1970. Under the stated facts, none of the $22,500 gain realized is recognized as ordinary income under section 1251(c)(1) as there is no potential gain (as defined in section 1251(e)(5)) with respect to the farm land. Since no gain is recognized as ordinary income under section 1251(c)(1), and since the applicable percentage, 80 percent, of the aggregate of the deductions allowed under sections 175 and 182, $18,000, or $14,400, is lower than the gain realized, $22,500, the amount of gain recognized as ordinary income under section 1252(a)(1) is $14,400. The remaining $8,100 of the gain may be treated as gain from the sale or exchange of property described in section 1231.

Example 2. Assume the same facts as in example (2) of paragraph (b)(6) of § 1.1251-1. Assume further that the aggregate of the amount of sections 175 and 182 deductions allowable to the M corporation is equal to the amount allowed. Under paragraph (a)(1) of the section, $5,000 is recognized as ordinary

income under section 1252(a)(1) upon the disposition of the land as a dividend, computed as follows:

(1) Aggregate of deductions allowed under sections 175 and 182	$18,000
(2) Minus: Gain recognized as ordinary income under section 1251(c)(1)	$13,000
(3) Difference	$5,000
(4) Multiply: Applicable percentage for property disposed of within the fifth year after it was acquired	100%
(5) Amount in paragraph (a)(1)(i)(*a*) of this section	$5,000
(6) Gain realized (fair market value $67,500, less adjusted basis, $45,000)	$22,500
(7) Minus: Amount in line (2)	$13,000
(8) Amount in paragraph (a)(1)(i)(b) of this section	$9,500
(9) Lower of line (5) or line (8)	$5,000

The *gain realized,* $22,500, minus the sum of the gain recognized as ordinary income under section 1251(c)(1), $13,000, and under section 1252(a)(1), $5,000, equals $4,500. Assuming section 311(d) (relating to certain distributions of appreciated property to redeem stock) does not apply, under section 311(a) the corporation does not recognize gain on account of the $4,500.

Example 3. Assume the same facts as in example (2) of this paragraph, except that M contracted to sell the land for $67,500 which would be paid in 10 equal payments of $6,750 each, plus a sufficient amount of interest so that section 483 does not apply. Assume further that the remaining gain of $4,500 is treated as gain from the sale or exchange of property described in section 1231. M properly elects under section 453 to report under the installment method gain of $13,000 to which section 1251(c)(1) applies, gain of $5,000 to which section 1252(a)(1) applies, and gain of $4,500 to which section 1231 applies. Since the total gain realized on the sale was $22,500, the gross profit realized on each installment payment is $2,250, i.e., $6,750 × ($67,500). Accordingly, the treatment of the income to be reported on each installment payment is as follows:

Payment No.	Applicable sections		
	1251	***1252***	***1231***
1	$2,250		
2	2,250		
3	2,250		
4	2,250		
5	2,250		
6	1,750	$500	

Payment No.	Applicable sections		
	1251	*1252*	*1231*
7		2,250	
8		2,250	
9			$2,250
10			2,250
Totals	13,000	5,000	4,500

[T.D. 7418, 41 FR 18831, May 7, 1976; 41 FR 23669, June 11, 1976]

§ 1.1252-2 Special rules.

(a) ***Exception for gifts*** —

(1) ***General rule.*** In general, no gain shall be recognized under section 1252(a)(1) upon a disposition of farm land by gift. For purposes of section 1252 and this paragraph, the term *gift* shall have the same meaning as in paragraph (a) of § 1.1245-4 and, with respect to the application of this paragraph, principles illustrated by the examples of paragraph (a)(2) of § 1.1245-4 shall apply. For reduction in amount of charitable contribution in case of a gift of farm land, see section 170(e) and § 1.170A-4.

(2) ***Disposition in part a sale or exchange and in part a gift.*** Where a disposition of farm land is in part a sale or exchange and in part a gift, the amount of gain which shall be recognized as ordinary income under section 1252(a)(1) shall be computed under paragraph (a)(1) of § 1.1252-1, applied by treating the gain realized (for purposes of paragraph (a)(1)(iii)(*a*) of § 1.1252-1) as the excess of the amount realized over the adjusted basis of the farm land.

(3) ***Treatment of farm land in hands of transferee.*** See paragraph (f) of this section for treatment of the transferee in the case of a disposition to which this paragraph applies.

(4) ***Examples.*** The provisions of this paragraph may be illustrated by the following examples:

Example 1. On March 2, 1976, A, a calendar year taxpayer, makes a gift to B of a parcel of land having an adjusted basis of $40,000, a fair market value of $65,000, and a holding period of 6 years (A, having purchased the land on January 15, 1971). On the date of such gift, the aggregate of the deductions allowed to A under sections 175 and 182 with respect to the land is $24,000 with $21,000 of such amount attributable to 1971. Upon making the gift, A recognizes no gain under section 1251(c)(1) or section 1252(a)(1). See paragraph (a)(1) of § 1.1251-4 and subparagraph 1 of this paragraph. For treatment of the farm land in the hands of B, see example (1) of paragraph (f)(3) of this section. For effect of the gift on the excess deductions accounts of A and of B, see paragraph (e)(2) of § 1.1251-2.

Example 2. (i) Assume the same facts as in example (1), except that A transfers the land to B for $50,000. Thus, the gain realized is $10,000 (amount realized, $50,000, minus adjusted basis, $40,000), and A has made a gift of $15,000 (fair market value, $65,000, minus amount realized, $50,000).

(ii) Upon the transfer of the land to B, A recognizes $3,000 of gain under section 1251(c)(1). See example (2) of paragraph (a)(4) of § 1.1251-4. Thus, A recognizes $7,000 as ordinary income under section 1252(a)(1), computed under subparagraph (2) of this paragraph as follows:

(1) Aggregate of deductions allowed under sections 175 and 182	$24,000
(2) Minus: Gain recognized as ordinary income under section 1251(c)(1)	$3,000
(3) Difference	$21,000
(4) Multiply: Applicable percentage for land disposed of within sixth year after it was acquired	80%
(5) Amount in paragraph (a)(1)(i)(*a*) of § 1.1252-1	$16,800
(6) Gain realized (see subdivision (i) of this example)	$10,000
(7) Minus: Amount in line (2)	$3,000
(8) Amount in paragraph (a)(1)(i)(*b*) of § 1.1252-1, applied in accordance with subparagraph (2) of this paragraph	$7,000
(9) Lower of line (5) or line (8)	$7,000

Thus, the entire gain realized on the transfer, $10,000, is recognized as ordinary income since that amount is equal to the sum of the gain recognized as ordinary income under section 1251(c)(1), $3,000, and under section 1252(a)(1), $7,000. For treatment of the farm land in the hands of B, see example (2) of paragraph (f)(3) of this section.

(b) ***Exception for transfers at death*** —

(1) ***In general.*** Except as provided in section 691 (relating to income in respect of a decedent), no gain shall be recognized under section 1252(a)(1) upon a transfer at death. For purposes of section 1252 and this paragraph, the term *transfer at death* shall have the same meaning as in paragraph (b) of § 1.1245-4 and, with respect to the application of this paragraph, principles illustrated by the examples of paragraph (b)(2) of § 1.1245-4 shall apply.

(2) ***Treatment of farm land in hands of transferee.*** If as of the date a person acquires farm land from a decedent such person's basis is determined, by reason of the application of section 1014(a), solely by reference to the fair market value of the property on the date of the decedent's death or on the applicable date provided in section 2032 (relating to alternative valuation date), then on such date the aggregate of the sections 175 and 182 deductions allowed with respect to the farm land in the hands of such transferee is zero.

(c) ***Limitation for certain tax-free transactions*** —

(1) ***Limitation on amount of gain.*** Upon a transfer of farm land described in subparagraph (2) of this paragraph, the amount of gain recognized as ordinary income under section 1252(a)(1) shall not exceed an amount equal to the excess (if any) of

(i) the amount of gain recognized to the transferor on the transfer (determined without regard to section 1252) over

(ii) the amount (if any) of gain recognized as ordinary income under section 1251(c)(1). For purposes of this subparagraph, the principles of paragraph (c)(1) of § 1.1245-4 shall apply. Thus, in the case of a transfer of farm land and property other than farm land in one transaction, the amount realized from the disposition of the farm land (as determined in a manner consistent with the principles of paragraph (a)(5) of § 1.1245-1) shall be deemed to consist of that portion of the fair market value of each property acquired which bears the same ratio to the fair market value of such acquired property as the amount realized from the disposition of the farm land bears to the total amount realized. The preceding sentence shall be applied solely for purposes of computing the portion of the total gain (determined without regard to section 1252) which is eligible to be recognized as ordinary income under section 1252(a)(1). The provisions of this paragraph do not apply to a disposition of property to an organization (other than a cooperative described in section 521) which is exempt from the tax imposed by Chapter 1 of the Code.

(2) ***Transfers covered.*** The transfers referred to in subparagraph (1) of this paragraph are transfers of farm land in which the basis of such property in the hands of the transferee is determined by reference to its basis in the hands of the transferor by reason of the application of any of the following provisions:

(i) Section 332 (relating to distributions in complete liquidation of an 80-percent-or-more controlled subsidiary corporation). For application of subparagraph (1) of this paragraph to such a complete liquidation, the principles of paragraph (c)(3) of § 1.1245-4 shall apply. Thus, for example, the provisions of subparagraph (1) of this paragraph do not apply to a liquidating distribution of farm land by an 80-percent-or-more controlled subsidiary to its parent if the parent's basis for the property is determined, under section 334(b)(2), by reference to its basis for the stock of the subsidiary.

(ii) Section 351 (relating to transfer to a corporation controlled by transferor).

(iii) Section 361 (relating to exchanges pursuant to certain corporate reorganizations).

(iv) Section 371(a) (relating to exchanges pursuant to certain receivership and bankruptcy proceedings).

(v) Section 374(a) (relating to exchanges pursuant to certain railroad reorganizations).

(vi) Section 721 (relating to transfers to a partnership in exchange for a partnership interest). See paragraph (e) of this section.

(vii) Section 731 (relating to distributions by a partnership to a partner). For special carryover of basis rule, see paragraph (e) of this section.

(3) ***Treatment of farm land in the hands of tranferee.*** See paragraph (f) of this section for treatment of the transferee in the case of a disposition to which this paragraph applies.

(4) ***Examples.*** The provisions of this paragraph may be illustrated by the following examples:

Example 1. On January 4, 1975, A, an individual calendar year taxpayer, owns a parcel of farm land, which he acquired on March 25, 1970, having an adjusted basis of $15,000 and a fair market value of $40,000. On that date he transfers the parcel to corporation M in exchange for stock in

the corporation worth $40,000 in a transaction qualifying under section 351. On the date of such transfer, the aggregate of the deductions allowed under sections 175 and 182 with respect to the land is $18,000. Without regard to section 1252, A would recognize no gain under section 351 upon the transfer and M's basis for the land would be determined under section 362(a) by reference to its basis in the hands of A. Thus, as a result of the disposition, no gain is recognized as ordinary income under section 1251(c)(1) or section 1252(a)(1) by A since the amount of gain recognized under such sections is limited to the amount of gain which is recognized under section 351 (determined without regard to sections 1251 and 1252). See paragraph (c)(1) of § 1.1251-4 and subparagraph (1) of this paragraph. For treatment of the farm land in the hands of B, see paragraph (f)(1) of this section. For effect of the transfer on the excess deductions account of A and of B, see paragraph (e)(1) of § 1.1251-2.

Example 2. Assume the same facts in example (1), except that A transferred the land to M for stock in the corporation worth $32,000 and $8,000 cash. The gain realized is $25,000 (amount realized, $40,000, minus adjusted basis, $15,000). Without regard to section 1252, A would recognize $8,000 of gain under section 351(b). Assume further that no gain is recognized as ordinary income under section 1251(c)(1). Therefore, since the applicable percentage, 100 percent, of the aggregate of the deductions allowed under sections 175 and 182, $18,000, is lower than the gain realized, $25,000, the amount of gain to be recognized as ordinary income under section 1252(a)(1) would be $18,000 if the provisions of subparagraph (1) of this paragraph do not apply. Since under section 351(b) gain in the amount of $8,000 would be recognized to the transferor without regard to section 1252, the limitation provided in subparagraph (1) of this paragraph limits the gain taken into account by A under section 1252(a)(1) to $8,000.

Example 3. Assume the same facts as in example (2), except that $5,000 of gain is recognized as ordinary income under section 1251(c)(1). The amount of gain recognized as ordinary income under section 1252(a)(1) is $3,000 computed as follows:

(1) Amount of gain under section 1252(a)(1) (determined without regard to subparagraph (1) of this paragraph):	
(a) Aggregate of deductions allowed under sections 175 and 182	$18,000
(b) Minus: Gain recognized as ordinary income under section 1251(c)(1)	$5,000
(c) Difference	$13,000
(d) Multiply: Applicable percentage for property disposed of within the fifth year after it was acquired	100%
(e) Amount in paragraph (a)(1)(i)(*a*) of § 1.1252-1	$13,000
(f) Gain realized (amount realized $40,000, less adjusted basis, $15,000)	$25,000
(g) Minus: Amount in line (b)	$5,000
(h) Amount in paragraph (a)(1)(i)(*b*) of § 1.1252-1	$20,000
(i) Lower of line (e) or (h)	$13,000
(2) Limitation in subparagraph (1) of this paragraph:	
(a) Gain recognized (determined without regard to section 1252)	$8,000
(b) Minus: Gain recognized as ordinary income under section 1251(c)(1)	$5,000

(c) Difference	$3,000
(3) Lower of line (1)(i) or line (2)(c)	$3,000

Thus, the entire gain recognized under section 351(b) (determined without regard to sections 1251 and 1252), $8,000, is recognized as ordinary income since that amount is equal to the sum of the gain recognized as ordinary income under section 1251(c)(1), $5,000, and under section 1252(a)(1), $3,000.

(d) ***Limitation for like kind exchanges and involuntary conversions*** —

(1) ***General rule.*** If farm land is disposed of and gain (determined without regard to section 1252) is not recognized in whole or in part under section 1031 (relating to like kind exchanges) or section 1033 (relating to involuntary conversions), then the amount of gain recognized as ordinary income by the transferor under section 1252(a)(1) shall not exceed the sum of:

(i) The excess (if any) of (*a*) the amount of gain recognized on such disposition (determined without regard to section 1252) over (*b*) the amount (if any) of gain recognized as ordinary income under section 1251(c)(1), plus

(ii) The fair market value of property acquired which is not farm land and which is not taken into account under subdivision (i) of this subparagraph (that is, the fair market value of property other than farm land acquired which is qualifying property under section 1031 or 1033, as the case may be).

(2) ***Examples.*** The provisions of subparagraph (1) of this paragraph may be illustrated by the following examples:

Example 1. (i) Assume the same facts as in example (2)(ii) of paragraph (d)(3) of § 1.1251-4. Assume further that the aggregate of the amount of sections 175 and 182 deductions allowable is equal to the amount allowed. Under paragraph (a)(1) of § 1.1252-1, $18,000 would be recognized as ordinary income under section 1252(a)(1) (determined without regard to subparagraph (1) of this paragraph), computed as follows:

(1) Aggregate of deductions allowed under sections 175 and 182	$18,000
(2) Minus: Gain recognized as ordinary income under section 1251(c)(1)	0
(3) Difference	$18,000
(4) Multiply: Applicable percentage for property disposed of within the fifth year after it was acquired	100%
(5) Amount in paragraph (a)(1)(i)(*a*) of § 1.1252-1	$18,000
(6) Gain realized (amount realized, $67,500, less adjusted basis, $48,000)	$19,500

(7) Minus: Amount in line (2)	0
(8) Amount in paragraph (a)(1)(i)(*b*) of § 1.1252-1	$19,500
(9) Lower of line (5) or line (8)	$18,000

(ii) Although no gain was recognized under section 1251(c)(1) and the stock purchased by A for $67,500 is farm recapture property for purposes of section 1251, it is not farm land for purposes of section 1252. Nevertheless, although no gain would be recognized under sections 1033(a)(3) and 1251(c)(1) (determined without regard to section 1252), the limitation under subparagraph (1) of this paragraph is $67,500 (that is, the fair market value of property other than farm land acquired which is qualifying property under section 1033). Since the amount of gain which would be recognized as ordinary income under section 1252(a)(1) (determined without regard to subparagraph (1) of this paragraph), $18,000 (as computed in subdivision (i) of this example), is lower than the amount of such limitation, $67,500, accordingly, only $18,000 is recognized as ordinary income under section 1252(a)(1). For determination of basis of the stock acquired, see subparagraph (5) of this paragraph.

Example 2. (i) Assume the same facts as in example (1) of this subparagraph, except that the cost of the stock was $62,500 (its fair market value). Thus, the amount of gain recognized on the disposition under section 1033(a)(3) (determined without regard to sections 1251 and 1252) is $5,000, that is, $67,500 minus $62,500. Assume further that $5,000 (the amount of gain recognized under section 1033(a)(3) (so determined)) was recognized as ordinary income under section 1251(c)(1). The amount of gain recognized as ordinary income under section 1252(a)(1) is $13,000, computed as follows:

(1) Amount of gain under section 1252(a)(1) (determined without regard to subparagraph (1) of this paragraph):	
(a) Aggregate of deductions allowed under sections 175 and 182	$18,000
(b) Minus: Gain recognized as ordinary income under section 1251(c)(1)	$5,000
(c) Difference	$13,000
(d) Multiply: Applicable percentage for property disposed of within the fifth year after it was acquired	100%
(e) Amount in paragraph (a)(1)(i)(*a*) of § 1.1252-1	$13,000
(f) Gain realized (amount realized, $67,500 (less adjusted basis, $48,000))	$19,500
(g) Minus: Amount in line (b)	$5,000

(h) Amount in paragraph (a)(1)(i)(*b*) of § 1.1252-1	$14,500
(i) Lower of line (e) or (h)	$13,000
(2) Limitation in subparagraph (1) of this paragraph:	
(a) Gain recognized (determined without regard to section 1252)	$5,000
(b) Minus: Gain recognized as ordinary income under section 1251(c)(1)	$5,000
(c) Difference	0
(d) Plus; The fair market value of property other than farm land acquired which is qualifying property under section 1033	$62,500
(e) Sum of lines (c) and (d)	$62,500
(3) Lower of line (1)(i) or line (2)(e)	$13,000

(3) ***Application to single disposition of farm land and property of different class.***

(i) If upon a sale of farm land gain would be recognized under section 1252(a)(1), and if such land together with property of a different class or classes is disposed of in one transaction in which gain is not recognized in whole or in part under section 1031 or 1033 (without regard to section 1252(a)(1)), then rules consistent with the principles of paragraph (d)(6) of § 1.1250-3 (relating to gain from disposition of certain depreciable realty) shall apply for purposes of allocating the amount realized to each of the classes of property disposed of and for purposes of determining what property the amount realized for each class consists of.

(ii) For purposes of this subparagraph, the classes of property other than farm recapture property (as defined in section 1251(e) and paragraph (a)(1) of § 1.1251-3) are (*a*) section 1245 property, (*b*) section 1250 property, and (*c*) other property.

(iii) For purposes of this subparagraph, the classes of farm recapture property are (*a*) land, (*b*) section 1245 property, and (*c*) other property.

(4) ***Treatment of farm land received in like kind exchange or involuntary conversion.*** The aggregate of the deductions allowed under sections 175 and 182 in respect of land acquired in a transaction described in subparagraph (1) of this paragraph shall include the aggregate of the deductions allowed under sections 175 and 182 in respect of the land transferred or converted (as the cr sections 175 and 182 in respect of land acquired in a transaction described in subparagraph (1) of this paragraph shall include the aggregate of the deductions allowed under sections 175 and 182 in respect of the land transferred or converted (as the case may be) in such transaction minus the amount of gain taken into account under sections 1251(c) and 1252(a) with respect to the land transferred or converted. Upon a subsequent disposition of such land, the holding period shall include the holding period with respect to the land transferred or converted.

(5) ***Basis adjustment.*** In order to reflect gain recognized under section 1252(a)(1) if property is acquired in a transaction to which subparagraph (1) of this paragraph applies, its basis shall be determined under the rules of section 1031(d) or 1033(c).

(e) ***Partnerships.*** [Reserved]

(f) ***Treatment of farm land received by a transferee in a disposition by gift and certain tax-free transactions*** —

(1) ***General rule.*** If farm land is disposed of in a transaction which is either a gift to which paragraph (a)(1) of this section applies, or a completely tax-free transfer to which paragraph (c)(1) of this section applies, then for purposes of section 1252:

(i) The aggregate of the deductions allowed under sections 175 and 182 in respect of the land in the hands of the tranferee immediately after the disposition shall be an amount equal to the amount of such aggregate in the hands of the transferor immediately before the disposition, and

(ii) For purposes of applying section 1252 upon a subsequent disposition by the transferee (including a computation of the applicable percentage), the holding period of the transferee shall include the holding period of the transferor.

(2) ***Certain partially tax-free transfers.*** If farm land is disposed of in a transaction which either is in part a sale or exchange and in part a gift to which paragraph (a)(2)of this section applies, or is a partially tax-free transfer to which paragraph (c)(1) of this section applies, then for purposes of section 1252 the amount determined under subparagraph (1)(i) of this paragraph shallbe reduced by the amount of gain taken into account under sections 1251(c) and 1252(a) by the transferor upon the disposition. Upon a subsequent disposition by the transferee, the holding period for purposes of computing the amount under section 1252(a)(1)(A), with respect to the 175 and 182 deductions taken by the transferor, shall include the holding period of the transferor. With respect to the 1975 and 182 deductions taken by the transferee, the holding period shall not include the holding period of the transferor.

(3) ***Examples.*** The provisions of subparagraphs (1) and (2) of this paragraph may be illustrated by the following examples:

Example 1. Assume the same facts as in example (1) of paragraph (a)(4) of this section. Therefore, on the date B receives the farm land in the gift transaction, under subparagraph (1) of this paragraph the aggregate of the deductions allowed under sections 175 and 182 in respect of the farm land in the hands of B is the amount in the hands of A, $24,000, and for purposes of applying section 1252 upon a subsequent disposition by B (including a computation of the applicable percentage) the holding period of B includes the holding period of A.

Example 2. Assume the same facts as in example (2) of paragraph (a)(4) of this section. Under subparagraph (2) of this paragraph, the aggregate of the sections 175 and 182 deductions which pass over to B for purposes of section 1252 is $14,000 ($24,000 deductions allowable under sections 175 and 182 minus $3,000 gain recognized under section 1251(c) in accordance with example (2) of paragraph (a)(4) of § 1.1251-4, minus $7,000 gain recognized under section 1252(a) in acordance with example (2) of paragraph (a)(4) of this section), B's holding period includes the holding period of A (i.e., the period back to January 15, 1971) with respect to A's deductions.

(g) ***Disposition of farm land not specifically covered.*** If farm land is disposed of in a transaction not specifically covered under § 1.1252-1 and this section, then the principles of section 1245 shall apply.

[T.D. 7418, 41 FR 18832, May 7, 1976; 41 FR 23669, June 11, 1976]

§ 1.1254-0 Table of contents for section 1254 recapture rules.

This section lists the major captions contained in §§ 1.1254-1 through 1.1254-6.

§ 1.1254-1 Treatment of gain from disposition of natural resource recapture property.

(a) In general.

(b) Definitions.

(1) Section 1254 costs.

(2) Natural resource recapture property.

(3) Disposition.

(c) Disposition of a portion of natural resource recapture property.

(1) Disposition of a portion (other than an undivided interest) of natural resource recapture property.

(2) Disposition of an undivided interest.

(3) Alternative allocation rule.

(d) Installment method.

§ 1.1254-2 Exceptions and limitations.

(a) Exception for gifts and section 1041 transfers.

(1) General rule.

(2) Part gift transactions.

(b) Exception for transfers at death.

(c) Limitation for certain tax-free transactions.

(1) General rule.

(2) Special rule for dispositions to certain tax exempt organizations.

(3) Transfers described.

(4) Special rules for section 332 transfers.

(d) Limitation for like kind exchanges and involuntary conversions.

(1) General rule.

(2) Disposition and acquisition of both natural resource recapture property and other property.

§ 1.1254-3 Section 1254 costs immediately after certain acquisitions.

(a) Transactions in which basis is determined by reference to cost or fair market value of property transferred.

(1) Basis determined under section 1012.

(2) Basis determined under section 301(d), 334(a), or 358(a)(2).

(3) Basis determined solely under former section 334(b)(2) or former section 334(c).

(4) Basis determined by reason of the application of section 1014(a).

(b) Gifts and certain tax-free transactions.

(1) General rule.

(2) Transactions covered.

(c) Certain transfers at death.

(d) Property received in a like kind exchange or involuntary conversion.

(1) General rule.

(2) Allocation of section 1254 costs among multiple natural resource recapture property acquired.

(e) Property transferred in cases to which section 1071 or 1081(b) applies.

§ 1.1254-4 Special rules for S corporations and their shareholders.

(a) In general.

(b) Determination of gain treated as ordinary income under section 1254 upon a disposition of natural resource recapture property by an S corporation.

(1) General rule.

(2) Examples.

(c) Character of gain recognized by a shareholder upon a sale or exchange of S corporation stock.

(1) General rule.

(2) Exceptions.

(3) Examples.

(d) Section 1254 costs of a shareholder.

(e) Section 1254 costs of an acquiring shareholder after certain acquisitions.

(1) Basis determined under section 1012.

(2) Basis determined under section 1014(a).

(3) Basis determined under section 1014(b)(9).

(4) Gifts and section 1041 transfers.

(f) Special rules for a corporation that was formerly an S corporation or formerly a C corporation.

(1) Section 1254 costs of an S corporation that was formerly a C corporation.

(2) Examples.

(3) Section 1254 costs of a C corporation that was formerly an S corporation.

(g) Determination of a shareholder's section 1254 costs upon certain stock transactions

(1) Issuance of stock.

(2) Natural resource recapture property acquired in exchange for stock.

(3) Treatment of nonvested stock.

(4) Exception.

(5) Aggregate of S corporation shareholders' section 1254 costs with respect to natural resource recapture property held by the S corporation

(6) Examples.

§ 1.1254-5 Special rules for partnerships and their partners.

(a) In general.

(b) Determination of gain treated as ordinary income under section 1254 upon the disposition of natural resource recapture property by a partnership.

(1) General rule.

(2) Exception to partner level recapture in the case of abusive allocations.

(3) Examples.

(c) Section 1254 costs of a partner.

(1) General rule.

(2) Section 1254 costs of a transferee partner after certain acquisitions.

(d) Property distributed to a partner.

(1) In general.

(2) Aggregate of partners' section 1254 costs with respect to natural resource recapture property held by a partnership.

§ 1.1254-6 Effective date of regulations.

[T.D. 8586, 60 FR 2501, Jan. 10, 1995, as amended by T.D. 8684, 61 FR 53063, Oct. 10, 1996]

§ 1.1254-1 Treatment of gain from disposition of natural resource recapture property.

(a) ***In general.*** Upon any disposition of section 1254 property or any disposition after December 31, 1975 of oil, gas, or geothermal property, gain is treated as ordinary income in an amount equal to the lesser of the amount of the section 1254 costs (as defined in paragraph (b)(1) of this section) with respect to the property, or the amount, if any, by which the amount realized on the sale, exchange, or involuntary conversion, or the fair market value of the property on any other disposition, exceeds the adjusted basis of the property. However, any amount treated as ordinary income under the preceding sentence is not included in the taxpayer's *gross income from the property* for purposes of section 613. Generally, the lesser of the amounts described in this paragraph (a) is treated as ordinary income even though, in the absence of section 1254(a), no gain would be recognized upon the disposition under any other provision of the Internal Revenue Code. For the definition of the term *section 1254 costs,* see paragraph (b)(1) of this section. For the definition of the terms *section 1254 property, oil, gas, or geothermal property,* and *natural resource recapture property,* see paragraph (b)(2) of this section. For rules relating to the *disposition* of natural resource recapture property, see paragraphs (b)(3), (c), and (d) of this section. For exceptions and limitations to the application of section 1254(a), see § 1.1254-2.

(b) ***Definitions*** —

(1) ***Section 1254 costs*** —

(i) ***Property placed in service after December 31, 1986.*** With respect to any property placed in service by the taxpayer after December 31, 1986, the term *section 1254 costs* means—

(A) The aggregate amount of expenditures that have been deducted by the taxpayer or any person under section 263, 616, or 617 with respect to such property and that, but for the deduction, would have been included in the adjusted basis of the property or in the adjusted basis of certain depreciable property associated with the property; and

(B) The deductions for depletion under section 611 that reduced the adjusted basis of the property.

(ii) ***Property placed in service before January 1, 1987.*** With respect to any property placed in service by the taxpayer before January 1, 1987, the term *section 1254 costs* means—

(A) The aggregate amount of costs paid or incurred after December 31, 1975, with respect to such property, that have been deducted as intangible drilling and development costs under section 263(c) by the taxpayer or any other person (except that section 1254 costs do not include costs incurred with respect to geothermal wells commenced before October 1, 1978) and that, but for the deduction, would be reflected in the adjusted basis of the property or in the adjusted basis of certain depreciable property associated with the property; reduced by

(B) The amount (if any) by which the deduction for depletion allowed under section 611 that was computed either under section 612 or sections 613 and 613A, with respect to the property, would have been increased if the costs (paid or incurred after December 31, 1975) had been charged to capital account rather than deducted.

(iii) ***Deductions under section 59 and section 291.*** Amounts capitalized pursuant to an election under section 59(e) or pursuant to section 291(b) are treated as section 1254 costs in the year in which an amortization deduction is claimed under section 59(e)(1) or section 291(b)(2).

(iv) ***Suspended deductions.*** If a deduction of a section 1254 cost has been suspended as of the date of disposition of section 1254 property, the deduction is not treated as a section 1254 cost if it is included in basis for determining gain or loss on the disposition. On the other hand, if the deduction will eventually be claimed, it is a section 1254 cost as of the date of disposition. For example, a deduction suspended pursuant to the 65 percent of taxable income limitation of section 613A(d)(1) may either be included in basis upon disposition of the property or may be deducted in a year after the year of disposition. See § 1.613A-4(a)(1). If it is included in the basis then it is not a section 1254 cost, but if it is deductible in a later year it is a section 1254 cost as of the date of the disposition.

(v) ***Previously recaptured amounts.*** If an amount has been previously treated as ordinary income pursuant to section 1254, it is not a section 1254 cost.

(vi) ***Nonproductive wells.*** The aggregate amount of section 1254 costs paid or incurred on any property includes the amount of intangible drilling and development costs incurred on nonproductive wells, but only to the extent that the taxpayer recognizes income on the foreclosure of a nonrecourse debt the proceeds from which were used to finance the section 1254 costs with respect to the property. For this purpose, the term nonproductive well means a well that does not produce oil or gas in commercial quantities, including a well that is drilled for the purpose of ascertaining the existence, location, or extent of an oil or gas reservoir (e.g., a delineation well). The term *nonproductive well* does not include an injection well (other than an injection well drilled as part of a project that does not result in production in commercial quantities).

(vii) ***Calculation of amount described in paragraph (b)(1)(ii)(B) of this section (hypothetical depletion offset)*** —

(A) ***In general.*** In calculating the amount described in paragraph (b)(1)(ii)(B) of this section, the taxpayer shall apply the following rules. The taxpayer may use the 65-percent-of-taxable-income limitation of section 613A(d)(1). If the taxpayer uses that limitation, the taxpayer is not required to recalculate the effect of such limitation with respect to any property not disposed of. That is, the taxpayer may assume that the hypothetical

capitalization of intangible drilling and development costs with respect to any property disposed of does not affect the allowable depletion with respect to property retained by the taxpayer. Any intangible drilling and development costs that, if they had not been treated as expenses under section 263(c), would have properly been capitalized under § 1.612-4(b)(2) (relating to items recoverable through depreciation under section 167 or cost recovery under section 168) are treated as costs described in § 1.612-4(b)(1) (relating to items recoverable through depletion). The increase in depletion attributable to the capitalization of intangible drilling and development costs is computed by subtracting the amount of cost or percentage depletion actually claimed from the amount of cost or percentage depletion that would have been allowable if intangible drilling and development costs had been capitalized. If the remainder is zero or less than zero, the entire amount of intangible drilling and development costs attributable to the property is recapturable.

(B) ***Example.*** The following example illustrates the principles of paragraph (b)(1)(vii)(A).

Example: Hypothetical depletion offset. In 1976, A purchased undeveloped property for $10,000. During 1977, A incurred $200,000 of productive well intangible drilling and development costs with respect to the property. A deducted the intangible drilling and development costs as expenses under section 263(c). Estimated reserves of 150,000 barrels of recoverable oil were discovered in 1977 and production began in 1978. In 1978, A produced and sold 30,000 barrels of oil at $8 per barrel, resulting in $240,000 of gross income. A had no other oil or gas production in 1978. A claimed a percentage depletion deduction of $52,800 (i.e., 22% of $240,000 gross income from the property). If A had capitalized the intangible drilling and development costs, assume that $200,000 of the costs would have been allocated to the depletable property and none to depreciable property. A's cost depletion deduction if the intangible drilling and development costs had been capitalized would have been $42,000 (i.e., (($200,000 intangible drilling and development costs + $10,000 acquisition costs) × 30,000 barrels of production)/ 150,000 barrels of estimated recoverable reserves). Since this amount is less than A's depletion deduction of $52,800 (percentage depletion), no reduction is made to the amount of intangible drilling and development costs ($200,000). On January 1, 1979, A sold the oil property to B for $360,000 and calculated section 1254 recapture without reference to the 65-percent-of-taxable-income limitation. A's gain on the sale is the entire $360,000, because A's basis in the property at the beginning of 1979 is zero (i.e., $10,000 cost less $52,800 depletion deduction for 1978). Since the section 1254 costs ($200,000) are less than A's gain on the sale, $200,000 is treated as ordinary income under section 1254(a). The remaining amount of A's gain ($160,000) is not subject to section 1254(a).

(2) ***Natural resource recapture property*** —

(i) ***In general.*** The term *natural resource recapture property* means section 1254 property or oil, gas, or geothermal property as those terms are defined in this section.

(ii) ***Section 1254 property.*** The term *section 1254 property* means any property (within the meaning of section 614) that is placed in service by the taxpayer after December 31, 1986, if any expenditures described in paragraph (b)(1)(i)(A) of this section (relating to costs under section 263, 616, or 617) are properly chargeable to such property, or if the adjusted basis of such property includes adjustments for deductions for depletion under section 611.

(iii) ***Oil, gas, or geothermal property.*** The term *oil, gas, or geothermal property* means any property (within the meaning of section 614) that was placed in service by the taxpayer before January 1, 1987, if any expenditures described in paragraph (b)(1)(ii)(A) of this section are properly chargeable to such property.

(iv) ***Property to which section 1254 costs are properly chargeable.***

(A) An expenditure is properly chargeable to property if—

(*1*) The property is an operating mineral interest with respect to which the expenditure has been deducted;

(*2*) The property is a nonoperating mineral interest (e.g., a net profits interest or an overriding royalty interest) burdening an operating mineral interest if the nonoperating mineral interest is carved out of an operating mineral interest described in paragraph (b)(2)(iv)(A)(*1*) of this section;

(*3*) The property is a nonoperating mineral interest retained by a lessor or sublessor if such lessor or sublessor held, prior to the lease or sublease, an operating mineral interest described in paragraph (b)(2)(iv)(A)(*1*) of this section; or

(*4*) The property is an operating or a nonoperating mineral interest held by a taxpayer if a party related to the taxpayer (within the meaning of section 267(b) or section 707(b)) held an operating mineral interest (described in paragraph (b)(2)(iv)(A)(*1*) of this section) in the same tract or parcel of land that terminated (in whole or in part) without being disposed of (e.g., a working interest which terminated after a specified period of time or a given amount of production), but only if there exists between the related parties an arrangement or plan to avoid recapture under section 1254. In such a case, the taxpayer's section 1254 costs with respect to the property include those of the related party.

(B) ***Example.*** The following example illustrates the provisions of paragraph (2)(iv)(A)(*4*) of this section:

Example: Arrangement or plan to avoid recapture. C, an individual, owns 100% of the stock of both X Co. and Y Co. On January 1, 1998, X Co. enters into a standard oil and gas lease. X Co. immediately assigns to Y Co. 1% of the working interest for one year, and 99% of the working interest thereafter. In 1998, X Co. and Y Co. expend $300 in intangible drilling and development costs developing the tract, of which $297 are deducted by X Co. under section 263(c). On January 1, 1999, Y Co. sells its 99% share of the working interest to an unrelated person. Based on all the facts and circumstances, the arrangement between X Co. and Y Co. is part of a plan or arrangement to avoid recapture under section 1254. Therefore, Y Co. must include in its section 1254 costs the $297 of intangible drilling and development costs deducted by X Co.

(v) ***Property the basis of which includes adjustments for depletion deductions.*** The adjusted basis of property includes adjustments for depletion under section 611 if—

(A) The basis of the property has been reduced by reason of depletion deductions; or

(B) The property has been carved out of or is a portion of property the basis of which has been reduced by reason of depletion deductions.

(vi) ***Property held by a transferee.*** Property held by a transferee is natural resource recapture property if the property was natural resource recapture property in the hands of the transferor and the transferee's basis in the property is determined with reference to the transferor's basis in the property (e.g., a gift) or is determined under section 732.

(vii) ***Property held by a transferor.*** Property held by a transferor of natural resource recapture property is natural resource recapture property if the transferor's basis in the property received is determined with reference to the transferor's basis in the property transferred by the transferor (e.g., a like kind exchange). For purposes of this paragraph (b)(2), property described in this paragraph (b)(2)(vii) is treated as placed in service at the time the property transferred by the transferor was placed in service by the transferor.

(3) ***Disposition*** —

(i) ***General rule.*** The term *disposition* has the same meaning as in section 1245, relating to gain from dispositions of certain depreciable property.

(ii) ***Exceptions.*** The term *disposition* does not include—

(A) Any transaction that is merely a financing device, such as a mortgage or a production payment that is treated as a loan under section 636 and the regulations thereunder;

(B) Any abandonment (except that an abandonment is a disposition to the extent the taxpayer recognizes income on the foreclosure of a nonrecourse debt);

(C) Any creation of a lease or sublease of natural resource recapture property;

(D) Any termination or election of the status of an S corporation;

(E) Any unitization or pooling arrangement;

(F) Any expiration or reversion of an operating mineral interest that expires or reverts by its own terms, in whole or in part; or

(G) Any conversion of an overriding royalty interest that, at the option of the grantor or successor in interest, converts to an operating mineral interest after a certain amount of production.

(iii) ***Special rule for carrying arrangements.*** In a carrying arrangement, liability for section 1254 costs attributable to the entire operating mineral interest held by the carrying party prior to reversion or conversion remains attributable to the reduced operating mineral interest retained by the carrying party after a portion of the operating mineral interest has reverted to the carried party or after the conversion of an overriding royalty interest that, at the option of the grantor or successor in interest, converts to an operating mineral interest after a certain amount of production.

(c) ***Disposition of a portion of natural resource recapture property*** —

(1) ***Disposition of a portion (other than an undivided interest) of natural resource recapture property*** —

(i) ***Natural resource recapture property subject to the general rules of § 1.1254-1.*** For purposes of section 1254(a)(1) and paragraph (a) of this section, except as provided in paragraphs (c) (1)(ii) and (3) of this section, in the case of the disposition of a portion (that is not an undivided interest) of natural resource recapture property, the entire amount of the section 1254 costs with respect to the natural resource recapture property is treated as allocable to that portion of the property to the extent of the amount of gain to which section 1254(a)(1) applies. If the amount of the gain to which section 1254(a)(1) applies is less than the amount of the section 1254 costs with respect to the natural resource recapture property, the balance of the section 1254 costs remaining after allocation to the portion of the property that was disposed of remains subject to recapture by the taxpayer under section 1254(a)(1) upon disposition of the remaining portion of the property. For example, assume that A owns an 80-acre tract of land with respect to which A has deducted intangible drilling and development costs under section 263(c). If A sells the north 40 acres, the entire amount of the section 1254 costs with respect to the 80-acre tract is treated as allocable to the 40-acre portion sold (to the extent of the amount of gain to which section 1254(a)(1) applies).

(ii) ***Natural resource recapture property subject to the exceptions and limitations of § 1.1254-2.*** For purposes of section 1254(a)(1) and paragraph (a) of this section, except as provided in paragraph (b)(3) of this section, in the case of the disposition of a portion (that is not an undivided interest) of natural resource recapture property to which section 1254(a)(1) does not apply by reason of the application of § 1.1254-2 (certain nonrecognition transactions), the following rule for allocation of costs applies. An amount of the section 1254 costs that bears the same ratio to the entire amount of such costs with respect to the entire natural resource recapture property as the value of the property transferred bears to the value of the entire natural resource recapture property is treated as allocable to the portion of the natural resource recapture property transferred. The balance of the section 1254 costs remaining after allocation to that portion of the transferred property remains subject to recapture by the taxpayer under section 1254(a)(1) upon disposition of the remaining portion of the property. For example, assume that A owns an 80-acre tract of land with respect to which A has deducted intangible drilling and development costs under section 263(c). If A gives away the north 40 acres, and if 60 percent of the value of the 80-acre tract were attributable to the north 40 acres given away, 60 percent of the section 1254 costs with respect to the 80-acre tract is allocable to the north 40 acres given away.

(2) ***Disposition of an undivided interest*** —

(i) ***Natural resource recapture property subject to the general rules of § 1.1254-1.*** For purposes of section 1254(a)(1), except as provided in paragraphs (b)(2)(ii) and (b)(3) of this section, in the case of the disposition of an undivided interest in natural resource recapture property (or a portion thereof), a proportionate part of the section 1254 costs with respect to the natural resource recapture property is treated as allocable to the transferred undivided interest to the extent of the amount of gain to which section 1254(a)(1) applies. For example, assume that A owns an 80-acre tract of land with respect to which A has deducted intangible drilling and development costs under section 263(c). If A sells an undivided 40 percent interest in the 80-acre tract, 40 percent of the section 1254 costs with respect to the 80-acre tract is allocable to the transferred 40 percent interest in the 80-acre tract. However, if the amount of gain recognized on the sale of the 40 percent undivided interest were equal to only 35 percent of the

amount of section 1254 costs attributable to the 80-acre tract, only 35 percent of the section 1254 costs would be treated as attributable to the undivided 40 percent interest. See paragraph (c)(3) of this section for an alternative allocation rule.

(ii) ***Natural resource recapture property subject to the exceptions and limitations of § 1.1254-2.*** For purposes of section 1254(a)(1) and paragraph (a) of this section, except as provided in paragraph (b)(3) of this section, in the case of a disposition of an undivided interest in natural resource recapture property (or a portion thereof) to which section 1254 (a)(1) does not apply by reason of § 1.1254-2, a proportionate part of the section 1254 costs with respect to the natural resource recapture property is treated as allocable to the transferred undivided interest. See paragraph (c)(3) of this section for an alternative allocation rule.

(3) ***Alternative allocation rule*** —

(i) ***In general.*** The rules for the allocation of costs set forth in section 1254(a)(2) and paragraphs (c) (1) and (2) of this section do not apply with respect to section 1254 costs that the taxpayer establishes to the satisfaction of the Commissioner do not relate to the transferred property. Except as provided in paragraphs (c)(3) (ii) and (iii) of this section, a taxpayer may satisfy this requirement only by receiving a private letter ruling from the Internal Revenue Service that the section 1254 costs do not relate to the transferred property.

(ii) ***Portion of property.*** Upon the transfer of a portion of a natural resource recapture property (other than an undivided interest) with respect to which section 1254 costs have been incurred, a taxpayer may treat section 1254 costs as not relating to the transferred portion if the transferred portion does not include any part of any deposit with respect to which the costs were incurred.

(iii) ***Undivided interest.*** Upon the transfer of an undivided interest in a natural resource recapture property with respect to which section 1254 costs have been incurred, a taxpayer may treat costs as not relating to the transferred interest if the undivided interest is an undivided interest in a portion of the natural resource recapture property, and the portion would be eligible for the alternative allocation rule under paragraph (c)(3)(ii) of this section.

(iv) ***Substantiation.*** If a taxpayer treats section 1254 costs incurred with respect to a natural resource recapture property as not relating to a transferred interest in a portion of the property, the taxpayer must indicate on his or her tax return that the costs do not relate to the transferred portion and maintain the records and supporting evidence that substantiate this position.

(d) ***Installment method.*** Gain from a disposition to which section 1254(a)(1) applies is reported on the installment method if that method otherwise applies under section 453 or 453A of the Internal Revenue Code and the regulations thereunder. The portion of each installment payment as reported that represents income (other than interest) is treated as gain to which section 1254(a)(1) applies until all of the gain (to which section 1254(a)(1) applies) has been reported, and the remaining portion (if any) of the income is then treated as gain to which section 1254(a)(1) does not apply. For treatment of amounts as interest on certain deferred payments, see sections 483, 1274, and the regulations thereunder.

[T.D. 8586, 60 FR 2502, Jan. 10, 1995]

§ 1.1254-2 Exceptions and limitations.

(a) ***Exception for gifts and section 1041 transfers*** —

(1) ***General rule.*** No gain is recognized under section 1254(a)(1) upon a disposition of natural resource recapture property by a gift or by a transfer in which no gain or loss is recognized pursuant to section 1041 (relating to transfers between spouses). For purposes of this paragraph (a), the term *gift* means, except to the extent that paragraph (a)(2) of this section applies, a transfer of natural resource recapture property that, in the hands of the transferee, has a basis determined under the provisions of section 1015(a) or 1015(d) (relating to basis of property acquired by gift) or section 1022 (relating to the basis of property acquired from certain decedents who died in 2010). For rules concerning the potential reduction in the amount of the charitable contribution in the case of natural resource recapture property, see section 170(e) and § 1.170A-4. See § 1.1254-3(b)(1) for determination of potential recapture of section 1254 costs on property acquired by gift. See § 1.1254-1 (c)(1)(ii) and (c)(2)(ii) for apportionment of section 1254 costs on a gift of a portion of natural resource recapture property.

(2) ***Part gift transactions.*** If a disposition of natural resource recapture property is in part a sale or exchange and in part a gift, the gain that is treated as ordinary income pursuant to section 1254(a)(1) is the lower of the section 1254 costs with respect to the property or the excess of the amount realized upon the disposition of the property over the adjusted basis of the property. In the case of a transfer subject to section 1011(b) (relating to bargain sales to charitable organizations), the adjusted basis for purposes of the preceding sentence is the adjusted basis for determining gain or loss under section 1011(b).

(b) ***Exception for transfers at death.*** Except as provided in section 691 (relating to income in respect of a decedent), no gain is recognized under section 1254(a)(1) upon a transfer at death. For purposes of this paragraph, the term *transfer at death* means a transfer of natural resource recapture property that, in the hands of the transferee, has a basis determined under the provisions of section 1014(a) (relating to basis of property acquired from a decedent) because of the death of the transferor. See § 1.1254-3 (a)(4) and (c) for the determination of potential recapture of section 1254 costs on property acquired in a transfer at death.

(c) ***Limitation for certain tax-free transactions*** —

(1) ***General rule.*** Upon a transfer of property described in paragraph (c)(3) of this section, the amount of gain treated as ordinary income by the transferor under section 1254(a)(1) may not exceed the amount of gain recognized to the transferor on the transfer (determined without regard to section 1254). In the case of a transfer of both natural resource recapture property and property that is not natural resource recapture property in one transaction, the amount realized from the disposition of the natural resource recapture property is deemed to be equal to the amount that bears the same ratio to the total amount realized as the fair market value of the natural resource recapture property bears to the aggregate fair market value of all the property transferred. The preceding sentence is applied solely for purposes of computing the portion of the total gain (determined without regard to section 1254) that may be recognized as ordinary income under section 1254(a)(1).

(2) ***Special rule for dispositions to certain tax-exempt organizations.*** Paragraph (c)(1) of this section does not apply to a disposition of natural resource recapture property to an organization (other than a cooperative described in section 521) that is exempt from the tax imposed by chapter I of the Internal Revenue Code. The preceding sentence does not apply to a disposition of natural resource recapture property to an organization described in section 511 (a)(2) or (b)(2) (relating to imposition of tax on unrelated business income of charitable, etc., organizations) if, immediately after the disposition, the organization uses the property in an unrelated trade or business as defined in section 513. If any property with respect to which gain is not recognized by reason of the exception

of this paragraph (c)(2) ceases to be used in an unrelated trade or business of the organization acquiring the property, that organization is, for purposes of section 1254, treated as having disposed of the property on the date of the cessation.

(3) ***Transfers described.*** The transfers referred to in paragraph (c)(1) of this section are transfers of natural resource recapture property in which the basis of the natural resource recapture property in the hands of the transferee is determined by reference to its basis in the hands of the transferor by reason of the application of any of the following provisions:

(i) Section 332 (relating to certain liquidations of subsidiaries). See paragraph (c)(4) of this section.

(ii) Section 351 (relating to transfer to a corporation controlled by transferor).

(iii) Section 361 (relating to exchanges pursuant to certain corporate reorganizations).

(iv) Section 721 (relating to transfers to a partnership in exchange for a partnership interest).

(v) Section 731 (relating to distributions by a partnership to a partner). For purposes of this paragraph, the basis of natural resource recapture property distributed by a partnership to a partner is deemed to be determined by reference to the adjusted basis of such property to the partnership.

(4) ***Special rules for section 332 transfers.*** In the case of a distribution in complete liquidation of a subsidiary to which section 332 applies, the limitation provided in this paragraph (c) is confined to instances in which the basis of the natural resource recapture property in the hands of the transferee is determined, under section 334(b)(1), by reference to its basis in the hands of the transferor. Thus, for example, the limitation may apply in respect of a liquidating distribution of natural resource recapture property by a subsidiary corporation to the parent corporation, but does not apply in respect of a liquidating distribution of natural resource recapture property to a minority shareholder. This paragraph (c) does not apply to a liquidating distribution of natural resource recapture property by a subsidiary to its parent if the parent's basis for the property is determined under section 334(b)(2) (as in effect before enactment of the Tax Reform Act of 1986), by reference to its basis for the stock of the subsidiary. This paragraph (c) does not apply to a liquidating distribution under section 332 of natural resource recapture property by a subsidiary to its parent if gain is recognized and there is a corresponding increase in the parent's basis in the property (e.g., certain distributions to a tax-exempt or foreign corporation).

(d) ***Limitation for like kind exchanges and involuntary conversions*** —

(1) ***General rule.*** If natural resource recapture property is disposed of and gain (determined without regard to section 1254) is not recognized in whole or in part under section 1031 (relating to like kind exchanges) or section 1033 (relating to involuntary conversions), the amount of gain taken into account by the transferor under section 1254(a)(1) may not exceed the sum of—

(i) The amount of gain recognized on the disposition (determined without regard to section 1254); plus

(ii) The fair market value of property acquired that is not natural resource recapture property (determined without regard to § 1.1254-1(b)(2)(vii)) and is not taken into account under paragraph (d)(1)(i) of this section (that is, qualifying property under section 1031 or 1033 that is not natural resource recapture property).

(2) ***Disposition and acquisition of both natural resource recapture property and other property.*** For purposes of this paragraph (d), if both natural resource recapture property and property that is not natural resource recapture property are acquired as the result of one disposition in which both natural resource recapture property and property that is not natural resource recapture property are disposed of—

(i) The total amount realized upon the disposition is allocated between the natural resource recapture property and the property that is not natural resource recapture property disposed of in proportion to their respective fair market values;

(ii) The amount realized upon the disposition of the natural resource recapture property is deemed to consist of so much of the fair market value of the natural resource recapture property acquired as is not in excess of the amount realized from the natural resource recapture property disposed of, and the remaining portion (if any) of the amount realized upon the disposition of such property is deemed to consist of so much of the fair market value of the property that is not natural resource recapture property acquired as is not in excess of the remaining portion; and

(iii) The amount realized upon the disposition of the property that is not natural resource recapture property is deemed to consist of so much of the fair market value of all the property acquired which was not taken into account under paragraph (d)(2)(ii) of this section. Except as provided in section 1060 and the regulations thereunder, if a buyer and seller have adverse interests as to such allocation of the amount realized, any arm's-length agreement between the buyer and seller is used to establish the allocation. In the absence of such an agreement, the allocation is made by taking into account the appropriate facts and circumstances.

[T.D. 8586, 60 FR 2505, Jan. 10, 1995, as amended by T.D. 8684, 61 FR 53063, Oct. 10, 1996; T.D. 9811, 82 FR 6241, Jan. 19, 2017]

§ 1.1254-3 Section 1254 costs immediately after certain acquisitions.

(a) ***Transactions in which basis is determined by reference to cost or fair market value of property transferred*** —

(1) ***Basis determined under section 1012.*** If, on the date a person acquires natural resource recapture property, the person's basis for the property is determined solely by reference to its cost (within the meaning of section 1012), the amount of section 1254 costs with respect to the natural resource recapture property in the person's hands is zero on the acquisition date.

(2) ***Basis determined under section 301(d), 334(a), or 358(a)(2).*** If, on the date a person acquires natural resource recapture property, the person's basis for the property is determined solely by reason of the application of section 301(d) (relating to basis of property received in a corporate distribution), section 334(a) (relating to basis of property received in a liquidation in which gain or loss is recognized), or section 358(a)(2) (relating to basis of other property received in certain exchanges), the amount of the section 1254 costs with respect to the natural resource recapture property in the person's hands is zero on the acquisition date.

(3) ***Basis determined solely under former section 334(b)(2) or former section 334(c).*** If, on the date a person acquires natural resource recapture property, the person's basis for the property is determined solely under the provisions of section 334(b)(2) (prior to amendment of that section by the Tax Equity and Fiscal Responsibility Act of 1982) or (c) (prior to repeal of that section by the Tax

Reform Act of 1986) (relating to basis of property received in certain corporate liquidations), the amount of section 1254 costs with respect to the natural resource recapture property in the person's hands is zero on the acquisition date.

(4) ***Basis determined by reason of the application of section 1014(a).*** If, on the date a person acquires natural resource recapture property from a decedent, the person's basis is determined, by reason of the application of section 1014(a), solely by reference to the fair market value of the property on the date of the decedent's death or on the applicable date provided in section 2032 (relating to alternate valuation date), the amount of section 1254 costs with respect to the natural resource recapture property in the person's hands is zero on the acquisition date. See paragraph (c) of this section for the treatment of certain transfers at death.

(b) ***Gifts and certain tax-free transactions*** —

(1) ***General rule.*** If natural resource recapture property is transferred in a transaction described in paragraph (b)(2) of this section, the amount of section 1254 costs with respect to the natural resource recapture property in the hands of the transferee immediately after the disposition is an amount equal to—

(i) The amount of section 1254 costs with respect to the natural resource recapture property in the hands of the transferor immediately before the disposition (and in the case of an S corporation or partnership transferor, the section 1254 costs of the shareholders or partners with respect to the natural resource recapture property); minus

(ii) The amount of any gain taken into account as ordinary income under section 1254(a)(1) by the transferor upon the disposition (and in the case of an S corporation or partnership transferor, any such gain taken into account as ordinary income by the shareholders or partners).

(2) ***Transactions covered.*** The transactions to which paragraph (b)(1) of this section apply are—

(i) A disposition that is a gift or in part a sale or exchange and in part a gift;

(ii) A transaction described in section 1041(a);

(iii) A disposition described in § 1.1254-2(c)(3) (relating to certain tax-free transactions); or

(iv) A transfer at death where basis of property in the hands of the transferee is determined under section 1022.

(c) ***Certain transfers at death.*** If natural resource recapture property is acquired in a transfer at death, the amount of section 1254 costs with respect to the natural resource recapture property in the hands of the transferee immediately after the transfer includes the amount, if any, of the section 1254 costs deducted by the transferee before the decedent's death, to the extent that the basis of the natural resource recapture property (determined under section 1014(a)) is required to be reduced under the second sentence of section 1014(b)(9) (relating to adjustments to basis where the property is acquired from a decedent prior to death).

(d) ***Property received in a like kind exchange or involuntary conversion*** —

(1) ***General rule.*** If natural resource recapture property is disposed of in a like kind exchange under section 1031 or involuntary conversion under section 1033, then immediately after the disposition the amount of section 1254 costs with respect to any natural resource recapture property acquired for the property transferred is an amount equal to—

(i) The amount of section 1254 costs with respect to the natural resource recapture property disposed of (including the section 1254 costs of the shareholders of an S corporation or of the partners of a partnership with respect to the natural resource recapture property); minus

(ii) The amount of any gain taken into account as ordinary income under section 1254(a)(1) by the transferor upon the disposition (and in the case of an S corporation or partnership transferor, any such gain taken into account as ordinary income by the shareholders or partners).

(2) ***Allocation of section 1254 costs among multiple natural resource recapture properties acquired.*** If more than one parcel of natural resource recapture property is acquired at the same time from the same person in a transaction referred to in paragraph (d)(1) of this section, the total amount of section 1254 costs with respect to the parcels is allocated to the parcels in proportion to their respective adjusted bases.

(e) ***Property transferred in cases to which section 1071 or 1081(b) applies.*** Rules similar to the rules of section 1245(b)(5) shall apply under section 1254.

[T.D. 8586, 60 FR 2506, Jan. 10, 1995, as amended by T.D. 8684, 61 FR 53063, Oct. 10, 1996; T.D. 9811, 82 FR 6242, Jan. 19, 2017]

§ 1.1254-4 Special rules for S corporations and their shareholders.

(a) ***In general.*** This section provides rules for applying the provisions of section 1254 to S corporations and their shareholders upon the disposition by an S corporation (and a corporation that was formerly an S corporation) of natural resource recapture property and upon the disposition by a shareholder of stock of an S corporation that holds natural resource recapture property.

(b) ***Determination of gain treated as ordinary income under section 1254 upon a disposition of natural resource recapture property by an S corporation*** —

(1) ***General rule.*** Upon a disposition of natural resource recapture property by an S corporation, the amount of gain treated as ordinary income under section 1254 is determined at the shareholder level. Each shareholder must recognize as ordinary income under section 1254 the lesser of—

(i) The shareholder's section 1254 costs with respect to the property disposed of; or

(ii) The shareholder's share of the amount, if any, by which the amount realized on the sale, exchange, or involuntary conversion, or the fair market value of the property upon any other disposition (including a distribution), exceeds the adjusted basis of the property.

(2) ***Examples.*** The following examples illustrate the provisions of paragraph (b)(1) of this section:

Example 1. Disposition of natural resource recapture property other than oil and gas property. A and B are equal shareholders in X, an S corporation. On January 1, 1997, X acquires for $90,000 an undeveloped mineral property, its sole property. During 1997, X expends and deducts $100,000 in developing the property. On January 15, 1998, X sells the property for $250,000 when X's basis in the property is $90,000. Thus, X recognizes gain of $160,000 on the sale. A and B's share of the $160,000 gain recognized is $80,000 each. Each shareholder has $50,000 of section 1254 costs with respect to the property. Under these circumstances, A and B each are required to recognize $50,000 of the $80,000 of gain on the sale of the property as ordinary income under section 1254.

Example 2. Disposition of oil and gas property the adjusted basis of which is allocated to the shareholders under section 613A(c)(11). C and D are equal shareholders in Y, an S corporation. On January 1, 1997, Y acquires for $150,000 an undeveloped oil and gas property, its sole property. During 1997, Y expends in developing the property $40,000 in intangible drilling costs which it elects to expense under section 263(c). On January 15, 1998, Y sells the property for $200,000. C and D's share of the $200,000 amount realized on the sale is $100,000 each. C and D each have a basis of $75,000 in the property and $20,000 of section 1254 costs with respect to the property. Under these circumstances, C and D each are required to recognize $20,000 of the $25,000 gain on the sale of the property as ordinary income under section 1254.

(c) ***Character of gain recognized by a shareholder upon a sale or exchange of S corporation stock*** —

(1) ***General rule.*** Except as provided in paragraph (c)(2) of this section, if an S corporation shareholder recognizes gain upon a sale or exchange of stock in the S corporation (determined without regard to section 1254), the gain is treated as ordinary income under section 1254 to the extent of the shareholder's section 1254 costs (with respect to the shares sold or exchanged).

(2) ***Exceptions*** —

(i) ***Gain not attributable to section 1254 costs*** —

(A) ***General rule.*** Paragraph (c)(1) of this section does not apply to any portion of the gain recognized on the sale or exchange of the stock that the taxpayer establishes is not attributable to section 1254 costs. The portion of the gain recognized that is not attributable to section 1254 costs is that portion of the gain recognized that exceeds the amount of ordinary income that the shareholder would have recognized under section 1254 (with respect to the shares sold or exchanged) if, immediately prior to the sale or exchange of the stock, the corporation had sold at fair market value all of the corporation's property the disposition of which would result in the recognition by the shareholder of ordinary income under section 1254.

(B) ***Substantiation.*** To establish that a portion of the gain recognized is not attributable to a shareholder's section 1254 costs so as to qualify for the exception contained in paragraph (c)(2)(i)(A) of this section, the shareholder must attach to the shareholder's tax return a statement detailing the shareholder's share of the fair market value and basis, and the shareholder's section 1254 costs, for each of the S corporation's natural resource recapture properties held immediately before the sale or exchange of stock.

(ii) ***Transactions entered into as part of a plan to avoid recognition of ordinary income under section 1254.*** In the case of a contribution of property prior to a sale or exchange of stock pursuant to a plan a principal purpose of which is to avoid recognition of ordinary income under section 1254, paragraph (c)(1) of this section does not apply. Instead, the amount recognized as ordinary income under section 1254 is the amount of ordinary income the selling or exchanging shareholder would have recognized under section 1254 (with respect to the shares sold or exchanged) had the S corporation sold its natural resource recapture property the disposition of which would have resulted in the recognition of ordinary income under section 1254. The amount recognized as ordinary income under the preceding sentence reduces the amount realized on the sale or exchange of the stock.

This reduced amount realized is used in determining any gain or loss on the sale or exchange.

(3) ***Examples.*** The following examples illustrate the provisions of this paragraph (c):

Example 1. Application of general rule upon a sale of S corporation stock. C and D are equal shareholders in Y, an S corporation. As of January 1, 1997, Y holds two mining properties: Blackacre, with an adjusted basis of $5,000 and a fair market value of $35,000, and Whiteacre, with an adjusted basis of $20,000 and a fair market value of $15,000. Y also holds securities with a basis of $5,000 and a fair market value of $10,000. On January 1, 1997, D sells 50 percent of D's Y stock to E for $15,000. As of the date of the sale, D's adjusted basis in the Y stock sold is $7,500, and D has $18,000 of section 1254 costs with respect to Blackacre and $12,000 of section 1254 costs with respect to Whiteacre. Under this paragraph (c), the gain recognized by D upon the sale of Y stock is treated as ordinary income to the extent of D's section 1254 costs with respect to the stock sold, unless D establishes that a portion of such excess is not attributable to D's section 1254 costs. However, because D would recognize $7,500 in ordinary income under section 1254 with respect to the stock sold if Y sold Blackacre (the only asset the disposition of which would result in ordinary income to D under section 1254), the $7,500 of gain recognized by D upon the sale of D's Y stock is attributable to D's section 1254 costs. Therefore, upon the sale of stock to E, D recognizes $7,500 of ordinary income under this paragraph (c).

Example 2. Sale of S corporation stock where gain is not entirely attributable to section 1254 costs.

Assume the same facts as in *Example 1,* except that Blackacre has a fair market value of $25,000, and the securities have a fair market value of $20,000. Immediately prior to the sale of stock to E, if Y had sold Blackacre (its only asset the disposition of which would result in the recognition of ordinary income to D under section 1254), D would recognize $5,000 in ordinary income with respect to the stock sold under section 1254. D attaches a statement to D's tax return for 1997 detailing D's share of the fair market values and bases, and D's section 1254 costs with respect to Blackacre and Whiteacre. Therefore, upon the sale of stock to E, of the $7,500 gain recognized by D, $5,000 is ordinary income under this paragraph (c).

Example 3. Contribution of property prior to sale of S corporation stock as part of a plan to avoid recognition of ordinary income under section 1254. H owns all of the stock of Z, an S corporation. As of January 1, 1997, H has $3,000 of section 1254 costs with respect to property P, which is natural resource recapture property and Z's only asset. Property P has an adjusted basis of $5,000 and a fair market value of $8,000. H has a basis of $5,000 in Z stock, which has a fair market value of $8,000. On January 1, 1997, H contributes securities to Z which have a basis of $7,000 and a fair market value of $4,000. On April 15, 1997, H sells all of the Z stock to J for $12,000. On that date, H's adjusted basis in the Z stock is also $12,000. Based on all the facts and circumstances, the sale of stock is part of a plan (along with the contribution by H of the securities to Z) that has a principal purpose to avoid recognition of ordinary income under section 1254. Consequently, under paragraph (c)(2)(ii) of this section, H must recognize $3,000 as ordinary income under section 1254, the amount of ordinary income that H would recognize as ordinary income under section 1254 if property P were sold at fair market value. In addition, H reduces the amount realized on the sale of the stock ($12,000) by $3,000. As a result, H also recognizes a $3,000 capital loss on the sale of the stock ($9,000 amount realized less $12,000 adjusted basis).

(d) ***Section 1254 costs of a shareholder.*** An S corporation shareholder's section 1254 costs with respect to any natural resource recapture property held by the corporation include all of the shareholder's section 1254 costs with respect to the property in the hands of the S corporation. See § 1.1254-1(b)(1) for the definition of section 1254 costs.

(e) ***Section 1254 costs of an acquiring shareholder after certain acquisitions*** —

(1) ***Basis determined under section 1012.*** If stock in an S corporation that holds natural resource recapture property is acquired and the acquiring shareholder's basis for the stock is determined solely by reference to its cost (within the meaning of section 1012), the amount of section 1254 costs with respect to the property held by the corporation in the acquiring shareholder's hands is zero on the acquisition date.

(2) ***Basis determined under section 1014(a).*** If stock in an S corporation that holds natural resource recapture property is acquired from a decedent and the acquiring shareholder's basis is determined, by reason of the application of section 1014(a), solely by reference to the fair market value of the stock on the date of the decedent's death or on the applicable date provided in section 2032 (relating to alternate valuation date), the amount of section 1254 costs with respect to the property held by the corporation in the acquiring shareholder's hands is zero on the acquisition date.

(3) ***Basis determined under section 1014(b)(9).*** If stock in an S corporation that holds natural resource recapture property is acquired before the death of the decedent, the amount of section 1254 costs with respect to the property held by the corporation in the acquiring shareholder's hands includes the amount, if any, of the section 1254 costs deducted by the acquiring shareholder before the decedent's death, to the extent that the basis of the stock (determined under section 1014(a)) is required to be reduced under section 1014(b)(9) (relating to adjustments to basis when the property is acquired before the death of the decedent).

(4) ***Gifts and section 1041 transfers.*** If stock is acquired in a transfer that is a gift, in a transfer that is a part sale or exchange and part gift, in a transfer that is described in section 1041(a), or in a transfer at death where the basis of property in the hands of the transferee is determined under section 1022, the amount of section 1254 costs with respect to the property held by the corporation in the acquiring shareholder's hands immediately after the transfer is an amount equal to—

(i) The amount of section 1254 costs with respect to the property held by the corporation in the hands of the transferor immediately before the transfer; minus

(ii) The amount of any gain recognized as ordinary income under section 1254 by the transferor upon the transfer.

(f) ***Special rules for a corporation that was formerly an S corporation or formerly a C corporation*** —

(1) ***Section 1254 costs of an S corporation that was formerly a C corporation.*** In the case of a C corporation that holds natural resource recapture property and that elects to be an S corporation, each shareholder's section 1254 costs as of the beginning of the corporation's first taxable year as an S corporation include a pro rata share of the section 1254 costs of the corporation as of the close of the last taxable year that the corporation was a C corporation.

(2) ***Examples.*** The following examples illustrate the application of the provisions of paragraph (f)(1) of this section:

> *Example 1. Sale of natural resource recapture property held by an S corporation that was*

formerly a C corporation. (i) Y is a C corporation that elects to be an S corporation effective January 1, 1997. On that date, Y owns Oil Well, which is natural resource recapture property and a capital asset. Y has section 1254 costs of $20,000 as of the close of the last taxable year that it was a C corporation. On January 1, 1997, Oil Well has a value of $200,000 and a basis of $100,000. Thus, under section 1374, Y's net unrealized built-in gain is $100,000. Also on that date, Y's basis in Oil Well is allocated to A, Y's sole shareholder, under section 613A(c)(11) and the section 1254 costs are allocated to A under paragraph (f)(1) of this section. In addition, A has a basis in A's Y stock of $100,000.
(ii) On November 1, 1997, Y sells Oil Well for $250,000. During 1997, Y has taxable income greater than $100,000, and no other transactions or items treated as recognized built-in gain or loss. Under section 1374, Y has net recognized built-in gain of $100,000. Assuming a tax rate of 35 percent on capital gain, Y has a tax of $35,000 under section 1374. The tax of $35,000 is treated as a capital loss under section 1366(f)(2). A has a realized gain on the sale of $150,000 ($250,000 minus $100,000) of which $20,000 is recognized as ordinary income under section 1254, and $130,000 is recognized as capital gain. Consequently, A recognizes ordinary income of $20,000 and net capital gain of $95,000 ($130,000 minus $35,000) on the sale.

Example 2. Sale of stock followed by sale of natural resource recapture property held by an S corporation that was formerly a C corporation. (i) Assume the same facts as in *Example 1*(i). On November 1, 1997, A sells all of A's Y stock to P for $250,000. A has a realized gain on the sale of $150,000 ($250,000 minus $100,000) of which $20,000 is recognized as ordinary income under section 1254, and $130,000 is recognized as capital gain.
(ii) On November 2, 1997, Y sells Oil Well for $250,000. During 1997, Y has taxable income greater than $100,000, and no other transactions or items treated as recognized built-in gain or loss. Under section 1374, Y has net recognized built-in gain of $100,000. Assuming a tax rate of 35 percent on capital gain, Y has a tax of $35,000 under section 1374. The tax of $35,000 is treated as a capital loss under section 1366(f)(2). P has a realized gain on the sale of $150,000 ($250,000 minus $100,000), which is recognized as capital gain. Consequently, P recognizes net capital gain of $115,000 ($150,000 minus $35,000) on the sale.

(3) ***Section 1254 costs of a C corporation that was formerly an S corporation.*** In the case of an S corporation that becomes a C corporation, the C corporation's section 1254 costs with respect to any natural resource recapture property held by the corporation as of the beginning of the corporation's first taxable year as a C corporation include the sum of its shareholders' section 1254 costs with respect to the property as of the close of the last taxable year that the corporation was an S corporation. In the case of an S termination year as defined in section 1362(e)(4), the shareholders' section 1254 costs are determined as of the close of the S short year as defined in section 1362(e)(1)(A). See paragraph (g)(5) of this section for rules on determining the aggregate amount of the shareholders' section 1254 costs.

(g) ***Determination of a shareholder's section 1254 costs upon certain stock transactions*** —

(1) ***Issuance of stock.*** Upon an issuance of stock (whether such stock is newly-issued or had been held as treasury stock) by an S corporation in a reorganization described in section 368 or otherwise—

(i) Each recipient of shares must be allocated a pro rata share (determined solely with respect to the shares issued in the transaction) of the aggregate of the S corporation shareholders' section 1254 costs with respect to natural resource recapture property held by the S corporation immediately before the issuance (as determined pursuant to paragraph (g)(5) of this section); and

(ii) Each pre-existing shareholder must reduce his or her section 1254 costs with respect to natural resource recapture property held by the S corporation immediately before the issuance by an amount equal to the pre-existing shareholder's section 1254 costs immediately before the issuance multiplied by the percentage of stock of the corporation issued in the transaction.

(2) ***Natural resource recapture property acquired in exchange for stock.*** If natural resource recapture property is transferred to an S corporation in exchange for stock of the S corporation (for example, in a section 351 transaction, or in a reorganization described in section 368), the S corporation must allocate to its shareholders a pro rata share of the S corporation's section 1254 costs with respect to the property immediately after the transaction (as determined under § 1.1254-3(b)(1)).

(3) ***Treatment of nonvested stock.*** Stock issued in connection with the performance of services that is substantially nonvested (within the meaning of § 1.83-3(b)) is treated as issued for purposes of this section at the first time it is treated as outstanding stock of the S corporation for purposes of section 1361.

(4) ***Exception.*** Paragraph (g)(1) of this section does not apply to stock issued in exchange for stock of the same S corporation (as for example, in a recapitalization described in section 368(a)(1)(E)).

(5) ***Aggregate of S corporation shareholders' section 1254 costs with respect to natural resource recapture property held by the S corporation*** —

(i) ***In general.*** The aggregate of S corporation shareholders' section 1254 costs is equal to the sum of each shareholder's section 1254 costs. The S corporation must determine each shareholder's section 1254 costs under either paragraph (g)(5)(ii) (written data) or paragraph (g)(5)(iii) (assumptions) of this section. The S corporation may determine the section 1254 costs of some shareholders under paragraph (g)(5)(ii) of this section and of others under paragraph (g)(5)(iii) of this section.

(ii) ***Written data.*** An S corporation may determine a shareholder's section 1254 costs by using written data provided by a shareholder showing the shareholder's section 1254 costs with respect to natural resource recapture property held by the S corporation unless the S corporation knows or has reason to know that the written data is inaccurate. If an S corporation does not receive written data upon which it may rely, the S corporation must use the assumptions provided in paragraph (g)(5)(iii) of this section in determining a shareholder's section 1254 costs.

(iii) ***Assumptions.*** An S corporation that does not use written data pursuant to paragraph (g)(5)(ii) of this section to determine a shareholder's section 1254 costs must use the following assumptions to determine the shareholder's section 1254 costs—

(A) The shareholder deducted his or her share of the amount of deductions under sections 263(c), 616, and 617 in the first year in which the shareholder could claim a deduction for such amounts, unless in the case of expenditures under sections 263(c) or 616 the S corporation elected to capitalize such amounts;

(B) The shareholder was not subject to the following limitations with respect to the shareholder's depletion allowance under section 611, except to the extent a limitation applied at the corporate level: the taxable income limitation of section 613(a); the depletable quantity limitations of section 613A(c); or the limitations of sections 613A(d)(2), (3), and (4) (exclusion of retailers and refiners).

(6) ***Examples.*** The following examples illustrate the provisions of this paragraph (g):

Example 1. Transfer of natural resource recapture property to an S corporation in a section 351 transaction. As of January 1, 1997, A owns all the stock (20 shares) in X, an S corporation. X holds property that is not natural resource recapture property that has a fair market value of $2,000 and an adjusted basis of $2,000. On January 1, 1997, B transfers natural resource recapture property, Property P, to X in exchange for 80 shares of X stock in a transaction that qualifies under section 351. Property P has a fair market value of $8,000 and an adjusted basis of $5,000. Pursuant to section 351, B does not recognize gain on the transaction. Immediately prior to the transaction, B's section 1254 costs with respect to Property P equaled $6,000. Under § 1.1254-2(c)(1), B does not recognize any gain under section 1254 on the section 351 transaction and, under § 1.1254-3(b)(1), X's section 1254 costs with respect to Property P immediately after the contribution equal $6,000. Under paragraph (g)(2) of this section, each shareholder is allocated a pro rata share of X's section 1254 costs. The pro rata share of X's section 1254 costs that is allocated to A equals $1,200 (20 percent interest in X multiplied by X's $6,000 of section 1254 costs). The pro rata share of X's section 1254 costs that is allocated to B equals $4,800 (80 percent interest in X multiplied by X's $6,000 of section 1254 costs).

Example 2. Contribution of money in exchange for stock of an S corporation holding natural resource recapture property. As of January 1, 1997, A and B each own 50 percent of the stock (50 shares each) in X, an S corporation. X holds natural resource recapture property, Property P, which has a fair market value of $20,000 and an adjusted basis of $14,000. A's and B's section 1254 costs with respect to Property P are $4,000 and $1,500, respectively. On January 1, 1997, C contributes $20,000 to X in exchange for 100 shares of X's stock. Under paragraph (g)(1)(i) of this section, X must allocate to C a pro rata share of its shareholders' section 1254 costs. Using the assumptions set forth in paragraph (g)(5)(iii) of this section, X determines that A's section 1254 costs with respect to natural resource recapture property held by X equal $4,500. Using written data provided by B, X determines that B's section 1254 costs with respect to Property P equal $1,500. Thus, the aggregate of X's shareholders' section 1254 costs equals $6,000. C's pro rata share of the $6,000 of section 1254 costs equals $3,000 (C's 50 percent interest in X multiplied by $6,000). Under paragraph (g)(1)(ii) of this section, A's section 1254 costs are reduced by $2,000 (A's actual section 1254 costs ($4,000) multiplied by 50 percent). B's section 1254 costs are reduced by $750 (B's actual section 1254 costs ($1,500) multiplied by 50 percent).

Example 3. Merger involving an S corporation that holds natural resource recapture property. X, an S corporation with one shareholder, A, holds as its sole asset natural resource recapture property that has a fair market value of $120,000 and an adjusted basis of $40,000. A has section 1254

costs with respect to the property of $60,000. For valid business reasons, X merges into Y, an S corporation with one shareholder, B, in a reorganization described in section 368(a)(1)(A). Y holds property that is not natural resource recapture property that has a fair market value of $120,000 and basis of $120,000. Under paragraph (c) of this section, A does not recognize ordinary income under section 1254 upon the exchange of stock in the merger because A did not otherwise recognize gain on the merger. Under paragraph (g)(2) of this section, Y must allocate to A and B a pro rata share of its $60,000 of section 1254 costs. Thus, A and B are each allocated $30,000 of section 1254 costs (50 percent interest in X, each, multiplied by $60,000).

[T.D. 8684, 61 FR 53063, Oct. 10, 1996, as amended by T.D. 9811, 82 FR 6242, Jan. 19, 2017]

§ 1.1254-5 Special rules for partnerships and their partners.

(a) ***In general.*** This section provides rules for applying the provisions of section 1254 to partnerships and their partners upon the disposition of natural resource recapture property by the partnership and certain distributions of property by a partnership. See section 751 and the regulations thereunder for rules concerning the treatment of gain upon the transfer of a partnership interest.

(b) ***Determination of gain treated as ordinary income under section 1254 upon the disposition of natural resource recapture property by a partnership*** —

(1) ***General rule.*** Upon a disposition of natural resource recapture property by a partnership, the amount treated as ordinary income under section 1254 is determined at the partner level. Each partner must recognize as ordinary income under section 1254 the lesser of—

(i) The partner's section 1254 costs with respect to the property disposed of; or

(ii) The partner's share of the amount, if any, by which the amount realized upon the sale, exchange, or involuntary conversion, or the fair market value of the property upon any other disposition, exceeds the adjusted basis of the property.

(2) ***Exception to partner level recapture in the case of abusive allocations.*** Paragraph (b)(1) of this section does not apply in determining the amount treated as ordinary income under section 1254 upon a disposition of section 1254 property by a partnership if the partnership has allocated the amount realized or gain recognized from the disposition with a principal purpose of avoiding the recognition of ordinary income under section 1254. In such case, the amount of gain on the disposition recaptured as ordinary income under section 1254 is determined at the partnership level.

(3) ***Examples.*** The provisions of paragraphs (a) and (b) of this section are illustrated by the following examples which assume that capital accounts are maintained in accordance with section 704(b) and the regulations thereunder:

Example 1. Partner level recapture—In general. A, B, and C, have equal interests in capital in Partnership ABC that was formed on January 1, 1985. The partnership acquired an undeveloped domestic oil property on January 1, 1985, for $120,000. The partnership allocated the property's basis to each partner in proportion to the partner's interest in partnership capital, so each partner was allocated $40,000 of basis. In 1985, the partnership incurred $60,000 of productive well intangible drilling and development costs with respect to the property. The partnership elected to deduct the intangible drilling and development costs as expenses under section 263(c). Each partner deducted $20,000 of the intangible drilling and development

costs. Assume that depletion allowable under section 613A(c)(7)(D) for each partner for 1985 was $10,000. On January 1, 1986, the partnership sold the oil property to an unrelated third party for $210,000. Each partner's allocable share of the amount realized is $70,000. Each partner's basis in the oil property at the end of 1985 is $30,000 ($40,000 cost—$10,000 depletion deductions claimed). Each partner has a gain of $40,000 on the sale of the oil property ($70,000 amount realized—$30,000 adjusted basis in the oil property). Assume that each partner's depletion allowance would not have been increased if the intangible drilling and development costs had been capitalized. Each partner's section 1254 costs with respect to the property are $20,000. Thus, A, B, and C each must treat $20,000 of gain recognized as ordinary income under section 1254(a).

Example 2. Special allocation of intangible drilling and development costs. K and L form a partnership on January 1, 1997, to acquire and develop a geothermal property as defined under section 613(e)(2). The partnership agreement provides that all intangible drilling and development costs will be allocated to partner K, and that all other items of income, gain, or loss will be allocated equally between the two partners. Assume these allocations have substantial economic effect under section 704(b) and the regulations thereunder. The partnership acquires a lease covering undeveloped acreage located in the United States for $50,000. In 1997, the partnership incurs $50,000 of intangible drilling and development costs that are allocated to partner K. The partnership also has $30,000 of depletion deductions, which are allocated equally between K and L. On January 1, 1998, the partnership sells the geothermal property to an unrelated third party for $160,000 and recognizes a gain of $140,000 ($160,000 amount realized less $20,000 adjusted basis ($50,000 unadjusted basis less $30,000 depletion deductions)). This gain is allocated equally between K and L. Because K's section 1254 costs are $65,000 and L's section 1254 costs are $15,000, K recognizes $65,000 as ordinary income under section 1254(a) and L recognizes $15,000 as ordinary income under section 1254(a). The remaining $5,000 of gain allocated to K and $55,000 of gain allocated to L is characterized without regard to section 1254.

Example 3. Section 59(e) election to capitalize intangible drilling and development costs. Partnership DK has 50 equal partners. On January 1, 1995, the partnership purchases an undeveloped oil and gas property for $100,000. The partnership allocates the property's basis equally among the partners, so each partner is allocated $2,000 of basis. In January 1995, the partnership incurs $240,000 of intangible drilling and development costs with respect to the property. The partnership elects to deduct the intangible drilling and development costs as expenses under section 263(c). Each partner is allocated $4,800 of intangible drilling and development costs. One of the partners, H, elects under section 59(e) to capitalize his $4,800 share of intangible drilling and development costs. Therefore, H is permitted to amortize his $4,800 share of intangible drilling and development costs over 60 months. H takes a $960 amortization deduction in 1995. Each of the remaining 49 partners deducts his $4,800 share of intangible drilling and development costs in 1995. Assume that depletion allowable for each partner under section 613A(c)(7)(D) for 1995 is $1,000. On December 31, 1995, the partnership sells the property for $300,000. Each partner is allocated $6,000 of amount realized. Each partner that deducted the intangible drilling and development costs has a basis in the oil property at the end of 1995 of $1,000 ($2,000 cost − $1,000 depletion deductions claimed). Each of these partners has a gain of $5,000 on the sale of the oil property ($6,000 amount realized − $1,000 adjusted basis in the property). The section 1254 costs of each partner that deducted intangible drilling and development costs are $5,800 ($4,800 intangible drilling and development costs deducted + $1,000 depletion deductions claimed). Because each partner's

section 1254 costs ($5,800) exceed each partner's share of amount realized less each partner's adjusted basis ($5,000), each partner must treat his $5,000 gain recognized on the sale of the oil property as ordinary income under section 1254(a). Because H elected under section 59(e) to capitalize the $4,800 of intangible drilling and development costs and amortized only $960 of the costs in 1995, the $3,840 of unamortized intangible drilling and development costs are included in H's basis in the oil property. Therefore, at the end of 1995 H's basis in the oil property is $4,840 (($2,000 cost + $4,800 capitalized intangible drilling and development costs) − ($960 intangible drilling and development costs amortized + $1,000 depletion deduction claimed)). H's gain on the sale of the oil property is $1,160 ($6,000 amount realized − $4,840 adjusted basis). H's section 1254 costs are $1,960 ($960 intangible drilling and development costs amortized + $1,000 depletion deductions claimed). Because H's section 1254 costs ($1,960) exceed H's share of amount realized less H's adjusted basis ($1,160), H must treat the $1,160 of gain recognized as ordinary income under section 1254(a).

(c) *Section 1254 costs of a partner* —

(1) ***General rule.*** A partner's section 1254 costs with respect to property held by a partnership include all of the partner's section 1254 costs with respect to the property in the hands of the partnership. In the case of property contributed to a partnership in a transaction described in section 721, a partner's section 1254 costs include all of the partner's section 1254 costs with respect to the property prior to contribution. Section 1.1254-1(b)(1)(iv), which provides rules concerning the treatment of suspended deductions, applies to amounts not deductible pursuant to section 704(d).

(2) *Section 1254 costs of a transferee partner after certain acquisitions* —

(i) ***Basis determined under section 1012.*** If a person acquires an interest in a partnership that holds natural resource recapture property (transferee partner) and the transferee partner's basis for the interest is determined by reference to its cost (within the meaning of section 1012), the amount of the transferee partner's section 1254 costs with respect to the property held by the partnership is zero on the acquisition date.

(ii) ***Basis determined by reason of the application of section 1014(a).*** If a transferee partner acquires an interest in a partnership that holds natural resource recapture property from a decedent and the transferee partner's basis is determined, by reason of the application of section 1014(a), solely by reference to the fair market value of the partnership interest on the date of the decedent's death or on the applicable date provided in section 2032 (relating to alternate valuation date), the amount of the transferee partner's section 1254 costs with respect to property held by the partnership is zero on the acquisition date.

(iii) ***Basis determined by reason of the application of section 1014(b)(9).*** If an interest in a partnership that holds natural resource recapture property is acquired before the death of the decedent, the amount of the transferee partner's section 1254 costs with respect to property held by the partnership shall include the amount, if any, of the section 1254 costs deducted by the transferee partner before the decedent's death, to the extent that the basis of the partner's interest (determined under section 1014(a)) is required to be reduced under section 1014(b)(9) (relating to adjustments to basis when the property is acquired before the death of the decedent).

(iv) ***Gifts and section 1041 transfers.*** If an interest in a partnership is transferred in a transfer that is a gift, in a transfer that is a part sale or exchange and part gift, in a transfer that is described in section 1041(a), or in a transfer at death where the basis of property in the hands of the

transferee is determined under section 1022, the amount of the transferee partner's section 1254 costs with respect to property held by the partnership immediately after the transfer is an amount equal to—

(A) The amount of the transferor partner's section 1254 costs with respect to the property immediately before the transfer; minus

(B) The amount of any gain recognized as ordinary income under section 1254 by the transferor partner upon the transfer.

(d) ***Property distributed to a partner*** —

(1) ***In general.*** The section 1254 costs for any natural resource recapture property received by a partner in a distribution with respect to part or all of an interest in a partnership include—

(i) The aggregate of the partners' section 1254 costs with respect to the natural resource recapture property immediately prior to the distribution; reduced by

(ii) The amount of any gain taken into account as ordinary income under section 751 by the partnership or the partners (as constituted after the distribution) on the distribution of the natural resource recapture property.

(2) ***Aggregate of partners' section 1254 costs with respect to natural resource recapture property held by a partnership*** —

(i) ***In general.*** The aggregate of partners' section 1254 costs is equal to the sum of each partner's section 1254 costs. The partnership must determine each partner's section 1254 costs under either paragraph (d)(2)(i)(A) (written data) or paragraph (d)(2)(i)(B) (assumptions) of this section. The partnership may determine the section 1254 costs of some of the partners under paragraph (d)(2)(i)(A) of this section and of others under paragraph (d)(2)(i)(B) of this section.

(A) ***Written data.*** A partnership may determine a partner's section 1254 costs by using written data provided by a partner showing the partner's section 1254 costs with respect to natural resource recapture property held by the partnership unless the partnership knows or has reason to know that the written data is inaccurate. If a partnership does not receive written data upon which it may rely, the partnership must use the assumptions provided in paragraph (d)(2)(i)(B) of this section in determining a partner's section 1254 costs.

(B) ***Assumptions.*** A partnership that does not use written data pursuant to paragraph (d)(2)(i)(A) of this section to determine a partner's section 1254 costs must use the following assumptions to determine the partner's section 1254 costs:

(*1*) The partner deducted his or her share of deductions under section 263(c), 616, or 617 for the first year in which the partner could claim a deduction for such amounts, unless in the case of expenditures under section 263(c) or 616, the partnership elected to capitalize such amounts;

(*2*) The partner was not subject to the following limitations with respect to the partner's depletion allowance under section 611, except to the extent a limitation applied at the partnership level: the taxable income limitation of section 613(a); the depletable quantity limitations of section 613A(c); or the limitations of section 613A(d)(2), (3), and (4) (exclusion of retailers and refiners).

[T.D. 8586, 60 FR 2507, Jan. 10, 1995, as amended by T.D. 9811, 82 FR 6242, Jan. 19, 2017]

§ 1.1254-6 Effective/applicability date.

(a) Sections 1.1254-1 through 1.1254-3 and 1.1254-5 are effective with respect to any disposition of natural resource recapture property occurring after March 13, 1995. The rule in § 1.1254-1(b)(2)(iv)(A)(2), relating to a nonoperating mineral interest carved out of an operating mineral interest with respect to which an expenditure has been deducted, is effective with respect to any disposition occurring after March 13, 1995, of property (within the meaning of section 614) that is placed in service by the taxpayer after December 31, 1986. Section 1.1254-4 applies to dispositions of natural resource recapture property by an S corporation (and a corporation that was formerly an S corporation) and dispositions of S corporation stock occurring on or after October 10, 1996. Sections 1.1254-2(d)(1)(ii) and 1.1254-3(b)(1)(i), (b)(1)(ii), (d)(1)(i), and (d)(1)(ii) are effective for dispositions of property occurring on or after October 10, 1996.

(b) The provisions of §§ 1.1254-2(a)(1), 1.1254-3(b)(2), 1.1254-4(e)(4), and 1.1254-5(c)(2)(iv) that relate to section 1022 are effective on and after January 19, 2017.

[T.D. 9811, 82 FR 6242, Jan. 19, 2017]

§ 1.1256(e)-1 Identification of hedging transactions.

(a) ***Identification and recordkeeping requirements.*** Under section 1256(e)(2), a taxpayer that enters into a hedging transaction must identify the transaction as a hedging transaction before the close of the day on which the taxpayer enters into the transaction.

(b) ***Requirements for identification.*** The identification of a hedging transaction for purposes of section 1256(e)(2) must satisfy the requirements of § 1.1221-2(f)(1). Solely for purposes of section 1256(f)(1), however, an identification that does not satisfy all of the requirements of § 1.1221-2(f)(1) is nevertheless treated as an identification under section 1256(e)(2).

(c) ***Consistency with § 1.1221-2.*** Any identification for purposes of § 1.1221-2(f)(1) is also an identification for purposes of this section. If a taxpayer satisfies the requirements of § 1.1221-2(g)(1)(ii), the transaction is treated as if it were not identified as a hedging transaction for purposes of section 1256(e)(2).

(d) ***Effective date.*** The rules of this section apply to transactions entered into on or after March 20, 2002.

[T.D. 8985, 67 FR 12870, Mar. 20, 2002; 67 FR 31955, May 13, 2002]

§ 1.1256(e)-2 Special rules for syndicates.

(a) ***Allocation of losses.*** For purposes of section 1256(e)(3), *syndicate* means any partnership or other entity (other than a corporation that is not an S corporation) if more than 35 percent of the losses of such entity during the taxable year are allocated to limited partners or limited entrepreneurs (within the meaning of section 461(k)(4)).

(b) ***Determination of loss amount.*** For purposes of section 1256(e)(3), the amount of losses to be allocated under paragraph (a) of this section is calculated without regard to section 163(j).

(c) ***Example.*** The following example illustrates the rules in this section:

(1) ***Facts.*** Entity is an S corporation that is equally owned by individuals A and B. A provides all of the goods and services provided by Entity. B provided all of the capital for Entity but does not participate in Entity's business. For the current taxable year, Entity has gross receipts of $5,000,000, non-interest expenses of $4,500,000, and interest expense of $600,000.

(2) ***Analysis.*** Under paragraph (b) of this section, Entity has a net loss of $100,000 ($5,000,000 minus $5,100,000) for the current taxable year. One half (50 percent) of this loss is allocated to B, a limited owner. Therefore, for the current taxable year, Entity is a syndicate within the meaning of section 1256(e)(3)(B).

(d) ***Applicability date.*** This section applies to taxable years beginning on or after March 22, 2021. However, taxpayers and their related parties, within the meaning of sections 267(b) (determined without regard to section 267(c)(3)) and 707(b)(1), may choose to apply the rules in this section for a taxable year beginning after December 31, 2017, and before March 22, 2021, provided that those taxpayers and their related parties consistently apply all of the rules of this section to that taxable year and each subsequent taxable year.

[T.D. 9943, 86 FR 5540, Jan. 19, 2021]

§ 1.1258-1 Netting rule for certain conversion transactions.

(a) ***Purpose.*** The purpose of this section is to provide taxpayers with a method to net certain gains and losses from positions of the same conversion transaction before determining the amount of gain treated as ordinary income under section 1258(a).

(b) ***Netting of gain and loss for identified transactions*** —

(1) ***In general.*** If a taxpayer disposes of or terminates all the positions of an identified netting transaction (as defined in paragraph (b)(2) of this section) within a 14-day period in a single taxable year, all gains and losses on those positions taken into account for Federal tax purposes within that period (other than built-in losses as defined in paragraph (c) of this section) are netted solely for purposes of determining the amount of gain treated as ordinary income under section 1258(a). For purposes of the preceding sentence, a taxpayer is treated as disposing of any position that is treated as sold under any provision of the Code or regulations thereunder (for example, under section 1256(a)(1)).

(2) ***Identified netting transaction.*** For purposes of this section, an identified netting transaction is a conversion transaction (as defined in section 1258(c)) that the taxpayer identifies as an identified netting transaction on its books and records. Identification of each position of the conversion transaction must be made before the close of the day on which the position becomes part of the conversion transaction. No particular form of identification is necessary, but all the positions of a single conversion transaction must be identified as part of the same transaction and must be distinguished from all other positions.

(c) ***Definition of built-in loss.*** For purposes of this section, built-in loss means—

(1) Built-in loss as defined in section 1258(d)(3)(B); and

(2) If a taxpayer realizes gain or loss on any one position of a conversion transaction (for example, under section 1256), as of the date that gain or loss is realized, any unrecognized loss in any other position of the conversion transaction that is not disposed of, terminated, or treated as sold under any provision of the Code or regulations thereunder within 14 days of and within the same taxable year as the realization event.

(d) ***Examples.*** These examples illustrate this section:

Example 1. Identified netting transaction with simultaneous actual dispositions. (i) On December 1, 1995, A purchases 1,000 shares of XYZ stock for $100,000 and enters into a forward contract to sell 1,000 shares of XYZ stock on November 30, 1997, for $110,000. The XYZ stock is actively traded as defined in § 1.1092(d)-1(a) and is a capital asset in A's hands. A maintains books and records on which, on December 1, 1995, it identifies the two positions as all the positions of a single conversion transaction. A owns no other XYZ stock. On December 1, 1996, when the applicable imputed income amount for the transaction is $7,000, A sells the 1,000 shares of XYZ stock for $95,000. On the same day, A terminates its forward contract with its counterparty, receiving $10,200. No dividends were received on the stock during the time it was part of the conversion transaction.
(ii) The XYZ stock and forward contract are positions of a conversion transaction. Under section 1258(c)(1), substantially all of A's expected return from the overall transaction is attributable to the time value of the net investment in the transaction. Under section 1258(c)(2)(B), the transaction is an applicable straddle as defined in section 1258(d)(1).

(iii) A disposed of or terminated all the positions of the conversion transaction within 14 days and within the same taxable year as required by paragraph (b)(1) of this section. The transaction is an identified netting transaction because it meets the identification requirement of paragraph (b)(2) of this section. Solely for purposes of section 1258(a), the $5,000 loss realized ($100,000 basis less $95,000 amount realized) on the disposition of the XYZ stock is netted against the $10,200 gain recognized on the disposition of the forward contract. Thus, the net gain from the conversion transaction for purposes of section 1258(a) is $5,200 ($10,200 gain less $5,000 loss). Only the $5,200 net gain is recharacterized as ordinary income under section 1258(a) even though the applicable imputed income amount is $7,000. For Federal tax purposes other than section 1258(a), A has recognized a $10,200 gain on the disposition of the forward contract ($5,200 of which is treated as ordinary income) and realized a separate $5,000 loss on the sale of the XYZ stock.

Example 2. Identified netting transaction with built-in loss. (i) The facts are the same as in *Example 1,* except that A had purchased the XYZ stock for $104,000 on May 15, 1995. The XYZ stock had a fair market value of $100,000 on December 1, 1995, the date it became part of a conversion transaction.
(ii) The results are the same as in *Example 1,* except that A has built-in loss (in addition to the $5,000 loss that arose economically during the period of the conversion transaction), as defined in section 1258(d)(3)(B), of $4,000 on the XYZ stock. That $4,000 built-in loss is not netted against the $10,200 gain on the forward contract for purposes of section 1258(a). Thus, the net gain from the conversion transaction for purposes of section 1258(a) is $5,200, the same as in *Example 1.* The $4,000 built-in loss is recognized and has a character determined without regard to section 1258.

(e) ***Effective date and transition rule*** —

(1) ***In general.*** These regulations are effective for conversion transactions that are outstanding on or after December 21, 1995.

(2) ***Transition rule for identification requirements.*** In the case of a conversion transaction entered into before February 20, 1996, paragraph (b)(2) of this section is treated as satisfied if the identification is made before the close of business on February 20, 1996.

[T.D. 8649, 60 FR 66084, Dec. 21, 1995]

§ 1.1271-0 Original issue discount; effective date; table of contents.

(a) ***Effective date.*** Except as otherwise provided, §§ 1.1271-1 through 1.1275-5 apply to debt instruments issued on or after April 4, 1994. Taxpayers, however, may rely on these sections (as contained in 26 CFR part 1 revised April 1, 1996) for debt instruments issued after December 21, 1992, and before April 4, 1994.

(b) ***Table of contents.*** This section lists captioned paragraphs contained in §§ 1.1271-1 through 1.1275-7.

§ 1.1271-1 Special rules applicable to amounts received on retirement, sale, or exchange of debt instruments.

(a) Intention to call before maturity.

(1) In general.

(2) Exceptions.

(b) Short-term obligations.

(1) In general.

(2) Method of making elections.

(3) Counting conventions.

§ 1.1272-1 Current inclusion of OID in income.

(a) Overview.

(1) In general.

(2) Debt instruments not subject to OID inclusion rules.

(b) Accrual of OID.

(1) Constant yield method.

(2) Exceptions.

(3) Modifications.

(4) Special rules for determining the OID allocable to an accrual period.

(c) Yield and maturity of certain debt instruments subject to contingencies.

(1) Applicability.

(2) Payment schedule that is significantly more likely than not to occur.

(3) Mandatory sinking fund provision.

(4) Consistency rule. [Reserved]

(5) Treatment of certain options.

(6) Subsequent adjustments.

(7) Effective date.

(d) Certain debt instruments that provide for a fixed yield.

(e) Convertible debt instruments.

(f) Special rules to determine whether a debt instrument is a short-term obligation.

(1) Counting of either the issue date or maturity date.

(2) Coordination with paragraph (c) of this section for certain sections of the Internal Revenue Code.

(g) Basis adjustment.

(h) Debt instruments denominated in a currency other than the U.S. dollar.

(i) [Reserved]

(j) Examples.

§ 1.1272-2 Treatment of debt instruments purchased at a premium.

(a) In general.

(b) Definitions and special rules.

(1) Purchase.

(2) Premium.

(3) Acquisition premium.

(4) Acquisition premium fraction.

(5) Election to accrue discount on a constant yield basis.

(6) Special rules for determining basis.

(c) Examples.

§ 1.1272-3 Election by a holder to treat all interest on a debt instrument as OID.

(a) Election.

(b) Scope of election.

(1) In general.

(2) Exceptions, limitations, and special rules.

(c) Mechanics of the constant yield method.

(1) In general.

(2) Special rules to determine adjusted basis.

(d) Time and manner of making the election.

(e) Revocation of election.

(f) Effective date.

§ 1.1273-1 Definition of OID.

(a) In general.

(b) Stated redemption price at maturity.

(c) Qualified stated interest.

(1) Definition.

(2) Debt instruments subject to contingencies.

(3) Variable rate debt instrument.

(4) Stated interest in excess of qualified stated interest.

(5) Short-term obligations.

(6) Business day convention.

(d) De minimis OID.

(1) In general.

(2) De minimis amount.

(3) Installment obligations.

(4) Special rule for interest holidays, teaser rates, and other interest shortfalls.

(5) Treatment of de minimis OID by holders.

(e) Definitions.

(1) Installment obligation.

(2) Self-amortizing installment obligation.

(3) Weighted average maturity.

(f) Examples.

§ 1.1273-2 Determination of issue price and issue date.

(a) Debt instruments issued for money.

(1) Issue price.

(2) Issue date.

(b) Publicly traded debt instruments issued for property.

(1) Issue price.

(2) Issue date.

(c) Debt instruments issued for publicly traded property.

(1) Issue price.

(2) Issue date.

(d) Other debt instruments.

(1) Issue price.

(2) Issue date.

(e) Special rule for certain sales to bond houses, brokers, or similar persons.

(f) Traded on an established market (publicly traded).

(1) In general.

(2) Sales price.

(3) Firm quote.

(4) Indicative quote.

(5) Presumption that price or quote is equal to fair market value.

(6) Exception for small debt issues.

(7) Anti-abuse rules.

(8) Convertible debt instruments.

(9) Issuer-holder consistency requirement.

(10) Effective/applicability dates.

(g) Treatment of certain cash payments incident to lending transactions.

(1) Applicability.

(2) Payments from borrower to lender.

(3) Payments from lender to borrower.

(4) Payments between lender and third party.

(5) Examples.

(h) Investment units.

(1) In general.

(2) Consistent allocation by holders and issuer.

(i) [Reserved]

(j) Convertible debt instruments.

(k) Below-market loans subject to section 7872(b).

(l) [Reserved]

(m) Treatment of amounts representing pre-issuance accrued interest.

(1) Applicability.

(2) Exclusion of pre-issuance accrued interest from issue price.

(3) Example.

§ 1.1274-1 Debt instruments to which section 1274 applies.

(a) In general.

(b) Exceptions.

(1) Debt instrument with adequate stated interest and no OID .

(2) Exceptions under sections 1274(c)(1)(B), 1274(c)(3), 1274A(c), and 1275(b)(1).

(3) Other exceptions to section 1274.

(c) Examples.

§ 1.1274-2 Issue price of debt instruments to which section 1274 applies.

(a) In general.

(b) Issue price.

(1) Debt instruments that provide for adequate stated interest; stated principal amount.

(2) Debt instruments that do not provide for adequate stated interest; imputed principal amount.

(3) Debt instruments issued in a potentially abusive situation; fair market value.

(c) Determination of whether a debt instrument provides for adequate stated interest.

(1) In general.

(2) Determination of present value.

(d) Treatment of certain options.

(e) Mandatory sinking funds.

(f) Treatment of variable rate debt instruments.

(1) Stated interest at a qualified floating rate.

(2) Stated interest at a single objective rate.

(g) Treatment of contingent payment debt instruments.

(h) Examples.

(i) [Reserved]

(j) Special rules for tax-exempt obligations.

(1) Certain variable rate debt instruments.

(2) Contingent payment debt instruments.

(3) Effective date.

§ 1.1274-3 Potentially abusive situations defined.

(a) In general.

(b) Operating rules.

(1) Debt instrument exchanged for nonrecourse financing.

(2) Nonrecourse debt with substantial down payment.

(3) Clearly excessive interest.

(4) Debt-for-debt exchange.

(c) Other situations to be specified by Commissioner.

(d) Consistency rule.

§ 1.1274-4 Test rate.

(a) Determination of test rate of interest.

(1) In general.

(2) Test rate for certain debt instruments.

(b) Applicable Federal rate.

(c) Special rules to determine the term of a debt instrument for purposes of determining the applicable Federal rate.

(1) Installment obligations.

(2) Certain variable rate debt instruments.

(3) Counting of either the issue date or the maturity date.

(4) Certain debt instruments that provide for principal payments uncertain as to time.

(d) Foreign currency loans.

(e) Examples.

§ 1.1274-5 Assumptions.

(a) In general.

(b) Modifications of debt instruments.

(1) In general.

(2) Election to treat buyer as modifying the debt instrument.

(c) Wraparound indebtedness.

(d) Consideration attributable to assumed debt.

§ 1.1274A-1 Special rules for certain transactions where stated principal amount does not exceed $2,800,000.

(a) In general.

(b) Rules for both qualified and cash method debt instruments.

(1) Sale-leaseback transactions.

(2) Debt instruments calling for contingent payments.

(3) Aggregation of transactions.

(4) Inflation adjustment of dollar amounts.

(c) Rules for cash method debt instruments.

(1) Time and manner of making cash method election.

(2) Successors of electing parties.

(3) Modified debt instrument.

(4) Debt incurred or continued to purchase or carry a cash method debt instrument.

§ 1.1275-1 Definitions.

(a) Applicability.

(b) Adjusted issue price.

(1) In general.

(2) Adjusted issue price for subsequent holders.

(c) OID.

(d) Debt instrument.

(e) Tax-exempt obligations.

(f) Issue.

(1) *Debt instruments issued on or after March 13, 2001.*

(2) *Debt instruments issued before March 13, 2001.*

(3) *Transition rule.*

(4) *Cross-references for reopening and aggregation rules.*

(g) Debt instruments issued by a natural person.

(h) Publicly offered debt instrument.

(i) [Reserved]

(j) Life annuity exception under section 1275(a)(1)(B)(i).

(k) Exception under section 1275(a)(1)(B)(ii) for annuities issued by an insurance company subject to tax under subchapter L of the Internal Revenue Code.

(1) Rule.

(2) Examples.

(3) Effective date.

(1) Purpose.

(2) General rule.

(3) Availability of a cash surrender option.

(4) Availability of a loan secured by the contract.

(5) Minimum payout provision.

(6) Maximum payout provision.

(7) Decreasing payout provision.

(8) Effective dates.

§ 1.1275-2 Special rules relating to debt instruments.

(a) Payment ordering rule.

(1) In general.

(2) Exceptions.

(b) Debt instruments distributed by corporations with respect to stock.

(1) Treatment of distribution.

(2) Issue date.

(c) Aggregation of debt instruments.

(1) General rule.

(2) Exception if separate issue price established.

(3) Special rule for debt instruments that provide for the issuance of additional debt instruments.

(4) Examples.

(d) *Special rules for Treasury securities.*

(1) *Issue price and issue date.*

(2) *Reopenings of Treasury securities.*

(e) Disclosure of certain information to holders.

(f) Treatment of pro rata prepayments.

(1) Treatment as retirement of separate debt instrument.

(2) Definition of pro rata prepayment.

(g) Anti-abuse rule.

(1) In general.

(2) Unreasonable result.

(3) Examples.

(4) Effective date.

(h) Remote and incidental contingencies.

(1) In general.

(2) Remote contingencies.

(3) Incidental contingencies.

(4) Aggregation rule.

(5) Consistency rule.

(6) Subsequent adjustments.

(7) Effective date.

(i) [Reserved]

(j) Treatment of certain modifications.

(k) *Reopenings.*

(1) *In general.*

(2) *Definitions.*

(3) *Qualified reopening.*

(4) *Issuer's treatment of a qualified reopening.*

(5) *Effective/applicability dates.*

(l) *OID rule for income item subject to section 451(b).*

(1) In general.

(2) Applicability dates.

(m) *Transition from certain interbank offered rates.*

(1) In general.

(2) Single qualified floating rate.

(3) Remote contingency.

(4) Change in circumstances.

(5) Applicability date.

§ 1.1275-3 OID information reporting requirements.

(a) In general.

(b) Information required to be set forth on face of debt instruments that are not publicly offered.

(1) In general.

(2) Time for legending.

(3) Legend must survive reissuance upon transfer.

(4) Exceptions.

(c) Information required to be reported to Secretary upon issuance of publicly offered debt instruments.

(1) In general.

(2) Time for filing information return.

(3) Exceptions.

(4) Subsequent registration.

(d) Application to foreign issuers and U.S. issuers of foreigntargeted debt instruments.

(e) Penalties.

(f) Effective date.

§ 1.1275-4 Contingent payment debt instruments.

(a) Applicability.

(1) In general.

(2) Exceptions.

(3) Insolvency and default.

(4) Convertible debt instruments.

(5) Remote and incidental contingencies.

(b) Noncontingent bond method.

(1) Applicability.

(2) In general.

(3) Description of method.

(4) Comparable yield and projected payment schedule.

(5) Qualified stated interest.

(6) Adjustments.

(7) Adjusted issue price, adjusted basis, and retirement.

(8) Character on sale, exchange, or retirement.

(9) Operating rules.

(c) Method for debt instruments not subject to the noncontingent bond method.

(1) Applicability.

(2) Separation into components.

(3) Treatment of noncontingent payments.

(4) Treatment of contingent payments.

(5) Basis different from adjusted issue price.

(6) Treatment of a holder on sale, exchange, or retirement.

(7) Examples.

(d) Rules for tax-exempt obligations.

(1) In general.

(2) Certain tax-exempt obligations with interest-based or revenue-based payments

(3) All other tax-exempt obligations.

(4) Basis different from adjusted issue price.

(e) Amounts treated as interest under this section.

(f) Effective date.

§ 1.1275-5 Variable rate debt instruments.

(a) Applicability.

(1) In general.

(2) Principal payments.

(3) Stated interest.

(4) Current value.

(5) No contingent principal payments.

(6) Special rule for debt instruments issued for nonpublicly traded property.

(b) Qualified floating rate.

(1) In general.

(2) Certain rates based on a qualified floating rate.

(3) Restrictions on the stated rate of interest.

(c) Objective rate.

(1) Definition.

(2) Other objective rates to be specified by Commissioner.

(3) Qualified inverse floating rate.

(4) Significant front-loading or back-loading of interest.

(5) Tax-exempt obligations.

(d) Examples.

(e) Qualified stated interest and OID with respect to a variable rate debt instrument.

(1) In general.

(2) Variable rate debt instrument that provides for annual payments of interest at a single variable rate.

(3) All other variable rate debt instruments except for those that provide for a fixed rate.

(4) Variable rate debt instrument that provides for a single fixed rate.

(f) Special rule for certain reset bonds.

§ 1.1275-6 Integration of qualifying debt instruments.

(a) In general.

(b) Definitions.

(1) Qualifying debt instrument.

(2) Section 1.1275-6 hedge.

(3) Financial instrument.

(4) Synthetic debt instrument.

(c) Integrated transaction.

(1) Integration by taxpayer.

(2) Integration by Commissioner.

(d) Special rules for legging into and legging out of an integrated transaction.

(1) Legging into.

(2) Legging out.

(e) Identification requirements.

(f) Taxation of integrated transactions.

(1) General rule.

(2) Issue date.

(3) Term.

(4) Issue price.

(5) Adjusted issue price.

(6) Qualified stated interest.

(7) Stated redemption price at maturity.

(8) Source of interest income and allocation of expense.

(9) Effectively connected income.

(10) Not a short-term obligation.

(11) Special rules in the event of integration by the Commissioner.

(12) Retention of separate transaction rules for certain purposes.

(13) Coordination with consolidated return rules.

(g) Predecessors and successors.

(h) Examples.

(i) [Reserved]

(j) Effective date.

§ 1.1275-7 Inflation-indexed debt instruments.

(a) Overview.

(b) Applicability.

(1) In general.

(2) Exceptions.

(c) Definitions.

(1) Inflation-indexed debt instrument.

(2) Reference index.

(3) Qualified inflation index.

(4) Inflation-adjusted principal amount.

(5) Minimum guarantee payment.

(d) Coupon bond method.

(1) In general.

(2) Applicability.

(3) Qualified stated interest.

(4) Inflation adjustments.

(5) Example.

(e) Discount bond method.

(1) In general.

(2) No qualified stated interest.

(3) OID.

(4) Example.

(f) Special rules.

(1) Deflation adjustments.

(2) Adjusted basis.

(3) Subsequent holders.

(4) Minimum guarantee.

(5) Temporary unavailability of a qualified inflation index.

(g) TIPS.

(1) Reopenings.

(2) TIPS issued with more than a de minimis amount of premium.

(h) Effective/applicability dates.

(1) In general.

(2) TIPS issued with more than a de minimis amount of premium.

[T.D. 8517, 59 FR 4808, Feb. 2, 1994]

Editorial Note: For FEDERAL REGISTER citations affecting § 1.1271-0, see the List of CFR Sections Affected, which appears in the Finding Aids section of the printed volume and at *www.govinfo.gov*.

§ 1.1271-1 Special rules applicable to amounts received on retirement, sale, or exchange of debt instruments.

(a) ***Intention to call before maturity*** —

(1) ***In general.*** For purposes of section 1271(a)(2), all or a portion of gain realized on a sale or exchange of a debt instrument to which section 1271 applies is treated as interest income if there was an intention to call the debt instrument before maturity. An intention to call a debt instrument before maturity means a written or oral agreement or understanding not provided for in the debt instrument between the issuer and the original holder of the debt instrument that the issuer will redeem the debt instrument before maturity. In the case of debt instruments that are part of an issue, the agreement or understanding must be between the issuer and the original holders of a substantial amount of the debt instruments in the issue. An intention to call before maturity can exist even if the intention is conditional (e.g., the issuer's decision to call depends on the financial condition of the issuer on the potential call date) or is not legally binding. For purposes of this section, original holder means the first holder (other than an underwriter or dealer that purchased the debt instrument for resale in the ordinary course of its trade or business).

(2) ***Exceptions.*** In addition to the exceptions provided in sections 1271(a)(2)(B) and 1271(b), section 1271(a)(2) does not apply to—

(i) A debt instrument that is publicly offered (as defined in § 1.1275-1(h));

(ii) A debt instrument to which section 1272(a)(6) applies (relating to certain interests in or mortgages held by a REMIC, and certain other debt instruments with payments subject to acceleration); or

(iii) A debt instrument sold pursuant to a private placement memorandum that is distributed to more than ten offerees and that is subject to the sanctions of section 12(2) of the Securities Act of 1933 (15 U.S.C. 77l) or the prohibitions of section 10(b) of the Securities Exchange Act of 1934 (15 U.S.C. 78j).

(b) *Short-term obligations* —

(1) ***In general.*** Under sections 1271 (a)(3) and (a)(4), all or a portion of the gain realized on the sale or exchange of a short-term government or nongovernment obligation is treated as interest income. Sections 1271 (a)(3) and (a)(4), however, do not apply to any short-term obligation subject to section 1281. See § 1.1272-1(f) for rules to determine if an obligation is a short-term obligation.

(2) ***Method of making elections.*** Elections to accrue on a constant yield basis under sections 1271 (a)(3)(E) and (a)(4)(D) are made on an obligation-by-obligation basis by reporting the transaction on the basis of daily compounding on the taxpayer's timely filed Federal income tax return for the year of the sale or exchange. These elections are irrevocable.

(3) ***Counting conventions.*** In computing the ratable share of acquisition discount under section 1271(a)(3) or OID under section 1271(a)(4), any reasonable counting convention may be used (e.g., 30 days per month/360 days per year).

[T.D. 8517, 59 FR 4809, Feb. 2, 1994]

§ 1.1272-1 Current inclusion of OID in income.

(a) *Overview* —

(1) ***In general.*** Under section 1272(a)(1), a holder of a debt instrument includes accrued OID in gross income (as interest), regardless of the holder's regular method of accounting. A holder includes qualified stated interest (as defined in § 1.1273-1(c)) in income under the holder's regular method of accounting. See §§ 1.446-2 and 1.451-1.

(2) ***Debt instruments not subject to OID inclusion rules.*** Sections 1272(a)(2) and 1272(c) list exceptions to the general inclusion rule of section 1272(a)(1). For purposes of section 1272(a)(2)(E) (relating to certain loans between natural persons), a loan does not include a stripped bond or stripped coupon within the meaning of section 1286(e), and the rule in section 1272(a)(2)(E)(iii), which treats a husband and wife as 1 person, does not apply to loans made between a husband and wife.

(b) *Accrual of OID* —

(1) ***Constant yield method.*** Except as provided in paragraphs (b)(2) and (b)(3) of this section, the amount of OID includible in the income of a holder of a debt instrument for any taxable year is determined using the constant yield method as described under this paragraph (b)(1).

(i) ***Step one: Determine the debt instrument's yield to maturity.*** The yield to maturity or yield of a debt instrument is the discount rate that, when used in computing the present value of all principal and interest payments to be made under the debt instrument, produces an amount equal to the issue price of the debt instrument. The yield must be constant over the term of the

debt instrument and, when expressed as a percentage, must be calculated to at least two decimal places. See paragraph (c) of this section for rules relating to the yield of certain debt instruments subject to contingencies.

(ii) ***Step two: Determine the accrual periods.*** An accrual period is an interval of time over which the accrual of OID is measured. Accrual periods may be of any length and may vary in length over the term of the debt instrument, provided that each accrual period is no longer than 1 year and each scheduled payment of principal or interest occurs either on the final day of an accrual period or on the first day of an accrual period. In general, the computation of OID is simplest if accrual periods correspond to the intervals between payment dates provided by the terms of the debt instrument. In computing the length of accrual periods, any reasonable counting convention may be used (e.g., 30 days per month/360 days per year).

(iii) ***Step three: Determine the OID allocable to each accrual period.*** Except as provided in paragraph (b)(4) of this section, the OID allocable to an accrual period equals the product of the adjusted issue price of the debt instrument (as defined in § 1.1275-1(b)) at the beginning of the accrual period and the yield of the debt instrument, less the amount of any qualified stated interest allocable to the accrual period. In performing this calculation, the yield must be stated appropriately taking into account the length of the particular accrual period. *Example 1* in paragraph (j) of this section provides a formula for converting a yield based upon an accrual period of one length to an equivalent yield based upon an accrual period of a different length.

(iv) ***Step four: Determine the daily portions of OID.*** The daily portions of OID are determined by allocating to each day in an accrual period the ratable portion of the OID allocable to the accrual period. The holder of the debt instrument includes in income the daily portions of OID for each day during the taxable year on which the holder held the debt instrument.

(2) ***Exceptions.*** Paragraph (b)(1) of this section does not apply to—

(i) A debt instrument to which section 1272(a)(6) applies (certain interests in or mortgages held by a REMIC, and certain other debt instruments with payments subject to acceleration);

(ii) A debt instrument that provides for contingent payments, other than a debt instrument described in paragraph (c) or (d) of this section or except as provided in § 1.1275-4; or

(iii) A variable rate debt instrument to which § 1.1275-5 applies, except as provided in § 1.1275-5.

(3) ***Modifications.*** The amount of OID includible in income by a holder under paragraph (b)(1) of this section is adjusted if—

(i) The holder purchased the debt instrument at a premium or an acquisition premium (within the meaning of § 1.1272-2); or

(ii) The holder made an election for the debt instrument under § 1.1272-3 to treat all interest as OID.

(4) ***Special rules for determining the OID allocable to an accrual period.*** The following rules apply to determine the OID allocable to an accrual period under paragraph (b)(1)(iii) of this section.

(i) ***Unpaid qualified stated interest allocable to an accrual period.*** In determining the OID allocable to an accrual period, if an interval between payments of qualified stated interest contains more than 1 accrual period—

(A) The amount of qualified stated interest payable at the end of the interval (including any qualified stated interest that is payable on the first day of the accrual period immediately following the interval) is allocated on a pro rata basis to each accrual period in the interval; and

(B) The adjusted issue price at the beginning of each accrual period in the interval must be increased by the amount of any qualified stated interest that has accrued prior to the first day of the accrual period but that is not payable until the end of the interval. See *Example 2* of paragraph (j) of this section for an example illustrating the rules in this paragraph (b)(4)(i).

(ii) ***Final accrual period.*** The OID allocable to the final accrual period is the difference between the amount payable at maturity (other than a payment of qualified stated interest) and the adjusted issue price at the beginning of the final accrual period.

(iii) ***Initial short accrual period.*** If all accrual periods are of equal length, except for either an initial shorter accrual period or an initial and a final shorter accrual period, the amount of OID allocable to the initial accrual period may be computed using any reasonable method. See *Example 3* in paragraph (j) of this section.

(iv) ***Payment on first day of an accrual period.*** The adjusted issue price at the beginning of an accrual period is reduced by the amount of any payment (other than a payment of qualified stated interest) that is made on the first day of the accrual period.

(c) ***Yield and maturity of certain debt instruments subject to contingencies*** —

(1) ***Applicability.*** This paragraph (c) provides rules to determine the yield and maturity of certain debt instruments that provide for an alternative payment schedule (or schedules) applicable upon the occurrence of a contingency (or contingencies). This paragraph (c) applies, however, only if the timing and amounts of the payments that comprise each payment schedule are known as of the issue date and the debt instrument is subject to paragraph (c)(2), (3), or (5) of this section. A debt instrument does not provide for an alternative payment schedule merely because there is a possibility of impairment of a payment (or payments) by insolvency, default, or similar circumstances. See § 1.1275-4 for the treatment of a debt instrument that provides for a contingency that is not described in this paragraph (c). See § 1.1273-1(c) to determine whether stated interest on a debt instrument subject to this paragraph (c) is qualified stated interest.

(2) ***Payment schedule that is significantly more likely than not to occur.*** If, based on all the facts and circumstances as of the issue date, a single payment schedule for a debt instrument, including the stated payment schedule, is significantly more likely than not to occur, the yield and maturity of the debt instrument are computed based on this payment schedule.

(3) ***Mandatory sinking fund provision.*** Notwithstanding paragraph (c)(2) of this section, if a debt instrument is subject to a mandatory sinking fund provision, the provision is ignored for purposes of computing the yield and maturity of the debt instrument if the use and terms of the provision meet reasonable commercial standards. For purposes of the preceding sentence, a mandatory sinking fund provision is a provision that meets the following requirements:

(i) The provision requires the issuer to redeem a certain amount of debt instruments in an issue prior to maturity.

(ii) The debt instruments actually redeemed are chosen by lot or purchased by the issuer either in the open market or pursuant to an offer made to all holders (with any proration determined by lot).

(iii) On the issue date, the specific debt instruments that will be redeemed on any date prior to maturity cannot be identified.

(4) ***Consistency rule.*** [Reserved]

(5) ***Treatment of certain options.*** Notwithstanding paragraphs (c) (2) and (3) of this section, the rules of this paragraph (c)(5) determine the yield and maturity of a debt instrument that provides the holder or issuer with an unconditional option or options, exercisable on one or more dates during the term of the debt instrument, that, if exercised, require payments to be made on the debt instrument under an alternative payment schedule or schedules (e.g., an option to extend or an option to call a debt instrument at a fixed premium). Under this paragraph (c)(5), an issuer is deemed to exercise or not exercise an option or combination of options in a manner that minimizes the yield on the debt instrument, and a holder is deemed to exercise or not exercise an option or combination of options in a manner that maximizes the yield on the debt instrument. If both the issuer and the holder have options, the rules of this paragraph (c)(5) are applied to the options in the order that they may be exercised. See paragraph (j) *Example 5* through *Example 8* of this section.

(6) ***Subsequent adjustments.*** If a contingency described in this paragraph (c) (including the exercise of an option described in paragraph (c)(5) of this section) actually occurs or does not occur, contrary to the assumption made pursuant to this paragraph (c) (a change in circumstances), then, solely for purposes of sections 1272 and 1273, the debt instrument is treated as retired and then reissued on the date of the change in circumstances for an amount equal to its adjusted issue price on that date. See paragraph (j) *Example 5* and *Example 7* of this section. If, however, the change in circumstances results in a substantially contemporaneous pro-rata prepayment as defined in § 1.1275-2(f)(2), the pro-rata prepayment is treated as a payment in retirement of a portion of the debt instrument, which may result in gain or loss to the holder. See paragraph (j) *Example 6* and *Example 8* of this section.

(7) ***Effective date.*** This paragraph (c) applies to debt instruments issued on or after August 13, 1996.

(d) ***Certain debt instruments that provide for a fixed yield.*** If a debt instrument provides for one or more contingent payments but all possible payment schedules under the terms of the instrument result in the same fixed yield, the yield of the debt instrument is the fixed yield. For example, the yield of a debt instrument with principal payments that are fixed in total amount but that are uncertain as to time (such as a demand loan) is the stated interest rate if the issue price of the instrument is equal to the stated principal amount and interest is paid or compounded at a fixed rate over the entire term of the instrument. This paragraph (d) applies to debt instruments issued on or after August 13, 1996.

(e) ***Convertible debt instruments.*** For purposes of section 1272, an option is ignored if it is an option to convert a debt instrument into the stock of the issuer, into the stock or debt of a related party (within the meaning of section 267(b) or 707(b)(1)), or into cash or other property in an amount equal to the approximate value of such stock or debt. For debt instruments issued on or after February 5, 2013, the term *stock* in the preceding sentence means an equity interest in any entity that is classified, for Federal tax purposes, as either a partnership or a corporation.

(f) ***Special rules to determine whether a debt instrument is a short-term obligation*** —

(1) ***Counting of either the issue date or maturity date.*** For purposes of determining whether a debt instrument is a short-term obligation (i.e., a debt instrument with a fixed maturity date that is not more than 1 year from the date of issue), the term of the debt instrument includes either the issue date or the maturity date, but not both dates.

(2) ***Coordination with paragraph (c) of this section for certain sections of the Internal Revenue Code.*** Notwithstanding paragraph (c) of this section, solely for purposes of determining whether a debt instrument is a short-term obligation under sections 871(g)(1)(B)(i), 881, 1271(a)(3), 1271(a)(4), 1272(a)(2)(C), and 1283(a)(1), the maturity date of a debt instrument is the last possible date that the instrument could be outstanding under the terms of the instrument. For purposes of the preceding sentence, the last possible date that the debt instrument could be outstanding is determined without regard to § 1.1275-2(h) (relating to payments subject to remote or incidental contingencies).

(g) ***Basis adjustment.*** The basis of a debt instrument in the hands of the holder is increased by the amount of OID included in the holder's gross income and decreased by the amount of any payment from the issuer to the holder under the debt instrument other than a payment of qualified stated interest. See, however, § 1.1275-2(f) for rules regarding basis adjustments on a pro rata prepayment.

(h) ***Debt instruments denominated in a currency other than the U.S. dollar.*** Section 1272 and this section apply to a debt instrument that provides for all payments denominated in, or determined by reference to, the functional currency of the taxpayer or qualified business unit of the taxpayer (even if that currency is other than the U.S. dollar). See § 1.988-2(b) to determine interest income or expense for debt instruments that provide for payments denominated in, or determined by reference to, a nonfunctional currency.

(i) [Reserved]

(j) ***Examples.*** The following examples illustrate the rules of this section. Each example assumes that all taxpayers use the calendar year as the taxable year. In addition, each example assumes a 30-day month, 360-day year, and that the initial accrual period begins on the issue date and the final accrual period ends on the day before the stated maturity date. Although, for purposes of simplicity, the yield as stated is rounded to two decimal places, the computations do not reflect any such rounding convention.

Example 1. Accrual of OID on zero coupon debt instrument; choice of accrual periods. (i) *Facts.* On July 1, 1994, A purchases at original issue, for $675,564.17, a debt instrument that matures on July 1, 1999, and provides for a single payment of $1,000,000 at maturity.
(ii) *Determination of yield.* Under paragraph (b)(1)(i) of this section, the yield of the debt instrument is 8 percent, compounded semiannually.

(iii) *Determination of accrual period.* Under paragraph (b)(1)(ii) of this section, accrual periods may be of any length, provided that each accrual period is no longer than 1 year and each scheduled payment of principal or interest occurs either on the first or final day of an accrual period. The yield to maturity to be used in computing OID accruals in any accrual period, however, must reflect the length of the accrual period chosen. A yield based on compounding b times per year is equivalent to a yield based on compounding c times per year as indicated by the following formula:

$$r = c\{(1 + i/b)^{b/c} - 1\}$$

In which:

i = The yield based on compounding b times per year expressed as a decimal

r = The equivalent yield based on compounding c times per year expressed as a decimal

b = The number of compounding periods in a year on which i is based (for example, 12, if i is based on monthly compounding)

c = The number of compounding periods in a year on which r is based

(iv) *Determination of OID allocable to each accrual period.* Assume that A decides to compute OID on the debt instrument using semiannual accrual periods. Under paragraph (b)(1)(iii) of this section, the OID allocable to the first semiannual accrual period is $27,022.56: the product of the issue price ($675,564.17) and the yield properly adjusted for the length of the accrual period (8 percent/2), less qualified stated interest allocable to the accrual period ($0). The daily portion of OID for the first semiannual accrual period is $150.13 ($27,022.56/180).
(v) *Determination of OID if monthly accrual periods are used.* Alternatively, assume that A decides to compute OID on the debt instrument using monthly accrual periods. Using the above formula, the yield on the debt instrument reflecting monthly compounding is 7.87 percent, compounded monthly ($12\{(1 + .08/2)^{2/12} - 1\}$). Under paragraph (b)(1)(iii) of this section, the OID allocable to the first monthly accrual period is $4,430.48: the product of the issue price ($675,564.17) and the yield properly adjusted for the length of the accrual period (7.87 percent/12), less qualified stated interest allocable to the accrual period ($0). The daily portion of OID for the first monthly accrual period is $147.68 ($4,430.48/30).

Example 2. Accrual of OID on debt instrument with qualified stated interest. (i) *Facts.* On September 1, 1994, A purchases at original issue, for $90,000, B corporation's debt instrument that matures on September 1, 2004, and has a stated principal amount of $100,000, payable on that date. The debt instrument provides for semiannual payments of interest of $3,000, payable on September 1 and March 1 of each year, beginning on March 1, 1995.
(ii) *Determination of yield.* The debt instrument is a 10-year debt instrument with an issue price of $90,000 and a stated redemption price at maturity of $100,000. The semiannual payments of $3,000 are qualified stated interest payments. Under paragraph (b)(1)(i) of this section, the yield is 7.44 percent, compounded semiannually.

(iii) *Accrual of OID if semiannual accrual periods are used.* Assume that A decides to compute OID on the debt instrument using semiannual accrual periods. Under paragraph (b)(1)(iii) of this section, the OID allocable to the first semiannual accrual period equals the product of the issue price ($90,000) and the yield properly adjusted for the length of the accrual period (7.44 percent/2), less qualified stated interest allocable to the accrual period ($3,000). Therefore, the amount of OID for the first semiannual accrual period is $345.78 ($3,345.78-$3,000).

(iv) *Adjustment for accrued but unpaid qualified stated interest if monthly accrual periods are used.* Assume, alternatively, that A decides to compute OID on the debt instrument using monthly accrual periods. The yield, compounded monthly, is 7.32 percent. Under paragraph (b)(1)(iii) of this section, the OID allocable to the first monthly accrual period is the product of the issue price ($90,000) and the yield properly adjusted for the length of the accrual period (7.32 percent/12), less qualified stated interest allocable to the accrual period. Under paragraph (b)(4)(i)(A) of this section, the qualified stated interest allocable to the first monthly accrual period is the pro rata amount of qualified stated interest allocable to the interval between payment dates ($3,000 × $^{1}/_{6}$, or $500). Therefore, the amount of OID for the first monthly accrual period is $49.18 ($549.18-$500). Under paragraph (b)(4)(i)(B) of this section, the adjusted issue price of the debt instrument for purposes of determining the amount of OID for the second monthly accrual period is $90,549.18 ($90,000 + $49.18 + $500). Although the adjusted issue price of the debt instrument for this purpose includes the amount of qualified stated interest allocable to the first monthly accrual period, A includes the qualified stated interest in income based on A's regular method of accounting (e.g., an accrual method or the cash receipts and disbursements method).

Example 3. Accrual of OID for debt instrument with initial short accrual period. (i) *Facts.* On May 1, 1994, G purchases at original issue, for $80,000, H corporation's debt instrument maturing on July 1, 2004. The debt instrument provides for a single payment at maturity of $250,000. G computes its OID using 6-month accrual periods ending on January 1 and July 1 of each year and an initial short 2-month accrual period from May 1, 1994, through June 30, 1994.
(ii) *Determination of yield.* The yield on the debt instrument is 11.53 percent, compounded semiannually.

(iii) *Determination of OID allocable to initial short accrual period.* Under paragraph (b)(4)(iii) of this section, G may use any reasonable method to compute OID for the initial short accrual period. One reasonable method is to calculate the amount of OID pursuant to the following formula:

$OID_{short} = IP \times (i/k) \times f$

In which:

OID_{short} = The amount of OID allocable to the initial short accrual period

IP = The issue price of the debt instrument

i = The yield to maturity expressed as a decimal

k = The number of accrual periods in a year

f = A fraction whose numerator is the number of days in the initial short accrual period, and whose denominator is the number of days in a full accrual period

(iv) *Amount of OID for the initial short accrual period.* Under this method, the amount of OID for the initial short accrual period is $1,537 ($80,000 × (11.53 percent/2) × (60/180)).
(v) *Alternative method.* Another reasonable method is to calculate the amount of OID for the initial short accrual period using the yield based on bi-monthly compounding, computed pursuant to the formula set forth in *Example 1* of paragraph (j) of this section. Under this method, the amount of OID for the initial short accrual period is $1,508.38 ($80,000 × (11.31 percent/6)).

Example 4. Impermissible accrual of OID using a method other than constant yield method. (i) *Facts.* On July 1, 1994, B purchases at original issue, for $100,000, C corporation's debt instrument that matures on July 1, 1999, and has a stated principal amount of $100,000. The debt instrument provides for a single payment at maturity of $148,024.43. The yield of the debt instrument is 8 percent, compounded semiannually.
(ii) *Determination of yield.* Assume that C uses 6 monthly accrual periods to compute its OID for 1994. The yield must reflect monthly compounding (as determined using the formula described in *Example 1* of paragraph (j) of this section). As a result, the monthly yield of the debt instrument is 7.87 percent, divided by 12. C may not compute its monthly yield for the last 6 months in 1994 by dividing 8 percent by 12.

Example 5. Debt instrument subject to put option. (i) *Facts.* On January 1, 1995, G purchases at original issue, for $70,000, H corporation's debt instrument maturing on January 1, 2010, with a stated principal amount of $100,000, payable at maturity. The debt instrument provides for semiannual payments of interest of $4,000, payable on January 1 and July 1 of each year, beginning on July 1, 1995. The debt instrument gives G an unconditional right to put the bond back to H, exercisable on January 1, 2005, in return for $85,000 (exclusive of the $4,000 of stated interest payable on that date).
(ii) *Determination of yield and maturity.* Yield determined without regard to the put option is 12.47 percent, compounded semiannually. Yield determined by assuming that the put option is exercised (i.e., by using January 1, 2005, as the maturity date and $85,000 as the stated principal amount payable on that date) is 12.56 percent, compounded semiannually. Thus, under paragraph (c)(5) of this section, it is assumed that G will exercise the put option, because exercise of the option would increase the yield of the debt instrument. Thus, for purposes of calculating OID, the debt instrument is assumed to be a 10-year debt instrument with an issue price of $70,000, a stated redemption price at maturity of $85,000, and a yield of 12.56 percent, compounded semiannually.

(iii) *Consequences if put option is, in fact, not exercised.* If the put option is, in fact, not exercised, then, under paragraph (c)(6) of this section, the debt instrument is treated, solely for purposes of sections 1272 and 1273, as if it were reissued on January 1, 2005, for an amount equal to its adjusted issue price on that date, $85,000. The new debt instrument matures on January 1, 2010, with a stated principal amount of $100,000 payable on that date and provides for semiannual payments of interest of $4,000. The yield of the new debt instrument is 12.08 percent, compounded semiannually.

Example 6. Debt instrument subject to partial call option. (i) *Facts.* On January 1, 1995, H purchases at original issue, for $95,000, J corporation's debt instrument that matures on January 1, 2000, and has a

stated principal amount of $100,000, payable on that date. The debt instrument provides for semiannual payments of interest of $4,000, payable on January 1 and July 1 of each year, beginning on July 1, 1995. On January 1, 1998, J has an unconditional right to call 50 percent of the principal amount of the debt instrument for $55,000 (exclusive of the $4,000 of stated interest payable on that date). If the call is exercised, the semiannual payments of interest made after the call date will be reduced to $2,000.
(ii) *Determination of yield and maturity.* Yield determined without regard to the call option is 9.27 percent, compounded semiannually. Yield determined by assuming J exercises its call option is 10.75 percent, compounded semiannually. Thus, under paragraph (c)(5) of this section, it is assumed that J will not exercise the call option because exercise of the option would increase the yield of the debt instrument. Thus, for purposes of calculating OID, the debt instrument is assumed to be a 5-year debt instrument with a single principal payment at maturity of $100,000, and a yield of 9.27 percent, compounded semiannually.

(iii) *Consequences if the call option is, in fact, exercised.* If the call option is, in fact, exercised, then under paragraph (c)(6) of this section, the debt instrument is treated as if the issuer made a pro rata prepayment of $55,000 that is subject to § 1.1275-2(f). Consequently, under § 1.1275-2(f)(1), the instrument is treated as consisting of two debt instruments, one that is retired on the call date and one that remains outstanding after the call date. The adjusted issue price, adjusted basis in the hands of the holder, and accrued OID of the original debt instrument is allocated between the two instruments based on the portion of the original instrument treated as retired. Since each payment remaining to be made after the call date is reduced by one-half, one-half of the adjusted issue price, adjusted basis, and accrued OID is allocated to the debt instrument that is treated as retired. The adjusted issue price of the original debt instrument immediately prior to the call date is $97,725.12, which equals the issue price of the original debt instrument ($95,000) increased by the OID previously includible in gross income ($2,725.12). One-half of this adjusted issue price is allocated to the debt instrument treated as retired, and the other half is allocated to the debt instrument that is treated as remaining outstanding. Thus, the debt instrument treated as remaining outstanding has an adjusted issue price immediately after the call date of $97,725.12/2, or $48,862.56. The yield of this debt instrument continues to be 9.27 percent, compounded semiannually. In addition, the portion of H's adjusted basis allocated to the debt instrument treated as retired is $97,725.12/2 or $48,862.56. Accordingly, under section 1271, H realizes a gain on the deemed retirement equal to $6,137.44 ($55,000 − $48,862.56).

Example 7. Debt instrument issued at par that provides for payment of interest in kind. (i) *Facts.* On January 1, 1995, A purchases at original issue, for $100,000, X corporation's debt instrument maturing on January 1, 2000, at a stated principal amount of $100,000, payable on that date. The debt instrument provides for annual payments of interest of $6,000 on January 1 of each year, beginning on January 1, 1996. The debt instrument gives X the unconditional right to issue, in lieu of the first interest payment, a second debt instrument (PIK instrument) maturing on January 1, 2000, with a stated principal amount of $6,000. The PIK instrument, if issued, would provide for annual payments of interest of $360 on January 1 of each year, beginning on January 1, 1997.

(ii) *Aggregation of PIK instrument with original debt instrument.* Under § 1.1275-2(c)(3), the issuance of the PIK instrument is not considered a payment made on the original debt instrument, and the PIK instrument is aggregated with the original debt instrument. The issue date of the PIK instrument is the same as the original debt instrument.

(iii) *Determination of yield and maturity.* The right to issue the PIK instrument is treated as an option to defer the initial interest payment until maturity. Yield determined without regard to the option is 6 percent, compounded annually, Yield determined by assuming X exercises the option is 6 percent, compounded annually. Thus, under paragraph (c)(5) of this section, it is assumed that X will not exercise the option by issuing the PIK instrument because exercise of the option would not decrease the yield of the debt instrument. For purposes of calculating OID, the debt instrument is assumed to be a 5-year debt instrument with a single principal payment at maturity of $100,000 and ten semiannual interest payments of $6,000, beginning on January 1, 1996. As a result, the debt instrument's yield is 6 percent, compounded annually.

(iv) *Determination of OID.* Under the payment schedule that would result if the option was exercised, none of the interest on the debt instrument would be qualified stated interest. Accordingly, under § 1.1273-1(c)(2), no payments on the debt instrument are qualified stated interest payments. Thus, $6,000 of OID accrues during the first annual accrual period. If the PIK instrument is not issued, $6,000 of OID accrues during each annual accrual period.

(v) *Consequences if the PIK instrument is issued.* Under paragraph (c)(6) of this section, if X issues the PIK instrument on January 1, 1996, the issuance of the PIK instrument is not a payment on the debt instrument. Solely for purposes of sections 1272 and 1273, the debt instrument is deemed reissued on January 1, 1996, for an issue price of $106,000. The recomputed yield is 6 percent, compounded annually. The OID for the first annual accrual period after the deemed reissuance is $6,360. The adjusted issue price of the debt instrument at the beginning of the next annual accrual period is $106,000 ($106,000 + $6,360 − $6,360). The OID for each of the four remaining annual accrual periods is $6,360.

Example 8. Debt instrument issued at a discount that provides for payment of interest in kind. (i) *Facts.* On January 1, 1995, T purchases at original issue, for $75,500, U corporation's debt instrument maturing on January 1, 2000, at a stated principal amount of $100,000, payable on that date. The debt instrument provides for annual payments of interest of $4,000 on January 1 of each year, beginning on January 1, 1996. The debt instrument gives U the unconditional right to issue, in lieu of the first interest payment, a second debt instrument (PIK instrument) maturing on January 1, 2000, with a stated principal amount of $4,000. The PIK instrument, if issued, would provide for annual payments of interest of $160 on January 1 of each year, beginning on January 1, 1997.
(ii) *Aggregation of PIK instrument with original debt instrument.* Under § 1.1275-2(c)(3), the issuance of the PIK instrument is not considered a payment made on the original debt instrument, and the PIK instrument is aggregated with the original debt instrument. The issue date of the PIK instrument is the same as the original debt instrument.

(iii) *Determination of yield and maturity.* The right to issue the PIK instrument is treated as an option to defer the initial interest payment until maturity. Yield determined without regard to the option is 10.55 percent, compounded annually. Yield determined by assuming U exercises the option is 10.32 percent, compounded annually. Thus, under paragraph (c)(5) of this section, it is assumed that U will exercise the option by issuing the PIK instrument because exercise of the option would decrease the yield of the debt instrument. For purposes of calculating OID, the debt instrument is assumed to be a 5-year debt instrument with a single principal payment at maturity of $104,000 and four annual interest payments of $4,160, beginning on January 1, 1997. As a result, the yield is 10.32 percent, compounded annually.

(iv) *Consequences if the PIK instrument is not issued.* Assume that T chooses to compute OID accruals on the basis of an annual accrual period. On January 1, 1996, the adjusted issue price of the debt instrument, and T's adjusted basis in the instrument, is $83,295.15. Under paragraph (c)(6) of this section, if U actually makes the $4,000 interest payment on January 1, 1996, the debt instrument is treated as if U made a pro rata prepayment (within the meaning of § 1.1275-2(f)(2)) of $4,000, which reduces the amount of each payment remaining on the instrument by a factor of 4/104, or 1/26. Thus, under § 1.1275-2(f)(1) and section 1271, T realizes a gain of $796.34 ($4,000 −($83,295.15/26)). The adjusted issue price of the debt instrument and T's adjusted basis immediately after the payment is $80,091.49 ($83,295.15 × 25/26) and the yield continues to be 10.32 percent, compounded annually.

Example 9. Debt instrument with stepped interest rate. (i) *Facts.* On July 1, 1994, G purchases at original issue, for $85,000, H corporation's debt instrument maturing on July 1, 2004. The debt instrument has a stated principal amount of $100,000, payable on the maturity date and provides for semiannual interest payments on January 1 and July 1 of each year, beginning on January 1, 1995. The amount of each payment is $2,000 for the first 5 years and $5,000 for the final 5 years.
(ii) *Determination of OID.* Assume that G computes its OID using 6-month accrual periods ending on January 1 and July 1 of each year. The yield of the debt instrument, determined under paragraph (b)(1)(i) of this section, is 8.65 percent, compounded semiannually. Interest is unconditionally payable at a fixed rate of at least 4 percent, compounded semiannually, for the entire term of the debt instrument. Consequently, under § 1.1273-1(c)(1), the semiannual payments are qualified stated interest payments to the extent of $2,000. The amount of OID for the first 6-month accrual period is $1,674.34 (the issue price of the debt instrument ($85,000) times the yield of the debt instrument for that accrual period (.0865/2) less the amount of any qualified stated interest allocable to that accrual period ($2,000)).

Example 10. Debt instrument payable on demand that provides for interest at a constant rate. (i) *Facts.* On January 1, 1995, V purchases at original issue, for $100,000, W corporation's debt instrument. The debt instrument calls for interest to accrue at a rate of 9 percent, compounded annually. The debt instrument is redeemable at any time at the option of V for an amount equal to $100,000, plus accrued interest. V uses annual accrual periods to accrue OID on the debt instrument.
(ii) *Amount of OID.* Pursuant to paragraph (d) of this section, the yield of the debt instrument is 9 percent, compounded annually. If the debt instrument is not redeemed during 1995, the amount of OID allocable to the year is $9,000.

[T.D. 8517, 59 FR 4810, Feb. 2, 1994, as amended by T.D. 8674, 61 FR 30140, June 14, 1996; T.D. 9612, 78 FR 8015, Feb. 5, 2013]

§ 1.1272-2 Treatment of debt instruments purchased at a premium.

(a) ***In general.*** Under section 1272(c)(1), if a holder purchases a debt instrument at a premium, the holder does not include any OID in gross income. Under section 1272(a)(7), if a holder purchases a debt instrument at an acquisition premium, the holder reduces the amount of OID includible in gross income by the fraction determined under paragraph (b)(4) of this section.

(b) ***Definitions and special rules*** —

(1) ***Purchase.*** For purposes of section 1272 and this section, purchase means any acquisition of a debt instrument, including the acquisition of a newly issued debt instrument in a debt-for-debt exchange or the acquisition of a debt instrument from a donor.

(2) ***Premium.*** A debt instrument is purchased at a premium if its adjusted basis, immediately after its purchase by the holder (including a purchase at original issue), exceeds the sum of all amounts payable on the instrument after the purchase date other than payments of qualified stated interest (as defined in § 1.1273-1(c)).

(3) ***Acquisition premium.*** A debt instrument is purchased at an acquisition premium if its adjusted basis, immediately after its purchase (including a purchase at original issue), is—

(i) Less than or equal to the sum of all amounts payable on the instrument after the purchase date other than payments of qualified stated interest (as defined in § 1.1273-1(c)); and

(ii) Greater than the instrument's adjusted issue price (as defined in § 1.1275-1(b)).

(4) ***Acquisition premium fraction.*** In applying section 1272(a)(7), the cost of a debt instrument is its adjusted basis immediately after its acquisition by the purchaser. Thus, the numerator of the fraction determined under section 1272(a)(7)(B) is the excess of the adjusted basis of the debt instrument immediately after its acquisition by the purchaser over the adjusted issue price of the debt instrument. The denominator of the fraction determined under section 1272(a)(7)(B) is the excess of the sum of all amounts payable on the debt instrument after the purchase date, other than payments of qualified stated interest, over the instrument's adjusted issue price.

(5) ***Election to accrue discount on a constant yield basis.*** Rather than applying the acquisition premium fraction, a holder of a debt instrument purchased at an acquisition premium may elect under § 1.1272-3 to compute OID accruals by treating the purchase as a purchase at original issuance and applying the mechanics of the constant yield method.

(6) ***Special rules for determining basis*** —

(i) ***Debt instruments acquired in exchange for other property.*** For purposes of section 1272(a)(7), section 1272(c)(1), and this section, if a debt instrument is acquired in an exchange for other property (other than in a reorganization defined in section 368) and the basis of the debt instrument is determined, in whole or in part, by reference to the basis of the other property, the basis of the debt instrument may not exceed its fair market value immediately after the exchange. For example, if a debt instrument is distributed by a partnership to a partner in a liquidating distribution and the partner's basis in the debt instrument would otherwise be determined under section 732, the partner's basis in the debt instrument may not exceed its fair market value for purposes of this section.

(ii) ***Acquisition by gift.*** For purposes of this section, a donee's adjusted basis in a debt instrument is the donee's basis for determining gain under section 1015(a).

(c) ***Examples.*** The following examples illustrate the rules of this section.

Example 1. Debt instrument purchased at an acquisition premium. (i) *Facts.* On July 1, 1994, A purchased at original issue, for $500, a debt instrument issued by Corporation X. The debt instrument matures on July 1, 1999, and calls for a single payment at maturity of $1,000. Under section 1273(a), the debt instrument has a stated redemption price at maturity of $1,000 and, thus, OID of $500. On July 1, 1996, when the debt instrument's adjusted issue price is $659.75, A sells the debt instrument to B for $750 in cash.
(ii) *Acquisition premium fraction.* Because the cost to B of the debt instrument is less than the amount payable on the debt instrument after the purchase date, but is greater than the debt instrument's adjusted issue price, B has paid an acquisition premium for the debt instrument. Accordingly, the daily portion of OID for any day that B holds the debt instrument is reduced by a fraction, the numerator of which is $90.25 (the excess of the cost of the debt instrument over its adjusted issue price) and the denominator of which is $340.25 (the excess of the sum of all payments after the purchase date over its adjusted issue price).

Example 2. Debt-for-debt exchange where holder is considered to purchase new debt instrument at a premium. (i) *Facts.* On January 1, 1995, H purchases at original issue, for $1,000, a debt instrument issued by Corporation X. On July 1, 1997, when H's adjusted basis in the debt instrument is $1,000, Corporation X issues a new debt instrument with a stated redemption price at maturity of $750 to H in exchange for the old debt instrument. Assume that the issue price of the new debt instrument is $600. Thus, under section 1273(a), the debt instrument has OID of $150. The exchange qualifies as a recapitalization under section 368(a)(1)(E), with the consequence that, under sections 354 and 358, H recognizes no loss on the exchange and has an adjusted basis in the new debt instrument of $1,000.
(ii) *Application of section 1272(c)(1).* Under paragraphs (b)(1) and (b)(2) of this section, H purchases the new debt instrument at a premium of $250. Accordingly, under section 1272(c)(1), H is not required to include OID in income with respect to the new debt instrument.

Example 3. Debt-for-debt exchange where holder is considered to purchase new debt instrument at an acquisition premium. (i) *Facts.* The facts are the same as in *Example 2* of paragraph (c) of this section, except that H purchases the old debt instrument from another holder on July 1, 1995, and on July 1, 1997, H's adjusted basis in the old debt instrument is $700. Under section 1273(a), the new debt instrument is issued with OID of $150.
(ii) *Application of section 1272(a)(7).* Under paragraphs (b)(1) and (b)(3) of this section, H purchases the new debt instrument at an acquisition premium of $100. Accordingly, the daily portion of OID that is includible in H's income is reduced by the fraction determined under section 1272(a)(7).

Example 4. Treatment of acquisition premium for debt instrument acquired by gift. (i) *Facts.* On July 1, 1994, D receives as a gift a debt instrument with a stated redemption price at maturity of $1,000 and an

adjusted issue price of $800. On that date, the fair market value of the debt instrument is $900 and the donor's adjusted basis in the debt instrument is $950.
(ii) *Application of section 1272(a)(7).* Under paragraphs (b)(1), (b)(3), and (b)(6)(ii) of this section, D is considered to have purchased the debt instrument at an acquisition premium of $150. Accordingly, the daily portion of OID that is includible in D's income is reduced by the fraction determined under section 1272(a)(7).

[T.D. 8517, 59 FR 4814, Feb. 2, 1994]

§ 1.1272-3 Election by a holder to treat all interest on a debt instrument as OID.

(a) ***Election.*** A holder of a debt instrument may elect to include in gross income all interest that accrues on the instrument by using the constant yield method described in paragraph (c) of this section. For purposes of this election, interest includes stated interest, acquisition discount, OID, de minimis OID, market discount, de minimis market discount, and unstated interest, as adjusted by any amortizable bond premium or acquisition premium.

(b) ***Scope of election*** —

(1) ***In general.*** Except as provided in paragraph (b)(2) of this section, a holder may make the election for any debt instrument.

(2) ***Exceptions, limitations, and special rules*** —

(i) ***Debt instrument with amortizable bond premium (as determined under section 171).***

(A) A holder may make the election for a debt instrument with amortizable bond premium only if the instrument qualifies as a bond under section 171(d).

(B) If a holder makes the election under this section for a debt instrument with amortizable bond premium, the holder is deemed to have made the election under section 171(c)(2) for the taxable year in which the instrument was acquired. If the holder has previously made the election under section 171(c)(2), the requirements of that election with respect to any debt instrument are satisfied by electing to amortize the bond premium under the rules provided by this section.

(ii) ***Debt instrument with market discount.***

(A) A holder may make the election under this section for a debt instrument with market discount only if the holder is eligible to make an election under section 1278(b).

(B) If a holder makes the election under this section for a debt instrument with market discount, the holder is deemed to have made both the election under section 1276(b)(2) for that instrument and the election under section 1278(b) for the taxable year in which the instrument was acquired. If the holder has previously made the election under section 1278(b), the requirements of that election with respect to any debt instrument are satisfied by electing to include the market discount in income in accordance with the rules provided by this section.

(iii) ***Tax-exempt debt instrument.*** A holder may not make the election for a tax-exempt obligation as defined in section 1275(a)(3).

(c) *Mechanics of the constant yield method* —

(1) ***In general.*** For purposes of this section, the amount of interest that accrues during an accrual period is determined under rules similar to those under section 1272 (the constant yield method). In applying the constant yield method, however, a debt instrument subject to the election is treated as if—

(i) The instrument is issued for the holder's adjusted basis immediately after its acquisition by the holder;

(ii) The instrument is issued on the holder's acquisition date; and

(iii) None of the interest payments provided for in the instrument are qualified stated interest payments.

(2) ***Special rules to determine adjusted basis.*** For purposes of paragraph (c)(1)(i) of this section—

(i) If the debt instrument is acquired in an exchange for other property (other than in a reorganization defined in section 368) and the basis of the debt instrument is determined, in whole or in part, by reference to the basis of the other property, the adjusted basis of the debt instrument may not exceed its fair market value immediately after the exchange; and

(ii) If the debt instrument was acquired with amortizable bond premium (as determined under section 171), the adjusted basis of the debt instrument is reduced by an amount equal to the value attributable to any conversion feature.

(d) ***Time and manner of making the election.*** The election must be made for the taxable year in which the holder acquires the debt instrument. A holder makes the election by attaching to the holder's timely filed Federal income tax return a statement that the holder is making an election under this section and that identifies the debt instruments subject to the election. A holder may make the election for a class or group of debt instruments by attaching a statement describing the type or types of debt instruments being designated for the election.

(e) ***Revocation of election.*** The election may not be revoked unless approved by the Commissioner.

(f) ***Effective date.*** This section applies to debt instruments acquired on or after April 4, 1994.

[T.D. 8517, 59 FR 4815, Feb. 2, 1994]

§ 1.1273-1 Definition of OID.

(a) ***In general.*** Section 1273(a)(1) defines OID as the excess of a debt instrument's stated redemption price at maturity over its issue price. Section 1.1273-2 defines issue price, and paragraph (b) of this section defines stated redemption price at maturity. Paragraph (d) of this section provides rules for de minimis amounts of OID. Although the total amount of OID for a debt instrument may be indeterminate, § 1.1272-1(d) provides a rule to determine OID accruals on certain debt instruments that provide for a fixed yield. See *Example 10* in § 1.1272-1(j).

(b) ***Stated redemption price at maturity.*** A debt instrument's stated redemption price at maturity is the sum of all payments provided by the debt instrument other than qualified stated interest payments. If the payment schedule of a debt instrument is determined under § 1.1272-1(c) (relating to certain debt instruments subject to contingencies), that payment schedule is used to determine the instrument's stated redemption price at maturity.

(c) *Qualified stated interest* —

(1) *Definition* —

(i) ***In general.*** Qualified stated interest is stated interest that is unconditionally payable in cash or in property (other than debt instruments of the issuer), or that will be constructively received under section 451, at least annually at a single fixed rate (within the meaning of paragraph (c)(1)(iii) of this section).

(ii) ***Unconditionally payable.*** Interest is unconditionally payable only if reasonable legal remedies exist to compel timely payment or the debt instrument otherwise provides terms and conditions that make the likelihood of late payment (other than a late payment that occurs within a reasonable grace period) or nonpayment a remote contingency (within the meaning of § 1.1275-2(h)). For purposes of the preceding sentence, remedies or other terms and conditions are not taken into account if the lending transaction does not reflect arm's length dealing and the holder does not intend to enforce the remedies or other terms and conditions. For purposes of determining whether interest is unconditionally payable, the possibility of nonpayment due to default, insolvency, or similar circumstances, or due to the exercise of a conversion option described in § 1.1272-1(e) is ignored. This paragraph (c)(1)(ii) applies to debt instruments issued on or after August 13, 1996.

(iii) *Single fixed rate* —

(A) ***In general.*** Interest is payable at a single fixed rate only if the rate appropriately takes into account the length of the interval between payments. Thus, if the interval between payments varies during the term of the debt instrument, the value of the fixed rate on which a payment is based generally must be adjusted to reflect a compounding assumption that is consistent with the length of the interval preceding the payment. See *Example 1* in paragraph (f) of this section.

(B) ***Special rule for certain first and final payment intervals.*** Notwithstanding paragraph (c)(1)(iii)(A) of this section, if a debt instrument provides for payment intervals that are equal in length throughout the term of the instrument, except that the first or final payment interval differs in length from the other payment intervals, the first or final interest payment is considered to be made at a fixed rate if the value of the rate on which the payment is based is adjusted in any reasonable manner to take into account the length of the interval. See *Example 2* of paragraph (f) of this section. The rule in this paragraph (c)(1)(iii)(B) also applies if the lengths of both the first and final payment intervals differ from the length of the other payment intervals.

(2) *Debt instruments subject to contingencies.* **The determination of whether a debt instrument described in § 1.1272-1(c) (a debt instrument providing for an alternative payment schedule (or schedules) upon the occurrence of one or more contingencies) provides for qualified stated interest is made by analyzing each alternative payment schedule (including the stated payment schedule) as if it were the debt instrument's sole payment schedule. Under this analysis, the debt instrument provides for qualified stated interest to the extent of the lowest fixed rate at which qualified stated interest would be payable under any payment schedule. See *Example (4)*** of paragraph (f) of this section.

(3) ***Variable rate debt instrument.*** In the case of a variable rate debt instrument, qualified stated interest is determined under § 1.1275-5(e).

(4) ***Stated interest in excess of qualified stated interest.*** To the extent that stated interest payable under a debt instrument exceeds qualified stated interest, the excess is included in the debt instrument's stated redemption price at maturity.

(5) ***Short-term obligations.*** In the case of a debt instrument with a term that is not more than 1 year from the date of issue, no payments of interest are treated as qualified stated interest payments.

(6) ***Business day convention*** —

(i) ***Rule.*** For purposes of this paragraph (c), if a scheduled payment date for stated interest falls on a Saturday, Sunday, or Federal holiday (within the meaning of 5 U.S.C. 6103) but, under the terms of the debt instrument, the stated interest is payable on the first business day that immediately follows the scheduled payment date, the stated interest is treated as payable on the scheduled payment date, provided no additional interest is payable as a result of the deferral.

(ii) ***Effective/applicability date.*** Paragraph (c)(6)(i) of this section applies to a debt instrument issued on or after September 13, 2012. A taxpayer, however, may rely on paragraph (c)(6)(i) of this section for a debt instrument issued before that date.

(d) ***De minimis OID*** —

(1) ***In general.*** If the amount of OID with respect to a debt instrument is less than the de minimis amount, the amount of OID is treated as zero, and all stated interest (including stated interest that would otherwise be characterized as OID) is treated as qualified stated interest.

(2) ***De minimis amount.*** The de minimis amount is an amount equal to 0.0025 multiplied by the product of the stated redemption price at maturity and the number of complete years to maturity from the issue date.

(3) ***Installment obligations.*** In the case of an installment obligation (as defined in paragraph (e)(1) of this section), paragraph (d)(2) of this section is applied by substituting for the number of complete years to maturity the weighted average maturity (as defined in paragraph (e)(3) of this section). Alternatively, in the case of a debt instrument that provides for payments of principal no more rapidly than a self-amortizing installment obligation (as defined in paragraph (e)(2) of this section), the de minimis amount defined in paragraph (d)(2) of this section may be calculated by substituting 0.00167 for 0.0025.

(4) ***Special rule for interest holidays, teaser rates, and other interest shortfalls*** —

(i) ***In general.*** This paragraph (d)(4) provides a special rule to determine whether a debt instrument with a teaser rate (or rates), an interest holiday, or any other interest shortfall has de minimis OID. This rule applies if—

(A) The amount of OID on the debt instrument is more than the de minimis amount as otherwise determined under paragraph (d) of this section; and

(B) All stated interest provided for in the debt instrument would be qualified stated interest under paragraph (c) of this section except that for 1 or more accrual periods the interest rate is below the rate applicable for the remainder of the instrument's term (e.g., if as a result of an interest holiday, none of the stated interest is qualified stated interest).

(ii) ***Redetermination of OID for purposes of the de minimis test.*** For purposes of determining whether a debt instrument described in paragraph (d)(4)(i) of this section has de minimis OID, the instrument's stated redemption price at maturity is treated as equal to the instrument's issue price plus the greater of the amount of foregone interest or the excess (if any) of the instrument's stated principal amount over its issue price. The amount of foregone interest is the amount of additional stated interest that would be required to be payable on the debt instrument during the period of the teaser rate, holiday, or shortfall so that all stated interest would be qualified stated interest under paragraph (c) of this section. See *Example 5* and *Example 6* of paragraph (f) of this section. In addition, for purposes of computing the de minimis amount of OID, the weighted average maturity of the debt instrument is determined by treating all stated interest payments as qualified stated interest payments.

(5) ***Treatment of de minimis OID by holders*** —

(i) ***Allocation of de minimis OID to principal payments.*** The holder of a debt instrument includes any de minimis OID (other than de minimis OID treated as qualified stated interest under paragraph (d)(1) of this section, such as de minimis OID attributable to a teaser rate or interest holiday) in income as stated principal payments are made. The amount includible in income with respect to each principal payment equals the product of the total amount of de minimis OID on the debt instrument and a fraction, the numerator of which is the amount of the principal payment made and the denominator of which is the stated principal amount of the instrument.

(ii) ***Character of de minimis OID*** —

(A) ***De minimis OID treated as gain recognized on retirement.*** Any amount of de minimis OID includible in income under this paragraph (d)(5) is treated as gain recognized on retirement of the debt instrument. See section 1271 to determine whether a retirement is treated as an exchange of the debt instrument.

(B) ***Treatment of de minimis OID on sale or exchange.*** Any gain attributable to de minimis OID that is recognized on the sale or exchange of a debt instrument is capital gain if the debt instrument is a capital asset in the hands of the seller.

(iii) ***Treatment of subsequent holders.*** If a subsequent holder purchases a debt instrument issued with de minimis OID at a premium (as defined in § 1.1272-2(b)(2)), the subsequent holder does not include the de minimis OID in income. Otherwise, a subsequent holder includes any discount in income under the market discount rules (sections 1276 through 1278) rather than under the rules of this paragraph (d)(5).

(iv) ***Cross-reference.*** See § 1.1272-3 for an election by a holder to treat de minimis OID as OID.

(e) ***Definitions*** —

(1) ***Installment obligation.*** An installment obligation is a debt instrument that provides for the payment of any amount other than qualified stated interest before maturity.

(2) ***Self-amortizing installment obligation.*** A self-amortizing installment obligation is an obligation that provides for equal payments composed of principal and qualified stated interest that are unconditionally payable at least annually during the entire term of the debt instrument with no significant additional payment required at maturity.

(3) ***Weighted average maturity.*** The weighted average maturity of a debt instrument is the sum of the following amounts determined for each payment under the instrument (other than a payment of qualified stated interest)—

(i) The number of complete years from the issue date until the payment is made; multiplied by

(ii) A fraction, the numerator of which is the amount of the payment and the denominator of which is the debt instrument's stated redemption price at maturity.

(f) ***Examples.*** The following examples illustrate the rules of this section.

Example 1. Qualified stated interest. (i) *Facts.* On January 1, 1995, A purchases at original issue, for $100,000, a debt instrument that matures on January 1, 1999, and has a stated principal amount of $100,000, payable at maturity. The debt instrument provides for interest payments of $8,000 on January 1, 1996, and January 1, 1997, and quarterly interest payments of $1,942.65, beginning on April 1, 1997.
(ii) *Amount of qualified stated interest.* The annual payments of $8,000 and the quarterly payments of $1,942.65 are payable at a single fixed rate because 8 percent, compounded annually, is equivalent to 7.77 percent, compounded quarterly. Consequently, all stated interest payments under the debt instrument are qualified stated interest payments.

Example 2. Qualified stated interest with short initial payment interval. On October 1, 1994, A purchases at original issue, for $100,000, a debt instrument that matures on January 1, 1998, and has a stated principal amount of $100,000, payable at maturity. The debt instrument provides for an interest payment of $2,000 on January 1, 1995, and interest payments of $8,000 on January 1, 1996, January 1, 1997, and January 1, 1998. Under paragraph (c)(1)(iii)(B) of this section, all stated interest payments on the debt instrument are computed at a single fixed rate and are qualified stated interest payments.

Example 3. Stated interest in excess of qualified stated interest. (i) *Facts.* On January 1, 1995, B purchases at original issue, for $100,000, C corporation's 5-year debt instrument. The debt instrument provides for a principal payment of $100,000, payable at maturity, and calls for annual interest payments of $10,000 for the first 3 years and annual interest payments of $10,600 for the last 2 years.
(ii) *Payments in excess of qualified stated interest.* All of the first three interest payments and $10,000 of each of the last two interest payments are qualified stated interest payments within the meaning of paragraph (c)(1) of this section. Under paragraph (c)(4) of this section, the remaining $600 of each of the last two interest payments is included in the stated redemption price at maturity, so that the stated redemption price at maturity is $101,200. Pursuant to paragraph (e)(3) of this section, the weighted average maturity of the debt instrument is 4.994 years [(4 years × $600/$101,200) + (5 years × $100,600/$101,200)]. The de minimis amount, or one-fourth of 1 percent of the stated redemption price at maturity multiplied by the weighted average maturity, is $1,263.50. Because the actual amount of discount, $1,200, is less than the de minimis amount, the instrument is treated as having no OID, and, under paragraph (d)(1) of this section, all of the interest payments are treated as qualified stated interest payments.

Example 4. Qualified stated interest on a debt instrument that is subject to an option. (i) *Facts.* On January 1, 1997, A issues, for $100,000, a 10-year debt instrument that provides for a $100,000 principal payment at maturity and for annual interest payments of $10,000. Under the terms of the debt instrument, A has the option, exercisable on January 1, 2002, to lower the annual interest payments to $8,000. In addition, the debt instrument gives the holder an unconditional right to put the debt instrument back to A, exercisable on January 1, 2002, in return for $100,000.
(ii) *Amount of qualified stated interest.* Under paragraph (c)(2) of this section, the debt instrument provides for qualified stated interest to the extent of the lowest fixed rate at which qualified stated interest would be payable under any payment schedule. If the payment schedule determined by assuming that the issuer's option will be exercised and the put option will not be exercised were treated as the debt instrument's sole payment schedule, only $8,000 of each annual interest payment would be qualified stated interest. Under any other payment schedule, the debt instrument would provide for annual qualified stated interest payments of $10,000. Accordingly, only $8,000 of each annual interest payment is qualified stated interest. Any excess of each annual interest payment over $8,000 is included in the debt instrument's stated redemption price at maturity.

Example 5. De minimis OID; interest holiday. (i) *Facts.* On January 1, 1995, C purchases at original issue, for $97,561, a debt instrument that matures on January 1, 2007, and has a stated principal amount of $100,000, payable at maturity. The debt instrument provides for an initial interest holiday of 1 quarter and quarterly interest payments of $2,500 thereafter (beginning on July 1, 1995). The issue price of the debt instrument is $97,561. C chooses to accrue OID based on quarterly accrual periods.
(ii) *De minimis amount of OID.* But for the interest holiday, all stated interest on the debt instrument would be qualified stated interest. Under paragraph (d)(4) of this section, for purposes of determining whether the debt instrument has de minimis OID, the stated redemption price at maturity of the instrument is $100,061 ($97,561 (issue price) plus $2,500 (the greater of the amount of foregone interest ($2,500) and the amount equal to the excess of the instrument's stated principal amount over its issue price ($2,439)). Thus, the debt instrument is treated as having OID of $2,500 ($100,061 minus $97,561). Because this amount is less than the de minimis amount of $3,001.83 (0.0025 multiplied by $100,061 multiplied by 12 complete years to maturity), the debt instrument is treated as having no OID, and all stated interest is treated as qualified stated interest.

Example 6. De minimis OID; teaser rate. (i) *Facts.* The facts are the same as in *Example 5* of this paragraph (f) except that C uses an initial semiannual accrual period rather than an initial quarterly accrual period.
(ii) *De minimis amount of OID.* The debt instrument provides for an initial teaser rate because the interest rate for the semiannual accrual period is less than the interest rate applicable to the subsequent quarterly accrual periods. But for the initial teaser rate, all stated interest on the debt instrument would be qualified stated interest. Under paragraph (d)(4) of this section, for purposes of determining whether the debt instrument has de minimis OID, the stated redemption price at maturity of the instrument is $100,123.50 ($97,561 (issue price) plus $2,562.50 (the greater of the amount of foregone interest ($2,562.50) and the

amount equal to the excess of the instrument's stated principal amount over its issue price ($2,439)). Thus, the debt instrument is treated as having OID of $2,562.50 ($100,123.50 minus $97,561). Because this amount is less than the de minimis amount of $3,003.71 (0.0025 multiplied by $100,123.50 multiplied by 12 complete years to maturity), the debt instrument is treated as having no OID, and all stated interest is treated as qualified stated interest.

[T.D. 8517, 59 FR 4815, Feb. 2, 1994, as amended by T.D. 8674, 61 FR 30141, June 14, 1996; T.D. 9599, 77 FR 56536, Sept. 13, 2012]

§ 1.1273-2 Determination of issue price and issue date.

(a) ***Debt instruments issued for money*** —

(1) ***Issue price.*** If a substantial amount of the debt instruments in an issue is issued for money, the issue price of each debt instrument in the issue is the first price at which a substantial amount of the debt instruments is sold for money. Thus, if an issue consists of a single debt instrument that is issued for money, the issue price of the debt instrument is the amount paid for the instrument. For example, in the case of a debt instrument evidencing a loan to a natural person, the issue price of the instrument is the amount loaned. See § 1.1275-2(d) for rules regarding Treasury securities. For purposes of this paragraph (a), money includes functional currency and, in certain circumstances, nonfunctional currency. See § 1.988-2(b)(2) for circumstances when nonfunctional currency is treated as money rather than as property.

(2) ***Issue date.*** The issue date of an issue described in paragraph (a)(1) of this section is the first settlement date or closing date, whichever is applicable, on which a substantial amount of the debt instruments in the issue is sold for money.

(b) ***Publicly traded debt instruments issued for property*** —

(1) ***Issue price.*** If a substantial amount of the debt instruments in an issue is traded on an established market (within the meaning of paragraph (f) of this section) and the issue is not described in paragraph (a)(1) of this section, the issue price of each debt instrument in the issue is the fair market value of the debt instrument, determined as of the issue date (as defined in paragraph (b)(2) of this section). See paragraph (f) of this section for rules to determine the fair market value of a debt instrument for purposes of this section.

(2) ***Issue date.*** The issue date of an issue described in paragraph (b)(1) of this section is the first date on which a substantial amount of the traded debt instruments in the issue is issued.

(c) ***Debt instruments issued for publicly traded property*** —

(1) ***Issue price.*** If a substantial amount of the debt instruments in an issue is issued for property that is traded on an established market (within the meaning of paragraph (f) of this section) and the issue is not described in paragraph (a)(1) or (b)(1) of this section, the issue price of each debt instrument in the issue is the fair market value of the property, determined as of the issue date (as defined in paragraph (c)(2) of this section). For purposes of the preceding sentence, property means a debt instrument, stock, security, contract, commodity, or nonfunctional currency. But see § 1.988-2(b)(2) for circumstances when nonfunctional currency is treated as money rather than as property. See paragraph (f) of this section for rules to determine the fair market value of property for purposes of this section.

(2) ***Issue date.*** The issue date of an issue described in paragraph (c)(1) of this section is the first date on which a substantial amount of the debt instruments in the issue is issued for traded property.

(d) ***Other debt instruments*** —

(1) ***Issue price.*** If an issue of debt instruments is not described in paragraph (a)(1), (b)(1), or (c)(1) of this section, the issue price of each debt instrument in the issue is determined as if the debt instrument were a separate issue. If the issue price of a debt instrument that is treated as a separate issue under the preceding sentence is not determined under paragraph (a)(1), (b)(1), or (c)(1) of this section, and if section 1274 applies to the debt instrument, the issue price of the instrument is determined under section 1274. Otherwise, the issue price of the debt instrument is its stated redemption price at maturity under section 1273(b)(4). See section 1274(c) and § 1.1274-1 to determine if section 1274 applies to a debt instrument.

(2) ***Issue date.*** The issue date of an issue described in paragraph (d)(1) of this section is the date on which the debt instrument is issued for money or in a sale or exchange.

(e) ***Special rule for certain sales to bond houses, brokers, or similar persons.*** For purposes of determining the issue price and issue date of a debt instrument under this section, sales to bond houses, brokers, or similar persons or organizations acting in the capacity of underwriters, placement agents, or wholesalers are ignored.

(f) ***Traded on an established market (publicly traded)*** —

(1) ***In general.*** Except as provided in paragraph (f)(6) of this section, property (including a debt instrument described in paragraph (b)(1) of this section) is traded on an established market for purposes of this section if, at any time during the 31-day period ending 15 days after the issue date—

(i) There is a sales price for the property as described in paragraph (f)(2) of this section;

(ii) There are one or more firm quotes for the property as described in paragraph (f)(3) of this section; or

(iii) There are one or more indicative quotes for the property as described in paragraph (f)(4) of this section.

(2) ***Sales price*** —

(i) ***In general.*** A sales price exists if the price for an executed purchase or sale of the property within the 31-day period described in paragraph (f)(1) of this section is reasonably available within a reasonable period of time after the sale.

(ii) ***Pricing information for a debt instrument.*** For purposes of paragraph (f)(2)(i) of this section, the price of a debt instrument is considered reasonably available if the sales price (or information sufficient to calculate the sales price) appears in a medium that is made available to issuers of debt instruments, persons that regularly purchase or sell debt instruments (including a price provided only to certain customers or to subscribers), or persons that broker purchases or sales of debt instruments.

(3) ***Firm quote.*** A firm quote is considered to exist when a price quote is available from at least one broker, dealer, or pricing service (including a price provided only to certain customers or to subscribers) for property and the quoted price is substantially the same as the price for which the person receiving the quoted price could purchase or sell the property. A price quote is considered to be available whether the quote is initiated by a person providing the quote or provided at the request

of the person receiving the quote. The identity of the person providing the quote must be reasonably ascertainable for a quote to be considered a firm quote for purposes of this paragraph (f)(3). A quote will be considered a firm quote if the quote is designated as a firm quote by the person providing the quote or if market participants typically purchase or sell, as the case may be, at the quoted price, even if the party providing the quote is not legally obligated to purchase or sell at that price.

(4) ***Indicative quote.*** An indicative quote is considered to exist when a price quote is available from at least one broker, dealer, or pricing service (including a price provided only to certain customers or to subscribers) for property and the price quote is not a firm quote described in paragraph (f)(3) of this section.

(5) ***Presumption that price or quote is equal to fair market value*** —

(i) ***In general.*** For purposes of this section, the fair market value of property will be presumed to be equal to its sales price or quoted price determined under paragraphs (f)(2) through (f)(4) of this section. If there is more than one sales price under paragraph (f)(2) of this section, more than one quoted price under paragraph (f)(3) or (f)(4) of this section, or both one or more sales prices under paragraph (f)(2) of this section and quoted prices under paragraph (f)(3) or (f)(4) of this section, a taxpayer may use any reasonable method, consistently applied to the same or substantially similar facts, to determine the fair market value. For example, to determine the fair market value under a reasonable method, a taxpayer may consider factors such as (but not necessarily limited to) the timing of each relevant sale or quote in relation to the issue date; whether the price is derived from a sale, a firm quote, or an indicative quote; the size of each relevant sale or quote; or whether the sales price or quote corresponds to pricing information provided by an independent bond or loan pricing service.

(ii) ***Special rule for property for which there is only an indicative quote.*** If property is described only in paragraph (f)(4) of this section, and the taxpayer determines that the quote (or an average of the quotes) materially misrepresents the fair market value of the property, the taxpayer can use any method that provides a reasonable basis to determine the fair market value of the property. A taxpayer must establish that the method chosen more accurately reflects the value of the property than the quote or quotes for the property to use the method provided in this paragraph (f)(5)(ii). For an equity or debt instrument, a volume discount or control premium will not be considered to create a material misrepresentation of value for purposes of this paragraph (f)(5)(ii).

(6) ***Exception for small debt issues.*** Notwithstanding any other provision in paragraph (f) of this section, a debt instrument will not be treated as traded on an established market if at the time the determination is made the outstanding stated principal amount of the issue that includes the debt instrument does not exceed US$100 million (or, for a debt instrument denominated in a currency other than the U.S. dollar, the equivalent amount in the currency in which the debt instrument is denominated).

(7) ***Anti-abuse rules*** —

(i) ***Effect of certain temporary restrictions on trading.*** If there is any temporary restriction on trading a purpose of which is to avoid the characterization of the property as one that is traded on an established market for Federal income tax purposes, then the property is treated as traded on an established market. For purposes of the preceding sentence, a temporary restriction on trading need not be imposed by the issuer.

(ii) ***Artificial pricing information.*** If a principal purpose for the existence of any sale or price quotation is to cause the property to be traded on an established market or to materially misrepresent the value of property, that sale or price quotation is disregarded.

(8) ***Convertible debt instruments.*** A debt instrument is not treated as traded on an established market solely because the debt instrument is convertible into property that is so traded.

(9) ***Issuer-holder consistency requirement*** —

(i) ***General rule.*** For purposes of this section, an issuer must determine whether property is traded on an established market and, if so, the fair market value of the property. An issuer is required to exercise reasonable diligence to determine whether purchases or sales have taken place, the quantity of purchases and sales, the price at which purchases or sales occurred, the existence of firm or indicative quotes, and any other relevant information using the rules provided in paragraph (f) of this section to determine the fair market value of the property. If an issuer determines that property is traded on an established market, the issuer is required to make that determination as well as the fair market value of the property (which can be stated as the issue price of the debt instrument) available to holders in a commercially reasonable fashion, including by electronic publication, within 90 days of the date that the debt instrument is issued. Each determination by an issuer is binding on a holder of the debt instrument unless the holder explicitly discloses that its determination is different from the issuer's determination (for example, the holder determines a different fair market value for the property or determines that the property is not traded on an established market). A holder must describe in the disclosure the reasons for its different determination and, if applicable, how the holder determined the fair market value. A holder's disclosure must be filed on a timely filed Federal income tax return for the taxable year that includes the acquisition date of the debt instrument. If an issuer for any reason does not make the fair market value or issue price of a debt instrument reasonably available to a holder, the holder must determine the fair market value of the property and issue price of the debt instrument using the rules provided in paragraph (f) of this section.

(ii) ***Co-obligors.*** If a debt instrument has more than one obligor, the obligors must designate one obligor (issuer) to determine whether property is traded on an established market and, if so, the fair market value of the property and issue price of the debt instrument and make the price available to holders using the rules provided in paragraph (f)(9)(i) of this section.

(10) ***Effective/applicability dates*** —

(i) This paragraph (f) applies to a debt instrument issued on or after November 13, 2012.

(ii) For rules applying to a debt instrument issued before November 13, 2012, see paragraph (f) of this section as contained in 26 CFR part 1, revised April 1, 2011.

(g) ***Treatment of certain cash payments incident to lending transactions*** —

(1) ***Applicability.*** The provisions of this paragraph (g) apply to cash payments made incident to private lending transactions (including seller financing).

(2) ***Payments from borrower to lender*** —

(i) ***Money lending transaction.*** In a lending transaction to which section 1273(b)(2) applies, a payment from the borrower to the lender (other than a payment for property or for services provided by the lender, such as commitment fees or loan processing costs) reduces the issue

price of the debt instrument evidencing the loan. However, solely for purposes of determining the tax consequences to the borrower, the issue price is not reduced if the payment is deductible under section 461(g)(2).

(ii) ***Section 1274 transaction.*** In a lending transaction to which section 1274 applies, a payment from the buyer-borrower to the seller-lender that is designated as interest or points reduces the stated principal amount of the debt instrument evidencing the loan, but is included in the purchase price of the property. If the payment is deductible under section 461(g)(2), however, the issue price of the debt instrument (as otherwise determined under section 1274 and the rule in the preceding sentence) is increased by the amount of the payment to compute the buyer-borrower's interest deductions under section 163.

(3) ***Payments from lender to borrower.*** A payment from the lender to the borrower in a lending transaction is treated as an amount loaned.

(4) ***Payments between lender and third party.*** If, as part of a lending transaction, a party other than the borrower (the third party) makes a payment to the lender, that payment is treated in appropriate circumstances as made from the third party to the borrower followed by a payment in the same amount from the borrower to the lender and governed by the provisions of paragraph (g)(2) of this section. If, as part of a lending transaction, the lender makes a payment to a third party, that payment is treated in appropriate circumstances as an additional amount loaned to the borrower and then paid by the borrower to the third party. The character of the deemed payment between the borrower and the third party depends on the substance of the transaction.

(5) ***Examples.*** The following examples illustrate the rules of this paragraph (g).

Example 1. Payments from borrower to lender in a cash transaction. (i) *Facts.* A lends $100,000 to B for a term of 10 years. At the time the loan is made, B pays $4,000 in points to A. Assume that the points are not deductible by B under section 461(g)(2) and that the stated redemption price at maturity of the debt instrument is $100,000.
(ii) *Payment results in OID.* Under paragraph (g)(2)(i) of this section, the issue price of B's debt instrument evidencing the loan is $96,000. Because the amount of OID on the debt instrument ($4,000) is more than a de minimis amount of OID, A accounts for the OID under § 1.1272-1. B accounts for the OID under § 1.163-7.

Example 2. Payments from borrower to lender in a section 1274 transaction. (i) *Facts.* A sells property to B for $1,000,000 in a transaction that is not a potentially abusive situation (within the meaning of § 1.1274-3). In consideration for the property, B gives A $300,000 and issues a 5-year debt instrument that has a stated principal amount of $700,000, payable at maturity, and that calls for semiannual payments of interest at a rate of 8.5 percent. In addition to the cash downpayment, B pays A $14,000 designated as points on the loan. Assume that the points are not deductible under section 461(g)(2).
(ii) *Issue price.* Under paragraph (g)(2)(ii) of this section, the stated principal amount of B's debt instrument is −$686,000 ($700,000 minus $14,000). Assuming a test rate of 9 percent, compounded semiannually, the imputed principal amount of B's debt instrument under § 1.1274-2(c)(1) is $686,153. Under § 1.1274-2(b)(1), the issue price of B's debt instrument is

the stated principal amount of $686,000. Because the amount of OID on the debt instrument ($700,000−$686,000, or $14,000) is more than a de minimis amount of OID, A accounts for the OID under § 1.1272-1 and B accounts for the OID under § 1.163-7. B's basis in the property purchased is $1,000,000 ($686,000 debt instrument plus $314,000 cash payments).

Example 3. Payments between lender and third party (seller-paid points). (i) *Facts.* A sells real property to B for $500,000 in a transaction that is not a potentially abusive situation (within the meaning of § 1.1274-3). B makes a cash down payment of $100,000 and borrows $400,000 of the purchase price from a lender, L, repayable in annual installments over a term of 15 years calling for interest at a rate of 9 percent, compounded annually. As part of the transaction, A makes a payment of $8,000 to L to facilitate the loan to B.
(ii) *Payment results in a de minimis amount of OID.* Under the provisions of paragraphs (g)(2)(i) and (g)(4) of this section, B is treated as having made an $8,000 payment directly to L and a payment of only $492,000 to A for the property. Thus, B's basis in the property is $492,000. The payment to L reduces the issue price of B's debt instrument to $392,000, resulting in $8,000 of OID ($400,000−$392,000). Because the amount of OID is de minimis under § 1.1273-1(d), L accounts for the de minimis OID under § 1.1273-1(d)(5). But see § 1.1272-3 (election to treat de minimis OID as OID). B accounts for the de minimis OID under § 1.163-7.

(h) ***Investment units*** —

(1) ***In general.*** Under section 1273(c)(2), an investment unit is treated as if the investment unit were a debt instrument. The issue price of the investment unit is determined under paragraph (a)(1), (b)(1), or (c)(1) of this section, if applicable. The issue price of the investment unit is then allocated between the debt instrument and the property right (or rights) that comprise the unit based on their relative fair market values. If paragraphs (a)(1), (b)(1), and (c)(1) of this section are not applicable, however, the issue price of the debt instrument that is part of the investment unit is determined under section 1273(b)(4) or 1274, whichever is applicable.

(2) ***Consistent allocation by holders and issuer.*** The issuer's allocation of the issue price of the investment unit is binding on all holders of the investment unit. However, the issuer's determination is not binding on a holder that explicitly discloses that its allocation is different from the issuer's allocation. Unless otherwise provided by the Commissioner, the disclosure must be made on a statement attached to the holder's timely filed Federal income tax return for the taxable year that includes the acquisition date of the investment unit. See § 1.1275-2(e) for rules relating to the issuer's obligation to disclose certain information to holders.

(i) [Reserved]

(j) ***Convertible debt instruments.*** The issue price of a debt instrument includes any amount paid for an option to convert the instrument into stock (or another debt instrument) of either the issuer or a related party (within the meaning of section 267(b) or 707(b)(1)) or into cash or other property in an amount equal to the approximate value of such stock (or debt instrument). For debt instruments issued on or after February 5, 2013, the term *stock* in the preceding sentence means an equity interest in any entity that is classified, for Federal tax purposes, as either a partnership or a corporation.

(k) ***Below-market loans subject to section 7872(b).*** The issue price of a below-market loan subject to section 7872(b) (a term loan other than a gift loan) is the issue price determined under this section, reduced by the excess amount determined under section 7872(b)(1).

(l) [Reserved]

(m) ***Treatment of amounts representing pre-issuance accrued interest*** —

(1) ***Applicability.*** Paragraph (m)(2) of this section provides an alternative to the general rule of this section for determining the issue price of a debt instrument if—

(i) A portion of the initial purchase price of the instrument is allocable to interest that has accrued prior to the issue date (pre-issuance accrued interest); and

(ii) The instrument provides for a payment of stated interest on the first payment date within 1 year of the issue date that equals or exceeds the amount of the pre-issuance accrued interest.

(2) ***Exclusion of pre-issuance accrued interest from issue price.*** If a debt instrument meets the requirements of paragraph (m)(1) of this section, the instrument's issue price may be computed by subtracting from the issue price (as otherwise computed under this section) the amount of pre-issuance accrued interest. If the issue price of the debt instrument is computed in this manner, a portion of the stated interest payable on the first payment date must be treated as a return of the excluded pre-issuance accrued interest, rather than as an amount payable on the instrument.

(3) ***Example.*** The following example illustrates the rule of paragraph (m) of this section.

> *Example:* (i) *Facts.* On January 15, 1995, A purchases at original issue, for $1,005, B corporation's debt instrument. The debt instrument provides for a payment of principal of $1,000 on January 1, 2005, and provides for semiannual interest payments of $60 on January 1 and July 1 of each year, beginning on July 1, 1995.
> (ii) *Determination of pre-issuance accrued interest.* Under paragraphs (m)(1) and (m)(2) of this section, $5 of the $1,005 initial purchase price of the debt instrument is allocable to pre-issuance accrued interest. Accordingly, the debt instrument's issue price may be computed by subtracting the amount of pre-issuance accrued interest ($5) from the issue price otherwise computed under this section ($1,005), resulting in an issue price of $1,000. If the issue price is computed in this manner, $5 of the $60 payment made on July 1, 1995, must be treated as a repayment by B of the pre-issuance accrued interest.

[T.D. 8517, 59 FR 4817, Feb. 2, 1994, as amended by T.D. 9599, 77 FR 56536, Sept. 13, 2012; T.D. 9612, 78 FR 8016, Feb. 5, 2013]

§ 1.1274-1 Debt instruments to which section 1274 applies.

(a) ***In general.*** Subject to the exceptions and limitations in paragraph (b) of this section, section 1274 and this section apply to any debt instrument issued in consideration for the sale or exchange of property. For purposes of section 1274, property includes debt instruments and investment units, but does not include money, services, or the right to use property. For the treatment of certain obligations given in exchange for services or the use of property, see sections 404 and 467. For purposes of this paragraph (a), money includes functional currency and, in certain circumstances, nonfunctional currency. See § 1.988-2(b)(2) for circumstances when nonfunctional currency is treated as money rather than as property.

(b) ***Exceptions*** —

(1) ***Debt instrument with adequate stated interest and no OID.*** Section 1274 does not apply to a debt instrument if—

(i) All interest payable on the instrument is qualified stated interest;

(ii) The stated rate of interest is at least equal to the test rate of interest (as defined in § 1.1274-4);

(iii) The debt instrument is not issued in a potentially abusive situation (as defined in § 1.1274-3); and

(iv) No payment from the buyer-borrower to the seller-lender designated as points or interest is made at the time of issuance of the debt instrument.

(2) ***Exceptions under sections 1274(c)(1)(B), 1274(c)(3), 1274A(c), and 1275(b)(1)*** —

(i) ***In general.*** Sections 1274(c)(1)(B), 1274(c)(3), 1274A(c), and 1275(b)(1) describe certain transactions to which section 1274 does not apply. This paragraph (b)(2) provides certain rules to be used in applying those exceptions.

(ii) ***Special rules for certain exceptions under section 1274(c)(3)*** —

(A) ***Determination of sales price for certain sales of farms.*** For purposes of section 1274(c)(3)(A), the determination as to whether the sales price cannot exceed $1,000,000 is made without regard to any other exception to, or limitation on, the applicability of section 1274 (e.g., without regard to the special rules regarding sales of principal residences and land transfers between related persons). In addition, the sales price is determined without regard to section 1274 and without regard to any stated interest. The sales price includes the amount of any liability included in the amount realized from the sale or exchange. See § 1.1001-2.

(B) ***Sales involving total payments of $250,000 or less.*** Under section 1274(c)(3)(C), the determination of the amount of payments due under all debt instruments and the amount of other consideration to be received is made as of the date of the sale or exchange or, if earlier, the contract date. If the precise amount due under any debt instrument or the precise amount of any other consideration to be received cannot be determined as of that date, section 1274(c)(3)(C) applies only if it can be determined that the maximum of the aggregate amount of payments due under the debt instruments and other consideration to be received cannot exceed $250,000. For purposes of section 1274(c)(3)(C), if a liability is assumed or property is taken subject to a liability, the aggregate amount of payments due includes the outstanding principal balance or adjusted issue price (in the case of an obligation originally issued at a discount) of the obligation.

(C) ***Coordination with section 1273 and § 1.1273-2.*** In accordance with section 1274(c)(3)(D), section 1274 and this section do not apply if the issue price of a debt instrument issued in consideration for the sale or exchange of property is determined under paragraph (a)(1), (b)(1), or (c)(1) of § 1.1273-2.

(3) ***Other exceptions to section 1274*** —

(i) ***Holders of certain below-market instruments.*** Section 1274 does not apply to any holder of a debt instrument that is issued in consideration for the sale or exchange of personal use property (within the meaning of section 1275(b)(3)) in the hands of the issuer and that evidences a below-market loan described in section 7872(c)(1).

(ii) ***Transactions involving certain demand loans.*** Section 1274 does not apply to any debt instrument that evidences a demand loan that is a below-market loan described in section 7872(c)(1).

(iii) ***Certain transfers subject to section 1041.*** Section 1274 does not apply to any debt instrument issued in consideration for a transfer of property subject to section 1041 (relating to transfers of property between spouses or incident to divorce).

(c) ***Examples.*** The following examples illustrate the rules of this section.

Example 1. Single stated rate paid semiannually. A debt instrument issued in consideration for the sale of nonpublicly traded property in a transaction that is not a potentially abusive situation calls for the payment of a principal amount of $1,000,000 at the end of a 10-year term and 20 semiannual interest payments of $60,000. Assume that the test rate of interest is 12 percent, compounded semiannually. The debt instrument is not subject to section 1274 because it provides for interest equal to the test rate and all interest payable on the instrument is qualified stated interest.

Example 2. Sale of farm for debt instrument with contingent interest. (i) *Facts.* On July 1, 1995, A, an individual, sells to B land used as a farm within the meaning of section 6420(c)(2). As partial consideration for the sale, B issues a debt instrument calling for a single $500,000 payment due in 10 years unless profits from the land in each of the 10 years preceding maturity of the debt instrument exceed a specified amount, in which case B is to make a payment of $1,200,000. The debt instrument does not provide for interest.
(ii) *Total payments may exceed $1,000,000.* Even though the total payments ultimately payable under the contract may be less than $1,000,000, at the time of the sale or exchange it cannot be determined that the sales price cannot exceed $1,000,000. Thus, the sale of the land used as a farm is not an excepted transaction described in section 1274(c)(3)(A).

Example 3. Sale between related parties subject to section 483(e). (i) *Facts.* On July 1, 1995, A, an individual, sells land (not used as a farm within the meaning of section 6420(c)(2)) to A's child B for $650,000. In consideration for the sale, B issues a 10-year debt instrument to A that calls for a payment of $650,000. No other consideration is given. The debt instrument does not provide for interest.
(ii) *Treatment of debt instrument.* For purposes of section 483(e), the $650,000 debt instrument is treated as two separate debt instruments: a $500,000 debt instrument and a $150,000 debt instrument. The $500,000 debt instrument is subject to section 483(e), and accordingly is covered by the exception from section 1274 described in section 1274(c)(3)(F). Because the amount of the payments due as consideration for the sale exceeds $250,000, however, the $150,000 debt instrument is subject to section 1274.

[T.D. 8517, 59 FR 4820, Feb. 2, 1994]

§ 1.1274-2 Issue price of debt instruments to which section 1274 applies.

(a) ***In general.*** If section 1274 applies to a debt instrument, section 1274 and this section determine the issue price of the debt instrument. For rules relating to the determination of the amount and timing of OID to be included in income, see section 1272 and the regulations thereunder.

(b) *Issue price* —

(1) ***Debt instruments that provide for adequate stated interest; stated principal amount.*** The issue price of a debt instrument that provides for adequate stated interest is the stated principal amount of the debt instrument. For purposes of section 1274, the stated principal amount of a debt instrument is the aggregate amount of all payments due under the debt instrument, excluding any amount of stated interest. Under § 1.1273-2(g)(2)(ii), however, the stated principal amount of a debt instrument is reduced by any payment from the buyer- borrower to the seller-lender that is designated as interest or points. See *Example 2* of § 1.1273-2(g)(5).

(2) ***Debt instruments that do not provide for adequate stated interest; imputed principal amount.*** The issue price of a debt instrument that does not provide for adequate stated interest is the imputed principal amount of the debt instrument.

(3) ***Debt instruments issued in a potentially abusive situation; fair market value.*** Notwithstanding paragraphs (b)(1) and (b)(2) of this section, in the case of a debt instrument issued in a potentially abusive situation (as defined in § 1.1274-3), the issue price of the debt instrument is the fair market value of the property received in exchange for the debt instrument, reduced by the fair market value of any consideration other than the debt instrument issued in consideration for the sale or exchange.

(c) *Determination of whether a debt instrument provides for adequate stated interest* —

(1) ***In general.*** A debt instrument provides for adequate stated interest if its stated principal amount is less than or equal to its imputed principal amount. Imputed principal amount means the sum of the present values, as of the issue date, of all payments, including payments of stated interest, due under the debt instrument (determined by using a discount rate equal to the test rate of interest as determined under § 1.1274-4). If a debt instrument has a single fixed rate of interest that is paid or compounded at least annually, and that rate is equal to or greater than the test rate, the debt instrument has adequate stated interest.

(2) ***Determination of present value.*** The present value of a payment is determined by discounting the payment from the date it becomes due to the date of the sale or exchange at the test rate of interest. To determine present value, a compounding period must be selected, and the test rate must be based on the same compounding period.

(d) ***Treatment of certain options.*** This paragraph (d) provides rules for determining the issue price of a debt instrument to which section 1274 applies (other than a debt instrument issued in a potentially abusive situation) that is subject to one or more options described in both paragraphs (c)(1) and (c)(5) of § 1.1272-1. Under this paragraph (d), an issuer will be deemed to exercise or not exercise an option or combination of options in a manner that minimizes the instrument's imputed principal amount, and a holder will be deemed to exercise or not exercise an option or combination of options in a manner that maximizes the instrument's imputed principal amount. If both the issuer and the holder have options, the rules of this paragraph (d) are applied to the options in the order that they may be exercised. Thus, the deemed exercise of one option may eliminate other options that are later in time. See § 1.1272-1(c)(5) to determine the debt instrument's yield and maturity for purposes of determining the accrual of OID with respect to the instrument.

(e) ***Mandatory sinking funds.*** In determining the issue price of a debt instrument to which section 1274 applies (other than a debt instrument issued in a potentially abusive situation) and that is subject to a mandatory sinking fund provision described in § 1.1272-1(c)(3), the mandatory sinking fund provision is ignored.

(f) *Treatment of variable rate debt instruments* —

(1) *Stated interest at a qualified floating rate* —

(i) ***In general.*** For purposes of paragraph (c) of this section, the imputed principal amount of a variable rate debt instrument (within the meaning of § 1.1275-5(a)) that provides for stated interest at a qualified floating rate (or rates) is determined by assuming that the instrument provides for a fixed rate of interest for each accrual period to which a qualified floating rate applies. For purposes of the preceding sentence, the assumed fixed rate in each accrual period is the greater of—

(A) The value of the applicable qualified floating rate as of the first date on which there is a binding written contract that substantially sets forth the terms under which the sale or exchange is ultimately consummated; or

(B) The value of the applicable qualified floating rate as of the date on which the sale or exchange occurs.

(ii) ***Interest rate restrictions.*** Notwithstanding paragraph (f)(1)(i) of this section, if, as a result of interest rate restrictions (such as an interest rate cap), the expected yield of the debt instrument taking the restrictions into account is significantly less than the expected yield of the debt instrument without regard to the restrictions, the interest payments on the debt instrument (other than any fixed interest payments) are treated as contingent payments. Reasonably symmetric interest rate caps and floors, or reasonably symmetric governors, that are fixed throughout the term of the debt instrument do not result in the debt instrument being subject to this rule.

(2) ***Stated interest at a single objective rate.*** For purposes of paragraph (c) of this section, the imputed principal amount of a variable rate debt instrument (within the meaning of § 1.1275-5(a)) that provides for stated interest at a single objective rate is determined by treating the interest payments as contingent payments.

(g) ***Treatment of contingent payment debt instruments.*** Notwithstanding paragraph (b) of this section, if a debt instrument subject to section 1274 provides for one or more contingent payments, the issue price of the debt instrument is the lesser of the instrument's noncontingent principal payments and the sum of the present values of the noncontingent payments (as determined under paragraph (c) of this section). However, if the debt instrument is issued in a potentially abusive situation, the issue price of the debt instrument is the fair market value of the noncontingent payments. For additional rules relating to a debt instrument that provides for one or more contingent payments, see § 1.1275-4. This paragraph (g) applies to debt instruments issued on or after August 13, 1996.

(h) ***Examples.*** The following examples illustrate the rules of this section. Each example assumes a 30-day month, 360-day year. In addition, each example assumes that the debt instrument is not a qualified debt instrument (as defined in section 1274A(b)) and is not issued in a potentially abusive situation.

> *Example 1. Debt instrument without a fixed rate over its entire term.* (i) *Facts.* On January 1, 1995, A sells nonpublicly traded property to B for a stated purchase price of $3,500,000. In consideration for the sale, B makes a down payment of $500,000 and issues a 10-year debt instrument with a stated principal amount of $3,000,000, payable at maturity. The debt instrument calls for no interest in the first 2 years and interest at a rate of 15 percent payable annually over

the remaining 8 years of the debt instrument. The first interest payment of $450,000 is due on December 31, 1997, and the last interest payment is due on December 31, 2004, together with the $3,000,000 payment of principal. Assume that the test rate of interest applicable to the debt instrument is 10.5 percent, compounded annually.

(ii) *Applicability of section 1274.* Because the debt instrument does not provide for any interest during the first 2 years, none of the interest on the debt instrument is qualified stated interest. Therefore, the issue price of the debt instrument is determined under section 1274. See § 1.1274-1(b)(1). If the debt instrument has adequate stated interest, the issue price of the instrument is its stated principal amount. Otherwise, the issue price of the debt instrument is its imputed principal amount. The debt instrument has adequate stated interest only if the stated principal amount is less than or equal to the imputed principal amount.

(iii) *Determination of imputed principal amount.* To compute the imputed principal amount of the debt instrument, all payments due under the debt instrument are discounted back to the issue date at 10.5 percent, compounded annually, as follows:

(A) The present value of the $3,000,000 principal payment payable on December 31, 2004, is $1,105,346.59, determined as follows:

$$\$1{,}105{,}346.59 = \frac{\$3{,}000{,}000}{(1+.105/1)^{10}}$$

(B) The present value of the eight interest payments of $450,000 as of January 1, 1997, is $2,357,634.55, determined as follows:

$$\$2{,}357{,}634.55 = \$450{,}000 \times \frac{1-(1+.105/1)^{-8}}{(.105/1)}$$

(C) The present value of this interim amount as of January 1, 1995, is $1,930,865.09, determined as follows:

$$\$1{,}930{,}865.09 = \frac{\$2{,}357{,}634.55}{(1+.105/1)^{2}}$$

(iv) *Determination of issue price.* The debt instrument's imputed principal amount (that is, the present value of all payments due under the debt instrument) is $3,036,211.68 ($1,105,346.59 + $1,930,865.09). Because the stated principal amount ($3,000,000) is less than the imputed principal amount, the debt instrument provides for adequate stated interest. Therefore, the issue price of the debt instrument is its stated principal amount ($3,000,000).

Example 2. Debt instrument subject to issuer call option. (i) *Facts.* On January 1, 1995, in partial consideration for the sale of nonpublicly traded property, H corporation issues to G a 10-year debt

instrument, maturing on January 1, 2005, with a stated principal amount of $10,000,000, payable on that date. The debt instrument provides for annual payments of interest of 8 percent for the first 5 years and 14 percent for the final 5 years, payable on January 1 of each year, beginning on January 1, 1996. In addition the debt instrument provides H with the unconditional option to call (prepay) the debt instrument at the end of 5 years for its stated principal amount of $10,000,000. Assume that the Federal mid-term and long-term rates applicable to the sale based on annual compounding are 9 percent and 10 percent, respectively.

(ii) *Option presumed exercised.* Assuming exercise of the call option, the imputed principal amount as determined under paragraph (d) of this section is $9,611,034.87 (the present value of all of the payments due within a 5-year term discounted at a test rate of 9 percent, compounded annually). Assuming nonexercise of the call option, the imputed principal amount is $10,183,354.78 (the present value of all of the payments due within a 10-year term discounted at a test rate of 10 percent, compounded annually). For purposes of determining the imputed principal amount, the option is presumed exercised because the imputed principal amount, assuming exercise of the option, is less than the imputed principal amount, assuming the option is not exercised. Because the option is presumed exercised, the debt instrument fails to provide for adequate stated interest because the imputed principal amount ($9,611,034.87) is less than the stated principal amount ($10,000,000). Thus, the issue price of the debt instrument is $9,611,034.87.

Example 3. Variable rate debt instrument with a single rate over its entire term. (i) *Facts.* On January 1, 1995, A sells B nonpublicly traded property. In partial consideration for the sale, B issues a debt instrument in the principal amount of $1,000,000, payable in 5 years. The debt instrument calls for interest payable monthly at a rate of 1 percentage point above the average prime lending rate of a major bank for the month preceding the month of the interest payment. Assume that the test rate of interest applicable to the debt instrument is 10.5 percent, compounded monthly. Assume also that 1 percentage point above the prime lending rate of the designated bank on the date of the sale is 12.5 percent, compounded monthly, which is greater than 1 percentage point above the prime lending rate of the designated bank on the first date on which there is a binding written contract that substantially sets forth the terms under which the sale is consummated.

(ii) *Debt instrument has adequate stated interest.* The debt instrument is a variable rate debt instrument (within the meaning of § 1.1275-5) that provides for stated interest at a qualified floating rate. Under paragraph (f)(1)(i) of this section, the debt instrument is treated as if it provided for a fixed rate of interest equal to 12.5 percent, compounded monthly. Because the test rate of interest is 10.5 percent, compounded monthly, the debt instrument provides for adequate stated interest.

Example 4. Debt instrument with a capped variable rate. On July 1, 1995, A sells nonpublicly traded property to B in return for a debt instrument with a stated principal amount of $10,000,000, payable on July 1, 2005. Interest is payable on July 1 of each year, beginning on July 1, 1996, at the Federal short-term rate for June of the same year. The debt instrument provides, however, that the interest rate cannot

rise above 8.5 percent, compounded annually. Assume that, as of the date the test rate of interest for the debt instrument is determined, the Federal short-term rate is 8 percent, compounded annually. Assume further that, as a result of the interest rate cap of 8.5 percent, compounded annually, the expected yield of the debt instrument is significantly less than the expected yield of the debt instrument if it did not include the interest rate cap. Under paragraph (f)(1)(ii) of this section, the variable payments are treated as contingent payments for purposes of this section.

(i) [Reserved]

(j) *Special rules for tax-exempt obligations* —

(1) ***Certain variable rate debt instruments.*** Notwithstanding paragraph (b) of this section, if a tax-exempt obligation (as defined in section 1275(a)(3)) is a variable rate debt instrument (within the meaning of § 1.1275-5) that pays interest at an objective rate and is subject to section 1274, the issue price of the obligation is the greater of the obligation's fair market value and its stated principal amount.

(2) ***Contingent payment debt instruments.*** Notwithstanding paragraphs (b) and (g) of this section, if a tax-exempt obligation (as defined in section 1275(a)(3)) is subject to section 1274 and § 1.1275-4, the issue price of the obligation is the fair market value of the obligation. However, in the case of a tax-exempt obligation that is subject to § 1.1275-4(d)(2) (an obligation that provides for interest-based or revenue-based payments), the issue price of the obligation is the greater of the obligation's fair market value and its stated principal amount.

(3) ***Effective date.*** This paragraph (j) applies to debt instruments issued on or after August 13, 1996.

[T.D. 8517, 59 FR 4821, Feb. 2, 1994, as amended by T.D. 8674, 61 FR 30141, June 14, 1996]

§ 1.1274-3 Potentially abusive situations defined.

(a) ***In general.*** For purposes of section 1274, a potentially abusive situation means-—

(1) A tax shelter (as defined in section 6662(d)(2)(C)(ii)); or

(2) Any other situation involving—

(i) A recent sales transaction;

(ii) Nonrecourse financing;

(iii) Financing with a term in excess of the useful life of the property; or

(iv) A debt instrument with clearly excessive interest.

(b) *Operating rules* —

(1) ***Debt instrument exchanged for nonrecourse financing.*** Nonrecourse financing does not include an exchange of a nonrecourse debt instrument for an outstanding recourse or nonrecourse debt instrument.

(2) ***Nonrecourse debt with substantial down payment.*** Nonrecourse financing does not include a sale or exchange of a real property interest financed by a nonrecourse debt instrument if, in addition to the nonrecourse debt instrument, the purchaser makes a down payment in money that equals or exceeds 20 percent of the total stated purchase price of the real property interest. For purposes of the preceding sentence, a real property interest means any interest, other than an interest solely as a creditor, in real property.

(3) ***Clearly excessive interest.*** Interest on a debt instrument is clearly excessive if the interest, in light of the terms of the debt instrument and the creditworthiness of the borrower, is clearly greater than the arm's length amount of interest that would have been charged in a cash lending transaction between the same two parties.

(4) ***Debt-for-debt exchange*** —

(i) ***Rule.*** A debt instrument issued in a debt-for-debt exchange, including a deemed exchange under § 1.1001-3, will not be treated as the subject of a recent sales transaction for purposes of section 1274(b)(3)(B)(ii)(I) even if the debt instrument exchanged for the newly issued debt instrument was recently acquired prior to the exchange. Therefore, the issue price of the debt instrument will not be determined under section 1274(b)(3). However, if the debt instrument or the property for which the debt instrument is issued is publicly traded within the meaning of § 1.1273-2(f), the rules of § 1.1273-2 will apply to determine the issue price of the debt instrument.

(ii) ***Effective/applicability date.*** Paragraph (b)(4)(i) of this section applies to a debt instrument issued on or after November 13, 2012.

(c) ***Other situations to be specified by Commissioner.*** The Commissioner may designate in the Internal Revenue Bulletin situations that, although described in paragraph (a)(2) of this section, will not be treated as potentially abusive because they do not have the effect of significantly misstating basis or amount realized (see § 601.601(d)(2)(ii) of this chapter).

(d) ***Consistency rule.*** The issuer's determination that the debt instrument is or is not issued in a potentially abusive situation is binding on all holders of the debt instrument. However, the issuer's determination is not binding on a holder who explicitly discloses a position that is inconsistent with the issuer's determination. Unless otherwise prescribed by the Commissioner, the disclosure must be made on a statement attached to the holder's timely filed Federal income tax return for the taxable year that includes the acquisition date of the debt instrument. See § 1.1275-2(e) for rules relating to the issuer's obligation to disclose certain information to holders.

[T.D. 8517, 59 FR 4822, Feb. 2, 1994, as amended by T.D. 9599, 77 FR 56538, Sept. 13, 2012]

§ 1.1274-4 Test rate.

(a) ***Determination of test rate of interest*** —

(1) ***In general*** —

(i) ***Test rate is the 3-month rate.*** Except as provided in paragraph (a)(2) of this section, the test rate of interest for a debt instrument issued in consideration for the sale or exchange of property is the 3-month rate.

(ii) ***The 3-month rate.*** Except as provided in paragraph (a)(1)(iii) of this section, the 3-month rate is the lower of—

(A) The lowest applicable Federal rate (based on the appropriate compounding period) in effect during the 3-month period ending with the first month in which there is a binding written contract that substantially sets forth the terms under which the sale or exchange is ultimately consummated; or

(B) The lowest applicable Federal rate (based on the appropriate compounding period) in effect during the 3-month period ending with the month in which the sale or exchange occurs.

(iii) ***Special rule if there is no binding written contract.*** If there is no binding written contract that substantially sets forth the terms under which the sale or exchange is ultimately consummated, the 3-month rate is the lowest applicable Federal rate (based on the appropriate compounding period) in effect during the 3-month period ending with the month in which the sale or exchange occurs.

(2) ***Test rate for certain debt instruments*** —

(i) ***Sale-leaseback transactions.*** Under section 1274(e) (relating to certain sale-leaseback transactions), the test rate is 110 percent of the 3-month rate determined under paragraph (a)(1) of this section. For purposes of section 1274(e)(3), related party means a person related to the transferor within the meaning of section 267(b) or 707(b)(1).

(ii) ***Qualified debt instrument.*** Under section 1274A(a), the test rate for a qualified debt instrument is no greater than 9 percent, compounded semiannually, or an equivalent rate based on an appropriate compounding period.

(iii) ***Alternative test rate for short-term obligations*** —

(A) ***Requirements.*** This paragraph (a)(2)(iii)(A) provides an alternative test rate under section 1274(d)(1)(D) for a debt instrument with a maturity of 1 year or less. This alternative test rate applies, however, only if the debt instrument provides for adequate stated interest using the alternative test rate, the issuer provides on the face of the debt instrument that the instrument qualifies as having adequate stated interest under section 1274(d)(1)(D), and the issuer and holder treat or agree to treat the instrument as having adequate stated interest.

(B) ***Alternative test rate.*** For purposes of paragraph (a)(2)(iii)(A), the alternative test rate is the market yield on U.S. Treasury bills with the same maturity date as the debt instrument. If the same maturity date is not available, the market yield on U.S. Treasury bills that mature in the same week or month as the debt instrument is used. The alternative test rate is determined as of the date on which there is a binding written contract that substantially sets forth the terms under which the sale or exchange is ultimately consummated or as of the date of the sale or exchange, whichever date results in a lower rate. If there is no binding written contract, however, the alternative test rate is determined as of the date of the sale or exchange.

(b) ***Applicable Federal rate.*** Except as otherwise provided in this section, the applicable Federal rate for a debt instrument is based on the term of the instrument (i.e., short-term, mid-term, or long-term). See section 1274(d)(1). The Internal Revenue Service publishes the applicable Federal rates for each month in the Internal Revenue Bulletin (see § 601.601(d)(2)(ii) of this chapter). The applicable Federal rates are based on the yield to maturity of outstanding marketable obligations of the United States of similar maturities during the one month period ending on the 14th day of the month preceding the month for which the rates are applicable.

(c) ***Special rules to determine the term of a debt instrument for purposes of determining the applicable Federal rate*** —

(1) ***Installment obligation.*** If a debt instrument is an installment obligation (as defined in § 1.1273-1(e)(1)), the term of the instrument is the instrument's weighted average maturity (as defined in § 1.1273-1(e)(3)).

(2) ***Certain variable rate debt instruments*** —

(i) ***In general.*** Except as otherwise provided in paragraph (c)(2)(ii) of this section, if a variable rate debt instrument (as defined in § 1.1275-5(a)) provides for stated interest at a qualified floating rate (or rates), the term of the instrument is determined by reference to the longest interval between interest adjustment dates, or, if the variable rate debt instrument provides for a fixed rate, the interval between the issue date and the last day on which the fixed rate applies, if this interval is longer.

(ii) ***Restrictions on adjustments.*** If, due to significant restrictions on variations in a qualified floating rate or the use of certain formulae pursuant to § 1.1275-5(b)(2) (e.g., 15 percent of 1-year LIBOR, plus 800 basis points), the rate in substance resembles a fixed rate, the applicable Federal rate is determined by reference to the term of the debt instrument.

(3) ***Counting of either the issue date or the maturity date.*** The term of a debt instrument includes either the issue date or the maturity date, but not both dates.

(4) ***Certain debt instruments that provide for principal payments uncertain as to time.*** If a debt instrument provides for principal payments that are fixed in total amount but uncertain as to time, the term of the instrument is determined by reference to the latest possible date on which a principal payment can be made or, in the case of an installment obligation, by reference to the longest weighted average maturity under any possible payment schedule.

(d) ***Foreign currency loans.*** If all of the payments of a debt instrument are denominated in, or determined by reference to, a currency other than the U.S. dollar, the applicable Federal rate for the debt instrument is a foreign currency rate of interest that is analogous to the applicable Federal rate described in this section. For this purpose, an analogous rate of interest is a rate based on yields (with the appropriate compounding period) of the highest grade of outstanding marketable obligations denominated in such currency (excluding any obligations that benefit from special tax exemptions or preferential tax rates not available to debt instruments generally) with due consideration given to the maturities of the obligations.

(e) ***Examples.*** The following examples illustrate the rules of this section.

Example 1. Variable rate debt instrument that limits the amount of increase and decrease in the rate. (i) *Facts.* On July 1, 1996, A sells nonpublicly traded property to B in return for a 5-year debt instrument that provides for interest to be paid on July 1 of each year, beginning on July 1, 1997, based on the prime rate of a local bank on that date. However, the interest rate cannot increase or decrease from one year to the next by more than .25 percentage points (25 basis points).
(ii) *Significant restriction.* The debt instrument is a variable rate debt instrument (as defined in § 1.1275-5) that provides for stated interest at a qualified floating rate. Assume that based on all the facts and circumstances, the restriction is a significant restriction on the variations in the rate of interest. Under paragraph (c)(2)(ii) of this section, the applicable Federal rate is determined by reference to the term of the debt instrument, and the applicable Federal rate is the Federal mid-term rate.

Example 2. Installment obligation. (i) *Facts.* On January 1, 1996, A sells nonpublicly traded property to B

in exchange for a debt instrument that calls for a payment of $500,000 on January 1, 2001, and a payment of $1,000,000 on January 1, 2006. The debt instrument does not provide for any stated interest.
(ii) *Determination of term.* The debt instrument is an installment obligation. Under paragraph (c)(1) of this section, the term of the debt instrument is its weighted average maturity (as defined in § 1.1273-1(e)(3)). The debt instrument's weighted average maturity is 8.33 years, which is the sum of (A) the ratio of the first payment to total payments (500,000/1,500,000), multiplied by the number of complete years from the issue date until the payment is due (5 years), and (B) the ratio of the second payment to total payments (1,000,000/1,500,000), multiplied by the number of complete years from the issue date until the second payment is due (10 years).

(iii) *Applicable Federal rate.* Based on the calculation in paragraph (ii) of this example, the term of the debt instrument is treated as 8.33 years. Consequently, the applicable Federal rate is the Federal mid-term rate.

[T.D. 8517, 59 FR 4823, Feb. 2, 1994]

§ 1.1274-5 Assumptions.

(a) ***In general.*** Section 1274 does not apply to a debt instrument if the debt instrument is assumed, or property is taken subject to the debt instrument, in connection with a sale or exchange of property, unless the terms of the debt instrument, as part of the sale or exchange, are modified in a manner that would constitute an exchange under section 1001.

(b) ***Modifications of debt instruments*** —

(1) ***In general.*** Except as provided in paragraph (b)(2) of this section, if a debt instrument is assumed, or property is taken subject to a debt instrument, in connection with a sale or exchange of property, the terms of the debt instrument are modified as part of the sale or exchange, and the modification triggers an exchange under section 1001, the modification is treated as a separate transaction taking place immediately before the sale or exchange and is attributed to the seller of the property. For purposes of this paragraph (b), a debt instrument is not considered to be modified as part of the sale or exchange unless the seller knew or had reason to know about the modification.

(2) ***Election to treat buyer as modifying the debt instrument*** —

(i) ***In general.*** Rather than having the rules in paragraph (b)(1) of this section apply, the seller and buyer may jointly elect to treat the transaction as one in which the buyer first assumed the original (unmodified) debt instrument and then subsequently modified the debt instrument. For this purpose, the modification is treated as a separate transaction taking place immediately after the sale or exchange.

(ii) ***Time and manner of making the election.*** The buyer and seller make the election under paragraph (b)(2)(i) of this section by jointly signing a statement that includes the names, addresses, and taxpayer identification numbers of the seller and buyer, and a clear indication that the election is being made under paragraph (b)(2)(i) of this section. Both the buyer and the seller must sign this statement not later than the earlier of the last day (including extensions) for filing the Federal income tax return of the buyer or seller for the taxable year in which the sale or exchange of the property occurs. The buyer and seller should attach this signed statement (or a copy thereof) to their timely filed Federal income tax returns.

(c) ***Wraparound indebtedness.*** For purposes of paragraph (a) of this section, the issuance of wraparound indebtedness is not considered an assumption.

(d) ***Consideration attributable to assumed debt.*** If, as part of the consideration for the sale or exchange of property, the buyer assumes, or takes the property subject to, an indebtedness that was issued with OID (including a debt instrument issued in a prior sale or exchange to which section 1274 applied), the portion of the buyer's basis in the property and the seller's amount realized attributable to the debt instrument equals the adjusted issue price of the debt instrument as of the date of the sale or exchange.

[T.D. 8517, 59 FR 4824, Feb. 2, 1994]

§ 1.1274A-1 Special rules for certain transactions where stated principal amount does not exceed $2,800,000.

(a) ***In general.*** Section 1274A allows the use of a lower test rate for purposes of sections 483 and 1274 in the case of a qualified debt instrument (as defined in section 1274A(b)) and, if elected by the borrower and the lender, the use of the cash receipts and disbursements method of accounting for interest on a cash method debt instrument (as defined in section 1274A(c)(2)). This section provides special rules for qualified debt instruments and cash method debt instruments.

(b) ***Rules for both qualified and cash method debt instruments*** —

(1) ***Sale-leaseback transactions.*** A debt instrument issued in a sale-leaseback transaction (within the meaning of section 1274(e)) cannot be either a qualified debt instrument or a cash method debt instrument.

(2) ***Debt instruments calling for contingent payments.*** A debt instrument that provides for contingent payments cannot be a qualified debt instrument unless it can be determined at the time of the sale or exchange that the maximum stated principal amount due under the debt instrument cannot exceed the amount specified in section 1274A(b). Similarly, a debt instrument that provides for contingent payments cannot be a cash method debt instrument unless it can be determined at the time of the sale or exchange that the maximum stated principal amount due under the debt instrument cannot exceed the amount specified in section 1274A(c)(2)(A).

(3) ***Aggregation of transactions*** —

(i) ***General rule.*** The aggregation rules of section 1274A(d)(1) are applied using a facts and circumstances test.

(ii) ***Examples.*** The following examples illustrate the application of section 1274A(d)(1) and paragraph (b)(3)(i) of this section.

Example 1. Aggregation of two sales to a single person. In two transactions evidenced by separate sales agreements, A sells undivided half interests in Blackacre to B. The sales are pursuant to a plan for the sale of a 100 percent interest in Blackacre to B. These sales or exchanges are part of a series of related transactions and, thus, are treated as a single sale for purposes of section 1274A.

Example 2. Aggregation of two purchases by unrelated individuals. Pursuant to a plan, unrelated individuals X and Y purchase undivided half interests in Blackacre from A and subsequently contribute these interests to a partnership in exchange for equal interests in the partnership. These purchases are treated as part of the same transaction and, thus, are treated as a single sale for purposes of section 1274A.

Example 3. Aggregation of sales made pursuant to a tender offer. Fifteen unrelated individuals own all of the stock of X Corporation. Y Corporation makes a tender offer to these 15 shareholders. The terms offered to each shareholder are identical. Shareholders holding a majority of the shares of X Corporation elect to tender their shares pursuant to Y Corporation's offer. These sales are part of the same transaction and, thus, are treated as a single sale for purposes of section 1274A.

Example 4. No aggregation for separate sales of similar property to unrelated persons. Pursuant to a newspaper advertisement, X Corporation offers for sale similar condominiums in a single building. The prices of the units vary due to a variety of factors, but the financing terms offered by X Corporation to all buyers are identical. The units are purchased by unrelated buyers who decided whether to purchase units in the building at the price and on the terms offered by X Corporation, without regard to the actions of other buyers. Because each buyer acts individually, the sales are not part of the same transaction or a series of related transactions and, thus, are treated as separate sales.

(4) ***Inflation adjustment of dollar amounts.*** Under section 1274A(d)(2), the dollar amounts specified in sections 1274A(b) and 1274A(c)(2)(A) are adjusted for inflation. The dollar amounts, adjusted for inflation, are published in the Internal Revenue Bulletin (see § 601.601(d)(2)(ii) of this chapter).

(c) ***Rules for cash method debt instruments*** —

(1) ***Time and manner of making cash method election.*** The borrower and lender make the election described in section 1274A(c)(2)(D) by jointly signing a statement that includes the names, addresses, and taxpayer identification numbers of the borrower and lender, a clear indication that an election is being made under section 1274A(c)(2), and a declaration that the debt instrument with respect to which the election is being made fulfills the requirements of a cash method debt instrument. Both the borrower and the lender must sign this statement not later than the earlier of the last day (including extensions) for filing the Federal income tax return of the borrower or lender for the taxable year in which the debt instrument is issued. The borrower and lender should attach this signed statement (or a copy thereof) to their timely filed Federal income tax returns.

(2) ***Successors of electing parties.*** Except as otherwise provided in this paragraph (c)(2), the cash method election under section 1274A(c) applies to any successor of the electing lender or borrower. Thus, for any period after the transfer of a cash method debt instrument, the successor takes into account the interest (including unstated interest) on the instrument under the cash receipts and disbursements method of accounting. Nevertheless, if the lender (or any successor thereof) transfers the cash method debt instrument to a taxpayer who uses an accrual method of accounting, section 1272 rather than section 1274A(c) applies to the successor of the lender with respect to the debt instrument for any period after the date of the transfer. The borrower (or any successor thereof), however, remains on the cash receipts and disbursements method of accounting with respect to the cash method debt instrument.

(3) ***Modified debt instrument.*** In the case of a debt instrument issued in a debt-for-debt exchange that qualifies as an exchange under section 1001, the debt instrument is eligible for the election to be a cash method debt instrument if the other prerequisites to making the election in section 1274A(c) are met. However, if a principal purpose of the modification is to defer interest income or deductions through the use of the election, then the debt instrument is not eligible for the election.

(4) ***Debt incurred or continued to purchase or carry a cash method debt instrument.*** If a debt instrument is incurred or continued to purchase or carry a cash method debt instrument, rules similar to those under section 1277 apply to determine the timing of the interest deductions for the debt instrument. For purposes of the preceding sentence, rules similar to those under section 265(a)(2) apply to determine whether a debt instrument is incurred or continued to purchase or carry a cash method debt instrument.

[T.D. 8517, 59 FR 4824, Feb. 2, 1994]

§ 1.1275-1 Definitions.

(a) ***Applicability.*** The definitions contained in this section apply for purposes of sections 163(e) and 1271 through 1275 and the regulations thereunder.

(b) ***Adjusted issue price*** —

(1) ***In general.*** The adjusted issue price of a debt instrument at the beginning of the first accrual period is the issue price. Thereafter, the adjusted issue price of the debt instrument is the issue price of the debt instrument—

(i) Increased by the amount of OID previously includible in the gross income of any holder (determined without regard to section 1272(a)(7) and section 1272(c)(1)); and

(ii) Decreased by the amount of any payment previously made on the debt instrument other than a payment of qualified stated interest. See § 1.1275-2(f) for rules regarding adjustments to adjusted issue price on a pro rata prepayment.

(2) ***Bond issuance premium.*** If a debt instrument is issued with bond issuance premium (as defined in § 1.163-13(c)), for purposes of determining the issuer's adjusted issue price, the adjusted issue price determined under paragraph (b)(1) of this section is also decreased by the amount of bond issuance premium previously allocable under § 1.163-13(d)(3).

(3) ***Adjusted issue price for subsequent holders.*** For purposes of calculating OID accruals, acquisition premium, or market discount, a holder (other than a purchaser at original issuance) determines adjusted issue price in any manner consistent with the regulations under sections 1271 through 1275.

(c) ***OID.*** OID means original issue discount (as defined in section 1273(a) and § 1.1273-1).

(d) ***Debt instrument.*** Except as provided in section 1275(a)(1)(B) (relating to certain annuity contracts; see paragraph (j) of this section), debt instrument means any instrument or contractual arrangement that constitutes indebtedness under general principles of Federal income tax law (including, for example, a certificate of deposit or a loan). Nothing in the regulations under sections 163(e), 483, and 1271 through 1275, however, shall influence whether an instrument constitutes indebtedness for Federal income tax purposes. See § 1.385-3 for rules that treat certain instruments that otherwise would be treated as indebtedness as stock for Federal tax purposes.

(e) ***Tax-exempt obligations.*** For purposes of section 1275(a)(3)(B), exempt from tax means exempt from Federal income tax.

(f) ***Issue.***

(1) ***Debt instruments issued on or after March 13, 2001.***

(2) ***Debt instruments issued before March 13, 2001.***

(3) ***Transition rule.***

(4) ***Cross-references for reopening and aggregation rules.***

(g) ***Debt instruments issued by a natural person.*** If an entity is a primary obligor under a debt instrument, the debt instrument is considered to be issued by the entity and not by a natural person even if a natural person is a co-maker and is jointly liable for the debt instrument's repayment. A debt instrument issued by a partnership is considered to be issued by the partnership as an entity even if the partnership is composed entirely of natural persons.

(h) ***Publicly offered debt instrument.*** A debt instrument is publicly offered if it is part of an issue of debt instruments the initial offering of which—

(1) Is registered with the Securities and Exchange Commission; or

(2) Would be required to be registered under the Securities Act of 1933 (15 U.S.C. 77a *et seq.*) but for an exemption from registration—

(i) Under section 3 of the Securities Act of 1933 (relating to exempted securities);

(ii) Under any law (other than the Securities Act of 1933) because of the identity of the issuer or the nature of the security; or

(iii) Because the issue is intended for distribution to persons who are not United States persons.

(i) [Reserved]

(j) ***Life annuity exception under section 1275(a)(1)(B)(i)*** —

(1) ***Purpose.*** Section 1275(a)(1)(B)(i) excepts an annuity contract from the definition of *debt instrument* if section 72 applies to the contract and the contract depends (in whole or in substantial part) on the life expectancy of one or more individuals. This paragraph (j) provides rules to ensure that an annuity contract qualifies for the exception in section 1275(a)(1)(B)(i) only in cases where the life contingency under the contract is real and significant.

(2) ***General rule*** —

(i) ***Rule.*** For purposes of section 1275(a)(1)(B)(i), an annuity contract depends (in whole or in substantial part) on the life expectancy of one or more individuals only if—

(A) The contract provides for periodic distributions made not less frequently than annually for the life (or joint lives) of an individual (or a reasonable number of individuals); and

(B) The contract does not contain any terms or provisions that can significantly reduce the probability that total distributions under the contract will increase commensurately with the longevity of the annuitant (or annuitants).

(ii) ***Terminology.*** For purposes of this paragraph (j):

(A) ***Contract.*** The term *contract* includes all written or unwritten understandings among the parties as well as any person or persons acting in concert with one or more of the parties.

(B) ***Annuitant.*** The term *annuitant* refers to the individual (or reasonable number of individuals) referred to in paragraph (j)(2)(i)(A) of this section.

(C) ***Terminating death.*** The phrase *terminating death* refers to the annuitant death that can terminate periodic distributions under the contract. (See paragraph (j)(2)(i)(A) of this section.) For example, if a contract provides for periodic distributions until the later of the death of the last-surviving annuitant or the end of a term certain, the terminating death is the death of the last-surviving annuitant.

(iii) ***Coordination with specific rules.*** Paragraphs (j) (3) through (7) of this section describe certain terms and conditions that can significantly reduce the probability that total distributions under the contract will increase commensurately with the longevity of the annuitant (or annuitants). If a term or provision is not specifically described in paragraphs (j) (3) through (7) of this section, the annuity contract must be tested under the general rule of paragraph (j)(2)(i) of this section to determine whether it depends (in whole or in substantial part) on the life expectancy of one or more individuals.

(3) ***Availability of a cash surrender option*** —

(i) ***Impact on life contingency.*** The availability of a cash surrender option can significantly reduce the probability that total distributions under the contract will increase commensurately with the longevity of the annuitant (or annuitants). Thus, the availability of any cash surrender option causes the contract to fail to be described in section 1275(a)(1)(B)(i). A cash surrender option is available if there is reason to believe that the issuer (or a person acting in concert with the issuer) will be willing to terminate or purchase all or a part of the annuity contract by making one or more payments of cash or property (other than an annuity contract described in this paragraph (j)).

(ii) ***Examples.*** The following examples illustrate the rules of this paragraph (j)(3):

> *Example 1.* (i) *Facts.* On March 1, 1998, X issues a contract to A for cash. The contract provides that, effective on any date chosen by A (the annuity starting date), X will begin equal monthly distributions for A's life. The amount of each monthly distribution will be no less than an amount based on the contract's account value as of the annuity starting date, A's age on that date, and permanent purchase rate guarantees contained in the contract. The contract also provides that, at any time before the annuity starting date, A may surrender the contract to X for the account value less a surrender charge equal to a declining percentage of the account value. For this purpose, the initial account value is equal to the cash invested. Thereafter, the account value increases annually by at least a minimum guaranteed rate.
> (ii) *Analysis.* The ability to obtain the account value less the surrender charge, if any, is a cash surrender option. This ability can significantly reduce the probability that total distributions under the contract will increase commensurately with A's longevity. Thus, the contract fails to be described in section 1275(a)(1)(B)(i).

Example 2. (i) *Facts.* On March 1, 1998, X issues a contract to B for cash. The contract provides that beginning on March 1, 1999, X will distribute to B a fixed amount of cash each month for B's life. Based on X's advertisements, marketing literature, or illustrations or on oral representations by X's sales personnel, there is reason to believe that an affiliate of X stands ready to purchase B's contract for its commuted value.
(ii) *Analysis.* Because there is reason to believe that an affiliate of X stands ready to purchase B's contract for its commuted value, a cash surrender option is available within the meaning of paragraph (j)(3)(i) of this section. This availability can significantly reduce the probability that total distributions under the contract will increase commensurately with B's longevity. Thus, the contract fails to be described in section 1275(a)(1)(B)(i).

(4) ***Availability of a loan secured by the contract*** —

(i) ***Impact on life contingency.*** The availability of a loan secured by the contract can significantly reduce the probability that total distributions under the contract will increase commensurately with the longevity of the annuitant (or annuitants). Thus, the availability of any such loan causes the contract to fail to be described in section 1275(a)(1)(B)(i). A loan secured by the contract is available if there is reason to believe that the issuer (or a person acting in concert with the issuer) will be willing to make a loan that is directly or indirectly secured by the annuity contract.

(ii) ***Example.*** The following example illustrates the rules of this paragraph (j)(4):

Example: (i) *Facts.* On March 1, 1998, X issues a contract to C for $100,000. The contract provides that, effective on any date chosen by C (the annuity starting date), X will begin equal monthly distributions for C's life. The amount of each monthly distribution will be no less than an amount based on the contract's account value as of the annuity starting date, C's age on that date, and permanent purchase rate guarantees contained in the contract. From marketing literature circulated by Y, there is reason to believe that, at any time before the annuity starting date, C may pledge the contract to borrow up to $75,000 from Y. Y is acting in concert with X.
(ii) *Analysis.* Because there is reason to believe that Y, a person acting in concert with X, is willing to lend money against C's contract, a loan secured by the contract is available within the meaning of paragraph (j)(4)(i) of this section. This availability can significantly reduce the probability that total distributions under the contract will increase commensurately with C's longevity. Thus, the contract fails to be described in section 1275(a)(1)(B)(i).

(5) ***Minimum payout provision*** —

(i) ***Impact on life contingency.*** The existence of a minimum payout provision can significantly reduce the probability that total distributions under the contract will increase commensurately with the longevity of the annuitant (or annuitants). Thus, the existence of any minimum payout provision causes the contract to fail to be described in section 1275(a)(1)(B)(i).

(ii) ***Definition of minimum payout provision.*** A minimum payout provision is a contractual provision (for example, an agreement to make distributions over a term certain) that provides for one or more distributions made—

(A) After the terminating death under the contract; or

(B) By reason of the death of any individual (including distributions triggered by or increased by terminal or chronic illness, as defined in section 101(g)(1) (A) and (B)).

(iii) ***Exceptions for certain minimum payouts*** —

(A) ***Recovery of consideration paid for the contract.*** Notwithstanding paragraphs (j)(2)(i)(A) and (j)(5)(i) of this section, a contract does not fail to be described in section 1275(a)(1)(B)(i) merely because it provides that, after the terminating death, there will be one or more distributions that, in the aggregate, do not exceed the consideration paid for the contract less total distributions previously made under the contract.

(B) ***Payout for one-half of life expectancy.*** Notwithstanding paragraphs (j)(2)(i)(A) and (j)(5)(i) of this section, a contract does not fail to be described in section 1275(a)(1)(B)(i) merely because it provides that, if the terminating death occurs after the annuity starting date, distributions under the contract will continue to be made after the terminating death until a date that is no later than the halfway date. This exception does not apply unless the amounts distributed in each contract year will not exceed the amounts that would have been distributed in that year if the terminating death had not occurred until the expected date of the terminating death, determined under paragraph (j)(5)(iii)(C) of this section.

(C) ***Definition of halfway date.*** For purposes of this paragraph (j)(5)(iii), the halfway date is the date halfway between the annuity starting date and the expected date of the terminating death, determined as of the annuity starting date, with respect to all then-surviving annuitants. The expected date of the terminating death must be determined by reference to the applicable mortality table prescribed under section 417(e)(3)(A)(ii)(I).

(iv) ***Examples.*** The following examples illustrate the rules of this paragraph (j)(5):

> *Example 1.* (i) *Facts.* On March 1, 1998, X issues a contract to D for cash. The contract provides that, effective on any date D chooses (the annuity starting date), X will begin equal monthly distributions for the greater of D's life or 10 years, regardless of D's age as of the annuity starting date. The amount of each monthly distribution will be no less than an amount based on the contract's account value as of the annuity starting date, D's age on that date, and permanent purchase rate guarantees contained in the contract.
> (ii) *Analysis.* A minimum payout provision exists because, if D dies within 10 years of the annuity starting date, one or more distributions will be made after D's death. The minimum payout provision does not qualify for the exception in paragraph (j)(5)(iii)(B) of this section because D may defer the annuity starting date until his remaining life

expectancy is less than 20 years. If, on the annuity starting date, D's life expectancy is less than 20 years, the minimum payout period (10 years) will last beyond the halfway date. The minimum payout provision, therefore, can significantly reduce the probability that total distributions under the contract will increase commensurately with D's longevity. Thus, the contract fails to be described in section 1275(a)(1)(B)(i).

Example 2. (i) *Facts.* The facts are the same as in *Example 1* of this paragraph (j)(5)(iv) except that the monthly distributions will last for the greater of D's life or a term certain. D may choose the length of the term certain subject to the restriction that, on the annuity starting date, the term certain must not exceed one-half of D's life expectancy as of the annuity starting date. The contract also does not provide for any adjustment in the amount of distributions by reason of the death of D or any other individual, except for a refund of D's aggregate premium payments less the sum of all prior distributions under the contract.
(ii) *Analysis.* The minimum payout provision qualifies for the exception in paragraph (j)(5)(iii)(B) of this section because distributions under the minimum payout provision will not continue past the halfway date and the contract does not provide for any adjustments in the amount of distributions by reason of the death of D or any other individual, other than a guaranteed death benefit described in paragraph (j)(5)(iii)(A) of this section. Accordingly, the existence of this minimum payout provision does not prevent the contract from being described in section 1275(a)(1)(B)(i).

(6) ***Maximum payout provision*** —

(i) ***Impact on life contingency.*** The existence of a maximum payout provision can significantly reduce the probability that total distributions under the contract will increase commensurately with the longevity of the annuitant (or annuitants). Thus, the existence of any maximum payout provision causes the contract to fail to be described in section 1275(a)(1)(B)(i).

(ii) ***Definition of maximum payout provision.*** A maximum payout provision is a contractual provision that provides that no distributions under the contract may be made after some date (the termination date), even if the terminating death has not yet occurred.

(iii) ***Exception.*** Notwithstanding paragraphs (j)(2)(i)(A) and (j)(6)(i) of this section, an annuity contract does not fail to be described in section 1275(a)(1)(B)(i) merely because the contract contains a maximum payout provision, provided that the period of time from the annuity starting date to the termination date is at least twice as long as the period of time from the annuity starting date to the expected date of the terminating death, determined as of the annuity starting date, with respect to all then-surviving annuitants. The expected date of the terminating death must be determined by reference to the applicable mortality table prescribed under section 417(e)(3)(A)(ii)(I).

(iv) ***Example.*** The following example illustrates the rules of this paragraph (j)(6):

Example: (i) *Facts.* On March 1, 1998, X issues a contract to E for cash. The contract

provides that beginning on April 1, 1998, X will distribute to E a fixed amount of cash each month for E's life but that no distributions will be made after April 1, 2018. On April 1, 1998, E's life expectancy is 9 years.
(ii) *Analysis.* A maximum payout provision exists because if E survives beyond April 1, 2018, E will receive no further distributions under the contract. The period of time from the annuity starting date (April 1, 1998) to the termination date (April 1, 2018) is 20 years. Because this 20-year period is more than twice as long as E's life expectancy on April 1, 1998, the maximum payout provision qualifies for the exception in paragraph (j)(6)(iii) of this section. Accordingly, the existence of this maximum payout provision does not prevent the contract from being described in section 1275(a)(1)(B)(i).

(7) ***Decreasing payout provision*** —

(i) ***General rule.*** If the amount of distributions during any contract year (other than the last year during which distributions are made) may be less than the amount of distributions during the preceding year, this possibility can significantly reduce the probability that total distributions under the contract will increase commensurately with the longevity of the annuitant (or annuitants). Thus, the existence of this possibility causes the contract to fail to be described in section 1275(a)(1)(B)(i).

(ii) ***Exception for certain variable distributions.*** Notwithstanding paragraph (j)(7)(i) of this section, if an annuity contract provides that the amount of each distribution must increase and decrease in accordance with investment experience, cost of living indices, or similar fluctuating criteria, then the possibility that the amount of a distribution may decrease for this reason does not significantly reduce the probability that the distributions under the contract will increase commensurately with the longevity of the annuitant (or annuitants).

(iii) ***Examples.*** The following examples illustrate the rules of this paragraph (j)(7):

Example 1. (i) *Facts.* On March 1, 1998, X issues a contract to F for $100,000. The contract provides that beginning on March 1, 1999, X will make distributions to F each year until F's death. Prior to March 1, 2009, distributions are to be made at a rate of $12,000 per year. Beginning on March 1, 2009, distributions are to be made at a rate of $3,000 per year.
(ii) *Analysis.* If F is alive in 2009, the amount distributed in 2009 ($3,000) will be less than the amount distributed in 2008 ($12,000). The exception in paragraph (j)(7)(ii) of this section does not apply. The decrease in the amount of any distributions made on or after March 1, 2009, can significantly reduce the probability that total distributions under the contract will increase commensurately with F's longevity. Thus, the contract fails to be described in section 1275(a)(1)(B)(i).

Example 2. (i) *Facts.* On March 1, 1998, X issues a contract to G for cash. The contract provides that, effective on any date G chooses (the annuity starting date), X will begin monthly distributions to G for G's life. Prior to the annuity starting date, the account value

of the contract reflects the investment return, including changes in the market value, of an identifiable pool of assets. When G chooses the annuity starting date, G must also choose whether the distributions are to be fixed or variable. If fixed, the amount of each monthly distribution will remain constant at an amount that is no less than an amount based on the contract's account value as of the annuity starting date, G's age on that date, and permanent purchase rate guarantees contained in the contract. If variable, the monthly distributions will fluctuate to reflect the investment return, including changes in the market value, of the pool of assets. The monthly distributions under the contract will not otherwise decline from year to year.

(ii) *Analysis.* Because the only possible year-to-year declines in annuity distributions are described in paragraph (j)(7)(ii) of this section, the possibility that the amount of distributions may decline from the previous year does not reduce the probability that total distributions under the contract will increase commensurately with G's longevity. Thus, the potential fluctuation in the annuity distributions does not cause the contract to fail to be described in section 1275(a)(1)(B)(i).

(8) ***Effective dates*** —

(i) ***In general.*** Except as provided in paragraph (j)(8) (ii) and (iii) of this section, this paragraph (j) is applicable for interest accruals on or after February 9, 1998 on annuity contracts held on or after February 9, 1998.

(ii) ***Grandfathered contracts.*** This paragraph (j) does not apply to an annuity contract that was purchased before April 7, 1995. For purposes of this paragraph (j)(8), if any additional investment in such a contract is made on or after April 7, 1995, and the additional investment is not required to be made under a binding contractual obligation that was entered into before April 7, 1995, then the additional investment is treated as the purchase of a contract after April 7, 1995.

(iii) ***Contracts consistent with the provisions of FI-33-94, published at 1995-1 C.B. 920. See § 601.601(d)(2)(ii)(b) of this chapter.*** This paragraph (j) does not apply to a contract purchased on or after April 7, 1995, and before February 9, 1998, if all payments under the contract are periodic payments that are made at least annually for the life (or lives) of one or more individuals, do not increase at any time during the term of the contract, and are part of a series of distributions that begins within one year of the date of the initial investment in the contract. An annuity contract that is otherwise described in the preceding sentence does not fail to be described therein merely because it also provides for a payment (or payments) made by reason of the death of one or more individuals.

(k) ***Exception under section 1275(a)(1)(B)(ii) for annuities issued by an insurance company subject to tax under subchapter L of the Internal Revenue Code*** —

(1) ***Rule.*** For purposes of section 1275(a)(1)(B)(ii), an annuity contract issued by a foreign insurance company is considered as issued by an insurance company subject to tax under subchapter L if the insurance company is subject to tax under subchapter L with respect to income earned on the annuity contract.

(2) ***Examples.*** The following examples illustrate the rule of paragraph (k)(1) of this section. Each example assumes that the annuity contract is a contract to which section 72 applies and was issued in a transaction where there is no consideration other than cash or another qualifying annuity contract, pursuant to the exercise of an election under an insurance contract by a beneficiary thereof on the death of the insured party, or in a transaction involving a qualified pension or employee benefit plan. The examples are as follows:

Example 1. Company X is an insurance company that is organized, licensed and doing business in Country Y. Company X does not have a U.S. trade or business and is not, under section 842, subject to U.S. income tax under subchapter L with respect to income earned on annuity contracts. A, a U.S. taxpayer, purchases an annuity contract from Company X in Country Y. The annuity contract is not excepted from the definition of a debt instrument by section 1275(a)(1)(B)(ii).

Example 2. The facts are the same as in Example 1, except that Company X has a U.S. trade or business. A purchased the annuity from Company X's U.S. trade or business. Under section 842(a), Company X is subject to tax under subchapter L with respect to income earned on the annuity contract. Under these facts, the annuity contract is excepted from the definition of a debt instrument by section 1275(a)(1)(B)(ii).

Example 3. The facts are the same as in *Example 2,* except that there is a tax treaty between Country Y and the United States. Company X is a resident of Country Y for purposes of the U.S.-Country Y tax treaty. Company X's activities in the U.S. do not constitute a permanent establishment under the U.S.-Country Y tax treaty. Because Company X does not have a U.S. permanent establishment, Company X is not subject to tax under subchapter L with respect to income earned on the annuity contract. Thus, the annuity contract is not excepted from the definition of a debt instrument by section 1275(a)(1)(B)(ii).

Example 4. The facts are the same as in *Example 1,* except that Company X is a foreign insurance corporation controlled by a U.S. shareholder. Company X does not make an election 1 under section 953(d) to be treated as a domestic corporation. The controlling U.S. shareholder is required under sections 953 and 954 to include income earned on the annuity contract in its taxable income under subpart F. However, Company X is not subject to tax under subchapter L with respect to income earned on the annuity contract. Thus, the annuity contract is not excepted from the definition of a debt instrument by section 1275(a)(1)(B)(ii).

Example 5. The facts are the same as in *Example 4,* except that Company X properly elects under section 953(d) to be treated as a domestic corporation. By reason of its election, Company X is subject to tax under subchapter L with respect to income earned on the annuity contract. Thus, the annuity contract is excepted from the definition of a debt instrument by section 1275(a)(1)(B)(ii).

(3) ***Effective date.*** This paragraph (k) is applicable for interest accruals on or after June 6, 2002. This paragraph (k) does not apply to an annuity contract that was purchased before January 12, 2001. For purposes of this paragraph (k), if any additional investment in a contract purchased before January 12, 2001, is made on or after January 12, 2001, and the additional investment is not required to be made under a binding written contractual obligation that was entered into before that date, then the additional investment is treated as the purchase of a contract after January 12, 2001.

[T.D. 8517, 59 FR 4825, Feb. 2, 1994, as amended by T.D. 8746, 62 FR 68183, Dec. 31, 1997; T.D. 8754, 63 FR 1057, Jan. 8, 1998; T.D. 8934, 66 FR 2815, Jan. 12, 2001; T.D. 8993, 67 FR 30548, May 7, 2002; T.D. 9790, 81 FR 72984, Oct. 21, 2016: T.D. 9880, 84 FR 59302, Nov. 4, 2019]

§ 1.1275-2 Special rules relating to debt instruments.

(a) ***Payment ordering rule*** —

(1) ***In general.*** Except as provided in paragraph (a)(2) of this section, each payment under a debt instrument is treated first as a payment of OID to the extent of the OID that has accrued as of the date the payment is due and has not been allocated to prior payments, and second as a payment of principal. Thus, no portion of any payment is treated as prepaid interest.

(2) ***Exceptions.*** The rule in paragraph (a)(1) of this section does not apply to—

(i) A payment of qualified stated interest;

(ii) A payment of points deductible under section 461(g)(2), in the case of the issuer;

(iii) A pro rata prepayment described in paragraph (f)(2) of this section; or

(iv) A payment of additional interest or a similar charge provided with respect to amounts that are not paid when due.

(b) ***Debt instruments distributed by corporations with respect to stock*** —

(1) ***Treatment of distribution.*** For purposes of determining the issue price of a debt instrument distributed by a corporation with respect to its stock, the instrument is treated as issued by the corporation for property. See section 1275(a)(4). Thus, under section 1273(b)(3), the issue price of a distributed debt instrument that is traded on an established market is its fair market value. The issue price of a distributed debt instrument that is not traded on an established market is determined under section 1274 or section 1273(b)(4).

(2) ***Issue date.*** The issue date of a debt instrument distributed by a corporation with respect to its stock is the date of the distribution.

(c) ***Aggregation of debt instruments*** —

(1) ***General rule.*** Except as provided in paragraph (c)(2) of this section, debt instruments issued in connection with the same transaction or related transactions (determined based on all the facts and circumstances) are treated as a single debt instrument for purposes of sections 1271 through 1275 and the regulations thereunder. This rule ordinarily applies only to debt instruments of a single issuer that are issued to a single holder. The Commissioner may, however, aggregate debt instruments that are issued by more than one issuer or that are issued to more than one holder if the debt instruments are issued in an arrangement that is designed to avoid the aggregation rule (e.g., debt instruments issued by or to related parties or debt instruments originally issued to different holders with the understanding that the debt instruments will be transferred to a single holder).

(2) ***Exception if separate issue price established.*** Paragraph (c)(1) of this section does not apply to a debt instrument if—

(i) The debt instrument is part of an issue a substantial portion of which is traded on an established market within the meaning of § 1.1273-2(f); or

(ii) The debt instrument is part of an issue a substantial portion of which is issued for money (or for property traded on an established market within the meaning of § 1.1273-2(f)) to parties who are not related to the issuer or holder and who do not purchase other debt instruments of the same issuer in connection with the same transaction or related transactions.

(3) ***Special rule for debt instruments that provide for the issuance of additional debt instruments.*** If, under the terms of a debt instrument (the original debt instrument), the holder may receive one or more additional debt instruments of the issuer, the additional debt instrument or instruments are aggregated with the original debt instrument. Thus, the payments made pursuant to an additional debt instrument are treated as made on the original debt instrument, and the distribution by the issuer of the additional debt instrument is not considered to be a payment made on the original debt instrument. This paragraph (c)(3) applies regardless of whether the right to receive an additional debt instrument is fixed as of the issue date or is contingent upon subsequent events. See § 1.1272-1(c) for the treatment of certain rights to issue additional debt instruments in lieu of cash payments.

(4) ***Examples.*** The following examples illustrate the rules set forth in paragraphs (c)(1) and (c)(2) of this section.

Example 1. Exception for debt instruments issued separately to other purchasers. On January 1, 1995, Corporation M issues two series of bonds, Series A and Series B. The two series are sold for cash and have different terms. Although some holders purchase bonds from both series, a substantial portion of the bonds is issued to different holders. H purchases bonds from both series. Under the exception in paragraph (c)(2)(ii) of this section, the Series A and Series B bonds purchased by H are not aggregated.

Example 2. Tiered REMICs. Z forms a dual tier real estate mortgage investment conduit (REMIC). In the dual tier structure, Z forms REMIC A to acquire a pool of real estate mortgages and to issue a residual interest and several classes of regular interests. Contemporaneously, Z forms REMIC B to acquire as qualified mortgages all of the regular interests in REMIC A. REMIC B issues several classes of regular interests and a residual interest, and Z sells all of those interests to unrelated parties in a public offering. Under the general rule set out in paragraph (c)(1) of this section, all of the regular interests issued by REMIC A and held by REMIC B are treated as a single debt instrument for purposes of sections 1271 through 1275.

(d) ***Special rules for Treasury securities*** —

(1) ***Issue price and issue date.*** The issue price of an issue of Treasury securities is the average price of the securities sold. The issue date of an issue of Treasury securities is the first settlement date on which a substantial amount of the securities in the issue is sold. For an issue of Treasury securities sold from November 1, 1998, to March 13, 2001, the issue price of the issue is the price of the securities sold at auction.

(2) ***Reopenings of Treasury securities*** —

(i) ***Treatment of additional Treasury securities.*** Notwithstanding § 1.1275-1(f), additional Treasury securities issued in a qualified reopening are part of the same issue as the original Treasury securities. As a result, the additional Treasury securities have the same issue price, issue date, and (with respect to holders) the same adjusted issue price as the original Treasury securities. This paragraph (d)(2) applies to qualified reopenings that occur on or after March 25, 1992.

(ii) ***Definitions*** —

(A) ***Additional Treasury securities.*** Additional Treasury securities are Treasury securities with terms that are in all respects identical to the terms of the original Treasury securities.

(B) ***Original Treasury securities.*** Original Treasury securities are securities comprising any issue of outstanding Treasury securities.

(C) ***Qualified reopening—reopenings on or after March 13, 2001.*** For a reopening of Treasury securities that occurs on or after March 13, 2001, a qualified reopening is a reopening that occurs not more than one year after the original Treasury securities were first issued to the public or, under paragraph (k)(3)(iii) of this section, a reopening in which the additional Treasury securities are issued with no more than a de minimis amount of OID. For a reopening of Treasury securities that occurs on or after September 13, 2012, a qualified reopening also is a reopening of Treasury securities that is described in paragraph (k)(3)(v) of this section.

(D) ***Qualified reopening—reopenings before March 13, 2001.*** For a reopening of Treasury securities that occurs before March 13, 2001, a qualified reopening is a reopening that occurs not more than one year after the original Treasury securities were first issued to the public. However, for a reopening of Treasury securities (other than Treasury Inflation-Indexed Securities) that occurred prior to November 5, 1999, a qualified reopening is a reopening of Treasury securities that satisfied the preceding sentence and that was intended to alleviate an acute, protracted shortage of the original Treasury securities.

(e) ***Disclosure of certain information to holders.*** Certain provisions of the regulations under section 163(e) and sections 1271 through 1275 provide that the issuer's determination of an item controls the holder's treatment of the item. In such a case, the issuer must provide the relevant information to the holder in a reasonable manner. For example, the issuer may provide the name or title and either the address or telephone number of a representative of the issuer who will make available to holders upon request the information required for holders to comply with these provisions of the regulations.

(f) ***Treatment of pro rata prepayments*** —

(1) ***Treatment as retirement of separate debt instrument.*** A pro rata prepayment is treated as a payment in retirement of a portion of a debt instrument, which may result in a gain or loss to the holder. Generally, the gain or loss is calculated by assuming that the original debt instrument consists of two instruments, one that is retired and one that remains outstanding. The adjusted issue price, holder's adjusted basis, and accrued but unpaid OID of the original debt instrument, determined immediately before the pro rata prepayment, are allocated between these two instruments based on the portion of the instrument that is treated as retired by the pro rata prepayment.

(2) ***Definition of pro rata prepayment.*** For purposes of paragraph (f)(1) of this section, a pro rata prepayment is a payment on a debt instrument made prior to maturity that—

(i) Is not made pursuant to the instrument's payment schedule (including a payment schedule determined under § 1.1272-1(c)); and

(ii) Results in a substantially pro rata reduction of each payment remaining to be paid on the instrument.

(g) ***Anti-abuse rule*** —

(1) ***In general.*** If a principal purpose in structuring a debt instrument or engaging in a transaction is to achieve a result that is unreasonable in light of the purposes of section 163(e), sections 1271 through 1275, or any related section of the Code, the Commissioner can apply or depart from the regulations under the applicable sections as necessary or appropriate to achieve a reasonable result. For example, if this paragraph (g) applies to a debt instrument that provides for a contingent payment, the Commissioner can treat the contingency as if it were a separate position. See also § 1.988-2(b)(18) for debt instruments with payments denominated in (or determined by reference to) a currency other than the taxpayer's functional currency.

(2) ***Unreasonable result.*** Whether a result is unreasonable is determined based on all the facts and circumstances. In making this determination, a significant fact is whether the treatment of the debt instrument is expected to have a substantial effect on the issuer's or a holder's U.S. tax liability. In the case of a contingent payment debt instrument, another significant fact is whether the result is obtainable without the application of § 1.1275-4 and any related provisions (e.g., if the debt instrument and the contingency were entered into separately). A result will not be considered unreasonable, however, in the absence of an expected substantial effect on the present value of a taxpayer's tax liability.

(3) ***Examples.*** The following examples illustrate the provisions of this paragraph (g):

Example 1. A issues a current-pay, increasing-rate note that provides for an early call option. Although the option is deemed exercised on the call date under § 1.1272-1(c)(5), the option is not expected to be exercised by A. In addition, a principal purpose of including the option in the terms of the note is to limit the amount of interest income includible by the holder in the period prior to the call date by virtue of the option rules in § 1.1272-1(c)(5). Moreover, the application of the option rules is expected to substantially reduce the present value of the holder's tax liability. Based on these facts, the application of § 1.1272-1(c)(5) produces an unreasonable result. Therefore, under this paragraph (g), the Commissioner can apply the regulations (in whole or in part) to the note without regard to § 1.1272-1(c)(5).

Example 2. C, a foreign corporation not subject to U.S. taxation, issues to a U.S. holder a debt instrument that provides for a contingent payment. The debt instrument is issued for cash and is subject to the noncontingent bond method in § 1.1275-4(b). Six months after issuance, C and the holder modify the debt instrument so that there is a deemed reissuance of the instrument under section 1001. The new debt instrument is subject to the rules of § 1.1275-4(c) rather than § 1.1275-4(b). The application of § 1.1275-4(c) is expected to substantially reduce the present value of the holder's tax liability as compared to the application of § 1.1275-4(b). In addition, a principal purpose of the modification is to substantially reduce the present value of the holder's tax liability through the application of § 1.1275-4(c). Based on these facts, the application of § 1.1275-4(c) produces an unreasonable result. Therefore, under this paragraph (g), the Commissioner can apply the noncontingent bond method to the modified debt instrument.

Example 3. D issues a convertible debt instrument rather than an economically equivalent investment unit consisting of a debt instrument and a warrant. The convertible debt instrument is issued at par and provides for annual payments of interest. D issues the convertible debt instrument rather than the investment unit so that the debt instrument would not have OID. See § 1.1273-2(j). In general, this is a reasonable result in light of the purposes of the applicable statutes. Therefore, the Commissioner generally will not use the authority under this paragraph (g) to depart from the application of § 1.1273-2(j) in this case.

(4) ***Effective date.*** This paragraph (g) applies to debt instruments issued on or after August 13, 1996.

(h) ***Remote and incidental contingencies*** —

(1) ***In general.*** This paragraph (h) applies to a debt instrument if one or more payments on the instrument are subject to either a remote or incidental contingency. Whether a contingency is remote or incidental is determined as of the issue date of the debt instrument, including any date there is a deemed reissuance of the debt instrument under paragraph (h)(6) (ii) or (j) of this section or § 1.1272-1(c)(6). Except as otherwise provided, the treatment of the contingency under this paragraph (h) applies for all purposes of sections 163(e) (other than sections 163(e)(5)) and 1271 through 1275 and the regulations thereunder. For purposes of this paragraph (h), the possibility of impairment of a payment by insolvency, default, or similar circumstances is not a contingency.

(2) ***Remote contingencies.*** A contingency is remote if there is a remote likelihood either that the contingency will occur or that the contingency will not occur. If there is a remote likelihood that the contingency will occur, it is assumed that the contingency will not occur. If there is a remote likelihood that the contingency will not occur, it is assumed that the contingency will occur.

(3) ***Incidental contingencies*** —

(i) ***Contingency relating to amount.*** A contingency relating to the amount of a payment is incidental if, under all reasonably expected market conditions, the potential amount of the payment is insignificant relative to the total expected amount of the remaining payments on the debt instrument. If a payment on a debt instrument is subject to an incidental contingency described in this paragraph (h)(3)(i), the payment is ignored until the payment is made. However, see paragraph (h)(6)(i)(B) of this section for the treatment of the debt instrument if a change in circumstances occurs prior to the date the payment is made.

(ii) ***Contingency relating to time.*** A contingency relating to the timing of a payment is incidental if, under all reasonably expected market conditions, the potential difference in the timing of the payment (from the earliest date to the latest date) is insignificant. If a payment on a debt instrument is subject to an incidental contingency described in this paragraph (h)(3)(ii), the payment is treated as made on the earliest date that the payment could be made pursuant to the contingency. If the payment is not made on this date, a taxpayer makes appropriate adjustments to take into account the delay in payment. However, see paragraph (h)(6)(i)(C) of this section for the treatment of the debt instrument if the delay is not insignificant.

(4) ***Aggregation rule.*** For purposes of paragraph (h)(2) of this section, if a debt instrument provides for multiple contingencies each of which has a remote likelihood of occurring but, when all of the contingencies are considered together, there is a greater than remote likelihood that at least one of the contingencies will occur, none of the contingencies is treated as a remote contingency. For purposes of paragraph (h)(3)(i) of this section, if a debt instrument provides for multiple contingencies each of which is incidental but the potential total amount of all of the payments subject to the contingencies is not, under reasonably expected market conditions, insignificant relative to the total expected amount of the remaining payments on the debt instrument, none of the contingencies is treated as incidental.

(5) ***Consistency rule.*** For purposes of paragraphs (h) (2) and (3) of this section, the issuer's determination that a contingency is either remote or incidental is binding on all holders. However, the issuer's determination is not binding on a holder that explicitly discloses that its determination is different from the issuer's determination. Unless otherwise prescribed by the Commissioner, the

disclosure must be made on a statement attached to the holder's timely filed Federal income tax return for the taxable year that includes the acquisition date of the debt instrument. See § 1.1275-2(e) for rules relating to the issuer's obligation to disclose certain information to holders.

(6) ***Subsequent adjustments*** —

(i) Applicability. This paragraph (h)(6) applies to a debt instrument when there is a change in circumstances. For purposes of the preceding sentence, there is a change in circumstances if—

(A) A remote contingency actually occurs or does not occur, contrary to the assumption made in paragraph (h)(2) of this section;

(B) A payment subject to an incidental contingency described in paragraph (h)(3)(i) of this section becomes fixed in an amount that is not insignificant relative to the total expected amount of the remaining payments on the debt instrument; or

(C) A payment subject to an incidental contingency described in paragraph (h)(3)(ii) of this section becomes fixed such that the difference between the assumed payment date and the due date of the payment is not insignificant.

(ii) ***In general.*** If a change in circumstances occurs, solely for purposes of sections 1272 and 1273, the debt instrument is treated as retired and then reissued on the date of the change in circumstances for an amount equal to the instrument's adjusted issue price on that date.

(iii) ***Contingent payment debt instruments.*** Notwithstanding paragraph (h)(6)(ii) of this section, in the case of a contingent payment debt instrument subject to § 1.1275-4, if a change in circumstances occurs, no retirement or reissuance is treated as occurring, but any payment that is fixed as a result of the change in circumstances is governed by the rules in § 1.1275-4 that apply when the amount of a contingent payment becomes fixed.

(7) ***Effective date.*** This paragraph (h) applies to debt instruments issued on or after August 13, 1996.

(i) [Reserved]

(j) ***Treatment of certain modifications.*** If the terms of a debt instrument are modified to defer one or more payments, and the modification does not cause an exchange under section 1001, then, solely for purposes of sections 1272 and 1273, the debt instrument is treated as retired and then reissued on the date of the modification for an amount equal to the instrument's adjusted issue price on that date. This paragraph (j) applies to debt instruments issued on or after August 13, 1996.

(k) ***Reopenings*** —

(1) ***In general.*** Notwithstanding § 1.1275-1(f), additional debt instruments issued in a qualified reopening are part of the same issue as the original debt instruments. As a result, the additional debt instruments have the same issue date, the same issue price, and (with respect to holders) the same adjusted issue price as the original debt instruments.

(2) ***Definitions*** —

(i) ***Original debt instruments.*** Original debt instruments are debt instruments comprising any single issue of outstanding debt instruments. For purposes of determining whether a particular reopening is a qualified reopening, debt instruments issued in prior qualified reopenings are treated as original debt instruments and debt instruments issued in the particular reopening are not so treated.

(ii) ***Additional debt instruments.*** Additional debt instruments are debt instruments that, without the application of this paragraph (k)—

(A) Are part of a single issue of debt instruments;

(B) Are not part of the same issue as the original debt instruments; and

(C) Have terms that are in all respects identical to the terms of the original debt instruments as of the reopening date.

(iii) ***Reopening date.*** The reopening date is the issue date of the additional debt instruments (determined without the application of this paragraph (k)).

(iv) ***Announcement date.*** The announcement date is the later of seven days before the date on which the price of the additional debt instruments is established or the date on which the issuer's intent to reopen a security is publicly announced through one or more media, including an announcement reported on the standard electronic news services used by security broker-dealers (for example, Reuters, Telerate, or Bloomberg).

(3) ***Qualified reopening*** —

(i) ***Definition.*** A qualified reopening is a reopening of original debt instruments that is described in paragraph (k)(3)(ii), (k)(3)(iii), (k)(3)(iv), or (k)(3)(v) of this section. In addition, see paragraph (d)(2) of this section to determine if a reopening of Treasury securities is a qualified reopening.

(ii) ***Reopening within six months.*** A reopening is described in this paragraph (k)(3)(ii) if—

(A) The original debt instruments are publicly traded (within the meaning of § 1.1273-2(f)) as of the date on which the price of the additional debt instruments is established (or, if earlier, the announcement date);

(B) The reopening date of the additional debt instruments is not more than six months after the issue date of the original debt instruments; and

(C) On the date on which the price of the additional debt instruments is established (or, if earlier, the announcement date), the yield of the original debt instruments (based on their fair market value) is not more than 110 percent of the yield of the original debt instruments on their issue date (or, if the original debt instruments were issued with no more than a de minimis amount of OID, the coupon rate).

(iii) ***Reopening with de minimis OID.*** A reopening (including a reopening of Treasury securities) is described in this paragraph (k)(3)(iii) if—

(A) The original debt instruments are publicly traded (within the meaning of § 1.1273-2(f)) as of the date on which the price of the additional debt instruments is established (or, if earlier, the announcement date); and

(B) The additional debt instruments are issued with no more than a de minimis amount of OID (determined without the application of this paragraph (k)).

(iv) ***Non-publicly traded debt issued for cash.*** A reopening is described in this paragraph (k)(3)(iv) if the additional debt instruments are issued for cash to persons unrelated to the issuer (as determined under section 267(b) or 707(b)) for an arm's length price and either the requirements in paragraphs (k)(3)(ii)(B) and (k)(3)(ii)(C) of this section for a reopening within six months are satisfied or the requirements in paragraph (k)(3)(iii)(B) of this section for a

reopening with de minimis OID are satisfied. For purposes of paragraph (k)(3)(ii)(C) of this section, the yield test is satisfied if, on the date on which the price of the additional debt instruments is established (or, if earlier, the announcement date), the yield of the additional debt instruments (based on their cash purchase price) is not more than 110 percent of the yield of the original debt instruments on their issue date (or, if the original debt instruments were issued with no more than a de minimis amount of OID, the coupon rate).

(v) ***100 Percent yield test for reopening after six months.*** A reopening is described in this paragraph (k)(3)(v) if the additional debt instruments are issued more than six months after the issue date of the original debt instruments and either the requirements in paragraphs (k)(3)(ii)(A) and (k)(3)(ii)(C) of this section are satisfied or the additional debt instruments are issued for cash to persons unrelated to the issuer (as determined under section 267(b) or 707(b)) for an arm's length price and the requirements in paragraph (k)(3)(ii)(C) of this section are satisfied. For purposes of the preceding sentence, the yield test in paragraph (k)(3)(ii)(C) of this section is satisfied if, on the date on which the price of the additional debt instruments is established (or, if earlier, the announcement date), the yield of the additional debt instruments (based on their fair market value or cash purchase price, whichever is applicable) is not more than 100 percent of the yield of the original debt instruments on their issue date (or, if the original debt instruments were issued with no more than a de minimis amount of OID, the coupon rate).

(vi) ***Exceptions.*** This paragraph (k)(3) does not apply to a reopening of tax-exempt obligations (as defined in section 1275(a)(3)) or contingent payment debt instruments (within the meaning of § 1.1275-4).

(4) ***Issuer's treatment of a qualified reopening.*** See § 1.163-7(e) for the issuer's treatment of the debt instruments that are part of a qualified reopening.

(5) ***Effective/applicability dates*** —

(i) Except as provided in paragraph (k)(5)(ii) of this section, this paragraph (k) applies to debt instruments that are part of a reopening if the reopening date is on or after March 13, 2001.

(ii) Paragraphs (k)(3)(ii)(A), (k)(3)(iii)(A), (k)(3)(iv) and (k)(3)(v) of this section apply to debt instruments that are part of a reopening if the reopening date is on or after September 13, 2012.

(l) ***OID rule for income item subject to section 451(b)*** —

(1) ***In general.*** Notwithstanding any other rule in sections 1271 through 1275 and §§ 1.1271-1 through 1.1275-7, if, and to the extent, a taxpayer's item of income with respect to a debt instrument is subject to the timing rules in § 1.451-3 because the item of income is a specified fee described in § 1.451-3(j) (such as credit card late fees, credit card cash advance fees, or interchange fees), then the taxpayer does not take the item into account to determine whether the debt instrument has any OID. As a result, the taxpayer does not treat the item as creating or increasing any OID on the debt instrument.

(2) ***Applicability dates*** —

(i) ***In general.*** Except as provided in paragraph (l)(2)(ii) and (iii) of this section, for a specified credit card fee as defined in § 1.451-3(j)(2), paragraph (l)(1) of this section applies for taxable years beginning on or after January 1, 2021, and, for a specified fee that is not a specified credit card fee, paragraph (l)(1) of this section applies for taxable years beginning on or after January 6, 2022.

(ii) ***Early application.*** For a taxable year beginning after December 31, 2018, and before January 1, 2021, a taxpayer and its related parties, within the meaning of sections 267(b) and 707(b), may choose to apply both paragraph (l)(1) of this section and the rules in § 1.451-3, in their entirety and in a consistent manner, to all specified credit card fees subject to § 1.451-3, provided that once applied to a taxable year the rules in paragraph (l)(1) of this section and the rules in § 1.451-3 that apply to specified credit card fees, are applied in their entirety and in a consistent manner for all subsequent taxable years. See section 7508(b)(7).

(iii) ***Applicability date for accounting method changes.*** Paragraph (l)(1) of this section will not apply in applying section 13221(e) of Public Law 115-97, 131 Stat. 2054 (2017), to determine the section 481(a) adjustment period for any adjustment under section 481(a) for a qualified change in method of accounting required under section 451(b) and § 1.451-3 for a specified credit card fee.

(m) ***Transition from certain interbank offered rates*** —

(1) ***In general.*** This paragraph (m) applies to a variable rate debt instrument (as defined in § 1.1275-5(a)) that provides both for a qualified floating rate that references a discontinued IBOR and for a methodology to change that rate referencing a discontinued IBOR to a different rate in anticipation of the discontinued IBOR becoming unavailable or unreliable. For purposes of this paragraph (m), *discontinued IBOR* has the meaning provided in § 1.1001-6(h)(4). See § 1.1001-6 for additional rules that may apply to a debt instrument that provides for a rate referencing a discontinued IBOR.

(2) ***Single qualified floating rate.*** If a debt instrument is described in paragraph (m)(1) of this section, the rate referencing a discontinued IBOR and the different rate are treated as a single qualified floating rate for purposes of § 1.1275-5.

(3) ***Remote contingency.*** If a debt instrument is described in paragraph (m)(1) of this section, the possibility that the discontinued IBOR will become unavailable or unreliable is treated as a remote contingency for purposes of paragraph (h) of this section.

(4) ***Change in circumstances.*** If a debt instrument is described in paragraph (m)(1) of this section, the fact that the discontinued IBOR has become unavailable or unreliable is not treated as a change in circumstances for purposes of paragraph (h)(6) of this section.

(5) ***Applicability date.*** Paragraph (m) of this section applies to debt instruments issued on or after March 7, 2022. A taxpayer may choose to apply paragraph (m) of this section to debt instruments issued before March 7, 2022, provided that the taxpayer and all related parties (within the meaning of section 267(b) or section 707(b)(1) or within the meaning of § 1.150-1(b) for a taxpayer that is a State or local governmental unit (as defined in § 1.103-1(a)) or a 501(c)(3) organization (as defined in section 150(a)(4))) apply paragraph (m) of this section to all debt instruments issued before that date. See section 7805(b)(7).

[T.D. 8517, 59 FR 4826, Feb. 2, 1994, as amended by T.D. 8674, 61 FR 30142, June 14, 1996; T.D. 8840, 64 FR 60343, Nov. 5, 1999; T.D. 8934, 66 FR 2816, Jan. 12, 2001; T.D. 9157, 69 FR 52829, Aug. 30, 2004; T.D. 9599, 77 FR 56538, Sept. 13, 2012; T.D. 9941, 86 FR 862, Jan. 6, 2021; 86 FR 1256, Jan. 8, 2021; 86 FR 2974, Jan. 14, 2021; T.D. 9961, 87 FR 182, Jan. 4, 2022]

§ 1.1275-3 OID information reporting requirements.

(a) ***In general.*** This section provides legending and information reporting requirements intended to facilitate the reporting of OID.

(b) ***Information required to be set forth on face of debt instruments that are not publicly offered*** —

(1) ***In general.*** Except as provided in paragraph (b)(4) or paragraph (d) of this section, this paragraph (b) applies to any debt instrument that is not publicly offered (within the meaning of § 1.1275-1(h)), is issued in physical form, and has OID. The issuer of any such debt instrument must legend the instrument by stating on the face of the instrument that the debt instrument was issued with OID. In addition, the issuer must either—

(i) Set forth on the face of the debt instrument the issue price, the amount of OID, the issue date, the yield to maturity, and, in the case of a debt instrument subject to the rules of § 1.1275-4(b), the comparable yield and projected payment schedule; or

(ii) Provide the name or title and either the address or telephone number of a representative of the issuer who will, beginning no later than 10 days after the issue date, promptly make available to holders upon request the information described in paragraph (b)(1)(i) of this section.

(2) ***Time for legending.*** An issuer may satisfy the requirements of this paragraph (b) by legending the debt instrument when it is first issued in physical form. Legending is not required, however, before the first holder of the debt instrument disposes of the instrument.

(3) ***Legend must survive reissuance upon transfer.*** Any new physical security that is issued (for example, upon registration of transfer of ownership) must contain any required legend.

(4) ***Exceptions.*** Paragraph (b)(1) of this section does not apply to debt instruments described in section 1272(a)(2) (relating to debt instruments not subject to the periodic OID inclusion rules), debt instruments issued by natural persons (as defined in § 1.6049-4(f)(2)), REMIC regular interests or other debt instruments subject to section 1272(a)(6), or stripped bonds and coupons within the meaning of section 1286.

(c) ***Information required to be reported to Secretary upon issuance of publicly offered debt instruments*** —

(1) ***In general.*** Except as provided in paragraph (c)(3) or paragraph (d) of this section, the information reporting requirements of this paragraph (c) apply to any debt instrument that is publicly offered and has original issue discount. The issuer of any such debt instrument must make an information return on the form prescribed by the Commissioner (Form 8281, as of September 2, 1992). The prescribed form must be filed with the Internal Revenue Service in the manner specified on the form. The taxpayer must use the prescribed form even if other information returns are filed using other methods (e.g., electronic media), unless the Commissioner announces otherwise in a revenue procedure.

(2) ***Time for filing information return.*** The prescribed form must be filed for each issue of publicly offered debt instruments within 30 days after the issue date of the issue.

(3) ***Exceptions.*** The rules of paragraph (c)(1) of this section do not apply to debt instruments described in section 1272(a)(2), debt instruments issued by natural persons (as defined in § 1.6049-4(f)(2)), certificates of deposit, REMIC regular interests or other debt instruments subject to section 1272(a)(6), or (unless otherwise required by the Commissioner pursuant to a revenue ruling or revenue procedure) stripped bonds and coupons (within the meaning of section 1286).

(4) ***Subsequent registration.*** Except as provided in paragraph (c)(3) or (d) of this section, the information reporting requirements of paragraph (c)(1) of this section apply to any debt instrument that has original issue discount if the instrument is part of an issue the offering of which is registered with the Securities and Exchange Commission (SEC) after the issue date of the debt instrument. For example, this paragraph (c)(4) applies to a newly issued debt instrument (B bond) exchanged for an otherwise identical non-SEC-registered debt instrument (A bond) if the B bond is part of an issue the offering of which is registered with the SEC and the B bond has an issue date that is the same as the issue date of the A bond for federal tax purposes because the exchange is not a realization event under § 1.1001-3. If a debt instrument is subject to this paragraph (c)(4), the prescribed form (Form 8281 or any successor) must be filed with the Internal Revenue Service within 30 days after the date the offering is registered with the SEC. This paragraph (c)(4) applies to a debt instrument that is part of an issue the offering of which is registered with the SEC on or after January 1, 2014.

(d) ***Application to foreign issuers and U.S. issuers of foreign-targeted debt instruments.*** A foreign or domestic issuer is subject to the rules of this section with respect to an issue of debt instruments unless the issue is not offered for sale or resale in the United States in connection with its original issuance.

(e) ***Penalties.*** See section 6706 for rules relating to the penalty imposed for failure to meet the information reporting requirements imposed by this section.

(f) ***Effective date.*** Paragraphs (c), (d), and (e) of this section are effective for an issue of debt instruments issued after September 2, 1992.

[T.D. 8431, 57 FR 40322, Sept. 3, 1992; 57 FR 46243, Oct. 7, 1992, as amended by T.D. 8517, 59 FR 4827, Feb. 2, 1994; T.D. 8674, 61 FR 30143, June 14, 1996; T.D. 9616, 78 FR 23126, Apr. 18, 2013]

§ 1.1275-4 Contingent payment debt instruments.

(a) ***Applicability*** —

(1) ***In general.*** Except as provided in paragraph (a)(2) of this section, this section applies to any debt instrument that provides for one or more contingent payments. In general, paragraph (b) of this section applies to a contingent payment debt instrument that is issued for money or publicly traded property and paragraph (c) of this section applies to a contingent payment debt instrument that is issued for nonpublicly traded property. Paragraph (d) of this section provides special rules for tax-exempt obligations. See § 1.1275-6 for a taxpayer's treatment of a contingent payment debt instrument and a hedge.

(2) ***Exceptions.*** This section does not apply to—

(i) A debt instrument that has an issue price determined under section 1273(b)(4) (e.g., a debt instrument subject to section 483);

(ii) A variable rate debt instrument (as defined in § 1.1275-5);

(iii) A debt instrument subject to § 1.1272-1(c) (a debt instrument that provides for certain contingencies) or § 1.1272-1(d) (a debt instrument that provides for a fixed yield);

(iv) A debt instrument subject to section 988 (except as provided in § 1.988-6);

(v) A debt instrument to which section 1272(a)(6) applies (certain interests in or mortgages held by a REMIC, and certain other debt instruments with payments subject to acceleration);

(vi) A debt instrument (other than a tax-exempt obligation) described in section 1272(a)(2) (e.g., U.S. savings bonds, certain loans between natural persons, and short-term taxable obligations);

(vii) An inflation-indexed debt instrument (as defined in § 1.1275-7); or

(viii) A debt instrument issued pursuant to a plan or arrangement if—

(A) The plan or arrangement is created by a state statute;

(B) A primary objective of the plan or arrangement is to enable the participants to pay for the costs of post-secondary education for themselves or their designated beneficiaries; and

(C) Contingent payments on the debt instrument are related to such objective.

(3) ***Insolvency and default.*** A payment is not contingent merely because of the possibility of impairment by insolvency, default, or similar circumstances.

(4) ***Convertible debt instruments.*** A debt instrument does not provide for contingent payments merely because it provides for an option to convert the debt instrument into the stock of the issuer, into the stock or debt of a related party (within the meaning of section 267(b) or 707(b)(1)), or into cash or other property in an amount equal to the approximate value of such stock or debt. For debt instruments issued on or after February 5, 2013, the term *stock* in the preceding sentence means an equity interest in any entity that is classified, for Federal tax purposes, as either a partnership or a corporation.

(5) ***Remote and incidental contingencies.*** A payment is not a contingent payment merely because of a contingency that, as of the issue date, is either remote or incidental. See § 1.1275-2(h) for the treatment of remote and incidental contingencies.

(b) ***Noncontingent bond method*** —

(1) ***Applicability.*** The noncontingent bond method described in this paragraph (b) applies to a contingent payment debt instrument that has an issue price determined under § 1.1273-2 (e.g., a contingent payment debt instrument that is issued for money or publicly traded property).

(2) ***In general.*** Under the noncontingent bond method, interest on a debt instrument must be taken into account whether or not the amount of any payment is fixed or determinable in the taxable year. The amount of interest that is taken into account for each accrual period is determined by constructing a projected payment schedule for the debt instrument and applying rules similar to those for accruing OID on a noncontingent debt instrument. If the actual amount of a contingent payment is not equal to the projected amount, appropriate adjustments are made to reflect the difference.

(3) ***Description of method.*** The following steps describe how to compute the amount of income, deductions, gain, and loss under the noncontingent bond method:

(i) ***Step one: Determine the comparable yield.*** Determine the comparable yield for the debt instrument under the rules of paragraph (b)(4) of this section. The comparable yield is determined as of the debt instrument's issue date.

(ii) ***Step two: Determine the projected payment schedule.*** Determine the projected payment schedule for the debt instrument under the rules of paragraph (b)(4) of this section. The projected payment schedule is determined as of the issue date and remains fixed throughout the term of the debt instrument (except under paragraph (b)(9)(ii) of this section, which applies to a payment that is fixed more than 6 months before it is due).

(iii) ***Step three: Determine the daily portions of interest.*** Determine the daily portions of interest on the debt instrument for a taxable year as follows. The amount of interest that accrues in each accrual period is the product of the comparable yield of the debt instrument (properly adjusted for the length of the accrual period) and the debt instrument's adjusted issue price at the beginning of the accrual period. See paragraph (b)(7)(ii) of this section to determine the adjusted issue price of the debt instrument. The daily portions of interest are determined by allocating to each day in the accrual period the ratable portion of the interest that accrues in the accrual period. Except as modified by paragraph (b)(3)(iv) of this section, the daily portions of interest are includible in income by a holder for each day in the holder's taxable year on which the holder held the debt instrument and are deductible by the issuer for each day during the issuer's taxable year on which the issuer was primarily liable on the debt instrument.

(iv) ***Step four: Adjust the amount of income or deductions for differences between projected and actual contingent payments.*** Make appropriate adjustments to the amount of income or deductions attributable to the debt instrument in a taxable year for any differences between projected and actual contingent payments. See paragraph (b)(6) of this section to determine the amount of an adjustment and the treatment of the adjustment.

(4) ***Comparable yield and projected payment schedule.*** This paragraph (b)(4) provides rules for determining the comparable yield and projected payment schedule for a debt instrument. The comparable yield and projected payment schedule must be supported by contemporaneous documentation showing that both are reasonable, are based on reliable, complete, and accurate data, and are made in good faith.

(i) ***Comparable yield*** —

(A) ***In general.*** Except as provided in paragraph (b)(4)(i)(B) of this section, the comparable yield for a debt instrument is the yield at which the issuer would issue a fixed rate debt instrument with terms and conditions similar to those of the contingent payment debt instrument (the comparable fixed rate debt instrument), including the level of subordination, term, timing of payments, and general market conditions. For example, if a § 1.1275-6 hedge (or the substantial equivalent) is available, the comparable yield is the yield on the synthetic fixed rate debt instrument that would result if the issuer entered into the § 1.1275-6 hedge. If a § 1.1275-6 hedge (or the substantial equivalent) is not available, but similar fixed rate debt instruments of the issuer trade at a price that reflects a spread above a benchmark rate, the comparable yield is the sum of the value of the benchmark rate on the issue date and the spread. In determining the comparable yield, no adjustments are made for the riskiness of the contingencies or the liquidity of the debt instrument. The comparable yield must be a reasonable yield for the issuer and must not be less than the applicable Federal rate (based on the overall maturity of the debt instrument).

(B) ***Presumption for certain debt instruments.*** This paragraph (b)(4)(i)(B) applies to a debt instrument if the instrument provides for one or more contingent payments not based on market information and the instrument is part of an issue that is marketed or sold in substantial part to persons for whom the inclusion of interest under this paragraph (b) is not expected to have a substantial effect on their U.S. tax liability. If this paragraph (b)(4)(i)(B) applies to a debt instrument, the instrument's comparable yield is presumed to be the applicable Federal rate (based on the overall maturity of the debt instrument). A taxpayer may overcome this presumption only with clear and convincing evidence that the

comparable yield for the debt instrument should be a specific yield (determined using the principles in paragraph (b)(4)(i)(A) of this section) that is higher than the applicable Federal rate. The presumption may not be overcome with appraisals or other valuations of nonpublicly traded property. Evidence used to overcome the presumption must be specific to the issuer and must not be based on comparable issuers or general market conditions.

(ii) ***Projected payment schedule.*** The projected payment schedule for a debt instrument includes each noncontingent payment and an amount for each contingent payment determined as follows:

(A) ***Market-based payments.*** If a contingent payment is based on market information (a market-based payment), the amount of the projected payment is the forward price of the contingent payment. The forward price of a contingent payment is the amount one party would agree, as of the issue date, to pay an unrelated party for the right to the contingent payment on the settlement date (e.g., the date the contingent payment is made). For example, if the right to a contingent payment is substantially similar to an exchange-traded option, the forward price is the spot price of the option (the option premium) compounded at the applicable Federal rate from the issue date to the date the contingent payment is due.

(B) ***Other payments.*** If a contingent payment is not based on market information (a non-market-based payment), the amount of the projected payment is the expected value of the contingent payment as of the issue date.

(C) ***Adjustments to the projected payment schedule.*** The projected payment schedule must produce the comparable yield. If the projected payment schedule does not produce the comparable yield, the schedule must be adjusted consistent with the principles of this paragraph (b)(4) to produce the comparable yield. For example, the adjusted amounts of non-market-based payments must reasonably reflect the relative expected values of the payments and must not be set to accelerate or defer income or deductions. If the debt instrument contains both market-based and non-market-based payments, adjustments are generally made first to the non-market-based payments because more objective information is available for the market-based payments.

(iii) ***Market information.*** For purposes of this paragraph (b), market information is any information on which an objective rate can be based under § 1.1275-5(c) (1) or (2).

(iv) ***Issuer/holder consistency.*** The issuer's projected payment schedule is used to determine the holder's interest accruals and adjustments. The issuer must provide the projected payment schedule to the holder in a manner consistent with the issuer disclosure rules of § 1.1275-2(e). If the issuer does not create a projected payment schedule for a debt instrument or the issuer's projected payment schedule is unreasonable, the holder of the debt instrument must determine the comparable yield and projected payment schedule for the debt instrument under the rules of this paragraph (b)(4). A holder that determines its own projected payment schedule must explicitly disclose this fact and the reason why the holder set its own schedule (e.g., why the issuer's projected payment schedule is unreasonable). Unless otherwise prescribed by the Commissioner, the disclosure must be made on a statement attached to the holder's timely filed Federal income tax return for the taxable year that includes the acquisition date of the debt instrument.

(v) ***Issuer's determination respected*** —

(A) ***In general.*** If the issuer maintains the contemporaneous documentation required by this paragraph (b)(4), the issuer's determination of the comparable yield and projected payment schedule will be respected unless either is unreasonable.

(B) ***Unreasonable determination.*** For purposes of paragraph (b)(4)(v)(A) of this section, a comparable yield or projected payment schedule generally will be considered unreasonable if it is set with a purpose to overstate, understate, accelerate, or defer interest accruals on the debt instrument. In a determination of whether a comparable yield or projected payment schedule is unreasonable, consideration will be given to whether the treatment of the debt instrument under this section is expected to have a substantial effect on the issuer's or holder's U.S. tax liability. For example, if a taxable issuer markets a debt instrument to a holder not subject to U.S. taxation, the comparable yield will be given close scrutiny and will not be respected unless contemporaneous documentation shows that the yield is not too high.

(C) ***Exception.*** Paragraph (b)(4)(v)(A) of this section does not apply to a debt instrument subject to paragraph (b)(4)(i)(B) of this section (concerning a yield presumption for certain debt instruments that provide for non-market-based payments).

(vi) ***Examples.*** The following examples illustrate the provisions of this paragraph (b)(4). In each example, assume that the instrument described is a debt instrument for Federal income tax purposes. No inference is intended, however, as to whether the instrument is a debt instrument for Federal income tax purposes.

Example 1. Market-based payment. (i) *Facts.* On December 31, 1996, X corporation issues for $1,000,000 a debt instrument that matures on December 31, 2006. The debt instrument provides for annual payments of interest, beginning in 1997, at the rate of 6 percent and for a payment at maturity equal to $1,000,000 plus the excess, if any, of the price of 10,000 shares of publicly traded stock in an unrelated corporation on the maturity date over $350,000, or less the excess, if any, of $350,000 over the price of 10,000 shares of the stock on the maturity date. On the issue date, the forward price to purchase 10,000 shares of the stock on December 31, 2006, is $350,000.
(ii) *Comparable yield.* Under paragraph (b)(4)(i) of this section, the debt instrument's comparable yield is the yield on the synthetic debt instrument that would result if X corporation entered into a § 1.1275-6 hedge. A § 1.1275-6 hedge in this case is a forward contract to purchase 10,000 shares of the stock on December 31, 2006. If X corporation entered into this hedge, the resulting synthetic debt instrument would yield 6 percent, compounded annually. Thus, the comparable yield on the debt instrument is 6 percent, compounded annually.

(iii) *Projected payment schedule.* Under paragraph (b)(4)(ii) of this section, the projected payment schedule for the debt instrument consists of 10 annual payments of $60,000 and a projected amount for the contingent payment at maturity. Because the right to the contingent payment is based on market information, the projected amount of the contingent payment is the forward price of the payment. The right to the contingent

payment is substantially similar to a right to a payment of $1,000,000 combined with a cash-settled forward contract for the purchase of 10,000 shares of the stock for $350,000 on December 31, 2006. Because the forward price to purchase 10,000 shares of the stock on December 31, 2006, is $350,000, the amount to be received or paid under the forward contract is projected to be zero. As a result, the projected amount of the contingent payment at maturity is $1,000,000, consisting of the $1,000,000 base amount and no additional amount to be received or paid under the forward contract.

(A) Assume, alternatively, that on the issue date the forward price to purchase 10,000 shares of the stock on December 31, 2006, is $370,000. If X corporation entered into a § 1.1275-6 hedge (a forward contract to purchase the shares for $370,000), the resulting synthetic debt instrument would yield 6.15 percent, compounded annually. Thus, the comparable yield on the debt instrument is 6.15 percent, compounded annually. The projected payment schedule for the debt instrument consists of 10 annual payments of $60,000 and a projected amount for the contingent payment at maturity. The projected amount of the contingent payment is $1,020,000, consisting of the $1,000,000 base amount plus the excess $20,000 of the forward price of the stock over the purchase price of the stock under the forward contract.

(B) Assume, alternatively, that on the issue date the forward price to purchase 10,000 shares of the stock on December 31, 2006, is $330,000. If X corporation entered into a § 1.1275-6 hedge, the resulting synthetic debt instrument would yield 5.85 percent, compounded annually. Thus, the comparable yield on the debt instrument is 5.85 percent, compounded annually. The projected payment schedule for the debt instrument consists of 10 annual payments of $60,000 and a projected amount for the contingent payment at maturity. The projected amount of the contingent payment is $980,000, consisting of the $1,000,000 base amount minus the excess $20,000 of the purchase price of the stock under the forward contract over the forward price of the stock.

Example 2. Non-market-based payments. (i) *Facts.* On December 31, 1996, Y issues to Z for $1,000,000 a debt instrument that matures on December 31, 2000. The debt instrument has a stated principal amount of $1,000,000, payable at maturity, and provides for payments on December 31 of each year, beginning in 1997, of $20,000 plus 1 percent of Y's gross receipts, if any, for the year. On the issue date, Y has outstanding fixed rate debt instruments with maturities of 2 to 10 years that trade at a price that reflects an average of 100 basis points over Treasury bonds. These debt instruments have terms and conditions similar to those of the debt instrument. Assume that on December 31, 1996, 4-year Treasury bonds have a yield of 6.5 percent, compounded annually, and that no § 1.1275-6 hedge is available for the debt instrument. In addition, assume that the interest inclusions attributable to the debt instrument are expected to have a substantial effect on Z's U.S. tax liability.

(ii) *Comparable yield.* The comparable yield for the debt instrument is equal to the value of the benchmark rate (i.e., the yield on 4-year Treasury bonds) on the issue date plus the spread. Thus, the debt instrument's comparable yield is 7.5 percent, compounded annually.

(iii) *Projected payment schedule.* Y anticipates that it will have no gross receipts in 1997, but that it will have gross receipts in later years, and those gross receipts will grow each year for the next three years. Based on its business projections, Y believes that it is not unreasonable to expect that its gross receipts in 1999 and each year thereafter will grow by between 6 percent and 13 percent over the prior year. Thus, Y must take these expectations into account in establishing a projected payment schedule for the debt instrument that results in a yield of 7.5 percent, compounded annually. Accordingly, Y could reasonably set the following projected payment schedule for the debt instrument:

Date	Noncontingent payment	Contingent payment
12/31/1997	$20,000	$0
12/31/1998	20,000	70,000
12/31/1999	20,000	75,600
12/31/2000	1,020,000	83,850

(5) ***Qualified stated interest.*** No amounts payable on a debt instrument to which this paragraph (b) applies are qualified stated interest within the meaning of § 1.1273-1(c).

(6) ***Adjustments.*** This paragraph (b)(6) provides rules for the treatment of positive and negative adjustments under the noncontingent bond method. A taxpayer takes into account only those adjustments that occur during a taxable year while the debt instrument is held by the taxpayer or while the taxpayer is primarily liable on the debt instrument.

(i) ***Determination of positive and negative adjustments.*** If the amount of a contingent payment is more than the projected amount of the contingent payment, the difference is a positive adjustment on the date of the payment. If the amount of a contingent payment is less than the projected amount of the contingent payment, the difference is a negative adjustment on the date of the payment (or on the scheduled date of the payment if the amount of the payment is zero).

(ii) ***Treatment of net positive adjustments.*** The amount, if any, by which total positive adjustments on a debt instrument in a taxable year exceed the total negative adjustments on the debt instrument in the taxable year is a net positive adjustment. A net positive adjustment is treated as additional interest for the taxable year.

(iii) ***Treatment of net negative adjustments.*** The amount, if any, by which total negative adjustments on a debt instrument in a taxable year exceed the total positive adjustments on the debt instrument in the taxable year is a net negative adjustment. A taxpayer's net negative adjustment on a debt instrument for a taxable year is treated as follows:

(A) ***Reduction of interest accruals.*** A net negative adjustment first reduces interest for the taxable year that the taxpayer would otherwise account for on the debt instrument under paragraph (b)(3)(iii) of this section.

(B) ***Ordinary income or loss.*** If the net negative adjustment exceeds the interest for the taxable year that the taxpayer would otherwise account for on the debt instrument under paragraph (b)(3)(iii) of this section, the excess is treated as ordinary loss by a holder and ordinary income by an issuer. However, the amount treated as ordinary loss by a holder is limited to the amount by which the holder's total interest inclusions on the debt instrument exceed the total amount of the holder's net negative adjustments treated as ordinary loss on the debt instrument in prior taxable years. The amount treated as ordinary income by an issuer is limited to the amount by which the issuer's total interest deductions on the debt instrument exceed the total amount of the issuer's net negative adjustments treated as ordinary income on the debt instrument in prior taxable years.

(C) ***Carryforward.*** If the net negative adjustment exceeds the sum of the amounts treated by the taxpayer as a reduction of interest and as ordinary income or loss (as the case may be) on the debt instrument for the taxable year, the excess is a negative adjustment carryforward for the taxable year. In general, a taxpayer treats a negative adjustment carryforward for a taxable year as a negative adjustment on the debt instrument on the first day of the succeeding taxable year. However, if a holder of a debt instrument has a negative adjustment carryforward on the debt instrument in a taxable year in which the debt instrument is sold, exchanged, or retired, the negative adjustment carryforward reduces the holder's amount realized on the sale, exchange, or retirement. If an issuer of a debt instrument has a negative adjustment carryforward on the debt instrument for a taxable year in which the debt instrument is retired, the issuer takes the negative adjustment carryforward into account as ordinary income.

(D) ***Treatment under section 67.*** A net negative adjustment is not subject to section 67 (the 2-percent floor on miscellaneous itemized deductions).

(iv) ***Cross-references.*** If a holder has a basis in a debt instrument that is different from the debt instrument's adjusted issue price, the holder may have additional positive or negative adjustments under paragraph (b)(9)(i) of this section. If the amount of a contingent payment is fixed more than 6 months before the date it is due, the amount and timing of the adjustment are determined under paragraph (b)(9)(ii) of this section.

(7) ***Adjusted issue price, adjusted basis, and retirement*** —

(i) ***In general.*** If a debt instrument is subject to the noncontingent bond method, this paragraph (b)(7) provides rules to determine the adjusted issue price of the debt instrument, the holder's basis in the debt instrument, and the treatment of any scheduled or unscheduled retirements. In general, because any difference between the actual amount of a contingent payment and the projected amount of the payment is taken into account as an adjustment to income or deduction, the projected payments are treated as the actual payments for purposes of making adjustments to issue price and basis and determining the amount of any contingent payment made on a scheduled retirement.

(ii) ***Definition of adjusted issue price.*** The adjusted issue price of a debt instrument is equal to the debt instrument's issue price, increased by the interest previously accrued on the debt instrument under paragraph (b)(3)(iii) of this section (determined without regard to any

adjustments taken into account under paragraph (b)(3)(iv) of this section), and decreased by the amount of any noncontingent payment and the projected amount of any contingent payment previously made on the debt instrument. See paragraph (b)(9)(ii) of this section for special rules that apply when a contingent payment is fixed more than 6 months before it is due.

(iii) ***Adjustments to basis.*** A holder's basis in a debt instrument is increased by the interest previously accrued by the holder on the debt instrument under paragraph (b)(3)(iii) of this section (determined without regard to any adjustments taken into account under paragraph (b)(3)(iv) of this section), and decreased by the amount of any noncontingent payment and the projected amount of any contingent payment previously made on the debt instrument to the holder. See paragraph (b)(9)(i) of this section for special rules that apply when basis is different from adjusted issue price and paragraph (b)(9)(ii) of this section for special rules that apply when a contingent payment is fixed more than 6 months before it is due.

(iv) ***Scheduled retirements.*** For purposes of determining the amount realized by a holder and the repurchase price paid by the issuer on the scheduled retirement of a debt instrument, a holder is treated as receiving, and the issuer is treated as paying, the projected amount of any contingent payment due at maturity. If the amount paid or received is different from the projected amount, see paragraph (b)(6) of this section for the treatment of the difference by the taxpayer. Under paragraph (b)(6)(iii)(C) of this section, the amount realized by a holder on the retirement of a debt instrument is reduced by any negative adjustment carryforward determined in the taxable year of the retirement.

(v) ***Unscheduled retirements.*** An unscheduled retirement of a debt instrument (or the receipt of a pro-rata prepayment that is treated as a retirement of a portion of a debt instrument under § 1.1275-2(f)) is treated as a repurchase of the debt instrument (or a pro-rata portion of the debt instrument) by the issuer from the holder for the amount paid by the issuer to the holder.

(vi) ***Examples.*** The following examples illustrate the provisions of paragraphs (b) (6) and (7) of this section. In each example, assume that the instrument described is a debt instrument for Federal income tax purposes. No inference is intended, however, as to whether the instrument is a debt instrument for Federal income tax purposes.

> *Example 1. Treatment of positive and negative adjustments.* (i) *Facts.* On December 31, 1996, Z, a calendar year taxpayer, purchases a debt instrument subject to this paragraph (b) at original issue for $1,000. The debt instrument's comparable yield is 10 percent, compounded annually, and the projected payment schedule provides for payments of $500 on December 31, 1997 (consisting of a noncontingent payment of $375 and a projected amount of $125) and $660 on December 31, 1998 (consisting of a noncontingent payment of $600 and a projected amount of $60). The debt instrument is a capital asset in the hands of Z.
> (ii) *Adjustment in 1997.* Based on the projected payment schedule, Z's total daily portions of interest on the debt instrument are $100 for 1997 (issue price of $1,000 × 10 percent). Assume that the payment actually made on December 31, 1997, is $375, rather than the projected $500. Under paragraph (b)(6)(i) of this section, Z has a negative adjustment of $125 on December 31, 1997, attributable to the difference between the amount of the

actual payment and the amount of the projected payment. Because Z has no positive adjustments for 1997, Z has a net negative adjustment of $125 on the debt instrument for 1997. This net negative adjustment reduces to zero the $100 total daily portions of interest Z would otherwise include in income in 1997. Accordingly, Z has no interest income on the debt instrument for 1997. Because Z had no interest inclusions on the debt instrument for prior taxable years, the remaining $25 of the net negative adjustment is a negative adjustment carryforward for 1997 that results in a negative adjustment of $25 on January 1, 1998.

(iii) *Adjustment to issue price and basis.* Z's total daily portions of interest on the debt instrument are $100 for 1997. The adjusted issue price of the debt instrument and Z's adjusted basis in the debt instrument are increased by this amount, despite the fact that Z does not include this amount in income because of the net negative adjustment for 1997. In addition, the adjusted issue price of the debt instrument and Z's adjusted basis in the debt instrument are decreased on December 31, 1997, by the projected amount of the payment on that date ($500). Thus, on January 1, 1998, Z's adjusted basis in the debt instrument and the adjusted issue price of the debt instrument are $600.

(iv) *Adjustments in 1998.* Based on the projected payment schedule, Z's total daily portions of interest are $60 for 1998 (adjusted issue price of $600 × 10 percent). Assume that the payment actually made on December 31, 1998, is $700, rather than the projected $660. Under paragraph (b)(6)(i) of this section, Z has a positive adjustment of $40 on December 31, 1998, attributable to the difference between the amount of the actual payment and the amount of the projected payment. Because Z also has a negative adjustment of $25 on January 1, 1998, Z has a net positive adjustment of $15 on the debt instrument for 1998 (the excess of the $40 positive adjustment over the $25 negative adjustment). As a result, Z has $75 of interest income on the debt instrument for 1998 (the $15 net positive adjustment plus the $60 total daily portions of interest that are taken into account by Z in that year).

(v) *Retirement.* Based on the projected payment schedule, Z's adjusted basis in the debt instrument immediately before the payment at maturity is $660 ($600 plus $60 total daily portions of interest for 1998). Even though Z receives $700 at maturity, for purposes of determining the amount realized by Z on retirement of the debt instrument, Z is treated as receiving the projected amount of the contingent payment on December 31, 1998. Therefore, Z is treated as receiving $660 on December 31, 1998. Because Z's adjusted basis in the debt instrument immediately before its retirement is $660, Z recognizes no gain or loss on the retirement.

Example 2. Negative adjustment carryforward for year of sale. (i) *Facts.* Assume the same facts as in *Example 1* of this paragraph (b)(7)(vi), except that Z sells the debt

instrument on January 1, 1998, for $630.
(ii) *Gain on sale.* On the date the debt instrument is sold, Z's adjusted basis in the debt instrument is $600. Because Z has a negative adjustment of $25 on the debt instrument on January 1, 1998, and has no positive adjustments on the debt instrument in 1998, Z has a net negative adjustment for 1998 of $25. Because Z has not included in income any interest on the debt instrument, the entire $25 net negative adjustment is a negative adjustment carryforward for the taxable year of the sale. Under paragraph (b)(6)(iii)(C) of this section, the $25 negative adjustment carryforward reduces the amount realized by Z on the sale of the debt instrument from $630 to $605. Thus, Z has a gain on the sale of $5 ($605−$600). Under paragraph (b)(8)(i) of this section, the gain is treated as interest income.

Example 3. Negative adjustment carryforward for year of retirement. (i) *Facts.* Assume the same facts as in *Example 1* of this paragraph (b)(7)(vi), except that the payment actually made on December 31, 1998, is $615, rather than the projected $660.
(ii) *Adjustments in 1998.* Under paragraph (b)(6)(i) of this section, Z has a negative adjustment of $45 on December 31, 1998, attributable to the difference between the amount of the actual payment and the amount of the projected payment. In addition, Z has a negative adjustment of $25 on January 1, 1998. See *Example 1*(ii) of this paragraph (b)(7)(vi). Because Z has no positive adjustments in 1998, Z has a net negative adjustment of $70 for 1998. This net negative adjustment reduces to zero the $60 total daily portions of interest Z would otherwise include in income for 1998. Therefore, Z has no interest income on the debt instrument for 1998. Because Z had no interest inclusions on the debt instrument for 1997, the remaining $10 of the net negative adjustment is a negative adjustment carryforward for 1998 that reduces the amount realized by Z on retirement of the debt instrument.

(iii) *Loss on retirement.* Immediately before the payment at maturity, Z's adjusted basis in the debt instrument is $660. Under paragraph (b)(7)(iv) of this section, Z is treated as receiving the projected amount of the contingent payment, or $660, as the payment at maturity. Under paragraph (b)(6)(iii)(C) of this section, however, this amount is reduced by any negative adjustment carryforward determined for the taxable year of retirement to calculate the amount Z realizes on retirement of the debt instrument. Thus, Z has a loss of $10 on the retirement of the debt instrument, equal to the amount by which Z's adjusted basis in the debt instrument ($660) exceeds the amount Z realizes on the retirement of the debt instrument ($660 minus the $10 negative adjustment carryforward). Under paragraph (b)(8)(ii) of this section, the loss is a capital loss.

(8) ***Character on sale, exchange, or retirement*** —

(i) ***Gain.*** Any gain recognized by a holder on the sale, exchange, or retirement of a debt instrument subject to this paragraph (b) is interest income.

(ii) ***Loss.*** Any loss recognized by a holder on the sale, exchange, or retirement of a debt instrument subject to this paragraph (b) is ordinary loss to the extent that the holder's total interest inclusions on the debt instrument exceed the total net negative adjustments on the debt instrument the holder took into account as ordinary loss. Any additional loss is treated as loss from the sale, exchange, or retirement of the debt instrument. However, any loss that would otherwise be ordinary under this paragraph (b)(8)(ii) and that is attributable to the holder's basis that could not be amortized under section 171(b)(4) is loss from the sale, exchange, or retirement of the debt instrument.

(iii) ***Special rule if there are no remaining contingent payments on the debt instrument*** —

(A) ***In general.*** Notwithstanding paragraphs (b)(8) (i) and (ii) of this section, if, at the time of the sale, exchange, or retirement of the debt instrument, there are no remaining contingent payments due on the debt instrument under the projected payment schedule, any gain or loss recognized by the holder is gain or loss from the sale, exchange, or retirement of the debt instrument. See paragraph (b)(9)(ii) of this section to determine whether there are no remaining contingent payments on a debt instrument that provides for fixed but deferred contingent payments.

(B) ***Exception for certain positive adjustments.*** Notwithstanding paragraph (b)(8)(iii)(A) of this section, if a positive adjustment on a debt instrument is spread under paragraph (b)(9)(ii)(F) or (G) of this section, any gain recognized by the holder on the sale, exchange, or retirement of the instrument is treated as interest income to the extent of the positive adjustment that has not yet been accrued and included in income by the holder.

(iv) ***Examples.*** The following examples illustrate the provisions of this paragraph (b)(8). In each example, assume that the instrument described is a debt instrument for Federal income tax purposes. No inference is intended, however, as to whether the instrument is a debt instrument for Federal income tax purposes.

> *Example 1. Gain on sale.* (i) *Facts.* On January 1, 1998, D, a calendar year taxpayer, sells a debt instrument that is subject to paragraph (b) of this section for $1,350. The projected payment schedule for the debt instrument provides for contingent payments after January 1, 1998. On January 1, 1998, D has an adjusted basis in the debt instrument of $1,200. In addition, D has a negative adjustment carryforward of $50 for 1997 that, under paragraph (b)(6)(iii)(C) of this section, results in a negative adjustment of $50 on January 1, 1998. D has no positive adjustments on the debt instrument on January 1, 1998.
> (ii) *Character of gain.* Under paragraph (b)(6) of this section, the $50 negative adjustment on January 1, 1998, results in a negative adjustment carryforward for 1998, the taxable year of the sale of the debt instrument. Under paragraph (b)(6)(iii)(C) of this section, the negative adjustment carryforward reduces the amount realized by D on the sale of the debt instrument from $1,350 to $1,300. As a result, D realizes a $100 gain on the sale of the debt instrument, equal to the $1,300 amount realized minus D's $1,200 adjusted basis in the debt instrument. Under paragraph (b)(8)(i) of this section, the gain is interest income to D.

Example 2. Loss on sale. (i) *Facts.* On December 31, 1996, E, a calendar year taxpayer, purchases a debt instrument at original issue for $1,000. The debt instrument is a capital asset in the hands of E. The debt instrument provides for a single payment on December 31, 1998 (the maturity date of the instrument), of $1,000 plus an amount based on the increase, if any, in the price of a specified commodity over the term of the instrument. The comparable yield for the debt instrument is 9.54 percent, compounded annually, and the projected payment schedule provides for a payment of $1,200 on December 31, 1998. Based on the projected payment schedule, the total daily portions of interest are $95 for 1997 and $105 for 1998.
(ii) *Ordinary loss.* Assume that E sells the debt instrument for $1,050 on December 31, 1997. On that date, E has an adjusted basis in the debt instrument of $1,095 ($1,000 original basis, plus total daily portions of $95 for 1997). Therefore, E realizes a $45 loss on the sale of the debt instrument ($1,050-$1,095). The loss is ordinary to the extent E's total interest inclusions on the debt instrument ($95) exceed the total net negative adjustments on the instrument that E took into account as an ordinary loss. Because E has not had any net negative adjustments on the debt instrument, the $45 loss is an ordinary loss.

(iii) *Capital loss.* Alternatively, assume that E sells the debt instrument for $990 on December 31, 1997. E realizes a $105 loss on the sale of the debt instrument ($990 – $1,095). The loss is ordinary to the extent E's total interest inclusions on the debt instrument ($95) exceed the total net negative adjustments on the instrument that E took into account as an ordinary loss. Because E has not had any net negative adjustments on the debt instrument, $95 of the $105 loss is an ordinary loss. The remaining $10 of the $105 loss is a capital loss.

(9) ***Operating rules.*** The rules of this paragraph (b)(9) apply to a debt instrument subject to the noncontingent bond method notwithstanding any other rule of this paragraph (b).

(i) ***Basis different from adjusted issue price.*** This paragraph (b)(9)(i) provides rules for a holder whose basis in a debt instrument is different from the adjusted issue price of the debt instrument (e.g., a subsequent holder that purchases the debt instrument for more or less than the instrument's adjusted issue price).

(A) ***General rule.*** The holder accrues interest under paragraph (b)(3)(iii) of this section and makes adjustments under paragraph (b)(3)(iv) of this section based on the projected payment schedule determined as of the issue date of the debt instrument. However, upon acquiring the debt instrument, the holder must reasonably allocate any difference between the adjusted issue price and the basis to daily portions of interest or projected payments over the remaining term of the debt instrument. Allocations are taken into account under paragraphs (b)(9)(i) (B) and (C) of this section.

(B) ***Basis greater than adjusted issue price.*** If the holder's basis in the debt instrument exceeds the debt instrument's adjusted issue price, the amount of the difference allocated to a daily portion of interest or to a projected payment is treated as a negative adjustment on

the date the daily portion accrues or the payment is made. On the date of the adjustment, the holder's adjusted basis in the debt instrument is reduced by the amount the holder treats as a negative adjustment under this paragraph (b)(9)(i)(B). See paragraph (b)(9)(ii)(E) of this section for a special rule that applies when a contingent payment is fixed more than 6 months before it is due.

(C) ***Basis less than adjusted issue price.*** If the holder's basis in the debt instrument is less than the debt instrument's adjusted issue price, the amount of the difference allocated to a daily portion of interest or to a projected payment is treated as a positive adjustment on the date the daily portion accrues or the payment is made. On the date of the adjustment, the holder's adjusted basis in the debt instrument is increased by the amount the holder treats as a positive adjustment under this paragraph (b)(9)(i)(C). See paragraph (b)(9)(ii)(E) of this section for a special rule that applies when a contingent payment is fixed more than 6 months before it is due.

(D) ***Premium and discount rules do not apply.*** The rules for accruing premium and discount in sections 171, 1272(a)(7), 1276, and 1281 do not apply. Other rules of those sections, such as section 171(b)(4), continue to apply to the extent relevant.

(E) ***Safe harbor for exchange listed debt instruments.*** If the debt instrument is exchange listed property (within the meaning of § 1.1273-2(f)(2) as contained in 26 CFR part 1, revised April 1, 2011), it is reasonable for the holder to allocate any difference between the holder's basis and the adjusted issue price of the debt instrument pro-rata to daily portions of interest (as determined under paragraph (b)(3)(iii) of this section) over the remaining term of the debt instrument. A pro-rata allocation is not reasonable, however, to the extent the holder's yield on the debt instrument, determined after taking into account the amounts allocated under this paragraph (b)(9)(i)(E), is less than the applicable Federal rate for the instrument. For purposes of the preceding sentence, the applicable Federal rate for the debt instrument is determined as if the purchase date were the issue date and the remaining term of the instrument were the term of the instrument.

(F) ***Examples.*** The following examples illustrate the provisions of this paragraph (b)(9)(i). In each example, assume that the instrument described is a debt instrument for Federal income tax purposes. No inference is intended, however, as to whether the instrument is a debt instrument for Federal income tax purposes. In addition, assume that each instrument is not exchange listed property.

> *Example 1. Basis greater than adjusted issue price.* (i) *Facts.* On July 1, 1998, Z purchases for $1,405 a debt instrument that matures on December 31, 1999, and promises to pay on the maturity date $1,000 plus the increase, if any, in the price of a specified amount of a commodity from the issue date to the maturity date. The debt instrument was originally issued on December 31, 1996, for an issue price of $1,000. The comparable yield for the debt instrument is 10.25 percent, compounded semiannually, and the projected payment schedule for the debt instrument (determined as of the issue date) provides for a single payment at maturity of $1,350. At the time of the purchase, the debt instrument has an adjusted issue price of $1,162, assuming semiannual accrual periods ending on December

31 and June 30 of each year. The increase in the value of the debt instrument over its adjusted issue price is due to an increase in the expected amount of the contingent payment and not to a decrease in market interest rates. The debt instrument is a capital asset in the hands of Z. Z is a calendar year taxpayer.
(ii) *Allocation of the difference between basis and adjusted issue price.* Z's basis in the debt instrument on July 1, 1998, is $1,405. Under paragraph (b)(9)(i)(A) of this section, Z allocates the $243 difference between basis ($1,405) and adjusted issue price ($1,162) to the contingent payment at maturity. Z's allocation of the difference between basis and adjusted issue price is reasonable because the increase in the value of the debt instrument over its adjusted issue price is due to an increase in the expected amount of the contingent payment.

(iii) *Treatment of debt instrument for 1998.* Based on the projected payment schedule, $60 of interest accrues on the debt instrument from July 1, 1998 to December 31, 1998 (the product of the debt instrument's adjusted issue price on July 1, 1998 ($1,162) and the comparable yield properly adjusted for the length of the accrual period (10.25 percent/2)). Z has no net negative or positive adjustments for 1998. Thus, Z includes in income $60 of total daily portions of interest for 1998. On December 31, 1998, Z's adjusted basis in the debt instrument is $1,465 ($1,405 original basis, plus total daily portions of $60 for 1998).

(iv) *Effect of allocation to contingent payment at maturity.* Assume that the payment actually made on December 31, 1999, is $1,400, rather than the projected $1,350. Thus, under paragraph (b)(6)(i) of this section, Z has a positive adjustment of $50 on December 31, 1999. In addition, under paragraph (b)(9)(i)(B) of this section, Z has a negative adjustment of $243 on December 31, 1999, which is attributable to the difference between Z's basis in the debt instrument on July 1, 1998, and the instrument's adjusted issue price on that date. As a result, Z has a net negative adjustment of $193 for 1999. This net negative adjustment reduces to zero the $128 total daily portions of interest Z would otherwise include in income in 1999. Accordingly, Z has no interest income on the debt instrument for 1999. Because Z had $60 of interest inclusions for 1998, $60 of the remaining $65 net negative adjustment is treated by Z as an ordinary loss for 1999. The remaining $5 of the net negative adjustment is a negative adjustment carryforward for 1999 that reduces the amount realized by Z on the retirement of the debt instrument from $1,350 to $1,345.

(v) *Loss at maturity.* On December 31, 1999, Z's basis in the debt instrument is $1,350 ($1,405 original basis, plus total daily portions of $60 for 1998 and $128 for 1999, minus the negative adjustment of $243). As a result, Z realizes a loss of $5 on the retirement of the debt instrument (the difference between the amount

realized on the retirement ($1,345) and Z's adjusted basis in the debt instrument ($1,350)). Under paragraph (b)(8)(ii) of this section, the $5 loss is treated as loss from the retirement of the debt instrument. Consequently, Z realizes a total loss of $65 on the debt instrument for 1999 (a $60 ordinary loss and a $5 capital loss).

Example 2. Basis less than adjusted issue price. (i) *Facts.* On January 1, 1999, Y purchases for $910 a debt instrument that pays 7 percent interest semiannually on June 30 and December 31 of each year, and that promises to pay on December 31, 2001, $1,000 plus or minus $10 times the positive or negative difference, if any, between a specified amount and the value of an index on December 31, 2001. However, the payment on December 31, 2001, may not be less than $650. The debt instrument was originally issued on December 31, 1996, for an issue price of $1,000. The comparable yield for the debt instrument is 9.80 percent, compounded semiannually, and the projected payment schedule for the debt instrument (determined as of the issue date) provides for semiannual payments of $35 and a contingent payment at maturity of $1,175. On January 1, 1999, the debt instrument has an adjusted issue price of $1,060, assuming semiannual accrual periods ending on December 31 and June 30 of each year. Y is a calendar year taxpayer.
(ii) *Allocation of the difference between basis and adjusted issue price.* Y's basis in the debt instrument on January 1, 1999, is $910. Under paragraph (b)(9)(i)(A) of this section, Y must allocate the $150 difference between basis ($910) and adjusted issue price ($1,060) to daily portions of interest or to projected payments. These amounts will be positive adjustments taken into account at the time the daily portions accrue or the payments are made.

(A) Assume that, because of a decrease in the relevant index, the expected value of the payment at maturity has declined by about 9 percent. Based on forward prices on January 1, 1999, Y determines that approximately $105 of the difference between basis and adjusted issue price is allocable to the contingent payment. Y allocates the remaining $45 to daily portions of interest on a pro-rata basis (i.e., the amount allocated to an accrual period equals the product of $45 and a fraction, the numerator of which is the total daily portions for the accrual period and the denominator of which is the total daily portions remaining on the debt instrument on January 1, 1999). This allocation is reasonable.

(B) Assume alternatively that, based on yields of comparable debt instruments and its purchase price for the debt instrument, Y determines that an appropriate yield for the debt instrument is 13 percent, compounded semiannually. Based on this determination, Y allocates $55.75 of the difference between basis and adjusted issue price to daily portions of interest as follows: $15.19 to the daily portions of interest for the taxable year ending December 31, 1999; $18.40 to the daily portions

> of interest for the taxable year ending December 31, 2000; and $22.16 to the daily portions of interest for the taxable year ending December 31, 2001. Y allocates the remaining $94.25 to the contingent payment at maturity. This allocation is reasonable.

(ii) ***Fixed but deferred contingent payments.*** This paragraph (b)(9)(ii) provides rules that apply when the amount of a contingent payment becomes fixed before the payment is due. For purposes of paragraph (b) of this section, if a contingent payment becomes fixed within the 6-month period ending on the due date of the payment, the payment is treated as a contingent payment even after the payment is fixed. If a contingent payment becomes fixed more than 6 months before the payment is due, the following rules apply to the debt instrument.

(A) ***Determining adjustments.*** The amount of the adjustment attributable to the contingent payment is equal to the difference between the present value of the amount that is fixed and the present value of the projected amount of the contingent payment. The present value of each amount is determined by discounting the amount from the date the payment is due to the date the payment becomes fixed, using a discount rate equal to the comparable yield on the debt instrument. The adjustment is treated as a positive or negative adjustment, as appropriate, on the date the contingent payment becomes fixed. See paragraph (b)(9)(ii)(G) of this section to determine the timing of the adjustment if all remaining contingent payments on the debt instrument become fixed substantially contemporaneously.

(B) ***Payment schedule.*** The contingent payment is no longer treated as a contingent payment after the date the amount of the payment becomes fixed. On the date the contingent payment becomes fixed, the projected payment schedule for the debt instrument is modified prospectively to reflect the fixed amount of the payment. Therefore, no adjustment is made under paragraph (b)(3)(iv) of this section when the contingent payment is actually made.

(C) ***Accrual period.*** Notwithstanding the determination under § 1.1272-1(b)(1)(ii) of accrual periods for the debt instrument, an accrual period ends on the day the contingent payment becomes fixed, and a new accrual period begins on the day after the day the contingent payment becomes fixed.

(D) ***Adjustments to basis and adjusted issue price.*** The amount of any positive adjustment on a debt instrument determined under paragraph (b)(9)(ii)(A) of this section increases the adjusted issue price of the instrument and the holder's adjusted basis in the instrument. Similarly, the amount of any negative adjustment on a debt instrument determined under paragraph (b)(9)(ii)(A) of this section decreases the adjusted issue price of the instrument and the holder's adjusted basis in the instrument.

(E) ***Basis different from adjusted issue price.*** If a holder's basis in a debt instrument exceeds the debt instrument's adjusted issue price, the amount allocated to a projected payment under paragraph (b)(9)(i) of this section is treated as a negative adjustment on the date the payment becomes fixed. If a holder's basis in a debt instrument is less than the debt instrument's adjusted issue price, the amount allocated to a projected payment under paragraph (b)(9)(i) of this section is treated as a positive adjustment on the date the payment becomes fixed.

(F) ***Special rule for certain contingent interest payments.*** Notwithstanding paragraph (b)(9)(ii)(A) of this section, this paragraph (b)(9)(ii)(F) applies to contingent stated interest payments that are adjusted to compensate for contingencies regarding the reasonableness of the debt instrument's stated rate of interest. For example, this paragraph (b)(9)(ii)(F) applies to a debt instrument that provides for an increase in the stated rate of interest if the credit quality of the issuer or liquidity of the debt instrument deteriorates. Contingent stated interest payments of this type are recognized over the period to which they relate in a reasonable manner.

(G) ***Special rule when all contingent payments become fixed.*** Notwithstanding paragraph (b)(9)(ii)(A) of this section, if all the remaining contingent payments on a debt instrument become fixed substantially contemporaneously, any positive or negative adjustments on the instrument are taken into account in a reasonable manner over the period to which they relate. For purposes of the preceding sentence, a payment is treated as a fixed payment if all remaining contingencies with respect to the payment are remote or incidental (within the meaning of § 1.1275-2(h)).

(H) ***Example.*** The following example illustrates the provisions of this paragraph (b)(9)(ii). In this example, assume that the instrument described is a debt instrument for Federal income tax purposes. No inference is intended, however, as to whether the instrument is a debt instrument for Federal income tax purposes.

> *Example: Fixed but deferred payments.* (i) *Facts.* On December 31, 1996, B, a calendar year taxpayer, purchases a debt instrument at original issue for $1,000. The debt instrument matures on December 31, 2002, and provides for a payment of $1,000 at maturity. In addition, on December 31, 1999, and December 31, 2002, the debt instrument provides for payments equal to the excess of the average daily value of an index for the 6-month period ending on September 30 of the preceding year over a specified amount. The debt instrument's comparable yield is 10 percent, compounded annually, and the instrument's projected payment schedule consists of a payment of $250 on December 31, 1999, and a payment of $1,439 on December 31, 2002. B uses annual accrual periods.
> (ii) *Interest accrual for 1997.* Based on the projected payment schedule, B includes a total of $100 of daily portions of interest in income in 1997. B's adjusted basis in the debt instrument and the debt instrument's adjusted issue price on December 31, 1997, is $1,100.
>
> (iii) *Interest accrual for 1998*—(A) *Adjustment.* Based on the projected payment schedule, B would include $110 of total daily portions of interest in income in 1998. However, assume that on September 30, 1998, the payment due on December 31, 1999, fixes at $300, rather than the projected $250. Thus, on September 30, 1998, B has an adjustment equal to the difference between the present value of the $300 fixed amount and the present value of the $250 projected amount of the contingent payment. The present values of the two payments are determined by discounting

each payment from the date the payment is due (December 31, 1999) to the date the payment becomes fixed (September 30, 1998), using a discount rate equal to 10 percent, compounded annually. The present value of the fixed payment is $266.30 and the present value of the projected amount of the contingent payment is $221.91. Thus, on September 30, 1998, B has a positive adjustment of $44.39 ($266.30-$221.91).

(B) *Effect of adjustment.* Under paragraph (b)(9)(ii)(C) of this section, B's accrual period ends on September 30, 1998. The daily portions of interest on the debt instrument for the period from January 1, 1998 to September 30, 1998 total $81.51. The adjusted issue price of the debt instrument and B's adjusted basis in the debt instrument are thus increased over this period by $125.90 (the sum of the daily portions of interest of $81.51 and the positive adjustment of $44.39 made at the end of the period) to $1,225.90. For purposes of all future accrual periods, including the new accrual period from October 1, 1998, to December 31, 1998, the debt instrument's projected payment schedule is modified to reflect a fixed payment of $300 on December 31, 1999. Based on the new adjusted issue price of the debt instrument and the new projected payment schedule, the yield on the debt instrument does not change.

(C) *Interest accrual for 1998.* Based on the modified projected payment schedule, $29.56 of interest accrues during the accrual period that ends on December 31, 1998. Because B has no other adjustments during 1998, the $44.39 positive adjustment on September 30, 1998, results in a net positive adjustment for 1998, which is additional interest for that year. Thus, B includes $155.46 ($81.51 + $29.56 + $44.39) of interest in income in 1998. B's adjusted basis in the debt instrument and the debt instrument's adjusted issue price on December 31, 1998, is $1,255.46 ($1,225.90 from the end of the prior accrual period plus $29.56 total daily portions for the current accrual period).

(iii) ***Timing contingencies.*** This paragraph (b)(9)(iii) provides rules for debt instruments that have payments that are contingent as to time.

(A) ***Treatment of certain options.*** If a taxpayer has an unconditional option to put or call the debt instrument, to exchange the debt instrument for other property, or to extend the maturity date of the debt instrument, the projected payment schedule is determined by using the principles of § 1.1272-1(c)(5).

(B) ***Other timing contingencies.*** [Reserved]

(iv) ***Cross-border transactions*** —

(A) ***Allocation of deductions.*** For purposes of § 1.861-8, the holder of a debt instrument shall treat any deduction or loss treated as an ordinary loss under paragraph (b)(6)(iii)(B) or (b)(8)(ii) of this section as a deduction that is definitely related to the class of gross

income to which income from such debt instrument belongs. Accordingly, if a U.S. person holds a debt instrument issued by a related controlled foreign corporation and, pursuant to section 904(d)(3) and the regulations thereunder, any interest accrued by such U.S. person with respect to such debt instrument would be treated as foreign source general limitation income, any deductions relating to a net negative adjustment will reduce the U.S. person's foreign source general limitation income. The holder shall apply the general rules relating to allocation and apportionment of deductions to any other deduction or loss realized by the holder with respect to the debt instrument.

(B) ***Investments in United States real property.*** Notwithstanding paragraph (b)(8)(i) of this section, gain on the sale, exchange, or retirement of a debt instrument that is a United States real property interest is treated as gain for purposes of sections 897, 1445, and 6039C.

(v) ***Coordination with subchapter M and related provisions.*** For purposes of sections 852(c)(2) and 4982 and § 1.852-11, any positive adjustment, negative adjustment, income, or loss on a debt instrument that occurs after October 31 of a taxable year is treated in the same manner as foreign currency gain or loss that is attributable to a section 988 transaction.

(vi) ***Coordination with section 1092.*** A holder treats a negative adjustment and an issuer treats a positive adjustment as a loss with respect to a position in a straddle if the debt instrument is a position in a straddle and the contingency (or any portion of the contingency) to which the adjustment relates would be part of the straddle if entered into as a separate position.

(c) ***Method for debt instruments not subject to the noncontingent bond method*** —

(1) ***Applicability.*** This paragraph (c) applies to a contingent payment debt instrument (other than a tax-exempt obligation) that has an issue price determined under § 1.1274-2. For example, this paragraph (c) generally applies to a contingent payment debt instrument that is issued for nonpublicly traded property.

(2) ***Separation into components.*** If paragraph (c) of this section applies to a debt instrument (the overall debt instrument), the noncontingent payments are subject to the rules in paragraph (c)(3) of this section, and the contingent payments are accounted for separately under the rules in paragraph (c)(4) of this section.

(3) ***Treatment of noncontingent payments.*** The noncontingent payments are treated as a separate debt instrument. The issue price of the separate debt instrument is the issue price of the overall debt instrument, determined under § 1.1274-2(g). No interest payments on the separate debt instrument are qualified stated interest payments (within the meaning of § 1.1273-1(c)) and the de minimis rules of section 1273(a)(3) and § 1.1273-1(d) do not apply to the separate debt instrument.

(4) ***Treatment of contingent payments*** —

(i) ***In general.*** Except as provided in paragraph (c)(4)(iii) of this section, the portion of a contingent payment treated as interest under paragraph (c)(4)(ii) of this section is includible in gross income by the holder and deductible from gross income by the issuer in their respective taxable years in which the payment is made.

(ii) ***Characterization of contingent payments as principal and interest*** —

(A) ***General rule.*** A contingent payment is treated as a payment of principal in an amount equal to the present value of the payment, determined by discounting the payment at the test rate from the date the payment is made to the issue date. The amount of the payment in excess of the amount treated as principal under the preceding sentence is treated as a payment of interest.

(B) ***Test rate.*** The test rate used for purposes of paragraph (c)(4)(ii)(A) of this section is the rate that would be the test rate for the overall debt instrument under § 1.1274-4 if the term of the overall debt instrument began on the issue date of the overall debt instrument and ended on the date the contingent payment is made. However, in the case of a contingent payment that consists of a payment of stated principal accompanied by a payment of stated interest at a rate that exceeds the test rate determined under the preceding sentence, the test rate is the stated interest rate.

(iii) ***Certain delayed contingent payments*** —

(A) ***General rule.*** Notwithstanding paragraph (c)(4)(ii) of this section, if a contingent payment becomes fixed more than 6 months before the payment is due, the issuer and holder are treated as if the issuer had issued a separate debt instrument on the date the payment becomes fixed, maturing on the date the payment is due. This separate debt instrument is treated as a debt instrument to which section 1274 applies. The stated principal amount of this separate debt instrument is the amount of the payment that becomes fixed. An amount equal to the issue price of this debt instrument is characterized as interest or principal under the rules of paragraph (c)(4)(ii) of this section and accounted for as if this amount had been paid by the issuer to the holder on the date that the amount of the payment becomes fixed. To determine the issue price of the separate debt instrument, the payment is discounted at the test rate from the maturity date of the separate debt instrument to the date that the amount of the payment becomes fixed.

(B) ***Test rate.*** The test rate used for purposes of paragraph (c)(4)(iii)(A) of this section is determined in the same manner as the test rate under paragraph (c)(4)(ii)(B) of this section is determined except that the date the contingent payment is due is used rather than the date the contingent payment is made.

(5) ***Basis different from adjusted issue price.*** This paragraph (c)(5) provides rules for a holder whose basis in a debt instrument is different from the instrument's adjusted issue price (e.g., a subsequent holder). This paragraph (c)(5), however, does not apply if the holder is reporting income under the installment method of section 453.

(i) ***Allocation of basis.*** The holder must allocate basis to the noncontingent component (i.e., the right to the noncontingent payments) and to any separate debt instruments described in paragraph (c)(4)(iii) of this section in an amount up to the total of the adjusted issue price of the noncontingent component and the adjusted issue prices of the separate debt instruments. The holder must allocate the remaining basis, if any, to the contingent component (i.e., the right to the contingent payments).

(ii) ***Noncontingent component.*** Any difference between the holder's basis in the noncontingent component and the adjusted issue price of the noncontingent component, and any difference between the holder's basis in a separate debt instrument and the adjusted issue price of the separate debt instrument, is taken into account under the rules for market discount, premium, and acquisition premium that apply to a noncontingent debt instrument.

(iii) ***Contingent component.*** Amounts received by the holder that are treated as principal payments under paragraph (c)(4)(ii) of this section reduce the holder's basis in the contingent component. If the holder's basis in the contingent component is reduced to zero, any additional principal payments on the contingent component are treated as gain from the sale or exchange of the debt instrument. Any basis remaining on the contingent component on the date the final contingent payment is made increases the holder's adjusted basis in the noncontingent component (or, if there are no remaining noncontingent payments, is treated as loss from the sale or exchange of the debt instrument).

(6) ***Treatment of a holder on sale, exchange, or retirement.*** This paragraph (c)(6) provides rules for the treatment of a holder on the sale, exchange, or retirement of a debt instrument subject to this paragraph (c). Under this paragraph (c)(6), the holder must allocate the amount received from the sale, exchange, or retirement of a debt instrument first to the noncontingent component and to any separate debt instruments described in paragraph (c)(4)(iii) of this section in an amount up to the total of the adjusted issue price of the noncontingent component and the adjusted issue prices of the separate debt instruments. The holder must allocate the remaining amount received, if any, to the contingent component.

(i) ***Amount allocated to the noncontingent component.*** The amount allocated to the noncontingent component and any separate debt instruments is treated as an amount realized from the sale, exchange, or retirement of the noncontingent component or separate debt instrument.

(ii) ***Amount allocated to the contingent component.*** The amount allocated to the contingent component is treated as a contingent payment that is made on the date of the sale, exchange, or retirement and is characterized as interest and principal under the rules of paragraph (c)(4)(ii) of this section.

(7) ***Examples.*** The following examples illustrate the provisions of this paragraph (c). In each example, assume that the instrument described is a debt instrument for Federal income tax purposes. No inference is intended, however, as to whether the instrument is a debt instrument for Federal income tax purposes.

> *Example 1. Contingent interest payments.* (i) *Facts.* A owns Blackacre, unencumbered depreciable real estate. On January 1, 1997, A sells Blackacre to B. As consideration for the sale, B makes a downpayment of $1,000,000 and issues to A a debt instrument that matures on December 31, 2001. The debt instrument provides for a payment of principal at maturity of $5,000,000 and a contingent payment of interest on December 31 of each year equal to a fixed percentage of the gross rents B receives from Blackacre in that year. Assume that the debt instrument is not issued in a potentially abusive situation. Assume also that on January 1, 1997, the short-term applicable Federal rate is 5 percent, compounded annually, and the mid-term applicable Federal rate is 6 percent, compounded annually.
> (ii) *Determination of issue price.* Under § 1.1274-2(g), the issue price of the debt instrument is $3,736,291, which is the present value, as of the issue date, of the $5,000,000 noncontingent payment due at maturity, calculated using a discount rate equal to the mid-term applicable Federal rate. Under § 1.1012-1(g)(1), B's basis in Blackacre on January 1, 1997, is $4,736,291 ($1,000,000 down payment plus the $3,736,291 issue price of the debt instrument).

(iii) *Noncontingent payment treated as separate debt instrument.* Under paragraph (c)(3) of this section, the right to the noncontingent payment of principal at maturity is treated as a separate debt instrument. The issue price of this separate debt instrument is $3,736,291 (the issue price of the overall debt instrument). The separate debt instrument has a stated redemption price at maturity of $5,000,000 and, therefore, OID of $1,263,709.

(iv) *Treatment of contingent payments.* Assume that the amount of contingent interest that is fixed and paid on December 31, 1997, is $200,000. Under paragraph (c)(4)(ii) of this section, this payment is treated as consisting of a payment of principal of $190,476, which is the present value of the payment, determined by discounting the payment at the test rate of 5 percent, compounded annually, from the date the payment is made to the issue date. The remainder of the $200,000 payment ($9,524) is treated as interest. The additional amount treated as principal gives B additional basis in Blackacre on December 31, 1997. The portion of the payment treated as interest is includible in gross income by A and deductible by B in their respective taxable years in which December 31, 1997 occurs. The remaining contingent payments on the debt instrument are accounted for similarly, using a test rate of 5 percent, compounded annually, for the contingent payments due on December 31, 1998, and December 31, 1999, and a test rate of 6 percent, compounded annually, for the contingent payments due on December 31, 2000, and December 31, 2001.

Example 2. Fixed but deferred payment. (i) *Facts.* The facts are the same as in paragraph (c)(7) *Example 1* of this section, except that the contingent payment of interest that is fixed on December 31, 1997, is not payable until December 31, 2001, the maturity date.
(ii) *Treatment of deferred contingent payment.* Assume that the amount of the payment that becomes fixed on December 31, 1997, is $200,000. Because this amount is not payable until December 31, 2001, under paragraph (c)(4)(iii) of this section, a separate debt instrument to which section 1274 applies is treated as issued by B on December 31, 1997 (the date the payment is fixed). The maturity date of this separate debt instrument is December 31, 2001 (the date on which the payment is due). The stated principal amount of this separate debt instrument is $200,000, the amount of the payment that becomes fixed. The imputed principal amount of the separate debt instrument is $158,419, which is the present value, as of December 31, 1997, of the $200,000 payment, computed using a discount rate equal to the test rate of the overall debt instrument (6 percent, compounded annually). An amount equal to the issue price of the separate debt instrument is treated as an amount paid on December 31, 1997, and characterized as interest and principal under the rules of paragraph (c)(4)(ii) of this section. The amount of the deemed payment characterized as principal is equal to $150,875, which is the present value, as of January 1, 1997 (the issue date of the overall debt instrument), of the deemed payment, computed using a discount rate of 5 percent, compounded annually. The amount of the deemed payment characterized as interest is $7,544 ($158,419 −$150,875), which is includible in gross income by A and deductible by B in their respective taxable years in which December 31, 1997 occurs.

(d) *Rules for tax-exempt obligations* —

(1) ***In general.*** Except as modified by this paragraph (d), the noncontingent bond method described in paragraph (b) of this section applies to a tax-exempt obligation (as defined in section 1275(a)(3)) to which this section applies. Paragraph (d)(2) of this section applies to certain tax-exempt obligations that provide for interest-based payments or revenue-based payments and paragraph (d)(3) of this section applies to all other obligations. Paragraph (d)(4) of this section provides rules for a holder whose basis in a tax-exempt obligation is different from the adjusted issue price of the obligation.

(2) *Certain tax-exempt obligations with interest-based or revenue-based payments* —

(i) ***Applicability.*** This paragraph (d)(2) applies to a tax-exempt obligation that provides for interest-based payments or revenue-based payments.

(ii) ***Interest-based payments.*** A tax-exempt obligation provides for interest-based payments if the obligation would otherwise qualify as a variable rate debt instrument under § 1.1275-5 except that—

(A) The obligation provides for more than one fixed rate;

(B) The obligation provides for one or more caps, floors, or governors (or similar restrictions) that are fixed as of the issue date;

(C) The interest on the obligation is not compounded or paid at least annually; or

(D) The obligation provides for interest at one or more rates equal to the product of a qualified floating rate and a fixed multiple greater than zero and less than .65, or at one or more rates equal to the product of a qualified floating rate and a fixed multiple greater than zero and less than .65, increased or decreased by a fixed rate.

(iii) ***Revenue-based payments.*** A tax-exempt obligation provides for revenue-based payments if the obligation—

(A) Is issued to refinance (including a series of refinancings) an obligation (in a series of refinancings, the original obligation), the proceeds of which were used to finance a project or enterprise; and

(B) Would otherwise qualify as a variable rate debt instrument under § 1.1275-5 except that it provides for stated interest payments at least annually based on a single fixed percentage of the revenue, value, change in value, or other similar measure of the performance of the refinanced project or enterprise.

(iv) ***Modifications to the noncontingent bond method.*** If a tax-exempt obligation is subject to this paragraph (d)(2), the following modifications to the noncontingent bond method described in paragraph (b) of this section apply to the obligation.

(A) ***Daily portions and net positive adjustments.*** The daily portions of interest determined under paragraph (b)(3)(iii) of this section and any net positive adjustment on the obligation are interest for purposes of section 103.

(B) ***Net negative adjustments.*** A net negative adjustment for a taxable year reduces the amount of tax-exempt interest the holder would otherwise account for on the obligation for the taxable year under paragraph (b)(3)(iii) of this section. If the net negative adjustment exceeds this amount, the excess is a nondeductible, noncapitalizable loss. If a

regulated investment company (RIC) within the meaning of section 851 has a net negative adjustment in a taxable year that would be a nondeductible, noncapitalizable loss under the prior sentence, the RIC must use this loss to reduce its tax-exempt interest income on other tax-exempt obligations held during the taxable year.

(C) ***Gains.*** Any gain recognized on the sale, exchange, or retirement of the obligation is gain from the sale or exchange of the obligation.

(D) ***Losses.*** Any loss recognized on the sale, exchange, or retirement of the obligation is treated the same as a net negative adjustment under paragraph (d)(2)(iv)(B) of this section.

(E) ***Special rule for losses and net negative adjustments.*** Notwithstanding paragraphs (d)(2)(iv)(B) and (D) of this section, on the sale, exchange, or retirement of the obligation, the holder may claim a loss from the sale or exchange of the obligation to the extent the holder has not received in cash or property the sum of its original investment in the obligation and any amounts included in income under paragraph (d)(4)(ii) of this section.

(3) ***All other tax-exempt obligations*** —

(i) ***Applicability.*** This paragraph (d)(3) applies to a tax-exempt obligation that is not subject to paragraph (d)(2) of this section.

(ii) ***Modifications to the noncontingent bond method.*** If a tax-exempt obligation is subject to this paragraph (d)(3), the following modifications to the noncontingent bond method described in paragraph (b) of this section apply to the obligation.

(A) ***Modification to projected payment schedule.*** The comparable yield for the obligation is the greater of the obligation's yield, determined without regard to the contingent payments, and the tax-exempt applicable Federal rate that applies to the obligation. The Internal Revenue Service publishes the tax-exempt applicable Federal rate for each month in the Internal Revenue Bulletin (see § 601.601(d)(2)(ii) of this chapter).

(B) ***Daily portions.*** The daily portions of interest determined under paragraph (b)(3)(iii) of this section are interest for purposes of section 103.

(C) ***Adjustments.*** A net positive adjustment on the obligation is treated as gain to the holder from the sale or exchange of the obligation in the taxable year of the adjustment. A net negative adjustment on the obligation is treated as a loss to the holder from the sale or exchange of the obligation in the taxable year of the adjustment.

(D) ***Gains and losses.*** Any gain or loss recognized on the sale, exchange, or retirement of the obligation is gain or loss from the sale or exchange of the obligation.

(4) ***Basis different from adjusted issue price.*** This paragraph (d)(4) provides rules for a holder whose basis in a tax-exempt obligation is different from the adjusted issue price of the obligation. The rules of paragraph (b)(9)(i) of this section do not apply to tax-exempt obligations.

(i) ***Basis greater than adjusted issue price.*** If the holder's basis in the obligation exceeds the obligation's adjusted issue price, the holder, upon acquiring the obligation, must allocate this difference to daily portions of interest on a yield to maturity basis over the remaining term of

the obligation. The amount allocated to a daily portion of interest is not deductible by the holder. However, the holder's basis in the obligation is reduced by the amount allocated to a daily portion of interest on the date the daily portion accrues.

(ii) ***Basis less than adjusted issue price.*** If the holder's basis in the obligation is less than the obligation's adjusted issue price, the holder, upon acquiring the obligation, must allocate this difference to daily portions of interest on a yield to maturity basis over the remaining term of the obligation. The amount allocated to a daily portion of interest is includible in income by the holder as ordinary income on the date the daily portion accrues. The holder's adjusted basis in the obligation is increased by the amount includible in income by the holder under this paragraph (d)(4)(ii) on the date the daily portion accrues.

(iii) ***Premium and discount rules do not apply.*** The rules for accruing premium and discount in sections 171, 1276, and 1288 do not apply. Other rules of those sections continue to apply to the extent relevant.

(e) ***Amounts treated as interest under this section.*** Amounts treated as interest under this section are treated as OID for all purposes of the Internal Revenue Code.

(f) ***Effective date.*** This section applies to debt instruments issued on or after August 13, 1996.

[T.D. 8674, 61 FR 30143, June 14, 1996, as amended by T.D. 8709, 62 FR 618, Jan. 6, 1997; T.D. 8838, 64 FR 48547, Sept. 7, 1999; T.D. 9157, 69 FR 52829, Aug. 30, 2004; T.D. 9599, 77 FR 56538, Sept. 13, 2012; T.D. 9612, 78 FR 8016, Feb. 5, 2013]

§ 1.1275-5 Variable rate debt instruments.

(a) ***Applicability —***

(1) ***In general.*** This section provides rules for variable rate debt instruments. Except as provided in paragraph (a)(6) of this section, a variable rate debt instrument is a debt instrument that meets the conditions described in paragraphs (a)(2), (3), (4), and (5) of this section. If a debt instrument that provides for a variable rate of interest does not qualify as a variable rate debt instrument, the debt instrument is a contingent payment debt instrument. See § 1.1275-4 for the treatment of a contingent payment debt instrument. See § 1.1275-6 for a taxpayer's treatment of a variable rate debt instrument and a hedge.

(2) ***Principal payments.*** The issue price of the debt instrument must not exceed the total noncontingent principal payments by more than an amount equal to the lesser of—

(i) .015 multiplied by the product of the total noncontingent principal payments and the number of complete years to maturity from the issue date (or, in the case of an installment obligation, the weighted average maturity as defined in § 1.1273-1(e)(3)); or

(ii) 15 percent of the total noncontingent principal payments.

(3) ***Stated interest —***

(i) ***General rule.*** The debt instrument must not provide for any stated interest other than stated interest (compounded or paid at least annually) at—

(A) One or more qualified floating rates;

(B) A single fixed rate and one or more qualified floating rates;

(C) A single objective rate; or

(D) A single fixed rate and a single objective rate that is a qualified inverse floating rate.

(ii) ***Certain debt instruments bearing interest at a fixed rate for an initial period.*** If interest on a debt instrument is stated at a fixed rate for an initial period of 1 year or less followed by a variable rate that is either a qualified floating rate or an objective rate for a subsequent period, and the value of the variable rate on the issue date is intended to approximate the fixed rate, the fixed rate and the variable rate together constitute a single qualified floating rate or objective rate. A fixed rate and a variable rate will be conclusively presumed to meet the requirements of the preceding sentence if the value of the variable rate on the issue date does not differ from the value of the fixed rate by more than .25 percentage points (25 basis points).

(4) ***Current value.*** The debt instrument must provide that a qualified floating rate or objective rate in effect at any time during the term of the instrument is set at a current value of that rate. A current value is the value of the rate on any day that is no earlier than 3 months prior to the first day on which that value is in effect and no later than 1 year following that first day.

(5) ***No contingent principal payments.*** Except as provided in paragraph (a)(2) of this section, the debt instrument must not provide for any principal payments that are contingent (within the meaning of § 1.1275-4(a)).

(6) ***Special rule for debt instruments issued for nonpublicly traded property.*** A debt instrument (other than a tax-exempt obligation) that would otherwise qualify as a variable rate debt instrument under this section is not a variable rate debt instrument if section 1274 applies to the instrument and any stated interest payments on the instrument are treated as contingent payments under § 1.1274-2. This paragraph (a)(6) applies to debt instruments issued on or after August 13, 1996.

(b) ***Qualified floating rate*** —

(1) ***In general.*** A variable rate is a qualified floating rate if variations in the value of the rate can reasonably be expected to measure contemporaneous variations in the cost of newly borrowed funds in the currency in which the debt instrument is denominated. The rate may measure contemporaneous variations in borrowing costs for the issuer of the debt instrument or for issuers in general. Except as provided in paragraph (b)(2) of this section, a multiple of a qualified floating rate is not a qualified floating rate. If a debt instrument provides for two or more qualified floating rates that can reasonably be expected to have approximately the same values throughout the term of the instrument, the qualified floating rates together constitute a single qualified floating rate. Two or more qualified floating rates will be conclusively presumed to meet the requirements of the preceding sentence if the values of all rates on the issue date are within .25 percentage points (25 basis points) of each other.

(2) ***Certain rates based on a qualified floating rate.*** For a debt instrument issued on or after August 13, 1996, a variable rate is a qualified floating rate if it is equal to either—

(i) The product of a qualified floating rate described in paragraph (b)(1) of this section and a fixed multiple that is greater than .65 but not more than 1.35; or

(ii) The product of a qualified floating rate described in paragraph (b)(1) of this section and a fixed multiple that is greater than .65 but not more than 1.35, increased or decreased by a fixed rate.

(3) ***Restrictions on the stated rate of interest.*** A variable rate is not a qualified floating rate if it is subject to a restriction or restrictions on the maximum stated interest rate (cap), a restriction or restrictions on the minimum stated interest rate (floor), a restriction or restrictions on the amount of increase or decrease in the stated interest rate (governor), or other similar restrictions. Notwithstanding the preceding sentence, the following restrictions will not cause a variable rate to fail to be a qualified floating rate—

(i) A cap, floor, or governor that is fixed throughout the term of the debt instrument;

(ii) A cap or similar restriction that is not reasonably expected as of the issue date to cause the yield on the debt instrument to be significantly less than the expected yield determined without the cap;

(iii) A floor or similar restriction that is not reasonably expected as of the issue date to cause the yield on the debt instrument to be significantly more than the expected yield determined without the floor; or

(iv) A governor or similar restriction that is not reasonably expected as of the issue date to cause the yield on the debt instrument to be significantly more or significantly less than the expected yield determined without the governor.

(c) ***Objective rate*** —

(1) ***Definition*** —

(i) ***In general.*** For debt instruments issued on or after August 13, 1996, an objective rate is a rate (other than a qualified floating rate) that is determined using a single fixed formula and that is based on objective financial or economic information. For example, an objective rate generally includes a rate that is based on one or more qualified floating rates or on the yield of actively traded personal property (within the meaning of section 1092(d)(1)).

(ii) ***Exception.*** For purposes of paragraph (c)(1)(i) of this section, an objective rate does not include a rate based on information that is within the control of the issuer (or a related party within the meaning of section 267(b) or 707(b)(1)) or that is unique to the circumstances of the issuer (or a related party within the meaning of section 267(b) or 707(b)(1)), such as dividends, profits, or the value of the issuer's stock. However, a rate does not fail to be an objective rate merely because it is based on the credit quality of the issuer.

(2) ***Other objective rates to be specified by Commissioner.*** The Commissioner may designate in the Internal Revenue Bulletin variable rates other than those described in paragraph (c)(1) of this section that will be treated as objective rates (see § 601.601(d)(2)(ii) of this chapter).

(3) ***Qualified inverse floating rate.*** An objective rate described in paragraph (c)(1) of this section is a qualified inverse floating rate if—

(i) The rate is equal to a fixed rate minus a qualified floating rate; and

(ii) The variations in the rate can reasonably be expected to inversely reflect contemporaneous variations in the qualified floating rate (disregarding any restrictions on the rate that are described in paragraphs (b)(3)(i), (b)(3)(ii), (b)(3)(iii), and (b)(3)(iv) of this section).

(4) ***Significant front-loading or back-loading of interest.*** Notwithstanding paragraph (c)(1) of this section, a variable rate of interest on a debt instrument is not an objective rate if it is reasonably expected that the average value of the rate during the first half of the instrument's term will be either significantly less than or significantly greater than the average value of the rate during the final half of the instrument's term.

(5) ***Tax-exempt obligations.*** Notwithstanding paragraph (c)(1) of this section, in the case of a tax-exempt obligation (within the meaning of section 1275(a)(3)), a variable rate is an objective rate only if it is a qualified inverse floating rate or a qualified inflation rate. A rate is a qualified inflation rate if the rate measures contemporaneous changes in inflation based on a general inflation index.

(d) ***Examples.*** The following examples illustrate the rules of paragraphs (b) and (c) of this section. For purposes of these examples, assume that the debt instrument is not a tax-exempt obligation. In addition, unless otherwise provided, assume that the rate is not reasonably expected to result in a significant front-loading or back-loading of interest and that the rate is not based on objective financial or economic information that is within the control of the issuer (or a related party) or that is unique to the circumstances of the issuer (or a related party).

Example 1. Rate based on LIBOR. X issues a debt instrument that provides for annual payments of interest at a rate equal to the value of the 1-year London Interbank Offered Rate (LIBOR) at the end of each year. Variations in the value of 1-year LIBOR over the term of the debt instrument can reasonably be expected to measure contemporaneous variations in the cost of newly borrowed funds over that term. Accordingly, the rate is a qualified floating rate.

Example 2. Rate increased by a fixed amount. X issues a debt instrument that provides for annual payments of interest at a rate equal to 200 basis points (2 percent) plus the current value, at the end of each year, of the average yield on 1-year Treasury securities as published in Federal Reserve bulletins. Variations in the value of this interest rate can reasonably be expected to measure contemporaneous variations in the cost of newly borrowed funds. Accordingly, the rate is a qualified floating rate.

Example 3. Rate based on commercial paper rate. X issues a debt instrument that provides for a rate of interest that is periodically adjusted to equal the current interest rate of Bank's commercial paper. Variations in the value of this interest rate can reasonably be expected to measure contemporaneous variations in the cost of newly borrowed funds. Accordingly, the rate is a qualified floating rate.

Example 4. Rate based on changes in the value of a commodity index. On January 1, 1997, X issues a debt instrument that provides for annual interest payments at the end of each year at a rate equal to the percentage increase, if any, in the value of an index for the year immediately preceding the payment. The index is based on the prices of several actively traded commodities. Variations in the value of this interest rate cannot reasonably be expected to measure contemporaneous variations in the cost of newly borrowed funds. Accordingly, the rate is not a qualified floating rate. However, because the rate is based on objective financial information using a single fixed formula, the rate is an objective rate.

Example 5. Rate based on a percentage of S&P 500 Index. On January 1, 1997, X issues a debt instrument that provides for annual interest payments at the end of each year based on a fixed percentage of the value of the S&P 500 Index. Variations in the value of this interest rate cannot reasonably be expected to measure contemporaneous variations in the cost of newly borrowed funds and, therefore, the rate is not a qualified floating rate. Although the rate is described in paragraph (c)(1)(i)

of this section, the rate is not an objective rate because, based on historical data, it is reasonably expected that the average value of the rate during the first half of the instrument's term will be significantly less than the average value of the rate during the final half of the instrument's term.

Example 6. Rate based on issuer's profits. On January 1, 1997, Z issues a debt instrument that provides for annual interest payments equal to 1 percent of Z's gross profits earned during the year immediately preceding the payment. Variations in the value of this interest rate cannot reasonably be expected to measure contemporaneous variations in the cost of newly borrowed funds. Accordingly, the rate is not a qualified floating rate. In addition, because the rate is based on information that is unique to the issuer's circumstances, the rate is not an objective rate.

Example 7. Rate based on a multiple of an interest index. On January 1, 1997, Z issues a debt instrument with annual interest payments at a rate equal to two times the value of 1-year LIBOR as of the payment date. Because the rate is a multiple greater than 1.35 times a qualified floating rate, the rate is not a qualified floating rate. However, because the rate is based on objective financial information using a single fixed formula, the rate is an objective rate.

Example 8. Variable rate based on the cost of borrowed funds in a foreign currency. On January 1, 1997, Y issues a 5-year dollar denominated debt instrument that provides for annual interest payments at a rate equal to the value of 1-year French franc LIBOR as of the payment date. Variations in the value of French franc LIBOR do not measure contemporaneous changes in the cost of newly borrowed funds in dollars. As a result, the rate is not a qualified floating rate for an instrument denominated in dollars. However, because the rate is based on objective financial information using a single fixed formula, the rate is an objective rate.

Example 9. Qualified inverse floating rate. On January 1, 1997, X issues a debt instrument that provides for annual interest payments at the end of each year at a rate equal to 12 percent minus the value of 1-year LIBOR as of the payment date. On the issue date, the value of 1-year LIBOR is 6 percent. Because the rate can reasonably be expected to inversely reflect contemporaneous variations in 1-year LIBOR, it is a qualified inverse floating rate. However, if the value of 1-year LIBOR on the issue date were 11 percent rather than 6 percent, the rate would not be a qualified inverse floating rate because the rate could not reasonably be expected to inversely reflect contemporaneous variations in 1-year LIBOR.

Example 10. Rate based on an inflation index. On January 1, 1997, X issues a debt instrument that provides for annual interest payments at the end of each year at a rate equal to 400 basis points (4 percent) plus the annual percentage change in a general inflation index (e.g., the Consumer Price Index, U.S. City Average, All Items, for all Urban Consumers, seasonally unadjusted). The rate, however, may not be less than zero. Variations in the value of this interest rate cannot reasonably be expected to measure contemporaneous variations in the cost of newly borrowed funds. Accordingly, the rate is not a qualified floating rate. However, because the rate is based on objective economic information using a single fixed formula, the rate is an objective rate.

(e) ***Qualified stated interest and OID with respect to a variable rate debt instrument*** —

(1) ***In general.*** This paragraph (e) provides rules to determine the amount and accrual of OID and qualified stated interest on a variable rate debt instrument. In general, the rules convert the debt instrument into a fixed rate debt instrument and then apply the general OID rules to the debt instrument. The issue price of a variable rate debt instrument, however, is not determined under this paragraph (e). See §§ 1.1273-2 and 1.1274-2 to determine the issue price of a variable rate debt instrument.

(2) ***Variable rate debt instrument that provides for annual payments of interest at a single variable rate.*** If a variable rate debt instrument provides for stated interest at a single qualified floating rate or objective rate and the interest is unconditionally payable in cash or in property (other than debt instruments of the issuer), or will be constructively received under section 451, at least annually, the following rules apply to the instrument:

(i) All stated interest with respect to the debt instrument is qualified stated interest.

(ii) The amount of qualified stated interest and the amount of OID, if any, that accrues during an accrual period is determined under the rules applicable to fixed rate debt instruments by assuming that the variable rate is a fixed rate equal to—

(A) In the case of a qualified floating rate or qualified inverse floating rate, the value, as of the issue date, of the qualified floating rate or qualified inverse floating rate; or

(B) In the case of an objective rate (other than a qualified inverse floating rate), a fixed rate that reflects the yield that is reasonably expected for the debt instrument.

(iii) The qualified stated interest allocable to an accrual period is increased (or decreased) if the interest actually paid during an accrual period exceeds (or is less than) the interest assumed to be paid during the accrual period under paragraph (e)(2)(ii) of this section.

(3) ***All other variable rate debt instruments except for those that provide for a fixed rate.*** If a variable rate debt instrument is not described in paragraph (e)(2) of this section and does not provide for interest payable at a fixed rate (other than an initial fixed rate described in paragraph (a)(3)(ii) of this section), the amount of interest and OID accruals for the instrument are determined under this paragraph (e)(3).

(i) ***Step one: Determine the fixed rate substitute for each variable rate provided under the debt instrument*** —

(A) ***Qualified floating rate.*** The fixed rate substitute for each qualified floating rate provided for in the debt instrument is the value of each rate as of the issue date. If, however, a variable rate debt instrument provides for two or more qualified floating rates with different intervals between interest adjustment dates, the fixed rate substitutes for the rates must be based on intervals that are equal in length. For example, if a 4-year debt instrument provides for 24 monthly interest payments based on the value of the 30-day commercial paper rate on each payment date followed by 8 quarterly interest payments based on the value of quarterly LIBOR on each payment date, the fixed rate substitutes may be based on the values, as of the issue date, of the 90-day commercial paper rate and quarterly LIBOR. Alternatively, the fixed rate substitutes may be based on the values, as of the issue date, of the 30-day commercial paper rate and monthly LIBOR.

(B) ***Qualified inverse floating rate.*** The fixed rate substitute for a qualified inverse floating rate is the value of the qualified inverse floating rate as of the issue date.

(C) ***Objective rate.*** The fixed rate substitute for an objective rate (other than a qualified inverse floating rate) is a fixed rate that reflects the yield that is reasonably expected for the debt instrument.

(ii) ***Step two: Construct the equivalent fixed rate debt instrument.*** The equivalent fixed rate debt instrument has terms that are identical to those provided under the variable rate debt instrument, except that the equivalent fixed rate debt instrument provides for the fixed rate substitutes (determined in paragraph (e)(3)(i) of this section) in lieu of the qualified floating rates or objective rate provided under the variable rate debt instrument.

(iii) ***Step three: Determine the amount of qualified stated interest and OID with respect to the equivalent fixed rate debt instrument.*** The amount of qualified stated interest and OID, if any, are determined for the equivalent fixed rate debt instrument under the rules applicable to fixed rate debt instruments and are taken into account as if the holder held the equivalent fixed rate debt instrument.

(iv) ***Step four: Make appropriate adjustments for actual variable rates.*** Qualified stated interest or OID allocable to an accrual period must be increased (or decreased) if the interest actually accrued or paid during an accrual period exceeds (or is less than) the interest assumed to be accrued or paid during the accrual period under the equivalent fixed rate debt instrument. This increase or decrease is an adjustment to qualified stated interest for the accrual period if the equivalent fixed rate debt instrument (as determined under paragraph (e)(3)(ii) of this section) provides for qualified stated interest and the increase or decrease is reflected in the amount actually paid during the accrual period. Otherwise, this increase or decrease is an adjustment to OID for the accrual period.

(v) ***Examples.*** The following examples illustrate the rules in paragraphs (e) (2) and (3) of this section:

> *Example 1. Equivalent fixed rate debt instrument.* (i) *Facts.* X purchases at original issue a 6-year variable rate debt instrument that provides for semiannual payments of interest. For the first 3 years, the rate of interest is the value of 6-month LIBOR on the payment date. For the final 3 years, the rate is the value of the 6-month T-bill rate on the payment date. On the issue date, the value of 6-month LIBOR is 3 percent, compounded semiannually, and the 6-month T-bill rate is 2 percent, compounded semiannually.
> (ii) *Determination of equivalent fixed rate debt instrument.* Under paragraph (e)(3)(i) of this section, the fixed rate substitute for 6-month LIBOR is 3 percent, compounded semiannually, and the fixed rate substitute for the 6-month T-bill rate is 2 percent, compounded semiannually. Under paragraph (e)(3)(ii) of this section, the equivalent fixed rate debt instrument is a 6-year debt instrument that provides for semiannual payments of interest at 3 percent, compounded semiannually, for the first 3 years followed by 2 percent, compounded semiannually, for the final 3 years.

> *Example 2. Equivalent fixed rate debt instrument with de minimis OID.* (i) *Facts.* Y purchases at original issue, for $100,000, a 4-year variable rate debt instrument that has a stated principal amount of $100,000, payable at maturity. The debt instrument provides for monthly payments of interest at the end of each month. For the first year, the interest rate is the monthly commercial paper rate and for the last 3 years, the interest rate is the monthly commercial paper rate plus 100 basis points. On the issue

date, the monthly commercial paper rate is 3 percent, compounded monthly.
(ii) *Equivalent fixed rate debt instrument.* Under paragraph (e)(3)(ii) of this section, the equivalent fixed rate debt instrument for the variable rate debt instrument is a 4-year debt instrument that has an issue price and stated principal amount of $100,000. The equivalent fixed rate debt instrument provides for monthly payments of interest at 3 percent, compounded monthly, for the first year ($250 per month) and monthly payments of interest at 4 percent, compounded monthly, for the last 3 years ($333.33 per month).

(iii) *De minimis OID.* Under § 1.1273-1(a), because a portion (100 basis points) of each interest payment in the final 3 years is not a qualified stated interest payment, the equivalent fixed rate debt instrument has OID of $2,999.88 ($102,999.88 −$100,000). However, under § 1.1273-1(d)(4) (the de minimis rule relating to teaser rates and interest holidays), the stated redemption price at maturity of the equivalent fixed rate debt instrument is $100,999.96 ($100,000 (issue price) plus $999.96 (the greater of the amount of foregone interest ($999.96) and the amount equal to the excess of the instrument's stated principal amount over its issue price ($0)). Thus, the equivalent fixed rate debt instrument is treated as having OID of $999.96 ($100,999.96 −$100,000). Because this amount is less than the de minimis amount of $1,010 (0.0025 multiplied by $100,999.96 multiplied by 4 complete years to maturity), the equivalent fixed rate debt instrument has de minimis OID. Therefore, the variable rate debt instrument has zero OID and all stated interest payments are qualified stated interest payments.

Example 3. Adjustment to qualified stated interest for actual payment of interest. (i) *Facts.* On January 1, 1995, Z purchases at original issue, for $90,000, a variable rate debt instrument that matures on January 1, 1997, and has a stated principal amount of $100,000, payable at maturity. The debt instrument provides for annual payments of interest on January 1 of each year, beginning on January 1, 1996. The amount of interest payable is the value of annual LIBOR on the payment date. The value of annual LIBOR on January 1, 1995, and January 1, 1996, is 5 percent, compounded annually. The value of annual LIBOR on January 1, 1997, is 7 percent, compounded annually.
(ii) *Accrual of OID and qualified stated interest.* Under paragraph (e)(2) of this section, the variable rate debt instrument is treated as a 2-year debt instrument that has an issue price of $90,000, a stated principal amount of $100,000, and interest payments of $5,000 at the end of each year. The debt instrument has $10,000 of OID and the annual interest payments of $5,000 are qualified stated interest payments. Under § 1.1272-1, the debt instrument has a yield of 10.82 percent, compounded annually. The amount of OID allocable to the first annual accrual period (assuming Z uses annual accrual periods) is $4,743.25 (($90,000 × .1082)− $5,000), and the amount of OID allocable to the second annual accrual period is $5,256.75 ($100,000−$94,743.25). Under paragraph (e)(2)(iii) of this section, the $2,000 difference between the $7,000 interest payment actually made at

maturity and the $5,000 interest payment assumed to be made at maturity under the equivalent fixed rate debt instrument is treated as additional qualified stated interest for the period.

(4) ***Variable rate debt instrument that provides for a single fixed rate*** —

(i) ***General rule.*** If a variable rate debt instrument provides for stated interest either at one or more qualified floating rates or at a qualified inverse floating rate and in addition provides for stated interest at a single fixed rate (other than an initial fixed rate described in paragraph (a)(3)(ii) of this section), the amount of interest and OID are determined using the method of paragraph (e)(3) of this section, as modified by this paragraph (e)(4). For purposes of paragraphs (e)(3)(i) through (e)(3)(iii) of this section, the variable rate debt instrument is treated as if it provided for a qualified floating rate (or a qualified inverse floating rate, if the debt instrument provides for a qualified inverse floating rate), rather than the fixed rate. The qualified floating rate (or qualified inverse floating rate) replacing the fixed rate must be such that the fair market value of the variable rate debt instrument as of the issue date would be approximately the same as the fair market value of an otherwise identical debt instrument that provides for the qualified floating rate (or qualified inverse floating rate) rather than the fixed rate.

(ii) ***Example.*** The following example illustrates the rule in paragraph (e)(4)(i) of this section.

Example: Variable rate debt instrument that provides for a single fixed rate. (i) *Facts.* On January 1, 1995, X purchases at original issue, for $100,000, a variable rate debt instrument that matures on January 1, 2001, and that has a stated principal amount of $100,000. The debt instrument provides for payments of interest on January 1 of each year, beginning on January 1, 1996. For the first 4 years, the interest rate is 4 percent, compounded annually, and for the last 2 years the interest rate is the value of 1-year LIBOR, as of the payment date, plus 200 basis points. On January 1, 1995, the value of 1-year LIBOR is 2 percent, compounded annually. In addition, assume that on January 1, 1995, the variable rate debt instrument has approximately the same fair market value as an otherwise identical debt instrument that provides for an interest rate equal to the value of 1-year LIBOR, as of the payment date, for the first 4 years.
(ii) *Equivalent fixed rate debt instrument.* Under paragraph (e)(4)(i) of this section, for purposes of paragraphs (e)(3)(i) through (e)(3)(iii) of this section, the variable rate debt instrument is treated as if it provided for an interest rate equal to the value of 1-year LIBOR, as of the payment date, for the first 4 years. Under paragraph (e)(3)(ii) of this section, the equivalent fixed rate debt instrument for the variable rate debt instrument is a 6-year debt instrument that has an issue price and stated principal amount of $100,000. The equivalent fixed rate debt instrument provides for interest payments of $2,000 for the first 4 years and $4,000 for the last 2 years.

(iii) *Accrual of OID and qualified stated interest.* Under § 1.1273-1, the equivalent fixed rate debt instrument has OID of $4,000 because a portion (200 basis points) of each interest payment in the last 2 years is not a qualified stated interest payment. The $4,000

> of OID is allocable over the 6-year term of the debt instrument under § 1.1272-1. Under paragraph (e)(3)(iv) of this section, the difference between the $4,000 payment made in the first 4 years and the $2,000 payment assumed to be made on the equivalent fixed rate debt instrument in those years is an adjustment to qualified stated interest. In addition, any difference between the amount actually paid in each of the last 2 years and the $4,000 payment assumed to be made on the equivalent fixed rate debt instrument is an adjustment to qualified stated interest.

(f) ***Special rule for certain reset bonds.*** Notwithstanding paragraph (e) of this section, this paragraph (f) provides a special rule for a variable rate debt instrument that provides for stated interest at a fixed rate for an initial interval, and provides that on the date immediately following the end of the initial interval (the effective date) the stated interest rate will be a rate determined under a procedure (such as an auction procedure) so that the fair market value of the instrument on the effective date will be a fixed amount (the reset value). Solely for purposes of calculating the accrual of OID, the variable rate debt instrument is treated as—

(1) Maturing on the date immediately preceding the effective date for an amount equal to the reset value; and

(2) Reissued on the effective date for an amount equal to the reset value.

[T.D. 8517, 59 FR 4827, Feb. 2, 1994, as amended by T.D. 8674, 61 FR 30153, June 14, 1996]

§ 1.1275-6 Integration of qualifying debt instruments.

(a) ***In general.*** This section generally provides for the integration of a qualifying debt instrument with a hedge or combination of hedges if the combined cash flows of the components are substantially equivalent to the cash flows on a fixed or variable rate debt instrument. The integrated transaction is generally subject to the rules of this section rather than the rules to which each component of the transaction would be subject on a separate basis. The purpose of this section is to permit a more appropriate determination of the character and timing of income, deductions, gains, or losses than would be permitted by separate treatment of the components. The rules of this section affect only the taxpayer who holds (or issues) the qualifying debt instrument and enters into the hedge.

(b) ***Definitions*** —

(1) ***Qualifying debt instrument.*** A qualifying debt instrument is any debt instrument (including an integrated transaction as defined in paragraph (c) of this section) other than—

(i) A tax-exempt obligation as defined in section 1275(a)(3);

(ii) A debt instrument to which section 1272(a)(6) applies (certain interests in or mortgages held by a REMIC, and certain other debt instruments with payments subject to acceleration); or

(iii) A debt instrument that is subject to § 1.483-4 or § 1.1275-4(c) (certain contingent payment debt instruments issued for nonpublicly traded property).

(2) ***Section 1.1275-6 hedge*** —

(i) ***In general.*** A § 1.1275-6 hedge is any financial instrument (as defined in paragraph (b)(3) of this section) if the combined cash flows of the financial instrument and the qualifying debt instrument permit the calculation of a yield to maturity (under the principles of section 1272), or the right to the combined cash flows would qualify under § 1.1275-5 as a variable rate debt instrument that pays interest at a qualified floating rate or rates (except for the requirement that the interest payments be stated as interest). A financial instrument is not a § 1.1275-6 hedge, however, if the resulting synthetic debt instrument does not have the same term as the remaining term of the qualifying debt instrument. A financial instrument that hedges currency risk is not a § 1.1275-6 hedge.

(ii) ***Limitations*** —

(A) A debt instrument issued by a taxpayer and a debt instrument held by the taxpayer cannot be part of the same integrated transaction.

(B) A debt instrument can be a § 1.1275-6 hedge only if it is issued substantially contemporaneously with, and has the same maturity (including rights to accelerate or delay payments) as, the qualifying debt instrument.

(3) ***Financial instrument.*** For purposes of this section, a financial instrument is a spot, forward, or futures contract, an option, a notional principal contract, a debt instrument, or a similar instrument, or combination or series of financial instruments. Stock is not a financial instrument for purposes of this section.

(4) ***Synthetic debt instrument.*** The synthetic debt instrument is the hypothetical debt instrument with the same cash flows as the combined cash flows of the qualifying debt instrument and the § 1.1275-6 hedge.

(c) ***Integrated transaction*** —

(1) ***Integration by taxpayer.*** Except as otherwise provided in this section, a qualifying debt instrument and a § 1.1275-6 hedge are an integrated transaction if all of the following requirements are satisfied:

(i) The taxpayer satisfies the identification requirements of paragraph (e) of this section on or before the date the taxpayer enters into the § 1.1275-6 hedge.

(ii) None of the parties to the § 1.1275-6 hedge are related within the meaning of section 267(b) or 707(b)(1), or, if the parties are related, the party providing the hedge uses, for Federal income tax purposes, a mark-to-market method of accounting for the hedge and all similar or related transactions.

(iii) Both the qualifying debt instrument and the § 1.1275-6 hedge are entered into by the same individual, partnership, trust, estate, or corporation (regardless of whether the corporation is a member of an affiliated group of corporations that files a consolidated return).

(iv) If the taxpayer is a foreign person engaged in a U.S. trade or business and the taxpayer issues or acquires a qualifying debt instrument, or enters into a § 1.1275-6 hedge, through the trade or business, all items of income and expense associated with the qualifying debt instrument and the § 1.1275-6 hedge (other than interest expense that is subject to § 1.882-5) would have been effectively connected with the U.S. trade or business throughout the term of the qualifying debt instrument had this section not applied.

(v) Neither the qualifying debt instrument, nor any other debt instrument that is part of the same issue as the qualifying debt instrument, nor the § 1.1275-6 hedge was, with respect to the taxpayer, part of an integrated transaction that was terminated or otherwise legged out of within the 30 days immediately preceding the date that would be the issue date of the synthetic debt instrument.

(vi) The qualifying debt instrument is issued or acquired by the taxpayer on or before the date of the first payment on the § 1.1275-6 hedge, whether made or received by the taxpayer (including a payment made to purchase the hedge). If the qualifying debt instrument is issued or acquired by the taxpayer after, but substantially contemporaneously with, the date of the first payment on the § 1.1275-6 hedge, the qualifying debt instrument is treated, solely for purposes of this paragraph (c)(1)(vi), as meeting the requirements of the preceding sentence.

(vii) Neither the § 1.1275-6 hedge nor the qualifying debt instrument was, with respect to the taxpayer, part of a straddle (as defined in section 1092(c)) prior to the issue date of the synthetic debt instrument.

(2) ***Integration by Commissioner.*** The Commissioner may treat a qualifying debt instrument and a financial instrument (whether entered into by the taxpayer or by a related party) as an integrated transaction if the combined cash flows on the qualifying debt instrument and financial instrument are substantially the same as the combined cash flows required for the financial instrument to be a § 1.1275-6 hedge. The Commissioner, however, may not integrate a transaction unless the qualifying debt instrument either is subject to § 1.1275-4 or is subject to § 1.1275-5 and pays interest at an objective rate. The circumstances under which the Commissioner may require integration include, but are not limited to, the following:

(i) A taxpayer fails to identify a qualifying debt instrument and the § 1.1275-6 hedge under paragraph (e) of this section.

(ii) A taxpayer issues or acquires a qualifying debt instrument and a related party (within the meaning of section 267(b) or 707(b)(1)) enters into the § 1.1275-6 hedge.

(iii) A taxpayer issues or acquires a qualifying debt instrument and enters into the § 1.1275-6 hedge with a related party (within the meaning of section 267(b) or 707(b)(1)).

(iv) The taxpayer legs out of an integrated transaction and within 30 days enters into a new § 1.1275-6 hedge with respect to the same qualifying debt instrument or another debt instrument that is part of the same issue.

(d) ***Special rules for legging into and legging out of an integrated transaction —***

(1) ***Legging into —***

(i) ***Definition.*** Legging into an integrated transaction under this section means that a § 1.1275-6 hedge is entered into after the date the qualifying debt instrument is issued or acquired by the taxpayer, and the requirements of paragraph (c)(1) of this section are satisfied on the date the § 1.1275-6 hedge is entered into (the leg-in date).

(ii) ***Treatment.*** If a taxpayer legs into an integrated transaction, the taxpayer treats the qualifying debt instrument under the applicable rules for taking interest and OID into account up to the leg-in date, except that the day before the leg-in date is treated as the end of an accrual period. As of the leg-in date, the qualifying debt instrument is subject to the rules of paragraph (f) of this section.

(iii) ***Anti-abuse rule.*** If a taxpayer legs into an integrated transaction with a principal purpose of deferring or accelerating income or deductions on the qualifying debt instrument, the Commissioner may—

(A) Treat the qualifying debt instrument as sold for its fair market value on the leg-in date; or

(B) Refuse to allow the taxpayer to integrate the qualifying debt instrument and the § 1.1275-6 hedge.

(2) ***Legging out*** —

(i) ***Definition*** —

(A) ***Legging out if the taxpayer has integrated.*** If a taxpayer has integrated a qualifying debt instrument and a § 1.1275-6 hedge under paragraph (c)(1) of this section, legging out means that, prior to the maturity of the synthetic debt instrument, the § 1.1275-6 hedge ceases to meet the requirements for a § 1.1275-6 hedge, the taxpayer fails to meet any requirement of paragraph (c)(1) of this section, or the taxpayer disposes of or otherwise terminates all or a part of the qualifying debt instrument or § 1.1275-6 hedge. If the taxpayer fails to meet the requirements of paragraph (c)(1) of this section but meets the requirements of paragraph (c)(2) of this section, the Commissioner may treat the taxpayer as not legging out.

(B) ***Legging out if the Commissioner has integrated.*** If the Commissioner has integrated a qualifying debt instrument and a financial instrument under paragraph (c)(2) of this section, legging out means that, prior to the maturity of the synthetic debt instrument, the requirements for Commissioner integration under paragraph (c)(2) of this section are not met or the taxpayer fails to meet the requirements for taxpayer integration under paragraph (c)(1) of this section and the Commissioner agrees to allow the taxpayer to be treated as legging out.

(C) ***Exception for certain nonrecognition transactions.*** If, in a single nonrecognition transaction, a taxpayer disposes of, or ceases to be primarily liable on, the qualifying debt instrument and the § 1.1275-6 hedge, the taxpayer is not treated as legging out. Instead, the integrated transaction is treated under the rules governing the nonrecognition transaction. For example, if a holder of an integrated transaction is acquired in a reorganization under section 368(a)(1)(A), the holder is treated as disposing of the synthetic debt instrument in the reorganization rather than legging out. If the successor holder is not eligible for integrated treatment, the successor is treated as legging out.

(ii) ***Operating rules.*** If a taxpayer legs out (or is treated as legging out) of an integrated transaction, the following rules apply:

(A) The transaction is treated as an integrated transaction during the time the requirements of paragraph (c) (1) or (2) of this section, as appropriate, are satisfied.

(B) Immediately before the taxpayer legs out, the taxpayer is treated as selling or otherwise terminating the synthetic debt instrument for its fair market value and, except as provided in paragraph (d)(2)(ii)(D) of this section, any income, deduction, gain, or loss is realized and recognized at that time.

(C) If, immediately after the taxpayer legs out, the taxpayer holds or remains primarily liable on the qualifying debt instrument, adjustments are made to reflect any difference between the fair market value of the qualifying debt instrument and the adjusted issue price of the qualifying debt instrument. If, immediately after the taxpayer legs out, the taxpayer is a party to a § 1.1275-6 hedge, the § 1.1275-6 hedge is treated as entered into at its fair market value.

(D) If a taxpayer legs out of an integrated transaction by disposing of or otherwise terminating a § 1.1275-6 hedge within 30 days of legging into the integrated transaction, then any loss or deduction determined under paragraph (d)(2)(ii)(B) of this section is not allowed. Appropriate adjustments are made to the qualifying debt instrument for any disallowed loss. The adjustments are taken into account on a yield to maturity basis over the remaining term of the qualifying debt instrument.

(E) If a holder of a debt instrument subject to § 1.1275-4 legs into an integrated transaction with respect to the instrument and subsequently legs out of the integrated transaction, any gain recognized under paragraph (d)(2)(ii) (B) or (C) of this section is treated as interest income to the extent determined under the principles of § 1.1275-4(b)(8)(iii)(B) (rules for determining the character of gain on the sale of a debt instrument all of the payments on which have been fixed). If the synthetic debt instrument would qualify as a variable rate debt instrument, the equivalent fixed rate debt instrument determined under § 1.1275-5(e) is used for this purpose.

(e) ***Identification requirements.*** For each integrated transaction, a taxpayer must enter and retain as part of its books and records the following information—

(1) The date the qualifying debt instrument was issued or acquired (or is expected to be issued or acquired) by the taxpayer and the date the § 1.1275-6 hedge was entered into by the taxpayer;

(2) A description of the qualifying debt instrument and the § 1.1275-6 hedge; and

(3) A summary of the cash flows and accruals resulting from treating the qualifying debt instrument and the § 1.1275-6 hedge as an integrated transaction (i.e., the cash flows and accruals on the synthetic debt instrument).

(f) ***Taxation of integrated transactions*** —

(1) ***General rule.*** An integrated transaction is generally treated as a single transaction by the taxpayer during the period that the transaction qualifies as an integrated transaction. Except as provided in paragraph (f)(12) of this section, while a qualifying debt instrument and a § 1.1275-6 hedge are part of an integrated transaction, neither the qualifying debt instrument nor the § 1.1275-6 hedge is subject to the rules that would apply on a separate basis to the debt instrument and the § 1.1275-6 hedge, including section 1092 or § 1.446-4. The rules that would govern the treatment of the synthetic debt instrument generally govern the treatment of the integrated transaction. For example, the integrated transaction may be subject to section 263(g) or, if the synthetic debt instrument would be part of a straddle, section 1092. Generally, the synthetic debt instrument is subject to sections 163(e) and 1271 through 1275, with terms as set forth in paragraphs (f) (2) through (13) of this section.

(2) ***Issue date.*** The issue date of the synthetic debt instrument is the first date on which the taxpayer entered into all of the components of the synthetic debt instrument.

(3) ***Term.*** The term of the synthetic debt instrument is the period beginning on the issue date of the synthetic debt instrument and ending on the maturity date of the qualifying debt instrument.

(4) ***Issue price.*** The issue price of the synthetic debt instrument is the adjusted issue price of the qualifying debt instrument on the issue date of the synthetic debt instrument. If, as a result of entering into the § 1.1275-6 hedge, the taxpayer pays or receives one or more payments that are substantially contemporaneous with the issue date of the synthetic debt instrument, the payments reduce or increase the issue price as appropriate.

(5) ***Adjusted issue price.*** In general, the adjusted issue price of the synthetic debt instrument is determined under the principles of § 1.1275-1(b).

(6) ***Qualified stated interest.*** No amounts payable on the synthetic debt instrument are qualified stated interest within the meaning of § 1.1273-1(c).

(7) ***Stated redemption price at maturity*** —

(i) ***Synthetic debt instruments that are borrowings.*** In general, if the synthetic debt instrument is a borrowing, the instrument's stated redemption price at maturity is the sum of all amounts paid or to be paid on the qualifying debt instrument and the § 1.1275-6 hedge, reduced by any amounts received or to be received on the § 1.1275-6 hedge.

(ii) ***Synthetic debt instruments that are held by the taxpayer.*** In general, if the synthetic debt instrument is held by the taxpayer, the instrument's stated redemption price at maturity is the sum of all amounts received or to be received by the taxpayer on the qualifying debt instrument and the § 1.1275-6 hedge, reduced by any amounts paid or to be paid by the taxpayer on the § 1.1275-6 hedge.

(iii) ***Certain amounts ignored.*** For purposes of this paragraph (f)(7), if an amount paid or received on the § 1.1275-6 hedge is taken into account under paragraph (f)(4) of this section to determine the issue price of the synthetic debt instrument, the amount is not taken into account to determine the synthetic debt instrument's stated redemption price at maturity.

(8) ***Source of interest income and allocation of expense.*** The source of interest income from the synthetic debt instrument is determined by reference to the source of income of the qualifying debt instrument under sections 861(a)(1) and 862(a)(1). For purposes of section 904, the character of interest from the synthetic debt instrument is determined by reference to the character of the interest income from the qualifying debt instrument. Interest expense is allocated and apportioned under regulations under section 861 or under § 1.882-5.

(9) ***Effectively connected income.*** If the requirements of paragraph (c)(1)(iv) of this section are satisfied, any interest income resulting from the synthetic debt instrument entered into by the foreign person is treated as effectively connected with a U.S. trade or business, and any interest expense resulting from the synthetic debt instrument entered into by the foreign person is allocated and apportioned under § 1.882-5.

(10) ***Not a short-term obligation.*** For purposes of section 1272(a)(2)(C), a synthetic debt instrument is not treated as a short-term obligation.

(11) ***Special rules in the event of integration by the Commissioner.*** If the Commissioner requires integration, appropriate adjustments are made to the treatment of the synthetic debt instrument, and, if necessary, the qualifying debt instrument and financial instrument. For example, the

Commissioner may treat a financial instrument that is not a § 1.1275-6 hedge as a § 1.1275-6 hedge when applying the rules of this section. The issue date of the synthetic debt instrument is the date determined appropriate by the Commissioner to require integration.

(12) ***Retention of separate transaction rules for certain purposes.*** This paragraph (f)(12) provides for the retention of separate transaction rules for certain purposes. In addition, by publication in the Internal Revenue Bulletin (see § 601.601(d)(2)(ii) of this chapter), the Commissioner may require use of separate transaction rules for any aspect of an integrated transaction.

(i) ***Foreign persons that enter into integrated transactions giving rise to U.S. source income not effectively connected with a U.S. trade or business.*** If a foreign person enters into an integrated transaction that gives rise to U.S. source interest income (determined under the source rules for the synthetic debt instrument) not effectively connected with a U.S. trade or business of the foreign person, paragraph (f) of this section does not apply for purposes of sections 871(a), 881, 1441, 1442, and 6049. These sections of the Internal Revenue Code are applied to the qualifying debt instrument and the § 1.1275-6 hedge on a separate basis.

(ii) ***Relationship between taxpayer and other persons.*** Because the rules of this section affect only the taxpayer that enters into an integrated transaction (i.e., either the issuer or a particular holder of a qualifying debt instrument), any provisions of the Internal Revenue Code or regulations that govern the relationship between the taxpayer and any other person are applied on a separate basis. For example, taxpayers must comply with any reporting or disclosure requirements on any qualifying debt instrument as if it were not part of an integrated transaction. Thus, if required under § 1.1275-4(b)(4), an issuer of a contingent payment debt instrument subject to integrated treatment must provide the projected payment schedule to holders. Similarly, if a U.S. corporation enters into an integrated transaction that includes a notional principal contract, the source of any payment received by the counterparty on the notional principal contract is determined under § 1.863-7 as if the contract were not part of an integrated transaction, and, if received by a foreign person who is not engaged in a U.S. trade or business, the payment is non-U.S. source income that is not subject to U.S. withholding tax.

(iii) ***Excise tax on repurchase of corporate stock*** —

(A) ***Application.*** If a taxpayer enters into an integrated transaction (for example, a convertible debt instrument integrated with one or more § 1.1275-6 hedges consisting of an option on the taxpayer's own stock), then, solely for purposes of section 4501 of the Code and the stock repurchase excise tax regulations (as defined in § 58.4501-1(b)(37) of this chapter), the taxpayer must apply the rules that would apply on a separate basis to the components of the integrated transaction, rather than the rules that otherwise would apply to the integrated transaction under this section.

(B) ***Applicability date.*** Notwithstanding paragraph (j) of this section, paragraph (f)(12)(iii)(A) of this section applies to an integrated transaction outstanding after December 31, 2022 (regardless of when such integrated transaction was entered into by the taxpayer).

(13) ***Coordination with consolidated return rules.*** If a taxpayer enters into a § 1.1275-6 hedge with a member of the same consolidated group (the counterparty) and the § 1.1275-6 hedge is part of an integrated transaction for the taxpayer, the § 1.1275-6 hedge is not treated as an intercompany transaction for purposes of § 1.1502-13. If the taxpayer legs out of integrated treatment, the taxpayer and the counterparty are each treated as disposing of its position in the § 1.1275-6 hedge

under the principles of paragraph (d)(2) of this section. If the § 1.1275-6 hedge remains in existence after the leg-out date, the § 1.1275-6 hedge is treated under the rules that would otherwise apply to the transaction (including § 1.1502-13 if the transaction is between members).

(g) ***Predecessors and successors.*** For purposes of this section, any reference to a taxpayer, holder, issuer, or person includes, where appropriate, a reference to a predecessor or successor. For purposes of the preceding sentence, a predecessor is a transferor of an asset or liability (including an integrated transaction) to a transferee (the successor) in a nonrecognition transaction. Appropriate adjustments, if necessary, are made in the application of this section to predecessors and successors.

(h) ***Examples.*** The following examples illustrate the provisions of this section. In each example, assume that the qualifying debt instrument is a debt instrument for Federal income tax purposes. No inference is intended, however, as to whether the debt instrument is a debt instrument for Federal income tax purposes.

Example 1. Issuer hedge. (i) *Facts.* On January 1, 1997, V, a domestic corporation, issues a 5-year debt instrument for $1,000. The debt instrument provides for annual payments of interest at a rate equal to the value of 1-year LIBOR and a principal payment of $1,000 at maturity. On the same day, V enters into a 5-year interest rate swap agreement with an unrelated party. Under the swap, V pays 6 percent and receives 1-year LIBOR on a notional principal amount of $1,000. The payments on the swap are fixed and made on the same days as the payments on the debt instrument. On January 1, 1997, V identifies the debt instrument and the swap as an integrated transaction in accordance with the requirements of paragraph (e) of this section.
(ii) *Eligibility for integration.* The debt instrument is a qualifying debt instrument. The swap is a § 1.1275-6 hedge because it is a financial instrument and a yield to maturity on the combined cash flows of the swap and the debt instrument can be calculated. V has met the identification requirements, and the other requirements of paragraph (c)(1) of this section are satisfied. Therefore, the transaction is an integrated transaction under this section.

(iii) *Treatment of the synthetic debt instrument.* The synthetic debt instrument is a 5-year debt instrument that has an issue price of $1,000 and provides for annual interest payments of $60 and a principal payment of $1,000 at maturity. Under paragraph (f)(6) of this section, no amounts payable on the synthetic debt instrument are qualified stated interest. Thus, under paragraph (f)(7)(i) of this section, the synthetic debt instrument has a stated redemption price at maturity of $1,300 (the sum of all amounts to be paid on the qualifying debt instrument and the swap, reduced by amounts to be received on the swap). The synthetic debt instrument, therefore, has $300 of OID.

Example 2. Issuer hedge with an option. (i) *Facts.* On December 31, 1996, W, a domestic corporation, issues for $1,000 a debt instrument that matures on December 31, 1999. The debt instrument has a stated principal amount of $1,000 payable at maturity. The debt instrument also provides for a payment at maturity equal to $10 times the increase, if any, in the value of a nationally known composite index of stocks from December 31, 1996, to the maturity date. On

December 31, 1996, W purchases from an unrelated party an option that pays $10 times the increase, if any, in the stock index from December 31, 1996, to December 31, 1999. W pays $250 for the option. On December 31, 1996, W identifies the debt instrument and option as an integrated transaction in accordance with the requirements of paragraph (e) of this section.
(ii) *Eligibility for integration.* The debt instrument is a qualifying debt instrument. The option is a § 1.1275-6 hedge because it is a financial instrument and a yield to maturity on the combined cash flows of the option and the debt instrument can be calculated. W has met the identification requirements, and the other requirements of paragraph (c)(1) of this section are satisfied. Therefore, the transaction is an integrated transaction under this section.

(iii) *Treatment of the synthetic debt instrument.* Under paragraph (f)(4) of this section, the issue price of the synthetic debt instrument is equal to the issue price of the debt instrument ($1,000) reduced by the payment for the option ($250). As a result, the synthetic debt instrument is a 3-year debt instrument with an issue price of $750. Under paragraph (f)(7) of this section, the synthetic debt instrument has a stated redemption price at maturity of $1,000 (the $250 payment for the option is not taken into account). The synthetic debt instrument, therefore, has $250 of OID.

Example 3. Hedge with prepaid swap. (i) *Facts.* On January 1, 1997, H purchases for £1,000 a 5-year debt instrument that provides for semiannual payments based on 6-month pound LIBOR and a payment of the £1,000 principal at maturity. On the same day, H enters into a swap with an unrelated third party under which H receives semiannual payments, in pounds, of 10 percent, compounded semiannually, and makes semiannual payments, in pounds, of 6-month pound LIBOR on a notional principal amount of £1,000. Payments on the swap are fixed and made on the same dates as the payments on the debt instrument. H also makes a £162 prepayment on the swap. On January 1, 1997, H identifies the swap and the debt instrument as an integrated transaction in accordance with the requirements of paragraph (e) of this section.
(ii) *Eligibility for integration.* The debt instrument is a qualifying debt instrument. The swap is a § 1.1275-6 hedge because it is a financial instrument and a yield to maturity on the combined cash flows of the swap and the debt instrument can be calculated. Although the debt instrument is denominated in pounds, the swap hedges only interest rate risk, not currency risk. Therefore, the transaction is an integrated transaction under this section. See § 1.988-5(a) for the treatment of a debt instrument and a swap if the swap hedges currency risk.

(iii) *Treatment of the synthetic debt instrument.* Under paragraph (f)(4) of this section, the issue price of the synthetic debt instrument is equal to the issue price of the debt instrument (£1,000) increased by the prepayment on the swap (£162). As a result, the synthetic debt instrument is a 5-year debt instrument that has an issue price of £1,162 and provides for semiannual interest payments of £50 and a principal payment of £1,000 at maturity. Under paragraph (f)(6) of this section, no amounts payable on the synthetic debt instrument are qualified stated interest. Thus, under paragraph (f)(7)(ii) of this section, the synthetic debt instrument's stated redemption price

at maturity is £1,500 (the sum of all amounts to be received on the qualifying debt instrument and the § 1.1275-6 hedge, reduced by all amounts to be paid on the § 1.1275-6 hedge other than the £162 prepayment for the swap). The synthetic debt instrument, therefore, has £338 of OID.

Example 4. Legging into an integrated transaction by a holder. (i) *Facts.* On December 31, 1996, X corporation purchases for $1,000,000 a debt instrument that matures on December 31, 2006. The debt instrument provides for annual payments of interest at the rate of 6 percent and for a payment at maturity equal to $1,000,000, increased by the excess, if any, of the price of 1,000 units of a commodity on December 31, 2006, over $350,000, and decreased by the excess, if any, of $350,000 over the price of 1,000 units of the commodity on that date. The projected amount of the payment at maturity determined under § 1.1275-4(b)(4) is $1,020,000. On December 31, 1999, X enters into a cash-settled forward contract with an unrelated party to sell 1,000 units of the commodity on December 31, 2006, for $450,000. On December 31, 1999, X also identifies the debt instrument and the forward contract as an integrated transaction in accordance with the requirements of paragraph (e) of this section.
(ii) *Eligibility for integration.* X meets the requirements for integration as of December 31, 1999. Therefore, X legged into an integrated transaction on that date. Prior to that date, X treats the debt instrument under the applicable rules of § 1.1275-4.

(iii) *Treatment of the synthetic debt instrument.* As of December 31, 1999, the debt instrument and the forward contract are treated as an integrated transaction. The issue price of the synthetic debt instrument is equal to the adjusted issue price of the qualifying debt instrument on the leg-in date, $1,004,804 (assuming one year accrual periods). The term of the synthetic debt instrument is from December 31, 1999, to December 31, 2006. The synthetic debt instrument provides for annual interest payments of $60,000 and a principal payment at maturity of $1,100,000 ($1,000,000 + $450,000 − $350,000). Under paragraph (f)(6) of this section, no amounts payable on the synthetic debt instrument are qualified stated interest. Thus, under paragraph (f)(7)(ii) of this section, the synthetic debt instrument's stated redemption price at maturity is $1,520,000 (the sum of all amounts to be received by X on the qualifying debt instrument and the § 1.1275-6 hedge, reduced by all amounts to be paid by X on the § 1.1275-6 hedge). The synthetic debt instrument, therefore, has $515,196 of OID.

Example 5. Abusive leg-in. (i) *Facts.* On January 1, 1997, Y corporation purchases for $1,000,000 a debt instrument that matures on December 31, 2001. The debt instrument provides for annual payments of interest at the rate of 6 percent, a payment on December 31, 1999, of the increase, if any, in the price of a commodity from January 1, 1997, to December 31, 1999, and a payment at maturity of $1,000,000 and the increase, if any, in the price of the commodity from December 31, 1999 to maturity. Because the debt instrument is a contingent payment debt instrument subject to § 1.1275-4, Y accrues interest based on the projected payment schedule.

(ii) *Leg-in.* By late 1999, the price of the commodity has substantially increased, and Y expects a positive adjustment on December 31, 1999. In late 1999, Y enters into an agreement to exchange the two commodity based payments on the debt instrument for two payments on the same dates of $100,000 each. Y identifies the transaction as an integrated transaction in accordance with the requirements of paragraph (e) of this section. Y disposes of the hedge in early 2000.

(iii) *Treatment.* The legging into an integrated transaction has the effect of deferring the positive adjustment from 1999 to 2000. Because Y legged into the integrated transaction with a principal purpose to defer the positive adjustment, the Commissioner may treat the debt instrument as sold for its fair market value on the leg-in date or refuse to allow integration.

Example 6. Integration of offsetting debt instruments. (i) *Facts.* On January 1, 1997, Z issues two 10-year debt instruments. The first, Issue 1, has an issue price of $1,000, pays interest annually at 6 percent, and, at maturity, pays $1,000, increased by $1 times the increase, if any, in the value of the S&P 100 Index over the term of the instrument and reduced by $1 times the decrease, if any, in the value of the S&P 100 Index over the term of the instrument. However, the amount paid at maturity may not be less than $500 or more than $1,500. The second, Issue 2, has an issue price of $1,000, pays interest annually at 8 percent, and, at maturity, pays $1,000, reduced by $1 times the increase, if any, in the value of the S&P 100 Index over the term of the instrument and increased by $1 times the decrease, if any, in the value of the S&P 100 Index over the term of the instrument. The amount paid at maturity may not be less than $500 or more than $1,500. On January 1, 1997, Z identifies Issue 1 as the qualifying debt instrument, Issue 2 as a § 1.1275-6 hedge, and otherwise meets the identification requirements of paragraph (e) of this section.
(ii) *Eligibility for integration.* Both Issue 1 and Issue 2 are qualifying debt instruments. Z has met the identification requirements by identifying Issue 1 as the qualifying debt instrument and Issue 2 as the § 1.1275-6 hedge. The other requirements of paragraph (c)(1) of this section are satisfied. Therefore, the transaction is an integrated transaction under this section.

(iii) *Treatment of the synthetic debt instrument.* The synthetic debt instrument has an issue price of $2,000, provides for a payment at maturity of $2,000, and, in addition, provides for annual payments of $140. Under paragraph (f)(6) of this section, no amounts payable on the synthetic debt instrument are qualified stated interest. Thus, under paragraph (f)(7)(i) of this section, the synthetic debt instrument's stated redemption price at maturity is $3,400 (the sum of all amounts to be paid on the qualifying debt instrument and the § 1.1275-6 hedge, reduced by amounts to be received on the § 1.1275-6 hedge other than the $1,000 payment received on the issue date). The synthetic debt instrument, therefore, has $1,400 of OID.

Example 7. Integrated transaction entered into by a foreign person. (i) *Facts.* X, a foreign person, enters into an integrated transaction by purchasing a qualifying debt instrument that pays U.S. source interest and entering into a notional principal contract with a U.S. corporation. Neither the income from the qualifying debt instrument nor the income from the notional principal contract is

effectively connected with a U.S. trade or business. The notional principal contract is a § 1.1275-6 hedge.

(ii) *Treatment of integrated transaction.* Under paragraph (f)(8) of this section, X will receive U.S. source income from the integrated transaction. However, under paragraph (f)(12)(i) of this section, the qualifying debt instrument and the notional principal contract are treated as if they are not part of an integrated transaction for purposes of determining whether tax is due and must be withheld on income. Accordingly, because the § 1.1275-6 hedge would produce foreign source income under § 1.863-7 to X if it were not part of an integrated transaction, any income on the § 1.1275-6 hedge generally will not be subject to tax under sections 871(a) and 881, and the U.S. corporation that is the counterparty will not be required to withhold tax on payments under the § 1.1275-6 hedge under sections 1441 and 1442.

(i) [Reserved]

(j) ***Effective date.*** This section applies to a qualifying debt instrument issued on or after August 13, 1996. This section also applies to a qualifying debt instrument acquired by the taxpayer on or after August 13, 1996, if—

(1) The qualifying debt instrument is a fixed rate debt instrument or a variable rate debt instrument; or

(2) The qualifying debt instrument and the § 1.1275-6 hedge are acquired by the taxpayer substantially contemporaneously.

[T.D. 8674, 61 FR 30155, June 14, 1996, as amended by T.D. 10037, 90 FR 53159, Nov. 24, 2025]

§ 1.1275-7 Inflation-indexed debt instruments.

(a) ***Overview.*** This section provides rules for the Federal income tax treatment of an inflation-indexed debt instrument. If a debt instrument is an inflation-indexed debt instrument, one of two methods will apply to the instrument: the coupon bond method (as described in paragraph (d) of this section) or the discount bond method (as described in paragraph (e) of this section). Both methods determine the amount of OID that is taken into account each year by a holder or an issuer of an inflation-indexed debt instrument.

(b) ***Applicability*** —

(1) ***In general.*** Except as provided in paragraph (b)(2) of this section, this section applies to an inflation-indexed debt instrument as defined in paragraph (c)(1) of this section. For example, this section applies to Treasury Inflation-Protected Securities (TIPS).

(2) ***Exceptions.*** This section does not apply to an inflation-indexed debt instrument that is also—

(i) A debt instrument (other than a tax-exempt obligation) described in section 1272(a)(2) (for example, U.S. savings bonds, certain loans between natural persons, and short-term taxable obligations); or

(ii) A debt instrument subject to section 529 (certain debt instruments issued by qualified state tuition programs).

(c) ***Definitions.*** The following definitions apply for purposes of this section:

(1) ***Inflation-indexed debt instrument.*** An inflation-indexed debt instrument is a debt instrument that satisfies the following conditions:

(i) ***Issued for cash.*** The debt instrument is issued for U.S. dollars and all payments on the instrument are denominated in U.S. dollars.

(ii) ***Indexed for inflation and deflation.*** Except for a minimum guarantee payment (as defined in paragraph (c)(5) of this section), each payment on the debt instrument is indexed for inflation and deflation. A payment is indexed for inflation and deflation if the amount of the payment is equal to—

(A) The amount that would be payable if there were no inflation or deflation over the term of the debt instrument, multiplied by

(B) A ratio, the numerator of which is the value of the reference index for the date of the payment and the denominator of which is the value of the reference index for the issue date.

(iii) ***No other contingencies.*** No payment on the debt instrument is subject to a contingency other than the inflation contingency or the contingencies described in this paragraph (c)(1)(iii). A debt instrument may provide for—

(A) A minimum guarantee payment as defined in paragraph (c)(5) of this section; or

(B) Payments under one or more alternate payment schedules if the payments under each payment schedule are indexed for inflation and deflation and a payment schedule for the debt instrument can be determined under § 1.1272-1(c). (For purposes of this section, the rules of § 1.1272-1(c) are applied to the debt instrument by assuming that no inflation or deflation will occur over the term of the instrument.)

(2) ***Reference index.*** The reference index is an index used to measure inflation and deflation over the term of a debt instrument. To qualify as a reference index, an index must satisfy the following conditions:

(i) The value of the index is reset once a month to a current value of a single qualified inflation index (as defined in paragraph (c)(3) of this section). For this purpose, a value of a qualified inflation index is current if the value has been updated and published within the preceding six month period.

(ii) The reset occurs on the same day of each month (the reset date).

(iii) The value of the index for any date between reset dates is determined through straight-line interpolation.

(3) ***Qualified inflation index.*** A qualified inflation index is a general price or wage index that is updated and published at least monthly by an agency of the United States Government (for example, the non-seasonally adjusted U.S. City Average All Items Consumer Price Index for All Urban Consumers (CPI-U), which is published by the Bureau of Labor Statistics of the Department of Labor).

(4) ***Inflation-adjusted principal amount.*** For any date, the inflation-adjusted principal amount of an inflation-indexed debt instrument is an amount equal to—

(i) The outstanding principal amount of the debt instrument (determined as if there were no inflation or deflation over the term of the instrument), multiplied by

(ii) A ratio, the numerator of which is the value of the reference index for the date and the denominator of which is the value of the reference index for the issue date.

(5) ***Minimum guarantee payment.*** In general, a minimum guarantee payment is an additional payment made at maturity on a debt instrument if the total amount of inflation-adjusted principal paid on the instrument is less than the instrument's stated principal amount. The amount of the additional payment must be no more than the excess, if any, of the debt instrument's stated principal amount over the total amount of inflation-adjusted principal paid on the instrument. An additional payment is not a minimum guarantee payment unless the qualified inflation index used to determine the reference index is either the CPI-U or an index designated for this purpose by the Commissioner in the FEDERAL REGISTER or the Internal Revenue Bulletin (see § 601.601(d)(2)(ii) of this chapter). See paragraph (f)(4) of this section for the treatment of a minimum guarantee payment.

(d) ***Coupon bond method*** —

(1) ***In general.*** This paragraph (d) describes the method (coupon bond method) to be used to account for qualified stated interest and inflation adjustments (OID) on an inflation-indexed debt instrument described in paragraph (d)(2) of this section.

(2) ***Applicability.*** The coupon bond method applies to an inflation-indexed debt instrument that satisfies the following conditions:

(i) ***Issued at par.*** The debt instrument is issued at par. A debt instrument is issued at par if the difference between its issue price and principal amount for the issue date is less than the de minimis amount. For this purpose, the de minimis amount is determined using the principles of § 1.1273-1(d). See paragraph (g)(2) of this section, however, for the treatment of TIPS issued with more than a de minimis amount of premium.

(ii) ***All stated interest is qualified stated interest.*** All stated interest on the debt instrument is qualified stated interest. For purposes of this paragraph (d), stated interest is qualified stated interest if the interest is unconditionally payable in cash, or is constructively received under section 451, at least annually at a single fixed rate. Stated interest is payable at a single fixed rate if the amount of each interest payment is determined by multiplying the inflation adjusted principal amount for the payment date by the single fixed rate.

(3) ***Qualified stated interest.*** Under the coupon bond method, qualified stated interest is taken into account under the taxpayer's regular method of accounting. The amount of accrued but unpaid qualified stated interest as of any date is determined by using the principles of § 1.446-3(e)(2)(ii) (relating to notional principal contracts). For example, if the interval between interest payment dates spans two taxable years, a taxpayer using an accrual method of accounting determines the amount of accrued qualified stated interest for the first taxable year by reference to the inflation-adjusted principal amount at the end of the first taxable year.

(4) ***Inflation adjustments*** —

(i) ***Current accrual.*** Under the coupon bond method, an inflation adjustment is taken into account for each taxable year in which the debt instrument is outstanding.

(ii) ***Amount of inflation adjustment.*** For any relevant period (such as the taxable year or the portion of the taxable year during which a taxpayer holds an inflation-indexed debt instrument), the amount of the inflation adjustment is equal to—

(A) The sum of the inflation-adjusted principal amount at the end of the period and the principal payments made during the period, minus

(B) The inflation-adjusted principal amount at the beginning of the period.

(iii) ***Positive inflation adjustments.*** A positive inflation adjustment is OID.

(iv) ***Negative inflation adjustments.*** A negative inflation adjustment is a deflation adjustment that is taken into account under the rules of paragraph (f)(1) of this section.

(5) ***Example.*** The following example illustrates the coupon bond method:

Example: (i) *Facts.* On October 15, 1997, X purchases at original issue, for $100,000, a debt instrument that is indexed for inflation and deflation. The debt instrument matures on October 15, 1999, has a stated principal amount of $100,000, and has a stated interest rate of 5 percent, compounded semiannually. The debt instrument provides that the principal amount is indexed to the CPI-U. Interest is payable on April 15 and October 15 of each year. The amount of each interest payment is determined by multiplying the inflation-adjusted principal amount for each interest payment date by the stated interest rate, adjusted for the length of the accrual period. The debt instrument provides for a single payment of the inflation-adjusted principal amount at maturity. In addition, the debt instrument provides for an additional payment at maturity equal to the excess, if any, of $100,000 over the inflation-adjusted principal amount at maturity. X uses the cash receipts and disbursements method of accounting and the calendar year as its taxable year.
(ii) *Indexing methodology.* The debt instrument provides that the inflation-adjusted principal amount for any day is determined by multiplying the principal amount of the instrument for the issue date by a ratio, the numerator of which is the value of the reference index for the day the inflation-adjusted principal amount is to be determined and the denominator of which is the value of the reference index for the issue date. The value of the reference index for the first day of a month is the value of the CPI-U for the third preceding month. The value of the reference index for any day other than the first day of a month is determined based on a straight-line interpolation between the value of the reference index for the first day of the month and the value of the reference index for the first day of the next month.

(iii) *Inflation-indexed debt instrument subject to the coupon bond method.* Under paragraph (c)(1) of this section, the debt instrument is an inflation-indexed debt instrument. Because there is no difference between the debt instrument's issue price ($100,000) and its principal amount for the issue date ($100,000) and because all stated interest is qualified stated interest, the coupon bond method applies to the instrument.

(iv) *Reference index values.* Assume the following table lists the relevant reference index values for 1997 through 1999:

Date	Reference index value
Oct. 15, 1997	100
Jan. 1, 1998	101
Apr. 15, 1998	103
Oct. 15, 1998	105
Jan. 1, 1999	99

(v) *Treatment of X in 1997.* X does not receive any payments of interest on the debt instrument in 1997. Therefore, X has no qualified stated interest income for 1997. X, however, must take into account the inflation adjustment for 1997. The inflation-adjusted principal amount for January 1, 1998, is $101,000 ($100,000 × 101/100). Therefore, the inflation adjustment for 1997 is $1,000, the inflation-adjusted principal amount for January 1, 1998 ($101,000) minus the principal amount for the issue date ($100,000). X includes the $1,000 inflation adjustment in income as OID in 1997.

(vi) *Treatment of X in 1998.* In 1998, X receives two payments of interest: On April 15, 1998, X receives a payment of $2,575 ($100,000 × 103/100 × .05/2), and on October 15, 1998, X receives a payment of $2,625 ($100,000 × 105/100 × .05/2). Therefore, X's qualified stated interest income for 1998 is $5,200 ($2,575 + $2,625). X also must take into account the inflation adjustment for 1998. The inflation-adjusted principal amount for January 1, 1999, is $99,000 ($100,000 × 99/100). Therefore, the inflation adjustment for 1998 is negative $2,000, the inflation-adjusted principal amount for January 1, 1999 ($99,000) minus the inflation-adjusted principal amount for January 1, 1998 ($101,000). Because the amount of the inflation adjustment is negative, it is a deflation adjustment. Under paragraph (f)(1)(i) of this section, X uses this $2,000 deflation adjustment to reduce the interest otherwise includible in income by X with respect to the debt instrument in 1998. Therefore, X includes $3,200 in income for 1998, the qualified stated interest income for 1998 ($5,200) minus the deflation adjustment ($2,000).

(e) ***Discount bond method*** —

(1) ***In general.*** This paragraph (e) describes the method (discount bond method) to be used to account for OID on an inflation-indexed debt instrument that does not qualify for the coupon bond method.

(2) ***No qualified stated interest.*** Under the discount bond method, no interest on an inflation-indexed debt instrument is qualified stated interest.

(3) ***OID.*** Under the discount bond method, the amount of OID that accrues on an inflation-indexed debt instrument is determined as follows:

(i) ***Step one: Determine the debt instrument's yield to maturity.*** The yield of the debt instrument is determined under the rules of § 1.1272-1(b)(1)(i). In calculating the yield under those rules for purposes of this paragraph (e)(3)(i), the payment schedule of the debt instrument is determined as if there were no inflation or deflation over the term of the instrument.

(ii) ***Step two: Determine the accrual periods.*** The accrual periods are determined under the rules of § 1.1272-1(b)(1)(ii). However, no accrual period can be longer than 1 month.

(iii) ***Step three: Determine the percentage change in the reference index during the accrual period.*** The percentage change in the reference index during the accrual period is equal to—

(A) The ratio of the value of the reference index at the end of the period to the value of the reference index at the beginning of the period,

(B) Minus one.

(iv) ***Step four: Determine the OID allocable to each accrual period.*** The OID allocable to an accrual period (n) is determined by using the following formula:

$$OID(_{(n)} = AIP_{(n)} \times [r + inf_{(n)} + (r \times inf_{(n)})]$$

in which,

r = yield of the debt instrument as determined under paragraph (e)(3)(i) of this section (adjusted for the length of the accrual period);

$inf_{(n)}$ = percentage change in the value of the reference index for period (n) as determined under paragraph (e)(3)(iii) of this section; and

$AIP_{(n)}$ = adjusted issue price at the beginning of period (n).

(v) ***Step five: Determine the daily portions of OID.*** The daily portions of OID are determined and taken into account under the rules of § 1.1272-1(b)(1)(iv). If the daily portions determined under this paragraph (e)(3)(v) are negative amounts, however, these amounts (deflation adjustments) are taken into account under the rules for deflation adjustments described in paragraph (f)(1) of this section.

(4) ***Example.*** The following example illustrates the discount bond method:

> *Example:* (i) *Facts.* On November 15, 1997, X purchases at original issue, for $91,403, a zero-coupon debt instrument that is indexed for inflation and deflation. The principal amount of the debt instrument for the issue date is $100,000. The debt instrument provides for a single payment on November 15, 2000. The amount of the payment will be determined by multiplying $100,000 by a fraction, the numerator of which is the CPI-U for September 2000, and the denominator of which is the CPI-U for September 1997. The debt instrument also provides that in no event will the payment on November 15, 2000, be less than $100,000. X uses the cash receipts and disbursements method of

accounting and the calendar year as its taxable year.
(ii) *Inflation-indexed debt instrument.* Under paragraph (c)(1) of this section, the instrument is an inflation-indexed debt instrument. The debt instrument's principal amount for the issue date ($100,000) exceeds its issue price ($91,403) by $8,597, which is more than the de minimis amount for the debt instrument ($750). Therefore, the coupon bond method does not apply to the debt instrument. As a result, the discount bond method applies to the debt instrument.

(iii) *Yield and accrual period.* Assume X chooses monthly accrual periods ending on the 15th day of each month. The yield of the debt instrument is determined as if there were no inflation or deflation over the term of the instrument. Therefore, based on the issue price of $91,403 and an assumed payment at maturity of $100,000, the yield of the debt instrument is 3 percent, compounded monthly.

(iv) *Percentage change in reference index.* Assume that the CPI-U for September 1997 is 160; for October 1997 is 161.2; and for November 1997 is 161.7. The value of the reference index for November 15, 1997, is 160, the value of the CPI-U for September 1997. Similarly, the value of the reference index for December 15, 1997, is 161.2, and for January 15, 1998, is 161.7. The percentage change in the reference index from November 15, 1997, to December 15, 1997, (inf_1) is 0.0075 (161.2/160-1); the percentage change in the reference index from December 15, 1997, to January 15, 1998, (inf_2) is 0.0031 (161.7/161.2-1).

(v) *Treatment of X in 1997.* For the accrual period ending on December 15, 1997, r is .0025 (.03/12), inf_1 is .0075, and the product of r and inf_1 is .00001875. Under paragraph (e)(3) of this section, the amount of OID allocable to the accrual period ending on December 15, 1997, is $916. This amount is determined by multiplying the issue price of the debt instrument ($91,403) by .01001875 (the sum of r, inf_1, and the product of r and inf_1). The adjusted issue price of the debt instrument on December 15, 1997, is $92,319 ($91,403 + $916). For the accrual period ending on January 15, 1998, r is .0025 (.03/12), inf_2 is .0031, and the product of r and inf_2 is .00000775. Under paragraph (e)(3) of this section, the amount of OID allocable to the accrual period ending on January 15, 1998, is $518. This amount is determined by multiplying the adjusted issue price of the debt instrument ($92,319) by .00560775 (the sum of r, inf_2, and the product of r and inf_2). Because the accrual period ending on January 15, 1998, spans two taxable years, only $259 of this amount ($518/30 days × 15 days) is allocable to 1997. Therefore, X includes $1,175 of OID in income for 1997 ($916 + $259).

(f) ***Special rules.*** The following rules apply to an inflation-indexed debt instrument:

(1) ***Deflation adjustments*** —

(i) ***Holder.*** A deflation adjustment reduces the amount of interest otherwise includible in income by a holder with respect to the debt instrument for the taxable year. For purposes of this paragraph (f)(1)(i), interest includes OID, qualified stated interest, and market discount. If the amount of the deflation adjustment exceeds the interest otherwise includible in income by the holder with respect to the debt instrument for the taxable year, the excess is treated as an ordinary loss by the holder for the taxable year. However, the amount treated as an ordinary loss is limited to the amount by which the holder's total interest inclusions on the debt instrument in prior taxable years exceed the total amount treated by the holder as an ordinary loss on the debt instrument in prior taxable years. If the deflation adjustment exceeds the interest otherwise includible in income by the holder with respect to the debt instrument for the taxable year and the amount treated as an ordinary loss for the taxable year, this excess is carried forward to reduce the amount of interest otherwise includible in income by the holder with respect to the debt instrument for subsequent taxable years.

(ii) ***Issuer.*** A deflation adjustment reduces the interest otherwise deductible by the issuer with respect to the debt instrument for the taxable year. For purposes of this paragraph (f)(1)(ii), interest includes OID and qualified stated interest. If the amount of the deflation adjustment exceeds the interest otherwise deductible by the issuer with respect to the debt instrument for the taxable year, the excess is treated as ordinary income by the issuer for the taxable year. However, the amount treated as ordinary income is limited to the amount by which the issuer's total interest deductions on the debt instrument in prior taxable years exceed the total amount treated by the issuer as ordinary income on the debt instrument in prior taxable years. If the deflation adjustment exceeds the interest otherwise deductible by the issuer with respect to the debt instrument for the taxable year and the amount treated as ordinary income for the taxable year, this excess is carried forward to reduce the interest otherwise deductible by the issuer with respect to the debt instrument for subsequent taxable years. If there is any excess remaining upon the retirement of the debt instrument, the issuer takes the excess amount into account as ordinary income.

(2) ***Adjusted basis.*** A holder's adjusted basis in an inflation-indexed debt instrument is determined under § 1.1272-1(g). However, a holder's adjusted basis in the debt instrument is decreased by the amount of any deflation adjustment the holder takes into account to reduce the amount of interest otherwise includible in income or treats as an ordinary loss with respect to the instrument during the taxable year. The decrease occurs when the deflation adjustment is taken into account under paragraph (f)(1) of this section.

(3) ***Subsequent holders.*** A holder determines the amount of acquisition premium or market discount on an inflation-indexed debt instrument by reference to the adjusted issue price of the instrument on the date the holder acquires the instrument. A holder determines the amount of bond premium on an inflation-indexed debt instrument by assuming that the amount payable at maturity on the instrument is equal to the instrument's inflation-adjusted principal amount for the day the holder acquires the instrument. Any premium or market discount is taken into account over the remaining term of the debt instrument as if there were no further inflation or deflation. See section 171 for additional rules relating to the amortization of bond premium and sections 1276 through 1278 for additional rules relating to market discount.

(4) ***Minimum guarantee.*** Under both the coupon bond method and the discount bond method, a minimum guarantee payment is ignored until the payment is made. If there is a minimum guarantee payment, the payment is treated as interest on the date it is paid.

(5) ***Temporary unavailability of a qualified inflation index.*** Notwithstanding any other rule of this section, an inflation-indexed debt instrument may provide for a substitute value of the qualified inflation index if and when the publication of the value of the qualified inflation index is temporarily delayed. The substitute value may be determined by the issuer under any reasonable method. For example, if the CPI-U is not reported for a particular month, the debt instrument may provide that a substitute value may be determined by increasing the last reported value by the average monthly percentage increase in the qualified inflation index over the preceding twelve months. The use of a substitute value does not result in a reissuance of the debt instrument.

(g) ***TIPS*** —

(1) ***Reopenings.*** For rules concerning a reopening of TIPS, see paragraphs (d)(2), (k)(3)(iii), and (k)(3)(v) of § 1.1275-2.

(2) ***TIPS issued with more than a de minimis amount of premium*** —

(i) ***Coupon bond method.*** Notwithstanding paragraph (d)(2)(i) of this section, the coupon bond method described in paragraph (d) of this section applies to TIPS issued with more than a de minimis amount of premium. For this purpose, the de minimis amount is determined using the principles of § 1.1273-1(d).

(ii) ***Example.*** The following example illustrates the application of the bond premium rules to a TIPS issued with bond premium:

> *Example.* (i) *Facts.* X, a calendar year taxpayer, purchases at original issuance TIPS with a stated principal amount of $100,000 and a stated interest rate of .125 percent, compounded semiannually. For purposes of this example, assume that the TIPS are issued in Year 1 on January 1, stated interest is payable on June 30 and December 31 of each year, and that the TIPS mature on December 31, Year 5. X pays $102,000 for the TIPS, which is the issue price for the TIPS as determined under § 1.1275-2(d)(1). Assume that the inflation-adjusted principal amount for the first coupon in Year 1 is $101,225 (resulting in an interest payment of $63.27) and for the second coupon in Year 1 is $102,500 (resulting in an interest payment of $64.06). X elects to amortize bond premium under § 1.171-4. (For simplicity, contrary to actual practice, the TIPS in this example were issued on the date with respect to which the calculation of the first coupon began.)
> (ii) *Bond premium.* The stated interest on the TIPS is qualified stated interest under § 1.1273-1(c). X acquired the TIPS with bond premium of $2,000 (basis of $102,000 minus the TIPS' stated principal amount of $100,000). *See* §§ 1.171-1(d), 1.171-3(b), and paragraph (f)(3) of this section. The $2,000 is more than the de minimis amount of premium for the TIPS of $1,250 (.0025 times the stated

principal amount of the TIPS ($100,000) times the number of complete years to the TIPS' maturity (5 years)). Under paragraph (g)(2)(i) of this section, X must use the coupon bond method to determine X's income from the TIPS.

(iii) *Allocation of bond premium.* Under § 1.171-3(b), the bond premium of $2,000 is allocable to each semiannual accrual period by assuming that there will be no inflation or deflation over the term of the TIPS. Moreover, for purposes of § 1.171-2, the yield of the securities is determined by assuming that there will be no inflation or deflation over their term. Based on this assumption, for purposes of section 171, the TIPS provide for semiannual interest payments of $62.50 and a $100,000 payment at maturity. As a result, the yield of the securities for purposes of section 171 is −0.2720 percent, compounded semiannually. Under § 1.171-2, the bond premium allocable to an accrual period is the excess of the qualified stated interest allocable to the accrual period ($62.50 for each accrual period) over the product of the taxpayer's adjusted acquisition price at the beginning of the accrual period (determined without regard to any inflation or deflation) and the taxpayer's yield. Therefore, the $2,000 of bond premium is allocable to each semiannual accrual period in Year 1 as follows: $201.22 to the accrual period ending on June 30, Year 1 (the excess of the stated interest of $62.50 over ($102,000 × −0.002720/2)); and $200.95 to the accrual period ending on December 31, Year 1 (the excess of the stated interest of $62.50 over ($101,798.78 × −0. 002720/2)). The adjusted acquisition price at the beginning of the accrual period ending on December 31, Year 1 is $101,798.78 (the adjusted acquisition price of $102,000 at the beginning of the accrual period ending on June 30, Year 1 reduced by the $201.22 of premium allocable to that accrual period).

(iv) *Income determined by applying the coupon bond method and the bond premium rules.* Under paragraph (d)(4) of this section, the application of the coupon bond method to the TIPS results in a positive inflation adjustment in Year 1 of $2,500, which is includible in X's income for Year 1. However, because X acquired the TIPS at a premium and elected to amortize the premium, the premium allocable to Year 1 will offset the income on the TIPS as follows: The premium allocable to the first accrual period of $201.22 first offsets the interest payable for that period of $63.27. The remaining $137.95 of premium is treated as a deflation adjustment that offsets the positive inflation adjustment. *See* § 1.171-3(b). The premium allocable to the second accrual period of $200.95 first offsets the interest payable for that period of $64.06. The remaining $136.89 of premium is treated as a deflation adjustment that further offsets the positive inflation adjustment. As a result, X does not include in income any of the stated interest received in Year 1 and includes in Year 1 income only $2,225.16 of the positive inflation adjustment for Year 1 ($2,500 − $137.94 − $136.89).

(h) *Effective/applicability dates* —

(1) ***In general.*** This section applies to an inflation-indexed debt instrument issued on or after January 6, 1997.

(2) ***TIPS issued with more than a de minimis amount of premium.*** Notwithstanding paragraph (h)(1) of this section, paragraph (g)(2) of this section applies to TIPS issued with more than a de minimis amount of premium on or after April 8, 2011.

[T.D. 8709, 62 FR 618, Jan. 6, 1997. Redesignated by T.D. 8838, 64 FR 48547, Sept. 7, 1999, as amended by T.D. 8840, 64 FR 60343, Nov. 5, 1999; T.D. 8934, 66 FR 2817, Jan. 12, 2001; T.D. 9609, 78 FR 668, Jan. 4, 2013]

§ 1.1286-1 Tax treatment of certain stripped bonds and stripped coupons.

(a) ***De minimis OID.*** If the original issue discount determined under section 1286(a) with respect to the purchase of a stripped bond or stripped coupon is less than the amount computed under subparagraphs (A) and (B) of section 1273(a)(3) and the regulations thereunder, then the amount of original issue discount with respect to that purchase (other than any tax-exempt portion thereof, determined under section 1286(d)(2)) shall be considered to be zero. For purposes of this computation, the number of complete years to maturity is measured from the date the stripped bond or stripped coupon is purchased.

(b) *Treatment of certain stripped bonds as market discount bonds* —

(1) ***In general.*** By publication in the Internal Revenue Bulletin (see § 601.601(d)(2)(ii)(*b*) of the Statement of Procedural Rules), the Internal Revenue Service may (subject to the limitation of paragraph (b)(2) of this section) provide that certain mortgage loans that are stripped bonds are to be treated as market discount bonds under section 1278. Thus, any purchaser of such a bond is to account for any discount on the bond as market discount rather than original issue discount.

(2) ***Limitation.*** This treatment may be provided for a stripped bond only if, immediately after the most recent disposition referred to in section 1286(b)—

(i) The amount of original issue discount with respect to the stripped bond is determined under paragraph (a) of this section (concerning *de minimis* OID); or

(ii) The annual stated rate of interest payable on the stripped bond is no more than 100 basis points lower than the annual stated rate of interest payable on the original bond from which it and any other stripped bond or bonds and any stripped coupon or coupons were stripped.

(c) ***Effective date.*** This section is effective on and after August 8, 1991.

[T.D. 8463, 57 FR 61812, Dec. 29, 1992]

§ 1.1286-2 Stripped inflation-protected debt instruments.

Stripped inflation-protected debt instruments. If a Treasury Inflation-Protected Security is stripped under the Department of the Treasury's Separate Trading of Registered Interest and Principal of Securities (STRIPS) program, the holders of the principal and coupon components must use the discount bond method (as described in § 1.1275-7(e)) to account for the original issue discount on the components.

[T.D. 8709, 62 FR 621, Jan. 6, 1997. Redesignated by T.D. 8838, 64 FR 48547, Sept. 7, 1999; T.D. 9609, 78 FR 668, Jan. 4, 2013]

§ 1.1287-1 Denial of capital gains treatment for gains on registration-required obligations not in registered form.

(a) ***In general.*** Except as provided in paragraph (c) of this section, any gain on the sale or other disposition of a registration-required obligation held after December 31, 1982, that is not in registered form shall be treated as ordinary income unless the issuance of the obligation was subject to tax under section 4701. The term *registration-required obligation* has the meaning given to that term in section 163(f)(2), except that clause (iv) of subparagraph (A) thereof shall not apply. Therefore, although an obligation that is not in registered form is described in § 1.163-5(c)(1), the holder of such an obligation shall be required to treat the gain on the sale or other disposition of such obligation as ordinary income. The term *holder* means the person that would be denied a loss deduction under section 165(j)(1) or denied capital gain treatment under section 1287(a).

(b) ***Registered form*** —

(1) ***Obligations issued after September 21, 1984.*** With respect to any obligation originally issued after September 21, 1984, the term *registered form* has the meaning given that term in section 103(j)(3) and the regulations thereunder. Therefore, an obligation that would otherwise be in registered form is not considered to be in registered form if it can be transferred at that time or at any time until its maturity by any means not described in § 5f.103-1(c). An obligation that, as of a particular time, is not considered to be in registered form because it can be transferred by any means not described in § 5f.103-1(c) is considered to be in registered form at all times during the period beginning with a later time and ending with the maturity of the obligation in which the obligation can be transferred only by a means described in § 5f.103-1(c).

(2) ***Obligations issued after December 31, 1982, and on or before September 21, 1984.*** With respect to any obligation originally issued after December 31, 1982, and on or before September 21, 1984, or an obligation originally issued after September 21, 1984, pursuant to the exercise of a warrant or the conversion of a convertible obligation, which warrant or obligation (including conversion privilege) was issued after December 31, 1982, and on or before September 21, 1984, that obligation will be considered to be in registered form if it satisfied § 5f.163-1 or the proposed regulations provided in § 1.163.-5(c) and published in the FEDERAL REGISTER on September 2, 1983 (48 FR 39953).

(c) ***Registration-required obligations not in registered form which are not subject to section 1287(c).*** Notwithstanding the fact than an obligation is a registration-required obligation that is not in registered form, the holder will not be subject to section 1287(a) if the holder meets the conditions of § 1.165-12(c).

(d) ***Effective date.*** These regulations apply generally to obligations issued after January 20, 1987. However, a taxpayer may choose to apply the rules of § 1.1287-1 with respect to an obligation issued after December 31, 1982, and on or before January 20, 1987, which obligation is held after January 20, 1987.

[T.D. 8110, 51 FR 45461, Dec. 19, 1986]

§ 1.1288-1 Adjustment of applicable Federal rate for tax-exempt obligations.

(a) ***In general.*** In applying section 483 or section 1274 to a tax-exempt obligation, the applicable Federal rate is adjusted to take into account the tax exemption for interest on the obligation. For each applicable Federal rate determined under section 1274(d), the Secretary computes a corresponding adjusted applicable Federal rate by multiplying the applicable Federal rate by the adjustment factor described in

paragraph (b) of this section. The Internal Revenue Service publishes the applicable Federal rates and the adjusted applicable Federal rates for each month in the Internal Revenue Bulletin (see § 601.601(d)(2)(ii) of this chapter).

(b) ***Adjustment factor.*** The adjustment factor is a percentage equal to—

(1) The excess of 100 percent, over

(2) The product of—

(i) 59 percent, and

(ii) The sum of the maximum rate in effect under section 1 applicable to individuals and the maximum rate in effect under section 1411 applicable to individuals for the month to which the adjusted applicable Federal rate applies.

(c) ***Effective/applicability date.*** The rules of this section apply to the determination of adjusted applicable Federal rates beginning with the rates determined during August 2016 that apply during September 2016.

[T.D. 9763, 81 FR 24484, Apr. 26, 2016]

§ 1.1291-0 Treatment of shareholders of certain passive foreign investment companies; table of contents.

This section contains a listing of the headings for §§ 1.1291-1, 1.1291-9, and 1.1291-10.

§ 1.1291-1 Taxation of U.S. persons that are shareholders of section 1291 funds.

(a) through (b)(2)(i) [Reserved]

(ii) Pedigreed QEF.

(b)(2)(iii) and (iv) [Reserved]

(v) Section 1291 fund.

(3) through (6) [Reserved]

(7) Shareholder.

(8) Indirect shareholder.

(i) In general.

(ii) Ownership through a corporation.

(A) Ownership through a non-PFIC foreign corporation.

(B) Ownership through a PFIC.

(C) Ownership through a domestic corporation.

(iii) Ownership through pass-through entities.

(A) Partnerships.

(B) S Corporations.

(C) Estates and nongrantor trusts.

(D) Grantor trusts.

(iv) Successive application.

(v) Examples.

(A) Example 1.

(*1*) Facts.

(*2*) Results.

(*i*) Treatment of DC.

(*ii*) Treatment of A.

(B) Example 2.

(*1*) Facts.

(*2*) Results.

(C) Example 3.

(*1*) Facts.

(*2*) Results.

(D) Example 4.

(*1*) Facts.

(*2*) Results.

(c) Coordination with other PFIC rules.

(1) and (2) [Reserved]

(3) Coordination with section 1296: Distributions and dispositions.

(4) Coordination with mark to market rules under chapter 1 of the Internal Revenue Code other than section 1296.

(i) In general.

(ii) Coordination rule.

(d) [Reserved]

(e) Exempt organization as shareholder.

(1) In general.

(2) Ownership through certain tax-exempt organizations and accounts.

(f) through (i) [Reserved]

(j) Applicability dates.

§ 1.1291-9 Deemed dividend election.

(a) Deemed dividend election.

(1) In general.

(2) Post-1986 earnings and profits defined.

(i) In general.

(ii) Pro rata share of post-1986 earnings and profits attributable to shareholder's stock.

(A) In general.

(B) Reduction for previously taxed amounts.

(b) Who may make the election.

(c) Time for making the election.

(d) Manner of making the election.

(1) In general.

(2) Attachment to Form 8621.

(e) Qualification date.

(1) In general.

(2) Elections made after March 31, 1995, and before January 27, 1997.

(i) In general.

(ii) Exception.

(3) Examples.

(f) Adjustment to basis.

(g) Treatment of holding period.

(h) Coordination with section 959(e).

(i) Election inapplicable to shareholder of former PFIC.

(1) [Reserved]

(2) Former PFIC.

(j) Definitions.

(1) Passive foreign investment company (PFIC).

(2) Types of PFICs.

(i) Qualified electing fund (QEF).

(ii) Pedigreed QEF.

(iii) Unpedigreed QEF.

(iv) Former PFIC.

(3) Shareholder.

(k) Effective/applicability dates.

§ 1.1291-10 Deemed sale election.

(a) Deemed sale election.

(b) Who may make the election.

(c) Time for making the election.

(d) Manner of making the election.

(e) Qualification date.

(1) In general.

(2) Elections made after March 31, 1995, and before January 27, 1997.

(i) In general.

(ii) Exception.

(f) Adjustments to basis.

(1) In general.

(2) Adjustment to basis for section 1293 inclusion with respect to deemed sale election made after March 31, 1995, and before January 27, 1997.

(g) Treatment of holding period.

(h) Election inapplicable to shareholder of former PFIC.

(i) Effective date.

[T.D. 8701, 61 FR 68151, Dec. 27, 1996, as amended by T.D. 8750, 63 FR 13, Jan. 2, 1998; T.D. 9123, 69 FR 24073, May 3, 2004; T.D. 9806, 81 FR 95465, Dec. 28, 2016; T.D. 9936, 86 FR 4555, Jan. 15, 2021]

§ 1.1291-1 Taxation of U.S. persons that are shareholders of section 1291 funds.

(a) through (b) (2)(i) [Reserved]

(ii) *Pedigreed QEF.* A PFIC is a *pedigreed QEF* with respect to a shareholder if the PFIC has been a QEF with respect to the shareholder for all taxable years during which the corporation was a PFIC that are included wholly or partly in the shareholder's holding period of the PFIC stock.

(b) (2)(iii) and (iv) [Reserved]

(v) *Section 1291 fund.* A PFIC is a *section 1291 fund* with respect to a shareholder unless the PFIC is a pedigreed QEF with respect to the shareholder or a section 1296 election is in effect with respect to the shareholder.

(3) through (6) [Reserved]

(7) ***Shareholder.*** A *shareholder* is a United States person that directly owns stock of a PFIC (a direct shareholder), or that is an indirect shareholder (as defined in section 1298(a) and paragraph (b)(8) of this section), except as provided in paragraph (e) of this section. For purposes of sections 1291 and 1298, a domestic partnership or S corporation (as defined in section 1361(a)(1)) is not treated as a shareholder of a PFIC except for purposes of any information reporting requirements, including the requirement to file an annual report under section 1298(f). In addition, to the extent that a person is treated under sections 671 through 678 as the owner of a portion of a domestic trust, the trust is not treated as a shareholder of a PFIC with respect to PFIC stock held by that portion of the trust, except for purposes of the information reporting requirements of § 1.1298-1(b)(3)(i) (imposing an information reporting requirement on domestic liquidating trusts and fixed investment trusts).

(8) ***Indirect shareholder*** —

(i) ***In general.*** An *indirect shareholder* of a PFIC is a United States person that indirectly owns stock of a PFIC. A person indirectly owns stock when it is treated as owning stock of a corporation owned by another person, including another United States person, under this paragraph (b)(8). In applying this paragraph (b)(8), the determination of a person's indirect ownership is made on the basis of all the facts and circumstances in each case; the substance rather than the form of ownership is controlling, taking into account the purposes of sections 1291 through 1298.

(ii) ***Ownership through a corporation*** —

(A) ***Ownership through a non-PFIC foreign corporation.*** A person that directly or indirectly owns 50 percent or more in value of the stock of a foreign corporation that is not a PFIC is considered to own a proportionate amount (by value) of any stock owned directly or indirectly by the foreign corporation.

(B) ***Ownership through a PFIC.*** A person that directly or indirectly owns stock of a PFIC is considered to own a proportionate amount (by value) of any stock owned directly or indirectly by the PFIC. Section 1297(d) does not apply in determining whether a corporation is a PFIC for purposes of this paragraph (b)(8)(ii)(B).

(C) ***Ownership through a domestic corporation*** —

(*1*) ***In general.*** Solely for purposes of determining whether a person satisfies the ownership threshold described in paragraph (b)(8)(ii)(A) of this section, a person that directly or indirectly owns 50 percent or more in value of the stock of a domestic corporation is considered to own a proportionate amount (by value) of any stock owned directly or indirectly by the domestic corporation.

(*2*) ***Non-duplication.*** Paragraph (b)(8)(ii)(C)(*1*) of this section does not apply to treat a United States person as owning (other than for purposes of applying the ownership threshold in paragraph (b)(8)(ii)(A) of this section) stock of a PFIC that is directly owned or considered owned indirectly within the meaning of this paragraph (b)(8) by another United States person (determined without regard to paragraph (b)(8)(ii)(C)(*1*)). See *Example 1* of paragraph (b)(8)(iv) of this section.

(*3*) ***S corporations.*** The 50 percent limitation in paragraph (b)(8)(ii)(C)(*1*) of this section does not apply with respect to stock owned directly or indirectly by an S corporation. See paragraph (b)(8)(iii)(B) of this section for rules regarding stock owned directly or indirectly by an S corporation.

(iii) *Ownership through pass-through entities* —

(A) ***Partnerships.*** If a foreign or domestic partnership directly or indirectly owns stock, the partners of the partnership are considered to own such stock proportionately in accordance with their ownership interests in the partnership.

(B) ***S Corporations.*** If an S corporation directly or indirectly owns stock, each S corporation shareholder is considered to own such stock proportionately in accordance with the shareholder's ownership interest in the S corporation.

(C) ***Estates and nongrantor trusts.*** If a foreign or domestic estate or nongrantor trust (other than an employees' trust described in section 401(a) that is exempt from tax under section 501(a)) directly or indirectly owns stock, each beneficiary of the estate or trust is considered to own a proportionate amount of such stock. For purposes of this paragraph (b)(8)(iii)(C), a nongrantor trust is any trust or portion of a trust that is not treated as owned by one or more persons under sections 671 through 679.

(D) ***Grantor trusts.*** If a foreign or domestic trust directly or indirectly owns stock, a person that is treated under sections 671 through 679 as the owner of any portion of the trust that holds an interest in the stock is considered to own the interest in the stock held by that portion of the trust.

(iv) ***Successive application.*** Stock considered to be owned by a person by reason of paragraphs (b)(8)(ii) or (iii) of this section is, for purposes of applying such paragraphs, considered to be actually owned by such person. Subject to the limitations provided in section 1298(a) and paragraphs (b)(8)(ii) and (b)(8)(iii) of this section, this paragraph applies by successively considering a person as actually owning its proportionate share of stock or other equity interest directly held by an entity directly owned by the person. Paragraph (b)(8)(ii)(C)(*2*) of this section applies after the other subparagraphs of paragraph (b)(8) of this section.

(v) ***Examples.*** The rules of this paragraph (b)(8) are illustrated by the following examples:

(A) ***Example 1*** —

(*1*) ***Facts.*** A is a United States person who owns 49% of the stock of FC1, a foreign corporation that is not a PFIC, and separately all of the stock of DC, a domestic corporation that is not an S corporation. DC, in turn, owns the remaining 51% of the stock of FC1, and FC1 owns 100 shares of stock in a PFIC that is not a controlled foreign corporation (CFC) within the meaning of section 957(a). The remainder of the PFIC's shares are owned by unrelated foreign persons.

(*2*) ***Results*** —

(*i*) ***Treatment of DC.*** Under paragraph (b)(8)(ii)(A) of this section, DC is considered to actually own 51 shares of the PFIC stock directly held by FC1 because DC directly owns 50% or more of the stock of FC1.

(*ii*) ***Treatment of A.*** In determining whether A is considered to own 50% or more of the value of FC1 for purposes of applying paragraphs (b)(8)(ii)(A) and (b)(8)(iv) of this section to the PFIC stock held through FC1, A is considered under paragraphs (b)(8)(ii)(C)(*1*) and (b)(8)(iv) of this section as indirectly owning all the stock of FC1 that DC directly owns, before the application of paragraph (b)(8)(ii)(C)(*2*) of this section. Because A also directly owns 49% of the stock of

FC1, before the application of paragraph (b)(8)(ii)(C)(*2*) of this section A would be treated as owning all 100 shares of PFIC stock held by FC1. However, because 51 shares of the PFIC stock held by FC1 are indirectly owned by DC under paragraph (b)(8)(ii)(A) of this section, pursuant to the limitation imposed by paragraph (b)(8)(ii)(C)(*2*) of this section, only the remaining 49 shares of the PFIC stock are considered as indirectly owned by A under paragraph (b)(8) of this section.

(B) ***Example 2*** —

(*1*) ***Facts.*** B, a United States citizen, owns 50% of the interests in Foreign Partnership, a foreign partnership treated as a partnership for U.S. federal income tax purposes, the remaining interests in which are owned by an unrelated foreign person. Foreign Partnership owns 100% of the stock of FC1 and 50% of the stock of FC2, the remainder of which is owned by an unrelated foreign person. Both FC1 and FC2 are foreign corporations that are not PFICs. FC1 and FC2 each own 50% of the stock of FC3, a foreign corporation that is a PFIC.

(*2*) ***Results.*** Under paragraphs (b)(8)(iii)(A) and (b)(8)(iv) of this section, for purposes of determining whether B is a shareholder of FC3, B is considered to actually own 50% (50% × 100%) of the stock of FC1 and 25% (50% × 50%) of the stock of FC2. Under paragraphs (b)(8)(ii)(A) and (b)(8)(iv) of this section, B is then considered to own 25% (50% × 100% × 50%) of the stock of FC3 indirectly through FC1, and thus is a shareholder of FC3 for purposes of the PFIC provisions. Because B is considered to own less than 50% of FC2, B is not considered to own any stock of FC3 indirectly through FC2.

(C) ***Example 3*** —

(*1*) ***Facts.*** The facts are the same as in paragraph (b)(8)(v)(B)(*1*) of this section (the facts in *Example 2*), except that B owns 40% of the interests in Foreign Partnership.

(*2*) ***Results.*** Under paragraph (b)(8)(iii)(A) and (b)(8)(iv) of this section, for purposes of determining whether B is a shareholder of FC3, B is considered to actually own 40% (40% × 100%) of the stock of FC1 and 20% (40% × 50%) of the stock of FC2, and thus is not considered to own 50% or more of the stock of FC1 or FC2. Under paragraphs (b)(8)(ii)(A) and (b)(8)(iv) of this section, B is not considered to own any stock of FC3 indirectly through FC1 or FC2.

(D) ***Example 4*** —

(*1*) ***Facts.*** The facts are the same as in paragraph (b)(8)(v)(C)(*1*) of this section (the facts in *Example 3*), except that FP owns only 80% of FC1 and B also directly owns 20% of FC1.

(*2*) ***Results.*** Under paragraph (b)(8)(iii)(A) and (b)(8)(iv) of this section, for purposes of determining whether B is a shareholder of FC3, B is considered to own 32% (40% × 80%) of the stock of FC1 and 20% (40% × 50%) of the stock of FC2. Because B directly owns 20% of FC1, B is considered to actually own 52% (32% + 20%) of the stock of FC1 in total. Under paragraphs (b)(8)(ii)(A) and (b)(8)(iv) of this section, B is

considered to own 26% (52% × 50%) of the stock of FC3 indirectly through FC1, and thus is a shareholder of FC3 for purposes of the PFIC provisions. B is not considered to own any stock of FC3 indirectly through FC2.

(c) ***Coordination with other PFIC rules.***

(1)-(2) [Reserved]

(3) ***Coordination with section 1296: distributions and dispositions.*** If PFIC stock is marked to market under section 1296 for any taxable year, then, except as provided in § 1.1296-1(i), section 1291 and the regulations thereunder shall not apply to any distribution with respect to section 1296 stock (as defined in § 1.1296-1(a)(2)), or to any disposition of such stock, for such taxable year.

(4) ***Coordination with mark to market rules under chapter 1 of the Internal Revenue Code other than section 1296*** —

(i) ***In general.*** If PFIC stock is marked to market for any taxable year under section 475 or any other provision of chapter 1 of the Internal Revenue Code, other than section 1296, regardless of whether the application of such provision is mandatory or results from an election by the taxpayer or another person, then, except as provided in paragraph (c)(4)(ii) of this section, section 1291 and the regulations thereunder shall not apply to any distribution with respect to such PFIC stock or to any disposition of such PFIC stock for such taxable year. *See* §§ 1.1295-1(i)(3) and 1.1296-1(h)(3)(i) for rules regarding the automatic termination of an existing election under section 1295 or section 1296 when a taxpayer marks to market PFIC stock under section 475 or any other provision of chapter 1 of the Internal Revenue Code.

(ii) ***Coordination rule.***

(A) Notwithstanding any provision in this section to the contrary, the rule of paragraph (c)(4)(ii)(B) of this section shall apply to the first taxable year in which a United States person marks to market its PFIC stock under a provision of chapter 1 of the Internal Revenue Code, other than section 1296, if such foreign corporation was a PFIC for any taxable year, prior to such first taxable year, during the United States person's holding period (as defined in section 1291(a)(3)(A) and § 1.1296-1(f)) in such stock, and for which such corporation was not treated as a QEF with respect to such United States person.

(B) For the first taxable year of a United States person that marks to market its PFIC stock under any provision of chapter 1 of the Internal Revenue Code, other than section 1296, such United States person shall, in lieu of the rules under which the United States person marks to market, apply the rules of § 1.1296-1(i)(2) and (3) as if the United States person had made an election under section 1296 for such first taxable year.

(d) [Reserved]

(e) ***Exempt organization as shareholder*** —

(1) ***In general.*** If the shareholder of a PFIC is an organization exempt from tax under this chapter, section 1291 and these regulations apply to such shareholder only if a dividend from the PFIC would be taxable to the organization under subchapter F.

(2) ***Ownership through certain tax-exempt organizations and accounts.*** To the extent a United States person owns stock of a PFIC through an organization or account described in § 1.1298-1(c)(1), that person is not treated as a shareholder with respect to the PFIC stock.

(f)-(i) [Reserved]

(j) *Applicability dates.*

(1) Paragraphs (c)(3) and (4) of this section apply for taxable years beginning on or after May 3, 2004.

(2) Paragraph (e)(1) of this section is applicable on and after April 1, 1992.

(3) Except as otherwise provided in paragraph (j)(4) of this section, paragraphs (b)(2)(ii) and (v), (b)(7) and (8), and (e)(2) of this section apply to taxable years of shareholders ending on or after December 31, 2013.

(4) Paragraphs (b)(8)(iv) and (b)(8)(v)(A), (B), (C), and (D) of this section apply for taxable years of shareholders beginning on or after January 14, 2021. A shareholder may choose to apply such paragraphs for any open taxable year beginning before January 14, 2021, provided that, with respect to a tested foreign corporation, the shareholder consistently applies such paragraphs and the provisions of §§ 1.1297-1 (except that consistent treatment is not required with respect to § 1.1297-1(c)(1)(i)(A)), 1.1297-2, 1.1297-4, 1.1297-6, 1.1298-2, and 1.1298-4 for such year and all subsequent years.

[T.D. 8750, 63 FR 13, Jan. 2, 1998. Redesignated by T.D. 8870, 65 FR 5779, Feb. 7, 2000, as amended by T.D. 9123, 69 FR 24073, May 3, 2004; T.D. 9806, 81 FR 95465, Dec. 28, 2016; T.D. 9936, 86 FR 4555, Jan. 15, 2021]

§ 1.1291-9 Deemed dividend election.

(a) *Deemed dividend election —*

(1) ***In general.*** This section provides rules for making the election under section 1291(d)(2)(B) (deemed dividend election). Under that section, a shareholder (as defined in paragraph (j)(3) of this section) of a PFIC that is an unpedigreed QEF may elect to include in income as a dividend the shareholder's pro rata share of the post-1986 earnings and profits of the PFIC attributable to the stock held on the qualification date (as defined in paragraph (e) of this section), provided the PFIC is a controlled foreign corporation (CFC) within the meaning of section 957(a) for the taxable year for which the shareholder elects under section 1295 to treat the PFIC as a QEF (section 1295 election). If the shareholder makes the deemed dividend election, the PFIC will become a pedigreed QEF with respect to the shareholder. The deemed dividend is taxed under section 1291 as an excess distribution received on the qualification date. The excess distribution determined under this paragraph (a) is allocated under section 1291(a)(1)(A) only to those days in the shareholder's holding period during which the foreign corporation qualified as a PFIC. For purposes of the preceding sentence, the holding period of the PFIC stock with respect to which the election is made ends on the day before the qualification date. For the definitions of PFIC, QEF, unpedigreed QEF, and pedigreed QEF, see paragraph (j) (1) and (2) of this section.

(2) *Post-1986 earnings and profits defined —*

(i) ***In general.*** For purposes of this section, the term post-1986 earnings and profits means the undistributed earnings and profits, within the meaning of section 902(c)(1), as of the day before the qualification date, that were accumulated and not distributed in taxable years of the PFIC beginning after 1986 and during which it was a PFIC, but without regard to whether the earnings relate to a period during which the PFIC was a CFC.

(ii) *Pro rata share of post-1986 earnings and profits attributable to shareholder's stock —*

(A) ***In general.*** A shareholder's pro rata share of the post-1986 earnings and profits of the PFIC attributable to the stock held by the shareholder on the qualification date is the amount of post-1986 earnings and profits of the PFIC accumulated during any portion of the shareholder's holding period ending at the close of the day before the qualification date and attributable, under the principles of section 1248 and the regulations under that section, to the PFIC stock held on the qualification date.

(B) ***Reduction for previously taxed amounts.*** A shareholder's pro rata share of the post-1986 earnings and profits of the PFIC does not include any amount that the shareholder demonstrates to the satisfaction of the Commissioner (in the manner provided in paragraph (d)(2) of this section) was, pursuant to another provision of the law, previously included in the income of the shareholder, or of another U.S. person if the shareholder's holding period of the PFIC stock includes the period during which the stock was held by that other U.S. person.

(b) ***Who may make the election.*** A shareholder of an unpedigreed QEF that is a CFC for the taxable year of the PFIC for which the shareholder makes the section 1295 election may make the deemed dividend election provided the shareholder held stock of that PFIC on the qualification date. A shareholder is treated as holding stock of the PFIC on the qualification date if its holding period with respect to that stock under section 1223 includes the qualification date. A shareholder may make the deemed dividend election without regard to whether the shareholder is a United States shareholder within the meaning of section 951(b). A deemed dividend election may be made by a shareholder whose pro rata share of the post-1986 earnings and profits of the PFIC attributable to the PFIC stock held on the qualification date is zero.

(c) ***Time for making the election.*** The shareholder makes the deemed dividend election in the shareholder's return for the taxable year that includes the qualification date. If the shareholder and the PFIC have the same taxable year, the shareholder makes the deemed dividend election in either the original return for the taxable year for which the shareholder makes the section 1295 election, or in an amended return for that year. If the shareholder and the PFIC have different taxable years, the deemed dividend election must be made in an amended return for the taxable year that includes the qualification date. If the deemed dividend election is made in an amended return, the amended return must be filed by a date that is within three years of the due date, as extended under section 6081, of the original return for the taxable year that includes the qualification date.

(d) ***Manner of making the election*** —

(1) ***In general.*** A shareholder makes the deemed dividend election by filing Form 8621 and the attachment to Form 8621 described in paragraph (d)(2) of this section with the return for the taxable year of the shareholder that includes the qualification date, reporting the deemed dividend as an excess distribution pursuant to section 1291(a)(1), and paying the tax and interest due on the excess distribution. A shareholder that makes the deemed dividend election after the due date of the return (determined without regard to extensions) for the taxable year that includes the qualification date must pay additional interest, pursuant to section 6601, on the amount of the underpayment of tax for that year.

(2) ***Attachment to Form 8621.*** The shareholder must attach a schedule to Form 8621 that demonstrates the calculation of the shareholder's pro rata share of the post-1986 earnings and profits of the PFIC that is treated as distributed to the shareholder on the qualification date pursuant to this section. If the shareholder is claiming an exclusion from its pro rata share of the post-1986 earnings and profits for an amount previously included in its income or the income of another U.S. person, the shareholder must include the following information:

(i) The name, address, and taxpayer identification number of each U.S. person that previously included an amount in income, the amount previously included in income by each such U.S. person, the provision of the law pursuant to which the amount was previously included in income, and the taxable year or years of inclusion of each amount; and

(ii) A description of the transaction pursuant to which the shareholder acquired, directly or indirectly, the stock of the PFIC from another U.S. person, and the provisions of law pursuant to which the shareholder's holding period includes the period the other U.S. person held the CFC stock.

(e) ***Qualification date*** —

(1) ***In general.*** Except as otherwise provided in this paragraph (e), the qualification date is the first day of the PFIC's first taxable year as a QEF (first QEF year).

(2) ***Elections made after March 31, 1995, and before January 27, 1997*** —

(i) ***In general.*** The qualification date for deemed dividend elections made after March 31, 1995, and before January 27, 1997, is the first day of the shareholder's election year. The shareholder's election year is the taxable year of the shareholder for which it made the section 1295 election.

(ii) ***Exception.*** A shareholder who made the deemed dividend election after May 1, 1992, and before January 27, 1997, may elect to change its qualification date to the first day of the first QEF year, provided the periods of limitations on assessment for the taxable year that includes that date and for the shareholder's election year have not expired. A shareholder changes the qualification date by filing amended returns, with revised Forms 8621 and the attachments described in paragraph (d)(2) of this section, for the shareholder's election year and the shareholder's taxable year that includes the first day of the first QEF year, and making all appropriate adjustments and payments.

(3) ***Examples.*** The rules of this paragraph (e) are illustrated by the following examples:

> *Example 1.* (i) *Eligibility to make deemed dividend election.* A is a U.S. person who files its income tax return on a calendar year basis. On January 2, 1994, A purchased one percent of the stock of M, a PFIC with a taxable year ending November 30. M was both a CFC and a PFIC, but not a QEF, for all of its taxable years. On December 3, 1996, M made a distribution to its shareholders. A received $100, all of which A reported in its 1996 return as an excess distribution as provided in section 1291(a)(1). A decides to make the section 1295 election in A's 1997 taxable year to treat M as a QEF effective for M's taxable year beginning December 1, 1996. Because A did not make the section 1295 election in 1994, the first year in its holding period of M stock that M qualified as a PFIC, M would be an unpedigreed QEF and A would be subject to both sections 1291 and 1293. A, however, may elect under section 1291(d)(2) to purge the years M was not a QEF from A's holding period. If A makes the section 1291(d)(2) election, the December 3 distribution will not be taxable under section 1291(a). Because M is a CFC, even though A is not a U.S. shareholder within the meaning of section 951(b), A may make the deemed dividend election under section 1291(d)(2)(B).

(ii) *Making the election.* Under paragraph (e)(1) of this section, the qualification date, and therefore the date of the deemed dividend, is December 1, 1996. Accordingly, to make the deemed dividend election, A must file an amended return for 1996, and include the deemed dividend in income in that year. As a result, M will be a pedigreed QEF as of December 1, 1996, and the December 3, 1996, distribution will not be taxable as an excess distribution. Therefore, in its amended return, A may report the December 3, 1996, distribution consistent with section 1293 and the general rules applicable to corporate distributions.

Example 2. X, a U.S. person, owned a five percent interest in the stock of FC, a PFIC with a taxable year ending June 30. X never made the section 1295 election with respect to FC. X transferred her interest in FC to her granddaughter, Y, a U.S. person, on February 14, 1996. The transfer qualified as a gift for Federal income tax purposes, and no gain was recognized on the transfer (see Regulation Project INTL-656-87, published in 1992-1 C.B. 1124; see § 601.601(d)(2)(ii)(*b*) of this chapter). As provided in section 1223(2), Y's holding period includes the period that X held the FC stock. Y decides to make the section 1295 election in her 1996 return to treat FC as a QEF for its taxable year beginning July 1, 1995. However, because Y's holding period includes the period that X held the FC stock, and FC was a PFIC but not a QEF during that period, FC will be an unpedigreed QEF with respect to Y unless Y makes a section 1291(d)(2) election. Although Y did not actually own the stock of FC on the qualification date (July 1, 1995), Y's holding period includes that date. Therefore, provided FC is a CFC for its taxable year beginning July 1, 1995, Y may make a section 1291(d)(2)(B) election to treat FC as a pedigreed QEF.

(f) ***Adjustment to basis.*** A shareholder that makes the deemed dividend election increases its adjusted basis of the stock of the PFIC owned directly by the shareholder by the amount of the deemed dividend. If the shareholder makes the deemed dividend election with respect to a PFIC of which it is an indirect shareholder, the shareholder's adjusted basis of the stock or other property owned directly by the shareholder, through which ownership of the PFIC is attributed to the shareholder, is increased by the amount of the deemed dividend. In addition, solely for purposes of determining the subsequent treatment under the Code and regulations of a shareholder of the stock of the PFIC, the adjusted basis of the direct owner of the stock of the PFIC is increased by the amount of the deemed dividend.

(g) ***Treatment of holding period.*** For purposes of applying sections 1291 through 1297 to the shareholder after the deemed dividend, the shareholder's holding period of the stock of the PFIC begins on the qualification date. For other purposes of the Code and regulations, this holding period rule does not apply.

(h) ***Coordination with section 959(e).*** For purposes of section 959(e), the entire deemed dividend is treated as included in gross income under section 1248(a).

(i) ***Election inapplicable to shareholder of a former PFIC or of a section 1297(e) PFIC.*** A shareholder may not make the section 1295 and deemed dividend elections if the foreign corporation is a former PFIC (as defined in paragraph (j)(2)(iv) of this section) or a section 1297(e) PFIC (as defined in paragraph (j)(2)(v) of this section) with respect to the shareholder. For the rules regarding the election by a shareholder of a former PFIC, see § 1.1298-3. For the rules regarding the election by a shareholder of a section 1297(e) PFIC, see § 1.1297-3.

(j) ***Definitions —***

(1) ***Passive foreign investment company (PFIC).*** A passive foreign investment company (PFIC) is a foreign corporation that satisfies either the income test of section 1296(a)(1) or the asset test of section 1296(a)(2). A corporation will not be treated as a PFIC with respect to a shareholder for those days included in the shareholder's holding period when the shareholder, or a person whose holding period of the stock is included in the shareholder's holding period, was not a United States person within the meaning of section 7701(a)(30).

(2) ***Types of PFICs*** —

(i) ***Qualified electing fund (QEF).*** A PFIC is a qualified electing fund (QEF) with respect to a shareholder that has elected, under section 1295, to be taxed currently on its share of the PFIC's earnings and profits pursuant to section 1293.

(ii) ***Pedigreed QEF.*** A PFIC is a pedigreed QEF with respect to a shareholder if the PFIC has been a QEF with respect to the shareholder for all taxable years during which the corporation was a PFIC that are included wholly or partly in the shareholder's holding period of the PFIC stock.

(iii) ***Unpedigreed QEF.*** A PFIC is an unpedigreed QEF for a taxable year if—

(A) An election under section 1295 is in effect for that year;

(B) The PFIC has been a QEF with respect to the shareholder for at least one, but not all, of the taxable years during which the corporation was a PFIC that are included wholly or partly in the shareholder's holding period of the PFIC stock; and

(C) The shareholder has not made an election under section 1291(d)(2) and this section or § 1.1291-10 with respect to the PFIC to purge the nonQEF years from the shareholder's holding period.

(iv) ***Former PFIC.*** A foreign corporation is a former PFIC with respect to a shareholder if the corporation satisfies neither the income test of section 1297(a)(1) nor the asset test of section 1297(a)(2), but its stock, held by that shareholder, is treated as stock of a PFIC, pursuant to section 1298(b)(1), because the corporation was a PFIC that was not a QEF at some time during the shareholder's holding period of the stock.

(v) ***Section 1297(e) PFIC.*** A foreign corporation is a section 1297(e) PFIC with respect to a shareholder (as defined in paragraph (j)(3) of this section) if—

(A) The foreign corporation qualifies as a PFIC under section 1297(a) on the first day on which the qualified portion of the shareholder's holding period in the foreign corporation begins, as determined under section 1297(e)(2); and

(B) The stock of the foreign corporation held by the shareholder is treated as stock of a PFIC, pursuant to section 1298(b)(1), because, at any time during the shareholder's holding period of the stock, other than the qualified portion, the corporation was a PFIC that was not a QEF.

(3) A shareholder is a United States person that is a shareholder as defined in § 1.1291-1(b)(7) or an indirect shareholder as defined in § 1.1291-1(b)(8), except as provided in § 1.1291-1(e).

(k) ***Effective/applicability date.***

(1) The rules of this section, except for paragraph (j)(2)(v) of this section, are applicable as of April 1, 1995.

(2) The rules of paragraph (j)(2)(v) of this section are applicable as of December 8, 2005.

(3) Paragraph (j)(3) of this section applies to taxable years of shareholders ending on or after December 31, 2013.

[T.D. 8701, 61 FR 68151, Dec. 27, 1996; 62 FR 7155, Feb. 18, 1997, as amended by T.D. 8750, 63 FR 13, Jan. 2, 1998; T.D. 9231, 70 FR 72915, Dec. 8, 2005; T.D. 9360, 72 FR 54821, Sept. 27, 2007; T.D. 9650, 78 FR 79608, Dec. 31, 2013; T.D. 9806, 81 FR 95466, Dec. 28, 2016]

§ 1.1291-10 Deemed sale election.

(a) ***Deemed sale election.*** This section provides rules for making the election under section 1291(d)(2)(A) (deemed sale election). Under that section, a shareholder (as defined in § 1.1291-9(j)(3)) of a PFIC that is an unpedigreed QEF may elect to recognize gain with respect to the stock of the unpedigreed QEF held on the qualification date (as defined in paragraph (e) of this section). If the shareholder makes the deemed sale election, the PFIC will become a pedigreed QEF with respect to the shareholder. A shareholder that makes the deemed sale election is treated as having sold, for its fair market value, the stock of the PFIC that the shareholder held on the qualification date. The gain recognized on the deemed sale is taxed under section 1291 as an excess distribution received on the qualification date. In the case of an election made by an indirect shareholder, the amount of gain to be recognized and taxed as an excess distribution is the amount of gain that the direct owner of the stock of the PFIC would have realized on an actual sale or other disposition of the stock of the PFIC indirectly owned by the shareholder. Any loss realized on the deemed sale is not recognized. For the definitions of PFIC, QEF, unpedigreed QEF, and pedigreed QEF, see § 1.1291-9(j) (1) and (2).

(b) ***Who may make the election.*** A shareholder of an unpedigreed QEF may make the deemed sale election provided the shareholder held stock of that PFIC on the qualification date. A shareholder is treated as holding stock of the PFIC on the qualification date if its holding period with respect to that stock under section 1223 includes the qualification date. A deemed sale election may be made by a shareholder that would realize a loss on the deemed sale.

(c) ***Time for making the election.*** The shareholder makes the deemed sale election in the shareholder's return for the taxable year that includes the qualification date. If the shareholder and the PFIC have the same taxable year, the shareholder makes the deemed sale election in either the original return for the taxable year for which the shareholder makes the section 1295 election, or in an amended return for that year. If the shareholder and the PFIC have different taxable years, the deemed sale election must be made in an amended return for the taxable year that includes the qualification date. If the deemed sale election is made in an amended return, the amended return must be filed by a date that is within three years of the due date, as extended under section 6081, of the original return for the taxable year that includes the qualification date.

(d) ***Manner of making the election.*** A shareholder makes the deemed sale election by filing Form 8621 with the return for the taxable year of the shareholder that includes the qualification date, reporting the gain as an excess distribution pursuant to section 1291(a), and paying the tax and interest due on the excess distribution. A shareholder that makes the deemed sale election after the due date of the return (determined without regard to extensions) for the taxable year that includes the qualification date must pay additional interest, pursuant to section 6601, on the amount of the underpayment of tax for that year. A shareholder that realizes a loss on the deemed sale reports the loss on Form 8621, but does not recognize the loss.

(e) ***Qualification date —***

(1) ***In general.*** Except as otherwise provided in this paragraph (e), the qualification date is the first day of the PFIC's first taxable year as a QEF (first QEF year).

(2) ***Elections made after March 31, 1995, and before January 27, 1997*** —

(i) ***In general.*** The qualification date for deemed sale elections made after March 31, 1995, and before January 27, 1997, is the first day of the shareholder's election year. The shareholder's election year is the taxable year of the shareholder for which it made the section 1295 election.

(ii) ***Exception.*** A shareholder who made the deemed sale election after May 1, 1992, and before January 27, 1997, may elect to change its qualification date to the first day of the first QEF year, provided the periods of limitations on assessment for the taxable year that includes that date and for the shareholder's election year have not expired. A shareholder changes the qualification date by filing amended returns, with revised Forms 8621, for the shareholder's election year and the shareholder's taxable year that includes the first day of the first QEF year, and making all appropriate adjustments and payments.

(f) ***Adjustments to basis*** —

(1) ***In general.*** A shareholder that makes the deemed sale election increases its adjusted basis of the PFIC stock owned directly by the amount of gain recognized on the deemed sale. If the shareholder makes the deemed sale election with respect to a PFIC of which it is an indirect shareholder, the shareholder's adjusted basis of the stock or other property owned directly by the shareholder, through which ownership of the PFIC is attributed to the shareholder, is increased by the amount of gain recognized by the shareholder. In addition, solely for purposes of determining the subsequent treatment under the Code and regulations of a shareholder of the stock of the PFIC, the adjusted basis of the direct owner of the stock of the PFIC is increased by the amount of gain recognized on the deemed sale. A shareholder shall not adjust the basis of any stock with respect to which the shareholder realized a loss on the deemed sale.

(2) ***Adjustment of basis for section 1293 inclusion with respect to deemed sale election made after March 31, 1995, and before January 27, 1997.*** For purposes of determining the amount of gain recognized with respect to a deemed sale election made after March 31, 1995, and before January 27, 1997, by a shareholder that treats the first day of the shareholder's election year as the qualification date, the adjusted basis of the stock deemed sold includes the shareholder's section 1293(a) inclusion attributable to the period beginning with the first day of the PFIC's first QEF year and ending on the day before the qualification date.

(g) ***Treatment of holding period.*** For purposes of applying sections 1291 through 1297 to the shareholder after the deemed sale, the shareholder's holding period of the stock of the PFIC begins on the qualification date, without regard to whether the shareholder recognized gain on the deemed sale. For other purposes of the Code and regulations, this holding period rule does not apply.

(h) ***Election inapplicable to shareholder of former PFIC.*** A shareholder may not make the section 1295 and deemed sale elections if the foreign corporation is a former PFIC (as defined in § 1.1291-9(j)(2)(iv)) with respect to the shareholder. For the rules regarding the election by a shareholder of a former PFIC, see § 1.1297-3T.

(i) ***Effective date.*** The rules of this section are applicable as of April 1, 1995.

[T.D. 8701, 61 FR 68153, Dec. 27, 1996]

§ 1.1293-0 Table of contents.

This section contains a listing of the headings for § 1.1293-1.

§ 1.1293-1 Current inclusion of income of qualified electing funds.

(a) In general. [Reserved]

(1) Other rules. [Reserved]

(2) Net capital gain defined.

(i) In general.

(ii) Effective date.

(b) Other rules. [Reserved]

(c) Application of rules of inclusion with respect to stock held by a pass through entity.

(1) In general.

(2) QEF stock transferred to a pass through entity.

(i) Pass through entity makes a section 1295 election.

(ii) Pass through entity does not make a section 1295 election.

(3) Effective date.

[T.D. 8750, 63 FR 13, Jan. 2, 1998, as amended by T.D. 8870, 65 FR 16319, Mar. 28, 2000]

§ 1.1293-1 Current taxation of income from qualified electing funds.

(a) ***In general.*** [Reserved]

(1) ***Other rules.*** [Reserved]

(2) ***Net capital gain defined*** —

(i) ***In general.*** This paragraph (a)(2) defines the term net capital gain for purposes of sections 1293 and 1295 and the regulations under those sections. The QEF, as defined in § 1.1291-9(j)(2)(i), in determining its net capital gain for a taxable year, may either—

(A) Calculate and report the amount of each category of long-term capital gain provided in section 1(h) that was recognized by the PFIC in the taxable year;

(B) Calculate and report the amount of net capital gain recognized by the PFIC in the taxable year, stating that that amount is subject to the highest capital gain rate of tax applicable to the shareholder; or

(C) Calculate its earnings and profits for the taxable year and report the entire amount as ordinary earnings.

(ii) ***Effective date.*** Paragraph (a)(2)(i) of this section is applicable to sales by QEFs during their taxable years ending on or after May 7, 1997.

(b) ***Other rules.*** [Reserved]

(c) ***Application of rules of inclusion with respect to stock held by a pass through entity*** —

(1) ***In general.*** If a domestic pass through entity makes a section 1295 election, as provided in paragraph (d)(2) of this section, with respect to the PFIC shares that it owns, directly or indirectly, the domestic pass through entity takes into account its pro rata share of the ordinary earnings and net capital gain attributable to the QEF shares held by the pass through entity. A U.S. person that indirectly owns QEF shares through the domestic pass through entity accounts for its pro rata shares of ordinary earnings and net capital gain attributable to the QEF shares according to the general rules applicable to inclusions of income from the domestic pass through entity. For the definition of pass through entity, see § 1.1295-1(j).

(2) ***QEF stock transferred to a pass through entity*** —

(i) ***Pass through entity makes a section 1295 election.*** If a shareholder transfers stock subject to a section 1295 election to a domestic pass through entity of which it is an interest holder and the pass through entity makes a section 1295 election with respect to that stock, as provided in § 1.1295-1(d)(2), the shareholder takes into account its pro rata shares of the ordinary earnings and net capital gain attributable to the QEF shares under the rules applicable to inclusions of income from the pass through entity.

(ii) ***Pass through entity does not make a section 1295 election.*** If the pass through entity does not make a section 1295 election with respect to the PFIC, the shares of which were transferred to the pass through entity subject to the 1295 election of the shareholder, the shareholder continues to be subject, in its capacity as an indirect shareholder, to the income inclusion rules of section 1293 and reporting rules required of shareholders of QEFs. Proper adjustments to reflect an inclusion in income under section 1293 by the indirect shareholder must be made, under the principles of § 1.1291-9(f), to the basis of the indirect shareholder's interest in the pass through entity.

(3) ***Effective date.*** Paragraph (c) of this section is applicable to taxable years of shareholders beginning after December 31, 1997.

[T.D. 8750, 63 FR 14, Jan. 2, 1998. Redesignated and amended by T.D. 8870, 65 FR 5779, 5781, Feb. 7, 2000]

§ 1.1294-0 Table of contents.

This section contains a listing of the headings for § 1.1294-1T.

§ 1.1294-1T Election to extend the time for payment of tax on undistributed earnings of a qualified electing fund.

(a) Purpose and scope.

(b) Election to extend time for payment of tax.

(1) In general.

(2) Exception.

(3) Undistributed earnings.

(i) In general.

(ii) Effect of loan, pledge or guarantee.

(c) Time for making the election.

(1) In general.

(2) Exception.

(d) Manner of making the election.

(1) In general.

(2) Information to be included in the election.

(e) Termination of the extension.

(f) Undistributed PFIC earnings tax liability.

(g) Authority to require a bond.

(h) Annual reporting requirement.

[T.D. 8750, 63 FR 13, Jan. 2, 1998]

§ 1.1294-1T Election to extend the time for payment of tax on undistributed earnings of a qualified electing fund (temporary).

(a) ***Purpose and scope.*** This section provides rules for making the annual election under section 1294. Under that section, a U.S. person that is a shareholder in a qualified electing fund (QEF) may elect to extend the time for payment of its tax liability which is attributable to its share of the undistributed earnings of the QEF. In general, a QEF is a passive foreign investment company (PFIC), as defined in section 1296, that makes the election under section 1295. Under section 1293, a U.S. person that owns, or is treated as owning, stock of a QEF at any time during the taxable year of the QEF shall include in gross income, as ordinary income, its pro rata share of the ordinary earnings of the QEF for the taxable year and, as long-term capital gain, its pro rata share of the net capital gain of the QEF for the taxable year. The shareholder's share of the earnings shall be included in the shareholder's taxable year in which or with which the taxable year of the QEF ends.

(b) ***Election to extend time for payment*** —

(1) ***In general.*** A U.S. person that is a shareholder of a QEF on the last day of the QEF's taxable year may elect under section 1294 to extend the time for payment of that portion of its tax liability which is attributable to the inclusion in income pursuant to section 1293 of the shareholder's share of the QEF's undistributed earnings. The election under section 1294 may be made only with respect to undistributed earnings, and interest is imposed under section 6601 on the amount of the tax liability which is subject to the extension. This interest must be paid on the termination of the election.

(2) ***Exception.*** An election under this § 1.1294-1T cannot be made for a taxable year of the shareholder if any portion of the QEF's earning is includible in the gross income of the shareholder for such year under either section 551 (relating to foreign personal holding companies) or section 951 (relating to controlled foreign corporations).

(3) ***Undistributed earnings*** —

(i) ***In general.*** For purposes of this § 1.1294-1T the term *undistributed earnings* means the excess, if any, of the amount includible in gross income by reason of section 1293(a) for the shareholder's taxable year (the includible amount) over the sum of

(A) the amount of any distribution to the shareholder during the QEF's taxable year and

(B) the portion of the includible amount that is attributable to stock in the QEF that the shareholder transferred or otherwise disposed of before the end of the QEF's year. For purposes of this paragraph, a distribution will be treated as made from the most recently accumulated earnings and profits.

(ii) ***Effect of a loan, pledge or guarantee.*** A loan, pledge, or guarantee described in § 1.1294-1T(e)(2) or (4) will be treated as a distribution of earnings for purposes of paragraph (b)(3)(i)(A). If earnings are treated as distributed in a taxable year by reason of a loan, pledge or guarantee described in § 1.1294-1T(e)(2) or (4), but the amount of the deemed distribution resulting therefrom was less than the amount of the actual loan by the QEF (or the amount of the loan secured by the pledge or guarantee), earnings derived by the QEF in a subsequent taxable year will be treated as distributed in such subsequent year to the shareholder for purposes of paragraph (b)(3)(i)(A) by virtue of such loan, but only to the extent of the difference between the outstanding principal balance on the loan in such subsequent year and the prior years' deemed distributions resulting from the loan. For this purpose, the outstanding principal balance on a loan in a taxable year shall be treated as equal to the greatest amount of the outstanding balance at any time during such year.

> *Example 1.* (i) *Facts. FC* is a PFIC that made the election under section 1295 to be a QEF for its taxable year beginning January 1, 1987. *S* owned 500 shares, or 50 percent, of *FC* throughout the first six months of 1987, but on June 30, 1987 sold 10 percent, or 50 shares, of the *FC* stock that it held. *FC* had $100,000*x* of ordinary earnings but no net capital gain in 1987. No part of *FC*'s earnings is includible in *S*'s income under either section 551 or 951. *FC* made no distributions to its shareholders in 1987. *S's* pro rata share of income is determined by attributing *FC's* income ratably to each day in *FC*'s year. Accordingly, FC's daily earnings are $274*x* ($100,000*x*/365). *S*'s share of the earnings of *FC* is $47,484*x,* determined as follows.

FC's daily earnings × number of days percentage held by *S* × percentage of ownership in *FC*.

Accordingly, *S*'s pro rata share of *FC*'s earnings for the first six months of *FC*'s year deemed earned while *S* held 50 percent of *FC*'s stock is $24,797*x* ($274*x* × 181 days × 50%). *S*'s pro rata share of *FC*'s earnings for remainder of *FC*'s year deemed earned while *S* held 45 percent of *FC*'s stock is $22,687*x* ($274*x* × 184 days × 45%). Therefore, *S*'s total share of *FC*'s earnings to be included in income under section 1293 is $47,484*x* ($24,797*x* + $22,687*x*).

(ii) *Election. S* intends to make the election under section 1294 to defer the payment of its tax liability that is attributable to the undistributed earnings of *FC.* The amount of current year undistributed earnings as defined in § 1.1294-1T(b)(3) with respect to which *S* can make the election is the excess of *S*'s inclusion in gross income under section 1293(a) for the taxable year over the sum of (1) the cash and other property distributed to *S* during *FC*'s tax year out of earnings included in income pursuant to section 1293(a), and (2) the earnings attributable to stock disposed of during *FC*'s tax year. Because *S* sold 10 percent, or 50 shares, of the *FC* stock that it held during the first six months of the year, 10 percent of its share of the earnings for that part of the year, which is $2,480*x* ($24,797*x* × 10%), is attributable to the shares sold. *S* therefore cannot make the election under section 1294 to extend the time for payment of its tax liability on that amount. Accordingly, *S* can make the election under section 1294 with respect to its tax on $45,004*x* ($47,484*x* less $2,480*x*), which is its pro rata share of *FC*'s earnings, reduced by the earnings attributable to the stock disposed of during the year.

Example 2. (i) *Facts.* The facts are the same as in Example 1 with the following exceptions. *S* did not sell any *FC* stock during 1987. Therefore, because *S* held 50 percent of the *FC* stock throughout 1987, *S*'s pro rata share of *FC*'s ordinary earnings was $50,000*x,* no part of which was includible in *S*'s income under either section 551 or 951. There were no actual distributions of earnings to *S* in 1988. On December 31, 1987, *S* pledged the FC stock as security for a bank loan of $75,000*x.* The pledge is treated as a disposition of the *FC* stock and therefore a distribution of *S*'s share of the undistributed earnings of *FC* up to the amount of the loan principal. *S*'s entire share of the undistributed earnings of *FC* are deemed distributed as a result of the pledge of the *FC* stock. *S* therefore cannot make the election under section 1294 to extend the time for payment of its tax liability on its share of *FC*'s earnings for 1987.
(ii) *Deemed distribution.* In 1988, *FC* has ordinary earnings of $100,000*x* but no net capital gain. *S*'s pro rata share of *FC*'s 1988 ordinary earnings was $50,000*x. S*'s loan remained outstanding throughout 1988; the highest loan balance during 1988 was $74,000*x.* Of *S*'s share of the ordinary earnings of FC of $50,000*x,* $24,000*x* is deemed

distributed to *S*. This is the amount by which the highest loan balance for the year ($74,000*x*) exceeds the portion of the undistributed earnings of *FC* deemed distributed to *S* in 1987 by reason of the pledge ($50,000*x*). *S* may make the election under section 1294 to extend the time for payment of its tax liability on $26,000*x*, which is the amount by which *S*'s includible amount for 1988 exceeds the amount deemed distributed to *S* during 1988.

(c) ***Time for making the election*** —

(1) ***In general.*** An election under this § 1.1294-1T may be made for any taxable year in which a shareholder reports income pursuant to section 1293. Except as provided in paragraph (c)(2), the election shall be made by the due date, as extended, of the tax return for the shareholder's taxable year for which the election is made.

(2) ***Exception.*** An election under this section may be made within 60 days of receipt of notification from the QEF of the shareholder's pro rata share of the ordinary earnings and net capital gain if notification is received after the time for filing the election provided in paragraph (c)(1) (and requires the filing of an amended return to report income pursuant to section 1293). If the notification reports an increase in the shareholder's pro rata share of the earnings previously reported to the shareholder by the QEF, the shareholder may make the election under this paragraph (c)(2) only with respect to the amount of such increase.

(d) ***Manner of making the election*** —

(1) ***In general.*** A shareholder shall make the election by

(i) attaching to its return for the year of the election Form 8621 or a statement containing the information and representations required by this section and

(ii) filing a copy of Form 8621 or the statement with the Internal Revenue Service Center, P.O. Box 21086, Philadelphia, Pennsylvania 19114.

(2) ***Information to be included in the election statement.*** If a statement is used in lieu of Form 8621, the statement should be identified, in a heading, as an election under section 1294 of the Code. The statement must include the following information and representations:

(i) The name, address, and taxpayer identification number of the electing shareholder and the taxable year of the shareholder for which the election is being made;

(ii) The name, address and taxpayer identification number of the QEF if provided to the shareholder;

(iii) A statement that the shareholder is making the election under section 1294 of the Code;

(iv) A schedule containing the following information:

(A) The ordinary earnings and net capital gain for the current year included in the shareholder's income under section 1293;

(B) The amount of cash and other property distributed by the QEF during its taxable year with respect to stock held directly or indirectly by the shareholder during that year, identifying the amount of such distributions that is paid out of current earnings and profits and the amount paid out of each prior year's earnings and profits; and

(C) The undistributed PFIC earnings tax liability (as defined in paragraph (f) of this section) for the taxable year, payment of which is being deferred by reason of the election under section 1294;

(v) The number of shares of stock held in the QEF during the QEF's taxable year which gave rise to the section 1293 inclusion and the number of such shares transferred, deemed transferred or otherwise disposed of by the electing shareholder before the end of the QEF's taxable year, and the data of transfer; and

(vi) The representations of the electing shareholder that—

(A) No part of the QEF's earnings for the taxable year is includible in the electing shareholder's gross income under either section 551 or 951 of the Code;

(B) The election is made only with respect to the shareholder's pro rata share of the undistributed earnings of the QEF; and

(C) The electing shareholder, upon termination of the election to extend the date for payment, shall pay the undistributed PFIC earnings tax liability attributable to those earnings to which the termination applies as well as interest on such tax liability pursuant to section 6601. Payment of this tax and interest must be made by the due date (determined without extensions) of the tax return for the taxable year in which the termination occurs.

(e) ***Termination of the extension.*** The election to extend the date for payment of tax will be terminated in whole or in part upon the occurrence of any of the following events:

(1) The QEF's distribution of earnings to which the section 1294 extension to pay tax is attributable; the extension will terminate only with respect to the tax attributable to the earnings that were distributed.

(2) The electing shareholder's transfer of stock in the QEF (or use thereof as security for a loan) with respect to which an election under this § 1.1294-1T was made. The election will be terminated with respect to the undistributed earnings attributable to the shares of the stock transferred. In the case of a pledge of the stock, the election will be terminated with respect to undistributed earnings equal to the amount of the loan for which the stock is pledged.

(3) Revocation of the QEF's election as a QEF or cessation of the QEF's status as a PFIC. A revocation of the QEF election or cessation of PFIC status will result in the complete termination of the extension.

(4) A loan of property by the QEF directly or indirectly to the electing shareholder or related person, or a pledge or guarantee by the QEF with respect to a loan made by another party to the electing shareholder or related person. The election will be terminated with respect to undistributed earnings in an amount equal to the amount of the loan, pledge, or guarantee.

(5) A determination by the District Director pursuant to section 1294(c)(3) that collection of the tax is in jeopardy. The amount of undistributed earnings with respect to which the extension is terminated under this paragraph (d)(5) will be left to the discretion of the District Director.

(f) ***Undistributed PFIC earnings tax liability.*** The electing shareholder's tax liability attributable to the ordinary earnings and net capital gain included in gross income under section 1293 shall be the excess of the tax imposed under chapter 1 of the Code for the taxable year over the tax that would be imposed for the taxable year without regard to the inclusion in income under section 1293 of the undistributed earnings as defined in paragraph (b)(3) of this section.

Example: The facts are the same as in § 1.1294-1T (b)(3), *Example 1,* with the following exceptions. *S,* a domestic corporation, did not dispose of any *FC* stock in 1987. Therefore, because *S* held 50 percent of the *FC* stock throughout 1987, *S*'s pro rata share of *FC*'s ordinary earnings was $50,000*x*. In addition to $50,000*x* of ordinary earnings from *FC, S* had $12,500*x* of domestic source income and $6,000*x* of expenses (other than interest expense) not definitely related to any gross income. These expenses are apportioned, pursuant to § 1.861-8(c)(2), on a pro rata basis between the domestic and foreign source income—$1,200*x* of expenses, or one-fifth, to domestic source income, and $4,800*x* of expenses, or four-fifths, to the section 1293 inclusion. *FC* paid foreign taxes of $25,000*x* in 1987. Accordingly, *S* is entitled to claim as an indirect foreign tax credit pursuant to section 1293(f) a proportionate amount of the foreign taxes paid by *FC,* which is $12,500*x* ($25,000*x* × $50,000*x*/$100,000*x*). *S* is taxed in the U.S. at the rate of 34 percent. The amount of tax liability for which *S* may extend the time for payment is determined as follows:

1987 Tax Liability (With Section 1293 Inclusion)

Source	U.S.	Foreign
Income	12,500*x*	0
Section 1293	0	50,000*x*
Expenses	−1,200*x*	−4,800*x*
Taxable income	11,300*x*	45,200*x*
Total taxable income	56,500*x*	
U.S. income tax rate	x34%	
Pre-credit U.S. tax	19,210*x*	
Foreign tax credit	−12,500x	
1987 Tax Liability	6,710*x*	

1987 Tax Liability (Without Section 1293 Inclusion)

Source	U.S.	Foreign
Income	12,500*x*	0
Expenses	−6,000x	
Taxable income	6,500*x*	
U.S. tax rate	x34%	
U.S. Tax	2,210*x*	
Foreign tax credit	0	

Source	U.S.	Foreign
Hypothetical 1987 Tax Liability	2,210*x*	

The amount of tax, payment of which *S* may defer pursuant to section 1294, is $4,500*x* ($6,710*x* less $2,210*x*).

(g) ***Authority to require a bond.*** Pursuant to the authority granted in section 6165 and in the manner provided therein, and subject to notification, the District Director may require the electing shareholder to furnish a bond to secure payment of the tax, the time for payment of which is extended under this section. If the electing shareholder does not furnish the bond within 60 days after receiving a request from the District Director, the election will be revoked.

(h) ***Annual reporting requirement.*** The electing shareholder must attach Form 8621 or a statement to its income tax return for each year during which an election under this section is outstanding. The statement must contain the following information:

(1) The total amount of undistributed earnings as of the end of the taxable year to which the outstanding elections apply;

(2) The total amount of the undistributed PFIC earnings tax liability and accrued interest charge as of the end of the year;

(3) The total amount of distributions received during the taxable year; and

(4) A description of the occurrence of any other termination event described in paragraph (e) of this section that occurred during the taxable year.

The electing shareholder also shall file by the due date, as extended, for its return a copy of Form 8621 or the statement with the Philadelphia Service Center, P.O. Box 21086, Philadelphia, Pennsylvania 19114.

[T.D. 8178, 53 FR 6773, Mar. 2, 1988; 53 FR 11731, Apr. 8, 1988]

§ 1.1295-0 Table of contents.

This section contains a listing of the headings for §§ 1.1295-1 and 1.1295-3.

§ 1.1295-1 Qualified electing funds.

(a) In general. [Reserved]

(b) Application of section 1295 election. [Reserved]

(1) Election personal to shareholder. [Reserved]

(2) Election applicable to specific corporation only.

(i) In general. [Reserved]

(ii) Stock of QEF received in a nonrecognition transfer. [Reserved]

(iii) Exception for options.

(3) Application of general rules to stock held by a pass through entity.

(i) Stock subject to a section 1295 election transferred to a pass through entity.

(ii) Limitation on application of pass through entity's section 1295 election.

(iii) Effect of partnership termination on section 1295 election.

(iv) Characterization of stock held through a pass through entity.

(4) Application of general rules to a taxpayer filing a joint return under section 6013.

(c) Effect of section 1295 election.

(1) In general.

(2) Years to which section 1295 election applies.

(i) In general.

(ii) Effect of PFIC status on election.

(iii) Effect on election of complete termination of a shareholder's interest in the PFIC.

(iv) Effect on section 1295 election of transfer of stock to a domestic pass through entity.

(v) Examples.

(d) Who may make a section 1295 election.

(1) General rule.

(2) Application of general rule to pass through entities.

(i) Partnerships.

(A) Domestic partnership.

(B) Foreign partnership.

(ii) S corporation.

(iii) Trust or estate.

(A) Domestic trust or estate.

(*1*) Nongrantor trust or estate.

(*2*) Grantor trust.

(B) Foreign trust or estate.

(*1*) Nongrantor trust or estate.

(*2*) Grantor trust.

(iv) Indirect ownership of the pass through entity or the PFIC.

(3) Indirect ownership of a PFIC through other PFICs.

(4) Member of consolidated return group as shareholder.

(5) Option holder.

(6) Exempt organization.

(e) Time for making a section 1295 election.

(1) General rule.

(2) Examples.

(f) Manner of making a section 1295 election and the annual election requirements of the shareholder.

(1) Manner of making the election.

(2) Annual election requirements.

(i) In general.

(ii) Retention of documents.

(g) Annual election requirements of the PFIC or intermediary.

(1) PFIC Annual Information Statement.

(2) Alternative documentation.

(3) Annual Intermediary Statement.

(4) Combined statements.

(i) PFIC Annual Information Statement.

(ii) Annual Intermediary Statement.

(h) Transition rules.

(i) Invalidation, termination or revocation of section 1295 election.

(1) Invalidation or termination of election at the discretion of the Commissioner.

(i) In general.

(ii) Deferral of section 1293 inclusion.

(iii) When effective.

(2) Shareholder revocation.

(i) In general.

(ii) Time for and manner of requesting consent to revoke.

(A) Time.

(B) Manner of making request.

(iii) When effective.

(3) Automatic termination.

(4) Effect of invalidation, termination or revocation.

(5) Election after invalidation, termination or revocation.

(i) In general.

(ii) Special rule.

(j) Definitions.

(k) Effective dates.

§ 1.1295-3 Retroactive elections.

(a) In general.

(b) General rule.

(c) Protective Statement.

(1) In general.

(2) Reasonable belief statement.

(3) Who executes and files the Protective Statement.

(4) Waiver of the periods of limitations.

(i) Time for and manner of extending periods of limitations.

(A) In general.

(B) Application of general rule to domestic partnerships.

(*1*) In general

(*2*) Special rules.

(*i*) Addition of partner to non-TEFRA partnership.

(*ii*) Change in status from non-TEFRA partnership to TEFRA partnership.

(C) Application of general rule to domestic nongrantor trusts and domestic estates.

(D) Application of general rule to S corporations.

(E) Effect on waiver of complete termination of a pass through entity or pass through entity's business.

(F) Application of general rule to foreign partnerships, foreign trusts, domestic or foreign grantor trusts, and foreign estates.

(ii) Terms of waiver.

(A) Scope of waiver.

(B) Period of waiver.

(5) Time for and manner of filing a Protective Statement.

(i) In general.

(ii) Special rule for taxable years ended before January 2, 1998

(6) Applicability of the Protective Statement.

(i) In general.

(ii) Invalidity of the Protective Statement.

(7) Retention of Protective Statement and information demonstrating reasonable belief.

(d) Reasonable belief.

(1) In general.

(2) Knowledge of law required.

(e) Special rules for qualified shareholders.

(1) In general.

(2) Qualified shareholder.

(3) Exceptions.

(f) Special consent.

(1) In general.

(2) Reasonable reliance on a qualified tax professional.

(i) In general.

(ii) Shareholder deemed to have not reasonably relied on a qualified tax professional.

(3) Prejudice to the interests of the United States government.

(i) General rule.

(ii) Elimination of prejudice to the interests of the United States government.

(4) Procedural requirements.

(i) Filing instructions.

(ii) Affidavit from shareholder.

(iii) Affidavits from other persons.

(iv) Other information.

(v) Notification of Internal Revenue Service.

(vi) Who requests special consent under this paragraph (f) and who enters into a closing agreement.

(g) Time for and manner of making a retroactive election.

(1) Time for making a retroactive election.

(i) In general.

(ii) Transition rule.

(iii) Ownership not required at time retroactive election is made.

(2) Manner of making a retroactive election.

(3) Who makes the retroactive election.

(4) Other elections.

(i) Section 1291(d)(2) election.

(ii) Section 1294 election.

(h) Effective date.

[T.D. 8750, 63 FR 14, Jan. 2, 1998, as amended by T.D. 8870, 65 FR 5779, Feb. 7, 2000; 65 FR 16319, Mar. 28, 2000; T.D. 9123, 69 FR 24073, May 3, 2004]

§ 1.1295-1 Qualified electing funds.

(a) ***In general.*** [Reserved]

(b) ***Application of section 1295 election.*** [Reserved]

(1) ***Election personal to shareholder.*** [Reserved]

(2) ***Election applicable to specific corporation only—***

(i) ***In general.*** [Reserved]

(ii) ***Stock of QEF received in a nonrecognition transfer.*** [Reserved]

(iii) ***Exception for options.*** A shareholder's section 1295 election does not apply to any option to buy stock of the PFIC.

(3) ***Application of general rules to stock held by a pass through entity*** —

(i) ***Stock subject to a section 1295 election transferred to a pass through entity.*** A shareholder's section 1295 election will not apply to a domestic pass through entity to which the shareholder transfers stock subject to section 1295 election, or to any other U.S. person that is an interest holder or beneficiary of the domestic pass through entity. However, as provided in paragraph (c)(2)(iv) of this section (relating to a transfer to a domestic pass through entity of stock subject to a section 1295 election), a shareholder that transfers stock subject to a section 1295 election to a pass through entity will continue to be subject to the section 1295 election with respect to the stock indirectly owned through the pass through entity and any other stock of that PFIC owned by the shareholder.

(ii) ***Limitation on application of pass through entity's section 1295 election.*** Except as provided in paragraph (c)(2)(iv) of this section, a section 1295 election made by a domestic pass through entity does not apply to other stock of the PFIC held directly or indirectly by the interest holder or beneficiary.

(iii) ***Effect of partnership termination on section 1295 election.*** Termination of a section 1295 election made by a domestic partnership by reason of the termination of the partnership under section 708(b) will not terminate the section 1295 election with respect to partners of the terminated partnership that are partners of the new partnership. Except as otherwise provided, the stock of the PFIC of which the new partners are indirect shareholders will be treated as stock of a QEF only if the new domestic partnership makes a section 1295 election with respect to that stock.

(iv) ***Characterization of stock held through a pass through entity.*** Stock of a PFIC held through a pass through entity will be treated as stock of a pedigreed QEF with respect to an interest holder or beneficiary only if—

(A) In the case of PFIC stock acquired (other than in a transaction in which gain is not recognized pursuant to regulations under section 1291(f) with respect to that stock) and held by a domestic pass through entity, the pass through entity makes the section 1295 election and the PFIC has been a QEF with respect to the pass through entity for all taxable years that are included wholly or partly in the pass through entity's holding period of the PFIC stock and during which the foreign corporation was a PFIC within the meaning of § 1.1291-9(j)(1); or

(B) In the case of PFIC stock transferred by an interest holder or beneficiary to a pass through entity in a transaction in which gain is not fully recognized (including pursuant to regulations under section 1291(f)), the pass through entity makes the section 1295 election with respect to the PFIC stock transferred for the taxable year in which the transfer was made. The PFIC stock transferred will be treated as stock of a pedigreed QEF by the pass through entity, however, only if that stock was treated as stock of a pedigreed QEF with respect to the interest holder or beneficiary at the time of the transfer, and the PFIC has been a QEF with respect to the pass through entity for all taxable years of the PFIC that are included wholly or partly in the pass through entity's holding period of the PFIC stock during which the foreign corporation was a PFIC within the meaning of § 1.1291-9(j).

(v) ***Characterization of stock distributed by a partnership.*** In the case of PFIC stock distributed by a partnership to a partner in a transaction in which gain is not fully recognized, the PFIC stock will be treated as stock of a pedigreed QEF by the partners only if that stock was treated as stock of a pedigreed QEF with respect to the partnership for all taxable years of the PFIC that are included wholly or partly in the partnership's holding period of the PFIC stock during which the foreign corporation was a PFIC within the meaning of § 1.1291-9(j), and the partner has a section 1295 election in effect with respect to the distributed PFIC stock for the partner's taxable year in which the distribution was made. If the partner does not have a section 1295 election in effect, the stock shall be treated as stock in a section 1291 fund. See paragraph (k) of this section for special applicability date of paragraph (b)(3)(v) of this section.

(4) ***Application of general rules to a taxpayer filing a joint return under section 6013.*** A section 1295 election made by a taxpayer in a joint return, within the meaning of section 6013, will be treated as also made by the spouse that joins in the filing of that return. See paragraph (k) of this section for special applicability date of paragraph (b)(4) of this section.

(c) ***Effect of section 1295 election*** —

(1) ***In general.*** Except as otherwise provided in this paragraph (c), the effect of a shareholder's section 1295 election is to treat the foreign corporation as a QEF with respect to the shareholder for each taxable year of the foreign corporation ending with or within a taxable year of the shareholder for which the election is effective. A section 1295 election is effective for the shareholder's election year and all subsequent taxable years of the shareholder unless invalidated, terminated or revoked as provided in paragraph (i) of this section. The terms shareholder and shareholder's election year are defined in paragraph (j) of this section.

(2) ***Years to which section 1295 election applies*** —

(i) ***In general.*** Except as otherwise provided in this paragraph (c), a foreign corporation with respect to which a section 1295 election is made will be treated as a QEF for its taxable year ending with or within the shareholder's election year and all subsequent taxable years of the foreign corporation that are included wholly or partly in the shareholder's holding period (or periods) of stock of the foreign corporation.

(ii) ***Effect of PFIC status on election.*** A foreign corporation will not be treated as a QEF for any taxable year of the foreign corporation that the foreign corporation is not a PFIC under section 1297(a) and is not treated as a PFIC under section 1298(b)(1). Therefore, a shareholder shall not be required to include pursuant to section 1293 the shareholder's pro rata share of ordinary earnings and net capital gain for such year and shall not be required to satisfy the section 1295 annual reporting requirement of paragraph (f)(2) of this section for such year. Cessation of a foreign corporation's status as a PFIC will not, however, terminate a section 1295 election. Thus, if the foreign corporation is a PFIC in any taxable year after a year in which it is not treated as a PFIC, the shareholder's original election under section 1295 continues to apply and the shareholder must take into account its pro rata share of ordinary earnings and net capital gain for such year and comply with the section 1295 annual reporting requirement.

(iii) ***Effect on election of complete termination of a shareholder's interest in the PFIC.*** Complete termination of a shareholder's direct and indirect interest in stock of a foreign corporation will not terminate a shareholder's section 1295 election with respect to the foreign corporation. Therefore, if a shareholder reacquires a direct or indirect interest in any stock of the foreign

corporation, that stock is considered to be stock for which an election under section 1295 has been made and the shareholder is subject to the income inclusion and reporting rules required of a shareholder of a QEF.

(iv) ***Effect on section 1295 election of transfer of stock to a domestic pass through entity.*** The transfer of a shareholder's direct or indirect interest in stock of a foreign corporation to a domestic pass through entity (as defined in paragraph (j) of this section) will not terminate the shareholder's section 1295 election with respect to the foreign corporation, whether or not the pass through entity makes a section 1295 election. For the rules concerning the application of section 1293 to stock transferred to a domestic pass through entity, see § 1.1293-1(c).

(v) ***Examples.*** The following examples illustrate the rules of this paragraph (c)(2).

Example 1. In 1998, C, a U.S. person, purchased stock of FC, a foreign corporation that is a PFIC. Both FC and C are calendar year taxpayers. C made a timely section 1295 election to treat FC as a QEF in C's 1998 return, and FC was therefore a pedigreed QEF. C included its shares of FC's 1998 ordinary earnings and net capital gain in C's 1998 Income and did not make a section 1294 election to defer the time for payment of tax on that income. In 1999, 2000, and 2001, FC did not satisfy either the income or asset test of section 1296(a), and therefore was neither a PFIC nor a QEF. C therefore did not have to include its pro rata shares of the ordinary earnings and net capital gain of FC pursuant to section 1293, or satisfy the section 1295 annual reporting requirements for any of those years. FC qualified as a PFIC again in 2002. Because C had made a section 1295 election in 1998, and the election had not been invalidated, terminated, or revoked, within the meaning of paragraph (i) of this section, C's section 1295 election remains in effect for 2002. C therefore is subject in 2002 to the income inclusion and reporting rules required of shareholders of QEFs.

Example 2. The facts are the same as in Example (1) except that FC did not lose PFIC status in any year and C sold all the FC stock in 1999 and repurchased stock of FC in 2002. Because C had made a section 1295 election in 1998 with respect to stock of FC, and the election had not been invalidated, terminated, or revoked, within the meaning of paragraph (i) of this section, C's section 1295 election remained in effect and therefore applies to the stock of FC purchased by C in 2002. C therefore is subject in 2002 to the income inclusion and reporting rules required of shareholders of QEFs.

Example 3. The facts are the same as in Example (2) except that C is a partner in domestic partnership P and C transferred its FC stock to P in 1999. Because C had made a section 1295 election in 1998 with respect to stock of FC, and the election had not been invalidated, terminated, or revoked, within the meaning of paragraph (i) of this section, C's section 1295 election remains in effect with respect to its indirect interest in the stock of FC. If P does not make the section 1295 election with respect to the FC stock, C will continue to be subject, in C's capacity as an indirect shareholder of FC, to the income inclusion and reporting rules required of shareholders of QEFs in 1999 and subsequent years for that portion of the FC stock C is treated as owning indirectly through the partnership. If P makes the section 1295 election, C will take into account its pro rata shares of the ordinary earnings and net capital gain of the FC under the rules applicable to inclusions of income from P.

(d) ***Who may make a section 1295 election —***

(1) ***General rule.*** Except as otherwise provided in this paragraph (d), any U.S. person that is a shareholder (as defined in paragraph (j) of this section) of a PFIC, including a shareholder that holds stock of a PFIC in bearer form, may make a section 1295 election with respect to that PFIC. The shareholder need not own directly or indirectly any stock of the PFIC at the time the shareholder makes the section 1295 election provided the shareholder is a shareholder of the PFIC during the taxable year of the PFIC that ends with or within the taxable year of the shareholder for which the section 1295 election is made. Except in the case of a shareholder that is an exempt organization that may not make a section 1295 election, as provided in paragraph (d)(6) of this section, in a chain of ownership only the first U.S. person that is a shareholder of the PFIC may make the section 1295 election.

(2) ***Application of general rule to pass through entities*** —

(i) ***Partnerships*** —

(A) ***Domestic partnership.*** A domestic partnership that holds an interest in stock of a PFIC makes the section 1295 election with request to that PFIC. The partnership election applies only to the stock of the PFIC held directly or indirectly by the partnership and not to any other stock held directly or indirectly by any partner. As provided in § 1.1293-1(c)(1), shareholders owning stock of a QEF by reason of an interest in the partnership take into account the section 1293 inclusions with respect to the QEF shares owned by the partnership under the rules applicable to inclusions of income from the partnership.

(B) ***Foreign partnership.*** A U.S. person that holds an interest in a foreign partnership that, in turn, holds an interest in stock of a PFIC makes the section 1295 election with respect to that PFIC. A partner's election applies to the stock of the PFIC owned directly or indirectly by the foreign partnership and to any other stock of the PFIC owned by that partner. A section 1295 election by a partner applies only to that partner.

(ii) ***S corporation.*** An S corporation that holds an interest in stock of a PFIC makes the section 1295 election with respect to that PFIC. The S corporation election applies only to the stock of the PFIC held directly or indirectly by the S corporation and not to any other stock held directly or indirectly by any S corporation shareholder. As provided in § 1.1293-1(c)(1), shareholders owning stock of a QEF by reason of an interest in the S corporation take into account the section 1293 inclusions with respect to the QEF shares under the rules applicable to inclusions of income from the S corporation.

(iii) ***Trust or estate*** —

(A) ***Domestic trust or estate*** —

(*1*) ***Nongrantor trust or estate.*** A domestic nongrantor trust or a domestic estate that holds an interest in stock of a PFIC makes the section 1295 election with respect to that PFIC. The trust or estate's election applies only to the stock of the PFIC held directly or indirectly by the trust or estate and not to any other stock held directly or indirectly by any beneficiary. As provided in § 1.1293-1(c)(1), shareholders owning stock of a QEF by reason of an interest in a domestic trust or estate take into account the section 1293 inclusions with respect to the QEF shares under the rules applicable to inclusions of income from the trust or estate.

(2) ***Grantor trust.*** A U.S. person that is treated under sections 671 through 678 as the owner of the portion of a domestic trust that owns an interest in stock of a PFIC makes the section 1295 election with respect to that PFIC. If that person ceases to be treated as the owner of the portion of the trust that owns an interest in the PFIC stock and is a beneficiary of the trust, that person's section 1295 election will continue to apply to the PFIC stock indirectly owned by that person under the rules of paragraph (c)(2)(iv) of this section as if the person had transferred its interest in the PFIC stock to the trust. However, the stock will be treated as stock of a PFIC that is not a QEF with respect to other beneficiaries of the trust, unless the trust makes the section 1295 election as provided in paragraph (d)(2)(iii)(A)(*1*) of this section.

(B) ***Foreign trust or estate*** —

(*1*) ***Nongrantor trust or estate.*** A U.S. person that is a beneficiary of a foreign nongrantor trust or estate that holds an interest in stock of a PFIC makes the section 1295 election with respect to that PFIC. A beneficiary's section 1295 election applies to all the PFIC stock owned directly and indirectly by the trust or estate and to the other PFIC stock owned directly or indirectly by the beneficiary. A section 1295 election by a beneficiary applies only to that beneficiary.

(2) ***Grantor trust.*** A U.S. person that is treated under sections 671 through 679 as the owner of the portion of a foreign trust that owns an interest in stock of a PFIC stock makes the section 1295 election with respect to that PFIC. If that person ceases to be treated as the owner of the portion of the trust that owns an interest in the PFIC stock and is a beneficiary of the trust, that person's section 1295 election will continue to apply to the PFIC stock indirectly owned by that person under the rules of paragraph (c)(2)(iv) of this section. However, as provided in paragraph (d)(2)(iii)(B)(*1*) of this section, any other shareholder that is a beneficiary of the trust and that wishes to treat the PFIC as a QEF must make the section 1295 election.

(iv) ***Indirect ownership of the pass through entity or the PFIC.*** The rules of this paragraph (d)(2) apply whether or not the shareholder holds its interest in the pass through entity directly or indirectly and whether or not the pass through entity holds its interest in the PFIC directly or indirectly.

(3) ***Indirect ownership of a PFIC through other PFIC*** s—

(i) ***In general.*** An election under section 1295 shall apply only to the foreign corporation for which an election is made. Therefore, if a shareholder makes an election under section 1295 to treat a PFIC as a QEF, that election applies only to stock in that foreign corporation and not to the stock in any other corporation which the shareholder is treated as owning by virtue of its ownership of stock in the QEF.

(ii) ***Example.*** The following example illustrates the rules of paragraph (d)(3)(i) of this section:

> ***Example.*** In 1988, T, a U.S. person, purchased stock of FC, a foreign corporation that is a PFIC. FC also owns the stock of SC, a foreign corporation that is a PFIC. T makes an election under section 1295 to treat FC as a QEF. T's section 1295 election applies only to the stock T owns in FC, and does not apply to the stock T indirectly owns in SC.

(4) ***Member of consolidated return group as shareholder.*** Pursuant to § 1.1502-77(a), the common parent of an affiliated group of corporations that join in filing a consolidated income tax return makes a section 1295 election for all members of the affiliated group. An election by a common parent will be effective for all members of the affiliated group with respect to interests in PFIC stock held at the time the election is made or at any time thereafter. A separate election must be made by the common parent for each PFIC of which a member of the affiliated group is a shareholder.

(5) ***Option holder.*** A holder of an option to acquire stock of a PFIC may not make a section 1295 election that will apply to the option or to the stock subject to the option.

(6) ***Exempt organization.*** A tax-exempt organization that is not taxable under section 1291, pursuant to § 1.1291-1(e), with respect to a PFIC may not make a section 1295 election with respect to that PFIC. In addition, such an exempt organization will not be subject to any section 1295 election made by a domestic pass through entity.

(e) ***Time for making a section 1295 election—***

(1) ***In general.*** Except as provided in § 1.1295-3, a shareholder making the section 1295 election must make the election on or before the due date, as extended under section 6081 (election due date), for filing the shareholder's income tax return for the first taxable year to which the election will apply. The section 1295 election must be made in the original return for that year, or in an amended return, provided the amended return is filed on or before the election due date.

(2) ***Examples.*** The following examples illustrate the rules of paragraph (e)(1) of this section:

Example 1. In 1998, C, a domestic corporation, purchased stock of FC, a foreign corporation that is a PFIC. Both C and FC are calendar year taxpayers. C wishes to make the section 1295 election for its taxable year ended December 31, 1998. The section 1295 election must be made on or before March 15, 1999, the due date of C's 1998 income tax return as provided by section 6072(b). On March 14, 1999, C files a request for a three-month extension of time to file its 1998 income tax return under section 6081(b). C's time to file its 1998 income tax return and to make the section 1295 election is thereby extended to June 15, 1999.

Example 2. The facts are the same as in *Example 1* except that on May 1, 1999, C filed its 1998 income tax return and failed to include the section 1295 election. C may file an amended income tax return for 1998 to make the section 1295 election provided the amended return is filed on or before the extended due date of June 15, 1999.

(f) ***Manner of making a section 1295 election and the annual election requirements of the shareholder —***

(1) ***Manner of making the election.*** A shareholder must make a section 1295 election by—

(i) Completing Form 8621 in the manner required by that form and this section for making the section 1295 election;

(ii) Attaching Form 8621 to its Federal income tax return filed by the election due date for the shareholder's election year; and

(iii) Receiving and reflecting in Form 8621 the information provided in the PFIC Annual Information Statement described in paragraph (g)(1) of this section, the Annual Intermediary Statement described in paragraph (g)(3) of this section, or the applicable combined statement described in paragraph (g)(4) of this section, for the taxable year of the PFIC ending with or within the taxable year for which Form 8621 is being filed. If the PFIC Annual Information Statement

contains a statement described in paragraph (g)(1)(ii)(C) of this section, the shareholder must attach a statement to Form 8621 that indicates that the shareholder rather than the PFIC calculated the PFIC's ordinary earnings and net capital gain.

(2) ***Annual election requirements*** —

(i) ***In general.*** A shareholder that makes a section 1295 election with respect to a PFIC held directly or indirectly, for each taxable year to which the section 1295 election applies, must—

(A) Complete Form 8621 in the manner required by that form and this section;

(B) Attach Form 8621 to its Federal income tax return filed by the due date of the return, as extended; and

(C) Receive and reflect in Form 8621 the PFIC Annual Information Statement described in paragraph (g)(1) of this section, the Annual Intermediary Statement described in paragraph (g)(3) of this section, or the applicable combined statement described in paragraph (g)(4) of this section, for the MTtaxable year of the PFIC ending with or within the taxable year for which Form 8621 is being filed. If the PFIC Annual Information Statement contains a statement described in paragraph (g)(1)(ii)(C) of this section, the shareholder must attach a statement to its Form 8621 that the shareholder rather than the PFIC provided the calculations of the PFIC's ordinary earnings and net capital gain.

(ii) ***Retention of documents.*** For all taxable years subject to the section 1295 election, the shareholder must retain copies of all Forms 8621, with their attachments, and PFIC Annual Information Statements or Annual Intermediary Statements. Failure to produce those documents at the request of the Commissioner in connection with an examination may result in invalidation or termination of the shareholder's section 1295 election.

(3) ***Effective date.*** See paragraph (k) of this section for special applicability date of paragraph (f) of this section.

(g) ***Annual election requirements of the PFIC or intermediary*** —

(1) ***PFIC Annual Information Statement.*** For each year of the PFIC ending in a taxable year of a shareholder to which the shareholder's section 1295 election applies, the PFIC must provide the shareholder with a PFIC Annual Information Statement. The PFIC Annual Information Statement is a statement of the PFIC, signed by the PFIC or an authorized representative of the PFIC, that contains the following information and representations—

(i) The first and last days of the taxable year of the PFIC to which the PFIC Annual Information Statement applies;

(ii) Either—

(A) The shareholder's pro rata shares of the ordinary earnings and net capital gain (as defined in § 1.1295-1(a)(2)) of the PFIC for the taxable year indicated in paragraph (g)(1)(i) of this section; or

(B) Sufficient information to enable the shareholder to calculate its pro rata shares of the PFIC's ordinary earnings and net capital gain, for that taxable year; or

(C) A statement that the foreign corporation has permitted the shareholder to examine the books of account, records, and other documents of the foreign corporation for the shareholder to calculate the amounts of the PFIC's ordinary earnings and the net capital gain according to Federal income tax accounting principles and to calculate the shareholder's pro rata shares of the PFIC's ordinary earnings and net capital gain;

(iii) The amount of cash and the fair market value of other property distributed or deemed distributed to the shareholder during the taxable year of the PFIC to which the PFIC Annual Information Statement pertains; and

(iv) Either—

(A) A statement that the PFIC will permit the shareholder to inspect and copy the PFIC's permanent books of account, records, and such other documents as may be maintained by the PFIC to establish that the PFIC's ordinary earnings and net capital gain are computed in accordance with U.S. income tax principles, and to verify these amounts and the shareholder's pro rata shares thereof; or

(B) In lieu of the statement required in paragraph (g)(1)(iv)(A) of this section, a description of the alternative documentation requirements approved by the Commissioner, with a copy of the private letter ruling and the closing agreement entered into by the Commissioner and the PFIC pursuant to paragraph (g)(2) of this section.

(2) ***Alternative documentation.*** In rare and unusual circumstances, the Commissioner will consider alternative documentation requirements necessary to verify the ordinary earnings and net capital gain of a PFIC other than the documentation requirements described in paragraph (g)(1)(iv)(A) of this section. Alternative documentation requirements will be allowed only pursuant to a private letter ruling and a closing agreement entered into by the Commissioner and the PFIC describing an alternative method of verifying the PFIC's ordinary earnings and net capital gain. If the PFIC has not obtained a private letter ruling from the Commissioner approving an alternative method of verifying the PFIC's ordinary earnings and net capital gain by the time a shareholder is required to make a section 1295 election, the shareholder may not use an alternative method for that taxable year.

(3) ***Annual Intermediary Statement.*** In the case of a U.S. person that is an indirect shareholder of a PFIC that is owned through an intermediary, as defined in paragraph (j) of this section, an Annual Intermediary Statement issued by an intermediary containing the information described in paragraph (g)(1) of this section and reporting the indirect shareholder's pro rata share of the ordinary earnings and net capital gain of the QEF as described in paragraph (g)(1)(ii)(A) of this section, may be provided to the indirect shareholder in lieu of the PFIC Annual Information Statement if the following conditions are satisfied—

(i) The intermediary receives a copy of the PFIC Annual Information Statement or the intermediary receives an annual intermediary statement from another intermediary which contains a statement that the other intermediary has received a copy of the PFIC Annual Information Statement and represents that the conditions of paragraphs (g)(3)(ii) and (g)(3)(iii) of this section are met;

(ii) The representations and information contained in the Annual Intermediary Statement reflect the representations and information contained in the PFIC Annual Information Statement; and

(iii) The PFIC Annual Information Statement issued to the intermediary contains either the representation set forth in paragraph (g)(1)(iv)(A) of this section, or, if alternative documentation requirements were approved by the Commissioner pursuant to paragraph (g)(2) of this section, a copy of the private letter ruling and closing agreement between the Commissioner and the PFIC, agreeing to an alternative method of verifying PFIC ordinary earnings and net capital gain as described in paragraph (g)(2) of this section;

(4) *Combined statements* —

(i) ***PFIC Annual Information Statement.*** A PFIC that owns directly or indirectly any stock of one or more PFICs with respect to which a shareholder may make the section 1295 election may prepare a PFIC Annual Information Statement that combines with its own information and representations the information and representations of all the PFICs. The PFIC may use any format for a combined PFIC Annual Information Statement provided the required information and representations are separately stated and identified with the respective corporations.

(ii) ***Annual Intermediary Statement.*** An intermediary described in paragraph (g)(3) of this section that owns directly or indirectly stock of one or more PFICs with respect to which an indirect shareholder may make the section 1295 election may prepare an Annual Intermediary Statement that combines with its own information and representations the information and representations with respect to all the PFICs. The intermediary may use any format for a combined Annual Intermediary Statement provided the required information and representations are separately stated and identified with the intermediary and the respective corporations.

(5) ***Effective date.*** See paragraph (k) of this section for special applicability date of paragraph (g) of this section.

(h) ***Transition rules.*** Taxpayers may rely on Notice 88-125 (1988-2 C.B. 535) (see § 601.601(d)(2) of this chapter), for rules on making and maintaining elections for shareholder election years (as defined in paragraph (j) of this section) beginning after December 31, 1986, and before January 1, 1998. Elections made under Notice 88-125 must be maintained as provided in § 1.1295-1 for taxable years beginning after December 31, 1997. A section 1295 election made prior to February 2, 1998 that was intended to be effective for the taxable year of the PFIC that began during the shareholder's election year will be effective for that taxable year of the foreign corporation provided that it is clear from all the facts and circumstances that the shareholder intended the election to be effective for that taxable year of the foreign corporation.

(i) *Invalidation, termination, or revocation of section 1295 election* —

(1) *Invalidation or termination of election at the discretion of the Commissioner* —

(i) ***In general.*** The Commissioner, in the Commissioner's discretion, may invalidate or terminate a section 1295 election applicable to a shareholder if the shareholder, the PFIC, or any intermediary fails to satisfy the requirements for making a section 1295 election or the annual election requirements of this section to which the shareholder, PFIC, or intermediary is subject, including the requirement to provide, on request, copies of the books and records of the PFIC or other documentation substantiating the ordinary earnings and net capital gain of the PFIC.

(ii) ***Deferral of section 1293 inclusion.*** The Commissioner may invalidate any pass through entity section 1295 election with respect to an interest holder or beneficiary if the section 1293 inclusion with respect to that interest holder or beneficiary is not included in the gross income

of either the pass through entity, an intermediate pass through entity, or the interest holder or beneficiary within two years of the end of the PFIC's taxable year due to nonconforming taxable years of the interest holder and the pass through entity or any intermediate pass through entity.

(iii) ***When effective.*** Termination of a shareholder's section 1295 election will be effective for the taxable year of the PFIC determined by the Commissioner in the Commissioner's discretion. An invalidation of a shareholder's section 1295 election will be effective for the first taxable year to which the section 1295 election applied, and the shareholder whose election is invalidated will be treated as if the section 1295 election was never made.

(2) ***Shareholder revocation*** —

(i) ***In general.*** In the Commissioner's discretion, upon a finding of a substantial change in circumstances, the Commissioner may consent to a shareholder's request to revoke a section 1295 election. Request for revocation must be made by the shareholder that made the election and at the time and in the manner provided in paragraph (i)(2)(ii) of this section.

(ii) ***Time for and manner of requesting consent to revoke*** —

(A) ***Time.*** The shareholder must request consent to revoke the section 1295 election no later than 12 calendar months after the discovery of the substantial change of circumstances that forms the basis for the shareholder's request to revoke the section 1295 election.

(B) ***Manner of making request.*** A shareholder requests consent to revoke a section 1295 election by filing a ruling request with the Office of the Associate Chief Counsel (International). The ruling request must satisfy the requirements, including payment of the user fee, for filing ruling requests with that office.

(iii) ***When effective.*** Unless otherwise determined by the Commissioner, revocation of a section 1295 election will be effective for the first taxable year of the PFIC beginning after the date the Commissioner consents to the revocation.

(3) ***Automatic termination.*** If a United States person, or the United States shareholder on behalf of a controlled foreign corporation, makes an election pursuant to section 1296 and the regulations thereunder with respect to PFIC stock for which a QEF election is in effect, or marks to market such stock under another provision of chapter 1 of the Internal Revenue Code, the QEF election is automatically terminated with respect to such stock that is marked to market under section 1296 or another provision of chapter 1 of the Internal Revenue Code. Such termination shall be effective on the last day of the shareholder's taxable year preceding the first taxable year for which the section 1296 election is in effect or such stock is marked to market under another provision of chapter 1 of the Internal Revenue Code.

Example. Corp Y, a domestic corporation, owns directly 100 shares of marketable stock in foreign corporation FX, a PFIC. Corp Y also owns a 50 percent interest in FP, a foreign partnership that owns 200 shares of FX stock. Accordingly, under section 1298(a)(3) and § 1.1296-1(e)(1), Corp Y is treated as indirectly owning 100 shares of FX stock. Corp Y also owns 100 percent of the stock of FZ, a foreign corporation that is not a PFIC. FZ owns 100 shares of FX stock, and therefore under section 1298(a)(2)(A), Corp Y is treated as owning the 100 shares of FX stock owned by FZ. For taxable year 2005, Corp Y has a QEF election in effect with respect to all 300 shares of FX stock that it owns directly or indirectly. See generally § 1.1295-1(c)(1). For taxable year 2006, Corp Y makes a timely election pursuant to section 1296 and the regulations thereunder. For purposes of section 1296, Corp Y is treated as owning stock held indirectly

through a partnership, but not through a foreign corporation. Section 1296(g); § 1.1296-1(e)(1). Accordingly, Corp Y's section 1296 election covers the 100 shares it owns directly and the 100 shares it owns indirectly through FP, but not the 100 shares owned by FZ. With respect to the first 200 shares, Corp Y's QEF election is automatically terminated effective December 31, 2005. With respect to the 100 shares Corp Y owns through foreign FZ, Corp Y's QEF election remains in effect unless invalidated, terminated, or revoked pursuant to this paragraph (i).

(4) ***Effect of invalidation, termination, or revocation.*** An invalidation, termination, or revocation of a section 1295 election—

(i) Terminates all section 1294 elections, as provided in § 1.1294-1T(e), and the undistributed PFIC earnings tax liability and interest thereon are due by the due date, without regard to extensions, for the return for the last taxable year of the shareholder to which the section 1295 election applies;

(ii) In the Commissioner's discretion, results in a deemed sale of the QEF stock on the last day of the PFIC's last taxable year as a QEF, in which gain, but not loss, will be recognized and with respect to which appropriate basis and holding period adjustments will be made; and

(iii) Subjects the shareholder to any other terms and conditions that the Commissioner determines are necessary to ensure the shareholder's compliance with sections 1291 through 1298 or any other provisions of the Code.

(5) ***Effect after invalidation, termination, or revocation*** —

(i) ***In general.*** Without the Commissioner's consent, a shareholder whose section 1295 election was invalidated, terminated, or revoked under this paragraph (i) may not make the section 1295 election with respect to the PFIC before the sixth taxable year in which the invalidation, termination, or revocation became effective.

(ii) ***Special rule.*** Notwithstanding paragraph (i)(5)(i) of this section, a shareholder whose section 1295 election was terminated pursuant to paragraph (i)(3) of this section, and either whose section 1296 election has subsequently been terminated because its PFIC stock ceased to be marketable or who no longer marks to market such stock under another provision of chapter 1 of the Internal Revenue Code, may make a section 1295 election with respect to its PFIC stock before the sixth taxable year in which its prior section 1295 election was terminated.

(j) ***Definitions.*** For purposes of this section—

Intermediary is a nominee or shareholder of record that holds stock on behalf of the shareholder or on behalf of another person in a chain of ownership between the shareholder and the PFIC, and any direct or indirect beneficial owner of PFIC stock (including a beneficial owner that is a pass through entity) in the chain of ownership between the shareholder and the PFIC.

Pass through entity is a partnership, S corporation, trust, or estate.

Shareholder has the same meaning as the term shareholder in § 1.1291-9(j)(3), except that for purposes of this section, a partnership and an S corporation also are treated as shareholders. Furthermore, unless otherwise provided, an interest holder of a pass through entity, which is treated as a shareholder of a PFIC, also will be treated as a shareholder of the PFIC.

Shareholder's election year is the taxable year of the shareholder for which it made the section 1295 election.

(k) ***Effective dates.*** Except as otherwise provided, paragraphs (b)(2)(iii), (b)(3), (b)(4), and (c) through (j) of this section are applicable to taxable years of shareholders beginning after December 31, 1997. However, taxpayers may apply the rules under paragraphs (b)(4), (f) and (g) of this section to a taxable year beginning before January 1, 1998, provided the statute of limitations on the assessment of tax has not expired as of April 27, 1998, and, in the case of paragraph (b)(4) of this section, the taxpayers who filed the joint return have consistently applied the rules of that section to all taxable years following the year the election was made. Paragraph (b)(3)(v) of this section is applicable as of February 7, 2000, however, a taxpayer may apply the rules to a taxable year prior to the applicable date provided the statute of limitations on the assessment of tax for that taxable year has not expired. Paragraphs (i)(3) and (i)(5)(ii) of this section are applicable for taxable years beginning on or after May 3, 2004.

[T.D. 8750, 63 FR 15, Jan. 2, 1998. Redesignated and amended by T.D. 8870, 65 FR 5779, 5781, Feb. 7, 2000; T.D. 9123, 69 FR 24073, May 3, 2004]

§ 1.1295-3 Retroactive elections.

(a) ***In general.*** This section prescribes the exclusive rules under which a shareholder, as defined in § 1.1295-1(j), may make a section 1295 election for a taxable year after the election due date, as defined in § 1.1295-1(e) (retroactive election). Therefore, a shareholder may not seek such relief under any other provision of the law, including § 301.9100 of this chapter. Paragraph (b) of this section describes the general rules for a shareholder to preserve the ability to make a retroactive election. These rules require that the shareholder possess reasonable belief as of the election due date that the foreign corporation was not a PFIC for its taxable year that ended in the shareholder's taxable year to which the election due date pertains, and that the shareholder file a Protective Statement to preserve its ability to make a retroactive election. Paragraph (c) of this section establishes the terms, conditions and other requirements with respect to a Protective Statement required to be filed under the general rules. Paragraph (d) of this section sets forth factors that establishes a shareholder's reasonable belief that a foreign corporation was not a PFIC. Paragraph (e) of this section prescribes special rules for certain shareholders that are deemed to satisfy the reasonable belief requirement and therefore are not required to file a Protective Statement. Paragraph (f) of this section describes the limited circumstances under which the Commissioner may permit a shareholder that lacked the requisite reasonable belief or failed to satisfy the requirements of paragraph (b) or (e) of this section to make a retroactive election. Paragraph (g) of this section provides the time for and manner of making a retroactive election. Paragraph (h) of this section provides the effective date of this section.

(b) ***General rule.*** Except as provided in paragraphs (e) and (f) of this section, a shareholder may make a retroactive election for a taxable year of the shareholder (retroactive election year) only if the shareholder—

(1) Reasonably believed, within the meaning of paragraph (d) of this section, that as of the election due date, as defined in § 1.1295-1(e), the foreign corporation was not a PFIC for its taxable year that ended during the retroactive election year;

(2) Filed a Protective Statement with respect to the foreign corporation, applicable to the retroactive election year, in which the shareholder described the basis for its reasonable belief and extended, in the manner provided in paragraph (c)(4) of this section, the periods of limitations on the assessment of taxes determined under sections 1291 and 1298 with respect to the foreign corporation (PFIC related taxes) for all taxable years of the shareholder to which the Protective Statement applies; and

(3) Complied with the other terms and conditions of the Protective Statement.

(c) *Protective Statement* —

(1) ***In general.*** A Protective Statement is a statement executed under penalties of perjury by the shareholder, or a person authorized to sign a Federal income tax return on behalf of the shareholder, that preserves the shareholder's ability to make a retroactive election. To file a Protective Statement that applies to a taxable year of the shareholder, the shareholder must reasonably believe as of the election due date that the foreign corporation was not a PFIC for the foreign corporation's taxable year that ended during the retroactive election year. The Protective Statement must contain—

(i) The shareholder's reasonable belief statement, as described in paragraph (c)(2) of this section;

(ii) The shareholder's agreement extending the periods of limitations on the assessment of PFIC related taxes for all taxable years to which the Protective Statement applies, as provided in paragraph (c)(4) of this section; and

(iii) The following information and representations—

(A) The shareholder's name, address, taxpayer identification number, and the shareholder's first taxable year to which the Protective Statement applies;

(B) The foreign corporation's name, address, and taxpayer identification number, if any; and

(C) The highest percentage of shares of each class of stock of the foreign corporation held directly or indirectly by the shareholder during the shareholder's first taxable year to which the Protective Statement applies.

(2) ***Reasonable belief statement.*** The Protective Statement must contain a reasonable belief statement, as described in paragraph (c)(1) of this section. The reasonable belief statement is a description of the shareholder's basis for its reasonable belief that the foreign corporation was not a PFIC for its taxable year that ended with or within the shareholder's first taxable year to which the Protective Statement applies. If the Protective Statement applies to a taxable year or years described in paragraph (c)(5)(ii) of this section, the reasonable belief statement must describe the shareholder's basis for its reasonable belief that the foreign corporation was not a PFIC for the foreign corporation's taxable year or years that ended in such taxable year or years of the shareholder. The reasonable belief statement must discuss the application of the income and asset tests to the foreign corporation and the factors, including those stated in paragraph (d) of this section, that affect the results of those tests.

(3) ***Who executes and files the Protective Statement.*** The person that executes and files and Protective Statement is the person that makes the section 1295 election, as provided in § 1.1295-1(d).

(4) *Waiver of the periods of limitations* —

(i) ***Time for and manner of extending periods of limitations.***

(A) ***In general.*** A shareholder that files the Protective Statement with the Commissioner must extend the periods of limitations on the assessment of all PFIC related taxes for all of the shareholder's taxable years to which the Protective Statement applies, as provided in this paragraph (c)(4). The shareholder is required to execute the waiver on such form as the Commission may prescribe for purposes of this paragraph (c)(4). Until that form is published, the shareholder must execute a statement in which the shareholder agrees to extend the periods of limitations on the assessment of all PFIC related taxes for all the shareholder's taxable years to which the Protective Statement applies, as provided in this

paragraph (c)(4), and agrees to the restrictions in paragraph (c)(4)(ii)(A) of this section. The shareholder or a person authorized to sign the shareholder's Federal income tax return must sign the form or statement. A properly executed form or statement authorized by this paragraph (c)(4) will be deemed consented to and signed by a Service Center Director or the Assistant Commissioner (International) for purposes of § 301.6501(c)-1(d) of this chapter.

(B) ***Application of general rule to domestic partnerships—***

(*1*) ***In general.*** A domestic partnership that holds an interest in stock of a PFIC satisfies the waiver requirement of paragraph (c)(4) of this section pursuant to the rules of this paragraph (c)(4)(i)(B)(*1*). The partnership must file one or more waivers obtained or arranged under this paragraph (c)(4)(i)(B) as part of the Protective Statement, as provided in paragraph (c)(1) of this section. The partnership must either—

(*i*) Obtain from each partner the partner's waiver of the periods of limitations;

(*ii*) Obtain from each partner a duly executed power of attorney under § 601.501 of this chapter authorizing the partnership to extend that partner's periods of limitations, and execute a waiver on behalf of the partners; or

(*iii*) In the case of a domestic partnership governed by the unified audit and litigation procedures of sections 6221 through 6233 (TEFRA partnership), arrange for the tax matters partner (or any other person authorized to enter into an agreement to extend the periods of limitations), as provided in section 6229(b), to execute a waiver on behalf of all the partners.

(*2*) ***Special rules —***

(*i*) ***Addition of partner to non-TEFRA partnership.*** In the case of any individual who becomes a partner in a domestic partnership other than a TEFRA partnership (non-TEFRA partnership) in a taxable year subsequent to the year in which the partnership filed a Protective Statement, the partner and the partnership must comply with the rules applicable to non-TEFRA partnerships, as provided in paragraph (c)(4)(i)(B)(*1*) of this section, by the due date, as extended, for the Federal income tax return of the partnership for the taxable year during which the individual became a partner. Failure to so comply will render the Protective Statement invalid with respect to the partnership and partners.

(*ii*) ***Change in status from non-TEFRA partnership to TEFRA partnership.*** If a partnership is a non-TEFRA partnership in one taxable year but becomes a TEFRA partnership in a subsequent taxable year, the partnership must file one or more waivers obtained or arranged under this paragraph (c)(4)(i)(B)(*2*)(*ii*), as part of the Protective Statement, as provided in paragraph (c)(1) of this section. The partnership must either—obtain from any new partner the partner's waiver described in this paragraph (c)(4); obtain from the new partner a duly executed power of attorney under § 601.501 of this chapter authorizing the partnership to extend the partner's periods of limitations, and execute a waiver on behalf of the new partner; or arrange for the tax matters partner (or any other person authorized to enter into an agreement to extend the periods of limitations) to

execute a waiver on behalf of all the partners. In each case, the partnership must attach any new waiver of a partner's periods of limitations, and a copy of the Protective Statement to its Federal income tax return for that taxable year.

(C) ***Application of general rule to domestic nongrantor trusts and domestic estates.*** A domestic nongrantor trust or a domestic estate that holds an interest in stock of a PFIC satisfies the waiver requirement of this paragraph (c)(4) at the entity level. For this purpose, such entity must comply with rules similar to those applicable to non-TEFRA partnerships, as provided in paragraph (c)(4)(i)(B)(*1*) of this section.

(D) ***Application of general rule to S corporations.*** An S corporation that holds an interest in stock of a PFIC satisfies the waiver requirement of this paragraph (c)(4) at the S corporation level. For this purpose, the S corporation must comply with rules similar to those applicable to non-TEFRA partnerships, as provided in paragraph (c)(4)(i)(B)(*1*) of this section. However, in the case of an S corporation that was governed by the unified audit corporate proceedings of sections 6241 through 6245 for any taxable year to which a Protective Statement applies (former TEFRA S corporation), the tax matters person (or any other person authorized to enter into such an agreement), as was provided in sections 6241 through 6245, may execute a waiver described in this paragraph (c)(4) that applies to such taxable year; for any other taxable year, the former TEFRA S corporation must comply with rules similar to those applicable to non-TEFRA partnerships.

(E) ***Effect on waiver of complete termination of a pass through entity or pass through entity's business.*** The complete termination of a pass through entity described in paragraphs (c)(4)(i) (B) through (D) of this section, or a pass through entity's trade or business, will not terminate a waiver that applies to a partner, shareholder, or beneficiary.

(F) ***Application of general rule to foreign partnerships, foreign trusts, domestic or foreign grantor trusts, and foreign estates.*** A U.S. person that is a partner or beneficiary of a foreign partnership, foreign trust, or foreign estate that holds an interest in stock of a PFIC satisfies the waiver requirement of this paragraph (c)(4) at the partner or beneficiary level. A U.S. person that is treated under sections 671 through 679 as the owner of the portion of a domestic or foreign trust that owns an interest in PFIC stock also satisfies the waiver requirement at the owner level. A waiver by a partner or beneficiary applies only to that partner or beneficiary, and is not affected by a complete termination of the entity or the entity's trade or business.

(ii) ***Terms of waiver*** —

(A) ***Scope of waiver.*** The waiver of the periods of limitations is limited to the assessment of PFIC related taxes. If the period of limitations for a taxable year affected by a retroactive election has expired with respect to the assessment of other non-PFIC related taxes, no adjustments, other than consequential changes, may be made by the Internal Revenue Service or by the shareholder to any other item of income, deduction, or credit for that year. If the period of limitations for refunds or credits for a taxable year affected by a retroactive election is open only by virtue of the assessment period extension and section 6511(c), no refund or credit is allowable on grounds other than adjustments to PFIC related taxes and consequential changes.

(B) ***Period of Waiver.*** The extension of the periods of limitations on the assessment of PFIC related taxes will be effective for all of the shareholder's taxable years to which the Protective Statement applies. In addition, the waiver, to the extent it applies to the period of limitations for a particular year, will terminate with respect to that year no sooner than three years from the date on which the shareholder files an amended return, as provided in paragraph (g) of this section, for that year. For the suspension of the running of the period of limitations for the collection of taxes for which a shareholder has elected under section 1294 to extend the time for payment, as provided in paragraph (g)(3)(ii) of this section, see sections 6503(i) and 6229(h).

(5) ***Time of and manner for filing a Protective Statement*** —

(i) ***In general.*** Except as provided in paragraph (c)(5)(ii) of this section, a Protective Statement must be attached to the shareholder's federal income tax return for the shareholder's first taxable year to which the Protective Statement will apply. The shareholder must file its return and the copy of the Protective Statement by the due date, as extended under section 6081, for the return.

(ii) ***Special rule for taxable years ended before January 2, 1998.*** A shareholder may file a Protective Statement that applies to the shareholder's taxable year or years that ended before January 2, 1998, provided the period of limitations on the assessment of taxes for any such year has not expired (open year). The shareholder must file the Protective Statement applicable to such open year or years, as provided in paragraph (c)(5)(i) of this section, by the due date, as extended, for the shareholder's return for the first taxable year ending after January 2, 1998.

(6) ***Applicability of the Protective Statement*** —

(i) ***In general.*** Except as otherwise provided in this paragraph (c)(6), a Protective Statement applies to the shareholder's first taxable year for which the Protective Statement was filed and to each subsequent taxable year. The Protective Statement will not apply to any taxable year of the shareholder during which the shareholder does not own any stock of the foreign corporation or to any taxable year thereafter. Accordingly, if the shareholder has not made a retroactive election with respect to the previously owned stock by the time the shareholder reacquires stock of the foreign corporation, the shareholder must file another Protective Statement to preserve its right to make a retroactive election with respect to the later acquired stock. For the rule that provides that a section 1295 election made with respect to a foreign corporation applies to stock of that corporation acquired after a lapse in ownership, see § 1.1295-1(c)(2)(iii).

(ii) ***Invalidity of the Protective Statement.*** A shareholder will be treated as if it never filed a Protective Statement if—

(A) The shareholder failed to make a retroactive election by the date prescribed for making the retroactive election in paragraph (g)(1) of this section; or

(B) The waiver of the periods of limitations terminates (by reason of a court decision or other determination) with respect to any taxable year before the expiration of three years from the date of filing of an amended return for that year pursuant to paragraph (g) of this section.

(7) ***Retention of Protective Statement and information demonstrating reasonable belief.*** A shareholder that files a Protective Statement must retain a copy of the Protective Statement and its attachments and must, for each taxable year of the shareholder to which the Protective Statement applies, retain information sufficient to demonstrate the shareholder's reasonable belief that the foreign corporation was not a PFIC for the taxable year of the foreign corporation ending during each such taxable year of the shareholder.

(d) ***Reasonable belief*** —

(1) ***In general.*** A foreign corporation is a PFIC for a taxable year if the foreign corporation satisfies either the income or asset test of section 1297(a). To determine whether a shareholder had reasonable belief that the foreign corporation is not a PFIC under section 1297(a), the shareholder must consider all relevant facts and circumstances. Reasonable belief may be based on a variety of factors, including reasonable asset valuations as well as reasonable interpretations of the applicable provisions of the Code, regulations, and administrative guidance regarding the direct and indirect ownership of the income or assets of the foreign corporation, the proper character of that income or those assets, and similar issues. Reasonable belief may be based on reasonable predictions regarding income to be earned and assets to be owned in subsequent years where qualifications of the foreign corporation as a PFIC for the current taxable year will depend on the qualification of the corporation as a PFIC in a subsequent year. Reasonable belief may be based on an analysis of generally available financial information of the foreign corporation. To determine whether a shareholder had reasonable belief that the foreign corporation was not a PFIC, the Commissioner may consider the size of the shareholder's interest in the foreign corporation.

(2) ***Knowledge of law required.*** Reasonable belief must be based on a good faith effort to apply the Code, regulations, and related administrative guidance. Any person's failure to know or apply these provisions will not form the basis of reasonable belief.

(e) ***Special rules for qualified shareholders*** —

(1) ***In general.*** A shareholder that is a qualified shareholder, as defined in paragraph (e)(2) of this section, for a taxable year of the shareholder is not required to satisfy the reasonable belief requirement of paragraph (b)(1) of this section or file a Protective Statement to preserve its ability to make a retroactive election with respect to such taxable year. Accordingly, a qualified shareholder may make a retroactive election for any open taxable year in the shareholder's holding period. The retroactive election will be treated as made in the earliest taxable year of the shareholder during which the foreign corporation qualified as a PFIC (including a taxable year ending prior to January 2, 1998) and the shareholder will be treated as a shareholder of a pedigreed QEF, as defined in § 1.1291-9(j)(2)(ii), provided the shareholder—

(i) Has been a qualified shareholder with respect to the foreign corporation for all taxable years of the shareholder included in the shareholder's holding period during which the foreign corporation was a PFIC, or in the case of taxable years ending before January 2, 1998, the shareholder satisfies the criteria of a qualified shareholder, for all such years; or

(ii) Has been a qualified shareholder, or in the case of taxable years ending before January 2, 1998 satisfies the criteria of a qualified shareholder, for all taxable years in its holding period before it filed a Protective Statement, which Protective Statement is applicable to all subsequent years, beginning with the first taxable year in which the shareholder is not a qualified shareholder.

(2) ***Qualified shareholder.*** A shareholder will be treated as a qualified shareholder for a taxable year if the shareholder did not file a Protective Statement applicable to an earlier taxable year included in the shareholder's holding period of the stock of the foreign corporation currently held and—

(i) At all times during the taxable year the shareholder owned, within the meaning of section 958, directly, indirectly, or constructively, less than two percent of the vote and value of each class of stock of the foreign corporation; and

(ii) With respect to the taxable year of the foreign corporation ending within the shareholder's taxable year, the foreign corporation or U.S. counsel for the foreign corporation indicated in a public filing, disclosure statement or other notice provided to U.S. persons that are shareholders of the foreign corporation (corporate filing) that the foreign corporation—

(A) Reasonably believes that it is not or should not constitute a PFIC for the corporation's taxable year; or

(B) Is unable to conclude that it is not or should not be a PFIC (due to certain asset valuation or interpretation issues, or because PFIC status will depend on the income or assets of the foreign corporation in the corporation's subsequent taxable years) but reasonably believes that, more likely than not, it ultimately will not be a PFIC.

(3) ***Exceptions.*** Notwithstanding paragraph (e)(2)(ii) of this section, a shareholder will not be treated as a qualified shareholder for a taxable year of the shareholder if the shareholder knew or had reason to know that a corporate filing regarding the foreign corporation's PFIC status was inaccurate, or knew that the foreign corporation was a PFIC for the taxable year of the foreign corporation ending with or within such taxable year of the shareholder. For purposes of this paragraph, a shareholder will be treated as knowing that a foreign corporation was a PFIC if the principal activity of the foreign corporation, directly or indirectly, is owning or trading a diversified portfolio of stock, securities, or other financial contracts.

(f) ***Special consent*** —

(1) ***In general.*** A shareholder that has not satisfied the requirements of paragraph (b) or (e) of this section may request the consent of the Commissioner to make a retroactive election for a taxable year of the shareholder provided the shareholder satisfies the requirements set forth in this paragraph (f). The Commissioner will grant relief under this paragraph (f) only if—

(i) The shareholder reasonably relied on a qualified tax professional, within the meaning of paragraph (f)(2) of this section;

(ii) Granting consent will not prejudice the interests of the United States government, as provided in paragraph (f)(3) of this section;

(iii) The shareholder requests consent under paragraph (f) of this section before a representative of the Internal Revenue Service raises upon audit the PFIC status of the corporation for any taxable year of the shareholder; and

(iv) The shareholder satisfies the procedural requirements set forth in paragraph (f)(4) of this section.

(2) ***Reasonable reliance on a qualified tax professional*** —

(i) ***In general.*** Except as provided in paragraph (f)(2)(ii) of this section, a shareholder is deemed to have reasonably relied on a qualified tax professional only if the shareholder reasonably relied on a qualified tax professional (including a tax professional employed by the shareholder) who failed to identify the foreign corporation as a PFIC or failed to advise the shareholder of the consequences of making, or failing to make, the section 1295 election. A shareholder will not be considered to have reasonably relied on a qualified tax professional if the shareholder knew, or reasonably should have known, that the foreign corporation was a PFIC and of the availability of a section 1295 election, or knew or reasonably should have known that the qualified tax professional—

(A) Was not competent to render tax advice with respect to the ownership of shares of a foreign corporation; or

(B) Did not have access to all relevant facts and circumstances.

(ii) ***Shareholder deemed to have not reasonably relied on a qualified tax professional.*** For purposes of this paragraph (f)(2), a shareholder is deemed to have not reasonably relied on a qualified tax professional if the shareholder was informed by the qualified tax professional that the foreign corporation was a PFIC and of the availability of the section 1295 election and related tax consequences, but either chose not to make the section 1295 election or was unable to make a valid section 1295 election.

(3) ***Prejudice to the interests of the United States government*** —(1) *General rule.* Except as otherwise provided in paragraph (f)(3)(ii) of this section, the Commissioner will not grant consent under paragraph (f) of this section if doing so would prejudice the interests of the United States government. The interests of the United States government are prejudiced if granting relief would result in the shareholder having a lower tax liability, taking into account applicable interest charges, in the aggregate for all years affected by the retroactive election (other than by a de minimis amount) than the shareholder would have had if the shareholder had made the section 1295 election by the election due date. The time value of money is taken into account for purposes of this computation.

(ii) ***Elimination of prejudice to the interests of the United States government.*** Notwithstanding the general rule of paragraph (f)(3)(i) of this section, if granting relief would prejudice the interests of the United States government, the Commissioner may, in the Commissioner's sole discretion, grant consent to make the election provided the shareholder enters into a closing agreement with the Commissioner that requires the shareholder to pay an amount sufficient to eliminate any prejudice to the United States government as a consequence of the shareholder's inability to file amended returns for closed taxable years.

(4) ***Procedural requirements*** —

(i) ***Filing instructions.*** A shareholder requests consent under paragraph (f) of this section to make a retroactive election by filing with the Office of the Associate Chief Counsel (International) a ruling request that includes the affidavits required by this paragraph (f)(4). The ruling request must satisfy the requirements, including payment of the user fee, for ruling requests filed with that office.

(ii) ***Affidavit from shareholder.*** The shareholder, or a person authorized to sign a Federal income tax return on behalf of the shareholder, must submit a detailed affidavit describing the events that led to the failure to make a section 1295 election by the election due date, and to the discovery thereof. The shareholder's affidavit must describe the engagement and responsibilities of the

qualified tax professional as well as the extent to which the shareholder relied on the tax professional. The shareholder must sign the affidavit under penalties of perjury. An individual who signs for an entity must have personal knowledge of the facts and circumstances at issue.

(iii) ***Affidavits from other persons.*** The shareholder must submit detailed affidavits from individuals having knowledge or information about the events that led to the failure to make a section 1295 election by the election due date, and to the discovery thereof. These individuals must include the qualified tax professional upon whose advice the shareholder relied, as well as any individual (including an employee of the shareholder) who made a substantial contribution to the return's preparation, and any accountant or attorney, knowledgeable in tax matters, who advised the shareholder with regard to its ownership of the stock of the foreign corporation. Each affidavit must describe the individual's engagement and responsibilities as well as the advice concerning the tax treatment of the foreign corporation that that individual provided to the shareholder. Each affidavit also must include the individual's name, address, and taxpayer identification number, and must be signed by the individual under penalties of perjury.

(iv) ***Other information.*** In connection with a request for consent under this paragraph (f), a shareholder must provide any additional information requested by the Commissioner.

(v) ***Notification of Internal Revenue Service.*** The shareholder must notify the branch of the Associate Chief Counsel (International) considering the request for relief under this paragraph (f) if, while the shareholder's request for consent is pending, the Internal Revenue Service begins an examination of the shareholder's return for the retroactive election year or for any subsequent taxable year during which the shareholder holds stock of the foreign corporation.

(vi) ***Who requests special consent under this paragraph (f) and who enters into a closing agreement.*** The person that requests consent under this paragraph (f) is the person that makes the section 1295 election, as provided in § 1.1295-1(d). If a shareholder is required to enter into a closing agreement with the Commissioner, as described in paragraph (f)(3)(ii) of this section, rules similar to those under paragraphs (c)(4)(i) (B) through (E) of this section apply for purposes of determining the person that enters into the closing agreement.

(g) ***Time for and manner of making a retroactive election*** —

(1) ***Time for making a retroactive election*** —

(i) ***In general.*** Except as otherwise provided in paragraph (g)(1)(ii) of this section, a shareholder must make a retroactive election, in the manner provided in paragraph (g)(2) of this section, on or before the due date, as extended, for the shareholder's return—

(A) In the case of a shareholder that makes a retroactive election pursuant to paragraph (b) or (e) of this section, for the taxable year in which the shareholder determines or reasonably should have determined that the foreign corporation was a PFIC; or

(B) In the case of a shareholder that obtains the consent of the Commissioner pursuant to paragraph (f) of this section for the taxable year in which such consent is granted.

(ii) ***Transition rule.*** A shareholder that files a Protective Statement for a taxable year described in paragraph (c)(5)(ii) of this section may make a retroactive election by the due date, as extended, for the return for the first taxable year ended after January 2, 1998 even if the shareholder determined or should have determined that the foreign corporation was a PFIC for a year described in paragraph (c)(5)(ii) of this section at any time on or before January 2, 1998.

(iii) ***Ownership not required at time retroactive election is made.*** The shareholder need not own shares of the foreign corporation at the time the shareholder makes a retroactive election with respect to the foreign corporation.

(2) ***Manner of making a retroactive election.*** A shareholder that has satisfied the requirements of paragraph (b) or (e) of this section, or a shareholder that has been granted consent under paragraph (f) of this section, must make a retroactive election in the manner provided in Form 8621 for making a section 1295 election, and must attach Form 8621 to an amended return for the later of the retroactive election year or the earliest open taxable year of the shareholder. The shareholder also must file an amended return for each of its subsequent taxable years affected by the retroactive election. In each amended return the shareholder must redetermine its income tax liability for that year to take into account the assessment of PFIC related taxes. If the period of limitations for the assessment of taxes for a taxable year affected by the retroactive election has expired except to the extent the waiver of limitations, described in paragraph (c)(4) of this section, has extended such period, no adjustments, other than consequential changes, may be made to any other items of income, deduction, or credit in that year. In addition, the shareholder must pay all taxes and interest owing by reason of the PFIC and QEF status of the foreign corporation in those years (except to the extent a section 1294 election extends the time to pay the taxes and interest). A shareholder that filed a Protective Statement must attach to Form 8621 filed with each amended return a representation that the shareholder, until the taxable year in which it determined or reasonably should have determined that the foreign corporation was a PFIC, reasonably believed, within the meaning of paragraph (d) of this section, that the foreign corporation was not a PFIC in the taxable year for which the amended return is filed, and in all other taxable years to which the Protective Statement applies. A shareholder that entered into a closing agreement must comply with the terms of that agreement, as provided in paragraph (f)(3)(ii) of this section, to eliminate any prejudice to the United States government's interests, as described in paragraph (f)(3) of this section.

(3) ***Who makes the retroactive election.*** The person that makes the retroactive election is the person that makes the section 1295 election, as provided in § 1.1295-1(d). A partner, shareholder, or beneficiary for which a pass through entity, as described in paragraphs (c)(4)(i) (B) through (D) of this section, filed a Protective Statement may make a retroactive election, if the pass through entity completely terminates its business or otherwise ceases to exist.

(4) ***Other elections —***

(i) ***Section 1291(d)(2) election.*** If the foreign corporation for which the shareholder makes a retroactive election will be treated as an unpedigreed QEF, as defined in § 1.1291-9(j)(2)(iii), with respect to the shareholder, the shareholder may make an election under section 1291(d)(2) to purge its holding period of the years or parts of years before the effective date of the retroactive election. If the qualification date, within the meaning of § 1.1291-9(e) or 1.1291-10(e), falls in a taxable year for which the period of limitations has expired, the shareholder may treat the first day of the retroactive election year as the qualification date. The shareholder may make a section 1291(d)(2) election at the time that it makes the retroactive election, but no later than two years after the date that the amended return in which the retroactive election is made is filed. For the requirements for making a section 1291(d)(2) election, see §§ 1.1291-9 and 1.1291-10.

(ii) ***Section 1294 election.*** A shareholder may make an election under section 1294 to extend the time for payment of tax on the shareholder's pro rata shares of the ordinary earnings and net capital gain of the foreign corporation reported in the shareholder's amended return, and

section 6621 interest attributable to such tax, but only to the extent the tax and interest are attributable to earnings that have not been distributed to the shareholder. The shareholder must make a section 1294 election for a taxable year at the time that it files its amended return for that year, as provided in paragraph (g)(1) of this section. For the requirements for making a section 1294 election, see § 1.1294-1T.

(h) ***Effective date.*** The rules of this section are effective as of January 2, 1998.

[T.D. 8750, 63 FR 19, Jan. 2, 1998. Redesignated and amended by T.D. 8870, 65 FR 5781, Feb. 7, 2000]

§ 1.1296-1 Mark to market election for marketable stock.

(a) ***Definitions*** —

(1) ***Eligible RIC.*** An *eligible RIC* is a regulated investment company that offers for sale, or has outstanding, any stock of which it is the issuer and which is redeemable at net asset value, or that publishes net asset valuations at least annually.

(2) ***Section 1296 stock.*** The term *section 1296 stock* means marketable stock in a passive foreign investment company (PFIC), including any PFIC stock owned directly or indirectly by an eligible RIC, for which there is a valid section 1296 election. Section 1296 stock does not include stock of a foreign corporation that previously had been a PFIC, and for which a section 1296 election remains in effect.

(3) ***Unreversed inclusions*** —

(i) ***General rule.*** The term *unreversed inclusions* means with respect to any section 1296 stock, the excess, if any, of—

(A) The amount of mark to market gain included in gross income of the United States person under paragraph (c)(1) of this section with respect to such stock for prior taxable years; over

(B) The amount allowed as a deduction to the United States person under paragraph (c)(3) of this section with respect to such stock for prior taxable years.

(ii) ***Section 1291 adjustment.*** The amount referred to in paragraph (a)(3)(i)(A) of this section shall include any amount subject to section 1291 under the coordination rule of paragraph (i)(2)(ii) of this section.

(iii) ***Example.*** An example of the computation of unreversed inclusions is as follows:

Example. A, a United States person, acquired stock in Corp X, a foreign corporation, on January 1, 2005 for $150. At such time and at all times thereafter, Corp X was a PFIC and A's stock in Corp X was marketable. For taxable years 2005 and 2006, Corp X was a nonqualified fund subject to taxation under section 1291. A made a timely section 1296 election with respect to the X stock, effective for taxable year 2007. The fair market value of the X stock was $200 as of December 31, 2006, and $240 as of December 31, 2007. Additionally, Corp X made no distribution with respect to its stock for the taxable years at issue. In 2007, pursuant to paragraph (i)(2)(ii) of this section, A must include the $90 gain in the X stock in accordance with the rules of section 1291 for purposes of determining the deferred tax

amount and any applicable interest. Nonetheless, for purposes of determining the amount of the unreversed inclusions pursuant to paragraph (a)(3)(ii) of this section, A will include the $90 of gain that was taxed under section 1291 and not the interest thereon.

(iv) ***Special rule for regulated investment companies.*** In the case of a regulated investment company which had elected to mark to market the PFIC stock held by such company as of the last day of the taxable year preceding such company's first taxable year for which such company makes a section 1296 election, the amount referred to in paragraph (a)(3)(i)(A) of this section shall include amounts previously included in gross income by the company pursuant to such mark to market election with respect to such stock for prior taxable years. For further guidance, see Notice 92-53 (1992-2 C.B. 384) (*see* also 601.601(d)(2) of this chapter).

(b) ***Application of section 1296 election*** —

(1) ***In general.*** Any United States person and any controlled foreign corporation (CFC) that owns directly, or is treated as owning under this section, marketable stock, as defined in § 1.1296-2, in a PFIC may make an election to mark to market such stock in accordance with the provisions of section 1296 and this section.

(2) ***Election applicable to specific United States person.*** A section 1296 election applies only to the United States person (or CFC that is treated as a U.S. person under paragraph (g)(2) of this section) that makes the election. Accordingly, a United States person's section 1296 election will not apply to a transferee of section 1296 stock.

(3) ***Election applicable to specific corporation only.*** A section 1296 election is made with respect to a single foreign corporation, and thus a separate section 1296 election must be made for each foreign corporation that otherwise meets the requirements of this section. A United States person's section 1296 election with respect to stock in a foreign corporation applies to all marketable stock of the corporation that the person owns directly, or is treated as owning under paragraph (e) of this section, at the time of the election or that is subsequently acquired.

(c) ***Effect of election*** —

(1) ***Recognition of gain.*** If the fair market value of section 1296 stock on the last day of the United States person's taxable year exceeds its adjusted basis, the United States person shall include in gross income for its taxable year the excess of the fair market value of such stock over its adjusted basis (mark to market gain).

(2) ***Character of gain.*** Mark to market gain, and any gain on the sale or other disposition of section 1296 stock, shall be treated as ordinary income.

(3) ***Recognition of loss.*** If the adjusted basis of section 1296 stock exceeds its fair market value on the last day of the United States person's taxable year, such person shall be allowed a deduction for such taxable year equal to the lesser of the amount of such excess or the unreversed inclusions with respect to such stock (mark to market loss).

(4) ***Character of loss*** —

(i) ***Losses not in excess of unreversed inclusions.*** Any mark to market loss allowed as a deduction under paragraph (c)(3) of this section, and any loss on the sale or other disposition of section 1296 stock, to the extent that such loss does not exceed the unreversed inclusions attributable to such stock, shall be treated as an ordinary loss, deductible in computing adjusted gross income.

(ii) ***Losses in excess of unreversed inclusions.*** Any loss recognized on the sale or other disposition of section 1296 stock in excess of any prior unreversed inclusions will be subject to the rules generally applicable to losses provided elsewhere in the Internal Revenue Code and the regulations thereunder.

(5) ***Application of election to separate lots of stock.*** In the case in which a United States person purchased or acquired shares of stock in a PFIC at different prices, the rules of this section shall be applied in a manner consistent with the rules of § 1.1012-1.

(6) ***Source rules.*** The source of any amount included in gross income under paragraph (c)(1) of this section, or the allocation and apportionment of any amount allowed as a deduction under paragraph (c)(3) of this section, shall be determined in the same manner as if such amounts were gain or loss (as the case may be) from the sale of stock in the PFIC.

(7) ***Examples.*** The following examples illustrate this paragraph (c):

Example 1. Treatment of gain as ordinary income. A, a United States individual, purchases stock in FX, a foreign corporation that is not a PFIC, in 1990 for $1,000. On January 1, 2005, when the fair market value of the FX stock is $1,100, FX becomes a PFIC. A makes a timely section 1296 election for taxable year 2005. On December 31, 2005, the fair market value of the FX stock is $1,200. For taxable year 2005, A includes $200 of mark to market gain (the excess of the fair market value of FX stock ($1,200) over A's adjusted basis ($1,000)) in gross income as ordinary income and pursuant to paragraph (d)(1) of this section increases his basis in the FX stock by that amount.

Example 2. Treatment of gain as capital gain. The facts are the same as in *Example 1.* For taxable year 2006, FX does not satisfy either the asset test or the income test of section 1297(a). A does not revoke the section 1296 election it made with respect to the FX stock. On December 1, 2006, A sells the FX stock when the fair market value of the stock is $1,500. For taxable year 2006, A includes $300 of gain (the excess of the fair market value of FX stock ($1,500) over A's adjusted basis ($1,200)) in gross income as long-term capital gain because at the time of sale of the FX stock by A, FX did not qualify as a PFIC, and, therefore, the FX stock was not section 1296 stock at the time of the disposition. Further, A's holding period for non-PFIC purposes was more than one year.

Example 3. Treatment of losses as ordinary where they do not exceed unreversed inclusions. The facts are the same as in *Example 1.* On December 1, 2006, A sells the stock in FX for $1,100. At that time, A's unreversed inclusions (the amount A included in income as mark to market gain) with respect to the stock in FX are $200. Accordingly, for taxable year 2006, A recognizes a loss on the sale of the FX stock of $100, (the fair market value of the FX stock ($1,100) minus A's adjusted basis ($1,200) in the stock) that is treated as an ordinary loss because the loss does not exceed the unreversed inclusions attributable to the stock of FX.

Example 4. Treatment of losses as long-term capital losses. The facts are the same as in *Example 3,* except that FX does not satisfy either the asset test or the income test of section 1297(a) for taxable year 2006. For taxable year 2006, A's $100 loss from the sale of the FX stock is treated as long-term capital loss because at the time of the sale of the FX stock by A FX did not qualify as a PFIC, and, therefore, the FX stock was not section 1296 stock at the time of the disposition. Further, A's holding period in the FX stock for non-PFIC purposes was more than one year.

Example 5. Long-term capital loss treatment of losses in excess of unreversed inclusions. The facts are the same as in *Example 3,* except that A sells his FX stock for $900. At the time of A's sale of the FX stock on December 1, 2006, A's unreversed inclusions with respect to the FX stock are $200. Accordingly, the $300 loss recognized by A on the disposition is treated as an ordinary loss to the extent of his unreversed inclusions ($200). The amount of the loss in excess of A's unreversed inclusions ($100) will be treated as a long-term capital loss because A's holding period in the FC stock for non-PFIC purposes was more than one year.

Example 6. Application of section 1296 election to separate lots of stock. On January 1, 2005, Corp A, a domestic corporation, purchased 100 shares (first lot) of stock in FX, a PFIC, for $500 ($5 per share). On June 1, 2005, Corp A purchased 100 shares (second lot) of FX stock for $1,000 ($10 per share). Corp A made a timely section 1296 election with respect to its FX stock for taxable year 2005. On December 31, 2005, the fair market value of FX stock was $8 per share. For taxable year 2005, Corp A includes $300 of gain in gross income as ordinary income under paragraph (c)(1) of this section with respect to the first lot, and adjusts its basis in that lot to $800 pursuant to paragraph (d)(1) of this section. With respect to the second lot, Corp A is not permitted to recognize a loss under paragraph (c)(3) of this section for taxable year 2005. Although Corp A's adjusted basis in that stock exceeds its fair market value by $200, Corp A has no unreversed inclusions with respect to that particular lot of stock. On July 1, 2006, Corp A sells 100 shares of FX stock for $900. Assuming that Corp A adequately identifies (in accordance with the rules of § 1.1012-1(c)) the shares of FX stock sold as being from the second lot, Corp A recognizes $100 of long term capital loss pursuant to paragraph (c)(4)(ii) of this section.

(d) ***Adjustment to basis*** —

(1) ***Stock held directly.*** The adjusted basis of the section 1296 stock shall be increased by the amount included in the gross income of the United States person under paragraph (c)(1) of this section with respect to such stock, and decreased by the amount allowed as a deduction to the United States person under paragraph (c)(3) of this section with respect to such stock.

(2) ***Stock owned through certain foreign entities.***

(i) In the case of section 1296 stock that a United States person is treated as owning through certain foreign entities pursuant to paragraph (e) of this section, the basis adjustments under paragraph (d)(1) of this section shall apply to such stock in the hands of the foreign entity actually holding such stock, but only for purposes of determining the subsequent treatment under chapter 1 of the Internal Revenue Code of the United States person with respect to such stock. Such increase or decrease in the adjusted basis of the section 1296 stock shall constitute an adjustment to the basis of partnership property only with respect to the partner making the section 1296 election. Corresponding adjustments shall be made to the adjusted basis of the United States person's interest in the foreign entity and in any intermediary entity described in paragraph (e) of this section through which the United States person holds the PFIC stock.

(ii) ***Example.*** The following example illustrates this paragraph (d)(2):

Example. FP is a foreign partnership. Corp A, a domestic corporation, owns a 20 percent interest in FP. Corp B, a domestic corporation, owns a 30 percent interest in FP. Corp C, a foreign corporation, with no direct or indirect shareholders that are U.S. persons, owns a 50% interest in FP. Corp A, Corp B, and FP all use a calendar year for their taxable year. In 2005,

FP purchases stock in FX, a foreign corporation and a PFIC, for $1,000. Corp A makes a timely section 1296 election for taxable year 2005. On December 31, 2005, the fair market value of the PFIC stock is $1,100. Corp A includes $20 of ordinary income in taxable year 2005 under paragraphs (c)(1) and (2) of this section. Corp A increases its basis in its FP partnership interest by $20. FP increases its basis in the FX stock to $1,020 solely for purposes of determining the subsequent treatment of Corp A, under chapter 1 of the Internal Revenue Code, with respect to such stock. In 2006, FP sells the FX stock for $1,200. For purposes of determining the amount of gain of Corp A, FP will be treated as having $180 in gain of which $20 is allocated to Corp A. Corp A's $20 of gain will be treated as ordinary income under paragraph (c)(2) of this section. For purposes of determining the amount of gain attributable to Corp B, FP will be treated as having $200 gain, $60 of which will be allocated to Corp B.

(3) ***Stock owned indirectly by an eligible RIC.*** Paragraph (d)(2) of this section shall also apply to an eligible RIC which is an indirect shareholder under § 1.1296-2(f) of stock in a PFIC and has a valid section 1296 election in effect with respect to the PFIC stock.

(4) ***Stock acquired from a decedent.*** In the case of stock of a PFIC that is acquired by bequest, devise, or inheritance (or by the decedent's estate) and with respect to which a section 1296 election was in effect as of the date of the decedent's death, notwithstanding section 1014 or section 1022, the basis of such stock in the hands of the person so acquiring it shall be the adjusted basis of such stock in the hands of the decedent immediately before his death (or, if lesser, the basis that would have been determined under section 1014 or section 1022 without regard to this paragraph (d)).

(5) ***Transition rule for individuals becoming subject to United States income taxation*** —

(i) ***In general.*** If any individual becomes a United States person in a taxable year beginning after December 31, 1997, solely for purposes of this section, the adjusted basis, before adjustments under this paragraph (d), of any section 1296 stock owned by such individual on the first day of such taxable year shall be treated as being the greater of its fair market value or its adjusted basis on such first day.

(ii) An example of the transition rule for individuals becoming subject to United States income taxation is as follows:

Example. A, a nonresident alien individual, purchases marketable stock in FX, a PFIC, for $50 in 1995. On January 1, 2005, A becomes a United States person and makes a timely section 1296 election with respect to the stock in accordance with paragraph (h) of this section. The fair market value of the FX stock on January 1, 2005, is $100. The fair market value of the FX stock on December 31, 2005, is $110. Under paragraph (d)(5)(i) of this section, A computes the amount of mark to market gain or loss for the FX stock in 2005 by reference to an adjusted basis of $100, and therefore A includes $10 in gross income as mark to market gain under paragraph (c)(1) of this section. Additionally, under paragraph (d)(1) of this section, A's adjusted basis in the FX stock for purposes of this section is increased to $110 (and to $60 for all other tax purposes). A sells the FX stock in 2006 for $120. For purposes of applying section 1001, A must use its original basis of $50, with any adjustments under paragraph (d)(1) of this section, $10 in this case, and therefore A recognizes $60 of gain. Under paragraph (c)(2) of this section (which is applied using an adjusted basis of $110), $10 of such gain is treated as ordinary income. The remaining $50 of gain from the sale of the FX stock is long term capital gain because A held such stock for more than one year.

(e) ***Stock owned through certain foreign entities*** —

(1) ***In general.*** Except as provided in paragraph (e)(2) of this section, the following rules shall apply in determining stock ownership for purposes of this section. PFIC stock owned, directly or indirectly, by or for a foreign partnership, foreign trust (other than a foreign trust described in sections 671 through 679), or foreign estate shall be considered as being owned proportionately by its partners or beneficiaries. PFIC stock owned, directly or indirectly, by or for a foreign trust described in sections 671 through 679 shall be considered as being owned proportionately by its grantors or other persons treated as owners under sections 671 through 679 of any portion of the trust that includes the stock. The determination of a person's proportionate interest in a foreign partnership, foreign trust or foreign estate will be made on the basis of all the facts and circumstances. Stock considered owned by reason of this paragraph shall, for purposes of applying the rules of this section, be treated as actually owned by such person.

(2) ***Stock owned indirectly by eligible RICs.*** The rules for attributing ownership of stock contained in § 1.1296-2(f) will apply to determine the indirect ownership of PFIC stock by an eligible RIC.

(f) ***Holding period.*** Solely for purposes of sections 1291 through 1298, if section 1296 applied to stock with respect to the taxpayer for any prior taxable year, the taxpayer's holding period in such stock shall be treated as beginning on the first day of the first taxable year beginning after the last taxable year for which section 1296 so applied.

(g) ***Special rules*** —

(1) ***Certain dispositions of stock.*** To the extent a United States person is treated as actually owning stock in a PFIC under paragraph (e) of this section, any disposition which results in the United States person being treated as no longer owning such stock, and any disposition by the person owning such stock, shall be treated as a disposition by the United States person of the stock in the PFIC.

(2) ***Treatment of CFC as a United States person.*** In the case of a CFC that owns, or is treated as owning under paragraph (e) of this section, section 1296 stock:

(i) Other than with respect to the sourcing rules in paragraph (c)(6) of this section, this section shall apply to the CFC in the same manner as if such corporation were a United States person. The CFC will be treated as a foreign person for purposes of applying the source rules of paragraph (c)(6).

(ii) For purposes of subpart F of part III of subchapter N of the Internal Revenue Code—

(A) Amounts included in the CFC's gross income under paragraph (c)(1) or (i)(2)(ii) of this section shall be treated as foreign personal holding company income under section 954(c)(1)(A); and

(B) Amounts allowed as a deduction under paragraph (c)(3) of this section shall be treated as a deduction allocable to foreign personal holding company income for purposes of computing net foreign base company income under § 1.954-1(c).

(iii) A United States shareholder, as defined in section 951(b), of the CFC shall not be subject to section 1291 with respect to any stock of the PFIC for the period during which the section 1296 election is in effect for that stock, and the holding period rule of paragraph (f) of this section shall apply to such United States shareholder.

(iv) The rules of this paragraph (g)(2) shall not apply to a United States person that is a shareholder of the PFIC for purposes of section 1291, but is not a United States shareholder under section 951(b) with respect to the CFC making a section 1296 election.

(3) ***Timing of inclusions for stock owned through certain foreign entities.*** In the case of section 1296 stock that a United States person is treated as owning through certain foreign entities pursuant to paragraph (e) of this section, the mark to market gain or mark to market loss is determined in accordance with paragraphs (c) and (i)(2)(ii) of this section as of the last day of the taxable year of the foreign partnership, foreign trust or foreign estate and then included in the taxable year of such United States person that includes the last day of the taxable year of the entity.

(h) ***Elections —***

(1) ***Timing and manner for making a section 1296 election —***

(i) ***United States persons.*** A United States person that owns marketable stock in a PFIC, or is treated as owning marketable stock under paragraph (e) of this section, on the last day of the taxable year of such person, and that wants to make a section 1296 election, must make a section 1296 election for such taxable year on or before the due date (including extensions) of the United States person's income tax return for that year. The section 1296 election must be made on the Form 8621, "Return by a Shareholder of a Passive Foreign Investment Company or Qualified Electing Fund", included with the original tax return of the United States person for that year, or on an amended return, provided that the amended return is filed on or before the election due date.

(ii) ***Controlled foreign corporations.*** A section 1296 election by a CFC shall be made by its controlling United States shareholders, as defined in § 1.964-1(c)(5), and shall be included with the Form 5471, "Information Return of U.S. Persons With Respect to Certain Foreign Corporations", for that CFC by the due date (including extensions) of the original income tax returns of the controlling United States shareholders for that year. A section 1296 election by a CFC shall be binding on all United States shareholders of the CFC.

(iii) ***Retroactive elections for PFIC stock held in prior years.*** A late section 1296 election may be permitted only in accordance with § 301.9100 of this chapter.

(2) ***Effect of section 1296 election —***

(i) A section 1296 election will apply to the taxable year for which such election is made and remain in effect for each succeeding taxable year unless such election is revoked or terminated pursuant to paragraph (h)(3) of this section.

(ii) ***Cessation of a foreign corporation as a PFIC.*** A United States person will not include mark to market gain or loss pursuant to paragraph (c) of this section with respect to any stock of a foreign corporation for any taxable year that such foreign corporation is not a PFIC under section 1297 or treated as a PFIC under section 1298(b)(1) (taking into account the holding period rule of paragraph (f) of this section). Cessation of a foreign corporation's status as a PFIC will not, however, terminate a section 1296 election. Thus, if a foreign corporation is a PFIC in a taxable year after a year in which it is not treated as a PFIC, the United States person's original election (unless revoked or terminated in accordance with paragraph (h)(3) of this section) continues to apply and the shareholder must include any mark to market gain or loss in such year.

(3) ***Revocation or termination of election —***

(i) ***In general.*** A United States person's section 1296 election is terminated if the section 1296 stock ceases to be marketable; if the United States person elects, or is required, to mark to market the section 1296 stock under another provision of chapter 1 of the Internal Revenue Code; or if the Commissioner, in the Commissioner's discretion, consents to the United States person's request to revoke its section 1296 election upon a finding of a substantial change in circumstances. A substantial change in circumstances for this purpose may include a foreign corporation ceasing to be a PFIC.

(ii) ***Timing of termination or revocation.*** Where a section 1296 election is terminated automatically (*e.g.,* the stock ceases to be marketable), section 1296 will cease to apply beginning with the taxable year in which such termination occurs. Where a section 1296 election is revoked with the consent of the Commissioner, section 1296 will cease to apply beginning with the first taxable year of the United States person after the revocation is granted unless otherwise provided by the Commissioner.

(4) ***Examples.*** The operation of the rules of this paragraph (h) is illustrated by the following examples:

Example 1. A, a United States person, owns stock in FX, a PFIC. A makes a QEF election in 1996 with respect to the FX stock. For taxable year 2005, A makes a timely section 1296 election with respect to its stock, and thus its QEF election is automatically terminated pursuant to § 1.1295-1(i)(3). In 2006, A's stock in FX ceases to be marketable, and therefore its section 1296 election is automatically terminated under paragraph (h)(3) of this section. Beginning with taxable year 2006, A is subject to the rules of section 1291 with respect to its FX stock unless it makes a new QEF election. See § 1.1295-1(i)(5).

Example 2. The facts are the same as in *Example 1,* except that A's stock in FX becomes marketable again in 2007. A may make a new section 1296 election with respect to the FX stock for its taxable year 2007, or thereafter. A will be subject to the coordination rules under paragraph (i) of this section unless it made a new QEF election in 2006.

(i) ***Coordination rules for first year of election*** —

(1) ***In general.*** Notwithstanding any provision in this section to the contrary, the rules of this paragraph (i) shall apply to the first taxable year in which a section 1296 election is effective with respect to marketable stock of a PFIC if such foreign corporation was a PFIC for any taxable year, prior to such first taxable year, during the United States person's holding period (as defined in paragraph (f) of this section) in such stock, and for which such corporation was not treated as a QEF with respect to such United States person.

(2) ***Shareholders other than regulated investment companies.*** For the first taxable year of a United States person (other than a regulated investment company) for which a section 1296 election is in effect with respect to the stock of a PFIC, such United States person shall, in lieu of the rules of paragraphs (c) and (d) of this section—

(i) Apply the rules of section 1291 to any distributions with respect to, or disposition of, section 1296 stock;

(ii) Apply section 1291 to the amount of the excess, if any, of the fair market value of such section 1296 stock on the last day of the United States person's taxable year over its adjusted basis, as if such amount were gain recognized from the disposition of stock on the last day of the taxpayer's taxable year; and

(iii) Increase its adjusted basis in the section 1296 stock by the amount of excess, if any, subject to section 1291 under paragraph (i)(2)(ii) of this section.

(3) ***Shareholders that are regulated investment companies.*** For the first taxable year of a regulated investment company for which a section 1296 election is in effect with respect to the stock of a PFIC, such regulated investment company shall increase its tax under section 852 by the amount of interest that would have been imposed under section 1291(c)(3) for such taxable year if such regulated investment company were subject to the rules of paragraph (i)(2) of this section, and not this paragraph (i)(3). No deduction or increase in basis shall be allowed for the increase in tax imposed under this paragraph (i)(3).

(4) The operation of the rules of this paragraph (i) is illustrated by the following examples:

Example (1). A, a United States person and a calendar year taxpayer, owns marketable stock in FX, a PFIC that it acquired on January 1, 1992. At all times, A's FX stock was a nonqualified fund subject to taxation under section 1291. A made a timely section 1296 election effective for taxable year 2005. At the close of taxable year 2005, the fair market value of A's FX stock exceeded its adjusted basis by $10. Pursuant to paragraph (i)(2)(ii) of this section, A must treat the $10 gain under section 1291 as if the FX stock were disposed of on December 31, 2005. Further, A increases its adjusted basis in the FX stock by the $10 in accordance with paragraph (i)(2)(iii) of this section.

Example (2). Assume the same facts as in *Example (1),* except that A is a RIC that had not made an election prior to 2005 to mark to market the PFIC stock. In taxable year 2005, A includes $10 of ordinary income under paragraph (c)(1) of this section, and such amount is not subject to section 1291. A also increases its tax imposed under section 852 by the amount of interest that would have been determined under section 1291(c)(3), and no deduction is permitted for such amount. Finally, under paragraph (d)(1) of this section, A increases its adjusted basis in the FX stock by $10.

(j) ***Effective/applicability date.*** The provisions in this section are applicable for taxable years beginning on or after May 3, 2004. The provisions of paragraph (d)(4) of this section relating to section 1022 are effective on and after January 19, 2017.

[T.D. 9123, 69 FR 24074, May 3, 2004, as amended by T.D. 9811, 82 FR 6242, Jan. 19, 2017]

§ 1.1296-2 Definition of marketable stock.

(a) ***General rule.*** For purposes of section 1296, the term *marketable stock* means—

(1) Passive foreign investment company (PFIC) stock that is regularly traded, as defined in paragraph (b) of this section, on a qualified exchange or other market, as defined in paragraph (c) of this section;

(2) Stock in certain PFICs, as described in paragraph (d) of this section; and

(3) Options on stock that is described in paragraph (a)(1) or (2) of this section, to the extent provided in paragraph (e) of this section.

(b) ***Regularly traded*** —

(1) ***General rule.*** For purposes of paragraph (a)(1) of this section, a class of stock that is traded on one or more qualified exchanges or other markets, as defined in paragraph (c) of this section, is regularly traded on such exchanges or markets for any calendar year during which such class of stock is traded, other than in de minimis quantities, on at least 15 days during each calendar quarter.

(2) ***Special rule for year of initial public offering.*** For the calendar year in which a corporation initiates a public offering of a class of stock for trading on one or more qualified exchanges or other markets, as defined in paragraph (c) of this section, such class of stock meets the requirements of paragraph (b)(1) of this section for such year if the stock is regularly traded on such exchanges or markets, other than in de minimis quantities, on $^{1}/_{6}$ of the days remaining in the quarter in which the offering occurs, and on at least 15 days during each remaining quarter of the taxpayer's calendar year. In cases where a corporation initiates a public offering of a class of stock in the fourth quarter of the calendar year, such class of stock meets the requirements of paragraph (b)(1) of this section in the calendar year of the offering if the stock is regularly traded on such exchanges or markets, other than in de minimis quantities, on the greater of $^{1}/_{6}$ of the days remaining in the quarter in which the offering occurs, or 5 days.

(3) ***Anti-abuse rule.*** Trades that have as one of their principal purposes the meeting of the trading requirements of paragraph (b)(1) or (2) of this section shall be disregarded. Further, a class of stock shall not be treated as meeting the trading requirement of paragraph (b)(1) or (2) of this section if there is a pattern of trades conducted to meet the requirement of paragraph (b)(1) or (2) of this section. Similarly, paragraph (b)(2) of this section shall not apply to a public offering of stock that has as one of its principal purposes to avail itself of the reduced trading requirements under the special rule for the calendar year of an initial public offering. For purposes of applying the immediately preceding sentence, consideration will be given to whether the trading requirements of paragraph (b)(1) of this section are satisfied in the subsequent calendar year.

(c) ***Qualified exchange or other market*** —

(1) ***General rule.*** For purposes of paragraph (a)(1) of this section, the term *qualified exchange or other market* means, for any calendar year—

(i) A national securities exchange that is registered with the Securities and Exchange Commission or the national market system established pursuant to section 11A of the Securities Exchange Act of 1934 (15 U.S.C. 78f); or

(ii) A foreign securities exchange that is regulated or supervised by a governmental authority of the country in which the market is located and which has the following characteristics—

(A) The exchange has trading volume, listing, financial disclosure, surveillance, and other requirements designed to prevent fraudulent and manipulative acts and practices, to remove impediments to and perfect the mechanism of a free and open, fair and orderly, market, and to protect investors; and the laws of the country in which the exchange is located and the rules of the exchange ensure that such requirements are actually enforced; and

(B) The rules of the exchange effectively promote active trading of listed stocks.

(2) ***Exchange with multiple tiers.*** If an exchange in a foreign country has more than one tier or market level on which stock may be separately listed or traded, each such tier shall be treated as a separate exchange.

(d) *Stock in certain PFICs* —

(1) ***General rule.*** Except as provided in paragraph (d)(2) of this section, a foreign corporation is a corporation described in section 1296(e)(1)(B), and paragraph (a)(2) of this section, if the foreign corporation offers for sale or has outstanding stock of which it is the issuer and which is redeemable at its net asset value and if the foreign corporation satisfies the following conditions with respect to the class of shares held by the electing taxpayer—

(i) At all times during the calendar year, the foreign corporation has more than one hundred shareholders with respect to the class, other than shareholders who are related under section 267(b);

(ii) At all times during the calendar year, the class of shares of the foreign corporation is readily available for purchase by the general public at its net asset value and the foreign corporation does not require a minimum initial investment of greater than $10,000 (U.S.);

(iii) At all times during the calendar year, quotations for the class of shares of the foreign corporation are determined and published no less frequently than on a weekly basis in a widely-available permanent medium not controlled by the issuer of the shares, such as a newspaper of general circulation or a trade publication;

(iv) No less frequently than annually, independent auditors prepare financial statements of the foreign corporation that include balance sheets (statements of assets, liabilities, and net assets) and statements of income and expenses, and those statements are made available to the public;

(v) The foreign corporation is supervised or regulated as an investment company by a foreign government or an agency or instrumentality thereof that has broad inspection and enforcement authority and effective oversight over investment companies;

(vi) At all times during the calendar year, the foreign corporation has no senior securities authorized or outstanding, including any debt other than in de minimis amounts;

(vii) Ninety percent or more of the gross income of the foreign corporation for its taxable year is passive income, as defined in section 1297(a)(1) and the regulations thereunder; and

(viii) The average percentage of assets held by the foreign corporation during its taxable year which produce passive income or which are held for the production of passive income, as defined in section 1297(a)(2) and the regulations thereunder, is at least 90 percent.

(2) ***Anti-abuse rule.*** If a foreign corporation undertakes any actions that have as one of their principal purposes the manipulation of the net asset value of a class of its shares, for the calendar year in which the manipulation occurs, the shares are not marketable stock for purposes of paragraph (d)(1) of this section.

(e) [Reserved]

(f) *Special rules for regulated investment companies (RICs)* —

(1) ***General rule.*** In the case of any RIC that is offering for sale, or has outstanding, any stock of which it is the issuer and which is redeemable at net asset value, if the RIC owns directly or indirectly, as defined in section 1298(a), stock in any passive foreign investment company, that stock will be treated as marketable stock owned by that RIC for purposes of section 1296. Except as provided in paragraph (f)(2) of this section, in the case of any other RIC that publishes net asset valuations at

least annually, if the RIC owns directly or indirectly, as defined in section 1298(a), stock in any passive foreign investment company, that stock will be treated as marketable stock owned by that RIC for purposes of section 1296.

(2) [Reserved]

(g) ***Effective date.*** This section applies to shareholders whose taxable year ends on or after January 25, 2000 for stock in a foreign corporation whose taxable year ends with or within the shareholder's taxable year. In addition, shareholders may elect to apply these regulations to any taxable year beginning after December 31, 1997, for stock in a foreign corporation whose taxable year ends with or within the shareholder's taxable year.

[T.D. 8867, 65 FR 3819, Jan. 25, 2000. Redesignated and amended by T.D. 9123, 69 FR 24073, May 3, 2004]

§ 1.1297-0 Table of contents.

This section contains a listing of the headings for §§ 1.1297-1, 1.1297-2, 1.1297-3, 1.1297-4, 1.1297-5, and 1.1297-6.

§ 1.1297-1 Definition of passive foreign investment company.

(a) Overview.

(b) Dividends included in gross income.

(1) General rule.

(2) Example.

(i) Facts.

(ii) Results.

(c) Passive income.

(1) Foreign personal holding company income.

(i) General rule.

(ii) Determination of gross income or gain on a net basis for certain items of foreign personal holding company income.

(iii) Amounts treated as dividends.

(2) [Reserved]

(3) Passive treatment of dividends and distributive share of partnership income.

(4) Exception for certain interest, dividends, rents, and royalties received from a related person.

(i) In general.

(ii) Ordering rule.

(iii) Allocation of interest.

(iv) Allocation of dividends.

(A) In general.

(B) Dividends paid out of current earnings and profits.

(C) Dividends paid out of accumulated earnings and profits.

(v) Allocation of rents and royalties.

(vi) Determination of whether amounts are received or accrued from a related person.

(vii) Allocation of distributive share of income from related partnership.

(d) Asset test.

(1) Calculation of average annual value (or adjusted bases).

(i) General rule.

(ii) Measuring period.

(A) General rule.

(B) Election to use alternative measuring period.

(C) Short taxable year.

(iii) Adjusted basis election.

(iv) Time and manner of elections and revocations.

(A) Elections.

(B) Revocations and subsequent elections.

(v) Method of measuring assets.

(A) Publicly traded foreign corporations.

(B) Non-publicly traded controlled foreign corporation.

(*1*) In general.

(*2*) Controlled foreign corporation determination.

(C) Other foreign corporations.

(*1*) In general.

(*2*) Lower-tier subsidiaries.

(*i*) Lower-tier subsidiaries that are publicly traded foreign corporations.

(*ii*) Lower-tier subsidiaries that are non-publicly traded controlled foreign corporations.

(*iii*) Other lower-tier subsidiaries.

(D) [Reserved]

(E) Examples.

(*1*) Example 1.

(*i*) Facts.

(*ii*) Results.

(*2*) Example 2.

(*i*) Facts.

(*ii*) Results.

(*3*) Example 3.

(*i*) Facts.

(*ii*) Results.

(2) [Reserved]

(3) Dual-character assets.

(i) General rule.

(ii) Special rule when only part of an asset produces income.

(iii) Special rule for stock that previously produced income that was excluded from passive income under section 1297(b)(2)(C).

(iv) Example.

(A) Facts.

(B) Results.

(4) Passive treatment of stock and partnership interests.

(5) Dealer property.

(e) Stapled stock.

(f) Definitions.

(1) Measuring date.

(2) Measuring period.

(3) Non-passive asset.

(4) Non-passive income.

(5) Passive asset.

(6) Passive income.

(7) Publicly traded foreign corporation.

(8) Related person.

(9) Tested foreign corporation.

(g) Applicability date.

(1) In general.

(2) Paragraph (d)(1)(v)(B)(2) of this section.

§ 1.1297-2 Special rules regarding look-through subsidiaries and look-through partnerships.

(a) Overview.

(b) General rules.

(1) Tested foreign corporation's ownership of a corporation.

(2) Tested foreign corporation's proportionate share of the assets and income of a look-through subsidiary.

(i) Proportionate share of subsidiary assets.

(ii) Proportionate share of subsidiary income.

(A) General rule.

(B) Partial year.

(iii) Coordination of section 1297(c) with section 1298(b)(7).

(3) Tested foreign corporation's proportionate share of the assets and income of a look-through partnership.

(i) Proportionate share of partnership assets.

(ii) Proportionate share of partnership income.

(A) General rule.

(B) Partial year.

(4) Examples.

(i) Example 1.

(A) Facts.

(B) Results.

(*1*) LTS.

(*2*) TFC.

(ii) Example 2.

(A) Facts.

(B) Results.

(iii) Example 3.

(A) Facts.

(B) Results.

(c) Elimination of certain intercompany assets and income.

(1) General rule for asset test.

(i) LTS stock.

(ii) LTS obligation.

(2) General rule for income test.

(i) LTS stock.

(ii) LTS obligation.

(3) Partnerships.

(4) Examples.

(i) Example 1.

(A) Facts.

(B) Results.

(*1*) LTS.

(*2*) TFC.

(ii) Example 2.

(A) Facts.

(B) Results.

(iii) Example 3.

(A) Facts.

(B) Results.

(iv) Example 4.

(A) Facts.

(B) Results.

(v) Example 5.

(A) Facts.

(B) Results.

(*1*) Asset test.

(*2*) Income test.

(*3*) Treatment of intangible and rental property.

(d) Related person determination for purposes of section 1297(b)(2)(C).

(1) General rule.

(2) Example.

(i) Facts.

(ii) Results.

(e) Treatment of activities of certain look-through subsidiaries and look-through partnerships for purposes of certain exceptions.

(1) General rule.

(2) Qualified affiliate.

(3) Examples.

(i) Example 1.

(A) Facts.

(B) Results.

(*1*) Qualified affiliates.

(2) FS1 and FS2.

(3) FS4.

(ii) Example 2.

(A) Facts.

(B) Results.

(iii) Example 3.

(A) Facts.

(B) Results.

(f) Gain on disposition of a look-through subsidiary or look-through partnership.

(1) [Reserved]

(2) Amount of gain taken into account from disposition of look-through subsidiary.

(3) Characterization of residual gain as passive income.

(4) Gain taken into account from disposition of 25%-owned partnerships and look-through partnerships.

(i) Section 954(c)(4) partnerships.

(ii) Look-through partnerships.

(5) Examples.

(i) Example 1.

(A) Facts.

(B) Results.

(ii) Example 2.

(A) Facts.

(B) Results.

(iii) Example 3.

(A) Facts.

(B) Results.

(g) Definitions.

(1) Direct LTS obligation.

(2) Indirect LTS obligation.

(3) Look-through subsidiary.

(4) Look-through partnership.

(i) In general.

(ii) Active partner test.

(A) Partnership interest under asset test.

(B) Partnership income under income test.

(iii) Election.

(iv) Examples.

(A) Example 1.

(*1*) Facts.

(*2*) Results.

(*i*) Active partner test with respect to partnership interest.

(*ii*) Active partner test with respect to partnership income.

(*iii*) Qualification of look-through partnership.

(B) Example 2.

(*1*) Facts.

(*2*) Results.

(*i*) Active partner test with respect to partnership interest.

(*ii*) Active partner test with respect to partnership income.

(*iii*) Failure to qualify as look-through partnership.

(5) LTS debt.

(6) LTS lease.

(7) LTS license.

(8) LTS obligation.

(9) LTS stock.

(10) Qualified affiliate.

(11) Residual gain.

(12) TFC obligation.

(13) Unremitted earnings.

(h) Applicability date.

§ 1.1297-3 Deemed sale or deemed dividend election by a U.S. person that is a shareholder of a section 1297(e) PFIC.

(a) In general.

(b) Application of deemed sale election rules.

(1) Eligibility to make the deemed sale election.

(2) Effect of the deemed sale election.

(3) Time for making the deemed sale election.

(4) Manner of making the deemed sale election.

(5) Adjustments to basis.

(6) Treatment of holding period.

(c) Application of deemed dividend election rules.

(1) Eligibility to make the deemed dividend election.

(2) Effect of the deemed dividend election.

(3) Post-1986 earnings and profits defined.

(4) Time for making the deemed dividend election.

(5) Manner of making the deemed dividend election.

(6) Adjustments to basis.

(7) Treatment of holding period.

(8) Coordination with section 959(e).

(d) CFC qualification date.

(e) Late purging elections requiring special consent.

(1) In general.

(2) Prejudice to the interests of the U.S. government.

(3) Procedural requirements.

(4) Time and manner of making late election.

(5) Multiple late elections.

(f) Effective/applicability date.

§ 1.1297-4 Qualifying insurance corporation.

(a) Scope.

(b) Qualifying insurance corporation.

(c) 25 percent test.

(d) Election to apply the alternative facts and circumstances test.

(1) In general.

(2) Predominantly engaged in an insurance business.

(i) In general.

(ii) Facts and circumstances.

(iii) Examples of facts indicating a foreign corporation is not predominantly engaged in an insurance business.

(3) Runoff-related circumstances.

(4) Rating-related circumstances.

(5) Election.

(i) In general.

(ii) Information provided by foreign corporation.

(iii) Time and manner for making the election.

(iv) Deemed election for small shareholders in publicly traded companies.

(A) In general.

(B) Publicly traded stock.

(v) Options.

(6) Stock ownership.

(e) Rules limiting the amount of applicable insurance liabilities.

(1) In general.

(2) General limitation on applicable insurance liabilities.

(3) Discounting.

(4) [Reserved]

(5) [Reserved]

(f) Definitions.

(1) Applicable financial statement.

(i) GAAP statements.

(ii) IFRS statements.

(iii) Regulatory annual statement.

(iv) [Reserved]

(2) Applicable insurance liabilities.

(i) In general.

(ii) Amounts not specified in paragraph (f)(2)(i) of this section.

(3) Applicable insurance regulatory body.

(4) Applicable reporting period.

(5) Financial guaranty insurance company.

(6) Financial statements.

(i) In general.

(ii) [Reserved]

(iii) [Reserved]

(7) Generally accepted accounting principles or GAAP.

(8) Insurance business.

(9) International financial reporting standards or IFRS.

(10) Mortgage insurance company.

(11) Total assets.

(g) Applicability date.

§ 1.1297-5 [Reserved]

§ 1.1297-6 Exception from the definition of passive income for active insurance income.

(a) Scope.

(b) Exclusion from passive income of active insurance income.

(c) Exclusion of assets for purposes of the passive asset test under section 1297(a)(2).

(d) Treatment of income and assets of certain look-through subsidiaries and look through partnerships for purposes of the section 1297(b)(2)(B) exception.

(1) General rule.

(2) Limitation.

(3) Examples.

(i) Example 1: QIC holds all the stock of an investment subsidiary.

(A) Facts.

(B) Result.

(C) Alternative Facts.

(*1*) Facts.

(*2*) Result.

(ii) Example 2: QIC holds all the stock of an operating subsidiary.

(A) Facts.

(B) Result.

(e) Qualifying domestic insurance corporation.

(1) General rule.

(2) [Reserved]

(3) [Reserved]

(f) Applicability date.

[T.D. 9360, 72 FR 54821, Sept. 27, 2007, as amended by T.D. 9936, 86 FR 4556, Jan. 15, 2021; T.D. 9936, 86 FR 13648, Mar. 10, 2021]

§ 1.1297-1 Definition of passive foreign investment company.

(a) ***Overview.*** This section provides rules concerning the income test set forth in section 1297(a)(1) and the asset test set forth in section 1297(a)(2). Paragraph (b) of this section provides a rule relating to the definition of gross income with respect to certain dividends that are excluded from gross income under section 1502 for purposes of section 1297. Paragraph (c) of this section provides rules relating to the definition of passive income for purposes of section 1297. Paragraph (d) of this section provides rules

relating to the asset test of section 1297. See §§ 1.1297-2 and 1.1297-6 for additional rules concerning the treatment of the income and assets of a corporation subject to look-through treatment under section 1297(c). Paragraph (e) of this section provides rules relating to the determination of passive foreign investment company (PFIC) status for stapled entities. Paragraph (f) of this section provides definitions applicable for this section, and paragraph (g) of this section provides the applicability date of this section.

(b) ***Dividends included in gross income*** —

(1) ***General rule.*** For purposes of section 1297, gross income includes dividends that are excluded from gross income under section 1502 and § 1.1502-13.

(2) ***Example*** —

(i) ***Facts.*** USP is a domestic corporation that owns 30% of TFC, a foreign corporation. The remaining 70% of TFC is owned by FP, a foreign corporation that is unrelated to USP. TFC owns 25% of the value of USS1, a domestic corporation. USS1 owns 80% of the value of USS2, a domestic corporation. USS1 and USS2 are members of an affiliated group (as defined in section 1504(a)) filing a consolidated return. USS2 distributes a dividend to USS1 that is excluded from USS1's income pursuant to § 1.1502-13 for purposes of determining the U.S. Federal income tax liability of the affiliated group of which USS1 and USS2 are members.

(ii) ***Results.*** Although the dividend received by USS1 from USS2 is excluded from USS1's income for purposes of determining the U.S. Federal income tax liability of the affiliated group of which USS1 and USS2 are members, pursuant to paragraph (b)(1) of this section, for purposes of section 1297, USS1's gross income includes the USS2 dividend. Accordingly, for purposes of section 1297, TFC's gross income includes 25% of the dividend received by USS1 from USS2 pursuant to section 1297(c) and § 1.1297-2(b)(2)(ii). See section 1298(b)(7) and § 1.1298-4 for rules concerning the characterization of the USS2 dividend.

(c) ***Passive income*** —

(1) ***Foreign personal holding company income*** —

(i) ***General rule.*** For purposes of section 1297(b)(1), except as otherwise provided in section 1297(b)(2), this section, and § 1.1297-6, the term *passive income* means income of a kind that would be foreign personal holding company income as defined under section 954(c). For the purpose of this paragraph (c)(1)—

(A) The exceptions to foreign personal holding company income in section 954(c)(1), 954(c)(2)(A) (relating to active rents and royalties), 954(c)(2)(B) (relating to export financing income), and 954(c)(2)(C) (relating to dealers) are taken into account;

(B) The exceptions in section 954(c)(3) (relating to certain income received from related persons), 954(c)(6) (relating to certain amounts received from related controlled foreign corporations), and 954(i) (relating to entities engaged in the active conduct of an insurance business) are not taken into account;

(C) The rules in section 954(c)(4) (relating to sales of certain partnership interests) and 954(c)(5) (relating to certain commodity hedging transactions) are taken into account; and

(D) An entity is treated as a controlled foreign corporation within the meaning of section 957(a) for purposes of applying an exception to foreign personal holding company income in section 954(c)(1)(B)'s flush language, (1)(C)(ii), (1)(D), (4), and (5) and § 1.954-2 and for purposes of identifying whether a person is a related person with respect to such entity within the meaning of section 954(d)(3).

(ii) ***Determination of gross income or gain on a net basis for certain items of foreign personal holding company income.*** For purposes of section 1297, the excess of gains over losses from property transactions described in section 954(c)(1)(B), the excess of gains over losses from transactions in commodities described in section 954(c)(1)(C), the excess of foreign currency gains over foreign currency losses described in section 954(c)(1)(D), and positive net income from notional principal contracts described in section 954(c)(1)(F) are taken into account as gross income. The excess of gains over losses (or, with respect to notional principal contracts, positive net income) for a category of transactions is calculated by a tested foreign corporation taking into account individual items of gain or loss (or, with respect to notional principal contracts, net income or net deduction) recognized by the tested foreign corporation and those items of gain or loss (or, with respect to notional principal contracts, net income or net deduction) treated as recognized by the tested foreign corporation with respect to its look-through subsidiaries and look-through partnerships pursuant to section 1297(c) and § 1.1297-2(b)(2) or (3).

(iii) ***Amounts treated as dividends.*** For purposes of section 1297, the term dividend includes all amounts treated as dividends for purposes of this chapter, including amounts treated as dividends pursuant to sections 302, 304, 356(a)(2), 964(e), and 1248.

(2) [Reserved]

(3) ***Passive treatment of dividends and distributive share of partnership income.*** For purposes of section 1297, a tested foreign corporation's share of dividends received from a corporation that is not a look-through subsidiary (as defined in § 1.1297-2(g)(3)) and distributive share of any item of income of a partnership that is not a look-through partnership (as defined in § 1.1297-2(g)(4)) with respect to a tested foreign corporation are treated as passive income, except to the extent that the item of income would not be treated as passive under section 1297(b)(2)(C) and paragraph (c)(4) of this section.

(4) ***Exception for certain interest, dividends, rents, and royalties received from a related person*** —

(i) ***In general.*** For purposes of section 1297(b)(2)(C), interest, dividends, rents, or royalties actually received or accrued by a tested foreign corporation are considered received or accrued from a related person only if the payor of the interest, dividend, rent, or royalty is a related person (within the meaning of section 954(d)(3)) with respect to the tested foreign corporation, taking into account paragraph (c)(1)(i)(D) of this section. For rules determining when amounts received or accrued by a look-through subsidiary or look-through partnership (and treated as received directly by a tested foreign corporation pursuant to section 1297(c) and § 1.1297-2(b)(2) and (b)(3)) are treated as received from a related person, see § 1.1297-2(d).

(ii) ***Ordering rule.*** Gross income that is interest, a dividend, or a rent or royalty that is, in each case, received or accrued from a related person is allocated to income that is not passive under the rules of this paragraph (c)(4). If the related person is also a look-through subsidiary or a look-through partnership with respect to the tested foreign corporation, this paragraph (c)(4) applies after the application of the intercompany income rules of § 1.1297-2(c).

(iii) ***Allocation of interest.*** For purposes of section 1297(b)(2)(C), interest that is received or accrued, as applicable based on the recipient's method of accounting, from a related person is allocated to income of the related person that is not passive income in proportion to the ratio of the portion of the related person's non-passive gross income for its taxable year that ends with or within the taxable year of the recipient to the total amount of the related person's gross income for the taxable year. If the related person does not have gross income for the taxable year that ends with or within the taxable year of the recipient, the interest is either allocated to income of the related person that is not passive income to the extent the related person's deduction for the interest would be allocable to non-passive income of the related person under the principles of §§ 1.861-9 through 1.861-13T, applied in a reasonable and consistent manner taking into account the general operation of the PFIC rules and the purpose of section 1297(b)(2)(C) or, alternatively, at the election of the tested foreign corporation is treated as allocated entirely to passive income.

(iv) ***Allocation of dividends*** —

(A) ***In general.*** For purposes of section 1297(b)(2)(C), the principles of § 1.316-2(a) apply in determining from what year's earnings and profits a dividend from a related person is treated as distributed. A dividend is considered to be distributed, first, out of the earnings and profits of the taxable year of the related person that includes the date the dividend is distributed (current earnings and profits) and that ends with or within the taxable year of the recipient; second, out of the earnings and profits accumulated for the immediately preceding taxable year of the related person; third, out of the earnings and profits accumulated for the second preceding taxable year of the related person; and so forth. For purposes of paragraph (c)(4)(iv) of this section, the principles of § 1.243-4(a)(6) apply with respect to a deficit in an earnings and profits account for a prior year.

(B) ***Dividends paid out of current earnings and profits.*** To the extent that a dividend is paid out of current earnings and profits of the related person for its taxable year that ends with or within the taxable year of the recipient, the dividend is treated as paid ratably out of earnings and profits attributable to passive income and to non-passive income. The portion of the current earnings and profits that is treated as paid out of non-passive income of the related person may be determined by multiplying the current earnings and profits by the ratio of the related person's non-passive gross income as determined under this section (including paragraph (c)(1)(ii) of this section) for the taxable year to its total gross income as determined under this section (including paragraph (c)(1)(ii) of this section) for that year.

(C) ***Dividends paid out of accumulated earnings and profits.*** To the extent that a dividend from a related person is treated as paid out of the related person's accumulated earnings and profits, the dividend is treated as paid ratably out of accumulated earnings and profits of the related person for prior taxable years (beginning with the most recently accumulated) that are attributable to passive income and to non-passive income, which may be determined in the same manner as in paragraph (c)(4)(iv)(B) of this section. Alternatively, the accumulated earnings and profits may be allocated based on the ratio of accumulated earnings and profits that are attributable to passive income and to non-passive income during either the related party period or the three-year period. The related party period is the entire period during which the related person was related to the recipient. The three-year period is the three taxable years immediately preceding the related person's taxable

year that ends with or within the current taxable year of the recipient. The three-year period may be used only if the related person has been related to the recipient for a period longer than the three taxable years immediately preceding the recipient's taxable year.

(v) ***Allocation of rents and royalties.*** For purposes of section 1297(b)(2)(C), rents and royalties that are received or accrued, as applicable based on the recipient's method of accounting, from a related person are allocable to income of the related person that is not passive income to the extent the related person's deduction for the rent or royalty is allocable to non-passive gross income of the related person under the principles of §§ 1.861-8 through 1.861-14T.

(vi) ***Determination of whether amounts are received or accrued from a related person.*** For purposes of section 1297(b)(2)(C), the determination of whether interest, dividends, rents, and royalties were received or accrued from a related person is made on the date of the receipt or accrual, as applicable based on the recipient's method of accounting, of the interest, dividend, rent, or royalty.

(vii) ***Allocation of distributive share of income from related partnership.*** For purposes of section 1297(a)(1), a tested foreign corporation includes its distributive share as provided in section 704 of the separate items of passive or non-passive income from a partnership that is a related person (and not a look-through partnership) with respect to the tested foreign corporation for the taxable year of the tested foreign corporation.

(d) ***Asset test*** —

(1) ***Calculation of average annual value (or adjusted bases)*** —

(i) ***General rule.*** For purposes of section 1297, the calculation of the average percentage of assets held by a tested foreign corporation during its taxable year that produce passive income or that are held for the production of passive income is determined based on the average of the fair market values, or the average of the adjusted bases, as appropriate, of the passive assets and total assets held (including assets treated as held pursuant to section 1297(c) and § 1.1297-2(b)(2)(i) and (b)(3)) by the foreign corporation on the last day of each measuring period (*measuring date*) of the foreign corporation's taxable year. The average of the fair market values (or the average of the adjusted bases) of the foreign corporation's passive assets or total assets for the taxable year is equal to the sum of the values (or adjusted bases) of the passive assets or total assets, as applicable, on each measuring date of the foreign corporation's taxable year, divided by the number of measuring dates in the taxable year.

(ii) ***Measuring period*** —

(A) ***General rule.*** Except as otherwise provided in paragraph (d)(1)(ii)(B) of this section, the measuring periods for a tested foreign corporation are the four quarters that make up the foreign corporation's taxable year.

(B) ***Election to use alternative measuring period.*** The average percentage of assets held by a tested foreign corporation during its taxable year that produce passive income or that are held for the production of passive income may be calculated using a period that is shorter than a quarter (such as a week or month). The same period must be used to measure the assets of the foreign corporation for the first year (including a short taxable year) that this alternative measuring period is used, and for any and all subsequent years, unless a

revocation is made. An election to use an alternative measuring period or a revocation of such an election must be made in accordance with the rules of paragraph (d)(1)(iv) of this section.

(C) ***Short taxable year.*** For purposes of applying section 1297 to a tested foreign corporation that has a taxable year of less than twelve months (short taxable year), the average values (or adjusted bases) are determined based on the measuring dates of the foreign corporation's taxable year that fall within the short taxable year, and by treating the last day of the short taxable year as a measuring date.

(iii) ***Adjusted basis election.*** An election under section 1297(e)(2)(B) with respect to an eligible tested foreign corporation or a revocation of such an election may be made by the tested foreign corporation or alternatively by the owner (as defined in paragraph (d)(1)(iv) of this section). If made by the owner, the election must be made in accordance with the rules of paragraph (d)(1)(iv) of this section.

(iv) ***Time and manner of elections and revocations*** —

(A) ***Elections.*** An owner (as defined in this paragraph (d)(1)(iv)) of a foreign corporation makes an election described in paragraph (d)(1)(ii)(B) or (d)(1)(iii) of this section for a taxable year in the manner provided in the Instructions to Form 8621 (or successor form), if the owner is required to file a Form 8621 (or successor form) with respect to the foreign corporation for the taxable year of the owner in which or with which the taxable year of the foreign corporation for which the election is made ends. If the owner is not required to file Form 8621 (or successor form) with respect to the foreign corporation for the taxable year, the owner makes such an election by filing a written statement providing for the election and attaching the statement to an original or amended Federal income tax return for the taxable year of the owner in which or with which the taxable year of the foreign corporation for which the election is made ends clearly indicating that such election has been made. An election can be made by an owner only if the owner's taxable year for which the election is made, and all taxable years that are affected by the election, are not closed by the period of limitations on assessments under section 6501. Elections described in paragraphs (d)(1)(ii)(B) and (d)(1)(iii) of this section are not eligible for relief under § 301.9100-3 of this chapter. For purposes of this paragraph (d)(1)(iv), an owner of a foreign corporation is a United States person that is eligible under § 1.1295-1(d) to make a section 1295 election with respect to the foreign corporation, or would be eligible under § 1.1295-1(d) to make a section 1295 election if the foreign corporation were a PFIC.

(B) ***Revocations and subsequent elections.*** An election described in paragraph (d)(1)(ii)(B) or (d)(1)(iii) of this section made pursuant to paragraph (d)(1)(iv)(A) of this section is effective for the taxable year of the foreign corporation for which it is made and all subsequent taxable years of such corporation unless revoked by the Commissioner or the owner (as defined in paragraph (d)(1)(iv)(A) of this section) of the foreign corporation. The owner of a foreign corporation may revoke such an election at any time. If an election described in paragraph (d)(1)(ii)(B) or (d)(1)(iii) of this section has been revoked under this paragraph (d)(1)(iv)(B), a new election described in paragraph (d)(1)(ii)(B) or (d)(1)(iii) of this section, as applicable, cannot be made until the sixth taxable year following the year for which the previous election was revoked, and such subsequent election cannot be revoked until the sixth taxable year following the year for which the subsequent election was made. The owner revokes the election for a taxable year in the manner provided in the

Instructions to Form 8621 (or successor form), if the owner is required to file a Form 8621 (or successor form) with respect to the foreign corporation for the taxable year of the owner in which or with which the taxable year of the foreign corporation for which the election is revoked ends, or by filing a written statement providing for the revocation and attaching the statement to an original or amended Federal income tax return for the taxable year of the owner in which or with which the taxable year of the foreign corporation for which the election is revoked ends clearly indicating that such election has been revoked, if the owner is not required to file Form 8621 (or successor form) with respect to the foreign corporation for the taxable year.

(v) ***Method of measuring assets*** —

(A) ***Publicly traded foreign corporations.*** For purposes of section 1297, the assets of a publicly traded foreign corporation as defined in paragraph (f)(7) of this section (including assets treated as held pursuant to section 1297(c) and § 1.1297-2(b)(2)(i) and (b)(3)(i), other than assets of a look-through subsidiary described in paragraph (d)(1)(v)(B) of this section) must be measured for all measuring periods of the taxable year on the basis of value.

(B) ***Non-publicly traded controlled foreign corporation*** —

(*1*) ***In general.*** For purposes of section 1297, the assets of a controlled foreign corporation that is not described in paragraph (d)(1)(v)(A) of this section (including assets treated as held pursuant to section 1297(c) and § 1.1297-2(b)(2)(i) and (b)(3)(i), other than assets held by a look-through subsidiary described in paragraph (d)(1)(v)(A) of this section) must be measured for all measuring periods of the taxable year during which the foreign corporation is a controlled foreign corporation on the basis of adjusted basis.

(*2*) ***Controlled foreign corporation determination.*** For purposes of section 1297(e)(2)(A) and this paragraph (d)(1)(v), the term *controlled foreign corporation* has the meaning provided in section 957, determined without applying subparagraphs (A), (B), and (C) of section 318(a)(3) so as to consider a United States person as owning stock which is owned by a person who is not a United States person.

(C) ***Other foreign corporations*** —

(*1*) ***In general.*** Except as provided in paragraph (d)(1)(v)(C)(*2*) of this section, the assets of a foreign corporation that is not described in paragraphs (d)(1)(v)(A) or (d)(1)(v)(B) of this section (including assets treated as held pursuant to section 1297(c) and § 1.1297-2(b)(2)(i) and (b)(3)(i), other than assets held by a look-through subsidiary described in paragraphs (d)(1)(v)(A) or (d)(1)(v)(B) of this section) are measured for all measuring periods of the taxable year on the basis of value, unless a tested foreign corporation or a shareholder makes an election under section 1297(e)(2)(B) in accordance with paragraph (d)(1)(iii) of this section. In the case of a foreign corporation that is described in paragraph (d)(1)(v)(B) of this section for some but not all measuring periods during a taxable year, this paragraph (d)(1)(v)(C)(*1*) applies to the remaining measuring period or periods during that taxable year.

(*2*) ***Lower-tier subsidiaries*** —

(*i*) ***Lower-tier subsidiaries that are publicly traded foreign corporations.*** For purposes of applying section 1297(a)(2) to the assets of a foreign corporation that is a lower-tier subsidiary of a foreign corporation that directly or indirectly owns all or part of the lower-tier subsidiary (a parent foreign corporation), if the lower-tier subsidiary is described in paragraph (d)(1)(v)(A), the rules of paragraph (d)(1)(v)(A) apply. The previous sentence applies both for purposes of applying section 1297(a)(2) to the lower-tier subsidiary as a tested foreign corporation, and for purposes of applying section 1297(a)(2) to a parent foreign corporation with respect to the assets of the lower-tier subsidiary.

(*ii*) ***Lower-tier subsidiaries that are non-publicly traded controlled foreign corporations.*** For purposes of applying section 1297(a)(2) to the assets of a foreign corporation that is a lower-tier subsidiary of a parent foreign corporation, if the lower-tier subsidiary is described in paragraph (d)(1)(v)(B), the rules of paragraph (d)(1)(v)(B) apply. The previous sentence applies both for purposes of applying section 1297(a)(2) to the lower-tier subsidiary as a tested foreign corporation, and for purposes of applying section 1297(a)(2) to a parent foreign corporation with respect to the assets of the lower-tier subsidiary.

(*iii*) ***Other lower-tier subsidiaries.*** For purposes of applying section 1297(a)(2) to a foreign corporation that is a lower-tier subsidiary of a parent foreign corporation, if the lower-tier subsidiary is not described in paragraphs (d)(1)(v)(A) or (d)(1)(v)(B) of this section, the assets of the lower-tier subsidiary (including assets treated as held pursuant to section 1297(c) and § 1.1297-2(b)(2)(i) and (b)(3)(i)) must be measured under the rules of the same paragraph of this section (d)(1)(v) that applies to the parent foreign corporation. The previous sentence applies both for purposes of applying section 1297(a)(2) to the lower-tier subsidiary as a tested foreign corporation, and for purposes of applying section 1297(a)(2) to a parent foreign corporation. If a tested foreign corporation indirectly owns a lower-tier subsidiary that is not described in paragraphs (d)(1)(v)(A) or (d)(1)(v)(B) of this section through one or more other foreign corporations, the status of any parent foreign corporation in that chain of corporations that is described in paragraph (d)(1)(v)(A) of this section, or if there is no such parent foreign corporation then the status of any parent foreign corporation in that chain of corporations that is described in paragraph (d)(1)(v)(B) of this section, determines the basis on which the assets of the lower-tier subsidiary are measured. In the case of a foreign corporation that is a lower-tier subsidiary with respect to more than one parent foreign corporation, this rule applies separately to measure the assets of the lower-tier subsidiary with respect to each parent foreign corporation.

(D) [Reserved]

(E) ***Examples.*** The following examples illustrate the application of this paragraph (d)(1)(v).

(*1*) ***Example 1*** —

(*i*) ***Facts.*** USP, a domestic corporation, owns 60% of TFC1, which is a foreign corporation. The remaining 40% of TFC1's stock is regularly traded on a national securities exchange that is registered with the Securities and Exchange Commission and continues to be until September 1 of the taxable year, when

USP acquires all of TFC1's stock pursuant to a tender offer. TFC1 owns 30% of the stock of FS1, a foreign corporation that is neither a publicly traded foreign corporation nor a controlled foreign corporation.

(*ii*) ***Results.*** TFC1 is a controlled foreign corporation with respect to USP. TFC1 also is a publicly traded foreign corporation until September 1 of the taxable year. For purposes of section 1297, the assets of TFC1 (including the assets of FS1 treated as held by TFC1 pursuant to section 1297(c) and § 1.1297-2(b)(2)(i)) must be measured on the basis of value for each measuring period ending before September 1, pursuant to paragraph (d)(1)(v)(A) of this section. For purposes of applying section 1297 to FS1 as a tested foreign corporation with respect to USP, the assets of FS1 must be measured using the same method as is used for TFC1's assets, pursuant to paragraph (d)(1)(v)(C)(*2*) of this section.

(*2*) ***Example 2*** —

(*i*) ***Facts.*** A, a United States person, owns 1% of the stock of TFC2, a foreign corporation that is neither a publicly traded foreign corporation nor a controlled foreign corporation. TFC2 owns 25% of the stock of FS2, a foreign corporation that is neither a publicly traded foreign corporation nor a controlled foreign corporation.

(*ii*) ***Results.*** For purposes of applying section 1297 to TFC2, the assets of TFC2 (including the assets of FS2 treated as held by TFC2 pursuant to section 1297(c) and § 1.1297-2(b)(2)(i)) are measured for all measuring periods of the taxable year on the basis of value, unless A or TFC2 makes an election under section 1297(e)(2)(B) in accordance with paragraph (d)(1)(iii) of this section, pursuant to paragraph (d)(1)(v)(C)(*1*) of this section. For purposes of applying section 1297 to FS2 as a tested foreign corporation with respect to A, the assets of FS2 must be measured using the same method as is used for TFC2's assets, pursuant to paragraph (d)(1)(v)(C)(*2*) of this section.

(*3*) ***Example 3*** —

(*i*) ***Facts.*** The facts are the same as in paragraph (d)(1)(v)(E)(*2*)(*i*) (the facts in Example 2), except that the 75% of FS2's stock not owned by TFC2 is owned by TFC3, a publicly traded foreign corporation that is neither related to TFC2 nor to A. B, a United States person that is neither related to A nor to TFC2, owns 1% of the stock of TFC3.

(*ii*) ***Results.*** For purposes of applying section 1297 to TFC2, the results are the same as in paragraph (d)(1)(v)(E)(*2*)(*ii*) (the results in Example 2). For purposes of applying section 1297 to FS2 as a tested foreign corporation with respect to A, the assets of FS2 must be measured using the same method as is used for TFC2's assets, pursuant to paragraph (d)(1)(v)(C)(*2*) of this section. For purposes of applying section 1297 to TFC3, the assets of TFC3 must be measured by reference to value pursuant to paragraph (d)(1)(v)(A) because it is a publicly traded corporation. For purposes of applying section 1297 to FS2 as a

tested foreign corporation with respect to B, the assets of FS2 must be measured by reference to value because TFC3 is a publicly traded foreign corporation, pursuant to paragraphs (d)(1)(v)(C)(2) and (d)(1)(v)(A) of this section.

(2) [Reserved]

(3) *Dual-character assets* —

(i) ***General rule.*** Except as otherwise provided in paragraph (d)(3)(ii) or (d)(3)(iii) of this section and in § 1.1297-2(c), for purposes of section 1297, an asset (or portion of an asset) that produces both passive income and non-passive income during a taxable year (dual-character asset), including stock and other assets that produce passive and non-passive income under section 1297(b)(2)(C) and paragraph (c)(4) of this section, is treated as two assets for each measuring period in the taxable year, one of which is a passive asset and one of which is a non-passive asset. The value (or adjusted basis) of the dual-character asset is allocated between the passive asset and the non-passive asset in proportion to the relative amounts of passive income and non-passive income produced by the asset (or portion of an asset) during the taxable year. See paragraph (d)(3)(iii) of this section for a special rule concerning stock that has previously produced dividends subject to the exception provided in section 1297(b)(2)(C). For purposes of section 1297(b)(2)(C), a partnership interest in a partnership that is a related person to the tested foreign corporation is treated as producing passive or non-passive income in proportion to the tested foreign corporation's distributive share of partnership passive or non-passive income for the taxable year under paragraph (c)(4)(vii) of this section.

(ii) ***Special rule when only part of an asset produces income.*** For purposes of section 1297, when only a portion of an asset produces income during a taxable year or a portion of a taxable year, the asset is treated as two assets for that period, one of which is characterized as a passive asset or a non-passive asset based on the income that it produces, and one of which is characterized based on the income that it is held to produce. The value (or adjusted basis) of the asset is allocated between the two assets pursuant to the method that most reasonably reflects the uses of the property. In the case of real property, an allocation based on the physical use of the property generally is the most reasonable method.

(iii) ***Special rule for stock that previously produced income that was excluded from passive income under section 1297(b)(2)(C).*** Stock with respect to which no dividends are received during a taxable year, but with respect to which dividends were received during one or both of the prior two taxable years, is characterized based on the relative portion of the dividends received that was passive or non-passive. If the dividends were in whole excluded from passive income under section 1297(b)(2)(C) and paragraph (c)(4)(iv) of this section, the stock is treated as a single non-passive asset. If the dividends were in part excluded from passive income under section 1297(b)(2)(C) and paragraph (c)(4)(iv) of this section, the stock is treated as two assets, one of which is a passive asset and one of which is a non-passive asset. The value (or adjusted basis) of the stock is allocated between the two assets in proportion to the average percentage of aggregate dividends received in the prior two taxable years that were characterized as passive income and the average percentage of aggregate dividends received in the prior two years that were characterized as non-passive income, for the previous two taxable years pursuant to section 1297(b)(2)(C) and paragraph (c)(4)(iv) of this section. If the

tested foreign corporation did not receive any dividends from the stock for the current taxable year or within either of the prior two taxable years of the tested foreign corporation, then the stock is treated as a passive asset.

(iv) ***Example.*** The following example illustrates the application of this paragraph (d)(3).

(A) ***Facts.***

(*1*) USP is a domestic corporation that owns 30% of TFC, a foreign corporation. The remaining 70% of TFC is owned by FP, a foreign corporation that is unrelated to USP. TFC owns 20% of the value of FS1, a foreign corporation, and FP owns the remaining 80% of the value of FS1. FP, TFC, and FS1 are not controlled foreign corporations within the meaning of section 957(a), and each has a calendar year taxable year.

(*2*) In Year 1, FS1 had current earnings and profits of $1000x, attributable to passive income of $500x and non-passive income of $500x, and paid $300x of dividends to TFC. In Year 2, FS1 had current earnings and profits of $1000x, attributable to passive income of $100x and non-passive income of $900x, and paid $100x of dividends to TFC. In Year 3, FS1 has passive income of $200x and non-passive income of $800x and does not pay a dividend.

(*3*) Throughout Year 3, TFC holds an obligation of FS1 with respect to which FS1 pays $100x of interest.

(*4*) In addition to the stock in FS1 and the FS1 obligation, TFC holds an office building, 40% of which is rented to FP throughout Year 3 for $100x per quarter. During Year 3, FP has only passive income. The remaining 60% of the office building is leased throughout Year 3 to an unrelated person for $300x per quarter, and TFC's own officers or staff of employees regularly perform active and substantial management and operational functions while the property is leased.

(B) ***Results.***

(*1*) For purposes of section 1297(b)(2)(C), FP is a “related person” with respect to TFC because FP owns more than 50% of the vote or value of TFC, and FS1 is a “related person” with respect to TFC because FP owns more than 50% of the vote or value of both TFC and of FS1.

(*2*) Under paragraph (c)(4)(iv) of this section, the dividends paid by FS1 in Year 1 were characterized as 50% passive income ($150x) and 50% non-passive income ($150x). Under paragraph (c)(4)(iv) of this section, the dividends paid by FS1 in Year 2 were characterized as 10% passive income ($10x) and 90% non-passive income ($90x). Accordingly, the average percentage of dividends for the previous two taxable years that were characterized as passive income is 40% (((10% × $100x) + (50% × $300x))/($100x + $300x)), and the average percentage of dividends characterized as non-passive income is 60% (((90% × $100x) + (50% × $300x))/($100x + $300x)). Thus, under paragraph (d)(3)(iii) of this section, 60% of each share of stock of FS1 is characterized as a non-passive asset and 40% is characterized as a passive asset for each quarter of Year 3 for purposes of applying section 1297(a)(2) to determine whether TFC is a PFIC.

(3) Under paragraph (c)(4)(iii) of this section, the interest received by TFC from FS1 is characterized as 20% ($200x/($200x + $800x)) passive income and thus 80% non-passive income for purposes of applying section 1297(a)(1) to determine whether TFC is a PFIC. Accordingly, under paragraph (d)(3)(i) of this section, 20% of the obligation of FS1 is characterized as a passive asset and 80% as a non-passive asset for each quarter of Year 3 for purposes of applying section 1297(a)(2) to determine whether TFC is a PFIC.

(4) Under paragraph (c)(4)(v) of this section, the rent received from FP throughout Year 3 is characterized as 100% passive income. Under paragraph (c)(1)(i)(A) of this section and section 954(c)(2)(A), the rent received from the unrelated person is characterized as 100% non-passive income. Accordingly, under paragraph (d)(3)(i) of this section, the 40% of the office building rented to FP has a value of 25% (($100x × 4)/(($100x × 4) + ($300x × 4))) of the value of the office building and that 25% is a passive asset, and the 60% of the office building rented to the unrelated person has a value of 75% (($300x × 4)/(($100x × 4) + ($300x × 4))) of the value of the office building and is a non-passive asset for purposes of applying section 1297(a)(2) to determine whether TFC is a PFIC.

(4) ***Passive treatment of stock and partnership interests.*** For purposes of section 1297(a)(2), shares of stock in a corporation that is not a look-through subsidiary (as defined in § 1.1297-2(g)(3)) and partnership interests in a partnership that is not a look-through partnership (as defined in § 1.1297-2(g)(4)) with respect to a tested foreign corporation for a taxable year or portion thereof are treated as passive assets for the taxable year or relevant portion thereof, except to the extent the stock or partnership interest is treated as a dual-character asset under section 1297(b)(2)(C) and paragraph (d)(3) of this section because it produces both passive and non-passive income, or the stock or partnership interest produces solely non-passive income for the taxable year under section 1297(b)(2)(C) and paragraph (c)(4) of this section or under paragraph (d)(5) of this section.

(5) ***Dealer property.*** For purposes of section 1297(a)(2), an asset that produces, or would produce upon disposition, income or gain that is, or would be, excluded from passive income pursuant to section 954(c)(2)(C) is treated as a non-passive asset.

(e) ***Stapled stock.*** If a United States person that would be a shareholder (within the meaning of § 1.1291-1(b)(7) and (b)(8)) of a stapled entity (as defined in section 269B(c)(2)) owns stock in all entities that are stapled entities with respect to each other and the shares are stapled interests (as defined in section 269B(c)(3)), the United States person's interests in the stapled entities are treated as an interest in a single entity that holds all of the assets of the stapled entities, conducts all of the activities of the stapled entities, and derives all of the income of the stapled entities for all purposes of the PFIC regime.

(f) ***Definitions.*** The following definitions apply for purposes of this section and § 1.1297-2:

(1) ***Measuring date.*** The term *measuring date* has the meaning provided in paragraph (d)(1)(i) of this section.

(2) ***Measuring period.*** The term *measuring period* means a three-month period or an alternative measuring period, within the meaning provided in paragraph (d)(1)(ii) of this section.

(3) ***Non-passive asset.*** The term *non-passive asset* means an asset other than a passive asset.

(4) ***Non-passive income.*** The term *non-passive income* means income other than passive income.

(5) ***Passive asset.*** The term *passive asset* means an asset that produces passive income, or which is held for the production of passive income, taking into account the rules in paragraphs (c) and (d) of this section.

(6) ***Passive income.*** The term *passive income* has the meaning provided in paragraph (c)(1) of this section.

(7) ***Publicly traded foreign corporation.*** The term *publicly traded foreign corporation* means a foreign corporation the stock of which is regularly traded on an exchange described in section 1297(e)(3), other than in de minimis quantities, for at least twenty trading days during a taxable year.

(8) ***Related person.*** For purposes of applying the rules of this section and § 1.1297-2 with respect to section 1297(b)(2)(C), the term means a *related person* within the meaning of section 954(d)(3).

(9) ***Tested foreign corporation.*** The term *tested foreign corporation* means a foreign corporation the PFIC status of which is being tested under section 1297(a).

(g) ***Applicability date*** —

(1) ***In general.*** Except as otherwise provided in paragraph (g)(2) of this section, the rules of this section apply to taxable years of shareholders beginning on or after January 14, 2021. A shareholder may choose to apply such rules for any open taxable year beginning before January 14, 2021, provided that, with respect to a tested foreign corporation, the shareholder consistently applies the provisions of this section (except that consistent treatment is not required with respect to paragraph (c)(1)(i)(A) of this section) and § 1.1291-1(b)(8)(iv) and (b)(8)(v)(A), (B), (C), and (D) and §§ 1.1297-2, 1.1298-2, and 1.1298-4 for such year and all subsequent years.

(2) ***Paragraph (d)(1)(v)(B)(2) of this section.*** Paragraph (d)(1)(v)(B)(*2*) of this section applies to taxable years of shareholders ending on or after October 1, 2019. For taxable years of shareholders ending before October 1, 2019, a shareholder may apply paragraph (d)(1)(v)(B)(*2*) of this section to the last taxable year of a foreign corporation beginning before January 1, 2018, and each subsequent taxable year of the foreign corporation, provided that the shareholder and United States persons that are related (within the meaning of section 267 or 707) to the taxpayer consistently apply such paragraph with respect to all foreign corporations.

[T.D. 9936, 86 FR 4557, Jan. 15, 2021, as amended at 86 FR 13648, Mar. 10, 2021]

§ 1.1297-2 Special rules regarding look-through subsidiaries and look-through partnerships.

(a) ***Overview.*** This section provides rules concerning the treatment of income and assets of a look-through subsidiary (as defined in § 1.1297-2(g)(3)) or look-through partnership (as defined in § 1.1297-2(g)(4)) for purposes of determining whether a tested foreign corporation (as defined in § 1.1297-1(f)(9)) is a passive foreign investment company (PFIC) under section 1297(a). Paragraph (b) of this section provides guidance for purposes of section 1297(c) on how to determine a tested foreign corporation's ownership in a corporation and how to determine a tested foreign corporation's proportionate share of a look-through subsidiary's or look-through partnership's assets and income. Paragraph (c) of this section provides rules that eliminate certain income and assets related to look-through subsidiaries and look-through partnerships for purposes of determining a tested foreign corporation's PFIC status. Paragraph (d) of this section provides a rule to determine whether certain income received or accrued by look-through subsidiaries and look-through partnerships is received or accrued from a related person for purposes of section 1297(b)(2)(C). Paragraph (e) of this section provides rules concerning the attribution of activities

from qualified affiliates (as defined in § 1.1297-2(e)(2)) for purposes of characterizing the income and assets of a look-through subsidiary or look-through partnership. Paragraph (f) of this section provides rules for determining the amount of gain from the direct or indirect sale or exchange of stock of a look-through subsidiary or partnership interests in a partnership described in section 954(c)(4) that is taken into account under section 1297(a) and for determining the passive or non-passive character of gain from the sale of a look-through subsidiary. Paragraph (g) of this section provides definitions applicable for this section, and paragraph (h) of this section provides the applicability date of this section.

(b) *General rules* —

(1) ***Tested foreign corporation's ownership of a corporation.*** For purposes of section 1297(c) and this section, the principles of section 958(a) and the regulations in this chapter under that section applicable to determining direct or indirect ownership by value apply to determine a tested foreign corporation's percentage ownership (by value) in the stock of another corporation. These principles apply whether an intermediate entity is domestic or foreign.

(2) ***Tested foreign corporation's proportionate share of the assets and income of a look-through subsidiary*** —

(i) ***Proportionate share of subsidiary assets.*** For each measuring period (as defined in § 1.1297-1(f)(2)), a tested foreign corporation is treated as if it held its proportionate share of each asset of a look-through subsidiary, determined based on the tested foreign corporation's percentage ownership (by value) (as determined under paragraph (b)(1) of this section)) of the look-through subsidiary on the measuring date (as defined in § 1.1297-1(f)(1)). A tested foreign corporation's proportionate share of a look-through subsidiary's asset is treated as producing passive income, or being held to produce passive income, to the extent the asset produced, or was held to produce, passive income in the hands of such look-through subsidiary under the rules of paragraph (b)(2)(ii) of this section.

(ii) ***Proportionate share of subsidiary income*** —

(A) ***General rule.*** A tested foreign corporation is treated as if it received directly its proportionate share of each item of gross income or loss of a corporation for a taxable year if the corporation is a look-through subsidiary with respect to the tested foreign corporation for the taxable year of the tested foreign corporation. In such case, a tested foreign corporation's proportionate share of a look-through subsidiary's gross income or loss is determined based on the corporation's average percentage ownership (by value) of the look-through subsidiary. The exceptions to passive income in section 1297(b)(2) and the relevant exceptions to foreign personal holding company income in section 954(c) that are based on whether income is derived in the active conduct of a business or whether a corporation is engaged in the active conduct of a business apply to such income only if the exception would have applied to exclude the income from passive income or foreign personal holding company income in the hands of the subsidiary, determined by taking into account only the activities of the subsidiary except as provided in paragraph (e) of this section. See paragraph (d) of this section for rules determining whether a person is a related person for purposes of applying section 1297(b)(2)(C) in the case of income received or accrued by a subsidiary that is treated as received directly by a tested foreign corporation pursuant to this paragraph (b)(2).

(B) ***Partial year.*** When a corporation is not a look-through subsidiary with respect to a tested foreign corporation for an entire taxable year of the tested foreign corporation, the tested foreign corporation may be treated as if it received directly its proportionate share of the gross income or loss of the first corporation for each measuring period in the year for which the first corporation is a look-through subsidiary, if the conditions in paragraph (g)(3)(ii)(B) of this section are satisfied. In such case, a tested foreign corporation's proportionate share of a look-through subsidiary's gross income or loss is determined based on the tested foreign corporation's percentage ownership (by value) (as determined under paragraph (b)(1) of this section) of the look-through subsidiary on the relevant measuring date.

(iii) ***Coordination of section 1297(c) with section 1298(b)(7).*** A tested foreign corporation is not treated under section 1297(c) and this paragraph (b) as holding its proportionate share of the assets of a domestic corporation, or receiving directly its proportionate share of the gross income or loss of the domestic corporation, if the stock of the domestic corporation is treated as an asset that is not a passive asset (as defined in § 1.1297-1(f)(5)) that produces income that is not passive income (as defined in § 1.1297-1(f)(6)) under section 1298(b)(7) (concerning the treatment of certain foreign corporations owning stock in certain 25-percent-owned domestic corporations). See § 1.1298-4 for rules governing the application of section 1298(b)(7).

(3) ***Tested foreign corporation's proportionate share of the assets and income of a look-through partnership*** —

(i) ***Proportionate share of partnership assets.*** For each measuring period (as defined in § 1.1297-1(f)(2)), a tested foreign corporation is treated as if it held its proportionate share of each asset of a look-through partnership, determined based on the tested foreign corporation's percentage ownership (by value) (as determined under paragraph (b)(1) of this section) of the look-through partnership on the measuring date (as defined in § 1.1297-1(f)(1)). A tested foreign corporation's proportionate share of a look-through partnership's asset is treated as producing passive income, or being held to produce passive income, to the extent the asset produced, or was held to produce, passive income in the hands of the partnership under the rules in paragraph (b)(3)(ii) of this section.

(ii) ***Proportionate share of partnership income*** —

(A) ***General rule.*** A tested foreign corporation is treated as if it received directly its proportionate share of any item of gross income or loss of a partnership that is a look-through partnership with respect to the tested foreign corporation for the taxable year of the tested foreign corporation. The exceptions to passive income in section 1297(b)(2) and the relevant exceptions to foreign personal holding company income in section 954(c) that are based on whether income is derived in the active conduct of a business or whether a corporation is engaged in the active conduct of a business apply to such income only if the exception would have applied to exclude the income from passive income or foreign personal holding company income in the hands of the partnership, determined by taking into account only the activities of the partnership except as provided in paragraph (e) of this section. See paragraph (d) of this section for rules determining whether a person is a related person for purposes of applying section 1297(b)(2)(C) in the case of income received or accrued by a partnership that is treated as received directly by a tested foreign corporation pursuant to this paragraph (b)(3).

(B) ***Partial year.*** When a partnership is not a look-through partnership with respect to a tested foreign corporation for an entire taxable year of the tested foreign corporation, the tested foreign corporation may be treated as if it received directly its proportionate share of the gross income of the partnership for each measuring period in the year for which the partnership is a look-through partnership, provided that the conditions set forth in paragraph (g)(3)(ii)(B) of this section would be satisfied if the partnership were a corporation.

(4) ***Examples.*** The following examples illustrate the rules of this paragraph (b). For purposes of these examples, USP is a domestic corporation; TFC, LTS, and FS are foreign corporations that are not controlled foreign corporations within the meaning of section 957(a); USP owns 30% of TFC; and LTS owns 25% of the only class of FS stock.

(i) ***Example 1*** —

(A) ***Facts.*** TFC directly owns 80% of the only class of LTS stock for TFC's and LTS's entire taxable year.

(B) ***Results*** —

(*1*) ***LTS.*** Under paragraph (b)(1) of this section and pursuant to the principles of section 958(a), LTS owns 25% of the value of FS. Under paragraph (b)(2)(i) and (ii) of this section, in determining whether LTS is a PFIC under section 1297(a), LTS is treated as if it held 25% of each of FS's assets on each of the measuring dates in its taxable year and received directly 25% of the gross income of FS for the taxable year.

(2) ***TFC.*** Under paragraph (b)(1) of this section and pursuant to the principles of section 958(a), TFC owns 80% of the value of LTS and indirectly owns 20% of the value of FS. Under paragraph (b)(2) of this section, in determining whether TFC is a PFIC under section 1297(a), TFC is treated as if it held 80% of each of LTS's assets on each of the measuring dates in its taxable year and received directly 80% of the gross income of LTS for the taxable year. However, because TFC indirectly owns less than 25% of FS, FS is not a look-through subsidiary with respect to TFC and, therefore, TFC is treated as if it held a 20% interest in the stock of FS (and not the assets of FS), and received 80% of any dividends paid from FS to LTS (and not any income of FS).

(ii) ***Example 2*** —

(A) ***Facts.*** TFC directly owns 25% of the only class of LTS stock on the last day of each of the first three quarters of its taxable year but disposes of its entire interest in LTS during the fourth quarter of its taxable year.

(B) ***Results.*** Under paragraph (b)(1) and pursuant to the principles of section 958(a), on each of its first three measuring dates, TFC owns 25% of the value of LTS and indirectly owns 6.25% of the value of FS. Under paragraph (g)(3) of this section, if information about the gross income of LTS for each of the first three quarters of its taxable year is available to TFC, LTS is treated as a look-through subsidiary with respect to TFC for those quarters because TFC owned 25% of the value of LTS on the measuring dates with respect to those measuring periods. In that case, under paragraph (b)(2) of this section, in determining whether TFC is a PFIC under section 1297(a), TFC is treated as if it held 25% of each of LTS's assets and received directly 25% of the gross income of LTS on each of the first three measuring dates in its taxable year. For each of its first three quarters, if LTS is

treated as a look-through subsidiary with respect to TFC under paragraph (g)(3) of this section, then TFC is treated as if it held a 6.25% interest in the stock of FS (and not the assets of FS) and received 25% of any dividends paid from FS to LTS (and not any income of FS). Under paragraph (g)(3) of this section, if information about the gross income of LTS for each of the first three quarters of its taxable year is not available to TFC, then LTS is not a look-through subsidiary with respect to TFC.

(iii) *Example 3* —

(A) ***Facts.*** TFC directly owns 100% of the only class of LTS stock for TFC's and LTS's entire taxable year. TFC sells one item of property described in section 954(c)(1)(B)(i) for a gain of $25x and another for a loss of $10x, and no exception from passive income applies to either amount. During the taxable year, FS sells one item of property described in section 954(c)(1)(B)(i) for a gain of $50x and another for a loss of $55x; no exception from passive income applies to either amount.

(B) ***Results.*** Under paragraph (b)(1) of this section and pursuant to the principles of section 958(a), TFC owns 100% of the value of LTS, and TFC indirectly owns 25% of the value of FS. Under paragraph (b) of this section, in determining whether TFC is a PFIC under section 1297(a), TFC is treated as if it held 100% of LTS's assets on each of the measuring dates in its taxable year and received directly 100% of the gross income of LTS for the taxable year. Furthermore, TFC is treated as if it held 25% of each of FS's assets and received directly 25% of the gross income of FS. Pursuant to § 1.1297-1(c)(1)(ii), the excess of gains over losses from property transactions described in section 954(c)(1)(B) is taken into account as gross income for purposes of section 1297, and items of gain or loss of look-through subsidiaries are treated as recognized by a tested foreign corporation. Accordingly, TFC takes into account the net $5x loss from the sales of property by FS. TFC's income from its own sales of property constitutes passive income pursuant to § 1.1297-1(c) and section 954(c)(1)(B), although, pursuant to § 1.1297-1(c)(1)(ii), only the excess of gains over losses, $15x ($25x − $10x), is taken into account as gross income for purposes of section 1297. As a result, TFC's income (including the $5x loss from FS), all of which is passive income, equals $10x ($15x − $5x) of gross income.

(c) ***Elimination of certain intercompany assets and income*** —

(1) ***General rule for asset test*** —

(i) ***LTS stock.*** For purposes of section 1297(a)(2), a tested foreign corporation does not take into account the value (or adjusted basis) of stock of a look-through subsidiary (*LTS stock*), including LTS stock that the tested foreign corporation is treated as owning on a measuring date pursuant to section 1297(c) and paragraph (b)(2) or (b)(3) of this section. Furthermore, for purposes of section 1297(a)(2), a tested foreign corporation does not take into account the value (or adjusted basis) of its own stock that it is treated as owning on a measuring date pursuant to section 1297(c) and paragraph (b)(2) or (b)(3) of this section.

(ii) ***LTS obligation.*** For purposes of section 1297(a)(2), a tested foreign corporation does not take into account the value (or adjusted basis) of its proportionate share of a direct LTS obligation, an indirect LTS obligation or a TFC obligation that it is treated as owning on a measuring date. The term *direct LTS obligation* means a debt obligation of, lease to, or license to a look-through subsidiary (*LTS debt, LTS lease,* and *LTS license,* respectively, and *LTS obligation* collectively)

from the tested foreign corporation that the tested foreign corporation owns on a measuring date, and the term *indirect LTS obligation* means a LTS obligation from a look-through subsidiary that the tested foreign corporation is treated as owning on a measuring date pursuant to section 1297(c) and paragraph (b)(2) or (b)(3) of this section. The term *TFC obligation* means a debt obligation of, lease to, or a license to the tested foreign corporation from a look-through subsidiary that the tested foreign corporation is treated as owning on a measuring date pursuant to section 1297(c) and paragraph (b)(2) or (b)(3) of this section. The tested foreign corporation's proportionate share of a LTS obligation or a TFC obligation is the value (or adjusted basis) of the item multiplied by the tested foreign corporation's percentage ownership (by value) in each relevant look-through subsidiary. For purposes of section 1297(a)(2) and § 1.1297-1(d) as applied to a tested foreign corporation, property subject to a LTS lease or LTS license or a lease or license to the tested foreign corporation is characterized as either producing passive income or non-passive income (or both) by taking into account the activities of the qualified affiliates (as defined in paragraph (e)(2) of this section) of the entity that owns the property. For this purpose, the activities of the entity that owns the property that is subject to the lease or license are not taken into account to the extent that they relate to the lease or license.

(2) ***General rule for income test*** —

(i) ***LTS stock.*** For purposes of section 1297(a)(1), a tested foreign corporation does not take into account dividends derived with respect to LTS stock, including dividends that the tested foreign corporation is treated as receiving on a measuring date pursuant to section 1297(c) and paragraph (b)(2) or (b)(3) of this section; provided that, notwithstanding the foregoing, a tested foreign corporation takes into account dividends that are attributable to income that was not treated as received directly by the tested foreign corporation pursuant to paragraph (b)(2) of this section. For this purpose, the rules of § 1.1297-1(c)(4)(iv)(A) apply to determine the earnings and profits from which a dividend is paid, substituting the term “look-through subsidiary” for “related person.”

(ii) ***LTS obligation.*** For purposes of section 1297(a)(1), a tested foreign corporation does not take into account its proportionate share of interest, rents, or royalties derived with respect to direct or indirect LTS obligations or TFC obligations. The tested foreign corporation's proportionate share of interest, rents, or royalties is the amount of the item multiplied by the tested foreign corporation's percentage ownership (by value) in each relevant look-through subsidiary.

(3) ***Partnerships.*** For purposes of section 1297(a)(1) and (a)(2), the principles of paragraphs (c)(1) and (2) of this section apply with respect to ownership interests in, debt of, and leases or licenses to a look-through partnership (as defined in paragraph (g)(4) of this section), and with respect to distributions and the distributive shares of income from a look-through partnership and interest, rents, or royalties derived with respect to the debt, leases or licenses of a look-through partnership.

(4) ***Examples.*** The following examples illustrate the rules of this paragraph (c). For purposes of these examples, USP is a domestic corporation; USP owns 30% of TFC; TFC, LTS, LTS1, LTS2, and FS are foreign corporations that are not controlled foreign corporations within the meaning of section 957(a); FPS is a foreign partnership; and TFC, LTS1, and LTS2 measure assets for purposes of section 1297(a)(2) based on value.

(i) ***Example 1*** —

(A) ***Facts.*** TFC directly owns 80% of the only class of LTS stock for TFC's and LTS's entire taxable year, and LTS is a look-through subsidiary (as defined in paragraph (g)(3) of this section) with respect to TFC. LTS owns 25% of the only class of FS stock, and FS is a look-through subsidiary with respect to LTS. Pursuant to the principles of section 958(a), TFC owns 80% of the value of LTS, LTS owns 25% of the value of FS, and TFC indirectly owns 20% of the value of FS. During the first quarter of the taxable year, LTS received a $20x dividend from FS.

(B) ***Results*** —

(*1*) ***LTS.*** Under paragraph (c)(1)(i) of this section, for purposes of applying section 1297(a)(2) to LTS, LTS's assets do not include the stock of FS. Under paragraph (c)(2)(i) of this section, for purposes of applying section 1297(a)(1) to LTS, LTS's income does not include the $20x dividend from FS.

(*2*) ***TFC.*** Under paragraph (c)(1)(i) of this section, for purposes of applying section 1297(a)(2) to TFC, TFC's assets do not include the stock of LTS. Under paragraph (b)(2)(ii)(A) of this section, for purposes of applying section 1297(a)(1) to TFC, TFC is treated as receiving directly the income of LTS. Because TFC indirectly owns less than 25% of FS, FS is not a look-through subsidiary with respect to TFC and, therefore, TFC's assets include the value of TFC's 20% interest in the stock of FS and do not include 20% of FS's assets. Similarly, TFC is treated as if it received $16x (80% × $20x) of the $20x dividend paid from FS to LTS (and not any income of FS). Because the dividend constitutes gross income to LTS (although it is eliminated for purposes of applying section 1297(a)(1) to LTS), TFC is treated as receiving the dividend from FS directly under paragraph (b)(2)(ii)(A) of this section. Because the dividend is from a subsidiary that is not a look-through subsidiary with respect to TFC, paragraph (c)(2)(i) of this section does not apply to eliminate the $16x dividend for purposes of section 1297(a).

(ii) *Example 2* —

(A) ***Facts.*** TFC directly owns 40% of the value of LTS1 stock on each of the measuring dates, and thus is treated under paragraph (b)(1) of this section as owning 40% of LTS1's assets on each of the measuring dates. TFC's assets include a loan to LTS1 with a balance of $1,000x on each of the measuring dates. During the first quarter of the taxable year, TFC received $20x of dividends from LTS1, which were attributable to income of LTS1 treated as received directly by TFC pursuant to paragraph (b)(2) of this section, and $30x of interest on the loan, both of which were paid in cash.

(B) ***Results.*** Under paragraph (c)(1)(i) of this section, for purposes of applying section 1297(a), TFC's assets do not include the stock of LTS1, and TFC's income does not include the $20x of dividends received from LTS1 pursuant to paragraph (c)(2)(i) of this section. Similarly, under paragraph (c)(1)(ii) of this section TFC's assets include only $600x ($1,000x loan −(40% × $1,000x)) of the loan to LTS1, and under paragraph (c)(2)(ii) of this section, TFC's income includes only $18x ($30x interest − (40% × $30x)) of the interest from LTS1. However, TFC's assets include the entire $50x of cash ($20x of dividends and $30x of interest) received from LTS1.

(iii) *Example 3* —

(A) ***Facts.*** The facts are the same as in paragraph (c)(4)(ii)(A) of this section (the facts in *Example 2*), except that TFC also directly owns 30% of the value of LTS2 stock on each of the measuring dates, and thus is treated under paragraph (b)(1) of this section as owning 30% of LTS2's assets, and LTS1's assets also include a loan to LTS2 with a balance of $200x on each of the measuring dates. During the first quarter of the taxable year, LTS1 received $5x of interest on the loan, which was paid in cash.

(B) ***Results.*** The results are the same as in paragraph (c)(4)(ii)(B) of this section (the results in *Example 2*), except that TFC's assets also do not include the stock of LTS2. Similarly, although TFC would be treated under paragraph (b)(2) of this section as owning $80x (40% × $200x) of the LTS1 loan to LTS2, under paragraph (c)(1)(ii) of this section TFC does not take into account its proportionate share of an indirect LTS obligation and accordingly, TFC does not take into account $24x (30% × $80x) of the loan to LTS2. As a result, TFC's assets include only $56x ($80x − $24x) of the LTS1 loan to LTS2. Furthermore, although TFC would be treated under paragraph (b)(2) of this section as receiving $2x (40% × $5x) of the interest received by LTS1 from LTS2, under paragraph (c)(2)(ii) of this section TFC does not take into account its proportionate share of interest with respect to an indirect LTS obligation and thus, TFC does not take into account $0.60x (30% × $2x) of the interest received by LTS1. Accordingly, TFC's income includes only $1.40x ($2x − $0.60x) of the interest from LTS2. Furthermore, TFC's assets include $2x (40% × $5x) of LTS1's cash received from LTS2.

(iv) ***Example 4*** —

(A) ***Facts.*** TFC directly owns 80% of the value of LTS1 stock on each of the measuring dates, and thus is treated under paragraph (b)(1) of this section as owning 80% of LTS1's assets on each of the measuring dates. TFC also directly owns 50% of the value in FPS on each of the measuring dates. LTS1's assets include the remaining 50% of the value in FPS and a loan to FPS with a balance of $500x on each of the measuring dates. FPS's assets include a loan to TFC with a balance of $1000x on each of the measuring dates. During the first measuring period of the taxable year, FPS received $30x of interest from TFC, and LTS1 received $15x of interest from FPS, both of which were paid in cash. During the last measuring period of the taxable year, FPS received $80x of income from an unrelated person in cash and distributed $60x of such income in cash to TFC and LTS1 in proportion to their interests in FPS.

(B) ***Results.*** Under paragraph (c)(1)(i) and (ii) of this section, for purposes of applying section 1297(a), TFC's assets do not include the stock of LTS1, the interests in FPS owned by TFC directly and through LTS1, any of the loan by FPS to TFC, or any of the loan by LTS1 to FPS. Similarly, under paragraph (c)(2)(i) and (ii) of this section, TFC's income does not include any of the $30x of interest received by FPS from TFC, any of the $15x of interest received by LTS1 from FPS, or any of the $60x of distributions received by TFC and LTS1 from FPS. However, on each of the measuring dates, TFC's assets include $27x ((50% × $30x) + (80% × 50% × $30x)) of the $30 of cash received by FPS from TFC and $12x (80% × $15x) of the $15x of cash received by LTS1 from FPS. Moreover, on the last measuring date of the taxable year, TFC's assets include $18x ((50% × $20x) + (80% × 50% × $20x)) of the $20x ($80x−$60x) of cash received by FPS from the unrelated person and retained by FPS and $54x ((50% × $60x) + (80% × 50% × $60x)) of the $60x cash received by FPS from the unrelated person and distributed. Furthermore, TFC's income includes $72x ((50% × $80x) + (80% × 50% × $80x)) of the $80x of income received by FPS from an unrelated person.

(v) *Example 5* —

(A) ***Facts.*** TFC directly owns 80% of the value of the stock of LTS1 and 60% of the value of the stock of LTS2 on each of the measuring dates, and thus is treated under paragraph (b)(1) of this section as owning 80% of LTS1's assets and 60% of LTS2's assets on each of the measuring dates. TFC's assets include a license for the use of its intangible property by LTS1 with a value of $5,000x on each of the measuring dates, LTS1's assets include a sub-license of such license to LTS2 with a value of $2,000x on each of the measuring dates, and LTS2's assets include a lease of its building to LTS1 with a value of $4,000x on each of the measuring dates. LTS1 and LTS2 each use the intangible property that is the subject of the license and sub-license in its respective trade or business, and LTS1 uses the building in its trade or business. During the last quarter of the taxable year, TFC received a royalty of $500x from LTS1 with respect to the license, and LTS1 received a royalty of $200x from LTS2 with respect to the sub-license, both of which were paid in cash. LTS2 received $100x of rent paid in cash from LTS1 during each quarter of the taxable year with respect to the building lease.

(B) *Results* —

(1) ***Asset test.*** Under paragraph (c) of this section, for purposes of applying section 1297(a)(2) to TFC's final measuring period, the following analysis applies. TFC's assets do not include the stock of LTS1 and LTS2. Similarly, TFC's assets include only $1,000x ($5,000x license − (80% × $5,000x)) of the license to LTS1. However, TFC's assets include the entire $500x of cash it received from LTS1 as a result of the royalty. Moreover, although TFC would be treated under paragraph (b)(2) of this section as owning $1,600x (80% × $2,000x) of the LTS1 sub-license to LTS2, under paragraph (c)(1)(ii) of this section TFC does not take into account its proportionate share of an indirect LTS obligation, and accordingly TFC does not take into account $960x (60% × $1,600x) of LTS1's sub-license to LTS2. As a result, TFC's assets include $640x ($1,600x − $960x) of the sub-license. In addition, TFC's assets include $160x (80% × $200x) of LTS1's cash received from LTS2 as a result of the royalty to LTS1. Similarly, although TFC would be treated under paragraph (b)(2) of this section as owning $2,400x (60% × $4,000x) of the LTS2 lease to LTS1, under paragraph (c)(1)(ii) of this section TFC does not take into account $1,920x (80% × $2,400x) of the LTS2 building lease, and accordingly, its assets include $480x ($2,400x − $1,920x) of the lease. TFC's assets also include $240x (60% × $100x × 4) of LTS2's cash received from LTS1 as a result of the rental payment to LTS2.

(2) ***Income test.*** Under paragraph (c)(2)(ii) of this section, because TFC does not take into account its proportionate share of a direct LTS obligation, TFC's income includes only $100x ($500x royalty − (80% × $500x)) of the royalties from LTS1. Furthermore, although TFC would be treated under paragraph (b)(2) of this section as receiving $160x (80% × $200x) of the royalty received by LTS1 from LTS2, under paragraph (c)(2)(ii) of this section TFC does not take into account its proportionate share of royalties derived with respect to an indirect LTS obligation, and accordingly TFC does not take into account $96x (60% × $160x) of the royalty received by LTS1. As a result, TFC's income includes only $64x ($160x − $96x) of the royalty from LTS2. Similarly, although TFC would be treated under paragraph (b)(2) of this section as receiving $240x (60% × $100x × 4) of the rent received by LTS2 from LTS1, under paragraph (c)(2)(ii) of this section TFC does not take into account its proportionate share of

rent derived with respect to an indirect LTS obligation, and accordingly TFC does not take into account $192x (80% × $240) of the rent received by LTS2. Therefore, TFC's income includes only $48 ($240x − $192x) of the rent received from LTS1.

(3) ***Treatment of intangible and rental property.*** For purposes of determining whether the intangible property that TFC owns and the building that TFC is treated as owning under paragraph (b)(2) of this section is held in the production of passive income, the activities performed by TFC and its qualified affiliates with respect to the property are taken into account under paragraphs (c)(1)(ii) and (e) of this section. Because TFC is the common parent of the affiliated group (as determined under paragraph (e)(2) of this section) that includes LTS1 and LTS2, LTS1 and LTS2 are qualified affiliates of TFC and the activities of their officers and employees with respect to the intangible property and building are taken into account to determine whether the building and intangible property would be treated as passive assets.

(d) ***Related person determination for purposes of section 1297(b)(2)(C)*** —

(1) ***General rule.*** For purposes of section 1297(b)(2)(C), interest, dividends, rents or royalties received or accrued by a look-through subsidiary (and treated as received directly by a tested foreign corporation pursuant to section 1297(c) and paragraph (b)(2) of this section) are considered received or accrued from a related person only if the payor of the interest, dividend, rent or royalty is a related person (within the meaning of section 954(d)(3)) with respect to the look-through subsidiary, taking into account § 1.1297-1(c)(1)(i)(D). Similarly, for purposes of 1297(b)(2)(C), interest, dividends, rents or royalties received or accrued by a look-through partnership (and treated as received directly by a tested foreign corporation pursuant to paragraph (b)(3) of this section) are considered received or accrued from a related person only if the payor of the interest, dividend, rent or royalty is a related person (within the meaning of section 954(d)(3)) with respect to the look-through partnership, taking into account § 1.1297-1(c)(1)(i)(D).

(2) ***Example.*** The following example illustrates the rule of this paragraph (d).

(i) ***Facts.*** USP is a domestic corporation that owns 30% of TFC. TFC directly owns 30% of the value of FS1 stock, and thus under paragraph (b) of this section is treated as owning 30% of FS1's assets and earning 30% of FS1's gross income. The remaining FS1 stock is owned by an unrelated foreign person. FS1 directly owns 60% of the vote of FS2 stock and 20% of the value of FS2 stock. The remaining vote and value of FS2 stock are owned by an unrelated foreign person. TFC, FS1, and FS2 are foreign corporations that are not controlled foreign corporations within the meaning of section 957(a). FS1 receives a $100x dividend from FS2.

(ii) ***Results.*** Pursuant to section 1297(c) and paragraph (b)(2) of this section, TFC is treated as receiving directly $30x of the dividend income received by FS1. FS2 is a related person (within the meaning of section 954(d)(3)) with respect to FS1 for purposes of section 1297(b)(2)(C) because FS1 owns more than 50% of the vote of FS2. FS2 is not a related person (within the meaning of section 954(d)(3)) with respect to TFC for purposes of section 1297(b)(2)(C) because TFC indirectly does not own more than 50% of the vote or value of the FS2 stock. Under paragraph (d)(1) of this section, for purposes of determining whether the dividend income received by FS1 is subject to the exception in section 1297(b)(2)(C) for purposes of testing the PFIC status of TFC, the dividend is treated as received from a related person because FS1 and FS2 are related persons within the meaning of section 1297(b)(2)(C). Therefore, to the extent the dividend income received by FS1 would be properly allocable to

income of FS2 that is not passive income, the dividend income that TFC is treated as receiving under section 1297(c) and paragraph (b)(2)(ii) of this section is treated as non-passive income (as defined in § 1.1297-1(f)(4)).

(e) ***Treatment of activities of certain look-through subsidiaries and look-through partnerships for purposes of certain exceptions*** —

(1) ***General rule.*** An item of income received by a tested foreign corporation (including an amount treated as received or accrued pursuant to section 1297(c) and paragraph (b)(2) or (b)(3) of this section) that would be passive income in the hands of the entity that actually received or accrued it is not passive if the item would be excluded from foreign personal holding company income under the following exceptions contained in section 954(c) that are based on whether the entity is engaged in the active conduct of a trade or business, determined by taking into account the activities performed by the officers and employees of the tested foreign corporation as well as activities performed by the officers and employees of any qualified affiliate of the tested foreign corporation—

(i) Section 954(c)(1)(B) and § 1.954-2(e)(1)(ii) and (3)(ii), (iii) and (iv);

(ii) Section 954(c)(1)(C) and § 1.954-2(f)(1)(ii) and (2)(iii)(D);

(iii) Section 954(c)(1)(D) and § 1.954-2(g)(2)(ii);

(iv) Section 954(c)(2)(A) and § 1.954-2(b)(6), (c), and (d);

(v) Section 954(c)(2)(B) and § 1.954-2(b)(2); and

(vi) Section 954(c)(2)(C) and § 1.954-2(h)(3)(ii).

(2) ***Qualified affiliate.*** The term *qualified affiliate* means a corporation or a partnership that is included in an affiliated group that includes the tested foreign corporation. For purposes of this paragraph (e), the term *affiliated group* has the meaning provided in section 1504(a), except that—

(i) The affiliated group is determined without regard to sections 1504(a)(2)(A), (b)(2) and (b)(3);

(ii) Subject to paragraph (e)(2)(iii) of this section, a partnership is treated as an includible corporation;

(iii) The common parent of the affiliated group is not a domestic corporation or domestic partnership;

(iv) Section 1504(a)(2)(B) is applied by substituting “more than 50 percent” for “at least 80 percent”;

(v) A foreign corporation or foreign partnership must be the common parent of the affiliated group;

(vi) Subject to paragraph (e)(2)(vii) of this section, a partnership is included as a member of the affiliated group if more than 50 percent of the value of its capital interests or profits interests is owned by one or more corporations or partnerships that are included in the affiliated group; and

(vii) A corporation or a partnership that is not the common parent of an affiliated group is included in the affiliated group only if it would be a look-through subsidiary or look-through partnership, as applicable, of the common parent if the common parent were a tested foreign corporation.

(3) ***Examples.*** The following examples illustrate the rule of this paragraph (e).

(i) ***Example 1*** —

(A) ***Facts.*** USP is a domestic corporation that directly owns 20% of the outstanding stock of FS1. The remaining 80% of the outstanding stock of FS1 is directly owned by a foreign person that is not related to USP. FS1 directly owns 100% of the value of the outstanding stock of FS2 and directly owns 80% of the value of the outstanding stock of FS3. The remaining 20% of the value of the outstanding stock of FS3 is directly owned by a foreign person that is not related to USP. FS2 directly owns 80% of the value of the outstanding stock of FS4. The remaining 20% of the value of the outstanding stock of FS4 is directly owned by a foreign person that is not related to USP. FS1, FS2, FS3 and FS4 are all organized in Country A and are not controlled foreign corporations within the meaning of section 957(a). FS4 owns real property that is leased to a person that is not a related person, but does not perform any activities. FS1 and FS2 also do not perform any activities. Officers and employees of FS3 in Country A perform activities with respect to the real property of FS4 that, if performed by officers or employees of FS4, would allow the rental income in the hands of FS4 to qualify for the exception from foreign personal holding company income in section 954(c)(2)(A) and § 1.954-2(b)(6) and (c)(1)(ii).

(B) ***Results*** —

(*1*) ***Qualified affiliates.*** FS1 is the common parent of the affiliated group (as determined under paragraph (e)(2) of this section) that includes FS2, FS3, and FS4 because (i) FS1 owns more than 50% by value of FS2 and FS3, (ii) FS2 owns more than 50% by value of FS4, and (iii) FS2, FS3, and FS4 would be look-through subsidiaries with respect to FS1 if FS1 were the tested foreign corporation. Accordingly, each of FS1, FS2, FS3 and FS4 are qualified affiliates (as determined under paragraph (e)(2) of this section) with respect to the other members of the group for purposes of determining whether FS1, FS2, FS3, or FS4 is a PFIC.

(*2*) ***FS1 and FS2.*** Under this paragraph (e), for purposes of determining whether the rental income actually received by FS4 with respect to the real property owned and rented by FS4 and treated under section 1297(c) and paragraph (b)(2) of this section as received directly by FS1 or by FS2, respectively, is passive income for purposes of section 1297, the activities of FS3 are taken into account because FS3 is a qualified affiliate of FS1 and FS2, respectively. Thus, the exception in section 954(c)(2)(A) would apply, and the rental income treated as received by FS1 or by FS2, respectively, would be treated as non-passive income for purposes of determining whether FS1 or FS2 is a PFIC.

(*3*) ***FS4.*** Under this paragraph (e), for purposes of determining whether the rental income received by FS4 with respect to the real property owned and rented by FS4 is passive income for purposes of section 1297, the activities of FS3 are taken into account, because FS3 is a qualified affiliate of FS4. Thus, the exception in section 954(c)(2)(A) would apply, and the rental income received by FS4 would be treated as non-passive income for purposes of determining whether FS4 is a PFIC.

(ii) *Example 2* —

(A) ***Facts.*** The facts are the same as in paragraph (e)(3)(i)(A) of this section (the facts in *Example 1*), except that FS2 also owns real property that is leased to a person that is not a related person, and the officers and employees of FS2 in Country A engage in activities that would allow rental income received by FS2 with respect to its real property to qualify for the exception in section 954(c)(2)(A) and § 1.954-2(b)(6) and (c)(1)(iv), relying on the

rule in § 1.954-2(c)(2)(ii) that provides that an organization is substantial in relation to rents if active leasing expenses equal or exceed 25% of adjusted leasing profit. However, the active leasing expenses of FS1 are less than 25% of its adjusted leasing profit, which includes the rental income of FS4 treated as received directly by FS1 as well as the rental income of FS2 treated as received directly by FS1.

(B) ***Results.*** Because FS2's rental income constitutes non-passive income as a result of the application of § 1.1297-1(c)(1)(i)(A) and section 954(c)(2)(A), it is treated as non-passive income that FS1 is treated as receiving directly under section 1297(c) and paragraph (b)(2) of this section for purposes of determining whether FS1 is a PFIC, and accordingly, it is not necessary to rely on paragraph (e) of this section.

(iii) ***Example 3*** —

(A) ***Facts.*** The facts are the same as in paragraph (e)(3)(i)(A) of this section (the facts in *Example 1*), except that USP directly owns 60% of the outstanding stock of FS1.

(B) ***Results.*** Under paragraph (e)(2)(iii) of this section, USP cannot be the common parent of an affiliated group for purposes of paragraph (e)(2) of this section because it is a domestic corporation. Because FS1 is a foreign corporation, FS1 may be the common parent of an affiliated group for purposes of paragraph (e)(2) of this section. The results therefore are the same as in paragraph (e)(3)(i)(B) of this section (the results in Example 1).

(f) ***Gain on disposition of a look-through subsidiary or look-through partnership*** —

(1) [Reserved].

(2) ***Amount of gain taken into account from disposition of look-through subsidiary.*** For purposes of section 1297(a)(1), section 1298(b)(3), and § 1.1298-2, the amount of gain that is taken into account by a tested foreign corporation from the tested foreign corporation's direct disposition of stock of a look-through subsidiary, or an indirect disposition resulting from the disposition of stock of a look-through subsidiary by other look-through subsidiaries or by look-through partnerships, is the residual gain. The residual gain equals the total gain recognized by the tested foreign corporation (including gain treated as recognized by the tested foreign corporation pursuant to section 1297(c) and paragraph (b)(2) or (b)(3) of this section) from the disposition of the stock of the look-through subsidiary reduced (but not below zero) by unremitted earnings. *Unremitted earnings* are the excess (if any) of the aggregate income (if any) taken into account by the tested foreign corporation pursuant to section 1297(c) and paragraph (b)(2) or (b)(3) of this section with respect to the stock of the disposed-of look-through subsidiary (including with respect to any other look-through subsidiary, to the extent it is owned by the tested foreign corporation indirectly through the disposed-of look-through subsidiary) over the aggregate dividends (if any) received by the tested foreign corporation from the disposed-of look-through subsidiary with respect to the stock, determined without regard to paragraph (c)(2)(i) of this section. For purposes of this paragraph (f)(2), the amount of gain derived from the disposition of stock of a look-through subsidiary and income of and dividends received from the look-through subsidiary is determined on a share-by-share basis under a reasonable method.

(3) ***Characterization of residual gain as passive income.*** For purposes of section 1297(a)(1), section 1298(b)(3), and § 1.1298-2, the residual gain from the direct or indirect disposition of stock of a look-through subsidiary is characterized as passive income or non-passive income based on the relative amounts of passive assets and non-passive assets (as defined in § 1.1297-1(f)(5) and (3),

respectively) of the disposed-of look-through subsidiary (and any other look-through subsidiary to the extent owned indirectly through the look-through subsidiary) treated as held by the tested foreign corporation on the date of the disposition of the look-through subsidiary. For the purpose of this paragraph (f)(3), the relative amounts of passive assets and non-passive assets held by the look-through subsidiary are measured under the same method (value or adjusted bases) used to measure the assets of the tested foreign corporation for purposes of section 1297(a)(2).

(4) ***Gain taken into account from disposition of 25%-owned partnerships and look-through partnerships*** —

(i) ***Section 954(c)(4) partnerships.*** The amount of gain derived from a tested foreign corporation's direct or indirect (through a look-through subsidiary or look-through partnership) disposition of partnership interests in a partnership described in section 954(c)(4) (treating the tested foreign corporation as if it were a controlled foreign corporation) that is taken into account by the tested foreign corporation for purposes of section 1297(a)(1), section 1298(b)(3), and § 1.1298-2 is determined under section 954(c)(4).

(ii) ***Look-through partnerships.*** In the case of a look-through partnership that is not described in paragraph (f)(4)(i) of this section, the principles of paragraphs (f)(2) and (f)(3) of this section apply to determine the amount and characterization of gain derived from a tested foreign corporation's direct or indirect (through a look-through subsidiary or look-through partnership) disposition of partnership interests of the look-through partnership that is taken into account by the tested foreign corporation for purposes of section 1297(a)(1), section 1298(b)(3), and § 1.1298-2.

(5) ***Examples.*** The following examples illustrate the rules of this paragraph (f). For purposes of the examples in this paragraph (f)(5), USP is a domestic corporation, TFC and FS are foreign corporations that are not controlled foreign corporations within the meaning of section 957(a), and USP, TFC, and FS each has a single class of stock with 100 shares outstanding and a calendar taxable year.

(i) ***Example 1*** —

(A) ***Facts.*** USP owned 30% of the outstanding stock of TFC throughout Years 1, 2, 3, and 4. In Year 1, TFC purchased 5 shares of FS stock, representing 5% of the stock of FS, from an unrelated person. On the first day of Year 3, TFC purchased 20 shares of FS stock, representing 20% of the stock of FS, from an unrelated person. TFC owned 25% of the outstanding stock of FS throughout Years 3 and 4. Before Year 3, TFC did not include any amount in income with respect to FS under section 1297(c)(2). During Years 3 and 4, for purposes of section 1297(a)(1), TFC included in income, in the aggregate, $40x of income with respect to FS under section 1297(c) and paragraph (b)(2) of this section. TFC did not receive dividends from FS during Year 1, 2, 3, or 4. For purposes of section 1297(a)(2), TFC measures its assets based on their fair market value as provided under section 1297(e). On the last day of Year 4, TFC recognizes a loss with respect to the sale of 5 shares of FS stock, and a $110x gain with respect to the sale of 20 shares of FS stock. On the date of the sale, FS owns non-passive assets with an aggregate fair market value of $150x, and passive assets with an aggregate fair market value of $50x.

(B) ***Results.*** For purposes of applying section 1297(a)(1) to TFC for Year 4, TFC must take into account $78x of residual gain, as provided by paragraph (f)(2) of this section, which equals the amount by which the $110x gain recognized on the sale of 20 shares in FS exceeds the aggregate pro rata share of $32x income ($40x × 20/25) taken into account

by TFC with respect to the 20 shares in FS under section 1297(c) and paragraph (b)(2) of this section during Years 3 and 4. There is zero residual gain on the sale of 5 shares of FS stock because they were sold at a loss. Under paragraph (f)(3) of this section, $58.50x of the residual gain is non-passive income ($78x × ($150x/$200x)) and $19.50x is passive income ($78x × ($50x/$200x)).

(ii) *Example 2* —

(A) ***Facts.*** The facts are the same as in paragraph (f)(5)(i)(A) of this section (the facts in *Example 1*), except that in Year 1, TFC purchased 15 shares of FS stock, representing 15% of the stock of FS, from an unrelated person, and on the first day of Year 3, TFC purchased an additional 15 shares of FS stock, representing 15% of the stock of FS, from an unrelated person, and on the last day of Year 4, TFC recognizes gain of $10x of the sale of 15 shares of FS stock purchased in Year 1, and gain of $60x on the sale of the other 15 shares of FS stock purchased in Year 3.

(B) ***Results.*** For purposes of applying section 1297(a)(1) to TFC for Year 4, TFC must take into account $40x of residual gain with respect to the 15 shares acquired in Year 3, as provided by paragraph (f)(2) of this section, which equals the amount by which the $60x gain recognized on the sale of those 15 shares exceeds the aggregate pro rata share of $20x income ($40x × 15/30) taken into account by TFC with respect to those 15 shares in FS under section 1297(c)(2) during Years 3 and 4. There is zero residual gain on the sale of the 15 shares of FS stock acquired in Year 1 because the $10x of gain does not exceed the aggregate pro rata share of $20x income taken into account by TFC with respect to those 15 shares of FS under section 1297(c) and paragraph (b)(2) of this section. Under paragraph (f)(3) of this section, $30x of the residual gain is non-passive income ($40x × ($150x/$200x)) and $10x is passive income ($40x × ($50x/$200x)).

(iii) *Example 3* —

(A) ***Facts.*** The facts are the same as in paragraph (f)(5)(ii)(A) of this section (the facts in *Example 2*), except that TFC received, in the aggregate, $20x of dividends from FS during Year 2.

(B) ***Results.*** The results are the same as in paragraph (f)(5)(ii)(B) of this section (the results in *Example 2*) with respect to the 15 shares acquired in Year 3 ($40x of residual gain attributable to the 15 shares acquired in Year 3). For purposes of applying section 1297(a)(1) to TFC for Year 4, TFC must also take into account $10x of residual gain with respect to the 15 shares acquired in Year 1. As provided by paragraph (f)(2) of this section, the residual gain equals the amount by which the $10x gain recognized on the sale of those 15 shares exceeds the unremitted earnings with respect to those shares. The unremitted earnings with respect to the 15 shares acquired in Year 1 are $0x, the amount by which the pro rata share of aggregate income ($20x) taken into account by TFC with respect to those 15 shares of FS stock under section 1297(c) and paragraph (b)(2) of this section in Years 3 and 4 exceeds the aggregate pro rata amount of dividends with respect to those 15 shares of FS stock ($20x) received by TFC from FS in Year 2. Total residual gain therefore is $50x ($40x + $10x). Under paragraph (f)(3) of this section, $37.50x of the residual gain is non-passive income ($50x × ($150x/$200x)) and $12.50x is passive income ($50x × ($50x/$200x)).

(g) ***Definitions.*** The following definitions apply for purposes of § 1.1297-1 and this section:

(1) ***Direct LTS obligation.*** The term *direct LTS obligation* has the meaning provided in paragraph (c)(1)(ii) of this section.

(2) ***Indirect LTS obligation.*** The term *indirect LTS obligation* has the meaning provided in paragraph (c)(1)(ii) of this section.

(3) ***Look-through subsidiary.*** The term *look-through subsidiary* means, with respect to a tested foreign corporation, a corporation as to which the asset test of paragraph (g)(3)(i) and the income test of paragraph (g)(3)(ii) of this section are satisfied on each measuring date during the taxable year of a tested foreign corporation. If a corporation satisfies both the asset test of paragraph (g)(3)(i) and the income test of paragraph (g)(3)(ii)(B) for some but not all measuring periods within the taxable year of a tested foreign corporation, the subsidiary is treated as a look-through subsidiary only for those measuring periods in which both tests are satisfied.

(i) For purposes of section 1297(a)(2) and paragraph (b)(2)(i) of this section, a corporation at least 25 percent of the value of the stock of which is owned (as determined under paragraph (b)(1) of this section) by the tested foreign corporation on the measuring date (as defined in § 1.1297-1(f)(1));

(ii) For purposes of section 1297(a)(1), either—

(A) For the taxable year, a corporation with respect to which the average percentage ownership (which is equal to the percentage ownership (by value) (as determined under paragraph (b)(1) of this section) on each measuring date during the taxable year, divided by the number of measuring dates in the year) by the tested foreign corporation during the tested foreign corporation's taxable year is at least 25 percent; or

(B) For a measuring period (as defined in § 1.1297-1(f)(2)), a corporation at least 25 percent of the value of the stock of which is owned (as determined under paragraph (b)(1) of this section) by the tested foreign corporation on the measuring date, provided all items of gross income of the corporation for each of the measuring periods in the taxable year for which the tested foreign corporation owns at least 25 percent of the value (as determined under paragraph (b)(1) of this section) on the relevant measuring dates can be established; and

(iii) For purposes of paragraph (f) of this section and § 1.1298-2, a corporation at least 25 percent of the value of the stock of which is owned (as determined under paragraph (b)(1) of this section) by the tested foreign corporation immediately before the disposition of stock of the corporation.

(4) ***Look-through partnership*** —

(i) ***In general.*** The term *look-through partnership* means, with respect to a tested foreign corporation—

(A) A partnership that would be a look-through subsidiary (as defined in paragraph (g)(3) of this section) if such partnership were a corporation; or

(B) A partnership that is not described in paragraph (g)(4)(i)(A) of this section, if the tested foreign corporation satisfies both of the active partner tests set forth in paragraphs (g)(4)(ii)(A) and (B) of this section on the measurement date or for the taxable year, as applicable, unless an election is made under paragraph (g)(4)(iii) of this section.

(ii) *Active partner test* —

(A) ***Partnership interest under asset test.*** For purposes of paragraph (b)(3)(i) of this section, paragraph (g)(4)(i)(B) of this section applies for the measuring period only if the tested foreign corporation would not be a PFIC if section 1297(a)(1) and (2) and the regulations thereunder were applied to the tested foreign corporation without regard to any partnership interest owned by the tested foreign corporation that is not a partnership described in paragraph (g)(4)(i)(A) of this section. For purposes of the preceding sentence, the active partner test is applied on the measurement date (as defined in § 1.1297-1(f)(1)).

(B) ***Partnership income under income test.*** For purposes of paragraph (b)(3)(ii) of this section, paragraph (g)(4)(i)(B) of this section applies for the taxable year of the tested foreign corporation or for a measuring period (as defined in § 1.1297-1(f)(2)), as applicable, only if the tested foreign corporation would not be a PFIC if section 1297(a)(1) and (2) and the regulations thereunder were applied to the tested foreign corporation without regard to any partnership interest owned by the tested foreign corporation that is not a partnership described in paragraph (g)(4)(i)(A) of this section. For purposes of the preceding sentence, the active partner test is applied on the measuring date (as defined in § 1.1297-1(f)(1)) or for the taxable year, as applicable using the same period that was used under paragraph (g)(3)(ii) of this section.

(iii) ***Election.*** For any taxable year, an election may be made with respect to a partnership described in paragraph (g)(4)(i)(B) of this section to not apply the provisions of this paragraph (g)(4) to such partnership.

(iv) ***Examples.*** The following examples illustrate the rules of this paragraph (g)(4). For purposes of the examples in this paragraph (g)(4)(iv), TFC is a foreign corporation that is not a controlled foreign corporation; FC1 and FC2 are foreign corporations that are not controlled foreign corporations; FPS is a foreign partnership; TFC owns 100% of the single class of stock of FC1 and FC2; FC2 owns 10% of the value of FPS, and the remaining 90% of FPS is owned by an unrelated foreign person; and TFC, FC1, FC2, and FPS are all calendar year taxpayers.

(A) *Example 1* —

(*1*) ***Facts.*** During Year 1, FC1 generated $100x of non-passive income, FC2 generated $150x of non-passive income, and FPS generated $50x of income. On all of the measurement dates in Year 1, FC1 has assets with a value of $1000x that FC1 uses in its trade or business generating non-passive income, FC2 has assets with a value of $1500x that FC2 uses in its trade or business generating non-passive income, and FPS has assets with a value of $500x.

(*2*) ***Results*** —

(*i*) ***Active partner test with respect to partnership interest.*** Pursuant to section 1297(c) and § 1.1297-2(b)(2), TFC is treated as holding directly the assets held by FC1 and FC2. For purposes of the active partner test under paragraph (g)(4)(ii)(B) of this section, TFC does not take into account its interest in FPS to determine whether it would be a PFIC. Because 100% ($2500x/$2500x) of the assets of FC1 and FC2 that TFC is treated as directly holding, without taking into account the interest in FPS, generates non-passive income, TFC satisfies the active partner test in paragraph (g)(4)(ii)(B) of this section.

(*ii*) ***Active partner test with respect to partnership income.*** Pursuant to section 1297(c) and paragraph (b)(2) of this section, TFC is treated as if it received directly its proportionate share of income of FC1 and FC2. For purposes of the active partner test under paragraph (g)(4)(ii)(A) of this section, TFC does not take into account its interest in FPS to determine whether it would be a PFIC. Because 100% ($250x/$250x) of the income of FC1 and FC2 that TFC is treated as directly receiving, without taking into account the interest in FPS, is non-passive income, TFC satisfies the active partner test in paragraph (g)(4)(ii)(A) of this section with respect to the income of FPS.

(*iii*) ***Qualification of look-through partnership.*** For purposes of paragraph (b)(3) of this section, FPS qualifies as a look-through partnership because TFC satisfies the active partner tests of both paragraphs (g)(4)(ii)(A) and (B) of this section. Unless an election is made not to treat FPS as a look-through partnership under paragraph (g)(4)(iii) of this section, TFC is treated as receiving directly $5x of income (10% × $50x), TFC's pro rata share of the income of FPS, the character of which is determined at the level of FPS for purposes of section 1297. In addition, TFC is treated as holding directly $50x of FPS's assets (10% × $500x), TFC's proportionate share of the assets held by FPS. The character of those assets as passive or non-passive is determined in the hands of FPS for purposes of section 1297.

(B) ***Example 2 —***

(*1*) ***Facts.*** During Year 1, FC1 generated $50x of passive income, FC2 earned $175x of non-passive income, and FPS generated $50x of income. On all of the measurement dates in Year 1, FC1 has assets with a value of $1100x that produce passive income, and FC2 has assets with a value of $900x that FC2 uses in its trade or business generating non-passive income. The value of FPS is $1000x taking into account its assets and liabilities.

(*2*) ***Results —***

(*i*) ***Active partner test with respect to partnership interest.*** Pursuant to section 1297(c) and § 1.1297-2(b)(2), TFC is treated as holding directly the assets held by FC1 and FC2. For purposes of the active partner test under paragraph (g)(4)(ii)(B) of this section, TFC does not take into account its interest in FPS to determine whether it would be a PFIC. Accordingly, 55% ($1100x/$2000x) of the assets that TFC is treated as directly holding, without taking into account the interest in FPS, generate passive income.

(*ii*) ***Active partner test with respect to partnership income.*** Pursuant to section 1297(c) and § 1.1297-2(b)(2), TFC is treated as if it received directly its proportionate share of income of FC1 and FC2. For purposes of the active partner test under paragraph (g)(4)(ii)(A) of this section, TFC does not take into account its interest in FPS to determine whether it would be a PFIC. Accordingly, 77.8% ($175x/$225x) of the income that TFC is treated as directly receiving, without taking into account the interest in FPS, is non-passive income.

(*iii*) ***Failure to qualify as look-through partnership.*** TFC satisfies the active partner test in paragraph (g)(4)(ii)(A) of this section but does not satisfy the active partner test in paragraph (g)(4)(ii) (B) of this section. Therefore, FPS does not qualify as a look-though partnership. Under paragraph (b)(3)(iii) of this section, TFC's share of income with respect to FPS is treated as passive income for purposes of section 1297 and TFC's $100x interest (10% × $1000x) in FPS is treated as a passive asset for purposes of section 1297.

(5) ***LTS debt.*** The term *LTS debt* has the meaning provided in paragraph (c)(1)(ii) of this section.

(6) ***LTS lease.*** The term *LTS lease* has the meaning provided in paragraph (c)(1)(ii) of this section.

(7) ***LTS license.*** The term *LTS license* has the meaning provided in paragraph (c)(1)(ii) of this section.

(8) ***LTS obligation.*** The term *LTS obligation* has the meaning provided in paragraph (c)(1)(ii) of this section.

(9) ***LTS stock.*** The term *LTS stock* has the meaning provided in paragraph (c)(1)(i) of this section.

(10) ***Qualified affiliate.*** The term *qualified affiliate* has the meaning provided in paragraph (e)(2) of this section.

(11) ***Residual gain.*** The term *residual gain* has the meaning provided in paragraph (f)(2) of this section.

(12) ***TFC obligation.*** The term *TFC obligation* has the meaning provided in paragraph (c)(1)(ii) of this section.

(13) ***Unremitted earnings.*** The term *unremitted earnings* has the meaning provided in paragraph (f)(2) of this section.

(h) ***Applicability date.*** The rules of this section apply to taxable years of shareholders beginning on or after January 14, 2021. A shareholder may choose to apply such rules for any open taxable year beginning before January 14, 2021, provided that, with respect to a tested foreign corporation, the shareholder consistently applies the provisions of § 1.1291-1(b)(8)(iv) and (b)(8)(v)(A), (B), (C), and (D) and §§ 1.1297-1 (except that consistent treatment is not required with respect to § 1.1297-1(c)(1)(i)(A)), 1.1298-2, and 1.1298-4 for such year and all subsequent years.

[T.D. 9936, 86 FR 4557, Jan. 15, 2021, as amended at 86 FR 13648, Mar. 10, 2021]

§ 1.1297-3 Deemed sale or deemed dividend election by a U.S. person that is a shareholder of a section 1297(e) PFIC.

(a) ***In general.*** A shareholder (as defined in § 1.1291-9(j)(3)) of a foreign corporation that is a section 1297(e) passive foreign investment company (PFIC) (as defined in § 1.1291-9(j)(2)(v)) with respect to such shareholder, shall be treated for tax purposes as holding stock in a PFIC and therefore continues to be subject to taxation under section 1291 unless the shareholder makes a purging election under section 1298(b)(1). A purging election under section 1298(b)(1) is made under rules similar to the rules of section 1291(d)(2). Section 1291(d)(2) allows a shareholder to purge the continuing PFIC taint by either making a deemed sale election or a deemed dividend election.

(b) ***Application of deemed sale election rules*** —

(1) ***Eligibility to make the deemed sale election.*** A shareholder of a foreign corporation that is a section 1297(e) PFIC with respect to such shareholder may make a deemed sale election under section 1298(b)(1) by applying the rules of this paragraph (b).

(2) ***Effect of the deemed sale election.*** A shareholder making the deemed sale election with respect to a section 1297(e) PFIC shall be treated as having sold all of its stock in the section 1297(e) PFIC for its fair market value on the controlled foreign corporation (CFC) qualification date, as defined in paragraph (d) of this section. A deemed sale under this section is treated as a disposition subject to taxation under section 1291. Thus, the gain from the deemed sale is taxed as an excess distribution received on the CFC qualification date. In the case of an election made by an indirect shareholder, the amount of gain to be recognized and taxed as an excess distribution is the amount of gain that the direct owner of the stock of the PFIC would have realized on an actual sale or disposition of the stock of the PFIC indirectly owned by the shareholder. Any loss realized on the deemed sale is not recognized. After the deemed sale election, the shareholder's stock with respect to which the election was made under this paragraph (b) shall not be treated as stock in a PFIC and the shareholder shall not be subject to taxation under section 1291 with respect to such stock unless the qualified portion of the shareholder's holding period ends, as determined under section 1297(e)(2), and the foreign corporation thereafter qualifies as a PFIC under section 1297(a).

(3) ***Time for making the deemed sale election.*** Except as provided in paragraph (e) of this section, a shareholder shall make the deemed sale election under this paragraph (b) and section 1298(b)(1) in the shareholder's original or amended return for the taxable year that includes the CFC qualification date (election year). If the deemed sale election is made in an amended return, the return must be filed by a date that is within three years of the due date, as extended under section 6081, of the original return for the election year.

(4) ***Manner of making the deemed sale election.*** A shareholder makes the deemed sale election under this paragraph (b) by filing Form 8621, “Return by a Shareholder of a Passive Foreign Investment Company or Qualified Electing Fund”, with the return of the shareholder for the election year, reporting the gain as an excess distribution pursuant to section 1291(a) as if such sale occurred under section 1291(d)(2), and paying the tax and interest due on the excess distribution. A shareholder that makes the deemed sale election after the due date of the return (determined without regard to extensions) for the election year must pay additional interest, pursuant to section 6601, on the amount of underpayment of tax for that year. An electing shareholder that realizes a loss shall report the loss on Form 8621, but shall not recognize the loss.

(5) ***Adjustments to basis.*** A shareholder that makes the deemed sale election increases its adjusted basis of the PFIC stock owned directly by the amount of gain recognized on the deemed sale. If the shareholder makes the deemed sale election with respect to a PFIC of which it is an indirect shareholder, the shareholder's adjusted basis of the stock or other property owned directly by the shareholder, through which ownership of the PFIC is attributed to the shareholder, is increased by the amount of gain recognized by the shareholder. In addition, solely for purposes of determining the subsequent treatment under the Internal Revenue Code (Code) and regulations of a shareholder of the stock of the PFIC, the adjusted basis of the direct owner of the stock of the PFIC is increased by the amount of gain recognized on the deemed sale. A shareholder shall not adjust the basis of any stock with respect to which the shareholder realized a loss on the deemed sale, which loss is not recognized under paragraph (b)(2) of this section.

(6) ***Treatment of holding period.*** If a shareholder of a foreign corporation has made a deemed sale election, then, for purposes of applying sections 1291 through 1298 to such shareholder after the deemed sale, the shareholder's holding period in the stock of the foreign corporation begins on the CFC qualification date, without regard to whether the shareholder recognized gain on the deemed sale. For other purposes of the Code and regulations, this holding period rule does not apply.

(c) ***Application of deemed dividend election rules*** —

(1) ***Eligibility to make the deemed dividend election.*** A shareholder of a foreign corporation that is a section 1297(e) PFIC with respect to such shareholder may make the deemed dividend election under the rules of this paragraph (c). A deemed dividend election may be made by a shareholder whose pro rata share of the post-1986 earnings and profits of the PFIC attributable to the PFIC stock held on the CFC qualification date is zero.

(2) ***Effect of the deemed dividend election.*** A shareholder making the deemed dividend election with respect to a section 1297(e) PFIC shall include in income as a dividend its pro rata share of the post-1986 earnings and profits of the PFIC attributable to all of the stock it held, directly or indirectly on the CFC qualification date, as defined in paragraph (d) of this section. The deemed dividend is taxed under section 1291 as an excess distribution received on the CFC qualification date. The excess distribution determined under this paragraph (c) is allocated under section 1291(a)(1)(A) only to each day of the shareholder's holding period of the stock during which the foreign corporation qualified as a PFIC. For purposes of the preceding sentence, the shareholder's holding period of the PFIC stock ends on the day before the CFC qualification date. After the deemed dividend election, the shareholder's stock with respect to which the election was made under this paragraph (c) shall not be treated as stock in a PFIC and the shareholder shall not be subject to taxation under section 1291 with respect to such stock unless the qualified portion of the shareholder's holding period ends, as determined under section 1297(e)(2), and the foreign corporation thereafter qualifies as a PFIC under section 1297(a).

(3) ***Post-1986 earnings and profits defined*** —

(i) ***In general*** —

(A) ***General rule.*** For purposes of this section, the term post-1986 earnings and profits means the post-1986 undistributed earnings, within the meaning of section 902(c)(1) (determined without regard to section 902(c)(3)), as of the day before the CFC qualification date, that were accumulated and not distributed in taxable years of the PFIC beginning after 1986 and during which it was a PFIC, without regard to whether the earnings related to a period during which the PFIC was a CFC.

(B) ***Special rule.*** If the CFC qualification date is a day that is after the first day of the taxable year, the term post-1986 earnings and profits means the post-1986 undistributed earnings, within the meaning of section 902(c)(1) (determined without regard to section 902(c)(3)), as of the close of the taxable year that includes the CFC qualification date. For purposes of this computation, only earnings and profits accumulated in taxable years during which the foreign corporation was a PFIC shall be taken into account, but without regard to whether the earnings related to a period during which the PFIC was a CFC.

(ii) ***Pro rata share of post-1986 earnings and profits attributable to shareholder's stock*** —

(A) ***In general.*** A shareholder's pro rata share of the post-1986 earnings and profits of the PFIC attributable to the stock held by the shareholder on the CFC qualification date is the amount of post-1986 earnings and profits of the PFIC accumulated during any portion of the shareholder's holding period ending at the close of the day before the CFC qualification date and attributable, under the principles of section 1248 and the regulations under that section, to the PFIC stock held on the CFC qualification date.

(B) ***Reduction for previously taxed amounts.*** A shareholder's pro rata share of the post-1986 earnings and profits of the PFIC does not include any amount that the shareholder demonstrates to the satisfaction of the Commissioner (in the manner provided in paragraph (c)(5)(ii) of this section) was, pursuant to another provision of the law, previously included in the income of the shareholder, or of another U.S. person if the shareholder's holding period of the PFIC stock includes the period during which the stock was held by that other U.S. person.

(4) ***Time for making the deemed dividend election.*** Except as provided in paragraph (e) of this section, the shareholder shall make the deemed dividend election under this paragraph (c) and section 1298(b)(1) in the shareholder's original or amended return for the taxable year that includes the CFC qualification date (election year). If the deemed dividend election is made in an amended return, the return must be filed by a date that is within three years of the due date, as extended under section 6081, of the original return for the election year.

(5) ***Manner of making the deemed dividend election*** —

(i) ***In general.*** A shareholder makes the deemed dividend election by filing Form 8621 and the attachment to Form 8621 described in paragraph (c)(5)(ii) of this section with the return of the shareholder for the election year, reporting the deemed dividend as an excess distribution pursuant to section 1291(a)(1), and paying the tax and interest due on the excess distribution. A shareholder that makes the deemed dividend election after the due date of the return (determined without regard to extensions) for the election year must pay additional interest, pursuant to section 6601, on the amount of underpayment of tax for that year.

(ii) ***Attachment to Form 8621.*** The shareholder must attach a schedule to Form 8621 that demonstrates the calculation of the shareholder's pro rata share of the post-1986 earnings and profits of the PFIC that is treated as distributed to the shareholder on the CFC qualification date, pursuant to this paragraph (c). If the shareholder is claiming an exclusion from its pro rata share of the post-1986 earnings and profits for an amount previously included in its income or the income of another U.S. person, the shareholder must include the following information:

(A) The name, address and taxpayer identification number of each U.S. person that previously included an amount in income, the amount previously included in income by each such U.S. person, the provision of law, pursuant to which the amount was previously included in income, and the taxable year or years of inclusion of each amount.

(B) A description of the transaction pursuant to which the shareholder acquired, directly or indirectly, the stock of the PFIC from another U.S. person, and the provision of law pursuant to which the shareholder's holding period includes the period the other U.S. person held the CFC stock.

(6) ***Adjustments to basis.*** A shareholder that makes the deemed dividend election increases its adjusted basis of the stock of the PFIC owned directly by the shareholder by the amount of the deemed dividend. If the shareholder makes the deemed dividend election with respect to a PFIC of which it is

an indirect shareholder, the shareholder's adjusted basis of the stock or other property owned directly by the shareholder, through which ownership of the PFIC is attributed to the shareholder, is increased by the amount of the deemed dividend. In addition, solely for purposes of determining the subsequent treatment under the Code and regulations of a shareholder of the stock of the PFIC, the adjusted basis of the direct owner of the stock of the PFIC is increased by the amount of the deemed dividend.

(7) ***Treatment of holding period.*** If the shareholder of a foreign corporation has made a deemed dividend election, then, for purposes of applying sections 1291 through 1298 to such shareholder after the deemed dividend, the shareholder's holding period of the stock of the foreign corporation begins on the CFC qualification date. For other purposes of the Code and regulations, this holding period rule does not apply.

(8) ***Coordination with section 959(e).*** For purposes of section 959(e), the entire deemed dividend is treated as having been included in gross income under section 1248(a).

(d) ***CFC qualification date.*** For purposes of this section, the CFC qualification date is the first day on which the qualified portion of the shareholder's holding period in the section 1297(e) PFIC begins, as determined under section 1297(e).

(e) ***Late purging elections requiring special consent*** —

(1) ***In general.*** This section prescribes the exclusive rules under which a shareholder of a section 1297(e) PFIC may make a section 1298(b)(1) election after the time prescribed in paragraph (b)(3) or (c)(4) of this section for making a deemed sale or a deemed dividend election has elapsed (late purging election). Therefore, a shareholder may not seek such relief under any other provisions of the law, including § 301.9100-3 of this chapter. A shareholder may request the consent of the Commissioner to make a late deemed sale or deemed dividend election for the taxable year of the shareholder that includes the CFC qualification date provided the shareholder satisfies the requirements set forth in this paragraph (e). The Commissioner may, in his discretion, grant relief under this paragraph (e) only if—

(i) In a case where the shareholder is requesting consent under this paragraph (e) after December 31, 2005, the shareholder requests such consent before a representative of the Internal Revenue Service (IRS) raises upon audit the PFIC status of the foreign corporation for any taxable year of the shareholder;

(ii) The shareholder has agreed in a closing agreement with the Commissioner, described in paragraph (e)(3) of this section, to eliminate any prejudice to the interests of the U.S. government, as determined under paragraph (e)(2) of this section, as a consequence of the shareholder's inability to file amended returns for its taxable year in which the CFC qualification date falls or an earlier closed taxable year in which the shareholder has taken a position that is inconsistent with the treatment of the foreign corporation as a PFIC; and

(iii) The shareholder satisfies the procedural requirements set forth in paragraph (e)(3) of this section.

(2) ***Prejudice to the interests of the U.S. government.*** The interests of the U.S. government are prejudiced if granting relief would result in the shareholder having a lower tax liability (other than by a de minimis amount), taking into account applicable interest charges, for the taxable year that includes the CFC qualification date (or a prior taxable year in which the taxpayer took a position on a return that was inconsistent with the treatment of the foreign corporation as a PFIC) than the shareholder

would have had if the shareholder had properly made the section 1298(b)(1) election in the time prescribed in paragraph (b)(2) or (c)(3) of this section (or had not taken a position in a return for an earlier year that was inconsistent with the status of the foreign corporation as a PFIC). The time value of money is taken into account for purposes of this computation.

(3) ***Procedural requirements*** —

(i) ***In general.*** The amount due with respect to a late purging election is determined in the same manner as if the purging election had been timely filed. However, the shareholder is also liable for interest on the amount due, pursuant to section 6601, determined for the period beginning on the due date (without extensions) for the taxpayer's income tax return for the year in which the CFC qualification date falls and ending on the date the late purging election is filed with the IRS.

(ii) ***Filing instructions.*** A late purging election is made by filing a completed Form 8621-A, "Return by a Shareholder Making Certain Late Elections to End Treatment as a Passive Foreign Investment Company."

(4) ***Time and manner of making late election*** —

(i) ***Time for making a late purging election.*** A shareholder may make a late purging election in the manner provided in paragraph (e)(4)(ii) of this section at any time. The date the election is filed with the IRS will determine the amount of interest due under paragraph (e)(3) of this section.

(ii) ***Manner of making a late purging election.*** A shareholder makes a late purging election by completing Form 8621-A in the manner required by that form and this section and filing that form with the Internal Revenue Service, DP 8621-A, Ogden, UT 84201.

(5) ***Multiple late elections*** —

(i) ***General rule.*** A shareholder of a foreign corporation may make multiple late purging elections under the rules of this paragraph (e) or § 1.1298-3(e) to the same extent such multiple purging elections could have been made if those purging elections had been filed within the time prescribed under paragraph (b)(3) or (c)(4) of this section or § 1.1298-3(b)(3) or (c)(4).

(ii) ***Example.*** The rule of this paragraph (e)(5) is illustrated by the following example:

> *Example.* (i) In 1991, X, a U.S. person, acquired a five percent interest in the stock of FC, a controlled foreign corporation, as defined in section 957(a). In years 1991, 1992, 1995, 1996 and 1997, FC satisfied either the income test or the asset test of section 1297(a). X did not make a QEF election with regard to FC. In years 1993 and 1994, FC did not satisfy either the income or the asset test of section 1297(a). In 1998, X acquired additional stock in FC such that X was a U.S. shareholder (as defined in section 951(b)) of FC.
> (ii) Because FC qualified as a PFIC in 1991, FC will be treated as a PFIC with respect to all of the stock held by X, under the "once a PFIC always a PFIC" rule of section 1298(b)(1), unless X makes an election to purge the PFIC taint. Because X ceased to satisfy either the income or asset test in 1993, X could have made an election under § 1.1298-3 to purge the PFIC taint of FC for that year if X had filed such an election within

the time prescribed under § 1.1298-3(b)(3) or (c)(4). If X had done so, the stock X held in FC would not be treated as stock in a PFIC for the years 1993 and 1994. Because X became a U.S. shareholder of FC in 1998, X then could have made a deemed sale or deemed dividend election under this section to purge the PFIC taint of FC for the years 1995 through 1997 if X had filed within the time prescribed under paragraph (b)(3) or (c)(4) of this section. Accordingly, X may make a late purging election to purge the PFIC taint of FC for the years 1991 and 1992 under the rules of § 1.1298-3(e) and may also make a late purging election to purge the PFIC taint of FC for the years 1995 through 1997 under the rules of this paragraph (e).

(f) ***Effective/applicability date.*** The rules of this section are applicable as of December 8, 2005.

[T.D. 9360, 72 FR 54821, Sept. 27, 2007, as amended at 72 FR 58758, Oct. 17, 2007]

§ 1.1297-4 Qualifying insurance corporation.

(a) ***Scope.*** This section provides rules for determining whether a foreign corporation is a qualifying insurance corporation for purposes of section 1297(f). Paragraph (b) of this section provides the general rule for determining whether a foreign corporation is a qualifying insurance corporation. Paragraph (c) of this section describes the 25 percent test in section 1297(f)(1)(B). Paragraph (d) of this section contains rules for applying the alternative facts and circumstances test in section 1297(f)(2). Paragraph (e) of this section contains rules limiting the amount of applicable insurance liabilities for purposes of the 25 percent test described in paragraph (c) of this section and the alternative facts and circumstances test described in paragraph (d) of this section. Paragraph (f) of this section provides definitions that apply for purposes of this section. Paragraph (g) of this section provides the applicability date of this section.

(b) ***Qualifying insurance corporation.*** For purposes of section 1297(b)(2)(B), this section, and §§ 1.1297-5 and 1.1297-6, with respect to a U.S. person, a qualifying insurance corporation (QIC) is a foreign corporation that—

(1) Is an insurance company as defined in section 816(a) that would be subject to tax under subchapter L if the corporation were a domestic corporation; and

(2) Satisfies—

(i) The 25 percent test described in paragraph (c) of this section; or

(ii) The requirements for an election to apply the alternative facts and circumstances test as described in paragraph (d) of this section and a United States person has made an election as described in paragraph (d)(5) of this section.

(c) ***25 percent test.*** A foreign corporation satisfies the 25 percent test if the amount of its applicable insurance liabilities exceeds 25 percent of its total assets. This determination is made on the basis of the applicable insurance liabilities and total assets reported on the corporation's applicable financial statement for the applicable reporting period.

(d) ***Election to apply the alternative facts and circumstances test*** —

(1) ***In general.*** A United States person that owns stock in a foreign corporation that fails to qualify as a QIC solely because of the 25 percent test may elect to treat the stock of the corporation as stock of a QIC if the foreign corporation—

(i) Is predominantly engaged in an insurance business as described in paragraph (d)(2) of this section;

(ii) Failed to satisfy the 25 percent test solely due to runoff-related circumstances, as described in paragraph (d)(3) of this section, or rating-related circumstances, as described in paragraph (d)(4) of this section; and

(iii) Reports an amount of applicable insurance liabilities that is at least 10 percent of the amount of the total assets on the corporation's applicable financial statement for the applicable reporting period.

(2) ***Predominantly engaged in an insurance business*** —

(i) ***In general.*** A foreign corporation is not considered predominantly engaged in an insurance business in any taxable year unless more than half of the business of the foreign corporation is the issuing of insurance or annuity contracts or the reinsuring of risks underwritten by insurance companies. This determination is made based on the character of the business actually conducted in the taxable year. The fact that a foreign corporation has been holding itself out as an insurer for a long period is not determinative of whether the foreign corporation is predominantly engaged in an insurance business.

(ii) ***Facts and circumstances.*** Facts and circumstances to consider in determining whether a foreign corporation is predominantly engaged in an insurance business include (but are not limited to)—

(A) Claims payment patterns for the current year and prior years;

(B) The foreign corporation's loss exposure as calculated for a regulator or for a credit rating agency, or, if those are not calculated, for internal pricing purposes;

(C) The percentage of gross receipts constituting premiums for the current and prior years; and

(D) The number and size of insurance contracts issued or taken on through reinsurance by the foreign corporation.

(iii) ***Examples of facts indicating a foreign corporation is not predominantly engaged in an insurance business.*** Examples of facts that may indicate a foreign corporation is not predominantly engaged in an insurance business include (but are not limited to)—

(A) A small overall number of insured risks with low likelihood but large potential costs;

(B) Employees and agents of the foreign corporation focused to a greater degree on investment activities than underwriting activities; and

(C) Low loss exposure.

(3) ***Runoff-related circumstances.*** During the annual reporting period covered by the applicable financial statement, a foreign corporation fails to satisfy the 25 percent test solely due to runoff-related circumstances only if the corporation—

(i) Was engaged in the process of terminating its pre-existing, active conduct of an insurance business (within the meaning of section 1297(b)(2)(B)) under the supervision of its applicable insurance regulatory body or pursuant to any court-ordered receivership proceeding (liquidation, rehabilitation, or conservation) and fails to satisfy the 25 percent test because the corporation is required to hold additional assets due to its business being in runoff;

(ii) Has no plan or intention to enter into, and did not issue or enter into, any insurance, annuity, or reinsurance contract, other than a contractually obligated renewal of an existing insurance contract or a reinsurance contract pursuant to and consistent with the termination of its active conduct of an insurance business; and

(iii) Made payments during the annual reporting period covered by the applicable financial statement as required to satisfy claims under insurance, annuity, or reinsurance contracts.

(4) ***Rating-related circumstances.*** A foreign corporation fails to satisfy the 25 percent test solely due to rating-related circumstances only if—

(i) The 25 percent test is not met due to capital and surplus amounts that a generally recognized credit rating agency considers necessary for the foreign corporation to obtain a public rating with respect to its financial strength, and the foreign corporation maintains such capital and surplus in order to obtain the minimum credit rating necessary for the annual reporting period by the foreign corporation to be able to write the business in its regulatory or board supervised business plan. This paragraph (c)(4)(i) applies only if the foreign corporation is a mortgage insurance company (as defined in paragraph (f)(10) of this section) or if more than half of the foreign corporation's net written premiums for the annual reporting period (or the average of the net written premiums for the foreign corporation's annual reporting period and the two immediately preceding annual reporting periods) are from insurance coverage against the risk of loss from a catastrophic loss event (that is, a low frequency but high severity loss event); or

(ii) The foreign corporation is a financial guaranty insurance company (as defined in paragraph (f)(5) of this section).

(5) ***Election*** —

(i) ***In general.*** A United States person may make the election under section 1297(f)(2) for its taxable year if the foreign corporation directly provides the United States person a statement, signed by a responsible officer of the foreign corporation or an authorized representative of the foreign corporation, or the foreign corporation (or its foreign parent corporation on its behalf) makes a publicly available statement (such as in a public filing, disclosure statement, or other notice provided to United States persons that are shareholders of the foreign corporation) that it satisfied the requirements of section 1297(f)(2) and paragraph (d)(1) of this section during the foreign corporation's applicable reporting period. However, a United States person may not rely upon any statement by the foreign corporation (or its foreign parent corporation) to make the election under section 1297(f)(2) if the shareholder knows or has reason to know based on reasonably accessible information that the statement made by the foreign corporation (or its foreign parent corporation) was incorrect.

(ii) ***Information provided by foreign corporation.*** In addition to a statement that the foreign corporation satisfied the requirements of section 1297(f)(2) and paragraph (d)(1) of this section, the statement described in paragraph (d)(5)(i) of this section also must include:

(A) The ratio of applicable insurance liabilities to total assets for the applicable reporting period; and

(B) A statement indicating whether the failure to satisfy the 25 percent test described in paragraph (c) of this section was the result of runoff-related or rating-related circumstances, along with a brief description of those circumstances.

(iii) ***Time and manner for making the election.*** Except as provided in paragraph (d)(5)(iv), the election described in paragraph (d)(1) of this section may be made by a United States person who owns stock in the foreign corporation by completing the appropriate part of Form 8621 (or successor form) for each taxable year of the United States person in which the election applies. A United States person must attach the Form 8621 (or successor form) to its original or amended Federal income tax return for the taxable year of the United States person to which the election relates. A United States person can attach the Form 8621 (or successor form) to an amended return for the taxable year of the United States person to which the election relates if the United States person can demonstrate the reason for not filing the form with its original return was due to reasonable cause.

(iv) ***Deemed election for small shareholders in publicly traded companies*** —

(A) ***In general.*** A United States person who owns publicly traded stock in a foreign corporation will be deemed to make the election under section 1297(f)(2) with respect to the foreign corporation and its subsidiaries if the following requirements are satisfied:

(*1*) The stock of the foreign corporation that is owned by the United States person (including stock owned indirectly) has a value of $25,000 or less ($50,000 or less in the case of a joint return) on the last day of the United States person's taxable year and on any day during the taxable year on which the United States person disposes of stock of the foreign corporation; and

(*2*) If the United States person owns stock of the foreign corporation indirectly through a domestic partnership, domestic trust, domestic estate, or S corporation (a *domestic pass-through entity*), the stock of the foreign corporation that is owned by the domestic pass-through entity has a value of $25,000 or less on the last day of the taxable year of the domestic pass-through entity that ends with or within the United States person's taxable year and on any day during the taxable year of the domestic pass-through entity on which it disposes of stock of the foreign corporation.

(B) ***Publicly traded stock.*** For the purpose of paragraph (d)(5)(iv)(A) of this section, stock is publicly traded if it would be treated as marketable stock within the meaning of section 1296(e) and § 1.1296-2 (without regard to § 1.1296-2(d)) if the election under section 1297(f)(2) is not made.

(v) ***Options.*** If a United States person is considered to own stock in a foreign corporation by reason of holding an option, the United States person may make the election under section 1297(f)(2) (or may be deemed to make an election under paragraph (d)(5)(iv) of this section) with respect to the foreign corporation or its subsidiaries in the same manner as if the United States person owned stock in the foreign corporation.

(6) ***Stock ownership.*** For purposes of this section, ownership of stock in a foreign corporation means either direct ownership of such stock or indirect ownership determined using the rules specified in § 1.1291-1(b)(8) (but without regard to the 50 percent ownership requirement of § 1.1291-1(b)(8)(ii)(A)).

(e) ***Rules limiting the amount of applicable insurance liabilities*** —

(1) ***In general.*** For purposes of determining whether a foreign corporation satisfies the 25 percent test described in paragraph (c) of this section or the 10 percent test described in paragraph (d)(1)(iii) of this section, the rules of this paragraph (e) apply to limit the amount of applicable insurance liabilities of the foreign corporation.

(2) ***General limitation on applicable insurance liabilities.*** The amount of applicable insurance liabilities may not exceed any of the amounts described in paragraphs (e)(2)(i) to (iii) of this section. This paragraph (e)(2) applies after applying paragraph (e)(3) of this section.

(i) The amount of applicable insurance liabilities of the foreign corporation shown on any financial statement that the foreign corporation filed or was required to file with its applicable insurance regulatory body for the financial statement's applicable reporting period;

(ii) If the foreign corporation's applicable financial statement is prepared on the basis of either GAAP or IFRS, the amount of the foreign corporation's applicable insurance liabilities determined on the basis of its applicable financial statement, whether or not the foreign corporation files the statement with its applicable insurance regulatory body; or

(iii) The amount of applicable insurance liabilities required for the foreign corporation by the applicable law or regulation of the jurisdiction of the applicable insurance regulatory body at the end of the applicable reporting period (or a lesser amount of applicable insurance liabilities, if the foreign corporation is holding a lesser amount as a permitted practice of the applicable regulatory body).

(3) ***Discounting.*** If an applicable financial statement or a financial statement described in paragraph (e)(2) of this section is prepared on the basis of an accounting method other than GAAP or IFRS and does not discount applicable insurance liabilities on an economically reasonable basis, the amount of applicable insurance liabilities may not exceed the amount of applicable insurance liabilities on the financial statement reduced by applying the discounting methods that would apply under either GAAP or IFRS to the insurance or annuity contracts to which the applicable insurance liabilities at issue relate. The foreign corporation may choose whether to apply either GAAP or IFRS discounting methods for this purpose.

(4) [Reserved]

(5) [Reserved]

(f) ***Definitions.*** The following definitions apply for purposes of this section.

(1) ***Applicable financial statement.*** The term *applicable financial statement* means the foreign corporation's financial statement prepared for financial reporting purposes, listed in paragraphs (f)(1)(i) through (iii) of this section, and that has the highest priority. The financial statements are, in order of descending priority—

(i) ***GAAP statements.*** A financial statement that is prepared in accordance with GAAP;

(ii) ***IFRS statements.*** A financial statement that is prepared in accordance with IFRS; or

(iii) ***Regulatory annual statement.*** A financial statement required to be filed with the applicable insurance regulatory body.

(iv) [Reserved]

(2) ***Applicable insurance liabilities*** —

(i) ***In general.*** The term *applicable insurance liabilities* means, with respect to any life or property and casualty insurance business—

(A) Reported losses (which are expected payments to policyholders for sustained losses related to insured events under an insurance contract that have occurred and have been reported to, but not paid by, the insurer as of the financial statement end date), and incurred but not reported losses (which are expected payments to policyholders for sustained losses relating to insured events under an insurance contract that have occurred but have not been reported to the insurer as of the financial statement end date);

(B) Unpaid loss adjustment expenses (including reasonable estimates of anticipated loss adjustment expenses) associated with investigating, defending, settling, and adjusting paid losses, unpaid reported losses, and incurred but not reported losses (of the type described in paragraph (f)(2)(i)(A) of this section) as of the financial statement end date; and

(C) The aggregate amount of reserves (excluding deficiency, contingency, or unearned premium reserves) held as of the financial statement end date to mature or liquidate potential, future claims for death, annuity, or health benefits that may become payable under contracts providing, at the time the reserve is computed, coverage for mortality or morbidity risks;

(D) Provided, however, that—

(*1*) No item or amount shall be taken into account more than once in determining applicable insurance liabilities;

(*2*) The applicable insurance liabilities eligible to be taken into account in applying this paragraph (f)(2) include only the applicable insurance liabilities of the foreign corporation whose QIC status is being determined; and

(*3*) [Reserved]

(ii) ***Amounts not specified in paragraph (f)(2)(i) of this section.*** Amounts not specified in paragraph (f)(2)(i) of this section are not applicable insurance liabilities. For example, the term applicable insurance liability does not include any amount held by an insurance company as a deposit liability that is not an insurance liability, such as a funding agreement, a guaranteed investment contract, premium or other deposit funds, structured settlements, or any other substantially similar contract issued by an insurance company. The term applicable insurance liabilities also does not include the amount of any reserve for a life insurance or annuity contract the payments of which do not depend on the life or life expectancy of one or more individuals.

(3) ***Applicable insurance regulatory body.*** The term *applicable insurance regulatory body* means the entity that has been established by law to license or authorize a corporation to engage in an insurance business, to regulate insurance company solvency, and, in the case of an applicable financial statement described in paragraph (f)(1)(iii), is the entity to which the applicable financial statement is provided.

(4) ***Applicable reporting period.*** The term *applicable reporting period* is the last annual reporting period for a financial statement ending with or within the taxable year of a U.S. person owning stock in a foreign corporation, within the meaning of paragraph (d)(6) of this section.

(5) ***Financial guaranty insurance company.*** The term *financial guaranty insurance company* means any insurance company whose sole business is to insure or reinsure only the type of business written by, or that would be permitted to be written by, a company licensed under, and compliant with, a U.S. state law, modeled after the Financial Guaranty Insurance Guideline as established by National Association of Insurance Companies, that specifically governs the licensing and regulation of financial guaranty insurance companies.

(6) ***Financial statements*** —

(i) ***In general.*** The term *financial statement* means a statement prepared for a legal entity for a reporting period in accordance with the rules of a financial accounting or statutory accounting standard that includes a complete balance sheet, statement of income, and a statement of cash flows (or equivalent statements under the applicable reporting standard).

(ii) [Reserved]

(iii) [Reserved]

(7) ***Generally accepted accounting principles or GAAP.*** The term *generally accepted accounting principles* or *GAAP* means United States generally accepted accounting principles described in standards established and made effective by the Financial Accounting Standards Board.

(8) ***Insurance business.*** For purposes of this section, § 1.1297-5, and § 1.1297-6, *insurance business* means the business of issuing insurance and annuity contracts and the reinsuring of risks underwritten by insurance companies, together with those investment activities and administrative services that are required to support (or are substantially related to) insurance, annuity, or reinsurance contracts issued or entered into by the foreign corporation.

(9) ***International financial reporting standards* or *IFRS.*** The term *international financial reporting standards* or *IFRS* means accounting standards established and made effective by the International Accounting Standards Board.

(10) ***Mortgage insurance company.*** For purposes of this section, *mortgage insurance company* means any insurance company whose sole business is to insure or reinsure against a lender's loss of all or a portion of the principal amount of a mortgage loan upon default of the mortgagor.

(11) ***Total assets.*** For purposes of section 1297(f) and this section, a foreign corporation's *total assets* are the aggregate value of the real property and personal property that the foreign corporation reports on its applicable financial statement as of the financial statement end date.

(g) ***Applicability date.*** The rules of this section apply to taxable years of shareholders beginning on or after January 14, 2021. A shareholder may choose to apply such rules for any open taxable year beginning after December 31, 2017 and before January 14, 2021, provided that, with respect to a tested foreign corporation, it consistently applies the provisions of this section and § 1.1297-6 for such year and all subsequent years.

[T.D. 9936, 86 FR 4571, Jan. 15, 2021, as amended at 86 FR 13648, Mar. 10, 2021]

§ 1.1297-5 [Reserved]

§ 1.1297-6 Exception from the definition of passive income for active insurance income.

(a) ***Scope.*** This section provides rules pertaining to the exception from passive income under section 1297(b)(2)(B) for income derived in the active conduct of an insurance business and rules related to certain income of a qualifying domestic insurance corporation. Paragraph (b) of this section provides a general rule that excludes from passive income certain income of a qualifying insurance corporation (QIC), as defined in § 1.1297-4(b), and certain income of a qualifying domestic insurance corporation. Paragraph (c) of this section provides rules excluding certain assets for purposes of the passive asset test under section 1297(a)(2). Paragraph (d) of this section provides rules concerning the treatment of income and assets of certain look-through subsidiaries and look-through partnerships of a QIC. Paragraph (e) of this section provides rules relating to qualifying domestic insurance corporations. Paragraph (f) of this section provides the applicability date of this section.

(b) ***Exclusion from passive income of active insurance income.*** For purposes of section 1297 and § 1.1297-1, passive income does not include—

(1) Income that a QIC derives in the active conduct of an insurance business (within the meaning of section 1297(b)(2)(B)); and

(2) Income of a qualifying domestic insurance corporation.

(c) ***Exclusion of assets for purposes of the passive asset test under section 1297(a)(2).*** For purposes of section 1297 and § 1.1297-1, passive assets (as defined in § 1.1297-1(f)(5)), do not include—

(1) Assets of a QIC available to satisfy liabilities of the QIC related to its insurance business (as defined in § 1.1297-4(f)(8)), if the QIC is engaged in the active conduct of an insurance business (within the meaning of section 1297(b)(2)(B)); and

(2) Assets of a qualifying domestic insurance corporation.

(d) ***Treatment of income and assets of certain look-through subsidiaries and look-through partnerships for purposes of the section 1297(b)(2)(B) exception*** —

(1) ***General rule.*** For purposes of applying paragraphs (b)(1) and (c)(1) of this section, a QIC is treated as receiving the income or holding the assets of a look-through subsidiary or look-through partnership to the extent provided in section 1297(c) and § 1.1297-2(b)(2) or § 1.1297-2(b)(3). Subject to the limitation of paragraph (d)(2) of this section, a QIC's proportionate share of the income or assets of a look-through subsidiary or look-through partnership may be treated as earned or held directly by the QIC, and thus as non-passive under paragraphs (b)(1) and (c)(1) of this section, if the requirements of those paragraphs are satisfied.

(2) ***Limitation.*** A QIC that is engaged in the active conduct of an insurance business (within the meaning of section 1297(b)(2)(B)) may not treat its proportionate share of the income or assets of a look-through subsidiary or look-through partnership as non-passive to the extent that it exceeds the greater of—

(i) The QIC's proportionate share of the income or assets, respectively, of the look-through subsidiary or look-through partnership multiplied by a fraction, the numerator of which is the net equity value of the interests held by the QIC in the look-through subsidiary or look-through partnership, and the denominator of which is the value of the QIC's proportionate share of the assets of the look-through subsidiary or look-through partnership; and

(ii) The QIC's proportionate share of the income or assets, respectively, of the look-through subsidiary or look-through partnership that are treated as non-passive in the hands of the look-through subsidiary or look-through partnership.

(3) ***Examples.*** The following examples illustrate the rules of this section.

(i) ***Example 1: QIC holds all the stock of an investment subsidiary*** —

(A) ***Facts.***

(*1*) F1 is a foreign corporation. In Year 1, F1 meets the definition of a QIC under section 1297(f) and § 1.1297-4 and is engaged in the active conduct of an insurance business within the meaning of section 1297(b)(2)(B). Throughout Year 1, F1 owns all the stock of F2, a foreign corporation that is not a QIC and is engaged solely in the investment of passive assets. The stock of F2 is an asset that is available to satisfy liabilities of F1 related to its insurance business within the meaning of paragraph (c)(1) of this section. The assets of F1 are measured on the basis of value under § 1.1297-1(d)(1)(v)(C).

(*2*) Throughout Year 1, F2 owns assets with a value of $1,000x and adjusted bases of $500x, all of which are treated as passive in the hands of F2. F2 has outstanding debt with a principal amount of $250x. On the financial statement end date of F1's applicable financial statement, the net equity value of the F2 stock held by F1 is $750x. In Year 1, F2 earned $100x of income that is treated as passive in the hands of F2.

(B) ***Result*** —

(*1*) Because F1 owns all of the stock of F2, F2 is a look-through subsidiary of F1 within the meaning of § 1.1297-2(g)(3). Under section 1297(c) and § 1.1297-2(b)(2), F1 is treated as if it held 100% of the assets of F2 and received directly 100% of the income of F2. Under paragraph (d)(1) of this section, because F1 is engaged in the active conduct of an insurance business and the stock of F2 is an asset that is available to satisfy the insurance liabilities of F1, F1 treats its proportionate share of the income and assets of F2 as non-passive. The amount of income and assets that is treated as non-passive is subject to the limitation of paragraph (d)(2) of this section.

(*2*) Under paragraph (d)(2) of this section, the amount of F1's proportionate share of F2's income that is treated as non-passive cannot exceed the greater of two amounts: $75x, which is F1's proportionate share of F2's income ($100x) multiplied by 75% (the

net equity value of the F2 stock held by F1, which is $750x, divided by the value of F1's proportionate share of F2's assets, which is $1,000x); and zero, which is F1's proportionate share of the income of F2 that is treated as non-passive in the hands of F2. Therefore, for the purpose of characterizing F1's proportionate share of F2's income, $75x is treated as non-passive, and $25x is treated as passive.

(3) Under paragraph (d)(2) of this section, the amount of F1's proportionate share of F2's assets that is treated as non-passive cannot exceed the greater of two amounts: $750x, which is F1's proportionate share of F2's assets ($1,000x) multiplied by 75% (the net equity value of the F2 stock held by F1, which is $750x, divided by the value of F1's proportionate share of F2's assets, which is $1,000x); and zero, which is F1's proportionate share of the assets of F2 that are treated as non-passive in the hands of F2. Therefore, for the purpose of characterizing F1's proportionate share of the assets of F2, $750x is treated as non-passive, and $250x is treated as passive.

(C) ***Alternative facts*** —

(1) ***Facts.*** The facts are the same as in paragraph (d)(3)(i)(A) of this section (paragraph (A) of this Example 1), except that the assets of F1 are measured on the basis of adjusted basis under § 1.1297-1(d)(1)(v)(C) pursuant to a valid election under § 1.1297-1(d)(1)(iii).

(2) ***Result.*** The result with respect to F1's proportionate share of the income of F2 is the same as in paragraph (d)(3)(i)(B)(2) of this section (paragraph (B)(2) of this Example 1). Because the assets of F1 are measured on the basis of adjusted basis under § 1.1297-1(d)(1)(v)(C), F1's proportionate share of the passive assets of F2 is equal to $500x (100% of $500x adjusted bases). Under paragraph (d)(2) of this section, the amount of F1's proportionate share of F2's assets that may be treated as non-passive cannot exceed the greater of two amounts: $375x, which is F1's proportionate share of F2's passive assets ($500x) multiplied by 75% (the net equity value of the F2 stock held by F1, which is $750x, divided by the value of F1's proportionate share of F2's assets, which is $1,000x); and zero, which is F1's proportionate share of the assets of F2 that are treated as non-passive in the hands of F2. Therefore, for the purpose of characterizing F1's proportionate share of the assets of F2, $375x is treated as non-passive, and $125x is treated as passive.

(ii) ***Example 2: QIC holds all the stock of an operating subsidiary*** —

(A) ***Facts.***

(1) F1 is a foreign corporation. In Year 1, F1 meets the definition of a QIC under section 1297(f) and § 1.1297-4 and is engaged in the active conduct of an insurance business within the meaning of section 1297(b)(2)(B). Throughout Year 1, F1 owns all the stock of F2, a foreign corporation engaged in a manufacturing business that is not a QIC. The stock of F2 is an asset that is available to satisfy liabilities of F1 related to its insurance business within the meaning of paragraph (c)(1) of this section. The assets of F1 are measured on the basis of value under § 1.1297-1(d)(1)(v)(C).

(2) Throughout Year 1, F2 owns assets with a value of $1,200x, of which $1,000x is treated as non-passive and $200x is treated as passive in the hands of F2. F2 has outstanding debt of $600x. On the financial statement end date of F1's applicable

financial statement, the net equity value of the F2 stock held by F1 is $600x. In Year 1, F2 earned $120x of income, of which, in the hands of F2, $100x is treated as non-passive and $20x is treated as passive.

(B) ***Result*** —

(*1*) Because F1 owns all the stock of F2, F2 is a look-through subsidiary of F1 within the meaning of § 1.1297-2(g)(3). Under section 1297(c) and § 1.1297-2(b)(2), F1 is treated as if it held 100% of the assets of F2 and received directly 100% of the income of F2. Under paragraph (d)(1) of this section, because F1 is engaged in the active conduct of an insurance business and the stock of F2 is an asset that is available to satisfy the insurance liabilities of F1, F1 treats its proportionate share of the income and assets of F2 as non-passive. The amount of income and assets that is treated as non-passive is subject to the limitation of paragraph (d)(2) of this section.

(*2*) Under paragraph (d)(2) of this section, the amount of F1's proportionate share of F2's income that is treated as non-passive cannot exceed the greater of two amounts: $60x, which is F1's proportionate share of F2's income ($120x) multiplied by 50% (the net equity value of the F2 stock held by F1, which is $600x, divided by the value of F1's proportionate share of F2's assets, which is $1,200x); and $100x, which is F1's proportionate share of the income of F2 that is treated as non-passive in the hands of F2. Therefore, for the purpose of characterizing F1's proportionate share of F2's income, $100x is treated as non-passive, and $20x is treated as passive.

(*3*) Under paragraph (d)(2) of this section, the amount of F1's proportionate share of F2's assets that is treated as non-passive cannot exceed the greater of two amounts: $600x, which is F1's proportionate share of F2's income ($1,200x) multiplied by 50% (the net equity value of the F2 stock held by F1, which is $600x, divided by the value of F1's proportionate share of F2's assets, which is $1,200x); and $1,000x, which is F1's proportionate share of the assets of F2 that are treated as non-passive in the hands of F2. Therefore, for the purpose of characterizing F1's proportionate share of the assets of F2, $1,000x is treated as non-passive, and $200x is treated as passive.

(e) ***Qualifying domestic insurance corporation*** —

(1) ***General rule.*** A domestic corporation (or a foreign corporation that is treated as a domestic corporation pursuant to a valid section 953(d) election and that computes its reserves as a domestic insurance company would under subchapter L) is a qualifying domestic insurance corporation if it is—

(i) Subject to tax as an insurance company under subchapter L of the Internal Revenue Code;

(ii) Subject to federal income tax on its net income; and

(iii) A look-through subsidiary of a tested foreign corporation.

(2)-(3) [Reserved]

(f) ***Applicability date.*** The rules of this section apply to taxable years of shareholders beginning on or after January 14, 2021. A shareholder may choose to apply such rules for any open taxable year beginning after December 31, 2017 and before January 14, 2021, provided that, with respect to a tested foreign corporation, it consistently applies the provisions of this section and § 1.1297-4, for such year and all subsequent years.

[T.D. 9936, 86 FR 4571, Jan. 15, 2021]

§ 1.1298-0 Passive foreign investment company—table of contents.

This section contains a listing of the paragraph headings for §§ 1.1298-1, 1.1298-2, 1.1298-3, and 1.1298-4.

§ 1.1298-1 Section 1298(f) annual reporting requirements for United States persons that are shareholders of a passive foreign investment company.

(a) Overview.

(b) Requirement to file.

(1) General rule.

(2) Additional requirement to file for certain indirect shareholders.

(i) General rule.

(ii) Exception to indirect shareholder reporting for certain QEF inclusions and MTM inclusions.

(3) Special rules for estates and trusts.

(i) Domestic liquidating trusts and fixed investment trusts.

(ii) Beneficiaries of foreign estates and trusts.

(c) Exceptions.

(1) Exception if shareholder is a tax-exempt entity.

(2) Exception if aggregate value of shareholder's PFIC stock is $25,000 or less, or value of shareholder's indirect PFIC stock is $5,000 or less.

(i) General rule.

(ii) Determination of the $25,000 threshold in the case of indirect ownership.

(iii) Application of the $25,000 exception to shareholders who file a joint return.

(iv) Reliance on periodic account statements.

(3) Exception for PFIC stock marked to market under a provision other than section 1296.

(4) Exception for PFIC stock held through certain foreign pension funds.

(5) Exception for certain shareholders who are dual resident taxpayers.

(i) General rule.

(ii) Dual resident taxpayer filing as nonresident alien at end of taxable year.

(iii) Dual resident taxpayer filing as resident alien at end of taxable year.

(6) Exception for certain domestic partnerships.

(7) Exception for certain short-term ownership of PFIC stock.

(8) Exception for certain bona fide residents of U.S. territories.

(9) Exception for taxable years ending before December 31, 2013.

(d) Time and manner for filing.

(e) Separate annual report for each PFIC.

(1) General rule.

(2) Special rule for shareholders who file a joint return.

(f) Coordination rule.

(g) Examples.

(h) Applicability date.

§ 1.1298-2 Rules for certain corporations changing businesses.

(a) Overview.

(b) Change of business exception.

(c) Special rules.

(d) Disposition of stock in a look-through subsidiary or partnership interests in a look-through partnership.

(e) Application of change of business exception.

(f) Examples.

(1) Example 1.

(i) Facts.

(ii) Results.

(2) Example 2.

(i) Facts.

(ii) Results.

(g) Applicability date.

§ 1.1298-3 Deemed sale or deemed dividend election by a U.S. person that is a shareholder of a former PFIC.

(a) In general.

(b) Application of deemed sale election rules.

(1) Eligibility to make the deemed sale election.

(2) Effect of the deemed sale election.

(3) Time for making the deemed sale election.

(4) Manner of making the deemed sale election.

(5) Adjustments to basis.

(6) Treatment of holding period.

(c) Application of deemed dividend election rules.

(1) Eligibility to make the deemed dividend election.

(2) Effect of the deemed dividend election.

(3) Post-1986 earnings and profits defined.

(4) Time for making the deemed dividend election.

(5) Manner of making the deemed dividend election.

(6) Adjustments to basis.

(7) Treatment of holding period.

(8) Coordination with section 959(e).

(d) Termination date.

(e) Late purging elections requiring special consent.

(1) In general.

(2) Prejudice to the interests of the U.S. government.

(3) Procedural requirements.

(4) Time and manner of making late election.

(5) Multiple late elections.

(f) Effective/applicability date.

§ 1.1298-4 Rules for certain foreign corporations owning stock in 25-percent-owned domestic corporations.

(a) Overview.

(b) Treatment of certain foreign corporations owning stock in a 25-percent-owned domestic corporation.

(1) General rule.

(2) Qualified stock and second-tier domestic corporation.

(c) Indirect ownership of stock through a partnership.

(d) Section 531 tax.

(1) Subject to section 531 tax.

(2) Waiver of treaty benefits.

(i) Tested foreign corporation that files, or is required to file, a Federal income tax return.

(ii) Tested foreign corporation that is not required to file a Federal income tax return.

(e) Anti-abuse rule.

(1) General rule.

(2) [Reserved]

(3) [Reserved]

(f) Applicability date.

[T.D. 9360, 72 FR 54824, Sept. 27, 2007, as amended by T.D. 9806, 81 FR 95466, Dec. 28, 2016; T.D. 9936, 86 FR 4576, Jan. 15, 2021]

§ 1.1298-1 Section 1298(f) annual reporting requirements for United States persons that are shareholders of a passive foreign investment company.

(a) ***Overview.*** This section provides rules regarding the reporting requirements under section 1298(f) applicable to a United States person that is a shareholder (as defined in § 1.1291-1(b)(7)) of a passive foreign investment company (PFIC). Paragraph (b) of this section provides the section 1298(f) annual reporting requirements generally applicable to United States persons. Paragraph (c) of this section sets forth exceptions to reporting for certain shareholders. Paragraph (d) of this section provides rules regarding the time and manner of filing the annual report. Paragraph (e) of this section sets forth the requirement to file a separate annual report with respect to each PFIC. Paragraph (f) of this section coordinates the requirement to file an annual report under section 1298(f) with the requirement to file an annual report under other provisions of the Internal Revenue Code (Code). Paragraph (g) of this section sets forth examples illustrating the application of this section. Paragraph (h) of this section provides effective/applicability dates.

(b) ***Requirement to file*** —

(1) ***General rule.*** Except as otherwise provided in this section, a United States person that is a shareholder of a PFIC must complete and file Form 8621, "Information Return by a Shareholder of a Passive Foreign Investment Company or Qualified Electing Fund" (or successor form), under section 1298(f) and these regulations for the PFIC if, during the shareholder's taxable year, the shareholder—

(i) Directly owns stock of the PFIC;

(ii) Is an indirect shareholder under § 1.1291-1(b)(8) that holds any interest in the PFIC through one or more entities, each of which is foreign; or

(iii) Is an indirect shareholder under § 1.1291-1(b)(8)(iii)(D) that is treated under sections 671 through 678 as the owner of any portion of a trust described in section 7701(a)(30)(E) that owns, directly or indirectly through one or more entities, each of which is foreign, any interest in the PFIC.

(2) ***Additional requirement to file for certain indirect shareholders*** —

(i) ***General rule.*** Except as otherwise provided in this section, an indirect shareholder that owns an interest in a PFIC through one or more United States persons also must file Form 8621 (or successor form) with respect to the PFIC under section 1298(f) and these regulations if, during the indirect shareholder's taxable year, the indirect shareholder is—

(A) Treated as receiving an excess distribution (within the meaning of section 1291(b)) with respect to the PFIC;

(B) Treated as recognizing gain that is treated as an excess distribution (under section 1291(a)(2)) as a result of a disposition of the PFIC;

(C) Required to include an amount in income under section 1293(a) with respect to the PFIC (QEF inclusion);

(D) Required to include or deduct an amount under section 1296(a) with respect to the PFIC (MTM inclusion); or

(E) Required to report the status of a section 1294 election with respect to the PFIC (see § 1.1294-1T(h)).

(ii) ***Exception to indirect shareholder reporting for certain QEF inclusions and MTM inclusions.*** Except as otherwise provided in this paragraph (b)(2)(ii), the filing requirements under paragraph (b) of this section do not apply with respect to an interest in a PFIC owned by an indirect shareholder described in paragraph (b)(2)(i)(C) or (D) of this section if another shareholder through which the indirect shareholder owns such interest in the PFIC timely files Form 8621 (or successor form) with respect to the PFIC under paragraph (b)(1) or (2) of this section. However, the exception in this paragraph (b)(2)(ii) does not apply with respect to a PFIC owned by an indirect shareholder described in paragraph (b)(2)(i)(C) of this section that owns the PFIC through a domestic partnership or S corporation if the domestic partnership or S corporation does not make a qualified electing fund election with respect to the PFIC (see § 1.1293-1(c)(2)(ii), addressing QEF stock transferred to a pass through entity that does not make a section 1295 election).

(3) ***Special rules for estates and trusts —***

(i) ***Domestic liquidating trusts and fixed investment trusts.*** A United States person that is treated under sections 671 through 678 as the owner of any portion of a trust described in section 7701(a)(30)(E) that owns, directly or indirectly, any interest in a PFIC is not required under section 1298(f) and these regulations to file Form 8621 (or successor form) with respect to the PFIC if the trust is either a domestic liquidating trust under § 301.7701-4(d) of this chapter created pursuant to a court order issued in a bankruptcy under Chapter 7 (11 U.S.C. 701 *et seq.*) of the Bankruptcy Code or a confirmed plan under Chapter 11 (11 U.S.C. 1101 *et seq.*) of the Bankruptcy Code, or a widely held fixed investment trust under § 1.671-5. Such a trust itself is treated as a shareholder for purposes of section 1298(f) and these regulations, and thus, except as otherwise provided in this section, the trust is required under section 1298(f) and these regulations to file Form 8621 (or successor form) with respect to the PFIC as provided in paragraphs (b)(1) and (2) of this section.

(ii) ***Beneficiaries of foreign estates and trusts.*** A United States person that is considered to own an interest in a PFIC because it is a beneficiary of an estate described in section 7701(a)(31)(A) or a trust described in section 7701(a)(31)(B) that owns, directly or indirectly, stock of a PFIC, and that has not made an election under section 1295 or 1296 with respect to the PFIC, is not required under section 1298(f) and these regulations to file Form 8621 (or successor form) with respect to the stock of the PFIC that it is considered to own through the estate or trust if, during the beneficiary's taxable year, the beneficiary is not treated as receiving an excess distribution (within the meaning of section 1291(b)) or as recognizing gain that is treated as an excess distribution (under section 1291(a)(2)) with respect to the stock.

(c) ***Exceptions —***

(1) ***Exception if shareholder is a tax-exempt entity.*** A shareholder that is an organization exempt under section 501(a) to the extent that it is described in section 501(c), 501(d), or 401(a), a state college or university described in section 511(a)(2)(B), a plan described in section 403(b) or 457(b), an individual retirement plan or annuity as defined in section 7701(a)(37), or a qualified tuition program described in section 529, a qualified ABLE program described in 529A, or a Coverdell education savings account described in section 530 is not required under section 1298(f) and these regulations to file Form 8621 (or successor form) with respect to a PFIC unless the income derived with respect to the PFIC stock would be taxable to the organization under subchapter F of Subtitle A of the Code.

(2) ***Exception if aggregate value of shareholder's PFIC stock is $25,000 or less, or value of shareholder's indirect PFIC stock is $5,000 or less*** —

(i) ***General rule.*** A shareholder is not required under section 1298(f) and these regulations to file Form 8621 (or successor form) with respect to a section 1291 fund (as defined in § 1.1291-1(b)(2)(v)) for a shareholder's taxable year if—

(A) On the last day of the shareholder's taxable year:

(*1*) The value of all PFIC stock owned directly or indirectly under section 1298(a) and § 1.1291-1(b)(8) by the shareholder is $25,000 or less; or

(*2*) The section 1291 fund stock is indirectly owned by the shareholder under section 1298(a)(2)(B) and § 1.1291-1(b)(8)(ii)(B), and the value of the section 1291 fund stock indirectly owned by the shareholder is $5,000 or less;

(B) The shareholder is not treated as receiving an excess distribution (within the meaning of section 1291(b)) with respect to the section 1291 fund during the taxable year or as recognizing gain treated as an excess distribution under section 1291(a)(2) as the result of a disposition of the section 1291 fund during the taxable year; and

(C) An election under section 1295 has not been made to treat the section 1291 fund as a qualified electing fund with respect to the shareholder.

(ii) ***Determination of the $25,000 threshold in the case of indirect ownership.*** For purposes of determining the value of stock held by a shareholder for purposes of paragraph (c)(2)(i)(A)(*1*) of this section, the shareholder must take into account the value of all PFIC stock owned directly or indirectly under section 1298(a) and § 1.1291-1(b)(8), except for PFIC stock that is—

(A) Owned through another United States person that itself is a shareholder of the PFIC (including a domestic partnership or S corporation treated as a shareholder of a PFIC for purposes of information reporting requirements applicable to a shareholder);

(B) Owned through a PFIC under section 1298(a)(2)(B) and § 1.1291-1(b)(8)(ii)(B); or

(C) Marked to market for the shareholder's taxable year under any provision of chapter 1 of the Internal Revenue Code other than section 1296, provided the rules of § 1.1296-1(i)(2) and (3) do not apply to the shareholder with respect to the PFIC stock pursuant to § 1.1291-1(c)(4)(ii) for the shareholder's taxable year.

(iii) ***Application of the $25,000 exception to shareholders who file a joint return.*** In the case of a joint return, the exception described in paragraph (c)(2)(i)(A)(*1*) of this section shall apply if the value of all PFIC stock owned directly or indirectly (as determined under section 1298(a), § 1.1291-1(b)(8), and paragraph (c)(2)(ii) of this section) by both spouses is $50,000 or less, and all of the other applicable requirements of paragraph (c)(2) of this section are met.

(iv) ***Reliance on periodic account statements.*** A shareholder may rely upon periodic account statements provided at least annually to determine the value of a PFIC unless the shareholder has actual knowledge or reason to know based on readily accessible information that the statements do not reflect a reasonable estimate of the PFIC's value.

(3) ***Exception for PFIC stock marked to market under a provision other than section 1296.*** A shareholder is not required under section 1298(f) and these regulations to file Form 8621 (or successor form) with respect to a PFIC for any taxable year in which the PFIC is marked to market under any provision of chapter 1 of the Internal Revenue Code other than section 1296, provided the rules of § 1.1296-1(i)(2) and (3) do not apply to the shareholder with respect to the PFIC pursuant to § 1.1291-1(c)(4)(ii) for the taxable year.

(4) ***Exception for PFIC stock held through certain foreign pension funds.*** A shareholder who is a member or beneficiary of, or participant in, a plan, trust, scheme, or other arrangement that is treated as a foreign pension fund (or equivalent) under an income tax treaty to which the United States is a party and that owns, directly or indirectly, an interest in a PFIC is not required under section 1298(f) and these regulations to file Form 8621 (or successor form) with respect to the PFIC interest if, pursuant to the applicable income tax treaty, the income earned by the foreign pension fund may be taxed as the income of the shareholder only when and to the extent the income is paid to, or for the benefit of, the shareholder.

(5) ***Exception for certain shareholders who are dual resident taxpayers*** —

(i) ***General rule.*** Subject to the provisions of paragraphs (c)(5)(ii) and (iii) of this section, a shareholder is not required under section 1298(f) and these regulations to file Form 8621 (or successor form) with respect to a PFIC for a taxable year, or the portion of a taxable year, in which the shareholder is a dual resident taxpayer (within the meaning of § 301.7701(b)-7(a)(1) of this chapter) who is treated as a nonresident alien of the United States for purposes of computing his or her United States income tax liability pursuant to § 301.7701(b)-7 of this chapter.

(ii) ***Dual resident taxpayer filing as a nonresident alien at end of taxable year.*** If a shareholder to whom this paragraph (c)(5) applies computes his or her U.S. income tax liability as a nonresident alien on the last day of the taxable year and complies with the filing requirements of § 301.7701(b)-7(b) and (c) of this chapter and, in particular, such individual timely files with the Internal Revenue Service Form 1040NR, “U.S. Nonresident Alien Income Tax Return,” or Form 1040NR-EZ, “U.S. Income Tax Return for Certain Nonresident Aliens With No Dependents,” as applicable, and attaches thereto a properly completed Form 8833, “Treaty-Based Return Position Disclosure Under Section 6114 or 7701(b),” and the schedule required by § 1.6012-1(b)(2)(ii)(*b*) (if applicable), such shareholder will not be required under section 1298(f) and these regulations to file Form 8621 (or successor form) with respect to the taxable year, or the portion of the taxable year, covered by Form 1040NR (or Form 1040NR-EZ).

(iii) ***Dual resident taxpayer filing as resident alien at end of taxable year.*** If a shareholder to whom this paragraph (c)(5) applies computes his or her U.S. income tax liability as a resident alien on the last day of the taxable year and complies with the filing requirements of § 1.6012-1(b)(2)(ii)(*a*) and, in particular such shareholder timely files with the Internal Revenue Service Form 1040, "U.S. Individual Income Tax Return," or Form 1040EZ, "Income Tax Return for Single and Joint Filers With No Dependents," as applicable, and attaches a properly completed Form 8833 to the schedule required by § 1.6012-1(b)(2)(ii)(*a*), such shareholder will not be required under section 1298(f) and these regulations to file Form 8621 (or successor form) with respect to the portion of the taxable year reflected on the schedule to such Form 1040 or Form 1040EZ required by § 1.6012-1(b)(2)(ii)(*a*).

(6) ***Exception for certain domestic partnerships.*** A shareholder that is a domestic partnership is not required under section 1298(f) and these regulations to file Form 8621 (or successor form) with respect to a PFIC directly or indirectly held by the domestic partnership for a taxable year if each person that directly or indirectly owns an interest in the domestic partnership for its taxable year in which or with which the taxable year of the partnership ends is either—

(i) Not a shareholder of the PFIC as defined by § 1.1291-1(b)(7);

(ii) A tax-exempt entity or account not required to file Form 8621 with respect to the stock of the PFIC under paragraph (c)(1) of this section;

(iii) A dual resident taxpayer not required to file Form 8621 with respect to the stock of the PFIC under paragraph (c)(5) of this section; or

(iv) A domestic partnership not required to file Form 8621 with respect to the stock of the PFIC under this paragraph (c)(6).

(7) ***Exception for certain short-term ownership of PFIC stock.*** A shareholder is not required under section 1298(f) and these regulations to file Form 8621 (or successor form) with respect to a section 1291 fund (as defined in § 1.1291-1(b)(2)(v)) for a taxable year when the shareholder—

(i) Acquires the section 1291 fund in the taxable year or the immediately preceding taxable year;

(ii) Is a shareholder of the section 1291 fund for a total of 30 days or less during the period beginning 29 days before the first day of the shareholder's taxable year and ending 29 days after the close of the shareholder's taxable year; and

(iii) Is not treated as receiving an excess distribution (within the meaning of section 1291(b)) with respect to the section 1291 fund, including any gain recognized that is treated as an excess distribution under section 1291(a)(2) as a result of the disposition of the section 1291 fund.

(8) ***Exception for certain bona fide residents of certain U.S. territories.*** A shareholder is not required under section 1298(f) and these regulations to file Form 8621 (or successor form) with respect to a PFIC for a taxable year when the shareholder—

(i) Is a bona fide resident (as defined by section 937(a)) of Guam, the Northern Mariana Islands, or the United States Virgin Islands; and

(ii) Is not required to file an income tax return with the Internal Revenue Service with respect to such taxable year.

(9) ***Exception for taxable years ending before December 31, 2013.*** A United States person is not required under section 1298(f) and these regulations to file an annual report with respect to a PFIC for a taxable year of the United States person ending before December 31, 2013.

(d) ***Time and manner for filing.*** A United States person required under section 1298(f) and these regulations to file Form 8621 (or successor form) with respect to a PFIC must attach the form to its Federal income tax return (or information return, if applicable) for the taxable year to which the filing obligation relates on or before the due date (including extensions) for the filing of the return, or must separately file the form in accordance with the instructions for the form when the United States person is not required to file a Federal income tax return (or information return, if applicable) for the taxable year. In the case of any failure to report information that is required to be reported pursuant to section 1298(f) and these regulations, the time for assessment of tax will be extended pursuant to section 6501(c)(8).

(e) ***Separate annual report for each PFIC*** —

(1) ***General rule.*** If a United States person is required under section 1298(f) and these regulations to file Form 8621 (or successor form) with respect to more than one PFIC, the United States person must file a separate Form 8621 (or successor form) for each PFIC.

(2) ***Special rule for shareholders who file a joint return.*** United States persons that file a joint return may file a single Form 8621 (or successor form) with respect to a PFIC in which they jointly or individually own an interest.

(f) ***Coordination rule.*** A United States person that is a shareholder of a PFIC may file a single Form 8621 (or successor form) with respect to the PFIC that contains all of the information required to be reported pursuant to section 1298(f) and these regulations and any other information reporting requirements or election rules under other provisions of the Code.

(g) ***Examples.*** The following examples illustrate the rules of this section:

> *Example 1.* *General requirement to file.* (i) *Facts.* In 2013, J, a United States citizen, directly owns an interest in Partnership X, a domestic partnership, which, in turn, owns an interest in A Corp, which is a PFIC. In addition, J directly owns an interest in Partnership Y, a foreign partnership, which, in turn, owns an interest in A Corp. Neither J nor Partnership X has made a qualified electing fund election under section 1295 or a mark to market election under section 1296 with respect to A Corp. As of the last day of 2013, the value of Partnership X's interest in A Corp is $200,000, and the value of J's proportionate share of Partnership Y's interest in A Corp is $100,000. During 2013, J is not treated as receiving an excess distribution or recognizing gain treated as an excess distribution with respect to A Corp. Partnership X timely files a Form 8621 under section 1298(f) and paragraph (b)(1) of this section with respect to A Corp for 2013.
> (ii) *Results.* J is the first United States person in the chain of ownership with respect to J's interest in A Corp held through Partnership Y. Under paragraph (b)(1) of this section, J must file a Form 8621 under section 1298(f) with respect to J's interest in A Corp held through Partnership Y because J is an indirect shareholder of A Corp under § 1.1291-1(b)(8) that holds PFIC stock through a foreign entity (Partnership Y), and there are no other United States persons in the chain of ownership. The fact that Partnership X filed a Form 8621 with respect to A Corp does not relieve J of the obligation under paragraph (b)(1) of this section to file a Form 8621 with respect to J's

interest in A Corp held through Partnership Y. J has no filing obligation under section 1298(f) and paragraph (b)(2) of this section with respect to J's proportionate share of Partnership X's interest in A Corp.

Example 2. Application of the $25,000 exception. (i) *Facts.* In 2013, J, a United States citizen, directly owns stock of A Corp, B Corp, and C Corp, all of which were PFICs during 2013. As of the last day of 2013, the value of J's interests was $5,000 in A Corp, $10,000 in B Corp, and $4,000 in C Corp. J timely filed an election under section 1295 to treat A Corp as a qualified electing fund for the first year in which A Corp qualified as a PFIC, and a mark-to-market election under section 1296 with respect to the stock of B Corp. J did not make a qualified electing fund election under section 1295 or a mark to market election under section 1296 with respect to C Corp. J did not receive an excess distribution or recognize gain treated as an excess distribution in respect of C Corp during 2013.
(ii) *Results.* Under paragraph (b)(1) of this section, J must file separate Forms 8621 with respect to A Corp and B Corp for 2013. However, J is not required to file a Form 8621 with respect to C Corp because J owns, in the aggregate, PFIC stock with a value of less than $25,000 on the last day of J's taxable year, C Corp is not subject to a qualified electing fund election or mark to market election with respect to J, and J did not receive an excess distribution in respect of C Corp or recognize gain treated as an excess distribution in respect of C Corp during 2013. Therefore, J qualifies for the $25,000 exception in paragraph (c)(2) of this section with respect to C Corp.

Example 3. Application of the $25,000 exception to indirect shareholder. (i) *Facts.* E, a United States citizen, directly owns an interest in Partnership X, a domestic partnership. Partnership X, in turn, directly owns an interest in A Corp and B Corp, both of which are PFICs. Partnership X timely filed an election under section 1295 to treat B Corp as a qualified electing fund for the first year in which B Corp qualified as a PFIC. In addition, E directly owns an interest in C Corp, which is a PFIC. C Corp, in turn, owns an interest in D Corp, which is a PFIC. E has not made a qualified electing fund election under section 1295 or a mark to market election under section 1296 with respect to A Corp, C Corp, or D Corp. As of the last day of 2013, the value of Partnership X's interest in A Corp is $30,000, the value of Partnership X's interest in B Corp is $30,000, the value of E's indirect interest in A Corp is $10,000, the value of E's indirect interest in B Corp is $10,000, the value of E's interest in C Corp is $20,000, and the value of C Corp's interest in D Corp is $10,000. During 2013, E did not receive an excess distribution, or recognize gain treated as an excess distribution, with respect to A Corp, C Corp, or D Corp. Partnership X timely files Forms 8621 under section 1298(f) and paragraph (b)(1) of this section with respect to A Corp and B Corp for 2013.
(ii) *Results.* Under paragraph (b) of this section, E does not have to file a Form 8621 under section 1298(f) and these regulations with respect to A Corp because E is not the United States person that is at the lowest tier in the chain of ownership with respect to A Corp and E did not receive an excess distribution or recognize gain treated as an excess distribution with respect to A Corp. Furthermore, under paragraph (b)(2)(ii) of this section, E does not have to file a Form 8621 under

section 1298(f) and these regulations with respect to B Corp because Partnership X timely filed a Form 8621 with respect to B Corp. In addition, under paragraph (c)(2)(ii)(A) of this section, E does not take into account the value of A Corp and B Corp, which E owns through Partnership X, in determining whether E qualifies for the $25,000 exception. Further, under paragraph (c)(2)(ii)(B) of this section, E does not take into account the value of D Corp in determining whether E qualifies for the $25,000 exception. Therefore, even though E is the United States person that is at the lowest tier in the chain of ownership with respect to C Corp and D Corp, E does not have to file a Form 8621 with respect to C Corp or D Corp because E qualifies for the $25,000 exception set forth in paragraph (c)(2)(i)(A)(*1*) of this section.

Example 4. *Indirect shareholder's requirement to file.* (i) *Facts.* The facts are the same as in *Example 3* of this paragraph (g), except that the value of E's interest in C Corp is $30,000 and the value of E's proportionate share of C Corp's interest in D Corp is $3,000.
(ii) *Results.* The results are the same as in *Example 3* of this paragraph (g) with respect to E having no requirement to file a Form 8621 under section 1298(f) and these regulations with respect to A Corp and B Corp. However, under the facts in this *Example 4,* E does not qualify for the $25,000 exception under paragraph (c)(2)(i)(A)(*1*) of this section with respect to C Corp because the value of E's interest in C Corp is $30,000. Accordingly, E must file a Form 8621 under section 1298(f) and these regulations with respect to C Corp. However, E does qualify for the $5,000 exception under paragraph (c)(2)(i)(A)(*2*) of this section with respect to D Corp, and thus does not have to file a Form 8621 with respect to D Corp.

Example 5. *Application of the domestic partnership exception.* (i) *Facts.* Tax Exempt Entity A and Tax Exempt Entity B are both organizations exempt under section 501(a) because they are described in section 501(c). Tax Exempt Entity A and Tax Exempt Entity B own all the interests in Partnership X, a domestic partnership, which, in turn, owns, an interest in Partnership Y, also a domestic partnership. The remaining interests in Partnership Y are owned by F Corp, a foreign corporation owned solely by individuals that are not residents or citizens of the United States. Partnership Y owns an interest in A Corp, which is a PFIC. Any income derived with respect to A Corp would not be taxable to Tax Exempt Entity A or Tax Exempt Entity B under subchapter F of Subtitle A of the Code. Tax Exempt Entity A, Tax Exempt Entity B, Partnership X, and Partnership Y all are calendar year taxpayers.
(ii) *Results.* Under paragraph (c)(1) of this section, Tax Exempt Entity A and Tax Exempt Entity B do not have to file Form 8621 under section 1298(f) and these regulations with respect to A Corp because neither entity would be subject to tax under subchapter F of Subtitle A of the Code with respect to income derived from A Corp. In addition, under paragraph (c)(6) of this section, neither Partnership X nor Partnership Y is required to file Form 8621 under section 1298(f) and these regulations with respect to A Corp because all of the direct and indirect interests in Partnership X and Partnership Y are owned by persons described in paragraph (c)(1) of this section or persons that are not a shareholder of A Corp as defined by § 1.1291-1(b)(7).

(h) ***Applicability dates.***

(1) Except as provided in paragraph (h)(2) of this section, this section applies to taxable years of shareholders ending on or after December 31, 2013.

(2) Paragraph (c)(9) of this section applies to taxable years of shareholders ending before December 31, 2013.

[T.D. 9806, 81 FR 95466, Dec. 28, 2016]

§ 1.1298-2 Rules for certain corporations changing businesses.

(a) ***Overview.*** This section provides rules under section 1298(b)(3) and 1298(g) that apply to certain foreign corporations that dispose of one or more active trades or businesses for purposes of determining whether a foreign corporation is treated as a passive foreign investment company (PFIC). Paragraph (b) of this section provides a rule that applies to certain foreign corporations that dispose of one or more active trades or businesses. Paragraph (c) of this section provides special rules. Paragraph (d) of this section provides a rule for the treatment of the disposition of the stock of a look-through subsidiary (as defined in § 1.1297-2(g)(3)) or partnership interests in a look-through partnership (as defined in § 1.1297-2(g)(4)). Paragraph (e) of this section provides guidance on when a tested foreign corporation can apply the change of business exception. Paragraph (f) provides examples illustrating the application of the rules in this section. Paragraph (g) provides the applicability date for this section.

(b) ***Change of business exception.*** A corporation is not treated as a PFIC for a taxable year if—

(1) Neither the corporation (nor any predecessor) was a PFIC for any prior taxable year;

(2) Either—

(i) Substantially all of the passive income of the corporation for the taxable year is attributable to proceeds from the disposition of one or more active trades or businesses; or

(ii) Following the disposition of one or more active trades or businesses, substantially all of the passive assets of the corporation on each of the measuring dates that occur during the taxable year and after the disposition are attributable to proceeds from the disposition; and

(3) The corporation reasonably does not expect to be and is not a PFIC for either of the first two taxable years following the taxable year.

(c) ***Special rules.*** The rules in this paragraph (c) apply for purposes of section 1298(b)(3) and this section.

(1) Income is attributable to proceeds from the disposition of one or more active trades or businesses to the extent the income is derived from the investment of the proceeds from the disposition of assets used in the active trades or businesses.

(2) Assets are attributable to proceeds from the disposition of one or more active trades or businesses only to the extent the assets are the proceeds of the disposition of assets used in the active trades or businesses, or are derived from the investment of the proceeds.

(3) The determination of the existence of an active trade or business and whether assets are used in an active trade or business is made under § 1.367(a)-2(d)(2), (3), and (5), except that officers and employees do not include the officers and employees of related entities as provided in § 1.367(a)-2(d)(3). However, if activities performed by the officers and employees of a look-through subsidiary of a corporation or of a look-through partnership (including a look-through subsidiary or a

look-through partnership with respect to which paragraph (d) of this section applies) would be taken into account by the corporation pursuant to § 1.1297-2(e) if it applied, such activities are taken into account for purposes of the determination of the existence of an active trade or business and the determination of whether assets are used in an active trade or business.

(4) In the case of a corporation that satisfies the condition in paragraph (b)(2)(ii) of this section, the condition in paragraph (b)(3) of this section is deemed to be satisfied if the corporation completely liquidates by the end of the taxable year following the year with respect to which the tested foreign corporation applies the exception in paragraph (b) of this section.

(d) ***Disposition of stock of a look-through subsidiary or partnership interests in a look-through partnership.*** For purposes of paragraph (b) of this section, the proceeds from a tested foreign corporation's disposition of the stock of a look-through subsidiary or of partnership interests in a look-through partnership are treated as proceeds from the disposition of a proportionate share of the assets held by the look-through subsidiary or look-through partnership on the date of the disposition, based on the method (value or adjusted bases) used to measure the assets of the tested foreign corporation for purposes of section 1297(a)(2). The proceeds attributable to assets used by the look-through subsidiary or look-through partnership in an active trade or business are treated as proceeds attributable to the disposition of an active trade or business.

(e) ***Application of change of business exception.*** A tested foreign corporation can apply the exception in paragraph (b) of this section with respect to a taxable year of a disposition of an active trade or business or an immediately succeeding taxable year, but cannot apply the exception with respect to more than one taxable year for a disposition.

(f) ***Examples.*** The following examples illustrate the rules of this section. For purposes of these examples: USP is a domestic corporation; TFC and FS are foreign corporations that are not controlled foreign corporations (within the meaning of section 957(a)); each corporation has outstanding a single class of stock; USP has owned its interest in TFC since the formation of TFC; each of USP, TFC, and FS have a calendar taxable year; and for purposes of section 1297(a)(2), TFC measures the amount of its assets based on value.

(1) ***Example 1*** —

(i) ***Facts.***

(A) USP owns 15% of the outstanding stock of TFC. TFC owns 30% of the outstanding stock of FS. FS operates an active trade or business and 100% of its assets are used in the active trade or business. The value of FS's non-passive assets (as defined in § 1.1297-1(f)(3)) is $900x; the value of FS's passive assets (which include cash and cash equivalents) is $100x. TFC has not been treated as a PFIC for any taxable year before Year 1 and has no predecessor. In addition to holding the FS stock, TFC directly conducts its own active trade or business. The value of TFC's non-passive assets (other than FS stock) is $50x; the value of TFC's passive assets (other than FS stock and assets received during Year 1) is $30x. TFC earns $1x of non-passive income (as defined in § 1.1297-1(f)(4)) from its directly conducted active trade or business.

(B) On January 1, Year 1, TFC sells all of its FS stock for $300x. The residual gain computed under § 1.1297-2(f)(2) on the sale of the FS stock is $10x. Under § 1.1297-2(f)(3), $9x of residual gain is characterized as non-passive income and $1x of residual gain is characterized as passive income. TFC earned $5x of passive income from the investment of the proceeds from the disposition of the FS stock during each quarter of Year 1, and

TFC maintained those earnings ($20x in total) as well as the disposition proceeds in cash for the remainder of the year. TFC reinvests the proceeds of the FS stock sale in an active trade or business during Year 2, and, thus, TFC is not a PFIC in Year 2 and Year 3. Less than 75% of TFC's gross income in Year 1 is passive income (($20x + $1x)/($10x + $20x + $1x) = 68%). However, subject to the application of section 1298(b)(3) and this section, TFC would be a PFIC in Year 1 under section 1297(a)(2) because the proceeds from the sale of the FS stock ($300x) together with TFC's other passive assets exceed 50% of TFC's total assets on each quarterly measuring date. For example, on the first quarterly measuring date TFC's ratio of passive assets to total assets is (($300x + $30x + $5x)/($300x + $30x + $5x + $50x)) and on the fourth quarterly measuring date TFC's ratio of passive assets to total assets is (($300x + $30x + $20x)/($300x + $30x + $20x + $50x)), each of which exceeds 87%. Therefore, TFC chooses to apply the change of business exception in paragraph (b) of this section to Year 1.

(ii) ***Results.***

(A) Under paragraph (d) of this section, for purposes of applying section 1298(b)(3)(B)(i) in Year 1, TFC's proceeds from the disposition of the stock of FS that are attributable to assets used by FS in an active trade or business are considered as from the disposition of an active trade or business. Because 100% of FS's assets are used in its active trade or business, all of TFC's proceeds are considered as from the disposition of an active trade or business. Therefore, under paragraph (c)(1) of this section, the passive income considered attributable to proceeds from a disposition of one or more active trades or businesses is $20x (from investment of disposition proceeds). Because TFC reasonably does not expect to be a PFIC in Year 2 and Year 3, and TFC is not, in fact, a PFIC for those years, TFC will not be treated as a PFIC in Year 1 by reason of section 1298(b)(3) and paragraph (b) of this section, based on the satisfaction of the condition in paragraph (b)(2)(i) of this section, because the 95% ($20x/($20x + $1x)) of TFC's passive income for Year 1 that is attributable to proceeds of the disposition of FS's active trade or business constitutes substantially all of its passive income.

(B) TFC would also not be treated as a PFIC in Year 1 by reason of section 1298(b)(3) and paragraph (b) of this section, based on the satisfaction of the condition in paragraph (b)(2)(ii) of this section, because the over 91% of TFC's passive assets on the quarterly measuring dates during Year 1 following the disposition of the stock of FS that is attributable to proceeds of the disposition of FS's active trade or business constitutes substantially all of its passive assets. For example, on the first quarterly measuring date TFC's ratio of passive assets attributable to the proceeds of the disposition of FS's active trade or business to its total passive assets is 91% ($305x/($305x + $30x)), and the same ratio for the fourth quarterly measuring date is 91.4% ($320x/($320x + $30x)).

(C) Under paragraph (e) of this section, TFC cannot claim the section 1298(b)(3) exception in relation to the income attributable to the proceeds of the FS stock sale in Year 2 because TFC already claimed the exception for Year 1.

(2) ***Example 2 —***

(i) ***Facts.*** The facts are the same as in paragraph (f)(1)(i) of this section (the facts in *Example 1*), except that during the first quarter of Year 1, TFC earned only $4x of passive income ($1x per quarter) from the investment of the proceeds from the disposition of the FS stock and earned $12x of passive income ($3x per quarter) from its other passive assets and maintained such earnings in cash for the remainder of the year.

(ii) ***Results.*** The results are the same as in paragraph (f)(1)(ii) of this section (the results in *Example 1*), except that under paragraph (c)(1) of this section, the passive income considered attributable to proceeds from a disposition of one or more active trades or businesses is $4x (from investment of disposition proceeds). Because 24% ($4x/($4x + $12x + $1x)) of TFC's passive income for Year 1 is attributable to proceeds of the disposition of FS's active trade or business, and 24% does not constitute substantially all of TFC's passive income for Year 1, TFC does not qualify for the exception from treatment as a PFIC in section 1298(b)(3) and paragraph (b)(2)(i) of this section for Year 1. However, under paragraphs (b)(2)(ii) and (d) of this section, more than $300x ($300x disposition proceeds + amounts earned from investment of disposition proceeds) of TFC's passive assets held on each quarterly measuring date after the disposition is considered attributable to the disposition of an active trade or business. Because TFC reasonably does not expect to be a PFIC in Year 2 and Year 3, and TFC is not, in fact, a PFIC for those years, TFC will not be treated as a PFIC in Year 1 by reason of paragraph (b) of this section, based on the satisfaction of the condition in paragraph (b)(2)(ii) of this section, assuming that the average 89% of TFC's passive assets on the quarterly measuring dates during Year 1 following the disposition of the stock of FS that is attributable to proceeds of the disposition of FS's active trade or business constitutes substantially all of its passive assets.

(g) ***Applicability date.*** The rules of this section apply to taxable years of shareholders beginning on or after January 14, 2021. A shareholder may choose to apply such rules for any open taxable year beginning before January 14, 2021, provided that, with respect to the tested foreign corporation, the shareholder consistently applies the provisions of this section and § 1.1291-1(b)(8)(iv) and (b)(8)(v)(A), (B), (C), and (D) and §§ 1.1297-1 (except that consistent treatment is not required with respect to § 1.1297-1(c)(1)(i)(A)), 1.1297-2, and 1.1298-4 for such year and all subsequent years.

[T.D. 9936, 86 FR 4576, Jan. 15, 2021, as at 86 FR 13648, Mar. 10, 2021]

§ 1.1298-3 Deemed sale or deemed dividend election by a U.S. person that is a shareholder of a former PFIC.

(a) ***In general.*** A shareholder (as defined in § 1.1291-9(j)(3)) of a foreign corporation that is a former PFIC, (as defined in § 1.1291-9(j)(2)(iv)) with respect to such shareholder, shall be treated for tax purposes as holding stock in a PFIC and therefore continues to be subject to taxation under section 1291 unless the shareholder makes a purging election under section 1298(b)(1). A purging election under section 1298(b)(1) is made under rules similar to the rules of section 1291(d)(2). Section 1291(d)(2) allows a shareholder to purge the continuing PFIC taint by making either a deemed sale election or a deemed dividend election.

(b) ***Application of deemed sale election rules*** —

(1) ***Eligibility to make the deemed sale election.*** A shareholder of a foreign corporation that is a former PFIC with respect to such shareholder may make a deemed sale election under section 1298(b)(1) by applying the rules of this paragraph (b).

(2) ***Effect of deemed sale election.*** A shareholder making the deemed sale election with respect to a former PFIC shall be treated as having sold all its stock in the former PFIC for its fair market value on the termination date, as defined in paragraph (d) of this section. A deemed sale is treated as a disposition subject to taxation under section 1291. Thus, gain from the deemed sale is taxed under section 1291 as an excess distribution received on the termination date. In the case of an election made by an indirect shareholder, the amount of gain to be recognized and taxed as an excess distribution is the amount of gain that the direct owner of the stock of the PFIC would have realized on an actual sale or disposition of the stock of the PFIC indirectly owned by the shareholder. Any loss realized on the deemed sale is not recognized. After the deemed sale election, the shareholder's stock with respect to which the election was made under this paragraph (b) shall not be treated as stock in a PFIC and the shareholder shall not be subject to taxation under section 1291 with respect to such stock unless the foreign corporation thereafter qualifies as a PFIC under section 1297(a).

(3) ***Time for making the deemed sale election.*** Except as provided in paragraph (e) of this section, the shareholder shall make the deemed sale election under this paragraph (b) and section 1298(b)(1) in the shareholder's original or amended return for the taxable year that includes the termination date (election year). If the deemed sale election is made in an amended return, the return must be filed by a date that is within three years of the due date, as extended under section 6081, of the original return for the election year.

(4) ***Manner of making the deemed sale election.*** A shareholder makes the deemed sale election under this paragraph (b) by filing Form 8621 ("Return by a Shareholder of a Passive Foreign Investment Company or Qualified Electing Fund") with the return of the shareholder for the election year, reporting the gain as an excess distribution pursuant to section 1291(a) as if such deemed sale occurred under section 1291(d)(2), and paying the tax and interest due on the excess distribution. A shareholder that makes the deemed sale election after the due date of the return (determined without regard to extensions) for the election year must pay additional interest, pursuant to section 6601, on the amount of underpayment of tax for that year. An electing shareholder that realizes a loss shall report the loss on Form 8621, but shall not recognize the loss.

(5) ***Adjustments to basis.*** A shareholder that makes the deemed sale election increases its adjusted basis of the PFIC stock owned directly by the amount of gain recognized on the deemed sale. If the shareholder makes the deemed sale election with respect to a PFIC of which it is an indirect shareholder, the shareholder's adjusted basis of the stock or other property owned directly by the shareholder, through which ownership of the PFIC is attributed to the shareholder, is increased by the amount of gain recognized by the shareholder. In addition, solely for purposes of determining the subsequent treatment under the Code and regulations of a shareholder of the stock of the PFIC, the adjusted basis of the direct owner of the stock of the PFIC is increased by the amount of gain recognized on the deemed sale. A shareholder shall not adjust the basis of any stock with respect to which the shareholder realized a loss on the deemed sale, but which loss is not recognized under paragraph (b)(2) of this section.

(6) ***Treatment of holding period.*** If a shareholder of a foreign corporation has made a deemed sale election, then, for purposes of applying sections 1291 through 1298 to such shareholder after the deemed sale, the shareholder's holding period in the stock of the foreign corporation begins on the day following the termination, without regard to whether the shareholder recognized gain on the deemed sale. For other purposes of the Code and regulations, this holding period rule does not apply.

(c) ***Application of deemed dividend election rules*** —

(1) ***Eligibility to make the deemed dividend election.*** A shareholder of a foreign corporation that is a former PFIC with respect to such shareholder may make the deemed dividend election under the rules of this paragraph (c) provided the foreign corporation was a controlled foreign corporation (as defined in section 957(a) (CFC)) during its last taxable year as a PFIC. A shareholder may make the deemed dividend election without regard to whether the shareholder is a United States shareholder within the meaning of section 951(b). A deemed dividend election may be made by a shareholder whose pro rata share of the post-1986 earnings and profits of the PFIC attributable to the PFIC stock held on the termination date is zero.

(2) ***Effect of the deemed dividend election.*** A shareholder making the deemed dividend election with respect to a former PFIC shall include in income as a dividend its pro rata share of the post-1986 earnings and profits of the PFIC attributable to all of the stock it held, directly or indirectly on the termination date, as defined in paragraph (d) of this section. The deemed dividend is taxed under section 1291 as an excess distribution received on the termination date. The excess distribution determined under this paragraph (c) is allocated under section 1291(a)(1)(A) only to each day of the shareholder's holding period of the stock during which the foreign corporation qualified as a PFIC. For purposes of the preceding sentence, the shareholder's holding period of the PFIC stock ends on the termination date. After the deemed dividend election, the shareholder's stock with respect to which the election was made under this paragraph (c) shall not be treated as stock in a PFIC and the shareholder shall not be subject to taxation under section 1291 with respect to such stock unless the foreign corporation thereafter qualifies as a PFIC under section 1297(a).

(3) ***Post-1986 earnings and profits defined—***

(i) ***In general.*** For purposes of this section, the term *post-1986 earnings and profits* means the post-1986 undistributed earnings, within the meaning of section 902(c)(1) (determined without regard to section 902(c)(3)), as of the close of the taxable year that includes the termination date. For purposes of this computation, only earnings and profits accumulated in taxable years during which the foreign corporation was a PFIC shall be taken into account, without regard to whether the earnings relate to a period during which the PFIC was a CFC.

(ii) ***Pro rata share of post-1986 earnings and profits attributable to shareholder's stock:***

(A) ***In general.*** A shareholder's pro rata share of the post-1986 earnings and profits of the PFIC attributable to the stock held by the shareholder on the termination date is the amount of post-1986 earnings and profits of the PFIC accumulated during any portion of the shareholder's holding period ending at the close of the termination date and attributable, under the principles of section 1248 and the regulations under that section, to the PFIC stock held on the termination date.

(B) ***Reduction for previously taxed amounts.*** A shareholder's pro rata share of the post-1986 earnings and profits of the PFIC does not include any amount that the shareholder demonstrates to the satisfaction of the Commissioner (in the manner provided in paragraph (c)(5)(ii) of this section) was, pursuant to another provision of the law, previously included in the income of the shareholder, or of another U.S. person if the shareholder's holding period of the PFIC stock includes the period during which the stock was held by that other U.S. person.

(4) ***Time for making the deemed dividend election.*** Except as provided in paragraph (e) of this section, the shareholder shall make the deemed dividend election under this paragraph (c) and section 1298(b)(1) in the shareholder's original or amended return for the taxable year that includes the

termination date (election year). If the deemed dividend election is made in an amended return, the return must be filed by a date that is within three years of the due date, as extended under section 6081, of the original return for the election year.

(5) ***Manner of making the deemed dividend election:***

(i) ***In general.*** A shareholder makes the deemed dividend election by filing Form 8621 and the attachment to Form 8621 described in paragraph (c)(5)(ii) of this section with the return of the shareholder for the election year, reporting the deemed dividend as an excess distribution pursuant to section 1291(a)(1), and paying the tax and interest due on the excess distribution. A shareholder that makes the deemed dividend election after the due date of the return (determined without regard to extensions) for the election year must pay additional interest, pursuant to section 6601, on the amount of underpayment of tax for that year.

(ii) ***Attachment to Form 8621.*** The shareholder must attach a schedule to Form 8621 that demonstrates the calculation of the shareholder's pro rata share of the post-1986 earnings and profits of the PFIC that is treated as distributed to the shareholder on the termination date pursuant to this paragraph (c). If the shareholder is claiming an exclusion from its pro rata share of the post-1986 earnings and profits for an amount previously included in its income or the income of another U.S. person, the shareholder must include the following information:

(A) The name, address, and taxpayer identification number of each U.S. person that previously included an amount in income, the amount previously included in income by each such U.S. person, the provision of law pursuant to which the amount was previously included in income, and the taxable year or years of inclusion of each amount.

(B) A description of the transaction pursuant to which the shareholder acquired, directly or indirectly, the stock of the PFIC from another U.S. person, and the provision of law pursuant to which the shareholder's holding period includes the period the other U.S. person held the CFC stock.

(6) ***Adjustments to basis.*** A shareholder that makes the deemed dividend election increases its adjusted basis of the stock of the PFIC owned directly by the shareholder by the amount of the deemed dividend. If the shareholder makes the deemed dividend election with respect to a PFIC of which it is an indirect shareholder, the shareholder's adjusted basis of the stock or other property owned directly by the shareholder, through which ownership of the PFIC is attributed to the shareholder, is increased by the amount of the deemed dividend. In addition, solely for purposes of determining the subsequent treatment under the Code and regulations of a shareholder of the stock of the PFIC, the adjusted basis of the direct owner of the stock of the PFIC is increased by the amount of the deemed dividend.

(7) ***Treatment of holding period.*** If the shareholder of a foreign corporation has made a deemed dividend election, then, for purposes of applying sections 1291 through 1298 to such shareholder after the deemed dividend, the shareholder's holding period of the stock of the foreign corporation begins on the day following the termination date. For other purposes of the Code and regulations, this holding period rule does not apply.

(8) ***Coordination with section 959(e).*** For purposes of section 959(e), the entire deemed dividend is treated as having been included in gross income under section 1248(a).

(d) ***Termination date.*** For purposes of this section, the termination date is the last day of the last taxable year of the foreign corporation during which it qualified as a PFIC under section 1297(a).

(e) *Late purging elections requiring special consent* —

(1) ***In general.*** This section prescribes the exclusive rules under which a shareholder of a former PFIC may make a section 1298(b)(1) election after the time prescribed in paragraph (b)(3) or (c)(4) of this section for making a deemed sale or a deemed dividend election has elapsed (late purging election). Therefore, a shareholder may not seek such relief under any other provisions of the law, including § 301.9100-3 of this chapter. A shareholder may request the consent of the Commissioner to make a late purging election for the taxable year of the shareholder that includes the termination date provided the shareholder satisfies the requirements set forth in this paragraph (e). The Commissioner may, in his discretion, grant relief under this paragraph (e) only if—

(i) In a case where the shareholder is requesting consent under this paragraph (e) after December 31, 2005, the shareholder requests such consent before a representative of the Internal Revenue Service raises upon audit the PFIC status of the foreign corporation for any taxable year of the shareholder;

(ii) The shareholder has agreed in a closing agreement with the Commissioner, described in paragraph (e)(3) of this section, to eliminate any prejudice to the interests of the U.S. government, as determined under paragraph (e)(2) of this section, as a consequence of the shareholder's inability to file amended returns for its taxable year in which the termination date falls or an earlier closed taxable year in which the shareholder has taken a position that is inconsistent with the treatment of the foreign corporation as a PFIC; and

(iii) The shareholder satisfies the procedural requirements set forth in paragraph (e)(3) of this section.

(2) ***Prejudice to the interests of the U.S. government.*** The interests of the U.S. government are prejudiced if granting relief would result in the shareholder having a lower tax liability (other than by a *de minimis* amount), taking into account applicable interest charges, for the taxable year that includes the termination date (or a prior taxable year in which the taxpayer took a position on a return that was inconsistent with the treatment of the foreign corporation as a PFIC) than the shareholder would have had if the shareholder had properly made the section 1298(b)(1) election in the time prescribed in paragraph (b)(2) or (c)(3) of this section (or had not taken a position in a return for an earlier year that was inconsistent with the status of the foreign corporation as a PFIC). The time value of money is taken into account for purposes of this computation.

(3) *Procedural requirements* —

(i) ***In general.*** The amount due with respect to a late purging election is determined in the same manner as if the purging election had been timely filed. However, the shareholder is also liable for interest on the amount due, pursuant to section 6601, determined for the period beginning on the due date (without extensions) for the taxpayer's income tax return for the year in which the termination date falls and ending on the date the late purging election is filed with the IRS.

(ii) ***Filing instructions.*** A late purging election is made by filing a completed Form 8621-A, “Return by a Shareholder Making Certain Late Elections to End Treatment as a Passive Foreign Investment Company.”

(4) *Time and manner of making late election* —

(i) ***Time for making a late purging election.*** A shareholder may make a late purging election in the manner provided in paragraph (e)(4)(ii) of this section at any time. The date the election is filed with the IRS will determine the amount of interest due under paragraph (e)(3) of this section.

(ii) ***Manner of making a late purging election.*** A shareholder makes a late purging election by completing Form 8621-A in the manner required by that form and this section and filing that form with the Internal Revenue Service, DP 8621-A, Ogden, UT 84201.

(5) ***Multiple late elections.*** For rules regarding the circumstances under which a shareholder of a foreign corporation may make multiple late purging elections under this paragraph (e) or § 1.1297-3(e), see § 1.1297-3(e)(5).

(f) ***Effective/applicability date.*** The rules of this section are applicable as of December 8, 2005.

[T.D. 9231, 70 FR 72915, Dec. 8, 2005, as amended by T.D. 9360, 72 FR 54824, Sept. 27, 2007]

§ 1.1298-4 Rules for certain foreign corporations owning stock in 25-percent-owned domestic corporations.

(a) ***Overview.*** This section provides rules under section 1298(b)(7) that apply to certain foreign corporations that own stock in 25-percent-owned domestic corporations (as defined in paragraph (b) of this section) for purposes of determining whether a foreign corporation is a passive foreign investment company (PFIC). Paragraph (b) of this section provides the general rule. Paragraph (c) of this section provides rules concerning ownership of 25-percent-owned domestic corporations or qualified stock (as defined in paragraph (b)(2) of this section) through partnerships. Paragraph (d) of this section provides rules for determining whether a foreign corporation is subject to the tax imposed by section 531 (the section 531 tax) and for waiving treaty benefits that would prevent the imposition of such tax. Paragraph (e) of this section provides an anti-abuse rule for the application of section 1298(b)(7). Paragraph (f) provides the applicability date for this section.

(b) ***Treatment of certain foreign corporations owning stock in a 25-percent-owned domestic corporation*** —

(1) ***General rule.*** Except as otherwise provided in paragraph (e) of this section, when a tested foreign corporation (as defined in § 1.1297-1(f)) is subject to the section 531 tax (or waives any benefit under any treaty that would otherwise prevent the imposition of the tax), and owns (directly or indirectly under the rules in paragraph (c) of this section) at least 25 percent (by value) of the stock of a domestic corporation (a *25-percent-owned domestic corporation*), for purposes of determining whether the foreign corporation is a PFIC, any qualified stock held directly or indirectly under the rules in paragraph (c) of this section by the 25-percent-owned domestic corporation is treated as an asset that does not produce passive income (and is not held for the production of passive income), and any amount included in gross income with respect to the qualified stock is not treated as passive income.

(2) ***Qualified stock and second-tier domestic corporation.*** For purposes of this section, the term *qualified stock* means any stock in a C corporation that is a domestic corporation and that is not a regulated investment company or real estate investment trust and the term *second-tier corporation* means the corporation.

(c) ***Indirect ownership of stock through a partnership.*** For purposes of paragraph (b)(1) of this section, a tested foreign corporation that is a partner in a partnership is considered to own its proportionate share of any stock of a domestic corporation held by the partnership, and a domestic corporation that is a

partner in a partnership is considered to own its proportionate share of any qualified stock held by the partnership. An upper-tier partnership's attributable share of the stock of a domestic corporation or of qualified stock held by a lower-tier partnership is treated as held by the upper-tier partnership for purposes of applying the rule in this paragraph (c).

(d) *Section 531 tax* —

(1) ***Subject to section 531 tax.*** For purposes of paragraph (b) of this section, a tested foreign corporation is considered subject to the section 531 tax regardless of whether the tax is imposed on the corporation and of whether the requirements of § 1.532-1(c) are met.

(2) *Waiver of treaty benefits* —

(i) ***Tested foreign corporation that files, or is required to file, a Federal income tax return.*** For purposes of paragraph (b) of this section, a tested foreign corporation that files, or is required to file, a Federal income tax return waives the benefit under a treaty that would otherwise prevent the imposition of the section 531 tax by attaching to its original or amended return for the taxable year for which section 1298(b)(7) and paragraph (b)(1) of this section are applied or any prior taxable year a statement that it irrevocably waives treaty protection against the imposition of the section 531 tax, effective for all prior, current, and future taxable years, provided the taxable year for which the return is filed and all subsequent taxable years are not closed by the period of limitations on assessments under section 6501.

(ii) ***Tested foreign corporation that is not required to file a Federal income tax return.*** For purposes of paragraph (b) of this section, a tested foreign corporation that is not required to file a Federal income tax return waives the benefit under a treaty that would otherwise prevent the imposition of the section 531 tax by a date no later than nine months following the close of the taxable year for which section 1298(b)(7) and paragraph (b)(1) of this section are applied by—

(A) Adopting a resolution or similar governance document that confirms that it has irrevocably waived any treaty protection against the imposition of the section 531 tax, effective for all prior, current, and future taxable years, and maintaining a copy of the resolution (or other governance document) in its records; or

(B) In the case of a tested foreign corporation described in section 1297(e)(3), including in its public filings a statement that it irrevocably waives treaty protection against the imposition of the section 531 tax, effective for all prior, current, and future taxable years.

(e) *Anti-abuse rule* —

(1) ***General rule.*** Paragraph (b) of this section does not apply with respect to qualified stock in a second-tier domestic corporation owned by a 25-percent-owned domestic corporation if a principal purpose for the formation of, acquisition of, or holding of stock of the 25-percent-owned domestic corporation or the second-tier domestic corporation, or for the capitalization or other funding of the second-tier domestic corporation, is to hold passive assets (as defined in § 1.1297-1(f)(5)) through the second-tier domestic corporation to avoid classification of the tested foreign corporation as a PFIC.

(2) [Reserved]

(3) [Reserved]

(f) ***Applicability date.*** The rules of this section apply to taxable years of shareholders beginning on or after January 14, 2021. A shareholder may choose to apply such rules for any open taxable year beginning before January 14, 2021, provided that, with respect to a tested foreign corporation, the shareholder consistently applies the provisions of this section and § 1.1291-1(b)(8)(iv) and (b)(8)(v)(A), (B), (C), and (D) and §§ 1.1297-1 (except that consistent treatment is not required with respect to § 1.1297-1(c)(1)(i)(A)), 1.1297-2, and 1.1298-2 for such year and all subsequent years.

[T.D. 9936, 86 FR 4578, Jan. 15, 2021, as amended at 86 FR 13648, Mar. 10, 2021]

INCOME AVERAGING

§ 1.1301-1 Averaging of farm and fishing income.

(a) ***Overview.*** An individual engaged in a farming or fishing business may make a farm income averaging election to compute current year (election year) income tax liability under section 1 by averaging, over the prior three-year period (base years), all or a portion of the individual's current year electible farm income as defined in paragraph (e) of this section. Electible farm income includes income from both farming and fishing businesses. An individual who makes a farm income averaging election—

(1) Designates all or a portion of the individual's electible farm income for the election year as elected farm income; and

(2) Determines the election year section 1 tax by calculating the sum of—

(i) The section 1 tax that would be imposed for the election year if taxable income for the year were reduced by elected farm income; plus

(ii) The amount by which the section 1 tax would be increased if taxable income for each base year were increased by one-third of elected farm income.

(b) ***Individual engaged in a farming or fishing business*** —

(1) ***In general*** —

(i) ***Farming or fishing business.*** "Farming business" has the same meaning as provided in section 263A(e)(4) and the regulations under that section. *Fishing business* means the conduct of commercial fishing as defined in section 3 of the Magnuson-Stevens Fishery Conservation and Management Act (16 U.S.C. 1802(4)). Accordingly, a fishing business is fishing in which the fish harvested are intended to or do enter commerce through sale, barter, or trade. *Fishing* means the catching, taking, or harvesting of fish; the attempted catching, taking, or harvesting of fish; any activities that reasonably can be expected to result in the catching, taking, or harvesting of fish; or any operations at sea in support of or in preparation for the catching, taking, or harvesting of fish. Fishing does not include any scientific research activity conducted by a scientific research vessel. *Fish* means finfish, mollusks, crustaceans, and all other forms of marine animal and plant life, other than marine mammals and birds. *Catching, taking, or harvesting* includes activities that result in the killing of fish or the bringing of live fish on board a vessel.

(ii) ***Exxon Valdez settlement payments.*** For purposes of this section, a qualified taxpayer who receives qualified settlement income in any taxable year is treated as engaged in a fishing business, and the income is treated as income attributable to a fishing business, for that taxable year. A *qualified taxpayer* is an individual plaintiff in the civil action *In re Exxon Valdez,*

No. 89-095-CV (HRH) (Consolidated) (D. Alaska). *Qualified taxpayer* also means any individual who is a beneficiary of the estate of such a plaintiff, was the spouse or immediate relative of that plaintiff, and acquired the right to receive the settlement income from that plaintiff. *Qualified settlement income* means any interest and punitive damage awards that are received in connection with the civil action *In re Exxon Valdez* (whether as lump-sum or periodic payments, whether pre- or post-judgment, and whether related to a settlement or to a judgment) and that are otherwise includible in income.

(iii) ***Form of business.*** An individual engaged in a farming or fishing business includes a sole proprietor of a farming or fishing business, a partner in a partnership engaged in a farming or fishing business, and a shareholder of an S corporation engaged in a farming or fishing business. Except as provided in paragraph (e)(1)(i) of this section, services performed as an employee are disregarded in determining whether an individual is engaged in a farming or fishing business for purposes of section 1301 of the Internal Revenue Code.

(iv) ***Base years.*** An individual is not required to have been engaged in a farming or fishing business in any of the base years in order to make a farm income averaging election.

(2) ***Certain landlords.*** A landlord is engaged in a farming business for purposes of section 1301 with respect to rental income that is based on a share of production from a tenant's farming business and, with respect to amounts received on or after January 1, 2003, is determined under a written agreement entered into before the tenant begins significant activities on the land. A landlord is not engaged in a farming business for purposes of section 1301 with respect to either fixed rent or, with respect to amounts received on or after January 1, 2003, rental income based on a share of a tenant's production determined under an unwritten agreement or a written agreement entered into after the tenant begins significant activities on the land. Whether the landlord materially participates in the tenant's farming business is irrelevant for purposes of section 1301.

(3) ***Lessors of vessels used in fishing.*** A lessor of a vessel is engaged in a fishing business for purposes of section 1301 with respect to payments that are received under the lease and are based on a share of the catch from the lessee's use of the vessel in a fishing business (or a share of the proceeds from the sale of the catch) if this manner of payment is determined under a written lease agreement entered into before the lessee begins any significant fishing activities resulting in the catch. A lessor of a vessel is not engaged in a fishing business for purposes of section 1301 with respect to fixed lease payments or with respect to lease payments based on a share of the lessee's catch (or a share of the proceeds from the sale of the catch) if the share is determined under either an unwritten agreement or a written agreement entered into after the lessee begins significant fishing activities resulting in the catch.

(c) ***Making, changing, or revoking an election*** —

(1) ***In general.*** A farm income averaging election is made by filing Schedule J, “Income Averaging for Farmers and Fishermen,” with an individual's Federal income tax return for the election year (including a late or amended return if the period of limitation on filing a claim for credit or refund has not expired).

(2) ***Changing or revoking an election.*** An individual may change the amount of the elected farm income in a previous election or revoke a previous election if the period of limitations on filing a claim for credit or refund has not expired for the election year.

(d) ***Guidelines for calculation of section 1 tax*** —

(1) ***Actual taxable income not affected.*** Under paragraph (a)(2) of this section, a determination of the section 1 tax for the election year involves a computation of the section 1 tax that would be imposed if taxable income for the election year were reduced by elected farm income and taxable income for each of the base years were increased by one-third of elected farm income. The reduction and increases required for purposes of this computation do not affect the actual taxable income for either the election year or the base years. Thus, for each of those years, the actual taxable income is taxable income determined without regard to any hypothetical reduction or increase required for purposes of the computation under paragraph (a)(2) of this section. The following illustrates this principle:

(i) Any reduction or increase in taxable income required for purposes of the computation under paragraph (a)(2) of this section is disregarded in determining the taxable year in which a net operating loss carryover or net capital loss carryover is applied.

(ii) The net section 1231 gain or loss and the character of any section 1231 items for the election year is determined without regard to any reduction in taxable income required for purposes of the computation under paragraph (a)(2) of this section.

(iii) The section 68 overall limitation on itemized deductions for the election year is determined without regard to any reduction in taxable income required for purposes of the computation under paragraph (a)(2) of this section. Similarly, the section 68 limitation for a base year is not recomputed to take into account any allocation of elected farm income to the base year for such purposes.

(iv) If a base year had a partially used capital loss, the remaining capital loss may not be applied to reduce the elected farm income allocated to the year for purposes of the computation under paragraph (a)(2) of this section.

(v) If a base year had a partially used credit, the remaining credit may not be applied to reduce the section 1 tax attributable to the elected farm income allocated to the year for purposes of the computation under paragraph (a)(2) of this section.

(2) ***Computation in base years*** —

(i) ***In general.*** As provided in paragraph (a)(2)(ii) of this section, the election year section 1 tax includes the amounts by which the section 1 tax for each base year would be increased if taxable income for the year were increased by one-third of elected farm income. For this purpose, all allowable deductions (including the full amount of any net operating loss carryover) are taken into account in determining the taxable income for the base year even if the deductions exceed gross income and the result is negative. If the result is negative, however, any amount that may provide a benefit in another taxable year is added back in determining base year taxable income. Amounts that may provide a benefit in another year include—

(A) The net operating loss (as defined in section 172(c)) for the base year;

(B) The net operating loss for any other year to the extent carried forward from the base year under section 172(b)(2); and

(C) The capital loss deduction allowed for the base year under section 1211(b)(1) or (2) to the extent such deduction does not reduce the capital loss carryover from the base year because it exceeds adjusted taxable income (as defined in section 1212(b)(2)(B)).

(ii) ***Example.*** The rules of this paragraph (d)(2) are illustrated by the following example:

Example. In 2001, F and F's spouse on their joint return elect to average $24,000 of income attributable to a farming business. One-third of the elected farm income, $8,000, is added to the 1999 base year income. In 1999, F and F's spouse reported adjusted gross income of $7,300 and claimed a standard deduction of $7,200 and a deduction for personal exemptions of $8,250. Therefore, their 1999 base year taxable income is −$8,150 [$7,300−($7,200 + $8,250)]. After adding the elected farm income to the negative taxable income, their 1999 base year taxable income would be zero [$8,000 + (−$8,150)=−$150]. If F and F's spouse elected to income average in 2002, and made the adjustments described in paragraph (d)(3) of this section to account for the 2001 election, their 1999 base year taxable income for the 2002 election would be −$150.

(3) ***Effect on subsequent elections*** —

(i) ***In general.*** The reduction and increases in taxable income assumed in computing the election year section 1 tax (within the meaning of paragraph (a)(2) of this section) for an election year are treated as having actually occurred for purposes of computing the election year section 1 tax for any subsequent election year. Thus, if a base year for a farm income averaging election is also an election year for another farm income averaging election, the increase in the section 1 tax for that base year is determined after reducing taxable income by the elected farm income from the earlier election year. Similarly, if a base year for a farm income averaging election is also a base year for another farm income averaging election, the increase in the section 1 tax for that base year is determined after increasing taxable income by elected farm income allocated to the year from the earlier election year.

(ii) ***Example.*** The rules of this paragraph (d)(3) are illustrated by the following example:

> *Example.* (i) T is a fisherman who uses the calendar taxable year. In each of the years 2007, 2008, and 2009, T's taxable income is $20,000, none of which is electible farm income. In 2010, T has taxable income of $30,000 (prior to any farm income averaging election), $10,000 of which is electible farm income. T makes a farm income averaging election with respect to $9,000 of the electible farm income for 2010. Under paragraph (a)(2)(ii) of this section, $3,000 of elected farm income is allocated to each of the base years 2007, 2008, and 2009. Under paragraph (a)(2) of this section, T's 2010 tax liability is the sum of the following amounts:
> (A) The section 1 tax on $21,000, which is T's taxable income of $30,000, minus elected farm income of $9,000.
>
> (B) For each of the base years 2007, 2008, and 2009, the amount by which the section 1 tax would be increased if one-third of elected farm income were allocated to each year. The amount for each year is the section 1 tax on $23,000 (T's taxable income of $20,000, plus $3,000, which is one-third of elected farm income for the 2010 election year), minus the section 1 tax on $20,000.

(ii) In 2011, T has taxable income of $50,000, $12,000 of which is electible farm income. T makes a farm income averaging election with respect to all $12,000 of the electible farm income for 2011. Under paragraph (a)(2)(ii) of this section, $4,000 of elected farm income is allocated to each of the base years 2008, 2009, and 2010. Under paragraph (a)(2) of this section, T's 2011 tax liability is the sum of the following amounts:

(A) The section 1 tax on $38,000, which is T's taxable income of $50,000, minus elected farm income of $12,000.

(B) For each of the base years 2008 and 2009, the amount by which section 1 tax would be increased if, after adjustments for previous farm income averaging elections pursuant to paragraph (d)(3)(i) of this section, one-third of 2011 elected farm income were allocated to each year. The amount for each year is the section 1 tax on $27,000 (T's taxable income of $20,000 increased by $3,000 for T's 2010 farm income averaging election and further increased by $4,000, which is one-third of elected farm income for the 2011 election year), minus the section 1 tax on $23,000 (T's taxable income of $20,000 increased by $3,000 for T's 2010 farm income averaging election).

(C) For base year 2010, the amount by which section 1 tax would be increased if, after adjustments for previous farm income averaging elections pursuant to paragraph (d)(3)(i) of this section, one-third of elected farm income were allocated to that year. This amount is the section 1 tax on $25,000 (T's 2010 taxable income of $30,000 reduced by $9,000 for T's 2010 farm income averaging election and increased by $4,000, which is one-third of elected farm income for the 2011 election year), minus the section 1 tax on $21,000 (T's taxable income of $30,000 reduced by $9,000 for T's 2010 farm income averaging election).

(4) ***Deposits into Merchant Marine Capital Construction Fund*** —

(i) ***Reductions to taxable income and electible farm income.*** Under section 7518(c)(1)(A), certain deposits to a Merchant Marine Capital Construction Fund (CCF) reduce taxable income for purposes of the Internal Revenue Code (the CCF reduction). The amount of the CCF reduction is limited under section 7518(a)(1)(A) to the taxpayer's taxable income (determined without regard to the reduction) attributable to specified maritime operations including operations in fisheries of the United States. The CCF reduction is taken into account in determining the taxable income used in computations under this section. In addition, except to the extent the amount described in section 7518(a)(1)(A) is not attributable to the individual's fishing business, the CCF reduction is treated in computing electible farm income as an item of deduction attributable to the individual's fishing business.

(ii) ***Example.*** The rules of this paragraph (d)(4) are illustrated by the following example:

Example. (i) T is a fisherman who uses the calendar taxable year. In each of the years 2007, 2008, and 2009, T's taxable income (before taking any CCF reduction into account)

is $20,000. For taxable year 2008, all of T's income is described in section 7518(a)(1)(A) and is attributable to T's fishing business. T makes a $5,000 deposit into a CCF for taxable year 2008. In 2010, T has total taxable income of $30,000 (before taking any CCF reduction into account). T's electible farm income for 2010 (before taking the CCF reduction into account) is $10,000, all of which is described in section 7518(a)(1)(A) and is attributable to T's fishing business. For taxable year 2010, T makes a $4,000 deposit into a CCF.
(ii) The amount of the 2010 CCF deposit reduces taxable income. Accordingly, T's taxable income for 2010 is $26,000 ($30,000-$4,000). In addition, the entire amount of the CCF reduction is treated as an item of deduction attributable to T's fishing business. Accordingly, T's electible farm income for 2010 is $6,000 ($10,000-$4,000). Similarly, the amount of the 2008 CCF deposit reduces T's taxable income for 2008. Accordingly, T's taxable income for 2008 is $15,000 ($20,000-$5,000).

(iii) T makes an income averaging election with respect to all $6,000 of the electible farm income for 2010. Under paragraph (a)(2)(ii) of this section, $2,000 of elected farm income is allocated to each of the base years 2007, 2008, and 2009. Under paragraph (a)(2) of this section, T's 2010 tax liability is the sum of the following amounts:

(A) The section 1 tax on $20,000, which is T's taxable income of $26,000 ($30,000 reduced by the $4,000 CCF deposit), minus elected farm income of $6,000.

(B) For each of the base years 2007, 2008, and 2009, the amount by which section 1 tax would be increased if one-third of elected farm income were allocated to each year. The amount for base years 2007 and 2009 is the section 1 tax on $22,000, (T's taxable income of $20,000, plus $2,000, which is one-third of elected farm income for the election year), minus the section 1 tax on $20,000. The amount for base year 2008 is the section 1 tax on $17,000, which is T's taxable income of $15,000 ($20,000 reduced by the $5,000 CCF deposit), plus $2,000 (one-third of elected farm income for the election year), minus the section 1 tax on $15,000.

(e) ***Electible farm income*** —

(1) ***Identification of items attributable to a farming or fishing business*** —

(i) ***In general.*** Farm and fishing income includes items of income, deduction, gain, and loss attributable to an individual's farming or fishing business. Farm and fishing losses include, to the extent attributable to a farming or fishing business, any net operating loss carryover or carryback or net capital loss carryover to an election year. Income, gain, or loss from the sale of development rights, grazing rights, and other similar rights is not treated as attributable to a farming business. In general, farm and fishing income does not include compensation received as an employee. However, a shareholder of an S corporation engaged in a farming or fishing business may treat compensation received from the corporation as farm or fishing income if the compensation is paid by the corporation in the conduct of the farming or fishing business.

If a crewmember on a vessel engaged in commercial fishing (within the meaning of section 3 of the Magnuson-Stevens Fishery Conservation and Management Act, 16 U.S.C. 1802(4)) is compensated by a share of the boat's catch of fish or a share of the proceeds from the sale of the catch, the crewmember is treated for purposes of section 1301 as engaged in a fishing business and the compensation is treated for such purposes as income from a fishing business.

(ii) ***Gain or loss on sale or other disposition of property*** —

(A) ***In general.*** Gain or loss from the sale or other disposition of property that was regularly used in the individual's farming or fishing business for a substantial period of time is treated as attributable to a farming or fishing business. For this purpose, the term *property* does not include land, but does include structures affixed to land. Property that has always been used solely in the farming or fishing business by the individual is deemed to meet both the regularly used and substantial period tests. Whether property not used solely in the farming or fishing business was regularly used in the farming or fishing business for a substantial period of time depends on all of the facts and circumstances.

(B) ***Cessation of a farming or fishing business.*** If gain or loss described in paragraph (e)(1)(ii)(A) of this section is realized after cessation of a farming or fishing business, the gain or loss is treated as attributable to a farming or fishing business only if the property is sold within a reasonable time after cessation of the farming or fishing business. A sale or other disposition within one year of cessation of the farming or fishing business is presumed to be within a reasonable time. Whether a sale or other disposition that occurs more than one year after cessation of the farming or fishing business is within a reasonable time depends on all of the facts and circumstances.

(2) ***Determination of amount that may be elected farm income*** —

(i) ***Electible farm income.***

(A) The maximum amount of income that an individual may elect to average (electible farm income) is the sum of any farm and fishing income and gains, minus any farm and fishing deductions or losses (including loss carryovers and carrybacks) that are allowed as a deduction in computing the individual's taxable income.

(B) Individuals conducting both a farming business and a fishing business must calculate electible farm income by combining income, gains, deductions, and losses derived from the farming business and the fishing business.

(C) Except as otherwise provided in paragraph (d)(4) of this section, the amount of any CCF reduction is treated as a deduction from income attributable to a fishing business in calculating electible farm income.

(D) Electible farm income may not exceed taxable income, and electible farm income from net capital gain attributable to a farming or fishing business may not exceed total net capital gain. Subject to these limitations, an individual who has both ordinary income and net capital gain from a farming or fishing business may elect to average any combination of the ordinary income and net capital gain.

(ii) ***Examples.*** The rules of this paragraph (e)(2) are illustrated by the following examples:

Example 1. A has ordinary income from a farming business of $200,000 and deductible expenses from a farming business of $50,000. A's taxable income is $150,000 ($200,000-$50,000). Under paragraph (e)(2)(i) of this section, A's electible farm income is $150,000, all of which is ordinary income.

Example 2. B has capital gain of $20,000 that is not from a farming or fishing business, capital loss from a farming business of $30,000, and ordinary income from a farming business of $100,000. Under section 1211(b), B's allowable capital loss is limited to $23,000. B's taxable income is $97,000 (($20,000-$23,000) + $100,000). B has a capital loss carryover from a farming business of $7,000 ($30,000 total loss − $23,000 allowable loss). Under paragraph (e)(2)(i) of this section, B's electible farm income is $77,000 ($100,000 ordinary income from a farming business, minus $23,000 capital loss from a farming business), all of which is ordinary income.

Example 3. C has ordinary income from a fishing business of $200,000 and ordinary loss from a farming business of $60,000. C's taxable income is $140,000 ($200,000 − $60,000). Under paragraph (e)(2)(i)(B) of this section, C must deduct the farm loss from the fishing income in determining C's electible farm income. Therefore, C's electible farm income is $140,000 ($200,000-$60,000), all of which is ordinary income.

Example 4. D has ordinary income from a farming business of $200,000 and ordinary loss of $50,000 that is not from a farming or fishing business. D's taxable income is $150,000 ($200,000 − $50,000). Under paragraph (e)(2)(i)(D) of this section, electible farm income may not exceed taxable income. Therefore, D's electible farm income is $150,000, all of which is ordinary income.

Example 5. E has capital gain from a farming business of $50,000, capital loss of $40,000 that is not from a farming or fishing business, and ordinary income from a farming business of $60,000. E's taxable income is $70,000 (($50,000 − $40,000) + $60,000). Under paragraph (e)(2)(i)(D) of this section, electible farm income may not exceed taxable income, and electible farm income from net capital gain attributable to a farming or fishing business may not exceed total net capital gain. Therefore, E's electible farm income is $70,000 of which $10,000 is capital gain and $60,000 is ordinary income.

(f) ***Miscellaneous rules*** —

(1) ***Short taxable year*** —

(i) ***In general.*** If a base year or an election year is a short taxable year, the rules of section 443 and the regulations thereunder apply for purposes of calculating the section 1 tax.

(ii) ***Base year is a short taxable year.*** If a base year is a short taxable year, elected farm income is allocated to such year for purposes of paragraph (a)(2) of this section after the taxable income for such year has been annualized.

(iii) ***Election year is a short taxable year.*** In applying paragraph (a)(2) of this section for purposes of determining tax computed on the annual basis (within the meaning of section 443(b)(1)) for an election year that is a short taxable year—

(A) The taxable income and the electible farm income for the year are annualized; and

(B) The taxpayer may designate all or any part of the annualized electible farm income as elected farm income.

(2) ***Changes in filing status.*** An individual is not prohibited from making a farm income averaging election solely because the individual's filing status is not the same in an election year and the base years. For example, an individual who is married and files a joint return in the election year, who filed as single in one or more of the base years, may elect to average farm or fishing income, by using the single filing status to compute the increase in section 1 taxes for the base years in which the individual filed as single.

(3) ***Employment tax.*** A farm income averaging election has no effect in determining the amount of wages for purposes of the Federal Insurance Contributions Act (FICA), the Federal Unemployment Tax Act (FUTA), and the Collection of Income Tax at Source on Wages (Federal income tax withholding), or the amount of net earnings from self-employment for purposes of the Self-Employment Contributions Act (SECA).

(4) ***Alternative minimum tax.*** A farm income averaging election is disregarded in computing the tentative minimum tax and the regular tax under section 55 for the election year or any base year. The election is taken into account, however, in determining the regular tax liability under section 53(c) for the election year.

(5) ***Unearned income of minor child.*** In an election year, if a minor child's investment income is taxable under section 1(g) and a parent makes a farm income averaging election, the tax rate used for purposes of applying section 1(g) is the rate determined after application of the election. In a base year, however, the tax on a minor child's investment income is not affected by a farm income averaging election.

(g) ***Effective/applicability date.*** This section applies for taxable years beginning after December 15, 2010. See the provisions of §§ 1.1301-1 and 1.1301-1T as in effect on December 14, 2010 for rules that apply for taxable years beginning on or before December 15, 2010. In addition, a taxpayer may apply paragraph (b)(1)(ii) of this section in taxable years beginning after December 31, 2003.

[T.D. 8972, 67 FR 819, Jan. 8, 2002; 67 FR 5203, Feb. 5, 2002; T.D. 9417, 73 FR 42523, July 22, 2008; T.D. 9509, 75 FR 78157, Dec. 15, 2010]

Readjustment of Tax Between Years and Special Limitations

Mitigation of Effect of Limitations and Other Provisions

§ 1.1311(a)-1 Introduction.

(a) Part II (section 1311 and following), subchapter Q, chapter 1 of the Code, provides certain rules for the correction of the effect of an erroneous treatment of an item in a taxable year which is closed by the statute of limitations or otherwise, in cases where, in connection with the ascertainment of the tax for another taxable year, it has been determined that there was an erroneous treatment of such item in the closed year.

(b) In most situations falling within this part the correction of the effect of the error on a closed year can be made only if either the Commissioner or the taxpayer has taken a position in another taxable year which is inconsistent with the erroneous treatment of the item in the closed year. If a refund or credit would result from the correction of the error in the closed year, then the Commissioner must be the one maintaining the inconsistent position. For example, if the taxpayer erroneously included an item of income on his return for an earlier year which is now closed and the Commissioner successfully requires it to be included in a later year, then the correction of the effect of the erroneous inclusion of that item in the

closed year may be made since the Commissioner has maintained a position inconsistent with the treatment of such item in such closed year. On the other hand, if an additional assessment would result from the correction of the error in the closed year, then the taxpayer must be the one maintaining the inconsistent position. For example, if the taxpayer deducted an item in an earlier year which is now closed and he successfully contends that the item should be deducted in a later year, then the correction of the effect of the erroneous deduction of that item in the closed year may be made since the taxpayer has taken a position inconsistent with the treatment of such item in such earlier year.

(c) There are two special circumstances which fall within this part but which do not require that an inconsistent position be maintained. One of these circumstances relates to the inclusion of an item of income in the correct year and the other relates to the allowance of a deduction in the correct year. In the first situation, if the Commissioner takes the position by a deficiency notice or before the Tax Court that an item of income should be included in the gross income of a taxpayer for a particular year and it is ultimately determined that such item was not so includible, then such item can be included in the income of the proper year if that year was not closed at the time the Commissioner took his position. In the second situation, if the taxpayer claims that a deduction should be allowed for a particular year and it is ultimately determined that the deduction was not allowable in that year, then the taxpayer may take the deduction in the proper year if that year was not closed at the time the taxpayer first claimed a deduction.

[T.D. 6500, 25 FR 12031, Nov. 26, 1960]

§ 1.1311(a)-2 Purpose and scope of section 1311.

(a) Section 1311 provides for the correction of the effect of certain errors under circumstances specified in section 1312 when one or more provisions of law, such as the statute of limitations, would otherwise prevent such correction. Section 1311 may be applied to correct the effect of certain errors if, on the date of a determination (as defined in section 1313(a) and the regulations thereunder), correction is prevented by the operation of any provision of law other than sections 1311 through 1315 and section 7122 (relating to compromises) and the corresponding provisions of prior revenue laws. Examples of provisions preventing such corrections are sections 6501, 6511, 6532, and 6901 (c), (d) and (e), relating to periods of limitations; section 6212(c) and 6512 relating to the effect of petition to the Tax Court of the United States on further deficiency letters and on credits or refunds; section 7121 relating to closing agreements; and sections 6401 and 6514 relating to payments, refunds, or credits after the period of limitations has expired. Section 1311 may also be applied to correct the effect of an error if, on the date of the determination, correction of the error is prevented by the operation of any rule of law, such as *res judicata* or *estoppel*.

(b) The determination (including a determination under section 1313 (a)(4)) may be with respect to any of the taxes imposed by subtitle A of the Internal Revenue Code of 1954, by chapter 1 and subchapters A, B, D, and E of chapter 2 of the Internal Revenue Code of 1939, or by the corresponding provisions of any prior revenue act, or by more than one of such provisions. Section 1311 may be applied to correct the effect of the error only as to the tax or taxes with respect to which the error was made which correspond to the tax or taxes with respect to which the determination relates. Thus, if the determination relates to a tax imposed by chapter 1 of the Internal Revenue Code of 1954, the adjustment may be only with respect to the tax imposed by such chapter or by the corresponding provisions of prior law.

(c) Section 1311 is not applicable if, on the date of the determination, correction of the effect of the error is permissible without recourse to said section.

(d) If the tax liability for the year with respect to which the error was made has been compromised under section 7122 or the corresponding provisions of prior revenue laws, no adjustment may be made under section 1311 with respect to said year.

(e) No adjustment may be made under section 1311 for any taxable year beginning prior to January 1, 1932. See section 1314(d).

(f) Section 1311 applies only to a determination (as defined in section 1313(a) and §§ 1.1313(a)-1 to 1.1313(a)-4, inclusive) made after November 14, 1954. Section 3801 of the Internal Revenue Code of 1939 and the regulations thereunder apply to determinations, as defined therein, made on or before November 14, 1954. See section 1315.

[T.D. 6500, 25 FR 12031, Nov. 26, 1960]

§ 1.1311(b)-1 Maintenance of an inconsistent position.

(a) ***In general.*** Under the circumstances stated in § 1.1312-1, § 1.1312-2, paragraph (a) of § 1.1312-3, § 1.1312-5, § 1.1312-6, and § 1.1312-7, the maintenance of an inconsistent position is a condition necessary for adjustment. The requirement in such circumstances is that a position maintained with respect to the taxable year of the determination and which is adopted in the determination be inconsistent with the erroneous inclusion, exclusion, omission, allowance, disallowance, recognition, or nonrecognition, as the case may be, with respect to the taxable year of the error. That is, a position successfully maintained with respect to the taxable year of the determination must be inconsistent with the treatment accorded an item which was the subject of an error in the computation of the tax for the closed taxable year. Adjustments under the circumstances stated in paragraph (b) of § 1.1312-3 and in § 1.1312-4 are made without regard to the maintenance of an inconsistent position.

(b) ***Adjustments resulting in refund or credit.***

(1) An adjustment under any of the circumstances stated in § 1.1312-1, § 1.1312-5, § 1.1312-6, or § 1.1312-7 which would result in the allowance of a refund or credit is authorized only if (i) the Commissioner, in connection with a determination, has maintained a position which is inconsistent with the erroneous inclusion, omission, disallowance, recognition, or nonrecognition, as the case may be, in the year of the error, and (ii) such inconsistent position is adopted in the determination.

Example: A taxpayer who keeps his books on the cash method erroneously included as income on his return for 1954 an item of accrued interest. After the period of limitations on refunds for 1954 had expired, the district director, on behalf of the Commissioner, proposed an adjustment for the year 1955 on the ground that the item of interest was received in 1955 and, therefore, was properly includible in gross income for that year. The taxpayer and the district director entered into an agreement which meets all of the requirements of § 1.1313(a)-4 and which determines that the interest item was includible in gross income for 1955. The Commissioner has maintained a position inconsistent with the inclusion of the interest item for 1954. As the determination (the agreement pursuant to § 1.1313(a)-4) adopted such inconsistent position, an adjustment is authorized for the year 1954.

(2) An adjustment under circumstances stated in § 1.1312-1, § 1.1312-5, § 1.1312-6, or § 1.1312-7 which would result in the allowance of a refund or credit is not authorized if the taxpayer with respect to whom the determination is made, and not the Commissioner, has maintained such inconsistent position.

Example: In the example in subparagraph (1) of this paragraph, assume that the Commissioner asserted a deficiency for 1955 based upon other items for that year but, in computing the net income upon which such deficiency was based, did not include the item of interest. The taxpayer appealed to the Tax Court and in his petition asserted that the interest item should be included in gross income for 1955. The Tax Court in 1960 included the item of interest in its redetermination of tax for the year 1955. In such case no adjustment would be authorized for 1954 as the taxpayer, and not the Commissioner, maintained a position inconsistent with the erroneous inclusion of the item of interest in the gross income of the taxpayer for that year.

(c) ***Adjustments resulting in additional assessments.***

(1) An adjustment under any of the circumstances stated in § 1.1312-2, paragraph (a) of § 1.1312-3, § 1.1312-5, § 1.1312-6, or § 1.1312-7 which would result in an additional assessment is authorized only if (i) the taxpayer with respect to whom the determination is made has, in connection therewith, maintained a position which is inconsistent with the erroneous exclusion, omission, allowance, recognition, or nonrecognition, as the case may be, in the year of the error, and (ii) such inconsistent position is adopted in the determination.

Example: A taxpayer in his return for 1950 claimed and was allowed a deduction for a loss arising from a casualty. After the taxpayer had filed his return for 1951 and after the period of limitations upon the assessment of a deficiency for 1950 had expired, it was discovered that the loss actually occurred in 1951. The taxpayer, therefore, filed a claim for refund for the year 1951 based upon the allowance of a deduction for the loss in that year, and the claim was allowed by the Commissioner in 1955. The taxpayer thus has maintained a position inconsistent with the allowance of the deduction for 1950 by filing a claim for refund for 1951 based upon the same deduction. As the determination (the allowance of the claim for refund) adopts such inconsistent position, an adjustment is authorized for the year 1950.

(2) An adjustment under the circumstances stated in § 1.1312-2, paragraph (a) of § 1.1312-3, § 1.1312-5, § 1.1312-6, or § 1.1312-7 which would result in an additional assessment is not authorized if the Commissioner, and not the taxpayer, has maintained such inconsistent position.

Example: In the example in subparagraph (1) of this paragraph, assume that the taxpayer did not file a claim for refund for 1951 but the Commissioner issued a notice of deficiency for 1951 based upon other items. The taxpayer filed a petition with the Tax Court of the United States and the Commissioner in his answer voluntarily proposed the allowance for 1951 of a deduction for the loss previously allowed for 1950. The Tax Court took the deduction into account in its redetermination in 1955 of the tax for the year 1951. In such case no adjustment would be authorized for the year 1950 as the Commissioner, and not the taxpayer, has maintained a position inconsistent with the allowance of a deduction for the loss in that year.

[T.D. 6500, 25 FR 12032, Nov. 26, 1960, as amended by T.D. 6617, 27 FR 10823, Nov. 7, 1962]

§ 1.1311(b)-2 Correction not barred at time of erroneous action.

(a) An adjustment under the circumstances stated in paragraph (b) of § 1.1312-3 (relating to the double exclusion of an item of gross income) which would result in an additional assessment, is authorized only if assessment of a deficiency against the taxpayer or related taxpayer for the taxable year in which the item is includible was not barred by any law or rule of law at the time the Commissioner first maintained,

in a notice of deficiency sent pursuant to section 6212 (or section 272(a) of the Internal Revenue Code of 1939) or before the Tax Court of the United States, that the item described in paragraph (b) of § 1.1312-3 should be included in the gross income of the taxpayer in the taxable year to which the determination relates.

(b) An adjustment under the circumstances stated in § 1.1312-4 (relating to the double disallowance of a deduction or credit), which would result in the allowance of a credit or refund, is authorized only if a credit or refund to the taxpayer or related taxpayer, attributable to such adjustment, was not barred by any law or rule of law when the taxpayer first maintained in writing before the Commissioner or the Tax Court that he was entitled to such deduction or credit for the taxable year to which the determination relates. The taxpayer will be considered to have first maintained in writing before the Commissioner or the Tax Court that he was entitled to such deduction or credit when he first formally asserts his right to such deduction or credit as, for example, in a return, in a claim for refund, or in a petition (or an amended petition) before the Tax Court.

(c) Under the circumstances of adjustment with respect to which the conditions stated in this section are applicable, the conditions stated in § 1.1311(b)-1 (maintenance of an inconsistent position) are not required. See paragraph (b) of § 1.1312-3 and § 1.1312-4 for examples of the application of this section.

[T.D. 6500, 25 FR 12032, Nov. 26, 1960]

§ 1.1311(b)-3 Existence of relationship in case of adjustment by way of deficiency assessment.

(a) Except for cases described in paragraph (b) of § 1.1312-3, no adjustment by way of a deficiency assessment shall be made, with respect to a related taxpayer, unless the relationship existed both at some time during the taxable year with respect to which the error was made and at the time the taxpayer with respect to whom the determination is made first maintained the inconsistent position with respect to the taxable year to which the determination relates. In the case of an adjustment by way of a deficiency assessment under the circumstance described in paragraph (b) of § 1.1312-3 (where the maintenance of an inconsistent position is not required), the relationship need exist only at some time during the taxable year in which the error was made.

(b) If the inconsistent position is maintained in a return, claim for refund, or petition (or amended petition) to the Tax Court of the United States for the taxable year in respect to which the determination is made, the requisite relationship must exist on the date of filing such document. If the inconsistent position is maintained in more than one of such documents, the requisite date is the date of filing of the document in which it was first maintained. If the inconsistent position was not thus maintained, then the relationship must exist on the date of the determination as, for example, where at the instance of the taxpayer a deduction is allowed, the right to which was not asserted in a return, claim for refund, or petition to the Tax Court, and a determination is effected by means of a closing agreement or an agreement under section 1313(a)(4).

[T.D. 6500, 25 FR 12033, Nov. 26, 1960]

§ 1.1312-1 Double inclusion of an item of gross income.

(a) Paragraph (1) of section 1312 applies if the determination requires the inclusion in a taxpayer's gross income of an item which was erroneously included in the gross income of the same taxpayer for another taxable year or of a related taxpayer for the same or another taxable year.

(b) The application of paragraph (a) of this section may be illustrated by the following examples:

Example 1. A taxpayer who keeps his books on the cash method erroneously included in income on his return for 1947 an item of accrued rent. In 1952, after the period of limitation on refunds for 1947 had expired, the Commissioner discovered that the taxpayer received this rent in 1948 and asserted a deficiency for the year 1948 which is sustained by the Tax Court of the United States in 1955. An adjustment in favor of the taxpayer is authorized with respect to the year 1947. If the taxpayer had returned the rent for both 1947 and 1948 and by a determination was denied a refund claim for 1948 on account of the rent item, a similar adjustment is authorized.

Example 2. A husband assigned to his wife salary to be earned by him in the year 1952. The wife included such salary in her separate return for that year and the husband omitted it. The Commissioner asserted a deficiency against the wife for 1952 with respect to a different item; she contested that deficiency, and the Tax Court entered an order in her case which became final in 1955. The wife would therefore be barred by section 6512(a) from claiming a refund for 1952. Thereafter, the Commissioner asserted a deficiency against the husband on account of the omission of such salary from his return for 1952. In 1955 the husband and the Commissioner enter into a closing agreement for the year 1952 in which the salary is taxed to the husband. An adjustment is authorized with respect to the wife's tax for 1952.

[T.D. 6500, 25 FR 12033, Nov. 26, 1960]

§ 1.1312-2 Double allowance of a deduction or credit.

(a) Paragraph (2) of section 1312 applies if the determination allows the taxpayer a deduction or credit which was erroneously allowed the same taxpayer for another taxable year or a related taxpayer for the same or another taxable year.

(b) The application of paragraph (a) of this section may be illustrated by the following examples:

Example 1. A taxpayer in his return for 1950 claimed and was allowed a deduction for destruction of timber by a forest fire. Subsequently, it was discovered that the forest fire occurred in 1951 rather than 1950. After the expiration of the period of limitations for the assessment of a deficiency for 1950, the taxpayer filed a claim for refund for 1951 based upon a deduction for the fire loss in that year. The Commissioner in 1955 allows the claim for refund. An adjustment is authorized with respect to the year 1950.

Example 2. The beneficiary of a testamentary trust in his return for 1949 claimed, and was allowed, a deduction for depreciation of the trust property. The Commissioner asserted a deficiency against the beneficiary for 1949 with respect to a different item and a final decision of the Tax Court of the United States was rendered in 1951, so that the Commissioner was thereafter barred by section 272(f) of the Internal Revenue Code of 1939 from asserting a further deficiency against the beneficiary for 1949. The trustee thereafter filed a timely refund claim contending that, under the terms of the will, the trust, and not the beneficiary, was entitled to the allowance for depreciation. The court in 1955 sustains the refund claim. An adjustment is authorized with respect to the beneficiary's tax for 1949.

[T.D. 6500, 25 FR 12033, Nov. 26, 1960]

§ 1.1312-3 Double exclusion of an item of gross income.

(a) ***Items included in income or with respect to which a tax was paid.***

(1) Paragraph (3)(A) of section 1312 applies if the determination requires the exclusion, from a taxpayer's gross income, of an item included in a return filed by the taxpayer, or with respect to which tax was paid, and which was erroneously excluded or omitted from the gross income of the same taxpayer for another taxable year or of a related taxpayer for the same or another taxable year.

(2) The application of subparagraph (1) of this paragraph may be illustrated by the following examples:

> *Example 1.* (i) A taxpayer received payments in 1951 under a contract for the performance of services and included the payments in his return for that year. After the expiration of the period of limitations for the assessment of a deficiency for 1950, the Commissioner issued a notice of deficiency to the taxpayer for the year 1951 based upon adjustments to other items, and the taxpayer filed a petition with the Tax Court of the United States and maintained in the proceedings before the Tax Court that he kept his books on the accrual basis and that the payments received in 1951 were on income that had accrued and was properly taxable in 1950. A final decision of the Tax Court was rendered in 1955 excluding the payments from 1951 income. An adjustment in favor of the Commissioner is authorized with respect to the year 1950, whether or not a tax had been paid on the income reported in the 1951 return.
> (ii) Assume the same facts as in (i), except that the taxpayer had not included the payments in any return and had not paid a tax thereon. No adjustment would be authorized under section 1312(3)(A) with respect to the year 1950. If the taxpayer, however, had paid a deficiency asserted for 1951 based upon the inclusion of the payments in 1951 income and thereafter successfully sued for refund thereof, an adjustment would be authorized with respect to the year 1950. (See paragraph (b) of this section for circumstances under which correction is authorized with respect to items not included in income and on which a tax was not paid.)

Example 2. A father and son conducted a partnership business, each being entitled to one-half of the net profits. The father included the entire net income of the partnership in his return for 1948, and the son included no portion of this income in his return for that year. Shortly before the expiration of the period of limitations with respect to deficiency assessments and refund claims for both father and son for 1948, the father filed a claim for refund of that portion of his 1948 tax attributable to the half of the partnership income which should have been included in the son's return. The court sustains the claim for refund in 1955. An adjustment is authorized with respect to the son's tax for 1948.

(b) ***Items not included in income and with respect to which the tax was not paid.***

(1) Paragraph (3)(B) of section 1312 applies if the determination requires the exclusion from gross income of an item not included in a return filed by the taxpayer and with respect to which a tax was not paid, but which is includible in the gross income of the same taxpayer for another taxable year, or in the gross income of a related taxpayer for the same or another taxable year. This is one of the two circumstances in which the maintenance of an inconsistent position is not a requirement for an adjustment, but the requirements in paragraph (a) of § 1.1311(b)-2 must be fulfilled (correction not barred at time of erroneous action).

(2) The application of subparagraph (1) of this paragraph may be illustrated by the following examples:

Example 1. The taxpayer, A, who computes his income by use of the accrual method of accounting, performed in 1949 services for which he received payments in 1949 and 1950. He did not include in his return for either 1949 or 1950 the payments which he received in 1950, and he paid no tax with respect to such payments. In 1952 the Commissioner sent a notice of deficiency to A with respect to the year 1949, contending that A should have included all of such payments in his return for that year. A contested the deficiency on the basis that in 1949 he had no accruable right to the payments which he received in 1950. In 1955 (after the expiration of the period of limitations for assessing deficiencies with respect to 1950), the Tax Court sustains A's position. The Commissioner may assess a deficiency for 1950, since a deficiency assessment for that year was not barred when he sent the notice of deficiency with respect to 1949.

Example 2. B and C were partners in 1950, each being entitled to one-half of the profits of the partnership business. During 1950, B received an item of income which he treated as partnership income so that his return for that year reflected only 50 percent of such item. C, however, included no part of such item in any return and paid no tax with respect thereto. In 1952, the Commissioner sent to C a notice of deficiency with respect to 1950, contending that his return for that year should have reflected 50 percent of such item. C contested the deficiency on the basis that such item was not partnership income. In 1955, after the expiration of the period of limitations for assessing deficiencies with respect to 1950, the Tax Court sustained C's position. The Commissioner may assess a deficiency against B with respect to 1950 requiring him to include the entire amount of such item in his income since assessment of the deficiency was not barred when the Commissioner sent the notice of deficiency with respect to such item to C.

[T.D. 6500, 25 FR 12034, Nov. 26, 1960]

§ 1.1312-4 Double disallowance of a deduction or credit.

(a) Paragraph (4) of section 1312 applies if the determination disallows a deduction or credit which should have been, but was not, allowed to the same taxpayer for another taxable year or to a related taxpayer for the same or another taxable year. This is one of the two circumstances in which the maintenance of an inconsistent position is not a requirement for an adjustment but the requirements in paragraph (b) of § 1.1311(b)-2 must be fulfilled (correction not barred at time of erroneous action).

(b) The application of paragraph (a) of this section may be illustrated by the following examples:

Example 1. The taxpayer, A, who computes his income by use of the accrual method of accounting, deducted in his return for the taxable year 1951 an item of expense which he paid in such year. At the time A filed his return for 1951, the statute of limitations for 1950 had not expired. Subsequently, the Commissioner asserted a deficiency for 1951 based on the position that the liability for such expense should have been accrued for the taxable year 1950. In 1955, after the period of limitations on refunds for 1950 had expired, there was a determination by the Tax Court disallowing such deduction for the taxable year 1951. A is entitled to an adjustment for the taxable year 1950. However, if such liability should have been accrued for the taxable year 1946 instead of 1950, A would not be entitled to an adjustment, if a credit or refund with respect to 1946 was already barred when he deducted such expense for the taxable year 1951.

Example 2. The taxpayer, B, in his return for 1951 claimed a deduction for a charitable contribution. The Commissioner asserted a deficiency for such year contending that 50 percent of the deduction should be disallowed, since the contribution was made from community property 50 percent of which was attributable to B's spouse. The deficiency is sustained by the Tax Court in 1956, subsequent to the period of limitations within which B's spouse could claim a refund with respect to 1951. An adjustment is permitted to B's spouse, a related taxpayer, since a refund attributable to a deduction by her of such contribution was not barred when B claimed the deduction.

[T.D. 6500, 25 FR 12034, Nov. 26, 1960]

§ 1.1312-5 Correlative deductions and inclusions for trusts or estates and legatees, beneficiaries, or heirs.

(a) Paragraph (5) of section 1312 applies to distributions by a trust or an estate to the beneficiaries, heirs, or legatees. If the determination relates to the amount of the deduction allowed by sections 651 and 661 or the inclusion in taxable income of the beneficiary required by sections 652 and 662 (including amounts falling within subpart D, subchapter J, chapter 1 of the Code, relating to treatment of excess distributions by trusts), or if the determination relates to the additional deduction (or inclusion) specified in section 162 (b) and (c) of the Internal Revenue Code of 1939 (or the corresponding provisions of a prior revenue act), with respect to amounts paid, credited, or required to be distributed to the beneficiaries, heirs, and legatees, and such determination requires:

(1) The allowance to the estate or trust of the deduction when such amounts have been erroneously omitted or excluded from the income of the beneficiaries, heirs, or legatees; or

(2) The inclusion of such amounts in the income of the beneficiaries, heirs, or legatees when the deduction has been erroneously disallowed to or omitted by the estate or trust; or

(3) The disallowance to an estate or trust of the deduction when such amounts have been erroneously included in the income of the beneficiaries, heirs, or legatees; or

(4) The exclusion of such amounts from the income of the beneficiaries, heirs, or legatees when the deduction has been erroneously allowed to the estate or trust.

(b) The application of paragraph (a)(1) of this section may be illustrated by the following example:

Example: For the taxable year 1954, a trustee, directed by the trust instrument to accumulate the trust income, made no distribution to the beneficiary and returned the entire income as taxable to the trust. Accordingly the beneficiary did not include the trust income in his return for the year 1954. In 1957, a State court holds invalid the clause directing accumulation and determines that the income is required to be currently distributed. It also rules that certain extraordinary dividends which the trustee in good faith allocated to corpus in 1954 were properly allocable to income. In 1958, the trustee, relying upon the court decision, files a claim for refund of the tax paid on behalf of the trust for the year 1954 and thereafter files a suit in the District Court. The claim is sustained by the court (except as to the tax on the extraordinary dividends) in 1959 after the expiration of the period of limitations upon deficiency assessments against the beneficiary for the year 1954. An adjustment is authorized with respect to the beneficiary's tax for the year 1954. The treatment of the distribution to the beneficiary of the extraordinary dividends shall be determined under subpart D of subchapter J.

(c) The application of paragraph (a)(2) of this section may be illustrated by the following example:

Example: Assume the same facts as in the example in paragraph (b) of this section, except that, instead of the trustee's filing a refund claim, the Commissioner, relying upon the decision of the State court, asserts a deficiency against the beneficiary for 1954. The deficiency is sustained by final decision of the Tax Court of the United States in 1959, after the expiration of the period for filing claim for refund on behalf of the trust for 1954. An adjustment is authorized with respect to the trust for the year 1954.

(d) The application of paragraph (a)(3) of this section may be illustrated by the following example:

Example: A trustee claimed in the trust return for 1954 for amounts paid to the beneficiary a deduction to the extent of distributable net income. This amount was included by the beneficiary in gross income in his return for 1954. In computing distributable net income the trustee had included short and long-term capital gains. In 1958, the Commissioner asserts a deficiency against the trust on the ground that the capital gains were not includible in distributable net income, and that, therefore, the gains were taxable to the trust, not the beneficiary. The deficiency is sustained by a final decision of the Tax Court in 1960, after the expiration of the period for filing claims for refund by the beneficiary for 1954. An adjustment is authorized with respect to the beneficiary's tax for the year 1954, based on the exclusion from 1954 gross income of the capital gains previously considered distributed by the trust under section 662.

(e) The application of paragraph (a)(4) of this section may be illustrated by the following example:

Example: Assume the same facts as in the example in paragraph (d) of this section, except that, instead of the Commissioner's asserting a deficiency, the beneficiary filed a refund claim for 1954 on the same ground. The claim is sustained by the court in 1960 after the expiration of the period of limitations upon deficiency assessments against the trust for 1954. An adjustment is authorized with respect to the trust for the year 1954.

[T.D. 6500, 25 FR 12034, Nov. 26, 1960]

§ 1.1312-6 Correlative deductions and credits for certain related corporations.

(a) Paragraph (6) of section 1312 applies if the determination allows or disallows a deduction (including a credit) to a corporation, and if a correlative deduction or credit has been erroneously allowed, omitted, or disallowed in respect of a related taxpayer described in section 1313(c)(7).

(b) The application of paragraph (a) of this section may be illustrated by the following examples:

Example 1. X Corporation is a wholly-owned subsidiary of Y Corporation. In 1955, X Corporation paid $5,000 to Y Corporation and claimed an interest deduction for this amount in its return for 1955. Y Corporation included this amount in its gross income for 1955. In 1958, the Commissioner asserted a deficiency against X Corporation for 1955, contending that the deduction for interest paid should be disallowed on the ground that the payment was in reality the payment of a dividend to Y Corporation. X Corporation contested the deficiency, and ultimately in June 1959, a final decision of the Tax Court sustained the Commissioner. Since the amount of the payment is a dividend, Y Corporation should have been allowed for 1955 the corporate dividends-received deduction under section 243 with respect to such payment. However, the Tax Court's decision sustaining the deficiency against X Corporation occurred after the expiration of the period for filing claim for refund by Y Corporation for 1955. An adjustment is authorized with respect to Y Corporation for 1955.

Example 2. Assume the same facts as in example (1) except that, instead of the Commissioner asserting a deficiency against X Corporation for 1955, Y Corporation filed a claim for refund in 1958, alleging that the payment received in 1955 from X Corporation was in reality a dividend to which the corporate dividends-received deduction (section 243) applies. The Commissioner denied the claim, and ultimately in June 1959, the district court, in a final decision, sustained Y Corporation. Since the amount of the payment is a dividend, X Corporation should not have been allowed an interest deduction for the amount paid to Y Corporation. However, the district court's decision sustaining the claim for refund occurred after the expiration of the period of limitations for assessing a deficiency against X Corporation for the year 1955. An adjustment is authorized with respect to X Corporation's tax for 1955.

[T.D. 6617, 27 FR 10823, Nov. 7, 1962]

§ 1.1312-7 Basis of property after erroneous treatment of a prior transaction.

(a) Paragraph (7) of section 1312 applies if the determination establishes the basis of property, and there occurred one of the following types of errors in respect of a prior transaction upon which such basis depends, or in respect of a prior transaction which was erroneously treated as affecting such basis:

(1) An erroneous inclusion in, or omission from, gross income, or

(2) An erroneous recognition or nonrecognition of gain or loss, or

(3) An erroneous deduction of an item properly chargeable to capital account or an erroneous charge to capital account of an item properly deductible.

(b)

(1) For this section to apply, the taxpayer with respect to whom the erroneous treatment occurred must be:

(i) The taxpayer with respect to whom the determination is made; or

(ii) A taxpayer who acquired title to the property in the erroneously treated transaction and from whom, mediately or immediately, the taxpayer with respect to whom the determination is made derived title in such a manner that he will have a basis ascertained by reference to the basis in the hands of the taxpayer who acquired title to the property in the erroneously treated transaction; or

(iii) A taxpayer who had title to the property at the time of the erroneously treated transaction and from whom, mediately or immediately, the taxpayer with respect to whom the determination is made derived title, if the basis of the property in the hands of the taxpayer with respect to whom the determination is made is determined under section 1015(a) (relating to the basis of property acquired by gift) or section 1022 (relating to the basis of property acquired from certain decedents who died in 2010).

(2) No adjustment is authorized with respect to the transferor of the property in a transaction upon which the basis of the property depends, when the determination is with respect to the original transferee or a subsequent transferee of the original transferee.

(c) The application of this section may be illustrated by the following examples:

> *Example 1.* In 1949 taxpayer A transferred property which had cost him $5,000 to the X Corporation in exchange for an original issue of shares of its stock having a fair market value of $10,000. In his return for 1949 taxpayer A treated the exchange as one in which the gain or loss was not recognizable:
> (i) In 1955 the X Corporation maintains that the gain should have been recognized in the exchange in 1949 and therefore the property it received had a $10,000 basis for depreciation. Its position is adopted in a closing agreement. No adjustment is authorized with respect to the tax of the X Corporation for 1949, as none of the three types of errors specified in paragraph (a) of this section

occurred with respect to the X Corporation in the treatment of the exchange in 1949. Moreover, no adjustment is authorized with respect to taxpayer A, as he is not within any of the three classes of taxpayers described in paragraph (b) of this section.

(ii) In 1953 taxpayer A sells the stock which he received in 1949 and maintains that, as gain should have been recognized in the exchange in 1949, the basis for computing the profit on the sale is $10,000. His position is confirmed in a closing agreement executed in 1955. An adjustment is authorized with respect to his tax for the year 1949 as the basis for computing the gain on the sale depends upon the transaction in 1949, and in respect of that transaction there was an erroneous nonrecognition of gain to taxpayer A, the taxpayer with respect to whom the determination is made.

Example 2. In 1950 taxpayer A was the owner of 10 shares of the common stock of the Z Corporation which had a basis of $1,500. In that year he received as a dividend thereon 10 shares of the preferred stock of the same corporation having a fair market value of $1,000. On his books, entries were made reducing the basis of the common stock by allocating $500 of the basis to the preferred stock, and on his return for 1950 he did not include the dividend in gross income.
(i) In 1951 taxpayer A made a gift of the preferred stock of the Z Corporation to taxpayer B, an unrelated individual. Taxpayer B sold the stock in 1953 and on his return for that year he reported the sale and claimed a basis of $1,000, contending that the dividend of preferred stock was taxable to A in 1950 at its fair market value of $1,000. The basis of $1,000 is confirmed by a closing agreement executed in 1955. An adjustment is authorized with respect to taxpayer A's tax for 1950, as the closing agreement determines basis of property, and in a prior transaction upon which such basis depends there was an erroneous omission from gross income of taxpayer A, a taxpayer who acquired title to the property in the erroneously treated transaction and from whom, immediately, the taxpayer with respect to whom the determination is made derived title.

(ii) Assuming the same facts as in (i) except that the common stock instead of the preferred stock was the subject of the gift, and the basis claimed by taxpayer B and confirmed in the closing agreement was $1,500. An adjustment is authorized with respect to taxpayer A's tax for 1950, as the closing agreement determines the basis of property, and in a prior transaction which was erroneously treated as affecting such basis there was an erroneous omission from gross income of taxpayer A, a taxpayer who had title to the property at the time of the erroneously treated transaction, and from whom, immediately, taxpayer B, with respect to whom the determination is made, derived title. The basis of the property in taxpayer B's hands with respect to whom the determination is made is determined under section 1015(a) (relating to the basis of property acquired by gift).

Example 3. In 1950 taxpayer A sold property acquired at a cost of $5,000 to taxpayer B for $10,000. In his return for 1950 taxpayer A failed to include the profit on such sale. In 1953 taxpayer B sold the property for $12,000, and in his return for 1953 reported a gain of $2,000 upon the sale, which is

confirmed by a closing agreement executed in 1955. No adjustment is authorized with respect to the tax of taxpayer A for 1950, as he does not come within any of the three classes of taxpayers described in paragraph (b) of this section.

Example 4. In 1950 a taxpayer who owned 100 shares of stock in Corporation Y received $1,000 from the corporation which amount the taxpayer reported on his return for 1950 as a taxable dividend. In 1952 Corporation Y was completely liquidated and the taxpayer received in that year liquidating distributions totalling $8,000. In his return for 1952 the taxpayer reported the receipt of the $8,000 and computed his gain or loss upon the liquidation by using as a basis the amount which he paid for the stock. The Commissioner maintained that the distribution in 1950 was a distribution out of capital and that in computing the taxpayer's gain or loss upon the liquidation in 1952, the basis of the stock should be reduced by the $1,000. This position is adopted in a closing agreement executed in 1955 with respect to the year 1952. An adjustment is authorized with respect to the year 1950 as the basis for computing gain or loss in 1952 depends upon the transaction in 1950, and in respect of the 1950 transaction (upon which the basis of the property depends) there was an erroneous inclusion in gross income of the taxpayer with respect to whom the determination is made.

Example 5. In 1946 a taxpayer received 100 shares of stock of the X Corporation having a fair market value of $5,000, in exchange for shares of stock in the Y Corporation which he had acquired at a cost of $12,000. In his return for 1946 the taxpayer treated the exchange as one in which gain or loss was not recognizable. The taxpayer sold 50 shares of the X Corporation stock in 1947 and in his return for that year treated such shares as having a $6,000 basis. In 1952, the taxpayer sold the remaining 50 shares of stock of the X Corporation for $7,500 and reported $1,500 gain in his return for 1952. After the expiration of the period of limitations on deficiency assessments and on refund claims for 1946 and 1947, the Commissioner asserted a deficiency for 1952 on the ground that the loss realized on the exchange in 1946 was erroneously treated as nonrecognizable, and the basis for computing gain upon the sale in 1952 was $2,500, resulting in a gain of $5,000. The deficiency is sustained by the Tax Court in 1955. An adjustment is authorized with respect to the year 1946 as to the entire $7,000 loss realized on the exchange, as the Court's decision determines the basis of property, and in a prior transaction upon which such basis depends there was an erroneous nonrecognition of loss to the taxpayer with respect to whom the determination was made. No adjustment is authorized with respect to the year 1947 as the basis for computing gain upon the sale of the 50 shares in 1952 does not depend upon the transaction in 1947 but upon the transaction in 1946.

(d) ***Effective/applicability date.*** This section applies on and after January 19, 2017. For rules before January 19, 2017, see § 1.1312-7 as contained in 26 CFR part 1 revised as of April 1, 2016.

[T.D. 6500, 25 FR 12035, Nov. 26, 1960, as amended by T.D. 6617, 27 FR 10824, Nov. 7, 1962; T.D. 9811, 82 FR 6242, Jan. 19, 2017]

§ 1.1312-8 Law applicable in determination of error.

The question whether there was an erroneous inclusion, exclusion, omission, allowance, disallowance, recognition, or nonrecognition is determined under the provisions of the internal revenue laws applicable with respect to the year as to which the inclusion, exclusion, omission, allowance, disallowance, recognition, or nonrecognition, as the case may be, was made. The fact that the inclusion, exclusion, omission, allowance, disallowance, recognition, or nonrecognition, as the case may be, was in pursuance of an interpretation, either judicial or administrative, accorded such provisions of the internal revenue laws at the time of such action is not necessarily determinative of this question. For example, if a later judicial decision authoritatively alters such interpretation so that such action

was contrary to such provisions of the internal revenue laws as later interpreted, the inclusion, exclusion, omission, allowance, disallowance, recognition, or nonrecognition, as the case may be, is erroneous within the meaning of section 1312.

[T.D. 6500, 25 FR 12036, Nov. 26, 1960. Redesignated by T.D. 6617, 27 FR 10824, Nov. 7, 1962]

§ 1.1313(a)-1 Decision by Tax Court or other court as a determination.

(a) A determination may take the form of a decision by the Tax Court of the United States or a judgment, decree, or other order by any court of competent jurisdiction, which has become final.

(b) The date upon which a decision by the Tax Court becomes final is prescribed in section 7481.

(c) The date upon which a judgment of any other court becomes final must be determined upon the basis of the facts in the particular case. Ordinarily, a judgment of a United States district court becomes final upon the expiration of the time allowed for taking an appeal, if no such appeal is duly taken within such time; and a judgment of the United States Court of Claims becomes final upon the expiration of the time allowed for filing a petition for certiorari if no such petition is duly filed within such time.

[T.D. 6500, 25 FR 12036, Nov. 26, 1960]

§ 1.1313(a)-2 Closing agreement as a determination.

A determination may take the form of a closing agreement authorized by section 7121. Such an agreement may relate to the total tax liability of the taxpayer for a particular taxable year or years or to one or more separate items affecting such liability. A closing agreement becomes final for the purpose of this section on the date of its approval by the Commissioner.

[T.D. 6500, 25 FR 12036, Nov. 26, 1960]

§ 1.1313(a)-3 Final disposition of claim for refund as a determination.

(a) ***In general.*** A determination may take the form of a final disposition of a claim for refund. Such disposition may result in a determination with respect to two classes of items, i.e., items included by the taxpayer in a claim for refund and items applied by the Commissioner to offset the alleged overpayment. The time at which a disposition in respect of a particular item becomes final may depend not only upon what action is taken with respect to that item but also upon whether the claim for refund is allowed or disallowed.

(b) ***Items with respect to which the taxpayer's claim is allowed.***

(1) The disposition with respect to an item as to which the taxpayer's contention in the claim for refund is sustained becomes final on the date of allowance of the refund or credit if:

(i) The taxpayer's claim for refund is unqualifiedly allowed; or

(ii) The taxpayer's contention with respect to an item is sustained and with respect to other items is denied, so that the net result is an allowance of refund or credit; or

(iii) The taxpayer's contention with respect to an item is sustained, but the Commissioner applies other items to offset the amount of the alleged overpayment and the items so applied do not completely offset such amount but merely reduce it so that the net result is an allowance of refund or credit.

(2) If the taxpayer's contention in the claim for refund with respect to an item is sustained but the Commissioner applies other items to offset the amount of the alleged overpayment so that the net result is a disallowance of the claim for refund, the date of mailing, by registered mail, of the notice of disallowance (see section 6532) is the date of the final disposition as to the item with respect to which the taxpayer's contention is sustained.

(c) ***Items with respect to which the taxpayer's claim is disallowed.*** The disposition with respect to an item as to which the taxpayer's contention in the claim for refund is denied becomes final upon the expiration of the time allowed by section 6532 for instituting suit on the claim for refund, unless the suit is instituted prior to the expiration of such period, if:

(1) The taxpayer's claim for refund is unqualifiedly disallowed; or

(2) The taxpayer's contention with respect to an item is denied and with respect to other items is sustained so that the net result is an allowance of refund or credit; or

(3) The taxpayer's contention with respect to an item is sustained in part and denied in part. For example, assume that the taxpayer claimed a deductible loss of $10,000 and a consequent overpayment of $2,500 and the Commissioner concedes that a deductible loss was sustained, but only in the amount of $5,000. The disposition of the claim for refund with respect to the allowance of the $5,000 and the disallowance of the remaining $5,000 becomes final upon the expiration of the time for instituting suit on the claim for refund unless suit is instituted prior to the expiration of such period.

(d) ***Items applied by the Commissioner in reduction of the refund or credit.*** If the Commissioner applies an item in reduction of the overpayment alleged in the claim for refund, and the net result is an allowance of refund or credit, the disposition with respect to the item so applied by the Commissioner becomes final upon the expiration of the time allowed by section 6532 for instituting suit on the claim for refund, unless suit is instituted prior to the expiration of such period. If such application of the item results in the assertion of a deficiency, such action does not constitute a final disposition of a claim for refund within the meaning of § 1.1313(a)-3, but subsequent action taken with respect to such deficiency may result in a determination under §§ 1.1313(a)-1, 1.1313(a)-2, or 1.1313(a)-4.

(e) ***Elimination of waiting period.*** The necessity of waiting for the expiration of the 2-year period of limitations provided in section 6532 may be avoided in such cases as are described in paragraph (c) or (d) of this section by the use of a closing agreement (see § 1.1313(a)-2) or agreement under § 1.1313(a)-4 to effect a determination.

[T.D. 6500, 25 FR 12036, Nov. 26, 1960]

§ 1.1313(a)-4 Agreement pursuant to section 1313(a)(4) as a determination.

(a) ***In general.***

(1) A determination may take the form of an agreement made pursuant to this section. This section is intended to provide an expeditious method for obtaining an adjustment under section 1311 and for offsetting deficiencies and refunds whenever possible. The provisions of part II (section 1311 and following), subchapter Q, chapter 1 of the Code, must be strictly complied with in any such agreement.

(2) An agreement made pursuant to this section will not, in itself, establish the tax liability for the open taxable year to which it relates, but it will state the amount of the tax, as then determined, for such open year. The tax may be the amount of tax shown on the return as filed by the taxpayer, but if any changes in the amount have been made, or if any are being made by documents executed concurrently with the execution of said agreement, such changes must be taken into account. For example, an agreement pursuant to this section may be executed concurrently with the execution of a waiver of restrictions on assessment and collection of a deficiency or acceptance of an overassessment with respect to the open taxable year, or concurrently with the execution and filing of a stipulation in a proceeding before the Tax Court of the United States, where an item which is to be the subject of an adjustment under section 1311 is disposed of by the stipulation and is not left for determination by the court.

(b) ***Contents of agreement.*** An agreement made pursuant to this section shall be so designated in the heading of the agreement, and it shall contain the following:

(1) A statement of the amount of the tax determined for the open taxable year to which the agreement relates, and if said liability is established or altered by a document executed concurrently with the execution of the agreement, a reference to said document.

(2) A concise statement of the material facts with respect to the item that was the subject of the error in the closed taxable year or years, and a statement of the manner in which such item was treated in computing the tax liability set forth pursuant to subparagraph (1) of this paragraph.

(3) A statement as to the amount of the adjustment ascertained pursuant to § 1.1314(a)-1 for the taxable year with respect to which the error was made and, where applicable, a statement as to the amount of the adjustment or adjustments ascertained pursuant to § 1.1314(a)-2 with respect to any other taxable year or years; and

(4) A waiver of restrictions on assessment and collection of any deficiencies set forth pursuant to subparagraph 3 of this paragraph.

(c) ***Execution and effect of agreement.*** An agreement made pursuant to this section shall be signed by the taxpayer with respect to whom the determination is made, or on the taxpayer's behalf by an agent or attorney acting pursuant to a power of attorney on file with the Internal Revenue Service. If an adjustment is to be made in a case of a related taxpayer, the agreement shall be signed also by the related taxpayer, or on the related taxpayer's behalf by an agent or attorney acting pursuant to a power of attorney on file with the Internal Revenue Service. It may be signed on behalf of the Commissioner by the district director, or such other person as is authorized by the Commissioner. When duly executed, such agreement will constitute the authority for an allowance of any refund or credit agreed to therein, and for the immediate assessment of any deficiency agreed to therein for the taxable year with respect to which the error was made, or any closed taxable year or years affected, or treated as affected, by a net operating loss deduction or capital loss carryover determined with reference to the taxable year with respect to which the error was made.

(d) ***Finality of determination.*** A determination made by an agreement pursuant to this section becomes final when the tax liability for the open taxable year to which the determination relates becomes final. During the period, if any, that a deficiency may be assessed or a refund or credit allowed with respect to such year, either the taxpayer or the Commissioner may properly pursue any of the procedures provided by law to secure a further modification of the tax liability for such year. For example, if the taxpayer subsequently files a claim for refund, or if the Commissioner subsequently issues a notice of deficiency with respect to such year, either may adopt a position with respect to the item that was the subject of the adjustment that

is at variance with the manner in which said item was treated in the agreement. Any assessment, refund, or credit that is subsequently made with respect to the tax liability for such open taxable year, to the extent that it is based upon a revision in the treatment of the item that was the subject of the adjustment, shall constitute an alteration or revocation of the determination for the purpose of a redetermination of the adjustment pursuant to paragraph (d) of § 1.1314(b)-1.

[T.D. 6500, 25 FR 12037, Nov. 26, 1960]

§ 1.1313(c)-1 Related taxpayer.

An adjustment in the case of the taxpayer with respect to whom the error was made may be authorized under section 1311 although the determination is made with respect to a different taxpayer, provided that such taxpayers stand in one of the relationships specified in section 1313(c). The concept of *related taxpayer* has application to all of the circumstances of adjustment specified in § 1.1312-1 through § 1.1312-5 if the related taxpayer is one described in section 1313(c); it has application to the circumstances of adjustment specified in § 1.1312-6 only if the related taxpayer is one described in section 1313(c)(7); it does not apply in the circumstances specified in § 1.1312-7. If such relationship exists, it is not essential that the error involve a transaction made possible only by reason of the existence of the relationship. For example, if the error with respect to which an adjustment is sought under section 1311 grew out of an assignment of rents between taxpayer A and taxpayer B, who are partners, and the determination is with respect to taxpayer A, an adjustment with respect to taxpayer B may be permissible despite the fact that the assignment had nothing to do with the business of the partnership. The relationship need not exist throughout the entire taxable year with respect to which the error was made, but only at some time during that taxable year. For example, if a taxpayer on February 15 assigns to his fiancee the net rents of a building which the taxpayer owns, and the two are married before the end of the taxable year, an adjustment may be permissible if the determination relates to such rents despite the fact that they were not husband and wife at the time of the assignment. See § 1.1311(b)-3 for the requirement in certain cases that the relationship exist at the time an inconsistent position is first maintained.

[T.D. 6617, 27 FR 10824, Nov. 7, 1962]

§ 1.1314(a)-1 Ascertainment of amount of adjustment in year of error.

(a) In computing the amount of the adjustment under sections 1311 to 1315, inclusive, there must first be ascertained the amount of the tax previously determined for the taxpayer as to whom the error was made for the taxable year with respect to which the error was made. The tax previously determined for any taxable year may be the amount of tax shown on the taxpayer's return, but if any changes in that amount have been made, they must be taken into account. In such cases, the tax previously determined will be the sum of the amount shown as the tax by the taxpayer upon his return and the amounts previously assessed (or collected without assessment) as deficiencies, reduced by the amount of any rebates made. The amount shown as the tax by the taxpayer upon his return and the amount of any rebates or deficiencies shall be determined in accordance with the provisions of section 6211 and the regulations thereunder.

(b)

(1) The tax previously determined may consist of tax for any taxable year beginning after December 31, 1931, imposed by subtitle A of the Internal Revenue Code of 1954, by chapter 1 and subchapters A, B, D, and E of chapter 2 of the Internal Revenue Code of 1939, or by the corresponding provisions of prior internal revenue laws, or by any one or more of such provisions.

(2) After the tax previously determined has been ascertained, a recomputation must then be made under the laws applicable to said taxable year to ascertain the increase or decrease in tax, if any, resulting from the correction of the error. The difference between the tax previously determined and the tax as recomputed after correction of the error will be the amount of the adjustment.

(c) No change shall be made in the treatment given any item upon which the tax previously determined was based other than in the correction of the item or items with respect to which the error was made. However, due regard shall be given to the effect that such correction may have on the computation of gross income, taxable income, and other matters under chapter 1 of the Code. If the treatment of any item upon which the tax previously determined was based, or if the application of any provisions of the internal revenue laws with respect to such tax, depends upon the amount of income (e.g. charitable contributions, foreign tax credit, dividends received credit, medical expenses, and percentage depletion), readjustment in these particulars will be necessary as part of the recomputation in conformity with the change in the amount of the income which results from the correct treatment of the item or items in respect of which the error was made.

(d) Any interest or additions to the tax collected as a result of the error shall be taken into account in determining the amount of the adjustment.

(e) The application of this section may be illustrated by the following example:

Example: (1) For the taxable year 1949 a taxpayer with no dependents, who kept his books on the cash receipts and disbursements method, filed a joint return with his wife disclosing adjusted gross income of $42,000 deductions amounting to $12,000, and a net income of $30,000. Included among other items in the gross income were salary in the amount of $15,000 and rents accrued but not yet received in the amount of $5,000. During the taxable year he donated $10,000 to the American Red Cross and in his return claimed a deduction of $6,300 on account thereof, representing the maximum deduction allowable under the 15-percent limitation imposed by section 23(o) of the Internal Revenue Code of 1939 as applicable to the year 1949. In computing his net income he omitted interest income amounting to $6,000 and neglected to take a deduction for interest paid in the amount of $4,500. The return disclosed a tax liability of $7,788, which was assessed and paid. After the expiration of the period of limitations upon the assessment of a deficiency or the allowance of a refund for 1949, the Commissioner included the item of rental income amounting to $5,000 in the taxpayer's gross income for the year 1950 and asserted a deficiency for that year. As a result of a final decision of the Tax Court of the United States in 1955 sustaining the deficiency for 1950, an adjustment is authorized for the year 1949.
(2) The amount of the adjustment is computed as follows:

Tax previously determined for 1949	$7,788
Net income for 1949 upon which tax previously determined was based	30,000
Less: Rents erroneously included	5,000
Balance	25,000
Adjustment for contributions (add 15 percent of $5,000)	750

Net income as adjusted	25,750
Tax as recomputed	6,152
Tax previously determined	7,788
Difference	1,636
Amount of adjustment to be refunded or credited	1,636

(3) In accordance with the provisions of paragraph (c) of this section, the recomputation to determine the amount of the adjustment does not take into consideration the item of $6,000 representing interest received, which was omitted from gross income, or the item of $4,500 representing interest paid, for which no deduction was allowed.

[T.D. 6500, 25 FR 12038, Nov. 26, 1960]

§ 1.1314(a)-2 Adjustment to other barred taxable years.

(a) An adjustment is authorized under section 1311 with respect to a taxable year or years other than the year of the error, but only if all of the following requirements are met:

(1) The tax liability for such other year or years must be affected, or must have been treated as affected, by a net operating loss deduction (as defined in section 172) or by a capital loss carryback or carryover (as defined in section 1212).

(2) The net operating loss deduction or capital loss carryback or carryover must be determined with reference to the taxable year with respect to which the error was made.

(3) On the date of the determination the adjustment with respect to such other year or years must be prevented by some law or rule of law, other than sections 1311 through 1315 and section 7122 and the corresponding provisions of prior revenue laws.

(b) The amount of the adjustment for such other year or years shall be computed in a manner similar to that provided in § 1.1314(a)-1. The tax previously determined for such other year or years shall be ascertained. A recomputation must then be made to ascertain the increase or decrease in tax, if any, resulting solely from the correction of the net operating loss deduction or capital loss carryback or carryover. The difference between the tax previously determined and the tax as recomputed is the amount of the adjustment. In the recomputation, no consideration shall be given to items other than the following:

(1) The items upon which the tax previously determined for such other year or years was based, and

(2) The net operating loss deduction or capital loss carryback or carryover as corrected.

In determining the correct net operating loss deduction or capital loss carryback or carryover, no changes shall be made in taxable income (net income in the case of taxable years subject to the provisions of the Internal Revenue Code of 1939 or prior revenue laws), net operating loss or capital loss, for any barred taxable year, except as provided in section 1314. Section 172 and the corresponding provisions of prior revenue laws, and the regulations promulgated thereunder, prescribe the methods of computing the net

operating loss deduction. Section 1212 and the corresponding provisions of prior revenue laws, and the regulations promulgated thereunder, prescribe the methods for computing the capital loss carryback and carryover.

(c) A net operating loss deduction or a capital loss carryback or carryover determined with reference to the year of the error may affect, or may have been treated as affecting, a taxable year with respect to which an adjustment is not prevented by the operation of any law or rule of law. In such case, the appropriate adjustment shall be made with respect to such open taxable year. However, the redetermination of the tax for such open taxable year is not made pursuant to part II (section 1311 and following), subchapter Q, chapter 1 of the Code, and the adjustment for such open year and the method of computation are not limited by the provisions of said sections.

(d) The application of this section may be illustrated by the following example:

Example: The taxpayer is a corporation which makes its income tax returns on a calendar year basis. Its net income in 1949, computed without any net operating loss deduction was $10,000, but because of a net operating loss deduction in excess of that amount resulting from a carryback of a net operating loss claimed for 1950, it paid no income tax for 1949. On its return for 1950 it showed an excess of deductions over gross income of $14,000, and it paid no income tax for 1950. For the year 1951 its net income, computed without any net operating loss deduction, was $15,000, and a net operating loss deduction of $13,000 was allowed ($4,000 of which was attributable to the carryover from 1950 and $9,000 of which was attributable to the carryback of a net operating loss of $9,000 sustained in 1952). In 1957 the assessment of deficiencies or the allowance of refunds for all of said years are barred by the statute of limitations.

(i) A Tax Court decision entered in 1957 with respect to the taxable year 1953 constituted a determination under which an adjustment is authorized to the taxable year 1950, the year with respect to which the error was made. This adjustment increases income for said year by $15,000, so that instead of a net operating loss of $14,000, its corrected net income is $1,000 for 1950, and the tax computed on that income will be assessed as a deficiency for 1950. An adjustment is authorized under this section with respect to each of the years 1949 and 1951, as the tax liability for each year was treated as affected by a net operating loss deduction which was determined by a computation in which reference was made to the year 1950. In the recomputation of the tax for 1949, the net operating loss carryback from 1950 will be eliminated, and in the recomputation of the tax for 1951 the net operating loss carryover from 1950 will be eliminated; for each of the years 1949 and 1951 there will be an adjustment which will be treated as a deficiency for said year.

(ii) Assuming the same facts, except that the correction with respect to the year 1950 increases the net operating loss for said year from $14,000 to $20,000. As a result of this correction, there will be no change in the tax due for 1949 and 1950. However, the net operating loss deduction for 1951 is recomputed to be $19,000, the aggregate of the $10,000 carryover from 1950 and the $9,000 carryback from 1952 (the carryover from 1950 is the excess of the $20,000 net operating loss for 1950 over the $10,000 net income for 1949, such 1949 income being determined without any net operating loss deduction). As a result of the correction of the net operating loss deduction for 1951, the tax recomputation will show no tax due for said year, and the adjustment for 1951 will result in a refund or credit of the tax previously paid. Moreover,

> computations resulting from this adjustment will disclose a net operating loss carryover from 1952 to 1953 of $4,000, that is, the excess of the $9,000 net operating loss for 1952 over the $5,000 net income for 1951 (such net income for 1951 being computed as the $15,000 reduced by the carryover of $10,000 from 1950, the carryback from 1952 not being taken into account). A further adjustment is authorized under section 1311 with respect to any subsequent barred year in which the tax liability is affected by a carryover of the net operating loss from 1952, inasmuch as such carryover from 1952 has been determined by a computation in which reference was made to 1950, the taxable year of the error.

[T.D. 6500, 25 FR 12038, Nov. 26, 1960, as amended by T.D. 7301, 39 FR 972, Jan. 4, 1974]

§ 1.1314(b)-1 Method of adjustment.

(a) If the amount of the adjustment ascertained pursuant to § 1.1314(a)-1 or § 1.1314(a)-2 represents an increase in tax, it is to be treated as if it were a deficiency determined by the Commissioner with respect to the taxpayer as to whom the error was made and for the taxable year or years with respect to which such adjustment was made. The amount of such adjustment is thus to be assessed and collected under the law and regulations applicable to the assessment and collection of deficiencies, subject, however, to the limitations imposed by § 1.1314(c)-1. Notice of deficiency, unless waived, must be issued with respect to such amount or amounts, and the taxpayer may contest the deficiency before the Tax Court of the United States or, if he chooses, may pay the deficiency and later file claim for refund. If the amount of the adjustment ascertained pursuant to § 1.1314(a)-1 or § 1.1314(a)-2 represents a decrease in tax, it is to be treated as if it were an overpayment claimed by the taxpayer with respect to whom the error was made for the taxable year or years with respect to which such adjustment was made. Such amount may be recovered under the law and regulations applicable to overpayments of tax, subject, however, to the limitations imposed by § 1.1314(c)-1. The taxpayer must file a claim for refund thereof, unless the overpayment is refunded without such claim, and if the claim is denied or not acted upon by the Commissioner within the prescribed time, the taxpayer may then file suit for refund.

(b) For the purpose of the adjustments authorized by section 1311, the period of limitations upon the making of an assessment or upon refund or credit, as the case may be, for the taxable year of an adjustment shall be considered as if, on the date of the determination, one year remained before the expiration of such period. The Commissioner thus has one year from the date of the determination within which to mail a notice of deficiency in respect of the amount of the adjustment where such adjustment is treated as if it were a deficiency. The issuance of such notice of deficiency, in accordance with the law and regulations applicable to the assessment of deficiencies will suspend the running of the 1-year period of limitations provided in section 1314(b). In accordance with the applicable law and regulations governing the collection of deficiencies, the period of limitation for collection of the amount of the adjustment will commence to run from the date of assessment of such amount. (See section 6502 and corresponding provisions of prior revenue laws.) Similarly, the taxpayer has a period of one year from the date of the determination within which to file a claim for refund in respect of the amount of the adjustment where such adjustment is treated as if it were an overpayment. Where the amount of the adjustment is treated as if it were a deficiency and the taxpayer chooses to pay such deficiency and contest it by way of a claim for refund, the period of limitation upon filing a claim for refund will commence to run from the date of such payment. See section 6511 and corresponding provisions of prior revenue laws.

(c) The amount of an adjustment treated as if it were a deficiency or an overpayment, as the case may be, will bear interest and be subject to additions to the tax to the extent provided by the internal revenue laws applicable to deficiencies and overpayments for the taxable year with respect to which the adjustment is

made. In the case of an adjustment resulting from an increase or decrease in a net operating loss or net capital loss which is carried back to the year of adjustment, interest shall not be collected or paid for any period prior to the close of the taxable year in which the net operating loss or net capital loss arises.

(d) If, as a result of a determination provided for in § 1.1313(a)-4, an adjustment has been made by the assessment and collection of a deficiency or the refund or credit of an overpayment, and subsequently such determination is altered or revoked, the amount of the adjustment ascertained under § 1.1314(a)-1 and § 1.1314(a)-2 shall be redetermined on the basis of such alteration or revocation, and any overpayment or deficiency resulting from such redetermination shall be refunded or credited, or assessed and collected, as the case may be, as an adjustment under section 1311. For the circumstances under which such an agreement can be altered or revoked, see paragraph (d) of § 1.1313(a)-4.

[T.D. 6500, 25 FR 12039, Nov. 26, 1960, as amended by T.D. 7301, 39 FR 972, Jan. 4, 1974]

§ 1.1314(c)-1 Adjustment unaffected by other items.

(a) The amount of any adjustment ascertained under § 1.1314(a)-1 or § 1.1314(a)-2 shall not be diminished by any credit or set-off based upon any item other than the one that was the subject of the adjustment.

(b) The application of this section may be illustrated by the following examples:

Example 1. In the example set forth in paragraph (e) of § 1.1314(a)-1, if, after the amount of the adjustment had been ascertained, the taxpayer, filed a refund claim for the amount thereof, the Commissioner could not diminish the amount of that claim by offsetting against it the amount of tax which should have been paid with respect to the $6,000 interest item omitted from gross income for the year 1949; nor could the court, if suit were brought on such claim for refund, offset against the amount of the adjustment the amount of tax which should have been paid with respect to such interest. Similarly, the amount of the refund could not be increased by any amount attributable to the taxpayer's failure to deduct the $4,500 interest paid in the year 1949.

Example 2. Assume that a taxpayer included in his gross income for the year 1953 an item which should have been included in his gross income for the year 1952. After the expiration of the period of limitations upon the assessment of a deficiency or the allowance of a refund for 1952, the taxpayer filed a claim for refund for the year 1953 on the ground that such item was not properly includible in gross income for that year. The claim for refund was allowed by the Commissioner and as a result of such determination an adjustment was authorized under section 1311 with respect to the tax for 1952. If, in such case, the Commissioner issued a notice of deficiency for the amount of the adjustment and the taxpayer contested the deficiency before the Tax Court of the United States, the taxpayer could not in such proceeding claim an offset based upon his failure to take an allowable deduction for the year 1952; nor could the Tax Court in its decision offset against the amount of the adjustment any overpayment for the year 1952 resulting from the failure to take such deduction.

(c) If the Commissioner has refunded the amount of an adjustment under section 1311, the amount so refunded may not subsequently be recovered by the Commissioner in any suit for erroneous refund based upon any item other than the one that was the subject of the adjustment,

Example: In the example set forth in paragraph (e) of § 1.1314(a)-1, if the Commissioner had refunded the amount of the adjustment, no part of the amount so refunded could subsequently be recovered by the Commissioner by a suit for erroneous refund based on the ground that there was no overpayment for 1949, as the taxpayer had failed to include in gross income the $6,000 item of interest received in that year.

(d) If the Commissioner has assessed and collected the amount of an adjustment under section 1311, no part thereof may be recovered by the taxpayer in any suit for refund based upon any item other than the one that was the subject of the adjustment.

Example: In example (2) of paragraph (b) of this section, if the taxpayer had paid the amount of the adjustment, he could not subsequently recover any part of such payment in a suit for refund based upon the failure to take an allowable deduction for the year 1952.

(e) If the amount of the adjustment is considered an overpayment, it may be credited, under applicable law and regulations, together with any interest allowed thereon, against any liability in respect of an internal revenue tax on the part of the person who made such overpayment. Likewise, if the amount of the adjustment is considered as a deficiency, any overpayment by the taxpayer of any internal revenue tax may be credited against the amount of such adjustment in accordance with the applicable law and regulations thereunder. (See section 6402 and the corresponding provisions of prior revenue laws.) Accordingly, it may be possible in one transaction between the Commissioner and the taxpayer to settle the taxpayer's tax liability for the year with respect to which the determination is made and to make the adjustment under section 1311 for the year with respect to which the error was made or for a year which is affected, or treated as affected, by a net operating loss deduction or a capital loss carryover from the year of the error.

[T.D. 6500, 25 FR 12040, Nov. 26, 1960]

INVOLUNTARY LIQUIDATION AND REPLACEMENT OF LIFO INVENTORIES

§ 1.1321-1 Involuntary liquidation of lifo inventories.

(a) Section 22(d)(6)(B) of the Internal Revenue Code of 1939 provides as follows:

> Sec. 22. Gross income. * * *
>
> (d) * * *
>
> (6) *Involuntary liquidation and replacement of inventory.* * * *
>
> (B) *Definition of involuntary liquidation.* The term *involuntary liquidation,* as used in this paragraph, means the sale or other disposition of goods inventoried under the method described in this subsection, either voluntary or involuntary, coupled with a failure on the part of the taxpayer to purchase, manufacture, or otherwise produce and have on hand at the close of the taxable year in which such sale or other disposition occurred such goods as would, if on hand at the close of such taxable year, be subject to the application of the provisions of this subsection, if such failure on the part of the taxpayer is due, directly and exclusively, (i) to enemy capture or control of sources of limited foreign supply; (ii) to shipping or other transportation shortages; (iii) to material shortages resulting from priorities or allocations; (iv) to labor shortages; or (v) to other prevailing war conditions beyond the control of the taxpayer.

(b)

(1) If, during any taxable year ending after June 30, 1950, and before January 1, 1955, the disruption of normal trade relations between countries, or one or more of the conditions attributable to a state of national preparedness and beyond the control of the taxpayer, as prescribed by section 22(d)(6)(B) of the Internal Revenue Code of 1939, as modified by section 1321(b) of the Internal Revenue Code

of 1954, should render it impossible during such period for a taxpayer using the last-in first-out inventory method to have on hand at the close of the taxable year a stock of merchandise in kind and description like that included in the opening inventory for the year, or in a quantity equal to that of the opening inventory, the resulting inventory decrease for the year will be regarded, at the election of the taxpayer, as reflecting an involuntary liquidation subject to replacement. If the taxpayer notifies the Commissioner within the period prescribed below that he intends to effect a replacement of the liquidated stock, in whole or in part, and that he desires to have applied in his case the involuntary liquidation and replacement provisions of section 1321, and if he establishes to the satisfaction of the Commissioner the involuntary character of the liquidation to which his stock has been subjected, effect shall be given, when replacement has been made, in whole or in part, but only to the extent made in taxable years ending before January 1, 1956, to an adjustment of taxable income for the year of liquidation in the amount of the difference between the replacement costs incurred and the original inventory cost of the liquidated base stock inventory that is replaced. The notification is to be given within 6 months after the filing by the taxpayer of his income tax return for the year of the liquidation. However, if the liquidation occurs in a taxable year ending after December 31, 1953, the notification may be given at any time within 3 months after the promulgation of regulations under section 1321, or prior to the expiration of the 6-month period following the filing of the return, whichever expiration date later occurs.

(2) If the replacement costs exceed such inventory costs, the taxable income of the taxpayer otherwise computed for the year of liquidation shall be reduced by an amount equal to such excess. If the replacement costs are less than the inventory costs, taxable income otherwise computed for the year of liquidation shall be increased to the extent of such difference. Any deficiency in the income or excess profits tax of the taxpayer, or any overpayment of such taxes, attributable to such adjustment shall be assessed and collected or credited or refunded to the taxpayer without interest.

(c)

(1) A failure on the part of the taxpayer to have on hand in his closing inventory for the taxable year merchandise of the kind, description, and quantity of that reflected in his opening inventory will be considered as an involuntary liquidation only if it is established to the satisfaction of the Commissioner that such failure is due wholly to his inability to purchase, manufacture, or otherwise produce and procure delivery of such merchandise during the taxable year of liquidation by reason of the disruption of normal trade relations between countries or by reason of certain war conditions, described in section 22(d)(6)(B) of the Internal Revenue Code of 1939, as modified by section 1321(b). Such war conditions are

(i) shortages in the source of foreign supply by reason of capture or control by an enemy;

(ii) shipping or other transportation shortages;

(iii) material shortages resulting from priorities or allocations;

(iv) labor shortages; and

(v) similar war conditions beyond the control of the taxpayer. For the purpose of the preceding sentence, the words *enemy* and *war* shall be interpreted to apply to circumstances, occurrences, and conditions lacking a state of war, which are similar, by reason of a state of national preparedness, to those which would exist under a state of war.

(2) The various directives, orders, regulations, and allotments issued by the Federal Government in connection with national preparedness are among such circumstances and conditions which might be recognized as effecting an involuntary liquidation under this section. Likewise, a voluntary compliance with a request of an authorized representative of the Federal Government made upon an industry or an important segment thereof, or a voluntary allocation of materials by an industry or important segment thereof sanctioned by the Federal Government, if made in connection with the national preparedness program, might be considered as such a circumstance or condition. Similarly, so much of an inventory decrease as is directly and exclusively attributable to the Federal Government's stockpiling program for periods during which an item is not subject to allotment shall also be considered as subject to the provisions of section 1321. Thus, so much of an inventory decrease as is due wholly to the effect of directives, orders, regulations, or allotments issued pursuant to the Defense Production Act of 1950, as amended (50 U.S.C. App. 2061 *et seq.*), or to any other circumstance or condition which is solely dependent upon other action taken by the Federal Government in furtherance of the national preparedness program, ordinarily shall be considered as an involuntary liquidation under section 1321 and this section; however, to the extent that such a decrease is due to the disposition of goods acquired in violation of such directives, orders, regulations, or allotments, such decrease shall not be considered as such an involuntary liquidation. An inventory decrease due directly and exclusively to a disruption of normal trade relations between countries shall be considered as an involuntary liquidation subject to the rules and requirements prescribed in this section, including the requirement that the taxpayer establish to the satisfaction of the Commissioner the cause of the involuntary liquidation. A disruption of normal trade relations between countries may be reflected by unusual export limitations imposed by a foreign government, by unusual exchange restrictions, or by other unusual circumstances or conditions beyond the control of the taxpayer.

(3) A voluntary shift by the taxpayer, in the exercise of business judgment, to merchandise of a different character, description, or use, or to merchandise processed out of a substantially different kind of raw materials while raw materials of the type originally used are still available will not be considered as an involuntary liquidation notwithstanding the fact that such a shift in merchandise stocked was prompted by a shifting market demand attributable to the above conditions. The term *involuntary liquidation* presupposes a physical inability to maintain a normal inventory as distinguished from a financial or business disinclination on the part of the taxpayer to do so.

(d) If the taxpayer would have the involuntary liquidation and replacement provisions applicable with respect to any inventory decrease, he must so elect within the time prescribed by this section. In making such election, the taxpayer shall attach to his return and make a part thereof, or he shall furnish separately to the Commissioner, a statement setting forth the following matters:

(1) The desire of the taxpayer to invoke the involuntary liquidation and replacement provisions;

(2) A detailed list or other identifying description of the items of merchandise claimed to have been subjected to involuntary liquidation and the extent to which replacement is intended;

(3) The circumstances relied upon as rendering the taxpayer unable to maintain throughout the taxable year a normal inventory of the items involved, including evidence of the applicable inventory control figures for the beginning and the close of the taxable year submitted to the appropriate Federal agency in control of defense production (or if none, a statement to that effect), allotments applied for, allotments received, and reason for failure to place allotments received;

(4) Detailed proof of such circumstances to the extent that they may not be the subject-matter of common knowledge;

(5) A full description of what efforts were made on the part of the taxpayer to effect replacement during the taxable year and the result of such efforts; and

(6) In the case of an election made pursuant to an extension of time granted by the Commissioner, the circumstances relied upon as justifying the election at such time, together with a disclosure of the extent, if any, to which replacements have already been made.

(e) The election of the taxpayer to treat an involuntary decrease of inventory as subject to the replacement adjustments is to be exercised separately for each taxable year reflecting such a decrease and the election, once exercised with respect to a given year, shall be irrevocable with respect to the particular decrease involved and its replacement, and shall be binding for the year of liquidation, the year of replacement, and all prior, intervening, and subsequent years to the extent that such prior, intervening, and subsequent years are affected by the adjustments authorized. The ultimate replacement and the resulting adjustment for the year of liquidation may have consequences, among others, in the earnings and profits of intervening years and the inventory accounts of subsequent years. They may have consequences in the prior years by reason of adjustments in net operating loss or unused excess profits credit carrybacks, and in intervening and subsequent taxable years by reason of adjustments in carryovers. Adjustments are to be made for the several years affected consistent with the adjustments made for the year of liquidation. Detailed records shall be maintained such as will enable the Commissioner, in his examination of the taxpayer's return for the year of replacement, readily to verify the extent of the inventory decrease claimed to be involuntary in character and the facts upon which such claim is based, all subsequent inventory increases and decreases, and all other facts material to the replacement adjustment authorized. For taxable years subject to the Internal Revenue Code of 1939, an election under 26 CFR (1939) 39.22(d)-7(e) (Regulations 118) or 26 CFR (1939) 29.22(d)-7 (Regulations 111) to have the involuntary liquidation and replacement provisions of section 22(d)(6) of the Internal Revenue Code of 1939 apply with respect to any inventory decrease for taxable years to which such section applies, shall be given the same effect as if such election had been made under this section. (See section 7807(b)(2).)

(f) Notwithstanding the ultimate purchase price or the cost of production ultimately incurred by the taxpayer in effecting replacement of a stock involuntarily liquidated, the merchandise reflecting the replacement shall be taken into purchases and included in the closing inventory for the year of replacement, and shall be included in the inventories of subsequent taxable years, at the inventory cost figure of the merchandise replaced.

(g) The goods reflected in any inventory increase in a year subsequent to a year of involuntary liquidation, to the extent that they constitute items of the kind and description liquidated in prior years, whether or not in a year of involuntary liquidation, shall be deemed, in the order of their acquisition, as having been acquired by the taxpayer in replacement of like goods most recently liquidated and not previously replaced. In a case involving involuntary liquidations of goods of the same class subject to the provisions of both section 22(d)(6)(A) of the Internal Revenue Code of 1939 and section 1321 of the Internal Revenue Code of 1954, the involuntary liquidations of such goods subject to the provisions of section 1321 shall, for the purpose of replacements made in taxable years ending before January 1, 1953, be considered as having occurred prior to the involuntary liquidations of such goods subject to the provisions of section 22(d)(6)(A) of the Internal Revenue Code of 1939. To the extent that the items of increase are allocated to items liquidated voluntarily, no adjustment will be required or permitted. Such replacement merchandise will be carried in the inventory at its actual cost of acquisition. To the extent that replacements are allocated to items involuntarily liquidated, however, the provisions of this section shall apply, both with respect to adjustments for the year of liquidation and other taxable years affected and with respect to inventory computations for the year of replacement and all subsequent taxable years.

(h) In some cases it may appear that, at the time of the filing of the income tax return for the year of replacement, or within three years thereafter, an adjustment with respect to the income or excess profits taxes for the year of the involuntary liquidation, or for some prior, intervening, or subsequent taxable year, is prevented by the running of the statute of limitations, by the execution of a closing agreement, by virtue of a court decision which has become final, or by reason of some other provision or rule of law other than section 7122 (relating to compromises) and other than the inventory replacement provisions. The adjustments provided for in connection with the involuntary liquidation and replacement of inventory shall nevertheless be made, but only if, within a period of three years after the date of the filing of the income tax return for the year of replacement, a notice of deficiency is mailed or a claim for refund is filed. No credit or refund will be allowed under such circumstances, whether within or without such three-year period, in the absence of a claim for refund duly filed; nor will a resulting deficiency be assessed or collected under section 6213(d) relating to waivers of restrictions. The issuance of the statutory notice of deficiency or the filing of a claim for refund are statutory conditions upon which depend the provisions of section 22(d)(6)(E) of the Internal Revenue Code of 1939, referred to in section 1321(c) of the Internal Revenue Code of 1954. The adjustment authorized by section 22(d)(6)(E) of the Internal Revenue Code of 1939 is limited further to the tax attributable solely to the replacement adjustments. The amount of the adjustment shall be computed by reference to the amount of the tax previously determined, and without regard to factors affecting the taxable year involved to which no effect was given in such prior determination. The tax previously determined shall be ascertained in accordance with the principles stated in section 452(d) of the Internal Revenue Code of 1939. Any deficiency paid or any overpayment credited or refunded under these circumstances shall not be subject to recovery on a claim for refund or a suit for the recovery of an erroneous refund in any case in which such claim or suit is based upon factors other than those giving rise to the adjustments made.

[T.D. 6500, 25 FR 12040, Nov. 26, 1960]

§ 1.1321-2 Liquidation and replacement of lifo inventories by acquiring corporations.

For additional rules in the case of certain corporate acquisitions referred to in section 381(a), see section 381(c)(5) and the regulations thereunder.

[T.D. 6500, 25 FR 12042, Nov. 26, 1960]

War Loss Recoveries

§ 1.1331-1 Recoveries in respect of war losses.

(a)

(1) The amount of any recovery in respect of *war loss property* must be included in gross income to the extent provided in section 1332 unless, pursuant to the taxpayer's election under section 1335, the provisions of section 1333 are applicable to such recovery. For the treatment of war loss recoveries under section 1333 and the manner of making the election under section 1335, see §§ 1.1333-1 and 1.1335-1.

(2) As used in this part, the term *war loss property* means property considered under section 127(a) of the Internal Revenue Code of 1939 as *destroyed or seized,* including any interest described in section 127(a)(3) of the Internal Revenue Code of 1939.

(3) For regulations governing the treatment of war losses under the Internal Revenue Code of 1939, see 26 CFR (1939) 29.127(a)-1 to 29.127(a)-4, inclusive, 29.127(b)-1, and 29.127(e)-1 (Regulations 111) and 26 CFR (1939) 39.127(a)-1 (Regulations 118).

(b) The recoveries in respect of any war loss property include the recovery of the same war loss property and the recovery of any money or property in lieu of such property or on account of the destruction or seizure of such property. For example, there is a recovery upon the return to the taxpayer after the termination of the war of his property which was treated as war loss property because it was located in a country at war with the United States. An award by a government on account of the seizure of the taxpayer's property by an enemy country is a recovery under this section. The amount obtained upon the sale or other transfer by the taxpayer of his right to any war loss property is also a recovery for the purpose of this section. Similarly, if a taxpayer who sustained a war loss upon the liquidation of a corporation has received the rights to any property of the corporation which was treated as war loss property, any recovery by the taxpayer with respect to such rights is a recovery by him for the purposes of this section.

(c) For the purpose of this section, the recoveries considered are only those with respect to war losses sustained in prior taxable years. Similarly, the only deductions considered are those allowable for prior taxable years, and any allowable deductions for the year of the recovery are ignored for the purposes of applying such section to the recovery.

(d) If a deduction was claimed under section 127(a) of the Internal Revenue Code of 1939 by a taxpayer in computing his tax for any taxable year and if such deduction was disallowed in whole or in part, any recovery in respect of the portion disallowed shall not be subject to the provisions of part IV (section 1331 and following), subchapter Q, chapter 1 of the Code.

[T.D. 6500, 25 FR 12042, Nov. 26, 1960]

§ 1.1332-1 Inclusion in gross income of war loss recoveries.

(a) ***Amount of recovery.*** Except as provided in section 1333(1), the amount of the recovery in respect of a war loss in a previous taxable year is determined in the same manner for the purpose of either section 1332 or 1333. The amount of the recovery of any money or property in respect of any war loss is the aggregate of the amount of such money and of the fair market value of such property, both determined as of the date of the recovery. But see paragraph (a) of § 1.1333-1 for optional valuation where the taxpayer recovers the same war loss property.

(b) ***Amount of gain includible.***

(1) A taxpayer who has sustained a war loss described in section 127(a) of the Internal Revenue Code of 1939 and who has not elected to have the provisions of section 1333 apply to any taxable year in which he recovered any money or property in respect of a war loss in any previous taxable year must include in his gross income for each taxable year, to the extent provided in section 1332, the amount of his recoveries of money and property for such taxable year in respect of any war loss in a previous taxable year. Section 1332 provides that such recoveries for any taxable year are not includible in income until the taxpayer has recovered an amount equal to his allowable deductions in prior taxable years on account of such war losses which did not result in a reduction of any tax under chapter 1 or 2 of the Internal Revenue Code of 1939. War loss recoveries are considered as made first on account of war losses allowable but not actually allowed as a deduction, and second on account of war losses allowed as a deduction but which did not result in a reduction of tax under chapter 1 or 2 of the Internal Revenue Code of 1939. If there were deductions allowed on account of war losses for

two or more taxable years which did not result in a reduction of any tax under chapter 1 or 2 of the Internal Revenue Code of 1939, a recovery on account of such losses is considered as made on account of such losses in the order of the taxable years for which they were allowed beginning with the latest. See § 1.1337-1 for the determination of the amount of such deductions. Recoveries in excess of such amount are treated as ordinary income until such excess equals the amount of the taxpayer's allowable deductions in prior taxable years on account of war losses which did result in a reduction of any such tax under chapter 1 or 2 of the Internal Revenue Code of 1939. Any further recoveries in excess of all the taxpayer's allowable deductions in prior taxable years for war losses are treated as gain on an involuntary conversion of property as a result of its destruction or seizure, and such gain is recognized or not recognized under the provisions of section 1033. See section 1033 and the regulations thereunder. Such gain, if recognized, is included in gross income as ordinary income unless section 1231(a) applies to cause such gain to be treated as gain from the sale or exchange of a capital asset held for more than six months. See section 1231(a) and the regulations thereunder.

(2) The determination as to whether and to what extent any recoveries are to be included in gross income is made upon the basis of the amount of all the recoveries for each day upon which there are any such recoveries, as follows:

(i) The amount of the recoveries for any day is not included in gross income, and is not considered gain on an involuntary conversion, to the extent, if any, that the aggregate of the allowable deductions in prior taxable years on account of war losses which did not result in a reduction of any tax of the taxpayer under chapter 1 or 2 of the Internal Revenue Code of 1939, as determined under § 1.1337-1, exceeds the amount of all previous recoveries in the same and prior taxable years.

(ii) The amount of the recoveries for any day which is not excluded from gross income under subdivision (i) of this subparagraph is included in gross income as ordinary income, and is not considered gain on an involuntary conversion, to the extent, if any, that the aggregate of all the allowable deductions in prior taxable years on account of war losses (both those which resulted in a reduction of a tax of the taxpayer and those which did not) exceeds the sum of the amount of all previous recoveries in the same and prior taxable years and of that portion, if any, of the amount of the recoveries for such day which is not included in gross income under subdivision (i) of this subparagraph.

(iii) The amount of the recoveries for any day which is not excluded from gross income under subdivision (i) of this subparagraph and is not included in gross income as ordinary income under subdivision (ii) of this subparagraph is considered gain on an involuntary conversion of property as a result of its destruction or seizure. The following provisions then apply to this gain:

(*a*) Such gain is recognized or not recognized under the provisions of section 1033, relating to gain on the involuntary conversion of property. For the purpose of applying section 1033, such gain for any day is deemed to be expended in the manner provided in section 1033 to the extent the recovery for such day is so expended.

(*b*) If such gain is recognized, it is included in gross income as ordinary income or, if the provisions of section 1231(a) apply and require such treatment, as gain on the sale or exchange of a capital asset held for more than six months. For the purpose of applying section 1231(a), such recognized gain for any day is deemed to be derived from property

described in that section to the extent of the recovery for such day with respect to such property, except such portion of such recovery as is attributable to the nonrecognized gain for such day.

(c) Section 1336 provides that in determining the unadjusted basis of recovered property, the total gain and the recognized gain with respect to such property must be determined. For such purpose, the recognized gain deemed to be derived from properties described in section 1231(a) may be allocated among such properties in the proportion of the recoveries with respect to such properties, reduced for each property by the portion of the recovery attributable to the nonrecognized gain for such day, and the recoveries with respect to properties not described in section 1231(a) may be similarly allocated. The total gain derived from any recovered property is the sum of the nonrecognized gain attributable to the recovery of such property and of the recognized gain allocable to such property.

(3) The foregoing provisions may be illustrated by the following examples:

Example 1. The taxpayer sustained war losses of $3,000 on account of properties A, B, C, and D. Of this amount, $1,000 did not result in a reduction of any income tax of the taxpayer, as determined under the provisions of § 1.1337-1. In a subsequent taxable year, he received an award of $800 from the Government on account of property A. This is not included in income since it is less than the amount by which his allowable deductions for prior taxable years on account of war losses which did not result in any tax benefit ($1,000) exceed $0, the sum of all his previous recoveries. On a later date the taxpayer recovers property B, which is worth $1,500 on the date of recovery. This recovery is not included in gross income to the extent of $200, the amount by which the aggregate of the allowable deductions for prior taxable years on account of war losses which did not result in any tax benefit ($1,000) exceeds the sum of all previous recoveries ($800). The remaining $1,300 of the recovery is included in gross income as ordinary income, and is not considered gain on the involuntary conversion of property, since it is less than the amount by which the aggregate of all the allowable deductions in prior taxable years on account of war losses ($3,000) exceeds $1,000, the sum of the $800 of previous recoveries and of the $200 portion of the recovery with respect to B which is not included in gross income. On a still later date the taxpayer sells for $2,500 his rights to recover C. Since the allowable deductions for prior taxable years on account of war losses which did not result in any tax benefit ($1,000) do not exceed the previous recoveries by the taxpayer ($800 and $1,500, or $2,300), none of the recovery on account of C is excluded from gross income. This recovery is included in gross income as ordinary income, and is not considered gain on the involuntary conversion of property, to the extent of $700, the amount by which the aggregate of all the allowable deductions for prior taxable years on account of war losses ($3,000) exceeds $2,300, the sum of the $2,300 of previous recoveries and of the $0 portion of the recovery on account of C which is not included in gross income. The remaining $1,800 of the recovery is considered gain on an involuntary conversion of property on account of its destruction or seizure, and is not recognized if forthwith expended in the manner provided in section 1033. Thus, it is not recognized if it is forthwith expended for the acquisition of property related in service or use to C. On a later date the taxpayer recovers D, which has a fair market value of $400 at the time of the recovery. Since the aggregate of all the allowable deductions for prior taxable years on account of war losses ($3,000) does not exceed the previous recoveries by the taxpayer ($800 + $1,500 + $2,500, or $4,800), all of the recovery with respect to D is considered gain on an involuntary conversion of property as a result of its destruction or seizure. Under the provisions

of section 1033, this gain is not recognized if D is used for the same purposes for which it was used before it was deemed destroyed or seized under section 127(a) of the Internal Revenue Code of 1939.

Example 2. The taxpayer on one day recovers $3,000 for property A and $7,000 for property B, both of which were treated as war loss property for a prior taxable year, and $8,000 of such $10,000 recoveries is considered gain on the involuntary conversion of property as a result of its destruction or seizure. The taxpayer forthwith expends $5,000 in the acquisition of property similar in use to B. Therefore, $5,000 of the $8,000 gain is not recognized under section 1033, leaving $3,000 of recognized gain. Property B is within the provisions of section 1231(a), relating to gains and losses on the involuntary conversion of certain described property, but property A is not. Therefore, the provisions of section 1231(a) apply to $2,000 of the $3,000 gain, that is, the amount of the recovery with respect to B which is not attributable to the nonrecognized gain for such day ($7,000 minus $5,000). If the taxpayer forthwith expended $8,000 or more for the acquisition of property similar in use to B, none of the gain would be recognized. If the taxpayer forthwith expended the $5,000 to acquire property related in use to A, the $3,000 recognized gain would be considered derived from B to the extent of the recovery with respect to B ($7,000), not reduced by any nonrecognized gain since none of such recovery is attributable to such nonrecognized gain, and therefore all of the $3,000 recognized gain would be subject to the provisions of section 1231(a).

(4) An allowable deduction with respect to a war loss is any deduction to which the taxpayer is entitled on account of any war loss property, regardless of whether or not such deduction was claimed by the taxpayer or otherwise allowed in computing his tax. If a deduction was claimed by a taxpayer in computing his tax for any taxable year and if such deduction was disallowed, such deduction will not be considered an allowable deduction for such taxable year since the previous determination will not be reconsidered.

[T.D. 6500, 25 FR 12043, Nov. 26, 1960]

§ 1.1333-1 Tax adjustment measured by prior benefits.

(a) ***Amount of recovery.*** The amount of recovery for purposes of this section shall be determined in accordance with the provisions of section 1332(a). See paragraph (a) of § 1.1332-1. If, pursuant to the taxpayer's election under section 1335, the provisions of section 1333 are applicable to any taxable year in which he recovers the same war loss property, the fair market value of such property shall, at the option of the taxpayer, be considered an amount equal to the adjusted basis (for determining loss) of such property in the hands of the taxpayer on the date such property was considered as destroyed or seized. This option is exercisable by the taxpayer with respect to each separate war loss property. Also, if the provisions of section 1333 are applicable pursuant to the taxpayer's election, the amount of the recovery of any money or property in respect of war loss property shall be reduced for the purpose of section 1333 (2) and (3) by the amount of the obligations or liabilities with respect to such property, if the taxpayer for any previous taxable year chose under section 127(b)(2) of the Internal Revenue Code of 1939 to treat such obligations or liabilities as discharged or satisfied out of such property, and such obligations or liabilities were not so discharged or satisfied before the date of the recovery. See 26 CFR (1939) 29.127(b)-1 (Regulations 111).

(b) ***Elective method; tax adjustment measured by prior benefits.***

(1) If the taxpayer elects pursuant to section 1335 and in accordance with the provisions of § 1.1335-1 to have the provisions of section 1333 apply to any taxable year in which he recovers any money or property in respect of war loss property, the amount of the recovery in respect of such property for any taxable year shall not be included in income until the taxpayer has recovered an amount equal to his allowable deductions in prior taxable years on account of the destruction or seizure of such property, whether or not such allowable deductions resulted in a reduction of any tax under chapter 1 or 2 of the Internal Revenue Code of 1939. However, for the purposes of section 6012(a)(1), relating to the requirement of individual returns, section 6012(a)(2), relating to the requirement of corporation returns, and section 1312, relating to the mitigation of the effect of the statute of limitations, the entire amount of the recovery shall be deemed to be an item includible in gross income for the taxable year in which the recovery is made. In lieu of including such amount in gross income, there shall be added to, and assessed and collected as a part of, the tax imposed under subtitle A of the Internal Revenue Code of 1954 for the taxable year of the recovery an adjustment on account of any tax benefits in all prior taxable years resulting directly or indirectly from the fact that the loss from the destruction or seizure of such property was an allowable deduction. The amount of such adjustment shall be the total increase in the tax under chapters 1 and 2 of the Internal Revenue Code of 1939 for all taxable years which would result by decreasing such allowable deductions with respect to the destruction or seizure of such property by an amount equal to that portion of the amount of the recovery which is not included in gross income for the taxable year of the recovery. The portion of the amount of the recovery which is in excess of such allowable deductions is included in gross income for the taxable year of the recovery as gain on the involuntary conversion of property as a result of its destruction or seizure and is recognized or not recognized as provided in section 1033. See section 1033 and the regulations thereunder. Such gain, if recognized, is included in gross income as ordinary income unless section 1231(a) applies to cause such gain to be treated as gain on the sale or exchange of capital assets held for more than six months. See section 1231(a) and the regulations thereunder.

(2) The determination as to whether and to what extent the amount of the recovery is to be excluded from gross income is to be made upon the basis of the total amount of the recoveries in each taxable year in respect of the same war loss property, as follows:

(i) The amount of the recovery in any taxable year is excluded from the gross income of such year and is not considered gain on an involuntary conversion to the extent that such amount does not exceed the aggregate of the allowable deductions in prior taxable years on account of the destruction or seizure of such property (whether or not such deductions resulted in a reduction of a tax of the taxpayer) reduced by the aggregate amount of any recoveries in intervening taxable years in respect of the same property.

(ii) The amount of the recovery in any taxable year which is not excluded from gross income under subdivision (i) of this subparagraph is included in gross income and is considered gain on an involuntary conversion of property as a result of its destruction or seizure. The following provisions apply to this gain:

(*a*) Such gain is recognized or not recognized under the provisions of section 1033, relating to gain on the involuntary conversion of property. For the purpose of applying section 1033, such gain for any taxable year is deemed to be expended in the manner provided in section 1033 to the extent the recovery in such taxable year is so expended.

(*b*) If such gain is recognized it is included in gross income as ordinary income or, if the provisions of section 1231(a) apply and require such treatment, as gain on the sale or exchange of a capital asset held for more than six months. In the case of the recovery of the same war loss property, any gain will not be deemed to be recognized under the provisions of section 1231(a) if such property is used for the same purpose for which it was used before it was deemed destroyed or seized under section 127(a) of the Internal Revenue Code of 1939.

(3) The determination of the total increase in the tax under chapters 1 and 2 of the Internal Revenue Code of 1939 for all taxable years which would result by decreasing the deductions allowable in any prior taxable year with respect to the destruction or seizure of the property in respect of which the taxpayer has made a recovery by an amount equal to the part of such recovery not included in gross income for the taxable year of such recovery shall be made as provided in this subparagraph. Such total increase shall include the increases described in subdivisions (i), (ii), (iii), and (iv) of this subparagraph, and shall be added to, and assessed and collected as a part of, the tax under subtitle A for the taxable year of the recovery. Proper adjustment of such increases shall be made on account of the application of the provisions of this subparagraph to intervening taxable years. Proper adjustment shall also be made in the determination of such increases in the case of a taxpayer who has made a valid election under section 1020, relating to the adjustment of basis of property for depreciation, obsolescence, amortization, and depletion. The term *tax previously determined* as used in this subparagraph shall have the same meaning as used in section 1314(a) and shall include any tax under chapter 1 or 2 of the Internal Revenue Code of 1939. In computing the amount of the increase in the tax previously determined under chapter 1 or 2 of the Internal Revenue Code of 1939 for any taxable year, the principles of section 1314(a) shall be applicable. See section 1314(a) and the regulations thereunder. However, the computation of the excess profits credit under chapter 2E of the Internal Revenue Code of 1939 for any taxable year shall not be affected by the adjustment provided in this subparagraph. All credits allowable against the tax for any year shall be taken into account in computing the increase in the tax previously determined. The increases referred to above include the following:

(i) The increase, if any, in the tax previously determined for each prior taxable year in which a deduction was allowable on account of the destruction or seizure of the property in respect of which there is a recovery in the taxable year. After the tax previously determined has been ascertained, such tax shall be recomputed by disregarding such allowable deduction (to the extent that it does not exceed the sum of the amount of such recovery not included in gross income for the taxable year of such recovery, plus the aggregate amount of any recoveries in intervening taxable years in respect of the same property) and any other deductions allowable on account of other war losses or any other losses, expenditures or accruals in such prior taxable year in respect of which, and to the extent that, recoveries in intervening taxable years have been excluded from gross income under section 127(c)(3) or section 22(b)(12) of the Internal Revenue Code of 1939, or section 1333 or section 111 of the Internal Revenue Code of 1954, or otherwise. The difference between the tax previously determined and the tax as recomputed will be the increase in the tax previously determined for the taxable year.

(ii) The increase, if any, in the tax previously determined for any taxable year (including the taxable year of the recovery) in which a net operating loss deduction was allowable, if all or a part of such deduction was attributable to the carryover or carryback to such taxable year of a net operating loss from another taxable year in which a deduction was allowable on account of the destruction or seizure of the property in respect of which there is a recovery in the taxable year

to which such increase is to be added. After the tax previously determined has been ascertained, such tax shall be recomputed by redetermining such net operating loss deduction. In the determination of such net operating loss deduction the net operating loss shall be recomputed by disregarding the deduction allowable on account of the war loss in respect of which there is a recovery in the taxable year to which such increase is to be added (to the extent that such deduction does not exceed the sum of the amount of such recovery not included in gross income for the taxable year of such recovery, plus the aggregate amount of any recoveries in intervening taxable years in respect of the same property) and by disregarding any other deductions allowable on account of other war losses or any other losses, expenditures, or accruals in the taxable year in respect of which, and to the extent that, recoveries in intervening taxable years have been excluded from gross income under section 127(c)(3) or 22(b)(12) of the Internal Revenue Code of 1939, or section 1333 or 111 of the Internal Revenue Code of 1954, or otherwise. The difference between the tax previously determined and the tax as recomputed will be the increase in the tax previously determined for the taxable year.

(iii) The increase, if any, in the tax previously determined for any taxable year (including the taxable year of recovery) in which an unused excess profits credit was availed of in computing the unused excess profits credit adjustment for such taxable year, if all or a part of such adjustment was attributable to the carryover or carryback to such taxable year of an unused excess profits credit from another taxable year in which a deduction was allowable on account of the destruction or seizure of the property in respect of which there is a recovery in the taxable year to which such increase is to be added. After the tax previously determined has been ascertained, such tax shall be recomputed by redetermining such unused excess profits credit carryover or carryback. In the recomputation such carryover or carryback shall be redetermined by disregarding such allowable war loss deduction (to the extent such deduction does not exceed the sum of the amount of the recovery not included in gross income for the taxable year of such recovery, plus the aggregate amount of any recoveries in intervening taxable years in respect of the same property) and by disregarding any other deductions allowable on account of other war losses or any other losses, expenditures, or accruals in the taxable year in respect of which, and to the extent that, recoveries in intervening taxable years have been excluded from gross income under section 127(c)(3) or 22(b)(12) of the Internal Revenue Code of 1939, or section 1333 or 111 of the Internal Revenue Code of 1954, or otherwise. The difference between the tax previously determined and the tax as recomputed will be the increase in the tax previously determined for the taxable year. In case there is an increase in the excess profits tax under chapter 2E of the Internal Revenue Code of 1939 for the taxable year in which an unused excess profits credit was availed of in computing the unused excess profits credit adjustment, and a decrease in the income tax under chapter 1 of the Internal Revenue Code of 1939 for such taxable year, the increase in the tax previously determined shall be considered to be an amount equal to the excess of the increase in the excess profits tax over the decrease in the income tax.

(iv) The increase, if any, in the tax previously determined for any taxable year (including the taxable year of the recovery) in which an unused excess profits credit was availed of in computing the unused excess profits credit adjustment for such taxable year, if all or a part of such adjustment was attributable to the carryover or carryback to such taxable year of an unused excess profits credit from another taxable year in which there was allowable a net operating loss deduction attributable to the carryover or carryback to such other taxable year of a net operating loss, and such net operating loss resulted in whole or in part from the deduction

allowable on account of the destruction or seizure of the property in respect of which there is a recovery in the taxable year to which such increase is to be added. After the tax previously determined has been ascertained, such tax shall be recomputed by redetermining such net operating loss deduction and such unused excess profits credit carryover or carryback. In the redetermination of such net operating loss deduction the net operating loss carryover or carryback shall be recomputed by disregarding such allowable war loss deduction (to the extent that such deduction does not exceed the sum of the amount of such recovery not included in gross income for the taxable year of such recovery, plus the aggregate amount of any recoveries in intervening taxable years in respect of the same property) and by disregarding any other deductions allowable on account of other war losses or any other losses, expenditures, or accruals in the taxable year in respect of which, and to the extent that, recoveries in intervening taxable years have been excluded from gross income under section 127(c)(3) or 22(b)(12) of the Internal Revenue Code of 1939, or section 1333 or 111 of the Internal Revenue Code of 1954, or otherwise. The unused excess profits credit carryover or carryback shall then be recomputed to conform to the redetermination of the net operating loss deduction for the taxable year from which the unused credit is carried over or carried back. The difference between the tax previously determined and the tax as recomputed shall be the amount of the increase which shall be added to the tax for the taxable year of the recovery. In case there is an increase in the excess profits tax under chapter 2E of the Internal Revenue Code of 1939 for the taxable year in which an unused excess profits credit was availed of in computing the unused excess profits credit adjustment, and a decrease in the income tax under chapter 1 of the Internal Revenue Code of 1939 for such taxable year, the increase which shall be added to the tax for the taxable year of the recovery shall be considered to be an amount equal to the excess of the increase in the excess profits tax over the decrease in the income tax.

[T.D. 6500, 25 FR 12045, Nov. 26, 1960]

§ 1.1334-1 Restoration of value of investments.

If any interest of the taxpayer in or with respect to property was determined to be worthless and was treated as a war loss under section 127(a)(3) of the Internal Revenue Code of 1939 (see 26 CFR (1939) 29.127(a)-4) (Regulations 111), or if the taxpayer retained an interest in a corporation with respect to which he sustained a war loss under section 127(e) of the Internal Revenue Code of 1939, and if the interest in the hands of the taxpayer is restored in value, in whole or in part, by reason of a recovery with respect to the underlying assets treated as war loss property, then such restoration in value is a recovery by the taxpayer for the purposes of section 1331. In the application of section 1333, such restoration shall be treated as a recovery of the same interest considered as destroyed or seized. War loss property is considered as not being in existence from the date of the loss to the date of its recovery.

[T.D. 6500, 25 FR 12046, Nov. 26, 1960]

§ 1.1335-1 Elective method; time and manner of making election and effect thereof.

(a) ***In general.*** If the taxpayer elects to have the provisions of section 1333 applicable to any taxable year in which any money or property is recovered in respect of war loss property, section 1333 will be applicable by virtue of that election to all taxable years of the taxpayer beginning after December 31, 1941. Thus, the taxpayer need not make an election with respect to each separate taxable year in which he had a

recovery. An election for any taxable year in which the taxpayer had a recovery in respect of a prior war loss is sufficient to make the provisions of section 1333 applicable not only to war loss recoveries received by the taxpayer in any past taxable year beginning after December 31, 1941, but to any recoveries which may be received by the taxpayer in any future taxable year. Such election once made shall be irrevocable. The election to have the provisions of section 1333 applicable to any taxable year cannot be made unless the taxpayer recovers money or property (in respect of a prior war loss) during the taxable year for which such election is made.

(b) ***Manner of election.*** In all cases the election to have the provisions of section 1333 apply must be made by the taxpayer not later than six months from the last day prescribed by law for the filing of his income tax return for any taxable year in which a recovery of war loss property has occurred. The election shall be evidenced by a written statement, made within such 6-month period, that the taxpayer elects to have the provisions of section 1333 apply to any taxable year in which any money or property is recovered in respect of war loss property. The statement may be made in (or attached to):

(1) The return or amended return filed for such taxable year;

(2) A claim for refund or credit filed for such taxable year for an overpayment resulting from application of such provisions;

(3) A timely petition or amended petition to The Tax Court of the United States for a redetermination of any deficiency for any taxable year in which a recovery of war loss property occurred; or

(4) A letter addressed to the district director for the district in which the return for such taxable year was required to be filed.

If the written statement of election is made in a letter, it shall be signed by the taxpayer making the election if an individual or, if the taxpayer is not an individual, the letter must be executed in the same manner as required in the case of the income tax return of such taxpayer. The date of the making of the election shall be the date the return, amended return, claim for refund or credit, or letter is filed in the office of the district director, or the date the petition or amended petition is filed with The Tax Court of the United States. In case the election is made in a return filed before the last day prescribed by law for the filing thereof (including any extension of time for such filing), such election shall not be considered made until such last day. See section 7502 and the regulations thereunder with respect to the timeliness of filing an election where filing is done by mail and section 7503 and the regulations thereunder with respect to the timeliness of filing where the last day for filing falls on a Saturday, Sunday, or legal holiday.

(c) ***Effect of election.***

(1) If the provisions of section 1333 are applicable to any taxable year pursuant to an election made by the taxpayer in accordance with the provisions of paragraph (a) of this section, the period of limitations provided in chapter 66 of the Code on the making of assessments and the beginning of distraint or a proceeding in court for collection with respect to

(i) the amount to be added to the tax for such taxable year under the provisions of section 1333 and

(ii) any deficiency for such taxable year or for any other taxable year to the extent attributable to the basis of the recovered property being determined under the provisions of section 1336(b), shall not expire prior to the expiration of two years following the date of the making of such

election. Such amount or such deficiency may be assessed at any time prior to the expiration of such period, notwithstanding any law or rule of law which would otherwise prevent such assessment and collection.

(2) If the provisions of section 1333 are applicable to any taxable year pursuant to an election made by the taxpayer in accordance with the provisions of paragraph (a) of this section, and refund or credit of any overpayment resulting from the application of such provisions to such taxable year is prevented on the date of the making of such election, or within one year from such date, by the operation of any law or rule of law (other than section 7122 relating to compromises), refund or credit of such overpayment may nevertheless be made or allowed, provided claim therefor is filed within one year from such date. Thus, the amount of such overpayment which may be refunded or credited is not subject to the limitations contained in section 6511 or 6512(b).

(3) In the case of any taxable year ending before the date of the making by the taxpayer of an election under section 1335, no interest shall be paid on any overpayment specified in subparagraph (2) of this paragraph for any period before the expiration of six months following the date of the making of such election by the taxpayer, and no interest shall be assessed or collected with respect to any amount or any deficiency specified in subparagraph (1) of this paragraph for any period before the expiration of six months following the date of the making of such election by the taxpayer.

[T.D. 6500, 25 FR 12047, Nov. 26, 1960]

§ 1.1336-1 Basis of recovered property.

(a) ***General rule.***

(1) Under section 1336(a), the unadjusted basis of any war loss property which is recovered and the unadjusted basis of any property which is recovered in lieu of or on account of any such war loss property is considered the fair market value of such recovered property upon the date of its recovery with the following adjustments:

(i) If the sum of the recoveries for the day such property is recovered and of all previous recoveries exceeds the aggregate of the allowable deductions for prior taxable years on account of war losses, so that a portion of the recoveries for such day is treated as gain on the involuntary conversion of property, such fair market value of the property is reduced by the total gain, if any, for such day derived from such recovered property as determined under paragraph (b) of § 1.1332-1.

(ii) Such fair market value, as reduced under subdivision (i) of this subparagraph, is increased by the portion, if any, of the recognized gain resulting from the recoveries for such day which is allocable to such recovered property, as determined under paragraph (b) of § 1.1332-1.

In effect, the unadjusted basis of such property is its fair market value upon the date of its recovery, reduced by the amount of nonrecognized gain attributable to such recovery under the provisions of paragraph (b) of § 1.1332-1.

(2) If the respective bases of several properties of a taxpayer determined under section 1336(a) are greatly disproportionate to their adjusted bases immediately before their treatment as war loss properties, the taxpayer may apply to the Commissioner for the allocation of the aggregate of the bases of such properties among them in the proportion of their adjusted bases immediately before the destruction or seizure of such properties determined under section 127(a) of the Internal

Revenue Code of 1939. The amount so allocated to any such property, in an application approved by the Commissioner, shall be the unadjusted basis of such property in lieu of the amount determined under subparagraph (1) of this paragraph.

(3) The application to the Commissioner shall set forth a list of all the properties of the taxpayer having an unadjusted basis determined under this section, a description of each such property together with a statement as to the amount of its adjusted basis immediately before the destruction or seizure of such property determined under section 127(a) of the Internal Revenue Code of 1939, and a statement as to whether there has been any substantial change in the use or nature of the property chosen for the allocation from its nature or use immediately before the time it was treated as destroyed or seized. Such application will be allowed unless there has been such a substantial change in the nature or use of such property that the allocation of the bases would produce an arbitrary result, or unless the taxpayer has obtained such tax benefits by reason of the basis determined under subparagraph (1) of this paragraph, that it would be inequitable to change his basis. Thus, the allocation will not be allowed if it would give the taxpayer an unadjusted basis with respect to any property which is less than the amount of the adjustments in reduction of the basis of such property which are allowable after its recovery. For example, when property A is recovered it has an unadjusted basis of $100. After $70 depreciation has been allowed on A, an allocation is sought which would give A an unadjusted basis of $60. Since this is less than the depreciation which is an adjustment against such basis, the allocation will not be permitted.

(4) The amount of any adjustments to the unadjusted basis determined under subparagraph (1) of this paragraph shall, upon the allocation of the bases, be taken as an adjustment to the allocated unadjusted basis. Thus, if $30 depreciation was allowed upon a $100 basis determined under subparagraph (1) of this paragraph and if the unadjusted basis upon allocation is $75, such $30 depreciation is allowed against such allocated unadjusted basis, so that the adjusted basis of the property is then $45.

(5) The taxpayer may choose any group of recovered properties for allocation, except that if any such recovered properties form one economic unit, such properties may not be separated but all or none must be included in the group. For example, a building may not be separated from the land on which it stands if both are recovered property, nor may one block of stock in a corporation be separated from other stock in such corporation or from bonds in such corporation which are also treated as a recovery. If the taxpayer has once been permitted to allocate the bases of any group of properties, he may obtain another allocation with respect to such properties only if all the properties in the original group are included together with other recovered properties not included in the original group. For example, if the bases of properties A and B are allocated, a second allocation will be made for properties A, B, and C, but not for A and C or B and C.

(b) ***Property recovered in taxable year to which section 1333 is applicable.*** If, pursuant to an election made by the taxpayer under section 1335 and paragraph (a) of § 1.1335-1, the provisions of section 1333 are applicable to any taxable year in which the taxpayer recovered property in respect of a war loss under section 127(a) of the Internal Revenue Code of 1939, the unadjusted basis of such property shall be the fair market value of such property determined as of the date of the recovery, reduced by the amount of nonrecognized gain attributable to such recovery under the provisions of paragraph (b) of § 1.1333-1. However, if the property recovered is the same war loss property, and if the taxpayer under section 1333(1) includes such property in the amount of the recovery at its adjusted basis (for determining loss) in his hands on the date such property was considered under section 127(a) of the Internal Revenue Code of 1939 as destroyed or seized, the unadjusted basis of such property shall be such adjusted basis, reduced by the amount of nonrecognized gain attributable to such recovery under the provisions of

paragraph (b) of § 1.1333-1. The fair market value of any property recovered, or the adjusted basis for determining loss) of such property if the same property treated as war loss property is recovered, shall not be reduced in determining the unadjusted basis of such property by the amount of the obligations or liabilities with respect to such property in respect of which the recovery was received, if the taxpayer for any previous taxable year chose under section 127(b)(2) of the Internal Revenue Code of 1939 to treat such obligations or liabilities as discharged or satisfied out of such property but such obligations or liabilities were not so discharged or satisfied prior to the date of the recovery.

[T.D. 6500, 25 FR 12048, Nov. 26, 1960]

§ 1.1337-1 Determination of tax benefits from allowable deductions.

(a) That part of the aggregate of the deductions allowed a taxpayer for any taxable year on account of war losses under section 127(a) of the Internal Revenue Code of 1939 which, if disallowed, would not result in an increase in the normal tax, surtax (including the tax imposed by section 102 of the Internal Revenue Code of 1939), or victory tax of taxpayer, or of any tax imposed in lieu of such taxes or of any tax imposed by chapter 2 of the Internal Revenue Code of 1939, for the taxable year in which such deductions are allowed or in any other taxable year, such as a taxable year in which the taxpayer's income tax is computed by reference to a carryover or carryback of net operating losses from the taxable year in which such deductions are allowed, is considered, for the purposes of section 127(a) of the Internal Revenue Code of 1939 an allowable deduction for the taxable year which did not result in a reduction of any tax of the taxpayer under chapter 1 or 2 of the Internal Revenue Code of 1939. In the case of recoveries of war losses and other items to which the recovery exclusion provisions of section 111 apply, such as bad debts, the determination of the tax benefit should be made in accordance with section 111(b) and the regulations thereunder. The deductions allowed a taxpayer for any taxable year on account of war losses are all the deductions on account of war losses which were claimed by the taxpayer in a return, in a claim for credit or refund of an overpayment, or in a petition to The Tax Court of the United States with respect to such taxable year and which were not disallowed, and all deductions on account of war losses which, although not so claimed by the taxpayer, were nevertheless allowed (for example, by the Commissioner, a court, or The Tax Court) in computing a tax of the taxpayer.

(b) Any deduction allowable for a taxable year on account of a war loss under section 127(a) of the Internal Revenue Code of 1939 which was not claimed by the taxpayer for such year in a return, a claim for credit or refund of an overpayment, or a petition to the Tax Court of the United States and was not allowed as a deduction (for example, by the Commissioner, a court, or the Tax Court) in computing his tax for such year or for any other year is considered a deduction which did not result in a reduction of any tax of the taxpayer under chapter 1 or 2 of the Internal Revenue Code of 1939, since it is an allowable deduction which was not allowed in computing any tax of the taxpayer. If the taxpayer claimed for any taxable year a deduction on account of a war loss, and if such deduction was disallowed, the taxpayer may not subsequently contend for the purposes of section 1331 that such deduction was an allowable deduction for such taxable year.

(c) If the taxpayer elected under section 127(b) of the Internal Revenue Code of 1939 to decrease the amount of a war loss by treating the obligations and liabilities described in that section as discharged or satisfied out of the property destroyed or seized, and if the taxpayer establishes that any of the obligations and liabilities were not so discharged or satisfied, then the amount by which such continuing obligations and liabilities decreased the war loss shall be considered an allowable deduction for the taxable year in which the war loss was sustained which did not result in a reduction of any tax of the taxpayer under chapter 1 or 2 of the Internal Revenue Code of 1939.

[T.D. 6500, 25 FR 12048, Nov. 26, 1960]

CLAIM OF RIGHT

§ 1.1341-1 Restoration of amounts received or accrued under claim of right.

(a) ***In general.***

(1) If, during the taxable year, the taxpayer is entitled under other provisions of chapter 1 of the Internal Revenue Code of 1954 to a deduction of more than $3,000 because of the restoration to another of an item which was included in the taxpayer's gross income for a prior taxable year (or years) under a claim of right, the tax imposed by chapter 1 of the Internal Revenue Code of 1954 for the taxable year shall be the tax provided in paragraph (b) of this section.

(2) For the purpose of this section *income included under a claim of right* means an item included in gross income because it appeared from all the facts available in the year of inclusion that the taxpayer had an unrestricted right to such item, and *restoration to another* means a restoration resulting because it was established after the close of such prior taxable year (or years) that the taxpayer did not have an unrestricted right to such item (or portion thereof).

(3) For purposes of determining whether the amount of a deduction described in section 1341(a)(2) exceeds $3,000 for the taxable year, there shall be taken into account the aggregate of all such deductions with respect to each item of income (described in section 1341(a)(1)) of the same class.

(b) ***Determination of tax.***

(1) Under the circumstances described in paragraph (a) of this section, the tax imposed by chapter 1 of the Internal Revenue Code of 1954 for the taxable year shall be the lesser of:

(i) The tax for the taxable year computed under section 1341(a)(4), that is, with the deduction taken into account, or

(ii) The tax for the taxable year computed under section 1341(a)(5), that is, without taking such deduction into account, minus the decrease in tax (net of any increase in tax imposed by section 56, relating to the minimum tax for tax preferences) (under chapter 1 of the Internal Revenue Code of 1954, under chapter 1 (other than subchapter E) and subchapter E of chapter 2 of the Internal Revenue Code of 1939, or under the corresponding provisions of prior revenue laws) for the prior taxable year (or years) which would result solely from the exclusion from gross income of all or that portion of the income included under a claim of right to which the deduction is attributable. For the purpose of this subdivision, the amount of the decrease in tax is not limited to the amount of the tax for the taxable year. See paragraph (i) of this section where the decrease in tax for the prior taxable year (or years) exceeds the tax for the taxable year.

(iii) For purposes of computing, under section 1341(a)(4) and subdivision (i) of this subparagraph, the tax for a taxable year beginning after December 31, 1961, if the deduction of the amount of the restoration results in a net operating loss for the taxable year of restoration, such net operating loss shall, pursuant to section 1341(b)(4)(A), be carried back to the same extent and in the same manner as is provided under section 172 (relating to the net operating loss deduction) and the regulations thereunder. If the aggregate decrease in tax for the taxable year (or years) to which such net operating loss is carried back is greater than the excess of:

(*a*) The amount of decrease in tax for a prior taxable year (or years) computed under section 1341(a)(5)(B), over

(*b*) The tax for the taxable year computed under section 1341(a)(5)(A),

The tax imposed for the taxable year under chapter 1 shall be the tax determined under section 1341(a)(4) and subdivision (i) of this subparagraph. If the tax imposed for the taxable year is determined under section 1341(a)(4) and subdivision (i) of this subparagraph, the decrease in tax for the taxable year (or years) to which the net operating loss is carried back shall be an overpayment of tax for the taxable year (or years) to which the net operating loss is carried back and shall be refunded or credited as an overpayment for such taxable year (or years). See section 6511(d)(2), relating to special period of limitation with respect to net operating loss carrybacks.

(2) Except as otherwise provided in section 1341(b)(4)(B) and paragraph (d) (1)(ii) and (4)(ii) of this section, if the taxpayer computes his tax for the taxable year under the provisions of section 1341(a)(5) and subparagraph (1)(ii) of this paragraph, the amount of the restoration shall not be taken into account in computing taxable income or loss for the taxable year, including the computation of any net operating loss carryback or carryover or any capital loss carryover. However, the amount of such restoration shall be taken into account in adjusting earnings and profits for the current taxable year.

(3) If the tax determined under subparagraph (1)(i) of this paragraph is the same as the tax determined under subparagraph (1)(ii) of this paragraph, the tax imposed for the taxable year under chapter 1 shall be the tax determined under subparagraph (1)(i) of this paragraph, and section 1341 and this section shall not otherwise apply.

(4) After it has been determined whether the tax imposed for a taxable year of restoration beginning after December 31, 1961, shall be computed under the provisions of section 1341(a)(4) or under the provisions of section 1341(a)(5), the net operating loss, if any, which remains after the application of section 1341(b)(4)(A) or the net operating loss or capital loss, if any, which remains after the application of section 1341(b)(4)(B) shall be taken into account in accordance with the following rules:

(i) If it is determined that section 1341(a)(4) and subparagraph (1)(i) of this paragraph apply, then that portion, if any, of the net operating loss for the taxable year which remains after the application of section 1341(b)(4)(A) and subparagraph (1)(iii) of this paragraph shall be taken into account under section 172 for taxable years subsequent to the taxable year of restoration to the same extent and in the same manner as a net operating loss sustained in such taxable year of restoration. Thus, if the net operating loss for the taxable year of restoration (computed with the deduction referred to in section 1341(a)(4)) exceeds the taxable income (computed with the modifications prescribed in section 172) for the taxable year (or years) to which it is carried back, such excess shall be available as a carryover to taxable years subsequent to the taxable year of restoration.

(ii) If it is determined that section 1341(a)(5) and subparagraph (1)(ii) of this paragraph apply, then that portion, if any, of a net operating loss or capital loss which remains after the application of section 1341(b)(4)(B) and paragraph (d)(4) of this section shall be taken into account under section 172 or 1212, as the case may be, for taxable years subsequent to the taxable year of restoration to the same extent and in the same manner as a net operating loss or capital loss sustained in the prior taxable year (or years). For example, if the net operating loss for the prior

taxable year (computed with the exclusion referred to in section 1341(a)(5)(B)) exceeds the taxable income (computed with the modifications prescribed in section 172) for prior taxable years to which such net operating loss is carried back or carried over (including for this purpose the taxable year of restoration), such excess shall be available as a carryover to taxable years subsequent to the taxable year of restoration in accordance with the rules prescribed in section 172 which are applicable to such prior taxable year (or years).

(c) ***Application to deductions which are capital in nature.*** Section 1341 and this section shall also apply to a deduction which is capital in nature otherwise allowable in the taxable year. If the deduction otherwise allowable is capital in nature, the determination of whether the taxpayer is entitled to the benefits of section 1341 and this section shall be made without regard to the net capital loss limitation imposed by section 1211. For example, if a taxpayer restores $4,000 in the taxable year and such amount is a long-term capital loss, the taxpayer will, nevertheless, be considered to have met the $3,000 deduction requirement for purposes of applying this section, although the full amount of the loss might not be allowable as a deduction for the taxable year. However, if the tax for the taxable year is computed with the deduction taken into account, the deduction allowable will be subject to the limitation on capital losses provided in section 1211, and the capital loss carryover provided in section 1212.

(d) ***Determination of decrease in tax for prior taxable years —***

(1) ***Prior taxable years.***

(i) Except as otherwise provided in subdivision (ii) of this subparagraph, the prior taxable year (or years) referred to in paragraph (b) of this section is the year (or years) in which the item to which the deduction is attributable was included in gross income under a claim of right and, in addition, any other prior taxable year (or years) the tax for which will be affected by the exclusion from gross income in such prior taxable year (or years) of such income.

(ii) For purposes of applying section 1341(b)(4)(B) in computing the amount of the decrease referred to in paragraph (b)(1)(ii) of this section for any taxable year beginning after December 31, 1961, the term *prior taxable year (or years)* includes the taxable year of restoration. Under section 1341(b)(4)(B), for taxable years of restoration beginning after December 31, 1961, in any case where the exclusion referred to in section 1341(a)(5)(B) and paragraph (b)(1)(ii) of this section results in a net operating loss or capital loss for the prior taxable year (or years), such loss shall, for purposes of computing the decrease in tax for the prior taxable year (or years) under such section 1341(a)(5)(B) and such paragraph (b)(1)(ii) of this section, be carried back and carried over to the same extent and in the same manner as is provided under section 172 (relating to the net operating loss deduction) or section 1212 (relating to capital loss carryover), except that no carryover beyond the taxable year shall be taken into account. See subparagraph (4) of this paragraph for rules relating to the computation of the amount of decrease in tax.

(2) ***Amount of exclusion from gross income in prior taxable years.***

(i) The amount to be excluded from gross income for the prior taxable year (or years) in determining the decrease in tax under section 1341(a)(5)(B) and paragraph (b)(1)(ii) of this section shall be the amount restored in the taxable year, but shall not exceed the amount included in gross income in the prior taxable year (or years) under the claim of right to which the deduction for the restoration is attributable, and shall be adjusted as provided in subdivision (ii) of this subparagraph.

(ii) If the amount included in gross income for the prior taxable year (or years) under the claim of right in question was reduced in such year (or years) by a deduction allowed under section 1202 (or section 117 (b) of the Internal Revenue Code of 1939 or corresponding provisions of prior revenue laws), then the amount determined under subdivision (i) of this subparagraph to be excluded from gross income for such year (or years) shall be reduced in the same proportion that the amount included in gross income under a claim of right was reduced.

(iii) The determination of the amount of the exclusion from gross income of the prior taxable year shall be made without regard to the capital loss limitation contained in section 1211 applicable in computing taxable income for the current taxable year. The amount of the exclusion from gross income in a prior taxable year (or years) shall not exceed the amount which would, but for the application of section 1211, be allowable as a deduction in the taxable year of restoration.

(iv) The rule provided in subdivision (iii) of this subparagraph may be illustrated as follows:

Example: For the taxable year 1952, an individual taxpayer had long-term capital gains of $50,000 and long-term capital losses of $10,000, a net long-term gain of $40,000. He also had other income of $5,000. In 1956, taxpayer restored the $50,000 of long-term gain. He had no capital gains or losses in 1956 but had other income of $5,000. If his tax liability for 1956, the taxable year of restoration, is computed by taking the deduction into account, the taxpayer would be entitled to a deduction under section 1211 of only $1,000 on account of the capital loss. However, if the taxpayer computes his tax under section 1341(a)(5) and paragraph (b)(1)(ii) of this section, it is necessary to determine the decrease in tax for 1952. In such a determination, $50,000 is to be excluded from gross income for that year, resulting in a net capital loss for that year of $10,000, and a capital loss deduction of $1,000 under section 117(d) of the Internal Revenue Code of 1939 (corresponding to section 1211 of the Internal Revenue Code of 1954) with carryover privileges. The difference between the tax previously determined and the tax as recomputed after such exclusion for the years affected will be the amount of the decrease.

(3) ***Determination of amount of deduction attributable to prior taxable years.***

(i) If the deduction otherwise allowable for the taxable year relates to income included in gross income under a claim of right in more than one prior taxable year and the amount attributable to each such prior taxable year cannot be readily identified, then the portion attributable to each such prior taxable year shall be that proportion of the deduction otherwise allowable for the taxable year which the amount of the income included under the claim of right in question for the prior taxable year bears to the total of all such income included under the claim of right for all such prior taxable years.

(ii) The rule provided in subdivision (i) of this subparagraph may be illustrated as follows:

Example: Under a claim of right, A included in his gross income over a period of three taxable years an aggregate of $9,000 for services to a certain employer, in amounts as follows: $2,000 for taxable year 1952, $4,000 for taxable year 1953, and $3,000 for taxable year 1954. In 1955 it is established that A must restore $6,750 of these amounts to his employer, and that A is entitled to a deduction of this amount in the taxable year 1955. The amount of the deduction attributable to each of the prior taxable years cannot be identified. Accordingly, the amount of the deduction attributable to each prior taxable year is: 1952—$6,750 × $2,000 ÷ $9,000 = $1,500 1953—$6,750 × $4,000 ÷ $9,000 = $3,000 1954—$6,750 × $3,000 ÷ $9,000 = $2,250

(4) ***Computation of amount of decrease in tax.***

(i) In computing the amount of decrease in tax for a prior taxable year (or years) resulting from the exclusion from gross income of the income included under a claim of right, there must first be ascertained the amount of tax previously determined for the taxpayer for such prior taxable year (or years). The tax previously determined shall be the sum of the amounts shown by the taxpayer on his return or returns, plus any amounts which have been previously assessed (or collected without assessment) as deficiencies or which appropriately should be assessed or collected, reduced by the amount of any refunds or credits which have previously been made or which appropriately should be made. For taxable years beginning after December 31, 1961, if the provisions of section 1341(b)(4)(B) are applicable, the tax previously determined shall include the tax for the taxable year of restoration computed without taking the deduction for the amount of the restoration into account. After the tax previously determined has been ascertained, a recomputation must then be made to determine the decrease in tax, if any, resulting from the exclusion from gross income of all or that portion of the income included under a claim of right to which the deduction otherwise allowable in the taxable year is attributable.

(ii) No item other than the exclusion of the income previously included under a claim of right shall be considered in computing the amount of decrease in tax if reconsideration of such other item is prevented by the operation of any provision of the internal revenue laws or any other rule of law. However, if the amounts of other items in the return are dependent upon the amount of adjusted gross income, taxable income, or net income (such as charitable contributions, foreign tax credit, deductions for depletion, and net operating loss), appropriate adjustment shall be made as part of the computation of the decrease in tax. For the purpose of determining the decrease in tax for the prior taxable year (or years) which would result from the exclusion from gross income of the item included under a claim of right, the exclusion of such item shall be given effect not only in the prior taxable year in which it was included in gross income but in all other prior taxable years (including the taxable year of restoration if such year begins after December 31, 1961, and section 1341(b)(4)(B) applies, see subparagraph (1)(ii) of this paragraph) affected by the inclusion of the item (for example, prior taxable years affected by a net operating loss carryback or carryover or capital loss carryover).

(iii) The rules provided in this subparagraph may be illustrated as follows:

> *Example 1.* For the taxable year 1954, a corporation had taxable income of $35,000, on which it paid a tax of $12,700. Included in gross income for the year was $20,000 received under a claim of right as royalties. In 1957, the corporation is required to return $10,000 of the royalties. It otherwise has taxable income in 1957 of $5,000, so that without the application of section 1341 it has a net operating loss of $5,000 in that year. Facts also come to light in 1957 which entitle the corporation to an additional deduction of $5,000 for 1954. When a computation is made under paragraph (b)(1)(i) of this section, the corporation has no tax for the taxable year 1957. When a computation is made under paragraph (b)(1)(ii) of this section, the tax for 1957, without taking the restoration into account, is $1,500, based on a taxable income of $5,000. The decrease

in tax for 1954 is computed as follows:

Tax shown on return for 1954		$12,700
Taxable income for 1954 upon which tax shown on return was based		35,000
Less: Additional deduction (on account of which credit or refund could be made)		5,000
Total		30,000
Tax on $30,000 (adjusted taxable income for 1954)		10,100
Tax on $30,000 (adjusted taxable income for 1954)		10,100
Taxable income for 1954, as adjusted	$30,000	
Less exclusion of amount restored	10,000	
Taxable income for 1954 by applying paragraph (b)(1)(ii) of this section	20,000	
Tax on $20,000		6,000
Decrease in tax for 1954 by applying paragraph (b)(1)(ii) of this section		$4,100
Tax for 1957 without taking the restoration into account		1,500
Amount by which decrease exceeds the tax for 1957 computed without taking restoration into account		$2,600

(The $2,600 is treated as having been paid on the last day prescribed by law for the payment of the tax for 1957 and is available as a refund. In addition the taxpayer has made an overpayment of $2,600 ($12,700 less $10,000) for 1954 because of the additional deduction of $5,000.)

Example 2. Assume the same facts as in example (1) except that, instead of the corporation being entitled to an additional deduction of $5,000 for 1954, it is determined that the corporation failed to include an item of $5,000 in gross income for that year. The decrease in tax for 1954 is computed as follows:

Tax shown on return for 1954		$12,700
Taxable income for 1954 upon which tax shown on return was based		35,000
Plus: Additional income (on account of which deficiency assessment could be made)		$5,000
Total		40,000
Tax on $40,000 (adjusted taxable income for 1954)		15,300
Tax on $40,000 (adjusted taxable income for 1954)		15,300
Taxable income for 1954 as adjusted	$40,000	

Less exclusion of amount restored	10,000	
Taxable income for 1954 by applying paragraph (b)(1)(ii) of this section	30,000	
Tax on $30,000		10,100
Decrease in tax for 1954 by applying paragraph (b)(1)(ii) of this section		5,200
Tax for 1957 without taking the restoration into account		1,500
Amount by which decrease exceeds the tax for 1957 computed without taking the restoration into account		$3,700

(The $3,700 is treated as having been paid on the last day prescribed by law for the payment of the tax for 1957 and is available as a refund. In addition the taxpayer has a deficiency of $2,600 ($15,300 less $12,700) for 1954 because of the additional income of $5,000.)

Example 3. For the taxable year 1954, a corporation had taxable income of $25,000, on which it paid a tax of $7,500. Included in gross income for the year was $10,000 received under a claim of right as commissions. In 1956, the corporation is required to return $5,000 of the commissions. The corporation has a net operating loss of $10,000 for 1956, excluding the deduction for the $5,000 restored. When a computation is made under either paragraph (b)(1)(i) or paragraph (b)(1)(ii) of this section, the corporation has no tax for the taxable year 1956. The decrease in tax for 1954 is computed as follows:

Tax shown on return for 1954		$7,500
Taxable income for 1954 upon which tax shown on return was based		25,000
Less: Additional deduction (on account of net operating loss carryback from 1956)		10,000
Net income as adjusted		15,000
Tax on $15,000 (adjusted taxable income for 1954)		4,500
Tax on $15,000 (adjusted taxable income for 1954)		4,500
Taxable income for 1954, as adjusted	$15,000	
Less: exclusion of amount restored	$5,000	
Taxable income for 1954 by applying paragraph (b)(1)(ii) of this section	10,000	
Tax on $10,000		$3,000
Decrease in tax for 1954 by applying paragraph (b)(1)(ii) of this section		1,500
Tax for 1956 without taking the restoration into account		None
Amount by which decrease exceeds the tax for 1956 computed without		$1,500

taking the restoration into account

(The $1,500 is treated as having been paid on the last day prescribed by law for the payment of the tax for 1956 and is available as a refund. In addition, the taxpayer has an overpayment of $3,000 ($7,500 less $4,500) for 1954 because of the net operating loss deduction of $10,000.)

Example 4. For the taxable year 1946 a married man with no dependents, who kept his books on the cash receipts and disbursements basis, filed a return (claiming two exemptions) disclosing adjusted gross income of $42,000, deductions amounting to $12,000, and a net income of $30,000. Gross income included among other items, salary in the amount of $15,000 and rental income in the amount of $5,000. During the taxable year he donated $10,000 to the American Red Cross and in his return claimed a deduction of $6,300 on account thereof, representing the maximum deduction allowable under the 15-percent limitation imposed by section 23(o) of the Internal Revenue Code of 1939 for the year 1946. In computing his net income he omitted interest income amounting to $6,000 and neglected to take a deduction for interest paid in the amount of $4,500. The return disclosed a tax liability of $11,970, which was assessed and paid. In 1955, after the expiration of the period of limitations upon the assessment of a deficiency or the allowance of a refund for 1946, the taxpayer had to restore the $5,000 included in his gross income in 1946 as rental income. The amount of the decrease in tax for 1946 is $2,467.62, computed as follows:

Tax previously determined for 1946	$11,970.00
Net income for 1946 upon which tax previously determined was based	30,000.00
Less: Rents included under claim of right	5,000.00
Balance	25,000.00
Adjustment for contributions (add 15 percent of $5,000)	750.00
Net income as adjusted	25,750.00
Tax on $25,750	9,502.38
Amount of decrease in tax for 1946:	
Tax previously determined	$11,970.00
Tax as recomputed	9,502.38

Decrease in tax	$2,467.62

The recomputation to determine the amount of the decrease in tax for 1946 does not take into consideration the barred item of $6,000 representing interest received, which was omitted from gross income, or the barred item of $4,500 representing interest paid for which no deduction was allowed. See subdivision (ii) of this subparagraph.

Example 5. (a) *Facts.* For the taxable year 1959, a corporation reporting income on the calendar year basis had taxable income of $20,000 on which it paid a tax of $6,000. Included in gross income for such year was $100,000 received under a claim of right as royalties. For each of its taxable years 1956, 1957, 1958, 1960, 1961, and 1962, the corporation had taxable income of $10,000 on which it paid tax of $3,000 for each year. In 1963, the corporation returns the entire amount of $100,000 of the royalties. In such taxable year the corporation has taxable income of $25,000 (without taking the deduction of $100,000 into account), and has a net operating loss of $75,000 (taking the deduction of $100,000 into account). In determining whether section 1341(a)(4) or section 1341(a)(5) applies, the corporation will compute the lesser amount of tax referred to in section 1341(a) by applying the rules provided in section 1341(b)(4).
(b) *Tax under section 1341 (a)(4) and (b)(4)(A).* The net operating loss of $75,000 for 1963 (taking into account the deduction of $100,000) is carried back to the three taxable years (1960, 1961, and 1962) in the manner provided under section 172. For purposes of this example it is assumed that no modifications under section 172 are necessary. Since the aggregate taxable income for such three taxable years is only $30,000 the entire taxable income for such years is eliminated by the carryback, and the corporation would be entitled to a refund of the tax for such years in the aggregate amount of $9,000. (In addition, the remaining $45,000 of the net operating loss for 1963 would be available as a carryover to taxable years after the taxable year (1963) to the extent and in the manner provided by section 172.)

(c) *Tax under section 1341 (a)(5) and (b)(4)(B).* The tax for the taxable year (1963) on $25,000 of taxable income (computed without the deduction of $100,000) is $7,500. The exclusion of $100,000 from gross income for the taxable year 1959 (the year in which the item was included) results in a net operating loss of $80,000 for such year ($20,000 taxable income minus the $100,000 exclusion, no adjustments under section 172 being necessary), thus decreasing the tax for such year by the entire amount of $6,000 paid. The resulting net operating loss of $80,000 for 1959 is available as a carryback to 1956, 1957, and 1958, and as a carryover to 1960, 1961, 1962, and 1963. For purposes of this example it is assumed that no modifications under section 172 are necessary. Since the

aggregate taxable income for such taxable years is $85,000, all except $5,000 of the 1963 taxable income is eliminated by such carryback and carryover. The tax on such remaining $5,000 of taxable income for 1963 is $1,500, thus decreasing the tax determined for such year by $6,000 ($7,500 minus $1,500). Under section 1341 (a)(5) and (b)(4)(B), the decrease in tax for the prior taxable years exceeds the tax for the taxable year of restoration computed without the deduction of the amount of the restoration by $22,500, computed as follows:

Tax for taxable year 1963 (on taxable income of $25,000 without the deduction)			$7,500
Decrease in tax for prior taxable years:			
Due to exclusion (1959)		$6,000	
Due to net operating loss carryback:			
1956	$3,000		
1957	3,000		
1958	3,000		
		9,000	
Due to net operating loss carryover:			
1960	$3,000		
1961	3,000		
1962	3,000		
1963	6,000		
		15,000	
			30,000
Excess of the decrease in tax for the prior taxable years over the tax for taxable year 1963 ($30,000 less $7,500 tax for the taxable year)			22,500

(d) *Application of section 1341(a)(4) or section 1341(a)(5).* Since the computation under section 1341 (a)(4) and (b)(4)(A) results in an available refund of only $9,000 tax for the taxable years to which the net operating loss for 1963 is carried back, and since the computation under section 1341 (a)(5) and (b)(4)(B) results in an overpayment of $22,500, it is determined that section 1341(a)(5) applies. Accordingly, the $22,500 is treated as having been paid on the last day prescribed by law for the payment of tax for 1963 and is available as a refund.

(e) ***Method of accounting.*** The provisions of section 1341 and this section shall be applicable in the case of a taxpayer on the cash receipts and disbursements method of accounting only to the taxable year in which the item of income included in a prior year (or years) under a claim of right is actually repaid. However, in the case of a taxpayer on the cash receipts and disbursements method of accounting who constructively

received an item of income under a claim of right and included such item of income in gross income in a prior year (or years), the provisions of section 1341 and this section shall be applicable to the taxable year in which the taxpayer is required to relinquish his right to receive such item of income. Such provisions shall be applicable in the case of other taxpayers only to the taxable year which is the proper taxable year (under the method of accounting used by the taxpayer in computing taxable income) for taking into account the deduction resulting from the restoration of the item of income included in a prior year (or years) under a claim of right. For example, if the taxpayer is on an accrual method of accounting, the provisions of this section shall apply to the year in which the obligation properly accrues for the repayment of the item included under a claim of right.

(f) ***Inventory items, stock in trade, and property held primarily for sale in the ordinary course of trade or business.***

(1) Except for amounts specified in subparagraphs (2) and (3) of this paragraph, the provisions of section 1341 and this section do not apply to deductions attributable to items which were included in gross income by reason of the sale or other disposition of stock in trade of the taxpayer (or other property of a kind which would properly have been included in the inventory of the taxpayer if on hand at the close of the prior taxable year) or property held by the taxpayer primarily for sale to customers in the ordinary course of the taxpayer's trade or business. This section is, therefore, not applicable to sales returns and allowances and similar items.

(2)

(i) In the case of taxable years beginning after December 31, 1957, the provisions of section 1341 and this section apply to deductions which arise out of refunds or repayments with respect to rates made by a regulated public utility, as defined in section 7701(a)(33) without regard to the limitation contained in the last two sentences thereof (for taxable years beginning before January 1, 1964, as defined in section 1503(c) (1) or (3) and paragraph (g) of § 1.1502-2A (as contained in the 26 CFR edition revised as of April 1, 1996)), if such refunds or repayments are required to be made by the Government, political subdivision, agency, or instrumentality referred to in such section, or are required to be made by an order of a court, or are made in settlement of litigation or under threat or imminence of litigation. Thus, deductions attributable to refunds of charges for the sale of natural gas under rates approved temporarily by a proper governmental authority are, in the case of taxable years beginning after December 31, 1957, eligible for the benefits of section 1341 and this section, if such refunds are required by the governmental authority, or by an order of a court, or are made in settlement of litigation or under threat or imminence of litigation.

(ii) In the case of taxable years beginning before January 1, 1958, the provisions of section 1341 and this section apply to deductions which arise out of refunds or repayments (whether or not with respect to rates) made by a regulated public utility, as defined in section 7701(a)(33) without regard to the limitation contained in the last two sentences thereof (for taxable years beginning before January 1, 1964, as defined in section 1503(c) (1) or (3) and paragraph (g) of § 1.1502-2A), if such refunds or repayments are required to be made by the Government, political subdivision, agency, or instrumentality referred to in such section. Thus, in the case of taxable years beginning before January 1, 1958, deductions attributable to refunds or repayments may be eligible for the benefits of section 1341 and this section, even though such refunds or repayments are not with respect to rates. On the other hand, in the case of such

taxable years, section 1341 and this section do not apply to any deduction which arises out of a refund or repayment (whether or not with respect to rates) which is required to be made by an order of a court, or which is made in settlement of litigation or under threat or imminence of litigation.

(3) The provisions of section 1341 and this section apply to a deduction which arises out of a payment or repayment made pursuant to a price redetermination provision in a subcontract:

(i) If such subcontract was entered into before January 1, 1958, between persons other than those bearing a relationship set forth in section 267(b);

(ii) If such subcontract is subject to statutory renegotiation; and

(iii) If section 1481 (relating to mitigation of effect of renegotiation of Government contracts) does not apply to such payment or repayment solely because such payment or repayment is not paid or repaid to the United States or any agency thereof.

Thus, a taxpayer who enters into a subcontract to furnish items to a prime contractor with the United States may, pursuant to a price redetermination provision in the subcontract, be required to refund an amount to the prime contractor or to another subcontractor. Since the refund would be made directly to the prime contractor or to another subcontractor, and not directly to the United States, the taxpayer would be unable to avail himself of the benefits of section 1481. However, the provisions of section 1341 and this section will apply in such a case, if the conditions set forth in subdivisions (i), (ii), and (iii) of this subparagraph are met. For provisions relating to the mitigation of the effect of a redetermination of price with respect to subcontracts entered into after December 31, 1957, when repayment is made to a party other than the United States or any agency thereof, see section 1482.

(g) ***Bad debts.*** The provisions of sections 1341 and this section do not apply to deductions attributable to bad debts.

(h) ***Legal fees and other expenses.*** Section 1341 and this section do not apply to legal fees or other expenses incurred by a taxpayer in contesting the restoration of an item previously included in income. This rule may be illustrated by the following example:

Example: A sold his personal residence to B in a prior taxable year and realized a capital gain on the sale. C claimed that under an agreement with A he was entitled to a 5-percent share of the purchase price since he brought the parties together and was instrumental in closing the sale. A rejected C's demand and included the entire amount of the capital gain in gross income for the year of sale. C instituted action and in the taxable year judgment is rendered against A who pays C the amount involved. In addition, A pays legal fees in the taxable year which were incurred in the defense of the action. Section 1341 applies to the payment of the 5-percent share of the purchase price to C. However, the payment of the legal fees, whether or not otherwise deductible, does not constitute an item restored for purposes of section 1341(a) and paragraph (a) of this section.

(i) ***Refunds.*** If the decrease in tax for the prior taxable year (or years) determined under section 1341(a)(5)(B) and paragraph (b)(1)(ii) of this section exceeds the tax imposed by chapter 1 of the Code for the taxable year computed without the deduction, and for taxable years beginning after December 31, 1961, if such excess is greater than the decrease in tax for the taxable year (or years) to which the net operating loss described in section 1341(b)(4)(A) and paragraph (b)(1)(iii) of this section is carried back, such excess shall be considered to be a payment of tax for the taxable year of restoration. Such payment is deemed to have been made on the last day prescribed by law for the payment of tax for the taxable year and shall be refunded or credited

in the same manner as if it were an overpayment of tax for such taxable year. However, no interest shall be allowed or paid if such an excess results from the application of section 1341(a)(5)(B) in the case of a deduction described in paragraph (f)(3) of this section (relating to payments or repayments pursuant to price redetermination). If the tax for the taxable year of restoration is computed under section 1341(a)(4) and results in a decrease in tax for the taxable year (or years) to which a net operating loss described in section 1341(b)(4)(A) is carried back, see paragraph (b)(1)(iii) of this section.

[T.D. 6500, 25 FR 12049, Nov. 26, 1960, as amended by T.D. 6617, 27 FR 10824, Nov. 7, 1962; T.D. 6747, 29 FR 9790, July 21, 1964; T.D. 7244, 37 FR 28897, Dec. 30, 1972; T.D. 7564, 43 FR 40496, Sept. 12, 1978; T.D. 8677, 61 FR 33323, June 27, 1996]

§ 1.1342-1 Computation of tax where taxpayer recovers substantial amount held by another under claim of right; effective date.

Section 1342 shall apply with respect to taxable years beginning after December 31, 1954.

[T.D. 6500, 25 FR 12052, Nov. 26, 1960]

OTHER LIMITATIONS

§ 1.1346-1 Recovery of unconstitutional taxes.

(a) ***In general.***

(1) A taxpayer who recovers unconstitutional Federal taxes which were paid or accrued and for which a deduction was allowed in a prior taxable year may elect, as provided in paragraph (b) of this section, to exclude the income (exclusive of interest) attributable to such recovery from his gross income in the taxable year of recovery. Any such exclusion of income is subject to the requirements of section 1346 and this section.

(2) If a taxpayer elects to receive the benefits of section 1346, the income (exclusive of interest) attributable to the recovery of the unconstitutional Federal tax will be treated as an offset to the deduction allowed therefor in a prior taxable year (or years). The taxpayer's return for the prior taxable year (or years) with respect to which the statutory period for the assessment of a deficiency has expired will be opened only for the purpose of reducing the deduction allowed for the unconstitutional Federal tax and assessing the resulting deficiency or deficiencies, if any. (An election under section 1346 may be made only if the taxpayer consents in writing to such assessment. See paragraph (b) of this section.) No other adjustment will be allowed.

(3) If the disallowance of the deduction allowed in respect of a prior taxable year results in a deficiency for that year, the deficiency will be assessed against the taxpayer within the period agreed upon between the taxpayer and the district director with respect to the taxable year of the prior deduction, even though the statutory period for the assessment may have expired prior to the filing of the consent.

(4) If a taxpayer does not elect under the provisions of section 1346 and this section to exclude the tax recovered from gross income in the taxable year of recovery, the tax recovered shall, from the standpoint of its inclusion in or exclusion from gross income, be governed by the provisions of section 111.

(b) *Manner of making election.*

(1) The election provided for in paragraph (a) of this section shall be made by the taxpayer filing a statement in writing that he elects to treat the deduction allowed in a prior taxable year for the unconstitutional tax as not having been allowable for such taxable year. Such a statement must be filed with the taxpayer's return for the taxable year in which the recovery of the unconstitutional tax or taxes occurs. No other method of making the election is permitted. The statement of election must contain a description of the tax recovered, the date of recovery, the taxable year in which paid or accrued, and the taxable year for which the deduction was allowed. The statement of election must also contain a statement signifying the taxpayer's consent

(i) to treat the deduction or portion thereof allowed in a prior year with respect to the unconstitutional tax as not allowable for that year and

(ii) to the assessment, in respect of the taxable year for which the deduction was allowed, of any deficiency, together with interest thereon as provided by law, resulting from disallowance of the deduction or portion thereof, even though the statutory period for the assessment of any such deficiency may have expired before the filing of such consent.

(2) The term *recovery,* as used in this section, includes not only refund or credit of taxes previously paid, but also the cancellation of a purported tax liability which was accrued and deducted for a prior taxable year but never actually paid.

[T.D. 6500, 25 FR 12052, Nov. 26, 1960]

§ 1.1347-1 Tax on certain amounts received from the United States.

(a) In the case of an amount (other than interest) received from the United States by an individual under a claim involving acquisition of property and remaining unpaid for more than 15 years, the tax (or, in the case of taxable years beginning before January 1, 1971, the surtax) imposed by section 1 attributable to such amount shall not exceed 33 percent of the amount (other than interest) so received (30 percent for taxable years beginning before January 1, 1971). For the purpose of section 1347 and this section, such amount shall not include any amount received from the United States which constitutes interest, whether such interest was included in the claim or in any judgment thereon or has accrued on such judgment. Section 1347 and this section shall only apply with respect to amounts received under a claim filed with the United States before January 1, 1958.

(b) To determine the application of section 1347 and this section to a particular amount, the taxpayer shall first compute the tax (or, in the case of taxable years beginning before January 1, 1971, the surtax) imposed by section 1 upon his entire taxable income, including the amount specified in paragraph (a) of this section, without regard to the limitation on tax provided in section 1347. The proportion of the tax (or surtax), so computed, indicated by the ratio which the taxpayer's taxable income attributable to the amount specified in paragraph (a) of this section, computed as prescribed in paragraph (c) of this section, bears to his total taxable income, is the portion of the tax (or surtax) attributable to such amount. If this portion of the tax (or surtax) exceeds 33 percent (30 percent for taxable years beginning before January 1, 1971) of the amount specified in paragraph (a) of this section, that portion of the tax (or surtax) shall be reduced to 33 percent (or 30 percent) of such amount.

(c) In determining the portion of the taxable income attributable to any amount specified in paragraph (a) of this section, the taxpayer shall allocate to such amount received and to the gross income derived from all other sources, the expenses, losses, and other deductions properly attributable thereto, and shall apply

any general expenses, losses, and other deductions (which cannot be properly apportioned otherwise) ratably to the gross income from all sources. The amount specified in paragraph (a) of this section, less the deductions properly attributable thereto and less its proportion of any general deductions, shall be the taxable income attributable to such amount. The taxpayer shall submit with his return a statement fully explaining the manner in which such expenses, losses, and deductions are allocated or apportioned.

[T.D. 6500, 25 FR 12052, Nov. 26, 1960, as amended by T.D. 7117, 36 FR 9422, May 25, 1971; 36 FR 11434, June 12, 1971]

§ 1.1348-1 Fifty-percent maximum tax on earned income.

Section 1348 provides generally that for taxable years beginning after December 31, 1971, the maximum tax rate applicable to the earned taxable income of an individual, estate, or trust is not to exceed 50 percent. In the case of an estate or trust, earned income includes only amounts which constitute income in respect of a decedent within § 1.1348-3(a)(4). For taxable years beginning after December 31, 1970, and before January 1, 1972, the maximum rate is 60 percent. Section 1348 does not apply if the taxpayer chooses the benefits of income averaging under sections 1301 through 1305. Section 1348 does not apply to a married individual who does not file a joint return with his spouse for the taxable year. For purposes of section 1348, an individual's marital status shall be determined under section 153 and the regulations thereunder.

[T.D. 7446, 41 FR 55337, Dec. 20, 1976]

§ 1.1348-2 Computation of the fifty-percent maximum tax on earned income.

(a) ***Computation of tax for taxable years beginning after 1971.*** If, for a taxable year beginning after December 31, 1971, an individual has earned taxable income (as defined in paragraph (d) of this section) which exceeds the applicable amount in column (1) of table A, the tax imposed by section 1 for such year shall be the sum of:

(1) The applicable amount in column (2) of table A.

(2) 50 percent of the amount by which earned taxable income exceeds the applicable amount in column (1) of table A, and

(3) The amount by which the tax imposed by chapter 1 on the entire taxable income exceeds a tax so computed on earned taxable income, such computations to be made without regard to section 1348 or 1301.

TABLE A

Status	(1)	(2)
Married individuals filing joint returns and surviving spouses	$52,000	$18,060
Heads of households	38,000	12,240
Unmarried individuals other than surviving spouses and heads of households	38,000	13,290

Status	(1)	(2)
Trusts and estates	26,000	9,030

(b) ***Computation of tax for taxable years beginning in 1971.*** If, for a taxable year beginning after December 31, 1970, and before January 1, 1972, an individual has earned taxable income (as defined in paragraph (d) of this section) which exceeds the applicable amount in column (1) of table B, the tax imposed by section 1 for such year shall be the sum of:

(1) The applicable amount in column (2) of table B,

(2) 60 percent of the amount by which earned taxable income exceeds the applicable amount in column (1) of table B, and

(3) The amount by which the tax imposed by chapter 1 on the entire taxable income exceeds a tax so computed on earned taxable income, such computations to be made without regard to section 1348 or 1301.

TABLE B

Status	(1)	(2)
Married individuals filing joint returns and surviving spouses	$100,000	$45,180
Heads of households	70,000	30,260
Unmarried individuals other than surviving spouses and heads of households	50,000	20,190
Trusts and estates	50,000	22,590

(c) ***Short taxable periods.*** If a taxpayer is required under section 443(a)(1) to make a return for a period of less than 12 months, the tax under section 1348 and this section shall be determined by placing his taxable income, earned net income, adjusted gross income, and items of tax preference on an annual basis in accordance with section 443 and the regulations thereunder. If a taxable year referred to in paragraph (d)(3)(i)(*a*) of this section is a period of less than 12 months for which a return is required under section 443(a)(1), the average described in such paragraph shall also be determined by placing the items of tax preference for such period on an annual basis in accordance with section 443 and the regulations thereunder. If a return for a period of less than 12 months is required under section 443(a)(3) for any taxable year referred to in paragraph (d)(3)(i)(*a*) of this section, section 1348 and this section shall not apply unless such period is reopened by the taxpayer as provided by section 6851(b).

(d) ***Earned taxable income*** —

(1) ***In general.*** For purposes of section 1348 and this section, the term *earned taxable income* means the excess of

(i) the portion of taxable income which, under subparagraph (2) of this paragraph, is attributable to earned net income over

(ii) the tax preference offset (as defined in subparagraph (3) of this paragraph). For purposes of computing the alternative tax under section 1201, earned taxable income shall not exceed the excess of taxable income over 50 percent of the net capital gain (net section 1201 gain for taxable years beginning before January 1, 1977).

(2) ***Taxable income attributable to earned net income.*** The portion of taxable income which is attributable to earned net income shall be determined by multiplying taxable income by a fraction (not exceeding one), the numerator of which is earned net income, and the denominator of which is adjusted gross income. For purposes of this subparagraph the term *earned net income* means the excess of the total of earned income (as defined in § 1.1343-(a)) over the total of any deductions which are required to be taken into account under section 62 in determining adjusted gross income and are properly allocable to or chargeable against earned income. Deductions are properly allocable to or chargeable against earned income if, and to the extent that, they are allowable in respect of expenses paid or incurred in connection with the production of earned income and have not been taken into account in determining the net profits of a trade or business in which both personal services and capital are material income producing factors (as defined in § 1.1348-3(a)(3)). Except as otherwise provided, deductions properly allocable to or chargeable against earned income include:

(i) Deductions attributable to a trade or business from which earned income is derived, except that if less than all the gross income from a trade or business constitutes earned income, only a ratable portion of the deductions attributable to such trade or business is allowable in respect of expenses paid or incurred in connection with the production of earned income,

(ii) Deductions consisting of expenses paid or incurred in connection with the performance of services as an employee,

(iii) The deductions described in section 62(7) and allowable by sections 404 and 405(c),

(iv) The deduction allowable by section 217,

(v) The deduction allowable by section 1379(b)(3), and

(vi) A net operating loss deduction to the extent that the net operating losses carried to the taxable year are properly allocable to or chargeable against earned income.

A net operating loss carried to the taxable year is properly allocable to or chargeable against earned income in such year to the extent of the excess (if any) of the deductions for the loss year which are properly allocable to or chargeable against earned income and which are allowable under section 172(d) in determining a net operating loss, over the earned income for the loss year. If the excess described in the preceding sentence is less than the entire net operating loss, such excess and the balance of such loss shall be deemed to reduce taxable income ratably for any taxable year to which such loss may be carried. See examples (3) and (4) in subparagraph (4) of this paragraph.

(3) ***Tax preference offset.***

(i) For purposes of subparagraph (1) of this paragraph, the *tax preference offset* is the amount by which the greater of:

(A) The average of the taxpayer's items of tax preference for the taxable year and the four preceding taxable years, or

(B) The taxpayer's items of tax preference for the taxable year,

exceeds $30,000.

(ii) The items of tax preference to be taken into account under subdivision (i) of this subparagraph for any taxable year shall be those items of tax preference referred to in section 57(a) and the regulations thereunder for the taxable year, but excluding any amount not taken into account in computing the tax under section 56(a) and the regulations thereunder for such taxable year. The items of tax preference to be taken into account by an individual for any taxable year in which such individual is or was a nonresident alien shall not include items of tax preference which are not effectively connected with the conduct of a trade or business within the United States.

(iii) Taxable years ending before January 1, 1970 shall not be included in computing the average described in subdivision (i)(A) of this subparagraph. Thus, for example, the tax preference offset for a taxable year ending on December 31, 1973, is the amount by which the average of the taxpayer's items of tax preference for 1970, 1971, 1972, and 1973, or the taxpayer's items of tax preference for 1973, whichever is greater, exceeds $30,000. Taxable years during which the taxpayer was not in existence shall not be included in computing the average described in subdivision (i)(A) of this subparagraph. A fractional part of a year which is treated as a taxable year under sections 441(b) and 7701(a)(23) shall be treated as a taxable year for purposes of this section for special rules if a taxable year referred to in subdivision (i)(A) of this subparagraph is a period of less than 12 months for which a return is required under section 443(a)(1).

(iv) If for the current taxable year the taxpayer and his spouse (or the estate of such spouse) file a joint return together, the items of tax preference for a preceding taxable year taken into account under subdivision (i)(A) of this subparagraph shall be the sum of the items of tax preference of the taxpayer and his spouse for such preceding year even though a joint return was not, or could not have been, filed by the taxpayer and such spouse for such preceding taxable year. If for the current taxable year the taxpayer

(A) is no longer married to a spouse to whom he was married for a preceding taxable year taken into account under subdivision (i)(A) of this subparagraph and files a return as a single person, head of household, or surviving spouse for such current taxable year, or

(B) is married to a spouse other than the spouse to whom he was married for a preceding taxable year taken into account under subdivision (i)(A) of this subparagraph, his items of tax preference shall be computed as if he were not married during such preceding taxable year.

(v) The sum of the items of tax preference of an estate or trust shall, for purposes of this paragraph, be apportioned between the estate or trust and the beneficiary in the manner and to the extent provided by section 58(c)(1) and the regulations thereunder.

(vi) If an item of gross income in respect of a decedent is includible in the gross income of a taxpayer and is treated as earned income in the hands of the taxpayer by reason of § 1.1348-3(a)(4), the items of tax preference for a taxable year taken into account under subdivision (i) of this subparagraph shall be the sum of the taxpayer's items of tax preference

for such taxable year and the decedent's items of tax preference for any taxable year of the decedent (including a short taxable year described in section 441(b)(3)) which ends with or within such taxable year of the taxpayer. For purposes of this subdivision, if a taxpayer (such as the estate of the decedent or a testamentary trust created by the decedent) has not been in existence for the number of preceding taxable years specified in subdivision (i)(A) or (iii) of this subparagraph, the items of tax preference for preceding taxable years taken into account shall be the taxpayer's items of tax preference for each of its preceding taxable years plus the decedent's items of tax preference for that number of the most recent taxable years of the decedent ending prior to the taxpayer's earliest taxable year which, when added to the taxpayer's preceding taxable years, equals such number of preceding taxable years specified in subdivision (i)(A), or (iii). The increase, if any, in the taxpayer's tax preference offset computed under this subdivision shall not exceed the amount by which the taxpayer's taxable income attributable to earned net income, computed as provided in § 1.1348-2(d)(2) and including the item of gross income in respect of a decedent, exceeds the taxpayer's taxable income attributable to earned net income computed without regard to such item of gross income.

(4) ***Illustrations.*** The provisions of this section may be illustrated by the following examples:

Example 1. (i) H and W, married calendar-year taxpayers filing a joint return, have the following items of income, deductions, and tax preference for 1976:

(a) Salary	$155,000	
(b) Dividends and interest	60,000	
Total	215,000	
(c) Deductible travel expenses of employee allocable to earned income	5,000	
(d) Adjusted gross income		$210,000
(e) Exemptions and itemized deductions		38,000
(f) Taxable income		172,000

In addition, the taxpayers have tax preference items for 1976 of $80,000 attributable to the exercise of a qualified stock option and total tax preference items of $300,000 for the years 1972 through 1975. Since the items of tax preference for 1976 exceed the average of the items of tax preference for the years 1972 through 1976, the tax preference offset for 1976 is $50,000 ($80,000−$30,000).

(ii) H and W have earned taxable income of $72,857 determined in the following manner:

(a) Earned income	$155,000
(b) Earned net income ($155,000−$5,000)	150,000

(c) Taxable income		172,000
(d) Adjusted gross income		210,000
(e) Taxable income attributable to earned net income:		
$172,000(c) × ($150,000(b) / $210,000(d)	$122,857	
(f) Tax preference offset	50,000	
(g) Earned taxable income		72,857

(iii) The tax imposed by section 1 is $90,938, determined pursuant to section 1348 in the following manner:

(a) Applicable amount from col. (2) of table A, § 1.1348-2(a)		$18,060
(b) 50 pct of amount by which $72,857 (earned taxable income) exceeds $52,000 (applicable amount from col. (1) of table A, § 1.1348-2(a))		10,429
(c) Tax computed under section 1 on $172,000 (taxable income)	$91,740	
(d) Tax computed under section 1 on $72,857 (earned taxable income)	29,291	
(e) Item (c) minus item (d)		962,449
(f) Tax (total of items (a), (b), and (e))		90,938

Example 2. (i) H and W, married calendar-year taxpayers filing a joint return, have the following items of income, deductions, and tax preference for 1976:

(a) Salary	$210,000	
(b) Dividends and interest	20,000	
(c) Net long-term capital gains	100,000	
Total	330,000	
(d) Sec. 1202 deduction ($^1/_2$ of net long-term capital gains)	50,000	
(e) Adjusted gross income		$280,000
(f) Exemptions and itemized deductions		40,000
(g) Taxable income		240,000

The taxpayers' tax preference item for 1976 is one-half of the net long-term capital gains of $100,000, or $50,000. The taxpayers have no items of tax preference for the years 1972 through 1975. Accordingly, their tax preference offset for 1976 is $20,000 ($50,000−$30,000).

(ii) H and W have earned taxable income of $160,000, determined in the following manner:

(a) Earned net income		$210,000
(b) Taxable income		240,000
(c) Adjusted gross income		280,000
(d) Taxable income attributable to earned net income:		
$240,000(b) × ($210,000(a) / $280,000(c))	180,000	
(e) Tax preference offset	$20,000	
(f) Earned taxable income		$160,000

(iii) The tax imposed by section 1 is $122,560, determined pursuant to section 1348 in the following manner:

(a) Applicable amount from col. (2) of table A, § 1.1348-2(a)		$18,060
(b) 50 pct of amount by which $160,000 (earned taxable income) exceeds $52,000 (applicable amount from col. (1) of table A, § 1.1348-2(a))		54,000
(c) Tax computed under section 1201(b) on $240,000 (taxable income):		
(1) Tax under section 1201(b)(1) (tax under section 1 on $190,000 (taxable income excluding capital gains))	$104,080	
(2) Tax under section 1201(b)(2) (25 pct of subsection (d) gain of $50,000)	12,500	
(3) Tax under section 1201(b)(3) (tax under section 1 on $240,000 (taxable income) less tax under section 1 on $215,000 (amount subject to tax under section 1201(b)(1) plus 50 pct of subsection (d) gain)) ($138,980−$121,480)	17,500	
Total	134,080	
(d) Tax computed under section 1 on $160,000 (earned taxable income)	83,580	
(e) Item (c) through item (d)		50,500
(f) Tax (total of items (a), (b), and (e))		$122,560

Example 3. (i) A, an unmarried calendar year taxpayer engaged in the practice of law, has

the following items of income and deductions for 1973 and 1976:

	1973	1976
Gross income from law practice	$240,000	$100,000
Dividends	60,000	20,000
Expense paid in law practice	50,000	160,000
Investment interest	30,000	10,000
Casualty loss on personal residence (amount in excess of $100)		50,000

(ii) For 1976, A's deductions exceed his gross income, and his taxable income is therefore zero. In addition, A has a net operating loss of $100,000 (i.e., the excess of his deductions of $220,000 over his gross income of $120,000), which may be carried back to 1973. In computing his taxable income and earned taxable income for 1973, $60,000 (i.e., the excess of the expenses paid in A's law practice of $160,000, over his gross income from his law practice of $100,000) of the net operating loss deduction is properly allocable to or chargeable against earned income.
(iii) A's recomputed taxable income and earned taxable income for 1973 are $119,250 and $103,350 respectively, determined in the following manner:

Gross income ($240,000 + $60,000)	$300,000
Adjusted gross income ($300,000 − $50,000 − $100,000)	150,000
Taxable income ($150,000 − $30,000 − $750)	119,250
Earned net income ($240,000 − $50,000 − $60,000)	130,000
Earned taxable income ($130,000 / $150,000 × $119,250)	$103,350

Example 4. The facts are the same as in example (3) except that A's gross income from his law practice for 1973 is $40,000. Thus, for 1973, A's deductions (including the net operating loss deduction) exceed his gross income, and his recomputed taxable income is therefore zero. The taxable income subtracted from the net operating loss to determine the carryback to 1974 is $20,000 (i.e., $40,000 + $60,000 − $50,000 − $30,000), and thus the net operating loss carryback to 1974 is $20,000 (i.e., $40,000 + $60,000 − $50,000 − $30,000), and thus the net operating loss carryback from 1976 to 1974 is $80,000 (i.e., $100,000 − $20,000). Of this amount, $48,000 ($80,000 × [$60,000 (the excess of the expenses paid in 1976 in A's law practice over his gross income from his law practice) ÷ $100,000 (A's net operating loss for 1976)]) is properly allocable to or chargeable against earned income, and must be taken into account in recomputing A's taxable income and earned taxable income for 1974.

Example 5. A, an unmarried calendar year taxpayer, receives a salary of $80,000 from Corporation X in 1975 and also owns and operates a laundry in which both his capital and services are material income producing factors. A incurs no section 62 expenses with respect to the salary income. In 1975 the laundry, a sole proprietorship, has gross income of $100,000 and business expenses deductible under section 62 of $80,000. A reasonable allowance as compensation for A's personal services rendered by him in his laundry business would be $12,000. The net profits of the laundry business were $20,000. A's earned income from the laundry business is limited to $6,000 (30 percent of $20,000). A's total earned income is $36,000 ($80,000 + $60,000). Since the section 62 deductions of the laundry business have already been taken into account in computing net profits, they are not again taken into account in computing earned net income. Accordingly, A's earned net income for 1975 is $86,000.

Example 6. The facts are the same as example (5) except that the gross income of the laundry is $130,000 and the net profits from the laundry are $50,000. A's earned income from the laundry is $12,000. Even though the 30-percent-of-net profits limitation has not resulted in a reduction of A's earned income from the laundry, the expenses deducted in computing net profits do not reduce earned income. Accordingly, both the earned income and the earned net income of A for 1975 are $92,000.

Example 7. The facts are the same as example (5) except that the gross income of the laundry is $60,000 and the laundry has a net loss of $20,000. A's earned income from the laundry is $12,000. Since the laundry does not have net profits, the expenses of the laundry have not been taken into account in computing the net profits limitation. Accordingly, a ratable portion of deductible expenses of the laundry must be allocated to the earned income from the laundry in accordance with § 1.1348-2(d)(2); $16,000 of the expenses are allocated to the earned income ($12,000/$60,000 × $80,000). A's total earned income for 1975 is $92,000, and his earned net income is $76,000 ($92,000 minus $16,000).

[T.D. 7446, 41 FR 55337, Dec. 20, 1976, as amended by T.D. 7728, 45 FR 72650, Nov. 3, 1980]

§ 1.1348-3 Definitions.

(a) ***Earned income*** —

(1) ***In general.***

(i) For purposes of section 1348 and the regulations thereunder, the term *earned income* means any item of gross income which is earned income within the meaning of section 401(c)(2)(C) or 911(b) unless the item constitutes deferred compensation as defined in paragraph (b) of this section or is otherwise excluded by application of this paragraph. Thus, subject to such exceptions, the term includes:

(A) Wages, salaries, professional fees, bonuses, amounts includible in gross income under section 83, commissions on sales or on insurance premiums, tips, and other amounts received, actually or constructively, as compensation for personal services actually rendered regardless of the medium or basis of payment.

(B) Compensatory payments for personal services made prior to the time such services are actually rendered, provided such advance payments are not made for a purpose of minimizing Federal income taxes by reason of the application of section 1348, and are either customary in the particular profession, trade, or business, or are made for a bona fide business purpose.

(C) Prizes and awards in recognition of personal services includible in gross income under section 74, amounts includible in gross income under section 79 (relating to group-term life insurance purchased for employees), and amounts includible in gross income under section 1379(b) (relating to contributions to qualified pension plans in the case of certain shareholder-employees); and

(D) Gains (other than gain which is treated as capital gain under any provision of chapter 1) and net earnings derived from the sale or other disposition of, the transfer of any interest in, or the licensing of the use of property (other than good will) by an individual whose personal efforts created such property

The term does not include such income as dividends (including an amount treated as a dividend by reason of section 1373(b) and § 1.1373-1), other distributions of corporate earnings and profits, gambling gains, or gains which are treated as capital gains under any provision of chapter 1. The term also does not include amounts received for refraining from rendering personal services or engaging in competitive activity or amounts received as consideration for the cancellation of an employment contract.

(ii) In the case of a nonresident alien individual, earned income includes only earned income from sources within the United States which is effectively connected with the conduct of a trade or business within the United States.

(2) ***Earned income and employed assistants.*** The entire amount received as professional fees shall be treated as earned income if the taxpayer is engaged in a professional occupation, such as a doctor, dentist, lawyer, architect, or accountant, even though he employs assistants to perform part or all of the services, provided the patients or clients are those of the taxpayer and look to the taxpayer as the person responsible for the services performed.

(3) ***Earned income from business in which capital is material.***

(i) If an individual is engaged in a trade or business (other than in corporate form) in which both personal services and capital are material income-producing factors, a reasonable allowance as compensation for the personal services actually rendered by the individual shall be considered earned income, but the total amount which shall be treated as the earned income of the individual from such a trade or business shall in no case exceed 30 percent of his share of the net profits of such trade or business (which share shall include any guaranteed payment (as defined by § 1.707-1(c)) received from a partnership). For purpose of the preceding sentence, the term *net profits of the trade or business* means the excess of gross income from such trade or business (including income from all sources, whether or not subject to Federal income tax, and without taking into account any deductions which may be allowable under section 1202) over the deductions attributable to such trade or business.

(ii) Whether capital is a material income-producing factor must be determined by reference to all the facts of each case. Capital is a material income-producing factor if a substantial portion of the gross income of the business is attributable to the employment of capital in the business, as reflected, for example, by a substantial investment in inventories, plant, machinery, or other equipment. In general, capital is not a material income-producing factor where gross income of the business consists principally of fees, commissions, or other compensation for personal services performed by an individual. Thus, the practice of his profession by a doctor, dentist, lawyer, architect, or accountant will not, as such, be treated as a trade or business in which capital is a material income-producing factor even though the practitioner may have a

substantial capital investment in professional equipment or in the physical plant constituting the office from which he conducts his practice since his capital investment is regarded as only incidental to his professional practice.

(iii) This subparagraph does not apply to gains and net earnings derived from the sale or other disposition of, the transfer of any interest in, or the licensing of the use of property by an individual whose personal efforts created such property which are, by reason of subparagraph (1)(i) of this paragraph, treated as earned income. Thus, for example, a research chemist's substantial capital investment in laboratory facilities which he uses to produce patentable chemical processes from which he derives gains within the meaning of this subdivision would not be considered a material income-producing factor.

(4) ***Income in respect of a decedent.*** An item of gross income in respect of a decedent includible in the gross income of a person described in section described in section 691(a)(1) shall be treated as earned income in the hands of such person for purposes of subparagraph (1) of this paragraph if such item of gross income would have constituted earned income of the decedent had he lived and received such amount. See § 1.1348-2(d)(3)(vi) for rules relating to attribution of tax preferences by reason of an item of income in respect of a decedent.

(5) ***Exceptions to definition of earned income.*** For purposes of section 1348 and the regulations thereunder, the term *earned income* does not include:

(i) Any distribution to which section 72(m)(5), relating to certain amounts received by owner-employees from a trust described in section 401(a) or under a plan described in section 403(a), applies,

(ii) Any distribution to which section 402(e), relating to the treatment of certain total distributions from a trust described in section 401(a) or under a plan described in section 403(a), applies,

(iii) Any distribution to which section 402(a)(2), relating to capital gains treatment of certain total distributions from a trust described in section 401(a), applies,

(iv) Any distribution to which section 403(a)(2)(A), relating to capital gains treatment for certain distributions under a plan described in section 404(a)(2), applies, or

(v) Any deferred compensation within the meaning of paragraph (b) of this section.

(6) ***Examples.*** The application of this paragraph may be illustrated by the following examples:

Example 1. A owns and operates an unincorporated laundering and dry cleaning business. A, assisted by his employees, devotes his entire time and attention to this business. Substantial capital is invested in the plant and equipment utilized in the laundering and dry cleaning of clothing for A's customers. Although personal services performed by A and his employees are a material income-producing factor in A's business, the capital investment in plant and equipment is not merely incidental to the performance of such services but is, as such, material to the production of business income. Therefore, A's laundering and dry cleaning business is one in which both personal services and capital are material income-producing factors within the meaning of paragraph (a)(3) of this section. A may treat as earned income for a taxable year a reasonable allowance as compensation for the personal services rendered by him in his business, but the amount so treated shall not exceed 30% of the net profits of his business for such year.

Example 2. In his unincorporated business as a real estate broker, which he conducts on a full-time basis, A performs substantial personal services, including solicitation of home buyers and sellers, escorting prospective buyers on house visits, arranging appraisal, financing, and legal services, and other related tasks. In the course of conducting such business, A often finances sales of real estate with his own capital, makes all the necessary arrangements incident to such financing, and a substantial portion of the gross income of the business consists of interest income from such financing. Under these facts and circumstances, both personal services and capital are material income-producing factors in A's real estate business within the meaning of paragraph (a)(3) of this section since the financing of real estate sales is an integral part of the entire business. Accordingly, A's earned income from his real estate business is limited to a reasonable allowance as compensation for the personal services A actually renders, but not in excess of 30% of the net profits from the business, including the interest income derived from financing sales of real estate.

Example 3. For his taxable year ending on December 31, 1973, A, a radiologist, reports fees of $100x for professional services rendered to his own patients during 1973. Since 1970, A has maintained his own office in a small building that he purchased for $60x. In addition, A owns X-ray equipment with an original cost of $300x which he uses in his professional practice. The entire $100x of professional fees earned by A during 1973 is treated as earned income, notwithstanding that A has a substantial capital investment in professional equipment and the office from which he conducts his medical practice, because such capital investment is only incidental to the rendition of personal services in A's professional practice.

(b) ***Deferred compensation*** —

(1) ***In general.*** For purposes of section 1348 and the regulations thereunder, the term *deferred compensation* means, except as otherwise provided in subparagraph (2) of this paragraph, any compensation which is deferred within the meaning of that concept in section 404, including any deferred compensation to which the provisions of section 404 and the regulations thereunder apply and any other compensation taxation of which is deferred in a manner similar to the treatment applicable to deferred compensation to which such provisions apply. Thus, the term includes any amounts includable in gross income as compensation for personal services pursuant to a plan, or method having the effect of a plan, deferring the taxation of such payment to a taxable year later than that in which such services were rendered. For purposes of section 1348, the term *deferred compensation* is not limited to payments to common-law employees but also includes payments to self-employed individuals: nor is it material that no deduction is allowable in respect of all or part of such payments or that a deduction in respect thereof is allowable under some provision of the Code other than section 404. For example, amounts received by a retired partner pursuant to a written plan of the partnership of the kind described in section 1402(a)(10) constitute deferred compensation except as otherwise provided in subparagraph (2) of this paragraph. The term *deferred compensation,* as defined in this paragraph, shall have no application to a determination of the deductibility of any amount under section 162, 404, or any other provision of the Code.

(2) ***Amounts not treated as deferred compensation.*** Notwithstanding the provisions of subparagraph (1) of this paragraph, any amount includible in gross income as compensation before the end of the taxable year following the first taxable year of the taxpayer in which his right to receive such amount is not subject to any requirement or condition which would be treated as resulting in a substantial risk of forfeiture within the meaning of section 83 and the regulations thereunder does not constitute

deferred compensation for purposes of section 1348 and the regulations thereunder. For purposes of this subparagraph, a fractional part of a year which is a taxable year under sections 441(b) and 7701(a)(23) shall be treated as a taxable year.

(3) *Application to certain compensation* —

(i) ***In general.*** This subparagraph provides rules for the application of the principles of subparagraphs (1) and (2) of this paragraph to certain types of compensation.

(ii) ***Pension, etc., plans.***

(A) In accordance with subparagraph (1) of this paragraph, the taxable portion of distributions under a pension, annuity, profit-sharing, or stock bonus plan, whether or not such plan meets the requirements of section 401(a), or pursuant to a method having the effect of such a plan, generally constitutes deferred compensation. However, under subparagraph (2) of this paragraph, such portion constitutes earned income if includible in gross income before the end of the taxable year following the first taxable year of the taxpayer in which his right to receive such amount is not subject to a substantial risk of forfeiture. In the case of a distribution under a contributory plan, the preceding sentence applies only to that part of the taxable portion of the distribution which is attributable to employer contributions to the plan. For purposes of the preceding sentence, that part of the taxable portion of a distribution which is attributable to employer contributions is the amount of such part, multiplied by a fraction, the numerator of which is the employer contributions to the plan on behalf of the employee (determined in accordance with the principles of § 1.402(a)-2), and the denominator of which is the sum of such employer contributions and the net employee contributions to the plan (as defined in paragraph (a)(2) of § 1.402(a)-2). Thus, if the employer does not contribute to the plan, no part of any distribution thereunder constitutes earned income. Amounts included in gross income under section 402(b), 403(c), or 1379(b)(1) in respect of employer contributions to a plan described in this subdivision do not constitute deferred compensation.

(B) If a recipient's rights to receive amounts pursuant to a plan cease to be subject to a substantial risk of forfeiture in more than one of his taxable years, each payment pursuant to such plan shall be considered to consist of a ratable portion of all of the amounts which are not subject to a substantial risk of forfeiture at the time of such payment. Thus, for example, if an employment contract provides in part that an employee or his estate is to receive in each of the fifteen years after the year in which he attains or would have attained age 65 an amount equal to $2,000 times his years of service with the employer and if he had eighteen years of service with the employer, each $36,000 payment would be considered to consist of 18 payments of $2,000, his right to receive one of which ceased to be subject to a substantial risk of forfeiture upon completing his first year of service with the employer, his right to receive another of which ceased to be subject to a substantial risk of forfeiture upon completing his second year of service with the employer, etc. Therefore, if the employee's last year of service with the employer was completed in the year in which he attained age 65, $2,000 of the first payment in the next year would not be deferred compensation under subparagraph (2) of this paragraph, and the remaining $34,000 of that payment and all of the other fourteen payments of $36,000 would be deferred compensation. If the employee's last year of service was completed in an earlier year, all fifteen payments would constitute deferred compensation in full.

(iii) ***Income attributable to options.***

(A) Ordinary income realized by a taxpayer upon a disqualifying disposition of stock acquired pursuant to the exercise of a statutory option (as defined in § 1.421-7(b)) is not deferred compensation for purposes of subparagraph (1) of this paragraph and, therefore, constitutes earned income.

(B) Ordinary income realized by a taxpayer upon the transfer of property pursuant to the exercise, or sale or other disposition, of an option which is not a statutory option (as defined in § 1.421-7(b)) and which was granted on or before December 15, 1971, is not deferred compensation for purposes of subparagraph (1) of this paragraph and, therefore, constitutes earned income. Ordinary income realized by a taxpayer upon the transfer of property pursuant to the exercise, or sale or other disposition, of an option which is not a statutory option (as defined in § 1.421-(b)) and which is granted after December 15, 1971 constitutes earned income rather than deferred compensation if such option cannot, by its terms, be exercised more than three months after termination (for any reason other than death) of the grantee's employment by the grantor of the option. If the terms of such an option granted after December 15, 1971 permit the exercise of the option more than three months after termination (for any reason other than death) of the grantee's employment by the grantor, ordinary income realized by a taxpayer upon the transfer of property pursuant to exercise, or sale or other disposition, of the option constitutes earned income rather than deferred compensation only if such income is realized in a taxable year no later than that following the taxable year in which the option was granted. In the case of the grantee's death within a period during which ordinary income realized upon the transfer of property pursuant to his exercise, or sale or other disposition, of an option described in this subdivision would have constituted earned income as provided in this subdivision had the grantee lived, ordinary income realized subsequently upon the transfer of property pursuant to exercise, or sale or other disposition, of an option described in this subdivision, by the grantee's legal represedntatives or beneficiary constitutes earned income only if such exercise or sale or other disposition, occurs on a date no later than the date twelve months following that of the grantee's death. For purposes of this subdivision, the term *employment by the grantor* includes employment by a related corporation as defined in § 1.421-7(i), and by a corporation which is considered a related corporation under § 1.421-7(h)(3). Therefore, the transfer of an employee from the grantor corporation to such a related corporation or from one related corporation to another related corporation or to the grantor corporation will not be treated as a termination of employment by the grantor.

(C) For purposes of (B) of this subdivision, if an option described therein and granted after December 15, 1971 is exercisable only following completion of a specified period of employment, the taxable year in which such period of employment is completed shall be treated as the taxable year in which the option was granted. Further, if the terms of an option described in (B) of this subdivision and granted after December 15, 1971 are modified, such modification shall not be considered as the granting of a new option for purposes of (B) in determining the taxable year in which such option was granted.

(D) For purposes of (B) of this subdivision, an option will not be considered exercisable by its terms more than three months following termination (for any reason other than death) of the grantee's employment by the grantor solely because the terms of such option permit,

in the event of such grantee's death within three months following termination of such employment, exercise of the option by the grantee's legal representative or beneficiary during or following such three-month period.

(4) ***Examples.*** The application of this paragraph may be illustrated by the following examples, in each of which it is assumed that any amounts paid as described therein constitute salaries or other compensation for personal services actually rendered rather than a distribution of earnings and profits:

Example 1. (i) On January 1, 1965, Corporation X and E, an individual, execute an employment contract under which E is to be employed by X for a period of 10 years. Under the contract, E is entitled to a stated annual salary and to additional compensation of $10x for each year. This additional compensation is to be credited as of December 31 of each year to a bookkeeping reserve account and will be deferred, accumulated, and paid only upon termination of the employment contract, E's becoming a part-time employee of X, or E's becoming partially or totally incapacitated. Under the terms of the contract, X is merely under a contractual obligation to make the payments when due, and neither X nor E intends that the amounts in the reserve be held by X in trust for E. The contract provides that if E shall fall or refuse to perform his duties, X will be relieved of any obligation to make further credits to the reserve but not of the obligation to distribute amounts previously credited to the reserve. In the event E should die prior to his receipt in full of the balance in the account, the remaining balance is distributed to his personal representative.
(ii) Having completed the terms of his employment contract, E retires from the employment of X on December 31, 1974, and on January 15, 1975, receives a total distribution of $100x from his reserve account. Of this distribution of $100x to E, only $10x, representing the credit made to E's reserve account in 1974, constitutes earned income. No other credits to E's reserve account are taken into account for this purpose because they were made to the reserve account and became nonforfeitable in a year earlier than the year preceding that in which the $100x distribution was made to E.

Example 2. (i) Corporation X follows a policy of permitting employees to elect before the beginning of any calendar year to defer the receipt of either 5 percent or 10 percent of their stated annual salary to be earned in that year. E, an employee, elects for each of 10 years of employment to defer receipt of $5x of his stated annual salary. The total so deferred, or $50x, is paid to E on January 15, 1974.
(ii) Since the salary which E elects to defer is includible in his gross income only in the taxable year in which actually received by him, then to the extent E receives any such deferred salary payment after the end of the taxable year following the taxable year from which such payment was deferred, such payment does not constitute earned income since such payment is deferred compensation under this paragraph (b). Accordingly, of the $50x distribution to E, only $5x, representing the salary deferral from 1973, constitutes earned income.

Example 3. (i) E is an officer of Corporation X, which has a plan for making future payments of additional compensation for current services to certain employees. The plan provides that a fixed percentage of the annual net earnings in excess of $400x is to be designated for division among the participants. This amount is not currently paid to the participants; but X has set up on its books a separate account for each participant, including E, and each year it credits thereto the dollar amount of his participation for the year. Distributions are to be made from the account when the employee reaches the age of 60, is no longer employed by X, including cessation of employment due to death, or becomes totally unable to perform his duties, whichever occurs first. X's liability to make these distributions is contingent upon the employee's refraining from engaging in any business competitive to that of X, making himself available to X for consultation and advice after retirement or termination of his services, unless disabled, and retaining unencumbered any interest or benefit under the plan. In the event of his death, either before or after the beginning of payments, amounts in an employee's account are distributable to his designated beneficiaries of heirs-at-law. Under the facts and circumstances, E's rights to distributions from his account pursuant to the terms of the plan are not subject to a substantial risk of forfeiture within the meaning of section 83(c)(1). Under the terms of the compensation plan, X is under a merely contractual obligation to make the payments when due, and the parties did not intend that the amounts in each account be held by X in trust for the participants.
(ii) Cash or property includable in gross income by E which is attributable to a credit to his account in a taxable year earlier than the year immediately preceding the year on onclusion does not constitute earned income since it is deferred compensation within the meaning of this paragraph (b). See subparagraph (3) of this paragraph (b) for rules for determining that portion of distributions from E's acount which are attributable to credits to his account in a taxable year immediately preceding the year in which such distributions are made.

Example 4. (i) Corporation X has an annual incentive bonus plan for its employees. Under this plan, X has the sole discretion to defer all or any part of any employee's incentive bonus award. In addition, no employee has any right to receive any incentive bonus for any year (whether to be paid currently or to be deferred) until such time, if any, as X makes an award to him. No employee has any election as to the amount or time of payment of his award for any year. Furthermore, the last of any payments under an award must be paid no later than 10 years from the normal retirement date of the employee. In addition, the obligations of X under the plan are merely contractual and are not funded or secured. The awards are nonassignable. However, in the case of death the awards are payable to the employee's designated beneficiary. Once made, a bonus award under the plan is not subject to any substantial risk of forfeiture.
(ii) In each of the years 1967, 1968, 1969, and 1970, X awards E a deferred bonus of $100x. E retires on June 30, 1971. Beginning in 1971, X pays to E the total of $400x of deferred bonus awards in 5 annual installments of $80x each. With respect to the $80x payment made to E in

1971, $20x, representing the ratable portion of the payment ($100x/$400x × $80x) allocable to the 1970 bonus award, is earned income because it was received in a year no later than the year following that (1970) in which E's right to receive such amount was no longer subject to a substantial risk of forfeiture. The balance of the $80x payment made in 1971 and all payments made subsequently constitute deferred compensation.

Example 5. (i) Under the terms of a nonqualified bonus planfor its executive employees, Corporation M contributes each year to a bonus reserve a given percentage of its net earnings for the year. M makes bonus awards each year from the reserve in cash or stock of M, or a combination of both, to such executive employees, and in such amounts, as M may determine. The bonus award so determined to be made to a beneficiary is paid to him in installments: 20 percent of the award at the time that the award is made and the remaining installments in January of each succeeding year (until the full amount of the award is paid). Such amounts are payable in succeeding years but only if earned out by the employee by continuing service to M, at the rate of $^{1}/_{12}$th of the amount of the first installment for each complete month of service beginning with the year of determination. If the beneficiary voluntarily terminates his employment, is discharged for cause, or conducts himself in a manner inimical to the best interests of M, he forfeits the rights to receive any portion of his bonus award previously earned out but undelivered to him and to continue earning out his bonus award. Upon retirement a beneficiary retains the right to earn out an unearned bonus award but forfeits the right to continue earning out the award if he conducts himself in a manner inimical to M's best interests or engages in an activity which is in competition with an activity of M. If a beneficiary dies while earning out a bonus award, any unpaid and undelivered portion of his award is paid and delivered to his estate or heirs at such time and in such manner as if the beneficiary were living.
(ii) On January 1, 1971, M makes a cash bonus award to A of $100x. On January 15, 1971, $20x, representing representing the first installment of the award, is paid to A. On January 15, 1972, $20x, representing the portion of the award earned out by A during the calendar year 1971 is paid to him. On January 1, 1972, A retires from employment with M and, having satisfied the conditions to continue earning out his bonus award, receives $20x on January 15, 1975.

(iii) Under the facts and circumstances, the conditions that A not conduct himself in a manner inimical to the best interests of M and refrain from activity competitive to that of M are not considered to result in a substantial risk of forfeiture of the bonus award. The total installments of $40x paid to A in 1971 and 1972 constitute earned income. The installment of $20x earned out by A in 1972 and paid to him in 1973 also constitutes earned income for the taxable year 1973 because it was includible in gross income by A before the end of the taxable year of A following the first taxable year (the year of his retirement, i.e., 1972) in which his right to receive the installment was not subject to a substantial risk of forfeiture. The

installments paid to A in 1974 and 1975, however, do not constitute earned income because they were paid in a year later than the year following the year of A's retirement. Had the conditions that A not conduct himself in a manner inimical to the best interests of M and refrain from activity competitive to that of M constituted a substantial risk of forfeiture, the installments paid to A in 1974 and 1975 would have constituted earned income.

Example 6. On January 15, 1968, Corporation M, under the terms of a nonqualified bonus plan for its employees, grants to A, an employee, 5,000 *dividend units,* which entitle A to receive, for the period during which the award remains in effect, a cash payment equal to the dividends declared andpaid by M on the equivalent of 5,000 shares of its capital stock. The award remains in effect for A's lifetime but is subject to forfeiture if A is dismissed or leaves the service of M for any reason other than his death or retirement, or if A, following his retirement, engages in any activity which is harmful to the interests of M. Under the particular facts and circumstances, the condition that A not engage in any harmful activity is not considered to amount to a substantial risk of forfeiture within the meaning of section 83(c)(1). A retires on January 1, 1971. In each of the calendar years 1971, 1972, 1973, and 1974. A receives cash payments of $5x under his bonus award. The payments totaling $10x to A in the years 1971 and 1972 constitute earned income because A received them before the end of the taxable year following the first taxable year (i.e., 1971, the year in which A retired) in which his right to receive such payments was not subject to a substantial risk of forfeiture. Payments totaling $10x to A in 1973 and 1974, however, constitute deferred compensation under paragraph (b) of this section.

Example 7. Corporation M maintains an employees' profit sharing trust which is not exempt from tax under section 501(a). Under the terms of the trust agreement, the interest of the trust beneficiaries in each contribution made to the trust by M is subject to asubstantial risk of forfeiture for a period of 2 years from the date on which the particular contribution is made, except that upon a beneficiary's retirement, his entire interest in the trust vests immediately. Contributions are made on December 30 of each year. As of August 1, 1969, the total interest, forfeitable and nonforfeitable, of A, an employee of M, in the trust is $320x. On December 30 in each of the years 1969, 1970, and 1971, M makes a further contribution to the trust allocable to A's account equal to $60x. A retires on December 31, 1971, and becomes entitled to a total distribution from the trust of $500x, of which $320x represents M's contributions made prior to August 1, 1969, and $180x represents contributions made subsequent to such date. Beginning in 1972, the trust distributes to A $500x in 5 equal annual installments. Because M's contributions to A's account for the years subsequent to August 1, 1969, totaling $180x vested as of his retirement date, such contributions of $180x constitute earned income of A for the year 1971 by reason of § 1.402(b)-1(b). No portion of any annual installment of $100x which is includible in A's gross income constitutes earned income since it is attributable to the $320x, in all of which A's rights became nonforfeitable no later than December 30, 1970.

Example 8. Corporation M maintains a qualified noncontributory pension plan for the benefit of its employees. Under the terms of the plan, no employee has a vested right to receive any distribution under the plan prior to his retirement from the employment of M upon reaching the age of 65. A, an employee of M, reaches age 65 on June 15, 1972, and retires on June 30, 1972. Under the terms of the pension plan, A becomes entitled to receive a monthly pension of $5x, beginning on July 1, 1972. A receives pension payments totalling $30x in 1972, $60x in 1973,

$60x in 1974, $60x in 1975, and $60x in 1976. The pension payments received by A in 1972 and 1973 constitute earned income within paragraph (b)(3)(ii) of this section. The pension payments received by A in 1974, 1975, and 1976 constitute deferred compensation.

Example 9. (i) A is a participant in X Corporation's noncontributory qualified pension plan. The plan provides an annual benefit upon attaining age 65 of 2 percent of average compensation for each calendar year of participation in the plan. Average compensation is defined as the average of an employee's annual compensation over the last 5 calendar years of service. The plan provides that an employee's rights in his accrued benefit are nonforfeitable after 15 years of participation in the plan. A attains age 65 on June 20, 1975 and begins to receive a pension on July 1, 1975. A's pension is based upon 30 years of participation in the plan. A's annual compensation for the period 1969 through 1974, is as follows:

Year	Annual Compensation
1969	$75,000
1970	80,000
1971	80,000
1972	85,000
1973	85,000
1974	90,000

(ii) Under the terms of the plan, A's accrued benefit as of December 31, 1974, and his pension are $50,400 (0.02 × 30 × $^{1}/_{5}$ ($80,000 + $80,000 + $85,000 + $90,000)). A's accrued benefit as of December 31, 1973, is $46,980 (0.02 × 29 × $^{1}/_{5}$ $85,000)). Since A's rights in $46,980 of his accrued benefit had ceased to be subject to a substantial risk of forfeiture before 1974, only $285 ($^{1}/_{12}$ × ($50,400 − $46,980)) of each payment received during 1975 does not constitute deferred compensation. The balance of the amounts received during 1975 and all amounts received in 1976 constitute deferred compensation since they are paid after the end of the taxable year following A's first taxable year in which his right to receive any such amount was not subject to a substantial risk of forfeiture.

Example 10. On January 15, 1971, Corporation M grants to A, an employee, an option to purchase 100 shares of stock of M at a price of $10x per share. Such option constitutes a qualified stock option constitutes a qualified stock option as defined in section 422(b). On August 1, 1971, A exercises his option, at which time the fair market value of the 100 shares of M Stock is $15x per share. On April 24, 1972, A sells the 100 shares of M stock acquired pursuant to exercise of his option at a price of $25x per share. Because the sale constitutes a disqualifying disposition

within the meaning of section 421(b), A realizes ordinary income of $500x and a capital gain of $1,000x in the taxable year 1972. The $500x of ordinary income so realized by A constitutes earned income.

Example 11. On November 30, 1072, Corporation M grants to A, an employee, a nonqualified stock option to which section 421 does not apply and which has no readily ascertainable fair market value on that date. The option may, by its terms, be exercised by A at any time during, or following termination of, his employment. On March 30, 1974, A, while still employed by M, exercises his option and realizes compensation income at that time. Such compensation does not constitute earned income because the option is exercisable within a period that may extend beyond three months after A's termination of employment (other than by reason of death). See paragraph (b)(3)(iii)(B) of this section. Had A exercised his option at any time prior to January 1, 1974, the compensation realized by him by reason of such exercise would have constituted earned income.

Example 12. On November 30, 1972, Corporation N grants to B, an employee, a nonqualified stock option to which section 421 does not apply and which has no readily ascertainable fair market value on that date. The option may by its terms, be exercised only within the period during which B is employed by N or within three months thereafter. On March 30, 1974, B exercises his option and realizes compensation at that time. Such compensation so realized by B constitutes earned income. See paragraph (b)(3)(iii)(B) of this section.

Example 13. On May 9, 1973, and in connection with the performance of services by E, an employee, Corporation X transfers to E 100 shares of X stock. Under the terms of the transfer, E is subject to a binding commitment to return the stock to X if E leaves X's employment for any reason prior to the expiration of a 3-year period beginning on the date of transfer. Since E must perform substantial services for X before he may keep the X stock, E's rights in the stock are subject to a substantial risk of forfeiture under section 83(c)(1). Consequently, if such restriction lapses on May 9, 1976, the compensation realized at such time constitutes earned income. Had E elected to include an amount in his gross income in 1973 pursuant to section 83(b) and the regulations thereunder, the amount so included would also have constituted earned income.

Example 14. On October 1, 1971, A, an author, and Corporation M, a publisher, executed an agreement under which A granted to M the exclusive right to print, publish and sell a book he had written. The agreement provides that M will pay to A specified royalties based on the actual cash received from the sale of the published work, render semiannual statements of the sales, and at the time of rendering each statement make settlement for the amount due. On the same day, another agreement was signed by A and M, mutually agreeing that, in consideration of, and notwithstanding, any contrary provisions contained in the first contract, M shall not pay A more than $100x in any one calendar year. Under this supplemental contract, sums in excess of $100x accruing in any one calendar year are to be carried over by M into succeeding years. For the calendar year 1971, royalties payable to A under the basic agreement amount to $100x and this sum is paid to A. For the calendar year 1972, royalties of $120x are payable to A under the basic agreement, but by reason of the supplemental agreement, only $100x of this sum is actually paid to A. For each of the calendar years 1973 and 1974, royalties of $100x are payable to A under the basic agreement, and this sum is paid to A. For the calendar year 1975, royalties of $80x are payable to A under the basic agreement, and this sum, plus $20x carried over from 1972, or $100x, is paid to A. The $100x paid to A in each of the years 1971, 1972, 1973, and 1974, and $80x of the $100x paid to A in 1975 constitute earned income. The additional $20x

carried over from 1972 and paid to A in 1975 constitutes deferred compensation under this paragraph (b) because it was paid to A later than the end of the year following the year (i.e., 1972) in which A's right to receive the amount was not subject to a substantial risk of forfeiture.

Example 15. Corporation M is the producer and owner of a feature length motion picture which is distributed to exhibitors by Corporation N pursuant to a distribution agreement between M and N providing for current payments to M of a given percentage of the current net profits derived by N from the exhibition and exploitation of the picture. A was employed by M as the leading actor in the picture for fixed compensation payable at the rate of $10x per week during the production period plus additional compensation equal to a given percentage of the net profits derived from the exhibition and exploitation of the picture. A's additional compensation is payable at the time that M receives payments from N under the terms of the distribution agreement. The additional compensation paid to A does not constitute deferred compensation since it is attributable to and measured by current net profits derived from the use of property created in part by A's efforts.

Example 16. A, a boxer entered into an agreement with M boxing club to fight a particular opponent on June 19, 1971. The agreement provided in part, that for his performance A was to receive 16 percent of the gross receipts derived from the match. Simultaneously, A and M executed a separate agreement providing for payment of A's share of the receipts from the match as follows: 25 percent thereof not later than August 15, 1971, and 25 percent thereof during each of the years 1972, 1973, and 1974 in equal semiannual installments. A's share of the gross receipts derived from the match was $100x, of which 25 percent was paid to him in 1971 and a total of $25x in each of the years 1972, 1973, and 1974. Under the particular facts and circumstances, A and M are not acting as partners or joint venturers. Thus, A is taxable upon his share of such gross receipts only in the years in which such share is actually paid to him under the terms of the separate agreement. The payments of $25x in each of the years 1971 and 1972 constitute earned income. The payments of $25x in each of the years 1973 and 1974 would not constitute earned income because they constitute deferred compensation received later than the end of the first taxable year (i.e., 1972) following the year in which A's right to receive such amounts was not subject to a substantial risk of forfeiture.

[T.D. 7446, 41 FR 55339, Dec. 20, 1976]

SMALL BUSINESS CORPORATIONS AND THEIR SHAREHOLDERS

§ 1.1361-0 Table of contents.

This section lists captions contained in §§ 1.1361-1, 1.1361-2, 1.1361-3, 1.1361-4, 1.1361-5, and 1.1361-6.

§ 1.1361-1 S Corporation defined.

(a) In general.

(b) Small business corporation defined.

(1) In general.

(2) Estate in bankruptcy.

(3) Treatment of restricted stock.

(4) Treatment of deferred compensation plans.

(5) Treatment of straight debt.

(6) Effective date provisions.

(c) Domestic corporation.

(d) Ineligible corporation.

(1) General rule.

(2) Exceptions.

(e) Number of shareholders.

(1) General rule.

(2) Special rules relating to stock owned by husband and wife.

(3) Special rules relating to stock owned by members of a family.

(f) Shareholder must be an individual or estate.

(g) No nonresident alien shareholder.

(1) General rule.

(2) Special rule for dual residents.

(h) Special rules relating to trusts.

(1) General rule.

(2) Foreign trust.

(3) Determination of shareholders.

(i) [Reserved]

(j) Qualified subchapter S trust.

(1) Definition.

(2) Special rules.

(3) Separate and independent shares of a trust.

(4) Qualified terminable interest property trust.

(5) Ceasing to meet the QSST requirements.

(6) Qualified subchapter S trust election.

(7) Treatment as shareholder.

(8) Coordination with grantor trust rules.

(9) Successive income beneficiary.

(10) Affirmative refusal to consent.

(11) Revocation of QSST election.

(12) Converting a QSST to an ESBT.

(k)(1) Examples.

(2) Effective date.

(l) Classes of stock.

(1) General rule.

(2) Determination of whether stock confers identical rights to distribution and liquidation proceeds.

(3) Stock taken into account.

(4) Other instruments, obligations, or arrangements treated as a second class of stock.

(5) Straight debt safe harbor.

(6) Inadvertent terminations.

(7) Effective date

(m) Electing small business trust (ESBT).

(1) Definition.

(2) ESBT election.

(3) Effect of ESBT election.

(4) Potential current beneficiaries.

(5) ESBT terminations.

(6) Revocation of ESBT election.

(7) Converting an ESBT to a QSST.

(8) Examples.

(9) Effective date.

§ 1.1361-2 Definitions relating to S corporation subsidiaries.

(a) In general.

(b) Stock treated as held by S corporation.

(c) Straight debt safe harbor.

(d) Examples.

§ 1.1361-3 QSub election.

(a) Time and manner of making election.

(1) In general.

(2) Manner of making election.

(3) Time of making election.

(4) Effective date of election.

(5) Example.

(6) Extension of time for making a QSub election.

(b) Revocation of QSub election.

(1) Manner of revoking QSub election.

(2) Effective date of revocation.

(3) Revocation after termination.

(4) Revocation before QSub election effective.

§ 1.1361-4 Effect of QSub election.

(a) Separate existence ignored.

(1) In general.

(2) Liquidation of subsidiary.

(i) In general.

(ii) Examples

(iii) Adoption of plan of liquidation.

(iv) Example.

(v) Stock ownership requirements of section 332.

(3) Treatment of banks.

(i) In general.

(ii) Examples.

(iii)Effective date.

(4) Treatment of stock of QSub.

(5) Transitional relief.

(i) General rule.

(ii) Examples.

(b) Timing of the liquidation.

(1) In general.

(2) Application to elections in tiered situations.

(3) Acquisitions.

(i) In general.

(ii) Special rules for acquired S corporations.

(4) Coordination with section 338 election.

(c) Carryover of disallowed losses and deductions.

(d) Examples.

§ 1.1361-5 Termination of QSub election.

(a) In general.

(1) Effective date.

(2) Information to be provided upon termination of QSub election by failure to qualify as a QSub.

(3) QSub joins a consolidated group.

(4) Examples.

(b) Effect of termination of QSub election.

(1) Formation of new corporation.

(i) In general.

(ii) Termination for tiered QSubs.

(2) Carryover of disallowed losses and deductions.

(3) Examples.

(c) Election after QSub termination.

(1) In general.

(2) Exception.

(3) Examples.

§ 1.1361-6 Effective date.

[T.D. 8600, 60 FR 37581, July 21, 1995, as amended by T.D. 8869, 65 FR 3848, Jan. 25, 2000; T.D. 8994, 67 FR 34397, May 14, 2002; T.D. 9422, 73 FR 47527, Aug. 14, 2008]

§ 1.1361-1 S corporation defined.

(a) ***In general.*** For purposes of this title, with respect to any taxable year—

(1) The term *S corporation* means a small business corporation (as defined in paragraph (b) of this section) for which an election under section 1362(a) is in effect for that taxable year.

(2) The term *C corporation* means a corporation that is not an S corporation for that taxable year.

(b) ***Small business corporation defined*** —

(1) ***In general.*** For purposes of subchapter S, chapter 1 of the Code and the regulations thereunder, the term *small business corporation* means a domestic corporation that is not an ineligible corporation (as defined in section 1361(b)(2)) and that does not have—

(i) More than the number of shareholders provided in section 1361(b)(1)(A);

(ii) As a shareholder, a person (other than an estate, a trust described in section 1361(c)(2), or, for taxable years beginning after December 31, 1997, an organization described in section 1361(c)(6)) who is not an individual;

(iii) A nonresident alien as a shareholder; or

(iv) More than one class of stock.

(2) ***Estate in bankruptcy.*** The term *estate,* for purposes of this paragraph, includes the estate of an individual in a case under title 11 of the United States Code.

(3) ***Treatment of restricted stock.*** For purposes of subchapter S, stock that is issued in connection with the performance of services (within the meaning of § 1.83-3(f)) and that is substantially nonvested (within the meaning of § 1.83-3(b)) is not treated as outstanding stock of the corporation, and the holder of that stock is not treated as a shareholder solely by reason of holding the stock, unless the holder makes an election with respect to the stock under section 83(b). In the event of such an election, the stock is treated as outstanding stock of the corporation, and the holder of the stock is treated as a shareholder for purposes of subchapter S. See paragraphs (l) (1) and (3) of this section for rules for determining whether substantially nonvested stock with respect to which an election under section 83(b) has been made is treated as a second class of stock.

(4) ***Treatment of deferred compensation plans.*** For purposes of subchapter S, an instrument, obligation, or arrangement is not outstanding stock if it—

(i) Does not convey the right to vote;

(ii) Is an unfunded and unsecured promise to pay money or property in the future;

(iii) Is issued to an individual who is an employee in connection with the performance of services for the corporation or to an individual who is an independent contractor in connection with the performance of services for the corporation (and is not excessive by reference to the services performed); and

(iv) Is issued pursuant to a plan with respect to which the employee or independent contractor is not taxed currently on income.

A deferred compensation plan that has a current payment feature (e.g., payment of dividend equivalent amounts that are taxed currently as compensation) is not for that reason excluded from this paragraph (b)(4).

(5) ***Treatment of straight debt.*** For purposes of subchapter S, an instrument or obligation that satisfies the definition of straight debt in paragraph (l)(5) of this section is not treated as outstanding stock.

(6) ***Effective date provision.*** Section 1.1361-1(b) generally applies to taxable years of a corporation beginning on or after May 28, 1992. However, a corporation and its shareholders may apply this § 1.1361-1(b) to prior taxable years. In addition, substantially nonvested stock issued on or before May 28, 1992, that has been treated as outstanding by the corporation is treated as outstanding for purposes of subchapter S, and the fact that it is substantially nonvested and no section 83(b) election has been made with respect to it will not cause the stock to be treated as a second class of stock.

(c) ***Domestic corporation.*** For purposes of paragraph (b) of this section, the term *domestic corporation* means a domestic corporation as defined in § 301.7701-5 of this chapter, and the term *corporation* includes an entity that is classified as an association taxable as a corporation under § 301.7701-2 of this chapter.

(d) ***Ineligible corporation*** —

(1) ***General rule.*** Except as otherwise provided in this paragraph (d), the term *ineligible corporation* means a corporation that is—

(i) For taxable years beginning on or after January 1, 1997, a financial institution that uses the reserve method of accounting for bad debts described in section 585 (for taxable years beginning prior to January 1, 1997, a financial institution to which section 585 applies (or would apply but for section 585(c)) or to which section 593 applies);

(ii) An insurance company subject to tax under subchapter L;

(iii) A corporation to which an election under section 936 applies; or

(iv) A DISC or former DISC.

(2) ***Exceptions.*** See the special rules and exceptions provided in sections 6(c) (2), (3) and (4) of Public Law 97-354 that are applicable for certain casualty insurance companies and qualified oil corporations.

(e) ***Number of shareholders*** —

(1) ***General rule.*** A corporation does not qualify as a small business corporation if it has more than the number of shareholders provided in section 1361(b)(1)(A). Ordinarily, the person who would have to include in gross income dividends distributed with respect to the stock of the corporation (if the corporation were a C corporation) is considered to be the shareholder of the corporation. For example, if stock (owned other than by a husband and wife or members of a family described in section 1361(c)(1)) is owned by tenants in common or joint tenants, each tenant in common or joint tenant is generally considered to be a shareholder of the corporation. (For special rules relating to stock owned by husband and wife or members of a family, see paragraphs (e)(2) and (3) of this section, respectively; for special rules relating to restricted stock, see paragraphs (b)(3) and (6) of this section.) The person for whom stock of a corporation is held by a nominee, guardian, custodian, or an agent is considered to be the shareholder of the corporation for purposes of this paragraph (e) and paragraphs (f) and (g) of this section. For example, a partnership may be a nominee of S corporation stock for a person who qualifies as a shareholder of an S corporation. However, if the partnership is the beneficial owner of the stock, then the partnership is the shareholder, and the corporation does not qualify as a small business corporation. In addition, in the case of stock held for a minor under a uniform transfers to minors act or similar statute, the minor and not the

custodian is the shareholder. Except as otherwise provided in paragraphs (h) and (j) of this section, and for purposes of this paragraph (e) and paragraphs (f) and (g) of this section, if stock is held by a decedent's estate or a trust described in section 1361(c)(2)(A)(ii) or (iii), the estate or trust (and not the beneficiaries of the estate or trust) is considered to be the shareholder; however, if stock is held by a subpart E trust (which includes a voting trust) or an electing QSST described in section 1361(d)(1), the deemed owner of the trust is considered to be the shareholder. If stock is held by an ESBT described in section 1361(c)(2)(A)(v), each potential current beneficiary of the trust shall be treated as a shareholder, except that the trust shall be treated as the shareholder during any period in which there is no potential current beneficiary of the trust. If stock is held by a trust described in section 1361(c)(2)(A)(vi), the individual for whose benefit the trust was created shall be treated as the shareholder. See paragraph (h) of this section for special rules relating to trusts.

(2) ***Special rules relating to stock owned by husband and wife.*** For purposes of paragraph (e)(1) of this section, stock owned by a husband and wife (or by either or both of their estates) is treated as if owned by one shareholder, regardless of the form in which they own the stock. For example, if husband and wife are owners of a subpart E trust, they will be treated as one individual. Both husband and wife must be U.S. citizens or residents, and a decedent spouse's estate must not be a foreign estate as defined in section 7701(a)(31). The treatment described in this paragraph (e)(2) will cease upon dissolution of the marriage for any reason other than death.

(3) ***Special rules relating to stock owned by members of a family*** —

(i) ***In general.*** For purposes of paragraph (e)(1) of this section, stock owned by members of a family is treated as owned by one shareholder. Members of a family include a common ancestor, any lineal descendant of the common ancestor (without any generational limit), and any spouse (or former spouse) of the common ancestor or of any lineal descendants of the common ancestor. An individual shall not be considered to be a common ancestor if, on the applicable date, the individual is more than six generations removed from the youngest generation of shareholders who would be members of the family determined by deeming that individual as the common ancestor. For purposes of this six-generation test, a spouse (or former spouse) is treated as being of the same generation as the individual to whom the spouse is or was married. This test is applied on the latest of the date the election under section 1362(a) is made for the corporation, the earliest date that a member of the family (determined by deeming that individual as the common ancestor) holds stock in the corporation, or October 22, 2004. For this purpose, the date the election under section 1362(a) is made for the corporation is the effective date of the election, not the date it is signed or received by any person. The test is only applied as of the applicable date, and lineal descendants (and spouses) more than six generations removed from the common ancestor will be treated as members of the family even if they acquire stock in the corporation after that date. The members of a family are treated as one shareholder under this paragraph (e)(3) solely for purposes of section 1361(b)(1)(A), and not for any other purpose, whether under section 1361 or any other provision. Specifically, each member of the family who owns or is deemed to own stock must meet the requirements of sections 1361(b)(1)(B) and (C) (regarding permissible shareholders) and section 1362(a)(2) (regarding shareholder consents to an S corporation election). Although a person may be a member of more than one family under this paragraph (e)(3), each family (not all of whose members are also members of the other family) will be treated as one shareholder. For purposes of this paragraph (e)(3), any legally adopted

child of an individual, any child who is lawfully placed with an individual for legal adoption by that individual, and any eligible foster child of an individual (within the meaning of section 152(f)(1)(C)), shall be treated as a child of such individual by blood.

(ii) ***Certain entities treated as members of a family.*** For purposes of this paragraph (e)(3), the estate or trust (described in section 1361(c)(2)(A)(ii) or (iii)) of a deceased member of the family will be considered to be a member of the family during the period in which the estate or such trust (if the trust is described in section 1361(c)(2)(A)(ii) or (iii)), holds stock in the S corporation. The members of the family also will include—

(A) In the case of an ESBT, each potential current beneficiary who is a member of the family;

(B) In the case of a QSST, the income beneficiary who makes the QSST election, if that income beneficiary is a member of the family;

(C) In the case of a trust created primarily to exercise the voting power of stock transferred to it, each beneficiary who is a member of the family;

(D) The individual for whose benefit a trust described in section 1361(c)(2)(A)(vi) was created, if that individual is a member of the family;

(E) The deemed owner of a trust described in section 1361(c)(2)(A)(i) if that deemed owner is a member of the family; and

(F) The owner of an entity disregarded as an entity separate from its owner under § 301.7701-3 of this chapter, if that owner is a member of the family.

(f) ***Shareholder must be an individual or estate.*** Except as otherwise provided in paragraph (e)(1) of this section (relating to nominees), paragraph (h) of this section (relating to certain trusts), and, for taxable years beginning after December 31, 1997, section 1361(c)(6) (relating to certain exempt organizations), a corporation in which any shareholder is a corporation, partnership, or trust does not qualify as a small business corporation.

(g) ***Nonresident alien shareholder*** —

(1) ***General rule.***

(i) A corporation having a shareholder who is a nonresident alien as defined in section 7701(b)(1)(B) does not qualify as a small business corporation. If a U.S. shareholder's spouse is a nonresident alien who has a current ownership interest (as opposed, for example, to a survivorship interest) in the stock of the corporation by reason of any applicable law, such as a state community property law or a foreign country's law, the corporation does not qualify as a small business corporation from the time the nonresident alien spouse acquires the interest in the stock. If a corporation's S election is inadvertently terminated as a result of a nonresident alien spouse being considered a shareholder, the corporation may request relief under section 1362(f).

(ii) The following examples illustrate this paragraph (g)(1)(i):

Example 1. In 1990, W, a U.S. citizen, married H, a citizen of a foreign country. At all times H is a nonresident alien under section 7701(b)(1)(B). Under the foreign country's law, all property acquired by a husband and wife during the existence of the marriage is community property and owned jointly by the husband and wife. In 1996 while residing in the foreign country, W formed X, a U.S. corporation, and X simultaneously filed an election to be an S corporation. X

issued all of its outstanding stock in W's name. Under the foreign country's law, X's stock became the community property of and jointly owned by H and W. Thus, X does not meet the definition of a small business corporation and therefore could not file a valid S election because H, a nonresident alien, has a current interest in the stock.

Example 2. Assume the same facts as *Example 1,* except that in 1991, W and H filed a section 6013(g) election allowing them to file a joint U.S. tax return and causing H to be treated as a U.S. resident for purposes of chapters 1, 5, and 24 of the Internal Revenue Code. The section 6013(g) election applies to the taxable year for which made and to all subsequent taxable years until terminated. Because H is treated as a U.S. resident under section 6013(g), X does meet the definition of a small business corporation. Thus, the election filed by X to be an S corporation is valid.

(2) ***Special rule for dual residents.*** [Reserved]

(h) ***Special rules relating to trusts*** —

(1) ***General rule.*** In general, a trust is not a permitted small business corporation shareholder. However, except as provided in paragraph (h)(2) of this section, the following trusts are permitted shareholders:

(i) ***Qualified subpart E trust.*** A trust all of which is treated (under subpart E, part I, subchapter J, chapter 1) as owned by an individual (whether or not the grantor) who is a citizen or resident of the United States (a qualified subpart E trust). This requirement applies only during the period that the trust holds S corporation stock.

(ii) ***Subpart E trust ceasing to be a qualified subpart E trust after the death of deemed owner.*** A trust that was a qualified subpart E trust immediately before the death of the deemed owner and that continues in existence after the death of the deemed owner, but only for the 2-year period beginning on the day of the deemed owner's death. A trust is considered to continue in existence if the trust continues to hold the stock pursuant to the terms of the will or the trust agreement, or if the trust continues to hold the stock during a period reasonably necessary to wind up the affairs of the trust. See § 1.641(b)-3 for rules concerning the termination of trusts for federal income tax purposes.

(iii) ***Electing qualified subchapter S trusts.*** A qualified subchapter S trust (QSST) that has a section 1361(d)(2) election in effect (an electing QSST). See paragraph (j) of this section for rules concerning QSSTs including the manner for making the section 1361(d)(2) election.

(iv) ***Testamentary trusts.*** A trust (other than a qualified subpart E trust, an electing QSST, or an electing small business trust) to which S corporation stock is—

(A) Transferred pursuant to the terms of a will, but only for the 2-year period beginning on the day the stock is transferred to the trust except as otherwise provided in paragraph (h)(3)(i)(D) of this section; or

(B) Transferred pursuant to the terms of an electing trust as defined in § 1.645-1(b)(2) during the election period as defined in § 1.645-1(b)(6), or deemed to be distributed at the close of the last day of the election period pursuant to § 1.645-1(h)(1), but in each case only for the 2-year period beginning on the day the stock is transferred or deemed distributed to the trust except as otherwise provided in paragraph (h)(3)(i)(D) of this section.

(v) ***Qualified voting trusts.*** A trust created primarily to exercise the voting power of S corporation stock transferred to it. To qualify as a voting trust for purposes of this section (a qualified voting trust), the beneficial owners must be treated as the owners of their respective portions of the trust under subpart E and the trust must have been created pursuant to a written trust agreement entered into by the shareholders, that—

(A) Delegates to one or more trustees the right to vote;

(B) Requires all distributions with respect to the stock of the corporation held by the trust to be paid to, or on behalf of, the beneficial owners of that stock;

(C) Requires title and possession of that stock to be delivered to those beneficial owners upon termination of the trust; and

(D) Terminates, under its terms or by state law, on or before a specific date or event.

(vi) ***Electing small business trusts.*** An electing small business trust (ESBT) under section 1361(e). See paragraph (m) of this section for rules concerning ESBTs including the manner of making the election to be an ESBT under section 1361(e)(3).

(vii) ***Individual retirement accounts.*** In the case of a corporation which is a bank (as defined in section 581) or a depository institution holding company (as defined in section 3(w)(1) of the Federal Deposit Insurance Act (12 U.S.C. 1813(w)(1)), a trust which constitutes an individual retirement account under section 408(a), including one designated as a Roth IRA under section 408A, but only to the extent of the stock held by such trust in such bank or company as of October 22, 2004. Individual retirement accounts (including Roth IRAs) are not otherwise eligible S corporation shareholders.

(2) ***Foreign trust.*** For purposes of paragraph (h)(1) of this section, in any case where stock is held by a foreign trust as defined in section 7701(a)(31), the trust is considered to be the shareholder and is an ineligible shareholder. Thus, even if a foreign trust qualifies as a subpart E trust (e.g., a qualified voting trust), any corporation in which the trust holds stock does not qualify as a small business corporation.

(3) ***Determination of shareholders*** —

(i) ***General rule.*** For purposes of paragraph (b) of this section (qualification as a small business corporation), and, except as provided in paragraph (h)(3)(ii) of this section, for purposes of sections 1366 (relating to the pass-through of items of income, loss, deduction, or credit), 1367 (relating to adjustments to basis of shareholder's stock), and 1368 (relating to distributions), the shareholder of S corporation stock held by a trust that is a permitted shareholder under paragraph (h)(1) of this section is determined as follows:

(A) If stock is held by a qualified subpart E trust, the deemed owner of the trust is treated as the shareholder.

(B) If stock is held by a trust defined in paragraph (h)(1)(ii) of this section, the estate of the deemed owner is generally treated as the shareholder as of the day of the deemed owner's death. However, if stock is held by such a trust in a community property state, the decedent's estate is the shareholder only of the portion of the trust included in the decedent's gross estate (and the surviving spouse continues to be the shareholder of the portion of the trust owned by that spouse under the applicable state's community property law). The estate ordinarily will cease to be treated as the shareholder upon the earlier of

the transfer of the stock by the trust or the expiration of the 2-year period beginning on the day of the deemed owner's death. If the trust qualifies and becomes an electing QSST, the beneficiary and not the estate is treated as the shareholder as of the effective date of the QSST election, and the rules provided in paragraph (j)(7) of this section apply. If the trust qualifies and becomes an ESBT, the shareholders are determined under paragraphs (h)(3)(i)(F) and (h)(3)(ii) of this section as of the effective date of the ESBT election, and the rules provided in paragraph (m) of this section apply.

(C) If stock is held by an electing QSST, see paragraph (j)(7) of this section for the rules on who is treated as the shareholder.

(D) If stock is transferred or deemed distributed to a testamentary trust described in paragraph (h)(1)(iv) of this section (other than a qualified subpart E trust, an electing QSST, or an ESBT), the estate of the testator is treated as the shareholder until the earlier of the transfer of that stock by the trust or the expiration of the 2-year period beginning on the day that the stock is transferred or deemed distributed to the trust. If the trust qualifies and becomes an electing QSST, the beneficiary and not the estate is treated as the shareholder as of the effective date of the QSST election, and the rules provided in paragraph (j)(7) of this section apply. If the trust qualifies and becomes an ESBT, the shareholders are determined under paragraphs (h)(3)(i)(F) and (h)(3)(ii) of this section as of the effective date of the ESBT election, and the rules provided in paragraph (m) of this section apply.

(E) If stock is held by a qualified voting trust, each beneficial owner of the stock, as determined under subpart E, is treated as a shareholder with respect to the owner's proportionate share of the stock held by the trust.

(F) If S corporation stock is held by an ESBT, each potential current beneficiary is treated as a shareholder. However, if for any period there is no potential current beneficiary of the ESBT, the ESBT is treated as the shareholder during such period. See paragraph (m)(4) of this section for the definition of potential current beneficiary.

(G) If stock in an S corporation bank or depository institution holding company is held by an individual retirement account (including a Roth IRA) described in paragraph (h)(1)(vii) of this section, the individual for whose benefit the trust was created shall be treated as the shareholder.

(ii) ***Exceptions. See*** § 1.641(c)-1 for the rules for the taxation of an ESBT. Solely for purposes of section 1366, 1367, and 1368 the shareholder of S corporation stock held by a trust is determined as follows—

(A) If stock is held by a trust as defined in paragraph (h)(1)(ii) of this section (other than an electing QSST or an ESBT), the trust is treated as the shareholder. If the trust continues to own the stock after the expiration of the 2-year period, the corporation's S election will terminate unless the trust is otherwise a permitted shareholder.

(B) If stock is transferred or deemed distributed to a testamentary trust described in paragraph (h)(1)(iv) of this section (other than a qualified subpart E trust, an electing QSST, or an ESBT), the trust is treated as the shareholder. If the trust continues to own the stock after the expiration of the 2-year period, the corporation's S election will terminate unless the trust otherwise qualifies as a permitted shareholder.

(i) [Reserved]

(j) *Qualified subchapter S trust* —

(1) ***Definition.*** A qualified subchapter S trust (QSST) is a trust (whether intervivos or testamentary), other than a foreign trust described in section 7701(a)(31), that satisfies the following requirements:

(i) All of the income (within the meaning of § 1.643(b)-1) of the trust is distributed (or is required to be distributed) currently to one individual who is a citizen or resident of the United States. For purposes of the preceding sentence, unless otherwise provided under local law (including pertinent provisions of the governing instrument that are effective under local law), income of the trust includes distributions to the trust from the S corporation for the taxable year in question, but does not include the trust's pro rata share of the S corporation's items of income, loss, deduction, or credit determined under section 1366. See §§ 1.651(a)-2(a) and 1.663(b)-1(a) for rules relating to the determination of whether all of the income of a trust is distributed (or is required to be distributed) currently. If under the terms of the trust income is not required to be distributed currently, the trustee may elect under section 663(b) to consider a distribution made in the first 65 days of a taxable year as made on the last day of the preceding taxable year. See section 663(b) and § 1.663(b)-2 for rules on the time and manner for making the election. The income distribution requirement must be satisfied for the taxable year of the trust or for that part of the trust's taxable year during which it holds S corporation stock.

(ii) The terms of the trust must require that—

(A) During the life of the current income beneficiary, there will be only one income beneficiary of the trust;

(B) Any corpus distributed during the life of the current income beneficiary may be distributed only to that income beneficiary;

(C) The current income beneficiary's income interest in the trust will terminate on the earlier of that income beneficiary's death or the termination of the trust; and

(D) Upon termination of the trust during the life of the current income beneficiary, the trust will distribute all of its assets to that income beneficiary.

(iii) The terms of the trust must satisfy the requirements of paragraph (j)(1)(ii) of this section from the date the QSST election is made or from the effective date of the QSST election, whichever is earlier, throughout the entire period that the current income beneficiary and any successor income beneficiary is the income beneficiary of the trust. If the terms of the trust do not preclude the possibility that any of the requirements stated in paragraph (j)(1)(ii) of this section will not be met, the trust will not qualify as a QSST. For example, if the terms of the trust are silent with respect to corpus distributions, and distributions of corpus to a person other than the current income beneficiary are permitted under local law during the life of the current income beneficiary, then the terms of the trust do not preclude the possibility that corpus may be distributed to a person other than the current income beneficiary and, therefore, the trust is not a QSST.

(2) *Special rules* —

(i) If a husband and wife are income beneficiaries of the same trust, the husband and wife file a joint return, and each is a U.S. citizen or resident, the husband and wife are treated as one beneficiary for purposes of paragraph (j) of this section. If a husband and wife are treated by

the preceding sentence as one beneficiary, any action required by this section to be taken by an income beneficiary requires joinder of both of them. For example, each spouse must sign the QSST election, continue to be a U.S. citizen or resident, and continue to file joint returns for the entire period that the QSST election is in effect.

(ii)

(A) ***Terms of the trust and applicable local law.*** The determination of whether the terms of a trust meet all of the requirements under paragraph (j)(1)(ii) of this section depends upon the terms of the trust instrument and the applicable local law. For example, a trust whose governing instrument provides that A is the sole income beneficiary of the trust is, nevertheless, considered to have two income beneficiaries if, under the applicable local law, A and B are considered to be the income beneficiaries of the trust.

(B) ***Legal obligation to support.*** If under local law a distribution to the income beneficiary is in satisfaction of the grantor's legal obligation of support to that income beneficiary, the trust will not qualify as a QSST as of the date of distribution because, under section 677(b), if income is distributed, the grantor will be treated as the owner of the ordinary income portion of the trust or, if trust corpus is distributed, the grantor will be treated as a beneficiary under section 662. See § 1.677(b)-1 for rules on the treatment of trusts for support and § 1.662(a)-4 for rules concerning amounts used in discharge of a legal obligation.

(C) ***Example.*** The following example illustrates the rules of paragraph (j)(2)(ii)(B) of this section:

Example: F creates a trust for the benefit of F's minor child, G. Under the terms of the trust, all income is payable to G until the trust terminates on the earlier of G's attaining age 35 or G's death. Upon the termination of the trust, all corpus must be distributed to G or G's estate. The trust includes all of the provisions prescribed by section 1361(d)(3)(A) and paragraph (j)(1)(ii) of this section, but does not preclude the trustee from making income distributions to G that will be in satisfaction of F's legal obligation to support G. Under the applicable local law, distributions of trust income to G will satisfy F's legal obligation to support G. If the trustee distributes income to G in satisfaction of F's legal obligation to support G, the trust will not qualify as a QSST because F will be treated as the owner of the ordinary income portion of the trust. Further, the trust will not be a qualified subpart E trust because the trust will be subject to tax on the income allocable to corpus.

(iii) If, under the terms of the trust, a person (including the income beneficiary) has a special power to appoint, during the life of the income beneficiary, trust income or corpus to any person other than the current income beneficiary, the trust will not qualify as a QSST. However, if the power of appointment results in the grantor being treated as the owner of the entire trust under the rules of subpart E, the trust may be a permitted shareholder under section 1361 (c)(2)(A)(i) and paragraph (h)(1)(i) of this section.

(iv) If the terms of a trust or local law do not preclude the current income beneficiary from transferring the beneficiary's interest in the trust or do not preclude a person other than the current income beneficiary named in the trust instrument from being treated as a beneficiary of the trust under § 1.643(c)-1, the trust will still qualify as a QSST. However, if the income beneficiary transfers or assigns the income interest or a portion of the income interest to

another, the trust may no longer qualify as a QSST, depending on the facts and circumstances, because any transferee of the current income beneficiary's income interest and any person treated as a beneficiary under § 1.643(c)-1 will be treated as a current income beneficiary for purposes of paragraph (j)(1)(ii) of this section and the trust may no longer meet the QSST requirements.

(v) If the terms of the trust do not preclude a person other than the current income beneficiary named in the trust instrument from being awarded an interest in the trust by the order of a court, the trust will qualify as a QSST assuming the trust meets the requirements of paragraphs (j)(1) (i) and (ii) of this section. However, if as a result of such court order, the trust no longer meets the QSST requirements, the trust no longer qualifies as a QSST and the corporation's S election will terminate.

(vi) A trust may qualify as a QSST even though a person other than the current income beneficiary is treated under subpart E as the owner of a part or all of that portion of a trust which does not consist of the S corporation stock, provided the entire trust meets the QSST requirements stated in paragraphs (j)(1) (i) and (ii) of this section.

(3) ***Separate and independent shares of a trust.*** For purposes of sections 1361 (c) and (d), a substantially separate and independent share of a trust, within the meaning of section 663(c) and the regulations thereunder, is treated as a separate trust. For a separate share which holds S corporation stock to qualify as a QSST, the terms of the trust applicable to that separate share must meet the QSST requirements stated in paragraphs (j)(1) (i) and (ii) of this section.

(4) ***Qualified terminable interest property trust.*** If property, including S corporation stock, or stock of a corporation that intends to make an S election, is transferred to a trust and an election is made to treat all or a portion of the transferred property as qualified terminable interest property (QTIP) under section 2056(b)(7), the income beneficiary may make the QSST election if the trust meets the requirements set out in paragraphs (j)(1) (i) and (ii) of this section. However, if property is transferred to a QTIP trust under section 2523(f), the income beneficiary may not make a QSST election even if the trust meets the requirements set forth in paragraph (j)(1)(ii) of this section because the grantor would be treated as the owner of the income portion of the trust under section 677. In addition, if property is transferred to a QTIP trust under section 2523(f), the trust does not qualify as a permitted shareholder under section 1361(c)(2)(A)(i) and paragraph (h)(1)(i) of this section (a qualified subpart E trust), unless under the terms of the QTIP trust, the grantor is treated as the owner of the entire trust under sections 671 to 677. If the grantor ceases to be the income beneficiary's spouse, the trust may qualify as a QSST if it otherwise satisfies the requirements under paragraphs (j)(1) (i) and (ii) of this section.

(5) ***Ceasing to meet the QSST requirements.*** If a QSST for which an election under section 1361(d)(2) has been made (as described in paragraph (j)(6) of this section) ceases to meet any of the requirements specified in paragraph (j)(1)(ii) of this section, the provisions of this paragraph (j) will cease to apply as of the first day on which that requirement ceases to be met. If such a trust ceases to meet the income distribution requirement specified in paragraph (j)(1)(i) of this section, but continues to meet all of the requirements in paragraph (j)(1)(ii) of this section, the provisions of this paragraph (j) will cease to apply as of the first day of the first taxable year beginning after the first taxable year for which the trust ceased to meet the income distribution requirement of paragraph (j)(1)(i) of this section. If a corporation's S election is inadvertently terminated as a result of a trust ceasing to meet the QSST requirements, the corporation may request relief under section 1362(f).

(6) ***Qualified subchapter S trust election —***

(i) ***In general.*** This paragraph (j)(6) applies to the election provided in section 1361(d)(2) (the QSST election) to treat a QSST (as defined in paragraph (j)(1) of this section) as a trust described in section 1361(c)(2)(A)(i), and thus a permitted shareholder. This election must be made separately with respect to each corporation whose stock is held by the trust. The QSST election does not itself constitute an election as to the status of the corporation; the corporation must make the election provided by section 1362(a) to be an S corporation. Until the effective date of a corporation's S election, the beneficiary is not treated as the owner of the stock of the corporation for purposes of section 678. Any action required by this paragraph (j) to be taken by a person who is under a legal disability by reason of age may be taken by that person's guardian or other legal representative, or if there be none, by that person's natural or adoptive parent.

(ii) ***Filing the QSST election.*** The current income beneficiary of the trust must make the election by signing and filing with the service center with which the corporation files its income tax return the applicable form or a statement that—

(A) Contains the name, address, and taxpayer identification number of the current income beneficiary, the trust, and the corporation;

(B) Identifies the election as an election made under section 1361(d)(2);

(C) Specifies the date on which the election is to become effective (not earlier than 15 days and two months before the date on which the election is filed);

(D) Specifies the date (or dates) on which the stock of the corporation was transferred to the trust; and

(E) Provides all information and representations necessary to show that:

(*1*) Under the terms of the trust and applicable local law—

(*i*) During the life of the current income beneficiary, there will be only one income beneficiary of the trust (if husband and wife are beneficiaries, that they will file joint returns and that both are U.S. residents or citizens);

(*ii*) Any corpus distributed during the life of the current income beneficiary may be distributed only to that beneficiary;

(*iii*) The current beneficiary's income interest in the trust will terminate on the earlier of the beneficiary's death or upon termination of the trust; and

(*iv*) Upon the termination of the trust during the life of such income beneficiary, the trust will distribute all its assets to such beneficiary.

(*2*) The trust is required to distribute all of its income currently, or that the trustee will distribute all of its income currently if not so required by the terms of the trust.

(*3*) No distribution of income or corpus by the trust will be in satisfaction of the grantor's legal obligation to support or maintain the income beneficiary.

(iii) ***When to file the QSST election.***

(A) If S corporation stock is transferred to a trust, the QSST election must be made within the 16-day-and-2-month period beginning on the day that the stock is transferred to the trust. If a C corporation has made an election under section 1362(a) to be an S corporation (S

election) and, before that corporation's S election is in effect, stock of that corporation is transferred to a trust, the QSST election must be made within the 16-day-and-2-month period beginning on the day that the stock is transferred to the trust.

(B) If a trust holds C corporation stock and that C corporation makes an S election effective for the first day of the taxable year in which the S election is made, the QSST election must be made within the 16-day-and-2-month period beginning on the day that the S election is effective. If a trust holds C corporation stock and that C corporation makes an S election effective for the first day of the taxable year following the taxable year in which the S election is made, the QSST election must be made within the 16-day-and-2-month period beginning on the day that the S election is made. If a trust holds C corporation stock and that corporation makes an S election intending the S election to be effective for the first day of the taxable year in which the S election is made but, under § 1.1362-6(a)(2), such S election is subsequently treated as effective for the first day of the taxable year following the taxable year in which the S election is made, the fact that the QSST election states that the effective date of the QSST election is the first day of the taxable year in which the S election is made will not cause the QSST election to be ineffective for the first year in which the corporation's S election is effective.

(C) If a trust ceases to be a qualified subpart E trust, satisfies the requirements of a QSST, and intends to become a QSST, the QSST election must be filed within the 16-day-and-2-month period beginning on the date on which the trust ceases to be a qualified subpart E trust. If the estate of the deemed owner of the trust is treated as the shareholder under paragraph (h)(3)(i) of this section, the QSST election may be filed at any time, but no later than the end of the 16-day-and-2-month period beginning on the date on which the estate of the deemed owner ceases to be treated as a shareholder.

(D) If a testamentary trust is a permitted shareholder under paragraph (h)(1)(iv) of this section, satisfies the requirements of a QSST, and intends to become a QSST, the QSST election may be filed at any time, but no later than the end of the 16-day-and-2-month period beginning on the day after the end of the 2-year period.

(E) If a corporation's S election terminates because of a late QSST election, the corporation may request inadvertent termination relief under section 1362(f). See § 1.1362-4 for rules concerning inadvertent terminations.

(iv) ***Protective QSST election when a person is an owner under subpart E.*** If the grantor of a trust is treated as the owner under subpart E of all of the trust, or of a portion of the trust which consists of S corporation stock, and the current income beneficiary is not the grantor, the current income beneficiary may not make the QSST election, even if the trust meets the QSST requirements stated in paragraph (j)(1)(ii) of this section. See paragraph (j)(6)(iii)(C) of this section as to when the QSST election may be made. See also paragraph (j)(2)(vi) of this section. However, if the current income beneficiary (or beneficiaries who are husband and wife, if both spouses are U.S. citizens or residents and file a joint return) of a trust is treated under subpart E as owning all or a portion of the trust consisting of S corporation stock, the current income beneficiary (or beneficiaries who are husband and wife, if both spouses are U.S. citizens or residents and file a joint return) may make the QSST election. See *Example 8* of paragraph (k)(1) of this section.

(7) ***Treatment as shareholder.***

(i) The income beneficiary who makes the QSST election and is treated (for purposes of section 678(a)) as the owner of that portion of the trust that consists of S corporation stock is treated as the shareholder for purposes of sections 1361(b)(1), 1366, 1367, and 1368.

(ii) If, upon the death of an income beneficiary, the trust continues in existence, continues to hold S corporation stock but no longer satisfies the QSST requirements, is not a qualified subpart E trust, and does not qualify as an ESBT, then, solely for purposes of section 1361(b)(1), as of the date of the income beneficiary's death, the estate of that income beneficiary is treated as the shareholder of the S corporation with respect to which the income beneficiary made the QSST election. The estate ordinarily will cease to be treated as the shareholder for purposes of section 1361(b)(1) upon the earlier of the transfer of that stock by the trust or the expiration of the 2-year period beginning on the day of the income beneficiary's death. During the period that the estate is treated as the shareholder for purposes of section 1361(b)(1), the trust is treated as the shareholder for purposes of sections 1366, 1367, and 1368. If, after the 2-year period, the trust continues to hold S corporation stock and does not otherwise qualify as a permitted shareholder, the corporation's S election terminates. If the termination is inadvertent, the corporation may request relief under section 1362(f).

(8) ***Coordination with grantor trust rules.*** If a valid QSST election is made, the income beneficiary is treated as the owner, for purposes of section 678(a), of that portion of the trust that consists of the stock of the S corporation for which the QSST election was made. However, solely for purposes of applying the preceding sentence to a QSST, an income beneficiary who is a deemed section 678 owner only by reason of section 1361(d)(1) will not be treated as the owner of the S corporation stock in determining and attributing the Federal income tax consequences of a disposition of the stock by the QSST. For example, if the disposition is a sale, the QSST election terminates as to the stock sold and any gain or loss recognized on the sale will be that of the trust, not the income beneficiary. Similarly, if a QSST distributes its S corporation stock to the income beneficiary, the QSST election terminates as to the distributed stock and the consequences of the distribution are determined by reference to the status of the trust apart from the income beneficiary's terminating ownership status under sections 678 and 1361(d)(1). The portions of the trust other than the portion consisting of S corporation stock are subject to subparts A through D of subchapter J of chapter 1, except as otherwise required by subpart E of the Internal Revenue Code. However, solely for purposes of applying sections 465 and 469 to the income beneficiary, a disposition of S corporation stock by a QSST shall be treated as a disposition by the income beneficiary.

(9) ***Successive income beneficiary.***

(i) If the income beneficiary of a QSST who made a QSST election dies, each successive income beneficiary of that trust is treated as consenting to the election unless a successive income beneficiary affirmatively refuses to consent to the election. For this purpose, the term *successive income beneficiary* includes a beneficiary of a trust whose interest is a separate share within the meaning of section 663(c), but does not include any beneficiary of a trust that is created upon the death of the income beneficiary of the QSST and which is a new trust under local law.

(ii) The application of this paragraph (j)(9) is illustrated by the following examples:

Example 1. Shares of stock in Corporation X, an S corporation, are held by Trust A, a QSST for which a QSST election was made. B is the sole income beneficiary of Trust A. On B's death, under the terms of Trust A, J and K become the current income beneficiaries of Trust A. J and K each

hold a separate and independent share of Trust A within the meaning of section 663(c). J and K are successive income beneficiaries of Trust A, and they are treated as consenting to B's QSST election.

Example 2. Assume the same facts as in *Example 1,* except that on B's death, under the terms of Trust A and local law, Trust A terminates and the principal is to be divided equally and held in newly created Trust B and Trust C. The sole income beneficiaries of Trust B and Trust C are J and K, respectively. Because Trust A terminated, J and K are not successive income beneficiaries of Trust A. J and K must make QSST elections for their respective trusts to qualify as QSSTs, if they qualify. The result is the same whether or not the trustee of Trusts B and C is the same as the trustee of trust A.

(10) ***Affirmative refusal to consent*** —

(i) ***Required statement.*** A successive income beneficiary of a QSST must make an affirmative refusal to consent by signing and filing with the service center where the corporation files its income tax return a statement that—

(A) Contains the name, address, and taxpayer identification number of the successive income beneficiary, the trust, and the corporation for which the election was made;

(B) Identifies the refusal as an affirmative refusal to consent under section 1361(d)(2); and

(C) Sets forth the date on which the successive income beneficiary became the income beneficiary.

(ii) ***Filing date and effectiveness.*** The affirmative refusal to consent must be filed within 15 days and 2 months after the date on which the successive income beneficiary becomes the income beneficiary. The affirmative refusal to consent will be effective as of the date on which the successive income beneficiary becomes the current income beneficiary.

(11) ***Revocation of QSST election.*** A QSST election may be revoked only with the consent of the Commissioner. The Commissioner will not grant a revocation when one of its purposes is the avoidance of Federal income taxes or when the taxable year is closed. The application for consent to revoke the election must be submitted to the Internal Revenue Service in the form of a letter ruling request under the appropriate revenue procedure. The application must be signed by the current income beneficiary and must—

(i) Contain the name, address, and taxpayer identification number of the current income beneficiary, the trust, and the corporation with respect to which the QSST election was made;

(ii) Identify the election being revoked as an election made under section 1361(d)(2); and

(iii) Explain why the current income beneficiary seeks to revoke the QSST election and indicate that the beneficiary understands the consequences of the revocation.

(12) ***Converting a QSST to an ESBT.*** For a trust that seeks to convert from a QSST to an ESBT, the consent of the Commissioner is hereby granted to revoke the QSST election as of the effective date of the ESBT election, if all the following requirements are met:

(i) The trust meets all of the requirements to be an ESBT under paragraph (m)(1) of this section except for the requirement under paragraph (m)(1)(iv)(A) of this section that the trust not have a QSST election in effect.

(ii) The trustee and the current income beneficiary of the trust sign the ESBT election. The ESBT election must be filed with the service center where the S corporation files its income tax return. This ESBT election must state at the top of the document "ATTENTION ENTITY CONTROL—CONVERSION OF A QSST TO AN ESBT PURSUANT TO SECTION 1.1361-1(j)" and include all information otherwise required for an ESBT election under paragraph (m)(2) of this section. A separate election must be made with respect to the stock of each S corporation held by the trust.

(iii) The trust has not converted from an ESBT to a QSST within the 36-month period preceding the effective date of the new ESBT election.

(iv) The date on which the ESBT election is to be effective cannot be more than 15 days and two months prior to the date on which the election is filed and cannot be more than 12 months after the date on which the election is filed. If an election specifies an effective date more than 15 days and two months prior to the date on which the election is filed, it will be effective on the day that is 15 days and two months prior to the date on which it is filed. If an election specifies an effective date more than 12 months after the date on which the election is filed, it will be effective on the day that is 12 months after the date it is filed.

(k)

(1) ***Examples.*** The provisions of paragraphs (h) and (j) of this section are illustrated by the following examples in which it is assumed that all noncorporate persons are citizens or residents of the United States:

> *Example 1.* (i) *Terms of the trust.* In 1996, A and A's spouse, B, created an intervivos trust and each funded the trust with separately owned stock of an S corporation. Under the terms of the trust, A and B designated themselves as the income beneficiaries and each, individually, retained the power to amend or revoke the trust with respect to the trust assets attributable to their respective trust contributions. Upon A's death, the trust is to be divided into two separate parts; one part attributable to the assets A contributed to the trust and one part attributable to B's contributions. Before the trust is divided, and during the administration of A's estate, all trust income is payable to B. The part of the trust attributable to B's contributions is to continue in trust under the terms of which B is designated as the sole income beneficiary and retains the power to amend or revoke the trust. The part attributable to A's contributions is to be divided into two separate trusts both of which have B as the sole income beneficiary for life. One trust, the *Credit Shelter Trust,* is to be funded with an amount that can pass free of estate tax by reason of A's available estate tax unified credit. The terms of the Credit Shelter Trust meet the requirements of section 1361(d)(3) as a QSST. The balance of the property passes to a Marital Trust, the terms of which satisfy the requirements of section 1361(d)(3) as a QSST and section 2056(b)(7) as QTIP. The appropriate fiduciary under § 20.2056(b)-7(b)(3) is directed to make an election under section 2056(b)(7).
> (ii) *Results after deemed owner's death.* On February 3, 1997, A dies and the portion of the trust assets attributable to A's contributions including the S stock contributed by A, is includible in A's gross estate under sections 2036 and 2038. During the administration of A's

estate, the trust holds the S corporation stock. Under section 1361(c)(2)(B)(ii), A's estate is treated as the shareholder of the S corporation stock that was included in A's gross estate for purposes of section 1361(b)(1); however, for purposes of sections 1366, 1367, and 1368, the trust is treated as the shareholder. B's part of the trust continues to be a qualified subpart E trust of which B is the owner under sections 676 and 677. B, therefore, continues to be treated as the shareholder of the S corporation stock in that portion of the trust. On May 13, 1997, during the continuing administration of A's estate, the trust is divided into separate trusts in accordance with the terms of the trust instrument. The S corporation stock that was included in A's gross estate is distributed to the Marital Trust and to the Credit Shelter Trust. A's estate will cease to be treated as the shareholder of the S corporation under section 1361(c)(2)(B)(ii) on May 13, 1997 (the date on which the S corporation stock was transferred to the trusts). B, as the income beneficiary of the Marital Trust and the Credit Shelter Trust, must make the QSST election for each trust by July 28, 1997 (the end of the 16-day-and-2-month period beginning on the date the estate ceases to be treated as a shareholder) to have the trusts become permitted shareholders of the S corporation.

Example 2. (i) *Qualified subpart E trust as shareholder.* In 1997, A, an individual established a trust and transferred to the trust A's shares of stock of Corporation M, an S corporation. A has the power to revoke the entire trust. The terms of the trust require that all income be paid to B and otherwise meet the requirements of a QSST under section 1361(d)(3). The trust will continue in existence after A's death. The trust is a qualified subpart E trust described in section 1361(c)(2)(A)(i) during A's life, and A (not the trust) is treated as the shareholder for purposes of sections 1361(b)(1), 1366, 1367, and 1368.
(ii) *Trust ceasing to be a qualified subpart E trust on deemed owner's death.* Assume the same facts as paragraph (i) of this *Example 2,* except that A dies without having exercised A's power to revoke. Upon A's death, the trust ceases to be a qualified subpart E trust described in section 1361(c)(2)(A)(i). A's estate (and not the trust) is treated as the shareholder for purposes of section 1361(b)(1). A's estate will cease to be treated as the shareholder for purposes of section 1361(b)(1) upon the earlier of the transfer of the Corporation M stock by the trust (other than to A's estate), the expiration of the 2-year period beginning on the day of A's death, or the effective date of a QSST or ESBT election if the trust qualifies as a QSST or ESBT. However, until that time, because the trust continues in existence after A's death and will receive any distributions with respect to the stock it holds, the trust is treated as the shareholder for purposes of sections 1366, 1367, and 1368. If no QSST or ESBT election is made effective upon the expiration of the 2-year period, the corporation ceases to be an S corporation, but the trust continues as the shareholder of a C corporation.

(iii) *Trust continuing to be a qualified subpart E trust on deemed owner's death.* Assume the same facts as paragraph (ii) of this *Example 2,* except that the terms of the trust also provide that if A does not exercise the power to revoke before A's death, B will have the sole power to withdraw all trust property at any time after A's death. The trust continues to qualify as a

qualified subpart E trust after A's death because, upon A's death, B is deemed to be the owner of the entire trust under section 678. Because the trust does not cease to be a qualified subpart E trust upon A's death, B (and not A's estate) is treated as the shareholder for purposes of sections 1361(b)(1), 1366, 1367, and 1368. Since the trust qualifies as a QSST, B may make a protective QSST election under paragraph (j)(6)(iv) of this section.

Example 3. (i) *2-year rule under section 1361(c)(2)(A)(ii) and (iii).* F owns stock of Corporation P, an S corporation. In addition, F is the deemed owner of a qualified subpart E trust that holds stock in Corporation O, an S corporation. F dies on July 1, 2003. The trust continues in existence after F's death but is no longer a qualified subpart E trust. On August 1, 2003, F's shares of stock in Corporation P are transferred to the trust pursuant to the terms of F's will. Because the stock of Corporation P was not held by the trust when F died, section 1361(c)(2)(A)(ii) does not apply with respect to that stock. Under section 1361(c)(2)(A)(iii), the last day on which the trust could be treated as a permitted shareholder of Corporation P is July 31, 2005 (that is, the last day of the 2-year period that begins on the date of the transfer from the estate to the trust). With respect to the shares of stock in Corporation O held by the trust at the time of F's death, section 1361(c)(2)(A)(ii) applies and the last day on which the trust could be treated as a permitted shareholder of Corporation O is June 30, 2005 (that is, the last day of the 2-year period that begins on the date of F's death).
(ii) *Section 645 electing trust and successor trust.* Assume the same facts as in paragraph (i) of this *Example 3,* except that F's trust is a qualified revocable trust for which a valid section 645 election is made on October 1, 2003 (electing trust). Because under section 645 the electing trust is treated and taxed for purposes of subtitle A of the Code as part of F's estate, the trust may continue to hold the O stock pursuant to § 1361(b)(1)(B), without causing the termination of Corporation O's S election, for the duration of the section 645 election period. However, on January 1, 2004, during the election period, the shares of stock in Corporation O are transferred pursuant to the terms of the electing trust to a successor trust. Because the successor trust satisfies the definition of a testamentary trust under paragraph (h)(1)(iv) of this section, the successor trust is a permitted shareholder until the earlier of the expiration of the 2-year period beginning on January 1, 2004, or the effective date of a QSST or ESBT election for the successor trust.

Example 4. (i) *QSST when terms do not require current distribution of income.* Corporation Q, a calendar year corporation, makes an election to be an S corporation effective for calendar year 1996. On July 1, 1996, G, a shareholder of Corporation Q, transfers G's shares of Corporation Q stock to a trust with H as its current income beneficiary. The terms of the trust otherwise satisfy the QSST requirements, but authorize the trustee in its discretion to accumulate or distribute the trust income. However, the trust, which uses the calendar year as its taxable year, initially satisfies the income distribution requirement because the trustee is currently distributing all of the income. On August 1, 1996, H makes a QSST election with

respect to Corporation Q that is effective as of July 1, 1996. Accordingly, as of July 1, 1996, the trust is a QSST and H is treated as the shareholder for purposes of sections 1361(b)(1), 1366, 1367, and 1368.

(ii) *QSST when trust income is not distributed currently.* Assume the same facts as in paragraph (i) of this *Example 4,* except that, for the taxable year ending on December 31, 1997, the trustee accumulates some trust income. The trust ceases to be a QSST on January 1, 1998, because the trust failed to distribute all of its income for the taxable year ending December 31, 1997. Thus, Corporation Q ceases to be an S corporation as of January 1, 1998, because the trust is not a permitted shareholder.

(iii) *QSST when a person other than the current income beneficiary may receive trust corpus.* Assume the same facts as in paragraph (i) of this *Example 4,* except that the events occur in 2003 and H dies on November 1, 2003, and the trust does not qualify as an ESBT. Under the terms of the trust, after H's death, L is the income beneficiary of the trust and the trustee is authorized to distribute trust corpus to L as well as to J. The trust ceases to be a QSST as of November 1, 2003, because corpus distributions may be made to someone other than L, the current (successive) income beneficiary. Under section 1361(c)(2)(B)(ii), H's estate (and not the trust) is considered to be the shareholder for purposes of section 1361(b)(1) for the 2-year period beginning on November 1, 2003. However, because the trust continues in existence after H's death and will receive any distributions from the corporation, the trust (and not H's estate) is treated as the shareholder for purposes of sections 1366, 1367, and 1368, during that 2-year period. After the 2-year period, the S election terminates and the trust continues as a shareholder of a C corporation. If the termination is inadvertent, Corporation Q may request relief under section 1362(f). However, the S election would not terminate if the trustee distributed all Corporation Q shares to L, J, or both on or before October 31, 2005, (the last day of the 2-year period) assuming that neither L nor J becomes the 76th shareholder of Corporation Q as a result of the distribution.

Example 5. QSST when current income beneficiary assigns the income interest to a person not named in the trust. On January 1, 1996, stock of Corporation R, a calendar year S corporation, is transferred to a trust that satisfies all of the requirements to be a QSST. Neither the terms of the trust nor local law preclude the current income beneficiary, K, from assigning K's income interest in the trust. K files a timely QSST election that is effective January 1, 1996. On July 1, 1996, K assigns the income interest in the trust to N. Under applicable state law, the trustee is bound as a result of the assignment to distribute the trust income to N. Thus, the QSST will cease to qualify as a QSST under section 1361(d)(3)(A)(iii) because N's interest will terminate on K's death (rather than on N's death). Accordingly, as of the date of the assignment, the trust ceases to be a QSST and Corporation R ceases to be an S corporation.

Example 6. QSST when terms fail to provide for distribution of trust assets upon termination during life of current income beneficiary. A contributes S corporation stock to a trust the terms of which provide for one income beneficiary, annual distributions of income, discretionary invasion of corpus only for the benefit

of the income beneficiary, and termination of the trust only upon the death of the current income beneficiary. Since the trust can terminate only upon the death of the income beneficiary, the governing instrument fails to provide for any distribution of trust assets during the income beneficiary's life. The governing instrument's silence on this point does not disqualify the trust under section 1361(d)(3)(A) (ii) or (iv).

Example 7. QSST when settlor of trust retains a reversion in the trust. On January 10, 1996, M transfers to a trust shares of stock in corporation X, an S corporation. D, who is 13 years old and not a lineal descendant of M, is the sole income beneficiary of the trust. On termination of the trust, the principal (including the X shares) is to revert to M. The trust instrument provides that the trust will terminate upon the earlier of D's death or D's 21st birthday. The terms of the trust satisfy all of the requirements to be a QSST except those of section 1361(d)(3)(A)(ii) (that corpus may be distributed during the current income beneficiary's life only to that beneficiary) and (iv) (that, upon termination of the trust during the life of the current income beneficiary, the corpus, must be distributed to that beneficiary). On February 10, 1996, M makes a gift of M's reversionary interest to D. Until M assigns M's reversion in the trust to D, M is deemed to own the entire trust under section 673(a) and the trust is a qualified subpart E trust. For purposes of section 1361(b)(1), 1366, 1367, and 1368, M is the shareholder of X. The trust ceases to be a qualified subpart E trust on February 10, 1996. Assuming that, by virtue of the assignment to D of M's reversionary interest, D (upon his 21st birthday) or D's estate (in the case of D's death before reaching age 21) is entitled under local law to receive the trust principal, the trust will be deemed as of February 10, 1996, to have satisfied the conditions of section 1361(d)(3)(A) (ii) and (iv) even though the terms of the trust do not explicitly so provide. D must make a QSST election by no later than April 25, 1996 (the end of the 16-day-and-2-month period that begins on February 10, 1996, the date on which the X stock is deemed transferred to the trust by M). See example (5) of § 1.1001-2(c) of the regulations.

Example 8. QSST when the income beneficiary has the power to withdraw corpus. On January 1, 1996, F transfers stock of an S corporation to an irrevocable trust whose income beneficiary is F's son, C. Under the terms of the trust, C is given the noncumulative power to withdraw from the corpus of the trust the greater of $5,000 or 5 percent of the value of the corpus on a yearly basis. The terms of the trust meet the QSST requirements. Assuming the trust distributions are not in satisfaction of F's legal obligation to support C, the trust qualifies as a QSST. C (or if C is a minor, C's legal representative) must make the QSST election no later than March 16, 1996 (the end of the 16-day-and-2-month period that begins on the date the stock is transferred to the trust).

> *Example 9.* (i) *Filing the QSST election.* On January 1, 1996, stock of Corporation T, a calendar year C corporation, is transferred to a trust that satisfies all of the requirements to be a QSST. On January 31, 1996, Corporation T files an election to be an S corporation that is to be effective for its taxable year beginning on January 1, 1996. In order for the S election to be effective for the 1996 taxable year, the QSST election must be effective January 1, 1996, and must be filed within the period beginning on January 1, 1996, and ending March 16, 1996 (the 16-day-and-2-month period beginning on the first day of the first taxable year for which the election to be an S corporation is intended to be effective).

(ii) *QSST election when the S election is filed late.* Assume the same facts as in paragraph (i) of this *Example 9,* except that Corporation T's election to be an S corporation is filed on April 1, 1996 (after the 15th day of the 3rd month of the first taxable year for which it is to be effective but before the end of that taxable year). Because the election to be an S corporation is not timely filed for the 1996 taxable year, under section 1362(b)(3), the S election is treated as made for the taxable year beginning on January 1, 1997. The QSST election must be filed within the 16-day-and-2-month period beginning on April 1, 1996, the date the S election was made, and ending on June 16, 1996.

Example 10. (i) *Transfers to QTIP trust.* On June 1, 1996, A transferred S corporation stock to a trust for the benefit of A's spouse B, the terms of which satisfy the requirements of section 2523(f)(2) as qualified terminable interest property. Under the terms of the trust, B is the sole income beneficiary for life. In addition, corpus may be distributed to B, at the trustee's discretion, during B's lifetime. However, under section 677(a), A is treated as the owner of the trust. Accordingly, the trust is a permitted shareholder of the S corporation under section 1361(c)(2)(A)(i), and A is treated as the shareholder for purposes of sections 1361(b)(1), 1366, 1367, and 1368.
(ii) *Transfers to QTIP trust where husband and wife divorce.* Assume the same facts as in paragraph (i) of this *Example 10,* except that A and B divorce on May 2, 1997. Under section 682, A ceases to be treated as the owner of the trust under section 677(a) because A and B are no longer husband and wife. Under section 682, after the divorce, B is the income beneficiary of the trust and corpus of the trust may only be distributed to B. Accordingly, assuming the trust otherwise meets the requirements of section 1361(d)(3), B must make the QSST election within 2 months and 15 days after the date of the divorce.

(iii) *Transfers to QTIP trust where no corpus distribution is permitted.* Assume the same facts as in paragraph (i) of this *Example 10,* except that the terms of the trust do not permit corpus to be distributed to B and require its retention by the trust for distribution to A and B's surviving children after the death of B. Under section 677, A is treated as the owner of the ordinary income portion of the trust, but the trust will be subject to tax on gross income allocable to corpus. Accordingly, the trust does not qualify as an eligible shareholder of the S corporation because it is neither a qualified subpart E trust nor a QSST.

(2) ***Effective date*** —

(i) ***In general.*** Paragraph (a) of this section, and paragraphs (c) through (k) of this section (as contained in the 26 CFR edition revised April 1, 2003) apply to taxable years of a corporation beginning after July 21, 1995. For taxable years beginning on or before July 21, 1995, to which paragraph (a) of this section and paragraphs (c) through (k) of this section (as contained in the 26 CFR edition revised April 1, 2003) do not apply, see § 18.1361-1 of this chapter (as

contained in the 26 CFR edition revised April 1, 1995). However, paragraphs (h)(1)(vi), (h)(3)(i)(F), (h)(3)(ii), and (j)(12) of this section (as contained in the 26 CFR edition revised April 1, 2003) are applicable for taxable years beginning on and after May 14, 2002. Otherwise, paragraphs (b)(1)(ii), (f), (h)(1)(ii), (h)(1)(iv), (h)(3)(i)(B), (h)(3)(i)(D), (h)(3)(ii)(A), (h)(3)(ii)(B), (j)(6)(iii)(C), (j)(6)(iii)(D), (j)(7)(ii), and (k)(1) *Example 2*(ii) fourth and last sentences, *Example 3,* and *Example 4*(iii) of this section apply on and after July 17, 2003. Paragraphs (b)(1)(i), (e)(1), (e)(3), (h)(1)(vii), (h)(3)(i)(G), and the fifth sentence of paragraph (j)(8) are effective on *August 14, 2008.*

(ii) ***Transition rules.*** Taxpayers may apply paragraph (h)(1)(iv)(B) of this section on and after December 24, 2002, and before July 17, 2003, to treat a trust as a testamentary trust, but not during any period for which a QSST or ESBT election was in effect for the trust. In addition, the Internal Revenue Service will not challenge the treatment of a trust described in paragraph (h)(1)(iv)(B) of this section as a permitted shareholder of an S corporation for periods after August 5, 1997, and before the earlier of July 17, 2003, or the effective date of any QSST or ESBT election for that trust.

(iii) ***Exception.*** If a QSST has sold or otherwise disposed of all or a portion of its S corporation stock in a tax year that is open for the QSST and the income beneficiary but on or before July 21, 1995, the QSST and the income beneficiary may both treat the transaction as if the beneficiary was the owner of the stock sold or disposed of, and thus recognize any gain or loss, or as if the QSST was the owner of the stock sold or disposed of as described in paragraph (j)(8) of this section. This exception applies only if the QSST and the income beneficiary take consistent reporting positions. The QSST and the income beneficiary must disclose by a statement on their respective returns (or amended returns), that they are taking consistent reporting positions.

(l) ***Classes of stock*** —

(1) ***General rule.*** A corporation that has more than one class of stock does not qualify as a small business corporation. Except as provided in paragraph (l)(4) of this section (relating to instruments, obligations, or arrangements treated as a second class of stock), a corporation is treated as having only one class of stock if all outstanding shares of stock of the corporation confer identical rights to distribution and liquidation proceeds. Differences in voting rights among shares of stock of a corporation are disregarded in determining whether a corporation has more than one class of stock. Thus, if all shares of stock of an S corporation have identical rights to distribution and liquidation proceeds, the corporation may have voting and nonvoting common stock, a class of stock that may vote only on certain issues, irrevocable proxy agreements, or groups of shares that differ with respect to rights to elect members of the board of directors.

(2) ***Determination of whether stock confers identical rights to distribution and liquidation proceeds*** —

(i) ***In general.*** The determination of whether all outstanding shares of stock confer identical rights to distribution and liquidation proceeds is made based on the corporate charter, articles of incorporation, bylaws, applicable state law, and binding agreements relating to distribution and liquidation proceeds (collectively, the governing provisions). A commercial contractual agreement, such as a lease, employment agreement, or loan agreement, is not a binding agreement relating to distribution and liquidation proceeds and thus is not a governing provision unless a principal purpose of the agreement is to circumvent the one class of stock requirement of section 1361(b)(1)(D) and this paragraph (l). Although a corporation is not treated as having more than one class of stock so long as the governing provisions provide for

identical distribution and liquidation rights, any distributions (including actual, constructive, or deemed distributions) that differ in timing or amount are to be given appropriate tax effect in accordance with the facts and circumstances.

(ii) ***State law requirements for payment and withholding of income tax.*** State laws may require a corporation to pay or withhold state income taxes on behalf of some or all of the corporation's shareholders. Such laws are disregarded in determining whether all outstanding shares of stock of the corporation confer identical rights to distribution and liquidation proceeds, within the meaning of paragraph (l)(1) of this section, provided that, when the constructive distributions resulting from the payment or withholding of taxes by the corporation are taken into account, the outstanding shares confer identical rights to distribution and liquidation proceeds. A difference in timing between the constructive distributions and the actual distributions to the other shareholders does not cause the corporation to be treated as having more than one class of stock.

(iii) ***Buy-sell and redemption agreements*** —

(A) ***In general.*** Buy-sell agreements among shareholders, agreements restricting the transferability of stock, and redemption agreements are disregarded in determining whether a corporation's outstanding shares of stock confer identical distribution and liquidation rights unless—

(*1*) A principal purpose of the agreement is to circumvent the one class of stock requirement of section 1361(b)(1)(D) and this paragraph (l), and

(*2*) The agreement establishes a purchase price that, at the time the agreement is entered into, is significantly in excess of or below the fair market value of the stock.

Agreements that provide for the purchase or redemption of stock at book value or at a price between fair market value and book value are not considered to establish a price that is significantly in excess of or below the fair market value of the stock and, thus, are disregarded in determining whether the outstanding shares of stock confer identical rights. For purposes of this paragraph (l)(2)(iii)(A), a good faith determination of fair market value will be respected unless it can be shown that the value was substantially in error and the determination of the value was not performed with reasonable diligence. Although an agreement may be disregarded in determining whether shares of stock confer identical distribution and liquidation rights, payments pursuant to the agreement may have income or transfer tax consequences.

(B) ***Exception for certain agreements.*** Bona fide agreements to redeem or purchase stock at the time of death, divorce, disability, or termination of employment are disregarded in determining whether a corporation's shares of stock confer identical rights. In addition, if stock that is substantially nonvested (within the meaning of § 1.83-3(b)) is treated as outstanding under these regulations, the forfeiture provisions that cause the stock to be substantially nonvested are disregarded. Furthermore, the Commissioner may provide by Revenue Ruling or other published guidance that other types of bona fide agreements to redeem or purchase stock are disregarded.

(C) ***Safe harbors for determinations of book value.*** A determination of book value will be respected if—

(1) The book value is determined in accordance with Generally Accepted Accounting Principles (including permitted optional adjustments); or

(2) The book value is used for any substantial nontax purpose.

(iv) ***Distributions that take into account varying interests in stock during a taxable year.*** A governing provision does not, within the meaning of paragraph (l)(2)(i) of this section, alter the rights to liquidation and distribution proceeds conferred by an S corporation's stock merely because the governing provision provides that, as a result of a change in stock ownership, distributions in a taxable year are to be made on the basis of the shareholders' varying interests in the S corporation's income in the current or immediately preceding taxable year. If distributions pursuant to the provision are not made within a reasonable time after the close of the taxable year in which the varying interests occur, the distributions may be recharacterized depending on the facts and circumstances, but will not result in a second class of stock.

(v) ***Special rule for section 338(h)(10) elections.*** If the shareholders of an S corporation sell their stock in a transaction for which an election is made under section 338(h)(10) and § 1.338(h)(10)-1, the receipt of varying amounts per share by the shareholders will not cause the S corporation to have more than one class of stock, provided that the varying amounts are determined in arm's length negotiations with the purchaser.

(vi) ***Examples.*** The application of paragraph (l)(2) of this section may be illustrated by the following examples. In each of the examples, the S corporation requirements of section 1361 are satisfied except as otherwise stated, the corporation has in effect an S election under section 1362, and the corporation has only the shareholders described.

> *Example 1. Determination of whether stock confers identical rights to distribution and liquidation proceeds.* (i) The law of State A requires that permission be obtained from the State Commissioner of Corporations before stock may be issued by a corporation. The Commissioner grants permission to S, a corporation, to issue its stock subject to the restriction that any person who is issued stock in exchange for property, and not cash, must waive all rights to receive distributions until the shareholders who contributed cash for stock have received distributions in the amount of their cash contributions.
> (ii) The condition imposed by the Commissioner pursuant to state law alters the rights to distribution and liquidation proceeds conferred by the outstanding stock of S so that those rights are not identical. Accordingly, under paragraph (l)(2)(i) of this section, S is treated as having more than one class of stock and does not qualify as a small business corporation.

> *Example 2. Distributions that differ in timing.* (i) S, a corporation, has two equal shareholders, A and B. Under S's bylaws, A and B are entitled to equal distributions. S distributes $50,000 to A in the current year, but does not distribute $50,000 to B until one year later. The circumstances indicate that the difference in timing did not occur by reason of a binding agreement relating to distribution or liquidation proceeds.

(ii) Under paragraph (l)(2)(i) of this section, the difference in timing of the distributions to A and B does not cause S to be treated as having more than one class of stock. However, section 7872 or other recharacterization principles may apply to determine the appropriate tax consequences.

Example 3. Treatment of excessive compensation. (i) S, a corporation, has two equal shareholders, C and D, who are each employed by S and have binding employment agreements with S. The compensation paid by S to C under C's employment agreement is reasonable. The compensation paid by S to D under D's employment agreement, however, is found to be excessive. The facts and circumstances do not reflect that a principal purpose to D's employment agreement is to circumvent the one class of stock requirement of section 1361(b)(1)(D) and this paragraph (l).
(ii) Under paragraph (l)(2)(i) of this section, the employment agreements are not governing provisions. Accordingly, S is not treated as having more than one class of stock by reason of the employment agreements, even though S is not allowed a deduction for the excessive compensation paid to D.

Example 4. Agreement to pay fringe benefits. (i) S, a corporation, is required under binding agreements to pay accident and health insurance premiums on behalf of certain of its employees who are also shareholders. Different premium amounts are paid by S for each employee-shareholder. The facts and circumstances do not reflect that a principal purpose of the agreements is to circumvent the one class of stock requirement of section 1361(b)(1)(D) and this paragraph (l).
(ii) Under paragraph (l)(2)(i) of this section, the agreements are not governing provisions. Accordingly, S is not treated as having more than one class of stock by reason of the agreements. In addition, S is not treated as having more than one class of stock by reason of the payment of fringe benefits.

Example 5. Below-market corporation-shareholder loan. (i) E is a shareholder of S, a corporation. S makes a below-market loan to E that is a corporation-shareholder loan to which section 7872 applies. Under section 7872, E is deemed to receive a distribution with respect to S stock by reason of the loan. The facts and circumstances do not reflect that a principal purpose of the loan is to circumvent the one class of stock requirement of section 1361(b)(1)(D) and this paragraph (l).
(ii) Under paragraph (l)(2)(i) of this section, the loan agreement is not a governing provision. Accordingly, S is not treated as having more than one class of stock by reason of the below-market loan to E.

Example 6. Agreement to adjust distributions for state tax burdens. (i) S, a corporation, executes a binding agreement with its shareholders to modify its normal distribution

policy by making upward adjustments of its distributions to those shareholders who bear heavier state tax burdens. The adjustments are based on a formula that will give the shareholders equal after-tax distributions.
(ii) The binding agreement relates to distribution or liquidation proceeds. The agreement is thus a governing provision that alters the rights conferred by the outstanding stock of S to distribution proceeds so that those rights are not identical. Therefore, under paragraph (l)(2)(i) of this section, S is treated as having more than one class of stock.

Example 7. State law requirements for payment and withholding of income tax. (i) The law of State X requires corporations to pay state income taxes on behalf of nonresident shareholders. The law of State X does not require corporations to pay state income taxes on behalf of resident shareholders. S is incorporated in State X. S's resident shareholders have the right (for example, under the law of State X or pursuant to S's bylaws or a binding agreement) to distributions that take into account the payments S makes on behalf of its nonresident shareholders.
(ii) The payment by S of state income taxes on behalf of its nonresident shareholders are generally treated as constructive distributions to those shareholders. Because S's resident shareholders have the right to equal distributions, taking into account the constructive distributions to the nonresident shareholders, S's shares confer identical rights to distribution proceeds. Accordingly, under paragraph (l)(2)(ii) of this section, the state law requiring S to pay state income taxes on behalf of its nonresident shareholders is disregarded in determining whether S has more than one class of stock.

(iii) The same result would follow if the payments of state income taxes on behalf of nonresident shareholders are instead treated as advances to those shareholders and the governing provisions require the advances to be repaid or offset by reductions in distributions to those shareholders.

Example 8. Redemption agreements. (i) F, G, and H are shareholders of S, a corporation. F is also an employee of S. By agreement, S is to redeem F's shares on the termination of F's employment.
(ii) On these facts, under paragraph (l)(2)(iii)(B) of this section, the agreement is disregarded in determining whether all outstanding shares of S's stock confer identical rights to distribution and liquidation proceeds.

Example 9. Analysis of redemption agreements. (i) J, K, and L are shareholders of S, a corporation. L is also an employee of S. L's shares were not issued to L in connection with the performance of services. By agreement, S is to redeem L's shares for an amount significantly below their fair market value on the termination of L's employment or if S's sales fall below certain levels.

(ii) Under paragraph (l)(2)(iii)(B) of this section, the portion of the agreement providing for redemption of L's stock on termination of employment is disregarded. Under paragraph (l)(2)(iii)(A), the portion of the agreement providing for redemption of L's stock if S's sales fall below certain levels is disregarded unless a principal purpose of that portion of the agreement is to circumvent the one class of stock requirement of section 1361(b)(1)(D) and this paragraph (l).

(3) ***Stock taken into account.*** Except as provided in paragraphs (b) (3), (4), and (5) of this section (relating to restricted stock, deferred compensation plans, and straight debt), in determining whether all outstanding shares of stock confer identical rights to distribution and liquidation proceeds, all outstanding shares of stock of a corporation are taken into account. For example, substantially nonvested stock with respect to which an election under section 83(b) has been made is taken into account in determining whether a corporation has a second class of stock, and such stock is not treated as a second class of stock if the stock confers rights to distribution and liquidation proceeds that are identical, within the meaning of paragraph (l)(1) of this section, to the rights conferred by the other outstanding shares of stock.

(4) ***Other instruments, obligations, or arrangements treated as a second class of stock*** —

(i) ***In general.*** Instruments, obligations, or arrangements are not treated as a second class of stock for purposes of this paragraph (l) unless they are described in paragraph (l)(5) (ii) or (iii) of this section. However, in no event are instruments, obligations, or arrangements described in paragraph (b)(4) of this section (relating to deferred compensation plans), paragraphs (l)(4)(iii) (B) and (C) of this section (relating to the exceptions and safe harbor for options), paragraph (l)(4)(ii)(B) of this section (relating to the safe harbors for certain short-term unwritten advances and proportionally-held debt), or paragraph (l)(5) of this section (relating to the safe harbor for straight debt), treated as a second class of stock for purposes of this paragraph (l).

(ii) ***Instruments, obligations, or arrangements treated as equity under general principles*** —

(A) ***In general.*** Except as provided in paragraph (l)(4)(i) of this section, any instrument, obligation, or arrangement issued by a corporation (other than outstanding shares of stock described in paragraph (l)(3) of this section), regardless of whether designated as debt, is treated as a second class of stock of the corporation—

(*1*) If the instrument, obligation, or arrangement constituters equity or otherwise results in the holder being treated as the owner of stock under general principles of Federal tax law; and

(*2*) A principal purpose of issuing or entering into the instrument, obligation, or arrangement is to circumvent the rights to distribution or liquidation proceeds conferred by the outstanding shares of stock or to circumvent the limitation on eligible shareholders contained in paragraph (b)(1) of this section.

(B) ***Safe harbor for certain short-term unwritten advances and proportionately held obligations*** —

(*1*) ***Short-term unwritten advances.*** Unwritten advances from a shareholder that do not exceed $10,000 in the aggregate at any time during the taxable year of the corporation, are treated as debt by the parties, and are expected to be repaid within a

reasonable time are not treated as a second class of stock for that taxable year, even if the advances are considered equity under general principles of Federal tax law. The failure of an unwritten advance to meet this safe harbor will not result in a second class of stock unless the advance is considered equity under paragraph (l)(4)(ii)(A)(*1*) of this section and a principal purpose of the advance is to circumvent the rights of the outstanding shares of stock or the limitation on eligible shareholders under paragraph (l)(4)(ii)(A)(*2*) of this section.

(*2*) ***Proportionately-held obligations.*** Obligations of the same class that are considered equity under general principles of Federal tax law, but are owned solely by the owners of, and in the same proportion as, the outstanding stock of the corporation, are not treated as a second class of stock. Furthermore, an obligation or obligations owned by the sole shareholder of a corporation are always held proportionately to the corporation's outstanding stock. The obligations that are considered equity that do not meet this safe harbor will not result in a second class of stock unless a principal purpose of the obligations is to circumvent the rights of the outstanding shares of stock or the limitation on eligible shareholders under paragraph (l)(4)(ii)(A)(*2*) of this section.

(iii) ***Certain call options, warrants or similar instruments*** —

(A) ***In general.*** Except as otherwise provided in this paragraph (l)(4)(iii), a call option, warrant, or similar instrument (collectively, call option) issued by a corporation is treated as a second class of stock of the corporation if, taking into account all the facts and circumstances, the call option is substantially certain to be exercised (by the holder or a potential transferee) and has a strike price substantially below the fair market value of the underlying stock on the date that the call option is issued, transferred by a person who is an eligible shareholder under paragraph (b)(1) of this section to a person who is not an eligible shareholder under paragraph (b)(1) of this section, or materially modified. For purposes of this paragraph (l)(4)(iii), if an option is issued in connection with a loan and the time period in which the option can be exercised is extended in connection with (and consistent with) a modification of the terms of the loan, the extension of the time period in which the option may be exercised is not considered a material modification. In addition, a call option does not have a strike price substantially below fair market value if the price at the time of exercise cannot, pursuant to the terms of the instrument, be substantially below the fair market value of the underlying stock at the time of exercise.

(B) ***Certain exceptions.***

(*1*) A call option is not treated as a second class of stock for purposes of this paragraph (l) if it is issued to a person that is actively and regularly engaged in the business of lending and issued in connection with a commercially reasonable loan to the corporation. This paragraph (l)(4)(iii)(B)(*1*) continues to apply if the call option is transferred with the loan (or if a portion of the call option is transferred with a corresponding portion of the loan). However, if the call option is transferred without a corresponding portion of the loan, this paragraph (l)(4)(iii)(B)(*1*) ceases to apply. Upon that transfer, the call option is tested under paragraph (l)(4)(iii)(A) (notwithstanding anything in that paragraph to the contrary) if, but for this paragraph, the call option would have been treated as a second class of stock on the date it was issued.

(2) A call option that is issued to an individual who is either an employee or an independent contractor in connection with the performance of services for the corporation or a related corporation (and that is not excessive by reference to the services performed) is not treated as a second class of stock for purposes of this paragraph (l) if—

(i) The call option is nontransferable within the meaning of § 1.83-3(d); and

(ii) The call option does not have a readily ascertainable fair market value as defined in § 1.83-7(b) at the time the option is issued.

If the call option becomes transferable, this paragraph (l)(4)(iii)(B)(2) ceases to apply. Solely for purposes of this paragraph (l)(4)(iii)(B)(2), a corporation is related to the issuing corporation if more than 50 percent of the total voting power and total value of its stock is owned by the issuing corporation.

(3) The Commissioner may provide other exceptions by Revenue Ruling or other published guidance.

(C) ***Safe harbor for certain options.*** A call option is not treated as a second class of stock if, on the date the call option is issued, transferred by a person who is an eligible shareholder under paragraph (b)(1) of this section to a person who is not an eligible shareholder under paragraph (b)(1) of this section, or materially modified, the strike price of the call option is at least 90 percent of the fair market value of the underlying stock on that date. For purposes of this paragraph (l)(4)(iii)(C), a good faith determination of fair market value by the corporation will be respected unless it can be shown that the value was substantially in error and the determination of the value was not performed with reasonable diligence to obtain a fair value. Failure of an option to meet this safe harbor will not necessarily result in the option being treated as a second class of stock.

(iv) ***Convertible debt.*** A convertible debt instrument is considered a second class of stock if—

(A) It would be treated as a second class of stock under paragraph (l)(4)(ii) of this section (relating to instruments, obligations, or arrangements treated as equity under general principles); or

(B) It embodies rights equivalent to those of a call option that would be treated as a second class of stock under paragraph (l)(4)(iii) of this section (relating to certain call options, warrants, and similar instruments).

(v) ***Examples.*** The application of this paragraph (l)(4) may be illustrated by the following examples. In each of the examples, the S corporation requirements of section 1361 are satisfied except as otherwise stated, the corporation has in effect an S election under section 1362, and the corporation has only the shareholders described.

> *Example 1. Transfer of call option by eligible shareholder to ineligible shareholder.* (i) S, a corporation, has 10 shareholders. S issues call options to A, B, and C, individuals who are U.S. residents. A, B, and C are not shareholders, employees, or independent contractors of S. The options have a strike price of $40 and are issued on a date when the fair market value of S stock is also $40. A year later, P, a partnership, purchases A's option. On the date of transfer, the fair market value of S stock is $80.

(ii) On the date the call option is issued, its strike price is not substantially below the fair market value of the S stock. Under paragraph (l)(4)(iii)(A) of this section, whether a call option is a second class of stock must be redetermined if the call option is transferred by a person who is an eligible shareholder under paragraph (b)(1) of this section to a person who is not an eligible shareholder under paragraph (b)(1) of this section. In this case, A is an eligible shareholder of S under paragraph (b)(1) of this section, but P is not. Accordingly, the option is retested on the date it is transferred to D.

(iii) Because on the date the call option is transferred to P its strike price is 50% of the fair market value, the strike price is substantially below the fair market value of the S stock. Accordingly, the call option is treated as a second class of stock as of the date it is transferred to P if, at that time, it is determined that the option is substantially certain to be exercised. The determination of whether the option is substantially certain to be exercised is made on the basis of all the facts and circumstances.

Example 2. Call option issued in connection with the performance of services. (i) E is a bona fide employee of S, a corporation. S issues to E a call option in connection with E's performance of services. At the time the call option is issued, it is not transferable and does not have a readily ascertainable fair market value. However, the call option becomes transferable before it is exercised by E.
(ii) While the option is not transferable, under paragraph (l)(4)(iii)(B)(2) of this section, it is not treated as a second class of stock, regardless of its strike price. When the option becomes transferable, that paragraph ceases to apply, and the general rule of paragraph (l)(4)(iii)(A) of this section applies. Accordingly, if the option is materially modified or is transferred to a person who is not an eligible shareholder under paragraph (b)(1) of this section, and on the date of such modification or transfer, the option is substantially certain to be exercised and has a strike price substantially below the fair market value of the underlying stock, the option is treated as a second class of stock.

(iii) If E left S's employment before the option became transferable, the exception provided by paragraph (l)(4)(iii)(B)(2) would continue to apply until the option became transferable.

(5) ***Straight debt safe harbor*** —

(i) ***In general.*** Notwithstanding paragraph (l)(4) of this section, straight debt is not treated as a second class of stock. For purposes of section 1361(c)(5) and this section, the term straight debt means a written unconditional obligation, regardless of whether embodied in a formal note, to pay a sum certain on demand, or on a specified due date, which—

(A) Does not provide for an interest rate or payment dates that are contingent on profits, the borrower's discretion, the payment of dividends with respect to common stock, or similar factors;

(B) Is not convertible (directly or indirectly) into stock or any other equity interest of the S corporation; and

(C) Is held by an individual (other than a nonresident alien), an estate, or a trust described in section 1361(c)(2).

(ii) ***Subordination.*** The fact that an obligation is subordinated to other debt of the corporation does not prevent the obligation from qualifying as straight debt.

(iii) ***Modification or transfer.*** An obligation that originally qualifies as straight debt ceases to so qualify if the obligation—

(A) Is materially modified so that it no longer satisfies the definition of straight debt; or

(B) Is transferred to a third party who is not an eligible shareholder under paragraph (b)(1) of this section.

(iv) ***Treatment of straight debt for other purposes.*** An obligation of an S corporation that satisfies the definition of straight debt in paragraph (l)(5)(i) of this section is not treated as a second class of stock even if it is considered equity under general principles of Federal tax law. Such an obligation is generally treated as debt and when so treated is subject to the applicable rules governing indebtedness for other purposes of the Code. Accordingly, interest paid or accrued with respect to a straight debt obligation is generally treated as interest by the corporation and the recipient and does not constitute a distribution to which section 1368 applies. However, if a straight debt obligation bears a rate of interest that is unreasonably high, an appropriate portion of the interest may be recharacterized and treated as a payment that is not interest. Such a recharacterization does not result in a second class of stock.

(v) ***Treatment of C corporation debt upon conversion to S status.*** If a C corporation has outstanding an obligation that satisfies the definition of straight debt in paragraph (l)(5)(i) of this section, but that is considered equity under general principles of Federal tax law, the obligation is not treated as a second class of stock for purposes of this section if the C corporation converts to S status. In addition, the conversion from C corporation status to S corporation status is not treated as an exchange of debt for stock with respect to such an instrument.

(6) ***Inadvertent terminations.*** See section 1362(f) and the regulations thereunder for rules relating to inadvertent terminations in cases where the one class of stock requirement has been inadvertently breached.

(7) ***Effective date.*** Section 1.1361-1(l) generally applies to taxable years of a corporation beginning on or after May 28, 1992. However, § 1.1361-1(l) does not apply to: an instrument, obligation, or arrangement issued or entered into before May 28, 1992, and not materially modified after that date; a buy-sell agreement, redemption agreement, or agreement restricting transferability entered into before May 28, 1992, and not materially modified after that date; or a call option or similar instrument issued before May 28, 1992, and not materially modified after that date. In addition, a corporation and its shareholders may apply this § 1.1361-1(l) to prior taxable years.

(m) ***Electing small business trust (ESBT)*** —

(1) ***Definition*** —

(i) ***General rule.*** An electing small business trust (ESBT) means any trust if it meets the following requirements: the trust does not have as a beneficiary any person other than an individual, an estate, an organization described in section 170(c)(2) through (5), or an organization described in section 170(c)(1) that holds a contingent interest in such trust and is not a potential current beneficiary; no interest in the trust has been acquired by purchase; and the trustee of the trust makes a timely ESBT election for the trust.

(ii) ***Qualified beneficiaries*** —

(A) ***In general.*** For purposes of this section, a beneficiary includes a person who has a present, remainder, or reversionary interest in the trust.

(B) ***Distributee trusts.*** A distributee trust is the beneficiary of the ESBT only if the distributee trust is an organization described in section 170(c)(2) or (3). In all other situations, any person who has a beneficial interest in a distributee trust is a beneficiary of the ESBT. A distributee trust is a trust that receives or may receive a distribution from an ESBT, whether the rights to receive the distribution are fixed or contingent, or immediate or deferred.

(C) ***Powers of appointment.*** A person in whose favor a power of appointment could be exercised is not a beneficiary of an ESBT until the holder of the power of appointment actually exercises the power in favor of such person.

(D) ***Nonresident aliens.*** A nonresident alien (NRA), as defined in section 7701(b)(1)(B), is an eligible beneficiary of an ESBT and an eligible potential current beneficiary.

(iii) ***Interests acquired by purchase.*** A trust does not qualify as an ESBT if any interest in the trust has been acquired by purchase. Generally, if a person acquires an interest in the trust and thereby becomes a beneficiary of the trust as defined in paragraph (m)(1)(ii)(A), and any portion of the basis in the acquired interest in the trust is determined under section 1012, such interest has been acquired by purchase. This includes a net gift of a beneficial interest in the trust, in which the person acquiring the beneficial interest pays the gift tax. The trust itself may acquire S corporation stock or other property by purchase or in a part-gift, part-sale transaction.

(iv) ***Ineligible trusts.*** An ESBT does not include—

(A) Any qualified subchapter S trust (as defined in section 1361(d)(3)) if an election under section 1361(d)(2) applies with respect to any corporation the stock of which is held by the trust;

(B) Any trust exempt from tax or not subject to tax under subtitle A; or

(C) Any charitable remainder annuity trust or charitable remainder unitrust (as defined in section 664(d)).

(2) ***ESBT election*** —

(i) ***In general.*** The trustee of the trust must make the ESBT election by signing and filing, with the service center where the S corporation files its income tax return, a statement that meets the requirements of paragraph (m)(2)(ii) of this section. If there is more than one trustee, the trustee or trustees with authority to legally bind the trust must sign the election statement. If any one of several trustees can legally bind the trust, only one trustee needs to sign the election statement. Generally, only one ESBT election is made for the trust, regardless of the number of

S corporations whose stock is held by the ESBT. However, if the ESBT holds stock in multiple S corporations that file in different service centers, the ESBT election must be filed with all the relevant service centers where the corporations file their income tax returns. This requirement applies only at the time of the initial ESBT election; if the ESBT later acquires stock in an S corporation which files its income tax return at a different service center, a new ESBT election is not required.

(ii) ***Election statement.*** The election statement must include—

(A) The name, address, and taxpayer identification number of the trust, the potential current beneficiaries, and the S corporations in which the trust currently holds stock. If the trust includes a power described in paragraph (m)(4)(vi)(B) of this section, then the election statement must include a statement that such a power is included in the instrument, but does not need to include the name, address, or taxpayer identification number of any particular charity or any other information regarding the power.

(B) An identification of the election as an ESBT election made under section 1361(e)(3);

(C) The first date on which the trust owned stock in each S corporation;

(D) The date on which the election is to become effective (not earlier than 15 days and two months before the date on which the election is filed); and

(E) Representations signed by the trustee stating that—

(*1*) The trust meets the definitional requirements of section 1361(e)(1); and

(*2*) All potential current beneficiaries of the trust meet the shareholder requirements of section 1361(b)(1); for the purpose of this paragraph (m)(2)(ii)(E)(*2*), an NRA potential current beneficiary does not violate the requirement under section 1361(b)(1)(C) that an S corporation cannot have an NRA as a shareholder.

(iii) ***Due date for ESBT election.*** The ESBT election must be filed within the time requirements prescribed in paragraph (j)(6)(iii) of this section for filing a qualified subchapter S trust (QSST) election.

(iv) ***Election by a trust described in section 1361(c)(2)(A)(ii) or (iii).*** A trust that is a qualified S corporation shareholder under section 1361(c)(2)(A)(ii) or (iii) may elect ESBT treatment at any time during the 2-year period described in those sections or the 16-day-and-2-month period beginning on the date after the end of the 2-year period. If the trust makes an ineffective ESBT election, the trust will continue nevertheless to qualify as an eligible S corporation shareholder for the remainder of the period described in section 1361(c)(2)(A)(ii) or (iii).

(v) ***No protective election.*** A trust cannot make a conditional ESBT election that would be effective only in the event the trust fails to meet the requirements for an eligible trust described in section 1361(c)(2)(A)(i) through (iv). If a trust attempts to make such a conditional ESBT election and it fails to qualify as an eligible S corporation shareholder under section 1361(c)(2)(A)(i) through (iv), the S corporation election will be ineffective or will terminate because the corporation will have an ineligible shareholder. Relief may be available under section 1362(f) for an inadvertent ineffective S corporation election or an inadvertent S corporation election termination. In addition, a trust that qualifies as an ESBT may make an ESBT election notwithstanding that the trust is a wholly-owned grantor trust.

(3) *Effect of ESBT election* —

(i) ***General rule.*** If a trust makes a valid ESBT election, the trust will be treated as an ESBT for purposes of chapter 1 of the Internal Revenue Code as of the effective date of the ESBT election.

(ii) ***Employer Identification Number.*** An ESBT has only one employer identification number (EIN). If an existing trust makes an ESBT election, the trust continues to use the EIN it currently uses.

(iii) ***Taxable year.*** If an ESBT election is effective on a day other than the first day of the trust's taxable year, the ESBT election does not cause the trust's taxable year to close. The termination of the ESBT election (including a termination caused by a conversion of the ESBT to a QSST) other than on the last day of the trust's taxable year also does not cause the trust's taxable year to close. In either case, the trust files one tax return for the taxable year.

(iv) ***Allocation of S corporation items.*** If, during the taxable year of an S corporation, a trust is an ESBT for part of the year and an eligible shareholder under section 1361(c)(2)(A)(i) through (iv) for the rest of the year, the S corporation items are allocated between the two types of trusts under section 1377(a). See § 1.1377-1(a)(2)(iii).

(v) ***Estimated taxes.*** If an ESBT election is effective on a day other than the first day of the trust's taxable year, the trust is considered one trust for purposes of estimated taxes under section 6654.

(4) *Potential current beneficiaries* —

(i) ***In general.*** For purposes of determining whether a corporation is a small business corporation within the meaning of section 1361(b)(1), each potential current beneficiary of an ESBT generally is treated as a shareholder of the corporation. Subject to the provisions of this paragraph (m)(4), a potential current beneficiary generally is, with respect to any period, any person who at any time during such period is entitled to, or in the discretion of any person may receive, a distribution from the principal or income of the trust. A person is treated as a shareholder of the S corporation at any moment in time when that person is entitled to, or in the discretion of any person may, receive a distribution of principal or income of the trust. No person is treated as a potential current beneficiary solely because that person holds any future interest in the trust. An NRA potential current beneficiary of an ESBT is treated as a shareholder for purposes of the 100-shareholder limit under section 1361(b)(1)(A). However, an NRA potential current beneficiary of an ESBT is not treated as a shareholder in determining whether a corporation is a small business corporation for purposes of the NRA-shareholder prohibition under section 1361(b)(1)(C).

(ii) ***Grantor trusts.*** If all or a portion of an ESBT is treated as owned by a person under subpart E, part I, subchapter J, chapter 1 of the Internal Revenue Code, such owner is a potential current beneficiary in addition to persons described in paragraph (m)(4)(i) of this section.

(iii) ***Special rule for dispositions of stock.*** Notwithstanding the provisions of paragraph (m)(4)(i) of this section, if a trust disposes of all of the stock which it holds in an S corporation, then, with respect to that corporation, any person who first met the definition of a potential current beneficiary during the 1-year period ending on the date of such disposition is not a potential current beneficiary and thus is not a shareholder of that corporation.

(iv) *Distributee trusts* —

(A) ***In general.*** This paragraph (m)(4)(iv) contains the rules for determining who are the potential current beneficiaries of an ESBT if a distributee trust becomes entitled to, or at the discretion of any person, may receive a distribution from principal or income of an ESBT. A distributee trust does not include a trust that is not currently in existence. For this purpose, a trust is not currently in existence if the trust has no assets and no items of income, loss, deduction, or credit. Thus, if a trust instrument provides for a trust to be funded at some future time, the future trust is not currently a distributee trust.

(B) If the distributee trust is not a trust described in section 1361(c)(2)(A), then the distributee trust is the potential current beneficiary of the ESBT and the corporation's S corporation election terminates.

(C) If the distributee trust is a trust described in section 1361(c)(2)(A), the persons who would be its potential current beneficiaries (as defined in paragraphs (m)(4)(i) and (ii) of this section) if the distributee trust were an ESBT are treated as the potential current beneficiaries of the ESBT. Notwithstanding the preceding sentence, however, if the distributee trust is a trust described in section 1361(c)(2)(A)(ii) or (iii), the estate described in section 1361(c)(2)(B) (ii) or (iii) is treated as the potential current beneficiary of the ESBT for the 2-year period during which such trust would be permitted as a shareholder.

(D) For the purposes of paragraph (m)(4)(iv)(C) of this section, a trust will be deemed to be described in section 1361(c)(2)(A) if such trust would qualify for a QSST election under section 1361(d) or an ESBT election under section 1361(e) if it owned S corporation stock.

(v) ***Contingent distributions.*** A person who is entitled to receive a distribution only after a specified time or upon the occurrence of a specified event (such as the death of the holder of a power of appointment) is not a potential current beneficiary until such time or the occurrence of such event.

(vi) ***Currently exercisable powers of appointment and other powers*** —

(A) ***Powers of appointment.*** A person to whom a distribution may be made during any period pursuant to a power of appointment (as described for transfer tax purposes in section 2041 and § 20.2041-1(b) of this chapter and section 2514 and § 25.2514-1(b) of this chapter) is not a potential current beneficiary unless the power is exercised in favor of that person during the period. It is immaterial for purposes of this paragraph (m)(4)(vi)(A) whether such power of appointment is a “general power of appointment” for transfer tax purposes as described in §§ 20.2041-1(c) and 25.2514-1(c) of this chapter. The mere existence of one or more powers of appointment during the lifetime of a power holder that would permit current distributions from the trust to be made to more than the number of persons described in section 1361(b)(1)(A) or to a person described in section 1361(b)(1)(B) or (C) will not cause the S corporation election to terminate unless one or more of such powers are exercised, collectively, in favor of an excessive number of persons or in favor of a person who is ineligible to be an S corporation shareholder. For purposes of this paragraph (m)(4)(vi)(A), a “power of appointment” includes a power, regardless of by whom held, to add a beneficiary or class of beneficiaries to the class of potential current beneficiaries, but generally does not include a power held by a fiduciary who is not also a beneficiary of the trust to spray or sprinkle trust distributions among

beneficiaries. Nothing in this paragraph (m)(4)(vi)(A) alters the definition of "power of appointment" for purposes of any provision of the Internal Revenue Code or the regulations.

(B) ***Powers to distribute to certain organizations not pursuant to powers of appointment.*** If a trustee or other fiduciary has a power (that does not constitute a power of appointment for transfer tax purposes as described in §§ 20.2041-1(b) and 25.2514-1(b) of this chapter) to make distributions from the trust to one or more members of a class of organizations described in section 1361(c)(6), such organizations will be counted collectively as only one potential current beneficiary for purposes of this paragraph (m), except that each organization receiving a distribution also will be counted as a potential current beneficiary. This paragraph (m)(4)(vi)(B) shall not apply to a power to currently distribute to one or more particular charitable organizations described in section 1361(c)(6). Each of such organizations is a potential current beneficiary of the trust.

(vii) ***Number of shareholders.*** Each potential current beneficiary of the ESBT, as defined in paragraphs (m)(4)(i) through (vi) of this section, is counted as a shareholder of any S corporation whose stock is owned by the ESBT. During any period in which the ESBT has no potential current beneficiaries, the ESBT is counted as the shareholder. A person is counted as only one shareholder of an S corporation even though that person may be treated as a shareholder of the S corporation by direct ownership and through one or more eligible trusts described in section 1361(c)(2)(A). Thus, for example, if a person owns stock in an S corporation and is a potential current beneficiary of an ESBT that owns stock in the same S corporation, that person is counted as one shareholder of the S corporation. Similarly, if a husband owns stock in an S corporation and his wife is a potential current beneficiary of an ESBT that owns stock in the same S corporation, the husband and wife will be counted as one shareholder of the S corporation.

(viii) ***Miscellaneous.*** Payments made by an ESBT to a third party on behalf of a beneficiary are considered to be payments made directly to the beneficiary. The right of a beneficiary to assign the beneficiary's interest to a third party does not result in the third party being a potential current beneficiary until that interest is actually assigned.

(5) ***ESBT terminations*** —

(i) ***Ceasing to meet ESBT requirements.*** A trust ceases to be an ESBT on the first day the trust fails to meet the definition of an ESBT under section 1361(e). The last day the trust is treated as an ESBT is the day before the date on which the trust fails to meet the definition of an ESBT.

(ii) ***Disposition of S stock.*** In general, a trust ceases to be an ESBT on the first day following the day the trust disposes of all S corporation stock. However, if the trust is using the installment method to report income from the sale or disposition of its stock in an S corporation, the trust ceases to be an ESBT on the day following the earlier of the day the last installment payment is received by the trust or the day the trust disposes of the installment obligation.

(iii) ***Potential current beneficiaries that are ineligible shareholders.*** If a potential current beneficiary of an ESBT is not an eligible shareholder of a small business corporation within the meaning of section 1361(b)(1), the S corporation election terminates. For example, the S corporation election will terminate if a charitable remainder trust becomes a potential current beneficiary of an ESBT. Such a potential current beneficiary is treated as an ineligible shareholder beginning

on the day such person becomes a potential current beneficiary, and the S corporation election terminates on that date. However, *see* the special rule of paragraph (m)(4)(iii) of this section. If the S corporation election terminates, relief may be available under section 1362(f).

(6) ***Revocation of ESBT election.*** An ESBT election may be revoked only with the consent of the Commissioner. The application for consent to revoke the election must be submitted to the Internal Revenue Service in the form of a letter ruling request under the appropriate revenue procedure.

(7) ***Converting an ESBT to a QSST.*** For a trust that seeks to convert from an ESBT to a QSST, the consent of the Commissioner is hereby granted to revoke the ESBT election as of the effective date of the QSST election, if all the following requirements are met:

(i) The trust meets all of the requirements to be a QSST under section 1361(d).

(ii) The trustee and the current income beneficiary of the trust sign the QSST election. The QSST election must be filed with the service center where the S corporation files its income tax return. This QSST election must state at the top of the document "ATTENTION ENTITY CONTROL—CONVERSION OF AN ESBT TO A QSST PURSUANT TO SECTION 1.1361-1(m)" and include all information otherwise required for a QSST election under § 1.1361-1(j)(6). A separate QSST election must be made with respect to the stock of each S corporation held by the trust.

(iii) The trust has not converted from a QSST to an ESBT within the 36-month period preceding the effective date of the new QSST election.

(iv) The date on which the QSST election is to be effective cannot be more than 15 days and two months prior to the date on which the election is filed and cannot be more than 12 months after the date on which the election is filed. If an election specifies an effective date more than 15 days and two months prior to the date on which the election is filed, it will be effective on the day that is 15 days and two months prior to the date on which it is filed. If an election specifies an effective date more than 12 months after the date on which the election is filed, it will be effective on the day that is 12 months after the date it is filed.

(8) ***Examples.*** The provisions of this paragraph (m) are illustrated by the following examples in which it is assumed, unless otherwise specified, that all noncorporate persons are citizens or residents of the United States:

(i) ***Example 1*** —

(A) ***ESBT election with section 663(c) separate shares.*** On January 1, 2003, *M* contributes S corporation stock to Trust for the benefit of *M*'s three children *A, B,* and *C.* Pursuant to section 663(c), each of Trust's separate shares for *A, B,* and *C* will be treated as separate trusts for purposes of determining the amount of distributable net income (DNI) in the application of sections 661 and 662. On January 15, 2003, the trustee of Trust files a valid ESBT election for Trust effective January 1, 2003. Trust will be treated as a single ESBT and will have a single S portion taxable under section 641(c).

(B) ***ESBT acquires stock of an additional S corporation.*** On February 15, 2003, Trust acquires stock of an additional S corporation. Because Trust is already an ESBT, Trust does not need to make an additional ESBT election.

(C) ***Section 663(c) shares of ESBT convert to separate QSSTs.*** Effective January 1, 2004, *A, B, C,* and Trust's trustee elect to convert each separate share of Trust into a separate QSST pursuant to paragraph (m)(7) of this section. For each separate share, they file a separate election for each S corporation whose stock is held by Trust. Each separate share will be treated as a separate QSST.

(ii) ***Example 2*** —

(A) ***Invalid potential current beneficiary.*** Effective January 1, 2005, Trust makes a valid ESBT election. On January 1, 2006, A, a partnership, becomes a potential current beneficiary of Trust. Trust does not dispose of all of its S corporation stock within one year after January 1, 2006. As of January 1, 2006, *A* is the potential current beneficiary of Trust and therefore is treated as a shareholder of the S corporation. Because *A* is not an eligible shareholder of an S corporation under section 1361(b)(1), the S corporation election of any corporation in which Trust holds stock terminates effective January 1, 2006. Relief may be available under section 1362(f).

(B) ***Invalid potential current beneficiary and disposition of S stock.*** Assume the same facts as in *Example 2* in paragraph (m)(8)(ii)(A) of this section except that within one year after January 1, 2006, trustee of Trust disposes of all Trust's S corporation stock. *A* is not considered a potential current beneficiary of Trust and therefore is not treated as a shareholder of any S corporation in which Trust previously held stock.

(iii) ***Example 3. Subpart E trust. M*** transfers stock in *X,* an S corporation, and other assets to Trust for the benefit of *B* and *B*'s siblings. *M* retains no powers or interest in Trust. Under section 678(a), *B* is treated as the owner of a portion of Trust that includes a portion of the *X* stock. No beneficiary has acquired any portion of his or her interest in Trust by purchase, and Trust is not an ineligible trust under paragraph (m)(1)(iv) of this section. Trust is eligible to make an ESBT election.

(iv) ***Example 4. Subpart E trust continuing after grantor's death.*** On January 1, 2003, M transfers stock in *X,* an S corporation, and other assets to Trust. Under the terms of Trust, the trustee of Trust has complete discretion to distribute the income or principal to *M* during *M*'s lifetime and to *M*'s children upon *M*'s death. During *M*'s life, *M* is treated as the owner of Trust under section 677. The trustee of Trust makes a valid election to treat Trust as an ESBT effective January 1, 2003. On March 28, 2004, M dies. Under applicable local law, Trust does not terminate on *M*'s death. Trust continues to be an ESBT after *M*'s death, and no additional ESBT election needs to be filed for Trust after *M*'s death.

(v) ***Example 5. Potential current beneficiaries and distributee trust holding S corporation stock.*** Trust-1 has a valid ESBT election in effect. The trustee of Trust-1 has the power to make distributions to *A* directly or to any trust created for the benefit of *A.* On January 1, 2003, *M* creates Trust-2 for the benefit of *A.* Also on January 1, 2003, the trustee of Trust-1 distributes some S corporation stock to Trust-2. *A,* as the current income beneficiary of Trust-2, makes a timely and effective election to treat Trust-2 as a QSST. Because Trust-2 is a valid S corporation shareholder, the distribution to Trust-2 does not terminate the ESBT election of Trust-1. Trust-2 itself will not be counted toward the shareholder limit of section 1361(b)(1)(A). Additionally, because *A* is already counted as an S corporation shareholder because of *A*'s status as a potential current income beneficiary of Trust-1, *A* is not counted again by reason of *A*'s status as the deemed owner of Trust-2.

(vi) ***Example 6. Potential current beneficiaries and distributee trust not holding S corporation stock*** —

(A) ***Distributee trust that would itself qualify as an ESBT.*** Trust-1 holds stock in *X,* an S corporation, and has a valid ESBT election in effect. Under the terms of Trust-1, the trustee has discretion to make distributions to *A, B,* and Trust-2, a trust for the benefit of *C, D,* and *E.* Trust-2 would qualify to be an ESBT, but it owns no S corporation stock and has made no ESBT election. Under paragraph (m)(4)(iv) of this section, Trust-2's potential current beneficiaries are treated as the potential current beneficiaries of Trust-1 and are counted as shareholders for purposes of section 1361(b)(1). Thus, *A, B, C, D,* and *E* are potential current beneficiaries of Trust-1 and are counted as shareholders for purposes of section 1361(b)(1). Trust-2 itself will not be counted as a shareholder of Trust-1 for purposes of section 1361(b)(1).

(B) ***Distributee trust that would not qualify as an ESBT or a QSST.*** Assume the same facts as *Example 6* in paragraph (m)(8)(vi)(A) of this section except that D is a charitable remainder trust. Trust-2 would not be eligible to make an ESBT or QSST election if it owned S corporation stock and therefore Trust-2 is a potential current beneficiary of Trust-1. Since Trust-2 is not an eligible shareholder, *X*'s S corporation election terminates.

(C) ***Distributee trust that is a section 1361(c)(2)(A)(ii) trust.*** Assume the same facts as in *Example 6* in paragraph (m)(8)(vi)(A) of this section except that Trust-2 is a trust treated as owned by *A* under section 676 because *A* has the power to revoke Trust-2 at any time prior to *A*'s death. On January 1, 2003, *A* dies. Because Trust-2 is a trust described in section 1361(c)(2)(A)(ii) during the 2-year period beginning on the day of *A*'s death, under paragraph (m)(4)(iv)(C) of this section, Trust-2's only potential current beneficiary is the person listed in section 1361(c)(2)(B)(ii), *A*'s estate. Thus, *B* and *A*'s estate are potential current beneficiaries of Trust-1 and are counted as shareholders for purposes of section 1361(b)(1).

(vii) ***Example 7. Potential current beneficiaries and powers of appointment. M*** creates Trust from which *A* has a right to all net income and funds it with S corporation stock. *A* also has a currently exercisable power to appoint income or principal to anyone except *A*, *A*'s creditors, *A*'s estate, and the creditors of A's estate. The potential current beneficiaries of Trust for any period will be *A* and each person who receives a distribution from Trust pursuant to *A*'s exercise of *A*'s power of appointment during that period.

(viii) ***Example 8. Power to distribute to an unlimited class of charitable organizations not pursuant to a power of appointment. M*** creates Trust from which *A* has a right to all net income and funds it with S corporation stock. In addition, the trustee of Trust, who is not *A* or a descendant of *M*, has the power to make discretionary distributions of principal to the living descendants of *M* and to any organizations described in section 1361(c)(6). The potential current beneficiaries of Trust for any period will be *A*, each then-living descendant of M, and each exempt organization described in section 1361(c)(6) that receives a distribution during that period. In addition, the class of exempt organizations will be counted as one potential current beneficiary.

(ix) ***Example 9. Power to distribute to a class of named charitable organizations not pursuant to a power of appointment. M*** creates Trust from which *A* has a right to all net income and funds it with S corporation stock. In addition, the trustee of Trust, who is not *A* or a descendant of *M*,

has the power to make discretionary distributions of principal to the living descendants of *M* and to *X, Y,* and *Z*, each of which is an organization described in section 1361(c)(6). The potential current beneficiaries of Trust for any period will be *A, X, Y, Z*, and each living descendant of *M.*

(9) ***Effective date.*** This paragraph (m) is applicable for taxable years of ESBTs beginning on and after May 14, 2002. Paragraphs (m)(2)(ii)(A) and (m)(4)(iii) and (vi) of this section and *Examples 2, 5,* and *7* through *9* in paragraphs (m)(8)(ii), (v), and (vii) through (ix), respectively, of this section are effective on *August 14, 2008.* Paragraphs (m)(1)(ii)(D), (m)(2)(ii)(E)(*2*), (m)(4)(i), (m)(5)(iii), and (m)(8) of this section apply to all ESBTs after December 31, 2017.

[T.D. 8419, 57 FR 22649, May 29, 1992; 57 FR 28613, June 26, 1992, as amended by T.D. 8600, 60 FR 37581, July 21, 1995; 60 FR 49976, Sept. 27, 1995; 60 FR 58234, Nov. 27, 1995; 61 FR 2869, Jan. 29, 1996; T.D. 8869, 65 FR 3849, Jan. 25, 2000; T.D. 8940, 66 FR 9929, 9957, Feb. 13, 2001; T.D. 8994, 67 FR 34397, May 14, 2002; T.D. 9078, 68 FR 42252, July 17, 2003; T.D. 9422, 73 FR 47527, Aug. 14, 2008; T.D. 9868, 84 FR 28216, June 18, 2019]

§ 1.1361-2 Definitions relating to S corporation subsidiaries.

(a) ***In general.*** The term *qualified subchapter S subsidiary* (QSub) means any domestic corporation that is not an ineligible corporation (as defined in section 1361(b)(2) and the regulations thereunder), if—

(1) 100 percent of the stock of such corporation is held by an S corporation; and

(2) The S corporation properly elects to treat the subsidiary as a QSub under § 1.1361-3.

(b) ***Stock treated as held by S corporation.*** For purposes of satisfying the 100 percent stock ownership requirement in section 1361(b)(3)(B)(i) and paragraph (a)(1) of this section—

(1) Stock of a corporation is treated as held by an S corporation if the S corporation is the owner of that stock for Federal income tax purposes; and

(2) Any outstanding instruments, obligations, or arrangements of the corporation which would not be considered stock for purposes of section 1361(b)(1)(D) if the corporation were an S corporation are not treated as outstanding stock of the QSub.

(c) ***Straight debt safe harbor.*** Section 1.1361-1(l)(5)(iv) and (v) apply to an obligation of a corporation for which a QSub election is made if that obligation would satisfy the definition of straight debt in § 1.1361-1(l)(5) if issued by the S corporation.

(d) ***Examples.*** The following examples illustrate the application of this section:

Example 1. X, an S corporation, owns 100 percent of Y, a corporation for which a valid QSub election is in effect for the taxable year. Y owns 100 percent of Z, a corporation otherwise eligible for QSub status. X may elect to treat Z as a QSub under section 1361(b)(3)(B)(ii).

Example 2. Assume the same facts as in *Example 1*, except that Y is a business entity that is disregarded as an entity separate from its owner under § 301.7701-2(c)(2) of this chapter. X may elect to treat Z as a QSub.

Example 3. Assume the same facts as in *Example 1*, except that Y owns 50 percent of Z, and X owns the other 50 percent. X may elect to treat Z as a QSub.

Example 4. Assume the same facts as in *Example 1*, except that Y is a C corporation. Although Y is a domestic corporation that is otherwise eligible to be a QSub, no QSub election has been made for Y. Thus, X is not treated as holding the stock of Z. Consequently, X may not elect to treat Z as a QSub.

Example 5. Individuals A and B own 100 percent of the stock of corporation X, an S corporation, and, except for C's interest (described below), X owns 100 percent of corporation Y, a C corporation. Individual C holds an instrument issued by Y that is considered to be equity under general principles of tax law but would satisfy the definition of straight debt under § 1.1361-1(l)(5) if Y were an S corporation. In determining whether X owns 100 percent of Y for purposes of making the QSub election, the instrument held by C is not considered outstanding stock. In addition, under § 1.1361-1(l)(5)(v), the QSub election is not treated as an exchange of debt for stock with respect to such instrument, and § 1.1361-1(l)(5)(iv) applies to determine the tax treatment of payments on the instrument while Y's QSub election is in effect.

[T.D. 8869, 65 FR 3849, Jan. 25, 2000]

§ 1.1361-3 QSub election.

(a) ***Time and manner of making election*** —

(1) ***In general.*** The corporation for which the QSub election is made must meet all the requirements of section 1361(b)(3)(B) at the time the election is made and for all periods for which the election is to be effective.

(2) ***Manner of making election.*** Except as provided in section 1361(b)(3)(D) and § 1.1361-5(c) (five-year prohibition on re-election), an S corporation may elect to treat an eligible subsidiary as a QSub by filing a completed form to be prescribed by the IRS. The election form must be signed by a person authorized to sign the S corporation's return required to be filed under section 6037. Unless the election form provides otherwise, the election must be submitted to the service center where the subsidiary filed its most recent tax return (if applicable), and, if an S corporation forms a subsidiary and makes a valid QSub election (effective upon the date of the subsidiary's formation) for the subsidiary, the election should be submitted to the service center where the S corporation filed its most recent return.

(3) ***Time of making election.*** A QSub election may be made by the S corporation parent at any time during the taxable year.

(4) ***Effective date of election.*** A QSub election will be effective on the date specified on the election form or on the date the election form is filed if no date is specified. The effective date specified on the form cannot be more than two months and 15 days prior to the date of filing and cannot be more than 12 months after the date of filing. For this purpose, the definition of the term *month* found in § 1.1362-6(a)(2)(ii)(C) applies. If an election form specifies an effective date more than two months and 15 days prior to the date on which the election form is filed, it will be effective two months and 15 days prior to the date it is filed. If an election form specifies an effective date more than 12 months after the date on which the election is filed, it will be effective 12 months after the date it is filed.

(5) ***Example.*** The following example illustrates the application of paragraph (a)(4) of this section:

Example. X has been a calendar year S corporation engaged in a trade or business for several years. X acquires the stock of Y, a calendar year C corporation, on April 1, 2002. On August 10, 2002, X makes an election to treat Y as a QSub. Unless otherwise specified on the election form, the election will be effective as of August 10, 2002. If specified on the election form, the election may be effective on some other date that is not more than two months and 15 days prior to August 10, 2002, and not more than 12 months after August 10, 2002.

(6) ***Extension of time for making a QSub election.*** An extension of time to make a QSub election may be available under the procedures applicable under §§ 301.9100-1 and 301.9100-3 of this chapter.

(b) ***Revocation of QSub election*** —

(1) ***Manner of revoking QSub election.*** An S corporation may revoke a QSub election under section 1361 by filing a statement with the service center where the S corporation's most recent tax return was properly filed. The revocation statement must include the names, addresses, and taxpayer identification numbers of both the parent S corporation and the QSub, if any. The statement must be signed by a person authorized to sign the S corporation's return required to be filed under section 6037.

(2) ***Effective date of revocation.*** The revocation of a QSub election is effective on the date specified on the revocation statement or on the date the revocation statement is filed if no date is specified. The effective date specified on the revocation statement cannot be more than two months and 15 days prior to the date on which the revocation statement is filed and cannot be more than 12 months after the date on which the revocation statement is filed. If a revocation statement specifies an effective date more than two months and 15 days prior to the date on which the statement is filed, it will be effective two months and 15 days prior to the date it is filed. If a revocation statement specifies an effective date more than 12 months after the date on which the statement is filed, it will be effective 12 months after the date it is filed.

(3) ***Revocation after termination.*** A revocation may not be made after the occurrence of an event that renders the subsidiary ineligible for QSub status under section 1361(b)(3)(B).

(4) ***Revocation before QSub election effective.*** For purposes of Section 1361(b)(3)(D) and § 1.1361-5(c) (five-year prohibition on re-election), a revocation effective on the first day the QSub election was to be effective will not be treated as a termination of a QSub election.

[T.D. 8869, 65 FR 3850, Jan. 25, 2000]

§ 1.1361-4 Effect of QSub election.

(a) ***Separate existence ignored*** —

(1) ***In general.*** Except as otherwise provided in paragraphs (a)(3), (a)(6), (a)(7), (a)(8), and (a)(9) of this section, for Federal tax purposes—

(i) A corporation that is a QSub shall not be treated as a separate corporation; and

(ii) All assets, liabilities, and items of income, deduction, and credit of a QSub shall be treated as assets, liabilities, and items of income, deduction, and credit of the S corporation.

(2) ***Liquidation of subsidiary*** —

(i) ***In general.*** If an S corporation makes a valid QSub election with respect to a subsidiary, the subsidiary is deemed to have liquidated into the S corporation. Except as provided in paragraph (a)(5) of this section, the tax treatment of the liquidation or of a larger transaction that includes the liquidation will be determined under the Internal Revenue Code and general principles of tax law, including the step transaction doctrine. Thus, for example, if an S corporation forms a subsidiary and makes a valid QSub election (effective upon the date of the subsidiary's formation) for the subsidiary, the transfer of assets to the subsidiary and the deemed liquidation are disregarded, and the corporation will be deemed to be a QSub from its inception.

(ii) ***Examples.*** The following examples illustrate the application of this paragraph (a)(2)(i) of this section:

Example 1. Corporation X acquires all of the outstanding stock of solvent corporation Y from an unrelated individual for cash and short-term notes. Thereafter, as part of the same plan, X immediately makes an S election and a QSub election for Y. Because X acquired all of the stock of Y in a qualified stock purchase within the meaning of section 338(d)(3), the liquidation described in paragraph (a)(2) of this section is respected as an independent step separate from the stock acquisition, and the tax consequences of the liquidation are determined under sections 332 and 337.

Example 2. Corporation X, pursuant to a plan, acquires all of the outstanding stock of corporation Y from the shareholders of Y solely in exchange for 10 percent of the voting stock of X. Prior to the transaction, Y and its shareholders are unrelated to X. Thereafter, as part of the same plan, X immediately makes an S election and a QSub election for Y. The transaction is a reorganization described in section 368(a)(1)(C), assuming the other conditions for reorganization treatment (e.g., continuity of business enterprise) are satisfied.

Example 3. After the expiration of the transition period provided in paragraph (a)(5)(i) of this section, individual A, pursuant to a plan, contributes all of the outstanding stock of Y to his wholly owned S corporation, X, and immediately causes X to make a QSub election for Y. The transaction is a reorganization under section 368(a)(1)(D), assuming the other conditions for reorganization treatment (e.g., continuity of business enterprise) are satisfied. If the sum of the amount of liabilities of Y treated as assumed by X exceeds the total of the adjusted basis of the property of Y, then section 357(c) applies and such excess is considered as gain from the sale or exchange of a capital asset or of property which is not a capital asset, as the case may be.

(iii) ***Adoption of plan of liquidation.*** For purposes of satisfying the requirement of adoption of a plan of liquidation under section 332, unless a formal plan of liquidation that contemplates the QSub election is adopted on an earlier date, the making of the QSub election is considered to be the adoption of a plan of liquidation immediately before the deemed liquidation described in paragraph (a)(2)(i) of this section.

(iv) ***Example.*** The following example illustrates the application of paragraph (a)(2)(iii) of this section:

Example. Corporation X owns 75 percent of a solvent corporation Y, and individual A owns the remaining 25 percent of Y. As part of a plan to make a QSub election for Y, X causes Y to redeem A's 25 percent interest on June 1 for cash and makes a QSub election for Y effective on June 3. The making of the QSub election is considered to be the adoption of a plan of liquidation immediately before the deemed liquidation. The deemed liquidation satisfies the requirements of section 332.

(v) ***Stock ownership requirements of section 332.*** The deemed exercise of an option under § 1.1504-4 and any instruments, obligations, or arrangements that are not considered stock under § 1.1361-2(b)(2) are disregarded in determining if the stock ownership requirements of section 332(b) are met with respect to the deemed liquidation provided in paragraph (a)(2)(i) of this section.

(3) ***Treatment of banks —***

(i) ***In general.*** If an S corporation is a bank, or if an S corporation makes a valid QSub election for a subsidiary that is a bank, any special rules applicable to banks under the Internal Revenue Code continue to apply separately to the bank parent or bank subsidiary as if the deemed liquidation of any QSub under paragraph (a)(2) of this section had not occurred (except as other published guidance may apply section 265(b) and section 291(a)(3) and (e)(1)(B) not only to the bank parent or bank subsidiary but also to any QSub deemed to have liquidated under paragraph (a)(2) of this section). For any QSub that is a bank, however, all assets, liabilities, and items of income, deduction, and credit of the QSub, as determined in accordance with the special bank rules, are treated as assets, liabilities, and items of income, deduction, and credit of the S corporation. For purposes of this paragraph (a)(3)(i), the term bank has the same meaning as in section 581.

(ii) ***Examples.*** The following examples illustrate the application of this paragraph (a)(3):

Example 1. X, an S corporation, is a bank as defined in section 581. X owns 100 percent of Y and Z, corporations for which valid QSub elections are in effect. Y is a bank as defined in section 581, and Z is not a financial institution. Pursuant to paragraph (a)(3)(i) of this section, any special rules applicable to banks under the Internal Revenue Code continue to apply separately to X and Y and do not apply to Z. Thus, for example, section 265(b), which provides special rules for interest expense deductions of banks, applies separately to X and Y. That is, X and Y each must make a separate determination under section 265(b) of interest expense allocable to tax-exempt interest, and no deduction is allowed for that interest expense. Section 265(b) does not apply to Z except as published guidance may provide otherwise.

Example 2. X, an S corporation, is a bank holding company and thus is not a bank as defined in section 581. X owns 100 percent of Y, a corporation for which a valid QSub election is in effect. Y is a bank as defined in section 581. Pursuant to paragraph (a)(3)(i) of this section, any special rules applicable to banks under the Internal Revenue Code continue to apply to Y and do not apply to X. However, all of Y's assets, liabilities, and items of income, deduction, and credit, as determined in accordance with the special bank rules, are treated as those of X. Thus, for example, section 582(c), which provides special rules for sales and exchanges of debt by banks, applies only to sales and exchanges by Y. However, any gain or loss on such a transaction by Y that is considered ordinary income or ordinary loss pursuant to section 582(c) is treated as ordinary income or ordinary loss of X.

(iii) ***Effective date.*** This paragraph (a)(3) applies to taxable years beginning after December 31, 1996.

(4) ***Treatment of stock of QSub.*** Except for purposes of section 1361(b)(3)(B)(i) and § 1.1361-2(a)(1), the stock of a QSub shall be disregarded for all Federal tax purposes.

(5) ***Transitional relief*** —

(i) ***General rule.*** If an S corporation and another corporation (the related corporation) are persons specified in section 267(b) prior to an acquisition by the S corporation of some or all of the stock of the related corporation followed by a QSub election for the related corporation, the step transaction doctrine will not apply to determine the tax consequences of the acquisition. This paragraph (a)(5) shall apply to QSub elections effective before January 1, 2001.

(ii) ***Examples.*** The following examples illustrate the application of this paragraph (a)(5):

Example 1. Individual A owns 100 percent of the stock of X, an S corporation. X owns 79 percent of the stock of Y, a solvent corporation, and A owns the remaining 21 percent. On May 4, 1998, A contributes its Y stock to X in exchange for X stock. X makes a QSub election with respect to Y effective immediately following the transfer. The liquidation described in paragraph (a)(2) of this section is respected as an independent step separate from the stock acquisition, and the tax consequences of the liquidation are determined under sections 332 and 337. The contribution by A of the Y stock qualifies under section 351, and no gain or loss is recognized by A, X, or Y.

Example 2. Individual A owns 100 percent of the stock of two solvent S corporations, X and Y. On May 4, 1998, A contributes the stock of Y to X. X makes a QSub election with respect to Y immediately following the transfer. The liquidation described in paragraph (a)(2) of this section is respected as an independent step separate from the stock acquisition, and the tax consequences of the liquidation are determined under sections 332 and 337. The contribution by A of the Y stock to X qualifies under section 351, and no gain or loss is recognized by A, X, or Y. Y is not treated as a C corporation for any period solely because of the transfer of its stock to X, an ineligible shareholder. Compare *Example 3* of § 1.1361-4(a)(2)(ii).

(6) ***Treatment of certain QSubs*** —

(i) ***In general.*** A QSub, even though it is generally not treated as a corporation separate from the S corporation, is treated as a separate corporation for purposes of:

(A) Federal tax liabilities of the QSub with respect to any taxable period for which the QSub was treated as a separate corporation.

(B) Federal tax liabilities of any other entity for which the QSub is liable.

(C) Refunds or credits of Federal tax.

(ii) ***Examples.*** The following examples illustrate the application of paragraph (a)(6)(i) of this section:

Example 1. X has owned all of the outstanding stock of Y, a domestic corporation that reports its taxes on a calendar year basis, since 2001. X and Y do not report their taxes on a consolidated basis. For 2003, X makes a timely S election and simultaneously makes a QSub election for Y. In 2004, the Internal Revenue Service (IRS) seeks to extend the period of limitations on assessment for Y's 2001 taxable year. Because Y was treated as a separate corporation for its 2001 taxable year, Y is the proper party to sign the consent to extend the period of limitations.

Example 2. The facts are the same as in *Example 1,* except that in 2004, the IRS determines that Y miscalculated and underreported its income tax liability for 2001. Because Y was treated as a separate corporation for its 2001 taxable year, the deficiency for Y's 2001 taxable year may be assessed against Y and, in the event that Y fails to pay the liability after notice and demand, a general tax lien will arise against all of Y's property and rights to property.

Example 3. X is a QSub of Y. In 2001, Z, a domestic corporation that reports its taxes on a calendar year basis, merges into X in a state law merger. Z was not a member of a consolidated group at any time during its taxable year ending in December 2000. Under

the applicable state law, X is the successor to Z and is liable for all of Z's debts. In 2003, the IRS seeks to extend the period of limitations on assessment for Z's 2000 taxable year. Because X is the successor to Z and is liable for Z's 2000 taxes that remain unpaid, X is the proper party to execute the consent to extend the period of limitations on assessment.

(iii) ***Effective date.*** This paragraph (a)(6) applies on or after April 1, 2004.

(7) ***Treatment of QSubs for purposes of employment taxes*** —

(i) ***In general.*** A QSub is treated as a separate corporation for purposes of Subtitle C—Employment Taxes and Collection of Income Tax (Chapters 21, 22, 23, 23A, 24, and 25 of the Internal Revenue Code).

(ii) ***Effective/applicability date.*** This paragraph (a)(7) applies with respect to wages paid on or after January 1, 2009.

(8) ***Treatment of QSubs for purposes of certain excise taxes*** —

(i) ***In general.*** A QSub is treated as a separate corporation for purposes of—

(A) Federal tax liabilities imposed by Chapters 31, 32 (other than section 4181), 33, 34, 35, 36 (other than section 4461), 38, and 49 of the Internal Revenue Code, or any floor stocks tax imposed on articles subject to any of these taxes;

(B) Collection of tax imposed by Chapters 33 and 49 of the Internal Revenue Code;

(C) Registration under sections 4101, 4222, and 4412;

(D) Claims of a credit (other than a credit under section 34), refund, or payment related to a tax described in paragraph (a)(8)(i)(A) of this section or under section 6426 or 6427; and

(E) Assessment and collection of an assessable payment imposed by section 4980H and reporting required by section 6056.

(ii) ***Effective/applicability date.***

(A) Except as provided in this paragraph (a)(8)(ii), paragraph (a)(8) of this section applies to liabilities imposed and actions first required or permitted in periods beginning on or after January 1, 2008.

(B) References to Chapter 49 in paragraph (a)(8) of this section apply to taxes imposed on amounts paid on or after July 1, 2012.

(C) Paragraph (a)(8)(i)(E) of this section applies for periods after December 31, 2014.

(9) ***Information returns*** —

(i) ***In general.*** Except to the extent provided by the Secretary or Commissioner in guidance (including forms or instructions), paragraph (a)(1) of this section shall not apply to part III of subchapter A of chapter 61, relating to information returns.

(ii) ***Effective/applicability date.*** This paragraph (a)(9) is effective on *August 14, 2008*.

(b) ***Timing of the liquidation*** —

(1) ***In general.*** Except as otherwise provided in paragraph (b)(3) or (4) of this section, the liquidation described in paragraph (a)(2) of this section occurs at the close of the day before the QSub election is effective. Thus, for example, if a C corporation elects to be treated as an S corporation and makes a QSub election (effective the same date as the S election) with respect to a subsidiary, the liquidation occurs immediately before the S election becomes effective, while the S electing parent is still a C corporation.

(2) ***Application to elections in tiered situations.*** When QSub elections for a tiered group of subsidiaries are effective on the same date, the S corporation may specify the order of the liquidations. If no order is specified, the liquidations that are deemed to occur as a result of the QSub elections will be treated as occurring first for the lowest tier entity and proceed successively upward until all of the liquidations under paragraph (a)(2) of this section have occurred. For example, S, an S corporation, owns 100 percent of C, the common parent of an affiliated group of corporations that includes X and Y. C owns all of the stock of X and X owns all of the stock of Y. S elects under § 1.1361-3 to treat C, X and Y as QSubs effective on the same date. If no order is specified for the elections, the following liquidations are deemed to occur as a result of the elections, with each successive liquidation occuring on the same day immediately after the preceding liquidation: Y is treated as liquidating into X, then X is treated as liquidating into C, and finally C is treated as liquidating into S.

(3) ***Acquisitions.***

(i) ***In general.*** If an S corporation does not own 100 percent of the stock of the subsidiary on the day before the QSub election is effective, the liquidation described in paragraph (a)(2) of this section occurs immediately after the time at which the S corporation first owns 100 percent of the stock.

(ii) ***Special rules for acquired S corporations.*** Except as provided in paragraph (b)(4) of this section, if a corporation (Y) for which an election under section 1362(a) was in effect is acquired, and a QSub election is made effective on the day Y is acquired, Y is deemed to liquidate into the S corporation at the beginning of the day the termination of its S election is effective. As a result, if corporation X acquires Y, an S corporation, and makes an S election for itself and a QSub election for Y effective on the day of acquisition, Y liquidates into X at the beginning of the day when X's S election is effective, and there is no period between the termination of Y's S election and the deemed liquidation of Y during which Y is a C corporation. Y's taxable year ends for all Federal income tax purposes at the close of the preceding day. Furthermore, if Y owns Z, a corporation for which a QSub election was in effect prior to the acquisition of Y by X, and X makes QSub elections for Y and Z, effective on the day of acquisition, the transfer of assets to Z and the deemed liquidation of Z are disregarded. See §§ 1.1361-4(a)(2) and 1.1361-5(b)(1)(i).

(4) ***Coordination with section 338 election.*** An S corporation that makes a qualified stock purchase of a target may make an election under section 338 with respect to the acquisition if it meets the requirements for the election, and may make a QSub election with respect to the target. If an S corporation makes an election under section 338 with respect to a subsidiary acquired in a qualified stock purchase, a QSub election made with respect to that subsidiary is not effective before the day after the acquisition date (within the meaning of section 338(h)(2)). If the QSub election is effective on the day after the acquisition date, the liquidation under paragraph (a)(2) of this section occurs immediately after the deemed asset purchase by the new target corporation under section 338. If an S corporation makes an election under section 338 (without a section 338(h)(10) election) with respect to a target, the target must file a final return as a C corporation reflecting the deemed sale.

See § 1.338-10(a). If the target was an S corporation on the day before the acquisition date, the final return as a C corporation must reflect the activities of the target for the acquisition date, including the deemed sale. *See § 1.338-10(a)(3).*

(c) ***Carryover of disallowed losses and deductions.*** If an S corporation (S1) acquires the stock of another S corporation (S2), and S1 makes a QSub election with respect to S2 effective on the day of the acquisition, see § 1.1366-2(c)(1) for provisions relating to the carryover of losses and deductions with respect to a former shareholder of S2 that may be available to that shareholder as a shareholder of S1.

(d) ***Examples.*** The following examples illustrate the application of this section:

Example 1. X, an S corporation, owns 100 percent of the stock of Y, a C corporation. On June 2, 2002, X makes a valid QSub election for Y, effective June 2, 2002. Assume that, under general principles of tax law, including the step transaction doctrine, X's acquisition of the Y stock and the subsequent QSub election would not be treated as related. The liquidation described in paragraph (a)(2) of this section occurs at the close of the day on June 1, 2002, the day before the QSub election is effective, and the plan of liquidation is considered adopted on that date. Y's taxable year and separate existence for Federal tax purposes end at the close of June 1, 2002.

Example 2. X, a C corporation, owns 100 percent of the stock of Y, another C corporation. On December 31, 2002, X makes an election under section 1362 to be treated as an S corporation and a valid QSub election for Y, both effective January 1, 2003. Assume that, under general principles of tax law, including the step transaction doctrine, X's acquisition of the Y stock and the subsequent QSub election would not be treated as related. The liquidation described in paragraph (a)(2) of this section occurs at the close of December 31, 2002, the day before the QSub election is effective. The QSub election for Y is effective on the same day that X's S election is effective, and the deemed liquidation is treated as occurring before the S election is effective, when X is still a C corporation. Y's taxable year ends at the close of December 31, 2002. See § 1.381(b)-1.

Example 3. On June 1, 2002, X, an S corporation, acquires 100 percent of the stock of Y, an existing S corporation, for cash in a transaction meeting the requirements of a qualified stock purchase (QSP) under section 338. X immediately makes a QSub election for Y effective June 2, 2002, and also makes a joint election under section 338(h)(10) with the shareholder of Y. Under section 338(a) and § 1.338(h)(10)-1(d)(3), Y is treated as having sold all of its assets at the close of the acquisition date, June 1, 2002. Y is treated as a new corporation which purchased all of those assets as of the beginning of June 2, 2002, the day after the acquisition date. Section 338(a)(2). The QSub election is effective on June 2, 2002, and the liquidation under paragraph (a)(2) of this section occurs immediately after the deemed asset purchase by the new corporation.

Example 4. X, an S corporation, owns 100 percent of Y, a corporation for which a QSub election is in effect. On May 12, 2002, a date on which the QSub election is in effect, X issues Y a $10,000 note under state law that matures in ten years with a market rate of interest. Y is not treated as a separate corporation, and X's issuance of the note to Y on May 12, 2002, is disregarded for Federal tax purposes.

Example 5. X, an S corporation, owns 100 percent of the stock of Y, a C corporation. At a time when Y is indebted to X in an amount that exceeds the fair market value of Y's assets, X makes a QSub election effective on the date it is filed with respect to Y. The liquidation described in paragraph (a)(2) of this section does not qualify under sections 332 and 337 and, thus, Y recognizes gain or loss on the assets distributed, subject to the limitations of section 267.

[T.D. 8869, 65 FR 3850, Jan. 25, 2000; 65 FR 16318, Mar. 28, 2000; T.D. 8940, 66 FR 9929, 9957, Feb. 13, 2001; T.D. 9183, 70 FR 9221, Feb. 25, 2005; T.D. 9356, 72 FR 45893, Aug. 16, 2007; T.D. 9422, 73 FR 47530, Aug. 14, 2008; T.D. 9596, 77 FR 37806, June 25, 2012; T.D. 9655, 79 FR 8577, Feb. 12, 2014: T.D. 9670, 79 FR 36205, June 26, 2014]

§ 1.1361-5 Termination of QSub election.

(a) In *general*—

(1) ***Effective date.*** The termination of a QSub election is effective—

(i) On the effective date contained in the revocation statement if a QSub election is revoked under § 1.1361-3(b);

(ii) At the close of the last day of the parent's last taxable year as an S corporation if the parent's S election terminates under § 1.1362-2; or

(iii) At the close of the day on which an event (other than an event described in paragraph (a)(1)(ii) of this section) occurs that renders the subsidiary ineligible for QSub status under section 1361(b)(3)(B).

(2) ***Information to be provided upon termination of QSub election by failure to qualify as a QSub.*** If a QSub election terminates because an event renders the subsidiary ineligible for QSub status, the S corporation must attach to its return for the taxable year in which the termination occurs a notification that a QSub election has terminated, the date of the termination, and the names, addresses, and employer identification numbers of both the parent corporation and the QSub.

(3) ***QSub joins a consolidated group.*** If a QSub election terminates because the S corporation becomes a member of a consolidated group (and no election under section 338(g) is made) the principles of § 1.1502-76(b)(1)(ii)(A)(2) (relating to a special rule for S corporations that join a consolidated group) apply to any QSub of the S corporation that also becomes a member of the consolidated group at the same time as the S corporation. See *Example 4* of paragraph (a)(4) of this section.

(4) ***Examples. The following examples illustrate the application of this paragraph (a):***

Example 1. Termination because parent's S election terminates. X, an S corporation, owns 100 percent of Y. A QSub election is in effect with respect to Y for 2001. Effective on January 1, 2002, X revokes its S election. Because X is no longer an S corporation, Y no longer qualifies as a QSub at the close of December 31, 2001.

Example 2. Termination due to transfer of QSub stock. X, an S corporation, owns 100 percent of Y. A QSub election is in effect with respect to Y. On December 10, 2002, X sells one share of Y stock to A, an individual. Because X no longer owns 100 percent of the stock of Y, Y no longer qualifies as a QSub. Accordingly, the QSub election made with respect to Y terminates at the close of December 10, 2002.

Example 3. No termination on stock transfer between QSub and parent. X, an S corporation, owns 100 percent of the stock of Y, and Y owns 100 percent of the stock of Z. QSub elections are in effect with respect to both Y and Z. Y transfers all of its Z stock to X. Because X is treated as owning the stock of Z both before and after the transfer of stock solely for purposes of determining whether the requirements of section 1361(b)(3)(B)(i) and § 1.1361-2(a)(1) have been satisfied, the transfer of Z stock does not terminate Z's QSub election. Because the stock of Z is disregarded for all other Federal tax purposes, no gain is recognized under section 311.

Example 4. Termination due to acquisition of S parent by a consolidated group. X, an S corporation, owns 100 percent of Y, a corporation for which a QSub election is in effect. Z, the common parent of a consolidated group of corporations, acquires 80 percent of the stock of X on June 1, 2002. Z does not make an election under section 338(g) with respect to the purchase of X stock. X's S election terminates as of the close of the preceding day, May 31, 2002. Y's QSub election also terminates at the close of May 31, 2002. Under § 1.1502-76(b)(1)(ii)(A)(2) and paragraph (a)(3) of this section, X and Y become members of Z's consolidated group of corporations as of the beginning of the day June 1, 2002.

Example 5. Termination due to acquisition of QSub by a consolidated group. The facts are the same as in Example 4, except that Z acquires 80 percent of the stock of Y (instead of X) on June 1, 2002. In this case, Y's QSub election terminates as of the close of June 1, 2002, and, under § 1.1502-76(b)(1)(ii)(A)(1), Y becomes a member of the consolidated group at that time.

(b) ***Effect of termination of QSub election*** —

(1) ***Formation of new corporation*** —

(i) ***In general.*** If a QSub election terminates under paragraph (a) of this section, the former QSub is treated as a new corporation acquiring all of its assets (and assuming all of its liabilities) immediately before the termination from the S corporation parent in exchange for stock of the new corporation. The tax treatment of this transaction or of a larger transaction that includes this transaction will be determined under the Internal Revenue Code and general principles of tax law, including the step transaction doctrine. For purposes of determining the application of section 351 with respect to this transaction, instruments, obligations, or other arrangements that are not treated as stock of the QSub under § 1.1361-2(b) are disregarded in determining control for purposes of section 368(c) even if they are equity under general principles of tax law.

(ii) ***Termination for tiered QSubs.*** If QSub elections terminate for tiered QSubs on the same day, the formation of any higher tier subsidiary precedes the formation of its lower tier subsidiary. See Example 6 in paragraph (b)(3) of this section.

(2) ***Carryover of disallowed losses and deductions.*** If a QSub terminates because the S corporation distributes the QSub stock to some or all of the S corporation's shareholders in a transaction to which section 368(a)(1)(D) applies by reason of section 355 (or so much of section 356 as relates to section 355), see § 1.1366-2(c)(2) for provisions relating to the carryover of disallowed losses and deductions that may be available.

(3) ***Examples.*** The following examples illustrate the application of this paragraph (b):

Example 1. X, an S corporation, owns 100 percent of the stock of Y, a corporation for which a QSub election is in effect. X sells 21 percent of the Y stock to Z, an unrelated corporation, for cash, thereby terminating the QSub election. Y is treated as a new corporation acquiring all of its assets (and assuming all of its liabilities) in exchange for Y stock immediately before the termination from the S corporation. The deemed exchange by X of assets for Y stock does not qualify under section 351 because X is not in control of Y within the meaning of section 368(c) immediately after the transfer as a result of the sale of stock to Z. Therefore, X must recognize gain, if any, on the assets transferred to Y in exchange for its stock. X's losses, if any, on the assets transferred are subject to the limitations of section 267.

Example 2. (i) X, an S corporation, owns 100 percent of the stock of Y, a corporation for which a QSub election is in effect. As part of a plan to sell a portion of Y, X causes Y to merge into T, a limited liability company wholly owned by X that is disregarded as an entity separate from its owner for Federal tax purposes. X then sells 21 percent of T to Z, an unrelated corporation, for cash. Following the sale, no entity classification election is made under § 301.7701-3(c) of this chapter to treat the limited liability company as an association for Federal tax purposes.
(ii) The merger of Y into T causes a termination of Y's QSub election. The new corporation (Newco) that is formed as a result of the termination is immediately merged into T, an entity that is disregarded for Federal tax purposes. Because, at the end of the series of transactions, the assets continue to be held by X for Federal tax purposes, under step transaction principles, the formation of Newco and the transfer of assets pursuant to the merger of Newco into T are disregarded. The sale of 21 percent of T is treated as a sale of a 21 percent undivided interest in each of T's assets. Immediately thereafter, X and Z are treated as contributing their respective interests in those assets to a partnership in exchange for ownership interests in the partnership.

(iii) Under section 1001, X recognizes gain or loss from the deemed sale of the 21 percent interest in each asset of the limited liability company to Z. Under section 721(a), no gain or loss is recognized by X and Z as a result of the deemed contribution of their respective interests in the assets to the partnership in exchange for ownership interests in the partnership.

Example 3. Assume the same facts as in *Example 1,* except that, instead of purchasing Y stock, Z contributes to Y an operating asset in exchange for 21 percent of the Y stock. Y is treated as a new corporation acquiring all of its assets (and assuming all of its liabilities) in exchange for Y stock immediately before the termination. Because X and Z are co-transferors that control the transferee immediately after the transfer, the transaction qualifies under section 351.

Example 4. X, an S corporation, owns 100 percent of the stock of Y, a corporation for which a QSub election is in effect. X distributes all of the Y stock pro rata to its shareholders, and the distribution terminates the QSub election. The transaction can qualify as a distribution to which sections 368(a)(1)(D) and 355 apply if the transaction otherwise satisfies the requirements of those sections.

Example 5. X, an S corporation, owns 100 percent of the stock of Y, a corporation for which a QSub election is in effect. X subsequently revokes the QSub election. Y is treated as a new corporation acquiring all of its assets (and assuming all of its liabilities) immediately before the revocation from its S corporation parent in a deemed exchange for Y stock. On a subsequent date, X sells 21 percent of the stock of Y to Z, an unrelated corporation, for cash. Assume that under general principles of tax law including the step transaction doctrine, the sale is not taken into account in determining whether X is in control of Y immediately after the deemed

exchange of assets for stock. The deemed exchange by X of assets for Y stock and the deemed assumption by Y of its liabilities qualify under section 351 because, for purposes of that section, X is in control of Y within the meaning of section 368(c) immediately after the transfer.

> *Example 6.* (i) X, an S corporation, owns 100 percent of the stock of Y, and Y owns 100 percent of the stock of Z. Y and Z are corporations for which QSub elections are in effect. X subsequently revokes the QSub elections and the effective date specified on each revocation statement is June 26, 2002, a date that is less than 12 months after the date on which the revocation statements are filed.
> (ii) Immediately before the QSub elections terminate, Y is treated as a new corporation acquiring all of its assets (and assuming all of its liabilities) directly from X in exchange for the stock of Y. Z is treated as a new corporation acquiring all of its assets (and assuming all of its liabilities) directly from Y in exchange for the stock of Z.

> *Example 7.* (i) The facts are the same as in Example 6, except that, prior to June 26, 2002 (the effective date of the revocations), Y distributes the Z stock to X under state law.
> (ii) Immediately before the QSub elections terminate, Y is treated as a new corporation acquiring all of its assets (and assuming all of its liabilities) directly from X in exchange for the stock of Y. Z is also treated as a new corporation acquiring all of its assets (and assuming all of its liabilities) directly from X in exchange for the stock of Z.

Example 8. Merger of parent into QSub. X, an S corporation, owns 100 percent of the stock of Y, a corporation for which a QSub election is in effect. X merges into Y under state law, causing the QSub election for Y to terminate, and Y survives the merger. The formation of the new corporation, Y, and the merger of X into Y can qualify as a reorganization described in section 368(a)(1)(F) if the transaction otherwise satisfies the requirements of that section.

Example 9. Transfer of 100 percent of QSub. X, an S corporation, owns 100 percent of the stock of Y, a corporation for which a QSub election is in effect. Z, an unrelated C corporation, acquires 100 percent of the stock of Y. The deemed formation of Y by X (as a consequence of the termination of Y's QSub election) is disregarded for Federal income tax purposes. The transaction is treated as a transfer of the assets of Y to Z, followed by Z's transfer of these assets to the capital of Y in exchange for Y stock. Furthermore, if Z is an S corporation and makes a QSub election for Y effective as of the acquisition, Z's transfer of the assets of Y in exchange for Y stock, followed by the immediate liquidation of Y as a consequence of the QSub election are disregarded for Federal income tax purposes.

(c) ***Election after QSub termination*** —

(1) ***In general.*** Absent the Commissioner's consent, and except as provided in paragraph (c)(2) of this section, a corporation whose QSub election has terminated under paragraph (a) of this section (or a successor corporation as defined in§ 1.1362-5(b)) may not make an S election under section 1362 or have a QSub election under section 1361(b)(3)(B)(ii) made with respect to it for five taxable years (as described in section 1361(b)(3)(D)). The Commissioner may permit an S election by the

corporation or a new QSub election with respect to the corporation before the five-year period expires. The corporation requesting consent to make the election has the burden of establishing that, under the relevant facts and circumstances, the Commissioner should consent to a new election.

(2) ***Exception.*** In the case of S and QSub elections effective after December 31, 1996, if a corporation's QSub election terminates, the corporation may, without requesting the Commissioner's consent, make an S election or have a QSub election made with respect to it before the expiration of the five-year period described in section 1361(b)(3)(D) and paragraph (c)(1) of this section, provided that—

(i) Immediately following the termination, the corporation (or its successor corporation) is otherwise eligible to make an S election or have a QSub election made for it; and

(ii) The relevant election is made effective immediately following the termination of the QSub election.

(3) ***Examples.*** The following examples illustrate the application of this paragraph (c):

Example 1. Termination upon distribution of QSub stock to shareholders of parent. X, an S corporation, owns Y, a QSub. X distributes all of its Y stock to X's shareholders. The distribution terminates the QSub election because Y no longer satisfies the requirements of a QSub. Assuming Y is otherwise eligible to be treated as an S corporation, Y's shareholders may elect to treat Y as an S corporation effective on the date of the stock distribution without requesting the Commissioner's consent.

Example 2. Sale of 100 percent of QSub stock. X, an S corporation, owns Y, a QSub. X sells 100 percent of the stock of Y to Z, an unrelated S corporation. Z may elect to treat Y as a QSub effective on the date of purchase without requesting the Commissioner's consent.

[T.D. 8869, 65 FR 3852, Jan. 25, 2000; 65 FR 16318, Mar. 28, 2000, as amended by T.D. 8869, 67 FR 65313, Oct. 24, 2002]

§ 1.1361-6 Effective date.

Except as provided in §§ 1.1361-4(a)(3)(iii), 1.1361-4(a)(5)(i), 1.1361-4(a)(6)(iii), 1.1361-4(a)(7)(ii), 1.1361-4(a)(8)(ii), 1.1361-4(a)(9), and 1.1361-5(c)(2), the provisions of §§ 1.1361-2 through 1.1361-5 apply to taxable years beginning on or after January 20, 2000; however, taxpayers may elect to apply the regulations in whole, but not in part (aside from those sections with special dates of applicability), for taxable years beginning on or after January 1, 2000, provided all affected taxpayers apply the regulations in a consistent manner. To make this election, the corporation and all affected taxpayers must file a return or an amended return that is consistent with these rules for the taxable year for which the election is made. For purposes of this section, affected taxpayers means all taxpayers whose returns are affected by the election to apply the regulations.

[T.D. 8869, 65 FR 3854, Jan. 25, 2000, as amended by T.D. 9356, 72 FR 45893, Aug. 16, 2007; T.D. 9422, 73 FR 47530, Aug. 14, 2008]

§ 1.1362-0 Table of contents.

This section lists the captions that appear in the regulations under section 1362.

§ 1.1362-1 Election to be an S corporation.

(a) In general.

(b) Years for which election is effective.

§ 1.1362-2 Termination of election.

(a) Termination by revocation.

(1) In general.

(2) When effective.

(i) In general.

(ii) Revocations specifying a prospective revocation date.

(3) Effect on taxable year of corporation.

(4) Rescission of a revocation.

(b) Termination by reason of corporation ceasing to be a small business corporation.

(1) In general.

(2) When effective.

(3) Effect on taxable year of corporation.

(c) Termination by reason of excess passive investment income.

(1) In general.

(2) When effective.

(3) Subchapter C earnings and profits.

(4) Gross receipts.

(i) In general.

(ii) Special rules for sales of capital assets, stock and securities.

(A) Sales of capital assets.

(B) Sales of stock or securities.

(*1*) In general.

(*2*) Treatment of certain liquidations.

(*3*) Definition of stock or securities.

(*4*) General partner interests.

(*i*) In general.

(*ii*) Exception.

(iii) Other exclusions from gross receipts.

(5) Passive investment income.

(i) In general.

(ii) Definitions.

(A) Royalties.

(*1*) In general.

(*2*) Royalties derived in the ordinary course of a trade or business.

(*3*) Copyright, mineral, oil and gas, and active business computer software royalties.

(B) Rents.

(*1*) In general.

(*2*) Rents derived in the active trade or business of renting property.

(*3*) Produced film rents.

(*4*) Income from leasing self-produced tangible property.

(C) Dividends.

(D) Interest.

(*1*) In general.

(*2*) Interest on obligations acquired in the ordinary course of a trade or business.

(E) Annuities.

(F) Gross receipts from the sale of stock or securities.

(G) Identified income.

(iii) Special rules.

(A) Options or commodities dealers.

(B) Treatment of certain lending, financing and other businesses.

(*1*) In general.

(*2*) Directly derived.

(C) Payment to a patron of a cooperative.

(6) Examples.

§ 1.1362-3 Treatment of S termination year.

(a) In general.

(b) Allocations other than pro rata.

(1) Elections under section 1362(e)(3).

(2) Purchase of stock treated as an asset purchase.

(3) 50 percent change in ownership during S termination year.

(c) Special rules.

(1) S corporation that is a partner in a partnership.

(2) Tax for the C short year.

(3) Each short year treated as taxable year.

(4) Year for carryover purposes.

(5) Due date for S short year return.

(6) Year in which income from S short year is includible.

(d) Examples.

§ Inadvertent terminations.

§ 1.1362-4 Inadvertent terminations and inadvertently invalid elections.

(a) In general.

(b) Inadvertent termination.

(c) Corporation's request for determination of an inadvertent termination.

(d) Adjustments.

(e) Corporation and shareholder consents.

(f) Status of corporation.

(g) *Effective/applicability date.*

§ 1.1362-5 Election after termination.

(a) In general.

(b) Successor corporation.

(c) Automatic consent after certain terminations.

§ 1.1362-6 Elections and consents.

(a) Time and manner of making elections.

(1) In general.

(2) Election to be an S corporation.

(i) Manner of making election.

(ii) Time of making election.

(A) In general.

(B) Elections made during the first $2^{1}/_{2}$ months treated as made for the following taxable year.

(C) Definition of month and beginning of the taxable year.

(iii) Examples.

(3) Revocation of S election.

(i) Manner of revoking election.

(ii) Time of revoking election.

(iii) Examples.

(4) Rescission of a revocation.

(i) Manner of rescinding a revocation.

(ii) Time of rescinding a revocation.

(5) Election not to apply pro rata allocation.

(b) Shareholders' consents.

(1) Manner of consents in general.

(2) Persons required to consent.

(i) Community interest in stock.

(ii) Minor.

(iii) Estate.

(iv) Trust.

(3) Special rules for consent of shareholder to election to be an S corporation.

(i) In general.

(ii) Examples.

(iii) Extension of time for filing consents to an election.

(A) In general.

(B) Required consents.

§ 1.1362-7 Effective date.

(a) In general.

(b) Special effective date for passive investment income provisions.

§ 1362-8 Dividends received from affiliated subsidiaries.

(a) In general.

(b) Determination of active or passive earnings and profits.

(1) In general.

(2) Lower tier subsidiaries.

(3) De minimis exception.

(4) Special rules for earnings and profits accumulated by a C corporation prior to 80 percent acquisition.

(5) Gross receipts safe harbor.

(c) Allocating distributions to active or passive earnings and profits.

(1) Distributions from current earnings and profits.

(2) Distributions from accumulated earnings and profits.

(3) Adjustments to active earnings and profits.

(4) Special rules for consolidated groups.

(d) Examples.

(e) Effective date.

[T.D. 8449, 57 FR 55448, Nov. 25, 1992; 58 FR 3330, Jan. 8, 1993, as amended by T.D. 8869, 65 FR 3854, Jan. 25, 2000; T.D. 9422, 73 FR 47530, Aug. 14, 2008]

§ 1.1362-1 Election to be an S corporation.

(a) ***In general.*** Except as provided in § 1.1362-5, a small business corporation as defined in section 1361 may elect to be an S corporation under section 1362(a). An election may be made only with the consent of all of the shareholders of the corporation at the time of the election. See § 1.1362-6(a) for rules concerning the time and manner of making this election.

(b) ***Years for which election is effective.*** An election under section 1362(a) is effective for the entire taxable year of the corporation for which it is made and for all succeeding taxable years of the corporation, until the election is terminated.

[T.D. 8449, 57 FR 55449, Nov. 25, 1992]

§ 1.1362-2 Termination of election.

(a) *Termination by revocation* —

(1) ***In general.*** An election made under section 1362(a) is terminated if the corporation revokes the election for any taxable year of the corporation for which the election is effective, including the first taxable year. A revocation may be made only with the consent of shareholders who, at the time the revocation is made, hold more than one-half of the number of issued and outstanding shares of stock (including non-voting stock) of the corporation. See § 1.1362-6(a) for rules concerning the time and manner of revoking an election made under section 1362(a).

(2) *When effective* —

(i) ***In general.*** Except as provided in paragraph (a)(2)(ii) of this section, a revocation made during the taxable year and before the 16th day of the third month of the taxable year is effective on the first day of the taxable year and a revocation made after the 15th day of the third month of the taxable year is effective for the following taxable year. If a corporation makes an election to be an S corporation that is to be effective beginning with the next taxable year and revokes its election on or before the first day of the next taxable year, the corporation is deemed to have revoked its election on the first day of the next taxable year.

(ii) ***Revocations specifying a prospective revocation date.*** If a corporation specifies a date for revocation and the date is expressed in terms of a stated day, month, and year that is on or after the date the revocation is filed, the revocation is effective on and after the date so specified.

(iii) ***Applicability of section 7503.*** With respect to a revocation made under paragraph (a)(2) of this section, see section 7503 (addressing time for performance of acts where the last day occurs on a Saturday, Sunday, or legal holiday). This paragraph (a)(2)(iii) applies to revocations made under paragraph (a)(2) of this section effective after October 20, 2020. A corporation may apply this paragraph (a)(2)(iii) retroactively to a revocation made by the corporation under paragraph (a)(2) of this section effective on or before October 20, 2020.

(3) ***Effect on taxable year of corporation.*** In the case of a corporation that revokes its election to be an S corporation effective on the first day of the first taxable year for which its election is to be effective, any statement made with the election regarding a change in the corporation's taxable year has no effect.

(4) ***Rescission of a revocation.*** A corporation may rescind a revocation made under paragraph (a)(2) of this section at any time before the revocation becomes effective. A rescission may be made only with the consent of each person who consented to the revocation and by each person who became a shareholder of the corporation within the period beginning on the first day after the date the revocation was made and ending on the date on which the rescission is made. See § 1.1362-6(a) for rules concerning the time and manner of rescinding a revocation.

(b) *Termination by reason of corporation ceasing to be a small business corporation* —

(1) ***In general.*** If a corporation ceases to be a small business corporation, as defined in section 1361(b), at any time on or after the first day of the first taxable year for which its election under section 1362(a) is effective, the election terminates. In the event of a termination under this paragraph (b)(1), the corporation should attach to its return for the taxable year in which the termination occurs a notification that a termination has occurred and the date of the termination.

(2) ***When effective.*** If an election terminates because of a specific event that causes the corporation to fail to meet the definition of a small business corporation, the termination is effective as of the date on which the event occurs. If a corporation makes an election to be an S corporation that is effective beginning with the following taxable year and is not a small business corporation on the first day of that following taxable year, the election is treated as having terminated on that first day. If a corporation is a small business corporation on the first day of the taxable year for which its election is effective, its election does not terminate even if the corporation was not a small business corporation during all or part of the period beginning after the date the election was made and ending before the first day of the taxable year for which the election is effective.

(3) ***Effect on taxable year of corporation.*** In the case of a corporation that fails to meet the definition of a small business corporation on the first day of the first taxable year for which its election to be an S corporation is to be effective, any statement made with the election regarding a change in the corporation's taxable year has no effect.

(c) ***Termination by reason of excess passive investment income*** —

(1) ***In general.*** A corporation's election under section 1362(a) terminates if the corporation has subchapter C earnings and profits at the close of each of three consecutive taxable years and, for each of those taxable years, has passive investment income in excess of 25 percent of gross receipts. See section 1375 for the tax imposed on excess passive investment income.

(2) ***When effective.*** A termination under this paragraph (c) is effective on the first day of the first taxable year beginning after the third consecutive year in which the S corporation had excess passive investment income.

(3) ***Subchapter C earnings and profits.*** For purposes of this paragraph (c), *subchapter C earnings and profits* of a corporation are the earnings and profits of any corporation, including the S corporation or an acquired or predecessor corporation, for any period with respect to which an election under section 1362(a) (or under section 1372 of prior law) was not in effect. The subchapter C earnings and profits of an S corporation are modified as required by section 1371(c).

(4) ***Gross receipts*** —

(i) ***In general.*** For purposes of this paragraph (c), *gross receipts* generally means the total amount received or accrued under the method of accounting used by the corporation in computing its taxable income and is not reduced by returns and allowances, cost of goods sold, or deductions.

(ii) ***Special rules for sales of capital assets, stock and securities*** —

(A) ***Sales of capital assets.*** For purposes of this paragraph (c), gross receipts from the sales or exchanges of capital assets (as defined in section 1221), other than stock and securities, are taken into account only to the extent of capital gain net income (as defined in section 1222).

(B) ***Sales of stock or securities*** —

(*1*) ***In general.*** For purposes of this paragraph (c), gross receipts from the sales or exchanges of stock or securities are taken into account only to the extent of gains therefrom. In addition, for purposes of computing gross receipts from sales or exchanges of stock or securities, losses do not offset gains.

(2) ***Treatment of certain liquidations.*** Gross receipts from the sales or exchanges of stock or securities do not include amounts described in section 1362(d)(3)(D)(iv), relating to the treatment of certain liquidations. For purposes of section 1362(d)(3)(D)(iv), stock of the liquidating corporation owned by an S corporation shareholder is not treated as owned by the S corporation.

(3) ***Definition of stock or securities.*** For purposes of this paragraph (c), *stock or securities* includes shares or certificates of stock, stock rights or warrants, or an interest in any corporation (including any joint stock company, insurance company, association, or other organization classified as a corporation under section 7701); an interest as a limited partner in a partnership; certificates of interest or participation in any profit-sharing agreement, or in any oil, gas, or other mineral property, or lease; collateral trust certificates; voting trust certificates; bonds; debentures; certificates of indebtedness; notes; car trust certificates; bills of exchange; or obligations issued by or on behalf of a State, Territory, or political subdivision thereof.

(4) ***General partner interests*** —

(*i*) ***In general.*** Except as provided in paragraph (c)(4)(ii)(B)(*4*)(*ii*) of this section, if an S corporation disposes of a general partner interest, the gain on the disposition is treated as gain from the sale of stock or securities to the extent of the amount the S corporation would have received as a distributive share of gain from the sale of stock or securities held by the partnership if all of the stock and securities held by the partnership had been sold by the partnership at fair market value at the time the S corporation disposes of the general partner interest. In applying this rule, the S corporation's distributive share of gain from the sale of stock or securities held by the partnership is not reduced to reflect any loss that would be recognized from the sale of stock or securities held by the partnership. In the case of tiered partnerships, the rules of this section apply by looking through each tier.

(*ii*) ***Exception.*** An S corporation that disposes of a general partner interest may treat the disposition, for purposes of this paragraph (c), in the same manner as the disposition of an interest as a limited partner.

(iii) ***Other exclusions from gross receipts.*** For purposes of this paragraph (c), gross receipts do not include—

(A) Amounts received in nontaxable sales or exchanges except to the extent that gain is recognized by the corporation on the sale or exchange; or

(B) Amounts received as a loan, as a repayment of a loan, as a contribution to capital, or on the issuance by the corporation of its own stock.

(5) ***Passive investment income*** —

(i) ***In general.*** In general, *passive investment income* means gross receipts (as defined in paragraph (c)(4) of this section) derived from royalties, rents, dividends, interest, annuities, and gains from the sales or exchanges of stock or securities.

(ii) ***Definitions.*** For purposes of this paragraph (c)(5), the following definitions apply:

(A) ***Royalties*** —

(1) ***In general. Royalties*** means all royalties, including mineral, oil, and gas royalties, and amounts received for the privilege of using patents, copyrights, secret processes and formulas, good will, trademarks, tradebrands, franchises, and other like property. The gross amount of royalties is not reduced by any part of the cost of the rights under which the royalties are received or by any amount allowable as a deduction in computing taxable income.

(2) ***Royalties derived in the ordinary course of a trade or business. Royalties*** does not include royalties derived in the ordinary course of a trade or business of franchising or licensing property. Royalties received by a corporation are derived in the ordinary course of a trade or business of franchising or licensing property only if, based on all the facts and circumstances, the corporation—

(*i*) Created the property; or

(*ii*) Performed significant services or incurred substantial costs with respect to the development or marketing of the property.

(3) ***Copyright, mineral, oil and gas, and active business computer software royalties. Royalties*** does not include copyright royalties, nor mineral, oil and gas royalties if the income from those royalties would not be treated as personal holding company income under sections 543 (a)(3) and (a)(4) if the corporation were a C corporation; amounts received upon disposal of timber, coal, or domestic iron ore with respect to which the special rules of sections 631 (b) and (c) apply; and active business computer software royalties as defined under section 543(d) (without regard to paragraph (d)(5) of section 543).

(B) ***Rents*** —

(1) ***In general. Rents*** means amounts received for the use of, or right to use, property (whether real or personal) of the corporation.

(2) ***Rents derived in the active trade or business of renting property. Rents*** does not include rents derived in the active trade or business of renting property. Rents received by a corporation are derived in an active trade or business of renting property only if, based on all the facts and circumstances, the corporation provides significant services or incurs substantial costs in the rental business. Generally, significant services are not rendered and substantial costs are not incurred in connection with net leases. Whether significant services are performed or substantial costs are incurred in the rental business is determined based upon all the facts and circumstances including, but not limited to, the number of persons employed to provide the services and the types and amounts of costs and expenses incurred (other than depreciation).

(3) ***Produced film rents. Rents*** does not include produced film rents as defined under section 543(a)(5).

(4) ***Income from leasing self-produced tangible property. Rents*** does not include compensation, however designated, for the use of, or right to use, any real or tangible personal property developed, manufactured, or produced by the taxpayer, if during the taxable year the taxpayer is engaged in substantial development, manufacturing, or production of real or tangible personal property of the same type.

(C) ***Dividends. Dividends*** includes dividends as defined in section 316, amounts to be included in gross income under section 551 (relating to foreign personal holding company income taxed to U.S. shareholders), and consent dividends as provided in section 565. See paragraphs (c)(5)(iii) (B) and (C) of this section for special rules for the treatment of certain dividends and certain payments to a patron of a cooperative. See § 1.1362-8 for special rules regarding the treatment of dividends received by an S corporation from a C corporation in which the S corporation holds stock meeting the requirements of section 1504(a)(2).

(D) ***Interest*** —

(*1*) ***In general. Interest*** means any amount received for the use of money (including tax-exempt interest and amounts treated as interest under section 483, 1272, 1274, or 7872). See paragraph (c)(5)(iii)(B) of this section for a special rule for the treatment of interest derived in certain businesses.

(*2*) ***Interest on obligations acquired in the ordinary course of a trade or business. Interest*** does not include interest on any obligation acquired from the sale of property described in section 1221(1) or the performance of services in the ordinary course of a trade or business of selling the property or performing the services.

(E) ***Annuities. Annuities*** means the entire amount received as an annuity under an annuity, endowment, or life insurance contract, if any part of the amount would be includible in gross income under section 72.

(F) ***Gross receipts from the sale of stock or securities.*** Gross receipts from the sales or exchanges of stock or securities, as described in paragraph (c)(4)(ii)(B) of this section, are passive investment income to the extent of gains therefrom. See paragraph (c)(5)(iii)(B) of this section for a special rule for the treatment of gains derived in certain businesses.

(G) ***Identified income. Passive investment income*** does not include income identified by the Commissioner by regulations, revenue ruling, or revenue procedure as income derived in the ordinary course of a trade or business for purposes of this section.

(iii) ***Special rules.*** For purposes of this paragraph (c)(5), the following special rules apply:

(A) ***Options or commodities dealers.*** In the case of an options dealer or commodities dealer, *passive investment income* does not include any gain or loss (in the normal course of the taxpayer's activity of dealing in or trading section 1256 contracts) from any section 1256 contract or property related to the contract. *Options dealer, commodities dealer,* and *section 1256 contract* have the same meaning as in section 1362(d)(3)(E)(ii).

(B) ***Treatment of certain lending, financing and other business*** —

(*1*) ***In general. Passive investment income*** does not include gross receipts that are directly derived in the ordinary course of a trade or business of—

(*i*) Lending or financing;

(*ii*) Dealing in property;

(*iii*) Purchasing or discounting accounts receivable, notes, or installment obligations; or

(*iv*) Servicing mortgages.

(2) ***Directly derived.*** For purposes of this paragraph (c)(5)(iii)(B), gross receipts directly derived in the ordinary course of business includes gain (as well as interest income) with respect to loans originated in a lending business, or interest income (as well as gain) from debt obligations of a dealer in such obligations. However, interest earned from the investment of idle funds in short-term securities does not constitute gross receipts directly derived in the ordinary course of business. Similarly, a dealer's income or gain from an item of property is not directly derived in the ordinary course of its trade or business if the dealer held the property for investment at any time before the income or gain is recognized.

(C) ***Payment to a patron of a cooperative. Passive investment income*** does not include amounts included in the gross income of a patron of a cooperative (within the meaning of section 1381(a), without regard to paragraph (2) (A) or (C) of section 1381(a)) by reason of any payment or allocation to the patron based on patronage occurring in the case of a trade or business of the patron.

(6) ***Examples.*** The principles of paragraphs (c)(4) and (c)(5) of this section are illustrated by the following examples. Unless otherwise provided in an example, *S* is an S corporation with subchapter C earnings and profits, and *S*'s gross receipts from operations are gross receipts not derived from royalties, rents, dividends, interest, annuities, or gains from the sales or exchanges of stock or securities. *S* is a calendar year taxpayer and its first taxable year as an S corporation is 1993.

Example 1. Sales of capital assets, stock and securities. (i) *S* uses an accrual method of accounting and sells:
(1) A depreciable asset, held for more than 6 months, which is used in the corporation's business;

(2) A capital asset (other than stock or securities) for a gain;

(3) A capital asset (other than stock or securities) for a loss; and

(4) Securities.

S receives payment for each asset partly in money and partly in the form of a note payable at a future time, and elects not to report the sales on the installment method.

(ii) The amount of money and the face amount (or issue price if different) of the note received for the business asset are considered gross receipts in the taxable year of sale and are not reduced by the adjusted basis of the property, costs of sale, or any other amount. With respect to the sales of the capital assets, gross receipts include the cash down payment and face amount (or issue price if different) of any notes, but only to the extent of *S*'s capital gain net income. In the case of the sale of the securities, gross receipts include the cash down payment and face amount (or issue price if different) of the notes, but only to the extent of gain on the sale. In determining gross receipts from sales of securities, losses are not netted

against gains.

Example 2. Long-term contract reported on percentage-of-completion method. S has a long-term contract as defined in § 1.460-1(b)(1) with respect to which it reports income according to the percentage-of-completion method as described in § 1.460-4(b). The portion of the gross contract price which corresponds to the percentage of the entire contract which has been completed during the taxable year is included in *S*'s gross receipts for the year.

Example 3. Income reported on installment sale method. For its 1993 taxable year, S sells personal property on the installment plan and elects to report its taxable income from the sale of the property (other than property qualifying as a capital asset or stock or securities) on the installment method in accordance with section 453. The installment payment actually received in a given taxable year of S is included in gross receipts for the year.

Example 4. Partnership interests. In 1993, S and two of its shareholders contribute cash to form a general partnership, PRS. S receives a 50 percent interest in the capital and profits of PRS. S formed PRS to indirectly invest in marketable stocks and securities. The only assets of PRS are the stock and securities, and certain real and tangible personal property. In 1994, S needs cash in its business and sells its partnership interest at a gain rather than having PRS sell the marketable stock or securities that have appreciated. Under paragraph (c)(4)(ii)(B)(*4*) of this section, the gain on S's disposition of its interest is PRS is treated as gain from the sale or exchange of stock or securities to the extent of the amount the distributive share of gain S would have received from the sale of stock or securities held by PRS if PRS had sold all of its stock or securities at fair market value at the time S disposed of its interest in PRS.

Example 5. Royalties derived in ordinary course of trade or business. (i) In 1993, S has gross receipts of $75,000. Of this amount, $5,000 is from royalty payments with respect to Trademark A, $8,000 is from royalty payments with respect to Trademark B, and $62,000 is gross receipts from operations. S created Trademark A, but S did not create Trademark B or perform significant services or incur substantial costs with respect to the development or marketing of Trademark B.
(ii) Because S created Trademark A, the royalty payments with respect to Trademark A are derived in the ordinary course of S's business and are not included within the definition of *royalties* for purposes of determining S's passive investment income. However, the royalty payments with respect to Trademark B are included within the definition of *royalties* for purposes of determining S's passive investment income. See paragraph (c)(5)(ii)(A) of this section. S's passive investment income for the year is $8,000, and S's passive investment income percentage for the taxable year is 10.67% ($8,000/$75,000). This does not exceed 25 percent of S's gross receipts and consequently the three-year period described in section 1362(d)(3) does not begin to run.

Example 6. Dividends; gain on sale of stock derived in the ordinary course of trade or business. (i) In 1993, S receives dividends of $10,000 on stock of corporations P and O, recognizes a gain of $25,000 on sale of the P stock, and recognizes a loss of $12,000 on sale of the O stock. S held the P and O stock for investment, rather than for sale in the ordinary course of a trade or business. S has gross receipts from operations and from gain on the sale of stock in the ordinary course of its trade or business of $110,000.

(ii) S's gross receipts are calculated as follows:

$110,000	Gross receipts from operations and from gain on the sale of stock in the ordinary course of a trade or business
10,000	Gross dividend receipts
25,000	Gain on sale of P stock (Loss on O stock not taken into account
145,000	Total gross receipts

(iii) S's passive investment income is determined as follows:

$10,000	Gross dividend receipts
25,000	Gain on sale of P stock (Loss on O stock not taken into account
35,000	Total passive investment income

(iv) S's passive investment income percentage for its first year as an S corporation is 24.1% ($35,000/$145,000). This does not exceed 25 percent of S's gross receipts and consequently the three-year period described in section 1362(d)(3) does not begin to run.

Example 7. Interest on accounts receivable; netting of gain on sale of real property investments. (i) In 1993, S receives $6,000 of interest on accounts receivable arising from S's sales of inventory property. S also received dividends with respect to stock held for investment of $1,500. In addition, *S* sells two parcels of real property (Property J and Property K) that S had purchased and held for investment. S sells Property J, in which S has a basis of $5,000, for $10,000 (a gain of $5,000). S sells Property K, in which S has a basis of $12,000, for $9,000 (a loss of $3,000). S has gross receipts from operations of $90,000.
(ii) S's gross receipts are calculated as follows:

$90,000	Gross receipts from operations
6,000	Gross interest receipts
1,500	Gross dividend receipts
2,000	Net gain on sale of real property investments
$99,500	Total gross receipts

(iii) Under paragraph (c)(5)(ii)(D) of this section, S's gross interest receipts are not passive investment income. In addition, gain on the sale of real property ($2,000) is not passive investment income. S's

passive investment income includes only the $1,500 of gross dividend receipts. Accordingly, S's passive investment income percentage for its first year as an S corporation is 1.51% ($1,500/$99,500). This does not exceed 25 percent of S's gross receipts and consequently the three-year period described in section 1362(d)(3) does not begin to run.

Example 8. Interest received in the ordinary course of a lending business. (i) In 1993, S has gross receipts of $100,000 from loans and investments made in the ordinary course of S's mortgage banking business. This includes, for example, mortgage servicing fees, interest earned on mortgages prior to sale of the mortgages, and gain on sale of mortgages. In addition, S receives, from the investment of idle funds in short-term securities, $15,000 of gross interest income and $5,000 of gain.
(ii) S's gross receipts are calculated as follows:

$100,000	Gross receipts from operations
15,000	Gross interest receipts
5,000	Gain on sale of securities
120,000	Total gross receipts

(iii) *S*'s passive investment income is determined as follows:

$15,000	Gross interest receipts
5,000	Gain on sale of securities,
20,000	Total passive investment income

(iv) S's passive investment income percentage for its first year as an S corporation is 16.67% ($20,000/$120,000). This does not exceed 25 percent of S's gross receipts and consequently the three-year period described in section 1362(d)(3) does not begin to run.

[T.D. 8449, 57 FR 55449, Nov. 25, 1992; 58 FR 15274, Mar. 22, 1993, as amended by T.D. 8869, 65 FR 3854, Jan. 25, 2000; T.D. 8995, 67 FR 34610, May 15, 2002; T.D. 9914, 85 FR 66478, Oct. 20, 2020]

§ 1.1362-3 Treatment of S termination year.

(a) ***In general.*** If an S election terminates under section 1362(d) on a date other than the first day of a taxable year of the corporation, the corporation's taxable year in which the termination occurs is an S termination year. The portion of the S termination year ending at the close of the day prior to the termination is treated as a short taxable year for which the corporation is an S corporation (the *S short year*). The portion of the S termination year beginning on the day the termination is effective is treated as a short taxable year for which the corporation is a C corporation (the *C short year*). Except as provided in paragraphs (b) and (c)(1)

of this section, the corporation allocates income or loss for the entire year on a pro rata basis as described in section 1362(e)(2). To the extent that income or loss is not allocated on a pro rata basis under this section, items of income, gain, loss, deduction, and credit are assigned to each short taxable year on the basis of the corporation's normal method of accounting as determined under section 446. See, however, § 1.1502-76(b)(1)(ii)(A)(2) for special rules for an S election that terminates under section 1362(d) immediately before the S corporation becomes a member of a consolidated group (within the meaning of § 1.1502-1(h)). See § 1.460-4(k)(3)(iv)(D) for rules relating to the computation of the S corporation's income or loss from a contract accounted for under a long-term contract method of accounting in the S termination year.

(b) *Allocations other than pro rata* —

(1) ***Elections under section 1362(e)(3).*** The pro rata allocation rules of section 1362(e)(2) do not apply if the corporation elects to allocate its S termination year income on the basis of its normal tax accounting method. This election may be made only with the consent of each person who is a shareholder in the corporation at any time during the S short year and of each person who is a shareholder in the corporation on the first day of the C short year. See § 1.1362-6(a) for rules concerning the time and manner of making this election.

(2) ***Purchase of stock treated as an asset purchase.*** The pro rata allocation rules of section 1362(e)(2) do not apply with respect to any item resulting from the application of section 338.

(3) ***50 percent change in ownership during S termination year.*** The pro rata allocation rules of section 1362(e)(2) do not apply if at any time during the S termination year, as a result of sales or exchanges of stock in the corporation during that year, there is a change in ownership of 50 percent or more of the issued and outstanding shares of stock of the corporation. If stock has already been sold or exchanged during the S termination year, subsequent sales or exchanges of that stock are not taken into account for purposes of this paragraph (b)(3).

(c) *Special rules* —

(1) ***S corporation that is a partner in a partnership.*** For purposes of section 706(c) only, the termination of the election of an S corporation that is a partner in a partnership during any portion of the S short year under § 1.1362-2 (a) or (b), is treated as a sale or exchange of the corporation's entire interest in the partnership on the last day of the S short year, if—

(i) The pro rata allocation rules do not apply to the corporation; and

(ii) Any taxable year of the partnership ends with or within the C short year.

(2) ***Tax for the C short year.*** The taxable income for the C short year is determined on an annualized basis as described in section 1362(e)(5).

(3) *Each short year treated as taxable year* —

(i) ***In general.*** Except as otherwise provided in paragraph (c)(4) of this section, the S and C short years are treated as two separate years for purposes of all provisions of the Internal Revenue Code.

(ii) ***Application of section 163(j).*** For purposes of section 163(j), a separate limitation (as defined in § 1.163(j)-1(b)(36)) applies to each S short year and each C short year. Any items necessary to determine the amount of business interest expense (as defined in § 1.163(j)-1(b)(3)) that are deducted in each S short year or C short year must be allocated between the S short year and C short year in accordance with an allocation methodology provided in section 1362(e).

(4) ***Year for carryover purposes.*** The S and C short years are treated as one year for purposes of determining the number of taxable years to which any item may be carried back or forward by the corporation.

(5) ***Due date for S short year return.*** The date by which the return for the S short year must be filed is the same as the date by which the return for the C short year must be filed (including extensions).

(6) ***Year in which income from S short year is includible.*** A shareholder must include in taxable income the shareholder's pro rata share of the items described in section 1366(a) for the S short year for the taxable year with or within which the S termination year ends.

(d) ***Examples*** The provisions of this section are illustrated by the following examples:

(1) ***Example 1.*** —S termination year not created.

(i) On January 1, 1993, the first day of its taxable year, a subchapter C corporation had three eligible shareholders. During 1993, the corporation properly elected to be treated as an S corporation effective January 1, 1994, the first day of the succeeding taxable year. Subsequently, a transfer of some of the stock in the corporation was made to an ineligible shareholder. The ineligible shareholder still holds the stock on January 1, 1994.

(ii) The corporation fails to meet the definition of a small business corporation on January 1, 1994, and its election is treated as having terminated on that date. See § 1.1362-2(b)(2) for the termination rules. Because the corporation ceases to be a small business corporation on the first day of a taxable year, an S termination year is not created. In addition, if the corporation in the future meets the definition of a small business corporation and desires to elect to be treated as an S corporation, the corporation is automatically granted consent to reelect before the expiration of the 5-year waiting period. See § 1.1362-5 for special rules concerning automatic consent to reelect.

(2) ***Example 2.*** More than 50 percent change in ownership during S short year.

A, an individual, owns all 100 outstanding shares of stock of S, a calendar year S corporation. On January 31, 1993, A sells 60 shares of S stock to B, an individual. On June 1, 1993, A sells 5 shares of S stock to PRS, a partnership. S ceases to be a small business corporation on June 1, 1993, and pursuant to section 1362(d)(2), its election terminates on that date. Because there was a more than 50 percent change in ownership of the issued and outstanding shares of S stock, S must assign the items of income, loss, deduction, or credit for the S termination year to the two short taxable years on the basis of S's normal method of accounting under the rules of paragraph (b)(3) of this section.

(3) ***Example 3.*** More than 50 percent change in ownership during C short year.

A, an individual, owns all 100 outstanding shares of stock of S, a calendar year S corporation. On June 1, 1993, A sells 5 shares of S stock to PRS, a partnership. S ceases to be a small business corporation on that date and pursuant to section 1362(d)(3), its election terminates on that date. On July 1, 1993, A sells 60 shares of S stock to B, an individual. Since there was a more than 50 percent change in ownership of the issued and outstanding shares of S stock during the S termination year, S

must assign the items of income, loss, deduction, or credit for the S termination year to the two short taxable years on the basis of S's normal method of accounting under the rules of paragraph (b)(3) of this section.

(4) ***Example 4.*** Stock acquired other than by sale or exchange.

C and D are shareholders in S, a calendar year S corporation. Each owns 50 percent of the issued and outstanding shares of the corporation on December 31, 1993. On March 1, 1994, C makes a gift of his entire shareholder interest to T, a trust not permitted as a shareholder under section 1361(c)(2). S ceases to be a small business corporation on March 1, 1994, and pursuant to section 1362(d)(2), its S corporation election terminates effective on that date. As a result of the gift, T owns 50 percent of S's issued and outstanding stock. However, because T acquired the stock by gift from C rather than by sale or exchange, there has not been a more than 50 percent change in ownership by sale or exchange of S that would cause the rules of paragraph (b)(3) of this section to apply.

[T.D. 8449, 57 FR 55452, Nov. 25, 1992, as amended by T.D. 8842, 64 FR 61205, Nov. 10, 1999; T.D. 9137, 69 FR 42559, July 16, 2004; T.D. 9905, 85 FR 56842, Sept. 14, 2020]

§ 1.1362-4 Inadvertent terminations and inadvertently invalid elections.

(a) ***In general.*** A corporation is treated as continuing to be an S corporation or a QSub (or, an invalid election to be either an S corporation or a QSub is treated as valid) during the period specified by the Commissioner if—

(1) The corporation made a valid election under section 1362(a) or section 1361(b)(3) and the election terminated or the corporation made an election under section 1362(a) or section 1361(b)(3) that was invalid;

(2) The Commissioner determines that the termination or invalidity was inadvertent;

(3) Within a reasonable period of time after discovery of the terminating event or invalid election, steps were taken so that the corporation for which the election was made or the termination occurred is a small business corporation or a QSub, as the case may be, or to acquire the required shareholder consents; and

(4) The corporation and shareholders agree to adjustments that the Commissioner may require for the period.

(b) ***Inadvertent termination or inadvertently invalid election.*** For purposes of paragraph (a) of this section, the determination of whether a termination or invalid election was inadvertent is made by the Commissioner. The corporation has the burden of establishing that under the relevant facts and circumstances the Commissioner should determine that the termination or invalid election was inadvertent. The fact that the terminating event or invalidity of the election was not reasonably within the control of the corporation and, in the case of a termination, was not part of a plan to terminate the election, or the fact that the terminating event or circumstance took place without the knowledge of the corporation, notwithstanding its due diligence to safeguard itself against such an event or circumstance, tends to establish that the termination or invalidity of the election was inadvertent.

(c) ***Corporation's request for determination of an inadvertent termination or invalid election.*** A corporation that believes that the termination or invalidity of its election was inadvertent may request a determination from the Commissioner that the termination or invalidity of its election was inadvertent. The request is made in the form of a ruling request and should set forth all relevant facts pertaining to the event or circumstance including, but not limited to, the facts described in paragraph (b) of this section, the date of

the corporation's election (or intended election) under section 1362(a) or 1361(b)(3), a detailed explanation of the event or circumstance causing the termination or invalidity, when and how the event or circumstance was discovered, and the steps taken under paragraph (a)(3) of this section.

(d) ***Adjustments.*** The Commissioner may require any adjustments that are appropriate. In general, the adjustments required should be consistent with the treatment of the corporation as an S corporation or QSub during the period specified by the Commissioner. In the case of stock held by an ineligible shareholder that causes an inadvertent termination or invalid election for an S corporation under section 1362(f), the Commissioner may require the ineligible shareholder to be treated as a shareholder of the S corporation during the period the ineligible shareholder actually held stock in the corporation. Moreover, the Commissioner may require protective adjustments that prevent the loss of any revenue due to the holding of stock by an ineligible shareholder (for example, a nonresident alien).

(e) ***Corporation and shareholder consents.*** The corporation and all persons who were shareholders of the corporation at any time during the period specified by the Commissioner must consent to any adjustments that the Commissioner may require. Each consent should be in the form of a statement agreeing to make the adjustments. The statement must be signed by the shareholder (in the case of shareholder consent) or a person authorized to sign the return required by section 6037 (in the case of corporate consent). See § 1.1362-6(b)(2) for persons required to sign consents. A shareholder's consent statement should include the name, address, and taxpayer identification numbers of the corporation and shareholder, the number of shares of stock owned by the shareholder, and the dates on which the shareholder owned any stock. The corporate consent statement should include the name, address, and taxpayer identification numbers of the corporation and each shareholder.

(f) ***Status of corporation.*** The status of the corporation after the terminating event or invalid election and before the determination of inadvertence is determined by the Commissioner. Inadvertent termination or inadvertent invalid election relief may be granted retroactively for all years for which the terminating event or circumstance giving rise to invalidity is effective, in which case the corporation is treated as if its election was valid or had not terminated. Alternatively, relief may be granted only for the period in which the corporation became eligible for subchapter S or QSub treatment, in which case the corporation is treated as a C corporation or, in the case of a QSub with an inadvertently terminated or invalid election, as a separate C corporation, during the period for which the corporation was not eligible for its intended status.

(g) ***Effective/applicability date.*** Paragraphs (a), (b), (c), (d), and (f) of this section are effective on *August 14, 2008.*

[T.D. 8449, 57 FR 55453, Nov. 25, 1992, as amended by T.D. 9422, 73 FR 47530, Aug. 14, 2008]

§ 1.1362-5 Election after termination.

(a) ***In general.*** Absent the Commissioner's consent, an S corporation whose election has terminated (or a successor corporation) may not make a new election under section 1362(a) for five taxable years as described in section 1362(g). However, the Commissioner may permit the corporation to make a new election before the 5-year period expires. The corporation has the burden of establishing that under the relevant facts and circumstances, the Commissioner should consent to a new election. The fact that more than 50 percent of the stock in the corporation is owned by persons who did not own any stock in the corporation on the date of the termination tends to establish that consent should be granted. In the absence of this fact, consent ordinarily is denied unless the corporation shows that the event causing

termination was not reasonably within the control of the corporation or shareholders having a substantial interest in the corporation and was not part of a plan on the part of the corporation or of such shareholders to terminate the election.

(b) ***Successor corporation.*** A corporation is a *successor corporation* to a corporation whose election under section 1362 has been terminated if—

(1) 50 percent or more of the stock of the corporation (the new corporation) is owned, directly or indirectly, by the same persons who, on the date of the termination, owned 50 percent or more of the stock of the corporation whose election terminated (the old corporation); and

(2) Either the new corporation acquires a substantial portion of the assets of the old corporation, or a substantial portion of the assets of the new corporation were assets of the old corporation.

(c) ***Automatic consent after certain terminations.*** A corporation may, without requesting the Commissioner's consent, make a new election under section 1362(a) before the 5-year period described in section 1362(g) expires if the termination occurred because the corporation—

(1) Revoked its election effective on the first day of the first taxable year for which its election was to be effective (see § 1.1362-2(a)(2)); or

(2) Failed to meet the definition of a small business corporation on the first day of the first taxable year for which its election was to be effective (see § 1.1362-2(b)(2)).

[T.D. 8449, 57 FR 55454, Nov. 25, 1992]

§ 1.1362-6 Elections and consents.

(a) ***Time and manner of making elections*** —

(1) ***In general.*** An election statement made under this section must identify the election being made, set forth the name, address, and taxpayer identification number of the corporation, and be signed by a person authorized to sign the return required to be filed under section 6037.

(2) ***Election to be an S corporation*** —

(i) ***Manner of making election.*** A small business corporation makes an election under section 1362(a) to be an S corporation by filing a completed Form 2553. The election form must be filed with the service center designated in the instructions applicable to Form 2553. The election is not valid unless all shareholders of the corporation at the time of the election consent to the election in the manner provided in paragraph (b) of this section. However, once a valid election is made, new shareholders need not consent to that election.

(ii) ***Time of making election*** —

(A) ***In general.*** The election described in paragraph (a)(2)(i) of this section may be made by a small business corporation at any time during the taxable year that immediately precedes the taxable year for which the election is to be effective, or during the taxable year for which the election is to be effective provided that the election is made before the 16th day of the third month of the year. If a corporation makes an election for a taxable year, and the election meets all the requirements of this section but is made during the period beginning after the 15th day of the third month of the taxable year, the election is treated as being made for the following taxable year provided that the corporation meets all the

requirements of section 1361(b) at the time the election is made. For taxable years of $2^1/_2$ months or less, an election made before the 16th day of the third month after the first day of the taxable year is treated as made during that year.

(B) ***Elections made during the first $2^1/_2$ months treated as made for the following taxable year.*** A timely election made by a small business corporation during the taxable year for which it is intended to be effective is nonetheless treated as made for the following taxable year if—

(*1*) The corporation is not a small business corporation during the entire portion of the taxable year which occurs before the date the election is made; or

(*2*) Any person who held stock in the corporation at any time during the portion of the taxable year which occurs before the time the election is made, and who does not hold stock at the time the election is made, does not consent to the election.

(C) ***Definition of month and beginning of the taxable year. Month*** means a period commencing on the same numerical day of any calendar month as the day of the calendar month on which the taxable year began and ending with the close of the day preceding the numerically corresponding day of the succeeding calendar month or, if there is no corresponding day, with the close of the last day of the succeeding calendar month. In addition, the taxable year of a new corporation begins on the date that the corporation has shareholders, acquires assets, or begins doing business, whichever is the first to occur. The existence of incorporators does not necessarily begin the taxable year of a new corporation.

(iii) ***Examples.*** The provisions of this section are illustrated by the following examples:

Example 1. Effective election; no prior taxable year. A calendar year small business corporation begins its first taxable year on January 7, 1993. To be an S corporation beginning with its first taxable year, the corporation must make the election set forth in this section during the period that begins January 7, 1993, and ends before March 22, 1993. Because the corporation had no taxable year immediately preceding the taxable year for which the election is to be effective, an election made earlier than January 7, 1993, will not be valid.

Example 2. Effective election; taxable year less than 21⁄2 months. A calendar year small business corporation begins its first taxable year on November 8, 1993. To be an S corporation beginning with its first taxable year, the corporation must make the election set forth in this section during the period that begins November 8, 1993, and ends before January 23, 1994.

Example 3. Election effective for the following taxable year; ineligible shareholder. On January 1, 1993, two individuals and a partnership own all of the stock of a calendar year subchapter C corporation. On January 31, 1993, the partnership dissolved and distributed its shares in the corporation to its five partners, all individuals. On February 28, 1993, the seven shareholders of the corporation consented to the corporation's election of subchapter S status. The corporation files a properly completed Form 2533 on March 2, 1993. The corporation is not eligible to be a subchapter S corporation for the 1993 taxable year because during the period of the taxable year prior to the election it had an ineligible shareholder. However, under paragraph (a)(2)(ii)(B) of this section, the election is treated as made for the corporation's 1994 taxable year.

(3) *Revocation of S election* —

(i) ***Manner of revoking election.*** To revoke an election, the corporation files a statement that the corporation revokes the election made under section 1362(a). The statement must be filed with the service center where the election was properly filed. The revocation statement must include the number of shares of stock (including non-voting stock) issued and outstanding at the time the revocation is made. A revocation may be made only with the consent of shareholders who, at the time the revocation is made, hold more than one-half of the number of issued and outstanding shares of stock (including non-voting stock) of the corporation. Each shareholder who consents to the revocation must consent in the manner required under paragraph (b) of this section. In addition, each consent should indicate the number of issued and outstanding shares of stock (including non-voting stock) held by each shareholder at the time of the revocation.

(ii) ***Time of revoking election.*** For rules concerning when a revocation is effective, see § 1.1362-2(a)(2).

(iii) ***Examples.*** The principles of this paragraph (a)(3) are illustrated by the following examples:

Example 1. Revocation; consent of shareholders owning more than one-half of issued and outstanding shares. A calendar year S corporation has issued an outstanding 40,000 shares of class A voting common stock and 20,000 shares of class B non-voting common stock. The corporation wishes to revoke its election of subchapter S status. Shareholders owning 11,000 shares of class A stock sign revocation consents. Shareholders owning 20,000 shares of class B stock sign revocation consents. The corporation has obtained the required shareholder consent to revoke its subchapter S election because shareholders owning more than one-half of the total number of issued and outstanding shares of stock of the corporation consented to the revocation.

Example 2. Effective prospective revocation. In June 1993, a calendar year S corporation determines that it will revoke its subchapter S election effective August 1, 1993. To do so it must file its revocation statement with consents attached on or before August 1, 1993, and the statement must indicate that the revocation is intended to be effective August 1, 1993.

(4) *Rescission of revocation* —

(i) ***Manner of rescinding a revocation.*** To rescind a revocation, the corporation files a statement that the corporation rescinds the revocation made under section 1362(d)(1). The statement must be filed with the service center where the revocation was properly filed. A rescission may be made only with the consent (in the manner required under paragraph (b)(1) of this section) of each person who consented to the revocation and of each person who became a shareholder of the corporation within the period beginning on the first day after the date the revocation was made and ending on the date on which the rescission is made.

(ii) ***Time of rescinding a revocation.*** If the rescission statement is filed before the revocation becomes effective and is filed with proper service center, the rescission is effective on the date it is so filed.

(5) ***Election not to apply pro rata allocation.*** To elect not to apply the pro rata allocation rules to an S termination year, a corporation files a statement that it elects under section 1362(e)(3) not to apply the rules provided in section 1362(e)(2). In addition to meeting the requirements of paragraph (a)(1) of this section, the statement must set forth the cause of the termination and the date thereof. The statement must be filed with the corporation's return for the C short year. This election may be made only with the consent of all persons who are shareholders of the corporation at any time during the S short year and all persons who are shareholders of the corporation on the first day of the C short year (in the manner required under paragraph (b)(1) of this section).

(b) ***Shareholders' consents —***

(1) ***Manner of consents in general.*** A shareholder's consent required under paragraph (a) of this section must be in the form of a written statement that sets forth the name, address, and taxpayer identification number of the shareholder, the number of shares of stock owned by the shareholder, the date (or dates) on which the stock was acquired, the date on which the shareholder's taxable year ends, the name of the S corporation, the corporation's taxpayer identification number, and the election to which the shareholder consents. The statement must be signed by the shareholder under penalties of perjury. Except as provided in paragraph (b)(3)(iii) of this section, the election of the corporation is not valid if any required consent is not filed in accordance with the rules contained in this paragraph (b). The consent statement should be attached to the corporation's election statement.

(2) ***Persons required to consent.*** The following rules apply in determining persons required to consent:

(i) ***Community interest in stock.*** When stock of the corporation is owned by husband and wife as community property (or the income from the stock is community property), or is owned by tenants in common, joint tenants, or tenants by the entirety, each person having a community interest in the stock or income therefrom and each tenant in common, joint tenant and tenant by the entirety must consent to the election.

(ii) ***Minor.*** The consent of a minor must be made by the minor or by the legal representative of the minor (or by a natural or an adoptive parent of the minor if no legal representative has been appointed).

(iii) ***Estate.*** The consent of an estate must be made by an executor or administrator thereof, or by any other fiduciary appointed by testamentary instrument or appointed by the court having jurisdiction over the administration of the estate.

(iv) ***Trusts.*** In the case of a trust described in section 1361(c)(2)(A) (including a trust treated under section 1361(d)(1)(A) as a trust described in section 1361(c)(2)(A)(i) and excepting an electing small business trust described in section 1361(c)(2)(A)(v) (ESBT)), only the person treated as the shareholder for purposes of section 1361(b)(1) must consent to the election. When stock of the corporation is held by a trust, both husband and wife must consent to any election if the husband and wife have a community interest in the trust property. See paragraph (b)(2)(i) of this section for rules concerning community interests in S corporation stock. In the case of an ESBT, the trustee and the owner of any portion of the trust that consists of the stock in one or more S corporations under subpart E, part I, subchapter J, chapter 1 of the Internal Revenue Code must consent to the S corporation election. If there is more than one trustee, the trustee or trustees with authority to legally bind the trust must consent to the S corporation election.

(3) ***Special rules for consent of shareholder to election to be an S corporation —***

(i) ***In general.*** The consent of a shareholder to an election by a small business corporation under section 1362(a) may be made on Form 2553 or on a separate statement in the manner described in paragraph (b)(1) of this section. In addition, the separate statement must set forth the name, address, and taxpayer identification number of the corporation. A shareholder's consent is binding and may not be withdrawn after a valid election is made by the corporation. Each person who is a shareholder (including any person who is treated as a shareholder under section 1361(c)(2)(B)) at the time the election is made) must consent to the election. If the election is made before the 16th day of the third month of the taxable year and is intended to be effective for that year, each person who was a shareholder (including any person who was treated as a shareholder under section 1361(c)(2)(B)) at any time during the portion of that year which occurs before the time the election is made, and who is not a shareholder at the time the election is made, must also consent to the election. If the election is to be effective for the following taxable year, no consent need be filed by any shareholder who is not a shareholder on the date of the election. Any person who is considered to be a shareholder under applicable State law solely by virtue of his or her status as an incorporator is not treated as a shareholder for purposes of this paragraph (b)(3)(i).

(ii) ***Examples.*** The principles of this section are illustrated by the following examples:

Example 1. Effective election; shareholder consents. On January 1, 1993, the first day of its taxable year, a subchapter C corporation had 15 shareholders. On January 30, 1993, two of the C corporation's shareholders, A and B, both individuals, sold their shares in the corporation to P, Q, and R, all individuals. On March 1, 1993, the corporation filed its election to be an S corporation for the 1993 taxable year. The election will be effective (assuming the other requirements of section 1361(b) are met) provided that all of the shareholders as of March 1, 1993, as well as former shareholders A and B, consent to the election.

Example 2. Consent of new shareholder unnecessary. On January 1, 1993, three individuals own all of the stock of a calendar year subchapter C corporation. On April 15, 1993, the corporation, in accordance with paragraph (a)(2) of this section, files a properly completed Form 2553. The corporation anticipates that the election will be effective beginning January 1, 1994, the first day of the succeeding taxable year. On October 1, 1993, the three shareholders collectively sell 75% of their shares in the corporation to another individual. On January 1, 1994, the corporation's shareholders are the three original individuals and the new shareholder. Because the election was valid and binding when made, it is not necessary for the new shareholder to consent to the election. The corporation's subchapter S election is effective on January 1, 1994 (assuming the other requirements of section 1361(b) are met).

(iii) ***Extension of time for filing consents to an election*** —

(A) ***In general.*** An election that is timely filed for any taxable year and that would be valid except for the failure of any shareholder to file a timely consent is not invalid if consents are filed as required under paragraph (b)(3)(iii)(B) of this section and it is shown to the satisfaction of the district director or director of the service center with which the corporation files its income tax return that—

(*1*) There was reasonable cause for the failure to file the consent;

(2) The request for the extension of time to file a consent is made within a reasonable time under the circumstances; and

(3) The interests of the Government will not be jeopardized by treating the election as valid.

(B) ***Required consents.*** Consents must be filed within the extended period of time as may be granted by the Internal Revenue Service, by all persons who—

(1) Were shareholders of the corporation at any time during the period beginning as of the date of the invalid election and ending on the date on which an extension of time is granted in accordance with this paragraph (b)(3)(iii); and

(2) Have not previously consented to the election.

[T.D. 8449, 57 FR 55454, Nov. 25, 1992, as amended by T.D. 8994, 67 FR 34400, May 14, 2002]

§ 1.1362-7 Effective dates.

(a) ***In general.*** The provisions of §§ 1.1362-1 through 1.1362-6 apply to taxable years of corporations beginning after December 31, 1992. For taxable years to which these regulations do not apply, corporations and shareholders subject to the provisions of section 1362 must take reasonable return positions taking into consideration the statute; its legislative history; the provisions of §§ 18.1362-1 through 18.1362-5 (see 26 CFR part 18 as contained in the CFR edition revised as of April 1, 1992). In addition, following these regulations is a reasonable return position. See Notice 92-56, 1992-49 I.R.B. (see § 601.601(d)(2)(ii)(*b*) of this chapter), for additional guidance regarding reasonable return positions for years to which §§ 1.362-1 through 1.1362-6 do not apply. Section 1.1362-6(b)(2)(iv) is applicable for taxable years beginning on and after May 14, 2002.

(b) ***Special effective date for passive investment income provisions.*** For taxable years of an S corporation and all affected shareholders that are not closed, the S corporation and all affected shareholders may elect to apply the provisions of § 1.1362-2(c)(5). To make the election, the corporation and all affected shareholders must file a return or an amended return that is consistent with these rules for the taxable year for which the election is made and each subsequent taxable year. For purposes of this section, *affected shareholders* means all shareholders who received distributive shares of S corporation items in the taxable year for which the election is made and all shareholders of the S corporation for all subsequent taxable years. However, the Commissioner may, in appropriate circumstances, permit taxpayers to make this election even if all affected shareholders cannot file consistent returns.

[T.D. 8449, 57 FR 55456, Nov. 25, 1992, as amended by T.D. 8994, 67 FR 34401, May 14, 2002]

§ 1.1362-8 Dividends received from affiliated subsidiaries.

(a) ***In general.*** For purposes of section 1362(d)(3), if an S corporation holds stock in a C corporation meeting the requirements of section 1504(a)(2), the term *passive investment income* does not include dividends from the C corporation to the extent those dividends are attributable to the earnings and profits of the C corporation derived from the active conduct of a trade or business (active earnings and profits). For purposes of applying section 1362(d)(3), earnings and profits of a C corporation are active earnings and profits to the extent that the earnings and profits are derived from activities that would not produce passive investment income (as defined in section 1362(d)(3)) if the C corporation were an S corporation.

(b) ***Determination of active or passive earnings and profits*** —

(1) ***In general.*** An S corporation may use any reasonable method to determine the amount of dividends that are not treated as passive investment income under section 1362(d)(3)(E). Paragraph (b)(5) of this section describes a method of determining the amount of dividends that are not treated as passive investment income under section 1362(d)(3)(E) that is deemed to be reasonable under all circumstances.

(2) ***Lower tier subsidiaries.*** If a C corporation subsidiary (upper tier corporation) holds stock in another C corporation (lower tier subsidiary) meeting the requirements of section 1504(a)(2), the upper tier corporation's gross receipts attributable to a dividend from the lower tier subsidiary are considered to be derived from the active conduct of a trade or business to the extent the lower tier subsidiary's earnings and profits are attributable to the active conduct of a trade or business by the subsidiary under paragraph (b) (1), (3), (4), or (5) of this section. For purposes of this section, distributions by the lower tier subsidiary will be considered attributable to active earnings and profits according to the rule in paragraph (c) of this section. This paragraph (b)(2) does not apply to any member of a consolidated group (as defined in § 1.1502-1(h)).

(3) ***De minimis exception.*** If less than 10 percent of a C corporation's earnings and profits for a taxable year are derived from activities that would produce passive investment income if the C corporation were an S corporation, all earnings and profits produced by the corporation during that taxable year are considered active earnings and profits.

(4) ***Special rules for earnings and profits accumulated by a C corporation prior to 80 percent acquisition.*** A C corporation may treat all earnings and profits accumulated by the corporation in all taxable years ending before the S corporation held stock meeting the requirements of section 1504(a)(2) as active earnings and profits in the same proportion as the C corporation's active earnings and profits for the three taxable years ending prior to the time when the S corporation acquired 80 percent of the C corporation bears to the C corporation's total earnings and profits for those three taxable years.

(5) ***Gross receipts safe harbor.*** A corporation may treat its earnings and profits for a year as active earnings and profits in the same proportion as the corporation's gross receipts (as defined in § 1.1362-2(c)(4)) derived from activities that would not produce passive investment income (if the C corporation were an S corporation), including those that do not produce passive investment income under paragraphs (b)(2) through (b)(4) of this section, bear to the corporation's total gross receipts for the year in which the earnings and profits are produced.

(c) ***Allocating distributions to active or passive earnings and profits*** —

(1) ***Distributions from current earnings and profits.*** Dividends distributed by a C corporation from current earnings and profits are attributable to active earnings and profits in the same proportion as current active earnings and profits bear to total current earnings and profits of the C corporation.

(2) ***Distributions from accumulated earnings and profits.*** Dividends distributed by a C corporation out of accumulated earnings and profits for a taxable year are attributable to active earnings and profits in the same proportion as accumulated active earnings and profits for that taxable year bear to total accumulated earnings and profits for that taxable year immediately prior to the distribution.

(3) ***Adjustments to active earnings and profits.*** For purposes of applying paragraph (c) (1) or (2) of this section to a distribution, the active earnings and profits of a corporation shall be reduced by the amount of any prior distribution properly treated as attributable to active earnings and profits from the same taxable year.

(4) ***Special rules for consolidated groups.*** For purposes of applying section 1362(d)(3) and this section to dividends received by an S corporation from the common parent of a consolidated group (as defined in § 1.1502-1(h)), the following rules apply—

(i) The current earnings and profits, accumulated earnings and profits, and active earnings and profits of the common parent shall be determined under the principles of § 1.1502-33 (relating to earnings and profits of any member of a consolidated group owning stock of another member); and

(ii) The gross receipts of the common parent shall be the sum of the gross receipts of each member of the consolidated group (including the common parent), adjusted to eliminate gross receipts from intercompany transactions (as defined in § 1.1502-13(b)(1)(i)).

(d) ***Examples.*** The following examples illustrate the principles of this section:

Example 1. (i) X, an S corporation, owns 85 percent of the one class of stock of Y. On December 31, 2002, Y declares a dividend of $100 ($85 to X), which is equal to Y's current earnings and profits. In 2002, Y has total gross receipts of $1,000, $200 of which would be passive investment income if Y were an S corporation.
(ii) One-fifth ($200/$1,000) of Y's gross receipts for 2002 is attributable to activities that would produce passive investment income. Accordingly, one-fifth of the $100 of earnings and profits is passive, and $17 ($^1/_5$ of $85) of the dividend from Y to X is passive investment income.

Example 2. (i) The facts are the same as in *Example 1,* except that Y owns 90 percent of the stock of Z. Y and Z do not join in the filing of a consolidated return. In 2002, Z has gross receipts of $15,000, $12,000 of which are derived from activities that would produce passive investment income. On December 31, 2002, Z declares a dividend of $1,000 ($900 to Y) from current earnings and profits.
(ii) Four-fifths ($12,000/$15,000) of the dividend from Z to Y are attributable to passive earnings and profits. Accordingly, $720 ($^4/_5$ of $900) of the dividend from Z to Y is considered gross receipts from an activity that would produce passive investment income. The $900 dividend to Y gives Y a total of $1,900 ($1,000 + $900) in gross receipts, $920 ($200 + $720) of which is attributable to passive investment income-producing activities. Under these facts, $41 ($920/$1,900 of $85) of Y's distribution to X is passive investment income to X.

(e) ***Effective date.*** This section applies to dividends received in taxable years beginning on or after January 20, 2000; however, taxpayers may elect to apply the regulations in whole, but not in part, for taxable years beginning on or after January 1, 2000, provided all affected taxpayers apply the regulations in a consistent manner. To make this election, the corporation and all affected taxpayers must file a return or an amended return that is consistent with these rules for the taxable year for which the election is made. For purposes of this section, affected taxpayers means all taxpayers whose returns are affected by the election to apply the regulations.

[T.D. 8869, 65 FR 3854, Jan. 25, 2000; 65 FR 16318, Mar. 28, 2000]

§ 1.1363-1 Effect of election on corporation.

(a) *Exemption of corporation from income tax* —

(1) *In general.* Except as provided in this paragraph (a), a small business corporation that makes a valid election under section 1362(a) is exempt from the taxes imposed by chapter 1 of the Internal Revenue Code with respect to taxable years of the corporation for which the election is in effect.

(2) *Corporate level taxes.* An S corporation is not exempt from the tax imposed by section 1374 (relating to the tax imposed on certain built-in gains), or section 1375 (relating to the tax on excess passive investment income). See also section 1363(d) (relating to the recapture of LIFO benefits) for the rules regarding the payment by an S corporation of LIFO recapture amounts.

(b) *Computation of corporate taxable income.* The taxable income of an S corporation is computed as described in section 1363(b).

(c) *Elections of the S corporation* —

(1) *In general.* Any elections (other than those described in paragraph (c)(2) of this section) affecting the computation of items derived from an S corporation are made by the corporation. For example, elections of methods of accounting, of computing depreciation, of treating soil and water conservation expenditures, and the option to deduct as expenses intangible drilling and development costs, are made by the corporation and not by the shareholders separately. All corporate elections are applicable to all shareholders.

(2) *Exceptions.*

(i) Each shareholder's pro rata share of expenses described in section 617 paid or accrued by the S corporation is treated according to the shareholder's method of treating those expenses, notwithstanding the treatment of the expenses by the corporation.

(ii) Each shareholder may elect to amortize that shareholder's pro rata share of any qualified expenditure described in section 59(e) paid or accrued by the S corporation.

(iii) Each shareholder's pro rata share of taxes described in section 901 paid or accrued by the S corporation to foreign countries or possessions of the United States (according to its method of treating those taxes) is treated according to the shareholder's method of treating those taxes, and each shareholder may elect to use the total amount either as a credit against tax or as a deduction from income.

(d) *Effective date.* This section applies to taxable years of corporations beginning after December 31, 1992. For taxable years to which this section does not apply, corporations and shareholders subject to the provisions of section 1363 must take reasonable return positions taking into consideration the statute, its legislative history and these regulations. See Notice 92-56, 1992-49 I.R.B. (see § 601.601(d)(2)(ii)(*b*) of this chapter), for additional guidance regarding reasonable return positions for taxable years to which this section does not apply.

[T.D. 8449, 57 FR 55456, Nov. 25, 1992]

§ 1.1363-2 Recapture of LIFO benefits.

(a) *In general.* A C corporation must include the LIFO recapture amount (as defined in section 1363(d)(3)) in its gross income—

(1) In its last taxable year as a C corporation if the corporation inventoried assets under the LIFO method for its last taxable year before its S corporation election becomes effective; or

(2) In the year of transfer by the C corporation to an S corporation of the LIFO inventory assets if paragraph (a)(1) of this section does not apply and the C corporation—

(i) Inventoried assets under the LIFO method during the taxable year of the transfer of those LIFO inventory assets; and

(ii) Transferred the LIFO inventory assets to the S corporation in a nonrecognition transaction (within the meaning of section 7701(a)(45)) in which the transferred assets constitute transferred basis property (within the meaning of section 7701(a)(43)).

(b) ***LIFO inventory held indirectly through partnership.*** A C corporation must include the lookthrough LIFO recapture amount (as defined in paragraph (c)(4) of this section) in its gross income—

(1) In its last taxable year as a C corporation if, on the last day of the corporation's last taxable year before its S corporation election becomes effective, the corporation held a lookthrough partnership interest (as defined in paragraph (c)(3) of this section); or

(2) In the year of transfer by the C corporation to an S corporation of a lookthrough partnership interest if the corporation transferred its lookthrough partnership interest to the S corporation in a nonrecognition transaction (within the meaning of section 7701(a)(45)) in which the transferred interest constitutes transferred basis property (within the meaning of section 7701(a)(43)).

(c) ***Definitions and special rules*** —

(1) ***Recapture date.*** In the case of a transaction described in paragraph (a)(1) or (b)(1) of this section, the recapture date is the day before the effective date of the S corporation election. In the case of a transaction described in paragraph (a)(2) or (b)(2) of this section, the recapture date is the date of the transfer of the partnership interest to the S corporation.

(2) ***Determination of LIFO recapture amount.*** The LIFO recapture amount shall be determined as of the end of the recapture date for transactions described in paragraph (a)(1) of this section, and as of the moment before the transfer occurs for transactions described in paragraph (a)(2) of this section.

(3) ***Lookthrough partnership interest.*** A partnership interest is a lookthrough partnership interest if the partnership owns (directly or indirectly through one or more partnerships) assets accounted for under the last-in, first-out (LIFO) method (LIFO inventory).

(4) ***Lookthrough LIFO recapture amount*** —

(i) ***In general.*** For purposes of this section, a corporation's lookthrough LIFO recapture amount is the amount of income that would be allocated to the corporation, taking into account section 704(c) and § 1.704-3, if the partnership sold all of its LIFO inventory for the inventory's FIFO value. For this purpose, the FIFO value of inventory is the inventory amount of the inventory assets under the first-in, first-out method of accounting authorized by section 471, determined in accordance with section 1363(d)(4)(C).

(ii) ***Determination of lookthrough LIFO recapture amount.*** Except as provided in paragraph (c)(4)(iii) of this section, the lookthrough LIFO recapture amount shall be determined as of the end of the recapture date for transactions described in paragraph (b)(1) of this section, and as of the moment before the transfer occurs for transactions described in paragraph (b)(2) of this section.

(iii) ***Alternative rule.*** If the partnership is not otherwise required to determine the inventory amount of the inventory using the LIFO method (the LIFO value) on the recapture date, the partnership may determine the lookthrough LIFO recapture amount as though the FIFO and LIFO values of the inventory on the recapture date equaled the FIFO and LIFO values of the opening inventory for the partnership's taxable year that includes the recapture date. For this purpose, the opening inventory includes inventory contributed by a partner to the partnership on or before the recapture date and excludes inventory distributed by the partnership to a partner on or before the recapture date. A partnership that applies the alternative method of this paragraph (c)(4)(iii) to calculate the lookthrough LIFO recapture amount must take into account any adjustments to the partnership's basis in its LIFO inventory that result from transactions occurring after the start of the partnership's taxable year and before the end of the recapture date. For example, the lookthrough LIFO recapture amount must be adjusted to take into account any adjustments to the basis of LIFO inventory during that period under sections 734(b), 737(c), or 751(b).

(d) ***Payment of tax.*** Any increase in tax caused by including the LIFO recapture amount or the lookthrough LIFO recapture amount in the gross income of the C corporation is payable in four equal installments. The C corporation must pay the first installment of this payment by the due date of its return, determined without regard to extensions, for the last taxable year it operated as a C corporation if paragraph (a)(1) or (b)(1) of this section applies, or for the taxable year of the transfer if paragraph (a)(2) or (b)(2) of this section applies. The three succeeding installments must be paid—

(1) For a transaction described in paragraph (a)(1) or (b)(1) of this section, by the corporation that made the election under section 1362(a) to be an S corporation, on or before the due date for the corporation's returns (determined without regard to extensions) for the succeeding three taxable years; and

(2) For a transaction described in paragraph (a)(2) or (b)(2) of this section, by the transferee S corporation on or before the due date for the transferee corporation's returns (determined without regard to extensions) for the succeeding three taxable years.

(e) ***Basis adjustments*** —

(1) ***General rule.*** Appropriate adjustments to the basis of inventory are to be made to reflect any amount included in income under paragraph (a) of this section.

(2) ***LIFO inventory owned through a partnership*** —

(i) ***Basis of corporation's partnership interest.*** Appropriate adjustments to the basis of the corporation's lookthrough partnership interest are to be made to reflect any amount included in income under paragraph (b) of this section.

(ii) ***Basis of partnership assets.*** A partnership directly holding LIFO inventory that is taken into account under paragraph (b) of this section may elect to adjust the basis of that LIFO inventory. In addition, a partnership that holds, through another partnership, LIFO inventory that is taken into account under paragraph (b) of this section may elect to adjust the basis of that partnership interest. Any adjustment under this paragraph (e)(2) to the basis of inventory held by the partnership is equal to the amount of LIFO recapture attributable to the inventory. Likewise, any adjustment under this paragraph (e)(2) to the basis of a lookthrough partnership interest held by the partnership is equal to the amount of LIFO recapture attributable to the interest. A basis adjustment under this paragraph (e)(2) is treated in the same manner and has the same effect as an adjustment to the basis of partnership property under section 743(b). See § 1.743-1(j).

(3) ***Election.*** A partnership elects to adjust the basis of its inventory and any lookthrough partnership interest that it owns by attaching a statement to its original or amended income tax return for the first taxable year ending on or after the date of the S corporation election or transfer described in paragraph (b) of this section. This statement shall state that the partnership is electing under this paragraph (e)(3) and must include the names, addresses, and taxpayer identification numbers of any corporate partner liable for tax under paragraph (d) of this section and of the partnership, as well as the amount of the adjustment and the portion of the adjustment that is attributable to each pool of inventory or lookthrough partnership interest that is held by the partnership.

(f) ***Examples.*** The following examples illustrate the rules of this section:

Example 1. (i) G is a C corporation with a taxable year ending on June 30. GH is a partnership with a calendar year taxable year. G has a 20 percent interest in GH. The remaining 80 percent interest is owned by an individual. On April 25, 2005, G contributed inventory that is LIFO inventory to GH, increasing G's interest in the partnership to 50 percent. GH holds no other LIFO inventory, and there are no other adjustments to the partnership's basis in its LIFO inventory between January 1, 2005 and the end of the recapture date. G elects to be an S corporation effective July 1, 2005. The recapture date is June 30, 2005 under paragraph (c)(1) of this section. GH elects to use the LIFO method for the inventory and determines that the FIFO and LIFO values of the opening inventory for GH's 2005 taxable year, including the inventory contributed by G, are $200 and $120, respectively.
(ii) Under paragraph (c)(4)(iii) of this section, GH is not required to determine the FIFO and LIFO values of the inventory on the recapture date. Instead, GH may determine the lookthrough LIFO recapture amount as though the FIFO and LIFO values of the inventory on the recapture date equaled the FIFO and LIFO values of the opening inventory for the partnership's taxable year (2005) that includes the recapture date. For this purpose, under paragraph (c)(4) of this section, the opening inventory includes the inventory contributed by G. The amount by which the FIFO value ($200) exceeds the LIFO value ($120) in GH's opening inventory is $80. Thus, if GH sold all of its LIFO inventory for $200, it would recognize $80 of income. G's lookthrough LIFO recapture amount is $80, the amount of income that would be allocated to G, taking into account section 704(c) and § 1.704-3, if GH sold all of its LIFO inventory for the FIFO value. Under paragraph (b)(1) of this section, G must include $80 in income in its taxable year ending on June 30, 2005. Under paragraph (e)(2) of this section, G must increase its basis in its interest in GH by $80. Under paragraphs (e)(2) and (3) of this section, and in accordance with section 743(b) principles, GH may elect to increase the basis (with respect to G only) of its LIFO inventory by $80.

Example 2. (i) J is a C corporation with a calendar year taxable year. JK is a partnership with a calendar year taxable year. J has a 30 percent interest in the partnership. JK owns LIFO inventory that is not section 704(c) property. J elects to be an S corporation effective January 1, 2005. The recapture date is December 31, 2004 under paragraph (c)(1) of this section. JK determines that the FIFO and LIFO values of the inventory on December 31, 2004 are $240 and $140, respectively.

(ii) The amount by which the FIFO value ($240) exceeds the LIFO value ($140) on the recapture date is $100. Thus, if JK sold all of its LIFO inventory for $240, it would recognize $100 of income. J's lookthrough LIFO recapture amount is $30, the amount of income that would be allocated to J if JK sold all of its LIFO inventory for the FIFO value (30 percent of $100). Under paragraph (b)(1) of this section, J must include $30 in income in its taxable year ending on December 31, 2004. Under paragraph (e)(2) of this section, J must increase its basis in its interest in JK by $30. Under paragraphs (e)(2) and (3) of this section, and in accordance with section 743(b) principles, JK may elect to increase the basis (with respect to J only) of its inventory by $30.

(g) *Effective dates.*

(1) The provisions of paragraph (a)(1) of this section apply to S elections made after December 17, 1987. For an exception, see section 10227(b)(2) of the Revenue Act of 1987.

(2) The provisions of paragraph (a)(2) of this section apply to transfers made after August 18, 1993.

(3) The provisions of paragraphs (b), (c), (d), (e)(2), (e)(3), and (f) of this section apply to S elections and transfers made on or after August 13, 2004. The rules that apply to S elections and transfers made before August 13, 2004, are contained in § 1.1363-2 as in effect prior to August 13, 2004 (see 26 CFR part 1 revised as of April 1, 2005).

[T.D. 8567, 59 FR 51106, Oct. 7, 1994, as amended by T.D. 9210, 70 FR 39921, July 12, 2005]

§ 1.1366-0 Table of contents.

The following table of contents is provided to facilitate the use of §§ 1.1366-1 through 1.1366-5:

§ 1.1366-1 Shareholder's share of items of an S corporation.

(a) Determination of shareholder's tax liability.

(1) In general.

(2) Separately stated items of income, loss, deduction, or credit.

(3) Nonseparately computed income or loss.

(4) Separate activities requirement.

(5) Aggregation of deductions or exclusions for purposes of limitations.

(b) Character of items constituting pro rata share.

(1) In general.

(2) Exception for contribution of noncapital gain property.

(3) Exception for contribution of capital loss property.

(c) Gross income of a shareholder.

(1) In general.

(2) Gross income for substantial omission of items.

(d) Shareholders holding stock subject to community property laws.

(e) Net operating loss deduction of shareholder of S corporation.

(f) Cross-reference.

§ 1.1366-2 Limitations on deduction of passthrough items of an S corporation to its shareholders.

(a) In general.

(1) Limitation on losses and deductions.

(2) Basis of indebtedness.

(i) In general.

(ii) Special rule for guarantees.

(iii) Examples.

(3) Carryover of disallowance.

(4) Basis limitation amount.

(i) Stock portion.

(ii) Indebtedness portion.

(5) Limitation on losses and deductions allocated to each item.

(6) Nontransferability of losses and deductions.

(i) *In general.*

(ii) *Exceptions for transfers of stock under section 1041(a).*

(iii) *Examples.*

(7) Basis of stock acquired by gift.

(b) Special rules for carryover of disallowed losses and deductions to post-termination transition period described in section 1377(b).

(1) In general.

(2) Limitation on losses and deductions.

(3) Limitation on losses and deductions allocated to each item.

(4) Adjustment to the basis of stock.

(c) Carryover of disallowed losses and deductions in the case of liquidations, reorganizations, and divisions.

(1) Liquidations and reorganizations.

(2) Corporate separations to which section 368(a)(1)(D) applies.

§ 1.1366-3 Treatment of family groups.

(a) In general.

(b) Examples.

§ 1.1366-4 Special rules limiting the passthrough of certain items of an S corporation to its shareholders.

(a) Passthrough inapplicable to section 34 credit.

(b) Reduction in passthrough for tax imposed on built-in gains.

(c) Reduction in passthrough for tax imposed on excess net passive income.

§ 1.1366-5 Effective/applicability date.

[T.D. 8852, 64 FR 71644, Dec. 22, 1999, as amended by T.D. 9422, 73 FR 47530, Aug. 14, 2008; T.D. 9682, 79 FR 42677, July 23, 2014]

§ 1.1366-1 Shareholder's share of items of an S corporation.

(a) ***Determination of shareholder's tax liability*** —

(1) ***In general.*** An S corporation must report, and a shareholder is required to take into account in the shareholder's return, the shareholder's pro rata share, whether or not distributed, of the S corporation's items of income, loss, deduction, or credit described in paragraphs (a)(2), (3), and (4) of this section. A shareholder's pro rata share is determined in accordance with the provisions of section 1377(a) and the regulations thereunder. The shareholder takes these items into account in determining the shareholder's taxable income and tax liability for the shareholder's taxable year with or within which the taxable year of the corporation ends. If the shareholder dies (or if the shareholder

is an estate or trust and the estate or trust terminates) before the end of the taxable year of the corporation, the shareholder's pro rata share of these items is taken into account on the shareholder's final return. For the limitation on allowance of a shareholder's pro rata share of S corporation losses or deductions, see section 1366(d) and § 1.1366-2.

(2) ***Separately stated items of income, loss, deduction, or credit.*** Each shareholder must take into account separately the shareholder's pro rata share of any item of income (including tax-exempt income), loss, deduction, or credit of the S corporation that if separately taken into account by any shareholder could affect the shareholder's tax liability for that taxable year differently than if the shareholder did not take the item into account separately. The separately stated items of the S corporation include, but are not limited to, the following items—

(i) The corporation's combined net amount of gains and losses from sales or exchanges of capital assets grouped by applicable holding periods, by applicable rate of tax under section 1(h), and by any other classification that may be relevant in determining the shareholder's tax liability;

(ii) The corporation's combined net amount of gains and losses from sales or exchanges of property described in section 1231 (relating to property used in the trade or business and involuntary conversions), grouped by applicable holding periods, by applicable rate of tax under section 1(h), and by any other classification that may be relevant in determining the shareholder's tax liability;

(iii) Charitable contributions, grouped by the percentage limitations of section 170(b), paid by the corporation within the taxable year of the corporation;

(iv) The taxes described in section 901 that have been paid (or accrued) by the corporation to foreign countries or to possessions of the United States;

(v) Each of the corporation's separate items involved in the determination of credits against tax allowable under part IV of subchapter A (section 21 and following) of the Internal Revenue Code, except for any credit allowed under section 34 (relating to certain uses of gasoline and special fuels);

(vi) Each of the corporation's separate items of gains and losses from wagering transactions (section 165(d)); soil and water conservation expenditures (section 175); deduction under an election to expense certain depreciable business expenses (section 179); medical, dental, etc., expenses (section 213); the additional itemized deductions for individuals provided in part VII of subchapter B (section 212 and following) of the Internal Revenue Code; and any other itemized deductions for which the limitations on itemized deductions under sections 67 or 68 applies;

(vii) Any of the corporation's items of portfolio income or loss, and expenses related thereto, as defined in the regulations under section 469;

(viii) The corporation's tax-exempt income. For purposes of subchapter S, tax-exempt income is income that is permanently excludible from gross income in all circumstances in which the applicable provision of the Internal Revenue Code applies. For example, income that is excludible from gross income under section 101 (certain death benefits) or section 103 (interest on state and local bonds) is tax-exempt income, while income that is excludible from gross income under section 108 (income from discharge of indebtedness) or section 109 (improvements by lessee on lessor's property) is not tax-exempt income;

(ix) The corporation's adjustments described in sections 56 and 58, and items of tax preference described in section 57; and

(x) Any item identified in guidance (including forms and instructions) issued by the Commissioner as an item required to be separately stated under this paragraph (a)(2).

(3) ***Nonseparately computed income or loss.*** Each shareholder must take into account separately the shareholder's pro rata share of the nonseparately computed income or loss of the S corporation. For this purpose, nonseparately computed income or loss means the corporation's gross income less the deductions allowed to the corporation under chapter 1 of the Internal Revenue Code, determined by excluding any item requiring separate computation under paragraph (a)(2) of this section.

(4) ***Separate activities requirement.*** An S corporation must report, and each shareholder must take into account in the shareholder's return, the shareholder's pro rata share of an S corporation's items of income, loss, deduction, or credit described in paragraphs (a)(2) and (3) of this section for each of the corporation's activities as defined in section 469 and the regulations thereunder.

(5) ***Aggregation of deductions or exclusions for purposes of limitations*** —

(i) ***In general.*** A shareholder aggregates the shareholder's separate deductions or exclusions with the shareholder's pro rata share of the S corporation's separately stated deductions or exclusions in determining the amount of any deduction or exclusion allowable to the shareholder under subtitle A of the Internal Revenue Code as to which a limitation is imposed.

(ii) ***Example.*** The provisions of paragraph (a)(5)(i) of this section are illustrated by the following example:

Example. In 1999, Corporation M, a calendar year S corporation, purchases and places in service section 179 property costing $10,000. Corporation M elects to expense the entire cost of the property. Shareholder A owns 50 percent of the stock of Corporation M. Shareholder A's pro rata share of this item after Corporation M applies the section 179(b) limitations is $5,000. Because the aggregate amount of Shareholder A's pro rata share and separately acquired section 179 expense may not exceed $19,000 (the aggregate maximum cost that may be taken into account under section 179(a) for the applicable taxable year), Shareholder A may elect to expense up to $14,000 of separately acquired section 179 property that is purchased and placed in service in 1999, subject to the limitations of section 179(b).

(b) ***Character of items constituting pro rata share*** —

(1) ***In general.*** Except as provided in paragraph (b)(2) or (3) of this section, the character of any item of income, loss, deduction, or credit described in section 1366(a)(1)(A) or (B) and paragraph (a) of this section is determined for the S corporation and retains that character in the hands of the shareholder. For example, if an S corporation has capital gain on the sale or exchange of a capital asset, a shareholder's pro rata share of that gain will also be characterized as a capital gain regardless of whether the shareholder is otherwise a dealer in that type of property. Similarly, if an S corporation engages in an activity that is not for profit (as defined in section 183), a shareholder's pro rata share of the S corporation's deductions will be characterized as not for profit. Also, if an S corporation makes a charitable contribution to an organization qualifying under section 170(b)(1)(A), a shareholder's pro rata share of the S corporation's charitable contribution will be characterized as made to an organization qualifying under section 170(b)(1)(A).

(2) ***Exception for contribution of noncapital gain property.*** If an S corporation is formed or availed of by any shareholder or group of shareholders for a principal purpose of selling or exchanging contributed property that in the hands of the shareholder or shareholders would not have produced capital gain if sold or exchanged by the shareholder or shareholders, then the gain on the sale or exchange of the property recognized by the corporation is not treated as a capital gain.

(3) ***Exception for contribution of capital loss property.*** If an S corporation is formed or availed of by any shareholder or group of shareholders for a principal purpose of selling or exchanging contributed property that in the hands of the shareholder or shareholders would have produced capital loss if sold or exchanged by the shareholder or shareholders, then the loss on the sale or exchange of the property recognized by the corporation is treated as a capital loss to the extent that, immediately before the contribution, the adjusted basis of the property in the hands of the shareholder or shareholders exceeded the fair market value of the property.

(c) ***Gross income of a shareholder*** —

(1) ***In general.*** Where it is necessary to determine the amount or character of the gross income of a shareholder, the shareholder's gross income includes the shareholder's pro rata share of the gross income of the S corporation. The shareholder's pro rata share of the gross income of the S corporation is the amount of gross income of the corporation used in deriving the shareholder's pro rata share of S corporation taxable income or loss (including items described in section 1366(a)(1)(A) or (B) and paragraph (a) of this section). For example, a shareholder is required to include the shareholder's pro rata share of S corporation gross income in computing the shareholder's gross income for the purposes of determining the necessity of filing a return (section 6012(a)) and the shareholder's gross income derived from farming (sections 175 and 6654(i)).

(2) ***Gross income for substantial omission of items*** —

(i) ***In general.*** For purposes of determining the applicability of the 6-year period of limitation on assessment and collection provided in section 6501(e) (relating to omission of more than 25 percent of gross income), a shareholder's gross income includes the shareholder's pro rata share of S corporation gross income (as described in section 6501(e)(1)(A)(i)). In this respect, the amount of S corporation gross income used in deriving the shareholder's pro rata share of any item of S corporation income, loss, deduction, or credit (as included or disclosed in the shareholder's return) is considered as an amount of gross income stated in the shareholder's return for purposes of section 6501(e).

(ii) ***Example.*** The following example illustrates the provisions of paragraph (c)(2)(i) of this section:

Example. Shareholder A, an individual, owns 25 percent of the stock of Corporation N, an S corporation that has $10,000 gross income and $2,000 taxable income. A reports only $300 as A's pro rata share of N's taxable income. A should have reported $500 as A's pro rata share of taxable income, derived from A's pro rata share, $2,500, of N's gross income. Because A's return included only $300 without a disclosure meeting the requirements of section 6501(e)(1)(A)(ii) describing the difference of $200, A is regarded as having reported on the return only $1,500 ($300/$500 of $2,500) as gross income from N.

(d) ***Shareholders holding stock subject to community property laws.*** If a shareholder holds S corporation stock that is community property, then the shareholder's pro rata share of any item or items listed in paragraphs (a)(2), (3), and (4) of this section with respect to that stock is reported by the husband and wife in accordance with community property rules.

(e) ***Net operating loss deduction of shareholder of S corporation.*** For purposes of determining a net operating loss deduction under section 172, a shareholder of an S corporation must take into account the shareholder's pro rata share of items of income, loss, deduction, or credit of the corporation. See section 1366(b) and paragraph (b) of this section for rules on determining the character of the items. In determining under section 172(d)(4) the nonbusiness deductions allowable to a shareholder of an S corporation (arising from both corporation sources and any other sources), the shareholder separately takes into account the shareholder's pro rata share of the deductions of the corporation that are not attributable to a trade or business and combines this amount with the shareholder's nonbusiness deductions from any other sources. The shareholder also separately takes into account the shareholder's pro rata share of the gross income of the corporation not derived from a trade or business and combines this amount with the shareholder's nonbusiness income from all other sources. See section 172 and the regulations thereunder.

(f) ***Cross-reference.*** For rules relating to the consistent tax treatment of subchapter S items, see section 6037(c).

[T.D. 8852, 64 FR 71645, Dec. 22, 1999]

§ 1.1366-2 Limitations on deduction of passthrough items of an S corporation to its shareholders.

(a) ***In general*** —

(1) ***Limitation on losses and deductions.*** The aggregate amount of losses and deductions taken into account by a shareholder under § 1.1366-1(a) (2), (3), and (4) for any taxable year of an S corporation cannot exceed the sum of—

(i) The adjusted basis of the shareholder's stock in the corporation (as determined under paragraph (a)(4)(i) of this section); and

(ii) The adjusted basis of any indebtedness of the corporation to the shareholder (as determined under paragraphs (a)(2) and (a)(4)(ii) of this section).

(2) ***Basis of indebtedness*** —

(i) ***In general.*** The term *basis of any indebtedness of the S corporation to the shareholder* means the shareholder's adjusted basis (as defined in § 1.1011-1 and as specifically provided in section 1367(b)(2)) in any bona fide indebtedness of the S corporation that runs directly to the shareholder. Whether indebtedness is bona fide indebtedness to a shareholder is determined under general Federal tax principles and depends upon all of the facts and circumstances.

(ii) ***Special rule for guarantees.*** A shareholder does not obtain basis of indebtedness in the S corporation merely by guaranteeing a loan or acting as a surety, accommodation party, or in any similar capacity relating to a loan. When a shareholder makes a payment on bona fide indebtedness of the S corporation for which the shareholder has acted as guarantor or in a similar capacity, then the shareholder may increase the shareholder's basis of indebtedness to the extent of that payment.

(iii) ***Examples.*** The following examples illustrate the provisions of paragraph (a)(2)(i) and (ii) of this section:

Example 1. Shareholder loan transaction. A is the sole shareholder of S, an S corporation. S received a loan from A. Whether the loan from A to S constitutes bona fide indebtedness from S to A is determined under general Federal tax principles and depends upon all of the facts and circumstances. See paragraph (a)(2)(i) of this section. If the loan constitutes bona fide indebtedness from S to A, A's loan to S increases A's basis of indebtedness under paragraph (a)(2)(i) of this section. The result is the same if A made the loan to S through an entity that is disregarded as an entity separate from A under § 301.7701-3 of this chapter.

Example 2. Back-to-back loan transaction. A is the sole shareholder of two S corporations, S1 and S2. S1 loaned $200,000 to A. A then loaned $200,000 to S2. Whether the loan from A to S2 constitutes bona fide indebtedness from S2 to A is determined under general Federal tax principles and depends upon all of the facts and circumstances. See paragraph (a)(2)(i) of this section. If A's loan to S2 constitutes bona fide indebtedness from S2 to A, A's back-to-back loan increases A's basis of indebtedness in S2 under paragraph (a)(2)(i) of this section.

Example 3. Loan restructuring through distributions. A is the sole shareholder of two S corporations, S1 and S2. In May 2014, S1 made a loan to S2. In December 2014, S1 assigned its creditor position in the note to A by making a distribution to A of the note. Under local law, after S1 distributed the note to A, S2 was relieved of its liability to S1 and was directly liable to A. Whether S2 is indebted to A rather than S1 is determined under general Federal tax principles and depends upon all of the facts and circumstances. See paragraph (a)(2)(i) of this section. If the note constitutes bona fide indebtedness from S2 to A, the note increases A's basis of indebtedness in S2 under paragraph (a)(2)(i) of this section.

Example 4. Guarantee. A is a shareholder of S, an S corporation. In 2014, S received a loan from Bank. Bank required A's guarantee as a condition of making the loan to S. Beginning in 2015, S could no longer make payments on the loan and A made payments directly to Bank from A's personal funds until the loan obligation was satisfied. For each payment A made on the note, A obtains basis of indebtedness under paragraph (a)(2)(ii) of this section. Thus, A's basis of indebtedness is increased during 2015 under paragraph (a)(2)(ii) of this section to the extent of A's payments to Bank pursuant to the guarantee agreement.

(3) ***Carryover of disallowance.*** A shareholder's aggregate amount of losses and deductions for a taxable year in excess of the sum of the adjusted basis of the shareholder's stock in an S corporation and of any indebtedness of the S corporation to the shareholder is not allowed for the taxable year. However, any disallowed loss or deduction retains its character and is treated as incurred by the corporation in the corporation's first succeeding taxable year, and subsequent taxable years, with respect to the shareholder. For rules on determining the adjusted bases of stock of an S corporation and indebtedness of the corporation to the shareholder, see paragraphs (a)(4) (i) and (ii) of this section.

(4) ***Basis limitation amount*** —

(i) ***Stock portion.*** A shareholder generally determines the adjusted basis of stock for purposes of paragraphs (a)(1)(i) and (3) of this section (limiting losses and deductions) by taking into account only increases in basis under section 1367(a)(1) for the taxable year and decreases in basis under section 1367(a)(2) (A), (D) and (E) (relating to distributions, noncapital,

nondeductible expenses, and certain oil and gas depletion deductions) for the taxable year. In so determining this loss limitation amount, the shareholder disregards decreases in basis under section 1367(a)(2) (B) and (C) (for losses and deductions, including losses and deductions previously disallowed) for the taxable year. However, if the shareholder has in effect for the taxable year an election under § 1.1367-1(g) to decrease basis by items of loss and deduction prior to decreasing basis by noncapital, nondeductible expenses and certain oil and gas depletion deductions, the shareholder also disregards decreases in basis under section 1367(a)(2) (D) and (E). This basis limitation amount for stock is determined at the time prescribed under § 1.1367-1(d)(1) for adjustments to the basis of stock.

(ii) ***Indebtedness portion.*** A shareholder determines the shareholder's adjusted basis in indebtedness of the corporation for purposes of paragraphs (a)(1)(ii) and (3) of this section (limiting losses and deductions) without regard to any adjustment under section 1367(b)(2)(A) for the taxable year. This basis limitation amount for indebtedness is determined at the time prescribed under § 1.1367-2(d)(1) for adjustments to the basis of indebtedness.

(5) ***Limitation on losses and deductions allocated to each item.*** If a shareholder's pro rata share of the aggregate amount of losses and deductions specified in § 1.1366-1(a)(2), (3), and (4) exceeds the sum of the adjusted basis of the shareholder's stock in the corporation (determined in accordance with paragraph (a)(4)(i) of this section) and the adjusted basis of any indebtedness of the corporation to the shareholder (determined in accordance with paragraph (a)(4)(ii) of this section), then the limitation on losses and deductions under section 1366(d)(1) must be allocated among the shareholder's pro rata share of each loss or deduction. The amount of the limitation allocated to any loss or deduction is an amount that bears the same ratio to the amount of the limitation as the loss or deduction bears to the total of the losses and deductions. For this purpose, the total of losses and deductions for the taxable year is the sum of the shareholder's pro rata share of losses and deductions for the taxable year, and the losses and deductions disallowed and carried forward from prior years pursuant to section 1366(d)(2).

(6) ***Nontransferability of losses and deductions*** —

(i) ***In general.*** Except as provided in paragraph (a)(6)(ii) of this section, any loss or deduction disallowed under paragraph (a)(1) of this section is personal to the shareholder and cannot in any manner be transferred to another person. If a shareholder transfers some but not all of the shareholder's stock in the corporation, the amount of any disallowed loss or deduction under this section is not reduced and the transferee does not acquire any portion of the disallowed loss or deduction. If a shareholder transfers all of the shareholder's stock in the corporation, any disallowed loss or deduction is permanently disallowed.

(ii) ***Exceptions for transfers of stock under section 1041(a).*** If a shareholder transfers stock of an S corporation after December 31, 2004, in a transfer described in section 1041(a), any loss or deduction with respect to the transferred stock that is disallowed to the transferring shareholder under paragraph (a)(1) of this section shall be treated as incurred by the corporation in the following taxable year with respect to the transferee spouse or former spouse. The amount of any loss or deduction with respect to the stock transferred shall be determined by prorating any losses or deductions disallowed under paragraph (a)(1) of this section for the year of the transfer between the transferor and the spouse or former spouse based on the stock ownership at the beginning of the following taxable year. If a transferor claims a deduction for losses in the taxable year of transfer, then under paragraph (a)(5) of this section, if the transferor's pro rata share of the losses and deductions in the year of transfer

exceeds the transferor's basis in stock and the indebtedness of the corporation to the transferor, then the limitation must be allocated among the transferor spouse's pro rata share of each loss or deduction, including disallowed losses and deductions carried over from the prior year.

(iii) ***Examples.*** The following examples illustrates the provisions of paragraph (a)(6)(ii) of this section:

Example 1. A owns all 100 shares in *X*, a calendar year S corporation. For *X*'s taxable year ending December 31, 2006, *A* has zero basis in the shares and *X* does not have any indebtedness to *A*. For the 2006 taxable year, *X* had $100 in losses that *A* cannot use because of the basis limitation in section 1366(d)(1) and that are treated as incurred by the corporation with respect to *A* in the following taxable year. Halfway through the 2007 taxable year, *A* transfers 50 shares to *B*, *A*'s former spouse in a transfer to which section 1041(a) applies. In the 2007 taxable year, *X* has $80 in losses. On *A*'s 2007 individual income tax return, *A* may use the entire $100 carryover loss from 2006, as well as *A*'s share of the $80 2007 loss determined under section 1377(a) ($60), assuming A acquires sufficient basis in the *X* stock. On *B*'s 2007 individual income tax return, *B* may use *B*'s share of the $80 2007 loss determined under section 1377(a) ($20), assuming *B* has sufficient basis in the *X* stock. If any disallowed 2006 loss is disallowed to *A* under section 1366(d)(1) in 2007, that loss is prorated between *A* and *B* based on their stock ownership at the beginning of 2008. On *B*'s 2008 individual income tax return, *B* may use that loss, assuming *B* acquires sufficient basis in the *X* stock. If neither *A* nor *B* acquires any basis during the 2007 taxable year, then as of the beginning of 2008, the corporation will be treated as incurring $50 of loss with respect to *A* and $50 of loss with respect to *B* for the $100 of disallowed 2006 loss, and the corporation will be treated as incurring $60 of loss with respect to *A* and $20 with respect to *B* for the $80 of disallowed 2007 loss.

Example 2. Assume the same facts as *Example 1*, except that during the 2007 taxable year, *A* acquires $10 of basis in *A*'s shares in *X*. For the 2007 taxable year, *A* may claim a $10 loss deduction, which represents $6.25 of the disallowed 2006 loss of $100 and $3.75 of *A*'s 2007 loss of $60. The disallowed 2006 loss is reduced to $93.75. As of the beginning of 2008, the corporation will be treated as incurring half of the remaining $93.75 of loss with respect to *A* and half of that loss with respect to *B* for the remaining $93.75 of disallowed 2006 loss, and if *B* does not acquire any basis during 2007, the corporation will be treated as incurring $56.25 of loss with respect to *A* and $20 with respect to *B* for the remaining disallowed 2007 loss.

(7) ***Basis of stock acquired by gift.*** For purposes of section 1366(d)(1)(A) and paragraphs (a)(1)(i) and (3) of this section, the basis of stock in a corporation acquired by gift is the basis of the stock that is used for purposes of determining loss under section 1015(a).

(b) ***Special rules for carryover of disallowed losses and deductions to post-termination transition period described in section 1377(b)*** —

(1) ***In general.*** If, for the last taxable year of a corporation for which it was an S corporation, a loss or deduction was disallowed to a shareholder by reason of the limitation in paragraph (a) of this section, the loss or deduction is treated under section 1366(d)(3) as incurred by that shareholder on the last day of any post-termination transition period (within the meaning of section 1377(b)).

(2) ***Limitation on losses and deductions.*** The aggregate amount of losses and deductions taken into account by a shareholder under paragraph (b)(1) of this section cannot exceed the adjusted basis of the shareholder's stock in the corporation determined at the close of the last day of the post-termination transition period. For this purpose, the adjusted basis of a shareholder's stock in the corporation is determined at the close of the last day of the post-termination transition period without regard to any reduction required under paragraph (b)(4) of this section. If a shareholder disposes of a share of stock prior to the close of the last day of the post-termination transition period, the adjusted basis of that share is its basis as of the close of the day of disposition. Any losses and deductions in excess of a shareholder's adjusted stock basis are permanently disallowed. For purposes of section 1366(d)(3)(B) and this paragraph (b)(2), the basis of stock in a corporation acquired by gift is the basis of the stock that is used for purposes of determining loss under section 1015(a).

(3) ***Limitation on losses and deductions allocated to each item.*** If the aggregate amount of losses and deductions treated as incurred by the shareholder under paragraph (b)(1) of this section exceeds the adjusted basis of the shareholder's stock determined under paragraph (b)(2) of this section, the limitation on losses and deductions under section 1366(d)(3)(B) must be allocated among each loss or deduction. The amount of the limitation allocated to each loss or deduction is an amount that bears the same ratio to the amount of the limitation as the amount of each loss or deduction bears to the total of all the losses and deductions.

(4) ***Adjustment to the basis of stock.*** The shareholder's basis in the stock of the corporation is reduced by the amount allowed as a deduction by reason of this paragraph (b). For rules regarding adjustments to the basis of a shareholder's stock in an S corporation, see § 1.1367-1.

(c) ***Carryover of disallowed losses and deductions in the case of liquidations, reorganizations, and divisions*** —

(1) ***Liquidations and reorganizations.*** If a corporation acquires the assets of an S corporation in a transaction to which section 381(a) applies, any loss or deduction disallowed under paragraph (a) of this section with respect to a shareholder of the distributor or transferor S corporation is available to that shareholder as a shareholder of the acquiring corporation. Thus, where the acquiring corporation is an S corporation, a loss or deduction of a shareholder of the distributor or transferor S corporation disallowed prior to or during the taxable year of the transaction is treated as incurred by the acquiring S corporation with respect to that shareholder if the shareholder is a shareholder of the acquiring S corporation after the transaction. Where the acquiring corporation is a C corporation, a post-termination transition period arises the day after the last day that an S corporation was in existence and the rules provided in paragraph (b) of this section apply with respect to any shareholder of the acquired S corporation that is also a shareholder of the acquiring C corporation after the transaction. See the special rules under section 1377 for the availability of the post-termination transition period if the acquiring corporation is a C corporation.

(2) ***Corporate separations to which section 368(a)(1)(D) applies.*** If an S corporation transfers a portion of its assets constituting an active trade or business to another corporation in a transaction to which section 368(a)(1)(D) applies, and immediately thereafter the stock and securities of the controlled corporation are distributed in a distribution or exchange to which section 355 (or so much of section 356 as relates to section 355) applies, any loss or deduction disallowed under paragraph (a) of this section with respect to a shareholder of the distributing S corporation immediately before the transaction is allocated between the distributing corporation and the controlled corporation with respect to the shareholder. Such allocation shall be made according to any reasonable method, including a method based on the relative fair market value of the shareholder's stock in the

distributing and controlled corporations immediately after the distribution, a method based on the relative adjusted basis of the assets in the distributing and controlled corporations immediately after the distribution, or, in the case of losses and deductions clearly attributable to either the distributing or controlled corporation, any method that allocates such losses and deductions accordingly.

[T.D. 8852, 64 FR 71646, Dec. 22, 1999, as amended by T.D. 9422, 73 FR 47531, Aug. 14, 2008; T.D. 9682, 79 FR 42678, July 23, 2014]

§ 1.1366-3 Treatment of family groups.

(a) ***In general.*** Under section 1366(e), if an individual, who is a member of the family of one or more shareholders of an S corporation, renders services for, or furnishes capital to, the corporation without receiving reasonable compensation, the Commissioner shall prescribe adjustments to those items taken into account by the individual and the shareholders as may be necessary to reflect the value of the services rendered or capital furnished. For these purposes, in determining the reasonable value for services rendered, or capital furnished, to the corporation, consideration will be given to all the facts and circumstances, including the amount that ordinarily would be paid in order to obtain comparable services or capital from a person (other than a member of the family) who is not a shareholder in the corporation. In addition, for purposes of section 1366(e), if a member of the family of one or more shareholders of the S corporation holds an interest in a passthrough entity (e.g., a partnership, S corporation, trust, or estate), that performs services for, or furnishes capital to, the S corporation without receiving reasonable compensation, the Commissioner shall prescribe adjustments to the passthrough entity and the corporation as may be necessary to reflect the value of the services rendered or capital furnished. For purposes of section 1366(e), the term *family* of any shareholder includes only the shareholder's spouse, ancestors, lineal descendants, and any trust for the primary benefit of any of these persons.

(b) ***Examples.*** The provisions of this section may be illustrated by the following examples:

Example 1. The stock of an S corporation is owned 50 percent by F and 50 percent by T, the minor son of F. For the taxable year, the corporation has items of taxable income equal to $70,000. Compensation of $10,000 is paid by the corporation to F for services rendered during the taxable year, and no compensation is paid to T, who rendered no services. Based on all the relevant facts and circumstances, reasonable compensation for the services rendered by F would be $30,000. In the discretion of the Internal Revenue Service, up to an additional $20,000 of the $70,000 of the corporation's taxable income, for tax purposes, may be allocated to F as compensation for services rendered. If the Internal Revenue Service allocates $20,000 of the corporation's taxable income to F as compensation for services, taxable income of the corporation would be reduced by $20,000 to $50,000, of which F and T each would be allocated $25,000. F would have $30,000 of total compensation paid by the corporation for services rendered.

Example 2. The stock of an S corporation is owned by A and B. For the taxable year, the corporation has paid compensation to a partnership that rendered services to the corporation during the taxable year. The spouse of A is a partner in that partnership. Consequently, if based on all the relevant facts and circumstances the partnership did not receive reasonable compensation for the services rendered to the corporation, the Internal Revenue Service, in its discretion, may make adjustments to those items taken into account by the partnership and the corporation as may be necessary to reflect the value of the services rendered.

[T.D. 8852, 64 FR 71648, Dec. 22, 1999]

§ 1.1366-4 Special rules limiting the passthrough of certain items of an S corporation to its shareholders.

(a) ***Passthrough inapplicable to section 34 credit.*** Section 1.1366-1(a) does not apply to any credit allowable under section 34 (relating to certain uses of gasoline and special fuels).

(b) ***Reduction in passthrough for tax imposed on built-in gains.*** For purposes of § 1.1366-1(a), if for any taxable year of the S corporation a tax is imposed on the corporation under section 1374, the amount of the tax imposed is treated as a loss sustained by the S corporation during the taxable year. The character of the deemed loss is determined by allocating the loss proportionately among the net recognized built-in gains giving rise to the tax and attributing the character of each net recognized built-in gain to the allocable portion of the loss.

(c) ***Reduction in passthrough for tax imposed on excess net passive income.*** For purposes of § 1.1366-1(a), if for any taxable year of the S corporation a tax is imposed on the corporation under section 1375, each item of passive investment income shall be reduced by an amount that bears the same ratio to the amount of the tax as the net amount of the item bears to the total net passive investment income for that taxable year.

[T.D. 8852, 64 FR 71648, Dec. 22, 1999; 65 FR 12471, Mar. 9, 2000]

§ 1.1366-5 Effective/applicability date.

(a) Sections 1.1366-1, 1.1366-2(a)(1), and 1.1366-2(b) through 1.1366-4 apply to taxable years of an S corporation beginning on or after August 18, 1998.

(b) Section 1.1366-2(a)(2) applies to indebtedness between an S corporation and its shareholder resulting from any transaction occurring on or after July 23, 2014. In addition, S corporations and their shareholders may rely on § 1.1366-2(a)(2) with respect to indebtedness between an S corporation and its shareholder that resulted from any transaction that occurred in a year for which the period of limitations on the assessment of tax has not expired before July 23, 2014.

(c) Sections 1.1366-2(a)(3) through (7), and this section apply on and after July 23, 2014. For rules that apply before that date, see 26 CFR part 1 (revised as of April 1, 2014).

[T.D. 9682, 79 FR 42678, July 23, 2014]

§ 1.1367-0 Table of contents.

The following table of contents is provided to facilitate the use of §§ 1.1367-1 through 1.1367-3.

§ 1.1367-1 Adjustments to basis of shareholder's stock in an S corporation.

(a) In general.

(1) Adjustments under section 1367.

(2) Applicability of other Internal Revenue Code provisions.

(b) Increase in basis of stock.

(1) In general.

(2) Amount of increase in basis of individual shares.

(c) Decrease in basis of stock.

(1) In general.

(2) Noncapital, nondeductible expenses.

(3) Amount of decrease in basis of individual shares.

(d) Time at which adjustments to basis of stock are effective.

(1) In general.

(2) Adjustment for nontaxable item.

(3) Effect of election under section 1377(a)(2) or § 1.1368-1(g)(2).

(e) Ordering rules for taxable years beginning before January 1, 1997.

(f) Ordering rules for taxable years beginning on or after August 18, 1998.

(g) Elective ordering rule.

(h) Examples.

(i) [Reserved]

(j) Adjustments for items of income in respect of a decedent.

§ 1.1367-2 Adjustments to basis of indebtedness to shareholder.

(a) In general.

(b) Reduction in basis of indebtedness.

(1) General rule.

(2) Termination of shareholder's interest in corporation during taxable year.

(3) Multiple indebtedness.

(c) Restoration of basis.

(1) General rule.

(2) Multiple indebtedness.

(d) Time at which adjustments to basis of indebtedness are effective.

(1) In general.

(2) Effect of election under section 1377(a)(2) or § 1.1368-1(g)(2).

(e) Examples.

§ 1.1367-3 Effective date and transition rule.

[T.D. 8508, 59 FR 15, Jan. 3, 1994, as amended by T.D. 8852, 64 FR 71648, Dec. 22, 1999]

§ 1.1367-1 Adjustments to basis of shareholder's stock in an S corporation.

(a) ***In general*** —

(1) ***Adjustments under section 1367.*** This section provides rules relating to adjustments required by section 1367 to the basis of a shareholder's stock in an S corporation. Paragraph (b) of this section provides rules concerning increases in the basis of a shareholder's stock, and paragraph (c) of this section provides rules concerning decreases in the basis of a shareholder's stock.

(2) ***Applicability of other Internal Revenue Code provisions.*** In addition to the adjustments required by section 1367 and this section, the basis of stock is determined or adjusted under other applicable provisions of the Internal Revenue Code.

(b) ***Increase in basis of stock*** —

(1) ***In general.*** Except as provided in § 1.1367-2(c) (relating to restoration of basis of indebtedness to the shareholder), the basis of a shareholder's stock in an S corporation is increased by the sum of the items described in section 1367(a)(1). The increase in basis described in section 1367(a)(1)(C) for the excess of the deduction for depletion over the basis of the property subject to depletion does not include the depletion deduction attributable to oil or gas property. See section 613(A)(c)(11).

(2) ***Amount of increase in basis of individual shares.*** The basis of a shareholder's share of stock is increased by an amount equal to the shareholder's pro rata portion of the items described in section 1367(a)(1) that is attributable to that share, determined on a per share, per day basis in accordance with section 1377(a).

(c) ***Decrease in basis of stock*** —

(1) ***In general.*** The basis of a shareholder's stock in an S corporation is decreased (but not below zero) by the sum of the items described in section 1367(a)(2).

(2) ***Noncapital, nondeductible expenses.*** For purposes of section 1367(a)(2)(D), expenses of the corporation not deductible in computing its taxable income and not properly chargeable to a capital account (*noncapital, nondeductible expenses*) are only those items for which no loss or deduction is allowable and do not include items the deduction for which is deferred to a later taxable year. Examples of noncapital, nondeductible expenses include (but are not limited to) the following: Illegal bribes, kickbacks, and other payments not deductible under section 162(c); fines and penalties not

deductible under section 162(f); expenses and interest relating to tax-exempt income under section 265; losses for which the deduction is disallowed under section 267(a)(1); the portion of meals and entertainment expenses disallowed under section 274; and the two-thirds portion of treble damages paid for violating antitrust laws not deductible under section 162. For basis adjustments necessary to coordinate sections 1367 and 362(e)(2), see § 1.362-4(e)(2).

(3) ***Amount of decrease in basis of individual shares.*** The basis of a shareholder's share of stock is decreased by an amount equal to the shareholder's pro rata portion of the passthrough items and distributions described in section 1367(a)(2) attributable to that share, determined on a per share, per day basis in accordance with section 1377(a). If the amount attributable to a share exceeds its basis, the excess is applied to reduce (but not below zero) the remaining bases of all other shares of stock in the corporation owned by the shareholder in proportion to the remaining basis of each of those shares.

(d) ***Time at which adjustments to basis of stock are effective*** —

(1) ***In general.*** The adjustments described in section 1367(a) to the basis of a shareholder's stock are determined as of the close of the corporation's taxable year, and the adjustments generally are effective as of that date. However, if a shareholder disposes of stock during the corporation's taxable year, the adjustments with respect to that stock are effective immediately prior to the disposition.

(2) ***Adjustment for nontaxable item.*** An adjustment for a nontaxable item is determined for the taxable year in which the item would have been includible or deductible under the corporation's method of accounting for Federal income tax purposes if the item had been subject to Federal income taxation.

(3) ***Effect of election under section 1377(a)(2) or § 1.1368-1(g)(2).*** If an election under section 1377(a)(2) (to terminate the year in the case of the termination of a shareholder's interest) or under § 1.1368-1(g)(2) (to terminate the year in the case of a qualifying disposition) is made with respect to the taxable year of a corporation, this paragraph (d) applies as if the taxable year consisted of separate taxable years, the first of which ends at the close of the day on which either the shareholder's interest is terminated or a qualifying disposition occurs, whichever the case may be.

(e) ***Ordering rules for taxable years beginning before January 1, 1997.*** For any taxable year of a corporation beginning before January 1, 1997, except as provided in paragraph (g) of this section, the adjustments required by section 1367(a) are made in the following order—

(1) Any increase in basis attributable to the income items described in section 1367(a)(1) (A) and (B) and the excess of the deductions for depletion described in section 1367(a)(1)(C);

(2) Any decrease in basis attributable to noncapital, nondeductible expenses described in section 1367(a)(2)(D) and the oil and gas depletion deduction described in section 1367(a)(2)(E);

(3) Any decrease in basis attributable to items of loss or deduction described in section 1367(a)(2) (B) and (C); and

(4) Any decrease in basis attributable to a distribution by the corporation described in section 1367(a)(2)(A).

(f) ***Ordering rules for taxable years beginning on or after August 18, 1998.*** For any taxable year of a corporation beginning on or after August 18, 1998, except as provided in paragraph (g) of this section, the adjustments required by section 1367(a) are made in the following order—

(1) Any increase in basis attributable to the income items described in section 1367(a)(1)(A) and (B), and the excess of the deductions for depletion described in section 1367(a)(1)(C);

(2) Any decrease in basis attributable to a distribution by the corporation described in section 1367(a)(2)(A);

(3) Any decrease in basis attributable to noncapital, nondeductible expenses described in section 1367(a)(2)(D), and the oil and gas depletion deduction described in section 1367(a)(2)(E); and

(4) Any decrease in basis attributable to items of loss or deduction described in section 1367(a)(2)(B) and (C).

(g) ***Elective ordering rule.*** A shareholder may elect to decrease basis under paragraph (e)(3) or (f)(4) of this section, whichever applies, prior to decreasing basis under paragraph (e)(2) or (f)(3) of this section, whichever applies. If a shareholder makes this election, any amount described in paragraph (e)(2) or (f)(3) of this section, whichever applies, that is in excess of the shareholder's basis in stock and indebtedness is treated, solely for purposes of this section, as an amount described in paragraph (e)(2) or (f)(3) of this section, whichever applies, in the succeeding taxable year. A shareholder makes the election under this paragraph by attaching a statement to the shareholder's timely filed original or amended return that states that the shareholder agrees to the carryover rule of the preceding sentence. Once a shareholder makes an election under this paragraph with respect to an S corporation, the shareholder must continue to use the rules of this paragraph for that S corporation in future taxable years unless the shareholder receives the permission of the Commissioner.

(h) ***Examples.*** The following examples illustrate the principles of § 1.1367-1. In each example, the corporation is a calendar year S corporation:

> *Example 1. Adjustments to basis of stock for taxable years beginning before January 1, 1997.* (i) On December 31, 1994, A owns a block of 50 shares of stock with an adjusted basis per share of $6 in Corporation S. On December 31, 1994, A purchases for $400 an additional block of 50 shares of stock with an adjusted basis of $8 per share. Thus, A holds 100 shares of stock for each day of the 1995 taxable year. For S's 1995 taxable year, A's pro rata share of the amount of the items described in section 1367(a)(1)(A) (relating to increases in basis of stock) is $300, and A's pro rata share of the amount of the items described in section 1367(a)(2) (B) and (D) (relating to decreases in basis of stock) is $500. S makes a distribution to A in the amount of $100 during 1995.
> (ii) Pursuant to the ordering rules of paragraph (e) of this section, A increases the basis of each share of stock by $3 ($300/100 shares) and decreases the basis of each share of stock by $5 ($500/100 shares). Then A reduces the basis of each share by $1 ($100/100 shares) for the distribution. Thus, on January 1, 1996, A has a basis of $3 per share in his original block of 50 shares ($6 + $3−$5−$1) and a basis of $5 per share in the second block of 50 shares ($8 + $3−$5−$1).

> *Example 2. Adjustments to basis of stock for taxable years beginning on or after August 18, 1998.* (i) On December 31, 2001, A owns a block of 50 shares of stock with an adjusted basis per share of $6 in Corporation S. On December 31, 2001, A purchases for $400 an additional block of 50

shares of stock with an adjusted basis of $8 per share. Thus, A holds 100 shares of stock for each day of the 2002 taxable year. For S's 2002 taxable year, A's pro rata share of the amount of items described in section 1367(a)(1)(A) (relating to increases in basis of stock) is $300, A's pro rata share of the amount of the items described in section 1367(a)(2)(B) (relating to decreases in basis of stock attributable to items of loss and deduction) is $300, and A's pro rata share of the amount of the items described in section 1367(a)(2)(D) (relating to decreases in basis of stock attributable to noncapital, nondeductible expenses) is $200. S makes a distribution to A in the amount of $100 during 2002.
(ii) Pursuant to the ordering rules of paragraph (f) of this section, A first increases the basis of each share of stock by $3 ($300/100 shares) and then decreases the basis of each share by $1 ($100/100 shares) for the distribution. A next decreases the basis of each share by $2 ($200/100 shares) for the noncapital, nondeductible expenses and then decreases the basis of each share by $3 ($300/100 shares) for the items of loss. Thus, on January 1, 2003, A has a basis of $3 per share in the original block of 50 shares ($6 + $3 − $1 − $2 − $3) and a basis of $5 per share in the second block of 100 shares ($8 + $3 − $1 − $2 − $3).

Example 3. Adjustments attributable to basis of individual shares of stock. (i) On December 31, 1993, B owns one share of S corporation's 10 outstanding shares of stock. The basis of B's share is $30. On July 2, 1994, B purchases from another shareholder two shares for $25 each. During 1994, S corporation has no income or deductions but incurs a loss of $365. Under section 1377(a)(1)(A) and paragraph (c)(3) of this section, the amount of the loss assigned to each day of S's taxable year is $1.00 ($365/365 days). For each day, $.10 is allocated to each outstanding share ($1.00 amount of loss assigned to each day/10 shares).
(ii) B owned one share for 365 days and, therefore, reduces the basis of that share by the amount of loss attributable to it, i.e., $36.50 ($.10 × 365 days). B owned two shares for 182 days and, therefore, reduces the basis of each of those shares by the amount of the loss attributable to each, i.e., $18.20 ($.10 × 182 days).

(iii) The bases of the shares are decreased as follows:

Share	Original basis	Decrease	Adjusted basis	Excess basis reduction
No. 1	$30.00	$36.50	$0	$6.50
No. 2	25.00	18.20	6.80	0
No. 3	25.00	18.20	6.80	0
Total remaining basis			13.60	

(iv) Because the decrease in basis attributable to share No. 1 exceeds the basis of share No. 1 by $6.50 ($36.50 − $30.00), the excess is applied to reduce the bases of shares No. 2 and No. 3 in

proportion to their remaining bases. Therefore, the bases of share No. 2 and share No. 3 are each decreased by an additional $3.25 ($6.50 × $6.80/$13.60). After this decrease, Share No. 1 has a basis of zero, Share No. 2 has a basis of $3.55, and Share No. 3 has a basis of $3.55.

Example 4. Effects of section 1377(a)(2) election and distribution on basis of stock for taxable years beginning before January 1, 1997. (i) On January 1, 1994, individuals B and C each own 50 of the 100 shares of issued and outstanding stock of Corporation S. B's adjusted basis in each share of stock is $120, and C's is $80. On June 30, 1994, S distributes $6,000 to B and $6,000 to C. On June 30, 1994, B sells all of her S stock for $10,000 to D. S elects under section 1377(a)(2) to treat its 1994 taxable year as consisting of two taxable years, the first of which ends at the close of June 30, the date on which B terminates her interest in S.
(ii) For the period January 1, 1994, through June 30, 1994, S has nonseparately computed income of $6,000 and a separately stated deduction item of $4,000. Therefore, on June 30, 1994, B and C, pursuant to the ordering rules of paragraph (e) of this section, increase the basis of each share by $60 ($6,000/100 shares) and decrease the basis of each share by $40 ($4,000/100 shares). Then B and C reduce the basis of each share by $120 ($12,000/100 shares) for the distribution.

(iii) The basis of B's stock is reduced from $120 to $20 per share ($120 + $60−$40−$120). The basis of C's stock is reduced from $80 to $0 per share ($80 + $60−$40−$120). See section 1368 and § 1.1368-1 (c) and (d) for rules relating to the tax treatment of the distributions.

(iv) Pursuant to paragraph (d)(3) of this section, the net reduction in the basis of B's shares of the S stock required by section 1367 and this section is effective immediately prior to B's sale of her stock. Thus, B's basis for determining gain or loss on the sale of the S stock is $20 per share, and B has a gain on the sale of $180 ($200−$20) per share.

Example 5. Effects of section 1377(a)(2) election and distribution on basis of stock for taxable years beginning on or after August 18, 1998. (i) The facts are the same as in *Example 4,* except that all of the events occur in 2001 rather than in 1994 and except as follows: On June 30, 2001, B sells 25 shares of her stock for $5,000 to D and 25 shares back to Corporation S for $5,000. Under section 1377(a)(2)(B) and § 1.1377-1(b)(2), B, C, and D are affected shareholders because B has transferred shares to Corporations S and D. Pursuant to section 1377(a)(2)(A) and § 1.1377-1(b)(1), B, C, and D, the affected shareholders, and Corporation S agree to treat the taxable year 2001 as if it consisted of two separate taxable years for all affected shareholders for the purposes set forth in § 1.1377-1(b)(3)(i).
(ii) On June 30, 2001, B and C, pursuant to the ordering rules of paragraph (f)(1) of this section, increase the basis of each share by $60 ($6,000/100 shares) for the nonseparately computed income. Then B and C reduce the basis of each share by $120 ($12,000/100 shares) for the distribution. Finally, B and C decrease the basis of each share by $40 ($4,000/100 shares) for the separately stated deduction item.

(iii) The basis of the stock of B is reduced from $120 to $20 per share ($120 + $60 − $120 − $40). Prior to accounting for the separately stated deduction item, the basis of the stock of C is reduced from $80 to $20 ($80 + $60 − $120). Finally, because the period from January 1 through June 30, 2001 is treated under § 1.1377-1(b)(3)(i) as a separate taxable year for purposes of making adjustments to the basis of stock, under section 1366(d) and § 1.1366-2(a)(3), C may deduct only $20 per share of the remaining $40 of the separately stated deduction item, and the basis of the stock of C is reduced from $20 per share to $0 per share. Under section 1366 and § 1.1366-2(a)(3), C's remaining separately stated deduction item of $20 per share is treated as having been incurred in the first succeeding taxable year of Corporation S, which, for this purpose, begins on July 1, 2001.

(i) [Reserved]

(j) ***Adjustments for items of income in respect of a decedent.*** The basis determined under section 1014 of any stock in an S corporation is reduced by the portion of the value of the stock that is attributable to items constituting income in respect of a decedent. For the determination of items realized by an S corporation constituting income in respect of a decedent, see sections 1367(b)(4)(A) and 691 and applicable regulations thereunder. For the determination of the allowance of a deduction for the amount of estate tax attributable to income in respect of a decedent, see section 691(c) and applicable regulations thereunder.

[T.D. 8508, 59 FR 15, Jan. 3, 1994, as amended by T.D. 8852, 64 FR 71648, Dec. 22, 1999; 65 FR 12471, Mar. 9, 2000; 65 FR 16319, Mar. 28, 2000; T.D. 9633, 78 FR 54168, Sept. 3, 2013; T.D. 9682, 79 FR 42678, July 23, 2014; T.D. 9759, 81 FR 17083, Mar. 28, 2016]

§ 1.1367-2 Adjustments to basis of indebtedness to shareholder.

(a) ***In general*** —

(1) ***Adjustments under section 1367.*** This section provides rules relating to adjustments required by subchapter S to the basis of indebtedness (including open account debt as described in paragraph (a)(2) of this section) of an S corporation to a shareholder. The basis of indebtedness of the S corporation to a shareholder is reduced as provided in paragraph (b) of this section and restored as provided in paragraph (c) of this section in accordance with the timing rules in paragraph (d) of this section.

(2) ***Open Account Debt*** —

(i) ***General rule.*** The term *open account debt* means shareholder advances not evidenced by separate written instruments and repayments on the advances, the aggregate outstanding principal of which does not exceed $25,000 of indebtedness of the S corporation to the shareholder at the close of the S corporation's taxable year. Advances and repayments on open account debt are treated as a single indebtedness.

(ii) ***Exception.*** If the shareholder advances not evidenced by a separate written instrument, net of repayments, exceeds an aggregate outstanding principal amount of $25,000 at the close of the S corporation's taxable year, for any subsequent taxable year the aggregate principal amount of that indebtedness is treated in the same manner as indebtedness evidenced by a separate

written instrument for purposes of this section. For any subsequent taxable year, that indebtedness is not open account debt and is subject to all basis adjustment rules applicable to basis of indebtedness of an S corporation to a shareholder in this section.

(b) ***Reduction in basis of indebtedness*** —

(1) ***General rule.*** If, after making the adjustments required by section 1367(a)(1) for any taxable year of the S corporation, the amounts specified in section 1367(a)(2) (B), (C), (D), and (E) (relating to losses, deductions, noncapital, nondeductible expenses, and certain oil and gas depletion deductions) exceed the basis of a shareholder's stock in the corporation, the excess is applied to reduce (but not below zero) the basis of any indebtedness of the S corporation to the shareholder held by the shareholder at the close of the corporation's taxable year. Any such indebtedness that has been satisfied by the corporation, or disposed of or forgiven by the shareholder, during the taxable year, is not held by the shareholder at the close of that year and is not subject to basis reduction.

(2) ***Termination of shareholder's interest in corporation during taxable year.*** If a shareholder terminates his or her interest in the corporation during the taxable year, the rules of this paragraph (b) are applied with respect to any indebtedness of the S corporation held by the shareholder immediately prior to the termination of the shareholder's interest in the corporation.

(3) ***Multiple indebtedness.*** If a shareholder holds more than one indebtedness at the close of the corporation's taxable year or, if applicable, immediately prior to the termination of the shareholder's interest in the corporation, the reduction in basis is applied to each indebtedness in the same proportion that the basis of each indebtedness bears to the aggregate bases of the indebtedness to the shareholder.

(c) ***Restoration of basis*** —

(1) ***General rule.*** If, for any taxable year of an S corporation beginning after December 31, 1982, there has been a reduction in the basis of an indebtedness of the S corporation to a shareholder under section 1367(b)(2)(A), any *net increase* in any subsequent taxable year of the corporation is applied to restore that reduction. For purposes of this section, *net increase* with respect to a shareholder means the amount by which the shareholder's pro rata share of the items described in section 1367(a)(1) (relating to income items and excess deduction for depletion) exceed the items described in section 1367(a)(2) (relating to losses, deductions, noncapital, nondeductible expenses, certain oil and gas depletion deductions, and certain distributions) for the taxable year. These restoration rules apply only to indebtedness held by a shareholder as of the beginning of the taxable year in which the net increase arises. The reduction in basis of indebtedness must be restored before any net increase is applied to restore the basis of a shareholder's stock in an S corporation. In no event may the shareholder's basis of indebtedness be restored above the adjusted basis of the indebtedness under section 1016(a), excluding any adjustments under section 1016(a)(17) for prior taxable years, determined as of the beginning of the taxable year in which the net increase arises.

(2) ***Multiple indebtedness.*** If a shareholder holds more than one indebtedness (including any open account debt and any debt treated as a single indebtedness under paragraph (a)(2)(ii) of this section) as of the beginning of an S corporation's taxable year, any net increase is applied first to restore the reduction of basis in any indebtedness repaid (in whole or in part) in that taxable year to the extent necessary to offset any gain that would otherwise be realized on the repayment. Any remaining net increase is applied to restore each outstanding indebtedness (including any open account debt and any debt treated as a single indebtedness under paragraph (a)(2)(ii) of this

section) in proportion to the amount that the basis of each outstanding indebtedness has been reduced under section 1367(b)(2)(A) and paragraph (b) of this section and not restored under section 1367(b)(2)(B) and this paragraph (c).

(d) *Time at which adjustments to basis of indebtedness are effective* —

(1) *In general.* The amounts of the adjustments to basis of indebtedness (including open account debt) provided in section 1367(b)(2) and this section are determined as of the close of the S corporation's taxable year, and the adjustments are generally effective as of the close of the S corporation's taxable year. However, if the shareholder is not a shareholder in the S corporation at that time, these adjustments are effective immediately before the shareholder terminates his or her interest in the S corporation. Except as provided in paragraph (d)(2) of this section, if a debt is disposed of or repaid in whole or in part before the close of the taxable year, the basis of that indebtedness is restored under paragraph (c) of this section, effective immediately before the disposition or the first repayment on the debt during the taxable year. To the extent any indebtedness of the S corporation to the shareholder is disposed of or repaid (in whole or in part) during the taxable year and the shareholder's basis in that indebtedness has been reduced under paragraph (b) of this section and is not restored completely under paragraph (c) of this section, the disposition or repayment is a recognition event effective immediately before the indebtedness is disposed of or repaid (in whole or in part).

(2) *Open account debt* —

(i) *In general.* All advances and repayments on open account debt (as described in paragraph (a)(2)(i) of this section) during the S corporation's taxable year are netted at the close of the S corporation's taxable year to determine the amount of any net advance or net repayment. The net advance or net repayment is combined with the outstanding aggregate principal balance of the existing open account debt and that amount is carried forward to the beginning of the subsequent taxable year as the outstanding aggregate principal amount of the open account debt (unless the aggregate principal amount meets the exception defined in paragraph (a)(2)(ii) of this section at the close of the taxable year). However, if the shareholder in the S corporation is not a shareholder of the S corporation at the close of the S corporation's taxable year, such advances and repayments on open account debt are netted, and the basis of that indebtedness is restored under paragraph (c) of this section, effective immediately before the shareholder terminates his or her interest in the S corporation. If any open account debt is disposed of before or upon the close of the taxable year, the disposition is effective at the close of the S corporation's taxable year, and all advances and repayments are netted immediately prior to the disposition and the basis of that indebtedness is restored under paragraph (c) of this section, effective at the close of the S corporation's taxable year.

(ii) *Exception.* Shareholder indebtedness that is open account debt at the beginning of the taxable year but meets the exception defined in paragraph (a)(2)(ii) of this section at the close of the taxable year, adjustments to the basis of the indebtedness for that taxable year follow the provisions for open account debt. The resulting aggregate principal amount of indebtedness is treated as the principal amount of a debt evidenced by a separate written instrument for any subsequent taxable year, and is no longer subject to the open account debt provisions of this section.

(3) *Effect of election under section 1377(a)(2) or § 1.1368-1(g)(2).* If an election is made under section 1377(a)(2) (to terminate the year in the case of the termination of a shareholder's interest) or under § 1.1368-1(g)(2) (to terminate the year in the case of a qualifying disposition), this paragraph (d)

applies as if the taxable year consisted of separate taxable years, the first of which ends at the close of the day on which the shareholder either terminates his or her interest in the corporation or disposes of a substantial amount of stock, whichever the case may be.

(e) ***Examples.*** The following examples illustrate the principles of § 1.1367-2. In each example, the corporation is a calendar year S corporation. The lending transactions described in the examples do not result in foregone interest (within the meaning of section 7872(e)(2)), original issue discount (within the meaning of section 1273), or total unstated interest (within the meaning of section 483(b)).

Example 1. Reduction in basis of indebtedness. (i) A has been the sole shareholder in Corporation S since 1992. In 1993, A loans S $1,000 (Debt No. 1), which is evidenced by a ten-year promissory note in the face amount of $1,000. In 1996, A loans S $5,000 (Debt No. 2), which is evidenced by a demand promissory note. On December 31, 1996, the basis of A's stock is zero; the basis of Debt No. 1 has been reduced under paragraph (b) of this section to $0; and the basis of Debt No. 2 has been reduced to $1,000. On January 1, 1997, A loans S $4,000 (Debt No. 3), which is evidenced by a demand promissory note. For S's 1997 taxable year, the sum of the amounts specified in section 1367(a)(1) (in this case, nonseparately computed income and the excess deduction for depletion) is $6,000, and the sum of the amounts specified in section 1367(a)(2) (B), (D), and (E) (in this case, items of separately stated deductions and losses, noncapital, nondeductible expenses, and certain oil and gas depletion deductions—there is no nonseparately computed loss) is $10,000. Corporation S makes no payments to A on any of the loans during 1997.
(ii) The $4,000 excess of loss and deduction items is applied to reduce the basis of each indebtedness in proportion to the basis of that indebtedness over the aggregate bases of the indebtedness to the shareholder (determined immediately before any adjustment under section 1367(b)(2)(A) and paragraph (b) of this section is effective for the taxable year). Thus, the basis of Debt No. 2 is reduced in an amount equal to $800 ($4,000 (excess) × $1,000 (basis of Debt No. 2)/$5,000 (total basis of all debt)). Similarly, the basis in Debt No. 3 is reduced in an amount equal to $3,200 ($4,000 × $4,000/$5,000). Accordingly, on December 31, 1997, A's basis in his stock is zero and his bases in the three debts are as follows:

Debt	1/1/96 basis	12/31/96 reduction	1/1/97 basis	12/31/97 reduction	1/1/98 basis
No. 1	$1,000	$1,000	$0	$0	$0
No. 2	5,000	4,000	1,000	800	200
No. 3			4,000	3,200	800

Example 2. Restoration of basis of indebtedness. (i) The facts are the same as in *Example 1.* On July 1, 1998, S completely repays Debt No. 3, and, for S's 1998 taxable year, the net increase (within the meaning of paragraph (c) of this section) with respect to A equals $4,500.
(ii) The net increase is applied first to restore the bases in the debts held on January 1, 1998, before any of the net increase is applied to increase A's basis in his shares of S stock. The net increase is applied to restore first the reduction of basis in indebtedness repaid in 1998. Any remaining net increase is applied to

restore the bases of the outstanding debts in proportion to the amount that each of these outstanding debts have been reduced previously under paragraph (b) of this section and have not been restored. As of December 31, 1998, the total reduction in A's debts held on January 1, 1998 equals $9,000. Thus, the basis of Debt No. 3 is restored by $3,200 (the amount of the previous reduction) to $4,000. A's basis in Debt No. 3 is treated as restored immediately before that debt is repaid. Accordingly, A does not realize any gain on the repayment. The remaining net increase of $1,300 ($4,500−$3,200) is applied to restore the bases of Debt No. 1 and Debt No. 2. As of December 31, 1998, the total reduction in these outstanding debts is $5,800 ($9,000−$3,200). The basis of Debt No. 1 is restored in an amount equal to $224 ($1,300 × $1,000/$5,800). Similarly, the basis in Debt No. 2 is restored in an amount equal to $1,076 ($1,300 × $4,800/$5,800). On December 31, 1998, A's basis in his S stock is zero and his bases in the two remaining debts are as follows:

Original basis	Amount reduced	1/1/98 basis	Amount restored	12/31/98 basis
$1,000	$1,000	$0	$224	$224
5,000	4,800	200	1,076	1,276

Example 3. Full restoration of basis in indebtedness when debt is repaid in part during the taxable year. (i) C has been a shareholder in Corporation S since 1992. In 1997, C loans S $1,000. S issues its note to C in the amount of $1,000, of which $950 is payable on March 1, 1998, and $50 is payable on March 1, 1999. On December 31, 1997, C's basis in all her shares of S stock is zero and her basis in the note has been reduced under paragraph (b) of this section to $900. For 1998, the net increase (within the meaning of paragraph (c) of this section) with respect to C is $300.
(ii) Because C's basis of indebtedness was reduced in a prior taxable year under § 1.1367-2(b), the net increase for 1998 is applied to restore this reduction. The restored basis cannot exceed the adjusted basis of the debt as of the beginning of the first day of 1998, excluding prior adjustments under section 1367, or $1,000. Therefore, $100 of the $300 net increase is applied to restore the basis of the debt from $900 to $1,000 effective immediately before the repayment on March 1, 1998. The remaining net increase of $200 increases C's basis in her stock.

Example 4. Determination of net increase—distribution in excess of increase in basis. (i) D has been the sole shareholder in Corporation S since 1990. On January 1, 1996, D loans S $10,000 in return for a note from S in the amount of $10,000 of which $5,000 is payable on each of January 1, 2000, and January 1, 2001. On December 31, 1997, the basis of D's shares of S stock is zero, and his basis in the note has been reduced under paragraph (b) of this section to $8,000. During 1998, the sum of the items under section 1367(a)(1) (relating to increases in basis of stock) with respect to D equals $10,000 (in this case, nonseparately computed income), and the sum of the items under section 1367(a)(2)(B), (C), (D), and (E) (relating to decreases in basis of stock) with respect to D equals $0. During 1998, S also makes distributions to D totaling $11,000. This distribution is an item that reduces basis of stock under section

1367(a)(2)(A) and must be taken into account for purposes of determining whether there is a net increase for the taxable year. Thus, for 1998, there is no net increase with respect to D because the amount of the items provided in section 1367(a)(1) do not exceed the amount of the items provided in section 1367(a)(2).
(ii) Because there is no net increase with respect to D for 1998, none of the 1997 reduction in D's basis in the indebtedness is restored. The $10,000 increase in basis under section 1367(a)(1) is applied to increase D's basis in his S stock. Under section 1367(a)(2)(A), the $11,000 distribution with respect to D's stock reduces D's basis in his shares of S stock to $0. See section 1368 and § 1.1368-1 (c) and (d) for the tax treatment of the $1,000 distribution in excess of D's basis.

Example 5. Distributions less than increase in basis. (i) The facts are the same as in *Example 4,* except that in 1998 S makes distributions to D totaling $8,000. On these facts, for 1998, there is a net increase with respect to D of $2,000 (the amount by which the items provided in section 1367(a)(1) exceed the amount of the items provided in section 1367(a)(2)).
(ii) Because there is a net increase of $2,000 with respect to D for 1998, $2,000 of the $10,000 increase in basis under section 1367(a)(1) is first applied to restore D's basis in the indebtedness to $10,000 ($8,000 + $2,000). Accordingly, on December 31, 1998, D has a basis in his shares of S stock of $0 ($0 + $8,000 (increase in basis remaining after restoring basis in indebtedness)—$8,000 (distribution)) and a basis in the note of $10,000.

Example 6. The $25,000 aggregate principal amount applies to each shareholder. (i) A and B have been the two shareholders in Corporation S since 2000. As of the end of the 2008 taxable year, the bases of A's and B's stock are both zero. On June 1, 2009, A advances S $16,000, which is not evidenced by a written instrument. On August 1, 2009, B advances S $22,000, which is not evidenced by a written instrument. Both the $16,000 advance and the $22,000 advance are open account debt and remain outstanding at those amounts during 2009. There is no net increase under paragraph (c) of this section in year 2009.
(ii) At the close of the 2009 taxable year, A's open account debt does not exceed $25,000. A therefore carries forward to the beginning of the 2010 taxable year the $16,000 as open account debt.

(iii) At the close of the 2009 taxable year, B's open account debt does not exceed $25,000. B therefore carries forward to the beginning of the 2010 taxable year the $22,000 as open account debt.

Example 7. Treatment of open account debt. (i) The facts are the same as in *Example 6,* in addition to which, on December 31, 2009, A's basis in the open account debt is reduced under paragraph (b) of this section to $8,000. On April 1, 2010, S repays A $4,000 of the open account indebtedness. On September 1, 2010, A advances S an additional $1,000, which is not evidenced by a written instrument. There is no net increase under paragraph (c) of this section in year 2010.

(ii) The $4,000 April repayment S makes to A and A's $1,000 September advance are netted to result in a net repayment of $3,000 for the taxable year on A's $16,000 open account debt carried forward from 2009. Because there is no net increase in 2010, no basis of indebtedness is restored for the 2010 taxable year, and A realizes $1,500 of income on the $3,000 net repayment at the close of the 2010 taxable year.

(iii) At close of the 2010 taxable year, A's open account debt does not exceed $25,000. The net repayment of $3,000 for the taxable year on A's $16,000 open account debt carried forward from 2009, leaves A with an open account debt of $13,000 to carry forward as open account debt to the beginning of the 2011 taxable year.

Example 8. Treatment of shareholder indebtedness not evidenced by a written instrument which exceeds $25,000. (i) The facts are the same as in *Example 7*, in addition to which, on February 1, 2011, S repays $5,000 of the open account debt and on March 1, 2011, A advances S $20,000, which is not evidenced by a written instrument.
(ii) At the close of the 2010 taxable year, A has an open account debt of $13,000 to carry forward as open account debt to the beginning of the 2011 taxable year.

(iii) The 2011 advances and repayments are netted to result in a net advance of $15,000 on A's $13,000 open account debt carried forward from 2010, increasing A's open account debt to $28,000 as of the close of the 2011 taxable year. Because A's open account debt exceeds $25,000, for any subsequent taxable year the $28,000 indebtedness will be treated in the same manner as indebtedness evidenced by a separate written instrument for the purposes of this section. Because there is no net increase in 2011, no basis of indebtedness is restored for the 2011 taxable year.

[T.D. 8508, 59 FR 16, Jan. 3, 1994, as amended by T.D. 9428, 73 FR 62202, Oct. 20, 2008; T.D. 9428, 73 FR 67389, Nov. 14, 2008; T.D. 9428, 73 FR 71545, Nov. 25, 2008]

§ 1.1367-3 Effective/Applicability date.

Section 1.1367-2(a), (c)(2), (d)(2), and (e) *Example 6, Example 7,* and *Example 8* apply to any shareholder advances to the S corporation made on or after October 20, 2008 and repayments on those advances by the S corporation. The rules that apply with respect to shareholder advances to the S corporation made before October 20, 2008, are contained in § 1.1367-3 in effect prior to October 20, 2008. (See 26 CFR part 1 revised as of April 1, 2007.) Shareholders have the option to apply these rules to shareholder advances to the S corporation made before October 20, 2008, and repayments on those advances by the S corporation. Section 1.1367-1(h), *Example 5*(iii) applies on and after July 23, 2014. The rules that apply before July 23, 2014 are contained in § 1.1367-3 in effect prior to July 23, 2014 (see 26 CFR part 1 revised as of April 1, 2014).

[T.D. 9428, 73 FR 62203, Oct. 20, 2008, as amended by T.D. 9682, 79 FR 42678, July 23, 2014]

§ 1.1368-0 Table of contents.

The following table of contents is provided to facilitate the use of §§ 1.1368-1 through 1.1368-4.

§ 1.1368-1 Distributions by S corporations.

(a) In general.

(b) Date distribution made.

(c) S corporation with no earnings and profits.

(d) S corporation with earnings and profits.

(1) General treatment of distribution.

(2) Previously taxed income.

(e) Certain adjustments taken into account.

(1) Taxable years beginning before January 1, 1997.

(2) Taxable years beginning on or after August 18, 1998.

(f) Elections relating to source of distributions.

(1) In general.

(2) Election to distribute earnings and profits first.

(i) In general.

(ii) Previously taxed income.

(iii) Corporation with subchapter C and subchapter S earnings and profits.

(3) Election to make a deemed dividend.

(4) Election to forego previously taxed income.

(5) Time and manner of making elections.

(i) For earnings and profits.

(ii) For previously taxed income and deemed dividends.

(iii) Corporate statement regarding elections.

(iv) Irrevocable elections.

(g) Special rule.

(1) Election to terminate year under § 1.1368-1(g)(2).

(2) Election in case of a qualifying disposition.

(i) In general.

(ii) Effect of the election.

(iii) Time and manner of making election.

(iv) Coordination with election under section 1377(a)(2).

§ 1.1368-2 Accumulated adjustments account (AAA).

(a) Accumulated adjustments account.

(1) In general.

(2) Increases to the AAA.

(3) Decreases to the AAA.

(i) In general.

(ii) Extent of allowable reduction.

(iii) Decrease to the AAA for distributions.

(4) Ordering rules for the AAA for taxable years beginning before January 1, 1997.

(5) Ordering rules for the AAA for taxable years beginning on or after August 18, 1998.

(b) Distributions in excess of the AAA.

(1) In general.

(2) Amount of the AAA allocated to each distribution.

(c) Distribution of money and loss property.

(1) In general.

(2) Allocating the AAA to loss property.

(d) Adjustment in the case of redemptions, liquidations, reorganizations, and divisions.

(1) Redemptions.

(i) General rule.

(ii) Special rule for years in which a corporation makes both ordinary and redemption distributions.

(iii) Adjustments to earnings and profits.

(2) Liquidations and reorganizations.

(3) Corporate separations to which section 368(a)(1)(D) applies.

(e) Election to terminate year under section 1377(a)(2) or § 1.1368-1(g)(2).

§ 1.1368-3 Examples.

§ 1.1368-4 Effective date and transition rule.

[T.D. 8508, 59 FR 18, Jan. 3, 1994, as amended by T.D. 8696, 61 FR 67455, Dec. 23, 1996; T.D. 8852, 64 FR 71649, Dec. 22, 1999; T.D. 8869, 65 FR 3855, Jan. 25, 2000]

§ 1.1368-1 Distributions by S corporations.

(a) ***In general.*** This section provides rules for distributions made by an S corporation with respect to its stock which, but for section 1368(a) and this section, would be subject to section 301(c) and other rules of the Internal Revenue Code that characterize a distribution as a dividend.

(b) ***Date distribution made.*** For purposes of section 1368, a distribution is taken into account on the date the corporation makes the distribution, regardless of when the distribution is treated as received by the shareholder.

(c) ***S corporation with no earnings and profits.*** A distribution made by an S corporation that has no accumulated earnings and profits as of the end of the taxable year of the S corporation in which the distribution is made is treated in the manner provided in section 1368(b).

(d) ***S corporation with earnings and profits*** —

(1) ***General treatment of distribution.*** Except as provided in paragraph (d)(2) of this section, a distribution made with respect to its stock by an S corporation that has accumulated earnings and profits as of the end of the taxable year of the S corporation in which the distribution is made is treated in the manner provided in section 1368(c). See section 316 and § 1.316-2 for provisions relating to the allocation of earnings and profits among distributions.

(2) ***Previously taxed income.*** This paragraph (d)(2) applies to distributions by a corporation that has both accumulated earnings and profits and previously taxed income (within the meaning of section 1375(d)(2), as in effect prior to its amendment by the Subchapter S Revision Act of 1982, and the regulations thereunder) with respect to one or more shareholders. In the case of such a distribution, that portion remaining after the application of section 1368(c)(1) (relating to distributions from the accumulated adjustments account (AAA) as defined in § 1.1368-2(a)) is treated in the manner provided in section 1368(b) (relating to S corporations without earnings and profits) to the extent that portion is a distribution of money and does not exceed the shareholder's net share immediately before the distribution of the corporation's previously taxed income. The AAA and the earnings and

profits of the corporation are not decreased by that portion of the distribution. Any distribution remaining after the application of this paragraph (d)(2) is treated in the manner provided in section 1368(c) (2) and (3).

(e) *Certain adjustments taken into account* —

(1) ***Taxable years beginning before January 1, 1997.*** For any taxable year of the corporation beginning before January 1, 1997, paragraphs (c) and (d) of this section are applied only after taking into account—

(i) The adjustments to the basis of the shares of a shareholder's stock described in section 1367 (without regard to section 1367(a)(2)(A) (relating to decreases attributable to distributions not includible in income)) for the S corporation's taxable year; and

(ii) The adjustments to the AAA required by section 1368(e)(1)(A) (but without regard to the adjustments for distributions under § 1.1368-2(a)(3)(iii)) for the S corporation's taxable year.

(2) ***Taxable years beginning on or after August 18, 1998.*** For any taxable year of the corporation beginning on or after August 18, 1998, paragraphs (c) and (d) of this section are applied only after taking into account—

(i) The adjustments to the basis of the shares of a shareholder's stock described in section 1367(a)(1) (relating to increases in basis of stock) for the S corporation's taxable year; and

(ii) The adjustments to the AAA required by section 1368(e)(1)(A) (but without regard to the adjustments for distributions under § 1.1368-2(a)(3)(iii)) for the S corporation's taxable year. Any net negative adjustment (as defined in section 1368(e)(1)(C)(ii)) for the taxable year shall not be taken into account.

(f) *Elections relating to source of distributions* —

(1) ***In general.*** An S corporation may modify the application of paragraphs (c) and (d) of this section by electing (pursuant to paragraph (f)(5) of this section)—

(i) To distribute earnings and profits first as described in paragraph (f)(2) of this section;

(ii) To make a deemed dividend as described in paragraph (f)(3) of this section; or

(iii) To forego previously taxed income as described in paragraph (f)(4) of this section.

(2) *Election to distribute earnings and profits first* —

(i) ***In general.*** An S corporation with accumulated earnings and profits may elect under this paragraph (f)(2) for any taxable year to distribute earnings and profits first as provided in section 1368(e)(3). Except as provided in paragraph (f)(2)(ii) of this section, distributions made by an S corporation making this election are treated as made first from earnings and profits under section 1368(c)(2) and second from the AAA under section 1368(c)(1). Any remaining portion of the distribution is treated in the manner provided in section 1368(b). This election is effective for all distributions made during the year for which the election is made.

(ii) ***Previously taxed income.*** If a corporation to which paragraph (d)(2) of this section (relating to corporations with previously taxed income) applies makes the election provided in this paragraph (f)(2) for the taxable year, and does not make the election to forego previously taxed income under paragraph (f)(4) of this section, distributions by the S corporation during the taxable year are treated as made first, from previously taxed income under paragraph (d)(2) of

this section; second, from earnings and profits under section 1368(c)(2); and third, from the AAA under section 1368(c)(1). Any portion of a distribution remaining after the previously taxed income, earnings and profits, and the AAA are exhausted is treated in the manner provided in section 1368(b).

(iii) ***Corporation with subchapter C and subchapter S earnings and profits.*** If an S corporation that makes the election provided in this paragraph (f)(2) has both subchapter C earnings and profits (as defined in section 1362(d)(3)(B)) and subchapter S earnings and profits in a taxable year of the corporation in which the distribution is made, the distribution is treated as made first from subchapter C earnings and profits, and second from subchapter S earnings and profits. *Subchapter S earnings and profits* are earnings and profits accumulated in a taxable year beginning before January 1, 1983 (or in the case of a qualified casualty insurance electing small business corporation or a qualified oil corporation, earnings and profits accumulated in any taxable year), for which an election under subchapter S of chapter 1 of the Internal Revenue Code was in effect.

(3) ***Election to make a deemed dividend.*** An S corporation may elect under this paragraph (f)(3) to distribute all or part of its subchapter C earnings and profits through a deemed dividend. If an S corporation makes the election provided in this paragraph (f)(3), the S corporation will be considered to have made the election provided in paragraph (f)(2) of this section (relating to the election to distribute earnings and profits first). The amount of the deemed dividend may not exceed the subchapter C earnings and profits of the corporation on the last day of the taxable year, reduced by any actual distributions of subchapter C earnings and profits made during the taxable year. The amount of the deemed dividend is considered, for all purposes of the Internal Revenue Code, as if it were distributed in money to the shareholders in proportion to their stock ownership, received by the shareholders, and immediately contributed by the shareholders to the corporation, all on the last day of the corporation's taxable year.

(4) ***Election to forego previously taxed income.*** An S corporation may elect to forego distributions of previously taxed income. If such an election is made, paragraph (d)(2) of this section (relating to corporations with previously taxed income) does not apply to any distribution made during the taxable year. Thus, distributions by a corporation that makes the election to forego previously taxed income for a taxable year under this paragraph (f)(4) and does not make the election to distribute earnings and profits first under paragraph (f)(2) of this section are treated in the manner provided in section 1368(c) (relating to distributions by corporations with earnings and profits). Distributions by a corporation that makes both the election to distribute earnings and profits first under paragraph (f)(2) of this section and the election to forego previously taxed income under this paragraph (f)(4), are treated in the manner provided in paragraph (f)(2)(i) of this section.

(5) ***Time and manner of making elections*** —

(i) ***For earnings and profits.*** If an election is made under paragraph (f)(2) of this section to distribute earnings and profits first, see section 1368(e)(3) regarding the consent required by shareholders.

(ii) ***For previously taxed income and deemed dividends.*** If an election is made to forego previously taxed income under paragraph (f)(4) of this section or to make a deemed dividend under paragraph (f)(3) of this section, consent by each “affected shareholder,” as defined in section 1368(e)(3)(B), is required.

(iii) ***Corporate statement regarding elections.*** A corporation makes an election for a taxable year under § 1.1368-1(f) by attaching a statement to a timely filed (including extensions) original or amended return required to be filed under section 6037 for that taxable year. In the statement, the corporation must identify the election it is making under § 1.1368-1(f) and must state that each shareholder consents to the election. In the case of elections for taxable years beginning before January 1, 2003, an officer of the corporation must sign under penalties of perjury the statement on behalf of the corporation. In the case of elections for taxable years beginning after December 31, 2002, the statement described in this paragraph (f)(5)(iii) shall be verified by signing the return. A statement of election to make a deemed dividend under § 1.1368-1(f) must include the amount of the deemed dividend that is distributed to each shareholder.

(iv) ***Irrevocable elections.*** The elections under this paragraph (f) are irrevocable and are effective only for the taxable year for which they are made. In applying the preceding sentence to elections under this paragraph (f), an election to terminate the taxable year under section 1377(a)(2) or § 1.1368-1(g)(2) is disregarded.

(g) ***Special rule —***

(1) ***Election to terminate year under § 1.1368-1(g)(2).*** If an election is made under paragraph (g)(2) of this section to terminate the year when there is a qualifying disposition, this section applies as if the taxable year consisted of separate taxable years, the first of which ends at the close of the day on which there is a qualifying disposition of stock.

(2) ***Election in case of a qualifying disposition —***

(i) ***In general.*** In the case of a qualifying disposition, a corporation may elect under this paragraph (g)(2)(i) to treat the year as if it consisted of separate taxable years, the first of which ends at the close of the day on which the qualifying disposition occurs. A *qualifying disposition* is—

(A) A disposition by a shareholder of 20 percent or more of the outstanding stock of the corporation in one or more transactions during any thirty-day period during the corporation's taxable year;

(B) A redemption treated as an exchange under section 302(a) or section 303(a) of 20 percent or more of the outstanding stock of the corporation from a shareholder in one or more transactions during any thirty-day period during the corporation's taxable year; or

(C) An issuance of an amount of stock equal to or greater than 25 percent of the previously outstanding stock to one or more new shareholders during any thirty-day period during the corporation's taxable year.

(ii) ***Effect of the election.*** A corporation making an election under paragraph (g)(2)(i) of this section must treat the taxable year as separate taxable years for purposes of allocating items of income and loss; making adjustments to the AAA, earnings and profits, and basis; and determining the tax effect of distributions under section 1368 (b) and (c). An election made under paragraph (g)(2)(i) of this section may be made upon the occurrence of any qualifying disposition. Dispositions of stock that are taken into account as part of a qualifying disposition are not taken into account in determining whether a subsequent qualifying disposition has been made. In the case of a taxable year for which an election is made under paragraph (g)(2)(i), for purposes of section 163(j), a separate section 163(j) limitation (as defined in § 1.163(j)-1(b)(36)) applies to each separate taxable year. Any items necessary to determine the

amount of business interest expense (as defined in § 1.163(j)-1(b)(3)) that are deducted in each separate taxable year must be allocated between the two separate taxable years in accordance with an allocation methodology provided in this paragraph (g).

(iii) ***Time and manner of making election.*** A corporation makes an election under § 1.1368-1(g)(2)(i) for a taxable year by attaching a statement to a timely filed (including extensions) original or amended return required to be filed under section 6037 for a taxable year (without regard to the election under § 1.1368-1(g)(2)(i)). In the statement, the corporation must state that it is electing for the taxable year under § 1.1368-1(g)(2)(i) to treat the taxable year as if it consisted of separate taxable years. The corporation also must set forth facts in the statement relating to the qualifying disposition (*e.g.*, sale, gift, stock issuance, or redemption), and state that each shareholder who held stock in the corporation during the taxable year (without regard to the election under § 1.1368-1(g)(2)(i)) consents to this election. For purposes of this election, a shareholder of the corporation for the taxable year is a shareholder as described in section 1362(a)(2). A single election statement may be filed for all elections made under § 1.1368-1(g)(2)(i) for the taxable year. An election made under § 1.1368-1(g)(2)(i) is irrevocable. In the case of elections for taxable years beginning before January 1, 2003, the statement through which a corporation makes an election under § 1.1368-1(g)(2)(i) must be signed by an officer of the corporation under penalties of perjury. In the case of elections for taxable years beginning after December 31, 2002, the statement described in the preceding sentence shall be verified by signing the return.

(iv) ***Coordination with election under section 1377(a)(2).*** If the event resulting in a qualifying disposition also results in a termination of a shareholder's entire interest as described in § 1.1377-1(b)(4), the election under this paragraph (g)(2) cannot be made. Rather, the election under section 1377(a)(2) and § 1.1377-1(b) may be made. See § 1.1377-1(b) (concerning the election under section 1377(a)(2)).

[T.D. 8508, 59 FR 19, Jan. 3, 1994, as amended by T.D. 8696, 61 FR 67455, Dec. 23, 1996; T.D. 8852, 64 FR 71650, Dec. 22, 1999; T.D. 9100, 68 FR 70706, Dec. 19, 2003; T.D. 9300, 71 FR 71043, Dec. 8, 2006; T.D. 9905, 85 FR 56842, Sept. 14, 2020]

§ 1.1368-2 Accumulated adjustments account (AAA).

(a) ***Accumulated adjustments account*** —

(1) ***In general.*** The accumulated adjustments account is an account of the S corporation and is not apportioned among shareholders. The AAA is relevant for all taxable years beginning on or after January 1, 1983, for which the corporation is an S corporation. On the first day of the first year for which the corporation is an S corporation, the balance of the AAA is zero. The AAA is increased in the manner provided in paragraph (a)(2) of this section and is decreased in the manner provided in paragraph (a)(3) of this section. For the adjustments to the AAA in the case of redemptions, liquidations, reorganizations, and corporate separations, see paragraph (d) of this section.

(2) ***Increases to the AAA.*** The AAA is increased for the taxable year of the corporation by the sum of the following items with respect to the corporation for the taxable year:

(i) The items of income described in section 1366(a)(1)(A) other than income that is exempt from tax;

(ii) Any nonseparately computed income determined under section 1366(a)(1)(B); and

(iii) The excess of the deductions for depletion over the basis of property subject to depletion unless the property is an oil or gas property the basis of which has been allocated to shareholders under section 613A(c)(11).

(3) *Decreases to the AAA* —

(i) ***In general.*** The AAA is decreased for the taxable year of the corporation by the sum of the following items with respect to the corporation for the taxable year—

(A) The items of loss or deduction described in section 1366(a)(1)(A);

(B) Any nonseparately computed loss determined under section 1366(a)(1)(B);

(C) Any expense of the corporation not deductible in computing its taxable income and not properly chargeable to a capital account, other than—

(*1*) Federal taxes attributable to any taxable year in which the corporation was a C corporation; and

(*2*) Expenses related to income that is exempt from tax; and

(D) The sum of the shareholders' deductions for depletion for any oil or gas property held by the corporation described in section 1367(a)(2)(E).

(ii) ***Extent of allowable reduction.*** The AAA may be decreased under paragraph (a)(3)(i) of this section below zero. The AAA is decreased by noncapital, nondeductible expenses under paragraph (a)(3)(i)(C) of this section even though a portion of the noncapital, nondeductible expenses is not taken into account by a shareholder under § 1.1367-1(g) (relating to the elective ordering rule). The AAA is also decreased by the entire amount of any loss or deduction even though a portion of the loss or deduction is not taken into account by a shareholder under section 1366(d)(1) or is otherwise not currently deductible under the Internal Revenue Code. However, in any subsequent taxable year in which the loss, deduction, or noncapital, nondeductible expense is treated as incurred by the corporation with respect to the shareholder under section 1366(d)(2) or § 1.1367-1(g) (or in which the loss or deduction is otherwise allowed to the shareholder), no further adjustment is made to the AAA.

(iii) ***Decrease to the AAA for distributions.*** The AAA is decreased (but not below zero) by any portion of a distribution to which section 1368 (b) or (c)(1) applies.

(4) ***Ordering rules for the AAA for taxable years beginning before January 1, 1997.*** For any taxable year beginning before January 1, 1997, the adjustments to the AAA are made in the following order—

(i) The AAA is increased under paragraph (a)(2) of this section before it is decreased under paragraph (a)(3) of this section for the taxable year;

(ii) The AAA is decreased under paragraph (a)(3)(i) of this section before it is decreased under paragraph (a)(3) (iii) of this section;

(iii) The AAA is decreased (but not below zero) by any portion of an ordinary distribution to which section 1368 (b) or (c)(1) applies; and

(iv) The AAA is adjusted (whether negative or positive) for redemption distributions under paragraph (d)(1) of this section.

(5) ***Ordering rules for the AAA for taxable years beginning on or after August 18, 1998.*** For any taxable year of the S corporation beginning on or after August 18, 1998, the adjustments to the AAA are made in the following order—

(i) The AAA is increased under paragraph (a)(2) of this section before it is decreased under paragraph (a)(3)(i) of this section for the taxable year;

(ii) The AAA is decreased under paragraph (a)(3)(i) of this section (without taking into account any net negative adjustment (as defined in section 1368(e)(1)(C)(ii)) before it is decreased under paragraph (a)(3)(iii) of this section;

(iii) The AAA is decreased (but not below zero) by any portion of an ordinary distribution to which section 1368(b) or (c)(1) applies;

(iv) The AAA is decreased by any net negative adjustment (as defined in section 1368(e)(1)(C)(ii)); and

(v) The AAA is adjusted (whether negative or positive) for redemption distributions under paragraph (d)(1) of this section.

(b) ***Distributions in excess of the AAA*** —

(1) ***In general.*** A portion of the AAA (determined under paragraph (b)(2) of this section) is allocated to each of the distributions made for the taxable year if—

(i) An S corporation makes more than one distribution of property with respect to its stock during the taxable year of the corporation (including an S short year as defined under section 1362(e)(1)(A));

(ii) The AAA has a positive balance at the close of the year; and

(iii) The sum of the distributions made during the corporation's taxable year exceeds the balance of the AAA at the close of the year.

(2) Amount of the AAA allocated to each distribution. The amount of the AAA allocated to each distribution is determined by multiplying the balance of the AAA at the close of the current taxable year by a fraction, the numerator of which is the amount of the distribution and the denominator of which is the amount of all distributions made during the taxable year. For purposes of this paragraph (b)(2), the term *all distributions made during the taxable year* does not include any distribution treated as from earnings and profits or previously taxed income pursuant to an election made under section 1368(e)(3) and § 1.1368-1(f)(2). See paragraph (d)(1) of this section for rules relating to the adjustments to the AAA for redemptions and distributions in the year of a redemption.

(c) ***Distribution of money and loss property*** —

(1) ***In general.*** The amount of the AAA allocated to a distribution under this section must be further allocated (under paragraph (c)(2) of this section) if the distribution—

(i) Consists of property the adjusted basis of which exceeds its fair market value on the date of the distribution and money;

(ii) Is a distribution to which § 1.1368-1(d)(1) applies; and

(iii) Exceeds the amount of the corporation's AAA properly allocable to that distribution.

(2) ***Allocating the AAA to loss property.*** The amount of the AAA allocated to the property other than money is equal to the amount of the AAA allocated to the distribution multiplied by a fraction, the numerator of which is the fair market value of the property other than money on the date of distribution and the denominator of which is the amount of the distribution. The amount of the AAA allocated to the money is equal to the amount of the AAA allocated to the distribution reduced by the amount of the AAA allocated to the property other than money.

(d) ***Adjustment in the case of redemptions, liquidations, reorganizations, and divisions*** —

(1) ***Redemptions*** —

(i) ***General rule.*** In the case of a redemption distribution by an S corporation that is treated as an exchange under section 302(a) or section 303(a) (a *redemption distribution*), the AAA of the corporation is adjusted in an amount equal to the ratable share of the corporation's AAA (whether negative or positive) attributable to the redeemed stock as of the date of the redemption.

(ii) ***Special rule for years in which a corporation makes both ordinary and redemption distributions.*** In any year in which a corporation makes one or more distributions to which section 1368(a) applies (*ordinary distributions*) and makes one or more redemption distributions, the AAA of the corporation is adjusted first for any ordinary distributions and then for any redemption distributions.

(iii) ***Adjustments to earnings and profits.*** Earnings and profits are adjusted under section 312 independently of any adjustments made to the AAA.

(2) ***Liquidations and reorganizations.*** An S corporation acquiring the assets of another S corporation in a transaction to which section 381(a) applies will succeed to and merge its AAA (whether positive or negative) with the AAA (whether positive or negative) of the distributor or transferor S corporation as of the close of the date of distribution or transfer. Thus, the AAA of the acquiring corporation after the transaction is the sum of the AAAs of the corporations prior to the transaction.

(3) ***Corporate separations to which section 368(a)(l)(D) applies.*** If an S corporation with accumulated earnings and profits transfers a part of its assets constituting an active trade or business to another corporation in a transaction to which section 368(a)(l)(D) applies, and immediately thereafter the stock and securities of the controlled corporation are distributed in a distribution or exchange to which section 355 (or so much of section 356 as relates to section 355) applies, the AAA of the distributing corporation immediately before the transaction is allocated between the distributing corporation and the controlled corporation in a manner similar to the manner in which the earnings and profits of the distributing corporation are allocated under section 312 (h). See § 1.312-10(a).

(e) ***Election to terminate year under section 1377(a)(2) or § 1.1368-1(g)(2).*** If an election is made under section 1377(a)(2) (to terminate the year in the case of termination of a shareholder's interest) or § 1.1368-1(g)(2) (to terminate the year in the case of a qualifying disposition), this section applies as if the taxable year consisted of separate taxable years, the first of which ends at the close of the day on which the shareholder terminated his or her interest in the corporation or makes a substantial disposition of stock, whichever the case may be.

[T.D. 8508, 59 FR 20, Jan. 3, 1994, as amended by T.D. 8852, 64 FR 71650, Dec. 22, 1999; T.D. 8869, 65 FR 3855, Jan. 25, 2000]

§ 1.1368-3 Examples.

The principles of §§ 1.1368-1 and 1.1368-2 are illustrated by the examples below. In each example Corporation S is a calendar year corporation:

> *Example 1. Distributions by S corporations without C corporation earnings and profits for taxable years beginning before January 1, 1997.* (i) Corporation S, an S corporation, has no earnings and profits as of January 1, 1996, the first day of its 1996 taxable year. S's sole shareholder, A, holds 10 shares of S stock with a basis of $1 per share as of that date. On March 1, 1996, S makes a distribution of $38 to A. For S's 1996 taxable year, A's pro rata share of the amount of the items described in section 1367(a)(1) (relating to increases in basis of stock) is $50 and A's pro rata share of the amount of the items described in section 1367(a)(2) (B) through (D) (relating to decreases in basis of stock for items other than distributions) is $26.
> (ii) Under section 1368(d)(1) and § 1.1368-1(e)(1), the adjustments to the bases of A's stock in S described in section 1367 are made before the distribution rules of section 1368 are applied. Thus, A's basis per share in the stock is $3.40 ($1 + [($50-$26) / 10 shares]) before taking into account the distribution. Under section 1367(a)(2)(A), the basis of A's stock is decreased by distributions to A that are not includible in A's income. Under § 1.1367-1(c)(3), the amount of the distribution that is attributable to each share of A's stock is $3.80 ($38 distribution / 10 shares). However, A only has a basis of $3.40 in each share, and basis may not be reduced below zero. Therefore, the basis of each share of his stock is reduced by $3.40 to zero, and the remaining $4.00 of the distribution ([$3.80-$3.40] × 10 shares) is treated as gain from the sale or exchange of property. As of January 1, 1997, A has a basis of $0 in his shares of S stock.

> *Example 2. Distributions by S corporations without earnings and profits for taxable years beginning on or after August 18, 1998.* (i) Corporation S, an S corporation, has no earnings and profits as of January 1, 2001, the first day of its 2001 taxable year. S's sole shareholder, A, holds 10 shares of S stock with a basis of $1 per share as of that date. On March 1, 2001, S makes a distribution of $38 to A. The balance in Corporation S's AAA is $100. For S's 2001 taxable year, A's pro rata share of the amount of the items described in section 1367(a)(1) (relating to increases in basis of stock) is $50. A's pro rata share of the amount of the items described in sections 1367(a)(2)(B) through (D) (relating to decreases in basis of stock for items other than distributions) is $26, $20 of which is attributable to items described in section 1367(a)(2)(B) and (C) and $6 of which is attributable to items described in section 1367(a)(2)(D) (relating to decreases in basis attributable to noncapital, nondeductible expenses).
> (ii) Under section 1368(d)(1) and § 1.1368-1(e)(1) and (2), the adjustments to the basis of A's stock in S described in sections 1367(a)(1) are made before the distribution rules of section 1368 are applied. Thus, A's basis per share in the stock is $6.00 ($1 + [$50/10]) before taking into account the distribution. Under section 1367(a)(2)(A), the basis of A's stock is decreased by distributions to A that are not includible in A's income. Under § 1.1367-1(c)(3), the amount of the distribution that is attributable to each share of A's stock is $3.80 ($38 distribution/10 shares). Thus, A's basis per share in the stock is $2.20 ($6.00-$3.80), after taking into account the distribution. Under section 1367(a)(2)(D), the basis of each share of A's stock in S after taking into account the distribution, $2.20, is decreased by $.60 ($6 noncapital, nondeductible

expenses/10). Thus, A's basis per share after taking into account the nondeductible, noncapital expenses is $1.60. Under section 1367(a)(2)(B) and (C), A's basis per share is further decreased by $2 ($20 items described in section 1367(a)(2)(B) and (C)/10 shares). However, basis may not be reduced below zero. Therefore, the basis of each share of A's stock is reduced to zero. As of January 1, 2002, A has a basis of $0 in his shares of S stock. Pursuant to section 1366(d)(2), the $.40 of loss in excess of A's basis in each of his shares of S stock is treated as incurred by the corporation in the succeeding taxable year with respect to A.

Example 3. Distributions by S corporations with C corporation earnings and profits for taxable years beginning before January 1, 1997. (i) Corporation S properly elects to be an S corporation beginning January 1, 1997, and as of that date has accumulated earnings and profits of $30. B, an individual and sole shareholder of Corporation S, has 10 shares of S stock with a basis of $12 per share. In addition, B lends $30 to S evidenced by a demand note.
(ii) During 1997, S has a nonseparately computed loss of $150. S makes no distributions to B during 1997. Under section 1366(d)(1), B is allowed a loss equal to $150, the amount equal to the sum of B's bases in his shares of stock and his basis in the debt. Under section 1367, the loss reduces B's adjusted basis in his stock and debt to $0. Under § 1.1368-2(a)(3), S's AAA as of December 31, 1997, has a deficit of $150 as a result of S's loss for the year.

(iii) For 1998, S has $220 of separately stated income and distributes $110 to B. The balance in the AAA (negative $150 from 1997) is increased by $220 for S's income for the year and decreased to $0 for the portion of the distribution that is treated as being from the AAA ($70). Under § 1.1367-2(c), B's net increase is $150, determined by reducing the $220 of income by the $70 of the distribution not includible in income by B. Thus, B's basis in the debt is fully restored to $30, and B's basis in S stock (before accounting for the distribution) is increased from zero to $19 per share ([$220-$30 applied to the debt] / 10). Thirty dollars of the distribution is considered a dividend to the extent of S's $30 of earnings and profits, and the remaining $10 of the distribution reduces B's basis in the S stock. Thus, B's basis in the S stock as of December 31, 1998, is $11 per share ($19-[$70 AAA distribution / 10]-[10 distribution treated as a reduction in basis / 10]). The balance in the AAA is $0, S's earnings and profits are $0, and B's basis in the loan is $30.

Example 4. Distributions by S corporations with earnings and profits and no net negative adjustment for taxable years beginning on or after August 18, 1998. (i) Corporation S, an S corporation, has accumulated earnings and profits of $1,000 and a balance in the AAA of $2,000 on January 1, 2001. S's sole shareholder B holds 100 shares of stock with a basis of $20 per share as of January 1, 2001. On April 1, 2001, S makes a distribution of $1,500 to B. B's pro rata share of the income earned by S during 2001 is $2,000 and B's pro rata share of S's losses is $1,500. For the taxable year ending December 31, 2001, S does not have a net negative adjustment as defined in section 1368(e)(1)(C). S does not make the election under section 1368(e)(3) and § 1.1368-1(f)(2) to distribute its earnings and profits before its AAA.

(ii) The AAA is increased from $2,000 to $4,000 for the $2,000 of income earned during the 2001 taxable year. The AAA is decreased from $4,000 to $2,500 for the $1,500 of losses. The AAA is decreased from $2,500 to $1,000 for the portion of the distribution ($1,500) to B that does not exceed the AAA.

(iii) As of December 31, 2001, B's basis in his stock is $10 ($20 + $20 ($2,000 income/100 shares)—$15 ($1,500 distribution/100 shares)—$15 ($1,500 loss/100 shares).

Example 5. Distributions by S corporations with earnings and profits and net negative adjustment for taxable years beginning on or after August 18, 1998. (i) Corporation S, an S corporation, has accumulated earnings and profits of $1,000 and a balance in the AAA of $2,000 on January 1, 2001. S's sole shareholder B holds 100 shares of stock with a basis of $20 per share as of January 1, 2001. On April 1, 2001, S makes a distribution of $2,000 to B. B's pro rata share of the income earned by S during 2001 is $2,000 and B's pro rata share of S's losses is $3,500. For the taxable year ending December 31, 2001, S has a net negative adjustment as defined in section 1368(e)(1)(C). S does not make the election under section 1368(e)(3) and § 1.1368-1(f)(2) to distribute its earnings and profits before its AAA.
(ii) The AAA is increased from $2,000 to $4,000 for the $2,000 of income earned during the 2001 taxable year. Because under section 1368(e)(1)(C)(ii) and § 1.1368-2(a)(ii), the net negative adjustment is not taken into account, the AAA is decreased from $4,000 to $2,000 for the portion of the losses ($2,000) that does not exceed the income earned during the 2001 taxable year. The AAA is reduced from $2,000 to zero for the portion of the distribution to B ($2,000) that does not exceed the AAA. The AAA is decreased from zero to a negative $1,500 for the portion of the $3,500 of loss that exceeds the $2,000 of income earned during the 2001 taxable year.

(iii) Under § 1.1367-1(c)(1), the basis of a shareholder's share in an S corporation stock may not be reduced below zero. Accordingly, as of December 31, 2001, B's basis per share in his stock is zero ($20 + $20 income—$20 distribution—$35 loss). Pursuant to section 1366(d)(2), the $15 of loss in excess of B's basis in each of his shares of S stock is treated as incurred by the corporation in the succeeding taxable year with respect to B.

Example 6. Election in case of disposition of substantial amount of stock. (i) Corporation S, an S corporation, has earnings and profits of $3,000 and a balance in the AAA of $1,000 on January 1, 1997. C, an individual and the sole shareholder of Corporation S, has 100 shares of S stock with a basis of $10 per share. On July 3, 1997, C sells 50 shares of his S stock to D, an individual, for $250. For 1997, S has taxable income of $1,000, of which $500 was earned on or before July 3, 1997, and $500 earned after July 3, 1997. During its 1997 taxable year, S distributes $1,000 to C on February 1 and $1,000 to each of C and D on August 1. S does not make the election under section 1368(e)(3) and § 1.1368-1(f)(2) to distribute its earnings and profits before its AAA. S makes the election under § 1.1368-1(g)(2) to treat its taxable year as if it consisted of separate taxable years, the first of which ends at the close of July 3, 1997, the date of the qualifying disposition.

(ii) Under section § 1.1368-1(g)(2), for the period ending on July 3, 1997, S's AAA is $500 ($1,000 (AAA as of January 1, 1997) + $500 (income earned from January 1, 1997 through July 3, 1997)-$1,000 (distribution made on February 1, 1997)). C's bases in his shares of stock is decreased to $5 per share ($10 (original basis) + $5 (increase per share for income)-$10 (decrease per share for distribution)).

(iii) The AAA is adjusted at the end of the taxable year for the period July 4 through December 31, 1997. It is increased from $500 (AAA as of the close of July 3, 1997) to $1,000 for the income earned during this period and is decreased by $1,000, the portion of the distribution ($2,000 in total) made to C and D on August 1 that does not exceed the AAA. The $1,000 portion of the distribution that remains after the AAA is reduced to zero is attributable to earnings and profits. Therefore C and D each have a dividend of $500, which does not affect their basis or S's AAA. The earnings and profits account is reduced from $3,000 to $2,000.

(iv) As of December 31, 1997, C and D have bases in their shares of stock of zero ($5 (basis as of July 4) + $5 ($500 income/100 shares)-$10 ($1,000 distribution/100 shares)). C and D each will report $500 as dividend income, which does not affect their basis or S's AAA.

Example 7. Election to distribute earnings and profits first. (i) Corporation S has been a calendar year C corporation since 1975. For 1982, S elects for the first time to be taxed under subchapter S, and during 1982 has $60 of earnings and profits. As of December 31, 1995, S has an AAA of $10 and earnings and profits of $160, consisting of $100 of subchapter C earnings and profits and $60 of subchapter S earnings and profits. For 1996, S has $200 of taxable income and the AAA is increased to $210 (before taking distributions into account). During 1996, S distributes $240 to its shareholders. With its 1996 tax return, S properly elects under section 1368(e)(3) and § 1.1368-1(f)(2) to distribute its earnings and profits before its AAA.
(ii) Because S elected to distribute its earnings and profits before its AAA, the first $100 of the distribution is characterized as a distribution from subchapter C earnings and profits; the next $60 of the distribution is characterized as a distribution from subchapter S earnings and profits. Because $160 of the distribution is from earnings and profits, the shareholders of S have a $160 dividend. The remaining $80 of the distribution is a distribution from S's AAA and is treated by the shareholders as a return of capital or gain from the sale or exchange of property, as appropriate, under § 1.1368-1(d)(1). S's AAA, as of December 31, 1996, equals $130 ($210-$80).

Example 8. Distributions in excess of the AAA. (i) On January 1, 1995, Corporation S has $40 of earnings and profits and a balance in the AAA of $100. S has two shareholders, E and F, each of whom own 50 shares of S's stock. For 1995, S has taxable income of $50, which increases the AAA to $150 as of December 31, 1995 (before taking into account distributions made during 1995). On February 1, 1995, S distributes $60 to each shareholder. On September 1, 1995, S distributes $30 to each shareholder. S does not make the election under section 1368(e)(3) and § 1.1368-1(f)(2) to distribute its earnings and profits before its AAA.

(ii) The sum of the distributions exceed S's AAA. Therefore, under § 1.1368-2(b), a portion of S's $150 balance in the AAA as of December 31, 1995, is allocated to each of the February 1 and September 1 distributions based on the respective sizes of the distributions. Accordingly, S must allocate $100 ($150 (AAA) × ($120 (February 1 distribution)/$180 (the sum of the distributions))) of the AAA to the February 1 distribution, and $50 ($150 × ($60/$180)) to the September 1 distribution. The portions of the distributions to which the AAA is allocated are treated by the shareholder as a return of capital or gain from the sale or exchange of property, as appropriate. The remainder of the two distributions is treated as a dividend to the extent that it does not exceed S's earnings and profits. E and F must each report $10 of dividend income for the February 1 distribution. For the September 1 distribution, E and F must each report $5 of dividend income.

Example 9. Ordinary and redemption distributions in the same taxable year. (i) On January 1, 1995, Corporation S, an S corporation, has $20 of earnings and profits and a balance in the AAA of $10. S has two shareholders, G and H, each of whom owns 50 shares of S's stock. For 1995, S has taxable income of $16, which increases the AAA to $26 as of December 31, 1995 (before taking into account distributions made during 1995). On February 1, 1995, S distributes $10 to each shareholder. On December 31, 1995, S redeems for $13 all of shareholder G's stock in a redemption that is treated as a sale or exchange under section 302(a).
(ii) The sum of the ordinary distributions does not exceed S's AAA. Therefore, S must reduce the $26 balance in the AAA by $20 for the February 1 ordinary distribution. The portions of the distribution by which the AAA is reduced are treated by the shareholders as a return of capital or gain from the sale or exchange of property. S must adjust the remaining AAA, $6, in an amount equal to the ratable share of the remaining AAA attributable to the redeemed stock, or $3 (50% × $6).

(iii) S also must adjust the earnings and profits of $20 in an amount equal to the ratable share of the earnings and profits attributable to the redeemed stock. Therefore, S adjusts the earnings and profits by $10 (50% × $20), the ratable share of the earnings and profits attributable to the redeemed stock.

[T.D. 8508, 59 FR 22, Jan. 3, 1994; 59 FR 10675, Mar. 7, 1994, as amended by T.D. 8852, 64 FR 71650, Dec. 22, 1999]

§ 1.1368-4 Effective date and transition rule.

Except for §§ 1.1368-1(e)(2), 1.1368-2(a)(5), and 1.1368-3 *Example 2, Example 4,* and *Example 5,* §§ 1.1368-1, 1.1368-2, and 1.1368-3 apply to taxable years of the corporation beginning on or after January 1, 1994. Section 1.1368-1(e)(2), § 1.1368-2(a)(5), and § 1.1368-3 *Example 2, Example 4,* and *Example 5* apply only to taxable years of the corporation beginning on or after August 18, 1998. For taxable years beginning before January 1, 1994, and taxable years beginning on or after January 1, 1997, and before August 18, 1998, the treatment of distributions by an S corporation to its shareholders must be determined in a reasonable manner, taking into account the statute and legislative history. Except with regard to the deemed dividend rule under § 1.1368-1(f)(3), § 1.1368-1(e)(2), § 1.1368-2(a)(5), and § 1.1368-3 *Example 2, Example 4,* and *Example 5,* return positions consistent with §§ 1.1368-1, 1.1368-2, and 1.1368-3 are reasonable for taxable years beginning before January 1, 1994. Return positions consistent with §§ 1.1368-1(e)(2), 1.1368-2(a)(5), and 1.1368-3 *Example 2, Example 4,* and *Example 5* are reasonable for taxable years beginning on or after January 1, 1997, and before August 18, 1998.

[T.D. 8852, 64 FR 71651, Dec. 22, 1999]

§ 1.1371-1 Distributions of money by an eligible terminated S corporation.

(a) ***Scope and definitions*** —

(1) ***Scope.*** This section provides rules relating to qualified distributions and distributions to which section 301 of the Internal Revenue Code (Code) applies during each taxable year of the ETSC period, including the taxable year in which the ETSC period ends. If an ETSC does not make any qualified distributions during a taxable year, then no distribution by the ETSC is governed by section 1371(f) of the Code or this section. Paragraph (a)(2) of this section contains definitions that apply for purposes of this section. Paragraph (b) of this section contains rules regarding the characterization of a qualified distribution. Paragraph (c) of this section contains rules regarding the characterization of any excess qualified distribution and non-qualified distribution during each taxable year of the ETSC period, including the taxable year in which the ETSC period ends. Paragraph (d) of this section contains examples illustrating the rules of this section. Paragraph (e) of this section contains the applicability date of this section.

(2) ***Definitions.*** The following definitions apply for purposes of this section—

(i) ***AAA.*** The term *AAA* means the accumulated adjustments account, within the meaning of section 1368(e)(1)(A) of the Code and § 1.1368-2(a)(1).

(ii) ***AAA ratio.*** Except as provided in this paragraph or paragraph (b)(3)(iv) of this section, the term *AAA ratio* means the fraction of which the numerator is historical AAA and the denominator is the sum of historical AAA and historical AE&P. Notwithstanding the preceding sentence, if the AE&P of the ETSC is less than or equal to zero as of the beginning of a taxable year, then the AAA ratio is one for such year and for all subsequent taxable years of the ETSC period.

(iii) ***AE&P.*** The term *AE&P* means earnings and profits described in section 316(a)(1) of the Code.

(iv) ***AE&P ratio.*** Except as provided in this paragraph or paragraph (b)(3)(iv) of this section, the term *AE&P ratio* means the fraction of which the numerator is historical AE&P, and the denominator is the sum of historical AAA and historical AE&P. Notwithstanding the preceding sentence, if the AE&P of the ETSC is less than or equal to zero as of the beginning of a taxable year, then the AE&P ratio is zero for such year and all subsequent taxable years of the ETSC period.

(v) ***CE&P.*** The term *CE&P* means earnings and profits that are described in section 316(a)(2).

(vi) ***ETSC.*** The term *ETSC* means an eligible terminated S corporation, within the meaning of section 481(d) of the Code and § 1.481-5.

(vii) ***ETSC period.*** In general, the term *ETSC period* means any taxable year, or portion thereof, of an ETSC beginning on the first day after the post-termination period within the meaning of section 1377(b)(1)(A) of the Code and ending on the date on which the ETSC's AAA balance is zero. Additionally, an ETSC does not have an ETSC period if the ETSC's AAA balance is not greater than zero at the end of its post-termination transition period. See § 1.1371-2 for rules governing the impact of a post-termination period, within the meaning of section 1377(b)(1)(B), on the ETSC period.

(viii) ***Excess qualified distribution.*** The term *excess qualified distribution* means the portion of a qualified distribution that is not characterized pursuant to paragraph (b)(2) or (3) of this section.

(ix) ***Historical AAA.*** The term *historical AAA* means the AAA of the ETSC as of the beginning of the day on which the revocation of an election under section 1362(a) of the Code is effective pursuant to section 1362(d)(1).

(x) ***Historical AE&P.*** The term *historical AE&P* means the AE&P of the ETSC as of the beginning of the day on which the revocation of an election under section 1362(a) is effective pursuant to section 1362(d)(1). For purposes of the preceding sentence, if the ETSC's historical AE&P is less than zero, then the historical AE&P is treated as zero.

(xi) ***Non-qualified distribution.*** The term *non-qualified distribution* means a distribution that is not a qualified distribution and to which section 301 applies.

(xii) ***Qualified distribution.*** The term *qualified distribution* means a distribution of money by an ETSC during the ETSC period to which, absent the application of section 1371(f) and this section, section 301 would apply. However, if paragraph (d)(2)(i) of this section applies to the ETSC, then a qualified distribution to a non-legacy shareholder is treated as a non-qualified distribution.

(b) ***Characterization of qualified distribution*** —

(1) ***In general.*** Paragraph (b)(2) of this section provides rules regarding the determination of the amount of a qualified distribution that is sourced from AAA and the corollary effects of such a characterization. Paragraph (b)(3) of this section provides rules regarding the determination of the amount of a qualified distribution that is sourced from AE&P and the corollary effects of such a characterization. Paragraph (b)(4) of this section provides rules regarding the characterization of an excess qualified distribution as a separate qualified distribution. The rules in paragraphs (b)(2) through (4) of this section are applied before the application of paragraph (c) of this section.

(2) ***Distribution of AAA*** —

(i) ***Amount.*** The portion of a qualified distribution that is sourced from an ETSC's AAA is equal to the lesser of:

(A) The product of the qualified distribution and the AAA ratio; and

(B) The ETSC's AAA immediately before the qualified distribution.

(ii) ***Reduction or elimination of ETSC's AAA.*** The ETSC's AAA is reduced by the amount of the distribution described in paragraph (b)(2)(i) of this section. If, with respect to a qualified distribution, the amount described in paragraph (b)(2)(i)(A) of this section equals or exceeds the amount described in paragraph (b)(2)(i)(B) of this section, then the rules in this paragraph (b) do not apply to any subsequent distributions by the ETSC. Instead, the subsequent distributions are treated in the manner provided in paragraph (c) of this section.

(iii) ***Effect on the shareholder.*** The amount described in paragraph (b)(2)(i) of this section is applied against and reduces the shareholder's adjusted basis of the shares of stock with respect to which the distribution is made under the principles of section 301(c)(2). If the application of the amount described in paragraph (b)(2)(i) of this section would result in a reduction of basis that exceeds the shareholder's adjusted basis of any share of stock with respect to which the distribution is made, such excess is treated as gain from the sale or exchange of property. The reduction of the shareholder's basis described in this paragraph with respect to a qualified distribution occurs prior to the application of paragraph (c) of this section to the excess qualified distribution, if any, with respect to such qualified distribution.

(3) *Distribution of AE&P* —

(i) ***Amount.*** This paragraph (b)(3) applies if an ETSC's AE&P ratio is greater than zero. If this paragraph (b)(3) applies, the portion of a qualified distribution that is sourced from the ETSC's AE&P is equal to the lesser of:

(A) The product of the qualified distribution and the AE&P ratio; and

(B) The ETSC's AE&P immediately before the qualified distribution. For purposes of the preceding sentence, if the ETSC's AE&P immediately before the qualified distribution is less than zero, then the ETSC's AE&P is treated as zero.

(ii) ***Effect on ETSC's AE&P.*** The ETSC's AE&P is reduced, as described in section 312(a)(1), by the amount of the distribution described in paragraph (b)(3)(i) of this section. The AE&P reduction described in this paragraph occurs prior to the application of paragraph (c) of this section, even if a distribution to which paragraph (c) of this section applies (regarding excess qualified distributions and non-qualified distributions) occurs earlier in time than the qualified distribution to which this paragraph applies.

(iii) ***Effect on the shareholder.*** The amount of the qualified distribution that is sourced from the ETSC's AE&P described in paragraph (b)(3)(i) of this section is included in the gross income of the shareholder as a dividend under section 301(c)(1).

(iv) ***Adjustment to the AAA ratio and the AE&P ratio.*** After the application of paragraph (b)(3)(ii) of this section, if the ETSC's AE&P is zero and the ETSC's AAA is greater than zero, then the ETSC's AAA ratio is one and the ETSC's AE&P ratio is zero for all subsequent qualified distributions during:

(A) That taxable year; and

(B) All subsequent taxable years of the ETSC period.

(4) *Excess qualified distribution treated as a separate qualified distribution* —

(i) ***In general.*** After the application of paragraph (b)(2)(ii) of this section with respect to a qualified distribution, if the ETSC has any remaining AAA, then any amount of excess qualified distribution, with respect to such qualified distribution, is treated as a separate qualified distribution and is analyzed pursuant to paragraph (b) of this section.

(ii) ***No change in characterization of previously characterized portion of qualified distribution.*** Paragraph (b)(4)(i) will not change the characterization of any portion of a qualified distribution that was previously characterized pursuant to paragraphs (b)(2) and (3) of this section and will reflect the application of paragraphs (b)(2) and (3) of this section to the portion of the qualified distribution previously characterized.

(c) ***Characterization of excess qualified distribution and non-qualified distributions.*** After the application of paragraph (b), the excess qualified distributions, if any, and non-qualified distributions, if any, are treated in the manner provided in sections 301(c) and 316.

(d) ***Examples.*** Paragraphs (d)(1) through (5) of this section (*Examples 1* through *5*) illustrate the rules of this section. For purposes of paragraphs (d)(1) through (5) of this section (*Examples 1* through *5*), X is a calendar year S corporation with a single share of stock outstanding. A, an individual, purchased its share of X stock prior to December 22, 2017, and, except as otherwise indicated, never contributed any amounts to X's capital. A remained the sole shareholder of X when X made a valid revocation on March 15, 2018,

pursuant to section 1362(d)(1) and §§ 1.1362-2 and 1.1362-6, of its S election and when that revocation became effective on January 1, 2018. X qualified as an ETSC pursuant to § 1.481-5(b) and its ETSC period began on January 1, 2019. Additionally, X did not make any distributions during its post-termination transition period, within the meaning of section 1377(b)(1)(A). Furthermore, A remains the sole shareholder of X at the time of the distribution(s) described.

(1) ***Example 1: Historical AE&P is zero*** —

(i) ***Facts.*** At the beginning of January 1, 2018, X had AAA of $100 and AE&P of $0. During 2018, X had $300 of CE&P and made no distributions. At the beginning of January 1, 2019, X has AAA of $100 and AE&P of $300, and A's adjusted basis in its share of X stock is $460. During 2019, the only distribution that X makes is a $60 distribution of money to A on December 27. X's CE&P during 2019 is $150, without diminution by reason of any distributions made during the taxable year.

(ii) ***Analysis*** —

(A) ***Calculation of AAA ratio and AE&P ratio.*** Pursuant to paragraphs (a)(2)(ix) and (x) of this section, respectively, X's historical AAA and X's historical AE&P are determined as of the beginning of January 1, 2018, the beginning of the day on which the revocation of X's election under section 1362(a) is effective pursuant to section 1362(d)(1). Accordingly, X's historical AAA is $100 and X's historical AE&P is $0. Therefore, X's AAA ratio is 1 ($100/($100 + $0)), and X's AE&P ratio is zero ($0/($100 + $0)).

(B) ***Characterization of distribution.*** Pursuant to paragraph (a)(2)(xii) of this section, the $60 distribution on December 27, 2019, is a qualified distribution because it is a distribution of money by an ETSC during the ETSC period to which section 301 would apply absent the application of section 1371(f) and this section.

(C) ***Analysis of qualified distribution*** —

(*1*) ***Distribution of AAA.*** Pursuant to paragraph (b)(2)(i) of this section, the portion of the qualified distribution that is sourced from AAA is equal to the lesser of: The product of the qualified distribution and the AAA ratio ($60 × 1, or $60), and X's AAA immediately before the qualified distribution ($100). Therefore, $60 is sourced from AAA. Pursuant to paragraph (b)(2)(ii) of this section, after the distribution, X's AAA is reduced by $60 to $40. Pursuant to paragraph (b)(2)(iii) of this section, A's basis in its X stock is reduced by $60 to $400.

(*2*) ***Distribution of AE&P.*** Pursuant to paragraph (b)(3)(i) of this section, the portion of the distribution that is sourced from AE&P is equal to the lesser of: The product of the qualified distribution and the AE&P ratio ($60 × 0, or $0), and X's AE&P immediately before the qualified distribution ($300). Therefore, $0 is sourced from AE&P.

(2) ***Example 2: Qualified distributions with both historical AAA and historical AE&P*** —

(i) ***Facts.*** At the beginning of January 1, 2018, X had AAA of $200 and AE&P of $100. During 2018, X had $0 of CE&P and made no distributions. At the beginning of January 1, 2019, X has AAA of $200 and AE&P of $100, and A's adjusted basis in its share of X stock is $500. During 2019, X makes a $90 distribution of money on February 9 and a $150 distribution of money on June 5. X's CE&P during 2019 is $500, without diminution by reason of any distributions made during the taxable year.

(ii) *Analysis* —

(A) ***Calculation of AAA ratio and AE&P ratio.*** Pursuant to paragraphs (a)(2)(ix) and (x) of this section, respectively, X's historical AAA and X's historical AE&P are determined as of the beginning of January 1, 2018, the beginning of the day on which the revocation of X's election under section 1362(a) is effective pursuant to section 1362(d)(1). Accordingly, X's historical AAA is $200 and X's historical AE&P is $100. Therefore, X's AAA ratio is 0.67 ($200/($200 + $100)), and X's AE&P ratio is 0.33 ($100/($200 + $100)).

(B) ***Characterization of distributions.*** Pursuant to paragraph (a)(2)(xii) of this section, the $90 distribution on February 9, 2019, and the $150 distribution on June 5, 2019, are both qualified distributions because they are distributions of money by an ETSC during the ETSC period to which section 301 would apply absent the application of section 1371(f) and this section.

(C) *Analysis of qualified distributions* —

(*1*) *February 9, 2019 distribution* —

(*i*) ***Distribution of AAA.*** Pursuant to paragraph (b)(2)(i) of this section, the portion of the qualified distribution that is sourced from AAA is equal to the lesser of: The product of the qualified distribution and the AAA ratio ($90 × 0.67, or $60), and X's AAA immediately before the qualified distribution ($200). Therefore, $60 is sourced from AAA. Pursuant to paragraph (b)(2)(ii) of this section, after the distribution, X's AAA is reduced by $60 to $140. Pursuant to paragraph (b)(2)(iii) of this section, A's basis in its X stock is reduced by $60 to $440.

(*ii*) ***Distribution of AE&P.*** Pursuant to paragraph (b)(3)(i) of this section, the portion of the distribution that is sourced from AE&P is equal to the lesser of: the product of the qualified distribution and the AE&P ratio ($90 × 0.33, or $30), and X's AE&P immediately before the qualified distribution ($100). Therefore, $30 is sourced from AE&P. Pursuant to paragraph (b)(3)(ii) of this section, after the distribution, X's AE&P is reduced by $30 to $70. Pursuant to paragraph (b)(3)(iii) of this section, the $30 distribution is characterized as a dividend.

(*2*) *June 5, 2019 distribution* —

(*i*) ***Distribution of AAA.*** Pursuant to paragraph (b)(2)(i) of this section, the portion of the qualified distribution that is sourced from AAA is equal to the lesser of: The product of the qualified distribution and the AAA ratio ($150 × 0.67, or $100), and X's AAA immediately before the qualified distribution ($140). Therefore, $100 is sourced from AAA. Pursuant to paragraph (b)(2)(ii) of this section, after the distribution, X's AAA is reduced by $100 to $40. Pursuant to paragraph (b)(2)(iii) of this section, A's basis in its X stock is reduced by $100 to $340.

(*ii*) ***Distribution of AE&P.*** Pursuant to paragraph (b)(3)(i) of this section, the portion of the distribution that is sourced from AE&P is equal to the lesser of: The product of the qualified distribution and the AE&P ratio ($150 × 0.33, or $50), and X's AE&P immediately before the qualified distribution ($70). Therefore, $50 is sourced from AE&P. Pursuant to paragraph (b)(3)(ii) of this section, after the distribution, X's AE&P is reduced by $50 to $20. Pursuant to paragraph (b)(3)(iii) of this section, the $50 distribution is characterized as a dividend.

(3) *Example 3: Limitation on amount characterized as AAA* —

(i) ***Facts.*** At the beginning of January 1, 2018, X had AAA of $100 and AE&P of $300. During 2018, X had $280 of CE&P and made no distributions. At the beginning of January 1, 2019, X has AAA of $100 and AE&P of $580, and A's adjusted basis in its share of X stock is $450. During 2019, the only distribution that X makes is a $500 distribution of money to A on October 5. X's CE&P during 2019 is $150, without diminution by reason of any distributions made during the taxable year.

(ii) *Analysis* —

(A) ***Calculation of AAA ratio and AE&P ratio.*** Pursuant to paragraphs (a)(2)(ix) and (x) of this section, respectively, X's historical AAA and X's historical AE&P are determined as of the beginning of January 1, 2018, the beginning of the day on which the revocation of X's election under section 1362(a) is effective pursuant to section 1362(d)(1). Accordingly, X's historical AAA is $100 and X's historical AE&P is $300. Therefore, X's AAA ratio is 0.25 ($100/($100 + $300)), and X's AE&P ratio is 0.75 ($300/($100 + $300)).

(B) ***Characterization of distribution.*** Pursuant to paragraph (a)(2)(xii) of this section, the $500 distribution on October 5, 2019, is a qualified distribution because it is a distribution of money by an ETSC during the ETSC period to which section 301 would apply absent the application of section 1371(f) and this section.

(C) *Analysis of qualified distribution* —

(*1*) ***Distribution of AAA.*** Pursuant to paragraph (b)(2)(i) of this section, the portion of the qualified distribution that is sourced from AAA is equal to the lesser of: The product of the qualified distribution and the AAA ratio ($500 × 0.25, or $125), and X's AAA immediately before the qualified distribution ($100). Therefore, $100 is sourced from AAA. Pursuant to paragraph (b)(2)(ii) of this section, after the distribution, X's AAA is reduced by $100 to $0. Pursuant to paragraph (b)(2)(iii) of this section, A's basis in its X stock is reduced by $100 to $350.

(*2*) ***Distribution of AE&P.*** Pursuant to paragraph (b)(3)(i) of this section, the portion of the distribution that is sourced from AE&P is equal to the lesser of: the product of the qualified distribution and the AE&P ratio ($500 × 0.75, or $375), and X's AE&P immediately before the qualified distribution ($580). Therefore, $375 is sourced from AE&P. Pursuant to paragraph (b)(3)(ii) of this section, after the distribution, X's AE&P is reduced by $375 to $205. Pursuant to paragraph (b)(3)(iii) of this section, the $375 distribution is characterized as a dividend.

(D) ***Effect of qualified distribution on ETSC period.*** Pursuant to paragraph (a)(2)(vii) of this section, X's ETSC period ends because X's AAA balance is zero following the October 5, 2019 distribution.

(E) *Analysis of excess qualified distribution* —

(*1*) ***Amount of excess qualified distribution.*** Pursuant to paragraph (a)(2)(viii) of this section, the amount of the excess qualified distribution is $25, the portion of the qualified distribution ($500) not characterized pursuant to paragraph (b)(2) or (3) of this section ($100 AAA distribution + $375 AE&P distribution).

(2) ***Characterization of excess qualified distribution.*** Paragraph (b)(4) of this section does not apply to the excess qualified distribution because X's AAA balance is zero after the application of paragraph (b)(2)(ii) of this section (see paragraph (d)(3)(ii)(C)(*1*) of this section). Pursuant to paragraph (c) of this section, section 301(c) applies to the excess qualified distribution. Pursuant to sections 301(c)(1) and 316, the $25 excess qualified distribution is sourced from CE&P.

(iii) ***Subsequent contribution.*** The facts are the same as paragraph (d)(3)(i) of this section, except that at the time of the October 5, 2019 distribution, A's adjusted basis in its X stock is $90. Further, on December 27, 2019, A contributes $100 to X in a transaction described in section 351(a). The analysis in paragraph (d)(3)(ii) of this section remains the same, except that, unlike the second to last sentence of paragraph (d)(3)(ii)(C)(*1*) of this section, A's basis in its X stock is reduced by $90 to $0 and pursuant to paragraph (b)(2)(iii) of this section, $10 is treated as gain from the sale or exchange of property. Additionally, as a result of the December 27, 2019 contribution of $100, A's basis in its X stock is increased by $100, so that at the end of 2019, A's basis in its X stock is $100.

(4) ***Example 4: Limitation on the amount characterized as AE&P*** —

(i) ***Facts.*** At the beginning of January 1, 2018, X had AAA of $100 and AE&P of $100. During 2018, X had CE&P of $(75) and made no distributions. At the beginning of January 1, 2019, X has AAA of $100 and AE&P of $25, and A's adjusted basis in its share of X stock is $500. During 2019, the only distributions that X makes are a $100 distribution of money to A on July 9 and a $40 distribution of money to A on September 27. X's CE&P during 2019 is $20, without diminution by reason of any distributions made during the taxable year.

(ii) ***Analysis*** —

(A) ***Calculation of AAA ratio and AE&P ratio.*** Pursuant to paragraphs (a)(2)(ix) and (x) of this section, respectively, X's historical AAA and X's historical AE&P are determined as of the beginning of January 1, 2018, the beginning of the day on which the revocation of X's election under section 1362(a) is effective pursuant to section 1362(d)(1). Accordingly, X's historical AAA is $100 and X's historical AE&P is $100. Therefore, X's AAA ratio is 0.5 ($100/($100 + $100)), and X's AE&P ratio is 0.5 ($100/($100 + $100)).

(B) ***Analysis of July 9, 2019 distribution*** —

(*1*) ***Characterization of distribution.*** Pursuant to paragraph (a)(2)(xii) of this section, the $100 distribution on July 9, 2019, is a qualified distribution because it is a distribution of money by an ETSC during the ETSC period to which section 301 would apply absent the application of section 1371(f) and this section.

(*2*) ***Analysis of qualified distribution*** —

(*i*) ***Distribution of AAA.*** Pursuant to paragraph (b)(2)(i) of this section, the portion of the distribution that is sourced from AAA is equal to the lesser of: The product of the qualified distribution and the AAA ratio ($100 × 0.5, or $50), and X's AAA immediately before the qualified distribution ($100). Therefore, $50 is sourced from AAA. Pursuant to paragraph (b)(2)(ii) of this section, after the distribution, X's AAA is reduced by $50 to $50. Pursuant to paragraph (b)(2)(iii) of this section, A's basis in its X stock is reduced by $50 to $450.

(*ii*) ***Distribution of AE&P.*** Pursuant to paragraph (b)(3)(i) of this section, the portion of the distribution that is sourced from AE&P is equal to the lesser of: The product of the qualified distribution and the AE&P ratio ($100 × 0.5, or $50), and X's AE&P immediately before the qualified distribution ($25). Therefore, $25 is sourced from AE&P. Pursuant to paragraph (b)(3)(ii) of this section, after the distribution, X's AE&P is reduced by $25 to $0. Pursuant to paragraph (b)(3)(iii) of this section, $25 of the distribution is characterized as a dividend.

(*3*) ***Recalculation of AAA and AE&P ratios.*** Pursuant to paragraph (b)(3)(iv) of this section, because the July 9, 2019 distribution caused X's AE&P to be reduced to zero, the AAA ratio is one and the AE&P ratio is zero for all subsequent qualified distributions during the 2019 taxable year and subsequent taxable years of the ETSC period.

(*4*) ***Excess qualified distribution*** —

(*i*) ***Amount of excess qualified distribution.*** Pursuant to paragraph (a)(2)(viii) of this section, the amount of the excess qualified distribution is $25, the amount of the qualified distribution ($100) not characterized pursuant to paragraph (b)(2) or (3) of this section ($50 AAA distribution + $25 AE&P distribution).

(*ii*) ***Characterization of excess qualified distribution as a separate qualified distribution.*** Pursuant to paragraph (b)(4) of this section, because X has AAA remaining after characterizing the qualified distribution (*see* paragraph (d)(4)(ii)(B)(*2*)(*i*) of this section), the $25 excess qualified distribution is treated as a separate qualified distribution and is analyzed pursuant to paragraph (b) of this section.

(iii) *Analysis of excess qualified distribution that is treated as a separate qualified distribution.* Pursuant to paragraph (b)(2)(i) of this section, the portion of the distribution that is sourced from AAA is equal to the lesser of: The product of the excess qualified distribution and the AAA ratio ($25 × 1, or $25), and X's AAA immediately before the excess qualified distribution ($50). Therefore, $25 is sourced from AAA. Pursuant to paragraph (b)(2)(ii) of this section, after the distribution, X's AAA is reduced by $25 to $25. Pursuant to paragraph (b)(2)(iii) of this section, A's basis in its X stock is reduced by $25 to $425. Pursuant to paragraph (b)(3)(i) of this section, because X's AE&P ratio is zero, paragraph (b)(3) of this section does not apply.

(C) ***Analysis of September 27, 2019 distribution*** —

(*1*) ***Characterization of the distribution.*** Pursuant to paragraph (a)(2)(xii) of this section, the $40 distribution on September 27, 2019, is a qualified distribution because it is a distribution of money by an ETSC during the ETSC period to which section 301 would apply absent the application of section 1371(f) and this section.

(*2*) ***Analysis of qualified distribution*** —

(*i*) ***Distribution of AAA.*** Pursuant to paragraph (b)(2)(i) of this section, the portion of the distribution that is sourced from AAA is equal to the lesser of: The product of the qualified distribution and the AAA ratio ($40 × 1, or $40), and X's AAA immediately before the qualified distribution ($25) (*see* paragraph (d)(4)(ii)(B)(*4*)(*iii*) of this section). Therefore, $25 is sourced from AAA.

Pursuant to paragraph (b)(2)(ii) of this section, after the distribution, X's AAA is reduced by $25 to $0. Pursuant to paragraph (b)(2)(iii) of this section, A's basis in its X stock is reduced by $25 to $400.

(*ii*) ***Distribution of AE&P.*** Pursuant to paragraph (b)(3)(i) of this section, because X's AE&P ratio is zero, paragraph (b)(3) of this section does not apply.

(*3*) ***Excess qualified distribution*** —

(*i*) ***Amount of excess qualified distribution.*** Pursuant to paragraph (a)(2)(viii) of this section, the amount of the excess qualified distribution is $15, the portion of the qualified distribution ($40) not characterized pursuant to paragraph (b)(2) or (3) of this section ($25 AAA distribution + $0 AE&P distribution).

(*ii*) ***Excess qualified distribution not characterized as a separate qualified distribution.*** Pursuant to paragraph (b)(4) of this section, because X has AAA of $0 after characterizing the qualified distribution (*see* paragraph (d)(4)(ii)(C)(2)(*i*) of this section), the $15 excess qualified distribution is not treated as a separate qualified distribution.

(iii) ***Analysis of excess qualified distribution that is not treated as a separate qualified distribution.*** Pursuant to paragraph (c) of this section, section 301(c) applies to the excess qualified distribution. Pursuant to sections 301(c)(1) and 316, the $15 excess qualified distribution is sourced from CE&P.

(5) ***Example 5: Distributions include non-qualified distributions*** —

(i) ***Facts.*** At the beginning of January 1, 2018, X had AAA of $100 and AE&P of $100. During 2018, X had $0 of CE&P and made no distributions. At the beginning of January 1, 2019, X has AAA of $100 and AE&P of $100, and A's adjusted basis in its X stock is $200. During 2019, X makes a $100 distribution of money on June 14; a $300 distribution of property on November 9; and a $200 distribution of money on December 18. X's CE&P during 2019 is $160, without diminution by reason of any distributions made during the taxable year.

(ii) ***Analysis*** —

(A) ***Calculation of AAA ratio and AE&P ratio.*** Pursuant to paragraphs (a)(2)(ix) and (x) of this section, respectively, X's historical AAA is $100 and X's historical AE&P is $100. Therefore, X's AAA ratio is 0.5 ($100/($100 + $100)), and X's AE&P ratio is 0.5 ($100/($100 + $100)).

(B) ***Characterization of distributions.*** Pursuant to paragraph (a)(2)(xii) of this section, the $100 distribution on June 14, 2019, and the $200 distribution on December 18, 2019, are both qualified distributions because they are distributions of money by an ETSC during the ETSC period to which section 301 would apply absent the application of section 1371(f) and this section. Pursuant to paragraph (a)(2)(xi) of this section, the $300 distribution of property on November 9, 2019, is a non-qualified distribution. Pursuant to paragraph (b)(1) of this section, the rules of paragraph (b)(2) through (b)(4) of this section apply to the qualified distributions before the rules of paragraph (c) of this section apply to the non-qualified distribution and any excess qualified distributions.

(C) ***Analysis of qualified distributions*** —

(*1*) ***June 14, 2019 distribution*** —

(*i*) ***Distribution of AAA.*** Pursuant to paragraph (b)(2)(i) of this section, the portion of the distribution that is sourced from AAA is equal to the lesser of: The product of the qualified distribution and the AAA ratio ($100 × 0.5, or $50), and X's AAA immediately before the qualified distribution ($100). Therefore, $50 is sourced from AAA. Pursuant to paragraph (b)(2)(ii) of this section, after the distribution, X's AAA is reduced by $50 to $50. Pursuant to paragraph (b)(2)(iii) of this section, on June 14, 2019, A's basis in its X stock is reduced by $50 to $150.

(*ii*) ***Distribution of AE&P.*** Pursuant to paragraph (b)(3)(i) of this section, the portion of the distribution that is sourced from AE&P is equal to the lesser of: The product of the qualified distribution and the AE&P ratio ($100 × 0.5, or $50), and X's AE&P immediately before the qualified distribution ($100). Therefore, $50 is sourced from AE&P. Pursuant to paragraph (b)(3)(ii) of this section, after the distribution, X's AE&P is reduced by $50 to $50. Pursuant to paragraph (b)(3)(iii) of this section, the $50 distribution is characterized as a dividend.

(*iii*) ***Amount of excess qualified distribution.*** The amount of the excess qualified distribution is $0, the amount of the qualified distribution ($100) not characterized pursuant to paragraph (b)(2) or (3) of this section ($50 AAA distribution + $50 AE&P distribution).

(*2*) ***December 18, 2019 distribution*** —

(*i*) ***Distribution of AAA.*** Pursuant to paragraph (b)(2)(i) of this section, the portion of the distribution that is sourced from AAA is equal to the lesser of: The product of the qualified distribution and the AAA ratio ($200 × 0.5, or $100), and X's AAA immediately before the qualified distribution ($50). Therefore, $50 is sourced from AAA. Pursuant to paragraph (b)(2)(ii) of this section, after the distribution, X's AAA is reduced by $50 to $0. Pursuant to paragraph (b)(2)(iii) of this section, A must determine its basis as of December 18, 2019, in order to determine the consequences of receiving the $50 AAA distribution. Because the non-qualified distribution on November 9, 2019, which precedes the December 18, 2019 qualified distribution, could have the effect of reducing A's basis, any effect on A's basis from that non-qualified distribution must be analyzed prior to determining the effect of the December 18, 2019 distribution of AAA on A's basis. See paragraphs (d)(5)(ii)(D)(*3*) and (*4*) of this section. Pursuant to paragraph (a)(2)(vii) of this section, X's ETSC period ends because X's AAA balance is zero following the December 18, 2019 distribution.

(*ii*) ***Distribution of AE&P.*** Pursuant to paragraph (b)(3)(i) of this section, the portion of the distribution that is sourced from AE&P is equal to the lesser of: The product of the qualified distribution and the AE&P ratio ($200 × 0.5, or $100), and X's AE&P immediately before the qualified distribution ($50). Therefore, $50 is sourced from AE&P. Pursuant to paragraph (b)(3)(ii) of this section, after the distribution, X's AE&P is reduced by $50 to $0. Pursuant to paragraph (b)(3)(iii) of this section, the $50 distribution is characterized as a dividend.

(*iii*) ***Amount of excess qualified distribution.*** The amount of the excess qualified distribution is $100, the amount of the qualified distribution ($200) not characterized pursuant to paragraph (b)(2) or (3) of this section ($50 AAA distribution + $50 AE&P distribution).

(D) ***Analysis of non-qualified and excess qualified distributions*** —

(*1*) ***In general.*** The $300 non-qualified distribution on November 9, 2019, and the $100 excess qualified distribution on December 18, 2019, are treated in the manner provided in section 301(c).

(*2*) ***Allocation of CE&P.*** Pursuant to section 316 and § 1.316-2, X's CE&P is allocated proportionately among the excess qualified and the non-qualified distributions. Therefore, the portion of X's CE&P that is allocated to the November 9, 2019 distribution and the December 18, 2019 distribution is $120 ($160 CE&P × ($300 distribution/$400 total excess qualified and non-qualified distributions during 2019) and $40 ($160 CE&P × ($100 distribution/$400 total excess qualified and non-qualified distributions during 2019), respectively.

(*3*) ***November 9, 2019 distribution.*** Pursuant to paragraph (d)(5)(ii)(D)(*2*) of this section, $120 of the $300 distribution is characterized as a distribution of CE&P. Pursuant to paragraph (d)(5)(ii)(C)(*2*)(*ii*) of this section, the amount of X's AE&P available to allocate the November 9, 2019 distribution is $0. Therefore, the remaining $180 is characterized pursuant to section 301(c)(2) and (3). Pursuant to paragraph (d)(5)(ii)(C)(*1*)(*i*) of this section, A's basis in its X stock prior to the November 9, 2019 distribution is $150. Therefore, $150 is applied against basis pursuant to section 301(c)(2) (reducing A's basis to $0) and $30 is treated as gain from the sale or exchange of property pursuant to section 301(c)(3).

(*4*) ***December 18, 2019 distribution*** —

(*i*) ***Consequences of AAA distribution.*** As of December 18, 2019, A's basis in its X stock is $0. See paragraph (d)(5)(ii)(D)(*3*) of this section. Pursuant to paragraph (d)(5)(ii)(C)(*2*)(*i*) of this section, $50 of the distribution is characterized as a distribution of AAA. Because the amount of the distribution of AAA ($50) exceeds A's basis in its X stock ($0), pursuant to paragraph (b)(2)(iii) of this section, on December 18, 2019, $50 is treated as gain from the sale or exchange of property.

(*ii*) ***Characterization of excess qualified distribution.*** Pursuant to paragraph (d)(5)(ii)(C)(*2*)(*iii*) of this section, $100 of the December 18, 2019 distribution is an excess qualified distribution. Paragraph (b)(4) of this section does not apply to the excess qualified distribution because X's AAA balance is zero after the application of paragraph (b)(2)(ii) of this section (see paragraph (d)(5)(ii)(C)(*2*)(*i*) of this section. Pursuant to paragraph (c) of this section, section 301(c) applies to the excess qualified distribution. Pursuant to paragraph (d)(5)(ii)(D)(*2*) of this section, $40 of the $100 excess qualified distribution is characterized as a distribution of CE&P. Pursuant to paragraph (d)(5)(ii)(D)(*3*) of this section, X's AE&P as the time of the December 18, 2019 distribution is $0. Therefore, the remaining $60 is characterized pursuant to section 301(c)(2) and (3). Pursuant to paragraph (d)(5)(ii)(D)(*4*)(*i*) of this section, A's basis in its X stock prior to characterization of the excess qualified distribution is $0. Therefore, $60 is treated as gain from the sale or exchange of property pursuant to section 301(c)(3).

(e) ***Applicability date.*** This section applies to taxable years beginning after October 20, 2020. However, a corporation may choose to apply the rules in §§ 1.481-5, 1.1371-1, and 1.1371-2 in their entirety to taxable years beginning on or before October 20, 2020. If a corporation makes the choice described in the previous sentence, all shareholders of the corporation must report consistently, and the corporation must continue to apply the rules in §§ 1.481-5, 1.1371-1, and 1.1371-2 in their entirety for the corporation's subsequent taxable years.

[T.D. 9914, 85 FR 66478, Oct. 20, 2020]

§ 1.1371-2 Impact of Audit PTTP on ETSC Period.

(a) ***Definitions.*** For purposes of this section, the definitions used in § 1.1371-1(a)(2) are applicable. Additionally, the following definitions apply for purposes of this section—

(1) ***Audit PTTP.*** The term *audit PTTP* means a post-termination transition period described in section 1377(b)(1)(B) of the Internal Revenue Code (Code).

(2) ***Initial PTTP.*** The term *initial PTTP* means a post-termination transition period described in section 1377(b)(1)(A).

(3) ***Intervening audit PTTP.*** The term *intervening audit PTTP* means an audit PTTP arising during the ETSC period.

(b) ***In general.*** If an intervening audit PTTP arises, the ETSC period immediately stops. Immediately following the end of the intervening audit PTTP, the ETSC period resumes if the ETSC's AAA balance is greater than zero. Otherwise, any subsequent distributions by the ETSC are treated in the manner provided in section 301(c) of the Code.

(c) ***Examples.*** Paragraphs (c)(1) and (2) of this section (*Examples 1* and *2*) illustrate the rules of this section. For purposes of paragraphs (c)(1) and (2) of this section (*Examples 1* and *2*), X is a calendar year S corporation. A, an individual, purchased all of the outstanding shares of X in a single transaction at the same price per share prior to December 22, 2017, and was the sole shareholder of X at all times. Pursuant to section 1362(d)(1) of the Code and §§ 1.1362-2 and 1.1362-6, X made a valid revocation of its S election on March 15, 2019, that became effective on January 1, 2019. No amount distributed by X is an extraordinary dividend within the meaning of section 1059.

(1) ***Example 1: No ETSC period following initial PTTP*** —

(i) ***Facts.*** At the beginning of January 1, 2019, X had AAA of $49,000 and AE&P of $2,000, and A's adjusted basis in its shares of X stock was $50,000. During 2019, the only distribution that X made was a $49,000 distribution of money to A on March 13, 2019. X's CE&P during 2019 was $0, without regard to any diminution by reason of any distributions made during the taxable year.

(ii) ***Analysis*** —

(A) ***Distribution during initial PTTP.*** Pursuant to sections 1371(e) and 1377(b)(1)(A), the $49,000 distribution of money on March 13, 2019, is characterized as a distribution of AAA because it was made during the initial PTTP.

(B) ***Effect on corporation.*** Pursuant to § 1.1368-2(a)(3)(iii), X's AAA is reduced by $49,000 to $0. Following the initial PTTP, even if X satisfies the requirements of section 481(d)(2) of the Code and § 1.481-5(b) to be an ETSC, X does not have an ETSC period because its AAA balance is zero at the end of its initial PTTP. Therefore, section 1371(f) of the Code and § 1.1371-1 will not apply to any subsequent distributions by X.

(C) ***Effect on shareholder.*** Pursuant to section 1371(e)(1), A reduces its basis in its X stock by $49,000 to $1,000.

(2) ***Example 2: Intervening audit PTTP —***

(i) ***Facts.*** The facts are the same as the facts in paragraph (c)(1) of this section. On May 20, 2020, which is after X's initial PTTP, the IRS begins an audit of X's 2018 return. During the audit it is agreed that X overstated its advertising expense deduction by $10,000. On July 6, 2020, A signs a closing agreement whereby X's overstatement results in an additional tax on A's 2018 individual return. As a result, at the beginning of January 1, 2019, X had AAA of $59,000 ($49,000 + $10,000) and AE&P of $2,000. Additionally, at the beginning of January 1, 2019, A's adjusted basis in its shares of X stock was $60,000 ($50,000 + $10,000). During 2020, the only distribution X makes is a $6,000 distribution of money to A on September 1, 2020. X's CE&P during 2020 was $0, without regard to any diminution by reason of any distributions made during the taxable year.

(ii) ***Analysis —***

(A) ***Analysis of March 13, 2019 distribution.*** The treatment of the March 13, 2019, distribution is the same as described in paragraph (c)(1)(ii)(A) of this section, because the amount of the distribution ($49,000) does not exceed X's AAA balance at the beginning of January 1, 2019 ($59,000), and so the entirety of the $49,000 distribution is properly characterized as a distribution of AAA.

(*1*) ***Effect on corporation.*** As described in paragraph (c)(1)(ii)(B) of this section, X's AAA ($59,000 at the beginning of January 1, 2019) is reduced by $49,000 to $10,000. At the conclusion of X's initial PTTP (ending on December 31, 2019), X's AAA balance is $10,000. Pursuant to § 1.1371-1(a)(2)(vii), X has an ETSC period. Therefore, section 1371(f) and § 1.1371-1 will apply to any subsequent qualified distributions by X.

(*2*) ***Effect on shareholder.*** As described in paragraph (c)(1)(ii)(C) of this section, A reduces its basis in its X stock ($60,000 at the beginning of January 1, 2019) by $49,000 to $11,000.

(B) ***Intervening audit PTTP.*** Pursuant to section 1377(b)(1)(B), X enters an intervening audit PTTP that begins on July 6, 2020, and ends on November 2, 2020. The application of section 1371(f) and § 1.1371-1 to distributions during the intervening audit PTTP is stopped. Instead, sections 1371(e) and 1377(b)(1)(B) and §§ 1.1371-2 and 1.1377-2 apply for the duration of the intervening audit PTTP. During the intervening audit PTTP, the only distribution X made is a $6,000 distribution of money to A on September 1, 2020. Pursuant to sections 1371(e) and 1377(b)(1)(B), the $6,000 distribution is characterized as a distribution of AAA because it was made during the intervening audit PTTP.

(1) ***Effect on corporation.*** Pursuant to § 1.1368-2(a)(3)(iii), X's AAA is reduced by $6,000 to $4,000. Beginning on November 3, 2020, pursuant to § 1.1371-1(a)(2)(vii), X's ETSC period resumes (after the intervening audit PTTP's conclusion) because its AAA balance is greater than zero.

(2) ***Effect on shareholder.*** Pursuant to section 1371(e)(1), A reduces its basis in its X stock by $6,000 to $5,000.

(C) ***ETSC period.*** Beginning on November 3, 2020, X's ETSC period resumes, and distributions of money are subject to section 1371(f) and § 1.1371-1 until X's AAA balance is zero. For purposes of calculating each of X's AAA and AE&P ratios, X's historical AAA is $59,000 (at the beginning of January 1, 2019, which includes the $10,000 increase as a result of the July 6, 2020, closing agreement).

(d) ***Applicability date.*** This section applies to taxable years beginning after October 20, 2020. However, a corporation may choose to apply the rules in §§ 1.481-5, 1.1371-1, and 1.1371-2 in their entirety to taxable years that began on or before October 20, 2020. If a corporation makes the choice described in the previous sentence, all shareholders of the corporation must report consistently, and the corporation must continue to apply the rules in §§ 1.481-5, 1.1371-1, and 1.1371-2 in their entirety for the corporation's subsequent taxable years.

[T.D. 9914, 85 FR 66478, Oct. 20, 2020]

§ 1.1374-0 Table of contents.

This section lists the major paragraph headings for §§ 1.1374-1 through 1.1374-10.

§ 1.1374-1 General rules and definitions.

(a) Computation of tax.

(b) Anti-trafficking rules.

(c) Section 1374 attributes.

(d) Recognition period.

(e) Predecessor corporation.

§ 1.1374-2 Net recognized built-in gain.

(a) In general.

(b) Allocation rule.

(c) Recognized built-in gain carryover.

(d) Accounting methods.

(e) Example.

§ 1.1374-3 Net unrealized built-in gain.

(a) In general.

(b) Example.

§ 1.1374-4 Recognized built-in gain or loss.

(a) Sales and exchanges.

(1) In general.

(2) Oil and gas property.

(3) Examples.

(b) Accrual method rule.

(1) Income items.

(2) Deduction items.

(3) Examples.

(c) Section 267(a)(2) and 404(a)(5) deductions.

(1) Section 267(a)(2).

(2) Section 404(a)(5).

(3) Examples.

(d) Section 481(a) adjustments.

(1) In general.

(2) Examples.

(e) Section 995(b)(2) deemed distributions.

(f) Discharge of indebtedness and bad debts.

(g) Completion of contract.

(h) Installment method.

(1) In general.

(2) Limitation on amount subject to tax.

(3) Rollover rule.

(4) Use of losses and section 1374 attributes.

(5) Examples.

(i) Partnership interests.

(1) In general.

(2) Limitations.

(i) Partnership RBIG.

(ii) Partnership RBIL.

(3) Disposition of partnership interest.

(4) RBIG and RBIL limitations.

(i)-Sale of partnership interest.

(ii) Amounts of limitations.

(5) Small interest exception.

(i) In general.

(ii) Contributed assets.

(iii) Anti-abuse rule.

(6) Section 704(c) gain or loss.

(7) Disposition of distributed partnership asset.

(8) Examples.

§ 1.1374-5 Loss carryforwards.

(a) In general.

(b) Example.

§ 1.1374-6 Credits and credit carryforwards.

(a) In general.

(b) Limitations.

(c) Examples.

§ 1.1374-7 Inventory.

(a) Valuation.

(b) Identity of dispositions.

§ 1.1374-8 Section 1374(d)(8) transactions.

(a) In general.

(b) Effective date of section 1374(d)(8).

(c) Separate determination of tax.

(d) Taxable income limitation.

(e) Examples.

§ 1.1374-9 Anti-stuffing rule.

§ 1.1374-10 Effective date and additional rules.

(a) In general.

(b) Additional rules.

(1) Certain transfers to partnerships.

(2) Certain inventory dispositions.

(3) Certain contributions of built-in loss assets.

(4) Certain installment sales.

(i) In general.

(ii) Examples.

(c) Revocation and re-election of S corporation status.

(1) In general.

(2) Example.

[T.D. 8579, 59 FR 66463, Dec. 27, 1994, as amended by T.D. 9236, 70 FR 75731, Dec. 21, 2005]

§ 1.1374-1 General rules and definitions.

(a) ***Computation of tax.*** The tax imposed on the income of an S corporation by section 1374(a) for any taxable year during the recognition period is computed as follows—

(1) Step One: Determine the net recognized built-in gain of the corporation for the taxable year under section 1374(d)(2) and § 1.1374-2;

(2) Step Two: Reduce the net recognized built-in gain (but not below zero) by any net operating loss and capital loss carryforward allowed under section 1374(b)(2) and § 1.1374-5;

(3) Step Three: Compute a tentative tax by applying the rate of tax determined under section 1374(b)(1) for the taxable year to the amount determined under paragraph (a)(2) of this section;

(4) Step Four: Compute the final tax by reducing the tentative tax (but not below zero) by any credit allowed under section 1374(b)(3) and § 1.1374-6.

(b) ***Anti-trafficking rules.*** If section 382, 383, or 384 would have applied to limit the use of a corporation's recognized built-in loss or section 1374 attributes at the beginning of the first day of the recognition period if the corporation had remained a C corporation, these sections apply to limit their use in determining the S corporation's pre-limitation amount, taxable income limitation, net unrealized built-in gain limitation, deductions against net recognized built-in gain, and credits against the section 1374 tax.

(c) ***Section 1374 attributes.*** Section 1374 attributes are the loss carryforwards allowed under section 1374(b)(2) as a deduction against net recognized built-in gain and the credit and credit carryforwards allowed under section 1374(b)(3) as a credit against the section 1374 tax.

(d) ***Recognition period.*** The recognition period is the 10-year (120-month) period beginning on the first day the corporation is an S corporation or the day an S corporation acquires assets in a section 1374(d)(8) transaction. For example, if the first day of the recognition period is July 14, 1996, the last day of the recognition period is July 13, 2006. If the recognition period for certain assets ends during an S corporation's taxable year (for example, because the corporation was on a fiscal year as a C corporation and changed to a calendar year as an S corporation or because an S corporation acquired assets in a section 1374(d)(8) transaction during a taxable year), the S corporation must determine its pre-limitation amount (as defined in § 1.1374-2(a)(1)) for the year as if the corporation's books were closed at the end of the recognition period.

(e) ***Predecessor corporation.*** For purposes of section 1374(c)(1), if the basis of an asset of the S corporation is determined (in whole or in part) by reference to the basis of the asset (or any other property) in the hands of another corporation, the other corporation is a predecessor corporation of the S corporation.

[T.D. 8579, 59 FR 66463, Dec. 27, 1994]

§ 1.1374-2 Net recognized built-in gain.

(a) ***In general.*** An S corporation's net recognized built-in gain for any taxable year is the least of—

(1) Its taxable income determined by using all rules applying to C corporations and considering only its recognized built-in gain, recognized built-in loss, and recognized built-in gain carryover (pre-limitation amount);

(2) Its taxable income determined by using all rules applying to C corporations as modified by section 1375(b)(1)(B) (taxable income limitation); and

(3) The amount by which its net unrealized built-in gain exceeds its net recognized built-in gain for all prior taxable years (net unrealized built-in gain limitation).

(b) ***Allocation rule.*** If an S corporation's pre-limitation amount for any taxable year exceeds its net recognized built-in gain for that year, the S corporation's net recognized built-in gain consists of a ratable portion of each item of income, gain, loss, and deduction included in the pre-limitation amount.

(c) ***Recognized built-in gain carryover.*** If an S corporation's net recognized built-in gain for any taxable year is equal to its taxable income limitation, the amount by which its pre-limitation amount exceeds its taxable income limitation is a recognized built-in gain carryover included in its pre-limitation amount for the succeeding taxable year. The recognized built-in gain carryover consists of that portion of each item of income, gain, loss, and deduction not included in the S corporation's net recognized built-in gain for the year the carryover arose, as determined under paragraph (b) of this section.

(d) ***Accounting methods.*** In determining its taxable income for pre-limitation amount and taxable income limitation purposes, a corporation must use the accounting method(s) it uses for tax purposes as an S corporation.

(e) ***Example.*** The rules of this section are illustrated by the following example.

Example: Net recognized built-in gain. X is a calendar year C corporation that elects to become an S corporation on January 1, 1996. X has a net unrealized built-in gain of $50,000 and no net operating loss or capital loss carryforwards. In 1996, X has a pre-limitation amount of $20,000, consisting of ordinary income of $15,000 and capital gain of $5,000, a taxable income limitation of $9,600, and a net unrealized built-in gain limitation of $50,000. Therefore, X's net recognized built-in gain for 1996 is $9,600, because that is the least of the three amounts described in paragraph (a) of this section. Under paragraph (b) of this section, X's net recognized built-in gain consists of recognized built-in ordinary income of $7,200 [$15,000 × ($9,600/$20,000) = $7,200] and recognized built-in capital gain of $2,400 [$5,000 × ($9,600/$20,000) = $2,400]. Under paragraph (c) of this section, X has a recognized built-in gain carryover to 1997 of $10,400 ($20,000−$9,600 = $10,400), consisting of $7,800 ($15,000−$7,200 = $7,800) of recognized built-in ordinary income and $2,600 ($5,000−$2,400 = $2,600) of recognized built-in capital gain.

[T.D. 8579, 59 FR 66463, Dec. 27, 1994]

§ 1.1374-3 Net unrealized built-in gain.

(a) ***In general.*** An S corporation's net unrealized built-in gain is the total of the following—

(1) The amount that would be the amount realized if, at the beginning of the first day of the recognition period, the corporation had remained a C corporation and had sold all its assets at fair market value to an unrelated party that assumed all its liabilities; decreased by

(2) Any liability of the corporation that would be included in the amount realized on the sale referred to in paragraph (a)(1) of this section, but only if the corporation would be allowed a deduction on payment of the liability; decreased by

(3) The aggregate adjusted bases of the corporation's assets at the time of the sale referred to in paragraph (a)(1) of this section; increased or decreased by

(4) The corporation's section 481 adjustments that would be taken into account on the sale referred to in paragraph (a)(1) of this section; and increased by

(5) Any recognized built-in loss that would not be allowed as a deduction under section 382, 383, or 384 on the sale referred to in paragraph (a)(1) of this section.

(b) ***Adjustment to net unrealized built-in gain*** —

(1) ***In general.*** If section 1374(d)(8) applies to an S corporation's acquisition of assets, some or all of the stock of the corporation from which such assets were acquired was taken into account in the computation of the net unrealized built-in gain for a pool of assets of the S corporation, and some or all of such stock is redeemed or canceled in such transaction, then, subject to the limitations of paragraph (b)(2) of this section, such net unrealized built-in gain is adjusted to eliminate any effect that any built-in gain or built-in loss in the redeemed or canceled stock (other than stock with respect to which a loss under section 165 is claimed) had on the initial computation of net unrealized built-in gain for that pool of assets. For purposes of this paragraph, stock described in section 1374(d)(6) shall be treated as taken into account in the computation of the net unrealized built-in gain for a pool of assets of the S corporation.

(2) ***Limitations on adjustment*** —

(i) ***Recognized built-in gain or loss.*** Net unrealized built-in gain for a pool of assets of the S corporation is only adjusted under paragraph (b)(1) of this section to reflect built-in gain or built-in loss in the redeemed or canceled stock that has not resulted in recognized built-in gain or recognized built-in loss during the recognition period.

(ii) ***Anti-duplication rule.*** Paragraph (b)(1) of this section shall not be applied to duplicate an adjustment to the net unrealized built-in gain for a pool of assets made pursuant to paragraph (b)(1) of this section.

(3) ***Effect of adjustment.*** Any adjustment to the net unrealized built-in gain made pursuant to this paragraph (b) only affects computations of the amount subject to tax under section 1374 for taxable years that end on or after the date of the acquisition to which section 1374(d)(8) applies.

(4) ***Pool of assets.*** For purposes of this section, a pool of assets means—

(i) The assets held by the corporation on the first day it became an S corporation, if the corporation was previously a C corporation; or

(ii) The assets the S corporation acquired from a C corporation in a section 1374(d)(8) transaction.

(c) ***Examples.*** The following examples illustrate the rules of this section:

> *Example 1. Computation of net unrealized built-in gain.* (i)(A) X, a calendar year C corporation using the cash method, elects to become an S corporation on January 1, 1996. On December 31, 1995, X has assets

and liabilities as follows:

Assets	FMV	Basis
Factory	$500,000	$900,000
Accounts Receivable	300,000	0
Goodwill	250,000	0
Total	1,050,000	900,000

Liabilities	Amount
Mortgage	$200,000
Accounts Payable	100,000
Total	300,000

(B) Further, X must include a total of $60,000 in taxable income in 1996, 1997, and 1998 under section 481(a).

(ii) If, on December 31, 1995, X sold all its assets to a third party that assumed all its liabilities, X's amount realized would be $1,050,000 ($750,000 cash received + $300,000 liabilities assumed = $1,050,000). Thus, X's net unrealized built-in gain is determined as follows:

Amount realized	$1,050,000
Deduction allowed (A/P)	(100,000)
Basis of X's assets	(900,000)
Section 481 adjustments	60,000
Net unrealized built-in gain	110,000

Example 2. Adjustment to net unrealized built-in gain for built-in gain in eliminated C corporation stock.

(i) X, a calendar year C corporation, elects to become an S corporation effective January 1, 2005. On that date, X's assets (the first pool of assets) have a net unrealized built-in gain of $15,000. Among the assets in the first pool of assets is all of the outstanding stock of Y, a C corporation, with a fair market value of $33,000 and an adjusted basis of $18,000. On March 1, 2009, X sells an asset that it owned on January 1, 2005, and as a result has $10,000 of recognized built-in gain. X has had no other recognized built-in gain or built-in loss. X's taxable income limitation for 2009 is $50,000. Effective June 1, 2009, X elects under section 1361 to treat Y as a qualified subchapter S subsidiary (QSub). The election is treated as a transfer

of Y's assets to X in a liquidation to which sections 332 and 337(a) apply.
(ii) Under paragraph (b) of this section, the net unrealized built in-gain of the first pool of assets is adjusted to account for the elimination of the Y stock in the liquidation. The net unrealized built-in gain of the first pool of assets, therefore, is decreased by $15,000, the amount by which the fair market value of the Y stock exceeded its adjusted basis as of January 1, 2005. Accordingly, for taxable years ending after June 1, 2009, the net unrealized built-in gain of the first pool of assets is $0.

(iii) Under § 1.1374-2(a), X's net recognized built-in gain for any taxable year equals the least of X's pre-limitation amount, taxable income limitation, and net unrealized built-in gain limitation. In 2009, X's pre-limitation amount is $10,000, X's taxable income limitation is $50,000, and X's net unrealized built-in gain limitation is $0. Because the net unrealized built-in gain of the first pool of assets has been adjusted to $0, despite the $10,000 of recognized built-in gain in 2009, X has $0 net recognized built-in gain for the taxable year ending on December 31, 2009.

Example 3. Adjustment to net unrealized built-in gain for built-in loss in eliminated C corporation stock. (i) X, a calendar year C corporation, elects to become an S corporation effective January 1, 2005. On that date, X's assets (the first pool of assets) have a net unrealized built-in gain of negative $5,000. Among the assets in the first pool of assets is 10 percent of the outstanding stock of Y, a C corporation, with a fair market value of $18,000 and an adjusted basis of $33,000. On March 1, 2009, X sells an asset that it owned on January 1, 2005, resulting in $8,000 of recognized built-in gain. X has had no other recognized built-in gains or built-in losses. X's taxable income limitation for 2009 is $50,000. On June 1, 2009, Y transfers its assets to X in a reorganization under section 368(a)(1)(C).
(ii) Under paragraph (b) of this section, the net unrealized built in-gain of the first pool of assets is adjusted to account for the elimination of the Y stock in the reorganization. The net unrealized built-in gain of the first pool of assets, therefore, is increased by $15,000, the amount by which the adjusted basis of the Y stock exceeded its fair market value as of January 1, 2005. Accordingly, for taxable years ending after June 1, 2009, the net unrealized built-in gain of the first pool of assets is $10,000.

(iii) Under § 1.1374-2(a), X's net recognized built-in gain for any taxable year equals the least of X's pre-limitation amount, taxable income limitation, and net unrealized built-in gain limitation. In 2009, X's pre-limitation amount is $8,000 and X's taxable income limitation is $50,000. The net unrealized built-in gain of the first pool of assets has been adjusted to $10,000, so X's net unrealized built-in gain limitation is $10,000. X, therefore, has $8,000 net recognized built-in gain for the taxable year ending on December 31, 2009. X's net unrealized built-in gain limitation for 2010 is $2,000.

Example 4. Adjustment to net unrealized built-in gain in case of prior gain recognition. (i) X, a calendar year C corporation, elects to become an S corporation effective January 1, 2005. On that date, X's assets (the first pool of assets) have a net unrealized built-in gain of $30,000. Among the assets in the first pool of assets is all of the outstanding stock of Y, a C corporation, with a fair market value of $45,000 and an adjusted basis of $10,000. Y has no current or accumulated earnings and profits. On April 1, 2007, Y distributes $18,000 to X, $8,000 of which is treated as gain to X from the sale or exchange of property

under section 301(c)(3). That $8,000 is recognized built-in gain to X under section 1374(d)(3), and results in $8,000 of net recognized built-in gain to X for 2007. X's net unrealized built-in gain limitation for 2008 is $22,000. On June 1, 2009, Y transfers its assets to X in a liquidation to which sections 332 and 337(a) apply.

(ii) Under paragraph (b) of this section, the net unrealized built in-gain of the first pool of assets is adjusted to account for the elimination of the Y stock in the liquidation. The net unrealized built-in gain of that pool of assets, however, can only be adjusted to reflect the amount of built-in gain that was inherent in the Y stock on January 1, 2005 that has not resulted in recognized built-in gain during the recognition period. In this case, therefore, the net unrealized built-in gain of the first pool of assets cannot be reduced by more than $27,000 ($35,000, the amount by which the fair market value of the Y stock exceeded its adjusted basis as of January 1, 2005, minus $8,000, the recognized built-in gain with respect to the stock during the recognition period). Accordingly, for taxable years ending after June 1, 2009, the net unrealized built-in gain of the first pool of assets is $3,000. The net unrealized built-in gain limitation for 2009 is $0.

[T.D. 8579, 59 FR 66464, Dec. 27, 1994, as amended by T.D. 9180, 70 FR 8728, Feb. 23, 2005]

§ 1.1374-4 Recognized built-in gain or loss.

(a) ***Sales and exchanges*** —

(1) ***In general.*** Section 1374(d)(3) or 1374(d)(4) applies to any gain or loss recognized during the recognition period in a transaction treated as a sale or exchange for Federal income tax purposes.

(2) ***Oil and gas property.*** For purposes of paragraph (a)(1) of this section, an S corporation's adjusted basis in oil and gas property equals the sum of the shareholders' adjusted bases in the property as determined in section 613A(c)(11)(B).

(3) ***Examples.*** The rules of this paragraph (a) are illustrated by the following examples.

Example 1. Production and sale of oil. X is a C corporation that purchased a working interest in an oil and gas property for $100,000 on July 1, 1993. X elects to become an S corporation effective January 1, 1996. On that date, the working interest has a fair market value of $250,000 and an adjusted basis of $50,000, but no oil has as yet been extracted. In 1996, X begins production of the working interest, sells oil that it has produced to a refinery for $75,000, and includes that amount in gross income. Under paragraph (a)(1) of this section, the $75,000 is not recognized built-in gain because as of the beginning of the recognition period X held only a working interest in the oil and gas property (since the oil had not yet been extracted from the ground), and not the oil itself.

Example 2. Sale of oil and gas property. Y is a C corporation that elects to become an S corporation effective January 1, 1996. Y has two shareholders, A and B. A and B each own 50 percent of Y's stock. In addition, Y owns a royalty interest in an oil and gas property with a fair market value of $300,000 and an adjusted basis of $200,000. Under section 613A(c)(11)(B), Y's $200,000 adjusted basis in the royalty interest is allocated $100,000 to A and $100,000 to B. During 1996, A and B take depletion deductions with respect to the royalty interest of $10,000 and $15,000, respectively. As of January 1, 1997, A and B have a basis in the royalty interest of $90,000 and

$85,000, respectively. On January 1, 1997, Y sells the royalty interest for $250,000. Under paragraph (a)(1) of this section, Y has gain recognized and recognized built-in gain of $75,000 ($250,000−($90,000 + $85,000) = $75,000) on the sale.

(b) *Accrual method rule* —

(1) ***Income items.*** Except as otherwise provided in this section, any item of income properly taken into account during the recognition period is recognized built-in gain if the item would have been properly included in gross income before the beginning of the recognition period by an accrual method taxpayer (disregarding any method of accounting for which an election by the taxpayer must be made unless the taxpayer actually used the method when it was a C corporation).

(2) ***Deduction items.*** Except as otherwise provided in this section, any item of deduction properly taken into account during the recognition period is recognized built-in loss if the item would have been properly allowed as a deduction against gross income before the beginning of the recognition period to an accrual method taxpayer (disregarding any method of accounting for which an election by the taxpayer must be made unless the taxpayer actually used the method when it was a C corporation). In determining whether an item would have been properly allowed as a deduction against gross income by an accrual method taxpayer for purposes of this paragraph, section 461(h)(2)(C) and § 1.461-4(g) (relating to liabilities for tort, worker's compensation, breach of contract, violation of law, rebates, refunds, awards, prizes, jackpots, insurance contracts, warranty contracts, service contracts, taxes, and other liabilities) do not apply.

(3) ***Examples.*** The rules of this paragraph (b) are illustrated by the following examples.

Example 1. Accounts receivable. X is a C corporation using the cash method that elects to become an S corporation effective January 1, 1996. On January 1, 1996, X has $50,000 of accounts receivable for services rendered before that date. On that date, the accounts receivable have a fair market value of $40,000 and an adjusted basis of $0. In 1996, X collects $50,000 on the accounts receivable and includes that amount in gross income. Under paragraph (b)(1) of this section, the $50,000 included in gross income in 1996 is recognized built-in gain because it would have been included in gross income before the beginning of the recognition period if X had been an accrual method taxpayer. However, if X instead disposes of the accounts receivable for $45,000 on July 1, 1996, in a transaction treated as a sale or exchange for Federal income tax purposes, X would have recognized built-in gain of $40,000 on the disposition.

Example 2. Contingent liability. Y is a C corporation using the cash method that elects to become an S corporation effective January 1, 1996. In 1995, a lawsuit was filed against Y claiming $1,000,000 in damages. In 1996, Y loses the lawsuit, pays a $500,000 judgment, and properly claims a deduction for that amount. Under paragraph (b)(2) of this section, the $500,000 deduction allowed in 1996 is not recognized built-in loss because it would not have been allowed as a deduction against gross income before the beginning of the recognition period if Y had been an accrual method taxpayer (even disregarding section 461(h)(2)(C) and § 1.461-4(g)).

Example 3. Deferred payment liabilities. X is a C corporation using the cash method that elects to become an S corporation on January 1, 1996. In 1995, X lost a lawsuit and became obligated to pay $150,000 in damages. Under section 461(h)(2)(C), this amount is not allowed as a deduction until X makes payment. In 1996, X makes payment and properly claims a deduction for the amount of the payment. Under paragraph (b)(2) of this section, the $150,000 deduction

allowed in 1996 is recognized built-in loss because it would have been allowed as a deduction against gross income before the beginning of the recognition period if X had been an accrual method taxpayer (disregarding section 461(h)(2)(C) and § 1.461-4(g)).

Example 4. Deferred prepayment income. Y is a C corporation using an accrual method that elects to become an S corporation effective January 1, 1996. In 1995, Y received $2,500 for services to be rendered in 1996, and properly elected to include the $2,500 in gross income in 1996 under Rev. Proc. 71-21, 1971-2 C.B. 549 (see § 601.601(d)(2)(ii)(*b*) of this chapter). Under paragraph (b)(1) of this section, the $2,500 included in gross income in 1996 is not recognized built-in gain because it would not have been included in gross income before the beginning of the recognition period by an accrual method taxpayer using the method that Y actually used before the beginning of the recognition period.

Example 5. Change in method. X is a C corporation using an accrual method that elects to become an S corporation effective January 1, 1996. In 1995, X received $5,000 for services to be rendered in 1996, and properly included the $5,000 in gross income. In 1996, X properly elects to include the $5,000 in gross income in 1996 under Rev. Proc. 71-21, 1971-2 C.B. 549 (see § 601.601(d)(2)(ii)(*b*) of this chapter). As a result of the change in method of accounting, X has a $5,000 negative section 481(a) adjustment. Under paragraph (b)(1) of this section, the $5,000 included in gross income in 1996 is recognized built-in gain because it would have been included in gross income before the beginning of the recognition period by an accrual method taxpayer using the method that X actually used before the beginning of the recognition period. In addition, the $5,000 negative section 481(a) adjustment is recognized built-in loss because it relates to an item (the $5,000 X received for services in 1995) attributable to periods before the beginning of the recognition period under the principles for determining recognized built-in gain or loss in this section. See paragraph (d) of this section for rules regarding section 481(a) adjustments.

(c) ***Section 267(a)(2) and 404(a)(5) deductions*** —

(1) ***Section 267(a)(2).*** Notwithstanding paragraph (b)(2) of this section, any amount properly deducted in the recognition period under section 267(a)(2), relating to payments to related parties, is recognized built-in loss to the extent—

(i) All events have occurred that establish the fact of the liability to pay the amount, and the exact amount of the liability can be determined, as of the beginning of the recognition period; and

(ii) The amount is paid—

(A) In the first two and one-half months of the recognition period; or

(B) To a related party owning, under the attribution rules of section 267, less than 5 percent, by voting power and value, of the corporation's stock, both as of the beginning of the recognition period and when the amount is paid.

(2) ***Section 404(a)(5).*** Notwithstanding paragraph (b)(2) of this section, any amount properly deducted in the recognition period under section 404(a)(5), relating to payments for deferred compensation, is recognized built-in loss to the extent—

(i) All events have occurred that establish the fact of the liability to pay the amount, and the exact amount of the liability can be determined, as of the beginning of the recognition period; and

(ii) The amount is not paid to a related party to which section 267(a)(2) applies.

(3) ***Examples.*** The rules of this paragraph (c) are illustrated by the following examples.

Example 1. Fixed annuity. X is a C corporation that elects to become an S corporation effective January 1, 1996. On December 31, 1995, A is age 60, has provided services to X as an employee for 20 years, and is a vested participant in X's unfunded nonqualified retirement plan. Under the plan, A receives $1,000 per month upon retirement until death. The plan provides no additional benefits. A retires on December 31, 1997, after working for X for 22 years. A at no time is a shareholder of X. X's deductions under section 404(a)(5) in the recognition period on paying A the $1,000 per month are recognized built-in loss because all events have occurred that establish the fact of the liability to pay the amount, and the exact amount of the liability can be determined, as of the beginning of the recognition period.

Example 2. Increase in annuity for working beyond 20 years. The facts are the same as *Example 1,* except that under the plan A receives $1,000 per month, plus $100 per month for each year A works for X beyond 20 years, upon retirement until death. X's deductions on paying A the $1,000 per month are recognized built-in loss. However, X's deductions on paying A the $200 per month for the two years A worked for X beyond 20 years are not recognized built-in loss because all events have not occurred that establish the fact of the liability to pay the amount, and the exact amount of the liability cannot be determined, as of the beginning of the recognition period.

Example 3. Cost of living adjustment. The facts are the same as *Example 1,* except that under the plan A receives $1,000 per month, plus annual cost of living adjustments, upon retirement until death. X's deductions under section 404(a)(5) on paying A the $1,000 per month are recognized built-in loss. However, X's deductions under section 404(a)(5) on paying A the annual cost of living adjustment are not recognized built-in loss because all events have not occurred that establish the fact of the liability to pay the amount, and the exact amount of the liability cannot be determined, as of the beginning of the recognition period.

(d) ***Section 481(a) adjustments*** —

(1) ***In general.*** Any section 481(a) adjustment taken into account in the recognition period is recognized built-in gain or loss to the extent the adjustment relates to items attributable to periods before the beginning of the recognition period under the principles for determining recognized built-in gain or loss in this section. The principles for determining recognized built-in gain or loss in this section include, for example, the accrual method rule under paragraph (b) of this section.

(2) ***Examples.*** The rules of this paragraph (d) are illustrated by the following examples.

Example 1. Omitted item attributable to prerecognition period. X is a C corporation that elects to become an S corporation effective January 1, 1996. X improperly capitalizes repair costs and recovers the costs through depreciation of the related assets. In 1999, X properly changes to deducting repair costs as they are incurred. Under section 481(a), the basis of the related assets are reduced by an amount equal to the excess of the repair costs incurred before the year of change over the repair costs recovered through depreciation before the year of change. In addition, X has a negative section 481(a) adjustment equal to the basis reduction. Under paragraph (d)(1) of this section, the portion of X's negative section 481(a) adjustment relating to the repair costs incurred before the recognition period is recognized built-in loss because those repair costs are items attributable to periods before the beginning of the recognition period under the principles for determining recognized built-in gain or loss in this section.

Example 2. Duplicated item attributable to prerecognition period. Y is a C corporation that elects to become an S corporation effective January 1, 1996. Y improperly uses an accrual method without regard to the economic performance rules of section 461(h) to account for worker's compensation claims. As a result, Y takes deductions when claims are filed. In 1999, Y properly changes to an accrual method with regard to the economic performance rules under section 461(h)(2)(C) for worker's compensation claims. As a result, Y takes deductions when claims are paid. The positive section 481(a) adjustment resulting from the change is equal to the amount of claims filed, but unpaid, before the year of change. Under paragraph (b)(2) of this section, the deduction allowed in the recognition period for claims filed, but unpaid, before the recognition period is recognized built-in loss because a deduction was allowed for those claims before the recognition period under an accrual method without regard to section 461(h)(2)(C). Under paragraph (d)(1) of this section, the portion of Y's positive section 481(a) adjustment relating to claims filed, but unpaid, before the recognition period is recognized built-in gain because those claims are items attributable to periods before the beginning of the recognition period under the principles for determining recognized built-in gain or loss in this section.

(e) ***Section 995(b)(2) deemed distributions.*** Any item of income properly taken into account during the recognition period under section 995(b)(2) is recognized built-in gain if the item results from a DISC termination or disqualification occurring before the beginning of the recognition period.

(f) ***Discharge of indebtedness and bad debts.*** Any item of income or deduction properly taken into account during the first year of the recognition period as discharge of indebtedness income under section 61(a)(12) or as a bad debt deduction under section 166 is recognized built-in gain or loss if the item arises from a debt owed by or to an S corporation at the beginning of the recognition period.

(g) ***Completion of contract.*** Any item of income properly taken into account during the recognition period under the completed contract method (as described in § 1.460-4(d)) where the corporation began performance of the contract before the beginning of the recognition period is recognized built-in gain if the item would have been included in gross income before the beginning of the recognition period under the percentage of completion method (as described in § 1.460-4(b)). Any similar item of deduction is recognized built-in loss if the item would have been allowed as a deduction against gross income before the beginning of the recognition period under the percentage of completion method.

(h) ***Installment method*** —

(1) ***In general.*** If a corporation sells an asset before or during the recognition period and reports the income from the sale using the installment method under section 453 during or after the recognition period, that income is subject to tax under section 1374.

(2) ***Limitation on amount subject to tax.*** For purposes of paragraph (h)(1) of this section, the taxable income limitation under § 1.1374-2(a)(2) is equal to the amount by which the S corporation's net recognized built-in gain would have been increased from the year of the sale to the earlier of the year the income is reported under the installment method or the last year of the recognition period, assuming all income from the sale had been reported in the year of the sale and all provisions of section 1374 applied. For purposes of the preceding sentence, if the corporation sells the asset before the recognition period, the income from the sale that is not reported before the recognition period is treated as having been reported in the first year of the recognition period.

(3) ***Rollover rule.*** If the limitation in paragraph (h)(2) of this section applies, the excess of the amount reported under the installment method over the amount subject to tax under the limitation is treated as if it were reported in the succeeding taxable year(s), but only for succeeding taxable year(s) in the

recognition period. The amount reported in the succeeding taxable year(s) under the preceding sentence is reduced to the extent that the amount not subject to tax under the limitation in paragraph (h)(2) of this section was not subject to tax because the S corporation had an excess of recognized built-in loss over recognized built-in gain in the taxable year of the sale and succeeding taxable year(s) in the recognition period.

(4) ***Use of losses and section 1374 attributes.*** If income is reported under the installment method by an S corporation for a taxable year after the recognition period and the income is subject to tax under paragraph (h)(1) of this section, the S corporation's section 1374 attributes may be used to the extent their use is allowed under all applicable provisions of the Code in determining the section 1374 tax. However, the S corporation's loss recognized for a taxable year after the recognition period that would have been recognized built-in loss if it had been recognized in the recognition period may not be used in determining the section 1374 tax.

(5) ***Examples.*** The rules of this paragraph (h) are illustrated by the following examples.

Example 1. Rollover rule. X is a C corporation that elects to become an S corporation effective January 1, 1996. On that date, X sells Blackacre with a basis of $0 and a value of $100,000 in exchange for a $100,000 note bearing a market rate of interest payable on January 1, 2001. X does not make the election under section 453(d) and, therefore, reports the $100,000 gain using the installment method under section 453. In the year 2001, X has income of $100,000 on collecting the note, unexpired C year attributes of $0, recognized built-in loss of $0, current losses of $100,000, and taxable income of $0. If X had reported the $100,000 gain in 1996, X's net recognized built-in gain from 1996 through 2001 would have been $75,000 greater than otherwise. Under paragraph (h) of this section, X has $75,000 net recognized built-in gain subject to tax under section 1374. X also must treat the $25,000 excess of the amount reported, $100,000, over the amount subject to tax, $75,000, as income reported under the installment method in the succeeding taxable year(s) in the recognition period, except to the extent X establishes that the $25,000 was not subject to tax under section 1374 in the year 2001 because X had an excess of recognized built-in loss over recognized built-in gain in the taxable year of the sale and succeeding taxable year(s) in the recognition period.

Example 2. Use of losses. Y is a C corporation that elects to become an S corporation effective January 1, 1996. On that date, Y sells Whiteacre with a basis of $0 and a value of $250,000 in exchange for a $250,000 note bearing a market rate of interest payable on January 1, 2006. Y does not make the election under section 453(d) and, therefore, reports the $250,000 gain using the installment method under section 453. In the year 2006, Y has income of $250,000 on collecting the note, unexpired C year attributes of $0, loss of $100,000 that would have been recognized built-in loss if it had been recognized in the recognition period, current losses of $150,000, and taxable income of $0. If Y had reported the $250,000 gain in 1996, X's net recognized built-in gain from 1996 through 2005 (that is, during the recognition period) would have been $225,000 greater than otherwise. Under paragraph (h) of this section, X has $225,000 net recognized built-in gain subject to tax under section 1374.

Example 3. Use of section 1374 attribute. Z is a C corporation that elects to become an S corporation effective January 1, 1996. On that date, Z sells Greenacre with a basis of $0 and a value of $500,000 in exchange for a $500,000 note bearing a market rate of interest payable on January 1, 2011. Z does not make the election under section 453(d) and, therefore, reports the $500,000 gain using the installment method under section 453. In the year 2011, Z has income of $500,000 on collecting the note, loss of $0 that would have been recognized built-in loss if it

had been recognized in the recognition period, current losses of $0, taxable income of $500,000, and a minimum tax credit of $60,000 arising in 1995. None of Z's minimum tax credit is limited under sections 53(c) or 383. If Z had reported the $500,000 gain in 1996, Z's net recognized built-in gain from 1996 through 2005 (that is, during the recognition period) would have been $350,000 greater than otherwise. Under paragraph (h) of this section, Z has $350,000 net recognized built-in gain subject to tax under section 1374, a tentative section 1374 tax of $122,500 ($350,000 × .35 = $122,500), and a section 1374 tax after using its minimum tax credit arising in 1995 of $62,250 ($122,500 − $60,000 = $62,250).

(i) *Partnership interests* —

(1) ***In general.*** If an S corporation owns a partnership interest at the beginning of the recognition period or transfers property to a partnership in a transaction to which section 1374(d)(6) applies during the recognition period, the S corporation determines the effect on net recognized built-in gain from its distributive share of partnership items as follows—

(i) Step One: Apply the rules of section 1374(d) to the S corporation's distributive share of partnership items of income, gain, loss, or deduction included in income or allowed as a deduction under the rules of subchapter K to determine the extent to which it would have been treated as recognized built-in gain or loss if the partnership items had originated in and been taken into account directly by the S corporation (partnership 1374 items);

(ii) Step Two: Determine the S corporation's net recognized built-in gain without partnership 1374 items;

(iii) Step Three: Determine the S corporation's net recognized built-in gain with partnership 1374 items; and

(iv) Step Four: If the amount computed under Step Three (paragraph (i)(1)(iii) of this section) exceeds the amount computed under Step Two (paragraph (i)(1)(ii) of this section), the excess (as limited by paragraph (i)(2)(i) of this section) is the S corporation's partnership RBIG, and the S corporation's net recognized built-in gain is the sum of the amount computed under Step Two (paragraph (i)(1)(ii) of this section) plus the partnership RBIG. If the amount computed under Step Two (paragraph (i)(1)(ii) of this section) exceeds the amount computed under Step Three (paragraph (i)(1)(iii) of this section), the excess (as limited by paragraph (i)(2)(ii) of this section) is the S corporation's partnership RBIL, and the S corporation's net recognized built-in gain is the remainder of the amount computed under Step Two (paragraph (i)(1)(ii) of this section) after subtracting the partnership RBIL.

(2) *Limitations* —

(i) ***Partnership RBIG.*** An S corporation's partnership RBIG for any taxable year may not exceed the excess (if any) of the S corporation's RBIG limitation over its partnership RBIG for prior taxable years. The preceding sentence does not apply if a corporation forms or avails of a partnership with a principal purpose of avoiding the tax imposed under section 1374.

(ii) ***Partnership RBIL.*** An S corporation's partnership RBIL for any taxable year may not exceed the excess (if any) of the S corporation's RBIL limitation over its partnership RBIL for prior taxable years.

(3) ***Disposition of partnership interest.*** If an S corporation disposes of its partnership interest, the amount that may be treated as recognized built-in gain may not exceed the excess (if any) of the S corporation's RBIG limitation over its partnership RBIG during the recognition period. Similarly, the amount that may be treated as recognized built-in loss may not exceed the excess (if any) of the S corporation's RBIL limitation over its partnership RBIL during the recognition period.

(4) ***RBIG and RBIL limitations*** —

(i) ***Sale of partnership interest.*** An S corporation's RBIG or RBIL limitation is the total of the following—

(A) The amount that would be the amount realized if, at the beginning of the first day of the recognition period, the corporation had remained a C corporation and had sold its partnership interest (and any assets the corporation contributed to the partnership during the recognition period) at fair market value to an unrelated party; decreased by

(B) The corporation's adjusted basis in the partnership interest (and any assets the corporation contributed to the partnership during the recognition period) at the time of the sale referred to in paragraph (i)(4)(i)(A) of this section; and increased or decreased by

(C) The corporation's allocable share of the partnership's section 481(a) adjustments at the time of the sale referred to in paragraph (i)(4)(i)(A) of this section.

(ii) ***Amounts of limitations.*** If the result in paragraph (i)(4)(i) of this section is a positive amount, the S corporation has a RBIG limitation equal to that amount and a RBIL limitation of $0, but if the result in paragraph (i)(4)(i) of this section is a negative amount, the S corporation has a RBIL limitation equal to that amount and a RBIG limitation of $0.

(5) ***Small interest exception*** —

(i) ***In general.*** Paragraph (i)(1) of this section does not apply to a taxable year in the recognition period if the S corporation's partnership interest represents less than 10 percent of the partnership's capital and profits at all times during the taxable year and prior taxable years in the recognition period, and the fair market value of the S corporation's partnership interest as of the beginning of the recognition period is less than $100,000.

(ii) ***Contributed assets.*** For purposes of paragraph (i)(5)(i) of this section, if the S corporation contributes any assets to the partnership during the recognition period and the S corporation held the assets as of the beginning of the recognition period, the fair market value of the S corporation's partnership interest as of the beginning of the recognition period is determined as if the assets were contributed to the partnership before the beginning of the recognition period (using the fair market value of each contributed asset as of the beginning of the recognition period). The contribution does not affect whether paragraph (i)(5)(i) of this section applies for taxable years in the recognition period before the taxable year in which the contribution was made.

(iii) ***Anti-abuse rule.*** Paragraph (i)(5)(i) of this section does not apply if a corporation forms or avails of a partnership with a principal purpose of avoiding the tax imposed under section 1374.

(6) ***Section 704(c) gain or loss.*** Solely for purposes of section 1374, an S corporation's section 704(c) gain or loss amount with respect to any asset is not reduced during the recognition period, except for amounts treated as recognized built-in gain or loss with respect to that asset under this paragraph.

(7) ***Disposition of distributed partnership asset.*** If on the first day of the recognition period an S corporation holds an interest in a partnership that holds an asset and during the recognition period the partnership distributes the asset to the S corporation that thereafter disposes of the asset, the asset is treated as having been held by the S corporation on the first day of the recognition period and as having the fair market value and adjusted basis in the hands of the S corporation that it had in the hands of the partnership on that day.

(8) ***Examples.*** The rules of this paragraph (i) are illustrated by the following examples.

Example 1. Pre-conversion partnership interest. X is a C corporation that elects to become an S corporation on January 1, 1996. On that date, X owns a 50 percent interest in partnership P and P owns (among other assets) Blackacre with a basis of $25,000 and a value of $45,000. In 1996, P buys Whiteacre for $50,000. In 1999, P sells Blackacre for $55,000 and recognizes a gain of $30,000 of which $15,000 is included in X's distributive share. P also sells Whiteacre in 1999 for $42,000 and recognizes a loss of $8,000 of which $4,000 is included in X's distributive share. Under this paragraph and section 1374(d)(3), X's $15,000 gain is presumed to be recognized built-in gain and thus treated as a partnership 1374 item, but this presumption is rebutted if X establishes that P's gain would have been only $20,000 ($45,000−$25,000 = $20,000) if Blackacre had been sold on the first day of the recognition period. In such a case, only X's distributive share of the $20,000 built-in gain, $10,000, would be treated as a partnership 1374 item. Under this paragraph and section 1374(d)(4), X's $4,000 loss is not treated as a partnership 1374 item because P did not hold Whiteacre on the first day of the recognition period.

Example 2. Post-conversion contribution. Y is a C corporation that elects to become an S corporation on January 1, 1996. On that date, Y owns (among other assets) Blackacre with a basis of $100,000 and a value of $200,000. On January 1, 1998, when Blackacre has a basis of $100,000 and a value of $200,000, Y contributes Blackacre to partnership P for a 50 percent interest in P. On January 1, 2000, P sells Blackacre for $300,000 and recognizes a gain of $200,000 on the sale ($300,000−$100,000 = $200,000). P is allocated $100,000 of the gain under section 704(c), and another $50,000 of the gain for its fifty percent share of the remainder, for a total of $150,000. Under this paragraph and section 1374(d)(3), if Y establishes that P's gain would have been only $100,000 ($200,000−$100,000 = $100,000) if Blackacre had been sold on the first day of the recognition period, Y would treat only $100,000 as a partnership 1374 item.

Example 3. RBIG limitation of $100,000 or $50,000. X is a C corporation that elects to become an S corporation on January 1, 1996. On that date, X owns a 50 percent interest in partnership P with a RBIG limitation of $100,000 and a RBIL limitation of $0. P owns (among other assets) Blackacre with a basis of $50,000 and a value of $200,000. In 1996, P sells Blackacre for $200,000 and recognizes a gain of $150,000 of which $75,000 is included in X's distributive share and treated as a partnership 1374 item. X's net recognized built-in gain for 1996 computed without partnership 1374 items is $35,000 and with partnership 1374 items is $110,000. Thus, X has a partnership RBIG of $75,000 except as limited under paragraph (i)(2)(i) of this section. Because X's RBIG limitation is $100,000, X's partnership RBIG of $75,000 is not limited and X's net recognized built-in gain for the year is $110,000 ($35,000 + $75,000 = $110,000). However, if X had a RBIG limitation of $50,000 instead of $100,000, X's partnership RBIG would be limited to $50,000 under paragraph (i)(2)(i) of this section and X's net recognized built-in gain would be $85,000 ($35,000 + $50,000 = $85,000).

Example 4. RBIL limitation of $60,000 or $40,000. Y is a C corporation that elects to become an S corporation on January 1, 1996. On that date, Y owns a 50 percent interest in partnership P with a RBIG limitation of $0 and a RBIL limitation of $60,000. P owns (among other assets) Blackacre with a basis of $225,000 and a value of $125,000. In 1996, P sells Blackacre for $125,000 and recognizes a loss of $100,000 of which $50,000 is included in Y's distributive share and treated as a partnership 1374 item. Y's net recognized built-in gain for 1996 computed without partnership 1374 items is $75,000 and with partnership 1374 items is $25,000. Thus, Y has a partnership RBIL of $50,000 for the year except as limited under paragraph (i)(2)(ii) of this section. Because Y's RBIL limitation is $60,000, Y's partnership RBIL for the year is not limited and Y's net recognized built-in gain for the year is $25,000 ($75,000−$50,000 = $25,000). However, if Y had a RBIL limitation of $40,000 instead of $60,000, Y's partnership RBIL would be limited to $40,000 under paragraph (i)(2)(ii) of this section and Y's net recognized built-in gain for the year would be $35,000 ($75,000−$40,000 = $35,000).

Example 5. RBIG limitation of $0. (i) X is a C corporation that elects to become an S corporation on January 1, 1996. X owns a 50 percent interest in partnership P with a RBIG limitation of $0 and a RBIL limitation of $25,000.
(a) In 1996, P's partnership 1374 items are—

(1) Ordinary income of $25,000; and

(2) Capital gain of $75,000.

(b) X itself has—

(1) Recognized built-in ordinary income of $40,000; and

(2) Recognized built-in capital loss of $90,000.

(ii) X's net recognized built-in gain for 1996 computed without partnership 1374 items is $40,000 and with partnership 1374 items is $65,000 ($40,000 + $25,000 = $65,000). Thus, X's partnership RBIG is $25,000 for the year except as limited under paragraph (i)(2)(i) of this section. Because X's RBIG limitation is $0, X's partnership RBIG of $25,000 is limited to $0 and X's net recognized built-in gain for the year is $40,000.

Example 6. RBIL limitation of $0. (i) Y is a C corporation that elects to become an S corporation on January 1, 1996. Y owns a 50 percent interest in partnership P with a RBIG limitation of $60,000 and a RBIL limitation of $0.
(a) In 1996, P's partnership 1374 items are—

(1) Ordinary income of $25,000; and

(2) Capital loss of $90,000.

(b) Y itself has—

(1) recognized built-in ordinary income of $40,000; and

(2) recognized built-in capital gain of $75,000.

(ii) Y's net recognized built-in gain for 1996 computed without partnership 1374 items is $115,000 ($40,000 + $75,000 = $115,000) and with partnership 1374 items is $65,000 ($40,000 + $25,000 = $65,000). Thus, Y's partnership RBIL is $50,000 for the year except as limited under paragraph (i)(2)(ii) of this section. Because Y's RBIL limitation is $0, Y's partnership RBIL of $50,000 is limited to $0 and Y's net recognized built-in gain is $115,000.

Example 7. Disposition of partnership interest. X is a C corporation that elects to become an S corporation on January 1, 1996. On that date, X owns a 50 percent interest in partnership P with a RBIG limitation of $200,000 and a RBIL limitation of $0. P owns (among other assets) Blackacre with a basis of $20,000 and a value of $140,000. In 1996, P sells Blackacre for $140,000 and recognizes a gain of $120,000 of which $60,000 is included in X's distributive share and treated as a partnership 1374 item. X's net recognized built-in gain for 1996 computed without partnership 1374 items is $95,000 and with partnership 1374 items is $155,000. Thus, X has a partnership RBIG of $60,000. In 1999, X sells its entire interest in P for $350,000 and recognizes a gain of $250,000. Under paragraph (i)(3) of this section, X's recognized built-in gain on the sale is limited by its RBIG limitation to $140,000 ($200,000−$60,000 = $140,000).

Example 8. Section 704(c) case. Y is a C corporation that elects to become an S corporation on January 1, 1996. On that date, Y contributes Asset 1, 5-year property with a value of $40,000 and a basis of $0, and an unrelated party contributes $40,000 in cash, each for a 50 percent interest in partnership P. The partnership adopts the traditional method under § 1.704-3(b). If P sold Asset 1 for $40,000 immediately after it was contributed by Y, P's $40,000 gain would be allocated to Y under section 704(c). Instead, Asset 1 is sold by P in 1999 for $36,000 and P recognizes gain of $36,000 ($36,000−$0 = $36,000) on the sale. However, because book depreciation of $8,000 per year has been taken on Asset 1 in 1996, 1997, and 1998, Y is allocated only $16,000 of P's $36,000 gain ($40,000−(3 × $8,000) = ($16,000−$0) = $16,000) under section 704(c). The remaining $20,000 of P's $36,000 gain ($36,000−$16,000 = $20,000) is allocated 50 percent to each partner under section 704(b). Thus, a total of $26,000 ($16,000 + $10,000 = $26,000) of P's $36,000 gain is allocated to Y. However, under paragraph (i)(6) of this section, Y treats $36,000 as a partnership 1374 item on P's sale of Asset 1.

Example 9. Disposition of distributed partnership asset. X is a C corporation that elects to become an S corporation on January 1, 1996. On that date, X owns a fifty percent interest in partnership P and P owns (among other assets) Blackacre with a basis of $20,000 and a value of $40,000. On January 1, 1998, P distributes Blackacre to X, when Blackacre has a basis of $20,000 and a value of $50,000. Under section 732(a)(1), X has a transferred basis of $20,000 in Blackacre.

On January 1, 1999, X sells Blackacre for $60,000 and recognizes a gain of $40,000. Under paragraph (i)(7) of this section and section 1374(d)(3), X has recognized built-in gain from the sale of $20,000, the amount of built-in gain in Blackacre on the first day of the recognition period.

[T.D. 8579, 59 FR 66464, Dec. 27, 1994, as amended by T.D. 8995. 67 FR 34610, May 15, 2002]

§ 1.1374-5 Loss carryforwards.

(a) ***In general.*** The loss carryforwards allowed as deductions against net recognized built-in gain under section 1374(b)(2) are allowed only to the extent their use is allowed under the rules applying to C corporations. Any other loss carryforwards, such as charitable contribution carryforwards under section 170(d)(2), are not allowed as deductions against net recognized built-in gain.

(b) ***Example.*** The rules of this section are illustrated by the following example.

Example: Section 382 limitation. X is a C corporation that has an ownership change under section 382(g)(1) on January 1, 1994. On that date, X has a fair market value of $500,000, NOL carryforwards of $400,000, and a net unrealized built-in gain under section 382(h)(3)(A) of $0. Assume X's section 382 limitation under section 382(b)(1) is $40,000. X elects to become an S corporation on January 1, 1998. On that date, X has NOL carryforwards of $240,000 (having used $160,000 of its pre-change net operating losses in its 4 preceding taxable years) and a section 1374 net unrealized built-in gain of $250,000. In 1998, X has net recognized built-in gain of $100,000. X may use $40,000 of its NOL carryforwards as a deduction against its $100,000 net recognized built-in gain, because X's section 382 limitation is $40,000.

[T.D. 8579, 59 FR 66469, Dec. 27, 1994]

§ 1.1374-6 Credits and credit carryforwards.

(a) ***In general.*** The credits and credit carryforwards allowed as credits against the section 1374 tax under section 1374(b)(3) are allowed only to the extent their use is allowed under the rules applying to C corporations. Any other credits or credit carryforwards, such as foreign tax credits under section 901, are not allowed as credits against the section 1374 tax.

(b) ***Limitations.*** The amount of business credit carryforwards and minimum tax credit allowed against the section 1374 tax are subject to the limitations described in section 38(c) and section 53(c), respectively, as modified by this paragraph. The tentative tax determined under paragraph (a)(3) of § 1.1374-1 is treated as the regular tax liability described in sections 38(c)(1) and 53(c)(1), and as the net income tax and net regular tax liability described in section 38(c)(1). The tentative minimum tax described in section 55(b) is determined using the rate of tax applicable to corporations and without regard to any alternative minimum tax foreign tax credit described in that section and by treating the net recognized built-in gain determined under § 1.1374-2, modified to take into account the adjustments of sections 56 and 58 applicable to corporations and the preferences of section 57, as the alternative minimum taxable income described in section 55(b)(2).

(c) ***Examples.*** The rules of this section are illustrated by the following examples.

Example 1. Business credit carryforward. X is a C corporation that elects to become an S corporation effective January 1, 1996. On that date, X has a $500,000 business credit carryforward from a C year and Asset #1 with a fair market value of $400,000, a basis for regular tax purposes of $95,000, and a

basis for alternative minimum tax purposes of $150,000. In 1996, X has net recognized built-in gain of $305,000 from selling Asset #1 for $400,000. Thus, X's tentative tax under paragraph (a)(3) of § 1.1374-1 and regular tax liability under paragraph (b) of this section is $106,750 ($400,000−$95,000 = $305,000 × .35= $106,750, assuming a 35 percent tax rate). Also, X's tentative minimum tax determined under paragraph (b) of this section is $47,000 [$400,000−$150,000 = $250,000−$15,000 ($40,000 corporate exemption amount −$25,000 phase-out = $15,000) = $235,000 × .20 = $47,000, assuming a 20 percent tax rate]. Thus, the business credit limitation under section 38(c) is $59,750 [$106,750−$47,000 (the greater of $47,000 or $20,438 (.25 × $81,750 ($106,750−$25,000 = $81,750))) = $59,750]. As a result, X's section 1374 tax is $47,000 ($106,750−$59,750= $47,000) for 1996 and X has $440,250 ($500,000−$59,750 = $440,250) of business credit carryforwards for succeeding taxable years.

Example 2. Minimum tax credit. Y is a C corporation that elects to become an S corporation effective January 1, 1996. On that date, Asset#1 has a fair market value of $5,000,000, a basis for regular tax purposes of $4,000,000, and a basis for alternative minimum tax purposes of $4,750,000. Y also has a minimum tax credit of $310,000 from 1995. Y has no other assets, no net operating or capital loss carryforwards, and no business credit carryforwards. In 1996, Y's only transaction is the sale of Asset #1 for $5,000,000. Therefore, Y has net recognized built-in gain in 1996 of $1,000,000 ($5,000,000−$4,000,000 = $1,000,000) and a tentative tax under paragraph (a)(3) of § 1.1374-1 of $350,000 ($1,000,000 × .35 = $350,000, assuming a 35 percent tax rate). Also, Y's tentative minimum tax determined under paragraph (b) of this section is $47,000 [$5,000,000−$4,750,000 = $250,000−$15,000 ($40,000 corporate exemption amount −$25,000 phase-out = $15,000) = $235,000 × .20 = $47,000, assuming a 20 percent tax rate]. Thus, Y may use its minimum tax credit in the amount of $303,000 ($350,000−$47,000 = $303,000) to offset its section 1374 tentative tax. As a result, Y's section 1374 tax is $47,000 ($350,000−$303,000 = $47,000) in 1996 and Y has a minimum tax credit attributable to years for which Y was a C corporation of $7,000 ($310,000−$303,000 = $7,000).

[T.D. 8579, 59 FR 66469, Dec. 27, 1994]

§ 1.1374-7 Inventory.

(a) ***Valuation.*** The fair market value of the inventory of an S corporation on the first day of the recognition period equals the amount that a willing buyer would pay a willing seller for the inventory in a purchase of all the S corporation's assets by a buyer that expects to continue to operate the S corporation's business. For purposes of the preceding sentence, the buyer and seller are presumed not to be under any compulsion to buy or sell and to have reasonable knowledge of all relevant facts.

(b) ***Identity of dispositions.*** The inventory method used by an S corporation for tax purposes must be used to identify whether the inventory it disposes of during the recognition period is inventory it held on the first day of that period. Thus, a corporation using the LIFO method does not dispose of inventory it held on the first day of the recognition period unless the carrying value of its inventory for a taxable year during that period is less than the carrying value of its inventory on the first day of the recognition period (determined using the LIFO method as described in section 472). However, if a corporation changes its method of accounting for inventory (for example, from the FIFO method to the LIFO method or from the LIFO method to the FIFO method) with a principal purpose of avoiding the tax imposed under section 1374, it must use its former method to identify its dispositions of inventory.

[T.D. 8579, 59 FR 66469, Dec. 27, 1994]

§ 1.1374-8 Section 1374(d)(8) transactions.

(a) ***In general.*** If any S corporation acquires any asset in a transaction in which the S corporation's basis in the asset is determined (in whole or in part) by reference to a C corporation's basis in the assets (or any other property) (a section 1374(d)(8) transaction), section 1374 applies to the net recognized built-in gain attributable to the assets acquired in any section 1374(d)(8) transaction.

(b) ***Effective date of section 1374(d)(8).*** Section 1374(d)(8) applies to any section 1374(d)(8) transaction, as defined in paragraph (a)(1) of this section, that occurs on or after December 27, 1994, without regard to the date of the corporation's election to be an S corporation under section 1362.

(c) ***Separate determination of tax.*** For purposes of the tax imposed under section 1374(d)(8), a separate determination of tax is made with respect to the assets the S corporation acquires in one section 1374(d)(8) transaction from the assets the S corporation acquires in another section 1374(d)(8) transaction and from the assets the corporation held when it became an S corporation. Thus, an S corporation's section 1374 attributes when it became an S corporation may only be used to reduce the section 1374 tax imposed on dispositions of assets the S corporation held at that time. Similarly, an S corporation's section 1374 attributes acquired in a section 1374(d)(8) transaction may only be used to reduce a section 1374 tax imposed on dispositions of assets the S corporation acquired in the same transaction. If an S corporation makes QSub elections under section 1361(b)(3) for a tiered group of subsidiaries effective on the same day, see § 1.1361-4(b)(2).

(d) ***Taxable income limitation.*** For purposes of paragraph (a) of this section, an S corporation's taxable income limitation under § 1.1374-2(a)(2) for any taxable year is allocated between or among each of the S corporation's separate determinations of net recognized built-in gain for that year (determined without regard to the taxable income limitation) based on the ratio of each of those determinations to the sum of all of those determinations.

(e) ***Examples.*** The rules of this section are illustrated by the following examples.

> *Example 1. Separate determination of tax.* (i) X is a C corporation that elected to become an S corporation effective January 1, 1986 (before section 1374 was amended in the Tax Reform Act of 1986). X has a net operating loss carryforward of $20,000 arising in 1985 when X was a C corporation. On January 1, 1996, Y (an unrelated C corporation) merges into X in a transaction to which section 368(a)(1)(A) applies. Y has no loss carryforwards, credits, or credit carryforwards. The assets X acquired from Y are subject to tax under section 1374 and have a net unrealized built-in gain of $150,000.
> (ii) In 1996, X has a pre-limitation amount of $50,000 on dispositions of assets acquired from Y and a taxable income limitation of $100,000 (because only one group of assets is subject to section 1374, there is no allocation of the taxable income limitation). As a result, X has a net recognized built-in gain on those assets of $50,000. X's $20,000 net operating loss carryforward may not be used as a deduction against its $50,000 net recognized built-in gain on the assets X acquired from Y. Therefore, X has a section 1374 tax of $17,500 ($50,000 × .35 = $17,500, assuming a 35 percent tax rate) for its 1996 taxable year.

> *Example 2. Allocation of taxable income limitation.* (i) Y is a C corporation that elects to become an S corporation effective January 1, 1996. The assets Y holds when it becomes an S corporation have a net unrealized built-in gain of $5,000. Y has no loss carryforwards, credits, or credit carryforwards. On January 1, 1997, Z (an unrelated C corporation) merges into Y in a transaction to which section 368(a)(1)(A)

applies. Z has no loss carryforwards, credits, or credit carryforwards. The assets Y acquired from Z are subject to tax under section 1374 and have a net unrealized built-in gain of $80,000.
(ii) In 1997, Y has a pre-limitation amount on the assets it held when it became an S corporation of $15,000, a pre-limitation amount on the assets Y acquired from Z of $15,000, and a taxable income limitation of $10,000. However, because the assets Y held on becoming an S corporation have a net unrealized built-in gain of $5,000, its net recognized built-in gain on those assets is limited to $5,000 before taking into account the taxable income limitation. Y's taxable income limitation of $10,000 is allocated between the assets Y held on becoming an S corporation and the assets Y acquired from Z for purposes of determining the net recognized built-in gain from each pool of assets. Thus, Y's net recognized built-in gain on the assets Y held on becoming an S corporation is $2,500 [$10,000 × ($5,000/$20,000) = $2,500]. Y's net recognized built-in gain on the assets Y acquired from Z is $7,500 [$10,000 × ($15,000/$20,000) = $7,500]. Therefore, Y has a section 1374 tax of $3,500 [($2,500 + $7,500) × .35 = $3,500, assuming a 35 percent tax rate] for its 1997 taxable year.

[T.D. 8579, 59 FR 66469, Dec. 27, 1994, as amended by T.D. 8869, 65 FR 3856, Jan. 25, 2000; T.D. 9170, 69 FR 76614, Dec. 22, 2004; T.D. 9236, 70 FR 75731, Dec. 21, 2005]

§ 1.1374-9 Anti-stuffing rule.

If a corporation acquires an asset before or during the recognition period with a principal purpose of avoiding the tax imposed under section 1374, the asset and any loss, deduction, loss carryforward, credit, or credit carryforward attributable to the asset is disregarded in determining the S corporation's pre-limitation amount, taxable income limitation, net unrealized built-in gain limitation, deductions against net recognized built-in gain, and credits against the section 1374 tax.

[T.D. 8579, 59 FR 66470, Dec. 27, 1994]

§ 1.1374-10 Effective date and additional rules.

(a) ***In general.*** Sections 1.1374-1 through 1.1374-9, other than § 1.1374-3(b) and (c) *Examples 2* through *4*, apply for taxable years ending on or after December 27, 1994, but only in cases where the S corporation's return for the taxable year is filed pursuant to an S election or a section 1374(d)(8) transaction occurring on or after December 27, 1994. Section 1.1374-3(b) and (c) *Examples 2* through *4* apply to section 1374(d)(8) transactions that occur in taxable years beginning after February 23, 2005. In addition, an S corporation may apply § 1.1374-3(b) and (c) *Examples 2* through *4* to section 1374(d)(8) transactions that occur in taxable years beginning on or before February 23, 2005, if the S corporation (and any predecessors or successors) and all affected shareholders file original or amended returns that are consistent with these provisions for taxable years of the S corporation during the recognition period of the pool of assets the net unrealized built-in gain of which would be adjusted pursuant to those provisions that are not closed as of the first date after February 23, 2005, that the S corporation files an original or amended return. For purposes of this section, affected shareholders means all shareholders who received distributive shares of S corporation items in such taxable years. However, the Commissioner may, in appropriate circumstances, permit taxpayers to apply these provisions even if all affected shareholders cannot file consistent returns. In addition, for this purpose, a predecessor of an S corporation is a

corporation that transfers its assets to the S corporation in a transaction to which section 381 applies. A successor of an S corporation is a corporation to which the S corporation transfers its assets in a transaction to which section 381 applies.

(b) ***Additional rules.*** This paragraph (b) provides rules applicable to certain S corporations, assets, or transactions to which §§ 1.1374-1 through 1.1374-9 do not apply.

(1) ***Certain transfers to partnerships.*** If a corporation transfers an asset to a partnership in a transaction to which section 721(a) applies and the transfer is made in contemplation of an S election or during the recognition period, section 1374 applies on a disposition of the asset by the partnership as if the S corporation had disposed of the asset itself. This paragraph (b)(1) applies as of the effective date of section 1374, unless the recognition period with respect to the contributed asset is pursuant to an S election or a section 1374(d)(8) transaction occurring on or after December 27, 1994.

(2) ***Certain inventory dispositions.*** For purposes of section 1374(d)(2)(A), the inventory method used by the taxpayer for tax purposes (FIFO, LIFO, etc.) must be used to identify whether goods disposed of following conversion to S corporation status were held by the corporation at the time of conversion. Thus, for example, a corporation using the LIFO inventory method will not be subject to the built-in gain tax with respect to sales of inventory except to the extent that a LIFO layer existing prior to the beginning of the first taxable year as an S corporation is invaded after the beginning of that year. This paragraph (b)(2) applies as of the effective date of section 1374, unless the recognition period with respect to the inventory is pursuant to an S election or a section 1374(d)(8) transaction occurring on or after December 27, 1994.

(3) ***Certain contributions of built-in loss assets.*** If a built-in loss asset (that is, an asset with an adjusted tax basis in excess of its fair market value) is contributed to a corporation within 2 years before the earlier of the beginning of its first taxable year as an S corporation, or the filing of its S election, the loss inherent in the asset will not reduce net unrealized built-in gain, as defined in section 1374(d)(1), unless the taxpayer demonstrates a clear and substantial relationship between the contributed property and the conduct of the corporation's current or future business enterprises. This paragraph (b)(3) applies as of the effective date of section 1374, unless the recognition period with respect to the contributed asset is pursuant to an S election or a section 1374(d)(8) transaction occurring on or after December 27, 1994.

(4) ***Certain installment sales*** —

(i) ***In general.*** If a taxpayer sells an asset either prior to or during the recognition period and recognizes income either during or after the recognition period from the sale under the installment method, the income will, when recognized, be taxed under section 1374 to the extent it would have been so taxed in prior taxable years if the selling corporation had made the election under section 453(d) not to report the income under the installment method. For purposes of determining the extent to which the income would have been subject to tax if the section 453(d) election had not been made, the taxable income limitation of section 1374(d)(2)(A)(ii) and the built-in gain carryover rule of section 1374(d)(2)(B) will be taken into account. This paragraph (b)(4) applies for installment sales occurring on or after March 26, 1990, and before December 27, 1994.

(ii) ***Examples.*** The rules of this paragraph (b)(4) are illustrated by the following examples.

Example 1. In year 1 of the recognition period under section 1374, a corporation realizes a gain of $100,000 on the sale of an asset with built-in gain. The corporation is to receive full payment for the asset in year 11. Because the corporation does not make an election

under section 453(d), all $100,000 of the gain from the sale is reported under the installment method in year 11. If the corporation had made an election under section 453(d) with respect to the sale, the gain would have been recognized in year 1 and, taking into account the corporation's income and gains from other sources, application of the taxable income limitation of section 1374(d)(2)(A)(ii) and the built-in gain carryover rule of section 1374(d)(2)(B) would have resulted in $40,000 of the gain being subject to tax during the recognition period under section 1374. Therefore, $40,000 of the gain recognized in year 11 is subject to tax under section 1374.

Example 2. In year 1 of the recognition period under section 1374, a corporation realizes a gain of $100,000 on the sale of an asset with built-in gain. The corporation is to receive full payment for the asset in year 6. Because the corporation does not make an election under section 453(d), all $100,000 of the gain from the sale is reported under the installment method in year 6. If the corporation had made an election under section 453(d) with respect to the sale, the gain would have been recognized in year 1 and, taking into account the corporation's income and gains from other sources, application of the taxable income limitation of section 1374(d)(2)(A)(ii) and the built-in gain carryover rule of section 1374(d)(2)(B) would have resulted in all of the gain being subjected to tax under section 1374 in years 1 through 5. Therefore, notwithstanding that the taxable income limitation of section 1374(d)(2)(A)(ii) might otherwise limit the taxation of the gain recognized in year 6, the entire $100,000 of gain will be subject to tax under section 1374 when it is recognized in year 6.

(c) ***Termination and re-election of S corporation status*** —

(1) ***In general.*** For purposes of section 633(d)(8) of the Tax Reform Act of 1986, as amended, any reference to an election to be an S corporation under section 1362 shall be treated as a reference to the corporation's most recent election to be an S corporation under section 1362. This paragraph (c) applies for taxable years beginning after December 22, 2004, without regard to the date of the corporation's most recent election to be an S corporation under section 1362.

(2) ***Example.*** The following example illustrates the rules of this paragraph (c):

Example. (i) Effective January 1, 1988, X, a C corporation that is a qualified corporation under section 633(d) of the Tax Reform Act of 1986, as amended, elects to be an S corporation under section 1362. Effective January 1, 1990, X revokes its S status and becomes a C corporation. On January 1, 2004, X again elects to be an S corporation under section 1362. X disposes of assets in 2006, 2007, and 2008, recognizing gain.
(ii) X is not eligible for treatment under the transition rule of section 633(d)(8) of the Tax Reform Act of 1986, as amended, with respect to these assets. Accordingly, X is subject to section 1374, as amended by the Tax Reform Act of 1986 and the Technical and Miscellaneous Revenue Act of 1988, and the 10-year recognition period begins on January 1, 2004.

(iii) To the extent the gain that X recognizes on the asset sales in 2006, 2007, and 2008 reflects built-in gain inherent in such assets in X's hands on January 1, 2004, such gain is subject to tax under section 1374 as amended by the Tax Reform Act of 1986 and the Technical and Miscellaneous Revenue Act of 1988.

[T.D. 8579, 59 FR 66470, Dec. 27, 1994, as amended by T.D. 9170, 69 FR 76614, Dec. 22, 2004; T.D. 9180, 70 FR 8728, Feb. 23, 2005; T.D. 9236, 70 FR 75731, Dec. 21, 2005]

§ 1.1375-1 Tax imposed when passive investment income of corporation having subchapter C earnings and profits exceed 25 percent of gross receipts.

(a) ***General rule.*** For taxable years beginning after 1981, section 1375(a) imposes a tax on the income of certain S corporations that have passive investment income. In the case of a taxable year beginning during 1982, an electing small business corporation may elect to have the rules under this section not apply. See the regulations under section 1362 for rules on the election. For purposes of this section, the term *S corporation* shall include an electing small business corporation under prior law. This tax shall apply to an S corporation for a taxable year if the S corporation has—

(1) Subchapter C earnings and profits at the close of such taxable year, and

(2) Gross receipts more than 25 percent of which are passive investment income

If the S corporation has no subchapter C earnings and profits at the close of the taxable year (because, for example, such earnings and profits were distributed in accordance with section 1368), the tax shall not be imposed even though the S corporation has passive investment income for the taxable year. If the tax is imposed, the tax shall be computed by multiplying the excess net passive income (as defined in paragraph (b) of this section) by the highest rate of tax specified in section 11(b).

(b) ***Definitions*** —

(1) ***Excess net passive income*** —

(i) ***In general.*** The term *excess net passive income* is defined in section 1375(b)(1), and can be expressed by the following formula:

$$\mathrm{ENPI} = \mathrm{NPI} \times \frac{\mathrm{PII} - (.25 \times \mathrm{GR})}{\mathrm{PII}}$$

Where:

ENPI = excess net passive income

NPI = net passive income

PII = passive investment income

GR = total gross receipts

(ii) ***Limitation.*** The amount of the excess net passive income for any taxable year shall not exceed the corporation's taxable income for the taxable year (determined in accordance with section 1374(d) and § 1.1374-1(d)).

(2) ***Net passive income.*** The term *net passive income* means—

(i) Passive investment income, reduced by

(ii) The deductions allowable under chapter 1 of the Internal Revenue Code of 1954 which are directly connected (within the meaning of paragraph (b)(3) of this section) with the production of such income (other than deductions allowable under section 172 and part VIII of subchapter B).

(3) ***Directly connected*** —

(i) ***In general.*** For purposes of paragraph (b)(2)(ii) of this section to be directly connected with the production of income, an item of deduction must have proximate and primary relationship to the income. Expenses, depreciation, and similar items attributable solely to such income qualify for deduction.

(ii) ***Allocation of deduction.*** If an item of deduction is attributable (within the meaning of paragraph (b)(3)(i) of this section) inpart to passive investment income and in part to income other than passive investment income, the deduction shall be allocated between the two types of items on a reasonable basis. The portion of any deduction so allocated to passive investment income shall be treated as proximately and primarily related to such income.

(4) ***Other definitions.*** The terms *subchapter C earnings and profits, passive investment income,* and *gross receipts* shall have the same meaning given these terms in section 1362(d)(3) and the regulations thereunder.

(c) ***Special rules*** —

(1) ***Disallowance of credits.*** No credit is allowed under part IV of subchapter A of chapter 1 of the Code (other than section 34) against the tax imposed by section 1375(a) and this section.

(2) ***Coordination with section 1374.*** If any gain—

(i) Is taken into account in determining passive income for purposes of this section, and

(ii) Is taken into account under section 1374,

the amount of such gain taken into account under section 1374(b) and § 1.1374-1(b) (1) and (2) in determining the amount of tax shall be reduced by the portion of the excess net passive income for the taxable year which is attributable (on a pro rata basis) to such gain. For purposes of the preceding sentence, the portion of excess net passive income for the taxable year which is attributable to such capital gain is equal to the amount determined by multiplying the excess net passive income by the following fraction:

$$\frac{NCG - E}{NPI}$$

Where:

NCG = net capital gain

NPI = net passive income.

E = Expense attributable to net capital gain.

(d) ***Waiver of tax in certain cases*** —

(1) ***In general.*** If an S corporation establishes to the satisfaction of the Commissioner that—

(i) It determined in good faith that it had no subchapter C earnings and profits at the close of the taxable year, and

(ii) During a reasonable period of time after it was determined that it did have subchapter C earnings and profits at the close of such taxable year such earnings and profits were distributed,

the Commissioner may waive the tax imposed by section 1375 for such taxable year. The S corporation has the burden of establishing that under the relevant facts and circumsances the Commissioner should waive the tax.

For example, if an S corporation establishes that in good faith and using due diligence it determined that it had no subchapter C earnings and profits at the close of a taxable year, but it was later determined on audit that it did have subchapter C earnings and profits at the close of such taxable year, and if the corporation establishes that it distributed such earnings and profits within a reasonable time after the audit, it may be appropriate for the Commissioner to waive the tax on passive income for such taxable year.

(2) ***Corporation's request for a waiver.*** A request for waiver of the tax imposed by section 1375 shall be made in writing to the district director and shall contain all relevant facts to establish that the requirements of paragraph (d)(1) of this section are met. Such request shall contain a description of how and on what date the S corporation in good faith and using due diligence determined that it had no subchapter C earnings and profits at the close of the taxable year, a description of how and on what date it was determined that the S corporation had subchapter C earnings and profits at the close of the year and a description (including dates) of any steps taken to distribute such earnings and profits. If the earnings and profits have not yet been distributed, the request shall contain a timetable for distribution and an explanation of why such timetable is reasonable. On the date the waiver is to become effective, all subchapter C earnings and profits must have been distributed.

(e) ***Reduction in pass-thru for tax imposed on excess net passive income.*** See section 1366(f)(3) for a special rule reducing each item of the corporation's passive investment income for purposes of section 1366(a) if a tax is imposed on the corporation under section 1375.

(f) ***Examples.*** The following examples illustrate the principles of this section:

Example 1. Assume Corporation M, an S corporation, has for its taxable year total gross receipts of $200,000, passive investment income of $100,000, $60,000 of which is interest income, and expenses directly connected with the production of such interest income in the amount of $10,000. Assume also that at the end of the taxable year Corporation M has subchapter C earnings and profits. Since more than 25 percent of the Corporation M's total gross receipts are passive investment income, and since Corporation M has subchapter C earnings and profits at the end of the taxable year, Corporation M will be subject to the tax imposed by section 1375. The amount of excess net passive investment income is $45,000 ($90,000 × (50,000 / 100,000)). Assume that the other $40,000 of passive investment income is attributable to net capital gain and that there are no expenses directly connected with such gain. Under these facts, $20,000 of the excess net passive income is attributable to the net capital gain ($45,000 × ($40,000 / $90,000)). Accordingly, the amount of gain taken into account under section 1374(b)(1) and the taxable income of Corporation M under section 1374(b)(2) shall be reduced by $20,000.

Example 2. Assume an S corporation with subchapter C earnings and profits has tax-exempt income of $400, its only passive income, gross receipts of $1,000 and taxable income of $250 and there are no expenses associated with the tax-exempt income. The corporation's excess net income for the taxable year would total $150 (400 × ((400 − 250 / 400)). This amount is subject to the tax imposed by section 1375, notwithstanding that such amount is otherwise tax-exempt income.

[T.D. 8104, 51 FR 34203, Sept. 26, 1986; 52 FR 9162, Mar. 23, 1987. Redesignated and amended by T.D. 8419, 57 FR 22653, May 29, 1992]

§ 1.1377-0 Table of contents.

The following table of contents is provided to facilitate the use of §§ 1.1377-1 through 1.1377-3:

§ 1.1377-1 Pro rata share.

(a) Computation of pro rata shares.

(1) In general.

(2) Special rules.

(i) Days on which stock has not been issued.

(ii) Determining shareholder for day of stock disposition.

(iii) Shareholder trust conversions.

(b) Election to terminate year.

(1) In general.

(2) Affected shareholders.

(3) Effect of the terminating election.

(i) In general.

(ii) Due date of S corporation return.

(iii) Taxable year of inclusion by shareholder.

(iv) S corporation that is a partner in a partnership.

(4) Determination of whether an S shareholder's entire interest has terminated.

(5) Time and manner of making a terminating election.

(i) In general.

(ii) Affected shareholders required to consent.

(iii) More than one terminating election.

(c) Examples.

§ 1.1377-2 Post-termination transition period.

(a) In general.

(b) Special rules for post-termination transition period.

(c) Determination defined.

(d) Date a determination becomes effective.

(1) Determination under section 1313(a).

(2) Written agreement.

(3) Implied agreement.

§ 1.1377-3 Effective date.

[T.D. 8696, 61 FR 67455, Dec. 23, 1996, as amended by T.D. 8994, 67 FR 34401, May 14, 2002]

§ 1.1377-1 Pro rata share.

(a) ***Computation of pro rata shares*** —

(1) ***In general.*** For purposes of subchapter S of chapter 1 of the Internal Revenue Code and this section, each shareholder's pro rata share of any S corporation item described in section 1366(a) for any taxable year is the sum of the amounts determined with respect to the shareholder by assigning an equal portion of the item to each day of the S corporation's taxable year, and then dividing that portion pro rata among the shares outstanding on that day. See paragraph (b) of this section for rules pertaining to the computation of each shareholder's pro rata share when an election is made under section 1377(a)(2) to treat the taxable year of an S corporation as if it consisted of two taxable years in the case of a termination of a shareholder's entire interest in the corporation. See § 1.460-4(k)(3)(iv)(D) for rules relating to the computation of the shareholders' pro rata share of S corporation's income or loss from a contract accounted for under a long-term contract method of accounting.

(2) ***Special rules*** —

(i) ***Days on which stock has not been issued.*** Solely for purposes of determining a shareholder's pro rata share of an item for a taxable year under section 1377(a) and this section, the beneficial owners of the corporation are treated as the shareholders of the corporation for any day on which the corporation has not issued any stock.

(ii) ***Determining shareholder for day of stock disposition.*** A shareholder who disposes of stock in an S corporation is treated as the shareholder for the day of the disposition. A shareholder who dies is treated as the shareholder for the day of the shareholder's death.

(iii) Shareholder trust conversions. If, during the taxable year of an S corporation, a trust that is an eligible shareholder of the S corporation converts from a trust described in section 1361(c)(2)(A)(i), (ii), (iii), or (v) for the first part of the year to a trust described in a different subpart of section 1361(c)(2)(A)(i), (ii), or (v) for the remainder of the year, the trust's share of the S corporation items is allocated between the two types of trusts. The first day that a qualified subchapter S trust (QSST) or an electing small business trust (ESBT) is treated as an S corporation shareholder is the effective date of the QSST or ESBT election. Upon the conversion, the trust is not treated as terminating its entire interest in the S corporation for purposes of paragraph (b) of this section, unless the trust was a trust described in section 1361(c)(2)(A)(ii) or (iii) before the conversion.

(b) ***Election to terminate year*** —

(1) ***In general.*** If a shareholder's entire interest in an S corporation is terminated during the S corporation's taxable year and the corporation and all affected shareholders agree, the S corporation may elect under section 1377(a)(2) and this paragraph (b) (terminating election) to apply paragraph (a) of this section to the affected shareholders as if the corporation's taxable year consisted of two separate taxable years, the first of which ends at the close of the day on which the shareholder's entire interest in the S corporation is terminated. If the event resulting in the termination of the shareholder's entire interest also constitutes a qualifying disposition as described in § 1.1368-1(g)(2)(i), the election under § 1.1368-1(g)(2) cannot be made. An S corporation may not make a terminating election if the cessation of a shareholder's interest occurs in a transaction that results in a termination under section 1362(d)(2) of the corporation's election to be an S corporation. (See section 1362(e)(3) for an election to have items assigned to each short taxable year under normal tax accounting rules in the case of a termination of a corporation's election to be an S corporation.) A terminating election is irrevocable and is effective only for the terminating event for which it is made.

(2) ***Affected shareholders.*** For purposes of the terminating election under section 1377(a)(2) and paragraph (b) of this section, the term *affected shareholders* means the shareholder whose interest is terminated and all shareholders to whom such shareholder has transferred shares during the taxable year. If such shareholder has transferred shares to the corporation, the term *affected shareholders* includes all persons who are shareholders during the taxable year.

(3) ***Effect of the terminating election*** —

(i) ***In general.*** An S corporation that makes a terminating election for a taxable year must treat the taxable year as separate taxable years for all affected shareholders for purposes of allocating items of income (including tax-exempt income), loss, deduction, and credit; making adjustments to the accumulated adjustments account, earnings and profits, and basis; and determining the tax effect of a distribution. An S corporation that makes a terminating election

must assign items of income (including tax-exempt income), loss, deduction, and credit to each deemed separate taxable year using its normal method of accounting as determined under section 446(a).

(ii) ***Section 163(j).*** If a terminating election is made to treat the S corporation's taxable year as consisting of separate taxable years, for purposes of section 163(j), a separate limitation (as defined in § 1.163(j)-1(b)(36)) will apply to each separate taxable year. Any items necessary to determine the amount of business interest expense (as defined in § 1.163(j)-1(b)(3)) that are deducted in each separate taxable year must be allocated between the separate taxable years in accordance with an allocation methodology provided in this section.

(iii) ***Due date of S corporation return.*** A terminating election does not affect the due date of the S corporation's return required to be filed under section 6037(a) for a taxable year (determined without regard to a terminating election).

(iv) ***Taxable year of inclusion by shareholder.*** A terminating election does not affect the taxable year in which an affected shareholder must take into account the affected shareholder's pro rata share of the S corporation's items of income, loss, deduction, and credit.

(v) ***S corporation that is a partner in a partnership.*** A terminating election by an S corporation that is a partner in a partnership is treated as a sale or exchange of the corporation's entire interest in the partnership for purposes of section 706(c) (relating to closing the partnership taxable year), if the taxable year of the partnership ends after the shareholder's interest is terminated and within the taxable year of the S corporation (determined without regard to any terminating election) for which the terminating election is made.

(4) ***Determination of whether an S shareholder's entire interest has terminated.*** For purposes of the terminating election under section 1377(a)(2) and paragraph (b) of this section, a shareholder's entire interest in an S corporation is terminated on the occurrence of any event through which a shareholder's entire stock ownership in the S corporation ceases, including a sale, exchange, or other disposition of all of the stock held by the shareholder; a gift under section 102(a) of all the shareholder's stock; a spousal transfer under section 1041(a) of all the shareholder's stock; a redemption, as defined in section 317(b), of all the shareholder's stock, regardless of the tax treatment of the redemption under section 302; and the death of the shareholder. A shareholder's entire interest in an S corporation is not terminated if the shareholder retains ownership of any stock (including an interest treated as stock under § 1.1361-1(l)) that would result in the shareholder continuing to be considered a shareholder of the corporation for purposes of section 1362(a)(2). Thus, in determining whether a shareholder's entire interest in an S corporation has been terminated, any interest held by the shareholder as a creditor, employee, director, or in any other non-shareholder capacity is disregarded.

(5) ***Time and manner of making a terminating election*** —

(i) ***In general.*** An S corporation makes a terminating election by attaching a statement to its timely filed original or amended return required to be filed under section 6037(a) (that is, a Form 1120S) for the taxable year during which a shareholder's entire interest is terminated. A single election statement may be filed by the S corporation for all terminating elections for the taxable year. The election statement must include—

(A) A declaration by the S corporation that it is electing under section 1377(a)(2) and this paragraph (b) to treat the taxable year as if it consisted of two separate taxable years;

(B) Information setting forth when and how the shareholder's entire interest was terminated (for example, a sale or gift);

(C) The signature on behalf of the S corporation of an authorized officer of the corporation under penalties of perjury, except that for taxable years beginning after December 31, 2002, the election statement described in § 1.1377-1(b)(5)(i) of this section shall be verified, and the requirement of this paragraph (b)(5)(i)(C) is satisfied, by the signature on the Form 1120S filed by the S corporation.

(D) A statement by the corporation that the corporation and each affected shareholder consent to the S corporation making the terminating election.

(ii) ***Affected shareholders required to consent.*** For purposes of paragraph (b)(5)(i)(D) of this section, a shareholder of the S corporation for the taxable year is a shareholder as described in section 1362(a)(2). For example, the person who under § 1.1362-6(b)(2) must consent to a corporation's S election in certain special cases is the person who must consent to the terminating election. In addition, an executor or administrator of the estate of a deceased affected shareholder may consent to the terminating election on behalf of the deceased affected shareholder.

(iii) ***More than one terminating election.*** A shareholder whose entire interest in an S corporation is terminated in an event for which a terminating election was made is not required to consent to a terminating election made with respect to a subsequent termination within the same taxable year unless the shareholder is an affected shareholder with respect to the subsequent termination.

(c) ***Examples.*** The following examples illustrate the provisions of this section:

Example 1. Shareholder's pro rata share in the case of a partial disposition of stock. (i) On January 6, 1997, X incorporates as a calendar year corporation, issues 100 shares of common stock to each of A and B, and files an election to be an S corporation for its 1997 taxable year. On July 24, 1997, B sells 50 shares of X stock to C. Thus, in 1997, A owned 50 percent of the outstanding shares of X on each day of X's 1997 taxable year, B owned 50 percent on each day from January 6, 1997, to July 24, 1997 (200 days), and 25 percent from July 25, 1997, to December 31, 1997 (160 days), and C owned 25 percent from July 25, 1997, to December 31, 1997 (160 days).
(ii) Because B's entire interest in X is not terminated when B sells 50 shares to C on July 24, 1997, X cannot make a terminating election under section 1377(a)(2) and paragraph (b) of this section for B's sale of 50 shares to C. Although B's sale of 50 shares to C is a qualifying disposition under § 1.1368-1(g)(2)(i), X does not make an election to terminate its taxable year under § 1.1368-1(g)(2). During its 1997 taxable year, X has nonseparately computed income of $720,000.

(iii) For each day in X's 1997 taxable year, A's daily pro rata share of X's nonseparately computed income is $1,000 ($720,000/360 days × 50%). Thus, A's pro rata share of X's nonseparately computed income for 1997 is $360,000 ($1,000 × 360 days). B's daily pro rata share of X's nonseparately computed income is $1,000 ($720,000/360 × 50%) for the first 200 days of X's 1997 taxable year, and $500 ($720,000/360 × 25%) for the following 160 days in 1997. Thus, B's pro rata share of X's nonseparately computed income

for 1997 is $280,000 (($1,000 × 200 days) + ($500 × 160 days)). C's daily pro rata share of X's nonseparately computed income is $500 ($720,000/360 × 25%) for 160 days in 1997. Thus, C's pro rata share of X's nonseparately computed income for 1997 is $80,000 ($500 × 160 days).

Example 2. Shareholder's pro rata share when an S corporation makes a terminating election under section 1377(a)(2). (i) On January 6, 1997, X incorporates as a calendar year corporation, issues 100 shares of common stock to each of A and B, and files an election to be an S corporation for its 1997 taxable year. On July 24, 1997, B sells B's entire 100 shares of X stock to C. With the consent of B and C, X makes an election under section 1377(a)(2) and paragraph (b) of this section for the termination of B's entire interest arising from B's sale of 100 shares to C. As a result of the election, the pro rata shares of B and C are determined as if X's taxable year consisted of two separate taxable years, the first of which ends on July 24, 1997, the date B's entire interest in X terminates. Because A is not an affected shareholder as defined by section 1377(a)(2)(B) and paragraph (b)(2) of this section, the treatment as separate taxable years does not apply to A.
(ii) During its 1997 taxable year, X has nonseparately computed income of $720,000. Under X's normal method of accounting, $200,000 of the $720,000 of nonseparately computed income is allocable to the period of January 6, 1997, through July 24, 1997 (the first deemed taxable year), and the remaining $520,000 is allocable to the period of July 25, 1997, through December 31, 1997 (the second deemed taxable year).

(iii) B's pro rata share of the $200,000 of nonseparately computed income for the first deemed taxable year is determined by assigning the $200,000 of nonseparately computed income to each day of the first deemed taxable year ($200,000/200 days = $1,000 per day). Because B held 50% of X's authorized and issued shares on each day of the first deemed taxable year, B's daily pro rata share for each day of the first deemed taxable year is $500 ($1,000 per day × 50%). Thus, B's pro rata share of the $200,000 of nonseparately computed income for the first deemed taxable year is $100,000 ($500 per day × 200 days). B must report this amount for B's taxable year with or within which X's full taxable year ends (December 31, 1997).

(iv) C's pro rata share of the $520,000 of nonseparately computed income for the second deemed taxable year is determined by assigning the $520,000 of nonseparately computed income to each day of the second deemed taxable year ($520,000/160 days = $3,250 per day). Because C held 50% of X's authorized and issued shares on each day of the second deemed taxable year, C's daily pro rata shares for each day of the second deemed taxable year is $1,625 ($3,250 per day × 50%). Therefore, C's pro rata share of the $520,000 of nonseparately computed income is $260,000 ($1,625 per day × 160 days). C must report this amount for C's taxable year with or within which X's full taxable year ends (December 31, 1997).

Example 3. Effect of conversion of a qualified subchapter S trust (QSST) to an electing small business trust (ESBT). (i) On January 1, 2003, Trust receives stock of S corporation. Trust's current income beneficiary makes a timely QSST election under section 1361(d)(2), effective January 1, 2003. Subsequently, the trustee and current income beneficiary of Trust elect, pursuant to § 1.1361-1(j)(12), to terminate the QSST

election and convert to an ESBT, effective July 1, 2004. The taxable year of S corporation is the calendar year. In 2004, Trust's pro rata share of S corporation's nonseparately computed income is $100,000.
(ii) For purposes of computing the income allocable to the QSST and to the ESBT, Trust is treated as a QSST through June 30, 2004, and Trust is treated as an ESBT beginning July 1, 2004. Pursuant to section 1377(a)(1), the pro rata share of S corporation income allocated to the QSST is $49,727 ($100,000 × 182 days/366 days), and the pro rata share of S corporation income allocated to the ESBT is $50,273 ($100,000 × 184 days/366 days).

[T.D. 8696, 61 FR 67456, Dec. 23, 1996, as amended by T.D. 8994, 67 FR 34401, May 14, 2002; T.D. 9100, 68 FR 70706, Dec. 19, 2003; T.D. 9137, 69 FR 42559, July 16, 2004; T.D. 9300, 71 FR 71043, Dec. 8, 2006; T.D. 9905, 85 FR 56843, Sept. 14, 2020]

§ 1.1377-2 Post-termination transition period.

(a) ***In general.*** For purposes of subchapter S of chapter 1 of the Internal Revenue Code (Code) and this section, the term *post-termination transition period* means—

(1) The period beginning on the day after the last day of the corporation's last taxable year as an S corporation and ending on the later of—

(i) The day which is 1 year after such last day; or

(ii) The due date for filing the return for the last taxable year as an S corporation (including extensions);

(2) The 120-day period beginning on the date of any determination pursuant to an audit of the taxpayer which follows the termination of the corporation's election and which adjusts a subchapter S item of income, loss, or deduction of the corporation arising during the S period (as defined in section 1368(e)(2)); and

(3) The 120-day period beginning on the date of a determination that the corporation's election under section 1362(a) had terminated for a previous taxable year.

(b) ***Special rules for post-termination transition period.*** Pursuant to section 1377(b)(1) and paragraph (a)(1) of this section, a post-termination transition period arises the day after the last day that an S corporation was in existence if a C corporation acquires the assets of the S corporation in a transaction to which section 381(a)(2) applies. However, if an S corporation acquires the assets of another S corporation in a transaction to which section 381(a)(2) applies, a post-termination transition period does not arise. (See § 1.1368-2(d)(2) for the treatment of the acquisition of the assets of an S corporation by another S corporation in a transaction to which section 381(a)(2) applies.)

(c) ***Determination defined.*** For purposes of section 1377(b)(1) and paragraph (a) of this section, the term *determination* means—

(1) A determination as defined in section 1313(a);

(2) A written agreement between the corporation and the Commissioner (including a statement acknowledging that the corporation's election to be an S corporation terminated under section 1362(d)) that the corporation failed to qualify as an S corporation;

(3) For a corporation subject to the audit and assessment provisions of subchapter C of chapter 63 of subtitle A of the Code, the expiration of the period specified in section 6226 for filing a petition for readjustment of a final S corporation administrative adjustment finding that the corporation failed to qualify as an S corporation, provided that no petition was timely filed before the expiration of the period; and

(4) For a corporation not subject to the audit and assessment provisions of subchapter C of chapter 63 of subtitle A of the Code, the expiration of the period for filing a petition under section 6213 for the shareholder's taxable year for which the Commissioner has made a finding that the corporation failed to qualify as an S corporation, provided that no petition was timely filed before the expiration of the period.

(d) ***Date a determination becomes effective*** —

(1) ***Determination under section 1313(a).*** A determination under paragraph (c)(1) of this section becomes effective on the date prescribed in section 1313 and the regulations thereunder.

(2) ***Written agreement.*** A determination under paragraph (c)(2) of this section becomes effective when it is signed by the district director having jurisdiction over the corporation (or by another Service official to whom authority to sign the agreement is delegated) and by an officer of the corporation authorized to sign on its behalf. Neither the request for a written agreement nor the terms of the written agreement suspend the running of any statute of limitations.

(3) ***Implied agreement.*** A determination under paragraph (c) (3) or (4) of this section becomes effective on the day after the date of expiration of the period specified under section 6226 or 6213, respectively.

[T.D. 8696, 61 FR 67457, Dec. 23, 1996, as amended by T.D. 9914, 85 FR 66484, Oct. 20, 2020]

§ 1.1377-3 Applicability dates.

(a) ***In general.*** Except as otherwise provided in this section, §§ 1.1377-1 and 1.1377-2 apply to taxable years of an S corporation beginning after December 31, 1996.

(b) ***Certain conversions.*** Section 1.1377-1(a)(2)(iii) and (c)(3) (*Example 3)* are applicable for taxable years beginning on and after May 14, 2002.

(c) ***Special treatment of distributions of money during post-termination transition period*** —

(1) ***In general.*** Except as provided in paragraph (c)(2) of this section, § 1.1377-2(b) applies to taxable years beginning after October 20, 2020. For taxable years beginning on or before October 20, 2020, see § 1.1377-2(b) as contained in 26 CFR part 1, revised April 1, 2020.

(2) ***Taxable years beginning on or before October 20, 2020.*** A corporation may choose to apply § 1.1377-2(b) to taxable years beginning on or before October 20, 2020 and with respect to which the period described in section 6501(a) has not expired. If a corporation makes the choice described in the previous sentence, all shareholders of the corporation must report consistently, and the corporation must adopt §§ 1.481-5, 1.1371-1, 1.1371-2, if an ETSC, and 1.1377-2(b) in their entity and continue to apply those rules in their entirety for the corporation's subsequent taxable years.

[T.D. 9914, 85 FR 66484, Oct. 20, 2020]

§ 1.1378-1 Taxable year of S corporation.

(a) ***In general.*** The taxable year of an S corporation must be a permitted year. A permitted year is the required taxable year (*i.e.,* a taxable year ending on December 31), a taxable year elected under section 444, a 52-53-week taxable year ending with reference to the required taxable year or a taxable year elected under section 444, or any other taxable year for which the corporation establishes a business purpose to the satisfaction of the Commissioner under section 442.

(b) ***Adoption of taxable year.*** An electing S corporation may adopt, in accordance with § 1.441-1(c), its required taxable year, a taxable year elected under section 444, or a 52-53-week taxable year ending with reference to its required taxable year or a taxable year elected under section 444 without the approval of the Commissioner. See § 1.441-1. An electing S corporation that wants to adopt any other taxable year, must establish a business purpose and obtain the approval of the Commissioner under section 442.

(c) ***Change in taxable year*** —

(1) ***Approval required.*** An S corporation or electing S corporation that wants to change its taxable year must obtain the approval of the Commissioner under section 442 or make an election under section 444. However, an S corporation or electing S corporation may obtain automatic approval for certain changes, including a change to its required taxable year, pursuant to administrative procedures published by the Commissioner.

(2) ***Short period tax return.*** An S corporation or electing S corporation that changes its taxable year must make its return for a short period in accordance with section 443, but must not annualize the corporation's taxable income.

(d) ***Retention of taxable year.*** In certain cases, an S corporation or electing S corporation will be required to change its taxable year unless it obtains the approval of the Commissioner under section 442, or makes an election under section 444, to retain its current taxable year. For example, a corporation using a June 30 fiscal year that elects to be an S corporation and, as a result, is required to use the calendar year must obtain the approval of the Commissioner to retain its current fiscal year.

(e) ***Procedures for obtaining approval or making a section 444 election*** —

(1) ***In general.*** See § 1.442-1(b) for procedures to obtain the approval of the Commissioner (automatically or otherwise) to adopt, change, or retain a taxable year. See §§ 1.444-1T and 1.444-2T for qualifications, and 1.444-3T for procedures, for making an election under section 444.

(2) ***Special rules for electing S corporations.*** An electing S corporation that wants to adopt, change to, or retain a taxable year other than its required taxable year must request approval of the Commissioner on Form 2553, "Election by a Small Business Corporation," when the election to be an S corporation is filed pursuant to section 1362(b) and § 1.1362-6. See § 1.1362-6(a)(2)(i) for the manner of making an election to be an S corporation. If such corporation receives permission to adopt, change to, or retain a taxable year other than its required taxable year, the election to be an S corporation will be effective. Denial of the request renders the election ineffective unless the corporation agrees that, in the event the request to adopt, change to, or retain a taxable year other than its required taxable year is denied, it will adopt, change to, or retain its required taxable year or, if applicable, make an election under section 444.

(f) ***Effective date.*** The rules of this section are applicable for taxable years ending on or after May 17, 2002.

[T.D. 8996, 67 FR 35024, May 17, 2002]

SECTION 1374 BEFORE THE TAX REFORM ACT OF 1986

§ 1.1374-1A Tax imposed on certain capital gains.

(a) ***General rule.*** Except as otherwise provided in paragraph (c) of this section, if for a taxable year beginning after 1982 of an S corporation—

(1) The net capital gain of such corporation exceeds $25,000, and

(2) The net capital gain of such corporation exceeds 50 percent of its taxable income (as defined in paragraph (d) of this section) for such year, and

(3) The taxable income of such corporation (as defined in paragraph (d) of this section) for such year exceeds $25,000,

section 1374 imposes a tax (computed under paragraph (b) of this section) on the income of such corporation. The tax is imposed on the S corporation and not on the shareholders.

(b) ***Amount of tax.*** The amount of tax shall be the lower of—

(1) An amount equal to the tax, determined as provided in section 1201(a)(2), on the amount by which the net capital gain of the corporation for the taxable year exceeds $25,000, or

(2) An amount equal to the tax which would be imposed by section 11 on the taxable income of the corporation (as defined in paragraph (d) of this section) for the taxable year were it not an S corporation.

No credit shall be allowable under part IV of subchapter A of chapter 1 of the Internal Revenue Code of 1954 (other than under section 34) against the tax imposed by section 1374(a) and this section. See section 1375(c)(2) and § 1.1375-1(c)(2) for a special rule that reduces the amount of the net capital gain of the corporation for purposes of this paragraph (b) in cases where a net capital gain is taxed as excess net passive income under section 1375. See section 1374(c)(3) and paragraph (c)(1)(ii) of this section for a special rule that limits the amount of tax on property with a substituted basis in certain cases.

(c) ***Exceptions to taxation*** —

(1) ***New corporations and corporations with election in effect for 3 immediately preceding years*** —

(i) ***In general.*** If an S corporation would be subject to the tax imposed by section 1374 for a taxable year pursuant to paragraph (a) of this section, the corporation shall, nevertheless, not be subject to such tax for such year, if:

(A) The election under section 1362(a) which is in effect with respect to such corporation for such year has been in effect for the corporation's three immediately preceding taxable years, or

(B) An election under section 1362(a) has been in effect with respect to such corporation for each of its taxable years for which it has been in existence, unless there is a net capital gain for the taxable year which is attributable to property with a substituted basis within the meaning of paragraph (c)(1)(iii) of this section.

(ii) ***Amount of tax on net capital gain attributable to property with a substituted basis.*** If for a taxable year of an S corporation either paragraph (c)(1)(i) (A) or (B) of this section is satisfied, but the S corporation has a net capital gain for such taxable year which is attributable to property with a

substituted basis (within the meaning of paragraph (c)(1)(iii) of this section), then paragraph (a) of this section shall apply for the taxable year, but the amount of tax determined under paragraph (b) of this section shall not exceed a tax, determined as provided in section 1201 (a), on the net capital gain attributable to property with a substituted basis.

(iii) ***Property with substituted basis.*** For purposes of this section, the term *property with a substituted basis* means:

(A) Property acquired by a corporation (*the acquiring corporation*) during the period beginning 36 months before the first day of the acquiring corporation's taxable year and ending on the last day of such year;

(B) The basis of such property in the hands of the acquiring corporation is determined in whole or in part by reference to the basis of any property in the hands of another corporation; and

(C) Such other corporation was not an S corporation throughout the period beginning the later of:

(*1*) 36 months before the first day of the acquiring corporation's taxable year, or

(*2*) The time such other corporation came into existence,

and ending on the date such other corporation transferred the property, the basis of which is used to determine, in whole or in part, the basis of the property in the hands of the acquiring corporation. An S corporation and any predecessor corporation shall not be treated as one corporation for purposes of this paragraph (c) (1).

(iv) ***Existence of a corporation.*** For purposes of this section, a corporation shall not be considered to be in existence for any month which precedes the first month in which such corporation has shareholders or acquires assets or begins business, whichever is first to occur.

(v) ***References to prior law included.*** **For purposes of this paragraph (c), the term *S corporation* shall include an electing small business corporation under prior subchapter S law, and the term *election under section 1362 (a)*** shall include an election under section 1372 of prior subchapter S law.

(iv) *Examples.* The provisions of this paragraph may be illustrated by the following examples:

Example 1. M Corporation was organized and began business in 1977. M subsequently made an election under section 1362 (a) which was effective for its 1984 taxable year. If such election does not terminate under section 1362 for its taxable years 1984, 1985, and 1986, M is not subject to the tax imposed by section 1374 for its taxable year 1987, or for any subsequent year for which such election remains in effect, unless it has, for any such year, an excess of net long-term capital gain over net short-term capital loss attributable to property with a substituted basis. If there is such an excess for any such year, and the requirements of paragraph (a) of this section are met, M will be subject to the tax for such year. If there is no such excess for any year after 1986, M will not be subject to the tax for any such year even though the requirements of paragraph (a) of this section are met.

Example 2. N corporation was organized in 1983, and was an S corporation for its first taxable year, N is not subject to the tax imposed by section 1374 for 1983, or for any subsequent year for which its orginal election under section 1362 (a) has not terminated under section 1362(d),

unless, for any such year, it has an excess of net long-term capital gain over net short-term capital loss attributable to property with a substituted basis and the requirements of paragraph (a) of this section are met.

(2) ***Treatment of certain gains of options and commodities dealers*** —

(i) ***Exclusion of certain capital gains.*** For purposes of this section, the net capital gain of any options dealer or commodities dealer shall be determined by not taking into account any gain or loss (in the normal course of the taxpayer's activity of dealing in or trading section 1256 contracts) from any section 1256 contract or property related to such a contract.

(ii) ***Definitions.*** For purposes of this paragraph (c)(2)—

(A) ***Options dealer.*** The term *options dealer* has the meaning given to such term by section 1256(g)(8).

(B) ***Commodities dealer.*** The term *commodities dealer* means a person who is actively engaged in trading section 1256 contracts and is registered with a domestic board of trade which is designated as a contract market by the Commodities Futures Trading Commission.

(C) ***Section 1256 contracts.*** The term *section 1256 contracts* has the meaning given to such term by section 1256(b).

(iii) ***Effective dates*** —

(A) ***In general.*** Except as otherwise provided in this paragraph (c)(2)(iii), this paragraph (c)(2) shall apply to positions established after July 18, 1984, in taxable years ending after such date.

(B) ***Special rule for options on regulated futures contracts.*** In the case of any option with respect to a regulated futures contract (within the meaning of section 1256), this paragraph (c)(2) shall apply to positions established after October 31, 1983, in taxable years ending after such date.

(C) ***Elections with respect to property held on or before July 18, 1984.*** See §§ 1.1256 (h)-1T and 1.1256(h)-2T for rules concerning an election to have this paragraph (c)(2) apply to certain property held on or before July 18, 1984.

(d) ***Determination of taxable income*** —

(1) ***General rule.*** For purposes of this section, taxable income of the corporation shall be determined under section 63(a) as if the corporation were a C corporation rather than an S corporation, except that the following deductions shall not apply in the computation—

(i) The deduction allowed by section 172 (relating to net operating loss deduction), and

(ii) The deductions allowed by part VIII of subchapter B (other than the deduction allowed by section 248, relating to organization expenditures).

For any taxable year in which a tax under this section is imposed on an S corporation, the S corporation shall attach a Form 1120 completed in accordance with this paragraph (d) and the instructions to Form 1120S to its tax return filed for such taxable year.

(2) ***Special rule for net capital gains taxed as excess net passive income under section 1375.*** See section 1375 (c) (2) and § 1.1375-1(c)(2) for a special rule that reduces the taxable income of the corporation for purposes of section 1374(b)(2) and § 1.1374-1(b)(2) in cases where a net capital gain is taxed as excess net passive income under section 1375.

(e) ***Reduction in pass-thru for tax imposed on capital gain.*** See section 1366(f)(2) for a special rule reducing the S corporation's long-term capital gains and the corporation's gain from sales or exchanges of property described in section 1231 for purposes of section 1366(a) by an amount of tax imposed under section 1374 and this section.

(f) ***Examples.*** The following examples illustrate the principles of this section and assume that a tax will not be imposed under section 1375:

Example 1. Corporation M is an S corporation for its taxable year beginning January 1, 1983. For 1983, M has an excess of net long-term capital gain over net short-term capital loss in the amount of $30,000. However, its taxable income for the year is only $20,000 as a result of other deductions in excess of other income. Thus, although the excess of the net long-term capital gain over the net short-term capital loss exceeds $25,000 and also exceeds 50 percent of taxable income, M is not subject to the tax imposed by section 1374 for 1983 because its taxable income does not exceed $25,000.

Example 2. Corporation N is an S Corporation for its 1983 taxable year. For 1983, N has an excess of net long-term capital gain over net short-term capital loss in the amount of $30,000, and taxable income of $65,000. Thus, although N's net capital gain ($30,000) exceeds $25,000, it does not exceed 50 percent of the corporation's taxable income for the year (50 percent of $65,000, or $32,500), and therefore N is not subject to the tax imposed by section 1374 for such year.

Example 3. Assume that Corporation O, an S corporation, is subject to the tax imposed by section 1374 for its taxable year 1983. For 1983, O has an excess of net long-term capital gain over net short-term capital loss in the amount of $73,000, and taxable income within the meaning of section 1374, which includes capital gains and losses, of $100,000. The amount of tax computed under paragraph (b)(1) of this section is 28 percent of $48.00 ($73,000—$25,000), or $13,440. Since this is lower than the amount computed under paragraph (b)(2) of this section, which is $25,750 ($3,750 + $4,500 + $7,500 + $10,000), $13,440 is the amount of tax imposed by section 1374.

Example 4. Assume that in example (3) the taxable income of O for 1983 is $35,000. This results from an excess of deductions over income with respect to items which were not included in determining the excess of the net long-term capital gain over the net short-term capital loss. In such case, the amount of tax, computed under paragraph (b)(2) of this section, is $5,550. Since this is lower than the amount computed under paragraph (b)(1) of this section, $5,550 is the amount of tax imposed by section 1374.

Example 5. Corporation P, an S corporation, for its taxable year 1983 has an excess of net long-term capital gain over net short-term capital loss in the amount of $65,000 and has taxable income of $80,000. P's election under section 1362 has been in effect for its three immediately preceding taxable years, but P, nevertheless, is subject to the tax imposed by section 1374 for 1983 since it has an excess of net long-term capital gain over net short-term capital loss (in the amount of $20,000) attributable to property with a substituted basis. The tax computed under paragraph (b)(1) of this section, $11,200 (28 percent of $40,000 ($65,000−$25,000)), is less than the tax computed under paragraph (b)(2) of this section, $17,750. However, under the limitation provided in paragraph (c) of this section which is

applicable in this factual situation, the tax imposed by section 1374 for 1983 may not exceed $5,600 (28 percent of $20,000, the excess of net long-term capital gain over net short-term capital loss attributable to property with a substituted basis).

[T.D. 8104, 51 FR 34201, Sept. 26, 1986; 52 FR 9162, Mar. 23, 1987. Redesignated and amended by T.D. 8419, 57 FR 22653, May 29, 1992. Further redesignated by T.D. 8579, 59 FR 66462, Dec. 27, 1994]

COOPERATIVES AND THEIR PATRONS

Tax Treatment of Cooperatives

§ 1.1381-1 Organizations to which part applies.

(a) ***In general.*** Except as provided in paragraph (b) of this section, part I, subchapter T, chapter 1 of the Code, applies to any corporation operating on a cooperative basis and allocating amounts to patrons on the basis of the business done with or for such patrons.

(b) ***Exceptions.*** Part I of such subchapter T does not apply to:

(1) Any organization which is exempt from income taxes under chapter 1 of the Code (other than an exempt farmers' cooperative described in section 521);

(2) Any organization which is subject to the provisions of part II (section 591 and following), subchapter H, chapter 1 of the Code (relating to mutual savings banks, etc.);

(3) Any organization which is subject to the provisions of subchapter L (section 801 and following), chapter 1 of the Code (relating to insurance companies); or

(4) Any organization which is engaged in generating, transmitting, or otherwise furnishing electric energy, or which provides telephone service, to persons in rural areas. The terms *rural areas* and *telephone service* shall have the meaning assigned to them in section 5 of the Rural Electrification Act of 1936, as amended (7 U.S.C. 924).

[T.D. 6643, 28 FR 3153, Apr. 2, 1963]

§ 1.1381-2 Tax on certain farmers' cooperatives.

(a) ***In general.***

(1) For taxable years beginning after December 31, 1962, farmers', fruit growers', or like associations, organized and operated in compliance with the requirements of section 521 and § 1.521-1, shall be subject to the taxes imposed by section 11 or section 1201. Although such associations are subject to both normal tax and surtax, as in the case of corporations generally, certain special deductions are provided for them in section 1382(c) and § 1.1382-3. For the purpose of any law which refers to organizations exempt from income taxes such an association shall, however, be considered as an organization exempt under section 501. Thus, the provisions of section 243, providing a credit for dividends received from a domestic corporation subject to taxation, are not applicable to dividends received from a cooperative association organized and operated in compliance with the requirements of section 521 and § 1.521-1. The provisions of section 1501, relating to consolidated returns, are likewise not applicable.

(2) Rules governing the manner in which amounts paid as patronage dividends are allowable as deductions in computing the taxable income of such an association are set forth in section 1382(b) and § 1.1382-2. For the tax treatment, as to patrons, of amounts received during the taxable year as patronage dividends, see section 1385 and the regulations thereunder.

(b) ***Cross references.*** For tax treatment of exempt cooperative associations for taxable years beginning before January 1, 1963, or for taxable years beginning after December 31, 1962, with respect to payments attributable to patronage occurring during taxable years beginning before January 1, 1963, see section 522 and the regulations thereunder. For requirements of annual returns by such associations, see sections 6012 and 6072(d) and paragraph (f) of § 1.6012-2.

[T.D. 6643, 28 FR 3153, Apr. 2, 1963]

§ 1.1382-1 Taxable income of cooperatives; gross income.

(a) ***Introduction.*** Section 1382(b) provides that the amount of certain patronage dividends (and amounts paid in redemption of nonqualified written notices of allocation) shall not be taken into account by a cooperative organization in determining its taxable income. Such section also provides that, for purposes of the Internal Revenue Code, an amount not taken into account is to be treated in the same manner as an item of gross income and as a deduction therefrom. Therefore, such an amount is treated as a deduction for purposes of applying the Internal Revenue Code and the regulations thereunder and, for simplicity, is referred to as a deduction in the regulations under such Code. However, this should not be regarded as a determination of the character of the amount for other purposes.

(b) ***Computation of gross income.*** Any cooperative organization to which part I, subchapter T, chapter 1 of the Code, applies shall not, for any purpose under the Code, exclude from its gross income (as a reduction in gross receipts, an increase in cost of goods sold, or otherwise) the amount of any allocation or distribution to a patron out of the net earnings of such organization with respect to patronage occurring during a taxable year beginning after December 31, 1962. See, however, section 1382(b) and § 1.1382-2 for deductions for certain amounts paid to patrons out of net earnings.

[T.D. 6643, 28 FR 3154, Apr. 2, 1963]

§ 1.1382-2 Taxable income of cooperatives; treatment of patronage dividends.

(a) ***In general.***

(1) In determining the taxable income of any cooperative organization to which part I, subchapter T, chapter 1 of the Code, applies, there shall be allowed as deductions from gross income, in addition to the other deductions allowable under chapter 1 of the Code, the deductions with respect to patronage dividends provided in section 1382(b) and paragraphs (b) and (c) of this section.

(2) For the definition of terms used in this section see section 1388 and § 1.1388-1; to determine the payment period for a taxable year, see section 1382(d) and § 1.1382-4.

(b) ***Deduction for patronage dividends*** —

(1) ***In general.*** In the case of a taxable year beginning after December 31, 1962, there is allowed as a deduction from the gross income of any cooperative organization to which part I of subchapter T applies, amounts paid to patrons during the payment period for the taxable year as patronage dividends with respect to patronage occurring during such taxable year, but only to the extent that

such amounts are paid in money, qualified written notices of allocation, or other property (other than non qualified written notices of allocation). See section 1382 (e) and (f) and §§ 1.1382-5 and 1.1382-6 for special rules relating to the time when patronage is deemed to occur where products are marketed under a pooling arrangement or where earnings are includible in the gross income of the cooperative organization for a taxable year after the year in which the patronage occurred. For purposes of this paragraph, a written notice of allocation is considered paid when it is issued to the patron. A patronage dividend shall be treated as paid in money during the payment period for the taxable year to the extent it is paid by a qualified check which is issued during the payment period for such taxable year and endorsed and cashed on or before the ninetieth day after the close of such payment period. In determining the amount paid which is allowable as a deduction under this paragraph, property (other than written notices of allocation) shall be taken into account at its fair market value when paid, and a qualified written notice of allocation shall be taken into account at its stated dollar amount.

(2) ***Special rule for certain taxable years.*** No deduction is allowed under this section for amounts paid during taxable years beginning before January 1, 1963, or for amounts paid during taxable years beginning after December 31, 1962, with respect to patronage occurring during taxable years beginning before January 1, 1963. With respect to such amounts, the Internal Revenue Code of 1954 (including section 522 and the regulations thereunder) shall be applicable without regard to subchapter T.

(c) ***Deduction for amounts paid in redemption of certain nonqualified written notices of allocation.*** In the case of a taxable year beginning after December 31, 1962, there is allowed as a deduction from the gross income of a cooperative organization to which part I of subchapter T applies, amounts paid by such organization during the payment period for such taxable year in redemption of a nonqualified written notice of allocation which was previously paid as a patronage dividend during the payment period for the taxable year during which the patronage occurred, but only to the extent such amounts (1) are paid in money or other property (other than written notices of allocation) and (2) do not exceed the stated dollar amount of such written notice of allocation. No deduction shall be allowed under this paragraph, however, for amounts paid in redemption of nonqualified written notices of allocation which were paid with respect to patronage occurring during a taxable year beginning before January 1, 1963. For purposes of this paragraph, if an amount is paid within the payment period for two or more taxable years, it will be allowable as a deduction only for the earliest of such taxable years. Thus, if a cooperative which reports its income on a calendar year basis pays an amount in redemption of a nonqualified written notice of allocation on January 15, 1966, it will be allowed a deduction for such amount only for its 1965 taxable year. In determining the amount paid which is allowable as a deduction under this paragraph, property (other than written notices of allocation) shall be taken into account at its fair market value when paid. Amounts paid in redemption of a nonqualified written notice of allocation in excess of its stated dollar amount shall be treated under the applicable provisions of the Code. For example, if such excess is in the nature of interest, its deductibility will be governed by section 163 and the regulations thereunder.

[T.D. 6643, 28 FR 3154, Apr. 2, 1963]

§ 1.1382-3 Taxable income of cooperatives; special deductions for exempt farmers' cooperatives.

(a) ***In general.***

(1) Section 1382(c) provides that in determining the taxable income of a farmers', fruit growers', or like association, described in section 1381(a)(1) and organized and operated in compliance with the requirements of section 521 and § 1.521-1, there shall be allowed as deductions from the gross income of such organization, in addition to the other deductions allowable under chapter 1 of the Code (including the deductions allowed by section 1382(b)) the special deductions provided in section 1382(c) and paragraphs (b), (c), and (d) of this section.

(2) For the definition of terms used in this section, see section 1388 and § 1.1388-1; to determine the payment period for a taxable year, see section 1382(d) and § 1.1382-4.

(b) ***Deduction for dividends paid on capital stock.*** In the case of a taxable year beginning after December 31, 1962, there is allowed as a deduction from the gross income of a cooperative association operated in compliance with the requirements of section 521 and § 1.521-1, amounts paid as dividends during the taxable year on the capital stock of such cooperative association. For the purpose of the preceding sentence, the term *capital stock* includes common stock (whether voting or nonvoting), preferred stock, or any other form of capital represented by capital retain certificates, revolving fund certificates, letters of advice, or other evidence of a proprietary interest in a cooperative association. Such deduction is applicable only to the taxable year in which the dividends are actually or constructively paid to the holder of capital stock or other proprietary interest in the cooperative association. If a dividend is paid by check and the check bearing a date within the taxable year is deposited in the mail, in a cover properly stamped and addressed to the shareholder at his last known address, at such time that in the ordinary handling of the mails the check would be received by such holder within the taxable year, a presumption arises that the dividend was paid to such holder in such year. The determination of whether a dividend has been paid to such holder by the corporation during its taxable year is in no way dependent upon the method of accounting regularly employed by the corporation in keeping its books. For further rules as to the determination of the right to a deduction for dividends paid, under certain specific circumstances, see section 561 and the regulations thereunder.

(c) ***Deduction for amounts allocated from income not derived from patronage*** —

(1) ***In general.*** In the case of a taxable year beginning after December 31, 1962, there is allowed as a deduction from the gross income of a cooperative association operated in compliance with the requirements of section 521 and § 1.521-1, amounts paid to patrons, during the payment period for the taxable year, on a patronage basis with respect to its income derived during such taxable year either from business done with or for the United States or any of its agencies or from sources other than patronage, but only to the extent such amounts are paid in money, qualified written notices of allocation, or other property (other than nonqualified written notices of allocation). For purposes of this subparagraph a written notice of allocation is considered paid when it is issued to the patron. An amount shall be treated as paid in money during the payment period for the taxable year to the extent it is paid by a qualified check which is issued during the payment period for such taxable year and endorsed and cashed on or before the ninetieth day after the close of such payment period. In determining the amount paid which is allowable as a deduction under this paragraph, property (other than written notices of allocation) shall be taken into account at its fair market value when paid, and a qualified written notice of allocation shall be taken into account at its stated dollar amount.

(2) ***Definition.*** The term *income derived from sources other than patronage* used in this paragraph (c) means income from nonpatronage sources within the meaning of § 1.1388-1(f)(3).

(3) ***Basis of distribution.*** In order that the deduction for amounts paid with respect to income derived from business done with or for the United States or any of its agencies or from sources other than patronage may be applicable, it is necessary that the amount sought to be deducted be paid on a

patronage basis in proportion, insofar as is practicable, to the amount of business done by or for patrons during the period to which such income is attributable. For example, if capital gains are realized from the sale or exchange of capital assets acquired and disposed of during the taxable year, income realized from such gains must be paid to patrons of such year in proportion to the amount of business done by such patrons during the taxable year. Similarly, if capital gains are realized by the association from the sale or exchange of capital assets held for a period extending into more than one taxable year income realized from such gains must be paid, insofar as is practicable, to the persons who were patrons during the taxable years in which the asset was owned by the association in proportion to the amount of business done by such patrons during such taxable years.

(4) ***Special rules for certain taxable years.*** No deduction is allowable under this paragraph for amounts paid during taxable years beginning before January 1, 1963, or for amounts paid during taxable years beginning after December 31, 1962, with respect to income derived during taxable years beginning before January 1, 1963. With respect to such amounts, the Internal Revenue Code of 1954 (including section 522 and the regulations thereunder) shall be applicable without regard to subchapter T.

(d) ***Deduction for amounts paid in redemption of certain nonqualified written notices of allocation.*** In the case of a taxable year beginning after December 31, 1962, there is allowed as a deduction from the gross income of a cooperative association operated in compliance with the requirements of section 521 and § 1.521-1, amounts paid by such association during the payment period for such taxable year in redemption of certain nonqualified written notices of allocation, but only to the extent such amounts (1) are paid in money or other property (other than written notices of allocation) and (2) do not exceed the stated dollar amount of such nonqualified written notices of allocation. The nonqualified written notices of allocation referred to in the preceding sentence are those which were previously paid to patrons on a patronage basis with respect to earnings derived either from business done with or for the United States or any of its agencies or from sources other than patronage, provided that such nonqualified written notices of allocation were paid during the payment period for the taxable year during which such earnings were derived. No deduction shall be allowed under this paragraph, however, for amounts paid in redemption of nonqualified written notices of allocation which were paid with respect to earnings derived during a taxable year beginning before January 1, 1963. For purposes of this paragraph, if an amount is paid within the payment period for two or more taxable years, it will be allowable as a deduction only for the earliest of such taxable years. In determining the amount paid which is allowable as a deduction under this paragraph, property (other than written notices of allocation) shall be taken into account at its fair market value when paid. Amounts paid in redemption of a nonqualified written notice of allocation in excess of its stated dollar amount shall be treated under the applicable provisions of the Code.

(e) ***Applicability date.*** Paragraph (c)(2) of this section applies to taxable years beginning after January 19, 2021. For taxable years beginning on or before January 19, 2021, taxpayers, however, may choose to apply the rules of paragraph (c)(2) of this section, provided the taxpayers apply the rules in their entirety and in a consistent manner.

[T.D. 6643, 28 FR 3155, Apr. 2, 1963, as amended by T.D. 9947, 86 FR 5593, Jan. 19, 2021]

§ 1.1382-4 Taxable income of cooperatives; payment period for each taxable year.

The payment period for a taxable year is the period beginning with the first day of such taxable year and ending with the fifteenth day of the ninth month following the close of such year.

[T.D. 6643, 28 FR 3156, Nov. 26, 1963]

§ 1.1382-5 Taxable income of cooperatives; products marketed under pooling arrangements.

For purposes of section 1382(b) and § 1.1382-2, in the case of a pooling arrangement for the marketing of products the patronage under such pool shall be treated as occurring during the taxable year in which the pool closes. The determination of when a pool is closed will be made on the basis of the facts and circumstances in each case, but generally the practices and operations of the cooperative organization shall control. This section may be illustrated by the following example:

Example: Farmer A delivers to the X Cooperative 100 bushels of wheat on August 15, 1963, at which time he receives a *per bushel* advance. (Both farmer A and the X Cooperative file returns on a calendar year basis.) On October 15, 1963 farmer A receives an additional *per bushel* payment. The pool sells some of its wheat in 1963 and the remainder in January of 1964. The pool is closed on February 15, 1964. For purposes of section 1382(b), A's patronage is considered as occurring in 1964.

[T.D. 6643, 28 FR 3156, Apr. 2, 1963]

§ 1.1382-6 Taxable income of cooperatives; treatment of earnings received after patronage occurred.

If earnings derived from business done with or for patrons are includible in the gross income of the cooperative organization for a taxable year after the taxable year during which the patronage occurred, then, for purposes of determining whether the cooperative is allowed a deduction under section 1382(b) and § 1.1382-2, the patronage to which these earnings relate shall be considered to have occurred during the taxable year for which such earnings are includible in the cooperative's gross income. Thus, if the cooperative organization pays these earnings out as patronage dividends during the payment period for the taxable year for which the earnings are includible in its gross income, it will be allowed a deduction for such payments under section 1382(b)(1) and paragraph (b) of § 1.1382-2, to the extent they are paid in money, qualified written notices of allocation, or other property (other than written notices of allocation).

[T.D. 6643, 28 FR 3156, Apr. 2, 1963]

§ 1.1382-7 Special rules applicable to cooperative associations exempt from tax before January 1, 1952.

(a) ***Basis of property.*** The adjustments to the cost or other basis provided in sections 1011 and 1016 and the regulations thereunder, are applicable for the entire period since the acquisition of the property. Thus, proper adjustment to basis must be made under section 1016 for depreciation, obsolescence, amortization, and depletion for all taxable years beginning prior to January 1, 1952, although the cooperative association was exempt from tax under section 521 or corresponding provisions of prior law for such years. However, no adjustment for percentage or discovery depletion is to be made for any year during which the association was exempt from tax. If a cooperative association has made a proper election in accordance with section 1020 and the regulations prescribed thereunder with respect to a taxable year beginning before 1952 in which the association was not exempt from tax, the adjustment to basis for depreciation for such years shall be limited in accordance with the provisions of section 1016(a)(2).

(b) ***Amortization of bond premium.*** In the case of tax exempt and partially taxable bonds purchased at a premium and subject to amortization under section 171, proper adjustment to basis must be made to reflect amortization with respect to such premium from the date of acquisition of the bond. (For principles governing the method of computation, see the example in paragraph (b) of § 1.1016-9, relating to mutual savings banks, building and loan associations, and cooperative banks.) The basis of a fully taxable bond purchased at a premium shall be adjusted from the date of the election to amortize such premium in accordance with the provisions of section 171 except that no adjustment shall be allowable for such portion of the premium attributable to the period prior to the election.

(c) ***Amortization of mortgage premium.*** In the case of a mortgage acquired at a premium where the principal of such mortgage is payable in installments, adjustments to the basis for the premium must be made for all taxable years (whether or not the association was exempt from tax under section 521 during such years) in which installment payments are received. Such adjustments may be made on an individual mortgage basis or on a composite basis by reference to the average period of payments of the mortgage loans of such association. For the purpose of this adjustment, the term *premium* includes the excess of the acquisition value of the mortgage over its maturity value. The acquisition value of the mortgage is the cost including buying commissions, attorneys' fees, or brokerage fees, but such value does not include amounts paid for accrued interest.

[T.D. 6643, 28 FR 3156, Apr. 2, 1963]

§ 1.1383-1 Computation of tax where cooperative redeems nonqualified written notices of allocation.

(a) ***General rule.***

(1) If, during the taxable year, a cooperative organization is entitled to a deduction under section 1382 (b)(2) or (c)(2)(B) for amounts paid in redemption of nonqualified written notices of allocation, the tax imposed for the taxable year by chapter 1 of the Code shall be the lesser of:

(i) The tax for the taxable year computed under section 1383(a)(1), that is, with such deduction taken into account, or

(ii) The tax for the taxable year computed under section 1383(a)(2), that is, without taking such deduction into account, minus the decrease in tax (under chapter 1 of the Code) for any prior taxable year (or years) which would result solely from treating all such nonqualified written notices of allocation redeemed during the taxable year as qualified written notices of allocation when paid. For the purpose of this subdivision, the amount of the decrease in tax is not limited to the amount of the tax for the taxable year. See paragraph (c) of this section for rules relating to a refund of tax where the decrease in tax for the prior taxable year (or years) exceeds the tax for the taxable year.

(2) If the cooperative organization computes its tax for the taxable year under the provisions of section 1383(a)(2) and subparagraph (1)(ii) of this paragraph, then no deduction under section 1382 (b)(2) or (c)(2)(B) shall be taken into account in computing taxable income or loss for the taxable year, including the computation of any net operating loss carryback or carryover. However, the amount of the deduction shall be taken into account in adjusting earnings and profits for the taxable year.

(3) If the tax determined under subparagraph (1)(i) of this paragraph is the same as the tax determined under subparagraph (1)(ii) of this paragraph, the tax imposed for the taxable year under chapter 1 of the Code shall be the tax determined under subparagraph (1)(I) of this paragraph, and section 1383

and this section shall not otherwise apply. The tax imposed for the taxable year shall be the tax determined under subparagraph (1)(ii) of this paragraph in any case when a credit or refund would be allowable for the taxable year under section 1383(b)(1).

(b) ***Determination of decrease in tax for prior taxable years*** —

(1) ***Prior taxable years.*** The prior taxable year (or years) referred to in paragraph (a) of this section is the year (or years) within the payment period for which the nonqualified written notices of allocation were paid and, in addition, any other prior taxable year (or years) which is affected by the adjustment to income by reason of treating such nonqualified written notices of allocation as qualified written notices of allocation when paid.

(2) ***Adjustment to income in prior taxable years.*** The deduction for the prior taxable year (or years) in determining the decrease in tax under section 1383(a)(2)(B) and paragraph (a)(1)(ii) of this section shall be the amount paid in redemption of the nonqualified written notices of allocation which, without regard to section 1383, is allowable as a deduction under section 1382 (b)(2) or (c)(2)(B) for the current taxable year.

(3) ***Computation of decrease in tax for prior taxable years.*** In computing the amount of decrease in tax for a prior taxable year (or years) resulting under this section, there must first be ascertained the amount of tax previously determined for the taxpayer for such prior taxable year (or years). The tax previously determined shall be the sum of the amounts shown as such tax by the taxpayer on his return or returns, plus any amounts which have been previously assessed (or collected without assessment) as deficiencies, reduced by the amount of any rebates which have previously been made. The amount shown as the tax by the taxpayer on his return and the amount of any rebates or deficiencies shall be determined in accordance with the provisions of section 6211 and the regulations thereunder. After the tax previously determined has been ascertained, a recomputation must then be made to determine the decrease in tax, if any, resulting under this section. In determining the decrease in tax for the prior taxable year (or years), appropriate adjustment shall be made to any item which is dependent upon the amount of gross income or taxable income (such as charitable contributions, net operating losses, the foreign tax credit, and the dividends received credit).

(c) ***Refunds.*** If the decrease in tax for the prior taxable year (or years) determined under section 1383(a)(2)(B) and paragraph (a)(1)(ii) of this section exceeds the tax imposed by chapter 1 of the Code for the taxable year computed without the deduction under section 1382 (b) or (c)(2)(B), the excess shall be considered to be a payment of tax for the taxable year of the deduction. Such payment is deemed to have been made on the last day prescribed by law for the payment of tax for the taxable year and shall be refunded or credited in the same manner as if it were an overpayment of tax for such taxable year. See section 6151 and the regulations thereunder, for rules relating to time and place for paying tax shown on returns.

(d) ***Example.*** The application of section 1383 may be illustrated by the following example:

Example: The X Cooperative (which reports its income on a calendar year basis) pays patronage dividends of $100,000 in nonqualified written notices of allocation on February 1, 1964, with respect to patronage occurring in 1963. Since the patronage dividends of $100,000 were paid in nonqualified written notices of allocation the X Cooperative is not allowed a deduction for that amount for 1963. On December 1, 1966, the X Cooperative redeems these nonqualified written notices of allocation for $50,000. Under section 1382(b)(2), a deduction of $50,000 is allowable in computing its taxable income for 1966. However, the X Cooperative has a loss for 1966 determined without regard to this deduction. The X Cooperative, therefore, makes the computation under the alternative method

provided in section 1383(a)(2). Under this alternative method, it will claim a credit or refund (as an overpayment of tax for 1966) of the decrease in tax for 1963 and for such other years prior to 1966 as are affected which results from recomputing its tax for 1963 and such other years affected) as if patronage dividends of $50,000 had been paid on February 1, 1964, in qualified written notices of allocation. In addition, under this alternative method the X Cooperative cannot use the $50,000 as a deduction for 1966 so as to increase its net operating loss for such year for purposes of computing a net operating loss carryback or carryover. If the X Cooperative also redeems on December 1, 1966, nonqualified written notices of allocation which were paid as patronage dividends on February 1, 1965, with respect to patronage occurring in 1964, it will claim a credit or refund (as an overpayment of tax for 1966) of the decrease in tax for 1964 and for such other years prior to 1966 as are affected. It shall not, however, apply one method for computing the tax with respect to the redemptions in 1966 of the nonqualified written notices of allocation paid in 1964 and the other method with respect to the redemption in 1966 of the nonqualified written notices of allocation paid in 1965.

[T.D. 6643, 28 FR 3156, Apr. 2, 1963]

TAX TREATMENT BY PATRONS OF PATRONAGE DIVIDENDS

§ 1.1385-1 Amounts includible in patron's gross income.

(a) ***General rules.*** Section 1385(a) requires every person to include in gross income the following amounts received by him during the taxable year, to the extent paid by the organization in money, a qualified written notice of allocation, or other property (other than a nonqualified written notice of allocation):

(1) The amount of any patronage dividend received from an organization subject to the provisions of part I, subchapter T, chapter 1 of the Code, unless such amount is excludable from gross income under the provisions of section 1385(b) and paragraph (c) of this section, and

(2) The amount of any distribution received from a farmers', fruit growers', or like association, organized and operated in compliance with the requirements of section 521 and § 1.521-1, which is paid on a patronage basis with respect to earnings derived by such association either from business done with or for the United States or any of its agencies or from sources other than patronage.

The amounts described in subparagraphs (1) and (2) of this paragraph are includible in gross income for the taxable year in which they are received even though the cooperative organization was allowed a deduction for such amounts for its preceding taxable year because they were paid during the payment period for such preceding taxable year. Similarly, such amounts are includible in gross income even though the cooperative organization is not permitted any deduction for such amounts under the provisions of section 1382 because such amounts were not paid within the time prescribed by such section.

(b) ***Treatment of certain nonqualified written notices of allocation.***

(1) Except as provided in paragraph (c) of this section, any gain on the redemption, sale, or other disposition of a nonqualified written notice of allocation described in subparagraph (2) of this paragraph shall, to the extent that the stated dollar amount of such written notice of allocation exceeds its basis, be considered as gain from the sale or exchange of property which is not a capital asset, whether such gain is realized by the patron who received the nonqualified written notice of allocation initially or by any subsequent holder. Any amount realized on the redemption, sale, or other

disposition of such a nonqualified written notice of allocation in excess of its stated dollar amount will be treated under the applicable provisions of the Code. For example, amounts received in redemption of a nonqualified written notice of allocation which are in excess of the stated dollar amount of such written notice of allocation and which, in effect, constitute interest shall be treated by the recipient as interest.

(2) The nonqualified written notices of allocation to which subparagraph (1) of this paragraph applies are the following:

(i) A nonqualified written notice of allocation which was paid as a patronage dividend (within the meaning of section 1388(a) and paragraph (a) of § 1.1388-1), by a cooperative organization subject to the provisions of part I of subchapter T, and

(ii) A nonqualified written notice of allocation which was paid by a farmers', fruit growers', or like association, organized and operated in compliance with the requirements of section 521 and § 1.521-1, to patrons on a patronage basis with respect to earnings derived either from business done with or for the United States or any of its agencies or from sources other than patronage.

(3) The basis of any nonqualified written notice of allocation described in subparagraph (2) of this paragraph, in the hands of the patron to whom such written notice of allocation was initially paid shall be zero, and the basis of such a written notice of allocation which was acquired from a decedent shall be its basis in the hands of the decedent.

(4) The application of this paragraph may be illustrated by the following example:

Example: A, a farmer, receives a patronage dividend from the X Cooperative, in the form of a nonqualified written notice of allocation, which is attributable to the sale of his crop to that cooperative organization. The stated dollar amount of the nonqualified written notice of allocation is $100. The basis of the written notice of allocation in the hands of A is zero and he must report any amount up to $100 received by him on its redemption, sale, or other disposition, as ordinary income. If A gives the written notice of allocation to his son B, B takes A's (the donor's) basis which is zero, and any gain up to $100 which B later realizes on its redemption, sale, or other disposition is ordinary income. Similarly, if A dies before realizing any gain on the nonqualified written notice of allocation, B, his legatee, has a zero basis for such written notice of allocation and any gain up to $100 which he then realizes on its redemption, sale, or other disposition is also ordinary income. Such gain is income in respect of a decedent within the meaning of section 691(a) and § 1.691(a)-1.

(c) ***Treatment of patronage dividends received with respect to certain property*** —

(1) ***Exclusions from gross income.*** Except as provided in subparagraph (2) of this paragraph, gross income shall not include:

(i) Any amount of a patronage dividend described in paragraph (a)(1) of this section which is received with respect to the purchase of supplies, equipment, or services, which were not used in the trade or business and the cost of which was not deductible under section 212, or which is received with respect to the marketing or purchasing of a capital asset (as defined in section 1221) or property used in the trade or business of a character which is subject to the allowance for depreciation provided in section 167; and

(ii) Any amount (to the extent treated as ordinary income under paragraph (b) of this section) received on the redemption, sale, or other disposition of a nonqualified written notice of allocation which was received as a patronage dividend with respect to the purchase of

supplies, equipment, or services, which were not used in the trade or business and the cost of which was not deductible under section 212, or which was received as a patronage dividend with respect to the marketing or purchasing of a capital asset (as defined in section 1221) or property used in the trade or business of a character which is subject to the allowance for depreciation provided in section 167.

(2) *Special rules.*

(i) If an amount described in subparagraph (1) of this paragraph relates to the purchase of a capital asset (as defined in section 1221), or property used in the trade or business of a character which is subject to the allowance for depreciation provided in section 167, and the person receiving such amount owned such asset or property at any time during the taxable year in which such amount is received, then such amount shall be taken into account as an adjustment to the basis of such property or asset as of the first day of the taxable year in which such amount is received. To the extent that such amount exceeds the adjusted basis of such property it shall be taken into account as ordinary income.

(ii) If an amount described in subparagraph (1) of this paragraph relates to the marketing or purchasing of a capital asset (as defined in section 1221), or property used in the trade or business of a character which is subject to the allowance for depreciation provided in section 167, and the person receiving such amount did not own the asset or property at any time during the taxable year in which such amount is received, then such amount shall be included in gross income as ordinary income except that:

(*a*) If such amount relates to a capital asset (as defined in section 1221) which was held by the recipient for more than 1 year (6 months for taxable years beginning before 1977; 9 months for taxable years beginning in 1977) and with respect to which a loss was or would have been deductible under section 165, such amount shall be taken into account as gain from the sale or exchange of a capital asset held for more than 1 year (6 months for taxable years beginning before 1977; 9 months for taxable years beginning in 1977);

(*b*) If such amount relates to a capital asset (as defined in section 1221) with respect to which a loss was not or would not have been deductible under section 165, such amount shall not be taken into account.

(iii) If an amount described in subparagraph (1) of this paragraph relates to the marketing of a capital asset (as defined in section 1221) or property used in the trade or business of a character which is subject to the allowance for depreciation provided in section 167, and such amount is received by the patron in the same taxable year during which he marketed the asset to which it relates, such amount shall be treated as an additional amount received on the sale or other disposition of such asset.

(iv) If a person receiving a patronage dividend or an amount on the redemption, sale, or other disposition of a nonqualified written notice of allocation which was received as a patronage dividend is unable to determine the item to which it relates, he shall include such patronage dividend or such amount in gross income as ordinary income in the manner and to the extent provided in paragraph (a) or (b) of this section, whichever is applicable.

(3) The application of this paragraph may be illustrated by the following examples:

> *Example 1.* On July 1, 1964, P, a patron of a cooperative association, purchases an

implement for use in his farming business from such association for $2,900. The implement has an estimated useful life of three years and has an estimated salvage value of $200 which P chooses to take into account in the computation of depreciation. P files his income tax returns on a calendar year basis. For 1964 P claims depreciation of $450 with respect to the implement pursuant to his use of the straight-line method at the rate of $900 per year. On July 1, 1965, the cooperative association pays a patronage dividend to P of $300 in cash with respect to his purchase of the farm implement. P will adjust the basis of the implement and will compute his depreciation deduction for 1965 (and subsequent taxable years) as follows:

Cost of farm implement, July 1, 1964	$2,900
Less:	
Salvage value	200
Depreciation for 1964 (6 months)	450
Adjustment as of January 1, 1965 for cash patronage dividend	300
Total	950
Basis for depreciation for the remaining $2^1/_2$ years of estimated life	1,950
Depreciation deduction for 1965 ($1,950 divided by the $2^1/_2$ years of remaining life)	700

Example 2. Assume the same facts as in example (1), except that on July 1, 1965, the cooperative association paid a patronage dividend to P with respect to his purchase of the implement in the form of a nonqualified written notice of allocation having a stated dollar amount of $300. Since such written notice of allocation was not qualified, no amount of the patronage dividend was taken into account by P as an adjustment to the basis of the implement, or in computing his depreciation deduction, for the year 1965. In 1968, P receives $300 cash from the association in full redemption of the written notice of allocation. Prior to 1968, he had recovered through depreciation $2,700 of the cost of the implement, leaving an adjusted basis of $200 (the salvage value). For the year 1968, the redemption proceeds of $300 are applied against the adjusted basis of $200, reducing the basis of the implement to zero, and the balance of the redemption proceeds, $100, is includable as ordinary income in P's gross income for the calendar year 1968. If the patronage dividend paid to P on July 1, 1965, had been in the form of $60 cash (20 percent of $300) and a qualified written notice of allocation with a stated dollar amount of $240, then the tax treatment of such patronage dividend would be that illustrated in example (1).

Example 3. Assume the same facts as in example (2), except that the nonqualified written notice of allocation is redeemed in cash on July 1, 1966. The full $300 received on redemption will reduce the adjusted basis of the implement as of January 1, 1966, and the

depreciation allowances for 1966 and 1967 are computed as follows:

Cost of farm implement, July 1, 1964	$2,900
Less:	
Salvage value	200
Depreciation for 1964 (6 months)	450
Depreciation for 1965	900
Adjustment as of January 1, 1966 for proceeds of the redemption	300
Total	1,850
Basis for depreciation on Jan. 1, 1966	1,050
If P uses the implement in his business until fully depreciated, he would be entitled to the following depreciation allowances with respect to such implement:	
For 1966	700
For 1967	350
Total	1,050
Balance to be depreciated	0

Example 4. Assume the same facts as in example (3), except that P sells the implement in 1965. The entire $300 received in 1966 in redemption of the nonqualified written notice of allocation is includible as ordinary income in P's gross income for the year 1966.

(d) ***Determination of amount received.*** In determining the amount received for purposes of this section:

(1) Property (other than written notices of allocation) shall be taken into account at its fair market value when received;

(2) A qualified written notice of allocation shall be taken into account at its stated dollar amount; and

(3) The amount of a qualified check shall be considered an amount received in money during the taxable year in which such check is received if the check is endorsed and cashed on or before the ninetieth day after the close of the payment period for the taxable year of the cooperative organization in which the patronage to which such amount relates occurred.

(e) ***Effective date.*** This section shall not apply to any distribution or allocation received from a cooperative organization, or to any gain or loss on the redemption, sale, or other disposition of any allocation received from such an organization, if such distribution or allocation was received with respect to patronage occurring in a taxable year of the organization beginning before January 1, 1963. See § 1.61-5 for the tax treatment by patrons of such distributions or allocations.

[T.D. 6643, 28 FR 3157, Apr. 2, 1963, as amended by T.D. 7728, 45 FR 72650, Nov. 3, 1980]

DEFINITIONS; SPECIAL RULES

§ 1.1388-1 Definitions and special rules.

(a) ***Patronage dividend*** —

(1) ***In general.*** The term *patronage dividend* means an amount paid to a patron by a cooperative organization subject to the provisions of part I, subchapter T, chapter 1 of the Code, which is paid:

(i) On the basis of quantity or value of business done with or for such patron,

(ii) Under a valid enforceable written obligation of such organization to the patron to pay such amount, which obligation existed before the cooperative organization received the amount so paid, and

(iii) Which is determined by reference to the net earnings of the cooperative organization from business done with or for its patrons.

For the purpose of subdivision (ii) of this subparagraph, amounts paid by a cooperative organization are paid under a valid enforceable written obligation if such payments are required by State law or are paid pursuant to provisions of the bylaws, articles of incorporation, or other written contract, whereby the organization is obligated to make such payment. The term *net earnings,* for purposes of subdivision (iii) of this subparagraph, includes the excess of amounts retained (or assessed) by the organization to cover expenses or other items over the amount of such expenses or other items. For purposes of such subdivision (iii), net earnings shall not be reduced by any taxes imposed by subtitle A of the Code, but shall be reduced by dividends paid on capital stock or other proprietary capital interests.

(2) ***Exceptions.*** The term *patronage dividend* does not include the following:

(i) An amount paid to a patron by a cooperative organization to the extent that such amount is paid out of earnings not derived from business done with or for patrons.

(ii) An amount paid to a patron by a cooperative organization to the extent that such amount is paid out of earnings from business done with or for other patrons to whom no amounts are paid, or to whom smaller amounts are paid, with respect to substantially identical transactions. Thus, if a cooperative organization does not pay any patronage dividends to nonmembers, any portion of the amounts paid to members which is out of net earnings from patronage with nonmembers, and which would have been paid to the nonmembers if all patrons were treated alike, is not a patronage dividend.

(iii) An amount paid to a patron by a cooperative organization to the extent that such amount is paid in redemption of capital stock, or in redemption or satisfaction of certificates of indebtedness, revolving fund certificates, retain certificates, letters of advice, or other similar documents, even if such documents were originally paid as patronage dividends.

(iv) An amount paid to a patron by a cooperative organization to the extent that such amount is fixed without reference to the net earnings of the cooperative organization from business done with or for its patrons.

(3) ***Examples.*** The application of subparagraphs (1) and (2) of this paragraph may be illustrated by the following examples:

> *Example 1.* (i) Cooperative A, a marketing association operating on a pooling basis, receives the products of patron W on January 5, 1964. On the same day cooperative A advances to W

45 cents per unit for the products so delivered and allocates to him a *retain certificate* having a face value calculated at the rate of 5 cents per unit. During the operation of the pool, and before substantially all the products in the pool are disposed of, cooperative A advances to W an additional 40 cents per unit, the amount being determined by reference to the market price of the products sold and the anticipated price of the unsold products. At the close of the pool on November 10, 1964, cooperative A determines the excess of its receipts over the sum of its expenses and its previous advances to patrons, and allocates to W an additional 3 cents per unit and shares of the capital stock of A having an aggregate stated dollar amount calculated at the rate of 2 cents per unit. Under the provisions of section 1382(e), W's patronage is deemed to occur in 1964, the year in which the pool is closed.
(ii) The patronage dividend paid to W during 1964 amounts to 5 cents per unit, consisting of the aggregate of the following per-unit allocations: The amount of the cash distribution (3 cents), and the stated dollar amount of the capital stock of A (2 cents), which are fixed with reference to the net earnings of A. The amount of the two distributions in cash (85 cents) and the face amount of the *retain certificate* (5 cents), which are fixed without reference to the net earnings of A, do not constitute patronage dividends.

Example 2. Cooperative B, a marketing association operating on a pooling basis, receives the products of patron X on March 5, 1964. On the same day cooperative B pays to X $1.00 per unit for such products, this amount being determined by reference to the market price of the product when received, and issues to him a participation certificate having no face value but which entitles X on the close of the pool to the proceeds derived from the sale of his products less the previous payment of $1.00 and the expenses and other charges attributable to such products. On March 5, 1967, cooperative B, having sold the products in the pool, having deducted the previous payments for such products, and having determined the expenses and other charges of the pool pays to X, in cash, 10 cents per unit pursuant to the participation certificate. Under the provisions of section 1382(e), X's patronage is deemed to occur in 1967, the year in which the pool is closed. The payment made to X during 1967, amounting to 10 cents per unit, is a patronage dividend. Neither the payment to X in 1964 of $1.00 nor the issuance to him of the participation certificate in that year constitutes a patronage dividend.

Example 3. Cooperative C, a purchasing association, obtains supplies for patron Y on May 1, 1964, and receives in return therefor $100. On February 1, 1965, cooperative C, having determined the excess of its receipts over its costs and expenses, pays to Y a cash distribution of $1.00 and a revolving fund certificate with a stated dollar amount of $1.00. The amount of patronage dividend paid to Y in 1965 is $2.00, the aggregate of the cash distribution ($1.00) and the stated dollar amount of the revolving fund certificate ($1.00).

Example 4. Cooperative D, a service association, sells the products of members on a fee basis. It receives the products of patron Z under an agreement not to pool his products with those of other members, to sell his products, and to deliver to him the proceeds of the sale. Patron Z makes payments to cooperative D during 1964 aggregating $75 for service rendered him by cooperative D during that year. On May 15, 1965, cooperative D, having determined the excess of its receipts over its costs and expenses, pays to Z a cash distribution of $2.00. Such amount is a patronage dividend paid by cooperative D during 1965.

(b) ***Written notice of allocation.*** The term *written notice of allocation* means any capital stock, revolving fund certificate, retain certificate, certificate of indebtedness, letter of advice, or other written notice, which discloses to the patron the stated dollar amount allocated to him on the books of the cooperative organization, and the portion thereof, if any, which constitutes a patronage dividend. Thus, a mere credit to the account of a patron on the books of the organization without disclosure to the patron, is not a written notice of allocation. A written notice of allocation may disclose to the patron the amount of the allocation which constitutes a patronage dividend either as a dollar amount or as a percentage of the stated dollar amount of the written notice of allocation.

(c) ***Qualified written notice of allocation*** —

(1) ***In general.*** The term *qualified written notice of allocation* means a written notice of allocation:

(i) Which meets the requirements of subparagraphs (2) or (3) of this paragraph, and

(ii) Which is paid as part of a patronage dividend, or as part of a payment by a cooperative association organized and operated in compliance with the provisions of section 521 and § 1.521-1 to patrons on a patronage basis with respect to earnings derived from business done with or for the United States or any of its agencies or from sources other than patronage, that also includes a payment in money or by qualified check equal to at least 20 percent of such patronage dividend or such payment.

In determining, for purposes of subdivision (ii) of this subparagraph, whether 20 percent of a patronage dividend or a payment with respect to nonpatronage earnings is paid in money or by qualified check, any portion of such dividend or payment which is paid in nonqualified written notices of allocation may be disregarded. Thus, if a cooperative pays a patronage dividend of $100 in the form of a nonqualified written notice of allocation with a stated dollar amount of $50, a written notice of allocation with a stated dollar amount of $40, and money in the amount of $10, the written notice of allocation with a stated dollar amount of $40 will constitute a qualified written notice of allocation if it meets the requirements of subparagraph (2) or (3) of this paragraph. A *payment in money,* as that term is used in subdivision (ii) of this subparagraph, includes a payment by a check drawn on a bank but does not include a credit against amounts owed by the patron to the cooperative organization, a credit against the purchase price of a share of stock or of a membership in such organization, nor does it include a payment by means of a document redeemable by such organization for money.

(2) ***Written notice of allocation redeemable in cash.*** The term *qualified written notice of allocation* includes a written notice of allocation which meets the requirement of subparagraph (1)(ii) of this paragraph and which may be redeemed in cash at its stated dollar amount at any time within a period beginning on the date such written notice of allocation is paid and ending not earlier than 90 days from such date, but only if the distributee receives written notice of the right of redemption at the time he receives such written notice of allocation. The written notice of the right of redemption referred to in the preceding sentence shall be given separately to each patron. Thus, a written notice of the right of redemption which is published in a newspaper or posted at the cooperative's place of business would not be sufficient to qualify a written notice of allocation which is otherwise described in this subparagraph.

(3) ***Consent of patron.*** The term *qualified written notice of allocation* also includes written notice of allocation which meets the requirement of subparagraph (1)(ii) of this paragraph and which the distributee has consented, in a manner provided in this subparagraph, to take into account at its stated dollar amount as provided in section 1385 and § 1.1385-1.

(i) ***Consent in writing.*** A distributee may consent to take the stated dollar amount of written notices of allocation into account under section 1385 by signing and furnishing a written consent to the cooperative organization. No special form is required for the written consent so long as the document on which it is made clearly discloses the terms of the consent. Thus, the written consent may be made on a signed invoice, sales slip, delivery ticket, marketing agreement, or other document, on which appears the appropriate consent. Unless the written consent specifically provides to the contrary, it shall be effective with respect to all patronage occurring during the taxable year of the cooperative organization in which such consent is received by such organization and, unless revoked under section 1388(c)(3)(B), for all subsequent taxable years. Section 1388(c)(3)(B)(i) provides that a written consent may be revoked by the patron at any time. Thus, any written consent which is, by its terms, irrevocable is not a consent that would qualify a written notice of allocation. A revocation, to be effective, must be in writing, signed by the patron, and furnished to the cooperative organization. Such a revocation shall be effective only with respect to patronage occurring after the close of the taxable year of the cooperative organization during which the revocation is filed with it. In the case of a pooling arrangement described in section 1382(e) and § 1.1382-5, a written consent which is made at any time before the close of the taxable year of the cooperative organization during which the pool closes shall be effective with respect to all patronage under that pool. In addition, any subsequent revocation of such consent by the patron will not be effective for that pool or any other pool with respect to which he has been a patron before such revocation.

(ii) ***Consent by membership.***

(a) A distributee may consent to take the stated dollar amount of written notices of allocation into account under section 1385 by obtaining or retaining membership in the cooperative organization after such organization has adopted a valid bylaw providing that membership in such cooperative organization constitutes such consent, but such consent shall take effect only after the distributee has received a written notification of the adoption of the bylaw provision and a copy of such bylaw. The bylaw must have been adopted by the cooperative organization after October 16, 1962, and must contain a clear statement that membership in the cooperative organization constitutes the prescribed consent. The written notification from the cooperative organization must inform the patron that this bylaw has been adopted and of its significance. The notification and copy of the bylaw shall be given separately to each member (or prospective member); thus, a written notice and copy of the bylaw which are published in a newspaper or posted at the cooperative's place of business are not sufficient to qualify a written notice of allocation under this subdivision. A member (or prospective member) is presumed to have received the notification and copy of the bylaw if they were sent to his last known address by ordinary mail. A prospective member must receive the notification and copy of the bylaw before he becomes a member of the organization in order to have his membership in the organization constitute consent. A consent made in the manner described in this subdivision shall be effective only with respect to patronage occurring after the patron has received a copy of the bylaw and the prerequisite notice and while he is a member of the organization. Thus, any such consent shall not be effective with respect to any patronage occurring after the patron ceases to be a member of the cooperative organization or after the bylaw provision is repealed by such organization. In the case of a pooling arrangement described in section 1382(e) and § 1.1382-5, a consent made under this subdivision will be effective only with respect to the patron's actual patronage occurring after he receives the notification and copy of the bylaw and while he is a member of the cooperative

organization. Thus such a consent shall not be effective with respect to any patronage under a pool after the patron ceases to be a member of the cooperative organization or after the bylaw provisions is repealed by the organization.

(*b*) The following is an example of a bylaw provision which would meet the requirements prescribed in (*a*) of this subdivision.

Example: Each person who hereafter applies for and is accepted to membership in this cooperative and each member of this cooperative on the effective date of this bylaw who continues as a member after such date shall, by such act alone, consent that the amount of any distributions with respect to his patronage occurring after _____, which are made in written notices of allocation (as defined in 26 U.S.C. 1388) and which are received by him from the cooperative, will be taken into account by him at their stated dollar amounts in the manner provided in 26 U.S.C. 1385(a) in the taxable year in which such written notices of allocation are received by him.

(*c*) For purposes of this subdivision the term *member* means a person who is entitled to participate in the management of the cooperative organization.

(iii) ***Consent by qualified check.***

(a) A distributee may consent to take the stated dollar amount of a written notice of allocation into account under section 1385 by endorsing and cashing a qualified check which is paid as a part of the same patronage dividend or payment described in subparagraph (1)(ii) of this paragraph of which the written notice of allocation is also a part. In order to constitute an effective consent under this subdivision, however, the qualified check must be endorsed and cashed by the payee on or before the ninetieth day after the close of the payment period for the taxable year of the cooperative organization with respect to which the patronage dividend or payment is paid (or on or before such earlier day as may be prescribed by the cooperative organization). The endorsing and cashing of a qualified check shall be considered a consent only with respect to written notices of allocation which are part of the same patronage dividend or payment as the qualified check and for which a consent under subdivision (i) or (ii) of this subparagraph is not in effect. A qualified check is presumed to be endorsed and cashed within the 90-day period if the earliest bank endorsement which appears thereon bears a date no later than 3 days after the end of such 90-day period (excluding Saturdays, Sundays, and legal holidays).

(*b*) The term *qualified check* means a check, or other instrument redeemable in money, which is paid as a part of a patronage dividend or payment described in subparagraph (1)(ii) of this paragraph, on which there is clearly imprinted a statement that the endorsement and cashing of the check or other instrument constitutes the consent of the payee to take into account, as provided in the Federal income tax laws, the stated dollar amount of any written notices of allocation which are paid as a part of the patronage dividend or payment of which such check or other instrument is also a part. A qualified check need not be in the form of an ordinary check which is payable through the banking system. It may, for example, be in the form of an instrument which is redeemable in money by the cooperative organization. The term *qualified check* does not include a check or other instrument paid as part of a patronage dividend or payment with respect to which a consent under subdivision (i) or (ii) of this subparagraph is in effect. In addition, the term *qualified check* does not include a check or other instrument which is paid as part of a patronage dividend or payment, if such patronage dividend or payment does not also

include a written notice of allocation (other than a written notice of allocation that may be redeemed in cash at its stated dollar amount which meets the requirements of section 1388(c)(1)(A) and subparagraph (2) of this paragraph). Thus, a check which is paid as part of a patronage dividend is not a qualified check (even though it has the required statement imprinted on it) if the remaining portion of such patronage dividend is paid in cash or if the only written notices of allocation included in the payment are qualified under section 1388(c)(1)(A) and subparagraph (2) of this paragraph (relating to certain written notices of allocation which are redeemable by the patron within a period of at least 90 days).

(*c*) The provisions of this subdivision may be illustrated by the following example.

> *Example:* (1) The A Cooperative is a cooperative organization filing its income tax returns on a calendar year basis. None of its patrons have consented in the manner prescribed in section 1388(c)(2) (A) or (B). On August 1, 1964, the A Cooperative pays patronage dividends to its patrons with respect to their 1963 patronage, and the payment to each such patron is partly by a qualified check and partly in the form of a written notice of allocation which is not redeemable for cash. Each patron who endorses and cashes his qualified check on or before December 14, 1964 (the ninetieth day following the close of the 1963 payment period) shall be considered to have consented with respect to the accompanying written notice of allocation and the amount of such check is treated as a patronage dividend paid in money on August 1, 1964.
> (*2*) As to any patron who has not endorsed and cashed his qualified check by December 14, 1964, there is no consent and both the written notice of allocation and the qualified check constitute nonqualified written notices of allocation within the meaning of section 1388(d) and paragraph (d) of this section. If such a patron then cashes his check on January 2, 1965, he shall treat the amount received as an amount received on January 2, 1965, in redemption of a nonqualified written notice of allocation. Likewise, the cooperative shall treat the amount of the check as an amount paid on January 2, 1965, in redemption of a nonqualified written notice of allocation.

(*d*) ***Nonqualified written notice of allocation.*** The term *nonqualified written notice of allocation* means a written notice of allocation which is not a qualified written notice of allocation described in section 1388(c) and paragraph (c) of this section, or a qualified check which is not cashed on or before the ninetieth day after the close of the payment period for the taxable year of the cooperative organization for which the payment of which it is a part is paid.

(*e*) ***Patron.*** The term *patron* includes any person with whom or for whom the cooperative association does business on a cooperative basis, whether a member or a nonmember of the cooperative association, and whether an individual, a trust, estate, partnership, company, corporation, or cooperative association.

(f) ***Patronage and nonpatronage sourced items*** —

(1) ***Directly related use test.*** Whether an item of income or deduction is patronage or nonpatronage sourced is determined by applying the directly related use test.

(2) ***Patronage sourced income or deductions.*** If the income or deduction is produced by a transaction that actually facilitates the accomplishment of the cooperative's marketing, purchasing, or services activities, the income or deduction is from patronage sources.

(3) ***Nonpatronage sourced income or deductions.*** If the transaction producing the income or deduction does not actually facilitate the accomplishment of the cooperative's marketing, purchasing, or services activities but merely enhances the overall profitability of the cooperative, being merely incidental to the association's cooperative operation, the income or deduction is from nonpatronage sources.

(g) ***Applicability date.*** Paragraph (f) of this section applies to taxable years beginning after January 19, 2021. Taxpayers, however, may choose to apply the rules of paragraph (f) of this section for taxable years beginning on or before that date, provided the taxpayers apply the rules in their entirety and in a consistent manner.

[T.D. 6643, 28 FR 3160, Apr. 2, 1963, as amended by T.D. 9947, 86 FR 5593, Jan. 19, 2021]

§ 1.1394-0 Table of contents.

This section lists the major paragraph headings contained in § 1.1394-1.

§ 1.1394-1 Enterprise zone facility bonds.

(a) Scope.

(b) Period of compliance.

(1) In general.

(2) Compliance after an issue is retired.

(3) Deemed compliance.

(c) Special rules for requirements of sections 1397B and 1397C.

(1) Start of compliance period.

(2) Compliance period for certain prohibited activities.

(3) Minimum compliance period.

(4) Initial testing date.

(d) Testing on an average basis.

(e) Resident employee requirements.

(1) Determination of employee status.

(2) Employee treated as zone resident.

(3) Resident employee percentage.

(f) Application to pooled financing bond and loan recycling programs.

(g) Limitation on amount of bonds.

(1) Determination of outstanding amount.

(2) Pooled financing bond programs.

(h) Original use requirement for purposes of qualified zone property.

(i) Land.

(j) Principal user.

(1) In general.

(2) Rental of real property.

(3) Pooled financing bond program.

(k) Treatment as separately incorporated business.

(l) Substantially all.

(m) Application of sections 142 and 146 through 150.

(1) In general.

(2) Maturity limitation.

(3) Volume cap.

(4) Remedial actions.

(n) Continuing compliance and change of use penalties.

(1) In general.

(2) Coordination with deemed compliance provisions.

(3) Application to pooled financing bond and loan recycling programs.

(4) Section 150(b)(4) inapplicable.

(o) Refunding bonds.

(1) In general.

(2) Maturity limitation.

(p) Examples.

(q) Effective dates.

(1) In general.

(2) Elective retroactive application in whole.

[T.D. 8673, 61 FR 27259, May 31, 1996]

§ 1.1394-1 Enterprise zone facility bonds.

(a) ***Scope.*** This section contains rules relating to tax-exempt bonds under section 1394 (enterprise zone facility bonds) to provide enterprise zone facilities in both empowerment zones and enterprise communities (zones). See sections 1394, 1397B, and 1397C for other rules and definitions.

(b) ***Period of compliance*** —

(1) ***In general.*** Except as provided in paragraphs (b)(2) and (c) of this section, the requirements under sections 1394 (a) and (b) applicable to enterprise zone facility bonds must be complied with throughout the greater of the following—

(i) The remainder of the period during which the zone designation is in effect under section 1391 (zone designation period); and

(ii) The period that ends on the weighted average maturity date of the enterprise zone facility bonds.

(2) ***Compliance after an issue is retired.*** Except as provided in paragraph (c)(3) of this section, the requirements applicable to enterprise zone facility bonds do not apply to an issue after the date on which no enterprise zone facility bonds of the issue are outstanding.

(3) ***Deemed compliance*** —

(i) ***General rule.*** An issue is deemed to comply with the requirements of sections 1394 (a) and (b) if—

(A) The issuer and the principal user in good faith attempt to meet the requirements of sections 1394 (a) and (b) throughout the period of compliance required under this section; and

(B) Any failure to meet these requirements is corrected within a one-year period after the failure is first discovered.

(ii) ***Exception.*** The provisions of paragraph (b)(3)(i) of this section do not apply to the requirements of section 1397B(d)(5)(A) (relating to certain prohibited business activities).

(iii) ***Good faith.*** In order to satisfy the good faith requirement of paragraph (b)(3)(i)(A) of this section, the principal user must at least annually demonstrate to the issuer the principal user's monitoring of compliance with the requirements of sections 1394 (a) and (b).

(c) ***Special rules for requirements of sections 1397B and 1397C*** —

(1) ***Start of compliance period.*** Except as provided in paragraph (c)(2) of this section, the requirements of sections 1397B (relating to qualification as an enterprise zone business) and 1397C (relating to satisfaction of the rules for qualified zone property) do not apply prior to the *initial testing date* (as defined in paragraph (c)(4) of this section) if—

(i) The issuer and the principal user reasonably expect on the issue date of the enterprise zone facility bonds that those requirements will be met by the principal user on or before the initial testing date; and

(ii) The issuer and the principal user exercise due diligence to meet those requirements prior to the initial testing date.

(2) ***Compliance period for certain prohibited activities.*** The requirements of section 1397B(d)(5)(A) (relating to certain prohibited business activities) must be complied with throughout the term of the enterprise zone facility bonds.

(3) ***Minimum compliance period.*** The requirements of sections 1397B (b) or (c) and 1397C must be satisfied for a continuous period of at least three years after the initial testing date, notwithstanding that—

(i) The period of compliance required under paragraph (b)(1) of this section expires before the end of the three-year period; or

(ii) The enterprise zone facility bonds are retired before the end of the three-year period.

(4) ***Initial testing date*** —

(i) ***In general.*** Except as otherwise provided in paragraph (c)(4)(ii) of this section, the initial testing date is the date that is 18 months after the later of the issue date of the enterprise zone facility bonds or the date on which the financed property is placed in service; provided, however, it is not later than—

(A) Three years after the issue date; or

(B) Five years after the issue date, if the issue finances a construction project for which both the issuer and a licensed architect or engineer certify on or before the issue date of the enterprise zone facility bonds that more than three years after the issue date is necessary to complete construction of the project.

(ii) ***Alternative initial testing date.*** If the issuer identifies as the initial testing date a date after the issue date of the enterprise zone facility bonds and prior to the initial testing date that would have been determined under paragraph (c)(4)(i) of this section, that earlier date is treated as the initial testing date.

(d) ***Testing on an average basis.*** Compliance with each of the requirements of section 1397B (b) or (c) is tested each taxable year. Compliance with any of the requirements may be tested on an average basis, taking into account up to four immediately preceding taxable years plus the current taxable year. The earliest taxable year that may be taken into account for purposes of the preceding sentence is the taxable year that includes the initial testing date. A taxable year is disregarded if the part of the taxable year that falls in a required compliance period does not exceed 90 days.

(e) ***Resident employee requirements*** —

(1) ***Determination of employee status.*** For purposes of the requirement of section 1397B (b)(6) or (c)(5) that at least 35 percent of the employees are residents of the zone, the issuer and the principal user may rely on a certification, signed under penalties of perjury by the employee, provided—

(i) The certification provides to the principal user the address of the employee's principal residence;

(ii) The employee is required by the certification to notify the principal user of a change of the employee's principal residence; and

(iii) Neither the issuer nor the principal user has actual knowledge that the principal residence set forth in the certification is not the employee's principal residence.

(2) ***Employee treated as zone resident.*** If an issue fails to comply with the requirement of section 1397B (b)(6) or (c)(5) because an employee who initially resided in the zone moves out of the zone, that employee is treated as still residing in the zone if—

(i) That employee was a bona fide resident of the zone at the time of the certification described in paragraph (e)(1) of this section;

(ii) That employee continues to perform services for the principal user in an enterprise zone business and substantially all of those services are performed in the zone; and

(iii) A resident of the zone meeting the requirements of section 1397B (b)(5) or (c)(4) is hired by the principal user for the next available comparable (or lesser) position.

(3) ***Resident employee percentage.*** For purposes of meeting the requirement of section 1397B (b)(6) or (c)(5) that at least 35 percent of the employees of an enterprise zone business are residents of a zone, paragraphs (e)(3) (i) and (ii) of this section apply.

(i) The term *employee* includes a self-employed individual within the meaning of section 401(c)(1).

(ii) The resident employee percentage is determined on any reasonable basis consistently applied throughout the period of compliance required under this section. The per-employee fraction (as defined in paragraph (e)(3)(ii)(A) of this section) or the employee actual work hour fraction (as defined in paragraph (e)(3)(ii)(B) of this section) are both reasonable methods.

(A) The term *per-employee fraction* means the fraction, the numerator of which is, during the taxable year, the number of employees who work at least 15 hours a week for the principal user, who reside in the zone, and who are employed for at least 90 days, and the denominator of which is, during the same taxable year, the aggregate number of all employees who work at least 15 hours a week for the principal user and who are employed for at least 90 days.

(B) The term *employee actual work hour fraction* means the fraction, the numerator of which is the aggregate total actual hours of work for the principal user of employees who reside in the zone during a taxable year, and the denominator of which is the aggregate total actual hours of work for the principal user of all employees during the same taxable year.

(f) ***Application to pooled financing bond and loan recycling programs.*** In the case of a pooled financing bond program described in paragraph (g)(2) of this section or a loan recycling program described in paragraph (m)(2)(ii) of this section, the requirements of paragraphs (b) through (e) of this section apply on a loan-by-loan basis. See also paragraphs (g)(2) (relating to limitation on amount of bonds), (m)(2) (relating to maturity limitations), (m)(3) (relating to volume cap), and (m)(4) (relating to remedial actions) of this section.

(g) ***Limitation on amount of bonds*** —

(1) ***Determination of outstanding amount.*** Whether an issue satisfies the requirements of section 1394(c) (relating to the $3 million and $20 million aggregate limitations on the amount of outstanding enterprise zone facility bonds) is determined as of the issue date of that issue, based on the issue price of that issue and the adjusted issue price of outstanding enterprise zone facility bonds. Amounts of outstanding enterprise zone facility bonds allocable to any entity are determined under rules contained in section 144(a)(10)(C) and the underlying regulations. Thus, the definition of *principal user* for purposes of section 1394(c) is different from the definition of principal user for purposes of paragraph (j) of this section.

(2) ***Pooled financing bond programs*** —

(i) ***In general.*** The limitations of section 1394(c) for an issue for a pooled financing bond program are determined with regard to the amount of the actual loans to enterprise zone businesses rather than the amount lent to *intermediary lenders* as defined in paragraph (g)(2)(ii) of this section. This paragraph (g)(2) applies only to the extent the proceeds of those enterprise zone facility bonds are loaned to one or more enterprise zone businesses within 42 months of the issue date of the enterprise zone facility bonds or are used to redeem enterprise zone facility bonds of the issue within that 42-month period.

(ii) ***Pooled financing bond program defined.*** For purposes of this section, *a pooled financing bond program* is a program in which the issuer of enterprise zone facility bonds, in order to provide loans to enterprise zone businesses, lends the proceeds of the enterprise zone facility bonds to a bank or similar intermediary (intermediary lender) which must then relend the proceeds to two or more enterprise zone businesses.

(h) ***Original use requirement for purposes of qualified zone property.*** In general, for purposes of section 1397C(a)(1)(B), the term *original use* means the first use to which the property is put within the zone. For purposes of section 1394, if property is vacant for at least a one-year period including the date of zone designation, use prior to that period is disregarded for purposes of determining original use. For this purpose, de minimis incidental uses of property, such as renting the side of a building for a billboard, are disregarded.

(i) ***Land.*** The determination of whether land is functionally related and subordinate to qualified zone property is made in a manner consistent with the rules for exempt facilities under section 142.

(j) ***Principal user*** —

(1) ***In general.*** Except as provided in paragraph (j)(2) of this section, the term *principal user* means the owner of financed property.

(2) ***Rental of real property*** —

(i) ***A lessee as the principal user.*** If an owner of real property financed with enterprise zone facility bonds is not an enterprise zone business within the meaning of section 1397B, but the rental of the property is a qualified business within the meaning of section 1397B(d)(2), the term *principal user* for purposes of sections 1394 (b) and (e) means the lessee or lessees.

(ii) ***Allocation of enterprise zone facility bonds.*** If a lessee is the principal user of real property under paragraph (j)(2)(i) of this section, then proceeds of enterprise zone facility bonds may be allocated to expenditures for real property only to the extent of the property allocable to the lessee's leased space, including expenditures for common areas.

(3) ***Pooled financing bond program.*** An intermediary lender in a pooled financing bond program described in paragraph (g)(2) of this section is not treated as the principal user.

(k) ***Treatment as separately incorporated business.*** For purposes of section 1394(b)(3)(B), a trade or business may be treated as separately incorporated if allocations of income and activities attributable to the business conducted within the zone are made using a reasonable allocation method and if that trade or business has evidence of those allocations sufficient to establish compliance with the requirements of paragraphs (b) through (f) of this section. Whether an allocation method is reasonable will depend upon the facts and circumstances. An allocation method will not be considered to be reasonable unless the allocation method is applied consistently by the trade or business and is consistent with the purposes of section 1394.

(l) ***Substantially all.*** For purposes of sections 1397B and 1397C(a), the term *substantially all* means 85 percent.

(m) ***Application of sections 142 and 146 through 150*** —

(1) ***In general.*** Except as provided in this paragraph (m), enterprise zone facility bonds are treated as exempt facility bonds that are described in section 142(a), and all regulations generally applicable to exempt facility bonds apply to enterprise zone facility bonds. For this purpose, enterprise zone businesses are treated as meeting the public use requirement. Sections 147(c)(1)(A) (relating to limitations on financing the acquisition of land), 147(d) (relating to financing the acquisition of existing property), and 142(b)(2) (relating to limitations on financing office space) do not apply to enterprise zone facility bonds. See also paragraph (n)(4) of this section.

(2) ***Maturity limitation*** —

(i) ***Requirements.*** An issue of enterprise zone facility bonds, the proceeds of which are to be used as part of a loan recycling program, satisfies the requirements of section 147(b) if—

(A) Each loan satisfies the requirements of section 147(b) (determined by treating each separate loan as a separate issue); and

(B) The term of the issue does not exceed 30 years.

(ii) ***Loan recycling program defined.*** A *loan recycling program* is a program in which—

(A) The issuer reasonably expects as of the issue date of the enterprise zone facility bonds that loan repayments from principal users will be used to make additional loans during the zone designation period;

(B) Repayments of principal on loans (including prepayments) received during the zone designation period are used within six months of the date of receipt either to make new loans to enterprise zone businesses or to redeem enterprise zone facility bonds that are part of the issue; and

(C) Repayments of principal on loans (including prepayments) received after the zone designation period are used to redeem enterprise zone facility bonds that are part of the issue within six months of the date of receipt.

(3) ***Volume cap.*** For purposes of applying section 146(f)(5)(A) (relating to elective carryforward of unused volume limitation), issuing enterprise zone facility bonds is a carryforward purpose.

(4) ***Remedial actions.*** In the case of a pooled financing bond program described in paragraph (g)(2) of this section or a loan recycling program described in paragraph (m)(2)(ii) of this section, if a loan fails to meet the requirements of paragraphs (b) through (f) of this section, within six months of noncompliance (after taking into account the deemed compliance provisions of paragraph (b)(3) of this section, if applicable), an amount equal to the outstanding loan principal must be prepaid and the issuer must—

(i) Reloan the amount of the prepayment; or

(ii) Use the prepayment to redeem an amount of outstanding enterprise zone facility bonds equal to the outstanding principal amount of the loan that no longer meets those requirements.

(n) ***Continuing compliance and change of use penalties*** —

(1) ***In general.*** The penalty provisions of section 1394(e) apply throughout the period of compliance required under paragraph (b)(1) of this section.

(2) ***Coordination with deemed compliance provisions.*** Section 1394(e)(2) does not apply during any period during which the issue is deemed to comply with the requirements of section 1394 under the deemed compliance provisions of paragraph (b)(3) of this section.

(3) ***Application to pooled financing bond and loan recycling programs.*** In the case of a pooled financing bond program described in paragraph (g)(2) of this section or a loan recycling program described in paragraph (m)(2)(ii) of this section, section 1394(e) applies on a loan-by-loan basis.

(4) ***Section 150(b)(4) inapplicable.*** Section 150(b)(4) does not apply to enterprise zone facility bonds.

(o) ***Refunding bonds*** —

(1) ***In general.*** An issue of bonds issued after the zone designation period to refund enterprise zone facility bonds (other than in an advance refunding) are treated as enterprise zone facility bonds if the refunding issue and the prior issue, if treated as a single combined issue, would meet all of the requirements for enterprise zone facility bonds, except the requirements in section 1394(c). For example, the compliance period described in paragraph (b)(1) of this section is calculated taking into account any extension of the weighted average maturity of the refunding issue compared to the remaining weighted average maturity of the prior issue. The proceeds of the refunding issue are allocated to the same expenditures and purpose investments as the prior issue.

(2) ***Maturity limitation.*** The maturity limitation of section 147(b) is applied to a refunding issue by taking into account the issuer's reasonable expectations about the economic life of the financed property as of the issue date of the prior issue and the actual weighted average maturity of the combined refunding issue and prior issue.

(p) ***Examples.*** The following examples illustrate paragraphs (a) through (o) of this section:

Example 1. Averaging of enterprise zone business requirements. City C issues enterprise zone facility bonds, the proceeds of which are loaned by C to Corporation B to finance the acquisition of equipment for its existing business located in a zone. On the issue date of the enterprise zone facility bonds, B meets all of the requirements of section 1397B(b), except that only 25% of B's employees reside in the zone. C and B reasonably expect on the issue date to meet all requirements of section 1397B(b) by the date that is 18 months after the equipment is placed in service (the initial testing date). In each of the first, second, and third taxable years after the initial testing date, 35%, 40% and 45%, respectively, of B's employees are zone residents. In the fourth year after the testing date, only 25% of B's employees are zone residents. B continues to meet the 35% resident employee requirement, because the average of zone resident employees for those four taxable years is approximately 36%. The percentage of zone residents employed by B before the initial testing date is not included in determining whether B continues to comply with the 35% resident employee requirement.

Example 2. Measurement of resident employee percentage. Authority D issues enterprise zone facility bonds, the proceeds of which are loaned to Sole Proprietor F to establish an accounting business in a zone. In the first year after the initial testing date, the staff working for F includes F, who works 40 hours per week and does not live in the zone, one employee who resides in the zone and works 40 hours per week, one employee who does not reside in the zone and works 20 hours per week, and one employee who does not reside in the zone and works 10 hours per week. F meets the 35% resident employee test by calculating the percentage on the basis of employee actual work hours as described in paragraph (e)(3)(ii)(B) of this section. If F uses the per-employee basis as described in paragraph (e)(3)(ii)(A) of this section to determine if the resident employee test is met, the percentage of employees who are zone residents on a per-employee basis is only 33% because F must exclude from the numerator and the denominator the employee who works only 10 hours per week. If F calculates the resident employee test as a percentage of employee actual work hours as described in paragraph (e)(3)(ii)(B) of this section in the first year, F must calculate the resident employee test as a percentage of employee actual work hours each year.

Example 3. Active conduct of business within the zone. State G issues enterprise zone facility bonds and loans the proceeds to Corporation H to finance the acquisition of equipment for H's mail order clothing business, which is located in a zone. H purchases the supplies for its clothing business from suppliers located both within and outside of the zone and expects that orders will be received both from customers who will reside or work within the zone and from others outside the zone. All orders are received and filled at, and are shipped from, H's clothing business located in the zone. H meets the requirement that at least 80% of its gross income is derived from the active conduct of business within the zone.

Example 4. Enterprise zone business definition. City J issues enterprise zone facility bonds, the proceeds of which are loaned to Partnership K to finance the acquisition of equipment for its printing operation located in the zone. All orders are taken and completed, and all billing and accounting activities are performed, at the print shop located in the zone. K, on occasion, uses its equipment (including its trucks) and employees to deliver large print jobs to customers who reside outside of the zone. So

long as K is able to establish that its trucks are used in the zone at least 85% of the time and its employees perform at least 85% of services for K in the zone, K meets the requirements of sections 1397B(b) (3) and (5).

Example 5. Treatment as a separately incorporated business. The facts are the same as in *Example 4* except that six years after the issue date of the enterprise zone facility bonds, K determines to expand its operations to a second location outside of the boundaries of the zone. Although the expansion would result in the failure of K to meet the tests of 1397B(b), K, using a reasonable allocation method, allocates income and activities to its operations within the zone and has evidence of these allocations sufficient to establish compliance with the requirements of paragraphs (b) through (f) of this section. The bonds will not fail to be enterprise zone facility bonds merely because of the expansion.

Example 6. Treatment of pooled financing bond programs. Authority L issues bonds in the aggregate principal amount of $5,000,000 and loans the proceeds to Bank M pursuant to a loans-to-lenders program. M does not meet the definition of enterprise zone business contained in section 1397B. Prior to the issue date of the bonds, L held a public hearing regarding issuance of the bonds for the loans-to-lenders program, describing the projects of identified borrowers to be financed initially with $4,000,000 of the proceeds of the bonds. The applicable elected representative of L approved issuance of the bonds subsequent to the public hearing. The loan agreement between L and M provides that the other proceeds of the bonds will be held by M and loaned to borrowers that qualify as enterprise zone businesses, following a public hearing and approval by the applicable elected representative of L of each loan by M to an enterprise zone business. None of the loans will be in principal amounts in excess of $3,000,000. The loans by M will otherwise meet the requirements of section 1394. The bonds will be enterprise zone facility bonds.

Example 7. Original use requirement for purposes of qualified zone property. City N issues enterprise zone facility bonds, the proceeds of which are loaned to Corporation P to finance the acquisition of equipment. P uses the proceeds after the zone designation date to purchase used equipment located outside of the zone and places the equipment in service at its location in the zone. Substantially all of the use of the equipment is in the zone and is in the active conduct of a qualified business by P. The equipment is treated as qualified enterprise zone property under section 1397C because P makes the first use of the property within the zone after the zone designation date.

Example 8. Principal user. State R issues enterprise zone facility bonds and loans the proceeds to Partnership S to finance the construction of a small shopping center to be located in a zone. S is in the business of commercial real estate. S is not an enterprise zone business, but has secured one anchor lessee, Corporation T, for the shopping center. T would qualify as an enterprise zone business. S will derive 60% of its gross rental income of the shopping center from T. S does not anticipate that the remaining rental income will come from enterprise zone businesses. T will occupy 60% of the total rentable space in the shopping center. S can use enterprise zone facility bond proceeds to finance the portion of the costs of the shopping center allocable to T (60%) because T is treated as the principal user of the enterprise zone facility bond proceeds.

Example 9. Remedial actions. State W issues pooled financing enterprise zone facility bonds, the proceeds of which will be loaned to several enterprise zone businesses in the two enterprise communities and one empowerment zone in W. Proceeds of the pooled financing bonds are loaned to Corporation X, an enterprise zone business, for a term of 10 years. Six years after the date of the loan, X expands its operations beyond the empowerment zone and is no longer able to meet the requirements of section 1394. X does not reasonably expect to be able to cure the noncompliance. The loan documents

provide that X must prepay its loan in the event of noncompliance. W does not expect to be able to reloan the prepayment by X within six months of noncompliance. X's noncompliance will not affect the qualification of the pooled financing bonds as enterprise zone facility bonds if W uses the proceeds from the loan prepayment to redeem outstanding enterprise zone facility bonds within six months of noncompliance in an amount comparable to the outstanding amount of the loan immediately prior to prepayment. X will be denied an interest expense deduction for the interest accruing from the first day of the taxable year in which the noncompliance began.

(q) ***Effective dates*** —

(1) ***In general.*** Except as otherwise provided in this section, the provisions of this section apply to all issues issued after July 30, 1996, and subject to section 1394.

(2) ***Elective retroactive application in whole.*** An issuer may apply the provisions of this section in whole, but not in part, to any issue that is outstanding on July 30, 1996, and is subject to section 1394.

[T.D. 8673, 61 FR 27259, May 31, 1996]

EMPOWERMENT ZONE EMPLOYMENT CREDIT

§ 1.1396-1 Qualified zone employees.

(a) ***In general.*** A qualified zone employee of an employer is an employee who satisfies the location-of-services requirement and the abode requirement with respect to the same empowerment zone and is not otherwise excluded by section 1396(d).

(1) ***Location-of-services requirement.*** The location-of-services requirement is satisfied if substantially all of the services performed by the employee for the employer are performed in the empowerment zone in a trade or business of the employer.

(2) ***Abode requirement.*** The abode requirement is satisfied if the employee's principal place of abode while performing those services is in the empowerment zone.

(b) ***Period for applying location-of-services requirement.*** In applying the location-of-services requirement, an employer may use either the pay period method described in paragraph (b)(1) of this section or the calendar year method described in paragraph (b)(2) of this section. For each taxable year of an employer, the employer must either use the pay period method with respect to all of its employees or use the calendar year method with respect to all of its employees. The employer may change the method applied to all of its employees from one taxable year to the next.

(1) ***Pay period method*** —

(i) ***Relevant period.*** Under the pay period method, the relevant period for applying the location-of-services requirement is each pay period in which an employee provides services to the employer during the calendar year with respect to which the credit is being claimed (*i.e.,* the calendar year that ends with or within the relevant taxable year). If an employer has one pay period for certain employees and a different pay period for other employees (e.g., a weekly pay period for hourly wage employees and a bi-weekly pay period for salaried employees), the pay period actually applicable to a particular employee is the relevant pay period for that employee under this method.

(ii) ***Application of method.*** Under this method, an employee does not satisfy the location-of-services requirement during a pay period unless substantially all of the services performed by the employee for the employer during that pay period are performed within the empowerment zone in a trade or business of the employer.

(2) ***Calendar year method*** —

(i) ***Relevant period.*** Under the calendar year method, the relevant period for an employee is the entire calendar year with respect to which the credit is being claimed. However, for any employee who is employed by the employer for less than the entire calendar year, the relevant period is the portion of that calendar year during which the employee is employed by the employer.

(ii) ***Application of method.*** Under this method, an employee does not satisfy the location-of-services requirement during any part of a calendar year unless substantially all of the services performed by the employee for the employer during that calendar year (or, if the employee is employed by the employer for less than the entire calendar year, the portion of that calendar year during which the employee is employed by the employer) are performed within the empowerment zone in a trade or business of the employer.

(3) ***Examples.*** This paragraph (b) may be illustrated by the following examples. In each example, the following assumptions apply. The employees satisfy the abode requirement at all relevant times and all services performed by the employees for their employer are performed in a trade or business of the employer. The employees are not precluded from being qualified zone employees by section 1396(d)(2) (certain employees ineligible). No portion of the employees' wages is precluded from being qualified zone wages by section 1396(c)(2) (only first $15,000 of wages taken into account) or section 1396(c)(3) (coordination with targeted jobs credit and work opportunity credit). The examples are as follows:

> *Example 1.* (i) Employer X has a weekly pay period for all its employees. Employee A works for X throughout 1997. During each of the first 20 weekly pay periods in 1997, substantially all of A's work for X is performed within the empowerment zone in which A resides. A also works in the zone at various times during the rest of the year, but there is no other pay period in which substantially all of A's work for X is performed within the empowerment zone. Employer X uses the pay period method.
> (ii) For each of the first 20 pay periods of 1997, A is a qualified zone employee, all of A's wages from X are qualified zone wages, and X may claim the empowerment zone employment credit with respect to those wages. X cannot claim the credit with respect to any of A's wages for the rest of 1997.

> *Example 2.* (i) Employer Y has a weekly pay period for its factory workers and a bi-weekly pay period for its office workers. Employee B works for Y in various factories and Employee C works for Y in various offices. Employer Y uses the pay period method.
> (ii) Y must use B's weekly pay periods to determine the periods (if any) in which B is a qualified zone employee. Y may claim the empowerment zone employment credit with respect to B's wages only for the weekly pay periods for which B is a qualified zone employee,

because those are B's only wages that are qualified zone wages. Y must use C's bi-weekly pay periods to determine the periods (if any) in which C is a qualified zone employee. Y may claim the credit with respect to C's wages only for the bi-weekly pay periods for which C is a qualified zone employee, because those are C's only wages that are qualified zone wages.

Example 3. (i) Employees D and E work for Employer Z throughout 1997. Although some of D's work for Z in 1997 is performed outside the empowerment zone in which D resides, substantially all of it is performed within that empowerment zone. E's work for Z is performed within the empowerment zone in which E resides for several weeks of 1997 but outside the zone for the rest of the year so that, viewed on an annual basis, E's work is not substantially all performed within the empowerment zone. Employer Z uses the calendar year method.
(ii) D is a qualified zone employee for the entire year, all of D's 1997 wages from Z are qualified zone wages, and Z may claim the empowerment zone employment credit with respect to all of those wages, including the portion attributable to work outside the zone. Under the calendar year method, E is not a qualified zone employee for any part of 1997, none of E's 1997 wages are qualified zone wages, and Z cannot claim any empowerment zone employment credit with respect to E's wages for 1997. Z cannot use the calendar year method for D and the pay period method for E because Z must use the same method for all employees. For 1998, however, Z can switch to the pay period method for E if Z also switches to the pay period method for D and all of Z's other employees.

(c) ***Effective date.*** This section applies with respect to wages paid or incurred on or after December 21, 1994.

[T.D. 8747, 62 FR 67727, Dec. 30, 1997]

§ 1.1397E-1 Qualified zone academy bonds.

(a) ***In general*** —

(1) ***Overview.*** In general, a qualified zone academy bond (QZAB or QZABs) is a taxable bond issued by a state or local government the proceeds of which are used to improve certain eligible public schools. An eligible taxpayer that holds a QZAB generally is allowed annual Federal income tax credits in lieu of periodic interest payments. These credits compensate the eligible taxpayer for lending money to the issuer and function as payments of interest on the bond. Accordingly, this section generally treats the allowance of a credit as if it were a payment of interest on the bond. This section also provides other rules for QZABs, including rules governing the credit rate, the private business contribution requirement, the maximum term, use and expenditure of proceeds, remedial actions, eligible issuers, arbitrage investment restrictions, and information reporting.

(2) ***Certain definitions*** —

(i) ***In general.*** For purposes of this section, except as otherwise provided in this section, the following definitions apply: the definitions set forth in this section; the definitions used for general tax-exempt bond purposes in § 1.150-1; and the definitions used for purposes of the arbitrage investment restrictions on tax-exempt bonds in § 1.148-1(b).

(ii) *Applicable definition of proceeds* —

(A) ***Use and expenditure provisions.*** Except as provided in paragraphs (a)(2)(ii)(B) and (a)(2)(ii)(C) of this section, for purposes of all applicable requirements regarding use and expenditure of proceeds of QZABs under section 1397E and this section, "proceeds" means "sale proceeds," as defined in § 1.148-1(b), plus "investment proceeds," as defined in § 1.148-1(b).

(B) ***Private business contribution requirement.*** For purposes of the private business contribution requirement of section 1397E(d)(2), "proceeds" means "sale proceeds," as defined in § 1.148-1(b).

(C) ***Arbitrage investment restrictions.*** For purposes of the scope of application of the arbitrage investment restrictions under section 1397E(g) and paragraph (i) of this section, "proceeds" generally means gross proceeds, as defined in § 1.148-1(b). In addition, in applying the arbitrage investment restrictions under paragraph (i) of this section and under section 148, the various applicable definitions of the various types of proceeds of tax-exempt bonds under § 1.148-1(b) shall apply.

(b) ***Credit rate.*** The Secretary shall determine monthly (or more often as deemed necessary by the Secretary) the credit rate the Secretary estimates will generally permit the issuance of a qualified zone academy bond without discount and without interest cost to the issuer. The manner for ascertaining the credit rate for a qualified zone academy bond as determined by the Secretary shall be set forth in procedures, notices, forms, or instructions prescribed by the Commissioner.

(c) *Private business contribution requirement*—

(1) ***Reasonable discount rate.*** To determine the present value (as of the issue date) of qualified contributions from private entities under section 1397E(d)(2), the issuer must use a reasonable discount rate. The credit rate determined under paragraph (b) of this section is a reasonable discount rate.

(2) ***Definition of private entities.*** For purposes of section 1397E(d)(2)(A), the term *private entities* includes any person (as defined in section 7701(a)) other than the United States, a State or local government, or any agency or instrumentality thereof or related party with respect thereto. To determine whether a person is related to the United States or a State or local government under this paragraph (c)(2), rules similar to those for determining whether a person is a related party under § 1.150-1(b) shall apply (treating the United States as a governmental unit for purposes of § 1.150-1(b)).

(3) ***Qualified contribution.*** For purposes of section 1397E(d)(2)(A), the term *qualified contribution* means any contribution (of a type and quality acceptable to the eligible local education agency) of any property or service described in section 1397E(d)(2)(B)(i), (ii), (iii), (iv) or (v). In addition, cash received with respect to a qualified zone academy from a private entity (other than cash received indirectly from a person that is not a private entity as part of a plan to avoid the requirements of section 1397E) constitutes a qualified contribution if it is to be used to purchase any property or service described in section 1397E(d)(2)(B)(i), (ii), (iii), (iv) or (v). Services of employees of the eligible local education agency do not constitute qualified contributions.

(d) ***Maximum term.*** The maximum term for a QZAB is determined under section 1397E(d)(3) by using a discount rate equal to 110 percent of the long-term adjusted applicable Federal rate (AFR), compounded semi-annually, for the month in which the bond is sold. The Internal Revenue Service publishes this figure

each month in a revenue ruling that is published in the Internal Revenue Bulletin. See § 601.601(d)(2)(ii)(*b*) of this chapter. A bond is sold on the sale date, as defined in § 1.150-1(c)(6), which is the first day on which there is a binding contract in writing for the sale or exchange of the bond.

(e) ***Tax credit*** —

(1) ***Eligible taxpayer.*** An eligible taxpayer (within the meaning of section 1397E(d)(6)) that holds a qualified zone academy bond on a credit allowance date is allowed a tax credit against the Federal income tax imposed on the taxpayer for the taxable year that includes the credit allowance date. The amount of the credit is equal to the product of the credit rate and the outstanding principal amount of the bond on the credit allowance date. The credit is subject to a limitation based on the eligible taxpayer's income tax liability. See section 1397E(c).

(2) ***Ineligible taxpayer.*** A taxpayer that is not an eligible taxpayer is not allowed a credit.

(f) ***Treatment of the allowance of the credit as a payment of interest*** —

(1) ***General rule.*** The holder of a qualified zone academy bond must treat the bond as if it pays qualified stated interest (within the meaning of § 1.1273-1(c)) on each credit allowance date. The amount of the deemed payment of interest on each credit allowance date is equal to the product of the credit rate and the outstanding principal amount of the bond on that date. Thus, for example, if the holder uses an accrual method of accounting, the holder must accrue as interest income the amount of the credit over the one-year accrual period that ends on the credit allowance date.

(2) ***Adjustment if the holder cannot use the credit to offset a tax liability.*** If a holder holds a qualified zone academy bond on the credit allowance date but cannot use all or a portion of the credit to reduce its income tax liability (for example, because the holder is not an eligible taxpayer or because the limitation in section 1397E(c) applies), the holder is allowed a deduction for the taxable year that includes the credit allowance date (or, at the option of the holder, the next succeeding taxable year). The amount of the deduction is equal to the amount of the unused credit deemed paid on the credit allowance date.

(g) ***Not a tax-exempt obligation.*** A qualified zone academy bond is not an obligation the interest on which is excluded from gross income under section 103(a).

(h) ***Use of proceeds*** —

(1) ***In general.*** Section 1397E(d)(1) provides that a bond issued as part of an issue is a QZAB only if, among other requirements, at least 95 percent of the proceeds of the issue are to be used for a qualified purpose with respect to a qualified zone academy established by an eligible local education agency (as defined in section 1397E(d)(4)(B)), and the issue meets the requirements of section 1397E(f) and (g). Section 1397E(d)(5) defines *qualified purpose,* with respect to any qualified zone academy, as rehabilitating or repairing the public school facility in which such academy is established, providing equipment for use at such academy, developing course materials for education to be provided at such academy, and training teachers and other school personnel in such academy. Section 1397E(d)(4)(A) defines *qualified zone academy* as any public school (or academic program within a public school) that is established by and operated under the supervision of an eligible local education agency to provide education or training below the postsecondary level and that meets the requirements of section 1397E(d)(4)(A)(i), (ii), (iii) and (iv).

(2) ***Use of proceeds requirements.*** An issue meets the requirements of sections 1397E (d)(1)(A) and (f) only if—

(i) The issuer reasonably expects, as of the issue date of the issue, that—

(A) At least 95 percent of the proceeds from the sale of the issue are to be spent for qualified purposes with respect to qualified zone academies within the 5-year period beginning on the issue date of the QZAB;

(B) A binding commitment with a third party to spend at least 10 percent of the proceeds from the sale of the issue will be incurred within the 6-month period beginning on the issue date of the QZAB;

(C) At least 95 percent of the proceeds from the sale of the issue will be spent for qualified purposes with respect to a qualified zone academy with due diligence (with due diligence measured by the reasonableness standard under § 1.148-1(b)); and

(D) At least 95 percent of the proceeds of the issue will be used for qualified purposes with respect to a qualified zone academy for the entire term of the issue (without regard to any redemption provision); and

(ii) Except as otherwise provided in paragraph (h)(8) of this section, at least 95 percent of the proceeds of the issue are actually used for qualified purposes with respect to a qualified academy for the entire term of the issue (without regard to any redemption provision).

(3) ***Extension of 5-year period.*** The Commissioner may extend the period described in paragraph (h)(2)(i)(A) of this section if the issuer, prior to the end of such period, submits a private ruling request, and establishes to the satisfaction of the Commissioner that—

(i) The failure to satisfy the 5-year spending requirement is due to reasonable cause; and

(ii) The expenditure of at least 95 percent of the proceeds from the sale of the issue for a qualified purpose with respect to a qualified zone academy will continue to proceed with due diligence.

(4) ***Unspent proceeds.*** For purposes of paragraphs (h)(2)(i)(D) and (h)(2)(ii) of this section, during the period described in paragraph (h)(2)(i)(A) of this section, including any extension under paragraph (h)(3) of this section, unspent proceeds are treated as used for a qualified purpose with respect to a qualified zone academy if the issuer reasonably expects to proceed with due diligence to spend those proceeds for a qualified purpose with respect to a qualified zone academy during that period.

(5) ***Proceeds spent for rehabilitation, repair or equipment*** —

(i) ***In general.*** Under section 1397E(d)(5)(A) the term *qualified purpose* with respect to any qualified zone academy includes rehabilitating or repairing the public school facility in which such academy is established. For this purpose, in determining whether proceeds are spent for rehabilitation, rules similar to those under section 47(c) (other than sections 47(c)(1)(B) and 47(c)(2)(B)(iv)) shall apply. Under section 1397E(d)(5)(B) the term *qualified purpose* also includes providing equipment for use at such academy. If proceeds of an issue are spent for a purpose described in section 1397E(d)(5)(A) or (B) with respect to a qualified zone academy, then those proceeds are treated as used for a qualified purpose with respect to the academy during any period after such expenditure that—

(A) The property financed with those proceeds is used for the purposes of the academy; and

(B) The academy maintains its status as a qualified zone academy under section 1397E(d)(4).

(ii) ***Retirement from service.*** The retirement from service of financed property due to normal wear or obsolescence does not cause the property to fail to be used for a qualified purpose with respect to a qualified zone academy.

(6) ***Proceeds spent to develop course materials or train teachers.*** Section 1397E(d)(5)(C) and (D) provides that the term *qualified purpose* with respect to any qualified zone academy includes developing course materials for education to be provided at such academy, and training teachers and other school personnel in such academy. If proceeds of an issue are spent for a purpose described in section 1397E(d)(5)(C) or (D) with respect to a qualified zone academy, then those proceeds are treated as used for a qualified purpose with respect to the academy during any period after such expenditure.

(7) ***Special rule for determining status as qualified zone academy.*** Section 1397E(d)(4)(A)(iv) provides that a public school (or academic program within a public school) is a qualified zone academy only if, among other requirements, the public school is located in an empowerment zone or enterprise community (as defined in section 1393), or there is a reasonable expectation (as of the issue date of the issue) that at least 35 percent of the students attending the school or participating in the program (as the case may be) will be eligible for free or reduced-cost lunches under the school lunch program established under the Richard B. Russell National School Lunch Act. For purposes of determining whether an issue complies with section 1397E(d)(4)(A)(iv)—

(i) A public school is treated as located in an empowerment zone or enterprise community for the entire term of the issue if the public school is located in an empowerment zone or enterprise community on the issue date of the issue; and

(ii) The determination of whether there is a reasonable expectation (as of the issue date of the issue) that at least 35 percent of the students attending the school or participating in the program (as the case may be) will be eligible for free or reduced-cost lunches under the school lunch program established under the Richard B. Russell National School Lunch Act is based on expectations regarding the one-year period following the issue date.

(8) ***Remedial actions*** —

(i) ***General rule.*** If less than 95 percent of the proceeds of an issue are properly used (as determined under paragraph (h)(8)(ii)(D) of this section), the issue will be treated as meeting the requirements of section 1397E(d)(1)(A) if the issue met the requirements of paragraph (h)(2)(i) of this section and a remedial action is taken under paragraph (h)(8)(ii) or (iii) of this section.

(ii) ***Redemption or defeasance*** —

(A) ***In general.*** A remedial action is taken under this paragraph (h)(8)(ii) if the requirements of paragraphs (h)(8)(ii)(B) and (C) of this section are met.

(B) ***Retirement of nonqualified bonds*** —

(*1*) ***In general.*** The requirements of this paragraph (h)(8)(ii)(B) are met if—

(*i*) All of the nonqualified bonds of the issue (as determined under § 1.142-2(e)) are redeemed within 90 days after the date on which the failure to properly use proceeds occurs; or

(*ii*) To the extent proceeds of the issue that have been actually spent for a qualified purpose with respect to a qualified zone academy, if any nonqualified bonds of the issue are not redeemed within 90 days after the date on which the failure to properly use such proceeds occurs (the unredeemed nonqualified bonds), a defeasance escrow is established for the unredeemed nonqualified bonds within 90 days after the date on which the failure to properly use proceeds occurs.

(*2*) ***Special rule for dispositions for cash.*** If the failure to properly use proceeds occurs because of a disposition of financed property described in section 1397E(d)(5)(A) or (B) and the consideration for the disposition is exclusively cash, the requirements of this paragraph (h)(8)(ii)(B) are met if all of the disposition proceeds (as defined in paragraph (h)(8)(iv) of this section) are used within 90 days after the date of the disposition to redeem, or establish a defeasance escrow for, the nonqualified bonds (as determined under § 1.142-2(e)).

(*3*) ***Definition of defeasance escrow.*** For purposes of this section, a defeasance escrow is an irrevocable escrow established to retire nonqualified bonds on the earliest call date after the date on which the failure to properly use proceeds occurs in an amount that is sufficient to retire nonqualified bonds on that call date. At least 90 percent of the weighted average amount in a defeasance escrow must be invested in investments (as defined in § 1.148-1(b)), except that no amount in a defeasance escrow may be invested in any investment the obligor (or any person that is a related party with respect to the obligor within the meaning of § 1.150-1(b)) of which is a user of proceeds of the bonds. All purchases or sales of an investment in a defeasance escrow must be made at the fair market value of the investment within the meaning of § 1.148-5(d)(6).

(C) ***Additional rules*** —

(*1*) ***Limitation on source of funding.*** Proceeds of an issue of QZABs (other than unspent proceeds of the issue for which the failure to properly use proceeds occurs) must not be used to redeem or defease nonqualified bonds under paragraph (h)(8)(ii)(B) of this section.

(*2*) ***Rebate requirement.*** The issuer must pay to the United States, at the same time and in the same manner as rebate amounts are required to be paid under § 1.148-3 (or at such other time or in such other manner as the Commissioner may prescribe), any investment earnings on amounts in a defeasance escrow established under paragraph (h)(8)(ii)(B) of this section that are in excess of the yield on the issue of QZABs with respect to which the defeasance escrow was established. For this purpose, the first computation period begins on the date on which the defeasance escrow is established.

(*3*) ***Notice of defeasance.*** The issuer must provide written notice to the Commissioner, at the place designated in § 1.150-5(a), of the establishment of the defeasance escrow within 90 days of the date the defeasance escrow is established.

(D) ***When a failure to properly use proceeds occurs*** —

(*1*) ***Unspent proceeds.*** For unspent proceeds, a failure to properly use proceeds occurs on the earliest of—

(*i*) The first date on which the public school (or academic program within the public school) fails to constitute a qualified zone academy;

(*ii*) The first date on which the issuer fails to have a reasonable expectation to proceed with due diligence to spend at least 95 percent of the proceeds of the issue for a qualified purpose with respect to a qualified zone academy; or

(*iii*) The last day of the period described in paragraph (h)(2)(i)(A) of this section, including any extension, if less than 95 percent of the proceeds of the issue are actually spent for a qualified purpose with respect to a qualified zone academy.

(*2*) ***Proceeds spent for rehabilitation, repair or equipment.*** For proceeds that have been spent for a purpose described in section 1397E(d)(5)(A) or (B) with respect to a qualified zone academy, a failure to properly use proceeds occurs on the earlier of—

(*i*) The first date on which the public school (or academic program within the public school) fails to constitute a qualified zone academy; and

(*ii*) The first date on which an action is taken that causes the issuer to fail actually to use at least 95 percent of the proceeds of the issue for a qualified purpose with respect to a qualified zone academy.

(*3*) ***Proceeds spent for course materials or training.*** If proceeds have been spent for a purpose described in section 1397E(d)(5)(C) or (D) with respect to a qualified zone academy, no event subsequent to such expenditure shall constitute a failure to properly use such proceeds.

(iii) ***Alternative use of disposition proceeds.*** A remedial action is taken under this paragraph (h)(8)(iii) if all of the requirements of paragraphs (h)(8)(iii)(A) through (D) of this section are met—

(A) The failure to properly use proceeds (as determined under paragraph (h)(8)(ii)(D) of this section) is a disposition of financed property described in section 1397E(d)(5)(A) or (B) and the consideration for the disposition is exclusively cash;

(B) The issuer reasonably expects as of the date of the disposition that—

(*1*) All of the disposition proceeds will be spent within the two-year period beginning with the date of the disposition for a qualified purpose with respect to a qualified zone academy; or

(*2*) To the extent not expected to be so spent, the disposition proceeds will be used within 90 days after the date of the disposition to redeem or defease bonds in a manner that meets the requirements of paragraph (h)(8)(ii) of this section;

(C) The disposition proceeds are treated as proceeds for purposes of section 1397E; and

(D) If all of the disposition proceeds are not actually used in the manner described in paragraph (h)(8)(iii)(B) of this section, the remainder of such amounts are used within 90 days after the end of the period described in paragraph (h)(8)(iii)(B)(*1*) of this section for a remedial action that meets the requirements of paragraph (h)(8)(ii) of this section.

(iv) ***Definition of disposition proceeds and allocation among multiple funding sources.*** For purposes of this paragraph (h)(8), *disposition proceeds* means disposition proceeds, as defined in § 1.141-12(c)(1), plus amounts derived from investing disposition proceeds. If property has been financed with an issue of QZABs and one or more other funding sources, any disposition proceeds from that property are allocated to the issue under the principles of § 1.141-12(c)(3).

(9) ***Payment of principal, interest or redemption price*** —

(i) ***In general.*** Except as provided in paragraphs (h)(9)(ii) and (h)(9)(iii) of this section, the use of proceeds of a bond to pay principal, interest, or redemption price of the bond or another bond is not a qualified purpose within the meaning of section 1397E(d)(5).

(ii) ***Exception for certain eligible reimbursements of interim refinancings.*** The use of proceeds of a bond (the refinancing bond) to pay principal, interest, or redemption price of another bond (the prior bond) is a qualified purpose within the meaning of section 1397E(d)(5) to the extent that—

(A) The prior bond was not a QZAB (and, in the case of a series of refinancings, no earlier bond in the series was a QZAB);

(B) The proceeds of the prior bond (or the original bond in the case of a series of refinancings, as applicable) were spent for a qualified purpose under section 1397E(d)(5) with respect to a qualified zone academy (the original expenditure); and

(C) The issuer makes a valid reimbursement allocation to allocate the proceeds of the refinancing bond to the payment of the original expenditure (the reimbursement allocation), which allocation satisfies the requirements for reimbursements under paragraph (h)(10) of this section. For purposes of applying the rules for reimbursement, a refinancing bond which otherwise meets the requirements of this paragraph (h)(9)(ii) is eligible for reimbursement and is not treated as a disqualified refunding under § 1.150-2(g).

(iii) ***Reissuance of a QZAB.*** For purposes of determining whether the establishing of a defeasance escrow under paragraph (h)(8)(ii)(B)(*1*)(*ii*) of this section results in an exchange under § 1.1001-1(a), the QZAB is treated as a tax-exempt bond under § 1.1001-3(e)(5)(ii)(B)(*1*).

(10) ***Reimbursement.*** An expenditure for a qualified purpose may be reimbursed with proceeds of a QZAB. For this purpose, rules similar to those on reimbursement of expenditures in § 1.142-4(b) and § 1.150-2 shall apply. In applying these reimbursement rules, expenditures eligible for reimbursement under § 1.150-2(d)(3) shall be deemed to mean any expenditure for a qualified purpose under section 1397E(d)(5).

(i) ***Arbitrage investment restrictions*** —

(1) ***In general.*** Under section 1397E(g) and this paragraph (i), and except as otherwise provided in this paragraph (i), the arbitrage investment restrictions and rebate requirements under section 148 and §§ 1.148-1 through 1.148-11, inclusive, and the exceptions to those restrictions, apply broadly to gross proceeds of QZABs issued under section 1397E to the same extent and in the same manner as they apply to gross proceeds of tax-exempt state or local governmental bonds. For this purpose, references in those sections to tax-exempt bonds generally shall be deemed to refer to QZABs and, to the extent that any particular arbitrage restriction depends on whether bonds are private activity bonds under section 141, the determination of whether QZABs are private activity bonds shall be

based on the general definition of private activity bonds under section 141. In applying section 148 and the regulations under that section to QZABs, the modifications set forth in paragraphs (i)(2) through (i)(6) of this section shall apply.

(2) ***5-year temporary period exception to arbitrage yield restriction.*** If an issue of QZABs meets the requirements of section 1397E(f)(1) and paragraph (h)(2)(i) of this section, then the proceeds of the issue of QZABs are treated as qualifying for a 5-year temporary period exception to arbitrage yield restriction under § 1.148-2(e)(2) beginning on the issue date of the issue.

(3) ***Disregard QZAB credit in QZAB yield for arbitrage purposes.*** In determining the yield on an issue of QZABs for arbitrage purposes under § 1.148-4, the QZAB credit allowed under section 1397E(a) is disregarded.

(4) ***Non-AMT tax-exempt bond investment exception inapplicable.*** The exception to arbitrage yield restriction for investments of gross proceeds of tax-exempt bonds in specified tax-exempt bond investments not subject to section 148(b)(3)(B) (relating to an exception to the definition of "investment property" for specified tax-exempt bonds) and § 1.148-2(d)(2)(v) (relating to a corresponding exception to arbitrage yield limitations) is inapplicable.

(5) ***Application of small issuer exception to the arbitrage rebate requirement.*** Except as otherwise provided in paragraph (i)(6) of this section, for purposes of the small issuer exception to the arbitrage rebate requirement under section 148(f)(4)(D) and § 1.148-8, QZABs that are actually issued or reasonably expected to be issued by the QZAB issuer (and applicable entities aggregated under section 148(f)(4)(D)) within a calendar year are taken into account in measuring the applicable size limitation.

(6) ***Certain defeasance escrow earnings.*** With respect to a defeasance escrow established in a remedial action for an issue of QZABs that meets the special rebate requirement under paragraph (h)(8)(ii)(C)(2) of this section, the QZAB issuer is treated as ineligible for the small issuer exception to arbitrage rebate under section 148(f)(4)(D) and paragraph (i)(5) of this section and compliance with that special rebate requirement is treated as satisfying applicable arbitrage investment restrictions under section 148 for that defeasance escrow.

(j) ***Information reporting requirement.*** Under section 1397E(h) and this paragraph (j), issuers of QZABs are required to submit information reporting returns to the IRS similar to the information reporting returns required to be submitted to the IRS under section 149(e) for tax-exempt state or local governmental bonds at the same time and in the same manner as those reports are required to be submitted to the IRS on such forms as shall be prescribed by the Commissioner for such purpose.

(k) ***State or local government*** —

(1) ***In general.*** For purposes of section 1397E(d)(1)(B), the term *State or local government* means a State or political subdivision as defined for purposes of section 103(c).

(2) ***On behalf of issuer.*** A qualified zone academy bond may be issued on behalf of a State or local government under rules similar to those for determining whether a bond issued on behalf of a State or political subdivision constitutes an obligation of that State or political subdivision for purposes of section 103.

(l) ***Cross-references.*** See section 171 and the regulations thereunder for rules relating to amortizable bond premium. See § 1.61-7(d) for the seller's treatment of a bond sold between interest payment dates (credit allowance dates) and § 1.61-7(c) for the buyer's treatment of a bond purchased between interest payment dates (credit allowance dates).

(m) ***Effective/applicability dates*** —

(1) ***In general.*** Except as otherwise provided in this paragraph (m), this section applies to bonds issued under section 1397E that are sold on or after September 14, 2007.

(2) ***Special effective dates*** —

(i) ***Effective dates for paragraphs (h)(2), (h)(3), (h)(4), (i), and (j) of this section in general.*** Paragraphs (h)(2), (h)(3), (h)(4), (i), and (j) of this section apply to bonds issued under section 1397E pursuant to allocations of the national qualified zone academy bond volume cap authority for calendar years after 2005 and sold on or after September 14, 2007.

(ii) ***Permissive retroactive application*** —

(A) ***In general.*** Except as otherwise provided in this paragraph (m), issuers and taxpayers may apply this section in whole, but not in part, to bonds issued under section 1397E that are sold before September 14, 2007.

(B) ***Special rule for certain provisions.*** For purposes of the permissive retroactive application rule in paragraph (m)(2)(ii)(A) of this section, paragraphs (h)(2), (h)(3), (h)(4), (i), and (j) of this section need not be applied to any bonds issued under section 1397E to which those provisions do not otherwise apply under the general effective date provisions for those provisions in paragraph (m)(2)(i) of this section.

(C) ***Definition of proceeds.*** Issuers and taxpayers may apply paragraph (h) of this section, without regard to the definition of proceeds in paragraph (a)(2)(ii) of this section, to bonds issued under section 1397E that are sold before September 14, 2007.

(D) ***Bonds issued before July 1, 1999.*** Paragraphs (b) and (h)(10) of this section may not be applied to bonds issued under section 1397E that are issued before July 1, 1999.

(3) ***Scope of reliance for bonds issued under sections 54A and 54E.*** Except to the extent inconsistent with the successor statutory provisions for QZABs in sections 54A and 54E or applicable public administrative or regulatory guidance under those provisions and except as otherwise provided in this paragraph (m)(3), issuers and taxpayers may apply these regulations to QZABs issued under sections 54A and 54E that are sold after October 3, 2008. In the case of QZABs that are issued under sections 54A and 54E for which the issuer makes an irrevocable election under section 6431(f) to receive payments with respect to credits under section 6431, issuers and taxpayers may not apply the remedial action provisions under paragraph (h)(8) of this section.

[T.D. 8755, 63 FR 673, Jan. 7, 1998; 63 FR 8528, Feb. 19, 1998, as amended by T.D. 8826, 64 FR 35574, July 1, 1999. Redesignated and amended by T.D. 8903, 65 FR 57733, Sept. 26, 2000; T.D. 9339, 72 FR 38774, July 16, 2007;T.D. 9495, 75 FR 44904, July 30, 2010; T.D. 9495, 75 FR 52267, Aug. 25, 2010]

Rules Relating to Individuals' Title 11 Cases

Source: Sections 1.1398-1 and 1.1398-2 appear at T.D. 8537, 59 FR 24937, May 13, 1994, unless otherwise noted.

§ 1.1398-1 Treatment of passive activity losses and passive activity credits in individuals' title 11 cases.

(a) ***Scope.*** This section applies to cases under chapter 7 or chapter 11 of title 11 of the United States Code, but only if the debtor is an individual.

(b) ***Definitions and rules of general application.*** For purposes of this section—

(1) ***Passive activity*** and *former passive activity* have the meanings given in section 469 (c) and (f)(3);

(2) The unused passive activity loss (determined as of the first day of a taxable year) is the passive activity loss (as defined in section 469(d)(1)) that is disallowed under section 469 for the previous taxable year; and

(3) The unused passive activity credit (determined as of the first day of a taxable year) is the passive activity credit (as defined in section 469(d)(2)) that is disallowed under section 469 for the previous taxable year.

(c) ***Estate succeeds to losses and credits upon commencement of case.*** The bankruptcy estate (estate) succeeds to and takes into account, beginning with its first taxable year, the debtor's unused passive activity loss and unused passive activity credit (determined as of the first day of the debtor's taxable year in which the case commences).

(d) ***Transfers from estate to debtor*** —

(1) ***Transfer not treated as taxable event.*** If, before the termination of the estate, the estate transfers an interest in a passive activity or former passive activity to the debtor (other than by sale or exchange), the transfer is not treated as a disposition for purposes of any provision of the Internal Revenue Code assigning tax consequences to a disposition. The transfers to which this rule applies include transfers from the estate to the debtor of property that is exempt under section 522 of title 11 of the United States Code and abandonments of estate property to the debtor under section 554(a) of such title.

(2) ***Treatment of passive activity loss and credit.*** If, before the termination of the estate, the estate transfers an interest in a passive activity or former passive activity to the debtor (other than by sale or exchange)—

(i) The estate must allocate to the transferred interest, in accordance with § 1.469-1(f)(4), part or all of the estate's unused passive activity loss and unused passive activity credit (determined as of the first day of the estate's taxable year in which the transfer occurs); and

(ii) The debtor succeeds to and takes into account, beginning with the debtor's taxable year in which the transfer occurs, the unused passive activity loss and unused passive activity credit (or part thereof) allocated to the transferred interest.

(e) ***Debtor succeeds to loss and credit of the estate upon its termination.*** Upon termination of the estate, the debtor succeeds to and takes into account, beginning with the debtor's taxable year in which the termination occurs, the passive activity loss and passive activity credit disallowed under section 469 for the estate's last taxable year.

(f) ***Effective date*** —

(1) ***Cases commencing on or after November 9, 1992.*** This section applies to cases commencing on or after November 9, 1992.

(2) ***Cases commencing before November 9, 1992*** —

(i) ***Election required.*** This section applies to a case commencing before November 9, 1992, and terminating on or after that date if the debtor and the estate jointly elect its application in the manner prescribed in paragraph (f)(2)(v) of this section (the election). The caption "ELECTION PURSUANT TO § 1.1398-1" must be placed prominently on the first page of each of the debtor's returns that is affected by the election (other than returns for taxable years that begin after the termination of the estate) and on the first page of each of the estate's returns that is affected by the election. In the case of returns that are amended under paragraph (f)(2)(iii) of this section, this requirement is satisfied by placing the caption on the amended return.

(ii) ***Scope of election.*** This election applies to the passive and former passive activities and unused passive activity losses and passive activity credits of the taxpayers making the election.

(iii) ***Amendment of previously filed returns.*** The debtor and the estate making the election must amend all returns (except to the extent they are for a year that is a closed year within the meaning of paragraph (f)(2)(iv)(D) of this section) they filed before the date of the election to the extent necessary to provide that no claim of a deduction or credit is inconsistent with the succession under this section to unused losses and credits. The Commissioner may revoke or limit the effect of the election if either the debtor or the estate fails to satisfy the requirement of this paragraph (f)(2)(iii).

(iv) ***Rules relating to closed years*** —

(A) Estate succeeds to debtor's passive activity loss and credit as of the commencement date. If, by reason of an election under this paragraph (f), this section applies to a case that was commenced in a closed year, the estate, nevertheless, succeeds to and takes into account the unused passive activity loss and unused passive activity credit of the debtor (determined as of the first day of the debtor's taxable year in which the case commenced).

(B) ***No reduction of unused passive activity loss and credit for passive activity loss and credit not claimed for a closed year.*** In determining a taxpayer's carryover of a passive activity loss or credit to its taxable year following a closed year, a deduction or credit that the taxpayer failed to claim in the closed year, if attributable to an unused passive activity loss or credit to which the taxpayer succeeded under this section, is treated as a deduction or credit that was disallowed under section 469.

(C) ***Passive activity loss and credit to which taxpayer succeeds reflects deductions of prior holder in a closed year.*** A loss or credit to which a taxpayer would otherwise succeed under this section is reduced to the extent the loss or credit was allowed to its prior holder for a closed year.

(D) ***Closed year.*** For purposes of this paragraph (f)(2)(iv), a taxable year is closed to the extent the assessment of a deficiency or refund of an overpayment is prevented, on the date of the election and at all times thereafter, by any law or rule of law.

(v) ***Manner of making election*** —

(A) *Chapter 7 cases.* In a case under chapter 7 of title 11 of the United States Code, the election is made by obtaining the written consent of the bankruptcy trustee and filing a copy of the written consent with the returns (or amended returns) of the debtor and the estate for their first taxable years ending after November 9, 1992.

(B) *Chapter 11 cases.* In a case under chapter 11 of title 11 of the United States Code, the election is made by incorporating the election into a bankruptcy plan that is confirmed by the bankruptcy court or into an order of such court and filing the pertinent portion of the plan or order with the returns (or amended returns) of the debtor and the estate for their first taxable years ending after November 9, 1992.

(vi) *Election is binding and irrevocable.* Except as provided in paragraph (f)(2)(iii) of this section, the election, once made, is binding on both the debtor and the estate and is irrevocable.

§ 1.1398-2 Treatment of section 465 losses in individuals' title 11 cases.

(a) *Scope.* This section applies to cases under chapter 7 or chapter 11 of title 11 of the United States Code, but only if the debtor is an individual.

(b) *Definition and rules of general application.* For purposes of this section—

(1) *Section 465 activity* means an activity to which section 465 applies; and

(2) For each section 465 activity, the unused section 465 loss from the activity (determined as of the first day of a taxable year) is the loss (as defined in section 465(d)) that is not allowed under section 465(a)(1) for the previous taxable year.

(c) *Estate succeeds to losses upon commencement of case.* The bankruptcy estate (the estate) succeeds to and takes into account, beginning with its first taxable year, the debtor's unused section 465 losses (determined as of the first day of the debtor's taxable year in which the case commences).

(d) *Transfers from estate to debtor* —

(1) *Transfer not treated as taxable event.* If, before the termination of the estate, the estate transfers an interest in a section 465 activity to the debtor (other than by sale or exchange), the transfer is not treated as a disposition for purposes of any provision of the Internal Revenue Code assigning tax consequences to a disposition. The transfers to which this rule applies include transfers from the estate to the debtor of property that is exempt under section 522 of title 11 of the United States Code and abandonments of estate property to the debtor under section 554(a) of such title.

(2) *Treatment of section 465 losses.* If, before the termination of the estate, the estate transfers an interest in a section 465 activity to the debtor (other than by sale or exchange) the debtor succeeds to and takes into account, beginning with the debtor's taxable year in which the transfer occurs, the transferred interest's share of the estate's unused section 465 loss from the activity (determined as of the first day of the estate's taxable year in which the transfer occurs). For this purpose, the transferred interest's share of such loss is the amount, if any, by which such loss would be reduced if the transfer had occurred as of the close of the preceding taxable year of the estate and been treated as a disposition on which gain or loss is recognized.

(e) *Debtor succeeds to losses of the estate upon its termination.* Upon termination of the estate, the debtor succeeds to and takes into account, beginning with the debtor's taxable year in which the termination occurs, the losses not allowed under section 465 for the estate's last taxable year.

(f) *Effective date* —

(1) ***Cases commencing on or after November 9, 1992.*** This section applies to cases commencing on or after November 9, 1992.

(2) ***Cases commencing before November 9, 1992*** —

(i) ***Election required.*** This section applies to a case commencing before November 9, 1992, and terminating on or after that date if the debtor and the estate jointly elect its application in the manner prescribed in paragraph (f)(2)(v) of this section (the election). The caption "ELECTION PURSUANT TO § 1.1398-2" must be placed prominently on the first page of each of the debtor's returns that is affected by the election (other than returns for taxable years that begin after the termination of the estate) and on the first page of each of the estate's returns that is affected by the election. In the case of returns that are amended under paragraph (f)(2)(iii) of this section, this requirement is satisfied by placing the caption on the amended return.

(ii) ***Scope of election.*** This election applies to the section 465 activities and unused losses from section 465 activities of the taxpayers making the election.

(iii) ***Amendment of previously filed returns.*** The debtor and the estate making the election must amend all returns (except to the extent they are for a year that is a closed year within the meaning of paragraph (f)(2)(iv)(D) of this section) they filed before the date of the election to the extent necessary to provide that no claim of a deduction is inconsistent with the succession under this section to unused losses from section 465 activities. The Commissioner may revoke or limit the effect of the election if either the debtor or the estate fails to satisfy the requirement of this paragraph (f)(2)(iii).

(iv) ***Rules relating to closed years*** —

(A) ***Estate succeeds to debtor's section 465 loss as of the commencement date.*** If, by reason of an election under this paragraph (f), this section applies to a case that was commenced in a closed year, the estate, nevertheless, succeeds to and takes into account the section 465 losses of the debtor (determined as of the first day of the debtor's taxable year in which the case commenced).

(B) ***No reduction of unused section 465 loss for loss not claimed for a closed year.*** In determining a taxpayer's carryover of an unused section 465 loss to its taxable year following a closed year, a deduction that the taxpayer failed to claim in the closed year, if attributable to an unused section 465 loss to which the taxpayer succeeds under this section, is treated as a deduction that was not allowed under section 465.

(C) ***Loss to which taxpayer succeeds reflects deductions of prior holder in a closed year.*** A loss to which a taxpayer would otherwise succeed under this section is reduced to the extent the loss was allowed to its prior holder for a closed year.

(D) ***Closed year.*** For purposes of this paragraph (f)(2)(iv), a taxable year is closed to the extent the assessment of a deficiency or refund of an overpayment is prevented, on the date of the election and at all times thereafter, by any law or rule of law.

(v) ***Manner of making election*** —

(A) ***Chapter 7 cases.*** In a case under chapter 7 of title 11 of the United States Code, the election is made by obtaining the written consent of the bankruptcy trustee and filing a copy of the written consent with the returns (or amended returns) of the debtor and the estate for their first taxable years ending after November 9, 1992.

(B) ***Chapter 11 cases.*** In a case under chapter 11 of title 11 of the United States Code, the election is made by incorporating the election into a bankruptcy plan that is confirmed by the bankruptcy court or into an order of such court and filing the pertinent portion of the plan or order with the returns (or amended returns) of the debtor and the estate for their first taxable years ending after November 9, 1992.

(vi) ***Election is binding and irrevocable.*** Except as provided in paragraph (f)(2)(iii) of this section, the election, once made, is binding on both the debtor and the estate and is irrevocable.

§ 1.1398-3 Treatment of section 121 exclusion in individuals' title 11 cases.

(a) ***Scope.*** This section applies to cases under chapter 7 or chapter 11 of title 11 of the United States Code, but only if the debtor is an individual.

(b) ***Definition and rules of general application.*** For purposes of this section, section 121 exclusion means the exclusion of gain from the sale or exchange of a debtor's principal residence available under section 121.

(c) ***Estate succeeds to exclusion upon commencement of case.*** The bankruptcy estate succeeds to and takes into account the section 121 exclusion with respect to the property transferred into the estate.

(d) ***Effective date.*** This section is applicable for sales or exchanges on or after December 24, 2002.

[67 FR 78367, Dec. 24, 2002]

§ 1.1400L(b)-1 Additional first year depreciation deduction for qualified New York Liberty Zone property.

(a) ***Scope.*** This section provides the rules for determining the 30-percent additional first year depreciation deduction allowable under section 1400L(b) for qualified New York Liberty Zone property.

(b) ***Definitions.*** For purposes of section 1400L(b) and this section, the definitions of the terms in § 1.168(k)-1(a)(2) apply and the following definitions also apply:

(1) ***Building*** and *structural components* have the same meanings as those terms are defined in § 1.48-1(e).

(2) ***New York Liberty Zone*** is the area located on or south of Canal Street, East Broadway (east of its intersection with Canal Street), or Grand Street (east of its intersection with East Broadway) in the Borough of Manhattan in the City of New York, New York.

(3) ***Nonresidential real property*** and *residential rental property* have the same meanings as those terms are defined in section 168(e)(2).

(4) ***Real property*** is a building or its structural components, or other tangible real property.

(c) ***Qualified New York Liberty Zone property*** —

(1) ***In general.*** Qualified New York Liberty Zone property is depreciable property that meets all the following requirements in the first taxable year in which the property is subject to depreciation by the taxpayer whether or not depreciation deductions for the property are allowable—

(i) The requirements in § 1.1400L(b)-1(c)(2) (description of property);

(ii) The requirements in § 1.1400L(b)-1(c)(3) (substantial use);

(iii) The requirements in § 1.1400L(b)-1(c)(4) (original use);

(iv) The requirements in § 1.1400L(b)-1(c)(5) (acquisition of property by purchase); and

(v) The requirements in § 1.1400L(b)-1(c)(6) (placed-in-service date).

(2) ***Description of qualified New York Liberty Zone property*** —

(i) ***In general.*** Depreciable property will meet the requirements of this paragraph (c)(2) if the property is—

(A) Described in § 1.168(k)-1(b)(2)(i); or

(B) Nonresidential real property or residential rental property depreciated under section 168, but only to the extent it rehabilitates real property damaged, or replaces real property destroyed or condemned, as a result of the terrorist attacks of September 11, 2001. Property is treated as replacing destroyed or condemned property if, as part of an integrated plan, the property replaces real property that is included in a continuous area that includes real property destroyed or condemned. For purposes of this section, real property is considered as destroyed or condemned only if an entire building or structure was destroyed or condemned as a result of the terrorist attacks of September 11, 2001. Otherwise, the real property is considered damaged real property. For example, if certain structural components (for example, walls, floors, and plumbing fixtures) of a building are damaged or destroyed as a result of the terrorist attacks of September 11, 2001, but the building is not destroyed or condemned, then only costs related to replacing the damaged or destroyed structural components qualify under this paragraph (c)(2)(i)(B).

(ii) ***Property not eligible for additional first year depreciation deduction.*** Depreciable property will not meet the requirements of this paragraph (c)(2) if—

(A) Section 168(k) or § 1.168(k)-1 applies to the property;

(B) The property is described in section 168(f);

(C) The property is required to be depreciated under the alternative depreciation system of section 168(g) pursuant to section 168(g)(1)(A) through (D) or other provisions of the Internal Revenue Code (for example, property described in section 263A(e)(2)(A) if the taxpayer (or any related person) has made an election under section 263A(d)(3), or property described in section 280F(b)(1));

(D) The property is included in any class of property for which the taxpayer elects not to deduct the additional first year depreciation under paragraph (e) of this section; or

(E) The property is qualified New York Liberty Zone leasehold improvement property as described in section 1400L(c)(2).

(3) ***Substantial use.*** Depreciable property will meet the requirements of this paragraph (c)(3) if substantially all of the use of the property is in the New York Liberty Zone and is in the active conduct of a trade or business by the taxpayer in New York Liberty Zone. For purposes of this paragraph (c)(3), “substantially all” means 80 percent or more.

(4) ***Original use.*** Depreciable property will meet the requirements of this paragraph (c)(4) if the original use of the property commences with the taxpayer in the New York Liberty Zone after September 10, 2001. The original use rules in § 1.168(k)-1(b)(3) apply for purposes of this paragraph (c)(4). In addition, used property will satisfy the original use requirement in this paragraph (c)(4) so long as the property has not been previously used within the New York Liberty Zone.

(5) ***Acquisition of property by purchase*** —

(i) ***In general.*** Depreciable property will meet the requirements of this paragraph (c)(5) if the property is acquired by the taxpayer by purchase (as defined in section 179(d) and § 1.179-4(c)) after September 10, 2001, but only if no written binding contract for the acquisition of the property was in effect before September 11, 2001. For purposes of this paragraph (c)(5), the rules in § 1.168(k)-1(b)(4)(ii) (binding contract), the rules in § 1.168(k)-1(b)(4)(iii) (self-constructed property), and the rules in § 1.168(k)-1(b)(4)(iv) (disqualified transactions) apply. For purposes of the preceding sentence, the rules in § 1.168(k)-1(b)(4)(iii) shall be applied without regard to 'and before January 1, 2005.'

(ii) ***Exception for certain transactions.*** For purposes of this section, the new partnership of a transaction described in § 1.168(k)-1(f)(1)(ii) (technical termination of a partnership) or the transferee of a transaction described in § 1.168(k)-1(f)(1)(iii) (section 168(i)(7) transactions) is deemed to acquire the depreciable property by purchase.

(6) ***Placed-in-service date.*** Depreciable property will meet the requirements of this paragraph (c)(6) if the property is placed in service by the taxpayer on or before December 31, 2006. However, nonresidential real property and residential rental property described in paragraph (c)(2)(i)(B) of this section must be placed in service by the taxpayer on or before December 31, 2009. The rules in § 1.168(k)-1(b)(5)(ii) (relating to sale-leaseback and syndication transactions), the rules in § 1.168(k)-1(b)(5)(iii) (relating to a technical termination of a partnership under section 708(b)(1)(B)), and the rules in § 1.168(k)-1(b)(5)(iv) (relating to section 168(i)(7) transactions) apply for purposes of this paragraph (c)(6).

(d) ***Computation of depreciation deduction for qualified New York Liberty Zone property.*** The computation of the allowable additional first year depreciation deduction and the otherwise allowable depreciation deduction for qualified New York Liberty Zone property is made in accordance with the rules for qualified property in § 1.168(k)-1(d)(1)(i) and (2).

(e) ***Election not to deduct additional first year depreciation*** —

(1) ***In general.*** A taxpayer may make an election not to deduct the 30-percent additional first year depreciation for any class of property that is qualified New York Liberty Zone property placed in service during the taxable year. If a taxpayer makes an election under this paragraph (e), the election applies to all qualified New York Liberty Zone property that is in the same class of property and placed in service in the same taxable year, and no additional first year depreciation deduction is allowable for the class of property.

(2) ***Definition of class of property.*** For purposes of this paragraph (e), the term class of property means—

(i) Except for the property described in paragraphs (e)(2)(ii), (iv), and (v) of this section, each class of property described in section 168(e) (for example, 5-year property);

(ii) Water utility property as defined in section 168(e)(5) and depreciated under section 168;

(iii) Computer software as defined in, and depreciated under, section 167(f)(1) and the regulations thereunder;

(iv) Nonresidential real property as defined in paragraph (b)(3) of this section and as described in paragraph (c)(2)(B) of this section; or

(v) Residential rental property as defined in paragraph (b)(3) of this section and as described in paragraph (c)(2)(B) of this section

(3) ***Time and manner for making election*** —

(i) ***Time for making election.*** Except as provided in paragraph (e)(4) of this section, the election specified in paragraph (e)(1) of this section must be made by the due date (including extensions) of the Federal tax return for the taxable year in which the qualified New York Liberty Zone property is placed in service by the taxpayer

(ii) ***Manner of making election.*** Except as provided in paragraph (e)(4) of this section, the election specified in paragraph (e)(1) of this section must be made in the manner prescribed on Form 4562, "Depreciation and Amortization," and its instructions. The election is made separately by each person owning qualified New York Liberty Zone property (for example, for each member of a consolidated group by the common parent of the group, by the partnership, or by the S corporation). If Form 4562 is revised or renumbered, any reference in this section to that form shall be treated as a reference to the revised or renumbered form.

(4) ***Special rules for 2000 or 2001 returns.*** For the election specified in paragraph (e)(1) of this section for qualified New York Liberty Zone property placed in service by the taxpayer during the taxable year that included September 11, 2001, the taxpayer should refer to the guidance provided by the Internal Revenue Service for the time and manner of making this election on the 2000 or 2001 Federal tax return for the taxable year that included September 11, 2001 (for further guidance, *see* sections 3.03(3) and 4 of Rev. Proc. 2002-33 (2002-1 C.B. 963), Rev. Proc. 2003-50 (2003-29 I.R.B. 119), and § 601.601(d)(2)(ii)(*b*) of this chapter).

(5) ***Failure to make election.*** If a taxpayer does not make the election specified in paragraph (e)(1) of this section within the time and in the manner prescribed in paragraph (e)(3) or (e)(4) of this section, the amount of depreciation allowable for that property under section 167(f)(1) or under section 168, as applicable, must be determined for the placed-in-service year and for all subsequent taxable years by taking into account the additional first year depreciation deduction. Thus, the election specified in paragraph (e)(1) of this section shall not be made by the taxpayer in any other manner (for example, the election cannot be made through a request under section 446(e) to change the taxpayer's method of accounting).

(6) ***Alternative minimum tax.*** If a taxpayer makes an election under this paragraph (e) for a class of property, the depreciation adjustments under section 56 and the regulations under section 56 apply to the property to which the election applies for purposes of computing the taxpayer's alternative minimum taxable income.

(7) ***Revocation of election*** —

(i) ***In general.*** Except as provided in paragraph (e)(7)(ii) of this section, an election under this paragraph (e), once made, may be revoked only with the written consent of the Commissioner of Internal Revenue. To seek the Commissioner's consent, the taxpayer must submit a request for a letter ruling.

(ii) ***Automatic 6-month extension.*** If a taxpayer made an election under this paragraph (e) for a class of property, an automatic extension of 6 months from the due date of the taxpayer's Federal tax return (excluding extensions) for the placed-in-service year of the class of property is granted to revoke that election, provided the taxpayer timely filed the taxpayer's Federal tax return for the placed-in-service year of the class of property and, within this 6-month extension period, the taxpayer (and all taxpayers whose tax liability would be affected by the election) files an amended Federal tax return for the placed-in-service year of the class of property in a manner that is consistent with the revocation of the election.

(f) ***Special rules —***

(1) ***Property placed in service and disposed of in the same taxable year.*** Rules similar to those provided in § 1.168(k)-1(f)(1) apply for purposes of this paragraph (f)(1).

(2) ***Redetermination of basis.*** If the unadjusted depreciable basis (as defined in § 1.168(k)-1(a)(2)(iii)) of qualified New York Liberty Zone property is redetermined (for example, due to contingent purchase price or discharge of indebtedness) on or before December 31, 2006 (or on or before December 31, 2009, for nonresidential real property and residential rental property described in paragraph (c)(2)(i)(B) of this section), the additional first year depreciation deduction allowable for the qualified New York Liberty Zone property is redetermined in accordance with the rules provided in § 1.168(k)-1(f)(2).

(3) ***Section 1245 and 1250 depreciation recapture.*** The rules provided in § 1.168(k)-1(f)(3) apply for purposes of this paragraph (f)(3).

(4) ***Coordination with section 169.*** Rules similar to those provided in § 1.168(k)-1(f)(4) apply for purposes of this paragraph (f)(4).

(5) ***Like-kind exchanges and involuntary conversions.*** This paragraph (f)(5) applies to acquired MACRS property (as defined in § 1.168(k)-1(f)(5)(ii)(A)) or acquired computer software (as defined in § 1.168(k)-1(f)(5)(ii)(C)) that is eligible for the additional first year depreciation deduction under section 1400L(b) at the time of replacement provided the time of replacement is after September 10, 2001, and on or before December 31, 2006, or in the case of acquired MACRS property or acquired computer software that is qualified New York Liberty Zone property described in paragraph (c)(2)(i)(B) of this section, the time of replacement is after September 10, 2001, and on or before December 31, 2009. The rules and definitions similar to those provided in § 1.168(k)-1(f)(5) apply for purposes of this paragraph (f)(5).

(6) ***Change in use.*** Rules similar to those provided in § 1.168(k)-1(f)(6) apply for purposes of this paragraph (f)(6).

(7) ***Earnings and profits.*** The rule provided in § 1.168(k)-1(f)(7) applies for purposes of this paragraph (f)(7).

(8) ***Section 754 election.*** Rules similar to those provided in § 1.168(k)-1(f)(9) apply for purposes of this paragraph (f)(8).

(9) ***Coordination with section 47.*** Rules similar to those provided in § 1.168(k)-1(f)(10) apply for purposes of this paragraph (f)(9).

(10) ***Coordination with section 514(a)(3).*** Rules similar to those provided in § 1.168(k)-1(f)(11) apply for purposes of this paragraph (f)(10).

(g) *Effective date* —

(1) ***In general.*** Except as provided in paragraphs (g)(2), (3), and (5) of this section, this section applies to qualified New York Liberty Zone property acquired by a taxpayer after September 10, 2001.

(2) ***Technical termination of a partnership or section 168(i)(7) transactions.*** If qualified New York Liberty Zone property is transferred in a technical termination of a partnership under section 708(b)(1)(B) or in a transaction described in section 168(i)(7) for a taxable year ending on or before September 8, 2003, and the additional first year depreciation deduction allowable for the property was not determined in accordance with paragraph (f)(1) of this section, the Internal Revenue Service will allow any reasonable method of determining the additional first year depreciation deduction allowable for the property in the year of the transaction that is consistently applied to the property by all parties to the transaction.

(3) ***Like-kind exchanges and involuntary conversions.*** If a taxpayer did not claim on a federal tax return for a taxable year ending on or before September 8, 2003, the additional first year depreciation deduction for the remaining carryover basis of qualified New York Liberty Zone property acquired in a transaction described in section 1031(a), (b), or (c), or in a transaction to which section 1033 applies and the taxpayer did not make an election not to deduct the additional first year depreciation deduction for the class of property applicable to the remaining carryover basis, the Internal Revenue Service will treat the taxpayer's method of not claiming the additional first year depreciation deduction for the remaining carryover basis as a permissible method of accounting and will treat the amount of the additional first year depreciation deduction allowable for the remaining carryover basis as being equal to zero, provided the taxpayer does not claim the additional first year depreciation deduction for the remaining carryover basis in accordance with paragraph (g)(4)(ii) of this section.

(4) *Change in method of accounting* —

(i) ***Special rules for 2000 or 2001 returns.*** If a taxpayer did not claim on the federal tax return for the taxable year that included September 11, 2001, any additional first year depreciation deduction for a class of property that is qualified New York Liberty Zone property and did not make an election not to deduct the additional first year depreciation deduction for that class of property, the taxpayer should refer to the guidance provided by the Internal Revenue Service for the time and manner of claiming the additional first year depreciation deduction for the class of property (for further guidance, *see* section 4 of Rev. Proc. 2002-33 (2002-1 C.B. 963), Rev. Proc. 2003-50 (2003-29 I.R.B. 119), and § 601.601(d)(2)(ii)(*b*) of this chapter).

(ii) ***Like-kind exchanges and involuntary conversions.*** If a taxpayer did not claim on a federal tax return for any taxable year ending on or before September 8, 2003, the additional first year depreciation deduction allowable for the remaining carryover basis of qualified New York Liberty Zone property acquired in a transaction described in section 1031(a), (b), or (c), or in a transaction to which section 1033 applies and the taxpayer did not make an election not to deduct the additional first year depreciation deduction for the class of property applicable to the remaining carryover basis, the taxpayer may claim the additional first year depreciation deduction allowable for the remaining carryover basis in accordance with paragraph (f)(5) of this section either—

(A) By filing an amended return (or a qualified amended return, if applicable (for further guidance, *see* Rev. Proc. 94-69 (1994-2 C.B. 804) and § 601.601(d)(2)(ii)(*b*) of this chapter)) on or before December 31, 2003, for the year of replacement and any affected subsequent taxable year; or,

(B) By following the applicable administrative procedures issued under § 1.446-1(e)(3)(ii) for obtaining the Commissioner's automatic consent to a change in method of accounting (for further guidance, *see* Rev. Proc. 2002-9 (2002-1 C.B. 327) and § 601.601(d)(2)(ii)(*b*) of this chapter).

(iii) ***Revisions made in paragraphs (b)(4) and (c)(2)(ii) of this section.*** If a taxpayer did not claim on a Federal tax return for a taxable year ending on or after September 11, 2001, and on or before September 1, 2006, any additional first year depreciation deduction for qualified New York Liberty Zone property because of the application of § 1.1400L(b)-1T(b)(4) or because the taxpayer made an election under § 1.168(k)-1T(e)(1) for a class of property that included such qualified New York Liberty Zone property, the taxpayer may claim the additional first year depreciation deduction for such qualified New York Liberty Zone property under this section in accordance with the applicable administrative procedures issued under § 1.446-1(e)(3)(ii) for obtaining the Commissioner's consent to a change in method of accounting. Section 481(a) applies to a request to claim the additional first year depreciation deduction for such qualified New York Liberty Zone property under this paragraph (g)(4)(iii).

(5) ***Revision to paragraphs (b)(4) and (b)(6).*** The addition of "(or, in the case of multiple units of property subject to the same lease, within three months after the date the final unit is placed in service, so long as the period between the time the first unit is placed in service and the time the last unit is placed in service does not exceed 12 months)" to § 1.168(k)-1(b)(3)(iii)(B) and § 1.168(k)-1(b)(5)(ii)(B) applies to property sold after June 4, 2004, for purposes of paragraphs (b)(4) and (b)(6) of this section.

(6) ***Rehabilitation credit.*** If a taxpayer did not claim on a Federal tax return for a taxable year ending on or before September 1, 2006, the rehabilitation credit provided by section 47(a) with respect to the portion of the basis of a qualified rehabilitated building that is attributable to qualified rehabilitation expenditures and the qualified rehabilitation expenditures are qualified New York Liberty Zone property, and the taxpayer did not make the election specified in paragraph (e)(1) of this section for the class of property that includes the qualified rehabilitation expenditures, the taxpayer may claim the rehabilitation credit for the remaining rehabilitated basis (as defined in § 1.168(k)-1(f)(10)(i)(B)) of the qualified rehabilitated building that is attributable to the qualified rehabilitation expenditures (assuming all the requirements of section 47 are met) in accordance with paragraph (f)(9) of this section by filing an amended Federal tax return for the taxable year for which the rehabilitation credit is to be claimed. The amended Federal tax return must include the adjustment to the tax liability for the rehabilitation credit and any collateral adjustments to taxable income or to the tax liability (for example, the amount of depreciation allowed or allowable in that taxable year for the qualified rehabilitated building). Such adjustments must also be made on amended Federal tax returns for any affected succeeding taxable years.

[T.D. 9091, 68 FR 53004, Sept. 8, 2003; T.D. 9091, 68 FR 63734, Nov. 10, 2003. Redesignated and amended by T.D. 9283, 71 FR 51746, Aug. 31, 2006]

§ 1.1400Z2-0 Table of Contents.

This section lists the table of contents for §§ 1.1400Z2(a)-1 through 1.1400Z2(f)-1.

§ 1.1400Z2(a)-1 Deferring tax on capital gains by investing in opportunity zones

(a) Deferring tax on capital gains.

(1) Overview.

(2) Procedure for deferring gain.

(b) Definitions.

(1) 30-month substantial improvement period.

(2) 70-percent tangible property standard.

(3) 70-percent use test.

(4) 90-percent investment standard.

(5) 90-percent qualified opportunity zone property holding period.

(6) 90-percent qualified opportunity zone business property holding period.

(7) 180-day period.

(8) Boot.

(9) Consolidated group.

(10) Deferral election.

(11) Eligible gain.

(12) Eligible interest.

(13) Eligible taxpayer.

(14) Inclusion event.

(15) Mixed-funds investment.

(16) Non-qualifying investment.

(17) Property.

(18) QOF.

(19) QOF C corporation.

(20) QOF corporation.

(21) QOF RIC.

(22) QOF REIT.

(23) QOF owner.

(24) QOF partner.

(25) QOF partnership.

(26) QOF S corporation.

(27) QOF shareholder.

(28) QOZ designation notice.

(29) Qualified opportunity zone business.

(30) Qualified opportunity zone business property.

(31) Qualified opportunity zone partnership interest.

(32) Qualified opportunity zone property.

(33) Qualified opportunity zone stock.

(34) Qualifying investment.

(35) Qualifying QOF partnership interest.

(36) Qualifying QOF stock.

(37) Qualifying section 355 transaction.

(38) Qualifying section 381 transaction.

(39) Related persons.

(40) Remaining deferred gain.

(41) Section 1400Z-2 regulations.

(c) Operational and special rules.

(1) Attributes of gains included in income under section 1400Z-2(a)(1)(B).

(2) Identification of which interest in a QOF corporation has been disposed of.

(3) Pro-rata method.

(4) Examples.

(5) Making an investment for purposes of an election under section 1400Z-2(a).

(6) Amount invested for purposes of section 1400Z-2(a)(1)(A).

(7) Eligible gains that a partnership elects to defer.

(8) Eligible gains that the partnership does not defer.

(9) Passthrough entities other than partnerships.

(d) Elections.

(1) Taxable year of deferral election.

(2) Annual reporting of qualifying investments.

(e) Interaction of section 1400Z-2 and § 1.897-6T.

(f) Treatment of mixed-funds investments.

(1) Investments to which no election under section 1400Z-2(a) applies.

(2) Treatment of deemed contributions of money under section 752(a).

(3) Treatment of contributions to QOF corporation in which no stock is received.

(4) Example.

(g) Applicability dates.

(1) In general.

(2) Prior periods.

§ 1.1400Z2(b)-1 Inclusion of gains that have been deferred under section 1400Z-2(a).

(a) Scope.

(b) General inclusion rule.

(c) Inclusion events.

(1) In general.

(2) Termination or liquidation of QOF or QOF owner.

(3) Transfer of an investment in a QOF by gift or incident to divorce.

(4) Transfer of an investment in a QOF by reason of the taxpayer's death.

(5) Grantor trusts.

(6) Special rules for partners and partnerships.

(7) Special rules for S corporations.

(8) Distributions by a QOF corporation.

(9) Dividend-equivalent redemptions and redemptions of section 306 stock.

(10) Qualifying section 381 transactions.

(11) Section 355 transactions.

(12) Recapitalizations and section 1036 transactions.

(13) Section 304 transactions.

(14) Deduction for worthlessness.

(15) Decertification of a QOF.

(16) Other inclusion and non-inclusion events.

(d) Holding periods.

(1) Holding period for qualifying investment.

(2) Status of QOF assets as qualified opportunity zone property.

(e) Amount includible.

(1) In general.

(2) Property received from a QOF in certain transactions.

(3) Gain recognized on December 31, 2026.

(4) Special amount includible rule for partnerships and S corporations.

(5) Limitation on amount of gain included after statutory five-year and seven-year basis increases.

(f) Examples.

(g) Basis adjustments.

(1) Basis adjustments under section 1400Z-2(b)(2)(B)(ii) resulting from the inclusion of deferred gain.

(2) Amount of basis adjustment under section 1400Z-2(b)(2)(B)(iii) and (iv).

(3) Examples.

(4) Special partnership rules.

(5) Basis adjustments in S corporation stock.

(6) Basis in the hands of a taxpayer who received a qualifying investment in a QOF by reason of the prior owner's death.

(h) Notifications by partners and partnerships, and shareholders and.

(1) Notification of deferral election.

(2) Notification of deferred gain recognition by indirect QOF owner.

(3) Notification of section 1400Z-2(c) election by QOF partner or QOF partnership.

(4) S corporations.

(i) Reserved.

(j) Applicability dates.

(1) In general.

(2) Prior periods.

§ 1.1400Z2(c)-1 Investments held for at least 10 years.

(a) Scope.

(b) Investment for which an election can be made.

(1) In general.

(2) Special election rules for QOF partnerships and QOF S corporations.

(3) Basis adjustments upon sale or exchange of qualifying QOF stock.

(c) Extension of availability of the election described in section 1400Z-2(c).

(d) Examples.

(e) Capital gain dividends paid by a QOF RIC or QOF REIT that some shareholders may be able to elect to receive tax free under section 1400Z-2(c).

(1) Eligibility.

(2) Definition of capital gain dividend identified with a date.

(3) General limitations on the amounts of capital gain with which a date may be identified.

(4) Determination of the amount of capital gain with which a date may be identified.

(f) Applicability dates.

§ 1.1400Z2(d)-1 Qualified opportunity funds and qualified opportunity zone businesses.

(a) Overview.

(1) Eligible entity.

(2) Self-certification as a QOF.

(3) Self-decertification of a QOF.

(4) [Reserved]

(b) Valuation of property for purposes of the 90-percent investment standard and the 70-percent tangible property standard.

(1) In general.

(2) Special rules.

(3) Applicable financial statement valuation method.

(4) Alternative valuation method.

(c) Qualified opportunity zone property.

(1) In general.

(2) Qualified opportunity zone stock.

(3) Qualified opportunity zone partnership interest.

(d) Qualified opportunity zone business.

(1) In general.

(2) Satisfaction of 70-percent tangible property standard.

(3) Operation of section 1397C requirements adopted by reference.

(4) Trade or businesses described in section 144(c)(6)(B) not eligible.

(5) Tangible property of a qualified opportunity zone business that ceases to be qualified opportunity zone business property

(6) Cure period for qualified opportunity zone businesses.

(e) Applicability dates.

(1) In general.

(2) Prior periods.

§ 1.1400Z2(d)-2 Qualified opportunity zone business property

(a) Qualified opportunity zone business property.

(1) In general.

(2) Qualified opportunity zone business property requirements.

(b) Tangible property owned by an eligible entity.

(1) Purchase requirement.

(2) Original use or substantial improvement requirement.

(3) Original use of tangible property acquired by purchase.

(4) Substantial improvement of tangible property acquired by purchase.

(c) Tangible property leased by an eligible entity.

(1) Qualifying acquisition of possession.

(2) Arms-length terms.

(3) Additional requirements for tangible property leased from a related person.

(4) Plan, intent, or expectation for purchases not for fair market value.

(d) Holding period and use within a qualified opportunity zone of owned or leased tangible property.

(1) In general.

(2) Valuation of owned and leased property.

(3) Substantially all of an eligible entity's holding period for owned or leased tangible property.

(4) Substantially all of the use of owned or leased tangible property in a qualified opportunity zone.

(e) Applicability dates.

(1) In general.

(2) Prior periods.

§ 1.1400Z2(e)-1 [Reserved]

§ 1.1400Z2(f)-1 Administrative rules- penalties, anti-abuse, etc.

(a) In general.

(b) Time period for a QOF to reinvest certain proceeds.

(1) In general.

(2) Federally declared disasters.

(c) Anti-abuse rules.

(1) General anti-abuse rule.

(2) Special anti-abuse rule for partnerships.

(3) Examples.

(d) Applicability dates.

(1) In general.

(2) Prior periods.

[T.D. 9889, 85 FR 1953, Jan. 13, 2020; 85 FR 19082, Apr. 6, 2020]

§ 1.1400Z2(a)-1 Deferring tax on capital gains by investing in opportunity zones.

(a) ***Deferring tax on capital gains*** —

(1) ***Overview.*** Under section 1400Z-2(a) of the Internal Revenue Code (Code) and the section 1400Z-2 regulations (as defined in paragraph (b)(41) of this section), an eligible taxpayer may elect to defer recognition of some or all of one or more eligible gains that otherwise would be recognized by the eligible taxpayer in the taxable year to the extent that the eligible taxpayer timely acquires a qualifying investment in a qualified opportunity fund (QOF) within the meaning of section 1400Z-2(d)(1) and § 1.1400Z2(d)-1. Paragraph (a)(2) of this section describes how a taxpayer elects to defer gain. Paragraph (b) of this section defines terms used in the section 1400Z-2 regulations. Paragraph (c) of this section provides operational rules for applying section 1400Z-2 and the section 1400Z-2 regulations, including special rules regarding the election to defer gain under section 1400Z-2(a) and this section when an eligible taxpayer that is a partnership, S corporation, trust, or decedent's estate recognizes an eligible gain in a taxable year. Paragraph (d) of this section provides the manner in which a deferral election under section 1400Z-2(a) must be made. Paragraph (e) of this section provides the treatment of section 1400Z-2 for purposes of § 1.897-6T. Paragraph (f) of this section provides rules for mixed-funds investments. Paragraph (g) of this section provides dates of applicability. See §§ 1.1502-14Z and 1.1504-3 for special rules applicable to consolidated groups that invest in QOFs.

(2) ***Procedure for deferring gain.*** A taxpayer defers gain, in whole or in part, by making an election on its Federal income tax return for the taxable year in which the gain would be included if not deferred. The election must be made in the manner prescribed by the Internal Revenue Service in guidance published in the Internal Revenue Bulletin or in forms and instructions (see §§ 601.601(d)(2) and 601.602 of this chapter).

(b) ***Definitions.*** The following definitions apply for purposes of section 1400Z-2 and the section 1400Z-2 regulations:

(1) ***30-month substantial improvement period.*** The term *30-month substantial improvement period* means any 30-month period, beginning after the date of acquisition of tangible property, in which additions to the basis of the tangible property in the hands of the QOF or qualified opportunity zone business (see § 1.1400Z2(d)-2(b)(4)) exceed an amount equal to the adjusted basis of such property at the beginning of the 30-month period in the hands of the QOF or qualified opportunity zone business.

(2) ***70-percent tangible property standard.*** The term *70-percent tangible property standard* means the requirement in section 1400Z-2(d)(3)(A)(i) that a qualified opportunity zone business must satisfy with respect to qualified opportunity zone business property (see § 1.1400Z2(d)-2) that the qualified opportunity zone business holds, whether the qualified opportunity zone business property is owned by the qualified opportunity zone business or leased by the qualified opportunity zone business from another person.

(3) ***70-percent use test.*** The term *70-percent use test* means the test described in § 1.1400Z2(d)-2(d)(4)(ii) that is used to determine if a QOF or qualified opportunity zone business satisfies the requirement in sections 1400Z-2(d)(2)(D)(i)(III) and 1400Z-2(d)(3)(A)(i) that substantially all of the use of tangible property was in a qualified opportunity zone.

(4) ***90-percent investment standard.*** The term *90-percent investment standard* means the requirement provided in section 1400Z-2(d)(1) that a QOF must hold at least 90 percent of its assets in qualified opportunity zone property, as defined in section 1400Z-2(d)(2) and § 1.1400Z2(d)-1(c)(1), determined by the average of the percentage of qualified opportunity zone property held by the QOF as measured on the last day of the first six-month period and on the last day of the taxable year of the QOF.

(5) ***90-percent qualified opportunity zone property holding period.*** The term *90-percent qualified opportunity zone property holding period* means the minimum portion of a QOF's holding period in stock of a corporation or interests in a partnership, during which the corporation or partnership qualifies as a qualified opportunity zone business in order for the stock or the partnership interests to meet the substantially all requirement under section 1400Z-2(d)(2)(B)(i)(III) to be treated as qualified opportunity zone stock or the substantially all requirement under section 1400Z-2(d)(2)(C)(iii) to be treated as qualified opportunity zone partnership interests, as applicable, held by the QOF.

(6) ***90-percent qualified opportunity zone business property holding period.*** The term *90-percent qualified opportunity zone business property holding period* means the minimum portion of a QOF's or qualified opportunity zone business's holding period in tangible property during which the 70-percent use test with respect to the tangible property must be satisfied, in order for the tangible property to meet the requirement under section 1400Z-2(d)(2)(D)(i)(III) to be treated as qualified opportunity zone business property held by the QOF or qualified opportunity zone business.

(7) ***180-day period —***

(i) ***In general.*** Except as otherwise provided elsewhere in this section, the term *180-day period* means the 180-day period referred to in section 1400Z-2(a)(1)(A) with respect to any eligible gain meeting the requirements of paragraph (b)(11) of this section that begins on the day on which the gain would be recognized for Federal income tax purposes if the eligible taxpayer did not elect under section 1400Z-2 and the section 1400Z-2 regulations to defer recognition of that gain.

(ii) ***180-day period for RIC and REIT capital gain dividends —***

(A) ***General rule.*** Unless the shareholder of a regulated investment company (RIC) or real estate investment trust (REIT) chooses to apply paragraph (b)(7)(ii)(B) of this section, the 180-day period for a RIC or REIT capital gain dividend begins on the last day of the shareholder's taxable year in which the capital gain dividend would otherwise be recognized by the shareholder.

(B) ***Elective rule.*** Notwithstanding the general rule in paragraph (b)(7)(ii)(A) of this section, a shareholder of a RIC or REIT may choose to treat the 180-day period with respect to a capital gain dividend that the shareholder receives from the RIC or REIT as beginning on the date of the dividend distribution; provided, however, that the aggregate amount of the shareholder's eligible gain with respect to capital gain dividends from the RIC or REIT is limited to the aggregate amount of capital gain dividends reported for that shareholder by the RIC for that shareholder's taxable year or designated for that shareholder by the REIT for that shareholder's taxable year.

(C) ***Undistributed capital gains.*** If section 852(b)(3)(D) or 857(b)(3)(C) (concerning undistributed capital gains) requires the holder of shares in a RIC or REIT to include an amount in the shareholder's long-term capital gains, the rule in paragraph (b)(7)(ii)(B) of this section does not apply to that amount. The 180-day period with respect to the included undistributed capital gain begins, at the shareholder's election, on either the last day of the RIC or REIT's taxable year or the last day of the shareholder's taxable year in which the amount would otherwise be recognized as long-term capital gains by the shareholder.

(iii) ***180-day period for partners, S corporation shareholders, and owners of other passthrough entities.*** See paragraph (c)(8) and (9) of this section for rules relating to the determination of the 180-day period for partners, S corporation shareholders, or beneficiaries of a trust or decedent's estate in cases in which a partnership, S corporation, trust, or decedent's estate is not an eligible taxpayer with respect to an eligible gain, or does not make a deferral election with respect to an eligible gain.

(iv) ***Examples.*** The following examples illustrate the principles of paragraph (b)(7)(i) through (iii) of this section.

(A) *Example 1. Regular-way trades of stock.* Individual A sells stock at a gain in a regular-way trade on an exchange (that is, in a transaction in which a trade order is placed on the trade date, and settlement of the transaction, including payment and delivery of the stock, occurs a standardized number of days after the trade date). The 180-day period with respect to A's gain on the stock begins on the trade date.

(B) *Example 2. Capital gain dividends received by a REIT shareholder.* REIT and Shareholder are calendar year taxpayers. REIT distributes a dividend to Shareholder on March 1, Year 1. REIT designates the March 1 dividend as a capital gain dividend before 30 days after the close of Year 1. Shareholder's 180-day period with respect to that capital gain dividend begins on December 31, Year 1. However, Shareholder may choose to begin the 180-day period on March 1, Year 1. If so, an equity interest in a QOF received by Shareholder in exchange for an investment of an amount corresponding to that capital gain dividend may be a qualifying investment to the extent that Shareholder's aggregate elected deferrals of dividends from REIT for Year 1 do not exceed Shareholder's aggregate capital gain dividends from REIT for the taxable year.

(C) *Example 3. Multiple capital gain dividends received by a RIC shareholder.* RIC is a calendar year taxpayer. RIC distributes a dividend of $100 to Shareholder, a calendar year taxpayer, on March 1, Year 1 and distributes another dividend of $50 to Shareholder on June 1, Year 1. RIC reports both the March 1 and June 1 dividends as capital gain dividends on Shareholder's Form 1099-DIV for Year 1. Shareholder's 180-day period with respect to both capital gain dividends begins on December 31, Year 1. However, Shareholder may choose to begin the 180-day period for the $100 RIC capital gain

dividend on March 1, Year 1, and may choose to begin the 180-day period for the $50 RIC capital gain dividend on June 1, Year 1. Thus, if Shareholder makes a single investment of $200 in a QOF in exchange for an eligible interest (as defined in paragraph (b)(12) of this section) on July 1, Year 1, absent any other eligible gain, Shareholder may treat $150 of the eligible interest as a qualifying investment in the QOF (that is, the amount that corresponds to the aggregate amount of the RIC capital gain dividends in Year 1) and $50 of the eligible interest as a non-qualifying investment therein.

(D) *Example 4. Additional deferral of previously deferred gains*—(*1*) *Facts.* Taxpayer A invested in a QOF and properly elected to defer realized gain. On March 15, 2025, A disposes of its entire investment in the QOF in a transaction that, under sections 1400Z-2(a)(1)(B) and (b), triggers an inclusion of gain in A's gross income. Section 1400Z-2(b) determines the date and amount of the gain included in A's income. That date is March 15, 2025, the date on which A disposed of its entire interest in the QOF. A wants to make a deferral election with respect to A's gain from the disposal of the QOF investment.

(*2*) *Analysis.* Under paragraph (b)(7)(i) of this section, the 180-day period for making another investment in a QOF begins on the day on which section 1400Z-2(b) requires the prior gain to be included. As prescribed by section 1400Z-2(b)(1)(A), that is March 15, 2025, the date of the inclusion-triggering disposition. Thus, in order to make a deferral election under section 1400Z-2, A must invest the amount of the inclusion in the original QOF or in another QOF during the 180-day period beginning on March 15, 2025, the date when A disposed of its entire investment in the QOF.

(8) ***Boot.*** The term *boot* means money or other property that section 354 or 355 does not permit to be received without the recognition of gain.

(9) ***Consolidated group.*** The term *consolidated group* has the meaning provided in § 1.1502-1(h).

(10) ***Deferral election.*** The term *deferral election* means an election under section 1400Z-2(a) and the section 1400Z-2 regulations made before January 1, 2027, with respect to an eligible gain.

(11) ***Eligible gain*** —

(i) ***In general.*** An amount of gain is an *eligible gain,* and thus is eligible for deferral under section 1400Z-2(a) and the section 1400Z-2 regulations, if the gain—

(A) Is treated as a capital gain for Federal income tax purposes or is a qualified 1231 gain within the meaning of paragraph (b)(11)(iii)(A) of this section, determined by—

(*1*) Not taking into account any losses unless otherwise specified in the section 1400Z-2 regulations; and

(*2*) Taking into account any other provision of the Code that requires the character of potential capital gain to be recharacterized or redetermined as ordinary income, as defined in section 64, for purposes of the Code;

(B) Would be recognized for Federal income tax purposes and subject to tax under subtitle A of the Code before January 1, 2027 (subject to Federal income tax), if section 1400Z-2(a)(1) did not apply to defer recognition of the gain; and

(C) Does not arise from a sale or exchange of property with a person that, within the meaning of section 1400Z-2(e)(2), is related to—

(*1*) The eligible taxpayer that would recognize the gain in the taxable year in which the sale or exchange occurs if section 1400Z-2(a)(1) and the section 1400Z-2 regulations did not apply to defer recognition of the gain; or

(*2*) Any passthrough entity or other person recognizing and allocating the gain to the eligible taxpayer described in paragraph (b)(11)(i)(C)(*1*) of this section.

(ii) ***Portion of eligible gain not already subject to a deferral election.*** In the case of an eligible taxpayer who has made an election under section 1400Z-2(a) and the section 1400Z-2 regulations regarding some but not all of an eligible gain, the portion of that eligible gain with respect to which no election under section 1400Z-2(a) and the section 1400Z-2 regulations has been made remains an eligible gain for which a deferral election may be made.

(iii) ***Qualified 1231 gains*** —

(A) ***Definition.*** A section 1231 gain (as defined in section 1231(a)(3)(A)) recognized on the sale or exchange of property defined in section 1231(b) (1231(b) property) is a *qualified 1231 gain* to the extent that it exceeds any amount with respect to the 1231(b) property that is treated as ordinary income under section 1245 or section 1250.

(B) ***180-day period.*** For the applicable 180-day period with respect to a qualified 1231 gain, see paragraph (b)(7) of this section.

(C) ***Attributes of included income when deferral ends.*** For the Federal income tax treatment of the later inclusion of a qualified 1231 gain deferred under section 1400Z-2(a)(1) and the section 1400Z-2 regulations, see paragraph (c)(1) of this section.

(iv) ***Gain arising from an inclusion event*** —

(A) ***In general.*** Gain that is otherwise required to be included in gross income under § 1.1400Z2(b)-1(e)(1), whether from the disposition of an entire interest in a QOF or a disposition of a partial interest, may be eligible for deferral under section 1400Z-2(a)(1), provided that all of the requirements to elect to defer gain under section 1400Z-2(a)(1)(A) are met. For purposes of determining whether such gain is eligible gain under section 1400Z-2(a)(1)(A) and this paragraph (b)(11)(iv)(A), the eligible taxpayer should treat such inclusion gain as if it was originally realized upon the occurrence of the inclusion event rather than on the sale or exchange that gave rise to the eligible gain to which the inclusion event relates.

(B) ***180-day period.*** The 180-day period for investing gain from an inclusion event begins on the date of the inclusion event.

(C) ***Holding period.*** The holding period for a qualifying investment attributable to eligible gain arising from an inclusion event begins on the date that the gain is reinvested in a QOF.

(v) ***No deferral for gain realized upon the acquisition of an eligible interest.*** Gain is not eligible for deferral under section 1400Z-2(a)(1) and the section 1400Z-2 regulations if such gain is realized upon the contribution, exchange, or other transfer of property to a QOF in exchange for an eligible interest (see paragraph (c)(6)(ii)(C) of this section) or the transfer of property to an eligible taxpayer in exchange for an eligible interest (see paragraph (c)(6)(iv) of this section).

(vi) ***Gain from section 1256 contracts and from positions in a straddle*** —

(A) ***General rule.*** Except as otherwise explicitly provided in paragraph (b)(11)(vi)(B), (C), or (D) of this section, eligible gain for a taxable year does not include—

(*1*) Gain from a section 1256 contract as defined in section 1256(b);

(*2*) Gain from a position that was part of a straddle as defined in section 1092 (straddle) during the taxable year; or

(*3*) Gain from a position that was part of a straddle in a previous taxable year if, under section 1092(a)(1)(B), a loss from any position in that straddle is treated as sustained, subject to the limitations of section 1092(a)(1)(A), during the taxable year.

(B) ***Exception for net gain from certain section 1256 contracts.*** Paragraph (b)(11)(vi)(A)(*1*) of this section does not apply to the net gain during the taxable year from section 1256 contracts that were not part of a straddle at any time during the taxable year (qualified section 1256 contracts). For purposes of this paragraph (b)(11)(vi)(B), the net gain during the taxable year from qualified section 1256 contracts is determined by taking into account all capital gains and losses from such contracts for the taxable year that are recognized for Federal income tax purposes, determined without regard to section 1400Z-2(a)(1). The 180-day period with respect to any eligible gain described in this paragraph (b)(11)(vi)(B) begins on the last day of the taxable year, and the character of that gain when it is later included under sections 1400Z-2(a)(1)(B) and 1400Z-2(b) is determined under the general rule in paragraph (c)(1) of this section. If, under section 1256(a)(4), section 1092 does not apply to a straddle, such straddle is not treated as a straddle for purposes of this paragraph (b)(11)(vi)(B).

(C) ***Exception for net gain from certain identified straddles*** —

(*1*) Paragraph (b)(11)(vi)(A) of this section does not apply to the net gain during the taxable year from positions in a straddle if—

(*i*) During the taxable year, the positions were part of an identified straddle under section 1092(a)(2), part of an identified mixed straddle under § 1.1092(b)-3T (and, as applicable, § 1.1092(b)-6), part of an identified straddle under section 1256(d), or included in a mixed straddle account under § 1.1092(b)-4T;

(*ii*) All gains and losses with respect to the positions that were part of such straddle or included in such mixed straddle account are recognized by the end of the taxable year (other than gain that would be recognized but for deferral under section 1400Z-2(a)(1));

(*iii*) None of the positions in such straddle or mixed straddle account were part of a straddle during the taxable year, other than a straddle described in paragraph (b)(11)(vi)(C)(*1*)(*i*) and (*ii*) of this section; and

(*iv*) None of the positions in such straddle or mixed straddle account were part of a straddle in a previous taxable year if, under section 1092(a)(1)(B), a loss from any position in such straddle is treated as sustained, subject to the limitations of section 1092(a)(1)(A), during the taxable year.

(*2*) For purposes of paragraph (b)(11)(vi)(C)(*1*) of this section, net gain during the taxable year from an identified straddle or mixed straddle account described in paragraph (b)(11)(vi)(C)(*1*)(*i*) through (*iv*) of this section is equal to the excess of the

capital gains recognized in the taxable year for Federal income tax purposes, determined without regard to section 1400Z-2(a)(1), from all of the positions that were part of that straddle over the sum of the capital losses and net ordinary loss (if any) from all of the positions that were part of that straddle. For purposes of this paragraph (b)(11)(vi)(C)(*2*), capital gains and losses from an identified straddle or mixed straddle account include capital gains and losses from section 1256 contracts and other positions marked to market either upon termination or on the last business day of the taxable year, as well as annual account net gain from positions in a mixed straddle account covered by § 1.1092(b)-4T. In addition, for purposes of this paragraph (b)(11)(vi)(C)(*2*), *net ordinary loss* means the excess of ordinary losses over ordinary gains.

(*3*) If a straddle is an identified straddle described in section 1092(a)(2), the basis adjustment provisions described in sections 1092(a)(2)(A)(ii) and (iii) must be applied in determining the net gain during the taxable year from positions that were part of that straddle.

(*4*) The 180-day period with respect to any eligible gain described in paragraph (b)(11)(vi)(C)(*2*) of this section begins on the earlier of the date when all of the positions that are, or have been, part of the straddle are disposed of (or otherwise terminated) or the last day of the taxable year.

(*5*) If net gain described in paragraph (b)(11)(vi)(C)(*2*) of this section is deferred under section 1400Z-2(a)(1), that gain is not treated as unrecognized gain for purposes of section 1092(a)(3)(A)(ii).

(D) ***Additional exceptions to the general rule.*** Additional exceptions to the general rule in paragraph (b)(11)(vi)(A) of this section may be prescribed in guidance published in the Internal Revenue Bulletin (see § 601.601(d)(2) of this chapter).

(E) ***Examples.*** The following examples illustrate the rules described in paragraph (b)(11)(vi) of this section. All of the examples assume that Taxpayer holds the positions described as capital assets and that Taxpayer holds no offsetting positions other than those described in the examples.

(*1*) ***Example 1.*** Taxpayer owns 100 shares of publicly traded Company X common stock and acquires put options on 100 shares of Company X common stock during the taxable year. Taxpayer does not make any straddle identifications under section 1092. During the taxable year, Taxpayer sells all 100 shares of its Company X common stock and has a $40 capital gain. During the taxable year, Taxpayer also closes out all of its put options on Company X common stock and has a $30 capital loss. That $40 of capital gain is from a position that was part of a straddle during the taxable year because the position in Company X common stock and the position in put options on Company X stock are offsetting positions as defined in section 1092(c). Under paragraph (b)(11)(vi)(A) of this section, none of Taxpayer's $40 of capital gain is eligible gain.

(*2*) ***Example 2.*** Taxpayer's taxable year is the calendar year. Taxpayer owns 100 shares of publicly traded Company Y common stock and has a basis in each share of $10.00. Taxpayer also owns put options on 100 shares of Company Y common stock. Taxpayer makes a valid and timely identification under section 1092(a)(2) of the 100

shares of Company Y common stock and the put options on the 100 shares of Company Y common stock. On January 10, Year 1, Taxpayer closes out all of the put options and has a $30.00 capital loss. On March 10, Year 1, Taxpayer sells 40 shares of the Company Y common stock for $11.00 per share. At the end of Year 1, the fair market value of each of the 60 remaining shares of Company Y common stock held by Taxpayer is $10.50. Under section 1092(a)(2)(A)(ii), when the put options are closed out at a loss of $30.00, the basis of each of Taxpayer's shares of Company Y common stock is increased by $0.30 ($30.00/100). Thus, Taxpayer has a gain of $28.00 ((40 * $11.00)−(40 * $10.30)) on the sale of the 40 shares of Company Y common stock. Paragraph (b)(11)(vi)(A) of this section applies to all of Taxpayer's gain during the taxable year from the straddle. Because Taxpayer has unrecognized gain from the straddle at the end of the taxable year, paragraph (b)(11)(vi)(C) of this section does not shield any of Taxpayer's gain from that result. The $28 of gain is thus not eligible gain. Taxpayer must recognize and include in taxable income for the taxable year the $28.00 capital gain. Under section 1092(a)(2)(A)(iv), Taxpayer may not deduct the $30.00 loss from the put options.

(*3*) ***Example 3.*** The facts are the same as in paragraph (b)(11)(vi)(E)(*2*) of this section (*Example 2*), except Taxpayer sells the 100 shares of Company Y common stock on March 10, Year 1, for $11.50 per share. Under section 1092(a)(2)(A)(ii), as in paragraph (b)(11)(vi)(E)(*2*) of this section (*Example 2*), when the put options are closed out at a loss of $30.00, the basis of each of Taxpayer's shares of Company Y common stock is increased by $0.30 ($30.00/100). Taxpayer has a gain of $120.00 ((100 * $11.50)−(100 * $10.30)) on the sale of the 100 shares of Company Y common stock. Taxpayer has net gain during the taxable year from the identified straddle of $120.00. Under paragraph (b)(11)(vi)(C) of this section, paragraph (b)(11)(vi)(A) of this section does not apply to prevent the $120.00 net gain from being eligible gain. As in paragraph (b)(11)(vi)(E)(*2*) of this section (*Example 2*), under section 1092(a)(2)(A)(iv), Taxpayer may not deduct the $30.00 loss from the put options.

(*4*) ***Example 4.*** Taxpayer's taxable year is the calendar year. Taxpayer owns 100 shares of publicly traded Company Z common stock and has a basis in each share of $10. Taxpayer also owns put options on 100 shares of Company Z common stock. In Year 1, Taxpayer closes out the put options at a $100 loss. At the end of Year 1, the fair market value of each of the shares of Company Z common stock held by Taxpayer is $15 and, under section 1092(a)(3), Taxpayer has $500 of unrecognized gain. Because Taxpayer's unrecognized gain on the Company Z common stock at the end of Year 1 exceeds Taxpayer's loss on the put options, Taxpayer's loss is deferred under section 1092(a)(1). During Year 2, Taxpayer sells 40 shares of Company Z common stock for $14 per share. Taxpayer has a gain of $160 ((40 * $14)−(40 * $10)) on the sale of the 40 shares of Company Z common stock. Under paragraph (b)(11)(vi)(A) of this section, because Taxpayer's Company Z common stock was part of a straddle in a previous taxable year and a loss from a position in that straddle was deferred under section 1092(a) at the end of Year 1, the preceding taxable year, Taxpayer's $160 Year 2 gain on the sale of the Company Z common stock is not eligible gain. At the end of Year 2, the fair market value of each of the 60 remaining shares of Company Z common stock held by Taxpayer is $10 and Taxpayer has no unrecognized gain on its Company Z common stock. Under section

1092(a)(1)(B), Taxpayer's $100 loss from Year 1 is treated as sustained in Year 2. Because Taxpayer has no unrecognized gain on its Company Z common stock at the end of Year 2, Taxpayer may deduct the $100 loss in Year 2. In Year 3, Taxpayer sells the remaining 60 shares of Company Z common stock for $50 per share. Taxpayer has a gain of $2,400 ((60 * $50)−(60 * $10)) on the sale of the 60 shares of Company Z common stock. Because there was no loss from the straddle deferred under section 1092(a) at the end of Year 2, paragraph (b)(11)(vi)(A) of this section does not apply to prevent the $2,400 of Year 3 net gain from being eligible gain.

(5) ***Example 5.*** Taxpayer's taxable year is the calendar year. On October 5, Year 1, Taxpayer buys 100 shares of publicly traded Exchange Traded Fund A (ETF A) and acquires offsetting section 1256 contracts on the index that underlies the ETF A shares. Taxpayer makes a valid and timely identification of all 100 ETF A shares and the offsetting section 1256 contracts under § 1.1092(b)-3T. On December 31, Year 1, the fair market value of the ETF A shares has increased by $500, and the fair market value of the section 1256 contracts has decreased by $450. On December 31, Year 1, Taxpayer sells the ETF shares for a $500 gain. In addition, under section 1256(a)(1), the section 1256 contracts are treated as sold for fair market value on December 31, Year 1, for a $450 loss. Pursuant to § 1.1092(b)-3T(b)(4), Taxpayer has a net short term capital gain from the identified mixed straddle of $50 ($500-$450). Under paragraph (b)(11)(vi)(C) of this section, paragraph (b)(11)(vi)(A) of this section does not apply to prevent the $50 of net short term capital gain from being eligible gain.

(vii) [Reserved]

(viii) ***Eligible installment sale gains*** —

(A) ***In general.*** The term *eligible gain* includes gains described in this paragraph (b)(11) that would be recognized by an eligible taxpayer under the installment method pursuant to section 453 and with §§ 1.453-1 through 1.453-12 for a taxable year, provided such gain otherwise meets the requirements of this paragraph (b)(11). This includes gains recognized under the installment method under section 453 from an installment sale that occurred before December 22, 2017.

(B) ***180-day period for gain from installment sales.*** For gains reported on the installment method, an eligible taxpayer may treat the date the payment on the installment sale is received or the last day of the taxable year in which the eligible taxpayer would have recognized the gain under the installment method as the beginning of the 180-day period described in paragraph (b)(7) of this section. Thus, if an eligible taxpayer receives one or more payments on an installment sale and treats the date the payment on the installment sale is received as the beginning of the 180-day period, each payment will begin a new 180-day period.

(ix) ***Additional rules for determining if gain is subject to Federal income tax*** —

(A) ***Application of a treaty*** —

(1) ***In general.*** For purposes of paragraph (b)(11)(i)(B) of this section, whether gain would be subject to Federal income tax is determined after application of any treaty exemption provision that an eligible taxpayer elects to apply under any applicable U.S. income tax convention.

(2) ***Treaty waiver.*** An eligible taxpayer who is not a United States person within the meaning of section 7701(a)(30) (or an eligible taxpayer who is a United States person within the meaning of section 7701(a)(30) but who is treated as a resident of another country under an applicable U.S. income tax convention) may not make an election to defer gain pursuant to section 1400Z-2(a) after the applicability date of this section (see paragraph (g) of this section) unless such eligible taxpayer irrevocably waives, in accordance with forms and instructions (see § 601.602 of this chapter), any treaty benefits that would exempt such gain from being subject to Federal income tax at the time of inclusion pursuant to an applicable U.S. income tax convention. In the event that such forms and instructions that include such waiver have not yet been published when an election pursuant to paragraph (d)(1) of this section is required to be made, such an eligible taxpayer must attach a written statement, signed under penalties of perjury, to any forms on which an election is made pursuant to paragraph (d)(1) of this section, which states "With respect to gain deferred pursuant to an election under section 1400Z-2(a), the below signed taxpayer irrevocably waives any treaty benefits that would exempt such gain from being subject to Federal income tax at the time of inclusion pursuant to an applicable U.S. income tax convention." If such an eligible taxpayer chooses to apply the section 1400Z-2 regulations in a consistent manner for all taxable years (see paragraph (g)(2)(i) of this section), the taxpayer must include the signed statement required under this paragraph (b)(11)(ix)(A)(*2*) with the first annual report described in paragraph (d)(2) of this section that is required to be filed on a date that is after March 13, 2020. An eligible taxpayer not described in the first sentence of this paragraph (b)(11)(ix)(A)(*2*) will only be required to make the waiver described in this paragraph (b)(11)(ix)(A)(*2*) if and to the extent required in forms and instructions (see § 601.602 of this chapter).

(*3*) ***Non-application to certain entities.*** This paragraph (b)(11)(ix)(A) does not apply to an entity described in paragraph (b)(11)(ix)(B) of this section.

(B) ***Gain of a partnership.*** Subject to § 1.1400Z2(f)-1(c), with respect to a partnership, the requirement in paragraph (b)(11)(i)(B) of this section that a gain be subject to Federal income tax does not apply to an otherwise eligible gain of the partnership, provided the partnership acquires the eligible interest with respect to such gain. See § 1.1400Z2(f)-1(c)(3)(i) and (ii), *Examples 1 and 2,* for illustrations of the application of § 1.1400Z2(f)-1(c) (providing an anti-abuse rule) to a partnership.

(12) ***Eligible interest*** —

(i) ***In general.*** For purposes of section 1400Z-2, an *eligible interest* in a QOF is an equity interest issued by the QOF, including preferred stock or a partnership interest with special allocations. Thus, the term *eligible interest* excludes any debt instrument including those within the meaning of section 1275(a)(1) and § 1.1275-1(d). An eligible interest includes a pre-existing interest in an entity that becomes a QOF pursuant to § 1.1400Z2(d)-1(a)(1)(iii).

(ii) ***Use as collateral permitted.*** Provided that the eligible taxpayer is the owner of the equity interest in the QOF for Federal income tax purposes, status as an eligible interest is not impaired by using the interest as collateral for a loan, whether as part of a purchase-money borrowing or otherwise.

(iii) ***Deemed contributions not creating mixed-funds investment.*** See paragraph (f)(2) of this section for rules regarding deemed contributions of money to a partnership pursuant to section 752(a).

(13) ***Eligible taxpayer.*** An *eligible taxpayer* is a person that is required to report the recognition of gains during the taxable year under Federal income tax accounting principles. Thus, for example, eligible taxpayers include individuals; C corporations, including RICs and REITs; organizations subject to tax under section 511; and partnerships, S corporations, trusts, and decedents' estates to the extent permitted by paragraphs (c)(7) through (9) of this section.

(14) ***Inclusion event.*** The term *inclusion event* has the meaning provided in § 1.1400Z2(b)-1(c).

(15) ***Mixed-funds investment.*** The term *mixed-funds investment* means an investment a portion of which is a qualifying investment and a portion of which is a non-qualifying investment.

(16) ***Non-qualifying investment.*** The term *non-qualifying investment* means an investment in a QOF described in section 1400Z-2(e)(1)(A)(ii).

(17) ***Property*** —

(i) ***In general.*** The term *property* means money, securities, or any other property.

(ii) ***Inclusion events regarding QOF corporation distributions.*** For purposes of § 1.1400Z2(b)-1(c), in the context in which a QOF corporation makes a distribution, the term *property* does not include stock (or rights to acquire stock) in the QOF corporation that makes the distribution.

(18) ***QOF.*** The term *QOF* means a qualified opportunity fund, as defined in section 1400Z-2(d)(1) and § 1.1400Z2(d)-1.

(19) ***QOF C corporation.*** The term *QOF C corporation* means a QOF corporation other than a QOF S corporation.

(20) ***QOF corporation.*** The term *QOF corporation* means a QOF that is classified as a corporation for Federal income tax purposes.

(21) ***QOF RIC.*** The term *QOF RIC* means a QOF that elects to be taxed as a RIC for Federal income tax purposes. For purposes of section 1400Z-2 and the section 1400Z-2 regulations, a *RIC* is a regulated investment company within the meaning of section 851.

(22) ***QOF REIT.*** The term *QOF REIT* means a QOF that elects to be taxed as a REIT for Federal income tax purposes. For purposes of section 1400Z-2 and the section 1400Z-2 regulations, a *REIT* is a real estate investment trust within the meaning of section 856.

(23) ***QOF owner.*** The term *QOF owner* means a QOF shareholder or a QOF partner.

(24) ***QOF partner.*** The term *QOF partner* means a person that directly owns a qualifying investment in a QOF partnership or a person that owns such a qualifying investment through equity interests solely in one or more partnerships.

(25) ***QOF partnership.*** The term *QOF partnership* means a QOF that is classified as a partnership for Federal income tax purposes.

(26) ***QOF S corporation.*** The term *QOF S corporation* means a QOF corporation that has elected under section 1362 to be an S corporation.

(27) ***QOF shareholder.*** The term *QOF shareholder* means a person that directly owns a qualifying investment in a QOF corporation.

(28) ***QOZ designation notice.*** The term *QOZ designation notice* means a notice designating population census tracts as qualified opportunity zones (QOZs) in guidance published in the Internal Revenue Bulletin (see § 601.601(d)(2) of this chapter).

(29) ***Qualified opportunity zone business.*** The term *qualified opportunity zone business* has the meaning provided in section 1400Z-2(d)(3) and § 1.1400Z2(d)-1(d).

(30) ***Qualified opportunity zone business property.*** The term *qualified opportunity zone business property* has the meaning provided in section 1400Z-2(d)(2)(D) and § 1.1400Z2(d)-2.

(31) ***Qualified opportunity zone partnership interest.*** The term *qualified opportunity zone partnership interest* has the meaning provided in section 1400Z-2(d)(2)(C) and § 1.1400Z2(d)-1(c)(3).

(32) ***Qualified opportunity zone property.*** The term *qualified opportunity zone property* has the meaning provided in section 1400Z-2(d)(2)(A) and § 1.1400Z2(d)-1(c)(1).

(33) ***Qualified opportunity zone stock.*** The term *qualified opportunity zone stock* has the meaning provided in section 1400Z-2(d)(2)(B) and § 1.1400Z2(d)-1(c)(2).

(34) ***Qualifying investment.*** The term *qualifying investment* means an eligible interest, or portion thereof, in a QOF to the extent that a deferral election is made and applies with respect to such eligible interest or portion thereof and the IRS has been timely notified of the deferral election. An eligible interest in a QOF ceases to be a qualifying investment of the owner upon, and to the extent of, the occurrence of an inclusion event with regard to that eligible interest, or portion thereof, except as is expressly provided otherwise in § 1.1400Z2(b)-1(c) or other provisions of the section 1400Z-2 regulations.

(35) ***Qualifying QOF partnership interest.*** The term *qualifying QOF partnership interest* means a direct or indirect interest in a QOF partnership that is a qualifying investment.

(36) ***Qualifying QOF stock.*** The term *qualifying QOF stock* means stock in a QOF corporation that is a qualifying investment.

(37) ***Qualifying section 355 transaction.*** The term *qualifying section 355 transaction* means a distribution described in § 1.1400Z2(b)-1(c)(11)(i)(B).

(38) ***Qualifying section 381 transaction.*** The term *qualifying section 381 transaction* means a transaction described in section 381(a)(2), except the following transactions:

(i) An acquisition of assets of a QOF by a QOF shareholder that holds a qualifying investment in the QOF;

(ii) An acquisition of assets of a QOF by a tax-exempt entity as defined in § 1.337(d)-4(c)(2);

(iii) An acquisition of assets of a QOF by an entity operating on a cooperative basis within the meaning of section 1381;

(iv) An acquisition by a QOF of assets of a QOF shareholder that holds a qualifying investment in the QOF;

(v) A reorganization of a QOF in a transaction that qualifies under section 368(a)(1)(G);

(vi) A transaction, immediately after which one QOF owns an investment in another QOF; and

(vii) A triangular reorganization of a QOF within the meaning of § 1.358-6(b)(2)(i), (ii), or (iii).

(39) ***Related persons.*** The term *related* when used with regard to persons and the term *related persons* means that there is a relationship described in section 267(b) or 707(b)(1), determined by substituting "20 percent" for "50 percent" each place it occurs in such sections. The term *unrelated* when used with regard to persons means that there is no relationship described in preceding sentence.

(40) ***Remaining deferred gain.*** With respect to a qualifying investment, the term *remaining deferred gain* means the full amount of gain that was deferred under section 1400Z-2(a)(1)(A), reduced by the amount of gain previously included under § 1.1400Z2(b)-1(b). After December 31, 2026, an eligible taxpayer's remaining deferred gain is $0.

(41) ***Section 1400Z-2 regulations.*** The term *section 1400Z-2 regulations* means the regulations in this chapter, which are prescribed in whole or in part under section 1400Z-2.

(c) ***Operational and special rules*** —

(1) ***Attributes of gains included in income under section 1400Z-2(a)(1)(B).*** If section 1400Z-2(a)(1)(B), section 1400Z-2(b), and the section 1400Z-2 regulations require a taxpayer to include in income some or all of a previously deferred gain, the rules of paragraphs (c)(1)(i) and (ii) of this section apply with respect to such gain.

(i) ***Deferral year attributes.*** The gain so included per paragraph (c)(1) of this section has the same attributes in the taxable year of inclusion that the gain would have had if recognition of the gain had not been deferred under section 1400Z-2(a)(1)(A). These attributes include those taken into account by sections 1(h), 1222, 1231(b), 1256, and any other applicable provisions of the Code.

(ii) ***Inclusion year treatment.*** The gain so included per paragraph (c)(1) of this section is subject to the same Federal income tax provisions and rates that would apply to any other gains that are realized and recognized at the same time as the included gain and that have the same attributes as the deferred gain. For example, when a deferred qualified 1231 gain, as defined in paragraph (b)(11)(iii) of this section, is required to be included in income, the included section 1231 gain is treated as if it were a section 1231 gain (within the meaning of section 1231(a)(3)(A)) that was recognized on the date of inclusion.

(iii) ***Rules for associating included gain with deferred gains*** —

(A) ***In general.*** For purposes of paragraphs (c)(1)(i) and (ii) of this section, a taxpayer determines which previously deferred gain is associated with a qualifying investment in accordance with guidance published in the Internal Revenue Bulletin or in forms and instructions (see §§ 601.601(d)(2) and 601.602 of this chapter). The rules of paragraphs (c)(1)(iii)(B) and (C) of this section apply only to the extent a deferred gain is not clearly associated with a particular qualifying investment under this paragraph (c)(1)(iii)(A).

(B) ***Only one eligible gain associated with a deferral election.*** If only one eligible gain could have been deferred with respect to a qualifying investment, that deferred gain is associated with that qualifying investment. For example, if an eligible taxpayer makes a deferral election with respect to an investment in a QOF and only one eligible gain of the taxpayer satisfies the 180-day period with respect to the investment in the QOF, that eligible gain is the gain deferred with respect to the qualifying investment for purposes of paragraphs (c)(1)(i) and (ii) of this section.

(C) ***Multiple eligible gains associated with a deferral election*** —

(*1*) ***In general.*** If more than one eligible gain may have been deferred with respect to an investment in a QOF for which a deferral election has been made, then for purposes of paragraphs (c)(1)(i) and (ii) of this section, the eligible taxpayer is treated as making the investment in the QOF first with respect to the earliest realized eligible gain, followed by the next earliest eligible gain and any other eligible gains in order of the date of their realization.

(*2*) ***Rule for gains realized on the same day.*** If in the application of paragraph (c)(1)(iii)(C)(*1*) of this section, two eligible gains are realized on the same day, such gains are allocated to the investment in the QOF proportionately.

(2) ***Identification of which interest in a QOF corporation has been disposed of*** —

(i) ***Need for identification.*** If a taxpayer holds shares of QOF stock with identical rights (*fungible interests*), and if the taxpayer disposes of less than all of the fungible interests, it is necessary to identify which interest or interests were disposed of. A taxpayer may effect this identification in accordance with the rules and principles of § 1.1012-1(c). Consistent with § 1.1012-1(c), if a taxpayer does not adequately identify which of the fungible interests are disposed of, the first-in, first-out identification method (*FIFO method*) applies.

(ii) ***Consequences of identification.*** The identification determines—

(A) Whether an investment disposed of is a qualifying investment or a non-qualifying investment; and

(B) In the case of qualifying investments—

(*1*) The attributes of the gain addressed in paragraph (c)(1) of this section; and

(*2*) The extent, if any, of an increase under section 1400Z-2(b)(2)(B) in the basis of an investment interest that is disposed of.

(3) ***Pro-rata method.*** If, after application of the FIFO method, a taxpayer is treated as having disposed of less than all of the investment interests that the taxpayer acquired on one day, and if the interests acquired on that day vary with respect to the characteristics described in paragraph (c)(2)(ii) of this section, then a proportionate allocation must be made to determine which interests were disposed of (*pro-rata method*).

(4) ***Examples.*** The following examples illustrate the rules of paragraph (c)(1) through (3) of this section.

(i) ***Example 1. Short-term gain.*** For 2018, taxpayer B properly made an election under section 1400Z-2 to defer $100 of eligible gain that, if not deferred, would have been recognized as short-term capital gain, as defined in section 1222(1). In 2022, sections 1400Z-2(a)(1)(B) and (b) require taxpayer B to include the gain in gross income. Under paragraph (c)(1) of this section, the gain included in 2022 is short-term capital gain.

(ii) ***Example 2. Collectibles gain.*** For 2018, taxpayer C properly made an election under section 1400Z-2 to defer a gain that, if not deferred, would have been collectibles gain as defined in section 1(h)(5). In a later taxable year, section 1400Z-2(a)(1)(B) and (b) requires some or all of that deferred gain to be included in gross income. The gain included is collectibles gain.

(iii) ***Example 3. Net capital gain from section 1256 contracts.*** For 2019, taxpayer D had $100 of net capital gain realized from section 1256 contracts that is eligible gain under paragraph (b)(11)(vi)(B) of this section. D timely invested $100 in a QOF and properly made an election under section 1400Z-2 to defer that $100 of gain. In 2023, section 1400Z-2(a)(1)(B) and (b) requires D to include that deferred gain in gross income. Under paragraph (c)(1) of this section, the character of the inclusion is governed by section 1256(a)(3), which requires a 40:60 split between short-term and long-term capital gain. Accordingly, $40 of the inclusion is short-term capital gain and $60 of the inclusion is long-term capital gain.

(iv) ***Example 4. FIFO method.*** For 2018, taxpayer E properly made an election under section 1400Z-2 to defer $300 of short-term capital gain. For 2020, E properly made a second election under section 1400Z-2 to defer $200 of long-term capital gain. In both cases, E properly invested in QOF corporation Q the amount of the gain to be deferred, resulting in a total investment in Q of $500. The two investments are fungible interests and the price of the interests was the same at the time of the two investments. E did not purchase any additional interest in Q or sell any of its interest in Q until 2024, when E sold for a gain 60 percent of its interest in Q. E did not adequately identify which investment in QOF Q E sold. Under paragraph (c)(2)(i) of this section, E must apply the FIFO method to identify which investments in Q that E disposed of. 60 percent of E's total investment in Q is $300 (60% × $500), thus under the FIFO method, E sold its entire 2018 initial investment of $300 in Q. Under section 1400Z-2(a)(1)(B) and (b), the sale triggered an inclusion of deferred gain. Because the inclusion has the same character as the gain that had been deferred, the inclusion is short-term capital gain.

(v) ***Example 5. FIFO method.*** In 2018, before Corporation R became a QOF, Taxpayer F invested $100 to R in exchange for 100 R common shares. Later in 2018, after R was a QOF, F invested $500 to R in exchange for 400 R common shares and properly elected under section 1400Z-2 to defer $500 of realized short-term capital gain from a separate investment. Even later in 2018, on different days, F realized $300 of short-term capital gain and $700 of long-term capital gain. On a single day that fell during the 180-day period for both of those gains, F invested $1,000 in R in exchange for 800 R common shares and properly elected under section 1400Z-2 to defer the two gains. In 2020, F sold 100 R common shares. F did not adequately identify which investment in R F sold. Under paragraph (c)(2)(i) of this section, F must apply the FIFO method to identify which investments in R F disposed of. As determined by that identification, F sold the initially acquired 100 R common shares, which were not part of a deferral election under section 1400Z-2. R must recognize gain or loss on the sale of its R shares under the generally applicable Federal income tax rules, but the sale does not trigger an inclusion of any deferred gain.

(vi) ***Example 6. FIFO method.*** The facts are the same as in paragraph (c)(4)(v) of this section (*Example 5*), except that, in addition, during 2021 F sold an additional 400 R common shares, and, as with the other sale, F did not adequately identify which investment in QOF R F sold. Under paragraph (c)(2)(i) of this section, F must apply the FIFO method to identify which investments in R were disposed of. As determined by this identification, F sold the 400 common shares which were associated with the deferral of $500 of short-term capital gain. Thus, the deferred gain that must be included upon sale of the 400 R common shares is short-term capital gain.

(vii) ***Example 7. Pro-rata method.*** The facts are the same as in examples 5 and 6, except that, in addition, during 2022 F sold an additional 400 R common shares. Under paragraph (c)(2)(i) of this section, F must apply the FIFO method to identify which investments in R were disposed of.

In 2022, F is treated as holding only the 800 R common shares purchased on a single day, and the section 1400Z-2 deferral election associated with these shares applies to gain with different characteristics (described in paragraph (c)(2)(ii) of this section). Under paragraph (c)(3) of this section, therefore, R must use the pro-rata method to determine which of the characteristics pertain to the deferred gain required to be included as a result of the sale of the 400 R common shares. Under the pro-rata method, $150 of the inclusion is short-term capital gain ($300 × 400/800) and $350 is long-term capital gain ($700 × 400/800).

(5) *Making an investment for purposes of an election under section 1400Z-2(a)* —

(i) *Transfer of cash or other property to a QOF.* A taxpayer makes an investment in a QOF by transferring cash or other property to a QOF in exchange for eligible interests in the QOF, regardless of whether the transfer is one in which the transferor would recognize gain or loss on the property transferred.

(ii) *Furnishing services.* Rendering services to a QOF is not a transfer of cash or other property to a QOF. Thus, if a taxpayer receives an eligible interest in a QOF for services rendered to the QOF or to a person in which the QOF holds any direct or indirect equity interest, then the interest in the QOF that the taxpayer receives is a non-qualifying investment.

(iii) *Acquisition of eligible interest from person other than QOF.* An eligible taxpayer may make an investment in a QOF by acquiring an eligible interest in a QOF from a person other than the QOF, provided that all of the requirements of section 1400Z-2(a)(1) and the section 1400Z-2 regulations for making a valid deferral election with respect to that investment are otherwise satisfied with respect to such acquisition. For example, an eligible taxpayer who acquires an eligible interest in a QOF other than from the QOF also must have an eligible gain within the 180-day period prior to the eligible taxpayer's acquisition of the eligible interest in the QOF.

(6) *Amount invested for purposes of section 1400Z-2(a)(1)(A)* —

(i) *In general.* In the case of any investments described in this paragraph (c)(6), the amount of a taxpayer's qualifying investment cannot exceed the amount of eligible gain to be deferred under the deferral election. If the amount of an otherwise qualifying investment exceeds the amount of eligible gain to be deferred under the deferral election, the amount of the excess is treated as a non-qualifying investment. See paragraph (c)(6)(iii) of this section for special rules applicable to transfers to QOF partnerships.

(ii) *Transfers to a QOF* —

(A) *Cash.* If a taxpayer makes an investment in a QOF by transferring cash to a QOF, the amount of the taxpayer's investment is that amount of cash.

(B) *Property other than cash—Nonrecognition transactions.* This paragraph (c)(6)(ii)(B) applies if a taxpayer makes an investment in a QOF by transferring property other than cash to a QOF and if, but for the application of section 1400Z-2(b)(2)(B) and the section 1400Z-2 regulations, the taxpayer's basis in the resulting investment in the QOF would be determined, in whole or in part, by reference to the taxpayer's basis in the transferred property. This paragraph (c)(6)(ii)(B) applies separately to each item of property transferred to a QOF.

(1) ***Amount of qualifying investment.*** If paragraph (c)(6)(ii)(B) of this section applies, the amount of the taxpayer's qualifying investment is the lesser of the taxpayer's adjusted basis in the eligible interest received in the transaction, without regard to section 1400Z-2(b)(2)(B) and the section 1400Z-2 regulations, or the fair market value of the eligible interest received in the transaction, both determined immediately after the transfer.

(2) ***Fair market value of the eligible interest received exceeds its adjusted basis.*** If paragraph (c)(6)(ii)(B) of this section applies, and if the fair market value of the eligible interest received is in excess of the eligible taxpayer's adjusted basis in the eligible interest received, without regard to section 1400Z-2(b)(2)(B) and the section 1400Z-2 regulations, then the eligible taxpayer's investment in a QOF is a mixed-funds investment to which section 1400Z-2(e)(1) applies. In such a case, an amount equal to the adjusted basis of the eligible interest in the hands of the eligible taxpayer is the eligible taxpayer's qualifying investment, and the excess is the eligible taxpayer's non-qualifying investment.

(3) ***Transfer of built-in loss property and section 362(e)(2).*** If paragraph (c)(6)(ii)(B) of this section and section 362(e)(2) both apply to a transaction, the eligible taxpayer and the QOF are deemed to have made an election under section 362(e)(2)(C).

(C) ***Property other than cash—Taxable transactions.*** This paragraph (c)(6)(ii)(C) applies if an eligible taxpayer makes an investment in a QOF by transferring property other than cash to a QOF and if, without regard to section 1400Z-2(b)(2)(B) and the section 1400Z-2 regulations, the eligible taxpayer's basis in the eligible interest received would not be determined, in whole or in part, by reference to the eligible taxpayer's basis in the transferred property. If this paragraph (c)(6)(ii)(C) applies, the amount of the eligible taxpayer's investment in a QOF is the fair market value of the transferred property, as determined immediately before the transfer. This paragraph (c)(6)(ii)(C) applies separately to each item of property transferred to a QOF.

(D) ***Basis in a mixed-funds investment.*** If a taxpayer's investment in a QOF is a mixed-funds investment to which section 1400Z-2(e)(1) applies, the taxpayer's basis in the non-qualifying investment is equal to the taxpayer's basis in all of the eligible interests received, determined without regard to section 1400Z-2(b)(2)(B) and the section 1400Z-2 regulations, and reduced by the basis of the taxpayer's qualifying investment, determined without regard to section 1400Z-2(b)(2)(B) and the section 1400Z-2 regulations.

(iii) ***Special rules for transfers to QOF partnerships.*** In the case of an investment in a QOF partnership, the following rules apply:

(A) ***Amounts not treated as a qualifying investment*** —

(1) ***Non-contributions in general.*** To the extent the transfer of property to a QOF partnership is characterized other than as a contribution, such as characterization as a sale under section 707 and the regulations in this part under section 707 of the Code, the transfer is not treated as being made in exchange for a qualifying investment.

(2) ***Reductions in investments otherwise treated as contributions.*** If any transfer of cash or other property to a partnership is not treated as a contribution, in whole or in part, under paragraph (c)(6)(iii)(A)(1) of this section, the part of the transfer to the

partnership that is not disregarded is not a qualifying investment to the extent the partnership makes a distribution to the partner and the transfer to the partnership and the distribution would be recharacterized as a disguised sale under section 707 and the regulations in this part under section 707 of the Code if:

(*i*) Any cash contributed were non-cash property; and

(*ii*) In the case of a distribution by the partnership to which § 1.707-5(b) (relating to debt-financed distributions) applies, the partner's share of liabilities is zero.

(B) ***Amount invested in a QOF partnership*** —

(*1*) ***Calculation of amount of qualifying and non-qualifying investments.*** To the extent paragraph (c)(6)(iii)(A) of this section does not apply, the amount of equity received by an eligible taxpayer in a QOF partnership in exchange for the lesser of the net basis or net value of the property contributed to the QOF partnership by the eligible taxpayer is a qualifying investment. The amount of equity received by an eligible taxpayer in a QOF partnership that is a non-qualifying investment is the excess, if any, of the total equity received by the eligible taxpayer over the amount treated as a qualifying investment.

(*2*) ***Net basis.*** For purposes of paragraph (c)(6)(iii)(B) of this section, net basis is the excess, if any, of—

(*i*) The adjusted basis of the property contributed to the partnership; over

(*ii*) The amount of any debt to which the property is subject or that is assumed by the partnership in the transaction.

(*3*) ***Net value.*** For purposes of paragraph (c)(6)(iii)(B) of this section, net value is the excess of—

(*i*) The gross fair market value of the property contributed to the partnership; over

(*ii*) The amount of the debt described in paragraph (c)(6)(iii)(B)(*2*)(*ii*) of this section.

(*4*) ***Basis of qualifying and non-qualifying investments.*** The initial basis of a qualifying investment, before application of section 1400Z-2(b)(2)(B) and the section 1400Z-2 regulations or any section 752 debt allocation, is the net basis of the property contributed. The basis of a non-qualifying investment, before any section 752 debt allocation, is the remaining net basis. The basis of the qualifying investment is adjusted as provided in section 1400Z-2(b)(2)(B) and the section 1400Z-2 regulations. The bases of qualifying and non-qualifying investments are increased by any debt allocated to those investments under the rules of § 1.1400Z2(b)-1(c)(6)(iv)(B).

(*5*) ***Rules applicable to mixed-funds investments.*** If one portion of an investment in a QOF partnership is a qualifying investment and another portion is a non-qualifying investment, see § 1.1400Z2(b)-1(c)(6)(iv) for the rules that apply.

(iv) ***Acquisitions from another person.*** An eligible taxpayer may make an investment in a QOF by acquiring in a sale or exchange to which § 1.1001-1(a) applies an eligible interest in a QOF from a person other than the QOF. The amount of the eligible taxpayer's investment in the QOF with

respect to which the eligible taxpayer may make a deferral election is the amount of the cash, or the net fair market value of the other property, as determined immediately before the exchange, that the eligible taxpayer exchanged for the eligible interest in the QOF.

(v) ***Examples.*** The following examples illustrate the rules of this paragraph (c)(6).

(A) ***Example 1. Transfer of built-in gain property with basis less than gain to be deferred*** —

(*1*) ***Facts.*** Individual B realizes $100 of eligible gain within the meaning of paragraph (b)(11) of this section. B transfers unencumbered property with a fair market value of $100 and an adjusted basis of $60 to QOF Q, a C corporation, in a transaction that is described in section 351(a).

(*2*) ***Analysis.*** Paragraph (c)(6)(ii)(B) of this section applies because B transferred property other than cash to Q and, but for the application of section 1400Z-2(b)(2)(B), B's basis in the eligible interests in Q would be determined, in whole or in part, by reference to B's basis in the transferred property. The fair market value of the eligible interest B received is $100, and, without regard to section 1400Z-2(b)(2)(B), B's basis in the eligible interest received would be $60. Thus, pursuant to paragraph (c)(6)(ii)(B)(*2*) of this section, B's investment is a mixed-funds investment to which section 1400Z-2(e)(1) applies. Pursuant to paragraphs (c)(6)(ii)(B)(*1*) and (*2*) of this section, B's qualifying investment is $60 (the lesser of the taxpayer's adjusted basis in the eligible interest, without regard to section 1400Z-2(b)(2)(B), of $60 and the $100 fair market value of the eligible interest received). Pursuant to section 1400Z-2(b)(2)(B)(i), B's basis in the qualifying investment is $0. Additionally, B's non-qualifying investment is $40 (the excess of the fair market value of the eligible interest received ($100) over the taxpayer's adjusted basis in the eligible interest, without regard to section 1400Z-2(b)(2)(B) ($60)). B's basis in the non-qualifying investment is $0 (B's $60 basis in its investment determined without regard to section 1400Z-2(b)(2)(B), reduced by the $60 of adjusted basis allocated to the investment to which section 1400Z-2(e)(1)(A)(i) applies, determined without regard to section 1400Z-2(b)(2)(B)). See paragraph (c)(6)(ii)(D) of this section. Pursuant to section 362, Q's basis in the transferred property is $60.

(B) ***Example 2. Transfer of built-in gain property with basis in excess of eligible gain to be deferred.*** The facts are the same as in paragraph (c)(6)(v)(A)(*1*) of this section (*Example 1*), except that B realizes $50 of eligible gain within the meaning of paragraph (b)(11) of this section. Pursuant to paragraph (c)(6)(i) of this section, B's qualifying investment cannot exceed the amount of eligible gain to be deferred (that is, the $50 of eligible gain) under the section 1400Z-2(a) election. Therefore, pursuant to paragraph (c)(6)(ii)(B)(*1*) of this section, B's qualifying investment is $50 (the lesser of the taxpayer's adjusted basis in the eligible interest received, without regard to section 1400Z-2(b)(2)(B), of $60 and the $100 fair market value of the eligible interest, limited by the amount of eligible gain to be deferred under the section 1400Z-2(a) election). B's qualifying investment has an adjusted basis of $0, as provided in section 1400Z-2(b)(2)(B)(i). Additionally, B's non-qualifying investment is $50 (the excess of the fair market value of the eligible interest received ($100) over the amount ($50) of B's section 1400Z-2(a)(1)(A) investment). B's basis in the non-qualifying investment is $10 (B's $60 basis in its investment determined without regard to section 1400Z-2(b)(2)(B)), reduced by the $50 of adjusted basis allocated to B's qualifying investment, determined without regard to section 1400Z-2(b)(2)(B).

(C) ***Example 3. Transfers to QOF partnerships*** —

(*1*) ***Facts.*** A and B each realized $100 of eligible gain and each transfers $100 to a QOF partnership. In a subsequent year, the partnership borrows $120 from an unrelated lender and distributes $120 equally to A and B.

(*2*) ***Analysis.*** If the contributions had been of property other than cash, the contributions and distributions would have been tested under the disguised sale rules of section 707 and the regulations in this part under section 707 of the Code, determining the timing of the distribution and amount of the debt allocated to each partner. Under paragraph (c)(6)(iii)(A)(*2*) of this section, the cash of $200 ($100 from A and $100 from B) is treated as property that could be sold in a disguised sale transaction and each partner's share of the debt is zero for purposes of determining the amount of the qualifying investment. To the extent there would have been a disguised sale applying the rule of paragraph (c)(6)(iii)(A)(*2*) of this section, the amount of the qualifying investment would be reduced by the amount of the contribution so recharacterized.

(D) ***Example 4. Return of capital by QOF partnership*** —

(*1*) ***Facts.*** A realized $100 of eligible gain and transfers $100 of cash to a QOF partnership. Later in the partner's tax year, the partnership distributes $20 to A in a distribution that is not recharacterized under paragraph (c)(6)(iii)(A)(*2*) of this section. At the time of the distribution, no allocations of income, gain, loss, or deduction had been made to A, and A's share of the partnership's debt was zero under section 752.

(*2*) ***Analysis.*** Because the contribution and distribution are not recharacterized under paragraph (c)(6)(iii)(A)(*2*) of this section, the amount of A's qualifying investment is $100 despite the $20 distribution. At the time the $20 distribution is made to A, A's basis in its qualifying investment is zero, and thus the distribution is an inclusion event under § 1.1400Z2(b)-1(c)(6)(iii).

(E) ***Example 5. Property contributed has built-in gain.*** The facts are the same as in paragraph (c)(6)(v)(C)(*1*) of this section (*Example 3*), except that the property contributed by A had a value of $100 and basis of $20 and the partnership did not borrow money or make a distribution. Under paragraph (c)(6)(iii)(B)(*1*) of this section, the amount of A's qualifying investment is $20 (the lesser of the net value or the net basis of the property that A contributed), and the excess of the $100 contribution over the $20 qualifying investment is a non-qualifying investment. Under paragraph (c)(6)(iii)(B)(*4*) of this section, A's basis in the qualifying investment (determined without regard to section 1400Z-2(b)(2)(B) or section 752(a)) is $20. After the application of section 1400Z-2(b)(2)(B) but before the application of section 752(a), A's basis in the qualifying investment is zero. A's basis in the non-qualifying investment is zero without regard to the application of section 752(a).

(*F*) ***Example 6. Property contributed has built-in gain and is subject to debt.*** The facts are the same as in paragraph (c)(6)(v)(E) of this section (*Example 5*), except that the property contributed by A has a gross value of $130 and is subject to debt of $30. Under paragraph (c)(6)(iii)(B)(*1*) of this section, the amount of A's qualifying investment is zero, the lesser of the property's $100 net value ($130 minus $30) or $0 net basis ($20 minus $30, but limited to zero). The entire contribution constitutes a non-qualifying investment.

(G) ***Example 7. Property contributed has built-in loss and is subject to debt.*** The facts are the same as in paragraph (c)(6)(v)(F) of this section (*Example 6*), except that the property contributed by A has a basis of $150. Under paragraph (c)(6)(iii)(B)(*1*) of this section, the amount of A's qualifying investment is $100, the lesser of the property's $100 net value ($130 minus $30) or $120 net basis ($150 minus $30). The non-qualifying investment is $0, the excess of the net value ($100) over the qualifying investment ($100). A's basis in the qualifying investment (determined without regard to section 1400Z-2(b)(2)(B) and section 752(a)) is $120, the net basis. After the application of section 1400Z-2(b)(2)(B), A's basis in the qualifying investment is zero, plus its share of partnership debt under section 752(a).

(7) ***Eligible gains that a partnership elects to defer.*** A partnership generally is an eligible taxpayer under paragraph (b)(13) of this section and may elect to defer recognition of some or all of its eligible gains under section 1400Z-2(a)(2) and the section 1400Z-2 regulations.

(i) ***Partnership deferral election.*** If a partnership properly makes a deferral election, then—

(A) The partnership defers recognition of the eligible gain under the rules of section 1400Z-2 and the section 1400Z-2 regulations, that is, the partnership does not recognize gain at the time it otherwise would have in the absence of the deferral election; and

(B) The deferred eligible gain is not included in the distributive shares of the partners under section 702 and is not treated as an item described in section 705(a)(1).

(ii) ***Subsequent recognition.*** Absent any additional deferral under section 1400Z-2(a)(1)(A) and the section 1400Z-2 regulations, any amount of deferred gain that an electing partnership subsequently must include in income under sections 1400Z-2(a)(1)(B) and (b) and the section 1400Z-2 regulations is recognized by the electing partnership at the time of inclusion, is subject to section 702 and is treated as an item described in section 705(a)(1) in a manner consistent with recognition at that time.

(8) ***Eligible gains that the partnership does not defer*** —

(i) ***Federal income tax treatment of the partnership.*** If a partnership does not elect to defer some, or all, of its eligible gains, the partnership's treatment of any such amounts is unaffected by the fact that the eligible gains could have been deferred under section 1400Z-2 and the section 1400Z-2 regulations.

(ii) ***Federal income tax treatment by the partners.*** If a partnership does not elect to defer some, or all, of the eligible gains—

(A) The gains for which a deferral election are not made are included in the partners' distributive shares under section 702 and are treated as items described in section 705(a)(1);

(B) If a partner's distributive share includes one or more gains that are eligible gains with respect to the partner, the partner may elect under section 1400Z-2(a)(1)(A) and the section 1400Z-2 regulations to defer some or all of such eligible gains; and

(C) A gain in a partner's distributive share is an eligible gain with respect to the partner only if it is an eligible gain with respect to the partnership and it did not arise from a sale or exchange with a person that, within the meaning of section 1400Z-2(e)(2) and the section 1400Z-2 regulations, is related to the partner.

(iii) *180-day period for a partner electing deferral* —

(A) ***General rule.*** If a partner's distributive share includes a gain that is described in paragraph (c)(8)(ii)(C) of this section (gains that are eligible gains with respect to the partner), the 180-day period with respect to the partner's eligible gains in the partner's distributive share generally begins on the last day of the partnership taxable year in which the partner's distributive share of the partnership's eligible gain is taken into account under section 706(a).

(B) ***Elective rule.*** Notwithstanding the general rule in paragraph (c)(8)(iii)(A) of this section, if a partnership does not elect to defer all of its eligible gain, the partner may elect to treat the partner's own 180-day period with respect to the partner's distributive share of that gain as being—

(*1*) The same as the partnership's 180-day period; or

(*2*) The 180-day period beginning on the due date for the partnership's tax return, without extensions, for the taxable year in which the partnership realized the gain that is described in paragraph (c)(8)(ii)(C) of this section.

(C) ***Example.*** The following example illustrates the principles of this paragraph (c)(8)(iii).

(*1*) ***Facts.*** Four individuals, A, B, C, and D, have equal interests in a partnership, P. P has no other partners, and P's taxable year is the calendar year. On January 17, 2019, P realizes a capital gain of $1000*x* that P decides not to elect to defer.

(*2*) ***Analysis of A's election.*** A is aware of the capital gain realized by P, and decides to defer its distributive shares of P's eligible gain. A invests $250*x* in a QOF during February 2020. Under the general rule in paragraph (c)(8)(iii)(A) of this section, this investment is within the 180-day period for A, which began on December 31, 2019, the last day of P's taxable year in which A's share of P's eligible gain is taken into account under section 706(a).

(*3*) ***Analysis of B's election.*** B is also aware of the capital gain realized by P, and decides to defer its distributive shares of P's eligible gain. B decides to make the election provided in paragraph (c)(8)(iii)(B)(*1*) of this section, and invests $250*x* in a QOF during February 2019. Under the elective rule in paragraph (c)(8)(iii)(B)(*1*) of this section, this investment is within the 180-day period for B, which began on January 17, 2019, the same day as P's 180-day period.

(*4*) ***Analysis of C's election.*** On March 15, 2020, P provides all of its partners with their Schedules K-1. Upon learning that its distributive share of income from P included eligible gain, C decides to make a deferral election, and also makes the election provided in paragraph (c)(8)(iii)(B)(*2*) of this section. It then invests $250*x* in a QOF during June 2020. Under the elective rule in paragraph (c)(8)(iii)(B)(*2*) of this section, this investment is within the 180-day period for C, which began on March 15, 2020, the 180-day period beginning on the due date for P's tax return without extensions, for the taxable year in which P realized eligible gain.

(9) *Passthrough entities other than partnerships* —

(i) ***S corporations, nongrantor trusts, and estates.*** If an S corporation, a nongrantor trust, or a decedent's estate realizes an eligible gain, then rules analogous to the rules of paragraphs (c)(7) and (8) of this section apply to that entity and to its shareholders or its beneficiaries, as the case may be, to the extent they receive or are deemed to receive an allocable share of the eligible gain.

(ii) ***Grantor trusts.*** If a grantor trust realizes an eligible gain, either the trust or the deemed owner of the trust may make the election to defer recognition of the gain and make the qualifying investment under rules analogous to the rules of paragraphs (c)(7) and (8) of this section (other than the rule in paragraph (c)(8)(iii) of this section regarding the 180-day period), whether or not the gain is distributed to the deemed owner of the trust.

(d) ***Elections —***

(1) ***Taxable year of deferral election.*** For a deferral election with respect to any eligible gain to be valid, an eligible taxpayer must make such election in accordance with guidance published in the Internal Revenue Bulletin or in forms and instructions (see §§ 601.601(d)(2) and 601.602 of this chapter), as to the required time, form, and manner in which an eligible taxpayer (including a partner, S corporation shareholder, or beneficiary applying the elective 180-day period provided in paragraphs (c)(8)(iii)(B) and (c)(9) of this section) may make a deferral election.

(2) ***Annual reporting of qualifying investments.*** An eligible taxpayer must report any qualifying investment held at any point during the taxable year in accordance with guidance published in the Internal Revenue Bulletin or in forms and instructions (see §§ 601.601(d)(2) and 601.602 of this chapter). A failure to make this report for any given taxable year will result in a rebuttable presumption that the taxpayer has had an inclusion event described in § 1.1400Z2(b)-1(c) during that year. The presumption described in the previous sentence may be rebutted by the taxpayer making the report described in the first sentence of this paragraph (d)(2) or by the taxpayer establishing to the satisfaction of the Commissioner that an inclusion event described in § 1.1400Z2(b)-1(c) did not occur during that taxable year.

(e) ***Interaction of section 1400Z-2 and § 1.897-6T.*** Section 1400Z-2 is not a nonrecognition provision, as defined in § 1.897-6T(a)(2), for purposes of § 1.897-6T.

(f) ***Treatment of mixed-funds investments —***

(1) ***Investments to which no election under section 1400Z-2(a) applies.*** If a taxpayer invests in a QOF and makes a deferral election with respect to less than all of that investment, the portion of the investment to which the election does not apply is a non-qualifying investment. Similarly, an investment in a QOF with respect to which no deferral election is made is a non-qualifying investment.

(2) ***Treatment of deemed contributions of money under section 752(a).*** In the case of a QOF partnership, the deemed contribution of money described in section 752(a) does not create or increase an investment in the QOF described in section 1400Z-2(e)(1)(A)(ii). Thus, any basis increase resulting from a deemed section 752(a) contribution is not taken into account in determining the portion of a partner's investment subject to section 1400Z-2(e)(1)(A)(i) or (ii). See § 1.1400Z2(b)-1(c)(6)(iv)(B) for rules relating to the application of section 752 to a mixed-funds investment.

(3) ***Treatment of contributions to QOF corporation in which no stock is received.*** If a taxpayer with a qualifying investment or a non-qualifying investment in a QOF corporation subsequently makes a non-qualifying investment or a qualifying investment, respectively, and if the taxpayer receives no additional QOF stock in exchange for the subsequent investment, the taxpayer has a mixed-funds investment.

(4) ***Example.*** The following example illustrates the rules of this paragraph (f):

(i) ***Facts.*** Taxpayer A realizes $1 million of eligible gain and on the next day contributes $1 million to a QOF, Partnership P, in exchange for a 50 percent interest in Partnership P. Taxpayer A makes an election under section 1400Z-2(a) with respect to $900,000 of that eligible gain. Under section 1400Z-2(e)(1), 90 percent of A's investment is described in section 1400Z-2(e)(1)(A)(i) (an investment that only includes amounts to which the election under section 1400Z-2(a) applies), and 10 percent is described in section 1400Z-2(e)(1)(A)(ii) (a separate investment consisting of other amounts). Partnership P borrows $8 million. Under § 1.752-3(a), taking into account the terms of the partnership agreement, $4 million of the $8 million liability is allocated to A.

(ii) ***Analysis.*** Under section 752(a), A is treated as contributing $4 million to Partnership P. Under paragraph (f) of this section, A's deemed $4 million contribution to Partnership P is ignored for purposes of determining the percentage of A's investment in Partnership P subject to the deferral election under section 1400Z-2(a) or the portion not subject to the deferral election under section 1400Z-2(a). As a result, after A's section 752(a) deemed contribution, $900,000, or 90 percent, of A's investment in Partnership P is described in section 1400Z-2(e)(1)(A)(i) and $100,000, or 10 percent, is described in section 1400Z-2(e)(1)(A)(ii).

(g) ***Applicability dates*** -(1) *In general.* The provisions of this section are applicable for taxable years beginning after March 13, 2020.

(2) ***Prior periods.*** With respect to eligible gains that would be recognized (absent the making of a deferral election) during the portion of a taxpayer's first taxable year ending after December 21, 2017, and during taxable years beginning after December 21, 2017, and on or before March 13, 2020, a taxpayer may choose either—

(i) To apply the section 1400Z-2 regulations, if applied in a consistent manner for all such taxable years (reliance by a taxpayer under paragraph (g)(2)(ii) of this section, § 1.1400Z2(b)-1(j)(2)(ii), § 1.1400Z2(d)-1(e)(2)(ii), § 1.1400Z2(d)-2(e)(2)(ii), or § 1.1400Z2(f)-1(d)(2)(ii), is disregarded solely for purposes of the consistency requirement under this paragraph (g)(2)(i)); or

(ii) To rely on the rules in proposed § 1.1400Z2(a)-1 contained in the notice of proposed rulemaking (REG-115420-18) published on October 29, 2018, as amplified by the notice of proposed rulemaking (REG-120186-18) published on May 1, 2019, but only if applied in a consistent manner for all such taxable years.

[T.D. 9889, 85 FR 1954, Jan. 13, 2020; 85 FR 19083, Apr. 6, 2020]

§ 1.1400Z2(b)-1 Inclusion of gains that have been deferred under section 1400Z-2(a).

(a) ***Scope.*** This section provides rules under section 1400Z-2(b) of the Internal Revenue Code and the section 1400Z-2 regulations (as defined in § 1.1400Z2(a)-1(b)(41)) regarding the inclusion in income of gain deferred by a QOF owner under section 1400Z-2(a)(1)(A) and the section 1400Z-2 regulations. This

section applies to a QOF owner only until all of such owner's gain deferred pursuant to a deferral election has been included in income, subject to the limitations described in paragraph (e)(5) of this section, and except as otherwise provided in paragraph (c) or (d) of this section. Paragraph (b) of this section provides general rules under section 1400Z-2(b)(1) regarding the timing of the inclusion in income of the deferred gain. Paragraph (c)(1) of this section provides the general rule regarding the determination of the extent to which an event triggers the inclusion in gross income of all, or a portion, of an eligible taxpayer's deferred gain, and paragraphs (c)(2) through (16) of this section provide specific rules for certain events that are or are not treated as inclusion events. Paragraph (d) of this section provides rules regarding holding periods for qualifying investments. Paragraph (e) of this section provides rules regarding the amount of deferred gain included in gross income under section 1400Z-2(a)(1)(B) and (b), including special rules for QOF partnerships and QOF S corporations. Paragraph (f) of this section provides examples illustrating the rules of paragraphs (c), (d), and (e) of this section. Paragraph (g) of this section provides rules regarding basis adjustments under section 1400Z-2(b)(2)(B). Paragraph (h) of this section provides special reporting rules applicable to partners, partnerships, and direct or indirect owners of QOF partnerships. Paragraph (i) is reserved. Paragraph (j) of this section provides dates of applicability.

(b) ***General inclusion rule.*** The gain to which a deferral election applies is included in gross income, to the extent provided in paragraph (e) of this section and in accordance with the rules of § 1.1400Z2(a)-1(c)(1), in the taxable year that includes the earlier of:

(1) The date of an inclusion event; or

(2) December 31, 2026.

(c) ***Inclusion events*** —

(1) ***In general.*** Except as otherwise provided in this paragraph (c), an event is an inclusion event, if, and to the extent that—

(i) The event reduces an eligible taxpayer's direct equity interest for Federal income tax purposes in the qualifying investment;

(ii) An eligible taxpayer receives property in the event with respect to its qualifying investment and the event is treated as a distribution for Federal income tax purposes, whether or not the receipt reduces the eligible taxpayer's ownership of the QOF;

(iii) An eligible taxpayer claims a loss for worthless stock under section 165(g) or otherwise claims a worthlessness deduction with respect to its qualifying investment; or

(iv) A QOF in which an eligible taxpayer holds a qualifying investment loses its status as a QOF.

(2) ***Termination or liquidation of QOF or QOF owner*** —

(i) ***Termination or liquidation of QOF.*** Except as otherwise provided in this paragraph (c), an eligible taxpayer has an inclusion event with respect to all of its qualifying investment if the QOF ceases to exist for Federal income tax purposes. For example, if a QOF partnership converts to a QOF C corporation, or if a QOF C corporation converts to a QOF partnership or to an entity disregarded as separate from its owner for Federal income tax purposes, all investors in the QOF have an inclusion event with respect to all of their qualifying investments in the QOF.

(ii) ***Liquidation of QOF owner*** —

(A) ***Portion of distribution treated as sale.*** A distribution of a qualifying investment in a complete liquidation of a QOF owner is an inclusion event to the extent that section 336(a) treats the distribution as if the qualifying investment were sold to the distributee at its fair market value, without regard to section 336(d).

(B) ***Distribution to 80-percent distributee.*** A distribution of a qualifying investment in a complete liquidation of a QOF owner is not an inclusion event to the extent section 337(a) applies to the distribution.

(3) ***Transfer of an investment in a QOF by gift or incident to divorce*** —

(i) ***Transfer of an investment in a QOF by gift.*** Except to the extent provided in paragraph (c)(5) of this section, a taxpayer's transfer of a qualifying investment by gift, as defined for purposes of chapter 12 of subtitle B of the Code, whether outright or in trust, is an inclusion event, regardless of whether that transfer is a completed gift for Federal gift tax purposes, and regardless of the taxable or tax-exempt status of the donee of the gift.

(ii) ***Transfers between spouses incident to divorce.*** A transfer between spouses or incident to divorce or otherwise as provided in section 1041 of the Code is an inclusion event.

(4) ***Transfer of an investment in a QOF by reason of the taxpayer's death*** —

(i) ***In general.*** Except as provided in paragraph (c)(4)(ii) of this section, a transfer of a qualifying investment by reason of the taxpayer's death is not an inclusion event. Transfers by reason of death include, for example:

(A) A transfer by reason of death to the deceased owner's estate;

(B) A distribution of a qualifying investment by the deceased owner's estate;

(C) A distribution of a qualifying investment by the deceased owner's trust that is made by reason of the deceased owner's death;

(D) The passing of a jointly owned qualifying investment to the surviving co-owner by operation of law; and

(E) Any other transfer of a qualifying investment at death by operation of law.

(ii) ***Exceptions.*** The following transfers are not included as a transfer by reason of the taxpayer's death, and thus are inclusion events:

(A) A sale, exchange, or other disposition by the deceased taxpayer's estate or trust, other than a distribution described in paragraph (c)(4)(i) of this section;

(B) Any disposition by the legatee, heir, or beneficiary who received the qualifying investment by reason of the taxpayer's death; and

(C) Any disposition by the surviving joint owner or other recipient who received the qualifying investment by operation of law on the taxpayer's death.

(iii) ***Liability for deferred Federal income tax.*** If the owner of a qualifying investment in a QOF dies before an inclusion event and the deferred gain is not includable in the decedent's gross income, the gain that the decedent elected to defer under section 1400Z-2(a) and the section 1400Z-2 regulations will be includable in the gross income, for the taxable year in which occurs an inclusion event, of the person described in section 691(a)(1).

(iv) ***Qualifying investment in the hands of the person described in section 691(a)(1).*** A qualifying investment received in a transfer by reason of death listed in paragraph (c)(4)(i) of this section continues to be a qualifying investment under § 1.1400Z2(a)-1(b)(34).

(5) ***Grantor trusts*** —

(i) ***Contributions to grantor trusts.*** If the owner of a qualifying investment contributes it to a trust and, under subpart E of part I of subchapter J of chapter 1 of subtitle A of the Code (grantor trust rules), the contributing owner of the investment is the deemed owner of the trust (grantor trust), the contribution to the grantor trust is not an inclusion event. Similarly, a transfer of the investment by the grantor trust to the trust's deemed owner is not an inclusion event. For all purposes of the section 1400Z-2 regulations, references to the term *grantor trust* mean the portion of the trust that holds the qualifying investment in the QOF, and such a grantor trust, or portion of the trust, is a wholly grantor trust as to the deemed owner. Such contributions may include transfers by gift or any other type of transfer between the grantor and the grantor trust that is a nonrecognition event as a result of the application of the grantor trust rules (that is, subpart E of part I of subchapter J of chapter 1 of subtitle A of the Code).

(ii) ***Changes in grantor trust status.*** In general, a change in the income tax status of an existing trust owning a qualifying investment in a QOF, whether the termination of grantor trust status or the creation of grantor trust status, is an inclusion event. Notwithstanding the previous sentence, the termination of grantor trust status as the result of the death of the owner of a qualifying investment is not an inclusion event, but the provisions of paragraph (c)(4) of this section apply to distributions or dispositions by the trust. If a qualifying investment is held in the grantor portion of an electing small business trust (ESBT), as defined in section 1361(e)(1), and the ESBT converts into a qualified subchapter S trust (QSST), as defined in section 1361(d)(3), the beneficiary of which is the deemed owner of the grantor portion of the ESBT, there has been no change in the grantor trust status because the deemed owner continues to be taxable under subtitle A of the Code on the income and gain from the qualifying investment.

(iii) ***Conversions of QSSTs and ESBTs.*** With regard to conversions of QSSTs and ESBTs, see paragraphs (c)(7)(i)(B) and (C) of this section. For purposes of paragraph (c)(5)(ii) of this section, if a qualifying investment is held by a QSST that converts to an ESBT, the beneficiary of the QSST is the deemed owner of the grantor portion of the ESBT that then holds the qualifying investment, and the deemed owner is not a nonresident alien for purposes of this section (and thus notwithstanding § 1.1361-1(j)(8)), there has been no change in the grantor trust status because the deemed owner continues to be taxable under subtitle A of the Code on the income and gain from the qualifying investment.

(6) ***Special rules for partners and partnerships*** —

(i) ***Scope.*** Except as otherwise provided in this paragraph (c)(6), in the case of a partnership that is a QOF or a QOF partner, the inclusion rules of this paragraph (c) apply to transactions involving any direct or indirect partner of the QOF to the extent of that partner's share of any eligible gain of the QOF.

(ii) ***Transactions that are not inclusion events*** —

(A) ***In general.*** Notwithstanding paragraphs (c)(1) and (2) of this section, and except as otherwise provided in paragraph (c)(6) of this section, no transaction described in paragraph (c)(6)(ii) of this section is an inclusion event.

(B) ***Section 721 contributions.*** Subject to paragraph (c)(6)(v) of this section, a contribution by a QOF owner (contributing partner), of its qualifying QOF stock, qualifying QOF partnership interest, or direct or indirect partnership interest in a qualifying investment to a partnership (transferee partnership) to the extent the transaction is governed by section 721(a) is not an inclusion event, provided the interest transfer does not cause a partnership termination of a QOF partnership, or the direct or indirect owner of a QOF, under section 708(b)(1). See paragraph (c)(6)(ii)(C) of this section for transactions governed by section 708(b)(2)(A). The inclusion rules in paragraph (c) of this section apply to any part of the transaction to which section 721(a) does not apply. The transferee partnership becomes subject to section 1400Z-2 and the section 1400Z-2 regulations with respect to the eligible gain associated with the contributed qualifying investment. The transferee partnership must allocate and report the remaining deferred gain that is associated with the contributed qualifying investment to the contributing partner to the same extent that the remaining deferred gain would have been allocated and reported to the contributing partner in the absence of the contribution. Additionally, the transferee partnership must allocate the basis increases described in section 1400Z-2(b)(2)(B)(iii) and (iv) to the contributing partner. If a transferee partnership is a direct QOF owner, only the transferee partnership may make the elections under section 1400Z-2(c) and the regulations in this part under section 1400Z-2(c) of the Code with respect to the contributed qualifying investment. See § 1.1400Z2(c)-1(b)(1)(ii) (election by transferee partnership).

(C) ***Section 708(b)(2)(A) mergers or consolidations*** —

(*1*) ***Merger of a partnership that is a QOF partner.*** Subject to paragraphs (c)(6)(iii) and (v) of this section, a merger or consolidation of a partnership that is a QOF partner (original partnership) with another partnership in a transaction to which section 708(b)(2)(A) applies is not an inclusion event to the extent section 721(a) applies to the merger. To the extent the original partnership terminates in the merger, as determined under § 1.708-1(c)(1), the partnership that is a continuation of the original partnership becomes subject to section 1400Z-2 and the section 1400Z-2 regulations to the same extent that the original partnership was so subject prior to the transaction, and must allocate and report any gain under section 1400Z-2(b) to the same extent and to the same partners that the original partnership allocated and reported such items prior to the transaction. Notwithstanding the rules in this paragraph (c)(6)(ii)(C)(*1*), the general inclusion rules of paragraph (c) of this section apply to the portion of the transaction that is otherwise treated as a sale or exchange under paragraph (c) of this section.

(*2*) ***Merger of QOF partnerships.*** Subject to paragraph (c)(6)(v) of this section, a merger or consolidation of a QOF partnership with another QOF partnership in a transaction to which section 708(b)(2)(A) applies is not an inclusion event under paragraph (c)(2)(i) of this section if, immediately after the merger or consolidation, the resulting partnership is a QOF. The continuing partnership, as determined under § 1.708-1(c)(1), becomes subject to section 1400Z-2 and the section 1400Z-2 regulations to the same extent that the terminated partnership was so subject prior to the transaction, and must allocate and report any gain under section 1400Z-2(b) to the same extent and to the same partners that the terminated partnership would have allocated and reported such items prior to the transaction. Notwithstanding the

rules in this paragraph (c)(6)(ii)(C)(2), the general inclusion rules of paragraph (c) of this section apply to the portion of the transaction that is otherwise treated as a sale or exchange under paragraph (c) of this section.

(D) ***Example.*** The following example illustrates the rules of this paragraph (c)(6)(ii).

(*1*) *Example*—(*i*) *Facts.* In 2019, taxpayer A contributes $100 of eligible gain to a QOF partnership, X, in exchange for a qualifying QOF partnership interest in X, and taxpayer B contributes $100 of eligible gain to another QOF partnership, Y, in exchange for a qualifying QOF partnership interest in Y. In 2021, in transactions governed by section 721(a), A contributes her qualifying QOF partnership interest in X, and B contributes her qualifying QOF partnership interest in Y, to a newly formed partnership, UTP. In 2024, C receives a profits interest in UTP for services that she will provide to UTP. In 2031, X sells a non-inventory asset and allocates X's distributive share of the gain to UTP. No distributions are ever made from X, Y, or UTP.

(*ii*) *Analysis.* On December 31, 2026, UTP recognizes $170 of remaining deferred gain relating to the QOF interests. Of that gain, A is allocated the $85 of gain relating to the $100 of eligible gain that she invested in X, and B is allocated the $85 of gain relating to the $100 of eligible gain that she invested in Y. C recognizes no gain at this time. In 2031, because UTP's holding period in X includes A's holding period in X, UTP has a holding period in X that exceeds 10 years, and may make an election under § 1.1400Z2(c)-1(b)(2)(ii) to exclude the gain from X's asset sale. Even though A was the original investor in X, she may not make the election. If UTP makes the election, UTP will exclude its distributive share of gain from the sale of the X asset.

(2) [Reserved]

(iii) ***Partnership distributions.*** Subject to paragraph (c)(6)(v) of this section, an actual or deemed distribution of property, including cash, by a QOF partnership to a partner with respect to its qualifying investment is an inclusion event only to the extent that the distributed property has a fair market value in excess of the partner's basis in its qualifying investment. For purposes of this paragraph (c)(6)(iii), in the case of a merger or consolidation of a QOF partnership with another QOF partnership in a transaction to which section 708(b)(2)(A) applies, the fair market value of the distributed property is reduced by the fair market value of the QOF partnership interest received in the merger or consolidation. A distribution from a partnership that directly or indirectly owns a QOF is an inclusion event only if the distribution is a liquidating distribution. For purposes of this paragraph (c)(6)(iii), the distribution is not in complete liquidation if the partnership making the distribution is a partnership that terminates in a partnership merger or consolidation under § 1.708-1(c), the continuing partnership in the merger or consolidation continues to directly or indirectly own an interest in the QOF, and the distributee is distributed an interest in the resulting partnership as part of the merger or consolidation. See paragraph (c)(6)(iv) of this section for special rules relating to mixed-funds investments.

(iv) ***Special rules for mixed-funds investments*** —

(A) ***In general.*** The rules of this paragraph (c)(6)(iv) apply solely for purposes of section 1400Z-2. A partner that holds a mixed-funds investment in a QOF partnership (a mixed-funds partner) shall be treated as holding two separate interests in the QOF partnership, one a qualifying investment and the other a non-qualifying investment (separate

interests). The basis of each separate interest is determined under the rules described in paragraphs (c)(6)(iv)(B) and (g) of this section as if each interest were held by different taxpayers.

(B) ***Allocations and distributions.*** All section 704(b) allocations of income, gain, loss, and deduction, all section 752 allocations of debt, and all distributions made to a mixed-funds partner will be treated as made to the separate interests based on the allocation percentages of those interests as defined in paragraph (c)(6)(iv)(D) of this section. For purposes of this paragraph (c)(6)(iv)(B), in allocating income, gain, loss, or deduction between these separate interests, section 704(c) principles apply to account for any value-basis disparities attributable to the qualifying investment or non-qualifying investment. Any distribution (whether actual or deemed) to the holder of a qualifying investment is subject to the rules of paragraphs (c)(6)(iii) and (v) of this section, without regard to the presence or absence of gain under other provisions of subchapter K of chapter 1 of subtitle A of the Internal Revenue Code.

(C) ***Subsequent contributions.*** In the event of an increase in a partner's qualifying or non-qualifying investment, as for example, in the case of an additional contribution for a qualifying investment or for an interest that is a non-qualifying investment or a change in allocations for services rendered, the partner's interest in the separate interests must be valued immediately prior to the event and the allocation percentages adjusted to reflect the relative values of these separate interests and the additional contribution, if any.

(D) ***Allocation percentages.*** The allocation percentages of the separate interests will be determined based on the relative capital contributions attributable to the qualifying investment and the non-qualifying investment. In the event a partner receives a profits interest in the QOF partnership for services provided to or for the benefit of the QOF partnership, the allocation percentage with respect to the profits interest is based on the share of residual profits the mixed-funds partner would receive with respect to that interest, disregarding any allocation of residual profits for which there is not a reasonable likelihood of application.

(E) ***Examples.*** The following examples illustrate the rules of this paragraph (c)(6)(iv).

(*1*) *Example 1. Allocation of residual profits for which there is no reasonable likelihood of application*—(*i*) *Facts.* A realizes $100 of eligible gain and B realizes $900 of eligible gain. A and B form Q, a QOF partnership. B contributes $900 to Q in exchange for a qualifying QOF partnership interest (B's capital interest). A contributes $100 to Q in exchange for a qualifying QOF partnership interest (A's capital interest and, with B's capital interest, the capital interests) and agrees to provide services to Q in exchange for a profits interest in Q (A's profits interest). Q's partnership agreement provides that Q's profits are first allocated to the capital interests until the capital interest holders receive a 10 percent preferred return with respect to those interests. Next, Q's profits are allocated 15 percent to A with respect to A's profits interest, 10 percent to A with respect to A's capital interest, and 75 percent to B until the capital interests receive a 1,000% preferred return. Thereafter, Q's profits are allocated 1 percent to A's profits interest and 99 percent to the capital interests. There is not a reasonable likelihood that Q's profits will be sufficient to result in an allocation in the last tranche.

(*ii*) *Analysis.* Under paragraph (c)(6)(iv)(D) of this section, the allocation percentage with respect to A's profits interest is calculated based on the share of residual profits that A would receive with respect to A's profits interest, disregarding any allocation of residual profits that has no reasonable likelihood of being achieved. Under Q's partnership agreement, A's share of Q's residual profits with respect to A's profits interest is 1 percent. However, there is no reasonable likelihood that this 1 percent allocation will apply because it is unlikely that the capital interests will receive a 1,000% preferred return. Therefore, under paragraph (c)(6)(iv)(D) of this section, A's share of Q's residual profits with respect to A's profits interest is 15 percent, the final allocation of Q's profits to A's profits interest that is reasonably likely to apply. The allocation percentage for A's capital interest in Q is 10 percent under paragraph (c)(6)(iv)(D) of this section. Thus, allocations and distributions made to A are treated as made 60 percent (15/25) to A's non-qualifying profits interest and 40 percent (10/25) to A's qualifying QOF partnership interest.

(*2*) *Example 2. Separate entity holding profits interest*—(i) *Facts.* The facts are the same as in paragraph (c)(6)(iv)(E)(*1*) of this section (*Example 1*), except that A is a partnership that has no eligible gain and P, a partnership that is owned by the same taxpayers who own A, realizes $100 of eligible gain and contributes $100 to Q for its qualifying investment.

(*ii*) *Analysis.* Under paragraph (c)(6)(iv)(D) of this section, A's profits interest is a non-qualifying investment in Q. Because P directly holds only a qualifying QOF partnership interest in Q, P is not a mixed-funds partner in Q, and 100 percent of the allocations and distributions made to P are attributable to P's qualifying QOF partnership interest.

(v) ***Remaining deferred gain reduction rule.*** An inclusion event occurs when and to the extent that a transaction has the effect of reducing:

(A) The amount of remaining deferred gain of one or more direct or indirect partners; or

(B) The amount of gain that would be recognized by such partner or partners under paragraph (e)(4)(ii) of this section to the extent that such amount would reduce such gain to an amount that is less than the remaining deferred gain.

(7) ***Special rules for S corporations*** —

(i) ***In general.*** Except as provided in paragraphs (c)(7)(ii), (iii), and (iv) of this section, none of the following is an inclusion event:

(A) An election, revocation, or termination of a corporation's status as an S corporation under section 1362;

(B) A conversion of a QSST to an ESBT, but only if the QSST beneficiary is the deemed owner of the grantor portion of the ESBT that receives the qualifying investment and if the deemed owner is not a nonresident alien;

(C) A conversion of an ESBT to a QSST, where the qualifying investment is held in the grantor portion of the ESBT and the QSST beneficiary is the deemed owner of the grantor portion of the ESBT; and

(D) A valid modification of a trust agreement of an S-corporation shareholder whether by an amendment, a decanting, a judicial reformation, or a material modification.

(ii) ***Distributions by QOF S corporation*** —

(A) ***General rule.*** An actual or constructive distribution of property by a QOF S corporation to a QOF shareholder with respect to its qualifying investment is an inclusion event to the extent that the distribution is treated as gain from the sale or exchange of property under section 1368(b)(2) and (c). For the treatment of a distribution by a QOF S corporation to which section 305(a) applies, see paragraph (c)(8)(ii). For the treatment of a distribution to which section 302(d) or section 306(a)(2) applies, see paragraph (c)(9)(ii) of this section.

(B) ***Spill-over rule.*** For purposes of applying paragraph (c)(7)(ii) of this section to the adjusted basis of a qualifying investment, or non-qualifying investment, as appropriate, in a QOF S corporation, the second sentence of § 1.1367-1(c)(3) applies—

(*1*) With regard to multiple qualifying investments, solely to the respective bases of such qualifying investments, and does not take into account the basis of any non-qualifying investment; and

(*2*) With regard to multiple non-qualifying investments, solely to the respective bases of such non-qualifying investments, and does not take into account the basis of any qualifying investment.

(iii) ***Conversion from S corporation to partnership or disregarded entity*** —

(A) ***General rule.*** Notwithstanding paragraph (c)(7)(i) of this section, and except as provided in paragraph (c)(7)(iii)(B) of this section, a conversion of an S corporation to a partnership or an entity disregarded as separate from its owner under § 301.7701-3(b)(1)(ii) of this chapter is an inclusion event.

(B) ***Exception for qualifying section 381 transaction.*** A conversion described in paragraph (c)(7)(iii)(A) of this section is not an inclusion event if the conversion comprises a step in a series of related transactions that together qualify as a qualifying section 381 transaction.

(iv) ***Treatment of separate blocks of stock in mixed-funds investments.*** With regard to a mixed-funds investment in a QOF S corporation, if different blocks of stock are created for separate qualifying investments to track basis in such qualifying investments, the separate blocks are not treated as different classes of stock for purposes of S corporation eligibility under section 1361(b)(1).

(v) ***Applicability.*** Paragraph (c)(7) of this section applies regardless of whether the S corporation is a QOF or a QOF shareholder.

(8) ***Distributions by a QOF corporation*** —

(i) ***General rule for distributions by a QOF C corporation.*** If a QOF C corporation distributes property to a QOF shareholder with respect to a qualifying investment, only the amount of the distribution to which section 301(c)(3) or 1059(a)(2) applies gives rise to an inclusion event. For purposes of this paragraph (c)(8)(i), a distribution of property includes a distribution of stock in the QOF C corporation making the distribution (or rights to acquire such stock) if the distribution is treated as a distribution of property to which section 301 applies pursuant to section 305(b).

(ii) ***Section 305(a) distributions.*** A distribution with respect to qualifying QOF stock to which section 305(a) applies is not an inclusion event. QOF stock received in such a distribution is qualifying QOF stock. The shareholder's remaining deferred gain is allocated pro rata between the new qualifying QOF stock received and the qualifying QOF stock with respect to which the distribution was made in proportion to the fair market values of each on the date of distribution. See § 1.307-1(a).

(9) ***Dividend-equivalent redemptions and redemptions of section 306 stock.*** —

(i) ***Redemptions by QOF C corporations*** —

(A) ***In general.*** Except as provided in paragraph (c)(9)(i)(B) of this section, if a QOF C corporation redeems its stock from a QOF shareholder in a transaction described in section 302(d) or section 306(a)(2), the full amount of such redemption gives rise to an inclusion event.

(B) ***Redemptions of stock of wholly owned QOF C corporation and pro rata redemptions.*** Paragraph (c)(8)(i) of this section applies to a redemption described in paragraph (c)(9)(i)(A) of this section if, at the time of such redemption—

(*1*) All stock in the QOF C corporation is held directly by a single shareholder, or directly by members of a single consolidated group; or

(2) The QOF C corporation has outstanding only one class of stock, as defined in section 1361 and § 1.1361-1(l), and the redemption is pro rata as to all shareholders of the redeeming QOF C corporation.

(ii) ***Redemptions by QOF S corporations.*** If a QOF S corporation redeems its stock from a QOF shareholder in a transaction described in section 302(d) or section 306(a)(2), the amount that gives rise to an inclusion event is the amount by which the distribution exceeds basis in the QOF stock as adjusted under paragraph (c)(7)(ii) of this section.

(10) ***Qualifying section 381 transactions*** —

(i) ***Assets of a QOF are acquired*** —

(A) ***In general.*** Except to the extent provided in paragraph (c)(10)(i)(C) of this section, if the assets of a QOF corporation are acquired in a qualifying section 381 transaction, and if the acquiring corporation is a QOF immediately after the acquisition, then the transaction is not an inclusion event.

(B) ***Determination of acquiring corporation's status as a QOF.*** For purposes of paragraph (c)(10)(i)(A) of this section, the acquiring corporation is treated as a QOF immediately after the qualifying section 381 transaction if the acquiring corporation satisfies the certification requirements in § 1.1400Z2(d)-1 immediately after the transaction and holds at least 90 percent of its assets in qualified opportunity zone property on the first testing date after the transaction. See section 1400Z-2(d)(1) and § 1.1400Z2(d)-1.

(C) ***Receipt of boot by QOF shareholder in qualifying section 381 transaction.*** This paragraph (c)(10)(i)(C) applies if assets of a QOF corporation are acquired in a qualifying section 381 transaction and an eligible taxpayer that is a QOF shareholder receives boot with respect to its qualifying investment. If this paragraph (c)(10)(i)(C) applies, the QOF shareholder has an inclusion event and is treated as disposing of a portion of its qualifying investment

that bears the same proportion to the QOF shareholder's total qualifying investment immediately before the inclusion event as the fair market value of the boot received by the QOF shareholder with respect to its qualifying investment in the qualifying section 381 transaction bears to the fair market value of the total consideration received by the QOF shareholder with respect to its qualifying investment in the qualifying section 381 transaction.

(ii) ***Assets of a QOF shareholder are acquired*** —

(A) ***In general.*** Except to the extent provided in paragraph (c)(10)(ii)(B) of this section, a qualifying section 381 transaction in which the assets of a QOF shareholder are acquired is not an inclusion event with respect to the qualifying investment and the acquiring corporation succeeds to the target corporation's status as the QOF shareholder with respect to the qualifying investment.

(B) ***Qualifying section 381 transaction in which QOF shareholder's qualifying investment is not completely acquired.*** If the assets of a QOF shareholder are acquired in a qualifying section 381 transaction in which the acquiring corporation does not acquire all of the QOF shareholder's qualifying investment, the QOF shareholder has an inclusion event and is treated as disposing of the portion of its qualifying investment that is not transferred to the acquiring corporation.

(11) ***Section 355 transactions*** —

(i) ***Distribution by a QOF*** —

(A) ***In general.*** Except as provided in paragraph (c)(11)(i)(B) of this section, if a QOF corporation distributes stock or securities of a controlled corporation to a QOF shareholder with respect to a qualifying investment in the QOF corporation in a transaction to which section 355 (or so much of section 356 as relates to section 355) applies, the QOF shareholder has an inclusion event and is treated as disposing of a portion of its qualifying investment equal in value to the fair market value of the shares of the controlled corporation and the fair market value of any boot received by the QOF shareholder in the distribution with respect to its qualifying investment.

(B) ***Controlled corporation becomes a QOF*** —

(*1*) ***In general.*** Except as provided in paragraph (c)(11)(i)(B)(*3*) of this section, if a QOF corporation distributes stock or securities of a controlled corporation in a transaction to which section 355, or so much of section 356 as relates to section 355, applies, and if both the distributing corporation and the controlled corporation are QOFs immediately after the final distribution (qualifying section 355 transaction), then the distribution is not an inclusion event with respect to a QOF shareholder's qualifying investment in the distributing QOF corporation or the controlled QOF corporation. This paragraph (c)(11)(i)(B) does not apply unless the distributing corporation distributes all of the stock and securities in the controlled corporation held by it immediately before the distribution within a 30-day period. For purposes of this paragraph (c)(11)(i)(B), the term *final distribution* means the last distribution that satisfies the preceding sentence.

(2) ***Determination of distributing corporation's and controlled corporation's status as QOFs.*** For purposes of paragraph (c)(11)(i)(B)(*1*) of this section, each of the distributing corporation and the controlled corporation is treated as a QOF immediately after the final distribution if the corporation satisfies the certification requirements in § 1.1400Z2(d)-1 immediately after the final distribution and holds at least 90 percent of its assets in qualified opportunity zone property on the first testing date after the final distribution. See section 1400Z-2(d)(1) and § 1.1400Z2(d)-1.

(3) ***Receipt of boot.*** If a QOF shareholder receives boot in a qualifying section 355 transaction with respect to its qualifying investment, and if section 356(a) applies to the transaction, paragraph (c)(10)(i)(C) of this section applies. If a QOF shareholder receives boot in a qualifying section 355 transaction with respect to its qualifying investment, and if section 356(b) applies to the transaction, paragraph (c)(8)(i) of this section applies.

(4) ***Treatment of controlled corporation stock as qualified opportunity zone stock.*** If stock or securities of a controlled corporation are distributed in a qualifying section 355 transaction, and if the distributing corporation retains a portion of the controlled corporation stock after the initial distribution, the retained stock will not cease to qualify as qualified opportunity zone stock in the hands of the distributing corporation solely as a result of the qualifying section 355 transaction. This paragraph (c)(11)(i)(B)(*4*) does not apply unless the distributing corporation distributes all of the stock and securities in the controlled corporation held by it immediately before the distribution within a 30-day period.

(ii) ***Distribution by a QOF shareholder.*** If a QOF shareholder distributes stock or securities of a controlled QOF corporation in a transaction to which section 355 applies, then for purposes of section 1400Z-2(b)(1) and paragraph (b) of this section, the QOF shareholder has an inclusion event and is treated as disposing of the portion of its qualifying QOF stock over which it no longer has direct Federal income tax ownership.

(12) ***Recapitalizations and section 1036 transactions*** —

(i) ***In general.*** Except as otherwise provided in paragraph (c)(12)(ii) of this section, if a QOF corporation engages in a transaction that qualifies as a reorganization described in section 368(a)(1)(E) (a recapitalization), or if a QOF shareholder engages in a transaction that is described in section 1036 (a section 1036 exchange), the transaction is not an inclusion event.

(ii) ***Receipt of property or boot by QOF shareholder.*** If a QOF shareholder receives property or boot, or is treated as having received property or boot, with respect to its qualifying investment in a recapitalization, then the property or boot is treated as property or boot to which section 301 or section 356(a) or (c) applies, as determined under general Federal income tax principles. If, in a section 1036 exchange, a QOF shareholder receives property with respect to its qualifying investment that is not permitted to be received without the recognition of gain, then, for purposes of this section, the receipt of the property is treated in a similar manner as the receipt of such property or boot in a recapitalization. Paragraph (c)(8)(i) of this section applies to property to which section 301 applies. Paragraph (c)(10)(i)(C) of this section applies to boot to which section 356(a) or (c) applies.

(13) ***Section 304 transactions.*** If a QOF shareholder transfers its qualifying investment in a transaction described in section 304(a), the full amount of the consideration gives rise to an inclusion event.

(14) ***Deduction for worthlessness.*** If an eligible taxpayer claims a loss for worthless stock under section 165(g) or otherwise claims a worthlessness deduction with respect to all or a portion of its qualifying investment, then for purposes of section 1400Z-2 and the section 1400Z-2 regulations, the eligible taxpayer has an inclusion event and is treated as having disposed of that portion of its qualifying investment on the date it became worthless. Thus, neither section 1400Z-2(b)(2)(B)(iii) or (iv) nor section 1400Z-2(c) applies to that portion of the eligible taxpayer's qualifying investment after the date it became worthless.

(15) ***Decertification of a QOF.*** The decertification of a QOF, whether a self-decertification pursuant to § 1.1400Z2(d)-1(a)(3) or an involuntary decertification pursuant to § 1.1400Z2(d)-1(a)(4), is an inclusion event.

(16) ***Other inclusion and non-inclusion events.*** Notwithstanding any other provision of this paragraph (c), the Commissioner may determine in guidance published in the Internal Revenue Bulletin (see § 601.601(d)(2) of this chapter) that a type of transaction is or is not an inclusion event.

(d) ***Holding periods*** —

(1) ***Holding period for qualifying investment*** —

(i) ***In general.*** Solely for purposes of section 1400Z-2(b)(2)(B), section 1400Z-2(c), and the section 1400Z-2 regulations, and except as otherwise provided in this paragraph (d)(1), the length of time a qualifying investment has been held is determined without regard to the period for which the eligible taxpayer had held property exchanged for such investment (even if such period would be relevant for determining the length of time for other Federal income tax purposes).

(ii) ***Holding period for qualifying investment received in certain transactions with respect to QOFs.*** For purposes of section 1400Z-2(b)(2)(B), section 1400Z-2(c), and the section 1400Z-2 regulations, the principles of section 1223(1) or (4) apply to determine the holding period for a qualifying investment received by a QOF owner in—

(A) A distribution described in paragraph (c)(2)(ii)(B) of this section;

(B) A distribution to which section 305(a) applies;

(C) A qualifying section 381 transaction described in paragraph (c)(10)(i) or (ii) of this section;

(D) A qualifying section 355 transaction described in paragraph (c)(11)(i)(B) of this section;

(E) A recapitalization or a section 1036 exchange described in paragraph (c)(12) of this section;

(F) A contribution of a QOF interest to a partnership to the extent section 721(a) applies to the transfer; or

(G) A distribution of a QOF interest to the extent the interest was received in a merger of two or more QOF partnerships in a transaction described in section 708(b)(2)(A).

(iii) ***Tacking with deceased owner or deemed owner of a grantor trust.*** For purposes of section 1400Z-2(b)(2)(B), section 1400Z-2(c), and the section 1400Z-2 regulations, the holding period of a qualifying investment held by an eligible taxpayer who received that qualifying investment by reason of the prior owner's death includes the time during which that qualifying investment

was held by the deceased owner. The rule in the preceding sentence also applies to allow a grantor trust to tack the holding period of the deemed owner if the grantor trust acquires the qualifying investment from the deemed owner in a transaction that is not an inclusion event.

(2) ***Status of QOF assets as qualified opportunity zone property.*** For purposes of section 1400Z-2(d) and the section 1400Z-2 regulations, including for purposes of determining whether the original use of qualified opportunity zone business property commences with the acquiring corporation or partnership, qualified opportunity zone property does not lose its status as qualified opportunity zone property solely as a result of—

(i) Its transfer by the transferor corporation to the acquiring corporation in a qualifying section 381 transaction described in paragraph (c)(10)(i) of this section;

(ii) Its transfer by the distributing corporation to the controlled corporation in a qualifying section 355 transaction described in paragraph (c)(11)(i)(B) of this section; or

(iii) Its transfer by the transferor partnership to the acquiring partnership in a transaction to which section 708(b)(2)(A) applies, but only to the extent section 721(a) applies to the transaction.

(e) ***Amount includible.*** Except as provided in §§ 1.1400Z2(a)-1(b)(7) and 1.1400Z2(f)-1(b), the amount of gain included in gross income under section 1400Z-2(a)(1)(B) and this section on a date described in paragraph (b) of this section is determined under this paragraph (e).

(1) ***In general.*** Except as provided in paragraphs (e)(2) and (4) of this section, and subject to paragraph (e)(5) of this section, in the case of an inclusion event, the amount of gain included in gross income is equal to the excess of the amount described in paragraph (e)(1)(i) of this section over the eligible taxpayer's basis in the portion of the qualifying investment that is disposed of in the inclusion event. See paragraph (c) of this section for rules regarding the amount that gave rise to the inclusion event, and see paragraph (g) of this section for applicable ordering rules.

(i) The amount described in this paragraph (e)(1)(i) is equal to the lesser of—

(A) An amount which bears the same proportion to the remaining deferred gain, as—

(*1*) The fair market value of the portion of the qualifying investment that is disposed of in the inclusion event bears to—

(*2*) The fair market value of the total qualifying investment immediately before the inclusion event; or

(B) The fair market value of the portion of the qualifying investment that is disposed of in the inclusion event.

(ii) For purposes of paragraph (e)(1)(i) of this section, the fair market value of the portion of the qualifying investment that is disposed of in the inclusion event is determined by multiplying the fair market value of the eligible taxpayer's entire qualifying investment in the QOF, determined as of the date of the inclusion event, by the percentage of the eligible taxpayer's qualifying investment that is represented by the portion that is disposed of in the inclusion event.

(2) ***Property received from a QOF in certain transactions.*** In the case of an inclusion event described in paragraph (c)(6)(iii) or (v), (c)(7)(ii), (c)(8)(i), or (c)(9) or (13) of this section (or in paragraph (c)(11) or (12) of this section, to the extent the rules in paragraph (c)(8)(i) of this section apply to the inclusion event), the amount of gain included in gross income is equal to the lesser of—

(i) The remaining deferred gain; or

(ii) The amount that gave rise to the inclusion event.

(3) ***Gain recognized on December 31, 2026.*** The amount of gain included in gross income on December 31, 2026 is equal to the excess of—

(i) The lesser of—

(A) The remaining deferred gain; and

(B) The fair market value of the qualifying investment held on December 31, 2026; over

(ii) The eligible taxpayer's basis in the qualifying investment as of December 31, 2026, taking into account only section 1400Z-2(b)(2)(B).

(4) ***Special amount includible rule for partnerships and S corporations.*** For purposes of paragraphs (e)(1) and (3) of this section, in the case of an inclusion event involving a qualifying investment in a QOF partnership or S corporation, or in the case of a qualifying investment in a QOF partnership or S corporation held on December 31, 2026, the amount of gain included in gross income is equal to the lesser of—

(i) The product of—

(A) The percentage of the qualifying investment that gave rise to the inclusion event; and

(B) The remaining deferred gain, less any basis adjustments pursuant to section 1400Z-2(b)(2)(B)(iii) and (iv); or

(ii) The gain that would be recognized on a fully taxable disposition at fair market value of the qualifying investment that gave rise to the inclusion event.

(5) ***Limitation on amount of gain included after statutory five-year and seven-year basis increases.*** The total amount of gain included in gross income under this paragraph (e) is limited to the amount deferred under section 1400Z-2(a)(1) and the section 1400Z-2 regulations, reduced by any increase in the basis of the qualifying investment made pursuant to section 1400Z-2(b)(2)(B)(iii) and (iv). See paragraph (g)(2) of this section for limitations on the amount of basis adjustments under section 1400Z-2(b)(2)(B)(iii) and (iv).

(f) ***Examples.*** The following examples illustrate the rules of paragraphs (c), (d) and (e) of this section. For purposes of the following examples: A, B, C, W, X, Y, and Z are C corporations that do not file a consolidated Federal income tax return; Q is a QOF corporation or a QOF partnership, as specified in each example; and each divisive corporate transaction satisfies the requirements of section 355.

(1) *Example 1. Determination of basis, holding period, and qualifying investment* —(i) *Facts.* A wholly and directly owns Q, a QOF corporation. On May 31, 2019, A sells a capital asset to an unrelated party and realizes $500 of capital gain. On October 31, 2019, A transfers unencumbered asset N to Q in exchange for a qualifying investment. Asset N, which A has held for 10 years, has a basis of $500 and a fair market value of $500. A elects to defer the inclusion of $500 in gross income under section 1400Z-2(a) and § 1.1400Z2(a)-1.

(ii) *Analysis.* Under § 1.1400Z2(a)-1(c)(6)(ii)(B)(*1*), A made a qualifying investment of $500. Under section 1400Z-2(b)(2)(B)(i), A's basis in its qualifying investment in Q is $0. For purposes of sections 1400Z-2(b)(2)(B) and 1400Z-2(c), A's holding period in its new investment in Q begins on October 31, 2019. See paragraph (d)(1)(i) of this section. Other than for purposes of applying section 1400Z-2, A has a 10-year holding period in its new Q investment as of October 31, 2019.

(iii) *Transfer of built-in gain property.* The facts are the same as in paragraph (f)(1)(i) of this section (this *Example 1*), but A's basis in transferred asset N is $200. Under § 1.1400Z2(a)-1(c)(6)(ii)(B)(*1*), A made a qualifying investment of $200 and a non-qualifying investment of $300.

(2) *Example 2. Transfer of qualifying investment*—(i) *Facts.* On May 31, 2019, taxpayer A sells a capital asset to an unrelated party and realizes $500 of capital gain. On October 31, 2019, A transfers $500 to newly formed Q, a QOF corporation, in exchange for a qualifying investment. On February 29, 2020, A transfers 25 percent of its qualifying investment in Q to newly formed Y in exchange for 100 percent of Y's stock in a transfer to which section 351 applies (Transfer), at a time when the fair market value of A's qualifying investment in Q is $800.

(ii) *Analysis.* Under § 1.1400Z2(a)-1(c)(6)(ii)(A), A made a qualifying investment of $500 on October 31, 2019. In the Transfer, A exchanged 25 percent of its qualifying investment for Federal income tax purposes, which reduced A's direct qualifying investment. Under paragraph (c)(1)(i) of this section, the Transfer is an inclusion event to the extent of the reduction in A's direct qualifying investment. Under paragraph (e)(1) of this section, A therefore includes in income an amount equal to the excess of the amount described in paragraph (e)(1)(i) of this section over A's basis in the portion of the qualifying investment that was disposed of, which in this case is $0. The amount described in paragraph (e)(1)(i) is the lesser of $125 ($500 × ($200/$800)) or $200. As a result, A must include $125 of its deferred capital gain in income in 2020. After the Transfer, the Q stock is not qualifying Q stock in Y's hands.

(iii) *Disregarded transfer.* The facts are the same as in paragraph (f)(2)(i) of this section (this *Example 2*), except that Y elects to be treated as an entity that is disregarded as an entity separate from its owner for Federal income tax purposes effective prior to the Transfer. Since the Transfer is disregarded for Federal income tax purposes, A's transfer of its qualifying investment in Q is not treated as a reduction in direct tax ownership for Federal income tax purposes, and the Transfer is not an inclusion event with respect to A's qualifying investment in Q for purposes of section 1400Z-2(b)(1) and paragraph (b) of this section. Thus, A is not required to include in income any portion of its deferred capital gain.

(iv) *Election to be treated as a corporation.* The facts are the same as in paragraph (f)(2)(iii) of this section (this *Example 2*), except that Y (a disregarded entity) subsequently elects to be treated as a corporation for Federal income tax purposes. A's deemed transfer of its qualifying investment in Q to Y under § 301.7701-3(g)(1)(iv) of this chapter is an inclusion event for purposes of section 1400Z-2(b)(1) and paragraph (b) of this section.

(3) *Example 3. Part sale of qualifying QOF partnership interest in Year 6 when value of the QOF partnership interest has increased*—(i) *Facts.* In October 2018, A and B each realize $200 of eligible gain, and C realizes $600 of eligible gain. On January 1, 2019, A, B, and C form Q, a QOF partnership. A contributes $200 of cash, B contributes $200 of cash, and C contributes $600 of cash to Q in exchange for qualifying QOF partnership interests in Q. A, B, and C hold 20 percent, 20 percent, and 60 percent interests in Q, respectively. On January 30, 2019, Q obtains a nonrecourse loan from a bank for $1,000. Under section 752, the loan is allocated $200 to A, $200 to B, and $600 to C. On February 1, 2019, Q purchases qualified opportunity zone business property for $2,000. On July 31, 2024, A sells 50 percent of its qualifying QOF partnership interest in Q to B for $400 cash.

Prior to the sale, there were no inclusion events, distributions, partner changes, income or loss allocations, or changes in the amount or allocation of debt outstanding. At the time of the sale, the fair market value of Q's qualified opportunity zone business property is $5,000.

(ii) *Analysis.* Because A held its qualifying QOF partnership interest for at least five years, A's basis in its partnership interest at the time of the sale is $220 (the original zero basis with respect to the contribution, plus the $200 debt allocation, plus the 10% increase for interests held for five years). The sale of 50 percent of A's qualifying QOF partnership interest to B requires A to recognize $90 of gain, the lesser of $90, which is 50 percent of $180 (the $200 remaining deferred gain less the $20 five-year basis adjustment), or $390, which is the gain that would be recognized on a taxable sale of 50 percent of the interest. A also recognizes $300 of gain relating to the appreciation of its interest in Q.

(4) *Example 4. Sale of qualifying QOF partnership interest when value of the QOF partnership interest has decreased*—(i) *Facts.* The facts are the same as in paragraph (f)(3) of this section (*Example 3*), except that A sells 50 percent of its qualifying QOF partnership interest in Q to B for cash of $50, and at the time of the sale, the fair market value of Q's qualified opportunity zone business property is $1,500.

(ii) *Analysis.* Because A held its qualifying QOF partnership interest for at least five years, A's basis at the time of the sale is $220. Under section 1400Z-2(b)(2)(A), the sale of 50 percent of A's qualifying QOF partnership interest to B requires A to recognize $40 of gain, the lesser of $90 (50 percent of the excess of A's $200 remaining deferred gain over A's $20 five-year adjustment) or $40 (the gain that would be recognized by A on a sale of 50 percent of its QOF interest). A's remaining basis in its qualifying QOF partnership interest is $110.

(5) *Example 5. Amount includible on December 31, 2026*—(i) *Facts.* The facts are the same as in paragraph (f)(3) of this section (*Example 3*), except that no sale of QOF interests takes place in 2024. Prior to December 31, 2026, there were no inclusion events, distributions, partner changes, income or loss allocations, or changes in the amount or allocation of debt outstanding.

(ii) *Analysis.* For purposes of calculating the amount includible on December 31, 2026, each of A's basis and B's basis is increased by $30 to $230, and C's basis is increased by $90 to $690 because they held their qualifying QOF partnership interests for at least seven years. Each of A and B is required to recognize $170 of gain, and C is required to recognize $510 of gain.

(iii) *Sale of qualifying QOF partnership interests.* The facts are the same as in paragraph (f)(5)(i) of this section (this *Example 5*), except that, on March 2, 2030, C sells its entire qualifying QOF partnership interest in Q to an unrelated buyer for cash of $4,200. Assuming an election under section 1400Z-2(c) is made, the basis of C's Q interest is increased to its fair market value immediately before the sale by C. C is treated as purchasing the interest immediately before the sale and the bases of the partnership's assets are increased in the manner they would be if the partnership had an election under section 754 in effect.

(6) *Example 6. Mixed-funds investment*—(i) *Facts.* On January 1, 2019, A and B form Q, a QOF partnership. A contributes $200 to Q, $100 of which is in exchange for a qualifying investment, and B contributes $200 to Q in exchange for a qualifying investment. All the cash is used to purchase qualified opportunity zone property. Q has no liabilities. On March 30, 2023, when the values and bases of the qualifying investments remain unchanged, Q distributes $50 to A.

(ii) *Analysis.* Under paragraph (c)(6)(iv) of this section, A is a mixed-funds partner holding two separate interests, a qualifying investment and a non-qualifying investment. One half of the $50 distribution is treated under that provision as being made with respect to A's qualifying investment. For the $25 distribution made with respect to the qualifying investment, A is required to recognize $25 of gain.

(iii) *Basis adjustments.* Under paragraph (g)(1)(ii)(B) of this section, prior to determining the tax consequences of the distribution, A increases its basis in its qualifying QOF partnership interest by $25 under section 1400Z-2(b)(2)(B)(ii). The distribution of $25 results in no gain under section 731. After the distribution, A's basis in its qualifying QOF partnership interest is $0 ($25−$25).

(7) *Example 7. Qualifying section 381 transaction of a QOF corporation*—(i) *Facts.* X wholly and directly owns Q, a QOF corporation. On May 31, 2019, X sells a capital asset to an unrelated party and realizes $500 of capital gain. On October 31, 2019, X contributes $500 to Q in exchange for a qualifying investment. In 2020, Q merges with and into unrelated Y (with Y surviving) in a transaction that qualifies as a reorganization under section 368(a)(1)(A) (Merger). X does not receive any boot in the Merger with respect to its qualifying investment in Q. Immediately after the Merger, Y satisfies the requirements for QOF status under section 1400Z-2(d)(1) (see paragraph (c)(10)(i)(B) of this section).

(ii) *Analysis.* The Merger is not an inclusion event for purposes of section 1400Z-2(b)(1) and paragraph (b) of this section. See paragraph (c)(10)(i)(A) of this section. Accordingly, X is not required to include in income in 2020 its $500 of deferred capital gain as a result of the Merger. For purposes of section 1400Z-2(b)(2)(B) and (c), X's holding period for its investment in Y is treated as beginning on October 31, 2019. For purposes of section 1400Z-2(d), Y's holding period in its assets includes Q's holding period in its assets, and Q's qualified opportunity zone business property continues to qualify as such. See paragraph (d)(2) of this section.

(iii) *Merger of QOF shareholder.* The facts are the same as in paragraph (f)(7)(i) of this section (this *Example 7*), except that, in 2020, X (rather than Q) merges with and into Y in a section 381 transaction in which Y acquires all of X's qualifying investment in Q, and Y does not qualify as a QOF immediately after the merger. The merger transaction is not an inclusion event for purposes of section 1400Z-2(b)(1) and paragraph (b) of this section. See paragraph (c)(10)(ii) of this section.

(iv) *Receipt of boot.* The facts are the same as in paragraph (f)(7)(i) of this section (this *Example 7*), except that the value of X's qualifying investment immediately before the Merger is $1,000, X receives $100 of cash in addition to Y stock with a fair market value of $900 in the Merger in exchange for its qualifying investment, and neither Q nor Y has any earnings and profits. Under paragraph (c)(10)(i)(C) of this section, X is treated as disposing of 10 percent ($100/$1000) of its qualifying investment. Under paragraph (e)(1) of this section, X is required to include $50 ($500 × ($100/$1000)) of its deferred capital gain in income in 2020.

(8) *Example 8. Section 355 distribution by a QOF*—(i) *Facts.* A wholly and directly owns Q, a QOF corporation, which wholly and directly owns Y, a corporation that is a qualified opportunity zone business. On May 31, 2019, A sells a capital asset to an unrelated party and realizes $500 of capital gain. On October 31, 2019, A contributes $500 to Q in exchange for a qualifying investment. On June 26, 2025, Q distributes all of the stock of Y to A in a transaction in which no gain or loss is recognized under section 355 (Distribution). Immediately after the Distribution, each of Q and Y satisfies the requirements for QOF status. (See paragraph (c)(11)(i)(B)(*2*) of this section.)

(ii) *Analysis.* Because each of Q, the distributing corporation, and Y, the controlled corporation, is a QOF immediately after the Distribution, the Distribution is a qualifying section 355 transaction. Thus, the Distribution is not an inclusion event for purposes of section 1400Z-2(b)(1) and paragraph (b) of this section. See paragraph (c)(11)(i)(B) of this section. Accordingly, A is not required to include in income in 2025 any of its $500 of deferred capital gain as a result of the Distribution. For purposes of section 1400Z-2(b)(2)(B) and (c), A's holding period for its qualifying investment in Y is treated as beginning on October 31, 2019. See paragraph (d)(1)(ii) of this section.

(iii) *Section 355 distribution by a QOF shareholder.* The facts are the same as in paragraph (f)(8)(i) of this section (this *Example 8*), except that A distributes 80 percent of the stock of Q, all of which is a qualifying investment in the hands of A, to A's shareholders in a transaction in which no gain or loss is recognized under section 355. At the time of the distribution, the fair market value of A's Q stock exceeds $500. The distribution is an inclusion event for purposes of section 1400Z-2(b)(1) and paragraph (b) of this section, and A is required to include in income $400 (80 percent of its $500 of deferred capital gain) as a result of the distribution. See paragraphs (c)(1) and (c)(11)(ii) of this section.

(iv) *Distribution of boot.* The facts are the same as in paragraph (f)(8)(i) of this section (this *Example 8*), except that A receives boot in the Distribution. Under paragraphs (c)(8)(i) and (c)(11)(i)(B)(*3*) of this section, the receipt of boot in the Distribution is an inclusion event for purposes of section 1400Z-2(b)(1) and paragraph (b) of this section to the extent of gain recognized pursuant to section 301(c)(3).

(v) *Section 355 split-off.* The facts are the same as in paragraph (f)(8)(i) of this section (this *Example 8*), except that Q stock is directly owned by both A and B (each of which has made a qualifying investment in Q), and Q distributes all of the Y stock to B in exchange for B's Q stock in a transaction in which no gain or loss is recognized under section 355. The distribution is a qualifying section 355 transaction and is not an inclusion event for purposes of section 1400Z-2(b)(1) and paragraph (b) of this section. Neither A nor B is required to include its deferred capital gain in income in 2025 as a result of the distribution.

(vi) *Section 355 split-up.* The facts are the same as in paragraph (f)(8)(v) of this section (this *Example 8*), except that Q wholly and directly owns both Y and Z; Q distributes all of the Y stock to A in exchange for A's Q stock and distributes all of the Z stock to B in exchange for B's Q stock in a transaction in which no gain or loss is recognized under section 355; Q then liquidates; and immediately after the Distribution, each of Y and Z satisfies the requirements for QOF status. The distribution is a qualifying section 355 transaction and is not an inclusion event for purposes of section 1400Z-2(b)(1) and paragraph (b) of this section. Neither A nor B is required to include its deferred capital gain in income in 2025 as a result of the transaction.

(vii) *Section 355 split-off with boot.* The facts are the same as in paragraph (f)(8)(v) of this section (this *Example 8*), except that B also receives boot. Under paragraph (c)(11)(i)(B)(*3*) of this section, B has an inclusion event and is treated as disposing of a portion of its qualifying investment that bears the same proportion to B's total qualifying investment immediately before the inclusion event as the fair market value of the boot bears to the fair market value of the total consideration received by B.

(9) *Example 9. Recapitalization*—(i) *Facts.* On May 31, 2019, each of A and B sells a capital asset to an unrelated party and realizes $500 of capital gain. On October 31, 2019, A contributes $500 to newly formed Q in exchange for 50 shares of class A stock of Q (A's qualifying investment) and B contributes $500 to Q in

exchange for 60 shares of class B stock of Q (B's qualifying investment). A and B are the sole shareholders of Q. In 2020, B exchanges all of its class B stock of Q for 40 shares of class A stock of Q as well as other property in a transaction that qualifies as a reorganization under section 368(a)(1)(E).

(ii) *Analysis.* Because A did not receive any boot in the transaction, A does not have an inclusion event with respect to its qualifying investment in Q. See paragraph (c)(12)(i) of this section. Therefore, A is not required to include any of its deferred gain in income as a result of this transaction. However, under paragraph (c)(12)(ii) of this section, B has an inclusion event. If section 301 applies to the boot received by B, B has an inclusion event to the extent of its section 301(c)(3) gain. If section 356(a) or (c) applies to the boot received by B, B is treated as disposing of a portion of its qualifying investment that bears the same proportion to B's total qualifying investment immediately before the inclusion event as the fair market value of the boot bears to the fair market value of the total consideration received by B.

(10) *Example 10. Debt financed distribution*—(i) *Facts.* On September 24, 2019, A and B form Q, a QOF partnership, each contributing $200 that is deferred under the section 1400Z-2(a) election to Q in exchange for a qualifying investment. On November 18, 2022, Q obtains a nonrecourse loan from a bank for $300. Under section 752, the loan is allocated $150 to A and $150 to B. On November 30, 2022, when the values and bases of the investments remain unchanged, Q distributes $50 to A.

(ii) *Analysis.* A is not required to recognize gain under paragraph (c) of this section because A's basis in its qualifying investment is $150 (the original zero basis with respect to the contribution, plus the $150 debt allocation). The distribution reduces A's basis to $100.

(11) *Example 11. Debt financed distribution in excess of basis*—(i) *Facts.* The facts are the same as in paragraph (f)(10) of this section (*Example 10*), except that the loan is entirely allocated to B under section 752. On November 30, 2024, when the values of the investments remain unchanged, Q distributes $50 to A.

(ii) *Analysis.* Under paragraph (c)(6)(iii) of this section, A is required to recognize $30 of eligible gain under paragraph (c) of this section because the $50 distributed to A exceeds A's $20 basis in its qualifying investment (the original zero basis with respect to its contribution, plus $20 with regard to section 1400Z-2(b)(2)(B)(iii)).

(g) ***Basis adjustments*** —

(1) ***Basis adjustments under section 1400Z-2(b)(2)(B)(ii) resulting from the inclusion of deferred gain*** —

(i) ***In general.*** Except as provided in paragraph (g)(1)(ii) of this section, basis adjustments under section 1400Z-2(b)(2)(B)(ii) are made immediately after the amount of gain determined under section 1400Z-2(b)(2)(A) is included in income under section 1400Z-2(b)(1). If the basis adjustment under section 1400Z-2(b)(2)(B)(ii) is being made as a result of an inclusion event, then the basis adjustment is made before determining the other Federal income tax consequences of the inclusion event.

(ii) ***Specific application to section 301(c)(3) gain, section 1059(a)(2) gain, S corporation shareholder gain, or partner gain*** —

(A) ***Applicability.*** This paragraph (g)(1)(ii) applies if a QOF makes a distribution to its owner, and if, without regard to any basis adjustment under section 1400Z-2(b)(2)(B)(ii), at least a portion of the distribution would be characterized as gain under section 301(c)(3), section 1059(a)(2), or paragraphs (c)(6)(iii) and (c)(7)(ii) of this section with respect to the owner's qualifying investment in the QOF.

(B) ***Ordering rule.*** If paragraph (g)(1)(ii) of this section applies, an eligible taxpayer is treated as having an inclusion event to the extent provided in paragraph (c)(6)(iii), (c)(7)(ii), or (c)(8), (9), (11), (12), or (13) of this section, as applicable. Then, the eligible taxpayer increases its basis under section 1400Z-2(b)(2)(B)(ii) before determining the Federal income tax consequences of the distribution.

(iii) ***Shares in QOF C corporations to which section 1400Z-2(b)(2)(B)(ii) adjustments are made.*** If a shareholder of a QOF C corporation disposes of qualifying QOF stock in an exchange subject to section 1001, basis adjustments under section 1400Z-2(b)(2)(B)(ii) are made only to the portion of the qualifying investment that is disposed of in the inclusion event.

(2) ***Amount of basis adjustment under section 1400Z-2(b)(2)(B)(iii) and (iv).*** The increases in basis under section 1400Z-2(b)(2)(B)(iii) and (iv) are limited to 10 percent and 5 percent, respectively, of the remaining deferred gain with respect to a qualifying investment as of the dates on which basis is increased under that section.

(3) ***Examples.*** The following examples illustrate the rules of paragraphs (g)(1) and (2) of this section.

(i) *Example 1*—(A) *Facts.* On May 31, 2019, A, a C corporation, sells a capital asset to an unrelated party and realizes $500 of capital gain. On October 31, 2019, A contributes $500 to Q, a newly formed QOF C corporation, in exchange for all of the outstanding Q common stock and elects to defer the recognition of $500 of capital gain under section 1400Z-2(a) and § 1.1400Z2(a)-1. In 2020, when Q has $40 of earnings and profits, Q distributes $100 to A (Distribution).

(B) *Recognition of gain.* Under paragraph (g)(1)(ii)(B) of this section, the Distribution is first evaluated without regard to any basis adjustment under section 1400Z-2(b)(2)(B)(ii). Of the $100 distribution, $40 is treated as a dividend and $60 is treated as gain from the sale or exchange of property under section 301(c)(3), because A's basis in its Q stock is $0 under section 1400Z-2(b)(2)(B)(i). Under paragraphs (c)(8)(i) and (e)(2) of this section, $60 of A's gain that was deferred under section 1400Z-2(a) and § 1.1400Z2(a)-1 is recognized in 2020. Pursuant to § 1.312-6(b), A's earnings and profits increase by $60.

(C) *Basis adjustments.* Under paragraph (g)(1)(ii)(B) of this section, prior to determining the further tax consequences of the Distribution, A increases its basis in its Q stock by $60 in accordance with section 1400Z-2(b)(2)(B)(ii). As a result, the Distribution is characterized as a dividend of $40 under section 301(c)(1) and a return of basis of $60 under section 301(c)(2). Therefore, after the section 301 distribution, A's basis in Q is $0 ($60−$60).

(ii) *Example 2*—(A) *Facts.* The facts are the same as in paragraph (g)(3)(i) of this section (*Example 1*), except that, instead of receiving a distribution, A sells half of the Q stock for $250 in 2020. A continues to hold the remainder of its Q stock through 2024.

(B) *Recognition of gain and basis adjustments in 2020.* Under paragraphs (c)(1) and (e)(1) of this section, $250 of A's gain that was deferred under section 1400Z-2(a) and § 1.1400Z2(a)-1 is recognized in 2020. Under paragraphs (g)(1)(i) and (iii) of this section, A increases its basis to $250 in the sold shares in

accordance with section 1400Z-2(b)(2)(B)(ii) immediately before the sale. Accordingly, A has no gain or loss on the sale ($250−$250). Pursuant to § 1.312-6(b), A's earnings and profits increase by $250. A's basis in its remaining shares of Q stock remains $0.

(C) *Basis adjustment in 2024.* Under paragraph (g)(2) of this section, A increases its basis in its remaining shares of Q stock in accordance with section 1400Z-2(b)(2)(B)(iii). Pursuant to § 1.312-6(b), A's earnings and profits are increased by the amount of the basis adjustment.

(4) ***Special partnership rules*** —

(i) ***General rule.*** The initial basis under section 1400Z-2(b)(2)(B)(i) of a qualifying investment in a QOF partnership is zero, as adjusted to take into account the contributing partner's share of partnership debt under section 752.

(ii) ***Treatment of basis adjustments.*** Any basis adjustment to a qualifying investment in a QOF partnership described in section 1400Z-2(b)(2)(B)(iii) and (iv) and section 1400Z-2(c) is basis for all purposes, including for purposes of suspended losses under section 704(d).

(iii) ***Tiered arrangements.*** Any basis adjustment described in section 1400Z-2(b)(2)(B)(iii) and

(iv) and section 1400Z-2(c) (basis adjustment rules) will be treated as an item of income described in section 705(a)(1) and must be reported in accordance with the applicable forms and instructions. Any amount to which the basis adjustment rules or to which section 1400Z-2(b)(1) applies will be allocated to the owners of the QOF, and to the owners of any partnership that directly or indirectly (solely through one or more partnerships) owns the eligible interest, and will track to the owners' interests, based on their shares of the remaining deferred gain to which such amounts relate.

(5) ***Basis adjustments in S corporation stock*** —

(i) ***Treatment of basis adjustments.*** Any basis adjustment to a qualifying investment in a QOF S corporation described in section 1400Z-2(b)(2)(B)(iii) and (iv) and section 1400Z-2(c) is basis for all purposes, including for purposes of suspended losses under section 1366(d).

(ii) ***S corporation investor in QOF*** —

(A) ***S corporation.*** If an S corporation is an investor in a QOF, the S corporation must adjust the basis of its qualifying investment as set forth in this paragraph (g). The rule in this paragraph (g)(5)(ii)(A) does not affect adjustments to the basis of any other asset of the S corporation.

(B) ***S corporation shareholder*** —

(*1*) ***In general.*** The S corporation shareholder's pro-rata share of any recognized capital gain that has been deferred at the S corporation level will be separately stated under section 1366 when recognized and will adjust the shareholders' stock bases under section 1367 at that time.

(*2*) ***Basis adjustments to qualifying investments.*** Any adjustment made to the basis of an S corporation's qualifying investment under section 1400Z-2(b)(2)(B)(iii) or (iv), or section 1400Z-2(c), will not:

(*i*) Be separately stated under section 1366; or

(*ii*) Until the date on which an inclusion event with respect to the S corporation's qualifying investment occurs, adjust the shareholders' stock bases under section 1367.

(*3*) ***Basis adjustments resulting from inclusion events.*** If the basis adjustment under section 1400Z-2(b)(2)(B)(ii) is being made as a result of an inclusion event, then the basis adjustment is made before determining the tax consequences of the inclusion event other than the computation of the tax on the deferred gain.

(iii) ***QOF S corporation*** —

(A) ***Transferred basis of assets received.*** If a QOF S corporation receives an asset in exchange for a qualifying investment, the basis of the asset shall be the same as it would be in the hands of the transferor, increased by the amount of the gain recognized by the transferor on such transfer.

(B) ***Basis adjustments resulting from inclusion events.*** If the basis adjustment under section 1400Z-2(b)(2)(B)(ii) for the shareholder of the QOF S corporation is being made as a result of an inclusion event, then the basis adjustment is made before determining the tax consequences of the inclusion event other than the computation of the tax on the deferred gain.

(6) ***Basis in the hands of a taxpayer who received a qualifying investment in a QOF by reason of the prior owner's death*** —(i) *In general.* The basis of a qualifying investment in a QOF, transferred by reason of a decedent's death in a transfer that is not an inclusion event, is zero under section 1400Z-2(b)(2)(B)(i), as adjusted for increases in basis as provided under section 1400Z-2(b)(2)(B)(ii) through (iv) and (c). See paragraph (c)(4) of this section.

(ii) *Examples.* The following examples illustrate the rule of this paragraph (g)(6).

(A) *Example 1.* Taxpayer A, an individual, contributed $50X to a QOF in exchange for a qualifying investment in the QOF in January 2019. This $50X was capital gain that was excluded from A's gross income under section 1400Z-2(a)(1)(A). A's basis in the qualifying investment is zero. As of January 2024, A's basis in the QOF is increased by an amount equal to 10 percent of the amount of gain deferred by reason of section 1400Z-2(a)(1)(A), so that A's adjusted basis in 2024 is $5X. A dies in 2025 and A's heir inherits this qualifying investment in the QOF. A's death is not an inclusion event for purposes of section 1400Z-2. The heir's basis in the qualifying investment is $5X.

(B) *Example 2.* The facts are the same as in paragraph (g)(6)(ii)(A) of this section (*Example 1*), except that A dies in November 2027, when the fair market value of the qualifying investment was $75X. A was required to pay the tax on the excess of the deferred capital gain over A's basis as part of A's 2026 income. Therefore, at the time of A's death, A's basis in the qualifying investment is the sum of three basis adjustments: The adjustment made in January 2024 described in paragraph (g)(6)(ii)(A) (*Example 1*) ($5X); an additional adjustment made as of January 2026 equal to 5 percent of the amount of gain deferred by reason of section 1400Z-2(a)(1)(A) ($2.5X); and the adjustment as of December 31, 2026, by reason of section 1400Z-2(b)(1)(B) and (b)(2)(B)(ii) ($42.5X). Accordingly, the basis of the qualifying investment in the hands of A's heir is $50X.

(h) ***Notifications by partners and partnerships, and shareholders and S corporations*** —

(1) ***Notification of deferral election.*** A partnership that makes a deferral election must notify all of its partners of the deferral election and state each partner's distributive share of the deferred gain in accordance with applicable forms and instructions.

(2) ***Notification of deferred gain recognition by indirect QOF owner.*** If an indirect owner of a QOF partnership sells or otherwise disposes of all or a portion of its indirect interest in the QOF partnership in a transaction that is an inclusion event under paragraph (c) of this section, such indirect owner must provide to the QOF owner notification and information sufficient to enable the QOF owner, in a timely manner, to recognize an appropriate amount of deferred gain.

(3) ***Notification of section 1400Z-2(c) election.*** A QOF partner or QOF S corporation shareholder must notify the QOF partnership or QOF S corporation, as appropriate, of an election under section 1400Z-2(c) to adjust the basis of the qualifying QOF partnership interest or qualifying QOF stock, as appropriate, that is disposed of in a taxable transaction. Notification of the section 1400Z-2(c) election, and the adjustments to the basis of the qualifying QOF partnership interest(s) or qualifying QOF stock disposed of, or to the QOF partnership asset(s) or QOF S corporation asset(s) disposed of, as appropriate, is to be made in accordance with applicable forms and instructions.

(i) [Reserved]

(j) ***Applicability dates*** —

(1) ***In general.*** The provisions of this section are applicable for taxable years beginning after March 13, 2020.

(2) ***Prior periods.*** With respect to the portion of a taxpayer's first taxable year ending after December 21, 2017, that began on December 22, 2017, and for taxable years beginning after December 21, 2017, and on or before March 13, 2020, a taxpayer may choose either—

(i) To apply section 1400Z-2 regulations, if applied in a consistent manner for all such taxable years; or

(ii) To rely on the rules in proposed § 1.1400Z2(b)-1 contained in the notice of proposed rulemaking (REG-120186-18) published on May 1, 2019, but only if applied in a consistent manner for all such taxable years.

[T.D. 9889, 85 FR 1964, Jan. 13, 2020; 85 FR 19083, Apr. 6, 2020]

Editorial Note: At 85 FR 19083, April 6, 2020, § 1.1400Z2(b)-1 was amended in part by revising paragraphs (j)(2) introductory text and (j)(2)(i); however, the amendment could not be incorporated due to inaccurate amendatory instruction.

§ 1.1400Z2(c)-1 Investments held for at least 10 years.

(a) ***Scope.*** This section provides rules under section 1400Z-2(c) of the Internal Revenue Code regarding the election to adjust the basis in a qualifying investment in a QOF or in certain eligible property held by the QOF. See § 1.1400Z2(b)-1(d) for rules for determining the holding period of a qualifying investment for purposes of this section.

(b) ***Investment for which an election can be made*** —

(1) ***In general*** —

(i) ***Election by taxpayer.*** An eligible taxpayer who makes a deferral election with respect to, or acquires by reason of a transaction that is not an inclusion event, a qualifying investment in a QOF, recognizes gain (if any) on December 31, 2026, of an amount determined under § 1.1400Z2(b)-1(e)(3) (and so much of § 1.1400Z2(b)-1(e)(4) as relates to § 1.1400Z2(b)-1(e)(3)) with respect to that qualifying investment, and whose holding period in that qualifying investment is at least ten years, is eligible to make an election described in section 1400Z-2(c) on the sale or exchange of that qualifying investment. Except as otherwise provided in this paragraph (b)(1), to the extent a taxpayer described in the preceding sentence has an inclusion event described in § 1.1400Z2(b)-1(c) with respect to any portion of a qualifying investment, that portion is no longer a qualifying investment and the taxpayer is not eligible to make an election pursuant to section 1400Z-2(c) and this section with respect to that portion. See § 1.1400Z2(c)-1(b)(2) for special election rules for QOF partnerships and QOF S corporations.

(ii) ***Transferee partnership to make an election under section 1400Z-2(c)*** —

(A) ***In general.*** This paragraph (b)(1)(ii)(A) applies if an eligible taxpayer (transferor) transfers its qualifying investment to a transferee in a transaction described in § 1.1400Z2(b)-1(c)(6)(ii) to the extent governed by section 721(a). If this paragraph (b)(1)(ii)(A) applies, and if the transferee sells or exchanges a qualifying investment that has a holding period of at least 10 years under § 1.1400Z2(b)-1(d)(1)(ii)(F), then the transferee can make an election described in section 1400Z-2(c) on the sale or exchange of the qualifying investment. See § 1.1400Z2(b)-1(c)(6)(ii)(B) (transferee partnership makes section 1400Z-2(c) election regarding contributed qualifying investment).

(B) ***Conditions for transferee partnership or merged partnership to make an election described in section 1400Z-2(c).*** A transferee referred to in paragraph (b)(1)(ii)(A) of this section is eligible to make an election described in section 1400Z-2(c) with respect to a qualifying investment only if the transferee:

(*1*) Files a statement, at the time and in the manner that the Commissioner of Internal Revenue may prescribe by Internal Revenue Service forms and instructions or by publication in the Internal Revenue Bulletin (see § 601.601(d)(ii)(b) of this chapter), providing the name of the transferor, the date of the transfer, and the transferor's holding period in the transferred qualifying investment immediately before the transfer; and

(*2*) Files form 8997, *Initial and Annual Statement of Qualified Opportunity Fund (QOF) Investments,* with the transferee's timely filed Federal Tax Return.

(iii) ***Limitation on the 10-year rule.*** As required by section 1400Z-2(e)(1) (treatment of investments with mixed funds), section 1400Z-2(c) applies only to the portion of an investment in a QOF that is a qualifying investment. For rules governing the application of section 1400Z-2(c) to the portion of an investment in a QOF for which a loss has been claimed under section 165(g) or otherwise, see § 1.1400Z2(b)-1(c)(14).

(iv) ***Transactions to which section 301(c)(3), section 1059(a)(2), or section 1368(b)(2) or (c)(3) applies.*** The receipt of amounts treated as gain from the sale or exchange of property under section 301(c)(3), section 1059(a)(2), or section 1368(b)(2) or (c)(3) with respect to qualifying QOF stock in a transaction treated as an inclusion event under § 1.1400Z2(b)-1(c) does not prevent the QOF shareholder from making a subsequent election described in section 1400Z-2(c) with respect to that qualifying QOF stock.

(v) ***Partnership distributions in excess of basis.*** The occurrence of an inclusion event described in § 1.1400Z2(b)-1(c)(6)(iii), which addresses a distribution of property by a QOF partnership to a QOF partner where the distributed property has a fair market value in excess of the QOF partner's basis in its qualifying investment, does not prevent the QOF partner from making a subsequent election described in section 1400Z-2(c) with respect to the QOF partner's qualifying QOF partnership interest.

(2) ***Special election rules for QOF partnerships and QOF S corporations*** —

(i) ***Dispositions of qualifying QOF partnership interests.*** If a QOF partner's basis in a qualifying QOF partnership interest is adjusted under section 1400Z-2(c) upon the disposition of a qualifying investment, then the basis of the QOF partnership interest is adjusted to an amount equal to the net fair market value of the interest, plus the QOF partner's share of QOF partnership indebtedness under section 752 with respect to that interest, and immediately prior to the sale or exchange, the bases of the assets of the QOF partnership and of any partnership owned directly or indirectly by the QOF partnership solely through one or more partnerships are also adjusted with respect to the disposed-of qualifying investment. For purposes of this paragraph (b)(2)(i), section 7701(g) will apply in determining the value of a qualifying investment in a QOF partnership. The adjustments in this paragraph (b)(2)(i) are calculated in a manner similar to the section 743(b) adjustments that would have been made if the transferor QOF partner had purchased its interest in the QOF partnership for cash equal to the fair market value of the interest immediately prior to the sale or exchange, assuming that valid section 754 elections had been in place with respect to the QOF partnership and any partnerships directly or indirectly owned by the QOF partnership, whether or not an actual section 754 election is in place for any of the partnerships. This paragraph (b)(2)(i) applies without regard to the amount of deferred gain that was included under section 1400Z-2(b)(1) or the timing of that inclusion.

(ii) ***Sales or exchanges of QOF property by QOF partnerships or QOF S corporations*** —

(A) ***Election to exclude gains and losses.*** If a taxpayer has held a qualifying investment in a QOF partnership or QOF S corporation for at least 10 years, as determined under § 1.1400Z2(b)-1(d), and the QOF partnership or QOF S corporation or any partnership that is owned directly, or indirectly solely through one or more partnerships, by the QOF partnership or QOF S corporation sells or exchanges property, the taxpayer may make an election under this paragraph (b)(2)(ii)(A) to exclude from the taxpayer's income all gains and losses allocable to the qualifying investment that arise from all such sales or exchanges for the QOF partnership's or QOF S corporation's taxable year. In order for the election to be valid, the requirements set forth in paragraph (b)(2)(ii)(B) of this section must be satisfied. For purposes of paragraph (b)(2)(ii) of this section, gains and losses include all gains and losses other than gains or losses from the sale or exchange of any item of inventory, as defined in section 1221(a)(1), in the ordinary course of business.

(B) ***Deemed distribution and recontribution*** —

(*1*) ***In general.*** If any partner of a QOF partnership, or shareholder of a QOF S corporation, makes an election under paragraph (b)(2)(ii)(A) of this section, the taxpayer is treated as receiving a distribution of cash as calculated under paragraph (b)(2)(ii)(B)(*2*) of this section, from the QOF partnership or QOF S corporation at the end of the QOF partnership's or QOF S corporation's taxable year and immediately recontributing the cash to the QOF partnership or QOF S corporation in exchange for a non-qualifying investment in the QOF partnership or QOF S corporation. In

determining the post-contribution qualifying investment and non-qualifying investment, the QOF will value each interest based on the underlying values of the QOF's assets determined at the end of its taxable year in accordance with the principles of § 1.704-1(b)(2)(iv) (in the case of a QOF partnership) or fair market value (in the case of a QOF S corporation). If the QOF partner or QOF S corporation shareholder is a mixed-funds partner or shareholder prior to the sale or exchange, the deemed distribution will be treated as made proportionately with respect to the partner's or shareholder's qualifying investment and non-qualifying investment in the QOF partnership in accordance with § 1.1400Z2(b)-1(c)(6)(iv)(B), or the QOF S corporation. The distribution and recontribution rule of paragraph (b)(2)(ii)(B) of this section is solely for purposes of determining the taxpayer's interests in the QOF partnership or QOF S corporation that constitute a qualifying investment and a non-qualifying investment, and has no other Federal income tax consequence (for example, the rule does not affect the accumulated adjustments account of an S corporation and cannot be treated as a disproportionate distribution by an S corporation).

(*2*) ***Amount of deemed distribution and re-contribution.*** The amount of cash referred to in paragraph (b)(2)(ii)(B)(*1*) of this section that is deemed distributed by and recontributed to the QOF partnership or QOF S corporation is equal to—

(*i*) The partner's or shareholder's share of net proceeds from all sales and exchanges of property described in paragraph (b)(2)(ii)(A) of this section (other than sales of inventory in the ordinary course of business) for the taxable year for which the election under paragraph (b)(2)(ii)(A) is made (calculated without regard to whether any gain or loss is recognized with regard to such property); less

(*ii*) All actual distributions of cash by the QOF partnership or QOF S corporation with respect to any such sale or exchange that is made within 90 days of the sale or exchange.

(*3*) ***Meaning of net proceeds*** —

(*i*) ***QOF partnerships.*** For purposes of paragraph (b)(2)(ii)(B)(*2*)(*i*) of this section, with respect to QOF partnerships, the term “net proceeds” means the amount realized from the sale of property described in paragraph (b)(2)(ii)(A) of this section less any indebtedness included in the amount realized that would constitute a qualified liability under § 1.707-5(a)(6) if the sold or exchanged property had been contributed to a lower-tier partnership subject to the debt.

(*ii*) ***QOF S corporations.*** For purposes of paragraph (b)(2)(ii)(B)(*2*)(*i*) of this section, with respect to QOF S corporations, the term “net proceeds” means the amount realized from the sale of property described in paragraph (b)(2)(ii)(A) of this section less any indebtedness included in the amount realized that would constitute a qualified liability under the principles of § 1.707-5(a)(6).

(C) ***Treatment as exempt income*** —

(*1*) ***General rule.*** With respect to the taxpayer making an election under paragraph (b)(2)(ii) of this section, the excess of any gains over losses excluded from income under paragraph (b)(2)(ii) of this section is treated as income of the partnership or S

corporation that is exempt from tax under the Internal Revenue Code for purposes of section 705(a)(1)(B) or section 1367(a)(1)(A). Section 265 or any similar provisions do not apply to disallow any deductions otherwise allowable under subtitle A for amounts paid or incurred by a taxpayer that are allocable to any gain excluded from income under paragraph (b)(2)(ii) of this section.

(2) ***Special rule regarding accumulated adjustments account.*** Solely for purposes of determining whether an adjustment must be made to the accumulated adjustments account of an S corporation, the excess amount described in paragraph (b)(2)(ii)(C)(*1*) of this section is not treated as tax exempt income.

(D) ***Time and manner of making the election to exclude gain.*** An election under paragraph (b)(2)(ii)(A) of this section is made by filing the applicable form with the taxpayer's timely filed income tax return, without extensions, for its taxable year that includes the taxable year end of the QOF partnership or QOF S corporation. A taxpayer must make the election under paragraph (b)(2)(ii)(A) of this section for each taxable year in which it wishes to exclude gains and losses of a QOF partnership or QOF S corporation.

(3) ***Basis adjustments upon sale or exchange of qualifying QOF stock*** —

(i) ***In general.*** Except as provided in paragraph (b)(3)(ii) of this section, if a QOF shareholder's basis in qualifying QOF stock is adjusted under section 1400Z-2(c), then the basis of the qualifying QOF stock is adjusted to an amount equal to the fair market value of the qualifying QOF stock immediately prior to the sale or exchange. This paragraph (b)(3)(i) applies without regard to the amount of deferred gain that was included under section 1400Z-2(b)(1) or the timing of that inclusion.

(ii) ***Specific application to transactions to which section 301(c)(3), section 1059(a)(2), or section 1368(b)(2) or (c)(3) applies*** —

(A) ***Applicability.*** This paragraph (b)(3)(ii) applies if a QOF corporation makes a distribution to a QOF shareholder, at least a portion of the distribution would be characterized as gain from a sale or exchange under section 301(c)(3), section 1059(a)(2), or section 1368(b)(2) or (c)(3) with respect to the QOF shareholder's qualifying QOF stock without regard to any basis adjustment under section 1400Z-2(c), and the QOF shareholder elects to adjust the basis of its qualifying QOF stock under section 1400Z-2(c).

(B) ***Ordering rule.*** If paragraph (b)(3)(ii) of this section applies with respect to a QOF corporation, the QOF shareholder increases its basis by the lesser of the amount of the distribution characterized as gain from a sale or exchange or the fair market value of the QOF shareholder's qualifying QOF stock before determining the Federal income tax consequences of the distribution.

(c) ***Extension of availability of the election described in section 1400Z-2(c).*** The ability to make an election under section 1400Z-2(c) for investments held for at least 10 years is not impaired solely because, under section 1400Z-1(f), the designation of one or more qualified opportunity zones ceases to be in effect. The preceding sentence does not apply to elections under section 1400Z-2(c) that are related to dispositions occurring after December 31, 2047.

(d) ***Examples.*** The following examples illustrate the principles of paragraphs (a) through (c) of this section.

(1) *Example 1*—(i) *Facts.* In 2020, taxpayer A invests $100 in QOF S, a QOF S corporation, in exchange for a qualifying investment and defers $100 of gain. At the end of 2028, the qualified opportunity zone designation expires for the population census tract in which QOF S primarily conducts its trade or business. In 2031, A sells all of its QOF S shares, realizes gain, and makes an election to increase the qualifying basis in its QOF S shares to fair market value. But for the expiration of the designated zones in section 1400Z-1(f), QOF S and A's conduct is consistent with continued eligibility to make the election under section 1400Z-2(c).

(ii) *Analysis.* Under paragraph (c) of this section, although the designation expired on December 31, 2028, the expiration of the zone's designation does not, without more, invalidate A's ability to make an election under section 1400Z-2(c). Accordingly, pursuant to that election, A's basis in the QOF stock is increased to its fair market value and A recognizes no gain or loss on the sale.

(2) *Example 2*—(i) *Facts.* In 2019, taxpayer A realizes $100 of eligible gain and contributes $100 to a QOF partnership, X, in exchange for a qualifying QOF partnership interest in X, and taxpayer B contributes $100 of eligible gain to another QOF partnership, Y, in exchange for a qualifying QOF partnership interest in Y. In 2021, in transactions governed by section 721(a), A contributes her qualifying QOF partnership interest in X, and B contributes her qualifying QOF partnership interest in Y, to a newly formed partnership, UTP. In 2024, C receives a profits interest in UTP for services that she will provide to UTP. In 2031, X sells a non-inventory asset and allocates X's distributive share of the gain to UTP. No distributions are ever made from X, Y, or UTP.

(ii) *Analysis.* On December 31, 2026, UTP recognizes $170 of remaining deferred gain relating to the QOF interests. Of that gain, A is allocated the $85 of gain relating to the $100 of eligible gain that she invested in X, and B is allocated the $85 of gain relating to the $100 of eligible gain that she invested in Y. C recognizes no gain at this time. In 2031, because UTP's holding period in X includes A's holding period in X, UTP has a holding period in X that exceeds 10 years, and may make an election under § 1.1400Z2(c)-1(b)(2)(ii)(A) to exclude the gain from X's asset sale. Even though A was the original investor in X, she may not make the election. If UTP makes the election, UTP will exclude its distributive share of gain from the sale of the X asset.

(3) *Example 3*—(i) *Facts.* In 2019, taxpayer B invests $100 in P, a QOF partnership, in exchange for a qualifying investment and properly makes an election under section 1400Z-2(a) to defer $100 of eligible gain. B's interest in the partnership is 50 percent. In 2030, when B's interest in P has a value of $130 and a basis of $100, B sells the interest, recognizing $30 of gain, $15 of which is attributable to inventory assets of P. B makes an election under section 1400Z-2(c) with respect to the sale.

(ii) *Analysis.* Because B's election under section 1400Z-2(c) is in effect with respect to the sale, the bases of B's interest in P and of P's assets with respect to the interest sold are adjusted to fair market value immediately before B's sale under paragraph (b)(2)(i) of this section, and B recognizes no gain or loss on the sale.

(4) *Example 4*—(i) *Facts.* The facts are the same as in paragraph (d)(3) of this section (*Example 3*), except that P sells qualified opportunity zone property that is not inventory sold in the ordinary course of business and distributes all of the proceeds from the sale to partners within 90 days of the sale (the qualified opportunity zone property was the only property sold by P in the taxable year). The sold property has a value of $60 and a basis of $40. P recognizes $20 of gain, $10 of which is allocable to B, and B makes an election under paragraph (b)(2)(ii)(A) of this section for the year in which B's allocable share of the partnership's recognized gain would be included in B's gross income.

(ii) *Analysis.* Because B's election under paragraph (b)(2)(ii)(A) of this section is in effect, B will exclude its entire $10 allocable share of the partnership's $20 of recognized gain. Because $10 of the sale proceeds were actually distributed to B within 90 days of the sale, P is not treated as making a deemed distribution and receiving a recontribution under paragraph (b)(2)(ii)(B) of this section with respect to B.

(5) *Example 5*—(i) *Facts.* In 2019, taxpayer C invests $100 in Q, a QOF partnership, in exchange for a qualifying investment and properly makes an election under section 1400Z-2(a) to defer $100 of eligible gain. C's interest in Q is 50%. Q's taxable year ends on December 31. In 2025, Q purchases three qualified opportunity zone properties, X, Y, and Z. On January 22, 2031, Q sells property X for $200, recognizing $140 of gain. On July 31, 2031, Q sells property Y for $80, recognizing $20 of loss. Q makes no distributions to its partners in 2031, has no indebtedness, and has no other gain or loss other than from the sales of properties X and Y. Property Z has a value of $280 at all times throughout 2031. C's share of Q's gain and loss is $70 and $10, respectively, for a net gain of $60, and C makes an election under paragraph (b)(2)(ii)(A) of this section to exclude the gains and losses from its income.

(ii) *Analysis.* Because C has made an election under paragraph (b)(2)(ii)(A) of this section, under paragraph (b)(2)(ii)(B) of this section, C is treated as receiving a cash distribution of $140 from Q, C's share of the net proceeds from the sales of properties X and Y, on December 31, 2031, and immediately recontributing $140 to Q in exchange for a non-qualifying investment in Q. Beginning on January 1, 2032, 50 percent of A's interest in Q is a qualifying investment, and 50 percent of A's investment in Q is a non-qualifying investment. This amount is calculated as a fraction, the numerator of which is $140, the amount deemed distributed and recontributed, and the denominator of which is $280, the value of C's interest prior to the deemed distribution.

(6) *Example 6*—(i) *Facts.* The facts are the same as in paragraph (d)(5) of this section (*Example 5*), except that Q distributes all of the proceeds from the sale of property X to its partners on March 30, 2031. Q does not make any distribution of proceeds from the sale of property Y.

(ii) *Analysis.* Under paragraph (b)(2)(iii)(B)(*2*)(*ii*) of this section, the actual distribution of cash to C on March 30, 2031, reduces the amount of the deemed distribution and recontribution with respect to C on December 31, 2031. Accordingly, the amount of C's deemed distribution and recontribution is $40, which increases C's non-qualifying investment to 22 percent. This amount is calculated as a fraction, the numerator of which is $40, the amount deemed distributed and recontributed, and the denominator of which is $180, the value of C's interest.

(7) *Example 7. Section 301(c)(3) gain*—(i) *Facts.* In 2020, taxpayer X makes an investment in Q, a QOF corporation, in exchange for a qualifying investment. In 2031, when X's qualifying Q stock is worth $1000x, Q makes a distribution to X with respect to X's qualifying QOF stock, $500x of which is treated as gain from a sale or exchange under section 301(c)(3). In 2032, X disposes of all of its qualifying QOF stock in Q.

(ii) *Analysis*—(A) *Section 301(c)(3) distribution.* X is eligible to make an election described in section 1400Z-2(c) in 2031 with respect to its $500x gain. Under paragraph (b)(3)(ii) of this section, the basis adjustment is $500x, the lesser of $500x, the amount of the distribution treated as gain from the sale or exchange of property, and $1000x, the fair market value of the qualifying QOF stock before the distribution. As a result of the election, X increases its basis in its qualifying QOF stock in Q by $500x immediately before the distribution; consequently, the $500x is treated as a return of basis under section 301(c)(2).

(B) *Disposition of qualifying QOF stock.* X is eligible to make an election described in section 1400Z-2(c) in 2032 with respect to all of its qualifying QOF stock in Q, notwithstanding X's receipt of a section 301(c)(3) distribution in 2031. See paragraph (b)(1)(iv) of this section.

(e) ***Capital gain dividends paid by a QOF RIC or QOF REIT that some shareholders may be able to elect to receive tax free under section 1400Z-2(c)*** —

(1) ***Eligibility.*** For purposes of paragraph (b) of this section, if a shareholder of a QOF RIC or QOF REIT receives a capital gain dividend identified with a date, as defined in paragraph (e)(2) of this section, then, to the extent that the shareholder's shares in the QOF RIC or QOF REIT paying the capital gain dividend are a qualifying investment in the QOF RIC or QOF REIT—

(i) The shareholder may treat the capital gain dividend, or part thereof, as gain from the sale or exchange of a qualifying investment on the date that the QOF RIC or QOF REIT identified with the dividend; and

(ii) If, on the date identified, the shareholder had held that qualifying investment in the QOF RIC or QOF REIT for at least 10 years, then the shareholder may exclude that capital gain dividend, or part thereof, from its taxable income for the taxable year.

(2) ***Definition of capital gain dividend identified with a date.*** A *capital gain dividend identified with a date* means an amount of a capital gain dividend, as defined in section 852(b)(3)(C) or 857(b)(3)(B), or part thereof, and a date that the QOF RIC reports or QOF REIT designates in a notice provided to the shareholder not later than one week after the QOF RIC reports or QOF REIT designates the capital gain dividend pursuant to section 852(b)(3)(C) or 857(b)(3)(B). The notice must be mailed to the shareholder unless the shareholder has provided the QOF RIC or QOF REIT with an email address to be used for this purpose. In the manner and at the time determined by the Commissioner, the QOF RIC or QOF REIT must provide the Commissioner all data that the Commissioner specifies with respect to the amounts of capital gain dividends and the dates reported or designated by the QOF RIC or QOF REIT for each shareholder.

(3) ***General limitations on the amounts of capital gain with which a date may be identified*** —

(i) ***No identification in the absence of any capital gains with respect to qualified opportunity zone property.*** If, during its taxable year, the QOF RIC or QOF REIT did not recognize long-term capital gain on any sale or exchange of qualified opportunity zone property, then no date may be identified with any capital gain dividends, or parts thereof, with respect to that year.

(ii) ***Proportionality.*** Reportings and designations of capital gain dividends identified with a date must be proportional for all capital gain dividends paid with respect to the taxable year. See section 857(g)(2). Greater than *de minimis* violation of proportionality invalidates all of the purported identifications for a taxable year.

(iii) ***Undistributed capital*** *gains.* If section 852(b)(3)(D)(i) or 857(b)(3)(C)(i) requires a shareholder of a QOF RIC or QOF REIT to include a reported or designated amount in the shareholder's long-term capital gain for a taxable year, then inclusion of this amount in this manner is treated as receipt of a capital gain for purposes of this paragraph (e) and may be identified with a date.

(iv) ***Gross gains.*** The amount determined under paragraph (e)(4) of this section is determined without regard to any losses that may have been recognized on other sales or exchanges of qualified opportunity zone property. The losses do, however, limit the total amount of capital gain dividends that may be reported or designated under section 852(b)(3) or section 857(b)(3).

(4) ***Determination of the amount of capital gain with which a date may be identified.*** A QOF RIC or QOF REIT may choose to identify the date for an amount of capital gain in one of the following manners:

(i) ***Simplified determination.*** If, during its taxable year, the QOF RIC or QOF REIT recognizes long-term capital gain on one or more sales or exchanges of qualified opportunity zone property, then the QOF RIC or QOF REIT may identify the first day of that taxable year as the date identified with each reported or designated amount with respect to the capital gain dividends for that taxable year. A reported or designated identification is invalid in its entirety if the amount of gains that the QOF RIC or QOF REIT identifies with that date exceeds the aggregate long-term capital gains recognized on those sales or exchanges for that taxable year.

(ii) ***Sale date determination*** —

(A) ***In general.*** If, during its taxable year, the QOF RIC or QOF REIT recognizes long-term capital gain on one or more sales or exchanges of qualified opportunity zone property, then the QOF RIC or QOF REIT may identify capital gain dividends, or a part thereof, with the latest date on which there was such a recognition. The amount of capital gain dividends so identified must not exceed the aggregate long-term capital gains recognized on that date from sales or exchanges of qualified opportunity zone property. A reported or designated identification is invalid in its entirety if the amount of gains that the QOF RIC or QOF REIT identifies with that date violates the preceding sentence.

(B) ***Iterative application.*** The process described in paragraph (e)(4)(ii)(A) of this section is applied iteratively to increasingly earlier transaction dates (from latest to earliest) until all capital gain dividends are identified with dates or there are no earlier dates in the taxable year on which the QOF RIC or QOF REIT recognized long-term capital gains with respect to a sale or exchange of qualified opportunity zone property, whichever comes first.

(f) ***Applicability dates.*** The provisions of this section are applicable for taxable years beginning after March 13, 2020.

[T.D. 9889, 85 FR 1974, Jan. 13, 2020; 85 FR 19083, Apr. 6, 2020]

§ 1.1400Z2(d)-1 Qualified opportunity funds and qualified opportunity zone businesses.

(a) ***Overview.*** This section provides rules that an eligible entity (as defined in paragraph (a)(1) of this section) must satisfy to be a qualified opportunity fund (QOF) or a qualified opportunity zone business. Paragraphs (a)(2) through (4) of this section provide rules that eligible entities must follow to be certified as QOFs, as well as rules for the de-certification of QOFs. Paragraph (b) of this section provides rules for determining whether the property held by a QOF satisfies the *90-percent investment standard* of section 1400Z-2(d)(1) or the property held by a qualified opportunity zone business satisfies the *70-percent tangible property standard* of section 1400Z-2(d)(3)(A)(i). Paragraph (c) of this section provides rules regarding qualified opportunity zone property that a QOF must hold to satisfy the 90-percent investment standard. Paragraph (d) of this section provides rules that an eligible entity must satisfy to be a qualified opportunity zone

business that is owned, in whole or in part, by one or more QOFs. Paragraph (e) of this section provides applicability dates for this section. See § 1.1400Z2(d)-2 for rules that must be satisfied for tangible property of an eligible entity to be treated as qualified opportunity zone business property.

(1) ***Eligible entity*** —

(i) ***In general.*** Except as provided in paragraph (a)(1)(ii) of this section, the term *eligible entity* means an entity that is classified as a corporation or partnership for Federal income tax purposes. In order to be treated as a QOF, an eligible entity must self-certify on an annual basis that it satisfies the requirements of paragraphs (b) and (c) of this section, as appropriate. An eligible entity is a qualified opportunity zone business if it satisfies the requirements of paragraph (d) of this section.

(ii) ***Exceptions based on where an entity is created, formed, or organized*** —

(A) ***QOFs.*** An entity classified as a corporation or partnership for Federal income tax purposes (an entity) but that is not organized under the law of the United States or the law of one of the 50 states, a government of a federally recognized tribe (Indian tribal government), the District of Columbia, or a U.S. territory, is not an eligible entity and is ineligible to be a QOF. An entity described in the preceding sentence is also ineligible to be a qualified opportunity zone business, and therefore an equity interest in the entity is neither qualified opportunity zone stock nor a qualified opportunity zone partnership interest for purposes of section 1400Z-2(d)(2).

(B) ***Entities organized in a U.S. territory*** —

(*1*) ***In general.*** If an entity is organized in a U.S. territory but not in one of the 50 States or the District of Columbia, the entity may be a QOF only if the entity is organized for investing in qualified opportunity zone property that relates to a trade or business operated in the U.S. territory in which the entity is organized. If an entity is organized in a U.S. territory but not in one of the 50 States or the District of Columbia, an equity interest in the entity may be qualified opportunity zone stock or a qualified opportunity zone partnership interest, as the case may be, only if the entity conducts a qualified opportunity zone business in the U.S. territory in which the entity is organized. An entity described in the preceding sentence is treated as satisfying the requirement, as applicable, of being a domestic corporation for purposes of section 1400Z-2(d)(2)(B)(i) or of being a domestic partnership for purposes of section 1400Z-2(d)(2)(C).

(2) ***U.S. territory defined.*** For purposes of this paragraph (a)(1), the term *U.S. territory* means American Samoa, Guam, the Commonwealth of the Northern Mariana Islands, the Commonwealth of Puerto Rico, the U.S. Virgin Islands, and any other territory not under the jurisdiction of one of the 50 States, an Indian tribal government, or the District of Columbia where a qualified opportunity zone has been designated under section 1400Z-1.

(iii) ***Pre-existing entities.*** There is no legal barrier to a pre-existing eligible entity qualifying as a QOF or a qualified opportunity zone business, but the pre-existing eligible entity must satisfy all of the applicable requirements of section 1400Z-2, this section, and § 1.1400Z2(d)-2.

(2) ***Self-certification as a QOF.*** The following rules apply to the required self-certification of an eligible entity as a QOF:

(i) ***Time, form, and manner.*** The self-certification must be timely-filed and effected annually in such form and manner as may be prescribed by the Commissioner of Internal Revenue (Commissioner) in the Internal Revenue Service (IRS) forms or instructions, or in publications or guidance published in the Internal Revenue Bulletin (see §§ 601.601(d)(2) and 601.602 of this chapter).

(ii) ***First taxable year.*** The self-certification must identify the first taxable year for which the self-certification takes effect.

(iii) ***First month.*** The self-certification may identify the first month (in that initial taxable year) in which the self-certification takes effect.

(A) ***Failure to specify first month.*** If the self-certification fails to specify the month in the initial taxable year that the self-certification takes effect, then the self-certification is treated as taking effect in the first month of that taxable year.

(B) ***Investments before entity's first month as QOF not eligible for deferral.*** If an investment in eligible interests of an eligible entity occurs prior to the eligible entity's first month as a QOF, any election under section 1400Z-2(a)(1) made for that investment is invalid and the investment is a non-qualifying investment.

(iv) ***Becoming a QOF in a month that is not the first month of the taxable year.*** This paragraph (a)(2)(iv) applies to an eligible entity if its self-certification as a QOF is first effective for a month that is not the first month of that entity's taxable year.

(A) For purposes of applying section 1400Z-2(d)(1)(A) and (B) in the first year of the QOF's existence, the phrase *first six-month period of the taxable year of the fund* means the first six months each of which is in the taxable year and in each of which the entity is a QOF. Thus, if an eligible entity becomes a QOF in the seventh or later month of a 12-month taxable year, the 90-percent investment standard in section 1400Z-2(d)(1) takes into account only the QOF's assets on the last day of the QOF's taxable year.

(B) The computation of any penalty under section 1400Z-2(f)(1) does not take into account any months before the first month in which an eligible entity is a QOF.

(3) ***Self decertification of a QOF.*** If a QOF chooses to decertify as a QOF, the self-decertification must be effected in such form and manner as may be prescribed by the Commissioner in IRS forms or instructions or in publications or guidance published in the Internal Revenue Bulletin (see §§ 601.601(d)(2) and 601.602 of this chapter.)

(4) [Reserved]

(b) ***Valuation of property for purposes of the 90-percent investment standard and the 70-percent tangible property standard —***

(1) ***In general.*** An eligible entity may value its owned or leased property using the valuation methods provided in paragraphs (b)(3) and (4) of this section to determine whether—

(i) In the case of an eligible entity that has self-certified as a QOF, the assets owned or leased by the QOF satisfy the 90-percent investment standard in section 1400Z-2(d)(1); and

(ii) In the case of an eligible entity that has issued qualified opportunity zone partnership interests or qualified opportunity zone stock to a QOF, the tangible property owned or leased by the eligible entity satisfies the *70-percent tangible property standard* in section 1400Z-2(d)(3)(A)(i).

(2) *Special rules* —

(i) *QOFs* —

(A) ***In general.*** To meet the *90-percent investment standard* in section 1400Z-2(d)(1), on a semiannual basis, a QOF may value its assets using the applicable financial statement valuation method set forth in paragraph (b)(3) of this section, if the QOF has an applicable financial statement within the meaning of § 1.475(a)-4(h), or the alternative valuation method set forth in paragraph (b)(4) of this section. During each taxable year, a QOF must apply consistently the valuation method that it selects under paragraph (b) of this section to all assets valued with respect to the taxable year.

(B) ***Option for QOFs to disregard recently contributed property.*** A QOF may choose to determine compliance with the *90-percent investment standard* by excluding from both the numerator and denominator of the test any property that satisfies all the criteria in paragraphs (b)(2)(i)(B)(*1*) through (*3*) of this section. A QOF need not be consistent from one semiannual test to another in whether it avails itself of the option in this paragraph (b)(2)(i)(B).

(*1*) The amount of the property was received by the QOF partnership as a contribution or by the QOF corporation solely in exchange for stock of the corporation;

(*2*) The contribution or exchange occurred not more than 6 months before the test from which it is being excluded; and

(*3*) Between the date of the fifth business day after the contribution or exchange and the date of the semiannual test, the amount was held continuously in cash, cash equivalents, or debt instruments with a term of 18 months or less.

(C) ***Safe harbor for QOFs to determine whether equity in an entity is qualified opportunity zone property.*** A QOF may choose to determine compliance with the *90-percent investment standard* for each semiannual testing date of the QOF by including in both the numerator and denominator of the test the equity of each entity the QOF holds on that testing date that satisfies all the criteria in paragraph (b)(2)(i)(C)(*1*) or (*2*) of this section.

(*1*) The entity was a qualified opportunity zone business for at least 90 percent of the QOF's cumulative holding period for that equity of the entity—

(*i*) Beginning on the date the QOF's self-certification as a QOF is first effective; and

(*ii*) Ending on the last day of the entity's most recent taxable year ending on or before the semiannual testing date of the QOF.

(*2*) An entity that would not be a qualified opportunity zone business as of the end of its last taxable year ending on or before a semiannual testing date of the QOF is a qualified opportunity zone business with respect to the QOF for that taxable year of the entity if—

(*i*) A cure is achieved for the entity under paragraph (d)(6) of this section; and

(*ii*) The QOF files its Federal income tax return for the taxable year of the QOF containing the testing date on a date that is timely (taking extensions into account) and that is not earlier than when that cure is achieved.

(ii) *Qualified opportunity zone businesses* —

(A) ***In general.*** For purposes of the fraction set forth in paragraph (d)(2)(ii)(A) of this section, the owned or leased tangible property of a qualified opportunity zone business may be valued using the applicable financial statement valuation method set forth in paragraph (b)(3) of this section, if the qualified opportunity zone business has an applicable financial statement within the meaning of § 1.475(a)-4(h), or the alternative valuation method set forth in paragraph (b)(4) of this section. During each taxable year, the valuation method selected under this paragraph (b) must be applied consistently to all tangible property valued with respect to the taxable year.

(B) ***Five-percent zone taxpayer.*** If a taxpayer both has self-certified as a QOF and holds an equity interest in an eligible entity that is tested as a qualified opportunity zone business, then that taxpayer may value the eligible entity's tangible property for purposes of satisfying the *70-percent tangible property standard* using the same valuation methodology under this paragraph (b) that the taxpayer uses for determining its own compliance with the 90-percent investment standard (compliance methodology), provided that no other equity holder in the eligible entity is a five-percent zone taxpayer. If two or more taxpayers that have self-certified as QOFs hold equity interests in the eligible entity and at least one of them is a five-percent zone taxpayer, then the values of the eligible entity's tangible property may be calculated using the compliance methodology that both is used by a five-percent zone taxpayer and that produces the highest percentage of qualified opportunity zone business property for the eligible entity for purposes of the *70-percent tangible property standard.* A *five-percent zone taxpayer* is a taxpayer that has self-certified as a QOF and that holds stock in the entity (if it is a corporation) representing at least 5 percent in voting rights and value or holds an interest of at least 5 percent in the profits and capital of the entity (if it is a partnership).

(*1*) ***Example.*** The example in paragraph (b)(2)(ii)(B)(*2*) of this section illustrates the principles of paragraph (b)(2)(ii)(B) of this section.

(*2*) ***Example.*** Entity JH is a corporation that has issued only one class of stock and that conducts a trade or business. Taxpayer X holds 94% of the JH stock, and Taxpayer Y holds the remaining 6% of that stock. (Thus, both X and Y are five percent zone taxpayers within the meaning of paragraph (b)(2)(ii)(B) of this section.) JH does not have an applicable financial statement, and, for that reason, a determination of whether JH is conducting a qualified opportunity zone business may employ the compliance methodology of X or Y. X and Y use different compliance methodologies permitted under paragraph (b)(2)(i)(A) of this section for purposes of satisfying the *90-percent investment standard* of section 1400Z-2(d)(1). Under X's compliance methodology (which is based on X's applicable financial statement), 65% of the tangible property owned or leased by JH's trade or business is qualified opportunity zone business property. Under Y's compliance methodology (which is based on Y's cost), 73% of the tangible property owned or leased by JH's trade or business is qualified opportunity zone business property. Because Y's compliance methodology would produce the higher percentage of qualified opportunity zone business property for JH (73%), both X and Y may use Y's compliance methodology to value JH's owned or leased tangible property. If JH's trade or business satisfies all additional requirements in section 1400Z-2(d)(3), the trade or business is a qualified

opportunity zone business. Thus, if all of the additional requirements in section 1400Z-2(d)(2)(B) are satisfied, stock in JH is qualified opportunity zone stock in the hands of a taxpayer that has self-certified as a QOF.

(iii) ***Inventory.*** In determining whether the *90-percent investment standard* in section 1400Z-2(d)(1) or the *70-percent tangible property standard* in section 1400Z-2(d)(3)(A)(i) is satisfied, an eligible entity may choose to exclude from both the numerator and denominator of the applicable test the value of all inventory (including raw materials) of the trade or business, if applied consistently within a taxable year of the eligible entity.

(3) ***Applicable financial statement valuation method*** —

(i) ***In general.*** Under the applicable financial statement valuation method set forth in this paragraph (b)(3), the value of each property that is owned or leased by an eligible entity is the value of that asset as reported on the eligible entity's applicable financial statement for the relevant reporting period.

(ii) ***Requirement for selection of method.*** An eligible entity may select the applicable financial statement valuation method set forth in this paragraph (b)(3) to value an asset leased by the eligible entity only if the applicable financial statement of the eligible entity is prepared according to U.S. generally accepted accounting principles (GAAP) and requires an assignment of value to the lease of the asset.

(4) ***Alternative valuation method*** —

(i) ***In general.*** Under the alternative valuation method set forth in this paragraph (b)(4), the value of the property owned by an eligible entity is calculated under paragraph (b)(4)(ii) of this section, and the value of the property leased by an eligible entity is calculated under paragraph (b)(4)(iii) of this section.

(ii) ***Property owned by an eligible entity*** —(A) *Property purchased or constructed.* The value of each property owned by an eligible entity that is acquired by purchase for fair market value or constructed for fair market value is the eligible entity's unadjusted cost basis of the asset under section 1012 or section 1013. Solely for purposes of this paragraph (b)(4)(ii)(A), the acquisition by a QOF of qualified opportunity zone stock or a qualified opportunity zone partnership interest is treated as a purchase of such interest by the QOF.

(iii) ***Property leased by an eligible entity*** —

(A) ***In general.*** The value of each property that is leased by an eligible entity is equal to the present value of the leased property as defined in paragraph (b)(4)(iii)(C) of this section.

(B) ***Discount rate.*** For purposes of calculating present value under paragraph (b)(4)(iii) of this section, the discount rate is the short-term applicable Federal rate under section 1274(d)(1), based on semiannual compounding, for the month in which the eligible entity enters into the lease. For purposes of the preceding sentence, the three month rule in section 1274(d)(2) does not apply to determine the applicable Federal rate.

(C) ***Present value.*** For purposes of paragraph (b)(4)(iii) of this section, present value of a leased property—

(*1*) Is equal to the sum of the present values of each payment under the lease for the property;

(2) Is calculated at the time the eligible entity enters into the lease for the property; and

(3) Once calculated, is used as the value for the property by the eligible entity for all testing dates during the term of the lease for purposes of the *90-percent investment standard* or the *70-perecent tangible property standard.*

(D) ***Term of a lease.*** For purposes of paragraph (b)(4)(iii) of this section, the term of a lease includes periods during which the lessee may extend the lease at a pre-defined market rate rent. For nonresidential real property or residential real property, pre-defined rent does not include the option to renew at fair market value, determined at the time of renewal. The terms of the pre-defined rent must satisfy the following criteria:

(1) ***General rule.*** The terms of the pre-defined rent are market rate (that is, the terms of the pre-defined rent reflect common, arms-length market pricing in the locale that includes the qualified opportunity zone as determined under section 482 and all section 482 regulations in this chapter) at the time the lease is entered into.

(2) ***Rebuttable presumption regarding leases not between related persons.*** There will be a rebuttable presumption that the terms of the extension of the lease are market rate for leases not between related persons (within the meaning of section 1400Z-2(e)(2)), and thus, the parties to the lease are not required to perform a section 482 analysis.

(3) ***Exception for state, local, and Indian tribal governments.*** For purposes of this paragraph (b)(4)(iii)(D), tangible property acquired by lease from a state or local government, or an Indian tribal government, is not considered tangible property acquired by lease from a related person.

(c) ***Qualified opportunity zone property*** —

(1) ***In general.*** Pursuant to section 1400Z-2(d)(2)(A), the following property is *qualified opportunity zone property:*

(i) Qualified opportunity zone stock as defined in paragraph (c)(2) of this section;

(ii) Qualified opportunity zone partnership interest as defined in paragraph (c)(3) of this section; and

(iii) Qualified opportunity zone business property as defined in § 1.1400Z2(d)-2.

(2) ***Qualified opportunity zone stock*** —

(i) ***In general.*** Except as provided in paragraph (c)(2)(ii) of this section, if an eligible entity is classified as a corporation for Federal income tax purposes (corporation), then an equity interest (stock) in the eligible entity is *qualified opportunity zone stock* if the requirements described in this paragraph (c)(2)(i) are satisfied:

(A) ***Date of acquisition.*** The stock is acquired by a QOF after December 31, 2017, at its original issue (directly or through an underwriter) from the corporation solely in exchange for cash;

(B) ***Qualified opportunity zone business.*** As of the time the stock was issued, the corporation was a qualified opportunity zone business as defined in section 1400Z-2(d)(3) and paragraph (d) of this section (or, in the case of a new corporation, the corporation was being organized for purposes of being such a qualified opportunity zone business); and

(C) *90-percent qualified opportunity zone property holding period* —

(*1*) ***Cumulative holding period test.*** During at least 90 percent of the QOF's holding period for the corporation's stock, determined on a cumulative basis in accordance with paragraph (c)(2)(i)(C)(*2*) of this section, the corporation qualified as a qualified opportunity zone business.

(*2*) ***Semiannual qualified opportunity zone business test.*** For purposes of determining satisfaction of the cumulative 90-percent qualified opportunity zone property holding period test described in paragraph (c)(2)(i)(C)(*1*) of this section, the determination of whether a corporation engaged in a trade or business qualifies as a qualified opportunity zone business may be made by the QOF on a semiannual basis pursuant to section 1400Z-2(d)(1). However, a QOF may choose to apply the safe harbor rule in paragraph (b)(2)(i)(C) of this section to make this determination.

(ii) ***Redemptions of stock.*** Pursuant to section 1400Z-2(d)(2)(B)(ii), the following rules apply for purposes of determining whether stock in a corporation qualifies as qualified opportunity zone stock:

(A) ***Redemptions from taxpayer or related person.*** Stock acquired by a QOF is not treated as qualified opportunity zone stock if, at any time during the 4-year period beginning on the date 2 years before the issuance of the stock, the corporation issuing the stock purchased either directly or indirectly any of its stock from the QOF or from a person related (within the meaning of section 1400Z-2(e)(2)) to the QOF. Even if the purchase occurs after the issuance, the stock was never qualified opportunity zone stock.

(B) *Significant redemptions* —

(*1*) ***In general.*** Stock issued by a corporation is not treated as qualified opportunity zone stock if, at any time during the 2-year period beginning on the date one year before the issuance of the stock, the corporation made one or more purchases of more than a de minimis amount of its stock and the purchased stock has an aggregate value (as of the time of the respective purchases) exceeding 5 percent of the aggregate value of all of its stock as of the beginning of the 2-year period. The aggregate value is determined as of the time of the stock purchases. Even if one or more of the disqualifying purchases occurs after the issuance, the stock was never qualified opportunity zone stock.

(*2*) ***De minimis amount.*** For purposes of this paragraph (c)(2)(ii)(B), stock acquired from the taxpayer or a related person exceeds a de minimis amount only if the aggregate amount paid for the stock exceeds $10,000 and more than 2 percent of the stock held by the taxpayer and related persons (within the meaning of section 1400Z-2(e)(2)) is acquired. The rules in the following sentences of this paragraph (c)(2)(ii)(B)(*2*) apply for purposes of determining whether the 2-percent limit is exceeded. The percentage of stock acquired in any single purchase is determined by dividing the stock's value (as of the time of purchase) by the value (as of the time of purchase) of all stock held (directly or indirectly) by the taxpayer and related persons immediately before the purchase. The percentage of stock acquired in multiple purchases is the sum of the percentages determined for each separate purchase.

(C) ***Treatment of certain transactions.*** If any transaction is treated under section 304(a) as a distribution in redemption of the stock of any corporation, for purposes of paragraphs (c)(2)(ii)(A) and (B) of this section, that corporation is treated as purchasing an amount of its stock equal to the amount that is treated as such a distribution under section 304(a).

(D) ***Principles of § 1.1202-2(c) and (d).*** The principles of § 1.1202-2(c) and (d) apply in determining whether stock is redeemed or purchased for purposes of paragraph (c)(2)(ii) of this section.

(iii) ***Reorganizations of corporations otherwise qualifying as qualified opportunity zone businesses*** —

(A) ***Qualification as qualified opportunity zone stock.*** Stock that meets all of the requirements of paragraph (c)(2)(i) of this section except for the requirement in paragraph (c)(2)(i)(A) of this section is qualified opportunity zone stock if it is received solely in exchange for qualified opportunity zone stock in a transaction described in section 381(a)(2). The requirements in paragraphs (c)(2)(i)(B) and (C) of this section must be met with respect to both the stock held before such transaction and the stock for which it is exchanged in such transaction.

(B) ***Satisfaction of original use and substantial improvement tests.*** The requirements of § 1.1400Z2(d)-2 apply to property of a qualified opportunity zone business acquired from a qualified opportunity zone business in a transaction described in section 381(a)(2) as if the acquiring corporation had held the property during the period in which the target corporation held the property. For example, an item of property must be substantially improved by the same date by which the target corporation was required to satisfy the substantial improvement test for such property.

(C) ***Reorganizations of qualified opportunity zone businesses within a consolidated group.*** See §§ 1.1502-14Z and 1.1504-3 for special rules applicable to consolidated groups.

(3) ***Qualified opportunity zone partnership interest*** —

(i) ***In general.*** If an *eligible* entity is classified as a partnership for Federal tax purposes (partnership), any capital or profits interest (partnership interest) in the eligible entity is a *qualified opportunity zone partnership interest* if—

(A) ***Date of acquisition.*** The partnership interest is acquired by a QOF after December 31, 2017, from the partnership solely in exchange for cash;

(B) ***Qualified opportunity zone business.*** As of the time the partnership interest was acquired, the partnership was a qualified opportunity zone business as defined in section 1400Z-2(d)(3) and paragraph (d) of this section (or, in the case of a new partnership, the partnership was being organized for purposes of being a qualified opportunity zone business); and

(C) ***90-percent qualified opportunity zone property holding period*** —

(1) ***Cumulative holding period test.*** During at least 90-percent of the QOF's holding period for the partnership interest, determined on a cumulative basis in accordance with paragraph (c)(3)(i)(C)(2) of this section, the partnership qualified as a qualified opportunity zone business.

(2) ***Semiannual qualified opportunity zone business test.*** For purposes of determining satisfaction of the cumulative 90-percent qualified opportunity zone property holding period test described in paragraph (c)(3)(i)(C)(*1*) of this section, the determination of whether a partnership engaged in a trade or business qualifies as a qualified opportunity zone business is made by the QOF on a semiannual basis pursuant to section 1400Z-2(d)(1). However, a QOF may choose to apply the safe harbor rule in paragraph (b)(2)(i)(C) of this section to make this determination.

(ii) ***Reorganizations of partnerships otherwise qualifying as qualified opportunity zone businesses*** —

(A) ***Qualification as a qualified opportunity zone partnership interest.*** A partnership interest that meets all of the requirements of paragraph (c)(3)(i) of this section except for the requirement in paragraph (c)(3)(i)(A) of this section is a qualified opportunity zone partnership interest if it is received solely in exchange for a qualified opportunity zone partnership interest in a merger or consolidation transaction described in section 708(b)(2)(A). The requirements in paragraphs (c)(3)(i)(B) and (C) of this section must be met with respect to both the partnership interest held before the transaction and the partnership interest for which it is exchanged in the transaction.

(B) ***Satisfaction of original use and substantial improvement tests.*** The requirements of § 1.1400Z2(d)-2 apply to property of a qualified opportunity zone business acquired from a qualified opportunity zone business in a transaction described in section 708(b)(2)(A) as if the resulting partnership had held the property during the period in which the merging or consolidating partnership held the property. For example, an item of property must be substantially improved by the same date by which the merging or consolidating partnership was required to satisfy the substantial improvement test for such property.

(d) ***Qualified opportunity zone business*** —

(1) ***In general.*** An eligible entity engaged in a trade or business within the meaning of section 162 is a *qualified opportunity zone business* if the entity satisfies, as determined at the end of its taxable year, all the criteria in paragraphs (d)(1)(i) through (*iii*) of this section. An eligible entity's status as a qualified opportunity zone business applies for the entire taxable year of the entity.

(i) Pursuant to section 1400Z-2(d)(3)(A)(i), the eligible entity engaged in the trade or business satisfies the *70-percent tangible property standard* with respect to its tangible property, as provided in paragraph (d)(2) of this section;

(ii) Pursuant to section 1400Z-2(d)(3)(A)(ii), the eligible entity engaged in the trade or business satisfies the requirements of section 1397C(b)(2), (4), and (8), as provided in paragraph (d)(3) of this section; and

(iii) Pursuant to section 1400Z-2(d)(3)(A)(iii), the eligible entity engaged in the trade or business is not described in section 144(c)(6)(B) as provided in paragraph (d)(4) of this section.

(2) ***Satisfaction of 70-percent tangible property standard*** —

(i) ***In general.*** A trade or business of an eligible entity satisfies the *70-percent tangible property standard* if at least 70 percent of the tangible property owned or leased by the trade or business is qualified opportunity zone business property (as defined in § 1.1400Z2(d)-2).

(ii) ***Calculating percent of tangible property owned or leased in a trade or business*** —

(A) ***In general.*** Whether a trade or business of the eligible entity satisfies the *70-percent tangible property standard* set forth in paragraph (d)(2)(i) of this section is determined by a fraction—

(*1*) The numerator of which is the total value of all tangible property owned or leased by the qualified opportunity zone business that is qualified opportunity zone business property; and

(*2*) The denominator of which is the total value of all tangible property owned or leased by the qualified opportunity zone business, whether located inside or outside of a qualified opportunity zone.

(B) ***Valuation.*** See paragraph (b)(2)(ii) of this section for rules regarding the valuation of tangible property for purposes of the *70-percent tangible property standard.*

(3) ***Operation of section 1397C requirements adopted by reference*** —

(i) ***Gross income requirement.*** Section 1400Z-2(d)(3)(A)(ii) incorporates section 1397C(b)(2), requiring that for each taxable year at least 50 percent of the gross income of a qualified opportunity zone business is derived from the active conduct of a trade or business in the qualified opportunity zone (or in multiple qualified opportunity zones). A trade or business meets the 50-percent gross income requirement in the preceding sentence if the trade or business satisfies any one of the four criteria described in paragraph (d)(3)(i)(A), (B), (C), or (D) of this section, or any criteria identified in published guidance issued by the Commissioner under § 601.601(d)(2) of this chapter.

(A) ***Services performed in qualified opportunity zone based on hours.*** At least 50 percent of the services performed for the trade or business are performed in a qualified opportunity zone, determined by the fraction described in paragraphs (d)(3)(i)(A)(*1*) and (*2*) of this section. Amounts paid to partners that provide services to the trade or business of a partnership are taken into account in the numerator and denominator set forth in paragraphs (d)(3)(i)(A)(*1*) and (*2*) of this section only to the extent the amounts paid to the partners are guaranteed payments for services provided to the partnership within the meaning of section 707(c).

(*1*) The numerator of the fraction is the total number of hours of services performed for the trade or business in a qualified opportunity zone during the taxable year by employees, partners that provide services to a partnership, independent contractors, and employees of independent contractors; and

(*2*) The denominator of the fraction is the total number of hours of services performed for the trade or business during the taxable year by employees, partners that provide services to a partnership, independent contractors, and employees of independent contractors.

(B) ***Services performed in qualified opportunity zone based on amounts paid for services.*** At least 50 percent of the services performed for the trade or business are performed in a qualified opportunity zone, determined by the fraction described in paragraphs (d)(3)(i)(B)(*1*) and (*2*) of this section. Amounts paid to partners that provide services to the trade or business of a partnership are taken into account in the numerator and

denominator set forth in paragraphs (d)(3)(i)(B)(*1*) and (*2*) of this section only to the extent the amounts paid to the partners are guaranteed payments for services provided to the partnership within the meaning of section 707(c).

(*1*) The numerator of the fraction is the total amount paid by the entity for services performed in a qualified opportunity zone during the taxable year, whether by employees, partners that provide services to a partnership, independent contractors, or employees of independent contractors; and

(*2*) The denominator of the fraction is the total amount paid by the entity for services performed during the taxable year, whether by employees, partners that provide services to a partnership, independent contractors, or employees of independent contractors.

(C) ***Necessary tangible property and business functions.*** The tangible property of the trade or business located in a qualified opportunity zone and the management or operational functions performed in a qualified opportunity zone are each necessary for the generation of at least 50 percent of the gross income of the trade or business.

(D) ***Facts and circumstances.*** Based on all the facts and circumstances, at least 50 percent of the gross income of a qualified opportunity zone business is derived from the active conduct of a trade or business in a qualified opportunity zone.

(E) ***Examples.*** The following examples illustrate the principles of paragraphs (d)(3)(i)(C) and (D) of this section.

(*1*) ***Example 1.*** A landscaping business has its headquarters in a qualified opportunity zone, its officers and employees manage the daily operations of the business (inside and outside the qualified opportunity zone) from its headquarters, and all its equipment and supplies are stored in the headquarters facilities. The activities occurring and the storage of equipment and supplies in the qualified opportunity zone are, taken together, necessary for the generation of the income of the business.

(*2*) ***Example 2.*** A trade or business is formed or organized under the laws of the jurisdiction within which a qualified opportunity zone is located, and the business has a P.O. Box located in the qualified opportunity zone. The mail received at that P.O. Box is fundamental to the income of the trade or business, but there is no other basis for concluding that the income of the trade or business is derived from activities in the qualified opportunity zone. The mere location of the P.O. Box is not necessary for the generation of gross income by the trade or business.

(*3*) ***Example 3.*** In 2019, Taxpayer X realized $w million of capital gains and within the 180-day period invested $w million in QOF Y, a qualified opportunity fund. QOF Y immediately acquired from partnership P a partnership interest in P, solely in exchange for $w million of cash. P is a real estate developer that has written plans to acquire land in a qualified opportunity zone on which it plans to construct a commercial building for lease to other trades or businesses. In 2023, P's commercial building is placed in service and is fully leased up to other trades or businesses. For the 2023 taxable year, at least 50 percent of P's gross income is derived from P's rental of its tangible property in the qualified opportunity zone. Thus, under P's facts and circumstances, P satisfies the gross income test under section 1397C(b)(2).

(ii) ***Use of intangible property requirement*** —

(A) ***In general.*** Section 1400Z-2(d)(3)(A)(ii) incorporates section 1397C(b)(4), requiring that, with respect to any taxable year, a substantial portion of the intangible property of a qualified opportunity zone business is used in the active conduct of a trade or business in a qualified opportunity zone. For purposes of section 1400Z-2(d)(3)(A)(ii) and the preceding sentence, the term *substantial portion* means at least 40 percent.

(B) ***Use of intangible property.*** For purposes of section 1400Z-2(d)(3)(A)(ii) and paragraph (d)(3)(ii)(A) of this section, intangible property of a qualified opportunity zone business is used in the active conduct of a trade or business in a qualified opportunity zone if—

(*1*) The use of the intangible property is normal, usual, or customary in the conduct of the trade or business; and

(*2*) The intangible property is used in the qualified opportunity zone in the performance of an activity of the trade or business that contributes to the generation of gross income for the trade or business.

(iii) ***Active conduct of a trade or business*** —

(A) ***Operating real property.*** Solely for purposes of section 1400Z-2(d)(3)(A), the ownership and operation (including leasing) of real property is the active conduct of a trade or business.

(B) ***Lessee is responsible for certain costs.*** Merely entering into a triple-net-lease with respect to real property owned by a taxpayer does not constitute the active conduct of a trade or business by such taxpayer.

(C) ***Examples.*** The following examples illustrate the rules of paragraph (d)(3)(iii) of this section.

(*1*) ***Example 1. Mere triple-net-lease not active conduct of trade or business*** —

(*i*) ***Facts.*** Company N constructs and places into service a new, three-story office building in a qualified opportunity zone and leases the entire building to tenant X, an unrelated person, which uses the building as office space for its software development firm. This building is the only property owned by Company N. The lease agreement between Company N and tenant X is a triple-net-lease under which tenant X is responsible for all of the costs relating to the office building (for example, paying all taxes, insurance, and maintenance expenses) in addition to paying rent. Company N also maintains an office in the building with staff members to address any issues that may arise with respect to the triple-net-lease.

(*ii*) ***Analysis.*** Solely for purposes of section 1400Z-2(d)(3)(A), Company N is treated as not engaged in the active conduct of a trade or business with respect to the leased office building. Company N leases the building to tenant X under a triple-net-lease, and therefore the employees of Company N do not meaningfully participate in the management or operations of the building. The fact that Company N maintains an office in the leased building with staff members to address any issues that may arise with respect to the triple-net-lease does not alter this result. Therefore, Company N does not conduct an active trade or business in a qualified opportunity zone.

(2) ***Example 2. Triple-net-lease and managerial and operational activities can constitute active conduct of trade or business*** —

(*i*) ***Facts.*** Company N constructs and places into service a new, three-story mixed-use building in a qualified opportunity zone and leases a floor to each of unrelated tenants X, Y, and Z, respectively. This building is the only property owned by Company N. The lease agreement between Company N and tenant X is a triple-net-lease under which tenant X is responsible for all of the costs relating to the third floor of the building (for example, paying all such taxes, insurance, and maintenance expenses) in addition to paying rent. The lease agreement between Company N and tenant Y is not a triple-net-lease and employees of Company N manage and operate the second floor of the building. Likewise, the lease agreement between Company N and tenant Z is not a triple-net-lease and employees of Company N manage and operate the first floor of the building. Company N maintains an office in the building, which the employees regularly use to carry out their managerial and operational duties with respect to the first and second floors, and address any other issues that may arise with respect to the three leases.

(*ii*) ***Analysis.*** Solely for purposes of section 1400Z-2(d)(3)(A), Company N is treated as engaged in the active conduct of a trade or business with respect to the leased mixed-use building. While Company N leases the third floor of the building to tenant X merely under a triple-net-lease, and therefore the employees of Company N do not meaningfully participate in the management or operations of that floor, the employees of Company N meaningfully participate in the management and operations of the first and second floors of the leased building. Therefore, in carrying out the overall leasing business of Company N with respect to the mixed-use building, employees of Company N conduct meaningful managerial and operational activities. As a result, Company N conducts an active trade or business in a qualified opportunity zone.

(iv) ***Nonqualified financial property limitation.*** Section 1400Z-2(d)(3)(A)(ii) incorporates section 1397C(b)(8), which requires that in each taxable year less than 5 percent of the average of the aggregate unadjusted bases of the property of a qualified opportunity zone business is attributable to nonqualified financial property. Section 1397C(e)(1), which defines the term *nonqualified financial property* for purposes of section 1397C(b)(8), excludes from that term reasonable amounts of working capital held in cash, cash equivalents, or debt instruments with a term of 18 months or less (working capital assets) and debt instruments described in section 1221(a)(4).

(v) ***Safe harbor for reasonable amount of working capital.*** Solely for purposes of applying section 1397C(e)(1) to the definition of a qualified opportunity zone business under section 1400Z-2(d)(3), working capital assets are treated as reasonable in amount for purposes of sections 1397C(b)(2) and 1400Z-2(d)(3)(A)(ii), if all of the requirements in paragraphs (d)(3)(v)(A) through (C) of this section are satisfied.

(A) ***Designated in writing.*** These amounts are designated in writing for the development of a trade or business in a qualified opportunity zone (as defined in section 1400Z-1(a)), including when appropriate the acquisition, construction, and/or substantial improvement of tangible property in such a zone.

(B) ***Reasonable written schedule.*** There is a written schedule consistent with the ordinary start-up of a trade or business for the expenditure of the working capital assets. Under the schedule, the working capital assets must be spent within 31 months of the receipt by the business of the assets.

(C) ***Property consumption consistent.*** The working capital assets are actually used in a manner that is substantially consistent with the writing and written schedule described in paragraphs (d)(3)(v)(A) and (B) of this section. If consumption of the working capital assets is delayed by waiting for governmental action the application for which is complete, that delay does not cause a failure of this paragraph (d)(3)(v)(C).

(D) ***Federally declared disasters.*** If the qualified opportunity zone business is located in a qualified opportunity zone within a federally declared disaster (as defined in section 165(i)(5)(A)), the qualified opportunity zone business may receive not more than an additional 24 months to consume its working capital assets, as long as it otherwise meets the requirements of paragraph (d)(3)(v) of this section.

(E) ***Ability of a single business to benefit from more than a single application of the safe harbor.*** A business may benefit from multiple overlapping or sequential applications of the working capital safe harbor, provided that each application independently satisfies all of the requirements in paragraphs (d)(3)(v)(A) through (C) of this section.

(vi) ***Safe harbor for section 1397C requirements other than "sin business" prohibition*** —

(A) ***Maximum 62-month safe harbor for start-up businesses.*** Property described in paragraphs (d)(3)(vi)(B), (C), and (D) of this section may benefit from one or more 31-month periods, for a total of 62 months, in the form of multiple overlapping or a sequential application of the working capital safe harbor if—

(*1*) Each application independently satisfies all of the requirements in paragraphs (d)(3)(v)(A) through (C) of this section;

(*2*) The working capital assets from an expiring 31-month period were expended in accordance with the requirements in paragraphs (d)(3)(v)(A) through (C) of this section;

(*3*) The subsequent infusions of working capital assets form an integral part of the plan covered by the initial working capital safe harbor period; and

(*4*) Each overlapping or sequential application of the working capital safe harbor includes a substantial amount of working capital assets (which may include debt instruments described in section 1221(a)(4)).

(B) ***Safe harbor for gross income derived from the active conduct of business.*** Solely for purposes of applying the 50-percent test in section 1397C(b)(2) to the definition of a qualified opportunity zone business in section 1400Z-2(d)(3), if any gross income is derived from property that paragraph (d)(3)(v) of this section treats as a reasonable amount of working capital, then that gross income is counted toward satisfaction of the 50-percent test.

(C) ***Safe harbor for use of intangible property.*** Solely for purposes of applying the use requirement in section 1397C(b)(4) to the definition of a qualified opportunity zone business under section 1400Z-2(d)(3), intangible property purchased or licensed by the

trade or business, pursuant to the reasonable written plan with a written schedule for the expenditure of the working capital, satisfies the use requirement during any period in which the business is proceeding in a manner that is substantially consistent with paragraphs (d)(3)(v)(A) through (C) of this section.

(D) ***Safe harbor for working capital and property on which working capital is being expended—***

(1) ***Working capital for start-up businesses.*** For start-up businesses utilizing the working capital safe harbor, if paragraph (d)(3)(v) of this section treats property of an entity that would otherwise be nonqualified financial property as being a reasonable amount of working capital because of compliance with the three requirements of paragraphs (d)(3)(v)(A) through (C) of this section, the entity satisfies the requirements of section 1400Z-2(d)(3)(A)(i) only during the working capital safe harbor period(s) for which the requirements of paragraphs (d)(3)(v)(A) through (C) of this section are satisfied; however such property is not qualified opportunity zone business property for any purpose.

(2) ***Tangible property acquired with covered working capital.*** For any eligible entity, if tangible property referred to in paragraph (d)(3)(v)(A) is expected to satisfy the requirements of section 1400Z-2(d)(2)(D)(i) as a result of the planned expenditure of working capital described in paragraph (d)(3)(v)(A), and is purchased, leased, or improved by the trade or business, pursuant to the written plan for the expenditure of the working capital, then the tangible property is treated as qualified opportunity zone business property satisfying the requirements of section 1400Z-2(d)(2)(D)(i), during that and subsequent working capital periods the property is subject to, for purposes of the *70-percent tangible property standard* in section 1400Z-2(d)(3).

(vii) ***Examples.*** The following examples illustrate the rules of paragraphs (d)(3)(v) and (vi) of this section.

(A) ***Example 1. General application of working capital safe harbor*** —

(1) ***Facts.*** QOF F creates a domestic C corporation E to open a fast-food restaurant and acquires almost all of the equity of E in exchange for cash. E has a written plan and a 20-month schedule for the use of this cash to establish the restaurant. Among the planned uses for the cash are identification of favorable locations in the qualified opportunity zone, leasing a building suitable for such a restaurant, outfitting the building with appropriate equipment and furniture (both owned and leased), necessary security deposits, obtaining a franchise and local permits, and the hiring and training of kitchen and wait staff. Not-yet-disbursed amounts were held in assets described in section 1397C(e)(1), and these assets were eventually expended in a manner consistent with the plan and schedule.

(2) ***Analysis.*** E's use of the cash qualifies for the working capital safe harbor described in paragraph (d)(3)(v) of this section.

(B) ***Example 2. Multiple applications of working capital safe harbor*** —

(1) ***Facts.*** QOF G creates a domestic C corporation H to start a new technology company and acquires equity of H in exchange for cash on Date 1. In addition to H's rapid deployment of capital received from other equity investors, H writes a plan with a 30-month schedule for the use of the Date 1 cash. The plan describes use of the

cash to research and develop a new technology (Technology), including paying salaries for engineers and other scientists to conduct the research, purchasing, and leasing equipment to be used in research and furnishing office and laboratory space. Approximately 18 months after Date 1, on Date 2, G acquires additional equity in H for cash, and H writes a second plan. This new plan has a 25-month schedule for the development of a new application of existing software (Application), to be marketed to government agencies. Among the planned uses for the cash received on Date 2 are paying development costs, including salaries for software engineers, other employees, and third-party consultants to assist in developing and marketing the new application to the anticipated customers. Not-yet-disbursed amounts that were scheduled for development of the Technology and the Application were held in assets described in section 1397C(e)(1), and these assets were eventually expended in a manner substantially consistent with the plans and schedules for both the Technology and the Application.

(2) ***Analysis.*** H's use of both the cash received on Date 1 and the cash received on Date 2 qualifies for the working capital safe harbor described in paragraph (d)(3)(v) of this section.

(C) ***Example 3. General application of working capital safe harbor*** —

(1) ***Facts.*** In 2019, Taxpayer H realized $w million of capital gains and within the 180-day period invested $w million in QOF T, a qualified opportunity fund. QOF T immediately acquired from partnership P a partnership interest in P, solely in exchange for $w million of cash. P immediately placed the $w million in working capital assets, which remained in working capital assets until used. P had written plans to acquire land in a qualified opportunity zone on which it planned to construct a commercial building. Of the $w million, $x million was dedicated to the land purchase, $y million to the construction of the building, and $z million to ancillary but necessary expenditures for the project. The written plans provided for purchase of the land within a month of receipt of the cash from QOF T and for the remaining $y and $z million to be spent within the next 30 months on construction of the building and on the ancillary expenditures. All expenditures were made on schedule, consuming the $w million. During the taxable years that overlap with the first 31-month period, P had no gross income other than that derived from the amounts held in those working capital assets. Prior to completion of the building, P's only assets were the land it purchased, the unspent amounts in the working capital assets, and P's work in process as the building was constructed.

(2) ***Analysis*** —P met the three requirements of the safe harbor provided in paragraphs (d)(3)(v)(A) through (C) of this section. P had a written plan to spend the $w received from QOF T for the acquisition, construction, and/or substantial improvement of tangible property in a qualified opportunity zone, as defined in section 1400Z-1(a). P had a written schedule consistent with the ordinary start-up for a business for the expenditure of the working capital assets. And, finally, P's working capital assets were actually used in a manner that was substantially consistent with its written plan and the ordinary start-up of a business. First, the $x million, the $y million, and the $z million are treated as reasonable in amount for purposes of sections 1397C(b)(2) and 1400Z-2(d)(3)(A)(ii). Second, because P had no other gross income during the 31 months at issue, 100 percent of P's gross income during that time is treated as

derived from an active trade or business in the qualified opportunity zone for purposes of satisfying the 50-percent test of section 1397C(b)(2). Third, for purposes of satisfying the requirement of section 1397C(b)(4), during the period of land acquisition and building construction a substantial portion of P's intangible property is treated as being used in the active conduct of a trade or business in the qualified opportunity zone. Fourth, all of the facts described are consistent with QOF T's interest in P being a qualified opportunity zone partnership interest for purposes of satisfying the 90-percent investment standard in section 1400Z-2(d)(1).

(3) ***Analysis if P had purchased an existing building.*** The conclusions would also apply if P's plans had been to buy and substantially improve a pre-existing commercial building. In addition, the fact that P's basis in the building has not yet doubled would not cause the building to fail to satisfy section 1400Z-2(d)(2)(D)(i)(III).

(D) ***Example 4. Multiple applications of working capital safe harbor to tangible property*** —

(1) ***Facts.*** QOF A forms a domestic C corporation B to develop a large mixed-use real estate development that will consist of commercial and residential real property, owning almost all of the equity of B in exchange for cash. To raise additional working capital for the mixed-use real estate development, B also will borrow cash under a new revolving credit agreement with an unrelated lender. B has a master written plan for the completion of the commercial and residential real property over a 55-month period. The plan provides that the commercial real property will be completed over a 30 month schedule and subsequently, the residential real property will be completed over a 25 month schedule. The plan further provides that a portion of the commercial real property is unable to be used in a trade or business after the completion of the commercial real property since that portion of the commercial real property will be unusable during the residential construction phase. Pursuant to B's original master plan for the completion of the real estate development, QOF A acquires additional equity in B for cash after the completion of the commercial development phase, and B commences use of those working capital assets for residential development phase.

(2) ***Analysis.*** B's use of the cash for the commercial and residential phase qualified for the working capital safe harbor described in paragraph (d)(3)(v) of this section. In addition, all of B's commercial real property developed pursuant to B's original master plan is treated as qualified opportunity zone business property under paragraph (d)(3)(vi)(D) of this section.

(viii) ***Safe harbor for property on which working capital is being expended*** —

(A) ***In general.*** If paragraph (d)(3)(v) of this section treats property that would otherwise be nonqualified financial property as being a reasonable amount of working capital because of compliance with the three requirements of paragraphs (d)(3)(v)(A) through (C) of this section and if the tangible property referred to in paragraph (d)(3)(v)(A) is expected to satisfy the requirements of section 1400Z-2(d)(2)(D)(i) as a result of the planned expenditure of those working capital assets, then tangible property purchased, leased, or improved by the trade or business, pursuant to the written plan for the expenditure of the working capital assets, is treated as qualified opportunity zone business property

satisfying the requirements of section 1400Z-2(d)(2)(D)(i), during that and subsequent working capital periods the property is subject to, for purposes of the *70-percent tangible property standard* in section 1400Z-2(d)(3).

(B) ***Example. Multiple applications of working capital safe harbor to tangible property*** —(i) *Facts.* B also borrows cash and forms a domestic C corporation B to develop a large mixed-use real estate development that will consist of commercial and residential real property, owning almost all of the equity of B in exchange for cash. QOF A has a master written plan for the completion of the commercial and residential real property over a 55 month period. The plan provides that the commercial real property will be completed over a 30 month schedule and subsequently, the residential real property will be completed over a 25 month schedule. The plan further provides that a portion of the commercial real property is unable to be used in a trade or business after the completion of the commercial real property since that portion of the commercial real property will be unusable during the residential construction phase. Pursuant to B's original master plan for the completion of the real estate development, QOF A acquires additional equity in B for cash after the completion of the commercial development phase, and B commences use of those working capital assets for residential development phase.

(*ii*) *Analysis.* B's use of the cash for the commercial and residential phase qualified for the working capital safe harbor described in paragraph (d)(3)(v) of this section. In addition, all of B's commercial real property developed pursuant to B's original master plan is treated as qualified opportunity zone business property under paragraph (d)(3)(viii) of this section.

(ix) ***Real property straddling a qualified opportunity zone.*** For purposes of satisfying the requirements in this paragraph (d)(3) in the case of real property that straddles a qualified opportunity zone, a qualified opportunity zone is the location of services, tangible property, or business functions if—

(A) The trade or business uses the portion of the real property located within a qualified opportunity zone in carrying out its business activities;

(B) The trade or business uses the real property located outside of a qualified opportunity zone in carrying out its business activities;

(C) The amount of the real property located within a qualified opportunity zone is substantial compared to the amount of real property located outside of a qualified opportunity zone; and

(D) The real property located in the qualified opportunity zone is contiguous to part, or all, of the real property located outside of the qualified opportunity zone.

(E) In general, one of the two methods in paragraph (d)(3)(ix)(E)(*1*) and (*2*) of this section may be chosen to determine whether the amount of real property located in the qualified opportunity zone is substantial compared to the amount of real property located outside the qualified opportunity zone.

(*1*) ***Square footage test.*** If the amount of real property based on square footage located within the qualified opportunity zone is greater than the amount of real property based on square footage outside of the qualified opportunity zone, and the real property outside of the qualified opportunity zone is contiguous to part or all of the

real property located inside the qualified opportunity zone, then all of the property is deemed to be located within a qualified opportunity zone. The test in this paragraph (d)(3)(ix)(E)(*1*) is carried out at the time at which the subject real property is acquired.

(*2*) ***Unadjusted cost test.*** If the unadjusted cost of the real property located inside a qualified opportunity zone is greater than the unadjusted cost of the real property outside the qualified opportunity zone, and the real property outside of the qualified opportunity zone is contiguous to all or part of the real property located inside the qualified opportunity zone, then all of the property is deemed to be located within a qualified opportunity zone. The unadjusted cost basis of property acquired as a single tract is presumed to be allocated on the basis of the square footage of the property. The test in this paragraph (d)(3)(ix)(E)(*2*) is carried out at the time at which the subject real property is acquired.

(F) For purposes of the two tests described in paragraph (d)(3)(ix)(E)(*1*) and (*2*) of this section, two or more tracts or parcels of land are contiguous if they share common boundaries or would share common boundaries but for the interposition of a road, street, railroad, stream or similar property. Tracts or parcels of land which touch only at a common corner are not contiguous.

(x) ***Example.*** The following example illustrates the rules of paragraph (d)(3) of this section—

(A) ***Facts.*** In 2019, Taxpayer H realized $w million of capital gains and within the 180-day period invested $w million in QOF T, a qualified opportunity fund. QOF T immediately acquired from partnership P a partnership interest in P, solely in exchange for $w million of cash. P immediately placed the $w million in working capital assets, which remained in working capital assets until used. P had written plans to acquire land in a qualified opportunity zone on which it planned to construct a commercial building. Of the $w million, $x million was dedicated to the land purchase, $y million to the construction of the building, and $z million to ancillary but necessary expenditures for the project. The written plans provided for purchase of the land within a month of receipt of the cash from QOF T and for the remaining $y and $z million to be spent within the next 30 months on construction of the building and on the ancillary expenditures. All expenditures were made on schedule, consuming the $w million. During the taxable years that overlap with the first 31-month period, P had no gross income other than that derived from the amounts held in those working capital assets. Prior to completion of the building, P's only assets were the land it purchased, the unspent amounts in the working capital assets, and P's work in process as the building was constructed.

(B) ***Analysis*** —

(*1*) P met the three requirements of the safe harbor provided in paragraph (d)(3)(v) of this section. P had a written plan to spend the $w received from QOF T for the acquisition, construction, and/or substantial improvement of tangible property in a qualified opportunity zone, as defined in section 1400Z-1(a). P had a written schedule consistent with the ordinary start-up for a business for the expenditure of the working capital assets. And, finally, P's working capital assets were actually used in a manner that was substantially consistent with its written plan and the ordinary

start-up of a business. Therefore, the $x million, the $y million, and the $z million are treated as reasonable in amount for purposes of sections 1397C(b)(2) and 1400Z-2(d)(3)(A)(ii).

(2) Because P had no other gross income during the 31 months at issue, 100 percent of P's gross income during that time is treated as derived from an active trade or business in the qualified opportunity zone for purposes of satisfying the 50-percent test of section 1397C(b)(2).

(3) For purposes of satisfying the requirement of section 1397C(b)(4), during the period of land acquisition and building construction a substantial portion of P's intangible property is treated as being used in the active conduct of a trade or business in the qualified opportunity zone.

(4) All of the facts described are consistent with QOF T's interest in P being a qualified opportunity zone partnership interest for purposes of satisfying the *90-percent investment standard* in section 1400Z-2(d)(1).

(C) ***Analysis if P had purchased an existing building.*** The conclusions in paragraph (d)(3)(x)(B) of this section would also apply if P's plans had been to buy and substantially improve a pre-existing commercial building. In addition, the fact that P's basis in the building has not yet doubled would not cause the building to fail to satisfy section 1400Z-2(d)(2)(D)(i)(III).

(4) ***Trade or businesses described in section 144(c)(6)(B) not eligible*** —

(i) Pursuant to section 1400Z-2(d)(3)(A)(iii), the following trades or businesses, and businesses leasing more than a de minimis amount of property to the following trades or businesses, cannot qualify as a qualified opportunity zone business:

(A) Any private or commercial golf course;

(B) Country club;

(C) Massage parlor;

(D) Hot tub facility;

(E) Suntan facility;

(F) Racetrack or other facility used for gambling; or

(G) Any store the principal business of which is the sale of alcoholic beverages for consumption off premises.

(ii) De minimis amounts of gross income attributable to a business described in section 144(c)(6)(B) will not cause a trade or business to fail to be a qualified opportunity zone business.

(iii) The term *de minimis amount of property,* used in paragraph (d)(4)(i) of this section, means less than 5 percent of the net rentable square feet for real property and less than 5 percent of the value for all other tangible property. The term *de minimis amount of gross income,* used in paragraph (d)(4)(ii) of this section, means less than 5 percent of the gross income of the qualified opportunity zone business may be attributable to the types of business described in section 144(c)(6)(B).

(iv) The following examples illustrate the rules of paragraph (d)(4) of this section:

(A) ***Example 1.*** Entity A is a QOF that meets the requirements of section 1400Z-2(d)(1). Entity A owns qualified opportunity zone stock in a domestic corporation described in section 1400Z-2(d)(2)(B), which operates a hotel located in a qualified opportunity zone that qualifies as a trade or business. As part of that trade or business, the hotel operates a spa that provides massages and other therapies. Less than 5 percent of the hotel's total gross income is attributable to the spa, and less than 5 percent of the net rentable square feet for real property and less than 5 percent of the value for all other tangible property is attributable to the spa. As a result, the operation of the spa, which is a business described in section 144(c)(6)(B), will not prevent the operation of the hotel from qualifying as a qualified opportunity zone business.

(B) ***Example 2*** —

(*1*) ***Facts.*** Entity B is a qualified opportunity zone business that meets the requirements of section 1400Z-2(d)(3). Entity B plans to acquire a commercial golf course that consists of land and other related buildings and equipment in a qualified opportunity zone, that will satisfy each requirement for qualified opportunity zone business property set forth in section 1400Z-2(d)(2)(D). Instead of directly managing and operating the commercial golf course business, Entity B will lease the land and other related buildings and equipment to a third party to manage and operate the commercial golf course. The leased real property represents more than 5 percent of the net rentable square feet of Entity B's real property and the leased and other tangible property represents more than 5 percent of the value for all other tangible property of Entity B.

(*2*) ***Analysis.*** Because a golf course is prohibited from being a qualified trade or business under section 1400Z-2(d)(3)(A)(iii), the leasing arrangement will cause Entity B to fail to be a qualified opportunity zone business regardless of the satisfaction of each requirement set forth in section 1400Z-2(d)(2)(D).

(C) ***Example 3*** —

(*1*) ***Facts.*** Entity B meets the explicit requirements of section 1400Z-2(d)(1) and has certified itself as a QOF. Entity B owns a commercial golf course that consists of land and other related buildings and equipment in a qualified opportunity zone, and the land and buildings satisfy all explicit requirements (in section 1400Z-2(d)(2)(D)) to be qualified opportunity zone business property. Entity B manages and operates the commercial golf course business, but does not manage or operate any other trade or business not described in section 144(c)(6)(B) (listing businesses not eligible to be a qualified opportunity zone business pursuant to section 1400Z-2(d)(3)(A)(iii)). Entity B chose to operate the commercial golf course through Entity B, rather than through a qualified opportunity zone business, in order to avoid the requirement in section 1400Z-2(d)(3)(A)(iii), which provides that a qualified opportunity zone business cannot operate a commercial golf course due to the inclusion of that trade or business in section 144(c)(6)(B).

(*2*) ***Analysis.*** The ownership and operation of the golf course at the QOF level will not disqualify the QOF because the prohibition on businesses described in section 144(c)(6)(B) is not applicable at the QOF level. In addition, if each requirement set

forth in section 1400Z-2(d)(2)(D) is satisfied, the property used in the commercial golf course will qualify as qualified opportunity zone business property held by Entity B for purposes of section 1400Z-2(d)(2)(A).

(5) ***Tangible property of a qualified opportunity zone business that ceases to be qualified opportunity zone business property.*** For qualified opportunity zone businesses, tangible property that ceases to be qualified opportunity zone business property shall continue to be treated as qualified opportunity zone business property for the lesser of five years after the date on which such tangible property ceases to be so qualified or the date on which such tangible property is no longer held by the qualified opportunity zone business. However, tangible property is not eligible for the benefits provided in this paragraph (d)(5) unless the tangible property ceasing to qualify as qualified opportunity zone business property was qualified opportunity zone business property used by a qualified opportunity zone business in a qualified opportunity zone for two years. For purposes of this paragraph (d)(5), tangible property purchased, leased, or improved by a trade or business, that is treated as satisfying the requirements of section 1400Z-2(d)(2)(D)(i) during that working capital safe harbor period pursuant to paragraph (d)(3)(v) of this section or that 30-month substantial improvement period described in § 1.1400Z2(d)-2(b)(4), is not treated as used by a qualified opportunity zone business in a qualified opportunity zone for any portion of the two year period described in this paragraph (d)(5).

(6) ***Cure period for qualified opportunity zone businesses.***

(i) For purposes of the *90-percent qualified opportunity zone business holding period* requirements set forth in sections 1400Z-2(d)(2)(B)(i)(III), 1400Z-2(d)(2)(C)(iii), and 1400Z-2(d)(2)(D)(i)(III), if a trade or business causes the QOF to fail the *90-percent investment standard* on a semiannual testing date, the QOF may treat the stock or partnership interest in that trade or business as qualified opportunity zone property for that semiannual testing date provided the trade or business corrects the failure within 6 months of the date on which the stock or partnership interest lost its qualification.

(ii) If the failure occurs on the last testing date of the taxable year, the six-month cure period described in paragraph (d)(6)(i) of this section is available to the QOF only if the QOF files a valid application for an extension of time to file its tax return.

(iii) Each QOF is permitted only one correction for a trade or business pursuant to this paragraph (d)(6). If the entity, at the end of the additional six-month cure period, fails to qualify as a qualified opportunity zone business, then the QOF becomes subject to the penalty under section 1400Z-2(f)(1) for each month the entity failed to qualify as a qualified opportunity zone business beginning with the first month following the last month that the QOF met the *90-percent investment standard*.

(e) ***Applicability dates*** —

(1) ***In general.*** The provisions of this section are applicable for taxable years beginning after March 13, 2020.

(2) ***Prior periods.*** With respect to the portion of a taxpayer's first taxable year ending after December 21, 2017, and for taxable years beginning after December 21, 2017, and on or before March 13, 2020, a taxpayer may choose either—

(i) To apply the section 1400Z-2 regulations, if applied in a consistent manner for all such taxable years (reliance by a taxpayer on paragraph (e)(2)(ii) of this section, § 1.1400Z2(a)-1(g)(2)(ii), § 1.1400Z2(b)-1(j)(2)(ii), § 1.1400Z2(d)-2(e)(2)(ii), or § 1.1400Z2(f)-1(d)(2)(ii), is disregarded solely for purposes of the consistency requirement under this paragraph (e)(2)(i)); or

(ii) To rely on the rules in proposed § 1.1400Z2(d)-1 contained in the notice of proposed rulemaking (REG-115420-18) published on October 29, 2018, as amplified by the notice of proposed rulemaking (REG-120186-18) published on May 1, 2019, but only if applied in a consistent manner for all such taxable years.

[T.D. 9889, 85 FR 1977, Jan. 13, 2020; 85 FR 19083, April 6, 2020; T.D. 9889, 86 FR 42716, Aug. 5, 2021]

Editorial Note: At 85 FR 19083, April 6, 2020, § 1.1400Z2(d)-1 was amended in part by redesignating paragraphs (d)(3)(ix) and (x) as (d)(3)(viii) and (ix); however, the amendment could not be incorporated due to inaccurate amendatory instruction.

§ 1.1400Z2(d)-2 Qualified opportunity zone business property.

(a) ***Qualified opportunity zone business property*** —

(1) ***In general.*** This section provides rules for determining whether owned or leased tangible property held by an eligible entity (within the meaning of § 1.1400Z2(d)-1(a)(1)) is qualified opportunity zone business property within the meaning of section 1400Z-2(d)(2)(D). Paragraph (a)(2) of this section provides general requirements that tangible property must satisfy to be qualified opportunity zone business property. Paragraph (b) of this section provides rules related to owned tangible property. Paragraph (c) of this section provides rules related to leased tangible property (that is, tangible property that the eligible entity acquires by lease from a lessor). Paragraph (d) of this section provides rules related to the 90-percent qualified opportunity zone business property holding period requirement and the 70-percent use test of section 1400Z-2(d)(2)(D)(i)(III). Paragraph (e) of this section provides the dates of applicability of this section.

(2) ***Qualified opportunity zone business property requirements.*** The term *qualified opportunity zone business property* means tangible property owned or leased by an eligible entity (as defined in § 1.1400Z2(d)-1(a)(1)) that—

(i) Is used by the eligible entity in a trade or business within the meaning of section 162; and

(ii) Satisfies the requirements of paragraphs (b), (c), and (d) of this section, as applicable.

(b) ***Tangible property owned by an eligible entity*** —

(1) ***Purchase requirement*** —

(i) ***In general.*** In the case of tangible property that is owned by an eligible entity, the tangible property must be acquired by the eligible entity after December 31, 2017, by purchase as defined by section 179(d)(2) from a person that is not a related person within the meaning of section 1400Z-2(e)(2) (providing that persons are related to each other if such persons are described in section 267(b) or section 707(b)(1), determined by substituting “20 percent” for “50 percent” each place it appears in such sections).

(ii) ***Plan, intent, or expectation for seller to repurchase acquired property.*** In the case of real property that is purchased by an eligible entity, if, at the time of the purchase, there was a plan, intent, or expectation for the acquired real property to be repurchased by the seller of the real property for an amount of consideration other than the fair market value of the real property, determined at the time of the repurchase by the seller, the purchased real property is not qualified opportunity zone business property.

(iii) ***Property manufactured, constructed, or produced for use in a qualified opportunity zone*** —

(A) ***In general.*** In the case of tangible property manufactured, constructed, or produced by an eligible entity, if the property is manufactured, constructed, or produced for use by an eligible entity with the intent to use such property in a trade or business in a qualified opportunity zone, then such property satisfies the requirements of paragraph (b)(1)(i) of this section if the manufacture, construction, or production begins after December 31, 2017. The materials and supplies used to manufacture, construct, or produce qualified opportunity zone business property by the eligible entity must also be qualified opportunity zone business property.

(B) ***Time when manufacture, construction or production considered to begin.*** For purposes of paragraph (b)(1)(iii) of this section, the acquisition date of such property is the date on which the manufacture, construction, or production of property (as defined in paragraph (b)(1)(iii) of this section) begins. The manufacture, construction, or production of property begins when physical work of a significant nature begins. Physical work does not include preliminary activities such as planning or designing, securing financing, exploring or researching. The determination of when physical work of a significant nature begins depends on the facts and circumstances. For example, if a factory is to be constructed on-site, construction begins when physical work of a significant nature commences at the site; this could occur, for example, when work begins on the excavation of footings, or the pourings of pads for the factory. Preliminary work, such as clearing or testing of soil condition, does not constitute the beginning of construction.

(C) ***Safe harbor.*** For purposes of paragraph (b)(1)(iii)(B) of this section, a taxpayer may choose to determine when physical work of a significant nature begins in accordance with this paragraph (b)(1)(iii)(C). Physical work of a significant nature will not be considered to begin before the taxpayer incurs or pays more than 10 percent of the total cost of the property (excluding the cost of any land and preliminary activities such as planning or designing, securing financing, exploring, or researching).

(2) ***Original use or substantial improvement requirement*** —

(i) ***In general.*** In the case of tangible property owned by the eligible entity either—

(A) The original use of the owned tangible property in the qualified opportunity zone, within the meaning of paragraph (b)(3) of this section, must commence with the eligible entity; or

(B) The eligible entity must substantially improve the owned tangible property within the meaning of paragraph (b)(4) of this section (which defines substantial improvement in this context).

(ii) ***Inventory.*** Inventory (including raw materials) of a trade or business produced by an eligible entity after December 31, 2017, is deemed to satisfy the requirements set forth in paragraphs (b)(1) and (b)(2)(i) of this section.

(3) *Original use of tangible property acquired by purchase* —

(i) *Original use* —

(A) ***In general.*** For purposes of paragraph (b)(2) of this section, the original use of tangible property in a qualified opportunity zone commences on the date any person first places the property in service in the qualified opportunity zone for purposes of depreciation or amortization, or first uses it in a manner that would allow depreciation or amortization if that person were the property's owner.

(B) ***Commencement of original use of vacant property.*** For purposes of this paragraph (b)(3), if real property, including land and buildings, has been vacant for an uninterrupted period of at least one calendar year beginning on a date prior to the date on which the qualified opportunity zone in which the property is located is listed as a designated qualified opportunity zone in a QOZ designation notice and the property has remained vacant through the date on which the property was purchased by the eligible entity, or if the property has been vacant for an uninterrupted three calendar year period beginning on a date after the date of publication of the QOZ designation notice that lists as designated the qualified opportunity zone in which the property is located and the property has remained vacant through the date on which the property was purchased by the eligible entity, original use in the qualified opportunity zone commences on the date after that period when any person first so uses or places the property in service in the qualified opportunity zone. Such property must satisfy the definition of vacancy under paragraph (b)(3)(iii) of this section.

(C) ***Used tangible property.*** Used tangible property satisfies the original use requirement if the property has not been previously so used or placed in service in the qualified opportunity zone. If the tangible property had been so used or placed in service in the qualified opportunity zone before it is acquired by purchase, it must be substantially improved in order to satisfy the requirements of section 1400Z-2(d)(2)(D)(i)(II).

(D) ***Example.*** The following example illustrates the principles of paragraph (b)(3)(i)(A) of this section.

(*1*) ***Facts.*** On January 1, 2019, QOF A purchases from a developer a newly constructed hotel building located in a qualified opportunity zone for $10 million. The developer purchased a parcel of land in that qualified opportunity zone, and constructed the hotel building thereon, with the intent and expectation to sell the building to a QOF. As of the time of the purchase, the developer had not placed the hotel building in service in the qualified opportunity zone for purposes of depreciation. Other than the original use requirement, assume that the hotel building satisfies all requirements under section 1400Z-2(d)(2)(D). In addition, assume that, at the time of the purchase, the developer had no plan, intent, or expectation to repurchase the hotel building.

(*2*) ***Analysis.*** At the time of QOF A's purchase of the hotel building, the original use of the hotel building had not commenced because the developer had not yet placed the hotel building into service for purposes of depreciation in a qualified opportunity zone. See paragraph (b)(3)(i)(A) of this section. Therefore, the original use of the hotel building in the qualified opportunity zone in which the building is located is

treated as commencing with QOF A. See paragraph (b)(3)(i)(A) of this section. As a result, the hotel building purchased by QOF A is treated as satisfying the original use requirement of section 1400Z-2(d)(2)(D)(i)(II).

(ii) ***Lessee improvements to leased property.*** Improvements made by a lessee to leased property satisfy the original use requirement in section 1400Z-2(d)(2)(D)(i)(II) as purchased property for the amount of the unadjusted cost basis under section 1012 of such improvements.

(iii) ***Vacancy.*** Solely for purposes of meeting the requirements of section 1400Z-2, real property, including land and buildings, is considered to be in a state of vacancy if the property is significantly unused. A building or land will be considered significantly unused if more than 80 percent of the building or land, as measured by the square footage of useable space, is not currently being used.

(iv) ***Brownfield sites.*** An eligible entity that purchases a parcel of land that is a brownfield site, as defined by section 101 of the Comprehensive Environmental Response, Compensation, and Liability Act of 1980 (42 U.S.C. 9601) (brownfield site), may treat all property composing the brownfield site (including the land and structures thereon) as satisfying the original use requirement of section 1400Z-2(d)(2)(D)(i)(II), if, within a reasonable period, the eligible entity makes investments in the brownfield site to ensure that all property composing the brownfield site meets basic safety standards for both human health and the environment.

(v) ***Property involuntarily transferred to local government.*** An eligible entity that purchases real property from a local government that the local government holds as the result of an involuntary transfer (including through abandonment, bankruptcy, foreclosure, or receivership) may treat all property composing the real property (including the land and structures thereon) as satisfying the original use requirement of section 1400Z-2(d)(2)(D)(i)(II).

(4) ***Substantial improvement of tangible property acquired by purchase*** —

(i) ***In general.*** Except as provided in paragraph (b)(4)(iv) of this section, for purposes of paragraph (b)(2) of this section, tangible property is treated as substantially improved by an eligible entity only if it meets the requirements of section 1400Z-2(d)(2)(D)(ii) during the *30-month substantial improvement period.* The property has been substantially improved when the additions to basis of the property in the hands of the QOF exceed an amount equal to the adjusted basis of such property at the beginning of such 30-month period in the hands of the QOF (substantial improvement requirement).

(ii) ***Treatment of property in the 30-month substantial improvement period.*** For purposes of the *90-percent investment standard* under section 1400Z-2(d)(1), tangible property purchased, leased, or improved by a trade or business that is undergoing the substantial improvement process but has not yet been placed in service by the eligible entity or used in the eligible entity's trade or business is treated as satisfying the requirements of section 1400Z-2(d)(2)(D)(i) and paragraph (b)(2) of this section for the *30-month substantial improvement period* with respect to that property provided the eligible entity reasonably expects that the property will be substantially improved as defined in paragraph (b)(4)(i) of this section and used in the eligible entity's trade or business in a qualified opportunity zone by the end of such 30-month period. Tangible property described in the preceding sentence is not considered qualified opportunity zone business property for purposes of the special rule in section 1400Z-2(d)(3)(B) unless the tangible property is qualified opportunity zone business property for at least two years without regard to this paragraph (b)(4)(ii).

(iii) *Aggregation of original use property that improves the functionality of non-original use property* —

(A) ***General rule.*** The cost of purchased property that would otherwise qualify as qualified opportunity zone business property may be taken into account in determining whether additions to the basis of non-original use property acquired by purchase satisfy the substantial improvement requirement under section 1400Z-2(d)(2)(D)(ii), so long as the purchased property is located in the same qualified opportunity zone (or a contiguous qualified opportunity zone) as the non-original use property, is used in the same trade or business as the non-original use property, and improves the functionality of the non-original use property.

(B) ***Improvement of non-original use real property.*** If an eligible entity chooses to apply this paragraph (b)(4)(iii) to non-original use real property, the eligible entity must improve the non-original use real property by more than an insubstantial amount within the meaning of paragraph (b)(4)(iv)(C) of this section.

(C) ***Effect on purchased property.*** If an eligible entity chooses to apply this paragraph (b)(4)(iii), the purchased property that would otherwise qualify as qualified opportunity zone business property will not be treated as original use property, and instead the basis of that purchased property will be taken into account in determining whether additions to the basis of the non-original use property satisfy the requirements under section 1400Z-2(d)(2)(D)(i)(II) and (d)(2)(D)(ii).

(D) ***Examples.*** The following examples illustrate the principles of paragraph (b)(4)(iii) of this section.

(*1*) *Example 1* —

(*i*) ***Facts.*** On January 1, 2019, QOF A purchases the assets of a hotel business located in a qualified opportunity zone for $5 million. The purchased assets include land, a building, linens, furniture and other fixtures attached to the building. $1 million of the purchase price is allocated to land and the remaining $4 million is allocated to the building, furniture and fixtures. During the course of renovations over the 30-month substantial improvement period, the QOF spent $1 million replacing linens, mattresses and furniture, $500,000 on the purchase of new exercise equipment for a gym located in the hotel building, $1 million on renovations for a restaurant (including restaurant equipment) attached to the hotel, and $1.5 million on structural renovations to the hotel. The QOF chooses to apply paragraph (b)(4)(iii) of this section to determine whether the substantial improvement requirement in section 1400Z-2(d)(2)(D)(ii) is met.

(*ii*) ***Analysis.*** In order for the hotel to be considered qualified opportunity zone business property, QOF A must substantially improve the hotel as the hotel had previously been placed in service in the qualified opportunity zone. (QOF A was not required to substantially improve the land on which the hotel was located pursuant to paragraph (b)(4)(iv) of this section.) Because the amount of basis allocated to the hotel was $4 million, QOF A must expend $4 million to improve the hotel within the 30-month substantial improvement period provided in section 1400Z-2(d)(2)(D)(ii). The new linens, mattresses and furniture, new

exercise equipment, and new restaurant equipment all qualify as original use assets under section 1400Z-2(d)(2)(D)(i)(II). QOF A also substantially improved the hotel, which was the asset that needed to be improved under section 1400Z-2(d)(2)(D)(i)(II). QOF A chose, at the start of the 30-month period, to include the costs of the newly purchased assets that improve the functionality of the hotel to the basis of the hotel. Thus, the cost of these items is eligible to be added to the hotel's basis pursuant to paragraph (b)(4)(iii) of this section. Therefore, QOF A has met the substantial improvement requirement under section 1400Z-2(d)(2)(D)(i)(II) by doubling its basis in the hotel and its fixtures within the 30-month substantial improvement period. The amounts spent replacing linens, mattresses, furniture, exercise equipment, and new restaurant equipment that were counted toward the substantial improvement requirement for the hotel are not considered original use assets for purposes of the *90-percent investment standard*.

(*2*) ***Example 2*** *—*

(*i*) ***Purchase of unrelated property.*** The facts are the same as in paragraph (b)(4)(iii)(D)(*1*)(*i*) of this section, except that in addition to purchasing the hotel and the related land, QOF A also purchases an apartment building one block away from the hotel for $10 million. The apartment building is located in the same qualified opportunity zone as the hotel.

(*ii*) ***Analysis.*** QOF A may not include any improvements made to the apartment building, including purchased property that improves the functionality of the apartment building, to the basis of the hotel. QOF A may choose, under paragraph (b)(4)(iii) of this section, to include the purchased property that improves the functionality of the apartment building in the basis of the apartment building for purposes of the substantial improvement requirement under section 1400Z-2(d)(2)(D)(i)(II).

(iv) ***Special rules for land and improvements on land*** *—*

(A) ***Buildings located in a qualified opportunity zone.*** In accordance with the rules set forth in this paragraph (b)(4)(iv)(A), if an eligible entity purchases a building located on a parcel of land within the geographic borders of a qualified opportunity zone, for purposes of section 1400Z-2(d)(2)(D)(ii), a substantial improvement to the building is measured by the eligible entity's additions to the basis of the building, as determined under section 1012.

(B) ***Unimproved land.*** Unimproved land that is within a qualified opportunity zone and acquired by purchase in accordance with section 1400Z-2(d)(2)(D)(i)(I) is not required to be substantially improved within the meaning of section 1400Z-2(d)(2)(D)(i)(II) and (d)(2)(D)(ii).

(C) ***Exception for insubstantially improved land.*** Notwithstanding paragraph (b)(4)(iv)(B) of this section, if the land is unimproved or minimally improved and the eligible entity purchases the land with an expectation or an intention to not improve the land by more than an insubstantial amount within 30 months after the date of purchase, paragraph (b)(4)(iv)(B) of this section does not apply with respect to such land and such land is not considered qualified opportunity zone business property unless it is substantially improved within the meaning of sections 1400Z-2(d)(2)(D)(i)(II) and (d)(2)(D)(ii). In determining whether an

eligible entity had an expectation or an intention to improve the land by more than an insubstantial amount, improvements to the land by the eligible entity (including grading, clearing of the land, remediation of the contaminated land, or acquisition of related qualified opportunity zone business property that facilitates the use of the land in a trade or business of the eligible entity) will be taken into account.

(D) ***Remediation of contaminated land.*** Betterments to land within the meaning of § 1.263(a)-3(j)(1)(i) may be added to the basis of the purchased land and included for purposes of section 1400Z-2(d)(2)(D)(ii) if the betterments are paid for by the eligible entity.

(E) ***Separate improvement to underlying land not required.*** In determining whether the substantial improvement test under section 1400Z-2(d)(2)(D) has been met with respect to a building, there is no requirement that the eligible entity separately substantially improve the land upon which the building is located.

(v) ***Aggregation of purchased buildings*** —

(A) ***Substantial improvement requirement for eligible building group.*** For purposes of applying the substantial improvement requirement under sections 1400Z-2(d)(2)(D)(i)(II) and 1400Z-2(d)(2)(D)(ii), an eligible entity may apply paragraph (b)(4)(v)(D) of this section with respect to two or more buildings located within a qualified opportunity zone or a single series of contiguous qualified opportunity zones, as described in paragraph (b)(4)(v)(B) or (C) of this section (eligible building group), respectively.

(B) ***Eligible building group located entirely within parcel of land described in single deed.*** All buildings comprising an eligible building group may be treated as a single property as that term is used in section 1400Z-2(d)(2)(D)(ii) (single property), if each building comprising the eligible building group is located entirely within the geographic borders of a parcel of land described in a single deed.

(C) ***Eligible building group spanning contiguous parcels of land described in separate deeds.*** An eligible entity may treat all buildings comprising an eligible building group located entirely within the geographic borders of contiguous parcels of land described in separate deeds as a single property to the extent each building is operated as part of one or more trades or businesses that—

(*1*) Are operated exclusively by the eligible entity;

(*2*) Share facilities or share significant centralized business elements, such as personnel, accounting, legal, manufacturing, purchasing, human resources, or information technology resources; and

(*3*) Are operated in coordination with, or reliance upon, one or more of the trades or businesses (for example, supply chain interdependencies or mixed-use facilities).

(D) ***Calculation of aggregate building basis and additions to basis of single property*** —

(*1*) ***In general.*** For purposes of the substantial improvement requirement under section 1400Z-2(d)(2)(D)(ii), the amount of basis required to be added to the portion of an eligible building group treated as a single property equals the total amount of basis calculated by adding the basis of each building comprising the single property at the

beginning of the 30-month period and additions to the basis of each building comprising the single property are aggregated to determine satisfaction of the substantial improvement requirement.

(2) ***Aggregation of original use property that improves the functionality of single property.*** In applying paragraph (b)(4)(v)(D)(*1*) of this section, purchased property that would otherwise qualify as qualified opportunity zone business property may be taken into account in determining whether additions to the basis of a single property described in paragraph (b)(4)(v)(B) or (C) of this section satisfy the substantial improvement requirement under section 1400Z-2(d)(2)(D)(ii).

(c) ***Tangible property leased by an eligible entity.*** In the case of tangible property with respect to which an eligible entity is a lessee—

(1) ***Qualifying acquisition of possession.*** The tangible property must be acquired by the eligible entity under a lease entered into after December 31, 2017.

(2) ***Arms-length terms*** —

(i) ***General rule.*** The terms of the lease must be market rate (that is, the terms of the lease reflect common, arms-length market pricing in the locale that includes the qualified opportunity zone as determined under section 482 and all section 482 regulations in this chapter) at the time that the lease was entered into.

(ii) ***Rebuttable presumption regarding unrelated persons.*** There will be a rebuttable presumption that the terms of the lease were market rate for leases between persons not related within the meaning of section 1400Z-2(e)(2) (unrelated persons), and thus, the parties to the lease are not required to perform a section 482 analysis.

(iii) ***Exception for state, local, and Indian tribal governments.*** For purposes of this paragraph (c)(2), tangible property acquired by lease from a state or local government, or an Indian tribal government, is not considered tangible property acquired by lease from a related person within the meaning of section 1400Z-2(e)(2) (related person).

(3) ***Additional requirements for tangible property leased from a related person.*** If the lessor is a related person with respect to an eligible entity that is the lessee of tangible property, the requirements of paragraphs (c)(3)(i) and (ii) of this section, as applicable, must be satisfied in order for the tangible property to be treated as qualified opportunity zone business property.

(i) ***Prepayments of not more than one year.*** The lessee at no time makes any prepayment in connection with the lease relating to a period of use of the tangible property that exceeds 12 months.

(ii) ***Purchase of other qualified opportunity zone business property.*** In the case of leased tangible property that is personal property, if the original use of the leased tangible personal property in a qualified opportunity zone (within the meaning of paragraph (c)(3)(iii) of this section) does not commence with the lessee, the property is not qualified opportunity zone business property unless, during the relevant testing period (as defined in paragraph (c)(3)(iv) of this section), the lessee becomes the owner of tangible property that is qualified opportunity zone business property having a value not less than the value of that leased tangible personal property. There

must be substantial overlap of the qualified opportunity zone(s) in which the owner of the tangible property so acquired uses it and the qualified opportunity zone(s) in which that person uses the leased tangible personal property.

(iii) ***Original use of leased tangible property*** —

(A) ***In general.*** For purposes of paragraph (c)(3)(ii) of this section, the original use of leased tangible property in a qualified opportunity zone commences on the date any person first places the property in service in the qualified opportunity zone for purposes of depreciation (or first uses the property in the qualified opportunity zone in a manner that would allow depreciation or amortization if that person were the property's owner).

(B) ***Used leased tangible property.*** Used leased tangible personal property can satisfy the original use requirement if the property has not been previously so used or placed in service in the qualified opportunity zone.

(iv) ***Relevant testing period.*** For purposes of paragraph (c)(3)(ii) of this section, the *relevant testing period* is the period that begins on the date that the lessee receives possession under the lease of the leased tangible personal property and ends on the earlier of—

(A) The date 30-months after the date the lessee receives possession of the leased tangible personal property under the lease; or

(B) The last day of the term of the lease (within the meaning of § 1.1400Z2(d)-1(b)(4)(iii)(D)).

(4) ***Plan, intent, or expectation for purchases not for fair market value.*** In the case of real property that is leased by an eligible entity, if, at the time the lease is entered into, there was a plan, intent, or expectation for the real property to be purchased by the eligible entity for an amount of consideration other than the fair market value of the real property determined at the time of the purchase without regard to any prior lease payments, the leased real property is not qualified opportunity zone business property.

(d) ***Holding period and use within a qualified opportunity zone of owned or leased tangible property*** —

(1) ***In general.*** In the case of tangible property that is owned or leased by an eligible entity, during substantially all of the eligible entity's holding period for the tangible property, substantially all of the use of the tangible property must be in a qualified opportunity zone.

(2) ***Valuation of owned and leased property.*** For purposes of the 70-percent use test in paragraph (d)(4) of this section, the value of owned and leased property is required to be determined in accordance with the valuation methodologies provided in § 1.1400Z2(d)-1(b), and such value in the case of leased tangible personal property is to be determined on the date the lessee receives possession of the tangible personal property under the lease.

(3) ***Substantially all of an eligible entity's holding period for owned or leased tangible property*** —

(i) ***In general.*** For purposes of determining whether the holding period requirement in paragraph (d)(1) of this section is satisfied, the term *substantially all* means at least 90 percent. The holding period requirement is applied on a semiannual basis, based on the entire amount of time the eligible entity has owned or leased such property. Thus, on each semiannual testing date of the eligible entity, the tangible property satisfies the 90-percent qualified opportunity

zone business property holding period requirement of section 1400Z-2(d)(2)(D)(i)(III) only if, during at least 90 percent of the period during which the QOF has owned or leased the property, the property has satisfied the 70-percent use test in paragraph (d)(4) of this section.

(ii) ***Semiannual qualified opportunity zone business test.*** For purposes of determining satisfaction of the 90-percent qualified opportunity zone business property holding period test described in paragraph (d)(3)(i) of this section in the case of a QOF, the determination of whether property satisfies the 70-percent use test is made on a semiannual basis pursuant to section 1400Z-2(d)(1) and paragraph (d)(4) of this section.

(4) ***Substantially all of the use of owned or leased tangible property in a qualified opportunity zone*** —

(i) ***Qualified tangible property.*** Tangible property used in a trade or business of an eligible entity satisfies the *substantially all* requirement of paragraph (d)(1) of this section if and only if the tangible property is qualified tangible property. Qualified tangible property is tangible property that satisfies the requirements of paragraph (d)(4)(ii), (iii) (subject to the limitation in paragraph (d)(4)(iv) of this section), or (v) of this section.

(ii) ***70-percent use test.*** Tangible property held by a trade or business is qualified tangible property to the extent, based on the number of days between two consecutive semiannual testing dates, not less than 70 percent of the total utilization of the tangible property by the trade or business occurs at a location within the geographic borders of a qualified opportunity zone (that is, the 70-percent use test).

(iii) ***Safe harbor for tangible property utilized in rendering services inside and outside of a qualified opportunity zone.*** Subject to the limitation described in paragraph (d)(4)(iv) of this section, tangible property utilized by a trade or business in rendering services both inside and outside of the geographic borders of a qualified opportunity zone may be treated as qualified tangible property if—

(A) The tangible property utilized in rendering the service directly generates gross income for the trade or business both inside and outside of the geographic borders of a qualified opportunity zone;

(B) The trade or business has an office or other facility located within the geographic borders of a qualified opportunity zone (QOZ office);

(C) The tangible property is operated by employees of the trade or business who—

(*1*) Regularly use a QOZ office of the trade or business in the course of carrying out their duties; and

(*2*) Are managed directly, actively, and substantially on a day-to-day basis by one or more employees of the trade or business who carry out their duties at a QOZ office; and

(D) The tangible property is not operated exclusively outside of the geographic borders of a qualified opportunity zone for a period longer than 14 consecutive days for the generation of gross income for the trade or business.

(iv) ***Limitation.*** For purposes of the *70-percent tangible property standard,* the safe harbor provided in paragraph (d)(4)(iii) of this section may not be used to treat more than 20 percent of the tangible property of the trade or business as qualified tangible property.

(v) ***Safe harbor for tangible property owned by leasing businesses with QOZ offices.*** Tangible property of a trade or business, the employees of which use a QOZ office of the trade or business to regularly lease such tangible property to customers of the trade or business, may be treated as qualified tangible property if—

(A) Consistent with the normal, usual, or customary conduct of the trade or business, when not subject to a lease to a customer of the trade or business, the tangible property is parked or otherwise stored at a QOZ office; and

(B) No lease under which a customer of the trade or business acquires possession of the tangible property is for a duration (including extensions) longer than 30 consecutive days.

(vi) ***Use of tangible property in one or more qualified opportunity zones.*** In accordance with paragraphs (d)(4)(ii) through (v) of this section, if qualified tangible property is utilized by the trade or business in one or more qualified opportunity zones, satisfaction of the 70-percent use test is determined by aggregating the number of days the tangible property is utilized by the trade or business in each qualified opportunity zone.

(vii) ***Real property straddling a qualified opportunity zone.*** For purposes of satisfying the requirements in this paragraph (d), the rules of § 1.1400Z2(d)-1(d)(3)(ix) apply to a QOF or qualified opportunity zone business for determining whether real property is situated in a qualified opportunity zone.

(viii) ***Safe harbor for inventory in transit*** —

(A) ***In general.*** In determining whether tangible property is used in a qualified opportunity zone for purposes of applying the 70-percent use test under paragraph (d)(4) of this section, inventory (including raw materials) of a trade or business does not fail to be used in a qualified opportunity zone solely because the inventory is in transit—

(*1*) From a vendor to a facility of the trade or business that is in a qualified opportunity zone; or

(*2*) From a facility of the trade or business that is in a qualified opportunity zone to customers of the trade or business that are not located in a qualified opportunity zone.

(B) ***No effect from certain events in transit.*** The distance traveled by the inventory while it is in transit, or the fact that the inventory is briefly warehoused while in transit, does not affect the application of the safe harbor described in paragraph (d)(4)(viii) of this section.

(e) ***Applicability dates*** —

(1) ***In general.*** The provisions of this section are applicable for taxable years beginning after March 13, 2020.

(2) ***Prior periods.*** With respect to the portion of a taxpayer's first taxable year ending after December 21, 2017, and for taxable years beginning after December 21, 2017, and on or before March 13, 2020, a taxpayer may choose either—

(i) To apply the section 1400Z-2 regulations, if applied in a consistent manner for all such taxable years (reliance by a taxpayer on paragraph (e)(2)(ii) of this section, § 1.1400Z2(a)-1(g)(2)(ii), § 1.1400Z2(b)-1(j)(2)(ii), § 1.1400Z2(d)-1(e)(2)(ii), or § 1.1400Z2(f)-1(d)(2)(ii), is disregarded solely for purposes of the consistency requirement under this paragraph (e)(2)(i)); or

(ii) To rely on the rules in proposed § 1.1400Z2(d)-1 contained in the notice of proposed rulemaking (REG-115420-18) published on October 29, 2018, as amplified by the notice of proposed rulemaking (REG-120186-18) published on May 1, 2019, but only if applied in a consistent manner for all such taxable years.

[T.D. 9889, 85 FR 1986, Jan. 13, 2020; 85 FR 19085, Apr. 6, 2020]

§ 1.1400Z2(e)-1 [Reserved]

§ 1.1400Z2(f)-1 Administrative rules- penalties, anti-abuse, etc.

(a) ***In general.*** Except as provided by § 1.1400Z2(d)-1(a)(2)(iv)(B) with respect to a taxpayer's first taxable year as a QOF, if a QOF fails to satisfy the 90-percent investment standard in section 1400Z-2(d)(1), then the QOF must pay the statutory penalty set forth in section 1400Z-2(f) for each month it fails to meet the 90-percent investment standard.

(b) ***Time period for a QOF to reinvest certain proceeds*** —

(1) ***In general.*** If a QOF receives proceeds from the return of capital or the sale or disposition of some or all of its qualified opportunity zone property within the meaning of section 1400Z-2(d)(2)(A), and if the QOF reinvests some or all of the proceeds in qualified opportunity zone property by the last day of the 12-month period beginning on the date of the distribution, sale, or disposition, then the proceeds, to the extent that they are so reinvested, are treated as qualified opportunity zone property for purposes of the 90-percent investment standard in section 1400Z-2(d)(1), but only to the extent that prior to the reinvestment in qualified opportunity zone property the proceeds are continuously held in cash, cash equivalents, or debt instruments with a term of 18 months or less. If reinvestment of the proceeds is delayed by waiting for governmental action the application for which is complete, that delay does not cause a failure of the 12-month requirement in this paragraph (b).

(2) ***Federally declared disasters.*** If the QOF's plan to reinvest some or all of the proceeds described in paragraph (b)(1) of this section in qualified opportunity zone property is delayed due to a federally declared disaster (as defined in section 165(i)(5)(A)), the QOF may receive not more than an additional 12 months to reinvest such proceeds, provided that the QOF invests such proceeds in the manner originally intended before the disaster.

(c) ***Anti-abuse rules*** —

(1) ***General anti-abuse rule.*** Pursuant to section 1400Z-2(e)(4)(C), the rules of section 1400Z-2 and §§ 1.1400Z2(a)-1 through 1.1400Z2(d)-(2), 1.1400Z2(f)-1, 1.1502-14Z, and 1.1504-3 must be applied in a manner consistent with the purposes of section 1400Z-2 and the section 1400Z-2 regulations (as defined in § 1.1400Z2(a)-1(b)(41)). The purposes of section 1400Z-2 and the section 1400Z-2 regulations are to provide specified Federal income tax benefits to owners of QOFs to encourage the making of longer-term investments, through QOFs and qualified opportunity zone businesses, of new capital in one or more qualified opportunity zones and to increase the economic growth of such qualified opportunity zones. Accordingly, if a significant purpose of a transaction is to achieve a Federal income tax result that is inconsistent with the purposes of section 1400Z-2 and the section 1400Z-2 regulations, a transaction (or series of transactions) will be recast or recharacterized for Federal tax purposes as appropriate to achieve tax results that are consistent with the purposes of section 1400Z-2 and the section 1400Z-2 regulations. This recasting and recharacterization may

include, as appropriate, treating an investment as other than a qualifying investment. A determination of whether a Federal income tax result is inconsistent with the purposes of section 1400Z-2 and the section 1400Z-2 regulations must be based on all facts and circumstances.

(2) *Special anti-abuse rule for partnerships* —

(i) ***In general.*** In addition to being subject to the general anti-abuse rule of paragraph (c)(1) of this section, the application of the rules of section 1400Z-2 and §§ 1.1400Z2(a)-1 through 1.1400Z2(d)-2, 1.1400Z2(f)-1, 1.1502-14Z, and 1.1504-3 to partnerships is also subject to the special anti-abuse rule set forth in paragraph (c)(2)(ii) of this section.

(ii) ***Special partnership anti-abuse rule.*** If a partnership is formed or availed of with a significant purpose of avoiding the requirements of § 1.1400Z2(a)-1(b)(11)(i)(B) that a gain be subject to Federal income tax in order to be an eligible gain, the partnership will be disregarded in whole or in part for purposes of § 1.1400Z2(a)-1(b)(11)(i)(B) and (b)(11)(ix)(B) to prevent the creation of a qualifying investment by the partnership with respect to any partner or partners that would not otherwise satisfy such requirements.

(3) ***Examples.*** The following examples illustrate the anti-abuse rule of paragraph (c) of this section.

(i) *Example 1* —

(A) ***Facts.*** Two nonresident alien individuals (collectively, the individuals) plan to sell stock at a gain of $50, to invest the amount of the resulting capital gain in a QOF, and to make a deferral election under section 1400Z-2(a). They make this election with the intent of holding the QOF investment for 10 years and then making an election to increase the qualifying basis to fair market value under section 1400Z-2(c). A gain on a sale of the stock by the individuals, however, would not be subject to Federal income tax, and so the gain would not support their making a deferral election as a result of the requirement in § 1.1400Z2(a)-1(b)(11)(i)(B). Instead of selling the stock themselves, the individuals form a domestic partnership with a significant purpose of using that partnership to make a deferral election with respect to the stock under the exception in § 1.1400Z2(a)-1(b)(11)(ix)(B). The individuals contribute their stock to the partnership in exchange for partnership interests, after which the partnership sells the stock and invests the $50 gain in a QOF. Had the partnership not made a deferral election, the individuals would not be subject to tax on their allocated portion of the partnership's recognized gain on the sale of the stock.

(B) ***Analysis.*** Based on these facts, the partnership is formed and availed of with a significant purpose to avoid the requirements of § 1.1400Z2(a)-1(b)(11)(i)(B). Thus, under paragraph (c)(2) of this section, the partnership is disregarded for purposes of applying § 1.1400Z2(a)-1(b)(11)(ix)(B) to the $50 gain, and therefore the partnership's investment in the QOF is not a qualifying investment.

(ii) *Example 2* —

(A) ***Facts.*** The facts are the same as in paragraph (c)(3)(i)(A) of this section (*Example 1*), except the individuals contribute their stock to an existing partnership, the sole partners of which are U.S. citizens, with a significant purpose of the individuals' use of the partnership being to make an investment in a QOF and a deferral election under the § 1.1400Z2(a)-1(b)(11)(ix)(B) exception for partnerships. During the year, the partnership sells property it owned before the individuals' contribution, resulting in capital gain of

$100, all of which is eligible to be invested in a QOF. It also sells the stock contributed by the individuals, resulting in $50 of capital gain. The partnership invests $150 in a QOF and makes the requisite gain deferral election.

(B) ***Analysis.*** Based on these facts, the partnership is availed of by the individuals with a significant purpose to avoid the requirements of § 1.1400Z2(a)-1(b)(11)(i)(B). Thus, under paragraph (c)(2) of this section, the partnership is disregarded for purposes of applying § 1.1400Z2(a)-1(b)(11)(i)(B) and (b)(11)(ix)(B) with respect to the $50 capital gain from the sale of the individuals' contributed stock and that gain fails to be eligible gain. Under § 1.1400Z2(a)-1(b), no section 1400Z-2(a) election is available for that gain and the partnership will have a mixed-funds investment, $100 of which is a qualifying investment and $50 of which is a non-qualifying investment.

(iii) ***Example 3*** —

(A) ***Facts.*** Entity C is a QOF that meets the requirements of section 1400Z-2(d)(1). Entity C owns qualified opportunity zone stock in a domestic corporation described in section 1400Z-2(d)(2)(B) (Corporation C), which operates a qualified opportunity zone business. Entity C also owns Corporation D stock, which is not qualified opportunity zone stock, which stock is less than 10% of the assets of Entity C. Under section 1400Z-2(e)(2), these stock holdings cause Entity C to be related to both Corporation C and Corporation D. On date 1, under section 1400Z-2(e)(2), Individual S is not a related person with respect to Entity C, Corporation C, or Corporation D. On that date, Individual S sells tangible property to Corporation C (Asset 1) for use in Corporation C's qualified opportunity zone business and sells a second asset to Corporation D (Asset 2). Both items sold were capital assets (as defined in section 1221), and had an adjusted basis of $0. As a result, Individual S realizes gain of $100 from the sale to Corporation C and $75 from the sale to Corporation D. At the time of the sale Individual S has a plan or intent to invest $175 in Entity C and to make deferral elections under section 1400Z-2(a)(1) with respect to the gain from the two sales. On date 2, for $175 Individual S acquired an eligible interest in Entity C, an acquisition that causes Individual S to become a related person with respect to Entity C within the meaning of section 1400Z-2(e)(2). *Analysis.* Under paragraph (c)(1) of this section, Individual S's $175 gain is not an eligible gain and cannot be the subject a deferral election under section 1400Z-2(a)(1). The gain fails to satisfy § 1.1400Z2a-1(b)(11)(i)(C) because of Individual S's plan to acquire sufficient equity in Entity C to become related to Corporations C and D. Moreover, for the same reason, the tangible property that Corporation C purchased from Individual S fails to satisfy the requirement that a purchase of qualified opportunity zone business property must be from an unrelated person. *See* sections 1400Z-2(d)(2)(D)(i)(I) and 179(d)(2)(A).

(B) ***Circular movement of consideration.*** The facts are the same as in paragraph (c)(3)(iii)(A) of this section (this Example 3), except that Entity C contributes the $100 and $75 (received from Individual S) to Corporations C and D, respectively, as part of a plan that includes each transaction described in paragraph (c)(3)(iii)(A) (collectively, the transaction series). Under the step transaction doctrine and circular cash flow principles, this circular movement of consideration is disregarded for Federal income tax purposes, including for purposes of section 1400Z-2 and the section 1400Z-2 regulations. Therefore, the transaction series is treated for Federal income tax purposes as a contribution by Individual S of Assets 1 and 2 to Entity C in exchange for an eligible interest in Entity C, followed by a contribution by Entity C of Assets 1 and 2 to Corporations C and D,

respectively. This result also would obtain if Individual S were not related to Entity C immediately following Individual S's acquisition of its eligible interest from Entity C. *See* Rev. Rul. 83-142, 1983-2 C.B. 68; Rev. Rul. 78-397, 1978-2 C.B. 150.

(iv) *Example 4* —

(A) ***Facts.*** Entity D is a QOF that meets the requirements of section 1400Z-2(d)(1). Entity D owns a majority qualified opportunity zone partnership interest in a domestic partnership, Partnership D described in section 1400Z-2(d)(2)(C). Entity D organized Partnership D for the purpose of being a qualified opportunity zone business. Partnership D acquires a tract of land located in a qualified opportunity zone. At the time of the acquisition of that land, there was no plan or intent to develop or otherwise utilize the land in a trade or business that would increase substantially the economic productivity of the land. Instead, there was a plan to pave the land for use as a parking lot. Partnership D planned to install a gate to the paved parking area, a small structure that would serve as an office for a parking attendant, and two self-pay stations for use by customers. The parking lot was not reasonably expected to expand significantly, and the initial small number of employees was not reasonably expected significantly to increase. A significant purpose for the acquisition of the land was to sell the land at a profit and to exclude any gain from appreciation by making an election under section 1400Z-2(c).

(B) ***Analysis.*** Under paragraph (c)(1) of this section, the acquisition of the land is a transaction carried out to achieve a tax result that is inconsistent with the purposes of section 1400Z-2 and the section 1400Z-2 regulations. Consequently, the land is not qualified opportunity zone business property and gain from the sale of the land will not be eligible to be excluded from gross income under section 1400Z-2(c). This recharacterization of the qualification of the land for Federal tax purposes is appropriate to ensure that the tax results of the transaction, including the status of Partnership D as a qualified opportunity zone business, are consistent with the purposes of section 1400Z-2 and the section 1400Z-2 regulations. Partnership D fails to be a qualified opportunity zone business unless other assets that it owns or leases are qualified opportunity zone business property that satisfy section 1400Z-2(d)(3)(A)(i), and the other requirements of section 1400Z-2 and the section 1400Z-2 regulations.

(v) *Example 5* —

(A) ***Facts.*** The facts are the same as in paragraph (c)(3)(iv) of this section, except that Partnership D, in year 1, acquired a tract of land located in a qualified opportunity zone that was previously used for hog and pig farming. On its Form 1065T the previous owner, also a partnership, properly described those activities with the principal business activity code 112210. During the several-year period ending on the date of the acquisition of the land, the value of the land had significantly increased and D projected the land to continue to increase in value by ten-fold during the following 10-year period. At the time of the acquisition, Partnership D intended to conduct sheep and goat farming activities on the land and, accordingly, planned to use principal business activity code 112400 on its Form 1065. According to its plan, Partnership D conducted sheep and goat farming activities on the land during the 10-year period beginning on the date of acquisition of the land. During the 10-year period, Partnership D made significant capital improvements to the land, including improvements to existing farm structures, construction of new farm structures, and installation of a new irrigation system. As expected, the value of the land substantially

increased during the following decade. The owners' entire interest in Partnership D was a qualifying investment, and, after having held it for at least 10 years the owners sold the entire interest at a large gain. As planned the owners made an election under section 1400Z-2(c) in order to avoid tax on the gain from the sale.

(B) ***Analysis.*** The modification of the land to suit sheep and goat farming activity from its previous use of hog and pig farming, and the significant capital improvements made to land, comprise a significant investment in the business activities on the land. Thus, Partnership D did not hold the land solely for speculative investment. As a result, under paragraph (c)(1) of this section, the acquisition of the land, the activities conducted on the land, the capital improvements made to the land, and the later disposition of the land for a significant profit are not inconsistent with the purposes of section 1400Z-2 and the section 1400Z-2 regulations.

(vi) ***Example 6*** —

(A) ***Facts.*** Individuals intend to sell stock at a capital gain and invest the resulting gain in a QOF pursuant to a deferral election under section 1400Z-2(a). The individuals form Entity F and file Form 8996 certifying that Entity F is a QOF organized for the purpose of investing in qualified opportunity zone property. Individuals have no intention of investing in qualified opportunity zone property. Instead individuals intend to invest in property other than qualified opportunity zone property hoping that the property will appreciate substantially in value and the individuals will be able to exclude any appreciation on their investment from gross income by making an election under section 1400Z-2(c). Each year Entity F files Form 8996 and pays the applicable penalty under section 1400Z-2(f). After holding their interests in Entity F for 10 years, individuals sell their interest in Entity F to an unrelated third party for a substantial gain and make an election to exclude the appreciation on their investment under section 1400Z-2(c).

(B) ***Analysis.*** A significant purpose of the transaction is to achieve a tax result that is inconsistent with the purposes of section 1400Z-2 and the section 1400Z-2 regulations, and the transaction will be recast and recharacterized for Federal tax purposes so that Entity F is not a QOF and the individuals are not eligible for the elections under sections 1400Z-2(a) and (c).

(vii) ***Example 7*** —

(A) ***Facts.*** Entity E treats itself as a QOF that meets the requirements of section 1400Z-2(d)(1). Entity E owns all of the stock in a domestic corporation, Corporation E, and Entity E treats this stock as qualified opportunity zone stock. Corporation E uses the majority of the cash invested by Entity E to purchase gold bars from unrelated parties within the meaning of section 1400Z-2(e)(2). The aggregate value of the gold bars is $1000. Corporation E rents a safe deposit box in a qualified opportunity zone and hires one employee to manage the purchase and sale of the gold bars. Each year Corporation E purchases a small number of additional gold bars and sells to customers a portion of the gold bars on hand. The aggregate value of both the purchases and sales approximates half the value of the bars held at the beginning of the year. Corporation E seeks to treat the gold bars as qualified opportunity zone business property within the meaning of section 1400Z-2(d)(3). At the time that Corporation E began the gold bar business, it did not reasonably expect the business to expand significantly, nor was the number of employees reasonably expected

to increase. Gold, however, was reasonably expected to appreciate. Ten years after the formation of Entity E, the investors in Entity E sell all of their interests in the entity and seek to make an election under section 1400Z-2(c) to exclude any gain from appreciation.

(B) ***Analysis.*** Under paragraph (c)(1) of this section, a significant purpose of Corporation E's activities is to achieve a tax result that is inconsistent with the purposes of section 1400Z-2 and the section 1400Z-2 regulations. The gold bar business carried out by Corporation E was merely speculative in nature and was not expected to increase economic activity in the subject qualified opportunity zone in a manner consistent with the purposes of section 1400Z-2 and the section 1400Z-2 regulations. As a result, Corporation E's activities are carried on to achieve tax results that are inconsistent with the purposes of section 1400Z-2 and the section 1400Z-2 regulations. Consequently, the gold bars are not qualified opportunity zone property. Corporation E fails to be a qualified opportunity zone business unless other assets that it owns or leases are qualified opportunity zone business property that satisfy section 1400Z-2(d)(3)(A)(i) (along with other requirements). If Corporation E fails to be a qualified opportunity zone business, Corporation E's stock fails to be qualified opportunity zone property in the hands of Entity E.

(d) ***Applicability date*** —

(1) ***In general.*** The provisions of this section are applicable for taxable years beginning after March 13, 2020.

(2) ***Prior periods.*** With respect to the portion of a taxpayer's first taxable year ending after December 21, 2017, that began on March 13, 2020, a taxpayer may choose either—

(i) To apply the section 1400Z-2 regulations, if applied in a consistent manner for all such taxable years (reliance by a taxpayer on paragraph (d)(2)(ii) of this section, § 1.1400Z2(a)-1(g)(2)(ii), § 1.1400Z2(b)-1(j)(2)(ii), § 1.1400Z2(d)-1(e)(2)(ii), or § 1.1400Z2(d)-2(e)(2)(ii), is disregarded for purposes of the consistency requirement under this paragraph (d)(2)(i)); or

(ii) To rely on the rules in proposed § 1.1400Z2(f)-1 contained in the notice of proposed rulemaking (REG-115420-18) published on October 29, 2018, as amplified by the notice of proposed rulemaking (REG-120186-18) published on May 1, 2019, but only if applied in a consistent manner for all such taxable years.

[T.D. 9889, 85 FR 1991, Jan. 13, 2020, as amended at 85 FR 19085, Apr. 6, 2020]

TAX ON SELF-EMPLOYMENT INCOME

§ 1.1401-1 Tax on self-employment income.

(a) There is imposed, in addition to other taxes, a tax upon the self-employment income of every individual at the rates prescribed in section 1401(a) (old-age, survivors, and disability insurance) and (b) (hospital insurance). (See subparagraphs (1) and (2) of paragraph (b) of this section.) This tax shall be levied, assessed, and collected as part of the income tax imposed by subtitle A of the Code and, except as otherwise expressly provided, will be included with the tax imposed by section 1 or 3 in computing any deficiency or overpayment and in computing the interest and additions to any deficiency, overpayment, or tax. Since the tax on self-employment income is part of the income tax, it is subject to the jurisdiction of the Tax Court of the United States to the same extent and in the same manner as the other taxes under

subtitle A of the Code. Furthermore, with respect to taxable years beginning after December 31, 1966, this tax must be taken into account in computing any estimate of the taxes required to be declared under section 6015.

(b) The rates of tax on self-employment income are as follows (these regulations do not reflect off-Code revisions to the following rates):

(1) For Old-age, Survivors, and Disability Insurance:

Taxable year	Percent
Beginning after December 31, 1983 and before January 1, 1988	11.40
Beginning after December 31, 1987 and before January 1, 1990	12.12
Beginning after December 31, 1989	12.40

(2)

(i) For Hospital Insurance:

Taxable year	Percent
Beginning after December 31, 1983 and before January 1, 1985	2.60
Beginning after December 31, 1984 and before January 1, 1986	2.70
Beginning after December 31, 1985	2.90

(ii) For Additional Medicare Tax:

Taxable year	Percent
Beginning after December 31, 2012	0.9

(c) In general, self-employment income consists of the net earnings derived by an individual (other than a nonresident alien) from a trade or business carried on by him as sole proprietor or by a partnership of which he is a member, including the net earnings of certain employees as set forth in § 1.1402(c)-3, and of crew leaders, as defined in section 3121(o) (see such section and the regulations thereunder in part 31 of this chapter (Employment Tax Regulations)). See, however, the exclusions, exceptions, and limitations set forth in §§ 1.1402(a)-1 through 1.1402(h)-1.

(d) *Special rules regarding Additional Medicare Tax.*

(1) ***General rule.*** An individual is liable for Additional Medicare Tax to the extent that his or her self-employment income exceeds the following threshold amounts.

Filling status	Threshold
Married individual filing a joint return	$250,000
Married individual filing a separate return	125,000
Any other case	200,000

Note: These threshold amounts are specified under section 1401(b)(2)(A).

(2) ***Coordination with Federal Insurance Contributions Act.***

(i) ***General rule.*** Under section 1401(b)(2)(B), the applicable threshold specified under section 1401(b)(2)(A) is reduced (but not below zero) by the amount of wages (as defined in section 3121(a)) taken into account in determining Additional Medicare Tax under section 3101(b)(2) with respect to the taxpayer. This rule does not apply to Railroad Retirement Tax Act (RRTA) compensation (as defined in section 3231(e)).

(ii) ***Examples.*** The rules provided in paragraph (d)(2)(i) of this section are illustrated by the following examples:

Example 1. A, a single filer, has $130,000 in self-employment income and $0 in wages. A is not liable to pay Additional Medicare Tax.

Example 2. B, a single filer, has $220,000 in self-employment income and $0 in wages. B is liable to pay Additional Medicare Tax on $20,000 ($220,000 in self-employment income minus the threshold of $200,000).

Example 3. C, a single filer, has $145,000 in self-employment income and $130,000 in wages. C's wages are not in excess of $200,000 so C's employer did not withhold Additional Medicare Tax. However, the $130,000 of wages reduces the self-employment income threshold to $70,000 ($200,000 threshold minus the $130,000 of wages). C is liable to pay Additional Medicare Tax on $75,000 of self-employment income ($145,000 in self-employment income minus the reduced threshold of $70,000).

Example 4. E, who is married and files a joint return, has $140,000 in self-employment income. F, E's spouse, has $130,000 in wages. F's wages are not in excess of $200,000 so F's employer did not withhold Additional Medicare Tax. However, the $130,000 of F's wages reduces E's self-employment income threshold to $120,000 ($250,000 threshold minus the $130,000 of wages). E and F are liable to pay Additional Medicare Tax on $20,000 of E's self-employment income ($140,000 in self-employment income minus the reduced threshold of $120,000).

Example 5. D, who is married and files married filing separately, has $150,000 in self-employment income and $200,000 in wages. D's wages are not in excess of $200,000 so D's employer did not withhold Additional Medicare Tax. However, the $200,000 of wages reduces the

self-employment income threshold to $0 ($125,000 threshold minus the $200,000 of wages). D is liable to pay Additional Medicare Tax on $75,000 of wages ($200,000 in wages minus the $125,000 threshold for a married filing separately return) and on $150,000 of self-employment income ($150,000 in self-employment income minus the reduced threshold of $0).

(e) ***Effective/applicability date.*** Paragraphs (b) and (d) of this section apply to quarters beginning on or after November 29, 2013.

[T.D. 6993, 34 FR 828, Jan. 18, 1969, as amended by T.D. 7333, 39 FR 44445, Dec. 24, 1974; T.D. 9645, 78 FR 71471, Nov. 29, 2013]

§ 1.1402(a)-1 Definition of net earnings from self-employment.

(a) Subject to the special rules set forth in §§ 1.1402(a)-3 to 1.1402(a)-17, inclusive, and to the exclusions set forth in §§ 1.1402(c)-2 to 1.1402(c)-7, inclusive, the term "net earnings from self-employment" means:

(1) The gross income derived by an individual from any trade or business carried on by such individual, less the deductions allowed by chapter 1 of the Code which are attributable to such trade or business, plus

(2) His distributive share (whether or not distributed), as determined under section 704, of the income (or minus the loss), described in section 702(a)(9) and as computed under section 703, from any trade or business carried on by any partnership of which he is a member.

(b) Gross income derived by an individual from a trade or business includes payments received by him from a partnership of which he is a member for services rendered to the partnership or for the use of capital by the partnership, to the extent the payments are determined without regard to the income of the partnership. However, such payments received from a partnership not engaged in a trade or business within the meaning of section 1402(c) and § 1.1402(c)-1 do not constitute gross income derived by an individual from a trade or business. See section 707(c) and the regulations thereunder, relating to guaranteed payments to a member of a partnership for services or the use of capital. See also section 706(a) and the regulations thereunder, relating to the taxable year of the partner in which such guaranteed payments are to be included in computing taxable income.

(c) Gross income derived by an individual from a trade or business includes gross income received (in the case of an individual reporting income on the cash receipts and disbursements method) or accrued (in the case of an individual reporting income on the accrual method) in the taxable year from a trade or business even though such income may be attributable in whole or in part to services rendered or other acts performed in a prior taxable year as to which the individual was not subject to the tax on self-employment income.

[T.D. 6691, 28 FR 12796, Dec. 3, 1963, as amended by T.D. 7333, 39 FR 44445, Dec. 24, 1974]

§ 1.1402(a)-2 Computation of net earnings from self-employment.

(a) ***General rule.*** In general, the gross income and deductions of an individual attributable to a trade or business (including a trade or business conducted by an employee referred to in paragraphs (b), (c), (d), or (e) of § 1.1402(c)-3), for the purpose of ascertaining his net earnings from self-employment, are to be determined by reference to the provisions of law and regulations applicable with respect to the taxes imposed by sections 1 and 3. Thus, if an individual uses the accrual method of accounting in computing taxable income from a trade or business for the purpose of the tax imposed by section 1 or 3, he must

use the same method in determining net earnings from self-employment. Likewise, if a taxpayer engaged in a trade or business of selling property on the installment plan elects, under the provisions of section 453, to use the installment method in computing income for purposes of the tax under section 1 or 3, he must use the same method in determining net earnings from self-employment. Income which is excludable from gross income under any provision of subtitle A of the Internal Revenue Code is not taken into account in determining net earnings from self-employment except as otherwise provided in § 1.1402(a)-9, relating to certain residents of Puerto Rico, in § 1.1402(a)-11, relating to ministers or members of religious orders, and in § 1.1402(a)-12, relating to the term "possession of the United States" as used for purposes of the tax on self-employment income. Thus, in the case of a citizen of the United States conducting, in a foreign country, a trade or business in which both personal services and capital are material income-producing factors, any part of the income therefrom which is excluded from gross income as earned income under the provisions of section 911 and the regulations thereunder is not taken into account in determining net earnings from self-employment.

(b) ***Trade or business carried on.*** The trade or business must be carried on by the individual, either personally or through agents or employees. Accordingly, income derived from a trade or business carried on by an estate or trust is not included in determining the net earnings from self-employment of the individual beneficiaries of such estate or trust.

(c) ***Aggregate net earnings.*** Where an individual is engaged in more than one trade or business within the meaning of section 1402(c) and § 1.1402(c)-1, his net earnings from self-employment consist of the aggregate of the net income and losses (computed subject to the special rules provided in §§ 1.1402(a)-1 to 1.1402(a)-17 inclusive) of all such trades or businesses carried on by him. Thus, a loss sustained in one trade or business carried on by an individual will operate to offset the income derived by him from another trade or business.

(d) ***Partnerships.*** The net earnings from self-employment of an individual include, in addition to the earnings from a trade or business carried on by him, his distributive share of the income or loss, described in section 702(a)(9), from any trade or business carried on by each partnership of which he is a member. An individual's distributive share of such income or loss of a partnership shall be determined as provided in section 704, subject to the special rules set forth in section 1402(a) and in §§ 1.1402(a)-1 to 1.1402(a)-17, inclusive, and to the exclusions provided in section 1402(c) and §§ 1.1402(c)-2 to 1.1402(c)-7, inclusive. For provisions relating to the computation of the taxable income of a partnership, see section 703.

(e) ***Different taxable years.*** If the taxable year of a partner differs from that of the partnership, the partner shall include, in computing net earnings from self-employment, his distributive share of the income or loss, described in section 702(a)(9), of the partnership for its taxable year ending with or within the taxable year of the partner. For the special rule in case of the termination of a partner's taxable year as result of death, see §§ 1.1402(f) and 1.1402(f)-1.

(f) ***Meaning of partnerships.*** For the purpose of determining net earnings from self-employment, a partnership is one which is recognized as such for income tax purposes. For income tax purposes, the term "partnership" includes not only a partnership as known at common law, but, also a syndicate, group, pool, joint venture, or other unincorporated organization which carries on any trade or business, financial operation, or venture, and which is not, within the meaning of the Code, a trust, estate, or a corporation. An organization described in the preceding sentence shall be treated as a partnership for purposes of the tax on self-employment income even though such organization has elected, pursuant to section 1361 and the regulations thereunder, to be taxed as a domestic corporation.

(g) ***Nature of partnership interest.*** The net earnings from self-employment of a partner include his distributive share of the income or loss, described in section 702(a)(9), of the partnership of which he is a member, irrespective of the nature of his membership. Thus, in determining his net earnings from self-employment, a limited or inactive partner includes his distributive share of such partnership income or loss. In the case of a partner who is a member of a partnership with respect to which an election has been made pursuant to section 1361 and the regulations thereunder to be taxed as a domestic corporation, net earnings from self-employment include his distributive share of the income or loss, described in section 702(a)(9), from the trade or business carried on by the partnership computed without regard to the fact that the partnership has elected to be taxed as a domestic corporation.

(h) ***Proprietorship taxed as domestic corporation.*** A proprietor of an unincorporated business enterprise with respect to which an election has been made pursuant to section 1361 and the regulations thereunder to be taxed as a domestic corporation shall compute his net earnings from self-employment without regard to the fact that such election has been made.

[T.D. 6691, 28 FR 12796, Dec. 3, 1963, as amended by T.D. 7333, 39 FR 44445, Dec. 24, 1974]

§ 1.1402(a)-3 Special rules for computing net earnings from self-employment.

For the purpose of computing net earnings from self-employment, the gross income derived by an individual from a trade or business carried on by him, the allowable deductions attributable to such trade or business, and the individual's distributive share of the income or loss, described in section 702(a)(9), from any trade or business carrier on by a partnership of which he is a member shall be computed in accordance with the special rules set forth in §§ 1.1402(a)-4 to 1.1402(a)-17, inclusive.

[T.D. 7333, 39 FR 44445, Dec. 24, 1974]

§ 1.1402(a)-4 Rentals from real estate.

(a) ***In general.*** Rentals from real estate and from personal property leased with the real estate (including such rentals paid in crop shares) and the deductions attributable thereto, unless such rentals are received by an individual in the course of a trade or business as a real-estate dealer, are excluded. Whether or not an individual is engaged in the trade or business of a real-estate dealer is determined by the application of the principles followed in respect of the taxes imposed by sections 1 and 3. In general, an individual who is engaged in the business of selling real estate to customers with a view to the gains and profits that may be derived from such sales is a real-estate dealer. On the other hand, an individual who merely holds real estate for investment or speculation and receives rentals therefrom is not considered a real-estate dealer. Where a real-estate dealer holds real estate for investment or speculation in addition to real estate held for sale to customers in the ordinary course of his trade or business as a real-estate dealer, only the rentals from the real estate held for sale to customers in the ordinary course of his trade or business as a real-estate dealer, and the deductions attributable thereto, are included in determining net earnings from self-employment; the rentals from the real estate held for investment or speculation, and the deductions attributable thereto, are excluded. Rentals paid in crop shares include income derived by an owner or lessee of land under an agreement entered into with another person pursuant to which such other person undertakes to produce a crop or livestock on such land and pursuant to which

(1) the crop or livestock, or the proceeds thereof, are to be divided between such owner or lessee and such other person, and

(2) the share of the owner or lessee depends on the amount of the crop or livestock produced. See, however, paragraph (b) of this section.

(b) *Special rule for "includible farm rental income"* —

(1) *In general.* Notwithstanding the rules set forth in paragraph (a) of this section, there shall be included in determining net earnings from self-employment for taxable years ending after 1955 any income derived by an owner or tenant of land, if the following requirements are met with respect to such income:

(i) The income is derived under an arrangement between the owner or tenant of land and another person which provides that such other person shall produce agricultural or horticultural commodities on such land, and that there shall be material participation by the owner or tenant in the production or the management of the production of such agricultural or horticultural commodities; and

(ii) There is material participation by the owner or tenant with respect to any such agricultural or horticultural commodity.

Income so derived shall be referred to in this section as "includible farm rental income".

(2) *Requirement that income be derived under an arrangement.* In order for rental income received by an owner or tenant of land to be treated as includible farm rental income, such income must be derived pursuant to a share-farming or other rental arrangement which contemplates material participation by the owner or tenant in the production or management of production of agricultural or horticultural commodities.

(3) *Nature of arrangement.*

(i) The arrangement between the owner or tenant and the person referred to in subparagraph (1) of this paragraph may be either oral or written. The arrangement must impose upon such other person the obligation to produce one or more agricultural or horticultural commodities (including livestock, bees, poultry, and fur-bearing animals and wildlife) on the land of the owner or tenant. In addition, it must be within the contemplation of the parties that the owner or tenant will participate in the production or the management of the production of the agricultural or horticultural commodities required to be produced by the other person under such arrangement to an extent which is material with respect either to the production or to the management of production of such commodities or is material with respect to the production and management of production when the total required participation in connection with both is considered.

(ii) The term "production", wherever used in this paragraph, refers to the physical work performed and the expenses incurred in producing a commodity. It includes such activities as the actual work of planting, cultivating, and harvesting crops, and the furnishing of machinery, implements, seed, and livestock. An arrangement will be treated as contemplating that the owner or tenant will materially participate in the "production" of the commodities required to be produced by the other person under the arrangement if under the arrangement it is understood that the owner or tenant is to engage to a material degree in the physical work related to the production of such commodities. The mere undertaking to furnish machinery, implements, and livestock and to incur expenses is not, in and of itself, sufficient. Such factors may be significant, however, in cases where the degree of physical work intended of the owner or tenant is not material. For example, if under the arrangement it is understood that the owner or

tenant is to engage periodically in physical work to a degree which is not material in and of itself and, in addition, to furnish a substantial portion of the machinery, implements, and livestock to be used in the production of the commodities or to furnish or advance funds or assume financial responsibility for a substantial part of the expense involved in the production of the commodities, the arrangement will be treated as contemplating material participation of the owner or tenant in the production of such commodities.

(iii) The term “management of the production”, wherever used in this paragraph, refers to services performed in making managerial decisions relating to the production, such as when to plant, cultivate, dust, spray, or harvest the crop, and includes advising and consulting, making inspections, and making decisions as to matters such as rotation of crops, the type of crops to be grown, the type of livestock to be raised, and the type of machinery and implements to be furnished. An arrangement will be treated as contemplating that the owner or tenant is to participate materially in the “management of the production” of the commodities required to be produced by the other person under the arrangement if the owner or tenant is to engage to a material degree in the management decisions related to the production of such commodities. The services which are considered of particular importance in making such management decisions are those services performed in making inspections of the production activities and in advising and consulting with such person as to the production of the commodities. Thus, if under the arrangement it is understood that the owner or tenant is to advise or consult periodically with the other person as to the production of the commodities required to be produced by such person under the arrangement and to inspect periodically the production activities on the land, a strong inference will be drawn that the arrangement contemplates participation by the owner or tenant in the management of the production of such commodities. The mere undertaking to select the crops or livestock to be produced or the type of machinery and implements to be furnished or to make decisions as to the rotation of crops generally is not, in and of itself, sufficient. Such factors may be significant, however, in making the overall determination of whether the arrangement contemplates that the owner or tenant is to participate materially in the management of the production of the commodities. Thus, if in addition to the understanding that the owner or tenant is to advise or consult periodically with the other person as to the production of the commodities and to inspect periodically the production activities on the land, it is also understood that the owner is to select the type of crops and livestock to be produced and the type of machinery and implements to be furnished and to make decisions as to the rotation of crops, the arrangement will be treated as contemplating material participation of the owner or tenant in the management of production of such commodities.

(4) ***Actual participation.*** In order for the rental income received by the owner or tenant of land to be treated as includible farm rental income, not only must it be derived pursuant to the arrangement described in subparagraph (1) of this paragraph, but also the owner or tenant must actually participate to a material degree in the production or in the management of the production of any of the commodities required to be produced under the arrangement, or he must actually participate in both the production and the management of the production to an extent that his participation in the one when combined with his participation in the other will be considered participation to a material degree. If the owner or tenant shows that he periodically advises or consults with the other person, who under the arrangement produces the agricultural or horticultural commodities, as to the production of any of these commodities and also shows that he periodically inspects the production activities on the land, he will have presented strong evidence of the existence of the degree of participation contemplated by section 1402(a)(1). If, in addition to the foregoing, the owner or tenant

shows that he furnishes a substantial portion of the machinery, implements, and livestock used in the production of the commodities or that he furnishes or advances funds, or assumes financial responsibility, for a substantial part of the expense involved in the production of the commodities, he will have established the existence of the degree of participation contemplated by section 1402(a)(1) and this paragraph.

(5) ***Employees or agents.*** An agreement entered into by an employee or agent of an owner or tenant and another person is considered to be an arrangement entered into by the owner or tenant for purposes of satisfying the requirement set forth in paragraph (b)(2) that the income must be derived under an arrangement between the owner or tenant and another person. For purposes of determining whether the arrangement satisfies the requirement set forth in paragraph (b)(3) that the parties contemplate that the owner or tenant will materially participate in the production or management of production of a commodity, services which will be performed by an employee or agent of the owner or tenant are not considered to be services which the arrangement contemplates will be performed by the owner or tenant. Services actually performed by such employee or agent are not considered services performed by the owner or tenant in determining the extent to which the owner or tenant has participated in the production or management of production of a commodity. For taxable years beginning before January 1, 1974, contemplated or actual services of an agent or an employee of the owner or tenant are deemed to be contemplated or actual services of the owner or tenant under paragraphs (b)(3) and (b)(4) of this section.

(6) ***Examples.*** Application of the rules prescribed in this paragraph may be illustrated by the following examples:

Example (1). After the death of her husband, Mrs. A rents her farm, together with its machinery and equipment, to B for one-half of the proceeds from the commodities produced on such farm by B. It is agreed that B will live in the tenant house on the farm and be responsible for the over-all operation of the farm, such as planting, cultivating, and harvesting the field crops, caring for the orchard and harvesting the fruit and caring for the livestock and poultry. It also is agreed that Mrs. A will continue to live in the farm residence and help B operate the farm. Under the agreement it is contemplated that Mrs. A will regularly operate and clean the cream separator and feed the poultry flock and collect the eggs. When possible she will assist B in such work as spraying the fruit trees, penning livestock, culling the poultry, and controlling weeds. She will also assist in preparing the meals when B engages seasonal workers. The agreement between Mrs. A and B clearly provides that she will materially participate in the over-all production operations to be conducted on her farm by B. In actual practice, Mrs. A performs such regular and intermittent services. The regularly performed services are material to the production of an agricultural commodity, and the intermittent services performed are material to the production operations to which they relate. The furnishing of a substantial portion of the farm machinery and equipment also adds support to a conclusion that Mrs. A has materially participated. Accordingly, the rental income Mrs. A receives from her farm should be included in net earnings from self-employment.

Example (2). D agrees to produce a crop on C's cotton farm under an arrangement providing that C and D will each receive one-half of the proceeds from such production. C agrees to furnish all the necessary equipment, and it is understood that he is to advise D when to plant the cotton and when it needs to be chopped, plowed, sprayed, and picked. It is also understood that during the growing season C is to inspect the crop every few days to determine whether D is properly taking care of the crop. Under the arrangement, D is required to furnish all labor needed to grow and harvest the crop. C, in fact, renders such advice, makes such inspections, and furnishes

such equipment. C's contemplated participation in management decisions is considered material with respect to the management of the cotton production operation. C's actual participation pursuant to the arrangement is also considered to be material with respect to the management of the production of cotton. Accordingly, the income C receives from his cotton farm is to be included in computing his net earnings from self-employment.

Example (3). E owns a grain farm and turns its operation over to his son, F. By the oral rental arrangement between E and F, the latter agrees to produce crops of grain on the farm, and E agrees that he will be available for consultation and advice and will inspect and help to harvest the crops. E furnishes most of the equipment, including a tractor, a combine, plows, wagons, drills, and harrows; he continues to live on the farm and does some of the work such as repairing barns and farm machinery, going to town for supplies, cutting weeds, etc.; he regularly inspects the crops during the growing season; and he helps F to harvest the crops. Although the final decisions are made by F, he frequently consults with his father regarding the production of the crops. An evaluation of all of E's actual activities indicates that they are sufficiently substantial and regular to support a conclusion that he is materially participating in the crop production operations and the management thereof. If it can be shown that the degree of E's actual participation was contemplated by the arrangement, E's income from the grain farm will be included in computing net earnings from self-employment.

Example (4). G owns a fully-equipped farm which he rents to H under an arrangement which contemplates that G shall materially participate in the management of the production of crops raised on the farm pursuant to the arrangement. G lives in town about 5 miles from the farm. About twice a month he visits the farm and looks over the buildings and equipment. G may occasionally, in an emergency, discuss with H some phase of a crop production activity. In effect, H has complete charge of the management of farming operations regardless of the understanding between him and G. Although G pays one-half of the cost of the seed and fertilizer and is charged for the cost of materials purchased by H to make all necessary repairs, G's activities do not constitute material participation in the crop production activities. Accordingly, G's income from the crops is not included in computing net earnings from self-employment.

Example (5). I owned a farm several miles from the town in which he lived. He rented the farm to J under an arrangement which contemplated I's material participation in the management of production of wheat. I furnished one-half of the seed and fertilizer and all the farm equipment and livestock. He employed K to perform all the services in advising, consulting, and inspecting contemplated by the arrangement. I is not materially participating in the management of production of wheat by J. The work done by I's employee, K, is not attributable to I in determining the extent of I's participation. I's rental income from the arrangement is, therefore, not to be included in computing his net earnings from self-employment. For taxable years beginning before January 1, 1974, however, I's rental income would be includible in those earnings.

Example (6). L, a calendar-year taxpayer, appointed M as his agent to rent his fully equipped farm for 1974. M entered into a rental arrangement with N under which M was to direct the planting of crops, inspect them weekly during the growing season, and consult with N on any problems that might arise in connection with irrigation, etc., while N furnished all the labor needed to grow and harvest the crops. M did in fact fulfill its responsibilities under the arrangement. Although the arrangement entered into by M and N is considered to have been made by L, M's services are not attributable to L, and L's furnishing of a fully equipped farm is insufficient by

itself to constitute material participation in the production of the crops. Accordingly, L's rental income from the arrangement is not included in his net earnings from self-employment for that year. For taxable years beginning before January 1, 1974, however, L's rental income would be includible in those earnings.

(c) *Rentals from living quarters* —

(1) ***No services rendered for occupants.*** Payments for the use or occupancy of entire private residences or living quarters in duplex or multiple-housing units are generally rentals from real estate. Except in the case of real-estate dealers, such payments are excluded in determining net earnings from self-employment even though such payments are in part attributable to personal property furnished under the lease.

(2) ***Services rendered for occupants.*** Payments for the use or occupancy of rooms or other space where services are also rendered to the occupant, such as for the use or occupancy of rooms or other quarters in hotels, boarding houses, or apartment houses furnishing hotel services, or in tourist camps or tourist homes, or payments for the use or occupancy of space in parking lots, warehouses, or storage garages, do not constitute rentals from real estate; consequently, such payments are included in determining net earnings from self-employment. Generally, services are considered rendered to the occupant if they are primarily for his convenience and are other than those usually or customarily rendered in connection with the rental of rooms or other space for occupancy only. The supplying of maid service, for example, constitutes such service; whereas the furnishing of heat and light, the cleaning of public entrances, exits, stairways and lobbies, the collection of trash, and so forth, are not considered as services rendered to the occupant.

(3) ***Example.*** The application of this paragraph may be illustrated by the following example:

Example. A, an individual, owns a building containing four apartments. During the taxable year, he receives $1,400 from apartments numbered 1 and 2, which are rented without services rendered to the occupants, and $3,600 from apartments numbered 3 and 4, which are rented with services rendered to the occupants. His fixed expenses for the four apartments aggregate $1,200 during the taxable year. In addition, he has $500 of expenses attributable to the services rendered to the occupants of apartments 3 and 4. In determining his net earnings from self-employment, A includes the $3,600 received from apartments 3 and 4, and the expenses of $1,100 ($500 plus one-half of $1,200) attributable thereto. The rentals and expenses attributable to apartments 1 and 2 are excluded. Therefore, A has $2,500 of net earnings from self-employment for the taxable year from the building.

(d) ***Treatment of business income which includes rentals from real estate.*** Except in the case of a real-estate dealer, where an individual or a partnership is engaged in a trade or business the income of which is classifiable in part as rentals from real estate, only that portion of such income which is not classifiable as rentals from real estate, and the expenses attributable to such portion, are included in determining net earnings from self-employment.

[T.D. 6691, 28 FR 12796, Dec. 3, 1963, as amended by T.D. 7710, 45 FR 50739, July 31, 1980]

§ 1.1402(a)-5 Dividends and interest.

(a) All dividends on shares of stock are excluded unless they are received by an individual in the course of his trade or business as a dealer in stocks or securities.

(b) Interest on any bond, debenture, note, or certificate, or other evidence of indebtedness, issued with interest coupons or in registered form by any corporation (including one issued by a government or political subdivision thereof) is excluded unless such interest is received in the course of a trade or business as a dealer in stocks or securities. However, interest with respect to which a credit against tax is allowable as provided in section 35, that is, interest on certain obligations of the United States and its instrumentalities, is not included in net earnings from self-employment even though received in the course of a trade or business as a dealer in stocks or securities. Only interest on bonds, debentures, notes, or certificates, or other evidence of indebtedness, issued with interest coupons or in registered form by a corporation, is excluded in the case of all persons other than dealers in stocks or securities; other interest received in the course of any trade or business (such as interest received by a pawnbroker on his loans or interest received by a merchant on his accounts or notes receivable) is not excluded.

(c) Dividends and interest of the character excludable under paragraphs (a) and (b) of this section received by an individual on stocks or securities held for speculation or investment are excluded whether or not the individual is a dealer in stocks or securities.

(d) A dealer in stocks or securities is a merchant of stocks or securities with an established place of business, regularly engaged in the business of purchasing stocks or securities and reselling them to customers; that is, he is one who as a merchant buys stocks or securities and sells them to customers with a view to the gains and profits that may be derived therefrom. Persons who buy and sell or hold stocks or securities for investment or speculation, irrespective of whether such buying or selling constitutes the carrying on of a trade or business, are not dealers in stocks or securities.

§ 1.1402(a)-6 Gain or loss from disposition of property.

(a) There is excluded any gain or loss:

(1) Which is considered as gain or loss from the sale or exchange of a capital asset;

(2) from the cutting of timber or the disposal of timber, coal, or iron ore, even though held primarily for sale to customers, if section 631 is applicable to such gain or loss; and

(3) from the sale, exchange, involuntary conversion, or other disposition of property if such property is neither

(i) stock in trade or other property of a kind which would properly be includible in inventory if on hand at the close of the taxable year, nor

(ii) property held primarily for sale to customers in the ordinary course of a trade or business. For the purpose of the special rule in subparagraph (3) of this paragraph, it is immaterial whether a gain or loss is treated as a capital gain or loss or as an ordinary gain or loss for purposes other than determining net earnings from self-employment. For instance, where the character of a loss is governed by the provisions of section 1231, such loss is excluded in determining net earnings from self-employment even though such loss is treated under section 1231 as an ordinary loss. For the purposes of this special rule, the term “involuntary conversion” means a compulsory or involuntary conversion of property into other property or money as a result of its destruction in whole or in part, theft or seizure, or an exercise of the power of requisition or condemnation or the threat or imminence thereof; and the term “other dispostion” includes the destruction or loss, in whole or in part, of property by fire, storm, shipwreck, or other casualty, or by theft, even though there is no conversion of such property into other property or money.

(b) The application of this section may be illustrated by the following example:

Example. During the taxable year 1954, A, who owns a grocery store, realized a net profit of $1,500 from the sale of groceries and a gain of $350 from the sale of a refrigerator case. During the same year, he sustained a loss of $2,000 as a result of damage by fire to the store building. In computing taxable income, all of these items are taken into account. In determining net earnings from self-employment, however, only the $1,500 of profit derived from the sale of groceries is included. The $350 gain and the $2,000 loss are excluded.

[T.D. 6691, 28 FR 12796, Dec. 3, 1963, as amended by T.D. 6841, 30 FR 9309, July 27, 1965]

§ 1.1402(a)-7 Net operating loss deduction.

The deduction provided by section 172, relating to net operating losses sustained in years other than the taxable year, is excluded.

§ 1.1402(a)-8 Community income.

(a) ***In case of an individual.*** If any of the income derived by an individual from a trade or business (other than a trade or business carried on by a partnership) is community income under community property laws applicable to such income, all of the gross income, and the deductions attributable to such income, shall be treated as the gross income and deductions of the husband unless the wife exercises substantially all of the management and control of such trade or business, in which case all of such gross income and deductions shall be treated as the gross income and deductions of the wife. For the purpose of this special rule, the term "management and control" means management and control in fact, not the management and control imputed to the husband under the community property laws. For example, a wife who operates a beauty parlor without any appreciable collaboration on the part of her husband will be considered as having substantially all of the management and control of such business despite the provision of any community property law vesting in the husband the right of management and control of community property; and the income and deductions attributable to the operation of such beauty parlor will be considered the income and deductions of the wife.

(b) ***In case of a partnership.*** Even though a portion of a partner's distributive share of the income or loss, described in section 702(a)(9), from a trade or business carried on by a partnership is community income or loss under the community property laws applicable to such share, all of such distributive share shall be included in computing the net earnings from self-employment of such partner; no part of such share shall be taken into account in computing the net earnings from self-employment of the spouse of such partner. In any case in which both spouses are members of the same partnership, the distributive share of the income or loss of each spouse is included in computing the net earnings from self-employment of that spouse.

§ 1.1402(a)-9 Puerto Rico.

(a) ***Residents.*** A resident of Puerto Rico, whether or not a bona fide resident thereof during the entire taxable year, and whether or not an alien, a citizen of the United States, or a citizen of Puerto Rico, shall compute his net earnings from self-employment in the same manner as would a citizen of the United States residing in the United States. See paragraph (d) of § 1.1402(b)-1 for regulations relating to nonresident aliens. For the purpose of the tax on self-employment income, the gross income of such a resident of Puerto Rico also includes income from Puerto Rican sources. Thus, under this special rule, income from

Puerto Rican sources will be included in determining net earnings from self-employment of a resident of Puerto Rico engaged in the active conduct of a trade or business in Puerto Rico despite the fact that, under section 933, such income may not be taken into account for purposes of the tax under section 1 or 3.

(b) ***Nonresidents.*** A citizen of Puerto Rico who is also a citizen of the United States and who is not a resident of Puerto Rico will compute his net earnings from self-employment in the same manner and subject to the same provisions of law and regulations as other citizens of the United States.

§ 1.1402(a)-10 Personal exemption deduction.

The deduction provided by section 151, relating to personal exemptions, is excluded.

§ 1.1402(a)-11 Ministers and members of religious orders.

(a) ***In general.*** For each taxable year ending after 1954 in which a minister or member of a religious order is engaged in a trade or business, within the meaning of section 1402(c) and § 1.1402(c)-5, with respect to service performed in the exercise of his ministry or in the exercise of duties required by such order, net earnings from self-employment from such trade or business include the gross income derived during the taxable year from any such service, less the deductions attributable to such gross income. For each taxable year ending on or after December 31, 1957, such minister or member of a religious order shall compute his net earnings from self-employment derived from the performance of such service without regard to the exclusions from gross income provided by section 107 (relating to rental value of parsonages) and section 119 (relating to meals and lodging furnished for the convenience of the employer). Thus, a minister who is subject to self-employment tax with respect to his services as a minister will include in the computation of his net earnings from self-employment for a taxable year ending on or after December 31, 1957, the rental value of a home furnished to him as remuneration for services performed in the exercise of his ministry or the rental allowance paid to him as remuneration for such services irrespective of whether such rental value or rental allowance is excluded from gross income by section 107. Similarly, the value of any meals or lodging furnished to a minister or to a member of a religious order in connection with service performed in the exercise of his ministry or as a member of such order will be included in the computation of his net earnings from self-employment for a taxable year ending on or after December 31, 1957, notwithstanding the exclusion of such value from gross income by section 119.

(b) ***In employ of American employer.*** If a minister or member of a religious order engaged in a trade or business described in section 1402(c) and § 1.1402(c)-5 is a citizen of the United States and performs service, in his capacity as a minister or member of a religious order, as an employee of an American employer, as defined in section 3121(h) and the regulations thereunder in part 31 of this chapter (Employment Tax Regulations), his net earnings from self-employment derived from such service shall be computed as provided in paragraph (a) of this section but without regard to the exclusions from gross income provided in section 911, relating to earned income from sources without the United States, and section 931, relating to income from sources within certain possessions of the United States. Thus, even though all the income of the minister or member for service of the character to which this paragraph is applicable was derived from sources without the United States, or from sources within certain possessions of the United States, and therefore may be excluded from gross income, such income is included in computing net earnings from self-employment.

(c) ***Minister in a foreign country whose congregation is composed predominantly of citizens of the United States —***

(1) ***Taxable years ending after 1956.*** For any taxable year ending after 1956, a minister of a church, who is engaged in a trade or business within the meaning of section 1402(c) and § 1.1402(c)-5, is a citizen of the United States, is performing service in the exercise of his ministry in a foreign country, and has a congregation composed predominantly of United States citizens, shall compute his net earnings from self-employment derived from his services as a minister for such taxable year without regard to the exclusion from gross income provided in section 911, relating to earned income from sources without the United States. For taxable years ending on or after December 31, 1957, such minister shall also disregard sections 107 and 119 in the computation of his net earnings from self-employment. (See paragraph (a) of this section.) For purposes of section 1402(a)(8) and this paragraph a "congregation composed predominantly of citizens of the United States" means a congregation the majority of which throughout the greater portion of its minister's taxable year were United States citizens.

(2) ***Election for taxable years ending after 1954 and before 1957.***

(i) A minister described in subparagraph (1) of this paragraph who, for a taxable year ending after 1954 and before 1957, had income from service described in such subparagraph which would have been included in computing net earnings from self-employment if such income had been derived in a taxable year ending after 1956 by an individual who had filed a waiver certificate under section 1402(e), may elect to have section 1402(a)(8) and subparagraph (1) of this paragraph apply to his income from such service for his taxable years ending after 1954 and before 1957. If such minister filed a waiver certificate prior to August 1, 1956, in accordance with § 1.1402(e)(1)-1, or he files such a waiver certificate on or before the due date of his return (including any extensions thereof) for his last taxable year ending before 1957, he must make such election on or before the due date of his return (including any extensions thereof) for such taxable year or before April 16, 1957, whichever is the later. If the waiver certificate is not so filed, the minister must make his election on or before the due date of the return (including any extensions thereof) for his first taxable year ending after 1956. Notwithstanding the expiration of the period prescribed by section 1402(e)(2) for filing such waiver, the minister may file a waiver certificate at the time he makes the election. In no event shall an election be valid unless the minister files prior to or at the time of the election a waiver certificate in accordance with § 1.1402(e)(1)-1.

(ii) The election shall be made by filing with the district director of internal revenue with whom the waiver certificate, Form 2031, is filed a written statement indicating that, by reason of the Social Security Amendments of 1956, the minister desires to have the Federal old-age, survivors, and disability insurance system established by title II of the Social Security Act extended to his services performed in a foreign country as a minister of a congregation composed predominantly of United States citizens beginning with the first taxable year ending after 1954 and prior to 1957 for which he had income from such services. The statement shall be dated and signed by the minister and shall clearly state that it is an election for retroactive self-employment tax coverage under the Self-Employment Contributions Act of 1954. In addition, the statement shall include the following information:

(*a*) The name and address of the minister.

(*b*) His social security account number, if he has one.

(*c*) That he is a duly ordained, commissioned, or licensed minister of a church.

(*d*) That he is a citizen of the United States.

(*e*) That he is performing services in the exercise of his ministry in a foreign country.

(*f*) That his congregation is composed predominantly of citizens of the United States.

(*g*)

(*1*) That he has filed a waiver certificate and, if so, where and under what circumstances the certificate was filed and the taxable year for which it is effective; or

(*2*) that he is filing a waiver certificate with his election for retroactive coverage and, if so, the taxable year for which it is effective.

(*h*) That he has or has not filed income tax returns for his taxable years ending after 1954 and before 1957. If he has filed such returns, he shall state the years for which they were filed and indicate the district director of internal revenue with whom they were filed.

(iii) Notwithstanding section 1402(e)(3), a waiver certificate filed pursuant to § 1.1402(e)(1)-1 by a minister making an election under this paragraph shall be effective (regardless of when such certificate is filed) for such minister's first taxable year ending after 1954 in which he had income from service described in subparagraph (1) of this paragraph or for the taxable year of the minister prescribed by section 1402(e)(3), if such taxable year is earlier, and for all succeeding taxable years.

(iv) No interest or penalty shall be assessed or collected for failure to file a return within the time prescribed by law if such failure arises solely by reason of an election made by a minister pursuant to this paragraph or for any underpayment of self-employment income tax arising solely by reason of such election, for the period ending with the date such minister makes an election pursuant to this paragraph.

(d) ***Treatment of certain remuneration paid in 1955 and 1956 as wages.*** For treatment of remuneration paid to an individual for service described in section 3121(b)(8)(A) which was erroneously treated by the organization employing him as employment with-in the meaning of chapter 21 of the Internal Revenue Code, see § 1.1402(e)(4)-1.

[T.D. 6691, 28 FR 12796, Dec. 3, 1963, as amended by T.D. 9194, 70 FR 18946, Apr. 11, 2005]

§ 1.1402(a)-12 Continental shelf and certain possessions of the United States.

(a) ***Certain possessions.*** For purposes of the tax on self-employment income, the exclusion from gross income provided by section 931 (relating to bona fide residents of certain possessions of the United States) will not apply. Net earnings from self-employment are subject to the tax on self-employment income even if such amounts are excluded from gross income under section 931.

(b) ***Continental shelf.*** For the definition of the term “United States” and for other geographical definitions relating to the continental shelf, see section 638 and § 1.638-1.

(c) ***Effective/applicability date.*** This section applies to taxable years ending after April 9, 2008.

[T.D. 9391, 73 FR 19376, Apr. 9, 2008]

§ 1.1402(a)-13 Income from agricultural activity.

(a) ***Agricultural trade or business.***

(1) An agricultural trade or business is one in which, if the trade or business were carried on exclusively by employees, the major portion of the services would constitute agricultural labor as defined in section 3121(g) and the regulations thereunder in part 31 of this chapter (Employment Tax Regulations). In case the services are in part agricultural and in part nonagricultural, the time devoted to the performance of each type of service is the test to be used to determine whether the major portion of the services would constitute agricultural labor. If more than half of the time spent in performing all the services is spent in performing services which would constitute agricultural labor under section 3121(g), the trade or business is agricultural. If only half, or less, of the time spent in performing all the services is spent in performing services which would constitute agricultural labor under section 3121(g), the trade or business is not agricultural. In every case the time spent in performing the services will be computed by adding the time spent in the trade or business during the taxable year by every individual (including the individual carrying on such trade or business and the members of his family) in performing such services. The operation of this special rule is not affected by section 3121(c), relating to the included-excluded rule for determining employment.

(2) The rules prescribed in subparagraph (1) of this paragraph have no application where the nonagricultural services are performed in connection with an enterprise which constitutes a trade or business separate and distinct from the trade or business conducted as an agricultural enterprise. Thus, the operation of a roadside automobile service station on farm premises constitutes a trade or business separate and distinct from the agricultural enterprise, and the gross income derived from such service station, less the deductions attributable thereto, is to be taken into account in determining net earnings from self-employment.

(b) ***Farm operator's income for taxable years ending before 1955.*** Income derived in a taxable year ending before 1955 from any agricultural trade or business (see paragraph (a) of this section), and all deductions attributable to such income, are excluded in computing net earnings from self-employment.

(c) ***Farm operator's income for taxable years ending after 1954.*** Income derived in a taxable year ending after 1954 from an agricultural trade or business (see paragraph (a) of this section) is includible in computing net earnings from self-employment. Income derived from an agricultural trade or business includes income derived by an individual under an agreement entered into by such individual with another person pursuant to which such individual undertakes to produce agricultural or horticultural commodities (including livestock, bees, poultry, and fur-bearing animals and wildlife) on land owned or leased by such other person and pursuant to which the agricultural or horticultural commodities produced by such individual, or the proceeds therefrom, are to be divided between such individual and such other person, and the amount of such individual's share depends on the amount of the agricultural or horticultural commodities produced. However, except as provided in paragraph (d) of this section, relating to arrangements involving material participation, the income derived under such an agreement by the owner or lessee of the land is not includible in computing net earnings from self-employment. See § 1.1402(a)-4. For options relating to the computation of net earnings from self-employment, see §§ 1.1402(a)-14 and 1.1402(a)-15.

(d) ***Includible farm rental income for taxable years ending after 1955.*** For taxable years ending after 1955, income derived from an agricultural trade or business (see paragraph (a) of this section) includes also income derived by the owner or tenant of land under an arrangement between such owner or tenant and another person, if such arrangement provides that such other person shall produce agricultural or horticultural commodities (including livestock, bees, poultry, and fur-bearing animals and wildlife) on such land, and that there shall be material participation by the owner or tenant in the production or the management of the production of such agricultural or horticultural commodities, and if there is material

participation by the owner or tenant with respect to any such agricultural or horticultural commodity. See paragraph (b) of § 1.1402(a)-4. For options relating to the computation of net earnings from self-employment, see §§ 1.1402(a)-14 and 1.1402(a)-15.

(e) ***Income from service performed after 1956 as a crew leader.*** Income derived by a crew leader (see section 3121(o) and the regulations thereunder in Part 31 of this chapter (Employment Tax Regulations)) from service performed after 1956 in furnishing individuals to perform agricultural labor for another person and from service performed after 1956 in agricultural labor as a member of the crew is considered to be income derived from a trade or business for purposes of § 1.1402(c)-1. Whether such trade or business is an agricultural trade or business shall be determined by applying the rules set forth in this section.

§ 1.1402(a)-14 Options available to farmers in computing net earnings from self-employment for taxable years ending after 1954 and before December 31, 1956.

(a) ***Computation of net earnings.*** In the case of any trade or business which is carried on by an individual who reports his income on the cash receipts and disbursements method, and in which, if it were carried on exclusively by employees, the major portion of the services would constitute agricultural labor as defined in section 3121(g) (see paragraph (a) of § 1.1402(a)-13), net earnings from self-employment may, for a taxable year ending after 1954, at the option of the taxpayer, be computed as follows:

(1) ***Gross income $1,800 or less.*** If the gross income, computed as provided in paragraph (b) of this section, from such trade or business is $1,800 or less, the taxpayer may, at his option, treat as net earnings from self-employment from such trade or business an amount equal to 50 percent of such gross income. If the taxpayer so elects, the amount equal to 50 percent of such gross income shall be used in computing his self-employment income in lieu of his actual net earnings from such trade or business, if any.

(2) ***Gross income in excess of $1,800.*** If the gross income, computed as provided in paragraph (b) of this section, from such trade or business is more than $1,800, and the actual net earnings from self-employment from such trade or business are less than $900, the taxpayer may, at his option, treat $900 as net earnings from self-employment. If the taxpayer so elects, $900 shall be used in computing his self-employment income in lieu of his actual net earnings from such trade or business, if any. However, if the taxpayer's actual net earnings from such trade or business, as computed in accordance with §§ 1.1402(a)-1 through 1.1402(a)-3 are $900 or more, such actual net earnings shall be used in computing his self-employment income.

(b) ***Computation of gross income.*** For purposes of paragraph (a) of this section, gross income shall consist of the gross receipts from such trade or business reduced by the cost or other basis of property which was purchased and sold in carrying on such trade or business, adjusted (after such reduction) in accordance with the provisions of § 1.1402(a)-3, relating to income and deductions not included in computing net earnings from self-employment.

(c) ***Two or more agricultural activities.*** If an individual is engaged in more than one agricultural trade or business within the meaning of paragraph (a) of § 1.1402(a)-13 (for example, the business of ordinary farming and the business of cotton ginning), the gross income derived from each agricultural trade or business shall be aggregated for purposes of the optional method provided in paragraph (a) of this section for computing net earnings from self-employment.

(d) ***Examples.*** Application of the regulations prescribed in paragraphs (a) and (b) of this section may be illustrated by the following examples:

Example (1). F, a farmer, uses the cash receipts and disbursements method of accounting in making his income tax returns. F's books and records show that during the calendar year 1955 he received $1,200 from the sale of produce raised on the farm, $200 from the sale of livestock raised on the farm and not held for breeding or dairy purposes, and $600 from the sale of a tractor. The income from the sale of the tractor is of a type which is excluded from net earnings from self-employment by section 1402(a). F's actual net earnings from self-employment, computed in accordance with the provisions of §§ 1.1402(a)-1 through 1.1402(a)-3, are $450. F may report $450 as his net earnings from self-employment or he may elect to report $700 (one-half of $1,400).

Example (2). C, a cattleman, uses the cash receipts and disbursements method of accounting in making his income tax returns. C had actual net earnings from self-employment, computed in accordance with the provisions of §§ 1.1402(a)-1 through 1.1402(a)-3, of $725. His gross receipts were $1,000 from the sale of produce raised on the farm and $1,200 from the sale of feeder cattle, which C bought for $500. The income from the sale of the feeder cattle is of a type which is included in computing net earnings from self-employment. Therefore, C may report $725 as his net earnings from self-employment or he may elect to report $850, one-half of $1,700 ($2,200 minus $500).

Example (3). R, a rancher, has gross income of $3,000 from the operation of his ranch, computed as provided in paragraph (b) of this section. His actual net earnings from self-employment from farming activities are less than $900. R, nevertheless, may elect to report $900 as net earnings from self-employment from such trade or business. If R had actual net earnings from self-employment from his farming activities in the amount of $900 or more, he would be required to report such amount in computing his self-employment income.

(e) ***Members of farm partnerships.*** The optional method provided by paragraph (a) of this section for computing net earnings from self-employment is not available to a member of a partnership with respect to his distributive share of the income or loss from any trade or business carried on by any partnership of which he is a member.

§ 1.1402(a)-15 Options available to farmers in computing net earnings from self-employment for taxable years ending on or after December 31, 1956.

(a) ***Computation of net earnings.*** In the case of any trade or business which is carried on by an individual or by a partnership and in which, if such trade or business were carried on exclusively by employees, the major portion of the services would constitute agricultural labor as defined in section 3121(g) (see paragraph (a) of § 1.1402(a)-13), net earnings from self-employment may, for a taxable year ending on or after December 31, 1956, at the option of the taxpayer, be computed as follows:

(1) ***In case of an individual*** —

(i) ***Gross income of less than specified amount.*** If the gross income, computed as provided in paragraph (b) of this section, from such trade or business is $2,400 or less ($1,800 or less for a taxable year ending on or after December 31, 1956, and beginning before January 1, 1966), the taxpayer may, at his option, treat as net earnings from self-employment from such trade or business an amount equal to $66^{2}/_{3}$ percent of such gross income. If the taxpayer so elects, the amount equal to $66^{2}/_{3}$ percent of such gross income shall be used in computing his self-employment income in lieu of his actual net earnings from such trade or business, if any.

(ii) ***Gross income in excess of specified amount.*** If the gross income, computed as provided in paragraph (b) of this section, from such trade or business is more than $2,400 ($1,800 for a taxable year ending on or after December 31, 1956, and beginning before January 1, 1966), and

the net earnings from self-employment from such trade or business (computed without regard to this section) are less than $1,600 ($1,200 for a taxable year ending on or after December 31, 1956, and beginning before January 1, 1966), the taxpayer may, at his option, treat $1,600 ($1,200 for a taxable year ending on or after December 31, 1956, and beginning before January 1, 1966) as net earnings from self-employment. If the taxpayer so elects, $1,600 ($1,200 for a taxable year ending on or after December 31, 1956, and beginning before January 1, 1966) shall be used in computing his self-employment income in lieu of his actual net earnings from such trade or business, if any. However, if the taxpayer's actual net earnings from such trade or business, as computed in accordance with the applicable provisions of §§ 1.1402(a)-1 to 1.1402(a)-13, inclusive, are $1,600 or more ($1,200 or more for a taxable year ending on or after December 31, 1956, and beginning before January 1, 1966) such actual net earnings shall be used in computing his self-employment income.

(2) ***In case of a member of a partnership*** —

(i) ***Distributive share of gross income of less than specified amount.*** If a taxpayer's distributive share of the gross income of a partnership (as such gross income is computed under the provisions of paragraph (b) of this section) derived from such trade or business (after such gross income has been reduced by the sum of all payments to which section 707(c) applies) is $2,400 or less ($1,800 or less for a taxable year ending on or after December 31, 1956, and beginning before January 1, 1966), the taxpayer may, at his option, treat as his distributive share of income described in section 702(a)(9) derived from such trade or business an amount equal to $66^{2}/_{3}$ percent of his distributive share of such gross income (after such gross income has been reduced by the sum of all payments to which section 707(c) applies). If the taxpayer so elects, the amount equal to $66^{2}/_{3}$ percent of his distributive share of such gross income shall be used by him in the computation of his net earnings from self-employment in lieu of the actual amount of his distributive share of income described in section 702(a)(9) from such trade or business, if any.

(ii) ***Distributive share of gross income in excess of specified amount.*** If a taxpayer's distributive share of the gross income of the partnership (as such gross income is computed under the provisions of paragraph (b) of this section) derived from such trade or business (after such gross income has been reduced by the sum of all payments to which section 707(c) applies) is more than $2,400 ($1,800 for a taxable year ending on or after December 31, 1956, and beginning before January 1, 1966) and the actual amount of his distributive share (whether or not distributed) of income described in section 702(a)(9) derived from such trade or business (computed without regard to this section) is less than $1,600 ($1,200 for a taxable year ending on or after December 31, 1956, and beginning before January 1, 1966), the taxpayer may, at his option, treat $1,600 ($1,200 for a taxable year ending on or after December 31, 1956, and beginning before January 1, 1966) as his distributive share of income described in section 702(a)(9) derived from such trade or business. If the taxpayer so elects, $1,600 ($1,200 for a taxable year ending on or after December 31, 1956, and beginning before January 1, 1966) shall be used by him in the computation of his net earnings from self-employment in lieu of the actual amount of his distributive share of income described in section 702(a)(9) from such trade or business, if any. However, if the actual amount of the taxpayer's distributive share of income described in section 702(a)(9) from such trade or business, as computed in accordance with the applicable provisions of §§ 1.1402(a)-1 to 1.1402(a)-13, inclusive, is

$1,600 or more ($1,200 or more for a taxable year ending on or after December 31, 1956, and beginning before January 1, 1966), such actual amount of the taxpayer's distributive share shall be used in computing his net earnings from self-employment.

(iii) ***Cross reference.*** For a special rule in the case of certain deceased partners, see paragraph (c) of § 1.1402(f)-1.

(b) ***Computation of gross income.*** For purposes of this section gross income has the following meanings:

(1) In the case of any such trade or business in which the income is computed under a cash receipts and disbursements method, the gross receipts from such trade or business reduced by the cost or other basis of property which was purchased and sold in carrying on such trade or business (see paragraphs (a) and (c), other than paragraph (a)(5), of § 1.61-4), adjusted (after such reduction) in accordance with the applicable provisions of §§ 1.1402(a)-3 to 1.1402(a)-13, inclusive.

(2) In the case of any such trade or business in which the income is computed under an accrual method (see paragraphs (b) and (c), other than paragraph (b)(5), of § 1.61-4), the gross income from such trade or business, adjusted in accordance with the applicable provisions of §§ 1.1402(a)-3 to 1.1402(a)-13, inclusive.

(c) ***Two or more agricultural activities.*** If an individual (including a member of a partnership) derives gross income (as defined in paragraph (b) of this section) from more than one agricultural trade or business, such gross income (including his distributive share of the gross income of any partnership derived from any such trade or business) shall be deemed to have been derived from one trade or business. Thus, such an individual shall aggregate his gross income derived from each agricultural trade or business carried on by him (which includes, under paragraph (b) of § 1.1402(a)-1, any guaranteed payment, within the meaning of section 707(c), received by him from a farm partnership of which he is a member) and his distributive share of partnership gross income (after such gross income has been reduced by any guaranteed payment within the meaning of section 707(c)) derived from each farm partnership of which he is a member. Such gross income is the amount to be considered for purposes of the optional method provided in this section for computing net earnings from self-employment. If the aggregate gross income of an individual includes income derived from an agricultural trade or business carried on by him and a distributive share of partnership income derived from an agricultural trade or business carried on by a partnership of which he is a member, such aggregate gross income shall be treated as income derived from a single trade or business carried on by him, and such individual shall apply the optional method applicable to individuals set forth in paragraph (a)(1) of this section for purposes of computing his net earnings from self-employment.

(d) ***Examples.*** The application of this section may be illustrated by the following examples:

Example (1). F is engaged in the business of farming and computes his income under the cash receipts and disbursements method. He files his income tax returns on the basis of the calendar year. During the year 1966, F's gross income from the business of farming (computed in accordance with paragraph (b) (1) of this section) is $2,325. His actual net earnings from self-employment derived from such business are $1,250. As his net earnings from self-employment, F may report $1,250 or, by the optional computation method, he may report $1,550 ($66^2/_3$ percent of $2,325).

Example (2). G is engaged in the business of farming and computes his income under the accrual method. His income tax returns are filed on the calendar year basis. For the year 1966, G's gross income from the operation of his farm (computed in accordance with paragraph (b)(2) of this section) is $2,800. He has actual net earnings from self-employment derived from such farm in the amount of $1,250. As his net earnings from self-employment derived from his farm, G may report his actual net

earnings of $1,250, or by the optional method he may report $1,600. If G's actual net earnings from self-employment from his farming activities for 1966 were in an amount of $1,600 or more, he would be required to report such amount in computing his self-employment income.

Example (3). M, who files his income tax returns on a calendar year basis, is one of the three partners of the XYZ Company, a partnership, engaged in the business of farming. The taxable year of the partnership is the calendar year, and its income is computed under the cash receipts and disbursements method. For M's services in connection with the planting, cultivating, and harvesting of the crops during the year 1966 the partnership agrees to pay him $500, the full amount of which is determined without regard to the income of the partnership and constitutes a guaranteed payment within the meaning of section 707(c). This guaranteed payment to M is the only such payment made during such year. The gross income derived from the business for the year 1966 computed in accordance with paragraph (b)(1) of this section and after being reduced by the guaranteed payment of $500 made to M, is $3,000. One-third of the $3,000 ($1,000), is M's distributive share of such gross income. Under paragraph (c) of this section, the guaranteed payment ($500) received by M and his distributive share of the partnership gross income ($1,000) are deemed to have been derived from one trade or business, and such amounts must be aggregated for purposes of the optional method of computing net earnings from self-employment. Since M's combined gross income from his two agricultural businesses ($1,000 and $500) is not more than $2,400 and since such income is deemed to be derived from one trade or business, M's net earnings from self-employment derived from such farming business may, at his option, be deemed to be $1,000 ($66^{2}/_{3}$ percent of $1,500).

Example (4). A is one of the two partners of the AB partnership which is engaged in the business of farming. The taxable year of the partnership is the calendar year and its income is computed under the accrual method. A files his income tax returns on the calendar year basis. The partnership agreement provides for an equal sharing in the profits and losses of the partnership by the two partners. A is an experienced farmer and for his services as manager of the partnership's farm activities during the year 1966 he receives $6,000 which amount constitutes a guaranteed payment within the meaning of section 707(c). The gross income of the partnership derived from such business for the year 1966, computed in accordance with paragraph (b)(2) of this section and after being reduced by the guaranteed payment made to A, is $9,600. A's distributive share of such gross income is $4,800 and his distributive share of income described in section 702(a)(9) derived from the partnership's business is $1,900. Under paragraph (c) of this section, the guaranteed payment received by A and his distributive share of the partnership gross income are deemed to have been derived from one trade or business, and such amounts must be aggregated for purposes of the optional method of computing his net earnings from self-employment. Since the aggregate of A's guaranteed payment ($6,000) and his distributive share of partnership gross income ($4,800) is more than $2,400 and since the aggregate of A's guaranteed payment ($6,000) and his distributive share ($1,900) of partnership income described in section 702(a)(9) is not less than $1,600, the optional method of computing net earnings from self-employment is not available to A.

Example (5). F is a member of the EFG partnership which is engaged in the business of farming. F files his income tax returns on the calendar year basis. The taxable year of the partnership is the calendar year, and its income is computed under a cash receipts and disbursements method. Under the partnership agreement the partners are to share equally the profits or losses of the business. The gross income derived from the partnership business for the year 1966, computed in accordance with paragraph (b)(1) of this section is $7,500. F's share of such gross income is $2,500. Due to drought and an epidemic among the livestock, the partnership sustains a net loss of $7,800 for the year 1966 of which loss F's share is $2,600. Since F's distributive share of gross income derived from such

business is in excess of $2,400 and since F does not receive income described in section 702(a)(9) of $1,600 or more from such business, he may, at his option, be deemed to have received $1,600 as his distributive share of income described in section 702(a)(9) from such business.

[T.D. 6691, 28 FR 12796, Dec. 3, 1963, as amended by T.D. 6993, 34 FR 828, Jan. 18, 1969]

§ 1.1402(a)-16 Exercise of option.

A taxpayer shall, for each taxable year with respect to which he is eligible to use the optional method described in § 1.1402(a)-14 or § 1.1402(a)-15, make a determination as to whether his net earnings from self-employment are to be computed in accordance with such method. If the taxpayer elects the optional method for a taxable year, he shall signify such election by computing net earnings from self-employment under the optional method as set forth in Schedule F (Form 1040) of the income tax return filed by the taxpayer for such taxable year. If the optional method is not elected at the time of the filing of the return for a taxable year with respect to which the taxpayer is eligible to elect such optional method, such method may be elected on an amended return (or on such other form as may be prescribed for such use) filed within the period prescribed by section 6501 and the regulations thereunder for the assessment of the tax for such taxable year. If the optional method is elected on a return for a taxable year, the taxpayer may revoke such election by filing an amended return (or such other form as may be prescribed for such use) for the taxable year within the period prescribed by section 6501 and the regulations thereunder for the assessment of the tax for such taxable year. If the taxpayer is deceased or unable to make an election, the person designated in section 6012(b) and the regulations thereunder may, within the period prescribed in this section elect the optional method for any taxable year with respect to which the taxpayer is eligible to use the optional method and revoke an election previously made by or for the taxpayer.

§ 1.1402(a)-17 Retirement payments to retired partners.

(a) ***In general.*** There shall be excluded, in computing net earnings from self-employment for taxable years ending on or after December 31, 1967, certain payments made on a periodic basis by a partnership, pursuant to a written plan of the partnership, to a retired partner on account of his retirement. The exclusion applies only if the payments are made pursuant to a plan which meets the requirements prescribed in paragraph (b) of this section, and, in addition, the conditions set forth in paragraph (c) of this section are met.

(b) ***Retirement plan of partnership.***

(1) To meet the requirements of section 1402(a)(10), the written plan of the partnership must set forth the terms and conditions of the program or system established by the partnership for the purpose of making payments to retired partners on account of their retirement. To qualify as payments on account of retirement, the payments must constitute bona fide retirement income. Thus, payments of benefits not customarily included in a pension or retirement plan such as layoff benefits are not payments on account of retirement. Eligibility for retirement generally is established on the basis of age, physical condition, or a combination of age or physical condition and years of service. Generally, retirement benefits are measured by, and based on, such factors as years of service and compensation received. In determining whether the plan of the partnership provides for payments on account of retirement, factors, formulas, etc., reflected in public, and in broad based private, pension or retirement plans in prescribing eligibility requirements and in computing benefits may be taken into account.

(2) The plan of the partnership must provide for payments on account of retirement:

(i) To partners generally or to a class or classes of partners,

(ii) On a periodic basis, and

(iii) Which continue at least until the partner's death.

For purposes of subdivision (i) of this subparagraph, a class of partners may, in an appropriate case, contain only one member. Payments are made on a periodic basis if made at regularly recurring intervals (usually monthly) not exceeding one year.

(c) ***Conditions relating to exclusion*** —

(1) ***In general.*** A payment made pursuant to a written plan of a partnership which meets the requirements of paragraph (b) of this section shall be excluded, in computing net earnings from self-employment, only if:

(i) The retired partner to whom the payment is made rendered no service with respect to any trade or business carried on by the partnership (or its successors) during the taxable year of the partnership (or its successors), which ends within or with the taxable year of the retired partner and in which the payment was received by him;

(ii) No obligation (whether certain in amount or contingent on a subsequent event) exists (as of the close of the partnership's taxable year referred to in subdivision (i) of this subparagraph) from the other partners to the retired partner except with respect to retirement payments under the plan or rights such as benefits payable on account of sickness, accident, hospitalization, medical expenses, or death; and

(iii) The retired partner's share (if any) of the capital of the partnership has been paid to him in full before the close of the partnership's taxable year referred to in subdivision (i) of this subparagraph.

By application of the conditions set forth in this subparagraph, either all payments on account of retirement received by a retired partner during the taxable year of the partnership ending within or with his taxable year are excluded or none of the payments are excluded. Subdivision (ii) of this subparagraph has application only to obligations from other partners in their capacity as partners as distinguished from an obligation which arose and exists from a transaction unrelated to the partnership or to a trade or business carried on by the partnership. The effect of the conditions set forth in subdivisions (ii) and (iii) of this subparagraph is that the exclusion may apply with respect to payments received by a retired partner during the taxable year of the partnership ending within or with his taxable year only if at the close of the partnership's taxable year the retired partner had no financial interest in the partnership except for the right to retirement payments.

(2) ***Examples.*** The application of subparagraph (1) of this paragraph may be illustrated by the following examples. Each example assumes that the partnership plan pursuant to which the payments are made meets the requirements of paragraph (b) of this section.

Example (1). A, who files his income tax returns on a calendar year basis, is a partner in the ABC partnership. The taxable year of the partnership is the period July 1 to June 30, inclusive. A retired from the partnership on January 1, 1973, and receives monthly payments on account of his retirement. As of June 30, 1973, no obligation existed from the other partners to A (except with respect to retirement payments under the plan) and A's share of the capital of the partnership had been paid to him in full. The monthly retirement payments received by A from the partnership in his taxable year ending on December 31, 1973, are not excluded from net

earnings from self-employment since A rendered service to the partnership during a portion of the partnership's taxable year (July 1, 1972, through June 30, 1973) which ends within A's taxable year ending on December 31, 1973.

Example (2). D, a partner in the DEF partnership, retired from the partnership as of the close of December 31, 1972. The taxable year of both D and the partnership is the calendar year. During the partnership's taxable year ending December 31, 1973, D rendered no service with respect to any trade or business carried on by the partnership. On or before December 31, 1973, all obligations (other than with respect to retirement payments under the plan) from the other partners to D have been liquidated, and D's share of the capital of the partnership has been paid to him. Retirement payments received by D pursuant to the partnership's plan in his taxable year ending December 31, 1973, are excluded in determining his net earnings from self-employment (if any) for that taxable year.

Example (3). Assume the same facts as in example (2) except that as of the close of December 31, 1973, D has a right to a fixed percentage of any amounts collected by the partnership after that date which are attributable to services rendered by him prior to his retirement for clients of the partnership. The monthly payments received by D in his taxable year ending December 31, 1973, are not excluded from net earnings from self-employment since as of the close of the partnership's taxable year which ends with D's taxable year, an obligation (other than an obligation with respect to retirement payments) exists from the other partners to D.

[T.D. 7333, 39 FR 44446, Dec. 24, 1974]

§ 1.1402(a)-18 Split-dollar life insurance arrangements.

See §§ 1.61-22 and 1.7872-15 for rules relating to the treatment of split-dollar life insurance arrangements.

[T.D. 9092, 68 FR 54352, Sept. 17, 2003]

§ 1.1402(b)-1 Self-employment income.

(a) ***In general.*** Except for the exclusions in paragraphs (b) and (c) of this section and the exception in paragraph (d) of this section, the term "self-employment income" means the net earnings from self-employment derived by an individual during a taxable year.

(b) ***Maximum self-employment income*** —

(1) ***General rule.*** Subject to the special rules described in subparagraph (2) of this paragraph, the maximum self-employment income of an individual for a taxable year (whether a period of 12 months or less) is:

(i) For any taxable year beginning in a calendar year after 1974, an amount equal to the contribution and benefit base (as determined under section 230 of the Social Security Act) which is effective for such calendar year; and

(ii) For any taxable year:

Ending before 1955	$3,600
Ending after 1954 and before 1959	4,200
Ending after 1958 and before 1966	4,800

Ending after 1965 and before 1968	6,600
Ending after 1967 and beginning before 1972	7,800
Beginning after 1971 and before 1973	9,000
Beginning after 1972 and before 1974	10,800
Beginning after 1973 and before 1975	13,200

(2) *Special rules.*

(i) If an individual is paid wages as defined in subparagraph (3) of this paragraph in a taxable year, the maximum self-employment income for such taxable year is computed as provided in subdivision (ii) or (iii) of this subparagraph.

(ii) If an individual is paid wages as defined in subparagraph (3) (i) or (ii) of this paragraph in a taxable year, the maximum self-employment income of such individual for such taxable year is the excess of the amounts indicated in subparagraph (1) of this paragraph over the amount of the wages, as defined in subparagraph (3) (i) and (ii) of this paragraph, paid to him during the taxable year. For example, if for his taxable year beginning in 1974, an individual has $15,000 of net earnings from self-employment and during such taxable year is paid $1,000 of wages as defined in section 3121(a) (see subparagraph (3)(i) of this paragraph), he has $12,200 ($13,200 −$1,000) of self-employment income for the taxable year.

(iii) For taxable years ending on or after December 31, 1968, wages, as defined in subparagraph (3)(iii) of this paragraph, are taken into account in determining the maximum self-employment income of an individual for purposes of the tax imposed under section 1401(b) (hospital insurance), but not for purposes of the tax imposed under section 1401(a) (old-age survivors, and disability insurance). If an individual is paid wages as defined in subparagraph (3)(iii) of this paragraph in a taxable year, his maximum self-employment income for such taxable year for purposes of the tax imposed under section 1401(a) is computed under subparagraph (1) of this paragraph or subdivision (ii) of this subparagraph (whichever is applicable), and his maximum self-employment income for such taxable year for purposes of the tax imposed under section 1401(b) is the excess of his section 1401(a) maximum self-employment income over the amount of wages, as defined in subparagraph (3)(iii) of this paragraph, paid to him during the taxable year. For purposes of this subdivision, wages as defined in subparagraph (3)(iii) of this paragraph are deemed paid to an individual in the period with respect to which the payment is made, that is, the period in which the compensation was earned or deemed earned within the meaning of section 3231(e). For an explanation of the term “compensation” and for provisions relating to when compensation is earned, see the regulations under section 3231(e) in part 31 of this chapter (Employment Tax Regulations). The application of the rules set forth in this subdivision may be illustrated by the following example:

Example. M, a calendar-year taxpayer, has $15,000 of net earnings from self-employment for 1974 and during the taxable year is paid $1,000 of wages as defined in section 3121(a) (see subparagraph (3)(i) of this paragraph) and $1,600 of compensation subject to tax under section 3201 (see subparagraph (3)(iii) of this paragraph). Of the $1,600 of taxable compensation, $1,200 represents compensation for services rendered in 1974 and the balance ($400) represents compensation which pursuant to the provisions of section 3231(e) is earned or deemed earned in 1973. M's maximum self-employment income for 1974 for purposes of the tax imposed under section 1401(a), computed as provided in subdivision (ii) of this

subparagraph, is $12,200 ($13,200−$1,000), and for purposes of the tax imposed under section 1401(b) is $11,000 ($12,200−$1,200). However, M may recompute his maximum self-employment income for 1973 for purposes of the tax imposed under section 1401(b) by taking into account the $400 of compensation which is deemed paid in 1973.

(3) ***Meaning of term "wages".*** For the purpose of the computation described in subparagraph (2) of this paragraph, the term "wages" includes:

(i) Wages as defined in section 3121(a);

(ii) Such remuneration paid to an employee for services covered by:

(*a*) An agreement entered into pursuant to section 218 of the Social Security Act (42 U.S.C. 418), which section provides for extension of the Federal old-age, survivors and disability insurance system to State and local government employees under voluntary agreements between the States and the Secretary of Health, Education, and Welfare (Federal Security Administrator before April 11, 1953), or

(*b*) An agreement entered into pursuant to the provisions of section 3121(1), relating to coverage of citizens of the United States who are employees of foreign subsidiaries of domestic corporations,

as would be wages under section 3121(a) if such services constituted employment under section 3121(b). For an explanation of the term "wages", see the regulations under section 3121(a) in part 31 of this chapter (Employment Tax Regulations); and

(iii) Compensation, as defined in section 3231(e), which is subject to the employee tax imposed by section 3201 or the employee representative tax imposed by section 3211.

(c) ***Minimum net earnings from self-employment.*** Self-employment income does not include the net earnings from self-employment of an individual when the amount of such earnings for the taxable year is less than $400. Thus, an individual having only $300 of net earnings from self-employment for the taxable year would not have any self-employment income. However, an individual having net earnings from self-employment of $400 or more for the taxable year may, by application of paragraph (b)(2) of this section, have less than $400 of self-employment income for purposes of the tax imposed under section 1401(a) and the tax imposed under section 1401(b) or may have self-employment income of $400 or more for purposes of the tax imposed under section 1401(a) and of less than $400 for purposes of the tax imposed under section 1401(b). This could occur in a case in which the amount of the individual's net earnings from self-employment is $400 or more for a taxable year and the amount of such net earnings from self-employment plus the amount of wages, as defined in paragraph (b)(3) of this section, paid to him during the taxable year exceed the maximum self-employment income, as set forth in paragraph (b)(1) of this section, for the taxable year. However, the result occurs only if such maximum self-employment income exceeds the amount of such wages. The application of this paragraph may be illustrated by the following example:

Example. For 1974 M, a calendar-year taxpayer, has net earnings from self-employment of $2,000 and wages (as defined in paragraph (b)(3) (i) and (ii) of this section) of $12,500. Since M's net earnings from self-employment plus his wages exceed the maximum self-employment income for 1974 ($13,200), his self-employment income for 1974 is $700 ($13,200−$12,500). If M also had wages, as defined in paragraph (b)(3)(iii) of this section, of $200, his self-employment income would be $700 for purposes of the tax imposed under section 1401(a) and $500 ($13,200−$12,700 ($12,500 + $200)) for purposes of the tax imposed under section 1401(b).

For provisions relating to when wages as defined in paragraph (b)(3)(iii) of this section are treated as paid, see paragraph (b)(2)(iii) of this section.

(d) ***Nonresident aliens.*** A nonresident alien individual never has self-employment income. While a nonresident alien individual who derives income from a trade or business carried on within the United States, Puerto Rico, the Virgin Islands, Guam, or American Samoa (whether by agents or employees, or by a partnership of which he is a member) may be subject to the applicable income tax provisions on such income, such nonresident alien individual will not be subject to the tax on self-employment income, since any net earnings which he may have from self-employment do not constitute self-employment income. For the purpose of the tax on self-employment income, an individual who is not a citizen of the United States but who is a resident of the Commonwealth of Puerto Rico, the Virgin Islands, or, for taxable years beginning after 1960, of Guam or American Samoa is not considered to be a nonresident alien individual.

[T.D. 6691, 28 FR 12796, Dec. 3, 1963, as amended by T.D. 7333, 39 FR 44447, Dec. 24, 1974]

§ 1.1402(c)-1 Trade or business.

In order for an individual to have net earnings from self-employment, he must carry on a trade or business, either as an individual or as a member of a partnership. Except for the exclusions discussed in §§ 1.1402(c)-2 to 1.1402(c)-7, inclusive, the term “trade or business”, for the purpose of the tax on self-employment income, shall have the same meaning as when used in section 162. An individual engaged in one of the excluded activities specified in such sections of the regulations may also be engaged in carrying on activities which constitute a trade or business for purposes of the tax on self-employment income. Whether or not he is also engaged in carrying on a trade or business will be dependent upon all of the facts and circumstances in the particular case. An individual who is a crew leader, as defined in section 3121(o) (see such section and the regulations thereunder in part 31 of this chapter (Employment Tax Regulations)), is considered to be engaged in carrying on a trade or business with respect to services performed by him after 1956 in furnishing individuals to perform agricultural labor for another person or services performed by him after 1956 as a member of the crew.

[T.D. 6978, 33 FR 15937, Oct. 30, 1968]

§ 1.1402(c)-2 Public office.

(a) ***In general*** —

(1) ***General rule.*** Except as otherwise provided in subparagraph (2) of this paragraph, the performance of the functions of a public office does not constitute a trade or business.

(2) ***Fee basis public officials*** —

(i) ***In general.*** If an individual receives fees after 1967 for the performance of the functions of a public office of a State or a political subdivision thereof for which he is compensated solely on a fee basis, and if the service performed in such office is eligible for (but is not made the subject of) an agreement between the State and the Secretary of Health, Education, and Welfare pursuant to section 218 of the Social Security Act to extend social security coverage thereto, the service for which such fees are received constitutes a trade or business within the meaning of section 1402(c) and § 1.1402(c)-1. If an individual performs service for a State or a political subdivision thereof in any period in more than one position, each position is treated

separately for purposes of the preceding sentence. See also paragraph (f) of § 1.1402(c)-3 relating to the performance of service by an individual as an employee of a State or a political subdivision thereof in a position compensated solely on a fee basis.

(ii) ***Election with respect to fees received in 1968.***

(A) Any individual who in 1968 receives fees for service performed by him with respect to the functions of a public office of a State or a political subdivision thereof in any period in which the functions are performed in a position compensated solely on a fee basis may elect, if the performance of the service for which such fees are received constitutes a trade or business pursuant to the provisions of subdivision (i) of this subparagraph, to have such performance of service treated as excluded from the term "trade or business" for the purpose of the tax on self-employment income, pursuant to the provisions of section 122(c)(2) of the Social Security Amendments of 1967 (as quoted in § 1.1402(c)). Such election shall not be limited to service to which the fees received in 1968 are attributable but must also be applicable to service (if any) in subsequent years which, except for the election, would constitute a trade or business pursuant to the provisions of subdivision (i) of this subparagraph. An election made pursuant to the provisions of this subparagraph is irrevocable.

(B) The election referred to in subdivision (ii)(A) of this subparagraph shall be made by filing a certificate of election of exemption (Form 4415) on or before the due date of the income tax return (see section 6072), including any extension thereof (see section 6081), for the taxable year of the individual making the election which begins in 1968. The certificate of election of exemption shall be filed with an internal revenue office in accordance with the instructions on the certificate.

(b) ***Meaning of public office.*** The term "public office" includes any elective or appointive office of the United States or any possession thereof, of the District of Columbia, of a State or its political subdivisions, or a wholly-owned instrumentality of any one or more of the foregoing. For example, the President, the Vice President, a governor, a mayor, the Secretary of State, a member of Congress, a State representative, a county commissioner, a judge, a justice of the peace, a county or city attorney, a marshal, a sheriff, a constable, a registrar of deeds, or a notary public performs the functions of a public office. (However, the service of a notary public could not be made the subject of a section 218 agreement under the Social Security Act because notaries are not "employees" within the meaning of that section. Accordingly, such service does not constitute a trade or business.)

[T.D. 7333, 39 FR 44448, Dec. 24, 1974, as amended by T.D. 7372, 40 FR 30945, July 24, 1975]

§ 1.1402(c)-3 Employees.

(a) ***General rule.*** Generally, the performance of service by an individual as an employee, as defined in the Federal Insurance Contributions Act (Chapter 21 of the Internal Revenue Code) does not constitute a trade or business within the meaning of section 1402(c) and § 1.1402(c)-1. However, in six cases set forth in paragraphs (b) to (g), inclusive, of this section, the performance of service by an individual is considered to constitute a trade or business within the meaning of section 1402(c) and § 1.1402(c)-1. (As to when an individual is an employee, see section 3121 (d) and (o) and section 3506 and the regulations under those sections in part 31 of this chapter (Employment Tax Regulations).)

(b) ***Newspaper vendors.*** Service performed by an individual who has attained the age of 18 constitutes a trade or business for purposes of the tax on self-employment income within the meaning of section 1402(c) and § 1.1402(c)-1 if performed in, and at the time of, the sale of newspapers or magazines to ultimate consumers, under an arrangement under which the newspapers or magazines are to be sold by him at a fixed price, his compensation being based on the retention of the excess of such price over the amount at which the newspapers or magazines are charged to him, whether or not he is guaranteed a minimum amount of compensation for such service, or is entitled to be credited with the unsold newspapers or magazines turned back.

(c) ***Sharecroppers.*** Service performed by an individual under an arrangement with the owner or tenant of land pursuant to which:

(1) Such individual undertakes to produce agricultural or horticultural commodities (including livestock, bees, poultry, and fur-bearing animals and wildlife) on such land,

(2) The agricultural or horticultural commodities produced by such individual, or the proceeds therefrom, are to be divided between such individual and such owner or tenant, and

(3) The amount of such individual's share depends on the amount of the agricultural or horticultural commodities produced, constitutes a trade or business within the meaning of section 1402(c) and § 1.1402(c)-1.

(d) ***Employees of foreign government, instrumentality wholly owned by foreign government, or international organization.*** Service performed in the United States, as defined in section 3121(e)(2) (see such section and the regulations thereunder in part 31 of this chapter (Employment Tax Regulations)), by an individual who is a citizen of the United States constitutes a trade or business within the meaning of section 1402(c) and § 1.1402(c)-1 if such service is excepted from employment, for purposes of the Federal Insurance Contributions Act (chapter 21 of the Code), by:

(1) Section 3121(b)(11), relating to service in the employ of a foreign government (for regulations under section 3121(b)(11), see § 31.3121(b)(11)-1 of this chapter);

(2) Section 3121(b)(12), relating to service in the employ of an instrumentality wholly owned by a foreign government (for regulations under section 3121(b)(12), see § 31.3121(b)(12)-1 of this chapter); or

(3) Section 3121(b)(15), relating to service in the employ of an international organization (for regulations under section 3121(b)(15), see § 31.3121(b)(15)-1 of this chapter).

This paragraph is applicable to service performed in any taxable year ending on or after December 31, 1960, except that it does not apply to service performed before 1961 in Guam or American Samoa.

(e) ***Ministers and members of religious orders*** —

(1) ***Taxable years ending before 1968.*** Service described in section 1402(c)(4) performed by an individual during taxable years ending before 1968 for which a certificate filed pursuant to section 1402(e) is in effect constitutes a trade or business within the meaning of section 1402(c) and § 1.1402(c)-1. See also § 1.1402(c)-5.

(2) ***Taxable years ending after 1967.*** Service described in section 1402(c)(4) performed by an individual during taxable years ending after 1967 constitutes a trade or business within the meaning of section 1402(c) and § 1.1402(c)-1 unless an exemption under section 1402(e) (see §§ 1.1402(e)-1A through 1.1402(e)-4A) is effective with respect to such individual for the taxable year during which the service is performed. See also § 1.1402(c)-5.

(f) *State and local government employees compensated on fee basis* —

(1) *In general.*

(i) Section 1402(c)(2)(E) and this paragraph are applicable only with respect to fees received by an individual after 1967 for service performed by him as an employee of a State or a political subdivision thereof in a position compensated solely on a fee basis. If an individual performs service for a State or a political subdivision thereof in more than one position, each position is treated separately for purposes of determining whether the service performed in such position is performed by an employee and whether compensation for service performed in the position is solely on a fee basis.

(ii) If an individual receives fees after 1967 for service performed by him as an employee of a State or a political subdivision thereof in a position compensated solely on a fee basis, the service for which such fees are received constitutes a trade or business within the meaning of section 1402(c) and § 1.1402(c)-1 except that if service performed in such position is covered under an agreement entered into by the State and the Secretary of Health, Education, and Welfare pursuant to section 218 of the Social Security Act at the time a fee is received, the service to which such fee relates does not constitute a trade or business. See also paragraph (a) of § 1.1402(c)-2, relating, in part, to the performance of the functions of a public office of a State or a political subdivision thereof by an individual.

(2) *Election with respect to fees received in 1968.*

(i) Any individual who in 1968 receives fees for service as an employee of a State or a political subdivision thereof in a position compensated solely on a fee basis may elect, if the performance of the service for which such fees are received constitutes a trade or business pursuant to the provisions of subparagraph (1) of this paragraph, to have such performance of service treated as excluded from the term “trade or business” for the purpose of the tax on self-employment income, pursuant to the provisions of section 122(c)(2) of the Social Security Amendments of 1967 (as quoted in § 1.1402(c)). Such election shall not be limited to service to which the fees received in 1968 are attributable but must also be applicable to service (if any) in subsequent years which, except for the election, would constitute a trade or business pursuant to the provisions of subparagraph (1) of this paragraph. An election made pursuant to the provisions of this subparagraph is irrevocable.

(ii) The election referred to in subdivision (i) of this subparagraph shall be made by filing a certificate of election of exemption (Form 4415) on or before the due date of the income tax return (see section 6072), including any extension thereof (see section 6081), for the taxable year of the individual making the election which begins in 1968. The certificate of election of exemption shall be filed with an internal revenue office in accordance with the instructions on the certificate.

(g) *Individuals engaged in fishing.* For taxable years ending after December 31, 1954, service performed by an individual on a boat engaged in catching fish or other forms of aquatic animal life (hereinafter “fish”) constitutes a trade or business within the meaning of section 1402(c) and § 1.1402(c)-1 if the service is excepted from the definition of employment by section 3121(b)(20) and § 31.3121(b)(20)-1(a). However, the preceding sentence does not apply to services performed after December 31, 1954, and before October 4, 1976, on a boat engaged in catching fish if the owner or operator of the boat treated the individual as an employee in the manner described in § 31.3121(b)(20)-1(b).

[T.D. 6691, 28 FR 12796, Dec. 3, 1963, as amended by T.D. 6978, 33 FR 15937, Oct. 30, 1968; T.D. 7333, 39 FR 44448, Dec. 24, 1974; T.D. 7691, 45 FR 24129, Apr. 9, 1980; T.D. 7716, 45 FR 57123, Aug. 27, 1980]

§ 1.1402(c)-4 Individuals under Railroad Retirement System.

The performance of service by an individual as an employee or employee representative as defined in section 3231(b) and (c), respectively (see §§ 31.3231(b)-1 and 31.3231(c)-1 of Part 31 of this chapter (Employment Tax Regulations)), that is, an individual covered under the railroad retirement system, does not constitute a trade or business.

§ 1.1402(c)-5 Ministers and members of religious orders.

(a) ***In general*** —

(1) ***Taxable years ending before 1968.*** For taxable years ending before 1955, a duly ordained, commissioned, or licensed minister of a church or a member of a religious order is not engaged in carrying on a trade or business with respect to service performed by him in the exercise of his ministry or in the exercise of duties required by such order. However, for taxable years ending after 1954 and before 1968, any individual who is a duly ordained, commissioned, or licensed minister of a church or a member of a religious order (other than a member of a religious order who has taken a vow of poverty as a member of such order) may elect, as provided in § 1.1402(e)(1)-1, to have the Federal old-age, survivors, and disability insurance system established by title II of the Social Security Act extended to service performed by him in his capacity as such a minister or member. If such a minister or a member of a religious order makes an election pursuant to § 1.1402(e)(1)-1 he is, with respect to service performed by him in such capacity, engaged in carrying on a trade or business for each taxable year to which the election is effective. An election by a minister or member of a religious order has no application to service performed by such minister or member which is not in the exercise of his ministry or in the exercise of duties required by such order.

(2) ***Taxable years ending after 1967.*** For any taxable year ending after 1967, a duly ordained, commissioned, or licensed minister of a church or a member of a religious order (other than a member of a religious order who has taken a vow of poverty as a member of such order) is engaged in carrying on a trade or business with respect to service performed by him in the exercise of his ministry or in the exercise of duties required by such order unless an exemption under section 1402(e) (see §§ 1.1402(e)-1A through 1.1402(e)-4A) is effective with respect to such individual for the taxable year during which the service is performed. An exemption which is effective with respect to a minister or a member of a religious order has no application to service performed by such minister or member which is not in the exercise of his ministry or in the exercise of duties required by such order.

(b) ***Service by a minister in the exercise of his ministry.***

(1)

(i) A certificate of election filed by a duly ordained, commissioned, or licensed minister of a church under the provisions of § 1.1402(e)(1)-1 has application only to service performed by him in the exercise of his ministry.

(ii) An exemption under section 1402(e) (see §§ 1.1402(e)-1A through 1.1402(e)-4A) which is effective with respect to a duly ordained, commissioned, or licensed minister of a church has application only to service performed by him in the exercise of his ministry.

(2) Except as provided in paragraph (c)(3) of this section, service performed by a minister in the exercise of his ministry includes the ministration of sacerdotal functions and the conduct of religious worship, and the control, conduct, and maintenance of religious organizations (including the religious boards, societies, and other integral agencies of such organizations), under the authority of a religious body constituting a church or church denomination. The following rules are applicable in determining whether services performed by a minister are performed in the exercise of his ministry:

(i) Whether service performed by a minister constitutes the conduct of religious worship or the ministration of sacerdotal functions depends on the tenets and practices of the particular religious body constituting his church or church denomination.

(ii) Service performed by a minister in the control, conduct, and maintenance of a religious organization relates to directing, managing, or promoting the activities of such organization. Any religious organization is deemed to be under the authority of a religious body constituting a church or church denomination if it is organized and dedicated to carrying out the tenets and principles of a faith in accordance with either the requirements or sanctions governing the creation of institutions of the faith. The term “religious organization” has the same meaning and application as is given to the term for income tax purposes.

(iii) If a minister is performing service in the conduct of religious worship or the ministration of sacerdotal functions, such service is in the exercise of his ministry whether or not it is performed for a religious organization. The application of this rule may be illustrated by the following example:

Example. M, a duly ordained minister, is engaged to perform service as chaplain at N University. M devotes his entire time to performing his duties as chaplain which include the conduct of religious worship, offering spiritual counsel to the university students, and teaching a class in religion. M is performing service in the exercise of his ministry.

(iv) If a minister is performing service for an organization which is operated as an integral agency of a religious organization under the authority of a religious body constituting a church or church denomination, all service performed by the minister in the conduct of religious worship, in the ministration of sacerdotal functions, or in the control, conduct, and maintenance of such organization (see subparagraph (2)(ii) of this paragraph) is in the exercise of his ministry. The application of this rule may be illustrated by the following example:

Example. M, a duly ordained minister, is engaged by the N Religious Board to serve as director of one of its departments. He performs no other service. The N Religious Board is an integral agency of O, a religious organization operating under the authority of a religious body constituting a church denomination. M is performing service in the exercise of his ministry.

(v) If a minister, pursuant to an assignment or designation by a religious body constituting his church, performs service for an organization which is neither a religious organization nor operated as an integral agency of a religious organization, all service performed by him, even though such service may not involve the conduct of religious worship or the ministration of sacerdotal functions, is in the exercise of his ministry. The application of this rule may be illustrated by the following example:

Example. M, a duly ordained minister, is assigned by X, the religious body constituting his church, to perform advisory service to Y Company in connection with the publication of a book dealing with the history of M's church denomination. Y is neither a religious organization nor operated as an integral agency of a religious organization. M performs no other service for X or Y. M is performing service in the exercise of his ministry.

(c) ***Service by a minister not in the exercise of his ministry.***

(1)

(i) A certificate filed by a duly ordained, commissioned, or licensed minister of a church under the provisions of § 1.1402(e)(1)-1 has no application to service performed by him which is not in the exercise of his ministry.

(ii) An exemption under section 1402(e) (see §§ 1.1402(e)-1A through 1.1402(e)-4A) which is effective with respect to a duly ordained, commissioned, or licensed minister of a church has no application to service performed by him which is not in the exercise of his ministry.

(2) If a minister is performing service for an organization which is neither a religious organization nor operated as an integral agency of a religious organization and the service is not performed pursuant to an assignment or designation by his ecclesiastical superiors, then only the service performed by him in the conduct of religious worship or the ministration of sacerdotal functions is in the exercise of his ministry. See, however, subparagraph (3) of this paragraph. The application of the rule in this subparagraph may be illustrated by the following example:

Example. M, a duly ordained minister, is engaged by N University to teach history and mathematics. He performs no other service for N although from time to time he performs marriages and conducts funerals for relatives and friends. N University is neither a religious organization nor operated as an integral agency of a religious organization. M is not performing the service for N pursuant to an assignment or designation by his ecclesiastical superiors. The service performed by M for N University is not in the exercise of his ministry. However, service performed by M in performing marriages and conducting funerals is in the exercise of his ministry.

(3) Service performed by a duly ordained, commissioned, or licensed minister of a church as an employee of the United States, or a State, Territory, or possession of the United States, or the District of Columbia, or a foreign government, or a political subdivision of any of the foregoing, is not considered to be in the exercise of his ministry for purposes of the tax on self-employment income, even though such service may involve the ministration of sacerdotal functions or the conduct of religious worship. Thus, for example, service performed by an individual as a chaplain in the Armed Forces of the United States is considered to be performed by a commissioned officer in his capacity as such, and not by a minister in the exercise of his ministry. Similarly, service performed by an employee of a State as a chaplain in a State prison is considered to be performed by a civil servant of the State and not by a minister in the exercise of his ministry.

(d) ***Service in the exercise of duties required by a religious order*** —

(1) ***Certificate of election.*** A certificate of election filed by a member of a religious order (other than a member of a religious order who has taken a vow of poverty as a member of such order) under the provisions of § 1.1402(e)(1)-1 has application to all duties required of him by such order.

(2) ***Exemption.*** An exemption under section 1402(e) (see §§ 1.1402(e)-1A through 1.1402(e)-4A) which is effective with respect to a member of a religious order (other than a member of a religious order who has taken a vow of poverty as a member of such order) has application only to the duties required of him by such order.

(3) ***Service.*** For purposes of subparagraphs (1) and (2) of this paragraph, the nature or extent of the duties required of the member by the order is immaterial so long as it is a service which he is directed or required to perform by his ecclesiastical superiors.

[T.D. 6691, 28 FR 12796, Dec. 3, 1963, as amended by T.D. 6978, 33 FR 15937, Oct. 30, 1968]

§ 1.1402(c)-6 Members of certain professions.

(a) ***Periods of exclusion*** —

(1) ***Taxable years ending before 1955.*** For taxable years ending before 1955, an individual is not engaged in carrying on a trade or business with respect to the performance of service in the exercise of his profession as a physician, lawyer, dentist, osteopath, veterinarian, chiropractor, naturopath, optometrist, Christian Science practitioner, architect, certified public accountant, accountant registered or licensed as an accountant under State or municipal law, full-time practicing public accountant, funeral director, or professional engineer.

(2) ***Taxable years ending in 1955.*** Except as provided in paragraph (b) of this section, for a taxable year ending in 1955 an individual is not engaged in carrying on a trade or business with respect to the performance of service in the exercise of his profession as a physician, lawyer, dentist, osteopath, veterinarian, chiropractor, naturopath, optometrist, or Christian Science practitioner.

(3) ***Taxable years ending after 1955*** —

(i) ***Doctors of medicine.*** For taxable years ending after 1955 and before December 31, 1965, and individual is not engaged in carrying on a trade or business with respect to the performance of service in the exercise of his profession as a doctor of medicine. For taxable years ending after December 30, 1965, an individual is engaged in carrying on a trade or business with respect to the performance of service in the exercise of his profession as a doctor of medicine.

(ii) ***Christian Science practitioners.*** Except as provided in paragraph (b)(1) of this section, for taxable years ending after 1955 and before 1968, an individual is not engaged in carrying on a trade or business with respect to the performance of service in the exercise of his profession as a Christian Science practitioner. For provisions relating to the performance of service in taxable years ending after 1967 by an individual in the exercise of his profession as a Christian Science practitioner, see paragraph (b)(2) of this section.

(b) ***Christian Science practitioner*** —

(1) ***Certain taxable years ending before 1968; election.*** For taxable years ending after 1954 and before 1968, a Christian Science practitioner may elect, as provided in § 1.1402(e)(1)-1, to have the Federal old-age, survivors, and disability insurance system established by title II of the Social Security Act extended to service performed by him in the exercise of his profession as a Christian Science practitioner. If an election is made pursuant to § 1.1402(e)(1)-1, the Christian Science practitioner is, with respect to the performance of service in the exercise of such profession, engaged in carrying on

a trade or business for each taxable year for which the election is effective. An election by a Christian Science practitioner has no application to service performed by him which is not in the exercise of his profession as a Christian Science practitioner.

(2) ***Taxable years ending after 1967; exemption.*** For a taxable year ending after 1967, a Christian Science practitioner is, with respect to the performance of service in the exercise of his profession as a Christian Science practitioner, engaged in carrying on a trade or business unless an exemption under section 1402(e) (see §§ 1.1402(e)-1A through 1.1402(e)-4A) is effective with respect to him for the taxable year during which the service is performed. An exemption which is effective with respect to a Christian Science practitioner has no application to service performed by him which is not in the exercise of his profession as a Christian Science practitioner.

(c) ***Meaning of terms.*** The designations in this section are to be given their commonly accepted meanings. For taxable years ending after 1955, an individual who is a doctor of osteopathy, and who is not a doctor of medicine within the commonly accepted meaning of that term, is deemed, for purposes of this section, not to be engaged in carrying on a trade or business in the exercise of the profession of doctor of medicine.

(d) ***Legal requirements.*** The exclusions specified in paragraph (a) of this section apply only if the individuals meet the legal requirements, if any, for practicing their professions in the place where they perform the service.

(e) ***Partnerships.*** In the case of a partnership engaged in the practice of any of the designated excluded professions, the partnership shall not be considered as carrying on a trade or business for the purpose of the tax on self-employment income, and none of the distributive shares of the income or loss, described in section 702(a)(9), of such partnership shall be included in computing net earnings from self-employment of any member of the partnership. On the other hand, where a partnership is engaged in a trade or business not within any of the designated excluded professions, each partner must include his distributive share of the income or loss, described in section 702(a)(9), of such partnership in computing his net earnings from self-employment, irrespective of whether such partner is engaged in the practice of one or more of such professions and contributes his professional services to the partnership.

[T.D. 6691, 28 FR 12796, Dec. 3, 1963, as amended by T.D. 6978, 33 FR 15938, Oct. 30, 1968]

§ 1.1402(c)-7 Members of religious groups opposed to insurance.

The performance of service by an individual:

(a) Who is a member of a recognized religious sect or division thereof, and

(b) Who is an adherent of established tenets or teachings of such sect or division by reason of which he is conscientiously opposed to acceptance of the benefits of any private or public insurance which makes payments in the event of death, disability, old age, or retirement or makes payments toward the cost of, or provides services for, medical care (including the benefits of any insurance system established by the Social Security Act),

during any taxable year for which he is granted a tax exemption, pursuant to section 1402(h), does not constitute a trade or business within the meaning of section 1402(c) and § 1.1402(c)-1. See also §§ 1.1402(h) and 1.1402(h)-1.

[T.D. 6993, 34 FR 830, Jan. 18, 1969]

§ 1.1402(d)-1 Employee and wages.

For the purpose of the tax on self-employment income, the term "employee" and the term "wages" shall have the same meaning as when used in the Federal Insurance Contributions Act. For an explanation of these terms, see Subpart B of Part 31 of this chapter (Employment Tax Regulations).

§ 1.1402(e)-1A Application of regulations under section 1402(e).

The regulations in §§ 1.1402(e)-2A through 1.1402(e)-4A relate to section 1402(e) as amended by section 115(b)(2) of the Social Security Amendments of 1967 (81 Stat. 839) and apply to taxable years ending after 1967. Section 1.1402(e)-5A reflects changes made by section 1704(a) of the Tax Reform Act of 1986 (100 Stat. 2085, 2779) and applies to applications for exemption under section 1402(e) filed after December 31, 1986. For regulations under section 1402(e) (as in effect prior to amendment by the Social Security Amendments of 1967) applicable to taxable years ending before 1968, see §§ 1.1402(e)(1)-1 through 1.1402(e)(6)-1.

[T.D. 8221, 53 FR 33461, Aug. 31, 1988]

§ 1.1402(e)-2A Ministers, members of religious orders and Christian Science practitioners; application for exemption from self-employment tax.

(a) ***In general.***

(1) Subject to the limitations set forth in subparagraphs (2) and (3) of this paragraph, any individual who is

(i) a duly ordained, commissioned, or licensed minister of a church or a member of a religious order (other than a member of a religious order who has taken a vow of poverty as a member of such order) or

(ii) a Christian Science practitioner may request an exemption from the tax on self-employment income (see section 1401 and § 1.1401-1) with respect to services performed by him in his capacity as a minister or member, or as a Christian Science practitioner, as the case may be. Such a request shall be made by filing an application for exemption on Form 4361 in the manner provided in paragraph (b) of this section and within the time specified in § 1.1402(e)-3A. For provisions relating to the taxable year or years for which an exemption from the tax on self-employment income with respect to service performed by a minister or member or a Christian Science practitioner in his capacity as such is effective, see § 1.1402(e)-4A. For additional provisions applicable to services performed by individuals referred to in this subparagraph, see paragraph (e) of § 1.1402(c)-3 and § 1.1402(c)-5 relating to ministers and members of religious orders, and paragraphs (a)(3)(ii) and (b) of § 1.1402(c)-6 relating to Christian Science practitioners.

(2) The application for exemption shall contain, or there shall be filed with such application, a statement to the effect that the individual making application for exemption is conscientiously opposed to, or because of religious principles is opposed to, the acceptance (with respect to services performed by him in his capacity as a minister, member, or Christian Science practitioner) of any public insurance which makes payments in the event of death, disability, old age, or retirement or makes payments toward the cost of, or provides services for, medical care (including the benefits of any insurance system established by the Social Security Act). Thus, ministers, members of religious orders, and Christian Science practitioners requesting exemption from social security coverage must meet either

of two alternative tests: (1) A religious principles test which refers to the institutional principles and discipline of the particular religious denomination to which he belongs, or (2) a conscientious opposition test which refers to the opposition because of religious considerations of individual ministers, members of religious orders, and Christian Science practitioners (rather than opposition based upon the general conscience of any such individual or individuals). The term "public insurance", as used in section 1402(e) and this paragraph, refers to governmental, as distinguished from private, insurance and does not include insurance carried with a commercial insurance carrier. To be eligible to file an application for exemption on Form 4361, a minister, member, or Christian Science practitioners need not be opposed to the acceptance of all public insurance making payments of this specified type; he must, however, be opposed on religious grounds to the acceptance of any such payment which, in whole or in part, is based on, or measured by earnings from, services performed by in his capacity as a minister or member (see § 1.1402(c)-5) or in his capacity as a Christian Science practitioner (see paragraph (b)(2) of § 1.1402(c)-6). For example, a minister performing service in the exercise of his ministry may be eligible to file an application for exemption on Form 4361 even though he is not opposed to the acceptance of benefits under the Social Security Act with respect to service performed by him which is not in the exercise of his ministry.

(3) An exemption from the tax imposed on self-employment income with respect to service performed by a minister, member, or Christian Science practitioner in his capacity as such may not be granted to a minister, member, or practitioner who (in accordance with the provisions of section 1402(e) as in effect prior to amendment by section 115(b)(2) of the Social Security Amendments of 1967 (81 Stat. 839)) filed a valid waiver certificate on Form 2031 electing to have the Federal old-age, survivors, and disability insurance system establish by title II of the Social Security Act extended to service performed by him in the exercise of his ministry or in the exercise of duties required by the order of which he is a member, or in the exercise of his profession as a Christian Science practitioner. For provisions relating to waiver certificates on Form 2031, see §§ 1.1402(e)(1)-1 through 1.1402(e)(6)-1.

(b) ***Application for exemption.*** An application for exemption on Form 4361 shall be filed in triplicate with the internal revenue officer or the internal revenue office, as the case may be, designated in the instructions relating to the application for exemption. The application for exemption must be filed within the time prescribed in § 1.1402(e)-3A. If the last original Federal income tax return of an individual to whom paragraph (a) of this section applies which was filed before the expiration of such time limitation for filing an application for exemption shows no liability for tax on self-employment income, such return will be treated as an application for exemption, provided that before February 28, 1975 such individual also files a properly executed Form 4361.

(c) ***Approval of application for exemption.*** The filing of an application for exemption on Form 4361 by a minister, a member of a religious order, or a Christian Science practitioner does not constitute an exemption from the tax on self-employment income with respect to services performed by him in his capacity as a minister, member, or practitioner. The exemption is granted only if the application is approved by an appropriate internal revenue officer. See § 1.1402(e)-4A relating to the period for which an exemption is effective.

[T.D. 7333, 39 FR 44448, Dec. 24, 1974; 39 FR 45216, Dec. 31, 1974]

§ 1.1402(e)-3A Time limitation for filing application for exemption.

(a) *General rule.*

(1) Any individual referred to in paragraph (a) of § 1.1402(e)-2A who desires an exemption from the tax on self-employment income with respect to service performed by him in his capacity as a minister or member of a religious order or as a Christian Science practitioner must file the application for exemption (Form 4361) prescribed by § 1.1402(e)-2A on or before whichever of the following dates is later:

(i) The due date of the income tax return (see section 6072), including any extension thereof (see section 6081), for his second taxable year ending after 1967, or

(ii) The due date of the income tax return, including any extension thereof, for his second taxable year beginning after 1953 for which he has net earnings from self-employment of $400 or more, any part of which:

(*a*) In the case of a duly ordained, commissioned, or licensed minister of a church, consists of remuneration for service performed in the exercise of his ministry,

(*b*) In the case of a member of a religious order who has not taken a vow of poverty as a member of such order, consists of remuneration for service performed in the exercise of duties required by such order, or

(*c*) In the case of a Christian Science practitioner, consists of remuneration for service performed in the exercise of his profession as a Christian Science practitioner.

See paragraph (c) of this section for provisions relating to the computation of net earnings from self-employment.

(2) If a minister, a member of a religious order, or a Christian Science practitioner derives gross income in a taxable year both from service performed in such capacity and from the conduct of another trade or business, and the deductions allowed by Chapter 1 of the Internal Revenue Code which are attributable to the gross income derived from service performed in such capacity equal or exceed the gross income derived from service performed in such capacity, no part of the net earnings from self-employment (computed as prescribed in paragraph (c) of this section) for the taxable year shall be considered as derived from service performed in such capacity.

(3) The application of the rules set forth in subparagraphs (1) and (2) of this paragraph may be illustrated by the following examples:

Example (1). M, who makes his income tax returns on a calendar year basis, was ordained as a minister in January 1960. During each of two or more taxable years ending before 1968 M has net earnings from self-employment in excess of $400 some part of which is from service performed in the exercise of his ministry. M has not filed an effective waiver certificate on Form 2031 (see paragraph (a)(3) of § 1.1402(e)-2A). If M desires an exemption from the tax on self-employment income with respect to service performed in the exercise of his ministry, he must file an application for exemption on or before the due date of his income tax return for 1969 (his second taxable year ending after 1967), or any extension thereof.

Example (2). M, who makes his income tax returns on a calendar year basis, was ordained as a minister in January 1966. M has net earnings of $350 for the taxable year 1966 and has net earnings in excess of $400 for each of his taxable years 1967 and 1968 (some part or all of

which is derived from service performed in the exercise of his ministry). M has not filed an effective waiver certificate on Form 2031 (see paragraph (a)(3) of § 1.1402(e)-2A). If M desires an exemption from the tax on self-employment income with respect to service performed in the exercise of his ministry, he must file an application for exemption on or before the due date of his income tax return for 1969 (his second taxable year ending after 1967), or any extension thereof.

Example (3). Assume the same facts as in example (2) except that M has net earnings in excess of $400 for each of his taxable years 1967 and 1969 (but less than $400 in 1968). The application for exemption must be filed on or before the due date of his income tax return for 1969, or any extension thereof.

Example (4). M was ordained as a minister in May 1973. During each of the taxable years 1973 and 1975, M, who makes his income tax returns on a calendar year basis, derives net earnings in excess of $400 from his activities as a minister. M has net earnings of $350 for the taxable year 1974, $200 of which is derived from service performed by him in the exercise of his ministry. If M desires an exemption from the tax on self-employment income with respect to service performed in the exercise of his ministry, he must file an application for exemption on or before the due date of his income tax return for 1975, or any extension thereof.

Example (5). M, who was ordained a minister in January 1973, is employed as a toolmaker by the XYZ Corporation for the taxable years 1973 and 1974 and also engages in activities as a minister on weekends. M makes his income tax returns on the basis of a calendar year. During each of the taxable years 1973 and 1974 M receives wages of $14,000 from the XYZ Corporation and derives net earnings of $400 from his activities as a minister. If M desires an exemption from the tax on self-employment income with respect to service performed in the exercise of his ministry, he must file an application for exemption on or before the due date of his income tax return for 1974, or any extension thereof. It should be noted that although by reason of section 1402(b)(1) (G) and (H) no part of the $400 represents "self-employment income", nevertheless the entire $400 constitutes "net earnings from self-employment" for purposes of fulfilling the requirements of section 1402(e)(2).

Example (6). M, who files his income tax returns on a calendar year basis, was ordained as a minister in March 1973. During 1973 he receives $410 for service performed in the exercise of his ministry. In addition to his ministerial services, M is engaged during the year 1973 in a mercantile venture from which he derives net earnings from self-employment in the amount of $4,000. The expenses incurred by him in connection with his ministerial services during 1973 and which are allowable deductions under Chapter 1 of the Internal Revenue Code amount to $410. During 1974 and 1975, M has net earnings from self-employment in amounts of $4,600 and $4,800, respectively, and some part of each of these amounts is from the exercise of his ministry. The deductions allowed in each of the years 1974 and 1975 by Chapter 1 which are attributable to the gross income derived by M from the exercise of his ministry in each of such years, respectively, do not equal or exceed such gross income in such year. If M desires an exemption from the tax on self-employment income with respect to service performed in the exercise of his ministry, he must file an application for exemption on or before the due date of his income tax return for 1975, or an extension thereof.

(b) ***Effect of death.*** The right of an individual to file an application for exemption shall cease upon his death. Thus, the surviving spouse, administrator, or executor of a decedent shall not be permitted to file an application for exemption for such decedent.

(c) *Computation of net earnings* —

(1) ***Taxable years ending before 1968.*** For purposes of this section net earnings from self-employment for taxable years ending before 1968 shall be determined without regard to the fact that, without an election under section 1402(e) (as in effect prior to amendment by section 115(b)(2) of the Social Security Amendments of 1967, see § 1.1402(e)-1A), the performance of services by a duly ordained, commissioned, or licensed minister of a church in the exercise of his ministry, or by a member of a religious order in the exercise of duties required by such order, or the performance of service by an individual in the exercise of his profession as a Christian Science practitioner, does not constitute a trade or business for purposes of the tax on self-employment income.

(2) ***Taxable years ending after 1967.*** For purposes of this section and § 1.1402(e)-4A net earnings from self-employment for taxable years ending after 1967 shall be determined without regard to section 1402(c) (4) and (5). See § 1.1402(c)-3(e)(2) and § 1.1402(c)-5 relating to ministers and members of religious orders, and paragraphs (a)(3)(ii) and (b) of § 1.1402(c)-6 relating to Christian Science practitioners.

[T.D. 7333, 39 FR 44449, Dec. 24, 1974]

§ 1.1402(e)-4A Period for which exemption is effective.

(a) ***In general.*** If an application for exemption on Form 4361:

(1) Is filed by a minister, a member of a religious order, or a Christian Science practitioner eligible to file such an application (see particularly paragraph (a) (2) and (3) of § 1.1402(e)-2A), and

(2) Is approved (see paragraph (c) of § 1.1402(e)-2A),

the exemption from the tax on self-employment income shall be effective for the first taxable year ending after 1967 for which such minister, member, or practitioner has net earnings from self-employment of $400 or more any part of which was derived from the performance of service in his capacity as a minister, member, or practitioner, and for all succeeding taxable years. See, however, paragraphs (b)(1)(ii) and (d)(2) of § 1.1402(c)-5 relating to ministers and members of religious orders and paragraph (b)(2) of § 1.1402(c)-6 relating to Christian Science practitioners.

(b) ***Exemption irrevocable.*** An exemption granted to a minister, a member of a religious order, or a Christian Science practitioner pursuant to the provisions of section 1402(e) is irrevocable.

[T.D. 7333, 39 FR 44450, Dec. 24, 1974]

§ 1.1402(e)-5A Applications for exemption from self-employment taxes filed after December 31, 1986, by ministers, certain members of religious orders, and Christian Science practitioners.

(a) ***In general.***

(1) Except as provided in paragraph (a)(2) of this section, this section applies to any individual who is a duly ordained, commissioned, or licensed minister of a church, member of a religious order (other than a member of a religious order who has taken a vow of poverty as a member of such order), or a Christian Science practitioner who files an application after December 31, 1986, for exemption from the tax on self-employment income (see section 1401 and 1.1401-1) with respect to services

performed by him or her in his or her capacity as a minister, member, or practitioner pursuant to §§ 1.1402(e)-2A through 1.1402(e)-4A. This section does not apply to applications for exemption under section 1402(e) that are filed before January 1, 1987.

(2) ***Application of this section to Christian Science practitioners.*** Paragraph (b) of this section does not apply to Christian Science practitioners. Thus, Christian Science practitioners filing applications for exemption from self-employment taxes under section 1402(e) should follow the procedures set forth in §§ 1.1402(e)-2A through 1.1402(e)-4A, and are not required to include the statement described in paragraph (b)(1)(ii) of this section. However, see paragraph (c) of this section for verification procedures with respect to applications for exemption from self-employment taxes filed after December 31, 1986, by Christian Science practitioners.

(b) ***Church or order must be informed*** —

(1) ***In general.*** Any individual, other than a Christian Science practitioner, who files an application for exemption from the tax on self-employment income under section 1402(e) after December 31, 1986:

(i) Shall file such application in accordance with the procedures set forth in §§ 1.1402(e)-2A through 1.1402(e)-4A, and

(ii) Shall include with such application a statement to the effect that the individual making application for exemption has informed the ordaining, commissioning, or licensing body of the church or order that he or she is opposed to the acceptance (for services performed as a minister or member of a religious order not under a vow of poverty) of any public insurance that makes payments in the event of death, disability, old age, or retirement, or that makes payments toward the cost of, or provides services for, medical care (including the benefits of any insurance system established by the Social Security Act).

(2) ***Statement to be filed with form.*** If the form provided by the Service for applying for exemption under 1402(e) does not contain the statement set forth in paragraph (b)(1)(ii) of this section, any individual required to include this statement with his or her application under this paragraph (b) shall file such statement with the individual's application at the time and place prescribed for filing such application under §§ 1.1402(e)-2A and 1.1402(e)-3A. The statement shall contain the information set forth in paragraph (b)(1)(ii) of this section and shall be signed by such individual under penalties of perjury.

(c) ***Verification of application*** —

(1) ***In general.*** The Service will approve an application for an exemption filed by an individual to whom this section applies only after verifying that the individual applying for the exemption is aware of the grounds on which the individual may receive an exemption under section 1402(e) (See § 1.1402(e)-2A) and that the individual seeks exemption on such grounds in accordance with the procedures set forth in paragraph (c)(2) of this section.

(2) ***Verification procedure.*** Upon receipt of an application for exemption from self-employment taxes under section 1402(e) and this section, the Service will mail to the applicant a statement that describes the grounds on which an individual may receive an exemption under section 1402(e). The individual filing the application shall certify that he or she has read the statement and that he or she seeks exemption from self-employment taxes on the grounds listed in the statement. The certification shall be made by signing a copy of the statement under penalties of perjury and mailing the signed copy to the Service Center from which the statement was issued not later than 90 days after the date on which the statement was mailed to the individual. If the signed copy of the

statement is not mailed to the Service Center within 90 days of the date on which the statement was mailed to the individual, that individual's exemption will not be effective until the date that the signed copy of the statement is received at the Service Center.

[T.D. 8136, 52 FR 12162, Apr. 15, 1987. Redesignated and amended by T.D. 8221, 53 FR 33461, Aug. 31, 1988]

§ 1.1402(e)(1)-1 Election by ministers, members of religious orders, and Christian Science practitioners for self-employment coverage.

(a) ***In general.*** Any individual who is

(1) a duly ordained, commissioned, or licensed minister of a church or a member of a religious order (other than a member of a religious order who has taken a vow of poverty as a member of such order) or

(2) a Christian Science practitioner may elect to have the Federal old-age, survivors, and disability insurance system established by title II of the Social Security Act extended to service performed by him in the exercise of his ministry or in the exercise of duties required by such order, or in the exercise of his profession as a Christian Science practitioner, as the case may be. Such an election shall be made by filing a certificate on Form 2031 in the manner provided in paragraph (b) of this section and within the time specified in § 1.1402(e)(2)-1. If a minister or member to whom this section has application, or a Christian Science practitioner, makes an election by filing Form 2031 such individual shall, for each taxable year for which the election is effective (see § 1.1402(e)(3)-1), be considered as carrying on a trade or business with respect to the performance of service in his capacity as a minister or member, or as a Christian Science practitioner, as the case may be.

(b) ***Waiver certificate.*** The certificate on Form 2031 shall be filed in triplicate with the district director of internal revenue for the internal revenue district in which is located the legal residence or principal place of business of the individual who executes the certificate. If such individual has no legal residence or principal place of business in any internal revenue district, the certificate shall be filed with the Director of International Operations, Internal Revenue Service, Washington, DC 20225, or at such other address as is designated in the instructions relating to the certificate. The certificate must be filed within the time prescribed in § 1.1402(e)(2)-1. If an individual to whom paragraph (a) of this section has application submits to a district director of internal revenue a dated and signed statement indicating that he desires to have the Federal old-age, survivors, and disability insurance system established by title II of the Social Security Act extended to his services, such statement will be treated as a waiver certificate, if filed within the time specified in § 1.1402(e)(2)-1, provided that without unnecessary delay such statement is supplemented by a properly executed Form 2031. An application for a social security account number filed on Form SS-5 or the filing of an income tax return showing an amount representing self-employment income or self-employment tax shall not be construed to constitute an election referred to in § 1.1402(e)(1)-1.

§ 1.1402(e)(2)-1 Time limitation for filing waiver certificate.

(a) ***General rule.***

(1) Any individual referred to in § 1.1402(e)(1)-1 who desires to have the Federal old-age, survivors, and disability insurance system established by title II of the Social Security Act extended to his services must file the waiver certificate (Form 2031) prescribed by § 1.1402(e)(1)-1 on or before whichever of the following dates is later:

(i) The due date of the income tax return (see section 6072), including any extension thereof (see section 6081), for his second taxable year ending after 1963; or

(ii) The due date of the income tax return, including any extension thereof, for his second taxable year ending after 1954 for which he has net earnings from self-employment (computed as prescribed in paragraph (c) of this section) of $400 or more, any part of which:

(*a*) In the case of a duly ordained, commissioned, or licensed minister of a church, consists of remuneration for service performed in the exercise of his ministry,

(*b*) In the case of a member of a religious order who has not taken a vow of poverty as a member of such order, consists of remuneration for service performed in the exercise of duties required by such order, or

(*c*) In the case of a Christian Science practitioner, consists of remuneration for service performed in the exercise of his profession as a Christian Science practitioner.

(2) If a minister, a member of a religious order, or a Christian Science practitioner derives gross income in a taxable year both from service performed in such capacity and from the conduct of another trade or business, and the deductions allowed by chapter 1 of the Internal Revenue Code which are attributable to the gross income derived from service performed in such capacity equal or exceed the gross income derived from service performed in such capacity, no part of the net earnings from self-employment (computed as prescribed in paragraph (c) of this section) for the taxable year shall be considered as derived from service performed in such capacity.

(3) The application of the rules set forth in subparagraphs (1) and (2) of this paragraph may be illustrated by the following examples:

Example (1). M was ordained as a minister in May 1963. During each of the taxable years 1963 and 1966, M, who makes his income tax returns on a calendar year basis, derives net earnings in excess of $400 from his activities as a minister. M has net earnings of $350 for each of the taxable years 1964 and 1965, $200 of which is derived from service performed by him as a minister. If M wishes to have the Federal old-age, survivors, and disability insurance system established by title II of the Social Security Act extended to his service as a minister, he must file the waiver certificate on or before the due date of his income tax return for 1966, or any extension thereof.

Example (2). M, who was ordained a minister in January 1965, is employed as a toolmaker by the XYZ Corporation for the taxable years 1965 and 1966 and also engages in activities as a minister on weekends. M makes his income tax return on the basis of a calendar year. During each of the taxable years 1965 and 1966, M receives wages of $4,800 from the XYZ Corporation and derives $400 (all of which constitutes net earnings from self-employment computed as prescribed in paragraph (c) of this section) from his activities as a minister. In such case if M wishes to have the Federal old-age, survivors, and disability insurance system established by title II of the Social Security Act extended to his services as a minister, he must file the waiver certificate on or before the due date of his income tax return for 1966, or any extension thereof. A waiver certificate filed after such date will be invalid. It should be noted that although by reason of section 1402(b)(1)(C) no part of the $400 for the taxable year 1965 represents “self-employment income”, nevertheless the entire $400 constitutes “net earnings from self-employment” for purposes of fulfilling the requirements of section 1402(e)(2).

Example (3). M, who files his income tax returns on a calendar year basis, was ordained as a minister in June 1964. During 1964 he receives $410 for services performed in the exercise of his ministry. In addition to his ministerial services, M is engaged during the year 1964 in a mercantile venture from which he derives net earnings from self-employment in the amount of $1,000. The expenses incurred by him in connection with his ministerial services during 1964 and which are allowable deductions under Chapter 1 of the Internal Revenue Code amount to $410. During 1965 and 1966, M has net earnings from self-employment in amounts of $1,200 and $1,500, respectively, and some part of each of these amounts is from the exercise of his ministry. The deductions allowed in each of the years 1965 and 1966 by Chapter 1 which are attributable to the gross income derived by M from the exercise of his ministry in each of such years, respectively, do not equal or exceed such gross income in such year. If M wishes to have the Federal old-age, survivors, and disability insurance system established by title II of the Social Security Act extended to his service as a minister, he must file a waiver certificate on or before the due date of his income tax return (including any extension thereof) for 1966.

Example (4). M, a licensed minister who makes his income tax returns on the basis of a calendar year, derived net earnings of $400 or more from the exercise of his ministry for two or more of the taxable years 1955 to 1965, inclusive. In such case, if M wishes to have the Federal old-age, survivors, and disability insurance system established by title II of the Social Security Act extended to his services as a minister, he must file the waiver certificate on or before the due date (April 15, 1966) prescribed for filing his income tax return for 1965, or any extension thereof. A waiver certificate filed after such date will be invalid.

(b) ***Effect of death.*** Except as provided in §§ 1.1402(e)(5)-1, 1.1402(e) (5)-2, and 1.1402(e)(6)-1, the right of an individual to file a waiver certificate shall cease from his death. Thus, except as provided in such sections, the surviving spouse, administrator, or executor of a decedent shall not be permitted to file a waiver certificate for such decedent.

(c) ***Computation of net earnings without regard to election.*** For the purpose of this section net earnings from self-employment shall be determined without regard to the fact that, without an election under section 1402(e), the performance of services by a duly ordained, commissioned, or licensed minister of a church in the exercise of his ministry, or by a member of a religious order in the exercise of duties required by such order, or the performance of service by an individual in the exercise of his profession as a Christian Science practitioner, does not constitute a trade or business for purposes of the tax on self-employment income.

[T.D. 6691, 28 FR 12796, Dec. 3, 1963, as amended by T.D. 6978, 33 FR 15938, Oct. 30, 1968]

§ 1.1402(e)(3)-1 Effective date of waiver certificate.

(a) ***Filed before August 31, 1957*** —

(1) ***In general.*** A certificate on Form 2031 filed by an individual before August 31, 1957, in accordance with the provisions of section 1402(e) in effect at the time the certificate is filed, shall be effective for the first taxable year with respect to which it is filed, and all subsequent taxable years. In order for a certificate filed by an individual before August 31, 1957, to be effective under section 1402(e), the certificate must be made effective for either the first or second taxable year ending after 1954 in which the individual has net earnings from self-employment of $400 or more (determined as provided in paragraph (c) of § 1.1402(e)(2)-1) some part of which is derived from service of the character with respect to which an election may be made. However, a certificate on Form 2031, filed

before August 31, 1957, even though filed within the time specified in paragraph (a)(1)(ii) of § 1.1402(e)(2)-1, may not be effective, except as provided in subparagraph (2) of this paragraph, for any taxable year with respect to which the due date for filing the individual's income tax return (including any extension thereof) has expired at the time such certificate is filed. Further, a certificate on Form 2031 may not be effective for any taxable year ending before 1955. In order for a certificate filed before August 31, 1957, except for the filing of a supplemental certificate, to be effective for the first or second taxable year ending after 1954 in which the individual has net earnings from self-employment (determined as provided in paragraph (c) of § 1.1402(e)(2)-1) some part of which is derived from service of the character with respect to which an election may be made, the certificate on Form 2031 must be filed on or before the due date for filing the income tax return of the individual for such first or second taxable year, respectively, or any extension thereof.

(2) ***Supplemental certificates*** —

(i) ***Filed before due date of 1958 return.*** If under subparagraph (1) of this paragraph the certificate is effective only for the individual's third or fourth taxable year ending after 1954 and all succeeding taxable years, the individual may make such a certificate effective for his first taxable year ending after 1955 and all succeeding taxable years by filing a supplemental certificate on Form 2031. To be valid the supplemental certificate must be filed after August 30, 1957, and on or before the due date of the return (including any extension thereof) for his second taxable year ending after 1956 and must be otherwise in accordance with § 1.1402(e)(1)-1.

Example. M, who files his income tax returns on a calendar year basis, was ordained as a minister in 1956, and his net earnings from service performed in the exercise of his ministry during such year were $400 or more. M had no net earnings from the exercise of his ministry during 1957. On July 15, 1957, M filed a waiver certificate and indicated thereon that it was to become effective for the taxable year 1958. At the time of filing, the certificate was effective for 1958 and all succeeding taxable years. Since the certificate was not filed on or before April 15, 1957 (the due date of M's income tax return for the taxable year 1956), and since there was no extension of time for filing his 1956 income tax return, the certificate was not, at the time of filing, effective for the taxable year 1956. M files a supplemental certificate on April 15, 1958. By the filing of the supplemental certificate, the certificate filed by M on July 15, 1957, was made effective for the year 1956 and all succeeding taxable years.

(ii) ***Filed after September 13, 1960, and on or before April 16, 1962.*** If under subparagraph (1) of this paragraph the certificate is effective only for the individual's first taxable year ending after 1956 and all succeeding taxable years, the individual may make such certificate effective for his first taxable year ending after 1955 and all succeeding taxable years by:

(*a*) Filing a supplemental certificate on Form 2031 after September 13, 1960, and before April 17, 1962;

(*b*) Paying on or before April 16, 1962, the tax under section 1401 in respect of all the individual's self-employment income (except for underpayments of tax attributable to errors made in good faith) for his first taxable year ending after 1955; and

(*c*) By repaying on or before April 16, 1962, the amount of any refund (including any interest paid under section 6611) that has been made of any such tax which (but for section 1402(e)(3)(B)) is an overpayment.

Any payment or repayment described in section 1402(e)(3)(B) and in this subparagraph shall not constitute an overpayment within the meaning of section 6401 which relates to amounts treated as overpayments. See section 6401 and the regulations thereunder in part 301 of this chapter (Regulations on Procedure and Administration).

> ***Example.*** M, who files his income tax returns on a calendar year basis, was ordained as a minister in 1956, and his net earnings from service performed in the exercise of his ministry during each of the years 1956 and 1957 were $400 or more. On July 15, 1957, M filed a waiver certificate which became effective, at the time of filing, for 1957 and all succeeding taxable years. Since the certificate was not filed on or before April 15, 1957 (the due date of M's income tax return for the taxable year 1956), and since there was no extension of time for filing his 1956 income tax return, the certificate was not, at the time of filing, effective for the taxable year 1956. M files a supplemental certificate on April 17, 1961. If, in addition to the filing of the supplemental certificate, M pays on or before April 16, 1962, the self-employment tax in respect of all his self-employment income (except for underpayments of tax attributable to errors made in good faith) for his taxable year 1956, and repays, on or before April 16, 1962, the amount of any refund (including any interest paid under section 6611) that has been made of any such tax which (but for section 1402(e)(3)(B)) is an overpayment, the certificate filed by M on July 15, 1957, becomes effective for the year 1956 and all succeeding taxable years.

(b) ***Filed after August 30, 1957, and before the due date of the 1958 return.*** A certificate on Form 2031 filed by an individual after August 30, 1957, but on or before the due date of the return (including any extension thereof) for his second taxable year ending after 1956, in accordance with the provisions of section 1402(e) in effect at the time the certificate is filed, shall be effective for his first taxable year ending after 1955, and all subsequent taxable years.

(c) ***Filed after due date of 1958 return*** —

(1) ***In general.*** Except as otherwise provided in § 1.1402(e)(5)-1 (applicable to certificates filed within the period September 14, 1960, to April 16, 1962, inclusive) and in subparagraphs (2) and (3) of this paragraph, a certificate on Form 2031 filed by an individual in accordance with the provisions of §§ 1.1402(e)(1)-1 and 1.1402(e)(2)-1, inclusive, after the due date of the return (including any extension thereof) for his second taxable year ending after 1956 shall be effective for the taxable year immediately preceding the earliest taxable year for which, at the time the certificate is filed, the period for filing a return (including any extension thereof) has not expired, and for all succeeding taxable years.

Example. M, a duly ordained minister of a church, makes his income tax returns on the basis of a calendar year. M has not been granted an extension of time for filing any return. On April 15, 1963, the due date of his income tax return for 1962, M files a waiver certificate pursuant to § 1.1402(e)(1)-1 and within the time limitation set forth in § 1.1402(e)(2)-1. On April 15, 1963, the year 1962 is the earliest taxable year for which the period for filing a return has not expired. Consequently, M's certificate is effective for 1961 and all succeeding taxable years. M must report and pay any self-employment tax due for 1961 and 1962. (The tax, if any, for 1962 is due on April 15, 1963.) Inasmuch as the due date of the tax for 1961 is April 16, 1962, M must pay interest on any tax due for 1961. For provisions relating to such interest, see § 301.6601-1 of Part 301 of this chapter (Regulations on Procedure and Administration).

(2) ***Filed after October 13, 1964, and on or before the due date of return for second taxable year ending after 1962.*** A certificate on Form 2031 filed by an individual in accordance with the provisions of §§ 1.1402(e)(1)-1 and 1.1402(e)(2)-1, inclusive, after October 13, 1964, and on or before the due date of the return (including any extension thereof) for his second taxable year ending after 1962 (April 15, 1965, in the case of a calendar year taxpayer who has not been granted an extension of time for filing his income tax return for 1964) shall be effective for his first taxable year ending after 1961 and all succeeding taxable years.

Example. M, a duly ordained minister of a church, makes his income tax returns on the basis of a calendar year. M has not been granted an extension of time for filing any return. On April 15, 1965, the due date of his income tax return for 1964, M files a waiver certificate pursuant to § 1.1402(e)(1)-1 and within the time limitation set forth in § 1.1402(e)(2)-1. M's certificate is effective for 1962 and all succeeding taxable years, and he must report and pay any self-employment tax due for 1962, 1963, and 1964. (The tax, if any, for 1964 is due on April 15, 1965.) Inasmuch as the due dates of the tax for 1962 and 1963 are April 15, 1963, and April 15, 1964, respectively, M must pay interest on any tax due for 1962 or 1963. For provisions relating to such interest, see § 301.6601-1 of Part 301 of this chapter (Regulations on Procedure and Administration).

(3) ***Filed after July 30, 1965, and on or before the due date of return for second taxable year ending after 1963.*** A certificate on Form 2031 filed by an individual in accordance with the provisions of §§ 1.1402(e)(1)-1 and 1.1402(e)(2)-1, inclusive, after July 30, 1965, and on or before the due date of the return (including any extension thereof) for his second taxable year ending after 1963 (Apr. 15, 1966, in the case of a calendar year taxpayer who has not been granted an extension of time for filing his income tax return for 1965) shall be effective for his first taxable year ending after 1962 and all succeeding taxable years.

Example. M, a duly ordained minister of a church, makes his income tax returns on the basis of a calendar year. M has not been granted an extension of time for filing any return. On April 15, 1966, the due date of his income tax return for 1965, M files a waiver certificate pursuant to § 1.1402(e)(1)-1 and within the time limitation set forth in § 1.1402(e)(2)-1. M's certificate is effective for 1963 and all succeeding taxable years, and he must report and pay any self-employment tax due for 1963, 1964, and 1965. (The tax, if any, for 1965 is due on April 15, 1966.) Inasmuch as the due dates of the tax for 1963 and 1964 are April 15, 1964, and April 15, 1965, respectively, M must pay interest on any tax due for 1963 or 1964. For provisions relating to such interest, see § 301.6601-1 of Part 301 of this chapter (Regulations on Procedure and Administration).

(d) ***Election irrevocable.*** An election which has become effective pursuant to this section is irrevocable. A certificate may not be withdrawn after June 30, 1961.

[T.D. 6691, 28 FR 12796, Dec. 3, 1963, as amended by T.D. 6978, 33 FR 15939, Oct. 30, 1968]

§ 1.1402(e)(4)-1 Treatment of certain remuneration paid in 1955 and 1956 as wages.

If in 1955 or 1956 an individual was paid remuneration for service described in section 3121(b)(8)(A) which was erroneously treated by the organization employing him (under a certificate filed by such organization pursuant to section 3121(k) or the corresponding section of prior law) as employment, within the meaning of the Federal Insurance Contributions Act (Chapter 21 of the Internal Revenue Code), and if on or before August 30, 1957, the taxes imposed by sections 3101 and 3111 were paid (in good faith and upon the assumption that the insurance system established by title II of the Social Security Act had been extended to such service) with respect to any part

of the remuneration paid to such individual for such service, then the remuneration with respect to which such taxes were paid, and with respect to which no credit or refund of such taxes (other than a credit or refund which would be allowable if such service had constituted employment) has been obtained either by the employer or the employee on or before August 30, 1957, shall be deemed, for purposes of the Self-Employment Contributions Act of 1954 and the Federal Insurance Contributions Act, to constitute remuneration paid for employment and not net earnings from self-employment. For regulations relating to section 3121(b)(8)(A) and (k), see § 31.3121(b)(8)-1 of subpart B of part 31 of this chapter (Employment Tax Regulations).

[T.D. 6500, 25 FR 11402, Nov. 26, 1960, as amended by T.D. 9849, 84 FR 9237, Mar. 14, 2019]

§ 1.1402(e)(5)-1 Optional provision for certain certificates filed before April 15, 1962.

(a) ***Certificates.***

(1) The optional provision contained in section 1402(e)(5)(A) may be applied to a certificate on Form 2031 filed within the period September 14, 1960, to April 16, 1962, inclusive, in the case of a duly ordained, commissioned, or licensed minister of a church, a member of a religious order (other than a member of a religious order who has taken a vow of poverty as a member of such order), or a Christian Science practitioner, who has derived net earnings, in any taxable year ending after 1954 and before 1960, from the performance of service in the exercise of his ministry, in the exercise of duties required by his religious order, or in the exercise of his profession as a Christian Science practitioner, respectively, and who has reported such earnings as self-employment income on a return filed before September 14, 1960, and on or before the date prescribed for filing such return (including any extension thereof). The certificate may be filed by such minister, member of a religious order, or Christian Science practitioner or by a fiduciary acting for such individual or his estate, or by his survivor within the meaning of section 205(c)(1)(C) of the Social Security Act, and it must be filed after September 13, 1960, and on or before April 16, 1962. Subject to the conditions stated in subparagraph (2) of this paragraph, such certificate may be effective at the election of the person filing it, for the first taxable year ending after 1954 and before 1960 for which a return, as described in the first sentence of this subparagraph, was filed, and for all succeeding taxable years, rather than for the period prescribed in § 1.1402(e)(3)-1. The election for retroactive application of the certificate may be made by indicating on the certificate the first taxable year for which it is to be effective and that such year is the first taxable year ending after 1954 and before 1960 for which the minister, member of a religious order, or Christian Science practitioner filed an income tax return on which he reported net earnings for such year from the exercise of his ministry, the exercise of duties required by his religious order, or the exercise of his profession as a Christian Science practitioner, as the case may be, and by fulfilling the conditions prescribed in subparagraph (2) of this paragraph.

(2) A certificate to which subparagraph (1) of this paragraph relates may be effective for a taxable year prior to the taxable year immediately preceding the earliest taxable year for which, at the time the certificate is filed, the period for filing a return (including any extension thereof) has not expired, only if the following conditions are met:

(i) The tax under section 1401 is paid on or before April 16, 1962, in respect of all self-employment income (whether or not derived from the performance of service by the individual in the exercise of his ministry, in the exercise of duties required by his religious order, or in the exercise of his profession as a Christian Science practitioner, as the case may be) for the first

taxable year ending after 1954 and before 1960 for which such individual has filed a return, as described in subparagraph (1) of this paragraph, and for each succeeding taxable year ending before 1960; and

(ii) In any case where refund has been made of any such tax which (but for section 1402(e)(5)) is an overpayment, the amount refunded (including any interest paid under section 6611) is repaid on or before April 16, 1962. For regulations under section 6611 (relating to interest on overpayments), see § 301.6611-1 of part 301 of this chapter (Regulations on Procedure and Administration).

(b) ***Supplemental certificates.***

(1) Subject to the conditions stated in subparagraph (2) of this paragraph, a certificate on Form 2031 filed on or before September 13, 1960, by a minister, member of a religious order, or a Christian Science practitioner described in paragraph (a)(1) of this section and which (but for section 1402(e)(5)(B)) is ineffective for the first taxable year ending after 1954 and before 1959 for which such a return as described in paragraph (a)(1) of this section was filed by such individual, shall be effective for such first taxable year and for all succeeding taxable years, provided a supplemental certificate is filed by such individual or by a fiduciary acting for him or his estate, or by his survivor (within the meaning of section 205(c)(1)(C) of the Social Security Act), after September 13, 1960 and on or before April 16, 1962.

(2) The filing of a supplemental certificate pursuant to subparagraph (1) of this paragraph will give retroactive effect to a certificate to which such subparagraph applies only if the following conditions are met:

(i) The tax under section 1401 is paid on or before April 16, 1962, in respect of all self-employment income (whether or not attributable to earnings as a minister, member of a religious order, or Christian Science practitioner) for the first taxable year for which the certificate is retroactively effective and for each subsequent year ending before 1959; and

(ii) In any case where refund has been made of any such tax which (but for section 1402(d)(5)) is an overpayment, the amount refunded (including any interest paid under section 6611) is repaid on or before April 16, 1962.

(c) ***Underpayment of tax.*** For purposes of this section, any underpayment of the tax which is attributable to an error made in good faith will not invalidate an election which is otherwise valid.

(d) ***Nonapplicability of section 6401.*** Any payment or repayment described in paragraph (a)(2) or paragraph (b)(2) of this section shall not constitute an overpayment within the meaning of section 6401 which relates to amounts treated as overpayments. For the provisions of section 6401 and the regulations thereunder, see section 6401 and § 301.6401-1 of part 301 of this chapter (Regulations on Procedure and Administration).

§ 1.1402(e)(5)-2 Optional provisions for certain certificates filed on or before April 17, 1967.

(a) ***In general*** —

(1) ***General rule.*** Section 1402(e)(5), as amended by the Social Security Amendments of 1965, applies only in the case of a duly ordained, commissioned, or licensed minister of a church, a member of a religious order (other than a member of a religious order who has taken a vow of poverty as a member of such order), or a Christian Science practitioner, who has derived net earnings in any taxable year ending after 1954 from the performance of service in the exercise of his ministry, in the

exercise of duties required by his religious order, or in the exercise of his profession as a Christian Science practitioner, respectively, and who has reported such earnings as self-employment income on a return filed on or before the date prescribed for filing such return (including any extension thereof).

(2) ***Supplemental certificate.*** Subject to the conditions stated in subparagraph (4) of this paragraph, a certificate on Form 2031 filed on or before April 15, 1966, by a minister, member of a religious order, or a Christian Science practitioner described in subparagraph (1) of this paragraph and which (but for section 1402(e)(5)(A)) is ineffective for the first taxable year ending after 1954 for which a return described in subparagraph (1) of this paragraph was filed by such individual, shall be effective for such first taxable year and for all succeeding taxable years, provided a supplemental certificate is filed by such individual or by a fiduciary acting for him or his estate, or by his survivor (within the meaning of section 205(c)(1)(C) of the Social Security Act), after July 30, 1965 (the date of enactment of the Social Security Amendments of 1965), and on or before April 17, 1967.

(3) ***Certificate filed by survivor.*** A survivor (within the meaning of section 205(c)(1)(C) of the Social Security Act) of an individual who:

(i) Died on or before April 15, 1966,

(ii) Was a minister, member of a religious order, or a Christian Science practitioner described in subparagraph (1) of this paragraph,

(iii) Has filed a return as described in subparagraph (1) of this paragraph for a taxable year ending after 1954, and

(iv) Had not filed a valid waiver certificate on Form 2031,

may file a certificate on Form 2031 on behalf of such individual. The certificate must be filed after July 30, 1965 (the date of enactment of the Social Security Amendments of 1965), and on or before April 17, 1967. Subject to the conditions stated in subparagraph (4) of this paragraph, such certificate shall be effective for the first taxable year ending after 1954 for which a return, as described in subparagraph (1) of this paragraph, was filed by such individual and for all succeeding taxable years.

(4) ***Applicable conditions.*** A supplemental certificate referred to in subparagraph (2) of this paragraph and a certificate referred to in subparagraph (3) of this paragraph shall be effective only if the following conditions are met:

(i) The tax under section 1401 is paid on or before April 17, 1967, in respect of all self-employment income (whether or not attributable to earnings as a minister, member of a religious order, or Christian Science practitioner) for the first taxable year ending after 1954 for which the individual (by or in respect of whom the supplemental certificate or certificate is filed) has filed a return, as described in paragraph (1) of this paragraph, and for each succeeding taxable year ending before January 1, 1966; and

(ii) In any case where refund has been made of any such tax which (but for section 1402(e)(5)) is an overpayment, the amount refunded (including any interest paid under section 6611) is repaid on or before April 17, 1967. For regulations under section 6611 (relating to interest on overpayments), see § 301.6611-1 of part 301 of this chapter (Regulations on Procedure and Administration).

(b) ***Underpayment of tax.*** For purposes of this section, any underpayment of the tax which is attributable to an error made in good faith will not invalidate an election which is otherwise valid.

(c) ***Nonapplicability of section 6401.*** Any payment or repayment described in paragraph (a)(4) of this section shall not constitute an overpayment within the meaning of section 6401 which relates to amounts treated as overpayments. For the provisions of section 6401 and the regulations thereunder, see section 6401 and § 301.6401-1 of part 301 of this chapter (Regulations on Procedure and Administration).

(d) ***Applicability of §§ 1.1402(e) (5)-1 and 1.1402(e)(6)-1.*** The provisions of section 1402(e) (5) and (6) (in effect prior to July 30, 1965, the date of enactment of the Social Security Amendments of 1965) and §§ 1.1402(e) (5)-1 and 1.1402(e)(6)-1 shall apply with respect to any certificate filed pursuant to such sections if a supplemental certificate is not filed with respect to such certificate as provided in this section.

[T.D. 6978, 33 FR 15939, Oct. 30, 1968]

§ 1.1402(e)(6)-1 Certificates filed by fiduciaries or survivors on or before April 15, 1962.

In any case in which an individual whose death has occurred after September 12, 1960, and before April 16, 1962, derived earnings from the performance of services as a duly ordained, commissioned, or licensed minister of a church in the exercise of his ministry, as a member of a religious order (other than a member of a religious order who has taken a vow of poverty as a member of such order) in the exercise of duties required by such order, or in the exercise of his profession as a Christian Science practitioner, a waiver certificate on Form 2031 may be filed after June 30, 1961 (the date of enactment of the Social Security Amendments of 1961), and on or before April 16, 1962, by a fiduciary acting for such individual's estate or by such individual's survivor within the meaning of section 205(c)(1)(C) of the Social Security Act. Such certificates shall be effective for the period prescribed in section 1402(e)(3)(A) (see § 1.1402(e)(3)-1(c)) as if filed by the individual on the date of his death.

§ 1.1402(f)-1 Computation of partner's net earnings from self-employment for taxable year which ends as result of his death.

(a) ***Taxable years ending after August 28, 1958 —***

(1) ***In general.*** The rules for the computation of a partner's net earnings from self-employment are set forth in paragraphs (d) to (g), inclusive, of § 1.1402(a)-2. In addition to the net earnings from self-employment computed under such rules for the last taxable year of a deceased partner, if a partner's taxable year ends after August 28, 1958, solely because of death, and on a day other than the last day of the partnership's taxable year, the deceased partner's net earnings from self-employment for such year shall also include so much of the deceased partner's distributive share of partnership ordinary income or loss (see subparagraph (3) of this paragraph) for the taxable year of the partnership in which his death occurs as is attributable to an interest in the partnership prior to the month following the month of his death.

(2) ***Computation.***

(i) The deceased partner's distributive share of partnership ordinary income or loss for the partnership taxable year in which he died shall be determined by applying the rules contained in paragraphs (d) to (g), inclusive, of § 1.1402(a)-2, except that paragraph (e) shall not apply.

(ii) The portion of such distributive share to be included under this section in the deceased partner's net earnings from self-employment for his last taxable year shall be determined by treating the ordinary income or loss constituting such distributive share as having been realized or sustained ratably over the period of the partnership taxable year during which the deceased partner had an interest in the partnership and during which his estate, or any other person succeeding by reason of his death to rights with respect to his partnership interest, held such interest in the partnership or held a right with respect to such interest. The amount to be included under this section in the deceased partner's net earnings from self-employment for his last taxable year will, therefore, be determined by multiplying the deceased partner's distributive share of partnership ordinary income or loss for the partnership taxable year in which he died, as determined under subdivision (i) of this subparagraph, by a fraction, the denominator of which is the number of calendar months in the partnership taxable year over which the ordinary income or loss constituting the deceased partner's distributive share of partnership income or loss for such year is treated as having been realized or sustained under the preceding sentence and the numerator of which is the number of calendar months in such partnership taxable year that precede the month following the month of his death.

(3) ***Definition of "deceased partner's distributive share".*** For the purpose of this section, the term "deceased partner's distributive share" includes the distributive share of his estate or of any other person succeeding, by reason of his death, to rights with respect to his partnership interest. It does not include any share attributable to a partnership interest which was not held by the deceased partner at the time of his death. Thus, if a deceased partner's estate should acquire an interest in a partnership additional to the interest to which it succeeded upon the death of the deceased partner, the amount of the distributive share attributable to such additional interest acquired by the estate would not be included in computing the "deceased partner's distributive share" of the partnership's ordinary income or loss for the partnership taxable year.

(4) ***Examples.*** The application of this paragraph may be illustrated by the following examples:

Example (1). B, an individual who files his income tax returns on the calendar year basis, is a member of the ABC partnership, the taxable year of which ends on June 30. B dies on October 17, 1958, and his estate succeeds to his partnership interest and continues as a partner in its own right under local law until June 30, 1959. B's distributive share of the partnership's ordinary income, as determined under paragraphs (d) to (g), inclusive, of § 1.1402(a)-2, for the taxable year of the partnership ended June 30, 1958 is $2,400. His distributive share, including the share of his estate, of such partnership's ordinary income, as determined under paragraphs (d) to (g), inclusive, of § 1.1402(a)-2 (with the exception of paragraph (e)), for the taxable year of the partnership ended June 30, 1959 is $4,500. The portion of such $4,500 attributable to an interest in the partnership prior to the month following the month in which he died is $4,500 × 4/12 (4 being the number of months in the partnership taxable year in which B died which precede the month following the month of his death and 12 being the number of months in such partnership taxable year in which B and his estate had an interest in the partnership) or $1,500. The amount to be included in the deceased partner's net earnings from self-employment for his last taxable year is $3,900 ($2,400 plus $1,500).

Example (2). If in the preceding example B's estate is entitled to only $1,000, the amount of B's distributive share of partnership ordinary income for the period July 1, 1958 through October 17, 1958, such $1,000 is considered to have been realized ratably over the period preceding B's death and will be included in B's net earnings from self-employment for his last taxable year.

Example (3). X, who reports his income on a calendar year basis, is a member of a partnership which also reports its income on a calendar year basis. X dies on June 30, 1959, and his estate succeeds to his partnership interest and continues as a partner in its own right under local law. On September 15, 1959, X's estate sells the partnership interest to which it succeeded on the death of X. X's distributive share of partnership income for 1959 is $5,500. $600 of such amount is X's share of the gain from the sale of a capital asset which occurs on May 1, 1959, and $400 of such amount is the estate's share of the gain from the sale of a capital asset which occurs on July 15, 1959. The remainder of such amount is income from services rendered. X's distributive share of partnership ordinary income for 1959, as determined under paragraphs (d) to (g), inclusive, of § 1.1402(a)-2 (with the exception of paragraph (e)), is $4,500 ($5,500 minus $1,000). The portion of such share attributable to an interest in the partnership prior to the month following the month of his death is $4,500 × 6/8.5 (6 being the number of months in the partnership taxable year in which X died as precede the month following the month of his death and 8.5 being the number of months in such partnership taxable year in which X and his estate had an interest in the partnership) or $3,176.47.

(b) ***Options available to farmers*** —

(1) ***Special rule.*** In determining whether the optional method available to a member of a farm partnership in computing his net earnings from self-employment may be applied, and in applying such method, it is necessary to determine the partner's distributive share of partnership gross income and the partner's distributive share of income described in section 702(a)(9). See section 1402(a) and § 1.1402(a)-15. If section 1402(f) and this section apply, or may be made applicable under section 403(b)(2) of the Social Security Amendments of 1958 and paragraph (c) of this section, for the last taxable year of a deceased partner, such partner's distributive share of income described in section 702(a)(9) for his last taxable year shall be determined by including therein any amount which is included under section 1402(f) and this section in his net earnings from self-employment for such taxable year. Such a partner's distributive share of partnership gross income for his last taxable year shall be determined by including therein so much of the deceased partner's distributive share (see paragraph (a)(3) of this section) of partnership gross income, as defined in section 1402(a) and paragraph (b) of § 1.1402(a)-15, for the partnership taxable year in which he died as is attributable to an interest in the partnership prior to the month following the month of his death. Such allocation shall be made in the same manner as is prescribed in paragraph (a)(2) of this section for determining the portion of a deceased partner's distributive share of partnership ordinary income or loss to be included under section 1402(f) and this section in his net earnings from self-employment for his last taxable year.

(2) ***Examples.*** The principles set forth in this paragraph may be illustrated by the following examples:

Example (1). X, an individual who files his income tax returns on a calendar year basis, is a member of the XYZ farm partnership, the taxable year of which ends on March 31. X dies on May 31, 1967, and his estate succeeds to his partnership interest and continues as a partner in its own right under local law until March 31, 1968. X's distributive share of the partnership's ordinary income, determined under paragraphs (d) to (g), inclusive, of § 1.1402(a)-2, for the taxable year of the partnership ended March 31, 1967, is $1,600. His distributive share, including the share of his estate, of such partnership's ordinary loss as determined under paragraphs (d) to (g), inclusive, of § 1.1402(a)-2 (with the exception of paragraph (e)), for the taxable year of the partnership ended March 31, 1968, is $1,200. The portion of such $1,200 attributable to an interest in the partnership prior to the month following the month in which he died is $1,200 × 2/12 (2 being the number of months in the partnership taxable year in which X

died which precede the month following the month of his death and 12 being the number of months in such partnership taxable year in which X and his estate had an interest in the partnership) or $200. X is also a member of the ABX farm partnership, the taxable year of which ends on May 31. His distributive share of the partnership loss described in section 702(a)(9) for the partnership taxable year ending May 31, 1967, is $300. Section 1402(f) and this section do not apply with respect to such $300 since X's last taxable year ends, as a result of his death, with the taxable year of the ABX partnership. Under this paragraph the $200 loss must be included in determining X's distributive share of XYZ partnership income described in section 702(a)(9) for the purpose of applying the optional method available to farmers for computing net earnings from self-employment. Further, the resulting $1,400 of income must be aggregated, pursuant to paragraph (c) of § 1.1402(a)-15, with the $300 loss, X's distributive share of ABX partnership loss described in section 702(a)(9), for purposes of applying such option. The representative of X's estate may exercise the option described in paragraph (a)(2)(ii) of § 1.1402(a)-15, provided the portion of X's distributive share of XYZ partnership gross income for the taxable year ended March 31, 1968, attributable to an interest in the partnership prior to the month following the month in which he died (the allocation being made in the manner prescribed for allocating his $1,200 distributive share of XYZ partnership loss for such year), when aggregated with his distributive share of XYZ partnership gross income for the partnership taxable year ended March 31, 1967, and with his distributive share of ABX partnership gross income for the partnership taxable year ended May 31, 1967, results in X having more than $2,400 of gross income from the trade or business of farming. If such aggregate amount of gross income is not more than $2,400, the option described in paragraph (a)(2)(i) of § 1.1402(a)-15, is available.

Example (2). A, a sole proprietor engaged in the business of farming, files his income tax returns on a calendar year basis. A is also a member of a partnership engaged in an agricultural activity. The partnership files its returns on the basis of a fiscal year ending March 31. A dies June 29, 1967. A's gross income from farming as a sole proprietor for the 6-month period comprising his taxable year which ends because of death is $1,600 and his actual net earnings from self-employment based thereon are $400. As of March 31, 1967, A's distributive share of the gross income of the farm partnership is $2,200 and his distributive share of income described in section 702(a)(9) based thereon is $1,000. The amount of A's distributive share of the partnership's ordinary income for its taxable year ended March 31, 1968, which may be included in his net earnings from self-employment under section 1402(f) and paragraph (a) of this section is $300. The amount of the deceased partner's distributive share of partnership gross income attributable to an interest in the partnership prior to the month following the month of his death as is determined, pursuant to subparagraph (1) of this paragraph, under paragraph (a) of this section is $2,000. An aggregation of the above figures produces a gross income from farming of $5,800 and actual net earnings from self-employment of $1,700. Under these circumstances none of the options provided by section 1402(a) may be used. If the actual net earnings from self-employment had been less than $1,600, the option described in paragraph (a)(2)(ii) of § 1.1402(a)-15 would have been available.

(c) ***Taxable years ending after 1955 and on or before August 28, 1958 —***

(1) ***Requirement of election.*** If a partner's taxable year ended, as a result of his death, after 1955 and on or before August 28, 1958, the rules set forth in paragraph (a) of this section may be made applicable in computing the deceased partner's net earnings from self-employment for his last taxable year provided that:

(i) Before January 1, 1960, there is filed, by the person designated in section 6012(b)(1) and paragraph (b)(1) of § 1.6012-3, a return (or amended return) of the tax imposed by chapter 2 for the taxable year ending as a result of death, and

(ii) Such return, if filed solely for the purpose of reporting net earnings from self-employment resulting from the enactment of section 1402(f), is accompanied by the amount of tax attributable to such net earnings.

(2) ***Administrative rule of special application.*** Notwithstanding the provisions of sections 6601, 6651, and 6653 (see such sections and the regulations thereunder) no interest or penalty shall be assessed or collected on the amount of any self-employment tax due solely by reason of the operation of section 1402(f) in the case of an individual who died after 1955 and before August 29, 1958.

[T.D. 6691, 28 FR 12796, Dec. 3, 1963, as amended by T.D. 6993, 34 FR 830, Jan. 18, 1969]

§ 1.1402(g)-1 Treatment of certain remuneration erroneously reported as net earnings from self-employment.

(a) ***General rule.*** If an amount is erroneously paid as self-employment tax, for any taxable year ending after 1954 and before 1962, with respect to remuneration for service (other than service described in section 3121(b)(8)(A)) performed in the employ of an organization described in section 501(c)(3) and exempt from income tax under section 501(a), and if such remuneration is reported as self-employment income on a return filed on or before the due date prescribed for filing such return (including any extension thereof), the individual who paid such amount (or a fiduciary acting for such individual or his estate, or his survivor (within the meaning of section 205(c)(1)(C) of the Social Security Act)), may request that such remuneration be deemed to constitute net earnings from self-employment. If such request is filed during the period September 14, 1960, to April 16, 1962, inclusive, and on or after the date on which the organization which paid such remuneration to such individual for services performed in its employ has filed, pursuant to section 3121(k), a certificate waiving exemption from taxes under the Federal Insurance Contributions Act, and if no credit or refund of any portion of the amount erroneously paid for such taxable year as self-employment tax (other than a credit or refund which would be allowable if such tax were applicable with respect to such remuneration) has been obtained before the date on which such request is filed or, if obtained, the amount credited or refunded (including any interest under section 6611) is repaid on or before such date, then, for purposes of the Self-Employment Contributions Act of 1954 and the Federal Insurance Contributions Act, any amount of such remuneration which is paid to such individual before the calendar quarter in which such request is filed (or before the succeeding quarter if such certificate first becomes effective with respect to services performed by such individual in such succeeding quarter) and with respect to which no tax (other than an amount erroneously paid as tax) has been paid under the Federal Insurance Contributions Act, shall be deemed to constitute net earnings from self-employment and not remuneration for employment. If the certificate filed by such organization pursuant to section 3121(k) is not effective with respect to services performed by such individual on or before the first day of the calendar quarter in which the request is filed, then, for purposes of section 3121(b)(8)(B) (ii) and (iii), such individual shall be deemed to have become an employee of such organization (or to have become a member of a group, described in section 3121(k)(1)(E), of employees of such organization) on the first day of the succeeding quarter.

(b) ***Request for validation.***

(1) No particular form is prescribed for making a request under paragraph (a) of this section. The request should be in writing, should be signed and dated by the person making the request, and should indicate clearly that it is a request that, pursuant to section 1402(g) of the Code, remuneration for service described in section 3121(b)(8) (other than service described in section 3121(b)(8)(A)) erroneously reported as self-employment income for one or more specified years be deemed to constitute net earnings from self-employment and not remuneration for employment. In addition, the following information shall be shown in connection with the request:

(i) The name, address, and social security account number of the individual with respect to whose remuneration the request is made.

(ii) The taxable year or years (ending after 1954 and before 1962) to which the request relates.

(iii) A statement that the remuneration was erroneously reported as self- employment income on the individual's return for each year specified and that the return was filed on or before its due date (including any extension thereof).

(iv) Location of the office of the district director with whom each return was filed.

(v) A statement that no portion of the amount erroneously paid by the individual as self-employment tax with respect to the remuneration has been credited or refunded (other than a credit or refund which would have been allowable if the tax had been applicable with respect to the remuneration); or, if a credit or refund of any portion of such amount has been obtained, a statement identifying the credit or refund and showing how and when the amount credited or refunded, together with any interest received in connection therewith, was repaid.

(vi) The name and address of the organization which paid the remuneration to the individual.

(vii) The date on which the organization filed a waiver certificate on Form SS-15, and the location of the office of the district director with whom it was filed.

(viii) The date on which the certificate became effective with respect to services performed by the individual.

(ix) If the request is made by a person other than the individual to whom the remuneration was paid, the name and address of that person and evidence which shows the authority of such person to make the request.

(2) The request should be filed with the district director of internal revenue with whom the latest of the returns specified in the request pursuant to subparagraph (1)(iii) of this paragraph was filed.

(c) ***Cross references.*** For regulations relating to exemption from income tax of an organization described in section 501(c)(3), see § 1.501(c)(3)-1.

[T.D. 6500, 25 FR 11402, Nov. 26, 1960, as amended by T.D. 9849, 84 FR 9237, Mar. 14, 2019]

§ 1.1402(h)-1 Members of certain religious groups opposed to insurance.

(a) ***In general.*** An individual—

(1) Who is a member of a recognized religious sect or division thereof and,

(2) Who is an adherent of established tenets or teachings of such sect or division and by reason thereof is conscientiously opposed to acceptance of the benefits of any private or public insurance which makes payments in the event of death, disability, old age, or retirement or makes payments toward the cost of, or provides services for, medical care (including the benefits of any insurance system established by the Social Security Act),

may file an application for exemption from the tax under section 1401. The form of insurance to which section 1402(h) and this section refer does not include liability insurance of a kind that provides only for the protection of other persons, or property of other persons, who may be injured or damaged by or on property belonging to, or by an action of, an individual who otherwise meets the requirements of this section. An application for exemption under section 1402(h) and this section shall be made in the manner provided in paragraph (b) of this section and within the time specified in paragraph (c) of this section. For provisions relating to the filing of an application for exemption by a fiduciary or survivor, see paragraph (d) of this section.

(b) ***Application for exemption.*** The application for exemption shall be filed on Form 4029 in duplicate with the internal revenue official or office designated on the form. The filing of a return by a member of a religious group opposed to insurance showing no self-employment income or self-employment tax shall not be construed as an application for exemption referred to in paragraph (a) of this section.

(c) ***Time limitation for filing application for exemption*** —

(1) ***Taxable years ending before December 31, 1967.*** A member of a religious group opposed to insurance within the meaning of paragraph (a) of this section:

(i) Who has self-employment income (determined without regard to subsections (c)(6) and (h) of section 1402 and this section) for one or more taxable years ending before December 31, 1967, and

(ii) Who desires to be exempt from the payment of the self-employment tax under section 1401,

must file the application for exemption on or before December 31, 1968.

(2) ***Taxable year ending on or after December 31, 1967*** —

(i) ***General rule.*** Except as provided in subdivision (ii) of this subparagraph, a member of a religious group opposed to insurance within the meaning of paragraph (a) of this section:

(*a*) Who has no self-employment income (determined without regard to subsections (c)(6) and (h) of section 1402 and this section) for any taxable year ending before December 31, 1967, and

(*b*) Who desires to be exempt from the payment of the self-employment tax under section 1401 for any taxable year ending on or after December 31, 1967,

must file the application for exemption on or before the due date of the income tax return (see section 6072), including any extension thereof (see section 6081), for the first taxable year ending on or after December 31, 1967, for which he has self-employment income (determined without regard to subsections (c)(6) and (h) of section 1402 and this section.

(ii) ***Exception to general rule.*** If an individual to whom subdivision (i) of this subparagraph applies:

(*a*) Is notified in writing by a district director of internal revenue or the Director of International Operations that he has not filed the application for exemption on or before the date specified in such subdivision (i), and

(*b*) Files the application for exemption on or before the last day of the third calendar month following the calendar month in which he is so notified,

such application shall be considered a timely filed application for exemption.

(d) ***Application by fiduciary or survivor.*** If an individual who was a member of a religious group opposed to insurance dies before the expiration of the time prescribed in section 1402(h)(2) and paragraph (c) of this section during which an application could have been filed by him, an application for exemption with respect to such deceased individual may be filed by a fiduciary acting for such individual's estate or by such individual's survivor within the meaning of section 205(c)(1)(C) of the Social Security Act. An application for exemption with respect to a deceased individual executed by a fiduciary or survivor may be approved only if it could have been approved if the individual were not deceased and had filed the application on the date the application was filed by the fiduciary or executor.

(e) ***Approval of application for exemption*** —

(1) ***In general.*** The filing of an application for exemption on Form 4029 by a member of a religious group opposed to insurance does not constitute an exemption from the payment of the tax on self-employment income. An individual who files such an application is exempt from the payment of the tax only if the application is approved by the official with whom the application is required to be filed (see paragraph (b) of this section).

(2) ***Conditions relating to approval or disapproval of application.*** An application for exemption on Form 4029 will not be approved unless the Secretary of Health, Education, and Welfare finds with respect to the religious sect or division thereof of which the individual filing the application is a member:

(i) That the sect or division thereof has the established tenets or teachings by reason of which the individual applicant is conscientiously opposed to the benefits of insurance of the type referred to in section 1402(h) (see paragraph (a) of this section),

(ii) That it is the practice, and has been for a period of time which the Secretary of Health, Education, and Welfare deems to be substantial, for members of such sect or division thereof to make provisions for their dependent members which, in the judgment of such Secretary, is reasonable in view of the general level of living of the members of the sect or division thereof; and

(iii) That the sect or division thereof has been in existence continuously since December 31, 1950.

In addition, an application for exemption on Form 4029 will not be approved if any benefit or other payment under title II of title XVIII of the Social Security Act became payable (or, but for section 203, relating to reduction of insurance benefits, or 222(b), relating to reduction of insurance benefits on account of refusal to accept rehabilitation services, of the Social Security Act would have been payable) at or before the time of the filing of the application for exemption. Any determination required to be made pursuant to the preceding sentence will be made by the Secretary of Health, Education, and Welfare.

(f) ***Period for which exemption is effective*** —

(1) ***General rule.*** An application for exemption shall be in effect (if approved as provided in paragraph (e) of this section) for all taxable years beginning after December 31, 1950, except as otherwise provided in subparagraph (2) of this paragraph.

(2) ***Exceptions.*** An application for exemption referred to in subparagraph (1) of this paragraph shall not be effective for any taxable year which:

(i) Begins

(*a*) before the taxable year in which the individual filing the application first met the requirements of subparagraphs (1) and (2) of paragraph (a) of this section, or

(*b*) before the time as of which the Secretary of Health, Education, and Welfare finds that the sect or division thereof of which the individual is a member met the requirements of subparagraphs (C) and (D) of section 1402(h)(1) (see subdivisions (i) and (ii) of paragraph (e)(2) of this section), or

(ii) Ends

(*a*) after the time at which the individual filing the application ceases to meet the requirements of subparagraphs (1) and (2) of paragraph (a) of this section, or

(*b*) after the time as of which the Secretary of Health, Education, and Welfare finds that the sect or division thereof of which the individual is a member ceases to meet the requirements of subparagraphs (C) and (D) of section 1402(h)(1) (see subdivisions (i) and (ii) of paragraph (e)(2) of this section).

(g) ***Refund or credit.*** An application for exemption on Form 4029 filed on or before December 31, 1968 (if approved as provided in paragraph (e) of this section), shall constitute a claim for refund or credit of any tax on self-employment income under section 1401 (or under section 480 of the Internal Revenue Code of 1939) paid or incurred in respect of any taxable year beginning after December 31, 1950, and ending before December 31, 1967, for which an exemption is granted. Refund or credit of any tax referred to in the preceding sentence may be made, pursuant to the provisions of section 501(c) of the Social Security Amendments of 1967 (81 Stat. 933), notwithstanding that the refund or credit would otherwise be prevented by operation of any law or rule of law. No interest shall be allowed or paid in respect of any refund or credit made or allowed in connection with a claim for refund or credit made on Form 4029.

[T.D. 6993, 34 FR 831, Jan. 18, 1969]

§ 1.1403-1 Cross references.

For provisions relating to the requirement for filing returns with respect to net earnings from self-employment, see § 1.6017-1. For provisions relating to declarations of estimated tax on self-employment income, see §§ 1.6015(a) to 1.6015(j)-1, inclusive. For other administrative provisions relating to the tax on self-employment income, see the applicable sections of the regulations in this part (§ 1.6001-1 *et seq.*) and the applicable sections of the regulations in part 301 of this chapter (Regulations on Procedure and Administration).

[T.D. 7427, 41 FR 34026, Aug. 12, 1976]

NET INVESTMENT INCOME TAX

§ 1.1411-0 Table of contents of provisions applicable to section 1411.

This section lists the table of contents for §§ 1.1411-1 through 1.1411-10.

§ 1.1411-1 General rules.

(a) General rule.

(b) Adjusted gross income.

(c) Effect of section 1411 and the regulations thereunder for other purposes.

(d) Definitions.

(e) Disallowance of certain credits against the section 1411 tax.

(f) Application to taxable years beginning before January 1, 2014.

(1) Retroactive application of regulations.

(2) Reliance and transitional rules.

(g) Effective/applicability date.

§ 1.1411-2 Application to individuals.

(a) Individual to whom tax applies.

(1) In general.

(2) Special rules.

(i) Dual resident individuals treated as residents of a foreign country under an income tax treaty.

(ii) Dual-status resident aliens.

(iii) Joint returns in the case of a nonresident alien individual married to a United States citizen or resident.

(A) Default treatment.

(B) Taxpayer election.

(*1*) Effect of election.

(*2*) Procedural requirements for making election.

(*3*) Ineffective elections.

(iv) Joint returns for a year in which nonresident alien married to a United States citizen or resident becomes a United States resident.

(A) Default treatment.

(B) Taxpayer election.

(*1*) Effect of election.

(*2*) Procedural requirements for making election.

(v) Grantor trusts.

(vi) Bankruptcy estates.

(vii) Bona fide residents of United States territories.

(A) Applicability.

(B) Coordination with exception for nonresident aliens.

(C) Definitions.

(*1*) Bona fide resident.

(*2*) United States territory.

(b) Calculation of tax.

(1) In general.

(2) Example.

(c) Modified adjusted gross income.

(1) General rule.

(2) Rules with respect to CFCs and PFICs.

(d) Threshold amount.

(1) In general.

(2) Taxable year of less than twelve months.

(i) General rule.

(ii) Change of annual accounting period.

(e) Effective/applicability date.

§ 1.1411-3 Application to Estates and Trusts

(a) Estates and trusts to which tax applies.

(1) In general.

(i) General application.

(ii) Calculation of tax.

(2) Taxable year of less than twelve months.

(i) General rule.

(ii) Change of annual accounting period.

(3) Rules with respect to CFCs and PFICs.

(b) Application to certain trusts and estates.

(1) Exception for certain trusts and estates.

(2) Special rules for certain taxable trusts and estates.

(i) Qualified funeral trusts.

(ii) Bankruptcy estates.

(c) Application to electing small business trusts (ESBTs).

(1) General application.

(2) Computation of tax.

(i) Step one.

(ii) Step two.

(iii) Step three.

(3) Example.

(d) Application to charitable remainder trusts (CRTs).

(1) Operational rules.

(i) Treatment of annuity or unitrust distributions.

(ii) Apportionment among multiple beneficiaries.

(iii) Accumulated net investment income.

(2) Application of section 664.

(i) General rule.

(ii) Special rules for CRTs with income from CFCs or PFICs [Reserved]

(iii) Examples.

(3) Elective simplified method. [Reserved]

(e) Calculation of undistributed net investment income.

(1) In general.

(2) Undistributed net investment income.

(3) Distributions of net investment income to beneficiaries.

(4) Deduction for amounts paid or permanently set aside for a charitable purpose.

(5) Examples.

(f) Effective/applicability date.

§ 1.1411-4 Definition of Net Investment Income

(a) In general.

(b) Ordinary course of a trade or business exception.

(c) Other gross income from a trade or business described in § 1.1411-5.

(d) Net gain.

(1) Definition of disposition.

(2) Limitation.

(3) Net gain attributable to the disposition of property.

(i) General rule.

(ii) Examples.

(4) Gains and losses excluded from net investment income.

(i) Exception for gain or loss attributable to property held in a trade or business not described in § 1.1411-5.

(A) General rule.

(B) Special rules for determining whether property is held in a trade or business.

(C) Examples.

(ii) Adjustments to gain or loss attributable to the disposition of interests in a partnership or S corporation.

(iii) Adjustment for capital loss carryforwards for previously excluded income. [Reserved]

(e) Net investment income attributable to certain entities.

(1) Distributions from estates and trusts.

(i) In general.

(ii) Distributions of accumulated net investment income from foreign nongrantor trusts to United States beneficiaries. [Reserved]

(2) CFCs and PFICs.

(3) Treatment of income from common trust funds. [Reserved]

(f) Properly allocable deductions.

(1) General rule.

(i) In general.

(ii) Limitations.

(2) Properly allocable deductions described in section 62.

(i) Deductions allocable to gross income from rents and royalties.

(ii) Deductions allocable to gross income from trades or businesses described in § 1.1411-5.

(iii) Penalty on early withdrawal of savings.

(iv) Net operating loss.

(v) Examples.

(3) Properly allocable deductions described in section 63(d).

(i) Investment interest expense.

(ii) Investment expenses.

(iii) Taxes described in section 164(a)(3).

(iv) Items described in section 72(b)(3).

(v) Items described in section 691(c).

(vi) Items described in section 212(3).

(vii) Amortizable bond premium.

(viii) Fiduciary expenses.

(4) Loss deductions.

(i) General rule.

(ii) Examples.

(5) Ordinary loss deductions for certain debt instruments.

(6) Other deductions.

(7) Application of limitations under sections 67 and 68.

(i) Deductions subject to section 67.

(ii) Deductions subject to section 68.

(iii) Itemized deductions.

(iv) Example.

(g) Special rules.

(1) Deductions allocable to both net investment income and excluded income.

(2) Recoveries of properly allocable deductions.

(i) General rule.

(ii) Recoveries of items allocated between net investment income and excluded income.

(iii) Recoveries with no prior year benefit.

(iv) Examples.

(3) Deductions described in section 691(b).

(4) Amounts described in section 642(h).

(5) Treatment of self-charged interest income.

(6) Treatment of certain nonpassive rental activities.

(i) Gross income from rents.

(ii) Gain or loss from the disposition of property.

(7) Treatment of certain real estate professionals.

(i) Safe harbor.

(ii) Definitions.

(A) Participation.

(B) Rental real estate activity.

(iii) Effect of safe harbor.

(8) Treatment of former passive activities.

(i) Section 469(f)(1)(A) losses.

(ii) Section 469(f)(1)(C) losses.

(iii) Examples.

(9) Treatment of section 469(g)(1) losses.

(10) Treatment of section 707(c) guaranteed payments. [Reserved]

(11) Treatment of section 736 payments. [Reserved]

(12) Income and deductions from certain notional principal contracts. [Reserved]

(13) Treatment of income or loss from REMIC residual interests. [Reserved]

(h) Net operating loss.

(1) In general.

(2) Applicable portion of a net operating loss.

(3) Section 1411 NOL amount of a net operating loss carried to and deducted in a taxable year.

(4) Total section 1411 NOL amount of a net operating loss deduction.

(5) Examples.

(i) Effective/applicability date.

§ 1.1411-5 Trades and Businesses to Which Tax Applies

(a) In general.

(b) Passive activity.

(1) In general.

(2) Application of income recharacterization rules.

(i) Income and gain recharacterization.

(ii) Gain recharacterization.

(iii) Exception for certain portfolio recharacterizations.

(3) Examples.

(c) Trading in financial instruments or commodities.

(1) Definition of financial instruments.

(2) Definition of commodities.

(d) Effective/applicability date.

§ 1.1411-6 Income on Investment of Working Capital Subject to Tax

(a) General rule.

(b) Example.

(c) Effective/applicability date.

§ 1.1411-7 Exception for Dispositions of Certain Active Interests in Partnerships and S Corporations [Reserved]

§ 1.1411-8 Exception for Distributions From Qualified Plans

(a) General rule.

(b) Rules relating to distributions.

(1) Actual distributions.

(2) Amounts treated as distributed.

(3) Amounts includible in gross income.

(4) Amounts related to employer securities.

(i) Dividends related to employer securities.

(ii) Amounts related to the net unrealized appreciation in employer securities.

(c) Effective/applicability date.

§ 1.1411-9 Exception for Self-Employment Income

(a) General rule.

(b) Special rule for traders.

(c) Examples.

(d) Effective/applicability date.

§ 1.1411-10 Controlled Foreign Corporations and Passive Foreign Investment Companies

(a) In general.

(b) Amounts derived from a trade or business described in § 1.1411-5.

(1) In general.

(2) Coordination rule for changes in trade or business status.

(c) Calculation of net investment income.

(1) Dividends.

(i) Distributions of previously taxed earnings and profits.

(A) Rules when an election under paragraph (g) of this section is not in effect with respect to the shareholder.

(*1*) General rule.

(*2*) Exception for distributions attributable to earnings and profits previously taken into account for purposes of section 1411.

(B) Rule when an election under paragraph (g) of this section is in effect with respect to the shareholder.

(C) Special rule for certain distributions related to 2013 taxable years.

(*1*) Scope.

(*2*) Rule.

(*3*) Ordering rule.

(ii) Excess distributions that constitute dividends.

(2) Net gain.

(i) Gains treated as excess distributions.

(ii) Inclusions and deductions with respect to section 1296 mark to market elections.

(iii) Gain or loss attributable to the disposition of stock of CFCs and QEFs.

(iv) Gain or loss attributable to the disposition of interests in domestic partnerships or S corporations that own directly or indirectly stock of CFCs or QEFs.

(3) Application of section 1248.

(4) Amounts distributed by an estate or trust.

(5) Properly allocable deductions.

(i) General rule.

(ii) Additional rules.

(d) Conforming basis adjustments.

(1) Basis adjustments under sections 961 and 1293.

(i) Stock held by individuals, estates, or trusts.

(ii) Stock held by domestic partnerships or S corporations.

(A) Rule when an election under paragraph (g) of this section is not in effect.

(B) Rules when an election under paragraph (g) of this section is in effect.

(2) Special rules for partners that own interests in domestic partnerships that own directly or indirectly stock of CFCs or QEFs.

(3) Special rules for S corporation shareholders that own interests in S corporations that own directly or indirectly stock of CFCs or QEFs.

(4) Special rules for participants in common trust funds.

(e) Conforming adjustments to modified adjusted gross income and adjusted gross income.

(1) Individuals.

(2) Estates and trusts.

(f) Application to estates and trusts.

(g) Election with respect to CFCs and QEFs.

(1) Effect of election.

(2) Years to which election applies.

(i) In general.

(ii) Termination of interest in CFC or QEF.

(iii) Termination of partnership.

(3) Who may make the election.

(4) Time and manner for making the election.

(i) Individuals, estates, and trusts.

(A) General rule.

(B) Special rule for charitable remainder trusts (CRTs).

(ii) Certain domestic passthrough entities.

(iii) Taxable years that begin before January 1, 2014.

(A) Individuals, estates, or trusts.

(B) Certain domestic passthrough entities.

(iv) Time for making election.

(h) Examples.

(i) Effective/applicability date.

[T.D. 9644, 78 FR 72422, Dec. 2, 2013, as amended at 79 FR 18160, Apr. 1, 2014]

§ 1.1411-1 General rules.

(a) ***General rule.*** Except as otherwise provided, all Internal Revenue Code (Code) provisions that apply for chapter 1 purposes in determining taxable income (as defined in section 63(a)) of a taxpayer also apply in determining the tax imposed by section 1411.

(b) ***Adjusted gross income.*** All references to an individual's adjusted gross income are treated as references to adjusted gross income as defined in section 62, and all references to an estate's or trust's adjusted gross income are treated as references to adjusted gross income as defined in section 67(e). However, there may be additional adjustments to adjusted gross income because of investments in controlled foreign corporations (CFCs) or passive foreign investment companies (PFICs). See § 1.1411-10(e).

(c) ***Effect of section 1411 and the regulations thereunder for other purposes.*** The inclusion or exclusion of items of income, gain, loss, or deduction in determining net investment income for purposes of section 1411, and the assignment of items of income, gain, loss, or deduction to a particular category of net investment income under section 1411(c)(1)(A), does not affect the treatment of any item of income, gain, loss, or deduction under any provision of the Code other than section 1411.

(d) ***Definitions.*** The following definitions apply for purposes of calculating net investment income under section 1411 and the regulations thereunder—

(1) The term *gross income from annuities* under section 1411(c)(1)(A) includes the amount received as an annuity under an annuity, endowment, or life insurance contract that is includible in gross income as a result of the application of section 72(a) and section 72(b), and an amount not received as an annuity under an annuity contract that is includible in gross income under section 72(e). In the case

of a sale of an annuity, to the extent the sales price of the annuity does not exceed its surrender value, the gain recognized would be treated as gross income from an annuity within the meaning of section 1411(c)(1)(A)(i) and § 1.1411-4(a)(1)(i). However, if the sales price of the annuity exceeds its surrender value, the seller would treat the gain equal to the difference between the basis in the annuity and the surrender value as gross income from an annuity described in section 1411(c)(1)(A)(i) and § 1.1411-4(a)(1)(i) and the excess of the sales price over the surrender value as gain from the disposition of property included in section 1411(c)(1)(A)(iii) and § 1.1411-4(a)(1)(iii). The term *gross income from annuities* does not include amounts paid in consideration for services rendered. For example, distributions from a foreign retirement plan that are paid in the form of an annuity and include investment income that was earned by the retirement plan does not constitute income from an annuity within the meaning of section 1411(c)(1)(A)(i).

(2) The term *controlled foreign corporation (CFC)* is as defined in section 953(c)(1)(B) or 957(a).

(3) The term *gross income from dividends* includes any item treated as a dividend for purposes of chapter 1. See also § 1.1411-10 for additional amounts that constitute gross income from dividends. The term *gross income from dividends* includes, but is not limited to, amounts treated as dividends—

(i) Pursuant to subchapter C that are included in gross income (including constructive dividends);

(ii) Pursuant to section 1248(a), other than as provided in § 1.1411-10;

(iii) Pursuant to § 1.367(b)-2(e)(2);

(iv) Pursuant to section 1368(c)(2); and

(v) Substitute dividends that represent payments made to the transferor of a security in a securities lending transaction or a sale-repurchase transaction.

(4) The term *excluded income* means:

(i) Items of income excluded from gross income in chapter 1. For example, interest on state and local bonds excluded from gross income under section 103 and gain from the sale of a principal residence excluded from gross income under section 121.

(ii) Items of income not included in net investment income, as determined under §§ 1.1411-4 and 1.1411-10. For example, wages, unemployment compensation, Alaska Permanent Fund Dividends, alimony, and Social Security Benefits.

(iii) Items of gross income and net gain specifically excluded by section 1411, the regulations thereunder, or other guidance published in the Internal Revenue Bulletin. For example, gains from the disposition of property used in a trade of business not described in section 1411(c)(2) under § 1.1411-4(d)(4)(i), distributions from certain Qualified Plans described in section 1411(c)(5) and § 1.1411-8, income taken into account in determining self-employment income that is subject to tax under section 1401(b) described in section 1411(c)(6) and § 1.1411-9, and section 951(a) inclusions from a CFC for which a § 1.1411-10(g) election is not in effect.

(5) The term *individual* means any natural person.

(6) The term *gross income from interest* includes any item treated as interest income for purposes of chapter 1 and substitute interest that represents payments made to the transferor of a security in a securities lending transaction or a sale-repurchase transaction.

(7) The term *married* and *married taxpayer* has the same meaning as in section 7703.

(8) The term *net investment income (NII)* means net investment income as defined in section 1411(c) and § 1.1411-4, as adjusted pursuant to the rules described in § 1.1411-10(c).

(9) The term *passive foreign investment company (PFIC)* is as defined in section 1297(a).

(10) The term *gross income from rents* includes amounts paid or to be paid principally for the use of (or the right to use) tangible property.

(11) The term *gross income from royalties* includes amounts received from mineral, oil, and gas royalties, and amounts received for the privilege of using patents, copyrights, secret processes and formulas, goodwill, trademarks, tradebrands, franchises, and other like property.

(12) The term *trade or business* refers to a trade or business within the meaning of section 162.

(13) The term *United States person* is as defined in section 7701(a)(30).

(14) The term *United States shareholder* is as defined in section 951(b).

(e) ***Disallowance of certain credits against the section 1411 tax.*** Amounts that may be credited against only the tax imposed by chapter 1 of the Code may not be credited against the section 1411 tax imposed by chapter 2A of the Code unless specifically provided in the Code. For example, the foreign income, war profits, and excess profits taxes that are allowed as a foreign tax credit by section 27(a), section 642(a), and section 901, respectively, are not allowed as a credit against the section 1411 tax.

(f) ***Application to taxable years beginning before January 1, 2014*** —

(1) ***Retroactive application of regulations.*** Taxpayers that are subject to section 1411, and any other taxpayer to which these regulations may apply (such as partnerships and S corporations), may apply §§ 1.1411-1 through 1.1411-10 (including the ability to make any election(s) contained therein) in any taxable year that begins after December 31, 2012, but before January 1, 2014, for which the period of limitation under section 6501 has not expired.

(2) ***Reliance and transitional rules.*** For taxable years beginning before January 1, 2014, the Internal Revenue Service will not challenge a taxpayer's computation of tax under section 1411 if the taxpayer has made a reasonable, good faith effort to comply with the requirements of section 1411. For example, a taxpayer's compliance with the provisions of the proposed and final regulations under section 1411 (REG-130507-11 or REG-130843-13), generally, will be considered a reasonable, good faith effort to comply with the requirements of section 1411 if reliance on such regulation projects under section 1411 are applied in their entirety, and the taxpayer makes reasonable adjustments to ensure that their section 1411 tax liability in the taxable years beginning after December 31, 2013, is not inappropriately distorted by the positions taken in taxable years beginning after December 31, 2012, but before January 1, 2014. A similar rule applies to any other taxpayer to which these regulations may apply (such as partnerships and S corporations).

(g) ***Effective/applicability date.*** This section applies to taxable years beginning after December 31, 2013. However, taxpayers may apply this section to taxable years beginning after December 31, 2012, in accordance with paragraph (f) of this section.

[T.D. 9644, 78 FR 72424, Dec. 2, 2013]

§ 1.1411-2 Application to individuals.

(a) ***Individual to whom tax applies*** —

(1) ***In general.*** Section 1411 applies to an individual who is a citizen or resident of the United States (within the meaning of section 7701(a)(30)(A)). Section 1411 does not apply to nonresident alien individuals (within the meaning of section 7701(b)(1)(B)). See paragraph (a)(2)(vi) of this section for special rules regarding bona fide residents of United States territories.

(2) ***Special rules —***

(i) ***Dual resident individuals treated as residents of a foreign country under an income tax treaty.*** A dual resident taxpayer (as defined in § 301.7701(b)-7(a)(1)) who determines that he or she is a resident of a foreign country for treaty purposes pursuant to an income tax treaty between the United States and the foreign country and who claims benefits of the treaty as a nonresident of the United States will be treated as a nonresident alien of the United States for purposes of paragraph (a)(1) of this section.

(ii) ***Dual-status resident aliens.*** A dual-status individual who is a resident of the United States for a portion of a taxable year and a nonresident alien for the other portion of the taxable year will not be subject to section 1411 with respect to the portion of the year for which that individual is treated as a nonresident alien. The only income the individual must take into account for purposes of section 1411 is the income he or she receives during the portion of the year for which he or she is treated as a resident of the United States. The threshold amount under paragraph (d)(1) of this section applies.

(iii) ***Joint returns in the case of a nonresident alien individual married to a United States citizen or resident —***

(A) ***Default treatment.*** In the case of a United States citizen or resident who is married to a nonresident alien individual, the spouses will be treated as married filing separately for purposes of section 1411. For purposes of calculating the tax imposed under section 1411(a)(1), the United States citizen or resident spouse will be subject to the threshold amount for a married taxpayer filing a separate return in paragraph (d)(1)(ii) of this section, and the nonresident alien spouse will not be subject to tax under section 1411. In accordance with the rules for married individuals filing separate returns, the spouse that is a United States citizen or resident must determine his or her own net investment income and modified adjusted gross income.

(B) ***Taxpayer election.*** Married taxpayers who file a joint Federal income tax return pursuant to a section 6013(g) election for purposes of chapter 1 and chapter 24 also may elect to be treated as making a section 6013(g) election for purposes of chapter 2A (relating to the tax imposed by section 1411).

(*1*) ***Effect of election.*** For purposes of calculating the tax imposed under section 1411(a)(1), the effect of an election under section 6013(g) is to include the combined income of the United States citizen or resident spouse and the nonresident spouse in the section 1411(a)(1) calculation and to apply the threshold amount for a taxpayer making a joint return as set out in paragraph (d)(1)(i) of this section.

(*2*) ***Procedural requirements for making election.*** Taxpayers with a section 6013(g) election in effect for chapter 1 and chapter 24 purposes for any taxable year beginning after December 31, 2012, or taxpayers making a section 6013(g) election for chapter 1 and chapter 24 purposes in any taxable year beginning after December 31, 2012, who want to apply their section 6013(g) election for purposes of chapter 2A must make the election for the first taxable year beginning after December 31,

2013, in which the United States taxpayer is subject to tax under section 1411. The determination of whether the United States taxpayer is subject to tax under section 1411 is made without regard to the effect of the section 6013(g) election described in paragraph (a)(2)(iii)(B) of this section. The election, if made, must be made in the manner prescribed by forms, instructions, or in other guidance on an original or amended return for the taxable year for which the election is made. An election can be made on an amended return only if the taxable year for which the election is made, and all taxable years that are affected by the election, are not closed by the period of limitations on assessments under section 6501. Further, once made, the duration and termination of the section 6013(g) election for chapter 2A is governed by the rules of section 6013(g)(2) through (g)(6) and the regulations thereunder.

(*3*) ***Ineffective elections.*** In the event a taxpayer makes an election described in paragraph (a)(2)(iii)(B) of this section and subsequently determines that such taxpayer does not meet the criteria for making such election in such tax year described in paragraph (a)(2)(iii)(B)(*2*) of this section, then such original election will have no effect for that year and all future years. In such a case, the taxpayer should make appropriate adjustments to properly reflect the ineffective election. However, notwithstanding the previous sentence, if a taxpayer meets the criteria for the same election in a subsequent year, such taxpayer is deemed to treat such original election as being made in that subsequent year unless the taxpayer files (or amends) the return for such subsequent year to report the taxpayer's net investment income tax without the original election. Furthermore, this paragraph (a)(2)(iii)(B)(*3*) shall not apply if a taxpayer does not meet the criteria described in paragraph (a)(2)(iii)(B)(*2*) of this section for making such election in such tax year solely as a result of the carryback of a net operating loss pursuant to section 172.

(iv) ***Joint returns for a year in which nonresident alien married to a United States citizen or resident becomes a United States resident*** —

(A) ***Default treatment.*** In the case of a United States citizen or resident who is married to an individual who is a nonresident alien individual at the beginning of any taxable year, but is a United States resident at the close of such taxable year, each spouse will be treated as married filing separately for the entire year for purposes of section 1411. For purposes of calculating the tax imposed under section 1411(a)(1), each spouse will be subject to the threshold amount for a married taxpayer filing a separate return in paragraph (d)(1)(ii) of this section. The spouse who becomes a United States resident during the tax year will be subject to section 1411 only with respect to income received for the portion of the year for which he or she is treated as a United States resident. Each spouse must determine his or her own net investment income and modified adjusted gross income.

(B) ***Taxpayer election.*** Married taxpayers who file a joint Federal income tax return pursuant to a section 6013(h) election for purposes of chapter 1 and chapter 24 also may elect to be treated as making a section 6013(h) election for purposes of chapter 2A for such tax year.

(*1*) ***Effect of election.*** For purposes of calculating the tax imposed under section 1411(a)(1), the effect of an election under section 6013(h) is to include the combined income of the United States citizen or resident spouse and the dual-status resident spouse in the section 1411(a)(1) calculation and to apply the threshold amount for a taxpayer making a joint return as set out in paragraph (d)(1)(i) of this section.

(2) ***Procedural requirements for making election.*** Taxpayers who make a section 6013(h) election for purposes of chapter 1 and chapter 24 for any taxable year beginning after December 31, 2012, may elect to have their section 6013(h) election apply for purposes of chapter 2A. The election, if made, must be made in the manner prescribed by forms, instructions, or in other guidance on an original or amended return for the taxable year for which the election is made. An election can be made on an amended return only if the taxable year for which the election is made, and all taxable years that are affected by the election, are not closed by the period of limitations on assessments under section 6501. Further, in all cases, once made, the section 6013(h) election is governed by the rules of section 6013(h)(2) and the regulations thereunder.

(iv) ***Grantor trusts.*** For rules regarding the treatment of owners of grantor trusts, see § 1.1411-3(b)(1)(v).

(v) ***Bankruptcy estates.*** A bankruptcy estate administered under chapter 7 (relating to liquidations) or chapter 11 (relating to reorganizations) of the Bankruptcy Code (Title 11 of the United States Code) of a debtor who is an individual is treated as a married taxpayer filing a separate return for purposes of section 1411. See § 1.1411-2(d)(1)(ii).

(vi) ***Bona fide residents of United States territories*** —

(A) ***Applicability.*** An individual who is a bona fide resident of a United States territory is subject to the tax imposed by section 1411(a)(1) only if the individual is required to file an income tax return with the United States upon application of section 931, 932, 933, or 935 and the regulations thereunder. With respect to an individual described in this paragraph (a)(2)(vi)(A), the amount excluded from gross income under section 931 or 933 and any deduction properly allocable or chargeable against amounts excluded from gross income under section 931 or 933, respectively, is not taken into account in computing modified adjusted gross income under paragraph (c) of this section or net investment income (within the meaning of § 1.1411-1(d)).

(B) ***Coordination with exception for nonresident aliens.*** An individual who is both a bona fide resident of a United States territory and a nonresident alien individual with respect to the United States is not subject to taxation under section 1411(a)(1).

(C) ***Definitions.*** For purposes of this section—

(1) ***Bona fide resident.*** The term *bona fide resident* has the meaning provided under section 937(a).

(2) ***United States territory.*** The term *United States territory* means American Samoa, Guam, the Northern Mariana Islands, Puerto Rico, or the United States Virgin Islands.

(b) ***Calculation of tax*** —

(1) ***In general.*** In the case of an individual described in paragraph (a)(1) of this section, the tax imposed by section 1411(a)(1) for each taxable year is equal to 3.8 percent of the lesser of—

(i) Net investment income for such taxable year; or

(ii) The excess (if any) of—

(A) The modified adjusted gross income (as defined in paragraph (c) of this section) for such taxable year; over

(B) The threshold amount (as defined in paragraph (d) of this section).

(2) ***Example.*** During Year 1 (a year in which section 1411 is in effect), A, an unmarried United States citizen, has modified adjusted gross income (as defined in paragraph (c) of this section) of $190,000, which includes $50,000 of net investment income. A has a zero tax imposed under section 1411 because the threshold amount for a single individual is $200,000 (as provided in paragraph (d)(1)(iii) of this section). If during Year 2, A has modified adjusted gross income of $220,000, which includes $50,000 of net investment income, then the individual has a section 1411 tax of $760 (3.8% multiplied by $20,000, the lesser of $50,000 net investment income or $20,000 excess of modified adjusted gross income over the threshold amount).

(c) ***Modified adjusted gross income*** —

(1) ***General rule.*** For purposes of section 1411, the term *modified adjusted gross income* means adjusted gross income increased by the excess of—

(i) The amount excluded from gross income under section 911(a)(1); over

(ii) The amount of any deductions (taken into account in computing adjusted gross income) or exclusions disallowed under section 911(d)(6) with respect to the amounts described in paragraph (c)(1)(i) of this section.

(2) ***Rules with respect to CFCs and PFICs.*** Additional rules in § 1.1411-10(e)(1) apply to an individual that is a United States shareholder of a controlled foreign corporation (CFC) or that is a United States person that directly or indirectly owns an interest in a passive foreign investment company (PFIC).

(d) ***Threshold amount*** —

(1) ***In general.*** The term *threshold amount* means—

(i) In the case of a taxpayer making a joint return under section 6013 or a surviving spouse (as defined in section 2(a)), $250,000;

(ii) In the case of a married taxpayer filing a separate return, $125,000; and

(iii) In the case of any other individual, $200,000.

(2) ***Taxable year of less than twelve months*** —

(i) ***General rule.*** In the case of an individual who has a taxable year consisting of less than twelve months (short taxable year), the threshold amount under paragraph (d)(1) of this section is not reduced or prorated. For example, in the case of an unmarried decedent who dies on June 1, the threshold amount is $200,000 for the decedent's short taxable year that begins on January 1 and ends on June 1.

(ii) ***Change of annual accounting period.*** Notwithstanding paragraph (d)(2)(i) of this section, an individual who has a short taxable year resulting from a change of annual accounting period reduces the threshold amount to an amount that bears the same ratio to the full threshold amount provided under paragraph (d)(1) of this section as the number of months in the short taxable year bears to twelve.

(e) ***Effective/applicability date.*** This section applies to taxable years beginning after December 31, 2013. However, taxpayers may apply this section to taxable years beginning after December 31, 2012, in accordance with § 1.1411-1(f).

[T.D. 9644, 78 FR 72424, Dec. 2, 2013, as amended at 79 FR 18160, Apr. 1, 2014]

§ 1.1411-3 Application to estates and trusts.

(a) ***Estates and trusts to which tax applies*** —

(1) ***In general*** —

(i) ***General application.*** Section 1411 and the regulations thereunder apply to all estates and trusts that are subject to the provisions of part I of subchapter J of chapter 1 of subtitle A of the Internal Revenue Code, unless specifically exempted under paragraph (b) of this section.

(ii) ***Calculation of tax.*** The tax imposed by section 1411(a)(2) for each taxable year is equal to 3.8 percent of the lesser of—

(A) The estate's or trust's undistributed net investment income for such taxable year; or

(B) The excess (if any) of—

(*1*) The estate's or trust's adjusted gross income (as defined in section 67(e) and as adjusted under § 1.1411-10(e)(2), if applicable) for such taxable year; over

(2) The dollar amount at which the highest tax bracket in section 1(e) begins for such taxable year.

(2) ***Taxable year of less than twelve months*** —

(i) ***General rule.*** In the case of an estate or trust that has a taxable year consisting of less than twelve months (short taxable year), the dollar amount described in paragraph (a)(1)(ii)(B)(*2*) of this section is not reduced or prorated.

(ii) ***Change of annual accounting period.*** Notwithstanding paragraph (a)(2)(i) of this section, an estate or trust that has a short taxable year resulting from a change of annual accounting period (but not from an individual's death) reduces the dollar amount described in paragraph (a)(1)(ii)(B)(*2*) of this section to an amount that bears the same ratio to that dollar amount as the number of months in the short taxable year bears to twelve.

(3) ***Rules with respect to CFCs and PFICs.*** Additional rules in § 1.1411-10 apply to an estate or trust that holds an interest in a controlled foreign corporation (CFC) or a passive foreign investment company (PFIC).

(b) ***Application to certain trusts and estates*** —

(1) ***Exception for certain trusts and estates.*** The following trusts are not subject to the tax imposed by section 1411:

(i) A trust or decedent's estate all of the unexpired interests in which are devoted to one or more of the purposes described in section 170(c)(2)(B).

(ii) A trust exempt from tax under section 501.

(iii) A charitable remainder trust described in section 664. However, see paragraph (d) of this section for special rules regarding the treatment of annuity or unitrust distributions from such a trust to persons subject to tax under section 1411.

(iv) Any other trust, fund, or account that is statutorily exempt from taxes imposed in subtitle A. For example, see sections 220(e)(1), 223(e)(1), 529(a), and 530(a).

(v) A trust, or a portion thereof, that is treated as a grantor trust under subpart E of part I of subchapter J of chapter 1. However, in the case of any such trust or portion thereof, each item of income or deduction that is included in computing taxable income of a grantor or another person under section 671 is treated as if it had been received by, or paid directly to, the grantor or other person for purposes of calculating such person's net investment income.

(vi) Electing Alaska Native Settlement Trusts subject to taxation under section 646.

(vii) Cemetery Perpetual Care Funds to which section 642(i) applies.

(viii) Foreign trusts (as defined in section 7701(a)(31)(B) and § 301.7701-7(a)(2)) (but see §§ 1.1411-3(e)(3)(ii) and 1.1411-4(e)(1)(ii) for rules related to distributions from foreign trusts to United States beneficiaries).

(ix) Foreign estates (as defined in section 7701(a)(31)(A)) (but see § 1.1411-3(e)(3)(ii) for rules related to distributions from foreign estates to United States beneficiaries).

(2) ***Special rules for certain taxable trusts and estates*** —

(i) ***Qualified funeral trusts.*** For purposes of the calculation of any tax imposed by section 1411, section 1411 and the regulations thereunder are applied to each qualified funeral trust (within the meaning of section 685) by treating each beneficiary's interest in each such trust as a separate trust.

(ii) ***Bankruptcy estates.*** A bankruptcy estate in which the debtor is an individual is treated as a married taxpayer filing a separate return for purposes of section 1411. See § 1.1411-2(a)(2)(v) and (d)(1)(ii).

(c) ***Application to electing small business trusts (ESBTs)*** —

(1) ***General application.*** The S portion and non-S portion (as defined in § 1.641(c)-1(b)(2) and (3), respectively) of a trust that has made an ESBT election under section 1361(e)(3) and § 1.1361-1(m)(2) are treated as separate trusts for purposes of the computation of undistributed net investment income in the manner described in paragraph (e) of this section, but are treated as a single trust for purposes of determining the amount subject to tax under section 1411. If a grantor or another person is treated as the owner of a portion of the ESBT, the items of income and deduction attributable to the grantor portion (as defined in § 1.641(c)-1(b)(1)) are included in the grantor's calculation of net investment income and are not included in the ESBT's computation of tax described in paragraph (c)(1)(ii) of this section.

(2) ***Computation of tax.*** This paragraph (c)(2) provides the method for an ESBT to compute the tax under section 1411.

(i) ***Step one.*** The S portion and non-S portion computes each portion's undistributed net investment income as separate trusts in the manner described in paragraph (e) of this section and then combine these amounts to calculate the ESBT's undistributed net investment income.

(ii) ***Step two.*** The ESBT calculates its adjusted gross income (as defined in paragraph (a)(1)(ii)(B)(*1*) of this section). The ESBT's adjusted gross income is the adjusted gross income of the non-S portion, increased or decreased by the net income or net loss of the S portion, after taking into account all deductions, carryovers, and loss limitations applicable to the S portion, as a single item of ordinary income (or ordinary loss).

(iii) ***Step three.*** The ESBT pays tax on the lesser of—

(A) The ESBT's total undistributed net investment income; or

(B) The excess of the ESBT's adjusted gross income (as calculated in paragraph (c)(2)(ii) of this section) over the dollar amount at which the highest tax bracket in section 1(e) begins for the taxable year.

(3) ***Example.***

(i) In Year 1 (a year that section 1411 is in effect), the non-S portion of Trust, an ESBT, has dividend income of $15,000, interest income of $10,000, and capital loss of $5,000. Trust's S portion has net rental income of $21,000 and a capital gain of $7,000. The Trustee's annual fee of $1,000 is allocated 60% to the non-S portion and 40% to the S portion. Trust makes a distribution from income to a single beneficiary of $9,000.

(ii) ***Step one.***

(A) Trust must compute the undistributed net investment income for the S portion and non-S portion in the manner described in paragraph (c) of this section.

The undistributed net investment income for the S portion is $27,600 and is determined as follows:

Net Rental Income	$21,000
Capital Gain	7,000
Trustee Annual Fee	(400)
Total S portion undistributed net investment income	27,600

(B) The undistributed net investment income for the non-S portion is $12,400 and is determined as follows:

Dividend Income	$15,000
Interest Income	10,000
Deductible Capital Loss	(3,000)
Trustee Annual Fee	(600)
Distributable net income distribution	(9,000)

Total non-S portion undistributed net investment income	12,400

(C) Trust combines the undistributed net investment income of the S portion and non-S portion from (ii)(A) and (B) to arrive at Trust's combined undistributed net investment income.

S portion's undistributed net investment income	$27,600
Non-S portion's undistributed net investment income	12,400
Combined undistributed net investment income	40,000

(iii) ***Step two.***

(A) The ESBT calculates its adjusted gross income. Pursuant to paragraph (c)(2)(ii) of this section, the ESBT's adjusted gross income is the non-S portion's adjusted gross income increased or decreased by the net income or net loss of the S portion.

(B) The adjusted gross income for the ESBT is $40,000 and is determined as follows:

Dividend Income	$15,000
Interest Income	10,000
Deductible Capital Loss	(3,000)
Trustee Annual Fee	(600)
Distributable net income distribution	(9,000)
S Portion Income	27,600
Adjusted gross income	40,000

(C) The S portion's single item of ordinary income used in the ESBT's adjusted gross income calculation is $27,600. This item of income is determined by starting with net rental income of $21,000 and capital gain of $7,000 and reducing it by the S portion's $400 share of the annual trustee fee.

(iv) ***Step three.*** Trust pays tax on the lesser of—

(A) The combined undistributed net investment income ($40,000); or

(B) The excess of adjusted gross income ($40,000) over the dollar amount at which the highest tax bracket in section 1(e) applicable to a trust begins for the taxable year.

(d) ***Application to charitable remainder trusts (CRTs)*** —

(1) *Operational rules* —

(i) ***Treatment of annuity or unitrust distributions.*** If one or more items of net investment income comprise all or part of an annuity or unitrust distribution from a CRT, such items retain their character as net investment income in the hands of the recipient of that annuity or unitrust distribution.

(ii) ***Apportionment among multiple beneficiaries.*** In the case of a CRT with more than one annuity or unitrust beneficiary, the net investment income is apportioned among such beneficiaries based on their respective shares of the total annuity or unitrust amount paid by the CRT for that taxable year.

(iii) ***Accumulated net investment income.*** The accumulated net investment income of a CRT is the total amount of net investment income received by a CRT for all taxable years that begin after December 31, 2012, less the total amount of net investment income distributed for all prior taxable years of the trust that begin after December 31, 2012.

(2) *Application of Section 664* —

(i) ***General rule.*** The Federal income tax rate of the item of net investment income, to be used to determine the proper classification of that item within the appropriate income category as described in § 1.664-1(d)(1)(i)(b), is the sum of the income tax rate applicable to that item under chapter 1 and the tax rate under section 1411. Thus, the accumulated net investment income and excluded income (as defined in § 1.1411-1(d)(4)) of a CRT in the same income category constitute separate classes of income within that category as described in § 1.664-1(d)(1)(i)(b).

(ii) ***Special rules for CRTs with income from CFCs or PFICs.*** [Reserved]

(iii) ***Examples.*** The following examples illustrate the provisions of this paragraph (d)(2).

Example 1. (i) In 2009, A formed CRT as a charitable remainder annuity trust. The trust document requires an annual annuity payment of $50,000 to A for 15 years. For purposes of this example, assume that CRT is a valid charitable remainder trust under section 664 and has not received any unrelated business taxable income during any taxable year.
(ii) As of January 1, 2013, CRT has the following items of undistributed income within its § 1.664-1(d)(1) categories and classes:

Category	Class	Tax rate (percent)	Amount
Ordinary Income	Interest	39.6	$4,000
	Net Rental Income	39.6	8,000
	Non-Qualified Dividend Income	39.6	2,000
	Qualified Dividend	20.0	10,000

Category	Class	Tax rate (percent)	Amount
	Income		
Capital Gain	Short-Term	39.6	39,000
	Unrecaptured Section 1250 Gain	25.0	1,000
	Long-Term	20.0	560,000
Other Income			None
Total undistributed income as of January 1, 2013			624,000

Pursuant to § 1.1411-3(d)(1)(iii), none of the $624,000 of undistributed income is accumulated net investment income (ANII) because none of it was received by CRT after December 31, 2012. Thus, the entire $624,000 of undistributed income is excluded income (as defined in § 1.1411-1(d)(4)).

(iii) During 2013, CRT receives $7,000 of interest income, $9,000 of qualified dividend income, $4,000 of short-term capital gain, and $11,000 of long-term capital gain. Prior to the 2013 distribution of $50,000 to A, CRT has the following items of undistributed income within its § 1.664-1(d)(1) categories and classes after the application of paragraph (d)(2) of this section:

Category	Class	Excluded/ ANII	Tax rate (percent)	Amount
Ordinary Income	Interest	NII	43.4	$7,000
	Interest	Excluded	39.6	4,000
	Net Rental Income	Excluded	39.6	8,000
	Non-Qualified Dividend Income	Excluded	39.6	2,000
	Qualified Dividend Income	NII	23.8	9,000
	Qualified Dividend Income	Excluded	20.0	10,000
Capital Gain	Short-Term	NII	43.4	4,000
	Short-Term	Excluded	39.6	39,000
	Unrecaptured Section 1250 Gain	Excluded	25.0	1,000
	Long-Term	NII	23.8	11,000
	Long-Term	Excluded	20.0	560,000

Category	Class	Excluded/ ANII	Tax rate (percent)	Amount
Other Income				None

(iv) The $50,000 distribution to A for 2013 will include the following amounts:

Category	Class	Excluded/ ANII	Tax rate (percent)	Amount
Ordinary Income	Interest	NII	43.4	$7,000
	Interest	Excluded	39.6	4,000
	Net Rental Income	Excluded	39.6	8,000
	Non-Qualified Dividend Income	Excluded	39.6	2,000
	Qualified Dividend Income	NII	23.8	9,000
	Qualified Dividend Income	Excluded	20.0	10,000
Capital Gain	Short-Term	NII	43.4	4,000
	Short-Term	Excluded	39.6	6,000
	Unrecaptured Section 1250 Gain	Excluded	25.0	None
	Long-Term	NII	23.8	None
	Long-Term	Excluded	20.0	None

The amount included in A's 2013 net investment income is $20,000. This amount is comprised of $7,000 of interest income, $9,000 of qualified dividend income, and $4,000 of short-term capital gain.

(v) As a result, as of January 1, 2014, CRT has the following items of undistributed income within its § 1.664-1(d)(1) categories and classes:

Category	Class	Excluded/ ANII	Tax rate (percent)	Amount
Ordinary Income	Interest			None
	Net Rental Income			None
	Non-Qualified Dividend			None

Category	Class	Excluded/ ANII	Tax rate (percent)	Amount
	Income			
	Qualified Dividend Income			None
Capital Gain	Short-Term	Excluded	39.6	$33,000
	Unrecaptured Section 1250 Gain	Excluded	25.0	1,000
	Long-Term	ANII	23.8	11,000
	Long-Term	Excluded	20.0	560,000
Other Income				None

Example 2. [Reserved]

(3) ***Elective simplified method.*** [Reserved]

(e) ***Calculation of undistributed net investment income*** —

(1) ***In general.*** This paragraph (e) provides special rules for the computation of certain deductions and for the allocation of net investment income between an estate or trust and its beneficiaries. Generally, an estate's or trust's net investment income is calculated in the same manner as that of an individual. See § 1.1411-10(c) for special rules regarding CFCs, PFICs, and estates and trusts holding interests in such entities.

(2) ***Undistributed net investment income.*** An estate's or trust's undistributed net investment income is the estate's or trust's net investment income reduced by distributions of net investment income to beneficiaries and by deductions under section 642(c) in the manner described in paragraphs (e)(3) and (e)(4) of this section.

(3) ***Distributions of net investment income to beneficiaries.***

(i) In computing the estate's or trust's undistributed net investment income, net investment income is reduced by distributions of net investment income made to beneficiaries. The deduction allowed under this paragraph (e)(3) is limited to the lesser of the amount deductible to the estate or trust under section 651 or section 661, as applicable, or the net investment income of the estate or trust. In the case of a deduction under section 651 or section 661 that consists of both net investment income and excluded income (as defined in § 1.1411-1(d)(4)), the distribution must be allocated between net investment income and excluded income in a manner similar to § 1.661(b)-1 as if net investment income constituted gross income and excluded income constituted amounts not includible in gross income. See § 1.661(c)-1 and *Example 1* in paragraph (e)(5) of this section.

(ii) If one or more items of net investment income comprise all or part of a distribution for which a deduction is allowed under paragraph (e)(3)(i) of this section, such items retain their character as net investment income under section 652(b) or section 662(b), as applicable, for purposes of computing net investment income of the recipient of the distribution who is subject to tax

under section 1411. The provisions of this paragraph (e)(3)(ii) also apply to distributions to United States beneficiaries of current year income described in section 652 or section 662, as applicable, from foreign estates and foreign nongrantor trusts.

(4) ***Deduction for amounts paid or permanently set aside for a charitable purpose.*** In computing the estate's or trust's undistributed net investment income, the estate or trust is allowed a deduction for amounts of net investment income that are allocated to amounts allowable under section 642(c). In the case of an estate or trust that has items of income consisting of both net investment income and excluded income, the allowable deduction under this paragraph (e)(4) must be allocated between net investment income and excluded income in accordance with § 1.642(c)-2(b) as if net investment income constituted gross income and excluded income constituted amounts not includible in gross income. For an estate or trust with deductions under both sections 642(c) and 661, see § 1.662(b)-2 and *Example 2* in paragraph (e)(5) of this section.

(5) ***Examples.*** The following examples illustrate the provisions of this paragraph (e). In each example, Year 1 is a year in which section 1411 is in effect and the taxpayer is not a foreign estate or trust:

Example 1. Calculation of undistributed net investment income (with no deduction under section 642(c)). (i) In Year 1, Trust has dividend income of $15,000, interest income of $10,000, capital gain of $5,000, and $75,000 of taxable income relating to a distribution from an individual retirement account (as defined under section 408). Trust has no expenses. Trust distributes $10,000 of its current year trust accounting income to A, a beneficiary of Trust.
(ii) Trust's distributable net income is $100,000 ($15,000 in dividends plus $10,000 in interest plus $75,000 of taxable income from an individual retirement account), from which the $10,000 distribution to A is paid. Trust's deduction under section 661 is $10,000. Under § 1.662(b)-1, the deduction reduces each class of income comprising distributable net income on a proportional basis. The $10,000 distribution equals 10% of distributable net income ($10,000 divided by $100,000). Therefore, the distribution consists of dividend income of $1,500, interest income of $1,000, and ordinary income attributable to the individual retirement account of $7,500. Because the $5,000 of capital gain allocated to principal for trust accounting purposes did not enter into distributable net income, no portion of that amount is included in the $10,000 distribution, nor does it qualify for the deduction under section 661.

(iii) Trust's net investment income is $30,000 ($15,000 in dividends plus $10,000 in interest plus $5,000 in capital gain). Trust's $75,000 of taxable income attributable to the individual retirement account is excluded income under § 1.1411-1(d)(4). Trust's undistributed net investment income under paragraph (e)(2) of this section is $27,500, which is Trust's net investment income ($30,000) less the amount of dividend income ($1,500) and interest income ($1,000) distributed to A. The $27,500 of undistributed net investment income is comprised of the capital gain allocated to principal ($5,000), the remaining undistributed dividend income ($13,500), and the remaining undistributed interest income ($9,000).

(iv) Under paragraph (e)(3) of this section and pursuant to § 1.1411-4(a)(1), A's net investment income includes dividend income of $1,500 and interest income of $1,000, but does not include the $7,500 of ordinary income attributable to the individual retirement account because it is excluded from net investment income under § 1.1411-8.

Example 2. Calculation of undistributed net investment income (with deduction under section 642(c)). (i) Same facts as *Example 1,* except Trust is required to distribute $30,000 to A. In addition, Trust has a $10,000 deduction under section 642(c) (deduction for amounts paid for a charitable purpose). Trust also makes an additional discretionary distribution of $20,000 to B, a beneficiary of Trust. As in *Example 1,* Trust's net investment income is $30,000 ($15,000 in dividends plus $10,000 in interest plus $5,000 in capital gain). In accordance with §§ 1.661(b)-2 and 1.662(b)-2, the items of income must be allocated between the mandatory distribution to A, the discretionary distribution to B, and the $10,000 distribution to a charity.
(ii) For purposes of the mandatory distribution to A, Trust's distributable net income is $100,000. See § 1.662(b)-2, *Example* 1(b). Trust's deduction under section 661 for the distribution to A is $30,000. Under § 1.662(b)-1, the deduction reduces each class of income comprising distributable net income on a proportional basis. The $30,000 distribution equals 30% of distributable net income ($30,000 divided by $100,000). Therefore, the distribution consists of dividend income of $4,500, interest income of $3,000, and ordinary income attributable to the individual retirement account of $22,500. A's mandatory distribution thus consists of $7,500 of net investment income and $22,500 of excluded income.

(iii) Trust's remaining distributable net income is $70,000. Trust's remaining undistributed net investment income is $22,500. The $10,000 deduction under section 642(c) is allocated in the same manner as the distribution to A, where the $10,000 distribution equals 10% of distributable net income ($10,000 divided by $100,000). For purposes of determining undistributed net investment income, Trust's net investment income is reduced by $2,500 under paragraph (e)(4) of this section (dividend income of $1,500, interest income of $1,000, but with no reduction for amounts attributable to the individual retirement account of $7,500).

(iv) With respect to the discretionary distribution to B, Trust's remaining distributable net income is $60,000. Trust's remaining undistributed net investment income is $20,000. Trust's deduction under section 661 for the distribution to B is $20,000. The $20,000 distribution equals 20% of distributable net income ($20,000 divided by $100,000). Therefore, the distribution consists of dividend income of $3,000, interest income of $2,000, and ordinary income attributable to the individual retirement account of $15,000. B's distribution consists of $5,000 of net investment income and $15,000 of excluded income.

(v) Trust's undistributed net investment income is $15,000 after taking into account distribution deductions and section 642(c) in accordance with paragraphs (e)(3) and (e)(4) of this section, respectively. To arrive at Trust's undistributed net investment income of $15,000, Trust's net investment income of $30,000 is reduced by $7,500 of the mandatory distribution to A, $2,500 of the section 642(c) deduction, and $5,000 of the discretionary distribution to B. The undistributed net investment income consists of the remaining dividend income of $6,000 ($15,000 less $4,500 less $1,500 less $3,000), interest income of $4,000 ($10,000 less $1,000 less $3,000 less $2,000), and the $5,000 of undistributed capital gain.

Example 3. Fiscal Year Estate. (i) D died in 2011. D's estate (Estate) filed its first return that established its fiscal year ending October 31, 2011. During Estate's fiscal year ending October 31, 2013, it earned $10,000 of interest, $1,000 of dividends, and $15,000 of short-term gains. The Estate distributed its interest and dividends to S, D's spouse and sole beneficiary, on a quarterly basis; the last quarter's payment for that taxable year was made to S on December 5, 2013. Pursuant to § 1.662(c)-1, S is deemed to have received the first three payments for that taxable year, regardless of the actual payment dates, on October 31, 2013, the last day of Estate's taxable year. Estate makes a timely section 663(b) election to treat the fourth quarter distribution to S as having been made on October 31, 2013, the last day of Estate's preceding taxable year. Accordingly, S is deemed to have received $10,000 of interest and $1,000 of dividends on October 31, 2013.
(ii) Because Estate's fiscal year ending October 31, 2013, began on November 1, 2012, the Estate is not subject to section 1411 on income received during that taxable year. Therefore, none of the income received by Estate during its fiscal year ending October 31, 2013, is net investment income. Pursuant to paragraph (e)(3)(ii) of this section, because none of the distributed interest or dividend income constituted net investment income to Estate, the $10,000 of interest and $1,000 of dividends that Estate distributed to S does not constitute net investment income to S.

(f) ***Effective/applicability date.*** This section applies to taxable years beginning after December 31, 2013, except that paragraph (d) of this section applies to taxable years of CRTs that begin after December 31, 2012. However, taxpayers other than CRTs may apply this section to taxable years beginning after December 31, 2012, in accordance with § 1.1411-1(f).

[T.D. 9644, 78 FR 72424, Dec. 2, 2013, as amended at 79 FR 18160, Apr. 1, 2014]

§ 1.1411-4 Definition of net investment income.

(a) ***In general.*** For purposes of section 1411 and the regulations thereunder, net investment income means the excess (if any) of—

(1) The sum of—

(i) Gross income from interest, dividends, annuities, royalties, and rents, except to the extent excluded by the ordinary course of a trade or business exception described in paragraph (b) of this section;

(ii) Other gross income derived from a trade or business described in § 1.1411-5; and

(iii) Net gain (to the extent taken into account in computing taxable income) attributable to the disposition of property, except to the extent excluded by the exception described in paragraph (d)(4)(i)(A) of this section for gain or loss attributable to property held in a trade or business not described in § 1.1411-5; over

(2) The deductions allowed by subtitle A that are properly allocable to such gross income or net gain (as determined in paragraph (f) of this section).

(b) ***Ordinary course of a trade or business exception.*** Gross income described in paragraph (a)(1)(i) of this section is excluded from net investment income if it is derived in the ordinary course of a trade or business not described in § 1.1411-5. See § 1.1411-6 for rules regarding working capital. To determine whether gross income described in paragraph (a)(1)(i) of this section is derived in a trade or business, the following rules apply.

(1) In the case of an individual, estate, or trust that owns or engages in a trade or business directly (or indirectly through ownership of an interest in an entity that is disregarded as an entity separate from its owner under § 301.7701-3), the determination of whether gross income described in paragraph (a)(1)(i) of this section is derived in a trade or business is made at the individual, estate, or trust level.

(2) In the case of an individual, estate, or trust that owns an interest in a passthrough entity (for example, a partnership or S corporation), and that entity is engaged in a trade or business, the determination of whether gross income described in paragraph (a)(1)(i) of this section is—

(i) Derived in a trade or business described in § 1.1411-5(a)(1) is made at the owner level; and

(ii) Derived in a trade or business described in § 1.1411-5(a)(2) is made at the entity level.

(3) The following examples illustrate the provisions of this paragraph (b). For purposes of these examples, assume that the taxpayer is a United States citizen, uses a calendar taxable year, and Year 1 and all subsequent years are taxable years in which section 1411 is in effect:

Example 1. Multiple passthrough entities. A, an individual, owns an interest in UTP, a partnership, which is engaged in a trade or business. UTP owns an interest in LTP, also a partnership, which is not engaged in a trade or business. LTP receives $10,000 in dividends, $5,000 of which is allocated to A through UTP. The $5,000 of dividends is not derived in a trade or business because LTP is not engaged in a trade or business. This is true even though UTP is engaged in a trade or business. Accordingly, the ordinary course of a trade or business exception described in paragraph (b) of this section does not apply, and A's $5,000 of dividends is net investment income under paragraph (a)(1)(i) of this section.

Example 2. Multiple passthrough entities. B, an individual, owns an interest in UTP2, a partnership, which is not engaged in a trade or business. UTP2 owns an interest in LTP2, also a partnership, which is engaged in a commercial lending trade or business. LTP2 is not engaged in a trade or business described in § 1.1411-5(a)(2). LTP2's trade or business is not a passive activity (within the meaning of section 469) with respect to B. LTP2 earns $10,000 of interest income from its trade or business which is allocated to B through UTP2. Although UTP2 is not engaged in a trade or business, the

$10,000 of interest income is derived in the ordinary course of LTP2's lending trade or business. Because LTP2 is not engaged in a trade or business described in § 1.1411-5(a)(2) and because LTP2's trade or business is not a passive activity with respect to B (as described in § 1.1411-5(a)(1)), the ordinary course of a trade or business exception described in paragraph (b) of this section applies, and B's $10,000 of interest is not included as net investment income under paragraph (a)(1)(i) of this section.

Example 3. Entity engaged in trading in financial instruments. C, an individual, owns an interest in PRS, a partnership, which is engaged in a trade or business of trading in financial instruments (as defined in § 1.1411-5(a)(2)). PRS' trade or business is not a passive activity (within the meaning of section 469) with respect to C. In addition, C is not directly engaged in a trade or business of trading in financial instruments or commodities. PRS earns interest of $50,000, and C's distributive share of the interest is $25,000. Because PRS is engaged in a trade or business described in § 1.1411-5(a)(2), the ordinary course of a trade or business exception described in paragraph (b) of this section does not apply, and C's $25,000 distributive share of the interest is net investment income under paragraph (a)(1)(i) of this section.

Example 4. Application of ordinary course of a trade or business exception. D, an individual, owns stock in S corporation, S. S is engaged in a banking trade or business (that is not a trade or business of trading in financial instruments or commodities), and S's trade or business is not a passive activity (within the meaning of section 469) with respect to D because D materially participates in the activity. S earns $100,000 of interest in the ordinary course of its trade or business, of which $5,000 is D's pro rata share. For purposes of paragraph (b) of this section, the interest income is derived in the ordinary course of S's banking business because it is not working capital under section 1411(c)(3) and § 1.1411-6(a) (because it is considered to be derived in the ordinary course of a trade or business under the principles of § 1.469-2T(c)(3)(ii)(A)). Because S is not engaged in a trade or business described in § 1.1411-5(a)(2) and because S's trade or business is not a passive activity with respect to D (as described in § 1.1411-5(a)(1)), the ordinary course of a trade or business exception described in paragraph (b) of this section applies, and D's $5,000 of interest is not included under paragraph (a)(1)(i) of this section.

(c) ***Other gross income from a trade or business described in § 1.1411-5.*** For a trade or business described in § 1.1411-5, paragraph (a)(1)(ii) of this section includes all other gross income (within the meaning of section 61) that is not gross income described in paragraph (a)(1)(i) of this section or net gain described in paragraph (a)(1)(iii) of this section.

(d) ***Net gain.*** This paragraph (d) describes special rules for purposes of paragraph (a)(1)(iii) of this section.

(1) ***Definition of disposition.*** For purposes of section 1411 and the regulations thereunder, the term *disposition* means a sale, exchange, transfer, conversion, cash settlement, cancellation, termination, lapse, expiration, or other disposition (including a deemed disposition, for example, under section 877A).

(2) ***Limitation.*** The calculation of net gain may not be less than zero. Losses allowable under section 1211(b) are permitted to offset gain from the disposition of assets other than capital assets that are subject to section 1411.

(3) ***Net gain attributable to the disposition of property*** —

(i) ***General rule.*** Net gain attributable to the disposition of property is the gain described in section 61(a)(3) recognized from the disposition of property reduced, but not below zero, by losses deductible under section 165, including losses attributable to casualty, theft, and abandonment

or other worthlessness. The rules in subchapter O of chapter 1 and the regulations thereunder apply. See, for example, § 1.61-6(b). For purposes of this paragraph, net gain includes, but is not limited to, gain or loss attributable to the disposition of property from the investment of working capital (as defined in § 1.1411-6); gain or loss attributable to the disposition of a life insurance contract; and gain attributable to the disposition of an annuity contract to the extent the sales price of the annuity exceeds the annuity's surrender value.

(ii) ***Examples.*** The following examples illustrate the provisions of this paragraph (d)(3). For purposes of these examples, assume that the taxpayer is a United States citizen, uses a calendar taxable year, and Year 1 and all subsequent years are taxable years in which section 1411 is in effect:

Example 1. Calculation of net gain. (i) In Year 1, A, an unmarried individual, realizes a capital loss of $40,000 on the sale of P stock and realizes a capital gain of $10,000 on the sale of Q stock, resulting in a net capital loss of $30,000. Both P and Q are C corporations. A has no other capital gain or capital loss in Year 1. In addition, A receives wages of $300,000 and earns $5,000 of gross income from interest. For income tax purposes, under section 1211(b), A may use $3,000 of the net capital loss against other income. Under section 1212(b)(1), the remaining $27,000 is a capital loss carryover. For purposes of determining A's Year 1 net gain under paragraph (a)(1)(iii) of this section, A's gain of $10,000 on the sale of the Q stock is reduced by A's loss of $40,000 on the sale of the P stock. In addition, A may reduce net investment income by the $3,000 of the excess of capital losses over capital gains allowed for income tax purposes under section 1211(b).
(ii) In Year 2, A has a capital gain of $30,000 on the sale of Y stock. Y is a C corporation. A has no other capital gain or capital loss in Year 2. For income tax purposes, A may reduce the $30,000 gain by the Year 1 section 1212(b) $27,000 capital loss carryover. For purposes of determining A's Year 2 net gain under paragraph (a)(1)(iii) of this section, A's $30,000 gain may also be reduced by the $27,000 capital loss carryover from Year 1. Therefore, in Year 2, A has $3,000 of net gain for purposes of paragraph (a)(1)(iii) of this section.

Example 2. Calculation of net gain. The facts are the same as in *Example 1,* except that in Year 1, A also realizes a gain of $20,000 on the sale of Rental Property D, all of which is treated as ordinary income under section 1250. For income tax purposes, under section 1211(b), A may use $3,000 of the net capital loss against other income. Under section 1212(b)(1) the remaining $27,000 is a capital loss carryover. For purposes of determining A's net gain under paragraph (a)(1)(iii) of this section, A's gain of $10,000 on the sale of the Q stock is reduced by A's loss of $40,000 on the sale of the P stock. A's $20,000 gain on the sale of Rental Property D is reduced to the extent of the $3,000 loss allowed under section 1211(b). Therefore, A's net gain for Year 1 is $17,000 ($20,000 gain treated as ordinary income on the sale of Rental Property D reduced by $3,000 loss allowed under section 1211).

Example 3. Section 121(a) exclusion. (i) In Year 1, A, an unmarried individual, sells a house that A has owned and used as A's principal residence for the five years preceding the sale and realizes $200,000 in gain. In addition to the gain realized from the sale of A's principal residence, A also realizes $7,000 in long-term capital gain. A has a $5,000 short-term capital loss carryover from a year preceding the effective date of section 1411.
(ii) For income tax purposes, under section 121(a), A excludes the $200,000 gain realized from the sale of A's principal residence from A's Year 1 gross income. In determining A's Year 1 adjusted gross income, A also reduces the $7,000 capital gain by the $5,000 capital loss carryover allowed under section 1211(b).

(iii) For section 1411 purposes, under section 121(a), A excludes the $200,000 gain realized from the sale of A's principal residence from A's Year 1 gross income and, consequently, from A's net investment income. In determining A's Year 1 net gain under paragraph (a)(1)(iii) of this section, A reduces the $7,000 capital gain by the $5,000 capital loss carryover allowed under section 1211(b).

Example 4. Section 1031 like-kind exchange. (i) In Year 1, A, an unmarried individual who is not a dealer in real estate, purchases Greenacre, a piece of undeveloped land, for $10,000. A intends to hold Greenacre for investment.
(ii) In Year 3, A enters into an exchange in which A transfers Greenacre, now valued at $20,000, and $5,000 cash for Blackacre, another piece of undeveloped land, which has a fair market value of $25,000. The exchange is a transaction for which no gain or loss is recognized under section 1031.

(iii) In Year 3, for income tax purposes, A does not recognize any gain from the exchange of Greenacre for Blackacre. A's basis in Blackacre is $15,000 ($10,000 substituted basis in Greenacre plus $5,000 additional cost of acquisition). For purposes of section 1411, A's net investment income for Year 3 does not include any realized gain from the exchange of Greenacre for Blackacre.

(iv) In Year 5, A sells Blackacre to an unrelated party for $35,000 in cash.

(v) In Year 5, for income tax purposes, A recognizes capital gain of $20,000 ($35,000 sale price minus $15,000 basis). For purposes of section 1411, A's net investment income includes the $20,000 gain recognized from the sale of Blackacre.

(4) ***Gains and losses excluded from net investment income —***

(i) ***Exception for gain or loss attributable to property held in a trade or business not described in § 1.1411-5 —***

(A) ***General rule.*** Net gain does not include gain or loss attributable to property (other than property from the investment of working capital (as described in § 1.1411-6)) held in a trade or business not described in § 1.1411-5.

(B) ***Special rules for determining whether property is held in a trade or business.*** To determine whether net gain described in paragraph (a)(1)(iii) of this section is from property held in a trade or business—

(*1*) A partnership interest or S corporation stock generally is not property held in a trade or business. Therefore, gain from the sale of a partnership interest or S corporation stock is generally gain described in paragraph (a)(1)(iii) of this section. However, net gain does not include certain gain or loss attributable to the disposition of certain interests in partnerships and S corporations as provided in § 1.1411-7.

(*2*) In the case of an individual, estate, or trust that owns or engages in a trade or business directly (or indirectly through ownership of an interest in an entity that is disregarded as an entity separate from its owner under § 301.7701-3), the determination of whether net gain described in paragraph (a)(1)(iii) of this section is attributable to property held in a trade or business is made at the individual, estate, or trust level.

(*3*) In the case of an individual, estate, or trust that owns an interest in a passthrough entity (for example, a partnership or S corporation), and that entity is engaged in a trade or business, the determination of whether net gain described in paragraph (a)(1)(iii) of this section from such entity is attributable to—

(*i*) Property held in a trade or business described in § 1.1411-5(a)(1) is made at the owner level; and

(*ii*) Property held in a trade or business described in § 1.1411-5(a)(2) is made at the entity level.

(C) ***Examples.*** The following examples illustrate the provisions of this paragraph (d)(4)(i). For purposes of these examples, assume the taxpayer is a United States citizen, uses a calendar taxable year, and Year 1 and all subsequent years are taxable years in which section 1411 is in effect:

Example 1. Gain from rental activity. A, an unmarried individual, rents a boat to B for $100,000 in Year 1. A's rental activity does not involve the conduct of a section 162 trade or business, and under section 469(c)(2), A's rental activity is a passive activity. In Year 2, A sells the boat to B, and A realizes and recognizes taxable gain attributable to the disposition of the boat of $500,000. Because the exception provided in paragraph (d)(4)(i)(A) of this section requires a trade or business, this exception is inapplicable, and therefore, A's $500,000 gain will be taken into account under § 1.1411-4(a)(1)(iii).

Example 2. Installment sale. (i) PRS, a partnership for Federal income tax purposes, operates an automobile dealership. B and C, unmarried individuals, each own a 40% interest in PRS and both materially participate in the activities of PRS for all relevant years. Therefore, with respect to B and C, PRS is not a

trade or business described in section 1411(c)(2) and § 1.1411-5. D owns the remaining 20% of PRS. Assume, for purposes of this example, that PRS is a passive activity with respect to D, and therefore is a trade or business described in section 1411(c)(2)(A) and § 1.1411-5(a)(1).
(ii)(A) In Year 0, a year preceding the effective date of section 1411, PRS relocates its dealership to a larger location. As a result of the relocation, PRS sells its old dealership facility to a real estate developer in exchange for $1,000,000 cash and a $4,500,000 promissory note, fully amortizing over the subsequent 15 years, and bearing adequate stated interest. PRS reports the sale transaction under section 453. PRS's adjusted tax basis in the old dealership facility is $1,075,000. Assume for purposes of this example that PRS has $300,000 of recapture income (within the meaning of section 453(i)); the buyer is not related to PRS, B, C, or D; and the buyer is not assuming any liabilities of PRS in the transaction.

(B) For chapter 1 purposes, PRS has realized gain on the transaction of $4,425,000 ($5,500,000 less $1,075,000). Pursuant to section 453(i), PRS will take into account $300,000 of the recapture income in Year 0, and the gain in excess of the recapture income ($4,125,000) will be taken into account under the installment method. For purposes of section 453, PRS's profit percentage is 75% ($4,125,000 gain divided by $5,500,000 gross selling price). In Year 0, PRS will take into account $750,000 of capital gain attributable to the $1,000,000 cash payment. In the subsequent 15 years, PRS will receive annual payments of $300,000 (plus interest). Each payment will result in PRS recognizing $225,000 of capital gain (75% of $300,000).

(iii)(A) In Year 1, PRS receives a payment of $300,000 plus the applicable amount of interest. For purposes of chapter 1, PRS recognizes $225,000 of capital gain. B and C's distributive share of the gain is $90,000 each and D's distributive share of the gain is $45,000.

(B) The old dealership facility constituted property held in PRS's trade or business. In the case of section 453 installment sales, section 453 governs the timing of the gain recognition, but does not alter the character of the gain. See § 1.1411-1(a). The determination of whether the gain is attributable to the disposition of property used in a trade or business described in paragraph (d)(4)(i) of this section constitutes an element of the gain's character for Federal tax purposes. As a result, the applicability of paragraph (d)(4)(i) of this section is determined in Year 0 and applies to all gain received on the

promissory note during the 15 year payment period. This result is consistent with the section 469 determination of the passive or nonpassive classification of the gain under § 1.469-2T(c)(2)(i)(A).

(C) In the case of D, PRS's trade or business is described in section 1411(c)(2)(A) and § 1.1411-5(a)(1). Therefore, the exclusion in paragraph (d)(4)(i) of this section does not apply, and D must include the $45,000 of gain in D's net investment income.

(D) In the case of B and C, PRS's trade or business is not described in section 1411(c)(2) or § 1.1411-5. Therefore, B and C exclude the $90,000 gain from net investment income pursuant to paragraph (d)(4)(i) of this section.

(iv) In Year 2, C dies and C's 40% interest in PRS passes to Estate.

(v)(A) In Year 3, PRS receives a payment of $300,000 plus the applicable amount of interest. For purposes of chapter 1, PRS recognizes $225,000 of capital gain. B and Estate each have a distributive share of the gain equal to $90,000 and D's distributive share of the gain is $45,000.

(B) The calculation of net investment income for B and D in Year 3 is the same as in (iii) for Year 1.

(C) In the case of Estate, the distributive share of the $90,000 gain constitutes income in respect of a decedent (IRD) under section 691(a)(4) and subchapter K. See § 1.1411-1(a). Assume that Estate paid estate taxes of $5,000 that were attributable to the $90,000 of IRD. Pursuant to section 691(c)(4), the amount of gain taken into account in computing Estate's taxable income in Year 3 is $85,000 ($90,000 reduced by the $5,000 of allocable estate taxes). Pursuant to section 691(a)(3) and § 1.691(a)-3(a), the character of the gain to the Estate is the same character as the gain would have been if C had survived to receive it. Although the amount of taxable gain for chapter 1 has been reduced, the remaining $85,000 retains its character attributable to the disposition of property used in a trade or business described in paragraph (d)(4)(i) of this section. Therefore, Estate may exclude the $85,000 gain from net investment income pursuant to paragraph (d)(4)(i) of this section.

(ii) ***Other gains and losses excluded from net investment income.*** Net gain, as determined under paragraph (d) of this section, does not include gains and losses excluded from net investment income by any other provision in §§ 1.1411-1 through 1.1411-10. For example, see § 1.1411-7

(certain gain or loss attributable to the disposition of certain interests in partnerships and S corporations) and § 1.1411-8(b)(4)(ii) (net unrealized appreciation attributable to employer securities realized on a disposition of those employer securities).

(iii) ***Adjustment for capital loss carryforwards for previously excluded income.*** [Reserved]

(e) ***Net investment income attributable to certain entities*** —

(1) ***Distributions from estates and trusts*** —

(i) ***In general.*** Net investment income includes a beneficiary's share of distributable net income, as described in sections 652(a) and 662(a), to the extent that, under sections 652(b) and 662(b), the character of such income constitutes gross income from items described in paragraphs (a)(1)(i) and (ii) of this section or net gain attributable to items described in paragraph (a)(1)(iii) of this section, with further computations consistent with the principles of this section, as provided in § 1.1411-3(e).

(ii) ***Distributions of accumulated net investment income from foreign nongrantor trusts to United States beneficiaries.*** [Reserved]

(2) ***CFCs and PFICs.*** For purposes of calculating net investment income, additional rules in § 1.1411-10(c) apply to an individual, an estate, or a trust that is a United States shareholder that owns an interest in a controlled foreign corporation (CFC) or that is a United States person that directly or indirectly owns an interest in a passive foreign investment company (PFIC).

(3) ***Treatment of income from common trust funds.*** [Reserved]

(f) ***Properly allocable deductions*** —

(1) ***General rule*** —

(i) ***In general.*** Unless provided elsewhere in §§ 1.1411-1 through 1.1411-10, only properly allocable deductions described in this paragraph (f) may be taken into account in determining net investment income.

(ii) ***Limitations.*** Any deductions described in this paragraph (f) in excess of gross income and net gain described in section 1411(c)(1)(A) are not taken into account in determining net investment income in any other taxable year, except as allowed under chapter 1.

(2) ***Properly allocable deductions described in section 62*** —

(i) ***Deductions allocable to gross income from rents and royalties.*** Deductions described in section 62(a)(4) allocable to rents and royalties described in paragraph (a)(1)(i) of this section are taken into account in determining net investment income.

(ii) ***Deductions allocable to gross income from trades or businesses described in § 1.1411-5.*** Deductions described in section 62(a)(1) allocable to income from a trade or business described in § 1.1411-5 are taken into account in determining net investment income to the extent the deductions have not been taken into account in determining self-employment income within the meaning of § 1.1411-9.

(iii) ***Penalty on early withdrawal of savings.*** Deductions described in section 62(a)(9) are taken into account in determining net investment income.

(iv) ***Net operating loss.*** The total section 1411 NOL amount of a net operating loss deduction allowed under section 172 is allowed as a properly allocable deduction in determining net investment income for any taxable year. See paragraph (h) of this section for the calculation of the total section 1411 NOL amount of a net operating loss deduction.

(v) ***Examples.*** The following examples illustrate the provisions of this paragraph (f)(2). For purposes of these examples, assume the taxpayer is a United States citizen, uses a calendar taxable year, and Year 1 and all subsequent years are taxable years in which section 1411 is in effect:

> *Example 1.* (i) A, an individual, is a 40% shareholder in SCo, an S corporation. SCo is engaged in a trade or business described in section 1411(c)(2)(A). SCo is the only passive activity owned by A. In Year 1, SCo reported a loss of $11,000 to A which was comprised of gross operating income of $29,000 and operating deductions of $40,000. A's at risk amount at the beginning of Year 1 is $7,000. There were no other events that affected A's at risk amount in Year 1.
> (ii) For purposes of calculating A's net investment income, A's $29,000 distributive share of SCo's gross operating income is income within the meaning of section 1411(c)(1)(A)(ii).
>
> (iii) As a result of A's at risk limitation, for chapter 1 purposes, A may only deduct $7,000 of the operating deductions in excess of the gross operating income. The remaining $4,000 deductions are suspended because A's amount at risk at the end of Year 1 is zero.
>
> (iv) For purposes of section 469, A has passive activity gross income of $29,000 and passive activity deductions of $36,000 ($40,000 of operating deductions allocable to A less $4,000 suspended under section 465). Because A has no other passive activity income from any other source, section 469 limits A's passive activity deductions to A's passive activity gross income. As a result, section 469 allows A to deduct $29,000 of SCo's operating deductions and suspends the remaining $7,000.
>
> (v) For purposes of calculating A's net investment income, A has $29,000 of properly allocable deductions allowed by section 1411(c)(1)(B) and paragraph (f)(2)(ii) of this section.

> *Example 2.* (i) Same facts as *Example 1.* In Year 2, SCo reported net income of $13,000 to A, which was comprised of gross operating income of $43,000 and operating deductions of $30,000. There were no other events that affected A's at risk amount in Year 2.
> (ii) For purposes of calculating A's net investment income, A's $43,000 distributive share of gross operating income is income within the meaning of section 1411(c)(1)(A)(ii).

(iii) Pursuant to section 465(a)(2), A's deductions attributable to the gross income of SCo include the $30,000 deduction allocable to A in Year 2 plus the $4,000 loss that was suspended and carried over to Year 2 from Year 1 pursuant to section 465(a)(2). Under section 465(a)(2), the $4,000 of losses from Year 1 are treated as deductions from the activity in Year 2. As a result, A's net operating income from SCo in Year 2 is $9,000 ($43,000−$30,000−$4,000) in Year 2. A's amount at risk at the end of Year 2 is $9,000.

(iv) For purposes of section 469, A has passive activity gross income of $43,000. A's passive activity deductions attributable to SCo are the sum of the Year 2 operating deductions allocable to A from S ($30,000), deductions formerly suspended by section 465 ($4,000), and passive activity losses suspended by section 469 ($7,000). Therefore, in Year 2, A has passive activity deductions of $41,000. Because A's passive activity gross income exceeds A's passive activity deductions, section 469 does not limit any of the deductions in Year 2. At the end of Year 2, A has no suspended passive activity losses.

(v) Although A's distributive share of Year 2 deductions allocable to SCo's operating income was $30,000; the operative provisions of sections 465 and 469 do not change the character of the deductions when such amounts are suspended under either section. Furthermore, section 465(a)(2) and §§ 1.469-1(f)(4) and 1.469-2T(d)(1) treat amounts suspended from prior years as deductions in the current year. See § 1.1411-1(a). Therefore, for purposes of calculating A's net investment income, A has $41,000 of properly allocable deductions allowed by section 1411(c)(1)(B) and paragraph (f)(2)(ii) of this section.

(3) ***Properly allocable deductions described in section 63(d).*** In determining net investment income, the following itemized deductions are taken into account:

(i) ***Investment interest expense.*** Investment interest (as defined in section 163(d)(3)) to the extent allowed under section 163(d)(1). Any investment interest not allowed under section 163(d)(1) is treated as investment interest paid or accrued by the taxpayer in the succeeding taxable year. The following example illustrates the provisions of this paragraph. For purposes of this example, assume that the taxpayer uses a calendar taxable year, and Year 1 and all subsequent years are taxable years in which section 1411 is in effect:

(A) In Year 1, A, an unmarried individual, pays interest of $4,000 on debt incurred to purchase stock. Under § 1.163-8T, this interest is allocable to the stock and is investment interest within the meaning of section 163(d)(3). A has no investment income as defined by section 163(d)(4). A has $10,000 of income from a trade or business that is a passive activity (as defined in § 1.1411-5(a)(1)) with respect to A. For income tax purposes, under section 163(d)(1), A may not deduct the $4,000 investment interest in Year 1 because A does not have any section 163(d)(4) net investment income. Under section 163(d)(2), the $4,000 investment interest is a carryforward of disallowed interest that is treated as

investment interest paid by A in the succeeding taxable year. Similarly, for purposes of determining A's Year 1 net investment income, A may not deduct the $4,000 investment interest.

(B) In Year 2, A has $5,000 of section 163(d)(4) net investment income. For both income tax purposes and for determining section 1411 net investment income, A's $4,000 carryforward of interest expense disallowed in Year 1 may be deducted in Year 2.

(ii) ***Investment expenses.*** Investment expenses (as defined in section 163(d)(4)(C)).

(iii) ***Taxes described in section 164(a)(3).*** State, local, and foreign income, war profits, and excess profit taxes described in section 164(a)(3) that are allocable to net investment income pursuant to paragraph (g)(1) of this section. Except to the extent specifically expected from section 275(a)(4), foreign income, war profits, and excess profit taxes are not allowed as deductions under section 164(a)(3) in determining net investment income if the taxpayer claims the benefit of the foreign tax credit under section 901 with respect to the same taxable year. For rules applicable to refunds of taxes described in this paragraph, see paragraph (g)(2) of this section.

(iv) ***Items described in section 72(b)(3).*** In the case of an amount allowed as a deduction to the annuitant for the annuitant's last taxable year under section 72(b)(3), such amount is allowed as a properly allocable deduction in the same taxable year if the income from the annuity (had the annuitant lived to receive such income) would have been included in net investment income under paragraph (a)(1)(i) of this section (and not excluded from net investment income by reason of § 1.1411-8).

(v) ***Items described in section 691(c).*** Deductions for estate and generation-skipping taxes allowed by section 691(c) that are allocable to net investment income; provided, however, that any portion of the section 691(c) deduction described in section 691(c)(4) is taken into account instead in computing net gain under paragraph (d) and not under this paragraph (f)(3)(v).

(vi) ***Items described in section 212(3).*** Amounts described in section 212(3) and § 1.212-1(l) to the extent they are allocable to net investment income pursuant to paragraph (g)(1) of this section.

(vii) ***Amortizable bond premium.*** A deduction allowed under section 171(a)(1) for the amortizable bond premium on a taxable bond (for example, see § 1.171-2(a)(4)(i)(C) for the treatment of a bond premium carryforward as a deduction under section 171(a)(1)).

(viii) ***Fiduciary expenses.*** In the case of an estate or trust, amounts described in § 1.212-1(i) to the extent they are allocable to net investment income pursuant to paragraph (g)(1) of this section.

(4) ***Loss deductions*** —

(i) ***General rule.*** Losses described in section 165, whether described in section 62 or section 63(d), are allowed as properly allocable deductions to the extent such losses exceed the amount of gain described in section 61(a)(3) and are not taken into account in computing net gain by reason of paragraph (d) of this section.

(ii) ***Examples.*** The following examples illustrate the provisions of this paragraph (f)(4). For purposes of these examples, assume the taxpayer is a United States citizen, uses a calendar taxable year, and Year 1 and all subsequent years are taxable years in which section 1411 is in effect:

> *Example 1.* (i) A, an unmarried individual, owns an interest in PRS, a partnership for

Federal income tax purposes. PRS is engaged in a trading business described in section 1411(c)(2)(B) and § 1.1411-5(a)(2) and has made a valid and timely election under section 475(f)(2). A's distributive share from PRS in Year 1 consists of $125,000 of interest and dividends and $60,000 of ordinary losses from the trading business. In addition to A's investment in PRS, A sold undeveloped land in Year 1 for a long-term capital gain of $50,000. A has no capital losses carried over from a preceding year.
(ii) For purposes of chapter 1, A includes the $125,000 of interest and dividends, $60,000 of ordinary loss, and $50,000 of long-term capital gain in the computation of A's adjusted gross income.

(iii) For purposes of calculating net investment income, A includes the $125,000 of interest and dividends. Pursuant to paragraph (d) of this section, A takes into account the $60,000 at ordinary loss from PRS and the $50,000 of long term capital gain in the computation of A's net gain. A's losses ($60,000) exceed A's gains ($50,000). Therefore, A's net gain under paragraph (d) of this section is zero. Additionally, A is allowed a deduction under paragraph (f)(4)(i) of this section for $10,000 (the amount of ordinary losses that were allowable under chapter 1 in excess of the amounts taken into account in computing net gain). A's net investment income in Year 1 is $115,000.

Example 2. (i) In Year 1, T, a nongrantor trust, incurs a capital loss of $5,000 on the sale of publicly traded stocks. In addition, T receives $17,000 of interest and dividend income. T has no capital losses carried over from a preceding year.
(ii) For purposes of chapter 1, T includes the $17,000 of interest and dividends and only $3,000 of the capital loss in the computation of adjusted gross income. The remaining $2,000 capital loss is carried over to Year 2.

(iii) For purposes of calculating net investment income, T includes the $17,000 of interest and dividends in net investment income. Pursuant to paragraph (d) of this section, T takes into account the $3,000 capital loss allowed by chapter 1. T's losses ($3,000) exceed T's gains ($0). Therefore, T's net gain under paragraph (d) of this section is zero. However, T is allowed a deduction under paragraph (f)(4)(i) of this section for $3,000 (the amount of losses that were allowable under chapter 1 in excess of the amounts taken into account in computing net gain). T's net investment income in Year 1 is $14,000.

Example 3. (i) In Year 1, B, an unmarried individual, incurs a short-term capital loss of $15,000 on the sale of publicly traded stocks. B also receives annuity income of $50,000. In addition, B disposes of property used in his sole proprietorship (which is not a trade or business described in section 1411(c)(2) or § 1.1411-5(a) for a gain of $21,000. Pursuant to section 1231, the gain of $21,000 is treated as a long-term capital gain for purposes of chapter 1. B has no capital losses carried over from a preceding year.

(ii) For purposes of chapter 1, B includes the $50,000 of annuity income in the computation of adjusted gross income. The $21,000 long-term capital gain is offset by the $15,000 short-term capital loss, so B includes $6,000 of net long-term capital gain in the computation of adjusted gross income.

(iii) For purposes of calculating net investment income, B includes the $50,000 of annuity income in net investment income. Pursuant to paragraph (d)(4)(i) of this section, B's net gain does not include the $21,000 long-term capital gain because it is attributable to property held in B's sole proprietorship (a nonpassive activity). Pursuant to paragraph (d) of this section, T takes into account the $15,000 capital loss allowed by chapter 1. B's losses ($15,000) exceed B's gains ($0). Therefore, A's net gain under paragraph (d) of this section is zero. However, B is allowed a deduction under paragraph (f)(4)(i) of this section for $15,000 (the amount of losses that were allowable under chapter 1 in excess of the amounts taken into account in computing net gain). B's net investment income in Year 1 is $35,000.

(5) ***Ordinary loss deductions for certain debt instruments.*** An amount treated as an ordinary loss by a holder of a contingent payment debt instrument under § 1.1275-4(b) or an inflation-indexed debt instrument under § 1.1275-7(f)(1).

(6) ***Other deductions.*** Any other deduction allowed by subtitle A that is identified in published guidance in the FEDERAL REGISTER or in the Internal Revenue Bulletin (see § 601.601(d)(2)(ii)(*b*) of this chapter) as properly allocable to gross income or net gain under this section.

(7) ***Application of limitations under sections 67 and 68.*** Any deductions described in this paragraph (f) that are subject to section 67 (the 2-percent floor on miscellaneous itemized deductions) or section 68 (the overall limitation on itemized deductions) are allowed in determining net investment income only to the extent the items are deductible for chapter 1 purposes after the application of sections 67 and 68. For this purpose, section 67 applies before section 68. The amount of deductions subject to sections 67 and 68 that may be deducted in determining net investment income after the application of sections 67 and 68 is determined as described in paragraph (f)(7)(i) and (f)(7)(ii) of this section.

(i) ***Deductions subject to section 67.*** The amount of miscellaneous itemized deductions (as defined in section 67(b)) tentatively deductible in determining net investment income after applying section 67 (but before applying section 68) is the lesser of:

(A) The portion of the taxpayer's miscellaneous itemized deductions (before the application of section 67) that is properly allocable to items of income or net gain included in determining net investment income, or

(B) The taxpayer's total miscellaneous itemized deductions allowed after the application of section 67, but before the application of section 68.

(ii) ***Deductions subject to section 68.*** The amount of itemized deductions allowed in determining net investment income after applying sections 67 and 68 is the lesser of:

(A) The sum of the amount determined under paragraph (f)(7)(i) of this section and the amount of itemized deductions not subject to section 67 that are properly allocable to items of income or net gain included in determining net investment income, or

(B) The total amount of itemized deductions allowed after the application of sections 67 and 68.

(iii) ***Itemized deductions.*** For purposes of paragraph (f)(7)(ii), itemized deductions do not include any deduction described in section 68(c).

(iv) ***Example.*** The following example illustrates the provisions of this paragraph (f)(7). For purposes of these examples, assume the taxpayer is a United States citizen, uses a calendar taxable year, and Year 1 and all subsequent years are taxable years in which section 1411 is in effect:

(A) A, an unmarried individual, has adjusted gross income in Year 1 as follows:

Wages	$1,600,000
Interest income	400,000
Adjusted gross income	2,000,000

In addition, A has the following items of expense qualifying as itemized deductions:

Investment expenses	$70,000
Job-related expenses	30,000
Investment interest expense	75,000
State income taxes	120,000

A's investment expenses and job-related expenses are miscellaneous itemized deductions. In addition, A's investment interest expense and investment expenses are properly allocable to net investment income (within the meaning of this section). A's job-related expenses are not properly allocable to net investment income. Of the state income tax expense, A applied a reasonable method pursuant to paragraph (g)(1) of this section to properly allocate $20,000 to net investment income.

(B) A's 2-percent floor under section 67 is $40,000 (2% of $2,000,000). For Year 1, assume the section 68 limitation starts at adjusted gross income of $200,000. The section 68 overall limitation disallows $54,000 of A's itemized deductions that are subject to section 68 (3% of the excess of the $2,000,000 adjusted gross income over the $200,000 limitation threshold).

(C)

(1) A's total miscellaneous itemized deductions allowable before the application of section 67 is $100,000 ($70,000 in investment expenses plus $30,000 in job-related expenses), and the total miscellaneous deductions allowed after the application of section 67 is $60,000 ($100,000 minus $40,000).

(2) The amount of the miscellaneous itemized deductions properly allocable to net investment income after the application of section 67 is $60,000 (the lesser of $70,000 in investment expenses that are deductible as a miscellaneous itemized deduction and properly allocable to net investment income or $60,000 of miscellaneous itemized deductions allocable to net investment income allowed after the application of section 67).

(D)

(1) The amount of itemized deductions allocable to net investment income after applying section 67 to deductions that are also miscellaneous itemized deductions but before applying section 68 is $155,000. This amount is the sum of $60,000 of miscellaneous itemized deductions determined in (C)(2), plus $20,000 in state income tax properly allocable to net investment income, plus $75,000 of investment interest expense. However, under section 68(c)(2), the $75,000 deduction for investment interest expenses is not subject to the section 68 limitation on itemized deductions and is excluded from the computation under § 1.1411-4(f)(7). Thus, the amount of itemized deductions allocable to net investment income and subject to section 68, after applying section 67 but before applying section 68, is $80,000.

(2) A's total itemized deductions allowed subject to the limitation under section 68 and after application of section 67, but before the application of section 68, are the following:

Miscellaneous itemized deductions	$60,000
State income tax	120,000
Deductions subject to section 68	180,000

(3) Of A's itemized deductions that are subject to the limitation under section 68, the amount allowed after the application of section 68 is $126,000 ($180,000 minus the $54,000 disallowed in (B)).

(E) Under paragraph (f)(7)(ii) of this section, the amount of itemized deductions allowed in determining net investment income after applying sections 67 and 68 is the lesser of $80,000 (the sum of $60,000 determined under paragraph (C)(2) and $20,000 state income tax allocable to net investment income) or $126,000 (determined under (D)(3)). Therefore, A's itemized deductions that are properly allocable to net investment income are $155,000 ($80,000 of properly allocable itemized deductions subject to section 67 or 68 plus $75,000 of investment interest expense (which is not subject to either section 67 or section 68 limitations)).

(g) *Special rules* —

(1) ***Deductions allocable to both net investment income and excluded income.*** In the case of a properly allocable deduction described in section 1411(c)(1)(B) and paragraph (f) of this section that is allocable to both net investment income and excluded income, the portion of the deduction that is properly allocable to net investment income may be determined by taxpayers using any reasonable method. Examples of reasonable methods of allocation include, but are not limited to, an allocation of the deduction based on the ratio of the amount of a taxpayer's gross income (including net gain) described in § 1.1411-4(a)(1) to the amount of the taxpayer's adjusted gross income (as defined under section 62 (or section 67(e) in the case of an estate or trust)). In the case of an estate or trust, an allocation of a deduction pursuant to rules described in § 1.652(b)-3(b) (and § 1.641(c)-1(h) in the case of an ESBT) is also a reasonable method.

(2) ***Recoveries of properly allocable deductions*** —

(i) ***General rule.*** If a taxpayer is refunded, reimbursed, or otherwise recovers any portion of an amount deducted as a section 1411(c)(1)(B) properly allocable deduction in a prior year, and such amount is not otherwise included in net investment income in the year of recovery under section 1411(c)(1)(A), the amount of the recovery will reduce the taxpayer's total section 1411(c)(1)(B) properly allocable deductions in the year of recovery (but not below zero). The preceding sentence applies regardless of whether the amount of the recovery is excluded from gross income by reason of section 111.

(ii) ***Recoveries of items allocated between net investment income and excluded income.*** In the case of a refund of any item that was deducted under section 1411(c)(1)(B) in a prior year and the gross amount of the deduction was allocated between items of net investment income and excluded income pursuant to paragraph (g)(1) of this section, the amount of the reduction in section 1411(c)(1)(B) properly allocable deductions in the year of receipt under this paragraph (g)(2) is the total amount of the refund multiplied by a fraction. The numerator of the fraction is the amount of the total deduction allocable to net investment income in the prior year to which the refund relates. The denominator of the fraction is the total amount of the deduction in the prior year to which the refund relates.

(iii) ***Recoveries with no prior year benefit.*** For purposes of this paragraph (g)(2), section 111 applies to reduce the amount of any reduction required by paragraph (g)(2)(i) of this section to the extent that such previously deducted amount did not reduce the tax imposed by section 1411. To the extent a deduction is taken into account in computing a taxpayer's net operating loss deduction under paragraph (h) of this section, section 111(c) applies. Except as provided in the preceding sentence, for purposes of this paragraph (g)(2), no reduction of section 1411(c)(1)(B) properly allocable deductions is required in a year when such recovered item is attributable to an amount deducted in a taxable year—

(A) Preceding the effective date of section 1411, or

(B) In which the taxpayer was not subject to section 1411 solely because that individual's (as defined in § 1.1411-2(a)) modified adjusted gross income (as defined in § 1.1411-2(c)) does not exceed the applicable threshold in § 1.1411-2(d) or such estate's or trust's (as defined in § 1.1411-3(a)(1)(i)) adjusted gross income does not exceed the amount described in section 1411(a)(2)(B)(ii) and § 1.1411-3(a)(1)(ii)(B)(2).

(iv) ***Examples.*** The following examples illustrate the provisions of this paragraph (g)(2). For purposes of these examples, assume the taxpayer is a United States citizen, uses a calendar taxable year, and Year 1 and all subsequent years are taxable years in which section 1411 is in effect:

Example 1. Recovery of amount included in income. A, an individual, is a 40% limited partner in LP. LP is a passive activity to A. In Year 1, A's distributable share of section 1411(c)(1)(A)(ii) income and properly allocable deductions described in § 1.1411-4(f)(2)(ii) were $50,000 and $37,000, respectively. In Year 2, LP received a refund of a properly allocable deduction described in § 1.1411-4(f)(2)(ii). A's distributable share of the recovered deduction is $2,000. Since the $2,000 recovery constitutes gross income described in section 1411(c)(1)(A)(ii) in Year 2, A does not reduce any properly allocable deductions attributable to Year 2.

Example 2. State income tax refund. In Year 1, D, an individual, allocated $15,000 of taxes out of a total of $75,000 to net investment income under paragraph (f)(3)(iii) of this section. D received no tax benefit from the deduction in Year 1 for chapter 1 purposes due to the alternative minimum tax, but it did reduce D's section 1411 tax. In Year 3, D received a refund of $5,000. For chapter 1 purposes, D excludes the $5,000 refund from gross income in Year 3 by reason of section 111. In Year 3, D allocated $30,000 of state income taxes out of a total of $90,000 to net investment income under paragraph (f)(3)(iii) of this section. Although the refund is excluded from D's gross income, D must nonetheless reduce Year 3's section 1411(c)(1)(B) properly allocable deductions by $1,000 ($5,000 × ($15,000/$75,000)). D's allocation of $33^{1}/_{3}$% of section 164(a)(3) taxes in Year 3 to net investment income is irrelevant to the calculation of the amount of the reduction required by this paragraph (g)(2).

Example 3. State income tax refund with no prior year benefit. Same facts as *Example 2,* except in Year 1, D's section 1411(c)(1)(B) properly allocable deductions exceeded D's section 1411(c)(1)(A) income by $300. As a result, D was not subject to section 1411 in Year 1. Pursuant to paragraph (g)(2)(iii) of this section, D does not reduce Year 3's section 1411(c)(1)(B) properly allocable deductions for recoveries of amounts to the extent that such deductions did not reduce the tax imposed by section 1411. Therefore, D must reduce Year 3's section 1411(c)(1)(B) properly allocable deductions by $700 ($1,000 less $300).

(3) ***Deductions described in section 691(b).*** For purposes of paragraph (f) of this section, properly allocable deductions include items of deduction described in section 691(b), provided that the item otherwise would have been deductible to the decedent under § 1.1411-4(f). For example, an estate may deduct the decedent's unpaid investment interest expense in computing its net investment income because section 691(b) specifically allows the deduction under section 163, and § 1.1411-4(f)(3)(i) allows those deductions as well. However, an estate or trust may not deduct a payment of real estate taxes on the decedent's principal residence that were unpaid at death in computing its net investment income because, although real estate taxes are deductible under section 164 and specifically are allowed by section 691(b), the real estate taxes would not have been a properly allocable deduction of the decedent under § 1.1411-4(f).

(4) ***Amounts described in section 642(h).*** For purposes of the calculation of net investment income under this section, one or more beneficiaries succeeding to the property of the estate or trust, within the meaning of section 642(h), shall—

(i) Treat excess capital losses of the estate or trust described in section 642(h)(1) as capital losses of the beneficiary in the calculation of net gain in paragraph (d) and paragraph (f)(4) of this section, as applicable, in a manner consistent with section 642(h)(1);

(ii) Treat excess net operating losses of the estate or trust described in section 642(h)(1) as net operating losses of the beneficiary in the calculation of net investment income in paragraphs (f)(2)(iv) and (h) of this section in a manner consistent with section 642(h)(1); and

(iii) Treat the deductions described in paragraph (f) of this section (other than those taken into account under paragraph (g)(4)(i) or (ii) of this section) that exceed the gross investment income described in paragraph (a)(1) of this section (after taking into account any modifications, adjustments, and special rules for calculating net investment income in section 1411 and the regulations thereunder) of a terminating estate or trust as a section 1411(c)(1)(B) deduction of the beneficiary in a manner consistent with section 642(h)(2).

(5) ***Treatment of self-charged interest income.*** Gross income from interest (within the meaning of section 1411(c)(1)(A)(i) and paragraph (a)(1)(i) of this section) that is received by the taxpayer from a nonpassive activity of such taxpayer, solely for purposes of section 1411, is treated as derived in the ordinary course of a trade or business not described in § 1.1411-5. The amount of interest income that is treated as derived in the ordinary course of a trade or business not described in § 1.1411-5, and thus excluded from the calculation of net investment income, under this paragraph (g)(5) is limited to the amount that would have been considered passive activity gross income under the rules of § 1.469-7 if the payor was a passive activity of the taxpayer. For purposes of this rule, the term nonpassive activity does not include a trade or business described in § 1.1411-5(a)(2). However, this rule does not apply to the extent the corresponding deduction is taken into account in determining self-employment income that is subject to tax under section 1401(b).

(6) ***Treatment of certain nonpassive rental activities*** —

(i) ***Gross income from rents.*** To the extent that gross rental income described in paragraph (a)(1)(i) of this section is treated as not derived from a passive activity by reason of § 1.469-2(f)(6) or as a consequence of a taxpayer grouping a rental activity with a trade or business activity under § 1.469-4(d)(1), such gross rental income is deemed to be derived in the ordinary course of a trade or business within the meaning of paragraph (b) of this section.

(ii) ***Gain or loss from the disposition of property.*** To the extent that gain or loss resulting from the disposition of property is treated as nonpassive gain or loss by reason of § 1.469-2(f)(6) or as a consequence of a taxpayer grouping a rental activity with a trade or business activity under § 1.469-4(d)(1), then such gain or loss is deemed to be derived from property used in the ordinary course of a trade or business within the meaning of paragraph (d)(4)(i) of this section.

(7) ***Treatment of certain real estate professionals*** —

(i) ***Safe Harbor.*** In the case of a real estate professional (as defined in section 469(c)(7)(B)) that participates in a rental real estate activity for more than 500 hours during such year, or has participated in such real estate activities for more than 500 hours in any five taxable years (whether or not consecutive) during the ten taxable years that immediately precede the taxable year, then—

(A) Such gross rental income from that rental activity is deemed to be derived in the ordinary course of a trade or business within the meaning of paragraph (b) of this section; and

(B) Gain or loss resulting from the disposition of property used in such rental real estate activity is deemed to be derived from property used in the ordinary course of a trade or business within the meaning of paragraph (d)(4)(i) of this section.

(ii) *Definitions* —

(A) ***Participation.*** For purposes of establishing participation under this paragraph (g)(7), any participation in the activity that would count towards establishing material participation under section 469 shall be considered.

(B) ***Rental real estate activity.*** The term *rental real estate activity* used in this paragraph (g)(7) is a rental activity within the meaning of § 1.469-1T(e)(3). An election to treat all rental real estate as a single rental activity under § 1.469-9(g) also applies for purposes of this paragraph (g)(7). However, any rental real estate that the taxpayer grouped with a trade or business activity under § 1.469-4(d)(1)(i)(A) or (d)(1)(i)(C) is not a rental real estate activity.

(iii) ***Effect of safe harbor.*** The inability of a real estate professional to satisfy the safe harbor in this paragraph (g)(7) does not preclude such taxpayer from establishing that such gross rental income and gain or loss from the disposition of property, as applicable, is not included in net investment income under any other provision of section 1411.

(8) *Treatment of former passive activities* —

(i) ***Section 469(f)(1)(A) losses.*** Losses allowed in computing taxable income by reason of the rules governing former passive activities in section 469(f)(1)(A) are taken into account in computing net gain under paragraph (d) of this section or as properly allocable deductions under paragraph (f) of this section, as applicable, in the same manner as such losses are taken into account in computing taxable income (as defined in section 63). The preceding sentence applies only to the extent the net income or net gain from the former passive activity (as defined in section 469(f)(3)) is included in net investment income.

(ii) ***Section 469(f)(1)(C) losses.*** Losses allowed in computing taxable income by reason of section 469(f)(1)(C) are taken into account in computing net gain under paragraph (d) of this section or as properly allocable deductions under paragraph (f) of this section, as applicable, in the same manner as such losses are taken into account in computing taxable income (as defined in section 63).

(iii) ***Examples.*** The following examples illustrate the provisions of this paragraph (g)(8). For purposes of these examples, assume the taxpayer is a United States citizen, uses a calendar taxable year, and Year 1 and all subsequent years are taxable years in which section 1411 is in effect:

> *Example 1.* (i) B, an individual taxpayer, owns a 50% interest in SCorp, an S corporation engaged in the trade or business of retail clothing sales. B also owns a single family rental property, a passive activity. B materially participates in the retail sales activity of SCorp, but B has $10,000 of suspended losses from prior years when the retail sales activity of SCorp was a passive activity of B. Therefore, the retail sales activity of SCorp is a former passive activity within the meaning of section 469(f)(3).

(ii) In Year 1, B reports $205,000 of wages, $7,000 of nonpassive net income, $500 of interest income (attributable to working capital) from SCorp's retail sales activity, and $1,000 of net rental income from the single family rental property. B's Year 1 modified adjusted gross income (as defined in § 1.1411-2(c)) is $205,500; which includes $205,000 of wages, $500 of interest income, $7,000 of nonpassive income from SCorp, $7,000 of section 469(f)(1)(A) losses, $1,000 of passive income from the single family rental property and $1,000 of section 469(f)(1)(C) losses.

(iii) For purposes of the calculation of B's Year 1 net investment income, B includes the $500 of interest income and $1,000 of net passive income from the single family rental property. The $7,000 of nonpassive income from SCorp's retail sales activity is excluded from net investment income because the income is not attributable to a trade or business described in § 1.1411-5. Therefore, pursuant to the rules of paragraph (g)(8)(i) of this section, the $7,000 of section 469(f)(1)(A) losses are not taken into account in computing B's net investment income. However, pursuant to the rules of paragraph (g)(8)(ii) of this section, the $1,000 of passive losses allowed by reason of section 469(f)(1)(C), which are allowed as a deduction in Year 1 by reason of B's $1,000 of passive income from the single family rental property are allowed in computing B's net investment income. As a result, B's net investment income is $500 ($500 of interest income plus $1,000 of passive rental income less $1,000 of section 469(f)(1)(C) losses). Although the $500 of interest income is attributable to SCorp and includable in B's net investment income, such income is not taken into account when calculating the amount of section 469(f)(1)(A) losses allowed in the current year. Therefore, such income is not taken into account in computing the amount of section 469(f)(1)(A) losses allowed by reason of paragraph (g)(8)(i) of this section. Pursuant to section 469(b), B carries forward $2,000 of suspended passive losses attributable to SCorp's retail sales activity to Year 2.

Example 2. Same facts as *Example 1.* In Year 2, B materially participates in the retail sales activity of SCorp, and disposes of his entire interest in SCorp for a $9,000 long-term capital gain. Pursuant to § 1.469-2T(e)(3), the $9,000 gain is characterized as nonpassive income. Pursuant to section 469(f)(1)(A), the remaining $2,000 of suspended passive loss is allowed because the $9,000 gain is treated as nonpassive income. Assume that under section 1411(c)(4) and § 1.1411-7, B takes into account only $700 of the $9,000 gain in computing net investment income for Year 2. Pursuant to paragraph (g)(8)(i) of this section, B may take into account $700 of the $2,000 loss allowed by section 469(f)(1)(A) in computing net investment income for Year 2. Pursuant to paragraph (g)(8)(i) of this section, B may not deduct the remaining $1,300 passive loss allowed for chapter 1 in calculating net investment income for Year 2.

(9) ***Treatment of section 469(g)(1) losses.*** Losses allowed in computing taxable income by reason of section 469(g) are taken into account in computing net gain under paragraph (d) of this section or as properly allocable deductions under paragraph (f) of this section, as applicable, in the same manner as such losses are taken into account in computing taxable income (as defined in section 63).

(10) ***Treatment of section 707(c) guaranteed payments.*** [Reserved]

(11) ***Treatment of section 736 payments.*** [Reserved]

(12) ***Income and deductions from certain notional principal contracts.*** [Reserved]

(13) ***Treatment of income or loss from REMIC residual interests.*** [Reserved]

(h) ***Net operating loss —***

(1) ***General rule.*** For purposes of paragraph (f)(2)(iv) of this section, the total section 1411 NOL amount of a net operating loss deduction for a taxable year is calculated by first determining the applicable portion of the taxpayer's net operating loss for each loss year under paragraph (h)(2) of this section. Next, the applicable portion for each loss year is used to determine the section 1411 NOL amount for each net operating loss carried from a loss year and deducted in the taxable year as provided in paragraph (h)(3) of this section. The section 1411 NOL amounts of each net operating loss carried from a loss year and deducted in the taxable year are then added together as provided in paragraph (h)(4) of this section. This sum is the total section 1411 NOL amount of the net operating loss deduction for the taxable year that is allowed as a properly allocable deduction in determining net investment income for the taxable year. For purposes of this paragraph (h), both the amount of a net operating loss for a loss year and the amount of a net operating loss deduction refer to such amounts as determined for purposes of chapter 1.

(2) ***Applicable portion of a net operating loss.*** In any taxable year beginning after December 31, 2012, in which a taxpayer incurs a net operating loss, the applicable portion of such loss is the lesser of:

(i) The amount of the net operating loss for the loss year that the taxpayer would incur if only items of gross income that are used to determine net investment income and only properly allocable deductions are taken into account in determining the net operating loss in accordance with section 172(c) and (d); or

(ii) The amount of the taxpayer's net operating loss for the loss year.

(3) ***Section 1411 NOL amount of a net operating loss carried to and deducted in a taxable year.*** The section 1411 NOL amount of each net operating loss that is carried from a loss year that is allowed as a deduction is the total amount of such net operating loss carried from the loss year allowed as a deduction under section 172(a) in the taxable year multiplied by a fraction. The numerator of the fraction is the applicable portion of the net operating loss for that loss year, as determined under paragraph (h)(2) of this section. The denominator of the fraction is the total amount of the net operating loss for the same loss year.

(4) ***Total section 1411 NOL amount of a net operating loss deduction.*** The section 1411 NOL amounts of each net operating loss carried to and deducted in the taxable year as determined under paragraph (h)(3) of this section are added together to determine the *total* section 1411 NOL amount of the net operating loss deduction for the taxable year that is properly allocable to net investment income.

(5) ***Examples.*** The following examples illustrate the provisions of this paragraph (h). For purposes of these examples, assume the taxpayer is a United States citizen, uses a calendar taxable year, and Year 1 and all subsequent years are taxable years in which section 1411 is in effect:

> *Example 1.* (i)(A) In Year 1, A, an unmarried individual, has the following items of income and deduction: $200,000 in wages, $50,000 in gross income from a trade or business of trading in

financial instruments or commodities (as defined in § 1.1411-5(a)(2)) (trading activity), $10,000 of dividends, $1,000,000 in loss from his sole proprietorship (which is not a trade or business described in § 1.1411-5), $12,000 of non-business investment expenses, and $250,000 in trading loss deductions. As a result, for income tax purposes A sustains a section 172(c) net operating loss of $1,000,000. A makes an election under section 172(b)(3) to waive the carryback period for this net operating loss.
(B) For purposes of section 1411, A's net investment income for Year 1 is the excess (if any) of $60,000 ($50,000 trading activity gross income plus $10,000 dividend income) over $262,000 ($250,000 trading loss deductions plus $12,000 nonbusiness expenses).

(C) The amount of the net operating loss for Year 1 determined under section 172 that A would incur if only items of gross income that are used to determine net investment income and only properly allocable deductions are taken into account is $200,000. This amount is the excess of $250,000 trading loss deductions, over $50,000 trading activity gross income. Under section 172(d)(4), in determining the net operating loss, the $12,000 nonbusiness expenses are allowed only to the extent of the $10,000 dividend income. The $200,000 net operating loss determined using only properly allocable deductions and gross income items used in determining net investment income is less than A's actual net operating loss for Year 1 of $1,000,000, and accordingly the applicable portion for Year 1 is $200,000. The ratio used to calculate section 1411 NOL amounts of A's Year 1 net operating loss is $200,000 (net operating loss determined using only properly allocable deductions and gross income items used in determining net investment income)/$1,000,000 (net operating loss), or 0.2.

(ii) For Year 2, A has $250,000 of wages, no gross income from the trading activity, $300,000 of income from his sole proprietorship, and $10,000 in trading loss deductions. For income tax purposes, A deducts $540,000 of the net operating loss carried over from Year 1. In addition, under § 1.1411-2(c), the $540,000 net operating loss will be allowed as a deduction in computing A's Year 2 modified adjusted gross income. Because A's modified adjusted gross income is $0, A is not subject to net investment income tax. For purposes of A's net investment income calculation, the section 1411 NOL amount of the $540,000 net operating loss from Year 1 that A deducts in Year 2 is $108,000 ($540,000 multiplied by 0.2 (the fraction determined based on the applicable portion of the net operating loss in the loss year)). The amount of the Year 1 net operating loss carried over to Year 3 is $460,000. For purposes of A's net investment income calculation, this net operating loss carryover amount includes a section 1411 NOL amount of $92,000 ($460,000 multiplied by 0.2). The section 1411 NOL amount may be applied in determining A's net investment income in Year 3.

(iii)(A) For Year 3, A has $400,000 of wages, $200,000 in trading gains which are gross income from the trading activity, $250,000 of income from his sole proprietorship, and $10,000 in trading loss deductions. For income tax purposes, A deducts the remaining $460,000 of the net operating loss from Year 1. In addition, under § 1.1411-2(c), the $460,000 net operating loss deduction reduces A's Year 3 modified adjusted gross income to $380,000.

(B) A's section 1411 NOL amount of the net operating loss deduction for Year 3 is $92,000, which is the $460,000 net operating loss deduction for Year 3 multiplied by 0.2.

(C) A's net investment income for Year 3 before the application of paragraph (f)(2)(iv) of this section is $190,000 ($200,000 in gross income from the trading activity, minus $10,000 in trading loss deductions). After the application of paragraph (f)(2)(iv) of this section, A's net investment income for Year 3 is $98,000 ($190,000 minus $92,000, the total section 1411 NOL amount of the net operating loss deduction).

Example 2. (i) The facts for Year 1 are the same as in *Example 1*.
(ii)(A) For Year 2, A has $100,000 in wages, $200,000 in gross income from the trading activity, $15,000 of dividends, $250,000 in losses from the sole proprietorship, $10,000 of non-business investment expenses, and $355,000 in trading loss deductions. As a result, for income tax purposes A sustains a section 172(c) net operating loss of $300,000. A makes an election under section 172(b)(3) to waive the carryback period for the Year 2 net operating loss.

(B) For purposes of section 1411, A's net investment income for Year 2 is the excess (if any) of $215,000 ($200,000 trading activity gross income plus $15,000 dividend income) over $365,000 ($355,000 trading loss deductions plus $10,000 nonbusiness expenses).

(C) The amount of the net operating loss for Year 2 determined under section 172 that A would incur if only items of gross income that are used to determine net investment income and only properly allocable deductions are taken into account is $150,000. This amount is the excess of $365,000 ($355,000 trading loss deductions plus $10,000 nonbusiness expenses) over $215,000 ($200,000 trading activity gross income plus $15,000 dividend income). Under section 172(d)(4), in determining the net operating loss, the $10,000 nonbusiness expenses are allowed in full against the $15,000 dividend income. The $150,000 net operating loss determined using only properly allocable deductions and gross income items used in determining net investment income is less than A's actual net operating loss for Year 2 of $300,000, and accordingly the applicable portion is $150,000. The ratio used to calculate the section 1411 NOL amount of A's Year 2 net operating loss is $150,000 (the applicable portion)/$300,000 (net operating loss), or 0.5.

(iii) For Year 3, A has $250,000 of wages, no gross income from the trading activity, $300,000 of income from his sole proprietorship, and $10,000 in trading loss deductions. For income tax purposes, A deducts $540,000 of the net operating loss from Year 1. In addition, under § 1.1411-2(c), the $540,000 net operating loss will be allowed as a deduction in computing A's Year 3 modified adjusted gross income. Because A's modified adjusted gross income is $0, A is not subject to net investment income tax. The section 1411 NOL amount of the $540,000 net operating loss from Year 1 that A deducts in Year 3 is $108,000 ($540,000 multiplied by 0.2 (the fraction used to calculate the section 1411 NOL amount of the net operating loss)), and this is also the total section 1411 NOL amount for Year 3. The amount of the Year 1 net operating loss carried over to Year 4 is $460,000. This net operating loss carryover amount includes a section 1411 NOL amount of $92,000 ($460,000 multiplied by 0.2) that may be applied in determining net investment income in Year 4. None of the Year 2 net operating loss is deducted in Year 3 so that the $300,000 Year 2 net operating loss (including the section 1411 NOL amount of $150,000) is carried to Year 4.

(iv)(A) For Year 4, A has $150,000 of wages, $450,000 in trading gains which are gross income from the trading activity, $250,000 of income from his sole proprietorship, and $10,000 in trading loss deductions. For income tax purposes, A deducts the remaining $460,000 of the net operating loss carryover from Year 1 and the $300,000 net operating loss carryover from Year 2, for a total net operating loss deduction in Year 4 of $760,000. In addition, under § 1.1411-2(c), the $760,000 net operating loss deduction reduces A's Year 4 modified adjusted gross income to $80,000.

(B) A's total section 1411 NOL amount of the net operating loss deduction for Year 4 is $242,000, which is the sum of the $92,000 ($460,000 net operating loss carryover from Year 1 and deducted in Year 4 multiplied by 0.2 (the ratio used to calculate the section 1411 NOL amount of the Year 1 net operating loss)) plus $150,000 ($300,000 net operating loss carryover from Year 2 and deducted in Year 4 multiplied by 0.5 (the ratio used to calculate the section 1411 NOL amount of the Year 2 net operating loss)).

(C) A's net investment income for Year 4 before the application of paragraph (f)(2)(iv) of this section is $440,000 ($450,000 in gross income from the trading activity, minus $10,000 in trading loss deductions). After the application of paragraph (f)(2)(iv) of this section, A's net investment income for Year 4 is $198,000 ($440,000 minus $242,000, the total section 1411 NOL amount of the Year 4 net operating loss deduction).

(i) ***Effective/applicability date.*** This section applies to taxable years beginning after December 31, 2013. However, taxpayers may apply this section to taxable years beginning after December 31, 2012, in accordance with § 1.1411-1(f).

[T.D. 9644, 78 FR 72424, Dec. 2, 2013, as amended at 79 FR 18160, Apr. 1, 2014]

§ 1.1411-5 Trades or businesses to which tax applies.

(a) ***In general.*** A trade or business is described in this section if such trade or business involves the conduct of a trade or business, and such trade or business is either—

(1) A passive activity (within the meaning of paragraph (b) of this section) with respect to the taxpayer; or

(2) The trade or business of a trader trading in financial instruments (as defined in paragraph (c)(1) of this section) or commodities (as defined in paragraph (c)(2) of this section).

(b) ***Passive activity*** —

(1) ***In general.*** A passive activity is described in this section if—

(i) Such activity is a trade or business; and

(ii) Such trade or business is a passive activity with respect to the taxpayer within the meaning of section 469 and the regulations thereunder.

(2) ***Application of income recharacterization rules*** —

(i) ***Income and gain recharacterization.*** To the extent that any income or gain from a trade or business is recharacterized as "not from a passive activity" by reason of § 1.469-2T(f)(2), § 1.469-2(f)(5), or § 1.469-2(f)(6), such trade or business does not constitute a passive activity within the meaning of paragraph (b)(1)(ii) of this section solely with respect to such recharacterized income or gain.

(ii) ***Gain recharacterization.*** To the extent that any gain from a trade or business is recharacterized as "not from a passive activity" by reason of § 1.469-2(c)(2)(iii) and does not constitute portfolio income under § 1.469-2(c)(2)(iii)(F), such trade or business does not constitute a passive activity within the meaning of paragraph (b)(1)(ii) of this section solely with respect to such recharacterized gain.

(iii) ***Exception for certain portfolio recharacterizations.*** To the extent that any income or gain from a trade or business is recharacterized as "not from a passive activity" and is further characterized as portfolio income under § 1.469-2(f)(10) or § 1.469-2(c)(2)(iii)(F), then such trade or business constitutes a passive activity within the meaning of paragraph (b)(1)(ii) of this section solely with respect to such recharacterized income or gain.

(3) ***Examples.*** The following examples illustrate the principles of paragraph (b)(1) of this section and the ordinary course of a trade or business exception in § 1.1411-4(b). In each example, unless otherwise indicated, the taxpayer uses a calendar taxable year, the taxpayer is a United States citizen, and Year 1 and all subsequent years are taxable years in which section 1411 is in effect:

Example 1. Rental activity. A, an unmarried individual, rents a commercial building to B for $50,000 in Year 1. A is not involved in the activity of the commercial building on a regular and continuous basis, therefore, A's rental activity does not involve the conduct of a trade or business, and under section 469(c)(2), A's rental activity is a passive activity. Because paragraph (b)(1)(i) of this section is not satisfied, A's rental income of $50,000 is not derived from a trade or business described in paragraph (b)(1) of this section. However, A's rental income of $50,000 still constitutes gross income from rents within the meaning of § 1.1411-4(a)(1)(i) because rents are included in the determination of net investment income under § 1.1411-4(a)(1)(i) whether or not derived from a trade or business described in paragraph (b)(1) of this section.

Example 2. Application of grouping rules under section 469. In Year 1, A, an unmarried individual, owns an interest in PRS, a partnership for Federal income tax purposes. PRS is engaged in two activities, X and Y, which constitute trades or businesses, and neither of which constitute trading in financial instruments or commodities (within the meaning of paragraph (a)(2) of this section). Pursuant to § 1.469-4, A has properly grouped X and Y together as one activity (the grouped activity). A participates in X for more than 500 hours during Year 1 and would be treated as materially participating in activity X within the meaning of § 1.469-5T(a)(1) if A's material participation were determined only with respect to activity X. A only participates in Y for 50 hours during Year 1. If not for the grouping of the X and Y activities together, A would not be treated as materially participating in Y within the meaning of § 1.469-5T(a). However, pursuant to §§ 1.469-4 and 1.469-5T(a)(1), A materially participates in the grouped activity. Therefore, for purposes of paragraph (b)(1)(ii) of this section, neither X nor Y is a passive activity with respect to A. Accordingly, with respect to A, neither X nor Y is a trade or business described in paragraph (b)(1) of this section.

Example 3. Application of the rental activity exceptions. B, an unmarried individual, is a partner in PRS, which is engaged in an equipment leasing activity. The average period of customer use of the equipment is seven days or less (and therefore meets the exception in § 1.469-1T(e)(3)(ii)(A)). B materially participates in the equipment leasing activity (within the meaning of § 1.469-5T(a)). The equipment leasing activity constitutes a trade or business. In Year 1, B has modified adjusted gross income (as defined in § 1.1411-2(c)) of $300,000, all of which is derived from PRS. All of the income from PRS is derived in the ordinary course of the equipment leasing activity, and all of PRS's property is held in the equipment leasing activity. Of B's allocable share of income from PRS, $275,000 constitutes gross income from rents (within the meaning of § 1.1411-4(a)(1)(i)). While $275,000 of the gross income from the equipment leasing activity meets the definition of rents in § 1.1411-4(a)(1)(i), the activity meets one of the exceptions to rental activity in § 1.469-1T(e)(3)(ii) and B materially participates in the activity. Therefore, the trade or business is not a passive activity with respect to B for purposes of paragraph (b)(1)(ii) of this section. Because the rents are derived in the ordinary course of a trade or business not described in paragraph (a) of this section, the ordinary course of a trade or business exception in § 1.1411-4(b) applies, and the rents are not described in § 1.1411-4(a)(1)(i). Furthermore, because the equipment leasing trade or business is not a trade or business described in paragraph (a)(1) or (a)(2) of this section, the $25,000 of other gross income is not net investment income under § 1.1411-4(a)(1)(ii). However, the $25,000 of other gross income may be net investment income by reason of section 1411(c)(3) and § 1.1411-6 if it is attributable to PRS's working capital. Finally, gain or loss from the sale of the property held in the equipment leasing activity will not be subject to § 1.1411-4(a)(1)(iii) because, although it is attributable to a trade or business, it is not a trade or business to which the section 1411 tax applies.

Example 4. Application of section 469 and other gross income under § 1.1411-4(a)(1)(ii). Same facts as *Example 3,* except B does not materially participate in the equipment leasing trade or business and therefore the trade or business is a passive activity with respect to B for purposes of paragraph (b)(1)(ii) of this section. Accordingly, the $275,000 of gross income from rents is described in § 1.1411-4(a)(1)(i) because the rents are derived from a trade or business that is a passive activity with respect to B. Furthermore, the $25,000 of other gross income from the equipment leasing trade or business is described in § 1.1411-4(a)(1)(ii) because the gross income is derived from a trade or business described in paragraph (a)(1) of this section. Finally,

gain or loss from the sale of the property used in the equipment leasing trade or business is subject to § 1.1411-4(a)(1)(iii) because the trade or business is a passive activity with respect to B, as described in paragraph (b)(1)(ii) of this section.

Example 5. Application of the portfolio income rule and section 469. C, an unmarried individual, is a partner in PRS, a partnership engaged in a trade or business that does not involve a rental activity. C does not materially participate in PRS within the meaning of § 1.469-5T(a). Therefore, the trade or business of PRS is a passive activity with respect to C for purposes of paragraph (a)(1) of this section. C's $500,000 allocable share of PRS's income consists of $450,000 of gross income from a trade or business and $50,000 of gross income from dividends and interest (within the meaning of § 1.1411-4(a)(1)(i)) that is not derived in the ordinary course of the trade or business of PRS. Therefore, C's $500,000 allocable share of PRS's income is subject to section 1411. C's $50,000 allocable share of PRS's income from dividends and interest is subject to § 1.1411-4(a)(1)(i) because the share is gross income from dividends and interest that is not derived in the ordinary course of a trade or business (that is, the ordinary course of a trade or business exception in § 1.1411-4(b) is inapplicable). C's $450,000 allocable share of PRS's income is subject to § 1.1411-4(a)(1)(ii) because it is gross income from a trade or business that is a passive activity.

(c) ***Trading in financial instruments or commodities*** —

(1) ***Definition of financial instruments.*** For purposes of section 1411 and the regulations thereunder, the term *financial instruments* includes stocks and other equity interests, evidences of indebtedness, options, forward or futures contracts, notional principal contracts, any other derivatives, or any evidence of an interest in any of the items described in this paragraph (c)(1). An evidence of an interest in any of the items described in this paragraph (c)(1) includes, but is not limited to, short positions or partial units in any of the items described in this paragraph (c)(1).

(2) ***Definition of commodities.*** For purposes of section 1411 and the regulations thereunder, the term *commodities* refers to items described in section 475(e)(2).

(d) ***Effective/applicability date.*** This section applies to taxable years beginning after December 31, 2013. However, taxpayers may apply this section to taxable years beginning after December 31, 2012, in accordance with § 1.1411-1(f).

[T.D. 9644, 78 FR 72424, Dec. 2, 2013, as amended at 79 FR 18160, Apr. 1, 2014]

§ 1.1411-6 Income on investment of working capital subject to tax.

(a) ***General rule.*** For purposes of section 1411, any item of gross income from the investment of working capital will be treated as not derived in the ordinary course of a trade or business, and any net gain that is attributable to the investment of working capital will be treated as not derived in the ordinary course of a trade or business. In determining whether any item is gross income from or net gain attributable to an investment of working capital, principles similar to those described in § 1.469-2T(c)(3)(ii) apply. See § 1.1411-4(f) for rules regarding properly allocable deductions with respect to an investment of working capital and § 1.1411-7 for rules relating to the adjustment to net gain on the disposition of interests in a partnership or S corporation.

(b) ***Example.*** The following example illustrates the principles of this section. Assume for purposes of the example that the taxpayer uses a calendar taxable year, the taxpayer is a United States citizen, and Year 1 and all subsequent years are taxable years in which section 1411 is in effect:

Example. (i) A, an unmarried individual, operates a restaurant, which is a section 162 trade or business but is not a trade or business described in § 1.1411-5(a)(1) with respect to A. A owns and conducts the restaurant business through S, an S corporation wholly-owned by A. S is able to pay all of the restaurant's current obligations with cash flow generated by the restaurant. S utilizes an interest-bearing checking account at a local bank to make daily deposits of cash receipts generated by the restaurant, and also to pay the recurring ordinary and necessary business expenses of the restaurant. The average daily balance of the checking account is approximately $2,500, but at any given time the balance may be significantly more or less than this amount depending on the short-term cash flow needs of the business. In addition, S has set aside $20,000 for the potential future needs of the business in case the daily cash flow into and from the checking account becomes insufficient to pay the restaurant's recurring business expenses. S does not currently need to spend or use the $20,000 capital to conduct the restaurant business, and S deposits and maintains the $20,000 in an interest-bearing savings account at a local bank. (ii) Both the $2,500 average daily balance of the checking account and the $20,000 savings account balance constitute working capital under § 1.469-2T(c)(3)(ii) and, pursuant to paragraph (a) of this section, the interest generated by this working capital will not be treated as derived in the ordinary course of S's restaurant business. Accordingly, the interest income derived by S from its checking and savings accounts and allocated to A under section 1366 constitutes gross income from interest under § 1.1411-4(a)(1)(i).

(c) ***Effective/applicability date.*** This section applies to taxable years beginning after December 31, 2013. However, taxpayers may apply this section to taxable years beginning after December 31, 2012, in accordance with § 1.1411-1(f).

[T.D. 9644, 78 FR 72424, Dec. 2, 2013]

§ 1.1411-7 Exception for dispositions of interests in partnerships and S corporations. [Reserved]

§ 1.1411-8 Exception for distributions from qualified plans.

(a) ***General rule.*** Net investment income does not include any distribution from a qualified plan or arrangement. For this purpose, the term qualified plan or arrangement means any plan or arrangement described in section 401(a), 403(a), 403(b), 408, 408A, or 457(b).

(b) ***Rules relating to distributions.*** This paragraph (b) provides rules for purposes of paragraph (a) of this section. For purposes of section 1411(c)(5) and this section, a distribution means the following:

(1) ***Actual distributions.*** Any amount actually distributed from a qualified plan or arrangement, as defined in paragraph (a) of this section, is a distribution within the meaning of section 1411(c)(5), and thus is not included in net investment income. Examples include a rollover to an eligible retirement plan within the meaning of section 402(c)(8)(B), a distribution of a plan loan offset amount within the meaning of Q&A-13(b) of § 1.72(p)-1, and certain corrective distributions under the Internal Revenue Code (Code).

(2) ***Amounts treated as distributed.*** Any amount that is treated as distributed from a qualified plan or arrangement under the Code for purposes of income tax is a distribution within the meaning of section 1411(c)(5), and thus is not included in net investment income. Examples include a conversion to a Roth IRA described in section 408A and a deemed distribution under section 72(p).

(3) ***Amounts includible in gross income.*** Any amount that is not treated as a distribution but is otherwise includible in gross income pursuant to a rule relating to amounts held in a qualified plan or arrangement described in paragraph (a) of this section is a distribution within the meaning of section 1411(c)(5), and thus is not included in net investment income. For example, any income of the trust of a qualified plan or arrangement that is applied to purchase a participant's life insurance coverage (the P.S. 58 costs) is a distribution within the meaning of section 1411(c)(5), and thus is not included in net investment income.

(4) ***Amounts related to employer securities*** —

(i) ***Dividends related to employer securities.*** Any dividend that is deductible under section 404(k) and is paid in cash directly to plan participants or beneficiaries is a distribution within the meaning of section 1411(c)(5), and thus is not included in net investment income. However, any amount paid as a dividend after the employer securities have been distributed from a qualified plan is not a distribution within the meaning of section 1411(c)(5), and thus is included in net investment income.

(ii) ***Amounts related to the net unrealized appreciation in employer securities.*** The amount of any net unrealized appreciation attributable to employer securities (within the meaning of section 402(e)(4)) realized on a disposition of those employer securities is a distribution within the meaning of section 1411(c)(5), and thus is not included in net investment income. However, any appreciation in value of the employer securities after the distribution from the qualified plan is not a distribution within the meaning of section 1411(c)(5), and is included in net investment income.

(c) ***Effective/applicability date.*** This section applies to taxable years beginning after December 31, 2013. However, taxpayers may apply this section to taxable years beginning after December 31, 2012, in accordance with § 1.1411-1(f).

[T.D. 9644, 78 FR 72424, Dec. 2, 2013]

§ 1.1411-9 Exception for self-employment income.

(a) ***General rule.*** Except as provided in paragraph (b) of this section, net investment income does not include any item taken into account in determining self-employment income that is subject to tax under section 1401(b) for such taxable year. For purposes of section 1411(c)(6) and this section, *taken into account* means income included and deductions allowed in determining net earnings from self-employment. However, amounts excepted in determining net earnings from self-employment under section 1402(a)(1)-(17), and thus excluded from self-employment income under section 1402(b), are not taken into account in determining self-employment income and thus may be included in net investment income if such amounts are described in § 1.1411-4. Except as provided in paragraph (b) of this section, if net earnings from self-employment consist of income or loss from more than one trade or business, all items taken into account in determining the net earnings from self-employment with respect to these trades or

businesses (see § 1.1402(a)-2(c)) are considered taken into account in determining the amount of self-employment income that is subject to tax under section 1401(b) and therefore not included in net investment income.

(b) ***Special rule for traders.*** In the case of gross income described in §§ 1.1411-4(a)(1)(ii) and (a)(1)(iii) derived from a trade or business of trading in financial instruments or commodities (as described in § 1.1411-5(a)(2)), the deductions described in § 1.1411-4(f)(2)(ii) properly allocable to the taxpayer's trade or business of trading in financial instruments or commodities are taken into account in determining the taxpayer's self-employment income only to the extent that such deductions reduce the taxpayer's net earnings from self-employment (after aggregating under § 1.1402(a)-2(c) the net earnings from self-employment from any trade or business carried on by the taxpayer as an individual or as a member of a partnership). Any deductions described in § 1.1411-4(f)(2)(ii) that exceed the amount of net earnings from self-employment, in the aggregate (if applicable), are allowed in determining the taxpayer's net investment income under section 1411 and the regulations thereunder.

(c) ***Examples.*** The following examples illustrate the provisions of this section. For purposes of these examples, assume the taxpayer is a United States citizen, uses a calendar taxable year, and Year 1 and all subsequent years are taxable years in which section 1411 is in effect:

Example 1. Exclusion from self-employment income. A is a general partner in PRS, a partnership carrying on a trade or business that is not a trade or business of trading in financial instruments or commodities (within the meaning of § 1.1411-5(a)(2)). During Year 1, A's distributive share from PRS is $1 million, $300,000 of which is attributable to the gain on the sale of PRS's capital assets. Section 1402(a)(3)(A) provides an exclusion from net earnings from self-employment for any gain or loss from the sale or exchange of a capital asset. For Year 1, A has $700,000 self-employment income subject to self-employment tax. This $700,000 subject to self-employment tax is not included as part of net investment income under paragraph (a) of this section. However, the $300,000 attributable to the gain on PRS's sale of a capital asset is excluded from net earnings from self-employment, and from self-employment income, and thus is not covered by the exception in section 1411(c)(6). Therefore, the $300,000 attributable to the gain on PRS's sale of a capital asset is included as net investment income if the other requirements of section 1411 are satisfied.

Example 2. Two trades or businesses. B is an individual engaged in two trades or businesses, Business X and Business Y, neither of which is the trade or business of trading in financial instruments or commodities (as described in § 1.1411-5(a)(2)). B carries on Business X as a sole proprietor and B is also a general partner in a partnership that carries on Business Y. Business Y is a nonpassive activity of B. During Year 1, B had net earnings from self-employment consisting of the aggregate of a $50,000 loss (that is, after application of the exclusions under section 1402(a)(1)-(17)) from Business X, and $70,000 in income (after application of the exclusions under section 1402(a)(1)-(17)) from B's distributive share from the partnership from carrying on Business Y. Thus, B's net earnings from self-employment in Year 1 are $20,000. For Year 1, all of B's income, deductions, gains, and losses from Business X and distributive share from the partnership carrying on Business Y, other than those amounts excluded due to application of section 1402(a)(1)-(17), are taken into account in determining B's net earnings from self-employment and self-employment income for such taxable year. Accordingly, in calculating B's net investment income (as defined in § 1.1411-4) for Year 1, B will not take into account the items of income, loss, gain, and deduction that comprise B's $50,000 loss attributable to Business X (after application of the exclusions under section 1402(a)(1)-(17)), and the items of income, loss, gain, and deduction that comprise B's $70,000 distributable share attributable to B's general partnership interest (after application of the exclusions under section 1402(a)(1)-(17)). Rather, only items of income, loss, gain, and deduction from the two

separate businesses that were excluded from the calculation of B's net earnings from self-employment income due to the application of the exclusions under section 1402(a)(1)-(17), such as any capital gains and losses excluded under section 1402(a)(3), are considered for purposes of calculating B's net investment income for Year 1 in connection with these two trades or businesses.

Example 3. Special rule for trader with single trade or business. D is an individual engaged in the trade or business of trading in commodities (as described in § 1.1411-5(a)(2)). D made a valid and timely election under section 475(f)(2). D derives $400,000 of trading gains, which are gross income described in § 1.1411-4(a)(1) and $15,000 of expenses described in § 1.1411-4(f)(2)(ii) from carrying on the trade or business. Pursuant to sections 475(f)(1)(D) and 1402(a)(3)(A), none of the gross income is taken into account in determining D's net earnings from self-employment and self-employment income. Therefore, under paragraph (a) of this section, the $400,000 of gross income is not covered by the exception in section 1411(c)(6). Because D had $0 net earnings from self-employment, the $15,000 of deductions did not reduce D's net earnings from self-employment under paragraph (b) of this section and § 1.1411-(4)(f)(2)(ii). Therefore, the $15,000 of deductions may reduce D's gross income of $400,000 for purposes of section 1411.

Example 4. Special rule for trader with multiple trades or businesses. E is an individual engaged in two trades or businesses, Business X (which is not a trade or business of trading in financial instruments or commodities) and Business Y (which is a trade or business of trading in financial instruments or commodities (as described in § 1.1411-5(a)(2)). E made a valid and timely election under section 475(f) with respect to Business Y. During Year 1, E had net earnings from self-employment from Business X of $35,000. During Year 1, E also had $300,000 of trading gains, which are gross income described in § 1.1411-4(a)(1) and $40,000 of expenses described in § 1.1411-4(f)(2)(ii) from Business Y. E's $300,000 of gross income from Business Y is excluded from net earnings from self-employment and self-employment income pursuant to sections 475(f)(1)(D) and 1402(a)(3)(A). E's $40,000 of deductions from Business Y reduce E's $35,000 of net earnings from self-employment from Business X to $0. Pursuant to paragraph (b) of this section and § 1.1411-4(f)(2)(ii), the remaining $5,000 of deductions from Business Y are taken into account in determining E's net investment income (by reducing E's gross income of $300,000 from Business Y to $295,000) for purposes of section 1411.

(d) ***Effective/applicability date.*** This section applies to taxable years beginning after December 31, 2013. However, taxpayers may apply this section to taxable years beginning after December 31, 2012, in accordance with § 1.1411-1(f).

[T.D. 9644, 78 FR 72424, Dec. 2, 2013]

§ 1.1411-10 Controlled foreign corporations and passive foreign investment companies.

(a) ***In general.*** This section provides rules that apply to an individual, estate, or trust that is a United States shareholder of a controlled foreign corporation (CFC), or that is a United States person that directly or indirectly owns an interest in a passive foreign investment company (PFIC). In addition, this section provides rules that apply to an individual, estate, or trust that owns an interest in a domestic partnership or an S corporation that is either a United States shareholder of a CFC or that has made an election under section 1295 to treat a PFIC as a qualified electing fund (QEF). References in this section to an election under paragraph (g) of this section being in effect relate to an election that is applicable to the person that is determining the section 1411 consequences with respect to holding a particular CFC or QEF.

(b) ***Amounts derived from a trade or business described in § 1.1411-5*** —

(1) ***In general.*** Except as provided in paragraph (b)(2) of this section, an amount included in gross income under section 951(a) or section 1293(a) that is also income derived from a trade or business described in section 1411(c)(2) and § 1.1411-5 (applying the relevant rules in § 1.1411-4(b)) is taken into account as net investment income under section 1411(c)(1)(A)(ii) and § 1.1411-4(a)(1)(ii) for purposes of section 1411 and the regulations thereunder when it is taken into account for purposes of chapter 1, and the rules in paragraphs (c) through (g) of this section do not apply to that amount. For purposes of section 1411 and the regulations thereunder, an amount included in gross income under section 1296(a) that is also income derived from a trade or business described in section 1411(c)(2) and § 1.1411-5 (applying the relevant rules in § 1.1411-4(b)), is net investment income within the meaning of section 1411(c)(1)(A)(ii) and § 1.1411-4(a)(1)(ii), and the rules in paragraph (c)(2)(ii) of this section do not apply to that amount.

(2) ***Coordination rule for changes in trade or business status.*** With respect to stock of a CFC or QEF for which an election under paragraph (g) of this section is not in effect, the rules in paragraphs (c) through (f) of this section apply to a distribution of earnings and profits described in paragraph (c)(1)(i)(A) of this section that was not taken into account as net investment income under paragraph (b) of this section.

(c) ***Calculation of net investment income —***

(1) ***Dividends.*** For purposes of section 1411(c)(1)(A)(i) and § 1.1411-4(a)(1)(i), net investment income is calculated by taking into account the amount of dividends described in this paragraph (c)(1).

(i) ***Distributions of previously taxed earnings and profits —***

(A) ***Rules when an election under paragraph (g) of this section is not in effect with respect to the shareholder —***

(*1*) ***General rule.*** Except as otherwise provided in this paragraph (c)(1)(i), with respect to stock of a CFC or QEF for which an election under paragraph (g) of this section is not in effect, a distribution of earnings and profits that is not treated as a dividend for chapter 1 purposes under section 959(d) or section 1293(c) is a dividend for purposes of section 1411(c)(1)(A)(i) and § 1.1411-4(a)(1)(i) if the distribution is attributable to amounts that are or have been included in gross income for chapter 1 purposes under section 951(a) or section 1293(a) in a taxable year beginning after December 31, 2012. Solely, for this purpose, distributions of earnings and profits attributable to amounts that are or have been included in gross income for chapter 1 purposes under section 951(a) or section 1293(a) are considered first attributable to those earnings and profits, if any, derived from the current taxable year, and then from prior taxable years beginning with the most recent prior taxable year, and with respect to amounts included under section 951(a), without regard to whether the earnings and profits are described in section 959(c)(1) or section 959(c)(2).

(*2*) ***Exception for distributions attributable to earnings and profits previously taken into account for purposes of section 1411.*** A distribution of earnings and profits that is not treated as a dividend for chapter 1 purposes under section 959(d) or section 1293(c) is not treated as a dividend for purposes of section 1411(c)(1)(A)(i) and § 1.1411-4(a)(1)(i), to the extent that an individual, estate, or trust establishes, by providing information that is similar to, and in the same manner as, the information described in § 1.959-1(d) (relating to previously taxed earnings and profits), that the distribution is attributable to—

(*i*) Amounts included in gross income by any person for chapter 1 purposes under section 951(a) or section 1293(a) that have been taken into account by any person as net investment income by reason of paragraph (b) of this section or an election under paragraph (g) of this section; or

(*ii*) Amounts included in gross income by any person as a dividend pursuant to section 1248(a) that, by reason of paragraph (c)(3)(ii) of this section, have been taken into account by any person as net investment income under section 1411(c)(1)(A)(i) and § 1.1411-4(a)(1)(i).

(B) ***Rule when an election under paragraph (g) of this section is in effect with respect to the shareholder.*** Except as otherwise provided in this paragraph (c)(1)(i), if an election under paragraph (g) of this section is in effect, a distribution of earnings and profits that is not treated as a dividend for chapter 1 purposes under section 959(d) or section 1293(c) is not treated as a dividend for purposes of section 1411(c)(1)(A)(i) and § 1.1411-4(a)(1)(i).

(C) ***Special rule for certain distributions related to 2013 taxable years*** —

(*1*) ***Scope.*** The rule in this paragraph (c)(1)(i)(C) applies to individuals, estates, and trusts that were subject to section 1411 during a taxable year that began after December 31, 2012, and before January 1, 2014, and that satisfy all of the conditions set forth in paragraph (c)(1)(i)(C)(*2*) of this section. This rule also applies to all domestic partnerships and S corporations that satisfy all of the conditions set forth in paragraph (c)(1)(i)(C)(*2*) of this section.

(*2*) ***Rule.*** A distribution of earnings and profits from a CFC or QEF, with respect to which an election under paragraph (g) is in effect, that is not treated as a dividend for chapter 1 purposes under section 959(d) or section 1293(c) is a dividend for purposes of section 1411(c)(1)(A)(i) and § 1.1411-4(a)(1)(i) to the extent that—

(*i*) The distribution of earnings and profits is attributable to an amount included by an individual, estate, trust, domestic partnership, S corporation or common trust fund in gross income for chapter 1 purposes under section 951(a) or section 1293(a) with respect to the CFC or QEF for a taxable year that began after December 31, 2012, and before January 1, 2014;

(*ii*) The individual, estate, trust, domestic partnership, S corporation, or common trust fund made the election under paragraph (g) of this section with respect to the CFC or QEF in a taxable year that began after December 31, 2013; and

(*iii*) The individual, estate, trust, domestic partnership, S corporation, or common trust fund did not make the election described in paragraph (g)(4)(iii) of this section (concerning making an election under paragraph (g) of this section for a taxable year that begins before January 1, 2014).

(*3*) ***Ordering rule.*** Solely, for purposes of this paragraph (c)(1)(i)(C)(*3*), distributions of earnings and profits attributable to amounts that have been included in gross income for chapter 1 purposes under section 951(a) or section 1293(a) are considered first attributable to the earnings and profits derived from a taxable year that began after December 31, 2012, and before January 1, 2014.

(ii) ***Excess distributions that constitute dividends.*** To the extent an excess distribution within the meaning of section 1291(b) constitutes a dividend within the meaning of section 316(a), the amount is included in net investment income for purposes of section 1411(c)(1)(A)(i) and § 1.1411-4(a)(1)(i).

(2) ***Net gain.*** For purposes of section 1411(c)(1)(A)(iii) and § 1.1411-4(a)(1)(iii), the rules in this paragraph (c)(2) apply in determining net gain attributable to the disposition of property.

(i) ***Gains treated as excess distributions.*** Gains treated as excess distributions under section 1291(a)(2) are included in determining net gain attributable to the disposition of property for purposes of section 1411(c)(1)(A)(iii) and § 1.1411-4(a)(1)(iii).

(ii) ***Inclusions and deductions with respect to section 1296 mark to market elections.*** Amounts included in gross income under section 1296(a)(1) and amounts allowed as a deduction under section 1296(a)(2) are taken into account in determining net gain attributable to the disposition of property for purposes of section 1411(c)(1)(A)(iii) and § 1.1411-4(a)(1)(iii).

(iii) ***Gain or loss attributable to the disposition of stock of CFCs and QEFs.*** With respect to stock of a CFC or QEF for which an election under paragraph (g) of this section is not in effect, for purposes of calculating the net gain under §§ 1.1411-4(a)(1)(iii) and 1.1411-4(d) that is attributable to the direct or indirect disposition of that stock (including for purposes of determining gain or loss on the direct or indirect disposition of that stock by a domestic partnership, S corporation, or common trust fund), basis is determined in accordance with the provisions of paragraph (d) of this section.

(iv) ***Gain or loss attributable to the disposition of interests in domestic partnerships or S corporations that own directly or indirectly stock of CFCs or QEFs.*** With respect to stock of a CFC or QEF for which an election under paragraph (g) of this section is not in effect, for purposes of calculating the net gain under §§ 1.1411-4(a)(1)(iii) and 1.1411-4(d) that is attributable to the disposition of an interest in a domestic partnership or S corporation that directly or indirectly owns that stock, basis is determined in accordance with the provisions of paragraph (d) of this section.

(3) ***Application of sections 1248 and 367(b).*** With respect to stock of a foreign corporation that is a CFC (or that was a CFC at any time during the 5-year period ending on the date of sale or exchange) or QEF for which an election under paragraph (g) of this section is not in effect, for purposes of section 1411 and § 1.1411-4—

(i) In determining the amount of gain recognized on the sale or exchange of stock of a foreign corporation under section 1248(a) or the amount of gain realized on the exchange of stock of a foreign corporation under § 1.367(b)-4 or 1.367(b)-5, basis is determined in accordance with the provisions of paragraph (d) of this section; and

(ii) Section 1248(a), and § 1.367(b)-2(c)(1) and (d)(2)(ii) apply without regard to the exclusions for certain earnings and profits under section 1248(d)(1) and (6), except that those exclusions will apply with respect to the earnings and profits of a foreign corporation that are attributable to:

(A) Amounts taken into account as net investment income under paragraph (b) of this section; and

(B) Amounts previously included in gross income for chapter 1 purposes under section 951(a) or section 1293(a) in a taxable year beginning before December 31, 2012, and that have not yet been distributed. For this purpose, the determination of whether earnings and profits that are attributable to amounts previously taxed in a taxable year beginning before December 31, 2012, have been distributed is determined based on the rules described in paragraph (c)(1)(i) of this section.

(4) ***Amounts distributed by an estate or trust.*** Net investment income of a beneficiary of an estate or trust includes the beneficiary's share of distributable net income, as described in sections 652 and 662 and as modified by paragraph (f) of this section, to the extent that the beneficiary's share of distributable net income includes items that, if they had been received directly by the beneficiary, would have been described in this paragraph (c).

(5) ***Properly allocable deductions*** —

(i) ***General rule.*** For purposes of section 1411(c)(1)(B) and § 1.1411-4(f), the section 163(d)(1) investment expense deduction may be calculated by—

(A) Increasing the amount of investment income determined for chapter 1 purposes under section 163(d)(4)(B) by the amount of dividends described in § 1.1411-10(c) that are derived from a CFC or QEF with respect to which an election under paragraph (g) of this section is not in effect;

(B) Decreasing the amount of investment income determined for chapter 1 purposes under section 163(d)(4)(B) by the amount included in gross income for chapter 1 purposes under section 951(a) or section 1293(a) that is attributable to a CFC or QEF with respect to which an election under paragraph (g) of this section is not in effect; and

(C) Increasing or decreasing, as applicable, the amount of investment income for chapter 1 purposes under section 163(d)(4)(B) by the difference between the amount calculated with respect to a disposition under paragraphs (c)(2)(iii) and (c)(2)(iv) of this section and the amount of the gain or loss attributable to the relevant disposition as calculated for chapter 1 purposes.

(ii) ***Additional rules.*** For purposes of section 1411(c)(1)(B) and § 1.1411-4(f), if the method of calculation described in paragraph (c)(5)(i) of this section is applied:

(A) The amount of investment interest not allowed as a deduction under section 163(d)(2) must be calculated consistent with the method of calculation described in paragraph (c)(5)(i).

(B) The method of calculation must be adopted by an individual, estate, or trust no later than the first year in which the individual, estate, or trust is subject to section 1411.

(C) The method of calculation must be applied with respect to all CFCs and QEFs for all taxable years with respect to which an election under paragraph (g) of this section is not in effect.

(D) A method of calculation under this paragraph is a method of accounting, which must be applied consistently, and may only be changed by the taxpayer by securing the consent of the Commissioner in accordance with § 1.446-1(e) and following the administrative procedures issued under § 1.446-1(e)(3)(ii).

(d) *Conforming basis adjustments* —

(1) *Basis adjustments under sections 961 and 1293* —

(i) ***Stock held by individuals, estates, or trusts.*** With respect to stock of a CFC or QEF which is held by an individual, estate, or trust, either directly or indirectly through one or more entities each of which is foreign, for which an election under paragraph (g) of this section is not in effect—

(A) The basis increases made pursuant to sections 961(a) and 1293(d) for amounts included in gross income for chapter 1 purposes under sections 951(a) and 1293(a) in taxable years beginning after December 31, 2012, are not taken into account for purposes of section 1411 and the regulations thereunder; and

(B) The basis decreases made pursuant to sections 961(b) and 1293(d) attributable to amounts treated as dividends for purposes of section 1411 under paragraph (c)(1)(i) of this section are not taken into account for purposes of section 1411 and the regulations thereunder.

(ii) *Stock held by domestic partnerships or S corporations* —

(A) ***Rule when an election under paragraph (g) of this section is not in effect.*** The rules of this paragraph (d)(1)(ii)(A) apply with respect to stock of a CFC or QEF held directly by a domestic partnership or S corporation, or indirectly through one or more entities each of which is foreign, for which an election under paragraph (g) of this section is not in effect. If an individual, estate, or trust is a shareholder of an S corporation, or if an individual, estate, or trust directly, or through one or more tiers of passthrough entities (including an S corporation), owns an interest in a domestic partnership, the S corporation or domestic partnership, as the case may be, will not take into account for purposes of section 1411 and the regulations thereunder the basis increases made by the domestic partnership or S corporation pursuant to sections 961(a) and 1293(d) for amounts included in gross income for chapter 1 purposes under sections 951(a) and 1293(a) for taxable years beginning after December 31, 2012, and the basis decreases made by the domestic partnership or S corporation pursuant to sections 961(b) and 1293(d) attributable to amounts treated as dividends for purposes of section 1411 under paragraph (c)(1)(i) of this section (the section 1411 recalculated basis). If the domestic partnership or S corporation disposes of the stock of a CFC or QEF, the section 1411 recalculated basis will be used to determine the distributive share or pro rata share of the gain or loss for purposes of section 1411 for partners or shareholders.

(B) ***Rules when an election under paragraph (g) of this section is in effect.*** If an election under paragraph (g) of this section is in effect with respect to stock of a CFC or QEF held directly or indirectly by a domestic partnership or S corporation, the partner's distributive share or the shareholder's pro rata share of the gain or loss for purposes of section 1411 is the same as the distributive share or pro rata share of the gain or loss for purposes of chapter 1. See *Example 6* of paragraph (h) of this section.

(2) ***Special rules for partners that own interests in domestic partnerships that own directly or indirectly stock of CFCs or QEFs.*** The rules of this paragraph (d)(2) apply with respect to stock of a CFC or QEF for which an election under paragraph (g) of this section is not in effect, and that is held by a domestic partnership, either directly or indirectly through one or more entities each of which is foreign. In such a case, the basis increases provided under section 705(a)(1)(A) to the partners for purposes of chapter 1 that are attributable to amounts that the domestic partnership includes or

included in gross income under section 951(a) or section 1293(a) for a taxable year beginning after December 31, 2012, are not taken into account for purposes of section 1411. Instead, each partner's adjusted basis in the partnership interest is increased by its share of any distributions to the partnership from the CFC or QEF that are treated as dividends for purposes of section 1411 under paragraph (c)(1)(i) of this section. Similar rules apply when the stock of the CFC or QEF is held in a tiered partnership structure. For purposes of determining net investment income under section 1411 and the regulations thereunder, the partner's adjusted basis in the partnership interest as calculated under this paragraph (d)(2) is used to determine all tax consequences related to tax basis (for example, loss limitation rules and the characterization of partnership distributions).

(3) ***Special rules for S corporation shareholders that own interests in S corporations that own directly or indirectly stock of CFCs or QEFs.*** The rules of this paragraph (d)(3) apply with respect to stock of a CFC or QEF for which an election under paragraph (g) of this section is not in effect, and that is held by an S corporation, directly or indirectly through one or more entities each of which is foreign. In such case, the basis increases provided in section 1367(a)(1)(A) to its shareholders for chapter 1 purposes that are attributable to amounts that the S corporation includes or included in gross income for chapter 1 purposes under section 951(a) or section 1293(a) for taxable years beginning after December 31, 2012, are not taken into account for purposes of section 1411. Instead, each shareholder's adjusted basis of stock in the S corporation is increased by its share of the distributions to the S corporation from the CFC or QEF that are treated as dividends for purposes of section 1411 under paragraph (c)(1)(i) of this section. Similar rules apply when the S corporation holds an interest in a CFC or QEF through a partnership. For purposes of determining net investment income under section 1411 and the regulations thereunder, the shareholder's adjusted basis in the stock of the S corporation as calculated under this paragraph (d)(3) is used to determine all tax consequences related to tax basis (for example, loss limitation rules and the characterization of S corporation distributions).

(4) ***Special rules for participants in common trust funds.*** Rules similar to the rules in paragraphs (d)(2) and (3) of this section apply to ownership interests in common trust funds (as defined in section 584).

(5) ***Basis adjustments under section 367(b).*** With respect to stock of a foreign corporation that is exchanged in a transaction subject to section 367(b), the portion of the basis increase provided by § 1.367(b)-2(e)(3)(ii) by reason of paragraph (c)(3)(ii) of this section is made solely for purposes of section 1411.

(e) ***Conforming adjustments to modified adjusted gross income and adjusted gross income*** —

(1) ***Individuals.*** Solely for purposes of section 1411(a)(1)(B)(i) and the regulations thereunder, the term *modified adjusted gross income* means modified adjusted gross income as defined in § 1.1411-2(c)(1)—

(i) Increased by amounts included in net investment income under paragraphs (c)(1)(i), (c)(1)(ii), (c)(2)(i), and (c)(4) of this section that are not otherwise included in gross income for chapter 1 purposes;

(ii) Increased or decreased, as applicable, by the difference between the amount calculated with respect to a disposition under paragraphs (c)(2)(iii) and (iv) of this section and the amount of the gain or loss attributable to the relevant disposition as calculated for chapter 1 purposes;

(iii) Decreased by any amount included in gross income for chapter 1 purposes under section 951(a) or section 1293(a) attributable to a CFC or QEF with respect to which no election under paragraph (g) of this section is in effect; and

(iv) To the extent the section 163(d)(1) investment interest expense deduction is calculated using the method of calculation set forth in paragraph (c)(5) of this section and the deduction is taken into account under § 1.1411-4(f)(2), increased or decreased, as appropriate, by the difference between the amount of the section 163(d)(1) investment interest expense deduction calculated under paragraph (c)(5) of this section and the amount calculated for chapter 1 purposes.

(2) ***Estates and trusts.*** Solely for purposes of section 1411(a)(2)(B)(i) and the regulations thereunder, the term *adjusted gross income* means adjusted gross income as defined in § 1.1411-3(a)(1)(ii)(B)(*1*) adjusted by the following amounts to the extent those amounts are not distributed by the estate or trust—

(i) Increased by amounts included in net investment income under paragraphs (c)(1)(i), (c)(1)(ii), (c)(2)(i), and (c)(4) of this section that are not otherwise included in gross income for chapter 1 purposes;

(ii) Increased or decreased, as applicable, by the difference between the amount calculated with respect to a disposition under paragraphs (c)(2)(iii) and (iv) of this section and the amount of the gain or loss attributable to the relevant disposition as calculated for chapter 1 purposes;

(iii) Decreased by any amount included in gross income for chapter 1 purposes under section 951(a) or section 1293(a) attributable to a CFC or QEF with respect to which no election under paragraph (g) of this section is in effect; and

(iv) To the extent the section 163(d)(1) investment interest expense deduction is calculated using the method of calculation set forth in paragraph (c)(5) of this section and taken into account under § 1.1411-4(f)(2), increased or decreased, as appropriate, by the difference between the amount of the section 163(d)(1) investment interest expense deduction calculated under paragraph (c)(5) of this section and the amount calculated for chapter 1 purposes.

(f) ***Application to estates and trusts.*** All of the items described in paragraph (c) of this section are included in the net investment income of an estate or trust or its beneficiaries. The amounts described in paragraphs (e)(2)(i) through (iv) of this section, regardless of whether the estate or trust receives those amounts directly or indirectly through another estate or trust, increase or decrease, as applicable, the estate's or trust's distributable net income for purposes of section 1411. The estate or trust, or the beneficiaries thereof, must take those amounts into account in a manner reasonably consistent with the general operating rules for estates and trusts in § 1.1411-3 and subchapter J in computing the undistributed net investment income of the estate or trust and the net investment income of the beneficiaries.

(g) ***Election with respect to CFCs and QEFs*** —

(1) ***Effect of election.*** If an election under paragraph (g) of this section is made with respect to a CFC or QEF, amounts included in gross income for chapter 1 purposes under section 951(a) or section 1293(a)(1)(A) with respect to the CFC or QEF in taxable years beginning with the taxable year for which the election is made are treated as net investment income for purposes of § 1.1411-4(a)(1)(i), and amounts included in gross income under section 1293(a)(1)(B) with respect to the QEF in taxable years beginning with the taxable year for which the election is made are taken into account

in calculating net gain attributable to the disposition of property under § 1.1411-4(a)(1)(iii). See paragraphs (c)(1)(i)(B) and (c)(1)(i)(C) of this section for the effect of this election on certain distributions of previously taxed earnings and profits.

(2) ***Years to which election applies*** —

(i) ***In general.*** An election under paragraph (g) of this section applies to the taxable year for which it is made and all subsequent taxable years, and applies to all subsequently acquired interests in the CFC or QEF. An election under paragraph (g) of this section is irrevocable.

(ii) ***Termination of interest in CFC or QEF.*** Complete termination of a person's interest in the CFC or QEF does not terminate the person's election under paragraph (g) of this section with respect to the CFC or QEF. Thus, if the person reacquires stock of the CFC or QEF, that stock is considered to be stock for which an election under paragraph (g) of this section has been made and is in effect.

(iii) ***Termination of partnership.*** If a domestic partnership that makes the election under paragraph (g) of this section is terminated pursuant to section 708(b)(1)(B), the election is binding on the new partnership.

(3) ***Who may make the election.*** An individual, estate, trust, domestic partnership, S corporation, or common trust fund may make an election under paragraph (g) of this section with respect to each CFC or QEF that it holds directly or indirectly through one or more entities, each of which is foreign. In addition, an individual, estate, trust, domestic partnership, S corporation, or common trust fund may make an election under paragraph (g) of this section with respect to a CFC or QEF that it holds indirectly through a domestic partnership, S corporation, estate, trust, or common trust fund if the domestic partnership, S corporation, estate, trust, or common trust fund does not make the election. The election, if made, for an estate or trust must be made by the fiduciary of that estate or trust.

(4) ***Time and manner for making the election*** —

(i) ***Individuals, estates, and trusts*** —

(A) ***General rule.*** Except as otherwise provided in this paragraph, in order for an election under paragraph (g) of this section by an individual, estate, or trust (other than a CRT) with respect to a CFC or QEF to be effective, the election must be made no later than the first taxable year beginning after December 31, 2013, during which the individual, estate, or trust—

(*1*) Includes an amount in gross income for chapter 1 purposes under section 951(a) or section 1293(a) with respect to the CFC or QEF; and

(*2*) Is subject to tax under section 1411 or would be subject to tax under section 1411 if the election were made with respect to the stock of the CFC or QEF.

(B) ***Special rule for charitable remainder trusts (CRTs).*** Except as otherwise provided in this paragraph, in order for an election under paragraph (g) of this section by a CRT with respect to a CFC or QEF to be effective, the election must be made no later than the first taxable year beginning after December 31, 2013, during which the CRT includes an amount in gross income for chapter 1 purposes under section 951(a) or section 1293(a) with respect to the CFC or QEF.

(ii) ***Certain domestic passthrough entities.*** Except as otherwise provided in this paragraph, in order for an election under paragraph (g) of this section by a domestic partnership, S corporation, or common trust fund with respect to a CFC or a QEF to be effective, the election must be made no later than the first taxable year beginning after December 31, 2013, during which the domestic partnership S corporation, or common trust fund—

(A) Includes an amount in gross income for chapter 1 purposes under section 951(a) or section 1293(a) with respect to the CFC or QEF; and

(B) Has a direct or indirect owner that is subject to tax under section 1411 or would be subject to tax under section 1411 if the election were made.

(iii) ***Taxable years that begin before January 1, 2014*** —

(A) ***Individuals, estates, or trusts.*** An individual, estate, or trust may make an election under paragraph (g) of this section for a taxable year that begins before January 1, 2014.

(B) ***Certain domestic passthrough entities.*** A domestic partnership, S corporation, or common trust fund may make an election under paragraph (g) of this section for a taxable year that begins before January 1, 2014, provided that all of its partners, shareholders, or participants, as the case may be, consent to the election. In the case of a partner, shareholder, or participant that is a partnership, S corporation, or common trust fund, all of the partners, shareholders, and participants also must consent to the election.

(iv) ***Time for making election.*** In all cases, the election under paragraph (g) of this section must be made in the manner prescribed by forms, instructions, or in other guidance on the individual's, estate's, trust's, domestic partnership's, S corporation's, or common trust fund's original or amended return for the taxable year for which the election is made. An election can be made on an amended return only if the taxable year for which the election is made, and all taxable years that are affected by the election, are not closed by the period of limitations on assessments under section 6501. An individual, estate, trust, domestic partnership, S corporation, or common trust fund may not seek an extension of time to make the election under any other provision of the law, including § 301.9100 of this chapter.

(h) ***Examples.*** The following examples illustrate the rules of this section. In each example, unless otherwise indicated, the individuals, the foreign corporation (FC), the QEF (QEF), and the partnership (PRS) use a calendar taxable year. Further, the gross income or gain with respect to an interest in FC is not derived in a trade or business described in § 1.1411-5.

> *Example 1.* (i) *Facts.* A, a United States citizen, is the sole shareholder of FC, a controlled foreign corporation (within the meaning of section 957). A is a United States shareholder (within the meaning of section 951(b)) with respect to FC. In 2012, A includes $40,000 in gross income for chapter 1 purposes under section 951(a)(1)(A) with respect to FC. On December 31, 2012, A's basis in the stock of FC for chapter 1 purposes is $500,000, which includes an increase to basis under section 961(a) of $40,000. The amount of FC's earnings and profits that are described in section 959(c)(2) is $40,000, the amount of FC's earnings and profits that are described in section 959(c)(3) is $20,000, and FC does not have any earnings and profits that are described in section 959(c)(1). No election is made under paragraph (g) of this section. During 2013, A does not include any amounts in income under section 951(a) with respect to FC, A does not receive any

distributions from FC, and there is no change in the amount of FC's earnings and profits. In 2014, A includes $10,000 in gross income for chapter 1 purposes under section 951(a)(1)(A) with respect to FC. As a result, A's basis in the stock of FC for chapter 1 purposes increases by $10,000 to $510,000 pursuant to section 961(a). During 2015, FC distributes $30,000 to A, which is not treated as a dividend for purposes of chapter 1 under section 959(d). As a result, A's basis in the stock of FC for chapter 1 purposes is decreased by $30,000 to $480,000 pursuant to section 961(b).

(ii) *Results for section 1411 purposes.* In 2014, A does not include the $10,000 section 951(a) income inclusion in A's net investment income under section 1411(c)(1)(A)(i) and § 1.1411-4(a)(1)(i). Pursuant to paragraph (e)(1)(iii) of this section, A decreases A's modified adjusted gross income for section 1411 purposes by $10,000 in 2014, and pursuant to paragraph (d)(1)(i) of this section, A's adjusted basis is not increased by $10,000 and remains at $500,000. In 2015, pursuant to paragraph (c)(2)(i) of this section, A includes $10,000 of the distribution of previously taxed earnings and profits as a dividend for purposes of determining A's net investment income because $10,000 of the $30,000 distribution is attributable to amounts that A included in gross income for chapter 1 purposes under section 951(a) in a tax year that began after December 31, 2012. Pursuant to paragraph (e)(1)(i) of this section, A increases A's modified adjusted gross income for section 1411 purposes by $10,000 in 2015. Under paragraph (d)(1)(i) of this section, A's adjusted basis is not decreased by the $10,000 that is treated as a dividend for section 1411 purposes, and thus, A's adjusted basis in FC for section 1411 purposes is decreased under section 961 only by $20,000 to $480,000.

Example 2. (i) *Facts.* Same facts as *Example 1.* In addition, during 2016, A includes $15,000 in gross income for chapter 1 purposes under section 951(a)(1)(A) with respect to FC. As a result, A's basis in the stock of FC for chapter 1 purposes increases by $15,000 to $495,000 pursuant to section 961(a). During 2017, A sells all of A's shares of FC for $550,000 and, prior to the application of section 1248, recognizes $55,000 ($550,000 minus $495,000) of long-term capital gain for chapter 1 purposes. For purposes of calculating the amount included in income as a dividend pursuant to section 1248(a) for chapter 1 purposes, the earnings and profits of FC attributable to A's shares in FC which were accumulated after December 31,1962 and during the period which A held the stock while FC was a controlled foreign corporation is $55,000, $35,000 of which is excluded pursuant to section 1248(d)(1). Therefore, after the application of section 1248, for chapter 1 purposes, upon the sale of the FC stock, A recognizes $35,000 of long-term capital gain and a $20,000 dividend.

(ii) *Results for section 1411 purposes.* (A) In 2016, A does not include the $15,000 section 951(a)(1)(A) income inclusion in A's net investment income under section 1411(c)(1)(A)(i) and § 1.1411-1(a)(1)(i). Pursuant to paragraph (e)(1)(ii) of this section, A decreases A's modified adjusted gross income for section 1411 purposes by $15,000, and, pursuant to paragraph (d)(1)(i) of this section, A's adjusted basis remains at $480,000.

(B) During 2017, prior to the application of section 1248, A recognizes $70,000 ($550,000 minus $480,000) of gain for section 1411 purposes. Pursuant to paragraph (c)(3) of this section, for section 1411 purposes, section 1248(a) applies to the gain on the sale of FC calculated for section 1411 purposes ($70,000) and section 1248(d)(1) does not apply, except with respect to the $20,000 of earnings and profits of FC that are attributable to amounts previously included in income for chapter 1 purposes under section 951 for a taxable year beginning before December 31, 2012. Accordingly, for purposes of calculating the amount of income includible as a dividend under section 1248(a), A has $55,000 of earnings and profits, $20,000 of which is excluded pursuant to section 1248(d)(1). Therefore, after the application of section 1248, for section 1411 purposes A has $35,000 of long-term capital gain and a $35,000 dividend. For purposes of calculating net investment income in 2017, A includes $35,000 as a dividend under section 1411(c)(1)(A)(i) and § 1.1411-4(a)(1)(i) and $35,000 as a gain under section 1411(c)(1)(A)(iii) and § 1.1411-4(a)(1)(iii).

Example 3. (i) *Facts.* Same facts as *Example 2,* except that A timely makes an election under paragraph (g)(4)(i) of this section for 2014 (and thus for all subsequent years).
(ii) *Results for section 1411 purposes.* A does not have any adjustments to A's modified adjusted gross income for section 1411 purposes for 2014, 2015, 2016 or 2017 because the election under paragraph (g)(4)(i) of this section was timely made. Pursuant to paragraph (g)(2) of this section, for purposes of calculating A's net investment income in 2014, the $10,000 that A included in income for chapter 1 purposes under section 951(a) is net investment income for purposes of section 1411(c)(1)(A)(i) and § 1.1411-4(a)(1)(i). A has no amount of net investment income with respect to FC in 2015. Pursuant to paragraph (g)(2) of this section, for purposes of calculating A's net investment income in 2016, the $15,000 that A included in income for chapter 1 purposes under section 951(a) is net investment income for purposes of section 1411(c)(1)(A)(i) and § 1.1411-4(a)(1)(i). For purposes of calculating A's net investment income in 2017, the amount of gain on the disposition of the FC shares is the same as the amount calculated for chapter 1 purposes. Applying section 1248, A includes $35,000 as a gain under section 1411(c)(1)(A)(iii) and § 1.1411-4(a)(1)(iii), and $20,000 as a dividend under section 1411(c)(1)(A)(i) and § 1.1411-4(a)(1)(i).

Example 4. Domestic partnership holding QEF stock. (i) *Facts.* (A) C, a United States citizen, owns a 50% interest in PRS, a domestic partnership. D, a United States citizen, and E, a United States citizen, each own a 25% interest in PRS. All allocations of partnership income and losses are pro rata based on ownership interests. PRS owns an interest in QEF, a foreign corporation that is a passive foreign investment company (within the meaning of section 1297(a)). PRS, a United States person, made an election under section 1295 with respect to QEF applicable to the first year of its holding period in QEF. As of December 31, 2012, for chapter 1 purposes, C's basis in his partnership interest is $100,000, D's basis in his partnership interest is $50,000, E's basis in his partnership interest is $50,000, and PRS's adjusted basis in its QEF stock is $80,000, which includes an increase in basis under section 1293(d) of $40,000. As of December 31, 2012, the

amount of QEF's earnings that have been included in income by PRS under section 1293(a), but have not been distributed by QEF, is $40,000. PRS also has cash of $60,000 and domestic C corporation stock with an adjusted basis of $60,000. During 2013, PRS does not include any amounts in income under section 1293(a) with respect to QEF, PRS does not receive any distributions from QEF, and there are no adjustments to the basis of C, D, or E in their interests in PRS.
(B) During 2014, PRS has income of $40,000 under section 1293(a) with respect to QEF and has no other partnership income. PRS does not make an election under paragraph (g) of this section.

(C) During 2015, QEF distributes $60,000 to PRS. PRS has no income for the year.

(ii) *Results for 2014.* (A) For chapter 1 purposes, as a result of the $40,000 income inclusion under section 1293(a), PRS's basis in its QEF stock is increased by $40,000 under section 1293(d)(1) to $120,000. Under § 1.1293-1(c)(1) and section 702, C's, D's, and E's distributive shares of the section 1293(a) income inclusion are $20,000, $10,000, and $10,000, respectively. Under section 705(a)(1)(A), C increases his adjusted basis in his partnership interest by $20,000 to $120,000, and D and E each increase his adjusted basis in his partnership interest by $10,000 to $60,000.

(B) For section 1411 purposes, pursuant to paragraph (d)(1)(ii) of this section, PRS's basis in QEF is not increased by the $40,000 income inclusion (it remains at $80,000). Because PRS did not make an election under paragraph (g) of this section, C, D and E do not have net investment income with respect to the income inclusion, and pursuant to paragraph (d)(2) of this section, they do not increase their adjusted bases in their interests in PRS (each remains at $50,000). Pursuant to paragraph (e)(1)(ii) of this section, C reduces his modified adjusted gross income by $20,000, and D and E each reduce their modified adjusted gross income by $10,000.

(iii) *Results for 2015.* (A) For chapter 1 purposes, the distribution of $60,000 from QEF to PRS is not a dividend under section 1293(c), and PRS decreases its basis in QEF by $60,000 under section 1293(d)(2) to $60,000.

(B) Pursuant to paragraph (c)(1)(i) of this section, $40,000 of the distribution is a dividend for section 1411 purposes because PRS included $40,000 in gross income for chapter 1 purposes under section 1293(a) in a tax year that began after December 31, 2012. For section 1411 purposes, pursuant to paragraph (d)(1)(ii) of this section, section 1293(d) will not apply to reduce PRS's basis in QEF to the extent of the $40,000 of the distribution that is treated as a dividend under paragraph (c)(2)(i) of this section. Thus, PRS's basis in QEF is decreased only by $20,000 for purposes of section 1411 and is $60,000. The $40,000 distribution of previously taxed earnings and profits that is treated as a dividend for section 1411 purposes is allocated $20,000 to C, $10,000 to D, and $10,000 to E. Because PRS did not make an election under paragraph (g) of this section, pursuant to paragraph (c)(2)(i) of this section, C has $20,000 of net investment income, and D and E each has $10,000 of net investment income as a result of the distribution by QEF, and

pursuant to paragraph (d)(2) of this section, C increases his adjusted basis in PRS by $20,000 to $120,000, and D and E each increases his adjusted basis in PRS by $10,000 to $60,000. Pursuant to paragraph (e)(1)(i) of this section, C increases his modified adjusted gross income by $20,000, and D and E each increases his modified adjusted gross income by $10,000.

Example 5. Sale of partnership interest. (i) *Facts.* Same facts as *Example 4.* In addition, in 2016, D sells his entire interest in PRS to F for $100,000.
(ii) *Results for 2016.* For chapter 1 purposes, D has a gain of $40,000 ($100,000 minus $60,000). For section 1411 purposes, D has a gain of $40,000 ($100,000 minus $60,000), and thus, has net investment income of $40,000. No adjustments to modified adjusted gross income are necessary under paragraph (e) of this section.

Example 6. Domestic partnership's sale of QEF stock. (i) *Facts.* Same facts as *Example 4.* In addition, in 2016 PRS has income of $60,000 under section 1293(a) with respect to QEF, and in 2017, PRS sells its entire interest in QEF for $170,000.
(ii) *Results for 2016.* (A) For chapter 1 purposes, as a result of the $60,000 income inclusion under section 1293(a), PRS's basis in its QEF stock is increased by $60,000 under section 1293(d)(1) to $120,000. Under § 1.1293-1(c)(1) and section 702, C's, D's, and E's distributive shares of the section 1293(a) income inclusion are $30,000, $15,000, and $15,000 respectively. Under section 705(a)(1)(A), C increases his adjusted basis in his partnership interest by $30,000 to $150,000, and D and E each increases his adjusted basis in his partnership interest by $15,000 to $75,000.

(B) For section 1411 purposes, pursuant to paragraph (d)(1)(ii) of this section, PRS's basis in QEF is not increased by the $60,000 income inclusion (it remains at $60,000). Because PRS did not make an election under paragraph (g) of this section, C, D and E do not have net investment income with respect to the income inclusion, and pursuant to paragraph (d)(2) of this section, they do not increase their adjusted bases in their interests in PRS (C remains at $120,000, and D and E each remain at $60,000). Pursuant to paragraph (e)(1)(ii) of this section, C reduces his modified adjusted gross income by $30,000, and D and E each reduce their modified adjusted gross income by $15,000.

(iii) *Results for 2017.* (A) For chapter 1 purposes, PRS has a gain of $50,000 ($170,000 minus $120,000), which is allocated 50% ($25,000) to C, 25% ($12,500) to D, and 25% ($12,500) to E.

(B) Based on PRS's basis in the stock of QEF for section 1411 purposes, PRS has a gain for section 1411 purposes of $110,000 ($170,000 minus $60,000), which in the absence of an election by PRS under paragraph (g) of this section, results in gain of $55,000 to C, $27,500 to D, and $27,500 to E. Therefore, C has net investment income of $55,000, and D and E each have net investment income of $27,500. Pursuant to paragraph (e)(1)(ii) of this section, C increases his modified adjusted gross income by $30,000, and D and E each increase their modified adjusted gross income by $15,000.

(i) ***Effective/applicability date.*** This section applies to taxable years beginning after December 31, 2013. However, taxpayers may apply this section to taxable years beginning after December 31, 2012, in accordance with § 1.1411-1(f). Paragraph (c)(3) of this section, to the extent it references regulations issued under section 367(b), and paragraph (d)(5) of this section, apply to transactions completed on or after October 5, 2023, and to any transactions treated as completed before October 5, 2023, as a result of an entity classification election made under § 301.7701-3 of this chapter that is filed on or after October 5, 2023.

[T.D. 9644, 78 FR 72424, Dec. 2, 2013, as amended at 79 FR 18160, Apr. 1, 2014; T.D. 10004, 89 FR 58285, July 18, 2024]

WITHHOLDING OF TAX ON NONRESIDENT ALIENS AND FOREIGN CORPORATIONS AND TAX-FREE COVENANT BONDS

NONRESIDENT ALIENS AND FOREIGN CORPORATIONS

§ 1.1441-0 Outline of regulation provisions for section 1441.

This section lists captions contained in §§ 1.1441-1 through 1.1441-9.

§ 1.1441-1 Requirement for the deduction and withholding of tax on payments to foreign persons.

(a) Purpose and scope.

(b) General rules of withholding.

(1) Requirement to withhold on payments to foreign persons.

(2) Determination of payee and payee's status.

(i) In general.

(ii) Payments to a U.S. agent of a foreign person.

(iii) Payments to wholly-owned entities.

(A) Foreign-owned domestic entity.

(B) Foreign entity.

(iv) Payments to a U.S. branch of certain foreign banks or foreign insurance companies.

(A) U.S. branch treated as a U.S. person in certain cases.

(B) Consequences to the withholding agent.

(C) Consequences to the U.S. branch.

(D) Definition of payment to a U.S. branch.

(E) Payments to other U.S. branches.

(v) Payments to a foreign intermediary.

(A) Payments treated as made to persons for whom the intermediary collects the payment.

(B) Payments treated as made to foreign intermediary.

(vi) Other payees.

(vii) Rules for reliably associating a payment with a withholding certificate or other appropriate documentation.

(A) Generally.

(B) Special rules applicable to a withholding certificate from a nonqualified intermediary or flow-through entity.

(C) Special rules applicable to a withholding certificate provided by a qualified intermediary that does not assume primary withholding responsibility.

(D) Special rules applicable to a withholding certificate provided by a qualified intermediary that assumes primary withholding responsibility under chapter 3 and chapter 4 of the Internal Revenue Code.

(E) Special rules applicable to a withholding certificate provided by a qualified intermediary that assumes primary Form 1099 reporting and backup withholding responsibility but not primary withholding under chapter 3 and chapter 4.

(F) Special rules applicable to a withholding certificate provided by a qualified intermediary that assumes primary withholding responsibility under chapter 3 and chapter 4 and primary Form 1099 reporting and backup withholding responsibility and a withholding certificate provided by a withholding foreign partnership or a withholding foreign trust.

(3) Presumptions regarding payee's status in the absence of documentation.

(i) General rules.

(ii) Presumptions of classification as individual, corporation, partnership, etc.

(A) In general.

(B) No documentation provided.

(C) Documentary evidence furnished for offshore obligation.

(iii) Presumption of U.S. or foreign status.

(A) Payments to exempt recipients.

(*1*) In general.

(*2*) Special rule for withholdable payments made to exempt recipients.

(B) Scholarships and grants.

(C) Pensions, annuities, etc.

(D) Payments with respect to offshore obligations.

(E) Certain payments for services.

(iv) Grace period.

(v) Special rules applicable to payments to foreign intermediaries.

(A) Reliance on claim of status as foreign intermediary.

(B) Beneficial owner documentation or allocation information is lacking or unreliable.

(vi) U.S. branches and territory financial institutions not treated as U.S. persons.

(vii) Joint payees.

(A) In general.

(B) Special rule for offshore obligations.

(viii) Rebuttal of presumptions.

(ix) Effect of reliance on presumptions and of actual knowledge or reason to know otherwise.

(A) General rule.

(B) Actual knowledge or reason to know that amount of withholding is greater than is required under the presumptions or that reporting of the payment is required.

(x) Examples.

(4) List of exemptions from, or reduced rates of, withholding under chapter 3 of the Code.

(5) Establishing foreign status under applicable provisions of chapter 61 of the Code.

(6) Rules of withholding for payments by a foreign intermediary or certain U.S. branches.

(i) In general.

(ii) Examples.

(7) Liability for failure to obtain documentation timely or to act in accordance with applicable presumptions.

(i) General rule.

(ii) Proof that tax liability has been satisfied.

(A) In general.

(B) Special rule for establishing that income is effectively connected with the conduct of a U.S. trade or business.

(iii) Liability for interest and penalties.

(iv) Special rule for determining validity of withholding certificate containing inconsequential errors.

(v) Special effective date.

(8) Adjustments, refunds, or credits of overwithheld amounts.

(9) Payments to joint owners.

(c) Definitions.

(1) Withholding.

(2) Foreign and U.S. person.

(i) In general.

(ii) Dual residents.

(3) Individual.

(i) Alien individual.

(ii) Nonresident alien individual.

(4) Certain foreign corporations.

(5) Financial institution and foreign financial institution (or FFI).

(6) Beneficial owner.

(i) General rule.

(ii) Special rules.

(A) General rule.

(B) Foreign partnerships.

(C) Foreign simple trusts and foreign grantor trusts.

(D) Other foreign trusts and foreign estates.

(7) Withholding agent.

(8) Person.

(9) Source of income.

(10) Chapter 3 of the Code (or chapter 3).

(11) Reduced rate.

(12) Payee.

(13) Intermediary.

(14) Nonqualified intermediary.

(15) Qualified intermediary.

(16) Withholding certificate.

(17) Documentary evidence; other appropriate documentation.

(18) Documentation.

(19) Payor.

(20) Exempt recipient.

(21) Non-exempt recipient.

(22) Reportable amounts.

(23) Flow-through entity.

(24) Foreign simple trust.

(25) Foreign complex trust.

(26) Foreign grantor trust.

(27) Partnership.

(28) Nonwithholding foreign partnership (or NWP).

(29) Withholding foreign partnership (or WP).

(30) Possession of the United States or U.S. territory.

(31) Amount subject to chapter 3 withholding.

(32) EIN.

(33) Flow-through withholding certificate.

(34) Foreign payee.

(35) Intermediary withholding certificate.

(36) Nonwithholding foreign trust (or NWT).

(37) Payment with respect to an offshore obligation.

(38) Permanent residence address.

(i) In general.

(ii) Hold mail instruction.

(39) Standing instructions to pay amounts.

(40) Territory financial institution.

(41) TIN.

(42) Withholding foreign trust (or WT).

(43) Certified deemed-compliant FFI.

(44) Chapter 3 withholding rate pool.

(45) Chapter 3 status.

(46) Chapter 4 of the Code (or chapter 4).

(47) Chapter 4 status.

(48) Chapter 4 withholding rate pool.

(49) Deemed-compliant FFI.

(50) GIIN (or Global Intermediary Identification Number).

(51) NFFE.

(52) Nonparticipating FFI.

(53) Participating FFI.

(54) Preexisting obligation.

(55) Registered deemed-compliant FFI.

(56) Withholdable payment.

(d) Beneficial owner's or payee's claim of U.S. status.

(1) In general.

(2) Payments for which a Form W-9 is otherwise required.

(3) Payments for which a Form W-9 is not otherwise required.

(4) When a payment to an intermediary or flow-through entity may be treated as made to a U.S. payee.

(e) Beneficial owner's claim of foreign status.

(1) Withholding agent's reliance.

(i) In general.

(ii) Payments that a withholding agent may treat as made to a foreign person that is a beneficial owner.

(A) General rule.

(B) Additional requirements.

(2) Beneficial owner withholding certificate.

(i) In general.

(ii) Requirements for validity of certificate.

(A) In general.

(B) Requirement to collect foreign TIN and date of birth.

(*1*) In general.

(*2*) Definitions.

(*3*) Requirements for reasonable explanation of the absence of a foreign TIN.

(*4*) Exceptions to the requirement to obtain a foreign TIN (or reasonable explanation for its absence).

(*i*) Jurisdictions with which the United States does not have an agreement relating to the exchange of tax information.

(*ii*) Jurisdictions that do not issue foreign TINs.

(*iii*) Account holder that is a government, international organization, foreign central bank of issue, or resident of a U.S. territory.

(*5*) Transition rules for the foreign TIN requirement for a beneficial owner withholding certificate signed before January 1, 2018.

(*i*) Payments made before January 1, 2020.

(*ii*) Payments made after December 31, 2019.

(*iii*) Limitation on standard of knowledge.

(*6*) Transition rule for the date of birth requirement for a beneficial owner withholding certificate signed before January 1, 2018.

(3) Intermediary, flow-through, or U.S. branch withholding certificate.

(i) In general.

(ii) Intermediary withholding certificate from a qualified intermediary.

(iii) Intermediary withholding certificate from a nonqualified intermediary.

(iv) Withholding statement provided by nonqualified intermediary.

(A) In general.

(B) General requirements.

(C) Content of withholding statement.

(*1*) In general.

(*2*) Nonqualified intermediary withholding statement for withholdable payments.

(*3*) Alternative withholding statement.

(*4*) Example.

(D) Alternative procedures.

(*1*) In general.

(*2*) Withholding rate pools.

(*i*) In general.

(*ii*) Withholding rate pools for .chapter 4 purposes.

(*3*) Allocation information.

(*4*) Failure to provide allocation information.

(*5*) Cure provision.

(*6*) Form 1042-S reporting in case of allocation failure.

(*7*) Liability for tax, interest, and penalties.

(*8*) Applicability to flow-through entities and certain U.S. branches.

(E) Notice procedures.

(v) Withholding certificate from certain U.S. branches (including territory financial institutions).

(vi) Reportable amounts.

(4) Applicable rules.

(i) Who may sign the certificate.

(A) In general.

(B) Electronic signatures.

(ii) Period of validity.

(A) General rule.

(*1*) Withholding certificates and documentary evidence.

(*2*) Documentary evidence for treaty claims and treaty statements.

(B) Indefinite validity period.

(C) Withholding certificate for effectively connected income.

(D) Change in circumstances.

(*1*) Defined.

(*2*) Obligation to notify a withholding agent of a change in circumstances.

(*3*) Withholding agent's obligation with respect to a change in circumstances.

(iii) Retention of documentation.

(iv) Electronic transmission of information.

(A) In general.

(B) Requirements.

(*1*) In general.

(*2*) Same information as paper Form W-8.

(*3*) Perjury statement and signature requirements.

(*i*) Perjury statement.

(*ii*) Electronic signature.

(*4*) Requests for electronic Form W-8 data.

(C) Form 8233.

(D) Forms and documentary evidence received by facsimile or email.

(E) Third party repositories.

(F) Examples.

(1) Example 1.

(2) Example 2.

(3) Example 3.

(v) Additional procedures for certificates provided electronically.

(vi) Acceptable substitute form.

(vii) Requirement of taxpayer identifying number.

(viii) Reliance rules.

(A) Classification.

(B) Status of payee as an intermediary or as a person acting for its own account.

(C) Reliance on a prior version of a withholding certificate.

(ix) Certificates to be furnished to withholding agent for each obligation unless exception applies.

(A) Exception for certain branch or account systems or system maintained by agent.

(B) Reliance on certification provided by introducing brokers.

(*1*) In general.

(*2*) Example.

(C) Reliance on documentation and certifications provided between principals and agents.

(*1*) Withholding agent as agent.

(*2*) Withholding agent as principal.

(D) Reliance upon documentation for accounts acquired in merger or bulk acquisition for value.

(5) Qualified intermediaries.

(i) In general.

(ii) Definition of qualified intermediary.

(iii) Withholding agreement.

(A) In general.

(B) Terms of the withholding agreement.

(iv) Assignment of primary withholding responsibility.

(v) Withholding statement.

(A) In general.

(B) Content of withholding statement.

(C) Withholding rate pools.

(*1*) In general.

(*2*) Withholding rate pool requirements for a withholdable payment.

(*3*) Alternative procedure for U.S. non-exempt recipients.

(D) Example.

(6) Qualified derivatives dealers.

(f) Effective/applicability date.

(1) In general.

(2) Lack of documentation for past years.

(3) Special rules related to section 871(m).

§ 1.1441-2 Amounts subject to withholding.

(a) In general.

(b) Fixed or determinable annual or periodical income.

(1) In general.

(i) Definition.

(ii) Manner of payment.

(iii) Determinability of amount.

(2) Exceptions.

(3) Original issue discount.

(i) Amount subject to tax.

(ii) Amounts subject to withholding.

(iii) Exceptions to withholding.

(4) Securities lending transactions and equivalent transactions.

(5) REMIC residual interests.

(6) Dividend equivalents.

(c) Other income subject to withholding.

(d) Exceptions to withholding where no money or property is paid or lack of knowledge.

(1) General rule.

(2) Cancellation of debt.

(3) Satisfaction of liability following underwithholding by withholding agent.

(4) Withholding exemption inapplicable.

(e) Payment.

(1) General rule.

(2) Income allocated under section 482.

(3) Blocked income.

(4) Special rules for dividends.

(5) Certain interest accrued by a foreign corporation.

(6) Payments other than in U.S. dollars.

(7) Payments of dividend equivalents.

(i) In general.

(ii) Payment.

(iii) Premiums and other upfront payments.

(f) Effective/applicability date.

§ 1.1441-3 Determination of amounts to be withheld.

(a) General rule.

(1) Withholding on gross amount.

(2) Coordination with chapter 4.

(b) Withholding on payments on certain obligations.

(1) Withholding at time of payment of interest.

(2) No withholding between interest payment dates.

(i) In general.

(ii) Anti-abuse rule.

(c) Corporate distributions.

(1) General rule.

(2) Exception to withholding on distributions.

(i) In general.

(ii) Reasonable estimate of accumulated and current earnings and profits on the date of payment.

(A) General rule.

(B) Procedures in case of underwithholding.

(C) Reliance by intermediary on reasonable estimate.

(D) Example.

(3) Special rules in the case of distributions from a regulated investment company.

(i) General rule

(ii) Reliance by intermediary on reasonable estimate.

(4) Coordination with withholding under section 1445.

(i) In general.

(A) Withholding under section 1441.

(B) Withholding under both sections 1441 and 1445.

(C) Coordination with REIT/QIE withholding.

(ii) Intermediary reliance rule.

(d) Withholding on payments that include an undetermined amount of income.

(1) In general.

(2) Withholding on certain gains.

(e) Payments other than in U.S. dollars.

(1) In general.

(2) Payments in foreign currency.

(f) Tax liability of beneficial owner satisfied by withholding agent.

(1) General rule.

(2) Example.

(g) Conduit financing arrangements

(1) Duty to withhold.

(2) Effective date.

(h) Dividend equivalents.

(1) Withholding on gross amount.

(2) Reliance by withholding agent on reasonable determinations.

(3) Effective/applicability date.

(i) Effective/applicability date.

§ 1.1441-4 Exemptions from withholding for certain effectively connected income and other amounts.

(a) Certain income connected with a U.S. trade or business.

(1) In general.

(2) Withholding agent's reliance on a claim of effectively connected income.

(i) In general.

(ii) Special rules for U.S. branches of foreign persons.

(A) U.S. branches of certain foreign banks or foreign insurance companies.

(B) Other U.S. branches.

(3) Income on notional principal contracts.

(i) General rule.

(ii) Exception for certain payments.

(iii) Exception for specified notional principal contracts.

(b) Compensation for personal services of an individual.

(1) Exemption from withholding.

(2) Manner of obtaining withholding exemption under tax treaty.

(i) In general.

(ii) Withholding certificate claiming withholding exemption.

(iii) Review by withholding agent.

(iv) Acceptance by withholding agent.

(v) Copies of Form 8233.

(3) Withholding agreements.

(4) Final payment exemption.

(5) Requirement of return.

(6) Personal exemption.

(i) In general.

(ii) Multiple exemptions.

(iii) Special rule where both certain scholarship and compensation income are received.

(c) Special rules for scholarship and fellowship income.

(1) In general.

(2) Alternate withholding election.

(d) Annuities received under qualified plans.

(e) Per diem of certain alien trainees.

(f) Failure to receive withholding certificates timely or to act in accordance with applicable presumptions.

(g) Effective/applicability date.

§ 1.1441-5 Withholding on payments to partnerships, trusts, and estates.

(a) In general.

(b) Rules applicable to U.S. partnerships, trusts, and estates.

(1) Payments to U.S. partnerships, trusts, and estates.

(2) Withholding by U.S. payees.

(i) U.S. partnerships.

(A) In general.

(B) Effectively connected income of partners.

(ii) U.S. simple trusts.

(iii) U.S. complex trusts and U.S. estates.

(iv) U.S. grantor trusts.

(v) Subsequent distribution.

(vi) Coordination with chapter 4 requirements for U.S. partnerships, trusts, and estates.

(c) Foreign partnerships.

(1) Determination of payee.

(i) Payments treated as made to partners.

(ii) Payments treated as made to the partnership.

(iii) Rules for reliably associating a payment with documentation.

(iv) Coordination with chapter 4 for payments made to foreign partnerships.

(v) Examples.

(2) Withholding foreign partnerships.

(i) Reliance on claim of withholding foreign partnership status.

(ii) Withholding agreement.

(iii) Withholding responsibility.

(iv) Withholding certificate from a withholding foreign partnership.

(3) Nonwithholding foreign partnerships.

(i) Reliance on claim of foreign partnership status.

(ii) Reliance on claim of reduced withholding by a partnership for its partners.

(iii) Withholding certificate from a nonwithholding foreign partnership.

(iv) Withholding statement provided by nonwithholding foreign partnership and coordination with chapter 4.

(v) Withholding and reporting by a foreign partnership.

(d) Presumption rules.

(1) In general.

(2) Determination of partnership status as U.S. or foreign in the absence of documentation.

(3) Determination of partners' status in the absence of certain documentation.

(4) Determination by a withholding foreign partnership of the status of its partners.

(e) Foreign trusts and estates.

(1) In general.

(2) Payments to foreign complex trusts and foreign estates.

(3) Payees of payments to foreign simple trusts and foreign grantor trusts.

(i) Payments for which beneficiaries and owners are payees.

(ii) Payments for which trust is payee.

(iii) Coordination with chapter 4 for payments made to foreign simple trusts and foreign grantor trusts.

(4) Reliance on claim of foreign complex trust or foreign estate status.

(5) Foreign simple trust and foreign grantor trust.

(i) Reliance on claim of foreign simple trust or foreign grantor trust status.

(ii) Reliance on claim of reduced withholding by a foreign simple trust or foreign grantor trust for its beneficiaries or owners.

(iii) Withholding certificate from foreign simple trust or foreign grantor trust.

(iv) Withholding statement provided by foreign simple trust or foreign grantor trust and coordination with chapter 4.

(v) Withholding foreign trusts.

(6) Presumption rules.

(i) In general.

(ii) Determination of status as U.S. or foreign trust or estate in the absence of documentation.

(iii) Determination of beneficiary or owner's status in the absence of certain documentation.

(f) Failure to receive withholding certificate timely or to act in accordance with applicable presumptions.

(g) Effective/applicability date.

§ 1.1441-6 Claim of reduced withholding under an income tax treaty.

(a) In general.

(b) Reliance on claim of reduced withholding under an income tax treaty.

(1) In general.

(i) Identification of limitation on benefits provisions.

(ii) Reason to know based on existence of treaty.

(2) Payment to fiscally transparent entity.

(i) In general.

(ii) Certification by qualified intermediary.

(iii) Dual treatment.

(iv) Examples.

(3) Certified TIN.

(4) Claim of benefits under an income tax treaty by a U.S. person.

(c) Exemption from requirement to furnish a taxpayer identifying number and special documentary evidence rules for certain income.

(1) General rule.

(2) Income to which special rules apply.

(3) Certificate of residence.

(4) Documentary evidence establishing residence in the treaty country.

(i) Individuals.

(ii) Persons other than individuals.

(5) Statements regarding entitlement to treaty benefits.

(i) Statement regarding conditions under a limitation on benefits provision.

(ii) Statement regarding whether the taxpayer derives the income.

(d) Joint owners.

(e) Competent authority.

(f) Failure to receive withholding certificate timely.

(g) Special taxpayer identifying number rule for certain foreign individuals claiming treaty benefits.

(1) General rule.

(2) Special rule.

(3) Requirement that an ITIN be requested during the first business day following payment.

(4) Definition of unexpected payment.

(5) Examples.

(h) Dividend equivalents.

(i) Effective/applicability dates.

(1) General rule.

(2) Dividend equivalents.

§ 1.1441-7 General provisions relating to withholding agents.

(a) Withholding agent defined.

(1) In general.

(2) Withholding agent with respect to dividend equivalents.

(3) Examples.

(4) Effective/applicability date.

(b) Standards of knowledge.

(1) In general.

(2) Reason to know.

(3) Financial institutions—limits on reason to know.

(i) In general.

(ii) Limits on reason to know for preexisting obligations.

(4) Rules applicable to withholding certificates.

(i) In general.

(ii) Examples.

(5) Withholding certificate—establishment of foreign status.

(i) Classification of U.S. status, U.S. address, or U.S. telephone number.

(ii) U.S. place of birth.

(iii) Standing instructions with respect to offshore obligations.

(6) Withholding certificate—claim of reduced rate of withholding under treaty.

(i) Permanent residence address.

(ii) Mailing address.

(iii) Standing instructions.

(7) Documentary evidence.

(8) Documentary evidence—establishment of foreign status.

(i) Documentary evidence received prior to January 1, 2001.

(ii) Documentary evidence received after December 31, 2000.

(A) Treatment of individual's foreign status.

(B) Presumption of entity's foreign status.

(iii) U.S. place of birth.

(iv) Standing instructions with respect of offshore obligations.

(9) Documentary evidence—claim of reduced rate of withholding under treaty.

(i) Permanent residence address and mailing address.

(ii) Standing instructions.

(10) Indirect account holders.

(11) Limits on reason to know for multiple obligations belonging to a single person.

(12) Reasonable explanation supporting claim of foreign status.

(13) Additional guidance.

(c) Agent.

(1) In general.

(2) Authorized agent.

(3) Liability of withholding agent acting through an agent.

(d) United States obligations.

(e) Assumed obligations.

(f) Conduit financing arrangements.

(1) Liability of withholding agent.

(2) Exception for withholding agents that do not know of conduit financing arrangement.

(i) In general.

(ii) Examples.

(g) Effective/applicability date.

§ 1.1441-8 Exemption from withholding for payments to foreign governments, international organizations, foreign central banks of issue, and the Bank for International Settlements.

(a) Foreign governments.

(b) Reliance on claim of exemption by foreign government.

(c) Income of a foreign central bank of issue or the Bank for International

Settlements.

(1) Certain interest income.

(2) Bankers' acceptances.

(d) Exemption for payments to international organizations.

(e) Failure to receive withholding certificate timely and other applicable procedures.

(f) Effective date.

(1) In general.

(2) Transition rules.

§ 1.1441-9 Exemption from withholding on exempt income of a foreign tax-exempt organization, including foreign private foundations.

(a) Exemption from withholding for exempt income.

(b) Reliance on foreign organization's claim of exemption from withholding.

(1) General rule.

(2) Withholding certificate.

(3) Presumptions in the absence of documentation.

(4) Reason to know.

(c) Failure to receive withholding certificate timely and other applicable procedures.

(d) Effective date.

(1) In general.

(2) Transition rules.

§ 1.1441-10 Withholding agents with respect to fast-pay arrangements.

(a) In general.

(b) Exception.

(c) Liability.

(d) Examples.

(e) Effective date.

[T.D. 8734, 62 FR 53421, Oct. 14, 1997, as amended by T.D. 8881, 66 FR 32168, May 22, 2000; T.D. 9023, 67 FR 70312, Nov. 22, 2002; T.D. 9272, 71 FR 43366, Aug. 1, 2006; T.D. 9415, 73 FR 40172, July 14, 2008; T.D. 9808, 82 FR 2056, Jan. 6, 2017; T.D. 9808, 82 FR 29720, June 30, 2017; T.D. 9890, 85 FR 198, Jan. 2, 2020]

§ 1.1441-1 Requirement for the deduction and withholding of tax on payments to foreign persons.

(a) ***Purpose and scope.*** This section, §§ 1.1441-2 through 1.1441-9, and 1.1443-1 provide rules for withholding under sections 1441, 1442, and 1443 when a payment is made to a foreign person. This section provides definitions of terms used in chapter 3 of the Internal Revenue Code (Code) and regulations thereunder. It prescribes procedures to determine whether an amount must be withheld under chapter 3 of the Code and documentation that a withholding agent may rely upon to determine the status of a payee or a beneficial owner as a U.S. person or as a foreign person and other relevant characteristics of the payee that may affect a withholding agent's obligation to withhold under chapter 3 of the Code and the regulations thereunder. Special procedures regarding payments to foreign persons that act as intermediaries are also provided. Section 1.1441-2 defines the income subject to withholding under sections 1441, 1442, and 1443 and the regulations under these sections. Section 1.1441-3 provides rules regarding the amount subject to withholding and rules for coordinating withholding under this section with withholding under section 1445 and under chapter 4 of the Code. Section 1.1441-4 provides exemptions from withholding for, among other things, certain income effectively connected with the conduct of a trade or business in the United States, including certain compensation for the personal services of an individual. Section 1.1441-5 provides rules for withholding on payments made to flow-through entities and other similar arrangements. Section 1.1441-6 provides rules for claiming a reduced rate of withholding under an income tax treaty. Section 1.1441-7 defines the term withholding agent and provides due diligence rules governing a withholding agent's obligation to withhold. Section 1.1441-8 provides rules for relying on claims of exemption from withholding for payments to a foreign government, an international organization, a foreign central bank of issue, or the Bank for International Settlements. Sections 1.1441-9 and 1.1443-1 provide rules for relying on claims of exemption from withholding for payments to foreign tax exempt organizations and foreign private foundations.

(b) ***General rules of withholding*** —

(1) ***Requirement to withhold on payments to foreign persons.*** A withholding agent must withhold 30 percent of any payment of an amount subject to withholding made to a payee that is a foreign person unless it can reliably associate the payment with documentation upon which it can rely to treat the payment as made to a payee that is a U.S. person or as made to a beneficial owner that is a foreign person entitled to a reduced rate of withholding. However, a withholding agent making a payment to a foreign person need not withhold where the foreign person assumes responsibility for withholding on the payment under chapter 3 of the Code and the regulations thereunder as a qualified intermediary (see paragraphs (e)(5) and (e)(6) of this section), as a U.S. branch of a foreign person (see paragraph (b)(2)(iv) of this section), as a withholding foreign partnership (see § 1.1441-5(c)(2)(i)), or as a withholding foreign trust (see § 1.1441-5(e)(5)(v)). When withholding under chapter 4 was applied to a payment, the withholding obligation under this section is satisfied. See § 1.1441-3(a)(2). This section (dealing with general rules of withholding and claims of foreign or U.S. status by a payee or a beneficial owner) and §§ 1.1441-4, 1.1441-5, 1.1441-6, 1.1441-8, 1.1441-9, and 1.1443-1 provide rules for determining whether documentation is required as a condition for reducing the rate of withholding on a payment to a foreign beneficial owner or to a U.S. payee and if so, the nature of the documentation upon which a withholding agent may rely in order to reduce such rate. Paragraph (b)(2) of this section prescribes the rules for the determination of who

the payee is, the extent to which a payment is treated as made to a foreign payee, and reliable association of a payment with documentation. Paragraph (b)(3) of this section describes the applicable presumptions for determining the payee's status as U.S. or foreign and the payee's other characteristics (*e.g.,* as an owner or intermediary, as an individual, partnership, corporation, etc.). Paragraph (b)(4) of this section lists the types of payments for which the 30-percent withholding rate may be reduced. Because the treatment of a payee as a U.S. or a foreign person also has consequences for purposes of making an information return under the provisions of chapter 61 of the Code and for withholding under other provisions of the Code, such as sections 3402, 3405, or 3406, paragraph (b)(5) of this section lists applicable provisions outside chapter 3 of the Code that require certain payees to establish their foreign status (*e.g.,* in order to be exempt from information reporting). Paragraph (b)(6) of this section describes the withholding obligations of a foreign person making a payment that it has received in its capacity as an intermediary. Paragraph (b)(7) of this section describes the liability of a withholding agent that fails to withhold at the required 30-percent rate in the absence of documentation. Paragraph (b)(8) of this section deals with adjustments and refunds in the case of overwithholding. Paragraph (b)(9) of this section deals with determining the status of the payee when the payment is jointly owned. See paragraph (c)(6) of this section for a definition of beneficial owner. See § 1.1441-7(a) for a definition of withholding agent. See § 1.1441-2(a) for the determination of an amount subject to withholding. See § 1.1441-2(e) for the definition of a payment and when it is considered made. Except as otherwise provided, the provisions of this section apply only for purposes of determining a withholding agent's obligation to withhold under chapter 3 of the Code and the regulations thereunder.

(2) ***Determination of payee and payee's status*** —

(i) ***In general.*** Except as otherwise provided in this paragraph (b)(2) and § 1.1441-5(c)(1) and (e)(3), a payee is the person to whom a payment is made, regardless of whether such person is the beneficial owner of the amount (as defined in paragraph (c)(6) of this section). A foreign payee is a payee who is a foreign person. A U.S. payee is a payee who is a U.S. person. Generally, the determination by a withholding agent of the U.S. or foreign status of a payee and of its other relevant characteristics (*e.g.,* as a beneficial owner or intermediary, or as an individual, corporation, or flow-through entity) is made on the basis of a withholding certificate that is a Form W-8 or a Form 8233 (indicating foreign status of the payee or beneficial owner) or a Form W-9 (indicating U.S. status of the payee). The provisions of this paragraph (b)(2), paragraph (b)(3) of this section, and § 1.1441-5(c), (d), and (e) dealing with determinations of payee and applicable presumptions in the absence of documentation apply only to payments of amounts subject to withholding under chapter 3 of the Code (within the meaning of § 1.1441-2(a)). However, for a payment that is both an amount subject to withholding under chapter 3 and a withholdable payment under chapter 4, first apply the rules of § 1.1471-3 for determining the payee of a withholdable payment under chapter 4 and the applicable presumptions in the absence of documentation applicable to such payments. See also § 1.6049-5(d) for payments of amounts that are not subject to withholding under chapter 3 of the Code (or the regulations thereunder) but that may be reportable under provisions of chapter 61 of the Code (and the regulations thereunder). See paragraph (d) of this section for documentation upon which the withholding agent may rely in order to treat the payee or beneficial owner as a U.S. person. See paragraph (e) of this section for documentation upon which the withholding agent may rely in order to treat the payee or beneficial owner as a foreign person. For applicable presumptions of status in the absence of documentation, see paragraph (b)(3) of this section and § 1.1441-5(d). For definitions of a foreign person and U.S. person, see paragraph (c)(2) of this section.

(ii) ***Payments to a U.S. agent of a foreign person.*** A withholding agent making a payment to a U.S. person (other than to a U.S. branch that is treated as a U.S. person pursuant to paragraph (b)(2)(iv) of this section) and who has actual knowledge that the U.S. person receives the payment as an agent of a foreign person must treat the payment as made to the foreign person. However, the withholding agent may treat the payment as made to the U.S. person if the U.S. person is a financial institution and the withholding agent has no reason to believe that the financial institution will not comply with its obligation to withhold. See paragraph (c)(5) of this section for the definition of a financial institution.

(iii) ***Payments to wholly-owned entities*** —

(A) ***Foreign-owned domestic entity.*** A payment to a wholly-owned domestic entity that is disregarded for federal tax purposes under § 301.7701-2(c)(2) of this chapter as an entity separate from its owner and whose single owner is a foreign person shall be treated as a payment to the owner of the entity, subject to the provisions of paragraph (b)(2)(iv) of this section. For purposes of this paragraph (b)(2)(iii)(A), a domestic entity means a person that would be treated as a U.S. person if it had an election in effect under § 301.7701-3(c)(1)(i) of this chapter to be treated as a corporation. For example, a limited liability company, A, organized under the laws of the State of Delaware, opens an account at a U.S. bank. Upon opening of the account, the bank requests A to furnish a Form W-9 as required under section 6049(a) and the regulations under that section. A does not have an election in effect under § 301.7701-3(c)(1)(i) of this chapter and, therefore, is not treated as an organization taxable as a corporation, including for purposes of the exempt recipient provisions in § 1.6049-4(c)(1). If A has a single owner and the owner is a foreign person (as defined in paragraph (c)(2) of this section), then A may not furnish a Form W-9 because it may not represent that it is a U.S. person for purposes of the provisions of chapters 3, 4, and 61 of the Code, and section 3406. Therefore, A must furnish a Form W-8 with the name, address, and taxpayer identifying number (TIN) (if required) of the foreign person who is the single owner in the same manner as if the account were opened directly by the foreign single owner. See §§ 1.894-1(d) and 1.1441-6(b)(2) for special rules where the entity's owner is claiming a reduced rate of withholding under an income tax treaty.

(B) ***Foreign entity.*** A payment to a wholly-owned foreign entity that is disregarded under § 301.7701-2(c)(2) of this chapter as an entity separate from its owner shall be treated as a payment to the single owner of the entity, subject to the provisions of paragraph (b)(2)(iv) of this section if the foreign entity has a U.S. branch in the United States. For purposes of this paragraph (b)(2)(iii)(B), a foreign entity means a person that would be treated as a foreign person if it had an election in effect under § 301.7701-3(c)(1)(i) of this chapter to be treated as a corporation. See §§ 1.894-1T(d) and 1.1441-6(b)(2) for special rules where the foreign entity or its owner is claiming a reduced rate of withholding under an income tax treaty. Thus, for example, if the foreign entity's single owner is a U.S. person, the payment shall be treated as a payment to a U.S. person. Therefore, based on the saving clause in U.S. income tax treaties, such an entity may not claim benefits under an income tax treaty even if the entity is organized in a country with which the United States has an income tax treaty in effect and treats the entity as a non-fiscally transparent entity. See § 1.894-1T(d)(6), *Example 10.* Unless it has actual knowledge or reason to know that the foreign entity to whom the payment is made is disregarded under § 301.7701-2(c)(2) of

this chapter, a withholding agent may treat a foreign entity as an entity separate from its owner unless it can reliably associate the payment with a withholding certificate from the entity's owner.

(iv) ***Payments to a U.S. branch of certain foreign banks or foreign insurance companies*** —

(A) ***U.S. branch treated as a U.S. person in certain cases.*** A payment to a U.S. branch of a foreign person is a payment to a foreign person. However, a U.S. branch of a foreign person that is described in this paragraph (b)(2)(iv)(A) may agree to be treated as a U.S. person for purposes of withholding on specified payments to the U.S. branch. If a U.S. branch agrees to be treated as a U.S. person with a withholding agent, it is required to act as a U.S. person with respect to all other withholding agents, including when acting as an intermediary with respect to withholdable payments for purposes of chapter 4. See § 1.1471-3(a)(3)(vi). In such cases, the U.S. branch is treated as a payee that is a U.S. person. See paragraph (C) of this section for additional requirements for the U.S. branch when treated as a payor that is a U.S. person. Notwithstanding the preceding sentence, a withholding agent making a payment to a U.S. branch treated as a U.S. person under this paragraph (b)(2)(iv)(A) shall not treat the branch as a U.S. person for purposes of reporting the payment made to the branch. Therefore, a payment to such U.S. branch shall be reported on Form 1042-S under § 1.1461-1(c) and § 1.1474-1(d)(1)(i) for a payment of U.S. source FDAP income that is a chapter 4 reportable amount as defined in § 1.1471-1(b)(18). Further, a U.S. branch that is treated as a U.S. person under this paragraph (b)(2)(iv)(A) shall not be treated as a U.S. person for purposes of the withholding certificate it provides to a withholding agent. Therefore, the U.S. branch must furnish a U.S. branch withholding certificate on a Form W-8IMY as provided in paragraph (e)(3)(v) of this section and not a Form W-9. An agreement to treat a U.S. branch as a U.S. person must be evidenced by a U.S. branch withholding certificate described in paragraph (e)(3)(v) of this section furnished by the U.S. branch to the withholding agent. A U.S. branch described in this paragraph (b)(2)(iv)(A) and eligible to be treated as a U.S. person is any U.S. branch of a foreign bank subject to regulatory supervision by the Federal Reserve Board or a U.S. branch of a foreign insurance company required to file an annual statement on a form approved by the National Association of Insurance Commissioners with the Insurance Department of a State, a Territory, or the District of Columbia. In addition, a territory financial institution (including a territory financial institution that is a flow-through entity) will be treated as a U.S. branch for purposes of this paragraph (b)(2)(iv)(A) and therefore is eligible to be treated as a U.S. person. The Internal Revenue Service (IRS) may approve a list of U.S. branches that may be eligible for treatment as U.S. persons under this paragraph (b)(2)(iv)(A) (see § 601.601(d)(2) of this chapter). See § 1.6049-5(c)(5)(vi) for the treatment of U.S. branches as U.S. payors if they make a payment that is subject to reporting under chapter 61 of the Code. Also see § 1.6049-5(d)(1)(ii) for the treatment of U.S. branches as foreign payees under chapter 61 of the Code.

(B) ***Consequences to the withholding agent.*** Any person that is otherwise a withholding agent regarding a payment to a U.S. branch described in paragraph (b)(2)(iv)(A) of this section shall treat the payment in one of the following ways—

(*1*) As a payment to a U.S. person, in which case the withholding agent is not responsible for withholding on such payment to the extent it can reliably associate the payment with a withholding certificate described in paragraph (e)(3)(v) of this section that has been furnished by the U.S. branch under its agreement with the withholding agent to be treated as a U.S. person;

(*2*) As a payment directly to the persons whose names are on withholding certificates or other appropriate documentation forwarded by the U.S. branch to the withholding agent when no agreement is in effect to treat the U.S. branch as a U.S. person for such payment, to the extent the withholding agent can reliably associate the payment with such certificates or documentation;

(*3*) As a payment to a foreign person of income that is effectively connected with the conduct of a trade or business in the United States if the withholding agent has obtained an EIN for the branch and cannot reliably associate the payment with a withholding certificate from a U.S. branch (or any other certificate or other appropriate documentation from another person). See § 1.1441-4(a)(2)(ii); or

(*4*) As a payment to a foreign person of income that is not effectively connected with the conduct of a trade or business in the United States if the withholding agent has not obtained an EIN for the branch and cannot reliably associate the payment with a withholding certificate from the U.S. branch.

(C) ***Consequences to the U.S. branch.*** A U.S. branch that is treated as a U.S. person under paragraph (b)(2)(iv)(A) of this section shall be treated as a separate person for purposes of section 1441(a) and all other provisions of chapters 3 and 4 of the Code and the regulations thereunder (other than for purposes of reporting the payment to the U.S. branch under § 1.1461-1(c) and § 1.1474-1(d)(1)(i) for a chapter 4 reportable amount by a withholding agent) or for purposes of the documentation such a branch must furnish under paragraph (e)(3)(v) of this section) for any payment that it receives as such. Thus, the U.S. branch shall be responsible for withholding on a payment as a U.S. person in accordance with the provisions under chapters 3 and 4 of the Code and the regulations thereunder and other applicable withholding provisions of the Code. For this purpose, it shall obtain and retain documentation from payees or beneficial owners of the payments that it receives as an intermediary as a U.S. person in the same manner as if it were a separate entity. For example, if a U.S. branch receives a payment as an intermediary on behalf of customers of its home office and the home office is a qualified intermediary, the U.S. branch must obtain a qualified intermediary withholding certificate described in paragraph (e)(3)(ii) of this section from its home office. Similarly, if a U.S. branch of an FFI treated as a U.S. person receives a payment on behalf of another branch of the FFI that is treated as a nonparticipating FFI, the U.S. branch must withhold on the payment made to the other branch as if it were a separate person to the extent required under chapter 4. In addition, a U.S. branch that has not provided documentation to the withholding agent for a payment that is, in fact, not effectively connected income is a withholding agent with respect to that payment. See paragraph (b)(6) of this section and § 1.1441-4(a)(2)(ii).

(D) ***Definition of payment to a U.S. branch.*** A payment is treated as a payment to a U.S. branch of a foreign bank or foreign insurance company if the payment is credited to an account maintained in the United States in the name of a U.S. branch of the foreign person, or the

payment is made to an address in the United States where the U.S. branch is located and the name of the U.S. branch appears on documents (in written or electronic form) associated with the payment (e.g., the check mailed or a letter addressed to the branch).

(E) ***Payments to other U.S. branches.*** Similar withholding procedures may apply to payments to U.S. branches that are not described in paragraph (b)(2)(iv)(A) of this section to the extent permitted by the IRS. Any such branch must establish that its situation is analogous to that of a U.S. branch described in paragraph (b)(2)(iv)(A) of this section. In the alternative, the branch must establish that the withholding and reporting requirements under chapter 3 of the Code and the regulations thereunder impose an undue administrative burden and that the collection of the tax imposed by section 871(a) or 881(a) on the foreign person (or its members in the case of a foreign partnership) will not be jeopardized by the exemption from withholding. Generally, an undue administrative burden will be found to exist in a case where the person entitled to the income, such as a foreign insurance company, receives from the withholding agent income on securities issued by a single corporation, some of which is, and some of which is not, effectively connected with conduct of a trade or business within the United States and the criteria for determining the effective connection are unduly difficult to apply because of the circumstances under which such securities are held. No exemption from withholding shall be granted under this paragraph (b)(2)(iv)(E) unless the person entitled to the income complies with such other requirements as may be imposed by the IRS and unless the IRS is satisfied that the collection of the tax on the income involved will not be jeopardized by the exemption from withholding. The IRS may prescribe such procedures as are necessary to make these determinations (see § 601.601(d)(2) of this chapter).

(v) ***Payments to a foreign intermediary —***

(A) ***Payments treated as made to persons for whom the intermediary collects the payment.*** Except as otherwise provided in paragraph (b)(2)(v)(B) of this section, the payee of a payment to a person that the withholding agent may treat as a foreign intermediary in accordance with the provisions of paragraph (b)(3)(ii)(C) or (b)(3)(v)(A) of this section is the person or persons for whom the intermediary collects the payment. Thus, for example, the payee of a payment that the withholding agent can reliably associate with a withholding certificate from a qualified intermediary (defined in paragraph (e)(5)(ii) of this section) that does not assume primary withholding responsibility or a payment to a nonqualified intermediary are the persons for whom the qualified intermediary or nonqualified intermediary acts and not to the intermediary itself. See paragraph (b)(3)(v) of this section for presumptions that apply if the payment cannot be reliably associated with valid documentation. For similar rules for payments to flow-through entities, see § 1.1441-5(c)(1) and (e)(3).

(B) ***Payments treated as made to foreign intermediary.*** The payee of a payment to a person that the withholding agent may treat as a qualified intermediary is the qualified intermediary to the extent that the qualified intermediary assumes primary withholding responsibility under paragraph (e)(5)(iv) of this section for the payment. For example if a qualified intermediary assumes primary withholding responsibility under chapter 3 of the Internal Revenue Code but does not assume primary reporting or withholding responsibility under

chapter 61 or section 3406 of the Internal Revenue Code and therefore provides Forms W-9 for U.S. non-exempt recipients, the qualified intermediary is the payee except to the extent the payment is reliably associated with a Form W-9 from a U.S. non-exempt recipient.

(vi) ***Other payees.*** A payment to a person described in § 1.6049-4(c)(1)(ii) that the withholding agent would treat as a payment to a foreign person without obtaining documentation for purposes of information reporting under section 6049 (if the payment were interest) is treated as a payment to a foreign payee for purposes of chapter 3 of the Code and the regulations thereunder (or to a foreign beneficial owner to the extent provided in paragraph (e)(1)(ii)(A)(*6*) or (*7*) of this section). Further, a payment that the withholding agent can reliably associate with documentary evidence described in § 1.6049-5(c)(1) relating to the payee is treated as a payment to a foreign payee. See § 1.1441-5(b)(1) and (c)(1) for payee determinations for payments to partnerships. See § 1.1441-5(e) for payee determinations for payments to foreign trusts or foreign estates.

(vii) ***Rules for reliably associating a payment with a withholding certificate or other appropriate documentation*** —

(A) ***Generally.*** The presumption rules of paragraph (b)(3) of this section and §§ 1.1441-5(d) and (e)(6) and 1.6049-5(d) apply to any payment, or portion of a payment, that a withholding agent cannot reliably associate with valid documentation. Generally, a withholding agent can reliably associate a payment with valid documentation if, prior to the payment, it holds valid documentation (either directly or through an agent), it can reliably determine how much of the payment relates to the valid documentation, and it has no actual knowledge or reason to know that any of the information, certifications, or statements in, or associated with, the documentation are incorrect. Special rules apply for payments made to intermediaries, flow-through entities, and certain U.S. branches. See paragraph (b)(2)(vii)(B) through (F) of this section. The documentation referred to in this paragraph (b)(2)(vii) is documentation described in paragraphs (c)(16) and (17) of this section upon which a withholding agent may rely to treat the payment as a payment made to a payee or beneficial owner, and to ascertain the characteristics of the payee or beneficial owner that are relevant to withholding or reporting under chapter 3 of the Internal Revenue Code and the regulations thereunder. A withholding agent that is not required to obtain documentation with respect to a payment is considered to lack documentation for purposes of this paragraph (b)(2)(vii). For example, a withholding agent paying U.S. source interest to a person that is an exempt recipient, as defined in § 1.6049-4(c)(1)(ii), is not required to obtain documentation from that person in order to determine whether an amount paid to that person is reportable under an applicable information reporting provision under chapter 61 of the Internal Revenue Code. The withholding agent must, however, treat the payment as made to an undocumented person for purposes of chapter 3 of the Internal Revenue Code. Therefore, the presumption rules of paragraph (b)(3)(iii) of this section apply to determine whether the person is presumed to be a U.S. person (in which case, no withholding is required under this section), or whether the person is presumed to be a foreign person (in which case 30-percent withholding is required under this section). See paragraph (b)(3)(v) of this section for special reliance rules in the case of a payment to a foreign intermediary and § 1.1441-5(d) and (e)(6) for special reliance rules in the case of a payment to a flow-through entity.

(B) ***Special rules applicable to a withholding certificate from a nonqualified intermediary or flow-through entity.***

(*1*) In the case of a payment made to a nonqualified intermediary, a flow-through entity (as defined in paragraph (c)(23) of this section), or a U.S. branch described in paragraph (b)(2)(iv) of this section (other than a U.S. branch that is treated as a U.S. person), a withholding agent can reliably associate the payment with valid documentation only to the extent that, prior to the payment, the withholding agent can allocate the payment to a valid nonqualified intermediary, flow-through entity, or U.S. branch withholding certificate (and a withholding certificate provided by a nonparticipating FFI with respect to a portion of a payment that is a withholdable payment allocated to an exempt beneficial owner as described in § 1.1471-3(c)(3)(iii)(B)(*4*)); the withholding agent can reliably determine how much of the payment relates to valid documentation provided by a payee as determined under paragraph (c)(12) of this section (*i.e.,* a person that is not itself an intermediary, flow-through entity, or U.S. branch); and the withholding agent has sufficient information to report the payment on Form 1042-S or Form 1099, if reporting is required. See, however, paragraph (e)(3)(iv) of this section for when a nonqualified intermediary may report payees to the withholding agent in a chapter 4 withholding rate pool, in which case a withholding agent need not associate the portion of the payment attributable to such payees with documentation from each such payee. See also paragraph (e)(3)(iii) of this section for the requirements of a nonqualified intermediary withholding certificate, paragraph (e)(3)(v) of this section for the requirements of a U.S. branch withholding certificate, and §§ 1.1441-5(c)(3)(iii) and (e)(5)(iii) for the requirements of a flow-through withholding certificate (including the requirements for a withholding certificate associated with a withholdable payment). Thus, a payment cannot be reliably associated with valid documentation provided by a payee to the extent such documentation is lacking or unreliable, or to the extent that information required to allocate and report all or a portion of the payment to each payee is lacking or unreliable. If a withholding certificate attached to an intermediary, U.S. branch, or flow-through withholding certificate is another intermediary, U.S. branch, or flow-through withholding certificate, the rules of this paragraph (b)(2)(vii)(B) apply by treating the share of the payment allocable to the other intermediary, U.S. branch, or flow-through entity as if the payment were made directly to such other entity. See paragraph (e)(3)(iv)(D) of this section for rules permitting information allocating a payment to documentation to be received after the payment is made.

(*2*) The rules of paragraph (b)(2)(vii)(B)(*1*) of this section are illustrated by the following examples. Each example illustrates a payment that is not a withholdable payment and, as a result of which, neither the chapter 4 status of the NQI nor payee specific documentation with respect to the chapter 4 status is required to be provided to the withholding agent (and no withholding applies under chapter 4 on each payment). See paragraph (e)(3)(iv)(C) of this section for the requirements of a withholding statement provided by a nonqualified intermediary that receives a withholdable payment and for an example illustrating the requirements of an NQI providing a withholding statement to a withholding agent for a withholdable payment.

Example 1. WA, a withholding agent, makes a payment of U.S. source interest with respect to a grandfathered obligation as described in § 1.1471-2(b) (and thus the payment is not a withholdable payment) to NQI, an intermediary that is a nonqualified intermediary. NQI provides a valid intermediary withholding certificate under

paragraph (e)(3)(iii) of this section. NQI does not, however, provide valid documentation from the persons on whose behalf it receives the interest payment, and, therefore, the interest payment cannot be reliably associated with valid documentation provided by a payee. WA must apply the presumption rules of paragraph (b)(3)(v) of this section to the payment.

Example 2. The facts are the same as in *Example 1,* except that NQI does attach valid beneficial owner withholding certificates (as defined in paragraph (e)(2)(i) of this section) from A, B, C, and D establishing their statuses as foreign persons. NQI does not, however, provide WA with any information allocating the payment among A, B, C, and D and, therefore, WA cannot determine the portion of the payment that relates to each beneficial owner withholding certificate. The interest payment cannot be reliably associated with valid documentation from a payee, and WA must apply the presumption rules of paragraph (b)(3)(v) of this section to the payment. See, however, paragraph (e)(3)(iv)(D) of this section providing for alternative procedures that allow a nonqualified intermediary to provide allocation information after a payment is made.

Example 3. The facts are the same as in *Example 2,* except that NQI provides allocation information associated with its intermediary withholding certificate indicating that 25% of the interest payment is allocable to A and 25% to B. NQI does not provide any allocation information regarding the remaining 50% of the payment. WA may treat 25% of the payment as made to A and 25% as made to B. The remaining 50% of the payment cannot be reliably associated with valid documentation from a payee, however, since NQI did not provide information allocating the payment. Thus, the remaining 50% of the payment is subject to the presumption rules of paragraph (b)(3)(v) of this section.

Example 4. WA makes a payment of U.S. source interest to NQI1, an intermediary that is not a qualified intermediary. NQI1 provides WA with a valid nonqualified intermediary withholding certificate as well valid beneficial owner withholding certificates from A and B and a valid nonqualified intermediary withholding certificate from NQI2. NQI2 has provided valid beneficial owner documentation from C sufficient to establish C's status as a foreign person. Based on information provided by NQI1, WA can allocate 20% of the interest payment to A, and 20% to B. Based on information that NQI2 provided NQI1 and that NQI1 provides to WA, WA can allocate 60% of the payment to NQI2, but can only allocate one half of that payment (30%) to C. Therefore, WA cannot reliably associate the remainder of the payment made to NQI2 (30% of the total payment) with valid documentation and must apply the presumption rules of paragraph (b)(3)(v) of this section to that portion of the payment.

(C) ***Special rules applicable to a withholding certificate provided by a qualified intermediary that does not assume primary withholding responsibility*** —

(*1*) If a payment is made to a qualified intermediary that does not assume primary withholding responsibility under chapters 3 and 4 of the Code or primary Form 1099 reporting and backup withholding responsibility under chapter 61 and section 3406 of the Code for the payment, a withholding agent can reliably associate the payment with valid documentation only to the extent that, prior to the payment, the withholding agent has received a valid qualified intermediary withholding certificate described in

paragraph (e)(3)(ii) of this section and the withholding agent can reliably determine the portion of the payment that relates to a chapter 3 withholding rate pool, as defined in paragraph (c)(44) of this section; a chapter 4 withholding rate pool (including for a withholdable payment as described in paragraph (e)(5)(v)(C)(*2*) of this section), as defined in paragraph (c)(48) of this section; or a pool attributable to U.S. exempt recipients. In the case of a withholding rate pool attributable to a U.S. non-exempt recipient, a payment cannot be reliably associated with valid documentation unless, prior to the payment, the qualified intermediary has provided the U.S. person's Form W-9 (or, in the absence of the form, the name, address, and TIN, if available, of the U.S. person) and sufficient information for the withholding agent to report the payment on Form 1099. See, however, paragraph (e)(5)(v)(C)(*3*) of this section for alternative procedures for allocating payments among U.S. non-exempt recipients and paragraphs (e)(5)(v)(C)(*1*) and (*2*) of this section for when a chapter 4 withholding rate pool of U.S. payees may be provided by a qualified intermediary instead of documentation with respect to each U.S. non-exempt recipient.

(*2*) The rules of this paragraph (b)(2)(vii)(C) are illustrated by the following examples:

Example 1. WA, a withholding agent, makes a payment of U.S. source dividends that is a withholdable payment to QI. QI provides WA with a valid qualified intermediary withholding certificate on which it indicates that it does not assume primary withholding responsibility under chapters 3 and 4 or primary Form 1099 reporting and backup withholding responsibility under chapter 61 and section 3406. QI does not provide any information allocating the dividend to withholding rate pools. WA cannot reliably associate the payment with valid payee documentation and therefore must apply the presumption rules applicable to a withholdable payment under § 1.1471-3(f)(5) to determine the status of the payee for purposes of chapter 4. See *Example 2* for an application of the presumption rules under § 1.1471-3(f).

Example 2. WA makes a payment of U.S. source dividends that is a withholdable payment to QI, which is an NFFE. QI has 5 customers: A, B, C, D, and E, all of whom are individuals except for C. QI has obtained valid documentation from A and B establishing their entitlement to a 15% rate of tax on U.S. source dividends under an income tax treaty. C is a U.S. person that is an exempt recipient as defined in paragraph (c)(20) of this section. D and E are U.S. non-exempt recipients who have provided Forms W-9 to QI. A, B, C, D, and E are each entitled to 20% of the dividend payment. QI provides WA with a valid qualified intermediary withholding certificate as described in paragraph (e)(3)(ii) of this section with which it associates the Forms W-9 from D and E. QI associates the following allocation information with its qualified intermediary withholding certificate: 40% of the payment is allocable to the 15% chapter 3 withholding rate pool, and 20% is allocable to each of D and E. QI does not provide any allocation information regarding the remaining 20% of the payment. WA cannot reliably associate 20% of the payment with valid documentation and, therefore, must apply the presumption rules applicable to a withholdable payment. Because QI is receiving a withholdable payment as an intermediary, under paragraph (b)(3)(iii) of this section WA must apply the presumption rule of § 1.1471-3(f)(5) to treat the portion of the payment that cannot reliably be associated with valid documentation as made to a nonparticipating FFI account holder of QI. As a result,

WA is required to withhold at a 30% rate of tax under chapter 4. See § 1.1441-3(a)(2) permitting WA to credit the amount withheld under chapter 4 against the liability for tax due on the payment under section 1441 or 1442. The 40% of the payment allocable to the 15% withholding rate pool and the portion of the payments allocable to D and E are payments that can be reliably associated with documentation.

(D) ***Special rules applicable to a withholding certificate provided by a qualified intermediary that assumes primary withholding responsibility under chapter 3 and chapter 4 of the Internal Revenue Code.***

(*1*) In the case of a payment made to a qualified intermediary that assumes primary withholding responsibility under chapters 3 and 4 of the Code with respect to that payment (but does not assume primary Form 1099 reporting and backup withholding responsibility under chapter 61 of the Code and section 3406), a withholding agent can reliably associate the payment with valid documentation only to the extent that, prior to the payment, the withholding agent has received a valid qualified intermediary withholding certificate and the withholding agent can reliably determine the portion of the payment that relates to the withholding rate pool for which the qualified intermediary assumes primary withholding responsibility and the portion of the payment attributable to withholding rate pools for each U.S. non-exempt recipient for whom the qualified intermediary has provided a Form W-9 (or, in absence of the form, the name, address, and TIN, if available, of the U.S. non-exempt recipient). See paragraph (e)(5)(iv) of this section (requiring a qualified intermediary assuming primary withholding responsibility under chapter 3 to assume primary withholding responsibility under chapter 4). See also paragraph (e)(5)(v)(C)(*3*) of this section for alternative allocation procedures for payments made to U.S. persons that are not exempt recipients and paragraphs (e)(5)(v)(C)(*1*) and (*2*) of this section for when a qualified intermediary may provide a chapter 4 withholding rate pool of U.S. payees to a withholding agent instead of documentation with respect to each U.S. non-exempt recipient.

(*2*) ***Examples.*** The following examples illustrate the rules of paragraph (b)(2)(vii)(D)(*1*) of this section. See also the example in paragraph (e)(5)(v)(D) for rules for reporting of U.S. non-exempt recipients when a qualified intermediary that is an FFI reports a U.S. account under chapter 4.

Example 1. WA makes a payment of U.S. source interest that is a withholdable payment to QI, a qualified intermediary that is an NFFE. QI provides WA with a withholding certificate that indicates that QI will assume primary withholding responsibility under chapters 3 and 4 of the Code with respect to the payment. In addition, QI attaches a Form W-9 from A, a U.S. non-exempt recipient, as defined in paragraph (c)(21) of this section, and provides the name, address, and TIN of B, a U.S. person that is also a non-exempt recipient but who has not provided a Form W-9. QI associates a withholding statement with its qualified intermediary withholding certificate indicating that 10% of the payment is attributable to A and 10% to B, and that QI will assume primary withholding responsibility under chapters 3 and 4 with respect to the remaining 80% of the payment. WA can reliably associate the entire payment with valid documentation. Although under the presumption rule of paragraph (b)(3)(v) of this section, an undocumented person receiving U.S. source interest is generally

presumed to be a foreign person, WA has actual knowledge that B is a U.S. non-exempt recipient and therefore must report the payment on Form 1099 and backup withhold on the interest payment under section 3406.

Example 2. The facts are the same as in *Example 1*, except that no information has been provided for the 20% of the payment that is allocable to A and B. Thus, QI has accepted withholding responsibility for 80% of the payment but has provided no information for the remaining 20%. In this case, 20% of the payment cannot be reliably associated with valid documentation, and, under paragraph (b)(3)(iii) of this section, WA must apply the presumption rule of § 1.1471-3(f)(5) to treat the payment as made to a nonparticipating FFI and withhold 30% of the gross amount of the payment (because the payment is a withholdable payment and is treated as made to a foreign payee under paragraph (b)(3)(v) of this section). See *Example 2* in paragraph (b)(2)(vii)(C)(*2*) and § 1.1471-3(f)(1).

(E) ***Special rules applicable to a withholding certificate provided by a qualified intermediary that assumes primary Form 1099 reporting and backup withholding responsibility but not primary withholding under chapter 3 and chapter 4.***

(*1*) If a payment is made to a qualified intermediary that assumes primary Form 1099 reporting and backup withholding responsibility for the payment (but does not assume primary withholding responsibility under chapters 3 and 4 of the Code), a withholding agent can reliably associate the payment with valid documentation only to the extent that, prior to the payment, the withholding agent has received a valid qualified intermediary withholding certificate and the withholding agent can reliably determine the portion of the payment that relates to a withholding rate pool or pools provided as part of the qualified intermediary's withholding statement and the portion of the payment for which the qualified intermediary assumes primary Form 1099 reporting and backup withholding responsibility. See paragraph (e)(5)(v)(C)(*2*) of this section for when a qualified intermediary may include a chapter 4 withholding rate pool on a withholding statement provided to a withholding agent with respect to a withholdable payment.

(*2*) The following example illustrates the rules of paragraph (b)(2)(vii)(D)(*1*) of this section:

Example. WA, a withholding agent, makes a payment of U.S. source dividends that is a withholdable payment to QI, a qualified intermediary that is a participating FFI. QI has provided WA with a valid qualified intermediary withholding certificate. QI states on its withholding statement accompanying the certificate that it assumes primary Form 1099 reporting and backup withholding responsibility but does not assume primary withholding responsibility under chapters 3 and 4 of the Code. QI represents that 15% of the dividend is subject to a 30% rate of withholding, 75% of the dividend is subject to a 15% rate of withholding. QI represents that it assumes primary Form 1099 reporting and backup withholding for the remaining 10% of the payment and will not need to provide a chapter 4 withholding rate pool with respect to this portion of the payment or documentation with respect to U.S. non-exempt recipients. WA can reliably associate the entire payment with valid documentation.

(F) ***Special rules applicable to a withholding certificate provided by a qualified intermediary that assumes primary withholding responsibility under chapter 3 and chapter 4 and primary Form 1099 reporting and backup withholding responsibility and a withholding certificate provided by a withholding foreign partnership or a withholding foreign trust.*** If a payment is made to a qualified intermediary that assumes both primary withholding responsibility under chapters 3 and 4 of the Code and primary Form 1099 reporting and backup withholding responsibility under chapter 61 and section 3406 of the Code for the payment, a withholding agent can reliably associate a payment with valid documentation provided that it receives a valid qualified intermediary withholding certificate as described in paragraph (e)(3)(ii) of this section. In the case of a payment made to a withholding foreign partnership or a withholding foreign trust, the withholding agent can reliably associate the payment with valid documentation to the extent it can associate the payment with a valid withholding certificate described in § 1.1441-5(c)(2)(iv) or in § 1.1441-5(e)(5)(v) (respectively). See paragraph (e)(5)(iv) of this section, providing that a qualified intermediary assuming primary withholding responsibility under chapter 3 must also assume primary withholding responsibility under chapter 4 with respect to a withholdable payment.

(3) ***Presumptions regarding payee's status in the absence of documentation*** —

(i) ***General rules.*** A withholding agent that cannot, prior to the payment, reliably associate (within the meaning of paragraph (b)(2)(vii) of this section) a payment of an amount subject to withholding (as described in § 1.1441-2(a)) with valid documentation may rely on the presumptions of this paragraph (b)(3) to determine the status of the person receiving the payment as a U.S. or a foreign person and the person's other relevant characteristics (*e.g.,* as an owner or intermediary, as an individual, trust, partnership, or corporation). The determination of withholding and reporting requirements applicable to payments to a person presumed to be a foreign person is governed only by the provisions of chapters 3 and 4 of the Code and the regulations thereunder. For the determination of withholding and reporting requirements applicable to payments to a person presumed to be a U.S. person, see chapter 61 of the Code, section 3402, 3405, or 3406, and, with respect to the reporting requirements of a participating FFI or registered deemed-compliant FFI, see chapter 4 of the Code and the related regulations. A presumption that a payee is a foreign payee is not a presumption that the payee is a foreign beneficial owner. Therefore, the provisions of this paragraph (b)(3) have no effect for purposes of reducing the withholding rate if associating the payment with documentation of foreign beneficial ownership is required as a condition for such rate reduction. See paragraph (b)(3)(ix) of this section for consequences to a withholding agent that fails to withhold in accordance with the presumptions set forth in this paragraph (b)(3) or if the withholding agent has actual knowledge or reason to know of facts that are contrary to the presumptions set forth in this paragraph (b)(3). See paragraph (b)(2)(vii) of this section for rules regarding the extent to which a withholding agent can reliably associate a payment with documentation.

(ii) ***Presumptions of classification as individual, corporation, partnership, etc.*** —

(A) ***In general.*** A withholding agent that cannot reliably associate a payment with a valid withholding certificate or that has received valid documentary evidence under §§ 1.1441-1(e)(1)(ii)(A)(2) and 1.6049-5(c)(1) or (4) but cannot determine a payee's classification from the documentary evidence must apply the rules of this paragraph (b)(3)(ii) to determine the payee's classification as an individual, trust, estate, corporation, or partnership. The fact that a payee is presumed to have a certain status under the

provisions of this paragraph (b)(3)(ii) does not mean that it is excused from furnishing documentation if documentation is otherwise required to obtain a reduced rate of withholding under this section. For example, if, for purposes of this paragraph (b)(3)(ii), a payee is presumed to be a tax-exempt organization based on § 1.6049-4(c)(1)(ii)(B), the withholding agent cannot rely on this presumption to reduce the rate of withholding on payments to such person (if such person is also presumed to be a foreign person under paragraph (b)(3)(iii)(A) of this section) because a reduction in the rate of withholding for payments to a foreign tax-exempt organization generally requires that a valid Form W-8 described in § 1.1441-9(b)(2) be furnished to the withholding agent.

(B) ***No documentation provided.*** If the withholding agent cannot reliably associate a payment with a valid withholding certificate or valid documentary evidence, it must presume that the payee is an individual, a trust, or an estate, if the payee appears to be such person (*e.g.,* based on the payee's name or information in the customer file). In the absence of reliable indications that the payee is an individual, a trust, or an estate, the withholding agent must presume that the payee is a corporation or one of the persons enumerated under § 1.6049-4(c)(1)(ii)(B) through (Q) if it can be so treated under § 1.6049-4(c)(1)(ii)(A)(*1*) or any one of the paragraphs under § 1.6049-4(c)(1)(ii)(B) through (Q) without the need to furnish documentation. If the withholding agent cannot treat a payee as a person described in § 1.6049-4(c)(1)(ii)(A)(*1*) through (Q), then the payee shall be presumed to be a partnership. If such a partnership is presumed to be foreign, it is not the beneficial owner of the income paid to it. See paragraph (c)(6) of this section. If such a partnership is presumed to be domestic, it is a U.S. non-exempt recipient for purposes of chapter 61 of the Code.

(C) ***Documentary evidence furnished for offshore obligation.*** If the withholding agent receives valid documentary evidence, as described in § 1.6049-5(c)(1) or (c)(4), with respect to an offshore obligation from an entity but the documentary evidence does not establish the entity's classification as a corporation, trust, estate, or partnership, the withholding agent may presume (in the absence of actual knowledge otherwise) that the entity is the type of person enumerated under § 1.6049-4 (c)(1)(ii)(B) through (Q) if it can be so treated under any one of those paragraphs without the need to furnish documentation. If the withholding agent cannot treat a payee as a person described in § 1.6049-4(c)(1)(ii)(B) through (Q), then the payee shall be presumed to be a corporation unless the withholding agent knows, or has reason to know, that the entity is not classified as a corporation for U.S. tax purposes. If a payee is, or is presumed to be, a corporation under this paragraph (b)(3)(ii)(C) and a foreign person under paragraph (b)(3)(iii) of this section, a withholding agent shall not treat the payee as the beneficial owner of income if the withholding agent knows, or has reason to know, that the payee is not the beneficial owner of the income. For this purpose, a withholding agent will have reason to know that the payee is not a beneficial owner if the documentary evidence indicates that the payee is a bank, broker, intermediary, custodian, or other agent, or is treated under § 1.6049-4(c)(1)(ii)(B) through (Q) as such a person. A withholding agent may, however, treat such a person as a beneficial owner if the foreign person provides a statement, in writing and signed by a person with authority to sign the statement, that is attached to the documentary evidence and that states that the foreign person is the beneficial owner of the income.

(iii) ***Presumption of U.S. or foreign status.*** A payment that the withholding agent cannot reliably associate with documentation is presumed to be made to a U.S. person, except as otherwise provided in this paragraph (b)(3)(iii), in paragraphs (b)(3)(iv) and (v) of this section, or in § 1.1441-5(d) or (e). A withholding agent must treat a payee that is presumed or known to be a trust but for which the withholding agent cannot determine the type of trust in accordance with the presumptions specified in § 1.1441-5(e)(6)(ii). In the case of a payment that is a withholdable payment, a withholding agent must apply the presumption rule under § 1.1471-3(f) for purposes of chapter 4.

(A) ***Payments to exempt recipients*** —

(*1*) ***In general.*** If a withholding agent cannot reliably associate a payment with documentation from the payee and the payee is an exempt recipient (as determined under the provisions of § 1.6049-4(c)(1)(ii) in the case of interest, or under similar provisions under chapter 61 of the Code applicable to the type of payment involved, but not including a payee that the withholding agent may treat as a foreign intermediary in accordance with paragraph (b)(3)(v) of this section), the payee is presumed to be a foreign person and not a U.S. person—

(*i*) If the withholding agent has actual knowledge of the payee's employer identification number and that number begins with the two digits “98”;

(*ii*) If the withholding agent's communications with the payee are mailed to an address in a foreign country;

(*iii*) If the name of the payee indicates that the entity is the type of entity that is on the per se list of foreign corporations contained in § 301.7701-2(b)(8)(i) of this chapter (and, in the case of a name which contains the designation “corporation” or “company,” the withholding agent has a document that reasonably demonstrates the payee was incorporated in the relevant jurisdiction);

(*iv*) If the payment is made with respect to an offshore obligation (as defined in paragraph (c)(37) of this section); or

(*v*) With respect to an account opened after July 1, 2014, if the withholding agent has a telephone number for the person outside of the United States.

(B) ***Scholarships and grants.*** A payment representing taxable scholarship or fellowship grant income that does not represent compensation for services (but is not excluded from tax under section 117) and that a withholding agent cannot reliably associate with documentation is presumed to be made to a foreign person if the withholding agent has a record that the payee has a U.S. visa that is not an immigrant visa. See section 871(c) and § 1.1441-4(c) for applicable tax rate and withholding rules.

(C) ***Pensions, annuities, etc.*** A payment from a trust described in section 401(a), an annuity plan described in section 403(a), a payment with respect to any annuity, custodial account, or retirement income account described in section 403(b), or a payment from an individual retirement account or individual retirement annuity described in section 408 that a withholding agent cannot reliably associate with documentation is presumed to be made to a U.S. person only if the withholding agent has a record of a Social Security number for the payee and relies on a mailing address described in the following sentence. A mailing

address is an address used for purposes of information reporting or otherwise communicating with the payee that is an address in the United States or in a foreign country with which the United States has an income tax treaty in effect and the treaty provides that the payee, if an individual resident in that country, would be entitled to an exemption from U.S. tax on amounts described in this paragraph (b)(3)(iii)(C). Any payment described in this paragraph (b)(3)(iii)(C) that is not presumed to be made to a U.S. person is presumed to be made to a foreign person. A withholding agent making a payment to a person presumed to be a foreign person may not reduce the 30-percent amount of withholding required on such payment unless it receives a withholding certificate described in paragraph (e)(2)(i) of this section furnished by the beneficial owner. For reduction in the 30-percent rate, see §§ 1.1441-4(e) or 1.1441-6(b).

(D) ***Payments with respect to offshore obligations.*** A payment is presumed made to a foreign payee if the payment is made outside the United States (as defined in § 1.6049-5(e)) with respect to an offshore obligation (as defined in paragraph (c)(37) of this section) and the withholding agent does not have actual knowledge that the payee is a U.S. person. See § 1.6049-5(d)(2) and (3) for exceptions to this rule.

(E) ***Certain payments for services.*** A payment for services is presumed to be made to a foreign person if—

(*1*) The payee is an individual;

(*2*) The withholding agent does not know, or have reason to know, that the payee is a U.S. citizen or resident;

(*3*) The withholding agent does not know, or have reason to know, that the income is (or may be) effectively connected with the conduct of a trade or business within the United States; and

(*4*) All of the services for which the payment is made were performed by the payee outside of the United States.

(iv) ***Grace period.*** A withholding agent may choose to apply the provisions of § 1.6049-5(d)(2)(ii) regarding a 90-day grace period for purposes of this paragraph (b)(3) (by applying the term withholding agent instead of the term payor) to amounts described in § 1.1441-6(c)(2) and to amounts covered by a Form 8233 described in § 1.1441-4(b)(2)(ii). Thus, for these amounts, a withholding agent may choose to treat the payee as a foreign person and withhold under chapter 3 of the Code (and the regulations thereunder) while awaiting documentation. For purposes of determining the rate of withholding under this section, the withholding agent must withhold at the unreduced 30-percent rate at the time that the amounts are credited to an account. For reporting of amounts credited both before and after the grace period, see § 1.1461-1(c)(4)(i)(A). The following adjustments shall be made at the expiration of the grace period:

(A) If, at the end of the grace period, the documentation is not furnished in the manner required under this section and the account holder is presumed to be a U.S. non-exempt recipient, then backup withholding only applies to amounts credited to the account after the expiration of the grace period. Amounts credited to the account during the grace period shall be treated as owned by a foreign payee and adjustments must be made to correct any underwithholding on such amounts in the manner described in § 1.1461-2.

(B) If, at the end of the grace period, the documentation is not furnished in the manner required under this section, or if documentation is furnished that does not support the claimed rate reduction, and the account holder is presumed to be a foreign person then adjustments must be made to correct any underwithholding on amounts credited to the account during the grace period, based on the adjustment procedures described in § 1.1461-2.

(v) *Special rules applicable to payments to foreign intermediaries* —

(A) ***Reliance on claim of status as foreign intermediary.*** The presumption rules of paragraph (b)(3)(v)(B) of this section apply to a payment made to an intermediary (whether the intermediary is a qualified or nonqualified intermediary) that has provided a valid withholding certificate under paragraph (e)(3)(ii) or (iii) of this section (or has provided documentary evidence described in paragraph (b)(3)(ii)(C) of this section that indicates it is a bank, broker, custodian, intermediary, or other agent) to the extent the withholding agent cannot treat the payment as being reliably associated with valid documentation under the rules of paragraph (b)(2)(vii) of this section. For this purpose, a U.S. person's foreign branch that is a qualified intermediary defined in paragraph (e)(5)(ii) of this section shall be treated as a foreign intermediary. A payee that the withholding agent may not reliably treat as a foreign intermediary under this paragraph (b)(3)(v)(A) is presumed to be a payee other than an intermediary whose classification as an individual, corporation, partnership, etc., must be determined in accordance with paragraph (b)(3)(ii) of this section to the extent relevant. In addition, such payee is presumed to be a U.S. or a foreign payee based upon the presumptions described in paragraph (b)(3)(iii) of this section. The provisions of paragraph (b)(3)(v)(B) of this section are not relevant to a withholding agent that can reliably associate a payment with a withholding certificate from a person representing to be a qualified intermediary to the extent the qualified intermediary has assumed primary withholding responsibility in accordance with paragraph (e)(5)(iv) of this section.

(B) ***Beneficial owner documentation or allocation information is lacking or unreliable.*** Except as otherwise provided in this paragraph (b)(3)(v)(B), any portion of a payment that the withholding agent may treat as made to a foreign intermediary (whether a nonqualified or a qualified intermediary) but that the withholding agent cannot treat as reliably associated with valid documentation under the rules of paragraph (b)(2)(vii) of this section is presumed made to an unknown, undocumented foreign payee. As a result, a withholding agent must deduct and withhold 30 percent from any payment of an amount subject to withholding. If a withholding certificate attached to an intermediary certificate is another intermediary withholding certificate or a flow-through withholding certificate, the rules of this paragraph (b)(3)(v)(B) (or § 1.1441-5(d)(3) or (e)(6)(iii)) apply by treating the portion of the payment allocable to the other intermediary or flow-through entity as if it were made directly to the other intermediary or flow-through entity. Any payment of an amount subject to withholding that is presumed made to an undocumented foreign person must be reported on Form 1042-S. See § 1.1461-1(c). See § 1.6049-5(d) for payments that are not subject to withholding under chapter 3. However, in the case of a payment that is a withholdable payment made to a foreign intermediary, the presumption rules under § 1.1471-3(f)(5) shall apply.

(vi) ***U.S. branches and territory financial institutions not treated as U.S. persons.*** The rules of paragraph (b)(3)(v)(B) of this section shall apply to payments to a U.S. branch or a territory financial institution described in paragraph (b)(2)(iv)(A) of this section that has provided a withholding certificate as described in paragraph (e)(3)(v) of this section on which it has not agreed to be treated as a U.S. person.

(vii) ***Joint payees*** —

(A) ***In general.*** Except as provided in paragraph (b)(3)(vii)(B) of this section and this paragraph (b)(3)(vii)(A), if a withholding agent makes a payment to joint payees and cannot reliably associate the payment with valid documentation from all payees, the payment is presumed made to an unidentified U.S. person. If, however, a withholding agent makes a payment that is a withholdable payment and any joint payee does not appear, by its name and other information contained in the account file, to be an individual, then the entire amount of the payment will be treated as made to an undocumented foreign person. See paragraph (b)(3)(iii) of this section for presumption rules that apply in the case of a payment that is a withholdable payment. However, if one of the joint payees provides a Form W-9 furnished in accordance with the procedures described in §§ 31.3406(d)-1 through 31.3406(d)-5 of this chapter, the payment shall be treated as made to that payee. See § 31.3406(h)-2 of this chapter for rules to determine the relevant payee if more than one Form W-9 is provided. For purposes of applying this paragraph (b)(3), the grace period rules in paragraph (b)(3)(iv) of this section shall apply only if each payee meets the conditions described in paragraph (b)(3)(iv) of this section.

(B) ***Special rule for offshore obligations.*** If a withholding agent makes a payment to joint payees and cannot reliably associate a payment with valid documentation from all payees, the payment is presumed made to an unknown foreign payee if the payment is made outside the United States (as defined in § 1.6049-5(e)) with respect to an offshore obligation (as defined in § 1.6049-5(c)(1)).

(viii) ***Rebuttal of presumptions.*** A payee or beneficial owner may rebut the presumptions described in this paragraph (b)(3) by providing reliable documentation to the withholding agent or, if applicable, to the IRS.

(ix) ***Effect of reliance on presumptions and of actual knowledge or reason to know otherwise*** —

(A) ***General rule.*** Except as otherwise provided in paragraph (b)(3)(ix)(B) of this section, a withholding agent that withholds on a payment under section 3402, 3405, or 3406 in accordance with the presumptions set forth in this paragraph (b)(3) shall not be liable for withholding under this section even if it is later established that the beneficial owner of the payment is, in fact, a foreign person. Similarly, a withholding agent that withholds on a payment under this section in accordance with the presumptions set forth in this paragraph (b)(3) shall not be liable for withholding under section 3402 or 3405 or for backup withholding under section 3406 even if it is later established that the payee or beneficial owner is, in fact, a U.S. person. A withholding agent that, instead of relying on the presumptions described in this paragraph (b)(3), relies on its own actual knowledge to withhold a lesser amount, not withhold, or not report a payment, even though reporting of the payment or withholding a greater amount would be required if the withholding agent relied on the presumptions described in this paragraph (b)(3), shall be liable for tax, interest, and penalties to the extent provided under section 1461 and the regulations

under that section. See paragraph (b)(7) of this section for provisions regarding such liability if the withholding agent fails to withhold in accordance with the presumptions described in this paragraph (b)(3).

(B) ***Actual knowledge or reason to know that amount of withholding is greater than is required under the presumptions or that reporting of the payment is required.*** Notwithstanding the provisions of paragraph (b)(3)(ix)(A) of this section, a withholding agent may not rely on the presumptions described in this paragraph (b)(3) to the extent it has actual knowledge or reason to know that the status or characteristics of the payee or of the beneficial owner are other than what is presumed under this paragraph (b)(3) and, if based on such knowledge or reason to know, it should withhold (under this section or another withholding provision of the Code) an amount greater than would be the case if it relied on the presumptions described in this paragraph (b)(3) or it should report (under this section or under another provision of the Code) an amount that would not otherwise be reportable if it relied on the presumptions described in this paragraph (b)(3). In such a case, the withholding agent must rely on its actual knowledge or reason to know rather than on the presumptions set forth in this paragraph (b)(3). Failure to do so and, as a result, failure to withhold the higher amount or to report the payment, shall result in liability for tax, interest, and penalties to the extent provided under sections 1461 and 1463 and the regulations under those sections.

(x) ***Examples.*** The provisions of this paragraph (b)(3) are illustrated by the following examples:

Example 1. A withholding agent, W, makes a payment of U.S. source interest with respect to a grandfathered obligation as described in § 1.1471-2(b) (and thus the payment is not a withholdable payment) to X, Inc. with respect to an account W maintains for X, Inc. outside the United States. W cannot reliably associate the payment to X, Inc. with documentation. Under § 1.6049-4(c)(1)(ii)(A)(*1*), W may treat X, Inc. as a corporation that is an exempt recipient under chapter 61. Thus, under the presumptions described in paragraph (b)(3)(iii) of this section as applicable to a payment to an exempt recipient that is not a withholdable payment, W must presume that X, Inc. is a foreign person (because the payment is made with respect to an offshore obligation). However, W knows that X, Inc. is a U.S. person who is an exempt recipient. W may not rely on its actual knowledge to not withhold under this section. If W's knowledge is, in fact, incorrect, W would be liable for tax, interest, and, if applicable, penalties, under section 1461. W would be permitted to reduce or eliminate its liability for the tax by establishing, in accordance with paragraph (b)(7) of this section, that the tax is not due or has been satisfied. If W's actual knowledge is, in fact, correct, W may nevertheless be liable for tax, interest, or penalties under section 1461 for the amount that W should have withheld based upon the presumptions. W would be permitted to reduce or eliminate its liability for the tax by establishing, in accordance with paragraph (b)(7) of this section, that its actual knowledge was, in fact, correct and that no tax or a lesser amount of tax was due.

Example 2. A withholding agent, W, makes a payment of U.S. source interest with respect to a grandfathered obligation as described in § 1.1471-2(b) (and thus the payment is not a withholdable payment) to Y who does not qualify as an exempt recipient under § 1.6049-4(c)(1)(ii). W cannot reliably associate the payment to Y with documentation. Under the presumptions described in paragraph (b)(3)(iii) of this section, W must presume that Y is a U.S. person who is not an exempt recipient for purposes of section 6049. However, W knows that Y is a foreign person. W may not rely on its actual knowledge to

withhold under this section rather than backup withhold under section 3406. If W's knowledge is, in fact, incorrect, W would be liable for tax, interest, and, if applicable, penalties, under section 3403. If W's actual knowledge is, in fact, correct, W may nevertheless be liable for tax, interest, or penalties under section 3403 for the amount that W should have withheld based upon the presumptions. Paragraph (b)(7) of this section does not apply to provide relief from liability under section 3403.

Example 3. A withholding agent, W, makes a payment of U.S. source dividends to X, Inc. with respect to an account that X, Inc. opened with W after June 30, 2014. W cannot reliably associate the payment to X, Inc. with documentation but may treat X, Inc. as an exempt recipient for purposes of this section applying the rules of § 1.6042-3(b)(1)(vii). However, because the dividend payment is a withholdable payment and W did not determine the chapter 3 status of X, Inc. before July 1, 2014, W may treat X, Inc. as a U.S. person that is an exempt recipient only if W obtains documentary evidence supporting X, Inc.'s status as a U.S. person. See paragraph (b)(3)(iii)(A)(*2*) of this section.

Example 4. A withholding agent, W, is a plan administrator who makes pension payments to person X with a mailing address in a foreign country with which the United States has an income tax treaty in effect. Under that treaty, the type of pension income paid to X is taxable solely in the country of residence. The plan administrator has a record of X's U.S. social security number. W has no actual knowledge or reason to know that X is a foreign person. W may rely on the presumption of paragraph (b)(3)(iii)(C) of this section in order to treat X as a U.S. person. Therefore, any withholding and reporting requirements for the payment are governed by the provisions of section 3405 and the regulations under that section.

(4) ***List of exemptions from, or reduced rates of, withholding under chapter 3 of the Code.*** A withholding agent that has determined that the payee is a foreign person for purposes of paragraph (b)(1) of this section must determine whether the payee is entitled to a reduced rate of withholding under section 1441, 1442, or 1443. This paragraph (b)(4) identifies items for which a reduction in the rate of withholding may apply and whether the rate reduction is conditioned upon documentation being furnished to the withholding agent. Documentation required under this paragraph (b)(4) is documentation that a withholding agent must be able to associate with a payment upon which it can rely to treat the payment as made to a foreign person that is the beneficial owner of the payment in accordance with paragraph (e)(1)(ii) of this section. This paragraph (b)(4) also cross-references other sections of the Code and applicable regulations in which some of these exceptions, exemptions, or reductions are further explained. See, for example, paragraph (b)(4)(viii) of this section, dealing with effectively connected income, that cross-references § 1.1441-4(a); see paragraph (b)(4)(xv) of this section, dealing with exemptions from, or reductions of, withholding under an income tax treaty, that cross-references § 1.1441-6. This paragraph (b)(4) is not an exclusive list of items to which a reduction of the rate of withholding may apply and, thus, does not preclude an exemption from, or reduction in, the rate of withholding that may otherwise be allowed under the regulations under the provisions of chapter 3 of the Code for a particular item of income identified in this paragraph (b)(4). The exclusions and limitations specified in this paragraph (b)(4) apply for purposes of chapter 3. Additional withholding and documentation requirements may apply to withholding agents under chapter 4 with respect to payments that are withholdable payments. See, for example, § 1.1471-2(a) requiring withholding on withholdable payments made to certain FFIs and § 1.1471-2(a)(4) for payments exempted from withholding under section 1471(a).

(i) Portfolio interest described in section 871(h) or 881(c) and substitute interest payments described in § 1.871-7(b)(2) or § 1.881-2(b)(2) are exempt from withholding under section 1441(a). See § 1.871-14 for regulations regarding portfolio interest and section 1441(c)(9) for the exemption from withholding for portfolio interest. Documentation establishing foreign status is required for interest on an obligation in registered form to qualify as portfolio interest. See section 871(h)(2)(B)(ii) and § 1.871-14(c)(1)(ii)(C). For special documentation rules regarding foreign-targeted registered obligations described in § 1.871-14(e)(2) (and issued before January 1, 2016), see § 1.871-14(e)(3) and (4) and, in particular, § 1.871-14(e)(4)(i)(A) and (ii)(A) regarding when the withholding agent must receive the documentation. The documentation furnished for purposes of qualifying interest as portfolio interest serves as the basis for the withholding exemption for purposes of this section and establishing foreign status for purposes of section 6049. See § 1.6049-5(b)(8). Documentation establishing foreign status is not required for qualifying interest on an obligation in bearer form described in § 1.871-14(b)(1) (and issued before March 19, 2012) as portfolio interest. However, in certain cases, documentation for portfolio interest on a bearer obligation may have to be furnished in order to establish foreign status for purposes of the information reporting provisions of section 6049 and backup withholding under section 3406. See § 1.6049-5(b)(7).

(ii) Bank deposit interest and similar types of deposit interest (including original issue discount) described in section 871(i)(2)(A) or 881(d) that are from sources within the United States are exempt from withholding under section 1441(a). See section 1441(c)(10). Documentation establishing foreign status is not required for purposes of this withholding exemption but may have to be furnished for purposes of the information reporting provisions of section 6049 and backup withholding under section 3406. See § 1.6049-5(d)(3)(iii) for exceptions to the foreign payee and exempt recipient rules regarding this type of income. See also § 1.6049-5(b)(11) for applicable documentation exemptions for certain bank deposit interest paid on obligations in bearer form.

(iii) Bank deposit interest (including original issue discount) described in section 861(a)(1)(B) is exempt from withholding under sections 1441(a) as income that is not from U.S. sources. Documentation establishing foreign status is not required for purposes of this withholding exemption but may have to be furnished for purposes of the information reporting provisions of section 6049 and backup withholding under section 3406. Reporting requirements for payments of such interest are governed by section 6049 and the regulations under that section. See § 1.6049-5(b)(12) and alternative documentation rules under § 1.6049-5(c)(1).

(iv) Interest or original issue discount from sources within the United States on certain short-term obligations described in section 871(g)(1)(B) or 881(a)(3) is exempt from withholding under sections 1441(a). Documentation establishing foreign status is not required for purposes of this withholding exemption but may have to be furnished for purposes of the information reporting provisions of section 6049 and backup withholding under section 3406. See § 1.6049-5(b)(12) for applicable documentation for establishing foreign status and § 1.6049-5(d)(3)(iii) for exceptions to the foreign payee and exempt recipient rules regarding this type of income. See also § 1.6049-5(b)(10) for applicable documentation exemptions for certain obligations in bearer form.

(v) Income from sources without the United States is exempt from withholding under sections 1441(a). Documentation establishing foreign status is not required for purposes of this withholding exemption but may have to be furnished for purposes of the information reporting provisions of section 6049 or other applicable provisions of chapter 61 of the Code and backup

withholding under section 3406. See, for example, § 1.6049-5(b) (6) and (12) and alternative documentation rules under § 1.6049-5(c). See also paragraph (b)(5) of this section for cross references to other applicable provisions of the regulations under chapter 61 of the Code.

(vi) Distributions from certain domestic corporations described in section 871(i)(2)(B) or 881(d) are exempt from withholding under section 1441(a). See section 1441(c)(10). Documentation establishing foreign status is not required for purposes of this withholding exemption but may have to be furnished for purposes of the information reporting provisions of section 6042 and backup withholding under section 3406. See § 1.6042-3(b)(1) (iii) through (vi).

(vii) Dividends paid by certain foreign corporations that are treated as income from sources within the United States by reason of section 861(a)(2)(B) are exempt from withholding under section 884(e)(3) to the extent that the distributions are paid out of earnings and profits in any taxable year that the corporation was subject to branch profits tax for that year. Documentation establishing foreign status is not required for purposes of this withholding exemption but may have to be furnished for purposes of the information reporting provisions of section 6042 and backup withholding under section 3406. See § 1.6042-3(b)(1) (iii) through (vii).

(viii) Certain income that is effectively connected with the conduct of a U.S. trade or business is exempt from withholding under section 1441(a). See section 1441(c)(1). Documentation establishing foreign status and status of the income as effectively connected must be furnished for purposes of this withholding exemption to the extent required under the provisions of § 1.1441-4(a). Documentation furnished for this purpose also serves as documentation establishing foreign status for purposes of applicable information reporting provisions under chapter 61 of the Code and for backup withholding under section 3406. See, for example, § 1.6041-4(a)(1).

(ix) Certain income with respect to compensation for personal services of an individual that are performed in the United States is exempt from withholding under section 1441(a). See section 1441(c)(4) and § 1.1441-4(b). However, such income may be subject to withholding as wages under section 3402. Documentation establishing foreign status must be furnished for purposes of any withholding exemption or reduction to the extent required under § 1.1441-4(b) or 31.3401(a)(6)-1 (e) and (f) of this chapter. Documentation furnished for this purpose also serves as documentation establishing foreign status for purposes of information reporting under section 6041. See § 1.6041-4(a)(1).

(x) Amounts described in section 871(f) that are received as annuities from certain qualified plans are exempt from withholding under section 1441(a). See section 1441(c)(7). Documentation establishing foreign status must be furnished for purposes of the withholding exemption as required under § 1.1441-4(d). Documentation furnished for this purpose also serves as documentation establishing foreign status for purposes of information reporting under section 6041. See § 1.6041-4(a)(1).

(xi) Payments to a foreign government (including a foreign central bank of issue) that are excludable from gross income under section 892(a) are exempt from withholding under section 1442. See § 1.1441-8(b). Documentation establishing status as a foreign government is required for purposes of this withholding exemption. Payments to a foreign government are exempt from information reporting under chapter 61 of the Code (see § 1.6049-4(c)(1)(ii)(F)).

(xii) Payments of certain interest income to a foreign central bank of issue or the Bank for International Settlements that are exempt from tax under section 895 are exempt from withholding under section 1442. Documentation establishing eligibility for such exemption is required to the extent provided in § 1.1441-8(c)(1). Payments to a foreign central bank of issue or to the Bank for International Settlements are exempt from information reporting under chapter 61 of the Code (see § 1.6049-4(c)(1)(ii) (H) and (M)).

(xiii) Amounts derived by a foreign central bank of issue from bankers' acceptances described in section 871(i)(2)(C) or 881(d) are exempt from tax and, therefore, from withholding. See section 1441(c)(10). Documentation establishing foreign status is not required for purposes of this withholding exemption if the name of the payee and other facts surrounding the payment reasonably indicate that the beneficial owner of the payment is a foreign central bank of issue as defined in § 1.861-2(b)(4). See § 1.1441-8(c)(2) for withholding procedures. See also §§ 1.6049-4(c)(1)(ii)(H) and 1.6041-3(q)(8) for a similar exemption from information reporting.

(xiv) Payments to an international organization from investments in the United States of stocks, bonds, or other domestic securities or from interest on deposits in banks in the United States of funds belonging to such international organization are exempt from tax under section 892(b) and, thus, from withholding. Documentation establishing status as an international organization is not required if the name of the payee and other facts surrounding the payment reasonably indicate that the beneficial owner of the payment is an international organization within the meaning of section 7701(a)(18). See § 1.1441-8(d). Payments to an international organization are exempt from information reporting under chapter 61 of the Code (see § 1.6049-4(c)(1)(ii)(G)).

(xv) Amounts may be exempt from, or subject to a reduced rate of, withholding under an income tax treaty. Documentation establishing eligibility for benefits under an income tax treaty is required for this purpose as provided under §§ 1.1441-6. Documentation furnished for this purpose also serves as documentation establishing foreign status for purposes of applicable information reporting provisions under chapter 61 of the Code and for backup withholding under section 3406. See, for example, § 1.6041-4(a)(1).

(xvi) Amounts of scholarships and grants paid to certain exchange or training program participants that do not represent compensation for services but are not excluded from tax under section 117 are subject to a reduced rate of withholding of 14-percent under section 1441(b). Documentation establishing foreign status is required for purposes of this reduction in rate as provided under § 1.1441-4(c). This income is not subject to information reporting under chapter 61 of the Code nor to backup withholding under section 3406. The compensatory portion of a scholarship or grant is reportable as wage income. See § 1.6041-3(o).

(xvii) Amounts paid to a foreign organization described in section 501(c) are exempt from withholding under section 1441 to the extent that the amounts are not income includible under section 512 in computing the organization's unrelated business taxable income and are not subject to the tax imposed by section 4948(a). Documentation establishing status as a tax-exempt organization is required for purposes of this exemption to the extent provided in § 1.1441-9. Amounts includible under section 512 in computing the organization's unrelated business taxable income are subject to withholding to the extent provided in section 1443(a) and § 1.1443-1(a). Gross investment income (as defined in section 4940(c)(2)) of a private foundation is subject to withholding at a 4-percent rate to the extent provided in section

1443(b) and § 1.1443-1(b). Payments to a tax-exempt organization are exempt from information reporting under chapter 61 of the Code and the regulations thereunder (see § 1.6049-4(c)(1)(ii)(B)(1)).

(xviii) Per diem amounts for subsistence paid by the U.S. government to a nonresident alien individual who is engaged in any program of training in the United States under the Mutual Security Act of 1954 are exempt from withholding under section 1441(a). See section 1441(c)(6). Documentation of foreign status is not required under § 1.1441-4(e) for purposes of establishing eligibility for this exemption. See § 1.6041-3(p).

(xix) Interest with respect to tax-free covenant bonds issued prior to 1934 is subject to special withholding procedures set forth in § 1.1461-1 in effect prior to January 1, 2001 (see § 1.1461-1 as contained in 26 CFR part 1, revised April 1, 1999).

(xx) Income from certain gambling winnings of a nonresident alien individual is exempt from tax under section 871(j) and from withholding under section 1441(a). See section 1441(c)(11). Documentation establishing foreign status is not required for purposes of this exemption but may have to be furnished for purposes of the information reporting provisions of section 6041 and backup withholding under section 3406. See §§ 1.6041-1 and 1.6041-4(a)(1).

(xxi) Amounts paid with respect to a notional principal contract described in § 1.871-15(a)(7), an equity-linked instrument described in § 1.871-15(a)(4), or a securities lending or sale-repurchase transaction described in § 1.871-15(a)(13) are exempt from withholding under section 1441(a) as dividend equivalents under section 871(m) if the transaction is not a section 871(m) transaction within the meaning of § 1.871-15(a)(12), if the transaction is subject to the exception described in § 1.871-15(k), or if the payment is not a dividend equivalent pursuant to § 1.871-15(c)(2). However, the amounts may be subject to withholding under section 1441(a) if they are subject to tax under any section other than section 871(m). For purposes of this withholding exemption, it is not necessary for the payee to provide documentation establishing that a notional principal contract or equity-linked instrument has a delta (as described in § 1.871-15(g)) that is less than 0.80 or does not have substantial equivalence (as defined in § 1.871-15(h)) with the underlying security. For purposes of the withholding exemption regarding corporate acquisitions described in § 1.871-15(k), the exemption only applies if the long party furnishes, under penalties of perjury, a written statement to the withholding agent certifying that it satisfies the requirements of § 1.871-15(k).

(xxii) Certain payments to qualified derivatives dealers (as described in paragraph (e)(6) of this section). For purposes of this withholding exemption, the qualified derivatives dealer must furnish to the withholding agent the documentation described in paragraph (e)(3)(ii) of this section. A withholding agent that makes a payment to a qualified intermediary that is acting as a qualified derivatives dealer is not required to withhold on the following payments if the withholding agent can reliably associate the payment with a valid qualified intermediary withholding certificate as described in paragraph (e)(3)(ii) of this section, including the certification described in paragraph (e)(3)(ii)(E):

(A) A payment with respect to a potential section 871(m) transaction that is not an underlying security;

(B) A payment of a dividend equivalent; or

(C) A payment of a dividend in 2017.

(xxiii) Amounts paid with respect to a potential section 871(m) transaction that is only a section 871(m) transaction as a result of applying § 1.871-15(n) to treat certain transactions as combined transactions, if the withholding agent is able to rely on one or more of the presumptions provided in § 1.871-15(n)(3)(i) or (ii) (applying those paragraphs whether or not the withholding agent is a short party by substituting "withholding agent" for "short party"), and the withholding agent does not otherwise have actual knowledge that the long party (or a related person within the meaning of section 267(b) or section 707(b)) entered into the potential section 871(m) transaction in connection with any other potential section 871(m) transactions. The ability of one or more withholding agents to rely on the presumptions provided in section 1.871-15(n)(3) does not affect the withholding tax obligations or liability of any party to the transaction that cannot rely on the presumptions. Notwithstanding the withholding exemption provided to the withholding agent in this paragraph (b)(4)(xxii), the long party may still be liable for tax on dividend equivalent amounts with respect to such combined transactions under section 871(m).

(xxiv) Any payments not otherwise mentioned in this paragraph (b)(4) shall be subject to withholding at the rate of 30-percent if it is an amount subject to withholding (as defined in § 1.1441-2(a)) unless and to the extent the IRS may otherwise prescribe in published guidance (see § 601.601(d)(2) of this chapter) or unless otherwise provided in regulations under chapter 3 of the Code.

(5) ***Establishing foreign status under applicable provisions of chapter 61 of the Code.*** This paragraph (b)(5) identifies relevant provisions of the regulations under chapter 61 of the Code that exempt payments from information reporting, and therefore, from backup withholding under section 3406, based on the payee's status as a foreign person. Many of these exemptions require that the payee's foreign status be established in order for the exemption to apply. The regulations under applicable provisions of chapter 61 of the Code generally provide that the documentation described in this section may be relied upon for purposes of determining foreign status.

(i) Payments to a foreign person that are governed by section 6041 (dealing with certain trade or business income) are exempt from information reporting under § 1.6041-4(a).

(ii) Payments to a foreign person that are governed by section 6041A (dealing with remuneration for services and certain sales) are exempt from information reporting under § 1.6041A-1(d)(3).

(iii) Payments to a foreign person that are governed by section 6042 (dealing with dividends) are exempt from information reporting under § 1.6042-3(b)(1) (iii) through (vi).

(iv) Payments to a foreign person that are governed by section 6044 (dealing with patronage dividends) are exempt from information reporting under § 1.6044-3(c)(1).

(v) Payments to a foreign person that are governed by section 6045 (dealing with broker proceeds) are exempt from information reporting under § 1.6045-1(g).

(vi) Payments to a foreign person that are governed by section 6049 (dealing with interest) to a foreign person are exempt from information reporting under § 1.6049-5(b) (6) through (15).

(vii) Payments to a foreign person that are governed by section 6050N (dealing with royalties) are exempt from information reporting under § 1.6050N-1(c).

(viii) Payments to a foreign person that are governed by section 6050P (dealing with income from cancellation of debt) are exempt from information reporting under section 6050P or the regulations under that section except to the extent provided in Notice 96-61 (1996-2 C.B. 227); see also § 601.601(b)(2) of this chapter.

(ix) Payments to a foreign person that are governed by section 6050W (dealing with payment card and third party network transactions) are exempt from information reporting under § 1.6050W-1(a)(5)(ii).

(6) ***Rules of withholding for payments by a foreign intermediary or certain U.S. branches*** —

(i) ***In general.*** A foreign intermediary described in paragraph (e)(3)(i) of this section or a U.S. branch or territory financial institution described in paragraph (b)(2)(iv) of this section that receives an amount subject to withholding (as defined in § 1.1441-2(a)) shall be required to withhold (if another withholding agent has not withheld the full amount required) and report such payment under chapter 3 of the Code and the regulations thereunder except as otherwise provided in this paragraph (b)(6). A nonqualified intermediary, U.S. branch, or territory financial institution described in paragraph (b)(2)(iv) of this section (other than a U.S. branch or territory financial institution that is treated as a U.S. person) shall not be required to withhold or report if it has provided a valid nonqualified intermediary withholding certificate or a U.S. branch withholding certificate, it has provided all of the information required by paragraph (e)(3)(iv) of this section (withholding statement), and it does not know, and has no reason to know, that another withholding agent failed to withhold the correct amount or failed to report the payment correctly under § 1.1461-1(c). The withholding requirement of a nonqualified intermediary under the previous sentence also excludes a case in which withholding under chapter 4 was applied by a withholding agent on the payment. See § 1.1441-3(a)(2) (coordinating withholding under chapter 3 with withholding applied under chapter 4 of the Code). A qualified intermediary's obligations to withhold and report shall be determined in accordance with its qualified intermediary withholding agreement.

(ii) ***Examples.*** The following examples illustrate the rules of paragraph (b)(6)(i) of this section and coordinate rules for withholding that apply under chapter 4 with those that apply under chapter 3. See also paragraph (e)(3)(iv)(C) of this section for the requirements of withholding statements provided by nonqualified intermediaries.

Example 1. FB, a foreign bank, acts as intermediary for five different individuals, A, B, C, D, and E, each of whom owns U.S. securities that generate U.S. source dividends (that are withholdable payments). The dividends are paid by USWA, a U.S. withholding agent. FB furnished USWA with a nonqualified intermediary withholding certificate, described in paragraph (e)(3)(iii) of this section, on which FB certifies its status as a participating FFI (such that withholding under chapter 4 does not apply), to which it attached valid withholding certificates for A, B, C, D, and E. The withholding certificates from A and B claim a 15% reduced rate of withholding under an income tax treaty. C, D, and E claim no reduced rate of withholding. FB provides a withholding statement that meets all of the requirements of paragraph (e)(3)(iv) of this section, including information allocating 20% of each dividend payment to each of A, B, C, D, and E. FB does not have actual knowledge or reason to know that USWA did not withhold the correct amounts or report the dividends on Forms 1042-S to each of A, B, C, D, and E. FB is not required to withhold or to report the dividends to A, B, C, D, and E.

Example 2. The facts are the same as in *Example 1*, except that FB did not provide any information for USWA to determine how much of the dividend payments were made to A, B, C, D, and E. Because USWA could not reliably associate the dividend payments with documentation under paragraph (b)(2)(vii) of this section with respect to a payment that is a withholdable payment, USWA applied the presumption rule of § 1.1471-3(f)(5) and withheld 30% from all dividend payments under chapter 4 and filed a Form 1042-S reporting the payment to an account holder of FB that is a non-participating FFI. FB is deemed to know that USWA did not report the payment to A, B, C, D, and E because it did not provide all of the information required on a withholding statement under paragraph (e)(3)(iv) of this section (*i.e.*, allocation information). Although FB is not required to withhold on the payment under this section because the full 30% withholding was imposed by USWA, it is required to report the payments on Forms 1042-S to A, B, C, D, and E. FB's intentional failure to do so will subject it to intentional disregard penalties under sections 6721 and 6722.

(7) ***Liability for failure to obtain documentation timely or to act in accordance with applicable presumptions*** —

(i) ***General rule.*** A withholding agent that cannot reliably associate a payment with valid documentation on the date of payment and that does not withhold under this section, or withholds at less than the 30-percent rate prescribed under section 1441(a) and paragraph (b)(1) of this section, is liable under section 1461 for the tax required to be withheld under chapter 3 of the Code and the regulations thereunder, without the benefit of a reduced rate unless—

(A) The withholding agent has appropriately relied on the presumptions described in paragraph (b)(3) of this section (including the grace period described in paragraph (b)(3)(iv) of this section) in order to treat the payee as a U.S. person or, if applicable, on the presumptions described in § 1.1441-4(a)(2)(ii) or (a)(3)(i) to treat the payment as effectively connected income;

(B) The withholding agent can demonstrate to the satisfaction of the district director or the Assistant Commissioner (International) that the proper amount of tax, if any, was in fact paid to the IRS;

(C) No documentation is required under section 1441 or this section in order for a reduced rate of withholding to apply; or

(D) The withholding agent has complied with the provisions of § 1.1441-6(c) or (g).

(ii) ***Proof that tax liability has been satisfied*** —

(A) ***In general.*** Proof of payment of tax may be established for purposes of paragraph (b)(7)(i)(B) of this section on the basis of a Form 4669 (or such other form as the IRS may prescribe in published guidance (see § 601.601(d)(2) of this chapter)) establishing the amount of tax, if any, actually paid by or for the beneficial owner on the income. Proof that a reduced rate of withholding was, in fact, appropriate under the provisions of chapter 3 of the Code and the regulations thereunder may also be established after the date of payment by the withholding agent on the basis of a valid withholding certificate or other appropriate documentation received after that date that was effective as of the date of payment. A withholding certificate furnished after the date of payment will be considered effective as of the date of the payment if the certificate contains a signed affidavit (either

at the bottom of the form or on an attached page) that states that the information and representations contained on the certificate were accurate as of the time of the payment. A withholding certificate received within 30 days after the date of the payment will not be considered to be unreliable solely because it does not contain the affidavit described in the preceding sentence. However, in the case of a withholding certificate of an individual received more than a year after the date of payment, the withholding agent will be required to obtain, in addition to the withholding certificate and affidavit, documentary evidence, as described in § 1.1471-3(c)(5)(i), that supports the individual's claim of foreign status or documentary evidence described in § 1.1441-6(c)(4)(i) to support any treaty claim made on the certificate. In the case of a withholding certificate of an entity received more than a year after the date of payment, the withholding agent will be required to obtain, in addition to the withholding certificate and affidavit, documentary evidence described in § 1.1471-3(c)(5)(i) that supports the entity's claim of foreign status or documentary evidence described in § 1.1441-6(c)(4)(ii) to support any treaty claim made on the certificate. If documentation other than a withholding certificate is submitted from a payee more than a year after the date of payment, the withholding agent will be required to obtain from the payee a withholding certificate and affidavit supporting the claim of chapter 3 status as of the time of the payment. See, however, paragraph (b)(7)(ii)(B) of this section for special rules that apply when a withholding certificate is received after the date of the payment to claim that income is effectively connected with the conduct of a U.S. trade or business. See § 1.1471-3(c)(7)(ii) for additional requirements that may apply under chapter 4 for documentation obtained after the date of payment of a withholdable payment.

(B) ***Special rules for establishing that income is effectively connected with the conduct of a U.S. trade or business.*** A withholding certificate received after the date of payment to claim under § 1.1441-4(a)(1) that income is effectively connected with the conduct of a U.S. trade or business will be considered effective as of the date of the payment if the certificate contains a signed affidavit (either at the bottom of the form or on an attached page) that states that the information and representations contained on the certificate were accurate as of the time of the payment. The signed affidavit must also state that the beneficial owner has included the income on its U.S. income tax return for the taxable year in which it is required to report the income or, alternatively, that the beneficial owner intends to include the income on a U.S. income tax return for the taxable year in which it is required to report the income and the due date for filing such return (including any applicable extensions) is after the date on which the affidavit is signed. A certificate received within 30 days after the date of the payment will not be considered to be unreliable solely because it does not contain the affidavit described in the preceding sentences.

(iii) ***Liability for interest and penalties.*** For payments made after December 31, 2000, if a withholding agent fails to deduct and withhold any tax imposed under sections 1441 or 1442, and the tax against which such tax may be credited under section 1462 is paid, then the amount of tax required to be deducted and withheld shall not be collected from the withholding agent. However, the withholding agent is not relieved from liability for interest or any penalties or additions to the tax otherwise applicable in respect of the failure to deduct and withhold. See section 1463. Further, in the event that a tax liability is assessed against the beneficial owner

under section 871, 881, or 882 and interest under section 6601(a) is assessed against, and collected from, the beneficial owner, the interest charge imposed on the withholding agent shall be abated to that extent so as to avoid the imposition of a double interest charge.

(iv) ***Special rule for determining validity of withholding certificate containing inconsequential errors.*** A withholding agent may treat a withholding certificate as valid when the certificate includes an error described as an inconsequential error in § 1.1471-3(c)(7)(i) for which the withholding agent obtains documentation sufficient for supporting a payee's claim of status as a foreign person or, for a payee that is an entity, its classification to the extent permitted under § 1.1471-3(c)(7)(i). For example, if the country of residence is abbreviated in an ambiguous way on a beneficial owner withholding certificate provided to establish the beneficial owner's foreign status, a withholding agent may treat the withholding certificate as valid if it has obtained documentary evidence supporting that the beneficial owner's residence is in a country other than the United States.

(v) ***Special effective date.*** See paragraph (f)(2)(ii) of this section for the special effective date applicable to this paragraph (b)(7).

(8) ***Adjustments, refunds, or credits of overwithheld amounts.*** If the amount withheld under section 1441, 1442, or 1443 is greater than the tax due by the withholding agent or the taxpayer, adjustments may be made in accordance with the procedures described in § 1.1461-2(a). Alternatively, refunds or credits may be claimed in accordance with the procedures described in § 1.1464-1, relating to refunds or credits claimed by the beneficial owner, or § 1.6414-1, relating to refunds or credits claimed by the withholding agent. If an amount was withheld under section 3406 or is subsequently determined to have been paid to a foreign person, see paragraph (b)(3)(vii) of this section and § 31.6413(a)-3(a)(1) of this chapter.

(9) ***Payments to joint owners.*** A payment to joint owners that requires documentation in order to reduce the rate of withholding under chapter 3 of the Code and the regulations thereunder does not qualify for such reduced rate unless the withholding agent can reliably associate the payment with documentation from each owner. Notwithstanding the preceding sentence, a payment to joint owners qualifies as a payment exempt from withholding under this section if any one of the owners provides a certificate of U.S. status on a Form W-9 in accordance with paragraph (d) (2) or (3) of this section or the withholding agent can associate the payment with an intermediary or flow-through withholding certificate upon which it can rely to treat the payment as made to a U.S. payee under paragraph (d)(4) of this section. See § 31.3406(h)-2(a)(3)(i)(B) of this chapter.

(c) ***Definitions.*** The following definitions apply for purposes of sections 1441 through 1443, 1461, and regulations under those sections. For definitions of terms used in these regulations that are defined under sections 1471 through 1474, see subparagraphs (43) through (56) of this paragraph.

(1) ***Withholding.*** The term *withholding* means the deduction and withholding of tax at the applicable rate from the payment.

(2) ***Foreign and U.S. person*** —

(i) ***In general.*** The term foreign person means any person that is not a U.S. person, including a QI branch of a U.S. financial institution (as defined in § 1.1471-1(b)(109). Such a branch continues to be a U.S. payor for purposes of chapter 61 of the Code. See § 1.6049-5(c)(4). A U.S. person is a person described in section 7701(a)(30), the U.S. government (including an agency or instrumentality thereof), a State (including an agency or instrumentality thereof), or the District of Columbia (including an agency or instrumentality thereof).

(ii) ***Dual residents.*** Individuals will not be treated as U.S. persons for purposes of this section for a taxable year or any portion of a taxable year for which they are a dual resident taxpayer (within the meaning of § 301.7701(b)-7(a)(1) of this chapter) who is treated as a nonresident alien pursuant to § 301.7701(b)-7(a)(1) of this chapter for purposes of computing their U.S. tax liability.

(3) ***Individual*** —

(i) ***Alien individual.*** The term *alien individual* means an individual who is not a citizen or a national of the United States. See § 1.1-1(c).

(ii) ***Nonresident alien individual.*** The term *nonresident alien individual* means persons described in section 7701(b)(1)(B), alien individuals who are treated as nonresident aliens pursuant to § 301.7701(b)-7 of this chapter for purposes of computing their U.S. tax liability, or an alien individual who is a resident of Puerto Rico, Guam, the Commonwealth of Northern Mariana Islands, the U.S. Virgin Islands, or American Samoa as determined under § 301.7701(b)-1(d) of this chapter. An alien individual who has made an election under section 6013(g) or (h) to be treated as a resident of the United States is nevertheless treated as a nonresident alien individual for purposes of withholding under chapter 3 of the Code and the regulations thereunder.

(4) ***Certain foreign corporations.*** For purposes of this section, a corporation created or organized in Guam, the Commonwealth of Northern Mariana Islands, the U.S. Virgin Islands, and American Samoa, is not treated as a foreign corporation if the requirements of sections 881(b)(1) (A), (B), and (C) are met for such corporation. Further, a payment made to a foreign government or an international organization shall be treated as a payment made to a foreign corporation for purposes of withholding under chapter 3 of the Code and the regulations thereunder.

(5) ***Financial institution and foreign financial institution (or FFI).*** The term financial institution means a person described in § 1.1471-1(b)(50). The term foreign financial institution or FFI has the meaning set forth in § 1.1471-1(b)(47).

(6) ***Beneficial owner*** —

(i) ***General rule.*** This paragraph (c)(6) defines the term *beneficial owner* for payments of income other than a payment for which a reduced rate of withholding is claimed under an income tax treaty. The term *beneficial owner* means the person who is the owner of the income for tax purposes and who beneficially owns that income. A person shall be treated as the owner of the income to the extent that it is required under U.S. tax principles to include the amount paid in gross income under section 61 (determined without regard to an exclusion or exemption from gross income under the Internal Revenue Code). Beneficial ownership of income is determined under the provisions of section 7701(l) and the regulations under that section and any other applicable general U.S. tax principles, including principles governing the determination of whether a transaction is a conduit transaction. Thus, a person receiving income in a capacity as a nominee, agent, or custodian for another person is not the beneficial owner of the income. In the case of a scholarship, the student receiving the scholarship is the beneficial owner of that scholarship. In the case of a payment of an amount that is not income, the beneficial owner determination shall be made under this paragraph (c)(6) as if the amount were income.

(ii) ***Special rules*** —

(A) ***General rule.*** The beneficial owners of income paid to an entity described in this paragraph (c)(6)(ii) are those persons described in paragraphs (c)(6)(ii)(B) through (D) of this section.

(B) ***Foreign partnerships.*** The beneficial owners of income paid to a foreign partnership (whether a nonwithholding or a withholding foreign partnership) are the partners in the partnership, unless they themselves are not the beneficial owners of the income under this paragraph (c)(6). For example, a partnership (first tier) that is a partner in another partnership (second tier) is not the beneficial owner of income paid to the second tier partnership since the first tier partnership is not the owner of the income under U.S. tax principles. Rather, the partners of the first tier partnership are the beneficial owners (to the extent they are not themselves persons that are not beneficial owners under this paragraph (c)(6)). See § 1.1441-5(b) for applicable withholding procedures for payments to a domestic partnership. See also § 1.1441-5(c)(3)(ii) for applicable withholding procedures for payments to a foreign partnership where one of the partners (at any level in the chain of tiers) is a domestic partnership.

(C) ***Foreign simple trusts and foreign grantor trusts.*** The beneficial owners of income paid to a foreign simple trust, as described in paragraph (c)(23) of this section, are the beneficiaries of the trust, unless they themselves are not the beneficial owners of the income under this paragraph (c)(6). The beneficial owners of income paid to a foreign grantor trust, as described in paragraph (c)(26) of this section, are the persons treated as the owners of the trust, unless they themselves are not the beneficial owners of the income under this paragraph (c)(6).

(D) ***Other foreign trusts and foreign estates.*** The beneficial owner of income paid to a foreign complex trust as defined in paragraph (c)(25) of this section or to a foreign estate is the foreign complex trust or estate itself.

(7) ***Withholding agent.*** For a definition of the term *withholding agent* and applicable rules, see § 1.1441-7.

(8) ***Person.*** For purposes of the regulations under chapter 3 of the Code, the term *person* shall mean a person described in section 7701(a)(1) and the regulations under that section and a U.S. branch to the extent treated as a U.S. person under paragraph (b)(2)(iv) of this section. For purposes of the regulations under chapter 3 of the Code, the term *person* does not include a wholly-owned entity that is disregarded for federal tax purposes under § 301.7701-2(c)(2) of this chapter as an entity separate from its owner. See paragraph (b)(2)(iii) of this section for procedures applicable to payments to such entities.

(9) ***Source of income.*** The source of income is determined under the provisions of part I (section 861 and following) , subchapter N, chapter 1 of the Code and the regulations under those provisions.

(10) ***Chapter 3 of the Code (or chapter 3).*** For purposes of the regulations under sections 1441, 1442, and 1443, any reference to chapter 3 of the Code (or chapter 3) shall not include references to sections 1445 and 1446, unless the context indicates otherwise.

(11) ***Reduced rate.*** For purposes of regulations under chapter 3 of the Code, and other withholding provisions of the Code, the term *reduced rate,* when used in regulations under chapter 3 of the Code, shall include an exemption from tax.

(12) ***Payee.*** For purposes of chapter 3 of the Code, the term payee of a payment is determined under paragraph (b)(2) of this section, § 1.1441-5(c)(1) (relating to partnerships), and § 1.1441-5(e)(2) and (3) (relating to trusts and estates) and includes foreign persons, U.S. exempt recipients, and U.S. non-exempt recipients. A nonqualified intermediary and a qualified intermediary (to the extent it does not assume primary withholding responsibility) are not payees if they are acting as intermediaries and not the beneficial owner of income. In addition, a flow-through entity (other than a withholding foreign partnership, withholding foreign trust, or qualified intermediary that assumes primary withholding responsibility) is not a payee unless the income is (or is deemed to be) effectively connected with the conduct of a trade or business in the United States. See § 1.6049-5(d)(1) for rules to determine the payee for purposes of chapter 61 of the Code. See §§ 1.1441-1(b)(3), 1.1441-5(d), and (e)(6) and § 1.6049-5(d)(3) for presumption rules that apply if a payee's identity cannot be determined on the basis of valid documentation. For purposes of chapter 4, the term payee has the meaning set forth in § 1.1471-3(a) with respect to a withholdable payment.

(13) ***Intermediary.*** An *intermediary* means, with respect to a payment that it receives, a person that, for that payment, acts as a custodian, broker, nominee, or otherwise as an agent for another person, regardless of whether such other person is the beneficial owner of the amount paid, a flow-through entity, or another intermediary.

(14) ***Nonqualified intermediary.*** A *nonqualified intermediary* means any intermediary that is not a U.S. person and not a qualified intermediary, as defined in paragraph (e)(5)(ii) of this section, or a qualified intermediary that is not acting in its capacity as a qualified intermediary with respect to a payment. For example, to the extent an entity that is a qualified intermediary provides another withholding agent with a foreign beneficial owner withholding certificate as defined in paragraph (e)(2)(i) of this section, the entity is not acting in its capacity as a qualified intermediary. Notwithstanding the preceding sentence, a qualified intermediary is acting as a qualified intermediary to the extent it provides another withholding agent with Forms W-9, or other information regarding U.S. non-exempt recipients pursuant to its qualified intermediary agreement with the IRS.

(15) ***Qualified intermediary.*** The term *qualified intermediary* is defined in paragraph (e)(5)(ii) of this section.

(16) ***Withholding certificate.*** The term withholding certificate means a Form W-8 described in paragraph (e)(2)(i) of this section (relating to foreign beneficial owners), paragraphs (e)(3)(i) or (e)(5)(i) of this section (relating to foreign intermediaries or qualified intermediaries), § 1.1441-5(c)(2)(iv), (c)(3)(iii), and (e)(5)(iii) (relating to flow-through entities), a Form 8233 described in § 1.1441-4(b)(2), a Form W-9 as described in paragraph (d) of this section, a statement described in § 1.871-14(c)(2)(v) (relating to portfolio interest), or any other certificates that under the Code or regulations certifies or establishes the status of a payee or beneficial owner as a U.S. or a foreign person.

(17) ***Documentary evidence; other appropriate documentation.*** The terms documentary evidence or other appropriate documentation refer to documentary evidence that may be provided for payments made outside the United States with respect to offshore obligations in accordance with § 1.6049-5(c)(1) or any other evidence that under the Code or regulations certifies or establishes the status of a payee or beneficial owner as a U.S. or foreign person. See §§ 1.1441-6(b)(2), (c)(3) and (4) (relating to treaty benefits), and 1.6049-5(c)(1) and (4) (relating to chapter 61 reporting). Also see § 1.1441-4(a)(3)(ii) regarding documentary evidence for notional principal contracts.

(18) ***Documentation.*** The term *documentation* refers to both withholding certificates, as defined in paragraph (c)(16) of this section, and documentary evidence or other appropriate documentation, as defined in paragraph (c)(17) of this section.

(19) ***Payor.*** The term *payor* is defined in § 31.3406(a)-2 of this chapter and § 1.6049-4(a)(2) and generally includes a withholding agent, as defined in § 1.1441-7(a). The term also includes any person that makes a payment to an intermediary, flow-through entity, or U.S. branch that is not treated as a U.S. person to the extent the intermediary, flow-through, or U.S. branch provides a Form W-9 or other appropriate information relating to a payee so that the payment can be reported under chapter 61 of the Internal Revenue Code and, if required, subject to backup withholding under section 3406. This latter rule does not preclude the intermediary, flow-through entity, or U.S. branch from also being a payor.

(20) ***Exempt recipient.*** The term *exempt recipient* means a person that is exempt from reporting under chapter 61 of the Internal Revenue Code and backup withholding under section 3406 and that is described in §§ 1.6041-3(q), 1.6045-2(b)(2)(i), and 1.6049-4(c)(1)(ii), and § 5f.6045-1(c)(3)(i)(B) of this chapter. Exempt recipients are not exempt from withholding under chapter 3 of the Internal Revenue Code unless they are U.S. persons or foreign persons entitled to an exemption from withholding under chapter 3.

(21) ***Non-exempt recipient.*** A *non-exempt recipient* is any person that is not an exempt recipient under paragraph (c)(20) of this section.

(22) ***Reportable amounts. Reportable amounts*** are defined in paragraph (e)(3)(vi) of this section.

(23) ***Flow-through entity.*** A flow-through entity means any entity that is described in this paragraph (c)(23) and that may provide documentation on behalf of its partners, beneficiaries, or owners to a withholding agent. The entities described in this paragraph are a foreign partnership (other than a withholding foreign partnership), a foreign simple trust (other than a withholding foreign trust) that is described in paragraph (c)(24) of this section, a foreign grantor trust (other than a withholding foreign trust) that is described in paragraph (c)(26) of this section, or, for any payments for which a reduced rate of withholding under an income tax treaty is claimed, any entity to the extent the entity is considered to be fiscally transparent under section 894 with respect to the payment by an interest holder's jurisdiction.

(24) ***Foreign simple trust.*** A *foreign simple trust* is a foreign trust that is described in section 651(a).

(25) ***Foreign complex trust.*** A foreign complex trust is a foreign trust other than a foreign simple trust or foreign grantor trust.

(26) ***Foreign grantor trust.*** A *foreign grantor trust* is a foreign trust but only to the extent all or a portion of the income of the trust is treated as owned by the grantor or another person under sections 671 through 679.

(27) ***Partnership.*** The term *partnership* means any entity treated as a partnership under § 301.7701-2 or -3 of this chapter.

(28) ***Nonwithholding foreign partnership (or NWP).*** A nonwithholding foreign partnership is a foreign partnership that is not a withholding foreign partnership, as defined in § 1.1441-5(c)(2)(i).

(29) ***Withholding foreign partnership (or WP).*** A withholding foreign partnership is defined in § 1.1441-5(c)(2)(i).

(30) ***Possessions of the United States or U.S. territory.*** For purposes of the regulations under chapters 3 and 61 of the Code, the term possessions of the United States or U.S. territory means Guam, American Samoa, the Northern Mariana Islands, Puerto Rico, or the Virgin Islands.

(31) ***Amount subject to chapter 3 withholding.*** An amount subject to withholding under chapter 3 is an amount described in § 1.1441-2(a).

(32) ***EIN.*** The term EIN means an employer identification number (also known as a federal tax identification number) described in § 301.6109-1(a)(1)(i).

(33) ***Flow-through withholding certificate.*** The term flow-through withholding certificate means a Form W-8IMY submitted by a foreign partnership, foreign simple trust, or foreign grantor trust.

(34) ***Foreign payee.*** The term foreign payee means any payee other than a U.S. payee.

(35) ***Intermediary withholding certificate.*** The term intermediary withholding certificate means a Form W-8IMY submitted by an intermediary or qualified intermediary.

(36) ***Nonwithholding foreign trust (or NWT).*** The term nonwithholding foreign trust or NWT means a foreign trust as defined in section 7701(a)(31)(B) that is a simple trust or grantor trust and is not a withholding foreign trust.

(37) ***Payment with respect to an offshore obligation.*** The term payment with respect to an offshore obligation means a payment made outside of the United States, within the meaning of § 1.6049-5(e), with respect to an offshore obligation (as defined in § 1.6049-5(c)(1), § 1.6041-1(d), or § 1.6042-3(b) (depending on the type of payment)).

(38) ***Permanent residence address*** —

(i) ***In general.*** The term *permanent residence address* is the address in the country of which the person claims to be a resident for purposes of that country's income tax. In the case of a withholding certificate furnished in order to claim a reduced rate of withholding under an income tax treaty, whether a person is a resident of a treaty country must be determined in the manner prescribed under the applicable treaty. See § 1.1441-6(b). The address of a financial institution with which the person maintains an account, a post office box, or an address used solely for mailing purposes is not a permanent residence address unless such address is the only address used by the person and appears as the person's registered address in the person's organizational documents. Further, an address that is provided subject to a hold mail instruction (as defined in paragraph (c)(38)(ii) of this section) is not a permanent residence address unless the person provides the documentary evidence described in paragraph (c)(38)(ii) of this section. If the person is an individual who does not have a tax residence in any country, the permanent residence address is the place at which the person normally resides. If the person is an entity and does not have a tax residence in any country, then the permanent residence address of the entity is the place at which the person maintains its principal office.

(ii) ***Hold mail instruction.*** The term *hold mail instruction* means a current instruction by a person to keep the person's mail until such instruction is amended. An instruction to send all correspondence electronically is not a hold mail instruction. An address that is subject to a hold mail instruction may be used as a permanent residence address if the person has also provided the withholding agent with documentary evidence described in § 1.1471-3(c)(5)(i) (without regard to the requirement in § 1.1471-3(c)(5)(i) that the documentary evidence contain a permanent residence address). The documentary evidence described in § 1.1471-3(c)(5)(i) must support the person's claim of foreign status or, in the case of a person that is claiming treaty benefits, must support residence in the country where the person is claiming a reduced rate of withholding under an income tax treaty. If, after a withholding certificate is provided, a person's permanent residence address is subsequently subject to a hold mail instruction, the

addition of the hold mail instruction is a change in circumstances requiring the person to provide the documentary evidence described in this paragraph (c)(38)(ii) in order for a withholding agent to use the address as a permanent residence address.

(39) ***Standing instructions to pay amounts.*** The term standing instructions to pay amounts has the meaning set forth in § 1.1471-1(b)(126).

(40) ***Territory financial institution.*** The term territory financial institution has the meaning set forth in § 1.1471-1(b)(130).

(41) ***TIN.*** The term TIN means the tax identifying number assigned to a person under section 6109.

(42) ***Withholding foreign trust (or WT).*** The term withholding foreign trust (or WT) means a foreign grantor trust or foreign simple trust that has executed the agreement described in § 1.1441-5(e)(5)(v).

(43) ***Certified deemed-compliant FFI.*** The term certified deemed-compliant FFI means an FFI described in § 1.1471-5(f)(2).

(44) ***Chapter 3 withholding rate pool.*** The term chapter 3 withholding rate pool has the meaning described in paragraph (e)(5)(v)(C)(*1*) of this section.

(45) ***Chapter 3 status.*** The term chapter 3 status refers to the attributes of a payee relevant for determining the rate of withholding with respect to a payment made to the payee for purposes of chapter 3.

(46) ***Chapter 4 of the Code (or chapter 4).*** The term chapter 4 of the Code (or chapter 4) means sections 1471 through 1474 and the regulations thereunder.

(47) ***Chapter 4 status.*** The term chapter 4 status means a person's status as a U.S. person, a specified U.S. person, an individual that is a foreign person, a participating FFI, a deemed-compliant FFI, a restricted distributor, an exempt beneficial owner, a nonparticipating FFI, a territory financial institution, an excepted NFFE, or a passive NFFE.

(48) ***Chapter 4 withholding rate pool.*** The term chapter 4 withholding rate pool has the meaning set forth § 1.1471-1(b)(20). For when a withholding statement may include a chapter 4 withholding rate pool of U.S. payees for purposes of this section and § 1.1441-5, however, see paragraph (e)(3)(iv)(A) of this section (for a withholding statement provided by a nonqualified intermediary) or paragraph (e)(5)(v)(C)(*2*) of this section (for a withholding statement provided by a qualified intermediary).

(49) ***Deemed-compliant FFI.*** The term deemed-compliant FFI means an FFI that is treated, pursuant to section 1471(b)(2) and § 1.1471-5(f), as meeting the requirements of section 1471(b). The term deemed-compliant FFI also includes a QI branch of a U.S. financial institution that is a reporting Model 1 FFI.

(50) ***GIIN (or Global Intermediary Identification Number).*** The term GIIN or Global Intermediary Identification Number means the identification number that is assigned to a participating FFI or registered deemed-compliant FFI. The term GIIN or Global Intermediary Identification Number also includes the identification number assigned to a reporting Model 1 FFI (as defined in § 1.1471-1(b)(114)) for purposes of identifying such entity to withholding agents. All GIINs will appear on the IRS FFI list.

(51) ***NFFE.*** The term NFFE or non-financial foreign entity has the meaning set forth in § 1.1471-1(b)(80).

(52) ***Nonparticipating FFI.*** The term nonparticipating FFI means an FFI other than a participating FFI, a deemed-compliant FFI, or an exempt beneficial owner.

(53) ***Participating FFI.*** The term participating FFI has the meaning set forth in § 1.1471-1(b)(91).

(54) ***Preexisting obligation.*** The term preexisting obligation has the meaning set forth in § 1.1471-1(b)(104).

(55) ***Registered deemed-compliant FFI.*** The term registered deemed- compliant FFI has the meaning set forth in § 1.1471-5(f)(1).

(56) ***Withholdable payment.*** The term withholdable payment has the meaning set forth in § 1.1473-1(a).

(d) ***Beneficial owner's or payee's claim of U.S. status*** —

(1) ***In general.*** Under paragraph (b)(1) of this section, a withholding agent is not required to withhold under chapter 3 of the Code on payments to a U.S. payee, to a person presumed to be a U.S. payee in accordance with the provisions of paragraph (b)(3) of this section, or to a person that the withholding agent may treat as a U.S. beneficial owner of the payment. Absent actual knowledge or reason to know otherwise, a withholding agent may rely on the provisions of this paragraph (d) in order to determine whether to treat a payee or beneficial owner as a U.S. person.

(2) ***Payments for which a Form W-9 is otherwise required.*** A withholding agent may treat as a U.S. payee any person who is required to furnish a Form W-9 and who furnishes it in accordance with the procedures described in §§ 31.3406(d)-1 through 31.3406(d)-5 of this chapter (including the requirement that the payee furnish its taxpayer identifying number (TIN)) if the withholding agent meets all the requirements described in § 31.3406(h)-3(e) of this chapter regarding reliance by a payor on a Form W-9. Providing a Form W-9 or valid substitute form shall serve as a statement that the person whose name is on the form is a U.S. person. Therefore, a foreign person, including a U.S. branch treated as a U.S. person under paragraph (b)(2)(iv) of this section, shall not provide a Form W-9. A U.S. branch of a foreign person may establish its status as a foreign person exempt from reporting under chapter 61 and backup withholding under section 3406 by providing a withholding certificate on Form W-8.

(3) ***Payments for which a Form W-9 is not otherwise required.*** In the case of a payee who is not required to furnish a Form W-9 under section 3406 (e.g., a person exempt from reporting under chapter 61 of the Internal Revenue Code), the withholding agent may treat the payee as a U.S. payee if the payee provides the withholding agent with a Form W-9 or a substitute form described in § 31.3406(h)-3(c)(2) of this chapter (relating to forms for exempt recipients) that contains the payee's name, address, and TIN. The form must be signed under penalties of perjury by the payee if so required by the form or by § 31.3406(h)-3 of this chapter. Providing a Form W-9 or valid substitute form shall serve as a statement that the person whose name is on the certificate is a U.S. person. A Form W-9 or valid substitute form shall not be provided by a foreign person, including any U.S. branch of a foreign person whether or not the branch is treated as a U.S. person under paragraph (b)(2)(iv) of this section. See paragraph (e)(3)(v) of this section for withholding certificates provided by U.S. branches described in paragraph (b)(2)(iv) of this section. The procedures described in § 31.3406(h)-2(a) of this chapter shall apply to payments to joint payees. A withholding agent that receives a Form W-9 to satisfy this paragraph (d)(3) must retain the form in accordance with the provisions of § 31.3406(h)-3(g) of this chapter, if applicable, or of paragraph (e)(4)(iii) of this section (relating to the retention of withholding certificates) if § 31.3406(h)-3(g) of this chapter does not apply. The rules of this paragraph (d)(3) are only intended to provide a method by which a withholding agent may determine that a payee is a U.S. person and do not otherwise impose a

requirement that documentation be furnished by a person who is otherwise treated as an exempt recipient for purposes of the applicable information reporting provisions under chapter 61 of the Internal Revenue Code (e.g., § 1.6049-4(c)(1)(ii) for payments of interest).

(4) ***When a payment to an intermediary or flow-through entity may be treated as made to a U.S. payee.*** A withholding agent that makes a payment to an intermediary (whether a qualified intermediary or nonqualified intermediary), a flow-through entity, or a U.S. branch or territory financial institution described in paragraph (b)(2)(iv) of this section may treat the payment as made to a U.S. payee to the extent that, prior to the payment, the withholding agent can reliably associate the payment with a Form W-9 described in paragraph (d)(2) or (3) of this section attached to a valid intermediary, flow-through, or U.S. branch withholding certificate described in paragraph (e)(3)(i) of this section or to the extent the withholding agent can reliably associate the payment with a Form W-8 described in paragraph (e)(3)(v) of this section that evidences an agreement to treat a U.S. branch or territory financial institution described in paragraph (b)(2)(iv) of this section as a U.S. person. In addition, a withholding agent may treat the payment as made to a U.S. payee only if it complies with the electronic confirmation procedures described in paragraph (e)(4)(v) of this section, if required, and it has not been notified by the IRS that any of the information on the withholding certificate or other documentation is incorrect or unreliable. In the case of a Form W-9 that is required to be furnished for a reportable payment that may be subject to backup withholding, the withholding agent may be notified in accordance with section 3406(a)(1)(B) and the regulations under that section. See applicable procedures under section 3406(a)(1)(B) and the regulations under that section for payors who have been notified with regard to such a Form W-9. Withholding agents who have been notified in relation to other Forms W-9, including under section 6724(b) pursuant to section 6721, may rely on the withholding certificate or other documentation only to the extent provided under procedures as prescribed by the IRS (see § 601.601(d)(2) of this chapter).

(e) ***Beneficial owner's claim of foreign status*** —

(1) ***Withholding agent's reliance*** —

(i) ***In general.*** Absent actual knowledge or reason to know otherwise, a withholding agent may treat a payment as made to a foreign beneficial owner in accordance with the provisions of paragraph (e)(1)(ii) of this section. See paragraph (e)(4)(viii) of this section for applicable reliance rules. See paragraph (b)(4) of this section for a description of payments for which a claim of foreign status is relevant for purposes of claiming a reduced rate of withholding for purposes of section 1441, 1442, or 1443. See paragraph (b)(5) of this section for a list of payments for which a claim of foreign status is relevant for other purposes, such as claiming an exemption from information reporting under chapter 61 of the Code.

(ii) ***Payments that a withholding agent may treat as made to a foreign person that is a beneficial owner*** —

(A) ***General rule.*** The withholding agent may treat a payment as made to a foreign person that is a beneficial owner if it complies with the requirements described in paragraph (e)(1)(ii)(B) of this section and, then, only to the extent—

(*1*) That the withholding agent can reliably associate the payment with a beneficial owner withholding certificate described in paragraph (e)(2) of this section furnished by the person whose name is on the certificate or attached to a valid foreign intermediary, flow-through, or U.S. branch withholding certificate;

(2) That the payment is made outside the United States (within the meaning of § 1.6049-5(e)) with respect to an offshore obligation (within the meaning of paragraph (c)(37) of this section) and the withholding agent can reliably associate the payment with documentary evidence described in §§ 1.1441-6(c)(3) or (4), or 1.6049-5(c)(1) relating to the beneficial owner;

(3) That the withholding agent can reliably associate the payment with a valid qualified intermediary withholding certificate, as described in paragraph (e)(3)(ii) of this section, and the qualified intermediary has provided sufficient information for the withholding agent to allocate the payment to a chapter 3 withholding rate pool;

(4) That the withholding agent can reliably associate the payment with a withholding certificate described in § 1.1441-5(c)(3)(iii) or (e)(5)(iii) from a flow-through entity claiming the income is effectively connected income;

(5) That the withholding agent identifies the payee as a U.S. branch described in paragraph (b)(2)(iv) of this section, the payment to which it treats as effectively connected income in accordance with § 1.1441-4(a) (2)(ii) or (3);

(6) That the withholding agent identifies the payee as an international organization (or any wholly-owned agency or instrumentality thereof) as defined in section 7701(a)(18) that has been designated as such by executive order (pursuant to 22 U.S.C. 288 through 288(f)); or

(7) That the withholding agent pays interest from bankers' acceptances and identifies the payee as a foreign central bank of issue (as defined in § 1.861-2(b)(4)).

(B) ***Additional requirements.*** In order for a payment described in paragraph (e)(1)(ii)(A) of this section to be treated as made to a foreign beneficial owner, the withholding agent must hold the documentation (if required) prior to the payment, comply with the electronic confirmation procedures described in paragraph (e)(4)(v) of this section (if required), and must not have been notified by the IRS that any of the information on the withholding certificate or other documentation is incorrect or unreliable. If the withholding agent has been so notified, it may rely on the withholding certificate or other documentation only to the extent provided under procedures prescribed by the IRS (see § 601.601(d)(2) of this chapter). See paragraph (b)(2)(vii) of this section for rules regarding reliable association of a payment with a withholding certificate or other appropriate documentation.

(2) ***Beneficial owner withholding certificate*** —

(i) ***In general.*** A beneficial owner withholding certificate is a statement by which the beneficial owner of the payment represents that it is a foreign person and, if applicable, claims a reduced rate of withholding under section 1441. A separate withholding certificate must be submitted to each withholding agent. If the beneficial owner receives more than one type of payment from a single withholding agent, the beneficial owner may have to submit more than one withholding certificate to the single withholding agent for the different types of payments as may be required by the applicable forms and instructions, or as the withholding agent may require (such as to facilitate the withholding agent's compliance with its obligations to determine withholding under this section or the reporting of the amounts under § 1.1461-1 (b) and (c)). For example, if a beneficial owner claims that some but not all of the income it receives is effectively connected with the conduct of a trade or business in the United States, it may be required to submit two separate withholding certificates, one for income that is not effectively

connected and one for income that is so connected. See § 1.1441-6(b)(2) for special rules for determining who must furnish a beneficial owner withholding certificate when a benefit is claimed under an income tax treaty. See paragraph (e)(4)(ix) of this section for reliance rules in the case of certificates held by another person or at a different branch location of the same person. For purposes of a qualified intermediary acting as a qualified derivatives dealer, a qualified intermediary withholding certificate, as described in paragraph (e)(3)(ii) of this section is a beneficial owner withholding certificate for purposes of treaty claims for dividends.

(ii) ***Requirements for validity of certificate*** —

(A) ***In general.*** A beneficial owner withholding certificate is valid for purposes of a payment of an amount subject to chapter 3 withholding only if it is provided on a Form W-8 or a Form 8233 in the case of personal services income described in § 1.1441-4(b) or certain scholarship or grant amounts described in § 1.1441-4(c) (or a substitute form described in paragraph (e)(4)(vi) of this section or such other form as the IRS may prescribe). A Form W-8 is valid only if its validity period has not expired, it is signed under penalties of perjury by the beneficial owner, and it contains all of the information required on the form. The required information is the beneficial owner's name, permanent residence address (as defined in § 1.1441-1(c)(38)), TIN (if required), a certification that the person is not a U.S. citizen (if the person is an individual) or a certification of the country under the laws of which the beneficial owner is created, incorporated, or governed (if a person other than an individual), the classification of the entity, and such other information as may be required by the regulations under section 1441 or by the form or accompanying instructions in addition to, or in lieu of, the information described in this paragraph (e)(2)(ii) (including when a foreign TIN and an individual's date of birth are required). A beneficial owner withholding certificate must also include the chapter 4 status of a beneficial owner when required for chapter 4 purposes in order to be valid. See paragraph (e)(4)(vii) of this section for circumstances in which a TIN is required on a beneficial owner withholding certificate.

(B) ***Requirement to collect foreign TIN and date of birth*** —

(*1*) ***In general.*** In addition to the general requirements of paragraph (e)(2)(ii)(A) of this section, except as provided in paragraphs (e)(2)(ii)(B)(*4*), through (*6*) of this section, a beneficial owner withholding certificate provided by an account holder to document an account that is maintained at a U.S. branch or office of a withholding agent that is a financial institution is valid for purposes of a payment of U.S. source income reportable on Form 1042-S (before the application of this paragraph (e)(2)(ii)(B)) made on or after January 1, 2018, only if it contains the account holder's taxpayer identification number issued by the account holder's jurisdiction of tax residence (foreign TIN) or a reasonable explanation for the absence of a foreign TIN (as described in paragraph (e)(2)(ii)(B)(*3*) of this section) and, in the case of an individual account holder, the account holder's date of birth, unless the withholding agent has the account holder's date of birth in its files. A withholding agent is permitted to obtain a foreign TIN on a written statement signed by an account holder that includes an acknowledgment that such statement is part of the withholding certificate if the withholding agent associates such statement with the account holder's withholding certificate. A withholding agent will be treated as having the account holder's date of birth in its files if it obtains the date of birth on a written statement (including a written statement transmitted by email) from the account

holder. A withholding agent may rely on the foreign TIN and date of birth contained in the withholding certificate unless it knows or has reason to know that the foreign TIN or date of birth is incorrect. Therefore, a withholding agent will not be required to validate the format or other specifications of the foreign TIN against the applicable jurisdiction's TIN system. For purposes of this paragraph (e)(2)(ii)(B), a change of address to another jurisdiction other than the United States is a change in circumstances for purposes of a withholding agent's reliance on a foreign TIN of the account holder (or reasonable explanation for its absence).

(*2*) ***Definitions.*** For purposes of this paragraph (e)(2)(ii)(B), the term “account” means a financial account as defined in § 1.1471-5(b) (substituting “U.S. office or branch of a financial institution” for “FFI”); the term “account holder” has the meaning described in § 1.1471-5(a)(3); and the term “financial institution” means an entity that is a depository institution, custodial institution, investment entity, or a specified insurance company, each as defined in § 1.1471-5(e).

(*3*) ***Requirements for reasonable explanation of the absence of a foreign TIN.*** A withholding agent may rely on a reasonable explanation for the absence of a foreign TIN on a beneficial owner withholding certificate only if the explanation addresses why the account holder was not issued a foreign TIN. An explanation provided in the instructions for, as applicable, Forms W-8BEN, W-8BEN-E, W-8ECI, W-8EXP, or Form W-8IMY is a reasonable explanation. If an account holder provides an explanation other than as described in the preceding sentence, the withholding agent must determine whether the explanation is reasonable. A reasonable explanation may be provided on the withholding certificate or on a separate attached statement associated with the form. A withholding agent may rely on a reasonable explanation described in this paragraph (e)(2)(ii)(B)(*3*) unless it has actual knowledge that the account holder has a foreign TIN.

(*4*) ***Exceptions to the requirement to obtain a foreign TIN (or reasonable explanation for its absence)*** —

(*i*) ***Jurisdictions with which the United States does not have an agreement relating to the exchange of tax information.*** A beneficial owner withholding certificate is not required to include a foreign TIN (or reasonable explanation for its absence) for an account holder resident of a jurisdiction that is not identified, in an applicable revenue procedure (see § 601.601(d)(2) of this chapter), as a jurisdiction that has in effect with the United States an income tax or other convention or bilateral agreement relating to the exchange of tax information within the meaning of section 6103(k)(4), under which the United States agrees to provide, as well as receive, tax information. A withholding agent that applies the exception described in the preceding sentence is, however, required to obtain the foreign TIN (or reasonable explanation for its absence) of each account holder resident in a jurisdiction that is added to the list on the applicable revenue procedure, before the time for filing Form 1042-S (with any applicable extension) for payments made during the calendar year following the calendar year in which the revenue procedure was published that added the jurisdiction to the list.

(*ii*) ***Jurisdictions that do not issue foreign TINs.*** A beneficial owner withholding certificate is not required to include a foreign TIN (or reasonable explanation for its absence) for an account holder resident of a jurisdiction that has been identified by the IRS on a list of jurisdictions that either do not issue foreign TINs to their residents or have requested that their residents not be required to provide foreign TINs to withholding agents for purposes of this paragraph (e)(2)(ii)(B). A withholding agent that applies the exception described in the preceding sentence is, however, required to obtain the foreign TIN (or reasonable explanation for its absence) of each account holder resident in a jurisdiction that is removed from the list of jurisdictions referenced in the preceding sentence before the time for filing Form 1042-S (with any applicable extension) for payments made during the calendar year following the calendar year in which the jurisdiction is removed from the list. A list of jurisdictions that either do not issue taxpayer identification numbers to their residents or that have requested to be included on the list is available at *https://www.irs.gov/businesses/corporations/list-of-jurisdictions-that-do-not-issue-foreign-tins* (or any replacement page on the IRS website or as provided in published guidance).

(*iii*) ***Account holder that is a government, international organization, foreign central bank of issue, or resident of a U.S. territory.*** A beneficial owner withholding certificate is not required to include a foreign TIN (or reasonable explanation for its absence) if the withholding agent has obtained a valid withholding certificate under paragraph (e)(2)(ii)(A) of this section or other documentation on which it may rely for purposes of the section 1441 regulations to treat the account holder as a government, an international organization, a foreign central bank of issue, or a resident of a U.S. territory. Thus, for example, a withholding agent may apply the exception provided in this paragraph (e)(2)(ii)(B)(*4*)(*iii*) with respect to an account holder claiming exemption under section 892 or otherwise identifying itself as a foreign government on a beneficial owner withholding certificate when the withholding agent may rely upon the claim of exemption under § 1.1441-8(b) or the claim of status as a foreign government under § 1.1441-7(b)(1) and (2).

(*5*) ***Transition rules for the foreign TIN requirement for a beneficial owner withholding certificate signed before January 1, 2018*** —

(*i*) ***Payments made before January 1, 2020.*** For payments made before January 1, 2020, an otherwise valid beneficial owner withholding certificate signed before January 1, 2018, is not treated as invalid if it does not include a foreign TIN (or a reasonable explanation for its absence) as required under paragraph (e)(2)(ii)(B) of this section until the earlier of—

(*A*) the expiration date of the validity period of the withholding certificate (if applicable); or

(*B*) the date when a change in circumstances (including for chapter 4 purposes) requires a revised withholding certificate.

(*ii*) ***Payments made after December 31, 2019.*** For payments made after December 31, 2019, an otherwise valid beneficial owner withholding certificate signed before January 1, 2018, is not treated as invalid if it does not include a foreign

TIN (or a reasonable explanation for its absence) as required under paragraph (e)(2)(ii)(B) of this section until the earlier of the date described in paragraph (e)(2)(ii)(B)(*5*)(*i*)(*A*) or (*B*) of this section, provided the withholding agent either—

(*A*) obtains from the account holder its foreign TIN (or reasonable explanation for its absence) on a written statement (including a written statement transmitted by email) which the withholding agent associates with the account holder's withholding certificate, or

(*B*) already has the account holder's foreign TIN in the withholding agent's files, which the withholding agent associates with the account holder's withholding certificate.

(*iii*) ***Limitation on standard of knowledge.*** If a withholding agent maintains an account on December 31, 2017, that is documented with a valid beneficial owner withholding certificate as of that date, the withholding agent's reason to know that the foreign TIN is incorrect, or actual knowledge that an account holder has a foreign TIN despite providing a reasonable explanation as described in paragraph (e)(2)(ii)(B)(*3*) of this section, is limited to electronically searchable information (as defined in § 1.1471-1(b)(38)) that is in the withholding agent's files.

(*6*) ***Transition rule for the date of birth requirement for a beneficial owner withholding certificate signed before January 1, 2018.*** For an otherwise valid beneficial owner withholding certificate signed before January 1, 2018, a withholding agent is not required to treat the withholding certificate as invalid for payments made before January 1, 2019, to an account holder solely because the withholding certificate does not include the account holder's date of birth and the date of birth is not in the withholding agent's files.

(3) ***Intermediary, flow-through, or U.S. branch withholding certificate*** —

(i) ***In general.*** An intermediary withholding certificate is a Form W-8 by which a payee represents that it is a foreign person and that it is an intermediary (whether a qualified or nonqualified intermediary) with respect to a payment and not the beneficial owner. See paragraphs (e)(3)(ii) and (iii) of this section. A flow-through withholding certificate is a Form W-8 used by a flow-through entity as defined in paragraph (c)(23) of this section. See § 1.1441-5(c)(3)(iii) (a nonwithholding foreign partnership), § 1.1441-5(e)(5)(iii) (a foreign simple trust or foreign grantor trust) or § 1.1441-6(b)(2) (foreign entity presenting claims on behalf of its interest holders for a reduced rate of withholding under an income tax treaty). A U.S. branch certificate is a Form W-8 furnished under paragraph (e)(3)(v) of this section by a U.S. branch described in paragraph (b)(2)(iv) of this section. See paragraph (e)(4)(viii) of this section for applicable reliance rules.

(ii) ***Intermediary withholding certificate from a qualified intermediary.*** A qualified intermediary shall provide a qualified intermediary withholding certificate for withholdable payments or reportable amounts received by the qualified intermediary. See paragraph (e)(3)(vi) of this section for the definition of reportable amount. A qualified intermediary withholding certificate is valid only if it is furnished on a Form W-8, an acceptable substitute form, or such other form as the IRS may

prescribe, it is signed under penalties of perjury by a person with authority to sign for the qualified intermediary, its validity has not expired, and it contains the following information, statement, and certifications—

(A) The name, permanent residence address, qualified intermediary employer identification number (QI-EIN), and the country under the laws of which the qualified intermediary is created, incorporated, or governed. If required for purposes of chapter 4 or if the qualified intermediary is a participating FFI or registered deemed-compliant FFI and certifies that it is providing (or will provide) a chapter 4 withholding rate pool of U.S. payees under § 1.6049-4(c)(4) with respect to accounts that the qualified intermediary maintains, the withholding certificate must also include the chapter 4 status of the qualified intermediary and its GIIN (if applicable). See paragraph (e)(5)(ii) for the chapter 4 status required of a qualified intermediary, including when a qualified intermediary withholding certificate may include a chapter 4 status of limited FFI (as defined in § 1.1471-1(b)(77)). A qualified intermediary that does not act in its capacity as a qualified intermediary must not use its QI-EIN. Rather, it should provide a nonqualified intermediary withholding certificate, if it is acting as an intermediary, and should use the taxpayer identification number (if any) that it uses for all other purposes and GIIN (if applicable);

(B) A certification that, with respect to accounts it identifies on its withholding statement (as described in paragraph (e)(5)(v) of this section), the qualified intermediary is not acting for its own account but is acting as a qualified intermediary;

(C) A certification that the qualified intermediary has provided, or will provide, a withholding statement as required by paragraph (e)(5)(v) of this section;

(D) A certification that the qualified intermediary meets the requirements of § 1.6049-4(c)(4) when the qualified intermediary provides (or will provide) a withholding statement associated with its Form W-8 that allocates a payment to a chapter 4 withholding rate pool of U.S. payees that hold accounts with the qualified intermediary. Additionally, when the qualified intermediary provides a chapter 4 withholding rate pool of U.S. payees that do not hold accounts maintained by the qualified intermediary, the qualified intermediary provides a certification on the Form W-8 that the qualified intermediary has obtained (or will obtain) documentation from the intermediary or flow through entity allocating the payment to the pool to establish that the entity's status is as a participating FFI, registered deemed-compliant FFI, or qualified intermediary under § 1.1471-3(d)(4) (or, as applicable, § 1.1471-3(e)(4)(vi)(B) or § 1.1441-1(b)(2)(vii)); and

(E) In the case of any payment with respect to a potential section 871(m) transaction (including any dividend equivalent payment within the meaning of § 1.871-15(i)) or underlying security (as defined in § 1.871-15(a)(15)) received by a qualified intermediary acting as a qualified derivatives dealer, a certification that the home office or branch receiving the payment, as applicable, meets the requirements to act as a qualified derivatives dealer as further described in paragraph (e)(6) of this section and that the qualified derivatives dealer assumes primary withholding and reporting responsibilities under chapters 3, 4, and 61, and section 3406 with respect to any payments it makes with respect to potential section 871(m) transactions;

(F) Any other information, certifications, or statements as may be required by the form or accompanying instructions in addition to, or in lieu of, the information and certifications described in this paragraph (e)(3)(ii) or paragraph (e)(3)(v) of this section. See paragraph (e)(5)(v) of this section for the requirements of a withholding statement associated with the qualified intermediary withholding certificate.

(iii) ***Intermediary withholding certificate from a nonqualified intermediary.*** A nonqualified intermediary shall provide a nonqualified intermediary withholding certificate for reportable amounts received by the nonqualified intermediary. See paragraph (e)(3)(vi) of this section for the definition of reportable amount. A nonqualified intermediary withholding certificate is valid only to the extent it is furnished on a Form W-8, an acceptable substitute form, or such other form as the IRS may prescribe, it is signed under penalties of perjury by a person authorized to sign for the nonqualified intermediary, it contains the information, statements, and certifications described in this paragraphs (e)(3)(iii) and (iv) of this section, its validity has not expired, and the withholding certificates and other appropriate documentation for all persons to whom the certificate relates are associated with the certificate. Withholding certificates and other appropriate documentation consist of beneficial owner withholding certificates described in paragraph (e)(2)(i) of this section, intermediary and flow-through withholding certificates described in paragraph (e)(3)(i) of this section, withholding foreign partnership and withholding foreign trust certificates described in § 1.1441-5(c)(2)(iv) and (e)(5)(iii), documentary evidence described in §§ 1.1441-6(c)(3) or (4) and 1.6049-5(c)(1), and any other documentation or certificates applicable under other provisions of the Code or regulations that certify or establish the status of the payee or beneficial owner as a U.S. or a foreign person. If a nonqualified intermediary is acting on behalf of another nonqualified intermediary or a flow-through entity, then the nonqualified intermediary must associate with its own withholding certificate the other nonqualified intermediary withholding certificate or the flow-through withholding certificate and separately identify all of the withholding certificates and other appropriate documentation that are associated with the withholding certificate of the other nonqualified intermediary or flow-through entity. Nothing in this paragraph (e)(3)(iii) shall require an intermediary to furnish original documentation. Copies of certificates or documentary evidence may be transmitted to the U.S. withholding agent, in which case the nonqualified intermediary must retain the original documentation for the same time period that the copy is required to be retained by the withholding agent under paragraph (e)(4)(iii) of this section and must provide it to the withholding agent upon request. For purposes of this paragraph (e)(3)(iii), a valid intermediary withholding certificate also includes a statement described in § 1.871-14(c)(2)(v) furnished for interest to qualify as portfolio interest for purposes of sections 871(h) and 881(c). The information and certifications required on a Form W-8 described in this paragraph (e)(3)(iii) are as follows—

(A) The name and permanent resident address of the nonqualified intermediary, chapter 4 status (if required for chapter 4 purposes or if the nonqualified intermediary provides the certification described in paragraph (e)(3)(iii)(D) of this section), GIIN (if applicable), and the country under the laws of which the nonqualified intermediary is created, incorporated, or governed;

(B) A certification that the nonqualified intermediary is not acting for its own account;

(C) If the nonqualified intermediary withholding certificate is used to transmit withholding certificates or other appropriate documentation for more than one person on whose behalf the nonqualified intermediary is acting, a withholding statement associated with the Form W-8 that provides all the information required by paragraph (e)(3)(iv) of this section;

(D) If the nonqualified intermediary provides a withholding statement associated with the Form W-8 allocating a payment to a chapter 4 withholding rate pool of U.S. payees, a certification that the nonqualified intermediary meets the requirements of § 1.6049-4(c)(4) with respect to any payees included in such pool that hold accounts maintained (as defined in § 1.1471-5(b)(5)) by the nonqualified intermediary; and

(E) Any other information, certifications, or statements as may be required by the form or accompanying instructions in addition to, or in lieu of, the information, certifications, and statements described in this paragraph (e)(3)(iii) or paragraph (e)(5)(iv) of this section.

(iv) ***Withholding statement provided by nonqualified intermediary*** —

(A) ***In general.*** A nonqualified intermediary shall provide a withholding statement required by this paragraph (e)(3)(iv) to the extent the nonqualified intermediary is required to furnish, or does furnish, documentation for payees on whose behalf it receives reportable amounts (as defined in paragraph (e)(3)(vi) of this section) or to the extent it otherwise provides the documentation of such payees to a withholding agent. A nonqualified intermediary, however, that is subject to withholding under chapter 4 due to its chapter 4 status as a nonparticipating FFI need not provide a withholding statement unless it is providing documentation to allocate a portion of the payment as made to an exempt beneficial owner as described in § 1.1471-3(c)(3)(iii)(B)(*4*). A nonqualified intermediary that is subject to withholding under chapter 4 due to its chapter 4 status is not required to disclose to the withholding agent information regarding persons for whom it collects reportable amounts unless it has actual knowledge that any such person is a U.S. non-exempt recipient as defined in paragraph (c)(21) of this section. Information regarding U.S. non-exempt recipients required under this paragraph (e)(3)(iv) must be provided irrespective of any requirement under foreign law that prohibits the disclosure of the identity of an account holder of a nonqualified intermediary or financial information relating to such account holder. A nonqualified intermediary is not required to provide information on a withholding statement regarding U.S. non-exempt recipients, provided that the nonqualified intermediary is a participating FFI (including a reporting Model 2 FFI) or registered deemed-compliant FFI (including a reporting Model 1 FFI) that identifies on the withholding statement the portion of a payment allocable to a chapter 4 withholding rate pool of U.S. payees to the extent that the nonqualified intermediary is permitted to include such U.S. payees in a pool under § 1.6049-4(c)(4)(iii). See § 1.1471-3(d)(4) for the requirements of an entity to identify itself as a participating FFI or registered deemed-compliant FFI to a withholding agent for purposes of chapter 4. Although a nonqualified intermediary is not required to provide documentation and other information required by this paragraph (e)(3)(iv) for persons other than U.S. non-exempt recipients not included in a chapter 4 withholding rate pool of U.S. payees, a withholding agent that does not receive documentation and such information must apply the presumption rules of paragraph (b) of this section, §§ 1.1441-5(d) and (e)(6), 1.6049-5(d), and 1.1471-3(f)(5) (for a withholdable payment) or the withholding agent shall be liable for tax, interest, and penalties. A withholding agent must apply the presumption rules even if it is not required

under chapter 61 of the Code to obtain documentation to treat a payee as an exempt recipient and even though it has actual knowledge that the payee is a U.S. person. For example, if a nonqualified intermediary receives a payment that is not a withholdable payment and fails to provide a withholding agent with a Form W-9 for an account holder that is a U.S. exempt recipient that is not included in a chapter 4 withholding rate pool of U.S. payees to the extent permitted in this paragraph (e)(3)(iv)(A), the withholding agent must presume (even if it has actual knowledge that the account holder is a U.S. exempt recipient) that the account holder is an undocumented foreign person with respect to amounts subject to chapter 3 withholding. See paragraph (b)(3)(v) of this section for applicable presumptions. Therefore, the withholding agent must withhold 30 percent from the payment even though if a Form W-9 had been provided, no withholding or reporting on the payment attributable to a U.S. exempt recipient would apply. Further, a nonqualified intermediary that fails to provide the documentation and the information under this paragraph (e)(3)(iv) for another withholding agent to report the payments on Forms 1042-S (including under the requirements of § 1.1474-1(d)(2) for a payment of a chapter 4 reportable amount) and Forms 1099 is not relieved of its responsibility to file information returns. See paragraph (b)(6) of this section. Therefore, unless the nonqualified intermediary itself files such returns and provides copies to the payees, it shall be liable for penalties under sections 6721 (failure to file information returns), and 6722 (failure to furnish payee statements), including the penalties under those sections for intentional failure to file information returns. In addition, failure to provide either the documentation or the information required by this paragraph (e)(3)(iv) results in a payment not being reliably associated with valid documentation. Therefore, the beneficial owners of the payment are not entitled to reduced rates of withholding and if the full amount required to be held under the presumption rules is not withheld by the withholding agent, the nonqualified intermediary must withhold the difference between the amount withheld by the withholding agent and the amount required to be withheld. Failure to withhold shall result in the nonqualified intermediary being liable for tax under section 1461, interest, and penalties, including penalties under section 6656 (failure to deposit) and section 6672 (failure to collect and pay over tax).

(B) ***General requirements.*** A withholding statement must be provided prior to the payment of a reportable amount and must contain the information specified in paragraph (e)(3)(iv)(C) of this section. The statement must be updated as often as required to keep the information in the withholding statement correct prior to each subsequent payment. The withholding statement forms an integral part of the withholding certificate provided under paragraph (e)(3)(iii) of this section, and the penalties of perjury statement provided on the withholding certificate shall apply to the withholding statement. The withholding statement may be provided in any manner the nonqualified intermediary and the withholding agent mutually agree, including electronically. If the withholding statement is provided electronically as part of a system established by the withholding agent or nonqualified intermediary to provide the statement, however, there must be sufficient safeguards to ensure that the information received by the withholding agent is the information sent by the nonqualified intermediary and all occasions of user access that result in the submission or modification of the withholding statement information must be recorded. In addition, the electronic system must be capable of providing a hard copy of all withholding statements provided by the nonqualified intermediary. A withholding statement may otherwise be transmitted by a nonqualified intermediary via email or

facsimile to a withholding agent under the requirements specified in paragraph (e)(4)(iv)(D) of this section (substituting the term withholding statement for the term Form W-8 or the term document, as applicable). A withholding agent will be liable for tax, interest, and penalties in accordance with paragraph (b)(7) of this section to the extent it does not follow the presumption rules of paragraph (b)(3) of this section or §§ 1.1441-5(d) and (e)(6), and 1.6049-5(d) for any payment of a reportable amount, or portion thereof, for which it does not have a valid withholding statement prior to making a payment. A withholding agent may not treat as valid an allocation of a payment to a chapter 4 withholding rate pool of U.S. payees described in paragraph (e)(3)(iv)(A) of this section or an allocation of a payment to a chapter 4 withholding rate pool of recalcitrant account holders described in paragraph (e)(3)(iv)(C)(*2*) of this section unless the withholding agent identifies the nonqualified intermediary maintaining the account (as described in § 1.1471-5(b)(5)) as a participating FFI (including a reporting Model 2 FFI) or registered deemed-compliant FFI (including a reporting Model 1 FFI) by applying the rules of § 1.1471-3(d)(4). Additionally, in the case of a withholdable payment that is an amount subject to withholding made on or after April 1, 2017, a withholding agent may not treat as valid an allocation of the payment to a chapter 4 withholding rate pool of U.S. payees unless the nonqualified intermediary identifies the pool of U.S. payees as one described in § 1.1471-3(c)(3)(iii)(B)(*2*)(*iii*) (or by describing such payees consistent with the description provided in § 1.1471-3(c)(3)(iii)(B)(*2*)(*iii*)).

(C) ***Content of withholding statement.*** The withholding statement provided by a nonqualified intermediary must contain the information required by this paragraph (e)(3)(iv)(C).

(*1*) ***In general.*** Except as otherwise provided by paragraph (e)(3)(iv)(C)(*2*) and (*3*) of this section), the withholding statement provided by a nonqualified intermediary must contain the information required by this paragraph (e)(3)(iv)(C)(*1*).

(*i*) Except as otherwise provided in (e)(3)(iv)(A) of this section (which excludes reporting of information with respect to certain U.S. persons on the withholding statement), the withholding statement must contain the name, address, TIN (if any), and the type of documentation (documentary evidence, Form W-9, or type of Form W-8) for every person from whom documentation has been received by the nonqualified intermediary and provided to the withholding agent and whether that person is a U.S. exempt recipient, a U.S. non-exempt recipient, or a foreign person. See paragraphs (c)(2), (20), and (21) of this section for the definitions of foreign person, U.S. exempt recipient, and U.S. non-exempt recipient. In the case of a foreign person, the statement must indicate whether the foreign person is a beneficial owner or an intermediary, flow-through entity, U.S. branch, or territory financial institution described in paragraph (b)(2)(iv) of this section and include the type of recipient, based on recipient codes applicable for chapter 3 purposes used for filing Forms 1042-S, if the foreign person is a recipient as defined in § 1.1461-1(c)(1)(ii).

(*ii*) The withholding statement must allocate each payment, by income type, to every payee required to be reported on the withholding statement for whom documentation has been provided (including U.S. exempt recipients except as provided in paragraph (e)(3)(iv)(A) of this section). Any payment that cannot be reliably associated with valid documentation from a payee shall be treated as made to an unknown payee in accordance with the presumption rules of

paragraph (b) of this section and §§ 1.1441-5(d) and (e)(6) and 1.6049-5(d). For this purpose, a type of income is determined by the types of income required to be reported on Forms 1042-S or 1099, as appropriate. Notwithstanding the preceding sentence, deposit interest (including original issue discount) described in section 871(i)(2)(A) or 881(d) and interest or original issue discount on short-term obligations as described in section 871(g)(1)(B) or 881(e) is only required to be allocated to the extent it is required to be reported on Form 1099 or Form 1042-S. See § 1.6049-8 (regarding reporting of bank deposit interest to certain foreign persons). If a payee receives income through another nonqualified intermediary, flow-through entity, or U.S. branch or territory financial institution described in paragraph (e)(2)(iv) of this section (other than a U.S. branch or territory financial institution treated as a U.S. person), the withholding statement must also state, with respect to the payee, the name, address, and TIN, if known, of the other nonqualified intermediary or U.S. branch from which the payee directly receives the payment or the flow-through entity in which the payee has a direct ownership interest. If another nonqualified intermediary, flow-through entity, or U.S. branch fails to allocate a payment, the name of the nonqualified intermediary, flow-through entity, or U.S. branch that failed to allocate the payment shall be provided with respect to such payment.

(*iii*) If a payee is identified as a foreign person, the nonqualified intermediary must specify the rate of withholding to which the payee is subject, the payee's country of residence and, if a reduced rate of withholding is claimed, the basis for that reduced rate (*e.g.,* treaty benefit, portfolio interest, exempt under section 501(c)(3), 892, or 895). The allocation statement must also include the TINs of those foreign persons for whom such a number is required under paragraph (e)(4)(vii) of this section or § 1.1441-6(b)(1) (regarding claims for treaty benefits for which a TIN is provided unless a foreign tax identifying number described in § 1.1441-6(b)(1) is provided). In the case of a claim of treaty benefits, the nonqualified intermediary's withholding statement must also state whether the limitation on benefits and section 894 statements required by § 1.1441-6(c)(5) have been provided, if required, in the beneficial owner's Form W-8 or associated with such owner's documentary evidence.

(*iv*) The withholding statement must also contain any other information the withholding agent reasonably requests in order to fulfill its obligations under chapter 3 and chapter 61 of the Code, and section 3406.

(*2*) ***Nonqualified intermediary withholding statement for withholdable payments.*** This paragraph (e)(3)(iv)(C)(*2*) modifies the requirements of a withholding statement described in paragraph (e)(3)(iv)(C)(*1*) of this section that is provided by a nonqualified intermediary with respect to a reportable amount that is a withholdable payment. For such a payment, the requirements applicable to a withholding statement described in paragraph (e)(3)(iv)(A) through (e)(3)(iv)(C)(*1*) of this section shall apply, except that—

(*i*) The withholding statement must include the chapter 4 status (using the applicable status code used for filing Form 1042-S) and GIIN (when required for chapter 4 purposes under § 1.1471-3(d)) of each other intermediary or flow-through entity that is a foreign person and that receives the payment, excluding

an intermediary or flow- through entity that is an account holder of or interest holder in a withholding foreign partnership, withholding foreign trust, or intermediary acting as a qualified intermediary for the payment;

(*ii*) If the nonqualified intermediary that is a participating FFI or registered deemed-compliant FFI provides a withholding statement described in § 1.1471-3(c)(3)(iii)(B)(*2*) (describing an FFI withholding statement), the withholding statement may include chapter 4 withholding rate pools with respect to the portions of the payment allocated to nonparticipating FFIs and recalcitrant account holders (to the extent permitted on an FFI withholding statement described in that paragraph) in lieu of providing specific payee information with respect to such persons on the statement (including persons subject to chapter 4 withholding) as described in paragraph (e)(3)(iv)(C)(*1*) of this section;

(*iii*) If the nonqualified intermediary provides a withholding statement described in § 1.1471-3(c)(3)(iii)(B)(*3*) (describing a chapter 4 withholding statement), the withholding statement may include chapter 4 withholding rate pools with respect to the portions of the payment allocated to nonparticipating FFIs; and

(*iv*) For a payment allocated to a payee that is a foreign person (other than a person included in a chapter 4 withholding rate pool described in paragraphs (e)(3)(iv)(C)(*2*)(*ii*) and (*iii*) of this section) that is reported on a withholding statement described in § 1.1471-3(c)(3)(iii)(B)(*2*) or (*3*), the withholding statement must include the chapter 4 status of the payee (unless an exception applies for purposes of providing such status under chapter 4) and, for a payee other than an individual, the recipient code for chapter 4 purposes used for filing Form 1042-S; and

(*v*) To the extent that a withholdable payment is not reportable on a Form 1042-S, Form 1099 under the rules of chapter 61, or Form 8966 "FATCA Report," no allocation of the payment is required on the withholding statement.

(*3*) ***Alternative withholding statement*** —

(i) In lieu of a withholding statement containing all of the information described in paragraph (e)(3)(iv)(C)(*1*) and (*2*) of this section, a withholding agent may accept from a nonqualified intermediary a withholding statement that meets all of the requirements of this paragraph (e)(3)(iv)(C)(*3*)(*i*) with respect to a payment. The withholding statement described in this paragraph (e)(3)(iv)(C)(*3*)(*i*) may be provided only by a nonqualified intermediary that provides the withholding agent with the withholding certificates from the beneficial owners (that is, not documentary evidence) before the payment is made.

(*A*) The withholding statement is not required to contain all of the information specified in paragraphs (e)(3)(iv)(C)(*1*) and (*2*) of this section that is also included on a withholding certificate (for example, name, address, TIN (if any), chapter 4 status, GIIN (if any)). The withholding statement is also not required to specify the rate of withholding to which each foreign payee is subject, provided that all of the information necessary to make such

determination is provided on the withholding certificate. A withholding agent that uses the withholding statement may not apply a different rate from that which the withholding agent may reasonably conclude from the information on the withholding certificate.

(*B*) The withholding statement must allocate the payment to every payee required to be reported as described in paragraph (e)(3)(iv)(C)(*1*)(*ii*) of this section.

(*C*) The withholding statement must also contain any other information the withholding agent reasonably requests in order to fulfill its obligations under chapters 3, 4, and 61, and section 3406.

(*D*) The withholding statement must contain a representation from the nonqualified intermediary that the information on the withholding certificates is not inconsistent with any other account information the nonqualified intermediary has for the beneficial owners for determining the rate of withholding with respect to each payee (applying the standards of knowledge applicable to a withholding agent's reliance on a withholding certificate in the regulations under section 1441 and, for a withholdable payment, the regulations under section 1471).

(*ii*) In lieu of a withholding statement that includes a recipient code for chapter 4 purposes used for filing Form 1042-S, a withholding agent may accept a nonqualified intermediary withholding statement that contains all of the information described in paragraph (e)(3)(iv)(C)(*1*) and (*2*) of this section (or an alternative withholding statement permitted under paragraph (e)(3)(iv)(C)(*3*)(i) of this section) but that does not provide a recipient code for chapter 4 purposes used for filing Form 1042-S for a payee as required in paragraph (e)(3)(iv)(C)(*2*)(*iv*) of this section if the withholding agent is able to determine such payee's recipient code based on other information included on or with the withholding statement or in the withholding agent's records with respect to the payee.

(*4*) ***Example.*** This example illustrates the principles of paragraph (e)(3)(iv)(C) of this section. WA makes a withholdable payment of U.S. source dividends to NQI, a nonqualified intermediary. NQI provides WA with a valid intermediary withholding certificate under paragraph (e)(3)(iii) of this section that includes NQI's certification of its status for chapter 4 purposes as a participating FFI. NQI provides a withholding statement on which NQI allocates 20% of the payment to a chapter 4 withholding rate pool of recalcitrant account holders of NQI for purposes of chapter 4 and allocates 80% of the payment equally to A and B, individuals that are account holders of NQI. NQI also provides WA with valid beneficial owner withholding certificates from A and B establishing their status as foreign persons entitled to a 15% rate of withholding under an applicable income tax treaty. Because NQI has certified its status as a participating FFI, withholding under chapter 4 is not required with respect to NQI. See § 1.1471-2(a)(4). Based on the documentation NQI provided to WA with respect to A and B, WA can reliably associate the payment with valid documentation on the portion of the payment allocated to them and, because the payment is a withholdable payment, may rely on the allocation of the payment for NQI's

recalcitrant account holders in a chapter 4 withholding rate pool in lieu of payee information with respect to such account holders. See paragraph (e)(3)(iv)(C)(*2*) of this section for the special rules for a withholding statement provided by a nonqualified intermediary for a withholdable payment. Also see § 1.1471-2(a) for WA's withholding requirements under chapter 4 with respect to the portion of the payment allocated to NQI's recalcitrant account holders and § 1.1441-3(a)(2) for coordinating withholding under chapter 3 for payments to which withholding is applied under chapter 4.

(D) ***Alternative procedures*** —

(*1*) ***In general.*** Under the alternative procedures of this paragraph (e)(3)(iv)(D), a nonqualified intermediary may provide information allocating a payment of a reportable amount to each payee (including U.S. exempt recipients) otherwise required under paragraph (e)(3)(iv)(B)(*2*) of this section after a payment is made. To use the alternative procedure of this paragraph (e)(3)(iv)(D), the nonqualified intermediary must inform the withholding agent on a statement associated with its nonqualified intermediary withholding certificate that it is using the procedure under this paragraph (e)(3)(iv)(D) and the withholding agent must agree to the procedure. If the requirements of the alternative procedure are met, a withholding agent, including the nonqualified intermediary using the procedures, can treat the payment as reliably associated with documentation and, therefore, the presumption rules of paragraph (b)(3) of this section and §§ 1.1441-5(d) and (e)(6) and 1.6049-5(d) do not apply even though information allocating the payment to each payee has not been received prior to the payment. See paragraph (e)(3)(iv)(D)(*7*) of this section, however, for a nonqualified intermediary's liability for tax and penalties if the requirements of this paragraph (e)(3)(iv)(D) are not met. These alternative procedures shall not be used for payments that are allocable to U.S. non-exempt recipients except as provided in paragraph (e)(3)(iv)(D)(*2*)(*ii*) of this section. Therefore, a nonqualified intermediary is required to provide a withholding agent with information allocating payments of reportable amounts to U.S. non-exempt recipients prior to the payment being made by the withholding agent.

(*2*) ***Withholding rate pools*** —

(*i*) ***In general.*** In place of the information required in paragraph (e)(3)(iv)(C)(*2*) of this section allocating payments to each payee, the nonqualified intermediary must provide a withholding agent with withholding rate pool information prior to the payment of a reportable amount. The withholding statement must contain all other information required by paragraph (e)(3)(iv)(C) of this section. Further, each payee listed in the withholding statement must be assigned to an identified withholding rate pool. To the extent a nonqualified intermediary is required to provide, or does provide, documentation, the alternative procedures do not relieve the nonqualified intermediary from the requirement to provide documentation prior to the payment being made. Therefore, withholding certificates or other appropriate documentation and all information required by paragraph (e)(3)(iv)(C) of this section (other than allocation information) must be provided to a withholding agent before any new payee receives a reportable amount. In addition, the withholding statement must be updated by assigning a new payee to a withholding rate pool prior to the payment of a reportable

amount. A withholding rate pool is a payment of a single type of income, determined in accordance with the categories of income used to file Form 1042-S, that is subject to a single rate of withholding. A withholding rate pool may be established by any reasonable method to which the nonqualified intermediary and a withholding agent agree (*e.g.,* by establishing a separate account for a single withholding rate pool, or by dividing a payment made to a single account into portions allocable to each withholding rate pool). The nonqualified intermediary shall determine withholding rate pools based on valid documentation or, to the extent a payment cannot be reliably associated with valid documentation, the presumption rules of paragraph (b)(3) of this section and §§ 1.1441-5(d) and (e)(6) and 1.6049-5(d).

(*ii*) ***Withholding rate pools for chapter 4 purposes.*** This paragraph (e)(3)(iv)(D)(*2*)(*ii*) modifies the provisions of paragraph (e)(3)(iv)(D)(*2*)(*i*) of this section with respect to the withholding rate pools permitted for the alternative procedures described in paragraph (e)(3)(iv)(D)(*1*) of this section in the case of a payment that is allocable on a withholding statement to a chapter 4 withholding rate pool as described in this paragraph. In the case of a withholdable payment, a nonqualified intermediary may include reportable amounts allocable to a chapter 4 withholding rate pool (other than a chapter 4 withholding rate pool of U.S. payees) in a 30-percent rate pool together with a withholding rate pool for amounts subject to chapter 3 withholding at the 30-percent rate. For a payment of a reportable amount that is allocable to a chapter 4 withholding rate pool of U.S. payees on a withholding statement, a nonqualified intermediary may include such amount in a single withholding rate pool with the amount of the payment that is exempt from withholding under chapter 3 instead of providing documentation regarding U.S. non-exempt recipients included in the pool or separately allocating the amount to the chapter 4 withholding rate pool. To the extent that a nonqualified intermediary allocates an amount to any chapter 4 withholding rate pool, the nonqualified intermediary is required to notify the withholding agent of the allocation before receiving the payment and is not required to provide documentation with respect to the payees included in such pool. The nonqualified intermediary shall determine the chapter 4 withholding rate pools permitted to be used under this paragraph (e)(3)(iv)(D)(*2*)(*ii*) in accordance with the nonqualified intermediary's applicable chapter 4 status and under § 1.1471-3(c)(3)(iii)(B)(*2*) (for an FFI withholding statement) or (c)(3)(iii)(B)(*3*) (for a chapter 4 withholding statement) or under § 1.6049-4(c)(4) for a chapter 4 withholding rate pool of U.S. payees (or similar applicable coordination rule in chapter 61 for payments other than interest). Additionally, the nonqualified intermediary shall identify those payees to which withholding under chapter 4 applies that are not included in a chapter 4 reporting pool (including payees that could be included in a chapter 4 withholding rate pool for whom the nonqualified intermediary chooses to provide payee specific information).

(*3*) ***Allocation information.*** The nonqualified intermediary must provide the withholding agent with sufficient information to allocate the income in each withholding rate pool to each payee (including U.S. exempt recipients or any chapter 4 withholding rate pool identified by the withholding agent under paragraph (e)(3)(iv)(D)(*2*)(*ii*) of this

section) within the pool no later than January 31 of the year following the year of payment. Any payments that are not allocated to payees for whom documentation has been provided or a chapter 4 withholding rate pool referred to in the previous sentence shall be allocated to an undocumented payee in accordance with the presumption rules of paragraph (b)(3) of this section and §§ 1.1441-5(d) and (e)(6), 1.6049-5(d), and 1.1471-3(f)(5) (for a withholdable payment for chapter 4 purposes). Notwithstanding the preceding sentence, deposit interest (including original issue discount) described in section 871(i)(2)(A) or 881(d) and interest or original issue discount on short-term obligations as described in section 871(g)(1)(B) or 881(e) is not required to be allocated to a U.S. exempt recipient or a foreign payee, except as required under § 1.6049-8 (regarding reporting of deposit interest paid to certain foreign persons).

(*4*) ***Failure to provide allocation information.*** Except as provided in paragraph (e)(3)(iv)(D)(*5*) of this section, if a nonqualified intermediary fails to provide allocation information, if required, by January 31 for any withholding rate pool to the extent required in paragraph (e)(3)(iv)(D)(*3*) of this section, a withholding agent shall not apply the alternative procedures of this paragraph (e)(3)(iv)(D) to any payments of reportable amounts paid after January 31 in the taxable year following the calendar year for which allocation information was not given and any subsequent taxable year. Further, the alternative procedures shall be unavailable for any other withholding rate pool (other than a chapter 4 withholding rate pool as otherwise permitted) even though allocation information was given for that other pool. Therefore, the withholding agent must withhold on a payment of a reportable amount in accordance with the presumption rules of paragraph (b)(3) of this section, and §§ 1.1441-5(d) and (e)(6), 1.6049-5(d), and 1.1471-3(f)(5) (for a withholdable payment for chapter 4 purposes), unless the nonqualified intermediary provides all of the information, including information sufficient to allocate the payment to each specific payee or chapter 4 withholding rate pool (as permitted), required by paragraph (e)(3)(iv)(A) through (C) of this section prior to the payment. A nonqualified intermediary must allocate at least 90 percent of the income required to be allocated for each withholding rate pool as required under this paragraph (e)(3)(iv)(D)(*4*) or the nonqualified intermediary will be treated as having failed to provide allocation information for purposes of this paragraph (e)(3)(iv)(D). For purposes of the allocation, a nonqualified intermediary is required to identify by January 31 the portion of the payment that is allocated to each chapter 4 withholding rate pool (rather than the payees included in each such pool). See paragraph (e)(3)(iv)(D)(*7*) of this section for liability for tax and penalties if a nonqualified intermediary fails to provide allocation information in whole or in part.

(*5*) ***Cure provision.*** A nonqualified intermediary may cure any failure to provide allocation information by providing the required allocation information to the withholding agent no later than February 14 following the calendar year of payment. If the withholding agent receives the allocation information by that date, it may apply the adjustment procedures of § 1.1461-2 (or of § 1.1474-2 for an amount withheld under chapter 4) to any excess withholding for payments made on or after February 1 and on or before February 14. Any nonqualified intermediary that fails to cure by February 14 may request the ability to use the alternative procedures of this paragraph (e)(3)(iv)(D) by submitting a request, in writing, to the IRS. The request must state the

reason that the nonqualified intermediary did not comply with the alternative procedures of this paragraph (e)(3)(iv)(D) and steps that the nonqualified intermediary has taken, or will take, to ensure that no failures occur in the future. If the IRS determines that the alternative procedures of this paragraph (e)(3)(iv)(D) may apply, a determination to that effect will be issued by the IRS to the nonqualified intermediary.

(*6*) ***Form 1042-S reporting in case of allocation failure.*** If a nonqualified intermediary fails to provide allocation information by February 14 following the year of payment for a withholding rate pool, the withholding agent must file Forms 1042-S for payments made to each payee in that pool (other than U.S. exempt recipients) in the prior calendar year by pro rating the payment to each payee (including U.S. exempt recipients) listed in the withholding statement for that withholding rate pool, treating as a payee for this purpose each chapter 4 withholding rate pool identified by the nonqualified intermediary under paragraph (e)(3)(iv)(D)(*2*)(*ii*) of this section. If the nonqualified intermediary fails to allocate 10 percent or less of an amount required to be allocated for a withholding rate pool, a withholding agent shall report the unallocated amount as paid to a single unknown payee in accordance with the presumption rules of paragraph (b) of this section and §§ 1.1441-5(d) and (e)(6), 1.6049-5(d), and § 1.1471-3(f)(5) (for a withholdable payment for chapter 4 purposes). The portion of the payment that can be allocated to specific recipients, as defined in § 1.1461-1(c)(1)(ii), shall be reported to each recipient in accordance with the rules of § 1.1461-1(c) and § 1.1474-1(d)(2) (for a withholdable payment).

(*7*) ***Liability for tax, interest, and penalties.*** If a nonqualified intermediary fails to provide allocation information by February 14 following the year of payment for all or a portion of the payments made to any withholding rate pool, the withholding agent from whom the nonqualified intermediary received payments of reportable amounts shall not be liable for any tax, interest, or penalties, due solely to the errors or omissions of the nonqualified intermediary. See § 1.1441-7(b)(2) through (10) for the due diligence requirements of a withholding agent. Because failure by the nonqualified intermediary to provide allocation information results in a payment not being reliably associated with valid documentation, the beneficial owners for whom the nonqualified intermediary acts are not entitled to a reduced rate of withholding. Therefore, the nonqualified intermediary, as a withholding agent, shall be liable for any tax not withheld by the withholding agent in accordance with the presumption rules, interest on the under withheld tax if the nonqualified intermediary fails to pay the tax timely, and any applicable penalties, including the penalties under sections 6656 (failure to deposit), 6721 (failure to file information returns) and 6722 (failure to file payee statements). Failure to provide allocation information for more than 10 percent of the payments made to a particular withholding rate pool will be presumed to be an intentional failure within the meaning of sections 6721(e) and 6722(c). The nonqualified intermediary may rebut the presumption.

(*8*) ***Applicability to flow-through entities and certain U.S. branches.*** See paragraph (e)(3)(v) of this section and § 1.1441-5(c)(3)(iv) and (e)(5)(iv) for the applicability of this paragraph (e)(3)(iv) to U.S. branches described in paragraph (b)(2)(iv) of this section (other than U.S. branches treated as U.S. persons) and flow-through entities.

(E) ***Notice procedures.*** The IRS may notify a withholding agent that the alternative procedures of paragraph (e)(3)(iv)(D) of this section are not applicable to a specified nonqualified intermediary, a U.S. branch described in paragraph (b)(2)(iv) of this section, or a flow-through entity. If a withholding agent receives such a notice, it must commence withholding under this section or chapter 4 (if applicable) in accordance with the presumption rules of paragraph (b)(3) of this section and §§ 1.1441-5(d) and (e)(6), 1.6049-5(d), and1.1471-3(f)(5) (for a withholdable payment for chapter 4 purposes) unless the nonqualified intermediary, U.S. branch, or flow-through entity complies with the procedures in paragraphs (e)(3)(iv)(A) through (C) of this section. In addition, the IRS may notify a withholding agent, in appropriate circumstances, that it must apply the presumption rules of paragraph (b)(3) of this section and §§ 1.1441-5(d) and (e)(6), 1.6049-5(d), and § 1.1471-3(f)(5) (for a withholdable payment for chapter 4 purposes) to payments made to a nonqualified intermediary, a U.S. branch, or a flow-through entity even if the nonqualified intermediary, U.S. branch, or flow-through entity provides allocation information prior to the payment. A withholding agent that receives a notice under this paragraph (e)(3)(iv)(E) must commence withholding in accordance with the presumption rules within 30 days of the date of the notice. The IRS may withdraw its prohibition against using the alternative procedures of paragraph (e)(3)(iv)(D) of this section, or its requirement to follow the presumption rules, if the nonqualified intermediary, U.S. branch, or flow-through entity can demonstrate to the satisfaction of the IRS that it is capable of complying with the rules under chapter 3 of the Code and any other conditions required by the IRS.

(v) ***Withholding certificate from certain U.S. branches (including territory financial institutions).*** A U.S. branch certificate is a withholding certificate provided by a U.S. branch (including a territory financial institution) described in paragraph (b)(2)(iv) of this section that is not the beneficial owner of the income. The withholding certificate is provided with respect to reportable amounts and must state that such amounts are not effectively connected with the conduct of a trade or business in the United States. The withholding certificate must either transmit the appropriate documentation for the persons for whom the branch receives the payment (*i.e.,* as an intermediary) or be provided as evidence of its agreement with the withholding agent to be treated as a U.S. person with respect to any payment associated with the certificate. A U.S. branch withholding certificate is valid only if it is furnished on a Form W-8, an acceptable substitute form, or such other form as the IRS may prescribe, it is signed under penalties of perjury by a person authorized to sign for the branch, its validity has not expired, and it contains the information, statements, and certifications described in this paragraph (e)(3)(v). If the certificate is furnished to transmit withholding certificates and other documentation, it must contain the information, certifications, and statements described in paragraphs (e)(3)(v)(A) through (C) of this section and in paragraphs (e)(3)(iii) and (iv) (alternative procedures) of this section, applying the term U.S. branch instead of the term nonqualified intermediary. If the certificate is furnished pursuant to an agreement to treat the U.S. branch or territory financial institution as a U.S. person (which agreement must be for purposes of chapter 4 in addition to this section in the case of a payment that is a withholdable payment), the information and certifications required on the withholding certificate are limited to the following—

(A) The name of the territory financial institution or person of which the U.S. branch is a part, the address of the territory financial institution or U.S. branch;

(B) A certification that the payments associated with the certificate are not effectively connected with the conduct of its trade or business in the United States;

(C) The EIN of the U.S. branch or territory financial institution;

(D) When required for chapter 4 purposes, the chapter 4 status and GIIN (if applicable) of the entity of which the U.S. branch is a part; and

(E) Any other information, certifications, or statements as may be required by the form or accompanying instructions in addition to, or in lieu of, the information and certification described in this paragraph (e)(3)(v).

(vi) ***Reportable amounts.*** For purposes of chapter 3 of the Internal Revenue Code, a nonqualified intermediary, qualified intermediary, flow-through entity, and U.S. branch described in paragraph (b)(2)(iv) of this section (other than a U.S. branch that agrees to be treated as a U.S. person) must provide a withholding certificate and associated documentation and other information with respect to reportable amounts. For purposes of the regulations under chapter 3 of the Internal Revenue Code, the term reportable amount means an amount subject to withholding within the meaning of § 1.1441-2(a), bank deposit interest (including original issue discount) and similar types of deposit interest described in section 871(i)(2)(A) or 881(d) that are from sources within the United States, and any amount of interest or original issue discount from sources within the United States on the redemption of certain short-term obligations described in section 871(g)(1)(B) or 881(e). Reportable amounts shall not include amounts received on the sale or exchange (other than a redemption) of an obligation described in section 871(g)(1)(B) or 881(e) that is effected at an office outside the United States. See § 1.6045-1(g)(3) to determine whether a sale is effected at an office outside the United States. Reportable amounts also do not include payments with respect to deposits with banks and other financial institutions that remain on deposit for a period of two weeks or less, to amounts of original issue discount arising from a sale and repurchase transaction that is completed within a period of two weeks or less, or to amounts described in § 1.6049-5(b)(7), (10) or (11) (relating to certain obligations issued in bearer form). While short-term OID and bank deposit interest are not subject to withholding under chapter 3 of the Internal Revenue Code, such amounts may be subject to information reporting under section 6049 if paid to a U.S. person who is not an exempt recipient described in § 1.6049-4(c)(1)(ii) and to backup withholding under section 3406 in the absence of documentation. See § 1.6049-5(d)(3)(iii) for applicable procedures when such amounts are paid to a foreign intermediary.

(4) ***Applicable rules.*** The provisions in this paragraph (e)(4) describe procedures applicable to withholding certificates on Form W-8 or Form 8233 (or a substitute form) or documentary evidence furnished to establish foreign status. These provisions do not apply to Forms W-9 (or their substitutes). For corresponding provisions regarding Form W-9 (or a substitute form), see section 3406 and the regulations under that section.

(i) ***Who may sign the certificate*** —

(A) ***In general.*** A withholding certificate (including an acceptable substitute) may be signed by any person authorized to sign a declaration under penalties of perjury on behalf of the person whose name is on the certificate as provided in section 6061 and the regulations under that section (relating to who may sign generally for an individual, estate, or trust, which includes certain agents who may sign returns and other documents), section 6062 and the regulations under that section (relating to who may sign corporate returns), and

section 6063 and the regulations under that section (relating to who may sign partnership returns). A person authorized to sign a withholding certificate includes an officer or director of a corporation, a partner of a partnership, a trustee of a trust, an executor of an estate, any foreign equivalent of the former titles, and any other person that has been provided written authorization by the individual or entity named on the certificate to sign documentation on such person's behalf.

(B) ***Electronic signatures.*** A withholding agent, regardless of whether the withholding agent has established an electronic system pursuant to paragraph (e)(4)(iv)(A) or (e)(4)(iv)(C) of this section, may accept a withholding certificate with an electronic signature, provided the electronic signature meets the requirements of paragraph (e)(4)(iv)(B)(*3*)(*ii*) of this section. In addition, the withholding certificate must reasonably demonstrate to the withholding agent that the form has been electronically signed by the recipient identified on the form (or a person authorized to sign for the recipient). For example, a withholding agent may treat as signed for purposes of the requirements for a valid withholding certificate, a withholding certificate that has in the signature block the name of the person authorized to sign, a time and date stamp, and a statement that the certificate has been electronically signed. However, a withholding agent may not treat a withholding certificate with a typed name in the signature line and no other information as signed for purposes of the requirements for a valid withholding certificate. A withholding agent may also rely upon, in addition to the contents of a withholding certificate, other documentation or information it has collected to support that a withholding certificate was electronically signed by the recipient identified on the form (or other person authorized to sign for the recipient), provided that the withholding agent does not have actual knowledge that the documentation or information is incorrect.

(ii) ***Period of validity*** —

(A) ***General rule*** —

(*1*) ***Withholding certificates and documentary evidence.*** Except as provided otherwise in paragraphs (e)(4)(ii)(B) and (C) of this section and this paragraph (e)(4)(ii)(A), a withholding certificate described in paragraph (e)(2)(i) of this section, or a certificate described in § 1.871-14(c)(2)(v) (furnished to qualify interest as portfolio interest for purposes of sections 871(h) and 881(c)), will remain valid until the earlier of the last day of the third calendar year following the year in which the withholding certificate is signed or the day that a change in circumstances occurs that makes any information on the certificate incorrect. For example, a withholding certificate signed on September 30, 2015, remains valid through December 31, 2018, unless circumstances change that make the information on the form no longer correct. Documentary evidence described in § 1.6049-5(c)(1) provided to establish a payee's foreign status shall remain valid until the last day of the third calendar year following the year in which the documentary evidence is provided to the withholding agent except as provided in paragraph (e)(4)(ii)(B) of this section; however, if such documentary evidence contains an expiration date, it may be treated as valid until that expiration date if doing so would provide a longer period of validity than the three-year period. Additionally, a withholding certificate or documentary evidence with a period of validity that is valid on December 31, 2013, will not be treated as invalid based solely on the period described in this paragraph (e)(4)(ii) before January 1, 2015. Notwithstanding the validity periods prescribed by this paragraph

(e)(4)(ii)(A) and paragraphs (e)(4)(ii)(B) and (C) of this section, a withholding certificate and documentary evidence will cease to be valid if a change in circumstances makes the information on the documentation incorrect.

(*2*) ***Documentary evidence for treaty claims and treaty statements.*** Documentary evidence described in § 1.1441-6(c)(3) or (4) shall remain valid until the last day of the third calendar year following the year in which the documentary evidence is provided to the withholding agent, except as provided in paragraph (e)(4)(ii)(B) of this section. A statement regarding entitlement to treaty benefits described in § 1.1441-6(c)(5) (treaty statement) shall remain valid until the last day of the third calendar year following the year in which the treaty statement is provided to the withholding agent except as provided in this paragraph (e)(4)(ii)(A)(*2*). A treaty statement provided by an entity that identifies a limitation on benefits provision for a publicly traded corporation shall not expire at the time provided in the preceding sentence if a withholding agent determines, based on publicly available information at each time for which the treaty statement would otherwise be renewed, that the entity is publicly traded. Notwithstanding the second sentence of this paragraph (e)(4)(ii)(A)(*2*), a treaty statement provided by an entity that identifies a limitation on benefits provision for a government or tax-exempt organization (other than a tax-exempt pension trust or pension fund) shall remain valid indefinitely. Notwithstanding the validity periods (or exceptions thereto) prescribed in this paragraph (e)(4)(ii)(A)(*2*), a treaty statement will cease to be valid if a change in circumstances makes the information on the statement unreliable or incorrect. For accounts opened and treaty statements obtained prior to January 6, 2017 (including those from publicly traded corporations, governments, and tax-exempt organizations), the treaty statement will expire January 1, 2020.

(B) ***Indefinite validity period.*** Notwithstanding paragraph (e)(4)(ii)(A) of this section, the certificates (or parts of certificates) and documentary evidence described in paragraphs (e)(4)(ii)(B)(*1*) through (*11*) of this section shall remain valid until a change in circumstances makes the information on the documentation incorrect under paragraph (e)(4)(ii)(D)(*3*). See, however, § 1.1471-3(c)(6)(ii) for when a withholding certificate or documentary evidence remains valid (or is subject to renewal) when also provided with respect to a withholdable payment made to an entity (including an intermediary) for purposes of whether a withholding agent may continue to rely on the entity's claim of chapter 4 status. Additionally, the provisions of paragraphs (e)(4)(ii)(B)(*1*), (*2*), and (*11*) of this section do not apply to documentary evidence or a withholding certificate furnished prior to July 1, 2014. (For documentary evidence or a withholding certificate furnished after December 31, 2000, and before July 1, 2014, see this section as in effect and contained in 26 CFR part 1, as revised April 1, 2013.)

(*1*) A beneficial owner withholding certificate (other than the portion of the certificate making a claim for treaty benefits) and documentary evidence supporting a claim of foreign status when both are provided together by an individual claiming foreign status, if the withholding agent does not have a current U.S. residence address or U.S. mailing address for the payee, does not have one or more current U.S. telephone numbers that are the only telephone numbers the withholding agent has for the payee, and, for a payment described in § 1.6049-5(c)(1), the withholding agent has not been provided standing instructions to make a payment to an account in the

United States for the obligation. For purposes of the preceding sentence, a beneficial owner withholding certificate and documentary evidence supporting the individual's claim of foreign status will be treated as provided together if they are provided within 30 days of each other, regardless of which the withholding agent receives first.

(*2*) A beneficial owner withholding certificate (other than the portion of the certificate making a claim for treaty benefits) and documentary evidence provided by an entity supporting the entity's claim of foreign status, if both are received by the withholding agent before the validity period of either the withholding certificate or the documentary evidence would otherwise expire under paragraph (e)(4)(ii)(A) of this section. See, however, § 1.1471-3(c)(6)(ii) for rules regarding indefinite validity for chapter 4 purposes.

(*3*) A beneficial owner withholding certificate provided by an entity claiming status as a tax-exempt entity under section 501(c) that is not a foreign private foundation under section 509, provided that the withholding agent reports at least one payment annually to the entity under § 1.1461-1(c).

(*4*) A certificate described in paragraph (e)(3)(ii) of this section (a qualified intermediary withholding certificate) but not including the withholding certificates, documentary evidence, statements, or other information associated with the certificate.

(*5*) A certificate described in paragraph (e)(3)(iii) of this section (a nonqualified intermediary certificate), but not including the withholding certificates, documentary evidence, statements, or other information associated with the certificate.

(*6*) A certificate described in paragraph (e)(3)(v) of this section (a U.S. branch (including a territory financial institution) withholding certificate that is not provided by the beneficial owner), but not including the withholding certificates, documentary evidence, statements, or other information associated with the certificate.

(*7*) A certificate furnished by a person representing to be an integral part of a foreign government (within the meaning of § 1.892-2T(a)(2)) in accordance with § 1.1441-8(b), or by a person representing to be a foreign central bank of issue (within the meaning of § 1.861-2(b)(4)) or the Bank for International Settlements in accordance with § 1.1441-8(c)(1).

(*8*) A withholding certificate provided by a withholding foreign trust described in § 1.1441-5(e)(5)(v).

(*9*) A certificate described in § 1.1441-5(c)(2)(iv) (dealing with a certificate from a person representing to be a withholding foreign partnership).

(*10*) A certificate described in § 1.1441-5(c)(3)(iii) (a withholding certificate from a nonwithholding foreign partnership) or in § 1.1441-5(e)(5)(iii) (a withholding certificate of a foreign simple or foreign grantor trust) but not including the withholding certificates, documentary evidence, statements, or other information required to be associated with the certificate; and

(*11*) Documentary evidence that is not generally renewed or amended (such as a certificate of incorporation).

(C) ***Withholding certificate for effectively connected income.*** Notwithstanding paragraph (e)(4)(ii)(B) of this section, the period of validity of a withholding certificate furnished to a withholding agent to claim a reduced rate of withholding for income that is effectively connected with the conduct of a trade or business within the United States shall be limited to the three-year period described in paragraph (e)(4)(ii)(A) of this section.

(D) ***Change in circumstances*** —

(*1*) ***Defined.*** A certificate or documentation becomes invalid from the date of a change in circumstances affecting the correctness of the certificate or documentation to the extent provided in this paragraph (e)(4)(ii)(D). For purposes of this section, a person is considered to have a change in circumstances only if such change affects the person's claim of chapter 3 status. Thus, for example, a change of address is not a change in circumstances with respect to a claim of only foreign status under this paragraph (e)(4)(ii)(D) if the change is to another address outside the United States, but is a change in circumstances if the change is to an address in the United States. However, see paragraph (e)(2)(ii)(B)(*1*) of this section for a special rule for a change of address for purposes of reliance on a foreign TIN (or a reasonable explanation for the absence of a foreign TIN) included on a beneficial owner withholding certificate.

(*2*) ***Obligation to notify a withholding agent of a change in circumstances.*** If a change in circumstances makes any information on a certificate or other documentary evidence incorrect, then the person whose name is on the certificate or other documentation must inform the withholding agent within 30 days of the change and furnish a new certificate or new documentary evidence. If an intermediary (including a U.S. branch or territory financial institution described in paragraph (b)(2)(iv)(A) of this section) or a flow-through entity becomes aware that a certificate or other appropriate documentation it has furnished to the person from whom it collects a payment is no longer valid because of a change in the circumstances of the person who issued the certificate or furnished the other appropriate documentation, then the intermediary or flow-through entity must notify the person from whom it collects the payment of the change of circumstances within 30 days of the date that it knows or has reason to know of the change in circumstances. It must also obtain a new withholding certificate or new appropriate documentation to replace the existing certificate or documentation the validity of which has expired due to the change in circumstances to continue to treat the person who provided the certificate or documentary evidence under its claimed chapter 3 status.

(*3*) ***Withholding agent's obligation with respect to a change in circumstances.*** A withholding agent may rely on a certificate without having to inquire into possible changes of circumstances that may affect the validity of the statement, unless it knows or has reason to know that circumstances have changed, as permitted under paragraph (e)(4)(viii) of this section. A withholding agent is required to notify any person providing documentary evidence (in lieu of a withholding certificate) of the person's obligation to notify the withholding agent of a change in circumstances. However, a withholding agent may choose to apply the provisions of paragraph (b)(3)(iv) of this section regarding the 90-day grace period as of that date while awaiting a new certificate or documentation or while seeking information regarding changes, or suspected changes, in the person's circumstances. A withholding agent

may also require a new certificate at any time prior to a payment, even though the withholding agent has no actual knowledge or reason to know that any information stated on the certificate has changed.

(iii) ***Retention of documentation.*** A withholding agent must retain each withholding certificate and other documentation for purposes of this section for as long as it may be relevant to the determination of the withholding agent's tax liability under section 1461 and § 1.1461-1. A withholding agent may retain a withholding certificate or documentary evidence that is an original, certified copy, or a scanned document (as described in paragraph (e)(4)(iv)(D) of this section). A withholding agent may also retain a withholding certificate by other means (such as microfiche) that allows a reproduction of the document provided that the withholding agent has recorded its receipt of a form described in the preceding sentence and is able to produce a hard copy of the form. See § 1.6049-5(c)(1) for the requirements for maintaining documentary evidence that also apply for purposes of determining a payee's U.S. or foreign status for purposes of chapter 3.

(iv) ***Electronic transmission of information*** —

(A) ***In general.*** A withholding agent may establish a system for a beneficial owner or payee to electronically furnish a Form W-8, an acceptable substitute Form W-8, or such other form as the IRS may prescribe. The system must meet the requirements described in paragraph (e)(4)(iv)(B) of this section. See paragraph (e)(4)(iv)(D) of this section for other cases in which a Form W-8 (or other documentation) may be furnished electronically.

(B) ***Requirements*** —

(*1*) ***In general.*** The electronic system must ensure that the information received is the information sent, and must document all occasions of user access that result in the submission renewal, or modification of a Form W-8. In addition, the design and operation of the electronic system, including access procedures, must make it reasonably certain that the person accessing the system and furnishing Form W-8 is the person named in the Form.

(*2*) ***Same information as paper Form W-8.*** The electronic transmission must provide the withholding agent or payor with exactly the same information as the paper Form W-8.

(*3*) ***Perjury statement and signature requirements.*** The electronic transmission must contain an electronic signature by the person whose name is on the Form W-8 and the signature must be under penalties of perjury in the manner described in this paragraph (e)(4)(iv)(B)(*3*).

(*i*) ***Perjury statement.*** The perjury statement must contain the language that appears on the paper Form W-8. The electronic system must inform the person whose name is on the Form W-8 that the person must make the declaration contained in the perjury statement and that the declaration is made by signing the Form W-8. The instructions and the language of the perjury statement must immediately follow the person's certifying statements and immediately precede the person's electronic signature.

(*ii*) ***Electronic signature.*** The act of the electronic signature must be effected by the person whose name is on the electronic Form W-8. The signature must also authenticate and verify the submission. For this purpose, the terms *authenticate*

and *verify* have the same meanings as they do when applied to a written signature on a paper Form W-8. An electronic signature can be in any form that satisfies the foregoing requirements. The electronic signature must be the final entry in the person's Form W-8 submission.

(*4*) ***Requests for electronic Form W-8 data.*** Upon request by the Internal Revenue Service during an examination, the withholding agent must supply a hard copy of the electronic Form W-8 and a statement that, to the best of the withholding agent's knowledge, the electronic Form W-8 was filed by the person whose name is on the form. The hard copy of the electronic Form W-8 must provide exactly the same information as, but need not be identical to, the paper Form W-8.

(C) ***Form 8233.*** A withholding agent may establish a system for a beneficial owner or payee to provide Form 8233 electronically, provided the system meets the requirements of paragraph (e)(4)(iv)(B)(*1*) through (*4*) of this section (replacing “Form W-8” with “Form 8233” each place it appears).

(D) ***Forms and documentary evidence received by facsimile or email.*** A withholding agent may rely upon an otherwise valid Form W-8 (or documentary evidence) received by facsimile or a form or document scanned and received electronically, such as, for example, an image embedded in an email or as a Portable Document Format (.pdf) attached to an email. A withholding agent may not rely on a form or document received by such means, however, if the withholding agent knows that the form or document was transmitted to the withholding agent by a person not authorized to do so by the person required to execute the form. A withholding agent may establish other procedures to authenticate and verify a form or document sent by such means and may reject any form or document that fails to satisfy the requirements of such procedures. A taxpayer may apply this paragraph (e)(4)(iv)(D) to all of its open tax years, including tax years that are currently under examination by the IRS.

(E) ***Third party repositories.*** A withholding certificate will be considered furnished for purposes of this section (including paragraph (e)(1)(ii)(A)(*1*) of this section) by the person providing the certificate, and a withholding agent may rely on an otherwise valid withholding certificate received electronically from a third party repository, if the withholding certificate was uploaded or provided to a third party repository and there are processes in place to ensure that the withholding certificate can be reliably associated with a specific request from the withholding agent and a specific authorization from the person providing the certificate (or an agent of the person providing the certificate) for the withholding agent making the request to receive the withholding certificate. For purposes of the preceding sentence, a withholding agent must be able to reliably associate each payment with a specific request and authorization except when the withholding agent is permitted to rely on the withholding certificate on an obligation-by- obligation basis or as otherwise permitted under paragraph (e)(4)(ix) of this section (treating the withholding certificate as obtained by the withholding agent and furnished by a customer for purposes of this paragraph (e)(4)(iv)(E)). A third party repository may also be used for withholding statements, and a withholding agent may also rely on an otherwise valid withholding statement, if the intermediary providing the withholding certificates and withholding statement through the repository provides an updated withholding statement in the event of any change in the information previously provided (for example, a change in the composition of a partnership or a change in the allocation of payments to the partners)

and ensures there are processes in place to update withholding agents when there is a new withholding statement (and withholding certificates, as necessary) in the event of any change that would affect the validity of the prior withholding certificates or withholding statement. A third party repository, for purposes of this paragraph, is an entity that maintains withholding certificates (including certificates accompanied by withholding statements) but is not an agent of the applicable withholding agent or the person providing the certificate.

(F) ***Examples.*** This paragraph contains examples to illustrate the rules of paragraph (e)(4)(iv)(E) of this section.

(*1*) ***Example 1.*** A, a foreign corporation, completes a Form W-8BEN-E and a Form W-8ECI and uploads the forms to X, a third party repository (X is an entity that maintains withholding certificates on an electronic data aggregation site). WA, a withholding agent, enters into a contract with A under which it will make payments to A of U.S. source FDAP that are not effectively connected with A's conduct of a trade or business in the United States. X is not an agent of WA or A. Before receiving a payment, A sends WA an email with a link that authorizes WA to access A's Form W-8BEN-E on X's system. The link does not authorize WA to access A's Form W-8ECI. X's system meets the requirements of a third party repository, and WA can treat the Form W-8BEN-E as furnished by A.

(*2*) ***Example 2.*** The facts are the same as Example 1 of this paragraph (e)(4)(iv)(F), and WA and A enter into a second contract under which WA will make payments to A that are effectively connected with A's conduct of a trade or business in the United States. A sends WA an email with a link that gives WA access to A's Form W-8ECI on X's system. The link in this second email does not give WA access to A's Form W-8BEN-E. A's email also clearly indicates that the link is associated with payments received under the second contract. X's system meets the requirements of a third party repository, and WA can treat the Form W-8ECI as furnished by A.

(*3*) ***Example 3.*** FP is a foreign partnership that is acting on behalf of its partners, A and B, who are both foreign individuals. FP completes a Form W-8IMY and uploads it to X, a third party repository. FP also uploads Forms W-8BEN from both A and B and a valid withholding statement allocating 50% of the payment to A and 50% to B. WA is a withholding agent that makes payments to FP as an intermediary for A and B. FP sends WA an email with a link to its Form W-8IMY on X's system. The link also provides WA access to FP's withholding statement and A's and B's Forms W-8BEN. FP also has processes in place that ensure it will provide a new withholding statement or withholding certificate to X's repository in the event of a change in the information previously provided that affects the validity of the withholding statement and that ensure it will update WA if there is a new withholding statement. X's system meets the requirements of a third party repository, and WA can treat the Form W-8IMY (and withholding statement) as furnished by FP. In addition, because FP is acting as an agent of A and B, the beneficial owners, WA can treat the Forms W-8BEN for A and B as furnished by A and B.

(v) ***Additional procedures for certificates provided electronically.*** The IRS may prescribe procedures in a revenue procedure (see § 601.601(d)(2) of this chapter) or may issue other appropriate guidance (including a written directive for revenue agents) to further prescribe the conditions

by which the IRS will determine that a system developed by a withholding agent to permit beneficial owners and payees to provide Forms W-8 electronically satisfies the requirements of paragraph (e)(4)(iv)(B) of this section.

(vi) ***Acceptable substitute form.*** A withholding agent may substitute its own form instead of an official Form W-8 or 8233 (or such other official form as the IRS may prescribe). Such a substitute for an official form will be acceptable if it contains provisions that are substantially similar to those of the official form, it contains the same certifications relevant to the transactions as are contained on the official form and these certifications are clearly set forth, and the substitute form includes a signature-under-penalties-of-perjury statement identical to the one stated on the official form. The substitute form is acceptable even if it does not contain all of the provisions contained on the official form, so long as it contains those provisions that are relevant to the transaction for which it is furnished (including those required for purposes of chapter 4). For example, a withholding agent that pays no income for which treaty benefits are claimed may develop a substitute form that is identical to the official form, except that it does not include information regarding claims of benefits under an income tax treaty. Similarly, a withholding agent that is not required to determine the chapter 4 status of a payee providing a form may develop a substitute form that does not contain chapter 4 statuses. A withholding agent who uses a substitute form must furnish instructions relevant to the substitute form only to the extent and in the manner specified in the instructions to the official form. A withholding agent may use a substitute form that is written in a language other than English and may accept a form that is filled out in a language other than English, but the withholding agent must make available an English translation of the form and its contents to the IRS upon request. A withholding agent may refuse to accept a certificate from a payee or beneficial owner (including the official Form W-8 or 8233) if the certificate provided is not an acceptable substitute form provided by the withholding agent, but only if the withholding agent furnishes the payee or beneficial owner with an acceptable substitute form within 5 business days of receipt of an unacceptable form from the payee or beneficial owner. In that case, the substitute form is acceptable only if it contains a notice that the withholding agent has refused to accept the form submitted by the payee or beneficial owner and that the payee or beneficial owner must submit the acceptable form provided by the withholding agent in order for the payee or beneficial owner to be treated as having furnished the required withholding certificate.

(vii) ***Requirement of taxpayer identifying number.*** A TIN must be stated on a withholding certificate when required by this paragraph (e)(4)(vii) for the withholding certificate to be valid for purposes of this section. A TIN is required to be stated on—

(A) A withholding certificate on which a beneficial owner is claiming the benefit of a reduced rate under an income tax treaty (other than for amounts described in § 1.1441-6(c)(2) or amounts for which a foreign tax identifying number has been provided, as described in § 1.1441-6(c)(2));

(B) A withholding certificate on which a beneficial owner is claiming exemption from withholding because income is effectively connected with a U.S. trade or business;

(C) A withholding certificate on which a beneficial owner is claiming exemption from withholding under section 871(f) for certain annuities received under qualified plans;

(D) A withholding certificate on which a beneficial owner is claiming an exemption based solely on a foreign organization's claim of tax exempt status under section 501(c) or private foundation status (however, a TIN is not required from a foreign private foundation that is subject to the 4-percent tax under section 4948(a) on income if that income would be exempt from withholding but for section 4948(a) (e.g., portfolio interest));

(E) A withholding certificate from a person representing to be a qualified intermediary described in paragraph (e)(5)(ii) of this section;

(F) A withholding certificate from a person representing to be a withholding foreign partnership or a withholding foreign trust;

(G) A withholding certificate provided by a foreign organization that is described in section 501(c);

(H) A withholding certificate from a person representing to be a U.S. branch or territory financial institution described in paragraph (b)(2)(iv) of this section; and

(I) A withholding certificate provided by an entity acting as a qualified securities lender, as defined for purposes of chapter 3, with respect to a substitute dividend paid in a securities lending or similar transaction.

(viii) ***Reliance rules.*** A withholding agent may rely on the information and certifications stated on withholding certificates or other documentation without having to inquire into the veracity of this information or certification, unless it has actual knowledge or reason to know that the information or certification is incorrect. In the case of amounts described in § 1.1441-6(c)(2), a withholding agent described in § 1.1441-7(b)(3) has reason to know that the information or certifications on a certificate are incorrect only to the extent provided in § 1.1441-7(b)(4) through (6). See § 1.1441-6(b)(1) for reliance on representations regarding eligibility for a reduced rate under an income tax treaty. Paragraphs (e)(4)(viii)(A) and (B) of this section provide examples of such reliance.

(A) ***Classification.*** A withholding agent may rely on the claim of entity classification indicated on the withholding certificate that it receives from or for the beneficial owner, unless it has actual knowledge or reason to know that the classification claimed is incorrect. A withholding agent may not rely on a person's claim of classification other than as a corporation if the name of the corporation indicates that the person is a per se corporation described in § 301.7701-2(b)(8)(i) of this chapter unless the certificate contains a statement that the person is a grandfathered per se corporation described in § 301.7701-2(b)(8) of this chapter and that its grandfathered status has not been terminated. In the absence of reliable representation or information regarding the classification of the payee or beneficial owner, see § 1.1441-1(b)(3)(ii) for applicable presumptions.

(B) ***Status of payee as an intermediary or as a person acting for its own account.*** A withholding agent may rely on the type of certificate furnished as indicative of the payee's status as an intermediary or as an owner, unless the withholding agent has actual knowledge or reason to know otherwise. For example, a withholding agent that receives a beneficial owner withholding certificate from a foreign financial institution may treat the institution as the beneficial owner, unless it has information in its records that would indicate otherwise or the certificate contains information that is not consistent with beneficial owner status (*e.g.,* sub-account numbers that do not correspond to accounts maintained by the

withholding agent for such person or names of one or more persons other than the person submitting the withholding certificate). If the financial institution also acts as an intermediary, the withholding agent may request that the institution furnish two certificates, *i.e.,* a beneficial owner certificate described in paragraph (e)(2)(i) of this section for the amounts that it receives as a beneficial owner, and an intermediary withholding certificate described in paragraph (e)(3)(i) of this section for the amounts that it receives as an intermediary. In the absence of reliable representation or information regarding the status of the payee as an owner or as an intermediary, see paragraph (b)(3)(v)(A) for applicable presumptions.

(C) ***Reliance on a prior version of a withholding certificate.*** Upon the issuance by the IRS of an updated version of a withholding certificate, a withholding agent may continue to accept the prior version of the withholding certificate until the later of six full months after the revision date shown on the updated withholding certificate or the end of the calendar year the updated withholding certificate is issued, unless the IRS has issued guidance that indicates that the period for accepting a prior version is shortened or extended (including in the instructions to the form), such as when there is a new payee status required to be established using the form. A withholding agent may continue to rely upon a previously signed prior version of the withholding certificate until its period of validity expires.

(ix) ***Certificates to be furnished to withholding agent for each obligation unless exception applies.*** Unless otherwise provided in paragraphs (e)(4)(ix)(A) through (D) of this section, a withholding agent that is a financial institution with which a customer may open an account shall obtain a withholding certificate or documentary evidence on an obligation-by-obligation basis and may not rely upon such documentation collected by another person or another branch of the withholding agent.

(A) ***Exception for certain branch or account systems or system maintained by agent.*** A withholding agent may rely on a withholding certificate or documentary evidence furnished by a customer as part of a single branch system, universal account system, or shared account system described in § 1.1471-3(c)(8) (substituting the term chapter 3 status for chapter 4 status each place it appears in that paragraph). Furthermore, a withholding agent may rely on a shared documentation system maintained by an agent as described in § 1.1471-3(c)(9)(i) (also substituting the term chapter 3 status for chapter 4 status each place it appears in that paragraph).

(B) ***Reliance on certification provided by introducing brokers*** —

(*1*) ***In general.*** A withholding agent may rely on the certification of a broker indicating the broker's determination of a payee's chapter 3 status and that the broker holds a valid beneficial owner withholding certificate described in paragraph (e)(2)(i) of this section or other appropriate documentation for that beneficial owner with respect to any readily tradable instrument, as defined in § 31.3406(h)-1(d) of this chapter, if the broker is a United States person (including a U.S. branch treated as a U.S. person under paragraph (b)(2)(iv) of this section) that is acting as the agent of a beneficial owner. A withholding agent may also rely on a certification described in the preceding sentence that is provided by a qualified intermediary that makes payments to beneficial owners that it receives from the withholding agent. The certification must be in writing or in electronic form and contain all of the information required of a nonqualified intermediary under paragraphs (e)(3)(iv)(B) and (C) of this section. If a

broker chooses to use this paragraph (e)(4)(ix)(B), that broker will be solely responsible for applying the rules of § 1.1441-7(b) to the withholding certificates or other appropriate documentation and shall be liable for any underwithholding as a result of the broker's failure to apply such rules. See § 1.1471-3(c)(9)(iii) for a similar allowance that applies to a broker's determination of a payee's chapter 4 status for purposes of chapter 4. For purposes of this paragraph (e)(4)(ix)(B), the term *broker* means a person treated as a broker under § 1.6045-1(a).

(2) ***Example.*** The following example illustrates the rules of this paragraph (e)(4)(x)(B) with respect to a U.S. broker:

Example. SCO is a U.S. securities clearing organization that provides clearing services for correspondent broker, CB, a U.S. corporation. Pursuant to a fully disclosed clearing agreement, CB fully discloses the identity of each of its customers to SCO. Part of SCO's clearing duties include the crediting of income and gross proceeds of readily tradable instruments (as defined in § 31.3406(h)-1(d)) to each customer's account. For each disclosed customer that is a foreign beneficial owner, CB provides SCO with information required under paragraphs (e)(3)(iv)(B) and (C) of this section that is necessary to apply the correct rate of withholding and to file Forms 1042-S. SCO may use the representations and beneficial owner information provided by CB to determine the proper amount of withholding and to file Forms 1042-S. CB is responsible for determining the validity of the withholding certificates or other appropriate documentation under § 1.1441-1(b).

(C) ***Reliance on documentation and certifications provided between principals and agents*** —

(1) ***Withholding agent as agent.*** A withholding agent that acts on behalf of a principal may rely upon documentation (or copies of documentation) obtained from the principal, and, with respect to a principal that is a U.S. withholding agent, a qualified intermediary (when acting as such for determining a payee's status), or a withholding foreign partnership or withholding foreign trust with respect to a partner, owner, or beneficiary in the partnership or trust, the withholding agent may rely upon certification provided by the principal for purposes of determining a payee's chapter 3 status. Thus an agent (such as a paying agent or transfer agent) may not rely upon a certification provided by a principal that is a participating FFI but is not also a qualified intermediary, withholding foreign partnership, or withholding foreign trust for purposes of this section, even though it may rely on the certification when provided solely for purposes of chapter 4 under § 1.1471-3(c)(9)(iv).

(2) ***Withholding agent as principal.*** A withholding agent may also rely on documentation collected by an agent of the withholding agent in order to fulfill its chapter 3 obligations because such agent's actions are imputed to the principal (the withholding agent). For example, a withholding agent may contract an agent to collect Forms W-8 from account holders on its behalf, but the withholding agent remains liable for any tax liability resulting from a failure of the agent to comply with the requirements of chapter 3.

(D) ***Reliance upon documentation for accounts acquired in merger or bulk acquisition for value.*** A withholding agent that acquires an account from a predecessor or transferor in a merger or bulk acquisition of accounts for value is permitted to rely upon valid documentation (or

copies of valid documentation) collected by the predecessor or transferor for determining the chapter 3 status of an account holder of such an account. In addition, a withholding agent that acquires an account in a merger or bulk acquisition of accounts for value, other than a related party transaction, from a U.S. withholding agent (or a qualified intermediary when the withholding agent is also a qualified intermediary) may also rely upon the predecessor's or transferor's determination of the account holder's chapter 3 status for a transition period of the lesser of six months from the date of the merger or until the acquirer knows that the claim of entity classification and status is inaccurate or a change in circumstances occurs with respect to the account. At the end of the transition period, the acquirer will be permitted to rely upon the predecessor's determination as to the chapter 3 status of the account holder only if the documentation that the acquirer has for the account holder, including documentation obtained from the predecessor or transferor, supports the status claimed. An acquirer that discovers at the end of the transition period that the chapter 3 status assigned by the predecessor or transferor to the account holder was incorrect and has not withheld as it would have been required to but for its reliance upon the predecessor's determination, will be required to withhold on future payments, if any, made to the account holder the amount of tax that should have been withheld during the transition period but for the erroneous classification as to the account holder's status. For purposes of this paragraph (e)(4)(ix)(D), a related party transaction is a merger or sale of accounts in which the acquirer is in the same expanded affiliated group, within the meaning of § 1.1471-5(i)(2), as the predecessor or transferor either prior to or after the merger or acquisition or the predecessor or transferor (or shareholders of the predecessor or transferor) obtain a controlling interest in the acquirer or in a newly formed entity created for purposes of the merger or acquisition. See § 1.1471-3(c)(9)(v) for a similar reliance rule that applies for purposes of chapter 4.

(5) ***Qualified intermediaries*** —

(i) ***In general.*** A qualified intermediary, as defined in paragraph (e)(5)(ii) of this section, may furnish a qualified intermediary withholding certificate to a withholding agent. The withholding certificate provides certifications on behalf of other persons for the purpose of claiming and verifying reduced rates of withholding under section 1441 or 1442 and for the purpose of reporting and withholding under other provisions of the Code, such as the provisions under chapter 61 and section 3406 (and the regulations under those provisions), or for the qualified derivative dealer (if applicable). Furnishing such a certificate is in lieu of transmitting to a withholding agent withholding certificates or other appropriate documentation for the persons for whom the qualified intermediary receives the payment, including interest holders in a qualified intermediary that is fiscally transparent under the regulations under section 894. Although the qualified intermediary is required to obtain withholding certificates or other appropriate documentation from beneficial owners, payees, or interest holders pursuant to its agreement with the IRS, it is generally not required to attach such documentation to the intermediary withholding certificate. Notwithstanding the preceding sentence, a qualified intermediary must provide a withholding agent with the Forms W-9, or disclose the names, addresses, and taxpayer identifying numbers, if known, of those U.S. non-exempt recipients for whom the qualified intermediary receives reportable amounts (within the meaning of paragraph (e)(3)(vi) of this section) to the extent required in the qualified intermediary's agreement with the IRS. When a qualified intermediary is acting as a qualified derivatives dealer, the withholding certificate entitles a withholding agent to make payments with respect to potential section 871(m) transactions that are not underlying securities and dividend equivalent payments on

underlying securities to the qualified derivatives dealer free of withholding. A withholding agent is required to withhold on all other U.S. source FDAP payments made to a qualified derivatives dealer as required by applicable law. Paragraph (e)(6) of this section contains detailed rules prescribing the circumstances in which a qualified intermediary can act as a qualified derivatives dealer. A person may claim qualified intermediary status before an agreement is executed with the IRS if it has applied for such status and the IRS authorizes such status on an interim basis under such procedures as the IRS may prescribe.

(ii) ***Definition of qualified intermediary.*** With respect to a payment to a foreign person, the term qualified intermediary means a person that is a party to a withholding agreement with the IRS where such person is—

(A) A foreign financial institution that is a participating FFI (including a reporting Model 2 FFI), a registered deemed-compliant FFI (including a reporting Model 1 FFI), an FFI treated as a deemed-compliant FFI under an applicable IGA that is subject to due diligence and reporting requirements with respect to its U.S. accounts similar to those applicable to a registered deemed-compliant FFI under § 1.1471-5(f)(1), excluding a U.S. branch of any of the foregoing entities, or any other category of FFI identified in a qualified intermediary withholding agreement as eligible to act as a qualified intermediary;

(B) A foreign branch or office of a U.S. financial institution or a foreign branch or office of a U.S. clearing organization that is either a reporting Model 1 FFI or agrees to the reporting requirements applicable to a participating FFI with respect to its U.S. accounts;

(C) A foreign person that is a home office or has a branch that is an eligible entity as described in paragraph (e)(6)(ii) of this section, without regard to the requirement that the person be a qualified intermediary; or

(D) Any other person acceptable to the IRS.

(iii) ***Withholding agreement*** —

(A) ***In general.*** The IRS may, upon request, enter into a withholding agreement with a foreign person described in paragraph (e)(5)(ii) of this section pursuant to such procedures as the IRS may prescribe in published guidance (see § 601.601(d)(2) of this chapter). Under the withholding agreement, a qualified intermediary shall generally be subject to the applicable withholding and reporting provisions applicable to withholding agents and payors under chapters 3, 4, and 61 of the Code, section 3406, the regulations under those provisions, and other withholding provisions of the Code, except to the extent provided under the agreement.

(B) ***Terms of the withholding agreement.*** The withholding agreement shall specify the obligations of the qualified intermediary under chapters 3 and 4 including, for a qualified intermediary that is an FFI, the documentation, withholding, and reporting obligations required of a participating FFI or registered deemed-compliant FFI (including a reporting Model 1 FFI as defined in § 1.1471-1(b)(114)) with respect to each branch of the qualified intermediary other than a U.S. branch that is treated as a U.S. person under paragraph (b)(2)(iv)(A) of this section. The withholding agreement will specify the type of certifications and documentation upon which the qualified intermediary may rely to ascertain the classification (*e.g.,* corporation or partnership), status (*i.e.,* U.S. or foreign and chapter 4 status) of beneficial owners and payees who receive reportable amounts, reportable payments, and withholdable payments collected by the qualified intermediary

for purposes of chapters 3, 4, and 61, section 3406, and, if necessary, entitlement to the benefits of a reduced rate under an income tax treaty. The withholding agreement shall specify if, and to what extent, the qualified intermediary may assume primary withholding responsibility in accordance with paragraph (e)(5)(iv) of this section. It shall also specify the extent to which applicable return filing and information reporting requirements are modified so that, in appropriate cases, the qualified intermediary may report payments to the IRS on an aggregated basis, without having to disclose the identity of beneficial owners and payees. However, the qualified intermediary may be required to provide to the IRS the name and address of those foreign customers who benefit from a reduced rate under an income tax treaty pursuant to the withholding agreement for purposes of verifying entitlement to such benefits, particularly under an applicable limitation on benefits provision. Under the withholding agreement, a qualified intermediary may agree to act as an acceptance agent to perform the duties described in § 301.6109-1(d)(3)(iv)(A) of this chapter. The withholding agreement may specify the manner in which applicable procedures for adjustments for underwithholding and overwithholding, including refund procedures, apply to qualified intermediaries and the extent to which applicable procedures may be modified. In particular, a withholding agreement may allow a qualified intermediary to claim refunds of overwithheld amounts. In addition, the withholding agreement shall specify the manner in which the IRS will verify compliance with the agreement, including the time and manner for which a qualified intermediary will be required to certify to the IRS regarding its compliance with the withholding agreement (including its performance of a periodic review) and the types of information required to be disclosed as part of the certification. In appropriate cases, the IRS may require review procedures be performed by an approved reviewer (in addition to those performed as part of the periodic review) and may conduct a review of the reviewer's findings. The withholding agreement may include provisions for the assessment and collection of tax in the event that failure to comply with the terms of the withholding agreement results in the failure by the withholding agent or the qualified intermediary to withhold and deposit the required amount of tax. Further, the withholding agreement may specify the procedures by which amounts withheld are to be deposited, if different from the deposit procedures under the Code and applicable regulations. To determine whether to enter a withholding agreement and the terms of any particular withholding agreement, the IRS will consider the type of local know-your-customer laws and practices to which the entity is subject (if the entity is an FFI), as well as the extent and nature of supervisory and regulatory control exercised under the laws of the foreign country over the foreign entity.

(iv) ***Assignment of primary withholding responsibility.*** Any person (whether a U.S. person or a foreign person) who meets the definition of a withholding agent under § 1.1441-7(a) (for payments subject to chapter 3 withholding) and § 1.1473-1(d) (for withholdable payments) is required to withhold and deposit any amount withheld under §§ 1.1461-1(a) and 1.1474-1(b) and to make the returns prescribed by §§ 1.1461-1(b) and (c), and by 1.1474-1(c), and (d). Under its qualified intermediary withholding agreement, a qualified intermediary may, however, inform a withholding agent from which it receives a payment that it will assume the primary obligation to withhold, deposit, and report amounts under chapters 3 and 4 of the Code and/or under chapter 61 and section 3406 of the Code. For assuming withholding obligations as described in the previous sentence, a qualified intermediary that assumes primary withholding responsibility for payments made to an account under chapter 3 is also required to assume primary withholding responsibility under chapter 4 for payments made to the account that are withholdable

payments. Additionally, a qualified intermediary may represent that it assumes chapter 61 reporting and section 3406 obligations for a payment when the qualified intermediary meets the requirements of § 1.6049-4(c)(4)(i) or (ii) for the payment. If a withholding agent makes a payment of an amount subject to withholding under chapter 3, a reportable payment (as defined in section 3406(b)), or a withholdable payment to a qualified intermediary that represents to the withholding agent that it has assumed primary withholding responsibility for the payment, the withholding agent is not required to withhold on the payment. The withholding agent is not required to determine that the qualified intermediary actually performs its primary withholding responsibilities. A qualified intermediary that assumes primary withholding responsibility under chapters 3 and 4 or primary reporting and backup withholding responsibility under chapter 61 and section 3406 is not required to assume primary withholding responsibility for all accounts it has with a withholding agent but must assume primary withholding responsibility for all payments made to any one account that it has with the withholding agent.

(v) ***Withholding statement*** —

(A) ***In general.*** A qualified intermediary must provide each withholding agent from which it receives reportable amounts as a qualified intermediary with a written statement (the withholding statement) containing the information specified in paragraph (e)(5)(v)(B) of this section. A withholding statement is not required, however, if all of the information a withholding agent needs to fulfill its withholding and reporting requirements is contained in the withholding certificate. The qualified intermediary withholding agreement will require the qualified intermediary to include information in its withholding statement relating to withholdable payments for purposes of withholding under chapter 4 as described in paragraph (e)(5)(v)(C)(*2*) of this section. The withholding statement forms an integral part of the qualified intermediary's qualified intermediary withholding certificate, and the penalties of perjury statement provided on the withholding certificate shall apply to the withholding statement as well. The withholding statement may be provided in any manner, and in any form, to which qualified intermediary and the withholding agent mutually agree, including electronically. If the withholding statement is provided electronically, the statement must satisfy the requirements described in paragraph (e)(3)(iv) of this section (applicable to a withholding statement provided by a nonqualified intermediary). The withholding statement shall be updated as often as necessary for the withholding agent to meet its reporting and withholding obligations under chapters 3, 4, and 61 and section 3406. For purposes of this section, a withholding agent will be liable for tax, interest, and penalties in accordance with paragraph (b)(7) of this section to the extent it does not follow the presumption rules of paragraph (b)(3) of this section, §§ 1.1441-5(d) and (e)(6), and 1.6049-5(d) for a payment, or portion thereof, for which it does not have a valid withholding statement prior to making a payment.

(B) ***Content of withholding statement.*** The withholding statement must contain sufficient information for a withholding agent to apply the correct rate of withholding on payments from the accounts identified on the statement and to properly report such payments on Forms 1042-S and Forms 1099, as applicable. The withholding statement must—

(*1*) Designate those accounts for which the qualified intermediary acts as a qualified intermediary;

(2) Designate those accounts for which qualified intermediary assumes primary withholding responsibility under chapter 3 and chapter 4 of the Code and/or primary reporting and backup withholding responsibility under chapter 61 and section 3406;

(3) If applicable, designate those accounts for which the qualified intermediary is acting as a qualified securities lender with respect to a substitute dividend paid in a securities lending or similar transaction;

(4) If a qualified intermediary is acting as a qualified derivatives dealer, designate the accounts:

(i) For which the qualified derivatives dealer is receiving payments with respect to potential section 871(m) transactions or underlying securities as a qualified derivatives dealer;

(ii) For which the qualified derivatives dealer is receiving payments with respect to potential section 871(m) transactions (and that are not underlying securities) for which withholding is not required;

(iii) For which qualified derivatives dealer is receiving payments with respect to underlying securities for which withholding is required; and

(iv) If applicable, identifying the home office or branch that is treated as the owner for U.S. federal income tax purposes; and

(5) Provide information regarding withholding rate pools, as described in paragraph (e)(5)(v)(C) of this section.

(C) ***Withholding rate pools*** —

(1) ***In general.*** Except to the extent it has assumed both primary withholding responsibility under chapters 3 and 4 of the Code and primary Form 1099 reporting and backup withholding responsibility under chapter 61 and section 3406 with respect to a payment, a qualified intermediary shall provide as part of its withholding statement the chapter 3 withholding rate pool information that is required for the withholding agent to meet its withholding and reporting obligations under chapters 3 and 61 of the Code and section 3406. See, however, paragraph (e)(5)(v)(C)(2) of this section for when a qualified intermediary may provide a chapter 4 withholding rate pool (as described in paragraph (c)(48) of this section) with respect to a payment that is a withholdable payment. A chapter 3 withholding rate pool is a payment of a single type of income, determined in accordance with the categories of income reported on Form 1042-S, that is subject to a single rate of withholding paid to a payee that is a foreign person and for which withholding under chapter 4 does not apply. A chapter 3 withholding rate pool may be established by any reasonable method on which the qualified intermediary and a withholding agent agree (*e.g.,* by establishing a separate account for a single chapter 3 withholding rate pool, or by dividing a payment made to a single account into portions allocable to each chapter 3 withholding rate pool). A qualified intermediary may include a separate pool for account holders that are U.S. exempt recipients or may include such accounts in a chapter 3 withholding rate pool to which withholding does not apply. The withholding statement must identify the chapter 4 exemption code (as provided in the instructions to Form 1042-S) applicable to the chapter 3 withholding rate pools

contained on the withholding statement. To the extent a qualified intermediary does not assume primary Form 1099 reporting and backup withholding responsibility under chapter 61 and section 3406, a qualified intermediary's withholding statement must establish a separate withholding rate pool for each U.S. non-exempt recipient account holder that the qualified intermediary has disclosed to the withholding agent unless the qualified intermediary uses the alternative procedures in paragraph (e)(5)(v)(C)(*3*) of this section or the account holder is a payee that the qualified intermediary is permitted to include in a chapter 4 withholding rate pool of U.S. payees. A qualified intermediary that is a participating FFI or registered deemed-compliant FFI may include a chapter 4 withholding rate pool of U.S. payees on a withholding statement by applying the rules under paragraph (e)(3)(iv)(A) of this section (by substituting "qualified intermediary" for "nonqualified intermediary") with respect to an account that it maintains (as described in § 1.1471-5(b)(5)) for the payee of the payment. A qualified intermediary shall determine withholding rate pools based on valid documentation that it obtains under its withholding agreement with the IRS, or if a payment cannot be reliably associated with valid documentation, under the applicable presumption rules. If a qualified intermediary has an account holder that is another intermediary (whether a qualified intermediary or a nonqualified intermediary) or a flow- through entity, the qualified intermediary may combine the account holder information provided by the other intermediary or flow-through entity with the qualified intermediary's direct account holder information to determine the qualified intermediary's chapter 3 withholding rate pools and each of the qualified intermediary's chapter 4 withholding rate pools to the extent provided in its withholding agreement with the IRS.

(*2*) ***Withholding rate pool requirements for a withholdable payment.*** This paragraph (e)(5)(v)(C)(*2*) modifies the requirements of a withholding statement described in paragraph (e)(5)(v)(C)(*1*) of this section provided by a qualified intermediary with respect to a withholdable payment (including a reportable amount that is a withholdable payment). For such a payment, the regulations applicable to a withholding statement described in paragraph (e)(5)(v)(C)(*1*) of this section shall apply, except that—

(*i*) If the qualified intermediary provides a withholding statement described in § 1.1471-3(c)(3)(iii)(B)(*2*) (describing an FFI withholding statement), the withholding statement may include a chapter 4 withholding rate pool with respect to the portion of the payment allocated to a single pool of recalcitrant account holders (without the need to subdivide into the pools described in § 1.1471-4(d)(6)), including both account holders of the qualified intermediary and of any participating FFI, registered deemed-compliant FFI, or other qualified intermediary for whom the first-mentioned qualified intermediary receives the payment, and nonparticipating FFIs (to the extent permitted) in lieu of reporting chapter 3 withholding rate pools with respect to such persons as described in paragraph (e)(5)(v)(C)(*1*) of this section); or

(*ii*) If the qualified intermediary provides a withholding statement described in § 1.1471-3(c)(3)(iii)(B)(*3*) (describing a chapter 4 withholding statement), the withholding statement may include a chapter 4 withholding rate pool with respect to the portion of the payment allocated to nonparticipating FFIs.

(*3*) ***Alternative procedure for U.S. non-exempt recipients.*** If permitted under its withholding agreement with the IRS, a qualified intermediary may, by mutual agreement with a withholding agent, establish a single zero withholding rate pool that includes U.S. non-exempt recipient account holders for whom the qualified intermediary has provided Forms W-9 prior to the withholding agent paying any reportable payments, as defined in the qualified intermediary withholding agreement, and foreign persons for which no withholding is required under chapters 3 and 4, and may include payments allocated to a chapter 4 withholding rate pool of U.S. payees. In such a case, the qualified intermediary may also establish a separate withholding rate pool (subject to 28-percent withholding, or other applicable statutory back-up withholding tax rate) that includes only U.S. non-exempt recipient account holders for whom a qualified intermediary has not provided Forms W-9 prior to the withholding agent paying any reportable payments. If a qualified intermediary chooses the alternative procedure of this paragraph (e)(5)(v)(C)(*3*), the qualified intermediary must provide the information required by its withholding agreement to the withholding agent no later than January 15 of the year following the year in which the payments are paid. Failure to provide such information will result in the application of penalties to the qualified intermediary under sections 6721 and 6722, as well as any other applicable penalties, and may result in the termination of the qualified intermediary's withholding agreement with the IRS. A withholding agent shall not be liable for tax, interest, or penalties for failure to backup withhold or report information under chapter 61 of the Code due solely to the errors or omissions of the qualified intermediary. If a qualified intermediary fails to provide the allocation information required by this paragraph (e)(5)(v)(C)(*3*), with respect to U.S. non-exempt recipients, the withholding agent shall report the unallocated amount paid from the withholding rate pool to an unknown recipient, or otherwise in accordance with the appropriate Form 1099 and the instructions accompanying the form.

(*D*) ***Example.*** The following example illustrates the application of paragraph (e)(5)(v)(C) of this section for a qualified intermediary providing chapter 4 withholding rate pools on an FFI withholding statement provided to a withholding agent. WA makes a payment of U.S. source interest that is a withholdable payment to QI, a qualified intermediary that is an FFI and a non-U.S. payor (as defined in § 1.6049-5(c)(5)), and A and B are account holders of QI (as defined under § 1.1471-5(a)) and are both U.S. non-exempt recipients (as defined in paragraph (c)(21) of this section). Ten percent of the payment is attributable to both A and B. A has provided WA with a Form W-9, but B has not provided WA with a Form W-9. QI assumes primary withholding responsibility under chapters 3 and 4 with respect to the payment, 80 percent of which is allocable to foreign payees who are account holders other than A and B. As a participating FFI, QI is required to report with respect to its U.S. accounts under § 1.1471-4(d) (as incorporated into its qualified intermediary agreement). Provided that QI reports A's account as a U.S. account under the requirements referenced in the preceding sentence, QI is not required to provide WA with a Form W-9 from A and may instead include A in a chapter 4 withholding rate pool of U.S. payees, allocating 10% of the payment to this pool. See § 1.6049-4(c)(4)(iii) concerning when reporting under section 6049 for a payment of interest is not required when an FFI that is a non-U.S. payor reports an account holder receiving the payment under its chapter 4 requirements. With respect to B, the interest payment is subject to backup withholding under section 3406. Because B is a recalcitrant account holder of QI for withholdable payments and because

QI assumes primary chapter 4 withholding responsibility, however, QI may include the portion of the payment allocated to B with the remaining 80% of the payment for which QI assumes primary withholding responsibility. WA can reliably associate the full amount of the payment based on the withholding statement and does so regardless of whether WA knows B is a U.S. non-exempt recipient that is receiving a portion of the payment. See § 31.3406(g)-1(e) (providing exemption to backup withholding when withholding was applied under chapter 4).

(6) ***Qualified derivatives dealers*** —

(i) ***In general.*** To act as a qualified derivatives dealer under a qualified intermediary withholding agreement, the home office or branch that is a qualified intermediary must be an eligible entity as described in paragraph (e)(6)(ii) of this section and, in accordance with the qualified intermediary agreement, must—

(A) Furnish to a withholding agent a qualified intermediary withholding certificate (described in paragraph (e)(3)(ii) of this section) that indicates that the home office or branch receiving the payment is a qualified derivatives dealer with respect to the payments associated with the withholding certificate;

(B) Agree to assume the primary withholding and reporting responsibilities, including the documentation provisions under chapters 3, 4, and 61, and section 3406, the regulations under those provisions, and other provisions of the Internal Revenue Code, for payments made as a qualified derivatives dealer with respect to potential section 871(m) transactions. For this purpose, a qualified derivatives dealer is required to obtain a withholding certificate or other appropriate documentation from each counterparty to whom the qualified derivatives dealer makes a reportable payment (including a dividend equivalent payment within the meaning of § 1.871-15(i)). The qualified derivatives dealer is also required to determine whether any payment it makes with respect to a potential section 871(m) transaction is, in whole or in part, a dividend equivalent;

(C) Agree to remain liable for tax under section 881, if any, on any payment with respect to a potential section 871(m) transaction (including a dividend equivalent payment within the meaning of § 1.871-15(i)) and underlying securities as defined in § 1.871-15(a)(15) (including dividends) it receives as a qualified derivatives dealer, or in the case of dividend equivalents received in its equity derivatives dealer capacity, the taxes required pursuant to § 1.871-15(q);

(D) Comply with the compliance review procedures applicable to a qualified intermediary that acts as a qualified derivatives dealer under the qualified intermediary withholding agreement, which will specify the time and manner in which a qualified derivatives dealer must:

(*1*) Certify to the IRS that it has complied with the obligations to act as a qualified derivatives dealer (including its performance of a periodic review applicable to a qualified derivatives dealer);

(*2*) Report to the IRS any amounts subject to reporting on Forms 1042-S (including dividend equivalent payments that it made);

(3) Report to the IRS on the appropriate U.S. federal tax return, its tax liabilities, including its tax liability pursuant to § 1.871-15(q)(1) and any other taxes on payments with respect to potential section 871(m) transactions or underlying securities as defined in § 1.871-15(a)(15) it receives; and

(4) Respond to inquiries from the IRS about obligations it has assumed as a qualified derivatives dealer in a timely manner;

(E) Agree to act as a qualified derivatives dealer for all payments made as a principal with respect to potential section 871(m) transactions and all payments received as a principal with respect to potential section 871(m) transactions and underlying securities as defined in § 1.871-15(a)(15) (including dividend equivalent payments within the meaning of § 1.871-15(i)), excluding any payments made or received by the qualified derivatives dealer to the extent the payment is treated as effectively connected with the conduct of a trade or business within the United States within the meaning of section 864, and not act as a qualified derivatives dealer for any other payments. For purposes of this paragraph (E), any securities lending or sale-repurchase transaction that the qualified intermediary enters into that is a section 871(m) transaction is treated as entered into as a principal unless the qualified intermediary determines that it is acting as an intermediary with respect to that transaction; and

(F) Each home office or branch must qualify and be approved for qualified derivatives dealer status and must represent itself as a qualified derivatives dealer on its Form W-8IMY and separately identify the home office or branch as the recipient on a withholding statement (if necessary). The home office means a foreign person, excluding any branches of the foreign person, that applies for qualified derivatives dealer status. Each home office or branch that obtains qualified derivatives dealer status must be treated as a separate qualified derivatives dealer.

(ii) ***Definition of eligible entity.*** An eligible entity is a home office or branch that is a qualified intermediary and that, treating the home office or branch as a separate entity, is—

(A) An equity derivatives dealer subject to regulatory supervision as a dealer by a governmental authority in the jurisdiction in which it was organized or operates;

(B) A bank or bank holding company subject to regulatory supervision as a bank or bank holding company (as applicable) by a governmental authority in the jurisdiction in which it was organized or operates or an entity that is wholly-owned (directly or indirectly) by a bank or bank holding company subject to regulatory supervision as a bank or bank holding company (as applicable) by a governmental authority in the jurisdiction in which the bank or bank holding company (as applicable) was organized or operates and that in its equity derivatives dealer capacity—

(1) Issues potential section 871(m) transactions to customers; and

(2) Receives dividends with respect to stock or dividend equivalent payments with respect to potential section 871(m) transactions that hedge potential section 871(m) transactions that it issued;

(C) A foreign branch of a U.S. financial institution, if the foreign branch would meet the requirements of paragraph (A) or (B) of this section if it were a separate entity; or

(D) Any person otherwise acceptable to the IRS.

(f) *Effective/applicability date* —

(1) ***In general.*** Except as otherwise provided in paragraphs (e)(2)(ii)(B), (e)(4)(iv)(D), (f)(2), and (f)(3) of this section, this section applies to payments made on or after January 6, 2017. (For payments made after June 30, 2014 (except for payments to which paragraph (e)(4)(iv)(D) applies, in which case, substitute March 5, 2014, for June 30, 2014), and before January 6, 2017, see this section as in effect and contained in 26 CFR part 1, as revised April 1, 2016. For payments made after December 31, 2000, and before July 1, 2014, see this section as in effect and contained in 26 CFR part 1, as revised April 1, 2013.)

(2) ***Lack of documentation for past years.*** A taxpayer may elect to apply the provisions of paragraphs (b)(7)(i)(B), (ii), and (iii) of this section, dealing with liability for failure to obtain documentation timely, to all of its open tax years, including tax years that are currently under examination by the IRS. The election is made by simply taking action under those provisions in the same manner as the taxpayer would take action for payments made after December 31, 2000.

(3) ***Special rules related to section 871(m).*** Paragraphs (b)(4)(xxi), (b)(4)(xxiii), (e)(3)(ii)(E), and (e)(6) of this section apply to payments made on or after September 18, 2015. Paragraphs (e)(5)(ii)(C) and (e)(5)(v)(B)(*4*) of this section apply to payments made on or after on January 19, 2017.

[T.D. 8734, 62 FR 53424, Oct. 14, 1997]

Editorial Note: For FEDERAL REGISTER citations affecting § 1.1441-1, see the List of CFR Sections Affected, which appears in the Finding Aids section of the printed volume and at *www.govinfo.gov*.

§ 1.1441-2 Amounts subject to withholding.

(a) ***In general.*** For purposes of the regulations under chapter 3 of the Internal Revenue Code, the term *amounts subject to withholding* means amounts from sources within the United States that constitute either fixed or determinable annual or periodical income described in paragraph (b) of this section or other amounts subject to withholding described in paragraph (c) of this section. For purposes of this paragraph (a), an amount shall be treated as being from sources within the United States if the source of the amount cannot be determined at the time of payment. See § 1.1441-3(d)(1) for determining the amount to be withheld from a payment in the absence of information at the time of payment regarding the source of the amount. Amounts subject to withholding include amounts that are not fixed or determinable annual or periodical income and upon which withholding is specifically required under a provision of this section or another section of the regulations under chapter 3 of the Internal Revenue Code (such as corporate distributions upon which withholding is required under § 1.1441-3(c)(1) that do not constitute dividend income). Amounts subject to withholding do not include—

(1) Amounts described in § 1.1441-1(b)(4)(i) to the extent they involve interest on obligations in bearer form or on foreign-targeted registered obligations (but, in the case of a foreign-targeted registered obligation, only to the extent of those amounts paid to a registered owner that is a financial institution within the meaning of section 871(h)(5)(B) or a member of a clearing organization which member is the beneficial owner of the obligation);

(2) Amounts described in § 1.1441-1(b)(4)(ii) (dealing with bank deposit interest and similar types of interest (including original issue discount) described in section 871(i)(2)(A) or 881(d));

(3) Amounts described in § 1.1441-1(b)(4)(iv) (dealing with interest or original issue discount on certain short-term obligations described in section 871(g)(1)(B) or 881(e));

(4) Amounts described in § 1.1441-1(b)(4)(xx) (dealing with income from certain gambling winnings exempt from tax under section 871(j));

(5) Amounts paid as part of the purchase price of an obligation sold or exchanged between interest payment dates, unless the sale or exchange is part of a plan the principal purpose of which is to avoid tax and the withholding agent has actual knowledge or reason to know of such plan;

(6) Original issue discount paid as part of the purchase price of an obligation sold or exchanged in a transaction other than a redemption of such obligation, unless the purchase is part of a plan the principal purpose of which is to avoid tax and the withholding agent has actual knowledge or reason to know of such plan; and

(7) Insurance premiums paid with respect to a contract that is subject to the section 4371 excise tax.

(8) Amounts of United States source gross transportation income, as defined in section 887(b)(1), that is taxable under section 887(a).

(b) ***Fixed or determinable annual or periodical income*** —

(1) ***In general*** —

(i) ***Definition.*** For purposes of chapter 3 of the Internal Revenue Code and the regulations thereunder, fixed or determinable annual or periodical income includes all income included in gross income under section 61 (including original issue discount) except for the items specified in paragraph (b)(2) of this section. Items of income that are excluded from gross income under a provision of law without regard to the U.S. or foreign status of the owner of the income, such as interest excluded from gross income under section 103(a) or qualified scholarship income under section 117, shall not be treated as fixed or determinable annual or periodical income under chapter 3 of the Internal Revenue Code. Income excluded from gross income under section 892 (income of foreign governments) or section 115 (income of a U.S. possession) is fixed or determinable annual or periodical income since the exclusion from gross income under those sections is dependent on the foreign status of the owner of the income. See § 1.306-3(h) for treating income from the disposition of section 306 stock as fixed or determinable annual or periodical income.

(ii) ***Manner of payment.*** The term *fixed or determinable annual or periodical* is merely descriptive of the character of a class of income. If an item of income falls within the class of income contemplated in the statute and described in paragraph (a) of this section, it is immaterial whether payment of that item is made in a series of payments or in a single lump sum. Further, the income need not be paid annually if it is paid periodically; that is to say, from time to time, whether or not at regular intervals. The fact that a payment is not made annually or periodically does not, however, prevent it from being fixed or determinable annual or periodical income (e.g., a lump sum payment). In addition, the fact that the length of time during which the payments are to be made may be increased or diminished in accordance with someone's will or with the happening of an event does not disqualify the payment as determinable or periodical. For this purpose, the share of the fixed or determinable annual or periodical income of an estate or trust from sources within the United States which is required to be distributed currently, or which has been paid or credited during the taxable year, to a nonresident alien beneficiary of such estate or trust constitutes fixed or determinable annual or periodical income.

(iii) ***Determinability of amount.*** An item of income is fixed when it is to be paid in amounts definitely pre-determined. An item of income is determinable if the amount to be paid is not known but there is a basis of calculation by which the amount may be ascertained at a later time. For example, interest is determinable even if it is contingent in that its amount cannot be determined at the time of payment of an amount with respect to a loan because the calculation of the interest portion of the payment is contingent upon factors that are not fixed at the time of the payment. For purposes of this section, an amount of income does not have to be determined at the time that the payment is made in order to be determinable. An amount of income described in paragraph (a) of this section which the withholding agent knows is part of a payment it makes but which it cannot calculate exactly at the time of payment, is nevertheless determinable if the determination of the exact amount depends upon events expected to occur at a future date. In contrast, a payment which may be income in the future based upon events that are not anticipated at the time the payment is made is not determinable. For example, loan proceeds may become income to the borrower when and to the extent the loan is canceled without repayment. While the cancellation of the debt is income to the borrower when it occurs, it is not determinable at the time the loan proceeds are disbursed to the borrower if the lack of repayment leading to the cancellation of part or all of the debt was not anticipated at the time of disbursement. The fact that the source of an item of income cannot be determined at the time that the payment is made does not render a payment not determinable. See § 1.1441-3(d)(1) for determining the amount to be withheld from a payment in the absence of information at the time of payment regarding the source of the amount.

(2) ***Exceptions.*** For purposes of chapter 3 of the Code and the regulations thereunder, the items of income described in this paragraph (b)(2) are not fixed or determinable annual or periodical income—

(i) Gains derived from the sale of property (including market discount and option premiums), except for gains described in paragraph (b)(3) or (c) of this section; and

(ii) Any other income that the Internal Revenue Service (IRS) may determine, in published guidance (see § 601.601(d)(2) of this chapter), is not fixed or determinable annual or periodical income.

(3) ***Original issue discount*** —

(i) ***Amount subject to tax.*** An amount representing original issue discount is fixed or determinable annual or periodical income that is subject to tax under sections 871(a)(1)(C) and 881(a)(3) to the extent provided in those sections and this paragraph (b)(3) if not otherwise excluded under paragraph (a) of this section. An amount of original issue discount is subject to tax with respect to a foreign beneficial owner of an obligation carrying original issue discount upon a sale or exchange of the obligation or when a payment is made on such obligation. The amount taxable is the amount of original issue discount that accrued while the foreign person held the obligation up to the time that the obligation is sold or exchanged or that a payment is made on the obligation, reduced by any amount of original issue discount that was taken into account prior to that time (due to a payment made on the obligation). In the case of a payment made on the obligation, the tax due on the amount of original issue discount may not exceed the amount of the payment reduced by the tax imposed on any portion of the payment that is qualified stated interest.

(ii) ***Amounts subject to withholding.*** A withholding agent must withhold on the taxable amount of original issue discount paid on the redemption of an original issue discount obligation unless an exception to withholding applies (e.g., portfolio interest or treaty exception). In addition, withholding is required on the taxable amount of original issue discount upon the sale or exchange of an original issue discount obligation, other than in a redemption, to the extent the withholding agent has actual knowledge or reason to know that the sale or exchange is part of a plan the principal purpose of which is to avoid tax. If a withholding agent cannot determine the taxable amount of original issue discount on the redemption of an original issue discount obligation (or on the sale or exchange of such an obligation if the principal purpose of the sale is to avoid tax), then it must withhold on the entire amount of original issue discount accrued from the date of issue until the date of redemption (or the date the obligation is sold or exchanged) determined on the basis of the most recently published "List of Original Issue Discount Instruments" (IRS Publication 1212, available from the IRS Forms Distribution Center) or similar list published by the IRS as if the beneficial owner of the obligation had held the obligation since its original issue.

(iii) ***Exceptions to withholding.*** To the extent that this paragraph (b)(3) applies to require withholding by a person other than an issuer of an original issue discount obligation, or the issuer's agent, it shall apply only to obligations issued after December 31, 2000.

(4) ***Securities lending transactions and equivalent transactions.*** See §§ 1.871-7(b)(2) and 1.881-2(b)(2) regarding the character of substitute payments as fixed and determinable annual or periodical income. Such amounts constitute income subject to withholding to the extent they are from sources within the United States, as determined under section §§ 1.861-2(a)(7) and 1.861-3(a)(6). See §§ 1.6042-3(a)(2) and 1.6049-5(a)(5) for reporting requirements applicable to substitute dividend and interest payments, respectively.

(5) ***REMIC residual interests.*** Amounts subject to withholding include an excess inclusion described in § 1.860G-3(b)(2) and the portion of an amount described in § 1.860G-3(b)(1) that is an excess inclusion.

(6) ***Dividend equivalents.*** Amounts subject to withholding include a dividend equivalent described in section 871(m) and the regulations thereunder. For this purpose, the amount of a dividend equivalent includes any gross amount that is used in computing any net amount that is transferred to or from the taxpayer under the terms of the transaction or any other payment described in section 871(m) and the regulations thereunder.

(c) ***Other income subject to withholding.*** Withholding is also required on the following items of income—

(1) Gains described in sections 631 (b) or (c), relating to treatment of gain on disposal of timber, coal, or domestic iron ore with a retained economic interest; and

(2) Gains subject to the 30-percent tax under section 871(a)(1)(D) or 881(a)(4), relating to contingent payments received from the sale or exchange of patents, copyrights, and similar intangible property.

(d) ***Exceptions to withholding where no money or property is paid or lack of knowledge*** —

(1) ***General rule.*** A withholding agent who is not related to the recipient or beneficial owner has an obligation to withhold under section 1441 only to the extent that, at any time between the date that the obligation to withhold would arise (but for the provisions of this paragraph (d)) and the due date for the filing of return on Form 1042 (including extensions) for the year in which the payment occurs, it has control over, or custody of money or property owned by the recipient or beneficial owner from

which to withhold an amount and has knowledge of the facts that give rise to the payment. The exemption from the obligation to withhold under this paragraph (d) shall not apply, however, to distributions with respect to stock or if the lack of control or custody of money or property from which to withhold is part of a pre-arranged plan known to the withholding agent to avoid withholding under section 1441, 1442, or 1443. For purposes of this paragraph (d), a withholding agent is related to the recipient or beneficial owner if it is related within the meaning of section 482. Any exemption from withholding pursuant to this paragraph (d) applies without a requirement that documentation be furnished to the withholding agent. However, documentation may have to be furnished for purposes of the information reporting provisions under chapter 61 of the Code and backup withholding under section 3406. The exemption from withholding under this paragraph (d) is not a determination that the amounts are not fixed or determinable annual or periodical income, nor does it constitute an exemption from reporting the amount under § 1.1461-1 (b) and (c).

(2) ***Cancellation of debt.*** A lender of funds who forgives any portion of the loan is deemed to have made a payment of income to the borrower under § 1.61-12 at the time the event of forgiveness occurs. However, based on the rules of paragraph (d)(1) of this section, the lender shall have no obligation to withhold on such amount to the extent that it does not have custody or control over money or property of the borrower at any time between the time that the loan is forgiven and the due date (including extensions) of the Form 1042 for the year in which the payment is deemed to occur. A payment received by the lender from the borrower in partial settlement of the debt obligation does not, for this purpose, constitute an amount of money or property belonging to the borrower from which the withholding tax liability can be satisfied.

(3) ***Satisfaction of liability following underwithholding by withholding agent.*** A withholding agent who, after failing to withhold the proper amount from a payment, satisfies the underwithheld amount out of its own funds may cause the beneficial owner to realize income to the extent of such satisfaction or may be considered to have advanced funds to the beneficial owner. Such determination depends upon the contractual arrangements governing the satisfaction of such tax liability (e.g., arrangements in which the withholding agent agrees to pay the amount due under section 1441 for the beneficial owner) or applicable laws governing the transaction. If the satisfaction of the tax liability is considered to constitute an advance of funds by the withholding agent to the beneficial owner and the withholding agent fails to collect the amount from the beneficial owner, a cancellation of indebtedness may result, giving rise to income to the beneficial owner under § 1.61-12. While such income is annual or periodical fixed or determinable, the withholding agent shall have no liability to withhold on such income to the extent the conditions set forth in paragraphs (d) (1) and (2) of this section are satisfied with respect to this income. Contrast the rules of this paragraph (d)(3) with the rules in § 1.1441-3(f)(1) dealing with a situation in which the satisfaction of the beneficial owner's tax liability itself constitutes additional income to the beneficial owner. See, also, § 1.1441-3(c)(2)(ii)(B) for a special rule regarding underwithholding on corporate distributions due to underestimating an amount of earnings and profits.

(4) ***Withholding exemption inapplicable.*** The exemption in § 1.1441-2(d) from the obligation to withhold shall not apply to amounts described in § 1.860G-3(b)(1) (regarding certain partnership allocations of REMIC net income with respect to a REMIC residual interest).

(e) ***Payment*** —

(1) ***General rule.*** A payment is considered made to a person if that person realizes income whether or not such income results from an actual transfer of cash or other property. For example, realization of income from cancellation of debt results in a deemed payment. A payment is considered made

when the amount would be includible in the income of the beneficial owner under the U.S. tax principles governing the cash basis method of accounting. A payment is considered made whether it is made directly to the beneficial owner or to another person for the benefit of the beneficial owner (e.g., to the agent of the beneficial owner). Thus, a payment of income is considered made to a beneficial owner if it is paid in complete or partial satisfaction of the beneficial owner's debt to a creditor. In the event of a conflict between the rules of this paragraph (e)(1) governing whether a payment has occurred and its timing and the rules of § 31.3406(a)-4 of this chapter, the rules in § 31.3406(a)-4 of this chapter shall apply to the extent that the application of section 3406 is relevant to the transaction at issue.

(2) ***Income allocated under section 482.*** A payment is considered made to the extent income subject to withholding is allocated under section 482. Further, income arising as a result of a secondary adjustment made in conjunction with a reallocation of income under section 482 from a foreign person to a related U.S. person is considered paid to a foreign person unless the taxpayer to whom the income is reallocated has entered into a repatriation agreement with the IRS and the agreement eliminates the liability for withholding under this section. For purposes of determining the liability for withholding, the payment of income is deemed to have occurred on the last day of the taxable year in which the transactions that give rise to the allocation of income and the secondary adjustments, if any, took place.

(3) ***Blocked income.*** Income is not considered paid if it is blocked under executive authority, such as the President's exercise of emergency power under the Trading with the Enemy Act (50 U.S.C. App. 5), or the International Emergency Economic Powers Act (50 U.S.C. 1701 *et seq.*). However, on the date that the blocking restrictions are removed, the income that was blocked is considered constructively received by the beneficial owner (and therefore paid for purposes of this section) and subject to withholding under § 1.1441-1. Any exemption from withholding pursuant to this paragraph (e)(3) applies without a requirement that documentation be furnished to the withholding agent. However, documentation may have to be furnished for purposes of the information reporting provisions under chapter 61 of the Code and backup withholding under section 3406. The exemption from withholding granted by this paragraph (e)(3) is not a determination that the amounts are not fixed or determinable annual or periodical income.

(4) ***Special rules for dividends.*** For purposes of sections 1441 and 6042, in the case of stock for which the record date is earlier than the payment date, dividends are considered paid on the payment date. In the case of a corporate reorganization, if a beneficial owner is required to exchange stock held in a former corporation for stock in a new corporation before dividends that are to be paid with respect to the stock in the new corporation will be paid on such stock, the dividend is considered paid on the date that the payee or beneficial owner actually exchanges the stock and receives the dividend. See § 31.3406(a)-4(a)(2) of this chapter.

(5) ***Certain interest accrued by a foreign corporation.*** For purposes of sections 1441 and 6049, a foreign corporation shall be treated as having made a payment of interest as of the last day of the taxable year if it has made an election under § 1.884-4(c)(1) to treat accrued interest as if it were paid in that taxable year.

(6) ***Payments other than in U.S. dollars.*** For purposes of section 1441, a payment includes amounts paid in a medium other than U.S. dollars. See § 1.1441-3(e) for rules regarding the amount subject to withholding in the case of such payments.

(7) ***Payments of dividend equivalents —***

(i) ***In general.*** Subject to paragraphs (e)(7)(iv), (vi), and (vii) of this section, a payment of a dividend equivalent is not considered to be made until the later of when—

(A) The amount of a dividend equivalent is determined as provided in § 1.871-15(j)(2), and

(B) A payment occurs with respect to the section 871(m) transaction after the amount of a dividend equivalent is determined as provided in § 1.871-15(j)(2).

(ii) ***Payment.*** For purposes of paragraph (e)(7) of this section, a payment occurs with respect to a section 871(m) transaction when—

(A) Money or other property is paid to or by the long party, unless the section 871(m) transaction is described in § 1.871-15(i)(3)(i), in which case a payment is treated as being made at the end of the applicable calendar quarter;

(B) The long party sells, exchanges, transfers, or otherwise disposes of the section 871(m) transaction (including by settlement, offset, termination, expiration, lapse, or maturity); or

(C) The section 871(m) transaction is transferred to an account that is not maintained by the withholding agent or the long party terminates the account relationship with the withholding agent.

(iii) ***Premiums and other upfront payments.*** When a long party pays a premium or other upfront payment to the short party at the time a section 871(m) transaction is issued, the premium or other upfront payment is not treated as a payment for purposes of paragraph (e)(7)(ii)(A) of this section.

(iv) ***Option to withhold on dividend payment date.*** A withholding agent may withhold on the payment date described in paragraph (e)(4) of this section for the applicable dividend on the underlying security (the dividend payment date) if it withholds on that date for all section 871(m) transactions of the same type (for example, securities lending or sale-repurchase transaction, NPC, or ELI) and satisfies the requirements to paragraph (e)(7)(v) of this section.

(v) ***Changes to time of withholding.*** This paragraph describes how a withholding agent changes the time that it withholds on a dividend equivalent payment to a time described in paragraph (e)(7)(i) or (iv) of this section and these requirements must be satisfied for a withholding agent to change the time it withholds. A withholding agent must apply the change consistently to all transactions of the same type entered into on or after the change. For transactions of the same type entered into before the change, a withholding agent must withhold under the original approach throughout the term of the transaction. When a withholding agent changes the time that it will withhold, the withholding agent must notify each payee in writing that it will withhold using the approach described in paragraph (e)(7)(i) or (iv) of this section, as applicable, before the time for determining the payee's first dividend equivalent payment (as determined under § 1.871-15(j)(2)). With respect to transactions held by an intermediary or foreign flow-through entity, a withholding agent is treated as providing notice to each payee holding that transaction through the entity when it notifies the intermediary or foreign flow-through entity of the time it will withhold, as described in the preceding sentence, provided that the intermediary or foreign flow-through entity agrees to provide the same notice to each payee. The withholding agent must attach a statement to its relevant income tax return (filed by the due date, including extensions) for the year of the change notifying the IRS of the change and when it applies, identifying the type of section 871(m) transaction to which the change applies, and certifying that it has notified its payees. For purposes of this paragraph, a withholding agent will be

considered to have entered into a transaction on the first date the withholding agent becomes responsible for withholding on the transaction (based on the rule in paragraph (e)(7)(ix) of this section).

(vi) ***Withholding by qualified derivatives dealers.*** A withholding agent that is acting as a qualified derivatives dealer must withhold with respect to a dividend equivalent payment on the payment date described in paragraph (e)(4) of this section for the applicable dividend on the underlying security and must notify each payee in writing that it will withhold on the dividend payment date before the time for determining the payee's first dividend equivalent payment (as determined under § 1.871-15(j)(2)).

(vii) ***Withholding with respect to derivatives that reference partnerships.*** To the extent that a withholding agent is required to withhold with respect to a partnership interest described in § 1.871-15(m), the liability for withholding arises on March 15 of the year following the year in which the payment of a dividend equivalent (determined under § 1.871-15(i)) occurs.

(viii) ***Notification to holders of withholding timing.*** If a withholding agent is required to notify a payee of when it will withhold under paragraph (e)(7)(v) of this section, it may use the reporting methods prescribed in § 1.871-15(p)(3)(i).

(ix) ***Withholding agent responsibility.*** A withholding agent is only responsible for dividend equivalent amounts determined (as provided in § 1.871-15(j)(2)) during the period the withholding agent is a withholding agent for the section 871(m) transaction.

(f) ***Effective/applicability date.*** This section applies to payments made after December 31, 2000. Paragraph (a)(8) of this section applies to payments made on or after January 6, 2017; however, taxpayers may apply paragraph (a)(8) to any open tax year. Paragraphs (b)(5) and (d)(4) of this section apply to payments made after August 1, 2006. Paragraph (b)(6) of this section applies to payments made on or after January 23, 2012. Paragraph (e)(7) of this section applies to payments made on or after January 19, 2017.

[T.D. 8734, 62 FR 53444, Oct. 14, 1997]

Editorial Note: For FEDERAL REGISTER citations affecting § 1.1441-2, see the List of CFR Sections Affected, which appears in the Finding Aids section of the printed volume and at *www.govinfo.gov*.

§ 1.1441-3 Determination of amounts to be withheld.

(a) ***General rule —***

(1) ***Withholding on gross amount.*** Except as otherwise provided in regulations under section 1441, the amount subject to withholding under § 1.1441-1 is the gross amount of income subject to withholding that is paid to a foreign person. The gross amount of income subject to withholding may not be reduced by any deductions, except to the extent that one or more personal exemptions are allowed as provided under § 1.1441-4(b)(6).

(2) ***Coordination with chapter 4.*** A withholding agent making a payment that is both a withholdable payment and an amount subject to withholding under § 1.1441-2(a) and that has withheld tax as required under chapter 4 from such payment is not required to withhold under this section notwithstanding paragraph (a)(1) of this section. See § 1.1474-6(b)(1) for the allowance for a withholding agent to credit withholding applied under chapter 4 against its liability for tax due under

sections 1441, 1442, or 1443, and see § 1.1474-6(b)(1) for the rule allowing a withholding agent to credit withholding applied under chapter 4 against its liability for tax due under sections 1441, 1442, or 1443, and § 1.1474-6(b)(2) for when such withholding is considered applied by a withholding agent. If the withholdable payment is not required to be withheld upon under chapter 4, then the withholding agent must apply the provisions of § 1.1441-1 to determine whether withholding is required under sections 1441, 1442, or 1443.

(b) ***Withholding on payments on certain obligations*** —

(1) ***Withholding at time of payment of interest.*** When making a payment on an interest-bearing obligation, a withholding agent must withhold under § 1.1441-1 upon the gross amount of stated interest payable on the interest payment date, regardless of whether the payment constitutes a return of capital or the payment of income within the meaning of section 61. To the extent an amount was withheld on an amount of capital rather than interest, see the rules for adjustments, refunds, or credits under § 1.1441-1(b)(8).

(2) ***No withholding between interest payment dates*** —

(i) ***In general.*** A withholding agent is not required to withhold under § 1.1441-1 upon interest accrued on the date of a sale or exchange of a debt obligation when that sale occurs between two interest payment dates (even though the amount is treated as interest under § 1.61-7(c) or (d) and is subject to tax under section 871 or 881). See § 1.6045-1(c) for reporting requirements by brokers with respect to sale proceeds. See § 1.61-7(c) regarding the character of payments received by the acquirer of an obligation subsequent to such acquisition (that is, as a return of capital or interest accrued after the acquisition). Any exemption from withholding pursuant to this paragraph (b)(2)(i) applies without a requirement that documentation be furnished to the withholding agent. However, documentation may have to be furnished for purposes of the information reporting provisions under section 6045 or 6049 and backup withholding under section 3406. The exemption from withholding granted by this paragraph (b)(2) is not a determination that the accrued interest is not fixed or determinable annual or periodical income under section 871(a) or 881(a).

(ii) ***Anti-abuse rule.*** The exemption in paragraph (b)(2)(i) of this section does not apply if the sale of securities is part of a plan the principal purpose of which is to avoid tax by selling and repurchasing securities and the withholding agent has actual knowledge or reason to know of such plan.

(c) ***Corporate distributions*** —

(1) ***General rule.*** A corporation making a distribution with respect to its stock or any intermediary (described in § 1.1441-1(c)(13)) making a payment of such a distribution is required to withhold under section 1441, 1442, or 1443 on the entire amount of the distribution, unless it elects to reduce the amount of withholding under the provisions of this paragraph (c). Any exceptions from withholding provided by this paragraph (c) apply without any requirement to furnish documentation to the withholding agent. However, documentation may have to be furnished for purposes of the information reporting provisions under section 6042 or 6045 and backup withholding under section 3406. See § 1.1461-1(c) to determine whether amounts excepted from withholding under this section are considered amounts that are subject to reporting.

(2) ***Exception to withholding on distributions*** —

(i) ***In general.*** An election described in paragraph (c)(1) of this section is made by actually reducing the amount of withholding at the time that the payment is made. An intermediary that makes a payment of a distribution is not required to reduce the withholding based on the distributing corporation's estimates under this paragraph (c)(2) even if the distributing corporation itself elects to reduce the withholding on payments of distributions that it itself makes to foreign persons. Conversely, an intermediary may elect to reduce the amount of withholding with respect to the payment of a distribution even if the distributing corporation does not so elect for the payments of distributions that it itself makes of distributions to foreign persons. The amounts with respect to which a distributing corporation or intermediary may elect to reduce the withholding are as follows:

(A) A distributing corporation or intermediary may elect to not withhold on a distribution to the extent it represents a nontaxable distribution payable in stock or stock rights.

(B) A distributing corporation or intermediary may elect to not withhold on a distribution to the extent it represents a distribution in part or full payment in exchange for stock.

(C) A distributing corporation or intermediary may elect to not withhold on a distribution (actual or deemed) to the extent it is not paid out of accumulated earnings and profits or current earnings and profits, based on a reasonable estimate determined under paragraph (c)(2)(ii) of this section.

(D) A regulated investment company or intermediary may elect to not withhold on a distribution representing a capital gain dividend (as defined in section 852(b)(3)(C)) or an exempt interest dividend (as defined in section 852(b)(5)(A)) based on the applicable procedures described under paragraph (c)(3) of this section.

(E) A U.S. Real Property Holding Corporation (defined in section 897(c)(2)) or a real estate investment trust (defined in section 856) or intermediary may elect to not withhold on a distribution to the extent it is subject to withholding under section 1445 and the regulations under that section. See paragraph (c)(4) of this section for applicable procedures.

(ii) ***Reasonable estimate of accumulated and current earnings and profits on the date of payment*** —

(A) ***General rule.*** A reasonable estimate for purposes of paragraph (c)(2)(i)(C) of this section is a determination made by the distributing corporation at a time reasonably close to the date of payment of the extent to which the distribution will constitute a dividend, as defined in section 316. The determination is based upon the anticipated amount of accumulated earnings and profits and current earnings and profits for the taxable year in which the distribution is made, the distributions made prior to the distribution for which the estimate is made and all other relevant facts and circumstances. A reasonable estimate may be made based on the procedures described in § 31.3406(b)(2)-4(c)(2) of this chapter.

(B) ***Procedures in case of underwithholding.*** A distributing corporation or intermediary that is a withholding agent with respect to a distribution and that determines at the end of the taxable year in which the distribution is made that it underwithheld under section 1441 on the distribution shall be liable for the amount underwithheld as a withholding agent under section 1461. However, for purposes of this section and § 1.1461-1, any amount underwithheld paid by a distributing corporation, its paying agent, or an intermediary shall not be treated as income subject to additional withholding even if that amount is treated

as additional income to the shareholders unless the additional amount is income to the shareholder as a result of a contractual arrangement between the parties regarding the satisfaction of the shareholder's tax liabilities. In addition, no penalties shall be imposed for failure to withhold and deposit the tax if—

(*1*) The distributing corporation made a reasonable estimate as provided in paragraph (c)(2)(ii)(A) of this section; and

(*2*) Either—

(*i*) The corporation or intermediary pays over the underwithheld amount on or before the due date for filing a Form 1042 for the calendar year in which the distribution is made, pursuant to § 1.1461-2(b); or

(*ii*) The corporation or intermediary is not a calendar year taxpayer and it files an amended return on Form 1042X (or such other form as the Commissioner may prescribe) for the calendar year in which the distribution is made and pays the underwithheld amount and interest within 60 days after the close of the taxable year in which the distribution is made.

(C) ***Reliance by intermediary on reasonable estimate.*** For purposes of determining whether the payment of a corporate distribution is a dividend, a withholding agent that is not the distributing corporation may, absent actual knowledge or reason to know otherwise, rely on representations made by the distributing corporation regarding the reasonable estimate of the anticipated accumulated and current earnings and profits made in accordance with paragraph (c)(2)(ii)(A) of this section. Failure by the withholding agent to withhold the required amount due to a failure by the distributing corporation to reasonably estimate the portion of the distribution treated as a dividend or to properly communicate the information to the withholding agent shall be imputed to the distributing corporation. In such a case, the Internal Revenue Service (IRS) may collect from the distributing corporation any underwithheld amount and subject the distributing corporation to applicable interest and penalties as a withholding agent.

(D) ***Example.*** The rules of this paragraph (c)(2) are illustrated by the following example:

> *Example.* (i) *Facts.* Corporation X, a publicly traded corporation with both U.S. and foreign shareholders and a calendar year taxpayer, has an accumulated deficit in earnings and profits at the close of 2000. In 2001, Corporation X generates $1 million of current earnings and profits each month and makes an $18 million distribution, resulting in a $12 million dividend. Corporation X plans to make an additional $18 million distribution on October 1, 2002. Approximately one month before that date, Corporation X's management receives an internal report from its legal and accounting department concerning Corporation X's estimated current earnings and profits. The report states that Corporation X should generate only $5.1 million of current earnings and profits by the close of the third quarter due to costs relating to substantial organizational and product changes, but these changes will enable Corporation X to generate $1.3 million of earnings and profits monthly for the last quarter of the 2002 fiscal year. Thus, the total amount of current and

earnings and profits for 2002 is estimated to be $9 million.
(ii) *Analysis.* Based on the facts in paragraph (i) of this *Example,* including the fact that earnings and profits estimate was made within a reasonable time before the distribution, Corporation X can rely on the estimate under paragraph (c)(2)(ii)(A) of this section. Therefore, Corporation X may treat $9 million of the $18 million of the October 1, 2002, distribution to foreign shareholders as a non-dividend distribution.

(3) ***Special rules in the case of distributions from a regulated investment company*** —

(i) ***General rule.*** If the amount of any distributions designated as being subject to section 852(b)(3)(C) or 5(A), or 871(k)(1)(C) or (2)(C), exceeds the amount that may be designated under those sections for the taxable year, then no penalties will be asserted for any resulting underwithholding if the designations were based on a reasonable estimate (made pursuant to the same procedures as described in paragraph (c)(2)(ii)(A) of this section) and the adjustments to the amount withheld are made within the time period described in paragraph (c)(2)(ii)(B) of this section. Any adjustment to the amount of tax due and paid to the IRS by the withholding agent as a result of underwithholding shall not be treated as a distribution for purposes of section 562(c) and the regulations thereunder. Any amount of U.S. tax that a foreign shareholder is treated as having paid on the undistributed capital gain of a regulated investment company under section 852(b)(3)(D) may be claimed by the foreign shareholder as a credit or refund under § 1.1464-1.

(ii) ***Reliance by intermediary on reasonable estimate.*** For purposes of determining whether a payment is a distribution designated as subject to section 852(b)(3)(C) or (5)(A), or 871(k)(1)(C) or (2)(C), a withholding agent that is not the distributing regulated investment company may, absent actual knowledge or reason to know otherwise, rely on the designations that the distributing company represents have been made in accordance with paragraph (c)(3)(i) of this section. Failure by the withholding agent to withhold the required amount due to a failure by the regulated investment company to reasonably estimate the required amounts or to properly communicate the relevant information to the withholding agent shall be imputed to the distributing company. In such a case, the IRS may collect from the distributing company any underwithheld amount and subject the company to applicable interest and penalties as a withholding agent.

(4) ***Coordination with withholding under section 1445*** —

(i) ***In general.*** A distribution from a U.S. Real Property Holding Corporation (USRPHC) (or from a corporation that was a USRPHC at any time during the five-year period ending on the date of distribution) with respect to stock that is a U.S. real property interest under section 897(c) or from a Real Estate Investment Trust (REIT) or other entity that is a qualified investment entity (QIE) under section 897(h)(4) with respect to its stock is subject to the withholding provisions under section 1441 (or section 1442 or 1443) and section 1445. A USRPHC (other than a REIT or other entity that is a QIE) making a distribution shall be treated as satisfying its withholding obligations under both sections if it withholds in accordance with one of the procedures described in either paragraph (c)(4)(i)(A) or (B) of this section. A USRPHC must apply the same withholding procedure to all the distributions made during the taxable year. However, the USRPHC may change the applicable withholding procedure from year to year. For rules regarding distributions by REITs and other entities that are QIEs, see paragraph (c)(4)(i)(C) of

this section. To the extent withholding under sections 1441, 1442, or 1443 applies under this paragraph (c)(4)(i) to any portion of a distribution that is a withholdable payment, see paragraph (a)(2) of this section for rules coordinating withholding under chapter 4.

(A) ***Withholding under section 1441.*** The USRPHC may choose to withhold on a distribution only under section 1441 (or 1442 or 1443) and not under section 1445. In such a case, the USRPHC must withhold under section 1441 (or 1442 or 1443) on the full amount of the distribution, whether or not any portion of the distribution represents a return of basis or capital gain. If a reduced tax rate under an income tax treaty applies to the distribution by the USRPHC, then the applicable rate of withholding on the distribution shall be no less than 15 percent for distributions after February 16, 2016, and no less than 10 percent for distributions on or before February 16, 2016, unless the applicable treaty specifies an applicable lower rate for distributions from a USRPHC, in which case the lower rate may apply.

(B) ***Withholding under both sections 1441 and 1445.*** As an alternative to the procedure described in paragraph (c)(4)(i)(A) of this section, a USRPHC may choose to withhold under both sections 1441 (or 1442 or 1443) and 1445 under the procedures set forth in this paragraph (c)(4)(i)(B). The USRPHC must make a reasonable estimate of the portion of the distribution that is a dividend under paragraph (c)(2)(ii)(A) of this section, and must—

(*1*) Withhold under section 1441 (or 1442 or 1443) on the portion of the distribution that is estimated to be a dividend under paragraph (c)(2)(ii)(A) of this section; and

(*2*) Withhold under section 1445(e)(3) and § 1.1445-5(e) on the remainder of the distribution (except for any portion paid to a withholding qualified holder (as defined in § 1.1445-1(g)(11)) or on such smaller portion based on a withholding certificate obtained in accordance with § 1.1445-5(e)(3)(iv).

(C) ***Coordination with REIT/QIE withholding.*** In the case of a distribution from a REIT or other entity that is a QIE, withholding is required as described in paragraph (c)(4)(i)(C)(*1*) and (*2*) of this section.

(*1*) Withholding is required under section 1441 (or 1442 or 1443) on—

(*i*) The portion of the distribution that is not designated (for REITs) or reported (for regulated investment companies that are QIEs) as a capital gain dividend, a return of basis, or a distribution in excess of a shareholder's adjusted basis in the stock of the REIT or QIE that is treated as a capital gain under section 301(c)(3); and

(*ii*) Any portion of a capital gain dividend from a REIT or other entity that is a QIE that is not treated as gain attributable to the sale or exchange of a U.S. real property interest pursuant to the second sentence of section 897(h)(1)).

(*2*) Withholding is required under section 1445 with respect to—

(*i*) A distribution in excess of a shareholder's adjusted basis in the stock of the REIT or QIE is, unless the interest in the REIT or QIE is not a U.S. real property interest (for example, an interest in a domestically controlled REIT or QIE under section 897(h)(2)) or the distribution is paid to a withholding qualified holder (as defined in § 1.1445-1(g)(11)); and

(*ii*) Any portion of a capital gain dividend that is attributable to the sale or exchange of a U.S. real property interest under section 897(h)(1), unless it is paid to a withholding qualified holder (as defined in § 1.1445-1(g)(11)). See § 1.1445-8.

(ii) ***Intermediary reliance rule.*** A withholding agent that is not the distributing USRPHC must withhold under paragraph (c)(4)(i) of this section, but may, absent actual knowledge or reason to know otherwise, rely on representations made by the USRPHC regarding the determinations required under paragraph (c)(4)(i) of this section. Failure by the withholding agent to withhold the required amount due to a failure by the distributing USRPHC to make these determinations in a reasonable manner or to properly communicate the determinations to the withholding agent shall be imputed to the distributing USRPHC. In such a case, the IRS may collect from the distributing USRPHC any underwithheld amount and subject the distributing USRPHC to applicable interest and penalties as a withholding agent.

(iii) ***Applicability date.*** Paragraphs (c)(4)(i), (c)(4)(i)(B)(*2*), and (c)(4)(i)(C) of this section apply to distributions made by a USRPHC or a QIE occurring on or after December 29, 2022. For distributions made by a USRPHC or a QIE occurring before December 29, 2022, see § 1.1441-3(c)(4)(i), (c)(4)(i)(B)(*2*), and (c)(4)(i)(C), as contained in 26 CFR part 1, revised as of April 1, 2021.

(d) ***Withholding on payments that include an undetermined amount of income*** —

(1) ***In general.*** Where the withholding agent makes a payment and does not know at the time of payment the amount that is subject to withholding because the determination of the source of the income or the calculation of the amount of income subject to tax depends upon facts that are not known at the time of payment, then the withholding agent must withhold an amount under § 1.1441-1 based on the entire amount paid that is necessary to ensure that the tax withheld is not less than 30 percent (or other applicable percentage) of the amount that could be from sources within the United States or income subject to tax. See § 1.1471-2(a)(5) for similar rules under chapter 4 that apply to payments made to payees that are entities. The amount so withheld shall not exceed 30 percent of the amount paid. With respect to a payment described in paragraph (d)(1) or (2) of this section, the withholding agent may elect to retain 30 percent of the payment to hold in escrow until the earlier of the date that the amount of income from sources within the United States or the taxable amount can be determined or one year from the date the amount is placed in escrow, at which time the withholding becomes due under § 1.1441-1, or, to the extent that withholding is not required, the escrowed amount must be paid to the payee.

(2) ***Withholding on certain gains.*** Absent actual knowledge or reason to know otherwise, a withholding agent may rely on a claim regarding the amount of gain described in § 1.1441-2(c) if the beneficial owner withholding certificate, or other appropriate withholding certificate, states the beneficial owner's basis in the property giving rise to the gain. In the absence of a reliable representation on a withholding certificate, the withholding agent must withhold an amount under § 1.1441-1 that is necessary to assure that the tax withheld is not less than 30 percent (or other applicable percentage) of the recognized gain. For this purpose, the recognized gain is determined without

regard to any deduction allowed by the Code from the gains. The amount so withheld shall not exceed 30 percent of the amount payable by reason of the transaction giving rise to the recognized gain. See § 1.1441-1(b)(8) regarding adjustments in the case of overwithholding.

(e) ***Payments other than in U.S. dollars*** —

(1) ***In general.*** The amount of a payment made in a medium other than U.S. dollars is measured by the fair market value of the property or services provided in lieu of U.S. dollars. The withholding agent may liquidate the property prior to payment in order to withhold the required amount of tax under section 1441 or obtain payment of the tax from an alternative source. However, the obligation to withhold under section 1441 is not deferred even if no alternative source can be located. Thus, for purposes of withholding under chapter 3 of the Code, the provisions of § 31.3406(h)-2(b)(2)(ii) of this chapter (relating to backup withholding from another source) shall not apply. If the withholding agent satisfies the tax liability related to such payments, the rules of paragraph (f) of this section apply.

(2) ***Payments in foreign currency.*** If the amount subject to withholding tax is paid in a currency other than the U.S. dollar, the amount of withholding under section 1441 shall be determined by applying the applicable rate of withholding to the foreign currency amount and converting the amount withheld into U.S. dollars on the date of payment at the spot rate (as defined in § 1.988-1(d)(1)) in effect on that date. A withholding agent making regular or frequent payments in foreign currency may use a month-end spot rate or a monthly average spot rate. In addition, such a withholding agent may use the spot rate on the date the amount of tax is deposited (within the meaning of § 1.6302-2(a)), provided that such deposit is made within seven days of the date of the payment giving rise to the obligation to withhold. A spot rate convention must be used consistently for all non-dollar amounts withheld and from year to year. Such convention cannot be changed without the consent of the Commissioner. The U.S. dollar amount so determined shall be treated by the beneficial owner as the amount of tax paid on the income for purposes of determining the final U.S. tax liability and, if applicable, claiming a refund or credit of tax.

(f) ***Tax liability of beneficial owner satisfied by withholding agent*** —

(1) ***General rule.*** In the event that the satisfaction of a tax liability of a beneficial owner by a withholding agent constitutes income to the beneficial owner and such income is of a type that is subject to withholding, the amount of the payment deemed made by the withholding agent for purposes of this paragraph (f) shall be determined under the gross-up formula provided in this paragraph (f)(1). Whether the payment of the tax by the withholding agent constitutes a satisfaction of the beneficial owner's tax liability and whether, as such, it constitutes additional income to the beneficial owner, must be determined under all the facts and circumstances surrounding the transaction, including any agreements between the parties and applicable law. The formula described in this paragraph (f)(1) is as follows:

$$\text{Payment} = \frac{\text{Gross payment without withholding}}{1\text{-(tax rate)}}$$

(2) ***Example.*** The following example illustrates the provisions of this paragraph (f):

Example. College X awards a qualified scholarship within the meaning of section 117(b) to foreign student, FS, who is in the United States on an F visa. FS is a resident of a country that does not have an income tax treaty with the United States. The scholarship is $20,000 to be applied to

tuition, mandatory fees and books, plus benefits in kind consisting of room and board and roundtrip air transportation. College X agrees to pay any U.S. income tax owed by FS with respect to the scholarship. The fair market value of the room and board measured by the amount College X charges non-scholarship students is $6,000. The cost of the roundtrip air transportation is $2,600. Therefore, the total fair market value of the scholarship received by FS is $28,600. However, the amount taxable is limited to the fair market value of the benefits in kind ($8,600) because the portion of the scholarship amount for tuition, fees, and books is not included in gross income under section 117. The applicable rate of withholding is 14 percent under section 1441(b). Therefore, under the gross-up formula, College X is deemed to make a payment of $10,000 ($8,600 divided by (1-.14). The U.S. tax that must be deducted and withheld from the payment under section 1441(b) is $1,400 (.14 × $10,000). College X reports scholarship income of $30,000 and $1,400 of U.S. tax withheld on Forms 1042 and 1042-S.

(g) ***Conduit financing arrangements*** —

(1) ***Duty to withhold.*** A financed entity or other person required to withhold tax under section 1441 with respect to a financing arrangement that is a conduit financing arrangement within the meaning of § 1.881-3(a)(2)(iv) shall be required to withhold under section 1441 as if the district director had determined, pursuant to § 1.881-3(a)(3), that all conduit entities that are parties to the conduit financing arrangement should be disregarded. The amount of tax required to be withheld shall be determined under § 1.881-3(d). The withholding agent may withhold tax at a reduced rate if the financing entity establishes that it is entitled to the benefit of a treaty that provides a reduced rate of tax on a payment of the type deemed to have been paid to the financing entity. Section 1.881-3(a)(3)(ii)(E) shall not apply for purposes of determining whether any person is required to deduct and withhold tax pursuant to this paragraph (g), or whether any party to a financing arrangement is liable for failure to withhold or entitled to a refund of tax under sections 1441 or 1461 to 1464 (except to the extent the amount withheld exceeds the tax liability determined under § 1.881-3(d)). See § 1.1441-7(f) relating to withholding tax liability of the withholding agent in conduit financing arrangements subject to § 1.881-3.

(2) ***Effective date.*** This paragraph (g) is effective for payments made by financed entities on or after September 11, 1995. This paragraph shall not apply to interest payments covered by section 127(g)(3) of the Tax Reform Act of 1984, and to interest payments with respect to other debt obligations issued prior to October 15, 1984 (whether or not such debt was issued by a Netherlands Antilles corporation).

(h) ***Dividend equivalents*** —

(1) ***Withholding on gross amount.*** The gross amount of a dividend equivalent described in section 871(m) and the regulations thereunder is subject to withholding in an amount equal to the gross amount of the dividend equivalent used in computing any net amount that is transferred to or from the taxpayer. Withholding is required on the amount of the dividend equivalent calculated under § 1.871-15(j).

(2) ***Reliance by withholding agent on reasonable determinations.*** For purposes of determining whether a payment is a dividend equivalent and the timing and amount of a dividend equivalent under section 871(m), a withholding agent may rely on the information received from the party to the transaction that is required (as provided in § 1.871-15(p)) to make those determinations, unless the withholding agent knows or has reason to know that the information is incorrect. When a withholding agent fails to withhold the required amount because the party described in § 1.871-15(p) fails to reasonably determine or timely provide information regarding whether a transaction is a section 871(m)

transaction, the timing and amount of any dividend equivalent, or any other information required to be provided pursuant to § 1.871-15(p), and the withholding agent relied, absent actual knowledge to the contrary, on that party's determination or did not timely receive required information, then the failure to withhold is imputed to the party required to make the determinations described in § 1.871-15(p). In that case, the IRS may collect any underwithheld amount from the party to the transaction that was required to make the determinations described in § 1.871-15(p) or timely provide the information and subject that party to applicable interest and penalties as if the party were a withholding agent with respect to the payment of the dividend equivalent made pursuant to the section 871(m) transaction.

(3) ***Effective/applicability date.*** Except for the first sentence of paragraph (h)(1), this paragraph (h) applies to payments made on or after September 18, 2015. The first sentence of paragraph (h)(1) of this section, applies to payments made on or after January 23, 2012.

(i) ***Effective/applicability date.*** Except as otherwise provided in paragraphs (g)(2) and (h)(3) of this section, this section applies to payments made on or after January 6, 2017. (For payments made after June 30, 2014, and before January 6, 2017, see this section as in effect and contained in 26 CFR part 1, revised April 1, 2016. For payments made after December 31, 2000, see this section as in effect and contained in 26 CFR part 1 as revised April 1, 2013.)

[T.D. 6500, 25 FR 12074, Nov. 26, 1960]

Editorial Note: For FEDERAL REGISTER citations affecting § 1.1441-3, see the List of CFR Sections Affected, which appears in the Finding Aids section of the printed volume and at *www.govinfo.gov*.

§ 1.1441-4 Exemptions from withholding for certain effectively connected income and other amounts.

(a) ***Certain income connected with a U.S. trade or business*** —

(1) ***In general.*** No withholding is required under section 1441 on income otherwise subject to withholding if the income is (or is deemed to be) effectively connected with the conduct of a trade or business within the United States and is includible in the beneficial owner's gross income for the taxable year. For purposes of this paragraph (a), an amount is not deemed to be includible in gross income if the amount is (or is deemed to be) effectively connected with the conduct of a trade or business within the United States and the beneficial owner claims an exemption from tax under an income tax treaty because the income is not attributable to a permanent establishment in the United States. To claim a reduced rate of withholding because the income is not attributable to a permanent establishment, see § 1.1441-6(b)(1). This paragraph (a) does not apply to income of a foreign corporation to which section 543(a)(7) applies for the taxable year or to compensation for personal services performed by an individual. See paragraph (b) of this section for compensation for personal services performed by an individual.

(2) ***Withholding agent's reliance on a claim of effectively connected income*** —

(i) ***In general.*** Absent actual knowledge or reason to know otherwise, a withholding agent may rely on a claim of exemption based upon paragraph (a)(1) of this section if, prior to the payment to the foreign person, the withholding agent can reliably associate the payment with a Form W-8 upon which it can rely to treat the payment as made to a foreign beneficial owner in accordance with § 1.1441-1(e)(1)(ii). For purposes of this paragraph (a), a withholding certificate is valid

only if, in addition to other applicable requirements, it includes the taxpayer identifying number of the person whose name is on the Form W-8 and represents, under penalties of perjury, that the amounts for which the certificate is furnished are effectively connected with the conduct of a trade or business in the United States and is includable in the beneficial owner's gross income for the taxable year. In the absence of a reliable claim that the income is effectively connected with the conduct of a trade or business in the United States, the income is presumed not to be effectively connected, except as otherwise provided in paragraph (a) (2)(ii) or (3) of this section. See § 1.1441-1(e)(4)(ii)(C) for the period of validity applicable to a certificate provided under this section and § 1.1441-1(e)(4)(ii)(D) for changes in circumstances arising during the taxable year indicating that the income to which the certificate relates is not, or is no longer expected to be, effectively connected with the conduct of a trade or business within the United States. A withholding certificate shall be effective only for the item or items of income specified therein. The provisions of § 1.1441-1(b)(3)(iv) dealing with a 90-day grace period shall apply for purposes of this section.

(ii) *Special rules for U.S. branches of foreign persons* —

(A) ***U.S. branches of certain foreign banks or foreign insurance companies.*** A payment to a U.S. branch described in § 1.1441-1(b)(2)(iv)(B)(3) is presumed to be effectively connected with the conduct of a trade or business in the United States without the need to furnish a certificate if the withholding agent obtains an EIN for the entity, unless the U.S. branch provides a U.S. branch withholding certificate described in § 1.1441-1(e)(3)(v) that represents otherwise. If no certificate is furnished but the income is not, in fact, effectively connected income, then the branch must withhold whether the payment is collected on behalf of other persons or on behalf of another branch of the same entity. See § 1.1441-1(b)(2)(iv) and (b)(6) for general rules applicable to payments to U.S. branches of foreign persons.

(B) ***Other U.S. branches.*** See § 1.1441-1(b)(2)(iv)(E) for similar procedures for other U.S. branches to the extent provided in a determination letter from the IRS.

(3) *Income on notional principal contracts* —

(i) ***General rule.*** Except as otherwise provided in paragraph (a)(3)(iii) of this section, a withholding agent that pays amounts attributable to a notional principal contract described in § 1.863-7(a) or § 1.988-2(e) shall have no obligation to withhold on the amounts paid under the terms of the notional principal contract regardless of whether a withholding certificate is provided. However, a withholding agent must file returns under § 1.1461-1(b) and (c) reporting the income that it must treat as effectively connected with the conduct of a trade or business in the United States under the provisions of this paragraph (a)(3). Except as otherwise provided in paragraph (a)(3)(ii) of this section, a withholding agent must treat the income as effectively connected with the conduct of a U.S. trade or business if the income is paid to, or to the account of, a qualified business unit of a foreign person located in the United States or, if the payment is paid to, or to the account of, a qualified business unit of a foreign person located outside the United States, the withholding agent knows, or has reason to know, the payment is effectively connected with the conduct of a trade or business within the United States. Income on a notional principal contract does not include the amount characterized as interest under the provisions of § 1.446-3(g)(4).

(ii) ***Exception for certain payments.*** A payment shall not be treated as effectively connected with the conduct of a trade or business within the United States for purposes of paragraph (a)(3)(i) of this section even if no withholding certificate is furnished if the payee provides a representation in a master agreement that governs the transactions in notional principal contracts between the parties (for example an International Swaps and Derivatives Association (ISDA) Agreement, including the Schedule thereto) or in the confirmation on the particular notional principal contract transaction that the payee is a U.S. person or a non-U.S. branch of a foreign person.

(iii) ***Exception for specified notional principal contracts.*** A withholding agent that makes a payment attributable to a specified notional principal contract described in section 871(m) and the regulations thereunder that is not treated as effectively connected with the conduct of a trade or business within the United States is obligated to withhold on the amount of the payment that is a dividend equivalent.

(b) ***Compensation for personal services of an individual*** —

(1) ***Exemption from withholding.*** Withholding is not required under § 1.1441-1 from salaries, wages, remuneration, or any other compensation for personal services of a nonresident alien individual if such compensation is effectively connected with the conduct of a trade or business within the United States and—

(i) Such compensation is subject to withholding under section 3402 (relating to withholding on wages) and the regulations under that section;

(ii) Such compensation would be subject to withholding under section 3402 but for the provisions of section 3401(a) (not including section 3401(a)(6)) and the regulations under that section. This paragraph (b)(1)(ii) does not apply to payments to a nonresident alien individual from any trust described in section 401(a), any annuity plan described in section 403(a), any annuity, custodial account, or retirement income account described in section 403(b), or an individual retirement account or individual retirement annuity described in section 408. Instead, these payments are subject to withholding under this section to the extent they are exempted from the definition of wages under section 3401(a)(12) or to the extent they are from an annuity, custodial account, or retirement income account described in section 403(b), or an individual retirement account or individual retirement annuity described in section 408. Thus, for example, payments to a nonresident alien individual from a trust described in section 401(a) are subject to withholding under section 1441 and not under section 3405 or section 3406.

(iii) Such compensation is for services performed by a nonresident alien individual who is a resident of Canada or Mexico and who enters and leaves the United States at frequent intervals;

(iv) Such compensation is, or will be, exempt from the income tax imposed by chapter 1 of the Code by reason of a provision of the Internal Revenue Code or a tax treaty to which the United States is a party;

(v) Such compensation is paid after January 3, 1979 as a commission or rebate paid by a ship supplier to a nonresident alien individual, who is employed by a nonresident alien individual, foreign partnership, or foreign corporation in the operation of a ship or ships of foreign registry, for placing orders for supplies to be used in the operation of such ship or ships with the supplier. See section 162(c) and the regulations thereunder for denial of deductions for illegal bribes, kickbacks, and other payments; or

(vi) Compensation that is exempt from withholding under section 3402 by reason of section 3402(e), provided that the employee and his employer enter into an agreement under section 3402(p) to provide for the withholding of income tax upon payments of amounts described in § 31.3401(a)-3(b)(1) of this chapter. An employee who desires to enter into such an agreement should furnish his employer with Form W-4 (withholding exemption certificate) (or such other form as the Internal Revenue Service (IRS) may prescribe). See section 3402(f) and the regulations thereunder and § 31.3402(p)-1 of this chapter.

(2) *Manner of obtaining withholding exemption under tax treaty* —

(i) ***In general.*** In order to obtain the exemption from withholding by reason of a tax treaty provided by paragraph (b)(1)(iv) of this section, a nonresident alien individual must submit a withholding certificate (described in paragraph (b)(2)(ii) of this section) to each withholding agent from whom amounts are to be received. A separate withholding certificate must be filed for each taxable year of the alien individual. If the withholding agent is satisfied that an exemption from withholding is warranted (see paragraph (b)(2)(iii) of this section), the withholding certificate shall be accepted in the manner set forth in paragraph (b)(2)(iv) of this section. The exemption from withholding becomes effective for payments made at least ten days after a copy of the accepted withholding certificate is forwarded to the IRS. The withholding agent may rely on an accepted withholding certificate only if the IRS has not objected to the certificate. For purposes of this paragraph (b)(2)(i), the IRS will be considered to have not objected to the certificate if it has not notified the withholding agent within a 10-day period beginning from the date that the withholding certificate is forwarded to the IRS pursuant to paragraph (b)(2)(v) of this section. After expiration of the 10-day period, the withholding agent may rely on the withholding certificate retroactive to the date of the first payment covered by the certificate. The fact that the IRS does not object to the withholding certificate within the 10-day period provided in this paragraph (b)(2)(i) shall not preclude the IRS from examining the withholding agent at a later date with respect to facts that the withholding agent knew or had reason to know regarding the payment and eligibility for a reduced rate and that were not disclosed to the IRS as part of the 10-day review process.

(ii) ***Withholding certificate claiming withholding exemption.*** The statement claiming an exemption from withholding shall be made on Form 8233 (or an acceptable substitute or such other form as the IRS may prescribe). Form 8233 shall be dated, signed by the beneficial owner under penalties of perjury, and contain the following information—

(A) The individual's name, permanent residence address, taxpayer identifying number (or a copy of a completed Form W-7 or SS-5 showing that a number has been applied for), and the U.S. visa number, if any;

(B) The individual's current immigration status and visa type;

(C) The individual's original date of entry into the United States;

(D) The country that issued the individual's passport and the number of such passport, or the individual's permanent address if a citizen of Canada or Mexico;

(E) The taxable year for which the statement is to apply, the compensation to which it relates, and the amount (or estimated amount if exact amount not known) of such compensation;

(F) A statement that the individual is not a citizen or resident of the United States;

(G) The number of personal exemptions claimed by the individual;

(H) A statement as to whether the compensation to be paid to him or her during the taxable year is or will be exempt from income tax and the reason why the compensation is exempt;

(I) If the compensation is exempt from withholding by reason of an income tax treaty to which the United States is a party, the tax treaty and provision under which the exemption from withholding is claimed and the country of which the individual is a resident;

(J) Sufficient facts to justify the claim in exemption from withholding; and

(K) Any other information as may be required by the form or accompanying instructions in addition to, or in lieu of, the information described in this paragraph (b)(2)(ii).

(iii) ***Review by withholding agent.*** The exemption from withholding provided by paragraph (b)(1)(iv) of this section shall not apply unless the withholding agent accepts (in the manner provided in paragraph (b)(2)(iv) of this section) the statement on Form 8233, "Exemption From Withholding on Compensation for Independent (and Certain Dependent) Personal Services of a Nonresident Alien Individual," (or successor form) supplied by the nonresident alien individual. Before accepting the statement, the withholding agent must examine the statement. If the withholding agent knows or has reason to know that any of the facts or assertions on Form 8233 may be false or that the eligibility of the individual's compensation for the exemption cannot be readily determined, the withholding agent may not accept the statement on Form 8233 and is required to withhold under this section. If the withholding agent accepts the statement and subsequently finds that any of the facts or assertions contained on Form 8233 may be false or that the eligibility of the individual's compensation for the exemption can no longer be readily determined, then the withholding agent shall promptly so notify the IRS by letter, and the withholding agent is not relieved of liability to withhold on any amounts still to be paid. If the withholding agent is notified by the IRS that the eligibility of the individual's compensation for the exemption is in doubt or that such compensation is not eligible for the exemption, the withholding agent is required to withhold under this section. The rules of this paragraph (b)(2) are illustrated by the following examples.

Example 1. C, a nonresident alien individual, submits Form 8233 to W, a withholding agent. The statement on Form 8233 does not include all the information required by paragraph (b)(2)(ii) of this section. Therefore, W has reason to know that he or she cannot readily determine whether C's compensation for personal services is eligible for an exemption from withholding and, therefore, W must withhold.

Example 2. D, a nonresident alien individual, is performing services for W, a withholding agent. W has accepted a statement on Form 8233 submitted by D, according to the provisions of this section. W receives notice from the IRS that the eligibility of D's compensation for a withholding exemption is in doubt. Therefore, W has reason to know that the eligibility of the compensation for a withholding exemption cannot be readily determined, as of the date W receives the notification, and W must withhold tax under section 1441 on amounts paid after receipt of the notification.

Example 3. E, a nonresident alien individual, submits Form 8233 to W, a withholding agent for whom E is to perform personal services. The statement contains all the information requested on Form 8233. E claims an exemption from withholding based on a personal exemption amount computed on the number of days E will perform personal services for

W in the United States. If W does not know or have reason to know that any statement on the Form 8233 is false or that the eligibility of E's compensation for the withholding exemption cannot be readily determined, W can accept the statement on Form 8233 and exempt from withholding the appropriate amount of E's income.

(iv) ***Acceptance by withholding agent.*** If after the review described in paragraph (b)(2)(iii) of this section the withholding agent is satisfied that an exemption from withholding is warranted, the withholding agent may accept the statement by making a certification, verified by a declaration

that it is made under the penalties of perjury, on Form 8233. The certification shall be—

(A) That the withholding agent has examined the statement,

(B) That the withholding agent is satisfied that an exemption from withholding is warranted, and

(C) That the withholding agent does not know or have reason to know that the individual's compensation is not entitled to the exemption or that the eligibility of the individual's compensation for the exemption cannot be readily determined.

(v) ***Copies of Form 8233.*** The withholding agent shall forward one copy of each Form 8233 that is accepted under paragraph (b)(2)(iv) of this section to the IRS within five days of such acceptance. The withholding agent shall retain a copy of Form 8233.

(3) ***Withholding agreements.*** Compensation for personal services of a nonresident alien individual who is engaged during the taxable year in the conduct of a trade or business within the United States may be wholly or partially exempted from the withholding required by § 1.1441-1 if an agreement is reached between the IRS and the alien individual with respect to the amount of withholding required. Such agreement shall be available in the circumstances and in the manner set forth by the Internal Revenue Service, and shall be effective for payments covered by the agreement that are made after the agreement is executed by all parties. The alien individual must agree to timely file an income tax return for the current taxable year.

(4) ***Final payment exemption*** —

(i) ***General rule.*** Compensation for independent personal services of a nonresident alien individual who is engaged during the taxable year in the conduct of a trade or business within the United States may be wholly or partially exempted from the withholding required by § 1.1441-1 from the final payment of compensation for independent personal services. This exemption does not apply to wages. This exemption from withholding is available only once during an alien individual's taxable year and is obtained by the alien individual presenting to the withholding agent a letter in duplicate from a district director stating the amount of compensation subject to the exemption and the amount that would otherwise be withheld from such final payment under section 1441 that shall be paid to the alien individual due to the exemption. The alien individual shall attach a copy of the letter to his or her income tax return for the taxable year for which the exemption is effective.

(ii) ***Final payment of compensation for personal services.*** For purposes of this paragraph, final payment of compensation for personal services means the last payment of compensation, other than wages, for personal services rendered within the United States that the individual expects to receive from any withholding agent during the taxable year.

(iii) ***Manner of applying for final payment exemption.*** In order to obtain the final payment exemption provided by paragraph (b)(4)(i) of this section, the nonresident alien individual (or his or her agent) must file the forms and provide the information required by the district director. Ordinary and necessary business expenses may be taken into account if substantiated to the satisfaction of the district director. The alien individual must submit a statement, signed by him or her and verified by a declaration that it is made under the penalties of perjury, that all the information provided is true and that to his or her knowledge no relevant information has been omitted. The information required to be submitted includes, but is not limited to—

(A) A statement by each withholding agent from whom amounts of gross income effectively connected with the conduct of a trade or business within the United States have been received by the alien individual during the taxable year, of the amount of such income paid and the amount of tax withheld, signed and verified by a declaration that it is made under penalties of perjury;

(B) A statement by the withholding agent from whom the final payment of compensation for personal services will be received, of the amount of such final payment and the amount which would be withheld under § 1.1441-1 if a final payment exemption under paragraph (b)(4)(i) of this section is not granted, signed and verified by a declaration that it is made under penalties of perjury;

(C) A statement by the individual that he or she does not intend to receive any other amounts of gross income effectively connected with the conduct of a trade or business within the United States during the current taxable year;

(D) The amount of tax which has been withheld (or paid) under any other provision of the Code or regulations with respect to any income effectively connected with the conduct of a trade or business within the United States during the current taxable year;

(E) The amount of any outstanding tax liabilities (and interest and penalties relating thereto) from the current taxable year or prior taxable periods; and

(F) The provision of any income tax treaty under which a partial or complete exemption from withholding may be claimed, the country of the individual's residence, and a statement of sufficient facts to justify an exemption pursuant to such treaty.

(iv) ***Letter to withholding agent.*** If the district director is satisfied that the information provided under paragraph (b)(4)(iii) of this section is sufficient, the district director will, after coordination with the Director of the Foreign Operations District, ascertain the amount of the alien individual's tentative income tax for the taxable year with respect to gross income that is effectively connected with the conduct of a trade or business within the United States. After the tentative tax has been ascertained, the district director will provide the alien individual with a letter to the withholding agent stating the amount of the final payment of compensation for personal services that is exempt from withholding, and the amount that would otherwise be withheld under section 1441 that shall be paid to the alien individual due to the exemption. The amount of compensation for personal services exempt from withholding under this paragraph (b)(4) shall not exceed $5,000.

> *Example 1.* On July 15, 1983, B, a non-resident alien individual, appears before a district director with the information required by paragraph (b)(4)(iii) of this section. B has

received personal service income in 1983 from which $3,000 has been withheld under section 1441. On August 1, 1983, B will receive $5,000 in personal service income from W. B does not intend to receive any other income subject to U.S. tax during 1983. Taking into account B's substantiated deductible business expenses, the district director computes the tentative tax liability on B's income effectively connected with the conduct of a trade or business in the United States during 1983 (including the $5,000 payment to be made on August 1, 1983) to be $3,300. B does not owe U.S. tax for any other taxable periods. The amount of B's final payment exemption is determined as follows:
(*1*) The amount of total withholding is $4,500 ($3,000 previously withheld plus $1,500, 30% of the $5,000 final payment);

(*2*) The amount of tentative excess withholding is $1,200 (total withholding of $4,500 minus B's tentative tax liability of $3,300); and

(*3*) To allow B to receive $1,200 of the amount which would otherwise have been withheld from the final payment, the district director allows a withholding exemption for $4,000 of B's final payment. W must withhold $300 from the final payment.

Example 2. The facts are the same as in Example 1 except B will receive a final payment of compensation on August 1, 1983, in the amount of $10,000 and B's tentative tax liability is $3,900. The amount of B's final payment exemption is determined as follows:
(*1*) The amount of total withholding is $6,000 ($3,000 previously withheld plus $3,000, 30% of the $10,000 final payment);

(*2*) The amount of tentative excess withholding is $2,100 (total withholding of $6,000 minus B's tentative tax liability of $3,900); and

(*3*) To allow B to receive $2,100 of the amount which would otherwise be withheld from the final payment, $7,000 of the final payment would have to be exempt from withholding; however, as no more than $5,000 of the final payment can be exempt from withholding under this paragraph (b)(4), the district director allows a withholding exemption for $5,000 of B's final payment. B must file a claim for refund at the end of the taxable year to obtain a refund of $600. W must withhold $1,500 from the final payment.

(5) ***Requirement of return.*** The tentative tax determined by the district director under paragraph (b)(4)(iv) of this section or by the Director of the Foreign Operations District under the withholding agreement procedure of paragraph (b)(3) of this section shall not constitute a final determination of the income tax liability of the nonresident alien individual, nor shall such determination constitute a tax return of the nonresident alien individual for any taxable period. An alien individual who applies for or obtains an exemption from withholding under the procedures of paragraphs (b) (2), (3), or (4) of this section is not relieved of the obligation to file a return of income under section 6012.

(6) *Personal exemption* —

(i) ***In general.*** To determine the tax to be withheld at source under § 1.1441-1 from remuneration paid for personal services performed within the United States by a nonresident alien individual and from scholarship and fellowship income described in paragraph (c) of this section, a withholding agent may take into account one personal exemption pursuant to sections 873(b)(3) and 151 regardless of whether the income is effectively connected. For purposes of withholding under section 1441 on remuneration for personal services, the exemption must be prorated upon a daily basis for the period during which the personal services are performed within the United States by the nonresident alien individual by dividing by 365 the number of days in the period during which the individual is present in the United States for the purpose of performing the services and multiplying the result by the amount of the personal exemption in effect for the taxable year. See § 31.3402(f)(6)-1 of this chapter.

(ii) ***Multiple exemptions.*** More than one personal exemption may be claimed in the case of a resident of a contiguous country or a national of the United States under section 873(b)(3). In addition, residents of a country with which the United States has an income tax treaty in effect may be eligible to claim more than one personal exemption if the treaty so provides. Claims for more than one personal exemption shall be made on the withholding certificate furnished to the withholding agent. The exemption must be prorated on a daily basis in the same manner as described in paragraph (b)(6)(i) of this section.

(iii) ***Special rule where both certain scholarship and compensation income are received.*** The fact that both non-compensatory scholarship income and compensation income (including compensatory scholarship income) are received during the taxable year does not entitle the taxpayer to claim more than one personal exemption amount (or more than the additional amounts permitted under paragraph (b)(6)(ii) of this section). Thus, if a nonresident alien student receives non-compensatory taxable scholarship income from one withholding agent and compensation income from another withholding agent, no more than the total personal exemption amount permitted under the Internal Revenue Code or under an income tax treaty may be taken into account by both withholding agents. For this purpose, the withholding agent may rely on a representation from the beneficial owner that the exemption amount claimed does not exceed the amount permissible under this section.

(c) *Special rules for scholarship and fellowship income* —

(1) ***In general.*** Under section 871(c), certain amounts paid as a scholarship or fellowship for study, training, or research in the United States to a nonresident alien individual temporarily present in the United States as a nonimmigrant under section 101(a)(15) (F), (J), (M), or (Q) of the Immigration and Nationality Act are treated as income effectively connected with the conduct of a trade or business within the United States. The amounts described in the preceding sentence are those amounts that do not represent compensation for services. Such amounts (as described in the second sentence of section 1441(b)) are subject to withholding under section 1441, but at the lower rate of 14 percent. That rate may be reduced under the provisions of an income tax treaty. Claims of a reduced rate under an income tax treaty shall be made under the procedures described in § 1.1441-6(b)(1). Therefore, claims for reduction in withholding under an income tax treaty on amounts described in this paragraph (c)(1) may not be made on a Form 8233. However, if the payee is receiving both compensation for personal services (including compensatory scholarship income) and non-compensatory scholarship income described in this paragraph (c)(1) from the same withholding agent, claims for reduction of withholding on both types of income may be made on Form 8233.

(2) ***Alternate withholding election.*** A withholding agent may elect to withhold on the amounts described in paragraph (c)(1) of this section at the rates applicable under section 3402, as if the income were wages. Such election shall be made by obtaining a Form W-4 (or an acceptable substitute or such other form as the IRS may prescribe) from the beneficial owner. The fact that the withholding agent asks the beneficial owner to furnish a Form W-4 for such fellowship or scholarship income or to take such income into account in preparing such Form W-4 shall serve as notice to the beneficial owner that the income is being treated as wages for purposes of withholding tax under section 1441.

(d) ***Annuities received under qualified plans.*** Withholding is not required under section § 1.1441-1 in the case of any amount received as an annuity if the amount is exempt from tax under section 871(f) and the regulations under that section. The withholding agent may exempt the payment from withholding if, prior to payment, it can reliably associate the payment with documentation upon which it can rely to treat the payment as made to a beneficial owner in accordance with § 1.1441-1(e)(1)(ii). A beneficial owner withholding certificate furnished for purposes of claiming the benefits of the exemption under this paragraph (d) is valid only if, in addition to other applicable requirements, it contains a taxpayer identifying number.

(e) ***Per diem of certain alien trainees.*** Withholding is not required under section 1441(a) and § 1.1441-1 on per diem amounts paid for subsistence by the United States Government (directly or by contract) to any nonresident alien individual who is engaged in any program of training in the United States under the Mutual Security Act of 1954, as amended (22 U.S.C. chapter 24). This rule shall apply even though such amounts are subject to tax under section 871. Any exemption from withholding pursuant to this paragraph (e) applies without a requirement that documentation be furnished to the withholding agent. However, documentation may have to be furnished for purposes of the information reporting provisions under section 6041 and backup withholding under section 3406. The exemption from withholding granted by this paragraph (e) is not a determination that the amounts are not fixed or determinable annual or periodical income.

(f) ***Failure to receive withholding certificates timely or to act in accordance with applicable presumptions.*** See applicable procedures described in § 1.1441-1(b)(7) in the event the withholding agent does not hold an appropriate withholding certificate or other appropriate documentation at the time of payment or does not act in accordance with applicable presumptions described in paragraph (a) (2)(i), (2)(ii), or (3) of this section.

(g) ***Effective/applicability date.*** This section applies to payments made on or after January 6, 2017. (For payments made after June 30, 2014, and before January 6, 2017, see this section as in effect and contained in 26 CFR part 1, revised April 1, 2016. For payments made after December 31, 2000, see this section as in effect and contained in 26 CFR part 1 revised April 1, 2013.)

[T.D. 6500, 25 FR 12075, Nov. 26, 1960]

Editorial Note: For FEDERAL REGISTER citations affecting § 1.1441-4, see the List of CFR Sections Affected, which appears in the Finding Aids section of the printed volume and at *www.govinfo.gov*.

§ 1.1441-5 Withholding on payments to partnerships, trusts, and estates.

(a) ***In general.*** This section describes the rules that apply to payments made to partnerships, trusts, and estates. Paragraph (b) of this section prescribes the rules that apply to a withholding agent making a payment to a U.S. partnership, trust, or estate. It also prescribes the obligations of a U.S. partnership,

trust, or estate that makes a payment to a foreign partner, beneficiary, or owner. Paragraph (c) of this section prescribes rules that apply to a withholding agent that makes a payment to a foreign partnership. Paragraph (d) of this section provides presumption rules that apply to payments made to foreign partnerships. Paragraph (e) of this section prescribes rules, including presumption rules, that apply to a withholding agent that makes a payment to a foreign trust or foreign estate.

(b) ***Rules applicable to U.S. partnerships, trusts, and estates*** —

(1) ***Payments to U.S. partnerships, trusts, and estates.*** No withholding is required under section 1.1441-1(b)(1) on a payment of an amount subject to withholding (as defined in § 1.1441-2(a)) that a withholding agent may treat as made to a U.S. payee. Therefore, if a withholding agent can reliably associate (within the meaning of § 1.1441-2(b)(vii)) a Form W-9 provided in accordance with § 1.1441-1(d)(2) or (4) by a U.S. partnership, U.S. trust, or a U.S. estate the withholding agent may treat the payment as made to a U.S. payee and the payment is not subject to withholding under section 1441 even though the partnership, trust, or estate may have foreign partners, beneficiaries, or owners. A withholding agent is also not required to withhold under section 1441 on a payment it makes to an entity presumed to be a U.S. payee under paragraphs (d)(2) and (e)(6)(ii) of this section.

(2) ***Withholding by U.S. payees*** —

(i) ***U.S. partnerships*** —

(A) ***In general.*** A U.S. partnership is required to withhold under § 1.1441-1 as a withholding agent on an amount subject to withholding (as defined in § 1.1441-2(a)) that is includible in the gross income of a partner that is a foreign person. Subject to paragraph (b)(2)(v) of this section, a U.S. partnership shall withhold when any distributions that include amounts subject to withholding (including guaranteed payments made by a U.S. partnership) are made. To the extent a foreign partner's distributive share of income subject to withholding has not actually been distributed to the foreign partner, the U.S. partnership must withhold on the foreign partner's distributive share of the income on the earlier of the date that the statement required under section 6031(b) is mailed or otherwise provided to the partner or the due date for furnishing the statement.

(B) ***Effectively connected income of partners.*** Withholding on items of income that are effectively connected income in the hands of the partners who are foreign persons is governed by section 1446 and not by this section. In such a case, partners in a domestic partnership are not required to furnish a withholding certificate in order to claim an exemption from withholding under section 1441(c)(1) and § 1.1441-4.

(ii) ***U.S. simple trusts.*** A U.S. trust that is described in section 651(a) (a U.S. simple trust) is required to withhold under chapter 3 of the Internal Revenue Code as a withholding agent on the distributable net income includible in the gross income of a foreign beneficiary to the extent the distributable net income is an amount subject to withholding (as defined in § 1.1441-2(a)). A U.S. simple trust shall withhold when a distribution is made to a foreign beneficiary. The U.S. trust may make a reasonable estimate of the portion of the distribution that constitutes distributable net income consisting of an amount subject to withholding and apply the appropriate rate of withholding to the estimated amount. If, at the end of the taxable year in which the distribution is made, the U.S. simple trust determines that it underwithheld under section 1441 or 1442, the trust shall be liable as a withholding agent for the amount under withheld under section 1461. No penalties shall be imposed for failure to withhold and deposit the tax if the U.S. simple trust's estimate was reasonable and the trust pays the underwithheld

amount on or before the due date of Form 1042 under section 1461. Any payment of underwithheld amounts by the U.S. simple trust shall not be treated as income subject to additional withholding even if that amount is treated as additional income to the foreign beneficiary, unless the additional amount is income to the foreign beneficiary as a result of a contractual arrangement between the parties regarding the satisfaction of the foreign beneficiary's tax liability. To the extent a U.S. simple trust is required to, but does not, distribute such income to a foreign beneficiary, the U.S. trust must withhold on the foreign beneficiary's allocable share at the time the income is required (without extension) to be reported on Form 1042-S under § 1.1461-1(c).

(iii) ***U.S. complex trusts and U.S. estates.*** A U.S. trust that is not a trust described in section 651(a) (see paragraph (b)(2)(ii) of this section) or sections 671 through 679 (see paragraph (b)(2)(iv) of this section) (a U.S. complex trust) is required to withhold under chapter 3 of the Internal Revenue Code (Code) as a withholding agent on the distributable net income includible in the gross income of a foreign beneficiary to the extent the distributable net income consists of an amount subject to withholding (as defined in § 1.1441-2(a)) that is, or is required to be, distributed currently. The U.S. complex trust shall withhold when a distribution is made to a foreign beneficiary. The trust may use the same procedures regarding an estimate of the amount subject to withholding as a U.S. simple trust under paragraph (b)(2)(ii) of this section. To the extent an amount subject to withholding is required to be, but is not actually, distributed, the U.S. complex trust must withhold on the foreign beneficiary's allocable share at the time the income is required to be reported on Form 1042-S under § 1.1461-1(c), without extension. A U.S. estate is required to withhold under chapter 3 of the Code on the distributable net income includible in the gross income of a foreign beneficiary to the extent the distributable net income consists of an amount subject to withholding (as defined in § 1.1441-2(a)) that is actually distributed. A U.S. estate may also use the reasonable estimate procedures of paragraph (b)(2)(ii) of this section. However, those procedures apply to an estate that has a taxable year other than a calendar year only if the estate files an amended return on Form 1042 for the calendar year in which the distribution was made and pays the underwithheld tax and interest within 60 days after the close of the taxable year in which the distribution was made.

(iv) ***U.S. grantor trusts.*** A U.S. trust that is described in section 671 through 679 (a U.S. grantor trust) must withhold on any income includible in the gross income of a foreign person that is treated as an owner of the grantor trust to the extent the amount includible consists of an amount that is subject to withholding (as described in § 1.1441-2(a)). The withholding must occur at the time the income is received by, or credited to, the trust.

(v) ***Subsequent distribution.*** If a U.S. partnership or U.S. trust withholds on a foreign partner, beneficiary, or owner's share of an amount subject to withholding before the amount is actually distributed to the partner, beneficiary, or owner, withholding is not required when the amount is subsequently distributed.

(vi) ***Coordination with chapter 4 requirements for U.S. partnerships, trusts, and estates.*** To the extent that a U.S. partnership is required to withhold on an amount under chapter 4 with respect to a partner, beneficiary, or owner, the partnership, trust, or estate must apply the rules described in § 1.1473-1(a)(5) to determine when it must withhold on the amount under chapter 4. In a case in which withholding applies under chapter 4 to such an amount, see § 1.1441-3(a)(2) to coordinate with withholding that otherwise applies to such an amount under this paragraph (b).

(c) ***Foreign partnerships*** —

(1) *Determination of payee* —

(i) ***Payments treated as made to partners.*** Except as otherwise provided in paragraph (c)(1)(ii) or (iv) of this section, the payees of a payment to a person that the withholding agent may treat as a nonwithholding foreign partnership under paragraph (c)(3)(i) or (d)(2) of this section are the partners (looking through partners that are foreign intermediaries or flow-through entities) as follows—

(A) If the withholding agent can reliably associate a partner's distributive share of the payment with a valid Form W-9 provided under § 1.1441-1(d), the partner is a U.S. payee;

(B) If the withholding agent can reliably associate a partner's distributive share of the payment with a valid Form W-8, or other appropriate documentation, provided under § 1.1441-1(e)(1)(ii), the partner is a payee that is a foreign beneficial owner;

(C) If the withholding agent can reliably associate a partner's distributive share of the payment with a qualified intermediary withholding certificate under § 1.1441-1(e)(3)(ii), a nonqualified intermediary withholding certificate under § 1.1441-1(e)(3)(iii), or a U.S. branch certificate under § 1.1441-1(e)(3)(v) (including one provided by a territory financial institution), then the rules of § 1.1441-1(b)(2)(v) shall apply to determine who the payee is in the same manner as if the partner's distributive share of the payment had been paid directly to such intermediary or U.S. branch or territory financial institution;

(D) If the withholding agent can reliably associate the partner's distributive share with a withholding foreign partnership certificate under paragraph (c)(2)(iv) of this section or a nonwithholding foreign partnership certificate under paragraph (c)(3)(iii) of this section, then the rules of this paragraph (c)(1)(i) or paragraph (c)(1)(ii) of this section shall apply to determine whether the payment is treated as made to the partners of the higher-tier partnership under this paragraph (c)(1)(i) or to the higher-tier partnership itself (under the rules of paragraph (c)(1)(ii) of this section) in the same manner as if the partner's distributive share of the payment had been paid directly to the higher-tier foreign partnership;

(E) If the withholding agent can reliably associate the partner's distributive share with a withholding certificate described in paragraph (e) of this section regarding a foreign trust or estate, then the rules of paragraph (e) of this section shall apply to determine who the payees are; and

(F) If the withholding agent cannot reliably associate the partner's distributive share with a withholding certificate or other appropriate documentation, the partners are considered to be the payees and the presumptions described in paragraph (d)(3) of this section shall apply to determine their classification and status.

(ii) ***Payments treated as made to the partnership.*** A payment to a person that the withholding agent may treat as a foreign partnership is treated as a payment to the foreign partnership and not to its partners only if—

(A) The withholding agent can reliably associate the payment with a withholding certificate described in paragraph (c)(2)(iv) of this section (withholding certificate of a withholding foreign partnership);

(B) The withholding agent can reliably associate the payment with a withholding certificate described in paragraph (c)(3)(iii) of this section (nonwithholding foreign partnership) certifying that the payment is income that is effectively connected with the conduct of a trade or business in the United States; or

(C) The withholding agent can treat the income as effectively connected income under the presumption rules of § 1.1441-4(a)(2)(ii) or (3)(i).

(iii) ***Rules for reliably associating a payment with documentation.*** For rules regarding the reliable association of a payment with documentation, see § 1.1441-1(b)(2)(vii). In the absence of documentation, see §§ 1.1441-1(b)(3) and 1.6049-5(d) and paragraphs (d) and (e)(6) of this section for applicable presumptions.

(iv) ***Coordination with chapter 4 for payments made to foreign partnerships.*** A withholding agent that makes a payment of U.S. source FDAP income to a foreign partnership that is a withholdable payment to which withholding under chapter 4 applies must apply the rules described in § 1.1473-1(a)(5)(vi) to determine when the payment is treated as made to a partner in the partnership for purposes of chapter 4. In a case in which withholding applies under chapter 4 to a withholdable payment made to a foreign partnership, see § 1.1441-3(a)(2) to coordinate with withholding otherwise required under this paragraph (c) with respect to the amount of the payment included in the gross income of a partner. For when a withholding agent may reliably associate a withholdable payment with a chapter 4 withholding rate pool in lieu of obtaining documentation for each payee include in the pool, see § 1.1441-1(e)(3)(iv)(C)(2) (substituting the term *nonwithholding foreign partnership* for the term *nonqualified intermediary*).

(v) ***Examples.*** The rules of paragraphs (c)(1)(i) and (ii) of this section are illustrated by the following examples. Each example assumes that all payments are not withholdable payments and thus no withholding applies under chapter 4.

Example 1. FP is a nonwithholding foreign partnership organized in Country X. FP has two partners, FC, a foreign corporation, and USP, a U.S. partnership. USWH, a U.S. withholding agent, makes a payment of U.S. source interest to FP that is not a withholdable payment. FP has provided USWH with a valid nonwithholding foreign partnership certificate, as described in paragraph (c)(3)(iii) of this section, with which it associates a beneficial owner withholding certificate from FC and a Form W-9, "Request for Taxpayer Identification Number and Certification," from USP together with the withholding statement required by paragraph (c)(3)(iv) of this section. USWH can reliably associate the payment of interest with the withholding certificates from FC and USP. Under paragraph (c)(1)(i) of this section, the payees of the interest payment are FC and USP.

Example 2. The facts are the same as in *Example 1,* except that FP1, a nonwithholding foreign partnership, is a partner in FP rather than USP. FP1 has two partners, A and B, both foreign persons. FP provides USWH with a valid nonwithholding foreign partnership certificate, as described in paragraph (c)(3)(iii) of this section, with which it associates a beneficial owner withholding certificate from FC and a nonwithholding foreign partnership certificate from FP1. In addition, foreign beneficial owner withholding certificates from A and B are associated with the nonwithholding foreign partnership withholding certificate from FP1. FP also provides the withholding statement required by paragraph (c)(3)(iv) of this section. USWH can reliably associate the interest payment with the withholding certificates provided by FC, A, and B. Therefore, under paragraph (c)(1)(i) of this section, the payees of the interest payment are FC, A, and B.

Example 3. USWH makes a payment of U.S. source dividends to WFP, a withholding foreign partnership, that is not a withholdable payment. WFP has two partners, FC1 and FC2, both foreign corporations. USWH can reliably associate the payment with a valid withholding foreign partnership withholding certificate from WFP. Therefore, under paragraph (c)(1)(ii)(A) of this section, WFP is the payee of the interest.

Example 4. USWH makes a payment of U.S. source royalties that is not a withholdable payment to FP, a foreign partnership. USWH can reliably associate the royalties with a valid withholding certificate from FP on which FP certifies that the income is effectively connected with the conduct of a trade or business in the United States. Therefore, under paragraph (c)(1)(ii)(B) of this section, FP is the payee of the royalties.

(2) ***Withholding foreign partnerships*** —

(i) ***Reliance on claim of withholding foreign partnership status.*** A withholding foreign partnership is a foreign partnership that has entered into an agreement with the IRS, as described in paragraph (c)(2)(ii) of this section, with respect to distributions and guaranteed payments it makes to its partners. A withholding agent that can reliably associate a payment with a certificate described in paragraph (c)(2)(iv) of this section may treat the person to whom it makes the payment as a withholding foreign partnership for purposes of withholding under chapters 3 and 4 of the Code, information reporting under chapter 61 of the Code, backup withholding under section 3406, and withholding under other provisions of the Code. Furnishing such a certificate is in lieu of transmitting to a withholding agent withholding certificates or other appropriate documentation for its partners. Although the withholding foreign partnership generally will be required to obtain withholding certificates or other appropriate documentation from its partners pursuant to its agreement with the IRS, it generally will not be required to attach such documentation to its withholding foreign partnership withholding certificate to the extent it is permitted to act as a withholding foreign partnership with respect to the payment under its agreement. In addition, the IRS may permit a foreign partnership to act as a qualified intermediary under § 1.1441-1(e)(5)(ii)(D) with respect to its partners in appropriate circumstances.

(ii) ***Withholding agreement.*** The IRS may, upon request, enter into a withholding agreement with a foreign partnership pursuant to such procedures as the IRS may prescribe in published guidance (see § 601.601(d)(2) of this chapter). Under the withholding agreement, a foreign partnership shall generally be subject to the applicable withholding and reporting provisions applicable to withholding agents and payors as defined in § 1.6049-4(a) under chapters 3, 4, and 61 of the Code, section 3406, the regulations under those provisions, and other withholding provisions of the Code, except to the extent provided under the withholding agreement. Under the withholding agreement, a foreign partnership may agree to act as an acceptance agent to perform the duties described in § 301.6109-1(d)(3)(iv)(A) of this chapter. For a foreign partnership that is an FFI, the withholding agreement will require the partnership to assume the requirements of a participating FFI, a registered deemed-compliant FFI, or an FFI treated as a deemed-compliant FFI under an applicable IGA that is subject to due diligence and reporting requirements with respect to its U.S. accounts similar to those applicable to a registered deemed-compliant FFI under § 1.1471-5(f)(1). The withholding agreement may specify the manner in which applicable procedures for adjustments for underwithholding and overwithholding, including refund procedures, apply to the withholding foreign partnership and its partners and the extent to which applicable procedures may be modified. In particular, the withholding agreement may allow a withholding foreign partnership to claim refunds of

overwithheld amounts on behalf of its customers. In addition, the withholding agreement must specify the manner in which the IRS will verify the partnership's compliance with its agreement, including the requirements for a periodic review of the partnership's compliance with the withholding agreement and the procedures for the partnership to certify to its compliance with the withholding agreement. A withholding foreign partnership must file a return on Form 1042, "Annual Withholding Tax Return for U.S. Source Income of Foreign Persons," and information returns on Form 1042-S, "Foreign Person's U.S. Source Income Subject to Withholding." The withholding agreement may also require a withholding foreign partnership to file a partnership return under section 6031(a) and partner statements under 6031(b), including for each U.S. partner to the extent required in the agreement. Additionally, a partnership that is an FFI will be required to file Form 8966, "FATCA Report" to the extent provided in the withholding agreement.

(iii) ***Withholding responsibility.*** A withholding foreign partnership must assume primary withholding responsibility under both chapters 3 and 4 of the Code to the extent required in the withholding agreement. It is not required to provide information to the withholding agent regarding each partner's distributive share of the payment (including a withholdable payment). The withholding foreign partnership will be responsible for reporting the payments under §§ 1.1461-1(c), 1.1474-1(d), and chapter 61 of the Code and filing Form 1042 (to the extent required in the withholding agreement). A withholding agent making a payment to a withholding foreign partnership is not required to withhold any amount under chapters 3 and 4 of the Code on the payment unless it has actual knowledge or reason to know that the foreign partnership is not acting as a withholding foreign partnership with respect to the payment or has not withheld to the extent required. The withholding foreign partnership shall withhold the payments under the same procedures and at the same time as prescribed for withholding by a U.S. partnership under paragraph (b)(2) of this section, except that, for purposes of determining the partner's status, the provisions of paragraph (d)(4) of this section shall apply.

(iv) ***Withholding certificate from a withholding foreign partnership.*** The rules of § 1.1441-1(e)(4) shall apply to withholding certificates described in this paragraph (c)(2)(iv). A withholding certificate furnished by a withholding foreign partnership is valid with regard to any partner on whose behalf the certificate is furnished only if it is furnished on a Form W-8, an acceptable substitute form, or such other form as the IRS may prescribe, it is signed under penalties of perjury by a partner with authority to sign for the partnership, its validity has not expired, and it contains the information, statement, and certifications described in this paragraph (c)(2)(iv) as follows—

(A) The name, permanent residence address (as described in § 1.1441-1(e)(2)(ii)), the employer identification number of the partnership, the country under the laws of which the partnership is created or governed, the chapter 4 status of the partnership if required for purposes of chapter 4 or if the partnership provides (or will provide) a withholding statement associated with the Form W-8 allocating a payment to a chapter 4 withholding rate pool of U.S. payees under § 1.6049-4(c)(4) with respect to its partners, and the GIIN of the partnership (if applicable). If the partnership provides (or will provide) a chapter 4 withholding rate pool of U.S. payees as described in the preceding sentence, the partnership must certify to its chapter 4 status as a participating FFI (including a reporting Model 2 FFI) or registered deemed-compliant FFI (including a reporting Model 1 FFI);

(B) A certification that the partnership is a withholding foreign partnership within the meaning of paragraph (c)(2)(i) of this section, and, for a partnership that is an FFI receiving a withholdable payment, a certification that the partnership is acting as a participating FFI, a registered deemed-compliant FFI, or a nonreporting IGA FFI (as defined in § 1.1471-1(b)(83)); and

(C) Any other information, certifications or statements as may be required by the withholding foreign partnership agreement with the IRS or the form or accompanying instructions in addition to, or in lieu of, the information, statements, and certifications described in this paragraph (c)(2)(iv).

(3) *Nonwithholding foreign partnerships* —

(i) ***Reliance on claim of foreign partnership status.*** A withholding agent may treat a person as a nonwithholding foreign partnership if it receives from that person a nonwithholding foreign partnership withholding certificate as described in paragraph (c)(3)(iii) of this section. A withholding agent that does not receive a nonwithholding foreign partnership withholding certificate or does not receive a valid withholding certificate from an entity it knows, or has reason to know, is a foreign partnership must apply the presumption rules of §§ 1.1441-1(b)(3) and 1.6049-5(d) and paragraphs (d) and (e)(6) of this section. In addition, to the extent a withholding agent cannot, prior to a payment, reliably associate the payment with valid documentation from a payee that is associated with the nonwithholding foreign partnership withholding certificate or has insufficient information to report the payment on Form 1042-S or Form 1099, to the extent reporting is required, the withholding agent must apply the presumption rules. See § 1.1441-1(b)(2)(vii)(A) and (B) for rules regarding reliable association. See, however, § 1.1441-1(e)(3)(iv)(C)(2) for when a withholding agent may reliably associate a withholdable payment with a chapter 4 withholding rate pool in lieu of obtaining documentation for each payee included in the pool (substituting the term nonwithholding foreign partnership for the term nonqualified intermediary). See also § 1.1441-1(e)(3)(iv)(A) for when a withholding agent may reliably associate a payment with a chapter 4 withholding rate pool of U.S. payees. See paragraph (c)(3)(iv) of this section and § 1.1441-1(e)(3)(iv) for alternative procedures permitting allocation information to be received after a payment is made.

(ii) ***Reliance on claim of reduced withholding by a partnership for its partners.*** This paragraph (c)(3)(ii) describes the manner in which a withholding agent may rely on a claim of reduced withholding when making a payment to a nonwithholding foreign partnership. To the extent that a withholding agent treats a payment to a nonwithholding foreign partnership as a payment to the nonwithholding foreign partnership's partners (whether direct or indirect) in accordance with paragraph (c)(1)(i) of this section, it may rely on a claim for reduced withholding by the partner if, prior to the payment, the withholding agent can reliably associate the payment (within the meaning of § 1.1441-1(b)(2)(vii)) with a valid withholding certificate or other appropriate documentation from the partner that establishes entitlement to a reduced rate of withholding. A withholding certificate or other appropriate documentation that establishes entitlement to a reduced rate of withholding is a beneficial owner withholding certificate described in § 1.1441-1(e)(2)(i), documentary evidence described in § 1.1441-6(c)(3) or (4) or § 1.6049-5(c)(1) (for a partner claiming to be a foreign person and a beneficial owner, determined under the provisions of § 1.1441-1(c)(6)), a Form W-9 described in § 1.1441-1(d) (for a partner claiming to be a U.S. payee), a withholding foreign partnership withholding certificate described in paragraph (c)(2)(iv) of this section, or a withholding statement allocating the payment to a chapter 4 withholding rate pool of U.S. payees. For when the withholding agent can reliably

associate the payment with a chapter 4 withholding rate pool, see paragraph (c)(3)(i) of this section. See also § 1.1441-3(a)(2) (coordinating withholding under chapter 3 when withholding under chapter 4 is applied to a payment). Unless a nonwithholding foreign partnership withholding certificate is provided for income claimed to be effectively connected with the conduct of a trade or business in the United States, a claim must be presented for each portion of the payment that represents an item of income includible in the distributive share of a partner as required under paragraph (c)(3)(iii)(C) of this section. When making a claim for several partners, the partnership may present a single nonwithholding foreign partnership withholding certificate to which the partners' certificates or other appropriate documentation are associated. Where the nonwithholding foreign partnership withholding certificate is provided for income claimed to be effectively connected with the conduct of a trade or business in the United States under paragraph (c)(3)(iii)(D) of this section, the claim may be presented without having to identify any partner's distributive share of the payment.

(iii) ***Withholding certificate from a nonwithholding foreign partnership.*** A nonwithholding foreign partnership shall provide a nonwithholding foreign partnership withholding certificate with respect to reportable amounts received by the nonwithholding foreign partnership. A nonwithholding foreign partnership withholding certificate is valid only to the extent it is furnished on a Form W-8 (or an acceptable substitute form or such other form as the IRS may prescribe), it is signed under penalties of perjury by a partner with authority to sign for the partnership, its validity has not expired, and it contains the information, statements, and certifications described in this paragraph (c)(3)(iii) and paragraph (c)(3)(iv) of this section, and the withholding certificates and other appropriate documentation for all the persons to whom the certificate relates are associated with the certificate. The rules of § 1.1441-1(e)(4) shall apply to withholding certificates described in this paragraph (c)(3)(iii). No withholding certificates or other appropriate documentation from persons who derive income through a partnership (whether or not U.S. exempt recipients) are required to be associated with the nonwithholding foreign partnership withholding certificate if the certificate is furnished solely for income claimed to be effectively connected with the conduct of a trade or business in the United States. Withholding certificates and other appropriate documentation that may be associated with the nonwithholding foreign partnership withholding certificate consist of beneficial owner withholding certificates under § 1.1441-1(e)(2)(i), intermediary withholding certificates under § 1.1441-1(e)(3)(i), withholding foreign partnership withholding certificates under paragraph (c)(2)(iv) of this section, nonwithholding foreign partnership withholding certificates under this paragraph (c)(3)(iii), withholding certificates from foreign trusts or estates under paragraph (e) of this section, documentary evidence described in § 1.1441-6(c)(3) or (4) or documentary evidence described in § 1.6049-5(c)(1), and any other documentation or certificates applicable under other provisions of the Internal Revenue Code or regulations that certify or establish the status of the payee or beneficial owner as a U.S. or a foreign person. Nothing in this paragraph (c)(3)(iii) shall require a nonwithholding foreign partnership to furnish original documentation. Copies of certificates or documentary evidence may be transmitted to the U.S. withholding agent, in which case the nonwithholding foreign partnership must retain the original documentation for the same time period that the copy is required to be retained by the withholding agent under § 1.1441-1(e)(4)(iii) and must provide it to the withholding agent upon request. The information, statement, and certifications required on the withholding certificate are as follows—

(A) The name, permanent residence address (as described in § 1.1441-1(e)(2)(ii)), the employer identification number of the partnership, if any, the country under the laws of which the partnership is created or governed, and the chapter 4 status of the partnership (for a nonwithholding foreign partnership receiving a withholdable payment or providing a withholding statement associated with the Form W-8 allocating a payment to a chapter 4 withholding rate pool of U.S. payees), and the GIIN of the partnership (if applicable);

(B) A certification that the person whose name is on the certificate is a foreign partnership;

(C) A withholding statement associated with the nonwithholding foreign partnership withholding certificate that provides all of the information required by paragraph (c)(3)(iv) of this section and § 1.1441-1(e)(3)(iv). No withholding statement is required, however, for a nonwithholding foreign partnership withholding certificate furnished for income claimed to be effectively connected with the conduct of a trade or business in the United States;

(D) A certification that the income is effectively connected with the conduct of a trade or business in the United States, if applicable; and

(E) Any other information, certifications, or statements required by the form or accompanying instructions in addition to, or in lieu of, the information and certifications described in this paragraph (c)(3)(iii).

(iv) ***Withholding statement provided by nonwithholding foreign partnership and coordination with chapter 4.*** The provisions of § 1.1441-1(e)(3)(iv) (regarding a withholding statement) shall apply to a nonwithholding foreign partnership by substituting the term nonwithholding foreign partnership for the term nonqualified intermediary, including when a nonwithholding foreign partnership may provide to a withholding agent a withholding statement that includes a chapter 4 withholding rate pool in lieu of information with respect to each partner that is a payee of a payment.

(v) ***Withholding and reporting by a foreign partnership.*** A nonwithholding foreign partnership described in this paragraph (c)(3) that receives an amount subject to withholding (as defined in § 1.1441-2(a)) shall be required to withhold and report such payment under chapter 3 of the Code and the regulations thereunder except as otherwise provided in this paragraph (c)(3)(v). A nonwithholding foreign partnership shall not be required to withhold and report if it has provided a valid nonwithholding foreign partnership withholding certificate, it has provided all of the information required by paragraph (c)(3)(iv) of this section (withholding statement), and it does not know, and has no reason to know, that another withholding agent failed to withhold the correct amount or failed to report the payment correctly under § 1.1461-1(c). A nonwithholding foreign partnership is also not required to withhold and report under this paragraph (c)(3) to the extent that withholding under chapter 4 was applied to a payment that is includible in the gross income of a partner in the partnership. See also § 1.1441-3(a)(2) for coordination rules when withholding under chapter 4 has been applied to a withholdable payment. A withholding foreign partnership's obligations to withhold and report shall be determined in accordance with its withholding foreign partnership agreement.

(d) ***Presumption rules*** —

(1) ***In general.*** This paragraph (d) contains the applicable presumptions for a withholding agent (including a partnership) to determine the classification and status of a partnership and its partners in the absence of documentation. The provisions of § 1.1441-1(b)(3)(iv) (regarding the 90-day grace period) and § 1.1441-1(b)(3)(vii) through (ix) shall apply for purposes of this paragraph (d).

(2) ***Determination of partnership status as U.S. or foreign in the absence of documentation.*** In the absence of a valid representation of U.S. partnership status in accordance with paragraph (b)(1) of this section or of foreign partnership status in accordance with paragraph (c)(2)(i) or (c)(3)(i) of this section, the withholding agent shall determine the classification of the payee under the presumptions set forth in § 1.1441-1(b)(3)(ii). If the withholding agent treats the payee as a partnership under § 1.1441-1(b)(3)(ii), the withholding agent shall apply the presumptions set forth in § 1.1441-1(b)(3)(iii)(A)(*1*) (applied by substituting the term *partnership* for the term *exempt recipient*) to determine whether to treat the partnership as a U.S. person or foreign person. For rules regarding reliable association with a withholding certificate from a domestic or a foreign partnership, see § 1.1441-1(b)(2)(vii).

(3) ***Determination of partners' status in the absence of certain documentation.*** If a nonwithholding foreign partnership has provided a nonwithholding foreign partnership withholding certificate under paragraph (c)(3)(iii) of this section that would be valid except that the withholding agent cannot reliably associate all or a portion of the payment with valid documentation from a partner of the partnership, then the withholding agent may apply the presumption rule of this paragraph (d)(3) with respect to all or a portion of the payment for which documentation has not been received. See § 1.1441-1(b)(2)(vii)(A) and (B) for rules regarding reliable association. The presumption rule of this paragraph (d)(3) also applies to a person that is presumed to be a foreign partnership under the rule of paragraph (d)(2) of this section. Any portion of a payment that the withholding agent cannot treat as reliably associated with valid documentation from a partner may be presumed made to a foreign payee. As a result, any payment of an amount subject to withholding is subject to withholding at a rate of 30 percent. Any payment that is presumed to be made to an undocumented foreign payee must be reported on Form 1042-S. See § 1.1461-1(c). For a payment described in this paragraph (d)(3) that is a withholdable payment, see § 1.1471-3(f)(5) for the presumption rule for determining the payee's chapter 4 status to determine whether withholding under chapter 4 applies to the payment.

(4) ***Determination by a withholding foreign partnership of the status of its partners.*** Except as otherwise provided in the agreement described in paragraph (c)(2) of this section, a withholding foreign partnership shall determine whether the partners or some other persons are the payees of the partners' distributive shares of any payment made by a withholding foreign partnership by applying the rules of § 1.1441-1(b)(2), paragraph (c)(1) of this section (in the case of a partner that is a foreign partnership), and paragraph (e)(3) of this section (in the case of a partner that is a foreign estate or a foreign trust). Further, the provisions of paragraph (d)(3) of this section shall apply to determine the status of partners and the applicable withholding rates to the extent that, at the time the foreign partnership is required to withhold on a payment, it cannot reliably associate the amount with documentation for any one or more of its partners.

(e) ***Foreign trusts and estates*** —

(1) ***In general.*** This paragraph (e) provides rules applicable to payments of amounts subject to withholding (as defined in § 1.1441-2(a)) that a withholding agent may treat as made to any foreign trust or a foreign estate. For rules relating to payments to a U.S. trust or a U.S. estate, see paragraph (b) of this section. For the definitions of foreign simple trust, foreign complex trust, and foreign grantor trust, see § 1.1441-1(c)(24), (25), and (26).

(2) ***Payments to foreign complex trusts and foreign estates.*** Under § 1.1441-1(c)(6)(ii)(D), a foreign complex trust or foreign estate is generally considered to be the beneficial owner of income paid to the foreign complex trust or foreign estate. See paragraph (e)(4) of this section for rules describing when a withholding agent may treat a payment as made to a foreign complex trust or a foreign estate.

(3) ***Payees of payments to foreign simple trusts and foreign grantor trusts*** —

(i) ***Payments for which beneficiaries and owners are payees.*** For purposes of the regulations under chapters 3 and 61 of the Internal Revenue Code and section 3406, a foreign simple trust is not a beneficial owner or a payee of a payment. Also, a foreign grantor trust (or a portion of a trust that is a foreign grantor trust) is not considered a beneficial owner or a payee of a payment. Except as otherwise provided in paragraph (e)(3)(ii) of this section, the payees of a payment made to a person that the withholding agent may treat as a foreign simple trust or a foreign grantor trust (or a portion of a trust that is a foreign grantor trust) are determined under the rules of this paragraph (e)(3)(i). The payees shall be treated as the beneficial owners if they may be so treated under § 1.1441-1(c)(6)(ii)(C) and they provide documentation supporting their status as the beneficial owners. The payees of a payment to a foreign simple trust or foreign grantor trust are determined as follows—

(A) If the withholding agent can reliably associate a payment with a valid Form W-9 provided under § 1.1441-1(d) from a beneficiary or owner of the foreign trust, then the beneficiary or owner is a U.S. payee;

(B) If the withholding agent can reliably associate a payment with a valid Form W-8, or other appropriate documentation, provided under § 1.1441-1(e)(1)(ii) from a beneficiary or owner of the foreign trust, then the beneficiary or owner is a payee that is a foreign beneficial owner;

(C) If the withholding agent can reliably associate a payment with a qualified intermediary withholding certificate under § 1.1441-1(e)(3)(ii), a nonqualified intermediary withholding certificate under § 1.1441-1(e)(3)(ii), or a U.S. branch withholding certificate under § 1.1441-1(e)(3)(v), then the rules of § 1.1441-1(b)(2)(v) shall apply to determine the payee in the same manner as if the payment had been paid directly to such intermediary or U.S. branch;

(D) If the withholding agent can reliably associate a payment with a withholding foreign partnership withholding certificate under paragraph (c)(2)(iv) of this section or a nonwithholding foreign partnership withholding certificate under paragraph (c)(3)(iii) of this section, then the rules of paragraph (c)(1)(i) or (ii) of this section shall apply to determine the payee;

(E) If the withholding agent can reliably associate the payment with a foreign simple trust withholding certificate or a foreign grantor trust withholding certificate (both described in paragraph (e)(5)(iii) of this section) from a second or higher-tier foreign simple trust or foreign grantor trust, then the rules of this paragraph (e)(3)(i) or paragraph (e)(3)(ii) of this section shall apply to determine whether the payment is treated as made to a beneficiary or owner of the higher-tier trust or to the trust itself in the same manner as if the payment had been made directly to the higher-tier trust; and

(F) If the withholding agent cannot reliably associate a payment with a withholding certificate or other appropriate documentation, the payees shall be determined by applying the presumptions described in paragraph (e)(6) of this section.

(ii) ***Payments for which trust is payee.*** A payment to a person that the withholding agent may treat as made to a foreign trust under paragraph (e)(5)(iii) of this section is treated as a payment to the trust, and not to a beneficiary of the trust, only if—

(A) The withholding agent can reliably associate the payment with a foreign complex trust withholding certificate under paragraph (e)(4) of this section;

(B) The withholding agent can reliably associate the payment with a foreign simple trust withholding certificate under paragraph (e)(5)(iii) of this section certifying that the payment is income that is treated as effectively connected with the conduct of a trade or business in the United States; or

(C) The withholding agent can treat the income as effectively connected income under the presumption rules of § 1.1441-4(a)(3)(i).

(iii) ***Coordination with chapter 4 for payments made to foreign simple trusts and foreign grantor trusts.*** A withholding agent that makes a payment of U.S. source FDAP income to a foreign simple trust or foreign grantor trust that is a withholdable payment to which withholding under chapter 4 applies must apply the rules described in § 1.1473-1(a)(5)(vi) to determine when the payment is treated as made to a beneficiary or owner of the trust for purposes of chapter 4. In a case in which withholding applies under chapter 4 to a withholdable payment made to a foreign simple trust or foreign grantor trust, see § 1.1441-3(a)(2) to coordinate withholding otherwise required under this paragraph (e) with respect to the amount of the payment included in the gross income of the payee of the payment. For when a withholding agent may reliably associate a withholdable payment with a chapter 4 withholding rate pool in lieu of obtaining documentation for each payee included in the pool, see § 1.1441-1(e)(3)(iv)(C)(2) (substituting the term *nonwithholding foreign trust* for the term *nonqualified intermediary*).

(4) ***Reliance on claim of foreign complex trust or foreign estate status.*** A withholding agent may treat a payment as made to a foreign complex trust or a foreign estate if the withholding agent can reliably associate the payment with a beneficial owner withholding certificate described in § 1.1441-1(e)(2)(i) or other documentary evidence under § 1.1441-6(c)(3) or (4) (regarding a claim for treaty benefits) or § 1.6049-5(c)(1) (regarding documentary evidence to establish foreign status for purposes of chapter 61 of the Internal Revenue Code) that establishes the foreign complex trust or foreign estate's status as a beneficial owner. See paragraph (e)(6) of this section for presumption rules if documentation is lacking.

(5) ***Foreign simple trust and foreign grantor trust*** —

(i) ***Reliance on claim of foreign simple trust or foreign grantor trust status.*** A withholding agent may treat a person as a foreign simple trust or foreign grantor trust if it receives from that person a foreign simple trust or foreign grantor trust withholding certificate as described in paragraph (e)(5)(iii) of this section. A withholding agent must apply the presumption rules of §§ 1.1441-1(b)(3) and 1.6049-5(d) and paragraphs (d) and (e)(6) of this section to the extent it cannot, prior to the payment, reliably associate a payment (within the meaning of § 1.1441-1(b)(2)(vii)) with a valid foreign simple trust or foreign grantor trust withholding certificate, it cannot reliably determine how much of the payment relates to valid documentation provided by a payee (*e.g.,* a person that is not itself a nonqualified intermediary,

flow-through entity, or U.S. branch) associated with the foreign simple trust or foreign grantor trust withholding certificate, or it does not have sufficient information to report the payment on Form 1042-S or Form 1099, if reporting is required. See § 1.1441-1(b)(2)(vii)(A) and (B). See, however, § 1.1441-1(e)(3)(iv)(C)(2) for when a withholding agent may reliably associate a withholdable payment with a chapter 4 withholding rate pool in lieu of obtaining documentation for each payee included in a pool (substituting the term *nonwithholding foreign trust* for the term *nonqualified intermediary*). See also § 1.1441-1(e)(3)(iv)(A) for when a withholding agent may reliably associate a payment with a chapter 4 withholding rate pool of U.S. payees.

(ii) ***Reliance on claim of reduced withholding by a foreign simple trust or foreign grantor trust for its beneficiaries or owners.*** This paragraph (e)(5)(ii) describes the manner in which a withholding agent may rely on a claim of reduced withholding when making a payment to a foreign simple trust or foreign grantor trust. To the extent that a withholding agent treats a payment to a foreign simple trust or foreign grantor trust as a payment to payees other than the trust in accordance with paragraph (e)(3)(i) of this section, it may rely on a claim for reduced withholding by a beneficiary or owner if, prior to the payment, the withholding agent can reliably associate the payment (within the meaning of § 1.1441-1(b)(2)(vii)) with a valid withholding certificate or other appropriate documentation from a payee or beneficial owner that establishes entitlement to a reduced rate of withholding. A withholding certificate or other appropriate documentation that establishes entitlement to a reduced rate of withholding is a beneficial owner withholding certificate described in § 1.1441-1(e)(2)(i) or documentary evidence described in § 1.1441-6(c)(3) or (4) or in § 1.6049-5(c)(1) (for a beneficiary or owner claiming to be a foreign person and a beneficial owner, determined under the provisions of § 1.1441-1(c)(6)), a Form W-9 described in § 1.1441-1(d) (for a beneficiary or owner claiming to be a U.S. payee), a withholding foreign partnership withholding certificate described in paragraph (c)(2)(iv) of this section, or a withholding statement allocating the payment to a chapter 4 withholding rate pool of U.S. payees. For when the withholding agent can reliably associate the payment with a chapter 4 withholding rate pool, see paragraph (c)(3)(i) of this section. See also § 1.1441-3(a)(2) (coordinating withholding under chapter 3 when withholding under chapter 4 is applied to a withholdable payment). Unless a foreign simple trust or foreign grantor trust withholding certificate is provided for income treated as income effectively connected with the conduct of a trade or business in the United States, a claim must be presented for each payee's portion of the payment. When making a claim for several payees, the trust may present a single foreign simple trust or foreign grantor trust withholding certificate with which the payees' certificates or other appropriate documentation are associated. Where the foreign simple trust or foreign grantor trust withholding certificate is provided for income that is treated as effectively connected with the conduct of a trade or business in the United States under paragraph (e)(5)(iii)(D) of this section, the claim may be presented without having to identify any beneficiary's or grantor's distributive share of the payment.

(iii) ***Withholding certificate from foreign simple trust or foreign grantor trust.*** A withholding certificate furnished by a foreign simple trust or a foreign grantor trust that is not a withholding foreign trust (within the meaning of paragraph (e)(5)(v) of this section) is valid only if it is furnished on a Form W-8, an acceptable substitute form, or such other form as the IRS may prescribe, it is signed under penalties of perjury by a trustee, its validity has not expired, it contains the information, statements, and certifications required by this paragraph (e)(5)(iii) and § 1.1441-1(e)(3)(iv), and the withholding certificates or other appropriate documentation for all of the payees (as determined under paragraph (e)(3)(i) of this section) to whom the certificate

relates are associated with the foreign simple trust or foreign grantor trust withholding certificate. The rules of § 1.1441-1(e)(4) shall apply to withholding certificates described in this paragraph (e)(5)(iii). No withholding certificates or other appropriate documentation from persons who derive income through a foreign simple trust or a foreign grantor trust (whether or not U.S. exempt recipients) are required to be associated with the foreign simple trust or foreign grantor trust withholding certificate if the certificate is furnished solely for income that is treated as effectively connected with the conduct of a trade or business in the United States. Withholding certificates and other appropriate documentation (as determined under paragraph (e)(3)(i) of this section) that may be associated with a foreign simple trust or foreign grantor trust withholding certificate consist of beneficial owner withholding certificates under § 1.1441-1(e)(2)(i), intermediary withholding certificates under § 1.1441-1(e)(3)(i), withholding foreign partnership withholding certificates under paragraph (c)(2)(iv) of this section, nonwithholding foreign partnership withholding certificates under paragraph (c)(3)(iii) of this section, withholding certificates from foreign trusts or estates under paragraph (e)(4) or (5)(iii) of this section, documentary evidence described in §§ 1.1441-6(c)(3) or (4), or 1.6049-5(c)(1), and any other documentation or certificates applicable under other provisions of the Internal Revenue Code or regulations that certify or establish the status of the payee or beneficial owner as a U.S. or a foreign person. Nothing in this paragraph (e)(5)(iii) shall require a foreign simple trust or foreign grantor trust to provide original documentation. Copies of certificates or documentary evidence may be passed up to the U.S. withholding agent, in which case the foreign simple trust or foreign grantor trust must retain the original documentation for the same time period that the copy is required to be retained by the withholding agent under § 1.1441-1(e)(4)(iii) and must provide it to the withholding agent upon request. The information, statement, and certifications required on a foreign simple trust or foreign grantor trust withholding certificate are as follows—

(A) The name, permanent residence address (as described in § 1.1441-1(e)(2)(ii)), the employer identification number, if required, of the trust, the country under the laws of which the trust is created, the chapter 4 status of the trust if required for purposes of chapter 4 or if the trust provides (or will provide) a withholding statement associated with the Form W-8 allocating a payment to a chapter 4 withholding rate pool of U.S. payees under § 1.6049-4(c)(4) with respect to the nonwithholding foreign trust's owners and beneficiaries, and the GIIN of the trust (if applicable). If a nonwithholding foreign trust provides (or will provide) a chapter 4 withholding rate pool of U.S. payees as described in the preceding sentence, the trust must certify to its chapter 4 status as a participating FFI (including a reporting Model 2 FFI) or registered deemed-compliant FFI (including a reporting Model 1 FFI);

(B) A certification that the person whose name is on the certificate is a foreign simple trust or a foreign grantor trust;

(C) A withholding statement associated with the foreign simple trust or foreign grantor trust withholding certificate that provides all of the information required by paragraph (e)(5)(iv) of this section. No withholding statement is required, however, for a foreign simple trust withholding certificate furnished for income that is treated as effectively connected with the conduct of a trade or business in the United States;

(D) A certification on a foreign simple trust withholding certificate that the income is treated as effectively connected with the conduct of a trade or business in the United States, if applicable; and

(E) Any other information, certifications, or statements required by the form or accompanying instructions in addition to, or in lieu of, the information, certifications, and statements described in this paragraph (e)(5)(iii);

(iv) ***Withholding statement provided by a foreign simple trust or foreign grantor trust and coordination with chapter 4.*** The provisions of § 1.1441-1(e)(3)(iv) (regarding a withholding statement) shall apply to a foreign simple trust or foreign grantor trust by substituting the term *foreign simple trust* or *foreign grantor trust* for the term *nonqualified intermediary,* including when a withholding statement provided by a foreign simple trust or foreign grantor trust may include a chapter 4 withholding rate pool in lieu of information with respect to each owner or beneficiary that is a payee of a payment.

(v) ***Withholding foreign trusts.*** The IRS may enter into a withholding agreement with a foreign trust to treat the trust or estate as a withholding foreign trust. Such a withholding agreement shall generally follow the same principles as a withholding agreement with a withholding foreign partnership under paragraph (c)(2)(ii) of this section. A withholding agent may treat a payment to a withholding foreign trust in the same manner the withholding agent would treat a payment (including a withholdable payment) to a withholding foreign partnership. See § 1.1441-1(e)(5)(ii)(D). For a withholding foreign trust that is an FFI, the withholding agreement will require the withholding foreign trust to assume the requirements of either a participating FFI, registered deemed-compliant FFI, or an FFI treated as a deemed-compliant FFI under an applicable IGA that is subject to due diligence and reporting requirements with respect to its U.S. accounts similar to those applicable to a registered deemed-compliant FFI under § 1.1471-5(f)(1).

(6) ***Presumption rules*** —

(i) ***In general.*** This paragraph (e)(6) contains the applicable presumptions for a withholding agent (including a trust or estate) to determine the classification and status of a trust or estate and its beneficiaries or owners in the absence of valid documentation. The provisions of § 1.1441-1(b)(3)(iv) (regarding the 90-day grace period) and § 1.1441-1(b)(3)(vii) through (ix) shall apply for purposes of this paragraph (e)(6).

(ii) ***Determination of status as U.S. or foreign trust or estate in the absence of documentation.*** In the absence of valid documentation that establishes the U.S. status of a trust or estate under paragraph (b)(1) of this section and of documentation that establishes the foreign status of a trust or estate under paragraph (e)(4) or (e)(5)(iii) of this section, the withholding agent shall determine the classification of the payee based upon the presumptions set forth in § 1.1441-1(b)(3)(ii). If, based upon those presumptions, the withholding agent classifies the payee as a trust or estate, the withholding agent shall apply the presumptions set forth in § 1.1441-1(b)(3)(iii)(A)(*1*) (applied by substituting the term *trust* for the term *exempt recipient*) to determine whether the trust or estate is a U.S. person or foreign person. An undocumented payee presumed to be a foreign trust shall be presumed to be a foreign complex trust. If a withholding agent has documentary evidence that establishes that an entity is a foreign trust, but the withholding agent cannot determine whether the foreign trust is a complex trust, a simple trust, or foreign grantor trust, the withholding agent shall presume that the trust is a foreign complex trust. Notwithstanding the preceding sentence, in the case of a foreign trust with a settlor that is a U.S. person for which a withholding agent has both a U.S. address and

TIN, the withholding agent shall presume that the trust is a grantor trust when it cannot determine the status of the trust as a simple trust, complex trust, or grantor trust. See § 1.1471-3(f)(4) and (5) to determine the status of the payee for purposes of chapter 4.

(iii) ***Determination of beneficiary or owner's status in the absence of certain documentation.*** If a foreign simple trust or foreign grantor trust has provided a foreign simple trust or foreign grantor trust withholding certificate under paragraph (e)(5)(iii) of this section but the payment to such trust cannot be reliably associated with valid documentation from a specific beneficiary or owner of the trust, then any portion of a payment that a withholding agent cannot treat as reliably associated with valid documentation from a beneficiary or owner may be presumed made to a foreign payee. As a result, any payment of an amount subject to withholding is subject to withholding at a rate of 30 percent. Any such payment that is presumed to be made to an undocumented foreign person must be reported on Form 1042-S. See § 1.1461-1(c).

(f) ***Failure to receive withholding certificate timely or to act in accordance with applicable presumptions.*** See applicable procedures described in § 1.1441-1(b)(7) in the event the withholding agent does not hold an appropriate withholding certificate or other appropriate documentation at the time of payment or fails to rely on the presumptions set forth in § 1.1441-1(b)(3) or in paragraph (d) or (e) of this section. For a payment that is a withholdable payment, see § 1.1471-3(f) for the presumption rule for determining the payee's chapter 4 status.

(g) ***Effective/applicability date.*** This section applies to payments made on or after January 6, 2017. (For payments made after June 30, 2014, and before January 6, 2017, see this section as in effect and contained in 26 CFR part 1, as revised April 1, 2016. For payments made after December 31, 2000, and before July 1, 2014, see this section as in effect and contained in 26 CFR part 1, as revised April 1, 2013.)

[T.D. 8734, 62 FR 53452, Oct. 14, 1997, as amended by T.D. 8804, 63 FR 72185, 72188, Dec. 31, 1998; 64 FR 73410, Dec. 30, 1999; T.D. 8881, 65 FR 32188, May 22, 2000; 66 FR 18188, Apr. 6, 2001; T.D. 9658, 79 FR 12773, Mar. 6, 2014; T.D. 9808, 82 FR 2088, Jan. 6, 2017]

§ 1.1441-6 Claim of reduced withholding under an income tax treaty.

(a) ***In general.*** The rate of withholding on a payment of income subject to withholding may be reduced to the extent provided under an income tax treaty in effect between the United States and a foreign country. Most benefits under income tax treaties are to foreign persons who reside in the treaty country. In some cases, benefits are available under an income tax treaty to U.S. citizens or U.S. residents or to residents of a third country. See paragraph (b)(5) of this section for claims of benefits by U.S. persons. If the requirements of this section are met, the amount withheld from the payment may be reduced at source to account for the treaty benefit. See, however, § 1.1471-2(a) and § 1.1472-1(b) for when withholding at source on a withholdable payment may not be reduced to account for a treaty benefit such that the beneficial owner of the payment may need to file a claim for refund to obtain a refund for the overwithheld amount of tax. See also § 1.1441-4(b)(2) for rules regarding claims of a reduced rate of withholding under an income tax treaty in the case of compensation from personal services and § 1.1441-4(c)(1) for rules regarding claims of a reduced rate of withholding under an income tax treaty in the case of scholarship and fellowship income.

(b) ***Reliance on claim of reduced withholding under an income tax treaty*** —

(1) ***In general.*** The withholding imposed under section 1441, 1442, or 1443 on any payment to a foreign person is eligible for reduction under the terms of an income tax treaty only to the extent that such payment is treated as derived by a resident of an applicable treaty jurisdiction, such resident is a

beneficial owner, and all other requirements for benefits under the treaty are satisfied. See section 894 and the regulations under section 894 to determine whether a resident of a treaty country derives the income. Absent actual knowledge or reason to know otherwise, a withholding agent may rely on a claim that a beneficial owner is entitled to a reduced rate of withholding based upon an income tax treaty if, prior to the payment, the withholding agent can reliably associate the payment with a beneficial owner withholding certificate, as described in § 1.1441-1(e)(2), that contains the information necessary to support the claim, or, in the case of a payment of income described in paragraph (c)(2) of this section made outside the United States with respect to an offshore obligation, documentary evidence described in paragraphs (c)(3), (c)(4), and (c)(5) of this section. See § 1.6049-5(e) for the definition of payments made outside the United States and § 1.6049-5(c)(1) for the definition of an offshore obligation. For purposes of this paragraph (b)(1), a beneficial owner withholding certificate described in § 1.1441-1(e)(2)(i) contains information necessary to support the claim for a treaty benefit only if it includes the beneficial owner's taxpayer identifying number (except as otherwise provided in paragraph (c)(1) and (g) of this section, or the beneficial owner provides its foreign tax identifying number issued by its country of residence and such country has with the United States an income tax treaty or information exchange agreement in effect), includes the representations that the beneficial owner derives the income under section 894 and the regulations under section 894, if required, and with regard to a beneficial owner that is an entity, includes a statement that the entity meets the limitation on benefits provisions of the treaty, if any. For claims for treaty benefits for scholarship and fellowship income, the beneficial owner withholding certificate must contain the beneficial owner's U.S. taxpayer identifying number (not a foreign taxpayer identifying number). The withholding certificate must also contain any other representations required by this section and any other information, certifications, or statements as may be required by the form or accompanying instructions in addition to, or in place of, the information and certifications described in this section. Absent actual knowledge or reason to know that the claims are unreliable or incorrect (applying the standards of knowledge in § 1.1441-7(b)), a withholding agent may rely on the claims made on a withholding certificate or on documentary evidence. A withholding agent may also rely on the information contained in a withholding statement provided under §§ 1.1441-1(e)(3)(iv) and 1.1441-5(c)(3)(iv) and (e)(5)(iv) to determine whether the appropriate statements regarding section 894 and limitation on benefits have been provided in connection with documentary evidence. The Internal Revenue Service (IRS) may apply the provisions of § 1.1441-1(e)(1)(ii)(B) to notify the withholding agent that the certificate cannot be relied upon to grant benefits under an income tax treaty. See § 1.1441-1(e)(4)(viii) regarding reliance on a withholding certificate by a withholding agent. The provisions of § 1.1441-1(b)(3)(iv) dealing with a 90-day grace period shall apply for purposes of this section.

(i) ***Identification of limitation on benefits provisions.*** In conjunction with the representation that the beneficial owner meets the limitation on benefits provision of the applicable treaty, if any, required by paragraph (b)(1) of this section, a beneficial owner withholding certificate must also identify the specific limitation on benefits provision of the article (if any, or a similar provision) of the treaty upon which the beneficial owner relies to claim the treaty benefit. A withholding agent may rely on the beneficial owner's claim regarding its reliance on a specific limitation on benefits provision absent actual knowledge that such claim is unreliable or incorrect.

(ii) ***Reason to know based on existence of treaty.*** For purposes of this paragraph (b)(1), a withholding agent's reason to know that a beneficial owner's claim to a reduced rate of withholding under an income tax treaty is unreliable or incorrect includes a circumstance where the beneficial owner is claiming benefits under an income tax treaty that does not exist or is not in force. A withholding agent may determine whether a tax treaty is in existence and is in force

by checking the list maintained on the IRS website at *https://www.irs.gov/businesses/international-businesses/united-states-income-tax-treaties-a-to-z* (or any replacement page on the IRS website) or in the State Department's annual Treaties in Force publication.

(2) ***Payment to fiscally transparent entity*** —

(i) ***In general.*** If the person claiming a reduced rate of withholding under an income tax treaty is an interest holder of an entity that is considered to be fiscally transparent (as defined in the regulations under section 894) by the interest holder's jurisdiction with respect to an item of income, then, with respect to such income derived by that person through the entity, the entity shall be treated as a flow-through entity and may provide a flow-through withholding certificate with which the withholding certificate or other documentary evidence of the interest holder that supports the claim for treaty benefits is associated. In the case of a payment that is a withholdable payment, see, however, § 1.1471-3(c) for determining the payee of the payment and §§ 1.1471-2(a) and 1472-1(b) for when withholding at source may apply to the payment based on the status of the payee notwithstanding a claim for treaty benefits made under this paragraph (b)(2) by an interest holder in the payee. In such a case, the interest holder may file a claim for refund of the overwithheld amount of tax. For purposes of this paragraph (b)(2)(i), interest holders do not include any direct or indirect interest holders that are themselves treated as fiscally transparent entities with respect to that income by the interest holder's jurisdiction. See § 1.1441-1(c)(23) and (e)(3)(i) for the definition of flow-through entity and flow-through withholding certificate. The entity may provide a beneficial owner withholding certificate, or beneficial owner documentation, with respect to any remaining portion of the income to the extent the entity is receiving income and is not treated as fiscally transparent by its own jurisdiction. Further, the entity may claim a reduced rate of withholding with respect to the portion of a payment for which it is not treated as fiscally transparent if it meets all the requirements to make such a claim and, in the case of treaty benefits, it provides the documentation required by paragraph (b)(1) of this section. If dual claims, as described in paragraph (b)(2)(iii) of this section, are made, multiple withholding certificates may have to be furnished. Multiple withholding certificates may also have to be furnished if the entity receives income for which a reduction of withholding is claimed under a provision of the Internal Revenue Code (*e.g.,* portfolio interest) and income for which a reduction of withholding is claimed under an income tax treaty.

(ii) ***Certification by qualified intermediary.*** Notwithstanding paragraph (b)(2)(i) of this section, a foreign entity that is fiscally transparent, as defined in the regulations under section 894, that is also a qualified intermediary for purposes of claiming a reduced rate of withholding under an income tax treaty for its interest holders (who are deriving the income paid to the entity as residents of an applicable treaty jurisdiction) may furnish a single qualified intermediary withholding certificate, as described in § 1.1441-1(e)(3)(ii), for amounts for which it claims a reduced rate of withholding under an income tax treaty on behalf of its interest holders.

(iii) ***Dual treatment.*** Under paragraph (b)(2)(i) of this section, a withholding agent may make a payment to a foreign entity that is simultaneously claiming to be the beneficial owner of a portion of the income (whether or not it is also claiming a reduced rate of tax on its own behalf) and a reduced rate on behalf of persons in their capacity as interest holders in the entity with respect to the same, or a different, portion of the income. If the same portion of a payment may be reliably associated with both the entity's claim and an interest holder's claim, the withholding agent may choose to reject both claims and request new documentation and information allocating the payment among the beneficial owners of the payment or the withholding agent

may choose which claim to apply. If the entity and the interest holder's claims are reliably associated with separate portions of the payment, the withholding agent may, at its option, accept such dual claims based on withholding certificates or other appropriate documentation furnished by the entity and its interest holders with respect to their respective shares of the payment even though this will result in the withholding agent treating the entity differently with respect to different portions of the same payment. Alternatively, the withholding agent may choose to apply only the claim made by the entity, provided the entity may be treated as a beneficial owner of the income. If the withholding agent does not accept claims for a reduced rate of withholding presented by any one or more of the interest holders, or by the entity, any interest holder or the entity may subsequently claim a refund or credit of any amount so withheld to the extent the interest holder's or entity's share of such withholding exceeds the amount of tax due.

(iv) ***Examples.*** The following examples illustrate the rules of paragraph (b)(2) of this section. Each of the following examples describes a payment of U.S. source royalties, which are not withholdable payments under chapter 4. See § 1.1473-1(a)(4)(iii) (describing nonfinancial payments that are not treated as withholdable payments). Thus, withholding under chapter 4 shall not apply with respect to the U.S. source royalties in any of the following examples:

(A) ***Example 1*** —(*i*) *Facts.* Entity E is a business organization formed under the laws of country Y. Country Y has an income tax treaty with the United States. The treaty contains a limitation on benefits provision. E receives U.S. source royalties from withholding agent W and claims a reduced rate of withholding under the U.S.-Y tax treaty on its own behalf (rather than on behalf of its interest holders). E furnishes a beneficial owner withholding certificate described in paragraph (b)(1) of this section that represents that E is a resident of country Y (within the meaning of the U.S.-Y tax treaty), is the beneficial owner of the income, derives the income under section 894 and the regulations under section 894, and is not precluded from claiming benefits by the treaty's limitation on benefits provision.

(*ii*) *Analysis.* Absent actual knowledge or reason to know otherwise, as described in paragraph (b)(1) of this section, W may rely on the representations made by E to apply a reduced rate of withholding.

(B) ***Example 2*** —(*i*) *Facts.* The facts are the same as under *Example 1,* except that one of E's interest holders, H, is an entity organized in country Z. The U.S.-Z tax treaty reduces the rate on royalties to zero whereas the rate on royalties under the U.S.-Y tax treaty applicable to E is 5%. H is not fiscally transparent under country Z's tax law with respect to such income. H furnishes a beneficial owner withholding certificate to E that represents that H derives, within the meaning of section 894 and the regulations under section 894, its share of the royalty income paid to E as a resident of country Z, is the beneficial owner of the royalty income, and is not precluded from claiming treaty benefits by virtue of the limitation on benefits provision in the U.S.-Z treaty. E furnishes to W a flow-through withholding certificate described in § 1.1441-1(e)(3)(i) to which it attaches H's beneficial owner withholding certificate and a withholding statement for the portion of the payment that H claims as its distributive share of the royalty income. E also furnishes to W a beneficial owner withholding certificate for itself for the portion of the payment that H does not claim as its distributive share.

(*ii*) *Analysis.* Absent actual knowledge or reason to know otherwise, as described in paragraph (b)(1) of this section, W may rely on the documentation furnished by E to treat the royalty payment to a single foreign entity (E) as derived by different residents of tax treaty countries as a result of the claims presented under different treaties. W may, at its option, grant dual treatment, that is, a reduced rate of zero percent under the U.S.-Z treaty on the portion of the royalty payment that H claims to derive as a resident of country Z and a reduced rate of 5% under the U.S.-Y treaty for the balance. However, under paragraph (b)(2)(iii) of this section, W may, at its option, treat E as the only relevant person deriving the royalty and grant benefits under the U.S.-Y treaty only.

(C) ***Example 3*** —(*i*) *Facts.* E is a business organization formed under the laws of country X. Country X has an income tax treaty with the United States. E has two interest holders, H1, organized in country Y, and H2, organized in country Z. E receives from W, a U.S. withholding agent, a payment of U.S. source royalties and interest, with respect to an obligation issued before July 1, 2014, that is eligible for the portfolio interest exception under sections 871(h) and 881(c), provided W receives the appropriate beneficial owner statement required under section 871(h)(5). E is classified as a corporation under U.S. tax law principles. Country X, E's country of organization, treats E as an entity that is not fiscally transparent with respect to items of income under the regulations under section 894. Under the U.S.-X income tax treaty, royalties are subject to a 5% rate of withholding. Country Y, H1's country of organization, treats E as fiscally transparent with respect to items of income under section 894 and H1 as not fiscally transparent with respect to items of income. Under the country Y-U.S. income tax treaty, royalties are exempt from U.S. tax. Country Z, H2's country of organization, treats E as not fiscally transparent under section 894 with respect to items of income. E provides W with a flow-through beneficial owner withholding certificate with which it associates a beneficial owner withholding certificate from H1. H1's withholding certificate states that H1 is a resident of country Y, derives the royalty income under section 894, meets the applicable limitation on benefits provisions of the U.S.-Y treaty, and is the beneficial owner of the income. The withholding statement attached to E's flow-through withholding certificate allocates one-half of the royalty payment to H1. E also provides W with a beneficial owner withholding certificate for the interest income and the remaining one-half of the royalty income. The withholding certificate states that E is a resident of country X, derives the royalty income under section 894, meets the limitation on benefits provisions of the U.S.-X treaty, and is the beneficial owner of the income.

(*ii*) *Analysis.* Absent actual knowledge or reason to know that the claims are incorrect, as described in paragraph (b)(1), W may treat one-half of the royalty derived by E as subject to a 5% withholding rate and one-half of the royalty as derived by H1 and subject to no withholding. Further, it may treat all of the interest as being paid to E and as qualifying for the portfolio interest exception. W can, at its option, treat the entire royalty as paid to E and subject it to withholding at a 5% rate of withholding. In that case, H1 would be entitled to claim a refund with respect to its one-half of the royalty.

(D) ***Example 4*** —

(*1*) ***Facts.*** Entity E is a business organization formed under the laws of Country Y. Country Y has an income tax treaty with the United States that contains a limitation on benefits provision. E receives U.S. source royalties from withholding agent W. E furnishes a beneficial owner withholding certificate to W claiming a reduced rate of

withholding under the U.S.-Country Y tax treaty. However, E's beneficial owner withholding certificate does not specifically identify the limitation on benefits provision that E satisfies.

(2) ***Analysis.*** Because E's withholding certificate does not specifically identify the limitation on benefits provision under the U.S.-Country Y tax treaty that E satisfies as required by paragraph (b)(1)(i) of this section, W cannot rely on E's withholding certificate to apply the reduced rate of withholding claimed by E.

(3) ***Certified TIN.*** The IRS may issue guidance requiring a foreign person claiming treaty benefits and for whom a TIN is required to establish with the IRS, at the time the TIN is requested or after the TIN is issued, that the person is a resident in a treaty country and meets other conditions (such as limitation on benefits provisions) of the treaty. See § 601.601(d)(2) of this chapter.

(4) ***Claim of benefits under an income tax treaty by a U.S. person.*** In certain cases, a U.S. person may claim the benefit of an income tax treaty. For example, under certain treaties, a U.S. citizen residing in the treaty country may claim a reduced rate of U.S. tax on certain amounts representing a pension or an annuity from U.S. sources. Claims of treaty benefits by a U.S. person may be made by furnishing a Form W-9 to the withholding agent or such other form as the IRS may prescribe in published guidance (see § 601.601(d)(2) of this chapter).

(c) ***Exemption from requirement to furnish a taxpayer identifying number and special documentary evidence rules for certain income*** —

(1) ***General rule.*** In the case of income described in paragraph (c)(2) of this section, a withholding agent may rely on a beneficial owner withholding certificate described in paragraph (b)(1) of this section without regard to the requirement that the withholding certificate include the beneficial owner's taxpayer identifying number. In the case of a payment of income not described in paragraph (c)(2) of this section, a withholding agent may rely on a withholding certificate that includes the beneficial owner's foreign taxpayer identifying number described in paragraph (b)(1) of this section instead of the beneficial owner's taxpayer identifying number. In the case of payments of income described in paragraph (c)(2) of this section made outside the United States (as defined in § 1.6049-5(e)) with respect to an offshore obligation (as defined in § 1.6049-5(c)(1)), a withholding agent may, as an alternative to a withholding certificate described in paragraph (b)(1) of this section, rely on a certificate of residence described in paragraph (c)(3) of this section or documentary evidence described in paragraph (c)(4) of this section, relating to the beneficial owner, that the withholding agent has reviewed and maintains in its records in accordance with § 1.1441-1(e)(4)(iii). In the case of a payment to a person other than an individual, the certificate of residence or documentary evidence must be accompanied by the statements described in paragraphs (c)(5)(i) and (ii) of this section regarding limitation on benefits and whether the amount paid is derived by such person or by one of its interest holders. The withholding agent maintains the reviewed documents by retaining the original, certified copy, or photocopy (microfiche, electronic scan, or similar means of electronic storage) of such documents. With respect to documentary evidence, the withholding agent must also note in its records the date on which the documents were received and reviewed. This paragraph (c)(1) shall not apply to amounts that are exempt from withholding based on a claim that the income is effectively connected with the conduct of a trade or business in the United States.

(2) ***Income to which special rules apply.*** The income to which paragraph (c)(1) of this section applies is dividends and interest from stocks and debt obligations that are actively traded, dividends from any redeemable security issued by an investment company registered under the Investment Company Act of 1940 (15 U.S.C. 80a-1), dividends, interest, or royalties from units of beneficial interest in a

unit investment trust that are (or were upon issuance) publicly offered and are registered with the Securities and Exchange Commission under the Securities Act of 1933 (15 U.S.C. 77a), and amounts paid with respect to loans of securities described in this paragraph (c)(2). With respect to a dividend equivalent described in section 871(m) and the regulations thereunder, this paragraph (c)(2) applies to the extent that the underlying security described in section 871(m) and the regulations thereunder satisfies the requirements of this paragraph (c)(2). For purposes of this paragraph (c)(2), a stock or debt obligation is actively traded if it is actively traded within the meaning of section 1092(d) and § 1.1092(d)-1 when documentation is provided.

(3) ***Certificate of residence.*** A certificate of residence referred to in paragraph (c)(1) of this section is a certification issued by an appropriate tax official of the treaty country of which the taxpayer claims to be a resident that the taxpayer has filed its most recent income tax return as a resident of that country (within the meaning of the applicable tax treaty). The certificate of residence must have been issued by such official within three years prior to its being presented to the withholding agent, or such other period as the IRS may prescribe in published guidance (see § 601.601(d)(2) of this chapter). See § 1.1441-1(e)(4)(ii)(A) for the period during which a withholding agent may rely on a certificate of residence. The competent authorities may agree to a different procedure for certifying residence, in which case such procedure shall govern for payments made to a person claiming to be a resident of the country with which such an agreement is in effect.

(4) ***Documentary evidence establishing residence in the treaty country*** —

(i) ***Individuals.*** For an individual, the documentary evidence referred to in paragraph (c)(1) of this section is any documentation that includes the individuals name, address, and photograph, is an official document issued by an authorized governmental body (*i.e.,* a government or agency thereof, or a municipality), and has been issued no more than three years prior to presentation to the withholding agent. A document older than three years may be relied upon as proof of residence only if it is accompanied by additional evidence of the person's residence in the treaty country (e.g., a bank statement, utility bills, or medical bills). Documentary evidence must be in the form of original documents or certified copies thereof.

(ii) ***Persons other than individuals.*** For a person other than an individual, the documentary evidence referred to in paragraph (c)(1) of this section is any documentation that includes the name of the entity and the address of its principal office in the treaty country, and is an official document issued by an authorized governmental body (e.g., a government or agency thereof, or a municipality).

(5) ***Statements regarding entitlement to treaty benefits*** —

(i) ***Statement regarding conditions under a limitation on benefits provision.*** In addition to the documentary evidence described in paragraph (c)(4)(ii) of this section, a taxpayer that is not an individual must provide a statement that it meets one or more of the conditions set forth in the limitation on benefits article (if any, or in a similar provision) contained in the applicable tax treaty and must identify the specific limitation on benefits provision of the article (if any, or a similar provision) of the treaty upon which the taxpayer relies to claim the treaty benefit. A withholding agent may rely on the taxpayer's claim on a treaty statement regarding its reliance on a specific limitation on benefits provision absent actual knowledge that such claim is unreliable or incorrect.

(ii) ***Statement regarding whether the taxpayer derives the income.*** A taxpayer that is not an individual must also provide, in addition to the documentary evidence and the statement described in paragraph (c)(5)(i) of this section, a statement that any income for which it intends to claim benefits under an applicable income tax treaty is income that will properly be treated as derived by itself as a resident of the applicable treaty jurisdiction within the meaning of section 894 and the regulations thereunder. This requirement does not apply if the taxpayer furnishes a certificate of residence that certifies that fact.

(d) ***Joint owners.*** In the case of a payment to joint owners, each owner must furnish a withholding certificate or, if applicable, documentary evidence or a certificate of residence. The applicable rate of withholding on a payment of income to joint owners shall be the highest applicable rate.

(e) ***Competent authority.*** The procedures described in this section may be modified to the extent the U.S. competent authority may agree with the competent authority of a country with which the United States has an income tax treaty in effect.

(f) ***Failure to receive withholding certificate timely.*** See applicable procedures described in § 1.1441-1(b)(7) in the event the withholding agent does not hold an appropriate withholding certificate or other appropriate documentation at the time of payment.

(g) ***Special taxpayer identifying number rule for certain foreign individuals claiming treaty benefits*** —

(1) ***General rule.*** Except as provided in paragraph (c) or (g)(2) of this section, for purposes of paragraph (b)(1) of this section, a withholding agent may not rely on a beneficial owner withholding certificate, described in paragraph (b)(1) of this section, that does not include the beneficial owner's taxpayer identifying number (TIN).

(2) ***Special rule.*** For purposes of satisfying the TIN requirement of paragraph (b)(1) of this section, a withholding agent may rely on a beneficial owner withholding certificate, described in such paragraph, without regard to the requirement that the withholding certificate include the beneficial owner's TIN, if—

(i) A withholding agent, who is also an acceptance agent, as defined in § 301.6109-1(d)(3)(iv) of this chapter (the payor), has entered into an acceptance agreement that permits the acceptance agent to request an individual taxpayer identification number (ITIN) on an expedited basis because of the circumstances of payment or unexpected nature of payments required to be made by the payor;

(ii) The payor was required to make an unexpected payment to the beneficial owner who is a foreign individual;

(iii) An ITIN for the beneficial owner cannot be received by the payor from the Internal Revenue Service (IRS) because the IRS is not issuing ITINs at the time of payment or any time prior to the time of payment when the payor has knowledge of the unexpected payment;

(iv) The unexpected payment to the beneficial owner could not be reasonably delayed to permit the payor to obtain an ITIN for the beneficial owner on an expedited basis; and

(v) The payor satisfies the provisions of paragraph (g)(3) of this section.

(3) ***Requirement that an ITIN be requested during the first business day following payment.*** The payor must submit a beneficial owner payee application for an ITIN (Form W-7 "Application for IRS Individual Taxpayer Identification Number") that complies with the requirements of § 301.6109-1(d)(3)(ii) of this chapter, and also the certification described in § 301.6109-1(d)(3)(iv)(A)(*4*) of this chapter, to the IRS during the first business day after payment is made.

(4) ***Definition of unexpected payment.*** For purposes of this section, an *unexpected payment* is a payment that, because of the nature of the payment or the circumstances in which it is made, could not reasonably have been anticipated by the payor or beneficial owner during a time when the payor or beneficial owner could obtain an ITIN from the IRS. For purposes of this paragraph (g)(4), a payor or beneficial owner will not lack the requisite knowledge of the forthcoming payment solely because the amount of the payment is not fixed.

(5) ***Examples.*** The rules of this paragraph (g) are illustrated by the following examples:

Example 1. G, a citizen and resident of Country Y, a country with which the United States has an income tax treaty that exempts U.S. source gambling winnings from U.S. tax, is visiting the United States for the first time. During his visit, G visits Casino B, a casino that has entered into a special acceptance agent agreement with the IRS that permits Casino B to request an ITIN on an expedited basis. During that visit, on a Sunday, G wins $5000 in slot machine play at Casino B and requests immediate payment from Casino B. ITINs are not available from the IRS on Sunday and would not again be available until Monday. G, who does not have an individual taxpayer identification number, furnishes a beneficial owner withholding certificate, described in § 1.1441-1(e)(2), to the Casino upon winning at the slot machine. The beneficial owner withholding certificate represents that G is a resident of Country Y (within the meaning of the U.S.-Y tax treaty) and meets all applicable requirements for claiming benefits under the U.S.-Y tax treaty. The beneficial owner withholding certificate does not, however, contain an ITIN for G. On the following Monday, Casino B faxes a completed Form W-7, including the required certification, for G, to the IRS for an expedited ITIN. Pursuant to paragraph (b) and (g)(2) of this section, absent actual knowledge or reason to know otherwise, Casino B, may rely on the documentation furnished by G at the time of payment and pay the $5000 to G without withholding U.S. tax based on the treaty exemption.

Example 2. The facts are the same as *Example 1,* except G visits Casino B on Monday. G requests payment Monday afternoon. In order to pay the winnings to G without withholding the 30 percent tax, Casino B must apply for and obtain an ITIN for G because an expedited ITIN is available from the IRS at the time of the $5000 payment to G.

Example 3. The facts are the same as *Example 1,* except G requests payment fifteen minutes before the time when the IRS begins issuing ITINs. Under these facts, it would be reasonable for Casino B to delay payment to G. Therefore, Casino B must apply for and obtain an ITIN for G if G wishes to claim an exemption from U.S. withholding tax under the U.S.-Y tax treaty at the time of payment.

Example 4. P, a citizen and resident of Country Z, is a lawyer and a well-known expert on real estate transactions. P is scheduled to attend a three-day seminar on complex real estate transactions, as a participant, at University U, a U.S. university, beginning on a Saturday and ending on the following Monday, which is a holiday. University U has entered into a special acceptance agent agreement with the IRS that permits University U to request an ITIN on an expedited basis. Country Z is a country with which the United States has an income tax treaty that exempts

certain income earned from the performance of independent personal services from U.S. tax. It is P's first visit to the United States. On Saturday, prior to the start of the seminar, Professor Q, one of the lecturers at the seminar, cancels his lecture. That same day the Dean of University U offers P $5000, to replace Professor Q at the seminar, payable at the conclusion of the seminar on Monday. P agrees. P gives her lecture Sunday afternoon. ITINs are not available from the IRS on that Saturday, Sunday, or Monday. After the seminar ends on Monday, P, who does not have an ITIN, requests payment for her teaching. P furnishes a beneficial owner withholding certificate, described in § 1.1441-1(e)(2), to University U that represents that P is a resident of Country Z (within the meaning of the U.S.-Z tax treaty) and meets all applicable requirements for claiming benefits under the U.S.-Z tax treaty. The beneficial owner withholding certificate does not, however, contain an ITIN for P. On Tuesday, University U faxes a completed Form W-7, including the required certification, for P, to the IRS for an expedited ITIN. Pursuant to paragraph (b) and (g)(2) of this section, absent actual knowledge or reason to know otherwise, University U may rely on the documentation furnished by P and pay $5000 to P without withholding U.S. tax based on the treaty exemption.

(h) ***Dividend equivalents.*** The rate of withholding on a dividend equivalent may be reduced to the extent provided under an income tax treaty in effect between the United States and a foreign country. For this purpose, a dividend equivalent as described in section 871(m) and the regulations thereunder is treated as a dividend from sources within the United States. To receive a reduced rate of withholding with respect to a dividend equivalent, a foreign person must satisfy the other requirements described in this section.

(i) ***Effective/applicability dates*** —

(1) ***General rule.*** Except as otherwise provided in paragraphs (i)(2) and (3) of this section, this section applies to payments made on or after January 6, 2017. (For payments made after June 30, 2014 (except for payments to which paragraph (c)(1) applies, in which case substitute March 5, 2014, for June 30, 2014), and before January 6, 2017, see this section as in effect and contained in 26 CFR part 1, revised April 1, 2016. For payments made after December 31, 2001, and before July 1, 2014, see this section as in effect and contained in 26 CFR part 1 revised April 1, 2013.)

(2) ***Dividend equivalents.*** Paragraph (h) of this section applies to payments made on or after December 5, 2013.

(3) ***Effective/applicability date.*** Paragraphs (b)(1)(i) and (ii), (b)(2)(iv)(D), and (c)(5)(i) of this section apply to withholding certificates and treaty statements provided on or after January 6, 2017.

[T.D. 8734, 62 FR 53458, Oct. 14, 1997]

Editorial Note: For FEDERAL REGISTER citations affecting § 1.1441-6, see the List of CFR Sections Affected, which appears in the Finding Aids section of the printed volume and at *www.govinfo.gov*.

§ 1.1441-7 General provisions relating to withholding agents.

(a) ***Withholding agent defined*** —

(1) ***In general.*** For purposes of chapter 3 of the Internal Revenue Code and the regulations under such chapter, the term *withholding agent* means any person, U.S. or foreign, that has the control, receipt, custody, disposal, or payment of an item of income of a foreign person subject to withholding, including (but not limited to) a foreign intermediary described in § 1.1441-1(e)(3)(i), a foreign

partnership, or a U.S. branch described in § 1.1441-1(b)(2)(iv)(A) or (E). See §§ 1.1441-1(b)(2) and (3) and 1.1441-5(c), (d), and (e), for rules to determine whether a payment is considered made to a foreign person. Any person who meets the definition of a withholding agent is required to deposit any tax withheld under § 1.1461-1(a) and to make the returns prescribed by § 1.1461-1(b) and (c), except as otherwise may be required by a qualified intermediary withholding agreement, a withholding foreign partnership agreement, or a withholding foreign trust agreement. When several persons qualify as withholding agents with respect to a single payment, only one tax is required to be withheld and deposited. See § 1.1461-1. A person who, as a nominee described in § 1.6031(c)-1T, has furnished to a partnership all of the information required to be furnished under § 1.6031(c)-1T(a) shall not be treated as a withholding agent if it has notified the partnership that it is treating the provision of information to the partnership as a discharge of its obligations as a withholding agent.

(2) ***Withholding agent with respect to dividend equivalents.*** Each person that is a party to any contract or arrangement that provides for the payment of a dividend equivalent, as described in section 871(m) and the regulations thereunder, is treated as having control and custody of the payment.

(3) ***Examples.*** The following examples illustrate the rules of paragraphs (a)(1) and (a)(2) of this section:

Example 1. USB is a broker organized in the United States. USB pays U.S. source dividends and interest, which are amounts subject to withholding under § 1.1441-2(a), to FC, a foreign corporation that has an investment account with USB. USB is a withholding agent as defined in paragraph (a)(1) of this section.

Example 2. USB is a bank organized in the United States. FB is a bank organized in country X. FB has an omnibus account with USB through which FB invests in debt and equity instruments that pay amounts subject to withholding as defined in § 1.1441-2(a). FB is a nonqualified intermediary, as defined in § 1.1441-1(c)(14). Both USB and FB are withholding agents as defined in paragraph (a)(1) of this section.

Example 3. The facts are the same as in *Example 2,* except that FB is a qualified intermediary. Both USB and FB are withholding agents as defined in paragraph (a)(1) of this section.

Example 4. FB is a bank organized in country X. FB has a branch in the United States. FB's branch has customers that are foreign persons who receive amounts subject to withholding, as defined in § 1.1441-2(a). FB is a withholding agent under paragraph (a)(1) of this section and is required to withhold and report payments of amounts subject to withholding in accordance with chapter 3 of the Internal Revenue Code.

Example 5. X is a foreign corporation. X pays dividends to shareholders who are foreign persons. Under section 861(a)(2)(B), a portion of the dividends are from sources within the United States and constitute amounts subject to withholding within the meaning of § 1.1441-2(a). The dividends are not subject to tax under section 884(a). See section 884(e)(3). X is a withholding agent under paragraph (a)(1) of this section.

Example 6. FC, a foreign corporation, enters into a notional principal contract (NPC) with Bank X, a bank organized in the United States. The NPC is a specified NPC for purposes of section 871(m) and the regulations thereunder. FC is the long party to the contract and Bank X is the short party. The NPC references a specified number of shares of dividend-paying common stock issued by a domestic corporation. As the long party, FC receives payments from Bank X based on any appreciation in the value of the common stock and dividends paid with respect to the common stock. As the short party, Bank X receives payment from FC based on any depreciation in the value of the common stock and a payment based on LIBOR. Bank X is a

withholding agent because Bank X is deemed to have control and custody of a dividend equivalent as a party to the NPC. If FC's tax liability under section 881 has not been satisfied in full by Bank X as withholding agent, FC is required to file a return on Form 1120-F (U.S. Income Tax Return of a Foreign Corporation).

Example 7. CO is a domestic clearing organization. CO serves as a central counterparty clearing and settlement service provider for derivatives exchanges in the United States. CB is a broker organized in Country X, a foreign country, and a clearing member of CO. CB is a nonqualified intermediary, as defined in § 1.1441-1(c)(14). FC is a foreign corporation that has an account with CB. FC instructs CB to purchase a call option that is a specified ELI (as described in § 1.871-15(e)). CB effects the trade for FC on the exchange. The exchange matches FC's order with an order for a written call option with the same terms. The exchange then sends the matched trade to CO, which clears the trade. CB and the clearing member representing the person who sold the call option settle the trade with CO. Upon receiving the matched trade, the option contracts are novated and CO becomes the counterparty to CB and the counterparty to the clearing member representing the person who sold the call option. To the extent that there is a dividend equivalent with respect to the call option, both CO and CB are withholding agents as described in paragraph (a)(1) of this section. As a withholding agent, CO and CB must each determine whether it is obligated to withhold under chapter 3 of the Internal Revenue Code and the regulations thereunder.

Example 8. FCO is a foreign clearing organization. FCO serves as a central counterparty clearing and settlement service provider for derivatives exchanges in Country A, a foreign country. CB is a broker organized in Country A, and a clearing member of FCO. CB is a nonqualified intermediary, as defined in § 1.1441-1(c)(14). FC is a foreign corporation that has an account with CB. FC instructs CB to purchase a call option that is a section 871(m) transaction. CB effects the trade for FC on the exchange. The exchange matches FC's order with an order for a written call option with the same terms. The exchange then sends the matched trade to FCO, which clears the trade. CB and the clearing member representing the call option seller settle the trade with FCO. Upon receiving the matched trade, the option contracts are novated and FCO becomes the counterparty to CB and the counterparty to the clearing member representing the call option seller. To the extent that there is a dividend equivalent with respect to the call option, both FCO and CB are withholding agents as described in paragraph (a)(1) of this section.

Example 9. The facts are the same as Example 8, except that CB is a qualified intermediary, as defined in § 1.1441-1(c)(15), that has assumed the primary obligation to withhold, deposit, and report amounts under chapters 3 and 4 of Internal Revenue Code. CB provides a written statement to FCO representing that it has assumed primary withholding responsibility for any dividend equivalent payment with respect to the call option. FCO, therefore, is not required to withhold on a dividend equivalent payment to CB.

(4) ***Effective/applicability date.*** Paragraph (a)(2) of this section and *Example 6* apply on or after January 23, 2012. *Example 7*, *Example 8*, and *Example 9* of paragraph (a)(3) of this section apply beginning January 19, 2017.

(b) ***Standards of knowledge*** —

(1) ***In general.*** A withholding agent must withhold at the full 30-percent rate under section 1441, 1442, or 1443(a) or at the full 4-percent rate under section 1443(b) if it has actual knowledge or reason to know that a claim of U.S. status or of a reduced rate of withholding under section 1441, 1442, or 1443 is unreliable or incorrect. A withholding agent shall be liable for tax, interest, and penalties to

the extent provided under sections 1461 and 1463 and the regulations under those sections if it fails to withhold the correct amount despite its actual knowledge or reason to know the amount required to be withheld. For purposes of the regulations under sections 1441, 1442, and 1443, a withholding agent may rely on information or certifications contained in, or associated with, a withholding certificate or other documentation furnished by or for a beneficial owner or payee unless the withholding agent has actual knowledge or reason to know that the information or certifications are incorrect or unreliable and, if based on such knowledge or reason to know, it should withhold (under chapter 3 of the Code or another withholding provision of the Code) an amount greater than would be the case if it relied on the information or certifications, or it should report (under chapter 3 of the Code or under another provision of the Code) an amount that would not otherwise be reportable if it relied on the information or certifications. See § 1.1441-1(e)(4)(viii) for applicable reliance rules. A withholding agent that has received notification by the Internal Revenue Service (IRS) that a claim of U.S. status or of a reduced rate is incorrect has actual knowledge beginning on the date that is 30 calendar days after the date the notice is received. A withholding agent that fails to act in accordance with the presumptions set forth in §§ 1.1441-1(b)(3), 1.1441-4(a), 1.1441-5 (d) and (e), or 1.1441-9(b)(3) may also be liable for tax, interest, and penalties. See § 1.1441-1(b)(3)(ix) and (7). In the case of a withholding agent making a withholdable payment to a payee that the withholding agent is required to treat as a foreign entity, see § 1.1471-3(e) for standards of knowledge and §§ 1.1471-2 and 1.1472-1(b) for withholding that may apply under chapter 4. A withholding agent is allowed to apply the rules under paragraphs (b)(5) and (b)(8) of this section as in effect and contained in 26 CFR part 1 revised April 1, 2013, to accounts opened, and obligations entered into, by an entity on or after July 1, 2014, and before January 1, 2015.

(2) ***Reason to know.*** A withholding agent shall be considered to have reason to know if its knowledge of relevant facts or of statements contained in the withholding certificates or other documentation is such that a reasonably prudent person in the position of the withholding agent would question the chapter 3 claims made. For an obligation other than a preexisting obligation, a withholding agent will have reason to know that a chapter 3 claim made by the holder of the obligation (account holder) is unreliable or incorrect if any information contained in its account opening files or other files pertaining to the obligation (account information), including documentation collected for purposes of AML due diligence (as defined under § 1.1471-1(b)(4)), conflicts with the account holder's claim. A withholding agent will not, however, be considered to have reason to know that a person's chapter 3 claim is unreliable or incorrect based on documentation collected for AML due diligence until the date that is 30 days after the obligation is executed (or the account is opened for an obligation that is an account with a financial institution).

(3) ***Financial institutions—limits on reason to know*** —

(i) ***In general.*** For purposes of this paragraph (b)(3) and paragraphs (b)(4) through (10) of this section, the terms withholding certificate, documentary evidence, and documentation are defined in § 1.1441-1(c)(16), (17), and (18). Except as otherwise provided in paragraphs (b)(4) through (9) of this section, a withholding agent that is a financial institution under § 1.1471-5(e), an insurance company (without regard to whether such company is a specified insurance company), or a broker or dealer in securities that maintains or opens an account for a beneficial owner (a direct account holder) has reason to know that documentation provided by the direct account holder is unreliable or incorrect only if one or more of the circumstances described in paragraphs (b)(4) through (9) of this section exist. If a direct account holder has provided documentation that is unreliable or incorrect under the rules of paragraph (b)(4) through (9) of this section, the withholding agent may require new documentation. Alternatively,

the withholding agent may rely on the documentation originally provided if the rules of paragraphs (b)(4) through (9) of this section permit such reliance based on additional statements and documentation obtained by the withholding agent from the beneficial owner. Paragraph (b)(10) of this section provides rules regarding reason to know for withholding agents that receive beneficial owner documentation from persons (indirect account holders) that have an account relationship with, or an ownership interest in, a direct account holder of the withholding agent. Paragraph (b)(11) of this section provides limitations on a withholding agent's reason to know for multiple obligations held by the same person. Paragraph (b)(12) of this section defines a reasonable explanation provided by an individual with respect to the individual's claim of foreign status. For rules regarding reliance on Form W-9, see § 31.3406(h)-3(e)(2) of this chapter. For payments that are withholdable payments, see § 1.1471-3(e)(3) and (4) for additional rules regarding a withholding agent's reason to know with respect to a payee's claim of chapter 4 status and § 1.1471-3(f) for presumption rules that apply when the claim of chapter 4 status is unreliable or incorrect.

(ii) ***Limits on reason to know for preexisting obligations.*** With respect to a preexisting obligation, a withholding agent that has documented the foreign status of the direct account holder for purposes of chapter 3 or chapter 61 before July 1, 2014, may continue to rely on such documentation without regard to a U.S. phone number or U.S. place of birth. If, however, the withholding agent reviews documentation for an individual account holder claiming foreign status that contains a U.S. place of birth (as described in paragraph (b)(5)(ii) of this section) or if the withholding agent is notified of a change in circumstances under the criteria of paragraphs (b)(5) and (8) of this section (as effective on July 1, 2014), the obligation will be treated as having experienced a change in circumstances under § 1.1441-1(e)(4)(ii)(D) as of the date that the withholding agent reviews the documentation or receives the notification, and the withholding agent will then have reason to know that the documentation is unreliable or incorrect. With respect to an obligation held by an entity, a withholding agent is not required to treat the additional U.S. indicia described in this paragraph (b) as a change in circumstances under § 1.1441-1(e)(4)(ii)(D) before January 1, 2015. See § 1.1441-1(b)(3)(iv) for the grace period following a change in circumstances. For purposes of this rule, a direct account holder will be considered documented prior to July 1, 2014, without regard to whether the withholding agent obtains renewal documentation for the account holder on or after July 1, 2014, pursuant to the requirements of § 1.1441-1(e)(4)(ii)(A).

(4) ***Rules applicable to withholding certificates*** —

(i) ***In general.*** A withholding agent has reason to know that a beneficial owner withholding certificate provided by a direct account holder is unreliable or incorrect if the withholding certificate is incomplete with respect to any item on the certificate that is relevant to the claims made by the direct account holder, the withholding certificate contains any information that is inconsistent with the direct account holder's claim, the withholding agent has account information that is inconsistent with the direct account holder's claim, or the withholding certificate lacks information necessary to establish entitlement to a reduced rate of withholding. For purposes of establishing a direct account holder's status as a foreign person or resident of a treaty country a withholding certificate shall be considered unreliable or inconsistent with an account holder's claims only if it is not reliable under the rules of paragraphs (b)(5) and (6) of this section. See, however, § 1.1441-1(e)(2)(ii)(B) for additional reliance standards that apply to a withholding certificate that is required to include an account

holder's foreign TIN. A withholding agent that relies on an agent to review and maintain a withholding certificate is considered to know or have reason to know the facts within the knowledge of the agent.

(ii) ***Examples.*** The rules of paragraph (b)(4) of this section are illustrated by the following examples:

Example 1. F, a foreign person that has a direct account relationship with USB, a bank that is a U.S. person, provides USB with a beneficial owner withholding certificate for the purpose of claiming a reduced rate of withholding on U.S. source dividends (which is a withholdable payment). F resides in a treaty country that has a limitation on benefits provision in its income tax treaty with the United States. The withholding certificate includes a certification of F's status for chapter 4 purposes to except the payment from withholding under chapter 4, but does not contain a statement regarding limitation on benefits or deriving the income under section 894 as required by § 1.1441-6(b)(1). USB cannot rely on the withholding certificate to grant a reduced rate of withholding for chapter 3 purposes because it is incomplete with respect to the claim made by F.

Example 2. F, a foreign person and entity that has a direct account relationship with USB, a broker that is a U.S. person, provides USB with a withholding certificate for the purpose of claiming the portfolio interest exception under section 881(c) with respect to interest paid on an obligation issued before July 1, 2014. The payment of interest is not a withholdable payment under § 1.1471-2(b) (referring to payments made with respect to grandfathered obligations), and, therefore, withholding does not apply to the payment under chapter 4. See § 1.1441-3(c)(4)(i) for rules coordinating withholding under chapters 3 and 4. F indicates on its withholding certificate, however, that it is a partnership. USB may not treat F as a beneficial owner of the interest for purposes of the portfolio interest exception because F has indicated on its withholding certificate that it is a foreign partnership, and such entity classification is inconsistent with its claim as a beneficial owner.

(5) ***Withholding certificate—establishment of foreign status.*** A withholding agent has reason to know that a beneficial owner withholding certificate (as defined in § 1.1441-1(e)(2), but excluding a Form W-8ECI) provided by a direct account holder is unreliable or incorrect for purposes of establishing the account holder's status as a foreign person as set forth in paragraphs (b)(5)(i) through (iii) of this section.

(i) ***Classification of U.S. status, U.S. address, or U.S. telephone number.*** A withholding certificate is unreliable or incorrect if the withholding agent has classified the person as a U.S. person in its account information, the withholding certificate has a current permanent residence address (as defined in § 1.1441-1(e)(2)(ii)) in the United States, the withholding certificate has a current mailing address in the United States, the withholding agent has a current residence or mailing address as part of its account information that is an address in the United States, or the direct account holder notifies the withholding agent of a new residence or mailing address in the United States (whether or not provided on a withholding certificate). A withholding agent also has reason to know that a withholding certificate provided by a person is unreliable or incorrect if the withholding agent has a current telephone number for the account holder in the United States and has no telephone number for the account holder outside of the United States. When any of the foregoing U.S. indicia are present, a withholding agent may nevertheless rely on the beneficial owner withholding certificate to establish the account holder's foreign status if it may do so under the provisions of paragraph (b)(5)(i)(A) or (B) of this section.

(A) A withholding agent may treat a direct account holder as a foreign person if the beneficial owner withholding certificate has been provided by an individual and—

(*1*) The withholding agent has in its possession or obtains documentary evidence establishing foreign status (as described in § 1.1471-3(c)(5)(i)) that does not contain a U.S. address and the individual provides the withholding agent with a reasonable explanation, in writing, supporting the claim of foreign status (as defined in paragraph (b)(12) of this section);

(*2*) For a payment made outside the U.S. with respect to an offshore obligation (as described in § 1.6049-5(c)(1)), the withholding agent has in its possession or obtains documentary evidence establishing foreign status (as described in § 1.1471-3(c)(5)(i)), that does not contain a U.S. address;

(*3*) For a payment made with respect to an offshore obligation (with offshore obligation defined as in § 1.6049-5(c)(1)), the withholding agent classifies the individual as a resident of the country in which the obligation is maintained, the withholding agent is required to report a payment made to the individual annually on a tax information statement that is filed with the tax authority of the country in which the office is located as part of that country's resident reporting requirements, and that country has a tax information exchange agreement or income tax treaty in effect with the United States; or

(*4*) For a case in which the withholding agent classified the account holder as a U.S. person in its account information, the withholding agent has in its possession or obtains documentary evidence described in § 1.1471-3(c)(5)(i)(B) evidencing citizenship in a country other than the United States.

(B) A withholding agent may treat a direct account holder as a foreign person if the beneficial owner withholding certificate has been provided by an entity that the withholding agent does not know, or does not have reason to know, is a flow-through entity and—

(*1*) The withholding agent has in its possession or obtains documentation establishing foreign status that substantiates that the entity is actually organized or created under the laws of a foreign country; or

(*2*) For a payment made with respect to an offshore obligation (with offshore obligation defined as in § 1.6049-5(c)(1)), the withholding agent classifies the entity as a resident of the country in which the account is maintained, the withholding agent is required to report a payment made to the entity annually on a tax information statement that is filed with the tax authority of the country in which the office is located as part of that country's resident reporting requirements, and that country has a tax information exchange agreement or income tax treaty in effect with the United States.

(ii) ***U.S. place of birth.*** A withholding agent has reason to know that a withholding certificate claiming foreign status provided by a direct account holder that is an individual is unreliable or incorrect if the withholding agent has, either on accompanying documentation or as part of its account information, an unambiguous indication of a place of birth for the individual in the United States. A withholding agent may treat the individual as a foreign person, notwithstanding the U.S. place of birth, if the withholding agent has in its possession or obtains documentary evidence described in § 1.1471-3(c)(5)(i)(B) evidencing citizenship in a country

other than the United States and either a copy of the individual's Certificate of Loss of Nationality of the United States or a reasonable written explanation of the account holder's renunciation of U.S. citizenship or the reason the account holder did not obtain U.S. citizenship at birth.

(iii) ***Standing instructions with respect to offshore obligations.*** A beneficial owner withholding certificate is unreliable or incorrect if it is provided with respect to an offshore obligation (as defined in § 1.6049-5(c)(1)) of a direct account holder that has provided standing instructions to pay amounts to an address or an account maintained in the United States. The withholding agent may treat the account holder as a foreign person, however, if the account holder provides either a reasonable explanation in writing that supports its foreign status or documentary evidence establishing foreign status described in § 1.1471-3(c)(5)(i).

(6) ***Withholding certificate—claim of reduced rate of withholding under treaty.*** A withholding agent has reason to know that a withholding certificate (other than Form W-9) provided by a direct account holder is unreliable or incorrect for purposes of establishing that the account holder is a resident of a country with which the United States has an income tax treaty if it is described in paragraphs (b)(6)(i) through (iii) of this section.

(i) ***Permanent residence address.*** A beneficial owner withholding certificate is unreliable or incorrect if the permanent residence address on the beneficial owner withholding certificate is not in the country whose treaty is invoked, or the direct account holder notifies the withholding agent of a new permanent residence address that is not in the treaty country. A withholding agent may, however, treat a direct account holder as entitled to a reduced rate of withholding under an income tax treaty if the account holder provides a reasonable explanation for the permanent residence address outside the treaty country (*e.g.,* the address is the address of a branch of the beneficial owner located outside the treaty country in which the entity is a resident) or the withholding agent has in its possession or obtains documentary evidence described in § 1.1471-3(c)(5)(i) that establishes residency in a treaty country.

(ii) ***Mailing address.*** A beneficial owner withholding certificate is unreliable or incorrect if the permanent residence address on the withholding certificate is in the applicable treaty country but the withholding certificate contains a mailing address outside the treaty country or the withholding agent has a current mailing address as part of its account information for the direct account holder that is outside the treaty country. A mailing address that is a P.O. Box, in-care-of address, or address at a financial institution (if the financial institution is not a beneficial owner) shall not preclude a withholding agent from treating the account holder as a resident of a treaty country if such address is in the treaty country. If a withholding agent has a mailing address (whether or not contained on the withholding certificate) outside the applicable treaty country, the withholding agent may nevertheless treat a direct account holder as a resident of an applicable treaty country if—

(A) The withholding agent has in its possession or obtains documentary evidence described in § 1.1471-3(c)(5)(i) supporting the account holder's claim of residence in the applicable treaty country (and the additional documentation does not contain an address outside the treaty country);

(B) The withholding agent has in its possession, or obtains, documentation that establishes that the direct account holder is an entity organized in a treaty country (or an entity managed and controlled in a treaty country, if the applicable treaty so requires);

(C) The withholding agent knows that the address outside the applicable treaty country (other than a P.O. box, or in-care-of address) is a branch of the account holder that is an entity that is a resident of the applicable treaty country; or

(D) The withholding agent obtains a written statement from the direct account holder that reasonably establishes entitlement to treaty benefits.

(iii) ***Standing instructions.*** A beneficial owner withholding certificate is unreliable or incorrect to establish entitlement to a reduced rate of withholding under an income tax treaty if the direct account holder has standing instructions to pay amounts directing the withholding agent to pay amounts from its account to an address or an account outside the treaty country unless the account holder provides a reasonable explanation, in writing, or the withholding agent has in its possession or obtains documentary evidence described in § 1.1471-3(c)(5)(i) establishing the account holder's residence in the applicable treaty country.

(7) ***Documentary evidence.*** A withholding agent shall not treat documentary evidence provided by a direct account holder as valid if the documentary evidence does not reasonably establish the identity of the person presenting the documentary evidence. For example, documentary evidence is not valid if it is provided in person by a direct account holder that is a natural person and the photograph or signature on the documentary evidence, if any, does not match the appearance or signature of the person presenting the document. A withholding agent shall not rely on documentary evidence to reduce the rate of withholding that would otherwise apply under the presumption rules of §§ 1.1441-1(b)(3), 1.1441-5(d) and (e)(6), and 1.6049-5(d) if the documentary evidence contains information that is inconsistent with the direct account holder's claim of a reduced rate of withholding, the withholding agent has other account information that is inconsistent with the direct account holder's claim, or the documentary evidence lacks information necessary to establish entitlement to a reduced rate of withholding. For example, if a direct account holder provides documentary evidence to claim treaty benefits and the documentary evidence establishes the direct account holder's status as a foreign person and a resident of a treaty country, but the account holder fails to provide the treaty statements required by § 1.1441-6(c)(5), the documentary evidence does not establish the direct account holder's entitlement to a reduced rate of withholding. For purposes of establishing a direct account holder's status as a foreign person or resident of a country with which the United States has an income tax treaty, documentary evidence shall be considered unreliable or incorrect only if it is not reliable under the rules of paragraph (b)(8) or (9) of this section.

(8) ***Documentary evidence—establishment of foreign status.*** A withholding agent has reason to know that documentary evidence is unreliable or incorrect for purposes of establishing the direct account holder's status as a foreign person if the documentary evidence is described in paragraphs (b)(8)(i), (ii), (iii), or (iv) of this section.

(i) ***Documentary evidence received prior to January 1, 2001.*** A withholding agent shall not treat documentary evidence provided by a direct account holder before January 1, 2001, as valid for purposes of establishing the account holder's status as a foreign person if it has actual knowledge that the account holder is a U.S. person or if it has a mailing or residence address for the account holder in the United States. If a withholding agent has an address for the direct account holder in the United States, the withholding agent may nevertheless treat the account holder as a foreign person if it can so treat the account holder under the rules of paragraph (b)(8)(ii) of this section. See, however, paragraph (b)(3)(ii) of this section regarding changes in circumstances with respect to preexisting obligations.

(ii) ***Documentary evidence received after December 31, 2000.*** A withholding agent shall not treat documentary evidence provided by an account holder after December 31, 2000, as valid for purposes of establishing the direct account holder's foreign status if the withholding agent does not have a permanent residence address for the account holder. Documentary evidence is also unreliable or incorrect to establish a direct account holder's status as a foreign person if the withholding agent has classified the account holder as a U.S. person in its account information, if the withholding agent has a current mailing or permanent residence address (whether or not on the documentation) for the direct account holder in the United States, the direct account holder notifies the withholding agent of a new residence or mailing address in the United States, or if the withholding agent has a current telephone number for the account holder in the United States and has no telephone number for the account holder outside of the United States. Notwithstanding the foregoing, a withholding agent may rely on documentary evidence as establishing the direct account holder's foreign status if it may do so under the provisions of paragraph (b)(8)(ii)(A) or (B) of this section.

(A) ***Treatment of individual's foreign status.*** A withholding agent may treat a direct account holder that is an individual as a foreign person even if it has any of the U.S. indicia described in this paragraph for the account holder if—

(*1*) The withholding agent has in its possession or obtains additional documentary evidence supporting the claim of foreign status (described in § 1.1471-3(c)(5)(i)) that does not contain a U.S. address and a reasonable explanation in writing supporting the account holder's foreign status;

(*2*) The withholding agent obtains a valid beneficial owner withholding certificate on Form W-8 and the Form W-8 contains a permanent residence address outside the United States and a mailing address outside the United States (or if a mailing address is inside the United States the account holder provides a reasonable explanation in writing supporting the account holder's foreign status); or

(*3*) For a payment made with respect to an offshore obligation (with offshore obligation defined as in § 1.6049-5(c)(1)), the withholding agent classifies the individual as a resident of the country in which the obligation is maintained, the withholding agent is required to report a payment made to the individual annually on a tax information statement that is filed with the tax authority of the country in which the office is located as part of that country's resident reporting requirements, and that country has a tax information exchange agreement or income tax treaty in effect with the United States.

(B) ***Presumption of entity's foreign status.*** A withholding agent may treat a direct account holder that is an entity (other than a flow-through entity) as a foreign person even if it has any of the U.S. indicia described in this paragraph for the account holder in the United States if—

(*1*) The withholding agent has in its possession or obtains documentary evidence establishing foreign status that substantiates that the entity is actually organized or created under the laws of a foreign country;

(2) The withholding agent obtains a valid beneficial owner withholding certificate on Form W-8 and the Form W-8 contains a permanent residence address outside the United States and a mailing address outside the United States (or if a mailing address is inside the United States the account holder provides additional documentary evidence sufficient to establish the account holder's foreign status); or

(3) For a payment made with respect to an offshore obligation (with offshore obligation defined as in § 1.6049-5(c)(1)), the withholding agent classifies the entity as a resident of the country in which the account is maintained, the withholding agent is required to report a payment made to the entity annually on a tax information statement that is filed with the tax authority of the country in which the office is located as part of that country's resident reporting requirements, and that country has a tax information exchange agreement or income tax treaty in effect with the United States.

(iii) ***U.S. place of birth.*** A withholding agent has reason to know that documentary evidence provided by a direct account holder to support an individual's foreign status is unreliable or incorrect if the withholding agent has, either on the documentary evidence or as part of its account information, an unambiguous indication of a place of birth for the individual in the United States. A withholding agent may treat the individual as a foreign person, notwithstanding the U.S. birth place, if the withholding agent has in its possession or obtains documentary evidence described in § 1.1471-3(c)(5)(i)(B) evidencing citizenship in a country other than the United States and a copy of the individual's Certificate of Loss of Nationality of the United States. Alternatively, a withholding agent may treat the individual as a foreign person if the withholding agent obtains a valid beneficial owner withholding certificate on Form W-8 from the individual that establishes the account holder's foreign status, documentary evidence described in § 1.1471-3(c)(5)(i)(B) evidencing citizenship in a country other than the United States, and a reasonable written explanation of the individual's renunciation of U.S. citizenship or the reason the individual did not obtain U.S. citizenship at birth.

(iv) ***Standing instructions with respect to offshore obligations.*** Documentary evidence is unreliable or incorrect if it is provided with respect to an offshore obligation (as defined in § 1.6049-5(c)(1)) of a direct account holder that has provided the withholding agent with standing instructions to pay amounts to an address or an account maintained in the United States. The withholding agent may treat the direct account holder as a foreign person, however, if the account holder provides either a reasonable explanation in writing that supports its foreign status or a valid beneficial owner withholding certificate claiming foreign status.

(9) ***Documentary evidence—claim of reduced rate of withholding under treaty.*** A withholding agent has reason to know that documentary evidence is unreliable or incorrect for purposes of establishing that a direct account holder is a resident of a country with which the United States has an income tax treaty if it is described in paragraph (b)(9)(i) or (ii) of this section.

(i) ***Permanent residence address and mailing address.*** Documentary evidence is unreliable or incorrect if the withholding agent has a current mailing or current permanent residence address for the direct account holder (whether or not on the documentary evidence) that is outside the applicable treaty country, or the withholding agent has no permanent residence address for the account holder. If a withholding agent has a current mailing or current permanent residence

address for the direct account holder outside the applicable treaty country, the withholding agent may nevertheless treat a direct account holder as a resident of an applicable treaty country if the withholding agent—

(A) Has in its possession or obtains additional documentary evidence described in § 1.1471-3(c)(5)(i) supporting the direct account holder's claim of residence in the applicable treaty country (and the documentary evidence does not contain an address outside the applicable treaty country, a P.O. box, an in-care-of address, or the address of a financial institution);

(B) Has in its possession or obtains documentary evidence described in § 1.1471-3(c)(5)(i) that establishes the direct account holder is an entity organized in a treaty country (or an entity managed and controlled in a treaty country, if the applicable treaty so requires); or

(C) Obtains a valid beneficial owner withholding certificate on Form W-8 that contains a permanent residence address and a mailing address in the applicable treaty country.

(ii) ***Standing instructions.*** Documentary evidence is unreliable or incorrect if the direct account holder has provided the withholding agent with standing instructions to pay amounts to an address or an account maintained outside the treaty country unless the direct account holder provides a reasonable explanation, in writing, establishing the direct account holder's residence in the applicable treaty country, or a valid beneficial owner withholding certificate that contains a permanent residence address and a mailing address in the applicable treaty country.

(10) ***Indirect account holders.*** A withholding agent that receives documentation from a payee through a nonqualified intermediary, a flow-through entity, or a U.S. branch (including a territory financial institution) described in § 1.1441-1(b)(2)(iv) (other than a U.S. branch or territory financial institution that is treated as a U.S. person) has reason to know that the documentation is unreliable or incorrect if a reasonably prudent person in the position of a withholding agent would question the claims made. This standard requires, but is not limited to, a withholding agent's compliance with the rules of paragraphs (b)(10)(i) through (iv).

(i) The withholding agent must review the withholding statement described in § 1.1441-1(e)(3)(iv) and may not rely on information in the statement to the extent the information does not support the claims made for any payee. For this purpose, a withholding agent may not treat a payee as a foreign person if an address in the United States is provided for such payee and may not treat a person as a resident of a country with which the United States has an income tax treaty if the address for that person is outside the applicable treaty country. Notwithstanding a U.S. address or an address outside a treaty country, the withholding agent may treat a payee as a foreign person or a foreign person as a resident of a treaty country if the withholding statement is accompanied by a valid withholding certificate and documentary evidence (as described in § 1.1471-3(c)(5)(i)) or a reasonable explanation is provided, in writing, by the nonqualified intermediary, flow-through entity, or U.S. branch supporting the payee's foreign status or the foreign person's residency in a treaty country.

(ii) The withholding agent must review each withholding certificate in accordance with the requirements of paragraphs (b)(5) and (6) of this section and verify that the information on the withholding certificate is consistent with the information on the withholding statement required under § 1.1441-1(e)(3)(iv). If there is a discrepancy between the withholding certificate and the withholding statement, the withholding agent may choose to rely on the withholding certificate, if valid, and instruct the nonqualified intermediary, flow-through entity, or U.S. branch to correct

the withholding statement or apply the presumption rules of §§ 1.1441-1(b), 1.1441-5(d) and (e)(6), 1.6049-5(d), and 1.1471-3(f) (for a withholdable payment for chapter 4 purposes) to the payment allocable to the payee who provided the withholding certificate. If the withholding agent chooses to rely upon the withholding certificate, the withholding agent is required to instruct the intermediary or flow-through entity to correct the withholding statement and confirm that the intermediary or flow-through entity does not know or have reason to know that the withholding certificate is unreliable or inaccurate.

(iii) The withholding agent must review the documentary evidence provided by the nonqualified intermediary, flow-through entity, or U.S. branch to determine that there is no obvious indication that the payee is a U.S. non-exempt recipient or that the documentary evidence does not establish the identity of the person who provided the documentation (*e.g.,* the documentary evidence does not appear to be an identification document).

(iv) If the beneficial owner is claiming a reduced rate of withholding under an income tax treaty, the rules of § 1.1441-6(b)(1)(ii) also apply to determine whether the withholding agent has reason to know that a claim for treaty benefits is unreliable or incorrect.

(11) ***Limits on reason to know for multiple obligations belonging to a single person.*** A withholding agent that maintains multiple obligations for a single person will have reason to know that a claim of foreign status for the person is inaccurate based on account information for another obligation held by the person only to the extent that—

(i) The withholding agent's computerized systems link the obligations by reference to a data element such as client number, EIN, or foreign tax identifying number and consolidates the account information and payment information for the obligations; or

(ii) The withholding agent has treated the obligations as consolidated obligations for purposes of sharing documentation pursuant to § 1.1441-1(e)(4)(ix).

(12) ***Reasonable explanation supporting claim of foreign status.*** A reasonable explanation supporting an individual's claim of foreign status for purposes of paragraphs (b)(5) and (8) of this section means a written statement prepared by the individual or the individual's completion of a checklist provided by the withholding agent, stating that the individual meets the requirements of one of paragraphs (b)(12)(i) through (iv) of this section.

(i) The individual certifies that he or she—

(A) Is a student at a U.S. educational institution and holds the appropriate visa;

(B) Is a teacher, trainee, or intern at a U.S. educational institution or a participant in an educational or cultural exchange visitor program, and holds the appropriate visa;

(C) Is a foreign individual assigned to a diplomatic post or a position in a consulate, embassy, or international organization in the United States; or

(D) Is a spouse or unmarried child under the age of 21 years of one of the persons described in paragraphs (b)(12)(i)(A) through (C) of this section;

(ii) The individual provides information demonstrating that he or she has not met the substantial presence test set forth in § 301.7701(b)-1(c) of this chapter (*e.g.,* a written statement indicating the number of days present in the United States during the three-year period that includes the current year);

(iii) The individual certifies that he or she meets the closer connection exception described in § 301.7701(b)-2, states the country to which the individual has a closer connection, and demonstrates how that closer connection has been established; or

(iv) With respect a payment entitled to a reduced rate of tax under a U.S. income tax treaty, the individual certifies that he or she is treated as a resident of a country other than the United States and is not treated as a U.S. resident or U.S. citizen for purposes of that income tax treaty.

(13) ***Additional guidance.*** The IRS may prescribe other circumstances for which a withholding certificate or documentary evidence is unreliable or incorrect in addition to the circumstances described in paragraph (b) of this section to establish an account holder's status as a foreign person or a beneficial owner entitled to a reduced rate of withholding in published guidance (see § 601.601(d)(2) of this chapter).

(c) ***Agent*** —

(1) ***In general.*** A withholding agent may authorize an agent to fulfill its obligations under chapter 3 if the requirements of paragraph (c)(2) of this section are satisfied. The acts of an agent of a withholding agent (including the receipt of withholding certificates, the payment of amounts of income subject to withholding, and the deposit of tax withheld) are imputed to the withholding agent on whose behalf it is acting.

(2) ***Authorized agent.*** An agent is an authorized agent only if—

(i) There is a written agreement between the withholding agent and the person acting as agent that clearly provides which obligations under chapter 3 that the agent is authorized to fulfill;

(ii) A Form 8655, “Reporting Agent Authorization,” is filed with the IRS by a withholding agent if its agent (including any sub-agent) acts as a reporting agent for filing Form 1042 on behalf of the withholding agent and the agent (or sub-agent) identifies itself (instead of the withholding agent) as the filer on the Form 1042;

(iii) Books and records and relevant personnel of the agent (including any sub-agent) are available to the withholding agent (on a continuous basis, including after termination of the relationship) in order to evaluate the withholding agent's compliance with the provisions of chapters 3, 4, and 61 of the Code, section 3406, and the regulations under those provisions; and

(iv) The U.S. withholding agent remains fully liable for the acts of its agent (or for any sub-agent) and does not assert any of the defenses that may otherwise be available, including under common law principles of agency in order to avoid tax liability under the Code.

(3) ***Liability of withholding agent acting through an agent.*** An authorized agent is subject to the same withholding and reporting obligations that apply to any withholding agent under the provisions of chapter 3 of the Code and the regulations thereunder. See the instructions to Form 1042-S for the manner for filing the form when an authorized agent acts on behalf of a withholding agent. Except as otherwise provided in the QI, WP, and WT agreements, an authorized agent does not benefit from the special procedures or exceptions that may apply to a QI, WP, or WT. A withholding agent acting through an authorized agent is liable for any failure of the agent, such as failure to withhold an amount or make payment of tax, in the same manner and to the same extent as if the agent's failure had been the failure of the withholding agent. For this purpose, the agent's actual knowledge or reason to know shall be imputed to the withholding agent. The withholding agent's liability shall exist

irrespective of the fact that the authorized agent is also a withholding agent and is itself separately liable for failure to comply with the provisions of the regulations under section 1441, 1442, or 1443. However, the same tax, interest, or penalties shall not be collected more than once.

(d) ***United States obligations.*** If the United States is a withholding agent for an item of interest, including original issue discount, on obligations of the United States or of any agency or instrumentality thereof, the withholding obligation of the United States is assumed and discharged by—

(1) The Commissioner of the Public Debt, for interest paid by checks issued through the Bureau of the Public Debt;

(2) The Treasurer of the United States, for interest paid by him or her, whether by check or otherwise;

(3) Each Federal Reserve Bank, for interest paid by it, whether by check or otherwise; or

(4) Such other person as may be designated by the IRS.

(e) ***Assumed obligations.*** If, in connection with the sale of a corporation's property, payment on the bonds or other obligations of the corporation is assumed by a person, then that person shall be a withholding agent to the extent amounts subject to withholding are paid to a foreign person. Thus, the person shall withhold such amounts under § 1.1441-1 as would be required to be withheld by the seller or corporation had no such sale or assumption been made.

(f) ***Conduit financing arrangements*** —

(1) ***Liability of withholding agent.*** Subject to paragraph (f)(2) of this section, any person that is required to deduct and withhold tax under § 1.1441-3(g) is made liable for that tax by section 1461. A person that is required to deduct and withhold tax but fails to do so is liable for the payment of the tax and any applicable penalties and interest.

(2) ***Exception for withholding agents that do not know of conduit financing arrangement*** —

(i) ***In general.*** A withholding agent will not be liable under paragraph (f)(1) of this section for failing to deduct and withhold with respect to a conduit financing arrangement unless the person knows or has reason to know that the financing arrangement is a conduit financing arrangement. This standard shall be satisfied if the withholding agent knows or has reason to know of facts sufficient to establish that the financing arrangement is a conduit financing arrangement, including facts sufficient to establish that the participation of the intermediate entity in the financing arrangement is pursuant to a tax avoidance plan. A withholding agent that knows only of the financing transactions that comprise the financing arrangement will not be considered to know or have reason to know of facts sufficient to establish that the financing arrangement is a conduit financing arrangement.

(ii) ***Examples.*** The following examples illustrate the operation of paragraph (d)(2) of this section. Each example assumes that withholding under chapter 4 does not apply.

> *Example 1.* (i) DS is a U.S. subsidiary of FP, a corporation organized in Country N, a country that does not have an income tax treaty with the United States. FS is a special purpose subsidiary of FP that is incorporated in Country T, a country that has an income tax treaty with the United States that prohibits the imposition of withholding tax on payments of interest. FS is capitalized with $10,000,000 in debt from BK, a Country N bank, and $1,000,000 in capital from FS.

(ii) On May 1, 1995, C, a U.S. person, purchases an automobile from DS in return for an installment note. On July 1, 1995, DS sells a number of installment notes, including C's, to FS in exchange for $10,000,000. DS continues to service the installment notes for FS, and C is not notified of the sale of its obligation and continues to make payments to DS. But for the withholding tax on payments of interest by DS to BK, DS would have borrowed directly from BK, pledging the installment notes as collateral.

(iii) The C installment note is a financing transaction, whether held by DS or by FS, and the FS note held by BK also is a financing transaction. After FS purchases the installment note, and during the time the installment note is held by FS, the transactions constitute a financing arrangement, within the meaning of § 1.881-3(a)(2)(i). BK is the financing entity, FS is the intermediate entity, and C is the financed entity. Because the participation of FS in the financing arrangement reduces the tax imposed by section 881 and because there was a tax avoidance plan, FS is a conduit entity.

(iv) Because C does not know or have reason to know of the tax avoidance plan (and by extension that the financing arrangement is a conduit financing arrangement), C is not required to withhold tax under section 1441. However, DS, who knows that FS's participation in the financing arrangement is pursuant to a tax avoidance plan and is a withholding agent for purposes of section 1441, is not relieved of its withholding responsibilities.

Example 2. Assume the same facts as in *Example 1* except that C receives a new payment booklet on which DS is described as "agent." Although C may deduce that its installment note has been sold, without more C has no reason to know of the existence of a financing arrangement. Accordingly, C is not liable for failure to withhold, although DS still is not relieved of its withholding responsibilities.

Example 3. (i) DC is a U.S. corporation that is in the process of negotiating a loan of $10,000,000 from BK1, a bank located in Country N, a country that does not have an income tax treaty with the United States. Before the loan agreement is signed, DC's tax lawyers point out that interest on the loan would not be subject to withholding tax if the loan were made by BK2, a subsidiary of BK1 that is incorporated in Country T, a country that has an income tax treaty with the United States that prohibits the imposition of withholding tax on payments of interest. BK1 makes a loan to BK2 to enable BK2 to make the loan to DC. Without the loan from BK1 to BK2, BK2 would not have been able to make the loan to DC.
(ii) The loan from BK1 to BK2 and the loan from BK2 to DC are both financing transactions and together constitute a financing arrangement within the meaning of § 1.881-3(a)(2)(i). BK1 is the financing entity, BK2 is the intermediate entity, and DC

is the financed entity. Because the participation of BK2 in the financing arrangement reduces the tax imposed by section 881 and because there is a tax avoidance plan, BK2 is a conduit entity.

(iii) Because DC is a party to the tax avoidance plan (and accordingly knows of its existence), DC must withhold tax under section 1441. If DC does not withhold tax on its payment of interest, BK2, a party to the plan and a withholding agent for purposes of section 1441, must withhold tax as required by section 1441.

Example 4. (i) DC is a U.S. corporation that has a long-standing banking relationship with BK2, a U.S. subsidiary of BK1, a bank incorporated in Country N, a country that does not have an income tax treaty with the United States. DC has borrowed amounts of as much as $75,000,000 from BK2 in the past. On January 1, 1995, DC asks to borrow $50,000,000 from BK2. BK2 does not have the funds available to make a loan of that size. BK2 considers asking BK1 to enter into a loan with DC but rejects this possibility because of the additional withholding tax that would be incurred. Accordingly, BK2 borrows the necessary amount from BK1 with the intention of on-lending to DC. BK1 does not make the loan directly to DC because of the withholding tax that would apply to payments of interest from DC to BK1. DC does not negotiate with BK1 and has no reason to know that BK1 was the source of the loan.
(ii) The loan from BK2 to DC and the loan from BK1 to BK2 are both financing transactions and together constitute a financing arrangement within the meaning of § 1.881-3(a)(2)(i). BK1 is the financing entity, BK2 is the intermediate entity, and DC is the financed entity. The participation of BK2 in the financing arrangement reduces the tax imposed by section 881. Because the participation of BK2 in the financing arrangement reduces the tax imposed by section 881 and because there was a tax avoidance plan, BK2 is a conduit entity.

(iii) Because DC does not know or have reason to know of the tax avoidance plan (and by extension that the financing arrangement is a conduit financing arrangement), DC is not required to withhold tax under section 1441. However, BK2, who is also a withholding agent under section 1441 and who knows that the financing arrangement is a conduit financing arrangement, is not relieved of its withholding responsibilities.

(g) ***Effective/applicability date.*** Except as otherwise provided in paragraph (a)(4) of this section, this section applies to payments made on or after January 6, 2017. (For payments made after June 30, 2014, and before January 6, 2017, see this section as in effect and contained in 26 CFR part 1, as revised April 1, 2016. For payments made after December 31, 2000, and before July 1, 2014, see this section as in effect and contained in 26 CFR part 1, as revised April 1, 2013.)

[T.D. 7977, 49 FR 36834, Sept. 20, 1984]

Editorial Note: For FEDERAL REGISTER citations affecting § 1.1441-7, see the List of CFR Sections Affected, which appears in the Finding Aids section of the printed volume and at *www.govinfo.gov*.

§ 1.1441-8 Exemption from withholding for payments to foreign governments, international organizations, foreign central banks of issue, and the Bank for International Settlements.

(a) ***Foreign governments.*** Under section 892, certain specific types of income received by foreign governments are excluded from gross income and are exempt from taxation, unless derived from the conduct of a commercial activity or received from or by a controlled commercial entity. Accordingly, withholding is not required under § 1.1441.1 with regard to any item of income which is exempt from taxation under section 892.

(b) ***Reliance on claim of exemption by foreign government.*** Absent actual knowledge or reason to know otherwise, the withholding agent may rely upon a claim of exemption made by the foreign government if, prior to the payment, the withholding agent can reliably associate the payment with documentation upon which it can rely to treat the payment as made to a beneficial owner in accordance with § 1.1441-1(e)(1)(ii). A Form W-8 furnished by a foreign government for purposes of claiming an exemption under this paragraph (b) is valid only if, in addition to other applicable requirements, it certifies that the income is, or will be, exempt from taxation under section 892 and the regulations under that section and whether the person whose name is on the certificate is an integral part of a foreign government (as defined in § 1.892-2T(a)(2)) or a controlled entity (as defined in § 1.892-2T(a)(3)).

(c) ***Income of a foreign central bank of issue or the Bank for International Settlements*** —

(1) ***Certain interest income.*** Section 895 provides for the exclusion from gross income of certain income derived by a foreign central bank of issue, or by the Bank for International Settlements, from obligations of the United States or of any agency or instrumentality thereof or from interest on deposits with persons carrying on the banking business if the bank is the owner of the obligations or deposits and does not hold the obligations or deposits for, or use them in connection with, the conduct of a commercial banking function or other commercial activity by such bank. See § 1.895-1. Absent actual knowledge or reason to know that a foreign central bank of issue, or the Bank for International Settlements, is operating outside the scope of the exclusion granted by section 895 and the regulations under that section, the withholding agent may rely on a claim of exemption if, prior to the payment, the withholding agent can reliably associate the payment with documentation upon which it can rely to treat the foreign central bank of issue or the Bank for International Settlements as the beneficial owner of the payment in accordance with § 1.1441-1(e)(1)(ii). A Form W-8 furnished by a foreign central bank of issue or the Bank for International Settlements for purposes of claiming an exemption under this paragraph (c)(1) is valid only if, in addition to other applicable requirements, it certifies that the person whose name is on the certificate is a foreign central bank of issue, or the Bank for International Settlements, and that the bank does not, and will not, hold the obligations or the bank deposits covered by the Form W-8 for, or use them in connection with, the conduct of a commercial banking function or other commercial activity.

(2) ***Bankers acceptances.*** Interest derived by a foreign central bank of issue from bankers acceptances is exempt from tax under sections 871(i)(2)(C) and 881(d) and § 1.861-2(b)(4). With respect to bankers' acceptances, a withholding agent may treat a payee as a foreign central bank of issue

without requiring a withholding certificate if the name of the payee and other facts surrounding the payment reasonably indicate that the payee or beneficial owner is a foreign central bank of issue, as defined in § 1.861-2(b)(4).

(d) ***Exemption for payments to international organizations.*** A payment to an international organization (within the meaning of section 7701(a)(18)) is exempt from withholding on any payment. A withholding agent may treat a payee as an international organization without requiring a withholding certificate if the name of the payee is one that is designated as an international organization by executive order (pursuant to 22 U.S.C. 288 through 288(f)) and other facts surrounding the transaction reasonably indicate that the international organization is the beneficial owner of the payment.

(e) ***Failure to receive withholding certificate timely and other applicable procedures.*** See applicable procedures described in § 1.1441-1(b)(7) in the event the withholding agent does not hold a valid withholding certificate described in paragraph (b) or (c)(1) of this section or other appropriate documentation at the time of payment. Further, the provisions of § 1.1441-1(e)(4) shall apply to withholding certificates and other documents related thereto furnished under the provisions of this section.

(f) ***Effective date*** —

(1) ***In general.*** This section applies to payments made after December 31, 2000.

(2) ***Transition rules.*** For purposes of this section, the validity of a Form 8709 that was valid on January 1, 1998, under the regulations in effect prior to January 1, 2001 (see 26 CFR part 1, revised April 1, 1999) and expired, or will expire, at any time during 1998, is extended until December 31, 1998. The validity of a Form 8709 that is valid on or after January 1, 1999, remains valid until its validity expires under the regulations in effect prior to January 1, 2001 (see 26 CFR part 1, revised April 1, 1999) but in no event shall such a form remain valid after December 31, 2000. The rule in this paragraph (f)(2), however, does not apply to extend the validity period of a Form 8709 that expires solely by reason of changes in the circumstances of the person whose name is on the certificate. Notwithstanding the first three sentences of this paragraph (f)(2), a withholding agent may choose to not take advantage of the transition rule in this paragraph (f)(2) with respect to one or more withholding certificates valid under the regulations in effect prior to January 1, 2001 (see 26 CFR part 1, revised April 1, 1999) and, therefore, to require withholding certificates conforming to the requirements described in this section (new withholding certificates). For purposes of this section, a new withholding certificate is deemed to satisfy the documentation requirement under the regulations in effect prior to January 1, 2001 (see 26 CFR part 1, revised April 1, 1999). Further, a new withholding certificate remains valid for the period specified in § 1.1441-1(e)(4)(ii), regardless of when the certificate is obtained.

[T.D. 8211, 53 FR 24066, June 27, 1988, as amended at T.D. 8211, 53 FR 27595, July 21, 1988; Redesignated and amended by T.D. 8734, 62 FR 53464, Oct. 14, 1997; T.D. 8804, 63 FR 72185, Dec. 31, 1998; 64 FR 73410, Dec. 30, 1999]

§ 1.1441-9 Exemption from withholding on exempt income of a foreign tax-exempt organization, including foreign private foundations.

(a) ***Exemption from withholding for exempt income.*** No withholding is required under section 1441(a) or 1442, and the regulations under those sections, on amounts paid to a foreign organization that is described in section 501(c) to the extent that the amounts are not income includable under section 512 in computing the organization's unrelated business taxable income. See, however, § 1.1443-1 for withholding on payments of unrelated business income to foreign tax-exempt organizations and on payments subject to tax under section 4948. For a foreign organization to claim an exemption from withholding under section

1441(a) or 1442 based on its status as an organization described in section 501(c), it must furnish the withholding agent with a withholding certificate described in paragraph (b)(2) of this section. A foreign organization described in section 501(c) may choose to claim a reduced rate of withholding under the procedures described in other sections of the regulations under section 1441 and not under this section. In particular, if an organization chooses to claim benefits under an income tax treaty, the withholding procedures applicable to claims of such a reduced rate are governed solely by the provisions of § 1.1441-6 and not of this section.

(b) ***Reliance on foreign organization's claim of exemption from withholding*** —

(1) ***General rule.*** A withholding agent may rely on a claim of exemption under this section only if, prior to the payment, the withholding agent can reliably associate the payment with a valid withholding certificate described in paragraph (b)(2) of this section.

(2) ***Withholding certificate.*** A withholding certificate under this paragraph (b)(2) is valid only if it is a Form W-8 and if, in addition to other applicable requirements, the Form W-8 includes the taxpayer identifying number of the organization whose name is on the certificate, and it certifies that the Internal Revenue Service (IRS) has issued a favorable determination letter (and the date thereof) that is currently in effect, what portion, if any, of the amounts paid constitute income includible under section 512 in computing the organization's unrelated business taxable income, and, if the organization is described in section 501(c)(3), whether it is a private foundation described in section 509. Notwithstanding the preceding sentence, if the organization cannot certify that it has been issued a favorable determination letter that is still in effect, its withholding certificate is nevertheless valid under this paragraph (b)(2) if the organization attaches to the withholding certificate an opinion that is acceptable to the withholding agent from a U.S. counsel (or any other person as the IRS may prescribe in published guidance (see § 601.601(d)(2) of this chapter)) concluding that the organization is described in section 501(c). If the determination letter or opinion of counsel to which the withholding certificate refers concludes that the organization is described in section 501(c)(3), and the certificate further certifies that the organization is not a private foundation described in section 509, an affidavit of the organization setting forth sufficient facts concerning the operations and support of the organization for the Internal Revenue Service (IRS) to determine that such organization would be likely to qualify as an organization described in section 509(a)(1), (2), (3), or (4) must be attached to the withholding certificate. An organization that provides an opinion of U.S. counsel or an affidavit may provide the same opinion or affidavit to more than one withholding agent provided that the opinion is acceptable to each withholding agent who receives it in conjunction with a withholding certificate. Any such opinion of counsel or affidavit must be renewed whenever there is a change in facts or circumstances that are relevant to determine the organization's status under section 501(c) or, if relevant, that the organization is or is not a private foundation described in section 509.

(3) ***Presumptions in the absence of documentation.*** Notwithstanding paragraph (b)(1) of this section, if the organization's certification with respect to whether amounts paid constitute income includable under section 512 in computing the organization's unrelated business taxable income is not reliable or is lacking but all other certifications are reliable, the withholding agent may rely on the certificate but the amounts paid are presumed to be income includable under section 512 in computing the organization's unrelated business taxable income. If the certification regarding private foundation status is not reliable, the withholding agent may rely on the certificate but the amounts paid are presumed to be paid to a foreign beneficial owner that is a private foundation.

(4) ***Reason to know.*** Reliance by a withholding agent on the information and certifications stated on a withholding certificate is subject to the agent's actual knowledge or reason to know that such information or certification is incorrect as provided in § 1.1441-7(b). For example, a withholding agent must cease to treat a foreign organization's claim for exemption from withholding based on the organization's tax-exempt status as valid beginning on the earlier of the date on which such agent knows that the IRS has given notice to such foreign organization that it is not an organization described in section 501(c) or the date on which the IRS gives notice to the public that such foreign organization is not an organization described in section 501(c). Similarly, a withholding agent may no longer rely on a certification that an amount is not subject to tax under section 4948 beginning on the earlier of the date on which such agent knows that the IRS has given notice to such foreign organization that it is subject to tax under section 4948 or the date on which the IRS gives notice that such foreign organization is a private foundation within the meaning of section 509(a).

(c) ***Failure to receive withholding certificate timely and other applicable procedures.*** See applicable procedures described in § 1.1441-1(b)(7) in the event the withholding agent does not hold a valid withholding certificate or other appropriate documentation at the time of payment. Further, the provisions of § 1.1441-1(e)(4) shall apply to withholding certificates and other documents related thereto furnished under the provisions of this section.

(d) ***Effective date*** —

(1) ***In general.*** This section applies to payments made after December 31, 2000.

(2) ***Transition rules.*** For purposes of this section, the validity of a Form W-8, 1001, or 4224 or a statement that was valid on January 1, 1998, under the regulations in effect prior to January 1, 2001 (see 26 CFR parts 1 and 35a, revised April 1, 1999) and expired, or will expire, at any time during 1998, is extended until December 31, 1998. The validity of a Form W-8, 1001, or 4224 or a statement that is valid on or after January 1, 1999 remains valid until its validity expires under the regulations in effect prior to January 1, 2001 (see 26 CFR parts 1 and 35a, revised April 1, 1999) but in no event shall such form or statement remain valid after December 31, 2000. The rule in this paragraph (d)(2), however, does not apply to extend the validity period of a Form W-8, 1001, or 4224 or a statement that expires solely by reason of changes in the circumstances of the person whose name is on the certificate. Notwithstanding the first three sentences of this paragraph (d)(2), a withholding agent may choose to not take advantage of the transition rule in this paragraph (d)(2) with respect to one or more withholding certificates valid under the regulations in effect prior to January 1, 2001 (see 26 CFR parts 1 and 35a, revised April 1, 1999) and, therefore, to require withholding certificates conforming to the requirements described in this section (new withholding certificates). For purposes of this section, a new withholding certificate is deemed to satisfy the documentation requirement under the regulations in effect prior to January 1, 2001 (see 26 CFR parts 1 and 35a, revised April 1, 1999). Further, a new withholding certificate remains valid for the period specified in § 1.1441-1(e)(4)(ii), regardless of when the certificate is obtained.

[T.D. 8734, 62 FR 53465, Oct. 14, 1997, as amended by T.D. 8804, 63 FR 72185, Dec. 31, 1998; T.D. 8856, 64 FR 73410, Dec. 10, 1999; T.D. 8881, 65 FR 32201, May 22, 2000]

§ 1.1441-10 Withholding agents with respect to fast-pay arrangements.

(a) ***In general.*** A corporation that issues fast-pay stock in a fast-pay arrangement described in § 1.7701(l)-3(b)(1) is a withholding agent with respect to payments made on the fast-pay stock and payments deemed made under the recharacterization rules of § 1.7701(l)-3. Except as provided in this

paragraph (a) or in paragraph (b) of this section, the withholding tax rules under section 1441 and section 1442 apply with respect to a fast-pay arrangement described in § 1.7701(l)-3(c)(1)(i) in accordance with the recharacterization rules provided in § 1.7701(l)-3(c). In all cases, notwithstanding paragraph (b) of this section, if at any time the withholding agent knows or has reason to know that the Commissioner has exercised the discretion under either § 1.7701(l)-3(c)(1)(ii) to apply the recharacterization rules of § 1.7701(l)-3(c), or § 1.7701(l)-3(d) to depart from the recharacterization rules of § 1.7701(l)-3(c) for a taxpayer, the withholding agent must withhold on payments made (or deemed made) to that taxpayer in accordance with the characterization of the fast-pay arrangement imposed by the Commissioner under § 1.7701(l)-3.

(b) ***Exception.*** If at any time the withholding agent knows or has reason to know that any taxpayer entered into a fast-pay arrangement with a principal purpose of applying the recharacterization rules of § 1.7701(l)-3(c) to avoid tax under section 871(a) or section 881, then for each payment made or deemed made to such taxpayer under the arrangement, the withholding agent must withhold, under section 1441 or section 1442, the higher of—

(1) The amount of withholding that would apply to such payment determined under the form of the arrangement; or

(2) The amount of withholding that would apply to deemed payments determined under the recharacterization rules of § 1.7701(l)-3(c).

(c) ***Liability.*** Any person required to deduct and withhold tax under this section is made liable for that tax by section 1461, and is also liable for applicable penalties and interest for failing to comply with section 1461.

(d) ***Examples.*** The following examples illustrate the rules of this section:

Example 1. REIT W issues shares of fast-pay stock to foreign individual A, a resident of Country C. United States source dividends paid to residents of C are subject to a 30 percent withholding tax. W issues all shares of benefited stock to foreign individuals who are residents of Country D. D's income tax convention with the United States reduces the United States withholding tax on dividends to 15 percent. Under § 1.7701(l)-3(c), the dividends paid by W to A are deemed to be paid by W to the benefited shareholders. W has reason to know that A entered into the fast-pay arrangement with a principal purpose of using the recharacterization rules of § 1.7701(l)-3(c) to reduce United States withholding tax. W must withhold at the 30 percent rate because the amount of withholding that applies to the payments determined under the form of the arrangement is higher than the amount of withholding that applies to the payments determined under § 1.7701(l)-3(c).

Example 2. The facts are the same as in *Example 1* of this paragraph (d) except that W does not know, or have reason to know, that A entered into the arrangement with a principal purpose of using the recharacterization rules of § 1.7701(l)-3(c) to reduce United States withholding tax. Further, the Commissioner has not exercised the discretion under § 1.7701(l)-3(d) to depart from the recharacterization rules of § 1.7701(l)-3(c). Accordingly, W must withhold tax at a 15 percent rate on the dividends deemed paid to the benefited shareholders.

(e) ***Effective date.*** This section applies to payments made (or deemed made) on or after January 6, 1999.

[T.D. 8853, 65 FR 1312, Jan. 10, 2000]

§ 1.1442-1 Withholding of tax on foreign corporations.

For regulations concerning the withholding of tax at source under section 1442 in the case of foreign corporations, foreign governments, international organizations, foreign tax-exempt corporations, or foreign private foundations, see §§ 1.1441-1 through 1.1441-9.

[T.D. 8734, 62 FR 53466, Oct. 14, 1997]

§ 1.1442-2 Exemption under a tax treaty.

For regulations providing for a claim of reduced withholding tax under section 1442 by certain foreign corporations pursuant to the provisions of an income tax treaty, see § 1.1441-6.

[T.D. 8734, 62 FR 53466, Oct. 14, 1997]

§ 1.1442-3 Tax exempt income of a foreign tax-exempt corporation.

For regulations providing for a claim of exemption for income exempt from tax under section 501(a) of a foreign tax-exempt corporation, see § 1.1441-9. See § 1.1443-1 for withholding rules applicable to foreign private foundations and to the unrelated business income of foreign tax-exempt organizations.

[T.D. 8734, 62 FR 53466, Oct. 14, 1997]

§ 1.1443-1 Foreign tax-exempt organizations.

(a) ***Income includible in computing unrelated business taxable income.*** In the case of a foreign organization that is described in section 501(c), amounts paid or effectively connected taxable income allocable to the organization that are includible under section 512 and section 513 in computing the organization's unrelated business taxable income are subject to withholding under §§ 1.1441-1, 1.1441-4, 1.1441-6, and 1.1446-1 through 1.1446-6, in the same manner as payments or allocations of effectively connected taxable income of the same amounts made to any foreign person that is not a tax-exempt organization. Therefore, a foreign organization receiving amounts includible under section 512 and section 513 in computing the organization's unrelated business taxable income may claim an exemption from withholding or a reduced rate of withholding with respect to that income in the same manner as a foreign person that is not a tax-exempt organization. See § 1.1441-9(b)(3) for a presumption that amounts are includible under section 512 and section 513 in computing the organization's unrelated business taxable income in the absence of reliable certification. See also § 1.1446-3(c)(3), applying this presumption in the context of section 1446.

(b) ***Income subject to tax under section 4948*** —

(1) ***In general.*** The gross investment income (as defined in section 4940(c)(2)) of a foreign private foundation is subject to withholding under section 1443(b) at the rate of 4 percent to the extent that the income is from sources within the United States and is subject to the tax imposed by section 4948(a) and the regulations under that section. Withholding under this paragraph (b) is required irrespective of the fact that the income may be effectively connected with the conduct of a trade or business in the United States by the foreign organization. See § 1.1441-9(b)(3) for applicable presumptions that amounts are subject to tax under section 4948. The withholding imposed under

this paragraph (b)(1) does not obviate a private foundation's obligation to file any return required by law with respect to such organization, such as the form that the foundation is required to file under section 6033 for the taxable year.

(2) ***Reliance on a foreign organization's claim of foreign private foundation status.*** For reliance by a withholding agent on a foreign organization's claim of foreign private foundation status, see § 1.1441-9 (b) and (c).

(3) ***Applicable procedures.*** A withholding agent withholding the 4-percent amount pursuant to paragraph (b)(1) of this section shall treat such withholding as withholding under section 1441(a) or 1442(a) for all purposes, including reporting of the payment on a Form 1042 and a Form 1042-S pursuant to § 1.1461-1 (b) and (c). Similarly, the foreign private foundation shall treat the 4-percent withholding as withholding under section 1441(a) or 1442(a), including for purposes of claims for refunds and credits.

(4) ***Claim of benefits under an income tax treaty.*** The withholding procedures applicable to claims of a reduced rate under an income tax treaty are governed solely by the provisions of § 1.1441-6 and not by this section.

(c) ***Effective date*** —

(1) ***In general.*** This section applies to payments made after December 31, 2000, except that the references in paragraph (a) of this section to effectively connected taxable income and withholding under section 1446 shall apply to partnership taxable years beginning after May 18, 2005, or such earlier time as the regulations under §§ 1.1446-1 through 1.1446-5 apply by reason of an election under § 1.1446-7.

(2) ***Transition rules.*** For purposes of this section, the validity of an affidavit or opinion of counsel described in § 1.1443-1(b)(4)(i) in effect prior to January 1, 2001 (see § 1.1443-1(b)(4)(i) as contained in 26 CFR part 1, revised April 1, 1999) is extended until December 31, 2000. However, a withholding agent may choose to not take advantage of the transition rule in this paragraph (c)(2) with respect to one or more withholding certificates valid under the regulations in effect prior to January 1, 2001 (see 26 CFR part 1, revised April 1, 1999) and, therefore, to require withholding certificates conforming to the requirements described in this section (new withholding certificates). For purposes of this section, a new withholding certificate is deemed to satisfy the documentation requirement under the regulations in effect prior to January 1, 2001 (see 26 CFR part 1, revised April 1, 1999). Further, a new withholding certificate remains valid for the period specified in § 1.1441-1(e)(4)(ii), regardless of when the certificate is obtained.

[T.D. 8734, 62 FR 53466, Oct. 14, 1997, as amended by T.D. 8804, 63 FR 72186, Dec. 31, 1998; T.D. 8856, 64 FR 73411, Dec. 30, 1999; T.D. 9200, 70 FR 28717, May 18, 2005; T.D. 9394, 73 FR 23074, Apr. 29, 2008]

§ 1.1445-1 Withholding on dispositions of U.S. real property interests by foreign persons: In general.

(a) ***Purpose and scope of regulations.*** These regulations set forth rules relating to the withholding requirements of section 1445. In general, section 1445(a) provides that any person who acquires a U.S. real property interest from a foreign person must withhold a tax of 15 percent (10 percent in the case of dispositions described in paragraph (b)(2) of this section) from the amount realized by the transferor foreign person (or a lesser amount established by agreement with the Internal Revenue Service). Section 1445(e) provides special rules requiring withholding on distributions and certain other transactions by

corporations, partnerships, trusts, and estates. This § 1.1445-1 provides general rules concerning the withholding requirement of sections 1445(a), as well as definitions applicable under both section 1445(a) and 1445(e). Section 1.1445-2 provides for various situations in which withholding is not required under section 1445(a). Section 1.1445-3 provides for adjustments to the amount required to be withheld by transferees under section 1445(a). Section 1.1445-4 prescribes the duties of agents in transactions subject to withholding under either section 1445(a) or 1445(e). Section 1.1445-5 provides rules concerning the withholding required under section 1445(e), while § 1.1445-6 provides for adjustments to the amount required to be withheld under section 1445(e). Finally, § 1.1445-7 provides rules concerning the treatment of a foreign corporation that has made an election under section 897(i) to be treated as a domestic corporation.

(b) ***Duty to withhold*** —

(1) ***In general.*** Except as provided in paragraph (b)(2) and §§ 1.1445-2 and 1.1445-3, transferees of U.S. real property interests are required to deduct and withhold a tax equal to 15 percent of the amount realized by the transferor if the transferor is a foreign person. Neither the transferee's duty to withhold nor the amount required to be withheld is affected by the amount of cash to be paid by the transferee. Amounts withheld must be reported and paid over in accordance with the requirements of paragraph (c) of this section. Failures to withhold and pay over are subject to the liabilities set forth in paragraph (e) of this section. If two or more persons are joint transferees of a U.S. real property interest, each such person is subject to the obligation to withhold. That obligation is fulfilled with respect to each such person if any one of them withholds and pays over the required amount in accordance with the rules of this section. If the amount realized (as defined in paragraph (g)(5) of this section) by the transferor is zero, then no withholding is required. For example, if a real property interest is transferred as a gift (i.e., the recipient does not assume any liabilities or furnish any other consideration to the transferor) then no withholding is required.

(2) ***Reduced rate for certain residences.*** Transferees of U.S. real property interests are required to deduct and withhold a tax equal to 10 percent of the amount realized by the transferor if the transferor is a foreign person and the following requirements are satisfied:

(i) The property is acquired by the transferee for use by the transferee as a residence;

(ii) the amount realized for the property does not exceed $1,000,000; and

(iii) section 1445(b)(5) does not apply to the disposition. See § 1.1445-2(d)(1).

(3) ***U.S. real property interest owned jointly by foreign and non-foreign transferors.*** The amount subject to withholding under paragraph (b)(1) of this section with respect to the transfer of a U.S. real property interest owned by one or more foreign persons (as defined in § 1.897-1(k)) and one or more non-foreign persons shall be determined by allocating the amount realized from the transfer between (or among) such transferors based upon the capital contribution of each transferor with respect to the property and by aggregating the amounts allocated to any foreign person (or persons). For this purpose, a husband and wife will each be deemed to have contributed 50 percent of the aggregate capital contributed by such husband and wife. See § 1.1445-1(f)(3)(iv) with respect to the crediting of the amount withheld between or among joint foreign transferors.

(4) ***Options to acquire a U.S. real property interest*** —

(i) ***No withholding on grant of option.*** No withholding is required under section 1445 with respect to any amount realized by the grantor on the grant of an option to acquire a U.S. real property interest.

(ii) ***No withholding upon lapse of option.*** No withholding is required under section 1445 with respect to any amount realized by the grantor upon the lapse of an option to acquire a U.S. real property interest.

(iii) ***Withholding required upon the sale or exchange of option.*** A transferee of an option to acquire a U.S. real property interest must deduct and withhold a tax equal to 15 percent of the amount realized by the transferor upon the disposition. This paragraph(b)(4)(iii) does not apply to require withholding upon the initial grant of an option.

(iv) ***Withholding required on exercise of option.*** If the holder exercises an option to purchase a U.S. real property interest, the amount paid for the option shall be considered an amount realized by the grantor/transferor upon the transfer of the property with respect to which the option was granted, and shall thus be subject to withholding on the day that such underlying property is transferred. The preceding sentence applies regardless of whether or not the terms of the option specifically provide that the option price is applied to the purchase price.

(5) Exceptions and modifications. The duty to withhold under section 1445(a) is subject to the exceptions and modifications contained in §§ 1.1445-2 and 1.1445-3. Generally, § 1.1445-2 provides rules for determining that withholding is not required because either the transferor is not a foreign person or the interest transferred is not a U.S. real property interest. In addition, § 1.1445-2 provides exceptions to the withholding requirement, including a rule that exempts from withholding any person who acquires a U.S. real property interest for use as a residence for a contract price of $300,000 or less. If withholding is required under section 1445(a), § 1.1445-3 allows the amount withheld to be modified pursuant to a withholding certificate issued by the Internal Revenue Service. If a transferee cannot withhold the full amount required because the first payment of consideration for the transfer does not involve sufficient cash (or other liquid assets convertible into cash, such as foreign currency), then a withholding certificate must be obtained pursuant to § 1.1445-3.

(c) ***Reporting and paying over of withheld amounts*** —

(1) ***In general.*** A transferee must report and pay over any tax withheld by the 20th day after the date of the transfer. Forms 8288 and 8288-A are used for this purpose, and must be filed at the location as provided in the instructions to Forms 8288 and 8288-A. Pursuant to section 7502 and regulations thereunder, the timely mailing of Forms 8288 and 8228-A will be treated as their timely filing. Form 8288-A will be stamped by the IRS to show receipt, and a stamped copy will be mailed by the IRS to the transferor (at the address reported on the form) for the transferor's use. See §§ 1.1445-1(f) and 1.1445-3(f). Forms 8288 and 8288-A are required to include the identifying numbers of both the transferor and the transferee, as provided in paragraph (d) of this section. If any identifying number as required by such forms is not provided, the transferee must still report and pay over any tax withheld on Form 8288, although the transferor cannot obtain a credit or refund of tax on the basis of a Form 8288-A that does not include the transferor's identifying number (see paragraph (f)(2) of this section).

(2) ***Pending application for withholding certificate*** —

(i) ***In general.***

(A) ***Delayed reporting and payment with respect to application submitted by transferee.*** If an application for a withholding certificate with respect to a transfer of a U.S. real property interest is submitted to the Internal Revenue Service by the transferee on the day of or at any time prior to the transfer, the transferee must withhold 15 percent (10 percent in the case of dispositions described in paragraph (b)(2) of this section) of the amount realized

as required by paragraph (b) of this section. However, the amount withheld, or a lesser amount as determined by the Service, need not be reported and paid over to the Service until the 20th day following the Service's final determination with respect to the application for a withholding certificate. For this purpose, the Service's final determination occurs on the day when the withholding certificate is mailed to the transferee by the Service or when a notification denying the request for a withholding certificate is mailed to the transferee by the Service. An application is submitted to the Service on the day it is actually received by the Service at the address provided in § 1.1445-1(g)(10) or, under the rules of section 7502, on the day it is mailed to the Service at the address provided in § 1.1445-1(g)(10).

(B) ***Delayed reporting and payment with respect to application submitted by transferor.*** If an application for a withholding certificate with respect to a transfer of a U.S. real property interest is submitted to the Internal Revenue Service by the Transferor on the day of or any time prior to the transfer, such transferor must provide notice to the transferee prior to the transfer. No particular form is required but the notice must set forth the name, address, and taxpayer identification number of the transferor, a brief description of the property which is the subject of the application, and the date the application was submitted to the Service. The transferee must withhold 15 percent (10 percent in the case of dispositions described in paragraph (b)(2) of this section) of the amount realized as required in paragraph (b) of this section but need not report or pay over to the Service such amount (or a lesser amount as determined by the Service) until the 20th day following the Service's final determination with respect to the application. The Service will send a copy of the withholding certificate or copy of the notification denying the request for a withholding certificate to the transferee. For this purpose, the Service's final determination will be deemed to occur on the day when the copy of the withholding certificate or the copy of the notification denying the request for a withholding certificate is mailed by the Service to the transferee (or transferees). An application is submitted to the Service on the day it is actually received by the Service at the address provided in § 1.1445-1(g)(10) or, under the rules of § 7502, on the day it is mailed to the Service at the address provided in § 1.1445-1(g)(10).

(ii) ***Anti-abuse rule*** —

(A) ***In general.*** A transferee that in reliance upon the rules of this paragraph (c)(2) fails to report and pay over amounts withheld by the 20th day following the date of the transfer, shall be subject to the payment of interest and penalties if the relevant application for a withholding certificate (or an amendment to the application for a withholding certificate) was submitted for a principal purpose of delaying the transferee's payment to the IRS of the amount withheld. Interest and penalties shall be assessed on the amount that is ultimately paid over (or collected pursuant to the agreement) with respect to the period between the 20th day after the date of the transfer and the date on which payment is made (or collected).

(B) ***Presumption.*** A principal purpose of delaying payment of the amount withheld shall be presumed if—

(*1*) The transferee applies for a withholding certificate pursuant to § 1.1445-3(c) based on a determination of the transferor's maximum tax liability, and

(2) Such liability is ultimately determined to be equal to 90 percent or more of the amount that was otherwise required to be withheld and paid over. However, the presumption created by the previous sentence may be rebutted by evidence establishing that delaying payment of the amount withheld was not a principal purpose of the transaction.

(d) *Contents of Forms 8288 and 8288-A* —

(1) ***Transactions subject to section 1445(a).*** Any person that is required to file Forms 8288 and 8288-A pursuant to section 1445(a) and the rules of this section must set forth thereon the following information:

(i) The name, identifying number, and home address (in the case of an individual) or office address (in the case of any entity) of the transferee(s) filing the return;

(ii) The name, identifying number, and home address (in the case of an individual) or office address (in the case of any entity) of the transferor(s);

(iii) A brief description of the U.S. real property interest transferred, including its location and the nature of any substantial improvements in the case of real property, and the class or type and amount of interests transferred in the case of interests in a corporation that constitute U.S. real property interests;

(iv) The date of the transfer;

(v) The amount realized by the transferor, as defined in paragraph (g)(5) of this section;

(vi) The amount withheld by the transferee and whether withholding is at the statutory or reduced rate; and

(vii) Such other information as the Commissioner may require.

For purposes of paragraph (d)(1) (i) and (ii), mailing addresses may be provided in addition to, but not in lieu of, home addresses or office addresses.

(2) ***Transactions subject to section 1445(e).*** Any person that is required to file Forms 8288 and 8288-A pursuant to the rules of § 1.1445-5 must set forth thereon the following information:

(i) The name, identifying number, and office address of the entity or fiduciary filing the return;

(ii) The amount withheld by the entity or fiduciary;

(iii) The date of the transfer;

(iv) In the case of a transaction subject to withholding pursuant to section 1445(e)(1) and § 1.1445-5(c):

(A) A brief description of the U.S. real property interest transferred, as described in paragraph (d)(1)(iii) of this section;

(B) The name, identifying number, and home address (in the case of an individual) or office address (in the case of an entity) of each holder of an interest in the entity that is a foreign person; and

(C) Each such interest-holder's pro rata share of the amount withheld;

(v) In the case of a distribution subject to withholding pursuant to section 1445(e)(2) and § 1.1445-5(d):

(A) A brief description of the U.S. real property interest transferred, as described in paragraph (d)(1)(iii) of this section; and

(B) The amount of gain recognized upon the distribution by the corporation.

(vi) In the case of a distribution subject to withholding pursuant to section 1445(e)(3) and § 1.1445-5(e):

(A) A brief description of the property distributed by the corporation;

(B) The name, identifying number, and home address (in case of an individual) or office address (in the case of an entity) of each holder of an interest in the entity that is a foreign person;

(C) The amount realized upon the distribution by each such foreign interest holder; and

(D) Each foreign interest-holder's pro rata share of the amount withheld; and

(vii) Such other information as the Commissioner may require.

(e) *Liability of transferee upon failure to withhold* —

(1) ***In general.*** Every person required to deduct and withhold tax under section 1445 is made liable for that tax by section 1461. Therefore, a person that is required to deduct and withhold tax but fails to do so may be held liable for the payment of the tax and any applicable penalties and interest.

(2) *Transferor's liability not otherwise satisfied* —

(i) ***Tax and penalties.*** Except as provided in paragraph (e)(3) of this section, if a transferee is required to deduct and withhold tax under section 1445 but fails to do so, then the tax shall be assessed against and collected from that transferee. Such person may also be subject to any of the civil and criminal penalties that apply. Corporate officers or other responsible persons may be subject to a civil penalty under section 6672 equal to the amount that should have been withheld and paid over.

(ii) ***Interest.*** If a transferee is required to deduct and withhold tax under section 1445 but fails to do so, then such transferee shall be liable for the payment of interest pursuant to section 6601 and the regulations thereunder. Interest shall be payable with respect to the period between—

(A) The last date on which the tax imposed under section 1445 was required to be paid over by the transferee, and

(B) The date on which such tax is actually paid. Interest shall be payable with respect to the entire amount that is required to be deducted and withheld. However, if the Service issues a withholding certificate providing for withholding of a reduced amount, then, for the period after the issuance of the certificate, interest shall be payable with respect to that reduced amount.

(3) *Transferor's liability otherwise satisfied* —

(i) ***Tax and penalties.*** If a transferee is required to deduct and withhold tax under section 1445 but fails to do so, and the transferor's tax liability with respect to the transfer was satisfied (or was established to be zero) by—

(A) The transferor's filing of an income tax return (and payment of any tax due) with respect to the transfer, or

(B) The issuance of a withholding certificate by the Internal Revenue Service establishing that the transferor's maximum tax liability is zero,

then the tax required to be withheld under section 1445 shall not be collected from the transferee. Such transferee's liability for tax, and the requirement that such person file Forms 8288 and 8288-A, shall be deemed to have been satisfied as of the date on which the transferor's income tax return was filed or the withholding certificate was issued. No penalty shall be imposed on or collected from such person for failure to return or pay the tax, unless such failure was fraudulent and for the purpose of evading payment. A transferee that seeks to avoid liability for tax and penalties pursuant to the rule of paragraph (e)(3)(i) must provide sufficient information for the Service to determine whether the transferor's tax liability was satisfied (or was established to be zero).

(ii) ***Interest.*** If a transferee is required to deduct and withhold tax under section 1445 but fails to do so, then such person shall be liable for the payment of interest under section 6601 and regulations thereunder. Such transferee's liability for the payment of interest shall not be excused by reason of the deemed satisfaction, pursuant to subdivision (i) of this paragraph (e)(3), of the transferee's liability under section 1445, because the deemed satisfaction of that liability is the equivalent of the late payment of a liability, on which interest must be paid. Interest shall be payable with respect to the period between—

(A) The last date on which the tax imposed under section 1445 was required to be paid over, and

(B) The date (established from information supplied to the Service by the transferee) on which any tax due is paid with respect to the transferor's relevant income tax return, or the date the withholding certificate is issued establishing that the transferor's maximum tax liability is zero.

Interest shall be payable with respect to the entire amount that is required to be deducted and withheld. However, if the Service issues a withholding certificate providing for withholding of a reduced amount, then for the period after the issuance of the certificate interest shall be payable with respect to that reduced amount.

(4) ***Coordination with entity with holding rules.*** For purposes of section 1445(e) and §§ 1.1445-5, 1.1445-6, 1.1445-7, and 1.1445-8T, the rules of this paragraph (e) shall be applied by—

(i) Substituting the words “person required to withhold” for the word “transferee” each place it appears in this paragraph (e), and

(ii) Substituting the words “person subject to withholding” for the word “transferor” each place it appears in this paragraph (e).

(f) ***Effect of withholding on transferor*** —

(1) ***In general.*** The withholding of tax under section 1445(a) does not excuse a foreign person that disposes of a U.S. real property interest from filing a U.S. tax return with respect to the income arising from the disposition. Form 1040NR, 1041, or 1120F, as appropriate, must be filed, and any tax due must be paid, by the filing deadline generally applicable to such person. (The return may be filed

by such later date as is provided in an extension granted by the Internal Revenue Service.) Any tax withheld under section 1445(a) shall be credited against the amount of income tax as computed in such return.

(2) ***Manner of obtaining credit or refund.*** A stamped copy of Form 8288-A will be provided to the transferor by the Service (under paragraph (c) of this section) if the Form 8288-A is complete, including the transferor's identifying number. Except as provided in paragraph (f)(3) of this section, a stamped copy of Form 8288-A must be attached to the transferor's return to establish the amount withheld that is available as a credit. If the amount withheld under section 1445(a) constitutes less than the full amount of the transferor's U.S. tax liability for that taxable year, then a payment of estimated tax may be required to be made pursuant to section 6154 or 6654 prior to the filing of the income tax return for that year. Alternatively, if the amount withheld under section 1445(a) exceeds the transferor's maximum tax liability with respect to the disposition (as determined by the IRS), then the transferor may seek an early refund of the excess pursuant to § 1.1445-3(g), or a normal refund upon the filing of a tax return.

(3) ***Special rules*** —

(i) ***Failure to receive Form 8288-A.*** If a stamped copy of Form 8288-A has not been provided to the transferor by the Service, the transferor may establish the amount of tax withheld by the transferee by attaching to its return substantial evidence (e.g., closing documents) of such amount. Such a transferor must attach to its return a statement which supplies all of the information required by § 1.1445-1(d), including the transferor's identifying number.

(ii) ***U.S. persons subjected to withholding.*** If a transferee withholds tax under section 1445(a) with respect to a person who is not a foreign person, such person may credit the amount of any tax withheld against his income tax liability in accordance with the provisions of this § 1.1145-1(f) or apply for an early refund under § 1.1445-3(g).

(iii) ***Refund in case of installment sale.*** A transferor that takes gain into account in accordance with the provisions of section 453 shall not be entitled to a refund of the amount withheld, unless a withholding certificate providing for such a refund is obtained from the Internal Revenue Service pursuant to the provisions of § 1.1445-3.

(iv) ***Joint foreign transferors.*** If two or more foreign persons jointly transfer a U.S. real property interest, each transferor shall be credited with such portion of the amount withheld as such transferors mutually agree. Such transferors must request that the transferee reflect the agreed-upon crediting of the amount withheld on the Forms 8288-A filed by the transferee. If the foreign transferors fail to request that the transferee reflect the agreed-upon crediting of the amount withheld by the 10th day after the date of transfer, the transferee must credit the amount withheld equally between (or among) the foreign transferors. In such case, the transferee is indemnified pursuant to section 1461 against any claim by a transferor objecting to the resulting division of credits. For rules regarding the amount realized allocated to joint foreign and non-foreign transferors, see § 1.1445-1(b)(2).

(g) ***Definitions*** —

(1) ***In general.*** Unless otherwise specified, the definitions of terms provided in § 1.897-1 shall apply for purposes of this section and §§ 1.1445-2 through 1.1445-7. For purposes of section 1445 and the regulations thereunder, definitions of other relevant terms are provided in this paragraph (g). In addition, the term "residence" is defined in 1.1445-2(d)(1), the terms "transferor's agent" and "transferee's agent" are defined in 1.1445-4(f), and the term "relevant taxpayer" is defined in 1.1445-6(a)(2).

(2) ***Transfer.*** The term "transfer" means any transaction that would constitute a disposition for any purpose, of the Internal Revenue Code and regulations thereunder. For purposes of §§ 1.1445-5 and 1.1445-6, the term includes distribution to shareholders of a corporation, partners of a partnership and beneficiaries of a trust or estate.

(3) ***Transferor.*** The term "transferor" means any person, foreign or domestic, that disposes of a U.S. real property interest by sale, exchange, gift, or any other transfer. The term "U.S. real property interest" is defined in § 1.897-1(c).

(4) ***Transferee.*** The term "transferee" means any person, foreign or domestic, that acquires a U.S. real property interest by purchase, exchange, gift, or any other transfer.

(5) ***Amount realized.*** The amount realized by the transferor for the transfer of a U.S. real property interest is the sum of.

(i) The cash paid, or to be paid.

(ii) The fair market value of other property transferred, or to be transferred, and

(iii) The outstanding amount of any liability assumed by the transferee or to which the U.S. real property interest is subject immediately before and after the transfer.

The term "cash paid or to be paid" does not include stated or unstated interest or original issue discount (as determined under the rules of sections 1271 through 1275).

(6) ***Contract price.*** The contract price of a U.S. real property interest is the sum that is agreed to by the transferee and transferor as the total amount of consideration to be paid for the property. That amount will generally be equal to the amount realized by the transferor, as defined in paragraph (b)(5) of this section.

(7) ***Fair market value.*** The fair market value of property means the price at which the property would change hands between an unrelated willing buyer and willing seller, neither being under any compulsion to buy or to sell and both having reasonable knowledge of all relevant facts.

(8) ***Date of transfer.*** The date of transfer of a U.S. real property interest is the first date on which consideration is paid (or a liability assumed) by the transferee. However, for purposes of section 1445(e) (2), (3), and (4) and §§ 1.1445-5(c)(1)(iii) and 1.1445-5(c)(3) only, the date of transfer is the date of the distribution that gives rise to the obligation to withhold. For purposes of this paragraph (g)(8), the payment of consideration does not include the payment, prior to the passage of legal or equitable title (other than pursuant to an initial contract for purchase), of earnest money, a good-faith deposit, or any similar sum that is primarily intended to bind the transferee or transferor to the entering or performance of a contract. Such a payment will not constitute a payment of consideration solely because it may ultimately be applied against the amount owed to the transferor by the transferee. Such a payment is presumed to be earnest money, a good faith deposit, or a

similar sum if it is subject to forfeiture in the event of a failure to enter into a contract or a breach of contract. However, a payment that is not forfeitable may nevertheless be found to constitute earnest money, a good faith deposit, or a similar sum.

(9) ***Identifying number.*** Pursuant to § 1.897-1(p), an individual's identifying number is the social security number or the identification number assigned by the Internal Revenue Service (see § 301.6109-1 of this chapter). The identifying number of any other person is its United States employer identification number.

(10) ***Address for correspondence.*** Any written communication to the Internal Revenue Service described in this section is to be mailed to the address specified in the Instructions for Form 8288 under the heading "Where To File."

(11) ***Withholding qualified holder.*** A withholding qualified holder means a qualified holder (under § 1.897(l)-1(d)), and a foreign partnership all of the interests of which are held by qualified holders (under § 1.897(l)-1(d)), including through one or more partnerships.

(h) ***Applicability dates.*** The requirement in paragraphs (c)(2)(i)(B), (d)(1)(i) and (ii), (d)(2)(i), (d)(2)(iv)(B), and (d)(2)(vi)(B) of this section that taxpayer identification numbers be provided (in all cases) is applicable for dispositions of U.S. real property interests occurring after November 3, 2003. The withholding rates set forth in paragraphs (a), (b)(1), (b)(2), (b)(4)(iii), (c)(2)(i)(A), and (c)(2)(i)(B) of this section apply to dispositions after February 16, 2016. For dispositions on or before February 16, 2016, see paragraphs (a), (b)(1), (b)(3)(iii), (c)(2)(i)(A), and (c)(2)(i)(B) of this section as contained in 26 CFR part 1 revised as of April 1, 2015.

[T.D. 8113, 51 FR 46629, Dec. 24, 1986; 52 FR 3796, 3916, Feb. 6, 1987, as amended by T.D. 8647, 60 FR 66076, Dec. 21, 1995; T.D. 9082, 68 FR 46084, Aug. 5, 2003; T.D. 9751, 81 FR 8400, Feb. 19, 2016; T.D. 9971, 87 FR 80065, Dec. 29, 2022]

§ 1.1445-2 Situations in which withholding is not required under section 1445(a).

(a) ***Purpose and scope of section.*** This section provides rules concerning various situations in which withhold is not required under section 1445(a). In general, a transferee has a duty to withhold under section 1445(a) only if both of the following are true:

(1) The transferor is a foreign person; and

(2) The transferee is acquiring a U.S. real property interest.

Thus, paragraphs (b) and (c) of this section provide rules under which a transferee of property can ascertain that he has no duty to withhold because one or the other of the two key elements is missing. Under paragraph (b), a transferee may determine that no withholding is required because the transferor is not a foreign person. Under paragraph (c), a transferee may determine that no withholding is required because the property acquired is not a U.S. real property interest. Finally, paragraph (d) of this section provides rules concerning exceptions to the withholding requirement.

(b) ***Transferor not a foreign person*** —

(1) ***In general.*** No withholding is required under section 1445 if the transferor of a U.S. real property interest is not a foreign person. Therefore, paragraph (b)(2) of this section provides rules pursuant to which the transferor can provide a certification of non-foreign status to inform the transferee that withholding is not required. A transferee that obtains such a certification must retain that document for five years, as provided in paragraph (b)(3) of this section. Except to the extent provided in

paragraph (b)(4) of this section, the obtaining of this certification excuses the transferee from any liability otherwise imposed by section 1445 and § 1.1445-1(e). However, section 1445 and the rules of this section do not impose any obligation upon a transferee to obtain a certification from the transferor, thus, a transferee may instead rely upon other means to ascertain the non-foreign status of the transferor. If, however, the transferee relies upon other means and the transferor was, in fact, a foreign person, then the transferee is subject to the liability imposed by section 1445 and § 1.1445-1(e).

A transferee is in no event required to rely upon other means to ascertain the non-foreign status of the transferor and may demand a certification of non-foreign status. If the certification is not provided, the transferee may withhold tax under section 1445 and will be considered, for purposes of sections 1461 through 1463, to have been required to withhold such tax.

(2) ***Transferor's certification of non-foreign status*** —

(i) ***In general.*** The rules in this paragraph (b)(2)(i) apply for purposes of the transferor's certification of non-foreign status (including a certification of non-foreign status provided by a withholding qualified holder (as defined in § 1.1445-1(g)(11)).

(A) A transferee of a U.S. real property interest is not required to withhold under section 1445(a) if, before or at the time of the transfer, the transferor furnishes to the transferee a certification that is signed under penalties of perjury and—

(*1*) States that the transferor is not a foreign person; and

(*2*) Sets forth the transferor's name, identifying number and home address (in the case of an individual) or office address (in the case of an entity).

(B) For purposes of paragraph (b)(2)(i)(A) of this section, a foreign person is a nonresident alien individual, foreign corporation, foreign partnership, foreign trust, or foreign estate, except that a withholding qualified holder (as defined in § 1.1445-1(g)(11)) is not a foreign person. Additionally, a foreign corporation that has made a valid election under section 897(i) is generally not treated as a foreign person for purposes of section 1445. In this regard, see § 1.1445-7. Pursuant to § 1.897-1(p), an individual's identifying number is the individual's Social Security number and any other person's identifying number is its U.S. employer identification number (EIN), or, if the transferor is a withholding qualified holder (as defined in § 1.1445-1(g)(11)) that does not have a U.S. taxpayer identification number, a foreign tax identification number issued by its jurisdiction of residence. A certification pursuant to this paragraph (b) must be verified as true and signed under penalties of perjury by a responsible officer in the case of a corporation, by a general partner in the case of a partnership, and by a trustee, executor, or equivalent fiduciary in the case of a trust or estate. No particular form is needed for a certification pursuant to this paragraph (b), nor is any particular language required, so long as the document meets the requirements of this paragraph (b)(2)(i), except that, with respect to a certification submitted by a withholding qualified holder (as defined in § 1.1445-1(g)(11)), the transferor must state on the certification that it is treated as a non-foreign person because it is a withholding qualified holder and must further specify whether it qualifies as a withholding qualified holder because it is a qualified holder under § 1.897(l)-1(d) or a foreign partnership that satisfies the requirements of § 1.1445-1(g)(11). Samples of acceptable certifications are provided in paragraph (b)(2)(iv) of this section.

(ii) ***Foreign corporation that "has made election under section 897(i).*** A foreign corporation that has made a valid election under section 897(i) to be treated as a domestic corporation for purposes of section 897 may provide a certification of non-foreign status pursuant to this paragraph (b)(2). However, an electing foreign corporation must attach to such certification a copy of the acknowledgment of the election provided to the corporation by the Internal Revenue Service pursuant to § 1.897-3(d)(4).

An acknowledgment is valid for this purpose only if it states that the information required by § 1.897-3 has been determined to be complete.

(iii) ***Disregarded entities.*** A disregarded entity may not certify that it is the transferor of a U.S. real property interest, as the disregarded entity is not the transferor for U.S. tax purposes, including sections 897 and 1445. Rather, the owner of the disregarded entity is treated as the transferor of property and must provide a certificate of non-foreign status to avoid withholding under section 1445. A disregarded entity for these purposes means an entity that is disregarded as an entity separate from its owner under § 301.7701-3 of this chapter, a qualified REIT subsidiary as defined in section 856(i), or a qualified subchapter S subsidiary under section 1361(b)(3)(B). Any domestic entity must include in its certification of non-foreign status with respect to the transfer a certification that it is not a disregarded entity. This paragraph (b)(2)(iii) and the sample certification provided in paragraph (b)(2)(iv)(B) of this section (to the extent it addresses disregarded entities) is applicable for dispositions occurring September 4, 2003.

(iv) ***Sample certifications*** —

(A) ***Individual transferor.***

> "Section 1445 of the Internal Revenue Code provides that a transferee (buyer) of a U.S. real property interest must withhold tax if the transferor (seller) is a foreign person. To inform the transferee (buyer) that withholding of tax is not required upon my disposition of a U.S. real property interest, I, [*name of transferor*], hereby certify the following:
>
> 1. I am not a nonresident alien for purposes of U.S. income taxation;
>
> 2. My U.S. taxpayer identifying number [Social Security number] is ____; and
>
> 3. My home address is:
>
> _____
>
> _____
>
> I understand that this certification may be disclosed to the Internal Revenue Service by the transferee and that any false statement I have made here could be punished by fine, imprisonment, or both.
>
> Under penalties of perjury I declare that I have examined this certification and to the best of my knowledge and belief it is true, correct, and complete. [Signature and Date]"

(B) ***Entity transferor.***

"Section 1445 of the Internal Revenue Code provides that a transferee of a U.S. real property interest must withhold tax if the transferor is a foreign person. For U.S. tax purposes (including section 1445), the owner of a disregarded entity (which has legal title to a U.S. real property interest under local law) will be the transferor of the property and not the disregarded entity. To inform the transferee that withholding of tax is not required upon the disposition of a U.S. real property interest by [name of transferor] , the undersigned hereby certifies the following on behalf of [name of the transferor]:

1. [Name of transferor] is not a foreign corporation, foreign partnership, foreign trust, or foreign estate (as those terms are defined in the Internal Revenue Code and Income Tax Regulations);

2. [Name of transferor] is not a disregarded entity as defined in § 1.1445-2(b)(2)(iii);

3. [Name of transferor]'s U.S. employer identification number is ___; and

4. [Name of transferor]'s office address is _____.

[Name of transferor] understands that this certification may be disclosed to the Internal Revenue Service by transferee and that any false statement contained herein could be punished by fine, imprisonment, or both.

Under penalties of perjury I declare that I have examined this certification and to the best of my knowledge and belief it is true, correct, and complete, and I further declare that I have authority to sign this document on behalf of [name of transferor].

[Signature(s) and date]

[Title(s)]"

(v) ***Form W-9.*** For purposes of paragraph (b)(2)(i) of this section, a certification of non-foreign status includes a valid Form W-9, *Request for Taxpayer Identification Number and Certification*, or its successor, submitted to the transferee by the transferor.

(vi) ***Form W-8EXP.*** A certification of non-foreign status may be made by a withholding qualified holder (as defined under § 1.1445-1(g)(11)) as provided in paragraph (b)(2)(i) of this section to certify its qualified holder status. A certification of non-foreign status under paragraph (b)(2)(i) of this section also includes a certification made on a Form W-8EXP (or its successor) that states that the transferor is treated as a non-foreign person because it is a withholding qualified holder and must further specify whether it qualifies as a withholding qualified holder because it is a qualified holder under § 1.897(l)-1(d) or a foreign partnership that satisfies the requirements of § 1.1445-1(g)(11). The certification must also meet all of the other requirements for a valid Form W-8EXP (or its successor) as provided on the form and the instructions to the form. A qualified holder may not provide a certification of non-foreign status on a Form W-9 (or its successor) as permitted in paragraph (b)(2)(v) of this section.

(3) ***Transferee must retain certification.*** If a transferee obtains a transferor's certification pursuant to the rules of this paragraph (b), then the transferee must retain that certification until the end of the fifth taxable year following the taxable year in which the transfer takes place. The transferee must retain the certification, and make it available to the Internal Revenue Service when requested in accordance with the requirements of section 6001 and regulations thereunder.

(4) ***Reliance upon certification not permitted*** —

(i) ***In general.*** A transferee may not rely upon a transferor's certification pursuant to this paragraph (b) under the circumstances set forth in either subdivision (ii) or (iii) of this paragraph (b)(4). In either of those circumstances, a transferee's withholding obligation shall apply as if a certification had never been obtained, and the transferee is fully liable pursuant to section 1445 and § 1.1445-1(e) for any failure to withhold.

(ii) ***Failure to attach IRS acknowledgment of election.*** A transferee that knows that the transferor is a foreign corporation may not rely upon a certification of non-foreign status provided by the corporation on the basis of election under section 897(i), unless there is attached to the certification a copy of the acknowledgment by the Internal Revenue Service of the corporation's election, as required by paragraph (b)(2)(ii) of this section.

(iii) ***Knowledge of falsity.*** A transferee is not entitled to rely upon a transferor's certification if prior to or at the time of the transfer the transferee either—

(A) Has actual knowledge that the transferor's certification is false; or

(B) Receives a notice that the certification is false from a transferor's or transferee's agent, pursuant to § 1.1445-4.

(iv) ***Belated notice of false certification.*** If after the date of the transfer a transferee receives a notice that a certification is false, then that transferee is entitled to rely upon the certification only with respect to consideration that was paid prior to receipt for the notice. Such a transferee is required to withhold a full 15 percent of the amount realized from the consideration that remains to be paid to the transferor if possible. Thus, if 15 percent or more of the amount realized remains to be paid to the transferor then the transferee is required to withhold and pay over the full 15 percent. The transferee must do so by withholding and paying over the entire amount of each successive payment of consideration to the transferor until the full 15 percent of the amount realized has been withheld and paid over. Amounts so withheld must be reported and paid over by the 20th day following the date on which each such payment of consideration is made. A transferee that is subject to the rules of this paragraph (b)(4)(iv) may not obtain a withholding certificate pursuant to § 1.1445-3, but must instead withhold and pay over the amounts required by this paragraph. For dispositions described in § 1.1445-1(b)(2), this paragraph shall be applied by replacing “15 percent” with “10 percent” each time it appears.

(c) ***Transferred property not a U.S. real property interest*** —

(1) ***In general.*** No withholding is required under section 1445 if the transferee acquires only property that is not a U.S. real property interest. As defined in section 897(c) and § 1.897-1(c), a U.S. real property interest includes certain interests in U.S. corporations, as well as direct interests in real property and certain associated personal property. This paragraph (c) provides rules pursuant to which a person acquiring an interest in a U.S. corporation may determine that withholding is not required because

that interest is not a U.S. real property interest. To determine whether an interest in tangible property constitutes a U.S. real property interest the acquisition of which would be subject to withholding, see § 1.897-1 (b) and (c).

(2) ***Interests in publicly traded entities.*** No withholding is required under section 1445(a) upon the acquisition of an interest in a domestic corporation if any class of stock of the corporation is regularly traded on an established securities market.

This exemption shall apply if the disposition is incident to an initial public offering of stock pursuant to a registration statement filed with the Securities and Exchange Commission. Similarly, no withholding is required under section 1445(a) upon the acquisition of an interest in a publicly traded partnership or trust. However, the rule of this paragraph (c)(2) shall not apply to the acquisition, from a single transferor in a single (or related transferors (as defined in § 1.897-1(i)) transaction (or related transactions), of an interest described in § 1.897-1(c)(2)(iii)(B) (relating to substantial amounts of non-publicly traded interests in publicly traded corporations) or to similar interests in publicly traded partnerships or trusts. The person making an acquisition described in the preceding sentence must otherwise determine whether withholding is required, pursuant to section 1445 and the regulations thereunder. Transactions shall be deemed to be related if they are undertaken within 90 days of one another or if it can otherwise be shown that they were undertaken in pursuance of a prearranged plan.

(3) ***Transferee receives statement that interest in corporation is not a U.S. real property interest*** —

(i) ***In general.*** No withholding is required under section 1445(a) upon the acquisition of an interest in a domestic corporation, if the transferor provides the transferee with a copy of a statement, issued by the corporation pursuant to § 1.897-2(h), certifying that the interest is not a U.S. real property interest, or if the transferor provides the transferee with a statement certifying that the corporation is a domestically controlled qualified investment entity (as determined under § 1.897-1(c)(3)) that is voluntarily issued by the corporation but otherwise complies with the requirements of § 1.897-2(h). In general, a corporation may issue such a statement only if the corporation was not a U.S. real property holding corporation at any time during the previous five years (or the period in which the interest was held by its present holder, if shorter), the corporation is a domestically controlled qualified investment entity (as determined under § 1.897-1(c)(3)), or if interests in the corporation ceased to be United States real property interests under section 897(c)(1)(B). (A corporation may not provide such a statement based on its determination that the interest in question is an interest solely as a creditor.) *See* § 1.897-2(f) and (h). The corporation may provide such a statement directly to the transferee at the transferor's request. The transferor must request such a statement before the transfer, and shall, to the extent possible, specify the anticipated date of the transfer. A corporation's statement may be relied upon for purposes of this paragraph (c)(3) only if the statement is dated not more than 30 days before the date of the transfer. A transferee may also rely upon a corporation's statement that is voluntarily provided by the corporation in response to a request from the transferee, if that statement otherwise complies with the requirements of this paragraph (c)(3) and § 1.897-2(h).

(ii) ***Reliance on statement not permitted.*** A transferee is not entitled to rely upon a statement that a corporation is not a U.S. real property holding corporation if, prior to or at the time of the transfer, the transferee either—

(A) Has actual knowledge that the statement is false, or

(B) Receives a notice that the statement is false from a transferor's or transferee's agent, pursuant to § 1.1445-4.

Such a transferee's withholding obligations shall apply as if a statement had never been given, and such a transferee may be held fully liable pursuant to § 1.1445-1(e) for any failure to withhold.

(iii) ***Belated notice of false statement.*** If after the date of the transfer, a transferee receives notice that a statement provided under § 1.1445-2(c)(3)(i) (that an interest in a corporation is not a U.S. real property interest) is false, then such transferee may rely on the statement only with respect to consideration that was paid prior to the receipt of the notice.

Such a transferee is required to withhold a full 15 percent of the amount realized from the consideration that remains to be paid to the transferor, if possible. Thus, if 15 percent or more of the amount realized remains to be paid to the transferor, then the transferee is required to withhold and pay over the full 15 percent. The transferee must do so by withholding and paying over the entire amount of each successive payment of consideration to the transferor, until the full 15 percent of the amount realized has been withheld and paid over. Amounts so withheld must be reported and paid over by the 20th day following the date on which each such payment of consideration is made. A transferee that is subject to the rules of this § 1.1445-2(c)(3)(iii) may not obtain a withholding certificate pursuant to § 1.1445-3, but must instead withhold and pay over the amounts required by this paragraph.

(d) ***Exceptions to requirement of withholding —***

(1) ***Purchase of residence for $300,000 or less.*** No withholding is required under section 1445(a) if one or more individual transferees acquire a U.S. real property interest for use as a residence and the amount realized on the transaction is $300,000 or less. For purposes of this section, a U.S. real property interest is acquired for use as a residence if on the date of the transfer the transferee (or transferees) has definite plans to reside at the property for at least 50 percent of the number of days that the property is used by any person during each of the first two 12-month periods following the date of the transfer. The number of days that the property will be vacant is not taken into account in determining the number of days such property is used by any person. A transferee shall be considered to reside at a property on any day on which a member of the transferee's family, as defined in section 267(c)(4), resides at the property. No form or other document need be filed with the Internal Revenue Service to establish a transferee's entitlement to rely upon the exception provided by this paragraph (d)(1). A transferee who fails to withhold in reliance upon this exception, but who does not in fact reside at the property for the minimum number of days set forth above, shall be liable for the failure to withhold (if the transferor was a foreign person and did not pay the full U.S. tax due on any gain recognized upon the transfer). However, if the transferee establishes that the failure to reside the minimum number of days was caused by a change in circumstances that could not reasonably have been anticipated at the time of the transfer, then the transferee shall not be liable for the failure to withhold.

The exception provided by paragraph (d)(1) does not apply in any case where the transferee is other than an individual even if the property is acquired for or on behalf of an individual who will use the property as a residence. However, this exception applies regardless of the organizational structure of the transferor (i.e., regardless of whether the transferor is an individual, partnership, trust, corporation, etc.).

(2) ***Coordination with nonrecognition provisions —***

(i) ***In general.*** A transferee shall not be required to withhold under section 1445(a) with respect to the transfer of a U.S. real property interest if—

(A) The transferor notifies the transferee, in the manner described in paragraph (d)(2)(iii) of this section, that by reason of the operation of a nonrecognition provision of the Internal Revenue Code or the provisions of any United States treaty the transferor is not required to recognize any gain or loss with respect to the transfer, and

(B) By the 20th day after the date of the transfer the transferee mails a copy of the transferor's notice to the Internal Revenue Service, at the address provided in § 1.1445-1(g)(10), together with a cover letter setting forth the name, identifying number, and home address (in the case of an individual) or office address (in the case of an entity) of the transferee providing the notice to the Service. The rule of this paragraph (d)(2)(i) is subject to the exceptions set forth in paragraph (d)(2)(ii). For purposes of this paragraph (d)(2) a nonrecognition provision is any provision of the Internal Revenue Code for not recognizing gain or loss.

(ii) ***Exceptions.*** A transferee may not rely upon the rule of paragraph (d)(2)(i) of this section, and must therefore withhold under section 1445(a) with respect to the transfer of a U.S. real property interest, if either:

(A) The transferor qualifies for nonrecognition treatment with respect to part, but not all, of the gain realized by the transferor upon the transfer, or

(B) The transferee knows or has reason to know that the transferor is not entitled to the nonrecognition treatment claimed by the transferor.

In either of the above circumstances the transferee or transferor may request a withholding certificate from the Internal Revenue Service pursuant to the rules of § 1.1445-3.

(iii) ***Contents of the notice.*** No particular form is required for a transferor's notice to a transferee that the transferor is not required to recognize gain or loss with respect to a transfer. The notice must be verified as true and signed under penalties of perjury by the transferor, by a responsible officer in the case of a corporation, by a general partner in the case of a partnership, and by a trustee or equivalent fiduciary in the case of a trust or estate. The following information must be set forth in paragraphs labeled to correspond with the designation set forth as follows—

(A) A statement that the document submitted constitutes a notice of a nonrecognition transaction or a treaty provision pursuant to the requirements of § 1.1445-2(d)(2);

(B) The name, identifying number, and home address (in the case of an individual) or office address (in the case of an entity) of the transferor submitting the notice;

(C) A statement that the transferor is not required to recognize any gain or loss with respect to the transfer;

(D) A brief description of the transfer; and

(E) A brief summary of the law and facts supporting the claim that recognition of gain or loss is not required with respect to the transfer.

(iv) ***No notice allowed.*** The provisions of this paragraph (d)(2) do not apply to exclusions from income under section 121, to simultaneous like-kind exchanges under section 1031 that do not qualify for nonrecognition treatment in their entirety (see paragraph (d)(2)(ii)(A) of this section),

and to non-simultaneous like-kind exchanges under section 1031 where the transferee cannot determine that the exchange has been completed and all the conditions for nonrecognition have been satisfied at the time it is otherwise required to pay the section 1445 withholding tax and file the withholding tax return (Form 8288, "U.S. Withholding Tax Return for Dispositions by Foreign Persons of U.S. Real Property Interests"). In these cases, the transferee is excused from withholding only upon the timely application for and receipt of a withholding certificate under § 1.1445-3 (see § 1.1445-3(b)(5) and (6) for specific rules applicable to transactions under sections 121 and 1031). This paragraph (d)(2)(iv) is applicable for dispositions and exchanges occurring September 4, 2003.

(3) ***Special procedural rules applicable to foreclosures*** —

(i) ***Amount to be withheld*** —

(A) ***foreclosures.*** A transferee that acquires a U.S. real property interest pursuant to a repossession or foreclosure on such property under a mortgage, security agreement, deed of trust or other instrument securing a debt must withhold tax under section 1445(a) equal to 15 percent (10 percent in the case of dispositions described in § 1.1445-1(b)(2)) of the amount realized on such sale. Such amount must be reported and paid over to the Service under the general rules of § 1.1445-1. However, if the transferee complies with the notice requirements of § 1.1445-2(d)(3) (ii) and (iii), such transferee may report and pay over to the Service on or before the 20th day following the final determination by a court or trustee with jurisdiction over the foreclosure action, the lesser of:

(*1*) The amount otherwise required to be withheld under section 1445(a), or

(*2*) The "alternative amount" as defined in the succeeding sentence. The alternative amount is the entire amount, if any, determined by a court or trustee with jurisdiction over the matter, that accrues to the debtor/transferor out of the amount realized from the foreclosure sale. The amount of any mortgage, lien, or other security agreement secured by the property, that is terminated, assumed by another person, or otherwise extinguished (as to the debtor/transferor) shall not be treated as an amount that accrues to the debtor/transferor for purposes of this § 1.1445-2(d)(3)(i)(A). If the alternative amount is zero, no withholding is required. Any difference between the amount withheld at the time of the foreclosure sale and the amount to be reported and paid over to the Service must be transferred to the court or trustee with jurisdiction over the foreclosure action. Amounts withheld, if any, are to be reported and paid to the Service by using Forms 8288 and 8288-A in conformity with § 1.1445-1(d).

(B) ***Deeds in lieu of foreclosures.*** A transferee of a U.S. real property interest pursuant to a deed in lieu of foreclosure must withhold tax equal to 15 percent (10 percent in the case of dispositions described in § 1.1445-1(b)(2)) of the amount realized by the debtor/transferor on the transfer. However, no withholding is required if:

(*1*) The transferee is the only person with a security interest in the property,

(*2*) No cash or other property (other than incidental fees incurred with respect to the transfer) is paid, directly or indirectly, to any person with respect to the transfer, and

(*3*) The notice requirement of § 1.1445-2(d)(3) are satisfied.

The amount withheld, if any, must be reported and paid over to the Service not later than the 20th day following the date of transfer. In a case where withholding would otherwise be required, a withholding certificate may be requested in accordance with § 1.1445-3.

(ii) ***Notice to the court or trustee in a foreclosure action*** —

(A) ***Notice on day of purchase.*** A transferee in a foreclosure sale that chooses to use the special rules applicable to foreclosures must provide notice to the court or trustee with jurisdiction over the foreclosure action on the day the property is transferred with respect to such transferee's withholding obligation. No particular form is necessary but the notice must set forth the transferee's name, home address in the case of an individual, office address in the case of an entity, a brief description of the property, the date of the transfer, the amount realized on the sale of the foreclosed property and the amount withheld under section 1445(a).

(B) ***Notice whether amount withheld or alternative amount is reported and paid over to the Service.*** A purchaser/transferee in a foreclosure that chooses to use the special rules applicable to foreclosures must provide notice to the court or trustee with jurisdiction over the foreclosure action regarding whether the amount withheld or the alternative amount will be (or has been) reported and paid over to the Service. The notice should set forth all the information required by the preceding paragraph (d)(3)(ii)(A), the amount withheld or alternative amount that will be (or has been) reported and paid over to the Service, and the amount that will be (or has been) paid over to the court or trustee.

(iii) ***Notice to the Service*** —

(A) ***General rule.*** A transferee that in reliance upon the rules of this paragraph (d)(3) withholds an alternative amount (or does not withhold because the alternative amount is zero) must, on or before the 20th day following the final determination by a court or trustee in a foreclosure action or on or before the 20th day following the date of the transfer with respect to a transfer pursuant to a deed in lieu of foreclosure, provide notice thereof to the Assistant Commissioner (International) at the address provided in § 1.1445-1(g)(10). (The filing of such a notice shall not relieve a creditor of any obligation it may have to file a notice pursuant to section 6050J and the regulations thereunder.) No particular form is required but the following information must be set forth in paragraphs labelled to correspond with the numbers set forth below.

(*1*) A statement that the notice constitutes a notice of foreclosure action or transfer pursuant to a deed in lieu of foreclosure under § 1.1445-2(d)(3).

(*2*) The name, identifying number, and home address (in the case of an individual) or office address (in the case of an entity) of the purchaser/transferee.

(*3*) The name, identifying number, and home address (in the case of an individual) or office address (in the case of an entity) of the debtor/transferor.

(*4*) In a foreclosure action, the date of the final determination by a court or trustee regarding the distribution of the amount realized from the foreclosure sale. In a transfer pursuant to a deed in lieu of foreclosure, the date the property is transferred to the purchaser/transferee.

(*5*) A brief description of the property.

(6) The amount realized from the foreclosure sale or with respect to the transfer pursuant to a deed in lieu of foreclosure.

(7) The alternative amount.

(B) ***Special rule for lenders required to file Form 1099-A where the alternative amount is zero.*** A person required under section 6050J to file Form 1099-A does not have to comply with the notice requirement of § 1.1445-2(d)(3)(iii)(A) if the alternative amount is zero. In such case, the filing of the Form 1099-A will be deemed to satisfy the notice requirements of § 1.1445-2(d)(3)(iii)(A).

(iv) ***Requirements not applicable.*** A transferee is not required to withhold tax or provide notice pursuant to the rules of this paragraph (d)(3) if no substantive withholding liability applies to the transfer of the property by the debtor/transferor. For example, if the debtor/transferor provides the transferee with a certification of non-foreign status pursuant to paragraph (b) of this section, then no substantive withholding liability would exist with respect to the acquisition of the property from the debtor transferor. In such a case, no withholding of tax or notice to the Internal Revenue Service is required of the transferee with respect to the repossession or foreclosure.

(v) ***Anti-abuse rule.*** If a U.S. real property interest is transferred in foreclosure or pursuant to a deed in lieu of foreclosure for a principal purpose of avoiding the requirements of section 1445(a), then the provisions of this paragraph (d)(3) shall not apply to the transfer and the transferee shall be fully liable for any failure to withhold with respect to the transfer. A principal purpose to avoid section 1445(a) will be presumed (subject to rebuttal on the basis of all relevant facts and circumstances) if:

(A) The transferee acquires property in which it, or a related party, has a security interest;

(B) The security interest did not arise in connection with the debtor/transferor's or a related party's or predecessor in interest's acquisition, improvement, or maintenance of the property; and

(C) The total amount of all debts secured by the property exceeds 90 percent of the fair market value of the property.

(4) ***Installment payments.*** A transferee of a U.S. real property interest is not required to withhold under section 1445 when making installment payments on an obligation arising out of a dispositions that took place before January 1, 1985. With respect to disposition that take place after December 31, 1984, the transferee shall be required to satisfy its entire withholding obligation within the time specified in § 1.1445-1(c) regardless of the amount actually paid by the transferee. Thereafter, no withholding is required upon further installment payments on an obligation arising out of the transfer. A transferee that is unable to satisfy its entire withholding obligation within the time specified in § 1.1445-1(c) may request a withholding certificate pursuant to § 1.1445-3.

(5) ***Acquisitions by governmental bodies.*** No withholding of tax is required under section 1445 with respect to any acquisition of property by the United States, a state or possession of the United States, a political subdivision thereof, or the District of Columbia.

(6) [Reserved]

(7) ***Withholding certificate obtained by transferee or transferor.*** No withholding is required under section 1445(a) if the transferee is provided with a withholding certificate that so specifies. Either the transferor or the transferee may seek a withholding certificate from the Internal Revenue Service, pursuant to the provisions of § 1.1445-3.

(8) ***Amount realized by transferor is zero.*** If the amount realized by transferor on a transfer of a U.S. real property interest is zero, no withholding is required.

(e) ***Applicability dates.*** The requirement in paragraphs (d)(2)(i)(B), (d)(2)(iii)(B), and (d)(3)(iii)(A)(*2*) and (*3*) of this section that taxpayer identification numbers be provided (in all cases) is applicable for dispositions of U.S. real property interests occurring after November 3, 2003. The exclusion of entities described in section 897(l) from the definition of foreign person in paragraph (b)(2)(i) of this section applies to dispositions and distributions after December 18, 2015, and the withholding rates set forth in paragraphs (b)(4)(iv), (c)(3)(iii), and (d)(3)(i) of this section apply to dispositions after February 16, 2016. For dispositions on or before February 16, 2016, see paragraphs (b)(4)(iv), (c)(3)(iii), and (d)(3)(i) of this section as contained in 26 CFR part 1 revised as of April 1, 2015. Paragraph (b)(2)(v) of this section applies to certifications provided on or after May 7, 2019, except that a taxpayer may choose to apply paragraph (b)(2)(v) of this section with respect to certifications provided before May 7, 2019. Paragraphs (b)(2)(i) and (b)(2)(vi) of this section, apply with respect to dispositions of U.S. real property interests and distributions described in section 897(h) occurring on or after December 29, 2022. For dispositions of U.S. real property interests and distributions described in section 897(h) occurring before December 29, 2022, see § 1.1445-2(b)(2)(i) and (b)(2)(vi), as contained in 26 CFR part 1, revised as of April 1, 2021. Paragraph (c)(3)(i) of this section applies with respect to dispositions of U.S. real property interests, and distributions described in section 897(h), occurring on or after April 25, 2024. For dispositions of U.S. real property interests, and distributions described in section 897(h), occurring before April 25, 2024, *see* § 1.1445-2(c)(3)(i), as contained in 26 CFR part 1, revised as of April 1, 2024.

[T.D. 8113, 51 FR 46633, Dec. 24, 1986; 52 FR 3917, Feb. 6, 1987, as amended by T.D. 8198, 53 FR 16230, May 5, 1988; T.D. 9082, 68 FR 46084, Aug. 5, 2003; T.D. 9751, 81 FR 8401, Feb. 19, 2016; T.D. 9926, 85 FR 76932, Nov. 30, 2020; T.D. 9971, 87 FR 80065, Dec. 29, 2022; T.D.9992, 89 FR 31632, Apr. 25, 2024]

§ 1.1445-3 Adjustments to amount required to be withheld pursuant to withholding certificate.

(a) ***In general.*** Withholding under section 1445(a) may be reduced or eliminated pursuant to a withholding certificate issued by the Internal Revenue Service in accordance with the rules of this section. A withholding certificate may be issued by the Service in cases where reduced withholding is appropriate (see paragraph (c) of this section), where the transferor is exempt from U.S. tax (see paragraph (d) of this section), or where an agreement for the payment of tax is entered into with the Service (see paragraph (e) of this section). A withholding certificate that is obtained prior to a transfer notifies the transferee that no withholding is required. A withholding certificate that is obtained after a transfer has been made may authorize a normal refund or an early refund pursuant to paragraph (g) of this section. Either a transferee or transferor may apply for a withholding certificate. The Internal Revenue Service will act upon an application for a withholding certificate not later than the 90th day after it is received. Solely for this purpose (i.e., determining the day upon which the 90-day period commences), an application is received by the Service on the date that all information necessary for the Service to make a determination is provided by the applicant. In no event, however, will a withholding certificate be issued without the transferor's identifying number. (For rules regarding whether an application for a withholding certificate has been timely submitted, see § 1.445-1(c)(2).) The Service may deny a request for a withholding

certificate where, after due notice, an applicant fails to provide information necessary for the Service to make a determination. The Service will act upon an application for an early refund not later than the 90th day after it is received. An application for an early refund must either

(1) include a copy of a withholding certificate issued by the Service with respect to the transaction or,

(2) be combined with an application for a withholding certificate. Where an application for an early refund is combined with an application for a withholding certificate, the Service will act upon both applications not later than the 90th day after receipt. In the case of an application for a certificate based on non-conforming security under paragraph (e)(3)(v) of this section, and in unusually complicated cases, the Service may be unable to provide a final withholding certificate by the 90th day. In such a case the Service will notify the applicant, by the 45th day after receipt of the application, that additional processing time will be necessary. The Service's notice may request additional information or explanation concerning particular aspects of the application, and will provide a target date for final action (contingent upon the application's timely submission of any requested information). A withholding certificate issued pursuant to the provisions of this section serves to fulfill the requirements of section 1445(b)(4) concerning qualifying statements, section 1445(c)(1) concerning the transferor's maximum tax liability, or section 1445(c)(2) concerning the Secretary's authority to prescribe reduced withholding.

(b) ***Applications for withholding certificates*** —

(1) ***In general.*** An application for a withholding certificate must be submitted to the address provided in § 1.1445-1(g)(10). An application for a withholding certificate must be signed by a responsible officer in the case of a corporation, by a general partner in the case of a partnership, by a trustee, executor, or equivalent fiduciary in the case of a trust or estate, and in the case of an individual by the individual himself. A duly authorized agent may sign the application but the application must contain a valid power of attorney authorizing the agent to sign the application on behalf of the applicant. The person signing the application must verify under penalties of perjury that all representations made in connection with the application are true, correct, and complete to his knowledge and belief. No particular form is required for an application, but the application must set forth the information described in paragraphs (b), (2), (3), and (4), and to the extent applicable, paragraph (b)(5) or (6) of this section.

(2) ***Parties to the transaction.*** The application must set forth the name, address, and identifying number of the person submitting the application (specifying whether that person is the transferee or transferor), and the name, address, and identifying number of other parties to the transaction (specifying whether each such party is a transferee or transferor). The Service will deny the application if complete information, including the identifying numbers of all the parties, is not provided. Thus, for example, the applicant should determine if an identifying number exists for each party, and, if none exists for a particular party, the applicant should notify the particular party of the obligation to get an identifying number before the application can be submitted to the Service. The address provided in the case of an individual must be that individual's home address, and the address provided in the case of an entity must be that entity's office address. A mailing address may be provided in addition to, but not in lieu of, a home address or office address.

(3) ***Real property interest to be transferred.*** The application must set forth information concerning the U.S. real property interest with respect to which the withholding certificate is sought, including the type of interest, the contract price, and, in the case of an interest in real property, its location and general description, or in the case of an interest in a U.S. real property holding corporation, the class or type and amount of the interest.

(4) *Basis for certificate* —

(i) ***Reduced withholding.*** If a withholding certificate is sought on the basis of a claim that reduced withholding in appropriate, the application must include:

(A) A calculation of the maximum tax that may be imposed on the disposition in accordance with paragraph (c)(2) of this section. Such calculation must be accompanied by a copy of the relevant contract and depreciation schedules or other evidence that confirms the contract price and adjusted basis of the property. If no depreciation schedules are provided, the application must state the nature of the use of the property and why depreciation was not allowable. Evidence that supports any claimed adjustment to the maximum tax on the disposition must also be provided;

(B) A calculation of the transferor's unsatisfied withholding liability, or evidence supporting the claim that no such liability exists, in accordance with paragraph (c)(3) of this section; and

(C) In the case of a request for a special reduction of withholding pursuant to paragraph (c)(4) of this section, a statement of law and facts in support of the request.

(ii) ***Exemption.*** If a withholding certificate is sought on the basis of the transferor's exemption from U.S. tax, the application must set forth a brief statement of the law and facts that support the claimed exemption. In this regard, see paragraph (d) of this section.

(iii) ***Agreement.*** If a withholding certificate is sought on the basis of an agreement for the payment of tax, the application must include a signed copy of the agreement proposed by the applicant and a copy of the security instrument (if any) proposed by the applicant. In this regard, see paragraph (e) of this section.

(5) ***Special rule for exclusions from income under section 121.*** A withholding certificate may be sought on the basis of a section 121 exclusion as a reduction in the amount of tax due under paragraph (c)(2)(v) of this section. The application must include information establishing that the transferor, who is a nonresident alien individual at the time of the sale (and is therefore subject to sections 897 and 1445) is entitled to claim the benefits of section 121. For example, a claim for reduced withholding as a result of section 121 must include information that the transferor occupied the U.S. real property interest as his or her personal residence for the required period of time.

(6) ***Special rule for like-kind exchanges under Section 1031.*** A withholding certificate may be requested with respect to a like-kind exchange under section 1031 as a transaction subject to a nonrecognition provision under paragraph (c)(2)(ii) of this section. The application must include information substantiating the requirements of section 1031. The IRS may require additional information during the course of the application process to determine that the requirements of section 1031 are satisfied. In the case of a deferred like-kind exchange, the withholding agent is excused from reporting and paying the withholding tax to the IRS within 20 days after the transfer only if an application for a withholding certificate is submitted prior to or on the date of transfer. See § 1.1445-1(c)(2) for rules concerning delayed reporting and payment where an application for a withholding certificate has been submitted to the IRS prior to or on the date of transfer.

(c) *Adjustment of amount required to be withheld* —

(1) ***In general.*** The Internal Revenue Service may issue a withholding certificate that excuses withholding or that permits the transferee to withhold an adjusted amount reflecting the transferor's maximum tax liability. The transferor's maximum tax liability is the sum of—

(i) The maximum amount which could be imposed as tax under section 871 or 882 upon the transferor's disposition of the subject real property interest, as determined under paragraph (c)(2) of this section, and

(ii) The transferor's unsatisfied withholding liability with respect to the subject real property interest, as determined under paragraph (c)(3) of this section.

In addition, the Internal Revenue Service may issue a withholding certificate that permits the transferee to withhold a reduced amount if the Service determines pursuant to paragraph (c)(4) of this section that reduced withholding will not jeopardize the collection of tax.

(2) ***Maximum tax imposed on disposition.*** The first element of the transferor's maximum tax liability is the maximum amount which the transferor could be required to pay as tax upon the disposition of the subject real property interest. In the case of an individual transferor that amount will generally be the contract price of the property minus its adjusted basis, multiplied by the maximum individual income tax rate applicable to long term capital gain. In the case of a corporate transferor, that amount will generally be the contract price of the property minus its adjusted basis, multiplied by the maximum corporate income tax rate applicable to long term capital gain. However, that amount must be adjusted to take into account the following:

(i) Any reduction of tax to which the transferor is entitled under the provisions of a U.S. income tax treaty;

(ii) The effect of any nonrecognition provision that is applicable to the transaction;

(iii) Any losses realized and recognized upon the previous disposition of U.S. real property interests during the taxable year;

(iv) Any amount that is required to be treated as ordinary income; and

(v) Any other factor that may increase or reduce the tax upon the disposition.

(3) ***Transferor's unsatisfied withholding liability*** —

(i) ***In general.*** The second element of the transferor's maximum tax liability is the transferor's unsatisfied withholding liability. That liability is the amount of any tax that the transferor was required to but did not withhold and pay over under section 1445 upon the acquisition of the subject U.S. real property interest or a predecessor interest. The transferor's unsatisfied withholding liability is included in the calculation of maximum tax liability so that such prior withholding liability can be satisfied by the transferee's withholding upon the current transfer. Alternatively, the transferor's unsatisfied withholding liability may be disregarded for purposes of calculating the maximum tax liability, if either—

(A) Such prior withholding liability is fully satisfied by a payment that is made with the application submitted pursuant to this section; or

(B) An agreement is entered into for the payment of that liability pursuant to the rules of paragraph (e) of this section.

Because section 1445 only requires withholding after December 31, 1984, no transferor's unsatisfied withholding liability can exist unless the transferor acquired the subject or predecessor real property interest after that date. For purposes of this paragraph (c), a

predecessor interest is one that was exchanged for the subject U.S. real property interest in a transaction in which the transferor was not required to recognize the full amount of the gain or loss realized upon the transfer.

(ii) ***Evidence that no unsatisfied withholding liability exists.*** For purposes of paragraph (b)(4)(i)(B) of this section (concerning information that must be submitted with an application for a withholding certificate), evidence that the transferor has no unsatisfied withholding liability includes any one of the following documents:

(A) Evidence that the transferor acquired the subject or predecessor real property interest prior to January 1, 1985;

(B) A copy of the Form 8288 that was filed by the transferor, and proof of payment of the amount shown due thereon, with respect to the transferor's acquisition of the subject or predecessor real property interest;

(C) A copy of a withholding certificate with respect to the transferor's acquisition of the subject or predecessor real property interest, plus a copy of Form 8288 and proof of payment with respect to any withholding required under that certificate;

(D) A copy of the non-foreign certification furnished by the person from whom the subject or predecessor U.S. real property interest was acquired, executed at the time of that acquisition;

(E) Evidence that the transferor purchased the subject or predecessor real property for $300,000 or less, and a statement signed by the transferor under penalties of perjury, that the transferor purchased the property for use as a residence within the meaning of § 1.1445-2(d)(1);

(F) Evidence that the person from whom the transferor acquired the subject or predecessor U.S. real property interest fully paid any tax imposed on that transaction pursuant to section 897.

(G) A copy of a notice of nonrecognition treatment provided to the transferor pursuant to § 1.1445-2(d)(2) by person from whom the transferor acquired the subject or predecessor U.S. real property interest; and

(H) A statement, signed by the transferor under penalties of perjury, setting forth the facts and circumstances that supported the transferor's conclusion that no withholding was required under section 1445(a) with respect to the transferor's acquisition of the subject or predecessor real property interest.

(4) ***Special reduction of amount required to be withheld.*** The Internal Revenue Service may, in its discretion, issue a withholding certificate that permits the transferee to withhold a reduced amount based upon a determination that reduced withholding will not jeopardize the collection of tax. A transferor that requests a withholding certificate pursuant to this paragraph (c)(4) is required pursuant to paragraph (b)(4)(i)(C) of this section to submit a statement of law and facts in support of the request. That statement must explain why the transferor is unable to enter into an agreement for the payment of tax pursuant to paragraph (e) of this section.

(d) ***Transferor's exemption from U.S. tax —***

(1) ***In general.*** The Internal Revenue Service will issue a withholding certificate that excuses all withholding by a transferee if it is established that:

(i) The transferor's gain from the disposition of the subject U.S. real property interest will be exempt from U.S. tax, and

(ii) The transferor has no unsatisfied withholding liability.

For the available exemptions, see paragraph (d)(2) of this section. The transferor's unsatisfied withholding liability shall be determined in accordance with the provisions of paragraph (c)(3) of this section. A transferor that is entitled to a reduction of (rather than an exemption from) U.S. tax may obtain a withholding certificate to that effect pursuant to the provisions of paragraph (c) of this section.

(2) ***Available exemptions.*** A transferor's gain from the disposition of a U.S. real property interest may be exempt from U.S. tax because either:

(i) The transferor is an integral part or controlled entity of a foreign government and the disposition of the subject property is not a commercial activity, as determined pursuant to section 892 and the regulations thereunder; or

(ii) The transferor is entitled to the benefits of an income tax treaty that provides for such an exemption (subject to the limitations imposed by section 1125(c) of Pub. L. 96-499, which, in general, overrides such benefits as of January 1, 1985).

(e) ***Agreement for the payment of tax*** —

(1) ***In general.*** The Internal Revenue Service will issue a withholding certificate that excuses withholding or that permits a transferee to withhold a reduced amount, if either the transferee or the transferor enters into an agreement for the payment of tax pursuant to the provisions of this paragraph (e). An agreement for the payment of tax is a contract between the Service and any other person that consists of two necessary elements. Those elements are—

(i) A contract between the Service and the other person, setting forth in detail the rights and obligations of each; and

(ii) A security instrument or other form of security acceptable to the Director, Foreign Operations District.

(2) ***Contents of agreement*** —

(i) ***In general.*** An agreement for the payment of tax must cover an amount described in subdivision (ii) or (iii) of this paragraph (e)(2). The agreement may either provide adequate security for the payment of the chosen amount in accordance with paragraph (e)(3) of this section, or provide for the payment of that amount through a combination of security and withholding of tax by the transferee.

(ii) ***Tax that would otherwise be withheld.*** An agreement for the payment of tax may cover the amount of tax that would otherwise be required to be withheld pursuant to section 1445(a). In addition to the amount computed pursuant to section 1445(a), the applicant must agree to pay interest upon that amount, at the rate established under section 6621, with respect to the period between the date on which the tax imposed by section 1445(a) would otherwise be due (*i.e.,* the 20th day after the date of transfer) and the date on which the transferor's payment of tax with respect to the disposition will be due under the agreement. The amount of interest

agreed upon must be paid by the applicant regardless of whether or not the Service is required to draw upon any security provided pursuant to the agreement. The interest may be paid either with the return or by the Service drawing upon the security.

(iii) ***Maximum tax liability.*** An agreement for the payment of tax may cover the transferor's maximum tax liability, determined in accordance with paragraph (c) of this section. The agreement must also provide for the payment of an additional amount equal to 25 percent of the amount determined under paragraph (c) of this section. This additional amount secures the interest and penalties that would accrue between the date of a failure to file a return and pay tax with respect to the disposition, and the date on which the Service collects upon that liability pursuant to the agreement. Such additional amount will only be collected if the Service finds it necessary to draw upon any security provided due to the transferor's failure to file a return and pay tax with respect to the relevant disposition.

(3) ***Major types of security*** —

(i) ***In general.*** The following are the major types of security acceptable to the Service. Further details with respect to the terms and conditions of each type may be specified by Revenue Procedure.

(ii) ***Bond with surety or guarantor.*** The Service may accept as security with respect to a transferor's tax liability a bond that is executed with a satisfactory surety or guarantor. Only the following persons may act as surety or guarantor for this purpose

(A) A surety company holding a certificate of authority from the Secretary as an acceptable surety on Federal bonds, as listed in Treasury Department Circular No. 570, published annually in the FEDERAL REGISTER on the first working day of July;

(B) A person that is engaged within or without the United States in the conduct of a banking, financing, or similar business under the principles of § 1.864-4(c)(5), and that is subject to U.S. or foreign local or national regulation of such business, if that person is otherwise acceptable to the Service; and

(C) A person that is engaged within or without the United States in the conduct of an insurance business that is subject to U.S. or foreign local or national regulation, if that person is otherwise acceptable to the Service.

(iii) ***Bond with collateral.*** The Service may accept as security with respect to a transferor's tax liability a bond that is secured by acceptable collateral. All collateral must be deposited with a responsible financial institution acting as escrow agent, or, in the Service's discretion, with the Service. Only the following types of collateral are acceptable:

(A) Bonds, notes, or other public debt obligations of the United States, in accordance with the rules of 31 CFR part 225; and

(B) A certified cashier's, or treasurer's check, drawn on an entity acceptable to the Service that is engaged within or without the United States in the conduct of a banking, financing, or similar business under the principles of § 1.864-4(c)(5) and that is subject to U.S. or foreign local or national regulation of such business.

(iv) ***Letter of credit.*** The Service may accept as security with respect to a transferor's tax liability an irrevocable letter of credit. The Service may accept a letter of credit issued by an entity acceptable to the Service that is engaged within or without the United States in the conduct of

a banking, financing, or similar business under the principles of § 1.864-4(c)(5) and that is subject to U.S. or foreign local or national regulation of such business. However, the Director will accept a letter of credit from an entity that is not engaged in trade or business in the United States only if such letter may be drawn on an advising bank within the United States.

(v) ***Guarantees and other non-conforming security*** —

(A) ***Guarantee.*** The Service may in its discretion accept as security with respect to a transferor's tax liability the applicant's guarantee that it will pay such liability. The Service will in general accept such a guarantee only from a corporation, foreign or domestic, any class of stock of which is regularly traded on an established securities market on the date of the transfer.

(B) ***Other forms of security.*** The Service may in unusual circumstances and at its discretion accept any form of security that if finds to be adequate. An application for a withholding certificate that proposes a form of security that does not conform with any of the preferred types set forth in paragraph (e)(3) (ii) through (iv) of this section or any relevant Revenue Procedure must include:

(*1*) A detailed statement of the facts and circumstances supporting the use of the proposed form of security, and

(*2*) A memorandum of law concerning the validity and enforceability of the proposed form of security.

(4) ***Terms of security instrument.*** Any security instrument that is furnished pursuant to this section must provide that—

(i) The amount of each deposit of estimated tax that will be required with respect to the gain realized on the subject disposition may be collected by levy upon the security as of the date following the date on which each such deposit is due (unless such deposit is timely made);

(ii) The entire amount of the liability may be collected by levy upon the security at any time during the nine months following the date on which the payment of tax with respect to the subject disposition is due, subject to release of the security upon the full payment of the tax and any interest and penalties due. If the transferor requests an extension of time to file a return with respect to the disposition, then the Director may require that the term of the security instrument be extended until the date that is nine months after the filing deadline as extended.

(f) ***Amendments to application for withholding certificate*** —

(1) ***In general.*** An applicant for a withholding certificate may amend an otherwise complete application by submitting an amending statement to the address provided in § 1.1445-1(g)(10). The amending statement shall provide the information required by § 1.1445-3(f)(3) and must be signed and accompanied by a penalties of perjury statement in accordance with § 1.1445-3(b)(1).

(2) ***Extension of time for the Service to process requests for withholding certificates*** —

(i) ***In general.*** If an amending statement is submitted, the time in which the Internal Revenue Service must act upon the amended application shall be extended by 30 days.

(ii) ***Substantial amendments.*** If an amending statement is submitted and the Service finds that the statement substantially amends the facts of the underlying application or substantially alters the terms of the withholding certificate as requested in the initial application, the time within which the Service must act upon the amended application shall be extended by 60 days. The applicant shall be so notified.

(iii) ***Amending statement received after the requested withholding certificate has been signed on behalf of the Service.*** If an amending statement is received after the withholding certificate, drafted in response to the underlying application, has been signed on behalf of the Service and prior to the day such certificate is mailed to the applicant, the time in which the Service must act upon the amended application shall be extended by 90 days. The applicant will be so notified.

(3) ***Information required to be submitted.*** No particular form is required for an amending statement but the statement must provide the following information:

(i) ***Identification of applicant.*** The amending statement must set forth the name, address and identifying number of the person submitting the amending statement (specifying whether that person is the transferee or transferor).

(ii) ***Date of underlying application.*** The amending statement must set forth the date of the underlying application for a withholding certificate.

(iii) ***Real property interest to be (or that has been) transferred.*** The amending statement must set forth a brief description of the real property interest with respect to which the underlying application for a withholding certificate was submitted.

(iv) ***Amending information.*** The amending statement must fully set forth the basis for the amendment including any modification of the facts supporting the application for a withholding certificate and any change sought in the terms of the withholding certificate.

(g) ***Early refund of overwithheld amounts.*** If a transferor receives a withholding certificate pursuant to this section, and an amount greater than that specified in the certificate was withheld by the transferee, then pursuant to the rules of this paragraph (g) the transferor may apply for a refund (without interest) of the excess amount prior to the date on which the transferor's tax return is due (without extensions). (Any interest payable on refunds issued after the filing of a tax return shall be determined in accordance with the provisions of section 6611 and regulations thereunder.) An application for an early refund must be delivered to the address provided in § 1.1445-1(g)(10). No particular form is required for the application, but the following information must be set forth in separate paragraphs numbered to correspond with the number given below:

(1) Name, address, and identifying number of the transferor seeking the refund;

(2) Amount required to be withheld pursuant to the withholding certificate issued by Internal Revenue Service;

(3) Amount withheld by the transferee (attach a copy of Form 8288-A stamped by IRS pursuant to § 1.1445-1(c));

(4) Amount to be refunded to the transferor. An application for an early refund cannot be processed unless the required copy of Form 8288-A (or substantial evidence of the amount withheld in the case of a failure to receive Form 8288-A as provided in § 1.1445-1(f)(3)) is attached to the application. If an application for a withholding certificate based upon the transferor's maximum tax liability is

submitted after the transfer takes place, then that application may be combined with an application for an early refund. The Service will act upon a claim for refund within the time limits set forth in paragraph (a) of this section.

(h) ***Effective date for taxpayer identification numbers.*** The requirement in paragraphs (b)(2), (f)(3)(i), and (g)(1) of this section that taxpayer identification numbers be provided (in all cases) is applicable for dispositions of U.S. real property interests occurring after November 3, 2003.

[T.D. 8113, 51 FR 46637, Dec. 24, 1986; 52 FR 3796, Feb. 6, 1987; T.D. 9082, 68 FR 46085, Aug. 5, 2003, as amended by T.D. 9751, 81 FR 8401, Feb. 19, 2016]

§ 1.1445-4 Liability of agents.

(a) ***Duty to provide notice of false certification or statement to transferee.*** A transferee's or transferor's agent must provide notice to the transferee if either—

(1) The transferee is furnished with a non-U.S. real property interest statement pursuant to § 1.1445-2(c)(3) and the agent knows that the statement is false; or

(2) The transferee is furnished with a non-foreign certification pursuant to § 1.1445-2(b)(2) and either

(i) the agent knows that the certification is false, or

(ii) the agent represents a transferor that is a foreign corporation. An agent that represents a transferor that is a foreign corporation is not required to provide notice to the transferee if the foreign corporation provided a non-foreign certification to the transferee prior to such agent's employment and the agent does not know that the corporation did so.

(b) ***Duty to provide notice of false certification or statement to entity or fiduciary.*** A transferee's or transferor's agent must provide notice to an entity or fiduciary that plans to carry out a transaction described in section 1445(e) (1), (2), (3), or (4) if either—

(1) The entity or fiduciary is furnished with a non-U.S. real property interest statement pursuant to § 1.1445-5(b)(4)(iii) and the agent knows that such statement is false; or

(2) The entity or fiduciary is furnished with a non-foreign certification pursuant to § 1.1445-5(b)(3) (ii) and either

(i) the agent knows that such certification is false, or

(ii) the agent represents a foreign corporation that made such a certification.

(c) ***Procedural requirements*** —

(1) ***Notice to transferee, entity, or fiduciary.*** An agent who is required by this section to provide notice must do so in writing as soon as possible after learning of the false certification or statement, but not later than the date of the transfer (prior to the transferee's payment of consideration). If an agent first learns of a false certification or statement after the date of the transfer, notice must be given by the third day following that discovery. The notice must state that the certification or statement is false and may not be relied upon. The notice must also explain the possible consequences to the recipient of a failure to withhold. The notice need not disclose the information on which the agent's statement is based. The following is an example of an acceptable notice."This is to notify you that you may be required to withhold tax in connection with (*describe transaction*). You have been provided with a certification of non-foreign status (or a non-U.S. real property interest statement) in

connection with that transaction. I have learned that that document is false. Therefore, you may not rely upon it as a basis for failing to withhold under section 1445 of the Internal Revenue Code. Section 1445 provides that any person who acquires a U.S. real property interest from a foreign person after February 16, 2016, must withhold a tax equal to 15 percent (10 percent in the case of dispositions described in § 1.1445-1(b)(2)) of the total purchase price. (The term 'U.S. real property interest' includes real property, stock in U.S. corporations whose assets are primarily real property, and some personal property associated with realty.) Any person who is required to withhold but fails to do so can be held liable for the tax. Thus, if you do not withhold the 15 percent tax (10 percent tax in the case of dispositions described in § 1.1445-1(b)(2)) from the total that you pay on this transaction you could be required to pay the tax yourself, if what you are acquiring is a U.S. real property interest and the transferor is a foreign person. Tax that is withheld must be promptly paid over to the IRS using Form 8288. For further information see sections 897 and 1445 of the Internal Revenue Code and the related regulations."

(2) ***Notice to be filed with IRS.*** An agent who is required by paragraph (a) or (b) of this section to provide notice to a transferee, entity, or fiduciary must furnish a copy of that notice to the Internal Revenue Service by the date on which the notice is required to be given to the transferee, entity, or fiduciary. The copy of the notice must be delivered to the address provided in § 1.1445-1(g)(10) and must be accompanied by a cover letter stating that the copy is being filed pursuant to the requirements of this § 1.1445-4(c)(2).

(d) ***Effect on recipient.*** A transferee, entity, or fiduciary that receives a notice pursuant to this section prior to the date of the transfer from any agent of the transferor or transferee may not rely upon the subject certification or statement for purposes of excusing withholding pursuant to § 1.1445-2 or § 1.1445-5. Therefore, the recipient of a notice may be held liable for any failure to deduct and withhold tax under section 1445 as if such certification or statement had never been given. For special rules concerning the effect of the receipt of a notice after the date of the transfer, see §§ 1.1445-2(b)(4)(iv) and 1.1445-5 (c), (d) and (e).

(e) ***Failure to provide notice.*** Any agent who is required to provide notice but who fails to do so in the manner required by paragraph (a) or (b) of this section shall be held liable for the tax that the recipient of the notice would have been required to withhold under section 1445 if such notice had been given. However, an agent's liability under this paragraph (e) is limited to the amount of compensation that that agent derives from the transaction. In addition, an agent who assists in the preparation of, or fails to disclose knowledge of, a false certification or statement may be liable for civil or criminal penalties.

(f) ***Definition of transferor's or transferee's agent*** —

(1) ***In general.*** For purposes of this section, the terms "transferor's agent" and "transferee's agent" means any person who represents the transferor or transferee (respectively)—

(i) In any negotiation with another person (or another person's agent) relating to the transaction; or

(ii) In settling the transaction.

(2) ***Transactions subject to section 1445(e).*** In the case of transactions subject section 1445(e), the following definitions apply.

(i) The term "transferor's agent" means any person that represents or advises an entity or fiduciary with respect to the planning, arrangement, or consummation by the entity of a transaction described in section 1445(e) (1), (2), (3), or (4).

(ii) The term "transferee's agent" means any person that represents or advises the holder of an interest in an entity with respect to the planning, arrangement or consummation by the entity of a transaction described in section 1445(e) (1), (2), (3), or (4).

(3) ***Exclusion of settlement officers and clerical personnel.*** For purposes of this section, a person shall not be treated as a transferor's agent or transferee's agent with respect to any transaction solely because such person performs one or more of the following activities.

(i) The receipt and disbursement of any portion of the consideration for the transaction;

(ii) The recording of any document in connection with the transaction;

(iii) Typing, copying, and other clerical tasks;

(iv) The obtaining of title insurance reports and reports concerning the condition of the real property that is the subject of the transaction; or

(v) The transmission or delivery of documents between the parties.

(4) ***Exclusion for governing body of a condominium association and the board of directors of a cooperative housing corporation.*** The members of a board, committee or other governing body of a condominium association and the board of directors and officers of a cooperative housing corporation will not be deemed agents of the transferor or transferee if such individuals function exclusively in their capacity as representatives of such association or corporation with respect to the transaction. In addition, the managing agent of a cooperative housing corporation or condominium association will not be deemed to be an agent of the transferee or transferor if such person functions exclusively in its capacity as a managing agent. If a person's activities include advising the transferee or transferor with respect to the transfer, this exclusion shall not apply.

[T.D. 8113, 51 FR 46641, Dec. 24, 1986; 52 FR 3796, 3917, Feb. 6, 1987; T.D. 9082, 68 FR 46086, Aug. 5, 2003, as amended by T.D. 9751, 81 FR 8402, Feb. 19, 2016]

§ 1.1445-5 Special rules concerning distributions and other transactions by corporations, partnerships, trusts, and estates.

(a) ***Purpose and scope.*** This section provides special rules concerning the withholding that is required under section 1445(e) upon distributions and other transactions involving domestic or foreign corporations, partnerships, trusts, and estates. Paragraph (b) of this section provides rules that apply generally to the various withholding requirements set forth in this section. Under section 1445(e)(1) and paragraph (c) of this section, a domestic partnership or the fiduciary of a domestic trust or estate is required to withhold tax upon the entity's disposition of a U.S. real property interest if any foreign persons are partners or beneficiaries of the entity. Paragraph (d) provides rules concerning the requirement of section 1445(e)(2) that a foreign corporation withhold tax upon its distribution of a U.S. real property interest to its interest-holders. Finally, under section 1445(e)(3) and paragraph (e) of this section a domestic U.S. real property holding corporation is required to withhold tax upon certain distributions to interest-holders that are foreign persons. Paragraphs (f) and (g) of this section are reserved to provide rules concerning transactions involving interests in partnerships, trusts, and estates that will be subject to withholding pursuant to sections 1445(e) (4) and (5).

(b) ***Rules of general application*** —

(1) ***Double withholding not required.*** If tax is required to be withheld with respect to a transfer of property in accordance with the rules of this section, then no additional tax is required to be withheld by the transferee of the property with respect to that transfer pursuant to the general rules of section 1445(a) and § 1.1445-1. For rules coordinating the withholding under section 1441 (or section 1442 or 1443) and under section 1445 on distributions from a corporation, see § 1.1441-3(b)(4). If a transfer of a U.S. real property interest described in section 1445(e) is exempt from withholding under the rules of this section, then no withholding is required under the general rules of section 1445(a) and § 1.1445-1.

(2) ***Coordination with nonrecognition provisions*** —

(i) ***In general.*** Withholding shall not be required under the rules of this section with respect to a transfer described in section 1445(e) of a U.S. real property interest if—

(A) By reason of the operation of a nonrecognition provision of the Internal Revenue Code or the provisions of any treaty of the United States no gain or loss is required to be recognized by the foreign person with respect to which withholding would otherwise be required; and

(B) The entity or fiduciary that is otherwise required to withhold complies with the notice requirements of paragraph (b)(2)(ii) of this section. The entity or fiduciary must determine whether gain or loss is required to be recognized pursuant to the rules of section 897 and the applicable nonrecognition provisions of the Internal Revenue Code. An entity or fiduciary may obtain a withholding certificate from the Internal Revenue Service that confirms the applicability of a nonrecognition provision, but is not required to do so. For purposes of this paragraph (b)(2), a nonrecognition provision is any provision of the Internal Revenue Code for not recognizing gain or loss. If nonrecognition treatment is available only with respect to part of the gain realized on a transfer, the exemption from withholding provided by this paragraph (b)(2) shall not apply. In such cases a withholding certificate may be sought pursuant to the provisions of § 1.1445-6.

(ii) ***Notice of nonrecognition transfer.*** An entity or fiduciary that fails to withhold tax with respect to a transfer in reliance upon the rules of this paragraph (b)(2) must by the 20th day after the date of the transfer deliver a notice thereof to the address provided in § 1.1445-1(g)(10). No particular form is required for a notice of transfer, but the following information must be set forth in paragraphs labelled to correspond with the letter set forth below:

(A) A statement that the document submitted constitutes a notice of a nonrecognition transfer pursuant to the requirements of § 1.1445-5(b)(2)(ii);

(B) The name, office address, and identifying number of the entity of fiduciary submitting the notice;

(C) The name, identifying number, and home address (in the case of an individual) or office address (in the case of an entity) of each foreign person with respect to which withholding would otherwise be required;

(D) A brief description of the transfer; and

(E) A brief statement of the law and facts supporting the claim that recognition of gain or loss is not required with respect to the transfer.

(3) ***Interest-holder not a foreign person*** —

(i) ***In general.*** Pursuant to the provisions of paragraphs (c) and (e) of this section, an entity or fiduciary is required to withhold with respect to certain transfers of property if a holder of an interest in the entity is a foreign person. For purposes of determining whether a holder of an interest is a foreign person, and entity or fiduciary may rely upon a certification of nonforeign status provided by that person in accordance with paragraph (b)(3)(ii) of this section. Except to the extent provided in paragraph (b)(3)(iii) of this section, such a certification excuses the entity or fiduciary from any liability otherwise imposed pursuant to section 1445(e) and regulations thereunder. However, no obligation is imposed upon an entity or fiduciary to obtain certifications from interest-holders; an entity or fiduciary may instead rely upon other means to ascertain the nonforeign status of an interest-holder. If the entity or fiduciary does rely upon other means but the interest-holder proves, in fact, to be a foreign person, then the entity or fiduciary is subject to any liability imposed pursuant to section 1445 and regulations thereunder.

An entity or fiduciary is not required to rely upon other means to ascertain the non-foreign status of an interest-holder and may demand a certification of non-foreign status. If the certification is not provided, the entity or fiduciary may withhold tax under section 1445 and will be considered, for purposes of sections 1461 through 1463, to have been required to withhold such tax.

(ii) ***Interest-holder's certification of non-foreign status*** —

(A) ***In general.*** For purposes of this section, an entity or fiduciary may treat any holder of an interest in the entity as a U.S. person if that interest-holder furnishes to the entity or fiduciary a certification stating that the interest-holder is not a foreign person, in accordance with the provisions of paragraph (b)(3)(ii)(B) of this section. In general, a foreign person is a nonresident alien individual, foreign corporation, foreign partnership, foreign trust, or foreign estate, except that a withholding qualified holder (as defined in § 1.1445-1(g)(11)) is not a foreign person for purposes of this section.

(B) ***Procedural rules.*** The rules in this paragraph (b)(3)(ii)(B) apply for purposes of the interest-holder's certification of non-foreign status (including a certification of non-foreign status provided by a withholding qualified holder (as defined in § 1.1445-1(g)(11)).

(*1*) An interest-holder's certification of non-foreign status must be signed under penalties of perjury and must state—

(*i*) That the interest-holder is not a foreign person; and

(*ii*) The interest-holder's name, identifying number, home address (in the case of an individual), or office address (in the case of an entity), and place of incorporation (in the case of a corporation).

(*2*) For purposes of paragraph (b)(3)(ii)(B)(*1*) of this section, an individual's identifying number is the individual's Social Security number and any other person's identifying number is its U.S. employer identification number (see § 1.897-1(p)), or, if the interest-holder is a withholding qualified holder (as defined in § 1.1445-1(g)(11)) that does not have a U.S. taxpayer identification number, a foreign tax identification number issued by its jurisdiction of residence. The certification must be signed by a responsible officer in the case of a corporation, by a general partner in the case of a partnership, and by a trustee, executor, or equivalent fiduciary in the case of a trust or estate. No particular form is needed for a certification pursuant to this paragraph (b)(3)(ii), nor is any particular language required, so long as the document meets the

requirements of this paragraph, except that, with respect to certification submitted by a withholding qualified holder (as defined in § 1.1445-1(g)(11)), the transferor must state on the certification that it is treated as a non-foreign person because it is a withholding qualified holder and must further specify whether it qualifies as a withholding qualified holder because it is a qualified holder under § 1.897(l)-1(d) or a foreign partnership that satisfies the requirements of § 1.1445-1(g)(11). Samples of acceptable certifications are provided in paragraph (b)(3)(ii)(E) of this section.

(*3*) An entity may rely upon a certification pursuant to this paragraph (b)(3)(ii)(B) for a period of two calendar years following the close of the calendar year in which the certification was given. If an interest holder becomes a foreign person (or no longer is treated as a withholding qualified holder (as defined in § 1.1445-1(g)(11)) and therefore is no longer treated as a non-foreign person for purposes of withholding under section 1445 within the period described in the preceding sentence, the interest-holder must notify the entity before any further dispositions or distributions and upon receipt of such notice (or any other notification of the foreign status of the interest-holder) the entity may no longer rely upon the prior certification. An entity that obtains and relies upon a certification must retain that certification with its books and records for a period of three calendar years following the close of the last calendar year in which the entity relied upon the certification.

(C) ***Foreign corporation that has made an election under section 897(i).*** A foreign corporation that has made a valid election under section 897(i) to be treated as a domestic corporation for purposes of section 897 may provide a certification of non-foreign status pursuant to this paragraph (b)(3)(ii). However, an electing foreign corporation must attach to such certification a copy of the acknowledgment of the election provided to the corporation by the Internal Revenue Service pursuant to § 1.897-3(d)(4).

An acknowledgment is valid for this purpose only if it states that the information required by § 1.897-3 has been determined to be complete.

(D) ***Form W-8EXP.*** A certification of non-foreign status can be made by a withholding qualified holder (as defined in § 1.1445-1(g)(11)) as provided in this paragraph (b)(3)(ii) to certify its qualified holder status. A certification of non-foreign status under this paragraph (b)(3)(ii) also includes a certification made on a Form W-8EXP that states that the interest-holder is treated as a non-foreign person because it is a withholding qualified holder and must further specify whether it qualifies as a withholding qualified holder because it is a qualified holder under § 1.897(l)-1(d) or a foreign partnership that satisfies the requirements of § 1.1445-1(g)(11). The certification must also meet all of the other requirements for a valid Form W-8EXP as provided on the form and the instructions to the form. A qualified holder may not provide a certification of non-foreign status on a Form W-9, as described in paragraph (b)(3)(iv) of this section.

(iii) ***Reliance upon certification not permitted.*** An entity or fiduciary may not rely upon an interest-holder's certification of non-foreign status if, prior to or at the time of the transfer with respect to which withholding would be required, the entity or fiduciary either—

(A) Has actual knowledge that the certification is false;

(B) Has received a notice that the certification is false from a transferor's or transferee's agent, pursuant to § 1.1445-4; or

(C) Has received from a corporation that it knows to be a foreign corporation a certification that does not have attached to it a copy of the IRS acknowledgment of the corporation's election under section 897(i), as required by paragraph (b)(3)(ii)(C) of this section. Such an entity's or fiduciary's withholding obligations shall apply as if a statement had never been given, and such an entity or fiduciary may be held fully liable pursuant to § 1.1445-1(e) for any failure to withhold. For special rules concerning an entity's belated receipt of a notice concerning a false certification, see paragraphs (c)(2)(ii) and (e)(2)(iii) of this section.

(iv) ***Form W-9.*** For purposes of paragraph (b)(3)(i) of this section, a certification of non-foreign status includes a valid Form W-9, *Request for Taxpayer Identification Number and Certification,* or its successor, submitted to the transferee by the transferor.

(4) ***Property transferred not a U.S. real property interest*** —

(i) ***In general.*** Pursuant to the provisions of paragraphs (c) and (d) of this section, an entity or fiduciary is required to withhold with respect to certain transfers of property, if the property transferred is a U.S. real property interest. (In addition, taxable distributions of U.S. real property interests by domestic or foreign partnerships, trusts, and estates will be subject to withholding pursuant to section 1445(e)(4) and paragraph (f) of this section after publication of a Treasury decision under sections 897 (e)(2) and (g). As defined in section 897(c) and § 1.897-1(c), a U.S. real property interest includes certain interests in U.S. corporations, as well as direct interests in real property and certain associated personal property. This paragraph (b)(4) provides rules pursuant to which an entity (or fiduciary thereof) that transfers an interest in a U.S. corporation may determine that withholding is not required because the interest transferred is not a U.S. real property interest. To determine whether an interest in tangible property constitutes a U.S. real property interest the transfer of which would be subject to withholding, see § 1.897-1 (b) and (c).

(ii) ***Interests in publicly traded entities.*** Withholding is not required under paragraph (c) or (d) of this section upon an entity's transfer of an interest in a domestic corporation if any class of stock of the corporation is regularly traded on an established securities market. This exemption shall apply to a disposition incident to an initial public offering of stock pursuant to a registration statement filed with the Securities and Exchange Commission.

Similarly, no withholding is required under paragraph (c) or (d) of this section upon an entity's transfer of an interest in a publicly traded partnership or trust. However, the rule of this paragraph (b)(4)(ii) shall not apply to the transfer, to a single transferee (or related transferees as defined in § 1.897-1(i)) in a single transaction (or related transactions), of an interest described in § 1.897-1(c)(2)(iii)(B) (relating to substantial amounts of non-publicly traded interests in publicly traded corporations) or of similar interests in publicly traded partnerships or trusts. The entity making a transfer described in the preceding sentence must otherwise determine whether withholding is required, pursuant to section 1445(e) and the regulations thereunder. Transactions shall be deemed to be related if they are undertaken within 90 days of one another or if it can otherwise be shown that they were undertaken in pursuance of a prearranged plan.

(iii) ***Corporation's statement that interest is not a U.S. real property interest.***

(A) ***In general.*** No withholding is required under paragraph (c) or (d) of this section upon an entity's transfer of an interest in a domestic corporation if, prior to the transfer, the entity or fiduciary obtains a statement, issued by the corporation pursuant to § 1.897-2(h),

certifying that the interest is not a U.S. real property interest. In general, a corporation may issue such a statement only if the corporation was not a U.S. real property holding corporation at any time during the previous five years (or the period in which the interest was held by its present holder, if shorter) or if interests in the corporation ceased to be United States real property interests under section 897(c)(1)(B). (A corporation may not provide such a statement based on its determination that the interest in question is an interest solely as a creditor.) See § 1.897-2 (f) and (h). A corporation's statement may be relied upon for purposes of this paragraph (b)(4)(iii) only if the statement is dated not more than 30 days prior to the date of the transfer.

(B) ***Reliance on statement not permitted.*** An entity or fiduciary is not entitled to rely upon a statement that an interest in a corporation is not a U.S. real property interest, if, prior to or at the time of the transfer, the entity or fiduciary either—

(*1*) Has actual knowledge that the statement is false, or

(*2*) Receives a notice that the statement is false from a transferor's or transferee's agent, pursuant to § 1.1445-4.

Such an entity's or fiduciary's withholding obligations shall apply as if a statement had never been given, and such an entity or fiduciary may be held fully liable pursuant to § 1.1445-1(e) for any failure to withhold. For special rules concerning an entity's belated receipt of a notice concerning a false statement, see paragraphs (c)(2)(iii) and (d)(2)(i) of this section.

(5) ***Reporting and paying over of withheld amounts*** —

(i) ***In General.*** An entity or fiduciary must report and pay over to the Internal Revenue Service any tax withheld pursuant to section 1445(e) and this section by the 20th day after the date of the transfer (as defined in § 1.1445-1(g)(8). Forms 8288 and 8288-A are used for this purpose and must be filed at the location as provided in the instructions to Forms 8288 and 8288-A. The contents of Forms 8288 and 8288-A are described in § 1.1445-1(d). Pursuant to section 7502 and regulations thereunder, the timely mailing of Forms 8288 and 8288-A by U.S. mail will be treated as their timely filing. Form 8288-A will be stamped by the Internal Revenue Service to show receipt, and a stamped copy will be mailed by the Service to the interest holder if the Form 8288 is complete, including the transferor's identifying number, at the address shown on the form, for the interest-holder's use. See paragraph (b)(7) of this section. If an application for a withholding certificate with respect to a transfer of a U.S. real property interest was submitted to the Internal Revenue Service on the day of or at any time prior to the transfer, the entity or fiduciary must withhold the amount required under section 1445(e) and the rules of this section. However, the amount withheld, or a lesser amount as determined by the Service, need not be reported and paid over to the Service until the 20th day following the Service's final determination. For this purpose, the Service's final determination occurs on the day when the withholding certificate is mailed to the applicant by the Service or when a notification denying the request for a withholding certificate is mailed to the applicant by the Service. An application is submitted to the Service on the day it is actually received by the Service at the address provided in § 1.1445-1(g)(10) or, under the rules of section 7502, on the day it is mailed to the Service at the address provided in § 1.1445-1(g)(10). For rules concerning the issuance of withholding certificates, see § 1.1445-6.

(ii) ***Anti-abuse rule.*** An entity or fiduciary that in reliance upon the rules of this paragraph (b)(5)(ii) fails to report and pay over amounts withheld by the 20th day following the date of the transfer, shall be subject to the payment of interest and penalties if the relevant application for a withholding certificate (or an amendment of the application for a withholding certificate) was submitted for a principle purpose of delaying the payment to the IRS of the amount withheld. Interest and penalties shall be assessed on the amount that is ultimately paid over, with respect to the period between the 20th day after the date of the transfer and the date on which payment is made.

(6) ***Liability upon failure to withhold.*** For rules regarding liability upon failure to withhold under section 1445(e) and this § 1.1445-5, see § 1.1445-1(e).

(7) ***Effect of withholding by entity or fiduciary upon interest holder.*** The withholding of tax under section 1445(e) does not excuse a foreign person that is subject to U.S. tax by reason of the operation of section 897 from filing a U.S. tax return. Thus, Form 1040NR. 1041. or 1120F, as appropriate must be filed and any tax due must be paid, by the filing date otherwise applicable to such person (or any extension thereof). The tax withheld with respect to the foreign person under section 1445(e) (as shown on Form 8288-A) shall be credited against the amount of income tax as computed in such return, but only if the stamped copy of Form 8288-A provided to the entity or fiduciary (under paragraph (b)(5) of this section) is attached to the return or substantial evidence of the amount of tax withheld is attached to the return in accordance with the succeeding sentence. If a stamped copy of Form 8288-A has not been provided to the interest-holder by the Service, the interest-holder may establish the amount of tax withheld by the entity or fiduciary by attaching to its return substantial evidence of such amount. Such an interest-holder must attach to its return a statement which supplies all of the information required by § 1.1445-1(d)(2). If the amount withheld under section 1445(e) constitutes less than the full amount of the foreign person's U.S. tax liability for that taxable year, then a payment of estimated tax may be required to be made pursuant to section 6154 or 6654 prior to the filing of the income tax return for the year. Alternatively, if the amount withheld under section 1445(e) exceeds the foreign person's maximum tax liability with respect to the transaction (*as reflected* in a withholding certificate issued by the Internal Revenue Service pursuant to § 1.1445-6), then the foreign person may seek an early refund of the excess pursuant to § 1.1445-6(g). A foreign person that takes gain into account in accordance with the provisions of section 453 shall not be entitled to a refund to the amount withheld, unless a withholding certificate providing for such a refund is obtained pursuant to § 1.1445-6. If an entity or fiduciary withholds tax under section 1445(e) with respect to a beneficial owner of an interest who is not a foreign person, such beneficial owner may credit the amount of any tax withheld against his income tax liability in accordance with the provisions of this § 1.1445-5(b)(7) or apply for an early refund under § 1.1445-6(g).

(8) ***Effective dates —***

(i) ***Partnership, trust, and estate dispositions of U.S. real property interests.*** The provisions of section 1445(e)(1) and paragraph (c) of this section, requiring withholding upon certain dispositions of U.S. real property interests by domestic partnerships, trusts, and estates, shall apply to any disposition on or after January 1, 1985.

(ii) ***Certain distributions by foreign corporations.*** The provisions of section 1445(e)(2) and paragraph (d) of this section, requiring withholding upon distributions of U.S. real property interests by foreign corporations shall apply to distributions made on or after January 1, 1985.

(iii) ***Distributions by certain domestic corporations to foreign shareholders.*** The provisions of section 1445(e)(3) and paragraph (e)(1) of this section, requiring withholding upon distributions in redemption of stock under section 302(a) or liquidating distributions under Part II of subchapter C of the Internal Revenue Code by U.S. real property holding corporations to foreign shareholders, shall apply to distributions made on or after January 1, 1985. The provisions of section 1445(e)(3) and paragraph (e)(1) of this section requiring withholding on distributions under section 301 by U.S. real property holding corporations to foreign shareholders shall apply to distributions made after August 20, 1996. The provisions of paragraph (e) of this section providing for the coordination of withholding between sections 1445 and 1441 (or 1442 or 1443) for distributions under section 301 by U.S. real property holding corporations to foreign shareholders apply to distributions after December 31, 2000 (see § 1.1441-3(c)(4) and (h)).

(iv) ***Taxable distributions by domestic or foreign partnerships, trusts, and estates.*** The provisions of section 1445(e)(4), requiring withholding upon certain taxable distributions by domestic or foreign partnerships, trusts, and estates, shall apply to distributions made on or after the effective date of a Treasury decision under section 897 (e)(2)(B)(ii) and (g).

(v) [Reserved]

(vi) ***Tiered Partnerships.*** No withholding is required upon the disposition of a U.S. real property interest by a partnership which is directly owned, in whole or in part, by another domestic partnership (but only to the extent that the amount realized is attributable to the partnership interest of that other partnership) until the effective date of a Treasury Decision published under section 1445(e) providing rules governing this matter.

(c) ***Dispositions of U.S. real property interests by domestic partnerships, trusts, and estates*** —

(1) ***Withholding required*** —

(i) ***In general.*** If a domestic partnership, trust, or estate disposes of a U.S. real property interest and any partner, beneficiary, or owner of the entity is a foreign person, then the partnership or the trustee, executor, or equivalent fiduciary of the trust or estate must withhold tax with respect to each such foreign person in accordance with the provisions of subdivision (ii), (iii), or (iv), of this paragraph (c)(1) (as applicable). The withholding obligation imposed by this paragraph (c) applies to the fiduciary of a trust even if the grantor of the trust or another person is treated as the owner of the trust or any portion thereof for purposes of the Internal Revenue Code. Thus, the withholding obligation imposed by this paragraph (c) applies to the trustee of a land trust or similar arrangement, even if such a trustee is not ordinarily treated under the applicable provisions of local law as a true fiduciary.

(ii) ***Disposition by partnership.*** A partnership must withhold a tax equal to the rate specified in section 1445(e)(1) multiplied by the amount of each foreign partner's distributive share of the gain realized by the partnership upon the disposition of each U.S. real property interest. Such distributive share of the gain must be determined pursuant to the principles of section 704 and the regulations thereunder. For the rules applicable to partnerships, interests in which are regularly traded on an established securities market, see § 1.1445-8.

(iii) ***Disposition by trust or estate*** —

(A) ***In general.*** A trustee, fiduciary, executor or equivalent fiduciary (hereafter collectively referred to as the fiduciary) of a trust or estate having one or more foreign beneficiaries must withhold tax in accordance with the rules of this § 1.1445-5(c)(1)(iii). Such a

fiduciary must establish a U.S. real property interest account and must enter in such account all gains and losses realized during the taxable year of the trust or estate from dispositions of U.S. real property interests. The fiduciary must withhold a tax equal to the rate specified in section 1445(e)(1) multiplied by the amount of any distribution to a foreign beneficiary that is attributable to the balance in the U.S. real property interest account on the day of the distribution. A distribution from a trust or estate to a beneficiary (domestic or foreign) shall, solely for purposes of section 1445(e)(1), be deemed to be attributable first to any balance in the U.S. real property interest account and then to other amounts. However, a distribution that occurs prior to the transfer of a U.S. real property interest in a taxable year or at any other time when the amount contained in the U.S. real property interest account is zero, is not subject to withholding under this § 1.1445-5(c)(1)(iii). The U.S. real property interest account is reduced by the amount distributed to all beneficiaries (domestic and foreign) attributable to such account during the taxable year of the trust or estate. Any ending balance of the U.S. real property interest account not distributed by the close of the taxable year of the trust or estate is cancelled and is not carried over (or carried back) to any other year. Thus, the beginning balance of such account in any taxable year of the trust or estate is always zero. For rules applicable to grantor trusts see § 1.1445-5(c)(1)(iv). For rules applicable to trusts, interests in which are regularly traded on an established securities market and real estate investment trusts, see § 1.1445-8.

(B) ***Example.*** The following example illustrates the rules of paragraph (c)(1)(iii)(A) of this section. In 1994, the relevant rate of withholding (that is, the rate specified in section 1445(e)(1)) was 35%.

On January 1, 1994, A establishes a domestic trust (which has as its taxable year, the calendar year) for the benefit of B, a nonresident alien, and C, a U.S. citizen. The trust is not a trust subject to sections 671 through 679. Under the terms of the trust, the trustee, T, is given discretion to distribute income and corpus of the trust to provide for the reasonable needs of B and C. During the trust's 1994 tax year, T disposes of three parcels of vacant land located in the United States. The following chart illustrates the computation of the amount subject to withholding under section 1445 with respect to distributions made by T to B and C during 1994.

Date	Parcel sold	Gains or (loss) realized	Distributions to C	Distributions to B (before withholding)	Section 1445 withholding 35% rate	U.S. real property interest account
1/01/94						-0-
3/01/94	Parcel 1	140,000				140,000
3/05/			5,000	10,000	3,500	125,000

Date	Parcel sold	Gains or (loss) realized	Distributions to C	Distributions to B (before withholding)	Section 1445 withholding 35% rate	U.S. real property interest account
94						
3/15/94			10,000	5,000	1,750	110,000
5/01/94	Parcel 2	300,000				410,000
5/15/94	Parcel 3	(50,000)				360,000
12/01/94			170,000	170,000	59,500	20,000
1/01/95						-0-

(iv) ***Disposition by grantor trust.*** The trustee or equivalent fiduciary of a trust that is subject to the provisions of subpart E of part 1 of subchapter J (sections 671 through 679) must withhold a tax equal to the rate specified in section 1445(e)(1) multiplied by the amount of the gain realized from each disposition of a U.S. real property interest to the extent such gain is allocable to a portion of the trust treated as owned by a foreign person under subpart E of part 1 of subchapter J.

(2) ***Withholding not required under paragraph (c)*** —

(i) [Reserved]

(ii) ***Interest-holder not a foreign person*** —

(A) ***In general.*** A domestic partnership, trust, or estate that disposes of a U.S. real property interest shall not be required to withhold with respect to any partner or beneficiary that it determines, pursuant to the rules of paragraph (b)(3) of this section, not to be a foreign person.

(B) ***Belated notice of false certification.*** If after the date of the transfer a partnership or fiduciary learns that a partner's or beneficiary's certification of non-foreign status is false, then that partnership or fiduciary shall be required to withhold, with respect to the foreign partner or beneficiary that gave the false certification, the lessor of—

(*1*) The amount otherwise required to be withheld under the rules of this paragraph (c), or

(2) An amount equal to that partner's or beneficiary's remaining interests in the income or assets of the partnership, trust, or estate. Amounts so withheld must be reported and paid over by the 60th day following the date on which the partnership or fiduciary learns that the certification is false. For rules concerning the notifications of false certifications that may be required to be given to partnerships and fiduciaries, see § 1.1445-4(b).

(iii) *Property disposed of not a U.S. real property interest* —

(A) ***In general.*** No withholding is required under this paragraph (c) if a domestic partnership, trust, or estate that disposes of property determines pursuant to the rules of paragraph (b)(4) of this section that the property disposed of is not a U.S. real property interest.

(B) ***Belated notice of false statement.*** If after the date of the transfer a partnership or fiduciary learns that a corporation's statement (that an interest in the corporation is not a U.S. real property interest) is false, then that partnership or fiduciary shall be required to withhold, with respect to each foreign partner or beneficiary, the lesser of—

(1) The amount otherwise required to be withheld under the rules of this paragraph (c), or

(2) An amount equal to that partner's or beneficiary's remaining interests in the income or assets of the partnership, trust, or estate.

Amounts so withheld must be reported and paid over by the 60th day following the date on which the partnership or fiduciary learns that the statement is false. For rules concerning the notifications of false statements that may be required to be given to partnerships or fiduciaries, see § 1.1445-4(b).

(iv) ***Withholding certificate.*** No withholding is required under this paragraph (c) with respect to the transfer of a U.S. real property interest if the Internal Revenue Service issues a withholding certificate that so provides. For rules concerning the issuance of withholding certificates, see § 1.1445-6.

(v) ***Nonrecognition transactions.*** For special rules concerning transactions entitled to nonrecognition of gain or loss, see paragraph (b)(2) of this section.

(3) *Large partnerships or trusts* —

(i) ***In general.*** If a partnership or trust has more than 100 partners or beneficiaries, then the partnership or fiduciary of the trust may elect to withhold in accordance with the provisions of this § 1.1445-5(c)(3) in lieu of withholding in the manner required by § 1.1445-5(c)(1). However, the rules of this § 1.1445-5(c)(3) shall not apply to any partnership or trust interests in which are regularly traded on an established securities market except as described in § 1.1445-8(c)(1). The rules of this § 1.1445-5(c)(3) shall not apply to any real estate investment trust. See § 1445-8.

(ii) ***Amount to be withheld.*** A partnership or trust electing to withhold under this paragraph (c)(3) shall withhold from each distribution to a foreign person an amount equal to the rate specified in section 1445(e)(1) multiplied by of the amount attributable to section 1445(e)(1) transfers.

(iii) ***Amounts attributable to section 1445(e)(1) transfers.*** A distribution is attributable to section 1445(e)(1) transfers to the extent of the partner's or beneficiary's proportionate share of the current balance of the entity's section 1445(e)(1) account. A distribution from a partnership or trust that has made an election under this § 1.1445-5(c)(3) shall be deemed first to be attributable to a section 1445(e)(1) transfer to the extent of the balance in the section 1445(e)(1) account. An entity's section 1445(e)(1) account shall be equal to—

(A) The total amount of net gain realized by the entity upon all transfers of U.S. real property interests carried out by the entity after the date of its election under this § 1.1445-5(c)(3); minus

(B) The total amount of all distributions by the entity to domestic and foreign distributees from such account.

(iv) ***Special rules for entities that make recurring sales of growing crops and timber.*** An entity that makes an election under § 1.1445-5(c)(3) and that makes recurring sales of growing crops and timber may further elect to determine the amount subject to withholding under the rules of this § 1.1445-5(c)(3)(iv). Such an entity must withhold from each distribution to a foreign partner or beneficiary an amount equal to 15 percent of such partner's or beneficiary's proportionate share of the current balance of the entity's gross section 1445(e)(1) account. An entity's gross section 1445(e)(1) account equals—

(A) The total amount realized by the entity upon all transfers of U.S. real property interests carried out by the entity after the date of its election under this § 1.1445-5(c)(3)(iv); minus

(B) The total amount of all distributions to domestic and foreign distributees from such account.

An entity that elects to compute the amount subject to withholding under this § 1.1445-5(c)(3)(iv), shall make such election in accordance with § 1.1445-5(c)(3)(vi) and shall be subject to the provisions otherwise applicable under § 1.1445-5(c)(3).

(v) ***Procedural rules.*** An election under paragraph (c)(3) may be made by filing a notice thereof with at the address provided in § 1.1445-1(g)(10). The notice must be submitted by a general partner (in the case of a partnership) or the trustee or equivalent fiduciary (in the case of a trust). The notice must set forth the name, office address, and identifying number of the partnership or fiduciary making the election, and, in the case of a partnership, must include the name, office address, and identifying number of the general partner submitting the election. An election under this paragraph (c)(3) may be revoked only with the consent of the Internal Revenue Service. Consent of the Service may be requested by filing an application to revoke the election at the address stated above. This application must include all information provided to the Service with the election notice and must provide an explanation of the reasons for revoking the election. The application to revoke an election must also specify the amount remaining to be distributed in the section 1445(e)(1) account or the gross section 1445(e)(1) account.

An entity that ceases to qualify under section 1.1445-5(c)(3) because such entity does not have more than 100 partners or beneficiaries may revoke its election only with the consent of the Internal Revenue Service.

(d) ***Distributions of U.S. real property interests by foreign corporations*** —

(1) ***In general.*** A foreign corporation that distributes a U.S. real property interest must deduct and withhold a tax equal to the rate specified in section 1445(e)(2) multiplied by of the amount of gain recognized by the corporation on the distribution. The amount of gain required to be recognized by the corporation must be determined pursuant to the rules of section 897 and any other applicable section. For special rules concerning the applicability of a nonrecognition provision to a distribution, see paragraph (b)(2) of this section. The withholding liability imposed by this paragraph (d) applies to the same taxpayer that owes the related substantive income tax liability pursuant to the operation of section 897. Only one such liability will be assessed and collected from a foreign corporation, but separate penalties for failures to comply with the two requirements will be asserted.

(2) ***Withholding not required*** —

(i) ***Property distributed not a U.S. real property interest*** —

(A) ***In general.*** No withholding is required under this paragraph (d) if a foreign corporation that distributes property determines pursuant to the rules of paragraph (b)(3) of this section that the property distributed is not a U.S. real property interest.

(B) ***Belated notice of false statement.*** If after the date of a distribution described in paragraph (d)(1) of this section a foreign corporation learns that another corporation's statement (that an interest in that other corporation is not a U.S. real property interest) is false, then the foreign corporation may not rely upon that statement for any purpose. Such a foreign corporation's withholding obligations under this paragraph (d) shall apply if a statement had never been given, and such a corporation may be held fully liable pursuant to § 1.1445-5(b)(5) for any failure to withhold. Amounts withheld pursuant to the rule of this paragraph (d)(2)(i)(B) must be reported and paid over by the 60th day following the date on which the foreign corporation learns that the statement is false. No penalties or interest will be assessed for failures to withhold prior to that date. For rules concerning the notifications of false statements that may be required to be given to foreign corporations, see § 1.1445-4(b).

(ii) ***Withholding certificate.*** No withholding is required under this paragraph (d) with respect to a foreign corporation's distribution of a U.S. real property interest if the distributing corporation obtains a withholding certificate from the Internal Revenue Service that so provides. For rules concerning the issuance of withholding certificates, see § 1.1445-6.

(e) ***Distributions to foreign persons by U.S. real property holding corporations*** —

(1) ***In general.*** A domestic corporation that distributes any property to a foreign person that holds an interest in the corporation must deduct and withhold a tax equal to 15 percent of the fair market value of the property distributed to the foreign person, if—

(i) The foreign person's interest in the corporation constitutes a U.S. real property interest under the provisions of section 897 and regulations thereunder; and

(ii) There is a distribution of property in redemption of stock treated as an exchange under section 302(a), in liquidation of the corporation pursuant to the provisions of Part II of subchapter C of the Internal Revenue Code (sections 331 through section 346), or with respect to stock under section 301 that is not made out of earnings and profits of the corporation.

(2) ***Coordination rules for Section 301 distributions.*** If a domestic corporation makes a distribution of property under section 301 to a foreign person whose interest in such corporation constitutes a U.S. real property interest under the provisions of section 897 and the regulations thereunder, then see § 1.1441-3(c)(4) for rules coordinating withholding obligations under sections 1445 and 1441 (or 1442 or 1443)).

(3) ***Withholding not required*** —

(i) ***Foreign person's interest not a U.S. real property interest.*** Withholding is required under this paragraph (e) only with respect to distributions to foreign persons holding interests in the corporation that constitute U.S. real property interests. In general, a foreign person's interest in a domestic corporation constitutes a U.S. real property interest if the corporation was a U.S real property holding corporation at any time during the shorter of

(A) the period in which the foreign person held the interest or

(B) the previous five years (but not earlier than June 19, 1980). See section 897(c) and §§ 1.897-1(c) and 1.897-2 (b) and (h). However, an interest in such a corporation ceases to be a U.S. real property interest after all of the U.S. real property interests held by the corporation itself are disposed of in transactions on which gain or loss is recognized. See section 897(c)(1)(B) and § 1.897-2(f)(2). Thus, if a U.S. real property holding corporation in the process of liquidation does not elect section 337 nonrecognition treatment upon its sale of all U.S. real property interests held by the corporation, and recognizes gain or loss upon such sales, interests in that corporation cease to be U.S. real property interests. Therefore, no withholding would be required with respect to that corporation's subsequent liquidating distribution to a foreign shareholder of property other than a U.S. real property interest.

(ii) ***Nonrecognition transactions.*** For special rules concerning the applicability of a nonrecognition provision to a distribution described in paragraph (e)(1) of this section, see paragraph (b)(2) of this section.

(iii) ***Interest-holder not a foreign person*** —

(A) ***In general.*** A domestic corporation shall not be required to withhold under this paragraph (e) with respect to a distribution of property to any distributee that it determines, pursuant to the rules of paragraph (b)(3) of this section, not to be a foreign person.

(B) ***Belated notice of false certification.*** If after the date of a distribution described in paragraph (e)(1) of this section a domestic corporation learns that an interest-holder's certification of non-foreign status is false, then the corporation may rely upon that certification only if the person providing the false certification holds (or held) less than 10 percent of the value of the outstanding stock of the corporation. With respect to less than 10 percent interest-holders, no withholding is required under this paragraph (e) upon receipt of a belated notice of false certification. With respect to 10 percent or greater interest-holders, the corporation's withholding obligations under this paragraph (e) shall apply as if a certification had never been given, and such a corporation may be held fully liable pursuant to § 1.1445-5(b)(6) for any failure to withhold as of the date specified in this § 1.1445-5(e)(3)(iii)(B). Amounts withheld pursuant to the rule of this paragraph (e)(3)(iii)(B) must be reported and paid over by the 60th day following the date on which the corporation learns that the certification is false. No penalties or interest for failures to

withhold will be assessed prior to that date. For rules concerning the notifications of false certifications that may be required to be given to U.S. real property holding corporations, see § 1.1445-4(b).

(iv) ***Withholding certificate.*** No withholding, or reduced withholding, is required under this paragraph (e) with respect to a domestic corporation's distribution of property if the distributing corporation obtains a withholding certificate from the Internal Revenue Service that so provides. For rules concerning the issuance of withholding certificates, see § 1.1445-6.

(f) ***Taxable distributions by domestic or foreign partnerships, trusts, or estates.*** [Reserved]

(g) ***Dispositions of interests in partnerships, trusts, and estates.*** [Reserved]

(h) ***Applicability dates.*** The requirement in paragraphs (b)(2)(ii)(B) and (C) of this section that taxpayer identification numbers be provided (in all cases) is applicable for dispositions of U.S. real property interests occurring after November 3, 2003. The withholding rates set forth in paragraphs (c)(3)(iv) and (e)(1) of this section apply to distributions after February 16, 2016. For distributions on or before February 16, 2016, see paragraphs (c)(3)(iv) and (e)(1) of this section as contained in 26 CFR part 1 revised as of April 1, 2015. Paragraph (b)(3)(iv) of this section applies to certifications provided on or after May 7, 2019, except that a taxpayer may choose to apply paragraph (b)(3)(iv) of this section with respect to certifications provided before May 7, 2019. Paragraphs (c) and (d) of this section apply to distributions on or after November 30, 2020. Paragraph (b)(3)(ii)(A) of this section applies with respect to dispositions of U.S. real property interests and distributions described in section 897(h) occurring on or after December 29, 2022. For dispositions of U.S. real property interests and distributions described in section 897(h) occurring before December 29, 2022, see § 1.1445-5(b)(3)(ii)(A), as contained in 26 CFR part 1, revised as of April 1, 2021.

[T.D. 8113, 51 FR 46642, Dec. 24, 1986]

Editorial Note: For FEDERAL REGISTER citations affecting § 1.1445-5, see the List of CFR Sections Affected, which appears in the Finding Aids section of the printed volume and at *www.govinfo.gov.*.

§ 1.1445-6 Adjustments pursuant to withholding certificate of amount required to be withheld under section 1445(e).

(a) ***Withholding certificate for purposes of section 1445(e)*** —

(1) ***In general.*** Pursuant to the provisions of § 1.1445-5 (c)(2)(iv), (d)(2)(ii), and (e)(2)(iv), withholding under section 1445(e) may be reduced or eliminated pursuant to a withholding certificate issued by the Internal Revenue Service in accordance with the rules of this § 1.1445-6. A withholding certificate may be issued in cases where adjusted withholding is appropriate (e.g., because of the applicability of a nonrecognition provision—see paragraph (c) of this section), where the relevant taxpayers are exempt from U.S. tax (see paragraph (d) of this section), or where an agreement for the payment of tax is entered into with the Service (see paragraph (e) of this section). A withholding certificate that is obtained prior to a transfer allows the entity or fiduciary to withhold a reduced amount or excuses withholding entirely. A withholding certificate that is obtained after a transfer has been made may authorize a normal refund or an early refund pursuant to paragraph (g) of this section. The Internal Revenue Service will act upon an application for a withholding certificate not later than the 90th day after it is received. (The Service may deny a request for a withholding certificate where, after due notice, an applicant fails to provide the information necessary to make a

determination.) Solely for this purpose (i.e., determining the day upon which the 90 day period commences), an application is received by the Service on the date when all information necessary for the Service to make a determination is provided by the applicant. In no event, however, will a withholding certificate be issued without the transferor's identifying number. (For rules regarding whether an application has been timely submitted, see § 1.1445-5(b)(5)). The Internal Revenue Service will act upon an application for an early refund not later than the 90th day after it is received. An application for an early refund must either

(i) include a copy of a withholding certificate issued by the Service with respect to the transaction, or

(ii) be combined with an application for a withholding certificate. Where an application for an early refund is combined with an application for a withholding certificate, the Service will act upon both applications not later than the 90th day after receipt. Either an entity, a fiduciary, or a relevant taxpayer (as defined in paragraph (a)(2) of this section) may apply for a withholding certificate. An entity or fiduciary may apply for a withholding certificate with respect to all or less than all relevant taxpayers. For special rules concerning the issuance of a withholding certificate to a foreign corporation that has made an election under section 897(i), see § 1.1445-7(d).

(2) ***Relevant taxpayer.*** For purposes of this section, the term “relevant taxpayer” means any foreign person that will bear substantive income tax liability by reason of the operation of section 897 with respect to a transaction upon which withholding is required under section 1445(e).

(b) ***Applications for withholding certificates*** —

(1) ***In general.*** An application for a withholding certificate pursuant to this § 1.1445-6 must be submitted in the manner provided in § 1.1445-3 (b). However, in lieu of the information required to be submitted pursuant to § 1.1445-3(b)(4), the applicant must provide the information required by paragraph (b)(2) of this section. In addition, the information required by paragraph (b)(3) of this section must be submitted with the application.

(2) ***Basis for certificate*** —

(i) ***Adjusted withholding.*** If a withholding certificate is sought on the basis of a claim that adjusted withholding is appropriate, the application must include a calculation, in accordance with paragraph (c) of this section, of the maximum tax that may be imposed on each relevant taxpayer with respect to which adjusted withholding is sought. The application must also include all evidence necessary to substantiate the claimed calculation, such as records of adjustments to basis or appraisals of fair market value.

(ii) ***Exemption.*** If a withholding certificate is sought on the basis of a relevant taxpayer's exemption from U.S. tax, the application must set forth a brief statement of the law and facts that support the claimed exemption. See paragraph (d) of this section.

(iii) ***Agreement.*** If a withholding certificate is sought on the basis of an agreement for the payment of tax, the application must include a copy of the agreement proposed by the applicant and a copy of the security instrument (if any) proposed by the applicant. In this regard, see paragraph (e) of this section.

(3) ***Relevant taxpayers.*** An application for withholding certificate pursuant to this section must include all of the following information: the name, identifying number, and home address (in the case of an individual) or office address (in the case of an entity) of each relevant taxpayer with respect to which adjusted withholding is sought.

(c) ***Adjustment of amount required to be withheld.*** The Internal Revenue Service may issue a withhold certificate that excuses withholding or that permits an entity or fiduciary to withhold an adjusted amount reflecting the relevant taxpayers' maximum tax liability. A relevant taxpayer's maximum tax liability is the maximum amount which that taxpayer could be required to pay as tax by reason of the transaction upon which withholding is required. In the case of an individual taxpayer that amount will generally be the gain realized by the individual, multiplied by the maximum individual income tax rate applicable to long term capital gain. In the case of a corporate taxpayer, that amount will generally be the gain realized by the corporation, multiplied by the maximum corporate income tax rate applicable to long term capital gain. However, that amount must be adjusted to take into account the following:

(1) Any reduction of tax to which the relevant taxpayer is entitled under the provisions of a U.S. income tax treaty;

(2) The effect of any nonrecognition provision that is applicable to the transaction;

(3) Any losses previously realized and recognized by the relevant taxpayer during the taxable year by reason of the operation of section 897;

(4) Any amount realized upon the subject transfer by the relevant taxpayer that is required to be treated as ordinary income under any provision of the Code; and

(5) Any other factor that may increase or reduce the tax upon the transaction.

(d) ***Relevant taxpayer's exemption from U.S. tax*** —

(1) ***In general.*** The Internal Revenue Service will issue a withholding certificate that excuses withholding by an entity or fiduciary if it is established that a relevant taxpayer's income from the transaction will be exempt from U.S. tax. For the available exemptions, see paragraph (d)(2) of this section. If a relevant taxpayer is entitled to a reduction of (rather than an exemption from) U.S. tax, then the entity or fiduciary may obtain a withholding certificate to that effect pursuant to the provisions of paragraph (c) of this section.

(2) ***Available exemptions.*** A relevant taxpayer's income from a transaction with respect to which withholding is required under section 1445(e) may be exempt from U.S. tax because either:

(i) The relevant taxpayer is an integral part or controlled entity of a foreign government and the subject income is exempt from U.S. tax pursuant to section 892 and the regulations thereunder; or

(ii) The relevant taxpayer is entitled to the benefits of an income tax treaty that provides for such an exemption (subject to the limitations imposed by section 1125(c) of Pub. L. 96-499, which, in general overrides such benefits as of January 1, 1985).

(e) ***Agreement for the payment of tax*** —

(1) ***In general.*** The Internal Revenue Service will issue a withholding certificate that excuses withholding or that permits an entity or fiduciary to withhold a reduced amount, if the entity, fiduciary, or a relevant taxpayer enters into an agreement for the payment of tax pursuant to the provisions of this paragraph (e). An agreement for the payment of tax is a contract between the Service and the entity, fiduciary, or relevant taxpayer that consists of two necessary elements. Those elements are—

(i) A contract between the Service and the other person, setting forth in detail the rights and obligations of each; and

(ii) A security instrument or other form of security acceptable to the Assistant Commissioner (International).

(2) ***Contents of agreement*** —

(i) ***In general.*** An agreement for the payment of tax must cover an amount described in subdivision (ii) or (iii) of this paragraph (e)(2). The agreement may either provide adequate security for the payment of the chosen amount with respect to the relevant taxpayer in accordance with paragraph (e)(3) of this section or provide for the payment of that amount through a combination of security and withholding of tax by the entity or fiduciary.

(ii) ***Tax that would otherwise be withheld.*** An agreement for the payment of tax may cover the amount of tax that would otherwise be required to be withheld with respect to the relevant taxpayer pursuant to section 1445(e). In addition to the amount computed pursuant to section 1445(e), the applicant must agree to pay interest upon that amount, at the rate established under section 6621, with respect to the period between the date on which withholding tax under section 1445(e) would otherwise be due and the date on which the relevant taxpayer's payment of tax with respect to the disposition will be due. The amount of interest agreed upon must be paid by the applicant regardless of whether or not the Service is required to draw upon any security provided pursuant to the agreement. The interest may be paid either with the return or by the Service drawing upon the security.

(iii) ***Maximum tax liability.*** An agreement for the payment of tax may cover the relevant taxpayer's maximum tax liability, determined in accordance with paragraph (c) of this section. The agreement must also provide for the payment of an additional amount equal to 25 percent of the amount determined under paragraph (c) of this section. This additional amount secures the interest and penalties that would accrue between the date of the relevant taxpayer's failure to file a return and pay tax with respect to the disposition, and the date of which the Service collects upon that liability pursuant to the agreement.

(iv) ***Allocation of payment.*** An agreement for the payment of tax pursuant to this section must set forth an allocation of the payment provided for by the agreement among the relevant taxpayers with respect to which the withholding certificate is sought. In the case of an agreement that covers an amount described in subdivision (ii) of this paragraph (e)(2), such allocation must be based upon the amount that would otherwise be required to be withheld with respect to each relevant taxpayer. In the case of an agreement that covers an amount described in subdivision (iii) of this paragraph (e)(2), such allocation must be based upon each relevant taxpayer's maximum tax liability.

(3) ***Major types of security.*** The major types of security that are acceptable to the Internal Revenue Service for purposes of this section are described in § 1.1445-3(e)(3).

(4) ***Terms of security instrument.*** Any security instrument that is furnished pursuant to this section must contain the terms described in § 1.1445-3(e)(4).

(f) ***Amendments to application for withholding certificates*** —

(1) ***In general.*** An applicant for a withholding certificate may amend an otherwise complete application by submitting an amending statement to the address provided in § 1.1445-1(g)(10). The amending statement shall provide the information required by § 1.1445-6(f)(3) and must be signed and accompanied by a penalties of perjury statement in accordance with § 1.1445-6(b).

(2) ***Extension of time for the Service to process requests for withholding certificates*** —

(i) ***In general.*** If an amending statement is submitted, the time in which the Internal Revenue Service must act upon the amended application shall be extended by 30 days.

(ii) ***Substantial amendments.*** If an amending statement is submitted and the Service finds that the statement substantially amends to the facts of the underlying application or substantially alters the terms of the withholding certificate as requested in the initial application, the time within which the Service must act upon the amended application shall be extended by 60 days. The applicant shall be so notified.

(iii) ***Amending statement received after the requested withholding certificate has been signed on behalf of the Service.*** If an amending statement is received after the withholding certificate, drafted in response to the underlying application, has been signed on behalf of the Service and prior to the day such certificate is mailed to the applicant, the time in which the Service must act upon the amended application shall be extended by 90 days.

(3) ***Information required to be submitted.*** No particular form is required for an amending statement but the statement must provide the following information:

(i) ***Identification of applicant.*** The amending statement must set forth the name, address, and identifying number of the person submitting the amending statement.

(ii) ***Date of application.*** The amending statement must set forth the date of the underlying application for a withholding certificate.

(iii) ***Real property interest to be (or that has been) transferred.*** The amending statement must set forth a brief description of the real property interest with respect to which the underlying application for a withholding certificate was submitted.

(iv) ***Amending information.*** The amending statement must fully set forth the basis for the amendment including any modification of the facts supporting the application for a withholding certificate and any change sought in the terms of the withholding certificate.

(g) ***Early refund of overwithheld amounts.*** If the Internal Revenue Service issues a withholding certificate pursuant to this section, and an amount greater than that specified in the certificate was withheld by the entity or fiduciary, then pursuant to the rules of this paragraph (g) a relevant taxpayer may apply for an early refund of a proportionate share of the excess amount (without interest) prior to the date on which the relevant taxpayer's return is due (without extensions). An application for an early refund must be delivered to the address provided in § 1.1445-1(g)(10). No particular form is required for the application, but the following information must be set forth in separate paragraphs numbered to correspond with the numbers given below:

(1) Name, address, and identifying number of the relevant taxpayer seeking the refund;

(2) Amount required to be withheld pursuant to withholding certificate;

(3) Amount withheld by entity or fiduciary (attach a copy of Form 8288-A stamped by IRS pursuant to § 1.1445-5(b)(4) or provide substantial evidence of the amount withheld in the case of a failure to receive Form 8288-A, as provided in § 1.1445-5(b)(7)); and

(4) Amount to be refunded to the relevant taxpayer.

An application for an early refund cannot be processed unless the required copy of Form 8288-A or substantial evidence of the amount withheld in the case of a failure to receive Form 8288-A (as provided in § 1.1445-5(b)(7)) is attached to the application. If an application for a withholding certificate is submitted after the transfer takes place, then that application may be combined with an application for an early refund. The Service will act upon a claim for refund within the time limits set forth in § 1.1445-6(a)(1).

(h) ***Effective date for taxpayer identification numbers.*** The requirement in paragraphs (b)(3), (f)(3)(i), and (g)(1) of this section that taxpayer identification numbers be provided (in all cases) is applicable for dispositions of U.S. real property interests occurring after November 3, 2003.

[T.D. 8113, 51 FR 46648, Dec. 24, 1986; 52 FR 3796, 3917, Feb. 6, 1987; T.D. 9082, 68 FR 46086, Aug. 5, 2003, as amended by T.D. 9751, 81 FR 8402, Feb. 19, 2016]

§ 1.1445-7 Treatment of foreign corporation that has made an election under section 897(i) to be treated as a domestic corporation.

(a) ***In general.*** Pursuant to section 897(i) a foreign corporation may elect to be treated as a domestic corporation for purposes of sections 897 and 6039C. A foreign corporation that has made such an election shall also be treated as a domestic corporation for purposes of the withholding required under section 1445, in accordance with the provisions of this section.

(b) ***Withholding under section 1445(a)*** —

(1) ***Dispositions by corporation.*** A foreign corporation that has made an election under section 897(i) may provide a transferee with a certification of non-foreign status in connection with the corporation's disposition of a U.S. real property interest. However, in accordance with the provisions of §§ 1.1445-2(b)(2)(ii) and 1.1445-5(b)(3)(ii)(C), such an electing foreign corporation must attach to such certification a copy of the acknowledgment of the election provided to the corporation by the Internal Revenue Service pursuant to § 1.897-3(d)(4) which states that the information required by § 1.897-3 has been determined to be complete.

(2) ***Dispositions of interests in corporation.*** Dispositions of interests in electing foreign corporations shall be subject to the withholding requirements of section 1445(a) and the rules of §§ 1.1445-1 through 1.1445-4. Therefore, if a foreign person disposes of an interest in such a corporation, and that interest is a U.S. real property interest under the provisions of section 897 and regulations thereunder, then the transferee is required to withhold under section 1445(a).

(c) ***Withholding under section 1445(e).*** Because a foreign corporation that has made an election under section 897(i) is treated as a domestic corporation for purposes of determining withholding obligations under section 1445, such a corporation is not subject to the requirement of section 1445(e)(2) that a foreign corporation withhold at the corporate capital gain rate from the gain recognized upon the distribution of a U.S. real property interest. Such a corporation is subject to the provisions of section 1445(e)(3). Thus, if interests in an electing corporation constitute U.S. real property interests, then the corporation is required

to withhold with respect to the non-dividend distribution of any property to an interest-holder that is a foreign person. See § 1.1445-5(e). Dividend distributions (distributions that are described in section 301) shall be treated as provided in sections 897(f), 1441 and 1442. In addition, if interests in an electing foreign corporation do not constitute U.S. real property interests, then distributions by such corporation shall be treated as provided in sections 897(f) (if applicable), 1441 and 1442.

(Approved by the Office of Management and Budget under control number 545-0902)

[T.D. 8113, 51 FR 46650, Dec. 24, 1986; 52 FR 3796, Feb. 6, 1987]

§ 1.1445-8 Special rules regarding publicly traded partnerships, publicly traded trusts and real estate investment trusts (REITs).

(a) ***Entities to which this section applies.*** The rules of this section apply to—

(1) Any partnership or trust, interests in which are regularly traded on an established securities market (regardless of the number of its partners or beneficiaries), and

(2) Any REIT (regardless of the form of its organization).

For purposes of paragraph (a)(1) of this section, the rules of section 1445 (e)(1) and this section shall not apply to a publicly traded partnership (as defined in section 7704) which is treated as a corporation under section 7704(a), or to those entities that are classified as “associations” and taxed as corporations. See § 301.7701-2.

(b) ***Obligation to withhold*** —

(1) ***In general.*** An entity described in paragraph (a) of this section is not required to withhold under the provisions of § 1.1445-5(c), which states the withholding requirements of domestic partnerships, trusts and estates upon the disposition of U.S. real property interests. Except as otherwise provided in this paragraph (b), an entity described in paragraph (a) of this section shall be liable to withhold tax upon the distribution of any amount attributable to the disposition of a U.S. real property interest, with respect to each holder of an interest in the entity that is a foreign person. The amount to be withhold is described in paragraph (c) of this section.

(2) ***Publicly traded partnerships.*** Publicly traded partnerships which comply with the withholding procedures under section 1446 will be deemed to have satisfied their withholding obligations under this paragraph (b).

(3) ***Special rule for certain distributions to nominees.*** In the case of a person that—

(i) Is a nominee (as defined in paragraph (d) of this section),

(ii) Receives a distribution attributable to the disposition of a U.S. real property interest directly from an entity described in paragraph (a) of this section or indirectly from such entity through a nominee,

(iii) Receives the distribution for payment to any foreign person, or the account of any foreign person, and

(iv) Receives a qualified notice pursuant to paragraph (f) of this section,

then the obligation to withhold in accordance with the general rules of section 1445(e)(1) and this paragraph (b) shall be imposed solely on that person to the extent of the amount specified by the qualified notice. A person obligated to withhold by reason of this paragraph (b)(3) is referred to as a withholding agent.

(4) ***Person designated to act for withholding agent.*** The rules stated in § 1.1441-7(b) (1) and (2) regarding a person designated to act for a withholding agent shall apply for purposes of this section.

(5) ***Effect of withholding exemption granted under § 1.1441-4(f).*** A letter issued by a district director under the provisions of § 1.1441-4(f), which exempts a person from withholding under section 1441 or section 1442, shall also exempt that person from withholding under this paragraph (b), if—

(i) The letter identifies another person as the withholding agent for purposes of section 1441 or 1442, and

(ii) Such other person enters into a written agreement, with the district director who issued the letter, to be the withholding agent for purposes of this paragraph (b).

The exemption granted, and the corresponding withholding obligation imposed, by this paragraph (b)(5) shall apply with respect to the first distribution made after execution of the agreement described in the preceding sentence and shall continue to apply to all distributions made during the period in which the exemption granted under § 1.1441-4(f) is in effect.

(6) ***Payment other than in money.*** The rule stated in § 1.1441-7(c) regarding payment other than in money shall apply for purposes of this section.

(c) ***Amount to be withheld*** —

(1) ***Distribution from a publicly traded partnership or publicly traded trust.*** The amount to be withheld under this section with respect to a distribution by a publicly traded partnership or publicly traded trust shall be computed in the manner described in § 1.1445-5(c)(3) (ii) and (iii), subject to the rules of this section.

(2) ***REITs*** —

(i) ***In general.*** The amount to be withheld with respect to a distribution by a REIT, under this section shall be equal to the highest rate specified in section 1445(e)(1) multiplied by the amount described in paragraph (c)(2)(ii) of this section.

(ii) ***Amount subject to withholding*** —

(A) ***In general.*** Except as otherwise provided in paragraph (c)(2)(ii)(C) of this section, the amount subject to withholding is the amount of any distribution, determined with respect to each share or certificate of beneficial interest, designated by a REIT as a capital gain dividend, multiplied by the number of shares or certificates of beneficial interest owned by the foreign person. Solely for purposes of this paragraph, the largest amount of any distribution occurring after March 7, 1991 that could be designated as a capital gain dividend under section 857(b)(3)(C) shall be deemed to have been designated by a REIT as a capital gain dividend regardless of the amount actually designated.

(B) ***Distribution attributable to net short-term capital gain from the disposition of a U.S. real property interest.*** [Reserved]

(C) ***Designation of prior distribution as capital gain dividend.*** If a REIT makes an actual designation of a prior distribution, in whole or in part, as a capital gain dividend, such prior distribution shall not be subject to withholding under this section. Rather, a REIT must characterize and treat as a capital gain dividend distribution (solely for purposes of section 1445(e)(1)) each distribution, determined with respect to each share or certificate of beneficial interest, made on the day of, or any time subsequent to, such designation as a capital gain dividend until such characterized amounts equal the amount of the prior distribution designated as a capital gain dividend. The provisions of this paragraph shall not be applicable in any taxable year in which the REIT adopts a formal or informal resolution or plan of complete liquidation.

(iii) ***Example.*** The following example illustrates the rules of paragraph (c)(2)(ii)(C) of this section.

> In the first quarter of 1988, XYZ REIT makes a dividend distribution of $2X. In the second quarter of 1988, XYZ sells real property, recognizing a long term capital gain of $15X, and makes a dividend distribution of $5X. In the third quarter of 1988, XYZ makes a distribution of $3X. In the fourth quarter of 1988, XYZ sells real property recognizing a long term capital loss of $2X. Within 30 days after the close of the taxable year, XYZ designates a capital gain dividend for the year of $13X. It subsequently makes a fourth quarter distribution of $7X. Since XYZ has made an actual designation of prior distributions during the taxable year as capital gain dividends, withholding on those prior distributions will not be required. However, the REIT must characterize, solely for purposes of section 1445(e)(1), a total amount of $13X of dividend distributions as capital gain dividends. Therefore, the fourth quarter dividend distribution of $7X must be characterized as a capital gain dividend subject to withholding under this section. In addition, XYZ will be required to characterize an additional $6X of subsequent dividend distributions as capital gain dividends.

(d) ***Definition of nominee.*** For purposes of this section, the term “nominee” means a domestic person that holds an interest in an entity described in paragraph (a) of this section on behalf of another domestic or foreign person.

(e) ***Determination of non-foreign status by withholding agent.*** A withholding agent may rely on a certification of non-foreign status pursuant to § 1.1445-5(b)(3)(ii) to determine whether an interest holder is not a foreign person. Reliance on these documents will excuse the withholding agent from liability imposed under section 1445(e)(1) in the absence of actual knowledge that the interest holder is a foreign person. A withholding agent may also employ other means to determine the status of an interest holder, but, if the agent relies on such other means and the interest holder proves, in fact, to be a foreign person (or, is not a withholding qualified holder (as defined in § 1.1445-1(g)(11)) and therefore is not treated as a non-foreign person for purposes of withholding under section 1445), then the withholding agent is subject to any liability imposed pursuant to section 1445 and the regulations thereunder for failure to withhold. See also § 1.1445-5(b)(3)(ii)(B)(*3*) for the period during which a withholding agent may rely on a certification of non-foreign status submitted by a withholding qualified holder (as defined in § 1.1445-1(g)(11)), which applies under this paragraph (e).

(f) ***Qualified notice.*** A qualified notice for purposes of paragraph (b)(3)(iv) of this section is a notice provided in the manner described in § 1.1446-4(b)(4) by a partnership, trust, or REIT regarding a distribution that is attributable to the disposition of a United States real property interest. In the case of a REIT, a qualified notice is only a notice of a distribution, all or any portion of which the REIT actually designates, or characterizes in accordance with paragraph (c)(2)(ii)(C) of this section, as a capital gain dividend in the manner described in § 1.1446-4(b)(4), with respect to each share or certificate of beneficial interest. A

deemed designation under paragraph (c)(2)(ii)(A) of this section may not be the subject of a qualified notice under this paragraph (f). A person described in paragraph (b)(3) of this section is treated as receiving a qualified notice when the notice is provided in accordance with § 1.1446-4(b)(4).

(g) ***Reporting and paying over withheld amounts.*** With respect to an amount withheld under this section, a withholding agent is not required to conform to the requirements of § 1.1445-5(b)(5) but is required to report and pay over to the Internal Revenue Service any amount required to be withheld pursuant to the rules and procedures of section 1461, the regulations thereunder and § 1.6302-2. Forms 1042 and 1042S are to be used for this purpose.

(h) ***Early refund procedure not available.*** The early refund procedure set forth in § 1.1445-6(g) shall not apply to amounts withheld under the rules of this section. For adjustment of over-withheld amounts, see § 1.1461.4.

(i) ***Liability upon failure to withhold.*** For rules regarding liability upon failure to withhold under § 1445(e) and this section, see § 1.1445-1(e).

(j) ***Applicability dates.*** Paragraph (c)(2)(i) of this section applies to distributions on or after November 30, 2020. Paragraph (e) of this section applies with respect to distributions made on or after December 29, 2022. For distributions made before December 29, 2022, see § 1.1445-8(e) as contained in 26 CFR part 1, as revised April 1, 2021. Paragraph (f) of this section applies to distributions made on or after January 1, 2022. For distributions made before January 1, 2022, see § 1.1445-8(f) as contained in 26 CFR part 1, revised as of April 1, 2020.

[T.D. 8321, 55 FR 50553, Dec. 7, 1990; 56 FR 4542, Feb. 5, 1991, as amended by T.D. 8647, 60 FR 66077, Dec. 21, 1995; T.D. 9926, 85 FR 76932, Nov. 30, 2020; T.D. 9971, 87 FR 80066, Dec. 29, 2022]

§ 1.1445-10T Special rule for Foreign governments (temporary).

(a) This section provides a temporary regulation that, if and when adopted as a final regulation will add a new paragraph (d)(6) to § 1.1445-2. Paragraph (b) of this section would then appear as paragraph (d)(6) of § 1.1445-2.

(b) ***Foreign government*** —

(1) ***As transferor.*** A foreign government is subject to U.S. taxation under section 897 on the disposition of a U.S. real property interest except to the extent specifically otherwise provided in the regulations issued under section 892. A foreign government that disposes of a U.S. real property interest that is not subject to taxation as specifically provided by the regulations under section 892 may present a notice of nonrecognition treatment pursuant to paragraph (d)(2) of this section that specifically cites the provision of such regulation, and thereby avoids withholding by the transferee of the property. A foreign government that disposes of a U.S. real property interest or the transferee of the property may obtain a withholding certificate from the Internal Revenue Service that confirms the applicability of section 892, but neither is required to do so. Rules concerning the issuance of withholding certificates are provided in § 1.1445-3.

(2) ***As transferee.*** A foreign government or international organization that acquires a U.S. real property interest is fully subject to section 1445 and the regulations thereunder. Therefore, such an entity is required to withhold tax upon the acquisition of a U.S. real property interest from a foreign person.

(c) ***Effective date.*** The rules of this section shall be effective for transfers, exchanges, distributions and other dispositions occurring on or after June 6, 1988.

[T.D. 8198, 53 FR 16230, May 5, 1988]

§ 1.1445-11T Special rules requiring withholding under § 1.1445-5 (temporary).

(a) ***Purpose and scope.*** This section provides temporary regulations that, if and when adopted as a final regulation will add certain new paragraphs within § 1.1445-5 (b) and (c). The paragraphs of this section would then appear as set forth below. Paragraph (b) of this section would then appear as paragraph (b)(8)(v) of § 1.1445-5. Paragraph (c) of this section would then appear as paragraph (c)(2)(i) of § 1.1445-5. Paragraph (d) of this section would then appear as paragraph (g) of § 1.1445-5.

(b) ***Dispositions of interests in partnerships, trusts, and estates.*** The provisions of section 1445(e)(5), requiring withholding upon certain dispositions of interests in partnerships, trusts, and estates, that own directly or indirectly a U.S. real property interest shall apply to dispositions on or after the effective date of a later Treasury decision under section 897(g) of the Code except in the case of dispositions of interests in partnerships in which fifty percent of the value of the gross assets consist of U.S. real property interests and ninety percent or more of the value of the gross assets consist of U.S. real property interests plus any cash or cash equivalents. The provisions of section 1445(e)(5), shall apply, however, to dispositions after June 6, 1988, of interests in partnerships in which fifty percent or more of the value of the gross assets consist of U.S. real property interests, and ninety percent or more of the value of the gross assets consist of U.S. real property interests plus any cash or cash equivalents. See paragraph (d) of this section.

(c) ***Transactions covered elsewhere.*** No withholding is required under this paragraph (c) with respect to the distribution of a U.S. real property interest by a partnership, trust, or estate. Such distributions shall be subject to withholding under section 1445(e)(4) and paragraph (f) of this § 1.1445-5 on the effective date of a later Treasury decision published under section 897(g) of the Code. No withholding is required at this time for distributions described in the preceding sentence. See paragraph (b)(8)(iv) of this § 1.1445-5. No withholding is required under this paragraph with respect to the disposition of an interest in a trust, estate, or partnership except in the case of a partnership in which fifty percent or more of the value of the gross assets consist of U.S. real property interests, and ninety percent or more of the value of the gross assets consist of U.S. real property interests plus any cash or cash equivalents. See paragraph (b)(8)(v) of § 1.1445-5. Withholding shall be required as provided in section 1445(e)(5) and paragraph (g) of this section with respect to the disposition after June 6, 1988, of an interest in a partnership in which fifty percent or more of the value of the gross assets consist of U.S. real property interests, and ninety percent or more of the value of the gross assets consist of U.S. real property interests plus any cash or cash equivalents.

(d) ***Dispositions of interests in partnerships, trusts or estates*** —

(1) ***Withholding required on disposition of certain partnership interests.*** Withholding is required under section 1445(e)(5) and this paragraph with respect to the disposition by a foreign partner of an interest in a domestic or foreign partnership in which fifty percent or more of the value of the gross assets consist of U.S. real property interests, and ninety percent or more of the value of the gross assets consist of U.S. real property interests plus any cash or cash equivalents. For purposes of this paragraph cash equivalents mean any asset readily convertible into cash (whether or not denominated in U.S. dollars), including, but not limited to, bank accounts, certificates of deposit, money market accounts, commercial paper, U.S. and foreign treasury obligations and bonds, corporate obligations and bonds, precious metals or commodities, and publicly traded instruments. The taxpayer on filing an income tax return for the year of the disposition may demonstrate the

extent to which the gain on the disposition of the interest is not attributable to U.S. real property interests. A taxpayer is also permitted by § 1.1445-3 to apply for a withholding certificate in instances where reduced withholding is appropriate.

(2) ***Withholding not required*** —

(i) ***Transferee receives statement that interest in partnership is not described in paragraph (d)(1).*** No withholding is required under paragraph (d)(1) of this section upon the disposition of a partnership interest otherwise described in that paragraph if the transferee is provided a statement, issued by the partnership and signed by a general partner under penalties of perjury no earlier than 30 days before the transfer, certifying that fifty percent or more of the value of the gross assets does not consist of U.S. real property interests, or that ninety percent or more of the value of the gross assets of the partnership does not consist of U.S. real property interests plus cash or cash equivalents.

(ii) ***Reliance on statement not permitted.*** A transferee is not entitled to rely upon a statement described in paragraph (d)(2)(i) of this section if, prior to or at the time of the transfer, the transferee either—

(A) Has actual knowledge that the statement is false, or

(B) Receives a notice, pursuant to § 1.1445-4.

Such a transferee's withholding obligations shall apply as if the statement had never been given, and such a transferee may be held fully liable pursuant to § 1.1445-1(e) for any failure to withhold.

(iii) ***Belated notice of false statement.*** If, after the date of the transfer, a transferee receives notice that a statement provided under paragraph (d)(2)(i) of this section is false, then such transferee may rely on the statement only with respect to consideration that was paid prior to the receipt of the notice. Such a transferee is required to withhold a full 10 percent of the amount realized from the consideration that remains to be paid to the transferor. Thus, if 10 percent or more of the amount realized remains to be paid to the transferor, then the transferee is required to withhold and pay over the full 10 percent. The transferee must do so by withholding and paying over the entire amount of each successive payment of consideration to the transferor, until the full 10 percent of the amount realized has been withheld and paid over. Amounts so withheld must be reported and paid over by the 20th day following the date on which each such payment of consideration is made. A transferee that is subject to the rules of this § 1.1445-10T(d)(2)(iii) may not obtain a withholding certificate pursuant to § 1.1445-3, but must instead withhold and pay over the amounts required by this paragraph.[1]

(e) ***Effective date.*** The rules of this section are effective for transactions after June 6, 1988.

[T.D. 8198, 53 FR 16231, May 5, 1988, as amended by T.D. 9751, 81 FR 8402, Feb. 19, 2016]

[1] Section 324(a) of the Protecting Americans from Tax Hikes Act of 2015 (Pub. L. 114-113) increased the withholding rate under section 1445(e)(5) to 15 percent, applicable to dispositions after February 16, 2016.

§ 1.1446-0 Table of contents.

This section lists the captions contained in §§ 1.1446-1 through 1.1446-7.

§ 1.1446-1 Withholding tax on foreign partners' share of effectively connected taxable income.

(a) In general.

(b) Steps in determining 1446 tax obligation.

(c) Determining whether a partnership has a foreign partner.

(1) In general.

(2) Submission of Forms W-8BEN, W-8IMY, W-8ECI, W-8EXP, and W-9.

(i) In general.

(ii) Withholding certificate applicable to each type of partner.

(A) U.S. person.

(B) Nonresident alien.

(C) Foreign partnership.

(D) Disregarded entities.

(E) Domestic and foreign grantor trusts.

(F) Nominees.

(G) Foreign governments, foreign tax-exempt organizations and other foreign persons.

(H) Foreign corporations, certain foreign trusts, and foreign estates.

(iii) Effect of Forms W-8BEN, W-8IMY, W-8ECI, W-8EXP, W-9, and statement.

(A) Partnership reliance on withholding certificate.

(B) Reason to know.

(C) Subsequent knowledge and impact on penalties.

(iv) Requirements for certificates to be valid.

(A) When period of validity expires.

(B) Required information for Forms W-8BEN, W-8IMY, W-8ECI, and W-8EXP.

(v) Partner must provide new withholding certificate when there is a change in circumstances.

(vi) Partnership must retain withholding certificates.

(3) Presumptions in the absence of valid Form W-8BEN, Form W-8IMY, Form W-8ECI, Form W-8EXP, Form W-9, or statement.

(4) Consequences when partnership knows or has reason to know that Form W-8BEN, Form W-8IMY, Form W-8ECI, Form W-8EXP, or Form W-9 is incorrect or unreliable and does not withhold.

(5) Acceptable substitute form.

§ 1.1446-2 Determining a partnership's effectively connected taxable income allocable to foreign partners under section 704.

(a) In general.

(b) Computation.

(1) In general.

(2) Income and gain rules.

(i) Application of the principles of section 864.

(ii) Income treated as effectively connected.

(iii) Exempt income.

(3) Deductions and losses.

(i) Oil and gas interests.

(ii) Charitable contributions.

(iii) Net operating losses and other suspended or carried losses.

(iv) Interest deductions.

(v) Limitation on capital losses.

(vi) Other deductions.

(vii) Limitations on deductions.

(4) Other rules.

(i) Exclusion of items allocated to U.S. partners.

(ii) Partnership credits.

(5) Examples.

§ 1.1446-3 Time and manner of calculating and paying over the 1446 tax.

(a) In general.

(1) Calculating 1446 tax.

(2) Applicable percentage.

(i) In general.

(ii) Special types of income or gain.

(b) Installment payments.

(1) In general.

(2) Calculation.

(i) General application of the principles of section 6655.

(ii) Annualization methods.

(iii) Partner's estimated tax payments.

(iv) Partner whose interest terminates during the partnership's taxable year.

(v) Exceptions and modifications to the application of the principles under section 6655.

(A) Inapplicability of special rules for large corporations.

(B) Inapplicability of special rules regarding early refunds.

(C) Period of underpayment.

(D) Other taxes.

(E) 1446 tax treated as tax under section 11.

(F) Application of section 6655(f).

(G) Application of section 6655(i).

(H) Current year tax safe harbor.

(I) Prior year tax safe harbor.

(3) 1446 tax safe harbor.

(i) In general.

(ii) Permission to change to standard annualization method.

(c) Coordination with other withholding rules.

(1) Fixed or determinable, annual or periodical income.

(2) Real property gains.

(i) Domestic partnerships.

(ii) Foreign partnerships.

(3) Coordination with section 1443.

(4) Coordination with section 1446(f).

(d) Reporting and crediting the 1446 tax.

(1) Reporting 1446 tax.

(i) Reporting of installment tax payments and notification to partners of installment tax payments.

(ii) Payment due dates.

(iii) Annual return and notification to partners.

(iv) Information provided to beneficiaries of foreign trusts and estates.

(v) Attachments required of foreign trusts and estates.

(vi) Attachments required of beneficiaries of foreign trusts and estates.

(vii) Information provided to beneficiaries of foreign trusts and estates that are partners in certain publicly traded partnerships.

(2) Crediting 1446 tax against a partner's U.S. tax liability.

(i) In general.

(ii) Substantiation for purposes of claiming the credit under section 33.

(iii) Special rules for apportioning the tax credit under section 33.

(A) Foreign trusts and estates.

(B) Use of domestic trusts to circumvent section 1446.

(iv) Refunds to withholding agent.

(v) 1446 tax treated as cash distribution to partners.

(vi) Examples.

(e) Liability of partnership for failure to withhold.

(1) In general.

(2) Proof that tax liability has been satisfied and deemed payment of 1446 tax.

(3) Liability for interest, penalties, and additions to the tax.

(i) Partnership.

(ii) Foreign partner.

(4) Examples.

(f) Effect of withholding on partner.

§ 1.1446-4 Publicly traded partnerships.

(a) In general.

(b) Definitions.

(1) Publicly traded partnership.

(2) Applicable percentage.

(3) Nominee.

(4) Qualified notice.

(c) Paying and reporting 1446 tax.

(d) Rules for nominees required to withhold tax under section 1446.

(1) In general.

(2) Exception to nominee's withholding.

(e) Determining foreign status of partners.

(f) Distributions subject to withholding.

(1) In general.

(2) In-kind distributions.

(3) Ordering rule relating to distributions.

(4) Coordination with section 1445(e)(1).

§ 1.1446-5 Tiered partnership structures.

(a) In general.

(b) Reporting requirements.

(1) In general.

(2) Publicly traded partnerships.

(c) Look through rules for foreign upper-tier partnerships.

(d) Publicly traded partnerships.

(1) Upper-tier publicly traded partnership.

(2) Lower-tier publicly traded partnership.

(e) Election by a domestic upper-tier partnership to apply look through rules.

(1) In general.

(2) Information required for valid election statement.

(3) Consent of lower-tier partnership.

(f) Examples.

§ 1.1446-6 Special rules to reduce a partnership's 1446 tax with respect to a foreign partner's allocable share of effectively connected taxable income.

(a) In general.

(1) Purpose and scope.

(2) Reasonable reliance on a certificate.

(b) Foreign partners to whom this section applies.

(1) In general.

(2) Definitions.

(i) U.S. income tax return.

(ii) Timely-filed.

(iii) Qualifying U.S. income tax return.

(3) Special rules.

(c) Reduction of 1446 tax with respect to a foreign partner.

(1) General rules.

(i) Certified deductions and losses.

(A) Deductions and losses from the partnership.

(B) Deductions and loss from other sources.

(C) Limit on the consideration of a partner's net operating loss deduction.

(D) Limitation on losses subject to certain partner level limitations.

(E) Certification of deductions and losses to other partnerships.

(F) Partner level use of deductions and losses certified to a partnership.

(ii) De minimis certificate for nonresident alien individual partners.

(A) In general.

(B) Requirements for exception.

(iii) Consideration of certain current year state and local taxes.

(2) Form and time of certification.

(i) Form of certification.

(ii) Time of certification provided to partnership.

A) First certificate submitted for a partnership's taxable year.

(B) Updated certificates and status updates.

(*1*) Preceding year tax returns not yet filed.

(*2*) Other circumstances requiring an updated certificate.

(*3*) Form and content of updated certificate.

(*4*) Partnership consideration of an updated certificate.

(3) Notification to partnership when a partner's certificate cannot be relied upon.

(4) Partner to receive copy of notice.

(5) Notification to partnership when no foreign partner's certificate can be relied upon.

(6) Partnership notification to partner regarding use of deductions and losses.

(7) Partner's certificate valid only for partnership taxable year for which submitted.

(d) Effect of certificate of deductions and losses on partner and partnership.

(1) Effect on partner.

(i) No effect on liability for income tax of foreign partner.

(ii) No effect on partner's estimated tax obligations.

(iii) No effect on partner's obligation to file U.S. income tax return.

(2) Effect on partnership.

(i) Reasonable reliance to relieve partnership from addition to tax under section 6665.

(ii) Continuing liability for withholding tax under section 1461 and for applicable interest and penalties.

(A) In general.

(B) Certificate defective because of amount or character of deductions and losses.

(3) Partnership level rules and requirements.

(i) Filing requirement.

(ii) Reasonable cause for failure to timely file a valid certificate and computation.

(A) Determining reasonable cause.

(B) Notification.

(e) Examples.

(f) Effective/Applicability date.

(g) Transition rule.

§ 1.1446-7 Applicability dates.

[T.D. 9200, 70 FR 28717, May 18, 2005, as amended by T.D. 9394, 73 FR 23074, Apr. 29, 2008; T.D. 9926, 85 FR 76933, Nov. 30, 2020]

§ 1.1446-1 Withholding tax on foreign partners' share of effectively connected taxable income.

(a) ***In general.*** If a domestic or foreign partnership has effectively connected taxable income (ECTI) as computed under § 1.1446-2 for any partnership tax year, and any portion of such taxable income is allocable under section 704 to a foreign partner, then the partnership must pay a withholding tax under section 1446 (1446 tax) at the time and in the manner prescribed in this section, and §§ 1.1446-2 through 1.1446-6.

(b) ***Steps in determining 1446 tax obligation.*** In general, a partnership determines its 1446 tax as follows. The partnership determines whether it has any foreign partners in accordance with paragraph (c) of this section. If the partnership does not have any foreign partners (including any person presumed to be foreign under paragraph (c) of this section and any domestic trust treated as foreign under § 1.1446-3(d)) during its taxable year, it generally will not have a 1446 tax obligation. If the partnership has one or more foreign partners, it then determines under § 1.1446-2 whether it has ECTI any portion of which is allocable under section 704 to one or more of the foreign partners. If the partnership has ECTI allocable under section 704 to one or more of its foreign partners, the partnership computes its 1446 tax, pays over 1446 tax, and reports the amount paid in accordance with the rules in § 1.1446-3. For special rules applicable to publicly traded partnerships, see § 1.1446-4. For special rules applicable to tiered partnership structures, see § 1.1446-5. For special rules that may apply in determining the amount of 1446 tax due with respect to a partner, see § 1.1446-6.

(c) ***Determining whether a partnership has a foreign partner —***

(1) ***In general.*** Except as otherwise provided in this section, § 1.1446-3, and § 1.1446-5, only a partnership that has at least one foreign partner during the partnership's taxable year can have a 1446 tax liability. Generally, the term foreign partner means any partner of the partnership that is not a U.S. person within the meaning of section 7701(a)(30). Thus, a partner of the partnership is generally a foreign partner if the partner is a nonresident alien, foreign partnership (see § 1.1446-5 for rules that allow a lower-tier partnership to look through an upper-tier foreign partnership to the partners of such partnership for purposes of computing its 1446 tax), foreign corporation (which includes a foreign government pursuant to section 892(a)(3)), foreign estate or trust (see paragraph (c)(2) of this section for rules that instruct a partnership to consider the grantor or other owner of a trust under subpart E of subchapter J as the partner for purposes of computing the partnership's 1446 tax), as those terms are defined under section 7701 and the regulations thereunder, or a foreign organization described in section 501(c), or other foreign person. A person also is a foreign partner if the person is presumed to be a foreign person under paragraph (c)(3) of this section. For purposes of this section, a partner that is treated as a U.S. person for all income tax purposes (by election or otherwise, see e.g., sections 953(d) and 1504(d)) will not be a foreign partner, provided the partner has provided the partnership a valid Form W-9, "Request for Taxpayer Identification Number and Certification," or the partnership uses other means to determine that the partner is not a foreign partner (see paragraph (c)(3) of this section). A partner that is treated as a U.S. person only for certain specified purposes is considered a foreign partner for purposes of section 1446, and a partnership must pay 1446 tax on the portion of ECTI allocable to that partner. For example, a partnership must generally pay 1446 tax on ECTI allocable to a foreign corporate partner that has made an election under section 897(i).

(2) ***Submission of Forms W-8BEN, W-8IMY, W-8ECI, W-8EXP, and W-9*** —

(i) ***In general.*** Except as otherwise provided in this paragraph (c)(2) or paragraph (c)(3) of this section, a partnership must generally determine whether a partner is a foreign partner, and the partner's tax classification (e.g., corporate or non-corporate), by obtaining a withholding certificate from the partner that is a Form W-8BEN, "Certificate of Foreign Status of Beneficial Owner for United States Tax Withholding," Form W-8IMY, "Certificate of Foreign Intermediary, Flow-Through Entity, or Certain U.S. Branches for United States Tax Withholding," Form W-8ECI, "Certificate of Foreign Person's Claim for Exemption from Withholding on Income Effectively Connected With the Conduct of a Trade or Business in the United States," Form W-8EXP, "Certificate of Foreign Government or other Foreign Organization for United States Tax Withholding," or a Form W-9, as applicable, or an acceptable substitute form permitted under paragraph (c)(5) of this section. Generally, a foreign partner that is a nonresident alien, a foreign estate or trust (other than a grantor trust described in this paragraph (c)(2)), a foreign corporation, or a foreign government should provide a valid Form W-8BEN.

(ii) ***Withholding certificate applicable to each type of partner.*** A partner that submits a valid Form W-8 (e.g., Form W-8BEN) for purposes of section 1441 or 1442 will generally satisfy the documentation requirements of this section provided that the submission of such form is not inconsistent with the rules of this paragraph (c)(2) or paragraph (c)(3) of this section. The following rules shall apply for purposes of this section.

(A) ***U.S. person.*** A partner that is a U.S. person (other than a grantor trust described in this paragraph (c)(2)), including a domestic partnership and domestic simple or complex trust (including an estate), shall provide a valid Form W-9.

(B) ***Nonresident alien.*** A Form W-8 (e.g., Form W-8BEN) submitted by a nonresident alien for purposes of withholding under section 1441 will generally be accepted for purposes of section 1446. If no such form is submitted for purposes of section 1441, such nonresident alien shall submit Form W-8BEN for purposes of section 1446.

(C) ***Foreign partnership.*** A partner that is a foreign partnership generally shall provide a valid Form W-8IMY for purposes of section 1446. See § 1.1446-5 (permitting a lower-tier partnership to look through an upper-tier foreign partnership in certain circumstances when computing 1446 tax).

(D) ***Disregarded entities.*** An entity that is disregarded as an entity separate from its owner under § 301.7701-3 of this chapter (whether domestic or foreign) shall not submit a Form W-8 (e.g., Form W-8BEN) or Form W-9. Instead, the owner of such entity for Federal tax purposes shall submit appropriate documentation to comply with this section. See §§ 301.7701-1 through 301.7701-3 of this chapter for determining the U.S. Federal tax classification of a partner.

(E) ***Domestic and foreign grantor trusts.*** To the extent that a grantor or other person is treated as the owner of any portion of a trust under subpart E of subchapter J of the Internal Revenue Code, such trust shall provide documentation under this paragraph (c)(2) to identify the trust as a grantor trust and provide documentation on behalf of the grantor or other person treated as the owner of all or a portion of such trust as required by this paragraph (c)(2). If such trust is a foreign trust, the trust shall submit Form W-8IMY to the partnership identifying itself as a foreign grantor trust and shall provide such documentation (e.g., Forms W-8BEN, W-8IMY, W-8ECI, W-8EXP, or W-9) and information pertaining to its grantor or other owner to the partnership that permits the partnership to reliably associate (within the meaning of § 1.1441-1(b)(2)(vii)) such portion of the trust's allocable share of partnership ECTI with the grantor or other person that is the owner of such portion of the trust. If such trust is a domestic trust, the trust shall furnish the partnership a statement under penalty of perjury that the trust is, in whole or in part, a domestic grantor trust and such statement shall identify that portion of the trust that is treated as owned by a grantor or another person under subpart E of subchapter J of the Internal Revenue Code. The trust shall also provide such documentation and information (e.g., Forms W-8BEN, W-8IMY, W-8ECI, W-8EXP, or W-9) pertaining to its grantor or other owner(s) to the partnership that permits the partnership to reliably associate (within the meaning of § 1.1441-1(b)(2)(vii)) such portion of the trust's allocable share of partnership ECTI with the grantor or other person that is the owner of such portion of the trust.

(F) ***Nominees.*** Where a nominee holds an interest in a partnership on behalf of another person, the beneficial owner of the partnership interest, not the nominee, shall submit a Form W-8 (e.g., Form W-8BEN) or Form W-9 to the partnership or nominee that is the withholding agent.

(G) ***Foreign governments, foreign tax-exempt organizations and other foreign persons.*** A Form W-8 (e.g., Form W-8EXP) submitted by a partner that is a foreign government, foreign tax-exempt organization, or other foreign person for purposes of withholding under §§ 1441 through 1443 will also operate to establish the foreign status of such partner under this section. However, except as set forth in § 1.1446-2(b)(4)(iii) (regarding withholding qualified holders (as defined in § 1.1445-1(g)(11)) and § 1.1446-3(c)(3) (regarding certain tax-exempt organizations described in section 501(c)), the submission of Form W-8EXP

(or successor) will have no effect on whether there is a 1446 tax due with respect to such partner's allocable share of partnership ECTI. For example, a partnership must still pay 1446 tax with respect to a foreign government partner's allocable share of ECTI because such partner is treated as a foreign corporation under section 892(a)(3). If no Form W-8 is submitted for purposes of withholding under sections 1441 through 1443, then such government, tax-exempt organization, or person must generally submit Form W-8BEN.

(H) ***Foreign corporations, certain foreign trusts, and foreign estates.*** Consistent with the rules of this paragraph (c)(2) and paragraph (c)(3) of this section, a foreign corporation, a foreign trust (other than a foreign grantor trust described in paragraph (c)(2)(ii)(E) of this section), or a foreign estate may generally submit any appropriate Form W-8 (for example, Form W-8BEN-E or Form W-8IMY) to the partnership to establish its foreign status for purposes of section 1446. In addition, a foreign entity may also submit a certification of non-foreign status (including a Form W-8EXP) described in § 1.1445-5(b)(3)(ii) for purposes of documenting itself as a withholding qualified holder (as defined in § 1.1445-1(g)(11)).

(iii) ***Effect of Forms W-8BEN, W-8IMY, W-8ECI, W-8EXP, W-9, and statement*** —

(A) ***Partnership reliance on withholding certificate.*** In general, for purposes of this section, a partnership may rely on a valid Form W-8 (e.g., Form W-8BEN) or Form W-9, or statement described in this paragraph (c)(2) from a partner, beneficial owner, or grantor trust to determine whether that person, beneficial owner, or the owner of a grantor trust, is a non-foreign or foreign partner for purposes of computing 1446 tax, and if such person is a foreign partner, to determine whether or not such person is a corporation for U.S. tax purposes. The rules of paragraph (c)(3) of this section shall apply to a partnership that receives a Form W-8IMY from a foreign grantor trust or a statement described in this paragraph (c)(2) from a domestic grantor trust, but does not receive a Form W-8 (e.g., Form W-8BEN) or Form W-9 identifying such grantor or other person. Further, a partnership may not rely on a Form W-8 or Form W-9, or statement described in this paragraph (c)(2), and such form or statement is therefore not valid for any installment period or Form 8804 filing date during which the partnership has actual knowledge or has reason to know that any information on the withholding certificate or statement is incorrect or unreliable and, if based on such knowledge or reason to know, the partnership should pay 1446 tax in an amount greater than would be the case if it relied on the certificate or statement.

(B) ***Reason to know.*** A partnership has reason to know that information on a withholding certificate or statement is incorrect or unreliable if its knowledge of relevant facts or statements contained on the form or other documentation is such that a reasonably prudent person in the position of the withholding agent would question the claims made. See §§ 1.1441-1(e)(4)(viii) and 1.1441-7(b)(1) and (2).

(C) ***Subsequent knowledge and impact on penalties.*** If the partnership does not have actual knowledge or reason to know that a Form W-8BEN, Form W-8IMY, Form W-8ECI, Form W-8EXP, Form W-9, or statement received from a partner, beneficial owner, or grantor trust contains incorrect or unreliable information, but it subsequently determines that the certificate or statement contains incorrect or unreliable information, and, based on such knowledge the partnership should pay 1446 tax in an amount greater than would be the case if it relied on the certificate or statement, then the partnership will not be subject to penalties for its failure to pay the 1446 tax in reliance on such certificate or statement for

any installment payment date prior to the date that the determination is made. See §§ 1.1446-1(c)(4) and 1.1446-3 concerning penalties for failure to pay the withholding tax when a partnership knows or has reason to know that a withholding certificate or statement is incorrect or unreliable.

(iv) ***Requirements for certificates to be valid.*** Except as otherwise provided in this paragraph (c), for purposes of this section, the validity of a Form W-9 shall be determined under section 3406 and § 31.3406(h)-3(e) of this chapter which establish when such form may be reasonably relied upon. A Form W-8BEN, Form W-8IMY, Form W-8ECI, or Form W-8EXP is only valid for purposes of this section if its validity period has not expired, the partner submitting the form has signed it under penalties of perjury, and it contains all the required information.

(A) ***When period of validity expires.*** For purposes of this section, a Form W-8BEN, Form W-8IMY, Form W-8ECI, or Form W-8EXP submitted by a partner shall be valid until the end of the period of validity determined for such form under § 1.1441-1(e). With respect to a foreign partnership submitting Form W-8IMY, the period of validity of such form shall be determined under § 1.1441-1(e) as if such foreign partnership submitted the form required of a nonwithholding foreign partnership. See § 1.1441-1(e)(4)(ii).

(B) ***Required information for Forms W-8BEN, W-8IMY, W-8ECI, and W-8EXP.*** Forms W-8BEN, W-8IMY, W-8ECI, and W-8EXP submitted under this section must contain the partner's name, permanent address and Taxpayer Identification Number (TIN), the country under the laws of which the partner is formed, incorporated or governed (if the person is not an individual), the classification of the partner for U.S. Federal tax purposes (e.g., partnership, corporation), and any other information required to be submitted by the forms or instructions for such form, as applicable.

(v) ***Partner must provide new withholding certificate when there is a change in circumstances.*** The principles of § 1.1441-1(e)(4)(ii)(D) shall apply when a change in circumstances has occurred (including situations where the status of a U.S. person changes) that requires a partner to provide a new withholding certificate.

(vi) ***Partnership must retain withholding certificates.*** A partnership or nominee who has responsibility for paying 1446 tax under this section or § 1.1446-4 must retain each withholding certificate, statement, and other information received from its direct and indirect partners for as long as it may be relevant to the determination of the withholding agent's 1446 tax liability under section 1461 and the regulations thereunder.

(3) ***Presumptions in the absence of valid Form W-8BEN, Form W-8IMY, Form W-8ECI, Form W-8EXP, Form W-9, or statement.*** Except as otherwise provided in this paragraph (c)(3), a partnership that does not receive a valid Form W-8BEN, Form W-8IMY, Form W-8ECI, Form W-8EXP, Form W-9, or statement required by paragraph (c)(2) of this section from a partner, beneficial owner, or grantor trust, or a partnership that receives a withholding certificate or statement but has actual knowledge or reason to know that the information on the certificate or statement is incorrect or unreliable, must presume that the partner is a foreign person. Except as provided in § 1.1446-3(a)(2) and § 1.1446-5(c)(2), a partnership that knows that a partner is an individual shall treat the partner as a nonresident alien. Except as provided in § 1.1446-3(a)(2) and § 1.1446-5(c)(2), a partnership that knows that a partner is an entity shall treat the partner as a corporation if the entity is a corporation as defined in § 301.7701-2(b)(8) of this chapter. See § 1.1446-3(a)(2) which prohibits a partnership in certain circumstances from considering preferential tax rates in computing its 1446 tax when the presumption and rules of this paragraph (c)(3) apply. In all other cases, the partnership shall treat

the partner as either a nonresident alien or a foreign corporation, whichever classification results in a higher 1446 tax being due, and shall pay the 1446 tax in accordance with this presumption. Except as provided in § 1.1446-5(c)(2), the presumption set forth in this paragraph (c)(3) that a partner is a foreign person shall not apply to the extent that the partnership relies on other means to ascertain the non-foreign status of a partner and the partnership is correct in its determination that such partner is a U.S. person. A partnership is in no event required to rely upon other means to determine the non-foreign status of a partner and may demand that a partner furnish an acceptable certificate under this section. If a certificate is not provided in such circumstances, the partnership may presume that the partner is a foreign partner, and for purposes of sections 1461 through 1463, will be considered to have been required to pay 1446 tax on such partner's allocable share of partnership ECTI.

(4) ***Consequences when partnership knows or has reason to know that Form W-8BEN, Form W-8IMY, Form W-8ECI, Form W-8EXP, or Form W-9 is incorrect or unreliable and does not withhold.*** If a partnership has actual knowledge or has reason to know that a Form W-8BEN, Form W-8IMY, Form W-8ECI, Form W-8EXP, Form W-9, or statement required by paragraph (c)(2) of this section submitted by a partner, beneficial owner, or grantor trust contains incorrect or unreliable information (either because the certificate or statement when given to the partnership contained incorrect information or because there has been a change in facts that makes information on the certificate or statement incorrect), and the partnership pays less than the full amount of 1446 tax due on ECTI allocable to that partner, the partnership shall be fully liable under section 1461 and § 1.1461-3 (§ 1.1461-1 for publicly traded partnerships subject to § 1.1446-4) and § 1.1446-3, and for all applicable penalties and interest, for any failure to pay the 1446 tax for the period during which the partnership has such knowledge or reason to know that the certificate contained incorrect or unreliable information and for all subsequent installment periods. If a partner, beneficial owner, or grantor trust submits a new valid Form W-8BEN, Form W-8IMY, Form W-8ECI, Form W-8EXP, Form W-9, or statement, as applicable, the partnership may rely on that documentation when paying 1446 tax (or any installment of such tax) for any payment date that has not passed at the time such form is received.

(5) ***Acceptable substitute form.*** A partnership or withholding agent responsible for paying 1446 tax (or any installment of such tax) may substitute its own form for the official version of Form W-8 (e.g., Form W-8BEN) that is recognized under this section to ascertain the identity of its partners, provided such form is consistent with § 1.1441-1(e)(4)(vi). All references under this section or §§ 1.1446-2 through 1.1446-6 to a Form W-8 (e.g., Form W-8BEN, Form W-8IMY, Form W-8ECI, Form W-8EXP) shall include the acceptable substitute form recognized under this paragraph (c)(5).

[T.D. 9200, 70 FR 28717, May 18, 2005, as amended by T.D. 9394, 73 FR 23074, Apr. 29, 2008; T.D. 9971, 87 FR 80066, Dec. 29, 2022]

§ 1.1446-2 Determining a partnership's effectively connected taxable income allocable to foreign partners under section 704.

(a) ***In general.*** A partnership's effectively connected taxable income (ECTI) is generally the partnership's taxable income as computed under section 703, with adjustments as provided in section 1446(c) and this section, and computed with consideration of only those partnership items which are effectively connected (or treated as effectively connected) with the conduct of a trade or business in the United States. For purposes of determining the section 1446 withholding tax (1446 tax) or any installment of such tax under § 1.1446-3, partnership ECTI allocable under section 704 to foreign partners is the sum of the allocable shares of ECTI of each of the partnership's foreign partners as determined under paragraph

(b) of this section. See § 1.1446-6 (special rules permitting the partnership to consider partner-level deductions and losses to reduce the partnership's 1446 tax). The calculation of partnership ECTI allocable to foreign partners as set forth in paragraph (b) of this section and the partnership's withholding tax obligation are partnership-level computations solely for purposes of determining the 1446 tax. Therefore, any deduction that is not taken into account in calculating a partner's allocable share of partnership ECTI (e.g., percentage depletion), but which is a deduction that under U.S. tax law the foreign partner is otherwise entitled to claim, can still be claimed by the foreign partner when computing its U.S. tax liability and filing its U.S. income tax return, subject to any restriction or limitation that otherwise may apply.

(b) ***Computation*** —

(1) ***In general.*** A foreign partner's allocable share of partnership ECTI for the partnership's taxable year that is allocable under section 704 to a particular foreign partner is equal to that foreign partner's distributive share of partnership gross income and gain for the partnership's taxable year that is effectively connected and properly allocable to the partner under section 704 and the regulations thereunder, reduced by the foreign partner's distributive share of partnership deductions for the partnership taxable year that are connected with such income under section 873(a) or 882(c) and properly allocable to the partner under section 704 and the regulations thereunder, in each case, after application of the rules of this section. See § 1.1446-6 (special rules permitting the partnership to consider partner-level deductions and losses to reduce the partnership's 1446 tax). For these purposes, a foreign partner's distributive share of effectively connected gross income and gain and the deductions connected with such income shall be computed by considering allocations that are respected under the rules of section 704 and § 1.704-1(b)(1), including special allocations in the partnership agreement (as defined in § 1.704-1(b)(2)(ii)(h)), and adjustments to the basis of partnership property described in section 743 pursuant to an election by the partnership under section 754 (see § 1.743-1(j)). The character of effectively connected partnership items (capital versus ordinary) shall be separately considered only to the extent set forth in paragraph (b)(3)(v) of this section and, when applicable, sections 1.1446-3(a)(2)(consideration of preferential rates when computing 1446 tax) and section 1.1446-6 (special rules permitting the partnership to consider partner-level deductions and losses to reduce the partnership's 1446 tax).

(2) ***Income and gain rules.*** For purposes of computing a foreign partner's allocable share of partnership ECTI under this paragraph (b), the following rules shall apply with respect to partnership income and gain.

(i) ***Application of the principles of section 864.*** The determination of whether a partnership's items of gross income are effectively connected shall be made by applying the principles of section 864 and the regulations thereunder.

(ii) ***Income treated as effectively connected.*** A partnership's items of gross income that are effectively connected include any income that is treated as effectively connected income, including partnership income subject to a partner's election under section 871(d) or section 882(d), any partnership income treated as effectively connected with the conduct of a U.S. trade or business pursuant to section 897, and any other items of partnership income treated as effectively connected under another provision of the Internal Revenue Code, without regard to whether those amounts are taxable to the partner. A partner that makes the election under section 871(d) or section 882(d) shall furnish to the partnership a statement that indicates that such election has been made. See § 1.871-10(d)(3). If a partnership receives a valid Form

W-8ECI from a partner, the partner is deemed, for purposes of section 1446, to have effectively connected income subject to withholding under section 1446 to the extent of the items identified on the form.

(iii) ***Exempt income.*** A foreign partner's allocable share of partnership ECTI does not include income or gain exempt from U.S. tax by reason of a provision of the Internal Revenue Code. A foreign partner's allocable share of partnership ECTI also does not include income or gain exempt from U.S. tax by operation of any U.S. income tax treaty or reciprocal agreement. In the case of income excluded by reason of a treaty provision, such income must be derived by a resident of an applicable treaty jurisdiction, the resident must be the beneficial owner of the item, and all other requirements for benefits under the treaty must be satisfied. The partnership must have received from the partner a valid withholding certificate, that is, Form W-8BEN (see § 1.1446-1(c)(2)(iii) regarding when a Form W-8BEN is valid for purposes of this section), containing the information necessary to support the claim for treaty benefits required in the forms and instructions. In addition, for purposes of this section, the withholding certificate must contain the beneficial owner's taxpayer identification number.

(3) ***Deductions and losses.*** For purposes of computing a foreign partner's allocable share of partnership ECTI under this paragraph (b), the following rules shall apply with respect to deductions and losses.

(i) ***Oil and gas interests.*** The deduction for depletion with respect to oil and gas wells shall be allowed, but the amount of such deduction shall be determined without regard to sections 613 and 613A.

(ii) ***Charitable contributions.*** The deduction for charitable contributions provided in section 170 shall not be allowed.

(iii) ***Net operating losses and other suspended or carried losses.*** Except as provided in § 1.1446-6, the net operating loss deduction of any foreign partner provided in section 172 shall not be taken into account. Further, except as provided in § 1.1446-6, the partnership shall not take into account any suspended losses (e.g., losses in excess of a partner's basis in the partnership, see section 704(d)) or any capital loss carrybacks or carryovers available to a foreign partner.

(iv) ***Interest deductions.*** The rules of this paragraph (b)(3)(iv) shall apply for purposes of determining the amount of interest expense that is allocable to income which is (or is treated as) effectively connected with the conduct of a trade or business for purposes of calculating a foreign partner's allocable share of partnership ECTI. In the case of a non-corporate foreign partner, the rules of § 1.861-9T(e)(7) shall apply. In the case of a corporate foreign partner, the rules of § 1.882-5 shall apply by treating the partnership as a foreign corporation and using the partner's pro-rata share of the partnership's assets and liabilities for these purposes. For these purposes, the rules governing elections under § 1.882-5(a)(7) shall be made at the partnership level.

(v) ***Limitation on capital losses.*** Losses from the sale or exchange of capital assets allocable under section 704 to a partner shall be allowed only to the extent of gains from the sale or exchange of capital assets allocable under section 704 to such partner.

(vi) ***Other deductions.*** No deduction shall be allowed for personal exemptions provided in section 151 or the additional itemized deductions for individuals provided in part VII of subchapter B of the Internal Revenue Code (section 211 and following).

(vii) ***Limitations on deductions.*** Except as provided in § 1.1446-6 and this paragraph (b)(3), any limitations on losses or deductions that apply at the partner level when determining ECTI allocable to a foreign partner shall not be taken into account.

(4) ***Other rules*** —

(i) ***Exclusion of items allocated to U.S. partners.*** Except as provided in § 1.1446-5(e), in computing partnership ECTI, the partnership shall not take into account any item of income, gain, loss, or deduction to the extent allocable to any partner that is not a foreign partner, as that term is defined in § 1.1446-1(c).

(ii) ***Partnership credits.*** See § 1.1446-3(a) providing that the 1446 tax is computed without regard to a partner's distributive share of the partnership's tax credits.

(iii) ***Special rule for qualified holders.*** With respect to a foreign partner that is a withholding qualified holder (as defined in § 1.1445-1(g)(11)), the foreign partner's allocable share of partnership ECTI does not include gain or loss that is not taken into account under § 1.897(l)-1(b) and that is not otherwise treated as effectively connected with a trade or business in the United States. The partnership must have received from the partner a valid certificate of non-foreign status (including a Form W-8EXP) described in § 1.1445-2(b)(2)(i) or § 1.1445-5(b)(3)(ii). See § 1.1446-1(c)(2)(ii)(G) and (H) regarding documentation of withholding qualified holders.

(5) ***Examples.*** The following examples illustrate the application of this section. In considering the examples, disregard the potential application of § 1.1446-3(b)(2)(v)(F) (relating to the de minimis exception to paying 1446 tax). The examples are as follows:

Example 1. Limitation on capital losses. PRS partnership has two equal partners, A and B. A is a nonresident alien and B is a U.S. citizen. A provides PRS with a valid Form W-8BEN, and B provides PRS with a valid Form W-9. PRS has the following annualized tax items for the relevant installment period, all of which are effectively connected with its U.S. trade or business and are allocated equally between A and B: $100 of long-term capital gain, $400 of long-term capital loss, $300 of ordinary income, and $100 of ordinary deductions. Assume that these allocations are respected under section 704(b) and the regulations thereunder. Accordingly, A's allocable share of PRS's effectively connected items includes $50 of long-term capital gain, $200 of long-term capital loss, $150 of ordinary income, and $50 of ordinary deductions. In determining A's allocable share of partnership ECTI, the amount of the long-term capital loss that may be taken into account pursuant to paragraph (b)(3)(v) of this section is limited to A's allocable share of gain from the sale or exchange of capital assets. Accordingly, A's share of partnership ECTI allocable under section 704 pursuant to § 1.1446-2 is $100 ($150 of ordinary income less $50 of ordinary deductions, plus $50 of capital gain less $50 of capital loss).

Example 2. Limitation on capital losses—special allocations. PRS partnership has two equal partners, A and B. A and B are both nonresident aliens. A and B each provide PRS with a valid Form W-8BEN. PRS has the following annualized tax items for the relevant installment period, all of which are effectively connected with its U.S. trade or business: $200 of long-term capital gain, $200 of long-term capital loss, and $400 of ordinary income. A and B have equal shares in the ordinary income, however, pursuant to the partnership agreement, capital gains and losses are subject to special allocations. The long-term capital gain is allocable to A, and the long-term capital loss is allocable to B. Assume that these allocations are respected under section 704(b) and the regulations thereunder. Pursuant to paragraph (b)(3)(v) of this section, A's allocable

share of partnership ECTI under § 1.1446-2 is $400 (consisting of $200 of ordinary income and $200 of long-term capital gain), and B's allocable share of partnership ECTI is $200 (consisting of $200 of ordinary income).

Example 3. Withholding tax obligation where partner has net operating losses. PRS partnership has two equal partners, FC, a foreign corporation, and DC, a domestic corporation. FC and DC provide a valid Form W-8BEN and Form W-9, respectively, to PRS. Both FC and PRS are on a calendar taxable year. PRS is engaged in the conduct of a trade or business in the United States and for its first installment period during its taxable year has $100 of annualized ECTI that is allocable to FC. As of the beginning of the taxable year, FC had an unused effectively connected net operating loss carryover in the amount of $300. FC's net operating loss carryover is not taken into account in determining FC's allocable share of partnership ECTI under § 1.1446-2 and, absent the application of § 1.1446-6 (permitting a foreign partner to certify deductions and losses reasonably expected to be available to reduce the partner's U.S. income tax liability on the effectively connected income or gain allocable from the partnership), is not considered in computing the 1446 tax installment payment due on behalf of FC. Accordingly, PRS must pay 1446 tax with respect to the $100 of ECTI allocable to FC.

[T.D. 9200, 70 FR 28717, May 18, 2005, as amended by T.D. 9394, 73 FR 23074, Apr. 29, 2008; T.D. 9971, 87 FR 80066, Dec. 29, 2022]

§ 1.1446-3 Time and manner of calculating and paying over the 1446 tax.

(a) ***In general*** —

(1) ***Calculating 1446 tax.*** This section provides rules for calculating, reporting, and paying over the section 1446 withholding tax (1446 tax). A partnership's 1446 tax equals the amount determined under this section and shall be paid in installments during the partnership's taxable year (see paragraph (d)(1) of this section for installment payment due dates), with any remaining tax due paid with the partnership's annual return required to be filed pursuant to paragraph (d) of this section. For these purposes, a partnership shall not take into account either a partner's liability for any other tax imposed under any other provision of the Internal Revenue Code (e.g., section 55 or 884) or a partner's distributive share of the partnership's tax credits when determining the amount of the partnership's 1446 tax.

(2) ***Applicable percentage*** —

(i) ***In general.*** Except as provided in this paragraph (a)(2), in the case of a foreign partner that is a corporation for U.S. tax purposes, the applicable percentage is the highest rate of tax specified in section 11(b) for such taxable year. Except as provided in this paragraph (a)(2) and § 1.1446-5, in the case of a foreign partner that is not a corporation for U.S. tax purposes (e.g., a partnership, individual, trust or estate), the applicable percentage is the highest rate of tax specified in section 1.

(ii) ***Special types of income or gain.*** Except as otherwise provided, a partnership is permitted to consider as the applicable percentage under this paragraph (a)(2) the highest rate of tax applicable to a particular type of income or gain allocable to a partner (e.g., long-term capital gain allocable to a non-corporate partner, unrecaptured section 1250 gain, collectibles gain under section 1(h)), to the extent of a partner's allocable share of such income or gain. Consideration of the highest rate of tax applicable to a particular type of income or gain under

the previous sentence shall be made without regard to the amount of such partner's income. A partnership is not permitted to consider the highest rate of tax applicable to a particular type of income or gain under this paragraph (a)(2)(ii) if the application of the preferential rate depends upon the corporate or non-corporate status of the person reporting the income or gain and, either no documentation has been provided to the partnership under § 1.1446-1 to establish the corporate or non-corporate status of the partner required to pay tax on the income or gain, or the partnership is otherwise required to compute and pay 1446 tax on such portion of the income or gain using the highest applicable percentage under section 1446(b). See e.g., §§ 1.1446-1(c)(3) (presumption of foreign status in the absence of documentation) and 1.1446-5(c)(2) (requirement to pay 1446 tax at higher of rates in section 1446(b) where a lower-tier partnership cannot reliably associate income with a partner of the upper-tier partnership).

(b) ***Installment payments*** —

(1) ***In general.*** Except as provided in § 1.1446-4 for certain publicly traded partnerships, a partnership must pay its 1446 tax by making installment payments of the 1446 tax based on the amount of partnership effectively connected taxable income (ECTI) allocable under section 704 to its foreign partners, without regard to whether the partnership makes any distributions to its partners during the partnership's taxable year. The amount of the installment payments is determined in accordance with this paragraph (b), and the tax must be paid at the times set forth in paragraph (d) of this section. Subject to paragraphs (b)(2)(v) and (b)(3)(ii) of this section, in computing its first installment of 1446 tax for a taxable year, a partnership must decide whether it will pay its 1446 tax for the entire taxable year by using the safe harbor set forth in paragraph (b)(3)(i) of this section, or by using one of several annualization methods available under paragraph (b)(2)(ii) of this section for computing partnership ECTI allocable to foreign partners. In the case of a partnership's underpayment of an installment of 1446 tax, the partnership shall be subject to an addition to the tax equal to the amount determined under section 6655, as modified by this section, as if such partnership were a corporation, as well as any other applicable interest and penalties. See § 1.1446-3(f). Section 6425 (permitting an adjustment for an overpayment of estimated tax by a corporation) shall not apply to a partnership's payment of its 1446 tax.

(2) ***Calculation*** —

(i) ***Application of the principles of section 6655*** —

(A) ***In general.*** Installment payments of 1446 tax required during the partnership's taxable year are based upon partnership ECTI for the portion of the partnership taxable year to which the payments relate, and, except as set forth in this paragraph (b)(2) or paragraph (b)(3) of this section, shall be calculated using the principles of section 6655. The principles of section 6655, except as otherwise provided in § 1.6655-2, are applied to annualize the partnership's items of effectively connected income, gain, loss, and deduction to determine each foreign partner's allocable share of partnership ECTI. Each foreign partner's allocable share of partnership ECTI is then multiplied by the relevant applicable percentage for the type of income allocable to the foreign partner under paragraph (a)(2) of this section. The respective 1446 tax amounts are then added for each foreign partner to yield an annualized 1446 tax with respect to such partner. The installment of 1446 tax due with respect to a foreign partner equals the excess of the section 6655(e)(2)(B)(ii) percentage of the annualized 1446 tax for that partner (or, if applicable, the adjusted seasonal amount) for the relevant installment period, over the aggregate amount of 1446 tax installment payments previously paid with respect to that partner during the

partnership's taxable year. The partnership's total 1446 tax installment payment equals the sum of the installment payments due for such period on behalf of all the partnership's foreign partners.

(B) ***Calculation rules when certificates are submitted under § 1.1446-6.***

(*1*) To the extent applicable, in computing the 1446 tax due with respect to a foreign partner, a partnership may consider a certificate received from such partner under § 1.1446-6(c)(1)(i) or (ii) and the amount of state and local taxes permitted to be considered under § 1.1446-6(c)(1)(iii). For the purposes of applying this paragraph (b)(2)(i)(B), a partnership shall first annualize the partner's allocable share of the partnership's items of effectively connected income, gain, deduction, and loss before—

(*i*) Considering under § 1.1446-6(c)(1)(i) the partner's certified deductions and losses;

(*ii*) Determining under § 1.1446-6(c)(1)(ii) whether the 1446 tax otherwise due with respect to that partner is less than $1,000 (determined with regard to any certified deductions or losses); or

(*iii*) Considering under § 1.1446-6(c)(1)(iii) the amount of state and local taxes withheld and remitted on behalf of the partner.

(*2*) The amount of the limitation provided in § 1.1446-6(c)(1)(i)(C) shall be based on the partner's allocable share of these annualized amounts. For any installment period in which the partnership considers a partner's certificate, the partnership must also consider the following events to the extent they occur prior to the due date for paying the 1446 tax for such installment period—

(*i*) The receipt of an updated certificate or status update from the partner under § 1.1446-6(c)(2)(ii)(B) certifying an amount of deductions or losses that is less than the amount reflected on the superseded certificate (see § 1.1446-6(e)(2) *Example 4*);

(*ii*) The failure to receive an updated certificate or status update from the partner that should have been provided under § 1.1446-6(c)(2)(ii)(B); and

(*iii*) The receipt of a notification from the IRS under § 1.1446-6(c)(3) or (5) (see § 1.1446-6(e)(2) *Example 5*).

(ii) ***Annualization methods.*** A partnership that decides to annualize its income for the taxable year shall use one of the annualization methods set forth in section 6655(e) and the regulations thereunder, and as described in the forms and instructions for Form 8804, “Annual Return for Partnership Withholding Tax (Section 1446),” Form 8805, “Foreign Partner's Information Statement of Section 1446 Withholding Tax,” and Form 8813, “Partnership Withholding Tax Payment Voucher.”

(iii) ***Partner's estimated tax payments.*** In computing its installment payments of 1446 tax, a partnership may not take into account a partner's estimated tax payments.

(iv) ***Partner whose interest terminates during the partnership's taxable year.*** If a partner's interest in the partnership terminates prior to the end of the partnership's taxable year, the partnership shall take into account the income that is allocable to the partner for the portion of the partnership taxable year that the person was a partner.

(v) ***Exceptions and modifications to the application of the principles under section 6655.*** To the extent not otherwise modified in §§ 1.1446-1 through 1.1446-7 or inconsistent with those rules, the principles of section 6655 apply to the calculation of the installment payments of 1446 tax made by a partnership as set forth in this paragraph (b)(2)(v).

(A) ***Inapplicability of special rules for large corporations.*** The principles of section 6655(d)(2), concerning large corporations (as defined in section 6655(g)(2)), shall not apply.

(B) ***Inapplicability of special rules regarding early refunds.*** The principles of section 6655(h), applicable to amounts excessively credited or refunded under section 6425, shall not apply. See paragraph (b)(1) of this section providing that section 6425 shall not apply for purposes of the 1446 tax. This paragraph (b)(2)(v)(B) shall apply to 1446 tax paid by a partnership or nominee, as well as to amounts that a partner is deemed to have paid for estimated tax purposes by reason of the partnership's or nominee's 1446 tax payments under § 1.1446-3(d)(1)(i).

(C) ***Period of underpayment.*** The period of the underpayment set forth in section 6655(b)(2) shall end on the earlier of the date the partnership is required to file Form 8804 (as provided in paragraph (d)(1)(iii) of this section and without regard to extensions), or with respect to any portion of the underpayment, the date on which such portion is paid.

(D) ***Other taxes.*** Section 6655 shall be applied without regard to any references to alternative minimum taxable income and modified alternative minimum taxable income.

(E) ***1446 tax treated as tax under section 11.*** The principles of section 6655(g)(1) shall be applied to treat the 1446 tax as a tax imposed by section 11, and any partnership required to pay such tax shall be treated as a corporation.

(F) ***Application of section 6655(f).*** A partnership subject to section 1446 shall apply section 6655(f) after aggregating the 1446 tax due (or any installment of such tax) for all its foreign partners. See § 1.1446-6(c)(1)(ii) for an exception to this rule when a nonresident alien partner certifies to the partnership that the partnership investment is the nonresident alien partner's only activity giving rise to effectively connected items.

(G) ***Application of section 6655(i).*** If a partnership has a taxable year of less than 12 months, the partnership is required to pay 1446 tax (including installments of such tax) in accordance with this section § 1.1446-3, if the partnership has ECTI allocable under section 704 to foreign partners. In such a case, the partnership shall adjust its installment payments of 1446 tax in a reasonable manner (e.g., the annualized amounts of ECTI estimated to be allocable to a foreign partner, and the section 6655(e)(2)(B)(ii) percentage to be applied to each installment) to account for the short-taxable year. However, if the partnership's taxable year is a period of less than 4 months, the partnership shall not be required to make installment payments of 1446 tax, but will only be required to file Forms 8804 and 8805 in accordance with this section § 1.1446-3, and report and pay the appropriate 1446 tax for the short-taxable year.

(H) ***Current year tax safe harbor.*** The safe harbor set forth in section 6655(d)(1)(B)(i) shall apply to a partnership subject to section 1446.

(I) ***Prior year tax safe harbor.*** The safe harbor set forth in section 6655(d)(1)(B)(ii) shall not apply and instead the safe harbor set forth in paragraph (b)(3) of this section applies.

(3) ***1446 tax safe harbor*** —

(i) ***In general.*** The addition to tax under section 6655 shall not apply to a partnership with respect to a current installment of 1446 tax if—

(A) The average of the amount of the current installment and prior installments during the taxable year is at least 25 percent of the total 1446 tax (without regard to § 1.1446-6) for the prior taxable year;

(B) The prior taxable year consisted of twelve months;

(C) The partnership timely files (including extensions) an information return under section 6031 for the prior year; and

(D) The amount of ECTI for the prior taxable year is not less than 50 percent of the ECTI shown on the annual return of section 1446 withholding tax that is (or will be) timely filed for the current year.

(ii) ***Permission to change to standard annualization method.*** Except as otherwise provided in this paragraph (b)(3)(ii), if a partnership decides to pay its 1446 tax for the first installment period based upon the safe harbor method set forth in paragraph (b)(3)(i), the partnership must use the safe harbor method for each installment payment made during the partnership's taxable year. Notwithstanding the previous sentence, if a partnership paying over 1446 tax during the taxable year pursuant to this paragraph (b)(3) determines during an installment period (based upon the standard option annualization method set forth in section 6655(e) and the regulations thereunder, as modified by the forms and instructions to Forms 8804, 8805, and 8813) that it will not qualify for the safe harbor in this paragraph (b)(3) because the prior year's ECTI will not meet the 50-percent threshold in paragraph (b)(3)(i)(D) of this section, then the partnership is permitted, without being subject to the addition to the tax under section 6655 (as applied through this section), to pay over its 1446 tax for the period in which such determination is made, and all subsequent installment periods during the taxable year, using the standard option annualization method. A change pursuant to this paragraph shall be disclosed in a statement attached to the Form 8804 the partnership files for the taxable year and shall include information to allow the IRS to determine whether the change was appropriate.

(c) ***Coordination with other withholding rules*** —

(1) ***Fixed or determinable, annual or periodical income.*** Fixed or determinable, annual or periodical income subject to tax under section 871(a) or section 881 is not subject to withholding under section 1446, and such income is subject to the withholding requirements of sections 1441 and 1442 and the regulations thereunder.

(2) ***Real property gains*** —

(i) ***Domestic partnerships.*** Except as otherwise provided in this paragraph (c)(2), a domestic partnership that is otherwise subject to the withholding requirements of sections 1445 and 1446 will be subject to the payment and reporting requirements of section 1446 only and not

section 1445(e)(1) and the regulations thereunder, with respect to partnership gain from the disposition of a U.S. real property interest (as defined in section 897(c)). A partnership that has complied with the requirements of section 1446 will be deemed to satisfy the withholding requirements of section 1445 and the regulations thereunder. However, a domestic partnership that would otherwise be exempt from section 1445 withholding by operation of a nonrecognition provision must continue to comply with the requirements of § 1.1445-5(b)(2). In the event that amounts are withheld under section 1445(e) at the time of the disposition of a U.S. real property interest, such amounts may be credited against the partnership's 1446 tax. A partnership that fails to comply fully with the requirements of section 1446 pursuant to this paragraph (c)(2) shall be liable for any unpaid 1446 tax and subject to any applicable addition to the tax, interest, and penalties under section 1446. See § 1.1446-4(f)(4) for rules coordinating the withholding liability of publicly traded partnerships under sections 1445 and 1446.

(ii) ***Foreign partnerships.*** A foreign partnership that is subject to withholding under section 1445(a) during its taxable year may credit the amount withheld under section 1445(a) against its section 1446 tax liability for that taxable year only to the extent such amount is allocable to foreign partners.

(3) ***Coordination with section 1443.*** A partnership that has ECTI allocable under section 704 to a foreign organization described in section 501(c) shall be required to pay 1446 tax on such ECTI only to the extent such ECTI is includible under section 512 and section 513 in computing the organization's unrelated business taxable income. The certificate procedure available under § 1.1441-9(b)(1) by which a partner may set forth the amounts it believes will and will not be includible in its computation of unrelated business taxable income under section 512 and section 513 shall also apply to a partner in a partnership subject to section 1446. Such certificate shall be made by a partner in the same manner as under § 1.1441-9(b)(2). A partnership that determines that the partner's certificate as to certain partnership items is unreliable or lacking must presume, consistent with § 1.1441-9(b)(3) (regarding amounts includible under section 512 in computing the organization's unrelated business taxable income), that such partnership items would be includible in computing the partner's UBTI.

(4) ***Coordination with section 1446(f).*** A partnership that is directly or indirectly subject to withholding under section 1446(f)(1) during its taxable year may credit the amount withheld under section 1446(f)(1) against its section 1446 tax liability for that taxable year only to the extent the amount is allocable to foreign partners.

(d) ***Reporting and crediting the 1446 tax*** —

(1) ***Reporting 1446 tax.*** This paragraph (d) sets forth the rules for reporting and crediting the 1446 tax paid by a partnership. To the extent that 1446 tax is paid on ECTI allocable to a domestic trust (including a grantor or other person treated as an owner of a portion of such trust) or a grantor or other person treated as the owner of a portion of a foreign trust, the rules of this paragraph (d) applicable to a foreign trust or its beneficiaries shall be applied to such domestic or foreign trust and its beneficiaries or owners, as applicable, so that appropriate credit for the 1446 tax may be claimed by the trust, beneficiary, grantor, or other person.

(i) ***Reporting of installment tax payments and notification to partners of installment tax payments.*** Each partnership required to make an installment payment of 1446 tax must file Form 8813, “Partnership Withholding Tax Payment Voucher (Section 1446),” in accordance with the instructions to that form. Form 8813 is generally used to transmit an installment payment of

1446 tax to the IRS with respect to partnership ECTI estimated to be allocated to foreign partners. However, see § 1.1446-6(d)(3) (relating to circumstances where a partnership must file Form 8813 when no payment is required under section 1446). Except as provided in this section, a partnership must notify each foreign partner of the 1446 tax paid on the partner's behalf when the partnership makes an installment payment of 1446 tax. The notice required to be given to a foreign partner under the previous sentence must be provided within 10 days of the installment payment due date, or, if paid later, the date such installment payment is made. A foreign partner generally may credit an installment of 1446 tax paid by the partnership on the partner's behalf against the partner's estimated tax that the partner must pay during the partner's own taxable year. See § 1.1446-5(b) (relating to tiered partnership structures). However, a foreign partner may not obtain an early refund of such amounts under the estimated tax rules. See § 1.1446-3(b)(2)(v)(B). See paragraph (d)(2) of this section for the amount of 1446 tax a partner may credit against its U.S. income tax liability. No particular form is required for a partnership's notification to a foreign partner, but each notification must include the partnership's name, the partnership's Taxpayer Identification Number (TIN), the partnership's address, the partner's name, the partner's TIN, the partner's address, the annualized ECTI estimated to be allocated to the foreign partner (or prior year's safe harbor amount, if applicable), and the amount of tax paid on behalf of the partner for both the current and any prior installment periods during the partnership's taxable year. Notwithstanding any other provision of this paragraph (d), a withholding agent is not required to notify a partner of an installment of 1446 tax paid on the partner's behalf, unless requested by the partner, if—

(A) The partnership's agent responsible for providing notice pursuant to this paragraph is the same person that acts as an agent of the foreign partner for purposes of filing the partner's U.S. Federal income tax return for the partner's taxable year that includes the installment payment date; or

(B) The partnership has at least 500 foreign partners and the total 1446 tax that the partnership determines will be required to be paid for the partnership taxable year on behalf of such partner (based on paragraph (b)(2)(ii) or (3) of this section) with respect to the partner's allocable share of ECTI is less than $1,000.

(ii) ***Payment due dates.*** The 1446 tax is calculated based on partnership ECTI allocable under section 704 to foreign partners during the partnership's taxable year, as determined under section 706. Installment payments of the 1446 tax generally must be made during the partnership's taxable year in which such income is derived. A partnership must pay to the Internal Revenue Service a portion of its estimated annual 1446 tax in installments on or before the 15th day of the fourth, sixth, ninth, and twelfth months of the partnership's taxable year as provided in section 6655. Any additional amount determined to be due is to be paid with the filing of the annual return of tax required under paragraph (d)(1)(iii) of this section and clearly designated as for the prior taxable year. Form 8813 should not be submitted for a payment made under the preceding sentence.

(iii) ***Annual return and notification to partners.*** Every partnership (except a publicly traded partnership subject to § 1.1446-4) that has effectively connected gross income for the partnership's taxable year allocable under section 704 to one or more of its foreign partners (or is treated as having paid 1446 tax under § 1.1446-5(b)), must file Form 8804, “Annual Return for Partnership Withholding Tax (Section 1446).” Additionally, every partnership that is required to file Form 8804 also must file Form 8805, “Foreign Partner's Information Statement of Section 1446 Withholding Tax,” for each of its foreign partners on whose behalf it paid 1446 tax, and

furnish Form 8804 and the Forms 8805 to the Internal Revenue Service and the respective Form 8805 to each of its partners. Notwithstanding the previous sentence, a partnership that considers a foreign partner's certificate under § 1.1446-6 when computing its 1446 tax on Form 8804 is required to furnish such partner and the Internal Revenue Service a Form 8805, even if the form submitted to the partner shows no payment of 1446 tax on behalf of the partner. Forms 8804 and 8805 are separate from Form 1065, "U.S. Return of Partnership Income," and the attachments thereto, and are not to be filed as part of the partnership's Form 1065. A partnership must generally file Forms 8804 and 8805 on or before the due date for filing the partnership's Form 1065. See § 1.6031(a)-1(c) for rules concerning the due date of a partnership's Form 1065. However, with respect to partnerships described in § 1.6081-5(a)(1), Forms 8804 and 8805 are not due until the 15th day of the sixth month following the close of the partnership's taxable year.

(iv) ***Information provided to beneficiaries of foreign trusts and estates.*** A foreign trust or estate that is a partner in a partnership subject to withholding under section 1446 shall be provided Form 8805 by the partnership. The foreign trust or estate must provide to each of its beneficiaries a copy of the Form 8805 furnished by the partnership. In addition, the foreign trust or estate must provide a statement for each of its beneficiaries to inform each beneficiary of the amount of the credit that may be claimed under section 33 (as determined under this section) for the 1446 tax paid by the partnership. Until an official Internal Revenue Service form is available, the statement from a foreign trust or estate that is described in this paragraph (d)(1)(iv) shall contain the following information—

(A) Name, address, and TIN of the foreign trust or estate;

(B) Name, address, and TIN of the partnership;

(C) The amount of the partnership's ECTI allocated to the foreign trust or estate for the partnership taxable year (as shown on the Form 8805 provided to the trust or estate);

(D) The amount of 1446 tax paid by the partnership on behalf of the foreign trust or estate (as shown on Form 8805 to the trust or estate);

(E) Name, address, and TIN of the beneficiary of the foreign trust or estate;

(F) The amount of the partnership's ECTI allocated to the trust or estate for purposes of section 1446 that is to be included in the beneficiary's gross income; and

(G) The amount of 1446 tax paid by the partnership on behalf of the foreign trust or estate that the beneficiary is entitled to claim on its return as a credit under section 33.

(v) ***Attachments required of foreign trusts and estates.*** The statement furnished to each foreign beneficiary under this paragraph (d)(1) must also be attached to the foreign trust or estate's U.S. Federal income tax return filed for the taxable year that includes the installment periods to which the statement relates.

(vi) ***Attachments required of beneficiaries of foreign trusts and estates.*** The beneficiary of the foreign trust or estate must attach the statement provided by the trust or estate pursuant to paragraph (d)(1)(iv) of this section, along with a copy of the Form 8805 furnished by the partnership to such trust or estate, to its U.S. income tax return for the year in which it claims a credit for the 1446 tax. See § 1.1446-3(d)(2)(ii) for additional rules regarding a partner or beneficial owner claiming a credit for the 1446 tax.

(vii) ***Information provided to beneficiaries of foreign trusts and estates that are partners in certain publicly traded partnerships.*** A statement similar to the statement required by paragraph (d)(1)(iv) of this section shall be provided by trusts or estates that hold interests in publicly traded partnerships subject to § 1.1446-4.

(2) ***Crediting 1446 tax against a partner's U.S. tax liability*** —

(i) ***In general.*** A partnership's payment of 1446 tax on the portion of ECTI allocable to a foreign partner generally relates to the partner's U.S. income tax liability for the partner's taxable year in which the partner is subject to U.S. tax on that income. Subject to paragraphs (d)(2)(ii) and (iii) of this section, a partner may claim as a credit under section 33 the 1446 tax paid by the partnership with respect to ECTI allocable to that partner. The partner may not claim an early refund of these amounts under the estimated tax rules. See paragraph (d)(1)(i) of this section regarding a partner's ability to credit an installment of 1446 tax paid on the partner's behalf against the partner's estimated tax payments due for the taxable year. See also § 1.1446-5(b) (relating to tiered partnership structures).

(ii) ***Substantiation for purposes of claiming the credit under section 33.*** A partner may credit the amount paid under section 1446 with respect to such partner against its U.S. income tax liability only if it attaches proof of payment to its U.S. income tax return for the partner's taxable year in which the items comprising such partner's allocable share of partnership ECTI are included in the partner's income. Except as provided in the next sentence, proof of payment consists of a copy of the Form 8805 the partnership provides to the partner (or in the case of a beneficiary of a foreign trust or estate, the statement required under paragraph (d)(1)(iv) or (vii) of this section to be provided by such trust or estate and a copy of the related Form 8805 furnished to such trust or estate), but only if the name and TIN on the Form 8805 (or the statement provided by a foreign trust or estate) match the name and TIN on the partner's U.S. tax return, and such form (or statement) identifies the partner (or beneficiary) as the person entitled to the credit under section 33. In the case of a partner of a publicly traded partnership that is subject to withholding on distributions under § 1.1446-4, proof of payment consists of a copy of the Form 1042-S, “Foreign Person's U.S. Source Income Subject to Withholding,” provided to the partner by the partnership.

(iii) ***Special rules for apportioning the tax credit under section 33*** —

(A) ***Foreign trusts and estates.*** Section 1446 tax paid on the portion of ECTI allocable under section 704 to a foreign trust or estate that the foreign trust or estate may claim as a credit under section 33 shall bear the same ratio to the total 1446 tax paid on behalf of the trust or estate as the total ECTI allocable to such trust or estate and not distributed (or treated as distributed) to the beneficiaries of such trust or estate, and, accordingly not deducted under section 651 or section 661 in calculating the trust or estate's taxable income, bears to the total ECTI allocable to such trust or estate. The 1446 tax that a foreign trust or estate is not entitled to claim as a credit under this paragraph (d)(2) may be claimed as a credit by the beneficiary of such trust or estate that includes the partnership ECTI allocated to the trust or estate in gross income under section 652 or section 662 (whether distributed or deemed to be distributed and with the same character as effectively connected income as in the hands of the trust or estate). In the case of a foreign trust or estate with multiple beneficiaries, each beneficiary may claim a portion of the 1446 tax that may be claimed by all beneficiaries under the previous sentence as a credit in the same proportion as the amount of ECTI included in such beneficiary's gross

income bears to the total amount of ECTI included by all beneficiaries. The trust or estate must provide each beneficiary with a copy of the Form 8805 provided to it by the partnership and prepare the statement required by paragraph (d)(1)(iv) of this section.

(B) ***Use of domestic trusts to circumvent section 1446.*** This paragraph (d)(2)(iii)(B) shall apply if a partnership knows or has reason to know that a foreign person holds its interest in the partnership through a domestic trust, and such domestic trust was formed or availed of with a principal purpose of avoiding the 1446 tax. The use of a domestic trust may have a principal purpose of avoiding the 1446 tax even though the tax avoidance purpose is outweighed by other purposes when taken together. In such case, a partnership is required to pay 1446 tax under this paragraph as if the domestic trust was a foreign trust for purposes of section 1446 and the regulations thereunder. Accordingly, all applicable additions to the tax, interest, and penalties shall apply to the partnership for its failure to pay 1446 tax under this paragraph (d)(2)(iii)(B), commencing with the installment period during which the partnership knows or has reason to know that this paragraph (d)(2)(iii)(B) applies. A publicly traded partnership within the meaning of § 1.1446-4 (or a nominee required to pay 1446 tax under § 1.1446-4) will not be considered to know or have reason to know a domestic trust is being used to avoid the 1446 tax under this paragraph (d)(2)(iii)(B), provided the interest held in such entity by the domestic trust is publicly traded.

(iv) ***Refunds to withholding agent.*** A withholding agent (*i.e.*, the partnership) may obtain a refund of the 1446 tax paid (or deemed paid under § 1.1446-5(b)) to the extent of the excess of the amount paid to the Internal Revenue Service by the partnership, over the partnership's section 1446 tax liability as determined by the sum of the total tax creditable to each partner indicated on all Forms 8805 for the taxable year. If a partnership issues Form 8805 to a partner, then the partnership may not claim a refund for any amount of tax shown on that form as paid on behalf of the partner. If a partnership incorrectly withholds upon a United States person under section 1446 of the Internal Revenue Code and issues a Form 8805 to that person, the partnership may not file for a refund of the amount incorrectly withheld. Instead, the United States person may file for a refund of that amount on its annual return. For rules concerning refunds to withholding agents who pay 1446 tax on distributions of effectively connected income or gain under § 1.1446-4 (*i.e.*, publicly traded partnerships or nominees), see § 1.1464-1.

(v) ***1446 tax treated as cash distribution to partners.*** Except as otherwise provided in this paragraph (d)(2)(v), a partnership's payment of 1446 tax on behalf of a foreign partner is treated under section 1446(d) and this section as a deemed distribution of money to the partner on the earliest of the day on which the partnership paid the tax, the last day of the partnership's taxable year for which the amount was paid, or the last day on which the partner owned an interest in the partnership during the taxable year for which the tax was paid. However, a deemed distribution of money under section 1446(d) resulting from a partnership's installment payment of 1446 tax on behalf of a partner is treated as an advance or drawing of money under § 1.731-1(a)(1)(ii) to the extent of the partner's distributive share of income for the partnership taxable year. The rule treating a deemed distribution as an advance or drawing of money under this paragraph (d)(2)(v) applies only for purposes of determining the tax results of the deemed distribution to the partner under sections 705, 731, and 733, and does not affect the date that the partnership is considered to have paid any installment of 1446 tax for purposes of section 6655 (as applied through this section) or the date a foreign partner is deemed to have paid estimated tax by reason of such installment payment. See paragraph (d)(1)(i) of this section

(permitting a partner to credit 1446 tax paid on the partner's behalf against the partner's estimated tax obligation). An amount treated as an advance or drawing of money is taken into account at the end of the partnership taxable year or the last day during the partnership's taxable year on which the partner owned an interest in the partnership. Any 1446 tax paid after the close of the partnership's taxable year, including amounts paid with the filing of Form 8804, that are on account of partnership ECTI allocated to partners for the prior taxable year shall be treated under section 1446(d) and this section as a distribution from the partnership on the earlier of the last day of the partnership's prior taxable year for which the tax is paid, or the last day in such prior taxable year on which such foreign partner held an interest in the partnership.

(vi) ***Examples.*** The following examples illustrate the application of this section. In considering the examples, disregard the potential application of paragraph (b)(2)(v)(F) of this section (relating to the *de minimis* exception to paying 1446 tax). The examples are as follows:

(A) ***Example 1: Simple trust that reports entire amount of ECTI.*** PRS is a partnership that has two partners, FT, a foreign trust, and A, a U.S. person. FT is a simple trust under section 651. FT and A each provide PRS with a valid Form W-8BEN and Form W-9, respectively. FT has one beneficiary, NRA, a nonresident alien. PRS and FT each maintain a calendar taxable year. PRS estimated for each installment period during the partnership's taxable year that FT would be allocated $100 of ECTI for the taxable year, and that all such ECTI would be ordinary in character. Assume that the allocation of the $100 would be respected under section 704(b) and the regulations thereunder. PRS pays installments of 1446 tax based upon its estimates and timely pays a total of $37 of 1446 tax over the course of the partnership's taxable year ($100 ECTI × .37). Assume that PRS' estimates of ECTI allocable to FT during the taxable year equal the actual amount of ECTI allocable to FT for the taxable year. Assume also that FT's only income for the taxable year is the $100 of income from PRS, and that, pursuant to the terms of the trust's governing instrument and local law, the $100 of ECTI is not included in FT's fiduciary accounting income and the deemed distribution of the $37 withholding tax paid under paragraph (d)(2)(v) of this section is not included in FT's fiduciary accounting income. Accordingly, the $100 of ECTI is not income required to be distributed by FT, and FT may not claim a deduction under section 651 for this amount. FT must report the $100 of ECTI in its gross income and may claim a credit under section 33 as determined under paragraph (d)(2)(iii) of this section of $37 for the 1446 tax paid by PRS. NRA is not required to include any of the ECTI in gross income and accordingly may not claim a credit for any amount of the $37 of 1446 tax PRS paid.

(B) ***Example 2: Simple trust that distributes a portion of ECTI to the beneficiary.*** Assume the same facts as in paragraph (d)(2)(vi)(A) of this section (*Example 1*), except that PRS distributes $60 to FT, which FT includes in its fiduciary accounting income under local law. FT will report the $100 of ECTI in its gross income and may claim a deduction for the $60 required to be distributed under section 651(a) to NRA. Pursuant to paragraph (d)(2)(iii) of this section, FT may claim a $14.8 credit under section 33 for the 1446 tax PRS paid ($40/$100 multiplied by $37). NRA is required to include the $60 of the ECTI in gross income under section 652 (as ECTI) and may claim a $22.2 credit under section 33 for the 1446 tax PRS paid ($37 less $14.8 or $60/$100 multiplied by $37).

(C) ***Example 3: Complex trust that distributes entire ECTI to the beneficiary.*** Assume the same facts as in paragraph (d)(2)(vi)(A) of this section (*Example 1*), except that FT is a complex trust under section 661. PRS distributes $60 to FT, which FT includes in its fiduciary

accounting income. FT distributes the $60 of fiduciary accounting income to NRA and also properly distributes an additional $40 to NRA from FT's principal. FT will report the $100 of ECTI in its gross income and may deduct the $60 required to be distributed to NRA under section 661(a)(1) and may deduct the $40 distributed to NRA under section 661(a)(2). Pursuant to paragraph (d)(2)(iii) of this section, FT may not claim a credit under section 33 for any of the $37 of 1446 tax paid by PRS. NRA is required to include $100 of the ECTI in gross income under section 662 (as ECTI) and may claim a $37 credit under section 33 for the 1446 tax paid by PRS ($37 less $0).

(e) ***Liability of partnership for failure to withhold*** —

(1) ***In general.*** Every partnership required to pay 1446 tax is made liable for that tax by section 1461. Therefore, a partnership that is required to pay 1446 tax but fails to do so, or pays less than the amount required under this section, is liable under section 1461 for the payment of the tax required to be withheld under chapter 3 of the Internal Revenue Code and the regulations thereunder unless, and to the extent, the partnership can demonstrate pursuant to paragraph (e)(2) of this section, to the satisfaction of the Commissioner or his delegate, that a foreign partner has paid the full amount of tax required to be paid by such partner to the Internal Revenue Service. See paragraph (e)(3) of this section and section 1463 regarding a partnership's liability for penalties and interest even though a foreign partner has satisfied the underlying tax liability. See also § 1.1461-3 for applicable penalties when a partnership fails to pay 1446 tax. See paragraph (b) of this section for an addition to the tax under section 6655 when there is an underpayment of 1446 tax.

(2) ***Proof that tax liability has been satisfied and deemed payment of 1446 tax.*** Proof of payment of tax may be established for purposes of paragraph (e)(1) of this section consistent with § 1.1445-1(e)(3). Under that standard, a partnership must provide sufficient information to the IRS to determine that the partner's tax liability was satisfied or established to be zero in accordance with the rules of this section. Under this section, a partnership's liability for 1446 tax shall be deemed to have been satisfied (deemed payment), to the extent of the 1446 tax due with respect to the ECTI allocable to a foreign partner, on the later of the date that such partner is considered to have paid all tax that is required to be shown on such partner's U.S. income tax return under section 6513(a) and (b)(2) (prescribing the date tax is considered paid for purposes of sections 6511(b)(2), (c), and 6512), or the last date for payment of the 1446 tax without extensions (the unextended due date for Form 8804). The deemed payment rule of this paragraph (e)(2) shall apply for purposes sections of 1446, 1461, and 1463, and any additions to the tax, interest, or penalties potentially applicable to such partnership under section 1446, including sections 6601, 6651, and 6655. Any deemed payment of 1446 tax under this paragraph (e)(2) shall not be treated as a deemed distribution under section 1446(d) and this section.

(3) ***Liability for interest, penalties, and additions to the tax*** —

(i) ***Partnership.*** Notwithstanding paragraph (e)(2) of this section, a partnership that fails to pay 1446 tax is not relieved from liability under section 6655 (as applied through this section) or for interest under section 6601, when applicable. See § 1.1463-1. Such liability may exist even if there is no underlying tax liability due from a foreign partner on its allocable share of partnership ECTI. The addition to the tax under section 6655 or the interest charge under section 6601 that is required by those sections shall be imposed as set forth in those sections, as modified by this section. The section 6601 interest charge shall accrue beginning on the last date prescribed for payment of the 1446 tax due under section 1461 (which is the due date, without extensions, for filing Form 8804). The section 6601 interest charge shall stop accruing

on the 1446 tax liability on the date, and to the extent, that the unpaid tax liability under section 1446 is satisfied (or is deemed satisfied under this paragraph (e)). Further, a partnership's liability under section 6655 (as applied through this section) for any underpaid installment payment shall accrue beginning on the relevant installment payment date, and shall stop accruing on the earlier of the date (and to the extent) that the 1446 tax liability is actually satisfied or the date prescribed in paragraph (b)(2)(v)(C) of this section. See paragraph (e)(4) of this section for examples illustrating that a partner's payment of estimated tax has no effect on the partnership's calculation of its addition to the tax under section 6655 and this section. See § 1.1461-3 for a list of the additions to tax, interest, and penalties that may apply to a partnership that fails to comply with section 1446. See § 1.1446-6(d)(2)(i) for exceptions to the application of the addition to the tax under section 6655 (as applied through this section) when a partnership reasonably relies on a foreign partner's certificate to reduce 1446 tax.

(ii) ***Foreign partner.*** A foreign partner is permitted to reduce any addition to the tax under section 6654 or section 6655 by the amount of any section 6655 addition to the tax paid by the partnership with respect to the partnership's failure to pay adequate installment payments of the 1446 tax on ECTI allocable to the foreign partner.

(4) ***Examples.*** The following examples illustrate the application of this section. In considering the examples, disregard the potential application of paragraph (b)(2)(v)(F) of this section (relating to the *de minimis* exception to paying 1446 tax). Further, in each of the examples where a partnership is deemed to have paid 1446 tax with respect to ECTI allocable to a partner, it is assumed that the partnership has presented to the IRS the appropriate information under paragraph (e)(2) of this section for the IRS to conclude that the deemed payment is appropriate. The examples are as follows:

(i) ***Example 1: Foreign partnership fails to pay 1446 tax and sole foreign partner fails to pay all tax required to be shown on partner's U.S. income tax return.***

(A) PRS is a foreign partnership engaged in a trade or business in the United States and has two equal partners, A, a U.S. person, and B, a nonresident alien. PRS is described in § 1.6081-5(a) (PRS keeps its books and records outside the United States and Puerto Rico) and, therefore, is required to file Form 8804 by the 15th day of the 6th month following the close of its taxable year. Both partners and PRS are calendar year taxpayers. PRS has received a valid Form W-9 and W-8BEN from A and B, respectively, but has not received any other documents or certificates. B is engaged in multiple trades or businesses (including the PRS partnership) that give rise to effectively connected income. PRS will use an acceptable annualization method under this section for computing its 1446 tax.

(B) In PRS's first year of operations (Year 1), PRS estimates for each installment period described in § 1.1446-3 that B will be allocated $100 of ordinary ECTI for the taxable year. Therefore, for each installment period PRS is required to pay one fourth of the tax on the annualized ECTI allocable to B, or $9.25 (.25 × ($100 × .37)). PRS fails to make any installment payments. PRS's operations actually result in $100 of ECTI allocated to B. Therefore, PRS was required to have paid 1446 tax of $37 on or before the due date, without extensions, for filing its Form 8804 which is June 15, Year 2 (the last date prescribed for payment of the 1446 tax). PRS does not file Forms 8804 or 8805.

(C) B pays estimated taxes and makes the following payments on the following dates: June 15, Year 1—$20, September 15, Year 1—$15, and January 15, Year 2—$10. B's total estimated tax payments equal $45. B files its U.S. Federal income tax return timely on

June 15, Year 2, and reports all effectively connected income required to be shown on its return. Assume that B's total correct tax liability as shown on the return is $50. B does not make a payment with its return and so B still owes $5 to the Internal Revenue Service (excluding any interest, penalties, and additions to the tax that may apply). Assume that B is not subject to an addition to the tax under section 6654.

(D) Under the rules of paragraph (e)(2) of this section, for purposes of sections 1446, 1461, and 1463, PRS is not considered to have paid any 1446 tax because B has not paid all of B's U.S. income tax liability.

(E) Further, under the principles of section 6655 and the rules of § 1.1446-3(e), a partner's estimated tax payments will not affect the calculation of a partnership's addition to the tax. Accordingly, PRS will be liable under the principles of section 6655 and § 1.1446-3 for failing to withhold for each installment payment. The addition to the tax will accrue beginning with the due date of each installment payment on the $9.25 underpayment for each respective installment period and will continue to accrue until June 15, Year 2 (the date prescribed in paragraph (b)(2)(v)(C) of this section).

(F) Further, beginning on June 15, Year 2 (the last date prescribed for payment of 1446 tax without extensions), PRS will be liable for interest under section 6601 with respect to the unpaid 1446 tax, $37. This interest will stop accruing on the earlier of the date that the 1446 tax is paid by PRS or is deemed paid under paragraph (e)(2) of this section by reason of B's payment of its full tax liability.

(G) Further, beginning on June 15, Year 2 (the due date for filing Form 8804), PRS will be liable for the addition to the tax under section 6651(a)(1) for failing to file Form 8804. This addition to the tax accrues on the amount required to be shown as the 1446 tax liability on Form 8804, $37. This addition to the tax will accrue at the rate of 5 percent per month until the date that PRS files Form 8804 for Year 1, or the maximum accrual of the penalty (25 percent of the tax required to be shown on the return) under that section has been reached.

(H) PRS may be liable for other penalties and additions to the tax for its failure to withhold or to furnish statements to its foreign partner B. See § 1.1461-3 for a list of the penalties that may apply.

(ii) ***Example 2: Foreign partnership fails to pay 1446 tax but sole foreign partner pays all tax required to be shown on the partner's U.S. income tax return.*** The facts are the same as paragraph (e)(4)(i)(A) of this section (*Example 1*), except that B pays $5 with the filing of B's return and has therefore paid all tax required to be shown on B's return within the meaning of paragraph (e)(2) of this section.

(A) For purposes of sections 1446, 1461, and 1463, PRS is deemed to have paid its 1446 tax liability under paragraph (e)(2) of this section as of the later of the date that B is considered to have paid its tax under section 6513(a) and (b)(2) (June 15, Year 2) and the last date for PRS to pay its 1446 tax without extensions (also June 15, Year 2). Therefore, PRS is deemed to have paid all of its 1446 tax liability as of June 15, Year 2. PRS has no continuing liability for 1446 tax under section 1461, however, additions to the tax, interest, and penalties may apply.

(B) For purposes of section 6655 and § 1.1446-3, under paragraph (e)(2) PRS is deemed to have paid its 1446 tax on June 15, Year 2. Even if B had fully paid its tax liability as of March 15, Year 2, the rule in paragraph (e)(2) of this section would not deem PRS to have paid its 1446 tax until June 15, Year 2. As a result, B's estimated tax payments will have no effect on PRS's calculation of its addition to the tax. The addition to the tax under 6655 and § 1.1446-3 shall begin to accrue on each installment date with respect to the underpaid installment ($8.75), and will stop accruing on June 15, Year 2, the date prescribed in paragraph (b)(2)(v)(C) of this section.

(C) Because PRS is deemed to have paid its full 1446 tax liability as of June 15, Year 2 (the last date prescribed for payment of 1446 tax without extensions), PRS is not subject to an interest charge under section 6601, or a failure to file penalty under section 6651 (see section 6651(b)(1)).

(D) PRS may be liable for other penalties and additions to the tax for its failure to withhold or to furnish statements to its foreign partner B. See § 1.1461-3 for a list of the penalties that may apply.

(E) If PRS had several foreign partners, PRS would conduct the same analysis as set forth above with respect to each partner. That is, under paragraph (e) of this section, PRS may be deemed to have paid 1446 tax with respect to the ECTI allocable to some but not all of its foreign partners.

(iii) ***Example 3: Domestic partnership fails to pay 1446 tax but sole foreign partner fully pays all tax required to be shown on partner's U.S. income tax return.*** The facts are the same as paragraph (e)(4)(ii) introductory text of this section (*Example 2*), except that PRS is a domestic partnership whose last date prescribed for paying 1446 tax without extensions (*i.e.*, generally the unextended due date for Form 8804) is March 15, Year 2.

(A) For purposes of sections 1446, 1461, and 1463, PRS is deemed to have paid its 1446 tax liability on the later of the date that B is considered to have paid tax under section 6513(a) and (b)(2) (June 15, Year 2) and the last date for paying 1446 tax without extensions (*i.e.*, the unextended due date for Form 8804, March 15, Year 2). Accordingly, PRS is not considered to have fully paid its 1446 tax liability until June 15, Year 2. PRS has no continuing liability for 1446 tax under section 1461, however, additions to the tax, interest, and penalties may apply.

(B) For purposes of section 6655 and § 1.1446-3, PRS is subject to an underpayment addition to the tax that accrues on the same amount as in paragraphs (e)(4)(i) and (ii) of this section (*Examples 1* and *2*), respectively because PRS is not deemed to have paid 1446 tax under paragraph (e)(2) of this section until June 15, Year 2. The addition to the tax will stop accruing on the date prescribed in paragraph (b)(2)(v)(C) of this section (*i.e.*, March 15, Year 2, the due date, without extensions, for filing Form 8804).

(C) For purposes of section 6601, as of the last date prescribed for paying 1446 tax without extensions (March 15, Year 2), PRS has not paid or been deemed to have paid any 1446 tax. Accordingly, the interest charge under section 6601 shall begin to accrue on March 15, Year 2, and shall accrue until the 1446 liability is paid or deemed to have been paid. In this case, the interest charge will accrue until June 15, Year 2, the date that PRS is deemed to have paid its 1446 tax under paragraph (e)(2) of this section.

(D) For purposes of section 6651(a)(1), as of March 15, Year 2, PRS's amount required to be shown as tax on its Form 8804 is $37. This amount cannot be reduced under section 6651(b)(1) because PRS is not deemed to have paid 1446 tax under paragraph (e)(2) of this section until June 15, Year 2, a date falling after the last date for PRS to pay its 1446 tax, March 15, Year 2. Accordingly, the failure to file penalty will begin to accrue on March 15, Year 2 (filing due date for Form 8804), and shall stop accruing on the earlier of the date that PRS files Form 8804 or the maximum accrual of the penalty (25 percent of the amount required to be shown as tax on the return) is reached.

(E) PRS may be liable for other penalties and additions to the tax for its failure to withhold or to furnish statements to its foreign partner B. See § 1.1461-3 for a list of the penalties that may apply.

(f) ***Effect of withholding on partner.*** The payment of the 1446 tax by a partnership does not excuse a foreign partner to which a portion of ECTI is allocable from filing a U.S. tax or informational return, as appropriate, with respect to that income. Information concerning installment payments of 1446 tax paid during the partnership's taxable year on behalf of a foreign partner shall be provided to such foreign partner in accordance with paragraph (d) of this section and such information may be taken into account by the foreign partner when computing the partner's estimated tax liability during the taxable year. Form 1040NR, "U.S. Nonresident Alien Income Tax Return," Form 1065, "U.S. Return of Partnership Income," Form 1120F, "U.S. Income Tax Return of a Foreign Corporation," or such other return as appropriate, must be filed by the partner, and any tax due must be paid, by the filing deadline (including extensions) generally applicable to such person. Pursuant to paragraph (d) of this section, a partner may generally claim a credit under section 33 for its share of any 1446 tax paid by the partnership against the amount of income tax (or 1446 tax in the case of tiers of partnerships) as computed in such partner's return. See § 1.1446-3(e)(3)(ii) for rules permitting a partner to reduce its addition to tax under section 6654 or section 6655.

[T.D. 9200, 70 FR 28717, May 18, 2005, as amended by T.D. 9394, 73 FR 23074, Apr. 29, 2008; T.D. 9821, 82 FR 33444, July 20, 2017; T.D. 9892, 85 FR 5324, Jan. 30, 2020; T.D. 9394, 85 FR 35558, June 11, 2020; T.D. 9926, 85 FR 76933, Nov. 30, 2020]

§ 1.1446-4 Publicly traded partnerships.

(a) ***In general.*** This section sets forth rules for applying the section 1446 withholding tax (1446 tax) to publicly traded partnerships. A publicly traded partnership (as defined in paragraph (b) of this section) that has effectively connected gross income, gain or loss must pay 1446 tax by withholding from distributions to a foreign partner. Publicly traded partnerships that withhold on distributions must pay over and report any 1446 tax as provided in paragraph (c) of this section, and generally are not to pay over and report the 1446 tax under the rules in § 1.1446-3. The amount of the withholding tax on distributions, other than distributions excluded under paragraph (f) of this section, that are made during any partnership taxable year, equals the applicable percentage (defined in paragraph (b)(2) of this section) of such distributions. For penalties and additions to the tax for failure to comply with this section, see §§ 1.1461-1 and 1.1461-3.

(b) ***Definitions*** —

(1) ***Publicly traded partnership.*** For purposes of this section, the term publicly traded partnership has the same meaning as in section 7704 (including the regulations thereunder), but does not include a publicly traded partnership treated as a corporation under that section.

(2) ***Applicable percentage.*** For purposes of this section, applicable percentage shall have the meaning as set forth in § 1.1446-3(a)(2), except that the partnership or nominee required to pay 1446 tax may not consider a preferential rate in computing the 1446 tax due with respect to a partner.

(3) ***Nominee.*** For purposes of this section, the term nominee means a person that holds an interest in a publicly traded partnership on behalf of a foreign person and that is either a U.S. person, a qualified intermediary (as defined in § 1.1441-1(e)(5)(ii)) that assumes primary withholding responsibility for the distribution, or a U.S. branch of a foreign person that agrees to be treated as a U.S. person (as described in § 1.1441-1(b)(2)(iv)) with respect to the distribution. For purposes of this paragraph (b)(3), a U.S. branch or a qualified intermediary is a nominee only if it assumes primary withholding responsibility for the distribution for all purposes of chapters 3 and 4 of subtitle A of the Code.

(4) ***Qualified notice.*** For purposes of this section, a qualified notice is a notice from a publicly traded partnership that states the amount of a distribution that is attributable to each type of income described in paragraphs (f)(3)(i) through (v) of this section. A qualified notice may also include the information described in § 1.1446(f)-4(b)(3) (relating to the 10-percent exception to withholding under section 1446(f)(1)) and the information described in § 1.1446(f)-4(c)(2)(iii) (relating to an adjustment to the amount realized for withholding under section 1446(f)(1)). The notice must be posted in a readily accessible format in an area of the primary public website of the publicly traded partnership that is dedicated to this purpose, and a copy of the notice must be delivered to any registered holder that is a nominee. A qualified notice must be posted and delivered to the registered holder by the date required for providing notice with respect to distributions described in 17 CFR 240.10b-17(b)(1) or (3) issued pursuant to the Securities Exchange Act of 1934 (15 U.S.C. 78a) and contain the information described therein as it would relate to the distribution. The publicly traded partnership must keep the notice accessible to the public for ten years on its primary public website or the primary public website of any successor organization. No specific format is required unless otherwise prescribed by the Commissioner in forms or instructions or in publications or guidance published in the Internal Revenue Bulletin (see §§ 601.601(d)(2) and 601.602 of this chapter). See paragraph (d) of this section regarding when a nominee is considered to have received a qualified notice.

(c) ***Paying and reporting 1446 tax.*** The withholding tax required under this section is to be paid pursuant to the rules and procedures of section 1461, §§ 1.1461-1, 1.1461-2, and 1.6302-2, as supplemented by the rules of this section. A withholding agent under this section must use Form 1042, “Annual Withholding Tax Return for U.S. Source Income of Foreign Persons,” and Form 1042-S, “Foreign Person's U.S. Source Income Subject to Withholding,” to report withholding from distributions under this section. See § 1.1461-1(b). Further, a withholding agent under this section may obtain a refund for 1446 tax paid in accordance with section 1464 and the regulations thereunder. See § 1.1446-3(d)(1)(iv) and (vii) (relating to a foreign trust or estate that holds an interest in a publicly traded partnership) and § 1.1446-5(d) (relating to a publicly traded partnership that is part of a tiered partnership structure) for additional guidance.

(d) ***Rules for nominees required to withhold tax under section 1446*** —

(1) ***In general.*** A nominee that receives a distribution from a publicly traded partnership (or another nominee) that is to be paid to (or for the account of) any foreign person is treated as a withholding agent under this section. A nominee that fails to withhold pursuant to this section is subject to liability under section 1461, as well as applicable penalties and interest, as if the nominee were the partnership responsible for withholding. A nominee that receives a qualified notice that meets the requirements in paragraph (b)(4) of this section must withhold based on the amounts specified on

the qualified notice. A nominee is treated as receiving a qualified notice on the date that the notice is posted to the publicly traded partnership's website or is received by the nominee in accordance with paragraph (b)(4) of this section. If a nominee properly withholds based on the amounts specified on a qualified notice, the nominee is not liable for any underwithholding on amounts that are effectively connected income, gain, or loss. Rather, the publicly traded partnership that issued the qualified notice is liable under section 1461 for underwithholding on such amounts. If a nominee does not receive a qualified notice that meets the requirements in paragraph (b)(4) of this section, or to the extent the qualified notice does not specify an amount, the nominee must withhold on the full amount of the distribution with respect to—

(i) A foreign partner that is a corporation, at the greater of the highest rate of tax specified in section 11(b) or 881 (without regard to any reduction in the rate of tax permitted under an applicable income tax treaty);

(ii) A foreign partner that is not a corporation, at the greater of the highest rate of tax specified in section 1 or 871 (without regard to any reduction in the rate of tax permitted under an applicable income tax treaty); or

(iii) A foreign partner whose classification cannot be determined, at the higher of the rate determined under paragraph (d)(1)(i) or (ii) of this section.

(2) ***Exception to nominee's withholding.*** A nominee is not required to withhold under paragraph (d)(1) of this section to the extent that it makes a payment of a distribution to a qualified intermediary or U.S. branch that is also a nominee for the distribution under paragraph (b)(3) of this section. For purposes of the preceding sentence, a nominee may treat a qualified intermediary or U.S. branch as a nominee for a distribution based on, respectively, a valid qualified intermediary withholding certificate described in § 1.1441-1(e)(3)(ii) or a valid U.S. branch withholding certificate described in § 1.1446(f)-4(a)(2)(ii)(B) on which the qualified intermediary or U.S. branch represents that it assumes primary withholding responsibility with respect to the distribution.

(e) ***Determining foreign status of partners.*** Except as provided in this paragraph (e), the rules of § 1.1446-1 shall apply in determining whether a partner of a publicly traded partnership is a foreign partner for purposes of the 1446 tax. A partnership or nominee obligated to withhold under this section shall be entitled to rely on any of the forms acceptable under § 1.1446-1 that it receives from persons on whose behalf it holds interests in the partnership to the same extent a partnership is entitled to rely on such forms under those rules. If a partnership or nominee pays a distribution to an entity that provides a valid qualified intermediary withholding certificate described in § 1.1441-1(e)(3)(ii) indicating that the entity does not assume primary withholding responsibility for the distribution, for withholding under this section the partnership or nominee may instead rely on a withholding statement that allocates the distribution to—

(1) A chapter 3 withholding rate pool (as described in § 1.1441-1(e)(5)(v)(C)) consisting of account holders that are foreign persons subject to withholding at the highest rate of tax specified in section 1;

(2) A chapter 3 withholding rate pool (as described in § 1.1441-1(e)(5)(v)(C)) consisting of account holders that are foreign persons subject to withholding at the highest rate of tax specified in section 11(b);

(3) A chapter 3 withholding rate pool (as described in § 1.1441-1(e)(5)(v)(C)) consisting of account holders that are foreign persons not subject to withholding; or

(4) Each account holder for which a form acceptable under § 1.1446-1 is provided.

(f) ***Distributions subject to withholding*** —

(1) ***In general.*** Except as provided in this paragraph (f)(1), a publicly traded partnership must withhold at the applicable percentage with respect to any actual distribution made to a foreign partner. The amount of a distribution subject to 1446 tax includes the amount of any 1446 tax required to be withheld on the distribution. In the case of a partnership (upper-tier partnership) that receives a partnership distribution from another partnership in which it is a partner (lower-tier partnership) (*i.e.*, a tiered structure described in § 1.1446-5), any 1446 tax that was paid by the lower-tier partnership may be credited by the upper-tier partnership and shall be treated as a distribution under section 1446. For example, a foreign publicly traded partnership, UTP, owns an interest in domestic publicly traded partnership, LTP. LTP makes a distribution subject to section 1446 of $100 to UTP during its taxable year beginning January 1, 2020, and withholds 37 percent (the highest rate in section 1) ($37) of that distribution under section 1446. UTP receives a net distribution of $63 which it immediately redistributes to its partners. UTP has a liability to pay 37 percent of the total actual and deemed distribution it makes to its foreign partners as a section 1446 withholding tax. UTP may credit the $37 withheld by LTP against this liability as if it were paid by UTP. See §§ 1.1462-1(b) and 1.1446-5(b)(1). When UTP distributes the $63 it actually receives from LTP to its partners, UTP is treated for purposes of section 1446 as if it made a distribution of $100 to its partners ($63 actual distribution and $37 deemed distribution). UTP's partners (U.S. and foreign) may claim a credit against their U.S. income tax liability for their allocable share of the $37 of 1446 tax paid on their behalf.

(2) ***In-kind distributions.*** If a publicly traded partnership distributes property other than money, the partnership shall not release the property until it has funds sufficient to enable the partnership to pay over in money the required 1446 tax.

(3) ***Ordering rule relating to distributions.*** Distributions from publicly traded partnerships are deemed to be paid out of the following types of income in the order indicated—

(i) Amounts attributable to income described in section 1441 or 1442 that are not effectively connected with the conduct of a trade or business in the United States and are subject to withholding under § 1.1441-2(a);

(ii) Amounts attributable to income described in section 1441 or 1442 that are not effectively connected with the conduct of a trade or business in the United States and are not subject to withholding under § 1.1441-2(a);

(iii) Amounts attributable to income effectively connected with the conduct of a trade or business in the United States that are not subject to withholding under §§ 1.1446-1 through 1.1446-6;

(iv) Amounts subject to withholding under §§ 1.1446-1 through 1.1446-6; and

(v) Amounts not listed in paragraphs (f)(3)(i) through (iv) of this section.

(4) ***Coordination with section 1445(e)(1).*** Except as otherwise provided in this section, a publicly traded partnership that complies with the requirements of withholding under section 1446 and this section will be deemed to have satisfied the requirements of section 1445(e)(1) and the regulations thereunder. Notwithstanding the excluded amounts set forth in paragraph (f)(3) of this section, distributions subject to withholding at the applicable percentage shall include the following—

(i) Amounts subject to withholding under section 1445(e)(1) upon distribution pursuant to an election under § 1.1445-5(c)(3) of the regulations; and

(ii) Amounts not subject to withholding under section 1445 because the distributee is a partnership or is a foreign corporation that has made an election under section 897(i).

[T.D. 9200, 70 FR 28717, May 18, 2005, as amended by T.D. 9926, 85 FR 76934, Nov. 30, 2020; 86 FR 13191, Mar. 8, 2021]

§ 1.1446-5 Tiered partnership structures.

(a) ***In general.*** The rules of this section shall apply in cases where a partnership (lower-tier partnership) that has effectively connected taxable income (ECTI), has a partner that is a partnership (upper-tier partnership). Except as provided in paragraph (e) of this section, if an upper-tier domestic partnership directly owns an interest in a lower-tier partnership, the lower-tier partnership is not required to pay the section 1446 withholding tax (1446 tax) with respect to the upper-tier partnership's allocable share of net income, regardless of whether the upper-tier domestic partnership's partners are foreign. Paragraph (b) of this section prescribes the reporting requirements for upper-tier and lower-tier partnerships subject to section 1446. Paragraph (c) of this section prescribes rules requiring a lower-tier partnership to look through an upper-tier foreign partnership to a partner of such upper-tier partnership to the extent it has sufficient documentation to determine the status of such partner and determine such partner's indirect share of the lower-tier partnership's effectively connected taxable income (ECTI). Paragraph (d) of this section prescribes rules applicable to a publicly traded partnership in a tiered partnership structure. Paragraph (e) of this section prescribes rules permitting a domestic upper-tier partnership to elect to apply the look through rules of paragraph (c) of this section. Paragraph (f) of this section sets forth examples illustrating the rules of this section.

(b) ***Reporting requirements*** —

(1) ***In general.*** Notwithstanding paragraph (c) of this section, to the extent that an upper-tier partnership that is a foreign partnership is a partner in a lower-tier partnership, and the lower-tier partnership has paid 1446 tax (including installment payments of such tax) with respect to ECTI allocable to the upper-tier partnership, the lower-tier partnership shall comply with §§ 1.1446-1 through 1.1446-3 and provide the upper-tier partnership notice of such payments and a copy of the statements and forms filed with respect to the upper-tier partnership's interest in the lower-tier partnership (e.g., Form 8805, “Foreign Partner's Information Statement of Section 1446 Withholding Tax”). The upper-tier partnership may treat the 1446 tax (or any installment of such tax) paid by the lower-tier partnership on its behalf as a credit against its liability to pay 1446 tax (or any installment of such tax), as if the upper-tier partnership actually paid over the amounts at the time that the amounts were paid by the lower-tier partnership. See § 1.1462-1(b) and § 1.1446-3(d). To the extent required in § 1.1446-3(d)(1)(iii), the upper-tier partnership will file Form 8804, “Annual Return for Partnership Withholding Tax (Section 1446),” and Form 8805, “Foreign Partner's Information Statement of Section 1446 Withholding Tax,” for each of its foreign partners with respect to its 1446 tax obligation. To the extent the upper-tier partnership does not claim a refund of the 1446 tax it paid (or is considered to have paid), the upper-tier partnership will pass the credit for the 1446 tax paid to its partners on the Forms 8805 it issues. See § 1.1446-3(d). The rules of this paragraph (b) shall apply to an upper-tier and lower-tier partnership to the extent that an election has been made and consented to under paragraph (e) of this section.

(2) ***Publicly traded partnerships.*** In the case of an upper-tier foreign partnership that is a publicly traded partnership, the rules of § 1.1446-4(c) shall apply. See also paragraph (d) of this section.

(c) ***Look through rules for foreign upper-tier partnerships.*** For purposes of computing the 1446 tax obligation of a lower-tier partnership, if an upper-tier foreign partnership owns an interest in the lower-tier partnership, the upper-tier partnership's allocable share of ECTI from the lower-tier partnership shall be treated as allocable to a partner of the upper-tier partnership, to the extent of such partner's indirect share of such ECTI (as if such partner were a direct partner in the lower-tier partnership), if—

(1) The upper-tier foreign partnership furnishes the lower-tier partnership a valid Form W-8IMY, "Certificate of Foreign Intermediary, Flow Through Entity, or Certain U.S. Branches for United States Tax Withholding," indicating that it is a look-through foreign partnership for purposes of section 1446; and

(2) The lower-tier partnership can reliably associate (within the meaning of § 1.1441-1(b)(2)(vii)) effectively connected partnership items allocable to the upper-tier partnership (and indirectly to such partner) with a Form W-8 (e.g., Form W-8BEN), Form W-9, "Request for Taxpayer Identification Number and Certification," or other form acceptable under § 1.1446-1, establishing the status of such partner provided by the upper-tier partnership. The lower-tier partnership required to pay 1446 tax must be able to provide the information necessary for the IRS to determine the chain of ownership, allocation of effectively connected items at each partnership level, as well as to the ultimate beneficial owner of the effectively connected items, and whether the amount of 1446 tax paid was appropriate. This information should permit each partnership in the tiered structure and the IRS to reliably associate any effectively connected items allocable to such upper-tier partnership, as well as to the ultimate beneficial owner of the effectively connected items. The principles of § 1.1441-1(b)(2)(vii) shall apply to determine whether a lower-tier partnership can reliably associate effectively connected partnership items allocable to the upper-tier partnership with a partner of the upper-tier partnership. To the extent the lower-tier partnership receives a valid Form W-8IMY from the upper-tier partnership but cannot reliably associate a portion of the upper-tier partnership's allocable share of effectively connected partnership items with a partner of such upper-tier partnership, then the lower-tier partnership shall pay 1446 tax on such portion at the higher of the applicable percentages in section 1446(b). See § 1.1446-3(a)(2) for the treatment of any income or gain potentially subject to a preferential rate. If a lower-tier partnership has not received a valid Form W-8IMY from the upper-tier partnership, the lower-tier partnership shall withhold on the upper-tier partnership's entire allocable share of ECTI at the higher of the applicable percentages in section 1446(b). The look through regime set forth in this paragraph (c) is for purposes of computing the lower-tier partnership's 1446 tax obligation only and does not alter the persons considered to be partners in the lower-tier partnership for partnership reporting purposes (e.g., issuing Form 8805, Schedule K-1).

(d) ***Publicly traded partnerships*** —

(1) ***Upper-tier publicly traded partnership.*** The rules set forth in paragraph (c) shall not apply to look through an upper-tier partnership whose interests are publicly traded (as defined in § 1.1446-4(b)(1)).

(2) ***Lower-tier publicly traded partnership.*** The look through rules of paragraph (c) of this section shall apply, if the requirements of that paragraph are met, to a lower-tier partnership that is a publicly traded partnership within the meaning of § 1.1446-4(b)(1) only if the upper-tier partnership is not described in paragraph (d)(1) of this section. For example, a lower-tier publicly traded partnership (or nominee) shall look through an upper-tier foreign partnership (or domestic partnership to the extent an election is made and consented to under paragraph (e) of this section) when computing its 1446

tax liability, provided the upper-tier partnership is not a publicly traded partnership and the appropriate documentation needed to satisfy the standards set forth in § 1.1441-1(b)(2)(vii) and paragraph (c) of this section have been furnished.

(e) ***Election by a domestic upper-tier partnership to apply look through rules*** —

(1) ***In general.*** Subject to the rules of this paragraph (e), a domestic partnership that is a partner in a lower-tier partnership may elect to apply the rules of this section 1.1446-5 and have the lower-tier partnership look through such upper-tier partnership to the partners of such domestic partnership for purposes of computing the lower-tier partnership's 1446 tax liability. A domestic partnership shall make this election by attaching to the Form W-9 submitted to the lower-tier partnership, a written statement and information (described in paragraph (e)(2) of this section) that identifies the upper-tier partnership as a domestic partnership and that states that such partnership is making the election under this paragraph (e). This paragraph (e)(1) shall not apply to a publicly traded partnership described in § 1.1446-4(b)(1). See paragraph (d)(1) of this section.

(2) ***Information required for valid election statement.*** In addition to the requirements of paragraphs (e)(1) and (3) of this section, the election statement submitted under this paragraph (e)(2) is not valid and cannot be accepted by the lower-tier partnership pursuant to paragraph (e)(3) of this section unless the upper-tier partnership attaches valid documentation pursuant to § 1.1446-1 (e.g., Form W-8BEN) with respect to one or more of its foreign partners. The information and documentation submitted with the election must comply with the rules of this section to permit the lower-tier partnership to reliably associate (within the meaning of § 1.1441-1(b)(2)(vii)) at least a portion of the upper-tier partnership's allocable share of ECTI with one or more foreign partners of the upper-tier partnership. The election statement must identify the upper-tier partnership by name, address, and TIN, and specify the percentage interest the domestic partnership holds in the lower-tier partnership. The statement may also include such information the upper-tier partnership deems necessary to enable the lower-tier partnership to apply the provisions of this section. If at any time the upper-tier partnership determines that the information or documentation previously provided to the lower-tier partnership is no longer correct, the upper-tier partnership shall update such information and documentation. Except as provided in paragraph (e)(3) of this section, an election that is effective under this paragraph (e) shall apply for subsequent taxable years until such upper-tier partnership revokes the election in writing. A revocation under this section shall be effective for any installment due date arising more than 15 days subsequent to the date that the lower-tier partnership receives such revocation.

(3) ***Consent of lower-tier partnership.*** An election made under this paragraph (e) is not effective until the lower-tier partnership consents in writing to the upper-tier partnership that it agrees to apply the provisions of this section. A lower-tier partnership may not consent to an election submitted under this paragraph (e) for any installment date or Form 8804 filing date arising within 15 days of the lower-tier partnership's receipt of such election. The lower-tier partnership's written consent must specify the extent to which it will look through the upper-tier partnership in computing its 1446 tax (or any installment of such tax). To the extent that the lower-tier partnership does not consent to an election to apply the look through provisions of paragraph (c) of this section, the lower-tier partnership shall consider such portion of the upper-tier partnership's allocable share of ECTI as allocable to a domestic person for purposes of computing its 1446 tax obligation. A lower-tier partnership that has consented to an election under this paragraph (e) may revoke or modify its consent, in writing, at any time.

(f) ***Examples.*** The following examples illustrate the provisions of this section. In considering the examples, disregard the potential application of § 1.l446-3(b)(2)(v)(F) (relating to the *de minimis* exception to paying 1446 tax). The examples are as follows:

Example 1. Sufficient documentation—tiered partnership structure. (i) Nonresident alien (NRA) and foreign corporation (FC) are partners in PRS, a foreign partnership, and share profits and losses in PRS 70 and 30 percent, respectively. All of PRS's partnership items are allocated based upon each partner's respective ownership interest and it is assumed that these allocations are respected under section 704(b) and the regulations thereunder. NRA and FC each furnish PRS with a valid Form W-8BEN establishing themselves as a foreign individual and foreign corporation, respectively. PRS holds a 40 percent interest in the profits, losses and capital of LTP, a lower-tier partnership. NRA holds the remaining 60 percent interest in profits, losses and capital of LTP. All of LTP's partnership items are allocated based upon each partner's respective ownership interest and it is assumed that these allocations are respected under section 704(b) and the regulations thereunder. LTP has $100 of annualized ECTI for the relevant installment period. All of this income is ordinary income and there is no potential application of a preferential rate applicable percentage under § 1.1446-3(a)(2). Further, § 1.1446-6 does not apply. PRS has no income other than the income allocated from LTP. PRS provides LTP with a valid Form W-8IMY indicating that it is a foreign partnership and attaches the valid Form W-8BENs executed by NRA and FC, as well as a statement describing the allocation of PRS's effectively connected items among its partners. The information that PRS submits to LTP is sufficient to permit LTP to reliably associate (within the meaning of § 1.1441-1(b)(2)(vii)) PRS's allocable share of effectively connected items with NRA and FC pursuant to this section. Further, NRA provides a valid Form W-8BEN to LTP.
(ii) LTP must pay 1446 tax on the $60 allocable to its direct partner NRA using the applicable percentage for non-corporate partners (the highest rate in section 1).

(iii) With respect to the effectively connected partnership items that LTP can reliably associate with NRA through PRS (70 percent of PRS's 40 percent allocable share ($40), or $28), LTP will pay 1446 tax on NRA's allocable share of LTP's ECTI (as determined by looking through PRS) using the applicable percentage for non-corporate partners (the highest rate in section 1).

(iv) With respect to the effectively connected partnership items that LTP can reliably associate with FC through PRS (30 percent of PRS's 40 percent allocable share ($40), or $12), LTP will pay 1446 tax on FC's allocable share of LTP's ECTI (as determined by looking through PRS) using the applicable percentage for corporate partners (the highest rate in section 11).

(v) LTP's payment of the 1446 tax is treated as a distribution to NRA and PRS, its direct partners, that those partners may credit against their respective tax obligations. PRS will report its 1446 tax obligation with respect to its direct foreign partners, NRA and FC, on the Form 8804 and Forms 8805 that it files with the Internal Revenue Service pursuant to paragraph (b) of this section and will credit the amount withheld by LTP on its Form 8804. This credit will satisfy PRS's 1446 tax

liability as reported on the Form 8804 it files because PRS's only income is from LTP, and LTP paid 1446 tax with respect to all of PRS's allocable share in LTP by looking through to PRS's partners NRA and FC. Further, PRS will pass along the credit for the 1446 tax withheld by LTP to its partners, NRA and FC on the Form 8805 issued to each partner. The credit passed to each partner on Form 8805 will be treated as a distribution to the respective partners under section 1446(d).

Example 2. Insufficient documentation—tiered partnership structure. (i) LTP is a domestic partnership that has two equal partners A and PRS. A is a nonresident alien and PRS is a foreign partnership that has two equal foreign partners, C and D. Neither A nor PRS provides LTP with a valid Form W-8 or Form W-9. Neither C nor D provides PRS with a valid Form W-8 or Form W-9. Pursuant to § 1.1446-1(c)(3), LTP must presume that PRS is a foreign person subject to withholding under section 1446 at the higher of the highest rate under section 1 or section 11(b)(1). LTP has also not received any documentation with respect to A. LTP must presume that A is a foreign person, and, if LTP knows that A is an individual, compute and pay 1446 tax, subject to § 1.1446-3(a)(2), based on that knowledge.

(ii) Assume a change of facts where C provides a form W-8 (e.g., Form W-8BEN) to PRS, and PRS in turn, furnishes that form to LTP along with its Form W-8IMY, and information regarding how effectively connected items are allocated to C and D. Based upon the additional facts, LTP can reliably associate one-half of PRS's allocable share of ECTI with documentation related with C. Therefore, under paragraph (c)(2) of this section, LTP will look through PRS to C when computing its 1446 tax to the extent of C's indirect share and will not look through with respect to the remainder of PRS's allocable share (D's indirect share).

[T.D. 9200, 70 FR 28717, May 18, 2005, as amended by T.D. 9394, 73 FR 23074, Apr. 29, 2008]

§ 1.1446-6 Special rules to reduce a partnership's 1446 tax with respect to a foreign partner's allocable share of effectively connected taxable income.

(a) ***In general*** —

(1) ***Purpose and scope.*** This section provides rules regarding when a partnership required to pay withholding tax under section 1446 (1446 tax), or an installment of 1446 tax, may consider certain partner-level deductions and losses in computing its 1446 tax obligation under § 1.1446-3, or otherwise not pay a de minimis amount of 1446 tax due with respect to a nonresident alien individual partner. A partnership determines the applicability of the rules of this section on a partner-by-partner basis for each installment period and when completing its Form 8804, "Annual Return for Partnership Withholding Tax (Section 1446)," and paying 1446 tax for the partnership taxable year. Except with respect to certain state and local taxes paid by the partnership on behalf of the partner, to apply the rules of this section with respect to a foreign partner, the partnership must receive a certificate from such partner for each partnership taxable year. Paragraph (b) of this section identifies the foreign partners to which this section applies. Paragraph (c) of this section identifies the deductions and losses that a foreign partner may certify to the partnership as well as the state and local taxes paid by the partnership on behalf of the foreign partner that can be taken into account without a certification, and establishes an exception that permits a partnership to not pay a de minimis amount of 1446 tax with respect to a nonresident alien partner. Paragraph (c) of this section also sets forth the requirements for a valid certificate. Paragraphs (a)(2) and (d) of this

section establish when a partnership may rely on and consider a foreign partner's certificate in computing its 1446 tax, and the effects of relying on such a certificate. Paragraph (d) of this section also describes the effects of a partnership relying on a certificate (including an updated certificate) and the reporting requirements of a partnership with respect to a certificate. Paragraph (e) of this section sets forth examples that illustrate the rules of this section. Paragraph (f) of this section provides the Effective/Applicability date. Paragraph (g) of this section provides a transition rule.

(2) ***Reasonable reliance on a certificate.*** Subject to § 1.1446-2 and the rules of this section, a partnership receiving a certificate (including an updated certificate or status update under paragraph (c)(2)(ii)(B) of this section) of deductions and losses from a partner provided in accordance with the provisions of this section may reasonably rely on such certificate (to the extent of the certified deductions and losses or other representations set forth in the certificate) until such time that it has actual knowledge or reason to know that the certificate is defective or that the time for receiving an updated certificate or status update from the partner under paragraph (c)(2)(ii)(B) of this section has expired. For this purpose, a partnership shall be considered to have actual knowledge or reason to know that a certificate is defective upon receipt of written notification from the IRS under paragraph (c)(3) or (c)(5) of this section.

(b) ***Foreign partner to whom this section applies*** —

(1) ***In general.*** Except as otherwise provided in paragraph (b)(3) of this section, a foreign partner to whom this section applies is a foreign partner that meets the requirements of this paragraph (b)(1).

(i) The partner has provided valid documentation to the partnership to which a certificate is submitted under this section in accordance with § 1.1446-1.

(ii) If the partner's current taxable year is the first taxable year in which the partner submits a certificate to any partnership, the partner has filed (or will file) a qualifying U.S. income tax return for each of its three taxable years ending before the end of the partnership's taxable year for which the partner is submitting a certificate (regardless of whether it was a partner in that partnership during each of these years). A qualifying U.S. income tax return for a taxable year that is prior to the first taxable year the partner submits a certificate to any partnership is a U.S. income tax return filed within the time specified in paragraph (b)(2)(iii) of this section.

(iii) If the current taxable year of the partner is not the first taxable year in which the partner submits a certificate to any partnership, the partner met the requirements in paragraph (b)(1)(ii) of this section for the first taxable year in which it submitted a certificate to any partnership and has filed (or will file) a qualifying U.S. income tax return for its first taxable year in which it submitted a certificate to any partnership and each subsequent taxable year ending before the beginning of the current taxable year (regardless of whether it was a partner in any partnership during each of those years). A qualifying U.S. income tax return for a taxable year that is prior to the taxable year the partner submits a certificate to any partnership is a U.S. income tax return filed within the time specified in paragraph (b)(2)(iii) of this section.

(iv) The partner files a qualifying U.S. income tax return (within the meaning of paragraph (b)(2)(iii) of this section) for its taxable year in which a certificate is provided to any partnership.

(2) ***Definitions*** —

(i) ***U.S. income tax return.*** A U.S. income tax return means a Form 1040NR, “U.S. Nonresident Alien Income Tax Return,” in the case of a nonresident alien individual and a Form 1120F, “U.S. Income Tax Return of a Foreign Corporation,” in the case of a foreign corporation.

(ii) ***Timely-filed.*** Only for purposes of this section, a U.S. income tax return shall be considered timely-filed if the return is filed on or before the due date set forth in section 6072(c), plus any extension of time to file such return granted under section 6081.

(iii) ***Qualifying U.S. income tax return.*** A U.S. income tax return shall constitute a qualifying U.S. income tax return if the return reports income or gain that is effectively connected with a U.S. trade or business or deductions or losses properly allocated and apportioned to such activities and if the return is described in paragraph (b)(2)(iii)(A), (B), or (C) of this section. A protective return described in § 1.874-1(b)(6) or § 1.882-4(a)(3)(vi) is not a qualifying U.S. income tax return for purposes of this section.

(A) A U.S. income tax return for a partner's preceding taxable year in which it did not submit a certificate to any partnership (but not including a taxable year following the first taxable year in which the partner submitted a certificate to any partnership), with a due date as set forth in section 6072(c), not including any extensions of time to file, which falls before the beginning of the current partnership taxable year for which the certificate is provided is described in this paragraph (b)(2)(iii)(A) if the return is filed and all amounts due with respect to such return (including interest, penalties, and additions to tax, if any) are paid on or before the earlier of—

(*1*) The date that is one year after the due date set forth in section 6072(c) for such return, not including any extensions of time to file; or

(*2*) The date on which the certificate for the current partnership taxable year is submitted to the partnership.

(B) A U.S. income tax return for a partner's preceding taxable year in which it did not submit a certificate to any partnership (but not including a taxable year following the first taxable year in which the partner submitted a certificate to any partnership), with a due date as set forth in section 6072(c), not including any extensions of time to file, which falls within the current partnership taxable year for which the certificate is provided is described in this paragraph (b)(2)(iii)(B) if the return is timely-filed and all amounts due with respect to such return are timely paid.

(C) A U.S. income tax return for a taxable year in which the partner submits a certificate to any partnership and for a taxable year following the first taxable year in which the partner submits a certificate to any partnership is described in this paragraph (b)(2)(iii)(C) if the return is timely-filed and all amounts due with such return are timely paid with respect to such return.

(3) ***Special rules*** —

(i) In the case of a partnership (upper-tier partnership) that is a partner in another partnership (lower-tier partnership)—

(A) The rules of this section may apply to reduce or eliminate the 1446 tax (or any installment of such tax) of the lower-tier partnership with respect to a foreign partner of the upper-tier partnership only to the extent the provisions of § 1.1446-5 apply to look through the upper-tier partnership to the foreign partner of such upper-tier partnership and the certificate described in paragraph (c) of this section is provided by such foreign partner to the upper-tier partnership and, in turn, provided to the lower-tier partnership with other appropriate documentation (see § 1.1446-5(c) and (e));

(B) An upper-tier partnership that submits a certificate of deductions and losses or a de minimis certificate to a lower-tier partnership may not submit that certificate to another lower-tier partnership;

(C) An upper-tier partnership that relies on a certificate submitted to it by a foreign partner under this section for computing its 1446 tax due on effectively connected taxable income (ECTI) allocable to that partner (other than ECTI allocable to it from a lower-tier partnership) may not submit that certificate to any lower-tier partnership; and

(D) In addition to any other information required by this section, a lower-tier partnership must submit with a Form 8813, "Partnership Withholding Tax Payment Voucher (Section 1446)," and Form 8805, "Foreign Partner's Information Statement of Section 1446 Withholding Tax," for which it relies on a certificate from an upper-tier partnership to reduce the 1446 tax due with respect to a foreign partner of the upper-tier partnership, sufficient information so that the IRS may reliably associate the ECTI and the certificate of deductions and losses with the partner in the upper-tier partnership submitting the certificate, including the name, taxpayer identification number (TIN) and allocation of effectively connected items at each partnership tier, as well as to the ultimate upper-tier partner submitting the certificate.

(ii) This section shall not apply to a partner that is a foreign estate or its beneficiaries.

(iii) This section shall not apply to a partner that is a trust or to its beneficiaries, except to the extent that such trust is owned by a grantor or other person under subpart E of subchapter J of the Internal Revenue Code, the documentation requirements of § 1.1446-1 have been met by the grantor or other owner of such trust, and the certificate described in paragraph (c) of this section is provided by the grantor or other owner of such trust to the partnership.

(iv) This section shall not apply to a partner in a publicly-traded partnership subject to § 1.1446-4.

(c) ***Reduction of 1446 tax with respect to a foreign partner*** —

(1) ***General rules.*** Under paragraph (c)(1)(i) of this section a foreign partner to whom this section applies may certify to a partnership for a partnership taxable year that it has certain deductions (other than charitable deductions) and losses properly allocated and apportioned to gross income that is effectively connected (or treated as effectively connected) with the conduct of the partner's trade or business in the United States, and that the partner reasonably expects those deductions and losses to be available and claimed on the partner's U.S. income tax return to be filed for that taxable year. Under paragraph (c)(1)(ii) of this section, a nonresident alien individual partner to whom this section applies may also certify to a partnership for a partnership taxable year that its only investment or activity giving rise to effectively connected items for the partnership's taxable year that ends with or within the partner's taxable year is (and will be) the partner's investment in the partnership. A certificate submitted by a foreign partner to a partnership under this section must be in accordance with the form and requirements set forth in paragraph (c)(2)(ii) of this section. Under paragraph (c)(1)(iii) of this section, a partnership may take into account certain state and local taxes withheld by the partnership on behalf of the partner.

(i) ***Certified deductions and losses*** —

(A) ***Deductions and losses from the partnership.*** Under this paragraph (c)(1)(i)(A), a partner may certify to a partnership for a partnership taxable year deductions (other than charitable deductions) and losses properly allocated and apportioned to gross income

which is effectively connected (or treated as effectively connected) with the conduct of the partner's trade or business in the United States, that are reported on a Form 1065 (Schedule K-1), "Partner's Share of Income, Credits, Deductions, etc.," issued (or to be issued) to the partner by the partnership for a prior partnership taxable year, that are (or will be) reported on a qualifying U.S. income tax return for a partner's taxable year that ends before the installment due date or the close of the partnership taxable year for which the partner is certifying such deductions and losses, and that the partner reasonably expects to be available and claimed on a qualifying U.S. income tax return for the partner's taxable year ending with or after the close of the partnership taxable year. A partner that has a loss reported on a Form 1065 (Schedule K-1) issued (or to be issued) to the partner by the partnership for a prior partnership taxable year, but that is not (and will not be) reported on a qualifying U.S. income tax return for a prior taxable year of the partner because the loss is suspended under section 704(d) may also certify such suspended loss to the partnership under this paragraph (c)(1)(i)(A).

(B) ***Deductions and losses from other sources.*** Under this paragraph (c)(1)(i)(B), a foreign partner may certify to a partnership for a partnership taxable year deductions (other than charitable deductions) and losses properly allocated and apportioned to gross income that is effectively connected (or treated as effectively connected) with the conduct of the partner's trade or business in the United States and that are from sources other than the partnership to whom the certificate is submitted if the deductions and losses are (or will be) reported on a qualifying U.S. income tax return of the partner for a taxable year that ends before the installment due date or the close of the partnership taxable year for which the partner is certifying the deductions and losses and the partner reasonably expects the deductions and losses to be available and claimed on the qualifying U.S. income tax return filed for its taxable year ending with or after the close of the partnership taxable year. Any deductions and losses certified under this paragraph (c)(1)(i)(B) that are allocated to the partner from another partnership must be reported on a Form 1065 (Schedule K-1) issued (or to be issued) to the partner by such other partnership. However, the partner may not certify any deduction or loss allocated to it from another partnership that is suspended under section 704(d).

(C) ***Limit on the consideration of a partner's net operating loss deduction.*** A partnership may not consider a net operating loss deduction (as determined under section 172) certified by the partner under this paragraph (c)(1)(i) in an amount greater than the percentage limitation, if any, provided in section 56(a)(4) and (d) multiplied by the partner's allocable share of ECTI from the partnership reduced by all other certified deductions and losses whether or not taken into account by the partnership, as well as deductions considered under paragraph (c)(1)(iii) of this section.

(D) ***Limitation on losses subject to certain partner level limitations.*** Pursuant to paragraph (c)(2)(i) of this section, a partner must identify any certified losses or deductions that are subject to special limitations at the partner level (for example, sections 465 and 469) and provide information to the partnership that will allow the partnership to take the special limitations into account. For example, where a partner certifies a loss to the partnership that is a passive activity loss under section 469, the partner shall identify the activities the partnership conducts that the partner expects will be passive activities. The partnership shall then ensure that these limitations are taken into account when determining the 1446 tax due with respect to the partner.

(E) ***Certification of deductions and losses to other partnerships.*** Deductions and losses certified to a partnership for a taxable year of the partnership may not be certified for the taxable year of another partnership that begins or ends with or within the taxable year of the partnership to which the deductions and losses were certified.

(F) ***Partner level use of deductions and losses certified to a partnership.*** Any deductions and losses certified to a partnership for a taxable year of the partner and considered by the partnership in computing its section 1446 tax due may not be considered by that partner for the same taxable year in computing the amount of its required installments under section 6654(d) or 6655(d) on income unrelated to the partnership to which the partner has submitted the certificate.

(ii) ***De minimis certificate for nonresident alien individual partners*** —

(A) ***In general.*** Under this paragraph (c)(1)(ii), a nonresident alien individual partner to whom this section applies and that satisfies the requirements of paragraph (c)(1)(ii)(B) of this section may certify to a partnership that its only activity giving rise to effectively connected income, gain, deduction, or loss for the partnership's taxable year that ends with or within the partner's taxable year is (and will be) the partner's investment in the partnership. A partnership that receives a certificate from a nonresident alien partner under this paragraph (c)(1)(ii) and that may reasonably rely on such certificate is not required to pay 1446 tax (or any installment of such tax) with respect to such partner if the partnership estimates that the annualized (or, in the case of a partnership completing its Form 8804, the actual) 1446 tax otherwise due with respect to such partner is less than $1,000, without taking into account any deductions or losses certified by the partner to the partnership under paragraph (c)(1)(i) of this section or any amounts under paragraph (c)(1)(iii) of this section.

(B) ***Requirements for exception.*** The requirements of this paragraph (c)(1)(ii)(B) are met if the nonresident individual alien partner's only activity giving rise to effectively connected income, gain, deduction, or loss for the partnership taxable year that ends with or within the partner's taxable year is (and will be) the partner's investment in the partnership. For this purpose, if the partner has (or has reason to expect to have) income or gain described in section 864(c)(6), such income or gain shall be considered derived from a separate investment activity. A certificate submitted by a nonresident alien individual partner under this paragraph (c)(1)(ii) is valid even if such certificate does not certify deductions and losses to partnership under this section. A nonresident alien individual partner that submits a certificate to a partnership under this paragraph (c)(1)(ii) must notify the partnership in writing and revoke such certificate within 10 days of the date that the partner invests or otherwise engages in another activity that may give rise to effectively connected income, gain, deduction, or loss for the partner's taxable year. For example, while an investment in a U.S. real property interest (as defined in section 897(c)) would not give rise to an activity requiring a notification (unless an election is in effect under section 871(d)), the disposition of the U.S. real property interest would give rise to an activity requiring a notification.

(iii) ***Consideration of certain current year state and local taxes.*** In addition to any deductions and losses certified by a foreign partner to a partnership under paragraph (c)(1)(i) of this section, the partnership may consider as a deduction of such partner 90-percent of any state and local income taxes withheld and remitted by the partnership on behalf of such partner with respect

to the partner's allocable share of partnership ECTI. The partnership may consider the amount of state and local taxes of the foreign partner determined under this paragraph (c)(1)(iii) regardless of whether the foreign partner submits a certificate to the partnership under paragraph (c)(1)(i) or (ii) of this section.

(2) *Form and time of certification* —

(i) ***Form of certification.*** A partner's certification to a partnership under paragraph (c)(1)(i) or (iii) of this section shall be made using Form 8804-C, "Certificate Of Partner-Level Items to Reduce Section 1446 Withholding" in accordance with the instructions of the form and the rules of this section.

(ii) *Time for certification provided to partnership* —

(A) ***First certificate submitted for a partnership's taxable year.*** Provided the other requirements of this section are met, a partnership may only rely on the first certificate received from a foreign partner for any 1446 tax installment due or Form 8804 filing due (without regard to extensions) on or after the date on which the certificate is received. See § 1.1446-3 for 1446 tax installment due dates. See also paragraph (e) of this section for examples illustrating the rules of this paragraph (c)(2).

(B) *Updated certificates and status updates* —

(*1*) ***Preceding year tax returns not yet filed.*** If a foreign partner's U.S. income tax return for a preceding taxable year has not been filed as of the time the partner submits to the partnership its first certificate under this paragraph (c), the certificate shall specify this fact and set forth the filing due date for such return set forth in section 6072(c), plus any extension of time to file such return granted under section 6081 and the regulations under section 6081. The partner shall also submit an updated certificate to the partnership in accordance with this paragraph (c) within 10 days of the date the partner files its U.S. income tax return for any such taxable year. In addition, prior to the partnership's final 1446 tax installment due date the partner shall provide to the partnership, under penalties of perjury, a status update regarding any U.S. income tax return for the prior taxable year that has not (or will not) be filed as of the final installment due date. The status update must identify the due date, set forth in section 6072(c), plus any extension of time to file such return granted under section 6081 and the regulations under section 6081, for any un-filed return identified in the first certificate and state whether the first certificate submitted may continue to be considered by the partnership. If the partnership does not receive an updated certificate or a status update from the partner prior to the partnership's final installment due date, the partnership shall disregard the partner's certificate when computing the 1446 tax due with respect to that partner for the final installment period and when completing its Form 8804 for the taxable year. In addition, the foreign partner shall not be permitted to submit an additional or substitute certificate for the disregarded certificate. See § 1.1446-3(b)(2)(i) for computation requirements for installment payments of 1446 tax when a partnership receives, or fails to receive, an updated certificate or status update. See also paragraph (e)(2) *Examples 4 and 8* of this section. Notwithstanding this paragraph (c)(2)(ii)(B)(*1*), a partner that can meet the requirements of this section for a subsequent partnership taxable year may submit a certificate to the partnership under this section for such taxable year.

(2) ***Other circumstances requiring an updated certificate.*** If at any time during the partnership taxable year the partner determines that its most recent certificate furnished to the partnership for such taxable year is incorrect, then the partner shall submit to the partnership an updated certificate in accordance with this paragraph (c) within 10 days of such determination. For example, if the partner determines that the amount or character of the certified deductions or losses is incorrect, the partner shall submit an updated certificate to the partnership. See § 1.1446-3(b)(2)(i) for computation requirements for installment payments of 1446 tax when a partnership receives an updated certificate.

(3) ***Form and content of updated certificate.*** The updated certificate required by this paragraph (c)(2)(ii) must be provided using the form and instructions identified in paragraph (c)(2)(i) of this section. The updated certificate must indicate that it is an updated certificate filed in accordance with this paragraph (c)(2)(ii). The partner is not required to attach to the updated certificate a copy of the certificate that is being updated (superseded certificate).

(4) ***Partnership consideration of an updated certificate.*** A partnership may consider an updated certificate, that meets the requirements of this paragraph (c), that is received prior to an installment due date in the same partnership taxable year for which the superseded certificate was provided, or prior to the due date of its Form 8804 (without regard to extensions) to be filed for the year the superseded certificate was provided. A partnership must consider an updated certificate that meets all the requirements of this paragraph (c) if it would increase the amount of 1446 tax the partnership would pay by the next installment due date, if any, or the due date of its Form 8804. An updated certificate considered by the partnership under this paragraph (c)(2)(ii)(B)(4) supersedes all prior certificates submitted by the foreign partner for the same partnership taxable year, beginning with the installment period or Form 8804 filing date for which the partnership considers the updated certificate. See paragraph (e)(2) *Example 4* of this section.

(3) ***Notification to partnership when a partner's certificate cannot be relied upon.*** If the IRS determines, in its discretion based on all the facts and circumstances, that a foreign partner's certificate is defective (or that it lacks information sufficient to make this determination after providing written request for such information to the partnership), the IRS shall notify the partnership of such determination in writing. Upon receipt of such written notification, the partnership shall not rely on any certificate submitted by that foreign partner for the partnership taxable year to which the defective certificate relates (or any subsequent partnership taxable year), until the IRS provides written notification to the partnership revoking or modifying the original written notification. For purposes of this section, a foreign partner's certificate of deductions and losses shall be defective if—

(i) The partner is not described in paragraph (b) of this section;

(ii) Any deductions or losses set forth in such certificate are not described in paragraph (c)(1)(i) of this section;

(iii) The timing requirements under paragraph (c)(2) of this section for submitting an original certificate, an updated certificate or a status update to the partnership are not met;

(iv) The certificate does not include all of the information required by paragraph (c)(2)(i) of this section;

(v) Any representation made on the certificate is incorrect;

(vi) The actual amount of deductions and losses available to the partner is less than the amount of deductions and losses certified to the partnership for the partnership taxable year and considered by the partnership in determining its 1446 tax due; or

(vii) There is a failure to comply with any other provision of this section.

(4) ***Partner to receive copy of notice.*** If the IRS notifies a partnership under paragraph (c)(3) of this section that a certificate of a foreign partner is defective, the IRS shall send a copy of such notice to the partner's address as shown on the certificate. The partnership shall also promptly furnish a copy of the IRS notice to such partner.

(5) ***Notification to partnership when no foreign partner's certificate can be relied upon.*** If the IRS determines, in its discretion based on all the facts and circumstances, that there would be a substantial reduction in section 1446 tax as a result of the submission of one or more defective certificates or that a substantial portion of all certificates being submitted by partners to the partnership and by the partnership to the IRS are defective (or lack information sufficient to make this determination), then the IRS shall notify the partnership of such determination in writing. Upon receipt of such written notification, the partnership shall not rely on any certificate submitted by any partner for the partnership taxable year to which the notice relates or any subsequent partnership taxable year, until the IRS provides written notification to the partnership revoking or modifying the original notice.

(6) ***Partnership notification to partner regarding use of deductions and losses.*** Unless § 1.1446-3(d)(1)(i)(A) or (B) applies (relating to waiver of notice of tax paid during the partnership taxable year), a partnership must notify each foreign partner of the amount of such partner's certified deductions and losses and state and local taxes, if any, taken into account under this paragraph (c) in determining the 1446 tax due with respect to such partner for each installment period or Form 8804 filing date, as applicable.

(7) ***Partner's certificate valid only for partnership taxable year for which submitted.*** A partnership that receives a certificate from a partnership under this paragraph (c) shall consider such certificate only for the partnership taxable year for which the certificate is submitted, as set forth on the certificate.

(d) ***Effect of certificate of deductions and losses on partners and partnership*** —

(1) ***Effect on partner*** —

(i) ***No effect on liability for income tax of foreign partner.*** A foreign partner that certifies deductions and losses to a partnership under this section is not relieved of liability for income tax on its allocable share of ECTI from the partnership. Further, the submission of a certificate under this section does not constitute an acceptance by the IRS of the amount or character of the deductions or losses certified therein.

(ii) ***No effect on partner's estimated tax obligations.*** A foreign partner that certifies deductions and losses to a partnership under this section is not relieved of any estimated tax obligation otherwise applicable to such partner with respect to income or gain allocated to such partner from the partnership.

(iii) ***No effect on partner's obligation to file U.S. income tax return.*** The submission of a certificate under paragraph (c) of this section does not relieve the foreign partner from its obligation to file a U.S. income tax return even if as a result of the partnership considering the certificate the partner would have no additional tax due with such return. See also § 1.1446-3(f).

(2) ***Effect on partnership*** —

(i) ***Reasonable reliance to relieve partnership from addition to tax under section 6655.*** A partnership that has reasonably relied on a certificate received from a foreign partner and complied with the filing requirements of paragraph (d)(3)(i) of this section, shall not be liable for any addition to tax under section 6655 (as applied through § 1.1446-3) for any period during which the partnership reasonably relied on such certificate, even if such certificate is later determined to be defective or the partner submits an updated certificate under paragraph (c)(2) of this section that increases the 1446 tax due with respect to such partner.

(ii) ***Continuing liability for withholding tax under section 1461 and for applicable interest and penalties*** —

(A) ***In general.*** Except as otherwise provided in this section, a partnership that has reasonably relied on a certificate received from a foreign partner and complied with the filing requirements of paragraph (d)(3)(i) of this section, is not relieved from liability for the 1446 tax (or any installment of such tax) under section 1461, any additions to the tax, interest or penalties. However, the partnership may be relieved of additions to the tax or penalties in certain circumstances. See §§ 301.6651-1(c) and 301.6724-1 of this chapter. Further, see § 1.1446-3(e) which deems a partnership to have paid 1446 tax with respect to ECTI allocable to a partner in certain circumstances. See also paragraph (e)(2) *Example 5* of this section.

(B) ***Certificate defective because of amount or character of deductions and losses.*** If a certificate is determined to be defective because the actual amount of deductions and losses available to the partner is less than the amount reflected on the certificate (other than when it is determined that the partner certified the same deduction or loss to more than one partnership), or because the character of the certified deductions and losses is erroneous, the partnership shall be liable for 1446 tax under section 1461 (or any installment of such tax) with respect to such partner to the extent the partnership considered an amount of certified deductions and losses greater than the amount actually available to the partner and permitted to be used under §§ 1.1446-1 through 1.1446-5 and this section, or to the extent that the proper character of the certified deductions and losses results in a greater amount of 1446 tax due with respect to such partner. See paragraph (e)(2) *Example 6* of this section.

(3) ***Partnership level rules and requirements*** —

(i) ***Filing requirement.*** A partnership that relies in whole or in part on a certificate received from a partner under this section in computing its 1446 tax due with respect to such partner must still file Form 8813 or Form 8804 and 8805, whichever is applicable, for the period for which the certificate is considered, even if as a result of relying on the certificate no 1446 tax (or an installment of such tax) is due with respect to such foreign partner. See generally § 1.1446-3(d)(1). Except as otherwise provided in this paragraph (d)(3)(i), the partnership must attach a copy of the foreign partner's certificate, and the computation of the 1446 tax due with respect to such partner, to both the Form 8813 and Form 8805 filed with the IRS for any

installment period or year for which such certificate is considered in computing the partnership's 1446 tax. See § 1.1446-3(d)(1)(iii) requiring the partnership to furnish Form 8805 to the IRS and such foreign partner even if no 1446 tax is paid on behalf of the partner. The partnership must include in that computation the amount of state and local taxes described in paragraph (c)(1)(iii) of this section taken into account in computing the 1446 tax due with respect to that partner. The partnership must also attach a computation of the 1446 tax due with respect to a partner for whom only state and local taxes described in paragraph (c)(1)(iii) are taken into account. For an installment period other than the first installment period for which the partnership considers a foreign partner's certificate or updated certificate, the partnership may, instead of attaching any partner's certificate, attach to Form 8813 a list containing the name, TIN, the amount of certified deductions and losses, and the amount of state and local taxes the partnership may consider under paragraph (c)(1)(iii) of this section for each foreign partner whose certificate was relied upon. For purposes of the preceding sentence, if the partnership is relying on a certificate received under paragraph (c)(1)(ii) of this section, instead of providing the amounts described in the prior sentence, it should attach a statement to Form 8813 which provides that, relying on that certificate, no 1446 tax is due with respect to that partner.

(ii) ***Reasonable cause for failure to timely file a valid certificate and computation.*** This paragraph (d)(3)(ii) provides the sole source of relief for a partnership that fails to timely file a valid certificate or attach a computation of 1446 tax as required under paragraph (d)(3)(i) of this section. To permit the partnership to reasonably rely on such certificate, the partnership shall be considered to have satisfied the requirements of paragraph (d)(3)(i) of this section if the partnership demonstrates that such failure was due to reasonable cause and not willful neglect and if once the partnership becomes aware of the failure, the partnership attaches the certificate and computation, as well as a written statement setting forth the reasons for the failure to comply with the requirements of paragraph (d)(3)(i) of this section, to an amended Form 8813 or amended Forms 8804 and 8805 for the relevant period. All such submissions should be sent to the address provided in the instructions to Form 8804-C.

(A) ***Determining reasonable cause.*** In determining whether the partnership has reasonable cause, the Director shall consider whether the partnership acted reasonably and in good faith considering all the facts and circumstances.

(B) ***Notification.*** If the IRS has notified, as provided in paragraph (c)(3) of this section, the partnership that the certificate is defective or that no foreign partner's certificate may be relied upon, as provided in paragraph (c)(5) of this section, the partnership will be deemed not to have acted reasonably and in good faith. Otherwise, the Director shall notify the partnership in writing within 120 days of the amended filing if it is determined that the failure to comply was not due to reasonable cause, or if additional time will be needed to make such determination. If the Director fails to notify the partnership within 120 days of the amended filing, the partnership shall be considered to have demonstrated to the Director that such failure was due to reasonable cause and not willful neglect.

(e) ***Examples.***

(1) The rules of this section are illustrated by the examples in paragraph (e)(2) of this section. In 2008, the relevant rate of withholding for foreign partners that were not corporations (that is, the highest rate in section 1 as specified in § 1.1446-3(a)(2)(i)) was 35%, and the due date for filing Form 8804 for domestic calendar year partnerships (that is, the date specified in § 1.1446-3(d)(1)(iii)) was April 15. Except as otherwise provided, in each example assume:

(i) Section 1.1446-3(b)(2)(v)(F) (relating to the de minimis exception to paying 1446 tax) does not apply;

(ii) Paragraph (c)(1)(ii) of this section (relating to a nonresident alien individual partner whose sole investment generating effectively connected income or gain is the partnership) does not apply;

(iii) All income and losses are ordinary;

(iv) For purposes of applying paragraph (c)(1)(i)(C) of this section, the percentage limitation under section 56(a)(4) and (d) is 90 percent;

(v) Any loss is not a passive activity loss within the meaning of section 469;

(vi) The partnership uses an acceptable annualization method under § 1.1446-3;

(vii) NRA is a nonresident alien individual who maintains a calendar taxable year for U.S. tax purpose;

(viii) B and C are U.S. individuals who maintain a calendar taxable year; and

(ix) Any partnership maintains a calendar taxable year.

(2) The examples are as follows:

> *Example 1. Qualifying U.S. income tax return.* (i) NRA and B form a partnership (PRS) in year 4 to conduct a trade or business in the United States. NRA and B provide PRS appropriate documentation under § 1.1446-1 to establish their status for purposes of section 1446. NRA submits a certificate to PRS (using Form 8804-C) on March 20, year 4, to be considered by PRS in determining its 1446 tax due with respect to NRA for the first installment period in the year 4. The Form 8804-C states that NRA reasonably expects to have an effectively connected net operating loss of $5,000 available to offset its allocable share of ECTI from PRS in year 4. Prior to year 4, NRA had not submitted a certificate to a partnership under this section. NRA filed (or will file) its year 1 U.S. income tax return on March 11, year 3; its year 2 U.S. income tax return on February 12, year 4; its year 3 U.S. income tax return on April 13, year 4; and its year 4 U.S. income tax return on May 14, year 5. NRA paid or (will pay) all amounts due with respect to the returns (including interest, penalties, and additions to tax, if any) by the date they are filed. NRA's years 1 though 3 U.S. income tax returns report income or gain effectively connected with a U.S. trade or business or deductions or losses properly allocated and apportioned to such activities.
> (ii) To be eligible to submit a certificate of deductions and losses to PRS under this section, NRA must satisfy the requirements of paragraph (b)(1) of this section. In accordance with § 1.1446-1, NRA provided valid documentation to PRS to establish its status for purposes of section 1446. NRA's year 1 U.S. income tax return is a qualifying U.S. income tax return

because it reported income or gain effectively connected with a U.S. trade or business or deductions or losses properly allocated and apportioned to such activities and is described under paragraph (b)(2)(iii)(A) of this section. Although NRA filed its year 1 return after the due date of the return (determined under section 6072(c) without regard to any extension of time to file) the return was filed on March 11, year 3, which was on or before the earlier of June 15, year 3, the date one year after its section 6072(c) due date without regard to any extension of time to file, and March 20, year 4, the date on which NRA submitted the certificate to PRS. NRA's year 2 U.S. income tax return is a qualifying U.S. income tax return because it reported income or gain effectively connected with a U.S. trade or business or deductions or losses properly allocated and apportioned to such activities and is described under paragraph (b)(2)(iii)(A) of this section. Although NRA filed its year 2 return after the due date of the return (determined under section 6072(c) without regard to any extension of time to file) the return was filed on February 12, year 4, which was on or before the earlier of June 15, year 4, the date one year after its section 6072(c) due date without regard to any extension of time to file, and March 20, year 4, the date on which NRA submitted the certificate to PRS. NRA's year 3 U.S. income tax return is a qualifying U.S. income tax return because it reported income or gain effectively connected with a U.S. trade or business or deductions or losses properly allocated and apportioned to such activities and is described under paragraph (b)(2)(iii)(B) of this section. Because NRA filed its year 3 U.S. income tax return on April 13, year 4, the return will be considered timely-filed under paragraph (b)(2)(ii) of this section, as the due date under section 6072(c) was June 15, year 4. NRA's year 4 U.S. income tax return is a qualifying U.S. income tax return because it reported income or gain effectively connected with a U.S. trade or business or deductions or losses properly allocated and apportioned to such activities and is described under paragraph (b)(2)(iii)(C) of this section. Because NRA filed its year 4 U.S. income tax return on May 14, year 5, the return will be considered timely-filed under paragraph (b)(2)(ii) of this section. Accordingly, NRA meets the conditions of paragraph (b)(1) of this section and is eligible to provide a certificate of deductions and losses to PRS for year 4.

Example 2. Subsequent year qualifying U.S. income tax return. (i) Assume the same facts as in Example 1. Further, NRA and C form a second partnership (XYZ) in year 7 to conduct a trade or business in the United States. NRA and C provide XYZ appropriate documentation under § 1.1446-1 to establish their status for purposes of section 1446. NRA did not submit a certificate under this section to any partnership for years 5 and 6. NRA submits a certificate to XYZ (using Form 8804-C) on April 10, year 7, to be considered by XYZ in determining its 1446 tax due with respect to NRA for its first installment period in year 7. The certificate states that NRA reasonably expects to have an effectively connected net operating loss of $8,000 available to offset its allocable share of ECTI from XYZ in year 7. Further, the certificate contains all of the necessary representations required under this section. NRA will file its U.S. income tax return for year 5 on March 25, year 7, (after its section 6072(c) due date and any extension of time to file that could have been granted under section 6081), its

U.S. income tax return for year 6 on April 26, year 7; and its U.S. income tax return for year 7 on May 27, year 8. NRA will pay all amounts due with the returns (including interest, penalties, and additions to tax, if any) by the dates they are filed. NRA's years 5, 6, and 7 U.S. income tax returns will report income or gain that is effectively connected with a U.S. trade or business or deductions or losses properly allocated and apportioned to such activities.
(ii) To be eligible to submit a certificate of deductions and losses to XYZ under this section, NRA must satisfy the requirements of paragraph (b)(1) of this section. NRA provided valid documentation to XYZ in accordance with § 1.1446-1. As described in Example 1, NRA's year 4 U.S. income tax return is a qualifying U.S. income tax return because it will report income or gain effectively connected with a U.S. trade or business and is described under paragraph (b)(2)(iii)(C) of this section. Although NRA's year 5 U.S. income tax return reports income or gain effectively connected with a U.S. trade or business or deductions or losses properly allocated and apportioned to such activities it is not a qualifying U.S. income tax return under paragraph (b)(2)(iii) of this section. Because NRA submitted a certificate to PRS in year 4, to constitute a qualifying U.S. income tax return the year 5 U.S. income tax return must be timely-filed and all amounts due with such return must be timely paid. See paragraph (b)(2)(iii)(C) of this section. However, NRA will not file its U.S. income tax return for year 5 until March 25, year 7, (after its section 6072(c) due date and any extension of time to file that could have been granted under section 6081). Because the year 5 tax return is not a qualifying U.S. income tax return under paragraph (b)(2)(iii) of this section, NRA does not satisfy the requirements of paragraph (b)(1)(ii) of this section and, therefore, may not submit a certificate of deductions and losses to XYZ under this section in year 7.

Example 3. General application of the rules of this section. NRA and B form a partnership (PRS) to conduct a trade or business in the United States. NRA and B are equal partners under the partnership agreement. NRA and B provide PRS appropriate documentation under § 1.1446-1 to establish their status for purposes of section 1446. Prior to the formation of PRS, NRA had not invested in or engaged in the conduct of a U.S. trade or business. PRS incurs a $1,500 effectively connected net operating loss in years 1 and 2. The loss incurred in each is allocated equally between NRA and B. NRA has filed a qualifying U.S. income tax return (within the meaning of paragraph (b)(2)(iii) of this section) for years 1 and 2 that report its allocable share of effective connected net operating loss allocated to it from PRS, as reported on the Form 1065 (Schedule K-1) issued to NRA for each year.
(i) In year 3, NRA may not submit a certificate to PRS under paragraph (c) because it will not have filed qualifying U.S. income tax returns for the preceding three years. In year 3, PRS has ECTI of $1,000 that is allocated equally between NRA and B. PRS satisfies its 1446 tax obligation with respect to NRA for year 3.

(ii) In year 4, PRS estimates that it will have ECTI of $4,000, which will be allocated equally between NRA and B. On or before April 15th of year 4 (the first installment due date), NRA submits a certificate to PRS under this section (using Form 8804-C) certifying that it reasonably expects to have an effectively connected net operating loss of $1,000 ($750 loss in both years 1 and 2, less $500 of income in year 3) available to offset its allocable share of ECTI from PRS in year 4. As of the date the certificate is submitted, NRA has received the Form 1065 (Schedule K-1) from PRS for year 3 but has not yet filed its U.S. income tax return for year 3.

(iii) With respect to year 4, and based upon paragraph (b)(1) of this section, NRA can include year 3 (NRA's preceding taxable year) as one of the preceding three years that it has filed or will file qualifying U.S. income tax returns (within the meaning of paragraph (b)(2)(iii) of this section). Therefore, provided PRS has, in accordance with paragraph (a)(2) of this section, no actual knowledge or reason to know the certificate is defective, PRS may reasonably rely on NRA's certificate. Accordingly, PRS may consider NRA's certificate to reduce the 1446 tax that would otherwise be required to be paid on NRA's behalf. Specifically, subject to paragraph (c)(1)(i)(C) of this section, the $1,000 of net losses that have been reported on Forms 1065 (Schedule K-1) issued to NRA that are available to reduce NRA's U.S. income tax on NRA's allocable share of effectively connected income or gain allocable from PRS may be used to reduce the $2,000 of ECTI estimated to be allocable to NRA. As a result, PRS must pay 1446 tax on only $1,100 of NRA's allocable share of partnership ECTI for the first installment period in year 5 ($2,000−($1,000 × .90)). PRS must pay 1446 tax of $96.25 for its first installment period with respect to the ECTI allocable to NRA ($1,100 (net ECTI after considering certified losses) × .35 (withholding tax rate) × .25 (section 6655(e)(2)(B) percentage for the first installment period)). See § 1.1446-3(b)(2). Pursuant to paragraph (d)(3) of this section, PRS must attach NRA's certificate and PRS's computation of its 1446 tax obligation with respect to NRA to its Form 8813, “Partnership Withholding Tax Payment Voucher (Section 1446),” filed for the first installment period. Under paragraph (c)(2)(ii)(B) of this section, NRA is required to provide an updated certificate on or before the 10th day after NRA files its U.S. income tax return for year 3, even if the updated certificate results in no change to the amount of deductions and losses reported on the superseded certificate.

(iv) The results are the same if NRA had not yet received a Form 1065 (Schedule K-1) from PRS for year 3. See paragraph (c)(1)(i)(A) of this section.

Example 4. Updated certificate submitted for losses. On January 1, year 8, NRA and B form a partnership (PRS) to conduct a trade or business in the United States. NRA and B are equal partners in PRS. NRA and B provide PRS appropriate documentation under § 1.1446-1 to establish their status for purposes of section 1446. During years 1 through 7 NRA held an interest in another partnership (XYZ) that conducted a trade or business in the United States. NRA timely-filed (within the meaning of paragraph (b)(2) of this section) U.S. income tax

returns for years 1 through 6 reporting its allocable share of ECTI (or loss) from XYZ (and timely paid all tax shown on such returns). NRA files its U.S. income tax return for year 7 on June 9, year 8 (and timely pays all tax due with such return). Therefore, NRA has filed qualifying U.S. income tax returns (within the meaning of paragraph (b)(2)(iii) of this section) for years 1 through 7. During years 1 through 7, NRA's only investment generating effectively connected items was its interest in XYZ. The XYZ partnership liquidated and ceased doing business on December 31, year 7.
(i) On or before April 15, year 8, PRS receives from NRA a valid certificate under this section using Form 8804-C in which NRA certifies that it reasonably expects to have available effectively connected net operating losses in the amount of $5,000. Among other statements made in accordance with paragraph (c) of this section, NRA represents that it has not yet filed its year 7 U.S. income tax return, but will timely file such return (and timely pay all tax due with such return). For its first installment period in year 8, PRS estimates that it will earn taxable income of $10,000 for the year which will be allocated equally to NRA and B (NRA's allocable share of PRS's ECTI is $5,000).

(ii) Provided PRS has, in accordance with paragraph (a)(2) of this section, no actual knowledge or reason to know the certificate is defective, PRS may reasonably rely on NRA's certificate when computing its 1446 tax obligation for the first installment period. PRS is limited under paragraph (c)(1)(i)(C) of this section and PRS may only consider $4,500 ($5,000 × .90) of the certified net operating loss. After consideration of the certified loss, PRS owes 1446 tax in the amount of $43.75 for the first installment period ($5,000 estimated allocable ECTI less $4,500 (certified loss as limited under paragraph (c)(1)(i)(C)) × .35 (1446 tax applicable percentage) × .25 (section 6655(e)(2)(B) percentage for the first installment period)). See § 1.1446-3(b)(2). Pursuant to paragraph (d)(3) of this section, PRS must attach a copy of NRA's certificate and the computation of 1446 tax due with respect to NRA to the Form 8813 filed with respect to NRA.

(iii) PRS's estimate of ECTI allocable to NRA for the second installment period remains unchanged from the first installment period. On June 10, year 8, NRA provides PRS an updated certificate reporting that NRA now reasonably expects to have an effectively connected net operating loss of $4,000 available to offset its allocable share of ECTI from PRS in year 4. NRA provided the updated certificate within 10 days of filing its U.S. income tax return for the year 7 taxable year, as required by paragraph (c)(2)(ii)(B) of this section. Provided the updated certificate is otherwise valid, PRS may rely on the updated certificate for the second installment period (due date June 15, year 8). Even if the updated certificate were not valid, PRS could no longer rely on the original certificate.

(iv) Under paragraph (d) of this section, PRS is not relieved from liability for the 1446 tax due with respect to NRA under section 1461 if it relies on a certificate determined to be defective, or if it receives an updated certificate reporting an amount of deductions and losses less than

the amount reported on the superseded certificate. Under the principles of section 6655 (as applied through § 1.1446-3), PRS is required to have paid 50-percent of the annualized 1446 tax due with respect to NRA on or before the due date of the second installment period (section 6655(e)(2)(B) percentage for the second installment period). Under paragraph (c)(2)(ii)(B) of this section, because NRA's updated certificate is valid for the second installment period, if PRS considers a certificate for that period it must consider the updated certificate. Under paragraph (c)(1)(i)(C) of this section, PRS can only consider $3,600 ($4,000 × .90) of NRA's updated effectively connected net operating loss. Assuming PRS considers NRA's updated certificate for the second installment period, PRS must have paid a total of $245 of 1446 tax with respect to the ECTI estimated to be allocable to NRA as of the second installment due date ($1,400 ($5,000 ECTI less $3,600 net operating loss deduction) × .35 (withholding tax rate) × .50 (section 6655(e)(2)(B) percentage for the second installment period)). After considering PRS's payment of 1446 tax for the first installment period, PRS is required to pay $201.25 for the second installment period ($245 less previous payment of $43.75). See § 1.1446-3(b)(2). Further, if PRS considers NRA's updated certificate for the second installment period, when PRS files Form 8813 it must attach the updated certificate along with PRS's computation of 1446 tax due with respect to NRA.

(v) Under paragraph (d) of this section, PRS is not liable for the addition to the tax under section 6655 (as applied through § 1.1446-3) for the first installment period because PRS reasonably relied on NRA's certificate of losses for that period.

(vi) Assume that PRS's estimate of its ECTI allocable to NRA for the third and fourth installment periods is the same as for the first and second installment periods. Assume PRS may reasonably rely on NRA's updated certificate in calculating its payment of 1446 tax for the third and fourth installment periods. The third installment of 1446 tax would be $122.50 (($5,000 − $3,600) × .35 × .75 = $367.50 − $245 (total previous payments)). The fourth installment of 1446 tax would be $122.50 (($5,000 − $3,600) × .35 × 1.00 = $490 − $367.50 (total previous payments)). See § 1.1446-3(b)(2). PRS must attach to each Form 8813 a computation of the 1446 tax due with respect to NRA that takes into account the amount of effectively connected net operating loss reported on NRA's updated certificate.

(vii) Because NRA's certified net operating loss has not changed for the third and fourth installments, in lieu of attaching NRA's certificate, PRS may attach a statement containing NRA's name, TIN, and the certified net operating loss amount. However, PRS must attach NRA's certificate and a computation of the 1446 tax due with respect to NRA that takes into account NRA's certified net operating loss to the Form 8805 filed with respect to NRA. See paragraph (d)(3) of this section.

Example 5. IRS determines in subsequent taxable year that partner's certificate is defective because partner failed to timely file a U.S. income tax return. NRA and B form a partnership

(PRS) in year 1 to conduct a trade or business in the United States. NRA and B provide PRS appropriate documentation under § 1.1446-1 to establish their status for purposes of section 1446. In year 4, NRA timely submits a certificate under this section (using Form 8804-C) to be considered by PRS for its first installment period. The certificate reports that NRA reasonably expects to have an effectively connected net operating loss of $5,000 available to offset its allocable share of ECTI from PRS in year 4. Further, the certificate contains all of the necessary representations required under this section. PRS estimates for each installment period that NRA's allocable share of ECTI will be $5,000 for the taxable year. PRS's actual operating results for the year result in $5,000 of ECTI allocable to NRA.
(i) PRS reasonably relies on (within the meaning of paragraph (a)(2) of this section) NRA's certificate when computing each installment payment during year 4 and the 1446 tax due on Form 8804 and appropriately considers the limitation in paragraph (c)(1)(i)(C) of this section. As a result, PRS paid $175 of 1446 tax on behalf of NRA for the taxable year ($5,000 of ECTI less $4,500 net operating loss deduction × .35 applicable percentage). As required under paragraph (d) of this section, PRS attached the certificate to the Form 8813 for the first installment period and the Form 8805 for year 4. Because NRA did not submit an updated certificate to PRS in year 4, PRS attached to the Forms 8813 for the second, third and fourth installment periods a statement containing NRA's name, TIN, and the certified net operating loss as well as the computation of 1446 tax due with respect to NRA reflecting the amount of net operating loss considered.

(ii) In year 5, NRA timely submits to PRS a certificate under this section to be considered for the first installment period. The certificate represents that NRA reasonably expects to have an effectively connected net operating loss of $5,000 available to offset its allocable share of ECTI from PRS in year 5. For the first installment period, PRS estimates that NRA's allocable share of partnership ECTI is $5,000. PRS reasonably relies on the certificate for the first installment period and determines that it is required to make a 1446 tax installment payment of $43.75 ($5,000 allocable ECTI less $4,500 (certified net operating loss as limited under paragraph (c)(1)(i)(C) of this section) × .35 (1446 tax applicable percentage) × .25 (section 6655(e)(2)(B) percentage for the first installment period)). See § 1.1446-3(b)(2). PRS makes the installment payment with the Form 8813 filed for the first installment period, and complies with paragraph (d)(3) of this section by attaching NRA's certificate and the computation of 1446 tax due with respect to NRA to the Form 8813.

(iii) The IRS provides written notification to PRS on June 1, year 5, (pursuant to paragraph (c)(3) of this section) that the certificate received from NRA in year 4 is defective because NRA failed to file a qualifying U.S. income tax return (within the meaning of paragraph (b)(2)(iii) of this section) for one of the preceding taxable years as required under paragraph (b)(1) of this section. The notice further states that PRS is not to rely on any certificate received from NRA in year 5.

(iv) Under paragraph (d)(2)(ii) of this section, because the certificate submitted by NRA in year was determined to be defective for a reason other than the amount or character of the certified deductions and losses, under section 1461 PRS is fully liable for the 1446 tax due with respect to NRA's allocable share of ECTI year 4 without regard to the certificate. The total 1446 tax due for year 4 without regard to the certificate is $1,750 ($5,000 ECTI × .35) and PRS paid $175 of 1446 tax in year 4. Therefore, PRS owes $1,575 of 1446 tax. However, PRS may be deemed to have paid the outstanding 1446 tax due if NRA paid all of its U.S. tax due in year 4. See § 1.1446-3(e).

(v) However, because PRS did not have actual knowledge or reason to know that the certificate NRA submitted in year 4 was defective, PRS reasonably relied on the certificate for purposes of paragraph (d)(2) of this section. Therefore, PRS is not liable for an addition to the tax with respect to its underpayment of 1446 tax under the principles of section 6655 (as applied through § 1.1446-3) for any installment period in year 4.

(vi) However, PRS is generally liable for interest under section 6601 and for the failure to pay addition to tax under section 6651(a)(2) on the $1,575 of 1446 tax due for year 4 for the period from April 15, year 5 (last date prescribed for payment of 1446 tax) to the date PRS pays the 1446 tax or is deemed to have paid the 1446 tax under § 1.1446-3(e).

(vii) With respect to the year 5, PRS reasonably relied on NRA's certificate when computing its first installment payment (due on April 15, year 5). Therefore, in accordance with paragraph (d)(2)(i) of this section, PRS will not be liable for an addition to the tax under the principles of section 6655 (as applied through § 1.1446-3) for the first installment period. However, because the IRS provided written notification to PRS on June 1, year 5, to disregard any certificate received from NRA for year 5, PRS may not rely on any certificate received from NRA certificate (or any new certificate provided by NRA) when it computes its second installment payment in year 5. PRS is not permitted to consider any certificate submitted by NRA until the IRS provides written notification to PRS revoking or modifying the original notice. PRS's second installment payment in year 5 must include the additional amount of 1446 tax it would have paid for the first installment period without regard to the certificate received from NRA.

Example 6. IRS determines in subsequent taxable year that partner's certificate is defective because partner's actual losses are less than amount certified and considered by the partnership. Assume the same facts as in *Example 5,* except that the IRS determines that NRA's certificate submitted in year 4 is defective because the actual effectively connected net operating loss available to NRA for year 4 was $1,000 rather than the $5,000 certified.
(i) Under paragraph (d)(2)(ii) of this section, PRS is not relieved from its liability for 1446 tax under section 1461 when it relies on a certificate of losses from a foreign partner that is later determined to be defective. However, when the IRS determines that a partner's certificate is

defective because of the amount of the certified deductions and losses, the partnership is liable for the 1446 tax, interest, additions to tax, and penalties to the extent the amount of certified deductions and losses taken into account when computing 1446 tax (or, unless there was reasonable reliance on the certificate, any installment of such tax) is greater than the actual amount of available deductions and losses. Here, PRS considered the certified deductions and losses in the amount of $4,500. The IRS subsequently determined that NRA only had $1,000 of actual losses, only $900 of which were permitted to be considered under paragraph (c)(1)(i)(C) of this section. Accordingly, PRS is liable for the 1446 tax due with respect to the portion of the overstated losses that it considered when computing its 1446 tax. The remaining 1446 tax due for year 4 is $1,260 ($3,600 ($4,500 less $900) of excess losses considered × .35). However, PRS may be deemed to have paid the $1,260 of 1446 tax under § 1.1446-3(e) if NRA has paid all of NRA's U.S. income tax.

(ii) If PRS had considered only $900 (or a lesser amount) of NRA's certified net operating loss when computing and paying its 1446 tax during year 4 then, under paragraph (d)(2)(iii) of this section, PRS would not be liable for 1446 tax because it did not consider a net operating loss greater than the amount actually available to NRA.

Example 7. Partner with different taxable year than partnership. PRS partnership has two equal partners, FC, a foreign corporation, and DC, a domestic corporation. PRS conducts a trade or business in the United States and generates effectively connected income. FC maintains a June 30 fiscal taxable year end, while DC and PRS maintain a calendar taxable year end. FC and DC provide a valid Form W-8BEN and Form W-9, respectively, to PRS. FC and DC are the only persons that have ever been partners in PRS. For its year 1 through year 3 taxable years, PRS issued Forms 1065 (Schedule K-1) reporting in the aggregate $100 of net loss to each partner. For its year 4 taxable year, PRS issued Forms 1065 (Schedule K-1) to its partners reporting $150 of loss to each partner. All of the losses reported on the Forms 1065 (Schedule K-1) are effectively connected to PRS's and FC's trade or business in the United States.
(i) Assume that FC submits a valid certificate under this section certifying losses to the partnership for the partnership's year 5 taxable year. Further, assume that FC's only source of effectively connected income, gain, deduction, or loss is the activity of PRS.

(ii) For PRS's first installment period in year 5, FC may only certify deductions and losses under this section in the amount of $100 (the losses as reported on the Forms 1065 (Schedule K-1) issued for PRS's year 1 through 3 taxable years). Under section 706, the taxable income of a partner shall include the income, gain, loss, deduction, or credit of the partnership for the partnership taxable year ending within or with the taxable year of the partner. PRS's year 4 calendar taxable year ends during FC's fiscal taxable year ending June 30, year 5. Therefore, under paragraph (c)(1) of this section, as of April 15, year 5 (the last date FC may submit its first certificate under paragraph (c) of this section to have it

considered for PRS's first installment due date of April 15, year 5), FC's allocable share of the PRS losses for years 1 through 3 are the only losses that FC can represent have been or will be reported on an FC U.S. income tax return filed for a taxable year ending prior to such installment due date.

(iii) The result in paragraph (ii) of this *Example 7* is the same for the year 5 second installment period, the due date of which is June 15, year 5.

(iv) FC may submit an updated certificate under this section after June 30, year 5, which includes the $150 loss for year 4. PRS may consider such an updated certificate for its third installment period (due date September 15, year 5), provided the updated certificate is received by the due date for such installment in accordance with paragraph (c) of this section.

Example 8. Failure to provide status update with respect to prior year unfiled returns. FC, a foreign corporation, and DC, a domestic corporation, form a partnership (PRS) to conduct a trade or business in the United States. FC and DC provide PRS appropriate documentation under § 1.1446-1 to establish their status for purposes of section 1446. FC and DC are equal partners in PRS, and all partnership items are allocated equally between FC and DC.
(i) In the current taxable year FC submits a certificate under this section using Form 8804-C prior to PRS's first installment due date. FC represents that it has filed or will file a qualifying U.S. income tax return (within the meaning of paragraph (b)(2)(iii) of this section) in each of the preceding three taxable years. FC specifies that it has not filed its U.S. income tax return for the immediately preceding taxable year. FC also represents that it will timely file its U.S. income tax return for the partnership taxable year during which the certificate is considered (and will timely pay all tax due with such return). Assume all other requirements under paragraph (c) of this section are met for FC's certificate to be valid.

(ii) Provided that PRS does not possess actual knowledge or reason to know that FC's certificate is defective under paragraph (a)(2) of this section, PRS may reasonably rely on FC's certificate for its first, second, and third installment payments.

(iii) If FC does not submit to PRS either an updated certificate or a status update as required by paragraph (c)(2)(ii)(B)(*1*) of this section by December 15th (PRS's final installment due date), PRS must disregard FC's certificate when computing its fourth installment payment of 1446 tax and when completing its Form 8804 for the taxable year. PRS's payment of 1446 tax for its fourth installment period must include the additional amount of 1446 tax it would have paid in the first, second and third installment periods had it not considered FC's certificate. Further, even if the status update is provided by December 15th, PRS may only rely on the certificate if the status update does not contradict the original certificate and such update indicates that the immediately preceding year's return will be timely filed. Finally, even if the

status update is provided by December 15th, FC must also submit an updated certificate to the partnership in accordance with paragraph (c) of this section within 10 days of the date FC timely files its U.S. income tax return for the preceding taxable year.

Example 9. Partnership consideration of certified deductions and losses or de minimis certificate. For purposes of this example assume paragraph (c)(1)(ii) of this section may apply. On January 1, year 4, NRA and B form a partnership (PRS) to conduct a trade or business in the United States. NRA and B are equal partners in PRS and all partnership items are shared equally. NRA and B provide PRS appropriate documentation under § 1.1446-1 to establish their status for purposes of section 1446. During years 1 through 3, NRA's only activity generating effectively connected items was an interest in partnership XYZ. XYZ allocated NRA a loss for all three years. NRA filed qualifying U.S. income tax returns (within the meaning of paragraph (b)(2)(iii) of this section) reporting its allocable share of losses from XYZ in years 1 through 3. The XYZ partnership dissolved on December 31, year 3.
(i) In year 4, NRA's only activity giving rise to effectively connected income, gain, deduction, or loss is its interest in PRS. NRA submits to PRS a valid certificate (using Form 8804-C) certifying under paragraph (c)(1)(i) its effectively connected net operating losses from years 1 through 3 and under (c)(1)(ii) of this section that its only activity giving rise to effectively connected income, gain, deduction, or loss for the PRS taxable year that ends with or within its taxable year is (and will be) its investment in PRS.

(ii) During year 4, PRS allocates ECTI to NRA. If the 1446 tax otherwise due on the annualized amount allocated to NRA is less than $1,000, determined without regard to any deductions and losses certified by NRA under paragraph (c)(1)(i) of this section, PRS may consider the certificate received from NRA under paragraph (c)(1)(ii) of this section and not pay 1446 tax (or any installment of such tax) with respect to NRA. Alternatively, PRS may consider the deductions and losses certified by NRA under paragraph (c)(1)(i) of this section.

(iii) Regardless of whether PRS considers NRA's certification under paragraph (c)(1)(i) or (c)(1)(ii) of this section in computing its 1446 tax due with respect to NRA, PRS must file Form 8813 for all installment periods as well as a Form 8805 for NRA with its Form 8804. If PRS considers NRA's certification under paragraph (c)(1)(i) or (c)(1)(ii) of this section, PRS must attach to each Form 8813, as well as to the Form 8805, a computation of the 1446 tax with respect to NRA that takes into account its consideration of NRA's certificate. In addition, PRS must attach NRA's certificate to the Form 8813 for the first installment period it considers the certificate, as well as to the Form 8805. For all subsequent installment periods, PRS may attach a statement containing NRA's name, and TIN. If PRS is relying on NRA's certified losses under paragraph (c)(1)(i) of this section, the statement must indicate the amount of losses and deductions NRA certified. If PRS is relying on NRA's certification under

paragraph (c)(ii) of this section, the statement must indicate that it is relying on NRA meeting the requirements under paragraph (c)(1)(ii) of this section and the 1446 tax on the annualized amount allocated to NRA is less than $1,000. See paragraph (d)(3)(i) of this section.

Example 10. Application of transition rule. NRA and B form a partnership (PRS) on January 1, 2004, to conduct a trade or business in the United States. NRA and B are equal partners in PRS and all partnership items are shared equally. NRA and B provide PRS appropriate documentation under § 1.1446-1 to establish their status for purposes of section 1446. For its 2004 through 2007 tax years, PRS issued Forms 1065 (Schedule K-1) to NRA and B reporting a $1,000 net loss from its U.S. trade or business to each partner for each year (for an aggregate loss of $4,000 per partner). During the 2004 through 2007 tax years, NRA's only activity generating effectively connected items was its investment in PRS.
(i) On February 10, 2008, NRA submitted a certificate to PRS, reporting its aggregate $4,000 effectively connected loss to PRS, that met the requirements of § 1.1446-6T(c) (See 26 CFR Part 1, revised as of April 1, 2007), as in effect before January 1, 2008. The certificate stated that NRA had timely filed its U.S. income tax returns for the 2004, 2005 and 2006 tax years, and that it would timely file a U.S. income tax return for its 2007 tax year. For the first and second installments period in 2008, PRS estimates that it will earn ECTI of $10,000.

(ii) Because the certificate submitted by NRA to PRS on February 10, 2008, met the requirements of § 1.1446-6T (See 26 CFR Part 1, revised as of April 1, 2007), as in effect before January 1, 2008, PRS may consider such certificate when computing its 1446 tax due for the first and second installment period even if the certificate does not meet all the requirements of paragraph (c) of this section.

(iii) NRA timely files its U.S. income tax return for the 2007 tax year on July 24, 2008. In accordance with paragraph (c)(2)(ii)(B)(*1*) of this section, within 10 days of filing such return NRA prepares an updated certificate to be submitted to PRS certifying that it reasonably expects to have only $3,500 of losses available to reduce its allocable share of ECTI from PRS. Because the updated certificate will be submitted after July 28, 2008, to be valid the updated certificate must meet the requirements of paragraph (c) this section.

(f) ***Effective/Applicability date.*** Except as otherwise provided in this paragraph (f), the rules of this section are applicable for partnership taxable years beginning after December 31, 2007. The rules of paragraphs (b)(3)(i)(B) through (D) shall apply to partnership taxable years beginning after July 28, 2008.

(g) ***Transition rule.*** A certificate that met the requirements of § 1.1446-6T(c) (See 26 CFR Part 1, revised as of April 1, 2007), as in effect before January 1, 2008, submitted on or before July 28, 2008 by a partner that met the requirements of § 1.1446-6T(b) (See 26 CFR Part 1, revised as of April 1, 2007), as in effect before January 1, 2008, shall not be considered defective because it does not meet the requirements of this section. However, any certificate (including any updated certificates and status updates) submitted, or required to be submitted, under paragraph (c) of this section after July 28, 2008, must meet the requirements of this section. See paragraph (e)(2) *Example 10* of this section.

[T.D. 9394, 73 FR 23085, Apr. 29, 2008, as amended at 74 FR 14931, Apr. 2, 2009; T.D. 9926, 85 FR 76935, Nov. 30, 2020]

§ 1.1446-7 Applicability dates.

Sections 1.1446-1 through 1.1446-5 shall apply to partnership taxable years beginning after May 18, 2005. However, a partnership may elect to apply all of the provisions of §§ 1.1446-1 through 1.1446-5 to partnership taxable years beginning after December 31, 2004. A partnership shall make the election under this section by complying with the provisions of §§ 1.1446-1 through § 1.1446-5 and attaching a statement to the Form 8804 or Form 1042 annual return, filed for the taxable year in which the regulation provisions first apply, that indicates that the partnership is making the election under this section. The revisions to §§ 1.1446-3(b)(2), 1.1446-3(b)(3)(i)(A) and 1.1446-5(c)(2) contained in the final regulations published in 2008 apply to partnership taxable years beginning after December 31, 2007. See § 1.1446-6(f) and (g) for the Effective/Applicability date and Transition rule for § 1.1446-6. Section 1.1446-3 generally applies to returns filed on or after January 30, 2020 and § 1.1446-3T (as contained in 26 CFR part 1, revised as of April 1, 2019) generally applies to returns filed before January 30, 2020. The addition of § 1.1446-3(c)(4) applies to transfers of partnership interests that occur on or after January 29, 2021, except that a taxpayer may choose to apply § 1.1446-3(c)(4) to transfers of partnership interests that occur on or after January 1, 2018. Sections 1.1446-3(a)(2)(i), (d)(2)(vi), and (e)(4) and 1.1446-4(f)(1) apply to partnership taxable years beginning on or after November 30, 2020. For partnership taxable years beginning before November 30, 2020, see those sections as in effect and contained in 26 CFR part 1, revised as of April 1, 2020. Section 1.1446-4(b)(3) and (4), (c), (d), (e), and (f)(3) apply to distributions made on or after January 1, 2022. For distributions made before January 1, 2022, see §§ 1.1446-4(b)(3) and (4), (c), (d), (e), and (f)(3), as contained in 26 CFR part 1, revised as of April 1, 2020. Sections 1.1446-1(c)(2)(ii)(G) and (H) and 1.1446-2(b)(4)(iii) apply with respect to dispositions of U.S. real property interests and distributions described in section 897(h) occurring on or after December 29, 2022. For dispositions of U.S. real property interests and distributions described in section 897(h) occurring before December 29, 2022, see §§ 1.1446-1(c)(2)(ii)(G) and (H), as contained in 26 CFR part 1, revised as of April 1, 2021.

[T.D. 9200, 70 FR 28717, May 18, 2005, as amended by T.D. 9394, 73 FR 23085, Apr. 29, 2008; T.D. 9926, 85 FR 76935, Nov. 30, 2020; T.D. 9971, 87 FR 80067, Dec. 29, 2022]

§ 1.1446(f)-1 General rules.

(a) ***Overview.*** This section and §§ 1.1446(f)-2 through 1.1446(f)-5 provide rules for withholding, reporting, and paying tax under section 1446(f) upon the sale, exchange, or other disposition of certain interests in partnerships. This section provides definitions and general rules that apply for purposes of section 1446(f). Section 1.1446(f)-2 provides withholding rules for the transfer of a non-publicly traded partnership interest under section 1446(f)(1). Section 1.1446(f)-3 provides rules that apply when a partnership is required to withhold under section 1446(f)(4) on distributions made to the transferee in an amount equal to the amount that the transferee failed to withhold plus interest. Section 1.1446(f)-4 provides special rules for the sale, exchange, or disposition of publicly traded partnership interests, for which the withholding obligation under section 1446(f)(1) is generally imposed on certain brokers that act on behalf of the transferor. Section 1.1446(f)-5 provides rules that address the liability for failure to withhold under section 1446(f) and rules regarding the liability of a transferor's or transferee's agent.

(b) ***Definitions.*** This paragraph (b) provides definitions that apply for purposes of this section and §§ 1.1446(f)-2 through 1.1446(f)-5.

(1) The term *broker* means any person, foreign or domestic, that, in the ordinary course of a trade or business during the calendar year, stands ready to effect sales made by others, and that, in connection with a transfer of a PTP interest, receives all or a portion of the amount realized on behalf of the transferor. The term broker includes a clearing organization (as defined in § 1.1471-1(b)(21)). In the case of a U.S. clearing organization clearing or settling sales of PTP

interests, however, see § 1.1446(f)-4(a)(3) for an exception from the requirement to withhold on a sale of a PTP interest. The term broker does not include an escrow agent that does not effect sales other than transactions that are incidental to the purpose of escrow (such as sales to collect on collateral).

(2) The term *controlling partner* means a partner that, together with any person that bears a relationship described in section 267(b) or 707(b)(1) to the partner, owns directly or indirectly a 50 percent or greater interest in the capital, profits, deductions, or losses of the partnership at any time within the 12 months before the determination date (see paragraph (c)(4) of this section).

(3) The term *effect* has the meaning provided in § 1.6045-1(a)(10).

(4) The term *foreign person* means a person that is not a United States person, including a QI branch of a U.S. financial institution (as defined in § 1.1471-1(b)(109)).

(5) The term *PTP interest* means an interest in a publicly traded partnership if the interest is publicly traded on an established securities market or is readily tradable on a secondary market (or the substantial equivalent thereof).

(6) The term *publicly traded partnership* has the same meaning as in section 7704 and §§ 1.7704-1 through 1.7704-4 but does not include a publicly traded partnership treated as a corporation under that section.

(7) The term *TIN* means the tax identifying number assigned to a person under section 6109.

(8) The term *transfer* means a sale, exchange, or other disposition, and includes a distribution from a partnership to a partner, as well as a transfer treated as a sale or exchange under section 707(a)(2)(B).

(9) The term *transferee* means any person, foreign or domestic, that acquires a partnership interest through a transfer, and includes a partnership that makes a distribution.

(10) Except as otherwise provided in this paragraph, the term *transferor* means any person, foreign or domestic, that transfers a partnership interest. In the case of a trust, to the extent all or a portion of the income of the trust is treated as owned by the grantor or another person under sections 671 through 679 (such trust, a grantor trust), the term transferor means the grantor or such other person.

(11) The term *transferor's agent* or *transferee's agent* means any person who represents the transferor or transferee (respectively) in any negotiation with another person relating to the transaction or in settling the transaction. A person will not be treated as a transferor's agent or a transferee's agent solely because it performs one or more of the activities described in § 1.1445-4(f)(3) (relating to activities of settlement officers and clerical personnel).

(12) The term *United States person* or *U.S. person* means a person described in section 7701(a)(30).

(c) ***General rules of applicability*** —

(1) ***In general.*** This paragraph (c) provides general rules that apply for purposes of this section and §§ 1.1446(f)-2 through 1.1446(f)-5.

(2) ***Certifications*** —

(i) ***In general.*** This paragraph (c)(2) provides rules that are applicable to certifications described in this section and §§ 1.1446(f)-2 through 1.1446(f)-5, except as otherwise provided therein, or as may be prescribed by the Commissioner in forms or instructions or in publications or guidance

published in the Internal Revenue Bulletin (see §§ 601.601(d)(2) and 601.602 of this chapter). A certification must provide the name and address of the person providing it. A certification must also be signed under penalties of perjury and, if the certification is provided by the transferor, must include a TIN if the transferor has, or is required to have, a TIN. A transferee (or other person required to withhold) may not rely on a certification if it knows that a transferor has, or is required to have, a TIN, and that TIN has not been provided with the certification. A certification includes any documents associated with the certification, such as statements from the partnership, IRS forms, withholding certificates, withholding statements, certifications, or other documentation. Documents associated with the certification form an integral part of the certification, and the penalties of perjury statement provided on the certification also applies to the associated documents. A certification (other than the certification described in § 1.1446(f)-2(d)(2)) may not be relied upon if it is obtained earlier than 30 days before the transfer or any time after the transfer.

(ii) ***Penalties of perjury.*** A certification signed under penalties of perjury must provide the following: "Under penalties of perjury, I declare that I have examined the information on this document, and to the best of my knowledge and belief, it is true, correct, and complete."

(iii) ***Authority to sign certifications on behalf of a business entity.*** A certification provided by a business entity must be signed by an individual who is an officer, director, general partner, or managing member of the entity, or other individual that has authority to sign for the entity under local law.

(iv) ***Electronic submission.*** A certification may be sent electronically, including as text in an email, an image embedded in an email, or a Portable Document Format (.pdf) attached to an email. An electronic certification, however, may not be relied upon if the person receiving the submission knows that the certification was transmitted by a person not authorized to do so by the person required to execute the certification.

(v) ***Retention period.*** Any person that relies on a certification pursuant to this section and §§ 1.1446(f)-2 through 1.1446(f)-5 must retain the certification (including any documentation) for as long as it may be relevant to the determination of its withholding obligation under section 1446(f) or its withholding tax liability under section 1461.

(vi) ***Submission to IRS.*** The recipient of a certification is not required to mail a copy to the IRS, except as provided in § 1.1446(f)-2(b)(7) and (c)(4)(vi) (involving certifications relating to an income tax treaty), or as may be prescribed by the Commissioner in forms or instructions or in publications or guidance published in the Internal Revenue Bulletin (see §§ 601.601(d)(2) and 601.602 of this chapter).

(vii) ***Grantor trusts.*** A certification provided by a transferor that is a grantor or other owner of a grantor trust must identify the portion of the amount realized that is attributable to the grantor or other owner. A certification provided by a foreign grantor trust on behalf of a transferor that is a grantor or owner must also include a Form W-8IMY, *Certificate of Foreign Intermediary, Foreign Flow-Through Entity, or Certain U.S. Branches for United States Tax Withholding and Reporting*), (or similar statement for a domestic grantor trust with a foreign grantor or owner), that includes a withholding statement that provides the percentage of the amount realized allocable to each grantor or owner of the trust, and any applicable certification for each grantor or owner. In the case of a certification so provided, a grantor or owner of the trust is treated as having provided the certification to the transferee (or broker).

(3) ***Books and records.*** A partnership that relies on its books and records pursuant to this section and §§ 1.1446(f)-2 through 1.1446(f)-5 (including for purposes of providing a certification or other statement) must identify in its books and records the date on which the transfer occurred, the information on which the partnership relied, and the provisions of this section and §§ 1.1446(f)-2 through 1.1446(f)-5 supporting an exception from, or adjustment to, the partnership's obligation to withhold. The identification required by this paragraph (c)(3) must be made no later than 30 days after the date of the transfer. The partnership must retain the identified information in its books and records for the longer of five calendar years following the close of the last calendar year in which it relied on the information or for as long as it may be relevant to the determination of its withholding obligation under section 1446(f) or its withholding tax liability under section 1461.

(4) ***Determination date*** —

(i) ***In general.*** This paragraph (c)(4) provides rules for the determination date. The same determination date must be used for all purposes with respect to a transfer. Any statement, certification, or books and records with regard to a transfer must state the determination date. The determination date of a transfer must be one of the following—

(A) The date of the transfer;

(B) Any date that is no more than 60 days before the date of the transfer; or

(C) The date that is the later of—

(*1*) The first day of the partnership's taxable year in which the transfer occurs, as determined under section 706; or

(*2*) The date, before the date of the transfer, of the most recent event described in § 1.704-1(b)(2)(iv)(*f*)(*5*) or (b)(2)(iv)(*s*)(*1*) (revaluation event), irrespective of whether the capital accounts of the partners are adjusted in accordance with § 1.704-1(b)(2)(iv)(*f*).

(ii) ***Controlling partner.*** The determination date for a transferor that is a controlling partner is determined without regard to paragraph (c)(4)(i)(C) of this section.

(5) ***IRS forms and instructions.*** Any reference to an IRS form includes its successor form. Any form must be filed in the manner prescribed by the Commissioner in forms or instructions or in publications or guidance published in the Internal Revenue Bulletin (see §§ 601.601(d)(2) and 601.602 of this chapter).

(d) ***Coordination with section 1445.*** A transferee that is otherwise required to withhold under section 1445(e)(5) or § 1.1445-11T(d)(1) with respect to the amount realized, as well as under section 1446(f)(1), will be subject to the payment and reporting requirements of section 1445 only, and not section 1446(f)(1), with respect to that amount. However, if the transferor has applied for a withholding certificate under the last sentence of § 1.1445-11T(d)(1), the transferee must withhold the greater of the amounts required under section 1445(e)(5) or 1446(f)(1). A transferee that has complied with the withholding requirements under either section 1445(e)(5) or 1446(f)(1), as applicable under this paragraph (d), will be deemed to satisfy the withholding requirement.

(e) ***Applicability date.*** This section applies to transfers that occur on or after January 29, 2021.

[T.D. 9926, 85 FR 76935, Nov. 30, 2020]

§ 1.1446(f)-2 Withholding on the transfer of a non-publicly traded partnership interest.

(a) ***Transferee's obligation to withhold.*** Except as otherwise provided in this section, a transferee is required to withhold under section 1446(f)(1) a tax equal to 10 percent of the amount realized on any transfer of a partnership interest. This section does not apply to a transfer of a PTP interest that is effected through one or more brokers, including a distribution made with respect to a PTP interest held in an account with a broker. For rules regarding those transfers, see § 1.1446(f)-4.

(b) ***Exceptions to withholding*** —

(1) ***In general.*** A transferee is not required to withhold under this section if it properly relies on a certification or its books and records as described in this paragraph (b). A transferee may not rely on a certification if it has actual knowledge that the certification is incorrect or unreliable. A partnership that is a transferee because it makes a distribution may not rely on its books and records if it knows, or has reason to know, that the information is incorrect or unreliable.

(2) ***Certification of non-foreign status by transferor.*** A transferee may rely on a certification of non-foreign status from the transferor that states that the transferor is not a foreign person, states the transferor's name, TIN, and address, and is signed under penalties of perjury. For purposes of this paragraph (b)(2), a certification of non-foreign status includes a valid Form W-9, *Request for Taxpayer Identification Number and Certification.* For purposes of this paragraph (b)(2), a transferee may rely on a valid Form W-9 from the transferor that it already possesses if the form meets the requirements of this paragraph (b)(2).

(3) ***No realized gain by transferor*** —

(i) ***In general.*** A transferee (other than a partnership that is a transferee because it makes a distribution) may rely on a certification from the transferor that states that the transfer of the partnership interest would not result in any realized gain (including ordinary income arising from the application of section 751 and § 1.751-1) to the transferor as of the determination date (see § 1.1446(f)-1(c)(4)). See paragraph (b)(6) of this section for rules that apply when the transferor realizes gain but is not required to recognize the gain under a provision of the Internal Revenue Code.

(ii) ***No section 751 income.*** For purposes of paragraph (b)(3)(i) of this section, a transferor may rely on a certification from the partnership stating that the transfer of the partnership interest would not result in any ordinary income arising from the application of section 751 and § 1.751-1 to the transferor as of the determination date. The certification from the partnership must be attached to, and forms part of, the certification of no realized gain that the transferor provides to the transferee.

(iii) ***Partnership distributions.*** A partnership that is a transferee because it makes a distribution may rely on its books and records, or on a certification from the transferor, to determine that the distribution would not result in any realized gain to the transferor as of the determination date.

(4) ***Less than 10 percent effectively connected gain*** —

(i) ***In general.*** A transferee (other than a partnership that is a transferee because it makes a distribution) may rely on a certification from the partnership that states that—

(A) If the partnership sold all of its assets at fair market value as of the determination date in the manner described in § 1.864(c)(8)-1(c), either—

(1) The partnership would have no gain that would have been effectively connected with the conduct of a trade or business within the United States, or, if the partnership would have a net amount of such gain, the amount of the partnership's net gain that would have been effectively connected with the conduct of a trade or business within the United States would be less than 10 percent of the total net gain; or

(2) The transferor would not have a distributive share of net gain from the partnership that would have been effectively connected with the conduct of a trade or business in the United States, or, if the transferor would have a distributive share of such gain from the partnership, the transferor's distributive share of net gain from the partnership that would have been effectively connected with the conduct of a trade or business within the United States would be less than 10 percent of the transferor's distributive share of the total net gain from the partnership; or

(B) The partnership was not engaged in a trade or business within the United States at any time during the taxable year of the partnership through the date of transfer.

(ii) ***Partnership distributions.*** A partnership that is a transferee because it makes a distribution may rely on its books and records to determine that paragraph (b)(4)(i)(A) of this section is satisfied as of the determination date or paragraph (b)(4)(i)(B) of this section is satisfied for the taxable year of the partnership through the date of transfer.

(5) ***Less than 10 percent effectively connected income*** —

(i) ***In general.*** A transferee (other than a partnership that is a transferee because it makes a distribution) may rely on a certification from the transferor that states that—

(A) The transferor was a partner in the partnership throughout the look-back period described in paragraph (b)(5)(ii) of this section;

(B) The transferor's distributive share of gross effectively connected income from the partnership, as reported on a Schedule K-1 (Form 1065), *Partner's Share of Income, Deductions, Credits, etc.,* or other statement required to be furnished under § 1.6031(b)-1T, including any gross effectively connected income included in the distributive share of a partner that bears a relationship to the transferor described in section 267(b) or 707(b)(1), was less than $1 million for each of the taxable years within the look-back period described in paragraph (b)(5)(ii) of this section;

(C) The transferor's distributive share of gross effectively connected income from the partnership, as reported on a Schedule K-1 (Form 1065), or other statement required to be furnished under § 1.6031(b)-1T, for each of the taxable years within the look-back period described in paragraph (b)(5)(ii) of this section, was less than 10 percent of the transferor's total distributive share of gross income from the partnership for that year as determined under subchapter K of the Internal Revenue Code (as provided on a Schedule K-1 (Form 1065) or other statement required to be furnished under § 1.6031(b)-1T); and

(D) The transferor's distributive share of income or gain from the partnership that is effectively connected with the conduct of a trade or business within the United States or deductions or losses properly allocated and apportioned to that income in each of the taxable years within the look-back period described in paragraph (b)(5)(ii) of this section has been reported on a Federal income tax return (either filed by the transferor or, in the case of transferor that is a partnership, filed by its direct or indirect nonresident alien individual or

foreign corporate partners) on or before the due date (including extensions), and all amounts due with respect to the reported amounts have been timely paid to the IRS, provided that the return was required to be filed when the transferor furnishes the certification (taking into account any extensions of time to file).

(ii) ***Look-back period*** —

(A) ***In general.*** The transferor's look-back period is the transferor's immediately prior taxable year and the two preceding taxable years.

(B) ***Immediately prior taxable year.*** The transferor's immediately prior taxable year is the transferor's most recent taxable year—

(1) With or within which a taxable year of the partnership ended; and

(2) For which a Schedule K-1 (Form 1065) was due (including extensions) or furnished (if earlier) before the transfer.

(C) ***Limitation.*** A transferee may not rely on a certification that is provided before the transferor's receipt of the Schedule K-1 (Form 1065) described in paragraph (b)(5)(ii)(B) of this section.

(iii) ***No distributive share of gross income.*** A transferor that did not have a distributive share of gross income in any year described in paragraph (b)(5)(ii)(A) of this section cannot provide the certification described in this paragraph (b)(5).

(iv) ***Partnership distributions.*** A partnership that is a transferee by reason of making a distribution may rely on its books and records to determine that the requirements in paragraphs (b)(5)(i)(A) through (C) of this section have been satisfied (subject to the rules in paragraphs (b)(5)(ii) and (iii) of this section). The partnership must also obtain a representation from the transferor stating that the requirement in paragraph (b)(5)(i)(D) of this section has been satisfied.

(6) ***Certification of nonrecognition by transferor*** —

(i) ***In general.*** A transferee may rely on a certification from the transferor that states that by reason of the operation of a nonrecognition provision of the Internal Revenue Code the transferor is not required to recognize any gain or loss with respect to the transfer. The certification must briefly describe the transfer and provide the relevant law and facts relating to the certification.

(ii) ***Partial nonrecognition.*** Paragraph (b)(6)(i) of this section does not apply if only a portion of the gain realized on the transfer is subject to a nonrecognition provision. However, see paragraph (c)(4)(v) of this section for rules applicable to a transferor's claim for partial nonrecognition.

(7) ***Income tax treaties*** —

(i) ***In general.*** A transferee may rely on a certification from the transferor that states that the transferor is not subject to tax on any gain from the transfer pursuant to an income tax treaty in effect between the United States and a foreign country if the requirements of this paragraph (b)(7) are met. The transferor makes the certification on a withholding certificate (on a Form W-8BEN, *Certificate of Foreign Status of Beneficial Owner for United States Tax Withholding and Reporting (Individuals),* or Form W-8BEN-E, *Certificate of Status of Beneficial Owner for United States Tax Withholding and Reporting (Entities)*) that meets the requirements for validity under § 1.1446-1(c)(2)(iv) (or an applicable substitute form that meets the requirements under § 1.1446-1(c)(5)) and that contains the information necessary to support the claim for treaty

benefits. A transferee may rely on a certification of treaty benefits only if, within 30 days after the date of the transfer, the transferee mails a copy of the certification to the Internal Revenue Service, at the address provided in § 1.1445-1(g)(10), together with a cover letter providing the name, TIN, and address of the transferee and the partnership in which an interest was transferred.

(ii) ***Treaty claim for less than all of the gain.*** Paragraph (b)(7)(i) of this section does not apply if treaty benefits apply to only a portion of the gain from the transfer. However, see paragraph (c)(4)(vi) of this section for rules applicable to situations in which treaty benefits apply to only a portion of the gain.

(iii) ***Exclusive means to claim an exception from withholding based on treaty benefits.*** A transferor claiming treaty benefits with respect to all of the gain from the transfer must use the exception in this paragraph (b)(7) and not any other exception or determination procedure in paragraphs (b) and (c) of this section to claim an exception to withholding by reason of a claim of treaty benefits.

(c) ***Determining the amount to withhold*** —

(1) ***In general.*** A transferee that is required to withhold under this section must withhold 10 percent of the amount realized on the transfer of the partnership interest, except as otherwise provided in this paragraph (c). Any procedures in this paragraph (c) apply solely for purposes of determining the amount to withhold under section 1446(f)(1) and this section. A transferee may not rely on a certification if it has actual knowledge that the certification is incorrect or unreliable. A partnership that is a transferee because it makes a distribution may not rely on its books and records if it knows, or has reason to know, that the information is incorrect or unreliable.

(2) ***Amount realized*** —

(i) ***In general.*** The amount realized on the transfer of the partnership interest is determined under section 1001 (including §§ 1.1001-1 through 1.1001-5) and section 752 (including §§ 1.752-1 through 1.752-7). Thus, the amount realized includes the amount of cash paid (or to be paid), the fair market value of other property transferred (or to be transferred), the amount of any liabilities assumed by the transferee or to which the partnership interest is subject, and the reduction in the transferor's share of partnership liabilities. In the case of a distribution, the amount realized is the sum of the amount of cash distributed (or to be distributed), the fair market value of property distributed (or to be distributed), and the reduction in the transferor's share of partnership liabilities.

(ii) ***Alternative procedures for transferee to determine share of partnership liabilities*** —

(A) ***In general.*** A transferee (other than a partnership that is a transferee because it makes a distribution), as an alternative to determining the share of partnership liabilities under paragraph (c)(2)(i) of this section, may use the procedures of this paragraph (c)(2)(ii) to determine the extent to which a reduction in partnership liabilities is included in the amount realized.

(B) ***Certification of liabilities by transferor.*** Except as otherwise provided in this section, a transferee may rely on a certification from a transferor, other than a controlling partner, that provides the amount of the transferor's share of partnership liabilities reported on the most recent Schedule K-1 (Form 1065) issued by the partnership. If the transferor's actual share of liabilities at the time of the transfer differs from the amount reported on that

Schedule K-1 (Form 1065), the certification will not be treated as incorrect or unreliable if the transferor also certifies that it does not have actual knowledge of any events occurring after receiving the Schedule K-1 (Form 1065) and before the date of the transfer that would cause the amount of the transferor's share of partnership liabilities at the time of the transfer to differ by more than 25 percent from the amount shown on the Schedule K-1 (Form 1065). A transferee may not rely on a certification if the last day of the partnership taxable year for which the Schedule K-1 (Form 1065) was provided was more than 22 months before the date of the transfer.

(C) ***Certification of liabilities by partnership.*** A transferee may rely on a certification from a partnership that provides the amount of the transferor's share of partnership liabilities on the determination date. If the transferor's actual share of liabilities at the time of the transfer differs from the amount on the certification, the certification will not be treated as incorrect or unreliable if the partnership also certifies that it does not have actual knowledge of any events occurring after the determination date and before the date on which the partnership provides the certification to the transferee that would cause the amount of the transferor's share of partnership liabilities at the time of the transfer to differ by more than 25 percent from the amount shown on the certification by the partnership for the determination date.

(iii) ***Partnership's determination of partnership liabilities for distributions.*** A partnership that is a transferee because it makes a distribution may rely on its books and records to determine the extent to which the transferor's share of partnership liabilities on the determination date are included in the amount realized. The information in the books and records will not be treated as incorrect or unreliable unless the partnership has actual knowledge, on or before the date of the distribution, of any events occurring after the determination date that would cause the amount of the transferor's share of partnership liabilities at the time of the transfer to differ by more than 25 percent from the amount determined by the partnership as of the determination date.

(iv) ***Certification by a foreign partnership of modified amount realized*** —

(A) ***In general.*** When a transferor is a foreign partnership, a transferee may use the procedures of this paragraph (c)(2)(iv) to determine the amount realized. For purposes of this paragraph (c)(2)(iv)(A), the transferee may treat the modified amount realized as the amount realized to the extent that it may rely on a certification from the transferor providing the modified amount realized.

(B) ***Determining modified amount realized.*** The modified amount realized is determined by multiplying the amount realized (as determined under this paragraph (c)(2), without regard to this paragraph (c)(2)(iv)) by the aggregate percentage computed as of the determination date. The aggregate percentage is the percentage of the gain (if any) arising from the transfer that would be allocated to presumed foreign taxable persons. For purposes of this paragraph (c)(2)(iv)(B), a presumed foreign taxable person is any direct or indirect partner of the transferor that has not provided either a certification of non-foreign status that meets the requirements of paragraph (b)(2) of this section or a certification of treaty benefits that states that the partner is not subject to tax on any gain from the transfer pursuant to an income tax treaty in effect between the United States and a foreign country. A valid certification of treaty benefits must meet the requirements of paragraph (b)(7) of this section (as applied to the partner claiming treaty benefits), including the requirement that the transferee mail a copy of the certification to the IRS

within the time prescribed. For purposes of this paragraph (c)(2)(iv), an indirect partner is a person that owns an interest in the transferor indirectly through one or more foreign partnerships.

(C) ***Certification.*** The certification is made by providing a withholding certificate (on Form W-8IMY, *Certificate of Foreign Intermediary, Foreign Flow-Through Entity, or Certain U.S. Branches for United States Tax Withholding and Reporting*) that includes a withholding statement that provides the percentage of gain allocable to each direct or indirect partner and that provides whether each such person is a United States person, a foreign partner eligible for treaty benefits, or a presumed foreign taxable person. The certification must also include the certification of non-foreign status or the certification of treaty benefits from each direct or indirect partner that is not a presumed foreign taxable person.

(3) ***Lack of money or property or lack of knowledge regarding liabilities.*** The amount to withhold equals the amount realized determined without regard to any decrease in the transferor's share of partnership liabilities if—

(i) The amount otherwise required to be withheld under this paragraph (c) would exceed the amount realized determined without regard to the decrease in the transferor's share of partnership liabilities; or

(ii) The transferee is unable to determine the amount realized because it does not have actual knowledge of the transferor's share of partnership liabilities (and has not received or cannot rely on a certification described in paragraph (c)(2)(ii)(B) or (C) of this section).

(4) ***Certification of maximum tax liability*** —

(i) ***In general.*** A transferee may use the procedures of this paragraph (c)(4) for determining the amount to withhold for purposes of section 1446(f)(1) and paragraph (a) of this section. A transferee (other than a partnership that is a transferee because it makes a distribution) may rely on a certification from a transferor that is a foreign corporation, a nonresident alien individual, a foreign partnership, or a foreign trust regarding the transferor's maximum tax liability as described in paragraph (c)(4)(ii) of this section. A partnership that is a transferee because it makes a distribution may instead rely on its books and records to determine the transferor's maximum tax liability if the books and records includes the information required by paragraphs (c)(4)(iii) and (iv) of this section. A transferor that is a foreign partnership or a foreign trust is treated as a nonresident alien individual for purposes of determining the transferor's maximum tax liability.

(ii) ***Maximum tax liability.*** For purposes of this paragraph (c)(4), the term *maximum tax liability* means the amount of the transferor's effectively connected gain (as determined under paragraph (c)(4)(iii)(E) of this section) multiplied by the applicable percentage, as defined in § 1.1446-3(a)(2).

(iii) ***Required information.*** The certification must include—

(A) A statement that the transferor is either a nonresident alien individual, a foreign corporation, a foreign partnership, or a foreign trust;

(B) The transferor's adjusted basis in the transferred interest on the determination date;

(C) The transferor's amount realized (determined in accordance with paragraph (c)(2) of this section) on the determination date;

(D) Whether the transferor remains a partner immediately after the transfer;

(E) The amount of outside ordinary gain and outside capital gain that would be recognized and treated as effectively connected gain under § 1.864(c)(8)-1(b) on the determination date (effectively connected gain);

(F) The transferor's maximum tax liability on the determination date;

(G) A representation from the transferor that the transferor determined the amounts described in paragraph (c)(4)(iii)(E) of this section based on the statement described in paragraph (c)(4)(iv) of this section, if applicable; and

(H) A representation from the transferor that it has provided the transferee with a copy of the statement described in paragraph (c)(4)(iv) of this section.

(iv) ***Partnership statement.*** A transferor may make the representation in paragraph (c)(4)(iii)(G) of this section only if the partnership provides to the transferor a statement (that meets the requirements for a certification under the general rules for applicability in § 1.1446(f)-1(c)) that includes—

(A) The partnership's name, address, and TIN; and

(B) The transferor's aggregate deemed sale EC ordinary gain, within the meaning of § 1.864(c)(8)-1(c)(3)(ii)(A) (if any) and the transferor's aggregate deemed sale EC capital gain, within the meaning of § 1.864(c)(8)-1(c)(3)(ii)(B) (if any), in each case, on the determination date.

(v) ***Partial nonrecognition.*** If a nonrecognition provision applies to only a portion of the gain realized on the transfer, a certification described in paragraph (c)(4)(i) may be relied upon only if the certification also includes the information required in paragraph (b)(6) of this section (substituting “a portion of the gain or loss” for “any gain or loss” in paragraph (b)(6)(i) of this section).

(vi) ***Income tax treaties.*** If only a portion of the gain on the transfer is not subject to tax pursuant to an income tax treaty in effect between the United States and a foreign country, a certification described in paragraph (c)(4)(i) of this section may be relied upon only if the requirements of paragraph (b)(7)(i) of this section have been met, including the requirement to obtain the applicable withholding certificate indicating that the gain from the transfer is not subject to tax pursuant to an income tax treaty (substituting “a portion of the gain” for “any gain” in paragraph (b)(7)(i) of this section), and the requirement to mail a copy of the withholding certificate to the IRS.

(d) ***Reporting and paying withheld amounts*** —

(1) ***In general.*** A transferee required to withhold under this section must report and pay any tax withheld by the 20th day after the date of the transfer using Forms 8288, *U.S. Withholding Tax Return for Dispositions by Foreign Persons of U.S. Real Property Interests,* and 8288-A, *Statement of Withholding on Dispositions by Foreign Persons of U.S. Real Property Interests,* in accordance with the instructions to those forms. The IRS will stamp Form 8288-A to show receipt and mail a stamped copy to the transferor (at the address reported on the form). See paragraph (e)(2) of this section for the procedures for the transferor to claim a credit for amounts withheld. Forms 8288 and 8288-A must include the TINs of both the transferor and the transferee. If any required TIN is not provided, the transferee must still report and pay any tax withheld on Form 8288.

(2) ***Certification of withholding to partnership for purposes of section 1446(f)(4).*** A transferee (other than a partnership that is a transferee because it makes a distribution) must certify to the partnership the extent to which it has satisfied its obligation to withhold under this section no later than 10 days after the transfer. The certification must either include a copy of Form 8288-A that the transferee files with respect to the transfer, or state the amount realized and the amount withheld on the transfer. The certification must also include any certifications that the transferee relied on to apply an exception to withholding under paragraph (b) of this section or to determine the amount to withhold under paragraph (c) of this section. A transferee that relied on a certification to apply an exception or adjustment to withholding remains liable under this section when the partnership knows, or has reason to know, that the certification is incorrect or unreliable. See § 1.1446(f)-3 for rules regarding a partnership's obligation to withhold on distributions to a transferee when this certification establishes only partial satisfaction of the required amount, is not provided, or cannot be relied upon.

(e) ***Effect of withholding on transferor*** —

(1) ***In general.*** The withholding of tax by a transferee under this section does not relieve a foreign person from filing a U.S. tax return with respect to the transfer. See §§ 1.6012-1(b)(1), 1.6012-2(g)(1), and 1.6031(a)-1. Further, the withholding of tax by a transferee does not relieve a nonresident alien individual or foreign corporation subject to tax on gain by reason of section 864(c)(8) from paying any tax due with the return that has not been fully satisfied through withholding.

(2) ***Manner of obtaining credit*** —

(i) ***Individuals or corporations.*** Except as provided in paragraph (e)(3) of this section, an individual or corporation may claim a credit under section 33 for the amount withheld under this section by attaching to its applicable return the stamped copy of Form 8288-A provided to it under paragraph (d)(1) of this section.

(ii) ***Partnerships, trusts, or estates.*** For a rule allowing a foreign partnership that is a transferor to claim a credit for the amount withheld under this section against its tax liability under section 1446(a), see § 1.1446-3(c)(4). For the rule providing the extent to which a foreign trust or estate may claim a credit for an amount withheld under this section, see § 1.1462-1. Except as provided in paragraph (e)(3) of this section, a foreign partnership, trust, or estate claiming a credit for an amount withheld must attach to its applicable return the stamped copy of Form 8288-A provided to it under paragraph (d)(1) of this section. A foreign trust or estate must also provide any other information required in forms or instructions to any beneficiary or owner that is liable for tax on any of the gain under section 864(c)(8).

(3) ***Failure to receive Form 8288-A.*** If a stamped copy of Form 8288-A has not been provided to the transferor by the IRS, the transferor may establish the amount of tax withheld by the transferee by attaching to its return substantial evidence of the amount. The transferor must attach to its return a statement that includes all of the information otherwise required to be provided on Form 8288-A.

(f) ***Applicability date.*** This section applies to transfers that occur on or after January 29, 2021.

[T.D. 9926, 85 FR 76935, Nov. 30, 2020]

§ 1.1446(f)-3 Partnership's requirement to withhold under section 1446(f)(4) on distributions to transferee.

(a) *Partnership's obligation to withhold amounts not withheld by the transferee* —

(1) ***In general.*** If a transferee fails to withhold any amount required to be withheld under § 1.1446(f)-2, the partnership in which the interest was transferred must withhold from any distributions with respect to the transferred interest pursuant to this section. To determine its withholding obligation under this paragraph (a)(1), a partnership may rely on a certification received from the transferee described in § 1.1446(f)-2(d)(2) unless it knows, or has reason to know, that the certification is incorrect or unreliable. A partnership that already possesses a certification of non-foreign status (including a Form W-9) for the transferor that meets the requirements provided in § 1.1446(f)-2(b)(2) may instead rely on this certification to determine that it has no withholding obligation under this paragraph (a)(1) unless it knows, or has reason to know, that the certification is incorrect or unreliable. A partnership that receives a certification described in § 1.1446(f)-2(d)(2) that is inconsistent with the information on the certification of non-foreign status in its possession is treated as having actual knowledge, or reason to know, that the certification of non-foreign status is incorrect or unreliable.

(2) ***Notification by IRS.*** A partnership that receives notification from the IRS that a transferee has provided incorrect information regarding the amount realized or amount withheld on the certification described in § 1.1446(f)-2(d)(2), or has failed to pay the IRS the amount reported as withheld on the certification, must withhold the amount prescribed in the notification on distributions with respect to the transferred interest made on or after the date that is 15 days after it receives the notification. The IRS will not issue a notification on the basis that the amount realized on the certification described in § 1.446(f)-2(d)(2) is incorrect if it determines that the transferee properly relied on a certification that included the incorrect information to compute the amount realized pursuant to § 1.1446(f)-2(c)(2).

(3) ***Subsequent transferees.*** A partnership is not required to withhold under paragraph (a)(1) or (2) of this section on distributions that are made after the date on which the transferee disposes of the transferred interest, unless the partnership has actual knowledge that any person that acquires the transferee's interest in the partnership is a related person, *i.e.,* a person that bears a relationship described in section 267(b) or 707(b)(1) with respect to the transferee or the transferor from which the transferee acquired the interest. A related person that acquires the transferee's interest is treated as liable for tax under section 1461 to the same extent that the transferee is liable for its failure to withhold under § 1.1446(f)-2.

(b) *Exceptions to withholding* —

(1) ***Withholding has been satisfied by transferee.*** A partnership is not required to withhold under paragraph (a)(1) of this section if it relies on a certification described in § 1.1446(f)-2(d)(2) received from the transferee (within the time prescribed in § 1.1446(f)-2(d)(2)) that states that an exception to withholding described in § 1.1446(f)-2(b) applies or that the transferee withheld the full amount required to be withheld (taking into account any adjustments under § 1.1446(f)-2(c)) under § 1.1446(f)-2.

(2) ***PTP interests.*** A partnership is not required to withhold under this section on distributions made with respect to a PTP interest.

(3) ***Distributing partnerships.*** A partnership that is a transferee because it makes a distribution is not required to withhold under this section.

(c) *Withholding rules* —

(1) *Timing of withholding* —

(i) ***In general.*** A partnership required to withhold under paragraph (a)(1) of this section must withhold on distributions made with respect to a transferred interest beginning on the later of—

(A) The date that is 30 days after the date of transfer; or

(B) The date that is 15 days after the date on which the partnership acquires actual knowledge that the transfer has occurred.

(ii) ***Satisfaction of withholding obligation.*** A partnership is treated as satisfying its withholding obligation under paragraph (a)(1) of this section and may stop withholding on distributions with respect to a transferred interest on the earlier of—

(A) The date on which the partnership completes withholding and paying the amount required to be withheld under paragraph (c)(2) of this section; or

(B) The date on which the partnership receives and may rely on a certification from the transferee described in § 1.1446(f)-2(d)(2) (without regard to whether the certification is received by the time prescribed in § 1.1446(f)-2(d)(2)) that claims an exception to withholding under § 1.1446(f)-2(b).

(2) *Amount to withhold* —

(i) ***In general.*** A partnership required to withhold under paragraph (a)(1) of this section must withhold the full amount of each distribution made with respect to the transferred interest until it has withheld—

(A) A tax of 10 percent of the amount realized (determined solely under § 1.1446(f)-2(c)(2)(i)) on the transfer, reduced by any amount withheld by the transferee; plus

(B) Any interest computed under paragraph (c)(2)(ii) of this section.

(ii) ***Computation of interest.*** The amount of interest required to be withheld under paragraph (a)(1) of this section is the amount of interest that would be required to be paid under section 6601 and § 301.6601-1 of this chapter if the amount that should have been withheld by the transferee was considered an underpayment of tax. For purposes of this paragraph (c)(2)(ii), interest is payable between the date that is 20 days after the date of the transfer and the date on which the tax due under paragraph (a)(1) of this section is paid to the IRS.

(iii) ***Certifications required.*** For purposes of paragraph (c)(2)(i)(A) of this section, a partnership must determine the amount realized on the transfer and any amount withheld by the transferee based on a certification from the transferee described in § 1.1446(f)-2(d)(2), without regard to whether the certification is received by the time prescribed in § 1.1446(f)-2(d)(2). A partnership that does not receive or cannot rely on a certification from the transferee described in § 1.1446(f)-2(d)(2) must withhold tax equal to the full amount of each distribution made with respect to a transferred interest until it receives a certification that it can rely on.

(3) ***Coordination with other withholding provisions.*** Any amount required to be withheld on a distribution under any other provision of the Internal Revenue Code is not also required to be withheld under section 1446(f)(4) or this section.

(d) ***Reporting and paying withheld amounts.*** The partnership must report and pay the tax withheld using Forms 8288, *U.S. Withholding Tax Return for Dispositions by Foreign Persons of U.S. Real Property Interests,* and 8288-C, *Statement of Withholding Under Section 1446(f)(4) for Withholding on Dispositions by Foreign Persons of Partnership Interests,* as provided in forms, instructions, or other guidance.

(e) ***Effect of withholding on transferor and transferee*** —

(1) ***Transferor.*** The withholding of tax by a partnership under this section does not relieve a foreign person from filing a U.S. income tax return with respect to the transfer. See §§ 1.6012-1(b)(1), 1.6012-2(g)(1), and 1.6031(a)-1. Further, the withholding of tax by a partnership does not relieve a nonresident alien individual or foreign corporation subject to tax on gain by reason of section 864(c)(8) from paying any tax due with the return that has not been fully satisfied through withholding. An individual or corporation is not allowed a credit under section 33 for amounts withheld on distributions to the transferee under this section. See, however, §§ 1.1446(f)-5(a) and 1.1463-1(a), which generally provide that tax will not be recollected if paid by another person.

(2) ***Transferee.*** A transferee is treated as satisfying its withholding tax liability under § 1.1446(f)-2 to the extent that a partnership withholds tax (which does not include interest) under this section. Interest computed under paragraph (c)(2)(ii) of this section that is withheld by the partnership from the transferee is treated as interest paid by the transferee with respect to its withholding tax liability under § 1.1446(f)-2. An excess amount under this section is the amount of tax and interest withheld under this section that exceeds the transferee's withholding tax liability under § 1.1446(f)-2 plus any interest owed by the transferee with respect to such liability. A transferee may claim a refund for the excess amount if payments have been made in excess of the tax which is properly due by the transferee for the tax period.

(f) ***Applicability date.*** This section applies to transfers that occur on or after January 1, 2022.

[T.D. 9926, 85 FR 76935, Nov. 30, 2020]

§ 1.1446(f)-4 Withholding on the transfer of a publicly traded partnership interest.

(a) ***Obligation to withhold on a transfer of a PTP interest*** —

(1) ***In general.*** If a transfer of a PTP interest is effected through one or more brokers (as defined in § 1.1446(f)-1(b)(1)), the transferee is not required to withhold under section 1446(f)(1) and§ 1.1446(f)-2. Rather, any broker required to withhold under paragraph (a)(2) of this section must withhold a tax equal to 10 percent of the amount realized (as defined in paragraph (c)(2) of this section) on the transfer of a PTP interest, except as otherwise provided in this section. For cases in which a publicly traded partnership is liable for withholding under this section, see paragraphs (b)(3)(i) and (c)(2)(iii) of this section.

(2) ***Broker's requirement to withhold*** —

(i) ***In general.*** Except as otherwise provided in this section, a broker is required to withhold under this section if it pays an amount realized to another broker that it is required to treat as a foreign person, or if a broker pays an amount realized to a foreign transferor that is its customer.

(ii) ***Payments to foreign brokers.*** A broker that pays an amount realized from the transfer of a PTP interest to another broker that it is required to treat as a foreign person must withhold under this section unless the first-mentioned broker obtains documentation on which it may rely

establishing that the second-mentioned broker is described in paragraph (a)(2)(ii)(A) or (B) of this section. A broker must treat any broker to which it pays an amount realized from the transfer of a PTP interest as a foreign person unless it obtains, or already possesses, documentation (including a certification of non-foreign status) on which it may rely that establishes that the other broker is a U.S. person. A broker may rely on documentation described in this paragraph (a)(2)(ii), or in paragraph (a)(2)(ii)(A) or (B) of this section, unless it has actual knowledge that the documentation is unreliable or incorrect.

(A) A broker is described in this paragraph (a)(2)(ii)(A) if it is a qualified intermediary (as defined in § 1.1441-1(e)(5)(ii)) that provides a valid qualified intermediary withholding certificate (as described in § 1.1441-1(e)(3)(ii)) that states that it assumes primary withholding responsibility for the payment.

(B) A broker is described in this paragraph (a)(2)(ii)(B) if it is a U.S. branch of a foreign person (as described in § 1.1441-1(b)(2)(iv)) that provides a valid U.S. branch withholding certificate (as described in § 1.1441-1(e)(3)(v), but without regard to the requirement in § 1.1441-1(e)(3)(v) that the certificate state that the amount is not effectively connected with a trade or business within the United States) that states that the U.S. branch agrees to be treated as a U.S. person with respect to the payment.

(iii) ***Payments to foreign transferors that are customers of the broker.*** A broker that pays an amount realized to a foreign transferor that is its customer (as defined in § 1.6045-1(a)(2)) from the transfer of a PTP interest is required to withhold under this section unless an exception under paragraph (b) of this section applies.

(3) ***Exception from certain withholding by U.S. clearing organizations.*** A broker that is a U.S. clearing organization clearing or settling a sale of a PTP interest is not required to withhold on the amount realized from the sale. However, see § 1.1461-1(c)(2)(i)(R)(*2*) for the requirement that a U.S. clearing organization acting as a central counterparty report on Form 1042-S sales of PTP interests that it clears and settles on a net basis.

(4) ***Exception when withholding already satisfied.*** A broker that receives from another broker an amount realized from the transfer of a PTP interest is required to withhold under this section unless the other broker has withheld the full amount required. A broker that receives from another broker an amount realized from the transfer of a PTP interest may treat the withholding as having been satisfied on the full amount required unless it knows or has reason to know that the withholding obligation has not already been satisfied. A broker that is a qualified intermediary determines its withholding requirement for purposes of this paragraph (a)(4) in accordance with its qualified intermediary agreement.

(5) ***Documentation obtained from another person to determine a broker's status.*** A U.S. clearing organization may act as an agent for a broker receiving an amount realized from another broker that is a member of the clearing organization for purposes of furnishing valid documentation described in paragraph (a)(2) of this section of the first-mentioned broker's status to such other broker, provided the clearing organization notifies the first-mentioned broker and such broker has the ability to opt out. A broker that obtains documentation from a clearing organization under this paragraph (a)(5) for a broker to which the first-mentioned broker is paying an amount realized may rely on such documentation unless it has actual knowledge that the documentation is incorrect or unreliable.

(6) ***Date of withholding with respect to a transfer other than a distribution.*** For a transfer of a PTP interest that is not a distribution, a broker is required to apply the principles of § 31.3406(a)-4(b)(1) of this chapter to determine the date on which to withhold under this section.

(7) ***Payments to qualified intermediaries not assuming primary withholding responsibility.*** With respect to the transfer of a PTP interest, if a broker pays the amount realized to a foreign person that the broker may treat as a qualified intermediary (as defined in § 1.1441-1(e)(5)(ii)) that does not assume primary withholding responsibility for the payment based on a valid qualified intermediary withholding certificate described in § 1.1441-1(e)(3)(ii) upon which the broker may rely under paragraph (a)(2) of this section, the broker may withhold as provided in this paragraph (a)(7). Under this paragraph (a)(7), a broker may withhold under this section by reference to the amount of the payment that the broker can reliably determine, based on the withholding statement provided with the withholding certificate, is allocable to—

(i) Foreign transferors included in a chapter 3 withholding rate pool (as described in § 1.1441-1(e)(5)(v)(C)) that are subject to a 10 percent rate of withholding on the payment of the amount realized;

(ii) Foreign transferors included in a chapter 3 withholding rate pool (as described in § 1.1441-1(e)(5)(v)(C)) that qualify for an exception from withholding on the payment of the amount realized under paragraph (b) of this section;

(iii) Each foreign transferor for which a form acceptable under § 1.1446-1 is provided; or

(iv) U.S. transferors, based on a valid Form W-9 provided for each such transferor to the extent that the transferor is not included in a chapter 4 withholding rate pool of U.S. payees (as described in § 1.1441-1(e)(5)(v)(C), to the extent permitted for purposes of chapter 4 of the Internal Revenue Code).

(8) ***Qualified intermediary or U.S. branch withholding requirement.*** A broker that is a qualified intermediary (as defined in § 1.1441-1(e)(5)(ii)) or U.S. branch must assume primary withholding responsibility under this section for a distribution from a publicly traded partnership for which the qualified intermediary or U.S. branch acts as a nominee for purposes of section 1446(a). See § 1.1446-4(b)(3).

(b) ***Exceptions to withholding*** —

(1) ***In general.*** A broker is not required to withhold under this section if it properly relies on a certification described in paragraph (b)(2), (5), or (6) of this section, a qualified notice described in paragraph (b)(3) of this section, or if the exception described in paragraph (b)(4) of this section applies. A broker may not rely on a certification described in this paragraph (b) if it has actual knowledge that the certification is incorrect or unreliable.

(2) ***Certification of non-foreign status.*** A broker may rely on a certification of non-foreign status that it obtains from the transferor. A certification of non-foreign status under this section means a Form W-9, *Request for Taxpayer Identification Number and Certification,* or valid substitute form, that meets the requirements of § 1.1441-1(d)(2). For purposes of this paragraph (b)(2), a broker may rely on a valid form that it already possesses from the transferor. A broker may instead rely on certification from a second broker (as defined in § 1.6045-1(a)(1)) that acts as an agent for the transferor when the second broker does not receive the amount realized from the transfer of the PTP interest. This

certification must state that the second broker has collected a valid certification of non-foreign status (within the meaning of this paragraph (b)(2)) from the transferor, and it must include the transferor's TIN and status as a foreign or U.S. person.

(3) ***Less than 10 percent effectively connected gain by partnership*** —

(i) ***In general.*** A broker may rely on a qualified notice described in paragraph (b)(3)(iii) of this section that states that the 10-percent exception applies, as determined under paragraph (b)(3)(ii) of this section. In a case in which a broker properly relies on a qualified notice under paragraph (b)(1) of this section that results in underwithholding on a transfer of a PTP interest, the publicly traded partnership that issued the notice is solely liable for the underwithheld tax under section 1461. A publicly traded partnership's liability referenced in the preceding sentence, however, applies only when the publicly traded partnership fails to make a reasonable estimate of the amounts required for determining the applicability of the 10-percent exception.

(ii) ***10-percent exception*** —

(A) ***In general.*** The 10-percent exception applies to a transfer if, on the PTP designated date described in paragraph (b)(3)(ii)(B) of this section—

(*1*) If the publicly traded partnership sold all of its assets at fair market value in the manner described in § 1.864(c)(8)-1(c), either—

(*i*) The amount of net gain that would have been effectively connected with the conduct of a trade or business within the United States would be less than 10 percent of the total net gain; or

(*ii*) No gain would have been effectively connected with the conduct of a trade or business in the United States; or

(*2*) The partnership was not engaged in a trade or business within the United States at any time during the taxable year of the partnership through the PTP designated date.

(B) ***PTP designated date.*** The PTP designated date for a transfer is any date for a deemed sale determination that is designated by the publicly traded partnership in a qualified notice described in paragraph (b)(3)(iii) of this section, provided that the PTP designated date occurs on or after the date that is 92 days before the date on which the publicly traded partnership posted the qualified notice naming the PTP designated date.

(iii) ***Qualified notice*** —

(A) ***In general.*** Except as provided in paragraphs (b)(3)(iii)(B) and (C) of this section, a qualified notice described in this paragraph (b)(3)(iii) is the most recent qualified notice (within the meaning of § 1.1446-4(b)(4)) posted by the publicly traded partnership.

(B) ***Qualified notice posting date requirement.*** A qualified notice is described in this paragraph (b)(3)(iii) only if the publicly traded partnership has posted it within the 92-day period ending on the date of the transfer. For a transfer that is a distribution by the publicly traded partnership, the qualified notice is described in paragraph (b)(3)(iii) of this section only if the qualified notice is posted with respect to the distribution.

(C) ***Recent posting of qualified notice.*** If the most recent qualified notice posted by the publicly traded partnership was posted during the 10-day period ending on the date of the transfer, a broker may instead rely on the immediately preceding qualified notice (within the meaning of § 1.1446-4(b)(4)) posted by the publicly traded partnership, provided that it satisfies the condition described in paragraph (b)(3)(iii)(B) of this section.

(4) ***Amount subject to withholding under section 3406.*** A broker is not required to withhold under this section if the amount realized from the transfer of the PTP interest is subject to withholding under § 31.3406(b)(3)-2 of this chapter.

(5) ***Income tax treaties.*** A broker may rely on a certification from the transferor that states that the transferor is not subject to tax on any gain from the transfer pursuant to an income tax treaty in effect between the United States and a foreign country if the requirements of this paragraph (b)(5) are met. The transferor makes the certification on a withholding certificate (on a Form W-8BEN, *Certificate of Foreign Status of Beneficial Owner for United States Tax Withholding and Reporting (Individuals),* or Form W-8BEN-E, *Certificate of Status of Beneficial Owner for United States Tax Withholding and Reporting (Entities)*) that meets the requirements for validity under § 1.1446-1(c)(2)(iv) (or an applicable substitute form that meets the requirements under § 1.1446-1(c)(5)) and that contains the information necessary to support the claim for treaty benefits. For purposes of this paragraph (b)(5), a broker may rely on a withholding certificate that it already possesses from the transferor that meets the requirements of this paragraph (b)(5) unless it has actual knowledge that the information is incorrect or unreliable. The exception in this paragraph (b)(5) does not apply if treaty benefits apply to only a portion of the gain from the transfer.

(6) ***Foreign dealers that provide Form W-8ECI.*** A broker may rely on a certification provided by a transferor that certifies that it is a dealer in securities (as defined in section 475(c)(1)) and that any gain from the transfer of the PTP interest is effectively connected with the conduct of a trade or business within the United States without regard to the provisions of section 864(c)(8). The certification described in the preceding sentence is made on a Form W-8ECI, *Certificate of Foreign Person's Claim That Income Is Effectively Connected With the Conduct of a Trade or Business in the United States,* that meets the requirements for validity under § 1.1446-1(c)(2)(iv) (or an applicable substitute form that meets the requirements under § 1.1446-1(c)(5)) and that contains any other information required in the instructions to the form. A broker may rely on a withholding certificate that it already possesses from the transferor that meets the requirements of this paragraph (b)(6) unless it has actual knowledge that the information is incorrect or unreliable.

(c) ***Determining the amount to withhold*** —

(1) ***In general.*** A broker that is required to withhold under this section must withhold 10 percent of the amount realized on the transfer of the PTP interest, except as provided in this paragraph (c). Any procedures in this paragraph (c) apply solely for purposes of determining the amount to withhold under section 1446(f)(1) and this section. A broker may not rely on a certification described in this paragraph (c) if it has actual knowledge that the certification is incorrect or unreliable.

(2) ***Amount realized*** —

(i) ***In general.*** Solely for purposes of this section, the amount realized is the amount of gross proceeds (as defined in § 1.6045-1(d)(5)) paid or credited upon the transfer to the customer or other broker (as applicable), or, in the case of a distribution, the amount determined under paragraph (c)(2)(iii) of this section.

(ii) ***Certification by a foreign partnership of modified amount realized*** —

(A) ***In general.*** When a transferor is a foreign partnership, a broker may use the procedures of this paragraph (c)(2)(ii) to determine the amount realized. For purposes of this paragraph (c)(2)(ii)(A), the broker may treat the modified amount realized as the amount realized to the extent it may rely on a certification from the transferor providing the modified amount realized.

(B) ***Determining modified amount realized.*** The modified amount realized is determined by multiplying the amount realized (as determined under this paragraph (c)(2), without regard to this paragraph (c)(2)(ii)) by the aggregate percentage computed as of the determination date (see § 1.1446(f)-1(c)(4)). The aggregate percentage is the percentage of the gain (if any) arising from the transfer that would be allocated to presumed foreign taxable persons. For purposes of this paragraph (c)(2)(ii)(B), a presumed foreign taxable person is any direct or indirect partner of the transferor that has not provided either a certification of non-foreign status that meets the requirements of paragraph (b)(2) of this section or a certification of treaty benefits that states that the partner is not subject to tax on any gain from the transfer pursuant to an income tax treaty in effect between the United States and a foreign country. A valid certification of treaty benefits must meet the requirements of paragraph (b)(5) of this section (as applied to the partner claiming treaty benefits). For purposes of this paragraph (c)(2)(ii), an indirect partner is a person that owns an interest in the transferor indirectly through one or more foreign partnerships.

(C) ***Certification.*** The certification is made by providing a withholding certificate (on Form W-8IMY, *Certificate of Foreign Intermediary, Foreign Flow-Through Entity, or Certain U.S. Branches for United States Tax Withholding and Reporting*) that includes a withholding statement that provides the percentage of gain allocable to each direct or indirect partner and that provides whether each such person is a United States person, a foreign partner eligible for treaty benefits, or a presumed foreign taxable person. The certification must also include the certification of non-foreign status or the certification of treaty benefits from each direct or indirect partner that is not a presumed foreign taxable person. For purposes of this paragraph (c)(2)(ii), a broker may rely on a withholding certificate and withholding statement that it already possesses from the partnership unless it has actual knowledge that the information is incorrect or unreliable.

(iii) ***Determination of amount realized on a distribution.*** The amount realized on a distribution from a publicly traded partnership is the amount of the distribution reduced by the portion of the distribution that is attributable to the cumulative net income of the partnership. The cumulative net income is the net income earned by the publicly traded partnership since its formation that has not been previously distributed by the partnership. A publicly traded partnership identifies such excess portion of the distribution as an amount in excess of cumulative net income on a qualified notice (within the meaning of § 1.1446-4(b)(4)) posted with respect to the distribution. If a broker properly withholds based on the qualified notice (applying the rules of § 1.1446-4(d)(1) to the distribution), the broker is not liable for any underwithholding on any amount attributable to an amount in excess of cumulative net income. Rather, the publicly traded partnership that issued the qualified notice is solely liable for the underwithheld tax under section 1461 on such amount that results from a broker's reliance on the notice.

(d) ***Reporting and paying withheld amounts.*** A broker that is required to withhold under this section must pay the withheld tax pursuant to the deposit rules in § 1.6302-2. For rules regarding reporting on Forms 1042, *Annual Withholding Tax Return for U.S. Source Income of Foreign Persons,* and 1042-S, *Foreign Person's U.S. Source Income Subject to Withholding,* that apply to a broker that withholds under this section, see §

1.1461-1(b) and (c). For rules regarding when an amount realized on the transfer of a PTP interest is reportable on a Form 1042-S (including in certain cases in which withholding is not required), see § 1.1461-1(c)(2)(i)(Q) and (R). A broker that pays the amount realized to a foreign partnership must issue a Form 1042-S directly to the partnership rather than issuing a form to each of the partners of the partnership. *See* § 1.1461-1(c)(1)(ii)(A)(*8*) (treating the foreign partnership as a recipient for reporting purposes). A broker making a payment to a U.S. branch treated as a U.S. person must not treat the branch as a U.S. person for purposes of reporting the payment made to the branch. Therefore, a payment to that U.S. branch must be reported on Form 1042-S. *See* § 1.1461-1(c). A Form 1042-S issued directly to the transferor must include the TIN of the transferor unless the broker does not know the TIN at the time of issuance.

(e) ***Effect of withholding on transferor*** —

(1) ***In general.*** The withholding of tax under this section does not relieve a foreign person from filing a U.S. tax return with respect to the transfer. *See* §§ 1.6012-1(b)(1), 1.6012-2(g)(1), and 1.6031(a)-1. Further, the withholding of tax by a broker does not relieve a nonresident alien individual or foreign corporation subject to tax on gain by reason of section 864(c)(8) from paying any tax due with the return that has not been fully satisfied through withholding.

(2) ***Manner of obtaining credit*** —

(i) ***Individuals and corporations.*** An individual or corporation may claim a credit under section 33 for the amount withheld under this section by attaching to its applicable return a copy of a Form 1042-S that includes its TIN (or as otherwise provided in IRS forms or instructions).

(ii) ***Partnerships, trusts, or estates.*** For a rule allowing a foreign partnership that is a transferor to claim a credit for the amount withheld under this section against its obligation to withhold under section 1446(a), see § 1.1446-3(c)(4). For the rule providing the extent to which a foreign trust or estate may claim a credit for an amount withheld under this section, see § 1.1462-1. A foreign partnership, trust, or estate claiming a credit for an amount withheld must attach to its applicable return the Form 1042-S provided to it under paragraph (d) of this section (or as otherwise provided in IRS forms or instructions). A foreign trust or estate must also provide any information required in forms or instructions to any beneficiary or owner that is liable for tax on any of the gain under section 864(c)(8).

(f) ***Applicability date.*** This section applies to transfers that occur on or after January 1, 2022.

[T.D. 9926, 85 FR 76935, Nov. 30, 2020]

§ 1.1446(f)-5 Liability for failure to withhold.

(a) ***Liability for failure to withhold.*** Every person required to withhold and pay tax under section 1446(f), but that fails to do so, is liable for the tax under section 1461, plus any applicable interest, penalties, or additions to tax. A partnership that failed to withhold and pay tax under § 1.1446(f)-3 is liable only for the amount of tax that it failed to collect (but not any interest computed on that amount under § 1.1446(f)-3(c)(2)(ii)), plus any interest, penalties, or additions to tax with regard to the partnership's failure to withhold.

(b) ***Tax liability otherwise satisfied.*** Under section 1463, if the tax required to be withheld under section 1446(f) is paid by another person required to withhold under section 1446(f), or by the nonresident alien individual or foreign corporation subject to tax on gain resulting from section 864(c)(8), the tax will not be

recollected. The person required to withhold must establish proof of payment by another person required to withhold or by the nonresident alien individual or foreign corporation subject to the tax on gain resulting from section 864(c)(8). The person required to withhold may show that a reduced rate of withholding was appropriate by establishing the amount of tax due by the foreign transferor (as defined in § 1.864(c)(8)-1(g)(3)) on gain resulting from section 864(c)(8). The person required to withhold under section 1446(f) is not relieved from liability for any interest, penalties, or additions to tax that would otherwise apply. However, if the person required to withhold establishes to the satisfaction of the Commissioner that no gain on the transfer is treated as effectively connected with the conduct of a trade or business within the United States under section 864(c)(8), no interest, penalties, or additions to tax will apply.

(c) *Liability of agents* —

(1) ***Duty to provide notice of false certification.*** A transferee's or transferor's agent (other than a broker required to withhold under § 1.1446(f)-4) must provide notice to a transferee (or other person required to withhold) if that person is furnished with a certification described in §§ 1.1446(f)-1 through 1.1446(f)-4 that the agent knows is false. A person required to withhold may not rely on a certification if it receives the notice described in this paragraph (c)(1).

(2) ***Procedural requirements.*** Any agent who is required to provide notice under paragraph (c)(1) of this section must do so in writing (including by electronic submission) as soon as possible after learning of the false certification. If the agent first learns of the false certification before the date of transfer, notice must be given by the third day following that discovery but no later than the date of transfer (before the transferee's payment of consideration). If an agent first learns of a false certification after the date of transfer, notice must be given by the third day following that discovery. The notice must also explain the possible consequences to the recipient of a failure to withhold. The notice need not disclose the information on which the agent's statement is based. The agent must also furnish a copy of the notice to the IRS by the date on which the notice is required to be given to the recipient. The copy of the notice must be delivered to the address provided in § 1.1445-1(g)(10) and must be accompanied by a cover letter stating that the copy is being filed pursuant to the requirements of this paragraph (c)(2).

(3) ***Failure to provide notice.*** Any agent who is required to provide notice under paragraph (c)(1) of this section, but fails to do so in the manner required in paragraph (c)(2) of this section, is liable for the tax that the person who should have been provided notice in accordance with paragraph (c)(2) of this section was required to withhold under section 1446(f) if the notice had been given.

(4) ***Limitation on liability.*** An agent's liability under paragraph (c)(3) of this section is limited to the amount of compensation that the agent derives from the transaction. In addition, an agent that assists in the preparation of, or fails to disclose knowledge of, a false certification may be liable for civil and criminal penalties.

(d) ***Applicability date.*** This section applies to transfers that occur on or after January 29, 2021.

[T.D. 9926, 85 FR 76935, Nov. 30, 2020]

TAX-FREE COVENANT BONDS

§ 1.1451-1 Tax-free covenant bonds issued before January 1, 1934.

(a) *Rates of withholding* —

(1) ***Rate of 2 percent.*** Withholding of a tax equal to 2 percent is required in the case of interest upon bonds or other corporate obligations containing a tax-free covenant and issued before January 1, 1934, paid to an individual, a fiduciary, or a partnership, whether resident or nonresident, or to a nonresident foreign corporation, regardless of whether the liability assumed by the obligor is less than, equal to, or greater than 2 percent.

(2) ***Rate of 30 percent.*** Notwithstanding subparagraph (1) of this paragraph, if the liability assumed by the obligor does not exceed 2 percent of the interest, withholding is required at the rate of 30 percent in the case of payments to a nonresident alien individual, a nonresident partnership composed in whole or in part of nonresident aliens, a nonresident foreign corporation, or an owner who is unknown to the withholding agent.

(3) ***Obligations of resident payers.*** The rates of withholding specified in subparagraphs (1) and (2) of this paragraph are applicable to interest on such tax-free covenant bonds issued by a domestic corporation or by a resident foreign corporation.

(4) ***Obligations of nonresident payers.*** A nonresident foreign corporation having a fiscal or paying agent in the United States is required to withhold a tax of 2 percent in the case of interest upon its tax-free covenant bonds issued before January 1, 1934, which is paid to an individual or fiduciary who is a citizen or resident of the United States, to a partnership any member of which is a citizen or resident, or to an unknown owner.

(5) ***Interest from sources without the United States.*** Withholding is not required under section 1451 in the case of interest upon bonds or other corporate obligations issued before January 1, 1934, and containing a tax-free covenant if the interest is not to be treated as income from sources within the United States and the payments are made to a nonresident alien, a partnership composed wholly of nonresident aliens, or a nonresident foreign corporation.

(6) ***Tax treaties.*** The rates of tax to be withheld in accordance with this paragraph shall be reduced as may be provided by treaty with any country. See section 894 and § 1.1441-6 relating to income subject to a reduced rate of, or an exemption from, income tax pursuant to an income tax convention.

(b) ***Date of issue.*** The withholding provisions of section 1451 are applicable only to bonds, mortgages, or deeds of trust, or other similar obligations of a corporation which were issued before January 1, 1934, and which contain a tax-free covenant. For the purpose of section 1451, bonds, mortgages, or deeds of trust, or other similar obligations of a corporation, are issued when delivered. If a broker or other person acts as selling agent of the obligor, the obligation is issued when delivered by the agent to the purchaser. If a broker or other person purchases the obligation outright for the purpose of holding or reselling it, the obligation is issued when delivered to such broker or other person.

(c) ***Extended maturity date.*** In cases where on or after January 1, 1934, the maturity date of bonds or other obligations of a corporation is extended, the bonds or other obligations shall be considered to have been issued on or after January 1, 1934. The interest on such obligations is not subject to the withholding provisions of section 1451 but falls within the class of interest described in section 1441. See paragraph (c)(5)(iii) of § 1.1441-3.

(d) ***Covenant in trust deed.*** Bonds issued under a trust deed containing a tax-free covenant are treated as if they contain such a covenant. If neither the bonds nor the trust deeds given by the obligor to secure them contained a tax-free covenant, but the original trust deeds were modified before January 1, 1934, by supplemental agreements containing a tax-free covenant executed by the obligor corporation and the

trustee, the bonds issued before January 1, 1934, are subject to the provisions of section 1451, provided appropriate authority existed for the modification of the trust deeds in this manner. The authority must have been contained in the original trust deeds or actually secured from the bondholders.

(e) ***Notation showing date of issue.*** In order that the date of issue of bonds, mortgages, deeds of trust, or other similar corporate obligations containing a tax-free covenant may be readily determined by the owner for the purpose of preparing the ownership certificates required by § 1.1461-1, the issuing or debtor corporation shall indicate the date of issue by an appropriate notation, or use the phrase "issued on or after January 1, 1934," on each such obligation or in a statement accompanying the delivery of the obligation.

(f) ***Effect of withholding on income taxes of bondholder and issuing corporation*** —

(1) ***Federal tax.*** In the case of corporate bonds or other corporate obligations issued before January 1, 1934, and containing a tax-free covenant, the corporation paying a Federal tax, or any part of it, for someone else pursuant to its agreement is not entitled to deduct such payment from its gross income on any ground; nor shall the tax so paid be included in the gross income of the bondholder. The amount of the tax so paid may, nevertheless, be claimed by the bondholder in accordance with paragraph (a) of § 1.1462-1 as a credit against the total amount of income tax due. See also section 32. The tax so paid by the corporation upon tax-free covenant bond interest payable to a domestic or resident fiduciary and allocable to any nonresident alien beneficiary under section 652 or 662 is allowable, pro rata, as a credit against:

(i) The tax required to be withheld by the fiduciary in accordance with paragraph (f) of § 1.1441-3 from the income of the beneficiary, and

(ii) The total income tax computed in the return of the beneficiary, as indicated in paragraph (a) of § 1.1462-1.

(2) ***State taxes.*** In the case of corporate bonds or other obligations containing an appropriate tax-free covenant, the corporation paying for someone else, pursuant to its agreement, a State tax or any tax other than a Federal tax may deduct such payment as interest paid on indebtedness.

(g) ***Alien resident of Puerto Rico.*** For purposes of this section the term "nonresident alien individual" includes an alien resident of Puerto Rico.

(h) ***Other rules for withholding of tax under section 1451.*** The rules for withholding stated in paragraphs (c) (2) and (3), (f), and (g) of § 1.1441-3 shall also apply for purposes of withholding the tax under this section.

[T.D. 6500, 25 FR 12076, Nov. 26, 1960, as amended by T.D. 7157, 36 FR 25228, Dec. 30, 1971]

§ 1.1451-2 Exemptions from withholding under section 1451.

(a) ***Claiming personal exemptions.*** Withholding under § 1.1451-1 from interest on bonds or other obligations of corporations issued before January 1, 1934, and containing a tax-free covenant shall not be required if there is filed with the withholding agent when presenting coupons for payment, or not later than February 1 of the following year, an ownership certificate on Form 1000 stating:

(1) In the case of a citizen or resident of the United States, that his taxable income does not exceed his deductions for personal exemptions allowed under section 151; or

(2) In the case of an estate or trust the fiduciary of which is a citizen or resident of the United States, that its taxable income does not exceed the deduction for the personal exemption allowed under section 642(b).

(b) ***Claiming residence in United States.*** To claim residence in the United States for purposes of section 1451, see § 1.1441-5.

(c) ***Other exemptions.*** The exemptions allowed by paragraphs (d) and (h) of § 1.1441-4 shall also apply for purposes of section 1451.

[T.D. 6500, 25 FR 12077, Nov. 26, 1960, as amended by T.D. 6908, 31 FR 16774, Dec. 31, 1966]

APPLICATION OF WITHHOLDING PROVISIONS

§ 1.1461-1 Payment and returns of tax withheld.

(a) ***Payment of withheld tax*** —

(1) ***Deposits of tax.*** Every withholding agent who withholds tax pursuant to chapter 3 of the Internal Revenue Code (Code) and the regulations under such chapter shall deposit such amount of tax as provided in § 1.6302-2(a). If for any reason the total amount of tax required to be returned for any calendar year pursuant to paragraph (b) of this section has not been deposited pursuant to § 1.6302-2, the withholding agent shall pay the balance of tax due for such year at such place as the Internal Revenue Service (IRS) shall specify. The tax shall be paid when filing the return required under paragraph (b)(1) of this section for such year, unless the IRS specifies otherwise. With respect to withholding under section 1446, this section shall apply only to publicly traded partnerships and nominees that withhold under § 1.1446-4 and brokers and publicly traded partnerships that withhold (or are otherwise liable for underwithholding) under § 1.1446(f)-4 on transfers of publicly traded partnership interests. See § 1.1461-3 regarding withholding tax liabilities under sections 1446(a) and 1446(f) and penalties that apply for failure to withhold under either of those sections.

(2) ***Penalties for failure to pay tax.*** For penalties and additions to the tax for failure to timely pay the tax required to be withheld under chapter 3 of the Code, see sections 6656, 6672, and 7202 and the regulations under those sections.

(b) ***Income tax return*** —

(1) ***General rule.*** A withholding agent shall make an income tax return on Form 1042 (or such other form as the IRS may prescribe) for income paid during the preceding calendar year that the withholding agent is required to report on an information return on Form 1042-S (or such other form as the IRS may prescribe) under paragraph (c)(1) of this section. See section 6011 and § 1.6011-1(c). The withholding agent must file the return on or before March 15 of the calendar year following the year in which the income was paid. The return must show the aggregate amount of income paid and tax withheld required to be reported on all the Forms 1042-S for the preceding calendar year by the withholding agent, in addition to such information as is required by the form and accompanying instructions. See § 1.1474-1(c) for the requirement to show the aggregate chapter 4 reportable amounts and tax withheld on Form 1042. A single Form 1042 may be filed by a withholding agent to report amounts under chapters 3 and 4, including tax withheld. Withholding certificates or other statements or information provided to a withholding agent are not required to be attached to the return. A return must be filed under this paragraph (b)(1) even though no tax was required to be withheld during the preceding calendar year. The withholding agent must retain a copy of Form 1042

for the applicable statute of limitations on assessments and collection with respect to the amounts required to be reported on the Form 1042. See section 6501 and the regulations thereunder for the applicable statute of limitations. Adjustments to the total amount of tax withheld, as described in § 1.1461-2, shall be stated on the return as prescribed by the form and accompanying instructions.

(2) ***Amended returns.*** An amended return may be filed on a Form 1042 or such other form as the IRS may prescribe. An amended return must include such information as the form or accompanying instructions shall require, including, with respect to any information that has changed from the time of the filing of the return, the information that was shown on the original return and the corrected information.

(c) ***Information returns*** —

(1) ***Filing requirement*** —

(i) ***In general.*** A withholding agent (other than an individual who is not acting in the course of a trade or business with respect to a payment) must make an information return on Form 1042-S, "Foreign Person's U.S. Source Income Subject to Withholding," (or such other form as the IRS may prescribe) to report the amounts subject to reporting, as defined in paragraph (c)(2) of this section, that were paid during the preceding calendar year. Notwithstanding the preceding sentence, any person that withholds or is required to withhold an amount under section 1441, 1442, or 1443 or § 1.1446-4(a) (applicable to publicly traded partnerships required to pay tax under section 1446(a) on distributions) or § 1.1446(f)-4(a) (applicable to brokers required to withhold on transfers of publicly traded partnership interests) must file a Form 1042-S for the payment withheld upon whether or not that person is engaged in a trade or business and whether or not the payment is an amount subject to reporting. A Form 1042-S shall be prepared for each recipient of an amount subject to reporting and for each single type of income payment. The Form 1042-S shall be prepared in such manner as the form and accompanying instructions prescribe. One copy of the Form 1042-S shall be filed with the IRS on or before March 15th of the calendar year following the year in which the amount subject to reporting was paid. It shall be filed with a transmittal form as provided in the instructions to the Form 1042-S and to the transmittal form. Withholding certificates, documentary evidence, or other statements or documentation provided to a withholding agent are not required to be attached to the form. Another copy of the Form 1042-S must be furnished to the recipient for whom the form is prepared (or any other person, as required under this paragraph (c) or the instructions to the form) on or before March 15 of the calendar year following the year in which the amount subject to reporting was paid. The withholding agent must retain a copy of each Form 1042-S for the statute of limitations on assessment and collection applicable to the Form 1042 to which the Form 1042-S relates. A withholding agent required by this section to furnish a recipient copy of Form 1042-S may furnish such copy electronically by complying with the requirements provided in § 1.6050W-2(a)(2) through (5) applicable to statements required under section 6050W (substituting the phrase "Form 1042-S" for the phrases "statement required under section 6050W" or "statements required by section 6050W(f)" each place they appear). A withholding agent that meets the requirements of that section for providing electronic copies to recipients may apply these rules to payments made in calendar year 2016.

(ii) ***Recipient*** —

(A) ***Defined.*** For purposes of this section, the term *recipient* means—

(*1*) A beneficial owner as defined in § 1.1441-1(c)(6), including a foreign estate or a foreign complex trust, as defined in § 1.1441-1(c)(25);

(*2*) A qualified intermediary as defined in § 1.1441-1(e)(5)(ii);

(*3*) A withholding foreign partnership as defined in § 1.1441-5(c)(2) or a withholding foreign trust under § 1.1441-5(e)(5)(v);

(*4*) A territory financial institution treated as a U.S. person under § 1.1441-1(b)(2)(iv)(A);

(*5*) A U.S. branch that is treated as a U.S. person under § 1.1441-1(b)(2)(iv)(A);

(*6*) A nonwithholding foreign partnership or a foreign simple trust as defined in § 1.1441-1(c)(24), but only to the extent the income is (or is treated as) effectively connected with the conduct of a trade or business in the United States by such entity, or if the nonwithholding foreign partnership or foreign simple trust is also described in paragraph (c)(1)(ii)(A)(*9*) or (c)(1)(ii)(A)(*10*) of this section;

(*7*) A payee, as defined in § 1.1441-1(b)(2) that is presumed to be a foreign person under the presumption rules of § 1.1441-1(b)(3); 1.1441-5(d) or (e)(6), or 1.6049-5(d);

(*8*) A partner (including a foreign partnership or a partner for which a qualified intermediary provides partner-specific documentation under § 1.1446-4(e)) receiving a distribution from a publicly traded partnership subject to withholding under section 1446(a) and § 1.1446-4 on distributions of effectively connected income, and a partner (including a foreign partnership or a partner for which a qualified intermediary provides partner-specific documentation under § 1.1446(f)-4(a)(7)) receiving an amount realized from a transfer of a publicly traded partnership interest under section 1446(f)(1) and § 1.1446(f)-4.

(*9*) A foreign intermediary, nonwithholding foreign partnership, or nonwithholding foreign trust that is a participating FFI or registered deemed-compliant FFI with respect to a chapter 4 reporting pool of U.S. payees;

(*10*) A participating FFI or a registered deemed-compliant FFI that is a recipient of a withholdable payment described in § 1.1474-1(d)(1)(ii)(A)(*1*)(*iii*); and

(*11*) Any other person as required on Form 1042-S or the instructions to the form.

(B) ***Persons that are not recipients.*** A recipient does not include—

(*1*) A nonqualified intermediary, except with respect to a payment (or portion of a payment) for which a nonqualified intermediary that is an FFI is a recipient reporting as described in § 1.1474-1(d)(1)(ii)(A)(*1*)(*iii*), or if the nonqualified intermediary is also described in paragraph (c)(1)(ii)(A)(*9*) or (c)(1)(ii)(A)(*10*) of this section;

(*2*) A payee included in a chapter 3 or chapter 4 withholding rate pool;

(*3*) A flow-through entity, as defined in § 1.1441-1(c)(23) (to the extent it is receiving amounts subject to reporting other than income effectively connected with the conduct of a trade or business in the United States), that is not a recipient described in paragraphs (c)(1)(ii)(A)(9) or (c)(1)(ii)(A)(10) of this section;

(*4*) A U.S. branch (including a territory financial institution) described in § 1.1441-1(b)(2)(iv)(A) that is not treated as a U.S. person under that section and is not a recipient described in paragraphs (c)(1)(ii)(A)(*9*) or (*10*) of this section; and

(*5*) A foreign broker withheld upon under § 1.1446(f)-4(a)(2)(ii) by another broker paying an amount realized from the transfer of a PTP interest.

(C) ***Coordination with chapter 4 reporting.*** See § 1.1474-1(d)(1)(ii)(A) for persons that are defined as recipients of a withholdable payment of U.S. source FDAP income for purposes of chapter 4 in addition to the persons that are recipients under this paragraph (c)(1)(ii).

(2) ***Amounts subject to reporting*** —

(i) ***In general.*** Subject to the exceptions described in paragraph (c)(2)(ii) of this section, amounts subject to reporting on Form 1042-S are amounts paid to a foreign payee or partner (including persons presumed to be foreign) that are amounts subject to withholding as defined in § 1.1441-2(a), distributions of effectively connected income under § 1.1446-4, or amounts realized from transfers of PTP interests under § 1.1446(f)-4. Amounts subject to reporting include amounts subject to withholding even if no amount is deducted and withheld from the payment because of a treaty or Internal Revenue Code exception to taxation or because an amount withheld was reimbursed to the payee under the adjustment procedures of § 1.1461-2. In addition, amounts subject to reporting include any amounts paid to a foreign payee on which a withholding agent withheld (including under § 1.1441-2(e)(7)) an amount (either under chapter 3 of the Internal Revenue Code or section 3406) whether or not the amount is subject to withholding. Amounts subject to reporting include, but are not limited to, the following items—

(A) The entire amount of a corporate distribution (whether actual or deemed) irrespective of any estimate of the portion of the distribution that represents a taxable dividend;

(B) Interest, including the portion of a notional principal contract payment that is characterized as interest. Interest shall also be reported on Form 1042-S if it is bank deposit interest paid to nonresident alien individuals as required under § 1.6049-8;

(C) Rents;

(D) Royalties;

(E) Compensation for dependent and independent personal services performed in the United States;

(F) Annuities;

(G) Pension distributions and other deferred income;

(H) Gambling winnings that are not exempt from tax under section 871(j);

(I) Income from the cancellation of indebtedness unless the withholding agent is unrelated to the debtor and does not have knowledge of the facts that give rise to the payment (see § 1.1441-2(d));

(J) Amounts that are (or are presumed to be) effectively connected with the conduct of a trade or business in the United States (including deposit interest as defined in sections 871(i)(2)(A) and 881(d)) even if no withholding certificate is required to be furnished by

the payee or beneficial owner. In the case of amounts paid on a notional principal contract described in § 1.1441-4(a)(3) that are presumed to be effectively connected with the conduct of a trade or business in the United States, the amount required to be reported is limited to the amount of cash paid from the notional principal contract;

(K) Scholarship, fellowship, or grant income and compensation for personal services that is not excludible from gross income under section 117 (whether or not the taxable scholarship, fellowship, grant income, or compensation for personal services is exempt from tax under an income tax treaty) paid to foreign students, trainees, teachers, or researchers;

(L) Dividend equivalents as described in section 871(m) and the regulations thereunder;

(M) Any dividend or any payment that references a dividend from an underlying security pursuant to a securities lending or sale-repurchase transaction paid to a qualified derivatives dealer even when the withholding agent is not required to withhold on the payment pursuant to § 1.1441-1(b)(4)(xxi), (xxii), or (xxiii);

(N) Amounts paid to foreign governments, international organizations, or the Bank for International Settlements, whether or not documentation must be provided;

(O) Original issue discount paid on the redemption of an OID obligation. The amount to be reported is the amount of OID includible in the gross income of the holder of the obligation, if known, or, if not known, the total amount of original issue discount determined as if the holder held the obligation from its original issuance. A withholding agent may determine the total amount of OID by using the most recently published "List of Original Issue Discount Instruments," (Publication 1212, available from the IRS Forms Distribution Centers);

(P) The amount of any distribution made by a publicly traded partnership that is an amount subject to withholding under § 1.1446-4, or that is paid to a qualified intermediary or a U.S. branch of a foreign person that agrees to be treated as a U.S. person;

(Q) Except with respect to a broker that is a U.S. clearing organization, an amount realized on the transfer of a PTP interest under § 1.1446(f)-4 (unless an exception to withholding applies under § 1.1446(f)-4(b)(2) through (4)); and

(R) In the case of a broker that is a U.S. clearing organization—

(*1*) An amount realized (as determined under § 1.1446(f)-4(c)(2)(iii)) on a distribution made by a publicly traded partnership for which withholding is required under § 1.1446(f)-4(a); and

(*2*) An amount realized on the sale of a PTP interest cleared and settled through a net settlement system maintained by the clearing organization acting as a central counterparty in the sale (with the reporting on the non-netted amount), unless an exception to withholding would apply under § 1.1446(f)-4(b)(2) or (3).

(ii) ***Exceptions to reporting.*** The amounts listed in this paragraph (c)(2)(ii) are not required to be reported on Form 1042-S—

(A) Interest (including original issue discount) that is deposit interest under sections 871(i)(2)(A) and 881(d) and that is not effectively connected with the conduct of a trade or business in the United States, unless reporting is required under § 1.6049-8 (regarding payments to certain foreign residents) or is interest that is effectively connected with the conduct of a trade or business in the United States;

(B) Interest or original issue discount on certain short-term obligations, described in section 871(g)(1)(B) or 881(a)(3);

(C) Interest paid on obligations sold between interest payment dates and the portion of the purchase price of an OID obligation that is sold or exchanged in a transaction other than a redemption, unless the sale or exchange is part of a plan, the principal purpose of which is to avoid tax and the withholding agent has actual knowledge or reason to know of such plan (see § 1.1441-2(a)(5) and (6));

(D) Any item required to be reported on a Form W-2, including an item required to be shown on Form W-2 solely by reason of § 1.6041-2 (relating to return of information for payments to employees) or § 1.6052-1 (relating to information regarding payment of wages in the form of group-term life insurance);

(E) Any item required to be reported on Form 1099, and such other forms as are prescribed pursuant to the information reporting provisions of sections 6041 through 6050W and the regulations under those sections;

(F) Amounts paid on a notional principal contract described in § 1.1441-4(a)(3)(i) that are not effectively connected with the conduct of a trade or business in the United States (or not treated as effectively connected pursuant to § 1.1441-4(a)(3)(ii));

(G) Amounts required to be reported on Form 8288 (U.S. Withholding Tax Return for Dispositions by Foreign Persons of U.S. Real Property Interests) or Form 8804 (Annual Return for Partnership Withholding Tax (section 1446)). A withholding agent that must report a distribution partly on a Form 8288 or 8804 and partly on a Form 1042-S may elect to report the entire amount on a Form 8288 or 8804;

(H) Interest (including original issue discount) paid with respect to foreign-targeted registered obligations issued before January 1, 2016, that are described in § 1.871-14(e)(2) to the extent the documentation requirements described in § 1.871-14(e)(3) and (e)(4) are required to be satisfied (taking into account the provisions of § 1.871-14(e)(4)(ii), if applicable;

(I) Interest on a foreign-targeted bearer obligation (see §§ 1.1441-1(b)(4)(i) and 1.1441-2(a)) issued before March 19, 2012;

(J) Except as provided in § 1.1461-1(c)(2)(i)(M), any payment to a qualified derivatives dealer when the withholding agent is not required to withhold on the payment pursuant to § 1.1441-1(b)(4)(xxi), (xxii), or (xxiii). This exception does not apply to withholding agents that are qualified derivatives dealers;

(K) Gain described in section 301(c)(3); and

(L) Amounts described in § 1.1441-1(b)(4)(xviii) (dealing with certain amounts paid by the U.S. government).

(iii) ***Applicability date.*** Paragraph (c)(2) of this section applies beginning January 19, 2017.

(3) ***Required information.*** The information required to be furnished under this paragraph (c)(3) shall be based upon the information provided by or on behalf of the recipient of an amount subject to reporting (as corrected and supplemented based on the withholding agent's actual knowledge) or the presumption rules of §§ 1.1441-1(b)(3), 1.1441-4(a), 1.1441-5(d) and (e), 1.1441-9(b)(3), 1.1446-1(c)(3) (as applied to publicly traded partnerships required to pay tax under section 1446 on distributions of effectively connected income) or 1.6049-5(d). The reference in the previous sentence to presumption rules applicable to withholding under section 1446 shall apply to partnership taxable years beginning after May 18, 2005, or such earlier time as the regulations under §§ 1.1446-1 through 1.1446-5 apply by reason of an election under § 1.1446-7. The Form 1042-S must include the following information, if applicable—

(i) The name, address, taxpayer identifying number of the withholding agent, and the withholding agent's status for chapter 3 purposes (based on the status codes applicable for chapter 3 purposes provided on the form);

(ii) A description of each category of income paid based on the income codes provided on the form (e.g., interest, dividends, royalties, etc.) and the aggregate amount in each category expressed in U.S. dollars;

(iii) For a payment not subject to withholding under chapter 4, the rate of withholding applied or the basis for exempting the payment from withholding under chapter 3, and the exemption applicable to the payment for chapter 4 purposes (based on the exemption codes provided on the form);

(iv) The name and address of the recipient;

(v) The name and address of any nonqualified intermediary, flow-through entity, or U.S. branch as described in § 1.1441-1(b)(2)(iv) (other than a branch that is treated as a U.S. person) to which the payment was made;

(vi) The taxpayer identifying number of the recipient if required under § 1.1441-1(e)(4)(vii) or if actually known to the withholding agent making the return;

(vii) The taxpayer identifying number of a nonqualified intermediary or flow-through entity (to the extent it is not a recipient) or other flow-through entity to the extent it is known to the withholding agent;

(viii) The country (based on the country codes provided on the form) of the recipient and of any nonqualified intermediary or flow-through entity the name of which appears on the form; and

(ix) Such information as the form or the instructions may require in addition to, or in lieu of, information required under this paragraph (c)(3).

(4) ***Method of reporting*** —

(i) ***Payments by U.S. withholding agents to recipients.*** A withholding agent that is a U.S. person (other than a foreign branch of a U.S. person that is a qualified intermediary as defined in § 1.1441-1(e)(5)(ii) that makes payments of amounts subject to reporting on Form 1042-S must file a separate Form 1042-S for each recipient who receives such amount. For purposes of this paragraph (c)(4), a U.S. person includes a U.S. branch (including a territory financial institution) described in § 1.1441-1(b)(2)(iv)(A) that is treated as a U.S. person. Except as may otherwise

be required on Form 1042-S or the instructions to the form, only payments for which the income code, exemption code, withholding rate, and recipient code are the same may be reported on a single Form 1042-S. See paragraph (c)(4)(ii) of this section for reporting of payments made to a person that is not a recipient. See § 1.1474-1(d)(4) for additional requirements that may apply for reporting on Form 1042-S with respect to a withholdable payment that is a chapter 4 reportable amount.

(A) ***Payments to beneficial owners.*** If a U.S. withholding agent makes a payment directly to a beneficial owner it must complete Form 1042-S treating the beneficial owner as the recipient. Under the grace period rule of § 1.1441-1(b)(3)(iv), a U.S. withholding agent may, under certain circumstances, treat a payee as a foreign person while the withholding agent awaits a valid withholding certificate. A U.S. withholding agent who relies on the grace period rule to treat a payee as a foreign person must file a Form 1042-S to report all payments on Form 1042-S during the period that person was presumed to be foreign even if that person is later determined to be a U.S. person based on appropriate documentation or is presumed to be a U.S. person after the grace period ends. In the case of joint owners, a withholding agent may provide a single Form 1042-S made out to the owner whose status the U.S. withholding agent relied upon to determine the applicable rate of withholding. If, however, any one of the owners requests its own Form 1042-S, the withholding agent must furnish a Form 1042-S to the person who requests it. If more than one Form 1042-S is issued for a single payment, the aggregate amount paid and tax withheld that is reported on all Forms 1042-S cannot exceed the total amounts paid to joint owners and the tax withheld thereon.

(B) ***Payments to a qualified intermediary, a withholding foreign partnership, or a withholding foreign trust.*** A U.S. withholding agent that makes payments to a qualified intermediary (whether or not the qualified intermediary assumes primary withholding responsibility for purposes of chapter 3 and chapter 4 of the Code), a withholding foreign partnership, or a withholding foreign trust shall complete Forms 1042-S treating the qualified intermediary, withholding foreign partnership, or withholding foreign trust as the recipient. The U.S. withholding agent must complete a separate Form 1042-S for each chapter 3 and chapter 4 withholding rate pool with respect to each qualified intermediary. A qualified intermediary that does not assume primary withholding responsibility on all payments it receives provides information regarding the proportions of income subject to a particular withholding rate (*i.e.,* a chapter 3 withholding rate pool) to the withholding agent on a withholding statement associated with a qualified intermediary withholding certificate. In such a case, the U.S. withholding agent must complete a separate Form 1042-S for each chapter 3 and chapter 4 withholding rate pool with respect to the qualified intermediary. To the extent a qualified intermediary is required to report a payment under chapter 61, it may provide a U.S. withholding agent with information regarding withholding rate pools for U.S. non-exempt recipients (as defined under § 1.1441-1(c)(21)). Amounts paid with respect to such withholding rate pools must be reported on a Form 1099 completed for each U.S. non-exempt recipient to the extent such U.S. non-exempt recipient is subject to Form 1099 reporting and is not reported on Form 1042-S. See, however, § 1.1441-1(e)(5)(v)(C) for when a qualified intermediary may provide a chapter 4 withholding rate pool of U.S payees (in lieu of reporting such payees on a withholding statement) and for the withholding rate pools (including chapter 4 withholding rate pools) otherwise reportable on a withholding statement provided by a qualified intermediary.

(C) ***Amounts paid to U.S. branches treated as U.S. persons.*** A U.S. withholding agent making a payment to a U.S. branch of a foreign person (including a territory financial institution) described in § 1.1441-1(b)(2)(iv)(A) shall complete Form 1042-S as follows—

(*1*) If the branch has provided the U.S. withholding agent with a withholding certificate that evidences its agreement with the withholding agent to be treated as a U.S. person, the U.S. withholding agent files Forms 1042-S treating the U.S. branch or territory financial institution as the recipient;

(*2*) If the branch has provided the U.S. withholding agent with a withholding certificate that transmits information regarding beneficial owners, qualified intermediaries, withholding foreign partnerships, or other recipients, the U.S. withholding agent must complete a separate Form 1042-S for each recipient whose documentation is associated with the U.S. branch's or territory financial institution's withholding certificate; or

(*3*) If the U.S. withholding agent cannot reliably associate a payment with a valid withholding certificate from the U.S. branch, it shall treat the U.S. branch as the recipient and report the income as effectively connected with the conduct of a trade or business in the United States except as otherwise provided in § 1.1441-1(b)(2)(iv)(B)(*4*).

(D) ***Dual Claims.*** A U.S. withholding agent may make a payment to a foreign entity that is simultaneously claiming a reduced rate of tax on its own behalf for a portion of the payment and a reduced rate on behalf of persons in their capacity as interest holders in that entity on the remaining portion. See § 1.1441-6(b)(2)(iii). If the claims are consistent and the withholding agent accepts the multiple claims, the withholding agent must file a separate Form 1042-S for those payments for which the entity is treated as the beneficial owner and Forms 1042-S for each of the interest holders in the entity for which the interest holder is treated as the recipient. For those payments for which the interest holder in an entity is treated as the recipient, the U.S. withholding agent shall prepare the Form 1042-S in the same manner as a payment made to a nonqualified intermediary or flow-through entity as set forth in paragraph (c)(4)(ii) of this section. If the claims are consistent but the withholding agent has not chosen to accept the multiple claims, or if the claims are inconsistent, the withholding agent must file a separate Form 1042-S for the person or persons it has chosen to treat as the recipients.

(ii) ***Payments made by U.S. withholding agents to persons that are not recipients*** —

(A) ***Amounts paid to a nonqualified intermediary, a flow-through entity, and certain U.S. branches.*** If a U.S. withholding agent makes a payment to a nonqualified intermediary, a flow-through entity, or a U.S. branch (including a territory financial institution) described in § 1.1441-1(b)(2)(iv) (other than a U.S. branch or territory financial institution that is treated as a U.S. person), it must complete a separate Form 1042-S for each recipient to the extent the withholding agent can reliably associate a payment with valid documentation (within the meaning of § 1.1441-1(b)(2)(vii)) from the recipient which is associated with the withholding certificate provided by the nonqualified intermediary, flow-through entity, or U.S. branch or territory financial institution. See § 1.1474-1(d)(4)(i) for when a withholding agent may report a chapter 4 reportable amount made to such an entity in a chapter 4 withholding rate pool. See also § 1.1441-1(e)(3)(iv)(A) for when a withholding statement provided by a nonqualified intermediary may include a chapter 4 withholding

rate pool of U.S. payees. If a payment is reported by the withholding agent in a chapter 4 withholding rate pool, the withholding agent must report on Form 1042-S the nonqualified intermediary or flow-through entity as a recipient associated with the applicable chapter 4 withholding rate pool. If a payment is made through tiers of nonqualified intermediaries or flow-through entities, the withholding agent must nevertheless complete Form 1042-S for the recipient to the extent it can reliably associate the payment with documentation from the recipient. A withholding agent that is completing a Form 1042-S for a recipient that receives a payment through a nonqualified intermediary, a flow-through entity, or a U.S. branch or territory financial institution must include on the Form 1042-S the name of the nonqualified intermediary, flow-through entity, U.S. branch or territory financial institution from which the recipient directly receives the payment. If a U.S. withholding agent cannot reliably associate the payment, or any portion of the payment, with valid documentation from a recipient either because no such documentation has been provided or because the nonqualified intermediary, flow-through entity, or U.S. branch or territory financial institution has failed to provide sufficient allocation information so that the withholding agent can associate the payment, or any portion thereof, with valid documentation, then the withholding agent must report the payments as made to an unknown recipient in accordance with the appropriate presumption rules for that payment. Thus, if the payment is not a withholdable payment and under the presumption rules the payment is presumed to be made to a foreign person, the withholding agent must generally withhold 30 percent of the payment and report the payment on Form 1042-S made out to an unknown recipient and shall also include the name of the nonqualified intermediary, flow-through entity, U.S. branch or territory financial institution that received the payment on behalf of the unknown recipient. If, however, the recipient is presumed to be a U.S. non-exempt recipient (as defined in § 1.1441-1(c)(21)), the withholding agent must withhold on the payment as required under section 3406 and report the payment as required under chapter 61 of the Code. See § 1.1474-1(d)(4) for reporting requirements that apply to payments of chapter 4 reportable amounts paid to nonqualified intermediaries and flow-through entities. If, however, the payment is a withholdable payment, the withholding agent must report the payment as made to a chapter 4 withholding rate pool of nonparticipating FFIs in accordance with the presumption rule under § 1.1471-3(f)(5). For a payment to a foreign partnership on the transfer of a publicly traded partnership interest subject to § 1.1446(f)-4(a), see paragraph (c)(1)(ii)(A)(*8*) of this section (treating the foreign partnership as a recipient).

(B) ***Disregarded entities.*** If a U.S. withholding agent makes a payment to a disregarded entity but receives a valid withholding certificate or other documentary evidence from a foreign person that is the single owner of a disregarded entity, the withholding agent must file a Form 1042-S treating the foreign single owner as the recipient. The taxpayer identifying number on the Form 1042-S, if required, must be the foreign single owner's TIN.

(iii) ***Reporting by qualified intermediaries, withholding foreign partnerships, and withholding foreign trusts.*** A qualified intermediary, a withholding foreign partnership, and a withholding foreign trust shall report payments on Form 1042-S as provided in their agreements with the IRS and the instructions to the form.

(iv) ***Reporting by a nonqualified intermediary, flow-through entity, and certain U.S. branches.*** A nonqualified intermediary, flow-through entity, or U.S. branch (including a territory financial institution) described in § 1.1441-1(e)(2)(iv) (other than a U.S. branch or territory financial

institution that is treated as a U.S. person) is a withholding agent and must file Forms 1042-S for amounts paid to recipients in the same manner as a U.S. withholding agent. A Form 1042-S will not be required, however, if another withholding agent has reported the same amount for which the nonqualified intermediary, flow-through entity, or U.S. branch would be required to file a return and the entire amount that should be withheld from such payment has been withheld (including withholding and reporting in accordance with the applicable presumption rule for the payment). A nonqualified intermediary, flow-through entity, or U.S. branch must report payments made to recipients to the extent it has failed to provide the appropriate documentation to another withholding agent together with the information required for that withholding agent to reliably associate the payment with the recipient documentation or to the extent it knows, or has reason to know, that less than the required amount has been withheld. A nonqualified intermediary or flow-through entity that is required to report a payment on Form 1042-S must follow the same rules as apply to a U.S. withholding agent under paragraphs (c)(4)(i) and (ii) of this section.

(v) ***Pro rata reporting for allocation failures.*** If a nonqualified intermediary, flow-through entity, or U.S. branch (including a territory financial institution) described in § 1.1441-1(b)(2)(iv) (other than a U.S. branch or territory financial institution treated as a U.S. person) uses the alternative procedures of § 1.1441-1(e)(3)(iv)(D) and fails to provide information sufficient to allocate the amount subject to reporting paid to a withholding rate pool to the payees identified for that pool, then the withholding agent shall report the payment in accordance with the rule provided in § 1.1441-1(e)(3)(iv)(D)(*6*).

(vi) ***Other withholding agents.*** Any person that is a withholding agent not described in paragraph (c)(4)(i), (iii), or (iv) of this section (e.g., a foreign person that is not a qualified intermediary, flow-through entity, or U.S. branch) shall file Form 1042-S in the same manner as a U.S. withholding agent and in accordance with the instructions to the form.

(d) ***Report of taxpayer identifying numbers.*** When so required under procedures that the IRS may prescribe in published guidance (see § 601.601(d)(2) of this chapter), a withholding agent must attach to the Form 1042 a list of all the taxpayer identifying numbers (and corresponding names) that have been furnished to the withholding agent and upon which the withholding agent has relied to grant a reduced rate of withholding and that are not otherwise required to be reported on a Form 1042-S under the provisions of this section.

(e) ***Indemnification of withholding agent.*** A withholding agent is indemnified against the claims and demands of any person for the amount of any tax it deducts and withholds in accordance with the provisions of chapter 3 of the Code and the regulations under that chapter. A withholding agent that withholds based on a reasonable belief that such withholding is required under chapter 3 of the Code and the regulations under that chapter is treated for purposes of section 1461 and this paragraph (e) as having withheld tax in accordance with the provisions of chapter 3 of the Code and the regulations under that chapter. In addition, a withholding agent is indemnified against the claims and demands of any person for the amount of any payments made in accordance with the grace period provisions set forth in § 1.1441-1(b)(3)(iv). This paragraph (e) does not apply to relieve a withholding agent from tax liability under chapter 3 of the Code or the regulations under that chapter.

(f) ***Amounts paid not constituting gross income.*** Any amount withheld in accordance with § 1.1441-3 shall be reported and paid in accordance with this section, even though the amount paid to the beneficial owner may not constitute gross income in whole or in part. For this purpose, a reference in this section and § 1.1461-2 to an amount shall, where appropriate, be deemed to refer to the amount subject to withholding under § 1.1441-3.

(g) ***Extensions of time to file Forms 1042 and 1042-S.*** The IRS may grant an extension of time in which to file a Form 1042 or a Form 1042-S. Form 2758, Application for Extension of Time to File Certain Excise, Income, Information, and Other Returns (or such other form as the IRS may prescribe), must be used to request an extension of time for a Form 1042. Form 8809, Request for Extension of Time to File Information Returns (or such other form as the IRS may prescribe) must be used to request an extension of time for a Form 1042-S. The request must contain a statement of the reasons for requesting the extension and such other information as the forms or instructions may require. It must be mailed or delivered not later than March 15 of the year following the end of the calendar year for which the return will be filed.

(h) ***Penalties.*** For penalties and additions to the tax for failure to file returns or furnish statements in accordance with this section, see sections 6651, 6662, 6663, 6721, 6722, 6723, 6724(c), 7201, 7203, and the regulations under those sections.

(i) ***Reporting in electronic form.*** See §§ 301.6011-2(b) and 301.6011-15 of this chapter for the requirements of a withholding agent that is not a financial institution with respect to the filing of Forms 1042-S and 1042 in electronic form. See § 301.1474-1(a) of this chapter, which applies for purposes of this section to a withholding agent that is a financial institution with respect to the filing of Forms 1042 and 1042-S in electronic form.

(j) ***Applicability date.*** The rules of this section apply to returns required to be filed for taxable years ending on or after December 31, 2023. (For returns required to be filed for taxable years ending before December 31, 2023, see this section as in effect and contained in 26 CFR part 1, as revised April 1, 2022.)

[T.D. 8734, 62 FR 53467, Oct. 14, 1997]

Editorial Note: For FEDERAL REGISTER citations affecting § 1.1461-1, see the List of CFR Sections Affected, which appears in the Finding Aids section of the printed volume and at *www.govinfo.gov*.

§ 1.1461-2 Adjustments for overwithholding or underwithholding of tax.

(a) ***Adjustments of overwithheld tax —***

(1) ***In general.*** Except as otherwise provided in this paragraph (a)(1), a withholding agent that has overwithheld under chapter 3 of the Internal Revenue Code, and made a deposit of the tax as provided in § 1.6302-2(a), may adjust the overwithheld amount either pursuant to the reimbursement procedure described in paragraph (a)(2) of this section or pursuant to the set-off procedure described in paragraph (a)(3) of this section. The rules in the preceding sentence do not apply to partnerships or nominees required to withhold under section 1446(a), other than on a distribution by a publicly traded partnership subject to withholding under § 1.1446-4(a) and a payment of an amount realized on the transfer of an interest in a publicly traded partnership subject to § 1.1446(f)-4.

(2) ***Reimbursement of tax —***

(i) ***General rule.*** Under the reimbursement procedure, the withholding agent repays the beneficial owner or payee for the amount of tax overwithheld. In such a case, the withholding agent may reimburse itself by reducing, by the amount of tax actually repaid to the beneficial owner or payee, the amount of any deposit of tax made by the withholding agent under § 1.6302-2(a)(1)(iii) for any subsequent payment period occurring before the end of the calendar year following the calendar year of overwithholding. Any such reduction that occurs for a payment period in the calendar year following the calendar year of overwithholding shall be allowed only if—

(A) The repayment to the beneficial owner or payee occurs before the earlier of the due date (not including extensions) for filing Form 1042-S for the calendar year of overwithholding or the date the Form 1042-S is actually filed with the IRS; and

(B) The withholding agent states on a timely filed (not including extensions) Form 1042 for the calendar year of overwithholding, that the filing of the Form 1042 constitutes a claim for credit in accordance with § 1.6414-1.

(ii) ***Record maintenance.*** If the beneficial owner is repaid an amount of withholding tax under the provisions of this paragraph (a)(2), the withholding agent shall keep as part of its records a receipt showing the date and amount of repayment and the withholding agent must provide a copy of such receipt to the beneficial owner. For this purpose, a canceled check or an entry in a statement is sufficient provided that the check or statement contains a specific notation that it is a refund of tax overwithheld.

(3) ***Set-offs.*** Under the set-off procedure, the withholding agent may repay the beneficial owner or payee by applying the amount overwithheld against any amount which otherwise would be required under chapter 3 of the Code or the regulations thereunder to be withheld from income paid by the withholding agent to such person before the earlier of the due date (without regard to extensions) for filing the Form 1042-S for the calendar year of overwithholding or the date that the Form 1042-S is actually filed with the IRS. For purposes of making a return on Form 1042 or 1042-S (or an amended form) for the calendar year of overwithholding and for purposes of making a deposit of the amount withheld, the reduced amount shall be considered the amount required to be withheld from such income under chapter 3 of the Code and the regulations thereunder.

(4) ***Examples.*** The principles of this paragraph (a) are illustrated by the following examples:

> *Example 1.* (i) N is a nonresident alien individual who is a resident of the United Kingdom. In December 2001, a domestic corporation C pays a dividend of $100 to N, at which time C withholds $30 and remits the balance of $70 to N. On February 10, 2002, prior to the time that C files its Form 1042 and Form 1042-S with respect to the payment, N furnishes a valid Form W-8 described in § 1.1441-1(e)(2)(i) upon which C may rely to reduce the rate of withholding to 15% under the provisions of the U.S.-U.K. tax treaty. Consequently, N advises C that its tax liability is only $15 and not $30 and requests reimbursement of $15. Although C has already deposited the $30 that was withheld, as required by § 1.6302-2(a)(1)(iv), C repays N in the amount of $15.
> (ii) During 2001, C makes no other payments upon which tax is required to be withheld under chapter 3 of the Code; accordingly, its return on Form 1042 for such year, which is filed on March 15, 2002, shows total tax withheld of $30, an adjusted total tax withheld of $15, and

> $30 previously paid for such year. Pursuant to § 1.6414-1(b), C claims a credit for the overpayment of $15 shown on the Form 1042 for 2001. Accordingly, it is permitted to reduce by $15 any deposit required by § 1.6302-2 to be made of tax withheld during the calendar year 2002. The Form 1042-S required to be filed by C with respect to the dividend of $100 paid to N in 2001 is required to show tax withheld under chapter 3 of $30 and tax repaid to N of $15.

Example 2. The facts are the same as in *Example 1*. In addition, during 2002, C makes payments to N upon which it is required to withhold $200 under chapter 3 of the Code, all of which is withheld in June 2002. Pursuant to § 1.6302-2(a)(1)(iii), C deposits the amount of $185 on July 15, 2002 ($200 less the $15 for which credit is claimed on the Form 1042 for 2001). On March 15, 2003, C Corporation files its return on Form 1042 for calendar year 2002, which shows total tax withheld of $200, $185 previously deposited by C, and $15 allowable credit.

Example 3. The facts are the same as in *Example 1*. Under § 1.6302-2(a)(1)(ii), C is required to deposit on a quarter-monthly basis the tax withheld under chapter 3 of the Code. C withholds tax of $100 between February 8 and February 15, 2002, and deposits $75 [($100 × 90%) less $15] of the withheld tax within 3 banking days after February 15, 2002, and by depositing $10 [($100−$15) less $75] within 3 banking days after March 15, 2002.

(b) ***Withholding of additional tax when underwithholding occurs.*** A withholding agent may withhold from future payments (including distributions of effectively connected income subject to withholding under § 1.1446-4 and the amount realized from the transfer of an interest in a publicly traded partnership subject to § 1.1446(f)-4) made to a beneficial owner the tax that should have been withheld from previous payments to that beneficial owner under chapter 3 of the Code. In the alternative, the withholding agent may satisfy the tax from property that it holds in custody for the beneficial owner or property over which it has control. Such additional withholding or satisfaction of the tax owed may only be made before the date that the Form 1042 is required to be filed (not including extensions) for the calendar year in which the underwithholding occurred. See § 1.6302-2 for making deposits of tax or § 1.1461-1(a) for making payment of the balance due for a calendar year. See also §§ 1.1461-1, 1.1461-3, and 1.1446-1 through 1.1446-7 for rules relating to withholding under section 1446.

(c) ***Definition.*** For purposes of this section, the term *payment period* means the period for which the withholding agent is required by § 1.6302-2(a)(1) to make a deposit of tax withheld under chapter 3 of the Code.

(d) ***Applicability date.*** This section applies to payments made on or after January 1, 2022. For payments made before January 1, 2022, see this section as in effect and contained in 26 CFR part 1, as revised April 1, 2020.

[T.D. 8734, 62 FR 53470, Oct. 14, 1997, as amended by T.D. 8804, 63 FR 72188, Dec. 31, 1998; T.D. 8856, 64 FR 73412, Dec. 30, 1999; T.D. 9200, 70 FR 28741, May 18, 2005; T.D. 9658, 79 FR 12792, Mar. 6, 2014; T.D. 9808, 82 FR 2105, Jan. 6, 2017; T.D. 9926, 85 FR 76946, Nov. 30, 2020]

§ 1.1461-3 Withholding under section 1446.

For rules relating to the withholding tax liability of a partnership, nominee, or transferee under section 1446, see §§ 1.1446-1 through 1.1446-7 and 1.1446(f)-1 through 1.1446(f)-5. For interest, penalties, and additions to the tax for failure to timely pay the tax required to be paid under section 1446, see sections 6601, 6651, 6655 (in the case of

publicly traded partnerships, see section 6656), 6672, and 7202 and the regulations under those sections. For additional penalties and additions to the tax for failure to comply with the regulations under section 1446, see sections 6651, 6662, 6663, 6721, 6722, 6723, 6724(c), 7201, 7203, and the regulations under those sections. The references in this section to §§ 1.1446-1 through 1.1446-7 apply to partnership taxable years beginning after May 18, 2005, or such earlier time as the regulations under §§ 1.1446-1 through 1.1446-5 apply by reason of an election under § 1.1446-7, and the references in this section to §§ 1.1446(f)-1 through 1.1446(f)-5 shall apply with respect to returns for transfers that occur on or after January 29, 2021.

[T.D. 9200, 70 FR 28741, May 18, 2005, as amended by T.D. 9926, 85 FR 76946, Nov. 30, 2020]

§ 1.1462-1 Withheld tax as credit to recipient of income.

(a) ***Creditable tax.*** The entire amount of the income from which the tax is required to be withheld (including amounts calculated under the gross-up formula in § 1.1441-3(f)(1)) shall be included in gross income in the return required to be made by the beneficial owner of the income, without deduction for the amount required to be or actually withheld, but the amount of tax actually withheld shall be allowed as a credit against the total income tax computed in the beneficial owner's return.

(b) ***Amounts paid to persons who are not the beneficial owner.*** Amounts withheld at source under chapter 3 of the Internal Revenue Code on payments to (or effectively connected taxable income allocable to) a fiduciary, partnership, or intermediary are deemed to have been paid by the taxpayer ultimately liable for the tax upon such income. Thus, for example, if a beneficiary of a trust is subject to the taxes imposed by section 1, 2, 3, or 11 upon any portion of the income received from a foreign trust, the part of any amount withheld at source which is properly allocable to the income so taxed to such beneficiary shall be credited against the amount of the income tax computed upon the beneficiary's return, and any excess shall be refunded. See § 1.1446-3 for examples applying this rule in the context of a partnership interest held by a foreign trust or estate. Further, if a partnership withholds an amount under chapter 3 of the Internal Revenue Code with respect to the allocable share of a partner that is a partnership (upper-tier partnership) or with respect to the allocable share of partners in an upper-tier partnership, such amount is deemed to have been withheld by the upper-tier partnership. See § 1.1446-5 for rules applicable to tiered partnership structures. References in this paragraph (b) to withholding under section 1446 shall apply to partnership taxable years beginning after May 18, 2005, or such earlier time as the regulations under §§ 1.1446-1 through 1.1446-5 apply by reason of an election under § 1.1446-7.

(c) ***Effective date.*** Unless otherwise provided in this section, this section applies to payments made after December 31, 2000.

[T.D. 8734, 62 FR 53471, Oct. 14, 1997, as amended by T.D. 8804, 63 FR 72188, Dec. 31, 1998; T.D. 9200, 70 FR 28741, May 18, 2005]

§ 1.1463-1 Tax paid by recipient of income.

(a) ***Tax paid.*** If the tax required to be withheld under chapter 3 of the Internal Revenue Code is paid by the beneficial owner of the income or by the withholding agent, it shall not be re-collected from the other, regardless of the original liability therefor. However, this section does not relieve the person that did not withhold tax from liability for interest or any penalties or additions to tax otherwise applicable. See § 1.1441-7(b) for additional applicable rules. See §§ 1.1446-3(e) and (f) and 1.1446(f)-5(a) for application of the rule of this paragraph (a), and for additional rules, in which the withholding tax was required to be paid under section 1446. The references in the previous sentence to § 1.1446-3(e) and (f) apply to

partnership taxable years beginning after May 18, 2005, or such earlier time as the regulations under §§ 1.1446-1 through 1.1446-5 apply by reason of an election under § 1.1446-7, and the reference in the previous sentence to § 1.1446(f)-5(a) shall apply to the tax required to be withheld under section 1446(f) for transfers that occur on or after January 29, 2021.

(b) ***Effective date.*** Unless otherwise provided in this section, this section applies to failures to withhold occurring after December 31, 2000.

[T.D. 8734, 62 FR 53471, Oct. 14, 1997, as amended by T.D. 8804, 63 FR 72188, Dec. 31, 1998; T.D. 8856, 64 FR 73412, Dec. 30, 1999; T.D. 9200, 70 FR 28741, May 18, 2005; T.D. 9926, 85 FR 76946, Nov. 30, 2020]

§ 1.1464-1 Refunds or credits.

(a) ***In general.*** The refund or credit under chapter 65 of the Code of an overpayment of tax which has actually been withheld at the source under chapter 3 of the Code shall be made to the taxpayer from whose income the amount of such tax was in fact withheld. To the extent that the overpayment under chapter 3 was not in fact withheld at the source, but was paid, by the withholding agent the refund or credit under chapter 65 of the overpayment shall be made to the withholding agent. Thus, where a debtor corporation assumes liability pursuant to its tax-free covenant for the tax required to be withheld under chapter 3 upon interest and pays the tax in behalf of its bondholder, and it can be shown that the bondholder is not in fact liable for any tax, the overpayment of tax shall be credited or refunded to the withholding agent in accordance with chapter 65 since the tax was not actually deducted and withheld from the interest paid to the bondholder. In further illustration, where a withholding agent who is required by chapter 3 to withhold $300 tax from rents paid to a nonresident alien individual mistakenly withholds $320 and mistakenly pays $350 as internal revenue tax, the amount of $30 shall be credited or refunded to the withholding agent in accordance with chapter 65 and the amount of $20 shall be credited or refunded in accordance with such chapter to the person from whose income such amount has been withheld. With respect to section 1446(a), this section applies only to a publicly traded partnership or nominee described in § 1.1446-4 and, with respect to section 1446(f), only to a publicly traded partnership or broker described in § 1.1446(f)-4.

(b) ***Tax repaid to payee.*** For purposes of this section and § 1.6414-1, any amount of tax withheld under chapter 3 of the Code, which, pursuant to paragraph (a)(1) of § 1.1461-2, is repaid by the withholding agent to the person from whose income such amount was erroneously withheld shall be considered as tax which, within the meaning of sections 1464 and 6414, was not actually withheld by the withholding agent.

(c) ***Applicability date.*** The last sentence of paragraph (a) of this section applies to nominees and publicly traded partnerships described in § 1.1446-4 for partnership taxable years beginning after April 29, 2008, and to brokers required to withhold and publicly traded partnerships liable for underwithholding under § 1.1446(f)-4 on transfers that occur on or after January 1, 2022.

[T.D. 6922, 32 FR 8713, June 17, 1967, as amended by T.D. 8804, 63 FR 72188, Dec. 31, 1998; T.D. 9394, 73 FR 23085, Apr. 29, 2008; 74 FR 14932, Apr. 2, 2009; T.D. 9926, 85 FR 76946, Nov. 30, 2020]

Information Reporting by Foreign Financial Institutions

§ 1.1471-0 Outline of regulation provisions for sections 1471 through 1474.

This section lists the table of contents for §§ 1.1471-1 through 1.1474-7 and § 301.1474-1 of this chapter.

§ 1.1471-1 Scope of chapter 4 and definitions.

(a) Scope of chapter 4 of the Internal Revenue Code.

(b) Definitions.

(1) Account.

(2) Account holder.

(3) Active NFFE.

(4) AML due diligence.

(5) Annuity contract.

(6) Assumes primary withholding responsibility.

(7) Backup withholding.

(8) Beneficial owner.

(9) Blocked account.

(10) Branch.

(11) Broker.

(12) Cash value.

(13) Cash value insurance contract.

(14) Certified deemed-compliant FFI.

(15) Change in circumstances.

(16) Chapter 3.

(17) Chapter 4.

(18) Chapter 4 reportable amount.

(19) Chapter 4 status.

(20) Chapter 4 withholding rate pool.

(21) Clearing organization.

(22) Complex trust.

(23) Consolidated obligations.

(24) Custodial account.

(25) Custodial institution.

(26) Customer master file.

(27) Deemed-compliant FFI.

(28) Deferred annuity contract.

(29) Depository account.

(30) Depository institution.

(31) Direct reporting NFFE.

(32) Documentary evidence.

(33) Documentation.

(34) Dormant account.

(35) Effective date of the FFI agreement.

(36) EIN.

(37) Election to be withheld upon.

(38) Electronically searchable information.

(39) Entity.

(40) Entity account.

(41) Excepted NFFE.

(42) Exempt beneficial owner.

(43) Exempt recipient.

(44) Expanded affiliated group.

(45) FATF.

(46) FATF-compliant jurisdiction.

(47) FFI.

(48) FFI agreement.

(49) Financial account.

(50) Financial institution.

(51) Flow-through entity.

(52) Flow-through withholding certificate.

(53) Foreign entity.

(54) Foreign passthru payment.

(55) Foreign payee.

(56) Foreign person.

(57) GIIN.

(58) Grandfathered obligation.

(59) Grantor trust.

(60) Gross proceeds.

(61) Group annuity contract.

(62) Group insurance contract.

(63) Immediate annuity.

(64) Individual account.

(65) Insurance company.

(66) Insurance contract.

(67) Intergovernmental agreement (IGA).

(68) Intermediary.

(69) Intermediary withholding certificate.

(70) Investment entity.

(71) Investment-linked annuity contract.

(72) Investment-linked insurance contract.

(73) IRS FFI list.

(74) Life annuity contract.

(75) Life insurance contract.

(76) Limited branch.

(77) Limited FFI.

(78) Model 1 IGA.

(79) Model 2 IGA.

(80) NFFE.

(81) Non-exempt recipient.

(82) Nonparticipating FFI.

(83) Nonreporting IGA FFI.

(84) Non-U.S. account.

(85) NQI.

(86) NWP.

(87) NWT.

(88) Offshore obligation.

(89) Owner.

(90) Owner-documented FFI.

(91) Participating FFI.

(92) Participating FFI group.

(93) Partnership.

(94) Passive NFFE.

(95) Passthru payment.

(96) Payee.

(97) Payment with respect to an offshore obligation.

(98) Payor.

(99) Permanent residence address.

(100) Person.

(101) Preexisting account.

(102) Preexisting entity account.

(103) Preexisting individual account.

(104) Preexisting obligation.

(105) Pre-FATCA Form W-8.

(106) Prima facie FFI.

(107) QI.

(108) QI agreement.

(109) QI branch of a U.S. financial institution.

(110) Recalcitrant account holder.

(111) Registered deemed-compliant FFI.

(112) Relationship manager.

(113) Reportable payment.

(114) Reporting Model 1 FFI.

(115) Reporting Model 2 FFI.

(116) Responsible officer.

(117) Restricted distributor.

(118) Simple trust.

(119) Specified insurance company.

(120) Specified U.S. person.

(121) Sponsored FFI.

(122) Sponsored FFI group.

(123) Sponsored direct reporting NFFE.

(124) Sponsoring entity.

(125) Standardized industry coding system.

(126) Standing instructions to pay amounts.

(127) Subject to withholding.

(128) Substantial U.S. owner.

(129) Territory entity.

(130) Territory financial institution.

(131) Territory financial institution treated as a U.S. person.

(132) Territory NFFE.

(133) TIN.

(134) U.S. account.

(135) U.S. branch treated as a U.S. person.

(136) U.S. financial institution.

(137) U.S. indicia.

(138) U.S. owned foreign entity.

(139) U.S. payee.

(140) U.S. payor.

(141) U.S. person.

(142) U.S. source FDAP income.

(143) U.S. territory.

(144) U.S. withholding agent.

(145) Withholdable payment.

(146) Withholding.

(147) Withholding agent.

(148) Withholding certificate.

(149) WP.

(150) Written statement.

(151) WT.

(c) Effective/applicability date.

§ 1.1471-2 Requirement to deduct and withhold tax on withholdable payments to certain FFIs.

(a) Requirement to withhold on payments to FFIs.

(1) General rule of withholding.

(2) Special withholding rules.

(i) Requirement to withhold on payments of U.S. source FDAP income to participating FFIs and deemed-compliant FFIs that are NQIs, NWPs, or NWTs, and U.S. branches acting as intermediaries.

(ii) Residual withholding responsibility of intermediaries and flow-through entities.

(iii) Requirement to withhold if a participating FFI or registered deemed-compliant FFI makes an election to be withheld upon.

(A) Election to be withheld upon for U.S. source FDAP income.

(B) Election to be withheld upon for gross proceeds.

(iv) Withholding obligation of a territory financial institution.

(v) Withholding obligation of a foreign branch of a U.S. financial institution.

(vi) Payments of gross proceeds.

(3) Coordination of withholding under sections 1471(a) and (b).

(4) Payments for which no withholding is required.

(i) Exception to withholding if the withholding agent lacks control, custody, or knowledge.

(A) In general.

(B) Example.

(ii) Exception to withholding for certain payments made prior to July 1, 2016 (transitional).

(iii) Payments to a participating FFI.

(iv) Payments to a deemed-compliant FFI.

(v) Payments to an exempt beneficial owner.

(vi) Payments to a territory financial institution.

(vii) Payments to an account held with a clearing organization with FATCA-compliant membership.

(viii) Payments to certain excepted accounts.

(5) Withholding requirements if source or character of payment is unknown.

(b) Grandfathered obligations.

(1) Grandfathered treatment of outstanding obligations.

(2) Definitions.

(i) Grandfathered obligation.

(ii) Obligation.

(iii) Date outstanding.

(iv) Material modification.

(3) Application to flow-through entities.

(i) Partnerships.

(ii) Simple trusts.

(iii) Grantor trusts.

(4) Determination by withholding agent of grandfathered treatment.

(i) In general.

(ii) Determination of material modification.

(iii) Record retention.

(c) Effective/applicability date.

§ 1.1471-3 Identification of payee.

(a) Payee defined.

(1) In general.

(2) Payee with respect to a financial account.

(3) Exceptions.

(i) Certain foreign agents or intermediaries.

(ii) Foreign flow-through entity.

(iii) U.S. intermediary or agent of a foreign person.

(iv) Territory financial institution.

(v) Disregarded entity or limited branch.

(vi) U.S. branch of treated as a U.S. person.

(vii) Foreign branch of a U.S. person.

(b) Determination of payee's status.

(1) Determining whether a payment is received by an intermediary.

(2) Determination of entity type.

(3) Determination of whether the payment is made to a QI, WP, or WT.

(4) Determination of whether the payee is receiving effectively connected income.

(c) Rules for reliably associating a payment with a withholding certificate or other appropriate documentation.

(1) In general.

(2) Reliably associating a payment with documentation if a payment is made through an intermediary or flow-through entity that is not the payee.

(i) In general.

(ii) Exception to entity account documentation rules for an offshore account of an intermediary or flow-through entity.

(3) Requirements for validity of certificates.

(i) Form W-9.

(ii) Beneficial owner withholding certificate (Form W-8BEN).

(iii) Withholding certificate of an intermediary, flow-through entity, or U.S. branch (Form W-8IMY).

(A) In general.

(B) Withholding statement.

(*1*) In general.

(*2*) Special requirements for an FFI withholding statement.

(*3*) Special requirements for a chapter 4 withholding statement.

(*4*) Special requirements for an exempt beneficial owner withholding statement.

(*5*) Nonqualified intermediary withholding statement.

(C) Failure to provide allocation information.

(D) Special rules applicable to a withholding certificate of a QI that assumes primary withholding responsibility under chapter 3.

(E) Special rules applicable to a withholding certificate of a QI that does not assume primary withholding responsibility under chapter 3.

(F) Special rules applicable to a withholding certificate of a territory financial institution that agrees to be treated as a U.S. person.

(G) Special rules applicable to a withholding certificate of a territory financial institution that does not agree to be treated as a U.S. person.

(H) Rules applicable to a withholding certificate of a U.S. branch.

(iv) Certificate for exempt status (Form W-8EXP).

(v) Certificate for effectively connected income (Form W-8ECI).

(4) Requirements for written statements.

(5) Requirements for documentary evidence.

(i) Foreign status.

(A) Certificate of residence.

(B) Individual government identification.

(C) QI documentation.

(D) Entity government documentation.

(E) Third-party credit report.

(ii) Chapter 4 status.

(A) General documentary evidence.

(B) Preexisting obligation documentary evidence.

(C) Payee-specific documentary evidence.

(6) Applicable rules for withholding certificates, written statements, and documentary evidence.

(i) Who may sign the withholding certificate or written statement.

(ii) Period of validity.

(A) General rule.

(B) Indefinite validity.

(C) Indefinite validity in the case of certain offshore obligations.

(D) Exception for certificate for effectively connected income.

(E) Change in circumstances.

(*1*) Defined.

(*2*) Obligation to notify withholding agent of a change in circumstances.

(*3*) Withholding agent's obligation with respect to a change in circumstances.

(iii) Record retention.

(A) In general.

(B) Exception for documentary evidence received with respect to offshore obligations.

(iv) Electronic transmission of withholding certificate, written statement, and documentary evidence.

(v) Acceptable substitute withholding certificate.

(A) In general.

(B) Non-IRS form for individuals.

(vi) Electronic confirmation of TIN on withholding certificate.

(vii) Reliance on a prior version of a withholding certificate.

(7) Curing documentation errors.

(i) Curing inconsequential errors on a withholding certificate.

(ii) Documentation received after the time of payment.

(8) Documentation furnished on account-by-account basis unless exception provided for sharing documentation within expanded affiliated group.

(i) Single branch systems.

(ii) Universal account systems.

(iii) Shared account systems.

(iv) Document sharing for gross proceeds.

(v) Preexisting account.

(9) Reliance on documentation collected by or certifications provided by other persons.

(i) Shared documentation system maintained by an agent.

(ii) Third-party data providers.

(iii) Reliance on certification provided by introducing brokers.

(iv) Reliance on documentation and certifications provided between principals and agents.

(A) In general.

(B) Reliance upon certification of the principal.

(C) Document sharing.

(D) Examples.

(v) Reliance upon documentation for accounts acquired in merger or bulk acquisition for value.

(d) Documentation requirements to establish payee's chapter 4 status.

(1) Reliance on pre-FATCA Form W-8.

(2) Identification of U.S. persons.

(i) In general.

(ii) Reliance on documentary evidence.

(iii) Preexisting obligations.

(3) Identification of individuals that are foreign persons.

(i) In general.

(ii) Exception for offshore obligations.

(4) Identification of participating FFIs and registered deemed-compliant FFIs.

(i) In general.

(ii) Exception for payments made prior to January 1, 2017, with respect to preexisting obligations (transitional).

(iii) Exception for offshore obligations.

(iv) Exceptions for payments to reporting Model 1 FFIs.

(v) Reason to know.

(vi) Sponsored investment entities and sponsored controlled foreign corporations.

(A) In general.

(B) Payments made prior to January 1, 2017 (transitional).

(C) Payments made after December 31, 2016, to payees documented prior to January 1, 2017.

(5) Identification of certified deemed-compliant FFIs.

(i) In general.

(ii) Sponsored, closely-held investment vehicles.

(A) In general.

(B) Offshore obligations.

(iii) Certain investment entities that do not maintain financial accounts.

(A) In general.

(B) Offshore obligations.

(6) Identification of owner-documented FFIs.

(i) In general.

(ii) Auditor's letter substitute.

(iii) Documentation for owners and debt holders of payee.

(iv) Content of FFI owner reporting statement.

(v) Exception for preexisting obligations (transitional).

(vi) Exception for offshore obligations.

(vii) Exception for certain offshore obligations of $1,000,000 or less.

(7) Nonreporting IGA FFIs.

(i) In general.

(ii) Exception for offshore obligations.

(8) Identification of nonparticipating FFIs.

(i) In general.

(ii) Special documentation rules for payments made to an exempt beneficial owner through a nonparticipating FFI.

(9) Identification of exempt beneficial owners.

(i) Identification of foreign governments, governments of U.S. territories, international organizations, and foreign central banks of issue.

(A) In general.

(B) Exception for offshore obligations.

(C) Exception for preexisting offshore obligations.

(ii) Identification of retirement funds.

(A) In general.

(B) Exception for offshore obligations.

(C) Exception for preexisting offshore obligations.

(iii) Identification of entities wholly owned by exempt beneficial owners.

(10) Identification of territory financial institutions.

(i) Identification of territory financial institutions that are beneficial owners.

(A) In general.

(B) Exception for preexisting offshore obligations.

(ii) Identification of territory financial institutions acting as intermediaries or that are flow-through entities.

(iii) Reason to know.

(11) Identification of excepted NFFEs.

(i) Identification of excepted nonfinancial group entities.

(A) In general.

(B) Exception for offshore obligations.

(ii) Identification of excepted nonfinancial start-up companies.

(A) In general.

(B) Exception for offshore obligations.

(C) Exception for preexisting offshore obligations.

(iii) Identification of excepted nonfinancial entities in liquidation or bankruptcy.

(A) In general.

(B) Exception for offshore obligations.

(C) Exception for preexisting offshore obligations.

(iv) Identification of section 501(c) organizations.

(A) In general.

(B) Reason to know.

(v) Identification of non-profit organizations.

(A) In general.

(B) Exception for offshore obligations.

(C) Exception for preexisting offshore obligations.

(D) Reason to know.

(vi) Identification of NFFEs that are publicly traded corporations.

(A) Exception for offshore obligations.

(B) Exception for preexisting offshore obligations.

(vii) Identification of NFFE affiliates.

(A) Exception for offshore obligations.

(B) Exception for preexisting offshore obligations.

(viii) Identification of excepted territory NFFEs.

(A) Exception for payments made prior to January 1, 2017, with respect to preexisting obligations of $1,000,000 or less (transitional).

(B) Exception for offshore obligations.

(C) Exception for preexisting offshore obligations of $1,000,000 or less.

(ix) Identification of active NFFEs.

(A) Exception for offshore obligations.

(B) Exception for preexisting offshore obligations.

(C) Limit on reason to know.

(x) Identifying a direct reporting NFFE (other than a sponsored direct reporting NFFE).

(A) In general.

(B) Exception for offshore obligations.

(C) Special rule for preexisting offshore obligations.

(xi) Identifying a sponsored direct reporting NFFE.

(A) In general.

(1) Payments made prior to January 1, 2017 (transitional).

(2) Payments made after December 31, 2016, to payees documented prior to January 1, 2017.

(B) Exception for offshore obligations.

(xii) Identification of excepted inter-affiliate FFI.

(A) In general.

(B) Offshore obligations.

(C) Reason to know.

(12) Identification of passive NFFEs.

(i) Exception for offshore obligations.

(ii) Special rule for preexisting offshore obligations.

(iii) Required owner certification for passive NFFEs.

(A) In general.

(B) Exception for preexisting obligations of $1,000,000 or less (transitional).

(e) Standards of knowledge.

(1) In general.

(2) Notification by the IRS.

(3) GIIN verification.

(i) In general.

(ii) Special rules for reporting Model 1 FFIs.

(iii) Special rules for direct reporting NFFEs.

(iv) Special rules for sponsored direct reporting NFFEs and sponsoring entities.

(A) Sponsored direct reporting NFFEs.

(B) Sponsoring entities (transitional).

(4) Reason to know.

(i) Reason to know regarding an entity's chapter 4 status.

(ii) Reason to know applicable to withholding certificates.

(A) In general.

(B) Withholding certificate provided by an FFI.

(iii) Reason to know applicable to written statements.

(iv) Reason to know applicable to documentary evidence.

(A) In general.

(B) Standards of knowledge applicable to certain types of documentary evidence.

(v) Specific standards of knowledge applicable when only documentary evidence is a code or classification described in paragraph (c)(5)(ii)(B) of this section.

(A) U.S. indicia for entities.

(B) Documentation required to cure U.S. indicia.

(vi) Specific standards of knowledge applicable to documentation received from intermediaries and flow-through entities.

(A) In general.

(B) Limits on reason to know with respect to documentation received from participating FFIs and registered deemed-compliant FFIs that are intermediaries or flow-through entities.

(vii) Limits on reason to know.

(A) Scope of review for preexisting obligations of entities.

(B) Reason to know there are U.S. indicia associated with preexisting obligations.

(C) Reason to know there are U.S. indicia associated with preexisting offshore obligations.

(D) Limits on reason to know for multiple obligations belonging to a single person.

(viii) Reasonable explanation supporting claim of foreign status.

(5) Conduit financing arrangements.

(6) Additional guidance.

(f) Presumptions regarding chapter 4 status of the person receiving the payment in the absence of documentation.

(1) In general.

(2) Presumptions of classification as an individual or entity and entity as the beneficial owner.

(3) Presumptions of U.S. or foreign status.

(4) Presumption of chapter 4 status for a foreign entity.

(5) Presumption of chapter 4 status of payee with respect to a payment to an intermediary or flow-through entity.

(6) Presumption of effectively connected income for payments to certain U.S. branches.

(7) Joint payees.

(i) In general.

(ii) Exception for offshore obligations.

(8) Rebuttal of presumptions.

(9) Effect of reliance on presumptions and of actual knowledge or reason to know otherwise.

(i) In general.

(ii) Actual knowledge or reason to know that amount of withholding is greater than is required under the presumptions or that reporting of the payment is required.

(g) Effective/applicability date.

§ 1.1471-4 FFI agreement.

(a) In general.

(1) Withholding.

(2) Identification and documentation of account holders.

(3) Reporting.

(4) Expanded affiliated group.

(5) Verification.

(6) Event of default.

(7) Refunds.

(b) Withholding requirements.

(1) In general.

(2) Withholding determination.

(3) Satisfaction of withholding requirements.

(i) In general.

(ii) Withholding not required.

(iii) Election to withhold under section 3406.

(4) Foreign passthru payments.

(5) Withholding on limited FFIs and limited branches.

(i) Limited FFIs.

(ii) Limited branches.

(6) Special rule for dormant accounts.

(7) Withholding requirements for U.S. branches of FFIs treated as U.S. persons.

(c) Due diligence for the identification and documentation of account holders and payees.

(1) Scope of paragraph.

(2) General rules for the identification and documentation of account holders and payees.

(i) Overview.

(ii) Standards of knowledge.

(A) In general.

(B) Limits on reason to know with respect to certain accounts acquired in merger of bulk acquisition.

(*1*) In general.

(*2*) Participating FFIs and certain deemed-compliant FFIs that apply the due diligence rules, and U.S. financial institutions.

(iii) Change in circumstances.

(A) Obligation to identify a change in circumstances.

(B) Definition of change in circumstances.

(C) Requirements following a change in circumstances.

(iv) Record retention.

(v) Documentation rules for U.S. branches of FFIs that are treated as U.S. persons.

(3) Identification and documentation procedure for entity accounts and payees.

(i) In general.

(ii) Timeframe for applying identification and documentation procedure for entity accounts and payees.

(iii) Documentation exception for certain preexisting entity accounts.

(A) Accounts to which this exception applies.

(B) Aggregation of entity accounts.

(C) Election to forgo exception.

(4) Identification and documentation procedure for individual accounts other than preexisting accounts.

(i) In general.

(ii) Reliance on third-party for identification of individual accounts other than preexisting accounts.

(iii) Alternative identification and documentation procedure for certain cash value insurance or annuity contracts.

(A) Group cash value insurance contracts or group annuity contracts.

(B) Accounts held by beneficiaries of a cash value insurance contract that is a life insurance contract.

(5) Identification and documentation procedure for preexisting individual accounts.

(i) In general.

(ii) Special rule for preexisting individual accounts previously documented as U.S. accounts for purposes of chapter 3 or 61.

(iii) Exceptions for certain low value preexisting individual accounts.

(A) Accounts to which an exception applies.

(B) Aggregation of accounts.

(C) Election to forgo exception.

(iv) Specific identification and documentation procedures for preexisting individual accounts.

(A) In general.

(B) U.S. indicia and relevant documentation rules.

(*1*) U.S. indicia.

(*2*) Documentation to be retained upon identifying U.S. indicia.

(*i*) Designation of account holder as a U.S. citizen or resident.

(*ii*) Unambiguous indication of a U.S. place of birth.

(*iii*) U.S. address or U.S. mailing address.

(*iv*) Only U.S. telephone numbers.

(*v*) U.S. telephone numbers and non-U.S. telephone numbers.

(*vi*) Standing instructions to pay amounts.

(*vii*) Power of attorney or signatory authority granted to a person with a U.S. address or “in-care-of” address or “hold mail” address.

(C) Electronic search for identifying U.S. indicia.

(D) Enhanced review for identifying U.S. indicia in the case of certain high-value accounts.

(*1*) In general.

(*2*) Relationship manager inquiry.

(*3*) Additional review of non-electronic records.

(*4*) Limitations on the enhanced review in the case of comprehensive electronically searchable information.

(E) Exception for preexisting individual accounts previously documented as held by foreign individuals.

(6) Examples.

(7) Certifications of responsible officer.

(d) Account reporting.

(1) Scope of paragraph.

(2) Reporting requirements in general.

(i) Accounts subject to reporting.

(ii) Financial institution required to report an account.

(A) In general.

(B) Special reporting of account holders of territory financial institutions.

(C) Special reporting of account holders of a sponsored FFI.

(D) Special reporting of accounts held by owner-documented FFIs.

(E) Requirement to identify the GIIN of a branch that maintains an account.

(F) Reporting by participating FFIs and registered deemed-compliant FFIs (including QIs, WPs, WTs, and certain U.S. branches not treated as U.S. persons) for accounts of nonparticipating FFIs (transitional).

(G) Combined reporting on Form 8966 following merger or bulk acquisition.

(iii) Special U.S. account reporting rules for U.S. payors.

(A) Special reporting rule for U.S. payors other than U.S. branches.

(B) Special reporting rules for U.S. branches treated as U.S. persons.

(C) Rules for U.S. branches of FFIs not treated as U.S. persons.

(3) Reporting of accounts under section 1471(c)(1).

(i) In general.

(ii) Accounts held by specified U.S. persons.

(iii) Accounts held by U.S. owned foreign entities.

(iv) Special reporting of accounts held by owner-documented FFIs.

(v) Form for reporting accounts under section 1471(c)(1).

(vi) Time and manner of filing.

(vii) Extensions in filing.

(4) Descriptions applicable to reporting requirements of § 1.1471-4(d)(3).

(i) Address.

(ii) Account number.

(iii) Account balance or value.

(A) In general.

(B) Currency translation of account balance or value.

(iv) Payments made with respect to an account.

(A) Depository accounts.

(B) Custodial accounts.

(C) Other accounts.

(D) Transfers and closings of deposit, custodial, insurance, and annuity financial accounts.

(E) Amount and character of payments subject to reporting.

(F) Currency translation.

(v) Record retention requirements.

(5) Election to perform chapter 61 reporting.

(i) In general.

(A) Election under section 1471(c)(2).

(B) Election to report in a manner similar to section 6047(d).

(ii) Additional information to be reported.

(iii) Special reporting of accounts held by owner-documented FFIs.

(iv) Branch reporting.

(v) Time and manner of making the election.

(vi) Revocation of election.

(vii) Filing of information under election.

(6) Reporting on recalcitrant account holders.

(i) In general.

(ii) Definition of dormant account.

(iii) End of dormancy.

(iv) Forms.

(v) Time and manner of filing.

(vi) Extensions in filing.

(vii) Record retention requirements.

(7) Special reporting rules with respect to the 2014 and 2015 calendar years.

(i) In general.

(ii) Participating FFIs that report under § 1.1471-4(d)(3).

(A) Reporting with respect to the 2014 calendar year.

(B) Reporting with respect to the 2015 calendar year.

(iii) Participating FFIs that report under § 1.1471-4(d)(5).

(iv) Forms for reporting.

(A) In general.

(B) Special determination date and timing for reporting with respect to the 2014 calendar year.

(8) Reporting requirements of QIs, WPs and WTs.

(9) Examples.

(e) Expanded affiliated group requirements.

(1) In general.

(2) Limited branches.

(i) In general.

(ii) Branch defined.

(iii) Limited branch defined.

(iv) Conditions for limited branch status.

(v) Term of limited branch status (transitional).

(vi) Exception from restriction on opening U.S. accounts and nonparticipating FFI accounts.

(3) Limited FFI.

(i) In general.

(ii) Limited FFI defined.

(iii) Conditions for limited FFI status.

(iv) Period for limited FFI status (transitional).

(v) Exception from registration requirement.

(A) Conditions for exception.

(B) Confirmation requirements of lead FI.

(vi) Exception from restriction on opening U.S. accounts and nonparticipating FFI accounts.

(4) Special rule for QIs.

(f) Verification.

(1) In general.

(2) Compliance program.

(i) In general.

(ii) Consolidated compliance program.

(A) In general.

(B) Requirements of compliance FI.

(*1*) Periodic certification.

(*i*) In general.

(*ii*) Late-joining electing FFIs.

(*2*) Preexisting account certification.

(3) Certification of compliance.

(i) In general.

(ii) Certification of effective internal controls.

(iii) Qualified certification.

(iv) Material failures defined.

(4) IRS review of compliance.

(i) General inquiries.

(ii) Inquiries regarding substantial non-compliance.

(g) Event of default.

(1) Defined.

(2) Notice of event of default.

(3) Remediation of event of default.

(h) Collective credit or refund procedures for overpayments.

(1) In general.

(2) Persons for which a collective refund is not permitted.

(3) Payments for which a collective refund is permitted.

(4) Procedural and other requirements for collective refund.

(i) Legal prohibitions on reporting U.S. accounts and withholding.

(1) In general.

(2) Requesting waiver or closure of a U.S. account.

(3) Legal prohibitions preventing withholding.

(i) In general.

(ii) Block or transfer accounts or obligations.

(j) Effective/applicability date.

(1) In general.

(2) Special applicability date.

§ 1.1471-5 Definitions applicable to section 1471.

(a) U.S. accounts.

(1) In general.

(2) Definition of U.S. account.

(3) Account holder.

(i) In general.

(ii) Financial accounts held by agents that are not financial institutions.

(iii) Jointly held accounts.

(iv) Account holder for insurance and annuity contracts.

(v) Examples.

(4) Exceptions to U.S. account status.

(i) Exception for certain individual accounts of participating FFIs.

(ii) Election to forgo exception.

(iii) Example.

(b) Financial accounts.

(1) In general.

(i) Depository account.

(ii) Custodial account.

(iii) Equity or debt interest.

(A) Equity or debt interests in an investment entity.

(B) Certain equity or debt interests in a holding company or treasury center.

(C) Equity or debt interests in other financial institutions.

(iv) Insurance and annuity contracts.

(2) Exceptions.

(i) Certain savings accounts.

(A) Retirement and pension accounts.

(B) Non-retirement savings accounts.

(C) Rollovers.

(D) Coordination with section 6038D.

(E) Account that is tax-favored.

(ii) Certain term life insurance contracts.

(iii) Account held by an estate.

(iv) Certain escrow accounts.

(v) Certain annuity contracts.

(vi) Account or product excluded under an intergovernmental agreement.

(3) Definitions.

(i) Depository account.

(A) In general.

(B) Exceptions.

(ii) Custodial account.

(iii) Equity interest in certain entities.

(A) Partnership.

(B) Trust.

(iv) Regularly traded on an established securities market.

(v) Value of interest determined, directly or indirectly, primarily by reference to assets that give rise (or could give rise) to withholdable payments.

(A) Equity interest.

(B) Debt interest.

(vi) Return earned on the interest (including upon a sale, exchange, or redemption) determined, directly or indirectly, primarily by reference to one or more investment entities or passive NFFEs.

(A) Equity interest.

(B) Debt interest.

(vii) Cash value insurance contract.

(A) In general.

(B) Cash value.

(C) Amounts excluded from cash value.

(D) Policyholder dividend.

(4) Account balance or value.

(i) In general.

(ii) Special rule for immediate annuity.

(A) Immediate annuities without minimum benefit guarantees.

(B) Immediate annuities with a minimum benefit guarantee.

(C) Net present value of amounts payable in future periods.

(iii) Account aggregation requirements.

(A) In general.

(B) Aggregation rule for relationship managers.

(C) Examples.

(iv) Currency translation of balance or value.

(5) Account maintained by financial institution.

(c) U.S. owned foreign entity.

(d) Definition of FFI.

(e) Definition of financial institution.

(1) In general.

(2) Banking or similar business.

(i) In general.

(ii) Exception for certain lessors and lenders.

(iii) Application of section 581.

(iv) Effect of local regulation.

(3) Holding financial assets for others as a substantial portion of its business.

(i) Substantial portion.

(A) In general.

(B) Special rule for start-up entities.

(ii) Income attributable to holding financial assets and related financial services.

(iii) Effect of local regulation.

(4) Investment entity.

(i) In general.

(ii) Financial assets.

(iii) Primarily conducts as a business.

(A) In general.

(B) Special rule for start-up entities.

(iv) Primarily attributable to investing, reinvesting, or trading in financial assets.

(A) In general.

(B) Special rule for start-up entities.

(v) Examples.

(5) Exclusions.

(i) Excepted nonfinancial group entities.

(A) In general.

(B) Nonfinancial group.

(C) Holding company.

(D) Treasury center.

(E) Captive finance company.

(ii) Excepted nonfinancial start-up companies or companies entering a new line of business.

(A) In general.

(B) Exception for investment funds.

(iii) Excepted nonfinancial entities in liquidation or bankruptcy.

(iv) Excepted inter-affiliate FFI.

(v) Section 501(c) entities.

(vi) Non-profit organizations.

(6) Reserving activities of an insurance company.

(f) Deemed-compliant FFIs.

(1) Registered deemed-compliant FFIs.

(i) Registered deemed-compliant FFI categories.

(A) Local FFIs.

(B) Nonreporting members of participating FFI groups.

(C) Qualified collective investment vehicles.

(D) Restricted funds.

(E) Qualified credit card issuers and servicers.

(F) Sponsored investment entities and controlled foreign corporations.

(ii) Procedural requirements for registered deemed-compliant FFIs.

(iii) Deemed-compliant FFI that is merged or acquired.

(iv) IRS review of compliance by registered deemed-compliant FFIs.

(A) General inquiries.

(B) Inquiries regarding substantial non-compliance.

(2) Certified deemed-compliant FFIs.

(i) Nonregistering local bank.

(ii) FFIs with only low-value accounts.

(iii) Sponsored, closely-held investment vehicles.

(iv) Limited life debt investment entities (transitional).

(v) Certain investment entities that do not maintain financial accounts.

(3) Owner-documented FFIs.

(i) In general.

(ii) Requirements of owner-documented FFI status.

(4) Definition of a restricted distributor.

(g) Recalcitrant account holders.

(1) Scope.

(2) Recalcitrant account holder.

(3) Start of recalcitrant account holder status.

(i) Preexisting accounts identified under the procedures described in § 1.1471-4(c) for identifying U.S. accounts.

(A) In general.

(B) Accounts other than high-value accounts.

(C) High-value accounts.

(D) Preexisting accounts that become high-value accounts.

(ii) Accounts that are not preexisting accounts and accounts requiring name/TIN correction.

(iii) Accounts with changes in circumstances.

(4) End of recalcitrant account holder status.

(h) Passthru payment.

(1) Defined.

(2) Foreign passthru payment.

(i) Expanded affiliated group.

(1) Scope of paragraph.

(2) Expanded affiliated group defined.

(3) Member of expanded affiliated group.

(4) Ownership test.

(i) Corporations.

(A) Stock not to include certain preferred stock.

(B) Valuation.

(ii) Partnerships.

(iii) Trusts.

(5) Treatment of warrants, options, and obligations convertible into equity for determining ownership.

(6) Exception for FFIs holding certain capital investments.

(7) Seed capital.

(8) Anti-abuse rule.

(9) Exception for limited life debt investment entities.

(10) Partnerships, trusts, and other non-corporate entities.

(j) Sponsoring entity verification.

(1) In general.

(2) Compliance program.

(3) Certification of compliance.

(i) Certification requirement.

(A) In general.

(B) Extension of time for the certification period ending on December 31, 2017.

(ii) Late-joining sponsored FFIs.

(iii) Certification period.

(iv) Additional certifications or information.

(v) Certifications regarding sponsoring entity and sponsored FFI requirements.

(vi) Certifications regarding internal controls.

(A) Certification of effective internal controls.

(B) Qualified certification.

(vii) Material failures defined.

(4) IRS review of compliance.

(i) General inquiries.

(ii) Inquiries regarding substantial non-compliance.

(iii) Compliance procedures for a sponsored FFI subject to a Model 2 IGA.

(5) Preexisting account certification.

(6) Sponsorship agreement.

(k) Sponsoring entity event of default.

(1) Defined.

(2) Notice of event of default.

(3) Remediation of event of default.

(4) Termination.

(i) In general.

(ii) Termination of sponsoring entity.

(iii) Termination of sponsored FFI.

(iv) Reconsideration of notice of default or notice of termination.

(v) Sponsoring entity of sponsored FFIs subject to a Model 2 IGA.

(l) Trustee-documented trust verification.

(1) Compliance program.

(2) Certification of compliance.

(i) Certification requirement.

(A) In general.

(B) Extension of time for the certification period ending on December 31, 2017.

(ii) Late-joining trustee-documented trusts.

(iii) Certification period.

(iv) Certifications.

(3) IRS review of compliance by trustees of trustee-documented trusts.

(i) General inquiries.

(ii) Inquiries regarding substantial non-compliance.

(m) Applicability date.

§ 1.1471-6 Payments beneficially owned by exempt beneficial owners.

(a) In general.

(b) Any foreign government, any political subdivision of a foreign government, or any wholly owned agency or instrumentality of any one or more of the foregoing.

(1) Integral part.

(2) Controlled entity.

(3) Inurement to the benefit of private persons.

(c) Any international organization or any wholly owned agency or instrumentality thereof.

(d) Foreign central bank of issue.

(1) In general.

(2) Separate instrumentality.

(3) Bank for International Settlements.

(4) Income on certain transactions.

(e) Governments of U.S. territories.

(f) Certain retirement funds.

(1) Treaty-qualified retirement fund.

(2) Broad participation retirement fund.

(3) Narrow participation retirement funds.

(4) Fund formed pursuant to a plan similar to a section 401(a) plan.

(5) Investment vehicles exclusively for retirement funds.

(6) Pension fund of an exempt beneficial owner.

(7) Example.

(g) Entities wholly owned by exempt beneficial owners.

(h) Exception for commercial activities.

(1) General rule.

(2) Limitation.

(i) Effective/applicability date.

§ 1.1472-1 Withholding on NFFEs.

(a) In general.

(b) Withholdable payments made to an NFFE.

(1) In general.

(2) Transitional relief.

(c) Exceptions.

(1) Payments to an excepted NFFE.

(i) Publicly traded corporation.

(A) Regularly traded.

(B) Special rules regarding the regularly traded requirement.

(*1*) Year of initial public offering.

(*2*) Classes of stock treated as meeting the regularly traded requirement.

(*3*) Anti-abuse rule.

(C) Established securities market.

(*1*) In general.

(*2*) Foreign exchange with multiple tiers.

(*3*) Computation of dollar value of stock traded.

(ii) Certain affiliated entities related to a publicly traded corporation.

(iii) Certain territory entities.

(iv) Active NFFEs.

(A) Passive income.

(B) Exceptions from passive income treatment.

(C) Methods of measuring assets.

(v) Excepted nonfinancial entities.

(vi) Direct reporting NFFEs.

(vii) Sponsored direct reporting NFFEs.

(2) Payments made to an exempt beneficial owner.

(3) Definition of direct reporting NFFE.

(4) Election to be treated as a direct reporting NFFE.

(i) Manner of making election.

(ii) Effective date of election.

(iii) Revocation of election by NFFE.

(iv) Revocation of election by Commissioner.

(v) Event of default.

(vi) Notice of event of default.

(vii) Remediation of event of default.

(5) Election by a direct reporting NFFE to be treated as a sponsored direct reporting NFFE.

(i) Definition of sponsored direct reporting NFFE.

(ii) Requirements for sponsoring entity of a sponsored direct reporting NFFE.

(iii) Revocation of status as sponsoring entity.

(iv) Liability of sponsoring entity.

(d) Rules for determining payee and beneficial owner.

(1) In general.

(2) Payments made to a NFFE that is a QI, WP, or WT.

(3) Payments made to a partner or beneficiary of an NFFE that is an NWP or NWT.

(4) Payments made to a beneficial owner that is an NFFE.

(5) Absence of valid documentation.

(e) Information reporting requirements.

(1) Reporting on withholdable payments.

(2) Reporting on substantial U.S. owners.

(f) Sponsoring entity verification.

(1) In general.

(2) Certification of compliance.

(i) Certification requirement.

(A) In general.

(B) Extension of time for the certification period ending on December 31, 2017.

(ii) Late-joining sponsored direct reporting NFFEs.

(iii) Certification period.

(iv) Certifications.

(3) IRS review of compliance.

(i) General inquiries.

(ii) Inquiries regarding substantial non-compliance.

(4) Sponsorship agreement.

(g) Sponsoring entity event of default.

(1) Defined.

(2) Notice of event of default.

(3) Remediation of event of default.

(4) Termination.

(i) In general.

(ii) Termination of sponsoring entity.

(iii) Termination of sponsored direct reporting NFFE.

(iv) Reconsideration of notice of default or notice of termination.

(h) Effective/applicability date.

§ 1.1473-1 Section 1473 definitions.

(a) Definition of withholdable payment.

(1) In general.

(2) U.S. source FDAP income defined.

(i) In general.

(A) FDAP income defined.

(B) U.S. source.

(C) Exceptions to withholding on U.S. source FDAP income not applicable under chapter 4.

(ii) Special rule for certain interest.

(iii) Original issue discount.

(iv) REMIC residual interests.

(v) Withholding liability of payee that is satisfied by withholding agent.

(vi) Special rule for sales of interest bearing debt obligations.

(vii) Payment of U.S. source FDAP income.

(A) Amount of payment of U.S. source FDAP income.

(B) When payment of U.S. source FDAP income is made.

(3) Gross proceeds defined.

(i) Sale or other disposition.

(A) In general.

(B) Special rule for sales effected by brokers.

(C) Special rule for gross proceeds from sales settled by a clearing organization.

(ii) Property of a type that can produce interest or dividend payments that would be U.S. source FDAP income.

(A) In general.

(B) Contracts producing dividend equivalent payments.

(C) Regulated investment company distributions.

(iii) Payment of gross proceeds.

(A) When gross proceeds are paid.

(B) Amount of gross proceeds.

(4) Payments not treated as withholdable payments.

(i) Certain short-term obligations.

(ii) Effectively connected income.

(iii) Excluded nonfinancial payments.

(iv) Gross proceeds from sales of excluded property.

(v) Fractional shares.

(vi) Offshore payments of U.S. source FDAP income prior to 2017 (transitional).

(vii) Collateral arrangements prior to 2017 (transitional).

(viii) Certain dividend equivalents.

(5) Special payment rules for flow-through entities, complex trusts, and estates.

(i) In general.

(ii) Partnerships.

(iii) Simple trusts.

(iv) Complex trusts and estates.

(v) Grantor trusts.

(vi) Special rule for an NWP or NWT.

(vii) Special rules for determining when gross proceeds are treated as paid to a partner, owner, or beneficiary of a flow-through entity.

(6) Reporting of withholdable payments.

(7) Example.

(b) Substantial U.S. owner.

(1) Definition.

(2) Indirect ownership of foreign entities.

(i) Indirect ownership of stock.

(ii) Indirect ownership in a foreign partnership or ownership of a beneficial interest in a foreign trust.

(iii) Ownership and holdings through options.

(iv) Determination of proportionate interest.

(v) Interests owned or held by a related person.

(3) Beneficial interest in a foreign trust.

(i) In general.

(ii) Determining the 10 percent threshold in the case of a beneficial interest in a foreign trust.

(4) Exceptions.

(i) De minimis amount or value exception.

(ii) Trusts wholly owned by certain U.S. persons.

(5) Special rule for certain financial institutions.

(6) Determination dates for substantial U.S. owners.

(7) Examples.

(c) Specified U.S. person.

(d) Withholding agent.

(1) In general.

(2) Participating FFIs and registered deemed-compliant FFIs as withholding agents.

(3) Grantor trusts as withholding agents.

(4) Deposit and return requirements.

(5) Multiple withholding agents.

(6) Exception for certain individuals.

(e) Foreign entity.

(f) Effective/applicability date.

§ 1.1474-1 Liability for withheld tax and withholding agent reporting.

(a) Payment and returns of tax withheld.

(1) In general.

(2) Withholding agent liability.

(3) Use of agents.

(i) In general.

(ii) Authorized agent.

(iii) Liability of withholding agent acting through an agent.

(4) Liability for failure to obtain documentation timely or to act in accordance with applicable presumptions.

(i) In general.

(ii) Withholding satisfied by another withholding agent.

(b) Payment of withheld tax.

(1) In general.

(2) Special rule for foreign passthru payments and payments of gross proceeds that include an undetermined amount of income subject to tax.

(c) Income tax return.

(1) In general.

(2) Participating FFIs, registered deemed-compliant FFIs, and U.S. branches treated as U.S. persons.

(3) Amended returns.

(d) Information returns for payment reporting.

(1) Filing requirement.

(i) In general.

(ii) Recipient.

(A) Defined.

(B) Persons that are not recipients.

(2) Amounts subject to reporting.

(i) In general.

(ii) Exception to reporting.

(iii) Coordination with chapter 3.

(3) Required information.

(4) Method of reporting.

(i) Payments by U.S. withholding agent to recipients.

(A) Payments to certain entities that are beneficial owners.

(B) Payments to participating FFIs, deemed-compliant FFIs, and certain QIs.

(C) Amounts paid to a U.S. branch.

(D) Amounts paid to territory financial institutions that are flow-through entities or acting as intermediaries.

(E) Amounts paid to NFFEs.

(ii) Payments made by withholding agents to certain entities that are not recipients.

(A) Entities that provide information for a withholding agent to perform specific payee reporting.

(B) Nonparticipating FFI that is a flow-through entity or intermediary.

(C) Disregarded entities.

(iii) Reporting by participating FFIs and deemed-compliant FFIs (including QIs, WPs, and WTs) and U.S. branches not treated as U.S. persons.

(A) In general.

(B) Special reporting requirements of participating FFIs, deemed-compliant FFIs, FFIs that make an election under section 1471(b)(3), and U.S. branches not treated as U.S. persons.

(C) Reporting by a U.S. branch treated as a U.S. person.

(iv) Reporting by territory financial institutions.

(v) Nonparticipating FFIs.

(vi) Other withholding agents.

(vii) Combined Form 1042-S reporting.

(e) Reporting in electronic form.

(f) Indemnification of withholding agent.

(g) Extensions of time to file Forms 1042 and 1042-S.

(h) Penalties.

(i) Additional reporting requirements with respect to U.S. owned foreign entities and owner-documented FFIs.

(1) Reporting by certain withholding agents with respect to owner-documented FFIs.

(2) Reporting by certain withholding agents with respect to U.S. owned foreign entities that are NFFEs.

(3) Cross reference to reporting by participating FFIs.

(4) Extensions of time to file.

(j) Applicability date.

§ 1.1474-2 Adjustments for overwithholding or underwithholding of tax.

(a) Adjustments of overwithheld tax.

(1) In general.

(2) Overwithholding.

(3) Reimbursement of tax.

(i) General rule.

(ii) Record maintenance.

(4) Set-offs.

(5) Examples.

(b) Withholding of additional tax when underwithholding occurs.

(c) Effective/applicability date.

§ 1.1474-3 Withheld tax as credit to beneficial owner of income.

(a) Creditable tax.

(b) Amounts paid to persons that are not the beneficial owners.

(c) Effective/applicability date.

§ 1.1474-4 Tax paid only once.

(a) Tax paid.

(b) Effective/applicability date.

§ 1.1474-5 Refunds or credits.

(a) Refund and credit.

(1) In general.

(2) Limitation to refund and credit for a nonparticipating FFI.

(3) Requirement to provide additional documentation for certain beneficial owners.

(i) In general.

(ii) Claim of reduced withholding under an income tax treaty.

(iii) Additional documentation to be furnished to the IRS for certain NFFEs.

(b) Tax repaid to payee.

(c) Effective/applicability date.

§ 1.1474-6 Coordination of chapter 4 with other withholding provisions.

(a) In general.

(b) Coordination of withholding for amounts subject to withholding under sections 1441, 1442, and 1443.

(1) In general.

(2) When withholding is applied.

(3) Special rule for certain substitute dividend payments.

(c) Coordination with amounts subject to withholding under section 1445.

(1) In general.

(2) Determining the amount of the distribution from certain domestic corporations subject to section 1445 or chapter 4 withholding.

(d) Coordination with section 1446.

(1) In general.

(2) Determining the amount of distribution subject to section 1446.

(e) Example.

(f) Coordination with section 3406.

(g) Effective/applicability date.

§ 1.1474-7 Confidentiality of information.

(a) Confidentiality of information.

(b) Exception for disclosure of participating FFIs.

(c) Effective/applicability date.

§ 301.1474-1 Required use of electronic form for financial institutions filing Form 1042, Form 1042-S, or Form 8966.

(a) Financial institutions filing certain information returns.

(b) Waiver.

(c) Failure to file.

(d) Meaning of terms.

(1) Magnetic media or electronic form.

(2) Financial institution.

(e) Applicability date.

[T.D. 9610, 78 FR 5899, Jan. 28, 2013; 78 FR 55203, Sept. 10, 2013; as amended by T.D. 9809, 82 FR 2144, Jan. 6, 2017; T.D. 9852, 84 FR 10979, Mar. 25, 2019; T.D. 9890, 85 FR 204, Jan. 2, 2020; T.D. 9972, 88 FR 11763, Feb. 23, 2023]

§ 1.1471-1 Scope of chapter 4 and definitions.

(a) ***Scope of chapter 4 of the Internal Revenue Code.*** Sections 1.1471-1 through 1.1474-7 provide rules for withholding when a withholding agent makes a payment to an FFI or NFFE and prescribe the requirements for and definitions relevant to FFIs and NFFEs to which withholding will not apply. Section 1.1471-1 provides definitions for terms used in chapter 4 of the Internal Revenue Code (Code) and the regulations thereunder. Section 1.1471-2 provides rules for withholding under section 1471(a) on payments to FFIs, including the exception from withholding for payments made with respect to certain grandfathered obligations. Section 1.1471-3 provides rules for determining the payee of a payment and the documentation requirements to establish a payee's chapter 4 status. Section 1.1471-4 describes the requirements of an FFI agreement under section 1471(b) and the application of sections 1471(b) and (c) to an expanded affiliated group of FFIs. Section 1.1471-5 defines terms relevant to section 1471 and the FFI agreement and defines categories of FFIs that will be deemed to have met the requirements of section 1471(b) pursuant to section 1471(b)(2). Section 1.1471-6 defines classes of beneficial owners of payments that are exempt from withholding under chapter 4. Section 1.1472-1 provides rules for withholding when a withholding agent makes a payment to an NFFE, and defines categories of NFFEs that

are not subject to withholding. Section 1.1473-1 provides definitions of the statutory terms in section 1473. Section 1.1474-1 provides rules relating to a withholding agent's liability for withheld tax, filing of income tax and information returns, and depositing of tax withheld. Section 1.1474-2 provides rules relating to adjustments for overwithholding and underwithholding of tax. Section 1.1474-3 provides the circumstances in which a credit is allowed to a beneficial owner for a withheld tax. Section 1.1474-4 provides that a chapter 4 withholding obligation need only be collected once. Section 1.1474-5 contains rules relating to credits and refunds of tax withheld. Section 1.1474-6 provides rules coordinating withholding under sections 1471 and 1472 with withholding provisions under other sections of the Code. Section 1.1474-7 provides the confidentiality requirement for information obtained to comply with the requirements of chapter 4. Any reference in the provisions of sections 1471 through 1474 to an amount that is stated in U.S. dollars includes the foreign currency equivalent of that amount. Except as otherwise provided, the provisions of sections 1471 through 1474 and the regulations thereunder apply only for purposes of chapter 4. See § 301.1474-1 of this chapter for the requirements for reporting on magnetic media that apply to financial institutions making payments or otherwise reporting accounts pursuant to chapter 4.

(b) ***Definitions.*** Except as otherwise provided in this paragraph (b) or under the terms of an applicable Model 2 IGA, the following definitions apply for purposes of sections 1471 through 1474 and the regulations under those sections.

(1) ***Account.*** The term *account* means a financial account as defined in § 1.1471-5(b).

(2) ***Account holder.*** The term *account holder* means the person who holds an account, as determined under § 1.1471-5(a)(3).

(3) ***Active NFFE.*** The term *active NFFE* has the meaning set forth in § 1.1472-1(c)(1)(iv).

(4) ***AML due diligence.*** The term *AML due diligence* means the customer due diligence procedures of a financial institution pursuant to the anti-money laundering or similar requirements to which the financial institution, or branch thereof, is subject. This includes identifying the customer (including the owners of the customer), understanding the nature and purpose of the account, and ongoing monitoring.

(5) ***Annuity contract.*** The term *annuity contract* means a contract under which the issuer agrees to make payments for a period of time determined in whole or in part by reference to the life expectancy of one or more individuals. The term also includes a contract that is considered to be an annuity contract in accordance with the law, regulation, or practice of the jurisdiction in which the contract was issued, and under which the issuer agrees to make payments for a term of years. For purposes of the preceding sentence, it is immaterial whether a contract satisfies any of the substantive U.S. tax rules (for example, sections 72(s), 72(u), 817(h), and the investor control prohibition) applicable to the taxation of a contract holder or issuer.

(6) ***Assumes primary withholding responsibility.*** The term *assumes primary withholding responsibility* refers to when a QI, territory financial institution, or U.S. branch assumes responsibility for withholding on a payment for purposes of chapters 3 and 4 as if it were a U.S. person. A QI may only assume primary withholding responsibility if it does not make an election to be withheld upon with respect to the payment.

(7) ***Backup withholding.*** The term *backup withholding* means the withholding required under section 3406.

(8) ***Beneficial owner.*** Except as provided in § 1.1472-1(d), § 1.1471-6(d)(4), and § 1.1471-6(f), the term *beneficial owner* has the meaning set forth in § 1.1441-1(c)(6).

(9) ***Blocked account.*** The term *blocked account* has the meaning set forth in § 1.1471-4(e)(2)(iii)(B).

(10) ***Branch.*** With respect to a financial institution, the term *branch* means a unit, business, or office of a financial institution that is treated as a branch under the regulatory regime of a country or that is otherwise regulated under the laws of a country as separate from other offices, units, or branches of the financial institution and also includes an entity that is disregarded as an entity separate from the financial institution (including branches maintained by such disregarded entity). A branch includes a unit, business, or office of a financial institution located in a country in which it is resident, and a unit, business, or office of a financial institution located in the country in which the financial institution is created or organized. All units, businesses, and offices of a participating FFI located in a single country, and all entities disregarded as entities separate from a participating FFI and located in a single country, shall be treated as a single branch and may use the same GIIN. An account will be treated as maintained by a branch or disregarded entity if the rights and obligations of the account holder and the participating FFI with regard to such account (including any assets held in the account) are governed by the laws of the country of the branch or disregarded entity.

(11) ***Broker.*** The term *broker* means any person, U.S. or foreign, that, in the ordinary course of a trade or business during the calendar year, stands ready to effect sales to be made by others. Examples of a broker include an obligor that regularly issues and retires its own debt obligations, a corporation that regularly redeems its own stock, and a clearing organization that effects sales of securities for its members. A broker does not include an international organization described in § 1.1471-6(c) that redeems or retires an obligation of which it is the issuer, a stock transfer agent that records transfers of stock for a corporation if the nature of the activities of the agent is such that the agent ordinarily would not know the gross proceeds from sales, an escrow agent that effects no sales other than transactions incidental to the purpose of the escrow (such as sales to collect on collateral), or a corporation that issues and retires long-term debt on an irregular basis.

(12) ***Cash value.*** The term *cash value* has the meaning set forth in § 1.1471-5(b)(3)(vii)(B).

(13) ***Cash value insurance contract.*** The term *cash value insurance contract* has the meaning set forth in § 1.1471-5(b)(3)(vii).

(14) ***Certified deemed-compliant FFI.*** The term *certified deemed-compliant FFI* means an FFI described in § 1.1471-5(f)(2).

(15) ***Change in circumstances.*** The term *change in circumstances* has the meaning set forth in § 1.1471-3(c)(6)(ii)(E) for withholding agents and, in the case of a participating FFI, has the meaning set forth in § 1.1471-4(c)(2)(iii).

(16) ***Chapter 3.*** For purposes of chapter 4, the term *chapter 3* means sections 1441 through 1464 and the regulations thereunder, but does not include sections 1445 and 1446 and the regulations thereunder, unless the context indicates otherwise.

(17) ***Chapter 4.*** The term *chapter 4* means sections 1471 through 1474 and the regulations thereunder.

(18) ***Chapter 4 reportable amount.*** The term *chapter 4 reportable amount* has the meaning set forth in § 1.1474-1(d)(2)(i).

(19) ***Chapter 4 status.*** The term *chapter 4 status* means a person's status as a U.S. person, a specified U.S. person, an individual that is a foreign person, a participating FFI, a deemed-compliant FFI, a restricted distributor, an exempt beneficial owner, a nonparticipating FFI, a territory financial institution, an excepted NFFE, or a passive NFFE.

(20) ***Chapter 4 withholding rate pool.*** The term *chapter 4 withholding rate pool* means a pool of payees that are nonparticipating FFIs provided on a chapter 4 withholding statement (as described in § 1.1471-3(c)(3)(iii)(B)(*3*)) to which a withholdable payment is allocated. The term *chapter 4 withholding rate pool* also means a pool provided on an FFI withholding statement (as described in § 1.1471-3(c)(3)(iii)(B)(*2*)) to which a withholdable payment is allocated to—

(i) A pool of payees consisting of each class of recalcitrant account holders described in § 1.1471-4(d)(6) (or with respect to an FFI that is a QI, a single pool of recalcitrant account holders without the need to subdivide into each class of recalcitrant account holders described in § 1.1471-4(d)(6)), including a separate pool of account holders to which the escrow procedures for dormant accounts apply; or

(ii) A pool of payees that are U.S. persons as described in § 1.1471-3(c)(3)(iii)(B)(*2*).

(21) ***Clearing organization.*** The term *clearing organization* means an entity that is in the business of holding securities for its member organizations or clearing trades of securities and transferring, or instructing the transfer of, securities by credit or debit to the account of a member without the necessity of physical delivery of the securities.

(22) ***Complex trust.*** A *complex trust* is a trust that is not a simple trust or a grantor trust.

(23) ***Consolidated obligations.*** The term *consolidated obligations* means multiple obligations that a withholding agent (including a withholding agent that is an FFI) has chosen to treat as a single obligation in order to treat the obligations as preexisting obligations pursuant to paragraph (b)(104)(ii) of this section or in order to share documentation between the obligations pursuant to § 1.1471-3(c)(8). A withholding agent that has opted to treat multiple obligations as consolidated obligations pursuant to the previous sentence must also treat the obligations as a single obligation for purposes of satisfying the standards of knowledge requirements set forth in §§ 1.1471-3(e) and 1.1471-4(c)(2)(ii), and for purposes of determining the balance or value of any of the obligations when applying any of the account thresholds applicable to due diligence or reporting as set forth in §§ 1.1471-3(c)(6)(ii), 1.1471-3(d), 1.1471-4(c), 1.1471-5(a)(4), and 1.1471-5(b)(3)(vii). For example, with respect to consolidated obligations, if a withholding agent has reason to know that the chapter 4 status assigned to the account holder or payee of one of the consolidated obligations is inaccurate, then it has reason to know that the chapter 4 status assigned for all other consolidated obligations of the account holder or payee is inaccurate. Similarly, to the extent that an account balance or value is relevant for purposes of applying any account threshold to one or more of the consolidated obligations, the withholding agent must aggregate the balance or value of all such consolidated obligations.

(24) ***Custodial account.*** The term *custodial account* has the meaning set forth in § 1.1471-5(b)(3)(ii).

(25) ***Custodial institution.*** The term *custodial institution* has the meaning set forth in § 1.1471-5(e)(1)(ii).

(26) ***Customer master file.*** A *customer master file* includes the primary files of a withholding agent, participating FFI, or deemed-compliant FFI for maintaining account holder information, such as information used for contacting account holders and for satisfying AML due diligence.

(27) ***Deemed-compliant FFI.*** The term *deemed-compliant FFI* means an FFI that is treated, pursuant to section 1471(b)(2) and § 1.1471-5(f), as meeting the requirements of section 1471(b). The term *deemed-compliant FFI* also includes a QI branch of a U.S. financial institution that is a reporting Model 1 FFI.

(28) ***Deferred annuity contract.*** The term *deferred annuity contract* means an annuity contract other than an immediate annuity contract.

(29) ***Depository account.*** The term *depository account* has the meaning set forth in § 1.1471-5(b)(3)(i).

(30) ***Depository institution.*** The term *depository institution* has the meaning set forth in § 1.1471-5(e)(1)(i).

(31) ***Direct reporting NFFE.*** The term *direct reporting NFFE* has the meaning set forth in § 1.1472-1(c)(3).

(32) ***Documentary evidence.*** The term *documentary evidence* means documents, other than a withholding certificate or written statement, that a withholding agent is permitted to rely upon to determine the chapter 4 status of a person in accordance with § 1.1471-3(c)(5).

(33) ***Documentation.*** The term *documentation* means withholding certificates, written statements, documentary evidence, and other documents that may be relevant in determining a person's chapter 4 status, including any document containing a determination of the account holder's citizenship or residency for tax or AML due diligence purposes or an account holder's claim of citizenship or residency for tax or AML due diligence purposes.

(34) ***Dormant account.*** The term *dormant account* has the meaning set forth in § 1.1471-4(d)(6)(ii).

(35) ***Effective date of the FFI agreement.*** The term *effective date of the FFI agreement* with respect to an FFI or a branch of an FFI that is a participating FFI means the date on which the IRS issues a GIIN to the FFI or branch. For participating FFIs that receive a GIIN prior to June 30, 2014, the effective date of the FFI agreement is June 30, 2014.

(36) ***EIN.*** The term *EIN* means an employer identification number (also known as a federal tax identification number) described in § 301.6109-1(a)(1)(i) of this chapter.

(37) ***Election to be withheld upon.*** The term *election to be withheld upon* has the meaning set forth in § 1.1471-2(a)(2)(iii).

(38) ***Electronically searchable information.*** The term *electronically searchable information* means information that a withholding agent or FFI maintains in its tax reporting files, customer master files, or similar files, and that is stored in the form of an electronic database against which standard queries in programming languages, such as Structured Query Language, may be used. Information, data, or files are not electronically searchable merely because they are stored in an image retrieval system (such as portable document format (.pdf) or scanned documents).

(39) ***Entity.*** The term *entity* means any person other than an individual.

(40) ***Entity account.*** The term *entity account* means an account held by one or more entities.

(41) ***Excepted NFFE.*** The term *excepted NFFE* means a NFFE that is described in § 1.1472-1(c)(1).

(42) ***Exempt beneficial owner.*** The term *exempt beneficial owner* means any person described in § 1.1471-6(b) through (g) or that is otherwise treated as an exempt beneficial owner pursuant to a Model 1 IGA or Model 2 IGA.

(43) ***Exempt recipient.*** The term *exempt recipient* means a person described in § 1.6049-4(c)(1)(ii) (for interest, dividends, and royalties), a person described in § 1.6045-2(b)(2)(i) (for broker proceeds), and a person described in § 1.6041-3(q) (for rents, amounts paid on notional principal contracts, and other fixed or determinable income).

(44) ***Expanded affiliated group.*** The term *expanded affiliated group* has the meaning set forth in § 1.1471-5(i)(2).

(45) ***FATF.*** The term *FATF* means the Financial Action Task Force, an inter-governmental body that develops and promotes international policies to combat money laundering and terrorist financing.

(46) ***FATF-compliant jurisdiction.*** The term *FATF-compliant jurisdiction* means a jurisdiction that—

(i) Is not subject to a FATF call on its members and other jurisdictions to apply counter-measures to protect the international financial system from the on-going and substantial money laundering and terrorist financing risks emanating from the jurisdiction;

(ii) Is not a jurisdiction with strategic AML/CFT (anti-money laundering and combating the financing of terrorism) deficiencies that has not made sufficient progress in addressing the deficiencies or has not committed to an action plan developed with the FATF to address the deficiencies; and

(iii) Is not a jurisdiction with strategic AML/CFT deficiencies that the FATF has identified as not making sufficient progress on its action plan agreed upon with the FATF.

(47) ***FFI.*** The term *FFI* or *foreign financial institution* has the meaning set forth in § 1.1471-5(d).

(48) ***FFI agreement.*** The term *FFI agreement* means an agreement that is described in § 1.1471-4(a). An FFI agreement includes a QI agreement, a WP agreement, and a WT agreement that is entered into by an FFI (other than an FFI that is a registered deemed-compliant FFI, including a reporting Model 1 FFI) and that has an effective date or renewal date on or after June 30, 2014. The term *FFI agreement* also includes a QI agreement that is entered into by a foreign branch of a U.S. financial institution (other than a branch that is a reporting Model 1 FFI) and that has an effective date or renewal date on or after June 30, 2014.

(49) ***Financial account.*** The term *financial account* has the meaning set forth in § 1.1471-5(b).

(50) ***Financial institution.*** The term *financial institution* has the meaning set forth in § 1.1471-5(e) and includes a financial institution as defined in an applicable Model 1 or Model 2 IGA.

(51) ***Flow-through entity.*** The term *flow-through entity* means a partnership, simple trust, or grantor trust, as determined under U.S. tax principles.

(52) ***Flow-through withholding certificate.*** The term *flow-through withholding certificate* means a Form W-8IMY submitted by a foreign partnership, foreign simple trust, or foreign grantor trust.

(53) ***Foreign entity.*** The term *foreign entity* has the meaning set forth in § 1.1473-1(e).

(54) ***Foreign passthru payment.*** The term *foreign passthru payment* has the meaning set forth in § 1.1471-5(h)(2).

(55) ***Foreign payee.*** The term *foreign payee* means any payee other than a U.S. payee.

(56) ***Foreign person.*** The term *foreign person* means any person other than a U.S. person and includes a QI branch of a U.S. financial institution.

(57) ***GIIN.*** The term *GIIN* or *Global Intermediary Identification Number* means the identification number that is assigned to a participating FFI or registered deemed-compliant FFI. The term *GIIN* or *Global Intermediary Identification Number* also includes the identification number assigned to a reporting Model 1 FFI for purposes of identifying such entity to withholding agents. All GIINs will appear on the IRS FFI list.

(58) ***Grandfathered obligation.*** The term *grandfathered obligation* has the meaning set forth in § 1.1471-2(b).

(59) ***Grantor trust.*** A *grantor trust* is a trust with respect to which one or more persons are treated as owners of all or a portion of the trust under sections 671 through 679. If only a portion of the trust is treated as owned by a person, that portion is a grantor trust with respect to that person.

(60) ***Gross proceeds.*** The term *gross proceeds* has the meaning set forth in § 1.1473-1(a)(3).

(61) ***Group annuity contract.*** The term *group annuity contract* means an annuity contract under which the obligees are individuals who are affiliated through an employer, trade association, labor union, or other association or group.

(62) ***Group insurance contract.*** The term *group insurance contract* means an insurance contract that—

(i) Provides coverage on individuals who are affiliated through an employer, trade association, labor union, or other association or group; and

(ii) Charges a premium for each member of the group (or member of a class within the group) that is determined without regard to the individual health characteristics other than age, gender, and smoking habits of the member (or class of members) of the group.

(63) ***Immediate annuity.*** The term *immediate annuity* means an annuity contract that—

(i) Is purchased with a single premium or annuity consideration; and

(ii) No later than one year from the purchase date of the contract commences to pay annually or more frequently substantially equal periodic payments.

(64) ***Individual account.*** The term *individual account* means an account held by one or more individuals.

(65) ***Insurance company.*** The term *insurance company* means an entity or arrangement—

(i) That is regulated as an insurance business under the laws, regulations, or practices of any jurisdiction in which the company does business;

(ii) The gross income of which (for example, gross premiums and gross investment income) arising from insurance, reinsurance, and annuity contracts for the immediately preceding calendar year exceeds 50 percent of total gross income for such year; or

(iii) The aggregate value of the assets of which associated with insurance, reinsurance, and annuity contracts at any time during the immediately preceding calendar year exceeds 50 percent of total assets at any time during such year.

(66) ***Insurance contract.*** The term *insurance contract* means a contract (other than an annuity contract) under which the issuer in exchange for consideration agrees to pay an amount upon the occurrence of a specified contingency involving mortality, morbidity, accident, liability, or property risk.

(67) ***Intergovernmental agreement (IGA).*** The term *intergovernmental agreement* or *IGA* means any applicable Model 1 or Model 2 IGA.

(68) ***Intermediary.*** The term *intermediary* has the meaning set forth in § 1.1441-1(c)(13).

(69) ***Intermediary withholding certificate.*** The term *intermediary withholding certificate* means a Form W-8IMY submitted by an intermediary.

(70) ***Investment entity.*** The term *investment entity* has the meaning set forth in § 1.1471-5(e)(1)(iii).

(71) ***Investment-linked annuity contract.*** The term *investment-linked annuity contract* means an annuity contract under which benefits or premiums are adjusted to reflect the investment return or market value of assets associated with the contract.

(72) ***Investment-linked insurance contract.*** The term *investment-linked insurance contract* means an insurance contract under which benefits, premiums, or the period of coverage are adjusted to reflect the investment return or market value of assets associated with the contract.

(73) ***IRS FFI list.*** The term *IRS FFI list* means the list published by the IRS that contains the names and GIINs for all participating FFIs, registered deemed-compliant FFIs, and reporting Model 1 FFIs.

(74) ***Life annuity contract.*** The term *life annuity contract* means an annuity contract that provides for payments over the life or lives of one or more individuals.

(75) ***Life insurance contract.*** The term *life insurance contract* means an insurance contract under which the issuer, in exchange for consideration, agrees to pay an amount upon the death of one or more individuals. That a contract provides one or more payments (for example, for endowment benefits or disability benefits) in addition to a death benefit will not cause the contract to be other than a life insurance contract. For purposes of the preceding sentence, it is immaterial whether a contract satisfies any of the substantive U.S. tax rules (for example, sections 101(f), 817(h), 7702, or investor control prohibition) applicable to the taxation of the contract holder or issuer.

(76) ***Limited branch.*** The term *limited branch* has the meaning set forth in § 1.1471-4(e)(2)(iii). With respect to a reporting Model 2 FFI, a limited branch is a branch of the reporting Model 2 FFI that operates in a jurisdiction that prevents such branch from fulfilling the requirements of a participating FFI or deemed-compliant FFI, or that cannot fulfill the requirements of a participating FFI or deemed-compliant FFI due to the expiration of the transitional rule for limited branches under § 1.1471-4(e)(2)(v), and for which the reporting Model 2 FFI meets the terms of the applicable Model 2 IGA with respect to the branch.

(77) ***Limited FFI.*** The term *limited FFI* has the meaning set forth in § 1.1471-4(e)(3)(ii). With respect to a reporting Model 2 FFI, a limited FFI is a related entity that operates in a jurisdiction that prevents the entity from fulfilling the requirements of a participating FFI or deemed-compliant FFI or that cannot fulfill the requirements of a participating FFI or deemed-compliant FFI due to the expiration of the transitional rule for limited FFIs under § 1.1471-4(e)(3)(iv), and for which the reporting Model 2 FFI meets the requirements of the applicable Model 2 IGA with respect to the entity.

(78) ***Model 1 IGA.*** The term *Model 1 IGA* means an agreement or arrangement between the United States or the Treasury Department and a foreign government or one or more agencies thereof to implement FATCA through reporting by financial institutions to such foreign government or agency thereof, followed by automatic exchange of the reported information with the IRS. The IRS will publish a list identifying all countries that are treated as having in effect a Model 1 IGA.

(79) ***Model 2 IGA.*** The term *Model 2 IGA* means an agreement or arrangement between the United States or the Treasury Department and a foreign government or one or more agencies thereof to facilitate the implementation of FATCA through reporting by financial institutions directly to the IRS in

accordance with the requirements of an FFI agreement, supplemented by the exchange of information between such foreign government or agency thereof and the IRS. The IRS will publish a list identifying all countries that are treated as having in effect a Model 2 IGA.

(80) ***NFFE.*** The term *NFFE* or *non-financial foreign entity* means a foreign entity that is not a financial institution (including a territory NFFE). The term also means a foreign entity treated as an NFFE pursuant to a Model 1 IGA or Model 2 IGA.

(81) ***Non-exempt recipient.*** The term *non-exempt recipient* means a person that is not an exempt recipient.

(82) ***Nonparticipating FFI.*** The term *nonparticipating FFI* means an FFI other than a participating FFI, a deemed-compliant FFI, or an exempt beneficial owner.

(83) ***Nonreporting IGA FFI.*** The term *nonreporting IGA FFI* means an FFI that is a resident of, or located or established in, a Model 1 or Model 2 IGA jurisdiction, as the context requires, and that meets the requirements of one of the following—

(i) A nonreporting financial institution described in Annex II of the Model 1 IGA;

(ii) A nonreporting financial institution described in Annex II of the Model 2 IGA;

(iii) A registered deemed-compliant FFI described in § 1.1471-5(f)(1)(i)(A) through (F);

(iv) A certified deemed-compliant FFI described in § 1.1471-5(f)(2)(i) through (v); or

(v) An exempt beneficial owner described in § 1.1471-6.

(84) ***Non-U.S. account.*** The term *non-U.S. account* means an account that is not a U.S. account and that does not have an account holder that is a nonparticipating FFI or recalcitrant account holder.

(85) ***NQI.*** The term *NQI* or *nonqualified intermediary* has the meaning set forth in § 1.1441-1(c)(14).

(86) ***NWP.*** The term *NWP* or *nonwithholding foreign partnership* means a foreign partnership that is not a withholding foreign partnership.

(87) ***NWT.*** The term *NWT* or *nonwithholding foreign trust* means a foreign trust as defined in section 7701(a)(31)(B) that is a simple trust or grantor trust and is not a withholding foreign trust.

(88) ***Offshore obligation.*** The term *offshore obligation* means an offshore obligation defined in § 1.6049-5(c)(1) (by substituting the terms *withholding agent* or *financial institution* for the term *payor*).

(89) ***Owner.*** The term *owner* means a person described in § 1.1473-1(b)(1), without regard to whether such person is a U.S. person and without regard to whether such person owns a ten percent interest in the entity. The term also includes a person that owns a discretionary interest in a trust and receives a distribution during the calendar year.

(90) ***Owner-documented FFI.*** The term *owner-documented FFI* means an FFI described in § 1.1471-5(f)(3).

(91) ***Participating FFI.*** The term *participating FFI* means an FFI that has agreed to comply with the requirements of an FFI agreement with respect to all branches of the FFI, other than a branch that is a reporting Model 1 FFI or a U.S. branch. The term *participating FFI* also includes an FFI described in a Model 2 IGA that has agreed to comply with the requirements of an FFI agreement with respect to a branch (a *reporting Model 2 FFI*), and a QI branch of a U.S. financial institution, unless such branch is a reporting Model 1 FFI.

(92) ***Participating FFI group.*** The term *participating FFI group* means an expanded affiliated group that includes one or more participating FFIs and meets the requirements of § 1.1471-4(e)(1). The term *participating FFI group* also means an expanded affiliated group in which one or more members of the group is a reporting Model 1 FFI and each member of the group that is an FFI is a registered deemed-compliant FFI, nonreporting IGA FFI, limited FFI, or retirement fund described in § 1.1471-6(f).

(93) ***Partnership.*** The term *partnership* has the meaning set forth in § 301.7701-2(c)(1) of this chapter.

(94) ***Passive NFFE.*** The term *passive NFFE* means an NFFE other than an excepted NFFE.

(95) ***Passthru payment.*** The term *passthru payment* has the meaning set forth in § 1.1471-5(h).

(96) ***Payee.*** The term *payee* has the meaning set forth in § 1.1471-3(a).

(97) ***Payment with respect to an offshore obligation.*** The term *payment with respect to an offshore obligation* means a payment made outside of the United States, within the meaning of § 1.6049-5(e), with respect to an offshore obligation.

(98) ***Payor.*** The term *payor* has the meaning set forth in §§ 31.3406(a)-2 and 1.6049-4(a)(2) and generally includes a withholding agent.

(99) ***Permanent residence address.*** The term *permanent residence address* has the meaning set forth in § 1.1441-1(c)(38).

(100) ***Person.*** The term *person* has the meaning set forth in section 7701(a)(1) and the regulations thereunder and includes an entity or arrangement that is an insurance company. The term *person* also includes, with respect to a withholdable payment, a QI branch of a U.S. financial institution.

(101) ***Preexisting account.*** The term *preexisting account* means a financial account that is a preexisting obligation.

(102) ***Preexisting entity account.*** The term *preexisting entity account* means a preexisting account held by one or more entities.

(103) ***Preexisting individual account.*** The term *preexisting individual account* means a preexisting account held by one or more individuals.

(104) ***Preexisting obligation*** —

(i) The term *preexisting obligation* means any account, instrument, contract, debt, or equity interest maintained, executed, or issued by the withholding agent that is outstanding on June 30, 2014. With respect to a participating FFI, the term *preexisting obligation* means any account, instrument, or contract (including any debt or equity interest) maintained, executed, or issued by the FFI that is outstanding on the effective date of the FFI agreement. With respect to a registered deemed-compliant FFI, a preexisting obligation means any account, instrument, or contract (including any debt or equity interest) that is maintained, executed, or issued by the FFI prior to the later of the date that the FFI registers as a deemed-compliant FFI pursuant to § 1.1471-5(f)(1) and receives a GIIN or the date the FFI is required to implement its account opening procedures under § 1.1471-5(f). Notwithstanding the previous provisions of this paragraph (b)(104)(i), a preexisting obligation includes an obligation held by an entity that is issued, opened, or executed on or after July 1, 2014, and before January 1, 2015, by or with a

withholding agent or FFI that treats the obligation as a preexisting obligation. See §§ 1.1471-2(a)(4)(ii), 1.1472-1(b)(2), and 1.1471-4(c)(3) for the due diligence requirements applicable to preexisting obligations for withholding agents and participating FFIs.

(ii) The term *preexisting obligation* also includes any obligation (referring to an account, instrument, contract, debt, or equity interest) of an account holder or payee, regardless of the date such obligation was entered into, if—

(A) The account holder or payee also holds with the withholding agent (or a member of the withholding agent's expanded affiliated group or sponsored FFI group) an account, instrument, contract, or equity interest that is a preexisting obligation under paragraph (b)(104)(i) of this section;

(B) The withholding agent (and, as applicable, the member of the withholding agent's expanded affiliated group or sponsored FFI group) treats both of the aforementioned obligations, and any other obligations of the payee or account holder that are treated as preexisting obligations under this paragraph (b)(104)(ii), as consolidated obligations; and

(C) With respect to an obligation that is subject to AML due diligence, the withholding agent is permitted to satisfy such AML due diligence for the obligation by relying upon the AML due diligence performed for the preexisting obligation described in paragraph (b)(104)(i) of this section.

(105) ***Pre-FATCA Form W-8.*** The term *pre-FATCA Form W-8* means a version of a Form W-8 that was issued by the IRS prior to 2013 (including an acceptable substitute form based on such version) and that does not contain chapter 4 statuses but otherwise meets the requirements of § 1.1441-1(e)(1)(ii) applicable to such certificate (or substitute form) and has not expired, or a Form W-8 that was issued prior to 2013 and furnished by an individual to establish such individual's foreign status but otherwise meets the requirements of § 1.1441-1(e)(1)(ii) applicable to such certificate and has not expired.

(106) ***Prima facie FFI.*** The term *prima facie FFI* means an entity described in § 1.1471-2(a)(4)(ii)(B).

(107) ***QI.*** The term *QI* or *qualified intermediary* has the meaning set forth in § 1.1441-1(e)(5)(ii).

(108) ***QI agreement.*** The term *QI agreement* means the agreement described in § 1.1441-1(e)(5)(iii).

(109) ***QI branch of a U.S. financial institution.*** The term *QI branch of a U.S. financial institution* means a foreign branch of a U.S. financial institution for which a QI agreement is in effect.

(110) ***Recalcitrant account holder.*** The term *recalcitrant account holder* has the meaning set forth in § 1.1471-5(g).

(111) ***Registered deemed-compliant FFI.*** The term *registered deemed-compliant FFI* means an FFI described in § 1.1471-5(f)(1). The term *registered deemed-compliant FFI* also includes a QI branch of a U.S. financial institution that is a reporting Model 1 FFI.

(112) ***Relationship manager.*** A *relationship manager* is an officer or other employee of an FFI who is assigned responsibility for specific account holders on an on-going basis (including as an officer or employee that is a member of an FFI's private banking department), advises account holders regarding their banking, investment, trust, fiduciary, estate planning, or philanthropic needs, and recommends, makes referrals to, or arranges for the provision of financial products, services, or other assistance by internal or external providers to meet those needs. Notwithstanding the previous

sentence, a person is only a relationship manager with respect to an account that has a balance or value of more than $1,000,000, taking into account the aggregation rules described in § 1.1471-5(b)(4)(iii)(A) and (B).

(113) ***Reportable payment.*** The term *reportable payment* means a payment of interest or dividends (as defined in section 3406(b)(2)) and other reportable payments (as defined in section 3406(b)(3)).

(114) ***Reporting Model 1 FFI.*** The term *reporting Model 1 FFI* means an FFI with respect to which a foreign government or agency thereof agrees to obtain and exchange information pursuant to a Model 1 IGA, other than an FFI that is treated as a nonparticipating FFI under the Model 1 IGA.

(115) ***Reporting Model 2 FFI.*** The term *reporting Model 2 FFI* means a participating FFI that is described in § 1.1471-1(b)(91).

(116) ***Responsible officer.*** The term *responsible officer* means, with respect to a participating FFI, an officer of any participating FFI or reporting Model 1 FFI in the participating FFI's expanded affiliated group with sufficient authority to fulfill the duties of a responsible officer described in § 1.1471-4, which include the requirement to periodically certify to the IRS regarding the FFI's compliance with its FFI agreement. The term *responsible officer* means, in the case of a registered deemed-compliant FFI, an officer of any deemed-compliant FFI or participating FFI in the deemed-compliant FFI's expanded affiliated group with sufficient authority to ensure that the FFI meets the applicable requirements of § 1.1471-5(f). The term *responsible officer* means, with respect to a sponsoring entity, an officer of the sponsoring entity or an officer of an entity that establishes and maintains policies and procedures for, and has general oversight over, the sponsoring entity, provided such officer has sufficient authority to fulfill the duties of a responsible officer described in § 1.1471-5(j) or § 1.1472-1(f) (as applicable). If a participating FFI elects to be part of a consolidated compliance program, the term *responsible officer* means an officer of the compliance FI (as described in § 1.1471-4(f)) with sufficient authority to fulfill the duties of a responsible officer described in § 1.1471-4(f)(2) and (3) on behalf of each FFI in the compliance group. In the case of an FI or sponsoring entity that is an investment entity, for purposes of this paragraph (b)(116), the responsible officer may be, in lieu of an officer of the investment entity, an individual who is a director, managing member, or general partner of the investment entity or, if the general partner or managing member of the investment entity is itself an entity, an individual who is an officer, director, managing member, or general partner of such other entity.

(117) ***Restricted distributor.*** The term *restricted distributor* means an entity described in § 1.1471-5(f)(4).

(118) ***Simple trust.*** The term *simple trust* means a trust that meets the requirements of section 651(a)(1) and (2).

(119) ***Specified insurance company.*** The term *specified insurance company* has the meaning set forth in § 1.1471-5(e)(1)(iv).

(120) ***Specified U.S. person.*** The term *specified U.S. person* or *specified United States person* has the meaning set forth in § 1.1473-1(c).

(121) ***Sponsored FFI.*** The term *sponsored FFI* means any entity described in § 1.1471-5(f)(1)(i)(F) (describing sponsored investment entities and sponsored controlled foreign corporations) or § 1.1471-5(f)(2)(iii) (describing sponsored, closely held investment vehicles). The term *sponsored FFI* also means a sponsored investment entity, a sponsored controlled foreign corporation, or a sponsored, closely held investment vehicle treated as deemed-compliant under an applicable Model 2 IGA.

(122) ***Sponsored FFI group.*** The term *sponsored FFI group* means a group of sponsored FFIs that share the same sponsoring entity.

(123) ***Sponsored direct reporting NFFE.*** The term *sponsored direct reporting NFFE* has the meaning set forth in § 1.1472-1(c)(5).

(124) ***Sponsoring entity.*** The term *sponsoring entity* means

(i) an entity that registers with the IRS and agrees to perform the due diligence, withholding, and reporting obligations of one or more FFIs pursuant to § 1.1471-5(f)(1)(i)(F) or (f)(2)(iii); or

(ii) an entity that registers with the IRS and agrees to perform the due diligence and reporting obligations of one or more direct reporting NFFEs pursuant to § 1.1472-1(c)(5).

(125) ***Standardized industry coding system.*** The term *standardized industry coding system* means a coding system used by the withholding agent or FFI to classify account holders by business type for purposes other than U.S. tax purposes and that was implemented by the withholding agent by the later of January 1, 2012, or six months after the date the withholding agent was formed or organized.

(126) ***Standing instructions to pay amounts.*** The term *standing instructions to pay amounts* means current payment instructions provided by the account holder, or an agent of the account holder, that will repeat without further instructions being provided by the account holder. Therefore, for example, a payment instruction to make an isolated payment is not a standing instruction to pay amounts, even if the instructions are given one year in advance. However, an instruction to make payments indefinitely is a standing instruction to pay amounts for the period during which such instructions are in effect, even if such instructions are amended after a single payment.

(127) ***Subject to withholding.*** The term *subject to withholding,* with respect to an amount, means an amount for which withholding is required under chapter 4 or an amount for which chapter 4 withholding was otherwise applied.

(128) ***Substantial U.S. owner.*** The term *substantial U.S. owner* or *substantial United States owner* has the meaning set forth in § 1.1473-1(b). In the case of a reporting Model 2 FFI, in applying this section with respect to a passive NFFE the term *substantial U.S. owner* means a controlling person as defined in the applicable Model 2 IGA.

(129) ***Territory entity.*** The term *territory entity* means any entity that is incorporated or organized under the laws of any U.S. territory.

(130) ***Territory financial institution.*** The term *territory financial institution* means a financial institution that is incorporated or organized under the laws of any U.S. territory, not including a territory entity that is an investment entity but that is not a depository institution, custodial institution, or specified insurance company.

(131) ***Territory financial institution treated as a U.S. person.*** The term *territory financial institution treated as a U.S. person* means a territory financial institution that is treated as a U.S. person under § 1.1471-3(a)(3)(iv).

(132) ***Territory NFFE.*** The term *territory NFFE* means a territory entity that is not a financial institution, including a territory entity that is an investment entity but is not a depository institution, custodial institution, or specified insurance company.

(133) ***TIN.*** The term *TIN* means the tax identifying number assigned to a person under section 6109.

(134) ***U.S. account.*** The term *U.S. account* or *United States account* has the meaning set forth in § 1.1471-5(a).

(135) ***U.S. branch treated as a U.S. person.*** The term *U.S. branch treated as a U.S. person* means a U.S. branch that agrees to be treated as a U.S. person as described in § 1.1441-1(b)(2)(iv)(A). For the due diligence, withholding, and reporting requirements of a U.S. branch of an FFI treated as a U.S. person for purposes of chapter 4, see § 1.1471-4(b)(7), (c)(2)(v), (d)(2)(iii)(B), § 1.1472-1(a), and § 1.1474-1(i)(1) and (2).

(136) ***U.S. financial institution.*** The term *U.S. financial institution* means a financial institution that is a U.S. person, including a U.S. branch treated as a U.S. person.

(137) ***U.S. indicia.*** The term *U.S. indicia* has the meaning set forth in § 1.1471-4(c)(5)(iv)(B) when applied to an individual and as set forth in § 1.1471-3(e)(4)(v)(A) when applied to an entity.

(138) ***U.S. owned foreign entity.*** The term *U.S. owned foreign entity* or *United States owned foreign entity* has the meaning set forth in § 1.1471-5(c).

(139) ***U.S. payee.*** The term *U.S. payee* means any payee that is a U.S. person.

(140) ***U.S. payor.*** The term *U.S. payor* means a U.S. payor or U.S. middleman as defined in § 1.6049-5(c)(5).

(141) ***U.S. person*** —

(i) Except as otherwise provided in paragraph (b)(141)(ii) of this section, the term *U.S. person* or *United States person* means a person described in section 7701(a)(30), the United States government (including an agency or instrumentality thereof), a State (including an agency or instrumentality thereof), or the District of Columbia (including an agency or instrumentality thereof). The term *U.S. person* or *United States person* also means a foreign insurance company that has made an election under section 953(d), provided that either the foreign insurance company is not a specified insurance company (as described in § 1.1471-5(e)(1)(iv)), or the foreign insurance company is a specified insurance company and is licensed to do business in any State.

(ii) The term *U.S. person* or *United States person* does not include a foreign insurance company that has made an election under section 953(d) if it is a specified insurance company and is not licensed to do business in any State. An individual will not be treated as a U.S. person for a taxable year or any portion of a taxable year that the individual is a dual resident taxpayer (within the meaning of § 301.7701(b)-7(a)(1) of this chapter) who is treated as a nonresident alien pursuant to § 301.7701(b)-7 of this chapter for purposes of computing the individual's U.S. tax liability. A U.S. person does not include an alien individual who has made an election under section 6013(g) or (h) to be treated as a resident of the United States.

(142) ***U.S. source FDAP income.*** The term *U.S. source FDAP income* has the meaning set forth in § 1.1473-1(a)(2).

(143) ***U.S. territory.*** The term *U.S. territory* or *possession of the United States* means American Samoa, Guam, the Northern Mariana Islands, Puerto Rico, or the U.S. Virgin Islands.

(144) ***U.S. withholding agent.*** The term *U.S. withholding agent* means a withholding agent that is either a U.S. person or a U.S. branch of a foreign person.

(145) ***Withholdable payment.*** The term *withholdable payment* has the meaning set forth in § 1.1473-1(a).

(146) ***Withholding.*** The term *withholding* means the deduction and withholding of tax at the applicable rate from a payment.

(147) ***Withholding agent.*** The term *withholding agent* has the meaning set forth in § 1.1473-1(d).

(148) ***Withholding certificate.*** The term *withholding certificate* means a Form W-8, Form W-9, or any other certificate that under the Code or regulations certifies or establishes the chapter 4 status of a payee or beneficial owner.

(149) ***WP.*** The term *WP* or *withholding foreign partnership* means a foreign partnership that has executed the agreement described in § 1.1441-5(c)(2)(ii).

(150) ***Written statement.*** The term *written statement* has the meaning set forth in § 1.1471-3(c)(4).

(151) ***WT.*** The term *WT* or *withholding foreign trust* means a foreign grantor trust or foreign simple trust that has executed the agreement described in § 1.1441-5(e)(5)(v).

(c) ***Applicability date.*** This section generally applies beginning on January 6, 2017, except for paragraphs (b)(116) and (121) of this section, which apply beginning on March 25, 2019. However, taxpayers may apply these provisions as of January 28, 2013. (For the rules that otherwise apply beginning on January 6, 2017, and before March 25, 2019, see this section as in effect and contained in 26 CFR part 1 revised April 1, 2018. For rules that otherwise apply beginning on January 28, 2013, and before January 6, 2017, see this section as in effect and contained in 26 CFR part 1 revised April 1, 2016.)

[T.D. 9610, 78 FR 5906, Jan. 28, 2013; 78 FR 55203, Sept. 10, 2013, as amended by T.D. 9657, 79 FR 12825, Mar. 6, 2014; T.D. 9809, 82 FR 2148, Jan. 6, 2017; T.D. 9852, 84 FR 10980, Mar. 25, 2019; T.D. 9890, 85 FR 204, Jan. 2, 2020]

§ 1.1471-2 Requirement to deduct and withhold tax on withholdable payments to certain FFIs.

(a) ***Requirement to withhold on payments to FFIs*** —

(1) ***General rule of withholding.*** Under section 1471(a), notwithstanding any exemption from withholding under any other provision of the Code or regulations, a withholding agent must withhold 30 percent of any withholdable payment made after June 30, 2014, to a payee that is an FFI unless either the withholding agent can reliably associate the payment with documentation upon which it is permitted to rely to treat the payment as exempt from withholding under paragraph (a)(4) of this section or the payment is made under a grandfathered obligation that is described in paragraph (b) of this section or constitutes gross proceeds from the disposition of such an obligation. A withholding agent that is making a payment must determine who the payee is under § 1.1471-3(a) with respect to that payment and the chapter 4 status of such payee. See § 1.1471-3 for requirements for determining the chapter 4 status of a payee, including additional documentation requirements that apply when a payment is made to an intermediary or flow-through entity that is not the payee. Withholding under this section applies without regard to whether the payee receives a withholdable payment as a beneficial owner or as an intermediary. See paragraph (a)(2)(iv) of this section for a description of the withholding requirements imposed on territory financial institutions as withholding agents under chapter 4. In the case of a withholdable payment to a NFFE, a withholding agent is required to determine whether withholding applies under section 1472 and § 1.1472-1. Except as otherwise provided in the regulations under chapter 4, a withholding obligation arises on the date a payment is made, as determined under § 1.1473-1(a).

(2) ***Special withholding rules*** —

(i) ***Requirement to withhold on payments of U.S. source FDAP income to participating FFIs and deemed-compliant FFIs that are NQIs, NWPs, or NWTs, and U.S. branches acting as intermediaries.*** A withholding agent that, after June 30, 2014, makes a payment of U.S. source FDAP income to a participating FFI or deemed-compliant FFI that is an NQI receiving the payment as an intermediary, or a NWP or NWT, must withhold 30 percent of the payment unless the withholding is reduced under this paragraph (a)(2)(i). A withholding agent is not required to withhold on a payment, or portion of a payment, that it can reliably associate, in the manner described in § 1.1471-3(c)(2), with a valid intermediary or flow-through withholding certificate that meets the requirements of § 1.1471-3(d)(4) and a withholding statement that meets the requirements of § 1.1471-3(c)(3)(iii)(B) and that allocates the payment or portion of the payment to payees for which no withholding is required under chapter 4. Further, a withholding agent is not required to withhold on a payment that it can reliably associate with documentation indicating that the payee is a U.S. branch treated as a U.S. person (as defined in § 1.1471-1(b)(135)) or is a U.S. branch of an FFI that is not treated as a U.S. person but that applies the rules described in § 1.1471-4(d)(2)(iii)(C). See also § 1.1471-3(c)(3)(iii)(H) for the rules for valid documentation of a U.S. branch.

(ii) ***Residual withholding responsibility of intermediaries and flow-through entities.*** An intermediary or flow-through entity that receives a withholdable payment after June 30, 2014, is required to withhold on such payment to the extent required under chapter 4. Notwithstanding the previous sentence, an intermediary or flow-through entity is not required to withhold if another withholding agent has withheld the full amount required. Further, an NQI, NWP, or NWT is not required to withhold with respect to a withholdable payment under chapter 4 if it has provided a valid intermediary withholding certificate or flow-through withholding certificate and all of the information required by § 1.1471-3(c)(3)(iii), and it does not know, and has no reason to know, that another withholding agent failed to withhold the correct amount. A QI's, WP's, or WT's obligation to withhold and report is determined in accordance with its QI agreement, WP agreement, or WT agreement.

(iii) ***Requirement to withhold if a participating FFI or registered deemed-compliant FFI makes an election to be withheld upon.*** A person that otherwise would be a payee with respect to a payment but that makes an election to be withheld upon does not agree to accept primary withholding responsibility for the payment under chapter 3 or 4. Accordingly, such person cannot be treated as the payee and the withholding agent must determine whether it must withhold based on the chapter 4 status of the payee on whose behalf the person is receiving the payment. The election to be withheld upon is only available to the extent provided in paragraph (a)(2)(iii)(A) and (B) of this section. The election is not available to an entity that is required to accept primary withholding responsibility for the payment, such as a WP or WT receiving a payment of U.S. source FDAP income, or an entity that already must be withheld upon because it may not accept primary withholding responsibility for the payment and, as such, already must pass up documentation with respect to the payee to the withholding agent, such as a participating FFI that is an NQI receiving a payment of U.S. source FDAP income.

(A) ***Election to be withheld upon for U.S. source FDAP income.*** A withholding agent is required to withhold with respect to a payment, or portion of a payment, that is U.S. source FDAP income subject to withholding that is made after June 30, 2014, to a QI that has elected in accordance with this paragraph to be withheld upon, unless such withholding agent also makes an election to be withheld upon under this paragraph (a)(2)(iii)(A) or is an FFI that may not accept primary withholding responsibility for the payment. In such case, the

withholding agent must withhold 30 percent of the portion of the payment that is allocable, pursuant to a withholding statement described in § 1.1471-3(c)(3)(iii)(B) provided by the QI, to recalcitrant account holders and nonparticipating FFIs. If no such allocation information is provided, the withholding agent must apply the presumption rules of § 1.1471-3(f) to determine the chapter 4 status of the payee. A QI that is an FFI and that makes the election to be withheld upon with respect to a payment of U.S. source FDAP income may not assume primary withholding responsibility under chapter 3 for that payment. Conversely, a QI that is an FFI and that does not make the election to be withheld upon with respect to a payment of U.S. source FDAP income is required to assume primary withholding responsibility under chapter 3 for that payment. The election to be withheld upon is only available with respect to a payment of U.S. source FDAP income if—

(*1*) The withholding agent is a participating FFI, reporting Model 1 FFI, QI, or a U.S. withholding agent;

(*2*) The person who receives the payment is a participating FFI or registered deemed-compliant FFI that acts as a QI with respect to the payment;

(*3*) The person who receives the payment provides the withholding agent, at or before the time of the payment, with a valid intermediary withholding certificate with respect to the payment that notifies the withholding agent that it has elected to be withheld upon, certifies that it is not assuming primary withholding responsibility under chapter 3, and designates whether such election is made for all accounts held with the withholding agent or for the specific accounts identified on the withholding certificate; and

(*4*) The intermediary withholding certificate is accompanied by a withholding statement described in § 1.1471-3(c)(3)(iii)(B).

(B) ***Election to be withheld upon for gross proceeds.*** [Reserved]

(iv) ***Withholding obligation of a territory financial institution.*** A territory financial institution that is a flow-through entity or that acts as an intermediary with respect to a withholdable payment has an obligation to withhold (to the extent required under this section and § 1.1472-1(b)) if it agrees to be treated as a U.S. person with respect to the payment for purposes of both chapter 4 and § 1.1441-1(b)(2)(iv)(A). A territory financial institution that is a flow-through entity or that acts as an intermediary with respect to a withholdable payment is not required to withhold under paragraph (a)(1) of this section or § 1.1472-1(b), however, if it has provided the withholding agent that is a U.S. withholding agent, participating FFI, reporting Model 1 FFI, or QI with all of the documentation described in § 1.1471-3(c)(3)(iii) (in which it has not agreed to be treated as a U.S. person with respect to the payment), and it does not know, or have reason to know, that another withholding agent failed to withhold the correct amount or failed to report the payment correctly under § 1.1474-1(d).

(v) ***Withholding obligation of a foreign branch of a U.S. financial institution.*** A foreign branch of a U.S. financial institution is a U.S. withholding agent and a payee that is a U.S. person, and is generally not an FFI. However, a foreign branch of a U.S. financial institution that is also a reporting Model 1 FFI is both a withholding agent and a registered deemed-compliant FFI. Additionally, a QI branch of a U.S. financial institution is both a withholding agent and either a participating FFI or a registered deemed-compliant FFI. Therefore, a foreign branch of a U.S.

financial institution is not subject to withholding under chapter 4 but has an obligation to withhold under this section and § 1.1472-1 and may be liable for the tax if it fails to do so. See § 1.1471-2(a) (requirement to withhold on payments to FFIs) and § 1.1471-3(a)(3)(iii) (U.S. intermediary or agent of a foreign person). A foreign branch that is a reporting Model 1 FFI or a reporting Model 2 FFI may apply the procedures under Annex I of an applicable IGA to document the chapter 4 status of a payee of a withholdable payment that is a holder of an account maintained by the branch in the Model 1 or Model 2 IGA jurisdiction. A QI branch of a U.S. financial institution must withhold in accordance with this chapter as provided in the QI agreement in addition to meeting its obligations under either § 1.1471-4(b) and its FFI agreement or § 1.1471-5(f).

(vi) ***Payments of gross proceeds.*** [Reserved]

(3) ***Coordination of withholding under sections 1471(a) and (b).*** The following entities are deemed to satisfy their withholding obligations under section 1471(a) and this section: participating FFIs that comply with the withholding requirements of § 1.1471-4(b); exempt beneficial owners; section 501(c) entities described in § 1.1471-5(e)(5)(v); and nonprofit organizations described in § 1.1471-5(e)(5)(vi). See § 1.1471-5(f) for when a deemed-compliant FFI is deemed to satisfy its withholding obligations under section 1471(a) and this section.

(4) ***Payments for which no withholding is required.*** A withholding agent that has determined, in accordance with the documentation requirements and other rules provided in § 1.1471-3, that the payee of a withholdable payment is a foreign entity must determine whether the payment is exempt from withholding. Paragraphs (a)(4)(i) through (viii) of this section describe the circumstances in which a withholdable payment is not subject to withholding under section 1471(a) and this section.

(i) ***Exception to withholding if the withholding agent lacks control, custody, or knowledge*** —

(A) ***In general.*** A withholding agent that is not related to the payee or beneficial owner has an obligation to withhold under chapter 4 only to the extent that, at any time between the date that the obligation to withhold would arise (but for the provisions of this paragraph (a)(4)(i)) and the due date for filing the return on Form 1042 (including extensions) for the year in which the payment occurs, it has control over or custody of money or property owned by the payee or beneficial owner from which to withhold an amount and has knowledge of the facts that give rise to the payment. The exemption from the obligation to withhold under this paragraph (a)(4)(i) does not apply, however, to payments with respect to stock or other securities or if the lack of control or custody of money or property from which to withhold is part of a pre-arranged plan known to the withholding agent to avoid withholding under section 1471 or 1472. A withholding agent does not lack control over money or property for purposes of this paragraph (a)(4)(i) if the withholding agent directs another party to make the payment. Thus, for example, a principal does not cease to have control over a payment when it contracts with a paying agent to make the payments to its account holders in lieu of paying the account holders directly. Further, a withholding agent does not lack knowledge of the facts that give rise to a payment merely because the withholding agent does not know the character or source of the payment for U.S. tax purposes. See paragraph (a)(5) of this section for rules addressing a withholding agent's obligations when the withholding agent has knowledge of the facts that give rise to the payment, but the character or source of the payment is not known. For purposes of this paragraph (a)(4)(i), a withholding agent is related to the payee or beneficial owner if it is related within the meaning of section 482. Any exemption from withholding pursuant to

this paragraph (a)(4)(i) applies without a requirement that documentation be furnished to the withholding agent. The special rules set forth in § 1.1441-2(d)(2) through (4), regarding the obligation of a withholding agent with respect to cancellation of debt, the satisfaction of a tax liability following underwithholding by a withholding agent, and amounts described in § 1.860G-3(b)(1) (regarding certain partnership allocations of REMIC net income with respect to a REMIC residual interest) also apply for purposes of chapter 4.

(B) ***Example.*** A, an individual, owns stock in DC, a domestic corporation, through a custodian, Bank 1, that is a participating FFI. A also has a money market account at Bank 2, which is also a participating FFI. DC pays a dividend of $1,000 that is deposited in A's custodial account at Bank 1. A then directs Bank 1 to transfer $1,000 to A's money market account at Bank 2. With respect to the payment of the dividend into A's custodial account with Bank 1, both DC and Bank 1 are withholding agents making a withholdable payment for which they have custody, control, and knowledge. See § 1.1473-1(a)(2)(vii)(B) and (d). Therefore, both DC and Bank 1 have an obligation to withhold on the payment unless they can reliably associate the payment with documentation sufficient to treat the respective payees as not subject to withholding under chapter 4. With respect to the wire transfer of $1,000 from A's account at Bank 1 to A's account at Bank 2, neither Bank 1 nor Bank 2 is required to withhold with respect to the transfer because neither bank has knowledge of the facts that gave rise to the payment. Even though Bank 1 is a custodian with respect to A's interest in DC and has knowledge regarding the $1,000 dividend paid to A, once Bank 1 credits the $1,000 dividend to A's account, the $1,000 becomes A's property. When A transfers the $1,000 to its account at Bank 2, this constitutes a separate payment about which Bank 1 has no knowledge regarding the type of payment made. Further, Bank 2 only has knowledge that it receives $1,000 to be credited to A's account but has no knowledge regarding the type of payment made. Accordingly, Bank 1 and Bank 2 have no withholding obligation with respect to the transfer from A's custodial account at Bank 1 to A's money market account at Bank 2.

(ii) ***Exception to withholding for certain payments made prior to July 1, 2016 (transitional)*** —

(A) ***In general.*** For any withholdable payment made prior to July 1, 2016, with respect to a preexisting obligation for which a withholding agent does not have documentation indicating the payee's status as a nonparticipating FFI, the withholding agent is not required to withhold under this section and section 1471(a) unless the payee is a prima facie FFI.

(B) ***Prima facie FFIs.*** If the payee is a prima facie FFI, the withholding agent must treat the payee as a nonparticipating FFI beginning on January 1, 2015, until the date the withholding agent obtains documentation sufficient to establish a different chapter 4 status of the payee. A prima facie FFI means any payee if—

(*1*) The withholding agent has available as part of its electronically searchable information a designation for the payee as a QI or NQI; or

(*2*) For an account maintained in the United States, the payee is presumed to be a foreign entity under § 1.1471-3(f) or is documented as a foreign entity for purposes of chapter 3 or 61, and the withholding agent has recorded as part of its

electronically searchable information one of the following North American Industry Classification System or Standard Industrial Classification codes indicating that the payee is a financial institution:

(*i*) Commercial Banking (NAICS 522110).

(*ii*) Savings Institutions (NAICS 522120).

(*iii*) Credit Unions (NAICS 522130).

(*iv*) Other Depositary Credit Intermediation (NAICS 522190).

(*v*) Investment Banking and Securities Dealing (NAICS 523110).

(*vi*) Securities Brokerage (NAICS 523120).

(*vii*) Commodity Contracts Dealing (NAICS 523130).

(*viii*) Commodity Contracts Brokerage (NAICS 523140).

(*ix*) Miscellaneous Financial Investment Activities (NAICS 523999).

(*x*) Open-End Investment Funds (NAICS 525910).

(*xi*) Commercial Banks, NEC (SIC 6029).

(*xii*) Branches and Agencies of Foreign Banks (branches) (SIC 6081).

(*xiii*) Foreign Trade and International Banking Institutions (SIC 6082).

(*xiv*) Asset-Backed Securities (SIC 6189).

(*xv*) Security & Commodity Brokers, Dealers, Exchanges & Services (SIC 6200).

(*xvi*) Security Brokers, Dealers & Flotation Companies (SIC 6211).

(*xvii*) Commodity Contracts Brokers & Dealers (SIC 6221).

(*xviii*) Unit Investment Trusts, Face-Amount Certificate Offices, and Closed-End Management Investment Offices (SIC 6726).

(iii) ***Payments to a participating FFI.*** Except to the extent provided in paragraph (a)(2)(i) of this section, a withholding agent is not required to withhold under section 1471(a) and this section on a withholdable payment made to a payee that the withholding agent can treat as a participating FFI in accordance with § 1.1471-3(d)(4). For this purpose, a limited branch of a participating FFI is treated as a nonparticipating FFI.

(iv) ***Payments to a deemed-compliant FFI.*** Except to the extent provided in paragraph (a)(2)(i) or (iii) of this section, a withholding agent is not required to withhold under section 1471(a) and this section on a withholdable payment made to a payee that the withholding agent can treat as a deemed-compliant FFI in accordance with § 1.1471-3(d)(4) through (7). For this purpose, a limited branch of a deemed-compliant FFI is treated as a nonparticipating FFI.

(v) ***Payments to an exempt beneficial owner.*** A withholding agent is not required to withhold under section 1471(a) and this section on a withholdable payment to the extent that the withholding agent can reliably associate the payment with documentation to determine the portion of the payment that is allocable to an exempt beneficial owner in accordance with § 1.1471-3(d)(8). For example, a withholding agent is not required to withhold under this section on a

withholdable payment made to a payee that is an exempt beneficial owner with respect to the payment, to a nonparticipating FFI to the extent that the nonparticipating FFI receives the payment as an intermediary on behalf of one or more of its account holders that are exempt beneficial owners, or to a flow-through entity to the extent that the flow-through entity receives the payment with respect to one or more of its partners, beneficiaries, or owners (as applicable) that are exempt beneficial owners. See § 1.1471-3(d)(8)(ii) for special rules for a withholding agent to determine the portion of a withholdable payment that is beneficially owned by an exempt beneficial owner in the case of a payment made to a nonparticipating FFI.

(vi) ***Payments to a territory financial institution.*** A withholding agent is not required to withhold under section 1471(a) and this section on a withholdable payment made to a payee that the withholding agent can treat as a territory financial institution that beneficially owns the payment in accordance with § 1.1471-3(d)(10)(i). A withholding agent also is not required to withhold under this section on a withholdable payment that the withholding agent can treat, in accordance with § 1.1471-3(d)(10)(ii), as made to a territory financial institution that is a flow-through entity or that acts as an intermediary with respect to the payment and that has agreed to be treated as a U.S. person for purposes of chapters 3 and 4 with respect to the payment. A territory financial institution's agreement to be treated as a U.S. person for purposes of this section must be evidenced by a withholding certificate described in § 1.1471-3(c)(3)(iii)(F) furnished by the territory financial institution to the withholding agent.

(vii) ***Payments to an account held with a clearing organization with FATCA-compliant membership.*** [Reserved]

(viii) ***Payments to certain excepted accounts.*** A withholding agent is not required to withhold under chapter 4 on a withholdable payment made to an account described in § 1.1471-5(b)(2).

(5) ***Withholding requirements if source or character of payment is unknown*** —

(i) ***General rule.*** If a withholding agent has knowledge of the facts that give rise to a payment but is unable to determine at the time of payment the character of the payment sufficiently to determine whether it is a withholdable payment, such payment must be treated as a withholdable payment. If a withholding agent has knowledge of the facts that give rise to a payment but is unable to determine at the time of payment the source of the payment, such payment must be treated as U.S. source income. For example, if a withholding agent does not know at the time of payment the amount of the payment that is a withholdable payment, because that calculation depends on facts that are not known at the time of payment (for example, because the withholding agent does not know whether services were performed in the United States or whether the payment constitutes income to the recipient) the withholding agent must withhold an amount necessary to ensure that the amount withheld is not less than 30 percent of the amount that could be a withholdable payment, subject to the limitation that the withheld amount must not exceed 30 percent of the amount paid. Notwithstanding this paragraph (a)(5), a withholding agent may presume a payment to be effectively connected with the conduct of a trade or business in the United States, and thus, not a withholdable payment, if it can do so under § 1.1471-3(f)(6) (regarding payments to certain U.S. branches).

(ii) ***Optional escrow procedure.*** With respect to a payment described in paragraph (a)(5) of this section, the withholding agent may elect to retain 30 percent of the payment to hold in escrow until the earlier of the date that the amount of the withholdable payment can be determined or

one year from the date the amount is placed in escrow, at which time either the withholding becomes due under this section or, to the extent that it is determined that the payment is of a type for which no withholding is required, the escrowed amount must be paid to the payee.

(b) ***Grandfathered obligations*** —

(1) ***Grandfathered treatment of outstanding obligations.*** Notwithstanding § 1.1473-1(a), a withholdable payment does not include any payment made under a grandfathered obligation described in paragraph (b)(2)(i)(A) of this section, or any gross proceeds from the disposition of such an obligation. Notwithstanding § 1.1471-5(h), a foreign passthru payment does not include any payment made under a grandfathered obligation described in paragraph (b)(2)(i)(A) or (B) of this section, or any gross proceeds from the disposition of such an obligation. A premium paid with regard to an insurance contract or annuity contract that is a grandfathered obligation is treated as a payment made under a grandfathered obligation.

(2) ***Definitions.*** The following definitions apply solely for purposes of this paragraph (b).

(i) ***Grandfathered obligation*** —

(A) The term *grandfathered obligation* means—

(*1*) Any obligation outstanding on July 1, 2014;

(*2*) Any obligation that gives rise to a withholdable payment solely because the obligation is treated as giving rise to a dividend equivalent pursuant to section 871(m) and the regulations thereunder, provided that the obligation is executed on or before the date that is six months after the date on which obligations of its type are first treated as giving rise to dividend equivalents;

(*3*) Any agreement requiring a secured party to make a payment with respect to, or to repay, collateral posted to secure a grandfathered obligation. If collateral (or a pool of collateral) secures both grandfathered obligations and obligations that are not grandfathered, the collateral posted to secure the grandfathered obligations may be determined by allocating (pro rata by value) the collateral (or each item comprising the pool of collateral) to all outstanding obligations secured by the collateral (or pool of collateral) or, if the collateral cannot be allocated pro rata to all obligations, by allocating all collateral to obligations that are not grandfathered and withholding to the extent required under chapter 4; and

(*4*) Any obligation that gives rise to substitute interest (as defined in § 1.861-2(a)(7)) that arises from the payee posting a grandfathered obligation described in paragraph (b)(2)(i)(A)(*1*) of this section as collateral.

(B) Solely for purposes of a foreign passthru payment, the term *grandfathered obligation* also includes any obligation that is executed on or before the date that is six months after the date on which final regulations defining the term foreign passthru payment are filed with the FEDERAL REGISTER.

(ii) ***Obligation*** —

(A) Except as otherwise provided in paragraph (b)(2)(ii)(B) of this section, the term *obligation* means any legally binding agreement or instrument. An obligation for purposes of this paragraph (b)(2)(i) includes, for example—

(1) A debt instrument (for example, a bond, guaranteed investment certificate, or term deposit);

(2) An agreement to extend credit for a fixed term (for example, a line of credit or a revolving credit facility), provided that the agreement as of its issue date fixes the material terms (including a stated maturity date) under which the credit will be provided;

(3) A derivatives transaction entered into between counterparties under an ISDA Master Agreement that is evidenced by a confirmation;

(4) A life insurance contract under which the entire contract value is payable no later than upon the death of the individual(s) insured under the contract but, in the case of a life insurance contract that contains a provision that permits the substitution of a new individual as the insured under the contract, only until a substitution occurs; and

(5) An immediate annuity contract payable for a period certain or for the life of the annuitant.

(B) An *obligation* for purposes of this paragraph (b)(2)(ii) does not include any legal agreement or instrument that—

(1) Is treated as equity for U.S. tax purposes;

(2) Lacks a stated expiration or term (for example, a savings deposit or demand deposit, a deferred annuity contract, or an annuity contract that permits a substitution of a new individual as the annuitant under the contract);

(3) Is a brokerage agreement, custodial agreement, investment linked insurance contract, investment linked annuity contract, or similar agreement to hold financial assets for the account of others and to make and receive payments of income and other amounts with respect to such assets; or

(4) Is a master agreement that merely sets forth standard terms and conditions that are intended to apply to a series of transactions between parties but that does not set forth all of the specific terms necessary to conclude a particular transaction.

(iii) ***Date outstanding.*** Except as provided in the following sentence, an obligation that constitutes indebtedness for U.S. tax purposes is outstanding on the date provided in paragraph (b)(2)(i) if it has an issue date before such date. In all other cases, including an agreement described in paragraph (b)(2)(ii)(A)(2) of this section, an obligation is outstanding on the date provided in paragraph (b)(2)(i) if a legally binding agreement establishing the obligation was executed between the parties to the agreement before such date. Any material modification of an outstanding obligation will result in the obligation being treated as newly issued or executed as of the effective date of such modification.

(iv) ***Material modification.*** In the case of an obligation that constitutes indebtedness for U.S. tax purposes, a material modification is any significant modification of the debt instrument as defined in § 1.1001-3(e). For life insurance contracts, a material modification includes any substitution of the insured under the contract. In all other cases, whether a modification of an obligation is material is determined based on the facts and circumstances.

(3) *Application to flow-through entities* —

(i) ***Partnerships.*** A payment made under a grandfathered obligation includes a payment made to a partnership with respect to such obligation and a payment made with respect to a partnership's disposition of such obligation. A payment made under a grandfathered obligation also includes the income from such obligation that is includible in the gross income of a partner with respect to a capital or profits interest in the partnership and the gross proceeds allocated to a partner from the disposition of such obligation as determined under § 1.1473-1(a)(5)(vii).

(ii) ***Simple trusts.*** A payment made under a grandfathered obligation includes a payment made to a simple trust with respect to such obligation, including a payment made with respect to a simple trust's disposition of such obligation. A payment made under a grandfathered obligation also includes income from such obligation that is includible in the income of a beneficiary and further includes a beneficiary's share of the gross proceeds from a disposition of such obligation as determined under § 1.1473-1(a)(5)(vii).

(iii) ***Grantor trusts.*** A payment made under a grandfathered obligation includes a payment made to a grantor trust with respect to such obligation, including a payment made with respect to the trust's disposition of such obligation. A payment made under a grandfathered obligation also includes income from such obligation that is includible in the gross income of a person that is treated as an owner of the trust and the gross proceeds from the disposition of such obligation to the extent such owner is treated as owning the portion of the trust that consists of the obligation.

(4) ***Determination by withholding agent of grandfathered treatment*** —

(i) ***In general.*** A withholding agent other than the issuer of the obligation (or agent of the issuer) may, absent actual knowledge, rely on a written statement by the issuer of the obligation to determine if such obligation meets the requirements for grandfathered treatment provided under this paragraph (b).

(ii) ***Determination of material modification.*** For purposes of paragraph (b)(2)(iv) of this section (defining material modification), a withholding agent, other than the issuer of the obligation (or an agent of the issuer), is required to treat a modification of the obligation as material only if the withholding agent has actual knowledge thereof, such as in the event the withholding agent receives a disclosure indicating that there has been or will be a material modification to such obligation. The issuer of the obligation (or an agent of the issuer) that is a withholding agent is required to treat a modification of the obligation as material if the withholding agent knows or has reason to know that a material modification has occurred with respect to the obligation.

(iii) ***Record retention.*** A withholding agent that relies on a document provided by the issuer of an obligation as described in paragraph (b)(4)(i) or (ii) of this section must retain such document in its records for the applicable period of limitations on assessment and collection with respect to amounts paid under the obligation or from disposition of the obligation.

(c) ***Effective/applicability date.*** This section applies on January 6, 2017. However, taxpayers may apply these provisions as of January 28, 2013. (For the rules that apply beginning on January 28, 2013, and before January 6, 2017, see this section as in effect and contained in 26 CFR part 1 revised April 1, 2016.)

[T.D. 9610, 78 FR 5911, Jan. 28, 2013; 78 FR 55203, Sept. 10, 2013, as amended by T.D. 9657, 79 FR 12828, Mar. 6, 2014; 79 FR 37176, July 1, 2014; T.D. 9809, 82 FR 2150, Jan. 6, 2017; 82 FR 29729, June 30, 2017]

§ 1.1471-3 Identification of payee.

(a) *Payee defined* —

(1) ***In general.*** Except as otherwise provided in this paragraph (a), for purposes of chapter 4 a payee is the person to whom a payment is made, regardless of whether such person is the beneficial owner of the amount.

(2) ***Payee with respect to a financial account.*** For purposes of payments made to a financial account and except as otherwise provided in paragraph (a)(3) of this section, the payee is the holder of the financial account.

(3) *Exceptions* —

(i) *Certain foreign agents or intermediaries* —

(A) Except as otherwise provided in paragraphs (a)(3)(iv) and (vi) of this section (applicable to territory financial institutions and certain U.S. branches), a foreign person that is acting as an agent or intermediary with respect to a payment in accordance with paragraph (b)(1) of this section is not the payee if such foreign person is—

(*1*) An NFFE, unless the NFFE is a QI that has assumed primary withholding responsibility; or

(*2*) In the case of a payment of U.S. source FDAP income, a participating FFI, deemed-compliant FFI, or restricted distributor, unless the participating FFI, deemed-compliant FFI, or restricted distributor is a QI that has assumed primary withholding responsibility.

(B) In the case of an agent or intermediary described in paragraph (a)(3)(i)(A) of this section, the payee is the person or persons for whom the agent or intermediary collects the payment. Thus, for example, the payee of a payment of U.S. source FDAP income that the withholding agent can reliably associate with a withholding certificate from a QI that does not assume primary withholding responsibility with respect to the payment under chapter 3, or a payment to a participating FFI that is an NQI, is the person or persons for whom the QI or NQI acts.

(ii) *Foreign flow-through entity* —

(A) A foreign entity that is a flow-through entity is a payee with respect to a payment only if the flow-through entity is—

(*1*) An FFI that is not a participating FFI or deemed-compliant FFI, or restricted distributor receiving a payment of U.S. source FDAP income;

(*2*) An excepted NFFE that is not acting as an agent or intermediary with respect to the payment;

(*3*) A WP or WT that is not acting as an agent or intermediary with respect to the payment; or

(*4*) Receiving income that is (or is deemed to be) effectively connected with the conduct of a trade or business in the United States, or receiving a payment of gross proceeds from the sale of property that can produce income that is effectively connected with the conduct of a trade or business in the United States and that is excluded from the definition of a withholdable payment under § 1.1473-1(a)(4).

(B) A withholding agent that makes a withholdable payment to a flow-through entity that is not described in paragraphs (a)(3)(ii)(A)(*1*) through (*3*) of this section will be required to treat the partner, beneficiary, or owner (as applicable) as the payee (looking through partners, beneficiaries, and owners that are themselves flow-through entities that are not described in paragraphs (a)(3)(ii)(A)(*1*) through (*3*)).

(iii) ***U.S. intermediary or agent of a foreign person.*** A withholding agent that makes a withholdable payment to a U.S. person and has actual knowledge that the person receiving the payment is acting as an intermediary or agent of a foreign person with respect to the payment must treat such foreign person, and not the intermediary or agent, as the payee of such payment. Notwithstanding the previous sentence, a withholding agent that makes a withholdable payment to a U.S. financial institution or a U.S. insurance broker (to the extent such withholdable payment is a payment of premiums) that is acting as an intermediary or agent with respect to the payment on behalf of one or more foreign persons may treat the U.S. financial institution or U.S. insurance broker as the payee if the withholding agent does not have reason to know that the U.S. financial institution or U.S. insurance broker will not comply with its obligations to withhold under sections 1471 and 1472.

(iv) ***Territory financial institution.*** A withholding agent that makes a withholdable payment to a territory financial institution that is a flow-through entity or is acting as an intermediary or agent with respect to the payment may treat the territory financial institution as the payee only if the territory financial institution has agreed (as evidenced by a withholding certificate described in paragraphs (c)(3)(iii)(A) and (F) of this section) to be treated as a U.S. person with respect to the payment for purposes of both chapters 3 and 4. In all other cases, the withholding agent must treat as the payee the partner, beneficiary, or owner (as applicable) of the territory financial institution that is a flow-through entity (looking through partners, beneficiaries, and owners that are themselves flow-through entities that are not described in paragraphs (a)(3)(ii)(A)(*1*) through (*3*)) or the person on whose behalf the territory financial institution is acting.

(v) ***Disregarded entity or limited branch.*** Except as otherwise provided in paragraph (a)(3)(v) through (vii) of this section, a withholding agent that makes a withholdable payment to an entity that is disregarded for U.S. federal tax purposes under § 301.7701-2(c)(2)(i) of this chapter as an entity separate from its single owner must treat the single owner as the payee. The rules under § 1.1471-3(d)(4) and (e)(3) apply to determine the circumstances under which a withholding agent may treat a payment made to a disregarded entity owned by an FFI as made to a payee that is a participating FFI or registered deemed-compliant FFI, and not as a payment made to a payee that is a nonparticipating FFI. A withholding agent that makes a payment to a limited branch (including an entity disregarded as a separate entity from its owner if such owner is an FFI and the disregarded entity is unable to comply with the terms of an FFI agreement with respect to accounts that it maintains) will be required to treat the payment as being made to a nonparticipating FFI.

(vi) ***U.S. branch treated as a U.S. person.*** A withholdable payment to a U.S. branch is a payment to a U.S. person if the U.S. branch is treated as a U.S. person (as defined in § 1.1471-1(b)(135)). In such case, the U.S. branch is treated as the payee. A U.S. branch treated as a U.S. person, however, is not treated as a U.S. person for purposes of the withholding certificate it may provide to a withholding agent for purposes of chapter 4. Accordingly, a U.S. branch treated as a U.S. person must furnish a withholding certificate on a Form W-8 to certify its chapter 4 status (and not a Form W-9, "Request for Taxpayer Identification Number and Certification"). See also paragraph (f)(6) of this section for the rules under which a withholding agent can presume a payment to a U.S. branch constitutes income that is effectively connected with a U.S. trade or business. A U.S. branch treated as a U.S. person may not make an election to be withheld upon, as described in section 1471(b)(3) and § 1.1471-2(a)(2)(iii), for purposes of chapter 4. See § 1.1471-4(c)(2)(v) for the rule requiring a U.S. branch treated as a U.S. person to apply the due diligence rules applicable to a U.S. withholding agent. See also § 1.1474-1(i)(1) and (2) for the requirement of a U.S. branch to report information regarding certain U.S. owners of owner documented FFIs and passive NFFEs. See § 1.1471-4(d) for rules for when a U.S. branch reports as a U.S. person.

(vii) ***Foreign branch of a U.S. person.*** A payment to a foreign branch of a U.S. person is generally a payment to a U.S. payee. However, a payment to a foreign branch of a U.S. financial institution will be treated as a payment to an FFI if the foreign branch is a QI that is acting as an intermediary with respect to the payment. Therefore, a foreign branch that is a QI will provide the withholding agent with an intermediary withholding certificate and the withholding agent will report the payment as having been made to the foreign branch on a Form 1042-S.

(b) ***Determination of payee's status.*** Except as otherwise provided in this section, a withholding agent must base its determination of the chapter 4 status of a payee on documentation that the withholding agent can reliably associate with such payment. If a withholding agent makes a payment to a person that is not the payee, the withholding agent will be required to determine the chapter 4 status of each intermediary or flow-through entity in the payment chain until the withholding agent is able to identify the payee. Paragraph (c) of this section provides rules for when a withholding agent can reliably associate a payment with appropriate documentation. Paragraph (d) of this section provides documentation requirements applicable to each class of payees, including exceptions for payments made with respect to offshore obligations or preexisting obligations. Paragraph (e) provides standards for determining when a withholding agent will be considered to have reason to know that a claim of exemption from withholding is unreliable or incorrect. Paragraph (f) of this section provides presumptions that apply for purposes of determining a payee's chapter 4 status in the absence of documentation or if the documentation provided is unreliable or incorrect.

(1) ***Determining whether a payment is received by an intermediary.*** A withholding agent must treat the person who receives a payment as an intermediary if it can reliably associate the payment with a valid intermediary withholding certificate on which the person who receives the payment claims to be a QI or NQI. A U.S. person's foreign branch that is acting in its capacity as a QI is treated as a foreign intermediary. A withholding agent that makes a payment with respect to an offshore obligation must also treat the person who receives the payment as an intermediary if the person has provided written notification, whether or not such notification is signed, that it accepts the payment on behalf of another person or persons. A withholding agent may rely on the type of certificate furnished as determinative of whether the person who receives the payment is an intermediary, unless the withholding agent knows or has reason to know that the certificate is incorrect. For example, a withholding agent that receives a beneficial owner withholding certificate from an FFI

may treat the FFI as the beneficial owner unless it has information in its records that would indicate otherwise or the certificate contains information that is not consistent with beneficial owner status (for example, sub-account numbers that do not correspond to accounts maintained by the withholding agent for such person or names of one or more persons other than the person submitting the withholding certificate). If the FFI receives a payment in part as a beneficial owner and in part as an intermediary, the withholding agent may request that the FFI furnish two certificates, that is, a beneficial owner certificate for the amounts it receives as a beneficial owner, and an intermediary withholding certificate for the amounts it receives as an intermediary. A withholding agent that cannot reliably associate a payment with documentation sufficient to treat the person who receives the payment as an intermediary or as other than an intermediary pursuant to this paragraph (b)(1) must follow the presumption rules set forth in paragraph (f)(5) of this section to determine whether it must treat the person who receives the payment as an intermediary. A determination that a payment is made to an intermediary under this paragraph (b)(1) is not a determination that the payment can be reliably associated with documentation. See paragraph (c)(2) of this section for rules on reliably associating a payment with documentation if such payment is made through an intermediary.

(2) ***Determination of entity type.*** A person's entity classification for purposes of chapter 4 is the person's entity classification for U.S. federal income tax purposes. Thus, for example, an entity that is disregarded as a legal entity in its country of organization or an arrangement that does not have a legal personality and is not a juridical person in the country in which it was organized will be treated as an entity for purposes of chapter 4 if it is an entity for U.S. federal income tax purposes. A withholding agent may rely upon a person's entity classification contained in a valid Form W-8 or W-9 if the withholding agent has no reason to know that the entity classification is incorrect. A withholding agent that makes a payment with respect to an offshore obligation may also rely upon a written notification provided by the person who receives the payment, regardless of whether such notification is signed, that indicates the person's entity classification (other than as a QI, WP, or WT) unless the withholding agent knows or has reason to know that the entity classification indicated by the person who receives the payment is incorrect. A withholding agent may not rely on a person's claim of classification other than as a corporation if the person's name indicates that the person is a per se corporation described in § 301.7701-2(b)(8) of this chapter unless the certificate or written statement contains a statement that the person is a grandfathered per se corporation described in § 301.7701-2(b)(8) and that its grandfathered status has not been terminated.

(3) ***Determination of whether the payment is made to a QI, WP, or WT.*** A withholding agent may treat the person who receives a payment as a QI, WP, or WT if the withholding agent can reliably associate the payment with a valid Form W-8IMY, as described in paragraph (c)(3)(iii) of this section, that indicates that the person who receives the payment is a QI, WP, or WT, provides the person's QI-EIN, WP-EIN, or WT-EIN, and the person's GIIN, if applicable.

(4) ***Determination of whether the payee is receiving effectively connected income.*** A withholding agent may treat a payment as being made to a payee that is receiving income that is effectively connected with a trade or business in the United States, or gross proceeds from the sale of property that can produce income that is effectively connected with the conduct of a trade or business in the United States, if it can reliably associate the payment with a valid Form W-8ECI described in paragraph (c)(3)(v) of this section or if it can do so under the presumption rule in paragraph (f)(6) of this section.

(c) ***Rules for reliably associating a payment with a withholding certificate or other appropriate documentation*** —

(1) ***In general.*** A withholding agent can reliably associate a withholdable payment with valid documentation if, before the payment, it has obtained (either directly from the payee or through its agent) valid documentation appropriate to the payee's chapter 4 status as described in paragraph (d) of this section, it can reliably determine how much of the payment relates to the valid documentation, and it does not know or have reason to know that any of the information, certifications, or statements in, or associated with, the documentation are unreliable or incorrect. Thus, a withholding agent cannot reliably associate a withholdable payment with valid documentation provided by a payee to the extent such documentation appears unreliable or incorrect with respect to the claims made, or to the extent that information required to allocate all or a portion of the payment to each payee is unreliable or incorrect. A withholding agent may rely on information and certifications contained in withholding certificates or other documentation without having to inquire into the truthfulness of the information or certifications, unless it knows or has reason to know that the information or certifications are untrue. A withholding agent may rely upon the same documentation for purposes of both chapters 3 and 4 provided the documentation is sufficient to meet the requirements of each chapter. Alternatively, a withholding agent may elect to rely upon the presumption rules of paragraph (f) of this section in lieu of obtaining documentation from the payee. A withholding certificate will be considered provided by a payee if a withholding agent obtains the certificate from a third party repository (rather than directly from the payee or through its agent) and the requirements in § 1.1441-1(e)(4)(iv)(E) are satisfied. A withholding certificate obtained from a third party repository must still be reviewed by the withholding agent in the same manner as any other documentation to determine whether it may be relied upon for chapter 4 purposes. A withholding agent may rely on an electronic signature on a withholding certificate if the requirements in § 1.1441-1(e)(4)(i)(B) are satisfied.

(2) ***Reliably associating a payment with documentation if a payment is made through an intermediary or flow-through entity that is not the payee —***

(i) ***In general.*** A withholding agent that makes a payment to a foreign intermediary or foreign flow-through entity that is not the payee under paragraph (a) of this section can reliably associate the payment with valid documentation if, in addition to the documentation described in paragraph (d) of this section that is relevant to each payee, the withholding agent also has obtained a valid Form W-8IMY, described in paragraph (c)(3)(iii) of this section, from the intermediary or flow-through entity (and, with respect to a payment made through a chain of intermediaries or flow-through entities, has received a valid Form W-8IMY from each intermediary or flow-through entity in that chain). An intermediary or flow-through entity that is a participating FFI or registered deemed-compliant FFI receiving a payment of U.S. source FDAP income may, in lieu of providing the withholding agent with documentation for each payee, provide pooled allocation information to the extent and in the manner permitted by paragraph (c)(3)(iii)(B)(2) of this section. With respect to the documentation provided for the owners of a foreign flow-through entity, the foreign flow-through entity is permitted to provide the documentary evidence described in paragraph (d) of this section applicable to each payee in lieu of a withholding certificate, regardless of whether the payment is made with respect to an offshore obligation.

(ii) ***Exception to entity account documentation rules for an offshore account of an intermediary or flow-through entity.*** In the case of an offshore account held by an intermediary or flow-through entity not receiving a payment of U.S. source FDAP income, an FFI may, in lieu of obtaining a withholding certificate, reliably associate such account with valid documentation if the FFI has obtained a written statement certifying as to the account holder's chapter 4 status and stating

that the account holder is a flow-through entity or is acting as an intermediary with respect to the payment. In such case, the intermediary or flow-through entity will also be required to provide the withholding statement that generally accompanies the Form W-8IMY, designating the payees and the appropriate amount that should be allocated to each payee, and valid documentation for each payee. If no such withholding statement or underlying documentation is provided, the payment will be treated as made to a nonparticipating FFI.

(3) ***Requirements for validity of certificates*** —

(i) ***Form W-9.*** A valid Form W-9, or a substitute form, must meet the requirements prescribed in § 31.3406(h)-3 of this chapter, including the requirement that the form contain the payee's name and TIN, and be signed and dated under penalties of perjury by the payee or a person authorized to sign for the payee pursuant to sections 6061 through 6063 and the regulations thereunder. A foreign person, including a U.S. branch of a foreign person that is treated as a U.S. person under § 1.1441-1(b)(2)(iv), or a foreign branch of a U.S. financial institution that is a QI, may not provide a Form W-9.

(ii) ***Beneficial owner withholding certificate (Form W-8BEN).*** A beneficial owner withholding certificate includes a Form W-8BEN (or a substitute form) and such other form as the IRS may prescribe. A beneficial owner withholding certificate is valid only if its validity period has not expired, it is signed under penalties of perjury by a person with authority to sign for the person whose name is on the form, and it contains—

(A) The person's name, permanent residence address, and TIN (if required);

(B) A certification that the person is not a U.S. citizen (if the person is an individual) or a certification of the country under the laws of which the person is created, incorporated, or governed (for a person other than an individual);

(C) The person's entity classification for U.S. tax purposes;

(D) The person's chapter 4 status; and

(E) Such other information required under paragraph (d) of this section applicable to the chapter 4 status selected or otherwise required by the regulations under section 1471 or 1472, or by the form or its accompanying instructions in addition to, or in lieu of, the information described in this paragraph (c)(3)(ii).

(iii) ***Withholding certificate of an intermediary, qualified intermediary, flow-through entity, or U.S. branch (Form W-8IMY)*** —

(A) ***In general.*** A withholding certificate of an intermediary, qualified intermediary, flow-through entity, or U.S. branch of such entity (whether or not such branch is treated as a U.S. person) is valid for purposes of chapter 4 only if it is furnished on a Form W-8IMY, an acceptable substitute form, or such other form as the IRS may prescribe, it is signed under penalties of perjury by a person with authority to sign for the person named on the form, its validity period has not expired, and it contains the following information, statements, and certifications—

(*1*) The name and permanent residence address of the person.

(*2*) The country under the laws of which the person is created, incorporated, or governed.

(*3*) The person's entity classification for U.S. tax purposes.

(*4*) The person's chapter 4 status.

(*5*) A GIIN, in the case of a participating FFI or a registered deemed-compliant FFI (including a QI, WP, or WT that is a participating FFI or registered deemed-compliant FFI), and an EIN in the case of a QI, WP, or WT. Additionally, if a branch (other than a U.S. branch) of a participating FFI or registered deemed-compliant FFI outside of its country of residence acts as an intermediary, a GIIN of such branch must be provided on the withholding certificate. In the case of a U.S. branch, see the rules in paragraph (c)(3)(iii)(H) of this section.

(*6*) In the case of an intermediary certificate, a certification that, with respect to accounts listed on the withholding statement, the intermediary is not acting for its own account.

(*7*) With respect to a withholding certificate of a QI, a certification that it is acting as a QI with respect to the accounts listed on the withholding statement.

(*8*) In the case of a participating FFI or registered deemed-compliant FFI (including a U.S. branch of either such entities that is not treated as a U.S. person) that is an NQI, NWP, NWT, or a QI that makes an election to be withheld upon, an FFI withholding statement that meets the requirements of paragraphs (c)(3)(iii)(B)(*1*) and (*2*) of this section.

(*9*) In the case of a territory financial institution that does not agree to be treated as a U.S. person or a U.S. branch that is not a U.S. branch of a participating FFI, registered deemed-compliant FFI, or nonparticipating FFI, a chapter 4 withholding statement that meets the requirements of paragraphs (c)(3)(iii)(B)(*1*) and (*3*) of this section.

(*10*) In the case of an NFFE or certified deemed-compliant FFI that is an NQI, NWP, or NWT and is not the payee, a chapter 4 withholding statement that meets the requirements of paragraphs (c)(3)(iii)(B)(*1*) and (*3*) of this section.

(*11*) In the case of a nonparticipating FFI receiving a payment on behalf of one or more exempt beneficial owners, an exempt beneficial owner withholding statement that meets the requirements of paragraphs (c)(3)(iii)(B)(*1*) and (*4*) of this section.

(*12*) Any other information, certifications, or statements as may be required by the form or its accompanying instructions in addition to, or in lieu of, the information and certifications described in this paragraph.

(B) ***Withholding statement*** —

(*1*) ***In general.*** A withholding statement forms an integral part of the withholding certificate and the penalties of perjury statement provided on the withholding certificate applies to the withholding statement as well. The withholding statement may be provided in any manner, and in any form, to which the person submitting the form and the withholding agent mutually agree, including electronically. A withholding statement may be provided electronically only if it meets the requirements of § 1.1441-1(e)(3)(iv)(B). The withholding statement must be updated as often as necessary for the withholding agent to meet its reporting and withholding obligations under chapter 4. A withholding agent will be liable for tax, interest, and penalties under § 1.1474-1(a) to the extent it does not follow the presumption rules

of paragraph (f) of this section for any payment, or portion thereof, for which a withholding statement is required and the withholding agent does not have a valid withholding statement prior to making a payment. A withholding agent that is making a withholdable payment for which a withholding statement is also required for purposes of chapter 3 may only rely upon the withholding statement if, in addition to providing the information required by paragraph (c)(3)(iii)(B) of this section, the withholding statement also includes all of the information required for purposes of chapter 3 and specifies the chapter 4 status of each payee or pool of payees identified on the withholding statement for purposes of chapter 3.

(2) ***Special requirements for an FFI withholding statement*** —

(*i*) An FFI withholding statement may include either payee-specific information or pooled information that indicates the portion of the payment allocable to a chapter 4 withholding rate pool of U.S. payees, each class of recalcitrant account holders described in § 1.1471-1(b)(20)(i), or a class of nonparticipating FFIs. In addition, an FFI withholding statement may include an allocation of a portion of the payment to a pool of account holders (other than nonqualified intermediaries and flow-through entities) for whom no reporting is required on any of Forms 1042-S, 1099, and 8966, provided that the FFI provides to the withholding agent for each account holder payee-specific information (including the payee's chapter 4 status (using the applicable status code used for filing Form 1042-S)) and any other information required for purposes of chapter 3 or 61 on the withholding statement, and the FFI provides documentation for each account holder in the pool (an *exempt payee pool*). For example, a participating FFI may provide on its withholding statement an exempt payee pool for a payment of U.S. source interest on a bank deposit not subject to withholding or reporting under chapter 4 that is allocable to a pool of foreign account holders (that is, a withholdable payment that is not reported on any of Forms 1042-S, 1099, and 8966) and provide to the withholding agent documentation for each account holder included in the pool. If payee-specific information is provided for purposes of chapter 4 it must indicate both the portion of the payment allocated to each payee and each payee's chapter 4 status (using the applicable status code used for filing Form 1042-S). A participating FFI that applies the escrow procedures described in § 1.1471-4(b)(6) for dormant accounts must also indicate the portion of the payment allocated to a chapter 4 withholding rate pool of recalcitrant account holders that hold dormant accounts for which the participating FFI (and not the withholding agent) will withhold in escrow. The withholding statement provided by a participating FFI that applies the election to backup withhold under § 1.1471-4(b)(3)(iii) must also indicate the portion of the reportable payment that is a withholdable payment allocated to each recalcitrant account holder subject to backup withholding under section 3406. See section 3406 for when backup withholding is required, including the exception to backup withholding under § 31.3406(g)-1(e). Regardless of whether the FFI withholding statement provides information on a pooled or payee-specific basis, a withholding statement provided by an FFI other than an FFI acting as a WP, WT, or QI with respect to the account must also identify each intermediary or flow-through entity that receives the payment and such entity's chapter 4 status (using the applicable status code used for filing Form 1042-S)

and GIIN (when required under paragraph (d) of this section), when applicable. An FFI withholding statement must also include any other information that the withholding agent or payor reasonably requests in order to fulfill its obligations under chapter 4, and chapters 3 and 61, if applicable.

(*ii*) An FFI withholding statement provided by a reporting Model 2 FFI or a reporting Model 1 FFI may indicate, with respect to a withholdable payment, that the payment is allocable to a chapter 4 withholding rate pool of U.S. payees, which is comprised of account holders receiving a payment that is not subject to withholding under chapter 3 or 4 or to backup withholding under section 3406 and that are, with respect to a reporting Model 2 FFI, the holders of non-consenting U.S. accounts as described in an applicable IGA when the FFI reports the accounts in one of the pools described in § 1.1471-4(d)(6) for the year in which the payment is made; or with respect to a reporting Model 1 FFI, the holders of accounts that have U.S. indicia for which appropriate documentation sufficient to treat the accounts as held by other than specified U.S. persons has not been provided pursuant to an applicable Model 1 IGA and the reporting Model 1 FFI reports the accounts as U.S. reportable accounts pursuant to the applicable Model 1 IGA for the year in which the payment is made.

(*iii*) An FFI withholding statement provided by a participating FFI or registered deemed-compliant FFI that is a non-U.S. payor (a payor other than a U.S. payor as defined in § 1.6049-5(c)(5)) may indicate, with respect to a withholdable payment, that the payment is allocable to a chapter 4 withholding rate pool of U.S. payees (in addition to the U.S. payees described in paragraph (c)(3)(iii)(B)(2)(*ii*) of this section), which is comprised of account holders that are not subject to withholding under chapter 3 or 4 or to backup withholding under section 3406 and that are, with respect to a participating FFI (including a reporting Model 2 FFI), account holders that hold U.S. accounts (as defined in § 1.1471-1(b)(134) and an applicable Model 2 IGA) that the FFI reports as U.S. accounts pursuant to § 1.1471-4(d)(3) or (5) for the year in which the payment is made; with respect to a registered deemed-compliant FFI (other than a reporting Model 1 FFI), account holders of U.S. accounts that the FFI reports pursuant to the conditions of its applicable deemed-compliant status under § 1.1471-5(f)(1) for the year in which the payment is made; or with respect to a reporting Model 1 FFI, account holders of U.S. accounts that the reporting Model 1 FFI reports as reportable U.S. accounts pursuant to an applicable Model 1 IGA, and which includes the U.S. TINs of such account holders, for the year in which the payment is made.

(*iv*) An FFI withholding statement provided by a participating FFI or a registered deemed-compliant FFI may include a certification that the FFI is reporting, for the year in which the payment is made, an account held by a passive NFFE with one or more substantial U.S. owners (or, with respect to a reporting Model 1 FFI or reporting Model 2 FFI, one or more controlling persons that are specified U.S. persons, as defined in an applicable IGA) as a U.S. account (excluding a non-

consenting U.S. account or an account held by a recalcitrant account holder) or, with respect to a reporting Model 1 FFI, a U.S. reportable account, in accordance with the terms of the FFI agreement or an applicable IGA.

(*v*) An FFI withholding statement provided by a participating FFI or a reporting Model 1 FFI may include a certification that the FFI is reporting to the IRS for the year of the payment all of the information described in § 1.1471-4(d) or § 1.1474-1(i)(1) (as applicable) with respect to all specified U.S. persons described in § 1.1471-3(d)(6)(iv)(A)(*1*) and (*2*) with respect to an account holder or payee that the FFI has agreed to treat as an owner-documented FFI.

(*3*) ***Special requirements for a chapter 4 withholding statement.*** A chapter 4 withholding statement must contain the name, address, TIN (if any), entity type, and chapter 4 status (using the applicable status code used for filing Form 1042-S) of each payee, the amount allocated to each payee, a valid withholding certificate or other appropriate documentation sufficient to establish the chapter 4 status of each payee, and each intermediary or flow-through entity that receives the payment on behalf of the payee, in accordance with paragraph (d) of this section, and any other information the withholding agent reasonably requests in order to fulfill its obligations under chapter 4. Notwithstanding the prior sentence, a chapter 4 withholding statement is permitted to provide pooled allocation information with respect to payees that are treated as nonparticipating FFIs (in lieu of providing the withholding agent with documentation for each payee). A chapter 4 withholding statement may include an allocation of a portion of the payment to a pool of payees (rather than to each payee) for whom no reporting is required on any of Forms 1042-S, 1099, and 8966, provided each payee is identified on the withholding statement and documentation is provided to the withholding agent for each payee included in the pool. If the withholdable payment is a reportable amount under chapter 3, see the provisions of § 1.1441-1(e)(3)(iv)(C) for any additional information that may be required on the withholding statement (including pooled information under the alternative procedures described in § 1.1441-1(e)(3)(iv)(D), if applicable).

(*4*) ***Special requirements for an exempt beneficial owner withholding statement.*** An exempt beneficial owner withholding statement must include the name, address, TIN (if any), entity type, and chapter 4 status (using the applicable status code used for filing Form 1042-S) of each exempt beneficial owner on behalf of which the nonparticipating FFI is receiving the payment, the amount of the payment allocable to each exempt beneficial owner, a valid withholding certificate or other documentation sufficient to establish the chapter 4 status of each exempt beneficial owner in accordance with paragraph (d) of this section, and any other information the withholding agent reasonably requests in order to fulfill its obligations under chapter 4. The withholding statement must allocate the remainder of the payment that is not allocated to an exempt beneficial owner to the nonparticipating FFI receiving the payment. With respect to the amount of the payment allocable to each exempt beneficial owner and subject to withholding under chapter 3, see § 1.1441-1(e)(3)(iv).

(5) ***Nonqualified intermediary withholding statement.*** A withholding agent that is making a withholdable payment to a nonqualified intermediary for which a withholding statement is required under chapters 3 or 4 may accept a withholding statement that meets the requirements described in § 1.1441-1(e)(3)(iv)(C)(*3*)(*i*) or (*ii*).

(C) ***Failure to provide allocation information.*** A withholding certificate that fails to provide allocation information or any of the required documentation for one or more of the payees will not be treated as invalid with respect to the persons for whom valid documentation and allocation information is properly provided. The portion of the payment that is not reliably associated with underlying documentation or that is not properly allocated will be treated in accordance with the presumption rules set forth in paragraph (f) of this section. For example, assume a withholding certificate that is provided by a participating FFI that is an NQI includes an FFI withholding statement that indicates that 50 percent of the payment is allocable to payees that are exempt for purposes of chapter 4 but does not allocate the remaining 50 percent of the payment for purposes of chapter 4. In such case, the withholding agent may treat 50 percent of the payment as exempt from chapter 4 and the remaining 50 percent that was not allocated will be treated, under the presumption rules set forth in paragraph (f) of this section, as made to a pool of payees that are nonparticipating FFIs.

(D) ***Special rules applicable to a withholding certificate of a QI that assumes primary withholding responsibility under chapter 3.*** A QI that assumes primary withholding responsibility under chapter 3 for a payment may not make an election to be withheld upon, as described in § 1.1471-2(a)(2)(iii), with respect to that payment. Thus, if a QI assumes primary withholding responsibility under chapter 3 with respect to a payment of U.S. source FDAP income, in addition to the other requirements described in paragraph (c)(3)(iii)(A) of this section, a withholding agent can reliably associate the payment with a valid withholding certificate only when the QI has also indicated on the intermediary withholding certificate that it will assume primary withholding responsibility for that payment for purposes of chapter 4.

(E) ***Special rules applicable to a withholding certificate of a QI that does not assume primary withholding responsibility under chapter 3.*** A QI that does not assume primary withholding responsibility under chapter 3 with respect to a payment of U.S. source FDAP income will be required to make the election to be withheld upon with respect to that payment. Thus, if a QI does not assume primary withholding responsibility under chapter 3, a withholding agent can reliably associate a payment of U.S. source FDAP income with a valid withholding certificate only when, in addition to the other information required by paragraph (c)(3)(iii)(A) of this section, the withholding certificate indicates that the QI does not assume primary withholding responsibility for that payment for purposes of chapter 4.

(F) ***Special rules applicable to a withholding certificate of a territory financial institution that agrees to be treated as a U.S. person.*** A withholding agent may reliably associate a payment with an intermediary withholding certificate or flow-through withholding certificate of a territory financial institution that agrees to be treated as a U.S. person if, in addition to the other information required by paragraph (c)(3)(iii)(A) of this section, the certificate contains an EIN of the territory financial institution and a certification that the

territory financial institution agrees to be treated as a U.S. person and accepts primary withholding responsibility with respect to the payment for purposes of both chapters 3 and 4.

(G) ***Special rules applicable to a withholding certificate of a territory financial institution that does not agree to be treated as a U.S. person.*** A withholding agent may reliably associate a payment with an intermediary withholding certificate or a flow-through withholding certificate of a territory financial institution that does not agree to be treated as a U.S. person if, in addition to the information required by paragraph (c)(3)(iii)(A) of this section, the certificate indicates that the institution has not agreed to be treated as a U.S. person for purposes of chapter 4 and the institution provides a withholding statement described in paragraphs (c)(3)(iii)(B)(*1*) and (*3*) of this section.

(H) ***Rules applicable to a withholding certificate of a U.S. branch.*** A withholding agent may reliably associate a payment with a withholding certificate of a U.S. branch of an FFI that is treated as a U.S. person for purposes of § 1.1441-1(b)(2)(iv) if, in addition to the other information required by paragraph (c)(2)(iii)(A) of this section, the certificate contains the EIN of the U.S. branch and a certification that the U.S. branch is described in paragraph § 1.1441-1(b)(2)(iv) and, accordingly, is required to accept primary withholding responsibility with respect to the payment for purposes of both chapters 3 and 4. A withholding agent may reliably associate a payment with a withholding certificate of a U.S. branch of an FFI that is not treated as a U.S. person and that applies the rules described in § 1.1471-4(d)(2)(iii)(C) if, in addition to the other information required by paragraph (c)(2)(iii)(A) of this section, the certificate contains the EIN of the U.S. branch and a certification that the U.S. branch applies the rules described in § 1.1471-4(d)(2)(iii)(C). However, the requirement to obtain the certification that a U.S. branch applies the rules described in § 1.1471-4(d)(2)(iii)(C) shall not apply to payments made on or before June 30, 2017.

(iv) ***Certificate for exempt status (Form W-8EXP).*** A Form W-8EXP is valid only if it contains the name, address, and chapter 4 status of the payee, the relevant certifications or documentation, and any other requirements indicated in the instructions to the form, and is signed under penalties of perjury by a person with authority to sign for the payee.

(v) ***Certificate for effectively connected income (Form W-8ECI).*** A Form W-8ECI is valid only if, in addition to meeting the requirements in the instructions to the form, it contains the name, address, and TIN of the payee (other than a GIIN), represents that the amounts for which the certificate is furnished are effectively connected with the conduct of a trade or business in the United States and are includable in the payee's gross income for the taxable year (or are gross proceeds from the sale of property that can produce income that is effectively connected with the conduct of a trade or business in the United States), and is signed under penalties of perjury by a person with authority to sign for the payee.

(4) ***Requirements for written statements.*** A written statement is a statement by the payee, or other person receiving the payment, that provides the person's chapter 4 status and any other information reasonably requested by the withholding agent to fulfill its obligations under chapter 4 with respect to the payment, such as whether the person is receiving the payment as a beneficial owner, intermediary, or flow-through entity. A written statement is valid only if it is provided by a person with respect to an offshore obligation, contains the name of the person, the person's address, the certifications relevant to the person's chapter 4 status (as contained on a withholding certificate),

any additional information required with respect to the chapter 4 status claimed as provided under paragraph (d) of this section (for example, a GIIN), and a signed and dated certification that the information provided on the form is accurate and will be updated by the individual within 30 days of a change in circumstances that causes the form to become incorrect. A written statement may be submitted in any form that is acceptable to the withholding agent, including a statement made as part of the account opening documentation. A written statement may be used in lieu of a withholding certificate only to the extent provided under § 1.1471-3(d), as applicable to the chapter 4 status claimed.

(5) ***Requirements for documentary evidence.*** Documentary evidence with respect to a payee is only reliable if it contains sufficient information to support the payee's claim of chapter 4 status.

(i) ***Foreign status.*** Acceptable documentary evidence supporting a claim of foreign status includes the following types of documentation if the documentation contains a permanent residence address for the person named on the documentation (or indicates the country in which a person that is an individual is a resident or citizen or the country in which a person that is an entity has a permanent residence or is incorporated or organized, if the withholding agent has otherwise obtained a current permanent residence address for the person)—

(A) ***Certificate of residence.*** A certificate of residence issued by an appropriate tax official of the country in which the payee claims to be a resident that indicates that the payee has filed its most recent income tax return as a resident of that country;

(B) ***Individual government identification.*** With respect to an individual, any valid identification issued by an authorized government body (for example, a government or agency thereof, or a municipality), that is typically used for identification purposes;

(C) ***QI documentation.*** With respect to an account maintained in a jurisdiction with anti-money laundering rules that have been approved by the IRS in connection with a QI agreement (as referenced in § 1.1441-1(e)(5)(iii)), any of the documents other than a Form W-8 or W-9 referenced in the jurisdiction's attachment to the QI agreement for identifying individuals or entities;

(D) ***Entity government documentation.*** With respect to an entity, any documentation that substantiates that the entity is actually organized or created under the laws of a foreign country; and

(E) ***Third-party credit report.*** For a payment made with respect to an offshore obligation to an individual, a third-party credit report that is obtained pursuant to the conditions described in § 1.1471-4(c)(4)(ii).

(ii) ***Chapter 4 status.*** Acceptable documentary evidence supporting an entity's claim of chapter 4 status includes—

(A) ***General documentary evidence.*** With respect to an entity other than a participating FFI or registered deemed-compliant FFI, any organizational document (such as articles of incorporation or a trust agreement), financial statement, third-party credit report, letter from a government agency, or statement from a government Web site, agency, or registrar (such as an SEC report) to the extent permitted in paragraphs (d) and (e) of this section;

(B) ***Preexisting obligation documentary evidence.*** With respect to a preexisting obligation of an entity, any classification in the withholding agent's records with respect to the payee that was determined based on documentation supplied by the payee (or other person receiving the payment) or a standardized industry coding system and that was recorded by the withholding agent consistent with its normal business practices for AML or another regulatory purpose (other than for tax purposes), to the extent permitted by paragraph (d) of this section and provided there is no U.S. indicia associated with the payee for which appropriate curing documentation has not been obtained as set forth in paragraph (e) of this section; and

(C) ***Payee-specific documentary evidence.*** A letter from an auditor or attorney with a location in the United States that is not related to the withholding agent or payee and is subject to the authority of a regulatory body that governs the auditor's or attorney's review of the chapter 4 status of the payee, any bankruptcy filing, corporate resolution, copy of a stock market index or other document to the extent permitted in the specific payee documentation requirements in paragraph (d) and (e) of this section.

(6) ***Applicable rules for withholding certificates, written statements, and documentary evidence.*** The provisions in this paragraph (c)(6) describe standards generally applicable to withholding certificates on Forms W-8 (or substitute forms), written statements, and documentary evidence furnished to establish the payee's chapter 4 status. These provisions do not apply to Forms W-9 (or their substitutes). For corresponding provisions regarding the Form W-9 (or a substitute Form W-9), see section 3406 and the regulations thereunder.

(i) ***Who may sign the withholding certificate or written statement.*** A withholding certificate (including an acceptable substitute) or written statement may be signed by any person authorized to sign a declaration under penalties of perjury on behalf of the person whose name is on the certificate or written statement, as provided in sections 6061 through 6063 and the regulations thereunder. A person authorized to sign a withholding certificate or written statement includes an officer or director of a corporation, a partner of a partnership, a trustee of a trust, an executor of an estate, any foreign equivalent of the former titles, and any other person that has been provided written authorization by the individual or entity named on the certificate or written statement to sign documentation on such person's behalf.

(ii) ***Period of validity*** —

(A) ***General rule.*** Except as provided otherwise in paragraphs (c)(6)(ii)(B) and (C) of this section, a withholding certificate or written statement will remain valid until the last day of the third calendar year following the year in which the withholding certificate or written statement is signed. Documentary evidence is generally valid until the last day of the third calendar year following the year in which the documentary evidence is provided to the withholding agent. Nevertheless, documentary evidence that contains an expiration date may be treated as valid until that expiration date if doing so would provide a longer period of validity than the three-year period. Notwithstanding the validity periods permitted by paragraphs (c)(6)(ii)(A) through (D) of this section, a withholding certificate, written statement, and documentary evidence will cease to be valid if the withholding agent has knowledge of a change in circumstances that makes the information on the documentation incorrect. Therefore, a withholding agent is required to institute procedures to ensure that any change to the customer master files that constitutes a change in circumstances described in paragraph (c)(6)(ii)(E) of this section is identified by

the withholding agent. In addition, a withholding agent is required to notify any person providing documentation of the person's obligation to notify the withholding agent of a change in circumstances.

(B) ***Indefinite validity.*** Notwithstanding paragraph (c)(6)(ii)(A) of this section, the following certificates (or parts of certificates), written statements, or documentary evidence shall remain valid until the withholding agent has knowledge of a change in circumstances that makes the information on the documentation incorrect—

(*1*) A withholding certificate or written statement provided by a participating FFI or registered deemed-compliant FFI that has furnished a valid GIIN that has been verified by the withholding agent in the manner set forth in paragraph (e)(3) of this section;

(*2*) A beneficial owner withholding certificate and documentary evidence supporting the individual's claim of foreign status when both are provided together (as defined in § 1.1441-1(e)(4)(ii)(B)(*1*)) by an individual claiming foreign status, if the withholding agent does not have a current U.S. residence or U.S. mailing address for the payee and does not have one or more current U.S. telephone numbers that are the only telephone numbers the withholding agent has for the payee;

(*3*) A beneficial owner withholding certificate that is provided by an entity described in paragraph (c)(6)(ii)(C)(*2*) of this section (other than an entity described in paragraph (c)(6)(ii)(C)(*2*)(*iii*) of this section) and documentary evidence establishing the entity's foreign status when both are received by the withholding agent before the validity period of either would otherwise expire under paragraph (c)(6)(ii)(A) of this section;

(*4*) A withholding certificate of an intermediary, flow-through entity, or U.S. branch (not including the withholding certificates, written statements, or documentary evidence of the payees, or withholding statements associated with the withholding certificate);

(*5*) A withholding certificate, written statement, or documentary evidence furnished by a foreign government, government of a U.S. territory, foreign central bank (including the Bank for International Settlements), international organization, or entity that is wholly owned by any such entities;

(*6*) Documentary evidence that is not generally renewed or amended (such as a certificate of incorporation); and

(*7*) For the validity period of a beneficial owner withholding certificate provided by an entity described in paragraph (c)(6)(ii)(C)(*2*)(*iii*) of this section, see § 1.1441-1(e)(4)(ii).

(C) ***Indefinite validity in the case of certain offshore obligations.*** Notwithstanding paragraph (c)(6)(ii)(A) of this section, the following certificates, written statements, and documentary evidence that are provided with respect to offshore obligations shall remain valid until a change in circumstances occurs that makes the information on the documentation incorrect—

(*1*) A withholding certificate or documentary evidence provided by an individual claiming foreign status if the withholding agent does not have a current U.S. residence or U.S. mailing address for the payee, does not have one or more current U.S. telephone

numbers that are the only telephone numbers the withholding agent has for the payee, and has not been provided standing instructions to make a payment in the United States for the obligation;

(*2*) A withholding certificate, written statement, or documentary evidence provided by one of the following entities if such entity is the payee—

(*i*) A retirement fund described in § 1.1471-6(f) or an entity that is wholly owned by such a retirement fund;

(*ii*) An excepted nonfinancial group entity described in § 1.1471-5(e)(5)(i);

(*iii*) A section 501(c) entity described in § 1.1471-5(e)(5)(v);

(*iv*) A non-profit organization described in § 1.1471-5(e)(5)(vi);

(*v*) A nonreporting IGA FFI;

(*vi*) A territory financial institution;

(*vii*) An NFFE whose stock is regularly traded as described in § 1.1472-1(c)(1)(i);

(*viii*) An NFFE affiliate described in § 1.1472-1(c)(1)(ii);

(*ix*) An active NFFE that the withholding agent has determined, through its AML due diligence, is engaged in a business other than that of a financial institution, and ongoing monitoring of the account for purposes of AML due diligence does not indicate that the determination is incorrect; and

(*x*) A sponsored FFI described in § 1.1471-5(f)(1)(i)(F);

(*3*) A withholding certificate or written statement of an owner-documented FFI, but not including the withholding statements, documentary evidence, and withholding certificates of its owners (unless such documentation is permitted indefinite validity under another provision);

(*4*) An owner reporting statement associated with a withholding certificate of an owner-documented FFI, provided the account balance of all accounts held by such owner-documented FFI with the withholding agent does not exceed $1,000,000 on the later of June 30, 2014, or the last day of the calendar year in which the account was opened, and the last day of each subsequent calendar year preceding the payment, applying the aggregation principles of § 1.1471-5(b)(4)(iii), and the owner-documented FFI does not have any contingent beneficiaries or designated classes with unidentified beneficiaries; and

(*5*) A withholding certificate of a passive NFFE or excepted territory NFFE, provided the account balance of all accounts held by such entity with the withholding agent does not exceed $1,000,000 on the later of June 30, 2014, or the last day of the calendar year in which the account was opened, and the last day of each subsequent calendar year preceding the payment, applying the aggregation principles of § 1.1471-5(b)(4)(iii), and the withholding agent does not know or have reason to know that the entity has any contingent beneficiaries or designated classes with unidentified beneficiaries.

(D) ***Exception for certificate for effectively connected income.*** Notwithstanding paragraphs (c)(6)(ii)(B) to (C) of this section, the period of validity of a withholding certificate furnished to a withholding agent to claim a reduced rate of withholding for income that is effectively connected with the conduct of a trade or business within the United States shall be limited to the three-year period described in paragraph (c)(6)(ii)(A) of this section.

(E) ***Change in circumstances*** —

(*1*) ***Defined.*** For purposes of this chapter, a person is considered to have a change in circumstances only if such change would affect the chapter 4 status of the person. A change in circumstances includes any change that results in the addition of information described in paragraph (e)(4) relevant to a person's claim of foreign status (that is, U.S. indicia that is not otherwise cured by documentation on file and that is relevant to the chapter 4 status claimed) or otherwise conflicts with such person's claim of chapter 4 status. Unless stated otherwise, a change of address or telephone number is a change in circumstances for purposes of this paragraph (c)(6)(ii)(E) only if it changes to an address or telephone number in the United States. A change in circumstances affecting the withholding information provided to the withholding agent, including allocation information or withholding pools contained in a withholding statement or owner reporting statement, will terminate the validity of the withholding certificate with respect to the information that is no longer reliable, until the information is updated.

(*2*) ***Obligation to notify withholding agent of a change in circumstances.*** If a change in circumstances makes any information on a certificate or other documentation incorrect, then the person whose name is on the certificate or other documentation must inform the withholding agent within 30 days of the change and furnish a new certificate, a new written statement, or new documentary evidence. Notwithstanding the previous sentence, if an FFI's chapter 4 status changes solely because the jurisdiction in which the FFI is resident, organized, or located is later treated as having an IGA in effect (including a jurisdiction that had a Model 2 IGA in effect and is later treated as having a Model 1 IGA in effect) or ceases to be treated as having an IGA in effect, in lieu of providing a new withholding certificate, the FFI may, within 30 days of such change in circumstances, provide to the withholding agent oral or written confirmation (including by email) of the change in the FFI's chapter 4 status. If an intermediary or a flow-through entity becomes aware that a certificate or other appropriate documentation it has furnished to the person from whom it collects a payment is no longer valid because of a change in the circumstances of the person who issued the certificate or furnished the other appropriate documentation, then the intermediary or flow-through entity must notify the person from whom it collects the payment of the change in circumstances within 30 days of the date that it knows or has reason to know of the change in circumstances. It must also obtain a new withholding certificate or new appropriate documentation to replace the existing certificate or documentation the validity of which has expired due to the change in circumstances.

(*3*) ***Withholding agent's obligation with respect to a change in circumstances.*** A certificate or other documentation becomes invalid on the date that the withholding agent holding the certificate or documentation knows or has reason to know that circumstances affecting the correctness of the certificate or documentation have

changed. A withholding agent will not have reason to know of a change in circumstances with respect to an FFI's chapter 4 status that results solely because a jurisdiction is later treated as having an IGA in effect (including a jurisdiction that had a Model 2 IGA in effect and is later treated as having a Model 1 IGA in effect) until the withholding agent obtains the confirmation of a change in the FFI's chapter 4 status described in paragraph (c)(6)(ii)(E)(*2*) of this section (which will become part of the FFI's withholding certificate or other documentation retained by the withholding agent). A withholding agent will have reason to know of a change in circumstances with respect to an FFI's chapter 4 status that results solely because the jurisdiction in which the FFI is resident, organized, or located ceases to be treated as having an IGA in effect on the date that the jurisdiction ceases to be treated as having an IGA in effect. A withholding agent may choose to treat a person as having the same chapter 4 status that it had prior to the change in circumstances until the earlier of 90 days from the date that the certificate or documentation became invalid due to the change in circumstances or the date that a new certificate or new documentation is obtained. See, however, § 1.1441-1(e)(4)(ii)(D) for requirements, including the requirement to withhold under chapter 3 or section 3406, applicable when a change in circumstances occurs for purposes of chapter 3 and the related grace period allowed under § 1.1441-1(b)(3)(iv). A withholding agent may rely on a certificate without having to inquire into possible changes of circumstances that may affect the validity of the statement, unless it knows or has reason to know that circumstances have changed. A withholding agent may require a new certificate or additional documentation at any time prior to a payment, regardless of whether the withholding agent knows or has reason to know that any information stated on the certificate or documentation has changed.

(*4*) [Reserved]. For further guidance, see § 1.1471-3T(c)(6)(ii)(E)(*4*).

(iii) ***Record Retention*** —

(A) ***In general.*** A withholding agent must retain each withholding certificate, written statement, or copy of documentary evidence for as long as it may be relevant to the determination of the withholding agent's tax liability under section 1474(a) and § 1.1474-1. A withholding agent may retain an original, certified copy, or photocopy (including a microfiche, electronic scan, or similar means of electronic storage) of the withholding certificate, written statement, or documentary evidence. With respect to documentary evidence, the withholding agent must also note in its records the date on which the document was received and reviewed. Any documentation that is stored electronically must be made available in hard copy form to the IRS upon request during an examination.

(B) ***Exception for documentary evidence received with respect to offshore obligations.*** A withholding agent that is making a payment with respect to an offshore obligation and is not required to retain copies of documentation reviewed pursuant to its AML due diligence, may, in lieu of retaining the documents as set forth in paragraph (c)(6)(iii)(A), retain a notation of the type of documentation reviewed, the date the documentation was reviewed, the document's identification number (if any) (for example, a passport number), and whether such documentation contained any U.S. indicia. The previous sentence applies with respect to an offshore obligation that is also a preexisting obligation, except,

in such case, the requirement to record whether the documentation contained U.S. indicia does not apply. See also § 1.1471-4(c)(2)(iv) for the record retention requirements of a participating FFI.

(iv) ***Electronic transmission of withholding certificate, written statement, and documentary evidence.*** A withholding agent may accept a withholding certificate (including an acceptable substitute form), a written statement, or other such form as the IRS may prescribe, electronically in accordance with the requirements set forth in § 1.1441-1(e)(4)(iv).

(v) ***Acceptable substitute withholding certificate*** —

(A) ***In general.*** A withholding agent may substitute its own form for an official Form W-8 (or such other official form as the IRS may prescribe). A substitute form will be acceptable if it contains provisions that are substantially similar to those of the official form, it contains the same certifications relevant to the transactions as are contained on the official form and these certifications are clearly set forth, and the substitute form includes a signature-under-penalties-of-perjury statement identical to the one on the official form. The substitute form is acceptable even if it does not contain all of the provisions contained on the official form, so long as it contains those provisions that are relevant to the transaction for which it is furnished. A withholding agent may choose to provide a substitute form that does not include all of the chapter 4 statuses provided on the official version but the substitute form must include any chapter 4 status for which withholding may apply, such as the categories for a nonparticipating FFI or passive NFFE. A withholding agent that uses a substitute form must furnish instructions relevant to the substitute form only to the extent and in the manner specified in the instructions to the official form. A withholding agent may use a substitute form that is written in a language other than English and may accept a form that is filled out in a language other than English, but the withholding agent must make available an English translation of the form and its contents to the IRS upon request. A withholding agent may refuse to accept a certificate (including the official Form W-8) from a person if the certificate provided is not an acceptable substitute form provided by the withholding agent, but only if the withholding agent furnishes the person with an acceptable substitute form within five business days of receipt of an unacceptable form from the person. In that case, the substitute form is acceptable only if it contains a notice that the withholding agent has refused to accept the form submitted by the person and that the person must submit the acceptable form provided by the withholding agent in order for the person to be treated as having furnished the required withholding certificate.

(B) ***Non-IRS form for individuals.*** A withholding agent may also substitute its own form for an official Form W-8BEN (for individuals), regardless of whether the substitute form is titled a Form W-8. However, in addition to the name and address of the individual that is the payee or beneficial owner, the substitute form must provide all countries in which the individual is resident for tax purposes, country of birth, a tax identification number (if any) for each country of residence, the individual's date of birth, and must contain a signed and dated certification made under penalties of perjury that the information provided on the form is accurate and will be updated by the individual within 30 days of a change in circumstances that causes the form to become incorrect. Notwithstanding the previous sentence, the signed certification provided on a form need not be signed under penalties of perjury if the form is accompanied by documentary evidence that supports the individual's claim of foreign status. Such documentary evidence may be the same documentary evidence that is used to support foreign status in the case of a payee whose

account has U.S. indicia as described in paragraph (e) of this section or § 1.1471-4(c)(4)(i)(A). The form may also request other information required for purposes of tax or AML due diligence in the United States or in other countries.

(vi) ***Electronic confirmation of TIN on withholding certificate.*** The Commissioner may prescribe procedures in a revenue procedure or other appropriate guidance to require a withholding agent to confirm electronically with the IRS information concerning any TIN stated on a withholding certificate.

(vii) ***Reliance on a prior version of a withholding certificate.*** Upon the issuance by the IRS of an updated version of a withholding certificate, a withholding agent may continue to accept the prior version of the withholding certificate in accordance with the requirements of § 1.1441-1(e)(4)(viii)(C) and without regard to whether a withholdable payment associated with the certificate is subject to withholding under § 1.1441-2(a).

(7) ***Curing documentation errors.*** The provisions in this paragraph (c)(7) describe standards generally applicable to withholding certificates (Forms W-8 or substitute forms), written statements, and documentary evidence furnished to establish the payee's chapter 4 status. These provisions do not apply to Forms W-9 (or their substitutes). For corresponding provisions regarding the Form W-9 (or a substitute Form W-9), see section 3406 and the regulations thereunder.

(i) ***Curing inconsequential errors on a withholding certificate.*** A withholding agent may treat a withholding certificate as valid, notwithstanding that the withholding certificate contains an inconsequential error, if the withholding agent has sufficient documentation on file to supplement the information missing from the withholding certificate due to the error. In such case, the documentation relied upon to cure the inconsequential error must be conclusive. For example, a withholding certificate in which the individual submitting the form abbreviated the country of residence in an ambiguous way may be treated as valid, notwithstanding the abbreviation, if the withholding agent has government issued identification for the person from a country that reasonably matches the abbreviation. On the other hand, an ambiguous abbreviation for the country of residence that does not reasonably match the country of residence shown on the person's passport is not an inconsequential error. A failure to select an entity type on a withholding certificate is not an inconsequential error, even if the withholding agent has an organization document for the entity that provides sufficient information to determine the person's entity type, if the person was eligible to make an election under § 301.7701-3(c)(1)(i) of this chapter (that is, a check-the-box election). A failure to check a box to make a required certification on the withholding certificate or to provide a country of residence or a country under which treaty benefits are sought is not an inconsequential error. In addition, information on a withholding certificate that contradicts other information contained on the withholding certificate or in the customer master file is not an inconsequential error.

(ii) ***Documentation received after the time of payment.*** Proof that withholding was not required under the provisions of chapter 4 and the regulations thereunder also may be established after the date of payment by the withholding agent on the basis of a valid withholding certificate and/or other appropriate documentation that was furnished after the date of payment but that was effective as of the date of payment. A withholding certificate furnished after the date of payment will be considered effective as of the date of the payment if the certificate contains a signed affidavit (either at the bottom of the form or on an attached page) that states that the information and representations contained on the certificate were accurate as of the time of the payment. A certificate obtained within 30 days after the date of the payment will not be

considered to be unreliable solely because it does not contain an affidavit. However, in the case of a withholding certificate of an individual received more than a year after the date of payment, the withholding agent will be required to obtain, in addition to the withholding certificate and affidavit, documentary evidence described in paragraph (c)(5)(i) of this section that supports the individual's claim of foreign status. In the case of a withholding certificate of an entity received more than a year after the date of payment, the withholding agent will be required to obtain, in addition to the withholding certificate and affidavit, documentary evidence specified in paragraph (c)(5)(ii) of this section that supports the chapter 4 status claimed. If documentation other than a withholding certificate is submitted from a payee more than a year after the date of payment, the withholding agent will be required to also obtain from the payee a withholding certificate and affidavit supporting the chapter 4 status claimed as of the date of the payment. See, however, § 1.1441-1(b)(7)(ii) for special rules that apply when a withholding certificate is received after the date of the payment to claim that income is effectively connected with the conduct of a U.S. trade or business (as applied for purposes of this paragraph (c)(7)(ii) to a claim to establish that the payment is not a withholdable payment under § 1.1473-1(a)(4)(ii) rather than to claim an exemption described in § 1.1441-4(a)(1)).

(8) ***Documentation furnished on account-by-account basis unless exception provided for sharing documentation within expanded affiliated group.*** Except as otherwise provided in this paragraph (c)(8), a withholding agent that is a financial institution with which a customer may open an account must obtain withholding certificates, written statements, Forms W-9, or documentary evidence on an account-by-account basis. Notwithstanding the previous sentence, a withholding agent may rely upon the withholding certificate, written statement, or documentary evidence furnished by a customer under any one or more of the circumstances described in this paragraph (c)(8).

(i) ***Single branch systems.*** A withholding agent may rely on documentation furnished by a customer for another account if both accounts are held at the same branch location and both accounts are treated as consolidated obligations.

(ii) ***Universal account systems.*** A withholding agent may rely on documentation furnished by a customer for an account held at another branch location of the same withholding agent or at a branch location of a member of the expanded affiliated group of the withholding agent if the withholding agent treats all accounts that share documentation as consolidated obligations and the withholding agent and the other branch location or expanded affiliated group member are part of a universal account system that uses a customer identifier that can be used to retrieve systematically all other accounts of the customer. A withholding agent that opts to rely upon the chapter 4 status designated for the payee in the universal account system without obtaining and reviewing copies of the documentation supporting the status must be able to produce all documentation (or a notation of the documentary evidence reviewed if the withholding agent is not required to retain copies of the documentary evidence) relevant to the chapter 4 status claimed upon request by the IRS and will be liable for any underwithholding that results from any failure to assign the correct status based upon the available information.

(iii) ***Shared account systems.*** A withholding agent may rely on documentation furnished by a customer for an account held at another branch location of the same withholding agent or at a branch location of a member of the expanded affiliated group of the withholding agent if the withholding agent treats all accounts that share documentation as a consolidated obligation and the withholding agent and the other branch location or expanded affiliated group member share an information system, electronic or otherwise, that is described in this paragraph (c)(8)(iii). The system must allow the withholding agent to easily access data regarding the

nature of the documentation, the information contained in the documentation (including a copy of the documentation itself), and the validity status of the documentation. The information system must also allow the withholding agent to easily transmit data into the system regarding any facts of which it becomes aware that may affect the reliability of the documentation. The withholding agent must be able to establish, to the extent applicable, how and when it has transmitted data regarding any facts of which it became aware that may affect the reliability of the documentation and must be able to establish that any data it has transmitted to the information system has been processed and appropriate due diligence has been exercised regarding the validity of the documentation. A withholding agent that opts to rely upon the chapter 4 status designated for the payee in the shared account system without obtaining and reviewing copies of the documentation supporting the status must be able to produce all documentation (or a notation of the documentary evidence reviewed if the withholding agent is not required to retain copies of the documentary evidence) relevant to the chapter 4 status claimed upon request by the IRS and will be liable for any underwithholding that results from any failure to assign the correct status based upon the available information.

(iv) ***Document sharing for gross proceeds.*** [Reserved]

(v) ***Preexisting account.*** A withholding agent may rely on documentation furnished by a payee for a preexisting account held at another branch location of the same withholding agent or at a branch location of a member of the expanded affiliated group of the withholding agent if the withholding agent obtains and reviews copies of such documentation supporting the chapter 4 status designated for the payee and the withholding agent has no reason to know that, at the time the documentation is obtained by the withholding agent, the documentation is unreliable or incorrect. For example, the withholding agent may not rely on documentation furnished by a payee for a preexisting account held at another branch location of the same withholding agent or at a branch location of a member of the expanded affiliated group of the withholding agent if, based on information in the withholding agent's account records, the withholding agent has reason to know that such documentation is unreliable or incorrect.

(9) ***Reliance on documentation collected by or certifications provided by other persons*** —

(i) ***Shared documentation system maintained by an agent.*** A withholding agent may rely on documentation collected by an agent (including a fund advisor for mutual funds, hedge funds, or a private equity group) of the withholding agent. The agent may retain the documentation as part of an information system maintained for a single withholding agent or multiple withholding agents provided that under the system, any withholding agent on behalf of which the agent retains documentation may easily access data regarding the nature of the documentation, the information contained in the documentation (including a copy of the documentation itself) and its validity, and must allow such withholding agent to easily transmit data, either directly into an electronic system or by providing such information to the agent, regarding any facts of which it becomes aware that may affect the reliability of the documentation. The withholding agent must be able to establish, to the extent applicable, how and when it has transmitted data regarding any facts of which it became aware that may affect the reliability of the documentation and must be able to establish that any data it has transmitted has been processed and appropriate due diligence has been exercised regarding the validity of the documentation. The agent must have a system in effect to ensure that any information it receives regarding facts that affect the reliability of the documentation or the chapter 4 status assigned to the customer are provided to all withholding agents for which the agent retains the documentation and any chapter 4 status assigned by the agent is amended to incorporate such

information. A withholding agent that opts to rely upon the chapter 4 status assigned by the agent without obtaining and reviewing copies of the documentation supporting the status must be able to produce all documentation relevant to the chapter 4 status claimed upon request by the IRS and will be liable for any underwithholding that results from a failure of the agent to assign the correct status based upon the available information. See § 1.1474-1(a) for a withholding agent's liability when it relies upon an agent for chapter 4 purposes. This paragraph (c)(9)(i) does not apply to a withholding certificate provided by a QI, a withholding certificate provided by a territory financial institution that elects to be treated as a U.S. person, or any withholding statement, unless the person submitting the form specifically identifies the withholding agents for which the certificates and/or statements are provided.

(ii) ***Third-party data providers.*** A withholding agent may rely upon documentation collected by a third-party data provider with respect to an entity, subject to the conditions described in this paragraph (c)(9)(ii).

(A) The third-party data provider must have collected documentation that is sufficient to determine the chapter 4 status of the entity under paragraph (d) of this section.

(B) The third-party data provider must be in the business of providing credit reports or business reports to customers unrelated to it and must have reviewed all information it has for the entity and verified that such additional information does not conflict with the chapter 4 status claimed by the entity. For purposes of this paragraph (c)(9)(ii)(B), a customer is related to a third-party data provider if they have a relationship with each other that is described in section 267(b).

(C) The third-party data provider must notify the entity submitting the documentation that such entity must notify the third-party data provider in the event of a change in circumstances within 30 days of the change in circumstances, and the third-party data provider must be obligated under its contract with the withholding agent to notify the withholding agent if a change in circumstances occurs.

(D) The withholding agent may not rely upon a chapter 4 status provided by a third-party data provider if the withholding agent knows or has reason to know that the chapter 4 status is unreliable or incorrect based on information in the withholding agent's account records, or if the documentation or information provided by the third-party data provider does not support the chapter 4 status claimed.

(E) The withholding agent must be able to submit copies of the documentation received from the third-party data provider upon request to the IRS and will remain liable for any underwithholding that occurs as a result of its reliance on information provided by the third-party data provider if the documentation is invalid or unreliable.

(F) This paragraph (c)(9)(ii) does not apply to a withholding statement or a withholding certificate that contains an election to accept withholding or reporting responsibility (such as one made by a QI, territory financial institution, or U.S. branch) provided by a third-party data provider.

(iii) ***Reliance on certification provided by introducing brokers*** —

(A) A withholding agent may rely on a certification of a broker indicating the broker's determination of a payee's chapter 4 status and indicating that the broker holds valid documentation sufficient to determine the payee's chapter 4 status under paragraph (d) of

this section with respect to any readily tradable instrument as defined in § 31.3406(h)-1(d) of this chapter if the conditions in paragraph (c)(9)(iii)(B) of this section are satisfied and the broker is either—

(*1*) A U.S. person (including a U.S. branch that is treated as a U.S. person) that is acting as the agent of the payee; or

(*2*) A participating FFI or a reporting Model 1 FFI that is acting as the agent of the payee with respect to an obligation and receiving all payments from the withholding agent with respect to such obligation as an intermediary on behalf of the payee.

(B) The certification from the broker must be in writing or in electronic form and contain all of the information required of a chapter 4 withholding statement described in paragraph (c)(3)(iii)(B)(*3*). Notwithstanding this paragraph (c)(9)(iii), a withholding agent may not rely upon a certification provided by a broker if it knows or has reason to know that the broker has not obtained valid documentation as represented or the information contained in the certification is otherwise inaccurate. A broker that chooses to provide a certification under this paragraph (c)(9)(iii) will be responsible for applying the rules set forth in the regulations under section 1471 and 1472 to the withholding certificates, written statements, or documentary evidence obtained from the payee and shall be liable for any underwithholding that occurs as a result of the broker's failure to reasonably apply such rules.

(iv) ***Reliance on documentation and certifications provided between principals and agents*** —

(A) ***In general.*** Subject to the conditions under § 1.1474-1(a)(3), a withholding agent is permitted to use an agent to fulfill its chapter 4 obligations and such agent's actions are imputed to the principal. However, an agent that makes a payment pursuant to an agency arrangement (paying agent) is also a withholding agent with respect to the payment unless an exception under § 1.1473-1(d) applies. Therefore, the paying agent will have its own obligation to determine the chapter 4 status of the payee and withhold upon the payment if required. Although a paying agent is generally a withholding agent for purposes of chapter 4, the financial accounts to which it makes payments are not necessarily financial accounts of the paying agent. See the rules under § 1.1471-5(b)(5) to determine when a financial institution maintains a financial account. In addition, the status of a payment as made with respect to an offshore obligation or as a preexisting obligation will be determined based on such obligation's status in relation to the principal. Further, the due diligence required with respect to the payment will be determined by the status of the principal and not the paying agent. Consequently, a payment that is made, for example, by a paying agent that is a foreign entity on behalf of a principal that is a U.S. withholding agent will be subject to the due diligence applicable to the principal. See § 1.1474-1(a)(3) for rules regarding the reporting obligations of a principal and agent in the case of a payment made by an agent of behalf of a principal.

(B) ***Reliance upon certification of the principal.*** An agent that makes a payment on behalf of a principal that it may treat, pursuant to paragraph (d) of this section, as a U.S. withholding agent, participating FFI, or reporting Model 1 FFI may rely upon a certification provided by the principal indicating that the principal has obtained valid documentation sufficient to determine the chapter 4 status of the payee and may rely upon the principal's determination as to the payee's chapter 4 status. In such a case, the agent will be permitted to rely upon the certification provided by the principal when determining

whether it is required to withhold on the payment and will not be liable for any underwithholding that occurs as a result of the principal's failure to properly determine the chapter 4 status of the payee unless the agent knows or has reason to know the certification provided by the principal is inaccurate.

(C) ***Document sharing.*** In lieu of obtaining a certification from the principal as described in paragraph (c)(9)(iv)(B) of this section, or when reliance upon such certification is not permitted, an agent that makes a payment on behalf of a principal may rely upon copies of documentation provided to the principal with respect to the payment. However, in such case, both the principal and the agent are obligated to determine the chapter 4 status of the payee based upon the documentation and ensure that adequate withholding occurs with respect to the payment. While a principal is imputed the knowledge of the agent with respect to the payment, the agent is not imputed the knowledge of the principal.

(D) ***Examples*** —(1) *Example 1. Paying agent that does not collect documentation.* A fund, P, that is a participating FFI contracts with a U.S. person, A, to make payments to its account holders with respect to their equity interests in P. P contracts with another agent, B, to obtain documentation sufficient to determine the chapter 4 status of such account holders. Based on the documentation it collects, B determines that none of P's account holders are subject to withholding. P provides a certification to A indicating that it has obtained documentation sufficient to determine the chapter 4 status of P's account holders and that each payee is not subject to withholding under chapter 4. As the actions of B, as P's agent, are attributed to P, P may provide a certification to A indicating that it has determined the chapter 4 status of its payees, even if it is B, and not P, who made the determinations. However, P will be liable for any underwithholding that results from a failure by B to reasonably apply the rules under chapter 4. A is permitted to rely upon the certification provided by P and, accordingly, is not required to withhold on the payments made to P's account holders and would not be liable for any underwithholding that results if the determinations made by B are incorrect unless A had reason to know that chapter 4 status claimed was inaccurate.

(ii) *Example 2. Paying agent that collects documentation.* A fund, P, that is a participating FFI contracts with a U.S. person, A, to make a payment to its account holders on its behalf. P also contracts with A to obtain documentation sufficient to determine the chapter 4 status of P's account holders. Based on the documentation it collects, A determines that none of P's account holders are subject to withholding. As the actions of A, as P's agent, are imputed to P, P will be liable for any underwithholding that results from a failure by A to reasonably apply the rules under chapter 4. P is also required to retain the documentation upon which A relied in determining the chapter 4 status of its account holders. Because A performed the due diligence on behalf of P, A will have reason to know if any of the chapter 4 determinations made based on the documentation received were made incorrectly, and, as a withholding agent with respect to the payment, is liable, in addition to P, for any underwithholding that results from an incorrect determination that withholding was not required. This result applies regardless of whether A retains copies of the documentation obtained with respect to P's account holders or receives a certification from P indicating that P has obtained documentation sufficient to determine the chapter 4 status of its account holders and that each payee is not subject to withholding under chapter 4.

(v) ***Reliance upon documentation for accounts acquired in merger or bulk acquisition for value.*** A withholding agent that acquires an account from a predecessor or transferor in a merger or bulk acquisition of accounts for value is permitted to rely upon valid documentation (or copies of valid documentation) collected by the predecessor or transferor. In addition, a withholding agent that acquires an account in a merger or bulk acquisition of accounts for value, other than a related party transaction, from a U.S. withholding agent, a participating FFI that has completed all due diligence required under its agreement with respect to the accounts transferred, or a reporting Model 1 FFI that has completed all due diligence required pursuant to the applicable Model 1 IGA, may also rely upon the predecessor's or transferor's determination of the chapter 4 status of an account holder for a transition period of the lesser of six months from the date of the merger or until the acquirer knows that the claim of status is inaccurate or a change in circumstances occurs. At the end of the transition period, the acquirer will be permitted to rely upon the predecessor's determination as to the chapter 4 status of the account holder only if the documentation that the acquirer has for the account holder, including documentation obtained from the predecessor or transferor, supports the chapter 4 status claimed. An acquirer that discovers at the end of the transition period that the chapter 4 status assigned by the predecessor or transferor to the account holder was incorrect and, as a result, has not withheld as it would have been required to but for its reliance upon the predecessor's determination, will be required to withhold on payments made after the transition period, if any, to the account holder equal to the amount of tax that should have been withheld during the transition period but for the erroneous classification as to the account holder's status. For purposes of this paragraph (c)(9)(v), a related party transaction is a merger or sale of accounts in which either the acquirer is in the same expanded affiliated group as the predecessor or transferor prior to or after the merger or acquisition or the predecessor or transferor (or shareholders of the predecessor or transferor) obtains a controlling interest in the acquirer or in a newly formed entity created for purposes of the merger or acquisition. See § 1.1471-4(c)(2)(ii)(B) for an additional allowance for a participating FFI to rely upon the determination made by another participating FFI as to the chapter 4 status of an account obtained as part of a merger or bulk acquisition for value.

(d) ***Documentation requirements to establish payee's chapter 4 status.*** Unless the withholding agent knows or has reason to know otherwise, a withholding agent may rely on the provisions of this paragraph (d) to determine the chapter 4 status of a payee (or other person that receives a payment). Except as otherwise provided in this paragraph (d), a withholding agent is required to obtain a valid withholding certificate or a Form W-9 from a payee in order to treat the payee as having a particular chapter 4 status. Paragraphs (d)(1) through (12) of this section indicate when it is appropriate for a withholding agent to rely upon a written statement, documentary evidence, or other information in lieu of a Form W-8 or W-9. Paragraphs (d)(1) through (12) of this section also prescribe additional documentation requirements that must be met in certain cases in order to treat a payee as having a specific chapter 4 status and specific standards of knowledge that apply to a particular payee, in addition to the general standards of knowledge set forth in paragraph (e) of this section. This paragraph (d) also provides the circumstances in which special documentation rules are permitted with respect to preexisting obligations. A withholding agent may not rely on documentation described in this paragraph (d) if the documentation is not valid or cannot reliably be associated with the payment pursuant to the requirements of paragraph (c) of this section, or the withholding agent knows or has reason to know that such documentation is incorrect or unreliable as described in paragraphs (d) and (e) of this section. If the chapter 4 status of a payee cannot be determined under this paragraph (d) based on documentation received, a withholding agent must apply the presumption rules in paragraph (f) to determine the chapter 4 status of the payee.

(1) ***Reliance on pre-FATCA Form W-8.*** To establish a payee's status as a foreign individual, foreign government, government of a U.S. territory, or international organization, a withholding agent may rely upon a pre-FATCA Form W-8 in lieu of obtaining an updated version of the withholding certificate. This reliance is only available in the case of a payee that is an international organization if such payee is described under section 7701(a)(18). To establish the chapter 4 status of a payee that is not a foreign individual, a foreign government, or an international organization, a withholding agent may, for payments made prior to January 1, 2017, rely upon a pre-FATCA Form W-8 in lieu of obtaining an updated version of the withholding certificate if the withholding agent has one or more forms of documentary evidence described in paragraphs (c)(5)(ii), as necessary, to establish the chapter 4 status of the payee and the withholding agent has obtained any additional documentation or information required for the particular chapter 4 status (such as withholding statements, certifications as to owners, or required documentation for underlying owners), as set forth under the specific payee rules in paragraphs (d)(2) through (12) of this section. See paragraph (d)(4)(ii) and (iv) of this section for specific requirements applicable when relying upon a pre-FATCA Form W-8 for a participating FFI or registered deemed-compliant FFI. This paragraph (d)(1) does not apply to nonregistering local banks, FFIs with only low-value accounts, sponsored FFIs, owner-documented FFIs, territory financial institutions that are not the beneficial owners of the payment, foreign central banks (other than a foreign central bank specifically identified as an exempt beneficial owner under a Model 1 IGA or Model 2 IGA), or international organizations not described under section 7701(a)(18).

(2) ***Identification of U.S. persons*** —

(i) ***In general.*** A withholding agent must treat a payee as a U.S. person, including a payee that is a foreign branch of a U.S. person (other than a branch that is treated as a QI) or is an FFI that has elected to be treated as a U.S. person for tax purposes under section 953(d), if it has a valid Form W-9 associated with the payee or if it must presume the payee is a U.S. person under the presumption rules set forth in paragraph (f) of this section. Consistent with the presumption rules in paragraph (f)(3) of this section, a withholding agent must treat a payee that has provided a valid Form W-9 as a specified U.S. person unless the Form W-9 contains a certification that the payee is other than a specified U.S. person. Notwithstanding the foregoing, a withholding agent receiving a Form W-9 indicating that the payee is other than a specified U.S. person must treat the payee as a specified U.S. person if the withholding agent knows or has reason to know that the payee's claim that it is other than a specified U.S. person is incorrect. For example, a withholding agent that receives a Form W-9 from a payee that is an individual would be required to treat the payee as a specified U.S. person regardless of whether the Form W-9 indicates that the payee is not a specified U.S. person, because an individual that is a U.S. person is not excepted from the definition of a specified U.S. person.

(ii) ***Reliance on documentary evidence.*** A withholding agent may also treat the payee as a U.S. person that is other than a specified U.S. person if the withholding agent has documentary evidence described in paragraphs (c)(5)(i)(C) and (D) of this section or general documentary evidence (as described in paragraph (c)(5)(ii)(A) of this section) that both establishes that the payee is a U.S. person and establishes (either through the documentation or the application of the rules in § 1.6049-4(c)(1)(ii) or paragraph (f)(3) of this section) that the payee is an exempt recipient. For purposes of the previous sentence, an exempt recipient means with respect to a withholding agent other than a participating FFI or registered deemed-compliant FFI, an exempt recipient under § 1.6049-4(c)(1)(ii) or, with respect to a withholding agent that is a participating FFI or registered deemed-compliant FFI, a U.S. person other than a specified U.S. person as described under § 1.1473-1(c).

(iii) ***Preexisting obligations.*** As an alternative to applying the rules in paragraphs (d)(2)(i) and (ii) of this section, a withholding agent that makes a payment with respect to a preexisting obligation may treat a payee as a U.S. person if it has a notation in its files that it has previously reviewed a Form W-9 that established that the payee is a U.S. person and has retained the payee's TIN. A withholding agent, other than a participating FFI or registered deemed-compliant FFI, may also treat a payee of a payment with respect to a preexisting obligation as a U.S. person if it has previously classified the payee as a U.S. person for purposes of chapter 3 or 61 and established (through the documentation or the application of the rules in § 1.6049-4(c)(1)(ii)) that the payee is an exempt recipient for purposes of chapter 61.

(3) ***Identification of individuals that are foreign persons*** —

(i) ***In general.*** A withholding agent may treat a payee as an individual that is a foreign person if the withholding agent has a withholding certificate identifying the payee as such a person.

(ii) ***Exception for offshore obligations.*** A withholding agent that makes a payment with respect to an offshore obligation may treat the payee as an individual that is a foreign person if it obtains documentary evidence supporting the payee's claim of status as a foreign individual (as described in paragraph (c)(5)(i)) or if the payee is presumed to be an individual that is a foreign person under the presumption rules set forth in paragraph (f) of this section.

(4) ***Identification of participating FFIs and registered deemed-compliant FFIs*** —

(i) ***In general.*** Except as otherwise provided in paragraphs (d)(4)(ii) through (iv) or paragraphs (e)(3)(i) and (ii) of this section, a withholding agent may treat a payee as a participating FFI or registered deemed-compliant FFI only if the withholding agent has a withholding certificate identifying the payee as a participating FFI, registered deemed-compliant FFI, or branch thereof (including an entity that is disregarded as an entity separate from the FFI), and the withholding certificate contains a GIIN described in paragraph (e)(3) of this section that is verified against the published IRS FFI list in the manner described in paragraph (e)(3) of this section (indicating when a withholding agent may rely upon a GIIN). For when a withholding agent may treat a payee as a registered deemed-compliant FFI that is a sponsored investment entity or sponsored controlled foreign corporation, see paragraph (d)(4)(vi) of this section. See paragraph (c)(3)(iii) of this section for additional requirements that apply to a valid withholding certificate provided by a participating FFI or registered deemed-compliant FFI that is a flow-through entity or is acting as an intermediary with respect to the payment.

(ii) ***Exception for payments made prior to January 1, 2017, with respect to preexisting obligations (transitional).*** For payments made prior to January 1, 2017, with respect to a preexisting obligation, a withholding agent may treat a payee as a participating FFI or registered deemed-compliant FFI, or branch thereof (including an entity that is disregarded as an entity separate from the FFI), if the payee has provided the withholding agent with a pre-FATCA Form W-8 and (either orally or in writing) its GIIN and has indicated whether it is a participating FFI or a registered deemed-compliant FFI (or whether such branch or disregarded entity is treated as a participating FFI or a registered deemed-compliant FFI), and the withholding agent has verified the GIIN of the FFI, branch, or disregarded entity, as the context requires, in the manner described in paragraph (e)(3) of this section.

(iii) ***Exception for offshore obligations.*** A withholding agent that makes a payment, other than a payment of U.S. source FDAP income, with respect to an offshore obligation may treat a payee as a participating FFI or registered deemed-compliant FFI, or branch thereof (including an entity

that is disregarded as an entity separate from the FFI), if the payee provides the withholding agent with its GIIN and states whether the payee is a participating FFI or a registered deemed-compliant FFI, and the withholding agent verifies the GIIN in the manner described in paragraph (e)(3) of this section. A withholding agent that makes a payment of U.S. source FDAP income with respect to an offshore obligation may treat the payee as a participating FFI or registered deemed-compliant FFI, or branch thereof (including an entity that is disregarded as an entity separate from the FFI) if—

(A) The payee provides the withholding agent with—

(*1*) A written statement that contains the payee's GIIN, states that the payee is the beneficial owner of the payment, and indicates whether the payee is treated as a participating FFI or a registered deemed-compliant FFI, as appropriate; and

(*2*) Documentary evidence supporting the payee's claim of foreign status; and

(B) The withholding agent verifies the GIIN in the manner described in paragraph (e)(3) of this section.

(iv) ***Exceptions for payments to reporting Model 1 FFIs.***

(A) For payments made prior to January 1, 2015, a withholding agent may treat a payee that is an FFI or branch of an FFI (including an entity that is disregarded as an entity separate from the FFI) as a reporting Model 1 FFI if it receives a withholding certificate from the payee indicating that the payee is a reporting Model 1 FFI and the country in which the payee is a reporting Model 1 FFI, regardless of whether the certificate contains a GIIN for the payee.

(B) For payments made prior to January 1, 2015, with respect to a preexisting obligation, a withholding agent may treat a payee as a reporting Model 1 FFI if it obtains a pre-FATCA Form W-8 from the payee, and the payee indicates (either orally or in writing) that it is a reporting Model 1 FFI and the country in which it is a reporting Model 1 FFI, regardless of whether the certificate contains a GIIN for the payee.

(C) For payments made prior to January 1, 2015, with respect to an offshore obligation, a withholding agent may treat a payee as a reporting Model 1 FFI if the payee informs the withholding agent that the payee is a reporting Model 1 FFI and provides the country in which the payee is a reporting Model 1 FFI. In the case of a payment of U.S. source FDAP income, such payee must also provide a written statement that it is the beneficial owner and documentary evidence supporting the payee's claim of foreign status (as described in paragraph (c)(5)(i) of this section).

(D) For payments made on or after January 1, 2015, that do not constitute U.S. source FDAP income, the withholding agent may continue to treat a payee as a reporting Model 1 FFI if the payee provides the withholding agent with its GIIN, either orally or in writing, and the withholding agent verifies the GIIN in the manner described in paragraph (e)(3) of this section.

(v) ***Reason to know.*** See paragraph (e) of this section for when a withholding agent will have reason to know that a withholding certificate or written statement provided by a payee claiming status as a participating FFI or registered deemed-compliant FFI is incorrect or invalid.

(vi) ***Sponsored investment entities and sponsored controlled foreign corporations*** —

(A) ***In general.*** A withholding agent may treat a payee as a sponsored investment entity or sponsored controlled foreign corporation if the withholding agent has a withholding certificate identifying the payee as a sponsored investment entity or sponsored controlled foreign corporation (as applicable) and the withholding certificate includes the GIIN of the sponsored investment entity or sponsored controlled foreign corporation entity (as applicable), which the withholding agent has verified against the published IRS FFI list in the manner described in paragraph (e)(3)(i) of this section.

(B) ***Payments made prior to January 1, 2017 (transitional).*** For payments made prior to January 1, 2017, a sponsored investment entity or sponsored controlled foreign corporation may provide the GIIN of its sponsoring entity on the withholding certificate, which the withholding agent must verify against the published IRS FFI list in the manner described in paragraph (e)(3)(i) of this section.

(C) ***Payments made after December 31, 2016, to payees documented prior to January 1, 2017.*** For a payment made after December 31, 2016, to a payee that the withholding agent has documented prior to January 1, 2017, as a sponsored investment entity or sponsored controlled foreign corporation with a valid withholding certificate that includes the GIIN of the sponsoring entity, the withholding agent must obtain and verify the GIIN of the sponsored investment entity or sponsored controlled foreign corporation against the published IRS FFI list in the manner described in paragraph (e)(3)(i) of this section by March 31, 2017. Notwithstanding the preceding sentence, a GIIN is not required for a payee that provides a valid withholding certificate prior to January 1, 2017, that identifies the payee as a sponsored FFI and includes the GIIN of the sponsoring entity if the withholding agent determines, based on information provided on the withholding certificate, that the sponsored entity is resident, organized, or located in a jurisdiction that is treated as having a Model 1 IGA in effect. A withholding agent required to obtain a GIIN of the sponsored investment entity or sponsored controlled foreign corporation under this paragraph (d)(4)(vi)(C) may obtain such GIIN by oral or written confirmation (including by email) rather than obtaining a new withholding certificate, provided that the withholding agent retains a record of the confirmation, which will become part of the withholding certificate.

(5) ***Identification of certified deemed-compliant FFIs*** —

(i) ***In general.*** Except as otherwise provided in this paragraph (d)(5), a withholding agent may treat a payee as a certified deemed-compliant FFI, other than a sponsored, closely held investment vehicle, if the withholding agent has a withholding certificate that identifies the payee as a certified deemed-compliant FFI, and the withholding certificate contains a certification by the payee that it meets the requirements to qualify as the type of certified deemed-compliant FFI identified on the withholding certificate. See paragraph (c)(3)(iii) of this section for additional requirements that apply to a valid withholding certificate provided by a certified deemed-compliant FFI that is a flow-through entity or is acting as an intermediary with respect to the payment, or by a U.S. branch of a certified deemed-compliant FFI.

(ii) ***Sponsored, closely held investment vehicles*** —

(A) ***In general.*** A withholding agent may treat a payee as a sponsored, closely held investment vehicle described in § 1.1471-5(f)(2)(iii) if the withholding agent can reliably associate the payment with a withholding certificate that identifies the payee as a sponsored, closely held investment vehicle and includes the sponsoring entity's GIIN, which the withholding

agent has verified against the published IRS FFI list in the manner described in paragraph (e)(3) of this section. In addition to the standards of knowledge rules indicated in paragraph (e) of this section, a withholding agent will have reason to know that the payee is not a sponsored, closely held investment vehicle described in § 1.1471-5(f)(2)(iii) if its AML due diligence indicates that the payee has in excess of 20 individual investors that own direct and/or indirect interests in the payee. See paragraph (c)(3)(iii) of this section for additional requirements that apply to a valid withholding certificate provided by a sponsored, closely held investment vehicle that is a flow-through entity or is acting as an intermediary with respect to the payment, or by a U.S. branch of such vehicle.

(B) ***Offshore obligations.*** A withholding agent that makes a payment with respect to an offshore obligation may treat a payee as a sponsored, closely held investment vehicle if it obtains a written statement that indicates that the payee is a sponsored, closely held investment vehicle, and provides the sponsoring entity's GIIN, which the withholding agent has verified in the manner described in paragraph (e)(3) of this section. In the case of a payment of U.S. source FDAP income, the written statement must also indicate that the payee is the beneficial owner and must be supplemented with documentary evidence supporting the payee's claim of foreign status (as described in paragraph (c)(5)(i) of this section).

(iii) ***Certain investment entities that do not maintain financial accounts*** —

(A) ***In general.*** A withholding agent may treat a payee as an investment entity that does not maintain financial accounts described in § 1.1471-5(f)(2)(v) if the withholding agent can reliably associate the payment with a withholding certificate that identifies the payee as an investment entity that does not maintain financial accounts. In addition to the standards of knowledge rules indicated in paragraph (e) of this section, a withholding agent will have reason to know that the payee is not an investment entity that does not maintain financial accounts described in § 1.1471-5(f)(2)(v) if its AML due diligence documentation indicates that the payee has financial accounts.

(B) ***Offshore obligations.*** A withholding agent that makes a payment with respect to an offshore obligation may treat a payee as an investment advisor and investment manager described in § 1.1471-5(f)(2)(v) if it obtains a written statement that indicates that the payee is an investment advisor and investment manager. In the case of a payment of U.S. source FDAP income, the written statement must also indicate that the payee is the beneficial owner and must be supplemented with documentary evidence supporting the payee's claim of foreign status (as described in paragraph (c)(5)(i) of this section).

(6) ***Identification of owner-documented FFIs*** —

(i) ***In general.*** A withholding agent may treat a payee as an owner-documented FFI if all the following requirements of paragraphs (d)(6)(i)(A) through (F) of this section are met. A withholding agent may not rely upon a withholding certificate to treat a payee as an owner-documented FFI, either in whole or in part, if the withholding certificate does not contain all of the information and associated documentation required by paragraphs (d)(6)(i)(A), (C), and (D) of this section.

(A) The withholding agent has a withholding certificate that identifies the payee as an owner-documented FFI that is not acting as an intermediary;

(B) The withholding agent is a U.S. financial institution, participating FFI, or reporting Model 1 FFI that agrees pursuant to § 1.1471-5(f)(3) to act as a designated withholding agent with respect to the payee;

(C) The payee submits to the withholding agent an FFI owner reporting statement that meets the requirements of paragraph (d)(6)(iv) of this section;

(D) The payee submits to the withholding agent valid documentation meeting the requirements of paragraph (d)(6)(iii) of this section with respect to each person identified on the FFI owner reporting statement;

(E) The withholding agent does not know or have reason to know that the payee (or any other FFI that is an owner of the payee and that the designated withholding agent is treating as an owner-documented FFI) maintains any financial account for a nonparticipating FFI; and

(F) The withholding agent does not know or have reason to know that the payee is a member of an expanded affiliated group with any FFI that is a depository institution, custodial institution, or specified insurance company, or that the FFI has any specified U.S. persons that own an equity interest in the FFI or a debt interest (other than a debt interest that is not a financial account or that has a balance or value not exceeding $50,000) in the FFI other than those identified on the FFI owner reporting statement described in paragraph (d)(6)(iv) of this section.

(ii) ***Auditor's letter substitute.*** A payee may, in lieu of providing an FFI owner reporting statement and documentation for each owner of the FFI as described in paragraphs (d)(6)(i)(C) and (D) of this section, provide a letter from an auditor or an attorney that is licensed in the United States or whose firm has a location in the United States, signed no more than four years prior to the date of the payment, that certifies that the firm or representative has reviewed the payee's documentation with respect to all of its owners and debt holders described in paragraph (d)(6)(iv) of this section in accordance with § 1.1471-4(c) and that the payee meets the requirements of § 1.1471-5(f)(3). The payee must also provide an FFI owner reporting statement and a Form W-9, with any applicable waiver, for each specified U.S. person that owns a direct or indirect interest in the payee or that holds debt interests described in paragraph (d)(6)(iv) of this section. A withholding agent may rely upon the letter described in this paragraph (d)(6)(ii) if it does not know or have reason to know that any of the information contained in the letter is unreliable or incorrect.

(iii) ***Documentation for owners and debt holders of payee.*** Acceptable documentation for an individual owning an equity interest in the payee or a debt holder described in paragraph (d)(6)(iv) of this section means a valid withholding certificate, valid Form W-9 (including any necessary waiver), or documentary evidence establishing the foreign status of the individual as set forth in paragraph (d)(3)(ii) of this section (regardless of whether the payment is made with respect to an offshore obligation). Acceptable documentation for a specified U.S. person means a valid Form W-9 (including any necessary waiver). Acceptable documentation for all other persons owning an equity or debt interest in the payee means documentation described in this paragraph (d), applicable to the chapter 4 status claimed by the person. The rules for reliably associating a payment with a withholding certificate or documentary evidence set forth in paragraph (c) of this section, the rules for payee documentation provided in this paragraph (d), and the standards of knowledge set forth in paragraph (e) of this section will apply to documentation submitted by the owners and debt holders by substituting the phrase “owner of the payee” or “debt holder” for “payee.”

(iv) ***Content of FFI owner reporting statement.*** The FFI owner reporting statement provided by an owner-documented FFI must contain the information required by this paragraph (d)(6)(iv) and is subject to the general rules applicable to all withholding statements described in paragraph (c)(3)(iii)(B)(*1*) of this section. An FFI that is a partnership, simple trust, or grantor trust may substitute an NWP withholding statement described in § 1.1441-5(c)(3)(iv) or a foreign simple trust or foreign grantor trust withholding statement described in § 1.1441-5(e)(5)(iv) for the FFI owner reporting statement, provided that the NWP withholding certificate or foreign simple trust or foreign grantor trust withholding certificate contains all of the information required in this paragraph (d)(6)(iv). The owner reporting statement will expire on the last day of the third calendar year following the year in which the statement was provided to the withholding agent unless an exception in paragraph (c)(6)(ii) of this section (for example, accounts with a balance or value of $1,000,000 or less) or this paragraph (d)(6) applies. The owner-documented FFI will also be required to provide the withholding agent with an updated owner reporting statement if there is a change in circumstances as required under paragraph (c)(6)(ii)(E) of this section.

(A) The FFI owner reporting statement must provide the following information:

(*1*) The name, address, TIN (if any), and chapter 4 status of every individual and specified U.S. person that owns a direct or indirect equity interest in the payee (looking through all entities other than specified U.S. persons).

(*2*) The name, address, TIN (if any), and chapter 4 status of every individual and specified U.S. person that owns a debt interest in the payee (including any indirect debt interest, which includes debt interests in any entity that directly or indirectly owns the payee or any direct or indirect equity interest in a debt holder of the payee), in either such case if the debt interest constitutes a financial account in excess of $50,000 (disregarding all such debt interests owned by participating FFIs, registered deemed-compliant FFIs, certified deemed-compliant FFIs, excepted NFFEs, exempt beneficial owners, or U.S. persons other than specified U.S. persons).

(*3*) Any other information the withholding agent reasonably requests in order to fulfill its obligations under chapter 4.

(B) The information on the FFI owner reporting statement may contain names of equity and debt holders that are prepopulated by the withholding agent based on prior information provided to the withholding agent by the payee if the prepopulated form instructs the payee to amend the statement if the contents are inaccurate, incomplete, or have changed, and the payee confirms in writing that the FFI owner reporting statement submitted to the withholding agent is accurate and complete.

(C) The FFI owner reporting statement may be submitted in any form that meets the requirements of this paragraph, including a form used for purposes of AML due diligence.

(v) ***Exception for preexisting obligations (transitional).*** A withholding agent may treat a payment made prior to January 1, 2017, with respect to a preexisting obligation as made to an owner-documented FFI if the withholding agent has collected, for purposes of satisfying its AML due diligence, documentation with respect to each individual and specified U.S. person that owns a direct or indirect interest in the payee, other than an interest as a creditor, within four years of the date of payment, that documentation is sufficient to satisfy the AML due diligence requirements of the jurisdiction in which the withholding agent maintains the account, the withholding agent has sufficient information to report all specified U.S. persons that own an

interest in the payee, and the withholding agent does not know, or have reason to know, that any nonparticipating FFI owns an equity interest in the FFI or that any nonparticipating FFI or specified U.S. person owns a debt interest in the FFI constituting a financial account in excess of $50,000.

(vi) ***Exception for offshore obligations.*** A withholding agent that is making a payment, other than a payment of U.S. source FDAP income, with respect to an offshore obligation may, in lieu of obtaining a withholding certificate as otherwise required under paragraph (d)(6)(i)(A) of this section, rely upon a written statement that indicates the payee meets the requirements to qualify as an owner-documented FFI under § 1.1471-5(f)(3) and is not acting as an intermediary, if the withholding agent provides a written notice to the payee indicating that the payee is required to update the written statement and all associated documentation (such as the FFI owner reporting statement and underlying documentation) within 30 days of a change in circumstances.

(vii) ***Exception for certain offshore obligations of $1,000,000 or less*** —

(A) A withholding agent may treat the payment as being made to an owner-documented FFI if—

(*1*) The payment is made with respect to an offshore obligation that has a balance or value not exceeding $1,000,000 on the later of June 30, 2014, or the last day of the calendar year in which the account was opened, and the last day of each subsequent year preceding the payment, applying the aggregation principles of § 1.1471-5(b)(4);

(*2*) The withholding agent has collected documentation or a certification as to the payee's owners (either for purposes of complying with its AML due diligence or for purposes of satisfying the requirements of this paragraph (d)(6)(vii)) sufficient to identify every individual and specified U.S. person that owns any direct or indirect interest in the payee (other than an interest as a creditor) and determine the chapter 4 status of such person;

(*3*) The documentation described in paragraph (d)(6)(vii)(A)(*2*) of this section is sufficient to satisfy the AML due diligence requirements of the jurisdiction in which the withholding agent maintains the account (and such jurisdiction is a FATF-compliant jurisdiction);

(*4*) The withholding agent has sufficient information to report all specified U.S. persons that own an interest in the payee in accordance with § 1.1474-1(d); and

(*5*) The withholding agent does not know, or have reason to know, that the payee has any contingent beneficiaries or designated classes with unidentified beneficiaries or owners, that any nonparticipating FFI owns a direct or indirect equity interest in the payee, or that any specified U.S. persons or nonparticipating FFIs own a debt interest constituting a financial account in excess of $50,000 in the payee (other than specified U.S. persons that the withholding agent has sufficient information to report).

(B) For example, a withholding agent that is required to obtain a certification from the payee identifying all persons owning an interest in the payee as part of its AML due diligence will not be required to obtain an FFI owner reporting statement, provided the other conditions of this paragraph (d)(6)(vii) are met. On the other hand, a withholding agent that has only

obtained documentation for persons owning a certain threshold percentage of the payee will be required to obtain additional documentation to satisfy the requirements of this paragraph (d)(6)(vii). A withholding agent that treats a payee as an owner-documented FFI pursuant to this paragraph (d)(6)(vii) will not be required to obtain new documentation, including the FFI owner reporting statement, until there is a change in circumstances or until the account balance or value exceeds $1,000,000 on the last day of the calendar year.

(7) ***Nonreporting IGA FFIs*** —

(i) ***In general.*** A withholding agent may treat a payee as a nonreporting IGA FFI described in § 1.1471-1(b)(83)(ii) (unless such FFI is treated as a registered deemed-compliant FFI under Annex II of the Model 2 IGA) or as a nonreporting IGA FFI described in § 1.1471-1(b)(83)(i), (iv), or (v) if the withholding agent has a withholding certificate identifying the payee, or the relevant branch of the payee, as a nonreporting IGA FFI. A withholding agent may treat a payee as a nonreporting IGA FFI described in § 1.1471-1(b)(83)(ii) that is treated as a registered deemed-compliant FFI under Annex II of the Model 2 IGA or as a nonreporting IGA FFI described in § 1.1471-1(b)(83)(iii) if the withholding agent has a withholding certificate identifying the payee, or the relevant branch of the payee, as a nonreporting IGA FFI, and the withholding certificate contains a GIIN for the payee that is verified against the published IRS FFI list in the manner described in paragraph (e)(3) of this section.

(ii) ***Exception for offshore obligations.*** A withholding agent that makes a payment with respect to an offshore obligation may treat a payee as a nonreporting IGA FFI if it can reliably associate the payment with a written statement identifying the payee (or the relevant branch of the payee) as a nonreporting IGA FFI and, with respect to a payment of U.S. source FDAP income, the written statement indicates that the payee is the beneficial owner of the income and is accompanied by documentary evidence supporting a claim of foreign status (as described in paragraph (c)(5)(i) of this section). A withholding agent that makes a payment with respect to an offshore obligation may also treat a payee as a nonreporting IGA FFI if the withholding agent has a permanent residence address for the payee, or an address of the relevant branch of the payee, and has obtained a notification, either orally or in writing, indicating that the payee is not acting as an intermediary and general documentary evidence (as described in paragraph (c)(5)(ii)(A) of this section) that provides the withholding agent with sufficient information to reasonably determine that the payee is an entity listed as a nonreporting IGA FFI pursuant to a Model 1 or Model 2 IGA.

(8) ***Identification of nonparticipating FFIs*** —

(i) ***In general.*** A withholding agent is required to treat a payee as a nonparticipating FFI if the withholding agent can reliably associate the payment with a withholding certificate identifying the payee as a nonparticipating FFI, the withholding agent knows or has reason to know that the payee is a nonparticipating FFI, or the withholding agent is required to treat the payee as a nonparticipating FFI under the presumption rules described in paragraph (f) of this section.

(ii) ***Special documentation rules for payments made to an exempt beneficial owner through a nonparticipating FFI.*** A withholding agent may treat a payment made to a nonparticipating FFI as beneficially owned by an exempt beneficial owner if the withholding agent can reliably associate the payment with—

(A) A withholding certificate that identifies the payee as a nonparticipating FFI that is either acting as an intermediary or is a flow-through entity; and

(B) An exempt beneficial owner withholding statement that meets the requirements of paragraphs (c)(3)(iii)(B)(*1*) and (*4*) of this section and contains the associated documentation necessary to establish the chapter 4 status of the exempt beneficial owner in accordance with paragraph (d)(9) of this section as if the exempt beneficial owner were the payee.

(9) ***Identification of exempt beneficial owners*** —

(i) ***Identification of foreign governments, governments of U.S. territories, international organizations, and foreign central banks of issue*** —

(A) ***In general.*** A withholding agent may treat a payee as a foreign government, government of a U.S. territory, international organization, or foreign central bank of issue if it has a withholding certificate that identifies the payee as such an entity, indicates that the payee is the beneficial owner of the payment, and indicates that the payee is not engaged in commercial financial activities with respect to the payments or accounts identified on the form. A withholding agent may treat a payee as an international organization without requiring a withholding certificate if the name of the payee is one that is designated as an international organization by executive order (pursuant to 22 U.S.C. 288 through 288f) and other facts surrounding the transaction reasonably indicate that the international organization is not receiving the payment as an intermediary on behalf of another person. A withholding agent may treat a payee as an exempt beneficial owner pursuant to a Model 1 IGA or Model 2 IGA if it has a withholding certificate that identifies the payee as such an entity and indicates that the payee is the beneficial owner of the payment.

(B) ***Exception for offshore obligations.*** A withholding agent that makes a payment, other than a payment of U.S. source FDAP income, with respect to an offshore obligation may treat a payee as a foreign government, government of a U.S. territory, international organization, or foreign central bank of issue if the payee provides a written statement that it is such an entity and the written statement indicates that the payee receives the payment as a beneficial owner (within the meaning provided in § 1.1471-6). A written statement provided by a foreign central bank of issue must also state that the foreign central bank of issue does not receive the payment in connection with a commercial activity as provided in § 1.1471-6(h).

(C) ***Exception for preexisting offshore obligations.*** A withholding agent that makes a payment, other than a payment of U.S. source FDAP income, with respect to an offshore obligation that is also a preexisting obligation may treat the payee as a foreign government, government of a U.S. territory, international organization, or foreign central bank of issue if—

(*1*) The payee is generally known to the withholding agent to be, the payee's name and the facts surrounding the payment reasonably indicate, or the withholding agent has preexisting account documentary evidence (as described in paragraph (c)(5)(ii)(B) of this section) that reasonably indicates that the payee is a foreign government or government of a U.S territory, a political subdivision of a foreign government or government of a U.S. territory, any wholly owned agency or instrumentality of any one or more of the foregoing, an international organization, a foreign central bank of issue, or the Bank for International Settlements; and

(2) The withholding agent does not know that the payee is not the beneficial owner, within the meaning of § 1.1471-6(b) through (e) (disregarding any presumption that a financial institution is assumed to be an intermediary absent documentation indicating otherwise) or a foreign central bank of issue receiving the payment in connection with a commercial activity.

(ii) ***Identification of retirement funds*** —

(A) ***In general.*** A withholding agent may treat a payee as a retirement fund described in § 1.1471-6(f) if it has a withholding certificate in which the payee certifies that it is a retirement fund meeting the requirements of § 1.1471-6(f).

(B) ***Exception for offshore obligations.*** A withholding agent that makes a payment with respect to an offshore obligation may treat the payment as being made to a retirement fund described in § 1.1471-6(f) if it obtains a written statement in which the payee certifies that it is a retirement fund under the laws of its local jurisdiction meeting the requirements of § 1.1471-6(f) and, with respect to a payment of U.S. source FDAP income, documentary evidence supporting a claim of foreign status (as described in paragraph (c)(5)(i) of this section). A withholding agent that makes a payment with respect to an offshore obligation may also treat the payment as made to a retirement fund if it obtains general documentary evidence (as described in paragraph (c)(5)(ii)(A) of this section) that provides the withholding agent with sufficient information to establish that the payee is a retirement fund meeting the requirements of § 1.1471-6(f).

(C) ***Exception for preexisting offshore obligations.*** A withholding agent that makes a payment with respect to an offshore obligation that is also a preexisting obligation, may treat the payee as a retirement fund described in § 1.1471-6(f) if the withholding agent has general documentary evidence or preexisting account documentary evidence (as described in paragraphs (c)(5)(ii)(A) or (B)) that establishes that the payee is a foreign entity that qualifies as a retirement fund in the country in which the payee is organized.

(iii) ***Identification of entities wholly owned by exempt beneficial owners.*** A withholding agent may treat a payee as an entity described in § 1.1471-6(g) (referring to certain entities wholly owned by exempt beneficial owners) if the withholding agent has—

(A) A withholding certificate or, for a payment made with respect to an offshore obligation, a written statement that identifies the payee as an investment entity that is the beneficial owner of the payment;

(B) An owner reporting statement that contains the name, address, TIN (if any), chapter 4 status (identifying the type of exempt beneficial owner), and a description of the type of documentation (Form W-8 or other documentary evidence) provided to the withholding agent for every person that owns a direct equity interest, or a debt interest constituting a financial account, in the payee, and that is subject to the general rules applicable to all withholding statements described in paragraph (c)(3)(iii)(B)(*1*) of this section; and

(C) Documentation for every person identified on the owner reporting statement establishing, pursuant to the documentation requirements described in this paragraph (d)(9), that such person is an exempt beneficial owner (without regard to whether the person is a beneficial owner of the payment).

(10) ***Identification of territory financial institutions*** —

(i) *Identification of territory financial institutions that are beneficial owners* —

(A) ***In general.*** A withholding agent may treat a payee as a territory financial institution if the withholding agent has a withholding certificate identifying the payee as a territory financial institution that beneficially owns the payment. See paragraph (d)(11)(viii) of this section for rules for documenting territory NFFEs.

(B) ***Exception for preexisting offshore obligations.*** A withholding agent that makes a payment with respect to an offshore obligation that is also a preexisting obligation may treat the payee as a territory financial institution if the withholding agent receives written notification, whether signed or not, that the payee is the beneficial owner of the payment and the withholding agent has general documentary evidence (as described in paragraph (c)(5)(ii)(A) of this section) or preexisting account documentary evidence (as described in paragraph (c)(5)(ii)(B) of this section) establishing that the payee was organized or incorporated under the laws of any U.S. territory and is a depository institution, custodial institution, or specified insurance company.

(ii) ***Identification of territory financial institutions acting as intermediaries or that are flow-through entities.*** A withholding agent may treat a payment as being made to a territory financial institution that is acting as an intermediary or that is a flow-through entity if the withholding agent has an intermediary withholding certificate or flow-through withholding certificate as described in paragraph (c)(3)(iii) of this section that identifies the person who receives the payment as a territory financial institution. A withholding agent that obtains the documentation described in the preceding sentence may treat the territory financial institution as the payee if the withholding certificate contains a certification that the territory financial institution agrees to be treated as a U.S. person with respect to the payment. If the withholding certificate does not contain such a certification, then the withholding agent must treat the person on whose behalf the territory financial institution receives the payment as the payee. See paragraph (c)(3)(iii) of this section for additional documentation that must accompany the withholding certificate of the territory financial institution in this case.

(iii) ***Reason to know.*** In addition to the general standards of knowledge described in paragraph (e) of this section, a withholding agent will have reason to know that an entity is not a territory financial institution if the withholding agent has: a current residence or mailing address, either in the entity's account files or on documentation provided by the payee, for the entity that is outside the U.S. territory in which the entity claims to be organized; a current telephone number for the payee that has a country code other than the country code for the U.S. territory or has an area code other than the area code(s) of the applicable U.S. territory and no telephone number for the payee in the applicable U.S. territory; or standing instructions for the withholding agent to pay amounts from its account to an address or account outside the applicable U.S. territory. A withholding agent that has knowledge of a current address, current telephone number, or standing payment instructions for the entity outside of the applicable U.S. territory, may nevertheless treat the entity as a territory financial institution if it obtains documentary evidence that establishes that the entity was organized in the applicable U.S. territory.

(11) *Identification of excepted NFFEs* —

(i) *Identification of excepted nonfinancial group entities* —

(A) ***In general.*** A withholding agent may treat a payee as an excepted nonfinancial group entity described in § 1.1471-5(e)(5)(i) if the withholding agent has a withholding certificate identifying the payee as such an entity.

(B) ***Exception for offshore obligations.*** A withholding agent that makes a payment with respect to an offshore obligation may treat a payee as an excepted nonfinancial group entity described in § 1.1471-5(e)(5)(i) if the withholding agent obtains:

(*1*) A written statement in which the payee certifies that it is a foreign entity operating primarily as an excepted nonfinancial group entity for a group that primarily engages in a business other than a financial business described in § 1.1471-5(e)(4) and, with respect to a payment of U.S. source FDAP income, documentary evidence supporting a claim of foreign status (as described in paragraph (c)(5)(i) of this section); or

(*2*) General documentary evidence (as described in paragraph (c)(5)(ii)(A) of this section) that provides the withholding agent with sufficient information to establish that the payee is an excepted nonfinancial group entity described in § 1.1471-5(e)(5)(i).

(ii) ***Identification of excepted nonfinancial start-up companies*** —

(A) ***In general.*** A withholding agent may treat a payee as an excepted nonfinancial start-up company described in § 1.1471-5(e)(5)(ii) if the withholding agent has a withholding certificate that identifies the payee as a start-up company that intends to operate as other than a financial institution and the withholding certificate provides a formation date for the payee that is less than 24 months prior to the date of the payment.

(B) ***Exception for offshore obligations.*** A withholding agent that makes a payment with respect to an offshore obligation may treat a payee as an excepted nonfinancial start-up company described in § 1.1471-5(e)(5)(ii) if it obtains—

(*1*) A written statement from the payee in which the payee certifies that it is a foreign entity formed for the purpose of operating a business other than that of a financial institution and provides the entity's formation date which was less than 24 months prior to the date of the payment and, with respect to a payment of U.S. source FDAP income, documentary evidence supporting a claim of foreign status (as described in paragraph (c)(5)(i) of this section); or

(*2*) General documentary evidence (as described in paragraph (c)(5)(ii)(A) of this section) that provides the withholding agent with sufficient information to establish that the payee is a foreign entity other than a financial institution and has a formation date which is less than 24 months prior to the date of the payment.

(C) ***Exception for preexisting offshore obligations.*** A withholding agent may treat a payment made with respect to an offshore obligation that is also a preexisting obligation as made to a start-up company described in § 1.1471-5(e)(5)(ii) if the withholding agent has general documentary evidence (as described in paragraph (c)(5)(ii)(A) of this section) or preexisting account documentary evidence (as described in paragraph (c)(5)(ii)(B) of this section) that provides the withholding agent sufficient information to establish that the payee is, or intends to be, engaged in a business other than as a financial institution and establishes that the payee is a foreign entity that was organized less than 24 months prior to the date of the payment.

(iii) ***Identification of excepted nonfinancial entities in liquidation or bankruptcy*** —

(A) ***In general.*** A withholding agent may treat a payee as an excepted nonfinancial entity in liquidation or bankruptcy, as described in § 1.1471-5(e)(5)(iii), if the withholding agent has a withholding certificate that identifies the payee as such an entity and the withholding agent has no knowledge that the payee has claimed to be such an entity for more than three years. A withholding agent may continue to treat a payee as an entity described in this paragraph for longer than three years if it obtains, in addition to a withholding certificate, documentary evidence such as a bankruptcy filing or other public document that supports the payee's claim that it remains in liquidation or bankruptcy.

(B) ***Exception for offshore obligations.*** A withholding agent that makes a payment with respect to an offshore obligation may treat the payee as an excepted nonfinancial entity in liquidation or bankruptcy, as described in § 1.1471-5(e)(5)(iii) if the withholding agent has general documentary evidence (as described in paragraph (c)(5)(ii)(A) of this section) or a copy of a bankruptcy filing, or similar documentation, establishing that the payee is a foreign entity in liquidation or bankruptcy and establishing that prior to the liquidation or bankruptcy filing, the payee was engaged in a business other than that of a financial institution. A withholding agent may also treat the payee with respect to an offshore obligation as an excepted nonfinancial entity in liquidation or bankruptcy, as described in § 1.1471-5(e)(5)(iii), if the withholding agent obtains a written statement stating that the payee is a foreign entity in the process of liquidating or reorganizing with the intent to continue or recommence its former business as a nonfinancial institution, the withholding agent has no knowledge that the payee has claimed to be such an entity for more than three years (unless the withholding agent has obtained additional documentary evidence to support the claim that the entity remains in bankruptcy or liquidation), and, with respect to a payment of U.S. source FDAP income, documentary evidence supporting a claim of foreign status (as described in paragraph (c)(5)(i) of this section).

(C) ***Exception for preexisting offshore obligations.*** A withholding agent that makes a payment with respect to an offshore obligation that is also a preexisting obligation may treat a payee as an excepted nonfinancial entity in liquidation or bankruptcy, as described in § 1.1471-5(e)(5)(iii), if the withholding agent has preexisting account documentary evidence (as described in paragraph (c)(5)(ii)(B) of this section) that unambiguously indicates that the payee is not a financial institution and is a foreign entity that entered liquidation or bankruptcy within the three years preceding the date of the payment.

(iv) ***Identification of section 501(c) organizations*** —

(A) ***In general.*** A withholding agent may treat a payee as a 501(c) organization described in § 1.1471-5(e)(5)(v) if the withholding agent can reliably associate the payment with a withholding certificate that identifies the payee as a section 501(c) organization and the payee provides either a certification that the payee has been issued a determination letter by the IRS that is currently in effect concluding that the payee is a section 501(c) organization and providing the date of the letter, or a copy of an opinion from U.S. counsel certifying that the payee is a section 501(c) organization (without regard to whether the payee is a foreign private foundation).

(B) ***Reason to know.*** A withholding agent must cease to treat a foreign organization's claim that it is a section 501(c) organization as valid beginning on the earlier of the date on which such agent knows that the IRS has given notice to such foreign organization that it

is not a section 501(c) organization or 90 days after the date on which the IRS gives notice to the public that such foreign organization is not a section 501(c) organization. Further, a withholding agent will have reason to know that a payee is not a section 501(c) organization if it has determined, pursuant to its AML due diligence, that the payee has beneficial owners (as defined for purposes of the AML due diligence).

(v) ***Identification of non-profit organizations*** —

(A) ***In general.*** A withholding agent may treat a payee as a non-profit organization described in § 1.1471-5(e)(5)(vi) if the withholding agent has a withholding certificate that identifies the payee as a non-profit organization.

(B) ***Exception for offshore obligations.*** A withholding agent may treat a payment with respect to an offshore obligation as made to a nonprofit organization without obtaining a withholding certificate for the payee if the payee—

(*1*) Has provided a written statement indicating that the payee is a non-profit organization described in § 1.1471-5(e)(5)(vi) and, with respect to a payment of U.S. source FDAP income, has provided documentary evidence supporting a claim of foreign status (as described in paragraph (c)(5)(i) of this section); or

(*2*) Is required to be reported by the withholding agent as a tax-exempt charitable organization under the information reporting laws of the country in which the account is maintained or is permitted an exemption from withholding due to its status as a tax exempt charitable organization under the laws of the country in which the account is maintained, and the withholding agent obtains general documentary evidence (as described in paragraph (c)(5)(ii)(A) of this section) establishing that the payee was organized for charitable purposes in the same country in which the account is maintained by the withholding agent for the purposes described in § 1.1471-5(e)(5)(vi) and that the payee has no beneficial owners (as that term is used for purposes of that country's AML due diligence).

(C) ***Exception for preexisting offshore obligations.*** A withholding agent that makes a payment with respect to an offshore obligation that is also a preexisting obligation may treat the payee as a nonprofit organization described in § 1.1471-5(e)(5)(vi) if the payee—

(*1*) Provides a letter of local counsel that certifies that the payee qualifies as a tax-exempt entity in its local jurisdiction; or

(*2*) Provides a letter issued by the tax authority of the country in which the payee is organized or a statement provided on the Web site of such tax authority indicating that the payee is a tax-exempt entity or charitable organization in the payee's country of organization.

(D) ***Reason to know.*** A withholding agent will have reason to know that a payee is not a nonprofit organization if it has determined, pursuant to its AML due diligence, that the payee has beneficial owners (as defined for purposes of the AML due diligence).

(vi) ***Identification of NFFEs that are publicly traded corporations.*** A withholding agent may treat a payee as an NFFE described in § 1.1472-1(c)(1)(i) (applying to an entity the stock of which is regularly traded on an established securities market) if it has a withholding certificate that certifies that the payee is such an entity and provides the name of a securities exchange upon which the payee's stock is regularly traded.

(A) ***Exception for offshore obligations.*** A withholding agent that makes a payment with respect to an offshore obligation may treat a payee as an NFFE described in § 1.1472-1(c)(1)(i) if the withholding agent obtains—

(*1*) A written statement that the payee is a foreign corporation that is not a financial institution, that its stock is regularly traded on an established securities market, the name of one of the exchanges upon which the payee's stock is traded, and, with respect to a payment of U.S. source FDAP income, documentary evidence supporting a claim of foreign status (as described in paragraph (c)(5)(i) of this section); or

(*2*) Any documentation establishing that the payee is listed on a public securities exchange or on a stock market index and general documentary evidence (as described in paragraph (c)(5)(ii)(A) of this section) establishing that the payee is a foreign corporation other than a financial institution.

(B) ***Exception for preexisting offshore obligations.*** A withholding agent that makes a payment with respect to an offshore obligation that is also a preexisting obligation may treat the payee as an entity described in § 1.1472-1(c)(1)(i) if the withholding agent has any documentation confirming that the payee is listed on a public securities exchange or on a stock market index and preexisting account documentary evidence (as described in paragraph (c)(5)(ii)(B) of this section) establishing that the payee is a foreign corporation other than a financial institution.

(vii) ***Identification of NFFE affiliates.*** A withholding agent may treat a payee as an NFFE described in § 1.1472-1(c)(1)(ii) (applying to an affiliate of an entity the stock of which is regularly traded on an established exchange) if it has a beneficial owner withholding certificate that identifies the payee as a foreign corporation that is an affiliate of an entity, described § 1.1472-1(c)(1)(i), whose stock is regularly traded on an established exchange and provides the name of the entity that is regularly traded and one of the exchanges upon which the entity's stock is listed.

(A) ***Exception for offshore obligations.*** A withholding agent that makes a payment with respect to an offshore obligation may treat a payment as being made to an NFFE described in § 1.1472-1(c)(1)(ii) if the withholding agent obtains—

(*1*) Documentary evidence or other information confirming that the payee is affiliated with an entity listed on a public securities exchange or on a stock market index and general documentary evidence (as described in paragraph (c)(5)(ii)(A) of this section) that indicates that the payee is a foreign corporation other than a financial institution; or

(*2*) A written statement that the payee is a foreign corporation that is not a financial institution, that the payee is an affiliate of another nonfinancial entity whose stock is regularly traded on an established securities exchange, providing the name of the payee's affiliate and one of the exchanges upon which the affiliate's stock is traded

and, in the case of a payment of U.S. source FDAP income, documentary evidence supporting the payee's claim of foreign status (as described in paragraph (c)(5)(i) of this section).

(B) ***Exception for preexisting offshore obligations.*** A withholding agent that makes a payment with respect to an offshore obligation that is also a preexisting obligation may treat the payee as an NFFE described in § 1.1472-1(c)(1)(ii) if the withholding agent has—

(*1*) Documentation or other information confirming that the payee is affiliated with a corporation that is listed on a public securities exchange or on a stock market index;

(*2*) Preexisting account documentary evidence (as described in paragraph (c)(5)(ii)(B) of this section) that unambiguously indicates that the payee is a corporation that is not a financial institution; and

(*3*) In the case of a payment of U.S. source FDAP income, documentary evidence supporting the payee's claim of foreign status (as described in paragraph (c)(5)(i) of this section).

(viii) ***Identification of excepted territory NFFEs.*** A withholding agent may treat a payee as an excepted territory NFFE described in § 1.1472-1(c)(1)(iii) if it has a withholding certificate that identifies the payee as an NFFE that was organized in a U.S. territory and includes a certification for chapter 4 purposes that all of its owners are bona fide residents of that U.S. territory.

(A) ***Exception for payments made prior to January 1, 2017, with respect to preexisting obligations of $1,000,000 or less (transitional).*** A withholding agent that makes a payment prior to January 1, 2017, with respect to a preexisting obligation with a balance or value not exceeding $1,000,000 on June 30, 2014, and December 31, 2015, applying the aggregation principles of § 1.1471-5(b)(4)(iii), may treat a payee as an excepted territory NFFE described in § 1.1472-1(c)(1)(iii) if the withholding agent—

(*1*) Has a pre-FATCA Form W-8 identifying the payee as a foreign entity with a permanent residence address in a U.S. territory; and

(*2*) Has general documentary evidence (as described in paragraph (c)(5)(ii)(A) of this section), preexisting account documentary evidence (as described in paragraph (c)(5)(ii)(B) of this section), or a prospectus establishing that the payee is an entity other than a depository institution, custodial institution, or specified insurance company; and

(*3*) Is subject, with respect to such obligation, to the laws of a FATF-compliant jurisdiction and as part of its AML due diligence has not identified any owners of the payee that are not bona fide residents of the U.S. territory in which the payee is organized.

(B) ***Exception for offshore obligations.*** A withholding agent that makes a payment with respect to an offshore obligation may treat a payment as being made to an excepted territory NFFE described in § 1.1472-1(c)(1)(iii) if it has—

(*1*) A written statement providing that the payee is an entity other than a depository institution, custodial institution, or specified insurance company, was organized in a U.S. territory, and is wholly owned by one or more bona fide residents of that U.S. territory, and, with respect to a payment of U.S. source FDAP income, the written

statement must indicate that the payee is the beneficial owner of the income and be accompanied by documentary evidence supporting a claim of foreign status (as described in paragraph (c)(5)(i) of this section); or

(2) General documentary evidence (as described in paragraph (c)(5)(ii)(A) of this section) or a prospectus establishing that the payee is an entity other than a depository institution, custodial institution, or specified insurance company, establishing that the payee was organized in a U.S. territory, and establishing that the payee is wholly owned by one or more bona fide residents of that U.S. territory.

(C) ***Exception for preexisting offshore obligations of $1,000,000 or less.*** A withholding agent that makes a payment with respect to an offshore obligation that is also a preexisting obligation with a balance or value not exceeding $1,000,000 on June 30, 2014 (or the effective date of the FFI agreement for a withholding agent that is a participating FFI) and the last day of each subsequent calendar year preceding the payment, applying the aggregation principles of § 1.1471-5(b)(4)(iii), may rely upon its review conducted for AML due diligence purposes to determine whether the owners of the payee are bona fide residents of the U.S. territory in which the payee is organized, in lieu of obtaining a written statement or documentary evidence described in paragraph (d)(11)(viii)(B) of this section. The preceding sentence applies only if the withholding agent is subject, with respect to such account, to the laws of a FATF-compliant jurisdiction and has identified the residence of the owners. The withholding agent relying upon this paragraph (d)(11)(viii)(C) must still obtain a written statement, documentary evidence (as provided in paragraph (d)(11)(viii)(B) of this section), or preexisting account documentary evidence (as described in paragraph (c)(5)(ii)(B) of this section) establishing that the payee is an entity other than a depository institution, custodial institution, or specified insurance company organized in a U.S. territory.

(ix) ***Identification of active NFFEs.*** A withholding agent may treat a payee as an active NFFE described in § 1.1472-1(c)(1)(iv) if it has a withholding certificate identifying the payee as an active NFFE.

(A) ***Exception for offshore obligations.*** A withholding agent that makes a payment with respect to an offshore obligation may treat the payee as an active NFFE if the withholding agent has—

(1) General documentary evidence (as described in paragraph (c)(5)(ii)(A) of this section) providing sufficient information to determine that the payee is a foreign entity engaged in an active trade or business other than that of a financial institution; or

(2) A written statement stating that the payee is a foreign entity engaged in an active business other than that of a financial institution and, in the case of a payment of U.S. source FDAP income, documentary evidence supporting the payee's claim of foreign status (as described in paragraph (c)(5)(i) of this section).

(B) ***Exception for preexisting offshore obligations.*** A withholding agent that makes a payment with respect to an offshore obligation that is also a preexisting obligation may treat the payee as an active NFFE if the withholding agent has preexisting account documentary evidence (as described in paragraph (c)(5)(ii)(B) of this section) that unambiguously indicates that the payee is a foreign entity engaged in a trade or business other than that

of a financial institution and, in the case of a payment of U.S. source FDAP income, documentary evidence supporting the payee's claim of foreign status (as described in paragraph (c)(5)(i) of this section).

(C) ***Limit on reason to know.*** A withholding agent relying on documentary evidence to determine that a payee is an active NFFE will not be required to determine that the payee meets the income and asset thresholds but rather must determine only that the payee is primarily engaged in a business other than that of a financial institution.

(x) ***Identifying a direct reporting NFFE (other than a sponsored direct reporting NFFE)*** —

(A) ***In general.*** A withholding agent may treat a payment as having been made to a direct reporting NFFE (other than a sponsored direct reporting NFFE) if it has a withholding certificate that identifies the payee as a direct reporting NFFE and the withholding certificate contains a GIIN for the payee that is verified against the published IRS FFI list in the manner described in paragraph (e)(3)(iii) of this section (indicating when a withholding agent may rely upon a GIIN).

(B) ***Exception for offshore obligations.*** A withholding agent that makes a payment with respect to an offshore obligation may treat the payment as made to a direct reporting NFFE if the withholding agent has—

(*1*)

(*i*) General documentary evidence (as described in paragraph (c)(5)(ii)(A) of this section) for the payee providing sufficient information to determine that the payee is a foreign entity that is not a financial institution; or

(*ii*) A written statement that the payee is a foreign entity that is not a financial institution and, for a payment of U.S. source FDAP income, documentary evidence supporting the payee's claim of foreign status (as described in paragraph (c)(5)(i) of this section), and

(*2*) Received (either orally or in writing) a GIIN from the direct reporting NFFE and has verified the GIIN in the manner described in paragraph (e)(3)(iii) of this section.

(C) ***Special rule for preexisting offshore obligations.*** A withholding agent that makes a payment with respect to an offshore obligation that is also a preexisting obligation may treat the payee as a direct reporting NFFE if the withholding agent has preexisting account documentary evidence (as described in paragraph (c)(5)(ii)(B) of this section) providing sufficient information to determine that the payee is a foreign entity that is not a financial institution and it has received (either orally or in writing) a GIIN from the direct reporting NFFE and has verified the GIIN in the manner described in paragraph (e)(3)(iii) of this section.

(xi) ***Identifying a sponsored direct reporting NFFE*** —

(A) ***In general.*** A withholding agent may treat a payment as having been made to a sponsored direct reporting NFFE if it has a withholding certificate that identifies the payee as a sponsored direct reporting NFFE and the withholding certificate includes the sponsored direct reporting NFFE's GIIN, which the withholding agent has verified against the published IRS FFI list in the manner described in paragraph (e)(3)(iv) of this section (indicating when a withholding agent may rely upon a GIIN).

(1) ***Payments made prior to January 1, 2017 (transitional).*** For payments prior to January 1, 2017, a sponsored direct reporting NFFE may provide the GIIN of its sponsoring entity on the withholding certificate, which the withholding agent must verify against the published IRS FFI list in the manner described in paragraph (e)(3)(iv) of this section.

(2) ***Payments made after December 31, 2016, to payees documented prior to January 1, 2017.*** For a payment made after December 31, 2016, to a payee that the withholding agent has documented prior to January 1, 2017, as a sponsored direct reporting NFFE with a valid withholding certificate that includes the GIIN of the sponsoring entity, the withholding agent must obtain and verify the GIIN of the sponsored direct reporting NFFE against the published IRS FFI list in the manner described in paragraph (e)(3)(i) of this section by March 31, 2017. A withholding agent required to obtain a GIIN of the sponsored direct reporting NFFE in the preceding sentence may obtain such GIIN by oral or written confirmation (including by email) rather than obtaining a new withholding certificate, provided that the withholding agent retains a record of the confirmation, which will become part of the withholding certificate.

(B) ***Exception for offshore obligations.*** A withholding agent that makes a payment with respect to an offshore obligation may treat the payment as made to a sponsored direct reporting NFFE if the withholding agent has—

(1) A written statement that the payee is a foreign entity that is a sponsored direct reporting NFFE and, for a payment of U.S. source FDAP income, documentary evidence supporting the payee's claim of foreign status (as described in paragraph (c)(5)(i) of this section), and

(2) Received (either orally or in writing) the GIIN of the sponsored direct reporting NFFE and has verified the GIIN in the manner described in paragraph (e)(3)(iv) of this section. For payments prior to January 1, 2017, such requirement may be fulfilled by receiving (either orally or in writing) the GIIN of the sponsoring entity to the extent that the sponsored direct reporting NFFE has not obtained a GIIN.

(xii) ***Identification of excepted inter-affiliate FFI*** —

(A) ***In general.*** A withholding agent may treat a payee as an excepted inter-affiliate FFI described in § 1.1471-5(e)(5)(iv) if it has obtained a withholding certificate identifying the payee as such an entity.

(B) ***Offshore obligations.*** A withholding agent that makes a payment with respect to an offshore obligation may treat the payment as made to an excepted inter-affiliate FFI described in § 1.1471-5(e)(5)(iv) if the withholding agent obtains a written statement in which the payee certifies that it is a foreign entity operating as an excepted inter-affiliate FFI and that it is a member of an expanded affiliated group of participating FFIs or registered deemed-compliant FFIs. In the case of a payment of U.S. source FDAP income, the written statement must also indicate that the payee is the beneficial owner and must be supplemented with documentary evidence supporting the payee's claim of foreign status (as described in paragraph (c)(5)(i) of this section).

(C) ***Reason to know.*** A withholding agent that is not a member of the payee's expanded affiliated group has reason to know that an entity is not an excepted inter-affiliate FFI if it makes any payments (other than a payment of bank deposit interest) to such entity.

(12) ***Identification of passive NFFEs.*** A withholding agent may treat a payment as having been made to a passive NFFE if it has a withholding certificate that identifies the payee as a passive NFFE.

(i) ***Exception for offshore obligations.*** A withholding agent that makes a payment with respect to an offshore obligation may treat the payment as made to a passive NFFE if the withholding agent has—

(A) General documentary evidence (as described in paragraph (c)(5)(ii)(A) of this section) for the payee providing sufficient information to determine that the payee is a foreign entity that is not a financial institution; or

(B) A written statement that the payee is a foreign entity that is not a financial institution and, for a payment of U.S. source FDAP income, documentary evidence supporting the payee's claim of foreign status (as described in paragraph (c)(5)(i) of this section).

(ii) ***Special rule for preexisting offshore obligations.*** A withholding agent that makes a payment with respect to an offshore obligation that is also a preexisting obligation may treat the payee as a passive NFFE if the withholding agent has preexisting account documentary evidence (as described in paragraph (c)(5)(ii)(B) of this section) providing sufficient information to determine that the payee is a foreign entity that is not a financial institution and, with respect to a payment of U.S. source FDAP income, documentary evidence supporting the payee's claim of foreign status (as described in paragraph (c)(5)(i) of this section).

(iii) ***Required owner certification for passive NFFEs*** —

(A) ***In general.*** A passive NFFE will be required to provide to the withholding agent either a written certification (contained on a withholding certificate or in a written statement) that it does not have any substantial U.S. owners or the name, address, and TIN of each substantial U.S. owner of the NFFE, to avoid being withheld upon under § 1.1472-1(b).

(B) ***Exception for preexisting obligations of $1,000,000 or less (transitional).*** A withholding agent that makes a payment prior to January 1, 2017, with respect to a preexisting obligation with a balance or value not exceeding $1,000,000 on June 30, 2014, and December 31, 2015, applying the aggregation principles of § 1.1471-5(b)(4)(iii), may rely upon its review conducted for AML due diligence purposes to identify any substantial U.S. owners of the payee in lieu of obtaining the certification or information required in paragraph (d)(12)(iii)(A) of this section if the withholding agent is subject, with respect to such obligation, to the laws of a FATF-compliant jurisdiction and has identified the residence of any controlling persons (within the meaning of the withholding agent's AML due diligence rules). A withholding agent that makes a payment with respect to an offshore obligation that is also a preexisting obligation with a balance or value not exceeding $1,000,000 on June 30, 2014, (or the effective date of the FFI agreement for a withholding agent that is a participating FFI) and the last day of each subsequent calendar year preceding the payment, applying the aggregation principles of § 1.1471-5(b)(4)(iii), may rely upon its review conducted for AML due diligence purposes to identify any substantial U.S. owners of the payee in lieu of obtaining the certification or information required in paragraph (d)(12)(iii)(A) of this section if the withholding agent is subject, with respect to such obligation, to the laws of a FATF-compliant jurisdiction and has identified the residence of any controlling persons (within the meaning of the withholding agent's AML due diligence rules).

(e) ***Standards of knowledge*** —

(1) ***In general.*** The standards of knowledge discussed in this section apply for purposes of determining the chapter 4 status of payees, beneficial owners, intermediaries, flow-through entities, and persons that own an interest in an owner-documented FFI. A withholding agent shall be liable for tax, interest, and penalties to the extent provided under section 1474 and the regulations under that section if it fails to withhold the correct amount despite knowing or having reason to know the amount required to be withheld. A withholding agent that cannot reliably associate the payment with documentation and fails to act in accordance with the presumption rules set forth in paragraph (f) of this section may also be liable for tax, interest, and penalties. See paragraph (e)(4) in this section for the specific standards of knowledge applicable to a person's specific claims of chapter 4 status.

(2) ***Notification by the IRS.*** A withholding agent that has received notification by the IRS that a claim of status as a U.S. person, a participating FFI, a deemed-compliant FFI, or other entity entitled to a reduced rate of withholding under section 1471 or 1472 is incorrect knows that such a claim is incorrect beginning on the date that is 30 days after the date the notice is received.

(3) ***GIIN verification*** —

(i) ***In general.*** A withholding agent that has received a payee's claim of status as a participating FFI or registered deemed-compliant FFI, and that is required under paragraph (d)(4) of this section to confirm that the FFI or branch thereof (including an entity that is disregarded as an entity separate from the FFI) claiming status as a participating FFI or registered deemed-compliant FFI has a GIIN that appears on the published IRS FFI list, has reason to know that such payee is not such a financial institution if the payee's name (including a name reasonably similar to the name the withholding agent has on file for the payee) and GIIN do not appear on the most recently published IRS FFI list within 90 days of the date that the claim is made. For purposes of this paragraph (e)(3)(i), the GIIN that the withholding agent must confirm is, with respect to a payee that is a participating FFI or registered deemed-compliant FFI, the GIIN assigned to the FFI identifying its country of residence for tax purposes (or place of organization if the FFI has no country of residence) or, with respect to a payment that is made to a branch (including a disregarded entity) of a participating FFI or registered deemed-compliant FFI located outside of the FFI's country of residence or organization, the GIIN of the branch (or disregarded entity) receiving the payment. The withholding agent will have reason to know that a withholdable payment is made to a branch (including a disregarded entity) of a participating or registered deemed-compliant FFI that is not itself a participating FFI or registered deemed-compliant FFI when the withholding agent is directed to make the payment to an address in a jurisdiction other than that of the participating FFI or registered deemed-compliant FFI (or branch (including a disregarded entity) of such FFI) that is identified as the FFI (or branch (including a disregarded entity) of such FFI) that is supposed to receive the payment and for which the FFI's GIIN is not confirmed as described in the preceding sentence. The preceding sentence does not apply to an FFI that is an investment entity. If an FFI (other than an investment entity) directs the withholding agent to make the payment to an account held by the FFI and maintained by another financial institution, the FFI must provide to the withholding agent a statement in writing that the FFI is not directing the payment to any branch of such FFI that is not a participating FFI or a registered deemed-compliant FFI. An FFI whose registration with the IRS as a participating FFI or a registered deemed-compliant FFI is in process but has not yet received a GIIN may provide a withholding agent with a Form W-8 claiming the chapter 4 status it applied for and writing “applied for” in the box for the GIIN. In such case, the withholding agent will have 90 days from the date it receives the Form W-8 to obtain a GIIN and to verify the accuracy of the GIIN against the published IRS FFI list before it has reason to know that the

payee is not a participating FFI or registered deemed-compliant FFI. If an FFI is removed from the published IRS FFI list, the withholding agent knows that such FFI is not a participating FFI or registered deemed-compliant FFI on the earlier of the date that the withholding agent discovers that the FFI has been removed from the list or the date that is one year from the date the FFI's GIIN was actually removed from the list.

(ii) ***Special rules for reporting Model 1 FFIs.*** Prior to January 1, 2015, a withholding agent that receives an FFI's claim of status as a reporting Model 1 FFI will not be required to confirm that the FFI has a GIIN that appears on the published IRS FFI list. A withholding agent has reason to know that the FFI is not a reporting Model 1 FFI if the withholding agent does not have a permanent residence address for the FFI, or an address of the relevant branch of the FFI, located in the country in which the FFI claims to be a reporting Model 1 FFI, or the withholding agent is making a payment to a branch of the FFI at an address in a country that does not have in effect a Model 1 IGA.

(iii) ***Special rules for direct reporting NFFEs.*** A withholding agent that has received a payee's claim of status as a direct reporting NFFE and that is required under paragraph (d)(11)(x) of this section to confirm that the entity claiming status as a direct reporting NFFE has a GIIN that appears on the published IRS FFI list, has reason to know that such payee is not such a NFFE if the payee's name (including a name reasonably similar to the name the withholding agent has on file for the payee) and GIIN do not appear on the most recently published IRS FFI list within 90 days of the date that the claim is made. A payee whose registration with the IRS as a direct reporting NFFE is in process but has not yet received a GIIN may provide a withholding agent with a Form W-8 claiming the chapter 4 status it applied for and writing “applied for” in the box for the GIIN. In such case, the withholding agent will have 90 days from the date it receives the Form W-8 to verify the accuracy of the GIIN against the published IRS FFI list before it has reason to know that the payee is not a direct reporting NFFE. If a direct reporting NFFE is removed from the published IRS FFI list, the withholding agent knows that such NFFE is not a direct reporting NFFE on the earlier of the date that the withholding agent discovers that the NFFE has been removed from the list or the date that is one year from the date the NFFE's GIIN was actually removed from the list.

(iv) ***Special rules for sponsored direct reporting NFFEs and sponsoring entities*** —

(A) ***Sponsored direct reporting NFFEs.*** A withholding agent that has received a payee's claim of status as a sponsored direct reporting NFFE and that is required under paragraph (d)(11)(xi) of this section to confirm that the entity claiming status as a sponsored direct reporting NFFE has a GIIN that appears on the published IRS FFI list, has reason to know that such payee is not such a NFFE if its name (including a name reasonably similar to the name the withholding agent has on file for the payee) and GIIN do not appear on the most recently published IRS FFI list within 90 days of the date that the claim is made. A sponsored direct reporting NFFE whose registration with the IRS as a sponsored direct reporting NFFE is in process but has not yet received a GIIN may provide a withholding agent with a Form W-8 claiming the chapter 4 status it applied for and writing “applied for” in the box for the GIIN. In such case, the withholding agent will have 90 days from the date it receives the Form W-8 to verify the accuracy of the GIIN against the published IRS FFI list before it has reason to know that the payee is not a sponsored direct reporting NFFE. If a sponsored direct reporting NFFE is removed from the published IRS FFI list, the withholding agent knows that such NFFE is not a sponsored direct reporting NFFE on the

earlier of the date that the withholding agent discovers that the sponsored entity has been removed from the list or the date that is one year from the date the sponsored entity's GIIN was actually removed from the list.

(B) ***Sponsoring entities (transitional).*** For payments made prior to January 1, 2017, a withholding agent that has received a payee's claim of status as a sponsored direct reporting NFFE has reason to know that such payee is not such a NFFE if the name of its sponsoring entity (including a name reasonably similar to the name the withholding agent has on file for the sponsoring entity) and the GIIN of its sponsoring entity do not appear on the most recently published IRS FFI list within 90 days of the date that the claim is made. A sponsoring entity whose registration with the IRS is in process but has not yet received a GIIN may provide a withholding agent with a Form W-8 claiming the chapter 4 status it applied for and writing "applied for" in the box for the GIIN. In such case, the withholding agent will have 90 days from the date it receives the Form W-8 to verify the accuracy of the GIIN against the published IRS FFI list before it has reason to know that the payee is not a sponsored direct reporting NFFE. If the sponsoring entity of the NFFE is removed from the published IRS FFI list, the withholding agent knows that such NFFE is not a sponsored direct reporting NFFE on the earlier of the date that the withholding agent discovers that the sponsoring entity has been removed from the list or the date that is one year from the date the sponsoring entity's GIIN was actually removed from the list.

(4) ***Reason to know.*** A withholding agent has reason to know that a claim of chapter 4 status is unreliable or incorrect if its knowledge of relevant facts or statements contained in the withholding certificate or other documentation is such that a reasonably prudent person in the position of the withholding agent would question the claim being made. For an obligation other than a preexisting obligation, a withholding agent has reason to know that a person's claim of chapter 4 status is unreliable or incorrect if any information contained in its account opening files or other customer account files, including documentation collected for AML due diligence purposes, conflicts with the chapter 4 status being claimed. A withholding agent will not, however, have reason to know that a person's claim of chapter 4 status is unreliable or incorrect based on documentation collected for AML due diligence purposes until the date that is 30 days after the obligation is created. In addition to the specific standards of knowledge set forth in this paragraph (e) regarding a person's claim of chapter 4 status, a withholding agent is also required to apply any specific standards of knowledge applicable to the chapter 4 status claimed as set forth in paragraph (d) of this section. A withholding agent that has obtained documentation to reliably associate a payment to a foreign person under paragraph (c) of this section has reason to know that the person's claim of foreign status is unreliable or incorrect only to the extent provided in this paragraph (e)(4). See also § 1.1441-1(e)(4)(ii)(D) for requirements that apply when a change in circumstances occurs for purposes of chapter 3 and the related grace period allowed under § 1.1441-1(b)(3)(iv). The limits on reason to know for multiple obligations held by the same person set forth in § 1.1441-7(b)(11) shall apply by substituting the term *chapter 4 status* for the term *foreign status*. See § 1.1471-3(e)(4)(vii) for the limits on reason to know with respect to a preexisting obligation.

(i) ***Reason to know regarding an entity's chapter 4 status.*** A withholding agent has reason to know that a withholding certificate, written statement, or documentary evidence provided by or on behalf of an entity is unreliable or incorrect if there is information on the face of the documentation or in the withholding agent's account files that conflicts with the entity's claim regarding its chapter 4 status. For example, a withholding agent has reason to know that an entity's claim that it is an excepted NFFE is unreliable or incorrect if the withholding agent has

obtained a financial statement or credit report for AML purposes that indicates that the entity is engaged in business as a financial institution. See also paragraph (e)(4) of this section for the 30-day period before a withholding agent has reason to know a claim is unreliable or incorrect based on AML information. Further, a withholding agent that has classified an entity as engaged in a particular type of business based on its records, such as through the use of a standardized industry coding system, AML or other regulatory purpose that requires the withholding agent to periodically monitor and periodically update the business classification based on the withholding agent's records, the withholding agent has reason to know that the chapter 4 status claimed by the entity is unreliable or incorrect only if the entity's claim conflicts with the withholding agent's classification of the entity's business type.

(ii) ***Reason to know applicable to withholding certificates*** —

(A) ***In general.*** A withholding agent has reason to know that a withholding certificate provided by a person is unreliable or incorrect if the withholding certificate is incomplete with respect to any item on the certificate that is relevant to the claims made by the person, the withholding certificate contains any information that is inconsistent with the person's claim, the withholding agent has other account information that is inconsistent with the person's claim, or the withholding certificate lacks information necessary to establish entitlement to an exemption from withholding for chapter 4 purposes. Except as otherwise provided in this paragraph (e)(4)(ii)(A), a withholding agent that is a financial institution or other entity described in § 1.1441-7(b)(3) and that has obtained a withholding certificate to reliably associate a payment to a foreign person under paragraph (c) of this section has reason to know that the person's claim of foreign status is unreliable or incorrect only if there are U.S. indicia, as described in § 1.1441-7(b)(5), associated with the person and for which appropriate documentation sufficient to cure the U.S. indicia has not been obtained in accordance with § 1.1441-7(b) within 90 days of when the U.S. indicia was first identified by the withholding agent. See also § 1.1441-1(e)(4)(ii)(D) for requirements that apply when a change in circumstances occurs for purposes of chapter 3 and the related grace period allowed under § 1.1441-1(b)(3)(iv). A withholding agent that relies on an agent to review and maintain a withholding certificate is considered to know or have reason to know the facts within the knowledge of the agent.

(B) ***Withholding certificate provided by an FFI.*** A withholding agent that obtains a withholding certificate to reliably associate a payment to a participating FFI, a registered deemed-compliant FFI, a sponsoring entity, or a sponsored FFI does not need to apply the standards of knowledge described in § 1.1441-7(b)(5) if it has confirmed the FFI's GIIN on the current published IRS FFI list, in the manner described under paragraph (e)(3) of this section, within 90 days of receipt of the withholding certificate.

(iii) ***Reason to know applicable to written statements.*** A withholding agent must apply the standards of knowledge applicable to withholding certificates, as set forth in paragraph (e)(4)(ii) of this section, to determine whether it has reason to know that a written statement is unreliable or incorrect in terms of establishing a person's claim of foreign status. The rules under paragraph (e)(4)(ii) shall be applied by substituting the term *written statement* for the term *withholding certificate*.

(iv) ***Reason to know applicable to documentary evidence*** —

(A) ***In general.*** A withholding agent may not treat documentary evidence provided by a person as valid if the documentary evidence does not reasonably establish the identity of the person presenting the documentary evidence. For example, documentary evidence is not valid if it is provided in person by an individual and the photograph or signature on the documentary evidence does not match the appearance or signature of the person presenting the document. A withholding agent may not treat documentary evidence as valid if the documentary evidence contains information that is inconsistent with the person's claim as to its chapter 4 status, the withholding agent has other account information that is inconsistent with the person's chapter 4 status, or the documentary evidence lacks information necessary to establish the person's chapter 4 status. Additionally, a withholding agent that is a financial institution under § 1.1471-5(e), or other entity as described in § 1.1441-7(b)(3) that has obtained documentary evidence to reliably associate a payment to a foreign person under paragraph (c) of this section has reason to know that the person's claim of foreign status is unreliable or incorrect only if there are U.S. indicia, as described in § 1.1441-7(b)(8), associated with the person and appropriate documentation sufficient to cure the U.S. indicia has not been obtained in accordance with § 1.1441-7(b) within 90 days of when the U.S. indicia was first identified by the withholding agent. See also § 1.1441-1(e)(4)(ii)(D) for requirements when a change in circumstances occurs for purposes of chapter 3 and the related grace period allowed under § 1.1441-1(b)(3)(iv).

(B) ***Standards of knowledge applicable to certain types of documentary evidence*** —

(*1*) ***Financial statement.*** A withholding agent that obtains a financial statement for purposes of establishing that a foreign payee meets a certain asset threshold has reason to know that the chapter 4 status claimed is unreliable or incorrect only if the total assets shown on the financial statement for the payee, and if relevant the payee's expanded affiliated group, are not within the permissible thresholds, or the footnotes to the financial statement indicate that the payee is not a foreign entity or is not a type of FFI eligible for the chapter 4 status claimed. A withholding agent that obtains a financial statement for purposes of establishing that the payee is an active NFFE will be required to review the balance sheet and income statement to determine whether the payee meets the income and asset thresholds set forth in § 1.1472-1(c)(1)(iv) and the footnotes of the financial statement for an indication that the payee is not a foreign entity or is a financial institution. A withholding agent that obtains a financial statement for purposes of establishing a chapter 4 status for a payee that does not require the payee to meet an asset or income threshold will be required to review only the footnotes to the financial statement to determine whether the financial statement supports the claim of chapter 4 status. A withholding agent that is not relying upon a financial statement to establish the chapter 4 status of the payee (for example because it has other documentation that establishes the payee's chapter 4 status) is not required to independently evaluate the financial statement solely because the withholding agent also has collected the financial statement in the course of its account opening or other procedures.

(*2*) ***Organizational documents.*** A withholding agent that obtains organizational documents for a payee solely for the purpose of supporting the chapter 4 status claimed by the entity will only be required to review the document sufficiently to establish that the entity is a foreign person and that the purposes for which the entity

was formed and its basic activities appear to be of a type consistent with the chapter 4 status claimed, unless otherwise specified in paragraph (d) of this section. A withholding agent that obtains organizational documents for the purpose of establishing that an entity has a particular chapter 4 status will only be required to review the document to the extent needed to establish that the entity is a foreign person, that the requirements applicable to the particular chapter 4 status are met, and that the document was executed, but will not be required to review the remainder of the document.

(v) ***Specific standards of knowledge applicable when only documentary evidence is a code or classification described in paragraph (c)(5)(ii)(B) of this section.*** A withholding agent may not rely upon a classification described in paragraph (c)(5)(ii)(B) of this section or a standardized industry coding system to treat an entity as having a foreign status if there are U.S. indicia described in paragraph (e)(4)(v)(A) of this section associated with the entity, unless such U.S. indicia are cured in the manner set forth in paragraph (e)(4)(v)(B) of this section.

(A) ***U.S. indicia for entities.*** The term *U.S. indicia* when used with respect to an entity includes, for purposes of this paragraph (e)(4)(v) any of the following—

(*1*) Classification of an account holder as a U.S. resident in the withholding agent's customer files;

(*2*) A current U.S. residence address or U.S. mailing address;

(*3*) With respect to an offshore obligation, standing instructions to pay amounts to a U.S. address or an account maintained in the United States;

(*4*) A current telephone number for the entity in the United States but no telephone number for the entity outside of the United States;

(*5*) A current telephone number for the entity in the United States in addition to a telephone number for the entity outside of the United States;

(*6*) A power of attorney or signatory authority granted to a person with a U.S. address; and

(*7*) An “in-care-of” address or “hold mail” address that is the sole address provided for the entity.

(B) ***Documentation required to cure U.S. indicia.*** A withholding agent may rely upon a code or classification described in paragraph (c)(5)(ii)(B) of this section to treat an entity as having a foreign chapter 4 status if there are U.S. indicia associated with the entity and the withholding agent obtains the relevant documentation described in this paragraph (e)(4)(v)(B).

(*1*) If there are U.S. indicia described in paragraphs (e)(4)(v)(A)(*1*) through (*4*) of this section associated with the entity, the withholding agent may treat the entity as a foreign person only if the withholding agent obtains a withholding certificate for the entity and one form of documentary evidence, described in paragraph (c)(5) of this section, that establishes the entity's status as a foreign person (such as a certificate of incorporation).

(2) If there are U.S. indicia described in paragraphs (e)(4)(v)(A)(*1*) through (*4*) of this section associated with the entity and the withholding agent is making a payment with respect to an offshore obligation, the withholding agent may also treat the entity as a foreign person if the withholding agent obtains a withholding certificate for the entity and the withholding agent treats the entity as foreign for purposes of foreign tax reporting. A withholding agent will treat an entity as foreign for purposes of foreign tax reporting only if the withholding agent classifies the entity as a resident of the country in which the obligation is maintained, the withholding agent is required to report a payment made to the entity annually on a tax information statement that is filed with the tax authority of the country in which the account is maintained as part of that country's resident reporting requirements, and that country has a tax information exchange agreement or income tax treaty in effect with the United States.

(3) If there are indicia described in paragraphs (e)(4)(v)(A)(*5*) through (*7*) of this section associated with the entity, the withholding agent may treat the entity as a foreign person if the withholding agent obtains a withholding certificate or one form of documentary evidence, described in paragraph (c)(5) of this section, that establishes the entity's status as a foreign person (such as a certificate of incorporation).

(vi) ***Specific standards of knowledge applicable to documentation received from intermediaries and flow-through entities*** —

(A) ***In general.*** A withholding agent that receives documentation from a payee through an intermediary or flow-through entity is required to review all documentation obtained with respect to the payee and all intermediaries and/or flow-through entities in the chain of payment, applying the standards of knowledge set forth in paragraph (e) of this section. This standard requires, but is not limited to, a withholding agent's compliance with the rules of paragraphs (e)(4)(vi)(A)(*1*) and (*2*) of this section.

(*1*) The withholding agent is required to review the withholding statement or owner reporting statement provided and may not rely on information in the statement to the extent the information does not support the claims made regarding the chapter 4 status of the person. For this purpose, a withholding agent may not treat a person as a foreign person if an address in the United States is provided for such person unless the withholding statement is accompanied by a valid withholding certificate and documentary evidence establishing foreign status (as described in paragraph (c)(5)(i) of this section).

(*2*) The withholding agent must review each withholding certificate and written statement in accordance with paragraph (e)(4)(i) through (iii) of this section and all documentary evidence in accordance with paragraph (e)(4)(i) and (iv) of this section, and must verify that the information contained on the withholding certificate, written statement, and documentary evidence is consistent with the information on the withholding statement or owner reporting statement. If there is a discrepancy between the withholding certificate, written statement, or documentary evidence and the withholding statement or owner reporting statement, the withholding agent may choose to rely on the withholding certificate, written statement, or documentary evidence provided such documentation is valid and the intermediary or flow-through entity does not indicate that the documentation is unreliable or inaccurate, or may

apply the presumption rules set forth in paragraph (f) of this section. If the withholding agent chooses to rely upon the withholding certificate, written statement, or documentary evidence, the withholding agent is required to instruct the intermediary or flow-through entity to correct the withholding statement and confirm that the intermediary or flow-through entity does not know or have reason to know that the documentation is unreliable or inaccurate.

(B) ***Limits on reason to know with respect to documentation received from participating FFIs and registered deemed-compliant FFIs that are intermediaries or flow-through entities.*** A withholding agent that receives documentation from a participating FFI or registered deemed-compliant FFI that is not the payee must apply the requirements of paragraph (e)(4)(vi)(A) of this section, except that the withholding agent may rely upon the chapter 4 status provided by the participating FFI or registered deemed-compliant FFI in the withholding statement, including a chapter 4 status determined under the requirements of (and documentation or information that is publicly available that determines the chapter 4 status of the payee permitted under) an applicable IGA for an account holder, provided that the withholding agent has the information necessary to report on Form 1042-S, unless the withholding agent has information that conflicts with the chapter 4 status provided. See § 1.1441-1(e)(3)(iv)(C)(*2*)(*iv*) (requiring that a nonqualified intermediary withholding statement for a reportable amount that is a withholdable payment include the recipient code for chapter 4 purposes used for filing Form 1042-S for an entity payee). If underlying documentation is provided for the payee and information in the documentation or in the withholding agent's records conflicts with the chapter 4 status claimed by the payee, the withholding agent has reason to know that the chapter 4 status claimed is unreliable or incorrect. A withholding agent is not, however, required to verify information contained in documentation provided by an intermediary or flow-through entity that is a participating FFI or registered deemed-compliant FFI that is not facially incorrect and is not required to obtain supporting documentation for the payee in addition to a withholding certificate unless the withholding agent obtains such documentation for purposes of chapter 3 or 61 or unless the withholding agent knows that the review conducted by the participating FFI or registered deemed-compliant FFI for purposes of chapter 4 was not adequate. For example, a withholding agent that receives a withholding statement from a participating FFI that is an intermediary stating that the payee is a registered deemed-compliant FFI is only required to determine that any withholding certificate provided for the payee contains a GIIN and that the GIIN does not appear to be facially invalid (for example, because it does not contain the correct amount of digits), but is not subject to the requirements set forth in paragraph (e)(3) of this section. Similarly, a withholding agent that receives from a participating FFI that is a partnership a withholding statement claiming that the payee is an active NFFE has reason to know that the claim is unreliable or incorrect if it receives a withholding statement that contains a U.S. address for the payee unless the partnership also provides a copy of documentation sufficient to cure the U.S. indicia in the manner set forth in this paragraph (e) or the withholding statement indicates that appropriate documentation sufficient to cure the U.S. indicia in the manner set forth in this paragraph (e) has been obtained and provides details of such documentation, such as the type of documentation and an identification number of the person contained in the document.

(vii) ***Limits on reason to know —***

(A) ***Scope of review for preexisting obligations of entities.*** For purposes of determining whether a withholding agent that makes a payment with respect to a preexisting obligation to an entity has reason to know that the chapter 4 status applied to the entity is unreliable or incorrect, the withholding agent is only required to review information contradicting the chapter 4 status claimed if such information is contained in the current customer master file, the most recent withholding certificate, written statement, and documentary evidence for the person, the most recent account opening contract, the most recent documentation obtained by the withholding agent for purposes of AML due diligence or for other regulatory purposes, any power of attorney or signature authority forms currently in effect, and any standing instructions to pay amounts that is currently in effect.

(B) ***Reason to know there are U.S. indicia associated with preexisting obligations.*** With respect to a preexisting obligation, a withholding agent may apply the limits on reason to know described in § 1.1441-7(b)(3)(ii) for a person that the withholding agent has previously documented for purposes of chapter 3 or 61. A withholding agent that applies the limits on reason to know described in § 1.1441-7(b)(3)(ii) must, however, review for U.S. indicia any additional documentation upon which the withholding agent is relying to determine the chapter 4 status of the person, if any.

(C) ***Reason to know there are U.S. indicia associated with preexisting offshore obligations.*** For payments made outside of the United States with respect to an offshore obligation that is also a preexisting obligation and with respect to a withholding agent that had not already documented the payee for purposes of chapter 3 or 61, the withholding agent, in lieu of searching the account files addressed in paragraph (e)(4)(vii)(A) of this section to determine whether there are U.S. indicia associated with the payee (or other person who receives the payment), may instead rely upon a search of its electronically searchable information associated with such person. A withholding agent that relies upon an electronic search pursuant to this paragraph (e)(4)(vii)(C) must also review for U.S. indicia any documentation upon which the withholding agent relies to determine the chapter 4 status of the person and any documentation that the withholding agent had been relying upon to determine the residency or citizenship of the person.

(D) ***Limits on reason to know for multiple obligations belonging to a single person.*** A withholding agent that maintains multiple obligations for a single person will have reason to know that a chapter 4 status assigned to the person is inaccurate based on information contained in the customer files for another obligation held by the person only to the extent that—

(*1*) The withholding agent's computerized systems link the obligations by reference to a data element such as client number, EIN, or foreign tax identifying number and consolidates the customer information and payment information for the obligations; or

(*2*) The withholding agent has treated the obligations as consolidated obligations for purposes of sharing documentation pursuant to paragraph (c)(8) of this section or for purposes of treating one or more accounts as preexisting obligations.

(viii) ***Reasonable explanation supporting claim of foreign status.*** A reasonable explanation supporting a claim of foreign status for an individual has the meaning described in § 1.1441-7(b)(12).

(5) ***Conduit financing arrangements.*** The rules set forth in § 1.1441-7(f), regarding a withholding agent's liability for failing to withhold in the case in which the financing arrangement is a conduit financing arrangement, apply for purposes determining a withholding agent's liability for any withholding required under chapter 4.

(6) ***Additional guidance.*** The IRS may prescribe other circumstances for which a withholding certificate or documentary evidence to establish a payee's chapter 4 status is unreliable or incorrect in addition to the circumstances described in this paragraph (e).

(f) ***Presumptions regarding chapter 4 status of the person receiving the payment in the absence of documentation*** —

(1) ***In general.*** A withholding agent that cannot, prior to the payment, reliably associate (within the meaning of paragraph (c) of this section) the payment with valid documentation may rely on the presumptions of this paragraph (f) to determine the status of the payee (or other person receiving the payment) as a U.S. or foreign person and such person's other relevant characteristics (for example, as a nonparticipating FFI). Paragraph (f)(2) of this section provides the presumption rules with respect to classification as an individual or entity. Paragraph (f)(3) of this section provides the presumption rules to determine a payee's U.S. or foreign status. Paragraph (f)(4) of this section provides the presumption rules with respect to an entity's chapter 4 status. Paragraph (f)(5) of this section provides the presumption rules with respect to an intermediary or flow-through entity. Paragraph (f)(6) of this section provides the presumption rules with respect to effectively connected income paid to a U.S. branch of a payee. Paragraph (f)(7) of this section provides the presumption rules that apply to a payment made to joint payees. Paragraph (f)(8) of this section provides rules for how a payee may rebut the presumptions described in this paragraph (f). Paragraph (f)(9) of this section provides the consequences to a withholding agent that fails to withhold in accordance with the presumptions set forth in this paragraph (f) or that has actual knowledge or reason to know facts that are contrary to the presumptions set forth in this paragraph (f).

(2) ***Presumptions of classification as an individual or entity and entity as the beneficial owner.*** A withholding agent that cannot reliably associate a payment with a valid withholding certificate, or that has received valid documentary evidence (as described in paragraph (c)(5) of this section), but cannot determine a payee's status as an individual or an entity from the documentary evidence, must apply the presumption rules of § 1.1441-1(b)(3)(ii) to determine the payee's classification as an individual, trust, partnership, corporation, intermediary, or flow-through entity. Additionally, a withholding agent that receives valid documentary evidence with respect to an entity must apply the rules under § 1.1441-1(b)(3)(ii) to determine when it may treat such entity as a beneficial owner.

(3) ***Presumptions of U.S. or foreign status.*** If a withholding agent cannot reliably associate a payment with a valid withholding certificate or valid documentary evidence from which it is possible to determine the payee's U.S. or foreign status, it must apply the presumption rules of § 1.1441-1(b)(3)(iii) to determine the U.S. or foreign status of the payee (substituting the term *withholdable payment* for the term *payment*). In the case of a payment that a withholding agent can reliably associate with valid documentation that indicates the payment is made to a U.S. person but does not indicate whether the person is a specified U.S. person, the payment will be presumed made to a specified U.S. person unless the withholding agent can apply the presumption rules of § 1.6049-4(c)(1)(ii)(B), (C), (D), (E), (I), (J), (K), (L), or (N), to presume that the person is other than a specified U.S. person, or the person's name reasonably indicates that the person is a bank (for example because it contains the word Bank or a foreign equivalent).

(4) ***Presumption of chapter 4 status for a foreign entity.*** If a withholding agent cannot reliably associate a valid withholding certificate or valid documentary evidence sufficient to determine the chapter 4 status of the entity receiving payment under paragraph (d) of this section (for example, as a participating FFI, nonparticipating FFI, or NFFE), it must presume that the entity is a nonparticipating FFI.

(5) ***Presumption of chapter 4 status of payee with respect to a payment to an intermediary or flow-through entity.*** If a withholding agent makes a payment to a foreign flow-through entity or intermediary, including a payment that it is required to treat as made to such an entity under paragraphs (f)(2) and (3) of this section, and cannot reliably associate such payment with valid documentation under paragraph (c) of this section, the withholding agent must presume that the payment is made to a nonparticipating FFI.

(6) ***Presumption of effectively connected income for payments to certain U.S. branches.*** A withholding agent that makes a payment to a U.S. branch described in this paragraph (f)(6) may presume, in the absence of documentation indicating otherwise, that the U.S. branch is the payee of a payment that is effectively connected with the conduct of a trade or business in the United States if the withholding agent has obtained an EIN from the U.S. branch (either orally or in writing). A U.S. branch is described in this paragraph (f)(6) if it is a U.S. branch of a foreign bank subject to regulatory supervision by the Federal Reserve Board or a U.S. branch of a foreign insurance company required to file an annual statement on a form approved by the National Association of Insurance Commissioners with the Insurance Department of a State, a Territory, or the District of Columbia. A payment is treated as made to a U.S. branch of a foreign bank or foreign insurance company if the payment is credited to an account maintained in the United States in the name of a U.S. branch of the foreign person, or the payment is made to an address in the United States where the U.S. branch is located and the name of the U.S. branch appears on documents (in written or electronic form) associated with the payment (for example, the check mailed or letter addressed to the branch).

(7) ***Joint payees*** —

(i) ***In general.*** If a withholding agent makes a payment to joint payees and cannot reliably associate the payment with valid documentation from each payee but all of the joint payees appear to be individuals, then the payment is presumed made to an unidentified U.S. person. If any joint payee does not appear, by its name and other information contained in the account file, to be an individual, then the entire payment will be treated as made to a nonparticipating FFI. However, if one of the joint payees provides a Form W-9 in accordance with the procedures described in §§ 31.3406(d)-1 through 31.3406(d)-5 of this chapter, the payment shall be treated as made to that payee.

(ii) ***Exception for offshore obligations.*** If a withholding agent makes a payment outside the United States with respect to an offshore obligation held by joint payees and cannot reliably associate a payment with valid documentation from each payee but all of the joint payees appear to be individuals, then the payment is presumed made to an unknown foreign individual if the payment with respect to the offshore obligation is made outside the United States (as described in § 1.6049-5(e)).

(8) ***Rebuttal of presumptions.*** A payee may rebut the presumptions described in paragraphs (f)(2) through (7) of this section by providing reliable documentation to the withholding agent or, if applicable, to the IRS.

(9) ***Effect of reliance on presumptions and of actual knowledge or reason to know otherwise*** —

(i) ***In general.*** Except as otherwise provided in this paragraph (f)(9), a withholding agent that withholds on a payment under section 1471 or 1472 in accordance with the presumptions set forth in this paragraph (f) shall not be liable for withholding under this section even if it is later established that the payee has a chapter 4 status other than the status presumed. A withholding agent that fails to report and withhold in accordance with the presumptions described in paragraphs (f)(2) through (7) of this section with respect to a payment that it cannot reliably associate with valid documentation shall be liable for tax, interest, and penalties. See § 1.1474-1(a) for the extent of a withholding agent's liability for failing to withhold in accordance with the presumptions described in this paragraph (f).

(ii) ***Actual knowledge or reason to know that amount of withholding is greater than is required under the presumptions or that reporting of the payment is required.*** Notwithstanding the provisions of paragraph (f)(9)(i) of this section, a withholding agent that knows or has reason to know that the status or characteristics of the person are other than what is presumed under this paragraph (f) may not rely on the presumptions described in this paragraph (f) to the extent that, if it determined the status of the person based on such knowledge or reason to know, it would be required to withhold (under this section or another withholding provision of the Code) an amount greater than would be the case if it relied on the presumptions described in this paragraph (f). In such a case, the withholding agent must rely on its knowledge or reason to know rather than on the presumptions set forth in this paragraph (f). Failure to do so shall result in liability for tax, interest, and penalties to the extent described in § 1.1474-1(a).

(g) ***Effective/applicability date.*** This section applies on January 6, 2017. However, taxpayers may apply these provisions as of January 28, 2013. A taxpayer may apply paragraph (c)(6)(iv) of this section to all of its open tax years. (For the rules that apply beginning on January 28, 2013, and before January 6, 2017, see this section as in effect and contained in 26 CFR part 1 revised April 1, 2016.)

[T.D. 9610, 78 FR 5916, Jan. 28, 2013; 78 FR 55204, Sept. 10, 2013, as amended by T.D. 9657, 79 FR 12830, Mar. 6, 2014; T.D. 9809, 82 FR 2152, Jan. 6, 2017; 82 FR 29729, June 30, 2017; T.D. 9890, 85 FR 204, Jan. 2, 2020]

§ 1.1471-4 FFI agreement.

(a) ***In general.*** An FFI agreement will be in effect in accordance with section 1471(b) if an FFI registers with the IRS pursuant to procedures prescribed by the IRS and agrees to comply with the terms of an FFI agreement. The FFI agreement will incorporate the requirements set forth in this section, any modifications set forth in an applicable Model 2 IGA, and any provisions applicable to a reporting Model 1 FFI.

(1) ***Withholding.*** A participating FFI is required to deduct and withhold tax with respect to payments made to recalcitrant account holders and nonparticipating FFIs to the extent required under paragraph (b) of this section. A participating FFI that is prohibited by foreign law from withholding as required under paragraph (b) of this section with respect to an account must close such account within a reasonable period of time or must otherwise block or transfer such account as described in paragraph (i) of this section.

(2) ***Identification and documentation of account holders.*** A participating FFI is required to obtain such information regarding each holder of each account maintained by the participating FFI to determine whether each account is a U.S. account or an account held by a recalcitrant account holder or nonparticipating FFI in accordance with the due diligence procedures for identifying and documenting account holders described in paragraph (c) of this section.

(3) ***Reporting.*** A participating FFI is required to report the information described in paragraph (d) of this section annually with respect to U.S. accounts under section 1471(c) and accounts held by recalcitrant account holders. A participating FFI must also comply with the filing requirements described in § 1.1474-1(c) and (d) to report payments that are chapter 4 reportable amounts paid to recalcitrant account holders and nonparticipating FFIs (including the transitional reporting of foreign reportable amounts paid to nonparticipating FFIs for calendar years 2015 and 2016 described in § 1.1471-4(d)(2)(ii)(F)). A participating FFI that is unable to obtain a waiver, if required by foreign law, to report an account as required under paragraph (d) of this section must close or transfer such account within a reasonable period of time as described in paragraph (i) of this section.

(4) ***Expanded affiliated group.*** Except as otherwise provided in Model 1 IGA or Model 2 IGA, in order for any FFI that is a member of an expanded affiliated group to be a participating FFI, each FFI that is a member of the expanded affiliated group must be a participating FFI, deemed-compliant FFI, or exempt beneficial owner as described in paragraph (e) of this section. For a limited period described in paragraph (e)(2) or (3) of this section, however, a branch of an FFI or an FFI that is a member of an expanded affiliated group and is unable under foreign law to satisfy the requirements of this section may instead obtain status as a limited branch of a participating FFI or limited FFI if the branch or FFI meets the requirements set forth in paragraph (e)(2) or (3) of this section (as applicable).

(5) ***Verification.*** A participating FFI is required to adopt a compliance program as described in paragraph (f) of this section under the authority of the responsible officer, who will be required to certify periodically to the IRS on behalf of the FFI regarding the participating FFI's compliance with the requirements of the FFI agreement. If the IRS identifies concerns about the participating FFI's compliance, the IRS may request additional information to verify compliance with the requirements of the FFI agreement as described in paragraph (f)(4) of this section.

(6) ***Event of default.*** A participating FFI is required to cure an event of default with respect to the FFI agreement as defined in paragraph (g) of this section. Upon the occurrence of an event of default, the IRS will deliver to a participating FFI a notice of default and will allow the FFI an opportunity to cure the event of default as described in paragraph (g) of this section.

(7) ***Refunds.*** A participating FFI may file a collective refund on behalf of certain account holders and payees for amounts withheld by the participating FFI or its withholding agent under chapter 4 in excess of the account holder or payee's U.S. tax liability to the extent permitted in paragraph (h) of this section. A participating FFI may also make an adjustment for overwithholding using either the reimbursement procedure described in § 1.1474-2(a)(3) or the set-off procedure described in § 1.1474-2(a)(4).

(b) ***Withholding requirements*** —

(1) ***In general.*** Except as otherwise provided in a Model 2 IGA, a participating FFI is required to deduct and withhold a tax equal to 30 percent of any withholdable payment made by such participating FFI to an account held by a recalcitrant account holder or to a nonparticipating FFI after June 30, 2014, to the extent required under paragraph (b)(3) of this section. See paragraph (b)(2) of this section for rules for a participating FFI to identify the payee of a payment in order to determine whether withholding is required under this paragraph (b). See paragraph (b)(4) of this section for the extent of a participating FFI's requirement to deduct and withhold tax on a foreign passthru payment made by such participating FFI to an account held by a recalcitrant account holder or to a nonparticipating FFI. See paragraph (b)(5) of this section for the rules for withholding on payments to limited branches and limited FFIs. See paragraph (b)(6) for the special allowance to set aside in escrow amounts withheld with respect to dormant accounts. See paragraph (b)(7) of this section for the

withholding requirements of certain U.S. branches of FFIs. See § 1.1471-2 for the exceptions to and special rules for withholding and the exclusion from the definitions of the terms *withholdable payment* and *foreign passthru payment* that applies to any payment made under a grandfathered obligation or the gross proceeds from the disposition of such an obligation. See § 1.1474-1(d)(4)(iii) for the requirement of participating FFIs to report payments that are chapter 4 reportable amounts. See § 1.1474-6 for the coordination of withholding on payments under this paragraph (b) with the other withholding provisions under the Code.

(2) ***Withholding determination.*** Except as otherwise provided under § 1.1471-2 and, with respect to certain preexisting accounts, under paragraph (c) of this section, a participating FFI is required to determine whether withholding applies at the time a payment is made by reliably associating the payment with valid documentation described in paragraph (c) of this section for the payee of the payment. For a payment made to an account, if the account is held by one or more individuals, the payee is each individual account holder. For a payment made to an account held by an entity, except as otherwise provided in § 1.1471-3(a)(3), the payee is the account holder. If the participating FFI makes a withholdable payment to a payee that is an entity and the payment is made with respect to an obligation that is not an account, except as otherwise provided in § 1.1471-3(a)(3), the payee is the person to whom the payment is made. See § 1.1473-1(a) to determine when a payment is made in the case of a withholdable payment. If a participating FFI cannot reliably associate a payment (or any portion of a payment) with valid documentation, the rules described in paragraph (c) of this section shall apply to determine the chapter 4 status of the account holder (and payee if other than the account holder). Notwithstanding the foregoing, a participating FFI may establish after the date of payment that withholding was not required to the extent permitted under § 1.1471-3(c)(7) or may apply the procedures provided in § 1.1474-2 when overwithholding occurs.

(3) ***Satisfaction of withholding requirements*** —

(i) ***In general.*** A participating FFI that complies with the withholding obligations of this paragraph (b) with respect to accounts held by recalcitrant account holders and payees that are nonparticipating FFIs shall be deemed to satisfy its withholding obligations under sections 1471(a) and 1472 with respect to such account holders and payees.

(ii) ***Withholding not required.*** A participating FFI that is an NQI, NWP, NWT, or that is a QI that elects under section 1471(b)(3) not to assume withholding responsibility for a payment and that provides its withholding agent with the information necessary to allocate all or a portion of the payment to each payee as part of a withholding certificate described in § 1.1471-3(c)(3)(iii) will generally not be required to withhold under paragraph (b)(1) of this section. See § 1.1471-2(a)(2)(ii), however, for the circumstances under which a participating FFI that is an NQI, NWP, or NWT has a residual withholding responsibility. See also § 1.1471-3(c)(9)(iii)(B) for the circumstances under which a participating FFI that is a broker has a residual withholding responsibility as an intermediary of the payment and may also be liable for any underwithholding that occurs. See §§ 1.1471-2(a) and 1.1472-1(a)(2)(i) and the QI, WP, or WT agreement for the withholding requirements of a participating FFI that is a QI, WP, or WT for purposes of chapter 4.

(iii) ***Election to withhold under section 3406.*** A participating FFI may elect to satisfy its withholding obligation under paragraph (b)(1) of this section with respect to recalcitrant account holders that are also U.S. non-exempt recipients subject to backup withholding under section 3406 receiving withholdable payments, to the extent that the payments also constitute reportable payments, by applying withholding under section 3406 at the backup withholding rate to such

withholdable payments. A participating FFI may make the election described in this paragraph only if it complies with the information reporting rules under chapter 61 with respect to payments to which backup withholding applies. Nothing in this paragraph relieves a participating FFI of its requirement to backup withhold under section 3406 with respect to reportable payments that are not also withholdable payments. See § 1.1474-6(f) for the general rule that satisfying withholding requirements under chapter 4 will satisfy backup withholding requirements under section 3406 for a payment that is both a withholdable payment and a reportable payment.

(4) ***Foreign passthru payments.*** A participating FFI is not required to deduct and withhold tax on a foreign passthru payment made by such participating FFI to an account held by a recalcitrant account holder or to a nonparticipating FFI before the later of January 1, 2019, or the date of publication in the FEDERAL REGISTER of final regulations defining the term *foreign passthru payment.*

(5) ***Withholding on limited FFIs and limited branches*** —

(i) ***Limited FFIs.*** A participating FFI is required to withhold on a withholdable payment made to a limited FFI identifying itself as a nonparticipating FFI. A participating FFI that is a member of an expanded affiliated group that includes one or more limited FFIs will also be required to treat any such limited FFI as a nonparticipating FFI with respect to withholdable payments made to such limited FFI. A participating FFI will be considered to have made a withholdable payment to a limited FFI if such participating FFI receives a withholdable payment with respect to a security or instrument held on behalf of a limited FFI (or an account maintained by the limited FFI). A participating FFI will also be considered to have made a withholdable payment to a limited FFI when the limited FFI receives a payment with respect to a transaction between the limited FFI and such participating FFI that is in the same expanded affiliated group and such transaction hedges or otherwise provides total return exposure to another transaction between such participating FFI and a third party that gives rise to a withholdable payment.

(ii) ***Limited branches.*** A participating FFI is required to withhold on a withholdable payment made to a limited branch identifying itself as a nonparticipating FFI. A branch of the participating FFI other than the limited branch is also required to withhold on a withholdable payment when it receives the payment on behalf of a limited branch of the participating FFI. A branch of the participating FFI other than a limited branch will be considered to have received a withholdable payment on behalf of a limited branch when such other branch receives a withholdable payment with respect to a security or instrument it holds on behalf of a limited branch (or an account maintained by the limited branch). A branch of a participating FFI other than a limited branch will be considered to hold a security or instrument on behalf of a limited branch when it executes a transaction with a limited branch that hedges or otherwise provides total return exposure to another transaction between such other branch and a third party that gives rise to a withholdable payment.

(6) ***Special rule for dormant accounts.*** A participating FFI that makes a withholdable payment not otherwise subject to withholding under chapter 3 or backup withholding under section 3406 to a recalcitrant account holder of a dormant account that it maintains must withhold on the account for purposes of chapter 4. However, the participating FFI may, in lieu of depositing the tax withheld, set aside the amount withheld in escrow until the date that the account ceases to be a dormant account. In such case, the tax withheld becomes due 90 days following the date that the account ceases to be a dormant account if the account holder does not provide the documentation required under paragraph (c) of this section or becomes refundable to the account holder if the account

holder provides the documentation required under paragraph (c) of this section establishing that withholding does not apply. A participating FFI that maintains a dormant account of a recalcitrant account holder and that elects to escrow withheld tax pursuant to this paragraph (b)(6) may not delegate the responsibility to escrow withheld tax to the withholding agent from which it is receiving payment. Once a dormant account escheats irrevocably to a foreign government under the relevant laws in the jurisdiction in which the participating FFI (or branch thereof) operates, the participating FFI is no longer required to deposit with the IRS the amount held in escrow with respect to the account. See paragraph (d)(6)(ii) of this section for the definition of dormant account.

(7) ***Withholding requirements for U.S. branches of FFIs treated as U.S. persons.*** A U.S. branch of an FFI treated as a U.S. person must satisfy its backup withholding obligations under section 3406(a) with respect to accounts held at the U.S. branch by account holders that are payees treated as other than exempt recipients under chapter 61. See §§ 1.1441-1(b)(2)(iv)(C), 1.1471-2(a), and 1.1472-1(a) for additional withholding obligations for a U.S. branch of an FFI treated as a U.S. person. See paragraph (d)(2)(iii)(B) of this section for the reporting requirements applicable to U.S. branches of FFIs that are treated as U.S. persons.

(c) Due diligence for the identification and documentation of account holders and payees—

(1) ***Scope of paragraph.*** Except to the extent that a participating FFI relies on the due diligence procedures set forth in an applicable Model 2 IGA, a participating FFI must follow this paragraph (c) to identify and document the chapter 4 status of each holder of an account maintained by the participating FFI to determine if the account is a U.S. account, non-U.S. account, or an account held by a recalcitrant account holder or nonparticipating FFI. Paragraph (c)(2) of this section provides the general rules for identification and documentation of account holders and payees, and paragraph (c)(2)(v) provides documentation requirements for certain U.S. branches of FFIs. Paragraph (c)(3) of this section provides the rules for documenting entity accounts and payees. Paragraph (c)(4) of this section provides the general rules for documenting individual accounts other than preexisting accounts. Paragraph (c)(5) of this section provides the identification and documentation procedure for preexisting individual accounts. Paragraph (c)(6) of this section provides examples illustrating the application of the documentation exceptions for entity accounts and individual accounts. Paragraph (c)(7) of this section outlines the certification requirement relating to the due diligence procedures of this paragraph (c) with respect to preexisting accounts within the specified periods of time.

(2) ***General rules for the identification and documentation of account holders and payees*** —

(i) ***Overview.*** Except as otherwise provided in paragraphs (c)(3)(iii) and (c)(5)(iii) of this section (documentation exceptions for certain preexisting accounts), a participating FFI is required to identify among accounts maintained by the participating FFI each account that is a U.S. account or an account held by a recalcitrant account holder or nonparticipating FFI, and to report information about such accounts in the manner provided in paragraph (d) of this section and § 1.1474-1(d)(4)(iii). See § 1.1471-5(a)(3) for rules to determine the holder of an account. The participating FFI is also required to retain a record of the documentation collected or otherwise maintained that meets the requirements described in this paragraph (c) when making certain payments to an account holder or payee (if other than an account holder) to determine whether withholding applies under paragraph (b) of this section or whether reporting applies under § 1.1474-1(d)(4)(iii)(C) and any payee for which it provides the certification described in § 1.1471-3(c)(9)(iii)(A) to another withholding agent.

(ii) ***Standards of knowledge*** —

(A) ***In general.*** A participating FFI may rely on valid documentation that is collected pursuant to the due diligence procedures set forth in this paragraph (c) or that is otherwise maintained in the participating FFI's files, unless the participating FFI knows or has reason to know that such documentation is unreliable or incorrect. For purposes of a participating FFI documenting an account holder under this paragraph (c), the requirements for the validity of withholding certificates, written statements, and documentary evidence provided in § 1.1471-3(c) shall apply regardless of whether the participating FFI makes a payment to the account. Except as otherwise provided paragraph (c)(2)(ii)(B) of this section (certain mergers or bulk acquisitions) and in paragraph (c)(5)(iv) of this section (preexisting individual accounts), to determine whether a participating FFI knows or has reason to know that the documentation collected or otherwise maintained with respect to the account holder is unreliable or incorrect, the standards of knowledge provided in § 1.1471-3(e) shall apply regardless of whether the participating FFI makes a payment to the account. See § 1.1471-3(c)(8) and (9) for the requirement to obtain documentation on an account-by-account basis and the exceptions to this requirement.

(B) ***Limits on reason to know with respect to certain accounts acquired in merger or bulk acquisition.*** A participating FFI that acquires accounts of another financial institution either in a merger or bulk acquisition of accounts for value (other than a related party transaction described in § 1.1471-3(c)(9)(v)) may apply the limitations on reason to know provided in paragraphs (c)(2)(ii)(B)(*1*) or (*2*) of this section (as applicable and subject to the conditions therein), or the rules of § 1.1471-3(c)(9)(v) to rely upon documentation collected by another financial institution for an account acquired either in a merger or bulk acquisition of accounts for value.

(*1*) ***In general.*** The participating FFI may treat accounts acquired in a transaction described in this paragraph (c)(2)(ii)(B) as preexisting accounts for purposes of applying the identification and documentation procedures of this paragraph (c) by substituting the date of acquisition of such accounts for the effective date of the FFI agreement.

(*2*) ***Participating FFIs and certain deemed-compliant FFIs that apply the due diligence rules, and U.S. financial institutions.*** If a participating FFI (transferee FFI) acquires accounts of another participating FFI or deemed-compliant FFI (including a U.S. branch of either such FFI) that applies the due diligence requirements of this paragraph (c) as a condition of its status (as described in § 1.1471-5(f)), or of a U.S. financial institution (transferor FI), the transferee FFI may rely on the chapter 4 status determination made by the transferor FI for an account holder and will not be subject to the standards of knowledge set forth in paragraph (c)(2)(ii)(A) of this section until there is a change in circumstances with respect to the account if the following conditions are met—

(*i*) The transferee FFI does not have actual knowledge that the chapter 4 status determination provided by the transferor FI is unreliable or incorrect;

(*ii*) For the certification period following the acquisition of such accounts (described in paragraph (f)(3)(i) of this section), the transferee FFI acquiring the accounts tests a sample of the acquired accounts to determine if the chapter 4 status determinations made by the transferor FI are reliable;

(*iii*) In the case of a transferor FI that is a participating FFI or a registered deemed-compliant FFI (or a U.S. branch of either such entity that is not treated as a U.S. person) or that is a deemed-compliant FFI that applies the requisite due diligence rules of this paragraph (c) as a condition of its status, the transferor FI provides a written representation to the transferee FFI acquiring the accounts that the transferor FI has applied the due diligence procedures of this paragraph (c) with respect to the transferred accounts and, in the case of a transferor FI that is a participating FFI, has complied with the requirements of paragraph (f)(2) of this section; and

(*iv*) In the case of a transferor FI that is a U.S. financial institution or that is a U.S branch of a participating FFI or of a registered deemed-compliant FFI that is treated as a U.S. person, the transferee FFI may rely on the chapter 4 status determinations for a payee that is an entity only if prior to the date of transfer the U.S. financial institution or U.S. branch made a withholdable payment to the payee or, for a payee that is an individual, only if the U.S. financial institution or U.S. branch made a reportable payment (as defined under section 3406(b)) to the payee.

(iii) *Change in circumstances* —

(A) ***Obligation to identify a change in circumstances.*** A participating FFI is required to institute procedures to ensure that any change in circumstances, as described in paragraph (c)(2)(iii)(B) of this section, is identified by the participating FFI, including procedures to ensure that a relationship manager identifies any change in circumstances with respect to an account. For example, if a relationship manager is notified that the account holder has a mailing address in the United States when there was no U.S. address previously associated with the account, the participating FFI will be required to treat the new address as a change in circumstances and will be required to retain a record of the appropriate documentation from the account holder as described in paragraph (c)(5)(iv)(B)(2)(iii) of this section.

(B) ***Definition of change in circumstances.*** For purposes of this section, a change in circumstances (as defined in § 1.1471-3(c)(6)(ii)(E)) includes any change or addition of information to the account holder's account (including the addition, substitution, or other change of an account holder) or any change or addition of information to any account associated with such account (applying the account aggregation rules described in § 1.1471-5(b)(4)(iii) or by treating the accounts as consolidated obligations) if such change or addition of information affects the chapter 4 status of the account holder. For example, if a holder of an account (including a preexisting account) opens another account that is linked to such account in the participating FFI's computerized system as described under § 1.1471-5(b)(4)(iii) and as part of the participating FFI's account opening procedures the account holder provides a U.S. telephone number for such other account, this is a change in circumstances with respect to the first mentioned account. With respect to a preexisting account that meets a documentation exception described in paragraphs (c)(3)(iii) and (c)(5)(iii) of this section, a change in circumstances also includes a change in account balance or value as of the end of the first subsequent year that causes the account no longer to meet the documentation exception.

(C) ***Requirements following a change in circumstances.*** With respect to an individual account or an account held by a passive NFFE for which there is a change in circumstances with respect to the information regarding its owners, following a change in circumstances the participating FFI must retain a record of the appropriate documentation described in paragraph (c)(3) or (c)(5)(iv)(B)(2) of this section within the time period provided by § 1.1471-5(g)(3)(iii) or, if unable to do so, must treat such account as held by a recalcitrant account holder. With respect to an account held by an entity other than a passive NFFE described in the preceding sentence, following a change in circumstances, the participating FFI must retain a record of the appropriate documentation described in paragraph (c)(3) of this section by the date that is 90 days after the change in circumstances or, if unable to do so, must treat such account as held by a nonparticipating FFI.

(iv) ***Record retention.*** A participating FFI must retain a record of the documentation collected (or otherwise maintained) to establish the chapter 4 status of an account holder or payee pursuant to the requirements of this paragraph (c)(2)(iv). A participating FFI will be treated as having retained a record of a withholding certificate, written statement, or documentary evidence if the participating FFI retains either an original, certified copy, or photocopy (including a microfiche, scan, or similar means of record retention) of the withholding certificate, written statement, or documentary evidence collected to determine the chapter 4 status of the account holder for six calendar years following the year in which the due diligence procedures of this paragraph (c) were performed for the account. With respect to documentary evidence for an offshore obligation, however, a participating FFI that is not required to retain copies of documentation reviewed pursuant to its AML due diligence will be treated as having retained a record of such documentation if the participating FFI retains a record in its files noting the date the documentation was reviewed, each type of document, the document's identification number (if any) (for example, passport number), and whether any U.S. indicia were identified. The previous sentence applies with respect to an offshore obligation that is also a preexisting obligation, except, in such case, the requirement to record whether the documentation contained U.S. indicia does not apply. A participating FFI must also retain a record of any searches, including search results provided by third-party credit agencies as described in paragraph (c)(4)(ii) of this section, results from electronic searches, and requests made and responses to relationship manager inquiries for six calendar years following the year in which the due diligence procedures of this paragraph (c) were performed for the account. A participating FFI may be required to extend the six year retention period if the IRS requests such extension prior to the end of the six year retention period. Notwithstanding the preceding sentences, a participating FFI must retain a record of the chapter 4 status of an account holder or payee for as long as the FFI maintains the account or obligation. See § 1.1471-3(c)(6)(iii)(A) for the record retention period applicable to a participating FFI that is a withholding agent with respect to documentation collected (or otherwise maintained) for a payee.

(v) ***Documentation rules for U.S. branches of FFIs that are treated as U.S. persons.*** A U.S. branch of an FFI that is treated as a U.S. person shall apply the due diligence requirements of § 1.1471-3 to determine the chapter 4 status of account holders and payees that are entities and shall apply the documentation requirements of chapter 3 or 61 (as applicable) with respect to individual account holders. See paragraph (b)(7) of this section for withholding rules and paragraph (d)(2)(iii)(B) of this section for reporting rules applicable to such U.S. branches.

(3) ***Identification and documentation procedure for entity accounts and payees*** —

(i) ***In general.*** With respect to accounts held by entities, unless the documentation exception described in paragraph (c)(3)(iii) of this section applies, a participating FFI must determine if the account is a U.S. account or an account held by a recalcitrant account holder or nonparticipating FFI by applying the principles of § 1.1471-3(b), (c), and (d) to establish the chapter 4 status of each account holder and each payee regardless of whether the participating FFI makes a payment to the account. If an account holder receiving a payment is not the payee of the payment under §§ 1.1471-3(a) and 1.1472-1(d)(3), the participating FFI is also required to establish the chapter 4 status of the payee or payees in order to determine whether withholding applies under paragraph (b) of this section.

(ii) ***Timeframe for applying identification and documentation procedure for entity accounts and payees.*** For preexisting entity accounts (including entity accounts that are opened on or after July 1, 2014, and before January 1, 2015, that the FFI treats as preexisting obligations under § 1.1471-1(b)(104)(i)), a participating FFI must perform the requisite identification and documentation procedures within six months of the effective date of the FFI agreement for any account holder that is a prima facie FFI, as defined in § 1.1471-2(a)(4)(ii)(B), and within two years of the effective date of the FFI agreement for all other entity accounts, except as otherwise provided in paragraph (c)(3)(iii) of this section. For accounts that are not preexisting accounts, the participating FFI must perform the requisite identification and documentation procedures by the earlier of the date a withholdable payment or a foreign passthru payment is made with respect to the account or within 90 days of the date the participating FFI opens the account. Notwithstanding the foregoing sentences of this paragraph (c)(3)(ii), with respect to a preexisting obligation issued in nonregistered (bearer) form by an investment entity, the investment entity is required to perform the requisite identification and documentation procedures at the time a payment is collected by the beneficial owner of the payment (including a beneficial owner that collects the payment through an intermediary or agent). If the participating FFI cannot obtain all the documentation described in § 1.1471-3(d) or if the participating FFI knows or has reason to know that the documentation provided for an entity account is unreliable or incorrect (by applying the standards of knowledge applicable to entities in § 1.1471-3(e) as modified by paragraph (c)(2)(ii)), the participating FFI shall apply the presumption rules of § 1.1471-3(f) (as applicable to entities) to determine the chapter 4 status of the account holder. In the case of an account held by a passive NFFE that provides the documentation described in § 1.1471-3(d)(12) to establish its status as a passive NFFE but fails to provide the information regarding its owners, see § 1.1471-5(g)(2)(iv) for the requirement to treat the account as held by a recalcitrant account holder.

(iii) ***Documentation exception for certain preexisting entity accounts —***

(A) ***Accounts to which this exception applies.*** Unless the participating FFI elects otherwise pursuant to paragraph (c)(3)(iii)(C) of this section, a participating FFI is not required to perform the identification and documentation procedure contained in this paragraph (c)(3) with respect to a preexisting entity account the aggregate balance or value of which is $250,000 or less if no holder of such account that has previously been documented by the FFI as a U.S. person for purposes of chapter 3 or 61 is a specified U.S. person. For purposes of applying this exception, the account balance must be determined as of the effective date of the FFI agreement and the aggregation rules of paragraph (c)(3)(iii)(B) of this section shall apply. An account that meets this exception will cease to meet this exception as of the end of any subsequent calendar year in which the account balance or value exceeds $1,000,000, applying the aggregation rules of paragraph (c)(3)(iii)(B) of this

section, or as of the date on which there is another change in circumstances with respect to the account or any account aggregated with the account. The exception to the identification and documentation procedure described in this paragraph (c)(3)(iii)(A) does not apply to an entity account opened on or after July 1, 2014, and before January 1, 2015, that the FFI treats as a preexisting account under § 1.1471-1(b)(104)(i).

(B) ***Aggregation of entity accounts.*** For purposes of determining the aggregate balance or value of accounts held by an entity in applying the exception in this paragraph (c)(3)(iii), an FFI is required to aggregate the balance or value of all accounts held (in whole or in part) by the same account holder to the extent required under § 1.1471-5(b)(4)(iii)(A) and (B).

(C) ***Election to forgo exception.*** A participating FFI may elect to forgo the exception described in this paragraph (c)(3)(iii) by applying the identification and documentation procedures provided in this paragraph (c)(3) within the time period provided by paragraph (c)(3)(ii) of this section or otherwise applying the presumption rules of § 1.1471-3(f) to determine the chapter 4 status of the account holder.

(4) ***Identification and documentation procedure for individual accounts other than preexisting accounts*** —

(i) ***In general.*** With respect to an individual account that is not a preexisting account or an account described under paragraph (c)(4)(iii)(B) of this section or § 1.1471-5(a)(4)(i) (providing an exception to U.S. account status for certain depository accounts with an aggregate balance or value of $50,000 or less), a participating FFI must determine if the account is a U.S. account or non-U.S. account by retaining a record of certain documentation to establish the chapter 4 status of each account holder. Specifically, a participating FFI must retain a record of documentary evidence that meets the requirements of § 1.1471-3(c)(5) (as applicable to individuals), the information described in paragraph (c)(4)(ii) or (c)(4)(iii)(A) of this section, or a withholding certificate to establish an account holder's status as a foreign person. Except as otherwise provided in paragraph (c)(4)(iii)(A) of this section, the participating FFI must also review all information collected in connection with the opening or maintenance of each account, including documentation collected as part of the participating FFI's account opening procedures and documentation collected for other regulatory purposes, and apply the standards of knowledge in paragraph (c)(2)(ii) of this section to determine if an account holder's claim of foreign status is unreliable or incorrect. If the participating FFI is not able to establish an account holder's status as a foreign person, the participating FFI must retain a record of either a Form W-9 or U.S. TIN (in any manner) and a valid and effective waiver described in section 1471(b)(1)(F)(i), if necessary, to establish an account holder's status as a U.S. person and to confirm that the account is a U.S. account. A participating FFI must complete the requisite identification and documentation procedures with respect to each account within the time period provided by § 1.1471-5(g)(3)(ii), or, if unable to do so, it must treat such account as held by a recalcitrant account holder. The presumption rules of § 1.1471-3(f) do not apply to individual account holders of a participating FFI.

(ii) ***Reliance on third party for identification of individual accounts other than preexisting accounts.*** A participating FFI may establish an account holder's status as a foreign person based on information provided by a third-party credit agency only if the following conditions are met—

(A) As part of the participating FFI's account opening procedures, the account holder provides a residence address outside the United States and attests in writing that the account holder is not a U.S. citizen or resident;

(B) The third-party credit agency verifies the account holder's claimed residence with at least one government data source from the jurisdiction in which the participating FFI (or branch thereof) operates or the account holder claims residence; and

(C) The participating FFI (or branch thereof) relies on the information provided by the third-party credit agency for purposes of satisfying AML due diligence with respect to the account in a FATF-compliant jurisdiction.

(iii) ***Alternative identification and documentation procedure for certain cash value insurance or annuity contracts*** —

(A) ***Group cash value insurance contracts or group annuity contracts.*** A participating FFI may treat an account that is a group cash value insurance contract or group annuity contract and that meets the requirements of this paragraph (c)(4)(iii)(A) as a non-U.S. account until the date on which an amount is payable to an employee/certificate holder or beneficiary, if the participating FFI obtains a certification from an employer that no employee/certificate holder (account holder) is a U.S. person. A participating FFI is also not required to review all the account information collected by the FFI to determine if an account holder's claim of foreign status is unreliable or incorrect. An account that is a group cash value insurance contract or group annuity contract meets the requirements of this paragraph (c)(4)(iii)(A) if—

(*1*) The group life insurance contract or a group annuity contract issued to an employer and covers twenty-five or more employee/certificate holders;

(*2*) The employee/certificate holders are entitled to receive any contract value and to name beneficiaries for the benefit payable upon the employee's death; and

(*3*) The aggregate amount payable to any employee/certificate holder or beneficiary does not exceed $1,000,000.

(B) ***Accounts held by beneficiaries of a cash value insurance contract that is a life insurance contract.*** A participating FFI may presume that an individual beneficiary (other than the owner) of a cash value insurance contract that is a life insurance contract (account holder) receiving a death benefit is a foreign person and treat such account as a non-U.S. account unless the participating FFI has actual knowledge or reason to know that the beneficiary is a U.S. person. A participating FFI has reason to know that a beneficiary of a cash value insurance contract is a U.S. person if the information collected by the participating FFI and associated with the beneficiary contains U.S. indicia as described in paragraph (c)(5)(iv)(B)(*1*) of this section. If a participating FFI has actual knowledge or reason to know that the beneficiary is a U.S. person, the participating FFI must retain a record of the appropriate documentation described in paragraph (c)(5)(iv)(B)(*2*) of this section.

(5) ***Identification and documentation procedure for preexisting individual accounts*** —

(i) ***In general.*** With respect to a preexisting individual account, unless the account is an account described in § 1.1471-5(a)(4)(i) (providing exception to U.S. account status for certain depository accounts with an aggregate balance or value of $50,000 or less), a participating FFI may follow the identification and documentation procedures described below in paragraph (c)(5)(ii) through (iv) of this section (as applicable), in lieu of the identification and documentation procedures described in paragraph (c)(4) of this section, to determine if an

account that is a preexisting account is a U.S. account, non-U.S. account, or account held by a recalcitrant account holder. A participating FFI must first determine whether there are any U.S. indicia associated with the account (as defined in paragraph (c)(5)(iv)(B)(*1*) of this section), and second, if there are U.S. indicia associated with the account, retain a record of the documentation described in paragraph (c)(5)(iv)(B)(*2*) of this section to establish the account holder's chapter 4 status. For this purpose, the presumption rules of § 1.1471-3(f) do not apply. A participating FFI must complete the requisite identification and documentation procedures with respect to each account within the time period provided by § 1.1471-5(g)(3)(i) or (ii) (as applicable) or, if unable to do so, must treat such account as held by a recalcitrant account holder. A participating FFI may continue to treat an account with no U.S. indicia or an account that meets a documentation exception described in paragraph (c)(5)(iii) of this section or § 1.1471-5(a)(4)(i) (providing exception to U.S. account status for certain depository accounts with an aggregate balance or value of $50,000 or less) as a non-U.S. account, until there is a change in circumstances with respect to the account as described in paragraph (c)(2)(iii) of this section.

(ii) ***Special rule for preexisting individual accounts previously documented as U.S. accounts for purposes of chapter 3 or 61.*** If a participating FFI has documented an individual account holder as a U.S. person for purposes of chapter 3 or 61 and such account holder is a specified U.S. person, the account holder's account will be treated as a U.S. account for chapter 4 purposes and the identification and documentation procedures in paragraph (c)(5)(i) and (iv) of this section will not apply.

(iii) ***Exceptions for certain low value preexisting individual accounts*** —

(A) ***Accounts to which an exception applies.*** Unless the participating FFI elects otherwise pursuant to paragraph (c)(5)(iii)(C) of this section, a participating FFI is not required to perform requisite identification and documentation procedures described in paragraph (c)(5)(i) and (iv) of this section with respect to either a preexisting individual account, other than a cash value insurance or annuity contract, the aggregate balance or value of which is $50,000 or less, or a preexisting individual account that is a cash value insurance or annuity contract described in § 1.1471-5(b)(1)(iv) the aggregate balance or value of which is $250,000 or less. For purposes of applying these exceptions, the account balance must be determined as of the effective date of the FFI agreement and the aggregation rules of paragraph (c)(5)(iii)(B) of this section shall apply. An account that meets either of these exceptions will cease to meet these exceptions as of the end of any subsequent calendar year in which the account balance or value exceeds $1,000,000, applying the aggregation rules of paragraph (c)(3)(iii)(B) of this section, or until there is another change in circumstances with respect to the account or any account aggregated with the account.

(B) ***Aggregation of accounts.*** For purposes of determining the aggregate balance or value of a preexisting individual account, other than an account that is cash value insurance or annuity contract, an FFI is required to aggregate the balance or value of all accounts that are not cash value insurance or annuity contracts to the extent required under § 1.1471-5(b)(4)(iii)(A) or (B). For purposes of determining the aggregate balance or value of preexisting individual account that is a cash value insurance or annuity contract, an FFI will be required to aggregate the balance or value of all accounts that are cash value insurance or annuity contracts to the extent required under § 1.1471-5(b)(4)(iii)(A) or (B).

(C) ***Election to forgo exception.*** A participating FFI may elect to forgo the exceptions described in paragraph (c)(5)(iii) of this section by applying the identification and documentation procedures provided in this paragraph (c) within the time provided by paragraph (c)(5)(i) of this section or otherwise treating the account as held by a recalcitrant account holder pursuant to § 1.1471-5(g).

(iv) ***Specific identification and documentation procedures for preexisting individual accounts*** —

(A) ***In general.*** A participating FFI applying the identification and documentation procedures of this paragraph (c)(5)(iv) must review its preexisting individual accounts (applying the electronic search described in paragraph (c)(5)(iv)(C) of this section and, if appropriate, the enhanced review for high-value accounts described in paragraph (c)(5)(iv)(D) of this section) to determine if there are any U.S. indicia (as described in paragraph (c)(5)(iv)(B)(*1*) of this section) associated with the account. If no U.S. indicia are identified with respect to an account, the participating FFI may treat the account as a non-U.S. account. If U.S. indicia are identified with respect to an account, the participating FFI must retain a record of the appropriate documentation described in paragraph (c)(5)(iv)(B)(*2*) of this section to establish the account holder's status as a foreign person. A participating FFI that follows the procedures described in this paragraph (c)(5)(iv) (as applicable) with respect to its preexisting individual accounts will not be treated as having reason to know that the determination made with respect to the account was unreliable or incorrect because of information contained in any account files that the participating FFI did not review and was not required to review under the applicable identification procedure. Thus, for example, if a participating FFI was only required to perform an electronic search with respect to a preexisting individual account and no U.S. indicia were identified in the results of the electronic search, the participating FFI would not have reason to know that the individual account holder was a U.S. person, even if the participating FFI had on file (but was not required to and did not review) a copy of the individual's passport that indicates that the individual was born in the United States.

(B) ***U.S. indicia and relevant documentation rules*** —

(*1*) ***U.S. indicia.*** A participating FFI must review an account holder's account information to the extent required under paragraphs (c)(5)(iv)(C) and (D) of this section for any of the following U.S. indicia:

(*i*) Designation of the account holder as a U.S. citizen or resident;

(*ii*) A U.S. place of birth;

(*iii*) A current U.S. residence address or U.S. mailing address (including a U.S. post office box);

(*iv*) A current U.S. telephone number (regardless of whether such number is the only telephone number associated with the account holder);

(*v*) Standing instructions to pay amounts from the account to an account maintained in the United States;

(*vi*) A current power of attorney or signatory authority granted to a person with a U.S. address; or

(*vii*) An "in-care-of" address or a "hold mail" address that is the sole address the FFI has identified for the account holder.

(*2*) ***Documentation to be retained upon identifying U.S. indicia.*** If U.S. indicia are identified with respect to an account holder's account information, a participating FFI must retain a record of the documentation described in paragraphs (c)(5)(iv)(B)(*2*)(*i*) through (*vii*) of this section, applicable to the U.S. indicia identified, to establish the account holder's status as a foreign person. If the participating FFI cannot establish an account holder's status as a foreign person based on such documentation, the participating FFI must retain a record of a Form W-9 and a valid and effective waiver as described in section 1471(b)(1)(F)(ii), if necessary, to confirm that the account is a U.S. account or, if unable to do so, must treat the account as held by a recalcitrant account holder.

(*i*) ***Designation of account holder as a U.S. citizen or resident.*** If the information required to be reviewed with respect to the account contains a designation of an account holder as a U.S. citizen or resident, the participating FFI must retain a record of a withholding certificate and documentary evidence described in § 1.1471-3(c)(5)(i)(B) evidencing citizenship in a country other than the United States in order to establish the account holder's status as a foreign person.

(*ii*) ***Unambiguous indication of a U.S. place of birth.*** If information required to be reviewed with respect to the account unambiguously indicates a U.S. place of birth for an account holder, the participating FFI must retain a record of a form of documentary evidence described in § 1.1471-3(c)(5)(i)(B) evidencing citizenship in a country other than the United States and a copy of the individual's Certificate of Loss of Nationality of the United States, or, alternatively, a withholding certificate, a form of documentary evidence described in § 1.1471-3(c)(5)(i)(B) evidencing citizenship in a country other than the United States, and a reasonable written explanation of the account holder's renunciation of U.S. citizenship or the reason the account holder did not obtain U.S. citizenship at birth in order to establish the account holder's status as a foreign person.

(*iii*) ***U.S. address or U.S. mailing address.*** If information required to be reviewed with respect to the account contains a U.S. address or a U.S. mailing address for an account holder, the participating FFI must retain a record of a withholding certificate and a form of documentary evidence described in § 1.1471-3(c)(5)(i)(A) through (C) in order to establish the account holder's status as a foreign person.

(*iv*) ***Only U.S. telephone numbers.*** If information required to be reviewed with respect to the account contains one or more telephone numbers in the United States and no other telephone numbers for an account holder, the participating FFI must retain a record of a withholding certificate and a form of documentary evidence described in § 1.1471-3(c)(5)(i)(A) through (C) in order to establish the account holder's status as a foreign person.

(*v*) ***U.S. telephone numbers and non-U.S. telephone numbers.*** If information required to be reviewed with respect to the account contains one or more telephone numbers in the United States and at least one telephone number outside the

United States for an account holder, the participating FFI must retain a record of a withholding certificate or a form of documentary evidence described in § 1.1471-3(c)(5)(i)(A) through (C) in order to establish the account holder's status as a foreign person.

(*vi*) ***Standing instructions to pay amounts.*** If information required to be reviewed with respect to the account contains standing instructions to pay amounts from the account to an account maintained in the United States for an account holder, the participating FFI must retain a record of a withholding certificate and either a form of documentary evidence described in § 1.1471-3(c)(5)(i)(A) through (C) or a written reasonable explanation (as defined in § 1.1441-7(b)(12)) establishing the account holder's status as a foreign person.

(*vii*) ***Power of attorney or signatory authority granted to a person with a U.S. address or "in-care-of" address or "hold mail" address.*** If information required to be reviewed with respect to the account includes a power of attorney or signatory authority granted to a person with a U.S. address or contains an "in-care-of" address or "hold mail" address that is the sole address identified for the account holder, the participating FFI must retain a record of either a withholding certificate or a form of documentary evidence described in § 1.1471-3(c)(5)(i)(A) through (C) in order to establish the account holder's status as a foreign person.

(C) ***Electronic search for identifying U.S. indicia.*** Except as provided in paragraph (c)(5)(iv)(D) of this section relating to the enhanced review for high-value accounts, a participating FFI may rely solely on a review of the electronically searchable information associated with an account and maintained by the participating FFI to determine if there are any of the U.S. indicia described in paragraph (c)(5)(iv)(B)(*1*) of this section associated with the account. For purposes of this paragraph (c)(5)(iv)(C), however, an FFI will not be required to treat as U.S. indicia an in-care-of address or a hold mail address that is the sole address identified for the account holder.

(D) ***Enhanced review for identifying U.S. indicia in the case of certain high-value accounts*** —

(*1*) ***In general.*** With respect to preexisting individual accounts that have a balance or value that exceeds $1,000,000 as of the effective date of the FFI agreement, or at the end of any subsequent calendar year ("high-value accounts"), a participating FFI must apply the enhanced review described in this paragraph (c)(5)(iv)(D) in addition to the electronic search described in paragraph (c)(5)(iv)(C) of this section to identify any U.S. indicia described in paragraph (c)(5)(iv)(B)(*1*) of this section associated with the account. For purposes of determining the balance or value of an account, a participating FFI must apply the aggregation rules § 1.1471-5(b)(4)(iii)(A) and (B). If a participating FFI applied the enhanced review described in this paragraph (c)(5)(iv)(D) to an account in a previous year, the participating FFI will not be required to reapply such procedures to such account in a subsequent year.

(*2*) ***Relationship manager inquiry.*** With respect to all high-value accounts, a participating FFI must identify accounts to which a relationship manager is assigned (including any accounts aggregated with such account) and for which the relationship manager has actual knowledge that the account holder is a U.S. citizen or resident.

(*3*) ***Additional review of non-electronic records.*** Except as provided in paragraph (c)(5)(iv)(E) of this section, and except with respect to any account for which the participating FFI has retained a record of a withholding certificate and documentary evidence described in § 1.1471-3(c)(5) establishing the account holder's foreign status, a participating FFI must review to identify any U.S. indicia the current customer master file of a high-value account and, if not contained in the current customer master file, the following documents described in paragraphs (c)(5)(iv)(D)(*3*)(*i*) through (*v*) of this section that are associated with such an account and were obtained by the participating FFI within the five calendar years preceding the later of the effective date of the FFI agreement, or the end of the calendar year in which the account exceeded the $1,000,000 threshold described in paragraph (c)(5)(iv)(D)(*1*) of this section. The documents to be reviewed by the participating FFI if not contained in the current customer master file are—

(*i*) The most recent withholding certificate, written statement, and documentary evidence;

(*ii*) The most recent account opening contract or documentation;

(*iii*) The most recent documentation obtained by the participating FFI for purposes of AML due diligence or for other regulatory purposes;

(*iv*) Any power of attorney or signature authority forms currently in effect; and

(*v*) Any standing instructions to pay amounts to another account.

(*4*) ***Limitations on the enhanced review in the case of comprehensive electronically searchable information.*** A participating FFI is not required to apply the enhanced review of paragraph (c)(5)(iv)(D)(*3*) and may instead rely on the electronic search described in paragraph (c)(5)(iv)(C) of this section to identify U.S. indicia to the extent the following information is available in the FFI's electronically searchable information—

(*i*) The account holder's nationality and/or residence status;

(*ii*) The account holder's current residence address and mailing address;

(*iii*) The account holder's current telephone number(s);

(*iv*) Whether there are standing instructions to pay amounts to another account;

(*v*) Whether there is a current “in-care-of” address or “hold mail” address for the account holder if no other residence or mailing address is found for the account; and

(*vi*) Whether there is any power of attorney or signatory authority for the account.

(E) ***Exception for preexisting individual accounts previously documented as held by foreign individuals.*** A participating FFI that has previously obtained documentation from an account holder to establish the account holder's status as a foreign individual in order to meet its obligations under its QI, WP, or WT agreement with the IRS, or to fulfill its reporting obligations as a U.S. payor under chapter 61, is not required to perform the electronic search described in paragraph (c)(5)(iv)(C) of this section or the enhanced review described in paragraph (c)(5)(iv)(D)(*3*) of this section for such account.

Additionally, a participating FFI with a U.S. payor as its paying agent is not required to perform the electronic search described in paragraph (c)(5)(iv)(C) of this section or the enhanced review described in paragraph (c)(5)(iv)(D)(*3*) of this section for an account for which its paying agent that is a U.S. payor has previously obtained documentation to establish the account holder's status as a foreign individual under chapter 61. The participating FFI is required, however, to perform the relationship manager inquiry described in paragraph (c)(5)(iv)(D)(*2*) of this section if the account is a high-value account described in paragraph (c)(5)(iv)(D)(*1*) of this section. For purposes of this paragraph (c)(5)(iv)(E), a participating FFI has documented an account holder's foreign status under chapter 61 if the participating FFI (or its paying agent that is a U.S. payor) has retained a record of the documentation required under chapter 61 to establish the foreign status of an individual and the account received a reportable payment as defined under section 3406(b) in any prior year that was properly reported in that year. In the case of a participating FFI that is a QI, WP, or WT, the participating FFI has documented an account holder's foreign status under its QI, WP, or WT agreement (as applicable) if the participating FFI has met the relevant documentation and reporting requirements of its agreement with respect to an account holder that received a reportable amount in any year in which its agreement was in effect.

(6) ***Examples.*** The following examples illustrate the documentation exceptions provided in paragraphs (c)(3)(iii) and (c)(5)(iii) of this section:

Example 1. Aggregation rules applicable to preexisting individual accounts. U, a U.S. resident individual, holds 100 shares of common stock of FFI1, an investment entity. On the effective date of FFI1's FFI agreement, the common stock held by U is worth $45,000. U also holds shares of preferred stock of FFI1. On the effective date of FFI1's FFI agreement, U's preferred stock in FFI1 is worth $35,000. Neither FFI1's common stock nor FFI1's preferred stock is regularly traded on an established securities market. U also holds debt instruments issued by FFI1 that are not regularly traded on an established securities market. On the effective date of FFI1's FFI agreement, U's FFI1 debt instruments are worth $15,000. U's common and preferred equity interests are associated with U and with one another by reference to U's foreign tax identification number in FFI1's computerized information management system. However, U's debt instruments are not associated with U's equity interests in FFI1's computerized information management system. None of these accounts are managed by a relationship manager. Previously, FFI1 was not required to and did not obtain a Form W-9 from U for purposes of chapter 3 or 61. U's FFI1 debt interests are eligible for the paragraph (c)(5)(iii)(A) documentation exception because that account does not exceed the $50,000 threshold described in paragraph (c)(5)(iii)(A)(*1*) of this section, taking into account the aggregation rule described in paragraph (c)(5)(iii)(A)(*2*) of this section. However, U's common and preferred equity interests are not eligible for the paragraph (c)(5)(iii)(A) documentation exception because the accounts exceed the $50,000 threshold described in paragraph (c)(5)(iii)(A)(*1*) of this section, taking into account the aggregation rules described in § 1.1471-5(b)(4)(iii) pursuant to the requirements of paragraph (c)(5)(iii)(A)(*2*) of this section.

Example 2. Aggregation rules for owners of entity accounts. In Year 1, U, a U.S. resident individual, maintains a depository account that is a preexisting account in CB, a commercial bank. The balance in U's depository account on the effective date of CB's FFI agreement is $20,000. U also owns 100% of Entity X, which maintains a depository account that is a preexisting account in CB, and 50% of Entity Y, which maintains a depository account that is a preexisting account in

CB. The balance in Entity X's account on the effective date of CB's FFI agreement is $130,000, and the balance in Entity Y's account on the effective date of CB's FFI agreement is $110,000. All three accounts are associated with one another in CB's computerized information management system by reference to U's foreign tax identification number. None of the accounts are managed by a relationship manager. Previously, CB was not required to and did not obtain a Form W-9 from U for purposes of chapter 3 or 61. U's depository account qualifies for the § 1.1471-5(a)(4)(i) exception to U.S. account status because it does not exceed the $50,000 threshold, taking into account the aggregation rule described in § 1.1471-5(a)(4)(iii)(A). Entity X's account and Entity Y's account both qualify for the paragraph (c)(3)(iii) documentation exception because the accounts do not exceed the $250,000 threshold described in paragraph (c)(3)(iii)(B)(*1*) of this section taking into account the aggregation rules described in § 1.1471-5(b)(*4*)(*iii*) pursuant to the requirements of paragraph (c)(3)(iii)(B)(*2*) of this section.

(7) ***Certifications of responsible officer.*** In order for a participating FFI to comply with the requirements of an FFI agreement with respect to its identification procedures for preexisting accounts, a responsible officer of the participating FFI must certify to the IRS regarding the participating FFI's compliance with the diligence requirements of this paragraph (c). The responsible officer must certify that the participating FFI has completed the review of all high-value accounts as required under paragraphs (c)(5)(iv)(D) and (E) of this section and treats any account holder of an account for which the participating FFI has not retained a record of any required documentation as a recalcitrant account holder as required under this section and § 1.1471-5(g). The responsible officer must also certify that the participating FFI has completed the account identification procedures and documentation requirements of this paragraph (c) for all other preexisting accounts or, if it has not retained a record of the documentation required under this paragraph (c) with respect to an account, treats such account in accordance with the requirements of this section and § 1.1471-5(g) or § 1.1471-3(f) (as applicable). The responsible officer must also certify to the best of the responsible officer's knowledge after conducting a reasonable inquiry, that the participating FFI did not have any formal or informal practices or procedures in place from August 6, 2011, through the date that is two years after the effective date of the FFI's FFI agreement to assist account holders in the avoidance of chapter 4. A reasonable inquiry for purposes of this paragraph (c)(7) is a review of the participating FFI's procedures and a written inquiry, such as email requests to relevant lines of business, that requires responses from relevant customer on-boarding and management personnel as to whether they engaged in any such practices during that period. Practices or procedures that assist account holders in the avoidance of chapter 4 include, for example, suggesting that account holders split up accounts to avoid classification as a high-value account; suggesting that account holders of U.S. accounts close, transfer, or withdraw from their account to avoid reporting; intentional failures to disclose a known U.S. account; suggesting that an account holder remove U.S. indicia from its account information; or facilitating the manipulation of account balances or values to avoid thresholds. If the responsible officer is unable to make any of the certifications described in this paragraph (c)(7), the responsible officer must make a qualified certification to the IRS stating that such certification cannot be made and that corrective actions will be taken by the responsible officer. The certifications described in this paragraph (c)(7) must be submitted to the IRS by the due date of the FFI's first certification of compliance required under paragraph (f)(3) of this section.

(d) ***Account reporting*** —

(1) ***Scope of paragraph.*** This paragraph (d) provides rules addressing the information reporting requirements applicable to participating FFIs with respect to U.S. accounts, accounts held by owner-documented FFIs, and recalcitrant account holders. Paragraph (d)(2) of this section describes the accounts subject to reporting under this paragraph (d), and specifies the participating FFI that is responsible for reporting an account or account holder. Paragraph (d)(3) of this section describes the information required to be reported and the manner of reporting by a participating FFI under section 1471(c)(1) with respect to a U.S. account or an account held by an owner-documented FFI. Paragraph (d)(4) of this section provides definitions of terms applicable to paragraph (d)(3). Paragraph (d)(5) of this section describes the conditions for a participating FFI to elect to report its U.S. accounts and accounts held by owner-documented FFIs under section 1471(c)(2) and the information required to be reported under such election. Paragraph (d)(6) of this section provides rules for a participating FFI to report its recalcitrant account holders. Paragraph (d)(7) of this section provides special transitional reporting rules applicable to reports due in 2015 and 2016. Paragraph (d)(8) of this section provides the reporting requirements of a participating FFI that is a QI, WP, or WT with respect to U.S. accounts. See chapter 61 for reporting requirements that may apply to a payor that is a participating FFI or registered deemed-compliant FFI with respect to payees. See § 301.1474-1(a) of this chapter for the requirement for a financial institution to file the information required under this paragraph (d) on magnetic media.

(2) ***Reporting requirements in general*** —(i)

(i) ***Accounts subject to reporting.*** Subject to the rules of paragraph (d)(7) of this section, a participating FFI shall report by the time and in the manner prescribed in paragraph (d)(3)(vi) of this section, the information described in paragraph (d)(3) of this section with respect to accounts maintained at any time during each calendar year for which the participating FFI is responsible for reporting under paragraph (d)(2)(ii) of this section and that it is required to treat as U.S. accounts or accounts held by owner-documented FFIs, including accounts that are identified as U.S. accounts by the end of such calendar year pursuant to a change in circumstances during such year as described in paragraph (c)(2)(iii) of this section. Alternatively, a participating FFI may elect to report under paragraph (d)(5) of this section with respect to such accounts for each calendar year. With respect to accounts held by recalcitrant account holders, a participating FFI is required to report with respect to each calendar year under paragraph (d)(6) of this section and not under paragraph (d)(3) or (5) of this section. For separate reporting requirements of participating FFIs with respect to foreign reportable amounts and for transitional rules for participating FFIs to report certain foreign reportable amounts paid to accounts held by nonparticipating FFIs, see § 1.1471-4(d)(2)(ii)(F).

(ii) ***Financial institution required to report an account*** —

(A) ***In general.*** Except as otherwise provided in paragraphs (d)(2)(ii)(B) through (G) of this section, the participating FFI that maintains the account is responsible for reporting the account in accordance with the requirements of paragraph (d)(2)(iii), (d)(3), or (d)(5) of this section (as applicable) for each calendar year. Except as otherwise provided in paragraph (d)(2)(ii)(C) of this section, a participating FFI is responsible for reporting accounts held by recalcitrant account holders that it maintains in accordance with the requirements of paragraph (d)(6) of this section. A participating FFI is not required to report the information required under paragraph (d)(6) of this section with respect to an account held by a recalcitrant account holder of another participating FFI even if that other

participating FFI holds the account as an intermediary on behalf of such account holder and regardless of whether the participating FFI is required to report payments made to the recalcitrant account holder of such other FFI under § 1.1474-1(d)(4)(iii).

(B) ***Special reporting of account holders of territory financial institutions.*** In the case of an account held by a territory financial institution that is a flow-through entity or acting as an intermediary with respect to a withholdable payment—

(*1*) If the territory financial institution agrees to be treated as a U.S. person with respect to the payment under § 1.1471-3(c)(3)(iii)(F), a participating FFI is not required to report under paragraph (d)(2)(i) of this section with respect to the account holders of the territory financial institution; or

(*2*) If the territory financial institution does not agree to be treated as a U.S. person with respect to a withholdable payment, the participating FFI must report with respect to each specified U.S. person or substantial U.S. owner of an entity that is treated as a passive NFFE with respect to which the territory financial institution acts as an intermediary or is a flow-through entity and provides the participating FFI with the information and documentation required under § 1.1471-3(c)(3)(iii)(G). The participating FFI shall be treated as having satisfied these reporting requirements if it reports with respect to each such specified U.S. person or substantial U.S. owner of a passive NFFE either—

(*i*) The information required by chapter 61 and described in paragraph (d)(5)(ii) or (d)(5)(iii) of this section (except account number); or

(*ii*) The information described in paragraph (d)(3)(ii), (d)(3)(iii), or (d)(3)(iv) of this section (except account number and account balance or value).

(C) ***Special reporting of account holders of a sponsored FFI.*** A sponsoring entity that has agreed to fulfill the reporting responsibilities of this paragraph (d) on behalf of a sponsored FFI shall report in accordance with the requirements of paragraph (d)(2)(iii), (3), or (5) of this section (as applicable) with respect to each U.S. account and paragraph (d)(6) of this section with respect to each account held by a recalcitrant account holder of the sponsored FFI to the extent and in the manner required if such sponsored FFI were a participating FFI. The sponsoring entity shall identify each sponsored FFI for which it is reporting to the extent required on the forms for reporting U.S. accounts and recalcitrant account holders and the accompanying instructions to the forms.

(D) ***Special reporting of accounts held by owner-documented FFIs.*** A participating FFI that maintains an account held by an FFI that it has agreed to treat as an owner-documented FFI under § 1.1471-3(d)(6) shall report the information described in paragraph (d)(3)(iv) or (d)(5)(iii) of this section with respect to each specified U.S. person identified in § 1.1471-3(d)(6)(iv)(A)(*1*) and (*2*). See § 1.1474-1(i) for the reporting obligations of a participating FFI with respect to a payee of an obligation other than an account that it has agreed to treat as an owner-documented FFI.

(E) ***Requirement to identify the GIIN of a branch that maintains an account.*** A participating FFI may report under paragraph (d)(3) or (d)(5) of this section either with respect to all of its U.S. accounts and recalcitrant accounts, or separately with respect to any clearly identified group of accounts (such as by line of business or the location of where the account is maintained). A participating FFI shall include the GIIN assigned to the participating FFI or

its branches to identify the jurisdiction of the FFI or branch that maintains the accounts subject to reporting under paragraph (d)(3) or (d)(5) of this section. Additionally, a participating FFI shall file with the IRS the information required to be reported on accounts that it maintains in accordance with the forms and their accompanying instructions provided by the IRS. For the definition of a branch that applies for purposes of this paragraph (d), see paragraph (e)(2)(ii) of this section.

(F) ***Reporting by participating FFIs (including QIs, WPs, WTs, and certain U.S. branches not treated as U.S. persons) for accounts of nonparticipating FFIs (transitional).*** Except as otherwise provided in the instructions to Form 8966, "FATCA Report" or in this paragraph (d)(2)(ii)(F), if a participating FFI (including a QI, WP, WT, or U.S. branch of a participating FFI that is not treated as a U.S. person) maintains an account for a nonparticipating FFI (including a limited branch and limited FFI treated as a nonparticipating FFI), the participating FFI must report on Form 8966 the name and address of the nonparticipating FFI, and the aggregate amount of foreign source payments, as described in paragraph (d)(4)(iv) of this section, paid to or with respect to each such account (foreign reportable amount) for each of the calendar years 2015 and 2016. If, however, the participating FFI is prohibited under domestic law from reporting on a specific payee basis without consent from the nonparticipating FFI account holder and the participating FFI has not been able to obtain such consent, the participating FFI may instead report the aggregate number of accounts held by such non-consenting nonparticipating FFIs and the aggregate amount of foreign reportable amounts paid with respect to such accounts, as described in paragraph (d)(4)(iv) of this section, during the calendar year. A participating FFI may, in lieu of reporting only foreign reportable amounts, report all income, gross proceeds, and redemptions (irrespective of the source) paid to the nonparticipating FFI's account by the participating FFI during the calendar year. With respect to calendar year 2015, however, a participating FFI is not required to report gross proceeds described in paragraph (d)(4)(iv)(B)(*3*) of this section paid to an account held by a nonparticipating FFI. In addition, the participating FFI must retain the account statements related to such nonparticipating FFI accounts. See paragraphs (d)(6)(iv), through (vii) of this section for rules relating to reporting on recalcitrant account holders. Form 8966 shall be filed electronically with the IRS on or before March 31 of the year following the end of the calendar year to which the form relates.

(G) ***Combined reporting on Form 8966 following merger or bulk acquisition.*** If a participating FFI (successor) acquires accounts of another participating FFI (predecessor) in a merger or bulk acquisition of accounts, the successor may assume the predecessor's obligations to report the acquired accounts under paragraph (d) of this section with respect to the calendar year in which the merger or acquisition occurs (acquisition year), provided that the requirements in paragraphs (d)(2)(ii)(G)(*1*) through (*4*) of this section are satisfied. If the requirements of paragraphs (d)(2)(ii)(G)(*1*) through (*4*) of this section are not satisfied, both the predecessor and the successor are required to report the acquired accounts for the portion of the acquisition year that it maintains the account.

(*1*) The successor must acquire substantially all of the accounts maintained by the predecessor, or substantially all of the accounts maintained at a branch of the predecessor, in a merger or bulk acquisition of accounts for value.

(*2*) The successor must agree to report the acquired accounts for the acquisition year on Form 8966 to the extent required in § 1.1471-4(d)(3) or (d)(5).

(*3*) The successor may not elect to report under section 1471(c)(2) and § 1.1471-4(d)(5) with respect to any acquired account that is a U.S. account for the acquisition year.

(*4*) The successor must notify the IRS on the form and in the manner prescribed by the IRS that Form 8966 is being filed on a combined basis.

(iii) ***Special U.S. account reporting rules for U.S. payors*** —

(A) ***Special reporting rule for U.S. payors other than U.S. branches.*** Participating FFIs that are U.S. payors (other than U.S. branches) shall be treated as having satisfied the chapter 4 reporting requirements described in paragraph (d)(2)(i) of this section with respect to accounts that the participating FFI is required to treat as U.S. accounts, or accounts held by owner-documented FFIs, if the participating FFI reports with respect to each such account either—

(*1*) The information required by chapter 61 and described in paragraph (d)(5)(ii) or (d)(5)(iii) of this section; or

(*2*) The information described in paragraph (d)(3)(ii), (d)(3)(iii), or (d)(3)(iv) of this section. However, such participating FFI that is required to report on such accounts under chapter 61 is not relieved of that obligation.

(B) ***Special reporting rules for U.S. branches treated as U.S. persons.*** A U.S. branch treated as a U.S. person (as defined in § 1.1471-1(b)(135)) shall be treated as having satisfied the reporting requirements described in paragraph (d)(2)(i) of this section if it reports under—

(*1*) Chapter 61 with respect to account holders that are U.S. non-exempt recipients;

(*2*) Chapter 61 with respect to persons subject to withholding under section 3406;

(*3*) Section 1.1474-1(i) with respect to substantial U.S. owners of NFFEs that are not excepted NFFEs as defined in § 1.1472-1(c) and;

(*4*) Section 1.1474-1(i) with respect to specified U.S. persons identified in § 1.1471-3(d)(6)(iv)(A)(*1*) and (*2*) of owner-documented FFIs.

(C) ***Rules for U.S. branches of FFIs not treated as U.S. persons.*** A U.S. branch of an FFI that is not treated as a U.S. person shall apply the due diligence rules in paragraph (c)(2) of this section to document its accounts and payees, and shall report its U.S. accounts and accounts held by owner-documented FFIs under paragraph (d)(3), (d)(5), or (d)(6) of this section, as if the U.S. branch were a participating FFI. In addition, the U.S. branch shall apply the withholding requirements in paragraph (b) of this section as if the U.S. branch were a participating FFI.

(3) ***Reporting of accounts under section 1471(c)(1)*** —

(i) ***In general.*** The participating FFI (or branch thereof) that is responsible for reporting an account that it is required to treat as a U.S. account or accounts held by owner-documented FFIs under paragraph (d)(2)(ii) of this section shall be required to report such account under this paragraph (d)(3) for each calendar year unless it elects to report its U.S. accounts or accounts held by owner-documented FFIs under paragraph (d)(5) of this section.

(ii) ***Accounts held by specified U.S. persons.*** In the case of an account described in paragraph (d)(3)(i) of this section that is held by one or more specified U.S. persons, a participating FFI is required to report the following information under this paragraph (d)(3)—

(A) The name, address, and TIN of each account holder that is a specified U.S. person;

(B) The account number;

(C) The account balance or value of the account;

(D) The payments made with respect to the account, as described in paragraph (d)(4)(iv) of this section, during the calendar year; and

(E) Such other information as is otherwise required to be reported under this paragraph (d)(3) or in the form described in paragraph (d)(3)(v) of this section and its accompanying instructions.

(iii) ***Accounts held by U.S. owned foreign entities.*** With respect to each U.S. account described in paragraph (d)(3)(i) of this section that is held by a passive NFFE that is a U.S. owned foreign entity, a participating FFI is required to report under this paragraph (d)(3)(iii)—

(A) The name of the U.S. owned foreign entity that is the account holder;

(B) The name, address, and TIN of each substantial U.S. owner of such entity;

(C) The account number;

(D) The account balance or value of the account held by the NFFE;

(E) The payments made with respect to the account, as described in paragraph (d)(4)(iv) of this section, during the calendar year; and

(F) Such other information as is otherwise required to be reported under this paragraph (d)(3) or in the form described in paragraph (d)(3)(v) of this section and its accompanying instructions.

(iv) ***Special reporting of accounts held by owner-documented FFIs.*** With respect to each account held by an owner-documented FFI, a participating FFI is required to report under this paragraph (d)(3)(iv)—

(A) The name of the owner-documented FFI;

(B) The name, address, and TIN of each specified U.S. person identified in § 1.1471-3(d)(6)(iv)(A)(*1*) and (*2*);

(C) The account number of the account held by the owner-documented FFI;

(D) The account balance or value of the account held by the owner-documented FFI;

(E) The payments made with respect to the account held by the owner-documented FFI, as described in paragraph (d)(4)(iv) of this section, during the calendar year; and

(F) Such other information as is otherwise required to be reported under this paragraph (d)(3) or in the form described in paragraph (d)(3)(vi) of this section and its accompanying instructions.

(v) ***Form for reporting accounts under section 1471(c)(1).*** The information described in paragraphs (d)(3)(ii) through (iv) of this section shall be reported on Form 8966, "FATCA Report," (or such other form as the IRS may prescribe) with respect to each account subject to reporting under paragraph (d)(3)(i) of this section maintained at any time during the calendar year. This form shall be filed in accordance with its requirements and its accompanying instructions.

(vi) ***Time and manner of filing.*** Except as provided in paragraph (d)(7)(iv)(B) of this section, Form 8966 shall be filed electronically with the IRS on or before March 31 of the year following the end of the calendar year to which the form relates. See the accompanying instructions to this form for electronic filing instructions.

(vii) ***Extensions in filing.*** The IRS shall grant an automatic 90-day extension of time in which to file Form 8966. Form 8809-I, "Application for Extension of Time to File FATCA Form 8966," (or such other form as the IRS may prescribe) must be used to request such extension of time and must be filed no later than the due date of Form 8966. Under certain hardship conditions, the IRS may grant an additional 90-day extension. A request for extension due to hardship must contain a statement of the reasons for requesting the extension and such other information as the forms or instructions may require.

(4) ***Descriptions applicable to reporting requirements of § 1.1471-4(d)(3)*** —

(i) ***Address.*** The address to be reported with respect to an account held by a specified U.S. person is the residence address recorded by the participating FFI for the account holder or, if no residence address is associated with the account holder, the address for the account used for mailing or for other purposes by the participating FFI. In the case of an account held by a passive NFFE that is a U.S. owned foreign entity, the address to be reported is the address of each substantial U.S. owner of such entity. In the case of an account held by an owner-documented FFI, the address to be reported is the address of each specified U.S. person identified in § 1.1471-3(d)(6)(iv)(A)(*1*) and (*2*).

(ii) ***Account number.*** The account number to be reported with respect to an account is the identifying number assigned by the participating FFI for purposes other than to satisfy the reporting requirements of this paragraph (d), or, if no such number is assigned to the account, a unique serial number or other number such participating FFI assigns to the financial account for purposes of reporting under paragraph (d)(3) of this section that distinguishes the account from other accounts maintained by such institution.

(iii) ***Account balance or value*** —

(A) ***In general.*** The participating FFI shall report the average balance or value of the account if the FFI reports average balance or value to the account holder for a calendar year. If the participating FFI does not report the average balance or value of the account to the account holder, the participating FFI shall report the balance or value of the account as of the end of the calendar year as determined in accordance with § 1.1471-5(b)(4). In the case of an account that is a cash value insurance or annuity contract, a participating FFI shall report the balance or value of the account as determined in accordance with § 1.1471-5(b)(4).

(B) ***Currency translation of account balance or value.*** The account balance or value of an account may be reported in U.S. dollars or in the currency in which the account is denominated. In the case of an account denominated in one or more foreign currencies, the participating FFI may elect to report the account balance or value in a currency in

which the account is denominated and is required to identify the currency in which the account is reported. If the participating FFI elects to report such an account in U.S. dollars, the participating FFI must calculate the account balance or value of the account in the manner described in § 1.1471-5(b)(4).

(iv) ***Payments made with respect to an account*** —

(A) ***Depository accounts.*** The payments made during a calendar year with respect to a depository account consist of the aggregate gross amount of interest paid or credited to the account during the year.

(B) ***Custodial accounts.*** The payments made during a calendar year with respect to a custodial account consist of—

(*1*) The aggregate gross amount of dividends paid or credited to the account during the calendar year;

(*2*) The aggregate gross amount of interest paid or credited to the account during the calendar year;

(*3*) The gross proceeds from the sale or redemption of property paid or credited to the account during the calendar year with respect to which the FFI acted as a custodian, broker, nominee, or otherwise as an agent for the account holder; and

(*4*) The aggregate gross amount of all other income paid or credited to the account during the calendar year.

(C) ***Other accounts.*** In the case of an account described in § 1.1471-5(b)(1)(iii) (relating to a debt or equity interest other than an interest as a partner in a partnership) or § 1.1471-5(b)(1)(iv) (relating to cash value insurance contracts and annuity contracts), the payments made during the calendar year with respect to such account are the gross amounts paid or credited to the account holder during the calendar year including payments in redemption (in whole or part) of the account. In the case of an account that is a partner's interest in a partnership, the payments made during the calendar year with respect to such account are the amount of the partner's distributive share of the partnership's income or loss for the calendar year, without regard to whether any such amount is distributed to the partner during the year, and any guaranteed payments for the use of capital. The payments required to be reported under this paragraph (d)(4)(iv)(C) with respect to a partner may be determined based on the partnership's tax returns or, if the tax returns are unavailable by the due date for filing Form 8966, the partnership's financial statements or any other reasonable method used by the partnership for calculating the partner's share of partnership income by such date.

(D) ***Transfers and closings of deposit, custodial, insurance, and annuity financial accounts.*** In the case of an account closed or transferred in its entirety during a calendar year that is a depository account, custodial account, or a cash value insurance contract or annuity contract, the payments made with respect to the account shall be—

(*1*) The payments and income paid or credited to the account that are described in paragraph (d)(4)(iv)(A) or (B) of this section for the calendar year until the date of transfer or closure; and

(2) The amount or value withdrawn or transferred from the account in connection with the closure or transfer of the account.

(E) ***Amount and character of payments subject to reporting.*** For purposes of reporting under paragraph (d)(3) of this section, the amount and character of payments made with respect to an account may be determined under the same principles that the participating FFI uses to report information on its resident account holders to the tax administration of the jurisdiction in which the FFI (or branch thereof) is located. Thus, the amount and character of items of income described in paragraphs (d)(4)(iv)(A), (B), and (C) need not be determined in accordance with U.S. federal income tax principles. If any of the types of payments described in paragraph (d)(4)(iv) of this section are not reported to the tax administration of the jurisdiction in which the participating FFI (or branch thereof) is located, such amounts may be determined in the same manner as is used by the participating FFI for purposes of reporting to the account holder. If any of the types of payments described in this paragraph (d)(4)(iv) is neither reported to the tax administration of the jurisdiction in which the FFI (or branch thereof) is located nor reported to the account holder for the year for which reporting is required under paragraph (d) of this section, such item must be determined and reported either in accordance with U.S. federal tax principles or in accordance with any reasonable method of reporting that is consistent with the accounting principles generally applied by the participating FFI. Once a participating FFI (or branch thereof) has applied a method to determine such amounts, it must apply such method consistently for all account holders and for all subsequent years unless the Commissioner consents to a change in such method. Consent will be automatically granted for a change to rely on U.S. federal income tax principles to determine such amounts.

(F) ***Currency translation.*** A payment described in this paragraph (d)(4)(iv) may be reported in the currency in which the payment is denominated or in U.S. dollars. In the case of payments denominated in one or more foreign currencies, a participating FFI may elect to report the payments in a currency in which payments are denominated and is required to identify the currency in which the account is reported. If such a payment is reported in U.S. dollars, the participating FFI must calculate the amount in the manner described in § 1.1471-5(b)(4).

(v) ***Record retention requirements.*** A participating FFI that produces, in the ordinary course of its business, account statements that summarize the activity (including withdrawals, transfers, and closures) of an account for any calendar year in which the account was required to be reported under paragraph (d)(3) of this section must retain a record of such account statements. The record must be retained for the longer of six years or the retention period under the FFI's normal business procedures. A participating FFI may be required to extend the six year retention period if the IRS requests such an extension prior to the expiration of the six year period.

(5) ***Election to perform chapter 61 reporting —***

(i) ***In general —***

(A) ***Election under section 1471(c)(2).*** Except as otherwise provided in this paragraph (d)(5), a participating FFI may elect under section 1471(c)(2) and this paragraph (d)(5) to report under sections 6041, 6042, 6045, and 6049, as appropriate, with respect to any account required to be reported under this paragraph (d). Such reporting must be done as if such

participating FFI were a U.S. payor and each holder of an account that is a specified U.S. person, passive NFFE that is a U.S. owned foreign entity, or owner-documented FFI were a payee who is an individual and citizen of the United States. If a participating FFI makes such an election, the FFI is required to report the information required under this paragraph (d)(5) with respect to each such U.S. account or account held by an owner-documented FFI, regardless of whether the account holder of such account qualifies as a recipient exempt from reporting by a payor or middleman under sections 6041, 6042, 6045, or 6049, including the reporting of payments made to such account of amounts that are subject to reporting under any of these sections. A participating FFI that elects to report an account under the election described in this paragraph (d)(5) is required to report the information described in paragraph (d)(5)(ii) or (iii) of this section for a calendar year regardless of whether a reportable payment was made to the U.S. account during the calendar year. A participating FFI that reports an account under the election described in this paragraph (d)(5) is not required to report the information described in paragraph (d)(3) of this section with respect to the account. The election under section 1471(c)(2) described in this paragraph (d)(5)(i)(A) does not apply to cash value insurance contracts or annuity contracts that are financial accounts described in § 1.1471-5(b)(1)(iv). See paragraph (d)(5)(i)(B) of this section for an election to report cash value insurance contracts or annuity contracts that are U.S. accounts held by specified U.S. persons in a manner similar to section 6047(d).

(B) ***Election to report in a manner similar to section 6047(d).*** Except as otherwise provided in this paragraph (d)(5), a participating FFI may elect to report with respect to any of its cash value insurance contracts or annuity contracts that are U.S. accounts held by specified U.S. persons under section 6047(d), modified as follows. The amount to be reported is any amount paid under the contract during such reporting period as if such participating FFI were a U.S. payor. Each holder of a U.S. account that is a specified U.S. person is treated for purposes of reporting under this paragraph (d)(5)(i)(B) as a contract holder or payee who is an individual and citizen of the United States.

(ii) ***Additional information to be reported.*** In addition to the information otherwise required to be reported under sections 6041, 6042, 6045, 6047(d) (in the manner described in paragraph (d)(5)(i)(B) of this section with respect to U.S. accounts held by specified U.S. persons), and 6049, including the reporting of payments made to such accounts subject to reporting under the applicable section, a participating FFI that elects to report under this paragraph (d)(5)(ii) must report with respect to each account that it is required to treat as a U.S. account—

(A) In the case of an account holder that is a specified U.S. person—

(*1*) The name, address, and TIN of the account holder; and

(*2*) The account number; and

(B) In the case of an account holder that is a U.S. owned foreign entity that is a passive NFFE—

(*1*) The name of such entity;

(*2*) The name, address, and TIN of each substantial U.S. owner of such entity; and

(*3*) The account number.

(iii) ***Special reporting of accounts held by owner-documented FFIs.*** With respect to each account held by an owner-documented FFI, a participating FFI that elects to report under this paragraph (d)(5) must report payments made to the owner-documented FFI under the requirements of sections 6041, 6042, 6045, 6047(d), and 6049, the other information required under each applicable section, and the following information—

(A) The name of such FFI;

(B) The name, address, and TIN of each specified U.S. person identified in § 1.1471-3(d)(6)(iv)(A)(*1*) and (*2*); and

(C) The account number for the account held by the owner-documented FFI.

(iv) ***Branch reporting.*** A participating FFI that reports the information described in paragraphs (d)(5)(ii) and (iii) of this section shall also report the jurisdiction of the branch that maintains the account being reported.

(v) ***Time and manner of making the election.*** A participating FFI (or one or more branches of the participating FFI) may make the election described in this paragraph (d)(5) by reporting the information described in this paragraph (d)(5) on the form described in paragraph (d)(5)(vii) of this section on the next reporting date following the end of the calendar year for which the election is made. A participating FFI may make an election under this paragraph (d)(5) either with respect to all of its U.S. accounts and recalcitrant accounts or, separately, with respect to any clearly identified group of accounts (such as by line of business or the location where the account is maintained).

(vi) ***Revocation of election.*** A participating FFI may revoke the election described in paragraph (d)(5)(i) of this section (as a whole or with regard to any clearly identified group of accounts) by reporting the information described in paragraph (d)(3) of this section beginning on the first reporting date with respect to the calendar year that follows the calendar year for which it last reports an account under this paragraph (d)(5).

(vii) ***Filing of information under election.*** In the case of an account holder that is a specified U.S. person, the information required to be reported under the election described in this paragraph (d)(5) shall be filed with the IRS and issued to the account holder in the time and manner prescribed in sections 6041, 6042, 6045, 6047(d), and 6049 and in accordance with the forms referenced therein and their accompanying instructions provided by the IRS for reporting under each of these sections. If the account holder is a passive NFFE that is a U.S. owned foreign entity or owner-documented FFI, however, the information required to be reported under the election described in this paragraph (d)(5) shall be filed on Form 8966 in accordance with its requirements and its accompanying instructions.

(6) ***Reporting on recalcitrant account holders*** —

(i) ***In general.*** Except as otherwise provided in a Model 2 IGA, a participating FFI, as part of its reporting responsibilities under this paragraph (d), shall report to the IRS for each calendar year the information described for each of the classes of account holders described in paragraphs (d)(6)(i)(A) through (E) of this section. See § 1.1474-1(d)(4)(ii) for a participating FFI or registered deemed-compliant FFI's requirement to report chapter 4 reportable amounts paid to such account holders and tax withheld.

(A) The aggregate number and aggregate balance or value of accounts held by recalcitrant account holders at the end of the calendar year that are described in § 1.1471-5(g)(2)(iv) (referencing passive NFFEs that are recalcitrant account holders).

(B) The aggregate number and aggregate balance or value of accounts held by recalcitrant account holders at the end of the calendar year that are described in § 1.1471-5(g)(2)(ii) and (iii) (referencing U.S. persons that are recalcitrant account holders).

(C) The aggregate number and aggregate balance or value of accounts held by recalcitrant account holders at the end of the calendar year, other than accounts described in paragraph (d)(6)(i)(A), (B), or (E) of this section, that have U.S. indicia.

(D) The aggregate number and aggregate balance or value of accounts held by recalcitrant account holders at the end of the calendar year, other than accounts described in paragraph (d)(6)(i)(A) or (E) of this section, that do not have U.S. indicia.

(E) The aggregate number and aggregate balance or value of accounts held by recalcitrant account holders at the end of the calendar year that are dormant accounts.

(ii) ***Definition of dormant account.*** A dormant account is an account (other than a cash value insurance contract or annuity contract) that is a dormant or inactive account under applicable laws or regulations or the normal operating procedures of the participating FFI that are consistently applied for all accounts maintained by such institution in a particular jurisdiction. If neither applicable laws or regulations nor the normal operating procedures of the participating FFI maintaining the account address dormant or inactive accounts, an account will be a dormant account if—

(A) The account holder has not initiated a transaction with regard to the account or any other account held by the account holder with the FFI in the past three years; and

(B) The account holder has not communicated with the FFI that maintains such account regarding the account or any other account held by the account holder with the FFI in the past six years.

(iii) ***End of dormancy.*** An account that is a dormant account under paragraph (d)(6)(ii) of this section ceases to be a dormant account when—

(A) The account holder initiates a transaction with regard to the account or any other account held by the account holder with the FFI;

(B) The account holder communicates with the FFI that maintains such account regarding the account or any other account held by the account holder with the FFI; or

(C) The account ceases to be a dormant account under applicable laws or regulations or the participating FFI's normal operating procedures.

(iv) ***Forms.*** Reporting under paragraph (d)(6)(i) of this section shall be filed on Form 8966 in accordance with its requirements and accompanying instructions.

(v) ***Time and manner of filing.*** Except as provided in paragraph (d)(7)(iv)(B) of this section, Form 8966 shall be filed electronically with the IRS on or before March 31 of the year following the end of the calendar year to which the form relates. See the accompanying instructions to this form for electronic filing instructions.

(vi) ***Extensions in filing.*** The IRS shall grant an automatic 90-day extension of time in which to file Form 8966. Form 8809-I, "Application for Extension of Time to File FATCA Form 8966," (or such other form as the IRS may prescribe) must be used to request such extension of time and must be filed no later than the due date of Form 8966. Under certain hardship conditions, the IRS may grant an additional 90-day extension. A request for extension due to hardship must contain a statement of the reasons for requesting the extension and such other information as the forms or instructions may require.

(vii) ***Record retention requirements.*** A participating FFI that produces, in the ordinary course of its business, account statements that summarize the activity (including withdrawals, transfers, and closures) of an account held by a recalcitrant account holder described in paragraph (d)(6)(i)(B) of this section for any calendar year in which the account was required to be reported under paragraph (d)(6) of this section must retain a record of such account statements. Such record must be retained for the longer of six years or the retention period under the FFI's normal business procedures. A participating FFI may be required to extend the six year retention period if the IRS requests such an extension prior to the expiration of the six year period.

(7) ***Special reporting rules with respect to the 2014 and 2015 calendar years*** —

(i) ***In general.*** If the effective date of the FFI agreement of a participating FFI is on or before December 31, 2015, the participating FFI is required to report U.S. accounts and accounts held by owner-documented FFIs that it maintained (or that it is otherwise required to report under paragraph (d)(2)(ii) of this section) during the 2014 and 2015 calendar years in accordance with paragraph (d)(7)(ii) or (iii) of this section.

(ii) ***Participating FFIs that report under § 1.1471-4(d)(3).*** With respect to accounts that a participating FFI is required to report in accordance with paragraph (d)(2) of this section, the participating FFI may, instead of the information described in paragraphs (d)(3)(ii) and (iii) of this section, report only the following information—

(A) ***Reporting with respect to the 2014 calendar year.*** With respect to accounts maintained during the 2014 calendar year—

(*1*) The name, address, and TIN of each specified U.S. person who is an account holder and, in the case of any account holder that is a passive NFFE that is a U.S. owned foreign entity or that is an owner-documented FFI, the name of such entity and the name, address, and TIN of each substantial U.S. owner of such NFFE or, in the case of an owner-documented FFI, of each specified U.S. person identified in § 1.1471-3(d)(6)(iv)(A)(*1*) and (*2*);

(*2*) The account balance or value as of the end of the relevant calendar year, or if the account was closed after the effective date of the FFI agreement, the amount or value withdrawn or transferred from the account in connection with closure; and

(*3*) The account number of the account.

(B) ***Reporting with respect to the 2015 calendar year.*** With respect to the 2015 calendar year, the participating FFI may report only—

(*1*) The information described in paragraph (d)(7)(ii)(A) of this section; and

(2) The payments made with respect to the account except for those payments described in paragraph (d)(4)(iv)(B)(*3*) of this section (certain gross proceeds).

(iii) ***Participating FFIs that report under § 1.1471-4(d)(5).*** A participating FFI that elects to report under paragraph (d)(5) of this section may report only the information described in paragraphs (d)(7)(ii)(A)(*1*) and (*3*) of this section for its 2014 calendar year. With respect to its 2015 calendar year, a participating FFI is required to report all of the information required to be reported under paragraphs (d)(5)(i) through (iii) of this section but may exclude from such reporting amounts reportable under section 6045.

(iv) ***Forms for reporting*** —

(A) ***In general.*** Except as provided in paragraph (d)(7)(iv)(B) of this section, reporting under paragraph (d)(7)(ii) of this section shall be made on Form 8966 (or such other form as the IRS may prescribe), in the manner described in paragraph (d)(3)(vi) of this section. Reporting under paragraph (d)(7)(iii) of this section shall be made in accordance with paragraph (d)(5)(vii) of this section.

(B) ***Special determination date and timing for reporting with respect to the 2014 calendar year.*** With respect to the 2014 calendar year, a participating FFI must report under paragraph (d)(3) or (5) of this section on all accounts that are identified and documented under paragraph (c) of this section as U.S. accounts or accounts held by owner-documented FFIs as of December 31, 2014, (or as of the date an account is closed if the account is closed prior to December 31, 2014) if such account was outstanding on or after the effective date of the participating FFI's FFI agreement. Reporting for the 2014 calendar year shall be filed with the IRS on or before March 31, 2015. However, a U.S. payor (including a U.S. branch treated as a U.S. person (as defined in § 1.1471-1(b)(135))) that reports in accordance with paragraph (d)(2)(iii) of this section may report all or a portion of its U.S. accounts and accounts held by owner-documented FFIs in accordance with the dates otherwise applicable to reporting under chapter 61 with respect to the 2014 calendar year.

(8) ***Reporting requirements of QIs, WPs, and WTs.*** In general, the reporting requirements with respect to the U.S. accounts maintained by a participating FFI that is a QI, WP, or WT will be consistent with the reporting requirements with respect to such accounts of a participating FFI that is not a QI, WP, or WT. See the QI, WP, or WT agreement for the coordination of the chapter 4 reporting obligations of a participating FFI that also is a QI, WP, or WT.

(9) ***Examples.*** The following examples illustrate the provisions of this paragraph (d):

Example 1. Financial institution required to report U.S. account. PFFI1, a participating FFI, issues shares of stock that are financial accounts under § 1.1471-5(b). Such shares are held in custody by PFFI2, another participating FFI, on behalf of U, a specified U.S. person that holds an account with PFFI2. The shares of PFFI1 held by PFFI2 will not be subject to reporting by PFFI1 if PFFI1 may treat PFFI2 as a participating FFI under § 1.1471-3(d)(4). See paragraph (d)(2)(ii)(A) of this section.

Example 2. Financial institution required to report U.S. account. U, a specified U.S. person, holds shares in PFFI1, a participating FFI that invests in other financial institutions (a fund of funds). The shares of PFFI1 are financial accounts under § 1.1471-5(b)(3)(iii). PFFI1 holds shares that are

also financial accounts under § 1.1471-5(b)(3)(iii) in PFFI2, another participating FFI. The shares of PFFI2 held by PFFI1 are not subject to reporting by PFFI2, if PFFI2 may treat PFFI1 as a participating FFI under § 1.1471-3(d)(4). See paragraph (d)(2)(ii)(A) of this section.

Example 3. U.S. owned foreign entity. FC, a passive NFFE, holds a custodial account with PFFI1, a participating FFI. U, a specified U.S. person, owns 3% of the only class of stock of FC. Q, another specified U.S. person, owns 12% of the only class of stock of FC. U is not a substantial U.S. owner of FC. See § 1.1473-1(b). Q is a substantial U.S. owner of FC and FC identifies her as such to PFFI1. PFFI1 does not elect to report under paragraph (d)(5) of this section. PFFI1 must complete and file the reporting form described in paragraph (d)(3)(v) of this section and report the information described in paragraph (d)(3)(iii) with respect to both FC and Q. See paragraph (d)(3)(ii) of this section.

Example 4. Election to perform Form 1099 reporting with regard to an NFFE. Same facts as in *Example 3,* except that PFFI1 has made the election in accordance with paragraph (d)(5) of this section. PFFI1 must complete and file the forms described in paragraph (d)(5)(vii) for FC, treating FC as if it were an individual and citizen of the United States and must identify Q as a substantial U.S. owner of FC on such form. See paragraph (d)(5)(ii) of this section. PFFI1 shall not complete the forms described in paragraph (d)(5)(vii) with regard to U.

Example 5. Owner-documented FFI. DC, an owner-documented FFI under § 1.1471-3(d)(6), holds a custodial account with PFFI1, a participating FFI. U, a specified U.S. person, owns 3% of the only class of stock of DC. Q, another specified U.S. person, owns 12% of the only class of stock of DC. Both U and Q are persons identified in § 1.1471-3(d)(6)(iv)(A)(*1*) and DC identifies U and Q to PFFI1 and otherwise provides to PFFI1 all of the information required to be reported with respect to DC. PFFI1 must complete and file a form described in paragraph (d)(3)(v) of this section with regard to U and Q. See paragraph (d)(3)(iii) of this section.

Example 6. Election to perform Form 1099 reporting with regard to an owner-documented FFI. Same facts as in *Example 5,* except that PFFI1 has made the election in accordance with paragraph (d)(5) of this section. PFFI1 must complete and file the forms described in paragraph (d)(5)(vii) for U and Q.

Example 7. Sponsored FFI. DC2 is an FFI that has agreed to have a sponsoring entity, PFFI1, fulfill DC2's chapter 4 responsibilities under § 1.1471-5(f)(2)(iii). U, a specified U.S. person, holds an equity interest in DC2 that is a financial account under § 1.1471-5(b)(3)(iii). PFFI1 must complete and file a form described in paragraph (d)(3)(v) of this section with regard to U's account on behalf of DC2. See paragraph (d)(2)(ii)(C) of this section.

(e) ***Expanded affiliated group requirements*** —

(1) ***In general.*** Except as otherwise provided in this paragraph (e)(1) or paragraphs (e)(2) and (e)(3) of this section, each FFI that is a member of an expanded affiliated group must have the chapter 4 status of a participating FFI, deemed-compliant FFI, or exempt beneficial owner as a condition for any member of such group to obtain the status of a participating FFI or registered deemed-compliant FFI. Accordingly, except as otherwise provided in paragraph (e)(3)(v) of this section, each FFI other than a certified deemed-compliant FFI or exempt beneficial owner in an expanded affiliated group must submit a registration form to the IRS in such manner as the IRS may prescribe requesting an FFI agreement, registered deemed-compliant status, or limited FFI status as a condition for any member to become a participating FFI or registered deemed-compliant FFI. Except as provided in paragraph (e)(2) of this section, each FFI other than a certified deemed-compliant FFI

or exempt beneficial owner that is a member of such group must also agree to all of the requirements for the status for which it applies with respect to all accounts maintained at all of its branches, offices, and divisions. For the withholding requirements of a participating FFI with respect to its limited branches and its affiliates that are limited FFIs, see paragraph (b)(5) of this section. Notwithstanding the foregoing, an FFI (or branch thereof) that is treated as a participating FFI or a deemed-compliant FFI pursuant to a Model 1 IGA or Model 2 IGA will maintain such status provided that it meets the terms for such status pursuant to such agreement.

(2) ***Limited branches*** —

(i) ***In general.*** An FFI that otherwise satisfies the requirements for participating FFI status as described in this section will be allowed to become a participating FFI notwithstanding that one or more of its branches cannot satisfy all of the requirements of a participating FFI as described in this section if—

(A) All branches (as defined in paragraph (e)(2)(ii) of this section) that cannot satisfy all of the requirements of a participating FFI as described in this section are limited branches as described in paragraph (e)(2)(iii) of this section;

(B) The FFI maintains at least one branch that complies with all of the requirements of a participating FFI, even if the only branch that can comply is a U.S. branch; and

(C) The FFI agrees to and complies with the conditions in paragraph (e)(2)(iv) of this section.

(ii) ***Branch defined.*** The term *branch* has the meaning set forth in § 1.1471-1(b)(10).

(iii) ***Limited branch defined.*** A limited branch is a branch of an FFI that, under the laws of the jurisdiction that apply with respect to the accounts maintained by the branch, cannot satisfy the conditions of both paragraphs (e)(2)(iii)(A) and (B) of this section, but with respect to which the FFI will agree to the conditions of paragraph (e)(2)(iv) of this section.

(A) With respect to accounts that pursuant to this section the participating FFI is required to treat as U.S. accounts, either report such accounts to the IRS as described in paragraph (d) of this section, close such accounts within a reasonable period of time, or transfer such accounts to a U.S. financial institution, a branch of the FFI that will so report, a participating FFI, or a reporting Model 1 FFI.

(B) With respect to recalcitrant account holders and accounts held by nonparticipating FFIs, withhold with respect to each such account as required under paragraph (b) of this section, block each such account (as defined in this paragraph), close each such account within a reasonable period of time, or transfer each such account to a U.S. financial institution, a branch of the FFI that will so report, a participating FFI, or a reporting Model 1 FFI. For purposes of this paragraph (e)(2)(iii)(B), an account is a blocked account if the FFI prohibits the account holder from effecting any transactions with respect to an account until such time as the account is closed, transferred, or the account holder provides the documentation described in paragraph (c) of this section for the FFI to determine the U.S. or non-U.S. status of the account and report the account if required under paragraph (d) of this section.

(iv) ***Conditions for limited branch status.*** An FFI with one or more limited branches must satisfy the following requirements when applying for participating FFI status with the IRS—

(A) Identify the relevant jurisdiction of each branch for which it seeks limited branch status;

(B) Agree that each such branch will identify its account holders under the due diligence requirements applicable to participating FFIs under paragraph (c) of this section, retain a record of account holder and payee documentation pertaining to those identification requirements for the longer of six years from the effective date of the FFI agreement or for as long as the branch maintains the account or obligation, and report to the IRS with respect to accounts that it is required to treat as U.S. accounts to the extent permitted under the relevant laws pertaining to the branch;

(C) Agree to treat each such branch as an entity separate from its other branches for purposes of the withholding requirements described in paragraph (b)(5) of this section;

(D) Except as otherwise provided in paragraph (e)(2)(vi) of this section, agree that each such branch will not open accounts that it is required to treat as U.S. accounts or accounts held by nonparticipating FFIs, including accounts transferred from any branch of the FFI or from any member of its expanded affiliated group; and

(E) Agree that each limited branch will identify itself to withholding agents as a nonparticipating FFI (including to affiliates of the FFI in the same expanded affiliated group that are withholding agents).

(v) ***Term of limited branch status (transitional).*** An FFI that becomes a participating FFI with one or more limited branches will cease to be a participating FFI after December 31, 2016, unless otherwise provided pursuant to Model 1 IGA or Model 2 IGA. A branch will cease to be a limited branch as of the beginning of the third calendar quarter following the date on which the branch is no longer prohibited from complying with the requirements of a participating FFI as described in this section. In such case, a participating FFI will retain its status as a participating FFI if it notifies the IRS by the date such branch ceases to be a limited branch that it will comply with the requirements of an FFI agreement with respect to such branch, or if otherwise provided pursuant to a Model 1 IGA or Model 2 IGA.

(vi) ***Exception from restriction on opening U.S. accounts and accounts held by nonparticipating FFIs.*** Notwithstanding the requirements of paragraph (e)(2)(iv)(D) of this section, a branch may open U.S. accounts for persons resident in the same jurisdiction in which such branch is located or operating and accounts for nonparticipating FFIs that are resident in the same jurisdiction provided that—

(A) The branch does not solicit U.S. accounts or accounts for nonparticipating FFIs from persons not resident in the same jurisdiction in which such branch is located or operating; and

(B) The branch is not used by the FFI or any FFI in its expanded affiliated group to circumvent the obligations of such FFI under section 1471.

(3) ***Limited FFI*** —

(i) ***In general.*** An FFI will be allowed to become either a participating FFI or a registered deemed-compliant FFI notwithstanding that one or more of the FFIs in the expanded affiliated group of which the FFI is a member cannot comply with all of the requirements of a participating FFI as described in this section if each such FFI is a limited FFI under paragraph (e)(3)(ii) of this section.

(ii) ***Limited FFI defined.*** A limited FFI is a member of an expanded affiliated group that includes one or more participating FFIs that agrees to the conditions described in paragraph (e)(3)(iii) of this section to become a limited FFI and if under the laws of each jurisdiction that apply with respect to the accounts maintained by the affiliate, the affiliate cannot satisfy the conditions of both paragraphs (e)(3)(ii)(A) and (B) of this section.

(A) With respect to accounts that are U.S. accounts, report such accounts to the IRS as described in paragraph (d) of this section, close such accounts within a reasonable period of time, or transfer such accounts to a U.S. financial institution, a participating FFI, or a reporting Model 1 FFI.

(B) With respect to recalcitrant account holders and accounts held by nonparticipating FFIs, withhold with respect to each such account as required under paragraph (b) of this section, block each such account, close each such account within a reasonable period of time, or transfer each such account to a U.S. financial institution, a participating FFI, or a reporting Model 1 FFI. See paragraph (e)(2)(iii)(B) of this section for when an account is considered blocked.

(iii) ***Conditions for limited FFI status.*** An FFI that seeks to become a limited FFI must—

(A) Except as otherwise provided in paragraph (e)(3)(v) of this section, register as part of its expanded affiliated group's FFI agreement process for limited FFI status;

(B) Agree as part of such registration to identify its account holders under the due diligence requirements applicable to participating FFIs under paragraph (c) of this section, retain a record of account holder and payee documentation pertaining to those identification requirements for the longer of six years from the effective date of its registration as a limited FFI or for as long as the FFI maintains the account or obligation, and report with respect to accounts that it is required to treat as U.S. accounts to the extent permitted under the relevant laws pertaining to the FFI;

(C) Except as otherwise provided in paragraph (e)(3)(vi) of this section, agree as part of such registration that it will not open accounts that it is required to treat as U.S. accounts or accounts held by nonparticipating FFIs, including accounts transferred from any member of its expanded affiliated group; and

(D) Agree as part of such registration that it will identify itself to withholding agents as a nonparticipating FFI.

(iv) ***Period for limited FFI status (transitional).*** A limited FFI will cease to be a limited FFI after December 31, 2016. An FFI will also cease to be a limited FFI when it becomes a participating FFI or deemed-compliant FFI, or as of the beginning of the third calendar quarter following the date on which the FFI is no longer prohibited from complying with the requirements of a participating FFI as described in this section. In such case, participating FFIs and deemed-compliant FFIs that are members of the same expanded affiliated group will retain their status if, by the date that an FFI ceases to be a limited FFI, such FFI enters into an FFI agreement or becomes a registered deemed-compliant FFI, unless otherwise provided pursuant to an applicable Model 1 IGA or Model 2 IGA.

(v) ***Exception from registration requirement*** —

(A) ***Conditions for exception.*** An FFI that seeks to become a limited FFI is excepted from the registration requirement of paragraph (e)(3)(iii)(A) of this section provided that—

(*1*) The FFI is prohibited under local law from registering as a limited FFI;

(*2*) A member of the FFI's expanded affiliated group that is a U.S. financial institution or an FFI seeking status as (or that is) a participating FFI or reporting Model 1 FFI registers as a lead FI (defined in the Instructions for Form 8957, "Foreign Account Tax Compliance Act (FATCA) Registration") with respect to the limited FFI; and

(*3*) The lead FI identifies the limited FFI on the lead FI's FATCA registration. However, if the limited FFI is prohibited under applicable law from being identified by its legal name on the FATCA registration Web site, the lead FI may use the term *Limited FFI* in place of the limited FFI's name and indicate the limited FFI's jurisdiction of residence or organization.

(B) ***Confirmation requirements of lead FI.*** By identifying a limited FFI on the FATCA registration Web site pursuant to paragraph (e)(3)(v)(A)(*2*) of this section, the lead FI is confirming that—

(*1*) The limited FFI has represented to the lead FI that it will meet the conditions for limited FFI status described in paragraph (e)(3)(iii) of this section;

(*2*) The limited FFI has agreed to notify the lead FI within 30 days of the date that such FFI ceases to meet the requirements of a limited FFI or the date that such FFI can comply with the requirements of a participating FFI or deemed-compliant FFI (and will separately register for that status); and

(*3*) The lead FI, if it receives a notification described in paragraph (e)(3)(v)(B)(*2*) of this section or otherwise knows that the limited FFI has not complied with the conditions for limited FFI status or can comply with the requirements of a participating FFI or deemed-compliant FFI, will, within 90 days of such notification or acquiring such knowledge, remove the FFI from the lead FI's registration on the FATCA registration Web site and maintain a record of the date on which the FFI ceased to be a limited FFI and (if applicable) the circumstances of the limited FFI's non-compliance, which will be available to the IRS upon request.

(vi) ***Exception from restriction on opening U.S. accounts and accounts held by nonparticipating FFIs.*** Notwithstanding paragraph (e)(3)(iii)(C) of this section, a limited FFI may open U.S. accounts for persons resident in the same jurisdiction in which such FFI is resident or organized and accounts for nonparticipating FFIs that are resident in the same jurisdiction provided that—

(A) Such FFI does not solicit U.S. accounts or accounts for nonparticipating FFIs from persons not resident in the same jurisdiction in which the FFI is resident or organized; and

(B) The FFI is not used by another FFI in the FFI's expanded affiliated group to circumvent the obligations of such other FFI under section 1471.

(4) ***Special rule for QIs.*** An FFI that has in effect a QI agreement with the IRS will be allowed to become a limited FFI notwithstanding that none of the FFIs in the expanded affiliated group of which the FFI is a member can comply with the requirements of a participating FFI as described in this section if the FFI that is a QI meets the conditions of a limited FFI under paragraph (e)(3)(iii) of this section.

(f) *Verification* —

(1) ***In general.*** This paragraph (f) describes the requirement for a participating FFI to establish and implement a compliance program for satisfying its requirements under this section. Paragraph (f)(2) of this section provides the requirement for a participating FFI to establish a compliance program and the option for a group of FFIs to adopt a consolidated compliance program. Paragraph (f)(3) of this section describes the periodic certification that the participating FFI must make to the IRS regarding the participating FFI's compliance with the requirements of an FFI agreement. Paragraph (f)(4) describes IRS information requests related to compliance with an FFI agreement.

(2) *Compliance program* —

(i) ***In general.*** The participating FFI must appoint a responsible officer to oversee the participating FFI's compliance with the requirements of the FFI agreement. The responsible officer must (either personally or through designated persons) establish a compliance program that includes policies, procedures, and processes sufficient for the participating FFI to satisfy the requirements of the FFI agreement. The responsible officer (or designee) must periodically review the sufficiency of the FFI's compliance program and the FFI's compliance with the requirements of an FFI agreement during the certification period described in paragraph (f)(3) of this section. The results of the periodic review must be considered by the responsible officer in making the periodic certifications required under paragraph (f)(3) of this section.

(ii) *Consolidated compliance program* —

(A) ***In general.*** A participating FFI that is a member of an expanded affiliated group that includes one or more FFIs may elect to be part of a consolidated compliance program (and perform a consolidated periodic review) under the authority of a participating FFI, reporting Model 1 FFI, or U.S. financial institution (compliance FI) that is a member of the electing FFI's expanded affiliated group, regardless of whether all such members so elect. In addition, when an FFI elects to be part of a consolidated compliance program, each branch that it maintains (including a limited branch or a branch described in § 1.1471-5(f)(1)), other than a branch located in a Model 1 IGA jurisdiction, must be subject to periodic review as part of such program and included on the periodic certification (described in paragraph (f)(2)(ii)(B)(*1*) of this section). To the extent that a compliance FI satisfies the certification requirements of paragraph (f)(2)(ii)(B) of this section on behalf of an electing FFI, such electing FFI does not have a certification requirement under paragraph (f)(3) of this section. See § 1.1471-5(j) for the requirement of a sponsoring entity to establish and implement a compliance program for its sponsored FFIs.

(B) ***Requirements of compliance FI.*** A participating FFI, reporting Model 1 FFI, or U.S. financial institution that agrees to establish and maintain a consolidated compliance program and perform a consolidated periodic review on behalf of one or more FFIs (the compliance group), must agree to identify itself as the compliance FI and identify each FFI for which it acts (an electing FFI) to the extent required by the IRS as part of the FFI registration process or certification procedures. The agreement between the compliance FI and each electing FFI must permit either the compliance FI or the electing FFI to terminate the agreement upon a finding by the IRS or by either party that the other party to the agreement is not fulfilling its obligations under the agreement or is no longer able to fulfill such obligations.

(*1*) *Periodic certification* —

(*i*) ***In general.*** On or before July 1 of the calendar year following the end of the certification period, the responsible officer of the compliance FI must make the certification described in either paragraph (f)(3)(ii) or (iii) of this section with respect to all electing FFIs for which it acts during the certification period on the form and in the manner prescribed by the IRS. The certification must be made on behalf of all electing FFIs in the compliance group during the certification period, except as otherwise provided in paragraph (f)(2)(ii)(B)(*1*)(*ii*) of this section. The first certification period for a compliance group begins on the later of the date the compliance FI is issued a GIIN or June 30, 2014, and ends at the close of the third full calendar year following such date. Each subsequent certification period is the three-calendar-year period following the previous certification period.

(*ii*) ***Late-joining electing FFIs.*** In general, with respect to a certification period, a compliance FI is not required to make a certification for an electing FFI that first elects to be part of the consolidated compliance program of the compliance FI during the six-month period before the end of the certification period, provided that the compliance FI makes certifications for such electing FFI for subsequent certification periods, and the first such certification covers both the subsequent certification period and the portion of the prior certification period of the compliance group during which such FFI was an electing FFI in the consolidated compliance program of the compliance FI. However, the preceding sentence does not apply to an electing FFI that, immediately before the electing FFI elects to be part of the consolidated compliance program, was a participating FFI or registered deemed-compliant FFI. The compliance FI may certify for an electing FFI described in the preceding sentence for the portion of the certification period of the compliance group before the date that the electing FFI elects to be part of the consolidated compliance program if the compliance FI obtains from the FFI (or the FFI's former compliance FI, if applicable) a written certification that the FFI has complied with its applicable chapter 4 requirements during such portion of the certification period, provided that: The compliance FI does not know that such certification is unreliable or incorrect; and the certification for the electing FFI for the subsequent certification period covers both the subsequent certification period and the portion of the prior certification period during which such FFI was an electing FFI in the consolidated compliance program of the compliance FI.

(*2*) ***Preexisting account certification.*** The responsible officer of a compliance FI must make the certification described in paragraph (c)(7) of this section (preexisting account certification of a participating FFI) with respect to each electing FFI that elects to be part of the consolidated compliance program under the compliance FI during the certification period. However, a preexisting account certification is not required for an electing FFI if immediately before electing to be part of the consolidated compliance program under the compliance FI the FFI was a participating FFI or a registered deemed-compliant FFI that is a local FFI or restricted fund, and the FFI (or the FFI's former compliance FI, if applicable) provides a written certification to the compliance FI that the FFI has made the preexisting account certification required under paragraph (c)(7) of this section or § 1.1471-5(f)(1)(i)(A)(*7*) or (f)(1)(i)(D)(*6*) (as applicable), unless the compliance FI

knows that such written certification is unreliable or incorrect. In addition, a preexisting account certification is not required for an electing FFI that elects to be part of the consolidated compliance program under the compliance FI during the two year period before the end of the certification period, provided that the compliance FI makes the preexisting account certification for such FFI for the subsequent certification period. The certification required under this paragraph (f)(2)(ii)(B)(*2*) for the certification period must be submitted by the due date of the FFI's certification of compliance required under paragraph (f)(2)(ii)(B)(*1*)(*i*) of this section for the certification period, on the form and in the manner prescribed by the IRS.

(3) ***Certification of compliance*** —

(i) ***In general.*** In addition to the certifications required under paragraph (c)(7) of this section, on or before July 1 of the calendar year following the end of each certification period, the responsible officer must make the certification described in either paragraph (f)(3)(ii) or (iii) of this section on the form and in the manner prescribed by the IRS. The first certification period begins on the effective date of the FFI agreement and ends at the close of the third full calendar year following the effective date of the FFI agreement. Each subsequent certification period is the three-calendar-year period following the previous certification period, unless the FFI agreement provides for a different period. The responsible officer must either certify that the participating FFI maintains effective internal controls or, if the participating FFI has identified an event of default (defined in paragraph (g) of this section) or a material failure (defined in paragraph (f)(3)(iv) of this section) that it has not corrected as of the date of the certification, must make the qualified certification described in paragraph (f)(3)(iii) of this section. The certification of compliance described in paragraph (f)(3)(ii) or (iii) of this section may be modified through an amendment to the FFI agreement to include any additional certifications or information (such as quantitative or factual information related to the FFI's compliance with the FFI agreement), provided that any additional information or certifications are published at least 90 days before being incorporated into the FFI agreement to allow for public comment.

(ii) ***Certification of effective internal controls.*** The responsible officer must certify to the following statements—

(A) The responsible officer (or designee) has established a compliance program that is in effect as of the date of the certification and that has been subjected to the review as described in paragraph (f)(2)(i) of this section;

(B) With respect to material failures—

(*1*) There are no material failures for the certification period; or

(*2*) If there are any material failures, appropriate actions were taken to remediate such failures and to prevent such failures from reoccurring; and

(C) With respect to any failure to withhold, deposit, or report to the extent required under the FFI agreement, the FFI has corrected such failure by paying any taxes due (including interest and penalties) and filing the appropriate return (or amended return).

(iii) ***Qualified certification.*** If the responsible officer has identified an event of default or a material failure that the participating FFI has not corrected as of the date of the certification, the responsible officer must certify to the following statements—

(A) With respect to the event of default or material failure—

(1) The responsible officer (or designee) has identified an event of default as defined in paragraph (g)(1) of this section; or

(2) The responsible officer has determined that as of the date of the certification, there are one or more material failures with respect to the participating FFI's compliance with the FFI agreement and that appropriate actions will be taken to prevent such failures from reoccurring;

(B) With respect to any failure to withhold, deposit, or report to the extent required under the FFI agreement, the FFI will correct such failure by paying any taxes due (including interest and penalties) and filing the appropriate return (or amended return); and

(C) The responsible officer (or designee) will respond to any notice of default (if applicable) or will provide to the IRS, to the extent requested, a description of each material failure and a written plan to correct each such failure.

(iv) ***Material failures defined.*** A material failure is a failure of the participating FFI to fulfill the requirements of the FFI agreement if the failure was the result of a deliberate action on the part of one or more employees of the participating FFI (its agent, sponsor, or compliance FI) to avoid the requirements of the FFI agreement or was an error attributable to a failure of the participating FFI to implement internal controls sufficient for the participating FFI to meet the requirements of this section. A material failure will not constitute an event of default unless such material failure occurs in more than limited circumstances when a participating FFI has not substantially complied with the requirements of an FFI agreement. Material failures include the following—

(A) The deliberate or systemic failure of the participating FFI to report accounts that it was required to treat as U.S. accounts, withhold on passthru payments to the extent required, deposit taxes withheld, or accurately report recalcitrant account holders or payees that are nonparticipating FFIs as required;

(B) A criminal or civil penalty or sanction imposed on the participating FFI (or any branch or office thereof) by a regulator or other governmental authority or agency with oversight over the participating FFI's compliance with the AML due diligence procedures to which it (or any branch or office thereof) is subject and that is imposed based on a failure to properly identify account holders under the requirements of those procedures; and

(C) A potential future tax liability related to the participating FFI's compliance (or lack thereof) with the FFI agreement for which the FFI establishes, for financial statement purposes, a tax reserve or provision.

(4) ***IRS review of compliance*** —

(i) ***General inquiries.*** The IRS, based upon the information reporting forms described in paragraphs (d)(3)(v), (d)(5)(vii), or (d)(6)(iv) of this section filed with the IRS (or the absence of such reporting) for each calendar year, may request additional information with respect to the information reported (or required to be reported) on the forms or may request the account statements described in paragraph (d)(4)(v) of this section, or confirmation that the FFI has no

accounts that it was required to report. The IRS may also request any additional information to determine an FFI's compliance with its FFI agreement and to assist the IRS with its review of account holder compliance with tax reporting requirements.

(ii) ***Inquiries regarding substantial non-compliance.*** If, based on the information reporting forms described in paragraphs (d)(3)(v), (d)(5)(vii), or (d)(6)(iv) of this section filed with the IRS for each calendar year, the certifications made by the responsible officer described in paragraph (f)(3) of this section, or any other information related to the participating FFI's compliance with its FFI agreement, the IRS determines in its discretion that the participating FFI may not have substantially complied with the requirements of its FFI agreement, the IRS may request from the responsible officer (or designee) information necessary to verify the participating FFI's compliance with the FFI agreement. The IRS may request, for example, a description or copy of the participating FFI's policies and procedures for fulfilling the requirements of the FFI agreement, a description of the participating FFI's procedures for conducting its periodic review, or a copy of any written reports documenting the findings of such review in order to evaluate the sufficiency of the participating FFI's compliance program and review of such program. The IRS may also request the performance of specified review procedures by a person (including an external auditor or third-party consultant) that the IRS identifies as competent to perform such procedures given the facts and circumstances surrounding the FFI's potential failure to comply with the FFI agreement. The IRS may make these requests to a sponsoring entity with respect to any sponsored FFI.

(g) ***Event of default*** —

(1) ***Defined.*** An event of default occurs if a participating FFI fails to perform material obligations required with respect to the due diligence, verification, withholding, or reporting requirements of the FFI agreement or if the IRS determines that the participating FFI has failed to substantially comply with the requirements of the FFI agreement. An event of default also includes the occurrence of the following—

(i) Failure to obtain, in any case in which foreign law would (but for a waiver) prevent the reporting of U.S. accounts required under paragraph (d) of this section, valid and effective waivers from holders of U.S. accounts or failure to otherwise close or transfer such U.S. accounts as required under paragraph (i) of this section;

(ii) Failure to significantly reduce, over a period of time, the number of account holders or payees that the participating FFI is required to treat as recalcitrant account holders or nonparticipating FFIs, as a result of the participating FFI failing to comply with the due diligence procedures for the identification and documentation of account holders and payees, as set forth in paragraph (c) of this section;

(iii) Failure, in any case in which foreign law prevents or otherwise limits withholding to the extent required under paragraph (b) of this section, to fulfill the requirements of paragraph (i) of this section;

(iv) Failure to establish or maintain a compliance program for fulfilling the requirements of the FFI agreement or to perform a periodic review of the participating FFI's compliance;

(v) Failure to take timely corrective actions to remedy a material failure described in paragraph (f)(3)(iv) of this section after making the qualified certification described in paragraph (f)(3)(iii) of this section;

(vi) Failure to make the initial certification required under paragraph (c)(7) of this section or to make the periodic certification required under paragraph (f)(3) of this section within the specified time period;

(vii) Making incorrect claims for refund under the collective refund procedures described in paragraph (h) of this section;

(viii) Failure to cooperate with an IRS request for additional information or making any fraudulent statement or misrepresentation of material fact to the IRS; or

(ix) Any transaction relating to sponsorship, promotion, or noncustodial distribution for or on behalf of any Local FFI, as described in § 1.1471-5(f)(1)(i)(A), that is an investment entity.

(2) ***Notice of event of default.*** Following an event of default known by or disclosed to the IRS, the IRS will deliver to the participating FFI a notice of default specifying the event of default. The IRS will request that the participating FFI remediate the event of default within 45 days (unless additional time is requested and agreed to by the IRS). The participating FFI must respond to the notice of default and provide information responsive to an IRS request for information or state the reasons why the participating FFI does not agree that an event of default has occurred. Taking into account the terms of any applicable Model 2 IGA, if the participating FFI does not provide a response within the specified time period, the IRS may, at its sole discretion, deliver a notice of termination that terminates the FFI's participating FFI status. If the FFI's participating FFI status is terminated, in addition to the requirements in § 1.1471-3(c)(6)(ii)(E)(*2*), the FFI must, within 30 days of the termination, send notice of the termination to each withholding agent from which it receives payments and each financial institution with which it holds an account for which a withholding certificate or other documentation was provided. An FFI that has had its participating FFI status terminated may not reregister on the FATCA registration website as a participating FFI or registered deemed-compliant FFI unless it receives written approval from the IRS to register. A participating FFI may request, within 90 days of a notice of default or notice of termination, reconsideration of a notice of default or notice of termination by written request to the IRS.

(3) ***Remediation of event of default.*** A participating FFI will be permitted to remediate an event of default to the extent that it agrees with the IRS on a remediation plan. Such a plan may, for example, allow a participating FFI to remediate an event of default described in paragraph (g)(1)(iii) of this section by providing specific information regarding its U.S. accounts when the FFI has been unable to report all of the information with respect to such accounts as required under paragraph (d) of this section and has been unable to close or transfer such accounts. The IRS may, as part of a remediation plan, require additional information from the FFI or the performance of the specified review procedures described in paragraph (f)(4)(ii) of this section.

(h) ***Collective credit or refund procedures for overpayments*** —

(1) ***In general.*** Except as otherwise provided in the FFI agreement, if there has been an overpayment of tax with respect to an account holder or payee of a participating FFI or reporting Model 1 FFI resulting from tax withheld under chapter 4 by either the participating FFI or reporting Model 1 FFI or by its withholding agent during a calendar year and the amount withheld has not been recovered under the reimbursement or set-off procedures described in § 1.1474-2(a) (applied by either the withholding agent or the participating FFI or reporting Model 1 FFI), the participating FFI or reporting Model 1 FFI may request a credit or refund from the IRS of the overpayment to the extent permitted under this paragraph (h) on behalf of such account holder or payee. For purposes of this paragraph (h), an overpayment means an amount withheld in excess of the account holder or payee's U.S. tax

liability with respect to the payment (including overwithholding as defined § 1.1474-2(a)(2)). If a participating FFI or reporting Model 1 FFI does not elect the procedure provided in this paragraph (h) to request a credit or refund, the participating FFI or reporting Model 1 FFI is required to (or must request that its withholding agent) file and furnish within a reasonable period a Form 1042-S (or such other form as the IRS may prescribe) and Form 1042 (or amended forms) to report to any account holder or payee that has requested such form with regard to the tax withheld by the participating FFI or reporting Model 1 FFI or its withholding agent.

(2) ***Persons for which a collective refund is not permitted.*** A participating FFI or reporting Model 1 FFI cannot include in its collective refund claim any payments made to an account holder or payee that is a nonparticipating FFI, a participating FFI or reporting Model 1 FFI that is a flow-through entity (including a WP or WT) or that is acting as an intermediary (including a QI), a U.S. person, or a passive NFFE that is a flow-through entity with respect to taxes allocated to its substantial U.S. owners. A participating FFI or reporting Model 1 FFI must follow the procedures set forth under sections 6402 and 6414 and the regulations thereunder, as modified by this paragraph (h), to claim the credit or refund. No credit or refund will be allowed after the expiration of the statutory period of limitation for refunds under section 6511.

(3) ***Payments for which a collective refund is permitted.*** A collective refund is permitted only for payments withheld upon under chapter 4.

(4) ***Procedural and other requirements for collective refund.*** A participating FFI or reporting Model 1 FFI may use the collective refund procedures of this paragraph (h) under the following conditions—

(i) All account holders and payees for which the participating FFI or reporting Model 1 FFI seeks a refund must have been included on a Form 1042-S in a reporting pool of nonparticipating FFIs or recalcitrant account holders described in § 1.1474-1(d)(4)(iii) with respect to the payments for which refund is sought and the participating FFI or reporting Model 1 FFI (or the withholding agent) has not filed or furnished a Form 1042-S to any such account holder or payee with respect to which the refund is sought;

(ii) If a refund is sought on the grounds that the account holder or payee of a payment that is U.S. source FDAP income subject to withholding under chapter 3 is entitled to a reduced rate of tax by reason of any treaty obligation of the United States, the participating FFI or reporting Model 1 FFI has also obtained valid documentation that meets the requirements of chapter 3 for a reduced rate of tax and such documentation is available to the IRS upon request with respect to each such account holder or payee; and

(iii) In filing a claim for refund with the IRS under this paragraph (h), the participating FFI or reporting Model 1 FFI submits the following, together with its Form 1042 (or amended Form 1042) on which it provides a reconciliation of amounts withheld and claims a credit or refund, a schedule identifying the taxes withheld with respect to each account holder or payee to which the claim relates, and, if applicable, a copy of the Form 1042-S (or such other form as the IRS may prescribe) furnished to the participating FFI or reporting Model 1 FFI by its withholding agent reporting the taxes withheld to which the claim relates, and a statement that includes the following representations and explanation—

(A) The reason(s) for the overpayment;

(B) A representation that the participating FFI or reporting Model 1 FFI or its withholding agent deposited the tax for which a refund is being sought under section 6302 and has not applied the reimbursement or set-off procedure of § 1.1474-2 to adjust the tax withheld to which the claim relates;

(C) A representation that the participating FFI or reporting Model 1 FFI has repaid or will repay the amount for which refund is sought to the appropriate account holders or payees;

(D) A representation that the participating FFI or reporting Model 1 FFI retains a record showing the total amount of tax withheld, credits from other withholding agents, tax assumed by the participating FFI or reporting Model 1 FFI, adjustments for underwithholding, and reimbursements for overwithholding as its relates to each account holder and payee and also showing the repayment to such account holders or payees for the amount of tax for which a refund is being sought;

(E) A representation that the participating FFI or reporting Model 1 FFI retains valid documentation that meets the requirements of chapters 3 (if applicable) and 4 to substantiate the amount of overwithholding with respect to each account holder and payee for which a refund is being sought and that such documentation is available to the IRS upon request; and

(F) A representation that the participating FFI or reporting Model 1 FFI will not issue a Form 1042-S (or such other form as the IRS may prescribe) to any account holder or payee for which a refund is being sought.

(i) ***Legal prohibitions on reporting U.S. accounts and withholding*** —

(1) ***In general.*** Except to the extent otherwise provided in a Model 2 IGA, a participating FFI (or branch thereof) that is prohibited by foreign law from reporting the information required under paragraph (d) of this section with respect to a U.S. account must follow the procedures of paragraph (i)(2) of this section to obtain a valid and effective waiver of such law and, if such waiver is not obtained within a reasonable period of time, to close or transfer such account. A participating FFI (or branch thereof) that is prohibited by law from withholding with respect to a recalcitrant account holder or nonparticipating FFI as required under paragraph (b) of this section is required to perform the procedures of paragraph (i)(3) of this section to obtain an authorization to withhold on payments made to the account holder or payee to the extent required under paragraph (b) of this section, close the account or terminate the obligation (as applicable), or to sell the assets in the account that produce (or could produce) withholdable payments and, if such authorization is not obtained within a reasonable period of time, to transfer or block such account or obligation. An FFI that cannot comply with any of the requirements of this paragraph (i) is not eligible to enter into an FFI agreement with the IRS, but may obtain status as a limited FFI if the FFI meets the requirements and agrees to the conditions of paragraph (e)(3) of this section. If a branch of an FFI cannot comply with the requirements of this paragraph (i), then the FFI must agree to the conditions of a limited branch as described in paragraph (e)(2) of this section to obtain status as a participating FFI.

(2) ***Requesting waiver or closure of a U.S. account*** —

(i) ***In general.*** If a participating FFI (or branch thereof) is prohibited by law from reporting the information required under paragraph (d) of this section with respect to a U.S. account that it maintains unless a valid and effective waiver of such law is obtained, the participating FFI must request a valid and effective waiver (including by obtaining waivers from all relevant account holders if necessary). For accounts other than preexisting accounts, the participating FFI must

obtain a valid and effective waiver upon opening the account or, if prohibitions on disclosure cannot by law be waived, the participating FFI must refrain from opening accounts that are U.S. accounts or must transfer such accounts as described in paragraph (i)(2)(iii) of this section. Beginning on the date provided in § 1.1471-5(g)(3) and until such time as the holder of a U.S. account either consents to disclosure or closure of the account or until the account is transferred, the participating FFI is required to treat the account as held by a recalcitrant account holder.

(ii) ***Valid and effective waiver for a U.S. account.*** For purposes of this paragraph (i)(2), a valid and effective waiver is a waiver that, under the applicable law governing the participating FFI's agreement with the account holder, permits the participating FFI (or branch thereof) to report to the IRS all of the information specified in paragraph (d) of this section with respect to the U.S. account and permits the FFI to provide the IRS with additional information concerning such account as specified in paragraph (f) or (g) of this section.

(iii) ***Closure or transfer of U.S. account.*** If the participating FFI (or branch thereof) is prohibited by law from reporting a U.S. account to the IRS under paragraph (d) of this section and the participating FFI either does not obtain a valid and effective waiver (and Form W-9) or prohibitions on disclosure cannot by law be waived, the participating FFI (or branch thereof) must close or transfer the account within a reasonable time. If the participating FFI cannot close or transfer the account absent the account holder consenting to closure, the participating FFI must request such a consent from such account holder and, if obtained, close or transfer the account within a reasonable period of time.

(3) ***Legal prohibitions preventing withholding*** —

(i) ***In general.*** If the participating FFI (or branch thereof) is prohibited by law from withholding with respect to payments subject to withholding under paragraph (b) of this section, the participating FFI (or a branch thereof) must obtain the authorization described in this paragraph (i)(3)(i) from each account holder or payee receiving such payments to either withhold, close the account or terminate the obligation, or sell all of the assets in the account that produce (or could produce) withholdable payments. If the participating FFI does not receive such authorization from the account holder or payee within a reasonable period of time, the participating FFI must block or transfer such accounts or obligations as described in paragraph (i)(3)(ii) of this section.

(ii) ***Block or transfer accounts or obligations.*** If the participating FFI does not receive the authorization described in paragraph (i)(3)(i) of this section from the account holder or payee within a reasonable period of time and is prohibited by law from closing accounts or terminating obligations with account holders or payees as described in paragraph (i)(3)(i) of this section, the participating FFI must either block or transfer such accounts or obligations prior to the date on which the participating FFI would otherwise be required to withhold under paragraph (b) of this section. See paragraph (e)(2)(iii)(B) of this section for when an account is considered blocked. A transfer of an account or obligation must be made to a branch of the FFI that may so withhold or to a participating FFI or reporting Model 1 FFI.

(j) ***Effective/applicability date*** —

(1) ***In general.*** This section generally applies beginning on January 6, 2017, except for paragraphs (f)(2)(ii)(A), (f)(2)(ii)(B)(*1*) and (*2*), (f)(3)(i), and (g)(2) of this section, which apply March 25, 2019. However, taxpayers may apply these provisions as of January 28, 2013. (For the rules that otherwise

apply beginning on January 6, 2017, and before March 25, 2019, see this section as in effect and contained in 26 CFR part 1 revised April 1, 2018. For rules that apply beginning on January 23, 2013 and before January 6, 2017, see this section as in effect and contained in 26 CFR part 1 revised April 1, 2016.)

(2) ***Special applicability date.*** Paragraph (d)(4)(iv)(C) of this section applies beginning with reporting with respect to calendar year 2017. (For rules that apply to reporting under paragraph (d)(4)(iv)(C) with respect to calendar years before 2017, see this section as in effect and contained in 26 CFR part 1 revised April 1, 2016.)

[T.D. 9610, 78 FR 5942, Jan. 28, 2013; 78 FR 55205, Sept. 10, 2013, as amended by T.D. 9657, 79 FR 12843, Mar. 6, 2014; 79 FR 37178, July 1, 2014; T.D. 9809, 82 FR 2167, Jan. 6, 2017; 82 FR 29729, June 30, 2017; T.D. 9852, 84 FR 10980, Mar. 25, 2019; 84 FR 13121, Apr. 4, 2019; T.D. 9890, 85 FR 205, Jan. 2, 2020]

§ 1.1471-5 Definitions applicable to section 1471.

(a) ***U.S. accounts*** —

(1) ***In general.*** This paragraph (a) defines the term *U.S. account* and describes when a person is treated as the holder of a financial account (account holder). This paragraph also provides rules for determining when an exception to U.S. account status applies for certain depository accounts, including account aggregation requirements relevant to applying the exception.

(2) ***Definition of U.S. account.*** Subject to the exception described in paragraph (a)(4)(i) of this section, a U.S. account is any financial account maintained by an FFI that is held by one or more specified U.S. persons or U.S. owned foreign entities. For the definition of the term financial account, see paragraph (b) of this section. For the definition of the term specified U.S. person, see § 1.1473-1(c). For the definition of the term U.S. owned foreign entity, see paragraph (c) of this section. For reporting requirements of participating FFIs with respect to U.S. accounts, see § 1.1471-4(d).

(3) ***Account holder*** —

(i) ***In general.*** Except as otherwise provided in this paragraph (a)(3), the account holder is the person listed or identified as the holder or owner of the account with the FFI that maintains the account, regardless of whether such person is a flow-through entity. Thus, for example, except as otherwise provided in paragraph (a)(3)(ii) of this section, if a trust (including a simple or grantor trust) or an estate is listed as the holder or owner of a financial account, the trust or estate is the account holder, rather than its owners or beneficiaries. Similarly, except as otherwise provided in this paragraph (a)(3), if a partnership is listed as the holder or owner of a financial account, the partnership is the account holder, rather than the partners in the partnership. In the case of an account held by an entity that is disregarded for U.S. federal tax purposes under § 301.7701-2(c)(2)(i) of this chapter, the account shall be treated as held by the person owning such entity. With respect to an account held by an exempt beneficial owner, such account is treated as held by an exempt beneficial owner only when all payments made to such account would be treated as made to an exempt beneficial owner. See § 1.1471-6(h) for when a payment derived from certain commercial activities is not treated as made to an exempt beneficial owner.

(ii) ***Financial accounts held by agents that are not financial institutions.*** A person, other than a financial institution, that holds a financial account for the benefit or account of another person as an agent, custodian, nominee, signatory, investment advisor, or intermediary, is not treated as an account holder with respect to such account for purposes of this section. Instead, such other person is treated as the account holder.

(iii) ***Jointly held accounts.*** With respect to a jointly held account, each joint holder is treated as an account holder for purposes of determining whether the account is a U.S. account. Thus, an account is a U.S. account if any of the account holders is a specified U.S. person or a U.S. owned foreign entity and the account is not otherwise excepted from U.S. account status under paragraph (a)(4) of this section. When more than one U.S. person is a joint holder, each U.S. person will be treated as an account holder and will be attributed the entire balance of the jointly held account, including for purposes of applying the aggregation rules set forth in paragraph (b)(4)(iii) of this section.

(iv) ***Account holder for insurance and annuity contracts.*** An insurance or annuity contract is held by each person that is entitled to access the contract's value (for example, through a loan, withdrawal, surrender, or otherwise) or change a beneficiary under the contract. If no person can access the contract's value or change a beneficiary, the account holders are any person named in the contract as an owner and any person who is entitled to receive a future payment under the terms of the contract. When an obligation to pay an amount under the contract becomes fixed, each person entitled to receive a payment is an account holder.

(v) ***Examples.*** The following examples illustrate the provisions of paragraph (a)(3) of this section:

Example 1. Account held by agent. F, a nonresident alien, holds a power of attorney from U, a specified U.S. person, that authorizes F to open, hold, and make deposits and withdrawals with respect to a depository account on behalf of U. The balance of the account for the calendar year is $100,000. F is listed as the holder of the depository account at a participating FFI, but because F holds the account as an agent for the benefit of U, F is not ultimately entitled to the funds in the account. Because the depository account is treated as held by U, a specified U.S. person, the account is a U.S. account.

Example 2. Jointly held accounts. U, a specified U.S. person, holds a depository account in a participating FFI. The balance of the account for the calendar year is $100,000. The account is jointly held with A, an individual who is a nonresident alien. Because one of the joint holders is a specified U.S. person, the account is a U.S. account.

Example 3. Jointly held accounts. U and Q, both specified U.S. persons, hold a depository account in a participating FFI. The balance of the account for the calendar year is $100,000. The account is a U.S. account and both U and Q are treated as holders of the account.

(4) ***Exceptions to U.S. account status*** —

(i) ***Exception for certain individual accounts of participating FFIs.*** Unless a participating FFI elects under paragraph (a)(4)(ii) of this section not to apply this paragraph (a)(4)(i), the term *U.S. account* shall not include any depository account maintained by such financial institution during a calendar year if the account is held solely by one or more individuals and, with respect to each holder of such account, the aggregate balance or value of all depository accounts held by each such individual does not exceed $50,000 as of the end of the calendar year or on the date the account is closed. For rules for determining the account balance or value, see paragraphs (a)(3)(iii) and (b)(4) of this section.

(ii) ***Election to forgo exception.*** A participating FFI may elect to disregard the exception described in paragraph (a)(4)(i) of this section by reporting all U.S. accounts, including those accounts that would otherwise meet the conditions of the exception.

(iii) ***Example. Aggregation rules for exception to U.S. account status for certain depository accounts.*** In Year 1, a U.S. resident individual, U, holds a depository account with CB, a commercial bank that is a participating FFI. The balance in U's CB account at the end of Year 1 is $35,000. In Year 1, U also holds a custodial account with CB's brokerage business. The custodial account has a $45,000 balance as of the end of Year 1. CB's retail banking and brokerage businesses share computerized information management systems that associate U's depository account and U's custodial account with U and with one another within the meaning of paragraph (b)(4)(iii)(A) of this section. For purposes of applying the $50,000 threshold described in paragraph (a)(4)(i) of this section, however, a depository account is aggregated only with other depository accounts. Therefore, U's depository account is eligible for the paragraph (a)(4)(i) exception to U.S. account status because the balance of the depository account does not exceed $50,000.

(b) ***Financial accounts*** —

(1) ***In general.*** Except as otherwise provided in this paragraph (b), the term *financial account* means—

(i) ***Depository account.*** Any depository account (as defined in paragraph (b)(3)(i) of this section) maintained by a financial institution;

(ii) ***Custodial account.*** Any custodial account (as defined in paragraph (b)(3)(ii) of this section) maintained by a financial institution;

(iii) ***Equity or debt interest*** —

(A) ***Equity or debt interests in an investment entity.*** Any equity or debt interest (other than interests regularly traded on an established securities market under paragraph (b)(3)(iv) of this section) in an investment entity described in paragraph (e)(4)(i)(B) or (C) of this section (including an entity that is also a depository institution, custodial institution, insurance company, or investment entity described in paragraph (e)(4)(i)(A) of this section);

(B) ***Certain equity or debt interests in a holding company or treasury center.*** Any equity or debt interest (other than interests regularly traded on an established securities market under paragraph (b)(3)(iv) of this section) in a holding company or treasury center described in paragraph (e)(1)(v) of this section if—

(*1*) The expanded affiliated group of which the entity is a member includes one or more investment entities described in paragraph (e)(4)(i)(B) or (C) of this section or passive NFFEs and the income derived by such investment entities or passive NFFEs is 50 percent or more of the aggregate income earned by the expanded affiliated group;

(*2*) The return earned on the interest is determined, directly or indirectly, primarily by reference to one or more investment entities described in paragraph (e)(4)(i)(B) or (C) of this section or one or more passive NFFEs that are members of the entity's expanded affiliated group (as determined under paragraph (b)(3)(vi) of this section);

(3) The value of the interest is determined, directly or indirectly, primarily by reference to assets that give rise (or could give rise) to withholdable payments (as determined under paragraph (b)(3)(v)) of this section); or

(4) The interest is issued with a principal purpose of avoiding the reporting or withholding requirements of chapter 4;

(C) ***Equity or debt interests in other financial institutions.*** Any equity or debt interest (other than interests regularly traded on an established securities market under paragraph (b)(3)(iv) of this section) in an entity that is a depository institution, custodial institution, investment entity described in paragraph (e)(4)(i)(A) of this section, or insurance company if—

(1) The value of the interest is determined, directly or indirectly, primarily by reference to assets that give rise (or could give rise) to withholdable payments (as determined under paragraph (b)(3)(v) of this section); or

(2) The interest is issued with a principal purpose of avoiding the reporting or withholding requirements of chapter 4.

(iv) ***Insurance and annuity contracts.*** A contract issued or maintained by an insurance company, a holding company (as described in paragraph (e)(5)(i)(C) of this section) of an insurance company, or a financial institution described in paragraphs (e)(1)(i), (ii), (iii), or (v) of this section, if the contract is a cash value insurance contract (as defined in paragraph (b)(3)(vii) of this section) or an annuity contract.

(2) ***Exceptions.*** A financial account does not include an account described in this paragraph (b)(2).

(i) ***Certain savings accounts*** —

(A) ***Retirement and pension accounts.*** A retirement or pension account that satisfies the following conditions under the laws of the jurisdiction where the account is maintained:

(1) The account is subject to regulation as a personal retirement account or is part of a registered or regulated retirement or pension plan for the provision of retirement or pension benefits (including disability or death benefits);

(2) The account is tax-favored (as described in paragraph (b)(2)(i)(E) of this section);

(3) Annual information reporting is required to the relevant tax authorities with respect to the account;

(4) Withdrawals are conditioned on reaching a specified retirement age, disability, or death, or penalties apply to withdrawals made before such specified events; and

(5) Either—

(*i*) Annual contributions are limited to $50,000 or less, or

(*ii*) There is a maximum lifetime contribution limit to the account of $1,000,000 or less.

(B) ***Non-retirement savings accounts.*** An account (other than an insurance or annuity contract) that satisfies the following conditions under the laws of the jurisdiction where the account is maintained:

(1) The account is subject to regulation as a savings vehicle for purposes other than for retirement;

(2) The account is tax-favored (as described in paragraph (b)(2)(i)(E) of this section);

(3) Withdrawals are conditioned on meeting specific criteria related to the purpose of the savings account (for example, the provision of educational or medical benefits), or penalties apply to withdrawals made before such criteria are met; and

(4) Annual contributions are limited to $50,000 or less;

(C) ***Rollovers.*** An account that otherwise satisfies the requirements of paragraph (b)(2)(i)(A) or (B) of this section will not fail to satisfy such requirements solely because such account may receive assets or funds transferred from one or more accounts that meet the requirements of paragraph (b)(2)(i)(A) or (B) of this section, one or more retirement or pension funds that meet the requirements of § 1.1471-6(f), one or more accounts described in paragraph (b)(2)(vi) of this section, or one or more entities identified as nonreporting financial institutions under the terms of an applicable Model 1 or Model 2 IGA because they are retirement or pension funds.

(D) ***Coordination with section 6038D.*** The exclusions provided under paragraph (b)(2)(i) of this section shall not apply for purposes of determining whether an account or other arrangement is a financial account for purposes of section 6038D.

(E) ***Account that is tax-favored.*** For purposes of this paragraph (b)(2)(i), an account is tax-favored under the laws of a jurisdiction where the account is maintained if—

(1) Contributions to the account that would otherwise be subject to tax under such laws are deductible or excluded from the gross income of the account holder or taxed at a reduced rate; or

(2) Taxation of investment income from the account is deferred or taxed at a reduced rate.

(ii) ***Certain term life insurance contracts.*** A life insurance contract with a coverage period that will end before the insured individual attains age 90, provided that the contract satisfies the following conditions—

(A) Periodic premiums, which do not decrease over time, are payable at least annually during the period the contract is in existence or until the insured attains age 90, whichever is shorter;

(B) The contract has no contract value that any person can access (by withdrawal, loan, or otherwise) without terminating the contract;

(C) The amount (other than a death benefit) payable upon cancellation or termination of the contract cannot exceed the aggregate premiums paid for the contract, less the sum of mortality, morbidity, and expense charges (whether or not actually imposed) for the period or periods of the contract's existence and any amounts paid prior to the cancellation or termination of the contract; and

(D) The contract is not held by a transferee for value.

(iii) ***Account held by an estate.*** An account that is held solely by an estate if the documentation for such account includes a copy of the deceased's will or death certificate.

(iv) ***Certain escrow accounts.*** An escrow account that is established in connection with—

(A) A court order or judgment; or

(B) A sale, exchange, or lease of real or personal property, provided that the account meets the following conditions—

(*1*) The account is funded solely with a down payment, earnest money, deposit in an amount appropriate to secure an obligation of one of the parties directly related to the transaction, or a similar payment, or with a financial asset that is deposited in the account in connection with the sale, exchange, or lease of the property;

(*2*) The account is established and used solely to secure the obligation of the purchaser to pay the purchase price for the property, the seller to pay any contingent liability, or the lessor or lessee to pay for any damages relating to the leased property as agreed under the lease;

(*3*) The assets of the account, including the income earned thereon, will be paid or otherwise distributed for the benefit of the purchaser, seller, lessor, or lessee (including to satisfy such person's obligation) when the property is sold, exchanged, or surrendered, or the lease terminates;

(*4*) The account is not a margin or similar account established in connection with a sale or exchange of a financial asset; and

(*5*) The account is not associated with a credit card account.

(v) ***Certain annuity contracts.*** A non-investment linked, non-transferable, immediate life annuity contract (including a disability annuity) that monetizes a retirement or pension account described in paragraph (b)(2)(i)(A) or (b)(2)(vi) of this section.

(vi) ***Account or product excluded under an intergovernmental agreement.*** An account or product that is excluded from the definition of financial account under the terms of an applicable Model 1 IGA or Model 2 IGA.

(3) ***Definitions.*** The following definitions apply for purposes of chapter 4—

(i) ***Depository account*** —

(A) ***In general.*** Except as otherwise provided in this paragraph (b)(3)(i), the term *depository account* means any account that is—

(*1*) A commercial, checking, savings, time, or thrift account, or an account that is evidenced by a certificate of deposit, thrift certificate, investment certificate, passbook, certificate of indebtedness, or any other instrument for placing money in the custody of an entity engaged in a banking or similar business for which such institution is obligated to give credit (regardless of whether such instrument is interest bearing or non-interest bearing), including, for example, a credit balance with respect to a credit card account issued by a credit card company that is engaged in a banking or similar business; or

(2) Any amount held by an insurance company under a guaranteed investment contract or under a similar agreement to pay or credit interest thereon or to return the amount held.

(B) ***Exceptions.*** A depository account does not include—

(1) A negotiable debt instrument that is traded on a regulated market or over-the-counter market and distributed and held through financial institutions; or

(2) An advance premium or premium deposit described in paragraph (b)(3)(vii)(C)(5) of this section.

(ii) ***Custodial account.*** The term *custodial account* means an arrangement for holding a financial instrument, contract, or investment (including, but not limited to, a share of stock in a corporation, a note, bond, debenture, or other evidence of indebtedness, a currency or commodity transaction, a credit default swap, a swap based upon a nonfinancial index, a notional principal contract as defined in § 1.446-3(c), an insurance or annuity contract, and any option or other derivative instrument) for the benefit of another person.

(iii) ***Equity interest in certain entities*** —

(A) ***Partnership.*** In the case of a partnership that is a financial institution, the term *equity interest* means either a capital or profits interest in the partnership.

(B) ***Trust.*** In the case of a trust that is a financial institution, an *equity interest* means an interest held by—

(1) A person who is an owner of all or a portion of the trust under sections 671 through 679;

(2) A beneficiary who is entitled to a mandatory distribution from the trust as defined in § 1.1473-1(b)(3); or

(3) A beneficiary who may receive a discretionary distribution as defined in § 1.1473-1(b)(3) from the trust but only if such person receives a distribution in the calendar year.

(iv) ***Regularly traded on an established securities market.*** To determine if debt or equity interests described in paragraph (b)(1)(iii) of this section are regularly traded, the principles of § 1.1472-1(c)(1)(i)(A)(2)(*i*) and (*ii*) shall apply with respect to the interests, and the principles of § 1.1472-1(c)(1)(i)(B)(1) shall apply for this purpose in the case of an initial public offering of such interests. See § 1.1472-1(c)(1)(i)(C) for the definition of an established securities market. For purposes of paragraph (b)(1)(iii) of this section, an interest is not regularly traded on an established securities market if the holder of the interest (excluding a financial institution acting as an intermediary) is registered on the books of the investment entity. The preceding sentence shall not apply to the extent a holder's interest is registered prior to July 1, 2014, on the books of the investment entity.

(v) ***Value of interest determined, directly or indirectly, primarily by reference to assets that give rise (or could give rise) to withholdable payments*** —

(A) ***Equity interest.*** The value of an equity interest is determined, directly or indirectly, primarily by reference to assets that give rise (or could give rise) to withholdable payments if the return earned on such interest (including upon a sale, exchange, or redemption) is determined primarily by reference to profits or assets of a U.S. person or equity interests in a U.S. person.

(B) ***Debt interest.*** The value of a debt interest is determined, directly or indirectly, primarily by reference to assets that give rise (or could give rise) to withholdable payments if—

(*1*) Debt is convertible into equity interests in a U.S. person; or

(*2*) The return earned on such interest (including upon a sale, exchange, or redemption) is determined primarily by reference to profits or assets of a U.S. person or equity interests in a U.S. person.

(vi) ***Return earned on the interest (including upon a sale, exchange, or redemption) determined, directly or indirectly, primarily by reference to one or more investment entities or passive NFFEs*** —

(A) ***Equity interest.*** The return earned on an equity interest is determined, directly or indirectly, primarily by reference to one or more investment entities described in paragraph (e)(4)(i)(B) or (C) of this section or passive NFFEs that are members of the entity's expanded affiliated group if the return on such interest (including upon a sale, exchange, or redemption) is determined primarily by reference to profits or assets of, or equity interests in, one or more investment entities described in paragraph (e)(4)(i)(B) or (C) of this section or passive NFFEs that are members of the entity's expanded affiliated group.

(B) ***Debt interest.*** The return earned on a debt interest is determined, directly or indirectly, primarily by reference to one or more investment entities described in paragraph (e)(4)(i)(B) or (C) of this section or passive NFFEs that are members of the entity's expanded affiliated group if—

(*1*) Debt is convertible into equity interests in one or more investment entities described in paragraph (e)(4)(i)(B) or (C) of this section or passive NFFEs that are members of the entity's expanded affiliated group; or

(*2*) The return on such interest (including upon a sale, exchange, or redemption) is determined primarily by reference to profits or assets of, or equity interests in, one or more investment entities described in paragraph (e)(4)(i)(B) or (C) of this section or passive NFFEs that are members of the entity's expanded affiliated group.

(vii) ***Cash value insurance contract*** —

(A) ***In general.*** The term *cash value insurance contract* means an insurance contract (other than an indemnity reinsurance contract between two insurance companies and a term life insurance contract described in paragraph (b)(2)(ii) of this section) that has an aggregate cash value greater than $50,000 at any time during the calendar year, applying the rules set forth in paragraph (b)(4)(iii) of this section. A participating FFI may elect to disregard the $50,000 threshold in the preceding sentence by reporting all contracts with a cash value greater than zero.

(B) ***Cash value.*** Except as otherwise provided in paragraph (b)(3)(vii)(C) of this section, the term *cash value* means any amount (determined without reduction for any charge or policy loan) that—

(*1*) Is payable under the contract to any person upon surrender, termination, cancellation, or withdrawal; or

(*2*) Any person can borrow under or with regard to (for example, by pledging as collateral) the contract.

(C) ***Amounts excluded from cash value.*** Cash value does not include an amount payable—

(*1*) Solely by reason of the death of an individual insured under a life insurance contract;

(*2*) As a personal injury or sickness benefit or a benefit providing indemnification of an economic loss incurred upon the occurrence of the event insured against;

(*3*) As a refund of a previously paid premium (less cost of insurance charges whether or not actually imposed) under an insurance contract (other than a life insurance or annuity contract) due to cancellation or termination of the contract, decrease in risk exposure during the effective period of the contract, or arising from the correction of a posting or similar error with regard to the premium for the contract; or

(*4*) As a policyholder dividend (other than a termination dividend) provided that the dividend relates to an insurance contract under which the only benefits payable are described in paragraph (b)(3)(vii)(C)(*2*) of this section.

(*5*) As a return of an advance premium or premium deposit for an insurance contract for which the premium is payable at least annually if the amount of the advance premium or premium deposit does not exceed the next annual premium that will be payable under the contract.

(D) ***Policyholder dividend*** —

(*1*) For purposes of paragraph (b)(3)(vii)(C)(*4*) of this section and except as otherwise provided in this paragraph, a policyholder dividend means any dividend or similar distribution to policyholders in their capacity as such, including—

(*i*) An amount paid or credited (including as an increase in benefits) if the amount is not fixed in the contract but rather depends on the experience of the insurance company or the discretion of management;

(*ii*) A reduction in the premium that, but for the reduction, would have been required to be paid; and

(*iii*) An experience rated refund or credit based solely upon the claims experience of the contract or group involved.

(*2*) A policyholder dividend cannot exceed the premiums previously paid for the contract, less the sum of the cost of insurance and expense charges (whether or not actually imposed) during the contract's existence and the aggregate amount of any prior dividends paid or credited with regard to the contract.

(3) A policyholder dividend does not include any amount that is in the nature of interest that is paid or credited to a contract holder to the extent that such amount exceeds the minimum rate of interest required to be credited with respect to contract values under local law.

(4) ***Account balance or value.*** This paragraph (b)(4) provides rules for determining the balance or value of a financial account for purposes of chapter 4. For example, the rules of this paragraph apply for purposes of determining whether an FFI meets the requirements of paragraph (f)(2)(i), (f)(2)(ii) or (f)(3) of this section to certify to a deemed-compliant FFI status. The rules of this paragraph also apply to a participating FFI's due diligence and reporting obligations to the extent required under § 1.1471-4(c) or (d) and to a U.S. withholding agent's due diligence obligations to the extent required under § 1.1471-3.

(i) ***In general.*** Except as otherwise provided in paragraph (b)(4)(ii) of this section with respect to immediate annuities, the balance or value of a financial account is the balance or value calculated by the financial institution for purposes of reporting to the account holder. In the case of an account described in paragraph (b)(1)(iii) of this section, the balance or value of an equity interest is the value calculated by the financial institution for the purpose that requires the most frequent determination of value, and the balance or value of a debt interest is its principal amount. Except as provided in paragraph (b)(3)(vii) of this section, the balance or value of an insurance or annuity contract is the balance or value as of either the calendar year end or the most recent contract anniversary date. The balance or value of the account is not to be reduced by any liabilities or obligations incurred by an account holder with respect to the account or any of the assets held in the account and is not to be reduced by any fees, penalties, or other charges for which the account holder may be liable upon terminating, transferring, surrendering, liquidating, or withdrawing cash from the account. Each holder of a jointly held account is attributed the entire balance or value of the joint account. See § 1.1473-1(b)(3) for rules regarding the valuation of trust interests that also apply under this paragraph (b)(4)(i) to determine the value of trust interests that are financial accounts.

(ii) ***Special rule for immediate annuity*** —

(A) ***Immediate annuities without minimum benefit guarantees.*** If the value of an immediate annuity contract with no minimum benefit guarantee is not reported to the account holder, the account balance or value of the contract is the sum of the net present values on the valuation date of the amounts reasonably expected to be payable in future periods under the contract.

(B) ***Immediate annuities with a minimum benefit guarantee.*** The account balance or value of an annuity contract with a minimum guarantee is the sum of the net present values on the valuation date of—

(1) The non-guaranteed amounts reasonably expected to be payable in future periods; and

(2) The guaranteed amounts payable in future periods.

(C) ***Net present value of amounts payable in future periods.*** The net present value of an amount payable in a future period shall be determined using—

(1) A reasonable actuarial valuation method, and

(2) The mortality tables and interest rate(s)—

(*i*) Prescribed pursuant to section 7520 and the regulations thereunder; or

(*ii*) Used by the issuer of the contract to determine the amounts payable under the contract.

(iii) ***Account aggregation requirements*** —

(A) ***In general.*** To the extent a financial institution is required under chapter 4 to determine the aggregate balance or value of an account, the financial institution is required to aggregate the account balance or value of all accounts that are held (in whole or in part) by the same person and that are maintained by the financial institution or members of its expanded affiliated group, but only to the extent that the financial institution's computerized systems link the accounts by reference to a data element, such as client number, EIN, or foreign tax identifying number, and allow the account balances of such accounts to be aggregated. Notwithstanding the rules set forth in this paragraph (b)(4)(iii), a financial institution is required to aggregate the balance or value of accounts that it treats as consolidated obligations.

(B) ***Aggregation rule for relationship managers.*** To the extent a financial institution is required under chapter 4 to apply the aggregation rules of this paragraph (b)(4)(iii), the financial institution also is required to aggregate all accounts that a relationship manager knows are directly or indirectly owned, controlled, or established (other than in a fiduciary capacity) by the same person, as well as all accounts that the relationship manager has associated with one another through a relationship code, customer identification number, TIN, or similar indicator, or that the relationship manager would typically associate with each other under the procedures of the financial institution (or the department, division, or unit with which the relationship manager is associated).

(C) ***Examples.*** The following examples illustrate the account aggregation requirements of this paragraph (b)(4)(iii):

Example 1. FFI not required to aggregate accounts for U.S. account exception. A U.S. resident individual, U, holds a depository account with Branch 1 of CB, a commercial bank that is a participating FFI. The balance in U's Branch 1 account at the end of Year 1 is $35,000. U also holds a depository account with Branch 2 of CB, with a $45,000 balance at the end of Year 1. CB's retail banking businesses share computerized information management systems across its branches, but U's accounts are not associated with one another in the shared computerized information system. In addition, CB has not assigned a relationship manager to U or U's accounts. Because the accounts are not associated in CB's system or by a relationship manager, CB is not required to aggregate the accounts under paragraph (b)(4)(iii) and both accounts are eligible for the exception to U.S. account status described in paragraph (a)(4)(i) of this section as neither account exceeds the $50,000 threshold.

Example 2. FFI required to aggregate accounts for U.S. account exception. Same facts as *Example 1,* except that both of U's depository accounts are associated with U and with one another by reference to CB's internal identification number. The system shows the account balances for both accounts, and such balances may be electronically aggregated, though the system does not show a combined balance for the accounts. In determining whether such accounts meet the exception to U.S.

account status described in paragraph (a)(4)(i) of this section for certain depository accounts with an aggregate balance or value of $50,000 or less, CB is required to aggregate the account balances of all depository accounts under the rules of paragraph (b)(4)(iii) of this section. Under those rules, U is treated as holding depository accounts with CB with an aggregate balance of $80,000. Accordingly, neither account is eligible for the exception to U.S. account status, because the accounts, when aggregated, exceed the $50,000 threshold.

Example 3. Aggregation rules for joint accounts maintained by a participating FFI. In Year 1, a U.S. resident individual, U, holds a custodial account that is a preexisting account at custodial institution CI, a participating FFI. The balance in U's CI custodial account at the end of Year 1 is $35,000. U also holds a joint custodial account that is a preexisting account with her sister, A, a nonresident alien for U.S. federal income tax purposes, with another custodial institution, CI2. The balance in the joint account at the end of Year 1 is also $35,000. CI and CI2 are part of the same expanded affiliated group and share computerized information management systems. Both U's custodial account at CI and U and A's custodial account at CI2 are associated with U and with one another by reference to CI's internal identification number and the system allows the balances to be aggregated. In determining whether such accounts meet the documentation exception described in § 1.1471-4(c)(4)(iv) for certain preexisting individual accounts with an aggregate balance or value of $50,000 or less, CI is required to aggregate the account balances of accounts held in whole or in part by the same account holder under the rules of paragraph (b)(4)(iii) of this section. Under those rules, U is treated as having financial accounts with C1 and CI2, each with an aggregate balance of $70,000. Accordingly, neither account is eligible for the documentation exception.

Example 4. Aggregation for applying indefinite validity periods. In Year 1, an owner-documented FFI, O, holds an offshore account with Branch 1 of CB, a commercial bank that is a U.S. withholding agent. The balance in O's CB account at the end of Year 1 is $600,000. In Year 1, O also holds an account in the United States with Branch 2 of CB. The Branch 2 account has a $450,000 balance at the end of Year 1. CB's banking businesses share computerized information management systems across its branches. O's accounts are associated with one another in the shared computerized information system and the system allows the balances to be aggregated. In determining whether CB is permitted to apply an indefinite validity period for the documentation submitted for O's account at Branch 1 pursuant to § 1.1471-3(c)(6)(ii)(C)(*4*) (permitting indefinite validity for a withholding statement of an owner-documented FFI if the balance or value of all accounts held by the owner-documented FFI does not exceed $1,000,000), CB is required to aggregate the account balance of O's accounts at Branch 1 and Branch 2 to the extent required under the rules of paragraph (b)(4)(iii) of this section. Accordingly, O is treated as holding financial accounts with CB with an aggregate balance of $1,050,000 and the documentation submitted for O's account at Branch 1 is not eligible for the indefinite validity period described under § 1.1471-3(c)(6)(ii)(C)(*4*).

(iv) ***Currency translation of balance or value.*** If the balance or value of a financial account, other obligation, or the aggregate amount payable under a group life or group annuity contract described in § 1.1471-4(c)(4) is denominated in a currency other than U.S. dollars, a

withholding agent must calculate the balance or value by applying a spot rate determined under § 1.988-1(d) to translate such balance or value into the U.S. dollar equivalent. For the purpose of a participating or registered deemed-compliant FFI reporting an account under § 1.1471-4(d), the spot rate must be determined as of the last day of the calendar year (or, in the case of an insurance contract or annuity contract, the most recent contract anniversary date, when applicable) for which the account is being reported or, if the account was closed during such calendar year, the date the account was closed. In the case of an FFI determining whether an account meets (or continues to meet) a preexisting account documentation exception described in § 1.1471-4(c)(3)(iii) or (c)(5)(iii), or whether the account is an account described in paragraph (a)(4)(i) of this section, the spot rate must be determined on the date for which the FFI is determining the threshold amount as prescribed in those provisions.

(5) ***Account maintained by financial institution.*** A custodial account is maintained by the financial institution that holds custody over the assets in the account (including a financial institution that holds assets in street name for an account holder in such institution). A depository account is maintained by the financial institution that is obligated to make payments with respect to the account (excluding an agent of a financial institution regardless of whether such agent is a financial institution under paragraph (e)(1) of this section). Any equity or debt interest in a financial institution that constitutes a financial account under paragraph (b)(1)(iii) of this section is maintained by such financial institution. A cash value insurance contract or an annuity contract described in paragraph (b)(1)(iv) of this section is maintained by the financial institution that is obligated to make payments with respect to the contract.

(c) ***U.S. owned foreign entity.*** The term *U.S. owned foreign entity* means any foreign entity that has one or more substantial U.S. owners (as defined in § 1.1473-1(b)). See § 1.1473-1(e) for the definition of foreign entity for purposes of chapter 4. For the requirements applicable to determining direct and indirect ownership in an entity, see § 1.1473-1(b)(2).

(d) ***Definition of FFI.*** The term *FFI* means, with respect to any entity that is not resident in, or organized under the laws of, as applicable, a country that has in effect a Model 1 IGA or Model 2 IGA, any financial institution (as defined in paragraph (e) of this section) that is a foreign entity. The term *FFI* also means, with respect to any entity that is resident in, or organized under the laws of, as applicable, a country that has in effect a Model 1 IGA or Model 2 IGA, any entity that is treated as a FATCA Partner Financial Institution pursuant to such Model 1 IGA or Model 2 IGA. See, however, § 1.1471-2(a)(2)(v) for when certain branches of U.S. financial institutions may be treated as FFIs. A territory financial institution is not an FFI under this paragraph (d).

(e) ***Definition of financial institution*** —

(1) ***In general.*** Except as otherwise provided in paragraph (e)(5) of this section, the term *financial institution* means any entity that—

(i) Accepts deposits in the ordinary course of a banking or similar business (as defined in paragraph (e)(2) of this section) (depository institution);

(ii) Holds, as a substantial portion of its business (as defined in paragraph (e)(3) of this section), financial assets for the benefit of one or more other persons (custodial institution);

(iii) Is an investment entity (as defined in paragraph (e)(4) of this section);

(iv) Is an insurance company or a holding company (as described in paragraph (e)(5)(i)(C) of this section) that is a member of an expanded affiliated group that includes an insurance company, and the insurance company or holding company issues, or is obligated to make payments with respect to, a cash value insurance or annuity contract described in paragraph (b)(1)(iv) of this section (specified insurance company); or

(v) Is an entity that is a holding company or treasury center (as described in paragraphs (e)(5)(i)(C) and (e)(5)(i)(D)(*1*) of this section) that—

(A) Is part of an expanded affiliated group that includes a depository institution, custodial institution, specified insurance company, or investment entity described in paragraphs (e)(4)(i)(B) or (C) of this section; or

(B) Is formed in connection with or availed of by a collective investment vehicle, mutual fund, exchange traded fund, private equity fund, hedge fund, venture capital fund, leveraged buyout fund, or any similar investment vehicle established with an investment strategy of investing, reinvesting, or trading in financial assets.

(2) ***Banking or similar business*** —

(i) ***In general.*** Except as otherwise provided in paragraph (e)(2)(ii) of this section, an entity is considered to be engaged in a banking or similar business if, in the ordinary course of its business with customers, the entity accepts deposits or other similar investments of funds and regularly engages in one or more of the following activities—

(A) Makes personal, mortgage, industrial, or other loans or provides other extensions of credit;

(B) Purchases, sells, discounts, or negotiates accounts receivable, installment obligations, notes, drafts, checks, bills of exchange, acceptances, or other evidences of indebtedness;

(C) Issues letters of credit and negotiates drafts drawn thereunder;

(D) Provides trust or fiduciary services;

(E) Finances foreign exchange transactions; or

(F) Enters into, purchases, or disposes of finance leases or leased assets.

(ii) ***Exception for certain lessors and lenders.*** An entity is not considered to be engaged in a banking or similar business for purposes of this paragraph (e)(2) if the entity solely accepts deposits from persons as collateral or security pursuant to a sale or lease of property or pursuant to a similar financing arrangement between such entity and the person holding the deposit with the entity.

(iii) ***Application of section 581.*** Entities engaged in a banking or similar business include, but are not limited to, entities that would qualify as banks under section 585(a)(2) (including banks as defined in section 581 and any corporation to which section 581 would apply but for the fact that it is a foreign corporation).

(iv) ***Effect of local regulation.*** Whether an entity is subject to the banking and credit laws of a foreign country, the United States, a State, a U.S. territory, or a subdivision thereof, or is subject to supervision and examination by agencies having regulatory oversight of banking or similar

institutions, is relevant to, but not necessarily determinative of, whether that entity qualifies as a financial institution under section 1471(d)(5)(A). Whether an entity conducts a banking or similar business is determined based upon the character of the actual activities of such entity.

(3) ***Holding financial assets for others as a substantial portion of its business*** —

(i) ***Substantial portion*** —

(A) ***In general.*** An entity holds financial assets for the account of others as a substantial portion of its business if the entity's gross income attributable to holding financial assets and related financial services equals or exceeds 20 percent of the entity's gross income during the shorter of—

(*1*) The three-year period ending on December 31 of the year preceding the year in which the determination is made; or

(*2*) The period during which the entity has been in existence before the determination is made.

(B) ***Special rule for start-up entities.*** An entity with no operating history as of the date of the determination is considered to hold financial assets for the account of others as a substantial portion of its business if the entity expects to meet the gross income threshold described in paragraph (e)(3)(i)(B) of this section based on its anticipated functions, assets, and employees, with due consideration given to any purpose or functions for which the entity is licensed or regulated (including those of any predecessor).

(ii) ***Income attributable to holding financial assets and related financial services.*** For purposes of this paragraph (e)(3), the term *income attributable to holding financial assets and related financial services* means custody, account maintenance, and transfer fees; commissions and fees earned from executing and pricing securities transactions; income earned from extending credit to customers with respect to financial assets held in custody by the entity (or acquired through such extension of credit); income earned on the bid-ask spread of financial assets; fees for providing financial advice with respect to financial assets held in (or potentially to be held in) custody by the entity; and fees for clearance and settlement services.

(iii) ***Effect of local regulation.*** Whether an entity is subject to the banking and credit, broker-dealer, fiduciary, or other similar laws and regulations of the United States, a State, a U.S. territory, a political subdivision thereof, or a foreign country, or to supervision and examination by agencies having regulatory oversight of banks, credit issuers, or other financial institutions, is relevant to, but not necessarily determinative of, whether that entity holds financial assets for the account of others as a substantial portion of its business.

(4) ***Investment entity*** —

(i) ***In general.*** The term *investment entity* means any entity that is described in paragraph (e)(4)(i)(A), (B), or (C) of this section.

(A) The entity primarily conducts as a business one or more of the following activities or operations for or on behalf of a customer—

(1) Trading in money market instruments (checks, bills, certificates of deposit, derivatives, etc.); foreign currency; foreign exchange, interest rate, and index instruments; transferable securities; or commodity futures;

(2) Individual or collective portfolio management; or

(3) Otherwise investing, administering, or managing funds, money, or financial assets on behalf of other persons.

(B) The entity's gross income is primarily attributable to investing, reinvesting, or trading in financial assets (as defined in paragraph (e)(4)(ii) of this section) and the entity is managed by another entity that is described in paragraph (e)(1)(i), (ii), (iv), or (e)(4)(i)(A) of this section. For purposes of this paragraph (e)(4)(i)(B), an entity is managed by another entity if the managing entity performs, either directly or through another third-party service provider, any of the activities described in paragraph (e)(4)(i)(A) of this section on behalf of the managed entity.

(C) The entity functions or holds itself out as a collective investment vehicle, mutual fund, exchange traded fund, private equity fund, hedge fund, venture capital fund, leveraged buyout fund, or any similar investment vehicle established with an investment strategy of investing, reinvesting, or trading in financial assets.

(ii) ***Financial assets.*** For purposes of this paragraph, the term *financial asset* means a security (as defined in section 475(c)(2) without regard to the last sentence thereof), partnership interest, commodity (as defined in section 475(e)(2)), notional principal contract (as defined in § 1.446-3(c)), insurance contract or annuity contract, or any interest (including a futures or forward contract or option) in a security, partnership interest, commodity, notional principal contract, insurance contract, or annuity contract.

(iii) ***Primarily conducts as a business*** —

(A) ***In general.*** An entity is treated as primarily conducting as a business one or more of the activities described in paragraph (e)(4)(i)(A) of this section if the entity's gross income attributable to such activities equals or exceeds 50 percent of the entity's gross income during the shorter of—

(1) The three-year period ending on December 31 of the year preceding the year in which the determination is made; or

(2) The period during which the entity has been in existence.

(B) ***Special rule for start-up entities.*** An entity with no operating history as of the date of the determination is treated as primarily conducting as a business one or more of the activities described in paragraph (e)(4)(i)(A) of this section if such entity expects to meet the gross income threshold described in paragraph (e)(4)(iii)(A) of this section based on its anticipated functions, assets, and employees, with due consideration given to any purpose or functions for which the entity is licensed or regulated (including those of any predecessor).

(iv) ***Primarily attributable to investing, reinvesting, or trading in financial assets*** —

(A) ***In general.*** An entity's gross income is primarily attributable to investing, reinvesting, or trading in financial assets for purposes of paragraph (e)(4)(i)(B) of this section if the entity's gross income attributable to investing, reinvesting, or trading in financial assets equals or exceeds 50 percent of the entity's gross income during the shorter of—

(*1*) The three-year period ending on December 31 of the year preceding the year in which the determination is made; or

(*2*) The period during which the entity has been in existence.

(B) ***Special rule for start-up entities.*** An entity with no operating history as of the date of the determination will be considered to have income that is primarily attributable to investing, reinvesting, or trading in financial assets for purposes of paragraph (e)(4)(i)(B) of this section if such entity expects to meet the income threshold described in paragraph (e)(4)(iv)(A) of this section based on its anticipated functions, assets, and employees, with due consideration given to any purpose or functions for which the entity is licensed or regulated (including those of any predecessor).

(v) ***Examples.*** The following examples illustrate the provisions of paragraph (e)(4) of this section:

Example 1. Investment advisor. Fund Manager is an investment entity within the meaning of paragraph (e)(4)(i)(A) of this section. Fund Manager, among its various business operations, organizes and manages a variety of funds, including Fund A, a fund that invests primarily in equities. Fund Manager hires Investment Advisor, a foreign entity, to provide advice and discretionary management of a portion of the financial assets held by Fund A. Investment Advisor earned more than 50% of its gross income for the last three years from providing similar services. Because Investment Advisor primarily conducts a business of managing financial assets on behalf of clients, Investment Advisor is an investment entity under paragraph (e)(4)(i)(A) of this section and an FFI under paragraph (e)(1)(iii) of this section.

Example 2. Entity that is managed by an FFI. The facts are the same as in *Example 1.* In addition, in every year since it was organized, Fund A has earned more than 50% of its gross income from investing in financial assets. Accordingly, Fund A is an investment entity under paragraph (e)(4)(i)(B) of this section because it is managed by Fund Manager and Investment Advisor and its gross income is primarily attributable to investing, reinvesting, or trading in financial assets.

Example 3. Investment manager. Investment Manager, a U.S. entity, is an investment entity within the meaning of paragraph (e)(4)(i)(A) of this section. Investment Manager organizes and registers Fund A in Country A. Investment Manager is authorized to facilitate purchases and sales of financial assets held by Fund A in accordance with Fund A's investment strategy. In every year since it was organized, Fund A has earned more than 50% of its gross income from investing, reinvesting, or trading in financial assets. Accordingly, Fund A is an investment entity under paragraph (e)(4)(i)(B) of this section and an FFI under paragraph (e)(1)(iii) of this section.

Example 4. Foreign real estate investment fund that is managed by an FFI. The facts are the same as in *Example 3,* except that Fund A's assets consist solely of non-debt, direct interests in real property located within and without the United States. Fund A is not an investment

entity under paragraph (e)(4)(i)(B) of this section, even though it is managed by Investment Manager, because less than 50% of its gross income is attributable to investing, reinvesting, or trading in financial assets.

Example 5. Trust managed by an individual. On January 1, 2013, X, an individual, establishes Trust A, a nongrantor foreign trust for the benefit of X's children, Y and Z. X appoints Trustee A, an individual, to act as the trustee of Trust A. Trust A's assets consists solely of financial assets, and its income consists solely of income from those financial assets. Pursuant to the terms of the trust instrument, Trustee A manages and administers the assets of the trust. Trustee A does not hire any entity as a third-party service provider to perform any of the activities described in paragraph (e)(4)(i)(A) of this section. Trust A is not an investment entity under paragraph (e)(4)(i)(B) of this section because it is managed solely by Trustee A, an individual.

Example 6. Trust managed by a trust company. The facts are the same as in *Example 5,* except that X hires Trust Company, an FFI, to act as trustee on behalf of Trust A. As trustee, Trust Company manages and administers the assets of Trust A in accordance with the terms of the trust instrument for the benefit of Y and Z. Because Trust A is managed by an FFI, Trust A is an investment entity under paragraph (e)(4)(i)(B) of this section and an FFI under paragraph (e)(1)(iii) of this section.

Example 7. Individual introducing broker. IB, an individual introducing broker, primarily conducts a business of providing advice to clients, has discretionary authority to manage clients' assets, and uses the services of a foreign entity to conduct and execute trades on behalf of clients. IB provides services as an investment advisor and manager to Entity, a foreign corporation. Entity has earned 50% or more of its gross income for the past three years from investing, reinvesting, or trading in financial assets. Because IB is an individual, notwithstanding that IB primarily conducts certain investment-related activities, IB is not an investment entity under paragraph (e)(4)(i)(A) of this section. Further, Entity is not an investment entity under paragraph (e)(4)(i)(B) of this section because Entity is managed by IB, an individual.

Example 8. Entity introducing broker. IB, a foreign entity introducing broker, primarily conducts a business of providing advice to clients, has discretionary authority to manage clients' assets, and uses the services of a foreign entity to conduct and execute trades on behalf of clients. IB provides its services as an investment advisor and manager to Entity, a foreign corporation. Entity has earned 50% or more of its gross income for the past three years from investing, reinvesting, or trading in financial assets. Because IB is an entity that primarily conducts certain investment-related activities, IB is an investment entity under paragraph (e)(4)(i)(A) of this section. Further, Entity is an investment entity under paragraph (e)(4)(i)(B) of this section because it is managed by IB, an investment entity that performs certain of the activities described in paragraph (e)(4)(i)(A) of this section on behalf of Entity.

(5) ***Exclusions.*** A financial institution does not include an entity described in this paragraph, provided that the entity is not also described in paragraph (e)(1)(iv) of this section. For the treatment of foreign entities described in this paragraph under section 1472, see § 1.1472-1(c)(1)(v).

(i) ***Excepted nonfinancial group entities*** —

(A) ***In general.*** A foreign entity that is a member of a nonfinancial group (as defined in paragraph (e)(5)(i)(B) of this section) if—

(*1*) The entity is not a depository institution or custodial institution (other than for members of its expanded affiliated group);

(*2*) The entity is a holding company, treasury center, or captive finance company and substantially all the activities of such entity are to perform one or more of the functions described in paragraphs (e)(5)(i)(C), (D), or (E) of this section; and

(*3*) The entity does not hold itself out as, and was not formed in connection with or availed of by, an arrangement or investment vehicle that is a private equity fund, venture capital fund, leveraged buyout fund, or any similar investment vehicle established with an investment strategy to acquire or fund companies and to treat the interests in those companies as capital assets held for investment purposes. For purposes of determining whether an entity was formed in connection with or availed of by such an arrangement or investment vehicle, any entity that existed at least six months prior to its acquisition by such arrangement or investment vehicle and that, prior to the acquisition, regularly conducted activities described in paragraph (e)(5)(i)(C), (D), or (E) of this section will not be considered to have been formed in connection with or availed of by the arrangement or investment vehicle, in the absence of other facts suggesting the existence of an investment strategy described in the prior sentence.

(B) ***Nonfinancial group.*** An expanded affiliated group defined in paragraph (i)(2) of this section is a nonfinancial group if, taking into account the application of this section—

(*1*) For the three-year period (or the period during which the expanded affiliated group has been in existence, if shorter) ending on December 31 (or the end of the fiscal year of one or more members of the group) of the year preceding the year in which the determination is made, no more than 25 percent of the gross income of the expanded affiliated group (excluding income derived by any member that is an entity described in paragraph (e)(5)(ii) or (iii) of this section, income derived from transactions between members of the expanded affiliated group, and interest income on notes issued by customers to a member of the expanded affiliated group that is a captive finance company to finance the customer's purchase of inventory or goods that are manufactured by a member of the expanded affiliated group) consists of passive income (as defined in § 1.1472-1(c)(1)(iv)); no more than five percent of the gross income of the expanded affiliated group is derived by members of the expanded affiliated group that are FFIs (excluding income derived from transactions between members of the expanded affiliated group or by any member of the expanded affiliated group that is a certified deemed-compliant FFI); and no more than 25 percent of the value of assets held by the expanded affiliated group (excluding assets held by a member that is an entity described in paragraph (e)(5)(ii) or (iii) of this section, assets resulting from transactions between related members of the expanded affiliated group, and receivables that are notes issued by customers to a member of the expanded affiliated group that is a captive finance company to finance the customer's purchase of inventory or goods that are manufactured by a member of the expanded affiliated group) are assets that produce or are held for the production of passive income; and

(2) Any member of the expanded affiliated group that is an FFI is a participating FFI, deemed-compliant FFI, or an exempt beneficial owner. However, an acquisition by a member of the expanded affiliated group of an FFI that is not a participating FFI, deemed-compliant FFI, or an exempt beneficial owner, or a change in the chapter 4 status of a member of the expanded affiliated group, will not cause a nonfinancial group to cease to be a nonfinancial group until 90 days after the acquisition or change in chapter 4 status.

(C) ***Holding company.*** For purposes of this paragraph (e)(5)(i), an entity is a holding company if its primary activity consists of holding (directly or indirectly) all or part of the outstanding stock of one or more members of its expanded affiliated group. A partnership or any other non-corporate entity shall be treated as a holding company if substantially all the activities of such partnership (or other entity) consist of holding more than 50 percent of the voting power and value of the stock of one or more common parent corporation(s) of one or more expanded affiliated group(s). If a partnership or other non-corporate entity owns more than 50 percent of the voting power and value of the stock of more than one common parent corporation of an expanded affiliated group, each common parent corporation's expanded affiliated group will be treated as a separate expanded affiliated group for purposes of applying the rules of this section unless a non-corporate entity is treated as the common parent entity of the expanded affiliated group in accordance with § 1.1471-5(i)(10).

(D) ***Treasury center*** —

(1) Except as otherwise provided in this paragraph, an entity is a treasury center for purposes of this paragraph (e)(5)(i) if the primary activity of such entity is to enter into investment, hedging, and financing transactions with or for members of its expanded affiliated group for purposes of—

(*i*) Managing the risk of price changes or currency fluctuations with respect to property that is held or to be held by the expanded affiliated group (or any member thereof);

(*ii*) Managing the risk of interest rate changes, price changes, or currency fluctuations with respect to borrowings made or to be made by the expanded affiliated group (or any member thereof);

(*iii*) Managing the risk of interest rate changes, price changes, or currency fluctuations with respect to assets or liabilities to be reflected in financial statements of the expanded affiliated group (or any member thereof);

(*iv*) Managing the working capital of the expanded affiliated group (or any member thereof) such as by pooling the cash balances of affiliates (including both positive and deficit cash balances) or by investing or trading in financial assets solely for the account and risk of such entity or any member of its expanded affiliated group; or

(*v*) Acting as a financing vehicle for the expanded affiliated group (or any member thereof).

(2) An entity is not a treasury center if any equity or debt interest in the entity is held by a person that is not a member of the entity's expanded affiliated group and the redemption or retirement amount or return earned on such interest is determined primarily by reference to—

(*i*) The investment, hedging, and financing activities of the treasury center with members outside of its expanded affiliated group; or

(*ii*) Any member of the group that is an investment entity described in (e)(4)(i)(B) or passive NFFE (as described in paragraph (b)(3)(vi) of this section with respect to either such entity).

(E) ***Captive finance company.*** For purposes of this paragraph (e)(5)(i), an entity is a captive finance company if the primary activity of such entity is to enter into financing (including the extension of credit) or leasing transactions with or for suppliers, distributors, dealers, franchisees, or customers of such entity or of any member of such entity's expanded affiliated group that is an active NFFE.

(ii) ***Excepted nonfinancial start-up companies or companies entering a new line of business*** —

(A) ***In general.*** A foreign entity that is investing capital in assets with the intent to operate a new business or line of business other than that of a financial institution or passive NFFE for a period of—

(*1*) In the case of an entity intending to operate a new business, 24 months from the initial organization of such entity; and

(*2*) In the case of an entity with the intent to operate a new line of business, 24 months from the date of the board resolution (or its equivalent) approving the new line of business, provided that such entity qualified as an active NFFE for the 24 months preceding the date of such approval.

(B) ***Exception for investment funds.*** An entity is not described in this paragraph (e)(5)(ii) if the entity functions (or holds itself out) as an investment fund, such as a private equity fund, venture capital fund, leveraged buyout fund, or any investment vehicle whose purpose is to acquire or fund companies and hold interests in those companies as capital assets for investment purposes.

(iii) ***Excepted nonfinancial entities in liquidation or bankruptcy.*** A foreign entity that was not a financial institution or passive NFFE at any time during the past five years and that is in the process of liquidating its assets or reorganizing with the intent to continue or recommence operations as a nonfinancial entity.

(iv) ***Excepted inter-affiliate FFI.*** A foreign entity that is a member of a participating FFI group if—

(A) The entity does not maintain financial accounts (other than accounts maintained for members of its expanded affiliated group);

(B) The entity does not hold an account (other than depository accounts in the country in which the entity is operating to pay for expenses in that country) with or receive payments from any withholding agent other than a member of its expanded affiliated group;

(C) The entity does not make withholdable payments to any person other than to members of its expanded affiliated group that are not limited FFIs or limited branches; and

(D) The entity has not agreed to report under § 1.1471-4(d)(2)(ii)(C) or otherwise act as an agent for chapter 4 purposes on behalf of any financial institution, including a member of its expanded affiliated group.

(v) ***Section 501(c) entities.*** A foreign entity that is described in section 501(c) other than an insurance company described in section 501(c)(15).

(vi) ***Non-profit organizations.*** A foreign entity that is established and maintained in its country of residence exclusively for religious, charitable, scientific, artistic, cultural or educational purposes if—

(A) The entity is exempt from income tax in its country of residence;

(B) The entity has no shareholders or members who have a proprietary or beneficial interest in its income or assets;

(C) Neither the laws of the entity's country of residence nor the entity's formation documents permit any income or assets of the entity to be distributed to, or applied for the benefit of, an individual or noncharitable entity other than pursuant to the conduct of the entity's charitable activities, or as payment of reasonable compensation for services rendered or the use of property, or as payment representing the fair market value of property that the entity has purchased; and

(D) The laws of the entity's country of residence or the entity's formation documents require that, upon the entity's liquidation or dissolution, all of its assets be distributed to an entity that meets the requirements of § 1.1471-6(b) or another organization that meets the requirements of this paragraph (e)(5)(vi) or escheat to the government of the entity's country of residence or any political subdivision thereof.

(6) ***Reserving activities of an insurance company.*** The reserving activities of an insurance company will not cause the company to be a financial institution described in (e)(1)(i), (ii), or (iii) of this section.

(f) ***Deemed-compliant FFIs.*** The term *deemed-compliant FFI* includes a registered deemed-compliant FFI (as defined in paragraph (f)(1) of this section), a certified deemed-compliant FFI (as defined in paragraph (f)(2) of this section), a nonreporting IGA FFI (as defined in § 1.1471-1(b)(83)), and, to the extent provided in paragraph (f)(3) of this section, an owner-documented FFI. A deemed-compliant FFI will be treated pursuant to section 1471(b)(2) as having met the requirements of section 1471(b). A deemed-compliant FFI that complies with the due diligence and withholding requirements applicable to such entity as provided in this paragraph (f) will also be deemed to have met its withholding obligations under sections 1471(a) and 1472(a). For this purpose, an intermediary or flow-through entity that has a residual withholding obligation under § 1.1471-2(a)(2)(ii) must fulfill such obligation to be considered a deemed-compliant FFI.

(1) ***Registered deemed-compliant FFIs.*** A registered deemed-compliant FFI means an FFI that meets the procedural requirements described in paragraph (f)(1)(ii) of this section and that either is described in any of paragraphs (f)(1)(i)(A) through (F) of this section or is treated as a registered deemed-compliant FFI under a Model 2 IGA. A registered deemed-compliant FFI also includes any FFI, or branch of an FFI, that is a reporting Model 1 FFI that complies with the registration requirements of a Model 1 IGA.

(i) ***Registered deemed-compliant FFI categories*** —

(A) ***Local FFIs.*** An FFI is described in this paragraph (f)(1)(i)(A) if the FFI meets the following requirements.

(*1*) The FFI is licensed and regulated as a financial institution under the laws of its country of incorporation or organization (which must be a FATF-compliant jurisdiction at the time the FFI registers for deemed-compliant status).

(*2*) The FFI does not have a fixed place of business outside its country of incorporation or organization. For this purpose, a fixed place of business does not include a location that is not advertised to the public and from which the FFI performs solely administrative support functions.

(*3*) The FFI does not solicit customers or account holders outside its country of incorporation or organization. For this purpose, an FFI will not be considered to have solicited customers or account holders outside its country of incorporation or organization merely because it operates a Web site, provided that the Web site does not specifically indicate that the FFI maintains accounts for or provides services to nonresidents, and does not otherwise target or solicit U.S. customers or account holders. An FFI will also not be considered to have solicited customers or account holders outside its country of incorporation or organization merely because it advertises in print media or on a radio or television station that is distributed or aired primarily within its country of incorporation or organization but is also incidentally distributed or aired in other countries, provided that the advertisement does not specifically indicate that the FFI maintains accounts for or provides services to nonresidents and does not otherwise target or solicit U.S. customers or account holders.

(*4*) The FFI is required under the laws of its country of incorporation or organization to identify resident account holders for purposes of either information reporting or withholding of tax with respect to accounts held by residents or is required to identify resident accounts for purposes of satisfying such country's AML due diligence requirements.

(*5*) At least 98 percent of the accounts by value maintained by the FFI as of the last day of the preceding calendar year are held by residents (including residents that are entities) of the country in which the FFI is incorporated or organized. An FFI that is incorporated or organized in a member state of the European Union may treat account holders that are residents (including residents that are entities) of other member states of the European Union as residents of the country in which the FFI is incorporated or organized for purposes of this calculation.

(*6*) By the later of June 30, 2014, or the date it registers as a deemed-compliant FFI, the FFI implements policies and procedures, consistent with those set forth for a participating FFI under § 1.1471-4(c), to monitor whether the FFI opens or maintains an account for a specified U.S. person who is not a resident of the country in which the FFI is incorporated or organized (including a U.S. person that was a resident when the account was opened but subsequently ceases to be a resident), an entity controlled or beneficially owned (as determined under the FFI's AML due diligence) by one or more specified U.S. persons that are not residents of the country in which the FFI is incorporated or organized, or a nonparticipating FFI. Such policies and procedures must provide that if any such account is discovered, the FFI will close

such account, transfer such account to a participating FFI, reporting Model 1 FFI, or U.S. financial institution, or withhold and report on such account as would be required under § 1.1471-4(b) and (d) if the FFI were a participating FFI.

(*7*) With respect to each preexisting account held by a nonresident of the country in which the FFI is organized or held by an entity, the FFI reviews those accounts in accordance with the procedures described in § 1.1471-4(c) applicable to preexisting accounts to identify any U.S. account or account held by a nonparticipating FFI, and certifies to the IRS that it did not identify any such account as a result of its review, that it has closed any such accounts that were identified or transferred them to a participating FFI, reporting Model 1 FFI, or U.S. financial institution, or that it agrees to withhold and report on such accounts as would be required under § 1.1471-4(b) and (d) if it were a participating FFI. Such certification must be submitted by the due date of the FFI's first certification of compliance required under paragraph (f)(1)(ii)(B) of this section.

(*8*) In the case of an FFI that is a member of an expanded affiliated group, each FFI in the group is incorporated or organized in the same country and, with the exception of any member that is a retirement plan described in § 1.1471-6(f), meets the requirements set forth in this paragraph (f)(1)(i)(A) and the procedural requirements of paragraph (f)(1)(ii) of this section.

(*9*) The FFI does not have policies or practices that discriminate against opening or maintaining accounts for individuals who are specified U.S. persons and who are residents of the FFI's country of incorporation or organization.

(B) ***Nonreporting members of participating FFI groups.*** An FFI that is a member of a participating FFI group is described in this paragraph (f)(1)(i)(B) if it meets the following requirements.

(*1*) By the later of June 30, 2014, or the date it registers with the IRS pursuant to paragraph (f)(1)(ii) of this section, the FFI implements policies and procedures to ensure that within six months of opening a U.S. account or an account held by a recalcitrant account holder or a nonparticipating FFI, the FFI either transfers such account to an affiliate that is a participating FFI, reporting Model 1 FFI, or U.S. financial institution, closes the account, or becomes a participating FFI.

(*2*) The FFI reviews its accounts that were opened prior to the time it implements the policies and procedures (including time frames) described in paragraph (f)(1)(i)(B)(*1*) of this section, using the procedures described in § 1.1471-4(c) applicable to preexisting accounts of participating FFIs, to identify any U.S. account or account held by a nonparticipating FFI. Within six months of the identification of any account described in this paragraph, the FFI transfers the account to an affiliate that is a participating FFI, reporting Model 1 FFI, or U.S. financial institution, closes the account, or becomes a participating FFI.

(*3*) By the later of June 30, 2014, or the date it registers with the IRS pursuant to paragraph (f)(1)(ii) of this section, the FFI implements policies and procedures to ensure that it identifies any account that becomes a U.S. account or an account held by a recalcitrant account holder or a nonparticipating FFI due to a change in circumstances. Within six months of the date on which the FFI first has knowledge or

reason to know of the change in the account holder's chapter 4 status, the FFI transfers any such account to an affiliate that is a participating FFI, reporting Model 1 FFI, or U.S. financial institution, closes the account, or becomes a participating FFI.

(C) ***Qualified collective investment vehicles.*** An FFI is described in this paragraph (f)(1)(i)(C) if it meets the following requirements.

(*1*) The FFI is an FFI solely because it is an investment entity, and it is regulated as an investment fund either in its country of incorporation or organization or in all of the countries in which it is registered and all of the countries in which it operates. A fund will be considered to be regulated as an investment fund under this paragraph if its manager is regulated with respect to the investment fund in all of the countries in which the investment fund is registered and in all of the countries in which the investment fund operates.

(*2*) Each holder of record of direct debt interests in the FFI in excess of $50,000, of any direct equity interests in the FFI (for example the holders of its units or global certificates), and of any other account holder of the FFI is a participating FFI, a registered deemed-compliant FFI, a retirement plan described in § 1.1471-6(f), a non-profit organization described in paragraph (e)(5)(vi) of this section, a U.S. person that is not a specified U.S. person, a nonreporting IGA FFI, or an exempt beneficial owner. Notwithstanding the prior sentence, an FFI will not be prohibited from qualifying as a qualified collective investment vehicle solely because it has issued interests in bearer form provided that the FFI ceased issuing interests in such form after December 31, 2012, retires all such interests upon surrender, and establishes policies and procedures to redeem or immobilize all such interests prior to January 1, 2017, and that prior to payment the FFI documents the account holder in accordance with the procedures set forth in § 1.1471-4(c) applicable to accounts other than preexisting accounts and agrees to withhold and report on such accounts as would be required under § 1.1471-4(b) and (d) if it were a participating FFI. For purposes of this paragraph (f)(1)(i)(C), an FFI may disregard equity interests owned by specified U.S. persons acquired with seed capital within the meaning of paragraph (i)(4) of this section if the specified U.S. person is described in paragraph (i)(3)(i) and (ii) of this section (substituting the term *U.S. person* for the terms *FFI* and *member*), and the specified U.S. person neither has held, nor intends to hold, such interest for more than three years.

(*3*) In the case of an FFI that is part of an expanded affiliated group, all other FFIs in the expanded affiliated group are participating FFIs, registered deemed-compliant FFIs, sponsored FFIs described in paragraph (f)(1)(i)(F)(*1*) or (*2*) of this section, nonreporting IGA FFIs, or exempt beneficial owners.

(D) ***Restricted funds.*** An FFI is described in this paragraph (f)(1)(i)(D) if it meets the following requirements.

(*1*) The FFI is an FFI solely because it is an investment entity, and it is regulated as an investment fund under the laws of its country of incorporation or organization (which must be a FATF-compliant jurisdiction at the time the FFI registers for deemed-compliant status) or in all of the countries in which it is registered and in all of the countries in which it operates. A fund will be considered to be regulated as an

investment fund for purposes of this paragraph if its manager is regulated with respect to the fund in all of the countries in which the investment fund is registered and in all of the countries in which the investment fund operates.

(*2*) Interests issued directly by the fund are redeemed by or transferred by the fund rather than sold by investors on any secondary market. Notwithstanding the prior sentence, an FFI will not be prohibited from qualifying as a restricted fund solely because it issued interests in bearer form provided that the FFI ceased issuing interests in bearer form after December 31, 2012, retires all such interests upon surrender, and establishes policies and procedures to redeem or immobilize all such interests prior to January 1, 2017, and that prior to payment the FFI documents the account holder in accordance with the procedures set forth in § 1.1471-4(c) applicable to accounts other than preexisting accounts and agrees to withhold and report on such accounts as would be required under § 1.1471-4(b) and (d) if it were a participating FFI. For purposes of this paragraph (f)(1)(i)(D), interests in the FFI that are issued by the fund through a transfer agent or distributor that does not hold the interests as a nominee of the account holder will be considered to have been issued directly by the fund.

(*3*) Interests that are not issued directly by the fund are sold only through distributors that are participating FFIs, registered deemed-compliant FFIs, nonregistering local banks described in paragraph (f)(2)(i) of this section, or restricted distributors described in paragraph (f)(4) of this section. For purposes of this paragraph (f)(1)(i)(D) and paragraph (f)(4) of this section, a distributor means an underwriter, broker, dealer, or other person who participates, pursuant to a contractual arrangement with the FFI, in the distribution of securities and holds interests in the FFI as a nominee.

(*4*) The FFI ensures that by the later of December 31, 2014, or six months after the date the FFI registers as a deemed-compliant FFI, each agreement that governs the distribution of its debt or equity interests prohibits sales and other transfers of debt or equity interests in the FFI (other than interests that are both distributed by and held through a participating FFI) to specified U.S. persons, nonparticipating FFIs, or passive NFFEs with one or more substantial U.S. owners. In addition, by that date, the FFI's prospectus and all marketing materials must indicate that sales and other transfers of interests in the FFI to specified U.S. persons, nonparticipating FFIs, or passive NFFEs with one or more substantial U.S. owners are prohibited unless such interests are both distributed by and held through a participating FFI.

(*5*) The FFI ensures that by the later of December 31, 2014, or six months after the date the FFI registers as a deemed-compliant FFI, each agreement entered into by the FFI that governs the distribution of its debt or equity interests requires the distributor to notify the FFI of a change in the distributor's chapter 4 status within 90 days of the change. The FFI must, with respect to any distributor that ceases to qualify as a distributor identified in paragraph (f)(1)(i)(D)(*3*) of this section, terminate its distribution agreement with the distributor, or cause the distribution agreement to be terminated, within 90 days of the notification of the distributor's change in status and, with respect to all debt and equity interests of the FFI issued through that

distributor, redeem those interests, convert those interests to direct holdings in the fund, or cause those interests to be transferred to another distributor identified in paragraph (f)(1)(i)(D)(*3*) of this section within six months of the distributor's change in status.

(*6*) With respect to any of the FFI's preexisting direct accounts that are held by the beneficial owner of the interest in the FFI, the FFI reviews those accounts in accordance with the procedures (and time frames) described in § 1.1471-4(c) applicable to preexisting accounts to identify any U.S. account or account held by a nonparticipating FFI. Notwithstanding the previous sentence, the FFI will not be required to review the account of any individual investor that purchased its interest at a time when all of the FFI's distribution agreements and its prospectus contained an explicit prohibition of the issuance and/or sale of shares to U.S. entities and U.S. resident individuals. An FFI will not be required to review the account of any investor that purchased its interest in bearer form until the time of payment, but at such time will be required to document the account in accordance with procedures set forth in § 1.1471-4(c) applicable to accounts other than preexisting accounts. The FFI is required to certify to the IRS either that it did not identify any U.S. account or account held by a nonparticipating FFI as a result of its review or, if any such accounts were identified, that the FFI will either redeem such accounts, transfer such accounts to an affiliate or other FFI that is a participating FFI, reporting Model 1 FFI, or U.S. financial institution, or withhold and report on such accounts as would be required under § 1.1471-4(b) and (d) if it were a participating FFI. Such certification must be submitted to the IRS by the due date of the FFI's first certification of compliance required under paragraph (f)(1)(ii)(B) of this section.

(*7*) By the later of June 30, 2014, or the date that it registers as a deemed-compliant FFI, the FFI implements the policies and procedures described in § 1.1471-4(c) to ensure that it either—

(*i*) Does not open or maintain an account for, or make a withholdable payment to, any specified U.S. person, nonparticipating FFI, or passive NFFE with one or more substantial U.S. owners and, if it discovers any such accounts, closes all accounts for any such person within six months of the date that the FFI had reason to know the account holder became such a person; or

(*ii*) Withholds and reports on any account held by, or any withholdable payment made to, any specified U.S. person, nonparticipating FFI, or passive NFFE with one or more substantial U.S. owners to the extent and in the manner that would be required under § 1.1471-4(b) and (d) if the FFI were a participating FFI.

(*8*) For an FFI that is part of an expanded affiliated group, all other FFIs in the expanded affiliated group are participating FFIs, registered deemed-compliant FFIs, sponsored FFIs described in paragraph (f)(1)(i)(F)(*1*) or (*2*) of this section, nonreporting IGA FFIs, or exempt beneficial owners.

(E) ***Qualified credit card issuers and servicers.*** An FFI is described in this paragraph (f)(1)(i)(E) if the FFI meets the following requirements.

(*1*) The FFI is an FFI solely because it is an issuer or servicer of credit cards that accepts deposits, on its own behalf or, in the case of a servicer, on behalf of a credit card issuer, only when a customer makes a payment in excess of a balance due with respect to the credit card account and the overpayment is not immediately returned to the customer.

(*2*) By the later of June 30, 2014, or the date it registers as a deemed-compliant FFI, the FFI implements policies and procedures to either prevent a customer deposit in excess of $50,000 or to ensure that any customer deposit in excess of $50,000 is refunded to the customer within 60 days. For this purpose, a customer deposit does not refer to credit balances to the extent of disputed charges but does include credit balances resulting from merchandise returns.

(F) ***Sponsored investment entities and controlled foreign corporations.*** An FFI is described in this paragraph (f)(1)(i)(F) if the FFI is described in paragraph (f)(1)(i)(F)(*1*) or (*2*) of this section and the sponsoring entity meets the requirements of paragraph (f)(1)(i)(F)(*3*) of this section.

(*1*) An FFI is a sponsored investment entity described in this paragraph (f)(1)(i)(F)(*1*) if—

(*i*) It is an investment entity that is not a QI, WP (except to the extent permitted in the WP agreement), or WT; and

(*ii*) An entity, other than a nonparticipating FFI, has agreed with the FFI to act as a sponsoring entity for the FFI.

(*2*) An FFI is a sponsored controlled foreign corporation described in this paragraph (f)(1)(i)(F)(*2*) if the FFI meets the following requirements—

(*i*) The FFI is a controlled foreign corporation as defined in section 957(a) that is not a QI, WP, or WT;

(*ii*) The FFI is wholly owned, directly or indirectly, by a U.S. financial institution that agrees with the FFI to act as a sponsoring entity for the FFI; and

(*iii*) The FFI shares a common electronic account system with the sponsoring entity that enables the sponsoring entity to identify all account holders and payees of the FFI and to access all account and customer information maintained by the FFI including, but not limited to, customer identification information, customer documentation, account balance, and all payments made to the account holder or payee.

(*3*) A sponsoring entity described in paragraph (f)(1)(i)(F)(*1*)(*ii*) or (f)(1)(i)(F)(*2*)(*ii*) of this section meets the requirements of this paragraph (f)(1)(i)(F)(*3*) if the sponsoring entity—

(*i*) Is authorized to act on behalf of the FFI (such as a fund manager, trustee, corporate director, or managing partner) to fulfill all due diligence, withholding, and reporting responsibilities that the FFI would have assumed if it were a participating FFI;

(*ii*) Has registered with the IRS as a sponsoring entity;

(*iii*) Has registered the FFI with the IRS by the later of January 1, 2017, or the date that the FFI identifies itself as qualifying under this paragraph (f)(1)(i)(F);

(*iv*) Agrees to perform, on behalf of the FFI, all due diligence, withholding, reporting, and other requirements that the FFI would have been required to perform if it were a participating FFI;

(*v*) Identifies the FFI in all reporting completed on the FFI's behalf to the extent required under §§ 1.1471-4(d)(2)(ii)(C) and 1.1474-1;

(*vi*) Complies with the verification procedures described in paragraph (j) of this section; and

(*vii*) Has not had its status as a sponsoring entity revoked.

(*4*) The IRS may revoke a sponsoring entity's status with respect to one or more sponsored FFIs based on the provisions of paragraphs (k)(2), (3), and (4) of this section (describing notice of event of default, remediation, and termination procedures) if there is an event of default as defined in paragraph (k)(1) of this section.

(*5*) A sponsoring entity is not liable for any failure to comply with the obligations contained in paragraph (f)(1)(i)(F)(*3*) of this section unless the sponsoring entity is a withholding agent that is separately liable for the failure to withhold on or report with respect to a payment made by the sponsoring entity on behalf of the sponsored FFI. A sponsored FFI will remain liable for any failure of its sponsoring entity to comply with the obligations contained in paragraph (f)(1)(i)(F)(*3*) of this section that the sponsoring entity has agreed to undertake on behalf of the FFI, even if the sponsoring entity is also a withholding agent and is itself separately liable for the failure to withhold on or report with respect to a payment made by the sponsoring entity on behalf of the sponsored FFI. The same tax, interest, or penalties, however, shall not be collected more than once.

(ii) ***Procedural requirements for registered deemed-compliant FFIs.*** A registered deemed-compliant FFI described in paragraph (f)(1)(i)(A) through (E) of this section may use one or more agents to perform the necessary due diligence to identify its account holders and to take any required action associated with obtaining and maintaining its deemed-compliant status. The FFI, however, remains responsible for ensuring that the requirements for its deemed-compliant status are met. Unless otherwise provided in this section, a registered deemed-compliant FFI described in paragraph (f)(1)(i)(A) through (E) of this section is required to—

(A) Register with the IRS pursuant to procedures prescribed by the IRS and agree to comply with the terms of its registered deemed-compliant status.

(B) Have its responsible officer certify, on or before July 1 of the calendar year following the end of each certification period, that all of the requirements for the deemed-compliant status claimed by the FFI have been satisfied during the certification period. The responsible officer may certify collectively for the FFI's expanded affiliated group that all of the requirements for the deemed-compliant status claimed by each member of the expanded affiliated group that is a registered deemed-compliant FFI (other than a member that is a reporting Model 1 FFI or deemed-compliant FFI under an applicable Model 1 IGA) have been satisfied. The certification must be made on the form and in the manner

prescribed by the IRS. The first certification period begins on the later of the date the FFI registers as a deemed-compliant FFI and is issued a GIIN, or June 30, 2014, and ends at the close of the third full calendar year following that date. Each subsequent certification period is the three calendar year period following the previous certification period.

(C) Maintain in its records the confirmation from the IRS of the FFI's registration as a deemed-compliant FFI and GIIN or such other information as the IRS specifies in forms or other guidance; and

(D) Agree to notify the IRS if there is a change in circumstances that would make the FFI ineligible for the deemed-compliant status for which it has registered, and to do so within six months of the change in circumstances unless the FFI is able to resume its eligibility for its registered-deemed compliant status within the six month notification period.

(iii) ***Deemed-compliant FFI that is merged or acquired.*** A deemed-compliant FFI that becomes a participating FFI or a member of a participating FFI group as a result of a merger or acquisition will not be required to redetermine the chapter 4 status of any account maintained by the FFI prior to the date of the merger or acquisition unless that account has a subsequent change in circumstances.

(iv) ***IRS review of compliance by registered deemed-compliant FFIs*** —

(A) ***General inquiries.*** With respect to a registered deemed-compliant FFI described in paragraph (f)(1)(i)(A), (C), or (D) of this section, the IRS, based upon the information reporting forms described in § 1.1471-4(d)(3)(v), (d)(5)(vii), or (d)(6)(iv) filed with the IRS for each calendar year (if applicable), may request additional information with respect to the information reported (or required to be reported) on the forms, the account statements described in § 1.1471-4(d)(4)(v), or confirmation that the FFI has no reporting requirements for the calendar year. The IRS may request additional information from the FFI to determine the FFI's compliance with § 1.1471-4 (if applicable) and to assist the IRS with its review of account holder compliance with tax reporting requirements. For IRS review of compliance with respect to a registered deemed-compliant FFI described in paragraph (f)(1)(i)(F) of this section (describing sponsored investment entities and controlled foreign corporations), see paragraph (j)(4) of this section.

(B) ***Inquiries regarding substantial non-compliance.*** With respect to a registered deemed-compliant FFI described in paragraph (f)(1)(i)(A) through (E) of this section, the IRS may determine in its discretion that the FFI may not have substantially complied with the requirements of the deemed-compliant status claimed by the FFI. This determination is based on the information reporting forms described in § 1.1471-4(d)(3)(v), (d)(5)(vii), or (d)(6)(iv) filed with the IRS for each calendar year (if applicable), the certifications made by the responsible officer described in paragraph (f)(1)(ii)(B) of this section (or the absence of such certifications), or any other information related to the FFI's compliance with the requirements of the deemed-compliant status claimed by the FFI. In such a case, the IRS may request from the responsible officer (or designee) information necessary to verify the FFI's compliance with the requirements for the deemed-compliant status claimed by the FFI. For example, in the case of a local FFI under paragraph (f)(1)(i)(A) of this section, the IRS may request a description or copy of the FFI's policies and procedures for identifying accounts held by specified U.S. persons not resident in the jurisdiction in which the FFI is incorporated or organized, identifying entities controlled or beneficially owned by such persons, and identifying nonparticipating FFIs. The IRS may also request the performance

of specified review procedures by a person (including an external auditor or third-party consultant) that the IRS identifies as competent to perform such procedures given the facts and circumstances surrounding the FFI's potential failure to comply with the requirements of the deemed-compliant category claimed by the FFI. If the IRS determines that the FFI has not complied with the requirements of the deemed-compliant status claimed by the FFI, the IRS may terminate the FFI's deemed-compliant status. If the FFI's deemed-compliant status is terminated, the FFI must send notice of the termination to each withholding agent from which it receives payments and each financial institution with which it holds an account for which a withholding certificate or other documentation was provided within 30 days after the termination. An FFI that has had its deemed-compliant status terminated may not reregister on the FATCA registration website as a registered deemed-compliant FFI or register on the FATCA registration website as a participating FFI unless it receives written approval from the IRS. A registered deemed-compliant FFI may request, within 90 days of a notice of termination, reconsideration of the notice of termination by written request to the IRS.

(2) ***Certified deemed-compliant FFIs.*** A certified deemed-compliant FFI means an FFI described in any of paragraphs (f)(2)(i) through (v) of this section that has certified as to its status as a deemed-compliant FFI by providing a withholding agent with the documentation described in § 1.1471-3(d)(5) applicable to the relevant deemed-compliant category. A certified deemed-compliant FFI is not required to register with the IRS.

(i) ***Nonregistering local bank.*** An FFI is described in this paragraph (f)(2)(i) if the FFI meets the following requirements.

(A) The FFI operates solely as (and is licensed and regulated under the laws of its country of incorporation or organization as)—

(*1*) A bank; or

(2) A credit union or similar cooperative credit organization that is operated without profit.

(B) The FFI's business consists primarily of receiving deposits from and making loans to, with respect to a bank, retail customers that are unrelated to such bank and, with respect to a credit union or similar cooperative credit organization, members, provided that no such member has a greater than 5 percent interest in such credit union or cooperative credit organization. For purposes of this paragraph (f)(2)(i)(B), a customer is related to a bank if the customer and the bank have a relationship described in section 267(b). For purposes of determining whether a member has a greater than 5 percent interest in a credit union or cooperative credit organization, the member must aggregate the ownership or beneficial interests in the credit union or cooperative credit organization that are owned or held by a related member. A member of a credit union or cooperative credit organization is related to another member if the relationship of such members is described in section 267(b).

(C) The FFI does not have a fixed place of business outside its country of incorporation or organization. For this purpose, a fixed place of business does not include a location that is not advertised to the public and from which the FFI performs solely administrative support functions.

(D) The FFI does not solicit customers or account holders outside its country of incorporation or organization. For this purpose, an FFI will not be considered to have solicited customers or account holders outside its country of incorporation or organization merely because it operates a Web site, provided that the Web site does not permit account opening, does not indicate that the FFI maintains accounts for or provides services to nonresidents, and does not otherwise target or solicit U.S. customers or account holders. An FFI will also not be considered to have solicited customers or account holders outside its country of incorporation or organization merely because it advertises in print media or on a radio or television station that is distributed or aired primarily within its country of incorporation or organization but is also incidentally distributed or aired in other countries, provided that the advertisement does not indicate that the FFI maintains accounts for or provides services to nonresidents and does not otherwise target or solicit U.S. customers or account holders.

(E) The FFI does not have more than $175 million in assets on its balance sheet and, if the FFI is a member of an expanded affiliated group, the group does not have more than $500 million in total assets on its consolidated or combined balance sheets.

(F) With respect to an FFI that is part of an expanded affiliated group, each member of the expanded affiliated group is incorporated or organized in the same country and does not have a fixed place of business outside of that country. For this purpose, a fixed place of business does not include a location that is not advertised to the public and from which the FFI performs solely administrative support functions. Further, each FFI in the group, other than an FFI described in paragraph (f)(2)(ii) of this section or § 1.1471-6(f), meets the requirements set forth in this paragraph (f)(2)(i). For this purpose, a fixed place of business does not include a location that is not advertised to the public and from which the FFI performs solely administrative support functions.

(ii) ***FFIs with only low-value accounts.*** An FFI is described in this paragraph (f)(2)(ii) if the FFI meets the following requirements:

(A) The FFI is not an investment entity.

(B) No financial account maintained by the FFI (or, in the case of an FFI that is a member of an expanded affiliated group, by any member of the expanded affiliated group) has a balance or value in excess of $50,000. The balance or value of a financial account shall be determined by applying the rules described in paragraph (b)(4) of this section, substituting the term *financial account* for the term *depository account* and the term *person* for the term *individual*.

(C) The FFI does not have more than $50 million in assets on its balance sheet as of the end of its most recent accounting year. In the case of an FFI that is a member of an expanded affiliated group, the entire expanded affiliated group does not have more than $50 million in assets on its consolidated or combined balance sheet as of the end of its most recent accounting year.

(iii) ***Sponsored, closely held investment vehicles.*** Subject to the provisions of paragraph (f)(2)(iii)(E) of this section, an FFI is described in this paragraph (f)(2)(iii) if it meets the requirements described in paragraphs (f)(2)(iii)(A) through (D) of this section.

(A) The FFI is an FFI solely because it is an investment entity and is not a QI, WP, or WT.

(B) A participating FFI, reporting Model 1 FFI, or U.S. financial institution agrees to fulfill all due diligence, withholding, and reporting responsibilities that the FFI would have assumed if it were a participating FFI.

(C) Twenty or fewer individuals own all of the debt and equity interests in the FFI (disregarding debt interests owned by U.S. financial institutions, participating FFIs, registered deemed-compliant FFIs, and certified deemed-compliant FFIs and equity interests owned by an entity if that entity owns 100 percent of the equity interests in the FFI and is itself a sponsored FFI under this paragraph (f)(2)(iii)).

(D) The sponsoring entity complies with the following requirements—

(*1*) The sponsoring entity has registered with the IRS as a sponsoring entity;

(*2*) The sponsoring entity agrees to perform, on behalf of the FFI, all due diligence, withholding, reporting, and other requirements that the FFI would have been required to perform if it were a participating FFI and retains documentation collected with respect to the FFI for a period of six years;

(*3*) The sponsoring entity identifies the FFI in all reporting completed on the FFI's behalf to the extent required under §§ 1.1471-4(d)(2)(ii)(C) and 1.1474-1;

(*4*) Complies with the verification procedures described in paragraph (j) of this section; and

(*5*) The sponsoring entity has not had its status as a sponsor revoked.

(E) The IRS may revoke a sponsoring entity's status as a sponsoring entity with respect to one or more sponsored FFIs based on the provisions of paragraphs (k)(2), (3), and (4) of this section (describing notice of event of default, remediation, and termination procedures) if there is an event of default as defined in paragraph (k)(1) of this section. A sponsoring entity is not liable for any failure to comply with the obligations contained in paragraph (f)(2)(iii)(D) of this section unless the sponsoring entity is a withholding agent that is separately liable for the failure to withhold on or report with respect to a payment made by the sponsoring entity on behalf of the sponsored FFI. A sponsored FFI will remain liable for any failure of its sponsoring entity to comply with the obligations contained in paragraph (f)(2)(iii)(D) of this section that the sponsoring entity has agreed to undertake on behalf of the FFI, even if the sponsoring entity is also a withholding agent and is itself separately liable for the failure to withhold on or report with respect to a payment made by the sponsoring entity on behalf of the sponsored FFI. The same tax, interest, or penalties, however, shall not be collected more than once.

(iv) ***Limited life debt investment entities (transitional).*** An FFI is described in this paragraph (f)(2)(iv) if the FFI is the beneficial owner of the payment (or of payments made with respect to the account) and the FFI meets the following requirements.

(A) The FFI is an investment entity that issued one or more classes of debt or equity interests to investors pursuant to a trust indenture or similar agreement and all of such interests were issued on or before January 17, 2013.

(B) The FFI was in existence as of January 17, 2013, and has entered into a trust indenture or similar agreement that requires the FFI to pay to investors holding substantially all of the interests in the FFI, no later than a set date or period following the maturity of the last asset held by the FFI, all amounts that such investors are entitled to receive from the FFI.

(C) The FFI was formed and operated for the purpose of purchasing or acquiring specific types of debt instruments or interests therein and holding those assets subject to reinvestment only under prescribed circumstances to maturity.

(D) Substantially all of the assets of the FFI consist of debt instruments or interests therein (including assets acquired pursuant to a foreclosure, restructuring, workout, or similar event with respect to a debt instrument).

(E) All payments made to the investors of the FFI (other than holders of a de minimis interest) are either cleared through a clearing organization or custodial institution that is a participating FFI, reporting Model 1 FFI, or U.S. financial institution or made through a transfer agent that is a participating FFI, reporting Model 1 FFI, or U.S. financial institution.

(F) The FFI's trustee or fiduciary is not authorized through a fiduciary duty or otherwise to fulfill the obligations of a participating FFI under § 1.1471-4 and no other person has the authority to fulfill the obligations of a participating FFI under § 1.1471-4 on behalf of the FFI.

(v) ***Certain investment entities that do not maintain financial accounts.*** An FFI is described in this paragraph (f)(2)(v) if the FFI meets the following requirements.

(A) The FFI is a financial institution solely because it is described in paragraph (e)(4)(i)(A) of this section.

(B) The FFI does not maintain financial accounts.

(3) ***Owner-documented FFIs*** —

(i) ***In general.*** An owner-documented FFI means an FFI that meets the requirements of paragraph (f)(3)(ii) of this section. An FFI may only be treated as an owner-documented FFI with respect to payments received from and accounts held with a designated withholding agent (or with respect to payments received from and accounts held with another FFI that is also treated as an owner-documented FFI by such designated withholding agent). A designated withholding agent is a U.S. financial institution, participating FFI, or reporting Model 1 FFI that agrees to undertake the additional due diligence and reporting required under paragraphs (f)(3)(ii)(D) and (E) of this section in order to treat the FFI as an owner-documented FFI. An FFI meeting the requirements of this paragraph (f)(3) will only be treated as a deemed-compliant FFI with respect to a payment or account for which it does not act as an intermediary.

(ii) ***Requirements of owner-documented FFI status.*** An FFI meets the requirements of this paragraph (f)(3)(ii) only if—

(A) The FFI is an FFI solely because it is an investment entity;

(B) The FFI is not owned by or in an expanded affiliated group with any FFI that is a depository institution, custodial institution, or specified insurance company;

(C) The FFI does not maintain a financial account for any nonparticipating FFI;

(D) The FFI provides the designated withholding agent with all of the documentation described in § 1.1471-3(d)(6) and agrees to notify the withholding agent if there is a change in circumstances; and

(E) The designated withholding agent agrees to report to the IRS (or, in the case of a reporting Model 1 FFI, to the relevant foreign government or agency thereof) all of the information described in § 1.1471-4(d) or § 1.1474-1(i) (as appropriate) with respect to any specified U.S. persons that are identified in § 1.1471-3(d)(6)(iv)(A)(*1*) and (*2*). Notwithstanding the previous sentence, the designated withholding agent is not required to report information with respect to an indirect owner of the FFI that holds its interest through a participating FFI, a deemed-compliant FFI (other than an owner-documented FFI), an entity that is a U.S. person, an exempt beneficial owner, or an excepted NFFE.

(4) ***Definition of a restricted distributor.*** An entity is a restricted distributor for purposes of paragraph (f)(1)(i)(D) of this section (relating to registered deemed-compliant restricted funds) if it operates as a distributor that holds debt or equity interests in a restricted fund as a nominee and meets the following requirements.

(i) The distributor provides investment services to at least 30 customers unrelated to each other and fewer than half of the distributor's customers are related to each other. For purposes of this paragraph (f)(4)(i), customers are related to each other if they have a relationship with each other described in section 267(b).

(ii) The distributor is required to perform AML due diligence procedures under the anti-money laundering laws of its country of incorporation or organization (which must be a FATF-compliant jurisdiction).

(iii) The distributor operates solely in its country of incorporation or organization, does not have a fixed place of business outside that country, and, if such distributor belongs to an expanded affiliated group, has the same country of incorporation or organization as all other members of its expanded affiliated group. For this purpose, a fixed place of business does not include a location that is not advertised to the public and from which the FFI performs solely administrative support functions.

(iv) The distributor does not solicit customers or account holders outside its country of incorporation or organization. For this purpose, a distributor will not be considered to have solicited customers or account holders outside its country of organization merely because it operates a Web site, provided that the Web site does not permit account opening by persons identified as nonresidents, does not specifically state that nonresidents may acquire securities from the distributor, and does not otherwise target U.S. customers or account holders. A distributor will also not be considered to have solicited customers or account holders outside its country of incorporation or organization merely because it advertises in print media or on a radio or television station that is distributed or aired primarily within its country of incorporation or organization but is also incidentally distributed or aired in other countries, provided that the advertisement does not indicate that the distributor maintains accounts for or provides services to nonresidents and does not otherwise target or solicit U.S. customers or account holders.

(v) The distributor does not have more than $175 million in total assets under management and has no more than $7 million in gross revenue on its income statement for the most recent financial accounting year and, if the distributor belongs to an expanded affiliated group, the

entire group does not have more than $500 million in total assets under management or more than $20 million in gross revenue for its most recent financial accounting year on a combined or consolidated income statement.

(vi) The distributor provides the restricted fund (or another distributor of the restricted fund that is a participating FFI or registered deemed-compliant FFI, and with which the distributor has entered into its distribution agreement) with a valid Form W-8 indicating that the distributor satisfies the requirements to be a restricted distributor.

(vii) The agreement governing the distributor's distribution of debt or equity interests of the restricted fund—

(A) Prohibits the distributor from distributing any securities to specified U.S. persons, passive NFFEs that have one or more substantial U.S. owners, and nonparticipating FFIs;

(B) Requires that if the distributor does distribute securities to any of the persons described in this paragraph (f)(4)(vii), it will cause the restricted fund to redeem or retire those interests, or it will transfer those interests to a distributor that is a participating FFI or reporting Model 1 FFI, within six months and the commission paid to the distributor will be forfeited to the restricted fund or to the participating FFI to which those interests are transferred; and

(C) Requires the distributor to notify the restricted fund (or another distributor of the restricted fund that is a participating FFI, reporting Model 1 FFI, or registered deemed-compliant FFI and with which the distributor has entered into its distribution agreement) of a change in the distributor's chapter 4 status within 90 days of the change in status.

(viii) With respect to sales after December 31, 2011, and prior to the time the restrictions described in paragraph (f)(4)(vii) of this section were incorporated into the distribution agreement, either the agreement governing the distributor's distribution of debt or equity interests of the relevant FFI contained a prohibition of the sale of such securities to U.S. entities or U.S. resident individuals, or the distributor reviews all accounts relating to such sales in accordance with the procedures (and time frames) described in § 1.1471-4(c) applicable to preexisting accounts and certifies that it has caused the restricted fund to redeem or retire, or it has transferred all securities sold to any of the persons described in paragraph (f)(4)(vii) of this section. If the distribution agreement addressed in the prior sentence contained only a prohibition on the sale of securities to U.S. resident individuals, the distributor will not be required to review the individual accounts relating to such sales but must review and make certifications with respect to all entity accounts in the manner described in the previous sentence.

(g) ***Recalcitrant account holders*** —

(1) ***Scope.*** This paragraph (g) provides rules for determining when an account holder of a participating FFI or registered deemed-compliant FFI is a recalcitrant account holder. Paragraph (g)(2) of this section defines the term recalcitrant account holder. Paragraphs (g)(3) and (4) of this section provide timing rules for when an account holder will begin to be treated as a recalcitrant account holder by a participating FFI and when an account holder will cease to be treated as a recalcitrant account holder by such institution. For rules for determining the holder of an account, see paragraph (a)(3) of this section. For the withholding requirements of an FFI with respect to its recalcitrant account holders, see paragraph (f) of this section and § 1.1471-4(b). For the reporting requirements of an FFI with respect to its recalcitrant account holders, see § 1.1471-4(d)(6), and, for the reporting required with respect to payments made to such account holders, see § 1.1474-1(d)(4)(iii). A U.S.

branch treated as a U.S. person shall apply the presumption rules of § 1.1471-3(f) (for foreign entity account holders) and chapter 3 or 61 (for individual payees) to determine the status of a payee if it cannot reliably associate a payment made to the payee with valid documentation and does not apply this paragraph (g).

(2) ***Recalcitrant account holder.*** The term *recalcitrant account holder* means any holder of an account maintained by an FFI if such account holder is not an FFI (or presumed to be an FFI under § 1.1471-3(f)), the account does not meet the requirements of the exception to U.S. account status described in paragraph (a)(4) of this section (for depository accounts with a balance of $50,000 or less) and does not qualify for any of the exceptions from the documentation requirements described in § 1.1471-4(c)(3)(iii), (c)(4)(iii), (c)(5)(iii), (c)(5)(iv)(E) (or the participating FFI elects to forego such exceptions) and—

(i) The account holder fails to comply with requests by the FFI for the documentation or information that is required under § 1.1471-4(c) for determining the status of such account as a U.S. account or other than a U.S. account;

(ii) The account holder fails to provide a valid Form W-9 upon request from the FFI or fails to provide a correct name and TIN combination upon request from the FFI when the FFI has received notice from the IRS indicating that the name and TIN combination reported by the FFI for the account holder is incorrect;

(iii) If foreign law would (but for a waiver) prevent reporting by the FFI (or branch or division thereof) of the information described in § 1.1471-4(d)(3) or (5) with respect to such account, the account holder (or substantial U.S. owner of an account holder that is a U.S. owned foreign entity) fails to provide a valid and effective waiver to permit such reporting; or

(iv) The account holder provides the documentation described in § 1.1471-3(d)(12) to establish its status as a passive NFFE (other than a WP or WT) but fails to provide the information regarding its owners required under § 1.1471-3(d)(12)(iii).

(3) ***Start of recalcitrant account holder status*** —

(i) ***Preexisting accounts identified under the procedures described in § 1.1471-4(c) for identifying U. S. accounts*** —

(A) ***In general.*** An account holder of a preexisting account described in paragraph (g)(2) of this section maintained by a participating FFI will be treated as a recalcitrant account holder beginning on the dates provided in paragraphs (g)(3)(B) through (D) of this section. An account holder of a preexisting account described in paragraph (g)(2) of this section that is maintained by a registered deemed-compliant FFI will be treated as a recalcitrant account holder beginning on the dates provided in paragraph (f) of this section (setting forth the time by which the FFI must identify its accounts in accordance with the requirements of § 1.1471-4(c) in order to meet the requirements of its applicable registered deemed-compliant status).

(B) ***Accounts other than high-value accounts.*** Account holders of preexisting accounts maintained by a participating FFI that are not high-value accounts (as described in § 1.1471-4(c)(5)(iv)(D)) and that are described in paragraph (g)(2) of this section will be treated as recalcitrant account holders beginning on the date that is two years after the effective date of the FFI agreement.

(C) ***High-value accounts.*** Account holders of preexisting accounts maintained by a participating FFI that are high-value accounts (as described in § 1.1471-4(c)(5)(iv)(D)) and that are described in paragraph (g)(2) of this section will be treated as recalcitrant account holders beginning on the date that is one year after the effective date of the FFI agreement.

(D) ***Preexisting accounts that become high-value accounts.*** With respect to a calendar year beginning after December 31, 2015, an account holder that is described in paragraph (g)(2) of this section and that holds a preexisting account that a participating FFI identifies as a high-value account pursuant to § 1.1471-4(c)(5)(iv)(D) will be treated as a recalcitrant account holder beginning on the earlier of the date a withholdable payment is made to the account following end of the calendar year in which the account is identified as a high-value account or the date that is six months after the calendar year end.

(ii) ***Accounts that are not preexisting accounts and accounts requiring name/TIN correction.*** An account holder of an account other than a preexisting account and that is described in paragraph (g)(2) of this section will be treated as a recalcitrant account holder beginning on the date that is the earlier of 90 days after the account is opened by the participating FFI or the date that a withholdable payment that is subject to withholding under § 1.1441-2(a) is made to the account. An account holder for which the participating FFI received a notice from the IRS indicating that the name and TIN combination provided for the account holder is incorrect will be treated as a recalcitrant account holder following the date of such notice within the time prescribed in § 31.3406(d)-5(a) of this chapter.

(iii) ***Accounts with changes in circumstances.*** An account holder holding an account that is described in paragraph (g)(2) of this section following a change in circumstances (other than a change in account balance or value in a subsequent year that causes an individual account to be identified as a high-value account) will be treated as a recalcitrant account holder beginning on the date that is 90 days after the change in circumstances. For the definition of a change in circumstances with respect to an account, see § 1.1471-4(c)(2)(iii).

(4) ***End of recalcitrant account holder status.*** An account holder that is treated as a recalcitrant account holder under paragraphs (g)(2) and (3) of this section will cease to be so treated as of the date on which the account holder is no longer described in paragraph (g)(2) of this section.

(h) ***Passthru payment*** —

(1) ***Defined.*** The term *passthru payment* means any withholdable payment and any foreign passthru payment.

(2) ***Foreign passthru payment.*** [Reserved]

(i) ***Expanded affiliated group*** —

(1) ***Scope of paragraph.*** This paragraph (i) defines the term *expanded affiliated group* for purposes of chapter 4. For the requirements of a participating FFI with respect to members of its expanded affiliated group that are FFIs, see § 1.1471-4(e).

(2) ***Expanded affiliated group defined.*** Except as otherwise provided in this paragraph (i), an expanded affiliated group is defined in accordance with the principles of section 1504(a) to mean one or more chains of members connected through ownership by a common parent entity if the common parent entity directly owns stock or other equity interests meeting the requirements of paragraph (i)(4) of

this section in at least one of the other members (for purposes of this paragraph (i), the constructive ownership rules of section 318 do not apply). Generally, only a corporation shall be treated as the common parent entity of an expanded affiliated group, unless the taxpayer elects to follow the approach described in paragraph (i)(10) of this section.

(3) ***Member of an expanded affiliated group.*** The term *member of an expanded affiliated group* means a corporation or any entity other than a corporation (such as a partnership or trust) with respect to which the ownership requirements of paragraph (i)(4) of this section are met, regardless of whether such entity is a U.S. person or a foreign person, but excluding corporations described in paragraphs (1), (4), (6), (7), or (8) of section 1504(b).

(4) ***Ownership test.*** The ownership requirements of this paragraph (i)(4) are met if—

(i) ***Corporations.*** For purposes of paragraph (i)(2) of this section, a corporation (except the common parent entity) will be considered owned by another member entity or by the common parent entity if more than 50 percent of the total voting power of the stock of such corporation and more than 50 percent of the total value of the stock of such corporation is owned directly by one or more other members of the group (including the common parent entity).

(A) ***Stock not to include certain preferred stock.*** For purposes of this paragraph (i)(4), the term *stock* does not include any stock which is described in section 1504(a)(4).

(B) ***Valuation.*** For purposes of section 1471(e) and this section, all shares of stock within a single class are considered to have the same value in determining the ownership percentage. Thus, control premiums and minority blockage discounts within a single class are not taken into account.

(ii) ***Partnerships.*** For purposes of paragraph (i)(2) of this section, a partnership will be considered owned by another member entity (including the common parent entity) if more than 50 percent (by value) of the capital or profits interest in the partnership is owned directly by one or more other members of the group (including the common parent entity).

(iii) ***Trusts.*** For purposes of paragraph (i)(2) of this section, a trust will be considered owned by another member entity or by the common parent entity if more than 50 percent (by value) of the beneficial interest in such trust is owned directly by one or more other members of the group (including the common parent entity). A beneficial interest in a trust includes an interest held by an entity treated as a grantor or other owner of the trust under sections 671 through 679 and a beneficial trust interest.

(5) ***Treatment of warrants, options, and obligations convertible into equity for determining ownership.*** For purposes of paragraph (i)(4) of this section, ownership of warrants, options, obligations convertible into the equity of a corporation or entity other than a corporation, and other similar interests is not considered for purposes of determining whether an entity is a member of an expanded affiliated group, except as follows:

(i) Ownership of a warrant, option, obligation convertible into stock, or other similar instrument creating an interest in a corporation will be considered for purposes of paragraph (i)(4) of this section to the extent that the common parent or member of the expanded affiliated group that holds such instrument also maintains voting rights with respect to such corporation. However, interests described in § 1.1504-4(d)(2) will not be treated as options.

(ii) Ownership of a warrant, option, obligation convertible into an equity interest, or other similar instrument creating an interest in a corporation or entity other than a corporation will be considered for purposes of paragraph (i)(4) of this section to the extent that such instrument is reasonably certain to be exercised, based on all of the facts and circumstances and in accordance with the principles set forth in § 1.1504-4(g).

(6) ***Exception for FFIs holding certain capital investments.*** Notwithstanding paragraphs (i)(2) and (i)(4) of this section, an investment entity will not be considered a member of an expanded affiliated group as a result of a contribution of seed capital by a member of such expanded affiliated group if—

(i) The member that owns the investment entity is an FFI that is in the business of providing seed capital to form investment entities, the interests in which it intends to sell to investors that do not have a relationship with each other described in section 267(b);

(ii) The investment entity is created in the ordinary course of such other FFI's business described in paragraph (i)(6)(i) of this section;

(iii) As of the date the FFI acquired the equity interest, any equity interest in the investment entity in excess of 50 percent of the total value of the stock of the investment entity is intended to be held by such other FFI (including ownership by other members of such other FFI's expanded affiliated group) for no more than three years from the date on which such other FFI first acquired an equity interest in the investment entity; and

(iv) In the case of an equity interest that has been held by such other FFI for over three years from the date referenced in paragraph (i)(6)(iii) of this section, the aggregate value of the equity interest held by such other FFI and the equity interests held by other members of its expanded affiliated group is 50 percent or less of the total value of the stock of the investment entity.

(7) ***Seed capital.*** For purposes of this paragraph (i), the term *seed capital* means an initial capital contribution made to an investment entity that is intended as a temporary investment and is deemed by the manager of the entity to be necessary or appropriate for the establishment of the entity, such as for the purpose of establishing a track record of investment performance for such entity, achieving economies of scale for diversified investment, avoiding an artificially high expense to return ratio, or similar purposes.

(8) ***Anti-abuse rule.*** A change in ownership, voting rights, or the form of an entity that results in an entity meeting or not meeting the ownership requirements described in paragraph (i)(4) of this section will be disregarded for purposes of determining whether an entity is a member of an expanded affiliated group if the change is pursuant to a plan a principal purpose of which is to avoid reporting or withholding that would otherwise be required under any chapter 4 provision. For purposes of this paragraph (i)(8), a change in voting rights includes a separation of voting rights and value.

(9) ***Exception for limited life debt investment entities.*** Notwithstanding paragraphs (i)(2) and (4) of this section, an entity that meets the requirements of paragraph (f)(2)(iv) of this section, including the requirements to have been in existence as of January 17, 2013, and to have issued interests in the entity on or before January 17, 2013, will not be considered a member of an expanded affiliated group as a result of any member of such expanded affiliated group owning interests in such entity.

(10) ***Partnerships, trusts, and other non-corporate entities.*** For purposes of determining the composition of an expanded affiliated group, an entity other than a corporation may elect to be treated as the common parent entity. Taxpayers following this approach may not, in a later year, follow the rule described in paragraph (i)(2) of this section without the approval of the Commissioner. See also paragraph (e)(5)(i)(C) of this section.

(j) ***Sponsoring entity verification*** —

(1) ***In general.*** This paragraph (j) describes the requirements for a sponsoring entity of a sponsored FFI to establish and implement a compliance program for satisfying its requirements as a sponsoring entity and to provide a certification of compliance with its requirements. This paragraph (j) also describes the procedures for the IRS to review the sponsoring entity's compliance with respect to each sponsored FFI for purposes of satisfying the requirements of paragraph (f)(1)(i)(F) or (f)(2)(iii) of this section or an applicable Model 2 IGA. For purposes of a sponsoring entity's certification of compliance under this paragraph (j), a sponsoring entity must have in place a written sponsorship agreement described in paragraph (j)(6) of this section with each sponsored FFI. See paragraph (j)(3)(v)(B) of this section for the certification regarding a sponsoring entity's sponsorship agreement with each sponsored FFI.

(2) ***Compliance program.*** The sponsoring entity must appoint a responsible officer to oversee the compliance of the sponsoring entity with respect to each sponsored FFI for purposes of satisfying the requirements of paragraph (f)(1)(i)(F) or (f)(2)(iii) of this section or an applicable Model 2 IGA. The responsible officer must (either personally or through designated persons) establish a compliance program that includes policies, procedures, and processes sufficient for the sponsoring entity to satisfy the requirements described in the preceding sentence. The responsible officer (or designee) must periodically review the sufficiency of the sponsoring entity's compliance program, the sponsoring entity's compliance with respect to each sponsored FFI for purposes of satisfying the requirements of paragraph (f)(1)(i)(F) or (f)(2)(iii) of this section or an applicable Model 2 IGA, and the compliance of each sponsored FFI with the due diligence, withholding, and reporting requirements of § 1.1471-4 or an applicable Model 2 IGA during the certification period described in paragraph (j)(3)(iii) of this section. The results of the periodic review must be considered by the responsible officer in making the periodic certifications described in paragraph (j)(3) of this section.

(3) ***Certification of compliance*** —

(i) ***Certification requirement*** —

(A) ***In general.*** In addition to the certification required under paragraph (j)(5) of this section (preexisting account certification), and except as otherwise provided in paragraph (j)(3)(i)(B) or (j)(3)(ii) of this section, on or before July 1 of the calendar year following the certification period, the responsible officer of the sponsoring entity must make the certification described in paragraph (j)(3)(v) of this section and either the certification described in paragraph (j)(3)(vi)(A) of this section or the certification described in paragraph (j)(3)(vi)(B) of this section with respect to all sponsored FFIs for which the sponsoring entity acts during the certification period on the form and in the manner prescribed by the IRS. To the extent that a sponsoring entity satisfies the certification requirements of paragraph (j)(3) of this section on behalf of a sponsored FFI, the sponsored FFI does not have a certification requirement under paragraph (f)(1)(ii)(B) of this section.

(B) ***Extension of time for the certification period ending on December 31, 2017.*** The certifications required for a certification period ending on December 31, 2017, must be submitted on or before March 31, 2019.

(ii) ***Late-joining sponsored FFIs.*** In general, with respect to a certification period, a sponsoring entity is not required to make a certification for a sponsored FFI that first agrees to be sponsored by the sponsoring entity during the six-month period before the end of the sponsoring entity's certification period, provided that the sponsoring entity makes certifications for such sponsored FFI for subsequent certification periods and the first such certification covers both the subsequent certification period and the portion of the prior certification period of the sponsoring entity during which such FFI was sponsored by the sponsoring entity. However, the preceding sentence does not apply to a sponsored FFI that, immediately before the FFI agrees to be sponsored by the sponsoring entity, was a participating FFI, registered deemed-compliant FFI, or sponsored, closely held investment vehicle of another sponsoring entity. The sponsoring entity may certify for a sponsored FFI described in the preceding sentence for the portion of the certification period of the sponsoring entity before the date that the FFI first agrees to be sponsored by the sponsoring entity if the sponsoring entity obtains from the FFI (or the FFI's sponsoring entity, if applicable) a written certification that the FFI has complied with its applicable chapter 4 requirements during such portion of the certification period, provided that: the sponsoring entity does not know that such certification is unreliable or incorrect; and the certification for the sponsored FFI for the subsequent certification period covers both the subsequent certification period and the portion of the prior certification period during which such FFI was sponsored by the sponsoring entity.

(iii) ***Certification period.*** The first certification period of a sponsoring entity begins on the later of the date the sponsoring entity is issued a GIIN to act as a sponsoring entity or June 30, 2014, and ends at the close of the third full calendar year following such date. Each subsequent certification period is the three-calendar-year period following the previous certification period.

(iv) ***Additional certifications or information.*** The certification of compliance described in paragraph (j)(3) of this section may be modified to include additional certifications or information (such as quantitative or factual information related to the sponsoring entity's compliance with respect to each sponsored FFI for purposes of satisfying the requirements of paragraph (f)(1)(i)(F) or (f)(2)(iii) of this section or an applicable Model 2 IGA), provided that such additional information or certifications are published at least 90 days before being made effective in order to allow for public comment.

(v) ***Certifications regarding sponsoring entity and sponsored FFI requirements.*** The responsible officer of the sponsoring entity must certify to the following statements—

(A) The sponsoring entity meets all of the requirements of a sponsoring entity as described in paragraph (f)(1)(i)(F)(*3*) or (f)(2)(iii)(D) of this section or an applicable Model 2 IGA, including the chapter 4 status required of such entity;

(B) The sponsoring entity has a written sponsorship agreement in effect with each sponsored FFI authorizing the sponsoring entity to fulfill the requirements of paragraph (f)(1)(i)(F) or (f)(2)(iii) of this section or an applicable Model 2 IGA with respect to each sponsored FFI; and

(C) Each sponsored FFI treated as a sponsored investment entity, a sponsored controlled foreign corporation, or a sponsored, closely held investment vehicle by the sponsoring entity meets the requirements of its respective status.

(vi) ***Certifications regarding internal controls*** —

(A) ***Certification of effective internal controls.*** The responsible officer of the sponsoring entity must certify to the following statements—

(*1*) The responsible officer of the sponsoring entity has established a compliance program that is in effect as of the date of the certification and that has been subject to the review as described in paragraph (j)(2) of this section;

(*2*) With respect to material failures (defined in paragraph (j)(3)(vii) of this section)—

(*i*) There are no material failures for the certification period; or

(*ii*) If there were any material failures, appropriate actions were taken to remediate such failures and to prevent such failures from reoccurring; and

(*3*) With respect to any failure to withhold, deposit, or report to the extent required under § 1.1471-4 or an applicable Model 2 IGA with respect to any sponsored FFI for any year during the certification period, the sponsored FFI has corrected such failure by paying (or directing the sponsoring entity to pay) any taxes due (including interest and penalties) and filing (or directing the sponsoring entity to file) the appropriate return (or amended return).

(B) ***Qualified certification.*** If the responsible officer of the sponsoring entity has identified an event of default (defined in paragraph (k)(1) of this section) or a material failure (defined in paragraph (j)(3)(vii) of this section) that the sponsoring entity has not corrected as of the date of the certification, the responsible officer must certify to the following statements—

(*1*) The responsible officer of the sponsoring entity has established a compliance program that is in effect as of the date of the certification and that has been subjected to the review as described in paragraph (j)(2) of this section;

(*2*) With respect to the event of default or material failure—

(*i*) The responsible officer (or designee) has identified an event of default; or

(*ii*) The responsible officer has determined that there are one or more material failures as defined in paragraph (j)(3)(vii) of this section and that appropriate actions will be taken to prevent such failures from reoccurring;

(*3*) With respect to any failure to withhold, deposit, or report to the extent required under § 1.1471-4 or an applicable Model 2 IGA with respect to any sponsored FFI for any year during the certification period, the sponsored FFI will correct such failure by paying (or directing the sponsoring entity to pay) any taxes due (including interest and penalties) and filing (or directing the sponsoring entity to file) the appropriate return (or amended return); and

(*4*) The responsible officer (or designee) will respond to any notice of default under paragraph (k)(2) of this section or will provide to the IRS a description of each material failure and a written plan to correct each such failure when requested under paragraph (j)(4) of this section.

(vii) ***Material failures defined.*** A material failure is a failure of the sponsoring entity with respect to each sponsored FFI to satisfy the requirements of paragraph (f)(1)(i)(F) or (f)(2)(iii) of this section or an applicable Model 2 IGA if the failure was the result of a deliberate action on the part of one or more employees of the sponsoring entity or was an error attributable to a failure of the sponsoring entity to implement internal controls sufficient for the sponsoring entity to meet its requirements. A material failure will not constitute an event of default unless such material failure occurs in more than limited circumstances when a sponsoring entity has not substantially complied with the requirements described in the preceding sentence. Material failures include the following—

(A) With respect to any sponsored FFI, the deliberate or systematic failure of the sponsoring entity to report accounts that such sponsored FFI was required to treat as U.S. accounts, withhold on passthru payments to the extent required, deposit taxes withheld to the extent required, accurately report recalcitrant account holders (or non-consenting U.S. accounts under an applicable Model 2 IGA), or accurately report with respect to nonparticipating FFIs as required under § 1.1471-4(d)(2)(ii)(F) or an applicable Model 2 IGA;

(B) A criminal or civil penalty or sanction imposed on the sponsoring entity or any sponsored FFI (or any branch or office of the sponsoring entity or any sponsored FFI) by a regulator or other governmental authority or agency with oversight over the sponsoring entity's or sponsored FFI's compliance with the AML due diligence procedures to which it (or any branch or office thereof) is subject and that is imposed based on a failure to properly identify account holders under the requirements of those procedures;

(C) A potential future tax liability of any sponsored FFI related to its compliance (or lack thereof) with the due diligence, withholding, and reporting requirements of § 1.1471-4 or an applicable Model 2 IGA for which such sponsored FFI has established, for financial statement purposes, a tax reserve or provision;

(D) A potential contractual liability under the agreement described in paragraph (j)(3)(v)(B) of this section of the sponsoring entity to any sponsored FFI related to such sponsoring entity's compliance (or lack thereof) with paragraph (f)(1)(i)(F) or (f)(2)(iii) of this section or an applicable Model 2 IGA for which the sponsoring entity has established, for financial statement purposes, a reserve or provision; and

(E) Failure to register with the IRS as a sponsoring entity or to register each sponsored FFI required to be registered under paragraph (f)(1)(i)(F)(*3*)(*iii*) of this section or an applicable Model 2 IGA.

(4) ***IRS review of compliance*** —

(i) ***General inquiries.*** The IRS, based upon the information reporting forms described in § 1.1471-4(d)(3)(v), (d)(5)(vii), or (d)(6)(iv) filed with the IRS (or the absence of such reporting) by the sponsoring entity for each calendar year with respect to any sponsoring FFI, may request additional information with respect to the information reported (or required to be reported) on the forms, the account statements described in § 1.1471-4(d)(4)(v) with respect to one or more sponsored FFIs, or confirmation that the FFI has no reporting requirements. The IRS may also

request any additional information from the sponsoring entity (including a copy of each sponsorship agreement the sponsoring entity has entered into with each sponsored FFI) necessary to determine the compliance with the due diligence, withholding, and reporting requirements of § 1.1471-4 or an applicable Model 2 IGA with respect to each sponsored FFI and to assist the IRS with its review of account holder compliance with tax reporting requirements.

(ii) ***Inquiries regarding substantial non-compliance.*** The IRS may determine in its discretion that a sponsoring entity may not have substantially complied with the requirements of paragraph (f)(1)(i)(F) or (f)(2)(iii) of this section or an applicable Model 2 IGA with respect to any sponsored FFI. This determination is based on the information reporting forms described in § 1.1471-4(d)(3)(v), (d)(5)(vii), or (d)(6)(iv) filed with the IRS by the sponsoring entity for each calendar year with respect to any sponsored FFI (or the absence of reporting), the certifications made by the responsible officer described in paragraphs (j)(3) and (5) of this section (or the absence of such certifications), or any other information related to the sponsoring entity's compliance with respect to any sponsored FFI for purposes of satisfying the requirements of paragraph (f)(1)(i)(F) or (f)(2)(iii) of this section or an applicable Model 2 IGA. In such a case, the IRS may request from the responsible officer (or designee) information necessary to verify the sponsoring entity's compliance with such requirements. The IRS may request, for example, a description or copy of the sponsoring entity's policies and procedures for fulfilling the requirements of paragraph (f)(1)(i)(F) or (f)(2)(iii) of this section or an applicable Model 2 IGA, a description or copy of the sponsoring entity's procedures for conducting its periodic review, or a copy of any written reports documenting the findings of such review. The IRS may also request the performance of specified review procedures by a person (including an external auditor or third-party consultant) that the IRS identifies as competent to perform such procedures given the facts and circumstances surrounding the sponsoring entity's potential failure to comply with respect to each sponsored FFI with the requirements of paragraph (f)(1)(i)(F) or (f)(2)(iii) of this section or an applicable Model 2 IGA.

(iii) ***Compliance procedures for a sponsored FFI subject to a Model 2 IGA.*** In the case of a sponsored FFI subject to the requirements of an applicable Model 2 IGA, the procedures described in paragraph (j)(4) of this section apply, except as otherwise provided in the applicable Model 2 IGA.

(5) ***Preexisting account certification.*** The responsible officer of a sponsoring entity must make the certification described in § 1.1471-4(c)(7) (preexisting account certification of a participating FFI) with respect to each sponsored FFI that enters into the sponsorship agreement with the sponsoring entity during the certification period (as defined in paragraph (j)(3)(iii) of this section). However, the preexisting account certification is not required for a sponsored FFI that, immediately before the FFI first agrees to be sponsored by the sponsoring entity, was a participating FFI, a sponsored FFI of another sponsoring entity, or a registered deemed-compliant FFI that is a local FFI or a restricted fund, if the FFI (or the FFI's former sponsoring entity, if applicable) provides a written certification to the sponsoring entity that the FFI has made the preexisting account certification required under § 1.1471-4(c)(7) or paragraph (f)(1)(i)(A)(*7*) or (f)(1)(i)(D)(*6*) of this section (as applicable), unless the sponsoring entity knows that such written certification is unreliable or incorrect. In addition, the preexisting account certification is not required for a sponsored FFI that enters into the sponsorship agreement with the sponsoring entity during the two year period before the end of the sponsoring entity's certification period, provided that the sponsoring entity makes the preexisting account certification for such FFI for the subsequent certification period. The certification described in this

paragraph (j)(5) for the certification period must be submitted by the due date of the sponsoring entity's certification of compliance required under paragraph (j)(3)(i) of this section for the certification period (or the extended due date described in paragraph (j)(3)(i)(B) of this section for the certification period ending on December 31, 2017), on the form and in the manner prescribed by the IRS. With respect to a sponsored FFI for which the sponsoring entity makes a preexisting account certification, a preexisting obligation means any account, instrument, or contract (including any debt or equity interest) maintained, executed, or issued by the sponsored FFI that is outstanding on the earlier of the date the FFI is issued a GIIN as a sponsored FFI or the date the FFI first agrees to be sponsored by the sponsoring entity.

(6) ***Sponsorship agreement.*** A sponsoring entity must have a written sponsorship agreement (which may be part of another agreement between the sponsoring entity and the sponsored FFI) that refers to the requirements of a sponsored FFI under FATCA and that must be in place with each sponsored FFI for which the sponsoring entity acts by the later of March 31, 2019, or the date that the sponsoring entity begins acting as a sponsoring entity for the applicable sponsored FFI.

(k) ***Sponsoring entity event of default*** —

(1) ***Defined.*** An event of default with regard to a sponsoring entity occurs if the sponsoring entity fails to perform material obligations required with respect to the due diligence, withholding, and reporting requirements of § 1.1471-4 or an applicable Model 2 IGA with respect to any sponsored FFI, to establish or maintain a compliance program as described in paragraph (j)(2) of this section, or to perform a periodic review described in paragraph (j)(2) of this section. An event of default also includes the occurrence of any of the following—

(i) With respect to any sponsored FFI, failure to obtain, in any case in which foreign law would (but for a waiver) prevent the reporting of U.S. accounts required under § 1.1471-4(d), valid and effective waivers from holders of U.S. accounts or failure to otherwise close or transfer such U.S. accounts as required under § 1.1471-4(i);

(ii) With respect to any sponsored FFI, failure to significantly reduce, over a period of time, the number of account holders or payees that such sponsored FFI is required to treat as recalcitrant account holders or nonparticipating FFIs, as a result of the sponsoring entity failing to comply with the due diligence procedures set forth in § 1.1471-4(c);

(iii) With respect to any sponsored FFI, failure to fulfill the requirements of § 1.1471-4(i) in any case in which foreign law prevents or otherwise limits withholding under § 1.1471-4(b);

(iv) Failure to take timely corrective actions to remedy a material failure described in paragraph (j)(3)(vii) of this section after making a qualified certification described in paragraph (j)(3)(vi)(B) of this section;

(v) Failure to make the preexisting account certification required under paragraph (j)(5) of this section or the periodic certification required under paragraph (j)(3) of this section with respect to any sponsored FFI within the specified time period;

(vi) Making incorrect claims for refund on behalf of any sponsored FFI;

(vii) Failure to cooperate with an IRS request for additional information under paragraph (j)(4) of this section;

(viii) Making any fraudulent statement or misrepresentation of material fact to the IRS or representing to a withholding agent or the IRS its status as a sponsoring entity for an entity other than an entity for which it acts as a sponsoring entity;

(ix) The sponsoring entity is no longer authorized to perform the requirements of a sponsoring entity with respect to one or more sponsored FFIs; or

(x) Failure to have the written sponsorship agreement described in paragraph (j)(3)(v)(B) of this section in effect with each sponsored FFI.

(2) ***Notice of event of default.*** Following an event of default known by or disclosed by the sponsoring entity to the IRS, the IRS will deliver to the sponsoring entity a notice of default specifying the event of default and, if applicable, identifying each sponsored FFI to which the notice relates. The IRS will request that the sponsoring entity remediate the event of default within 45 days (unless additional time is requested and agreed to by the IRS). The sponsoring entity must respond to the notice of default and provide information responsive to an IRS request for information or state the reasons why the sponsoring entity does not agree that an event of default has occurred.

(3) ***Remediation of event of default.*** A sponsoring entity will be permitted to remediate an event of default to the extent that it agrees with the IRS on a remediation plan. Such a plan may, for example, allow a sponsoring entity to remediate an event of default described in paragraph (k)(1) of this section with respect to a sponsored FFI by providing specific information regarding the U.S. accounts maintained by such sponsored FFI when the sponsoring entity has been unable to report all of the information with respect to such accounts as required under § 1.1471-4(d) and has been unable to close or transfer such accounts. The IRS may, as part of a remediation plan, require additional information from the sponsoring entity or the performance of the specified review procedures described in paragraph (j)(4)(ii) of this section.

(4) ***Termination*** —

(i) ***In general.*** If the sponsoring entity does not provide a response to a notice of default within the period specified in paragraph (k)(2) of this section or does not remediate the event of default as described in paragraph (k)(3) of this section, the IRS may deliver a notice of termination that terminates the sponsoring entity's status, the status of one or more sponsored FFIs as deemed-compliant FFIs, or the status of both the sponsoring entity and one or more sponsored FFIs.

(ii) ***Termination of sponsoring entity.*** If the IRS terminates the status of the sponsoring entity, the sponsoring entity must send notice of the termination within 30 days after the date of termination to each sponsored FFI for which it acts, as well as to each withholding agent from which each sponsored FFI receives payments and each financial institution with which each sponsored FFI holds an account for which a withholding certificate or other documentation was provided. A sponsoring entity that has had its status terminated cannot register on the FATCA registration website to act as a sponsoring entity for any sponsored FFI or for any entity that is a sponsored entity under a Model 1 IGA unless it receives written approval from the IRS to register. Unless the status of a sponsored FFI has been terminated, the sponsored FFI may register on the FATCA registration website as a participating FFI or registered deemed-compliant FFI (as applicable). However, a sponsored FFI whose sponsoring entity has been terminated may not register or represent its status as a sponsored FFI of a sponsoring entity that has a relationship described in section 267(b) or 707(b) with the sponsoring entity that was terminated without receiving written approval from the IRS.

(iii) ***Termination of sponsored FFI.*** If the IRS notifies the sponsoring entity that the status of a sponsored FFI is terminated (but not the sponsoring entity's status), the sponsoring entity must remove the sponsored FFI from the sponsoring entity's registration account on the FATCA registration website and send notice of the termination within 30 days after the date of termination to each withholding agent from which the sponsored FFI receives payments and each financial institution with which it holds an account for which a withholding certificate or other documentation was provided with respect to such sponsored FFI. A sponsored FFI that has had its status as a sponsored FFI terminated (independent from a termination of status of its sponsoring entity) may not register on the FATCA registration website as a participating FFI or registered deemed-compliant FFI unless it receives written approval from the IRS.

(iv) ***Reconsideration of notice of default or notice of termination.*** A sponsoring entity or sponsored FFI may request, within 90 days of a notice of default or notice of termination, reconsideration of the notice of default or notice of termination by written request to the IRS.

(v) ***Sponsoring entity of sponsored FFIs subject to a Model 2 IGA.*** Subject to the provisions of an applicable Model 2 IGA, the IRS may revoke the status of a sponsoring entity with respect to one or more sponsored FFIs subject to a Model 2 IGA based on the provisions of paragraphs (k)(2), (3), and (4) of this section (describing notice of event of default and termination procedures) if there is an event of default as defined in paragraph (k)(1) of this section.

(l) ***Trustee-documented trust verification*** —

(1) ***Compliance program.*** A trustee of a trust treated as a trustee-documented trust under an applicable Model 2 IGA must establish and implement a compliance program for purposes of satisfying the requirements of an applicable Model 2 IGA with respect to each such trust. The trustee must appoint a responsible officer who must (either personally or through designated persons) establish policies, procedures, and processes sufficient for the trustee to implement the compliance program. The responsible officer (or designee) must periodically review the sufficiency of the trustee's compliance program and the trustee's compliance with respect to each trust for purposes of satisfying the requirements of an applicable Model 2 IGA for each certification period described in paragraph (l)(2) of this section. The results of the periodic review must be considered by the responsible officer in making the certification described in paragraph (l)(2) of this section.

(2) ***Certification of compliance*** —

(i) ***Certification requirement*** —

(A) ***In general.*** Except as otherwise provided in paragraph (l)(2)(i)(B) or (l)(2)(ii) of this section, on or before July 1 of the calendar year following the end of the certification period, the responsible officer of the trustee must make a certification for the certification period with respect to all trustee-documented trusts described in paragraph (l)(1) of this section on the form and in the manner prescribed by the IRS.

(B) ***Extension of time for the certification period ending on December 31, 2017.*** The certifications required for a certification period ending on December 31, 2017, must be submitted on or before March 31, 2019.

(ii) ***Late-joining trustee-documented trusts.*** In general, with respect to a certification period, the responsible officer of a trustee is not required to make a certification for a trustee-documented trust for which the trustee first agreed to act as the trustee under Annex II of an applicable IGA during the six-month period before the end of the trustee's certification period, provided that the

responsible officer of the trustee makes certifications for such trustee-documented trust for subsequent certification periods and the first such certification covers both the subsequent certification period and the portion of the prior certification period of the trustee during which the trustee acted as the trustee of the trustee-documented trust. However, the preceding sentence does not apply to a trustee-documented trust that, immediately before the trustee first agrees to act as the trustee under Annex II of an applicable IGA, was a trustee-documented trust of another trustee. The trustee of a trustee-documented trust may certify for a trustee-documented trust described in the preceding sentence for the portion of the certification period of the trustee before the date that the trustee first agrees to act as the trustee under Annex II of an applicable IGA if the trustee obtains from the trustee-documented trust (or the trust's former trustee, if applicable) a written certification that the trust has complied with its applicable chapter 4 requirements during such portion of the certification period, provided that: The trustee does not know that such certification is unreliable or incorrect; and the certification for the trustee-documented trust for the subsequent certification period covers both the subsequent certification period and the portion of the prior certification period during which the trustee acts as the trustee under Annex II of an applicable IGA.

(iii) ***Certification period.*** The first certification period of the trustee begins on the later of the date the trustee is issued a GIIN to act as a trustee of a trustee-documented trust or June 30, 2014, and ends at the close of the third full calendar year following such date. Each subsequent certification period is the three-calendar-year period following the previous certification period.

(iv) ***Certifications.*** The responsible officer of the trustee must certify to the following statements—

(A) The responsible officer of the trustee has established a compliance program that is in effect as of the date of the certification and has performed a periodic review described in paragraph (l)(1) of this section for the certification period; and

(B) The trustee has reported to the IRS on Form 8966, “FATCA Report” (or such other form as the IRS may prescribe), all of the information required to be reported pursuant to the applicable Model 2 IGA with respect to all U.S. accounts of each trustee-documented trust for which the trustee acts during the certification period by the due date of Form 8966 (including extensions) for each year.

(3) ***IRS review of compliance by trustees of trustee-documented trusts*** —

(i) ***General inquiries.*** Based upon the information reporting forms filed with the IRS (or the absence of such reporting) by a trustee with respect to any trustee-documented trust subject to a Model 2 IGA for each calendar year, and subject to the requirements of an applicable Model 2 IGA, the IRS may request from the trustee additional information with respect to the information reported on the forms with respect to any trustee-documented trust or a confirmation that the trustee has no reporting requirements with respect to any trustee-documented trust. The IRS may also request any additional information to determine the trustee's compliance for purposes of satisfying the trust's requirements as a trustee-documented trust under an applicable Model 2 IGA or to assist the IRS with its review of account holder compliance with tax reporting requirements.

(ii) ***Inquiries regarding substantial non-compliance.*** The IRS may determine in its discretion that the trustee may not have substantially complied with the requirements applicable to a trustee of a trustee-documented trust. This determination is based on the information reporting forms filed with the IRS by a trustee with respect to any trustee-documented trust subject to a Model 2 IGA

for each calendar year (or the absence of such reporting), the certification described in paragraph (l)(2) of this section (or the absence of such certification), or any other information related to the trustee's compliance with respect to any trustee-documented trust for purposes of satisfying the trust's applicable Model 2 IGA requirements. In such a case, the IRS may request from the responsible officer information necessary to verify the trustee's compliance with such requirements. The IRS may also request the performance of specified review procedures by a person (including an external auditor or third-party consultant) that the IRS identifies as competent to perform such procedures given the circumstances surrounding the trustee's potential failure to comply with the requirements of an applicable Model 2 IGA with respect to one or more trustee-documented trusts. The IRS may notify the applicable Model 2 IGA jurisdiction that the trustee has not complied with its requirements as a trustee of one or more trustee-documented trusts.

(m) ***Applicability date.*** This section generally applies beginning on January 6, 2017, except for paragraphs (f)(1)(i)(F)(*3*)(*vi*), (f)(1)(i)(F)(*4*), (f)(1)(iv), (f)(2)(iii)(D)(*4*), (f)(2)(iii)(E), (j), (k), and (l) of this section, which apply March 25, 2019. However, taxpayers may apply these provisions as of January 28, 2013. (For the rules that otherwise apply beginning on January 6, 2017, and before March 25, 2019, see this section as in effect and contained in 26 CFR part 1 revised April 1, 2018. For the rules that otherwise apply beginning on January 28, 2013, and before January 6, 2017, see this section as in effect and contained in 26 CFR part 1 revised April 1, 2016.)

[T.D. 9610, 78 FR 5961, Jan. 28, 2013; 78 FR 55207, Sept. 10, 2013, as amended by T.D. 9657, 79 FR 12849, Mar. 6, 2014; T.D. 9809, 82 FR 2177, Jan. 6, 2017; 82 FR 29729, June 30, 2017; T.D. 9852, 84 FR 10981, Mar. 25, 2019; 84 FR 13121, Apr. 4, 2019]

§ 1.1471-6 Payments beneficially owned by exempt beneficial owners.

(a) ***In general.*** This section describes classes of beneficial owners that are identified in section 1471(f) (exempt beneficial owners). Except as otherwise provided in paragraphs (d) (regarding securities held by foreign central banks of issue) and (f) (regarding retirement funds) of this section, a person must be a beneficial owner of a payment to be treated as an exempt beneficial owner with respect to the payment. The following classes of persons are exempt beneficial owners: any foreign government, any political subdivision of a foreign government, or any wholly owned agency or instrumentality of any one or more of the foregoing described in paragraph (b) of this section; any international organization or any wholly owned agency or instrumentality thereof described in paragraph (c) of this section; any foreign central bank of issue described in paragraph (d) of this section; any government of a U.S. territory described in paragraph (e) of this section; certain foreign retirement funds described in paragraph (f) of this section; and certain entities described in paragraph (g) of this section that are wholly owned by one or more other exempt beneficial owners. In addition, an exempt beneficial owner includes any person treated as an exempt beneficial owner pursuant to a Model 1 IGA or Model 2 IGA. See §§ 1.1471-2(a)(4)(v) and 1.1472-1(c)(2) for the exemptions from withholding for payments beneficially owned by an exempt beneficial owner; § 1.1471-3(d)(9) for the documentation requirements applicable to a withholding agent for purposes of determining when a withholdable payment is beneficially owned by an exempt beneficial owner; and § 1.1471-3(d)(8)(ii) for when a withholding agent may treat a payment made to a nonparticipating FFI as beneficially owned by an exempt beneficial owner.

(b) ***Any foreign government, any political subdivision of a foreign government, or any wholly owned agency or instrumentality of any one or more of the foregoing.*** Solely for purposes of this section and except as provided in paragraph (h) of this section, the term *any foreign government, any political subdivision of a foreign government, or any wholly owned agency or instrumentality of any one or more of the foregoing* means only the integral parts, controlled entities, and political subdivisions of a foreign sovereign.

(1) ***Integral part.*** Solely for purposes of this paragraph (b), an *integral part* of a foreign sovereign is any person, body of persons, organization, agency, bureau, fund, instrumentality, or other body, however designated, that constitutes a governing authority of a foreign country. The net earnings of the governing authority must be credited to its own account or to other accounts of the foreign sovereign, with no portion inuring to the benefit of any private person as defined in paragraph (b)(3) of this section. An integral part does not include any individual who is a sovereign, official, or administrator acting in a private or personal capacity. All the facts and circumstances will be taken into account in determining whether an individual is acting in a private or personal capacity.

(2) ***Controlled entity.*** Solely for purposes of this paragraph (b), a *controlled entity* means an entity that is separate in form from a foreign sovereign or that otherwise constitutes a separate juridical entity, provided that—

(i) The entity is wholly owned and controlled by one or more foreign sovereigns directly or indirectly through one or more controlled entities;

(ii) The entity's net earnings are credited to its own account or to other accounts of one or more foreign sovereigns, with no portion of its income inuring to the benefit of any private person as defined in paragraph (b)(3) of this section; and

(iii) The entity's assets vest in one or more foreign sovereigns upon dissolution.

(3) ***Inurement to the benefit of private persons.*** Solely for purposes of this paragraph (b)—

(i) Income does not inure to the benefit of private persons if such persons (within the meaning of section 7701(a)(1)) are the intended beneficiaries of a governmental program carried on by a foreign sovereign, and the program activities constitute governmental functions under the regulations under section 892.

(ii) Income is considered to inure to the benefit of private persons if such income benefits—

(A) Private persons through the use of a governmental entity as a conduit for personal investment;

(B) Private persons through the use of a governmental entity to conduct a commercial business, such as a commercial banking business, that provides financial services to private persons; or

(C) Private persons who divert such income from its intended use by exerting influence or control through means explicitly or implicitly approved of by the foreign sovereign.

(c) ***Any international organization or any wholly owned agency or instrumentality thereof.*** Except as provided in paragraph (h) of this section, the term *any international organization or any wholly owned agency or instrumentality thereof* means any entity described in section 7701(a)(18). The term also includes any intergovernmental or supranational organization—

(1) That is comprised primarily of foreign governments;

(2) That is recognized as an intergovernmental or supranational organization under a foreign law similar to 22 U.S.C. 288-288f or that has in effect a headquarters agreement with a foreign government; and

(3) Whose income does not inure to the benefit of private persons under the principles of paragraph (b)(3)(ii) of this section, as applied to the intergovernmental or supranational organization in place of the government or governmental entity.

(d) *Foreign central bank of issue* —

(1) ***In general.*** Solely for purposes of this section and except as provided in paragraph (h) of this section, the term *foreign central bank of issue* means an institution that is by law or government sanction the principal authority, other than the government itself, issuing instruments intended to circulate as currency. Such an institution is generally the custodian of the banking reserves of the country under whose law it is organized.

(2) ***Separate instrumentality.*** A foreign central bank of issue may include an instrumentality that is separate from a foreign government, whether or not owned in whole or in part by a foreign government. For example, foreign banks organized along the lines of, and performing functions similar to, the Federal Reserve System qualify as foreign central banks of issue for purposes of this section.

(3) ***Bank for International Settlements.*** The Bank for International Settlements is a foreign central bank of issue for purposes of this section.

(4) ***Income on certain transactions.*** Solely for purposes of determining whether an entity is an exempt beneficial owner of a payment under this paragraph (d), a foreign central bank of issue is a beneficial owner with respect to income earned on cash and securities, including cash and securities held as collateral or securities held in connection with a securities lending transaction, held by the foreign central bank of issue in the ordinary course of its operations as a central bank of issue.

(e) ***Governments of U.S. territories.*** Except as provided in paragraph (h) of this section, whether a person or entity constitutes a government of a U.S. territory for purposes of this section is determined by applying principles analogous to those set forth in paragraph (b) of this section.

(f) ***Certain retirement funds.*** A fund is described in this paragraph (f) if it is described in paragraphs (f)(1) through (6) of this section. In addition, if a withholding agent may treat a withholdable payment as made to a payee that is a retirement fund in accordance with § 1.1471-3, then the withholding agent may also treat such retirement fund as the beneficial owner of the payment. See § 1.1471-3(d)(9)(ii).

(1) ***Treaty-qualified retirement fund.*** A fund established in a country with which the United States has an income tax treaty in force, provided that the fund is entitled to benefits under such treaty on income that it derives from sources within the United States (or would be entitled to such benefits if it derived any such income) as a resident of the other country that satisfies any applicable limitation on benefits requirement, and is operated principally to administer or provide pension or retirement benefits;

(2) ***Broad participation retirement fund.*** A fund established to provide retirement, disability, or death benefits, or any combination thereof, to beneficiaries that are current or former employees (or persons designated by such employees) of one or more employers in consideration for services rendered, provided that the fund—

(i) Does not have a single beneficiary with a right to more than five percent of the fund's assets;

(ii) Is subject to government regulation and provides annual information reporting about its beneficiaries to the relevant tax authorities in the country in which the fund is established or operates; and

(iii) Satisfies one or more of the following requirements—

(A) The fund is generally exempt from tax on investment income under the laws of the country in which it is established or operates due to its status as a retirement or pension plan;

(B) The fund receives at least 50 percent of its total contributions (other than transfers of assets from accounts described in § 1.1471-5(b)(2)(i)(A) (referring to retirement and pension accounts), from retirement and pension accounts described in an applicable Model 1 or Model 2 IGA, or from other retirement funds described in this paragraph (f) or in an applicable Model 1 or Model 2 IGA) from the sponsoring employers;

(C) Distributions or withdrawals from the fund are allowed only upon the occurrence of specified events related to retirement, disability, or death (except rollover distributions to accounts described in § 1.1471-5(b)(2)(i)(A) (referring to retirement and pension accounts), to retirement and pension accounts described in an applicable Model 1 or Model 2 IGA, or to other retirement funds described in this paragraph (f) or in an applicable Model 1 or Model 2 IGA), or penalties apply to distributions or withdrawals made before such specified events; or

(D) Contributions (other than certain permitted make-up contributions) by employees to the fund are limited by reference to earned income of the employee or may not exceed $50,000 annually.

(3) ***Narrow participation retirement funds.*** A fund established to provide retirement, disability, or death benefits to beneficiaries that are current or former employees (or persons designated by such employees) of one or more employers in consideration for prior services rendered, provided that—

(i) The fund has fewer than 50 participants;

(ii) The fund is sponsored by one or more employers and each of these employers are not investment entities or passive NFFEs;

(iii) Employee and employer contributions to the fund (other than transfers of assets from other retirement plans described in paragraph (f)(1) of this section, from accounts described in § 1.1471-5(b)(2)(i)(A) (referring to retirement and pension accounts), or retirement and pension accounts described in an applicable Model 1 or Model 2 IGA) are limited by reference to earned income and compensation of the employee, respectively;

(iv) Participants that are not residents of the country in which the fund is established or operated are not entitled to more than 20 percent of the fund's assets; and

(v) The fund is subject to government regulation and provides annual information reporting about its beneficiaries to the relevant tax authorities in the country in which the fund is established or operates.

(4) ***Fund formed pursuant to a plan similar to a section 401(a) plan.*** A fund formed pursuant to a pension plan that would meet the requirements of section 401(a), other than the requirement that the plan be funded by a trust created or organized in the United States.

(5) ***Investment vehicles exclusively for retirement funds.*** A fund established exclusively to earn income for the benefit of one or more retirement funds described in paragraphs (f)(1) through (5) of this section or in an applicable Model 1 or Model 2 IGA, accounts described in § 1.1471-5(b)(2)(i)(A) (referring to retirement and pension accounts), or retirement and pension accounts described in an applicable Model 1 or Model 2 IGA.

(6) ***Pension fund of an exempt beneficial owner.*** A fund established and sponsored by an exempt beneficial owner described in paragraph (b), (c), (d), or (e) of this section or an exempt beneficial owner (other than a fund that qualifies as an exempt beneficial owner) described in an applicable Model 1 or Model 2 IGA to provide retirement, disability, or death benefits to beneficiaries or participants that are current or former employees of the exempt beneficial owner (or persons designated by such employees), or that are not current or former employees, but the benefits provided to such beneficiaries or participants are in consideration of personal services performed for the exempt beneficial owner.

(7) ***Example.*** FP, a foreign pension fund established in Country X, is generally exempt from income taxation in Country X, and is operated principally to provide retirement benefits in such country. The U.S.-Country X income tax treaty is identical in all material respects to the 2006 U.S. model income tax convention. FP is a resident of Country X under Article 4(2)(a) and a qualified person under Article 22(2)(d) of the U.S.-Country X income tax treaty. Therefore, FP is a pension fund described in paragraph (f)(1) of this section.

(g) ***Entities wholly owned by exempt beneficial owners.*** A person is described in this paragraph (g) if it is an FFI solely because it is an investment entity, each direct holder of an equity interest in the investment entity is an exempt beneficial owner described in paragraph (b), (c), (d), (e), (f), or (g) of this section or an exempt beneficial owner described in an applicable Model 1 or Model 2 IGA, and each direct holder of a debt interest in the investment entity is either a depository institution (with respect to a loan made to such entity), an exempt beneficial owner described in paragraph (b), (c), (d), (e), (f), or (g) of this section, or an exempt beneficial owner described in an applicable Model 1 or Model 2 IGA.

(h) ***Exception for commercial activities*** —

(1) ***General rule.*** An exempt beneficial owner described in paragraph (b), (c), (d), or (e) of this section will not be treated as an exempt beneficial owner with respect to a payment that is derived from an obligation held in connection with a commercial financial activity of a type engaged in by an insurance company, custodial institution, or depository institution (including the accepting of deposits). Thus, for example, a central bank of issue that conducts a commercial financial activity, such as acting as an intermediary on behalf of persons other than in the bank's capacity as a central bank of issue, is not an exempt beneficial owner under paragraph (d)(1) of this section with respect to payments received in connection with an account held in connection with such activity.

(2) ***Limitation.*** Paragraph (h)(1) of this section will not apply to treat an exempt beneficial owner as engaged in a commercial financial activity if—

(i) The entity undertakes commercial financial activity described in paragraph (h)(1) of this section solely for or at the direction of other exempt beneficial owners and such commercial financial activity is consistent with the purposes of the entity;

(ii) The entity has no outstanding debt that would be a financial account under § 1.1471-5(b)(1)(iii); and

(iii) The entity otherwise maintains financial accounts only for exempt beneficial owners, or, in the case of a foreign central bank of issue as described in paragraph (d), the entity only maintains financial accounts that are depository accounts for current or former employees of the entity (and the spouses and children of such employees) or financial accounts for exempt beneficial owners.

(i) ***Effective/applicability date.*** This section applies on January 6, 2017. However, taxpayers may apply these provisions as of January 28, 2013. (For the rules that apply beginning on January 28, 2013, and before January 6, 2017, see this section as in effect and contained in 26 CFR part 1 revised April 1, 2016.)

[T.D. 9610, 78 FR 5976, Jan. 28, 2013; 78 FR 55208, Sept. 10, 2013, as amended by T.D. 9657, 79 FR 12857, Mar. 6, 2014; T.D. 9809, 82 FR 2183, Jan. 6, 2017]

§ 1.1472-1 Withholding on NFFEs.

(a) ***In general.*** This section provides rules that a withholding agent must apply to determine its obligations to withhold under section 1472 on withholdable payments made to a payee that is a NFFE. A participating FFI that complies with its withholding obligations under § 1.1471-4(b) will be deemed to satisfy its obligations under section 1472 with respect to withholdable payments made to NFFEs that are account holders. The rules of this section will apply, however, in the case of a participating FFI acting as a withholding agent with respect to a payment made to a NFFE that is not an account holder (for example, a payment with respect to a contract that does not constitute a financial account). See § 1.1473-1(a)(4)(vi), however, for rules excepting from the definition of withholdable payment certain payments of U.S. source FDAP income made prior to January 1, 2017, with respect to an offshore obligation and § 1.1471-2(b) for rules excepting from the definition of withholdable payment a grandfathered obligation. See also § 1.1471-2(a)(2)(ii), (iv), (v), and (vi) for special rules of withholding that apply for purposes of this section and § 1.1471-2(a)(5) for withholding requirements if the source or character of a payment is unknown. The following entities are deemed to satisfy their withholding obligations under section 1472: Exempt beneficial owners; section 501(c) entities described in § 1.1471-5(e)(5)(v); and nonprofit organizations described in § 1.1471-5(e)(5)(vi). See § 1.1471-5(f) for when a deemed-compliant FFI is deemed to satisfy its withholding obligations with respect to payments made to NFFEs that are account holders under section 1472.

(b) ***Withholdable payments made to an NFFE*** —

(1) ***In general.*** Except as otherwise provided in paragraph (b)(2) of this section (providing transitional relief) or paragraph (c)(1) or (2) of this section (providing exceptions for payments to an excepted NFFE or an exempt beneficial owner), § 1.1471-2(a)(4)(i) (providing an exception to withholding if the withholding agent lacks control, custody, or knowledge), § 1.1471-2(a)(4)(vii) (providing an exception to withholding for payments made to an account held with or equity interests traded through a clearing organization with FATCA-compliant membership), or § 1.1471-2(a)(4)(viii) (providing an exception to withholding for payments to certain excepted accounts), a withholding agent must withhold 30 percent of any withholdable payment made after June 30, 2014, to a payee that is a NFFE unless—

(i) The beneficial owner of such payment is the NFFE or any other NFFE;

(ii) The withholding agent can, pursuant to paragraph (d) of this section, treat the beneficial owner of the payment as an NFFE that does not have any substantial U.S. owners, or as an NFFE that has identified its substantial U.S. owners; and

(iii) The withholding agent reports the information described in § 1.1474-1(i)(2) relating to any substantial U.S. owners of the beneficial owner of such payment.

(2) ***Transitional relief.*** For any withholdable payment made prior to July 1, 2016, with respect to a preexisting obligation to a payee that is not a prima facie FFI and for which a withholding agent does not have documentation indicating the payee's status as a passive NFFE when the NFFE has failed to provide the owner certification as required under § 1.1471-3(d)(12)(iii), the withholding agent is not required to withhold under this section or report under § 1.1474-1(i)(2) (describing the reporting obligations of withholding agents with respect to NFFEs).

(c) ***Exceptions*** —

(1) ***Payments to an excepted NFFE.*** A withholding agent is not required to withhold under section 1472(a) and paragraph (b) of this section on a withholdable payment (or portion thereof) if the withholding agent can treat the payment as made to a payee that is an excepted NFFE. For purposes of this paragraph, the term *excepted NFFE* means a payee that the withholding agent may treat as a NFFE that is a QI, WP, or WT. Additionally, the term *excepted NFFE* means, with respect to the payment, a NFFE described in paragraphs (c)(1)(i) through (vii) of this section to the extent the withholding agent may treat the NFFE as the beneficial owner of the payment.

(i) ***Publicly traded corporation.*** A NFFE is described in this paragraph (c)(1)(i) if it is a corporation the stock of which is regularly traded on one or more established securities markets for the calendar year.

(A) ***Regularly traded.*** For purposes of this section, stock of a corporation is *regularly traded* on one or more established securities markets for a calendar year if—

(*1*) One or more classes of stock of the corporation that, in the aggregate, represent more than 50 percent of the total combined voting power of all classes of stock of such corporation entitled to vote and of the total value of the stock of such corporation are listed on such market or markets during the prior calendar year; and

(*2*) With respect to each class relied on to meet the more-than-50-percent listing requirement of paragraph (c)(1)(i)(A)(*1*) of this section—

(*i*) Trades in each such class are effected, other than in de minimis quantities, on such market or markets on at least 60 days during the prior calendar year; and

(*ii*) The aggregate number of shares in each such class that are traded on such market or markets during the prior year are at least 10 percent of the average number of shares outstanding in that class during the prior calendar year.

(B) ***Special rules regarding the regularly traded requirement*** —

(*1*) ***Year of initial public offering.*** For the calendar year in which a corporation initiates a public offering of a class of stock for trading on one or more established securities markets, as defined in paragraph (c)(1)(i)(C) of this section, such class of stock meets the requirements of this paragraph (c)(1)(i) for such year if the stock is regularly traded in more than de minimis quantities on $^{1}/_{6}$ of the days remaining after the date of the offering in the quarter during which the offering occurs, and on at least 15 days during each remaining quarter of the calendar year. If a corporation initiates a public offering of a class of stock in the fourth quarter of the calendar year, such class of stock meets the requirements of this paragraph (c)(1)(i) in the calendar

year of the offering if the stock is regularly traded on such established securities market, other than in de minimis quantities, on the greater of $^{1}/_{6}$ of the days remaining after the date of the offering in the quarter during which the offering occurs, or 5 days.

(*2*) ***Classes of stock treated as meeting the regularly traded requirement.*** A class of stock meets the trading requirements of this paragraph (c)(1)(i) for a calendar year if the stock is traded during such year on an established securities market located in the United States and is regularly quoted by dealers making a market in the stock. A dealer makes a market in a stock only if the dealer regularly and actively offers to, and in fact does, purchase the stock from, and sell the stock to, customers who are not related persons (as defined in section 954(d)(3)) with respect to the dealer in the ordinary course of a trade or business.

(*3*) ***Anti-abuse rule.*** Any trade conducted with a principal purpose of meeting the regularly traded requirements of this paragraph (c)(1)(i) shall be disregarded. Further, a class of stock shall not be treated as regularly traded if there is a pattern of trades conducted to meet the requirements of this paragraph (c)(1)(i). Similarly, paragraph (c)(1)(i)(B)(*1*) of this section shall not apply to a public offering of stock that has as one of its principal purposes qualification of the class of stock as regularly traded under the reduced regularly traded requirements for the calendar year of an initial public offering. For purposes of applying the immediately preceding sentence, consideration will be given to whether the regularly traded requirements of this paragraph (c)(1)(i) are satisfied in the calendar year immediately following the initial public offering.

(C) ***Established securities market*** —

(*1*) ***In general.*** For purposes of this paragraph (c)(1)(i), the term *established securities market* means, for any calendar year—

(*i*) A foreign securities exchange that is officially recognized, sanctioned, or supervised by a governmental authority of the foreign country in which the market is located, and has an annual value of shares traded on the exchange (or a predecessor exchange) exceeding $1 billion during each of the three calendar years immediately preceding the calendar year in which the determination is being made;

(*ii*) A national securities exchange that is registered under section 6 of the Securities Exchange Act of 1934 (15 U.S.C. 78f) with the Securities and Exchange Commission;

(*iii*) Any exchange designated under a Limitation on Benefits article of an income tax treaty with the United States that is in force; or

(*iv*) Any other exchange that the Secretary may designate in published guidance.

(*2*) ***Foreign exchange with multiple tiers.*** If an exchange in a foreign country has more than one tier or market level on which stock may be separately listed or traded, each such tier shall be treated as a separate exchange.

(3) ***Computation of dollar value of stock traded.*** For purposes of paragraph (c)(1)(i)(C)(*1*)(*i*) of this section, the value in U.S. dollars of shares traded during a calendar year shall be determined on the basis of the dollar value of such shares traded as reported by the World Federation of Exchanges located in Paris (or a successor institution), or, if not so reported, by converting into U.S. dollars the aggregate value in local currency of the shares traded using an exchange rate equal to the average of the spot rates on the last day of each month of the calendar year.

(ii) ***Certain affiliated entities related to a publicly traded corporation.*** A NFFE is described in this paragraph (c)(1)(ii) if it is a corporation that is a member of the same expanded affiliated group (as defined in § 1.1471-5(i)) as a corporation described in paragraph (c)(1)(i) of this section (without regard to whether such corporation is a NFFE).

(iii) ***Certain territory entities.*** A NFFE is described in this paragraph (c)(1)(iii) if it is a territory entity that is directly or indirectly wholly owned by one or more bona fide residents of the U.S. territory under the laws of which the entity is organized. The term *bona fide resident of a U.S. territory* means an individual who qualifies as a bona fide resident under section 937(a) and § 1.937-1.

(iv) ***Active NFFEs.*** A NFFE is described in this paragraph (c)(1)(iv) (and thus constitutes an active NFFE) if it is an entity and for the preceding calendar or fiscal year less than 50 percent of its gross income is passive income and the weighted average of the percentage of assets held by it that produce or are held for the production of passive income (weighted by total assets and measured quarterly) is less than 50 percent, as determined after the application of paragraph (c)(1)(iv)(B) of this section (passive assets). For purposes of the calculations described in the preceding sentence, a NFFE may use any accounting method permitted under paragraph (c)(1)(iv)(C) of this section but must apply a uniform method for measuring assets for the calendar or fiscal year.

(A) ***Passive income.*** Except as provided in paragraph (c)(1)(iv)(B) of this section, the term *passive income* means the portion of gross income that consists of—

(*1*) Dividends, including substitute dividend amounts;

(*2*) Interest;

(*3*) Income equivalent to interest, including substitute interest and amounts received from or with respect to a pool of insurance contracts if the amounts received depend in whole or part upon the performance of the pool;

(*4*) Rents and royalties, other than rents and royalties derived in the active conduct of a trade or business conducted, at least in part, by employees of the NFFE;

(*5*) Annuities;

(*6*) The excess of gains over losses from the sale or exchange of property that gives rise to passive income described in paragraphs (c)(1)(iv)(A)(*1*) through (*5*) of this section;

(*7*) The excess of gains over losses from transactions (including futures, forwards, and similar transactions) in any commodities, but not including—

(*i*) Any commodity hedging transaction described in section 954(c)(5)(A), determined by treating the entity as a controlled foreign corporation; or

(*ii*) Active business gains or losses from the sale of commodities, but only if substantially all the foreign entity's commodities are property described in paragraph (1), (2), or (8) of section 1221(a);

(*8*) The excess of foreign currency gains over foreign currency losses (as defined in section 988(b)) attributable to any section 988 transaction;

(*9*) Net income from notional principal contracts as defined in § 1.446-3(c)(1);

(*10*) Amounts received under cash value insurance contracts; or

(*11*) Amounts earned by an insurance company in connection with its reserves for insurance and annuity contracts.

(B) ***Exceptions from passive income treatment.*** Notwithstanding paragraph (c)(1)(iv)(A) of this section, the term *passive income* does not include—

(*1*) Any income from interest, dividends, rents, or royalties that is received or accrued from a related person to the extent such amount is properly allocable to income of such related person that is not passive income. For purposes of this paragraph (c)(1)(iv)(B)(*1*), the term “related person” has the meaning given such term by section 954(d)(3) determined by substituting “foreign entity” for “controlled foreign corporation” each place it appears in section 954(d)(3); or

(*2*) In the case of a foreign entity that regularly acts as a dealer in property described in paragraph (c)(1)(iv)(A)(*6*) of this section (referring to the sale or exchange of property that gives rise to passive income), forward contracts, option contracts, or similar financial instruments (including notional principal contracts and all instruments referenced to commodities)—

(*i*) Any item of income or gain (other than any dividends or interest) from any transaction (including hedging transactions and transactions involving physical settlement) entered into in the ordinary course of such dealer's trade or business as such a dealer; and

(*ii*) If such dealer is a dealer in securities (within the meaning of section 475(c)(2)), any income from any transaction entered into in the ordinary course of such trade or business as a dealer in securities.

(C) ***Methods of measuring assets.*** For purposes of this paragraph (c)(1)(iv), the value of a NFFE's assets is determined based on the fair market value or book value of the assets that is reflected on the NFFE's balance sheet (as determined under either a U.S. or an international financial accounting standard).

(v) ***Excepted nonfinancial entities.*** A NFFE is described in this paragraph (c)(1)(v) if it is an entity described in § 1.1471-5(e)(5) (referring to holding companies, treasury centers, and captive finance companies that are members of a nonfinancial group; start-up companies; entities that are liquidating or emerging from bankruptcy; and non-profit organizations).

(vi) ***Direct reporting NFFEs.*** A NFFE is described in this paragraph (c)(1)(vi) if it meets the requirements described in § 1.1472-1(c)(3) to be treated as a direct reporting NFFE.

(vii) ***Sponsored direct reporting NFFEs.*** A NFFE is described in this paragraph (c)(1)(vii) if it meets the requirements described in § 1.1472-1(c)(5) to be treated as a sponsored direct reporting NFFE.

(2) ***Payments made to an exempt beneficial owner.*** A withholding agent is not required to withhold on a withholdable payment (or portion thereof) under section 1472(a) and paragraph (b) of this section if the withholding agent may treat the payment as made to an exempt beneficial owner.

(3) ***Definition of direct reporting NFFE.*** A direct reporting NFFE means a NFFE that elects to report information about its direct or indirect substantial U.S. owners to the IRS and meets the following requirements—

(i) The NFFE must register on Form 8957, "FATCA Registration," (or such other form as the IRS may prescribe) with the IRS to obtain a GIIN pursuant to the procedures prescribed by the IRS;

(ii) The NFFE must report directly to the IRS on Form 8966, "FATCA Report," (or such other form as the IRS may prescribe) the following information for each calendar year (or, may be required by the IRS to certify on Form 8966, or in such other manner as the IRS may prescribe, that the NFFE has no substantial U.S. owners):

(A) The name, address, and TIN of each substantial U.S. owner (as defined in § 1.1473-1(b)) of such NFFE;

(B) The total of all payments made to each substantial U.S. owner (including the gross amounts paid or credited to the substantial U.S. owner with respect to such owner's equity interest in the NFFE during the calendar year, which include payments in redemption or liquidation (in whole or part) of the substantial U.S. owner's equity interest in the NFFE);

(C) The value of each substantial U.S. owner's equity interest in the NFFE determined by applying the rules described in § 1.1471-5(b)(4) (substituting the term *equity* for the terms *account* and *financial account*);

(D) The name, address, and GIIN of the NFFE; and

(E) Any other information as required by Form 8966 (or such other form as the IRS may prescribe) and its accompanying instructions;

(iii) The NFFE must obtain a written certification (contained on a withholding certificate or in a written statement) from each person that would be treated as a substantial U.S. owner of the NFFE if such person were a specified U.S. person. Such written certification must indicate whether the person is a substantial U.S. owner of the NFFE, and if so, the name, address and TIN of the person. If the NFFE has reason to know that such written certification is unreliable or incorrect, it must contact the person and request a revised written certification. If no revised written certification is received, the NFFE must treat the person as a substantial U.S. owner and report on Form 8966 the information required under paragraph (c)(3)(ii) of this section. The NFFE has reason to know that such a written certification is unreliable or incorrect if the certification is inconsistent with information in the NFFE's possession, including information that the NFFE provides to a financial institution in order for the financial institution to meet its AML or other account identification due diligence procedures with respect to the NFFE's account, information that is publicly available, or U.S. indicia as described in § 1.1441-7(b) for which appropriate documentation sufficient to cure the U.S. indicia in the manner set forth in § 1.1441-7(b)(8) has not been obtained;

(iv) The NFFE must keep records that it produces in the ordinary course of its business that summarize the activity (including the gross amounts described in paragraph (c)(3)(ii)(B) of this section that are paid or credited to each of its substantial U.S. owners) relating to its transactions with respect to the equity of the NFFE held by each of its substantial U.S. owners for any calendar year in which the owner was required to be reported under paragraph (c)(3)(ii) of this section. The records must be retained for the longer of six years or the retention period under the NFFE's normal business procedures. A NFFE may be required to extend the six year retention period if the IRS requests such an extension prior to the expiration of the six year period;

(v) The NFFE must respond to requests made by the IRS for additional information with respect to any substantial U.S. owner that is subject to reporting by the NFFE or with respect to the records described in paragraph (c)(3)(iii) or (iv) of this section;

(vi) The NFFE must make a periodic certification to the IRS on or before July 1 of the calendar year following the end of each certification period relating to its compliance with respect to the election described in paragraphs (c)(3) and (4) of this section on the form and in the manner prescribed by the IRS. The first certification period begins on the later of the date a GIIN is issued or June 30, 2014, and ends at the close of the third full calendar year following that date. Each subsequent certification period is the three calendar year period following the close of the previous certification period. The certification will require an officer of the NFFE to certify to the following statements—

(A)

(1) The NFFE has not had any events of default described in paragraph (c)(4)(v) of this section; or

(2) If there are any events of default, appropriate measures were taken to remediate such failures and to prevent such failures from recurring; and

(B) With respect to any failure to report to the extent required under paragraph (c)(3)(ii), the NFFE has corrected such failure by filing the appropriate information returns; and

(vii) The NFFE has not had its status as a direct reporting NFFE revoked by the IRS.

(4) ***Election to be treated as a direct reporting NFFE*** —

(i) ***Manner of making election.*** A NFFE may elect to be treated as a direct reporting NFFE by registering on Form 8957 (or such other form as the IRS may prescribe) with the IRS to obtain a GIIN pursuant to the procedures prescribed by the IRS.

(ii) ***Effective date of election.*** The election is effective upon the issuance of a GIIN to the NFFE.

(iii) ***Revocation of election by NFFE.*** The election may be revoked by the NFFE by canceling its registration account on the FATCA registration Web site and notifying the IRS of its revocation in such manner as the IRS may prescribe in the Instructions for Form 8966, “FATCA Report.” The NFFE must also notify within 30 days its sponsoring entity (if applicable) and each withholding agent and financial institution from which it receives payments or with which it holds an account for which a withholding certificate or written statement prescribed in § 1.1471-3(d)(11)(x)(B) (as applicable) was provided on which the NFFE certified its status as a direct reporting NFFE if it revokes its election.

(iv) ***Revocation of election by Commissioner.*** The election may be revoked by the Commissioner upon an event of default described in paragraph (c)(4)(v) of this section and following the notice and remediation procedures described in paragraphs (vi) and (vii) of this section. If the Commissioner revokes the NFFE's status as a direct reporting NFFE, the NFFE must provide notification within 30 days of the revocation to each withholding agent and financial institution from which the NFFE receives payments or with which it holds an account for which a withholding certificate or written statement (as permitted for chapter 4 purposes) was provided by the NFFE to represent its status as a direct reporting NFFE.

(v) ***Event of default.*** An event of default occurs if a direct reporting NFFE fails to perform any of the obligations described in (c)(3)(i) through (vi) of this section. An event of default also includes any misrepresentation of a material fact to the IRS.

(vi) ***Notice of event of default.*** Following an event of default known by or disclosed to the IRS, the IRS will deliver to the NFFE a notice of default specifying the event of default. The IRS will request that the NFFE remediate the event of default within a specified time period. The NFFE must respond to the notice of default and provide information responsive to an IRS request for information or state the reasons why the NFFE does not agree that an event of default has occurred. If the NFFE does not provide a response within the specified time period, the IRS may, at its sole discretion, deliver a notice to the NFFE that its election to be treated as a direct reporting NFFE has been revoked. A NFFE may request, within 90 days of receipt, reconsideration of a notice of default or notice of revocation by written request to the IRS.

(vii) ***Remediation of event of default.*** A NFFE will be permitted to remediate an event of default to the extent it agrees with the IRS on a remediation plan. The IRS may, as part of a remediation plan, require additional information from the NFFE.

(5) ***Election by a direct reporting NFFE to be treated as a sponsored direct reporting NFFE*** —

(i) ***Definition of sponsored direct reporting NFFE.*** A NFFE is a sponsored direct reporting NFFE if the NFFE is a direct reporting NFFE and if another entity, other than a nonparticipating FFI, has agreed with the NFFE to act as its sponsoring entity, as described in paragraph (c)(5)(ii) of this section.

(ii) ***Requirements for sponsoring entity of a sponsored direct reporting NFFE.*** A sponsoring entity meets the requirements of this paragraph (c)(5)(ii) if the sponsoring entity—

(A) Is authorized to act on behalf of the NFFE;

(B) Has registered with the IRS as a sponsoring entity;

(C) Has registered the NFFE with the IRS as a sponsored direct reporting NFFE by the later of January 1, 2017, or the date that the NFFE identifies itself to a withholding agent or financial institution as qualifying as a sponsored direct reporting NFFE under paragraph (c)(5) of this section;

(D) Agrees to perform, on behalf of the NFFE, all due diligence, reporting, and other requirements that the NFFE would have been required to perform as a direct reporting NFFE;

(E) Identifies the NFFE in all reporting completed on the NFFE's behalf;

(F) Complies with the certification and other requirements in paragraphs (f) and (g) of this section;

(G) Has not had its status as a sponsoring entity revoked; and

(H) Agrees to notify all relevant withholding agents and the IRS if its status as a sponsoring entity is revoked, if it otherwise ceases to be the sponsoring entity of any of its sponsored direct reporting NFFEs (for example, if the sponsored direct reporting NFFE changes sponsors), or if the status of any of its sponsored direct reporting NFFEs has been revoked.

(iii) ***Revocation of status as sponsoring entity.*** The IRS may revoke a sponsoring entity's status as a sponsoring entity with respect to all sponsored direct reporting NFFEs if there is an event of default as defined in paragraph (g) of this section with respect to any sponsored direct reporting NFFE.

(iv) ***Liability of sponsoring entity.*** A sponsoring entity is not liable for any failure to comply with the obligations contained in paragraph (c)(5)(ii) of this section. A sponsored direct reporting NFFE will remain liable for all of its chapter 4 obligations without regard to any failure of its sponsoring entity to comply with the obligations contained in paragraph (c)(5)(ii) of this section that the sponsoring entity has agreed to undertake on behalf of the NFFE.

(d) ***Rules for determining payee and beneficial owner*** —

(1) ***In general.*** For purposes of this section, except in the case of a payee that is a QI, WP, or WT, a withholding agent may treat a withholdable payment as beneficially owned by the payee as determined under § 1.1471-3. Thus, a withholding agent may treat a withholdable payment as beneficially owned by an excepted NFFE (other than a QI, WP, or WT) if the withholding agent can reliably associate the payment with valid documentation to determine the payee's status as an excepted NFFE under the rules of § 1.1471-3(d).

(2) ***Payments made to a NFFE that is a QI, WP, or WT.*** A withholding agent may treat the payee of a withholdable payment as a NFFE that is a QI, WP, or WT if the withholding agent can reliably associate the payment with valid documentation to determine the payee's status as such under the rules of § 1.1471-3(b)(3) and (d).

(3) ***Payments made to a partner or beneficiary of an NFFE that is an NWP or NWT.*** A withholding agent may treat a partner or beneficiary of an NFFE that is an NWP or NWT, respectively, as the payee of a withholdable payment under this section if the withholding agent can reliably associate the payment with a valid Form W-8 or written notification that the NFFE is a flow-through entity as described in § 1.1471-3(c)(2), including valid documentation sufficient to establish the chapter 4 status of each payee of the payment that is a partner or beneficiary, respectively, by applying the rules described in § 1.1471-3(d).

(4) ***Payments made to a beneficial owner that is an NFFE.*** A withholding agent may treat the beneficial owner of a withholdable payment as an NFFE that does not have any substantial U.S. owners or that has identified all of its substantial U.S. owners if it can reliably associate the payment with valid documentation identifying the beneficial owner as an NFFE that does not have any substantial U.S. owners or that has identified all of its substantial U.S. owners by applying the rules described in § 1.1471-3(d).

(5) ***Absence of valid documentation.*** A withholding agent that cannot reliably associate the payment with documentation as described in any of paragraphs (d)(2) through (4) of this section must treat the payment as made to a payee in accordance with the presumption rules under § 1.1471-3(f).

(e) ***Information reporting requirements*** —

(1) ***Reporting on withholdable payments.*** A withholding agent that treats a withholdable payment as made to any payee described in paragraph (d) of this section must provide information about such payee on Form 1042-S and file a withholding income tax return on Form 1042 to the extent required under § 1.1474-1(d) and (c), respectively.

(2) ***Reporting on substantial U.S. owners.*** A withholding agent that receives information about any substantial U.S. owners of an NFFE that is not an excepted NFFE must report information about the NFFE's substantial U.S. owners in accordance with § 1.1474-1(i)(2). See § 1.1471-4(d) for the reporting requirements of a participating FFI with respect to the substantial U.S. owners of account holders that are NFFEs.

(f) ***Sponsoring entity verification*** —

(1) ***In general.*** This paragraph (f) describes the requirements for a sponsoring entity to provide a certification of compliance with respect to each sponsored direct reporting NFFE for purposes of satisfying the requirements of paragraph (c)(5) of this section and defines the certification period for such certifications. This paragraph (f) also describes the procedures for the IRS to review the sponsoring entity's compliance with such requirements during the certification period. Finally, this paragraph (f) describes the requirement that a sponsoring entity have in place a written sponsorship agreement with each sponsored direct reporting NFFE for which it acts and specifies the terms of such agreement. See paragraph (g)(1)(i) of this section, describing an event of default for a sponsoring entity that does not have a sponsorship agreement with each sponsored direct reporting NFFE for which it acts as a sponsoring entity. References in this paragraph (f) or paragraph (g) of this section to a sponsored direct reporting NFFE mean a sponsored direct reporting NFFE for which the sponsoring entity acts as a sponsoring entity under paragraph (c)(5)(ii) of this section.

(2) ***Certification of compliance*** —

(i) ***Certification requirement*** —

(A) ***In general.*** The sponsoring entity must appoint a responsible officer to oversee the sponsoring entity's compliance with respect to each sponsored direct reporting NFFE for purposes of satisfying the requirements of paragraph (c)(5) of this section. Except as otherwise provided in paragraph (f)(2)(i)(B) or (f)(2)(ii) of this section, on or before July 1 of the calendar year following the certification period, the responsible officer of the sponsoring entity must make a certification for the certification period with respect to all sponsored direct reporting NFFEs for which the sponsoring entity acts during the certification period on the form and in the manner prescribed by the IRS. To the extent that a sponsoring entity satisfies the certification requirements of paragraph (f)(2) of this section on behalf of a sponsored direct reporting NFFE, the NFFE does not have a certification requirement under paragraph (c)(3)(vi) of this section.

(B) ***Extension of time for the certification period ending on December 31, 2017.*** The certifications required for a certification period ending on December 31, 2017, must be submitted on or before March 31, 2019.

(ii) ***Late-joining sponsored direct reporting NFFEs.*** In general, with respect to a certification period, a sponsoring entity is not required to make a certification for a sponsored direct reporting NFFE that first agrees to be sponsored by the sponsoring entity during the six-month period before the end of the sponsoring entity's certification period, provided that the sponsoring entity makes certifications for such sponsored direct reporting NFFE for subsequent certification periods, and the first such certification covers both the subsequent certification period and the portion of the prior certification period of the sponsoring entity during which the sponsored direct reporting NFFE was sponsored by the sponsoring entity. However, the preceding sentence does not apply to a sponsored direct reporting NFFE that, immediately before the NFFE agrees to be sponsored by the sponsoring entity, was a direct reporting NFFE or sponsored direct reporting NFFE of another sponsoring entity. The sponsoring entity may certify for a sponsored direct reporting NFFE described in the preceding sentence for the portion of the certification period of the sponsoring entity before the date that the NFFE first agrees to be sponsored by the sponsoring entity if the sponsoring entity obtains from the NFFE (or the NFFE's sponsoring entity, if applicable) a written certification that the NFFE has complied with its applicable chapter 4 requirements during such portion of the certification period, provided that: The sponsoring entity does not know that such certification is unreliable or incorrect; and the certification for the sponsored direct reporting NFFE for the subsequent certification period covers both the subsequent certification period and the portion of the prior certification period during which such NFFE was sponsored by the sponsoring entity.

(iii) ***Certification period.*** The first certification period of a sponsoring entity begins on the later of the date the sponsoring entity is issued a GIIN to act as a sponsoring entity or June 30, 2014, and ends at the close of the third full calendar year after such date. Each subsequent certification period is the three-calendar-year period following the close of the previous certification period.

(iv) ***Certifications.*** The certification will require the responsible officer of the sponsoring entity to certify to the following statements—

(A) The sponsoring entity meets all of the requirements of a sponsoring entity described in paragraph (c)(5)(ii) of this section;

(B) The sponsoring entity has the written sponsorship agreement described in paragraph (f)(4) of this section in effect with each sponsored direct reporting NFFE;

(C) There were no events of default (as defined in paragraph (g) of this section) with respect to the sponsoring entity, or, to the extent there were any such events of default, appropriate measures were taken by the sponsoring entity to remediate and prevent such events from reoccurring; and

(D) With respect to any failure to report to the extent required under paragraph (c)(3)(ii) of this section with respect to one or more sponsored direct reporting NFFEs, the sponsoring entity has corrected such failure by filing the appropriate information returns.

(3) ***IRS review of compliance*** —

(i) ***General inquiries.*** The IRS, based upon the information reporting forms described in paragraph (c)(3)(ii) of this section filed with the IRS (or the absence of such reporting) by the sponsoring entity for each calendar year with respect to any sponsored direct reporting NFFE, may request additional information with respect to the information reported (or required to be reported) on the forms about any substantial U.S. owner reported on the form or the records for each direct reporting NFFE described in paragraph (c)(3)(iv) of this section. The IRS may also request any

additional information from the sponsoring entity (including a copy of each sponsorship agreement the sponsoring entity has entered into with each sponsored FFI) to determine its compliance with paragraph (f) of this section with respect to each sponsored direct reporting NFFE and to assist the IRS with its review of any substantial U.S. owners' compliance with tax reporting requirements.

(ii) ***Inquiries regarding substantial non-compliance.*** The IRS may determine in its discretion that a sponsoring entity may not have substantially complied with the requirements of a sponsoring entity with respect to each sponsored direct reporting NFFE for purposes of satisfying the requirements of paragraph (c)(5) of this section. This determination is based on the information reporting forms referenced in paragraph (c)(3)(ii) of this section filed with the IRS by the sponsoring entity for each calendar year with respect to any sponsored direct reporting NFFE (or the absence of such reporting), the certification made by the responsible officer described in paragraph (f)(2) of this section (or the absence of such certification), or any other information related to the sponsoring entity's compliance with the requirements of a sponsoring entity with respect to each sponsored direct reporting NFFE for purposes of satisfying the requirements of paragraph (c)(5) of this section. In such a case, the IRS may request from the responsible officer information necessary to verify the sponsoring entity's compliance with such requirements. The IRS may also request the performance of specified review procedures by a person (including an external auditor or third-party consultant) that the IRS identifies as competent to perform such procedures given the circumstances surrounding the sponsoring entity's potential failure to comply with the requirements of a sponsoring entity.

(4) ***Sponsorship agreement.*** The sponsoring entity must have a written sponsorship agreement (which may be part of another agreement between the sponsoring entity and the sponsored direct reporting NFFE) in place with each sponsored direct reporting NFFE for which it acts by the later of March 31, 2019, or the date that the sponsoring entity begins acting as a sponsoring entity for the applicable sponsored direct reporting NFFE, under which—

(i) The sponsored direct reporting NFFE agrees to provide the sponsoring entity access to the sponsored direct reporting NFFE's books and records regarding each of its owners (including AML/KYC documentation regarding the sponsored direct reporting NFFE's owners provided by the sponsored direct reporting NFFE with respect to each financial account it holds) and such other information sufficient for the sponsoring entity to determine the direct and indirect substantial U.S. owners of the sponsored direct reporting NFFE, including the information about such owners required under paragraph (c)(3)(ii) of this section to be reported on Form 8966, “FATCA Report” (or such other form as the IRS may prescribe);

(ii) The sponsored direct reporting NFFE obtains a valid and effective waiver of any legal prohibitions on reporting the information about its direct and indirect substantial U.S. owners required under paragraph (c)(3)(ii) of this section to be reported on Form 8966 (or such other form as the IRS may prescribe);

(iii) The sponsored direct reporting NFFE authorizes the sponsoring entity to act on the sponsored direct reporting NFFE's behalf with respect to the sponsored direct reporting NFFE's obligations as a sponsored direct reporting NFFE (for example, authorizing the sponsoring entity to file Form 8966 on the sponsored direct reporting NFFE's behalf, responding to the IRS inquiries described in paragraph (f)(3) of this section, and providing the certification described in paragraph (f)(2) of this section);

(iv) The sponsored direct reporting NFFE agrees to identify to the sponsoring entity on request each withholding agent and financial institution to which the sponsored direct reporting NFFE reports its status as a sponsored direct reporting NFFE and agrees to provide to the sponsoring entity a copy of the withholding certificate or written statement prescribed in § 1.1471-3(d)(11)(x)(B) (as applicable) that the sponsored direct reporting NFFE provides to each such withholding agent or financial institution;

(v) The sponsored direct reporting NFFE represents that it does not have any formal or informal practices or procedures to assist its substantial U.S. owners with the avoidance of the requirements of chapter 4;

(vi) The sponsored direct reporting NFFE agrees to cooperate with the sponsoring entity in responding to any IRS inquiries under paragraph (f)(3) of this section with respect to the sponsored direct reporting NFFE; and

(vii) The sponsoring entity retains the records described in paragraphs (c)(3)(iii) and (iv) of this section for the longer of six years or the retention period under the sponsoring entity's normal business procedures. A sponsoring entity may be required to extend the retention period if the IRS requests such an extension before the expiration of the period.

(g) ***Sponsoring entity event of default*** —

(1) ***Defined.*** An event of default by the sponsoring entity means the occurrence of any of the following—

(i) Failure to have the written sponsorship agreement described in paragraph (f)(4) of this section in effect with each sponsored direct reporting NFFE;

(ii) Failure to satisfy the requirements of paragraph (c)(3)(iii) of this section with respect to each sponsored direct reporting NFFE that the NFFE would have been required to satisfy as a direct reporting NFFE;

(iii) Failure to report to the IRS on Form 8966, "FATCA Report," (or such other form as the IRS may prescribe) all of the information required under paragraph (c)(3)(ii) of this section with respect to each sponsored direct reporting NFFE and each of its substantial U.S. owners (or report to the IRS on Form 8966 that the sponsored direct reporting NFFE had no substantial U.S. owners) by the due date of the form (including any extensions);

(iv) Failure to make the certification required under paragraph (f)(2) of this section;

(v) Failure to cooperate with an IRS request for additional information described in paragraph (f)(3) of this section, including requests for the records described in paragraph (c)(3)(iv) of this section and requests to extend the retention period for these records as described in (f)(4)(vii) of this section;

(vi) Making any fraudulent statement or misrepresentation of material fact to the IRS or representing to a withholding agent or the IRS its status as a sponsoring entity under paragraph (c)(5) of this section for an entity other than an entity for which it acts as a sponsoring entity; or

(vii) Failure to obtain from each sponsored direct reporting NFFE the information required to report on Form 8966.

(2) ***Notice of event of default.*** Following an event of default known by or disclosed to the IRS, the IRS will deliver to the sponsoring entity a notice of default specifying the event of default and, if applicable, identifying each sponsored direct reporting NFFE to which the notice relates. The IRS will request

that the sponsoring entity remediate the event of default within 45 days (unless additional time is requested and agreed to by the IRS). The sponsoring entity must respond to the notice of default and provide information responsive to an IRS request for information or state the reasons why the sponsoring entity does not agree that an event of default has occurred.

(3) ***Remediation of event of default.*** A sponsoring entity will be permitted to remediate an event of default to the extent that it agrees with the IRS on a remediation plan. The IRS may, as part of a remediation plan, require additional information from the sponsoring entity, remedial actions, or the performance of the specified review procedures described in paragraph (f)(3)(ii) of this section.

(4) ***Termination*** —

(i) ***In general.*** If the sponsoring entity does not provide a response to a notice of default within the period specified in paragraph (g)(2) of this section, or if the sponsoring entity does not satisfy the conditions of the remediation plan within the time period specified by the IRS, the IRS may deliver a notice of termination that terminates the sponsoring entity's status, the status of one or more sponsored direct reporting NFFEs as a direct reporting NFFE, or the status of both the sponsoring entity and one or more sponsored direct reporting NFFEs.

(ii) ***Termination of sponsoring entity.*** If the IRS notifies the sponsoring entity that its status is terminated, the sponsoring entity must send notice of the termination within 30 days after the date of termination to each withholding agent from which each sponsored direct reporting NFFE receives payments and each financial institution with which each sponsored direct reporting NFFE holds an account for which a withholding certificate or written statement prescribed in § 1.1471-3(d)(11)(x)(B) (as applicable) was provided. A sponsoring entity that has had its status terminated cannot reregister on the FATCA registration website to act as a sponsoring entity for any sponsored direct reporting NFFE unless it receives written approval from the IRS. Unless the status of the sponsored direct reporting NFFEs has been terminated, the sponsored direct reporting NFFEs may register on the FATCA registration website as direct reporting NFFEs or as sponsored direct reporting NFFEs of another sponsoring entity, other than a sponsoring entity that is related to the sponsoring entity that was terminated (absent written approval from the IRS allowing the registration). An entity is related to the terminated sponsoring entity if they have a relationship with each other that is described in section 267(b) or 707(b).

(iii) ***Termination of sponsored direct reporting NFFE.*** If the IRS notifies the sponsoring entity that the status of a sponsored direct reporting NFFE is terminated (but not the sponsoring entity's status), the sponsoring entity must remove the sponsored direct reporting NFFE from the sponsoring entity's registration account on the FATCA registration website and send notice of the termination within 30 days after the date of termination to each withholding agent from which the sponsored direct reporting NFFE receives payments and each financial institution with which it holds an account for which a withholding certificate or written statement prescribed in § 1.1471-3(d)(11)(x)(B) (as applicable) was provided with respect to such sponsored direct reporting NFFE. A sponsored direct reporting NFFE that has had its status as a sponsored direct reporting NFFE terminated (independent from a termination of status of its sponsoring entity) may not register on the FATCA registration website as a direct reporting NFFE or as a sponsored direct reporting NFFE of another sponsoring entity unless it receives written approval from the IRS.

(iv) ***Reconsideration of notice of default or notice of termination.*** A sponsoring entity or sponsored direct reporting NFFE may request, within 90 days of a notice of default or notice of termination, reconsideration of the notice of default or notice of termination by written request to the IRS.

(h) ***Applicability date.*** This section generally applies beginning on January 6, 2017, except for paragraphs (c)(5)(iii), (f), and (g) of this section, which apply March 25, 2019. However, taxpayers may apply these provisions as of January 28, 2013. (For the rules that otherwise apply beginning on January 6, 2017, and before March 25, 2019, see this section as in effect and contained in 26 CFR part 1 revised April 1, 2018. For rules that otherwise apply beginning on January 28, 2013, and before January 6, 2017, see this section as in effect and contained in 26 CFR part 1 revised April 1, 2016.)

[T.D. 9610, 78 FR 5978, Jan. 28, 2013; 78 FR 55208, Sept. 10, 2013, as amended by T.D. 9657, 79 FR 12858, Mar. 6, 2014; T.D. 9809, 82 FR 2184, Jan. 6, 2017; T.D. 9852, 84 FR 10987, Mar. 25, 2019; 84 FR 13121, Apr. 4, 2019]

§ 1.1473-1 Section 1473 definitions.

(a) ***Definition of withholdable payment*** —

(1) ***In general.*** Except as otherwise provided in this paragraph (a) and § 1.1471-2(b) (regarding grandfathered obligations), the term *withholdable payment* means—

(i) Any payment of U.S. source FDAP income (as defined in paragraph (a)(2) of this section); and

(ii) For any sales or other dispositions occurring after December 31, 2018, any gross proceeds from the sale or other disposition (as defined in paragraph (a)(3)(i) of this section) of any property of a type that can produce interest or dividends that are U.S. source FDAP income.

(2) ***U.S. source FDAP income defined*** —

(i) ***In general*** —

(A) ***FDAP income defined.*** For purposes of chapter 4, the term *FDAP income* means fixed or determinable annual or periodic income that is described in § 1.1441-2(b)(1) or § 1.1441-2(c) (excluding income described in paragraph (a)(2)(vi) of this section or § 1.1441-2(b)(2) (such as gains derived from the sale of certain property)) and including the types of income enumerated in paragraphs (a)(2)(iii) through (v) of this section.

(B) ***U.S. source.*** The term *U.S. source* means derived from sources within the United States. A payment is derived from sources within the United States if it is income treated as derived from sources within the United States under sections 861 through 865 and other relevant provisions of the Code. In the case of a payment of FDAP income for which the source cannot be determined at the time of payment, see § 1.1471-2(a)(5).

(C) ***Exceptions to withholding on U.S. source FDAP income not applicable under chapter 4.*** Except as otherwise provided in paragraph (a)(4) of this section, no exception to withholding on U.S. source FDAP income for purposes other than chapter 4 applies for purposes of determining whether a payment of such income is a withholdable payment under chapter 4. Thus, for example, an exclusion from an amount subject to withholding under § 1.1441-2(a) or an exclusion from taxation under section 881 does not apply for purposes of determining whether such income constitutes a withholdable payment.

(ii) ***Special rule for certain interest.*** Interest that is described in section 861(a)(1)(A) (relating to interest paid by foreign branches of domestic corporations and partnerships) is treated as U.S. source FDAP income.

(iii) ***Original issue discount.*** The rules described in § 1.1441-2(b)(3)(ii) for determining when an amount representing original issue discount is subject to withholding for chapter 3 purposes apply for purposes of determining when original issue discount from sources within the United States is U.S. source FDAP income.

(iv) ***REMIC residual interests.*** U.S. source FDAP income includes an amount described in § 1.1441-2(b)(5).

(v) ***Withholding liability of payee that is satisfied by withholding agent.*** If a withholding agent satisfies a withholding liability arising under chapter 4 with respect to a withholdable payment from the withholding agent's own funds, the satisfaction of such liability is treated as an additional payment of U.S. source FDAP income to the payee to the extent that the withholding agent's satisfaction of such withholding liability also satisfies a tax liability of the payee under section 881 or 871 with respect to the same payment, and the satisfaction of the tax liability constitutes additional income to the payee under § 1.1441-3(f) that is U.S. source FDAP income. In such case, the amount of any additional payment treated as made by the withholding agent for purposes of this paragraph (a)(2)(v) and any tax liability resulting from such payment shall be determined under § 1.1441-3(f). See § 1.1474-6 regarding the coordination of the withholding requirements under chapters 3 and 4 in the case of a withholdable payment that is also subject to withholding under chapter 3.

(vi) ***Special rule for sales of interest bearing debt obligations.*** Income that is otherwise described as U.S. source FDAP income in paragraphs (a)(2)(i) through (v) of this section does not include an amount of interest accrued on the date of a sale or exchange of an interest bearing debt obligation if the sale occurs between two interest payment dates and is not part of a plan described in § 1.1441-3(b)(2)(ii).

(vii) ***Payment of U.S. source FDAP income —***

(A) ***Amount of payment of U.S. source FDAP income.*** The amount of U.S. source FDAP income is the gross amount of the payment of such income, unreduced by any deductions or offsets. The rules of § 1.1441-3(b)(1) shall apply to determine the amount of an interest payment on an interest-bearing obligation. In the case of a corporate distribution, the distributing corporation or intermediary shall determine the portion of the distribution that is treated as U.S. source FDAP income under this paragraph (a)(2) in the same manner as the distributing corporation or intermediary determines the portion of the distribution subject to withholding under § 1.1441-3(c). Any portion of a payment on a debt instrument or a corporate distribution that does not constitute U.S. source FDAP income under this paragraph (a)(2) solely because of a provision other than the source rules of sections 861 through 865 shall be taken into account as gross proceeds under paragraph (a)(3) of this section. For rules regarding the determination of the amount of a payment of U.S. source FDAP income under paragraph (a)(2) of this section made in a medium other than U.S. dollars, see § 1.1441-3(e). For determining the amount of a payment of a dividend equivalent, see section 871(m) and the regulations thereunder.

(B) ***When payment of U.S. source FDAP income is made.*** A payment is considered made when the amount would be includible in the income of the beneficial owner under the U.S. tax principles governing the cash method of accounting. If an FFI acts as an intermediary with respect to a payment of U.S. source FDAP income, the FFI will be treated as making a payment of such U.S. source FDAP income to the person with respect to which the FFI acts as an intermediary when it pays or credits such amount to such person. The following rules also apply for purposes of this paragraph (a)(2)(vii)(B): §§ 1.1441-2(e)(2) (regarding when a payment is considered made in the case of income allocated under section 482); 1.1441-2(e)(3) (regarding blocked income); 1.1441-2(e)(4) (regarding when a dividend is considered paid); and 1.1441-2(e)(5) (regarding when interest is considered paid if a foreign person has made an election under § 1.884-4(c)(1)).

(3) ***Gross proceeds defined*** —

(i) ***Sale or other disposition*** —

(A) ***In general.*** Except as otherwise provided in this paragraph (a)(3)(i), the term *sale or other disposition* means any sale, exchange, or disposition of property described in paragraph (a)(3)(ii) of this section that requires recognition of gain or loss under section 1001(c), determined without regard to whether the owner of such property is subject to U.S. federal income tax with respect to such sale, exchange, or disposition. The term sale or other disposition includes (but is not limited to) sales of securities; redemptions of stock; retirements and redemptions of indebtedness; entering into short sales; and a closing transaction under a forward contract, option, or other instrument that is otherwise a sale. Such term further includes a distribution from a corporation to the extent the distribution is a return of capital or a capital gain to the beneficial owner of the payment. Such term does not include grants or purchases of options, exercises of call options for physical delivery, transfers of securities for which gain or loss is excluded from recognition under section 1058, or mere executions of contracts that require delivery of personal property or an interest therein. For purposes of this section only, a constructive sale under section 1259 or a mark to fair market value under section 475 or 1296 is not a sale or disposition.

(B) ***Special rule for sales effected by brokers.*** In the case of a sale effected by a broker (with the term *effect* defined in § 1.6045-1(a)(10)), a sale means a sale as defined in § 1.6045-1(a)(9) with respect to property described in paragraph (a)(3)(ii) of this section.

(C) ***Special rule for gross proceeds from sales settled by a clearing organization.*** In the case of a clearing organization that settles sales and purchases of securities between members of such organization on a net basis, the gross proceeds from sales or dispositions are limited to the net amount paid or credited to a member's account that is associated with sales or other dispositions of property described in paragraph (a)(3)(ii) of this section by such member as of the time that such transactions are settled under the settlement procedures of such organization.

(ii) ***Property of a type that can produce interest or dividend payments that would be U.S. source FDAP income*** —

(A) ***In general.*** Property is of a type that can produce interest or dividends payments that would be U.S. source FDAP income if the property is of a type that ordinarily gives rise to the payment of interest or dividends that would constitute U.S. source FDAP income, regardless of whether any such payment is made during the period such property is held

by the person selling or disposing of such property. Thus, for example, stock issued by a domestic corporation is property of a type that can produce dividends from sources within the United States if a dividend from such corporation would be from sources within the United States, regardless of whether the stock pays dividends at regular intervals and regardless of whether the issuer has any plans to pay dividends or has ever paid a dividend with respect to the stock.

(B) ***Contracts producing dividend equivalent payments.*** In the case of any contract that results in the payment of a dividend equivalent as defined in section 871(m) and the regulations thereunder (including as part of a termination payment), such contract shall be treated as property that is described in paragraph (a)(3)(ii)(A) of this section, without regard to whether the taxpayer is a foreign person subject to U.S. federal income tax with respect to such transaction. To the extent that the proceeds from a termination payment include the payment of a dividend equivalent, the gross amount of such proceeds will not include the amount of such dividend equivalent.

(C) ***Regulated investment company distributions.*** The amount of a distribution that is designated as a capital gain dividend under section 852(b)(3)(C) or 871(k)(2) is a payment of gross proceeds to the extent attributable to property described in paragraph (a)(3)(ii)(A) of this section.

(iii) ***Payment of gross proceeds*** —

(A) ***When gross proceeds are paid.*** With respect to a sale that is effected by a broker that results in a payment of gross proceeds as defined in this paragraph (a)(3), the date the gross proceeds are considered paid is the date that the proceeds of such sale are credited to the account of or otherwise made available to the person entitled to the payment.

(B) ***Amount of gross proceeds.*** Except as otherwise provided in this paragraph (a)(3)—

(*1*) The amount of gross proceeds from a sale or other disposition means the total amount realized as a result of a sale or other disposition of property described in paragraph (a)(3)(ii) under section 1001(b);

(*2*) In the case of a sale effected by a broker, the amount of gross proceeds from a sale or other disposition means the total amount paid or credited to the account of the person entitled to the payment increased by any amount not so paid by reason of the repayment of margin loans. The broker may (but is not required to) take commissions with respect to the sale into account in determining the amount of gross proceeds;

(*3*) In the case of a corporate distribution, the amount treated as gross proceeds excludes the amount described in paragraph (a)(2)(vii)(A) of this section that is treated as U.S. source FDAP income;

(*4*) In the case of a sale of an obligation described in paragraph (a)(2)(vi), gross proceeds includes any interest accrued between interest payment dates other than an amount described in paragraph (a)(2)(vi) of this section that is treated as U.S. source FDAP income; and

(5) In the case of a sale, retirement, or redemption of a debt obligation, gross proceeds excludes the amount of original issue discount treated as U.S. source FDAP income under paragraph (a)(2)(iii) of this section.

(4) ***Payments not treated as withholdable payments.*** The following payments are not withholdable payments under paragraph (a)(1) of this section—

(i) ***Certain short-term obligations.*** A payment of interest or original issue discount on short-term obligations described in section 871(g)(1)(B)(i).

(ii) ***Effectively connected income.*** Any payment to the extent it gives rise to an item of income that is taken into account under section 871(b)(1) or 882(a)(1) for the taxable year. An item of income is taken into account under section 871(b)(1) or 882(a)(1) when the income is (or is deemed to be) effectively connected with the conduct of a trade or business in the United States and is includible in the beneficial owner's gross income for the taxable year. An amount of income shall not be treated as taken into account under section 871(b)(1) or 882(a)(1) if the income is (or is deemed to be) effectively connected with the conduct of a trade or business in the United States and the beneficial owner claims an exception from tax under an income tax treaty because the income is not attributable to a permanent establishment in the United States.

(iii) ***Excluded nonfinancial payments.*** Payments for the following: services (including wages and other forms of employee compensation (such as stock options)), the use of property, office and equipment leases, software licenses, transportation, freight, gambling winnings, awards, prizes, scholarships, and interest on outstanding accounts payable arising from the acquisition of goods or services. Notwithstanding the preceding sentence, excluded nonfinancial payments do not include: payments in connection with a lending transaction (including loans of securities), a forward, futures, option, or notional principal contract, or a similar financial instrument; premiums for insurance contracts or annuity contracts; amounts paid under cash value insurance or annuity contracts; dividends; interest (including substitute interest described in § 1.861-2(a)(7)) other than interest described in the preceding sentence; gross proceeds other than gross proceeds described in paragraph (a)(4)(iv) of this section; investment advisory fees; custodial fees; and bank or brokerage fees.

(iv) ***Gross proceeds from sales of excluded property.*** Gross proceeds from the sale or other disposition of any property that can produce U.S. source FDAP income if all such U.S. source FDAP income would be excluded from the definition of withholdable payment under paragraphs (a)(4)(i) through (iii) of this section.

(v) ***Fractional shares.*** Payments arising in sales described in § 1.6045-1(c)(3)(ix).

(vi) ***Offshore payments of U.S. source FDAP income prior to 2017 (transitional).*** A payment with respect to an offshore obligation (as defined in § 1.1471-1(b)(88)) made prior to January 1, 2017, if such payment is U.S. source FDAP income and made by a person that is not acting as an intermediary or as a WP or WT with respect to the payment. Additionally, a payment with respect to an account, obligation, contract, or other instrument that is issued or maintained by an entity other than a financial institution and that would be treated as an offshore obligation under § 1.6049-5(c)(1) (applied by substituting the term *entity* for the term *financial institution* (as defined in § 1.1471-5(e)) in each place that it appears), made prior to January 1, 2017, if such payment is U.S. source FDAP and made by a person that is not acting as an intermediary or as a WP or WT with respect to the payment is not a withholdable payment under paragraph

(a)(1) of this section. The exception for offshore payments of U.S. source FDAP income provided in the preceding sentences shall not apply, however, in the case of a flow-through entity that has a residual withholding requirement with respect to its partners, owners, or beneficiaries under § 1.1471-2(a)(2)(ii), or in the case of payments made with respect to debt or equity issued by a U.S. person (excluding interest payments made by a foreign branch of a U.S. financial institution with respect to depository accounts it maintains). For purposes of this paragraph (a)(4)(vi), an intermediary includes a person that acts as a qualified securities lender as defined for purposes of chapter 3 and does not include a person acting as an insurance broker with respect to premiums.

(vii) ***Collateral arrangements prior to 2017 (transitional).*** A payment made prior to January 1, 2017, by a secured party, or to a secured party other than a nonparticipating FFI, with respect to collateral securing one or more transactions under a collateral arrangement, provided that only a commercially reasonable amount of collateral is held by the secured party (or by a third party for the benefit of the secured party) as part of the collateral arrangement. For purposes of this paragraph (a)(4)(vii), the term *transaction* generally includes a debt instrument, a derivative financial instrument (including a notional principal contract, future, forward, and option), and any securities lending transaction, sale-repurchase transaction, margin loan, or substantially similar transaction that is subject to a collateral arrangement. Solely for purposes of this paragraph (a)(4)(vii), a secured party may provide documentation to the withholding agent indicating that it is the beneficial owner of a payment described in this paragraph (a)(4)(vii), and a withholding agent may rely on such certification for purposes of its requirements under § 1.1471-3(d) for determining whether withholding under chapter 4 applies.

(viii) ***Certain dividend equivalents.*** Amounts paid with respect to a notional principal contract described in § 1.871-15(a)(7), an equity-linked instrument described in § 1.871-15(a)(4), or a securities lending or sale-repurchase transaction described in § 1.871-15(a)(13) that are exempt from withholding under section 1441(a) as dividend equivalents under section 871(m) if the transaction is not a section 871(m) transaction within the meaning of § 1.871-15(a)(12), if the transaction is subject to the exception described in § 1.871-15(k), or to the extent the payment is not a dividend equivalent pursuant to § 1.871-15(c)(2).

(5) ***Special payment rules for flow-through entities, complex trusts, and estates*** —

(i) ***In general.*** This paragraph (a)(5) provides special rules for a flow-through entity, complex trust, or estate to determine when such entity must treat a payment of U.S. source FDAP income that is also a withholdable payment as having been paid by such entity to its partners, owners, or beneficiaries (as applicable depending on the type of entity).

(ii) ***Partnerships.*** An amount of U.S. source FDAP income that is also a withholdable payment is treated as being paid to a partner under rules similar to the rules prescribing when withholding is required for chapter 3 purposes as described in § 1.1441-5(b)(2)(i)(A).

(iii) ***Simple trusts.*** An amount of U.S. source FDAP income that is also a withholdable payment is treated as being paid to a beneficiary of a simple trust under rules similar to the rules prescribing when withholding is required for chapter 3 purposes as described in § 1.1441-5(b)(2)(ii).

(iv) ***Complex trusts and estates.*** An amount of U.S. source FDAP income that is also a withholdable payment is treated as being paid to a beneficiary of a complex trust or estate under rules similar to the rules prescribing when withholding is required for chapter 3 purposes as described in § 1.1441-5(b)(2)(iii).

(v) ***Grantor trusts.*** If an amount of U.S. source FDAP income that is also a withholdable payment is paid to a grantor trust, a person treated as an owner of all or a portion of such trust is treated as having been paid such income by the trust at the time it is received by or credited to the trust or portion thereof.

(vi) ***Special rule for an NWP or NWT.*** In the case of a partnership, simple trust, or complex trust that is an NWP or NWT, the rules described in paragraphs (a)(5)(ii) and (iii) of this section shall not apply, and U.S. source FDAP income that is also a withholdable payment is treated as being paid to the partner or beneficiary at the time the income is paid to the partnership or trust, respectively.

(vii) ***Special rules for determining when gross proceeds are treated as paid to a partner, owner, or beneficiary of a flow-through entity.*** [Reserved]

(6) ***Reporting of withholdable payments.*** See § 1.1474-1(c) and (d) for a description of the income tax return and information reporting requirements applicable to a withholding agent that has made a withholdable payment.

(7) ***Example. Satisfaction of payee's chapter 4 liability by withholding agent.*** Recalcitrant account holder (RA) is entitled to receive a payment of $100 of U.S. source interest from withholding agent, WA. The payment is subject to withholding under chapter 4, but is not subject to withholding under section 1442, and RA has no substantive tax liability under section 881 with respect to this payment. WA pays the full $100 to RA and, after the date of payment, pays the $30 of tax due under chapter 4 to the IRS from its own funds. Because no underlying tax liability of RA is satisfied, and further because WA and RA did not execute any agreement for WA to pay this tax and WA did not have an obligation to pay this tax apart from the requirements of chapter 4, WA's payment of the tax does not give rise to a deemed payment of U.S. source FDAP income to RA under paragraph (a)(2)(v) of this section. Thus, WA is not required to pay any additional tax with respect to this payment for purposes of chapter 4.

(b) ***Substantial U.S. owner*** —

(1) ***Definition.*** Except as otherwise provided in paragraph (b)(4) or (5) of this section, the term *substantial United States owner* (or *substantial U.S. owner*) means:

(i) With respect to any foreign corporation, any specified U.S. person that owns, directly or indirectly, more than 10 percent of the stock of such corporation (by vote or value);

(ii) With respect to any foreign partnership, any specified U.S. person that owns, directly or indirectly, more than 10 percent of the profits interests or capital interests in such partnership; and

(iii) In the case of a trust—

(A) Any specified U.S. person treated as an owner of any portion of the trust under sections 671 through 679; and

(B) Any specified U.S. person that holds, directly or indirectly, more than 10 percent of the beneficial interests of the trust.

(2) ***Indirect ownership of foreign entities.*** For purposes of determining a person's interest in a foreign entity, the following rules shall apply.

(i) ***Indirect ownership of stock.*** Stock of a foreign corporation that is owned directly or indirectly by an entity (other than a participating FFI, a deemed-compliant FFI (excluding an owner-documented FFI), a U.S. financial institution, a U.S. person that is not a specified U.S. person, an exempt beneficial owner, or an excepted NFFE) that is a corporation, partnership, or trust shall be considered as being owned proportionately by such entity's shareholders, partners, or, in the case of a trust, persons treated as owners under sections 671 through 679 of any portion of the trust that includes the stock, and the beneficiaries of the trust. Stock considered to be owned by a person by reason of the application of the preceding sentence shall, for purposes of applying such sentence, be treated as actually owned by such person.

(ii) ***Indirect ownership in a foreign partnership or ownership of a beneficial interest in a foreign trust.*** A capital or profits interest in a foreign partnership or an ownership or beneficial interest (as described in paragraph (b)(3) of this section) in a foreign trust that is owned or held directly or indirectly by an entity (other than a participating FFI, a deemed-compliant FFI (excluding an owner-documented FFI), a U.S. financial institution, a U.S. person that is not a specified U.S. person, an exempt beneficial owner, or an excepted NFFE) that is a corporation, partnership, or trust shall be considered as being owned or held proportionately by such entity's shareholders, partners, or, in the case of a trust, persons treated as owners under sections 671 through 679 of any portion of the trust that includes the partnership or beneficial trust interest, and the beneficiaries of the trust. Partnership or beneficial trust interests considered to be owned or held by a person by reason of the application of the preceding sentence shall, for purposes of applying such sentence, be treated as actually owned or held by such person.

(iii) ***Ownership and holdings through options.*** If a specified U.S. person holds, directly or indirectly (applying the principles of paragraphs (b)(2)(i) and (ii) of this section) an option to acquire stock in a foreign corporation, a capital or profits interest in a foreign partnership, or an ownership or beneficial interest in a foreign trust, such person is considered to own the underlying equity or other ownership interest in such foreign entity for purposes of this paragraph (b). For purposes of the preceding sentence, an option to acquire such an option, and each one of a series of such options, shall be considered an option to acquire such stock or other ownership interest described in this paragraph (b)(2)(iii).

(iv) ***Determination of proportionate interest.*** For purposes of this paragraph (b), and except as otherwise provided in paragraph (b)(3) of this section, the determination of a person's proportionate interest in a foreign corporation, partnership, or trust is based on all of the relevant facts and circumstances. In making this determination, any arrangement that artificially decreases a specified U.S. person's proportionate interest in any such entity will be disregarded in determining whether such person is a substantial U.S. owner. In lieu of applying the rules of this paragraph (b)(2) to determine whether an owner's proportionate interest in a foreign entity meets the 10 percent threshold described in paragraph (b)(1) of this section, the entity or its withholding agent may opt to treat the owner as a substantial U.S. owner.

(v) ***Interests owned or held by a related person.*** For purposes of determining whether a specified U.S. person is a substantial U.S. owner in a foreign entity described in paragraphs (b)(2)(i) through (iv) of this section, if a specified U.S. person owns or holds, directly or indirectly, any

interest in the foreign entity, that interest must be aggregated with any such interest in the foreign entity owned or held, directly or indirectly, by a related person. For purposes of the preceding sentence, a related person is a person or spouse of a person described in § 1.267(c)-1(a)(4), determined by reference to such specified U.S. person.

(3) ***Beneficial interest in a foreign trust*** —

(i) ***In general.*** For purposes of paragraph (b)(1)(iii)(B) of this section, a person holds a beneficial interest in a foreign trust if such person has the right to receive directly or indirectly (for example, through a nominee) a mandatory distribution or may receive, directly or indirectly, a discretionary distribution from the trust. For purposes of this section, a *mandatory distribution* means a distribution that is required to be made pursuant to the terms of the trust document. A *discretionary distribution* means a distribution that is made to a person at the discretion of the trustee or a person with a limited power of appointment of such trust.

(ii) ***Determining the 10 percent threshold in the case of a beneficial interest in a foreign trust.*** A person will be treated as holding directly or indirectly more than 10 percent of the beneficial interest in a foreign trust if—

(A) The person receives, directly or indirectly, only discretionary distributions from the trust and the fair market value of the currency or other property distributed, directly or indirectly, from the trust to such person during the prior calendar year exceeds 10 percent of the value of either all of the distributions made by the trust during that year or all of the assets held by the trust at the end of that year;

(B) The person is entitled to receive, directly or indirectly, mandatory distributions from the trust and the value of the person's interest in the trust, as determined under section 7520, exceeds 10 percent of the value of all the assets held by the trust as of the end of the prior calendar year; or

(C) The person is entitled to receive, directly or indirectly, mandatory distributions and may receive, directly or indirectly, discretionary distributions from the trust, and the value of the person's interest in the trust, determined as the sum of the fair market value of all of the currency or other property distributed from the trust at the discretion of the trustee during the prior calendar year to the person and the value of the person's interest in the trust as determined under section 7520 at the end of that year, exceeds either 10 percent of the value of all distributions made by such trust during the prior calendar year or 10 percent of the value of all the assets held by the trust at the end of that year.

(4) ***Exceptions*** —

(i) ***De minimis amount or value exception.*** A specified U.S. person is not treated as a substantial U.S. owner if—

(A) The fair market value of the currency or other property distributed, directly or indirectly, from the trust to such specified U.S. person during the prior calendar year is $5,000 or less and,

(B) In the case of a specified U.S. person that is entitled to receive mandatory distributions, the value of such person's interest in the trust is $50,000 or less.

(ii) ***Trusts wholly owned by certain U.S. persons.*** A trust that is treated as owned only by U.S. persons under sections 671 through 679 is not required to treat any of its beneficiaries as substantial U.S. owners.

(5) ***Special rule for certain financial institutions.*** In the case of any financial institution described in § 1.1471-5(e)(1)(iii) or (iv) (referring to investment entities and specified insurance companies), this section shall be applied by substituting "0 percent" for "10 percent" in each place that it appears. Additionally, in the case of a financial institution described in § 1471-5(e)(1)(iii) that is a trust, the rules of paragraph (b)(3) and (4) of this section (referring to beneficial interests in a trust) shall be applied by substituting "calendar year" for "prior calendar year" in each place that it appears.

(6) ***Determination dates for substantial U.S. owners.*** A foreign entity may make the determination of whether it has one or more direct or indirect substantial U.S. owners as of the last day of such entity's accounting year or as of the date on which such foreign entity provides the documentation described in § 1.1471-3(d) to the withholding agent for which such determination is required to be made. See § 1.1471-4(c) for when a participating FFI is required to obtain documentation with respect to its account holders.

(7) ***Examples.*** The following examples illustrate the provisions of paragraph (b) of this section:

Example 1. Indirect ownership. U, a specified U.S. person, owns directly 100% of the sole class of stock of F1, a foreign corporation. F1 owns directly 90% of the sole class of stock of F2, a foreign corporation, and U owns directly the remaining 10% of the sole class of stock of F2. F2 owns directly 10% of the sole class of stock of F3, a foreign corporation, and U owns directly 3% of the sole class of stock of F3. U is treated as owning 13% (3% directly and 10% indirectly) of the sole class of stock of F3 and 100% (10% directly and 90% indirectly) of the sole class of stock of F2 for purposes of this paragraph (b). U is a substantial U.S. owner of F1, F2, and F3.

Example 2. Indirect ownership through entities that are specified U.S. persons. U, a specified U.S. person, owns directly 100% of the sole class of stock of US1, a U.S. corporation that is a specified U.S. person. US1 owns directly 100% of the sole class of stock of US2, a U.S. corporation that is a specified U.S. person. US2 owns directly 15% of the sole class of stock of FC, a foreign corporation. For purposes of this paragraph (b), U, US1, and US2 are all substantial U.S. owners of FC.

Example 3. Determining the 10% threshold in the case of a beneficial interest in a foreign trust. U, a U.S. citizen, holds an interest in FT1, a foreign trust, under which U may receive discretionary distributions from FT1. U also holds an interest in FT2, a foreign trust, and FT2, in turn, holds an interest in FT1 under which FT2 may receive discretionary distributions from FT1. U receives $25,000 from FT1 in Year 1. FT2 receives $120,000 from FT1 in Year 1 and distributes the entire amount to its beneficiaries in Year 1. The distribution from FT1 is FT2's only source of income and FT2's distributions in Year 1 total $120,000. U receives $40,000 from FT2 in Year 1. FT1's distributions in Year 1 total $750,000. U's discretionary interest in FT1 is valued at $65,000 at the end of Year 1 and therefore does not meet the 10% threshold as determined under paragraph (b)(3)(ii)(A). U's discretionary interest in FT2, however, is valued at $40,000 at the end of Year 1 and therefore meets the 10% threshold as determined under paragraph (b)(3)(ii)(A).

Example 4. Determining ownership (determination date). F, a foreign corporation that is an NFFE, has a calendar year accounting year. On December 31 of Year 1, U, a specified U.S. person, owns 12% of the sole class of outstanding stock of F. In March of Year 2, F redeems a portion of U's stock

and reduces U's ownership of F to 9%. In May of Year 2, F opens an account with P, a participating FFI, and delivers to P the documentation required under § 1.1471-3(d). At the time F opens its account with P, U is the only specified U.S. person that directly or indirectly owns stock in F. Because of the redemption, U's interest in F is 9% on the date F opens its account with P. Pursuant to paragraph (b)(6) of this section, F may determine whether it has a substantial U.S. owner as of the date it provides the documentation required under § 1.1471-3(d) to P, which would be the day it opens the account. As a result, F may indicate in its § 1.1471-3(d) documentation that it has no substantial U.S. owners.

(c) ***Specified U.S. person.*** The term *specified United States person* (or *specified U.S. person*) means any U.S. person other than—

(1) A corporation the stock of which is regularly traded on one or more established securities markets, as described in § 1.1472-1(c)(1)(i);

(2) Any corporation that is a member of the same expanded affiliated group as a corporation described in § 1.1472-1(c)(1)(i);

(3) Any organization exempt from taxation under section 501(a) or an individual retirement plan as defined in section 7701(a)(37);

(4) The United States or any wholly owned agency or instrumentality thereof;

(5) Any State, the District of Columbia, any U.S. territory, any political subdivision of any of the foregoing, or any wholly owned agency or instrumentality of any one or more of the foregoing;

(6) Any bank as defined in section 581;

(7) Any real estate investment trust as defined in section 856;

(8) Any regulated investment company as defined in section 851 or any entity registered with the Securities Exchange Commission under the Investment Company Act of 1940 (15 U.S.C. 80a-64);

(9) Any common trust fund as defined in section 584(a);

(10) Any trust that is exempt from tax under section 664(c) or is described in section 4947(a)(1);

(11) A dealer in securities, commodities, or derivative financial instruments (including notional principal contracts, futures, forwards, and options) that is registered as such under the laws of the United States or any State;

(12) A broker; and

(13) Any tax exempt trust under a section 403(b) plan or section 457(g) plan.

(d) ***Withholding agent*** —

(1) ***In general.*** Except as provided in this paragraph (d), the term *withholding agent* means any person, U.S. or foreign, in whatever capacity acting, that has the control, receipt, custody, disposal, or payment of a withholdable payment or foreign passthru payment.

(2) ***Participating FFIs and registered deemed-compliant FFIs as withholding agents.*** The term withholding agent includes a participating FFI that has the control, receipt, custody, disposal, or payment of a passthru payment (as defined in § 1.1471-5(h)). The term withholding agent also includes a registered deemed-compliant FFI to the extent that such FFI is required to withhold on a passthru payment as part of the conditions for maintaining its status as a deemed-compliant FFI under §

1.1471-5(f)(1)(ii). For the withholding requirements of a participating FFI, including the requirement to withhold with respect to limited branches and limited FFIs that are in the same expanded affiliated group as the participating FFI, see §§ 1.1471-4(b) and 1.1472-1(a).

(3) ***Grantor trusts as withholding agents.*** The term withholding agent includes a grantor trust with respect to a withholdable payment or a foreign passthru payment (in the case of a grantor trust that is a participating FFI) made to a person treated as an owner of the trust under sections 671 through 679. For purposes of determining when a payment is treated as made to such a person, see § 1.1473-1(a)(5)(v).

(4) ***Deposit and return requirements.*** See § 1.1474-1(b) for a withholding agent's requirement to deposit any tax withheld, and § 1.1474-1(c) and (d) for the requirement to file income tax and information returns (including the special allowance in § 1.1474-1(b)(2) for participating FFIs with respect to dormant accounts).

(5) ***Multiple withholding agents.*** When several persons qualify as a withholding agent with respect to a single payment, only one tax is required to be withheld and deposited. See § 1.1474-1(a). A person who, as a nominee described in § 1.6031(c)-1T, has furnished to a partnership all of the information required to be furnished under § 1.6031(c)-1T(a) shall not be treated as a withholding agent if the person has notified the partnership that it is treating the provision of information to the partnership as a discharge of its obligations as a withholding agent.

(6) ***Exception for certain individuals.*** An individual is not a withholding agent with respect to a withholdable payment made by the individual outside the course of such individual's trade or business (including as an agent with respect to making or receiving such payment).

(e) ***Foreign entity.*** The term *foreign entity* means any entity that is not a U.S. person and includes a territory entity.

(f) ***Effective/applicability date.*** This section generally applies on January 6, 2017. However, taxpayers may apply these provisions as of January 28, 2013. Paragraph (a)(4)(viii) of this section applies to payments made on or after September 18, 2015. (For the rules that apply beginning on January 28, 2013, and before January 6, 2017, see this section as in effect and contained in 26 CFR part 1 revised April 1, 2016.)

[T.D. 9610, 78 FR 5981, Jan. 28, 2013; 78 FR 55208, Sept. 10, 2013, as amended by T.D. 9657, 79 FR 12860, Mar. 6, 2014; T.D. 9734, 80 FR 56890, Sept. 18, 2015; T.D. 9809, 82 FR 2187, Jan. 6, 2017]

§ 1.1474-1 Liability for withheld tax and withholding agent reporting.

(a) ***Payment and returns of tax withheld —***

(1) ***In general.*** A withholding agent is required to deposit any tax withheld pursuant to chapter 4 as provided under paragraph (b) of this section and to make the returns prescribed by paragraphs (c) and (d) of this section. When several persons qualify as withholding agents with respect to a single payment, only one tax is required to be withheld and deposited.

(2) ***Withholding agent liability.*** A withholding agent that is required to withhold with respect to a payment under § 1.1471-2(a), 1.1471-4(b) (in the case of a participating FFI), or 1.1472-1(b) but fails either to withhold or to deposit any tax withheld as required under paragraph (b) of this section is liable for the amount of tax not withheld and deposited.

(3) ***Use of agents —***

(i) ***In general.*** Except as otherwise provided in this paragraph (a)(3), a withholding agent may authorize an agent to fulfill its obligations under chapter 4. The acts of an agent of a withholding agent (including the receipt of withholding certificates, the payment of amounts subject to withholding, the withholding and deposit of tax withheld, and the reporting required on the relevant form) are imputed to the withholding agent on whose behalf it is acting.

(ii) ***Authorized agent.*** An agent is authorized only if—

(A) There is a written agreement between the withholding agent and the person acting as agent;

(B) A Form 8655, "Reporting Agent Authorization," is filed with the IRS by a withholding agent if its agent (including any sub-agent) acts as a reporting agent for filing Form 1042 on behalf of the withholding agent and the agent (or sub-agent) identifies itself as the filer on the Form 1042;

(C) Books and records and relevant personnel of the agent (including any sub-agent) are available to the withholding agent (on a continuous basis, including after termination of the relationship) in order to evaluate the withholding agent's compliance with the provisions of chapter 4; and

(D) The withholding agent remains fully liable for the acts of its agent (or any sub-agent) and does not assert any of the defenses that may otherwise be available, including under common law principles of agency, in order to avoid tax liability under the Code.

(iii) ***Liability of withholding agent acting through an agent.*** A withholding agent acting through an agent is liable for any failure of the agent, such as a failure to withhold an amount or make a payment of tax, in the same manner and to the same extent as if the agent's failure had been the failure of the withholding agent. For this purpose, the agent's actual knowledge or reason to know shall be imputed to the withholding agent. Except as otherwise provided in the QI, WP, or WT agreement, an agent of a withholding agent is subject to the same withholding and reporting obligations that apply to any withholding agent under the provisions of chapter 4 and does not benefit from the special procedures or exceptions that apply to a QI, WP, or WT. If the agent is a foreign person, however, a U.S. withholding agent may treat the acts of the foreign agent as its own for purposes of determining whether it has complied with the provisions of chapter 4. The withholding agent's liability under paragraph (a)(2) of this section will exist even if the agent is also a withholding agent and is itself separately liable for failure to comply with the provisions of chapter 4. The same tax, interest, or penalties, however, shall not be collected more than once.

(4) ***Liability for failure to obtain documentation timely or to act in accordance with applicable presumptions*** —

(i) ***In general.*** A withholding agent that cannot reliably associate a payment with documentation on the date of payment and that does not withhold under § 1.1471-2(a), 1.1471-4(b), or 1.1472-1(b), or withholds at less than the 30 percent rate prescribed, is liable under this section for the tax required to be withheld under § 1.1471-2(a), 1.1471-4(b), or 1.1472-1(b) (including interest, penalties, or additions to tax otherwise applicable in respect of the failure to deduct and withhold) unless—

(A) The withholding agent has appropriately relied on the presumptions described in § 1.1471-3(f) in order to treat the payment as exempt from withholding; or

(B) The withholding agent obtained after the date of payment valid documentation that meets the requirements of § 1.1471-3(c)(7) to establish that the payment was, in fact, exempt from withholding.

(ii) ***Withholding satisfied by another withholding agent.*** If a withholding agent fails to deduct and withhold any amount required to be deducted and withheld under § 1.1471-2(a), 1.1471-4(b), or 1.1472-1(b), and the tax is satisfied by another withholding agent or is otherwise paid, then the amount of tax required to be deducted and withheld shall not be collected from the first-mentioned withholding agent. However, the withholding agent is not relieved from liability in any such case for any interest or penalties or additions to tax otherwise applicable in respect of the failure to deduct and withhold.

(b) ***Payment of withheld tax*** —

(1) ***In general.*** Except as otherwise provided in this paragraph (b), every withholding agent who withholds tax pursuant to chapter 4 shall deposit such tax within the time provided in § 1.6302-2(a) by electronic funds transfer as provided under § 31.6302-1(h) of this chapter. If for any reason the total amount of tax required to be deposited for any calendar year pursuant to the income tax return described in paragraph (c) of this section has not been deposited pursuant to § 1.6302-2, the withholding agent shall pay the balance of such tax due for such year at such place as the IRS shall specify. The tax shall be paid when filing the return described in paragraph (c)(1) of this section for such year, unless the IRS specifies otherwise. See § 1.1471-4(b)(6) for the special rule allowing participating FFIs to set aside in escrow amounts withheld with respect to dormant accounts.

(2) ***Special rule for foreign passthru payments and payments of gross proceeds that include an undetermined amount of income subject to tax.*** [Reserved]

(c) ***Income tax return*** —

(1) ***In general.*** Every withholding agent shall file an income tax return on Form 1042, "Annual Withholding Tax Return for U.S. Source Income of Foreign Persons," (or such other form as the IRS may prescribe) to report chapter 4 reportable amounts (as defined in paragraph (d)(2)(i) of this section). This income tax return shall be filed on the same income tax return used to report amounts subject to reporting for chapter 3 purposes as described in § 1.1461-1(b). The return must show the aggregate amount of payments that are chapter 4 reportable amounts and must report the tax withheld for the preceding calendar year by the withholding agent, in addition to any information required by the form and its accompanying instructions. Withholding certificates and other statements or information provided to a withholding agent are not required to be attached to the return. A Form 1042 must be filed under this paragraph (c)(1) even if no tax was required to be withheld for chapter 4 purposes during the preceding calendar year. The withholding agent must retain a copy of Form 1042 for the applicable period of limitations on assessment and collection with respect to the amounts required to be reported on the Form 1042. See section 6501 and the regulations thereunder for the applicable period of limitations. Adjustments to the total amount of tax withheld described in § 1.1474-2 shall be stated on the return as prescribed by the form and its accompanying instructions.

(2) ***Participating FFIs, registered deemed-compliant FFIs, and U.S. branches treated as U.S. persons.*** A participating FFI or registered deemed-compliant FFI shall file Form 1042 in accordance with paragraph (c)(1) of this section to report chapter 4 reportable amounts for which the participating FFI or registered deemed-compliant FFI is required to file Form 1042-S, as described in paragraph (d)(4)(iii) of this section. A participating FFI or registered deemed-compliant FFI with a U.S. branch

that is treated as a U.S. person must exclude from Form 1042 payments made and taxes withheld by such U.S. branch. A U.S. branch that is treated as a U.S. person shall file a separate Form 1042 in accordance with paragraph (c)(1) of this section and the instructions on the form to report chapter 4 reportable amounts.

(3) ***Amended returns.*** An amended return under this paragraph (c)(3) must be filed on Form 1042. An amended return must include such information as the form or its accompanying instructions shall require, including, with respect to any information that has changed from the time of the filing of the return, the information that was shown on the original return and the corrected information.

(d) ***Information returns for payment reporting*** —

(1) ***Filing requirement*** —

(i) ***In general.*** Except as otherwise provided in paragraph (d)(4) of this section or in the instructions to Form 1042-S, every withholding agent must file an information return on Form 1042-S, "Foreign Person's U.S. Source Income Subject to Withholding," (or such other form as the IRS may prescribe) to report to the IRS chapter 4 reportable amounts as described in paragraph (d)(2)(i) of this section that were paid to a recipient during the preceding calendar year. Except as otherwise provided in paragraphs (d)(4)(ii)(B) (certain unknown recipients) and (d)(4)(i)(B) and (d)(4)(iii)(A) of this section (describing payees includable in reporting pools of a participating FFI or registered deemed-compliant FFI), a separate Form 1042-S must be filed with the IRS for each recipient of an amount subject to reporting under paragraph (d)(2)(i) of this section and for each separate type of payment made to a single recipient in accordance with paragraph (d)(4)(i) of this section. The Form 1042-S shall be prepared in such manner as the form and its accompanying instructions prescribe. One copy of the Form 1042-S shall be filed with the IRS on or before March 15 of the calendar year following the year in which the amount subject to reporting was paid, with a transmittal form as provided in the instructions to the form. Withholding certificates, certifications, documentary evidence, or other statements or documentation provided to a withholding agent are not required to be attached to the form. A copy of the Form 1042-S must be furnished to the recipient for whom the form is prepared (or any other person, as required under this paragraph or the instructions to the form) and to any intermediary or flow-through entity described in paragraph (d)(3)(vii) of this section on or before March 15 of the calendar year following the year in which the amount subject to reporting was paid. A person required by this paragraph (d)(1)(i) to furnish a copy of Form 1042-S to the recipient for whom it is prepared may furnish the copy of Form 1042-S in an electronic format in lieu of a paper format provided it meets the requirements of § 1.1461-1(c)(1)(i)(A). The withholding agent must retain a copy of each Form 1042-S for the period of limitations on assessment and collection applicable to the tax reportable on the Form 1042 to which the Form 1042-S relates (determined as set forth in paragraph (c)(1) of this section). See paragraph (d)(4)(iii) of this section for the additional reporting requirements of participating FFIs and deemed-compliant FFIs.

(ii) ***Recipient*** —

(A) ***Defined.*** Except as otherwise provided in paragraph (d)(1)(ii)(B) of this section, the term *recipient* under this paragraph (d) means a person that is a recipient of a chapter 4 reportable amount, and includes—

(*1*) With respect to a payment of U.S. source FDAP income—

(*i*) A QI (including a QI that is a foreign branch of a U.S. person);

(*ii*) A WP or WT;

(*iii*) A participating FFI or a registered deemed-compliant FFI that is an NQI, NWP, NWT, and a U.S. branch of an FFI that is not treated as a U.S. person that applies the rules described in § 1.1471-4(d)(2)(iii)(C) and that provides its withholding agent with sufficient information to determine the portion of the payment allocable to its reporting pools of recalcitrant account holders, payees that are nonparticipating FFIs, and payees that are U.S. persons described in paragraph (d)(4)(i)(B) of this section;

(*iv*) An account holder or payee to the extent that the withholding agent issues a Form 1042-S to such account holder or payee;

(*v*) An FFI that is a beneficial owner of the payment (including a limited branch of the FFI);

(*vi*) A U.S. branch of an FFI treated as a U.S. person;

(*vii*) A territory financial institution treated as a U.S. person;

(*viii*) An excepted NFFE and passive NFFE that also is not a flow-through entity and that is not acting as an agent or intermediary with respect to the payment;

(*ix*) A foreign person that is a partner or beneficiary in a flow-through entity that is a NFFE (looking through a partner or beneficiary that is a foreign intermediary or flow-through entity);

(*x*) An exempt beneficial owner of a payment, including when the payment is made to such owner through an FFI (including a nonparticipating FFI) that provides documentation and information sufficient for a withholding agent to determine the portion of the payment allocable to such owner; and

(*xi*) Any person (including a flow-through entity or U.S. branch) receiving such income that is (or is deemed to be) effectively connected with the conduct of its trade or business in the United States;

(*2*) With respect to a payment other than U.S. source FDAP income. [Reserved]; and

(*3*) Any other person required to be reported as a recipient by Form 1042-S, its accompanying instructions, under an FFI agreement, or paragraph (d)(4)(iii) of this section with respect to the Form 1042-S reporting requirements of a participating FFI.

(B) ***Persons that are not recipients.*** Persons that are not recipients include—

(*1*) With respect to a payment of U.S. source FDAP income—

(*i*) A certified deemed-compliant FFI that is an NQI, NWP, or NWT and that fails to provide its withholding agent with sufficient information to allocate the payment to its account holders and payees;

(*ii*) A financial institution (other than a nonparticipating FFI) to the extent that the withholding agent issues a Form 1042-S to the FFI's account holder or payee;

(*iii*) A participating FFI or a registered deemed-compliant FFI that is an NQI, NWP, or NWT, and a U.S. branch of an FFI that is not treated as a U.S. person that applies the rules described in § 1.1471-4(d)(2)(iii)(C) to the extent it provides its withholding agent with sufficient information to allocate the payment to its account holders and payees that are exempt from withholding under chapter 4;

(*iv*) An account holder or payee of a participating FFI or registered deemed-compliant FFI, and an account holder or payee of a U.S. branch of an FFI that is not treated as a U.S. person that applies the rules described in § 1.1471-4(d)(2)(iii)(C) that is included in the FFI's reporting pools described in paragraph (d)(4)(i)(B) of this section;

(*v*) A nonparticipating FFI that acts as an intermediary with respect to a payment or that is a flow-through entity (including a limited branch);

(*vi*) An account holder or payee of a nonparticipating FFI except to the extent described in paragraph (d)(1)(ii)(A)(*1*)(*x*) of this section for an exempt beneficial owner;

(*vii*) Except as provided in paragraph (d)(1)(ii)(A)(*1*) of this section, an entity that is disregarded under § 301.7701-2(c)(2) of this chapter as an entity separate from its owner;

(*viii*) A territory financial institution to the extent provided in paragraph (d)(4)(i)(D)(*2*) and (*3*) of this section; and

(*ix*) A passive NFFE or an excepted NFFE that is a flow-through entity or acts as an intermediary;

(*2*) With respect to a payment other than U.S. source FDAP income. [Reserved]; and

(*3*) Any other person not treated as a recipient on Form 1042-S, its accompanying instructions, or under an FFI agreement.

(2) ***Amounts subject to reporting*** —

(i) ***In general.*** Subject to paragraph (d)(2)(iii) of this section, the term *chapter 4 reportable amount* means each of the following amounts reportable on a Form 1042-S for purposes of chapter 4—

(A) An amount of a withholdable payment that is subject to withholding under chapter 4 paid after June 30, 2014;

(B) An amount of a withholdable payment of U.S. source FDAP income (including an amount that would be a withholdable payment but for the fact that it is an amount effectively connected with a U.S. trade or business, as described in § 1.1471-3(a)(4)(ii)) that is also reportable on Form 1042-S under § 1.1461-1(c)(2)(i); or

(C) A foreign passthru payment subject to withholding under chapter 4.

(ii) ***Exception to reporting.*** Except as otherwise provided in this paragraph (d)(2)(ii), a chapter 4 reportable amount does not include an amount paid to a U.S. person if the withholding agent treats such U.S. person as a payee for purposes of determining whether withholding is required under §§ 1.1471-2 and 1.1472-1. A chapter 4 reportable amount does, however, include an

amount paid to a participating FFI or registered deemed-compliant FFI to the extent allocable to its reporting pool of payees that are U.S. persons as described in paragraph (d)(4)(i)(B) of this section.

(iii) ***Coordination with chapter 3.*** A payment that is not subject to reporting under this paragraph (d)(2) may be subject to chapter 3 reporting on Form 1042-S to the extent provided on such form and its accompanying instructions or under § 1.1461-1(c)(2). The recipient information and other information required to be reported on Form 1042-S for purposes of chapter 4 shall be in addition to the information required to be provided on Form 1042-S for purposes of chapter 3.

(3) ***Required information.*** The information required to be furnished under this paragraph (d)(3) shall be based upon the information provided by or on behalf of the recipient of an amount subject to reporting (as corrected and supplemented based on the withholding agent's actual knowledge) or the presumption rules provided under § 1.1471-3(f) for a U.S. withholding agent and under § 1.1471-4(c)(3)(ii) and (c)(4)(i) for a participating FFI. The Form 1042-S must include the following information, if applicable—

(i) The name, address, and EIN or GIIN (as applicable) of the withholding agent (as required on the instructions to the form) and the withholding agent's status for chapter 3 and chapter 4 purposes (as defined in the instructions to the form);

(ii) A description of each category of income or payment made based on the income and payment codes provided on the form (for example, interest, dividends, and gross proceeds) and the aggregate amount in each category expressed in U.S. dollars;

(iii) The rate and amount of withholding applied or, in the case of a payment of U.S. source FDAP income not subject to withholding and reportable under paragraph (d)(2)(i)(A) of this section, the basis for exempting the payment from withholding under chapter 4 based on exemption codes provided on the form);

(iv) The name and address of the recipient and its TIN or GIIN (as applicable) and foreign taxpayer identification number and date of birth (as required on the instructions to the form);

(v) In the case of a payment to a person (including a flow-through entity or U.S. branch) for which the payment is reported as effectively connected with its conduct of a trade or business in the United States or, in the case of a U.S. branch that is treated as a U.S. person, the EIN used by the person or U.S. branch to file its U.S. income tax returns;

(vi) The name, address of any FFI, flow-through entity that is an NFFE, or U.S. branch or territory financial institution that is not treated as a U.S. person when an account holder or owner of such entity (including an unknown recipient or owner) is treated as the recipient of the payment;

(vii) The EIN or GIIN (as applicable), status for chapter 3 and chapter 4 purposes (as required on the instructions to the form) of an entity reported under paragraph (d)(3)(vi) of this section;

(viii) The country of incorporation or organization (based on the country codes provided on the form) of any entity the name of which appears on the form; and

(ix) Such information as the form or instructions may require in addition to, or in lieu of, information required under this paragraph (d)(3).

(4) ***Method of reporting*** —

(i) ***Payments by U.S. withholding agent to recipients.*** Except as otherwise provided in this paragraph (d)(4) or on the Form 1042-S and its accompanying instructions, a withholding agent that is a U.S. person (including a U.S. branch that is treated as a U.S. person and excluding a foreign branch of a U.S. person that is a QI) and that makes a payment of a chapter 4 reportable amount must file a separate form for each recipient that receives such amount. Except as otherwise provided on Form 1042-S or its instructions, only payments for which the income or payment code, exemption code, withholding rate, and recipient code are the same may be reported on a single form filed with the IRS. See paragraph (d)(4)(ii) of this section for reporting of payments made to a person that is not a recipient and that is otherwise required to be reported on Form 1042-S.

(A) ***Payments to certain entities that are beneficial owners.*** If the beneficial owner of a payment made by a U.S. withholding agent is an exempt beneficial owner, an FFI, an NFFE, or a territory entity, it must complete Form 1042-S treating such entity as the recipient of the payment.

(B) ***Payments to participating FFIs, deemed-compliant FFIs, and certain QIs.*** Except as otherwise provided in this paragraph (d)(4)(i)(B), a U.S. withholding agent that makes a payment of a chapter 4 reportable amount to a participating FFI or deemed-compliant FFI that is an NQI, NWP, or NWT must complete a Form 1042-S treating such FFI as the recipient. With respect to a payment of U.S. source FDAP income made to a participating FFI or registered deemed-compliant FFI that is an NQI, NWP, or NWT or QI that elects to be withheld upon under section 1471(b)(3) and from whom the withholding agent receives an FFI withholding statement allocating the payment (or portion of the payment) to a chapter 4 withholding rate pool, a U.S. withholding agent must complete a separate Form 1042-S issued to the participating FFI, registered deemed-compliant FFI, or QI (as applicable) as the recipient with respect to each such pool identified on an FFI withholding statement, described in § 1.1471-3(c)(3)(iii)(B)(2). If, however, a participating FFI, deemed-compliant FFI, or QI (as applicable) has made an election under § 1.1471-4(b)(3)(iii), for the portion of the payment that the FFI allocates to each recalcitrant account holder that is subject to backup withholding under section 3406, the withholding agent must report on Form 1099 the amount of the payment and tax withheld in accordance with the form's requirements and accompanying instructions. See § 1.1471-2(a)(2)(i) for the requirement of a withholding agent to withhold on payments of U.S. source FDAP income made to a participating FFI or registered deemed-compliant FFI that is an NQI, NWP, or NWT. See also § 1.1471-2(a)(2)(iii) in the case of payments made to a QI. See § 1.1461-1(c)(4)(A) for the extent to which reporting is required under that section for U.S. source FDAP income that is reportable on Form 1042-S under chapter 3 and not subject to withholding under chapter 4, in which case the U.S. withholding agent must report in the manner described under § 1.1461-1(c)(4)(ii) and paragraph (d)(4)(ii)(A) of this section. See paragraph (d)(4)(ii)(A) of this section for reporting rules applicable if participating FFIs or deemed-compliant FFIs provide specific payee information for reporting to the recipient of the payment for Form 1042-S reporting purposes. See paragraph (d)(4)(iii) of this section for the residual reporting responsibilities of an NQI, NWP, or NWT that is an FFI.

(C) ***Amounts paid to a U.S. branch.*** A U.S. withholding agent making a payment of U.S. source FDAP income to a U.S. branch shall complete Form 1042-S as follows—

(1) If the U.S. branch is treated as a U.S. person, if the withholding agent treats amounts paid as effectively connected with the conduct of the branch's trade or business in the United States, or if the U.S. branch is the beneficial owner of the payment, the withholding agent must file Form 1042-S reporting the U.S. branch as the recipient;

(2) If the U.S. branch of an FFI is not treated as a U.S. person and applies the rules described in § 1.1471-4(d)(2)(iii)(C) and provides the withholding agent with a withholding certificate that transmits information regarding its reporting pools referenced in paragraph (d)(4)(i)(B) of this section or information regarding each recipient that is an account holder or payee of the U.S. branch, the withholding agent must complete a separate Form 1042-S issued to the U.S. branch for each such pool to the extent required on the form and its accompanying instructions or must complete a separate Form 1042-S issued to each recipient whose documentation is associated with the U.S. branch's withholding certificate as described in paragraph (d)(4)(ii)(A) of this section and report the U.S. branch as an entity not treated as a recipient; or

(3) If the U.S. branch of an FFI is not treated as a U.S. person and applies the rules described in § 1.1471-4(d)(2)(iii)(C) to the extent it fails to provide sufficient information regarding its account holders or payees, the withholding agent shall report the recipient of the payment as an unknown recipient to the extent recipient information is not provided and report the U.S. branch as provided in paragraph (d)(4)(ii)(A) of this section for an entity not treated as a recipient.

(D) ***Amounts paid to territory financial institutions that are flow-through entities or acting as intermediaries.*** A U.S. withholding agent making a withholdable payment to a territory financial institution that is a flow-through entity or that acts as an intermediary must complete Form 1042-S as follows—

(1) If the territory financial institution is treated as a U.S. person or is the beneficial owner of the payment, the withholding agent must file Form 1042-S treating the territory financial institution as the recipient;

(2) If the territory financial institution is not treated as a U.S. person and provides the withholding agent with a withholding certificate that transmits information regarding each recipient that is an partner, beneficiary, owner, account holder, or payee, the withholding agent must complete a separate Form 1042-S for each recipient whose documentation is associated with the territory financial institution's withholding certificate as described in paragraph (d)(4)(ii)(A) of this section and must report the territory financial institution under that paragraph; or

(3) If the territory financial institution is not treated as a U.S. person, to the extent its fails to provide sufficient information regarding its partners, beneficiaries, owners, account holders or payees, the withholding agent shall report the recipient of the payment as an unknown recipient and report the territory financial institution as provided in paragraph (d)(4)(ii)(A) of this section for an entity not treated as a recipient.

(E) ***Amounts paid to NFFEs.*** A U.S. withholding agent that makes payments of chapter 4 reportable amounts to an excepted or passive NFFE shall complete Forms 1042-S treating the NFFE as the recipient, except when the NFFE is a flow-through entity or acting as an

intermediary and the partner or beneficiary is treated as the payee. In cases in which the chapter 4 reportable amount is also an amount of U.S. source FDAP income reportable on Form 1042-S (described in § 1.1441-2(a)), see also § 1.1461-1(c)(4)(ii)(A) for the extent to which reporting is required with respect to the partners, beneficiaries, or owners of such entities.

(ii) ***Payments made by withholding agents to certain entities that are not recipients*** —

(A) ***Entities that provide information for a withholding agent to perform specific payee reporting.*** If a U.S. withholding agent makes a payment of a chapter 4 reportable amount to a flow-through entity that is a passive NFFE, a nonparticipating FFI receiving a payment on behalf of an exempt beneficial owner, or a participating FFI or deemed-compliant FFI that is an NQI, NWP, or NWT, except as otherwise provided in paragraph (d)(4)(i)(B) of this section, the withholding agent must complete a separate Form 1042-S for each recipient that is a partner, beneficiary, owner, or account holder of such entity to the extent the withholding agent can reliably associate the payment with valid documentation (under the rules of § 1.1471-3(c) and (d)) provided by such entity, as applicable, with respect to each such recipient. If a payment is made through tiers of such entities, the withholding agent must nevertheless complete Form 1042-S for the recipient to the extent it can reliably associate the payment with documentation provided with respect to that recipient. A withholding agent that is completing a Form 1042-S for a recipient described in this paragraph (d)(4)(ii)(A) must include on the form the information described in paragraph (d)(3)(vii) of this section for the entity through which the recipient directly receives the payment.

(B) ***Nonparticipating FFI that is a flow-through entity or intermediary.*** If a withholding agent makes a payment of a chapter 4 reportable amount to a nonparticipating FFI that it is required to treat as an intermediary with regard to a payment or as a flow-through entity under rules described in § 1.1471-3(c)(3)(iii), and except as otherwise provided in paragraph (d)(1)(ii)(A)(*1*)(*x*) of this section (relating to an exempt beneficial owner), the withholding agent must report the recipient of the payment as an unknown recipient and report the nonparticipating FFI as provided in paragraph (d)(4)(ii)(A) of this section for an entity not treated as a recipient.

(C) ***Disregarded entities.*** If a U.S. withholding agent makes a payment to a disregarded entity and receives a valid withholding certificate or other documentary evidence from the person that is the single owner of such disregarded entity, the withholding agent must file a Form 1042-S treating the single owner as the recipient in accordance with the instructions to the Form 1042-S.

(iii) ***Reporting by participating FFIs and deemed-compliant FFIs (including QIs, WPs, and WTs) and U.S. branches of FFIs not treated as U.S. persons*** —

(A) ***In general.*** Except as otherwise provided in paragraph (d)(4)(iii)(B) (relating to NQIs, NWPs, NWTs, and FFIs electing under section 1471(b)(3)) and § 1.1471-4(d)(2)(ii)(F) (relating to transitional payee-specific reporting for payments to nonparticipating FFIs), a participating FFI or deemed-compliant FFI (including a QI, WP, or WT), and a U.S. branch of an FFI that is not treated as a U.S. person that applies the rules described in § 1.1471-4(d)(2)(iii)(C) that makes a payment that is a chapter 4 reportable amount to a recalcitrant account holder or nonparticipating FFI must complete a Form 1042-S to report such payments. A participating FFI or registered deemed-compliant FFI (including a QI, WP, or WT), and a U.S. branch of an FFI that is not treated as a U.S. person that applies the rules described in

§ 1.1471-4(d)(2)(iii)(C) may report in pools consisting of its recalcitrant account holders and payees that are nonparticipating FFIs. With respect to recalcitrant account holders, the FFI may report in pools consisting of recalcitrant account holders within a particular status described in § 1.1471-4(d)(6) and within a particular income code. Except as otherwise provided in § 1.1471-4(d)(2)(ii)(F), with respect to payees that are nonparticipating FFIs, the FFI may report in pools consisting of one or more nonparticipating FFIs that fall within a particular income code and within a particular status code described in the instructions to Form 1042-S. Alternatively, a participating FFI or registered deemed-compliant FFI (including a QI, WP, or WT) and a U.S. branch of an FFI that is not treated as a U.S. person that applies the rules described in § 1.1471-4(d)(2)(iii)(C) may (and a certified deemed-compliant FFI is required to) perform payee-specific reporting to report a chapter 4 reportable amount paid to a recalcitrant account holder or a nonparticipating FFI when withholding was applied (or should have applied) to the payment.

(B) ***Special reporting requirements of participating FFIs, deemed-compliant FFIs, FFIs that make an election under section 1471(b)(3), and U.S. branches of FFIs not treated as U.S. persons.*** Except as otherwise provided in § 1.1471-4(d)(2)(ii)(F), a participating FFI or deemed-compliant FFI that is an NQI, NWP, or NWT, and a U.S. branch of an FFI that is not treated as a U.S. person that applies the rules described in § 1.1471-4(d)(2)(iii)(C) or an FFI that has made an election under section 1471(b)(3) and has provided sufficient information to its withholding agent to withhold and report the payment is not required to report the payment on Form 1042-S as described in paragraph (d)(4)(iii)(A) of this section if the payment is made to a nonparticipating FFI or recalcitrant account holder and its withholding agent has withheld the correct amount of tax on such payment and correctly reported the payment on a Form 1042-S. Such FFI or branch is required to report a payment, however, when the FFI knows, or has reason to know, that less than the required amount has been withheld by the withholding agent on the payment or the withholding agent has not correctly reported the payment on Form 1042-S. In such case, the FFI or branch must report on Form 1042-S to the extent required under paragraph (d)(4)(iii)(A) of this section. See, however, § 1.1471-4(d)(6) for the requirement to report certain aggregate information regarding accounts held by recalcitrant account holders on Form 8966, "FATCA Report," regardless of whether withholdable payments are made to such accounts.

(C) ***Reporting by a U.S. branch treated as a U.S. person.*** A U.S. branch treated as a U.S. person (as defined in § 1.1471-1(b)(135)) must report amounts paid to recipients on Forms 1042-S in the same manner as a U.S. withholding agent under paragraph (d)(4)(i) of this section.

(iv) ***Reporting by territory financial institutions.*** A territory financial institution that is not treated as a U.S. person will not be required to report on Form 1042-S if another withholding agent has reported the same amount with regard to the same recipient for which such entity would otherwise be required to file a return under this paragraph (d)(4)(iv) and such withholding agent has withheld the entire amount required to be withheld from such payment. A territory financial institution must, however, report payments made to recipients for whom it has failed to provide the appropriate documentation to another withholding agent or to the extent it knows, or has reason to know, that less than the required amount has been withheld. A territory financial

institution that is treated as a U.S. person or is otherwise required under this paragraph (d)(4)(iv) to report amounts paid to recipients on Forms 1042-S must report in the same manner as a U.S. withholding agent.

(v) ***Nonparticipating FFIs.*** A nonparticipating FFI that is a flow-through entity or that acts as an intermediary with respect to a payment may file Forms 1042 and 1042-S only to report and allocate tax withheld to the account holders, partners, owners, or beneficiaries of the nonparticipating FFI.

(vi) ***Other withholding agents.*** Any person that is a withholding agent that is not described in any of paragraphs (d)(4)(i) through (v) of this section shall file Forms 1042-S in the same manner as a U.S. withholding agent and in accordance with the instructions to the form.

(vii) ***Combined Form 1042-S reporting.*** A withholding agent required to report on Form 1042-S under paragraph (d)(4) of this section (other than a nonparticipating FFI reporting under paragraph (d)(4)(v) of this section) may rely on the procedures used for chapter 3 purposes (provided in published guidance) for reporting on Form 1042-S (even if the withholding agent is not required to report under chapter 3) for combined reporting following a merger or acquisition, provided that all of the requirements for such reporting provided in the Instructions for Form 1042-S are satisfied.

(e) ***Reporting in electronic form.*** See §§ 301.6011-2(b) and 301.6011-15 of this chapter, which apply for purposes of this section, for the requirements of a withholding agent that is not a financial institution with respect to the filing of Forms 1042-S and Form 1042 in electronic form. See § 301.1474-1(a) of this chapter for the requirements applicable to a withholding agent that is a financial institution with respect to the filing of Forms 1042 and 1042-S in electronic form.

(f) ***Indemnification of withholding agent.*** A withholding agent is indemnified against the claims and demands of any person for the amount of any tax it deducts and withholds in accordance with the provisions of chapter 4 and the regulations thereunder. A withholding agent that withholds based on a reasonable belief that such withholding is required under chapter 4 and the regulations thereunder is treated for purposes of section 1474 and this paragraph (f) as having withheld tax in accordance with the provisions of chapter 4 and the regulations thereunder. This paragraph (f) does not relieve a withholding agent from tax liability under chapter 3 or chapter 4 or the regulations under those chapters.

(g) ***Extensions of time to file Forms 1042 and 1042-S.*** The IRS may grant an extension of time to file Form 1042 or 1042-S as described in § 1.1461-1(g).

(h) ***Penalties.*** For penalties and additions to tax for failure to file returns or file and furnish statements in accordance with this section, see sections 6651, 6662, 6663, 6721, 6722, 6723, 6724(c), 7201, 7203, and the regulations under those sections. For penalties and additions to tax for failure to timely pay the tax required to be withheld under chapter 4, see sections 6656, 6672, 7202, and the regulations under those sections.

(i) ***Additional reporting requirements with respect to U.S. owned foreign entities and owner-documented FFIs*** —

(1) ***Reporting by certain withholding agents with respect to owner-documented FFIs*** —

(i) Beginning on July 1, 2014, if a withholding agent (other than an FFI reporting accounts held by owner-documented FFIs under § 1.1471-4(d)) makes a withholdable payment to an entity account holder or payee of an obligation and the withholding agent treats the entity as an

owner-documented FFI under § 1.1471-3(d)(6), the withholding agent is required to report for July 1 through December 31, 2014, with respect to each specified U.S. person identified in § 1.1471-3(d)(6)(iv)(A)(*1*) and (*2*) the information described in paragraph (i)(1)(iii) of this section.

(ii) Beginning in calendar year 2015, if a withholding agent (other than an FFI reporting accounts held by owner-documented FFIs under § 1.1471-4(d)) makes during a calendar year a withholdable payment to an entity account holder or payee of an obligation and the withholding agent treats the entity as an owner-documented FFI under § 1.1471-3(d)(6), the withholding agent is required to report for such calendar year with respect to each specified U.S. person identified in § 1.1471-3(d)(6)(iv)(A)(*1*) and (*2*) the information described in paragraph (i)(1)(iii) of this section.

(iii) The information that a withholding agent (other than an FFI reporting accounts held by owner-documented FFIs under § 1.1471-4(d)) is required to report under paragraphs (i)(1)(i) and (ii) of this section must be made on Form 8966 (or such other form as the IRS may prescribe) and filed on or before March 31 of the calendar year following the year in which the withholdable payment was made. A withholding agent is not required to report under paragraph (i)(1)(i) or (ii) of this section on a withholdable payment made to a participating FFI or reporting Model 1 FFI that is allocated to a payee that is an owner-documented FFI on an FFI withholding statement when the participating FFI or reporting Model 1 FFI includes on the statement the certification described in § 1.1471-3(c)(3)(iii)(B)(*2*)(*v*), provided that the withholding agent does not know or have reason to know that the certification is incorrect or unreliable. The report must contain the following information—

(A) The name of the owner-documented FFI;

(B) The name, address, and TIN of each specified U.S. person identified in § 1.1471-3(d)(6)(iv)(A)(*1*) and (*2*);

(C) For the period from July 1 through December 31, 2014, the total of all withholdable payments made to the owner-documented FFI, and with respect to payments made after the 2014 calendar year, the total of all withholdable payments made to the owner-documented FFI during the calendar year;

(D) The account balance or value of the account held by the owner-documented FFI; and

(E) Any other information required on Form 8966 and its accompanying instructions provided for purposes of such reporting. iii) through (i)(1)(iii)(E).

(2) ***Reporting by certain withholding agents with respect to U.S. owned foreign entities that are passive NFFEs.*** Beginning on July 1, 2014, in addition to the reporting on Form 1042-S required under paragraph (d)(4)(i)(E) of this section, a withholding agent (other than an FFI reporting accounts held by NFFEs under § 1.1471-4(d)) that makes a withholdable payment to, and receives information about any substantial U.S. owners of, a passive NFFE that is not an excepted NFFE as defined in § 1.1472-1(c) shall file a report with the IRS for the period from July 1 through December 31, 2014, and in each subsequent calendar year in which a withholdable payment is made with respect to any substantial U.S. owners of such NFFE. Such report must be made on Form 8966 (or such other form as the IRS may prescribe) and filed on or before March 31 of the calendar year following the year in which the withholdable payment was made. A withholding agent is not required to report under this paragraph (i)(2) on a withholdable payment made to a participating FFI or a registered deemed-compliant FFI that is allocated to a payee that is a passive NFFE with one or more substantial U.S. owners on an FFI withholding statement when the participating FFI or registered deemed-compliant

FFI includes on the statement the certification described in § 1.1471-3(c)(3)(iii)(B)(*2*)(*iv*), provided that the withholding agent does not know or have reason to know that the certification is incorrect or unreliable. In the case of an entity to which the preceding sentence does not apply that is a flow-through entity or is acting as an intermediary receiving a withholdable payment allocable to a passive NFFE with one or more substantial U.S. owners, the entity is not required to report with respect to the passive NFFE under this paragraph (i)(2) if it provides to the withholding agent from which it receives the payment documentation sufficient for the withholding agent to report information with respect to the passive NFFE under this paragraph (i)(2), provided that the intermediary or flow-through entity does not know or have reason to know that the withholding agent does not report with respect to the passive NFFE under this paragraph (i)(2). The report must contain the following information—

(i) Name of the NFFE that is owned by a substantial U.S. owner;

(ii) The name, address, and TIN of each substantial U.S. owner of such NFFE;

(iii) For the period from July 1, 2014 through December 31, 2014, the total of all withholdable payments made to the NFFE and, with respect to payments made after the 2014 calendar year, the total of all withholdable payments made to the NFFE during the calendar year; and

(iv) Any other information as required by the form and its accompanying instructions.

(3) ***Cross reference to reporting by participating FFIs.*** For the reporting requirements of a participating FFI with respect to an account holder that is a U.S. owned foreign entity or that it treats as an owner-documented FFI, see § 1.1471-4(d).

(4) ***Extensions of time to file.*** The IRS shall grant an automatic 90-day extension of time in which to file Form 8966 as required under paragraph (i)(1) or (i)(2) of this section. Form 8809-I, "Application of Extension of Time to File FATCA Form 8966," (or such other form as the IRS may prescribe) must be used to request such extension of time and must be filed no later than the due date of Form 8966. Under certain hardship conditions, the IRS may grant an additional 90-day extension. A request for extension due to hardship must contain a statement of the reasons for requesting the extension and such other information as the form or instructions may require.

(j) ***Applicability date.*** The rules of this section apply to returns required to be filed for taxable years ending on or after December 31, 2023. (For returns required to be filed for taxable years ending before December 31, 2023, see this section as in effect and contained in 26 CFR part 1, as revised April 1, 2022.)

[T.D. 9610, 78 FR 5985, Jan. 28, 2013; 78 FR 55208, Sept. 10, 2013, as amended by T.D. 9657, 79 FR 12862, Mar. 6, 2014; T.D. 9809, 82 FR 2188, Jan. 6, 2017; 82 FR 29729, June 30, 2017; T.D. 9890, 85 FR 206, Jan. 2, 2020; T.D. 9972, 88 FR 11763, Feb. 23, 2023]

§ 1.1474-2 Adjustments for overwithholding or underwithholding of tax.

(a) ***Adjustments of overwithheld tax*** —

(1) ***In general.*** Except as otherwise provided by this section, a withholding agent that has overwithheld tax under chapter 4 and made a deposit of the tax as provided in § 1.6302-2(a) may adjust the amount of overwithheld tax either pursuant to the reimbursement procedure described in paragraph (a)(3) of this section or pursuant to the set-off procedure described in paragraph (a)(4) of this section. Adjustments under this paragraph (a) may only be made within the time prescribed under

paragraph (a)(3) or (a)(4) of this section. After such time, a refund of the amount of overwithheld tax can only be claimed pursuant to the procedures described in § 1.1474-5 and chapter 65 of the Code and the regulations thereunder.

(2) ***Overwithholding.*** For purposes of this section, the term *overwithholding* means an amount actually withheld (determined before application of the adjustment procedures under this section and regardless of whether such overwithholding was in error or appeared correct at the time it occurred) from an item of income or other payment pursuant to chapter 4 that is in excess of the greater of—

(i) The amount required to be withheld with respect to such item of income or other payment under chapter 4; and

(ii) The actual tax liability of the beneficial owner that is attributable to the income or payment from which the amount was withheld.

(3) ***Reimbursement of tax*** —

(i) ***General rule.*** Under the reimbursement procedure, the withholding agent may repay the beneficial owner or payee for an amount of overwithheld tax. In such case, the withholding agent may reimburse itself by reducing, by the amount actually repaid to the beneficial owner or payee, the amount of any deposit of tax made by the withholding agent under § 1.6302-2(a)(1)(iii) for any subsequent payment period occurring before the end of the calendar year following the calendar year of overwithholding. A withholding agent must obtain valid documentation as described under § 1.1471-3(c)(6) with respect to the beneficial owner or payee supporting a reduced rate of withholding before reducing the amount of any deposit of tax under this paragraph (a)(3)(i). Any such reduction that occurs for a payment period in the calendar year following the calendar year of overwithholding shall be allowed only if—

(A) The repayment of the beneficial owner or payee occurs before the earlier of the due date (without regard to extensions) for filing the Form 1042-S for the calendar year of overwithholding or the date that the Form 1042-S is actually filed with the IRS;

(B) The withholding agent states on a timely filed (not including extensions) Form 1042-S the amount of tax withheld and the amount of any actual repayment; and

(C) The withholding agent states on a timely filed (not including extensions) Form 1042 for the calendar year of overwithholding that the filing of the Form 1042 constitutes a claim for credit in accordance with § 1.6414-1.

(ii) ***Record maintenance.*** If the beneficial owner or payee is repaid an amount of overwithheld tax under the provisions of this paragraph (a)(3), the withholding agent shall keep as part of its records a receipt showing the date and amount of repayment, and the withholding agent must provide a copy of such receipt to the beneficial owner or payee. For this purpose, a canceled check or an entry in a statement is sufficient, provided that the check or statement contains a specific notation that it is a refund of tax overwithheld.

(4) ***Set-offs.*** Under the set-off procedure, the withholding agent may repay the beneficial owner or payee for an amount of overwithheld tax by applying the amount overwithheld against any amount which otherwise would be required under chapter 3 or 4 to be withheld from the amount paid by the withholding agent to such person before the earlier of the due date (without regard to extensions) for filing the Form 1042-S for the calendar year of overwithholding or the date that the Form 1042-S is actually filed with the IRS. For purposes of making a return on Form 1042 or 1042-S (or an

amended form) for the calendar year of overwithholding and for purposes of making a deposit of the amount withheld, the reduced amount shall be considered the amount required to be withheld from such payment under chapter 3 or 4, respectively.

(5) ***Examples.*** The principles of this paragraph (a) are illustrated by the following examples:

Example 1. (i) Fund A is a unit investment trust that is an FFI and a resident of Country X. Fund A also qualifies for the benefits of the income tax treaty between the United States and Country X. On December 1, 2016, domestic corporation C pays a dividend of $100 to Fund A, at which time C withholds $30 of tax pursuant to § 1.1471-2(a) and remits the balance of $70 to Fund A, because it does not hold valid documentation that Fund A is a participating FFI or deemed-compliant FFI. On February 10, 2017, prior to the time that C is obligated to file its Form 1042, Fund A furnishes a valid Form W-8BEN described in §§ 1.1441-1(e)(2)(i) and 1.1471-3(c)(3)(ii) upon which C may rely to treat Fund A as the beneficial owner of the income and as a participating FFI so that C may reduce the rate of withholding to 15% under the provisions of the United States-Country X income tax treaty with respect to the payment. C repays the excess tax withheld of $15 to Fund A.
(ii) During the 2016 calendar year, C makes no other payments upon which tax is required to be withheld under chapter 3 or 4; accordingly, its Form 1042 for such year, filed on March 15, 2017, shows total tax withheld of $30, an adjusted total tax withheld of $15, and tax deposited of $30 for such year. Pursuant to § 1.6414-1, C claims a credit for the overpayment of $15 shown on the Form 1042 for 2016. Accordingly, C is permitted to reduce by $15 any deposit required by § 1.6302-2 to be made of tax withheld during the 2017 calendar year with respect to taxes due under chapter 3 or 4. The Form 1042-S required to be filed by C with respect to the dividend of $100 paid to Fund A in 2016 is required to show tax withheld of $30 and tax repaid of $15 to Fund A.

Example 2. (i) In November 2016, Bank A, a foreign bank organized in Country X that is an NQI, receives on behalf of one of its account holders, Z, an individual, a $100 dividend payment from C, a domestic corporation. At the time of payment, C withholds $30 pursuant to § 1.1471-2(a) and remits the balance of $70 to Bank A, because it does not hold valid documentation that it may rely on to treat Bank A as a participating FFI or deemed-compliant FFI. In December 2016, prior to the time that C files its Forms 1042 and 1042-S, Bank A furnishes a valid Form W-8IMY and FFI withholding statement described in § 1.1471-3(c)(3)(iii) that establishes Bank A's status as a participating FFI that is an NQI, as well as a valid Form W-8BEN that has been completed by Z as described in § 1.1471-3(c)(3)(ii) and § 1.1441-1(e)(2)(i) upon which C may rely to treat the payment as made to Z, a nonresident alien individual who is a resident of Country X eligible for a reduced rate of withholding of 15% under the income tax treaty between the United States and Country X. Although C has already deposited the $30 that was withheld, as required by § 1.6302-2(a)(1)(iv), C remits the amount of $15 to Bank A for the benefit of Z.

(ii) During the 2016 calendar year, C makes no other payments upon which tax is required to be withheld under chapter 3 or 4; accordingly, its return on Form 1042 for such year, which is filed on March 15, 2017, shows total tax withheld of $30, an adjusted total tax withheld of $15, and tax deposited of $30. Pursuant to § 1.6414-1(b), C claims a credit for the overpayment of $15 shown on the Form 1042 for 2014. Accordingly, it is permitted to reduce by $15 any deposit required by § 1.6302-2 to be made of tax withheld during the 2017 calendar year. The Form 1042-S required to be filed by C for 2016 with respect to the dividend of $100 beneficially owned by Z is required to show tax withheld of $30 and tax repaid of $15 to Z.

(b) ***Withholding of additional tax when underwithholding occurs.*** A withholding agent that has underwithheld under chapter 4 may apply the procedures described in § 1.1461-2(b) (by substituting the term “chapter 4” for “chapter 3”) to satisfy its withholding obligations under chapter 4 with respect to a payee or beneficial owner.

(c) ***Effective/applicability date.*** This section applies January 28, 2013.

[T.D. 9610, 78 FR 5991, Jan. 28, 2013]

§ 1.1474-3 Withheld tax as credit to beneficial owner of income.

(a) ***Creditable tax.*** The entire amount of the income, if any, attributable to a payment from which tax is required to be withheld under chapter 4 (including income deemed paid by a withholding agent under § 1.1473-1(a)(2)(v)) shall be included in gross income in a return required to be made by the beneficial owner of the income, without deduction for the amount required to be or actually withheld, but the amount of tax actually withheld shall be allowed as a credit against the total income tax computed in the beneficial owner's return.

(b) ***Amounts paid to persons that are not the beneficial owners.*** Amounts actually deducted and withheld under chapter 4 on payments made to a fiduciary, agent, partnership, trust, or intermediary are deemed to have been paid by the beneficial owner of the item of income or other payment subject to withholding under chapter 4, except when the fiduciary, agent, partnership, trust, or intermediary pays the tax from its own funds and does not in turn withhold with respect to the payment made to such person. Thus, for example, if a beneficiary of a trust is subject to the taxes imposed by section 1, 2, 3, or 11 upon any amount of distributable net income or other taxable distribution received from a foreign trust, the part of any amount withheld at source under chapter 4 that is properly allocable to the income so taxed to such beneficiary shall be credited against the amount of the income tax computed upon the beneficiary's return, and any excess shall be refunded to the beneficiary in accordance with § 1.1474-5 and chapter 65 of the Code.

(c) ***Effective/applicability date.*** This section applies January 28, 2013.

[T.D. 9610, 78 FR 5992, Jan. 28, 2013]

§ 1.1474-4 Tax paid only once.

(a) ***Tax paid.*** If the tax required to be withheld under chapter 4 on a payment is paid by the payee, beneficial owner, or the withholding agent, it shall not be re-collected from any other, regardless of the original liability therefor. However, this section does not relieve a person that was required to, but did not, withhold tax from liability for interest or any penalties or additions to tax otherwise applicable.

(b) ***Effective/applicability date.*** This section applies January 28, 2013.

[T.D. 9610, 78 FR 5992, Jan. 28, 2013]

§ 1.1474-5 Refunds or credits.

(a) ***Refund and credit —***

(1) ***In general.*** Except to the extent otherwise provided in this section, a refund or credit of tax which has actually been withheld at the source at the time of payment under chapter 4 shall be made to the beneficial owner of the payment to which the amount of withheld tax is attributable if the beneficial owner or payee meets the requirements of this paragraph (a) and any other requirements that may be required under chapter 65. To the extent that the amount withheld under chapter 4 is not actually withheld at source, but is later paid by the withholding agent to the IRS, the refund or credit under chapter 65 of the Code shall be made to the withholding agent to the extent the withholding agent provides documentation with respect to the beneficial owner or payee described in paragraphs (a)(2) and (3) of this section sufficient for the beneficial owner or payee to have obtained a refund of the tax and sufficient for the withholding agent to have applied a reduced rate or exemption from withholding under chapter 4. The preceding sentence shall not, however, apply to a nonparticipating FFI that is acting as a withholding agent with respect to one or more of its account holders. In such a case, only the account holders of the nonparticipating FFI will be entitled to a credit or refund of an amount withheld under chapter 4, to the extent otherwise allowable under this section. Additionally, there are collective refund procedures for a participating FFI or reporting Model 1 FFI to claim a refund or credit on behalf of certain direct account holders that are beneficial owners of the payment under § 1.1471-4(h) (in lieu of such account holders claiming refund or credit under this paragraph (a)(1)).

(2) ***Limitation to refund and credit for a nonparticipating FFI.*** Notwithstanding paragraph (a)(1) of this section, a nonparticipating FFI (determined as of the time of payment) that is the beneficial owner of an item of income or other payment that is subject to withholding under chapter 4 shall not be entitled to any credit or refund pursuant to section 1474(b)(2) and this section unless it is entitled to a reduced rate of tax with respect to the income or other payment by reason of any treaty obligation of the United States. If the nonparticipating FFI is entitled to a reduced rate of tax with respect to an item of income or other payment by reason of any treaty obligation of the United States, the amount of any credit or refund with respect to such tax shall not exceed the amount of credit or refund attributable to such reduction in rate on the item of income or other payment, and no interest otherwise allowable under section 6611 shall be allowed or paid with respect to such credit or refund.

(3) ***Requirement to provide additional documentation for certain beneficial owners —***

(i) ***In general.*** Except as provided in paragraph (a)(3)(ii) of this section, no refund or credit shall be allowed under paragraph (a)(1) of this section to the beneficial owner of the income or other payment to which the amount of such withheld tax was attributable if such beneficial owner is an NFFE, unless the NFFE attaches to its income tax return the information described in paragraph (a)(3)(iii) of this section.

(ii) ***Claim of reduced withholding under an income tax treaty.*** Paragraph (a)(3)(i) of this section does not apply to the extent that the beneficial owner is entitled to a reduced rate of tax with respect to the income or other payment by reason of any treaty obligation of the United States.

(iii) ***Additional documentation to be furnished to the IRS for certain NFFEs.*** The information described in this paragraph (a)(3)(iii) is—

(A) A certification that the beneficial owner does not have any substantial U.S. owners;

(B) The form described in § 1.1474-1(i)(2) relating to each substantial U.S. owner of such entity; or

(C) Other appropriate documentation to establish withholding was not required under chapter 4.

(b) ***Tax repaid to payee.*** For purposes of this section and § 1.6414-1, any amount of tax withheld under chapter 4, which, pursuant to § 1.1474-2(a)(1), is repaid by the withholding agent to the beneficial owner of the income or payment to which the withheld amount is attributable shall be considered as tax which, within the meaning of sections 1474 and 6414, was not actually withheld by the withholding agent.

(c) ***Effective/applicability date.*** This section applies January 28, 2013.

[T.D. 9610, 78 FR 5992, Jan. 28, 2013]

§ 1.1474-6 Coordination of chapter 4 with other withholding provisions.

(a) ***In general.*** This section coordinates the withholding requirements of a withholding agent when a withholdable payment or foreign passthru payment is subject to withholding under both chapter 4 and another Code provision. See § 1.1473-1(a) for the definition of withholdable payment and see § 1.1471-5(h)(2) for the definition of foreign passthru payment.

(b) ***Coordination of withholding for amounts subject to withholding under sections 1441, 1442, and 1443*** —

(1) ***In general.*** In the case of a withholdable payment that is both subject to withholding under chapter 4 and is an amount subject to withholding under § 1.1441-2(a), a withholding agent may credit the withholding applied under chapter 4 against its liability for any tax due under sections 1441, 1442, or 1443. See § 1.1474-1(c) and (d) for the income tax return and information return reporting requirements that apply in the case of a payment that is a withholdable payment subject to withholding under chapter 4 that is also an amount subject to withholding under § 1.1441-2(a).

(2) ***When withholding is applied.*** For purposes of paragraph (b)(1) of this section, withholding is applied by a withholding agent under section 1441 (or section 1442 or 1443) or chapter 4 (as applicable) when the withholding agent has withheld on the payment and has designated the withholding as having been made under section 1441 (or section 1442 or 1443) or chapter 4 to the extent required in the reporting described in § 1.1474-1(c) and (d). For purposes of allowing an offset of withholding and allowing a credit to a withholding agent against its liability for such tax as described in paragraph (b)(1) of this section, withholding is treated as applied for purposes of paragraph (a) of

this section only when the withholding agent has actually withheld on a payment and has not made any adjustment for overwithheld tax applicable to the amount withheld that would otherwise be permitted with respect to the payment.

(3) ***Special rule for certain substitute dividend payments.*** In the case of a dividend equivalent under section 871(m) paid pursuant to a securities lending transaction described in section 1058 (or a substantially similar transaction), or pursuant to a sale-repurchase transaction, a withholding agent may offset its obligation to withhold under chapter 4 for amounts withheld by another withholding agent under chapters 3 and 4 with respect to the same underlying security in such a transaction, but only to the extent that there is sufficient evidence as required under chapter 3 that tax was actually withheld on a prior dividend equivalent paid to the withholding agent or a prior withholding agent with respect to the same underlying security in such transaction.

(c) ***Coordination with amounts subject to withholding under section 1445 —***

(1) ***In general.*** An amount subject to withholding under section 1445 is not subject to withholding under chapter 4 as described in paragraphs (c)(2)(i) and (ii) of this section.

(2) ***Determining the amount of the distribution from certain domestic corporations subject to section 1445 or chapter 4 withholding —***

(i) ***Distribution from qualified investment entity.*** In the case of a passthru payment (including a withholdable payment) subject to withholding under chapter 4 that is a distribution with respect to the stock of a qualified investment entity as described in section 897(h)(4)(A), withholding under chapter 4 does not apply when withholding under section 1445 applies to such amounts. With respect to the portion of such distribution that is not subject to withholding under section 1445 but is subject to withholding under section 1441 (or section 1442 or 1443) and chapter 4, the coordination rule described in paragraph (b)(1) of this section shall apply.

(ii) ***Distribution from a United States real property holding corporation.*** A distribution (or portion of a distribution) from a United States real property holding corporation (or from a corporation that was a United States real property holding corporation at any time during the five-year period ending on the date of the distribution) with respect to its stock that is a United States real property interest under section 897(c) is subject to withholding under chapter 4 and is also subject to the withholding provisions of section 1441 (or section 1442 or 1443) and section 1445. In such case, to the extent that the United States real property holding corporation chooses to withhold on a distribution only under section 1441 (or section 1442 or 1443) pursuant to § 1.1441-3(c)(4)(i)(A), the coordination rule described in paragraph (b)(1) of this section shall apply to such distribution. Alternatively, to the extent that the United States real property holding corporation chooses to withhold under both section 1441 (or section 1442 or 1443) and section 1445 pursuant to § 1.1441-3(c)(4)(i)(B), the coordination rule described in paragraph (b)(1) of this section shall apply to the portion of such distribution described in § 1.1441-3(c)(4)(i)(B)(1), and withholding under section 1445 shall apply to the amount of such distribution described in § 1.1441-3(c)(4)(i)(B)(2). A withholding agent other than a United States real property holding corporation may rely, absent actual knowledge or reason to know otherwise, on the representations of the United States real property holding corporation making the distribution regarding the portion of the distribution that is estimated to be a dividend under § 1.1441-3(c)(2)(ii)(A), and in the case of a failure by the withholding agent to withhold under chapter 4 due to this reliance, the required amount shall be imputed to the United States real property holding corporation.

(d) ***Coordination with section 1446*** —

(1) ***In general.*** Except as otherwise provided in paragraph (d)(2) of this section, a withholdable payment or a foreign passthru payment subject to withholding under section 1446 shall not be subject to withholding under chapter 4. See § 1.1473-1(a)(4)(ii) for the exclusion from withholdable payment and the requirements for such exclusion for any item of income that is taken into account under section 871(b)(1) or 882(a)(1) for the taxable year.

(2) ***Determining the amount of distribution subject to section 1446.*** [Reserved]

(e) ***Example. Chapter 4 withholding satisfies chapter 3 withholding obligation.*** WA, a U.S. withholding agent, makes a payment consisting of a dividend from sources within the United States to NPFFI. NPFFI is a nonparticipating FFI that is a resident of Country X, a country that has an income tax treaty in force with the United States that would allow WA to reduce the rate of withholding for section 1442 purposes on a payment of U.S. source dividends paid to NPFFI to 15%. Because the payment is a withholdable payment and NPFFI is a nonparticipating FFI, WA withholds on the payment at the rate of 30% under chapter 4. WA does not make any adjustment for overwithholding that is otherwise permitted with respect to this payment. Although the payment is also an amount subject to withholding under section 1442, WA is not required to withhold any tax on this payment under section 1442. WA may credit its withholding applied under chapter 4 against the amount of tax otherwise required to be withheld on this payment under section 1442. See § 1.1474-5(a)(2) for the credit and refund procedures for nonparticipating FFIs that are entitled to a reduced rate of tax with respect to an amount subject to withholding under chapter 4 by reason of any treaty obligation of the United States.

(f) ***Coordination with section 3406.*** A participating FFI that makes a withholdable payment that is also a reportable payment (as defined in the relevant sections of chapter 61) to a recalcitrant account holder that is a U.S. non-exempt recipient is not required to withhold under section 3406 if it withholds on the payment at a 30-percent rate in accordance with its withholding obligations under chapter 4. See, however, § 1.1471-4(b)(3)(iii) for the election to withhold on recalcitrant account holders that are non-exempt U.S. recipients under section 3406 instead of withholding under chapter 4.

(g) ***Effective/applicability date.*** This section applies on January 6, 2017. However, taxpayers may apply these provisions as of January 28, 2013. (For the rules that apply beginning on January 28, 2013, and before January 6, 2017, see this section as in effect and contained in 26 CFR part 1 revised April 1, 2016.)

[T.D. 9610, 78 FR 5993, Jan. 28, 2013, as amended by T.D. 9657, 79 FR 12865, Mar. 6, 2014; T.D. 9809, 82 FR 2191, Jan. 6, 2017]

§ 1.1474-7 Confidentiality of information.

(a) ***Confidentiality of information.*** Pursuant to section 1474(c)(1), the provisions of § 31.3406(f)-1(a) of this chapter shall apply (substituting “sections 1471 through 1474” for “section 3406”) to information obtained or used in connection with the requirements of chapter 4.

(b) ***Exception for disclosure of participating FFIs.*** Pursuant to section 1474(c)(2), the identity of a participating FFI or deemed-compliant FFI shall not be treated as return information for purposes of section 6103.

(c) ***Effective/applicability date.*** This section applies January 28, 2013.

[T.D. 9610, 78 FR 5994, Jan. 28, 2013]

MITIGATION OF EFFECT OF RENEGOTIATION OF GOVERNMENT CONTRACTS

§ 1.1481-1 [Reserved]

CONSOLIDATED RETURNS

RETURNS AND PAYMENT OF TAX

CONSOLIDATED RETURN REGULATIONS

§ 1.1502-0 Effective/applicability dates.

(a) ***In general.*** Except as provided in paragraph (b) of this section, the consolidated return regulations (as defined in § 1.1502-1(g)) are applicable to taxable years beginning after December 31, 1965.

(b) ***Exceptions.*** The applicability date described in paragraph (a) of this section does not apply to any provision of the consolidated return regulations with an applicability or effective date different than the date provided by paragraph (a) of this section.

[T.D. 10018, 89 FR 106852, Dec. 30, 2024]

§ 1.1502-1 Definitions.

For purposes of the consolidated return regulations (and any provision of this chapter that refers to the consolidated return regulations):

(a) ***Group.*** The term *group* means an affiliated group of corporations as defined in section 1504. See § 1.1502-75(d) as to when a group remains in existence. Except as the context otherwise requires, references to a group are references to a consolidated group (as defined in paragraph (h) of this section).

(b) ***Member.*** The term *member* means a corporation (including the common parent) that is included in the group, or as the context may require, a corporation that is included in a subgroup.

(c) ***Subsidiary.*** The term *subsidiary* means a corporation other than the common parent which is a member of such group.

(d) ***Consolidated return year.*** The term *consolidated return year* means a taxable year for which a consolidated return is filed or required to be filed by such group.

(e) ***Separate return year.*** The term *separate return year* means a taxable year of a corporation for which it files a separate return or for which it joins in the filing of a consolidated return by another group.

(f) ***Separate return limitation year*** —

(1) ***In general.*** Except as provided in paragraphs (f)(2) and (3) of this section, the term *separate return limitation year* (or *SRLY*) means any separate return year of a member or of a predecessor of a member.

(2) ***Exceptions.*** The term *separate return limitation year* (or SRLY) does not include:

(i) A separate return year of the corporation which is the common parent for the consolidated return year to which the tax attribute is to be carried (except as provided in § 1.1502-75(d)(2)(ii) and paragraph (f)(3) of this section);

(ii) A separate return year of any corporation which was a member of the group for each day of such year; or

(iii) A separate return year of a predecessor of any member if such predecessor was a member of the group for each day of such year.

(3) ***Reverse acquisitions.*** In the event of an acquisition to which § 1.1502-75(d)(3) applies, all taxable years of the first corporation and of each of its subsidiaries ending on or before the date of the acquisition are treated as separate return limitation years, and the separate return years (if any) of the second corporation and each of its subsidiaries are not treated as separate return limitation years (unless they were so treated immediately before the acquisition). For example, if corporation P merges into corporation T, and the persons who were stockholders of P immediately before the merger, as a result of owning the stock of P, own more than 50 percent of the fair market value of the outstanding stock of T, then a loss incurred before the merger by T (even though it is the common parent), or by a subsidiary of T, is treated as having been incurred in a separate return limitation year. Conversely, a loss incurred before the merger by P, or by a subsidiary of P in a separate return year during all of which such subsidiary was a member of the group of which P was the common parent, is treated as having been incurred in a year which is not a separate return limitation year.

(4) ***Predecessor and successors.*** The term *predecessor* means a transferor or distributor of assets to a member (the successor) in a transaction—

(i) To which section 381(a) applies; or

(ii) That occurs on or after January 1, 1997, in which the successor's basis for the assets is determined, directly or indirectly, in whole or in part, by reference to the basis of the assets of the transferor or distributor, but in the case of a transaction that occurs before June 25, 1999, only if the amount by which basis differs from value, in the aggregate, is material. For a transaction that occurs before June 25, 1999, only one member may be considered a predecessor to or a successor of one other member.

(g) ***Consolidated return regulations.*** The term *consolidated return regulations* means the regulations issued under the authority of section 1502.

(h) ***Consolidated group.*** The term “consolidated group” means a group filing (or required to file) consolidated returns for the tax year.

(i) [Reserved]

(j) ***Affiliated.*** Corporations are affiliated if they are members of a group with each other.

(k) ***Nonlife insurance company.*** The term *nonlife insurance company* means a member that is an insurance company other than a *life insurance company,* each as defined in section 816(a).

(l) ***U.S. territory.*** The *term U.S. territory* means—

(1) American Samoa;

(2) The Commonwealth of the Northern Mariana Islands;

(3) The Commonwealth of Puerto Rico;

(4) Guam; and

(5) The U.S. Virgin Islands.

(m) ***Applicability date.*** Paragraph (k) of this section applies to taxable years beginning after December 31, 2020. However, a taxpayer may choose to apply paragraph (k) of this section to taxable years beginning on or before December 31, 2020.

[T.D. 6894, 31 FR 11794, Sept. 8, 1966, as amended by T.D. 7246, 38 FR 758, Jan. 4, 1973; T.D. 8294, 55 FR 9434, Mar. 14, 1990; T.D. 8319, 55 FR 49038, Nov. 26, 1990; T.D. 8560, 59 FR 41675, Aug. 15, 1994; T.D. 8677, 61 FR 33325, June 27, 1996; T.D. 8823, 64 FR 36101, July 2, 1999; T.D. 9927, 85 FR 67974, Oct. 27, 2020; T.D. 10018, 89 FR 106852, Dec. 30, 2024]

CONSOLIDATED TAX LIABILITY

§ 1.1502-2 Computation of tax liability.

(a) ***Taxes imposed.*** The tax liability of a group for a consolidated return year is determined by adding together—

(1) The tax imposed by section 11(a) in the amount described in section 11(b) on the consolidated taxable income for the year (reduced by the taxable income of a member described in paragraphs (a)(5) through (8) of this section);

(2) The tax imposed by section 541 on the consolidated undistributed personal holding company income;

(3) If paragraph (a)(2) of this section does not apply, the aggregate of the taxes imposed by section 541 on the separate undistributed personal holding company income of the members which are personal holding companies;

(4) If neither paragraph (a)(2) nor (3) of this section apply, the tax imposed by section 531 on the consolidated accumulated taxable income (see § 1.1502-43);

(5) The tax imposed by section 594(a) in lieu of the taxes imposed by section 11 on the taxable income of a life insurance department of the common parent of a group which is a mutual savings bank;

(6) The tax imposed by section 801 on consolidated life insurance company taxable income;

(7) The tax imposed by section 831(a) on consolidated insurance company taxable income of the members which are subject to such tax;

(8) Any increase in tax described in section 1351(d)(1) (relating to recoveries of foreign expropriation losses); and

(9) The tax imposed by section 59A on base erosion payments of taxpayers with substantial gross receipts.

(b) ***Credits.*** A group is allowed as a credit against the taxes described in paragraph (a) of this section (except for paragraph (a)(9) of this section) of this section: The general business credit under section 38 (see § 1.1502-3), the foreign tax credit under section 27 (see § 1.1502-4), and any other applicable credits provided under the Internal Revenue Code. Any increase in tax due to the recapture of a tax credit will be taken into account. See section 59A and the regulations thereunder for credits allowed against the tax described in paragraph (a)(9) of this section.

(c) ***Allocation of dollar amounts.*** For purposes of this section, if a member or members of the consolidated group are also members of a controlled group that includes corporations that are not members of the consolidated group, any dollar amount described in any section of the Internal Revenue Code is apportioned among all members of the controlled group in accordance with the provisions of the applicable section and the regulations thereunder.

(d) ***Applicability date*** —This section applies to taxable years for which the original consolidated Federal income tax return is due (without extension) after December 6, 2019.

[T.D. 9885, 84 FR 67038, Dec. 6, 2019]

§ 1.1502-3 Consolidated tax credits.

(a) ***Determination of amount of consolidated credit*** —

(1) ***In general.*** The credit allowed by section 38 for a consolidated return year of a group shall be equal to the consolidated credit earned. The consolidated credit earned is equal to the aggregate of the credit earned (as determined under subparagraph (2) of this paragraph) by all members of the group for the consolidated return year.

(2) ***Determination of credit earned.*** The credit earned of a member is an amount equal to 7 percent of such member's qualified investment (determined under section 46(c)). For purposes of computing a member's qualified investment, the basis of property shall not include any gain or loss realized with respect to such property by another member in an intercompany transaction (as defined in § 1.1502-13(b)), whether or not such gain or loss is deferred. Thus, if section 38 property acquired in an intercompany transaction has a basis of $100 to the purchasing member, and if the selling member has a $20 gain with respect to such property, the basis of such property for purposes of computing the purchaser's qualified investment is only $80. Such $80 basis shall also be used for purposes of applying section 47 to such property. See paragraph (f) of this section.

(3) ***Consolidated limitation based on amount of tax.***

(i) Notwithstanding the amount of the consolidated credit earned for the taxable year, the consolidated credit allowed by section 38 to the group for the consolidated return year is limited to:

(*a*) So much of the consolidated liability for tax as does not exceed $25,000, plus

(*b*) For taxable years ending on or before March 9, 1967, 25 percent of the consolidated liability for tax in excess of $25,000, or

(*c*) For taxable years ending after March 9, 1967, 50 percent of the consolidated liability for tax in excess of $25,000.

The $25,000 amount referred to in the preceding sentence shall be reduced by any part of such $25,000 amount apportioned under § 1.46-1 to component members of the controlled group (as defined in section 46(a)(5)) which do not join in the filing of the consolidated return. For further rules for computing the limitation based on amount of tax with respect to the suspension period (as defined in section 48(j)), see section 46(a)(2). The amount determined under this subparagraph is referred to in this section as the “consolidated limitation based on amount of tax.”

(ii) If an organization to which section 593 applies or a cooperative organization described in section 1381(a) joins in the filing of the consolidated return, the $25,000 amount referred to in subdivision (i) of this subparagraph (reduced as provided in such subdivision) shall be apportioned equally among the members of the group filing the consolidated return. The amount so apportioned equally to any such organization shall then be decreased in accordance with the provisions of section 46(d). Finally, the sum of all such equal portions (as decreased under section 46(d)) of each member of the group shall be substituted for the $25,000 amount referred to in subdivision (i) of this subparagraph.

(4) ***Consolidated liability for tax.*** For purposes of subparagraph (3) of this paragraph, the consolidated liability for tax shall be the income tax imposed for the taxable year upon the group by chapter 1 of the Code, reduced by the consolidated foreign tax credit allowable under § 1.1502-4. The tax imposed by section 56 (relating to minimum tax for tax preferences), section 531 (relating to accumulated earnings tax), section 541 (relating to personal holding company tax), and any additional tax imposed by section 1351(d)(1) (relating to recoveries of foreign expropriation losses), shall not be considered tax imposed by chapter 1 of the Code. In addition, any increase in tax resulting from the application of section 47 (relating to certain dispositions, etc., of section 38 property) shall not be treated as tax imposed by chapter 1 for purposes of computing the consolidated liability for tax.

(b) ***Carryback and carryover of unused credits*** —

(1) ***Allowance of unused credit as consolidated carryback or carryover.*** A group shall be allowed to add to the amount allowable as a credit under paragraph (a)(1) of this section for any consolidated return year an amount equal to the aggregate of the consolidated investment credit carryovers and carrybacks to such year. The consolidated investment credit carryovers and carrybacks to the taxable year shall consist of any consolidated unused credits of the group, plus any unused credits of members of the group arising in separate return years of such members, which may be carried over or back to the taxable year under the principles of section 46(b). However, such consolidated carryovers and carrybacks shall not include any consolidated unused credits apportioned to a corporation for a separate return year pursuant to paragraph (c) of § 1.1502-79 and shall be subject to the limitations contained in paragraphs (c) and (e) of this section. A consolidated unused credit for any consolidated return year is the excess of the consolidated credit earned over the consolidated limitation based on amount of tax for such year.

(2) ***Absorption rules.*** For purposes of determining the amount, if any, of an unused credit (whether consolidated or separate) which can be carried to a taxable year (consolidated or separate), the amount of such unused credit which is absorbed in a prior consolidated return year under section 46(b) shall be determined by:

(i) Applying all unused credits which can be carried to such prior year in the order of the taxable years in which such unused credits arose, beginning with the taxable year which ends earliest, and

(ii) Applying all such unused credits which can be carried to such prior year from taxable years ending on the same date on a pro rata basis.

(3) ***Example.*** The provisions of paragraphs (a) and (b) of this section may be illustrated by the following example:

> *Example.* (i) Corporation P is incorporated on January 1, 1966. On that same day P

incorporates corporation S, a wholly owned subsidiary. P and S file consolidated returns for calendar years 1966 and 1967. P's and S's credit earned, the consolidated credit earned, and the consolidated limitation based on amount of tax for 1966 and 1967 are as follows:

	Credit earned	Consolidated credit earned	Consolidated limitation based on amount of tax
1966:			
P	$60,000		
S	$30,000	$90,000	$100,000
1967:			
P	$40,000		
S	$25,000	$65,000	$50,000

(ii) P's and S's credit earned for 1966 are aggregated, and the group's consolidated credit earned, $90,000, is allowable in full to the group as a credit under section 38 for 1966 since such amount is less than the consolidated limitation based on amount of tax for 1966, $100,000.

(iii) Since the consolidated limitation based on amount of tax for 1967 is $50,000, only $50,000 of the $65,000 consolidated credit earned for such year is allowable to the group under section 38 as a credit for 1967. The consolidated unused credit for 1967 of $15,000 ($65,000 less $50,000) is a consolidated investment credit carryback and carryover to the years prescribed in section 46(b). In this case the consolidated unused credit is a consolidated investment credit carryback to 1966 (since P and S were not in existence in 1964 and 1965) and a consolidated investment credit carryover to 1968 and subsequent years. The portion of the consolidated unused credit for 1967 which is allowable as a credit for 1966 is $10,000. This amount shall be added to the amount allowable as a credit to the group for 1966. The balance of the consolidated unused credit for 1967 to be carried to 1968 is $5,000. These amounts are computed as follows:

Consolidated carryback to 1966			$15,000
1966 consolidated limitation based on tax		$100,000	
Less: Consolidated credit earned for 1966	$90,000		
Consolidated unused credits attributable to years preceding 1967	0	$90,000	
Limit on amount of 1967 consolidated unused credit which may be added as a credit for 1966			$10,000

Balance of 1967 consolidated unused credit to be carried to 1968			$5,000

(c) ***Limitation on investment credit carryovers and carrybacks from separate return limitation years applicable for consolidated return years for which the due date of the return is on or before March 13, 1998*** —

(1) ***General rule.*** In the case of an unused credit of a member of the group arising in a separate return limitation year (as defined in § 1.1502-1(f)) of such member (and in a separate return limitation year of any predecessor of such member), the amount which may be included under paragraph (b) of this section (computed without regard to the limitation contained in paragraph (e) of this section) shall not exceed the amount determined under paragraph (c)(2) of this section.

(2) ***Computation of limitation.*** The amount referred to in paragraph (c)(1) of this section with respect to a member of the group is the excess, if any, of—

(i) The limitation based on amount of tax of the group, minus such limitation recomputed by excluding the items of income, deduction, and foreign tax credit of such member; over

(ii) The sum of the investment credit earned by such member for such consolidated return year, and the unused credits attributable to such member which may be carried to such consolidated return year arising in unused credit years ending prior to the particular separate return limitation year.

(3) ***Special effective date.*** This paragraph (c) applies to consolidated return years for which the due date of the income tax return (without extensions) is on or before March 13, 1998. See paragraph (d) of this section for the rule that limits the group's use of a section 38 credit carryover or carryback from a SRLY for a consolidated return year for which the due date of the income tax return (without extensions) is after March 13, 1998. See also paragraph (d)(4) of this section for an optional effective date rule (generally making the rules of this paragraph (c) inapplicable to a consolidated return year beginning after December 31, 1996, if the due date of the income tax return (without extensions) for such year is on or before March 13, 1998).

(4) ***Examples.*** The provisions of this paragraph (c) may be illustrated by the following examples:

Example 1. (i) Assume the same facts as in the example contained in paragraph (b)(3) of this section, except that all the stock of corporation T, also a calendar year taxpayer, is acquired by P on January 1, 1968, and that P, S, and T file a consolidated return for 1968. In 1966, T had an unused credit of $10,000 which has not been absorbed and is available as an investment credit carryover to 1968. Such carryover is from a separate return limitation year. P's and S's credit earned for 1968 is $10,000 each, and T's credit earned is $8,000; the consolidated credit earned is therefore $28,000. The group's consolidated limitation based on amount of tax for 1968 is $50,000. Such limitation recomputed by excluding the items of income, deduction, and foreign tax credit of T is $30,000. Thus, the amount determined under paragraph (c)(2)(i) of this section is $20,000 ($50,000 minus $30,000). Accordingly, the limitation on the carryover of T's unused credit is $12,000, the excess of $20,000 over $8,000

(the sum of T's credit earned for the taxable year and any carryovers from prior unused credit years (none in this case)). Therefore T's $10,000 unused credit from 1966 may be carried over to the consolidated return year without limitation.
(ii) The group's consolidated credit earned for 1968, $28,000, is allowable in full as a credit under section 38 since such amount is less than the consolidated limitation based on amount of tax, $50,000.

(iii) The group's consolidated investment credit carryover to 1968 is $15,000, consisting of the consolidated unused credits of the group ($5,000) plus T's separate return year unused credit ($10,000). The entire $15,000 consolidated carryover shall be added to the amount allowable to the group as a credit under section 38 for 1968, since such amount is less than $22,000 (the excess of the consolidated limitation based on tax, $50,000, over the sum of the consolidated credit earned for 1968, $28,000, and unused credits arising in prior unused credit years, zero).

Example 2. Assume the same facts as in *Example 1,* except that the amount determined under paragraph (c)(2)(i) of this section is $12,000. Therefore, the limitation on the carryover of T's unused credit is $4,000. Accordingly, the consolidated investment credit carryover is only $9,000 since the amount of T's separate return year unused credit which may be added to the group's $ 5,000 consolidated unused credit is $4,000. These amounts are computed as follows:

T's carryover to 1968			$10,000
Consolidated limitation based on amount of tax minus recomputed limitation		$12,000	
Less: T's credit earned for 1968	$8,000		
Unused credits attributable to T arising in unused credit years preceding 1966	0	$8,000	
Limit on amount of 1966 unused credit of T which may be added to consolidated investment credit carryover			$4,000
Balance of 1966 unused credit of T to be carried to 1969 (subject to the limitation contained in paragraph (c) of this section)			$6,000

(d) ***Limitation on tax credit carryovers and carrybacks from separate return limitation years applicable for consolidated return years for which the due date of the return is after March 13, 1998*** —

(1) ***General rule.*** The aggregate of a member's unused section 38 credits arising in SRLYs that are included in the consolidated section 38 credits for all consolidated return years of the group may not exceed—

(i) The aggregate for all consolidated return years of the member's contributions to the consolidated section 38(c) limitation for each consolidated return year; reduced by

(ii) The aggregate of the member's section 38 credits arising and absorbed in all consolidated return years (whether or not absorbed by the member).

(2) *Computational rules* —

(i) ***Member's contribution to the consolidated section 38(c) limitation.*** If the consolidated section 38(c) limitation for a consolidated return year is determined by reference to the consolidated tentative minimum tax (see section 38(c)(1)(A)), then a member's contribution to the consolidated section 38(c) limitation for such year equals the member's share of the consolidated net income tax minus the member's share of the consolidated tentative minimum tax. If the consolidated section 38(c) limitation for a consolidated return year is determined by reference to the consolidated net regular tax liability (see section 38(c)(1)(B)), then a member's contribution to the consolidated section 38(c) limitation for such year equals the member's share of the consolidated net income tax minus 25 percent of the quantity which is equal to so much of the member's share of the consolidated net regular tax liability less its portion of the $25,000 amount specified in section 38(c)(1)(B). The group computes the member's shares by applying to the respective consolidated amounts the principles of section 1552 and the percentage method under § 1.1502-33(d)(3), assuming a 100% allocation of any decreased tax liability. The group must make proper adjustments so that taxes and credits not taken into account in computing the limitation under section 38(c) are not taken into account in computing the member's share of the consolidated net income tax, etc. (See, for example, the taxes described in section 26(b) that are disregarded in computing regular tax liability.) Also, the group may apportion all or a part of the $25,000 amount (or lesser amount if reduced by section 38(c)(3)) for any year to one or more members.

(ii) ***Years included in computation.*** For purposes of computing the limitation under this paragraph (d), the consolidated return years of the group include only those years, including the year to which a credit is carried, that the member has been continuously included in the group's consolidated return, but exclude—

(A) For carryovers, any years ending after the year to which the credit is carried; and

(B) For carrybacks, any years ending after the year in which the credit arose.

(iii) ***Subgroups and successors.*** The SRLY subgroup principles under § 1.1502-21(c)(2) apply for purposes of this paragraph (d). The predecessor and successor principles under § 1.1502-21(f) also apply for purposes of this paragraph (d).

(iv) ***Overlap with section 383.*** The principles under § 1.1502-21(g) apply for purposes of this paragraph (d). For example, an overlap of paragraph (d) of this section and the application of section 383 with respect to a credit carryover occurs if a corporation becomes a member of a consolidated group (the SRLY event) within six months of the change date of an ownership change giving rise to a section 383 credit limitation with respect to that carryover (the section 383 event), with the result that the limitation of this paragraph (d) does not apply. See §§ 1.1502-21(g)(2)(ii)(A) and 1.383-1; see also § 1.1502-21(g)(4) (subgroup rules).

(3) *Effective date* —

(i) ***In general.*** This paragraph (d) generally applies to consolidated return years for which the due date of the income tax return (without extensions) is after March 13, 1998.

(A) ***Contribution years.*** Except as provided in paragraph (d)(4)(ii) of this section, a group does not take into account a consolidated taxable year for which the due date of the income tax return (without extensions) is on or before March 13, 1998, in determining a member's (or subgroup's) contributions to the consolidated section 38(c) limitation under this paragraph (d).

(B) ***Special subgroup rule.*** In the event that the principles of § 1.1502-21(g)(1) do not apply to a particular credit carryover in the current group, then solely for purposes of applying paragraph (d) of this section to determine the limitation with respect to that carryover and with respect to which the SRLY register (the aggregate of the member's or subgroup's contribution to consolidated section 38(c) limitation reduced by the aggregate of the member's or subgroup's section 38 credits arising and absorbed in all consolidated return years) began in a taxable year for which the due date of the return is on or before May 25, 2000, the principles of § 1.1502-21(c)(2) shall be applied without regard to the phrase "or for a carryover that was subject to the overlap rule described in paragraph (g) of this section or § 1.1502-15(g) with respect to another group (the former group)."

(ii) ***Overlap rule.*** Paragraph (d)(2)(iv) of this section (relating to overlap with section 383) applies to taxable years for which the due date (without extensions) of the consolidated return is after May 25, 2000. For purposes of paragraph (d)(2)(iv) of this section, only an ownership change to which section 383, as amended by the Tax Reform Act of 1986 (100 Stat. 2085), applies and which results in a section 383 credit limitation shall constitute a section 383 event.

(4) ***Optional effective date of January 1, 1997.***

(i) For consolidated taxable years beginning on or after January 1, 1997, for which the due date of the income tax return (without extensions) is on or before March 13, 1998, in lieu of paragraphs (c) and (e)(3) of this section (relating to the general business credit), § 1.1502-4(f)(3) and (g)(3) (relating to the foreign tax credit), the next to last sentence of § 1.1502-9A(a)(2), § 1.1502-9A(b)(1)(v) (relating to overall foreign losses), and § 1.1502-55(h)(4)(iii) (relating to the alternative minimum tax credit), a consolidated group may apply the corresponding provisions as they appear in 1998-1 C.B. 655 through 661 (see § 601.601(d)(2) of this chapter) (treating references in such corresponding provisions to §§ 1.1502-9(b)(1)(ii), (iii), and (iv) as references to §§ 1.1502-9A(b)(1)(ii), (iii), and (iv)). Also, in the case of a consolidated return change of ownership that occurs on or after January 1, 1997, in a taxable year for which the due date of the income tax return (without extensions) is on or before March 13, 1998, a consolidated group may choose not to apply paragraph (e) of this section and § 1.1502-4(g) to taxable years ending after December 31, 1996. A consolidated group making the choices described in the two preceding sentences generally must apply all such corresponding provisions (including not applying paragraph (e) of this section and § 1.1502-4(g)) for all relevant years. However, a consolidated group making the election provided in § 1.1502-9A(b)(1)(vi) (electing not to apply § 1.1502-9A(b)(1)(v) to years beginning before January 1, 1998) may nevertheless choose to apply all such corresponding provisions referred to in this paragraph (d)(4)(i) other than the provision corresponding to § 1.1502-9A(b)(1)(v) for all relevant years.

(ii) If a consolidated group chooses to apply the corresponding provisions referred to in paragraph (d)(4)(i) of this section, the consolidated group shall not take into account a consolidated taxable year beginning before January 1, 1997, in determining a member's (or subgroup's) contributions to the consolidated section 38(c) limitation under this paragraph (d).

(5) ***Example.*** The following example illustrates the provisions of this paragraph (d):

> *Example.* (i) Individual A owns all of the stock of P and T. P is the common parent of the P group. P acquires all the stock of T at the beginning of Year 2. T carries over an unused section 38 general business credit from Year 1 of $100,000. The table in paragraph (i) of this Example shows the group's net consolidated income tax, consolidated tentative minimum tax, and consolidated net regular tax liabilities, and T's share of such taxes computed under the principles of section 1552 and the percentage method under § 1.1502-33(d)(3), assuming a 100% allocation of any decreased tax liability, for Year 2. (The effects of the lower section 11 brackets are ignored, there are no other tax credits affecting a group amount or member's share, and $1,000s are omitted.)

Year 2	Group	P's share of col. 1	T's share of col. 1
1. consolidated taxable income	$2,000	$1,200	$800
2. consolidated net regular tax	$700	$420	$280
3. consolidated alternative minimum taxable income	$4,000	$3,200	$800
4. consolidated tentative minimum tax	$800	$640	$160
5. consolidated net income tax	$800	$520	$280
6. greater of line 4 or 25% of (line 2 minus $25,000) for the group	$800		
7. consolidated §38(c) limitation (line 5 minus line 6)	$0		

(ii) T's Year 1 is a SRLY with respect to the P group. See § 1.1502-1(f)(2)(ii). T did not undergo an ownership change giving rise to a section 383 credit limitation within 6 months of

joining the P group. Thus, T's $100,000 general business credit arising in Year 1 is subject to a SRLY limitation in the P group. The amount of T's unused section 38 credits from Year 1 that are included in the consolidated section 38 credits for Year 2 may not exceed T's contribution to the consolidated section 38(c) limitation. For Year 2, the group determines the consolidated section 38(c) limitation by reference to consolidated tentative minimum tax for Year 2. Therefore, T's contribution to the consolidated section 38(c) limitation for Year 2 equals its share of consolidated net income tax minus its share of consolidated tentative minimum tax. T's contribution is $280,000 minus $160,000, or $120,000. However, because the group has a consolidated section 38 limitation of zero, it may not include any of T's unused section 38 credits in the consolidated section 38 credits for Year 2.
(iii) The following table shows similar information for the group for Year 3:

Year 3	Group	P's share of col. 1	T's share of col. 1
1. consolidated taxable income	$1,200	$1,500	$(300)
2. consolidated net regular tax	$420	$525	$(105)
3. consolidated alternative minimum taxable income	$1,500	$1,700	$(200)
4. consolidated tentative minimum tax	$300	$340	$(40)
5. consolidated net income tax	$420	$525	$(105)
6. greater of line 4 or 25% of (line 2 minus $25,000) for the group	$300		
7. consolidated §38(c) limitation (line 5 minus line 6)	$120		

(iv) The amount of T's unused section 38 credits from Year 1 that are included in the consolidated section 38 credits for Year 3 may not exceed T's aggregate contribution to the consolidated section 38(c) limitation for Years 2 and 3. For Year 3, the group determines the consolidated section 38(c) limitation by reference to the consolidated tentative minimum tax

for Year 3. Therefore, T's contribution to the consolidated section 38(c) limitation for Year 3 equals its share of consolidated net income tax minus its share of consolidated tentative minimum tax. Applying the principles of section 1552 and § 1.1502-33(d) (taking into account, for example, that T's positive earnings and profits adjustment under § 1.1502-33(d) reflects its losses actually absorbed by the group), T's contribution is $(105,000) minus $(40,000), or $(65,000). T's aggregate contribution to the consolidated section 38(c) limitation for Years 2 and 3 is $120,000 + $(65,000), or $55,000. The group may include $55,000 of T's Year 1 unused section 38 credits in its consolidated section 38 tax credit in Year 3.

(e) [Reserved]

(f) ***Early dispositions, etc., of section 38 property*** —

(1) ***Dispositions of section 38 property during and after consolidated return year.*** If property is subject to section 47(a) (1) or (2) with respect to a member during a consolidated return year, any increase in tax shall be added to the tax liability of the group under § 1.1502-2 (regardless of whether the property was placed in service in a consolidated or separate return year). Also, if property is subject to section 47(a) (1) or (2) with respect to a corporation during a taxable year for which such corporation files on a separate return basis, any increase in tax shall be added to the tax liability of such corporation (regardless of whether such property was placed in service in a consolidated or separate return year).

(2) ***Exception for transfer to another member.***

(i) Except as provided in subdivisions (ii) and (iii) of this subparagraph, a transfer of section 38 property from one member of the group to another member of such group during a consolidated return year shall not be treated as a disposition or cessation within the meaning of section 47(a)(1). If such section 38 property is disposed of, or otherwise ceases to be section 38 property or becomes public utility property with respect to the transferee, before the close of the estimated useful life which was taken into account in computing qualified investment, then section 47(a) (1) or (2) shall apply to the transferee with respect to such property (determined by taking into account the period of use, qualified investment, other dispositions, etc., of the transferor). Any increase in tax due to the application of section 47(a) (1) or (2) shall be added to the tax liability of such transferee (or the tax liability of a group, if the transferee joins in the filing of a consolidated return).

(ii) Except as provided in subdivision (iii) of this subparagraph, if section 38 property is disposed of during a consolidated return year by one member of the group to another member of such group which is an organization to which section 593 applies or a cooperative organization described in section 1381(a), the tax under chapter 1 of the Code for such consolidated return year shall be increased by an amount equal to the aggregate decrease in the credits allowed under section 38 for all prior taxable years which would result solely from treating such property, for purposes of determining qualified investment, as placed in service by such organization to which section 593 applies or such cooperative organization described in section 1381(a), as the case may be, but with due regard to the use of the property before such transfer.

(iii) Section 47(a)(1) shall apply to a transfer of section 38 property by a corporation during a consolidated return year if such corporation is liquidated in a transaction to which section 334(b)(2) applies.

(3) ***Examples.*** The provisions of this paragraph may be illustrated by the following examples:

Example 1. P, S, and T file a consolidated return for calendar year 1967. In such year S places in service section 38 property having an estimated useful life of more than 8 years. In 1968, P, S, and T file a consolidated return and in such year S sells such property to T. Such sale will not cause section 47(a)(1) to apply.

Example 2. Assume the same facts as in example (1), except that P, S, and T filed separate returns for 1967. The sale from S to T will not cause section 47(a)(1) to apply.

Example 3. Assume the same facts as in example (1), except that P, S, and T continue to file consolidated returns through 1971 and in such year T disposes of the property to individual A. Section 47(a)(1) will apply to the group and any increase in tax shall be added to the tax liability of the group. For the purposes of determining the actual period of use by T, such period shall include S's period of use.

Example 4. Assume the same facts as in example (3), except that T files a separate return in 1971. Again, the actual periods of use by S and T will be combined in applying section 47. If the disposition results in an increase in tax under section 47(a)(1), such additional tax shall be added to the separate tax liability of T.

Example 5. Assume the same facts as in example (1), except that in 1969, P sells all the stock of T to a third party. Such sale will not cause section 47(a)(1) to apply.

[T.D. 6894, 31 FR 11794, Sept. 8, 1966, as amended by T.D. 7246, 38 FR 758, Jan. 4, 1973; T.D. 8597, 60 FR 36679, July 18, 1995; T.D. 8751, 63 FR 1742, Jan. 12, 1998; T.D. 8766, 63 FR 12642, Mar. 16, 1998; T.D. 8884, 65 FR 33754, May 25, 2000; 65 FR 48379, Aug. 8, 2000; 65 FR 50281, Aug. 17, 2000; T.D. 10018, 89 FR 106852, Dec. 30, 2024]

§ 1.1502-4 Consolidated foreign tax credit.

(a) ***In general.*** The foreign tax credit under section 901 is allowed to the group only if the agent for the group (as defined in § 1.1502-77(a)) chooses to use the credit in the computation of the consolidated tax liability of the group for the consolidated return year. If that choice is made, section 275(a)(4) provides that no deduction against taxable income may be taken on the consolidated return for foreign taxes paid or accrued by any member. However, if section 275(a)(4) does not apply, a deduction against consolidated taxable income may be allowed for certain taxes for which a credit is not allowed, even though the choice is made to claim a credit for other taxes. See, for example, sections 901(j)(3), 901(k)(7), 901(l)(4), 901(m)(6), and 908(b).

(b) ***Computation of foreign tax credit.*** The foreign tax credit for the consolidated return year is determined on a consolidated basis under the principles of sections 901 through 909 and 960. All foreign income taxes paid or accrued by members of the group for the year (including those deemed paid under section 960 and paragraph (d) of this section) must be aggregated.

(c) ***Computation of limitation on credit.*** For purposes of computing the group's limiting fraction under section 904, the following rules apply:

(1) ***Computation of taxable income from foreign sources —***

(i) ***Separate categories.*** The group must compute a separate foreign tax credit limitation for income in each separate category (as defined in § 1.904-5(a)(4)(v)) for purposes of this section. The numerator of the limiting fraction in any separate category is the consolidated taxable income of the group determined in accordance with § 1.1502-11, taking into account adjustments required under section 904(b), if any, from sources without the United States in that category, determined in accordance with the rules of §§ 1.904-4 and 1.904-5 and the section 861 regulations (as defined in § 1.861-8(a)(1)).

(ii) ***Adjustments under sections 904(f) and (g).*** The rules for allocation and recapture of separate limitation losses and overall foreign losses under section 904(f) and § 1.1502-9 apply to determine the foreign source and U.S. source taxable income in each separate category of the consolidated group. Similarly, the rules for allocation and recapture of overall domestic losses under section 904(g) and § 1.1502-9 apply to determine the foreign source and U.S. source taxable income in each separate category of the consolidated group. See § 1.904(g)-3 for allocation rules under sections 904(f) and 904(g). The rules of sections 904(f) and 904(g) do not operate to recharacterize foreign income tax attributable to any separate category.

(iii) ***Computation of consolidated net operating loss.*** The source and separate category of the group's consolidated net operating loss ("CNOL"), as that term is defined in § 1.1502-21(e), for the taxable year, if any, is determined based on the amounts of any separate limitation losses and U.S. source loss that are not allocated to reduce U.S. source income or income in other separate categories under the rules of sections 904(f) and 904(g) in computing the group's consolidated foreign tax credit limitations for the taxable year under paragraphs (c)(1)(i) and (ii) of this section.

(iv) ***Characterization of CNOL carried to a separate return year*** —

(A) ***In general.*** The total amount of CNOL attributable to a member that is carried to a separate return year is determined under the rules of § 1.1502-21(b)(2). The source and separate category of the portion of the CNOL that is attributable to a member is determined under this paragraph (c)(1)(iv).

(B) ***Tentative apportionment.*** For the portion of the CNOL that is attributable to the member described in paragraph (c)(1)(iv) of this section, the consolidated group determines a tentative allocation and apportionment to each statutory and residual grouping (as described in § 1.861-8(a)(4) with respect to section 904 as the operative section) under the principles of § 1.1502-9(c)(2)(i), (ii), (iv), and (v) by treating the portion of the group's CNOL in each statutory and residual grouping as if it were a CSLL account, as that term is described in § 1.1502-9(b)(4). This determination is made as of the end of the taxable year of the consolidated group in which the CNOL arose or, if earlier and applicable, when the member leaves the consolidated group.

(C) ***Adjustments.***

(*1*) If the total tentative apportionment for all statutory and residual groupings exceeds the portion of the CNOL attributable to the member described in paragraph (c)(1)(iv)(A) of this section (the "excess amount"), then the tentative apportionment in each grouping is reduced by an amount equal to the excess amount multiplied by a fraction, the numerator of which is the tentative apportionment in that grouping, and the denominator of which is the total tentative apportionments in all groupings.

(2) If the total tentative apportionment for all statutory and residual groupings is less than the total CNOL attributable to the member described in paragraph (c)(1)(iv)(A) (the "deficiency"), then the tentative apportionment in each grouping is increased by an amount equal to the deficiency multiplied by a fraction, the numerator of which is the CNOL in that grouping that was not tentatively apportioned, and the denominator of which is the total CNOL in all groupings that was not tentatively apportioned.

(v) ***Consolidated net capital losses.*** The principles of the rules in paragraphs (c)(1)(i) through (iv) of this section apply for purposes of determining the source and separate category of consolidated net capital losses described in § 1.1502-22(e).

(2) ***Computation of consolidated taxable income.*** The denominator of the limiting fraction in any separate category is the consolidated taxable income of the group determined in accordance with § 1.1502-11, taking into account adjustments required under section 904(b), if any.

(3) ***Computation of tax against which credit is taken.*** The tax against which the limiting fraction under section 904(a) is applied will be the consolidated tax liability of the group determined under § 1.1502-2, but without regard to § 1.1502-2(a)(2) through (4) and (8) and (9), and without regard to any credit against such liability. See sections 26(b) and 901(a).

(d) ***Carryover and carryback of unused foreign tax*** —

(1) ***Allowance of unused foreign tax as consolidated carryover or carryback.*** The consolidated group's carryovers and carrybacks of unused foreign tax (as defined in § 1.904-2(c)(1)) to the taxable year is determined on a consolidated basis under the principles of section 904(c) and § 1.904-2 and is deemed to be paid or accrued to a foreign country or U.S. territory (as defined in § 1.1502-1(l)) for that year. The consolidated group's unused foreign tax carryovers and carrybacks to the taxable year consist of any unused foreign tax of the consolidated group, plus any unused foreign tax of members for separate return years, which may be carried over or back to the taxable year under the principles of section 904(c) and § 1.904-2. The consolidated group's unused foreign tax carryovers and carrybacks do not include any unused foreign taxes apportioned to a corporation for a separate return year pursuant to § 1.1502-79(d). A consolidated group's unused foreign tax in each separate category is the excess of the foreign taxes paid, accrued or deemed paid under section 960 by the consolidated group over the limitation in the applicable separate category for the consolidated return year. *See* paragraph (c) of this section.

(2) ***Absorption rules.*** For purposes of determining the amount, if any, of an unused foreign tax which can be carried to a taxable year (whether a consolidated or separate return year), the amount of the unused foreign tax that is absorbed in a prior consolidated return year under section 904(c) shall be determined by—

(i) Applying all unused foreign taxes which can be carried to a prior year in the order of the taxable years in which those unused foreign taxes arose, beginning with the taxable year that ends earliest; and

(ii) Applying all unused foreign taxes which can be carried to such prior year from taxable years ending on the same date on a pro rata basis.

(e) ***Example.*** The following example illustrates the application of this section:

(1) ***Facts.***

(i) Domestic corporation P is incorporated on January 1, Year 1. On that same day, P incorporates domestic corporations S and T as wholly owned subsidiaries. P, S, and T file consolidated returns for Years 1 and 2 on the basis of a calendar year. T engages in business solely through a qualified business unit in Country A. S engages in business solely through qualified business units in Countries A and B. P does business solely in the United States. During Year 1, T sold an item of inventory to P at a gain of $2,000. Under § 1.1502-13 the intercompany gain has not been taken into account as of the close of Year 1. The taxable income of each member for Year 1 from foreign and U.S. sources, and the foreign taxes paid on such foreign income, are as follows:

TABLE 1 TO PARAGRAPH (e)(1)(i)

Corporation	U.S. source taxable income	Foreign branch category foreign source taxable income	Foreign branch category foreign tax paid	Total taxable income
P	$40,000			$40,000
T		$20,000	$12,000	20,000
S		20,000	9,000	20,000
Group	40,000	40,000	21,000	80,000

(ii) The separate taxable income of each member was computed by taking into account the rules under § 1.1502-12. Accordingly, T's intercompany gain of $2,000 is not included in T's taxable income for Year 1. The group's consolidated taxable income (computed in accordance with § 1.1502-11) is $80,000. The consolidated tax liability against which the credit may be taken (computed in accordance with paragraph (c)(3) of this section) is $16,800.

(2) ***Analysis.*** Under section 904(d) and paragraph (c)(1)(i) of this section, the aggregate amount of foreign income taxes paid to all foreign countries with respect to the foreign branch category income of $21,000 ($12,000 + $9,000) that may be claimed as a credit in Year 1 is limited to $8,400 ($16,800 × $40,000/$80,000). Assuming P, as the agent for the group, chooses to use the foreign taxes paid as a credit, the group may claim a $8,400 foreign tax credit.

(f) ***Applicability date.*** This section applies to taxable years for which the original consolidated Federal income tax return is due (without extensions) after January 11, 2021.

[T.D. 9922, 85 FR 72072, Nov. 12, 2020, as amended by T.D. 10018, 89 FR 106852, Dec. 30, 2024]

§ 1.1502-5 Estimated tax.

(a) ***General rule —***

(1) ***Consolidated estimated tax.*** If a group files a consolidated return for two consecutive taxable years, it must make payments of estimated tax on a consolidated basis for each subsequent taxable year until separate returns are filed. When filing on a consolidated basis, the group is generally treated as

a single corporation for purposes of section 6655 (relating to payment of estimated tax by corporations). If separate returns are filed by the members for a taxable year, the amount of any estimated tax payments made with respect to a consolidated estimated tax for the year is credited against the separate tax liabilities of the members in any reasonable manner designated by the common parent.

(2) ***First two consolidated return years.*** For its first two consolidated return years, a group may make payments of estimated tax on either a consolidated or a separate member basis. The amount of any separate estimated tax payments is credited against the consolidated tax liability of the group.

(b) ***Addition to tax for failure to pay estimated tax under section 6655*** —

(1) ***Consolidated return filed.*** For its first two consolidated return years, a group may compute the amount of the penalty (if any) under section 6655 on a consolidated basis or a separate member basis, regardless of the method of payment. Thereafter, the group must compute the penalty for any consolidated return year on a consolidated basis.

(2) ***Computation of penalty on consolidated basis*** —

(i) ***In general.*** This paragraph (b)(2) provides rules for computing the penalty under section 6655 on a consolidated basis.

(ii) ***Preceding taxable year.*** The tax shown on the return for the preceding taxable year referred to in section 6655(d)(1)(B)(ii) is, if a consolidated return was filed for that preceding year, the tax shown on the consolidated return for that preceding year or, if a consolidated return was not filed for that preceding year, the aggregate of the taxes shown on the separate returns of the common parent and any other corporation that was a member of the same affiliated group as the common parent for that preceding year.

(iii) ***Aggregate of payments made by all members.*** If estimated tax was not paid on a consolidated basis, the amount of the group's payments of estimated tax for the taxable year is the aggregate of the payments made by all members for the year.

(iv) ***Required annual payment rule.*** If the common parent is otherwise eligible to use the section 6655(d)(1)(B)(ii) required annual payment rule, that rule applies only if the group's consolidated return, or each member's separate return if the group did not file a consolidated return, for the preceding taxable year was a taxable year of 12 months.

(3) ***Computation of penalty on separate member basis.*** To compute any penalty under section 6655 on a separate member basis, for purposes of section 6655(d)(1)(B)(i), the “tax shown on the return” for the taxable year is the portion of the tax shown on the consolidated return allocable to the member under paragraph (b)(6) of this section. If the member was included in the consolidated return filed by the group for the preceding taxable year, for purposes of section 6655(d)(1)(B)(ii), the “tax shown on the return” for the preceding taxable year for any member is the portion of the tax shown on the consolidated return for the preceding year allocable to the member under paragraph (b)(6) of this section.

(4) ***Consolidated payments if separate returns filed.*** If the group does not file a consolidated return for the taxable year but makes payments of estimated tax on a consolidated basis, for purposes of section 6655(b)(1)(B), the “amount (if any) of the installment paid” by any member is an amount apportioned to the member in any reasonable manner designated by the common parent. If a

member was included in the consolidated return filed by the group for the preceding taxable year, the amount of the member's penalty under section 6655 is computed on the separate member basis described in paragraph (b)(3) of this section.

(5) ***Tax defined.*** For purposes of this section, the term *tax* means the excess of—

(i) The sum of—

(A) The consolidated tax imposed by section 11 or subchapter L of chapter 1, whichever applies;

(B) The tax imposed by section 55(a); plus

(C) The tax imposed by section 59A; over

(ii) The credits against tax provided by part IV of subchapter A of chapter 1 of the Internal Revenue Code.

(6) ***Allocation of consolidated tax liability for determining earnings and profits.*** For purposes of this section, the tax shown on a consolidated return is allocated to the members of the group by allocating any tax described in paragraph (b)(5)(i) of this section, net of allowable credits under paragraph (b)(5)(ii) of this section, under the method that the group has elected pursuant to section 1552 and § 1.1502-33(d).

(c) ***Examples.*** The provisions of this section are illustrated by the following examples.

(1) ***Example 1.*** Corporations P and S1 file a consolidated return for the first time for calendar year 2021. P and S1 also file consolidated returns for calendar year 2022 and calendar year 2023. Under paragraph (a)(2) of this section, for the 2021 and 2022 taxable years, P and S1 may pay estimated tax on either a separate or consolidated basis. Under paragraph (a)(1) of this section, for the 2023 taxable year, the group must pay its estimated tax on a consolidated basis. In determining whether P and S1 come within the exception provided in section 6655(d)(1)(B)(ii) for 2023, the “tax shown on the return” is the tax shown on the consolidated return for the 2022 taxable year.

(2) ***Example 2.*** Corporations P, S1, and S2 file a consolidated return for the first time for calendar year 2021 and file their second consolidated return for calendar year 2022. S2 ceases to be a member of the group on September 15, 2023. Under paragraph (b)(2) of this section, in determining whether the group (which no longer includes S2) comes within the exception provided in section 6655(d)(1)(B)(ii) for 2023, the “tax shown on the return” is the tax shown on the consolidated return for calendar year 2022.

(3) ***Example 3.*** Corporations P and S1 file a consolidated return for the first time for calendar year 2021 and file their second consolidated return for calendar year 2022. Corporation S2 becomes a member of the group on July 1, 2023, and joins in the filing of the consolidated return for calendar year 2023. Under paragraph (b)(2) of this section, in determining whether the group (which now includes S2) comes within the exception provided in section 6655(d)(1)(B)(ii) for 2023, the “tax shown on the return” is the tax shown on the consolidated return for calendar year 2022. Any tax of S2 for any separate return year is not included as a part of the “tax shown on the return” for purposes of applying section 6655(d)(1)(B)(ii).

(4) *Example 4.* Corporations X and Y file consolidated returns for the calendar years 2021 and 2022 and separate returns for calendar year 2023. Under paragraph (b)(3) of this section, in determining whether X or Y comes within the exception provided in section 6655(d)(1)(B)(ii) for 2023, the "tax shown on the return" is the amount of tax shown on the consolidated return for 2022 allocable to X and to Y in accordance with paragraph (b)(6) of this section.

(d) *Cross-references* —

(1) For provisions relating to quick refunds of corporate estimated tax payments, *see* §§ 1.1502-78 and 1.6425-1 through 1.6425-3.

(2) For provisions relating to depositing estimated taxes, *see* § 1.6302-1(b).

(e) ***Applicability date.*** This section applies to any taxable year for which the due date of the income tax return (without regard to extensions) is after December 30, 2024. For prior years, *see* § 1.1502-5 (as contained in the 26 CFR edition revised as of April 1, 2024).

[T.D. 10018, 89 FR 106852, Dec. 30, 2024]

§ 1.1502-6 Liability for tax.

(a) ***Several liability of members of group.*** Except as provided in paragraph (b) of this section, the common parent corporation and each subsidiary which was a member of the group during any part of the consolidated return year shall be severally liable for the tax for such year computed in accordance with the regulations under section 1502 prescribed on or before the due date (not including extensions of time) for the filing of the consolidated return for such year.

(b) ***Liability of subsidiary after withdrawal.*** If a subsidiary has ceased to be a member of the group and in such cessation resulted from a bona fide sale or exchange of its stock for fair value and occurred prior to the date upon which any deficiency is assessed, the Commissioner may, if the Commissioner believes that the assessment or collection of the balance of the deficiency will not be jeopardized, make assessment and collection of such deficiency from such former subsidiary in an amount not exceeding the portion of such deficiency which the Commissioner may determine to be allocable to it. If the Commissioner makes assessment and collection of any part of a deficiency from such former subsidiary, then for purposes of any credit or refund of the amount collected from such former subsidiary the agency of the common parent under the provisions of § 1.1502-77 does not apply.

(c) ***Effect of intercompany agreements.*** No agreement entered into by one or more members of the group with any other member of such group or with any other person shall in any case have the effect of reducing the liability prescribed under this section.

[T.D. 6894, 31 FR 11794, Sept. 8, 1966, as amended by T.D. 9002, 67 FR 43540, June 28, 2002; T.D. 10018, 89 FR 106853, Dec. 30, 2024]

§ 1.1502-9 Consolidated overall foreign losses, separate limitation losses, and overall domestic losses.

(a) ***In general.*** This section provides rules for applying section 904(f) and (g) (including its definitions and nomenclature) to a group and its members. Generally, section 904(f) concerns rules relating to overall foreign losses (OFLs) and separate limitation losses (SLLs) and the consequences of such losses. Under section 904(f)(5), losses are computed separately in each category of income described in section

904(d)(1) or § 1.904-5(a)(4)(v) (separate category). Section 904(g) concerns rules relating to overall domestic losses (ODLs) and the consequences of such losses. Paragraph (b) of this section defines terms and provides computational and accounting rules, including rules regarding recapture. Paragraph (c) of this section provides rules that apply to OFLs, SLLs, and ODLs when a member becomes or ceases to be a member of a group. Paragraph (d) of this section provides a predecessor and successor rule. Paragraph (e) of this section provides effective dates.

(b) ***Consolidated application of section 904(f) and (g).*** A group applies section 904(f) and (g) for a consolidated return year in accordance with that section, subject to the following rules:

(1) ***Computation of CSLI or CSLL and consolidated U.S.-source taxable income or CDL.*** The group computes its consolidated separate limitation income (CSLI) or consolidated separate limitation loss (CSLL) for each separate category under the principles of § 1.1502-11 by aggregating each member's foreign-source taxable income or loss in such separate category computed under the principles of § 1.1502-12, and taking into account the foreign portion of the consolidated items described in § 1.1502-11(a)(2) through (a)(6) for such separate category. The group computes its consolidated U.S.-source taxable income or consolidated domestic loss (CDL) under similar principles.

(2) ***Netting CSLLs, CSLIs, and consolidated U.S.-source taxable income.*** The group applies section 904(f)(5) to determine the extent to which a CSLL for a separate category reduces CSLI for another separate category or consolidated U.S.-source taxable income.

(3) ***Netting CDL and CSLI.*** The group applies section 904(g)(2) to determine the extent to which a CDL reduces CSLI.

(4) ***CSLL, COFL, and CODL accounts.*** To the extent provided in section 904(f), the amount by which a CSLL for a separate category (the loss category) reduces CSLI for another separate category (the income category) will result in the creation of (or addition to) a CSLL account for the loss category with respect to the income category. Likewise, the amount by which a CSLL for a loss category reduces consolidated U.S.-source taxable income will create (or add to) a consolidated overall foreign loss account (a COFL account). To the extent provided in section 904(g), the amount by which a CDL reduces CSLI will result in the creation of (or addition to) a consolidated overall domestic loss (CODL) account for the income category reduced by the CDL.

(5) ***Recapture of COFL, CSLL, and CODL accounts.*** In the case of a COFL account for a loss category, section 904(f)(1) and section 904(f)(3) recharacterize some or all of the foreign-source income in the loss category as U.S.-source income. In the case of a CSLL account for a loss category with respect to an income category, section 904(f)(5)(C) and section 904(f)(5)(F) recharacterize some or all of the foreign-source income in the loss category as foreign-source income in the income category. In the case of a CODL account, section 904(g)(3) recharacterizes some of the U.S.-source income as foreign-source income in the separate category that was offset by the CDL. The COFL account, CSLL account, or CODL account is reduced to the extent income is recharacterized with respect to such account.

(6) ***Intercompany transactions —***

(i) ***Nonapplication of section 904(f) disposition rules.*** Neither section 904(f)(3) (in the case of a COFL account) nor section 904(f)(5)(F) (in the case of a CSLL account) applies at the time of a disposition that is an intercompany transaction to which § 1.1502-13 applies. Instead, section 904(f)(3) and section 904(f)(5)(F) apply only at such time and only to the extent that the group is required under § 1.1502-13 (without regard to section 904(f)(3) and section 904(f)(5)(F)) to

take into account any intercompany items resulting from the disposition, based on the COFL or CSLL account existing at the end of the consolidated return year during which the group takes the intercompany items into account.

(ii) ***Examples.*** Paragraph (b)(6)(i) of this section is illustrated by the following examples. The identity of the parties and the basic assumptions set forth in § 1.1502-13(c)(7)(i) apply to the examples. Except as otherwise stated, assume further that the consolidated group recognizes no foreign source income other than as a result of the transactions described. The examples are as follows:

Example 1. (i) On June 10, year 1, S transfers nondepreciable property with a basis of $100 and a fair market value of $250 to B in a transaction to which section 351 applies. The property was predominantly used without the United States in a trade or business within the meaning of section 904(f)(3). B continues to use the property without the United States. The group has a COFL account in the relevant loss category of $120 as of December 31, year 1.
(ii) Because the contribution from S to B is an intercompany transaction, section 904(f)(3) does not apply to result in any gain recognition in year 1. See paragraph (b)(5)(i) of this section.

(iii) On January 10, year 4, B ceases to be a member of the group. Because S did not recognize gain in year 1 under section 351, no gain is taken into account in year 4 under § 1.1502-13. Thus, no portion of the group's COFL account is recaptured in year 4. For rules requiring apportionment of a portion of the COFL account to B, see paragraph (c)(2) of this section.

Example 2. (i) The facts are the same as in paragraph (i) of *Example 1.* On January 10, year 4, B sells the property to X for $300. As of December 31, year 4, the group's COFL account is $40. (The COFL account was reduced between year 1 and year 4 due to unrelated foreign-source income taken into account by the group.)
(ii) B takes into account gain of $200 in year 4. The $40 COFL account in year 4 recharacterizes $40 of the gain as U.S. source. See section 904(f)(3).

Example 3. (i) On June 10, year 1, S sells nondepreciable property with a basis of $100 and a fair market value of $250 to B for $250 cash. The property was predominantly used without the United States in a trade or business within the meaning of section 904(f)(3). The group has a COFL account in the relevant loss category of $120 as of December 31, year 1. B predominantly uses the property in a trade or business without the United States.
(ii) Because the sale is an intercompany transaction, section 904(f)(3) does not require the group to take into account any gain in year 1. Thus, under paragraph (b)(5)(i) of this section, the COFL account is not reduced in year 1.

(iii) On January 10, year 4, B sells the property to X for $300. As of December 31, year 4, the group's COFL account is $60. (The COFL account was reduced between year 1 and year 4 due to unrelated foreign-source income taken into account by the group.)

(iv) In year 4, S's $150 intercompany gain and B's $50 corresponding gain are taken into account to produce the same effect on consolidated taxable income as if S and B were divisions of a single corporation. See § 1.1502-13(c). All of B's $50 corresponding gain is recharacterized under section 904(f)(3). If S and B were divisions of a single corporation and the intercompany sale were a transfer between the divisions, B would succeed to S's $100 basis in the property and would have $200 of gain ($60 of which would be recharacterized under section 904(f)(3)), instead of a $50 gain. Consequently, S's $150 intercompany gain and B's $50 corresponding gain are taken into account, and $10 of S's gain is recharacterized under section 904(f)(3) as U.S. source income to reflect the $10 difference between B's $50 recharacterized gain and the $60 recomputed gain that would have been recharacterized.

(c) ***Becoming or ceasing to be a member of a group*** —

(1) ***Adding separate accounts on becoming a member.*** At the time that a corporation becomes a member of a group (a new member), the group adds to the balance of its COFL, CSLL or CODL account the balance of the new member's corresponding OFL account, SLL account or ODL account. A new member's OFL account corresponds to a COFL account if the account is for the same loss category. A new member's SLL account corresponds to a CSLL account if the account is for the same loss category and with respect to the same income category. A new member's ODL account corresponds to a CODL account if the account is with respect to the same income category. If the group does not have a COFL, CSLL or CODL account corresponding to the new member's account, it creates a COFL, CSLL or CODL account with a balance equal to the balance of the member's account.

(2) ***Apportionment of consolidated account to departing member*** —

(i) ***In general.*** A group apportions to a member that ceases to be a member (a departing member) a portion of each COFL, CSLL and CODL account as of the end of the year during which the member ceases to be a member and after the group makes the additions or reductions to such account required under paragraphs (b)(4), (b)(5), and (c)(1) of this section (other than an addition under paragraph (c)(1) of this section attributable to a member becoming a member after the departing member ceases to be a member). The group computes such portion under paragraph (c)(2)(ii) of this section, as limited by paragraph (c)(2)(iii) of this section. The departing member carries such portion to its first separate return year after it ceases to be a member. Also, the group reduces each account by such portion and carries such reduced amount to its first consolidated return year beginning after the year in which the member ceases to be a member. If two or more members cease to be members in the same year, the group computes the portion allocable to each such member (and reduces its accounts by such portion) in the order that the members cease to be members.

(ii) ***Departing member's portion of group's account.*** A departing member's portion of a group's COFL, CSLL or CODL account for a loss category is computed based upon the member's share of the group's assets that generate income subject to recapture at the time that the member ceases

to be a member. Under the characterization principles of §§ 1.861-9T(g)(3), 1.861-12, and 1.861-13, the group identifies the assets of the departing member and the remaining members that generate U.S.-source income (domestic assets) and foreign-source income (foreign assets) in each separate category. The assets are characterized based upon the income that the assets are reasonably expected to generate after the member ceases to be a member. The member's portion of a group's COFL or CSLL account for a loss category is the group's COFL or CSLL account, respectively, multiplied by a fraction, the numerator of which is the value of the member's foreign assets for the loss category and the denominator of which is the value of the foreign assets of the group (including the departing member) for the loss category. The member's portion of a group's CODL account for each income category is the group's CODL account multiplied by a fraction, the numerator of which is the value of the member's domestic assets and the denominator of which is the value of the domestic assets of the group (including the departing member). The value of the domestic and foreign assets is determined under the asset valuation rules of § 1.861-9(g)(1) and (2) using either tax book value or alternative tax book value under the method chosen by the group for purposes of interest apportionment as provided in § 1.861-9(g)(1)(ii). For purposes of this paragraph (c)(2)(ii), § 1.861-9T(g)(2)(iv) (assets in intercompany transactions) applies, but § 1.861-9T(g)(2)(iii) (adjustments for directly allocated interest) does not apply. The member's portions of COFL, CSLL, and CODL accounts are limited by paragraph (c)(2)(iii) of this section. In addition, for purposes of this paragraph (c)(2)(ii), the tax book value of assets transferred in intercompany transactions is determined without regard to previously deferred gain or loss that is taken into account by the group as a result of the transaction in which the member ceases to be a member. The assets should be valued at the time the member ceases to be a member, but values on other dates may be used unless this creates substantial distortions. For example, if a member ceases to be a member in the middle of the group's consolidated return year, an average of the values of assets at the beginning and end of the year (as provided in § 1.861-9(g)(2)) may be used or, if a member ceases to be a member in the early part of the group's consolidated return year, values at the beginning of the year may be used, unless this creates substantial distortions.

(iii) ***Limitation on member's portion.*** If the aggregate of a member's portions of COFL and CSLL accounts for a loss category (with respect to one or more income categories) determined under paragraph (c)(2)(ii) of this section exceeds 150 percent of the actual fair market value of the member's foreign assets in the loss category, the member's portion of the COFL or CSLL accounts for the loss category is reduced (proportionately, in the case of multiple accounts) by such excess. In addition, if the aggregate of a member's portions of CODL accounts (with respect to one or more income categories) determined under paragraph (c)(2)(ii) of this section exceeds 150 percent of the actual fair market value of the member's domestic assets, the member's portion of the CODL accounts is reduced (proportionately, in the case of multiple accounts) by such excess. This rule does not apply in the case of COFL or CSLL accounts if the departing member and all other members that cease to be members as part of the same transaction own all (or substantially all) the foreign assets in the loss category. In the case of CODL accounts, this rule does not apply if the departing member and all other members that cease to be members as part of the same transaction own all (or substantially all) the domestic assets.

(iv) ***Determination of values of domestic and foreign assets binding on departing member.*** The group's determination of the value of the member's and the group's domestic and foreign assets for a loss category is binding on the member, unless the Commissioner concludes that

the determination is not appropriate. The common parent of the group must attach a statement to the return for the taxable year that the departing member ceases to be a member of the group that sets forth the name and taxpayer identification number of the departing member, the amount of each COFL and CSLL for each loss category and each CODL that is apportioned to the departing member under this paragraph (c)(2), the method used to determine the value of the member's and the group's domestic and foreign assets in each such loss category, and the value of the member's and the group's domestic and foreign assets in each such loss category. The common parent must also furnish a copy of the statement to the departing member.

(v) ***Anti-abuse rule.*** If a corporation becomes a member and ceases to be a member, and a principal purpose of the corporation becoming and ceasing to be a member is to transfer the corporation's OFL account, SLL account or ODL account to the group or to transfer the group's COFL, CSLL or CODL account to the corporation, appropriate adjustments will be made to eliminate the benefit of such a transfer of accounts. Similarly, if any member acquires assets or disposes of assets (including a transfer of assets between members of the group and the departing member) with a principal purpose of affecting the apportionment of accounts under paragraph (c)(2)(i) of this section, appropriate adjustments will be made to eliminate the benefit of such acquisition or disposition.

(vi) ***Examples.*** The following examples illustrate the rules of this paragraph (c):

Example 1. (i) On November 6, year 1, S, a member of the P group, a consolidated group with a calendar consolidated return year, ceases to be a member of the group. On December 31, year 1, the P group has a $40 COFL account for the general category, a $20 CSLL account for the general category (that is, the loss category) with respect to the passive category (that is, the income category), and a $10 CODL account with respect to the passive category (that is, the income category). No member of the group has foreign-source income or loss in year 1. The group apportions its interest expense according to the tax book value method.
(ii) On November 6, year 1, the group identifies S's assets and the group's assets (including S's assets) expected to produce foreign-source general category income. Use of end-of-the-year values will not create substantial distortions in determining the relative values of S's and the group's relevant assets on November 6, year 1. The group determines that S's relevant assets have a tax book value of $2,000 and a fair market value of $2,200. Also, the group's relevant assets (including S's assets) have a tax book value of $8,000. On November 6, year 1, S has no assets expected to produce U.S. source income.

(iii) Under paragraph (c)(2)(ii) of this section, S takes a $10 COFL account for the general category ($40 × $2,000/$8,000) and a $5 CSLL account for the general category with respect to the passive category ($20 × $2,000/$8,000). S does not take any portion of the CODL account. The limitation described in paragraph (c)(2)(iii) of this section does

not apply because the aggregate of the COFL and CSLL accounts for the general category that are apportioned to S ($15) is less than 150% of the actual fair market value of S's general category foreign assets ($2,200 × 150%).

Example 2. (i) Assume the same facts as in *Example 1*, except that the fair market value of S's general category foreign assets is $4 as of November 6, year 1.
(ii) Under paragraph (c)(2)(iii) of this section, S's COFL and CSLL accounts for the general category must be reduced by $9, which is the excess of $15 (the aggregate amount of the accounts apportioned under paragraph (c)(2)(ii) of this section) over $6 (150% of the $4 actual fair market value of S's general category foreign assets). S thus takes a $4 COFL account for the general category ($10 − ($9 × $10/$15)) and a $2 CSLL account for the general category with respect to the passive category ($5 − ($9 × $5/$15)).

Example 3. (i) Assume the same facts as in *Example 1*, except that S also has assets that are expected to produce U.S. source income.
(ii) On November 6, year 1, the group identifies S's assets and the group's assets (including S's assets) expected to produce U.S. source income. Use of end-of-the-year values will not create substantial distortions in determining the relative values of S's and the group's relevant assets on November 6, year 1. The group determines that S's relevant assets have a tax book value of $3,000 and a fair market value of $2,500. Also, the group's relevant assets (including S's assets) have a tax book value of $6,000.

(iii) Under paragraph (c)(2)(ii) of this section, S takes a $5 CODL account ($10 × $3,000/$6,000), in addition to the COFL and CSLL accounts determined in *Example 1*. The limitation described in paragraph (c)(2)(iii) of this section does not apply because the CODL account that is apportioned to S ($5) is less than 150% of the actual fair market value of S's U.S. assets ($2,500 × 150%).

(d) ***Predecessor and successor.*** A reference to a member includes, as the context may require, a reference to a predecessor or successor of the member. See § 1.1502-1(f).

(e) ***Effective/applicability date.*** This section applies to consolidated return years beginning on or after January 1, 2012, for which the return is due (without extensions) after June 22, 2012. Taxpayers may choose to apply the provisions of this section to other consolidated return years beginning after December 31, 2006, including periods covered by 26 CFR 1.1502-9T (revised as of April 1, 2010). For rules relating to overall foreign losses and separate limitation losses in consolidated return years beginning on or before December 21, 2007, see 26 CFR 1.1502-9 (revised as of April 1, 2007).

[T.D. 9595, 77 FR 37585, June 22, 2012, as amended by T.D. 10018, 89 FR 106854, Dec. 30, 2024]

COMPUTATION OF CONSOLIDATED TAXABLE INCOME

§ 1.1502-11 Consolidated taxable income.

(a) ***In general.*** The consolidated taxable income (CTI) for a consolidated return year is determined by taking into account:

(1) The separate taxable income of each member of the group (*see* § 1.1502-12 for the computation of separate taxable income);

(2) Any consolidated net operating loss (CNOL) deduction (*see* § 1.1502-21 for the computation of the CNOL deduction);

(3) Any consolidated capital gain net income (*see* § 1.1502-22 for the computation of consolidated capital gain net income);

(4) Any consolidated section 1231 net loss (*see* § 1.1502-23 for the computation of consolidated section 1231 net loss);

(5) Any consolidated charitable contributions deduction (*see* § 1.1502-24 for the computation of the consolidated charitable contributions deduction); and

(6) Any consolidated dividends received deduction (*see* § 1.1502-26 for the computation of the consolidated dividends received deduction).

(b) ***Elimination of circular stock basis adjustments when there is no excluded COD income*** —

(1) ***In general.*** If one member (P) disposes of the stock of another member (S), this paragraph (b) limits the use of S's deductions and losses in the year of disposition and the carryback of items to prior years. The purpose of the limitation is to prevent P's income or gain from the disposition of S's stock from increasing the absorption of S's deductions and losses, because the increased absorption would reduce P's basis (or increase its excess loss account) in S's stock under § 1.1502-32 and, in turn, increase P's income or gain. See paragraph (b)(3) of this section for the application of these principles to P's deduction or loss from the disposition of S's stock, and paragraph (b)(4) of this section for the application of these principles to multiple stock dispositions. This paragraph (b) applies only when no member realizes discharge of indebtedness income that is excluded from gross income under section 108(a) (excluded COD income) during the taxable year of the disposition. See paragraph (c) of this section for rules that apply when a member realizes excluded COD income during the taxable year of the disposition. See § 1.1502-19(c) for the definition of disposition.

(2) ***Limitation on deductions and losses*** —

(i) ***Determination of amount of limitation.*** If P disposes of one or more shares of S's stock, the extent to which S's deductions and losses for the tax year of the disposition (and its deductions and losses carried over from prior years) may offset income and gain is subject to limitation. The amount of S's deductions and losses that may offset income and gain is determined by tentatively computing taxable income (or loss) for the year of disposition (and any prior years to which the deductions or losses may be carried) without taking into account P's income and gain from the disposition.

(ii) ***Application of limitation.*** S's deductions and losses offset income and gain only to the extent of the amount determined under paragraph (b)(2)(i) of this section. To the extent S's deductions and losses in the year of disposition cannot offset income or gain because of the limitation under this paragraph (b), the items are carried to other years under the applicable provisions of

the Internal Revenue Code and regulations as if they were the only items incurred by S in the year of disposition. For example, to the extent S incurs an operating loss in the year of disposition that is limited, the loss is treated as a separate net operating loss attributable to S arising in that year. The tentative computation does not affect the manner in which S's unlimited deductions and losses are absorbed or the manner in which deductions and losses of other members are absorbed. (If the amount of S's unlimited deductions and losses actually absorbed is less than the amount absorbed in the tentative computation, P's stock basis adjustments under § 1.1502-32 reflect only the amounts actually absorbed.)

(iii) ***Examples.*** For purposes of the examples in this paragraph (b), unless otherwise stated, P owns all of the only class of S's stock for the entire year, S owns no stock of lower-tier members, the tax year of all persons is the calendar year, all persons use the accrual method of accounting, the facts set forth the only corporate activity, all transactions are between unrelated persons, and tax liabilities are disregarded. The principles of this paragraph (b)(2) are illustrated by the following examples.

(A) ***Example 1. Limitation on losses with respect to stock gain.*** —

(*1*) P has a $500 basis in S's stock. For Year 1, P has ordinary income of $30 (determined without taking P's gain or loss from the disposition of S's stock into account) and S has an $80 ordinary loss. P sells S's stock for $520 at the close of Year 1.

(*2*) To determine the amount of the limitation on S's loss under paragraph (b)(2)(i) of this section, and the effect under § 1.1502-32(b) of the absorption of S's loss on P's basis in S's stock, P's gain or loss from the disposition of S's stock is not taken into account. The group is tentatively treated as having a consolidated net operating loss of $50 (P's $30 of income minus S's $80 loss). Thus, $50 of S's loss is limited under this paragraph (b).

(*3*) Because $30 of S's loss is absorbed in the determination of consolidated taxable income under paragraph (b)(2)(ii) of this section, P's basis in S's stock is reduced under § 1.1502-32(b) from $500 to $470 immediately before the disposition. Consequently, P recognizes a $50 gain from the sale of S's stock and the group has consolidated taxable income of $50 for Year 1 (P's $30 of ordinary income and $50 gain from the sale of S's stock, less the $30 of S's loss). In addition, S's limited loss of $50 is treated as a separate net operating loss attributable to S and, because S ceases to be a member, the loss is apportioned to S under § 1.1502-21 and carried to its first separate return year.

(B) ***Example 2. Carrybacks and carryovers.*** —

(*1*) For Year 1, the P group has consolidated taxable income of $30, and a consolidated net capital loss of $100 ($50 attributable to P and $50 to S). At the beginning of Year 2, P has a $300 basis in S's stock. For Year 2, P has ordinary income of $30, and a $20 capital gain (determined without taking the $100 consolidated net capital loss carryover or P's gain or loss from the disposition of S's stock into account), and S has a $100 ordinary loss. P sells S's stock for $280 at the close of Year 2.

(*2*) To determine the amount of the limitation under paragraph (b)(2)(i) of this section on S's losses, and the effect of the absorption of S's losses on P's basis in S's stock under § 1.1502-32(b), P's gain or loss from the disposition of S's stock is not taken into account. For Year 2, the P group is tentatively treated as having a $70

consolidated net operating loss (S's $100 ordinary loss, less P's $30 of ordinary income). The P group is also treated as having no consolidated net capital gain in Year 2, because P's $20 capital gain is reduced by $20 of the consolidated net capital loss carryover from Year 1 under section 1212(a) (the absorption of which is attributed equally to P and S). In addition, of the $70 consolidated net operating loss, $30 is carried back to Year 1 and offsets P's ordinary income in that year, and $40 is carried forward. Consequently, $40 of S's operating loss from Year 2, and $40 of the consolidated net capital loss carryover from Year 1 attributable to S, are limited under this paragraph (b).

(*3*) Under paragraph (b)(2)(ii) of this section, the limitation under this paragraph (b) does not affect the absorption of any deductions and losses attributable to P, $60 of S's operating loss from Year 2, and $10 of the consolidated net capital loss from Year 1 attributable to S. Consequently, P's basis in S's stock is reduced under § 1.1502-32(b) by $70, from $300 to $230, and P recognizes a $50 gain from the sale of S's stock in Year 2. Thus, the P group is treated as having a $20 unlimited net operating loss that is carried back to Year 1:

Ordinary income:	
P	$30
S (excluding the $40 limited loss)	(60)
Sub Total	$(30)
Consolidated net capital gain:	
P ($20 + $50 from S stock − $50 from Year 1)	$20
S (−$10 from Year 1)	(10)
Sub Total	$10
Consolidated taxable income	$(20)

(*4*) Under paragraph (b)(2)(ii) of this section, S's $40 ordinary loss from Year 2 that is limited under this paragraph (b) is treated as a separate net operating loss arising in Year 2. Similarly, $40 of the consolidated net capital loss from Year 1 attributable to S is treated as a separate net capital loss carried over from Year 1. Because S ceases to be a member, the $40 net operating loss from Year 2 and the $40 consolidated net capital loss from Year 1 are allocated to S under §§ 1.1502-21 and 1.1502-22, respectively and are carried to S's first separate return year.

(C) ***Example 3. Allocation of basis adjustments.*** —

(*1*) For Year 1, the P group has consolidated taxable income of $100. At the beginning of Year 2, P has a $40 basis in each of the 10 shares of S's stock. For Year 2, P has an $80 ordinary loss (determined without taking into account P's gain or loss from the disposition of S's stock) and S has an $80 ordinary loss. P sells 2 shares of S's stock for $85 each at the close of Year 2.

(2) Under paragraph (b)(2)(i) of this section, the amount of the limitation on S's loss is determined by tentatively treating the P group as having a $160 consolidated net operating loss for Year 2. Of this amount, $100 is carried back under section 172 and absorbed in Year 1 ($50 attributable to S and $50 attributable to P). Consequently, $30 of S's loss is limited under this paragraph (b).

(3) Under paragraph (b)(2)(ii) of this section, the limitation under this paragraph (b) does not affect the absorption of P's $80 ordinary loss or $50 of S's ordinary loss. Consequently, P's basis in each share of S's stock is reduced from $40 to $35 under § 1.1502-32(b), and P recognizes a $100 gain from the sale of the 2 shares. Thus, the P group is treated as having a $30 unlimited net operating loss:

Ordinary loss:	
P	$(80)
S (excluding the $30 limited loss)	(50)
Sub Total	$(130)
Consolidated net capital gain:	
P	$100
S	0
Sub Total	$100
Unlimited consolidated net operating loss	$(30)

(4) A portion of the $130 of unlimited operating losses for Year 2 is fully absorbed in that year, and a portion is carried back to Year 1. Thus, $61.50 of P's $80 loss ($100 multiplied by $80/$130) and $38.50 of S's $50 unlimited loss ($100 multiplied by $50/$130) are absorbed in Year 2. P's remaining $18.50 of loss and S's remaining $11.50 of loss are not subject to limitation and are carried back and absorbed in Year 1.

(5) Under paragraph (b)(2)(ii) of this section, S's $30 of loss limited under this paragraph (b) is treated as a separate net operating loss.

(3) ***Loss dispositions*** —

(i) ***General rule.*** The principles of paragraph (b)(2) of this section apply to the extent necessary to carry out the purposes of paragraph (b)(1) of this section if P recognizes a deduction or loss from the disposition of S's stock.

(ii) ***Example.*** The principles of this paragraph (b)(3) are illustrated by the following example.

> *Example.* (a) P has a $400 basis in S's stock. For Year 1, P has a capital gain of $100 (determined without taking P's gain or loss from the disposition of S's stock into account) and S has both a $60 capital loss and a $200 ordinary loss. P sells S's stock for $140 at the close of Year 1.

(b) Under paragraph (b)(3) of this section, the amount of S's ordinary and capital losses that may offset income and gain is determined by tentatively computing the group's consolidated net operating loss and consolidated net capital loss without taking into account P's loss from the disposition of S's stock. The limitation is necessary to prevent P's loss from the disposition of S's stock from affecting the absorption of S's losses and thereby the adjustments to P's basis in S's stock under § 1.1502-32(b) (which would, in turn, affect P's loss).

(c) Under the principles of paragraph (b)(2)(i) of this section, the amount of the limitation on S's loss is determined by tentatively treating the P group as having a $40 consolidated net capital gain and a $200 ordinary loss, which results in a $160 consolidated net operating loss for Year 1, all of which is attributable to S. Thus, $160 of S's ordinary loss is limited under this paragraph (b). *See also* §§ 1.337(d)-2, 1.1502-35, and 1.1502-36 for rules relating to basis adjustments and allowance of stock loss on dispositions of stock of a subsidiary member.

(4) ***Multiple dispositions*** —

(i) ***Stock of a member.*** To the extent income, gain, deduction, or loss from a prior disposition of S's stock is deferred under any rule of law, the limitation under paragraph (b)(2) of this section is determined by treating the year the deferred amount is taken into account as the year of the disposition.

(ii) ***Stock of different members.*** If S is a higher-tier corporation with respect to another member (T), and all of T's items of income, gain, deduction, and loss (including the absorption of T's deduction or loss) would be fully reflected in P's basis in S's stock under § 1.1502-32, the limitation under paragraph (b)(2)(i) of this section with respect to T's deductions and losses is determined without taking into account any income, gain, deduction, or loss from the disposition of the stock of S or T (or of the stock of members owned in the chain connecting S and T). However, this paragraph (b) does not otherwise limit the absorption of one member's deduction or loss with respect to the disposition of another member's stock.

(iii) ***Examples.*** The principles of this paragraph (b)(4) are illustrated by the following examples.

Example 1. Chain of subsidiaries. (a) P owns all of S's stock with a $500 basis, and S owns all of T's stock with a $500 basis. For Year 1, P has ordinary income of $30, S has no income or loss, and T has an $80 ordinary loss. P sells S's stock for $520 at the close of Year 1.
(b) Under paragraph (b)(4) of this section, to determine the amount of the limitation under paragraph (b) of this section on T's loss, and the effect of the absorption of T's loss on P's basis in S's stock under § 1.1502-32(b), P's gain or loss from the disposition of S's stock is not taken into account. The group is tentatively treated as having a consolidated net operating loss of $50 (P's $30 of income minus T's $80 loss). Because

only $30 of T's loss offsets income or gain, P's basis in S's stock is reduced under § 1.1502-32(b) from $500 to $470 immediately before the disposition of S's stock. Thus, P takes into account a $50 gain from the sale of S's stock.

(c) The facts are the same as in paragraph (a) of this *Example 1*, except that S has a $10 excess loss account in T's stock (rather than a $500 basis). Under paragraph (b)(4) of this section, neither P's gain or loss from the disposition of S's stock nor S's gain or loss from the disposition of T's stock (under § 1.1502-19) are taken into account for purposes of the tentative computations and the effect of any absorption under § 1.1502-32(b) on P's basis in S's stock and S's excess loss account in T's stock. The group is tentatively treated as having a consolidated net operating loss of $50 (P's $30 of income minus T's $80 loss), and only $30 of T's loss may offset the group's income or gain. Under § 1.1502-32(b), the absorption of $30 of T's loss increases S's excess loss account in T's stock to $40 and, under § 1.1502-19, the excess loss account is taken into account. Moreover, under § 1.1502-32(b), P's basis in S's stock is increased immediately before the sale by $10 (S's $40 gain under § 1.1502-19(b) minus T's $30 loss absorbed and tiered up under § 1.1502-32(b)), from $500 to $510. Thus, P takes into account a $10 gain from the sale of S's stock, and S takes into account a $40 gain from its excess loss account in T's stock.

Example 2. Brother-sister subsidiaries. (a) P owns all of the stock of S1 and S2, each with a $50 basis. For Year 1, the group has a $100 consolidated net operating loss ($50 of which is attributable to S1, and $50 to S2) determined without taking gain or loss from the disposition of member stock into account. At the close of Year 1, P sells the stock of S1 and S2 for $100 each.
(b) Paragraph (b)(4) of this section does not limit the loss of S1 or S2 with respect to the disposition of stock of the other. Consequently, each subsidiary's loss may offset P's gain from the disposition of the stock of the other subsidiary. Because this absorption results in a $50 reduction in P's basis in the stock of each subsidiary under § 1.1502-32(b), P's aggregate gain from the stock dispositions is increased from $100 to $200, $100 of which is offset by the losses of the subsidiaries.

(5) ***Effective date.*** This paragraph (b) applies to stock dispositions occurring in consolidated return years beginning on or after January 1, 1995. For prior years, see § 1.1502-11(b) as contained in the 26 CFR part 1 edition revised as of April 1, 1994.

(c) ***Elimination of circular stock basis adjustments when there is excluded COD income*** —

(1) ***In general.*** If one member (P) disposes of the stock of another member (S) in a year during which any member realizes excluded COD income, this paragraph (c) limits the use of S's deductions and losses in the year of disposition and the carryback of items to prior years, the amount of the attributes of certain members that can be reduced in respect of excluded COD income of certain other members, and the attributes that can be used to offset an excess loss account taken into

account by reason of the application of § 1.1502-19(c)(1)(iii)(B). In addition to the purpose set forth in paragraph (b)(1) of this section, the purpose of these limitations is to prevent the reduction of tax attributes in respect of excluded COD income from affecting P's income, gain, or loss on the disposition of S stock (including a disposition of S stock that results from the application of § 1.1502-19(c)(1)(iii)(B)) and, in turn, affecting the attributes available for reduction pursuant to sections 108 and 1017 and § 1.1502-28. See § 1.1502-19(c) for the definition of disposition.

(2) ***Computation of tax liability, reduction of attributes, and computation of limits on absorption and reduction of attributes.*** If a member realizes excluded COD income in the taxable year during which P disposes of S stock, the steps used to compute tax liability, to effect the reduction of attributes, and to compute the limitations on the absorption and reduction of attributes are as follows. These steps also apply to determine whether and to what extent an excess loss account must be taken into account as a result of the application of § 1.1502-19(b)(1) and (c)(1)(iii)(B).

(i) ***Limitation on deductions and losses to offset income or gain.*** First, the determination of the extent to which S's deductions and losses for the tax year of the disposition (and its deductions and losses carried over from prior years) may offset income and gain is made pursuant to paragraphs (b)(2) and (3) of this section.

(ii) ***Tentative adjustment of stock basis.*** Second, § 1.1502-32 is tentatively applied to adjust the basis of the S stock to reflect the amount of S's income and gain included, and unlimited deductions and losses that are absorbed, in the tentative computation of taxable income or loss for the year of the disposition (and any prior years) that is made pursuant to paragraph (b)(2) of this section, but not to reflect the realization of excluded COD income and the reduction of attributes in respect thereof.

(iii) ***Tentative computation of stock gain or loss.*** Third, in the case of a disposition of S stock that does not result from the application of § 1.1502-19(c)(1)(iii)(B), P's income, gain, or loss from the disposition of S stock is computed. For this purpose, the result of the computation pursuant to paragraph (c)(2)(ii) of this section is treated as the basis of such stock.

(iv) ***Tentative computation of tax imposed.*** Fourth, the tax imposed by chapter 1 of the Internal Revenue Code for the year of disposition (and any prior years) is tentatively computed. For this purpose, in the case of a disposition of S stock that does not result from the application of § 1.1502-19(c)(1)(iii)(B), the tentative computation of tax imposed takes into account P's income, gain, or loss from the disposition of S stock computed pursuant to paragraph (c)(2)(iii) of this section. The tentative computation of tax imposed is made without regard to whether all or a portion of an excess loss account in a share of S stock is required to be taken into account pursuant to § 1.1502-19(b)(1) and (c)(1)(iii)(B).

(v) ***Tentative reduction of attributes.*** Fifth, the rules of sections 108 and 1017 and § 1.1502-28 are tentatively applied to reduce the attributes remaining after the tentative computation of tax imposed pursuant to paragraph (c)(2)(iv) of this section.

(vi) ***Actual adjustment of stock basis.*** Sixth, § 1.1502-32 is applied to reflect the amount of S's income and gain included, and unlimited deductions and losses that are absorbed, in the tentative computation of tax imposed for the year of the disposition (and any prior years) made pursuant to paragraph (c)(2)(iv) of this section, and the excluded COD income applied to reduce attributes and the attributes tentatively reduced in respect of the excluded COD income pursuant to paragraph (c)(2)(v) of this section.

(vii) ***Actual computation of stock gain or loss.*** Seventh, the group's actual gain or loss on the disposition of S stock (including a disposition that results from the application of § 1.1502-19(c)(1)(iii)(B)) is computed. The result of the computation pursuant to paragraph (c)(2)(vi) of this section is treated as the basis of such stock.

(viii) ***Actual computation of tax imposed.*** Eighth, the tax imposed by chapter 1 of the Internal Revenue Code for the year of the disposition (and any prior years) is computed. The actual tax imposed on the group for the year of the disposition is computed by applying the limitation computed pursuant to paragraph (c)(2)(i) of this section, and by including the gain or loss recognized on the disposition of S stock computed pursuant to paragraph (c)(2)(vii) of this section. However, attributes that were tentatively used in the computation of tax imposed pursuant to paragraph (c)(2)(iv) of this section and attributes that were tentatively reduced pursuant to paragraph (c)(2)(v) of this section cannot offset any excess loss account taken into account as a result of the application of § 1.1502-19(b)(1) and (c)(1)(iii)(B).

(ix) ***Actual reduction of attributes.*** Ninth, the rules of sections 108 and 1017 and § 1.1502-28 are actually applied to reduce the attributes remaining after the actual computation of tax imposed pursuant to paragraph (c)(2)(viii) of this section.

(A) ***S or a lower-tier corporation realizes excluded COD income.*** If S or a lower-tier corporation of S realizes excluded COD income, the aggregate amount of excluded COD income that is applied to reduce attributes attributable to members other than S and any lower-tier corporation of S pursuant to this paragraph (c)(2)(ix) shall not exceed the aggregate amount of excluded COD income that was tentatively applied to reduce attributes attributable to members other than S and any lower-tier corporation of S pursuant to paragraph (c)(2)(v) of this section. The amount of the actual reduction of attributes attributable to S and any lower-tier corporation of S that may be reduced in respect of the excluded COD income of S or a lower-tier corporation of S shall not be so limited.

(B) ***A member other than S or a lower-tier corporation realizes excluded COD income.*** If a member other than S or a lower-tier corporation of S realizes excluded COD income, the aggregate amount of excluded COD income that is applied to reduce attributes (other than credits) attributable to S and any lower-tier corporation of S pursuant to this paragraph (c)(2)(ix) shall not exceed the aggregate amount of excluded COD income that was tentatively applied to reduce attributes (other than credits) attributable to S and any lower-tier corporation of S pursuant to paragraph (c)(2)(v) of this section. The amount of the actual reduction of attributes attributable to any member other than S and any lower-tier corporation of S that may be reduced in respect of the excluded COD income of S or a lower-tier corporation of S shall not be so limited.

(3) ***Special rules.***

(i) If the reduction of attributes attributable to a member is prevented as a result of a limitation described in paragraph (c)(2)(ix)(B) of this section, the excluded COD income that would have otherwise been applied to reduce such attributes is applied to reduce the remaining attributes of the same type that are available for reduction under § 1.1502-28(a)(4), on a pro rata basis, prior to reducing attributes of a different type. The reduction of such remaining attributes, however, is subject to any applicable limitation described in paragraph (c)(2)(ix)(B) of this section.

(ii) To the extent S's deductions and losses in the year of disposition (or those of a lower-tier corporation of S) cannot offset income or gain because of the limitation under paragraph (b) of this section or this paragraph (c) and are not reduced pursuant to sections 108 and 1017 and § 1.1502-28, such items are carried to other years under the applicable provisions of the Internal Revenue Code and regulations as if they were the only items incurred by S (or a lower-tier corporation of S) in the year of disposition. For example, to the extent S incurs an operating loss in the year of disposition that is limited and is not reduced pursuant to section 108 and § 1.1502-28, the loss is treated as a separate net operating loss attributable to S arising in that year.

(4) ***Definition of lower-tier corporation.*** A corporation is a lower-tier corporation of S if all of its items of income, gain, deduction, and loss (including the absorption of deduction or loss and the reduction of attributes other than credits) would be fully reflected in P's basis in S's stock under § 1.1502-32.

(5) ***Examples.*** For purposes of the examples in this paragraph (c), unless otherwise stated, the tax year of all persons is the calendar year, all persons use the accrual method of accounting, the facts set forth the only corporate activity, all transactions are between unrelated persons, tax liabilities are disregarded, and no election under section 108(b)(5) is made. The principles of this paragraph (c) are illustrated by the following examples:

> *Example 1. Departing member realizes excluded COD income.* (i) *Facts.* P owns all of S's stock with a $90 basis. For Year 1, P has ordinary income of $30, and S has an $80 ordinary loss and $100 of excluded COD income from the discharge of non-intercompany indebtedness. P sells the S stock for $20 at the close of Year 1. As of the beginning of Year 2, S has Asset A with a basis of $0 and a fair market value of $20.
> (ii) *Analysis.* The steps used to compute the tax imposed on the group, to effect the reduction of attributes, and to compute the limitations on the use and reduction of attributes are as follows:
>
> (A) *Computation of limitation on deductions and losses to offset income or gain.* To determine the amount of the limitation under paragraph (c)(2)(i) of this section on S's loss and the effect of the absorption of S's loss on P's basis in S's stock under § 1.1502-32(b), P's gain or loss from the disposition of S's stock is not taken into account. The group is tentatively treated as having a consolidated net operating loss of $50 (P's $30 of income minus S's $80 loss). Thus, $30 of S's loss is unlimited and $50 of S's loss is limited under paragraph (c)(2)(i) of this section. Under the principles of § 1.1502-21(b)(2)(iv), all of the consolidated net operating loss is attributable to S.
>
> (B) *Tentative adjustment of stock basis.* Then, pursuant to paragraph (c)(2)(ii) of this section, § 1.1502-32 is tentatively applied to adjust the basis of S stock. For this purpose, however, adjustments attributable to the excluded COD income and the reduction of attributes in respect thereof are not taken into account. Under § 1.1502-32(b), the absorption of $30 of S's loss decreases P's basis in S's stock by $30 to $60.

(C) *Tentative computation of stock gain or loss.* Then, P's income, gain, or loss from the sale of S stock is computed pursuant to paragraph (c)(2)(iii) of this section using the basis computed in the previous step. Thus, P is treated as recognizing a $40 loss from the sale of S stock.

(D) *Tentative computation of tax imposed.* Pursuant to paragraph (c)(2)(iv) of this section, the tax imposed for the year of disposition is then tentatively computed, taking into account P's $40 loss on the sale of the S stock computed pursuant to paragraph (c)(2)(iii) of this section. The group has a $50 consolidated net operating loss for Year 1 that, under the principles of § 1.1502-21(b)(2)(iv), is wholly attributable to S and a consolidated capital loss of $40 that, under the principles of § 1.1502-21(b)(2)(iv), is wholly attributable to P.

(E) *Tentative reduction of attributes.* Next, pursuant to paragraph (c)(2)(v) of this section, the rules of sections 108 and 1017 and § 1.1502-28 are tentatively applied to reduce attributes remaining after the tentative computation of the tax imposed. Pursuant to § 1.1502-28(a)(2), the tax attributes attributable to S would first be reduced to take into account its $100 of excluded COD income. Accordingly, the consolidated net operating loss for Year 1 would be reduced by $50, the portion of that consolidated net operating loss attributable to S under the principles of § 1.1502-21(b)(2)(iv), to $0. Then, pursuant to § 1.1502-28(a)(4), S's remaining $50 of excluded COD income would reduce the consolidated capital loss attributable to P of $40 by $40 to $0. The remaining $10 of excluded COD income would have no effect.

(F) *Actual adjustment of stock basis.* Pursuant to paragraph (c)(2)(vi) of this section, § 1.1502-32 is applied to reflect the amount of S's income and gain included, and unlimited deductions and losses that are absorbed, in the tentative computation of the tax imposed for the year of the disposition and the excluded COD income tentatively applied to reduce attributes and the attributes reduced in respect of the excluded COD income pursuant to the previous step. Under § 1.1502-32(b), the absorption of $30 of S's loss, the application of $90 of S's excluded COD income to reduce attributes of P and S, and the reduction of the $50 loss attributable to S in respect of the excluded COD income results in a positive adjustment of $10 to P's basis in the S stock. P's basis in the S stock, therefore, is $100.

(G) *Actual computation of stock gain or loss.* Pursuant to paragraph (c)(2)(vii) of this section, P's actual gain or loss on the sale of the S stock is computed using the basis computed in the previous step. Accordingly, P recognizes an $80 loss on the disposition of the S stock.

(H) *Actual computation of tax imposed.* Pursuant to paragraph (c)(2)(viii) of this section, the tax imposed is computed by taking into account P's $80 loss from the sale of S stock. Before the application of § 1.1502-28, therefore, the group has a consolidated net operating loss of

$50 that is wholly attributable to S under the principles of § 1.1502-21(b)(2)(iv), and a consolidated capital loss of $80 that is wholly attributable to P under the principles of § 1.1502-21(b)(2)(iv).

(I) *Actual reduction of attributes.* Pursuant to paragraph (c)(2)(ix) of this section, sections 108 and 1017 and § 1.1502-28 are then actually applied to reduce attributes remaining after the actual computation of the tax imposed. Pursuant to § 1.1502-28(a)(2), the tax attributes attributable to S must first be reduced to take into account its $100 of excluded COD income. Accordingly, the consolidated net operating loss for Year 1 is reduced by $50, the portion of that consolidated net operating loss attributable to S under the principles of § 1.1502-21(b)(2)(iv), to $0. Then, pursuant to § 1.1502-28(a)(4), S's remaining $50 of excluded COD income reduces consolidated tax attributes. In particular, without regard to the limitation imposed by paragraph (c)(2)(ix)(A) of this section, the $80 consolidated capital loss, which under the principles of § 1.1502-21(b)(2)(iv) is attributable to P, would be reduced by $50 from $80 to $30. However, the limitation imposed by paragraph (c)(2)(ix)(A) of this section prevents the reduction of the consolidated capital loss attributable to P by more than $40. Therefore, the consolidated capital loss attributable to P is reduced by only $40 in respect of S's excluded COD income. The remaining $10 of excluded COD income has no effect.

Example 2. Member other than departing member realizes excluded COD income. (i) *Facts.* P owns all of S1's and S2's stock. P's basis in S2's stock is $600. For Year 1, P has ordinary income of $30, S1 has a $100 ordinary loss and $100 of excluded COD income from the discharge of non-intercompany indebtedness, and S2 has $200 of ordinary loss. P sells the S2 stock for $600 at the close of Year 1. As of the beginning of Year 2, S1 has Asset A with a basis of $0 and a fair market value of $10.
(ii) *Analysis.* The steps used to compute the tax imposed on the group, to effect the reduction of attributes, and to compute the limitations on the use and reduction of attributes are as follows:

(A) *Computation of limitation on deductions and losses to offset income or gain.* To determine the amount of the limitation under paragraph (c)(2)(i) of this section on S2's loss and the effect of the absorption of S2's loss on P's basis in S2's stock under § 1.1502-32(b), P's gain or loss from the sale of S2's stock is not taken into account. The group is tentatively treated as having a consolidated net operating loss of $270 (P's $30 of income minus S1's $100 loss and S2's $200 loss). Consequently, $20 of S2's loss from Year 1 is unlimited and $180 of S2's loss from Year 1 is limited under paragraph (c)(2)(i) of this section. Under the principles of § 1.1502-21(b)(2)(iv), $90 of the consolidated net operating loss is attributable to S1 and $180 of the consolidated net operating loss is attributable to S2.

(B) *Tentative adjustment of stock basis.* Then, pursuant to paragraph (c)(2)(ii) of this section, § 1.1502-32 is tentatively applied to adjust the basis of S2's stock. For this purpose, however, adjustments to the basis of S2's stock attributable to the reduction of attributes in respect of S1's excluded COD income are not taken into account. Under § 1.1502-32(b), the absorption of $20 of S2's loss decreases P's basis in S2's stock by $20 to $580.

(C) *Tentative computation of stock gain or loss.* Then, P's income, gain, or loss from the disposition of S2 stock is computed pursuant to paragraph (c)(2)(iii) of this section using the basis computed in the previous step. Thus, P is treated as recognizing a $20 gain from the sale of the S2 stock.

(D) *Tentative computation of tax imposed.* Pursuant to paragraph (c)(2)(iv) of this section, the tax imposed for the year of disposition is then tentatively computed, taking into account P's $20 gain from the sale of S2 stock computed pursuant to paragraph (c)(2)(iii) of this section. Although S2's limited loss cannot be used to offset P's $20 gain from the sale of S2's stock under the rules of this section, S1's loss will offset that gain. Therefore, the group is tentatively treated as having a consolidated net operating loss of $250, $70 of which is attributable to S1 and $180 of which is attributable to S2 under the principles of § 1.1502-21(b)(2)(iv).

(E) *Tentative reduction of attributes.* Next, pursuant to paragraph (c)(2)(v) of this section, the rules of sections 108 and 1017 and § 1.1502-28 are tentatively applied to reduce attributes remaining after the tentative computation of the tax imposed. Pursuant to § 1.1502-28(a)(2), the tax attributes attributable to S1 would first be reduced to take into account its $100 of excluded COD income. Accordingly, the consolidated net operating loss for Year 1 would be reduced by $70, the portion of that consolidated net operating loss attributable to S1 under the principles of § 1.1502-21(b)(2)(iv), to $0. Then, pursuant to § 1.1502-28(a)(4), S1's remaining $30 of excluded COD income would reduce the consolidated net operating loss for Year 1 attributable to S2 of $180 by $30 to $150.

(F) *Actual adjustment of stock basis.* Pursuant to paragraph (c)(2)(vi) of this section, § 1.1502-32 is applied to reflect the amount of S2's income and gain included, and unlimited deductions and losses that are absorbed, in the tentative computation of the tax imposed for the year of the disposition and the excluded COD income tentatively applied to reduce attributes and the attributes reduced in respect of the excluded COD income pursuant to the previous step. Under § 1.1502-32(b), the absorption of $20 of S2's loss to offset a portion of P's income and the application of $30 of S1's excluded COD income to reduce attributes attributable to S2 results in a negative adjustment of $50 to P's basis in the S2 stock. P's basis in the S2 stock, therefore, is $550.

(G) *Actual computation of stock gain or loss.* Pursuant to paragraph (c)(2)(vii) of this section, P's actual gain or loss on the sale of the S2 stock is computed using the basis computed in the previous step. Therefore, P recognizes a $50 gain on the disposition of the S2 stock.

(H) *Actual computation of tax imposed.* Pursuant to paragraph (c)(2)(viii) of this section, the tax imposed is computed by taking into account P's $50 gain from the disposition of the S2 stock. Before the application of § 1.1502-28, therefore, the group has a consolidated net operating loss of $220, $40 of which is attributable to S1 and $180 of which is attributable to S2 under the principles of § 1.1502-21(b)(2)(iv).

(I) *Actual reduction of attributes.* Pursuant to paragraph (c)(2)(ix) of this section, sections 108 and 1017 and § 1.1502-28 are then actually applied to reduce attributes remaining after the actual computation of the tax imposed. Pursuant to § 1.1502-28(a)(2), the tax attributes attributable to S1 must first be reduced to take into account its $100 of excluded COD income. Accordingly, the consolidated net operating loss for Year 1 is reduced by $40, the portion of that consolidated net operating loss attributable to S1 under the principles of § 1.1502-21(b)(2)(iv), to $0. Then, pursuant to § 1.1502-28(a)(4), without regard to the limitation imposed by paragraph (c)(2)(ix)(B) of this section, S1's remaining $60 of excluded COD income would reduce S2's net operating loss of $180 to $120. However, the limitation imposed by paragraph (c)(2)(ix)(B) of this section prevents the reduction of S2's loss by more than $30. Therefore, S2's loss of $180 is reduced by $30 to $150 in respect of S1's excluded COD income. The remaining $30 of excluded COD income has no effect.

Example 3. Lower-tier corporation of departing member realizes excluded COD income. (i) *Facts.* P owns all of S1's stock, S2's stock, and S3's stock. S1 owns all of S4's stock. P's basis in S1's stock is $50 and S1's basis in S4's stock is $50. For Year 1, P has $50 of ordinary loss, S1 has $100 of ordinary loss, S2 has $150 of ordinary loss, S3 has $50 of ordinary loss, and S4 has $50 of ordinary loss and $80 of excluded COD income from the discharge of non-intercompany indebtedness. P sells the S1 stock for $100 at the close of Year 1. As of the beginning of Year 2, S4 has Asset A with a fair market value of $10. After the computation of tax imposed for Year 1 and before the application of sections 108 and 1017 and § 1.1502-28, Asset A has a basis of $0.
(ii) *Analysis.* The steps used to compute the tax imposed on the group, to effect the reduction of attributes, and to compute the limitations on the use and reduction of attributes are as follows:

(A) *Computation of limitation on deductions and losses to offset income or gain.* To determine the amount of the limitation under paragraph (c)(2)(i) of this section on S1's and S4's losses and the effect of the absorption of S1's and S4's losses on P's basis in S1's stock under §

1.1502-32(b), P's gain or loss from the sale of S1's stock is not taken into account. The group is tentatively treated as having a consolidated net operating loss of $400. Consequently, $100 of S1's loss and $50 of S4's loss is limited under paragraph (c)(2)(i) of this section.

(B) *Tentative adjustment of stock basis.* Then, pursuant to paragraph (c)(2)(ii) of this section, § 1.1502-32 is tentatively applied to adjust the basis of S1's stock. For this purpose, adjustments to the basis of S1's stock attributable to S4's realization of excluded COD income and the reduction of attributes in respect of such excluded COD income are not taken into account. There is no adjustment under § 1.1502-32 to the basis of the S1 stock. Therefore, P's basis in the S1 stock for this purpose is $50.

(C) *Tentative computation of stock gain or loss.* Then, P's income, gain, or loss from the sale of S1 stock is computed pursuant to paragraph (c)(2)(iii) of this section using the basis computed in the previous step. Thus, P is treated as recognizing a $50 gain from the sale of the S1 stock.

(D) *Tentative computation of tax imposed.* Pursuant to paragraph (c)(2)(iv) of this section, the tax imposed for the year of disposition is then tentatively computed, taking into account P's $50 gain from the sale of the S1 stock computed pursuant to paragraph (c)(2)(iii) of this section. Although S1's and S4's limited losses cannot be used to offset P's $50 gain from the sale of S1's stock under the rules of this section, $10 of P's loss, $30 of S2's loss, and $10 of S3's loss will offset that gain. Therefore, the group is tentatively treated as having a consolidated net operating loss of $350, $40 of which is attributable to P, $100 of which is attributable to S1, $120 of which is attributable to S2, $40 of which is attributable to S3, and $50 of which is attributable to S4 under the principles of § 1.1502-21(b)(2)(iv).

(E) *Tentative reduction of attributes.* Next, pursuant to paragraph (c)(2)(v) of this section, the rules of sections 108 and 1017 and § 1.1502-28 are tentatively applied to reduce attributes remaining after the tentative computation of the tax imposed. Pursuant to § 1.1502-28(a)(2), the tax attributes attributable to S4 would first be reduced to take into account its $80 of excluded COD income. Accordingly, the consolidated net operating loss for Year 1 would be reduced by $50, the portion of the consolidated net operating loss attributable to S4 under the principles of § 1.1502-21(b)(2)(iv), to $300. Then, pursuant to § 1.1502-28(a)(4), S4's remaining $30 of excluded COD income would reduce the consolidated net operating loss for Year 1 that is attributable to other members. Therefore, the consolidated net operating loss for Year 1 would be reduced by $30. Of that amount, $4 is attributable to P, $10 is attributable to S1, $12 is attributable to S2, and $4 is attributable to S3.

(F) *Actual adjustment of stock basis.* Pursuant to paragraph (c)(2)(vi) of this section, § 1.1502-32 is applied to reflect the amount of S1's and S4's income and gain included, and unlimited deductions and losses that are absorbed, in the tentative computation of tax

imposed for the year of the disposition and the excluded COD income tentatively applied to reduce attributes and the attributes reduced in respect of the excluded COD income pursuant to the previous step. Under § 1.1502-32(b), the application of $80 of S4's excluded COD income to reduce attributes, and the reduction of S4's loss in the amount of $50 and S1's loss in the amount of $10 in respect of the excluded COD income results in a positive adjustment of $20 to P's basis in the S1 stock. Accordingly, P's basis in S1 stock is $70.

(G) *Actual computation of stock gain or loss.* Pursuant to paragraph (c)(2)(vii) of this section, P's actual gain or loss on the sale of the S1 stock is computed using the basis computed in the previous step. Accordingly, P recognizes a $30 gain on the disposition of the S1 stock.

(H) *Actual computation of tax imposed.* Pursuant to paragraph (c)(2)(viii) of this section, the tax imposed is computed by taking into account P's $30 gain from the sale of S1 stock. Before the application of § 1.1502-28, therefore, the group has a consolidated net operating loss of $370, $44 of which is attributable to P, $100 of which is attributable to S1, $132 of which is attributable to S2, $44 of which is attributable to S3, and $50 of which is attributable to S4.

(I) *Actual reduction of attributes.* Pursuant to paragraph (c)(2)(ix) of this section, sections 108 and 1017 and § 1.1502-28 are then actually applied to reduce attributes remaining after the actual computation of the tax imposed. Pursuant to § 1.1502-28(a)(2), the tax attributes attributable to S4 must first be reduced to take into account its $80 of excluded COD income. Accordingly, the consolidated net operating loss for Year 1 is reduced by $50, the portion of that consolidated net operating loss attributable to S4 under the principles of § 1.1502-21(b)(2)(iv), to $320. Then, pursuant to § 1.1502-28(a)(4), without regard to the limitation imposed by paragraph (c)(2)(ix)(A) of this section, S4's remaining $30 of excluded COD income would reduce the consolidated net operating loss for Year 1 by $30 ($4.12 of the consolidated net operating loss attributable to P, $9.38 of the consolidated net operating loss attributable to S1, $12.38 of the consolidated net operating loss attributable to S2, and $4.12 of the consolidated net operating loss attributable to S3) to $290. However, the limitation imposed by paragraph (c)(2)(ix)(A) of this section prevents the reduction of the consolidated net operating loss attributable to P, S2, and S3 by more than $4, $12, and $4 respectively. The $.62 of excluded COD income that would have otherwise reduced the consolidated net operating loss attributable to P, S2, and S3 is applied to reduce the consolidated net operating loss attributable to S1. Therefore, S1 carries forward $90 of loss.

Example 4. Excess loss account taken into account. (i) *Facts.* P is the common parent of a consolidated group. On Day 1 of Year 2, P acquired all of the stock of S1. As of the beginning of Year 2, S1 had a $30 net operating loss carryover from Year 1, a separate return limitation year. A limitation under § 1.1502-21(c) applies to the use of that loss by the P group. For Years 1 and 2, the P group had no consolidated taxable income or loss. On Day 1 of Year 3, S1

acquired all of the stock of S2 for $10. In Year 3, P had ordinary income of $10, S1 had ordinary income of $25, and S2 had an ordinary loss of $50. In addition, in Year 3, S2 realized $20 of excluded COD income from the discharge of non-intercompany indebtedness. After the discharge of this indebtedness, S2 had no liabilities. As of the beginning of Year 4, S2 had Asset A with a fair market value of $10. After the computation of tax imposed for Year 3 and before the application of sections 108 and 1017 and § 1.1502-28, Asset A has a basis of $0. S2 had no taxable income (or loss) for Year 1 and Year 2.
(ii) *Analysis.* The steps used to compute the tax imposed on the group, to effect the reduction of attributes, and to compute the limitations on the use and reduction of attributes are as follows:

(A) *Computation of limitation on deductions and losses to offset income or gain, tentative basis adjustments, tentative computation of stock gain or loss.* Because it is not initially apparent that there has been a disposition of stock, paragraph (c)(2)(i) of this section does not limit the use of deductions to offset income or gain, no adjustments to the basis are required pursuant to paragraph (c)(2)(ii) of this section, and no stock gain or loss is computed pursuant to paragraph (c)(2)(iii) of this section or taken into account in the tentative computation of tax imposed pursuant to paragraph (c)(2)(iv) of this section.

(B) *Tentative computation of tax imposed.* Pursuant to paragraph (c)(2)(iv) of this section, the tax imposed for Year 3 is tentatively computed. For Year 3, the P group has a consolidated taxable loss of $15, all of which is attributable to S2 under the principles of § 1.1502-21(b)(2)(iv).

(C) *Tentative reduction of attributes.* Next, pursuant to paragraph (c)(2)(v) of this section, the rules of sections 108 and 1017 and § 1.1502-28 are tentatively applied to reduce attributes remaining after the tentative computation of tax imposed. Pursuant to § 1.1502-28(a)(2), the tax attributes attributable to S2 would first be reduced to take into account its $20 of excluded COD income. Accordingly, the consolidated net operating loss for Year 3 is reduced by $15, the portion of that consolidated net operating loss attributable to S2 under the principles of § 1.1502-21(b)(2)(iv), to $0. The remaining $5 of excluded COD income is not applied to reduce attributes as there are no remaining attributes that are subject to reduction.

(D) *Actual adjustment of stock basis.* Pursuant to paragraph (c)(2)(vi) of this section, § 1.1502-32 is applied to reflect the amount of S2's income and gain included, and unlimited deductions and losses that are absorbed, in the tentative computation of tax imposed for the year of the disposition and the excluded COD income tentatively applied to reduce attributes and the attributes reduced in respect of the excluded COD income pursuant to the previous step. Under § 1.1502-32, the absorption of $35 of S2's loss, the application of $15 in respect of S2's excluded COD income to reduce attributes, and the reduction of $15 in respect of the

loss attributable to S2 reduced in respect of the excluded COD income results in a negative adjustment of $35 to the basis of the S2 stock. Therefore, S1 has an excess loss account of $25 in the S2 stock.

(E) *Actual computation of stock gain or loss.* Pursuant to paragraph (c)(2)(vii) of this section, S1's actual gain or loss, if any, on the S2 stock is computed. Because S2 realized $5 of excluded COD income that was not applied to reduce attributes, pursuant to § 1.1502-19(b)(1) and (c)(1)(iii)(B), S1 is required to take into account $5 of its excess loss account in the S2 stock.

(F) *Actual computation of tax imposed.* Pursuant to paragraph (c)(2)(viii) of this section, the tax imposed is computed by taking into account the $5 of the excess loss account in the S2 stock required to be taken into account. See § 1.1502-28(b)(6) (requiring an excess loss account that is required to be taken into account as a result of the application of § 1.1502-19(c)(1)(iii)(B) to be included in the group's tax return for the year that includes the date of the debt discharge). However, pursuant to paragraph (c)(2)(viii) of this section, such amount may not be offset by any of the consolidated net operating loss attributable to S2. It may, however, subject to applicable limitations, be offset by the separate net operating loss of S1 from Year 1.

(G) *Actual reduction of attributes.* Pursuant to paragraph (c)(2)(ix) of this section, sections 108 and 1017 and § 1.1502-28 are then actually applied to reduce attributes remaining after the actual computation of the tax imposed. Attributes will be actually reduced in the same way that they were tentatively reduced.

(6) ***Additional rules for multiple dispositions.*** [Reserved]

(7) ***Effective date.*** This paragraph (c) applies to dispositions of subsidiary stock that occur after March 22, 2005.

(d) ***Disallowance of loss attributable to pre-1966 distributions.*** No loss shall be allowed upon the sale or other disposition of stock, bonds, or other obligations of a member or former member to the extent that such loss is attributable to a distribution made in an affiliated year beginning before January 1, 1966, out of earnings and profits accumulated before the distributing corporation became a member.

[T.D. 7246, 38 FR 759, Jan. 4, 1973]

Editorial Note: For FEDERAL REGISTER citations affecting § 1.1502-11, see the List of CFR Sections Affected, which appears in the Finding Aids section of the printed volume and at *www.govinfo.gov*.

COMPUTATION OF SEPARATE TAXABLE INCOME

§ 1.1502-12 Separate taxable income.

The separate taxable income of a member (including a case in which deductions exceed gross income) is computed in accordance with the provisions of the Code covering the determination of taxable income of separate corporations, subject to the following modifications:

(a) Transactions between members and transactions with respect to stock, bonds, or other obligations of members shall be reflected according to the provisions of § 1.1502-13;

(b) Any deduction that is disallowed under § 1.1502-15 must be taken into account as provided in that section.

(c) The limitation on deductions provided in section 615(c) or section 617(h) shall be taken into account as provided in § 1.1502-16;

(d) The method of accounting under which such computation is made and the adjustments to be made because of any change in method of accounting shall be determined under § 1.1502-17;

(e) [Reserved]

(f) Any amount included in income under § 1.1502-19 shall be taken into account;

(g) [Reserved]

(h) No net operating loss deduction shall be taken into account;

(i) [Reserved]

(j) No capital gains or losses shall be taken into account;

(k) No gains and losses subject to section 1231 shall be taken into account;

(l) No deduction under section 170 with respect to charitable contributions shall be taken into account;

(m) [Reserved]

(n) No deduction under section 243(a)(1) or section 245 (relating to deductions with respect to dividends received) is taken into account;

(o) Basis shall be determined under §§ 1.1502-31 and 1.1502-32, and earnings and profits shall be determined under § 1.1502-33; and

(p) The limitation on deductions provided in section 613A shall be taken into account for each member's oil and gas properties as provided in § 1.1502-44.

(q) [Reserved]

(r) *See* §§ 1.337(d)-2, 1.1502-35, and 1.1502-36 for rules relating to basis adjustments and allowance of stock loss on dispositions or transfers of subsidiary stock.

(s) See § 1.1502-51 for rules relating to the computation of a member's GILTI inclusion amount under section 951A and related basis adjustments.

(t) See § 1.1502-50 for rules relating to the computation of a member's deduction under section 250.

(Secs. 1502 and 7805 of the Internal Revenue Code of 1954 (68A Stat. 637; 917; 26 U.S.C. 1502, 7805))

[T.D. 6894, 31 FR 11794, Sept. 8, 1966]

Editorial Note: For FEDERAL REGISTER citations affecting § 1.1502-12, see the List of CFR Sections Affected, which appears in the Finding Aids section of the printed volume and at *www.govinfo.gov*.

§ 1.1502-13 Intercompany transactions.

(a) ***In general*** —

(1) ***Purpose.*** This section provides rules for taking into account items of income, gain, deduction, and loss of members from intercompany transactions. The purpose of this section is to provide rules to clearly reflect the taxable income (and tax liability) of the group as a whole by preventing intercompany transactions from creating, accelerating, avoiding, or deferring consolidated taxable income (or consolidated tax liability).

(2) ***Separate entity and single entity treatment.*** Under this section, the selling member (S) and the buying member (B) are treated as separate entities for some purposes but as divisions of a single corporation for other purposes. The *amount* and *location* of S's intercompany items and B's corresponding items are determined on a separate entity basis (separate entity treatment). For example, S determines its gain or loss from a sale of property to B on a separate entity basis, and B has a cost basis in the property. The *timing,* and the *character, source,* and other *attributes* of the intercompany items and corresponding items, although initially determined on a separate entity basis, are redetermined under this section to produce the effect of transactions between divisions of a single corporation (single entity treatment). For example, if S sells land to B at a gain and B sells the land to a nonmember, S does not take its gain into account until B's sale to the nonmember.

(3) ***Timing rules as a method of accounting*** —

(i) ***In general.*** The timing rules of this section are a method of accounting for intercompany transactions, to be applied by each member in addition to the member's other methods of accounting. *See* §§ 1.1502-17 and 1.446-1(c)(2)(iii). To the extent the timing rules of this section are inconsistent with a member's otherwise applicable methods of accounting, the timing rules of this section control. For example, if S sells property to B in exchange for B's note, the timing rules of this section apply instead of the installment sale rules of section 453. S's or B's application of the timing rules of this section to an intercompany transaction clearly reflects income only if the effect of that transaction as a whole (including, for example, related costs and expenses) on consolidated taxable income is clearly reflected.

(ii) ***Automatic consent for joining and departing members*** —

(A) ***Consent granted.*** Section 446(e) consent is granted under this section to the extent a change in method of accounting is necessary solely by reason of the timing rules of this section—

(*1*) For each member, with respect to its intercompany transactions, in the first consolidated return year which follows a separate return year and in which the member engages in an intercompany transaction; and

(2) For each former member, with respect to its transactions with members that would otherwise be intercompany transactions if the former member were still a member, in the first separate return year in which the former member engages in such a transaction.

(B) ***Cut-off basis.*** Any change in method of accounting described in paragraph (a)(3)(ii)(A) of this section is to be effected on a cut-off basis for transactions entered into on or after the first day of the year for which consent is granted under paragraph (a)(3)(ii)(A) of this section.

(4) ***Application of other rules of law.*** See § 1.1502-80(a) regarding the general applicability of other rules of law and a limitation on duplicative adjustments. The rules of this section apply in addition to other applicable law (including nonstatutory authorities). For example, this section applies in addition to sections 267(f) (additional rules for certain losses), 269 (acquisitions to evade or avoid income tax), and 482 (allocations among commonly controlled taxpayers). Thus, an item taken into account under this section can be deferred, disallowed, or eliminated under other applicable law, for example, section 1091 (losses from wash sales).

(5) ***References.*** References in other sections to this section include, as appropriate, references to prior law. For effective dates and prior law see paragraph (l) of this section.

(6) ***Overview*** —

(i) ***In general.*** The principal rules of this section that implement single entity treatment are the matching rule and the acceleration rule of paragraphs (c) and (d) of this section. Under the matching rule, S and B are generally treated as divisions of a single corporation for purposes of taking into account their items from intercompany transactions. The acceleration rule provides additional rules for taking the items into account if the effect of treating S and B as divisions cannot be achieved (for example, if S or B becomes a nonmember). Paragraph (b) of this section provides definitions. Paragraph (e) of this section provides simplifying rules for certain transactions. Paragraphs (f) and (g) of this section provide additional rules for stock and obligations of members. Paragraphs (h) and (j) of this section provide anti-avoidance rules and miscellaneous operating rules.

(ii) ***Table of examples.*** This section contains the following examples:

Rule	General location	Paragraph	Example
(A) Matching rule	§ 1.1502-13(c)(7)(ii)	(A)	Example 1. Intercompany sale of land followed by sale to a nonmember.
		(B)	Example 2. Dealer activities.
		(C)	Example 3. Intercompany section 351 transfer.
		(D)	Example 4. Depreciable property.
		(E)	Example 5. Intercompany sale followed by installment sale.
		(F)	Example 6. Intercompany sale of installment obligation.

Rule	General location	Paragraph	Example
		(G)	Example 7. Performance of services.
		(H)	Example 8. Rental of property.
		(I)	Example 9. Intercompany sale of a partnership interest.
		(J)	Example 10. Net operating losses subject to section 382 or the SRLY rules.
		(K)	Example 11. Section 475.
		(L)	Example 12. Section 1092.
		(M)	Example 13. [Reserved]
		(N)	Example 14. Source of income under section 863.
		(O)	Example 15. Section 1248.
		(P)	Example 16. Intercompany stock distribution followed by section 332 liquidation.
		(Q)	Example 17. Intercompany stock sale followed by section 355 distribution.
		(R)	Example 18. Redetermination of attributes for section 250 purposes.
(B) Acceleration rule	§ 1.1502-13(d)(3)	(i)	Example 1. Becoming a nonmember—timing.
		(ii)	Example 2. Becoming a nonmember—attributes.
		(iii)	Example 3. Selling member's disposition of installment note.
		(iv)	Example 4. Cancellation of debt and attribute reduction under section 108(b).
		(v)	Example 5. Section 481.
(C) Simplifying rules—inventory	§ 1.1502-13(e)(1)(v)	(A)	Example 1. Increment averaging method.
		(B)	Example 2. Increment valuation method.
		(C)	Example 3. Other reasonable inventory methods.
(D) Stock of members	§ 1.1502-13(f)(7)	(i)	Example 1. Dividend exclusion and property distribution.
		(ii)	Example 2. Excess loss accounts.
		(iii)	Example 3. Intercompany reorganization.
		(iv)	Example 4. All cash intercompany reorganization under section 368(a)(1)(D).
		(v)	Example 5. Stock redemptions and distributions.
		(vi)	Example 6. Intercompany stock sale followed

Rule	General location	Paragraph	Example
			by section 332 liquidation.
		(vii)	Example 7. Intercompany stock sale followed by section 355 distribution.
(E) Obligations of members	§ 1.1502-13(g)(7)(ii)	(A)	Example 1. Interest on intercompany obligation.
		(B)	Example 2. Intercompany obligation becomes nonintercompany obligation.
		(C)	Example 3. Loss or bad debt deduction with respect to intercompany obligation.
		(D)	Example 4. Intercompany nonrecognition transactions.
		(E)	Example 5. Assumption of intercompany obligation.
		(F)	Example 6. Extinguishment of intercompany obligation.
		(G)	Example 7. Exchange of intercompany obligations.
		(H)	Example 8. Tax benefit rule.
		(I)	Example 9. Issuance at off-market rate of interest.
		(J)	Example 10. Nonintercompany obligation becomes intercompany obligation.
		(K)	Example 11. Notional principal contracts.
(F) Anti-avoidance rules	§ 1.1502-13(h)(2)	(i)	Example 1. Sale of a partnership interest.
		(ii)	Example 2. Transitory status as an intercompany obligation.
		(iii)	Example 3. Corporate mixing bowl.
		(iv)	Example 4. Partnership mixing bowl.
		(v)	Example 5. Sale and leaseback.
		(vi)	Example 6. Section 163(j) interest limitation.
(G) Miscellaneous operating rules	§ 1.1502-13(j)(10)	(i)	Example 1. Intercompany sale followed by section 351 transfer to member.
		(ii)	Example 2. Intercompany sale of member stock followed by recapitalization.
		(iii)	Example 3. Back-to-back intercompany transactions—matching.
		(iv)	Example 4. Back-to-back intercompany transactions—acceleration.
		(v)	Example 5. Successor group.
		(vi)	Example 6. Liquidation—80% distributee.

Rule	General location	Paragraph	Example
		(vii)	Example 7. Liquidation—no 80% distributee.
		(viii)	Example 8: Loan by section 987 QBU.
		(ix)	Example 9: Sale of property by section 987 QBU.

(b) ***Definitions.*** For purposes of this section—

(1) ***Intercompany transactions*** —

(i) ***In general.*** An intercompany transaction is a transaction between corporations that are members of the same consolidated group immediately after the transaction. S is the member transferring property or providing services, and B is the member receiving the property or services. Intercompany transactions include—

(A) S's sale of property (or other transfer, such as an exchange or contribution) to B, whether or not gain or loss is recognized;

(B) S's performance of services for B, and B's payment or accrual of its expenditure for S's performance;

(C) S's licensing of technology, rental of property, or loan of money to B, and B's payment or accrual of its expenditure; and

(D) S's distribution to B with respect to S stock.

(ii) ***Time of transaction.*** If a transaction occurs in part while S and B are members and in part while they are not members, the transaction is treated as occurring when performance by either S or B takes place, or when payment for performance would be taken into account under the rules of this section if it were an intercompany transaction, whichever is earliest. Appropriate adjustments must be made in such cases by, for example, dividing the transaction into two separate transactions reflecting the extent to which S or B has performed.

(iii) ***Separate transactions.*** Except as otherwise provided in this section, each transaction is analyzed separately. For example, if S simultaneously sells two properties to B, one at a gain and the other at a loss, each property is treated as sold in a separate transaction. Thus, the gain and loss cannot be offset or netted against each other for purposes of this section. Similarly, each payment or accrual of interest on a loan is a separate transaction. In addition, an accrual of premium is treated as a separate transaction, or as an offset to interest that is not a separate transaction, to the extent required under separate entity treatment. If two members exchange property, each member is S with respect to the property it transfers and B with respect to the property it receives. If two members enter into a notional principal contract, each payment under the contract is a separate transaction and the member making the payment is B with respect to that payment and the member receiving the payment is S. See paragraph (j)(4) of this section for rules aggregating certain transactions.

(2) ***Intercompany items*** —

(i) ***In general.*** S's income, gain, deduction, and loss from an intercompany transaction are its intercompany items. For example, S's gain from the sale of property to B is intercompany gain. An item is an intercompany item whether it is directly or indirectly from an intercompany transaction.

(ii) ***Related costs or expenses.*** S's costs or expenses related to an intercompany transaction are included in determining its intercompany items. For example, if S sells inventory to B, S's direct and indirect costs properly includible under section 263A are included in determining its intercompany income. Similarly, related costs or expenses that are not capitalized under S's separate entity method of accounting are included in determining its intercompany items. For example, deductions for employee wages, in addition to other related costs, are included in determining S's intercompany items from performing services for B, and depreciation deductions are included in determining S's intercompany items from renting property to B.

(iii) ***Amounts not yet recognized or incurred.*** S's intercompany items include amounts from an intercompany transaction that are not yet taken into account under its separate entity method of accounting. For example, if S is a cash method taxpayer, S's intercompany income might be taken into account under this section even if the cash is not yet received. Similarly, an amount reflected in basis (or an amount equivalent to basis) under S's separate entity method of accounting that is a substitute for income, gain, deduction or loss from an intercompany transaction is an intercompany item.

(3) ***Corresponding items*** —

(i) ***In general.*** B's income, gain, deduction, and loss from an intercompany transaction, or from property acquired in an intercompany transaction, are its corresponding items. For example, if B pays rent to S, B's deduction for the rent is a corresponding deduction. If B buys property from S and sells it to a nonmember, B's gain or loss from the sale to the nonmember is a corresponding gain or loss; alternatively, if B recovers the cost of the property through depreciation, B's depreciation deductions are corresponding deductions. An item is a corresponding item whether it is directly or indirectly from an intercompany transaction (or from property acquired in an intercompany transaction).

(ii) ***Disallowed or eliminated amounts.*** B's corresponding items include amounts that are permanently disallowed or permanently eliminated, whether directly or indirectly. Thus, corresponding items include amounts disallowed under section 265 (expenses relating to tax-exempt income), and amounts not recognized under section 311(a) (nonrecognition of loss on distributions), section 332 (nonrecognition on liquidating distributions), or section 355(c) (certain distributions of stock of a subsidiary). On the other hand, an amount is not permanently disallowed or permanently eliminated (and therefore is not a corresponding item) to the extent it is not recognized in a transaction in which B receives a successor asset within the meaning of paragraph (j)(1) of this section. For example, B's corresponding items do not include amounts not recognized from a transaction with a nonmember to which section 1031 applies or from another transaction in which B receives exchanged basis property.

(4) ***Recomputed corresponding items.*** The recomputed corresponding item is the corresponding item that B would take into account if S and B were divisions of a single corporation and the intercompany transaction were between those divisions. For example, if S sells property with a $70 basis to B for $100, and B later sells the property to a nonmember for $90, B's corresponding item is its $10 loss, and the recomputed corresponding item is $20 of gain (determined by comparing the $90 sales price with the $70 basis the property would have if S and B were divisions of a single

corporation). Although neither S nor B actually takes the recomputed corresponding item into account, it is computed as if B did take it into account (based on reasonable and consistently applied assumptions, including any provision of the Internal Revenue Code or regulations that would affect its timing or attributes).

(5) ***Treatment as a separate entity.*** Treatment as a separate entity means treatment without application of the rules of this section, but with the application of the other consolidated return regulations. For example, if S sells the stock of another member to B, S's gain or loss on a separate entity basis is determined with the application of § 1.1502-80(b) (non-applicability of section 304), but without redetermination under paragraph (c) or (d) of this section.

(6) ***Attributes.*** The attributes of an intercompany item or corresponding item are all of the item's characteristics, except *amount, location,* and *timing,* necessary to determine the item's effect on taxable income (and tax liability). For example, attributes include character, source, treatment as excluded from gross income or as a noncapital, nondeductible amount, and treatment as built-in gain or loss under section 382(h) or 384. In contrast, the characteristics of property, such as a member's holding period, or the fact that property is included in inventory, are not attributes of an item, but these characteristics might affect the determination of the attributes of items from the property.

(c) ***Matching rule.*** For each consolidated return year, B's corresponding items and S's intercompany items are taken into account under the following rules:

(1) ***Attributes and holding periods*** —

(i) ***Attributes.*** The separate entity attributes of S's intercompany items and B's corresponding items are redetermined to the extent necessary to produce the same effect on consolidated taxable income (and consolidated tax liability) as if S and B were divisions of a single corporation, and the intercompany transaction were a transaction between divisions. Thus, the activities of both S and B might affect the attributes of both intercompany items and corresponding items. For example, if S holds property for sale to unrelated customers in the ordinary course of its trade or business, S sells the property to B at a gain and B sells the property to an unrelated person at a further gain, S's intercompany gain and B's corresponding gain might be ordinary because of S's activities with respect to the property. Similar principles apply if S performs services, rents property, or engages in any other intercompany transaction.

(ii) ***Holding periods.*** The holding period of property transferred in an intercompany transaction is the aggregate of the holding periods of S and B. However, if the basis of the property is determined by reference to the basis of other property, the property's holding period is determined by reference to the holding period of the other property. For example, if S distributes stock to B in a transaction to which section 355 applies, B's holding period in the distributed stock is determined by reference to B's holding period in the stock of S.

(2) ***Timing*** —

(i) ***B's items.*** B takes its corresponding items into account under its accounting method, but the redetermination of the attributes of a corresponding item might affect its timing. For example, if B's sale of property acquired from S is treated as a dealer disposition because of S's activities, section 453(b) prevents any corresponding income of B from being taken into account under the installment method.

(ii) ***S's items.*** S takes its intercompany item into account to reflect the difference for the year between B's corresponding item taken into account and the recomputed corresponding item.

(3) ***Divisions of a single corporation.*** As divisions of a single corporation, S and B are treated as engaging in their actual transaction and owning any actual property involved in the transaction (rather than treating the transaction as not occurring). For example, S's sale of land held for investment to B for cash is not disregarded, but is treated as an exchange of land for cash between divisions (and B therefore succeeds to S's basis in the property). Similarly, S's issuance of its own stock to B in exchange for property is not disregarded, B is treated as owning the stock it receives in the exchange, and section 1032 does not apply to B on its subsequent sale of the S stock. Although treated as divisions, S and B nevertheless are treated as:

(i) Operating separate trades or businesses. See, e.g., § 1.446-1(d) (accounting methods for a taxpayer engaged in more than one business).

(ii) Having any special status that they have under the Internal Revenue Code or regulations. For example, a bank defined in section 581, a domestic building and loan association defined in section 7701(a)(19), and an insurance company to which section 801 or 831 applies are treated as divisions having separate special status. On the other hand, the fact that a member holds property for sale to customers in the ordinary course of its trade or business is not a special status.

(4) ***Conflict or allocation of attributes.*** This paragraph (c)(4) provides special rules for redetermining and allocating attributes under paragraph (c)(1)(i) of this section.

(i) ***Offsetting amounts*** —

(A) ***In general.*** To the extent B's corresponding item offsets S's intercompany item in amount, the attributes of B's corresponding item, determined based on both S's and B's activities, control the attributes of S's offsetting intercompany item. For example, if S sells depreciable property to B at a gain and B depreciates the property, the attributes of B's depreciation deduction (ordinary deduction) control the attributes of S's offsetting intercompany gain. Accordingly, S's gain is ordinary.

(B) ***B controls unreasonable.*** To the extent the results under paragraph (c)(4)(i)(A) of this section are inconsistent with treating S and B as divisions of a single corporation, the attributes of the offsetting items must be redetermined in a manner consistent with treating S and B as divisions of a single corporation. To the extent, however, that B's corresponding item on a separate entity basis is excluded from gross income, is a noncapital, nondeductible amount, or is otherwise permanently disallowed or eliminated, the attributes of B's corresponding item always control the attributes of S's offsetting intercompany item.

(ii) ***Allocation.*** To the extent S's intercompany item and B's corresponding item do not offset in amount, the attributes redetermined under paragraph (c)(1)(i) of this section must be allocated to S's intercompany item and B's corresponding item by using a method that is reasonable in light of all the facts and circumstances, including the purposes of this section and any other rule affected by the attributes of S's intercompany item and B's corresponding item. A method of allocation or redetermination is unreasonable if it is not used consistently by all members of the group from year to year.

(5) ***Special status.*** Notwithstanding the general rule of paragraph (c)(1)(i) of this section, to the extent an item's attributes determined under this section are permitted or not permitted to a member under the Internal Revenue Code or regulations by reason of the member's special status, the attributes required under the Internal Revenue Code or regulations apply to that member's items (but not the other member). For example, if S is a bank to which section 582(c) applies, and sells debt securities at a gain to B, a nonbank, the character of S's intercompany gain is ordinary as required under section 582(c), but the character of B's corresponding item as capital or ordinary is determined under paragraph (c)(1)(i) of this section without the application of section 582(c). For other special status issues, *see,* for example, sections 818(b) (life insurance company treatment of capital gains and losses) and 1503(c) (limitation on absorption of certain losses).

(6) ***Treatment of intercompany items if corresponding items are excluded or nondeductible*** —

(i) ***In general.*** Under paragraph (c)(1)(i) of this section, S's intercompany item might be redetermined to be excluded from gross income or treated as a noncapital, nondeductible amount. For example, S's intercompany loss from the sale of property to B is treated as a noncapital, nondeductible amount if B distributes the property to a nonmember shareholder at no further gain or loss (because, if S and B were divisions of a single corporation, the loss would not have been recognized under section 311(a)). Paragraph (c)(6)(ii) of this section, however, provides limitations on the application of this rule to intercompany income or gain. See also §§ 1.1502-32 and 1.1502-33 (adjustments to S's stock basis and earnings and profits to reflect amounts so treated).

(ii) ***Limitation on treatment of intercompany items as excluded from gross income.*** Notwithstanding the general rule of paragraph (c)(1)(i) of this section, S's intercompany income or gain is redetermined to be excluded from gross income only to the extent one of the following applies:

(A) ***Disallowed amounts.*** B's corresponding item is a deduction or loss and, in the taxable year the item is taken into account under this section, it is permanently and explicitly disallowed under another provision of the Internal Revenue Code or regulations. For example, deductions that are disallowed under section 265 are permanently and explicitly disallowed. An amount is not permanently and explicitly disallowed, for example, to the extent that—

(*1*) The Internal Revenue Code or regulations provide that the amount is not recognized (for example, a loss that is realized but not recognized under section 332 or section 355(c) is not permanently and explicitly disallowed, notwithstanding that it is a corresponding item within the meaning of paragraph (b)(3)(ii) of this section (certain disallowed or eliminated amounts));

(*2*) A related amount might be taken into account by B with respect to successor property, such as under section 280B (demolition costs recoverable as capitalized amounts);

(*3*) A related amount might be taken into account by another taxpayer, such as under section 267(d) (disallowed loss under section 267(a) might result in nonrecognition of gain for a related person);

(*4*) A related amount might be taken into account as a deduction or loss, including as a carryforward to a later year, under any provision of the Internal Revenue Code or regulations (whether or not the carryforward expires in a later year); or

(*5*) The amount is reflected in the computation of any credit against (or other reduction of) Federal income tax (whether allowed for the taxable year or carried forward to a later year).

(B) ***Section 311.*** The corresponding item is a loss that is realized, but not recognized under section 311(a) on a distribution to a nonmember (even though the loss is not a permanently and explicitly disallowed amount within the meaning of paragraph (c)(6)(ii)(A) of this section).

(C) ***Certain intercompany gains on stock*** —

(*1*) ***In general.*** Notwithstanding paragraph (c)(6)(ii)(A)(*1*) of this section, intercompany gain with respect to a member's stock that was created by reason of an intercompany transfer of the stock, and that would not otherwise be taken into account upon a subsequent elimination of the stock's basis but for the transfer, is redetermined to be excluded from gross income if—

(*i*) B or S becomes a successor (as defined in paragraph (j)(2) of this section) to the other party (either B or S), or a third member becomes a successor to both B and S;

(*ii*) Immediately before the intercompany gain would be taken into account, the successor member holds the member's stock with respect to which the intercompany gain was realized;

(*iii*) The successor member's basis in the member's stock that reflects the intercompany gain that is taken into account is eliminated without the recognition of gain or loss (and such eliminated basis is not further reflected in the basis of any successor asset);

(*iv*) The effects of the intercompany transaction have not previously been reflected, directly or indirectly, on the group's consolidated return; and

(*v*) The group has not derived, and no taxpayer will derive, any Federal income tax benefit from the intercompany transaction that gave rise to the intercompany gain or the redetermination of the intercompany gain (including any adjustment to basis in member stock under § 1.1502-32). For this purpose, the redetermination of the intercompany gain is not itself considered a Federal income tax benefit.

(*2*) ***Effect on earnings and profits and investment adjustments.*** Any amount excluded from gross income under paragraph (c)(6)(ii)(C)(*1*) of this section shall not be taken into account as earnings and profits of any member and shall not be treated as tax-exempt income under § 1.1502-32(b)(2)(ii).

(D) ***Other amounts.***

(*1*) The Commissioner may determine that treating S's intercompany item as excluded from gross income is consistent with the purposes of this section and other applicable provisions of the Internal Revenue Code, regulations, and published guidance, if the following conditions are met, depending on whether the intercompany item is an item of income or an item of gain:

(*i*) In the case of an intercompany item of income, the corresponding item is permanently disallowed; or

(*ii*) If the intercompany item constitutes gain, the conditions described in paragraphs (c)(6)(ii)(C)(*1*)(*iv*) and (c)(6)(ii)(C)(*1*)(*v*) of this section are satisfied.

(*2*) A determination by the Commissioner may be obtained only through a letter ruling request.

(7) ***Examples*** —

(i) ***In general.*** For purposes of the examples in this section, unless otherwise stated, P is the common parent of the P consolidated group, P owns all of the only class of stock of subsidiaries S and B, X is a person unrelated to any member of the P group, the taxable year of all persons is the calendar year, all persons use the accrual method of accounting, tax liabilities are disregarded, the facts set forth the only corporate activity, no member has any special status, and the transaction is not otherwise subject to recharacterization. If a member acts as both a selling member and a buying member (e.g., with respect to different aspects of a single transaction, or with respect to related transactions), the member is referred to as M, M1, or M2 (rather than as S or B).

(ii) ***Matching rule.*** The matching rule of this paragraph (c) is illustrated by the following examples.

(A) ***Example 1. Intercompany sale of land followed by sale to a nonmember*** —

(*1*) ***Facts.*** S holds land for investment with a basis of $70. S has held the land for more than one year. On January 1 of Year 1, S sells the land to B for $100. B also holds the land for investment. On July 1 of Year 3, B sells the land to X for $110.

(*2*) ***Definitions.*** Under paragraph (b)(1) of this section, S's sale of the land to B is an intercompany transaction, S is the selling member, and B is the buying member. Under paragraphs (b)(2) and (3) of this section, S's $30 gain from the sale to B is its intercompany item, and B's $10 gain from the sale to X is its corresponding item.

(*3*) ***Attributes.*** Under the matching rule of paragraph (c) of this section, S's $30 intercompany gain and B's $10 corresponding gain are taken into account to produce the same effect on consolidated taxable income (and consolidated tax liability) as if S and B were divisions of a single corporation. In addition, the holding periods of S and B for the land are aggregated. Thus, the group's entire $40 of gain is long-term capital gain. Because both S's intercompany item and B's corresponding item on a separate entity basis are long-term capital gain, the attributes are not redetermined under paragraph (c)(1)(i) of this section.

(*4*) ***Timing.*** For each consolidated return year, S takes its intercompany item into account under the matching rule to reflect the difference for the year between B's corresponding item taken into account and the recomputed corresponding item. If S and B were divisions of a single corporation and the intercompany sale were a transfer between the divisions, B would succeed to S's $70 basis in the land and would have a $40 gain from the sale to X in Year 3, instead of a $10 gain. Consequently, S takes no gain into account in Years 1 and 2, and takes the entire $30 gain into account in Year 3, to reflect the $30 difference in that year between the $10 gain B takes into account and the $40 recomputed gain (the recomputed

corresponding item). Under §§ 1.1502-32 and 1.1502-33, P's basis in its S stock and the earnings and profits of S and P do not reflect S's $30 gain until the gain is taken into account in Year 3. (Under paragraph (a)(3) of this section, the results would be the same if S sold the land to B in an installment sale to which section 453 would otherwise apply, because S must take its intercompany gain into account under this section.)

(*5*) ***Intercompany loss followed by sale to a nonmember at a gain.*** The facts are the same as in *Example 1* in paragraph (c)(7)(ii)(A)(*1*) of this section, except that S's basis in the land is $130 (rather than $70). The attributes and timing of S's intercompany loss and B's corresponding gain are determined under the matching rule in the manner provided in *Example 1* in paragraphs (c)(7)(ii)(A)(*3*) and (*4*) of this section. If S and B were divisions of a single corporation and the intercompany sale were a transfer between the divisions, B would succeed to S's $130 basis in the land and would have a $20 loss from the sale to X instead of a $10 gain. Thus, S takes its entire $30 loss into account in Year 3 to reflect the $30 difference between B's $10 gain taken into account and the $20 recomputed loss. (The results are the same under section 267(f).) S's $30 loss is long-term capital loss, and B's $10 gain is long-term capital gain.

(*6*) ***Intercompany gain followed by sale to a nonmember at a loss.*** The facts are the same as in *Example 1* in paragraph (c)(7)(ii)(A)(*1*) of this section, except that B sells the land to X for $90 (rather than $110). The attributes and timing of S's intercompany gain and B's corresponding loss are determined under the matching rule. If S and B were divisions of a single corporation and the intercompany sale were a transfer between the divisions, B would succeed to S's $70 basis in the land and would have a $20 gain from the sale to X instead of a $10 loss. Thus, S takes its entire $30 gain into account in Year 3 to reflect the $30 difference between B's $10 loss taken into account and the $20 recomputed gain. S's $30 gain is long-term capital gain, and B's $10 loss is long-term capital loss.

(*7*) ***Intercompany gain followed by distribution to a nonmember at a loss.*** The facts are the same as in *Example 1* in paragraph (c)(7)(ii)(A)(*1*) of this section, except that B distributes the land to X, a minority shareholder of B, and at the time of the distribution the land has a fair market value of $90. The attributes and timing of S's intercompany gain and B's corresponding loss are determined under the matching rule. Under section 311(a), B does not recognize its $10 loss on the distribution to X. If S and B were divisions of a single corporation and the intercompany sale were a transfer between divisions, B would succeed to S's $70 basis in the land and would have a $20 gain from the distribution to X instead of an unrecognized $10 loss. Under paragraph (b)(3)(ii) of this section, B's loss that is not recognized under section 311(a) is a corresponding item. Thus, S takes its $30 gain into account under the matching rule in Year 3 to reflect the difference between B's $10 corresponding unrecognized loss and the $20 recomputed gain. B's $10 corresponding loss offsets $10 of S's intercompany gain and, under paragraph (c)(4)(i) of this section, the attributes of B's corresponding item control the attributes of S's intercompany item. Paragraph (c)(6) of this section does not prevent the redetermination of S's

intercompany item as excluded from gross income. (See paragraph (c)(6)(ii)(B) of this section). Thus, $10 of S's $30 gain is redetermined to be excluded from gross income.

(8) ***Intercompany sale followed by section 1031 exchange with nonmember.*** The facts are the same as in *Example 1* in paragraph (c)(7)(ii)(A)(*1*) of this section, except that, instead of selling the land to X, B exchanges the land for land owned by X in a transaction to which section 1031 applies. There is no difference in Year 3 between B's $0 corresponding item taken into account and the $0 recomputed corresponding item. Thus, none of S's intercompany gain is taken into account under the matching rule as a result of the section 1031 exchange. Instead, B's gain is preserved in the land received from X and, under the successor asset rule of paragraph (j)(1) of this section, S's intercompany gain is taken into account by reference to the replacement property. (If B takes gain into account as a result of boot received in the exchange, S's intercompany gain is taken into account under the matching rule to the extent the boot causes a difference between B's gain taken into account and the recomputed gain.)

(9) ***Intercompany sale followed by section 351 transfer to nonmember.*** The facts are the same as in *Example 1* in paragraph (c)(7)(ii)(A)(*1*) of this section, except that, instead of selling the land to X, B transfers the land to X in a transaction to which section 351(a) applies and X remains a nonmember. There is no difference in Year 3 between B's $0 corresponding item taken into account and the $0 recomputed corresponding item. Thus, none of S's intercompany gain is taken into account under the matching rule as a result of the section 351(a) transfer. However, S's entire gain is taken into account in Year 3 under the acceleration rule of paragraph (d) of this section (because X, a nonmember, reflects B's $100 cost basis in the land under section 362).

(B) ***Example 2. Dealer activities*** —

(1) ***Facts.*** S holds land for investment with a basis of $70. On January 1 of Year 1, S sells the land to B for $100. B develops the land as residential real estate, and sells developed lots to customers during Year 3 for an aggregate amount of $110.

(2) ***Attributes.*** S and B are treated under the matching rule as divisions of a single corporation for purposes of determining the attributes of S's intercompany item and B's corresponding item. Thus, although S held the land for investment, whether the gain is treated as from the sale of property described in section 1221(1) is based on the activities of both S and B. If, based on both S's and B's activities, the land is described in section 1221(1), both S's gain and B's gain are ordinary income.

(C) ***Example 3. Intercompany section 351 transfer*** —

(1) ***Facts.*** S holds land with a $70 basis and a $100 fair market value for sale to customers in the ordinary course of business. On January 1 of Year 1, S transfers the land to B in exchange for all of the stock of B in a transaction to which section 351 applies. S has no gain or loss under section 351(a), and its basis in the B stock is $70 under section 358. Under section 362, B's basis in the land is $70. B holds the land

for investment. On July 1 of Year 3, B sells the land to X for $100. Assume that if S and B were divisions of a single corporation, B's gain from the sale would be ordinary income because of S's activities.

(2) ***Timing and attributes.*** Under paragraph (b)(1) of this section, S's transfer to B is an intercompany transaction. Under paragraph (c)(3) of this section, S is treated as transferring the land in exchange for B's stock even though, as divisions, S could not own stock of B. S has no intercompany item, but B's $30 gain from its sale of the land to X is a corresponding item because the land was acquired in an intercompany transaction. B's $30 gain is ordinary income that is taken into account under B's method of accounting.

(3) ***Intercompany section 351 transfer with boot.*** The facts are the same as in *Example 3* in paragraph (c)(7)(ii)(C)(*1*) of this section, except that S receives $10 cash in addition to the B stock in the transfer. S recognizes $10 of gain under section 351(b), and its basis in the B stock is $70 under section 358. Under section 362, B's basis in the land is $80. S takes its $10 intercompany gain into account in Year 3 to reflect the $10 difference between B's $20 corresponding gain taken into account and the $30 recomputed gain. Both S's $10 gain and B's $20 gain are ordinary income.

(4) ***Partial disposition.*** The facts are the same as in *Example 3* in paragraph (c)(7)(ii)(C)(*3*) of this section, except B sells only a one- half, undivided interest in the land to X for $50. The timing and attributes are determined in the manner provided in *Example 3* in paragraph (c)(7)(ii)(C)(*2*) of this section, except that S takes only $5 of its gain into account in Year 3 to reflect the $5 difference between B's $10 gain taken into account and the $15 recomputed gain.

(D) ***Example 4. Depreciable property*** —

(1) ***Facts.*** On January 1 of Year 1, S buys 10-year recovery property for $100 and depreciates it under the straight-line method. On January 1 of Year 3, S sells the property to B for $130. Under section 168(i)(7), B is treated as S for purposes of section 168 to the extent B's $130 basis does not exceed S's adjusted basis at the time of the sale. B's additional basis is treated as new 10-year recovery property for which B elects the straight-line method of recovery. (To simplify the example, the half-year convention is disregarded.)

(2) ***Depreciation through Year 3; intercompany gain.*** S claims $10 of depreciation for each of Years 1 and 2 and has an $80 basis at the time of the sale to B. Thus, S has a $50 intercompany gain from its sale to B. For Year 3, B has $10 of depreciation with respect to $80 of its basis (the portion of its $130 basis not exceeding S's adjusted basis). In addition, B has $5 of depreciation with respect to the $50 of its additional basis that exceeds S's adjusted basis.

(3) ***Timing.*** S's $50 gain is taken into account to reflect the difference for each consolidated return year between B's depreciation taken into account with respect to the property and the recomputed depreciation. For Year 3, B takes $15 of depreciation into account. If the intercompany transaction were a transfer between divisions of a single corporation, B would succeed to S's adjusted basis in the

property and take into account only $10 of depreciation for Year 3. Thus, S takes $5 of gain into account in Year 3. In each subsequent year that B takes into account $15 of depreciation with respect to the property, S takes into account $5 of gain.

(*4*) ***Attributes.*** Under paragraph (c)(1)(i) of this section, the attributes of S's gain and B's depreciation must be redetermined to the extent necessary to produce the same effect on consolidated taxable income as if the intercompany transaction were between divisions of a single corporation (the group must have a net depreciation deduction of $10). In each year, $5 of B's corresponding depreciation deduction offsets S's $5 intercompany gain taken into account and, under paragraph (c)(4)(i) of this section, the attributes of B's corresponding item control the attributes of S's intercompany item. Accordingly, S's intercompany gain that is taken into account as a result of B's depreciation deduction is ordinary income.

(*5*) ***Sale of property to a nonmember.*** The facts are the same as in *Example 4* in paragraph (c)(7)(ii)(D)(*1*) of this section, except that B sells the property to X on January 1 of Year 5 for $110. As set forth in *Example 4* in paragraphs (c)(7)(ii)(D)(*3*) and (*4*) of this section, B has $15 of depreciation with respect to the property in each of Years 3 and 4, causing S to take $5 of intercompany gain into account in each year as ordinary income. The $40 balance of S's intercompany gain is taken into account in Year 5 as a result of B's sale to X, to reflect the $40 difference between B's $10 gain taken into account and the $50 of recomputed gain ($110 of sale proceeds minus the $60 basis B would have if the intercompany sale were a transfer between divisions of a single corporation). Treating S and B as divisions of a single corporation, $40 of the gain is section 1245 gain and $10 is section 1231 gain. On a separate entity basis, S would have more than $10 treated as section 1231 gain, and B would have no amount treated as section 1231 gain. Under paragraph (c)(4)(ii) of this section, all $10 of the section 1231 gain is allocated to S. S's remaining $30 of gain, and all of B's $10 gain, is treated as section 1245 gain.

(E) ***Example 5. Intercompany sale followed by installment sale*** —

(*1*) ***Facts.*** S holds land for investment with a basis of $70x. On January 1 of Year 1, S sells the land to B for $100x. B also holds the land for investment. On July 1 of Year 3, B sells the land to X in exchange for X's $110x note. The note bears a market rate of interest in excess of the applicable Federal rate, and provides for principal payments of $55x in Year 4 and $55x in Year 5. The interest charge under section 453A(c) applies to X's note.

(*2*) ***Timing and attributes.*** S takes its $30x gain into account to reflect the difference in each consolidated return year between B's gain taken into account for the year and the recomputed gain. Under section 453, B takes into account $5x of gain in Year 4 and $5x of gain in Year 5. Thus, S takes into account $15x of gain in Year 4 and $15x of gain in Year 5 to reflect the $15x difference in each of those years between B's $5x gain taken into account and the $20x recomputed gain. Both S's $30x gain and B's $10x gain are subject to the section 453A(c) interest charge beginning in Year 3.

(*3*) ***Election out under section 453(d).*** If, under the facts in *Example 5* in paragraph (c)(7)(ii)(E)(*1*) of this section, the P group wishes to elect not to apply section 453 with respect to S's gain, an election under section 453(d) must be made for Year 3 with respect to B's gain. This election will cause B's $10x gain to be taken into

account in Year 3. Under the matching rule, this will result in S's $30x gain being taken into account in Year 3. (An election by the P group solely with respect to S's gain has no effect because the gain from S's sale to B is taken into account under the matching rule, and therefore must reflect the difference between B's gain taken into account and the recomputed gain.)

(*4*) ***Sale to a nonmember at a loss, but overall gain.*** The facts are the same as in *Example 5* in paragraph (c)(7)(ii)(E)(*1*) of this section, except that B sells the land to X in exchange for X's $90x note (rather than $110x note). If S and B were divisions of a single corporation, B would succeed to S's basis in the land, and the sale to X would be eligible for installment reporting under section 453, because it resulted in an overall gain. However, because only gains may be reported on the installment method, B's $10x corresponding loss is taken into account in Year 3. Under paragraph (b)(4) of this section the recomputed corresponding item is $20x gain that would be taken into account under the installment method, $0 in Year 3 and $10x in each of Years 4 and 5. Thus, in Year 3 S takes $10x of gain into account to reflect the difference between B's $10x loss taken into account and the $0 recomputed gain for Year 3. Under paragraph (c)(4)(i) of this section, B's $10x corresponding loss offsets $10x of S's intercompany gain, and B's attributes control. S takes $10x of gain into account in each of Years 4 and 5 to reflect the difference in those years between B's $0 gain taken into account and the $10x recomputed gain that would be taken into account under the installment method. Only the $20x of S's gain taken into account in Years 4 and 5 is subject to the interest charge under section 453A(c) beginning in Year 3. (If P elects under section 453(d) for Year 3 not to apply section 453 with respect to the gain, all of S's $30x gain will be taken into account in Year 3 to reflect the difference between B's $10x loss taken into account and the $20x recomputed gain.)

(*5*) ***Intercompany loss, installment gain.*** The facts are the same as in *Example 5* in paragraph (c)(7)(ii)(E)(*1*) of this section, except that S has a $130x (rather than $70x) basis in the land. Under paragraph (c)(1)(i) of this section, the separate entity attributes of S's and B's items from the intercompany transaction must be redetermined to produce the same effect on consolidated taxable income (and tax liability) as if the transaction had been a transfer between divisions. If S and B were divisions of a single corporation, B would succeed to S's basis in the land and the group would have $20x loss from the sale to X, installment reporting would be unavailable, and the interest charge under section 453A(c) would not apply. Accordingly, B's gain from the transaction is not eligible for installment treatment under section 453. B takes its $10x gain into account in Year 3, and S takes its $30x of loss into account in Year 3 to reflect the difference between B's $10x gain and the $20x recomputed loss.

(*6*) ***Recapture income.*** The facts are the same as in *Example 5* in paragraph (c)(7)(ii)(E)(*1*) of this section, except that S bought depreciable property (rather than land) for $100x, claimed depreciation deductions, and reduced the property's basis to $70x before Year 1. (To simplify the example, B's depreciation is disregarded.) If the intercompany sale of property had been a transfer between divisions of a single corporation, $30x of the $40x gain from the sale to X would be section 1245 gain (which is ineligible for installment reporting) and $10x would be section 1231 gain

(which is eligible for installment reporting). On a separate entity basis, S would have $30x of section 1245 gain and B would have $10x of section 1231 gain. Accordingly, the attributes are not redetermined under paragraph (c)(1)(i) of this section. All of B's $10x gain is eligible for installment reporting and is taken into account $5x each in Years 4 and 5 (and is subject to the interest charge under section 453A(c)). S's $30x gain is taken into account in Year 3 to reflect the difference between B's $0 gain taken into account and the $30x of recomputed gain. (If S had bought the depreciable property for $110x and its recomputed basis under section 1245 had been $110x (rather than $100x), B's $10x gain and S's $30x gain would both be recapture income ineligible for installment reporting.)

(F) *Example 6. Intercompany sale of installment obligation* —

(*1*) ***Facts.*** S holds land for investment with a basis of $70x. On January 1 of Year 1, S sells the land to X in exchange for X's $100x note, and S reports its gain on the installment method under section 453. X's note bears interest at a market rate of interest in excess of the applicable Federal rate, and provides for principal payments of $50x in Year 5 and $50x in Year 6. Section 453A applies to X's note. On July 1 of Year 3, S sells X's note to B for $100x, resulting in $30x gain from S's prior sale of the land to X under section 453B(a).

(*2*) ***Timing and attributes.*** S's sale of X's note to B is an intercompany transaction, and S's $30x gain is intercompany gain. S takes $15x of the gain into account in each of Years 5 and 6 to reflect the $15x difference in each year between B's $0 gain taken into account and the $15x recomputed gain. S's gain continues to be treated as its gain from the sale to X, and the deferred tax liability remains subject to the interest charge under section 453A(c).

(*3*) ***Worthlessness.*** The facts are the same as in *Example 6* in paragraph (c)(7)(ii)(F)(*1*) of this section, except that X's note becomes worthless on December 1 of Year 3 and B has a $100x short-term capital loss under section 165(g) on a separate entity basis. Under paragraph (c)(1)(ii) of this section, B's holding period for X's note is aggregated with S's holding period. Thus, B's loss is a long- term capital loss. S takes its $30x gain into account in Year 3 to reflect the $30x difference between B's $100x loss taken into account and the $70x recomputed loss. Under paragraph (c)(1)(i) of this section, S's gain is long-term capital gain.

(*4*) ***Pledge.*** The facts are the same as in *Example 6* in paragraph (c)(7)(ii)(F)(*1*) of this section, except that, on December 1 of Year 3, B borrows $100x from an unrelated bank and secures the indebtedness with X's note. X's note remains subject to section 453A(d) following the sale to B. Under section 453A(d), B's $100x of proceeds from the secured indebtedness is treated as an amount received on December 1 of Year 3 by B on X's note. Thus, S takes its entire $30x gain into account in Year 3.

(G) *Example 7. Performance of services* —

(*1*) ***Facts.*** S is a driller of water wells. B operates a ranch in a remote location, and B's taxable income from the ranch is not subject to section 447. B's ranch requires water to maintain its cattle. During Year 1, S drills an artesian well on B's ranch in exchange for $100 from B, and S incurs $80 of expenses (e.g., for employees and equipment). B capitalizes its $100 cost for the well under section 263, and takes into account $10

of cost recovery deductions in each of Years 2 through 11. Under its separate entity method of accounting, S would take its income and expenses into account in Year 1. If S and B were divisions of a single corporation, the costs incurred in drilling the well would be capitalized.

(*2*) ***Definitions.*** Under paragraph (b)(1) of this section, the service transaction is an intercompany transaction, S is the selling member, and B is the buying member. Under paragraph (b)(2)(ii) of this section, S's $100 of income and $80 of related expenses are both included in determining its intercompany income of $20.

(*3*) ***Timing and attributes.*** S's $20 of intercompany income is taken into account under the matching rule to reflect the $20 difference between B's corresponding items taken into account (based on its $100 cost basis in the well) and the recomputed corresponding items (based on the $80 basis that B would have if S and B were divisions of a single corporation and B's basis were determined by reference to S's $80 of expenses). In Year 1, S takes into account $80 of its income and the $80 of expenses. In each of Years 2 through 11, S takes $2 of its $20 intercompany income into account to reflect the annual $2 difference between B's $10 of cost recovery deductions taken into account and the $8 of recomputed cost recovery deductions. S's $100 income and $80 expenses, and B's cost recovery deductions, are ordinary items (because S's and B's items would be ordinary on a separate entity basis, the attributes are not redetermined under paragraph (c)(1)(i) of this section). If S's offsetting $80 of income and expense would not be taken into account in the same year under its separate entity method of accounting, they nevertheless must be taken into account under this section in a manner that clearly reflects consolidated taxable income. See paragraph (a)(3)(i) of this section.

(*4*) ***Sale of capitalized services.*** The facts are the same as in *Example 7* in paragraph (c)(7)(ii)(G)(*1*) of this section, except that B sells the ranch before Year 11 and recognizes gain attributable to the well. To the extent of S's income taken into account as a result of B's cost recovery deductions, as well as S's offsetting $80 of income and expense, the timing and attributes are determined in the manner provided in *Example 7* in paragraph (c)(7)(ii)(G)(*3*) of this section. The attributes of the remainder of S's $20 of income and B's gain from the sale are redetermined to produce the same effect on consolidated taxable income as if S and B were divisions of a single corporation. Accordingly, S's remaining intercompany income is treated as recapture income or section 1231 gain, even though it is from S's performance of services.

(H) ***Example 8. Rental of property.*** B operates a ranch that requires grazing land for its cattle. S owns undeveloped land adjoining B's ranch. On January 1 of Year 1, S leases grazing rights to B for Year 1. B's $100 rent expense is deductible for Year 1 under its separate entity accounting method. Under paragraph (b)(1) of this section, the rental transaction is an intercompany transaction, S is the selling member, and B is the buying member. S takes its $100 of income into account in Year 1 to reflect the $100 difference between B's rental deduction taken into account and the $0 recomputed rental deduction. S's income and B's deduction are ordinary items (because S's intercompany item and B's corresponding item would both be ordinary on a separate entity basis, the attributes are not redetermined under paragraph (c)(1)(i) of this section).

(I) *Example 9. Intercompany sale of a partnership interest* —

(*1*) ***Facts.*** S owns a 20% interest in the capital and profits of a general partnership. The partnership holds land for investment with a basis equal to its value, and operates depreciable assets which have value in excess of basis. S's basis in its partnership interest equals its share of the adjusted basis of the partnership's land and depreciable assets. The partnership has an election under section 754 in effect. On January 1 of Year 1, S sells its partnership interest to B at a gain. During Years 1 through 10, the partnership depreciates the operating assets, and B's depreciation deductions from the partnership reflect the increase in the basis of the depreciable assets under section 743(b).

(*2*) ***Timing and attributes.*** S's gain is taken into account during Years 1 through 10 to reflect the difference in each year between B's depreciation deductions from the partnership taken into account and the recomputed depreciation deductions from the partnership. Under paragraphs (c)(1)(i) and (c)(4)(i) of this section, S's gain taken into account is ordinary income. (The acceleration rule does not apply to S's gain as a result of the section 743(b) adjustment, because the adjustment is solely with respect to B and therefore no nonmember reflects any part of the intercompany transaction.)

(*3*) ***Partnership sale of assets.*** The facts are the same as in *Example 9* in paragraph (c)(7)(ii)(I)(*1*) of this section, and the partnership sells some of its depreciable assets to X at a gain on December 31 of Year 4. In addition to the intercompany gain taken into account as a result of the partnership's depreciation, S takes intercompany gain into account in Year 4 to reflect the difference between B's partnership items taken into account from the sale (which reflect the basis increase under section 743(b)) and the recomputed partnership items. The attributes of S's additional gain are redetermined to produce the same effect on consolidated taxable income as if S and B were divisions of a single corporation (recapture income or section 1231 gain).

(*4*) ***B's sale of partnership interest.*** The facts are the same as in *Example 9* in paragraph (c)(7)(ii)(I)(*1*) of this section, and on December 31 of Year 4, B sells its partnership interest to X at no gain or loss. In addition to the intercompany gain taken into account as a result of the partnership's depreciation, the remaining balance of S's intercompany gain is taken into account in Year 4 to reflect the difference between B's $0 gain taken into account from the sale of the partnership interest and the recomputed gain. The character of S's remaining intercompany item and B's corresponding item are determined on a separate entity basis under section 751, and then redetermined to the extent necessary to produce the same effect as treating the intercompany transaction as occurring between divisions of a single corporation.

(*5*) ***No section 754 election.*** The facts are the same as in *Example 9* in paragraph (c)(7)(ii)(I)(*4*) of this section, except that the partnership does not have a section 754 election in effect, and B recognizes a capital loss from its sale of the partnership interest to X on December 31 of Year 4. Because there is no difference between B's depreciation deductions from the partnership taken into account and the recomputed depreciation deductions, S does not take any of its gain into account

during Years 1 through 4 as a result of B's partnership's items. Instead, S's entire intercompany gain is taken into account in Year 4 to reflect the difference between B's loss taken into account from the sale to X and the recomputed gain or loss.

(J) ***Example 10. Net operating losses subject to section 382 or the SRLY rules*** —

(*1*) ***Facts.*** On January 1 of Year 1, P buys all of S's stock. S has net operating loss carryovers from prior years. P's acquisition results in an ownership change under section 382 with respect to S's loss carryovers, and S has a net unrealized built-in gain (within the meaning of section 382(h)(3)). S owns nondepreciable property with a $70 basis and $100 value. On July 1 of Year 3, S sells the property to B for $100, and its $30 gain is recognized built-in gain (within the meaning of section 382(h)(2)) on a separate entity basis. On December 1 of Year 5, B sells the property to X for $90.

(*2*) ***Timing and attributes.*** S's $30 gain is taken into account in Year 5 to reflect the $30 difference between B's $10 loss taken into account and the recomputed $20 gain. S and B are treated as divisions of a single corporation for purposes of applying section 382 in connection with the intercompany transaction. Under a single entity analysis, the single corporation has losses subject to limitation under section 382, and this limitation may be increased under section 382(h) if the single corporation has recognized built-in gain with respect to those losses. B's $10 corresponding loss offsets $10 of S's intercompany gain, and thus, under paragraph (c)(4)(i) of this section, $10 of S's intercompany gain is redetermined not to be recognized built-in gain. S's remaining $20 intercompany gain continues to be treated as recognized built-in gain.

(*3*) ***B's recognized built-in gain.*** The facts are the same as in *Example 10* in paragraph (c)(7)(ii)(J)(*1*) of this section, except that the property declines in value after S becomes a member of the P group, S sells the property to B for its $70 basis, and B sells the property to X for $90 during Year 5. Treating S and B as divisions of a single corporation, S's sale to B does not cause the property to cease to be built-in gain property. Thus, B's $20 gain from its sale to X is recognized built-in gain that increases the section 382 limitation applicable to S's losses.

(*4*) ***SRLY limitation.*** The facts are the same as in *Example 10* in paragraph (c)(7)(ii)(J)(*1*) of this section, except that P's acquisition of S is not subject to the overlap rule of § 1.1502-21(g), and S's net operating loss carryovers are subject to the separate return limitation year (SRLY) rules. See § 1.1502-21(c). The application of the SRLY rules depends on S's status as a separate corporation having losses from separate return limitation years. Under paragraph (c)(5), the attribute of S's intercompany item as it relates to S's SRLY limitation is not redetermined, because the SRLY limitation depends on S's special status. Accordingly, S's $30 intercompany gain is included in determining its SRLY limitation for Year 5.

(K) ***Example 11. Section 475*** —

(*1*) ***Facts.*** S, a dealer in securities within the meaning of section 475(c), owns a security with a basis of $70. The security is held for sale to customers and is not identified under section 475(b) as within an exception to marking to market. On July 1 of Year

1, S sells the security to B for $100. B is not a dealer and holds the security for investment. On December 31 of Year 1, the fair market value of the security is $100. On July 1 of Year 2, B sells the security to X for $110.

(*2*) ***Attributes.*** Under section 475, a dealer in securities can treat a security as within an exception to marking to market under section 475(b) only if it timely identifies the security as so described. Under the matching rule, attributes must be redetermined by treating S and B as divisions of a single corporation. As a result of S's activities, the single corporation is treated as a dealer with respect to securities, and B must continue to mark to market the security acquired from S. Thus, B's corresponding items and the recomputed corresponding items are determined by continuing to treat the security as not within an exception to marking to market. Under section 475(d)(3), it is possible for the character of S's intercompany items to differ from the character of B's corresponding items.

(*3*) ***Timing and character.*** S has a $30 gain when it disposes of the security by selling it to B. This gain is intercompany gain that is taken into account in Year 1 to reflect the $30 difference between B's $0 gain taken into account from marking the security to market under section 475 and the recomputed $30 gain that would be taken into account. The character of S's gain and B's gain are redetermined as if the security were transferred between divisions. Accordingly, S's gain is ordinary income under section 475(d)(3)(A)(i), but under section 475(d)(3)(B)(ii) B's $10 gain from its sale to X is capital gain that is taken into account in Year 2.

(*4*) ***Nondealer to dealer.*** The facts are the same as in *Example 11* in paragraph (c)(7)(ii)(K)(*1*) of this section, except that S is not a dealer and holds the security for investment with a $70 basis, B is a dealer to which section 475 applies and, immediately after acquiring the security from S for $100, B holds the security for sale to customers in the ordinary course of its trade or business. Because S is not a dealer and held the security for investment, the security is treated as properly identified as held for investment under section 475(b)(1) until it is sold to B. Under section 475(b)(3), the security thereafter ceases to be described in section 475(b)(1) because B holds the security for sale to customers. The mark-to-market requirement applies only to changes in the value of the security after B's acquisition. B's mark-to-market gain taken into account and the recomputed mark-to-market gain are both determined based on changes from the $100 value of the security at the time of B's acquisition. There is no difference between B's $0 mark-to-market gain taken into account in Year 1 and the $0 recomputed mark-to-market gain. Therefore, none of S's gain is taken into account in Year 1 as a result of B's marking the security to market in Year 1. In Year 2, B has a $10 gain when it disposes of the security by selling it to X, but would have had a $40 gain if S and B were divisions of a single corporation. Thus, S takes its $30 gain into account in Year 2 under the matching rule. Under section 475(d)(3), S's gain is capital gain even though B's subsequent gain or loss from marking to market or disposing of the security is ordinary gain or loss. If B disposes of the security at a $10 loss in Year 2, S's gain taken into account in Year 2 is still capital because on a single entity basis section 475(d)(3) would provide for $30 of capital gain and $10 of ordinary loss. Because the attributes are not redetermined under paragraph (c)(1)(i) of this section, paragraph (c)(4)(i) of this

section does not apply. Furthermore, if B held the security for investment, and so identified the security under section 475(b)(1), the security would continue to be excepted from marking to market.

(L) ***Example 12. Section 1092*** —

(*1*) ***Facts.*** On July 1 of Year 1, S enters into offsetting long and short positions with respect to actively traded personal property. The positions are not section 1256 contracts, and they are the only positions taken into account for purposes of applying section 1092. On August 1 of Year 1, S sells the long position to B at an $11 loss, and there is $11 of unrealized gain in the offsetting short position. On December 1 of Year 1, B sells the long position to X at no gain or loss. On December 31 of Year 1, there is still $11 of unrealized gain in the short position. On February 1 of Year 2, S closes the short position at an $11 gain.

(*2*) ***Timing and attributes.*** If the sale from S to B were a transfer between divisions of a single corporation, the $11 loss on the sale to X would have been deferred under section 1092(a)(1)(A). Accordingly, there is no difference in Year 1 between B's corresponding item of $0 and the recomputed corresponding item of $0. S takes its $11 loss into account in Year 2 to reflect the difference between B's corresponding item of $0 taken into account in Year 2 and the recomputed loss of $11 that would have been taken into account in Year 2 under section 1092(a)(1)(B) if S and B had been divisions of a single corporation. (The results are the same under section 267(f)).

(M) ***Example 13.*** [Reserved]

(N) ***Example (14): Source of income under section 863*** —

(*1*) ***Intercompany sale*** —

(*i*) ***Facts.*** S manufactures inventory property solely in the United States and recognizes $75x of income on sales to B in Year 1. B conducts further production activity on the inventory property solely in Country Y and then sells the inventory property to X in Country Y and recognizes $25x of income on the sale to X, also in Year 1. Title passes from S to B, and from B to X, in Country Y. Assume that applying § 1.863-3 on a single entity basis, including the formula for apportionment of multi-country production activities by reference to the basis of production assets, $10x would be treated as foreign source income and $90x would be treated as U.S. source income (that is, 10 percent of the production occurred outside the United States and 90 percent occurred within the United States, as measured by the basis of assets used in production activities with respect to the property). Assume further that, on a separate entity basis, S would have $0x of foreign source income and $75x of U.S. source income and all of B's $25x of income would be foreign source income.

(*ii*) ***Analysis.*** Under the matching rule, both S's $75x intercompany item and B's $25x corresponding item are taken into account in Year 1. In determining the source of S and B's income from the inventory property sales, the attributes of S's intercompany item and B's corresponding item are redetermined to the extent necessary to produce the same effect on consolidated taxable income (and consolidated tax liability) as if S and B were divisions of a single

corporation. See paragraph (c)(1)(i) of this section. On a single entity basis, S and B would have $10x that would be treated as foreign source income and $90x that would be treated as U.S. source income, but without application of this section (that is, on a separate entity basis), S would have $75x of U.S. source income and B would have $25x of foreign source income. Under paragraph (c)(4)(ii) of this section, a redetermined attribute must be allocated between S and B using a reasonable method. On a separate entity basis B would have only foreign source income and S would have only U.S. source income. Accordingly, under paragraph (c)(1)(i) of this section, $15x of B's $25x sales income that would be treated as foreign source income on a separate entity basis is redetermined to be U.S. source income.

(2) ***Sale of property reflecting intercompany services or intangibles*** —

(*i*) ***Facts.*** S earns $10x of income performing services in the United States for B. B capitalizes S's fees into the basis of inventory property that it manufactures in the United States and sells to an unrelated person in Year 1 at a $90x profit, with title passing in Country Y. Assume that on a single entity basis, $100x is treated as U.S. source income and $0x is treated as foreign source income. Further assume that on a separate entity basis, S would have $10x of U.S. source income, and B would have $90x of U.S. source income, with neither having any foreign source income.

(*ii*) ***Analysis.*** Under the matching rule, S's $10x income and B's $90x income are taken into account in Year 1. In determining the source of S and B's income, the attributes of S's intercompany item and B's corresponding item are redetermined to the extent necessary to produce the same effect on consolidated taxable income (and consolidated tax liability) as if S and B were divisions of a single corporation. Because the results are the same on a single entity basis and a separate entity basis ($100x of U.S. source income and $0x of foreign source income), the attributes are not redetermined under paragraph (c)(1)(i) of this section.

(O) ***Example 15. Section 1248*** —

(*1*) ***Facts.*** On January 1 of Year 1, S forms FT, a wholly owned foreign subsidiary, with a $10 contribution. During Years 1 through 3, FT has earnings and profits of $40. None of the earnings and profits is taxed as subpart F income under section 951, and FT distributes no dividends to S during this period. On January 1 of Year 4, S sells its FT stock to B for $50. While B owns FT, FT has a deficit in earnings and profits of $10. On July 1 of Year 6, B sells its FT stock for $70 to X, an unrelated foreign corporation.

(*2*) ***Timing.*** S's $40 of intercompany gain is taken into account in Year 6 to reflect the difference between B's $20 of gain taken into account and the $60 recomputed gain.

(*3*) ***Attributes.*** Under the matching rule, the attributes of S's intercompany gain and B's corresponding gain are redetermined to have the same effect on consolidated taxable income (and consolidated tax liability) as if S and B were divisions of a single corporation. On a single entity basis, there is $60 of gain and the portion which is characterized as a dividend under section 1248 is determined on the basis of FT's $30 of earnings and profits at the time of the sale of FT to X (the sum of FT's $40 of

earnings and profits while held by S and FT's $10 deficit in earnings and profits while held by B). Therefore, $30 of the $60 gain is treated as a dividend under section 1248. The remaining $30 is treated as capital gain. On a separate entity basis, all of S's $40 gain would be treated as a dividend under section 1248 and all of B's $20 gain would be treated as capital gain. Thus, as a result of the single entity determination, $10 that would be treated as a dividend under section 1248 on a separate entity basis is redetermined to be capital gain. Under paragraph (c)(4)(ii) of this section, this redetermined attribute must be allocated between S's intercompany item and B's corresponding item by using a reasonable method. On a separate entity basis, only S would have any amount treated as a dividend under section 1248 available for redetermination. Accordingly, $10 of S's income is redetermined to be not subject to section 1248, with the result that $30 of S's intercompany gain is treated as a dividend and the remaining $10 is treated as capital gain. All of B's corresponding gain is treated as capital gain, as it would be on a separate entity basis.

(*4*) ***B has loss.*** The facts are the same as in *Example 15* in paragraph (c)(7)(ii)(O)(*1*) of this section, except that FT has no earnings and profits or deficit in earnings and profits while B owns FT, and B sells the FT stock to X for $40. On a single entity basis, there is $30 of gain, and section 1248 is applied on the basis of FT's $40 earnings and profits at the time of the sale of FT to X. Under section 1248, the amount treated as a dividend is limited to $30 (the amount of the gain). On a separate entity basis, S's entire $40 gain would be treated as a dividend under section 1248, and B's $10 loss would be a capital loss. B's $10 corresponding loss offsets $10 of S's intercompany gain and, under paragraph (c)(4)(i) of this section, the attributes of B's corresponding item control. Accordingly, $10 of S's gain must be redetermined to be capital gain. B's $10 loss remains a capital loss. (If, however, S sold FT to B at a loss and B sold FT to X at a gain, it may be unreasonable for the attributes of B's corresponding gain to control S's offsetting intercompany loss. If B's attributes were to control, for example, the group could possibly claim a larger foreign tax credit than would be available if S and B were divisions of a single corporation.)

(P) ***Example 16. Intercompany stock distribution followed by section 332 liquidation*** —

(*1*) ***Facts.*** P owns all of the stock of S, S owns all the stock of T, a member of the P group, and T owns all of the stock of T1, also a member of the P group. On January 1 of Year 1, S distributes all of the T stock to P in a distribution to which section 301 applies. At the time of this distribution, the value of the T stock is $100 and S has a $40 basis in the T stock. Under section 311(b), the distribution creates $60 of intercompany gain to S. Under section 301(d), P's basis in the T stock is $100. S will take its $60 intercompany gain into account under the matching rule. On January 1 of Year 4, in an independent transaction, S distributes all of its assets to P in a complete liquidation to which section 332 applies, and, under paragraph (j)(2) of this section, P succeeds to S's $60 gain. On January 1 of Year 7, T distributes all of its T1 stock to P in a transaction to which section 355 applies. At the time of this distribution, P has a basis in the T stock of $100, the value of the T stock (without regard to T1) is $75, and the value of the T1 stock is $25. Under section 358, P allocates $25 of its $100 basis in the T stock to the T1 stock, and, under paragraph

(j)(1) of this section, the T1 stock becomes a successor asset to the T stock. On January 1 of Year 9, in an independent transaction, T distributes all of its assets to P in a complete liquidation to which section 332 applies.

(2) ***Analysis.*** Under paragraphs (b)(1) and (f)(2) of this section, S's distribution in Year 1 of the T stock to P is an intercompany transaction, S is the selling member, and P is the buying member. In Year 9 when T liquidates, P has no gain or loss under section 332. Under paragraph (b)(3)(ii) of this section, P's $0 gain or loss with respect to the T stock under section 332 is a corresponding item. P takes $45 (75/100 × $60) of its intercompany gain into account under the matching rule in Year 9 to reflect the difference between P's $0 of unrecognized gain and P's $45 of recomputed unrecognized gain. (If P and S were divisions of a single corporation, P would have had a $40 basis in the T stock, and, after the Year 7 distribution of the T1 stock, would have held the T stock with a $30 basis.) However, paragraph (c)(6) of this section does not prevent the redetermination of P's intercompany gain as excluded from gross income provided P succeeds to S's intercompany item; P and S are a single entity; P's basis in the T stock that reflects the $45 intercompany gain taken into account is eliminated without the recognition of gain or loss (and this eliminated basis is not further reflected in the basis of any successor asset); the group has not derived and no taxpayer will derive any Federal income tax benefit from the basis in the T stock and will not derive any Federal income tax benefit from a redetermination of this portion of the gain; and the effects of the intercompany transaction have not previously been reflected, directly or indirectly, on the P group's consolidated return. (See paragraph (c)(6)(ii)(C) of this section.) Accordingly, under paragraph (c)(6)(ii)(C) of this section, the $45 intercompany gain that P takes into account is redetermined to be excluded from gross income. P's basis in its T1 stock continues to reflect $15 of intercompany gain.

(Q) ***Example 17. Intercompany stock sale followed by section 355 distribution*** —

(1) ***Facts.*** The facts are the same as *Example 16* in paragraph (c)(7)(ii)(P) of this section, except that T does not distribute the stock of T1, instead, in Year 7, T makes a distribution of $50 to P in a transaction to which section 301 applies. Under § 1.1502-32, P's basis in its T stock is reduced by $50 and, under paragraph (f)(2)(ii) of this section, the intercompany distribution is excluded from P's gross income. Further, in Year 9, instead of liquidating T, P distributes the T stock to its shareholders in a transaction to which section 355 applies.

(2) ***Analysis.*** On the distribution of the T stock in Year 9, P has $0 of unrecognized gain under section 355(c). Under paragraph (b)(3)(ii) of this section, P's $0 of unrecognized gain or loss with respect to the T stock under section 355(c) is a corresponding item. P takes its $60 intercompany gain into account under the matching rule in Year 9 to reflect the difference between P's $0 of unrecognized gain and P's $60 of recomputed gain ($50 unrecognized gain and $10 recognized gain). (If P and S were divisions of a single corporation, P would have had a $40 basis in the T stock, and, after the Year 7 distribution, would have held the T stock with a $10 excess loss account.) See *Example 2* in paragraph (f)(7) of this section. Paragraph (c)(6) of this section does not prevent the redetermination of P's intercompany gain as excluded from gross income provided P succeeds to S's intercompany item; P and S are a single entity; P's basis in the T stock that reflects the $60 intercompany gain

taken into account is eliminated without the recognition of gain or loss (and this eliminated basis is not further reflected in any successor asset); the group has not derived any Federal income tax benefit from the basis in the T stock and will not derive any Federal income tax benefit from a redetermination of this portion of the gain; and the effects of the intercompany transaction have not previously been reflected, directly or indirectly, on the P group's consolidated return. (See paragraph (c)(6)(ii)(C) of this section.) The intercompany transaction with respect to the T stock resulted in an increase in the basis of the T stock, and this increase in the basis of the T stock prevented P from holding the T stock with a $10 excess loss account (as a result of the Year 7 distribution) at the time of the section 355 distribution. Accordingly, the group derived a Federal income tax benefit from the intercompany transaction to the extent of $10 and, under paragraph (c)(6)(ii)(C) of this section, only $50 of the $60 intercompany gain that P takes into account is redetermined to be excluded from gross income.

(3) ***Application of section 355(e).*** If it were determined that section 355(e) applied to P's distribution of the T stock, P would recognize $0 of gain and derive a Federal income tax benefit to the extent of the full $60 increase in the basis of the T stock. Therefore, no portion of P's intercompany gain would be redetermined to be excluded from gross income under paragraph (c)(6)(ii)(C) of this section.

(R) ***Example 18: Redetermination of attributes for section 250 purposes*** —

(1) ***Facts.*** S manufactures equipment in the United States and recognizes $75 of gross income included in gross DEI (as defined in § 1.250(b)-1(c)(15)) on the sale of Asset, which is not depreciable property, to B in Year 1 for $100. In Year 2, B sells Asset to X for $125 and recognizes $25 of gross income. The sale is a FDDEI sale (as defined in § 1.250(b)-1(c)(8)), and thus the $25 of income is included in B's gross FDDEI (as defined in § 1.250(b)-1(c)(16)) for Year 2.

(2) ***Timing and attributes.*** S's $75 of intercompany income is taken into account in Year 2 under the matching rule to reflect the $75 difference between B's $25 corresponding item taken into account (based on B's $100 cost basis in Asset) and the recomputed corresponding item (based on the $25 basis that B would have if S and B were divisions of a single corporation and B's basis were determined by reference to S's basis). In determining whether S's gross income included in gross DEI from the sale of Asset is included in gross FDDEI, S and B are treated as divisions of a single corporation. See paragraph (a)(6) of this section. In determining the amount of income included in gross DEI that is included in gross FDDEI, the attributes of S's intercompany item and B's corresponding item may be redetermined to the extent necessary to produce the same effect on consolidated taxable income (and consolidated tax liability) as if S and B were divisions of a single corporation. See paragraph (c)(1)(i) of this section. Applying section 250 and § 1.1502-50 on a single entity basis, all $100 of income included in gross DEI would be gross FDDEI. On a separate entity basis, S would have $75 of gross income included in gross DEI that is included in gross RDEI (as defined in § 1.250(b)-1(c)(14)) and B would have $25 of gross income included in gross DEI that is included in gross FDDEI. Thus, on a separate entity basis, S and B would have, in the aggregate, $100 of gross income included in gross DEI, of which only $25 is included gross FDDEI. Accordingly, under

single entity treatment, $75 that would be treated as gross income included in gross DEI that is included in gross RDEI on a separate entity basis is redetermined to be included in gross FDDEI.

(3) ***Intercompany sale for loss.*** The facts are the same as in paragraph (c)(7)(ii)(R)(*1*) of this section (the facts in *Example 18*), except that S recognizes $25 of loss on the sale of Asset. S's $25 of intercompany loss is taken into account under the matching rule to reflect the $25 difference between B's $25 corresponding item taken into account (based on B's $100 cost basis in Asset) and the recomputed corresponding item (based on the $125 basis that B would have if S and B were divisions of a single corporation and B's basis were determined by reference to S's $125 of costs). Applying section 250 and § 1.1502-50 on a single entity basis, $0 of income would be included in gross DEI. In order to reflect this result, under the matching rule, S's $25 loss is allocated and apportioned solely to B's $25 of gross income from the sale of Asset for purposes of determining B's DEI and FDDEI. Furthermore, B's $25 of gross income is not taken into account for purposes of apportioning any other deductions under section 861 and the regulations under that section for purposes of determining any member's DEI or FDDEI.

(iii) ***Effective/applicability date*** —

(A) ***In general.*** Paragraphs (c)(6)(ii)(C) and (D) of this section, *Example 16* in paragraph (c)(7)(ii)(P) of this section, and *Example 17* in paragraph (c)(7)(ii)(Q) of this section apply with respect to items taken into account on or after March 4, 2011.

(B) ***Prior periods.*** For items taken into account on or after March 7, 2008, and before March 4, 2011, see § 1.1502-13T(c)(6)(ii)(C) and (f)(7), *Examples 7* and *8* as contained in 26 CFR part 1 in effect on April 1, 2009. For items taken into account before March 7, 2008, see § 1.1502-13 as contained in 26 CFR part 1 in effect on April 1, 2007.

(d) ***Acceleration rule.*** S's intercompany items and B's corresponding items are taken into account under this paragraph (d) to the extent they cannot be taken into account to produce the effect of treating S and B as divisions of a single corporation. For this purpose, the following rules apply:

(1) ***S's items*** —

(i) ***Timing.*** S takes its intercompany items into account to the extent they cannot be taken into account to produce the effect of treating S and B as divisions of a single corporation. The items are taken into account immediately before it first becomes impossible to achieve this effect. For this purpose, the effect cannot be achieved—

(A) To the extent an intercompany item or corresponding item will not be taken into account in determining the group's consolidated taxable income (or consolidated tax liability) under the matching rule (for example, if S or B becomes a nonmember, or if S's intercompany item is no longer reflected in the difference between B's basis (or an amount equivalent to basis) in property and the basis (or equivalent amount) the property would have if S and B were divisions of a single corporation); or

(B) To the extent a nonmember reflects, directly or indirectly, any aspect of the intercompany transaction (e.g., if B's cost basis in property purchased from S is reflected by a nonmember under section 362 following a section 351 transaction).

(ii) ***Attributes.*** The attributes of S's intercompany items taken into account under this paragraph (d)(1) are determined as follows:

(A) ***Sale, exchange, or distribution.*** If the item is from an intercompany sale, exchange, or distribution of property, its attributes are determined under the principles of the matching rule as if B sold the property, at the time the item is taken into account under paragraph (d)(1)(i) of this section, for a cash payment equal to B's adjusted basis in the property (i.e., at no net gain or loss), to the following person:

(*1*) ***Property leaves the group.*** If the property is owned by a nonmember immediately after S's item is taken into account, B is treated as selling the property to that nonmember. If the nonmember is related for purposes of any provision of the Internal Revenue Code or regulations to any party to the intercompany transaction (or any related transaction) or to the common parent, the nonmember is treated as related to B for purposes of that provision. For example, if the nonmember is related to P within the meaning of section 1239(b), the deemed sale is treated as being described in section 1239(a). See paragraph (j)(6) of this section, under which property is not treated as being owned by a nonmember if it is owned by the common parent after the common parent becomes the only remaining member.

(*2*) ***Property does not leave the group.*** If the property is not owned by a nonmember immediately after S's item is taken into account, B is treated as selling the property to an affiliated corporation that is not a member of the group.

(B) ***Other transactions.*** If the item is from an intercompany transaction other than a sale, exchange, or distribution of property (e.g., income from S's services capitalized by B), its attributes are determined on a separate entity basis.

(2) ***B's items*** —

(i) ***Attributes.*** The attributes of B's corresponding items continue to be redetermined under the principles of the matching rule, with the following adjustments:

(A) If S and B continue to join with each other in the filing of consolidated returns, the attributes of B's corresponding items (and any applicable holding periods) are determined by continuing to treat S and B as divisions of a single corporation.

(B) Once S and B no longer join with each other in the filing of consolidated returns, the attributes of B's corresponding items are determined as if the S division (but not the B division) were transferred by the single corporation to an unrelated person. Thus, S's activities (and any applicable holding period) before the intercompany transaction continue to affect the attributes of the corresponding items (and any applicable holding period).

(ii) ***Timing.*** If paragraph (d)(1) of this section applies to S, B nevertheless continues to take its corresponding items into account under its accounting method. However, the redetermination of the attributes of a corresponding item under this paragraph (d)(2) might affect its timing.

(3) ***Examples.*** The acceleration rule of this paragraph (d) is illustrated by the following examples.

(i) ***Example 1. Becoming a nonmember—timing*** —

(A) ***Facts.*** S owns land with a basis of $70. On January 1 of Year 1, S sells the land to B for $100. On July 1 of Year 3, P sells 60% of S's stock to X for $60 and, as a result, S becomes a nonmember.

(B) ***Matching rule.*** Under the matching rule, none of S's $30 gain is taken into account in Years 1 through 3 because there is no difference between B's $0 gain or loss taken into account and the recomputed gain or loss.

(C) ***Acceleration of S's intercompany items.*** Under the acceleration rule of paragraph (d) of this section, S's $30 gain is taken into account in computing consolidated taxable income (and consolidated tax liability) immediately before the effect of treating S and B as divisions of a single corporation cannot be produced. Because the effect cannot be produced once S becomes a nonmember, S takes its $30 gain into account in Year 3 immediately before becoming a nonmember. S's gain is reflected under § 1.1502-32 in P's basis in the S stock immediately before P's sale of the stock. Under § 1.1502-32, P's basis in the S stock is increased by $30, and therefore P's gain is reduced (or loss is increased) by $18 (60% of $30). *See also* §§ 1.1502-33 and 1.1502-76(b). (The results would be the same if S sold the land to B in an installment sale to which section 453 would otherwise apply, because S must take its intercompany gain into account under this section.)

(D) ***B's corresponding items.*** Notwithstanding the acceleration of S's gain, B continues to take its corresponding items into account under its accounting method. Thus, B's items from the land are taken into account based on subsequent events (for example, its sale of the land).

(E) ***Sale of B's stock.*** The facts are the same as in paragraph (d)(3)(i)(A) of this section (*Example 1*), except that P sells 60% of B's stock (rather than S stock) to X for $60 and, as a result, B becomes a nonmember. Because the effect of treating S and B as divisions of a single corporation cannot be produced once B becomes a nonmember, S takes its $30 gain into account under the acceleration rule immediately before B becomes a nonmember. (The results would be the same if S sold the land to B in an installment sale to which section 453 would otherwise apply, because S must take its intercompany gain into account under this section.)

(F) ***Discontinue filing consolidated returns.*** The facts are the same as in paragraph (d)(3)(i)(A) of this section (*Example 1*), except that the P group receives permission under § 1.1502-75(c) to discontinue filing consolidated returns beginning in Year 3. Under the acceleration rule, S takes its $30 gain into account on December 31 of Year 2.

(G) ***No subgroups.*** The facts are the same as in paragraph (d)(3)(i)(A) of this section (*Example 1*), except that P simultaneously sells all of the stock of both S and B to X (rather than 60% of S's stock), and S and B become members of the X consolidated group. Because the effect of treating S and B as divisions of a single corporation in the P group cannot be produced once S and B become nonmembers, S takes its $30 gain into account under the acceleration rule immediately before S and B become nonmembers. (Paragraph (j)(5) of this section does not apply to treat the X consolidated group as succeeding to the P group because the X group acquired only the stock of S and B.) However, so long as S and B continue to join with each other in the filing of consolidated returns, B continues to treat S and B as divisions of a single corporation for purposes of determining the attributes of B's corresponding items from the land.

(ii) *Example 2. Becoming a nonmember—attributes* —

(A) ***Facts.*** S holds land for investment with a basis of $70. On January 1 of Year 1, S sells the land to B for $100. B holds the land for sale to customers in the ordinary course of business, and expends substantial resources over a two-year period subdividing, developing, and marketing the land. On July 1 of Year 3, before B has sold any of the land, P sells 60% of S's stock to X for $60 and, as a result, S becomes a nonmember.

(B) ***Attributes.*** Under the acceleration rule, the attributes of S's gain are redetermined under the principles of the matching rule as if B sold the land to an affiliated corporation that is not a member of the group for a cash payment equal to B's adjusted basis in the land (because the land continues to be held within the group). Thus, whether S's gain is capital gain or ordinary income depends on the activities of both S and B. Because S and B no longer join with each other in the filing of consolidated returns, the attributes of B's corresponding items (for example, from its subsequent sale of the land) are redetermined under the principles of the matching rule as if the S division (but not the B division) were transferred by the single corporation to an unrelated person at the time of P's sale of the S stock. Thus, B continues to take into account the activities of S with respect to the land before the intercompany transaction.

(C) ***Depreciable property.*** The facts are the same as in paragraph (d)(3)(ii)(A) of this section (*Example 2*), except that the property sold by S to B is depreciable property. Section 1239 applies to treat all of S's gain as ordinary income because it is taken into account as a result of B's deemed sale of the property to an affiliated corporation that is not a member of the group (a related person within the meaning of section 1239(b)).

(iii) *Example 3. Selling member's disposition of installment note* —

(A) ***Facts.*** S owns land with a basis of $70. On January 1 of Year 1, S sells the land to B in exchange for B's $110 note. The note bears a market rate of interest in excess of the applicable Federal rate, and provides for principal payments of $55 in Year 4 and $55 in Year 5. On July 1 of Year 3, S sells B's note to X for $110.

(B) ***Timing.*** S's intercompany gain is taken into account under this section, and not under the rules of section 453. Consequently, S's sale of B's note does not result in its intercompany gain from the land being taken into account (for example, under section 453B). The sale does not prevent S's intercompany items and B's corresponding items from being taken into account in determining the group's consolidated taxable income under the matching rule, and X does not reflect any aspect of the intercompany transaction (X has its own cost basis in the note). S will take the intercompany gain into account under the matching rule or acceleration rule based on subsequent events (for example, B's sale of the land). *See also* paragraph (g) of this section for additional rules applicable to B's note as an intercompany obligation.

(iv) *Example 4. Cancellation of debt and attribute reduction under section 108(b)* —

(A) ***Facts.*** S holds land for investment with a basis of $0. On January 1 of Year 1, S sells the land to B for $100. B also holds the land for investment. During Year 3, B is insolvent and B's nonmember creditors discharge $60 of B's indebtedness. Because of insolvency, B's $60 discharge is excluded from B's gross income under section 108(a), and B reduces the basis of the land by $60 under sections 108(b) and 1017.

(B) ***Acceleration rule.*** As a result of B's basis reduction under section 1017, $60 of S's intercompany gain will not be taken into account under the matching rule (because there is only a $40 difference between B's $40 basis in the land and the $0 basis the land would have if S and B were divisions of a single corporation). Accordingly, S takes $60 of its gain into account under the acceleration rule in Year 3. S's gain is long-term capital gain, determined under paragraph (d)(1)(ii) of this section as if B sold the land to an affiliated corporation that is not a member of the group for $100 immediately before the basis reduction.

(C) ***Purchase price adjustment.*** Assume instead that S sells the land to B in exchange for B's $100 purchase money note, B remains solvent, and S subsequently agrees to discharge $60 of the note as a purchase price adjustment to which section 108(e)(5) applies. Under applicable principles of tax law, $60 of S's gain and $60 of B's basis in the land are eliminated and never taken into account. Similarly, the note is not treated as satisfied and reissued under paragraph (g) of this section.

(v) ***Example 5. Section 481*** —

(A) ***Facts.*** S operates several trades or businesses, including a manufacturing business. S receives permission to change its method of accounting for valuing inventory for its manufacturing business. S increases the basis of its ending inventory by $100, and the related $100 positive section 481(a) adjustment is to be taken into account ratably over six taxable years, beginning in Year 1. During Year 3, S sells all of the assets used in its manufacturing business to B at a gain. Immediately after the transfer, B does not use the same inventory valuation method as S. On a separate entity basis, S's sale results in an acceleration of the balance of the section 481(a) adjustment to Year 3.

(B) ***Timing and attributes.*** Under paragraph (b)(2) of this section, the balance of S's section 481(a) adjustment accelerated to Year 3 is intercompany income. However, S's $100 basis increase before the intercompany transaction eliminates the related difference for this amount between B's corresponding items taken into account and the recomputed corresponding items in subsequent periods. Because the accelerated section 481(a) adjustment will not be taken into account in determining the group's consolidated taxable income (and consolidated tax liability) under the matching rule, the balance of S's section 481 adjustment is taken into account under the acceleration rule as ordinary income at the time of the intercompany transaction. (If S's sale had not resulted in accelerating S's section 481(a) adjustment on a separate entity basis, S would have no intercompany income to be taken into account under this section.)

(e) ***Simplifying rules*** —

(1) ***Dollar-value LIFO inventory methods*** —

(i) ***In general.*** This paragraph (e)(1) applies if either S or B uses a dollar-value LIFO inventory method to account for intercompany transactions. Rather than applying the matching rule separately to each intercompany inventory transaction, this paragraph (e)(1) provides methods to apply an aggregate approach that is based on dollar-value LIFO inventory accounting. Any method selected under this paragraph (e)(1) must be applied consistently.

(ii) ***B uses dollar-value LIFO*** —

(A) ***In general.*** If B uses a dollar-value LIFO inventory method to account for its intercompany inventory purchases, and includes all of its inventory costs incurred for a year in its cost of goods sold for the year (that is, B has no inventory increment for the year), S takes into account all of its intercompany inventory items for the year. If B does not include all of its inventory costs incurred for the year in its cost of goods sold for the year (that is, B has an inventory increment for the year), S does not take all of its intercompany inventory income or loss into account. The amount not taken into account is determined under either the increment averaging method of paragraph (e)(1)(ii)(B) of this section or the increment valuation method of paragraph (e)(1)(ii)(C) of this section. Separate computations are made for each pool of B that receives intercompany purchases from S, and S's amount not taken into account is layered based on B's LIFO inventory layers.

(B) ***Increment averaging method.*** Under this paragraph (e)(1)(ii)(B), the amount not taken into account is the amount of S's intercompany inventory income or loss multiplied by the ratio of the LIFO value of B's current-year costs of its layer of increment to B's total inventory costs incurred for the year under its LIFO inventory method. If B includes more than its inventory costs incurred during any subsequent year in its cost of goods sold (a decrement), S takes into account the intercompany inventory income or loss layers in the same manner and proportion as B takes into account its inventory decrements.

(C) ***Increment valuation method.*** Under this paragraph (e)(1)(ii)(C), the amount not taken into account is the amount of S's intercompany inventory income or loss for the appropriate period multiplied by the ratio of the LIFO value of B's current-year costs of its layer of increment to B's total inventory costs incurred in the appropriate period under its LIFO inventory method. The principles of paragraph (e)(1)(ii)(B) of this section otherwise apply. The appropriate period is the period of B's year used to determine its current-year costs.

(iii) ***S uses dollar-value LIFO.*** If S uses a dollar-value LIFO inventory method to account for its intercompany inventory sales, S may use any reasonable method of allocating its LIFO inventory costs to intercompany transactions. LIFO inventory costs include costs of prior layers if a decrement occurs. For example, a reasonable allocation of the most recent costs incurred during the consolidated return year can be used to compute S's intercompany inventory income or loss for the year if S has an inventory increment and uses the earliest acquisitions costs method, but S must apportion costs from the most recent appropriate layers of increment if an inventory decrement occurs for the year.

(iv) ***Other reasonable methods.*** S or B may use a method not specifically provided in this paragraph (e)(1) that is expected to reasonably take into account intercompany items and corresponding items from intercompany inventory transactions. However, if the method used results, for any year, in a cumulative amount of intercompany inventory items not taken into account by S that significantly exceeds the cumulative amount that would not be taken into account under paragraph (e)(1)(ii) or (iii) of this section, S must take into account for that year the amount necessary to eliminate the excess. The method is thereafter applied with appropriate adjustments to reflect the amount taken into account.

(v) ***Examples.*** The inventory rules of this paragraph (e)(1) are illustrated by the following examples.

(A) ***Example 1. Increment averaging method*** —

(*1*) ***Facts.*** Both S and B use a double-extension, dollar-value LIFO inventory method, and both value inventory increments using the earliest acquisitions cost valuation method. During Year 2, S sells 25 units of product Q to B on January 15 at $10/unit. S sells another 25 units on April 15, on July 15, and on September 15, at $12/unit. S's earliest cost of product Q is $7.50/unit and S's most recent cost of product Q is $8.00/unit. Both S and B have an inventory increment for the year. B's total inventory costs incurred during Year 2 are $6,000 and the LIFO value of B's Year 2 layer of increment is $600.

(*2*) ***Intercompany inventory income.*** Under paragraph (e)(1)(iii) of this section, S must use a reasonable method of allocating its LIFO inventory costs to intercompany transactions. Because S has an inventory increment for Year 2 and uses the earliest acquisitions cost method, a reasonable method of determining its intercompany cost of goods sold for product Q is to use its most recent costs. Thus, its intercompany cost of goods sold is $800 ($8.00 most recent cost, multiplied by 100 units sold to B), and its intercompany inventory income is $350 ($1,150 sales proceeds from B minus $800 cost).

(*3*) ***Timing.***

(*i*) Under the increment averaging method of paragraph (e)(1)(ii)(B) of this section, $35 of S's $350 of intercompany inventory income is not taken into account in Year 2, computed as follows: LIFO value of B's Year 2 layer of increment/B's total inventory costs for year 2, or $600/$6,000 = 10%. 10% × S's $350 intercompany inventory income = $35.

(*ii*) Thus, $315 of S's intercompany inventory income is taken into account in Year 2 ($350 of total intercompany inventory income minus $35 not taken into account).

(*4*) ***S incurs a decrement.*** The facts are the same as in paragraph (e)(1)(v)(A)(*1*) of this section (*Example 1*), except that in Year 2, S incurs a decrement equal to 50% of its Year 1 layer. Under paragraph (e)(1)(iii) of this section, S must reasonably allocate the LIFO cost of the decrement to the cost of goods sold to B to determine S's intercompany inventory income.

(*5*) ***B incurs a decrement.*** The facts are the same as in paragraph (e)(1)(v)(A)(*1*) of this section (*Example 1*), except that B incurs a decrement in Year 2. S must take into account the entire $350 of Year 2 intercompany inventory income because all 100 units of product Q are deemed sold by B in Year 2.

(B) ***Example 2. Increment valuation method*** —

(*1*) ***Facts.*** The facts are the same as in paragraph (e)(1)(v)(A)(*1*) of this section (*Example 1*). In addition, B's use of the earliest acquisition's cost method of valuing its increments results in B valuing its year-end inventory using costs incurred from January through March. B's costs incurred during the year are: $1,428 in the period January through March; $1,498 in the period April through June; $1,524 in the period July through September; and $1,550 in the period October through December. S's intercompany inventory income for these periods is: $50 in the period January

through March ((25 × $10)−(25 × $8)); $100 in the period April through June ((25 × $12)−(25 × $8)); $100 in the period July through September ((25 × $12)−(25 × $8)); and $100 in the period October through December ((25 × $12)−(25 × $8)).

(2) ***Timing.***

(i) Under the increment valuation method of paragraph (e)(1)(ii)(C) of this section, $21 of S's $350 of intercompany inventory income is not taken into account in Year 2, computed as follows: LIFO value of B's Year 2 layer of increment/B's total inventory costs from January through March of Year 2, or $600/$1,428 = 42%. 42% × S's $50 intercompany inventory income for the period from January through March = $21.

(ii) Thus, $329 of S's intercompany inventory income is taken into account in Year 2 ($350 of total intercompany inventory income minus $21 not taken into account).

(3) ***B incurs a subsequent decrement.*** The facts are the same as in paragraph (e)(1)(v)(B)(*1*) of this section (*Example 2*). In addition, assume that in Year 3, B experiences a decrement in its pool that receives intercompany purchases from S. B's decrement equals 20% of the base-year costs for its Year 2 layer. The fact that B has incurred a decrement means that all of its inventory costs incurred for Year 3 are included in cost of goods sold. As a result, S takes into account its entire amount of intercompany inventory income from its Year 3 sales. In addition, S takes into account $4.20 of its Year 2 layer of intercompany inventory income not already taken into account (20% of $21).

(C) ***Example 3. Other reasonable inventory methods*** —

(1) ***Facts.*** Both S and B use a dollar-value LIFO inventory method for their inventory transactions. During Year 1, S sells inventory to B and to X. Under paragraph (e)(1)(iv) of this section, to compute its intercompany inventory income and the amount of this income not taken into account, S computes its intercompany inventory income using the transfer price of the inventory items less a FIFO cost for the goods, takes into account these items based on a FIFO cost flow assumption for B's corresponding items, and the LIFO methods used by S and B are ignored for these computations. These computations are comparable to the methods used by S and B for financial reporting purposes, and the book methods and results are used for tax purposes. S adjusts the amount of intercompany inventory items not taken into account as required by section 263A.

(2) ***Reasonable method.*** The method used by S is a reasonable method under paragraph (e)(1)(iv) of this section if the cumulative amount of intercompany inventory items not taken into account by S is not significantly greater than the cumulative amount that would not be taken into account under the methods specifically described in paragraph (e)(1) of this section. If, for any year, the method results in a cumulative amount of intercompany inventory items not taken into account by S that significantly exceeds the cumulative amount that would not be taken into account under the methods specifically provided, S must take into account for that year the

amount necessary to eliminate the excess. The method is thereafter applied with appropriate adjustments to reflect the amount taken into account (for example, to prevent the amount from being taken into account more than once).

(2) ***Reserve accounting*** —

(i) ***Banks and thrifts.*** Except as provided in paragraph (g)(4)(v) of this section (deferral of items from an intercompany obligation), a member's addition to, or reduction of, a reserve for bad debts that is maintained under section 585 is taken into account on a separate entity basis. For example, if S makes a loan to a nonmember and subsequently sells the loan to B, any deduction for an addition to a bad debt reserve under section 585 and any recapture income (or reduced bad debt deductions) are taken into account on a separate entity basis rather than as intercompany items or corresponding items taken into account under this section. Any gain or loss of S from its sale of the loan to B is taken into account under this section, however, to the extent it is not attributable to recapture of the reserve.

(ii) ***Insurance companies*** —

(A) ***Direct insurance.*** If a member provides insurance to another member in an intercompany transaction, the transaction is taken into account by both members on a separate entity basis. For example, if one member provides life insurance coverage for another member with respect to its employees, the premiums, reserve increases and decreases, and death benefit payments are determined and taken into account by both members on a separate entity basis rather than taken into account under this section as intercompany items and corresponding items.

(B) ***Reinsurance*** —

(*1*) ***In general.*** Paragraph (e)(2)(ii)(A) of this section does not apply to a reinsurance transaction that is an intercompany transaction. For example, if a member assumes all or a portion of the risk on an insurance contract written by another member, the amounts transferred as reinsurance premiums, expense allowances, benefit reimbursements, reimbursed policyholder dividends, experience rating adjustments, and other similar items are taken into account under the matching rule and the acceleration rule. For purposes of this section, the assuming company is treated as B and the ceding company is treated as S.

(*2*) ***Reserves determined on a separate entity basis.*** For purposes of determining the amount of a member's increase or decrease in reserves, the amount of any reserve item listed in section 807(c) or 832(b)(5) resulting from a reinsurance transaction that is an intercompany transaction is determined on a separate entity basis. But see section 845, under which the Commissioner may allocate between or among the members any items, recharacterize any such items, or make any other adjustments necessary to reflect the proper source and character of the separate taxable income of a member.

(3) ***Consent to treat intercompany transactions on a separate entity basis*** —

(i) ***General rule.*** The common parent may request consent to take into account on a separate entity basis items from intercompany transactions other than intercompany transactions with respect to stock or obligations of members. Consent may be granted for all items, or for items from a class or classes of transactions. The consent is effective only if granted in writing by the

Internal Revenue Service. Unless revoked with the written consent of the Internal Revenue Service, the separate entity treatment applies to all affected intercompany transactions in the consolidated return year for which consent is granted and in all subsequent consolidated return years. Consent under this paragraph (e)(3) does not apply for purposes of taking into account losses and deductions deferred under section 267(f).

(ii) ***Time and manner for requesting consent.*** The request for consent described in paragraph (e)(3)(i) of this section must be made in the form of a ruling request. The request must be signed by the common parent, include any information required by the Internal Revenue Service, and be filed on or before the due date of the consolidated return (not including extensions of time) for the first consolidated return year to which the consent is to apply. The Internal Revenue Service may impose terms and conditions for granting consent. A copy of the consent must be attached to the group's consolidated returns (or amended returns) as required by the terms of the consent.

(iii) ***Effect of consent on methods of accounting.*** A consent for separate entity accounting under this paragraph (e)(3), and a revocation of that consent, may require changes in members' methods of accounting for intercompany transactions. Because the consent, or a revocation of the consent, is effective for all intercompany transactions occurring in the consolidated return year for which the consent or revocation is first effective, any change in method is effected on a cut-off basis. Section 446(e) consent is granted for any changes in methods of accounting for intercompany transactions that are necessary solely to conform a member's methods to a binding consent with respect to the group under this paragraph (e)(3) or the revocation of that consent, provided the changes are made in the first consolidated return year for which the consent or revocation under this paragraph (e)(3) is effective. Therefore, section 446(e) consent must be separately requested under applicable administrative procedures if a member has failed to conform its practices to the separate entity accounting provided under this paragraph (e)(3) or the revocation of that treatment in the first consolidated return year for which the consent to use separate entity accounting or revocation of that consent is effective.

(iv) ***Consent to treat intercompany transactions on a separate entity basis under prior law.*** A group that has received consent that is in effect as of the first day of the first consolidated return year beginning on or after July 12, 1995 to treat certain intercompany transactions as provided in § 1.1502-13(c)(3) of the regulations (as contained in the 26 CFR part 1 edition revised as of April 1, 1995) will be considered to have obtained the consent of the Commissioner to take items from intercompany transactions into account on a separate entity basis as provided in paragraph (e)(3)(i) of this section. This treatment is applicable only to the items, class or classes of transactions for which consent was granted under prior law.

(f) ***Stock of members*** —

(1) ***In general.*** In addition to the general rules of this section, the rules of this paragraph (f) apply to stock of members.

(2) ***Intercompany distributions to which section 301 applies*** —

(i) ***In general.*** This paragraph (f)(2) provides rules for intercompany transactions to which section 301 applies (intercompany distributions). For purposes of determining whether a distribution is an intercompany distribution, it is treated as occurring under the principles of the entitlement rule of paragraph (f)(2)(iv) of this section. A distribution is not an intercompany distribution to the extent it is deducted by the distributing member. See, for example, section 1382(c)(1).

(ii) ***Distributee member.*** An intercompany distribution is not included in the gross income of the distributee member (B). However, this exclusion applies to a distribution only to the extent there is a corresponding negative adjustment reflected under § 1.1502-32 in B's basis in the stock of the distributing member (S). For example, no amount is included in B's gross income under section 301(c)(3) from a distribution in excess of the basis of the stock of a subsidiary that results in an excess loss account under § 1.1502-32(a) which is treated as negative basis under § 1.1502-19. B's dividend received deduction under section 243(a)(3) is determined without regard to any intercompany distributions under this paragraph (f)(2) to the extent they are not included in gross income. See § 1.1502-26(b) (applicability of the dividends received deduction to distributions not excluded from gross income, such as a distribution from the common parent to a subsidiary owning stock of the common parent).

(iii) ***Distributing member.*** The principles of section 311(b) apply to S's loss, as well as gain, from an intercompany distribution of property. Thus, S's loss is taken into account under the matching rule if the property is subsequently sold to a nonmember. However, section 311(a) continues to apply to distributions to nonmembers (for example, loss is not recognized).

(iv) ***Entitlement rule*** —

(A) ***In general.*** For all Federal income tax purposes, an intercompany distribution is treated as taken into account when the shareholding member becomes entitled to it (generally on the record date). For example, if B becomes entitled to a cash distribution before it is made, the distribution is treated as made when B becomes entitled to it. For this purpose, B is treated as entitled to a distribution no later than the time the distribution is taken into account under the Internal Revenue Code (e.g., under section 305(c)). To the extent a distribution is not made, appropriate adjustments must be made as of the date it was taken into account.

(B) ***Nonmember shareholders.*** If nonmembers own stock of the distributing corporation at the time the distribution is treated as occurring under this paragraph (f)(2)(iv), appropriate adjustments must be made to prevent the acceleration of the distribution to members from affecting distributions to nonmembers.

(3) ***Boot in an intercompany reorganization*** —

(i) ***Scope.*** This paragraph (f)(3) provides additional rules for an intercompany transaction in which the receipt of money or other property (nonqualifying property) results in the application of section 356. For example, the distribution of stock of a lower-tier member to a higher-tier member in an intercompany transaction to which section 355 would apply but for the receipt of nonqualifying property is a transaction to which this paragraph (f)(3) applies. This paragraph (f)(3) does not apply if a party to the transaction becomes a member or nonmember as part of the same plan or arrangement. For example, if S merges into a nonmember in a transaction described in section 368(a)(1)(A), this paragraph (f)(3) does not apply.

(ii) ***Treatment.*** Nonqualifying property received as part of a transaction described in this paragraph (f)(3) is treated as received by the member shareholder in a separate transaction. See, for example, sections 302 and 311 (rather than sections 356 and 361). The nonqualifying property is treated as taken into account immediately after the transaction if section 354 would apply but for the fact that nonqualifying property is received. It is treated as taken into account

immediately before the transaction if section 355 would apply but for the fact that nonqualifying property is received. The treatment under this paragraph (f)(3)(ii) applies for all Federal income tax purposes.

(4) ***Acquisition by issuer of its own stock.*** If a member acquires its own stock, or an option to buy or sell its own stock, in an intercompany transaction, the member's basis in that stock or option is treated as eliminated for all purposes. Accordingly, S's intercompany items from the stock or options of B are taken into account under this section if B acquires the stock or options in an intercompany transaction (unless, for example, B acquires the stock in exchange for successor property within the meaning of paragraph (j)(1) of this section in a nonrecognition transaction). For example, if B redeems its stock from S in a transaction to which section 302(a) applies, S's gain from the transaction is taken into account immediately under the acceleration rule.

(5) ***Certain liquidations and distributions*** —

(i) ***Netting allowed.*** S's intercompany item from a transfer to B of the stock of another corporation (T) is taken into account under this section in certain circumstances even though the T stock is never held by a nonmember after the intercompany transaction. For example, if S sells all of T's stock to B at a gain, and T subsequently liquidates into B in a separate transaction to which section 332 applies, S's gain is taken into account under the matching rule. Under paragraph (c)(6)(ii) of this section, S's intercompany gain taken into account as a result of a liquidation under section 332 or a comparable nonrecognition transaction is not redetermined to be excluded from gross income. Under this paragraph (f)(5)(i), if S has both intercompany income or gain and intercompany deduction or loss attributable to stock of the same corporation having the same material terms, only the income or gain in excess of the deduction or loss is subject to paragraph (c)(6)(ii) of this section. This paragraph (f)(5)(i) applies only to a transaction in which B's basis in its T stock is permanently eliminated in a liquidation under section 332 or any comparable nonrecognition transaction, including—

(A) A merger of B into T under section 368(a);

(B) A distribution by B of its T stock in a transaction described in section 355; or

(C) A deemed liquidation of T resulting from an election under section 338(h)(10).

(ii) ***Elective relief*** —

(A) ***In general.*** If an election is made pursuant to this paragraph (f)(5)(ii), certain transactions are recharacterized to prevent S's items from being taken into account or to provide offsets to those items. This paragraph (f)(5)(ii) applies only if T is a member throughout the period beginning with S's transfer and ending with the completion of the nonrecognition transaction.

(B) ***Section 332*** —

(*1*) ***In general.*** If section 332 would otherwise apply to T's (old T's) liquidation into B, and B transfers substantially all of old T's assets to a new member (new T), and if a direct transfer of substantially all of old T's assets to new T would qualify as a reorganization described in section 368(a), then, for all Federal income tax purposes, T's liquidation into B and B's transfer of substantially all of old T's assets to new T will be disregarded and instead, the transaction will be treated as if old T transferred substantially all of its assets to new T in exchange for new T stock and the

assumption of T's liabilities in a reorganization described in section 368(a). (Under paragraph (j)(1) of this section, B's stock in new T would be a successor asset to B's stock in old T, and S's gain would be taken into account based on the new T stock.)

(*2*) ***Time limitation and adjustments.*** The transfer of old T's assets to new T qualifies under paragraph (f)(5)(ii)(B)(*1*) of this section only if B has entered into a written plan, on or before the due date of the group's consolidated income tax return (including extensions) for the tax year that includes the date of old T's liquidation, to transfer the old T assets to new T, and the statement described in paragraph (f)(5)(ii)(E) of this section is included on or with a timely filed consolidated income tax return (including extensions) for the tax year that includes the date of the liquidation. The transfer of substantially all of T's assets to new T must be completed within 12 months of the filing of the return. Appropriate adjustments are made to reflect any events occurring before the formation of new T and to reflect any assets not transferred to new T, or liabilities not assumed by new T. For example, if B retains an asset of old T, the asset is treated under paragraph (f)(3) of this section as acquired by new T but distributed to B immediately after the reorganization.

(C) ***Sections 338(h)(10) and 336(e).*** —

(*1*) ***In general.*** This paragraph (f)(5)(ii)(C) applies to a deemed liquidation of T under section 332 as the result of an election under section 338(h)(10) or section 336(e). This paragraph (f)(5)(ii)(C) does not apply if paragraph (f)(5)(ii)(B) of this section is applied to the deemed liquidation. Under this paragraph, B is treated with respect to each share of its T stock as recognizing as a corresponding item any loss or deduction it would recognize (determined after adjusting stock basis under § 1.1502-32) if section 331 applied to the deemed liquidation. For all other Federal income tax purposes, the deemed liquidation remains subject to section 332.

(*2*) ***Limitation on amount of loss.*** The amount of B's loss or deduction under this paragraph (f)(5)(ii)(C) is limited as follows—

(*i*) The aggregate amount of loss recognized with respect to T stock cannot exceed the amount of S's intercompany income or gain that is in excess of S's intercompany deduction or loss with respect to shares of T stock having the same material terms as the shares giving rise to S's intercompany income or gain; and

(*ii*) The aggregate amount of loss recognized under this paragraph (f)(5)(ii)(C) from T's deemed liquidation cannot exceed the net amount of deduction or loss (if any) that would be taken into account from the deemed liquidation if section 331 applied with respect to all T shares.

(*3*) ***Asset sale, etc.*** The principles of this paragraph (f)(5)(ii)(C) apply, with appropriate adjustments, if T transfers all of its assets to a nonmember and completely liquidates in a transaction comparable to the section 338(h)(10) transaction described in paragraph (f)(5)(ii)(C)(*1*) of this section. For example, if S sells all of T's stock to B at a gain followed by T's merger into a nonmember in exchange for a cash payment to B in a transaction treated for Federal income tax purposes as T's sale of its assets to the nonmember and complete liquidation, the merger is ordinarily treated as a comparable transaction.

(D) ***Section 355.*** If B distributes the T stock in an intercompany transaction to which section 355 applies (including an intercompany transaction to which 355 applies because of the application of paragraph (f)(3) of this section), the redetermination of the basis of the T stock under section 358 could cause S's gain or loss to be taken into account under this section. This paragraph (f)(5)(ii)(D) applies to treat B's distribution as subject to sections 301 and 311 (as modified by this paragraph (f)), rather than section 355. The election will prevent S's gain or loss from being taken into account immediately to the extent matching remains possible, but B's gain or loss from the distribution will also be taken into account under this section.

(E) ***Election.*** An election to apply paragraph (f)(5)(ii) of this section is made in a separate statement entitled, "[INSERT NAME AND EMPLOYER IDENTIFICATION NUMBER OF COMMON PARENT] HEREBY ELECTS THE APPLICATION OF § 1.1502-13(f)(5)(ii) FOR AN INTERCOMPANY TRANSACTION INVOLVING [INSERT NAME AND EMPLOYER IDENTIFICATION NUMBER OF S] AND [INSERT NAME AND EMPLOYER IDENTIFICATION NUMBER OF T]." A separate election must be made for each such application. The election must be filed by including the statement on or with the consolidated group's income tax return for the year of T's liquidation (or other transaction). The Commissioner may impose reasonable terms and conditions to the application of paragraph (f)(5)(ii) of this section that are consistent with the purposes of such section. The statement must—

(*1*) Identify S's intercompany transaction and T's liquidation (or other transaction); and

(*2*) Specify which provision of paragraph (f)(5)(ii) of this section applies and how it alters the otherwise applicable results under this section (including, for example, the amount of S's intercompany items and the amount deferred or offset as a result of paragraph (f)(5)(ii) of this section).

(F) ***Applicability date.*** Paragraphs (f)(5)(ii)(B)(*1*) and (*2*) of this section apply to transactions in which old T's liquidation into B occurs on or after October 25, 2007.

(6) ***Stock of common parent.*** In addition to the general rules of this section, this paragraph (f)(6) applies to parent stock (P stock) and positions in P stock held or entered into by another member. For this purpose, P stock is any stock of the common parent held (directly or indirectly) by another member or any stock of a member (the issuer) that was the common parent if the stock was held (directly or indirectly) by another member while the issuer was the common parent.

(i) ***Loss stock*** —

(A) ***Recognized loss.*** Any loss recognized, directly or indirectly, by a member with respect to P stock is permanently disallowed and does not reduce earnings and profits. See § 1.1502-32(b)(3)(iii)(A) for a corresponding reduction in the basis of the member's stock.

(B) ***Other cases.*** If a member, M, owns P stock, the stock is subsequently owned by a nonmember, and, immediately before the stock is owned by the nonmember, M's basis in the share exceeds its fair market value, then, to the extent paragraph (f)(6)(i)(A) of this section does not apply, M's basis in the share is reduced to the share's fair market value immediately before the share is held by the nonmember. For example, if M owns shares of P stock with a $100x basis and M becomes a nonmember at a time when the P shares have a value of $60x, M's basis in the P shares is reduced to $60x immediately before M becomes a nonmember. Similarly, if M contributes the P stock to a nonmember in a

transaction subject to section 351, M's basis in the shares is reduced to $60x immediately before the contribution. See § 1.1502-32(b)(3)(iii)(B) for a corresponding reduction in the basis of M's stock.

(C) ***Waiver of built-in loss on P stock*** —

(*1*) ***In general.*** If a nonmember that owns P stock with a basis in excess of its fair market value becomes a member of the P consolidated group in a qualifying cost basis transaction, the group may make an irrevocable election to reduce the basis of the P stock to its fair market value immediately before the nonmember becomes a member of the P group. If the nonmember was a member of another consolidated group immediately before becoming a member of the P group, the reduction in basis is treated as occurring immediately after it ceases to be a member of the prior group. A qualifying cost basis transaction is the purchase (i.e., a transaction in which basis is determined under section 1012) by members of the P consolidated group (while they are members) in a 12-month period of an amount of the nonmember's stock satisfying the requirements of section 1504(a)(2).

(*2*) ***Election.*** The election described in paragraph (f)(6)(i)(C)(*1*) of this section must be made in a separate statement entitled, "ELECTION TO REDUCE BASIS OF P STOCK UNDER § 1.1502-13(f)(6) HELD BY [INSERT NAME AND EMPLOYER IDENTIFICATION NUMBER OF MEMBER WHOSE BASIS IN P STOCK IS REDUCED]." The election must be filed by including the statement on or with the consolidated group's income tax return for the year in which the nonmember becomes a member. The statement must identify the member's basis in the P stock (taking into account the effect of this election) and the number of shares of P stock held by the member.

(ii) ***Gain stock.*** For dispositions of P stock, *see* § 1.1032-3.

(iii) ***Mark-to-market of P stock.*** Paragraphs (f)(6)(i) and (ii) of this section shall not apply to any gain or loss from a share of P stock held by a member, M, if—

(A) M regularly trades in P stock (of the same class) with customers in the ordinary course of its business as a dealer;

(B) The gain or loss on the share is taken into account by M pursuant to section 475(a);

(C) M's basis in the share is not adjusted by reference to the basis of any other property or by reference to income, gain, deduction, or loss from other property; and

(D) Neither M nor any other member of the group has structured or engaged in any transaction while a member (or in anticipation of becoming a member), during the taxable year or in any year within the preceding five taxable years that is open for assessment under section 6501, with a principal purpose of avoiding gain or creating loss on P stock subject to section 475(a).

(iv) ***Options, warrants, and other positions*** —

(A) ***In general.*** This paragraph (f)(6) applies with appropriate adjustments to positions in P stock to the extent that P's gain or loss from an equivalent position would not be recognized under section 1032. Thus, if M purchases an option to buy or sell P stock and sells the option at a loss, the loss is permanently disallowed under paragraph (f)(6)(i)(A) of this section. Similarly, if M is the grantor of such an option and becomes a nonmember,

then the principles of paragraph (f)(6)(i)(B) of this section apply to the extent that M would recognize loss from cash settlement of the option at its fair market value immediately before M becomes a nonmember, and proper adjustments must be made in the amount of any gain or loss subsequently realized from the position by M. If P grants M an option to acquire P stock in a transaction meeting the requirements of § 1.1032-3, M is treated as having purchased the option from P for fair market value with cash contributed to M by P.

(B) ***Mark-to-market of positions in P stock.*** For purposes of paragraph (f)(6)(iii) of this section, gain or loss with respect to a position taken into account under section 1256(a) is treated as taken into account under section 475(a) to the extent that the gain or loss would be taken into account under the principles of section 475.

(v) ***Applicability date.*** This paragraph (f)(6) applies to gain or loss taken into account on or after July 12, 1995, and to transactions occurring on or after July 12, 1995.

(7) ***Examples—In general.*** The application of this section to intercompany transactions with respect to stock of members is illustrated by the following examples.

(i) ***Example 1. Dividend exclusion and property distribution*** —

(A) ***Facts.*** S owns land with a $70 basis and $100 value. On January 1 of Year 1, P's basis in S's stock is $100. During Year 1, S declares and makes a dividend distribution of the land to P. Under section 311(b), S has a $30 gain. Under section 301(d), P's basis in the land is $100. On July 1 of Year 3, P sells the land to X for $110.

(B) ***Dividend elimination and stock basis adjustments.*** Under paragraph (b)(1) of this section, S's distribution to P is an intercompany distribution. Under paragraph (f)(2)(ii) of this section, P's $100 of dividend income is not included in gross income. Under § 1.1502-32, P's basis in S's stock is reduced from $100 to $0 in Year 1.

(C) ***Matching rule and stock basis adjustments.*** Under the matching rule (treating P as the buying member and S as the selling member), S takes its $30 gain into account in Year 3 to reflect the $30 difference between P's $10 gain taken into account and the $40 recomputed gain. Under § 1.1502-32, P's basis in S's stock is increased from $0 to $30 in Year 3.

(D) ***Loss property.*** The facts are the same as in paragraph (f)(7)(i)(A) of this section (*Example 1*), except that S has a $130 (rather than $70) basis in the land. Under paragraph (f)(2)(iii) of this section, the principles of section 311(b) apply to S's loss from the intercompany distribution. Thus, S has a $30 loss that is taken into account under the matching rule in Year 3 to reflect the $30 difference between P's $10 gain taken into account and the $20 recomputed loss. (The results are the same under section 267(f).) Under § 1.1502-32, P's basis in S's stock is reduced from $100 to $0 in Year 1, and from $0 to a $30 excess loss account in Year 3. (If P had distributed the land to its shareholders, rather than selling the land to X, P would take its $10 gain under section 311(b) into account, and S would take its $30 loss into account under the matching rule with $10 offset by P's gain and $20 recharacterized as a noncapital, nondeductible amount.)

(E) ***Entitlement rule.*** The facts are the same as in paragraph (f)(7)(i)(A) of this section (*Example 1*), except that, after P becomes entitled to the distribution but before the distribution is made, S issues additional stock to the public and becomes a nonmember. Under paragraph (f)(2)(i) of this section, the determination of whether a distribution is an

intercompany distribution is made under the entitlement rule of paragraph (f)(2)(iv) of this section. Treating S's distribution as made when P becomes entitled to it results in the distribution being an intercompany distribution. Under paragraph (f)(2)(ii) of this section, the distribution is not included in P's gross income. S's $30 gain from the distribution is intercompany gain that is taken into account under the acceleration rule immediately before S becomes a nonmember. Thus, there is a net $70 decrease in P's basis in its S stock under § 1.1502-32 ($100 decrease for the distribution and a $30 increase for S's $30 gain). Under paragraph (f)(2)(iv) of this section, P does not take the distribution into account again under separate return rules when received, and P is not entitled to a dividends received deduction.

(ii) *Example 2. Excess loss accounts* —

(A) ***Facts.*** S owns all of T's only class of stock with a $10 basis and $100 value. S has substantial earnings and profits, and T has $10 of earnings and profits. On January 1 of Year 1, S declares and distributes a dividend of all of the T stock to P. Under section 311(b), S has a $90 gain. Under section 301(d), P's basis in the T stock is $100. During Year 3, T borrows $90 and declares and makes a $90 distribution to P to which section 301 applies, and P's basis in the T stock is reduced under § 1.1502-32 from $100 to $10. During Year 6, T has $5 of earnings that increase P's basis in the T stock under § 1.1502-32 from $10 to $15. On December 1 of Year 9, T issues additional stock to X and, as a result, T becomes a nonmember.

(B) ***Dividend exclusion.*** Under paragraph (f)(2)(ii) of this section, P's $100 of dividend income from S's distribution of the T stock, and its $10 of dividend income from T's $90 distribution, are not included in gross income.

(C) ***Matching and acceleration rules.*** Under § 1.1502-19(b)(1), when T becomes a nonmember P must include in income the amount of its excess loss account (if any) in T stock. P has no excess loss account in the T stock. Therefore P's corresponding item from the deconsolidation of T is $0. Treating S and P as divisions of a single corporation, the T stock would continue to have a $10 basis after the distribution, and the adjustments under § 1.1502-32 for T's $90 distribution and $5 of earnings would result in a $75 excess loss account. Thus, the recomputed corresponding item from the deconsolidation is $75. Under the matching rule, S takes $75 of its $90 gain into account in Year 9 as a result of T becoming a nonmember, to reflect the difference between P's $0 gain taken into account and the $75 recomputed gain. S's remaining $15 of gain is taken into account under the matching and acceleration rules based on subsequent events (for example, under the matching rule if P subsequently sells its T stock, or under the acceleration rule if S becomes a nonmember).

(D) ***Reverse sequence.*** The facts are the same as in paragraph (f)(7)(ii)(A) of this section (*Example 2*), except that T borrows $90 and makes its $90 distribution to S before S distributes T's stock to P. Under paragraph (f)(2)(ii) of this section, T's $90 distribution to S ($10 of which is a dividend) is not included in S's gross income. The corresponding negative adjustment under § 1.1502-32 reduces S's basis in the T stock from $10 to an $80 excess loss account. Under section 311(b), S has a $90 gain from the distribution of T stock to P. Under section 301(d) P's initial basis in the T stock is $10 (the stock's fair market value), and the basis increases to $15 under § 1.1502-32 as a result of T's earnings in Year 6. The timing and attributes of S's gain are determined in the manner

provided in paragraph (f)(7)(ii)(C) of this section (*Example 2*). Thus, $75 of S's gain is taken into account under the matching rule in Year 9 as a result of T becoming a nonmember, and the remaining $15 is taken into account under the matching and acceleration rules based on subsequent events.

(E) ***Partial stock sale.*** The facts are the same as in paragraph (f)(7)(ii)(A) of this section (*Example 2*), except that P sells 10% of T's stock to X on December 1 of Year 9 for $1.50 (rather than T's issuing additional stock and becoming a nonmember). Under the matching rule, S takes $9 of its gain into account to reflect the difference between P's $0 gain taken into account ($1.50 sale proceeds minus $1.50 basis) and the $9 recomputed gain ($1.50 sale proceeds plus $7.50 excess loss account).

(F) ***Loss, rather than cash distribution.*** The facts are the same as in paragraph (f)(7)(ii)(A) of this section (*Example 2*), except that T retains the loan proceeds and incurs a $90 loss in Year 3 that is absorbed by the group. The timing and attributes of S's gain are determined in the same manner provided in paragraph (f)(7)(ii)(C) of this section (*Example 2*). Under § 1.1502-32, the loss in Year 3 reduces P's basis in the T stock from $100 to $10, and T's $5 of earnings in Year 6 increase the basis to $15. Thus, $75 of S's gain is taken into account under the matching rule in Year 9 as a result of T becoming a nonmember, and the remaining $15 is taken into account under the matching and acceleration rules based on subsequent events. (The timing and attributes of S's gain would be determined in the same manner provided in paragraph (f)(7)(ii)(D) of this section (*Example 2*) if T incurred the $90 loss before S's distribution of the T stock to P.)

(G) ***Stock sale, rather than stock distribution.*** The facts are the same as in paragraph (f)(7)(ii)(A) of this section (*Example 2*), except that S sells the T stock to P for $100 (rather than distributing the stock). The timing and attributes of S's gain are determined in the same manner provided in paragraph (f)(7)(ii)(C) of this section (*Example 2*). Thus, $75 of S's gain is taken into account under the matching rule in Year 9 as a result of T becoming a nonmember, and the remaining $15 is taken into account under the matching and acceleration rules based on subsequent events.

(iii) ***Example 3. Intercompany reorganization*** —

(A) ***Facts.*** P forms S and B by contributing $200 to the capital of each. During Years 1 through 4, S and B each earn $50, and under § 1.1502-32 P adjusts its basis in the stock of each to $250. (*See* § 1.1502-33 for adjustments to earnings and profits.) On January 1 of Year 5, the fair market value of S's assets and its stock is $500, and S merges into B in a tax-free reorganization. Pursuant to the plan of reorganization, P receives B stock with a fair market value of $350 and $150 of cash.

(B) ***Treatment as a section 301 distribution.*** The merger of S into B is a transaction to which paragraph (f)(3) of this section applies. P is treated as receiving additional B stock with a fair market value of $500 and, under section 358, a basis of $250. Immediately after the merger, $150 of the stock received is treated as redeemed, and the redemption is treated under section 302(d) as a distribution to which section 301 applies. Because the $150 distribution is treated as not received as part of the merger, section 356 does not apply and no basis adjustments are required under section 358(a)(1)(A) and (B). Because B is treated under section 381(c)(2) as receiving S's earnings and profits and the redemption is treated as occurring after the merger, $100 of the distribution is treated as a dividend under section 301 and P's basis in the B stock is reduced correspondingly under §

1.1502-32. The remaining $50 of the distribution reduces P's basis in the B stock. Section 301(c)(2) and § 1.1502-32. Under paragraph (f)(2)(ii) of this section, P's $100 of dividend income is not included in gross income. Under § 1.302-2(c), proper adjustments are made to P's basis in its B stock to reflect its basis in the B stock redeemed, with the result that P's basis in the B stock is reduced by the entire $150 distribution.

(C) ***Depreciated property.*** The facts are the same as in paragraph (f)(7)(iii)(A) of this section (*Example 3*), except that property of S with a $200 basis and $150 fair market value is distributed to P (rather than cash of B). As in paragraph (f)(7)(iii)(B) of this section (*Example 3*), P is treated as receiving additional B stock in the merger and a $150 distribution to which section 301 applies immediately after the merger. Under paragraph (f)(2)(iii) of this section, the principles of section 311(b) apply to B's $50 loss and the loss is taken into account under the matching and acceleration rules based on subsequent events (for example, under the matching rule if P subsequently sells the property, or under the acceleration rule if B becomes a nonmember). The results are the same under section 267(f).

(D) ***Divisive transaction.*** Assume instead that, pursuant to a plan, S distributes the stock of a lower-tier subsidiary in a spin-off transaction to which section 355 applies together with $150 of cash. The distribution of stock is a transaction to which paragraph (f)(3) of this section applies. P is treated as receiving the $150 of cash immediately before the section 355 distribution, as a distribution to which section 301 applies. Section 356(b) does not apply and no basis adjustments are required under section 358(a)(1) (A) and (B). Because the $150 distribution is treated as made before the section 355 distribution, the distribution reduces P's basis in the S stock under § 1.1502-32, and the basis allocated under section 358(c) between the S stock and the lower-tier subsidiary stock received reflects this basis reduction.

(iv) ***Example 4. All cash intercompany reorganization under section 368(a)(1)(D)*** —

(A) ***Facts.*** P owns all of the stock of M and B. M owns all of the stock of S with a basis of $25. On January 1 of Year 2, the fair market value of S's assets and its stock is $100, and S sells all of its assets to B for $100 cash and liquidates. The transaction qualifies as a reorganization described in section 368(a)(1)(D). Pursuant to § 1.368-2(l), B will be deemed to issue a nominal share of B stock to S in addition to the $100 of cash actually exchanged for the S assets, and S will be deemed to distribute all of the consideration to M. M will be deemed to distribute the nominal share of B stock to P.

(B) ***Treatment as a section 301 distribution.*** The sale of S's assets to B is a transaction to which paragraph (f)(3) of this section applies. In addition to the nominal share issued by B to S under § 1.368-2(l), S is treated as receiving additional B stock with a fair market value of $100 (in lieu of the $100) and, under section 358, a basis of $25 which S distributes to M in liquidation. Immediately after the sale, the B stock (with the exception of the nominal share which is still held by M) received by M is treated as redeemed for $100, and the redemption is treated under section 302(d) as a distribution to which section 301 applies. M's basis of $25 in the B stock is reduced under § 1.1502-32(b)(3)(v), resulting in an excess loss account of $75 in the nominal share. (*See* § 1.302-2(c)). M's deemed distribution of the nominal share of B stock to P under § 1.368-2(l) will result in M generating an intercompany gain under section 311(b) of $75, to be subsequently taken into account under the matching and acceleration rules.

(v) *Example 5. Stock redemptions and distributions* —

(A) ***Facts.*** Before becoming a member of the P group, S owns P stock with a $30 basis. On January 1 of Year 1, P buys all of S's stock. On July 1 of Year 3, P redeems the P stock held by S for $100 in a transaction to which section 302(a) applies.

(B) ***Gain under section 302.*** Under paragraph (f)(4) of this section, P's basis in the P stock acquired from S is treated as eliminated. As a result of this elimination, S's intercompany item will never be taken into account under the matching rule because P's basis in the stock does not reflect S's intercompany item. Therefore, S's $70 gain is taken into account under the acceleration rule in Year 3. The attributes of S's item are determined under paragraph (d)(1)(ii) of this section by applying the matching rule as if P had sold the stock to an affiliated corporation that is not a member of the group at no gain or loss. Although P's corresponding item from a sale of its stock would have been excluded from gross income under section 1032, paragraph (c)(6)(ii) of this section prevents S's gain from being treated as excluded from gross income; instead S's gain is capital gain.

(C) ***Gain under section 311.*** The facts are the same as in paragraph (f)(7)(v)(A) of this section (*Example 5*), except that S distributes the P stock to P in a transaction to which section 301 applies (rather than the stock being redeemed), and S has a $70 gain under section 311(b). The timing and attributes of S's gain are determined in the manner provided in paragraph (f)(7)(v)(B) of this section (*Example 5*).

(D) ***Loss stock.*** The facts are the same as in paragraph (f)(7)(v)(A) of this section (*Example 5*), except that S has a $130 (rather than $30) basis in the P stock and has a $30 loss under section 302(a). The limitation under paragraph (c)(6)(ii) of this section does not apply to intercompany losses. Thus, S's loss is taken into account in Year 3 as a noncapital, nondeductible amount.

(vi) *Example 6. Intercompany stock sale followed by section 332 liquidation* —

(A) ***Facts.*** S owns all of the stock of T, with a $70 basis and $100 value, and T's assets have a $10 basis and $100 value. On January 1 of Year 1, S sells all of T's stock to B for $100. On July 1 of Year 3, when T's assets are still worth $100, T distributes all of its assets to B in an unrelated complete liquidation to which section 332 applies.

(B) ***Timing and attributes.*** Under paragraph (b)(3)(ii) of this section, B's unrecognized gain or loss under section 332 is a corresponding item for purposes of applying the matching rule. In Year 3 when T liquidates, B has $0 of unrecognized gain or loss under section 332 because B has a $100 basis in the T stock and receives a $100 distribution with respect to its T stock. Treating S and B as divisions of a single corporation, the recomputed corresponding item would have been $30 of unrecognized gain under section 332 because B would have succeeded to S's $70 basis in the T stock. Thus, under the matching rule, S's $30 intercompany gain is taken into account in Year 3 as a result of T's liquidation. Under paragraph (c)(1)(i) of this section, the attributes of S's gain and B's corresponding item are redetermined as if S and B were divisions of a single corporation. Although S's gain ordinarily would be redetermined to be treated as excluded from gross income to reflect the nonrecognition of B's gain under section 332, S's gain remains capital gain because B's unrecognized gain under section 332 is not permanently and explicitly disallowed under the Code. *See* paragraph (c)(6)(ii) of this section. However, relief may be elected under paragraph (f)(5)(ii) of this section.

(C) ***Intercompany sale at a loss.*** The facts are the same as in paragraph (f)(7)(vi)(A) of this section (*Example 6*), except that S has a $130 (rather than $70) basis in the T stock. The limitation under paragraph (c)(6)(ii) of this section does not apply to intercompany losses. Thus, S's intercompany loss is taken into account in Year 3 as a noncapital, nondeductible amount. However, relief may be elected under paragraph (f)(5)(ii) of this section.

(vii) ***Example 7. Intercompany stock sale followed by section 355 distribution*** —

(A) ***Facts.*** S owns all of the stock of T with a $70 basis and a $100 value. On January 1 of Year 1, S sells all of T's stock to M for $100. On June 1 of Year 6, M distributes all of its T stock to its nonmember shareholders in a transaction to which section 355 applies. At the time of the distribution, M has a basis in T stock of $100 and T has a value of $150.

(B) ***Timing and attributes.*** Under paragraph (b)(3)(ii) of this section, M's $50 gain not recognized on the distribution under section 355 is a corresponding item. Treating S and M as divisions of a single corporation, the recomputed corresponding item would be $80 of unrecognized gain under section 355 because M would have succeeded to S's $70 basis in the T stock. Thus, under the matching rule, S's $30 intercompany gain is taken into account in Year 6 as a result of the distribution. Under paragraph (c)(1)(i) of this section, the attributes of S's intercompany item and M's corresponding item are redetermined to produce the same effect on consolidated taxable income as if S and M were divisions of a single corporation. Although S's gain ordinarily would be redetermined to be treated as excluded from gross income to reflect the nonrecognition of M's gain under section 355(c), S's gain remains capital gain because M's unrecognized gain under section 355(c) is not permanently and explicitly disallowed under the Code. *See* paragraph (c)(6)(ii) of this section. Because M's distribution of the T stock is not an intercompany transaction, relief is not available under paragraph (f)(5)(ii) of this section.

(C) ***Section 355 distribution within the group.*** The facts are the same as under paragraph (f)(7)(vii)(A) of this section (*Example 7*), except that M distributes the T stock to B (another member of the group), and B takes a $75 basis in the T stock under section 358. Under paragraph (j)(2) of this section, B is a successor to M for purposes of taking S's intercompany gain into account, and therefore both M and B might have corresponding items with respect to S's intercompany gain. To the extent it is possible, matching with respect to B's corresponding items produces the result most consistent with treating S, M, and B as divisions of a single corporation. *See* paragraphs (j)(3) and (j)(4) of this section. However, because there is only $5 difference between B's $75 basis in the T stock and the $70 basis the stock would have if S, M, and B were divisions of a single corporation, only $5 can be taken into account under the matching rule with respect to B's corresponding items. (This $5 is taken into account with respect to B's corresponding items based on subsequent events.) The remaining $25 of S's $30 intercompany gain is taken into account in Year 6 under the matching rule with respect to M's corresponding item from its distribution of the T stock. The attributes of S's remaining $25 of gain are determined in the same manner as in paragraph (f)(7)(vii)(B) of this section (*Example 7*).

(D) ***Relief elected.*** The facts are the same as in paragraph (f)(7)(vii)(C) of this section (*Example 7*) except that P elects relief pursuant to paragraph (f)(5)(ii)(D) of this section. As a result of the election, M's distribution of the T stock is treated as subject to sections 301 and 311 instead of section 355. Accordingly, M recognizes $50 of intercompany gain from the distribution, B takes a basis in the stock equal to its fair market value of $150,

and S and M take their intercompany gains into account with respect to B's corresponding items based on subsequent events. (None of S's gain is taken into account in Year 6 as a result of M's distribution of the T stock.)

(g) *Obligations of members* —

(1) ***In general.*** In addition to the general rules of this section, the rules of this paragraph (g) apply to intercompany obligations.

(2) ***Definitions.*** For purposes of this section, the following definitions apply—

(i) ***Obligation of a member*** is a debt or security of a member.

(A) ***Debt of a member*** is any obligation of the member constituting indebtedness under general principles of Federal income tax law (for example, under nonstatutory authorities, or under section 108, section 163, or § 1.1275-1(d)), but not an executory obligation to purchase or provide goods or services.

(B) ***Security of a member*** is any security of the member described in section 475(c)(2)(D) or (E), and any commodity of the member described in section 475(e)(2)(A), (B), or (C), but not if the security or commodity is a position with respect to the member's stock. See paragraphs (f)(4) and (f)(6) of this section for special rules applicable to positions with respect to a member's stock.

(ii) ***Intercompany obligation*** is an obligation between members, but only for the period during which both parties are members.

(iii) ***Intercompany obligation subgroup*** is comprised of two or more members that include the creditor and debtor on an intercompany obligation if the creditor and debtor bear the relationship described in section 1504(a)(1) to each other through an intercompany obligation subgroup parent.

(iv) ***Intercompany obligation subgroup parent*** is the corporation (including either the creditor or debtor) that bears the same relationship to the other members of the intercompany obligation subgroup as a common parent bears to the members of a consolidated group. Any reference to an intercompany obligation subgroup parent includes, as the context may require, a reference to a predecessor or successor. For this purpose, a predecessor is a transferor of assets to a transferee (the successor) in a transaction to which section 381(a) applies.

(v) ***Tax benefit*** is the benefit of, for Federal tax purposes, a net reduction in income or gain, or a net increase in loss, deduction, credit, or allowance. A tax benefit includes, but is not limited to, the use of a built-in item or items from an intercompany obligation to reduce gain or increase loss on the sale of member stock, or to create or absorb a tax attribute of a member or subgroup.

(vi) ***Eighty-percent chain*** is a chain of two or more corporations in which stock meeting the requirements of section 1504(a)(2) of each lower-tier member is held directly by a higher-tier member of such chain.

(3) *Deemed satisfaction and reissuance of intercompany obligations in triggering transactions* —

(i) *Scope* —

(A) ***Triggering transactions.*** For purposes of this paragraph (g)(3), a triggering transaction includes the following:

(1) ***Assignment and extinguishment transactions.*** Any intercompany transaction in which a member realizes an amount, directly or indirectly, from the assignment or extinguishment of all or part of its remaining rights or obligations under an intercompany obligation or any comparable transaction in which a member realizes any such amount, directly or indirectly, from an intercompany obligation (for example, a mark to fair market value of an obligation or a bad debt deduction). However, a reduction of the basis of an intercompany obligation pursuant to § 1.1502-36(d) (attribute reduction to prevent duplication of loss), or pursuant to sections 108 and 1017 and § 1.1502-28 (basis reductions upon the exclusion from gross income of discharge of indebtedness) or any other provision that adjusts the basis of an intercompany obligation as a substitute for income, gain, deduction, or loss, is not a comparable transaction.

(2) ***Outbound transactions.*** Any transaction in which an intercompany obligation becomes an obligation that is not an intercompany obligation.

(B) ***Exceptions.*** Except as provided in paragraph (g)(3)(i)(C) of this section, a transaction is not a triggering transaction as described in paragraph (g)(3)(i)(A) of this section if any of the exceptions in this paragraph (g)(3)(i)(B) apply. In making this determination, if a creditor or debtor realizes an amount in a transaction in which a creditor assigns all or part of its rights under an intercompany obligation to the debtor, or a debtor assigns all or part of its obligations under an intercompany obligation to the creditor, the transaction will be treated as an extinguishment and will be excepted from the definition of "triggering transaction" only if either of the exceptions in paragraphs (g)(3)(i)(B)(*5*) or (*6*) of this section apply. The exceptions are as follows.

(1) ***Intercompany section 361, 332, or 351 exchange.*** The transaction is an intercompany exchange to which section 361(a), sections 332 and 337(a), or (except as provided in the following sentence) section 351 applies in which no amount of income, gain, deduction or loss is recognized by the creditor or debtor. The assignment of an intercompany obligation by a creditor member in an intercompany exchange to which section 351 applies is a triggering transaction, notwithstanding the preceding sentence, if a member of the group is described in, or engages in a transaction that is described in, any of the following paragraphs.

(*i*) The transferor or transferee member has a loss subject to a limitation (for example, a loss from a separate return limitation year that is subject to limitation under § 1.1502-21(c), or a dual consolidated loss that is subject to limitation under § 1.1503(d)-4), but only if the other member is not subject to a comparable limitation;

(*ii*) The transferor or transferee member has a special status within the meaning of § 1.1502-13(c)(5) (for example, a bank defined in section 581, or a life insurance company subject to tax under section 801) that the other member does not also possess;

(*iii*) A member of the group realizes discharge of indebtedness income that is excluded from gross income under section 108(a) within the same taxable year as that of the exchange, and the tax attributes attributable to either the transferor or the transferee member are reduced under sections 108, 1017, and

§ 1.1502-28 (except if the attribute reduction results solely from the application of § 1.1502-28(a)(4) (reduction of certain tax attributes attributable to other members));

(*iv*) The transferee member has a nonmember shareholder;

(*v*) The transferee member issues preferred stock to the transferor member in exchange for the assignment of the intercompany obligation; or

(*vi*) The stock of the transferee member (or a higher-tier member other than a higher-tier member of an 80-percent chain that includes the transferor and transferee) is disposed of within 12 months from the assignment of the intercompany obligation, unless at the time of the assignment, the transferor member, transferee member (or in the case of successive section 351 exchanges, each transferor and transferee member) and the debtor member are all in the same 80-percent chain; and all of the stock of the transferee (or in the case of successive section 351 exchanges, the lowest-tier transferee) held by members of the group is disposed of as part of the same plan or arrangement, either directly or indirectly, to persons that are not members of the group.

(*2*) ***Intercompany assumption transaction.*** All of the debtor's obligations under an intercompany obligation are assumed in connection with the debtor's sale or other disposition of property (other than solely money) in an intercompany transaction in which gain or loss is recognized under section 1001.

(*3*) ***Exception to the application of section 108(e)(4).*** The obligation became an intercompany obligation by reason of an event described in § 1.108-2(e)(2) (exception to the application of section 108(e)(4) in the case of acquisitions by securities dealers).

(*4*) ***Reserve accounting.*** The amount realized is from reserve accounting under section 585 (see paragraph (g)(4)(v) of this section for special rules).

(*5*) ***Intercompany extinguishment transaction.*** All or part of the rights and obligations under the intercompany obligation are extinguished in an intercompany transaction (other than an exchange or deemed exchange of an intercompany obligation for a newly issued intercompany obligation), the adjusted issue price of the obligation is equal to the creditor's basis in the obligation, and the debtor's corresponding item and the creditor's intercompany item (after taking into account the special rules of paragraph (g)(4)(i)(C) of this section) with respect to the obligation offset in amount.

(*6*) ***Routine modification of intercompany obligation.*** All of the rights and obligations under the intercompany obligation are extinguished in an intercompany transaction that is an exchange (or deemed exchange) for a newly issued intercompany obligation, and the issue price of the newly issued obligation equals both the adjusted issue price of the extinguished obligation and the creditor's basis in the extinguished obligation. Solely for purposes of the preceding sentence, a newly issued intercompany obligation includes an obligation that is issued (or deemed issued) by a member other than the original debtor if such other member assumes the original debtor's obligations under the original obligation in a transaction that is

described in either paragraph (g)(3)(i)(B)(*1*) or (g)(3)(i)(B)(*2*) of this section and the assumption results in a significant modification of the original obligation under § 1.1001-3(e)(4) and a deemed exchange under § 1.1001-3(b).

(*7*) ***Outbound distribution of newly issued intercompany obligation.*** The intercompany obligation becomes an obligation that is not an intercompany obligation in a transaction in which a member that is a party to the reorganization exchanges property in pursuance of the plan of reorganization for a newly issued intercompany obligation of another member that is a party to the reorganization and distributes such intercompany obligation to a nonmember shareholder or nonmember creditor in a transaction to which section 361(c) applies.

(*8*) ***Outbound subgroup exception.*** The intercompany obligation becomes an obligation that is not an intercompany obligation in a transaction in which the members of an intercompany obligation subgroup cease to be members of a consolidated group, neither the creditor nor the debtor recognize any income, gain, deduction, or loss with respect to the intercompany obligation, and such members constitute an intercompany obligation subgroup of another consolidated group immediately after the transaction.

(C) ***Tax benefit rule.*** If an assignment or extinguishment of an intercompany obligation in an intercompany transaction is otherwise excepted from the definition of triggering transaction under paragraph (g)(3)(i)(B)(*1*), (*2*), (*5*), or (*6*) of this section (and not also under paragraph (g)(3)(i)(B)(*3*) or (*4*) of this section), and the assignment or extinguishment is engaged in with a view to shift items of built-in gain, loss, income, or deduction from the obligation from one member to another member in order to secure a tax benefit (as defined in paragraph (g)(2)(v) of this section) that the group or its members would not otherwise enjoy in a consolidated or separate return year, then the assignment or extinguishment will be a triggering transaction to which paragraph (g)(3)(ii) of this section applies.

(ii) ***Application of deemed satisfaction and reissuance.*** This paragraph (g)(3)(ii) applies if a triggering transaction occurs.

(A) ***General rule.*** If the intercompany obligation is debt of a member, then (except as provided in the following sentence) the debt is treated for all Federal income tax purposes as having been satisfied by the debtor for cash in an amount equal to its fair market value, and then as having been reissued as a new obligation (with a new holding period but otherwise identical terms) for the same amount of cash, immediately before the triggering transaction. However, if the creditor realizes an amount with respect to the debt in the triggering transaction that differs from the debt's fair market value, and the triggering transaction is not an exchange (or deemed exchange) of debt of a member for newly issued debt of a member, then the debt is treated for all Federal income tax purposes as having been satisfied by the debtor for cash in an amount equal to such amount realized, and reissued as a new obligation (with a new holding period but otherwise identical terms) for the same amount of cash, immediately before the triggering transaction. If the triggering transaction is a mark to fair market value under section 475, then the intercompany obligation will be deemed satisfied and reissued for its fair market value (as determined under section 475 and applicable regulations) and section 475 will not otherwise apply with respect to that triggering transaction. If the intercompany obligation

is a security of a member, similar principles apply (with appropriate adjustments) to treat the security as having been satisfied and reissued immediately before the triggering transaction.

(B) ***Treatment as separate transaction.*** The deemed satisfaction and deemed reissuance are treated as transactions separate and apart from the triggering transaction. The deemed satisfaction and reissuance of a member's debt will not cause the debt to be recharacterized as other than debt for Federal income tax purposes.

(4) *Special rules* —

(i) ***Timing and attributes.*** For purposes of applying the matching rule and the acceleration rule to a transaction involving an intercompany obligation (other than a transaction to which paragraph (g)(5) of this section applies)—

(A) Paragraph (c)(6)(i) of this section (treatment of intercompany items if corresponding items are excluded or nondeductible) will not apply to exclude any amount of income or gain attributable to a reduction of the basis of the intercompany obligation pursuant to § 1.1502-36(d), or pursuant to sections 108 and 1017 and § 1.1502-28 or any other provision that adjusts the basis of an intercompany obligation as a substitute for income or gain;

(B) Paragraph (c)(6)(ii) of this section (limitation on treatment of intercompany income or gain as excluded from gross income) does not apply to prevent any intercompany income or gain from the intercompany obligation from being excluded from gross income;

(C) Any income, gain, deduction, or loss from the intercompany obligation is not subject to section 108(a), section 354, section 355(a)(1), section 1091, or, in the case of an extinguishment of an intercompany obligation in a transaction in which the creditor transfers the obligation to the debtor in exchange for stock in such debtor, section 351(a); and

(D) Section 108(e)(7) does not apply upon the extinguishment of an intercompany obligation.

(ii) ***Newly issued obligation in intercompany exchange.*** If an intercompany obligation is exchanged (or is deemed exchanged) for a newly issued intercompany obligation and the exchange (or deemed exchange) is not a routine modification of an intercompany obligation (as described in paragraph (g)(3)(i)(B)(6) of this section), then the newly issued obligation will be treated for all Federal income tax purposes as having an issue price equal to its fair market value.

(iii) ***Off-market issuance.*** If an intercompany obligation is issued at a rate of interest that is materially off-market (off-market obligation) with a view to shift items of built-in gain, loss, income, or deduction from the obligation from one member to another member in order to secure a tax benefit (as defined in paragraph (g)(2)(v) of this section), then the intercompany obligation will be treated, for all Federal income tax purposes, as originally issued for its fair market value, and any difference between the amount loaned and the fair market value of the obligation will be treated as transferred between the creditor and the debtor at the time the obligation is issued. For example, if S lends $100 to B in return for an off-market B note valued at $130, and the note is issued with a view to shift items from the note to secure a tax benefit, then the B note will be treated as issued for $130. The $30 difference will be treated as a distribution or capital contribution between S and B (as appropriate) at the time of issuance, and this amount will be reflected in future payments on the note as bond issuance premium. An

adjustment to an off-market obligation under this paragraph (g)(4)(iii) will be made without regard to the application of, and in lieu of any adjustment under, section 467 (certain payments for the use of property or services), 482 (allocations among commonly controlled taxpayers), 483 (interest on certain deferred payments), 1274 (determination of issue price for certain debt instruments issued for property), or 7872 (treatment of loans with below-market interest rates).

(iv) ***Deferral of loss or deduction with respect to nonmember indebtedness acquired in certain debt exchanges.*** If a creditor transfers an intercompany obligation to a nonmember (former intercompany obligation) in exchange for newly issued debt of a nonmember (nonmember debt), and the issue price of the nonmember debt is not determined by reference to its fair market value (for example, the issue price is determined under section 1273(b)(4) or 1274(a) or any other provision of applicable law), then any loss of the creditor otherwise allowable on the subsequent disposition of the nonmember debt, or any comparable tax benefit that would otherwise be available in any other transaction that directly or indirectly results from the disposition of the nonmember debt, is deferred until the date the debtor retires the former intercompany obligation.

(v) ***Bad debt reserve.*** A member's deduction under section 585 for an addition to its reserve for bad debts with respect to an intercompany obligation is not taken into account, and is not treated as realized for purposes of paragraph (g)(3)(i)(A)(*1*) of this section, until the intercompany obligation is extinguished or becomes an obligation that is not an intercompany obligation.

(5) ***Deemed satisfaction and reissuance of obligations becoming intercompany obligations*** —

(i) ***Application of deemed satisfaction and reissuance*** —

(A) ***In general.*** This paragraph (g)(5) applies if an obligation that is not an intercompany obligation becomes an intercompany obligation.

(B) ***Exceptions.*** This paragraph (g)(5) does not apply to an intercompany obligation if either of the following exceptions apply.

(*1*) ***Exception to the application of section 108(e)(4).*** The obligation becomes an intercompany obligation by reason of an event described in § 1.108-2(e)(2) (exception to the application of section 108(e)(4) in the case of acquisitions by securities dealers); or

(*2*) ***Inbound subgroup exception.*** The obligation becomes an intercompany obligation in a transaction in which the members of an intercompany obligation subgroup cease to be members of a consolidated group, neither the creditor nor the debtor recognize any income, gain, deduction, or loss with respect to the intercompany obligation, and such members constitute an intercompany obligation subgroup of another consolidated group immediately after the transaction.

(ii) ***Deemed satisfaction and reissuance*** —

(A) ***General rule.*** If the intercompany obligation is debt of a member, then the debt is treated for all Federal income tax purposes, immediately after it becomes an intercompany obligation, as having been satisfied by the debtor for cash in an amount determined under the principles of § 1.108-2(f), and then as having been reissued as a new obligation (with a new holding period but otherwise identical terms) for the same amount of cash. If the intercompany obligation is a security of a member, similar principles apply (with

appropriate adjustments) to treat the security, immediately after it becomes an intercompany obligation, as satisfied and reissued by the debtor for cash in an amount equal to its fair market value.

(B) ***Treatment as separate transaction.*** The deemed satisfaction and deemed reissuance are treated as transactions separate and apart from the transaction in which the debt becomes an intercompany obligation, and the tax consequences of the transaction in which the debt becomes an intercompany obligation must be determined before the deemed satisfaction and reissuance occurs. (For example, if the debt becomes an intercompany obligation in a transaction to which section 351 applies, any limitation imposed by section 362(e) on the basis of the intercompany obligation in the hands of the transferee member is determined before the deemed satisfaction and reissuance.) The deemed satisfaction and reissuance of a member's debt will not cause the debt to be recharacterized as other than debt for Federal income tax purposes.

(6) ***Special rules*** —

(i) ***Timing and attributes.*** If paragraph (g)(5) of this section applies to an intercompany obligation—

(A) Section 108(e)(4) does not apply;

(B) The attributes of all items taken into account from the satisfaction of the intercompany obligation are determined on a separate entity basis, rather than by treating S and B as divisions of a single corporation; and

(C) Any intercompany gain or loss realized by the creditor is not subject to section 354 or section 1091.

(ii) ***Waiver of loss carryovers from separate return limitation years.*** Solely for purposes of § 1.1502-32(b)(4) and the effect of any election under that provision, any loss taken into account under paragraph (g)(5) of this section by a corporation that becomes a member as a result of the transaction in which the obligation becomes an intercompany obligation is treated as a loss carryover from a separate return limitation year.

(iii) ***Deduction of repurchase premium in certain debt exchanges.*** If an obligation to which paragraph (g)(5) of this section applies is acquired in exchange for the issuance of an obligation to a nonmember and the issue price of this newly issued obligation is not determined by reference to its fair market value (for example, the issue price is determined under section 1273(b)(4) or 1274(a) or any other provision of applicable law), then, under the principles of § 1.163-7(c), any repurchase premium from the deemed satisfaction of the intercompany obligation under paragraph (g)(5)(ii) of this section will be amortized by the debtor over the term of the obligation issued to the nonmember in the same manner as if it were original issue discount and the obligation to the nonmember had been issued directly by the debtor.

(7) ***Examples*** —

(i) ***In general.*** For purposes of the examples in this paragraph (g), unless otherwise stated, interest is qualified stated interest under § 1.1273-1(c), and the intercompany obligations are capital assets and are not subject to section 475.

(ii) The application of this section to obligations of members is illustrated by the following examples:

(A) ***Example 1. Interest on intercompany obligation*** —

(*1*) ***Facts.*** On January 1 of year 1, B borrows $100 from S in return for B's note providing for $10 of interest annually at the end of each year, and repayment of $100 at the end of year 5. B fully performs its obligations. Under their separate entity methods of accounting, B accrues a $10 interest deduction annually under section 163, and S accrues $10 of interest income annually under section 61(a)(4) and § 1.446-2.

(*2*) ***Matching rule.*** Under paragraph (b)(1) of this section, the accrual of interest on B's note is an intercompany transaction. Under the matching rule, S takes its $10 of income into account in each of years 1 through 5 to reflect the $10 difference between B's $10 of interest expense taken into account and the $0 recomputed expense. S's income and B's deduction are ordinary items. (Because S's intercompany item and B's corresponding item would both be ordinary on a separate entity basis, the attributes are not redetermined under paragraph (c)(1)(i) of this section.)

(*3*) ***Original issue discount.*** The facts are the same as in paragraph (g)(7)(ii)(A)(*1*) of this section (*Example 1*), except that B borrows $90 (rather than $100) from S in return for B's note providing for $10 of interest annually and repayment of $100 at the end of year 5. The principles described in paragraph (g)(7)(ii)(A)(*2*) of this section (*Example 1*) for stated interest also apply to the $10 of original issue discount. Thus, as B takes into account its corresponding expense under section 163(e), S takes into account its intercompany income under section 1272. S's income and B's deduction are ordinary items.

(*4*) ***Tax-exempt income.*** The facts are the same as in paragraph (g)(7)(ii)(A)(*1*) of this section (*Example 1*), except that B's borrowing from S is allocable under section 265 to B's purchase of state and local bonds to which section 103 applies. The timing of S's income is the same as in paragraph (g)(7)(ii)(A)(*2*) of this section (*Example 1*). Under paragraph (c)(4)(i) of this section, the attributes of B's corresponding item of disallowed interest expense control the attributes of S's offsetting intercompany interest income. Paragraph (c)(6) of this section does not prevent the redetermination of S's intercompany item as excluded from gross income because section 265(a)(2) permanently and explicitly disallows B's corresponding deduction and because, under paragraph (g)(4)(i)(B) of this section, paragraph (c)(6)(ii) of this section does not apply to prevent any intercompany income from the B note from being excluded from gross income. Accordingly, S's intercompany income is treated as excluded from gross income.

(B) ***Example 2. Intercompany obligation becomes nonintercompany obligation*** —

(*1*) ***Facts.*** On January 1 of year 1, B borrows $100 from S in return for B's note providing for $10 of interest annually at the end of each year, and repayment of $100 at the end of year 5. As of January 1 of year 3, B has paid the interest accruing under the note and S sells B's note to X for $70, reflecting an increase in prevailing market interest rates. B is never insolvent within the meaning of section 108(d)(3).

(*2*) ***Deemed satisfaction and reissuance.*** Because the B note becomes an obligation that is not an intercompany obligation, the transaction is a triggering transaction under paragraph (g)(3)(i)(A)(*2*) of this section. Under paragraph (g)(3)(ii) of this section, B's

note is treated as satisfied and reissued for its fair market value of $70 immediately before S's sale to X. As a result of the deemed satisfaction of the note for less than its adjusted issue price, B takes into account $30 of discharge of indebtedness income under § 1.61-12. On a separate entity basis, S's $30 loss would be a capital loss under section 1271(a)(1). Under the matching rule, however, the attributes of S's intercompany item and B's corresponding item must be redetermined to produce the same effect as if the transaction had occurred between divisions of a single corporation. Under paragraph (c)(4)(i) of this section, the attributes of B's $30 of discharge of indebtedness income control the attributes of S's loss. Thus, S's loss is treated as ordinary loss. B is also treated as reissuing, immediately after the satisfaction, a new note to S with a $70 issue price, a $100 stated redemption price at maturity, and a $70 basis in the hands of S. S is then treated as selling the new note to X for the $70 received by S in the actual transaction. Because S has a basis of $70 in the new note, S recognizes no gain or loss from the sale to X. After the sale, the new note held by X is not an intercompany obligation, it has a $70 issue price, a $100 stated redemption price at maturity, and a $70 basis. The $30 of original issue discount will be taken into account by B and X under sections 163(e) and 1272.

(*3*) ***Creditor deconsolidation.*** The facts are the same as in paragraph (g)(7)(ii)(B)(*1*) of this section (*Example 2*), except that P sells S's stock to X (rather than S selling B's note to X). Because the B note becomes an obligation that is not an intercompany obligation, the transaction is a triggering transaction under paragraph (g)(3)(i)(A)(*2*) of this section. Under paragraph (g)(3)(ii) of this section, B's note is treated as satisfied and reissued for its $70 fair market value immediately before S becomes a nonmember. The treatment of S's $30 of loss and B's $30 of discharge of indebtedness income is the same as in paragraph (g)(7)(ii)(B)(*2*) of this section (*Example 2*). The new note held by S upon deconsolidation is not an intercompany obligation, it has a $70 issue price, a $100 stated redemption price at maturity, and a $70 basis. The $30 of original issue discount will be taken into account by B and S under sections 163(e) and 1272.

(*4*) ***Debtor deconsolidation.*** The facts are the same as in paragraph (g)(7)(ii)(B)(*1*) of this section (*Example 2*), except that P sells B's stock to X (rather than S selling B's note to X). The results to S and B are the same as in paragraph (g)(7)(ii)(B)(*3*) of this section (*Example 2*).

(*5*) ***Subgroup exception.*** The facts are the same as in paragraph (g)(7)(ii)(B)(*1*) of this section (*Example 2*), except that P owns all of the stock of S, S owns all of the stock of B, and P sells all of the S stock to X, the parent of another consolidated group. Because B and S, members of an intercompany obligation subgroup, cease to be members of the P group in a transaction that does not cause either member to recognize an item with respect to the B note, and such members constitute an intercompany obligation subgroup in the X group, P's sale of S stock is not a triggering transaction under paragraph (g)(3)(i)(B)(*8*) of this section, and the note is not treated as satisfied and reissued under paragraph (g)(3)(ii) of this section. After the sale, the note held by S has a $100 issue price, a $100 stated redemption price at maturity, and a $100 basis. The results are the same if the S stock is sold to an individual and the S-B affiliated group elects to file a consolidated return for the period beginning on the day after S and B cease to be members of the P group.

(*6*) ***Section 338 election.*** The facts are the same as in paragraph (g)(7)(ii)(B)(*1*) of this section (*Example 2*), except that P sells S's stock to X and a section 338 election is made with respect to the stock sale. Under section 338, S is treated as selling all of its assets to new S, including the B note, at the close of the acquisition date. The aggregate deemed sales price (within the meaning of § 1.338-4) allocated to the B note is $70. Because the B note becomes an obligation that is not an intercompany obligation, the transaction is a triggering transaction under paragraph (g)(3)(i)(A)(2) of this section. Under paragraph (g)(3)(ii) of this section, B's note is treated as satisfied and reissued immediately before S's deemed sale to new S for $70, the amount realized with respect to the note (the aggregate deemed sales price allocated to the note under § 1.338-6). The results to S and B are the same as in paragraph (g)(7)(ii)(B)(*2*) of this section (*Example 2*).

(*7*) ***Appreciated note.*** The facts are the same as in paragraph (g)(7)(ii)(B)(*1*) of this section (*Example 2*), except that S sells B's note to X for $130 (rather than $70), reflecting a decline in prevailing market interest rates. Because the B note becomes an obligation that is not an intercompany obligation, the transaction is a triggering transaction under paragraph (g)(3)(i)(A)(*2*) of this section. Under paragraph (g)(3)(ii) of this section, B's note is treated as satisfied and reissued for its fair market value of $130 immediately before S's sale to X. As a result of the deemed satisfaction of the note for more than its adjusted issue price, B takes into account $30 of repurchase premium under § 1.163-7(c). On a separate entity basis, S's $30 gain would be a capital gain under section 1271(a)(1). Under the matching rule, however, the attributes of S's intercompany item and B's corresponding item must be redetermined to produce the same effect as if the transaction had occurred between divisions of a single corporation. Under paragraph (c)(4)(i) of this section, the attributes of B's premium deduction control the attributes of S's gain. Accordingly, S's gain is treated as ordinary income. B is also treated as reissuing, immediately after the satisfaction, a new note to S with a $130 issue price, $100 stated redemption price at maturity, and $130 basis in the hands of S. S is then treated as selling the new note to X for the $130 received by S in the actual transaction. Because S has a basis of $130 in the new note, S recognizes no gain or loss from the sale to X. After the sale, the new note held by X is not an intercompany obligation, it has a $130 issue price, a $100 stated redemption price at maturity, and a $130 basis. The treatment of B's $30 of bond issuance premium under the new note is determined under § 1.163-13.

(*8*) ***Deferral of loss or deduction with respect to nonmember indebtedness acquired in debt exchange.*** The facts are the same as in paragraph (g)(7)(ii)(B)(*1*) of this section (*Example 2*), except that S sells B's note to X for a non-publicly traded X note with an issue price and face amount of $100 and a fair market value of $70, and that, subsequently, S sells the X note for $70. Because the B note becomes an obligation that is not an intercompany obligation, the transaction is a triggering transaction under paragraph (g)(3)(i)(A)(*2*) of this section. Under paragraph (g)(3)(ii) of this section, B's note is treated as satisfied and reissued immediately before S's sale to X for $100, the amount realized with respect to the note (determined under section 1274). As a result of the deemed satisfaction, neither S nor B take into account any items of income, gain, deduction, or loss. S is then treated as selling the new B note to X for the X note received by S in the actual transaction. Because S has a basis of

$100 in the new note, S recognizes no gain or loss from the sale to X. After the sale, the new B note held by X is not an intercompany obligation, it has a $100 issue price, a $100 stated redemption price at maturity, and a $100 basis. S also holds an X note with a basis of $100 but a fair market value of $70. When S disposes of the X note, S's loss on the disposition is deferred under paragraph (g)(4)(iv) of this section, until B retires its note (the former intercompany obligation in the hands of X).

(C) ***Example 3. Loss or bad debt deduction with respect to intercompany obligation*** —

(*1*) ***Facts.*** On January 1 of year 1, B borrows $100 from S in return for B's note providing for $10 of interest annually at the end of each year, and repayment of $100 at the end of year 5. On January 1 of year 3, the fair market value of the B note has declined to $60 and S sells the B note to P for property with a fair market value of $60. B is never insolvent within the meaning of section 108(d)(3). The B note is not a security within the meaning of section 165(g)(2).

(*2*) ***Deemed satisfaction and reissuance.*** Because S realizes an amount of loss from the assignment of the B note, the transaction is a triggering transaction under paragraph (g)(3)(i)(A)(*1*) of this section. Under paragraph (g)(3)(ii) of this section, B's note is treated as satisfied and reissued for its fair market value of $60 immediately before S's sale to P. As a result of the deemed satisfaction of the note for less than its adjusted issue price ($100), B takes into account $40 of discharge of indebtedness income under § 1.61-12. On a separate entity basis, S's $40 loss would be a capital loss under section 1271(a)(1). Under the matching rule, however, the attributes of S's intercompany item and B's corresponding item must be redetermined to produce the same effect as if the transaction had occurred between divisions of a single corporation. Under paragraph (c)(4)(i) of this section, the attributes of B's $40 of discharge of indebtedness income control the attributes of S's loss. Thus, S's loss is treated as ordinary loss. B is also treated as reissuing, immediately after the satisfaction, a new note to S with a $60 issue price, $100 stated redemption price at maturity, and $60 basis in the hands of S. S is then treated as selling the new note to P for the $60 of property received by S in the actual transaction. Because S has a basis of $60 in the new note, S recognizes no gain or loss from the sale to P. After the sale, the note is an intercompany obligation, it has a $60 issue price and a $100 stated redemption price at maturity, and the $40 of original issue discount will be taken into account by B and P under sections 163(e) and 1272.

(*3*) ***Partial bad debt deduction.*** The facts are the same as in paragraph (g)(7)(ii)(C)(*1*) of this section (*Example 3*), except that S claims a $40 partial bad debt deduction under section 166(a)(2) (rather than selling the note to P). Because S realizes a deduction from a transaction comparable to an assignment of the B note, the transaction is a triggering transaction under paragraph (g)(3)(i)(A)(*1*) of this section. Under paragraph (g)(3)(ii) of this section, B's note is treated as satisfied and reissued for its fair market value of $60 immediately before section 166(a)(2) applies. The treatment of S's $40 loss and B's $40 of discharge of indebtedness income are the same as in paragraph (g)(7)(ii)(C)(*2*) of this section (*Example 3*). After the reissuance, S has a basis of $60 in the new note. Accordingly, the application of section 166(a)(2) does not result in any additional deduction for S. The $40 of original issue discount on the new note will be taken into account by B and S under sections 163(e) and 1272.

(*4*) ***Insolvent debtor.*** The facts are the same as in paragraph (g)(7)(ii)(C)(*1*) of this section (*Example 3*), except that B is insolvent within the meaning of section 108(d)(3) at the time that S sells the note to P. As explained in paragraph (g)(7)(ii)(C)(*2*) of this section (*Example 3*), the transaction is a triggering transaction and the B note is treated as satisfied and reissued for its fair market value of $60 immediately before S's sale to P. On a separate entity basis, S's $40 loss would be capital, B's $40 income would be excluded from gross income under section 108(a), and B would reduce attributes under section 108(b) or section 1017 (*see also* § 1.1502-28). However, under paragraph (g)(4)(i)(C) of this section, section 108(a) does not apply to characterize B's income as excluded from gross income. Accordingly, the attributes of S's loss and B's income are redetermined in the same manner as in paragraph (g)(7)(ii)(C)(*2*) of this section (*Example 3*).

(D) ***Example 4. Intercompany nonrecognition transactions*** —

(*1*) ***Facts.*** On January 1 of year 1, B borrows $100 from S in return for B's note providing for $10 of interest annually at the end of each year, and repayment of $100 at the end of year 5. As of January 1 of year 3, B has fully performed its obligations, but the note's fair market value is $130, reflecting a decline in prevailing market interest rates. On January 1 of year 3, S transfers the note and other assets to a newly formed corporation, Newco, for all of Newco's common stock in an exchange to which section 351 applies.

(*2*) ***No deemed satisfaction and reissuance.*** Because the assignment of the B note is an exchange to which section 351 applies and neither S nor B recognize gain or loss, the transaction is not a triggering transaction under paragraph (g)(3)(i)(B)(*1*) of this section, and the note is not treated as satisfied and reissued under paragraph (g)(3)(ii) of this section.

(*3*) ***Receipt of other property.*** The facts are the same as in paragraph (g)(7)(ii)(D)(*1*) of this section (*Example 4*), except that the other assets transferred to Newco have a basis of $100 and a fair market value of $260, and S receives, in addition to Newco common stock, $15 of cash. Because S would recognize $15 of gain under section 351(b), the assignment of the B note is a triggering transaction under paragraph (g)(3)(i)(A)(*1*) of this section. Under paragraph (g)(3)(ii) of this section, B's note is treated as satisfied and reissued for its fair market value of $130 immediately before the transfer to Newco. As a result of the deemed satisfaction of the note for more than its adjusted issue price, B takes into account $30 of repurchase premium under § 1.163-7(c). On a separate entity basis, S's $30 gain would be a capital gain under section 1271(a)(1). Under the matching rule, however, the attributes of S's intercompany item and B's corresponding item must be redetermined to produce the same effect as if the transaction had occurred between divisions of a single corporation. Under paragraph (c)(4)(i) of this section, the attributes of B's premium deduction control the attributes of S's gain. Accordingly, S's gain is treated as ordinary income. B is also treated as reissuing, immediately after the satisfaction, a new note to S with a $130 issue price, $100 stated redemption price at maturity, and $130 basis in the hands of S. S is then treated as transferring the new note to Newco for the Newco stock and cash received by S in the actual transaction. Because S has a basis of $130 in the new B note, S recognizes no gain or loss with respect to the transfer of the note in the section 351 exchange, and S recognizes $10 of gain with

respect to the transfer of the other assets under section 351(b). After the transfer, the note has a $130 issue price and a $100 stated redemption price at maturity. The treatment of B's $30 of bond issuance premium under the new note is determined under § 1.163-13.

(*4*) ***Transferee loss subject to limitation.*** The facts are the same as in paragraph (g)(7)(ii)(D)(*1*) of this section (*Example 4*), except that T is a member with a loss from a separate return limitation year that is subject to limitation under § 1.1502-21(c) (a SRLY loss), and on January 1 of year 3, S transfers the assets and the B note to T in an exchange to which section 351 applies. Because the transferee, T, has a loss that is subject to a limitation, the assignment of the B note is a triggering transaction under paragraph (g)(3)(i)(A)(*1*) of this section (the exception in paragraph (g)(3)(i)(B)(*1*) of this section does not apply). Under paragraph (g)(3)(ii) of this section, B's note is treated as satisfied and reissued for its fair market value, immediately before S's transfer to T. As a result of the deemed satisfaction of the note for more than its adjusted issue price, B takes into account $30 of repurchase premium under § 1.163-7(c). On a separate entity basis, S's $30 gain would be a capital gain under section 1271(a)(1). Under the matching rule, however, the attributes of S's intercompany item and B's corresponding item must be redetermined to produce the same effect as if the transaction had occurred between divisions of a single corporation. Under paragraph (c)(4)(i) of this section, the attributes of B's premium deduction control the attributes of S's gain. Accordingly, S's gain is treated as ordinary income. B is also treated as reissuing, immediately after the satisfaction, a new note to S with a $130 issue price, $100 stated redemption price at maturity, and $130 basis in the hands of S. The treatment of B's $30 of bond issuance premium under the new note is determined under § 1.163-13. S is then treated as transferring the new note to T as part of the section 351 exchange. Because T will have a fair market value basis in the reissued B note immediately after the exchange, T's intercompany item from the subsequent retirement of the B note will not reflect any of S's built-in gain (and the amount of T's SRLY loss that may be absorbed by such item will be limited to any appreciation in the B note accruing after the exchange).

(*5*) ***Intercompany obligation transferred in section 332 transaction.*** The facts are the same as paragraph (g)(7)(ii)(D)(*1*) of this section (*Example 4*), except that S transfers the B note to P in complete liquidation under section 332. Because the transaction is an exchange to which section 332 and section 337(a) applies, and neither S nor B recognize gain or loss, the transaction is not a triggering transaction under paragraph (g)(3)(i)(B)(*1*) of this section, and the note is not treated as satisfied and reissued under paragraph (g)(3)(ii) of this section.

(E) ***Example 5. Assumption of intercompany obligation*** —

(*1*) ***Facts.*** On January 1 of year 1, B borrows $100 from S in return for B's note providing for $10 of interest annually at the end of each year, and repayment of $100 at the end of year 5. The note is fully recourse and is incurred for use in Business Z. As of January 1 of year 3, B has fully performed its obligations, but the note's fair market value is $110 reflecting a decline in prevailing market interest rates. Business Z has a fair market value of $95. On January 1 of year 3, B transfers all of the assets of Business Z and $15 of cash (substantially all of B's assets) to member T in exchange

for the assumption by T of all of B's obligations under the note in a transaction in which gain or loss is recognized under section 1001. The terms and conditions of the note are not modified in connection with the sales transaction, the transaction does not result in a change in payment expectations, and no amount of income, gain, deduction, or loss is recognized by S, B, or T with respect to the note.

(2) ***No deemed satisfaction and reissuance.*** Because all of B's obligations under the B note are assumed by T in connection with the sale of the Business Z assets, the assignment of B's obligations under the note is not a triggering transaction under paragraph (g)(3)(i)(B)(2) of this section, and the note is not treated as satisfied and reissued under paragraph (g)(3)(ii) of this section.

(F) ***Example 6. Extinguishment of intercompany obligation*** —

(1) ***Facts.*** On January 1 of year 1, B borrows $100 from S in return for B's note providing for $10 of interest annually at the end of each year, and repayment of $100 at the end of year 20. The note is a security within the meaning of section 351(d)(2). As of January 1 of year 3, B has fully performed its obligations, but the fair market value of the B note is $130, reflecting a decline in prevailing market interest rates, and S transfers the note to B in exchange for $130 of B stock in a transaction to which both section 351 and section 354 applies.

(2) ***No deemed satisfaction and reissuance.*** As a result of the satisfaction of the note for more than its adjusted issue price, B takes into account $30 of repurchase premium under § 1.163-7(c). Although the transfer of the B note is a transaction to which both section 351 and section 354 applies, under paragraph (g)(4)(i)(C) of this section, any gain or loss from the intercompany obligation is not subject to either section 351(a) or section 354, and therefore, S has a $30 gain under section 1001. Because the note is extinguished in a transaction in which the adjusted issue price of the note is equal to the creditor's basis in the note, and the debtor's and creditor's items offset in amount, the transaction is not a triggering transaction under paragraph (g)(3)(i)(B)(5) of this section, and the note is not treated as satisfied and reissued under paragraph (g)(3)(ii) of this section. On a separate entity basis, S's $30 gain would be a capital gain under section 1271(a)(1). Under the matching rule, however, the attributes of S's intercompany item and B's corresponding item must be redetermined to produce the same effect as if the transaction had occurred between divisions of a single corporation. Under paragraph (c)(4)(i) of this section, the attributes of B's premium deduction control the attributes of S's gain. Accordingly, S's gain is treated as ordinary income. Under paragraph (g)(4)(i)(D) of this section, section 108(e)(7) does not apply upon the extinguishment of the B note, and therefore, the B stock received by S in the exchange will not be treated as section 1245 property.

(G) ***Example 7. Exchange of intercompany obligations*** —

(1) ***Facts.*** On January 1 of year 1, B borrows $100 from S in return for B's note providing for $10 of interest annually at the end of each year, and repayment of $100 at the end of year 20. As of January 1 of year 3, B has fully performed its obligations and, pursuant to a recapitalization to which section 368(a)(1)(E) applies, B issues a new note to S in exchange for the original B note. The new B note has an issue price, stated redemption price at maturity, and stated principal amount of $100, but

contains terms that differ sufficiently from the terms of the original B note to cause a realization event under § 1.1001-3. The original B note and the new B note are both securities (within the meaning of section 354(a)(1)).

(2) ***No deemed satisfaction and reissuance.*** Because the original B note is extinguished in exchange for a newly issued B note and the issue price of the new B note is equal to both the adjusted issue price of the original B note and S's basis in the original B note, the transaction is not a triggering transaction under paragraph (g)(3)(i)(B)(*6*) of this section, and the note is not treated as satisfied and reissued under paragraph (g)(3)(ii) of this section. B has neither income from discharge of indebtedness under section 108(e)(10) nor a deduction for repurchase premium under § 1.163-7(c). Although the exchange of the original B note for the new B note is a transaction to which section 354 applies, under paragraph (g)(4)(i)(C) of this section, any gain or loss from the intercompany obligation is not subject to section 354. Under section 1001, S has no gain or loss from the exchange of notes.

(H) ***Example 8. Tax benefit rule*** —

(*1*) ***Facts.*** On January 1 of year 1, B borrows $100 from S in return for B's note providing for $10 of interest annually at the end of each year, and repayment of $100 at the end of year 5. As of January 1 of year 3, B has fully performed its obligations, but the note's fair market value has depreciated, reflecting an increase in prevailing market interest rates. On that date, S transfers the B note to member T as part of an exchange for T common stock which is intended to qualify for nonrecognition treatment under section 351 but with a view to sell the T stock at a reduced gain. On February 1 of year 4, all of the stock of T is sold at a reduced gain.

(*2*) ***Deemed satisfaction and reissuance.*** Because the assignment of the B note does not occur within 12 months of the sale of T stock, paragraph (g)(3)(i)(B)(*1*)(*vi*) of this section does not apply to treat the assignment as a triggering transaction. However, because the assignment of the B note was engaged in with a view to shift built-in loss from the obligation in order to secure a tax benefit that the group or its members would not otherwise enjoy, under paragraph (g)(3)(i)(C) of this section, the assignment of the B note is a triggering transaction to which paragraph (g)(3)(ii) of this section applies. Under paragraph (g)(3)(ii) of this section, B's note is treated as satisfied and reissued for its fair market value, immediately before S's transfer to T. As a result of the deemed satisfaction of the note for less than its adjusted issue price, B takes into account discharge of indebtedness income and S has a corresponding loss which is treated as ordinary loss. B is also treated as reissuing, immediately after the deemed satisfaction, a new note to S with an issue price and basis equal to its fair market value. S is then treated as transferring the new note to T as part of the section 351 exchange. Because S's basis in the T stock received with respect to the transferred B note is equal to its fair market value, S's gain with respect to the T stock will not reflect any of the built-in loss attributable to the B note. (This example does not address common law doctrines or other authorities that might apply to recharacterize the transaction or to otherwise affect the tax treatment of the transaction.)

(I) ***Example 9. Issuance at off-market rate of interest*** —

(1) ***Facts.*** T is a member with a SRLY loss. T's sole shareholder, P, borrows an amount of cash from T in return for a P note that provides for a materially above market rate of interest. The P note is issued with a view to generate additional interest income to T over the term of the note to facilitate the absorption of T's SRLY loss.

(2) ***With a view.*** Because the P note is issued with a view to shift interest income from the off-market obligation in order to secure a tax benefit that the group or its members would not otherwise enjoy, under paragraph (g)(4)(iii) of this section, the intercompany obligation is treated, for all Federal income tax purposes, as originally issued for its fair market value so T is treated as purchasing the note at a premium. The difference between the amount loaned and the fair market value of the obligation is treated as transferred from P to T as a capital contribution at the time the note is issued. Throughout the term of the note, T takes into account interest income and bond premium and P takes into account interest deduction and bond issuance premium under generally applicable Internal Revenue Code sections. The adjustment under paragraph (g)(4)(iii) of this section is made without regard to the application of, and in lieu of any adjustment under, section 482 or 1274.

(J) ***Example 10. Nonintercompany obligation becomes intercompany obligation*** —

(1) ***Facts.*** On January 1 of year 1, B borrows $100 from X in return for B's note providing for $10 of interest annually at the end of each year, and repayment of $100 at the end of year 5. As of January 1 of year 3, B has fully performed its obligations, but the note's fair market value is $70, reflecting an increase in prevailing market interest rates. On January 1 of year 3, P buys all of X's stock. B is solvent within the meaning of section 108(d)(3).

(2) ***Deemed satisfaction and reissuance.*** Under paragraph (g)(5)(ii) of this section, B's note is treated as satisfied for $70 (determined under the principles of § 1.108-2(f)(2)) immediately after it becomes an intercompany obligation. Both X's $30 capital loss (under section 1271(a)(1)) and B's $30 of discharge of indebtedness income (under § 1.61-12) are taken into account in determining consolidated taxable income for year 3. Under paragraph (g)(6)(i)(B) of this section, the attributes of items resulting from the satisfaction are determined on a separate entity basis. *But see* section 382 and § 1.1502-15 (as appropriate). B is also treated as reissuing a new note to X. The new note is an intercompany obligation, it has a $70 issue price and $100 stated redemption price at maturity, and the $30 of original issue discount will be taken into account by B and X in the same manner as provided in paragraph (g)(7)(ii)(A)(*3*) of this section (*Example 1*).

(3) ***Amortization of repurchase premium.*** The facts are the same as in paragraph (g)(7)(ii)(J)(*1*) of this section (*Example 10*), except that on January 1 of year 3, the B note has a fair market value of $130 and rather than P purchasing the X stock, P purchases the B note from X by issuing its own note. The P note has an issue price, stated redemption price at maturity, stated principal amount, and fair market value of $130. Under paragraph (g)(5)(ii) of this section, B's note is treated as satisfied for $130 (determined under the principles of § 1.108-2(f)(1)) immediately after it becomes an intercompany obligation. As a result of the deemed satisfaction of the note, P has no gain or loss and B has $30 of repurchase premium. Under paragraph (g)(6)(iii) of this section, B's $30 of repurchase premium from the deemed

satisfaction is amortized by B over the term of the newly issued P note in the same manner as if it were original issue discount and the newly issued P note had been issued directly by B. B is also treated as reissuing a new note to P. The new note is an intercompany obligation, it has a $130 issue price and $100 stated redemption price at maturity, and the treatment of B's $30 of bond issuance premium under the new B note is determined under § 1.163-13.

(*4*) ***Election to file consolidated returns.*** Assume instead that B borrows $100 from S during year 1, but the P group does not file consolidated returns until year 3. Under paragraph (g)(5)(ii) of this section, B's note is treated as satisfied and reissued as a new note immediately after the note becomes an intercompany obligation. The satisfaction and reissuance are deemed to occur on January 1 of year 3, for the fair market value of the obligation (determined under the principles of § 1.108-2(f)(2)) at that time.

(K) ***Example 11. Notional principal contracts*** —

(*1*) ***Facts.*** On April 1 of year 1, M1 enters into a contract with counterparty M2 under which, for a term of five years, M1 is obligated to make a payment to M2 each April 1, beginning in year 2, in an amount equal to the London Interbank Offered Rate (LIBOR), as determined by reference to LIBOR on the day each payment is due, multiplied by a $1,000 notional principal amount. M2 is obligated to make a payment to M1 each April 1, beginning in year 2, in an amount equal to 8 percent multiplied by the same notional principal amount. LIBOR is 7.80 percent on April 1 of year 2, and therefore, M2 owes $2 to M1.

(*2*) ***Matching rule.*** Under § 1.446-3(d), the net income (or net deduction) from a notional principal contract for a taxable year is included in (or deducted from) gross income. Under § 1.446-3(e), the ratable daily portion of M2's obligation to M1 as of December 31 of year 1 is $1.50 ($2 multiplied by 275/365). Under the matching rule, M1's net income for year 1 of $1.50 is taken into account to reflect the difference between M2's net deduction of $1.50 taken into account and the $0 recomputed net deduction. Similarly, the $.50 balance of the $2 of net periodic payments made on April 1 of year 2 is taken into account for year 2 in M1's and M2's net income and net deduction from the contract. In addition, the attributes of M1's intercompany income and M2's corresponding deduction are redetermined to produce the same effect as if the transaction had occurred between divisions of a single corporation. Under paragraph (c)(4)(i) of this section, the attributes of M2's corresponding deduction control the attributes of M1's intercompany income. (Although M1 is the selling member with respect to the payment on April 1 of year 2, it might be the buying member in a subsequent period if it owes the net payment.)

(*3*) ***Dealer.*** The facts are the same as in paragraph (g)(7)(ii)(K)(*1*) of this section (*Example 11*), except that M2 is a dealer in securities, and the contract with M1 is not inventory in the hands of M2. Under section 475, M2 must mark its securities to fair market value at year-end. Assume that under section 475, M2's loss from marking to fair market value the contract with M1 is $10. Because M2 realizes an amount of loss from the mark to fair market value of the contract, the transaction is a triggering transaction under paragraph (g)(3)(i)(A)(*1*) of this section. Under paragraph (g)(3)(ii) of this section, M2 is treated as making a $10 payment to M1 to terminate the

contract immediately before a new contract is treated as reissued with an up-front payment by M1 to M2 of $10. M1's $10 of income from the termination payment is taken into account under the matching rule to reflect M2's deduction under § 1.446-3(h). The attributes of M1's intercompany income and M2's corresponding deduction are redetermined to produce the same effect as if the transaction had occurred between divisions of a single corporation. Under paragraph (c)(4)(i) of this section, the attributes of M2's corresponding deduction control the attributes of M1's intercompany income. Accordingly, M1's income is treated as ordinary income. Under § 1.446-3(f), the deemed $10 up-front payment by M1 to M2 in connection with the issuance of a new contract is taken into account over the term of the new contract in a manner reflecting the economic substance of the contract (for example, allocating the payment in accordance with the forward rates of a series of cash-settled forward contracts that reflect the specified index and the $1,000 notional principal amount). (The timing of taking items into account is the same if M1, rather than M2, is the dealer subject to the mark-to-market requirement of section 475 at year-end. However in this case, because the attributes of the corresponding deduction control the attributes of the intercompany income, M1's income from the deemed termination payment from M2 might be ordinary or capital). Under paragraph (g)(3)(ii)(A) of this section, section 475 does not apply to mark the notional principal contract to fair market value after its deemed satisfaction and reissuance.

(8) ***Effective/applicability date.*** The rules of this paragraph (g) apply to transactions involving intercompany obligations occurring in consolidated return years beginning on or after December 24, 2008.

(h) ***Anti-avoidance rules*** —

(1) ***In general.*** If a transaction is engaged in or structured with a principal purpose to avoid the purposes of this section (including, for example, by avoiding treatment as an intercompany transaction), adjustments must be made to carry out the purposes of this section.

(2) ***Examples.*** The anti-avoidance rules of this paragraph (h) are illustrated by the following examples. The examples set forth below do not address common law doctrines or other authorities that might apply to recast a transaction or to otherwise affect the tax treatment of a transaction. Thus, in addition to adjustments under this paragraph (h), the Commissioner can, for example, apply the rules of section 269 or § 1.701-2 to disallow a deduction or to recast a transaction.

(i) ***Example 1: Sale of a partnership interest*** —

(A) ***Facts.*** S owns land with a $10 basis and $100 value. B has net operating losses from separate return limitation years (SRLYs) subject to limitation under § 1.1502-21(c). Pursuant to a plan to absorb the losses without limitation by the SRLY rules, S transfers the land to an unrelated, calendar-year partnership in exchange for a 10% interest in the capital and profits of the partnership in a transaction to which section 721 applies. The partnership does not have a section 754 election in effect. S later sells its partnership interest to B for $100. In the following year, the partnership sells the land to X for $100. Because the partnership does not have a section 754 election in effect, its $10 basis in the land does not reflect B's $100 basis in the partnership interest. Under section 704(c), the partnership's $90 built-in gain is allocated to B, and B's basis in the partnership interest increases to $190 under section 705. In a later year, B sells the partnership interest to a nonmember for $100.

(B) ***Adjustments.*** Under § 1.1502-21(c), the partnership's $90 built-in gain allocated to B ordinarily increases the amount of B's SRLY limitation, and B's $90 loss from its sale of the partnership interest ordinarily is not subject to limitation under the SRLY rules. Because the contribution of property to the partnership and the sale of the partnership interest were part of a plan a principal purpose of which was to achieve a reduction in consolidated tax liability by creating offsetting gain and loss for B while deferring S's intercompany gain, B's allocable share of the partnership's gain from its sale of the land is treated under paragraph (h)(1) of this section as not increasing the amount of B's SRLY limitation.

(ii) ***Example 2: Transitory status as an intercompany obligation*** —

(A) ***Facts.*** P historically has owned 70% of X's stock and the remaining 30% is owned by unrelated shareholders. On January 1 of Year 1, S borrows $100 from X in return for S's note requiring $10 of interest annually at the end of each year, and repayment of $100 at the end of Year 20. As of January 1 of Year 3, the P group has substantial net operating loss carryovers, and the fair market value of S's note falls to $70 due to an increase in prevailing market interest rates. X is not permitted under section 166(a)(2) to take into account a $30 loss with respect to the note. Pursuant to a plan to permit X to take into account its $30 loss without disposing of the note, P acquires an additional 10% of X's stock, causing X to become a member, and P subsequently resells the 10% interest. X's $30 loss with respect to the note is a net unrealized built-in loss within the meaning of § 1.1502-15.

(B) ***Adjustments.*** Under paragraph (g)(4) of this section, X ordinarily would take into account its $30 loss as a result of the note becoming an intercompany obligation, and S would take into account $30 of discharge of indebtedness income. Under § 1.1502-22, X's loss is not combined with items of the other members and the loss would be carried to X's separate return years as a result of X becoming a nonmember. However, the transitory status of S's indebtedness to X as an intercompany obligation is structured with a principal purpose to accelerate the recognition of X's loss. Thus, S's note is treated under paragraph (h)(1) of this section as not becoming an intercompany obligation.

(iii) ***Example 3: Corporate mixing bowl*** —

(A) ***Facts.*** M1 and M2 are subsidiaries of P. M1 operates a manufacturing business on land it leases from M2. The land is the only asset held by M2. P intends to dispose of the M1 business, including the land owned by M2; P's basis in the M1 stock is equal to the stock's fair market value. M2's land has a value of $20 and a basis of $0 and P has a $0 basis in the stock of M2. In Year 1, with a principal purpose of avoiding gain from the sale of the land (by transferring the land to M1 with a carry-over basis without affecting P's basis in the stock of M1 or M2), M1 and M2 form corporation T; M1 contributes cash in exchange for 80% of the T stock and M2 contributes the land in exchange for 20% of the stock. In Year 3, T liquidates, distributing $20 cash to M2 and the land (plus $60 cash) to M1. Under § 1.1502-34, section 332 applies to both M1 and M2. Under section 337, T recognizes no gain or loss from its liquidating distribution of the land to M1. T has neither gain nor loss on its distribution of cash to M2. In Year 4, P sells all of the stock of M1 to X and liquidates M2.

(B) ***Adjustments.*** A principal purpose for the formation and liquidation of T was to avoid gain from the sale of M2's land. Thus, under paragraph (h)(1) of this section, M2 must take $20 of gain into account when the stock of M1 is sold to X.

(iv) ***Example 4: Partnership mixing bowl*** —

(A) ***Facts.*** M1 owns a self-created intangible asset with a $0 basis and a fair market value of $100. M2 owns land with a basis of $100 and a fair market value of $100. In Year 1, with a principal purpose of creating basis in the intangible asset (which would be eligible for amortization under section 197), M1 and M2 form partnership PRS; M1 contributes the intangible asset and M2 contributes the land. X, an unrelated person, contributes cash to PRS in exchange for a substantial interest in the partnership. PRS uses the contributed assets in legitimate business activities. Five years and six months later, PRS liquidates, distributing the land to M1, the intangible to M2, and cash to X. The group reports no gain under sections 707(a)(2)(B) and 737(a) and claims that M2's basis in the intangible asset is $100 under section 732 and that the asset is eligible for amortization under section 197.

(B) ***Adjustments.*** A principal purpose of the formation and liquidation of PRS was to create additional amortization without an offsetting increase in consolidated taxable income by avoiding treatment as an intercompany transaction. Thus, under paragraph (h)(1) of this section, appropriate adjustments must be made.

(v) ***Example 5: Sale and leaseback*** —

(A) ***Facts.*** S operates a factory with a $70 basis and $100 value, and has loss carryovers from SRLYs. Pursuant to a plan to take into account the $30 unrealized gain while continuing to operate the factory, S sells the factory to X for $100 and leases it back on a long-term basis. In the transaction, a substantial interest in the factory is transferred to X. The sale and leaseback are not recharacterized under general principles of Federal income tax law. As a result of S's sale to X, the $30 gain is taken into account and increases S's SRLY limitation.

(B) ***No adjustments.*** Although S's sale was pursuant to a plan to accelerate the $30 gain, it is not subject to adjustment under paragraph (h)(1) of this section. The sale is not treated as engaged in or structured with a principal purpose to avoid the purposes of this section.

(vi) ***Example 6: Section 163(j) interest limitation*** —

(A) ***Facts.*** S1 and S2 are members of a consolidated group of which P is the common parent. S1 is engaged in an excepted trade or business, and S2 is engaged in a non-excepted trade or business. If S1 were to lend funds directly to S2 in an intercompany transaction, under § 1.163(j)-10(a)(4)(i), the intercompany obligation of S2 would not be considered an asset of S1 for purposes of § 1.163(j)-10 (concerning allocations of interest and other taxable items between excepted and non-excepted trades or businesses for purposes of section 163(j)). With a principal purpose of avoiding treatment of a lending transaction between S1 and S2 as an intercompany transaction (and increasing the P group's basis in its assets allocable to excepted trades or businesses), S1 lends funds to X (an unrelated third party). X then on-lends funds to S2 on substantially similar terms.

(B) ***Analysis.*** A principal purpose of the steps undertaken was to avoid treatment of a lending transaction between S1 and S2 as an intercompany transaction. Therefore, under paragraph (h)(1) of this section, appropriate adjustments are made, and the X obligation in the hands of S1 is not treated as an asset of S1 for purposes of § 1.163(j)-10, to the extent of the loan from X to S2.

(i) [Reserved]

(j) ***Miscellaneous operating rules.*** For purposes of this section—

(1) ***Successor assets.*** Any reference to an asset includes, as the context may require, a reference to any other asset the basis of which is determined, directly or indirectly, in whole or in part, by reference to the basis of the first asset.

(2) ***Successor persons*** —

(i) ***In general.*** Any reference to a person includes, as the context may require, a reference to a predecessor or successor. For this purpose, a predecessor is a transferor of assets to a transferee (the successor) in a transaction—

(A) To which section 381(a) applies;

(B) In which substantially all of the assets of the transferor are transferred to members in a complete liquidation;

(C) In which the successor's basis in assets is determined (directly or indirectly, in whole or in part) by reference to the basis of the transferor, but the transferee is a successor only with respect to the assets the basis of which is so determined; or

(D) Which is an intercompany transaction, but only with respect to assets that are being accounted for by the transferor in a prior intercompany transaction.

(ii) ***Intercompany items.*** If the assets of a predecessor are acquired by a successor member, the successor succeeds to, and takes into account (under the rules of this section), the predecessor's intercompany items. If two or more successor members acquire assets of the predecessor, the successors take into account the predecessor's intercompany items in a manner that is consistently applied and reasonably carries out the purposes of this section and applicable provisions of law.

(3) ***Multiple triggers.*** If more than one corresponding item can cause an intercompany item to be taken into account under the matching rule, the intercompany item is taken into account in connection with the corresponding item most consistent with the treatment of members as divisions of a single corporation. For example, if S sells a truck to B, its intercompany gain from the sale is not taken into account by reference to B's depreciation if the depreciation is capitalized under section 263A as part of B's cost for a building; instead, S's gain relating to the capitalized depreciation is taken into account when the building is sold or as it is depreciated. Similarly, if B purchases appreciated land from S and transfers the land to a lower-tier member in exchange for stock, thereby duplicating the basis of the land in the basis of the stock, items with respect to both the stock and the land can cause S's intercompany gain to be taken into account; if the lower-tier member becomes a nonmember as a result of the sale of its stock, the attributes of S's intercompany gain are determined with respect to the land rather than the stock.

(4) ***Multiple or successive intercompany transactions.*** If a member's intercompany item or corresponding item affects the accounting for more than one intercompany transaction, appropriate adjustments are made to treat all of the intercompany transactions as transactions between divisions of a single corporation. For example, if S sells property to M, and M sells the property to B, then S, M, and B are treated as divisions of a single corporation for purposes of applying the rules of this section. Similar principles apply with respect to intercompany transactions that are part of the same plan or arrangement. For example, if S sells separate properties to different members as part of the same plan or arrangement, all of the participating members are treated as divisions of a single corporation for purposes of determining the attributes (which might also affect timing) of the intercompany items and corresponding items from each of the properties.

(5) ***Acquisition of group*** —

(i) ***Scope.*** This paragraph (j)(5) applies only if a consolidated group (the terminating group) ceases to exist as a result of—

(A) The acquisition of either the assets of the common parent of the terminating group in a reorganization described in section 381(a)(2), or the stock of the common parent of the terminating group; or

(B) The application of the principles of § 1.1502-75(d)(2) or (d)(3).

(ii) ***Application.*** If the terminating group ceases to exist under circumstances described in paragraph (j)(5)(i) of this section, the surviving group is treated as the terminating group for purposes of applying this section to the intercompany transactions of the terminating group. For example, intercompany items and corresponding items from intercompany transactions between members of the terminating group are taken into account under the rules of this section by the surviving group. This treatment does not apply, however, to members of the terminating group that are not members of the surviving group immediately after the terminating group ceases to exist (for example, under section 1504(a)(3) relating to reconsolidation, or section 1504(c) relating to includible insurance companies).

(6) ***Former common parent treated as continuation of group.*** If a group terminates because the common parent is the only remaining member, the common parent succeeds to the treatment of the terminating group for purposes of applying this section so long as it neither becomes a member of an affiliated group filing separate returns nor becomes a corporation described in section 1504(b). For example, if the only subsidiary of the group liquidates into the common parent in a complete liquidation to which section 332 applies, or the common parent merges into the subsidiary and the subsidiary is treated as the common parent's successor under paragraph (j)(2)(i) of this section, the taxable income of the surviving corporation is treated as the group's consolidated taxable income in which the intercompany and corresponding items must be included. See § 1.267(f)-1 for additional rules applicable to intercompany losses or deductions.

(7) ***Becoming a nonmember.*** For purposes of this section, a member is treated as becoming a nonmember if it has a separate return year (including another group's consolidated return year). A member is not treated as having a separate return year if its items are treated as taken into account in computing the group's consolidated taxable income under paragraph (j)(5) or (6) of this section.

(8) ***Recordkeeping.*** Intercompany and corresponding items must be reflected on permanent records (including work papers). See also section 6001, requiring records to be maintained. The group must be able to identify from these permanent records the amount, location, timing, and attributes of the items, so as to permit the application of the rules of this section for each year.

(9) ***Section 987 QBUs.*** No intercompany transaction is attributable to a section 987 QBU (within the meaning of § 1.987-2(b)). That is, in order to produce single entity treatment, an intercompany transaction that otherwise would involve the section 987 QBU(s) of one or more members is treated instead as occurring directly between the members (without the involvement of any section 987 QBUs), and transfers are deemed to take place between each section 987 QBU and its owner (*see* § 1.987-2(c)(2)(ii)). For example, if a member (M1) lends money to the section 987 QBU of another member (M2), this intercompany transaction is treated as a loan from M1 to M2 and a contribution from M2 to its section 987 QBU.

(10) ***Examples.*** The operating rules of this paragraph (j) are illustrated generally throughout this section, and by the following examples.

(i) ***Example 1. Intercompany sale followed by section 351 transfer to member*** —

(A) ***Facts.*** S holds land for investment with a basis of $70. On January 1 of Year 1, S sells the land to M for $100. M also holds the land for investment. On July 1 of Year 3, M transfers the land to B in exchange for all of B's stock in a transaction to which section 351 applies. Under section 358, M's basis in the B stock is $100. B holds the land for sale to customers in the ordinary course of business and, under section 362(b), B's basis in the land is $100. On December 1 of Year 5, M sells 20% of the B stock to X for $22. In an unrelated transaction on July 1 of Year 8, B sells 20% of the land for $22.

(B) ***Definitions.*** Under paragraph (b)(1) of this section, S's sale of the land to M and M's transfer of the land to B are both intercompany transactions. S is the selling member and M is the buying member in the first intercompany transaction, and M is the selling member and B is the buying member in the second intercompany transaction. M has no intercompany items under paragraph (b)(2) of this section. Because B acquired the land in an intercompany transaction, B's items from the land are corresponding items to be taken into account under this section. Under the successor asset rule of paragraph (j)(1) of this section, references to the land include references to M's B stock. Under the successor person rule of paragraph (j)(2) of this section, references to M include references to B with respect to the land.

(C) ***Timing and attributes resulting from the stock sale.*** Under paragraph (c)(3) of this section, M is treated as owning and selling B's stock for purposes of the matching rule even though, as divisions, M could not own and sell stock in B. Under paragraph (j)(3) of this section, both M's B stock and B's land can cause S's intercompany gain to be taken into account under the matching rule. Thus, S takes $6 of its gain into account in Year 5 to reflect the $6 difference between M's $2 gain taken into account from its sale of B stock and the $8 recomputed gain. Under paragraph (j)(4) of this section, the attributes of this gain are determined by treating S, M, and B as divisions of a single corporation. Under paragraph (c)(1) of this section, S's $6 gain and M's $2 gain are treated as long-term capital gain. The gain would be capital on a separate entity basis (assuming that section 341 does not apply), and this treatment is not inconsistent with treating S, M, and B as divisions of a single corporation because the stock sale and subsequent land sale are unrelated transactions and B remains a member following the sale.

(D) ***Timing and attributes resulting from the land sale.*** Under paragraph (j)(3) of this section, S takes $6 of its gain into account in Year 8 under the matching rule to reflect the $6 difference between B's $2 gain taken into account from its sale of an interest in the land and the $8 recomputed gain. Under paragraph (j)(4) of this section, the attributes of this

gain are determined by treating S, M, and B as divisions of a single corporation and taking into account the activities of S, M, and B with respect to the land. Thus, both S's gain and B's gain might be ordinary income as a result of B's activities. (If B subsequently sells the balance of the land, S's gain taken into account is limited to its remaining $18 of intercompany gain.)

(E) ***Sale of successor stock resulting in deconsolidation.*** The facts are the same as in paragraph (j)(10)(i)(A) of this section (*Example 1*), except that M sells 60% of the B stock to X for $66 on December 1 of Year 5 and B becomes a nonmember. Under the matching rule, M's sale of B stock results in $18 of S's gain being taken into account (to reflect the difference between M's $6 gain taken into account and the $24 recomputed gain). Under the acceleration rule, however, the entire $30 gain is taken into account (to reflect B becoming a nonmember, because its basis in the land reflects M's $100 cost basis from the prior intercompany transaction). Under paragraph (j)(4) of this section, the attributes of S's gain are determined by treating S, M, and B as divisions of a single corporation. Because M's cost basis in the land will be reflected by B as a nonmember, all of S's gain is treated as from the land (rather than a portion being from B's stock), and B's activities with respect to the land might therefore result in S's gain being ordinary income.

(ii) ***Example 2. Intercompany sale of member stock followed by recapitalization*** —

(A) ***Facts.*** Before becoming a member of the P group, S owns P stock with a basis of $70. On January 1 of Year 1, P buys all of S's stock. On July 1 of Year 3, S sells the P stock to M for $100. On December 1 of Year 5, P acquires M's original P stock in exchange for new P stock in a recapitalization described in section 368(a)(1)(E).

(B) ***Timing and attributes.*** Although P's basis in the stock acquired from M is eliminated under paragraph (f)(4) of this section, the new P stock received by M is exchanged basis property (within the meaning of section 7701(a)(44)) having a basis under section 358 equal to M's basis in the original P stock. Under the successor asset rule of paragraph (j)(1) of this section, references to M's original P stock include references to M's new P stock. Because it is still possible to take S's intercompany item into account under the matching rule with respect to the successor asset, S's gain is not taken into account under the acceleration rule as a result of the basis elimination under paragraph (f)(4) of this section. Instead, the gain is taken into account based on subsequent events with respect to M's new P stock (for example, a subsequent distribution or redemption of the new stock).

(iii) ***Example 3. Back-to-back intercompany transactions—matching*** —

(A) ***Facts.*** S holds land for investment with a basis of $70. On January 1 of Year 1, S sells the land to M for $90. M also holds the land for investment. On July 1 of Year 3, M sells the land for $100 to B, and B holds the land for sale to customers in the ordinary course of business. During Year 5, B sells all of the land to customers for $105.

(B) ***Timing.*** Under paragraph (b)(1) of this section, S's sale of the land to M and M's sale of the land to B are both intercompany transactions. S is the selling member and M is the buying member in the first intercompany transaction, and M is the selling member and B is the buying member in the second intercompany transaction. Under paragraph (j)(4) of this section, S, M and B are treated as divisions of a single corporation for purposes of determining the timing of their items from the intercompany transactions. See also

paragraph (j)(2) of this section (B is treated as a successor to M for purposes of taking S's intercompany gain into account). Thus, S's $20 gain and M's $10 gain are both taken into account in Year 5 to reflect the difference between B's $5 gain taken into account with respect to the land and the $35 recomputed gain (the gain that B would have taken into account if the intercompany sales had been transfers between divisions of a single corporation, and B succeeded to S's $70 basis).

(C) ***Attributes.*** Under paragraph (j)(4) of this section, the attributes of the intercompany items and corresponding items of S, M, and B are also determined by treating S, M, and B as divisions of a single corporation. For example, the attributes of S's and M's intercompany items are determined by taking B's activities into account.

(iv) ***Example 4. Back-to-back intercompany transactions—acceleration*** —

(A) ***Facts.*** During Year 1, S performs services for M in exchange for $10 from M. S incurs $8 of employee expenses. M capitalizes the $10 cost of S's services under section 263 as part of M's cost to acquire real property from X. Under its separate entity method of accounting, S would take its income and expenses into account in Year 1. M holds the real property for investment and, on July 1 of Year 5, M sells it to B at a gain. B also holds the real property for investment. On December 1 of Year 8, while B still owns the real property, P sells all of M's stock to X and M becomes a nonmember.

(B) ***M's items.*** M takes its gain into account immediately before it becomes a nonmember. Because the real property stays in the group, the acceleration rule redetermines the attributes of M's gain under the principles of the matching rule as if B sold the real property to an affiliated corporation that is not a member of the group for a cash payment equal to B's adjusted basis in the real property, and S, M, and B were divisions of a single corporation. Thus, M's gain is capital gain.

(C) ***S's items.*** Under paragraph (b)(2)(ii) of this section, S includes the $8 of expenses in determining its $2 intercompany income. In Year 1, S takes into account $8 of income and $8 of expenses. Under paragraph (j)(4) of this section, appropriate adjustments must be made to treat both S's performance of services for M and M's sale to B as occurring between divisions of a single corporation. Thus, S's $2 of intercompany income is not taken into account as a result of M becoming a nonmember, but instead will be taken into account based on subsequent events (*e.g.,* under the matching rule based on B's sale of the real property to a nonmember, or under the acceleration rule based on P's sale of the stock of S or B to a nonmember). See the successor person rules of paragraph (j)(2) of this section (B is treated as a successor to M for purposes of taking S's intercompany income into account).

(D) ***Sale of S's stock.*** The facts are the same as in paragraph (j)(9)(iv)(A) of this section (*Example 4*), except that P sells all of S's stock (rather than M's stock) and S becomes a nonmember on July 1 of Year 5. S's remaining $2 of intercompany income is taken into account immediately before S becomes a nonmember. Because S's intercompany income is not from an intercompany sale, exchange, or distribution of property, the attributes of the intercompany income are determined on a separate entity basis. Thus, S's $2 of intercompany income is ordinary income. M does not take any of its intercompany gain into account as a result of S becoming a nonmember.

(E) ***Intercompany income followed by intercompany loss.*** The facts are the same as in paragraph (j)(9)(iv)(A) of this section (*Example 4*), except that M sells the real property to B at a $1 loss (rather than a gain). M takes its $1 loss into account under the acceleration rule immediately before M becomes a nonmember. But see § 1.267(f)-1 (which might further defer M's loss if M and B remain in a controlled group relationship after M becomes a nonmember). Under paragraph (j)(4) of this section appropriate adjustments must be made to treat the group as if both intercompany transactions occurred between divisions of a single corporation. Accordingly, P's sale of M stock also results in S taking into account $1 of intercompany income as capital gain to offset M's $1 of corresponding capital loss. The remaining $1 of S's intercompany income is taken into account based on subsequent events.

(v) ***Example 5. Successor group*** —

(A) ***Facts.*** On January 1 of Year 1, B borrows $100 from S in return for B's note providing for $10 of interest annually at the end of each year, and repayment of $100 at the end of Year 20. As of January 1 of Year 3, B has paid the interest accruing under the note. On that date, X acquires all of P's stock and the former P group members become members of the X consolidated group.

(B) ***Successor.*** Under paragraph (j)(5) of this section, although B's note ceases to be an intercompany obligation of the P group, the note is not treated as satisfied and reissued under paragraph (g) of this section as a result of X's acquisition of P stock. Instead, the X consolidated group succeeds to the treatment of the P group for purposes of paragraph (g) of this section, and B's note is treated as an intercompany obligation of the X consolidated group.

(vi) ***Example 6. Liquidation—80% distributee*** —

(A) ***Facts.*** X has had preferred stock described in section 1504(a)(4) outstanding for several years. On January 1 of Year 1, S buys all of X's common stock for $60, and B buys all of X's preferred stock for $40. X's assets have a $0 basis and $100 value. On July 1 of Year 3, X distributes all of its assets to S and B in a complete liquidation. Under § 1.1502-34, section 332 applies to both S and B. Under section 337, X has no gain or loss from its liquidating distribution to S. Under sections 336 and 337(c), X has a $40 gain from its liquidating distribution to B. B has a $40 basis under section 334(a) in the assets received from X, and S has a $0 basis under section 334(b) in the assets received from X.

(B) ***Intercompany items from the liquidation.*** Under the matching rule, X's $40 gain from its liquidating distribution to B is not taken into account under this section as a result of the liquidation (and therefore is not yet reflected under §§ 1.1502-32 and 1.1502-33). Under the successor person rule of paragraph (j)(2)(i) of this section, S and B are both successors to X. Under section 337(c), X recognizes gain or loss only with respect to the assets distributed to B. Under paragraph (j)(2)(ii) of this section, to be consistent with the purposes of this section, S succeeds to X's $40 intercompany gain. The gain will be taken into account by S under the matching and acceleration rules of this section based on subsequent events. (The allocation of the intercompany gain to S does not govern the allocation of any other attributes.)

(vii) ***Example 7. Liquidation—no 80% distributee*** —

(A) ***Facts.*** X has only common stock outstanding. On January 1 of Year 1, S buys 60% of X's stock for $60, and B buys 40% of X's stock for $40. X's assets have a $0 basis and $100 value. On July 1 of Year 3, X distributes all of its assets to S and B in a complete liquidation. Under § 1.1502-34, section 332 applies to both S and B. Under sections 336 and 337(c), X has a $100 gain from its liquidating distributions to S and B. Under section 334(b), S has a $60 basis in the assets received from X and B has a $40 basis in the assets received from X.

(B) ***Intercompany items from the liquidation.*** Under the matching rule, X's $100 intercompany gain from its liquidating distributions to S and B is not taken into account under this section as a result of the liquidation (and therefore is not yet reflected under §§ 1.1502-32 and 1.1502-33). Under the successor person rule of paragraph (j)(2)(i) of this section, S and B are both successors to X. Under paragraph (j)(2)(ii) of this section, to be consistent with the purposes of this section, S succeeds to X's $40 intercompany gain with respect to the assets distributed to B, and B succeeds to X's $60 intercompany gain with respect to the assets distributed to S. The gain will be taken into account by S and B under the matching and acceleration rules of this section based on subsequent events. (The allocation of the intercompany gain does not govern the allocation of any other attributes.)

(viii) ***Example 8: Loan by section 987 QBU*** —

(A) ***Facts.*** S owns all the interests in DE1, a disregarded entity operating a business that is a section 987 QBU (S QBU) whose functional currency is the euro. S has net unrecognized section 987 gain with respect to S QBU. In year 1, S QBU lends €100 to B with interest due annually. B makes interest payments on the loan to S QBU in years 1 through 3. In year 3, B repays the loan and recognizes section 988 loss of $12 on the loan repayment. All payments are made in euros, and B recognizes no section 988 gain or loss on the euros it uses to pay the interest and principal. B is never insolvent within the meaning of section 108(d)(3). Other than with respect to the loan, there are no transfers between S and S QBU during years 1 through 3, and neither S nor B had any other foreign currency gain or loss. Neither S nor B has made an election under section 988 or the section 988 regulations.

(B) ***Analysis*** —

(*1*) ***Loan.*** Under paragraph (j)(9) of this section, the loan is treated as a transfer from S QBU to S and a loan directly between S and B. Specifically, S is treated as receiving a transfer of €100 from S QBU in year 1; S is then treated as lending €100 directly to B. For purposes of § 1.987-2, the loan is attributable to S, not to S QBU. As an intercompany loan, S's loan to B is subject to the rules of this section. Because there is a remittance from S QBU to S in year 1, S recognizes section 987 gain under § 1.987-5.

(*2*) ***Interest payments.*** While the loan is outstanding, each of B's interest payments to S QBU is treated as an interest payment from B to S, followed by a transfer from S to S QBU. Under the matching rule in paragraph (c) of this section, S's intercompany interest income offsets B's corresponding interest expense. *See* paragraph (g)(7)(ii)(A)(*2*) of this section (*Example 1*). Since the functional currency of both S and B is the dollar, if B recognizes any section 988 gain or loss on the interest

payments, S will recognize an offsetting amount of section 988 loss or gain. Because the only transfer between S and S QBU in year 2 is from S to S QBU, there is no remittance from S QBU to S and S does not recognize section 987 gain under § 1.987-5.

(*3*) ***Repayment.*** Upon the year 3 repayment of the loan, B is treated as repaying €100 to S, and S is treated as transferring €100 to S QBU. Since the functional currency of both S and B is the dollar, and B recognizes section 988 loss of $12 on the loan repayment, S will recognize an offsetting section 988 gain of $12. Because the only transfers between S and S QBU in year 3 are from S to S QBU, there is no remittance from S QBU to S and S does not recognize section 987 gain under § 1.987-5.

(4) ***Summary.*** Overall, the group's taxable income includes S's section 987 gain in year 1 (the section 988 inclusions offset). This result is consistent with the treatment of a single corporation that borrows from its section 987 QBU.

(C) ***Loan sold to non-member.*** The facts are the same as in paragraph (j)(10)(viii)(A) of this section, except that, in year 3, S QBU sells the loan to unrelated X for €90, reflecting an increase in prevailing market interest rates. Up until the sale, the analysis is the same as in paragraphs (j)(10)(viii)(B)(*1*) and (*2*) of this section. Because the loan is attributable to S (*see* paragraphs (j)(9) and (j)(10)(viii)(B)(*1*) of this section), the sale is treated as a sale by S. Under paragraph (g)(3) of this section, immediately before the sale, B is deemed to satisfy and reissue the loan for its fair market value of €90. As a result, B takes into account cancellation of indebtedness income, and S takes into account an offsetting amount of ordinary loss. *See* paragraph (g)(7)(ii) (*Example 2*) of this section. If there is currency gain or loss, S and B take into account offsetting amounts of gain and loss under section 988 (subject to the limitation of § 1.988-2(b)(8)). Because S has a basis of €90 in the new loan, S recognizes no gain or loss on the sale to X. S is then treated as transferring the €90 to S QBU.

(D) ***Party becomes a nonmember.*** The facts are the same as in paragraph (j)(10)(viii)(A) of this section, except that, in year 3, B becomes a nonmember. Up until B leaves the group, the analysis is the same as in paragraphs (j)(10)(viii)(B)(*1*) and (*2*) of this section. Immediately before B becomes a nonmember, B is deemed to satisfy and reissue the loan for its fair market value under paragraph (g)(3) of this section, with the same consequences as described in paragraph (j)(10)(viii)(C) of this section. When B becomes a nonmember, the loan (which is no longer an intercompany obligation) ceases to be subject to paragraph (j)(9) of this section. If the loan is attributable to S QBU under § 1.987-2, S is treated as transferring the loan to S QBU.

(ix) ***Example 9: Sale of property by section 987 QBU*** —

(A) ***Facts.*** M1 owns all the interests in DE1, a disregarded entity operating a business that is a section 987 QBU (M1 QBU) whose functional currency is the euro. M1 has net unrecognized section 987 gain with respect to M1 QBU. M1 QBU sells property to M2 for €100 in year 1.

(B) ***Analysis*** —

(1) ***In general.*** Under paragraph (j)(9) of this section, the sale of property is treated as a transfer of the property from M1 QBU to M1, followed by an exchange of the property for €100 directly between M1 and M2, and a transfer of the €100 from M1 to M1 QBU.

(2) ***Distribution.*** M1 QBU is treated as transferring the property to M1.

(3) ***Exchange.*** M1 is then treated as selling the property to M2 for €100. M1 takes into account its intercompany gain or loss on the property under the rules of this section. M2 recognizes intercompany section 988 gain or loss on its exchange of €100 for the property. *See* paragraph (b)(1)(iii) of this section for property exchanges between members.

(4) ***Contribution.*** Finally, M1 is treated as transferring the €100 to M1 QBU. Because M1's basis in the €100 equals its fair market value, M1 has a corresponding section 988 gain or loss of zero upon the contribution. *See* § 1.988-1(a)(10). Both the transfer of the property from M1 QBU to M1 and the transfer of the €100 from M1 to M1 QBU are taken into account in determining whether there is a remittance from M1 QBU to M1 in year 1 and whether M1 recognizes section 987 gain under § 1.987-5.

(5) ***Summary.*** Overall, in year 1, M1 may take into account section 987 gain if the transfers between M1 and M1 QBU result in a remittance, and M2 takes into account section 988 gain or loss on the €100. This result is consistent with the treatment of a single corporation that purchases property from its section 987 QBU.

(k) *Cross references* —

(1) ***Section 108.*** See § 1.108-3 for the treatment of intercompany deductions and losses as subject to attribute reduction under section 108(b).

(2) ***Section 263A(f).*** See section 263A(f) and § 1.263A-9(g)(5) for special rules regarding interest from intercompany transactions.

(3) ***Section 267(f).*** See section 267(f) and § 1.267(f)-1 for special rules applicable to certain losses and deductions from transactions between members of a controlled group.

(4) ***Section 460.*** See § 1.460-4(j) for special rules regarding the application of section 460 to intercompany transactions.

(5) ***Section 469.*** See § 1.469-1(h) for special rules regarding the application of section 469 to intercompany transactions.

(6) ***§ 1.1502-80.*** See § 1.1502-80 for the non-application of certain Internal Revenue Code rules.

(l) *Effective/applicability dates* —

(1) ***In general.*** This section applies with respect to transactions occurring in years beginning on or after July 12, 1995. If both this section and prior law apply to a transaction, or neither applies, with the result that items may be duplicated, omitted, or eliminated in determining taxable income (or tax liability), or items may be treated inconsistently, prior law (and not this section) applies to the transaction. For example, S's and B's items from S's sale of property to B which occurs in a consolidated return year beginning before July 12, 1995, are taken into account under prior law, even though B may dispose of the property in a consolidated return year beginning on or after July 12, 1995. Similarly, an intercompany distribution to which a shareholder becomes entitled in a

consolidated return year beginning before July 12, 1995, but which is distributed in a consolidated return year beginning on or after that date is taken into account under prior law (generally when distributed), because this section generally takes dividends into account when the shareholder becomes entitled to them but this section does not apply at that time. If application of prior law to S's deferred gain or loss from a deferred intercompany transaction (as defined under prior law) occurring in a consolidated return year beginning prior to July 12, 1995, would be affected by an intercompany transaction (as defined under this section) occurring in a consolidated return year beginning on or after July 12, 1995, S's deferred gain or loss continues to be taken into account as provided under prior law, and the items from the subsequent intercompany transaction are taken into account under this section. Appropriate adjustments must be made to prevent items from being duplicated, omitted, or eliminated in determining taxable income as a result of the application of both this section and prior law to the successive transactions, and to ensure the proper application of prior law. Paragraphs (a)(4), (f)(6)(ii), (f)(6)(iv)(A), (g)(3)(ii)(B)(2), and (j)(5)(i)(A) of this section apply with respect to transactions occurring on or after September 17, 2008. However, taxpayers may apply paragraph (j)(5)(i)(A) of this section to transactions that occurred prior to September 17, 2008.

(2) ***Avoidance transactions.*** This paragraph (l)(2) applies if a transaction is engaged in or structured on or after April 8, 1994, with a principal purpose to avoid the rules of this section (and instead to apply prior law). If this paragraph (l)(2) applies, appropriate adjustments must be made in years beginning on or after July 12, 1995, to prevent the avoidance, duplication, omission, or elimination of any item (or tax liability), or any other inconsistency with the rules of this section. For example, if S is a dealer in real property and sells land to B on March 16, 1995 with a principal purpose of converting any future appreciation in the land to capital gain, B's gain from the sale of the land on May 11, 1997 might be characterized as ordinary income under this paragraph (l)(2).

(3) ***Election for certain stock elimination transactions*** —

(i) ***In general.*** A group may elect pursuant to this paragraph (l)(3) to apply this section (including the elections available under paragraph (f)(5)(ii) of this section) to stock elimination transactions to which prior law would otherwise apply. If an election is made, this section, and not prior law, applies to determine the timing and attributes of S's and B's gain or loss from stock with respect to all stock elimination transactions.

(ii) ***Stock elimination transactions.*** For purposes of this paragraph (l)(3), a stock elimination transaction is a transaction in which stock transferred from S to B—

(A) Is cancelled or redeemed on or after July 12, 1995;

(B) Is treated as cancelled in a liquidation pursuant to an election under section 338(h)(10) with respect to a qualified stock purchase with an acquisition date on or after July 12, 1995;

(C) Is distributed on or after July 12, 1995; or

(D) Is exchanged on or after July 12, 1995 for stock of a member (determined immediately after the exchange) in a transaction that would cause S's gain or loss from the transfer to be taken into account under prior law.

(iii) ***Time and manner of making election.*** An election under this paragraph (l)(3) is made by attaching to a timely filed original return (including extensions) for the consolidated return year including July 12, 1995 a statement entitled "[Insert Name and Employer Identification Number

of Common Parent] HEREBY ELECTS THE APPLICATION OF § 1.1502-13(l)(3)." See paragraph (f)(5)(ii)(E) of this section for the manner of electing the relief provisions of paragraph (f)(5)(ii) of this section.

(4) ***Prior law.*** For transactions occurring in S's years beginning before July 12, 1995, see the applicable regulations issued under section 1502. See §§ 1.1502-13, 1.1502-13T, 1.1502-14, 1.1502-14T, 1.1502-31, and 1.1502-32 (as contained in the 26 CFR part 1 edition revised as of April 1, 1995).

(5) ***Consent to adopt method of accounting.*** For intercompany transactions occurring in a consolidated group's first taxable year beginning on or after July 12, 1995, the Commissioner's consent under section 446(e) is hereby granted for any changes in methods of accounting that are necessary solely by reason of the timing rules of this section. Changes in method of accounting for these transactions are to be effected on a cut-off basis.

(6) ***Applicability date regarding paragraph (f)(7)(iv) of this section (Example 4).*** Paragraph (f)(7)(iv) of this section (*Example 4*) applies to transactions occurring on or after December 18, 2009.

(7) ***Applicability date.*** Generally, paragraph (j)(9) of this section applies to taxable years beginning after December 31, 2024, for which the original Federal income tax return is due (without extensions) after December 11, 2024. However, if pursuant to § 1.987-15(b), a taxpayer chooses to apply §§ 1.987-1 through 1.987-15 to a taxable year before the first taxable year described in § 1.987-15(a)(1), then paragraph (j)(9) of this section applies to that taxable year and subsequent years.

(8) ***Election to apply paragraph (f)(5)(ii) of this section to an intercompany transaction.*** Paragraph (f)(5)(ii)(E) of this section applies to any original consolidated Federal income tax return due (without extensions) after June 14, 2007.

(9) ***Election to reduce basis of parent stock under paragraph (f)(6) of this section.*** Paragraph (f)(6)(i)(C)(2) of this section applies to any original consolidated Federal income tax return due (without extensions) after June 14, 2007.

(10) ***Certain qualified stock dispositions.*** Paragraph (f)(5)(ii)(C) of this section applies to any qualified stock disposition (as defined in § 1.336-1(b)(6)) for which the disposition date (as defined in § 1.336-1(b)(8)) is on or after May 15, 2013.

[T.D. 8597, 60 FR 36685, July 18, 1995]

Editorial Note: For FEDERAL REGISTER citations affecting § 1.1502-13, see the List of CFR Sections Affected, which appears in the Finding Aids section of the printed volume and at *www.govinfo.gov*.

§ 1.1502-14Z Application of opportunity zone rules to members of a consolidated group.

(a) *Scope and definitions* —

(1) ***Scope.*** This section provides rules regarding the Federal income tax treatment of QOFs owned by members of a consolidated group (as defined in § 1.1502-1(b) and (h), respectively). Rules in the section 1400Z-2 regulations (as defined in § 1.1400Z2(a)-1(b)(41)) apply to consolidated groups except as modified in this section. Paragraph (b) of this section generally provides rules regarding the effects of an election under § 1.1504-3(b)(2) to treat a subsidiary QOF C corporation as a member of a consolidated group. Paragraph (c) of this section provides rules regarding qualifying investments made by members of a consolidated group (including an election to treat the

investment by one member as a qualifying investment by another member) and the application of § 1.1502-13 to intercompany transfers of a qualifying investment. Paragraph (d) of this section provides coordinating rules for basis adjustments within a consolidated group. Paragraph (e) of this section provides coordinating rules for § 1.1502-36(d). Paragraph (f) of this section provides elective transition relief to taxpayers that consolidated a subsidiary QOF C corporation prior to May 1, 2019. Paragraph (g) of this section provides rules regarding the consequences of a deconsolidation of a QOF C corporation. Paragraph (h) of this section provides instructions for making the elections provided by paragraphs (c) and (f) of this section. Paragraph (i) of this section is reserved. Paragraph (j) of this section provides examples. Paragraph (k) of this section provides the applicability dates.

(2) ***Definitions*** —

(i) ***In general.*** The definitions provided in §§ 1.1400Z2(a)-1(b) and 1.1400Z2(d)-1 apply for purposes of this section.

(ii) ***Definitions for consolidated groups*** —

(A) ***Day one.*** The term *day one* means the date members of the consolidated group formed or acquired section 1504 control of the pre-existing QOF sub. If a pre-existing QOF sub was a member of the consolidated group prior to becoming a QOF C corporation, day one is the first day of the first month in which the member self-certified as, or is treated as, a QOF C corporation, whichever is earlier.

(B) ***Election date.*** The term *election date* means the date on which an election under paragraph (c) or (f) of this section is made.

(C) ***Pre-existing QOF sub.*** The term *pre-existing QOF sub* means a subsidiary QOF C corporation that meets the affiliation requirements in section 1504 (without regard to § 1.1504-3(b)(1)) as of May 1, 2019.

(D) ***QOF investor member.*** The term *QOF investor member* means any member holding a qualifying investment in the QOF member.

(E) ***QOF member.*** The term *QOF member* means a subsidiary QOF C corporation that is treated as a member of a consolidated group pursuant to an election in § 1.1504-3(b)(2).

(F) ***QOF member stock.*** The term *QOF member stock* means the QOF stock of a QOF member.

(G) ***QOF SAG.*** The term *QOF SAG* means, with respect to a QOF member, the affiliated group that would be determined under section 1504(a) if the QOF member were the common parent.

(H) ***Subsidiary QOF C corporation.*** The term *subsidiary QOF C corporation* means a QOF C corporation that meets the requirements to be a member of an affiliated group (as defined in section 1504(a)(1), and without regard to § 1.1504-3(b)(1)) other than the common parent of such consolidated group.

(b) ***Subsidiary QOF C corporation treated as member of the consolidated group*** —

(1) ***Effects of election to treat a subsidiary QOF C corporation as a member*** —

(i) ***Determining whether a distribution is an inclusion event.*** A distribution of property with respect to qualifying QOF stock by a QOF member to a QOF investor member is an inclusion event to the extent the distribution would create or increase an excess loss account (ELA) in the qualifying QOF stock, without regard to any inclusion resulting from application of this paragraph (b)(1)(i). Solely for purposes of determining whether a distribution creates or increases an ELA during a taxable year, investment adjustments pertaining to a distribution on qualifying QOF stock by a QOF member are made after all other investment adjustments under § 1.1502-32 for that year.

(ii) ***Determining the amount of deferred gain includible by the QOF investor member.*** The amount of gain included in gross income of a QOF investor member under section 1400Z-2(a)(1)(B) on a date described in § 1.1400Z2(b)-1(b) (modified by paragraph (c)(3) of this section, as applicable) is determined under this paragraph (b)(1)(ii). The amount of gain included in gross income of the QOF investor member is the lesser of:

(A) The product of:

(*1*) The percentage of the qualifying investment that gave rise to the inclusion event; and

(*2*) The remaining deferred gain (see § 1.1400Z2(a)-1(b)(40)), less any basis adjustments pursuant to section 1400Z-2(b)(2)(B)(iii) and (iv); or

(B) The gain that would be recognized on a fully taxable disposition of the qualifying investment that gave rise to the inclusion event.

(iii) ***Application of ELA rules on the disposition of QOF member stock.*** When a QOF investor member disposes of a share of qualifying QOF member stock, any ELA in the share is taken into account as income or gain from the disposition under § 1.1502-19(b)(1) before the basis of the share is increased under section 1400Z-2(c), if applicable. See paragraph (g)(3)(i) of this section for the general rule regarding the treatment of an ELA upon the deconsolidation of a QOF member.

(iv) ***Transactions between the QOF member and other members of the consolidated group*** —

(A) ***In general.*** This paragraph (b)(1)(iv) governs transactions between a member of a QOF SAG and other members of the consolidated group.

(B) ***Sale or exchange of property.*** A sale or exchange of property between a member of a QOF SAG and a member of the consolidated group that is not a member of a single QOF SAG is not treated as an intercompany transaction (as defined in § 1.1502-13(b)(1)) and is not subject to the rules in § 1.1502-13. In contrast, a sale or exchange of property between members of the QOF SAG is an intercompany transaction that is subject to the rules in § 1.1502-13.

(C) ***Other transactions.*** Any transaction between a member of a QOF SAG and a member of the consolidated group that is not a member of that QOF SAG that is not a sale or exchange of property is an intercompany transaction subject to the rules in § 1.1502-13.

(v) ***Separate-entity application of QOF qualifying rules to QOF member.*** A consolidated group is not treated as a single entity for purposes of determining whether a QOF member or a qualified opportunity zone business that is a consolidated group member satisfies the investment standard rules in section 1400Z-2(d) and (f) and §§ 1.1400Z2(d)-1 and 1.1400Z2(f)-1. Instead, those investment standard rules apply on a separate-entity basis. Therefore, for example, the QOF member's satisfaction of the requirements under section 1400Z-2(d) is determined by

taking into account only property (including qualified opportunity zone stock or qualified opportunity zone partnership interests) held by the QOF member, without regard to property transferred by the QOF member to other members of the consolidated group.

(2) ***Anti-avoidance rule.*** The purposes of section 1400Z-2 and the section 1400Z-2 regulations are to provide specified tax benefits to owners of QOFs to encourage the making of longer-term investments, through QOFs and qualified opportunity zone businesses, of new capital in one or more qualified opportunity zones and to increase the economic growth of such qualified opportunity zones. If a transaction is engaged in or structured with a view to avoid the application of the rules of section 1400Z-2, the section 1400Z-2 regulations, or the regulations in this part under section 1502 of the Code (including this section), appropriate adjustments will be made to carry out the purposes of section 1400Z-2 and the section 1400Z-2 regulations. For example, if a consolidated group engages in a restructuring (such as a distribution described in section 355) with a view to using stock basis adjustments under § 1.1502-32 resulting from increases in the basis of stock under section 1400Z-2(b) in a sale or exchange transaction without disposing of any part of the consolidated group's direct ownership of the relevant qualifying investment, the transaction will be treated as an inclusion event with regard to an appropriate amount of deferred gain.

(c) ***Qualifying investments by members of a consolidated group*** —

(1) ***In general.*** Except as otherwise provided in this section or in § 1.1400Z2(b)-1 (see, for example, § 1.1400Z2(b)-1(c)(9)(i)(B)(*1*)), section 1400Z-2 applies separately to each member of a consolidated group. Therefore, for example, the same member of the consolidated group generally must both engage in the sale of a capital asset giving rise to eligible gain and timely invest an amount equal to some or all of such gain in a QOF (as provided in section 1400Z-2(a)(1)) in order to qualify for deferral of such gain under section 1400Z-2.

(2) ***Election to treat investment of one member as a qualifying investment by another member*** —

(i) ***Availability of election.*** If members of a consolidated group satisfy the requirements of this paragraph (c)(2), the consolidated group may elect to treat an investment by one member as a qualifying investment by another member. The election provided by this paragraph (c)(2) is available when a member of a consolidated group (M1) has eligible gain and a second member (M2) makes an investment in a QOF that would be a qualifying investment if M1, rather than M2, had made the investment. For example, if M1 has $100x of eligible gain but M2 has none, and M2 makes a $120x investment in a QOF C corporation, only $100x of M2's investment in the QOF C corporation is eligible for the election under this paragraph (c)(2). See paragraph (h)(2) of this section for the form and manner of making this election. If M2 has its own eligible gain, M2 may make a qualifying investment on its own behalf and defer such eligible gain under section 1400Z-2(a)(1)(A) and § 1.1400Z2(a)-1.

(ii) ***Effect of election.*** If a consolidated group makes an election under this paragraph (c)(2), then M1 is treated as having made the investment in the QOF that is actually made by M2. M1 is then treated as having immediately sold such investment to M2 for fair market value. The deemed sale by M1 is subject to the rules in paragraph (c)(3) of this section. The consolidated group must treat the deemed investment by M1 and the deemed sale by M1 to M2 as having occurred for all Federal income tax purposes.

(3) ***Intercompany transfers of a qualifying investment*** —

(i) ***In general.*** Except as otherwise provided in this paragraph (c)(3), when one member (S) transfers its qualifying investment to another member (B), the transaction is not treated as an intercompany transaction within the meaning of § 1.1502-13(b)(1) for purposes of applying the rules of section 1400Z-2 and the section 1400Z-2 regulations. Therefore, § 1.1502-13(c) does not apply to treat S and B as divisions of a single entity for purposes of section 1400Z-2. For example, if S transfers its qualifying investment to B in a section 351 transaction, the transfer is an inclusion event for S under § 1.1400Z2(b)-1(c). In addition, because the transfer is not an intercompany transaction for purposes of section 1400Z-2, § 1.1502-13 does not apply to continue S's deferral under § 1.1400Z2(a)-1(a)(1).

(ii) ***Application of § 1.1502-13 to fully taxable intercompany transfers of a qualifying investment*** —

(A) ***Applicable transactions.*** Notwithstanding paragraph (c)(3)(i) of this section, if S transfers its qualifying investment to B in a fully taxable transaction, the transaction is treated as an intercompany transaction, and § 1.1502-13(c) applies to treat S and B as divisions of a single entity for purposes of applying section 1400Z-2.

(B) ***Treatment of S's intercompany gain on its qualifying investment.*** If a transaction is described in paragraph (c)(3)(ii)(A) of this section, § 1.1502-13(c)(6)(ii) is inapplicable in determining the excludability of S's gain (or the treatment of such gain as tax-exempt income) on the application of section 1400Z-2(b) and (c) to S and B as a single entity. Thus, S's gain on the qualifying investment (including the amount includible under § 1.1400Z2(b)-1(e)) may be redetermined to be excluded from gross income (or treated as tax-exempt income), as appropriate, to achieve single-entity treatment between S and B with regard to the ownership and disposal of the qualifying investment. To qualify for benefits under section 1400Z-2, S and B must otherwise satisfy the requirements of section 1400Z-2. See also § 1.1502-13(j)(4) (concerning multiple or successive intercompany transactions).

(C) ***Investment adjustments and adjustments to earnings and profits.*** Income of S excluded under section 1400Z-2 by application of paragraphs (c)(3)(ii)(A) and (B) of this section and § 1.1502-13 results in adjustments to S's earnings and profits and is treated as tax-exempt income to S for purposes of § 1.1502-32(b)(2)(ii).

(D) ***Election under section 1400Z-2(c).*** To the extent paragraph (c)(3)(ii)(A) of this section applies to S's transfer of its qualifying investment to B, B (and not S) is entitled to make the election under section 1400Z-2(c) at the time when, treating S and B as divisions of a single entity, the single entity would be entitled to make such an election. For example, pursuant to § 1.1502-13(c)(1)(ii), B takes S's holding period into account in determining whether B is treated as holding the transferred qualifying investment for 10 years. In addition, the attributes of S's intercompany item on the transfer of the qualifying investment may be redetermined based on B's election.

(4) ***Intercompany transfer as qualifying investment in a QOF member.*** A transfer by a consolidated group member with an eligible gain to a QOF member before January 1, 2027, is not treated as an intercompany transaction within the meaning of § 1.1502-13 and may constitute a qualifying investment. But see § 1.1504-3(b)(2) regarding conditions for consolidating a QOF C corporation.

(5) ***Intercompany gain as eligible gain.*** When S sells property to B, § 1.1502-13 applies to determine if, and when, S's intercompany gain and B's corresponding gain constitute eligible gain. S's gain and B's gain are treated as eligible gain only to the extent such gain would be eligible gain if S and B were

divisions of a single entity. For example, if S sells a piece of property to B at a gain, B subsequently sells that property to an unrelated party at a further gain, and the gains are treated as capital gain under § 1.1502-13(c)(1) and (4), then both S's gain and B's gain are eligible gains at the time B sells the property to the unrelated party. In contrast, if S sells a piece of property to B at a loss, and B subsequently sells that property to an unrelated party at a gain, then B's corresponding gain on the property is eligible gain only to the extent that S and B, if treated as divisions of a single entity, would have eligible gain on the sale of property to the unrelated party. See § 1.1502-13(a)(1).

(d) ***Tiering-up of investment adjustments provided by section 1400Z-2.*** Basis increases in a qualifying investment in a QOF under sections 1400Z-2(b)(2)(B)(iii), 1400Z-2(b)(2)(B)(iv), and 1400Z-2(c) are treated as satisfying the requirements of § 1.1502-32(b)(3)(ii)(A) and thus qualify as tax-exempt income to the QOF owner. Therefore, if the QOF owner is a member of a consolidated group and is owned by other members of the same consolidated group (upper-tier members), the upper-tier members increase their bases in the shares of the QOF owner under § 1.1502-32(b)(2)(ii). However, there is no basis adjustment under § 1.1502-32(b)(2)(ii) or (iii) in shares of upper-tier members with regard to a basis adjustment under section 1400Z-2(c) and § 1.1400Z2(c)-1 unless and until the basis of the qualifying investment is adjusted to its fair market value, as provided in section 1400Z-2(c) and § 1.1400Z2(c)-1.

(e) ***Application of § 1.1502-36(d).*** This paragraph (e) clarifies how § 1.1502-36(d) applies if a member (M) transfers a loss share of another member (S) that is a QOF owner that owns a qualifying investment. To determine S's attribute reduction amount under § 1.1502-36(d)(3), S's basis in its qualifying investment is included in S's net inside attribute amount to compute S's aggregate inside loss under § 1.1502-36(d)(3)(iii)(A). However, S's basis in the qualifying investment is not included in S's Category D attributes available for attribute reduction under § 1.1502-36(d)(4). Thus, S's basis in the qualifying investment cannot be reduced under § 1.1502-36(d). If S's attribute reduction amount exceeds S's attributes available for reduction, then to the extent of the lesser of S's basis in the qualifying investment or the remaining attribute reduction amount, the common parent is treated as making the election under § 1.1502-36(d)(6) to reduce M's basis in the transferred loss S shares.

(f) ***Transition relief*** —

(1) ***Overview.*** This paragraph (f) provides options for elective relief to pre-existing QOF subs. An election under this paragraph (f) is made in the manner provided in paragraph (h)(3) of this section. If a timely election under this paragraph (f) is not made, the pre-existing QOF sub is treated as deconsolidating on March 13, 2020.

(2) ***Reclassification election*** —

(i) ***In general.*** For each pre-existing QOF sub of a consolidated group, the consolidated group may make one of the alternative, irrevocable elections provided in paragraphs (f)(2)(ii) through (iv) of this section. All elective relief provided in this paragraph (f)(2) is effective on day one.

(ii) ***Treatment as a QOF partnership*** —

(A) ***Election.*** A consolidated group may elect to treat a pre-existing QOF sub as a QOF partnership (electing QOF partnership). To be eligible for the election in this paragraph (f)(2)(ii)(A), a pre-existing QOF sub must have converted to an entity treated as a partnership for Federal income tax purposes as of the election date.

(B) ***Effect of the QOF partnership election.*** As a result of making the election under this paragraph (f)(2)(ii), the pre-existing QOF sub is treated as a QOF partnership from day one. Consequently, the consolidated group must file amended or superseding returns, as

applicable, to account for the electing QOF partnership's income, gain, deduction, and loss; the electing QOF partnership also must file its own partnership returns for taxable periods beginning on day one, as applicable. The electing QOF partnership must include its self-certification under § 1.1400Z2(d)-1(a) with its own returns, and the self-certification will be treated as timely so long as the consolidated group filed a timely self-certification under § 1.1400Z2(d)-1(a) for the pre-existing QOF sub. In addition, appropriate adjustments must be made to account for the change in status of the electing QOF partnership from day one, including modifications to investment adjustments to the basis in members' stock made under § 1.1502-32 and adjustments to members' earnings and profits made under § 1.1502-33.

(C) ***Pre-existing QOF sub with single owner.*** If a pre-existing QOF sub is wholly owned by one member of a consolidated group, then for purposes of making the election under this paragraph (f)(2)(ii), the electing QOF partnership is deemed to have had a nominal partner from day one until the date the electing QOF partnership is treated as a partnership for Federal income tax purposes without regard to this paragraph (f)(2)(ii).

(D) ***Example.*** The following example illustrates the election under this paragraph (f)(2)(ii).

(*1*) ***Facts.*** P, the common parent of a consolidated group (P group), wholly owns M1 and M2. On July 1, 2018, M1 and M2 each sell an asset to an unrelated party and realize $70x and $30x of eligible gain, respectively. On August 13, 2018, M1 and M2 form Q12 (a QOF C corporation that was formed as a corporation under state law). Also on August 13, 2018, M1 and M2 contribute $70x and $30x, respectively, to Q12 in exchange for stock of Q12 and properly elect to defer their respective eligible gains under section 1400Z-2(a) and § 1.1400Z2(a)-1. The P group also makes a timely self-certification under § 1.1400Z2(d)-(1)(a) for Q12. Following March 13, 2020, the P group intends to timely elect under this paragraph (f)(2)(ii) to treat Q12 as a QOF partnership.

(*2*) ***Analysis*** —

(*i*) ***Eligibility to elect.*** For the P group to elect to treat Q12 as a QOF partnership under this paragraph (f)(2)(ii), by the date of the election, Q12 must either convert to a state law partnership or another entity treated as a partnership for Federal income tax purposes.

(*ii*) ***Consequences of the election.*** As a result of making the election under this paragraph (f)(2)(ii), Q12 is treated as a QOF partnership from August 13, 2018 (day one). The P group must file amended or superseding returns, as applicable and as necessary, to account for Q12's income, gain, deduction, and loss. In addition, Q12 must file its own returns for the taxable period beginning on August 13, 2018, as applicable. The returns must be filed within the time frame provided in paragraph (h)(3)(iii) of this section. Finally, because the P group filed a timely self-certification under § 1.1400Z2(d)-(1)(a) for Q12 as a QOF C corporation, Q12's self-certification as a QOF partnership would be is considered timely filed.

(*3*) ***Deemed nominal partner*** —

(*i*) ***Facts.*** The facts are the same as in paragraph (f)(2)(iii)(D)(*1*) of this section, except that on July 1, 2018, only M1 sells an asset to an unrelated party and realizes $70x of eligible gain. On August 13, 2018, M1 contributes cash of $70x to Q12 in exchange for stock of Q12 and properly elects to defer the eligible gain under section 1400Z-2(a) and § 1.1400Z2(a)-1. As of the date the election is made to treat Q12 as a partnership from day one, a second party invests in Q12, and Q12 is an entity treated as a partnership for Federal income tax purposes.

(*ii*) ***Analysis.*** The analysis is generally the same as in paragraph (f)(2)(iii)(D)(*2*) of this section. In addition, because Q12 is wholly owned by M1, solely for purposes of treating Q12 as a QOF partnership from August 13, 2018, Q12 is deemed to have a nominal partner from August 13, 2018 until the election date or the date Q12 qualifies as a partnership, if earlier.

(iii) ***Treatment as a non-member QOF C corporation*** —

(A) ***Election.*** A consolidated group may elect to treat a pre-existing QOF sub as a QOF C corporation that is not a member of the consolidated group.

(B) ***Effect of the non-member QOF C corporation election.*** As a result of making the election under this paragraph (f)(2)(iii), the pre-existing QOF sub is treated as not being a member of the consolidated group from day one. Consequently, the consolidated group must file amended or superseding returns, as applicable, to exclude all of the pre-existing QOF sub's income, gain, deduction, and loss from the consolidated returns; the pre-existing QOF sub also must file its own returns for taxable periods beginning on day one, as applicable. In addition, all adjustments resulting from the pre-existing QOF sub's operations must be eliminated from the consolidated group, including investment adjustments made under § 1.1502-32 to basis in members' stock (as well as stock in the pre-existing QOF sub) and adjustments made under § 1.1502-33 to members' earnings and profits.

(iv) ***Treatment as a non-QOF C corporation*** —

(A) ***Election.*** A consolidated group may elect to treat a pre-existing QOF sub as if it never self-certified to be a QOF pursuant to § 1.1400Z2(d)-1.

(B) ***Effect of the non-QOF C corporation election.*** As a result of making the election under this paragraph (f)(2)(iv), the pre-existing QOF sub is treated from day one as a member of the consolidated group and not as a QOF. Therefore, section 1400Z-2 is not applicable, and amended returns or superseding returns must be filed, as applicable, to account for the eligible gain that was invested in the pre-existing QOF sub. In addition, appropriate adjustments must be made to account for the non-applicability of section 1400Z-2, including adjustments to members' stock basis and earnings and profits under §§ 1.1502-32 and 1.1502-33, respectively.

(3) ***Election to continue treating pre-existing QOF sub as a member of the consolidated group*** —

(i) ***Election.*** A consolidated group may elect to have a pre-existing QOF sub retain its QOF status and remain a member of the consolidated group.

(ii) ***Effects of electing to remain a QOF and a member of the consolidated group.*** As a result of making the election under this paragraph (f)(3), the conditions and effects provided in § 1.1504-3(b)(2) and paragraph (b)(1) of this section will apply to the pre-existing QOF sub and the consolidated group as of the effective date of this election. See paragraph (h)(1) of this section for the effective date of this election, and see paragraph (h)(3)(iii) of this section regarding the timing for meeting the requirements in § 1.1504-3(b)(2)(ii).

(g) ***Deconsolidation rules —***

(1) ***In general.*** This paragraph (g) provides rules applicable on any deconsolidation of a QOF C corporation (deconsolidating QOF).

(2) ***Deconsolidation and inclusion event.*** A deconsolidation event is not an inclusion event unless the deconsolidation is the result of an actual transfer of the QOF member stock or a worthlessness event within the meaning of § 1.1502-80(c). For example, when a consolidated group fails to meet the conditions in § 1.1504-3(b)(2) of this section and causes a QOF member to deconsolidate, the deconsolidation event is not an inclusion event solely as a result of the consolidated group's failure to meet the requirements in § 1.1504-3(b)(2) of this section.

(3) ***Basis in the deconsolidating QOF at time of deconsolidation —***

(i) ***ELA in a deconsolidating QOF.*** Any ELA in stock of the deconsolidating QOF at the time of the deconsolidation is taken into account under the rules of § 1.1502-19. See paragraph (b)(1)(iii) of this section for rules coordinating the application of section 1400Z-2(c) with § 1.1502-19.

(ii) ***Positive basis in the deconsolidating QOF resulting from § 1.1502-32.*** Consolidated group members retain any positive basis in the deconsolidating QOF resulting from investment adjustments under § 1.1502-32 following its deconsolidation. However, following the deconsolidation, for purposes of determining the amount includible under § 1.1400Z2(b)-1(e), the amount of basis referred to in section 1400Z-2(b)(2)(A)(ii) is computed by applying only those rules applicable to corporations that do not file a consolidated return (that is, the basis rules under subchapter C and section 1400Z-2). Therefore, any positive basis resulting from § 1.1502-32 adjustments is not taken into account in computing the amount includable under § 1.1400Z2(b)-1(e).

(4) ***Deconsolidating QOF's earnings and profits —***

(i) ***Deconsolidation on or before December 31, 2026.*** Notwithstanding § 1.1502-33(e)(1), if a deconsolidating QOF deconsolidates before December 31, 2026, the deconsolidating QOF retains its earnings and profits under this paragraph (g)(4)(i). Any earnings and profits of the deconsolidating QOF that were taken into account by any other members under § 1.1502-33 are eliminated from those members as of the end of the day on which the deconsolidating QOF deconsolidates.

(ii) ***Deconsolidation after December 31, 2026.*** If the deconsolidating QOF deconsolidates after December 31, 2026, the rules under § 1.1502-33(e) apply.

(5) ***Consequences under § 1.1502-36.*** See § 1.1502-36(f)(10)(i)(B) for the treatment of a deconsolidation as a transfer of all of the stock in the deconsolidating member held by other members of the consolidated group.

(h) ***Form and manner of making an election under this section —***

(1) ***In general.*** The elections provided in this section are irrevocable. The information required for each election is provided in this paragraph (h). A reclassification election under paragraph (f)(2) of this section is effective as of day one. All other elections are effective on the election date.

(2) ***Election under paragraph (c)(2) of this section to treat investment by M2 as qualifying investment by M1*** —

(i) ***Form of election.*** The election under paragraph (c)(2) of this section must be made in the form of a statement titled "THIS IS AN ELECTION UNDER § 1.1502-14Z(c)(2) TO TREAT AN INVESTMENT BY [insert name and employer identification number (E.I.N.) of M2] AS A QUALIFYING INVESTMENT BY [insert name and E.I.N. of M1]." The statement must be included with the consolidated group's timely filed return (original, superseding, or amended return, as applicable, including extensions). In addition, the statement must include the information required under paragraph (h)(2)(ii) of this section.

(ii) ***Required information.***

(A) The amount of M1's eligible gain;

(B) The amount of the investment M2 has made in a QOF, including identification of the amount of the investment that is eligible for treatment as a qualifying investment under paragraph (c)(2) of this section and the amount (if any) that is not eligible for such treatment; and

(C) The date on which M1 recognized its eligible gain, and the date on which M2 made the investment in the QOF.

(3) ***Elections under paragraph (f) of this section for transition relief*** —

(i) ***Form of election.*** The elections under paragraph (f) of this section must be made in the form of a statement titled "THIS IS AN ELECTION UNDER § 1.1502-14Z(f) FOR [insert name and E.I.N. of pre-existing QOF sub]." All actions necessary to make these elections, including the filing of an amended return (or superseding return, as applicable), or filing an original return, as applicable, must be completed within the time designated in paragraph (h)(3)(iii) of this section. The statement must be included on or with any amended prior-year consolidated return (or superseding or original return, as applicable) and on or with the consolidated group's timely filed return (original or amended if filed by the due date for the return, including extensions) for the election year. In addition, the statement must include the information required in paragraph (h)(3)(ii) of this section.

(ii) ***Required information*** —

(A) ***Reclassification election under paragraph (f)(2)(ii) of this section.***

(*1*) A statement that the pre-existing QOF sub is electing to be a QOF partnership;

(*2*) The election date;

(*3*) The effective date of the election;

(*4*) Specification of the appropriate adjustments required under paragraph (f)(2)(ii) of this section made by the pre-existing QOF sub and the consolidated group; and

(5) Certification that the appropriate change under state law or the entity classification election under § 301.7701-3 of this chapter (as applicable) has been made, and the date of the change or entity classification election.

(B) ***Reclassification election under paragraph (f)(2)(iii) or (iv) of this section.***

(1) A statement that the pre-existing QOF sub is changing its status;

(2) The pre-existing QOF sub's new status (either a non-member QOF C corporation, under paragraph (f)(2)(iii) of this section, or a non-QOF C corporation, under paragraph (f)(2)(iv) of this section);

(3) The election date;

(4) The effective date of the election; and

(5) Specification of the appropriate adjustments made the by pre-existing QOF sub and the consolidated group pursuant to paragraph (f)(2)(iii) or (iv) of this section, as applicable.

(C) ***Election to continue treating the pre-existing QOF sub as a subsidiary member of the consolidated group under paragraph (f)(3) of this section.***

(1) A statement that the pre-existing QOF sub is electing to retain its status as a QOF C corporation and remain a member of the consolidated group;

(2) The election date; and

(3) Certification that the pre-existing QOF sub and the consolidated group are in compliance with the conditions under § 1.1504-3(b)(2)(ii) as of the date that the pre-existing QOF sub and the consolidated group are in compliance with the conditions under § 1.1504-3(b)(2)(ii).

(iii) ***Time for completing the elections under paragraph (f) of this section.***

(A) If the pre-existing QOF sub is making an election under paragraph (f)(2)(ii) or (f)(3) of this section, all actions necessary to make such election must be completed by April 13, 2020. Specifically, if the pre-existing QOF sub is making the election under paragraph (f)(3) of this section, the conditions in § 1.1504-3(b)(2)(ii) must be met by April 13, 2020. In addition, the consolidated group's amended return (or superseding return, as applicable), taking into account the relevant changes, if applicable, must be filed by May 12, 2020. Moreover, if the electing QOF partnership had been a QOF partnership on day one and the electing QOF partnership's return would have been due, then such return also must be filed by May 12, 2020.

(B) If the pre-existing QOF sub is making a reclassification election under paragraph (f)(2)(iii) or (iv) of this section, all actions necessary to make such election, including the filing of the pre-existing QOF sub's own return (if the return would have been due had the pre-existing QOF sub not been included in the consolidated group on day one), and the consolidated group's amended return (or superseding return, as applicable), if applicable, must be completed by April 13, 2020.

(iv) ***Extension of statute of limitations.*** If, as a result of making a reclassification election in paragraph (f)(2) of this section, the consolidated group is required to file an amended return, and the electing QOF partnership is required to file a return by May 12, 2020 or the pre-existing QOF sub is required to file a return by April 13, 2020 (collectively, the related returns), then the consolidated group (and the pre-existing QOF sub, if an election under paragraph (f)(2)(iii) of this section is made) also must consent to extend the period of limitations on assessment with respect to any issues arising under section 1400Z-2 in the related returns of the consolidated group (and the pre-existing QOF sub, if applicable). This consent must be effected at such time and in such form and manner as may be prescribed by the Commissioner of Internal Revenue in Internal Revenue Service forms or instructions or in publications or guidance published in the Internal Revenue Bulletin (see §§ 601.601(d)(2) and 601.602 of this chapter).

(i) [Reserved]

(j) ***Examples.*** The following examples illustrate the rules of this section. For purposes of these examples, and unless otherwise stated: P is the common parent of the P consolidated group (P group); S, B, and M are members of the P group; Q is a QOF C corporation that is not a member of the P group; and X is an unrelated party.

(1) ***Example 1: Distribution by a QOF member and inclusion events*** —

(i) ***Facts.*** P wholly owns S. In 2018, S sells an asset to an unrelated party and realizes $500x of eligible gain. S forms a new QOF C corporation Q2, contributes $500x to Q2 in exchange for stock of Q2, and properly elects to defer the eligible gain under section 1400Z-2(a) and § 1.1400Z2(a)-1. The P group elects under § 1.1504-3(b)(2) to consolidate Q2. In 2024, Q2 distributes $20x to S when S's basis in Q2 is $50x, the value of Q2 exceeds $500x, and Q2 has no earnings and profits. There are no other events in 2024 that result in investment adjustments to Q2 stock.

(ii) ***Analysis.*** Under §§ 1.1502-13(f)(2) and 1.1502-32, the intercompany distribution from Q2 to S of $20x reduces S's basis in Q2 to $30x ($50x−$20x). Under paragraph (b)(1)(i) of this section, because the distribution does not create or increase an ELA in Q2 stock, the distribution is not an inclusion event.

(iii) ***Distribution that creates an ELA.*** The facts are the same as in paragraph (j)(1)(i) of this section except that in 2024 Q2 distributes $70x to S. Under §§ 1.1502-13(f)(2) and 1.1502-32, the intercompany distribution from Q2 to S of $70x reduces S's basis in Q2 to $0 and creates an ELA of $20x ($50x−$70x). Under paragraph (b)(1)(i) of this section, because an ELA is created in Q2's stock, the distribution is an inclusion event to the extent of the increase in the ELA. S therefore includes $20x of its deferred gain into income in 2024. See § 1.1400Z2(b)-1(e)(2). In addition, under § 1.1400Z2(b)-1(g)(1)(ii), the adjustment to S's basis in Q2 under section 1400Z-2(b)(2)(B)(ii) is applied before determining the other Federal income tax consequences of the distribution. Therefore, as a result of the inclusion event, S's basis in Q2 is first increased to $70x ($50x + $20x), and then S's basis in Q2 is reduced by $70x (the amount of the distribution) to $0 under § 1.1502-32.

(2) ***Example 2: Basis adjustment when member owns qualifying QOF stock*** —

(i) ***Facts.*** P wholly owns S. In 2018, S sells an asset to an unrelated party and realizes $500x of eligible gain. S contributes $500x to Q in exchange for stock of Q and properly elects to defer the eligible gain under section 1400Z-2(a) and § 1.1400Z2(a)-1. S does not otherwise own

stock in Q. In 2026, the fair market value of S's qualifying investment in Q exceeds $500x. In 2029, when S still owns its qualifying investment in Q, P sells all of the stock of S to X. S retains its stock in Q.

(ii) *Analysis* —

(A) ***Five-year and seven-year basis increase and § 1.1502-32 tier-up.*** In 2023, when S has held the stock of Q for five years, under section 1400Z-2(b)(2)(B)(iii), S increases its basis in its Q stock by $50x (10 percent of $500x, the amount of gain deferred by reason of section 1400Z-2(a)(1)(A)). The 10-percent basis increase qualifies as tax-exempt income to S under paragraph (d) of this section. Thus, P (an upper-tier member) increases its basis in S's stock by $50x under § 1.1502-32(b)(2)(ii). Similarly, in 2025, when S has held the stock of Q for seven years, under section 1400Z-2(b)(2)(B)(iv), S increases its basis in its Q stock by an additional $25x (5 percent of $500x). The 5-percent basis increase also qualifies as tax-exempt income to S under paragraph (d) of this section, and P increases its basis in S's stock by an additional $25x under § 1.1502-32(b)(2)(ii).

(B) ***S's recognition of deferred capital gain in 2026.*** S did not dispose of its Q stock prior to December 31, 2026. Therefore, under section 1400Z-2(b)(1)(B) and § 1.1400Z2(b)-1(b)(2), S's remaining deferred gain is included in S's income on December 31, 2026. The amount of gain included under section 1400Z-2(b)(2)(A) and § 1.1400Z2(b)-1(e)(3) is $425x ($500x of remaining deferred gain less S's $75x basis in Q). S's basis in Q is increased by $425x to $500x, and P's basis in S also is increased by $425x under § 1.1502-32(b)(2)(i).

(C) ***P's disposition of S.*** P's sale of S stock in 2029 results in the deconsolidation of S. S retains its Q stock, and S is not treated as selling or exchanging its Q stock for purposes of section 1400Z-2(c). Therefore, no basis adjustments under section 1400Z-2 are made as a result of P's sale of S stock.

(iii) ***S sells the stock of Q after 10 years.*** The facts are the same as in paragraph (j)(2)(i) of this section, except that in 2029, instead of P selling all of the stock of S, S sells all of the stock of Q to X for its fair market value of $800x. At the time of the sale, S has owned the Q stock for over 10 years, and S elects under section 1400Z-2(c) to adjust its stock basis in Q from $500x (see the analysis in paragraph (j)(2)(ii)(B) of this section) to $800x, the fair market value of Q on the date of the sale. As a result of the election, S has no gain on the sale of Q stock. Additionally, the $300x basis increase in Q is treated as tax-exempt income to S pursuant to paragraph (d) of this section. Thus, P increases its basis in P's S stock by $300x under § 1.1502-32(b)(2)(ii).

(3) *Example 3: Intercompany sale of qualifying investment* —

(i) ***Facts.*** In 2018, S sells an asset to an unrelated party and realizes $100x of eligible gain. Also in 2018, S contributes $100x to Q in exchange for Q stock and properly elects to defer the eligible gain under section 1400Z-2(a) and § 1.1400Z2(a)-1. S does not otherwise own stock in Q. In 2021, S sells all of its Q stock to B for $250x in a fully taxable transaction. In 2026, the fair market value of Q is $300x. In 2030, B sells the Q stock to X for $800x.

(ii) *Analysis* —

(A) ***Intercompany sale treated as an inclusion event.*** In 2021, S's sale of its Q stock to B is an inclusion event under section 1400Z-2(b)(1) and § 1.1400Z2(b)-1(c). The amount includible pursuant to § 1.1400Z2(b)-1(e)(1) is $100x (the lesser of the remaining deferred gain of $100x and the fair market value of the qualifying investment of $250x, over S's

basis in Q, $0). As a result of the inclusion, S's basis in Q increases from $0 to $100x and S also realizes a capital gain of $150x ($250x of amount realized less its $100x basis in the Q stock) from the intercompany sale of Q to B. Because S's sale of its Q stock to B is a fully taxable transaction, paragraph (c)(3)(ii) of this section applies to treat the sale as an intercompany transaction and S's intercompany gains are taken into account under § 1.1502-13(c)(2)(ii). Thus, S defers the inclusion of its $100x of remaining deferred gain and its $150x of capital gain in 2021. B has a $250x basis in its Q stock.

(B) ***Five-year basis increase in 2023.*** Pursuant to paragraph (c)(3)(ii) of this section, S and B are treated as divisions of a single entity for purposes of applying section 1400Z-2. In 2023, the single entity would have held the QOF investment for five years and its basis in Q would be increased to $10x ($100x × 10%) under section 1400Z-2(b)(2)(B)(iii). To achieve this single entity result, $10x of S's $100x of remaining deferred gain is redetermined to be tax-exempt income. See § 1.1502-13(c)(1); see also paragraph (c)(3)(ii)(B) of this section making § 1.1502-13(c)(6)(ii) inapplicable in determining the excludability of S's intercompany gain. Therefore, in 2023, S is treated as having $10x of tax-exempt income, S's remaining deferred gain is $90x ($100x−$10x), while B's basis in Q remains $250x.

(C) ***Seven-year basis increase in 2025.*** The same analysis in paragraph (j)(3)(ii)(B) of this section applies for the year 2025. Therefore, in 2025, S is treated as having $5x ($100x × 5%) of tax-exempt income, S's remaining deferred gain is $85x ($90x−$5x), and B's basis in Q remains $250x.

(D) ***Inclusion of S's remaining deferred gain in 2026.*** B continues to own the Q stock through 2026, and, treating S and B as divisions of a single entity for purposes of section 1400Z-2, the single entity would include its remaining deferred gain in income on December 31, 2026. See section 1400Z-2(b)(1), § 1.1400Z2(b)-1(b). On a single-entity basis, the amount includible pursuant to § 1.1400Z2(b)-1(e) is $85x (the lesser of the remaining deferred gain of $100x and the fair market value of the qualifying investment of $300x, over the single entity's basis in Q, $15x). B does not otherwise have an income event with respect to its Q stock in 2026. Therefore, under § 1.1502-13(c), all $85x of S's remaining deferred gain is taken into account in 2026. In addition, S's $150x of capital gain on its Q stock sale continues to be deferred, and B's basis in Q remains $250x.

(E) ***B sells the Q stock in 2030.*** In 2030, B sells all its Q stock to X for $800x. Under paragraph (c)(3)(ii)(D) of this section, B is entitled to make the election under section 1400Z-2(c) if, treating S and B as a single entity, the single entity would be eligible to make the election. Taking into account S's holding period, B has held Q for over 10 years, and B is eligible for the election when it sells Q to X in 2030. B makes the section 1400Z-2(c) election at the time of sale. Following the election, if S and B were divisions of a single entity, the single entity's basis in Q would increase from $100x to its fair market value of $800x, causing to be excluded the $700x of gain on the sale of Q stock. To achieve this single entity result, § 1.1502-13(c)(1) redetermines B's $550x ($800x−$250x) of gain and S's deferred $150x of capital gain to be tax-exempt income. See paragraph (c)(3)(ii)(B) of this section making § 1.1502-13(c)(6)(ii) inapplicable in determining the excludability of S's intercompany gain. Therefore, as a result of the sale of the Q stock and B making the section 1400Z-2(c) election, S has $150x of tax-exempt income, and B has $550x of tax-exempt income.

(4) ***Example 4: Intercompany sale of qualifying investment followed by sale of QOF at a loss outside of the consolidated group —***

(i) ***Facts.*** The facts are the same as in paragraph (j)(3)(i) of this section, except that in 2030, B sells the stock of Q for $225x to X.

(ii) ***Analysis.*** The analysis for tax years prior to 2030 is the same as in paragraphs (j)(3)(ii)(A) through (D) of this section. In addition, applying the analysis in paragraph (j)(3)(ii)(E) of this section, B is entitled to make the election under section 1400Z-2(c) and B makes the election. Following the election, if S and B were divisions of a single entity, the single entity's basis in Q would increase from $100x to $225x, causing to be excluded the $125x of gain on the sale of Q stock. To achieve this single entity result, § 1.1502-13(c)(1) redetermines B's $25x ($225x−$250x) of loss to be a noncapital, nondeductible expense and S's deferred $150x of capital gain to be tax-exempt income. Therefore, as a result of the sale of Q stock and B making the section 1400Z-2 election, S has $150x of tax-exempt income, and B has $25x of noncapital, nondeductible expense.

(5) ***Example 5: Intercompany section 351 transfer of qualifying investment*** —

(i) ***Facts.*** In 2018, M sells an asset to an unrelated party and realizes $100x of eligible gain. Also in 2018, M contributes $100x to Q in exchange for Q stock and properly elects to defer the eligible gain under section 1400Z-2(a) and § 1.1400Z2(a)-1. M does not otherwise own stock in Q. In 2021, when the value of Q is $200x, M contributes all of its Q stock to S in exchange for S stock in a transaction that qualifies under section 351.

(ii) ***Analysis.*** In 2021, M's contribution of its Q stock to S is an inclusion event under section 1400Z-2(b)(1) and § 1.1400Z2(b)-1(c). The amount includible pursuant to § 1.1400Z2(b)-1(e) is $100x (the lesser of the remaining deferred gain of $100x and the fair market value of the qualifying investment of $200x, over S's basis in Q, $0). Because M's contribution of its Q stock to S is not a fully taxable transaction, the general rule in paragraph (c)(3)(i) of this section applies to treat the contribution as not an intercompany transaction for purposes of applying section 1400Z-2, and § 1.1502-13 does not apply to treat M and S as a single entity for purposes of section 1400Z-2. Thus, as a result of the transfer, M takes its $100x of remaining deferred gain into account, M's basis in S is $100x, and S's basis in Q is $100x.

(6) ***Example 6: Intercompany sale of qualifying investment followed by a tax-free transfer of the qualifying investment*** —

(i) ***Section 351 transfer to another member of the consolidated group*** —

(A) ***Facts.*** In 2018, S sells an asset to an unrelated party and realizes $100x of eligible gain. Also in 2018, S contributes $100x to Q in exchange for Q stock and properly elects to defer the eligible gain under section 1400Z-2(a) and § 1.1400Z2(a)-1. S does not otherwise own stock in Q. In 2021, when the fair market value of the Q stock is $250, S sells all of its Q stock to B for $250x in a fully taxable transaction. In 2024, B transfers all its Q stock to another member of the P group, B2, in a section 351 transaction. At such time, the fair market value of the Q stock is $300x.

(B) ***Analysis*** —

(*1*) ***Intercompany sale in 2021.*** In 2021, S's sale of its Q stock to B is an inclusion event under section 1400Z-2(b)(1) and § 1.1400Z2(b)-1(c). The amount includible pursuant to § 1.1400Z2(b)-1(e) is $100x (the lesser of the remaining deferred gain of $100x and the fair market value of the qualifying investment of $250x, over S's basis in Q, $0). As a result of the inclusion, S's basis in its Q stock increases from $0 to $100x

and S also realizes a capital gain of $150x ($250x of amount realized less its $100x basis in the Q stock) from the intercompany sale of the Q stock to B. Because S's sale of its Q stock to B is a fully taxable transaction, paragraph (c)(3)(ii) of this section applies to treat the sale as an intercompany transaction. Therefore, S's intercompany gains are taken into account under § 1.1502-13(c) and (d). Thus, S defers the inclusion of its $100x of remaining deferred gain and its $150x of capital gain in 2021. B has a $250x basis in its Q stock.

(*2*) ***Five-year basis increase in 2023.*** Pursuant to paragraph (c)(3)(ii) of this section, S and B are treated as divisions of a single entity for purposes of applying section 1400Z-2. In 2023, the single entity has held the QOF investment for five years and its basis in the Q stock would be increased to $10x ($100x × 10%) under section 1400Z-2(b)(2)(B)(iii). To achieve this single entity result, $10x of S's $100x of remaining deferred gain is redetermined to be tax-exempt income. See § 1.1502-13(c)(1); see also paragraph (c)(3)(ii)(B) of this section making § 1.1502-13(c)(6)(ii) inapplicable in determining the excludability of S's intercompany gain. Therefore, in 2023, S is treated as having $10x of tax-exempt income, S's remaining deferred gain is $90x ($100x−$10x), and B's basis in the Q stock remains $250x.

(*3*) ***Intercompany transfer in a section 351 transaction.*** In 2024, B's contribution of its Q stock to B2, a member of the P group, is an inclusion event under section 1400Z-2(b)(1) and § 1.1400Z2(b)-1(c). The amount includible pursuant to § 1.1400Z2(b)-1(e) is $90x (the remaining deferred gain as determined in paragraph (j)(6)(i)(B) of this section). Because B's contribution of its Q stock to B2 is not a fully taxable transaction, the general rule in paragraph (c)(3)(i) of this section applies to prevent the contribution from being treated as an intercompany transaction for purposes of section 1400Z-2. As a result, for purposes of section 1400Z-2, § 1.1502-13 does not apply to treat B and B2 as a single entity, and the application of § 1.1502-13(j) is adjusted accordingly. As a result of the section 351 transfer, S takes its $90x of remaining deferred gain into account. B's basis in its B2 stock is $250x, and B's basis in its Q stock is $250x. However, because S's $150x of capital gain from the intercompany sale of its Q stock to B in 2021 is not an item related to section 1400Z-2, it continues to be deferred under § 1.1502-13 because B2 is a member of the P group. See § 1.1502-13(j)(4) regarding successive intercompany transactions.

(ii) ***Section 351 transfer to a non-member —***

(A) ***Facts.*** The facts are the same as in paragraph (j)(6)(i)(A) of this section, except that B2 is not a member of the P group, and B contributes all its Q stock to B2 in a transaction that qualifies under section 351.

(B) ***Analysis —***

(*1*) ***Intercompany sale in 2021 and five-year basis increase in 2023.*** The analysis for the 2021 and 2023 tax years are the same as in paragraphs (j)(6)(i)(B)(*1*) and (*2*) of this section.

(2) ***Transfer of Q to a non-member in a section 351 transaction.*** In 2024, B's contribution of its Q stock to B2, a non-member of the P group, is an inclusion event under section 1400Z-2(b)(1) and § 1.1400Z2(b)-1(c). The amount includible pursuant to § 1.1400Z2(b)-1(e) is $90x (the remaining deferred gain as determined in paragraph (j)(6)(ii)(B)(1) of this section). S's deferred capital gain of $150x is taken into account in 2024 under the acceleration rule of § 1.1502-13(d) because the Q stock has left the P group. B2's holding period for the qualifying investment does not include the time during which B and S held the qualifying investment.

(iii) ***Section 721(a) transfer to a partnership —***

(A) ***Facts.*** The facts are the same as in paragraph (j)(6)(i)(A) of this section, except that B2 is a partnership, and an unrelated party is the other partner in B2. B's transfer of all of its Q stock to B2 qualifies for non-recognition treatment under section 721(a). In 2026, the fair market value of Q is $330x.

(B) ***Analysis —***

(*1*) ***Intercompany sale in 2021 and five-year basis increase in 2023.*** The analysis for the 2021 and 2023 tax years are the same as in paragraphs (j)(6)(i)(B)(*1*) and (*2*) of this section.

(*2*) ***Transfer of Q stock to a partnership in a section 721(a) transaction.*** In 2024, B transfers its Q stock to B2, a partnership, in a section 721(a) transaction. Although a section 721(a) transaction is not an inclusion event under § 1.1400Z2(b)-1(c)(7), under the acceleration rule of § 1.1502-13(d), S must take into account its $90x of remaining deferred gain because B2 has benefited from an increased basis in the Q stock as a result of the intercompany sale between S and B such that this is the appropriate time to take the remaining deferred gain into account. S's deferred capital gain of $150x is taken into account in 2024 for the same reason.

(7) ***Example 7: Computation and application of the attribute reduction amount under § 1.1502-36(d) when S owns a QOF —***

(i) ***Facts.*** In 2018, S sells an asset to an unrelated party and realizes $5,000x of eligible gain. S contributes $5,000x to Q in exchange for stock of Q and properly elects to defer the eligible gain under section 1400Z-2(a) and § 1.1400Z2(a)-1. In 2024, M sells all of its S stock to X for its fair market value of $100x, and M's basis in the stock of S is $300x. At the time of sale, S owns the Q stock with a basis of $500x (S's basis in its Q stock was increased under section 1400Z-2(b)(2)(B)(iii) to $500x in 2023), and S has a net operating loss carryover of $50x. M's transfer of the S shares is a transfer of loss shares under § 1.1502-36. Assume that no basis redetermination is required under § 1.1502-36(b) and no basis reduction is required under § 1.1502-36(c).

(ii) ***Attribute reduction under § 1.1502-36(d).*** Under § 1.1502-36(d), S's attributes are reduced by S's attribute reduction amount. Section 1.1502-36(d)(3) provides that S's attribute reduction amount is the lesser of the net stock loss and S's aggregate inside loss. The net stock loss is the excess of the $300x aggregate basis of the transferred S shares over the $100x aggregate value of those shares, or $200x. S's aggregate inside loss, which includes the basis of the stock of Q as provided by paragraph (e) of this section, is the excess of S's net inside attribute amount over the value of the S share. S's net inside attribute amount is $550x, computed as the sum of S's $50x loss carryover and its $500x basis in Q. S's aggregate inside loss is therefore

$450x ($550x net inside attribute amount over the $100x value of the S share). Accordingly, S's attribute reduction amount is the lesser of the $200x net stock loss and the $450x aggregate inside loss, or $200x. Under § 1.1502-36(d)(4), S's $200x attribute reduction is first allocated and applied to reduce S's $50x loss carryover to $0. Under § 1.1502-36(d)(4)(i)(D), S generally would be able to reduce the basis of its category D assets (including stock in other corporations) by the remaining attribute reduction amount ($150x). However, paragraph (e) of this section provides that S's basis in the stock of Q is not included in S's Category D attributes that are available for reduction under § 1.1502-36(d)(4), and the remaining $150x of attribute reduction amount cannot be used to reduce the basis of Q shares under § 1.1502-36(d). Rather, under paragraph (e) of this section, P is treated as making the election under § 1.1502-36(d)(6) to reduce M's basis in the transferred loss S shares by $150x. As a result, P's basis in its M stock is also reduced by $150x.

(k) ***Applicability dates*** —

(1) ***In general.*** This section applies for taxable years beginning after March 13, 2020.

(2) ***Prior periods.*** With respect to the portion of a consolidated group's first taxable year ending after December 21, 2017, and for taxable years beginning after December 21, 2017, and on or before March 13, 2020, a consolidated group may choose either—

(i) To apply the section 1400Z-2 regulations, if applied in a consistent manner for all such taxable years; or

(ii) To rely on the rules in proposed § 1.1400Z2(g)-1 contained in the notice of proposed rulemaking (REG-120186-18) published on May 1, 2019, but only if applied in a consistent manner for all such taxable years.

[T.D. 9889, 85 FR 1993, Jan. 13, 2020; 85 FR 19086, Apr. 6, 2020]

§ 1.1502-15 SRLY limitation on built-in losses.

(a) ***SRLY limitation.*** Except as provided in paragraph (f) of this section (relating to built-in losses of the common parent) and paragraph (g) of this section (relating to an overlap with section 382), built-in losses are subject to the SRLY limitation under §§ 1.1502-21(c) and 1.1502-22(c) (including applicable subgroup principles). Built-in losses are treated as deductions or losses in the year recognized, except for the purpose of determining the amount of, and the extent to which the built-in loss is limited by, the SRLY limitation for the year in which it is recognized. Solely for such purpose, a built-in loss is treated as a hypothetical net operating loss carryover or net capital loss carryover arising in a SRLY, instead of as a deduction or loss in the year recognized. To the extent that a built-in loss is allowed as a deduction under this section in the year it is recognized, it offsets any consolidated taxable income for the year before any loss carryovers or carrybacks are allowed as a deduction. To the extent not so allowed, it is treated as a separate net operating loss or net capital loss carryover or carryback arising in the year of recognition and, under § 1.1502-21(c) or 1.1502-22(c), the year of recognition is treated as a SRLY.

(b) ***Built-in losses*** —

(1) ***Defined.*** If a corporation has a net unrealized built-in loss under section 382(h)(3) (as modified by this section) on the day it becomes a member of the group (whether or not the group is a consolidated group), its deductions and losses are built-in losses under this section to the extent

they are treated as recognized built-in losses under section 382(h)(2)(B) (as modified by this section). This paragraph (b) generally applies separately with respect to each member, but see paragraph (c) of this section for circumstances in which it is applied on a subgroup basis.

(2) ***Operating rules.*** Solely for purposes of applying paragraph (b)(1) of this section, the principles of § 1.1502-94(c) apply with appropriate adjustments, including the following:

(i) ***Stock acquisition.*** A corporation is treated as having an ownership change under section 382(g) on the day the corporation becomes a member of a group, and no other events (e.g., a subsequent ownership change under section 382(g) while it is a member) are treated as causing an ownership change.

(ii) ***Asset acquisition.*** In the case of an asset acquisition by a group, the assets and liabilities acquired directly from the same transferor (whether corporate or non-corporate, foreign or domestic) pursuant to the same plan are treated as the assets and liabilities of a corporation that becomes a member of the group (and has an ownership change) on the date of the acquisition.

(iii) ***Recognized built-in gain or loss.*** A loss that is included in the determination of net unrealized built-in gain or loss and that is recognized but disallowed or deferred (e.g., under § 1.337(d)-2, § 1.1502-35, § 1.1502-36, or section 267) is not treated as a built-in loss unless and until the loss would be allowed during the recognition period without regard to the application of this section. Section 382(h)(1)(B)(ii) does not apply to the extent it limits the amount of recognized built-in loss that may be treated as a pre-change loss to the amount of the net unrealized built-in loss.

(c) ***Built-in losses of subgroups*** —

(1) ***In general.*** In the case of a subgroup, the principles of paragraph (b) of this section apply to the subgroup, and not separately to its members. Thus, the net unrealized built-in loss and recognized built-in loss for purposes of paragraph (b) of this section are based on the aggregate amounts for each member of the subgroup.

(2) ***Members of subgroups.*** A subgroup is composed of those members that have been continuously affiliated with each other for the 60 consecutive month period ending immediately before they become members of the group in which the loss is recognized. A member remains a member of the subgroup until it ceases to be affiliated with the loss member. For this purpose, the principles of § 1.1502-21(c)(2)(iv) through (vi) apply with appropriate adjustments.

(3) ***Coordination of 60 month affiliation requirement with the overlap rule.*** If one or more corporations become members of a group and are included in the determination of a net unrealized built-in loss that is subject to the overlap rule described in paragraph (g)(1) of this section, then for purposes of paragraph (c)(2) of this section, such corporations that become members of the group are treated as having been affiliated for 60 consecutive months with the common parent of the group and are also treated as having been affiliated with any other members who have been affiliated or are treated as having been affiliated with the common parent at such time. The corporations are treated as having been affiliated with such other members for the same period of time that those members have been affiliated or are treated as having been affiliated with the common parent. If two or more corporations become members of the group at the same time, but this paragraph (c)(3) does not apply to every such corporation, then immediately after the corporations become members of the group, and solely for purposes of paragraph (c)(2) of this section, the corporations to which this paragraph (c)(3) applies are treated as having not been previously affiliated with the corporations to

which this paragraph (c)(3) does not apply. If the common parent has become the common parent of an existing group within the previous five year period in a transaction described in § 1.1502-75(d)(2)(ii) or (3), the principles of §§ 1.1502-91(g)(6) and 1.1502-96(a)(2)(iii) shall apply.

(4) ***Built-in amounts.*** Solely for purposes of determining whether the subgroup has a net unrealized built-in loss or whether it has a recognized built-in loss, the principles of § 1.1502-91(g) and (h) apply with appropriate adjustments.

(d) ***Examples.*** For purposes of the examples in this section, unless otherwise stated, all groups file consolidated returns, all corporations have calendar taxable years, the facts set forth the only corporate activity, value means fair market value and the adjusted basis of each asset equals its value, all transactions are with unrelated persons, and the application of any limitation or threshold under section 382 is disregarded. The principles of this section are illustrated by the following examples:

Example 1. Determination of recognized built-in loss. (i) Individual A owns all of the stock of P and T. T has two depreciable assets. Asset 1 has an unrealized loss of $55 (basis $75, value $20), and asset 2 has an unrealized gain of $20 (basis $30, value $50). P acquires all the stock of T from Individual A during Year 1, and T becomes a member of the P group. P's acquisition of T is not an ownership change as defined by section 382(g). Paragraph (g) of this section does not apply because there is not an overlap of the application of the rules contained in paragraph (a) of this section and section 382.
(ii) Under paragraph (b)(2)(i) of this section, and solely for purposes of applying paragraph (b)(1) of this section, T is treated as having an ownership change under section 382(g) on becoming a member of the P group. Under paragraph (b)(1) of this section, none of T's $55 of unrealized loss is treated as a built-in loss unless T has a net unrealized built-in loss under section 382(h)(3) on becoming a member of the P group.

(iii) Under section 382(h)(3)(A), T has a $35 net unrealized built-in loss on becoming a member of the P group (($55) + $20 = ($35)). Assume that this amount exceeds the threshold requirement in section 382(h)(3)(B). Under section 382(h)(2)(B), the entire amount of T's $55 unrealized loss is treated as a built-in loss to the extent it is recognized during the 5-year recognition period described in section 382(h)(7). Under paragraph (b)(2)(iii) of this section, the restriction under section 382(h)(1)(B)(ii), which limits the amount of recognized built-in loss that is treated as pre-change loss to the amount of the net unrealized built-in loss, is inapplicable for this purpose. Consequently, the entire $55 of unrealized loss (not just the $35 net unrealized loss) is treated under paragraph (b)(1) of this section as a built-in loss to the extent it is recognized within 5 years of T's becoming a member of the P group. Under paragraph (a) of this section, a built-in loss is subject to the SRLY limitation under § 1.1502-21(c)(1).

(iv) Under paragraph (b)(2)(ii) of this section, the built-in loss would similarly be subject to a SRLY limitation under § 1.1502-21(c)(1) if T transferred all of its assets and liabilities to a subsidiary of the P group in a single transaction described in section 351. To the extent the built-in loss is recognized within 5 years of T's transfer, all of the items contributed by the acquiring subsidiary to

consolidated taxable income (and not just the items attributable to the assets and liabilities transferred by T) are included for purposes of determining the SRLY limitation under § 1.1502-21(c)(1).

Example 2. Actual application of section 382 not relevant. (i) Individual A owns all of the stock of P, and Individual B owns all of the stock of T. T has two depreciable assets. Asset 1 has an unrealized loss of $25 (basis $75, value $50), and asset 2 has an unrealized gain of $20 (basis $30, value $50). P buys 55 percent of the stock of T in January of Year 1, resulting in an ownership change of T under section 382(g). During March of Year 2, P buys the 45 percent balance of the T stock, and T becomes a member of the P group.
(ii) Although T has an ownership change for purposes of section 382 in Year 1 and not Year 2, T's joining the P group in Year 2 is treated as an ownership change under section 382(g) solely for purposes of this section. Consequently, for purposes of this section, whether T has a net unrealized built-in loss under section 382(h)(3) is determined as if the day T joined the P group were a change date.

Example 3. Determination of a recognized built-in loss of a subgroup. (i) Individual A owns all of the stock of P, S, and M. P and M are each the common parent of a consolidated group. During Year 1, P acquires all of the stock of S from Individual A, and S becomes a member of the P group. P's acquisition of S is not an ownership change as defined by section 382(g). At the beginning of Year 7, M acquires all of the stock of P from Individual A, and P and S become members of the M group. M's acquisitions of P and S are also not ownership changes as defined by section 382(g). At the time of M's acquisition of the P stock, P has (disregarding the stock of S) a $10 net unrealized built-in gain (two depreciable assets, asset 1 with a basis of $35 and a value of $55, and asset 2 with a basis of $55 and a value of $45), and S has a $75 net unrealized built-in loss (two depreciable assets, asset 3 with a basis of $95 and a value of $10, and asset 4 with a basis of $10 and a value of $20).
(ii) Under paragraph (c) of this section, P and S compose a subgroup on becoming members of the M group because P and S were continuously affiliated for the 60 month period ending immediately before they became members of the M group. Consequently, paragraph (b) of this section does not apply to P and S separately. Instead, their separately computed unrealized gains and losses are aggregated for purposes of determining whether, and the extent to which, any unrealized loss is treated as built-in loss under this section and is subject to the SRLY limitation under § 1.1502-21(c).

(iii) Under paragraph (c) of this section, the P subgroup has a net unrealized built-in loss on the day P and S become members of the M group, determined by treating the day they become members as a change date. The net unrealized built-in loss is the aggregate of P's net unrealized built-in gain of $10 and S's net unrealized built-in loss of $75, or an aggregate net unrealized built-in loss of $65. (The stock of S owned by P is disregarded for purposes of determining the net unrealized

built-in loss. However, any loss allowed on the sale of the stock within the recognition period is taken into account in determining recognized loss.) Assume that the $65 net unrealized built-in loss exceeds the threshold requirement under section 382(h)(3)(B).

(iv) Under paragraphs (b)(1), (b)(2)(iii), and (c) of this section, a loss recognized during the 5-year recognition period on an asset of P or S held on the day that P and S became members of the M group is a built-in loss except to the extent the group establishes that such loss exceeds the amount by which the adjusted basis of such asset on the day the member became a member exceeded the fair market value of such asset on that same day. If P sells asset 2 for $45 in Year 7 and recognizes a $10 loss, the entire $10 loss is treated as a built-in loss under paragraphs (b)(2)(iii) and (c) of this section. If S sells asset 3 for $10 in Year 7 and recognizes an $85 loss, the entire $85 loss is treated as a built-in loss under paragraphs (b)(2)(iii) and (c) of this section (not just the $55 balance of the P subgroup's $65 net unrealized built-in loss).

(v) The determination of whether P and S constitute a SRLY subgroup for purposes of loss carryovers and carrybacks, and the extent to which built-in losses are not allowed under the SRLY limitation, is made under § 1.1502-21(c).

Example 4. Computation of SRLY limitation. (i) Individual A owns all of the stock of P, the common parent of a consolidated group. During Year 1, Individual A forms T by contributing $300, and T sustains a $100 net operating loss. During Year 2, T's assets decline in value to $100. At the beginning of Year 3, P acquires all the stock of T from Individual A, and T becomes a member of the P group with a net unrealized built-in loss of $100. P's acquisition of T is not an ownership change as defined by section 382(g). Assume that $100 exceeds the threshold requirements of section 382(h)(3)(B). During Year 3, T recognizes its unrealized built-in loss as a $100 ordinary loss. The members of the P group contribute the following net income to the consolidated taxable income of the P group (disregarding T's recognized built-in loss and any consolidated net operating loss deduction under § 1.1502-21) for Years 3 and 4:

	Year 3	Year 4	Total
P group (without T)	$100	$100	$200
T	60	40	100
CTI	160	140	300

(ii) Under paragraph (b) of this section, T's $100 ordinary loss in Year 3 (not taken into account in the consolidated taxable income computations above) is a built-in loss. Under paragraph (a) of this section, the built-in loss is treated as a net operating loss carryover for purposes of determining the SRLY limitation under § 1.1502-21(c).

(iii) For Year 3, § 1.1502-21(c) limits T's $100 built-in loss and $100 net operating loss carryover from Year 1 to the aggregate of the P group's consolidated taxable income through Year 3, determined by reference to only T's items. For this purpose, consolidated taxable income is determined without regard to any consolidated net operating loss deductions under § 1.1502-21(a).

(iv) The P group's consolidated taxable income through Year 3 is $60 when determined by reference to only T's items. Under § 1.1502-21(c), the SRLY limitation for Year 3 is therefore $60.

(v) Under paragraph (a) of this section, the $100 built-in loss is treated as a current deduction for all purposes other than determination of the SRLY limitation under § 1.1502-21(c). Consequently, a deduction for the built-in loss is allowed in Year 3 before T's loss carryover from Year 1 is allowed, but only to the extent of the $60 SRLY limitation. None of T's Year 1 loss carryover is allowed because the built-in loss ($100) exceeds the SRLY limitation for Year 3.

(vi) The $40 balance of the built-in loss that is not allowed in Year 3 because of the SRLY limitation is treated as a $40 net operating loss arising in Year 3 that is carried to other years in accordance with the rules of § 1.1502-21(b). The $40 net operating loss is treated under paragraph (a) of this section and § 1.1502-21(c)(1)(ii) as a loss carryover or carryback from Year 3 that arises in a SRLY, and is subject to the rules of § 1.1502-21 (including § 1.1502-21(c)) rather than this section. See also § 1.1502-21(c)(1)(iii) *Example 4.*

(vii) The facts are the same as in paragraphs (i) through (vi) of this *Example 4,* except that T has an additional built-in loss when it joins the P group which is recognized in Year 4. For purposes of determining the SRLY limitation for this additional loss in Year 4 (or any subsequent year), the $60 of built-in loss allowed as a deduction in Year 3 is treated under paragraph (a) of this section as a deduction in Year 3 that reduces the P group's consolidated taxable income when determined by reference to only T's items.

Example 5. Built-in loss exceeding consolidated taxable income in the year recognized. (i) Individual A owns all of the stock of P and T. During Year 1, P acquires all the stock of T from Individual A, and T becomes a member of the P group. P's acquisition of T was not an ownership change as defined by section 382(g). At the time of acquisition, T has a noncapital asset with an unrealized loss of $45 (basis $100, value $55), which exceeds the threshold requirements of section 382(h)(3)(B). During Year 2, T sells its asset for $55 and recognizes the unrealized built-in loss. The P group has $10 of consolidated taxable income in Year 2, computed by disregarding T's recognition of the $45 built-in loss and the consolidated net operating loss deduction, while the consolidated taxable income would be $25 if determined by reference to only T's items (other than the $45 loss).

(ii) T's $45 loss is recognized in Year 2 and, under paragraph (b) of this section, constitutes a built-in loss. Under paragraph (a) of this section and § 1.1502-21(c)(1)(ii), the loss is treated as a net operating loss carryover to Year 2 for purposes of applying the SRLY limitation under § 1.1502-21(c).

(iii) For Year 2, T's SRLY limitation is the aggregate of the P group's consolidated taxable income through Year 2 determined by reference to only T's items. For this purpose, consolidated taxable income is determined by disregarding any built-in loss that is treated as a net operating loss carryover, and any consolidated net operating loss deductions under § 1.1502-21(a). Consolidated taxable income so determined is $25.

(iv) Under § 1.1502-21(c), $25 of the $45 built-in loss could be deducted in Year 2. Because the P group has only $10 of consolidated taxable income (determined without regard to the $45), the $25 loss creates a consolidated net operating loss of $15. This loss is carried back or forward under the rules of § 1.1502-21(b) and absorbed under the rules of § 1.1502-21(a). This loss is not treated as arising in a SRLY (see § 1.1502-21(c)(1)(ii)) and therefore is not subject to the SRLY limitation under § 1.1502-21(c) in any consolidated return year of the group to which it is carried. The remaining $20 is treated as a loss carryover arising in a SRLY and is subject to the limitation of § 1.1502-21(c) in the year to which it is carried.

(e) ***Predecessors and successors.*** For purposes of this section, any reference to a corporation or member includes, as the context may require, a reference to a successor or predecessor, as defined in § 1.1502-1(f)(4).

(f) ***Built-in losses recognized by common parent of group*** —

(1) ***General rule.*** Paragraph (a) of this section does not apply to any loss recognized by the group on an asset held by the common parent on the date the group is formed. Following an acquisition described in § 1.1502-75(d)(2) or (3), references to the common parent are to the corporation that was the common parent immediately before the acquisition.

(2) ***Anti-avoidance rule.*** If a corporation that becomes a common parent of a group acquires assets with a net unrealized built-in loss in excess of the threshold requirement of section 382(h)(3)(B) (and thereby increases its net unrealized built-in loss or decreases its net unrealized built-in gain) prior to, and in anticipation of, the formation of the group, paragraph (f)(1) of this section does not apply.

(g) ***Overlap with section 382*** —

(1) ***General rule.*** The limitations provided in §§ 1.1502-21(c) and 1.1502-22(c) do not apply to recognized built-in losses or to loss carryovers or carrybacks attributable to recognized built-in losses when the application of paragraph (a) of this section results in an overlap with the application of section 382.

(2) ***Definitions*** —

(i) ***Generally.*** For purposes of this paragraph (g), the definitions and nomenclature contained in section 382, the regulations thereunder, and §§ 1.1502-90 through 1.1502-99 apply.

(ii) *Overlap* —

(A) An overlap of the application of paragraph (a) of this section and the application of section 382 with respect to built-in losses occurs if a corporation becomes a member of a consolidated group (the SRLY event) within six months of the change date of an ownership change giving rise to a section 382(a) limitation that would apply with respect to the corporation's recognized built-in losses (the section 382 event). Except as provided in paragraph (g)(3) of this section, application of the overlap rule does not require that the size and composition of the corporation's net unrealized built-in loss is the same on the date of the section 382 event and the SRLY event.

(B) For special rules in the event that there is a SRLY subgroup and/or a loss subgroup as defined in § 1.1502-91(d)(2) with respect to built-in losses, see paragraph (g)(4) of this section.

(3) *Operating rules* —

(i) ***Section 382 event before SRLY event.*** If a SRLY event occurs on the same date as a section 382 event or within the six month period beginning on the date of the section 382 event, paragraph (g)(1) of this section applies beginning with the tax year that includes the SRLY event. Paragraph (g)(1) of this section does not apply, however, if a corporation that would otherwise be subject to the overlap rule acquires assets from a person other than a member of the group with a net unrealized built-in loss in excess of the threshold requirement of section 382(h)(3)(B) (and thereby increases its net unrealized built-in loss) after the section 382 event, and before the SRLY event.

(ii) ***SRLY event before section 382 event.*** If a section 382 event occurs within the period beginning the day after the SRLY event and ending six months after the SRLY event, paragraph (g)(1) of this section applies starting with the first tax year that begins after the section 382 event. However, paragraph (g)(1) of this section does not apply at any time if a corporation that otherwise would be subject to paragraph (g)(1) of this section transfers assets with an unrealized built-in loss to another member of the group after the SRLY event, but before the section 382 event, unless the corporation recognizes the built-in loss upon the transfer.

(4) ***Subgroup rules.*** In general, in the case of built-in losses for which there is a SRLY subgroup and the corporations joining the group at the time of the SRLY event also constitute a loss subgroup (as defined in § 1.1502-91(d)(2)), the principles of this paragraph (g) apply to the SRLY subgroup, and not separately to its members. However, paragraph (g)(1) of this section applies with respect to built-in losses only if—

(i) All members of the SRLY subgroup with respect to those built-in losses are also included in a loss subgroup (as defined in § 1.1502-91(d)(2)); and

(ii) All members of a loss subgroup (as defined in § 1.1502-91(d)(2)) are also members of a SRLY subgroup with respect to those built-in losses.

(5) ***Asset acquisitions.*** Notwithstanding the application of this paragraph (g), paragraph (a) of this section applies to asset acquisitions by the corporation that occurs after the latter of the SRLY event and the section 382 event. See, paragraph (b)(2)(ii) of this section.

(6) ***Examples.*** The principles of this paragraph (g) are illustrated by the following examples:

Example 1. Determination of subgroup. (i) Individual A owns all of the stock of P, P1, and S. In Year 1, P acquires all of the stock of P1, and they file a consolidated return. In Year 3, P acquires all of the stock of S, and S joins the P group. Individual B, unrelated to Individual A, owns all of the stock of M and K, each the common parent of a consolidated group. Individual C, unrelated to either Individual A or Individual B, owns all of the stock of T.
(ii) At the beginning of Year 7, M acquires all of the stock of P from Individual A, and, as a result, P, P1, and S become members of the M group. At the time of M's acquisition of the P stock, P has a $15 net unrealized built-in loss (disregarding the stock of P1), P1 has a net unrealized built-in gain of $10, and S has a net unrealized built-in gain of $5.

(iii) During Year 8, M acquires all of the stock of T, and T joins the M group. At the time of M's acquisition of the T stock, T had an unrealized built-in loss of $15. At the beginning of Year 9, K acquires all of the stock of M from Individual B, and the members of the M consolidated group including P, P1, S, and T become members of the K group. At the time of K's acquisition of the M stock, M has (disregarding the stock of P and T) a $15 net unrealized built-in loss, P has a $20 net unrealized built-in loss (disregarding the stock of P1), P1 has a net unrealized built-in gain of $5, S has a net unrealized built-in loss of $35, and T has a $15 net unrealized built-in loss.

(iv) M's acquisition of P in Year 7 results in P, P1, and S becoming members of the M group (the SRLY event). Under paragraph (c) of this section, P and P1 compose a SRLY built-in loss subgroup because they have been affiliated for the 60 consecutive month period immediately preceding joining the M group. S is not a member of the subgroup because on becoming a member of the M group it had not been continuously affiliated with P and P1 for the 60 month period ending immediately before it became a member of the M group. Consequently, § 1.1502-15 applies to S separately from the P and P1 subgroup.

(v) Assuming that the $5 net unrealized built-in loss of the P/P1 subgroup exceeds the threshold requirement under section 382(h)(3)(B), M's acquisition of P resulted in an ownership change of P and P1 within the meaning of section 382(g) that subjects P and P1 to a limitation under section 382(a) (the section 382 event). Because, with respect to P and P1, the SRLY event and the change date of the section 382 event occur on the same date and because the loss subgroup and SRLY subgroup are coextensive, there is an overlap of the application of the SRLY rules and the application of section 382.

(vi) S was not a loss corporation because it did not have a net operating loss carryover, or a net unrealized built-in loss, and therefore, M's acquisition of P did not result in an ownership change of S within the meaning of section 382(g). S, therefore is not subject to the overlap rule of paragraph (g) of this section.

(vii) M's acquisition of T resulted in T becoming a member of the M group (the SRLY event). Assuming that T's $15 net unrealized built-in loss exceeds the threshold requirement under section 382(h)(3)(B), M's acquisition of T also resulted in an ownership change of T within the meaning of section 382(g) that subjects T to a limitation under section 382(a) (the section 382 event). Because, with respect to T, the SRLY event and the change date of the section 382 event occur on the same date, there is an overlap of the application of the SRLY rules and the application of section 382 within the meaning of paragraph (g) of this section.

(viii) K's acquisition of M results in the members of the M consolidated group, including T, P, P1, and S, becoming members of the K group (the SRLY event). Because T, P, and P1 were each included in the determination of a net unrealized built-in loss that was subject to the overlap rule described in paragraph (g)(1) of this section when they each became members of the M group, they are deemed under paragraph (c)(3) of this section to have been continuously affiliated with M for the 60 month period ending immediately before becoming a member of the M group, notwithstanding their actual affiliation history. As a result, M, T, P, and P1 compose a SRLY built-in loss subgroup under paragraph (c)(2) of this section. K's acquisition of M is not subject to paragraph (g) of this section because it does not result in a section 382 event.

(ix) S, however, is not a member of the subgroup under paragraph (c)(2) of this section. Because S was not included in the determination of a net unrealized built-in loss that was subject to the overlap rule described in paragraph (g)(1) of this section when it joined the M group, S is treated as becoming an affiliate of M on the date it joined the M group. Furthermore, under paragraph (c)(3) of this section, S is deemed to have begun its affiliation with P and P1 on the date it joined the M group. Consequently, § 1.1502-15 applies to S separately to the extent its built-in loss is recognized within the recognition period.

Example 2. Post-overlap acquisition of assets. (i) Individual A owns all of the stock of P, the common parent of a consolidated group. B, an individual unrelated to Individual A, owns all of the stock of T. T has two depreciable assets. Asset 1 has an unrealized built-in loss of $25 (basis $75, value $50), and asset 2 has an unrealized built-in gain of $20 (basis $30, value $50). During Year 3, P buys all of the stock of T from Individual B. On January 1, Year 4, P contributes $80 cash and Individual A contributes asset 3, a depreciable asset, with a net unrealized built-in loss of $45 (basis $65, value $20), in exchange for T stock in a transaction that is described in section 351.
(ii) P's acquisition of T results in T becoming a member of the P group (the SRLY event) and also results in an ownership change of T, within the meaning of section 382(g), that gives rise to a limitation under section 382(a) (the section 382 event).

(iii) Because the SRLY event and the change date of the section 382 event occur on the same date, there is an overlap of the application of the SRLY rules and the application of section 382. Consequently, under paragraph (g) of this section, the limitation under paragraph (a) of this section does not apply to T's net unrealized built-in loss when it joined the P group.

(iv) Individual A's Year 4 contribution of a depreciable asset occurred after T was a member of the P group. Assuming that the amount of the net unrealized built-in loss exceeds the threshold requirement of section 382(h)(3)(B), the sale of asset 3 within the recognition period is subject to the SRLY limitation of paragraphs (a) and (b)(2)(ii) of this section.

Example 3. Overlap rule. (i) Individual A owns all of the stock of P, the common parent of a consolidated group. B, an individual unrelated to Individual A, owns all of the stock of T. T has two depreciable assets. Asset 1 has an unrealized loss of $55 (basis $75, value $20), and asset 2 has an unrealized gain of $30 (basis $30, value $60). On February 28 of Year 2, P purchases 55% of T from Individual B. On June 30, of Year 2, P purchases an additional 35% of T from Individual B.
(ii) The February 28 purchase of 55% of T is a section 382 event because it results in an ownership change of T that gives rise to a section 382(a) limitation. The June 30 purchase of 35% of T results in T becoming a member of the P group and is therefore a SRLY event.

(iii) Because the SRLY event occurred within six months of the change date of the section 382 event, there is an overlap of the application of the SRLY rules and the application of section 382, and paragraph (a) of this section does not apply. Therefore, the SRLY limitation does not apply to any of the $55 loss in asset 1 recognized by T after T joined the P group. See § 1.1502-94 for rules relating to the application of section 382 with respect to T's $25 unrealized built-in loss.

Example 4. Overlap rule-Fluctuation in value. (i) The facts are the same as in *Example 3,* except that by June 30, of Year 2, asset 1 had declined in value by a further $10. Thus asset 1 had an unrealized loss of $65 (basis $75, value $10), and asset 2 had an unrealized gain of $30 (basis $30, value $60).
(ii) Because paragraph (a) of this section does not apply, the further decrease in asset 1's value is disregarded. Consequently, the results are the same as in *Example 3.*

(h) ***Effective date*** —

(1) ***In general.*** This section generally applies to built-in losses recognized in taxable years for which the due date (without extensions) of the consolidated return is after June 25, 1999. However—

(i) In the event that paragraphs (f)(1) and (g)(1) of this section do not apply to a particular built-in loss in the current group, then solely for purposes of applying paragraph (a) of this section to determine a limitation with respect to that built-in loss and with respect to which the SRLY register (consolidated taxable income determined by reference to only the member's (or

subgroup's) items of income, gain, deduction, or loss) began in a taxable year for which the due date of the return was on or before June 25, 1999, paragraph (c)(3) of this section shall not apply; and

(ii) For purposes of paragraph (g) of this section, only an ownership change to which section 382(a) as amended by the Tax Reform Act of 1986 applies shall constitute a section 382 event.

(2) ***Prior periods.*** For certain taxable years ending on or before June 25, 1999, see § 1.1502-15T in effect prior to June 25, 1999, as contained in 26 CFR part 1 revised April 1, 1999, as applicable.

[T.D. 8823, 64 FR 36101, July 2, 1999; 64 FR 41784, Aug. 2, 1999, as amended by T.D. 9048, 68 FR 12290, Mar. 14, 2003; T.D. 9187, 70 FR 10326, Mar. 3, 2005; T.D. 9254, 71 FR 13018, Mar. 14, 2006; T.D. 9424, 73 FR 53986, Sept. 17, 2008]

§ 1.1502-16 Mine exploration expenditures.

(a) ***Section 617 —***

(1) ***In general.*** If the aggregate amount of the expenditures to which section 617(a) applies, paid or incurred with respect to mines or deposits located outside the United States (as defined in section 638 and the regulations thereunder), does not exceed:

(i) $400,000 minus

(ii) All amounts deducted or deferred during the taxable year and all preceding taxable years under section 617 or section 615 of the Internal Revenue Code of 1954 and section 23(ff) of the Internal Revenue Code of 1939 by corporations which are members of the group during the taxable year (and individuals or corporations which have transferred any mineral property to any such member within the meaning of section 617(g)(2)(B)) for taxable years ending after December 31, 1950 and prior to the taxable year, then the deduction under section 617 with respect to such foreign expenditures and paragraph (c) of § 1.1502-12 for each member shall be no greater than an allocable portion of such amount hereinafter referred to as the “consolidated foreign exploration limitation.” Such allocable portion shall be determined under subparagraph (2) of this paragraph. If the amount of such expenditures exceeds the consolidated foreign exploration limitation, no deduction shall be allowed with respect to such excess.

(2) ***Allocable portion of limitation.*** A member's allocable portion of the consolidated foreign exploration limitation for a consolidated return year shall be:

(i) The amount allocated by the common parent pursuant to an allocation plan adopted by the consolidated group, but in no event shall a member be allocated more than the amount it could have deducted had it filed a separate return. Such allocation plan must include a statement which also contains the total foreign exploration expenditures of each member which could have been deducted under section 617 if the member had filed a separate return. Such plan must be attached to a consolidated return filed on or before the due date of such return (including extensions of time), and may not be changed after such date, or

(ii) If no plan is filed in accordance with subdivision (i) of this subparagraph, then the portion of the consolidated foreign exploration limitation allocable to each member incurring such expenditures is an amount equal to such limitation multiplied by a fraction, the numerator of

which is the amount of foreign exploration expenditures which could have been deducted under section 617 by such member had it filed a separate return and the denominator of which is the aggregate of such amounts for all members of the group.

(b) *Section 615* —

(1) ***In general.*** If the aggregate amount of the expenditures, to which section 615(a) applies, which are paid or incurred by the members of the group during any consolidated return year exceeds the lesser of:

(i) $100,000, or

(ii) $400,000 minus all such expenditures deducted (or deferred) by corporations which are members of the group during the taxable year (and individuals or corporations which have transferred any mineral property to any such member within the meaning of section 615(c)(2)(B)) for taxable years ending after December 31, 1950, and prior to the taxable year, then the deduction (or amount deferrable) under section 615 and paragraph (c) of § 1.1502-12 for each member shall be no greater than an allocable portion of such lesser amount, hereinafter referred to as the "consolidated exploration limitation". Such allocable portion shall be determined under subparagraph (2) of this paragraph.

(2) ***Allocable portion of limitation.*** A member's allocable portion of the consolidated exploration limitation for a consolidated return year shall be:

(i) The amount allocated by the common parent pursuant to an allocation plan adopted by the consolidated group, but in no event shall a member be allocated more than the amount it could have deducted (or deferred) had it filed a separate return. Such allocation plan must include a statement which also contains the total exploration expenditures of each member for the taxable year, and the expenditures of each member which could have been deducted (or deferred) under section 615 if the member had filed a separate return. Such plan must be attached to a consolidated return filed on or before the due date of such return (including extensions of time), and may not be changed after such date, or

(ii) If no plan is filed in accordance with subdivision (i) of this subparagraph, then the portion of the consolidated exploration limitation allocable to each member incurring such expenditures is an amount equal to such limitation multiplied by a fraction, the numerator of which is the amount which could have been deducted (or deferred) under section 615 by such member had it filed a separate return and the denominator of which is the aggregate of such amounts for all members of the group.

(c) ***Examples.*** The provisions of this section may be illustrated by the following examples:

Example 1. Corporation X and its wholly owned subsidiaries, corporations Y and Z, file a consolidated return for the calendar year 1971. None of the corporations have incurred exploration expenditures described in section 617 in previous years. During 1971, X incurred foreign exploration expenditures of $30,000, Y of $20,000, and Z of $40,000. The amount of foreign exploration expenditures deductible under section 617 for purposes of computing separate taxable income under § 1.1502-12 will be the amount actually expended by each corporation.

> *Example 2.* Assume the same facts as in example (1) except that prior to 1971, X, Y, and Z had deducted (or deferred) under section 615 and 617 a total of $300,000 of exploration

expenditures. During 1971, with respect to deposits located outside the United States X incurred exploration expenditures of $25,000, Y of $75,000, and Z of $125,000. The consolidated exploration limitation under paragraph (a) of this section with respect to the foreign deposits (there is no limitation with respect to the domestic expenditures) is $100,000. X may allocate the $100,000 in any manner among the three members, except that X may not be allocated more than $25,000 nor Y more than $75,000, the amount actually expended by X and Y and which they could have deducted had they each filed a separate return. If the allocation is not made in accordance with paragraph (a)(2)(i) of this section, the $100,000 limitation will be allocated under paragraph (a)(2)(ii) of this section as follows:

Corporation	Expenditure	Fraction		Limitation		Allocable portion
X	$25,000	25,000 / 200,000	×	$100,000	=	$12,500
Y	$75,000	75,000 / 200,000	×	$100,000	=	$37,500
Z	$125,000	100,000 / 200,000	×	$100,000	=	$50,000

The denominator of $200,000 was calculated as follows:

X = $25,000
Y = $75,000

Z = $100,000 (maximum amount allowed if filed separately)

Total $200,000.

Example 3. Assume the same facts as in example (2) and that on January 1, 1971, X acquired all of the stock of corporation T which prior to its taxable year beginning January 1, 1971, had previously deducted (or deferred) $310,000 of exploration expenditures. Assume further that in 1971 X incurred $25,000 of foreign exploration expenditures, Y $50,000, T $50,000, and Z none. A consolidated return is filed for 1971. None of the expenditures may be deducted under section 617 since the consolidated exploration limitation is zero. The limitation is zero since the aggregate amount of previously deducted (or deferred) exploration expenditures by the members of the group exceeds $400,000. (The total of such expenditures is $410,000, of which $310,000 is attributable to T and, assuming the allocation of the limitation in example (2) is made under paragraph (a)(2)(ii) of this section, $12,500 is attributable to X, $37,500 to Y, and $50,000 to Z.

Example 4. Assume the same facts as in example (3) except that on December 31, 1971, X sold all of the stock in Z to an unrelated party. The consolidated exploration limitation for 1972 will be $40,000, computed by subtracting from $400,000, the aggregate amount of previously deducted (or deferred) exploration expenditures incurred by the members of the group prior to 1972. (The total of such expenditures is $360,000, of which $12,500 is attributable to X, $37,500 to Y and $310,000 to T.) Amounts previously deducted (or deferred) by Z are not taken into account since it was not a member of the group at any time during 1972. Amounts previously deducted (or deferred) by Z shall be taken into account by it for subsequent separate return years.

[T.D. 7192, 37 FR 12949, June 30, 1972]

§ 1.1502-17 Methods of accounting.

(a) ***General rule.*** The method of accounting to be used by each member of the group is determined in accordance with the provisions of section 446 as if such member filed a separate return.

(b) ***Adjustments required if method of accounting changes*** —

(1) ***General rule.*** If a member of a group changes its method of accounting for a consolidated return year, the terms and conditions prescribed by the Commissioner under section 446(e), including section 481(a) where applicable, shall apply to the member. If the requirements of section 481(b) are met because applicable adjustments under section 481(a) are substantial, the increase in tax for any prior year shall be computed upon the basis of a consolidated return or a separate return, whichever was filed for such prior year.

(2) ***Changes in method of accounting for intercompany transactions.*** If a member changes its method of accounting for intercompany transactions for a consolidated return year, the change in method generally will be effected on a cut-off basis.

(c) ***Anti-avoidance rules*** —

(1) ***General rule.*** If one member (B) directly or indirectly acquires an activity of another member (S), or undertakes S's activity, with the principal purpose to avail the group of an accounting method that would be unavailable (or would be unavailable without securing consent from the Commissioner) if S and B were treated as divisions of a single corporation, B must use the accounting method for the acquired or undertaken activity determined under paragraph (c)(2) of this section or must secure consent from the Commissioner under applicable administrative procedures to use a different method.

(2) ***Treatment as divisions of a single corporation.*** B must use the method of accounting that would be required if B acquired the activity from S in a transaction to which section 381 applied. Thus, the principles of section 381 (c)(4) and (c)(5) apply to resolve any conflicts between the accounting methods of S and B, and the acquired or undertaken activity is treated as having the accounting method used by S. Appropriate adjustments are made to treat all acquisitions or undertakings that are part of the same plan or arrangement as a single acquisition or undertaking.

(d) ***Examples.*** The provisions of this section are illustrated by the following examples:

Example 1. Separate return treatment generally. X and its wholly-owned subsidiary Y filed separate returns for their calendar years ending December 31, 1965. During calendar year 1965, X employed an accrual method of accounting, established a reserve for bad debts, and elected under section 171 to amortize bond premiums with respect to its fully taxable bonds. During calendar year 1965, Y

employed the cash receipts and disbursements method, used the specific charge-off method with respect to its bad debts, and did not elect to amortize bond premiums under section 171 with respect to its bonds. X and Y filed a consolidated return for 1966. For 1966 X and Y must continue to compute income under their respective methods of accounting (unless a change in method under section 446 is made).

Example 2. Adopting methods. Corporation P is a member of a consolidated group. P provides consulting services to customers under various agreements. For one type of customer, P's agreements require payment only when the contract is completed (payment-on-completion contracts). P uses an overall accrual method of accounting. Accordingly, P takes its income from consulting contracts into account when earned, received, or due, whichever is earlier. With the principal purpose to avoid seeking the consent of the Commissioner to change its method of accounting for the payment-on-completion contracts to the cash method, P forms corporation S, and S begins to render services to those customers subject to the payment-on-completion contracts. P continues to render services to those customers not subject to these contracts.
(b) Under paragraph (c) of this section, S must account for the consulting income under the payment-on-completion contracts on an accrual method rather than adopting the cash method contemplated by P.

Example 3. Changing inventory sub-method. (a) Corporation P is a member of a consolidated group. P operates a manufacturing business that uses dollar-value LIFO, and has built up a substantial LIFO reserve. P has historically manufactured all its inventory and has used one natural business unit pool. P begins purchasing goods identical to its own finished goods from a foreign supplier, and is concerned that it must establish a separate resale pool under § 1.472-8(c). P anticipates that it will begin to purchase, rather than manufacture, a substantial portion of its inventory, resulting in a recapture of most of its LIFO reserve because of decrements in its manufacturing pool. With the principal purpose to avoid the decrements, P forms corporation S in Year 1. S operates as a distributor to nonmembers, and P sells all of its existing inventories to S. S adopts LIFO, and elects dollar-value LIFO with one resale pool. Thereafter, P continues to manufacture and purchase inventory, and to sell it to S for resale to nonmembers. P's intercompany gain from sales to S is taken into account under § 1.1502-13. S maintains its Year 1 base dollar value of inventory so that P will not be required to take its intercompany items (which include the effects of the LIFO reserve recapture) into account.
(b) Under paragraph (c) of this section, S must maintain two pools (manufacturing and resale) to the same extent that P would be required to maintain those pools under § 1.472-8 if it had not formed S.

(e) ***Effective dates.*** Paragraph (b) of this section applies to changes in method of accounting effective for years beginning on or after July 12, 1995. Paragraphs (c) and (d) of this section apply with respect to acquisitions occurring or activities undertaken in years beginning on or after July 12, 1995.

[T.D. 6894, 31 FR 11794, Sept. 8, 1966, as amended by T.D. 8597, 60 FR 36708, July 18, 1995; T.D. 10018, 89 FR 106867, Dec. 30, 2024]

§ 1.1502-19 Excess loss accounts.

(a) ***In general*** —

(1) ***Purpose.*** This section provides rules for a member (M) to include in income its excess loss account in the stock of another member (S). The purpose of the excess loss account is to recapture in consolidated taxable income M's negative adjustments with respect to S's stock (e.g., under § 1.1502-32 from S's deductions, losses, and distributions), to the extent the negative adjustments exceed M's basis in the stock. This section also provides rules for eliminating losses and other attributes attributable to S in certain cases in which S stock becomes worthless or S ceases to be a member and does not have a separate return year.

(2) ***Excess loss accounts*** —

(i) ***In general.*** M's basis in S's stock is adjusted under the consolidated return regulations and other rules of law. Negative adjustments may exceed M's basis in S's stock. The resulting negative amount is M's excess loss account in S's stock. For example:

(A) Once M's negative adjustments under § 1.1502-32 exceed its basis in S's stock, the excess is M's excess loss account in the S stock. If M has further adjustments, they first increase or decrease the excess loss account.

(B) If M forms S by transferring property subject to liabilities in excess of basis, § 1.1502-80(d) provides for the nonapplicability of section 357(c) and the resulting negative basis under section 358 is M's excess loss account in the S stock.

(ii) ***Treatment as negative basis.*** M's excess loss account is treated for all Federal income tax purposes as basis that is a negative amount, and a reference to M's basis in S's stock includes a reference to M's excess loss account.

(3) ***Application of other rules of law, duplicative recapture.*** See § 1.1502-80(a) regarding the general applicability of other rules of law and a limitation on duplicative adjustments and recapture.

(b) ***Excess loss account taken into account as income or gain*** —

(1) ***Operating rules*** —

(i) ***General rule.*** Except as provided in paragraph (b)(1)(ii) of this section, if M is treated under this section as disposing of a share of S's stock, M takes into account its excess loss account in the share as income or gain from the disposition.

(ii) ***Special limitation on amount taken into account.*** Notwithstanding paragraph (b)(1)(i) of this section, if M is treated as disposing of a share of S's stock as a result of the application of paragraph (c)(1)(iii)(B) of this section, the aggregate amount of its excess loss account in the shares of S's stock that M takes into account as income or gain from the disposition shall not exceed the amount of S's indebtedness that is discharged that is neither included in gross

income nor treated as tax-exempt income under § 1.1502-32(b)(3)(ii)(C)(*1*). If more than one share of S's stock has an excess loss account, such excess loss accounts shall be taken into account pursuant to the preceding sentence, to the extent possible, in a manner that equalizes the excess loss accounts in S's shares that have an excess loss account.

(iii) ***Treatment of disposition.*** Except as provided in paragraph (b)(4) of this section, the disposition is treated as a sale or exchange for purposes of determining the character of the income or gain.

(iv) ***Reduction of attributes in the case of certain dispositions by worthlessness or where S ceases to be a member and does not become a nonmember.*** If this paragraph (b)(1)(iv) applies, any net operating or capital loss carryover that is attributable to S, including any losses that would be apportioned to S under the principles of § 1.1502-21(b)(2) if S had a separate return year, any deferred deductions attributable to S, including S's portion of such consolidated tax attributes (for example, consolidated excess charitable contributions that would be apportioned to S under the principles of § 1.1502-79(e) if S had a separate return year), and any credit carryover attributable to S, including any consolidated credits that would be apportioned to S under the principles of § 1.1502-79 if S had a separate return year, are eliminated. Attributes other than consolidated tax attributes (determined as of the disposition) are eliminated under this paragraph (b)(1)(iv) immediately before the disposition resulting in the application of this paragraph (b)(1)(iv). The elimination of attributes under this paragraph (b)(1)(iv) is not a noncapital, nondeductible expense described in § 1.1502-32(b)(2)(iii). This paragraph (b)(1)(iv) applies if—

(A) A share of S stock becomes worthless under section 165, the requirements of paragraph (c)(1)(iii) of this section are satisfied, M does not recognize a net deduction or loss on the S stock, and S is a member of the group on the day following the last day of the group's taxable year during which the share becomes worthless; or

(B) M recognizes any amount that is not a net deduction or loss on the stock of S in a transaction in which S ceases to be a member and does not become a nonmember.

(2) ***Nonrecognition or deferral*** —

(i) ***In general.*** M's income or gain under paragraph (b)(1) of this section is subject to any nonrecognition or deferral rules applicable to the disposition. For example, if S liquidates and the exchange of M's stock in S is subject to section 332, or M transfers all of its assets (including S's stock) to S in a reorganization to which section 361(a) applies, M's income or gain from the excess loss account is not recognized under these rules.

(ii) ***Nonrecognition or deferral inapplicable.*** If M's income or gain under paragraph (b)(1) of this section is from a disposition described in paragraph (c)(1) (ii) or (iii) of this section (relating to deconsolidations and worthlessness), the income or gain is taken into account notwithstanding any nonrecognition or deferral rules (even if the disposition is also described in paragraph (c)(1)(i) of this section). For example, if M transfers S's stock to a nonmember in a transaction to which section 351 applies, M's income or gain from the excess loss account is taken into account.

(3) ***Tiering up in chains.*** If the stock of more than one subsidiary is disposed of in the same transaction, the income or gain under this section is taken into account in the order of the tiers, from the lowest to the highest.

(4) *Insolvency* —

(i) ***In general.*** Gain under this section is treated as ordinary income to the extent of the amount by which S is insolvent (within the meaning of section 108(d)(3)) immediately before the disposition. For this purpose S's liabilities include any amount to which preferred stock would be entitled if S were liquidated immediately before the disposition, and any former liabilities that were discharged to the extent the discharge was treated as tax-exempt income under § 1.1502-32(b)(3)(ii)(C) (special rule for discharges).

(ii) ***Reduction for amount of distributions.*** The amount treated as ordinary income under this paragraph (b)(4) is reduced to the extent it exceeds the amount of M's excess loss account redetermined without taking into account S's distributions to M to which § 1.1502-32(b)(2)(iv) applies.

(c) ***Disposition of stock.*** For purposes of this section:

(1) ***In general.*** M is treated as disposing of a share of S's stock:

(i) ***Transfer, cancellation, etc.*** At the time—

(A) M transfers or otherwise ceases to own the share for Federal income tax purposes, even if no gain or loss is taken into account; or

(B) M takes into account gain or loss (in whole or in part) with respect to the share.

(ii) ***Deconsolidation.*** At the time—

(A) M becomes a nonmember, or a nonmember determines its basis in the share (or any other asset) by reference to M's basis in the share, directly or indirectly, in whole or in part (e.g., under section 362); or

(B) S becomes a nonmember, or M's basis in the share is reflected, directly or indirectly, in whole or in part, in the basis of any asset other than member stock (e.g., under section 1071).

(iii) ***Worthlessness.*** At the time—

(A) All of S's assets (other than its corporate charter and those assets, if any, necessary to satisfy state law minimum capital requirements to maintain corporate existence) are treated as disposed of, abandoned, or destroyed for Federal income tax purposes (for example, under section 165(a) or § 1.1502-80(c), or, if S's asset is stock of a lower-tier member, the stock is treated as disposed of under this paragraph (c)). An asset of S is not considered to be disposed of or abandoned to the extent the disposition is in complete liquidation of S under section 332 or is in exchange for consideration (other than relief from indebtedness);

(B) An indebtedness of S is discharged, if any part of the amount discharged is not included in gross income and is not treated as tax-exempt income under § 1.1502-32(b)(3)(ii)(C); or

(C) A member takes into account a deduction or loss for the uncollectibility of an indebtedness of S, and the deduction or loss is not matched in the same tax year by S's taking into account a corresponding amount of income or gain from the indebtedness in determining consolidated taxable income.

(2) ***Becoming a nonmember.*** A member is treated as becoming a nonmember if it has a separate return year (including another group's consolidated return year). For example, S may become a nonmember if it issues additional stock to nonmembers, but S does not become a nonmember as a result of its complete liquidation. A disposition under paragraph (c)(1)(ii) of this section must be taken into account in the consolidated return of the group. For example, if a group ceases under § 1.1502-75(c) to file a consolidated return as of the close of its consolidated return year, the disposition under paragraph (c)(1)(ii) of this section is treated as occurring immediately before the close of the year. If S becomes a nonmember because M sells S's stock to a nonmember, M's sale is a disposition under both paragraphs (c)(1) (i) and (ii) of this section. If a group terminates under § 1.1502-75(d) because the common parent is the only remaining member, the common parent is not treated as having a deconsolidation event under paragraph (c)(1)(ii) of this section.

(3) ***Exception for acquisition of group*** —

(i) ***Application.*** This paragraph (c)(3) applies only if a consolidated group (the terminating group) ceases to exist as a result of—

(A) The acquisition of either the assets of the common parent of the terminating group in a reorganization described in section 381(a)(2), or the stock of the common parent of the terminating group; or

(B) The application of the principles of § 1.1502-75(d)(2) or (d)(3).

(ii) ***General rule.*** Paragraph (c)(1)(ii) of this section does not apply solely by reason of the termination of a group in a transaction to which this paragraph (c)(3) applies, if there is a surviving group that is, immediately thereafter, a consolidated group. Instead, the surviving group is treated as the terminating group for purposes of applying this section to the terminating group. This treatment does not apply, however, to members of the terminating group that are not members of the surviving group immediately after the terminating group ceases to exist (e.g., under section 1504(a)(3) relating to reconsolidation, or section 1504(c) relating to includible insurance companies).

(d) ***Special allocation of basis in connection with an adjustment or determination*** —

(1) ***Excess loss account in original shares.*** If a member has an excess loss account in shares of a class of S's stock at the time of a basis adjustment or determination under the Internal Revenue Code with respect to shares of the same class of S's stock owned by the member, the adjustment or determination is allocated first to equalize and eliminate that member's excess loss account. See § 1.1502-32(c) for similar allocations of investment adjustments to prevent or eliminate excess loss accounts.

(2) ***Excess loss account in new S shares.*** If a member would otherwise determine shares of a class of S's stock (new shares) to have an excess loss account and such member owns one or more other shares of the same class of S's stock, the basis of such other shares is allocated to eliminate and equalize any excess loss account that would otherwise be in the new shares.

(e) ***Anti-avoidance rule.*** If any person acts with a principal purpose contrary to the purposes of this section, to avoid the effect of the rules of this section or apply the rules of this section to avoid the effect of any other provision of the consolidated return regulations, adjustments must be made as necessary to carry out the purposes of this section.

(f) ***Predecessors and successors.*** For purposes of this section, any reference to a corporation (or to a share of the corporation's stock) includes a reference to a successor or predecessor (or to a share of stock of a predecessor or successor), as the context may require.

(g) ***Examples.*** For purposes of the examples in this section, unless otherwise stated, M owns all 100 shares of the only class of S's stock and S owns all 100 shares of the only class of T's stock, the stock is owned for the entire year, T owns no stock of lower-tier members, the tax year of all persons is the calendar year, all persons use the accrual method of accounting, the facts set forth the only corporate activity, all transactions are between unrelated persons, and tax liabilities are disregarded. The principles of this section are illustrated by the following examples.

Example 1. Taxable disposition of stock. (a) *Facts.* M has a $150 basis in S's stock, and S has a $100 basis in T's stock. For Year 1, M has $500 of ordinary income, S has no income or loss, and T has a $200 ordinary loss. S sells T's stock to a nonmember for $60 at the close of Year 1.
(b) *Analysis.* Under paragraph (c) of this section, the sale is a disposition of T's stock at the close of Year 1 (the day of the sale). Under § 1.1502-32(b), T's loss results in S having a $100 excess loss account in T's stock immediately before the sale. Under paragraph (b)(1) of this section, S takes into account the $100 excess loss account as an additional $100 of gain from the sale. Consequently, S takes into account a $160 gain from the sale in determining the group's consolidated taxable income. Under § 1.1502-32(b), T's $200 loss and S's $160 gain result in a net $40 decrease in M's basis in S's stock as of the close of Year 1, from $150 to $110.

(c) *Intercompany sale followed by sale to nonmember.* The facts are the same as in paragraph (a) of this *Example 1,* except that S sells T's stock to M for $60 at the close of Year 1, and M sells T's stock to a nonmember at a gain at the beginning of Year 5. Under paragraph (c) of this section, S's sale is treated as a disposition of T's stock at the close of Year 1 (the day of the sale). Under § 1.1502-13 and paragraph (b)(2) of this section, S's $160 gain from the sale is deferred and taken into account in Year 5 as a result of M's sale of the T stock. Under § 1.1502-32(b), the absorption of T's $200 loss in Year 1 results in M having a $50 excess loss account in S's stock at the close of Year 1. In Year 5, S's $160 gain taken into account eliminates M's excess loss account in S's stock and increases M's basis in the stock to $110.

(d) *Intercompany distribution followed by sale to a nonmember.* The facts are the same as in paragraph (a) of this *Example 1,* except that the value of the T stock is $60 and S declares and distributes a dividend of all of the T stock to M at the close of Year 1, and M sells the T stock to a nonmember at a gain at the beginning of Year 5. Under paragraph (c) of this section, S's distribution is treated as a disposition of T's stock at the close of Year 1 (the day of the distribution). S's $100 excess loss account in T's stock is treated as additional gain under section 311(b) from the distribution. Under section 301(d), M's basis in the T stock is $60. Under § 1.1502-13, and paragraph (b)(2) of this section, S's $160 gain from the distribution is deferred and taken into account in Year 5 as a result of M's sale of the T stock. Under § 1.1502-32(b), T's $200

loss and S's $60 distribution result in M having a $110 excess loss account in S's stock at the close of Year 1. In Year 5, S's $160 gain taken into account eliminates M's excess loss account in S's stock and increases M's basis in the stock to $50.

Example 2. Basis determinations under the Internal Revenue Code in intercompany reorganizations—transfer of shares without an excess loss account. (i) *Facts.* M owns all of the sole class of stock of each of S and T. M has 150 shares of S stock that it acquired on Date 1. Each S share has a $1 basis and a fair market value of $1. M has 100 shares of T stock that it acquired on Date 2. Each T share has a $1.20 excess loss account and a fair market value of $1. M transfers S's stock to T without receiving additional T stock. The transfer is an exchange described in both section 351 and section 354.
(ii) *Analysis.* Under sections 351 and 354, M does not recognize gain in connection with the transfer. Under § 1.358-2(a)(2)(iii), M is deemed to receive 150 shares of T stock of the same class. Without regard to the application of paragraph (d) of this section, under section 358 and § 1.358-2(a)(2)(i), M would have a $1 basis in each such share. However, because the basis of the additional shares of T stock will be determined when M has an excess loss account in its original shares of T stock, under paragraph (d)(1) of this section, the basis that M would otherwise have in such additional shares will eliminate the excess loss account in M's original shares of T stock such that each original share of T stock will have a basis of $0 and each share of T stock deemed received will have a basis of $0.20. Then, under § 1.358-2(a)(2)(iii), the T stock is deemed to be recapitalized in a reorganization under section 368(a)(1)(E) in which M receives 100 shares of T stock (those shares M actually owns immediately after the transfer) in exchange for those 100 shares of T stock that M held immediately prior to the transfer and those 150 shares of T stock M is deemed to receive in the transfer. Under § 1.358-2(a)(2)(i), immediately after the transfer, M holds 100 shares of T stock, 60 of which take a basis of $0.50 each and 40 of which take a basis of $0 each. In addition, T takes a $1 basis in each share of S stock under section 362. (If M had actually received an additional 150 shares of T stock of the same class, paragraph (d)(1) of this section would apply to shift basis from such additional T shares to M's original T shares because the basis of the additional T stock would be determined when M had an excess loss account in its original T shares. M would have a basis of $0 in each of the original T shares and a basis of $0.20 in each of the additional T shares.)

(iii) *Transfer of shares with an excess loss account.* The facts are the same as in paragraph (i) of this *Example 2*, except that M transfers T's stock to S without receiving additional S stock. The transfer is an exchange described in both section 351 and section 354. Under paragraph (c) of this section, M's transfer is treated as a disposition of T's stock. Under sections 351 and 354 and paragraph (b)(2) of this section, M does not recognize gain from the disposition. Under § 1.358-2(a)(2)(iii), M is deemed to have received 100 shares of S stock of the same class. Without regard to the application of paragraph (d) of this section, M would have a $1.20 excess loss account in each such share. However, because M will have an excess loss account in such shares and M owns other shares of S stock of the same class, under paragraph (d)(2) of this section, the

excess loss account that M would otherwise have in such shares will decrease M's basis in its original shares of S's stock such that each such original share will have a basis of $0.20 and each share deemed received will have a basis of $0. Then, under § 1.358-2(a)(2)(iii), the S stock is deemed to be recapitalized in a reorganization under section 368(a)(1)(E) in which M receives 150 shares of S stock (those shares M actually owns immediately after the transfer) in exchange for those 150 shares of S stock that M held immediately prior to the transfer and those 100 shares of S stock that M is deemed to receive in connection with the transfer. Under § 1.358-2(a)(2)(i), immediately after the transfer, M holds 150 shares of S stock, 90 of which take a basis of $0.33 each and 60 of which take a basis of $0 each. In addition, S takes an excess loss account of $1.20 in each share of T stock under section 362. (If M had actually received 100 additional shares of S stock of the same class, paragraph (d)(2) of this section would apply to shift basis from M's original S stock because M would have otherwise had an excess loss account in such additional shares and M owned other shares of S stock of the same class. The excess loss account that M would have otherwise had in such additional shares would have decreased M's basis in its original shares of S's stock. M would have had a basis of $0.20 in each of the original shares and a basis of $0 in each of the additional shares.)

(iv) *Intercompany merger—shares with excess loss account retained.* The facts are the same as in paragraph (i) of this *Example 2*, except that S merges into T in a reorganization described in section 368(a)(1)(A) (and in section 368(a)(1)(D)), and M receives 150 additional shares of T stock of the same class in the reorganization. Under section 354, M does not recognize gain. Without regard to the application of paragraph (d) of this section, under section 358 and § 1.358-2(a)(2)(i), M would have a $1 basis in each such share. However, because the basis of the additional shares of T stock will be determined when M has an excess loss account in its original shares of T stock, under paragraph (d)(1) of this section, the basis that M would otherwise have in such additional shares eliminates the excess loss account in M's original shares of T stock such that each original share of T stock has a basis of $0 and each additional share of T stock has a basis of $0.20.

(v) *Intercompany merger—shares with excess loss account surrendered.* The facts are the same as in paragraph (i) of this *Example 2*, except that T merges into S in a reorganization described in section 368(a)(1)(A) (and in section 368(a)(1)(D)), and M receives 100 additional shares of S stock of the same class in the reorganization. Under section 354 and paragraph (b)(2) of this section, M does not recognize gain from the disposition. Without regard to the application of paragraph (d) of this section, under section 358 and § 1.358-2(a)(2)(i), M would have a $1.20 excess loss account in each additional share of S stock received. However, because M would have an excess loss account in such shares and M owns other shares of S stock of the same class, under paragraph (d)(2) of this section, the excess loss account that M would otherwise have in such shares decreases M's basis in its original shares of S's stock such that each original share of S stock has a basis of $0.20 and each additional share of S stock has a basis of $0.

Example 3. Section 355 distribution of stock with an excess loss account. (a) *Facts.* M has a $30

excess loss account in S's stock, and S has a $90 excess loss account in T's stock. S distributes the T stock to M in a transaction to which section 355 applies, and neither M nor S recognizes any gain or loss. At the time of the distribution, the T stock represents 33% of the value of the S stock. Following the distribution, M's basis in the S stock is allocated under § 1.358-2 in proportion to the fair market values of the S stock and the T stock.
(b) *Analysis.* Under paragraph (c) of this section, S's distribution of the T stock is treated as a disposition. Under section 355(c) and paragraph (b)(2) of this section, S does not recognize any gain from the distribution. Under section 358, S's excess loss account in the T stock is eliminated, and M's $30 excess loss account in the S stock is treated as basis allocated between the S stock and the T stock based on their relative values. Consequently, M has a $20 excess loss account in the S stock and a $10 excess loss account in the T stock. (If M had a $30 basis rather than a $30 excess loss account in the S stock, S would not recognize gain, its excess loss account in the T stock would be eliminated, and M's basis in the stock of S and T would be $20 and $10, respectively.)

(c) *Section 355 distribution to nonmember.* The facts are the same as in paragraph (a) of this *Example 3,* except that M also distributes the T stock to its shareholders in a transaction to which section 355 applies. Under paragraph (c) of this section, M's distribution is treated as a disposition of T's stock. Under paragraph (b)(2) of this section, because M's disposition is described in paragraph (c)(1)(ii) of this section, M's $10 excess loss account in the T stock must be taken into account at the time of the distribution, notwithstanding the nonrecognition rules of section 355(c).

Example 4. Deconsolidation of a member. (a) *Facts.* M has a $50 excess loss account in S's stock, and S has a $100 excess loss account in T's stock. T issues additional stock to a nonmember and, as a consequence, T becomes a nonmember.
(b) *Analysis.* Under paragraph (c)(2) of this section, S is treated as disposing of each of its shares of T's stock immediately before T becomes a nonmember. Under paragraph (b)(1) of this section, S takes into account its $100 excess loss account as gain from the sale or exchange of T's stock. Under § 1.1502-32(b) of this section, S's $100 gain eliminates M's excess loss account in S's stock and increases M's basis in S's stock to $50.

(c) *Deconsolidation of a higher-tier member.* The facts are the same as in paragraph (a) of this *Example 4,* except that S (rather than T) issues the stock and, as a consequence, both S and T become nonmembers. Under paragraph (c)(2) of this section, M is treated as disposing of S's stock and S is treated as disposing of T's stock immediately before S and T become nonmembers. Under § 1.1502-32(b) and paragraph (b)(3) of this section, because S and T become nonmembers in the same transaction and T is the lower-tier member, S is first treated under paragraph (b)(1) of this section as taking into account its $100 excess loss account as gain from the sale or exchange of T's stock. Under § 1.1502-32(b), S's $100 gain eliminates M's excess loss account in S's stock

and increases M's basis in S's stock to $50 immediately before S becomes a nonmember. Thus, only S's $100 gain is taken into account in the determination of the group's consolidated taxable income.

(d) *Intercompany gain and deconsolidation.* The facts are the same as in paragraph (c) of this *Example 4,* except that T has $30 of gain that is deferred under § 1.1502-13 and taken into account in determining consolidated taxable income immediately before T becomes a nonmember. Under § 1.1502-32(b), T's $30 gain decreases S's excess loss account in T's stock from $100 to $70 immediately before S is treated as disposing of T's stock. Under paragraph (b)(1) of this section, S is treated as taking into account its $70 excess loss account as gain from the disposition of T's stock. Under § 1.1502-32(b), S's $70 gain from the excess loss account and T's $30 deferred gain that is taken into account eliminate M's $50 excess loss account in S's stock and increase M's basis in S's stock to $50 immediately before S becomes a nonmember.

Example 5. Worthlessness. (a) *Facts.* M forms S with a $150 contribution, and S borrows $150. For Year 1, S has a $50 ordinary loss that is carried over as part of the group's consolidated net operating loss. For Year 2, M has $160 of ordinary income, and S has a $160 ordinary loss. Under § 1.1502-32(b), S's loss results in M having a $10 excess loss account in S's stock. During Year 3, the value of S's assets (without taking S's liabilities into account) continues to decline and S's stock becomes worthless within the meaning of section 165(g) (without taking into account § 1.1502-80(c)). For Year 4, S has $10 of ordinary income.
(b) *Analysis.* Under paragraph (c)(1)(iii)(A) of this section, M is not treated as disposing of S's stock in Year 3 solely because S's stock becomes worthless within the meaning of section 165(g) (taking S's liabilities into account). In addition, because S's stock is not treated as worthless, section 382(g)(4)(D) does not prevent the Year 1 consolidated net operating loss carryover from offsetting S's $10 of income in Year 4.

(c) *Discharge of indebtedness.* The facts are the same as in paragraph (a) of this *Example 5,* except that, instead of S's stock becoming worthless within the meaning of section 165(g), S's creditor discharges $40 of S's indebtedness during Year 3, S is insolvent by more than $40 before the discharge, the discharge is excluded from the M group's gross income under section 108(a), and $40 of the $50 consolidated net operating loss carryover attributable to S is eliminated under section 108(b). Under § 1.1502- 32(b)(3)(ii)(C), S's $40 of discharge income is treated as tax-exempt income because there is a corresponding decrease under § 1.1502-32(b)(3)(iii) for elimination of the loss carryover. Under paragraph (c)(1)(iii)(B) of this section, M is treated as disposing of S's stock if the amount discharged is not included in gross income and is not treated as tax-exempt income under § 1.1502-32(b)(3)(ii)(C). Because the discharge is treated as tax-exempt income, M is not treated as disposing of S's stock by reason of the discharge.

Example 6. Avoiding worthlessness. (a) *Facts.* M forms S with a $100 contribution and S borrows $150. For Years 1 through 5, S has a $210 ordinary loss that is absorbed by the group. Under §

1.1502-32(b), S's loss results in M having a $110 excess loss account in S's stock. S defaults on the indebtedness, but the creditor does not discharge the debt (or initiate collection procedures). At the beginning of Year 6, S ceases any substantial operations with respect to the assets, but maintains their ownership with a principal purpose to avoid M's taking into account its excess loss account in S's stock.

(b) *Analysis.* Under paragraph (c)(1)(iii)(A) of this section, M's excess loss account on each of its shares of S's stock ordinarily is taken into account at the time substantially all of S's assets are treated as disposed of, abandoned, or destroyed for Federal income tax purposes. Under paragraph (e) of this section, however, S's assets are not taken into account at the beginning of Year 6 for purposes of applying paragraph (c)(1)(iii)(A) of this section. Consequently, S is treated as worthless at the beginning of Year 6, and M's $110 excess loss account is taken into account.

(h) ***Effective/applicability dates*** —

(1) ***Application.*** This section applies with respect to determinations of the basis of (including an excess loss account in) the stock of a member in consolidated return years beginning on or after January 1, 1995. However, taxpayers may apply paragraph (c)(3)(i)(A) of this section to transactions that occurred prior to September 17, 2008. Any such determination or redetermination does not, however, affect any prior period. Paragraphs (a)(3), (c)(1)(iii)(A), and (c)(3)(i)(A) of this section apply with respect to determinations and transactions occurring on or after September 17, 2008. However, taxpayers may elect to apply paragraph (c)(3)(i)(A) of this section to transactions that occurred prior to September 17, 2008. The last sentence of paragraph (a)(1) and paragraph (b)(1)(iv) of this section applies with respect to dispositions on or after December 16, 2008.

(2) ***Dispositions of stock*** —

(i) ***Dispositions of stock before effective date.*** If M was treated as disposing of stock of S in a tax year beginning before January 1, 1995 (including, for example, a deemed disposition because S was worthless) under the rules of this section then in effect, the amount of M's income, gain, deduction, or loss, and the stock basis reflected in that amount, are not redetermined under paragraph (h)(1) of this section. See paragraph (h)(3) of this section for the applicable rules.

(ii) ***Application of special limitation.*** If M was treated as disposing of stock of S because S was treated as worthless as a result of the application of paragraph (c)(1)(iii)(B) of this section after August 29, 2003, the amount of M's income, gain, deduction, or loss, and the stock basis reflected in that amount, are determined or redetermined with regard to paragraph (b)(1)(ii) of this section. If M was treated as disposing of stock of S because S was treated as worthless as a result of the application of paragraph (c)(1)(iii)(B) of this section on or before August 29, 2003, the group may determine or redetermine the amount of M's income, gain, deduction, or loss, and the stock basis reflected in that amount with regard to paragraph (b)(1)(ii) of this section.

(iii) ***Intercompany amounts.*** For purposes of this paragraph (h)(2), a disposition does not include a transaction to which § 1.1502-13, § 1.1502-13T, § 1.1502-14, or § 1.1502-14T applies. Instead, the transaction is deemed to occur as the income, gain, deduction, or loss (if any) is taken into account.

(iv) ***Intercompany reorganizations.*** Paragraphs (d) and (g) *Example 2* of this section apply to transactions occurring on or after July 18, 2007. For transactions occurring on or after January 23, 2006, and before July 18, 2007, see § 1.1502-19T as contained in 26 CFR part 1 in effect April 1, 2007. For transactions occurring before January 23, 2006, see § 1.1502-19 as contained in 26 CFR part 1 in effect April 1, 2005.

(3) ***Prior law.*** For prior determinations, see prior regulations under section 1502 as in effect with respect to the determination. See, e.g., § 1.1502-19 as contained in the 26 CFR part 1 edition revised as of April 1, 1994. For guidance regarding determinations of the basis of the stock of a subsidiary acquired in an intercompany reorganization before January 23, 2006, see paragraph (d) and (g) *Example 2* of § 1.1502-19 as contained in the 26 CFR part 1 edition revised as of April 1, 2005.

[T.D. 8560, 59 FR 41677, Aug. 15, 1994, as amended by T.D. 8597, 62 FR 12097, Mar. 14, 1997; T.D. 9089, 68 FR 52490, Sept. 4, 2003; T.D. 9192, 70 FR 14403, Mar. 22, 2005; T.D. 9242, 71 FR 4274, Jan. 26, 2006; T.D. 9341, 72 FR 39314, July 18, 2007; T.D. 9424, 73 FR 53948, Sept. 17, 2008; 73 FR 62204, Oct. 20, 2008]

COMPUTATION OF CONSOLIDATED ITEMS

§ 1.1502-21 Net operating losses.

(a) ***Consolidated net operating loss deduction*** —

(1) ***In general.*** Subject to any limitations under the Internal Revenue Code or this chapter (for example, the limitations under section 172(a)(2) and paragraph (a)(2) of this section), the consolidated net operating loss deduction (or CNOL deduction) for any consolidated return year is the aggregate of the net operating loss carryovers and carrybacks to the year. The net operating loss carryovers and carrybacks consist of—

(i) Any CNOLs (as defined in paragraph (e) of this section) of the consolidated group; and

(ii) Any net operating losses (or NOLs) of the members arising in separate return years.

(2) ***Application of section 172 for computing net operating loss deductions*** —

(i) ***Overview.*** For purposes of § 1.1502-11(a)(2) (regarding a CNOL deduction), the rules of section 172 regarding the use of net operating losses are taken into account as provided by this paragraph (a)(2) in calculating the consolidated taxable income of a group for a particular consolidated return year. More specifically, in computing taxable income for taxable years beginning after December 31, 2020, section 172(a) generally limits the deductibility of net operating losses arising in taxable years beginning after December 31, 2017 (post-2017 NOLs). However, these limitations do not apply to net operating losses arising in taxable years beginning before January 1, 2018 (pre-2018 NOLs). Therefore, in any particular consolidated return year beginning after December 31, 2020, the group's CNOL deduction includes CNOLs arising in taxable years beginning before January 1, 2018 (pre-2018 CNOLs), without limitation under section 172(a). Following the deduction of pre-2018 CNOLs, this paragraph (a)(2) applies to compute the maximum amount of CNOLs from taxable years beginning after December 31, 2017 (post-2017 CNOLs), that can be deducted against taxable income in a consolidated return year beginning after December 31, 2020 (post-2017 CNOL deduction limit). See section 172(a)(2)(A) and (B).

(ii) ***Computation of the 80-percent limitation and special rule for nonlife insurance companies*** —

(A) ***Determinations based on status of group members.*** If a portion of a post-2017 CNOL is carried back or carried over to a consolidated return year beginning after December 31, 2020, whether the members of the group include nonlife insurance companies, other types of corporations, or both determines whether section 172(a) (including the limitation described in section 172(a)(2)(B)(ii) (80-percent limitation)), section 172(f) (providing special rules for nonlife insurance companies), or both, apply to the group for the consolidated return year.

(B) ***Determination of post-2017 CNOL deduction limit.*** The post-2017 CNOL deduction limit is determined under paragraph (a)(2)(iii) of this section by applying section 172(a)(2)(B)(ii) (that is, the 80-percent limitation), section 172(f) (that is, the special rule for nonlife insurance companies), or both, to the group's consolidated taxable income for that year.

(C) ***Inapplicability of 80-percent limitation.*** The 80-percent limitation does not apply to CNOL deductions taken in taxable years beginning before January 1, 2021, or to CNOLs arising in taxable years beginning before January 1, 2018 (that is, pre-2018 CNOLs). See section 172(a).

(iii) ***Computations under sections 172(a)(2)(B) and 172(f).*** This paragraph (a)(2)(iii) provides rules for applying sections 172(f) and 172(a)(2)(B) to consolidated return years beginning after December 31, 2020 (that is, for computing the post-2017 CNOL deduction limit). Section 172(f) applies to income of nonlife insurance company members, whereas section 172(a)(2)(B)(ii) applies to income of members that are not nonlife insurance companies. Thus, this paragraph (a)(2)(iii) provides specific rules for groups with no nonlife insurance company members, only nonlife insurance company members, or a combination of nonlife insurance company members and other members. For groups with both nonlife insurance company members and life insurance company members, see paragraph (b)(2)(iv)(E) of this section.

(A) ***Groups without nonlife insurance company members.*** If no member of a group is a nonlife insurance company during a particular consolidated return year beginning after December 31, 2020, section 172(a)(2)(B)(ii) (that is, the 80-percent limitation) applies to all income of the group for that year. Therefore, the post-2017 CNOL deduction limit for the group for that year is the lesser of—

(*1*) The aggregate amount of post-2017 NOLs carried to that year; or

(*2*) The amount determined by multiplying—

(*i*) 80 percent, by

(*ii*) Consolidated taxable income for the group for that year (determined without regard to any deductions under sections 172, 199A, and 250) less the aggregate amount of pre-2018 NOLs carried to that year.

(B) ***Groups comprised solely of nonlife insurance companies.*** If a group is comprised solely of nonlife insurance companies during a particular consolidated return year beginning after December 31, 2020, section 172(f) applies to all income of the group for that year. Therefore, the post-2017 CNOL deduction limit for the group for that year equals the lesser of—

(*1*) The aggregate amount of post-2017 NOLs carried to that year, or

(2) Consolidated taxable income less the aggregate amount of pre-2018 NOLs carried to that year.

(C) ***Groups that include both nonlife insurance companies and other corporations*** —

(1) ***General rule.*** Except as provided in paragraph (a)(2)(iii)(C)(5) of this section, if a group has at least one member that is a nonlife insurance company and at least one member that is not a nonlife insurance company during a particular consolidated return year beginning after December 31, 2020, the post-2017 CNOL deduction limit for the group for that year equals the lesser of—

(i) The aggregate amount of post-2017 NOLs carried to that year, or

(ii) The sum of the amounts in the income pools determined under paragraphs (a)(2)(iii)(C)(2) and (3) of this section.

(2) ***Residual income pool.*** The amount determined under this paragraph (a)(2)(iii)(C)(2) (residual income pool) is eighty percent of the excess of—

(i) The consolidated taxable income of the group for a consolidated return year beginning after December 31, 2020, determined without regard to any income, gain, deduction, or loss of members that are nonlife insurance companies and without regard to any deductions under sections 172, 199A, and 250, over

(ii) The aggregate amount of pre-2018 NOLs carried to that year that are allocated to this income pool under paragraph (a)(2)(iii)(C)(4) of this section (that is, by applying the 80-percent limitation). See section 172(a)(2)(B)(ii).

(3) ***Nonlife income pool.*** The amount determined under this paragraph (a)(2)(iii)(C)(3) (nonlife income pool) is the consolidated taxable income of the group for a consolidated return year beginning after December 31, 2020, determined without regard to any income, gain, deduction, or loss of members included in the computation under paragraph (a)(2)(iii)(C)(2) of this section, less the aggregate amount of pre-2018 NOLs carried to that year that are allocated to this income pool under paragraph (a)(2)(iii)(C)(4) of this section. See section 172(f).

(4) ***Pro rata allocation of pre-2018 NOLs between pools of income.*** For purposes of paragraphs (a)(2)(iii)(C)(2) and (3) of this section, the aggregate amount of pre-2018 NOLs carried to any particular consolidated return year beginning after December 31, 2020, is prorated between the residual income pool and the nonlife income pool based on the relative amounts of positive income of those two pools. For example, if $30 of pre-2018 NOLs is carried over to a consolidated return year in which the residual income pool contains $75 and the nonlife income pool contains $150, the residual income pool is allocated $10 of the pre-2018 NOLs ($30 × $75/($75 + $150), or $30 × $^{1}/_{3}$), and the nonlife income pool is allocated the remaining $20 of pre-2018 NOLs ($30 × $150/($75 + $150), or $30 × $^{2}/_{3}$).

(5) ***Exception.*** The post-2017 CNOL deduction limit for the group for a consolidated return year is determined under this paragraph (a)(2)(iii)(C)(5) if the amounts computed under paragraphs (a)(2)(iii)(C)(2) and (3) of this section for that year are not both positive.

(*i*) ***Positive residual income pool and negative nonlife income pool.*** This paragraph (a)(2)(iii)(C)(*5*)(*i*) applies if the amount computed under paragraph (a)(2)(iii)(C)(*2*) of this section for the residual income pool is positive and the amount computed under paragraph (a)(2)(iii)(C)(*3*) of this section for the nonlife income pool is negative. If this paragraph (a)(2)(iii)(C)(*5*)(*i*) applies, the post-2017 CNOL deduction limit for the group for a consolidated return year equals the lesser of the aggregate amount of post-2017 NOLs carried to that year, or 80 percent of the consolidated taxable income of the entire group (determined without regard to any deductions under sections 172, 199A, and 250) after subtracting the aggregate amount of pre-2018 NOLs carried to that year (that is, by applying the 80-percent limitation). See section 172(a)(2)(B).

(*ii*) ***Positive nonlife income pool and negative residual income pool.*** If the amount computed under paragraph (a)(2)(iii)(C)(*3*) of this section for the nonlife income pool is positive and the amount computed under paragraph (a)(2)(iii)(C)(*2*) of this section for the residual income pool is negative, the post-2017 CNOL deduction limit for the group for a consolidated return year equals the lesser of the aggregate amount of post-2017 NOLs carried to that year, or the consolidated taxable income of the entire group less the aggregate amount of pre-2018 NOLs carried to that year. See section 172(f).

(b) ***Net operating loss carryovers and carrybacks to consolidated return and separate return years.*** Net operating losses of members arising during a consolidated return year are taken into account in determining the group's CNOL under paragraph (e) of this section for that year. Losses taken into account in determining the CNOL may be carried to other taxable years (whether consolidated or separate) only under this paragraph (b).

(1) ***Carryovers and carrybacks generally.*** The net operating loss carryovers and carrybacks to a taxable year are determined under the principles of, and are subject to any limitations under, section 172 and this section. Thus, losses permitted to be absorbed in a consolidated return year generally are absorbed in the order of the taxable years in which they arose, and losses carried from taxable years ending on the same date, and which are available to offset consolidated taxable income for the year, generally are absorbed on a pro rata basis. In addition, except as otherwise provided in this section, the amount of any CNOL absorbed by the group in any year is apportioned among members based on the percentage of the CNOL eligible for carryback or carryover that is attributable to each member as of the beginning of the year. The percentage of the CNOL attributable to a member is determined pursuant to paragraph (b)(2)(iv)(B) of this section. Additional rules provided under the Internal Revenue Code or regulations also apply. See, for example, section 382(l)(2)(B) (if losses are carried from the same taxable year, losses subject to limitation under section 382 are absorbed before losses that are not subject to limitation under section 382). See paragraph (c)(1)(iii)(B) of this section, (Example 2), for an illustration of pro rata absorption of losses subject to a SRLY limitation.

(2) ***Carryovers and carrybacks of CNOLs to separate return years*** —

(i) ***In general.*** If any CNOL that is attributable to a member may be carried to a separate return year of the member, the amount of the CNOL that is attributable to the member is apportioned to the member (apportioned loss) and carried to the separate return year. If carried back to a separate return year, the apportioned loss may not be carried back to an equivalent, or earlier, consolidated return year of the group; if carried over to a separate return year, the apportioned loss may not be carried over to an equivalent, or later, consolidated return year of the group.

(ii) *Special rules* —

(A) ***Year of departure from group.*** If a corporation ceases to be a member during a consolidated return year, net operating loss carryovers attributable to the corporation are first carried to the consolidated return year, then are subject to reduction under section 108 and § 1.1502-28 (regarding discharge of indebtedness income that is excluded from gross income under section 108(a)), and then are subject to reduction under § 1.1502-36 (regarding transfers of loss shares of subsidiary stock). Only the amount that is neither absorbed by the group in that year nor reduced under section 108 and § 1.1502-28 or under § 1.1502-36 may be carried to the corporation's first separate return year. For rules concerning a member departing a subgroup, see paragraph (c)(2)(vii) of this section.

(B) ***Offspring rule.*** In the case of a member that has been a member continuously since its organization (determined without regard to whether the member is a successor to any other corporation), the CNOL attributable to the member is included in the carrybacks to consolidated return years before the member's existence. If the group did not file a consolidated return for a carryback year, the loss may be carried back to a separate return year of the common parent under paragraph (b)(2)(i) of this section, but only if the common parent was not a member of a different consolidated group or of an affiliated group filing separate returns for the year to which the loss is carried or any subsequent year in the carryback period. Following an acquisition described in § 1.1502-75(d)(2) or (3), references to the common parent are to the corporation that was the common parent immediately before the acquisition.

(iii) ***Equivalent years.*** Taxable years are equivalent if they bear the same numerical relationship to the consolidated return year in which a CNOL arises, counting forward or backward from the year of the loss. For example, in the case of a member's third taxable year (which was a separate return year) that preceded the consolidated return year in which the loss arose, the equivalent year is the third consolidated return year preceding the consolidated return year in which the loss arose. See paragraph (b)(7) of this section for certain short taxable years that are disregarded in making this determination.

(iv) *Operating rules.*

(A) ***Amount of CNOL attributable to a member.*** The amount of a CNOL that is attributable to a member equals the product obtained by multiplying the CNOL and the percentage of the CNOL attributable to the member.

(B) *Percentage of CNOL attributable to a member* —

(*1*) ***In general.*** Except as provided in paragraph (b)(2)(iv)(B)(*2*) of this section, the percentage of the CNOL for the consolidated return year attributable to a member equals the separate net operating loss of the member for the consolidated return year divided by the sum of the separate net operating losses for that year of all members having such losses for that year. For this purpose, the separate net operating loss of a member is determined by computing the CNOL by reference to only the member's items of income, gain, deduction, and loss, including the member's losses and deductions actually absorbed by the group in the consolidated return year (whether or not absorbed by the member). The source and section 904(d) separate category of the CNOL attributable to a member is determined under § 1.1502-4(c)(1)(iii).

(2) ***Recomputed percentage.*** If, for any reason, a member's portion of a CNOL is absorbed or reduced on a non-pro rata basis (for example, under § 1.1502-11(b) or (c), paragraph (b)(2)(iv)(C) of this section, § 1.1502-28, or 1.1502-36(d), or as the result of a carryback to a separate return year), the percentage of the CNOL attributable to each member is recomputed. In addition, if a member with a separate net operating loss ceases to be a member, the percentage of the CNOL attributable to each remaining member is recomputed. The recomputed percentage of the CNOL attributable to each member equals the remaining CNOL attributable to the member at the time of the recomputation divided by the sum of the remaining CNOL attributable to all of the remaining members at the time of the recomputation. For purposes of this paragraph (b)(2)(iv)(B)(*2*), a CNOL that is permanently disallowed or eliminated is treated as absorbed.

(C) ***Net operating loss carryovers and carrybacks*** —

(*1*) ***General rules.*** Subject to the rules regarding allocation of special status losses under paragraph (b)(2)(iv)(D) of this section—

(*i*) ***Nonlife insurance companies.*** The portion of a CNOL attributable to any members of the group that are nonlife insurance companies is carried back or carried over under the rules in section 172(b) applicable to nonlife insurance companies.

(*ii*) ***Corporations other than nonlife insurance companies.*** The portion of a CNOL attributable to any other members of the group is carried back or carried over under the rules in section 172(b) applicable to corporations other than nonlife insurance companies.

(*2*) ***Recomputed percentage.*** For rules governing the recomputation of the percentage of a CNOL attributable to each remaining member if any portion of the CNOL attributable to a member is carried back under section 172(b)(1)(B) or (C) and absorbed on a non-pro rata basis, see paragraph (b)(2)(iv)(B)(*2*) of this section.

(D) ***Allocation of special status losses.*** The amount of the group's CNOL that is determined to constitute a farming loss (as defined in section 172(b)(1)(B)(ii)) or any other net operating loss that is subject to special carryback or carryover rules (special status loss) is allocated to each member separately from the remainder of the CNOL based on the percentage of the CNOL attributable to the member, as determined under paragraph (b)(2)(iv)(B) of this section. This allocation is made without regard to whether a particular member actually incurred specific expenses or engaged in specific activities required by the special status loss provisions. This paragraph (b)(2)(iv)(D) applies only with regard to losses for which the special carryback or carryover rules are dependent on the type of expense generating the loss, rather than on the special status of the entity to which the loss is allocable. See section 172(b)(1)(C) and paragraph (b)(2)(iv)(C)(*1*)(*i*) of this section (applicable to losses of nonlife insurance companies). This paragraph (b)(2)(iv)(D) does not apply to farming losses incurred by a consolidated group in any taxable year beginning after December 31, 2017, and before January 1, 2021.

(E) ***Coordination with rules for life-nonlife groups under § 1.1502-47.*** For groups that include at least one member that is a life insurance company and for which an election is in effect under section 1504(c)(2), any computation of the 80-percent limitation under paragraph

(a)(2)(iii)(C) of this section is computed only with respect to items of income, gain, deduction, and loss of the members of the nonlife subgroup (as defined in § 1.1502-47(b)(9)). For rules regarding the use of CNOLs of the nonlife subgroup to offset life insurance company taxable income of the life subgroup (each as defined in § 1.1502-47(b)), or the use of CNOLs of the life subgroup to offset consolidated taxable income of the nonlife subgroup, see generally section 1503(c)(1) and § 1.1502-47.

(v) ***Examples.*** For purposes of the examples in this paragraph (b)(2)(v), unless otherwise stated, all groups file consolidated returns, all corporations have calendar taxable years, all losses are farming losses within the meaning of section 172(b)(1)(B)(ii), all taxable years begin after December 31, 2020, the facts set forth the only corporate activity, value means fair market value and the adjusted basis of each asset equals its value, all transactions are with unrelated persons, and the application of any limitation or threshold under section 382 is disregarded. The principles of this paragraph (b) are illustrated by the following examples:

(A) ***Example 1: Offspring rule.***

(*1*) During Year 1, Individual A forms P and T, and they each file a separate return. P forms S on March 15 of Year 2, and P and S file a consolidated return. P acquires all the stock of T from Individual A at the beginning of Year 3, and T becomes a member of the P group. P's acquisition of T is not an ownership change within the meaning of section 382. P, S, and T sustain a $1,100 CNOL in Year 3 and, under paragraph (b)(2)(iv) of this section, the loss is attributable $200 to P, $300 to S, and $600 to T.

(*2*) Of the $1,100 CNOL in Year 3, the $500 amount of the CNOL that is attributable to P and S ($200 + $300) may be carried to P's separate return in Year 1. Even though S was not in existence in Year 1, the $300 amount of the CNOL attributable to S may be carried back to P's separate return in Year 1 because S (unlike T) has been a member of the P group since its organization and P is a qualified parent under paragraph (b)(2)(ii)(B) of this section. To the extent not absorbed in that year, the loss may then be carried to the P group's return in Year 2. The $600 amount of the CNOL attributable to T is a net operating loss carryback to T's separate return in Year 1, and if not absorbed in Year 1, then to Year 2.

(B) ***Example 2: Departing members.***

(*1*) The facts are the same as in *Example 1.* In addition, on June 15 of Year 4, P sells all the stock of T. The P group's consolidated return for Year 4 includes the income of T through June 15. T files a separate return for the period from June 16 through December 31.

(*2*) $600 of the Year 3 CNOL attributable to T is apportioned to T and is carried back to its separate return in Year 1. To the extent the $600 is not absorbed in T's separate return in Year 1 or Year 2, it is carried to the consolidated return in Year 4 before being carried to T's separate return in Year 4. Any portion of the loss not absorbed in T's Year 1 or Year 2 or in the P group's Year 4 is then carried to T's separate return in Year 4.

(C) ***Example 3. Offspring rule following acquisition.***

(*1*) Individual A owns all of the stock of P, the common parent of a consolidated group. In Year 1, B, an individual unrelated to Individual A, forms T. P acquires all of the stock of T at the beginning of Year 3, and T becomes a member of the P group. The P group has $200 of consolidated taxable income in Year 2, and $300 of consolidated taxable income in Year 3 (computed without regard to the CNOL deduction). At the beginning of Year 4, T forms a subsidiary, Y, in a transaction described in section 351. The P group has a $300 consolidated net operating loss in Year 4, and under paragraph (b)(2)(iv) of this section, the loss is attributable entirely to Y.

(*2*) Even though Y was not in existence in Year 2, $300, the amount of the consolidated net operating loss attributable to Y, may be carried back to the P group's Year 2 consolidated return under paragraph (b)(2)(ii)(B) of this section because Y has been a member of the P group since its organization. To the extent not absorbed in that year, the loss may then be carried to the P group's consolidated return in Year 3.

(D) ***Example 4: Allocation of a CNOL arising in a consolidated return year beginning after December 31, 2020.***

(*1*) P is the common parent of a consolidated group that includes S. Neither P nor S is a nonlife insurance company. The P group also includes nonlife insurance companies PC1, PC2, and PC3. In the P group's 2021 consolidated return year, all members except S have separate net operating losses, and the P group's CNOL in that year is $40. No member of the P group engages in farming activities. See section 172(b)(1)(B)(ii).

(*2*) Under paragraphs (b)(1) and (b)(2)(iv)(B)(*1*) of this section, for purposes of carrying losses to other taxable years, the P group's $40 CNOL is allocated pro rata among the group members that have separate net operating losses. Under paragraph (b)(2)(iv)(C) of this section, those respective portions of the CNOL attributable to PC1, PC2, and PC3 (that is, members that are nonlife insurance companies) are carried back to each of the two preceding taxable years and then carried over to each of the 20 subsequent taxable years. See section 172(b)(1)(C). The portion attributable to P (which is not a nonlife insurance company) may not be carried back but is carried over to future years. See section 172(b)(1)(A).

(E) ***Example 5: Allocation of a CNOL arising in a consolidated return year beginning before January 1, 2021.*** The facts are the same as in paragraph (b)(2)(v)(D)(*1*) of this section, except that the P group incurred the CNOL during the P group's 2020 consolidated return year. The allocation among the P group members of the CNOL described in paragraph (b)(2)(v)(D)(*2*) of this section would be the same. However, those respective portions of the CNOL attributable to PC1, PC2, and PC3 (that is, members that are nonlife insurance companies) will be carried back to each of the five preceding taxable years and then carried over to each of the 20 subsequent taxable years. See section 172(b)(1)(C) and section 172(b)(1)(D)(i). The portion attributable to P (which is not a nonlife insurance company) will be carried back to each of the five preceding taxable years and then carried over to future years. See section 172(b)(1)(A) and section 172(b)(1)(D)(i).

(F) ***Example 6: CNOL deduction and application of section 172.***

(*1*) P (a type of corporation other than a nonlife insurance company) is the common parent of a consolidated group that includes PC1 (a nonlife insurance company). P and PC1 were both incorporated in Year 1 (a year beginning after December 31, 2020). In Year 1, P and PC1 have separate taxable income of $20 and $25, respectively. As a result, the P group has Year 1 consolidated taxable income of $45. In Year 2, P has separate taxable income of $24, and PC1 has a separate taxable loss of $40, resulting in a P group CNOL of $16. Additionally, in Year 3, P has separate taxable income of $15, and PC1 has a separate taxable loss of $45, resulting in a P group CNOL of $30. No member of the P group engages in farming activities. See section 172(b)(1)(B)(ii).

(*2*) Under paragraph (b)(2)(iv)(B) of this section, the P group's Year 2 CNOL and Year 3 CNOL are entirely attributable to PC1, a nonlife insurance company. Therefore, under section 172(b)(1)(C)(i), the entire amount of each of these CNOLs is eligible to be carried back to Year 1.

(*3*) Under paragraph (a)(2)(ii) of this section, the amount of the Year 2 CNOL that may be used by the P group in Year 1 is determined by taking into account the status (nonlife insurance company or other type of corporation) of the member that has separate taxable income composing in whole or in part the P group's consolidated taxable income. Because the P group includes both a nonlife insurance company member and a member that is not a nonlife insurance company, paragraph (a)(2)(iii)(C) of this section applies to determine the computation of the post-2017 CNOL deduction limit for the group for Year 1. Therefore, the 80-percent limitation is applied to the residual income pool, which consists of the taxable income of P, a type of corporation other than a nonlife insurance company. Under the 80-percent limitation, the maximum amount of P's Year 1 income that may be offset by the P group's post-2017 CNOLs is $16, which equals 80 percent of the excess of P's taxable income for Year 1 ($20) over the aggregate amount of pre-2018 NOLs allocable to P ($0) (80 percent × ($20−$0)). See paragraph (a)(2)(iii)(C)(*2*) and (a)(2)(iii)(C)(*4*) of this section. PC1 is a nonlife insurance company to which section 172(f), rather than the 80-percent limitation in section 172(a)(2)(B)(ii), applies. Therefore, the maximum amount of PC1's Year 1 income that may be offset by the P group's post-2017 CNOLs is $25, which equals the excess of PC1's taxable income for Year 1 ($25) over the aggregate amount of pre-2018 NOLs allocable to PC1 ($0). See paragraph (a)(2)(iii)(C)(*3*) and (*4*) of this section.

(*4*) Based on paragraph (a)(2)(iii)(C) of this section and the analysis set forth in paragraph (b)(2)(v)(F)(*3*) of this section, at the end of Year 2, the P group's post-2017 CNOL deduction limit for Year 1 is the lesser of the aggregate amount of post-2017 NOLs carried to Year 1 ($16), or $41 ($16 + $25). Therefore, the P group can offset $16 of its Year 1 income with its CNOL carryback from Year 2.

(*5*) When the Year 3 CNOL is carried back to Year 1, the P group's post-2017 CNOL deduction limit for Year 1 is the lesser of $46 (the aggregate amount of post-2017 NOLs carried to Year 1) or $41 ($16 + $25; see the computation in paragraph (b)(2)(v)(F)(*3*) of this section). Thus, the total amount of the P group's Year 1 income that may be offset by the P group's Year 2 and Year 3 CNOLs is $41 ($16 from Year 2

+ $25 from Year 3). As a result, the P group reports $4 of income ($45−$41) in Year 1 that is ineligible for offset by any other NOLs. The P group carries over its remaining $5 CNOL ($46−$41) to future years.

(G) ***Example 7: Pre-2018 and post-2017 CNOLs.***

(*1*) P is the common parent of a consolidated group. No member of the P group is a nonlife insurance company or is engaged in a farming business, and no member of the P group has a loss that is subject to a SRLY limitation. The P group had the following consolidated taxable income or CNOL for the following taxable years:

Table 1 to Paragraph (b)(2)(v)(G)(*1*)

2014	2015	2016	2017	2018	2019	2020	2021
$60	$0	$0	($90)	$30	($40)	($100)	$120

(2) Under section 172(a)(1), all $30 of the P group's 2018 consolidated taxable income is offset by the 2017 CNOL carryover without limitation. The remaining $60 of the P group's 2017 CNOL is carried over to 2021 under section 172(b)(1)(A)(ii)(I).

(3) Under section 172(b)(1)(D)(i)(I), the P group's $40 2019 CNOL is carried back to the five taxable years preceding the year of the loss. Thus, the P group's $40 2019 CNOL is carried back to offset $40 of its 2014 consolidated taxable income.

(4) Under section 172(a)(2) and paragraph (a)(2)(i) of this section, the P group's CNOL deduction for 2021 equals the aggregate amount of pre-2018 NOLs carried to 2021 plus the group's post-2017 CNOL deduction limit. The P group has $60 of pre-2018 NOLs carried to 2021 ($90−$30). Because no member of the P group is a nonlife insurance company, paragraph (a)(2)(iii)(A) of this section applies to determine the computation of the group's post-2017 CNOL deduction limit for 2021. See also section 172(a)(2)(B). Therefore, the post-2017 CNOL deduction limit of the P group for 2021 is $48, which equals the lesser of the aggregate amount of post-2017 NOLs carried to 2021 ($100), or 80 percent of the excess of the P group's consolidated taxable income for that year computed without regard to any deductions under sections 172, 199A, and 250 ($120) over the aggregate amount of pre-2018 NOLs carried to 2021 ($60) (that is, 80 percent × $60). Thus, the P group's CNOL deduction for 2021 equals $108 ($60 pre-2018 NOLs carried to 2021 + $48 post-2017 CNOL deduction limit). See section 172(a)(2) and paragraph (a)(2)(i) of this section. The P group offsets $108 of its $120 of 2021 consolidated taxable income, resulting in $12 of consolidated taxable income in 2021. The remaining $52 of the P group's 2020 CNOL ($100−$48) is carried over to future taxable years. See section 172(b)(1)(A)(ii)(II).

(3) ***Election to relinquish entire carryback period*** —

(i) ***In general.*** A group may make an irrevocable election under section 172(b)(3) to relinquish the entire carryback period with respect to a CNOL for any consolidated return year. Except as provided in paragraphs (b)(4) and (5) of this section, the election may not be made separately for any member (whether or not it remains a member), and must be made in a separate statement titled "THIS IS AN ELECTION UNDER § 1.1502-21(b)(3)(i) TO WAIVE THE ENTIRE CARRYBACK PERIOD PURSUANT TO SECTION 172(b)(3) FOR THE [insert consolidated return year] CNOLs OF THE CONSOLIDATED GROUP OF WHICH [insert name and employer identification number of common parent] IS THE COMMON PARENT." The statement must be filed with the group's income tax return for the consolidated return year in which the loss arises. The election may be made in an unsigned statement.

(ii) ***Groups that include insolvent financial institutions.*** For rules applicable to relinquishing the entire carryback period with respect to losses attributable to insolvent financial institutions, *see* § 301.6402-7 of this chapter.

(4) ***General split-waiver election.*** If one or more members of a consolidated group becomes a member of another consolidated group, the acquiring group may make an irrevocable election to relinquish, with respect to all consolidated net operating losses attributable to the member, the portion of the carryback period for which the corporation was a member of another group, provided that any other corporation joining the acquiring group that was affiliated with the member immediately before it joined the acquiring group is also included in the waiver. This election is not a yearly election and applies to all losses that would otherwise be subject to a carryback to a former group under section

172. The election must be made in a separate statement titled "THIS IS AN ELECTION UNDER § 1.1502-21(b)(4) TO WAIVE THE PRE- [insert first taxable year for which the member (or members) was not a member of another group] CARRYBACK PERIOD FOR THE CNOLs attributable to [insert names and employer identification number of members]." The statement must be filed with the acquiring consolidated group's original income tax return for the year the corporation (or corporations) became a member. The election may be made in an unsigned statement.

(5) ***Split-waiver elections to which amended carryback rules apply*** —

(i) ***In general.*** An acquiring group may make either (but not both) an amended statute split-waiver election or an extended split-waiver election with respect to a particular amended carryback CNOL. These elections are available only if the statutory amendment to the carryback period referred to in paragraph (b)(5)(ii)(D) of this section occurs after the date of acquisition of an acquired member. A separate election is available for each taxable year to which amended carryback rules apply. An acquiring group may make an amended statute split-waiver election or an extended split-waiver election only if the acquiring group, with regard to that election—

(A) Satisfies the requirements in paragraph (b)(5)(iii) of this section; and

(B) Follows the procedures in paragraphs (b)(5)(v) and (vi) of this section, as relevant to that election.

(ii) ***Definitions.*** The definitions provided in this paragraph (b)(5)(ii) apply for purposes of paragraphs (b)(5) and (6) of this section.

(A) ***Acquired member.*** The term *acquired member* means a member of a consolidated group that joins another consolidated group.

(B) ***Acquiring group.*** The term *acquiring group* means a consolidated group that has acquired a former member of another consolidated group (that is, an acquired member).

(C) ***Amended carryback CNOL.*** The term *amended carryback CNOL* means the portion of a CNOL attributable to an acquired member (determined pursuant to paragraph (b)(2)(iv)(B) of this section) arising in a taxable year to which amended carryback rules apply.

(D) ***Amended carryback rules.*** The term *amended carryback rules* means the rules of section 172 of the Code after amendment by statute to extend the carryback period for NOLs attributable to an acquired member (determined pursuant to paragraph (b)(2)(iv)(B) of this section).

(E) ***Amended statute split-waiver election.*** The term *amended statute split-waiver election* means, with respect to any amended carryback CNOL, an irrevocable election made by an acquiring group to relinquish the portion of the carryback period (including the default carryback period and the extended carryback period) for that loss during which an acquired member was a member of any former group.

(F) ***Amended statute split-waiver election statement.*** The term *amended statute split-waiver election statement* has the meaning provided in paragraph (b)(5)(v)(A) of this section.

(G) ***Default carryback period.*** The term *default carryback period* means the NOL carryback period existing at the time the acquiring group acquired the acquired member, before the applicability of amended carryback rules.

(H) ***Extended carryback period.*** The term *extended carryback period* means the additional taxable years added to a default carryback period by any amended carryback rules.

(I) ***Extended split-waiver election.*** The term *extended split-waiver election* means, with respect to any amended carryback CNOL, an irrevocable election made by an acquiring group to relinquish solely the portion of the extended carryback period (and no part of the default carryback period) for that loss during which an acquired member was a member of any former group.

(J) ***Extended split-waiver election statement.*** The term *extended split-waiver election statement* has the meaning provided in paragraph (b)(5)(v)(B) of this section.

(K) ***Former group.*** The term *former group* means a consolidated group of which an acquired member previously was a member.

(iii) ***Conditions for making an amended statute split-waiver election or an extended split-waiver election.*** An acquiring group may make an amended statute split-waiver election or an extended split-waiver election (but not both) with respect to an amended carryback CNOL only if—

(A) The acquiring group has not filed a valid election described in paragraph (b)(4) of this section with respect to the acquired member on or before the effective date of the amended carryback rules;

(B) The acquiring group has not filed a valid election described in section 172(b)(3) and paragraph (b)(3)(i) of this section with respect to a CNOL of the acquiring group from which the amended carryback CNOL is attributed to the acquired member;

(C) Any other corporation joining the acquiring group that was affiliated with the acquired member immediately before the acquired member joined the acquiring group is included in the waiver; and

(D) A former group does not claim any carryback (as provided in paragraph (b)(5)(iv) of this section) to any taxable year in the carryback period (in the case of an amended statute split-waiver election) or in the extended carryback period (in the case of an extended split-waiver election) with respect to the amended carryback CNOL on a return or other filing filed on or before the date the acquiring group files the election.

(iv) ***Claim for a carryback.*** For purposes of paragraph (b)(5)(iii)(D) of this section, a carryback is claimed with respect to an amended carryback CNOL if there is a claim for refund, an amended return, an application for a tentative carryback adjustment, or any other filing that claims the benefit of the NOL in a taxable year prior to the taxable year of the loss, whether or not subsequently revoked in favor of a claim based on the period provided for in the amended carryback rules.

(v) ***Procedures for making an amended statute split-waiver election or an extended split-waiver election*** —

(A) ***Amended statute split-waiver election.*** An amended statute split-waiver election must be made in a separate amended statute split-waiver election statement titled “THIS IS AN ELECTION UNDER SECTION 1.1502-21(b)(5)(i) TO WAIVE THE PRE-[insert first day of the first taxable year for which the acquired member was a member of the acquiring group] CARRYBACK PERIOD FOR THE CNOLS ATTRIBUTABLE TO THE [insert taxable year of

losses] TAXABLE YEAR(S) OF [insert names and employer identification numbers of members]". The amended statute split-waiver election statement must be filed as provided in paragraph (b)(5)(vi) of this section.

(B) ***Extended split-waiver election.*** An extended split-waiver election must be made in a separate extended split-waiver election statement titled "THIS IS AN ELECTION UNDER SECTION 1.1502-21(b)(5)(i) TO WAIVE THE PRE-[insert first day of the first taxable year for which the acquired member was a member of the acquiring group] EXTENDED CARRYBACK PERIOD FOR THE CNOLS ATTRIBUTABLE TO THE [insert taxable year of losses] TAXABLE YEAR(S) OF [insert names and employer identification numbers of members]". The extended split-waiver election statement must be filed as provided in paragraph (b)(5)(vi) of this section.

(vi) ***Time and manner for filing statement —***

(A) ***In general.*** Except as otherwise provided in paragraph (b)(5)(vi)(B) or (C) of this section, an amended statute split-waiver election statement or extended split-waiver election statement must be filed with the acquiring group's timely filed consolidated return (including extensions) for the year during which the amended carryback CNOL is incurred.

(B) ***Amended returns.*** This paragraph (b)(5)(vi)(B) applies if the date of the filing required under paragraph (b)(5)(vi)(A) of this section is not at least 150 days after the date of the statutory amendment to the carryback period referred to in paragraph (b)(5)(ii)(D) of this section. Under this paragraph (b)(5)(vi)(B), an amended statute split-waiver election statement or extended split-waiver election statement may be attached to an amended return filed by the date that is 150 days after the date of the statutory amendment referred to in paragraph (b)(5)(ii)(D) of this section.

(C) ***Certain taxable years beginning before January 1, 2021.*** This paragraph (b)(5)(vi)(C) applies to taxable years beginning before January 1, 2021, for which the date of the filing required under paragraph (b)(5)(vi)(A) of this section precedes November 30, 2020. Under this paragraph (b)(5)(vi)(C), an amended statute split-waiver election statement or extended split-waiver election statement may be attached to an amended return filed by November 30, 2020.

(6) ***Examples.*** The following examples illustrate the rules of paragraph (b)(5) of this section. For purposes of these examples: All affiliated groups file consolidated returns; all corporations are includible corporations that have calendar taxable years; each of P, X, and T is a corporation having one class of stock outstanding; each of P and X is the common parent of a consolidated group (P Group and X Group, respectively); neither the P Group nor the X Group includes an insolvent financial institution or an insurance company; no NOL is a farming loss; there are no other relevant NOL carrybacks to the X Group's consolidated taxable years; except as otherwise stated, the X Group has sufficient consolidated taxable income determined under § 1.1502-11 (CTI) to absorb the stated NOL carryback by T; T has sufficient SRLY register income within the X Group to absorb the stated NOL carryback by T; all transactions occur between unrelated parties; and the facts set forth the only relevant transactions.

(i) ***Example 1: Computation and absorption of amended carrybacks —***

(A) ***Facts.*** In Year 1, T became a member of the X Group. On the last day of Year 5, P acquired all the stock of T from X. At the time of P's acquisition of T stock, the default carryback period was zero taxable years. The P Group did not make an irrevocable split-waiver

election under paragraph (b)(4) of this section to relinquish, with respect to all CNOLs attributable to T while a member of the P Group, the portion of the carryback period for which T was a member of the X Group (that is, a former group). In Year 7, the P Group sustained a $1,000 CNOL, $600 of which was attributable to T pursuant to paragraph (b)(2)(iv)(B) of this section. In that year, P did not make an irrevocable general waiver election under section 172(b)(3) and paragraph (b)(3)(i) of this section with respect to the $1,000 CNOL when the P Group filed its consolidated return for Year 7. In Year 8, legislation was enacted that amended section 172 to require a carryback period of five years for NOLs arising in a taxable year beginning after Year 5 and before Year 9.

(B) ***Analysis.*** As a result of the amended carryback rules enacted in Year 8, the P Group's $1,000 CNOL in Year 7 must be carried back to Year 2. Therefore, T's $600 attributed portion of the P Group's Year 7 CNOL (that is, T's amended carryback CNOL) must be carried back to taxable years of the X Group. *See* paragraphs (b)(1) and (b)(2)(i) of this section. To the extent T's amended carryback CNOL is not absorbed in the X Group's Year 2 taxable year, the remaining portion must be carried to the X Group's Year 3, Year 4, and Year 5 taxable years, as appropriate. *See id.* Any remaining portion of T's amended carryback CNOL is carried to consolidated return years of the P Group. *See* paragraph (b)(1) of this section.

(ii) ***Example 2: Amended statute split-waiver election*** —

(A) ***Facts.*** The facts are the same as in paragraph (b)(6)(i)(A) of this section (*Example 1*), except that, following the change in statutory carryback period in Year 8, the P Group made a valid amended statute split-waiver election under paragraph (b)(5)(i) of this section to relinquish solely the carryback of T's amended carryback CNOL.

(B) ***Analysis.*** Because the P Group made a valid amended statute split-waiver election, T's amended carryback CNOL is not eligible to be carried back to any taxable years of the X Group (that is, a former group). However, the amended statute split-waiver election does not prevent T's Year 7 amended carryback CNOL from being carried back to years of the P group (that is, the acquiring group) during which T was a member. *See* paragraph (b)(5)(ii)(E) of this section. As a result, the entire amount of T's amended carryback CNOL is eligible to be carried back to taxable Year 6 of the P Group. Any remaining CNOL may then be carried over within the P Group. *See* paragraph (b)(1) of this section.

(iii) ***Example 3: Computation and absorption of extended carrybacks*** —

(A) ***Facts.*** The facts are the same as in paragraph (b)(6)(i)(A) of this section (*Example 1*), except that the X Group had $300 of CTI in Year 4 and $200 of CTI in Year 5 and, at the time of the P Group's acquisition of T, the default carryback period was two years. Therefore, T's $600 attributed portion of the P Group's Year 7 CNOL was required to be carried back to the X Group's Year 5 taxable year, and the X Group was able to offset $200 of CTI in Year 5.

(B) ***Analysis.*** As a result of the amended carryback rules, the X Group must offset its $300 of CTI in Year 4 against T's amended carryback CNOL. *See* paragraphs (b)(1) and (b)(2)(i) of this section. The remaining $100 ($600-$300-$200) of T's amended carryback CNOL is carried to taxable years of the P Group. *See* paragraph (b)(1) of this section.

(iv) ***Example 4: Extended split-waiver election*** —

(A) ***Facts.*** The facts are the same as in paragraph (b)(6)(iii)(A) of this section (*Example 3*), except that, following the change in law in Year 8, the P Group made a valid extended split-waiver election under paragraph (b)(5)(i) of this section to relinquish the extended carryback period for T's amended carryback CNOL for years in which T was a member of the X Group.

(B) ***Analysis.*** As a result of the P Group's extended split-waiver election, T's amended carryback CNOL is not eligible to be carried back to any portion of the extended carryback period (that is, any taxable year prior to Year 5). *See* paragraph (b)(5)(ii)(I) of this section. As a result, the X Group absorbs $200 of T's $600 loss in Year 5, and the remaining $400 ($600-$200) is carried to taxable years of the P Group. *See* paragraph (b)(1) of this section.

(7) ***Short years in connection with transactions to which section 381(a) applies.*** If a member distributes or transfers assets to a corporation that is a member immediately after the distribution or transfer in a transaction to which section 381(a) applies, the transaction does not cause the distributor or transferor to have a short year within the consolidated return year of the group in which the transaction occurred that is counted as a separate year for purposes of determining the years to which a net operating loss may be carried.

(c) ***Limitations on net operating loss carryovers and carrybacks from separate return limitation years*** —

(1) ***SRLY limitation*** —

(i) ***General rule.*** Except as provided in paragraph (g) of this section (relating to an overlap with section 382), the aggregate of the net operating loss carryovers and carrybacks of a member (SRLY member) arising (or treated as arising) in SRLYs (SRLY NOLs) that are included in the CNOL deductions for all consolidated return years of the group under paragraph (a) of this section may not exceed the aggregate consolidated taxable income for all consolidated return years of the group determined by reference to only the member's items of income, gain, deduction, and loss (cumulative register). For this purpose—

(A) Consolidated taxable income is computed without regard to CNOL deductions;

(B) Consolidated taxable income takes into account the member's losses and deductions (including capital losses) actually absorbed by the group in consolidated return years (whether or not absorbed by the member);

(C) In computing consolidated taxable income, the consolidated return years of the group include only those years, including the year to which the loss is carried, that the member has been continuously included in the group's consolidated return, but exclude—

(*1*) For carryovers, any years ending after the year to which the loss is carried; and

(*2*) For carrybacks, any years ending after the year in which the loss arose;

(D) The treatment under § 1.1502-15 of a built-in loss as a hypothetical net operating loss carryover in the year recognized is solely for purposes of determining the limitation under this paragraph (c) with respect to the loss in that year and not for any other purpose. Thus, for purposes of determining consolidated taxable income for any other losses, a built-in loss allowed under this section in the year it arises is taken into account; and

(E) If a limitation on the amount of taxable income that may be offset under section 172(a) (see paragraph (a)(2) of this section) applies in a taxable year to a member whose carryovers or carrybacks are subject to a SRLY limitation (SRLY member), the amount of net operating loss subject to a SRLY limitation that is available for use by the group in that year is limited to the percentage of the balance in the cumulative register that would be available for offset under section 172(a) if the SRLY member filed a separate return and reported as taxable income in that year the amount contained in the cumulative register. For example, assume that a consolidated group has a SRLY member that is a corporation other than a nonlife insurance company, and that the SRLY member has a SRLY NOL that arose in a taxable year beginning after December 31, 2017 (post-2017 NOL). The group's consolidated taxable income for a consolidated return year beginning after December 31, 2020 is $200, but the cumulative register has a positive balance of only $120 (and no other net operating loss carryovers or carrybacks are available for the year). Because the SRLY limitation would be $96 ($120 × 80 percent), only $96 of SRLY loss may be used, rather than $160 ($200 × 80 percent). In addition, to the extent that this paragraph (c)(1)(i)(E) applies, the cumulative register is decreased by the full amount of income required under section 172(a) to support the amount of SRLY NOL absorption. See, for example, paragraph (c)(1)(iii)(A) and (B) of this section for examples illustrating the application of this rule.

(ii) ***Losses treated as arising in SRLYs.*** If a net operating loss carryover or carryback did not arise in a SRLY but is attributable to a built-in loss (as defined under § 1.1502-15), the carryover or carryback is treated for purposes of this paragraph (c) as arising in a SRLY if the built-in loss was not allowed, after application of the SRLY limitation, in the year it arose. For an illustration, see § 1.1502-15(d), *Example 5.* But see § 1.1502-15(g)(1).

(iii) ***Examples.*** For purposes of the examples in this paragraph (c)(1)(iii), no corporation is a nonlife insurance company and, unless otherwise specified, all taxable years begin after December 31, 2020, and all CNOLs arise in taxable years beginning after December 31, 2020. The principles of this paragraph (c)(1) are illustrated by the following examples:

(A) ***Example 1: Determination of SRLY limitation.***

(*1*) Individual A owns P. In Year 1, Individual A forms T, and T sustains a $100 net operating loss that is carried forward. P acquires all the stock of T at the beginning of Year 2, and T becomes a member of the P group. The P group has $300 of consolidated taxable income in Year 2 (computed without regard to the CNOL deduction). Such consolidated taxable income would be $70 if determined by reference to only T's items.

(*2*) T's $100 net operating loss carryover from Year 1 arose in a SRLY. See § 1.1502-1(f)(2)(iii). P's acquisition of T was not an ownership change as defined by section 382(g). Thus, the $100 net operating loss carryover is subject to the SRLY limitation in paragraph (c)(1) of this section. The positive balance of the cumulative register of T for Year 2 equals the consolidated taxable income of the P group determined by reference to only T's items, or $70. However, due to the 80-percent limitation and the application of paragraph (c)(1)(i)(E) of this section, the SRLY limitation is $56 ($70 × 80 percent). No losses from equivalent years are available, and the P group otherwise has sufficient consolidated taxable income to support the CNOL deduction ($300 × 80 percent = $240). Therefore, $56 of the SRLY net

operating loss is included under paragraph (a) of this section in the P group's CNOL deduction for Year 2. Although only $56 is absorbed, the cumulative register of T is reduced by $70, the full amount of income necessary to support the $56 deduction after taking into account the 80-percent limitation ($70 × 80 percent = $56).

(3) The facts are the same as in paragraph (i) of this *Example 1,* except that such consolidated taxable income (computed without regard to the CNOL deduction and by reference to only T's items) for Year 2 is a loss (a CNOL) of $370. Because the SRLY limitation may not exceed the consolidated taxable income determined by reference to only T's items, and such items aggregate to a CNOL, T's $100 net operating loss carryover from Year 1 is not allowed under the SRLY limitation in Year 2. Moreover, if consolidated taxable income (computed without regard to the CNOL deduction and by reference to only T's items) did not exceed $370 in Year 3, the carryover would still be restricted under paragraph (c) of this section in Year 3, because the aggregate consolidated taxable income for all consolidated return years of the group computed by reference to only T's items would not be a positive amount.

(B) ***Example 2: Net operating loss carryovers.***

(1) In Year 1, Individual A forms P, and P sustains a $40 net operating loss that is carried forward. P has no income in Year 2. Individual A also owns T which sustains a net operating loss of $50 in Year 2 that is carried forward. P acquires the stock of T from Individual A during Year 3, but T is not a member of the P group for each day of the year. P and T file separate returns and sustain net operating losses of $120 and $60, respectively, for Year 3. The P group files consolidated returns beginning in Year 4. During Year 4, the P group has $160 of consolidated taxable income (computed without regard to the CNOL deduction). Such consolidated taxable income would be $70 if determined by reference to only T's items. These results are summarized as follows:

	Separate	**Separate**	**Separate/ affiliated**	**Consolidated**
	Year 1	**Year 2**	**Year 3**	**Year 4**
P	$ (40)	$0	$ (120)	$90
T	0	(50)	(60)	70
CTI				160

(2) P's Year 1, Year 2, and Year 3 are not SRLYs with respect to the P group. See § 1.1502-1(f)(2)(i). Thus, P's $40 net operating loss arising in Year 1 and $120 net operating loss arising in Year 3 are not subject to the SRLY limitation under paragraph (c) of this section. Although the P group has $160 of taxable income in Year 4, the 80-percent limitation reduces the P group's net operating loss deduction in that year to $128 ($160 × 80 percent). Under the principles of section 172, paragraph (b) of

this section requires that P's $40 loss arising in Year 1 be the first loss absorbed by the P group in Year 4. Absorption of this loss leaves $88 ($128−$40) of the P group's Year 4 consolidated taxable income available for offset by loss carryovers.

(3) T's Year 2 and Year 3 are SRLYs with respect to the P group. See § 1.1502-1(f)(2)(ii). P's acquisition of T was not an ownership change as defined by section 382(g). Thus, T's $50 net operating loss arising in Year 2 and $60 net operating loss arising in Year 3 are subject to the SRLY limitation. The positive balance of the cumulative register of T for Year 4 equals the P group's consolidated taxable income determined by reference to only T's items, or $70. Under paragraph (c)(1)(i)(E) of this section, after taking into account the 80-percent limitation, T's SRLY limitation is $56 ($70 × 80 percent). Therefore, the P group can absorb up to $56 of T's SRLY net operating losses in Year 4. Under the principles of section 172, T's $50 SRLY net operating loss from Year 2 is included under paragraph (a) of this section in the P group's CNOL deduction for Year 4. After absorption of this loss, under paragraph (c)(1)(i) of this section, $6 of SRLY limit remains in Year 4 ($56−$50). Further, the total amount of Year 4 consolidated taxable income available for offset by other loss carryovers under section 172(a) is $38 ($88−$50).

(4) P and T each carry over net operating losses to Year 4 from a taxable year ending on the same date (that is, Year 3). The losses carried over from Year 3 total $180. However, the remaining Year 4 SRLY limit is $6. Therefore, the total amount of loss available for absorption is $126 ($120 allocable to P and $6 allocable to T). Under paragraph (b) of this section, the losses available for absorption that are carried over from Year 3 are absorbed on a pro rata basis, even though one loss arises in a SRLY and the other loss does not. Thus, $36.19 of P's Year 3 loss is absorbed ($120/($120 + $6)) × $38 = $36.19. In addition, $1.81 of T's Year 3 loss is absorbed ($6/($120 + $6)) × $38 = $1.81.

(5) After deduction of T's SRLY net operating losses in Year 4, the cumulative register of T is adjusted pursuant to paragraph (c)(1)(i)(E) of this section. A total of $51.81 of SRLY net operating losses were absorbed in Year 4 ($50 + $1.81). After taking into account the 80-percent limitation, the amount of income necessary to support this deduction is $64.76 ($64.76 × 80 percent = $51.81). Therefore, the cumulative register of T is decreased by $64.76, and $5.24 remains in the cumulative register ($70−$64.76).

(6) P carries its remaining $83.81 ($120−$36.19) Year 3 net operating loss and T carries its remaining $58.19 ($60−$1.81) Year 3 net operating loss over to Year 5. Assume that, in Year 5, the P group has $90 of consolidated taxable income (computed without regard to the CNOL deduction). The P group's consolidated taxable income determined by reference to only T's items is a CNOL of $4. Therefore, the positive balance of the cumulative register of T in Year 5 equals $1.24 ($5.24−$4). Under paragraph (c)(1)(i)(E) of this section, after taking into account the 80-percent limitation, T's SRLY limitation is $0.99 ($1.24 × 80 percent). For Year 5, the total amount of Year 5 consolidated taxable income available for offset by loss carryovers as a result of the 80-percent limitation is $72 ($90 × 80 percent). Under paragraph (b) of this section, the losses carried over from Year 3 are absorbed on a pro rata basis,

even though one loss arises in a SRLY and the other loss does not. Therefore, $71.16 of P's Year 3 loss is absorbed (($83.81/($83.81 + $0.99)) × $72 = $71.16). In addition, $0.84 of T's Year 3 losses is absorbed (($0.99/($83.81 + $0.99)) × $72 = $0.84).

(C) ***Example 3: Net operating loss carrybacks.***

(*1*) P owns all of the stock of S and T. The members of the P group contribute the following to the consolidated taxable income of the P group for Years 1, 2, and 3:

	Year 1	Year 2	Year 3	Total
P	$100	$60	$80	$240
S	20	20	30	70
T	30	10	(50)	(10)
CTI	150	90	60	300

(*2*) P sells all of the stock of T to Individual A at the beginning of Year 4, a taxable year that begins on January 1, 2021. For its Year 4 separate return year, T has a net operating loss of $30.

(*3*) T's Year 4 is a SRLY with respect to the P group. See § 1.1502-1(f)(1). T's $30 net operating loss carryback to the P group from Year 4 is not allowed under paragraph (c) of this section to be included in the CNOL deduction under paragraph (a) of this section for Year 1, 2, or 3, because the P group's consolidated taxable income would not be a positive amount if determined by reference to only T's items for all consolidated return years through Year 4 (without regard to the $30 net operating loss). The $30 loss is carried forward to T's Year 5 and succeeding taxable years as provided under the Internal Revenue Code.

(D) ***Example 4: Computation of SRLY limitation for built-in losses treated as net operating loss carryovers.***

(*1*) Individual A owns P. In Year 1, Individual A forms T by contributing $300 and T sustains a $100 net operating loss. During Year 2, T's assets decline in value by $100. At the beginning of Year 3, P acquires all the stock of T from Individual A, and T becomes a member of the P group in a transaction that does not result in an ownership change under section 382(g). At the time of the acquisition, T has a $100 net unrealized built-in loss, which exceeds the threshold requirements of section 382(h)(3)(B). During Year 3, T recognizes its unrealized loss as a $100 ordinary loss.

The members of the P group contribute the following to the consolidated taxable income of the P group for Years 3 and 4 (computed without regard to T's recognition of its unrealized loss and any CNOL deduction under this section):

	Year 3	Year 4	Total
P group (without T)	$100	$100	$200
T	60	40	100
CTI	160	140	300

(2) Under § 1.1502-15(a), T's $100 of ordinary loss in Year 3 constitutes a built-in loss that is subject to the SRLY limitation under paragraph (c) of this section. The amount of the limitation is determined by treating the deduction as a net operating loss carryover from a SRLY. The built-in loss is therefore subject to both a SRLY limitation and the 80-percent limitation for Year 3. The built-in loss is treated as a net operating loss carryover solely for purposes of determining the extent to which the loss is not allowed by reason of the SRLY limitation, and for all other purposes the loss remains a loss arising in Year 3. See § 1.1502-21(c)(1)(i)(D). Consequently, under paragraph (b) of this section, the built-in loss is absorbed by the P group before the net operating loss carryover from Year 1 is absorbed. The positive balance of the cumulative register of T for Year 3 equals the P group's consolidated taxable income determined by reference to only T's items, or $60. Under paragraph (c)(1)(i)(E) of this section, after taking into account the 80-percent limitation, the SRLY limitation for Year 3 is $48 ($60 × 80 percent). Therefore, $48 of the built-in loss is absorbed by the P group. None of T's $100 SRLY net operating loss carryover from Year 1 is allowed.

(3) After deduction of T's $48 SRLY built-in loss in Year 4, the cumulative register of T is adjusted pursuant to paragraph (c)(1)(i)(E) of this section. After taking into account the 80-percent limitation, the amount of income necessary to support this deduction is $60 ($60 × 80 percent = $48). Therefore, the cumulative register of T is decreased by $60, and zero remains in the cumulative register ($60−$60).

(4) Under § 1.1502-15(a), the $52 balance of the built-in loss that is not allowed in Year 3 because of the SRLY limitation and the 80-percent limitation is treated as a $52 net operating loss arising in Year 3 that is subject to the SRLY limitation because, under paragraph (c)(1)(ii) of this section, Year 3 is treated as a SRLY. The built-in loss is carried to other years in accordance with the rules of paragraph (b) of this section. The positive balance of the cumulative register of T for Year 4 equals $40 (zero from Year 3 + $40). Under paragraph (c)(1)(i)(E) of this section, after taking into account the 80-percent limitation, the SRLY limitation for Year 4 is $32 ($40 × 80 percent). Therefore, under paragraph (c) of this section, $32 of T's $100 net operating loss carryover from Year 1 is included in the CNOL deduction under paragraph (a) of this section in Year 4.

(5) After deduction of T's $32 SRLY net operating loss in Year 4, the cumulative register of T is adjusted pursuant to paragraph (c)(1)(i)(E) of this section. After taking into account the 80-percent limitation, the amount of income necessary to support this deduction is $40 ($40 × 80 percent = $32). Therefore, the cumulative register is decreased by $40, and zero remains in the cumulative register ($40−$40).

(E) ***Example 5: Dual SRLY registers and accounting for SRLY losses actually absorbed.***

(1) In Year 1, T sustains a $100 net operating loss and a $50 net capital loss. At the beginning of Year 2, T becomes a member of the P group in a transaction that does not result in an ownership change under section 382(g). Both of T's carryovers from Year 1 are subject to SRLY limits under this paragraph (c) and § 1.1502-22(c). The members of the P group contribute the following to the consolidated taxable income for Years 2 and 3 (computed without regard to T's CNOL deduction under this section or net capital loss carryover under § 1.1502-22):

	P	T
YEAR 1 (SRLY)		
Ordinary		(100)
Capital		(50)
YEAR 2		
Ordinary	30	60
Capital	0	(20)
YEAR 3		
Ordinary	10	40
Capital	0	30

(2) For Year 2, the P group computes separate SRLY limits for each of T's SRLY carryovers from Year 1. The group determines its ability to use its capital loss carryover before it determines its ability to use its ordinary loss carryover. Under section 1212, because the P group has no Year 2 capital gain, it cannot absorb any capital losses in Year 2. T's Year 1 net capital loss and the P group's Year 2 consolidated net capital loss (all of which is attributable to T) are carried over to Year 3.

(3) The P group's ability to deduct net operating losses in Year 2 is subject to the 80-percent limitation, based on the P group's consolidated taxable income for the year. Thus, the group's limitation for Year 2 is $72 ($90 × 80 percent). However, use of the Year 1 net operating loss also is subject to the SRLY limitation. The positive balance of the cumulative register of T applicable to SRLY net operating losses for Year 2 equals the P group's consolidated taxable income determined by reference to only T's items, or $60. Under paragraph (c)(1)(i)(E) of this section, after taking into account the 80-percent limitation, the SRLY limitation for Year 2 is $48 ($60 × 80 percent). Therefore, only $48 of T's Year 1 SRLY net operating loss is absorbed by the P group in Year 2. T carries over its remaining $52 of its Year 1 loss to Year 3.

(4) After deduction of T's SRLY net operating losses in Year 2, the net operating loss cumulative register is adjusted pursuant to paragraph (c)(1)(i)(E) of this section. The P group deducted $48 of T's SRLY net operating losses in Year 2. After taking into account the 80-percent limitation, the amount of taxable income necessary to support this deduction is $60 ($60 × 80 percent = $48). Therefore, the net operating loss cumulative register of T is decreased by $60, and zero remains in the net operating loss cumulative register ($60−$60).

(5) For Year 3, the P group again computes separate SRLY limits for each of T's SRLY carryovers from Year 1. The group has consolidated net capital gain (without taking into account a net capital loss carryover deduction) of $30. Under § 1.1502-22(c), the aggregate amount of T's $50 capital loss carryover from Year 1 that is included in computing the P group's consolidated net capital gain for all years of the group (in this case, Years 2 and 3) may not exceed $30 (the aggregate consolidated net capital gain computed by reference only to T's items, including losses and deductions actually absorbed (that is, $30 of capital gain in Year 3)). Thus, the P group may include $30 of T's Year 1 capital loss carryover in its computation of consolidated net capital gain for Year 3, which offsets the group's capital gains for Year 3. T carries over its remaining $20 of its Year 1 capital loss to Year 4. Therefore, the capital loss cumulative register of T is decreased by $30, and zero remains in the capital loss cumulative register ($30−$30). Further, because the net operating loss cumulative register includes all taxable income of T included in the P group, as well as all absorbed losses of T (including capital items), a zero net increase occurs in the net operating loss cumulative register. The P group carries over the Year 2 consolidated net capital loss to Year 4.

(6) The P group's ability to deduct net operating losses in Year 3 is subject to the 80-percent limitation, based on the P group's consolidated taxable income for the year. Thus, the P group's taxable income for Year 3 that can be offset, before use of net operating losses, is $40 (80 percent × the sum of zero capital gain, after use of the capital loss carryover, plus $50 of ordinary income). However, use of the Year 1 net operating loss also is subject to the SRLY limitation. The positive balance of the cumulative register of T applicable to SRLY net operating losses for Year 3 equals the P group's consolidated taxable income determined by reference only to T's items, or $40. This amount equals the sum obtained by adding the zero carryover from Year 2, a net inclusion of zero from capital items implicated in Year 3 ($30−$30), and $40 of taxable income in Year 3. Under paragraph (c)(1)(i)(E) of this section, after taking into account the 80-percent limitation, the SRLY limitation for Year 3 is $32 ($40 × 80 percent). Therefore, only $32 of the Year 1 net operating loss is absorbed by the P group in Year 3. T carries over its remaining $20 of its Year 1 loss to Year 4.

(F) ***Example 6: Pre-2018 NOLs and post-2017 NOLs.***

(1) Individual A owns P. On January 1, 2017, A forms T. P and T are calendar-year taxpayers. In 2017, T sustains a $100 net operating loss that is carried over. During 2018, 2019, and 2020, T deducts a total of $90 of its 2017 net operating loss against its taxable income, and T carries over the remaining $10 of its 2017 net operating loss. In 2021, T sustains a net operating loss of $50. On December 31, 2021, P acquires all the stock of T, and T becomes a member of the P group. The P group has $300 of consolidated taxable income in 2022 (computed without regard to the CNOL

deduction). Such consolidated taxable income would be $70 if determined by reference to only T's items. The P group has no other SRLY net operating loss carryovers or CNOL carryovers.

(2) T's remaining $10 of net operating loss carryover from 2017 and its $50 net operating loss carryover from 2021 are both SRLY losses in the P group. See § 1.1502-1(f)(2)(iii). P's acquisition of T was not an ownership change as defined by section 382(g). Thus, T's net operating loss carryovers are subject to the SRLY limitation in paragraph (c)(1) of this section. The SRLY limitation for the P group's 2022 consolidated return year is consolidated taxable income determined by reference to only T's $70 of items.

(3) Because T's oldest (2017) carryover was sustained in a year beginning before January 1, 2018, its use is not subject to limitation under section 172(a)(2)(B). Therefore, all $10 of T's 2017 SRLY net operating loss (that is, a pre-2018 NOL) is included under paragraph (a) of this section in the P group's CNOL deduction for 2022. After deduction of T's $10 SRLY net operating loss from 2017, the cumulative register of T is reduced on a dollar-for-dollar basis, pursuant to paragraph (c)(1)(i) of this section. Therefore, the cumulative register of T is decreased by $10, and $60 remains in the cumulative register ($70−$10).

(4) The P group's deduction of T's 2021 net operating loss is subject to both a SRLY limitation and the 80-percent limitation under section 172(a)(2)(B)(ii). Therefore, the total limitation on the use of T's 2021 net operating loss in the P group is $48 (the remaining cumulative register of $60 × 80 percent). No losses from equivalent years are available, and the P group otherwise has sufficient consolidated taxable income to support the CNOL deduction ($290 × 80 percent = $232). Therefore, $48 of T's 2021 SRLY net operating loss is included under paragraph (a) of this section in the P group's CNOL deduction for 2022. The remaining $2 of T's 2021 SRLY net operating loss ($50−$48) is carried over to the P group's 2023 consolidated return year.

(5) After deduction of T's $48 SRLY NOL in 2022, the cumulative register of T is adjusted pursuant to paragraph (c)(1)(i)(E) of this section. After taking into account the 80-percent limitation, the amount of income necessary to support this deduction is $60 ($60 × 80 percent = $48). Therefore, the cumulative register of T is decreased by $60, and zero remains in the cumulative register ($60−$60).

(2) ***SRLY subgroup limitation.*** In the case of a net operating loss carryover or carryback for which there is a SRLY subgroup, the principles of paragraph (c)(1) of this section apply to the SRLY subgroup, and not separately to its members. Thus, the contribution to consolidated taxable income and the net operating loss carryovers and carrybacks arising (or treated as arising) in SRLYs that are included in the CNOL deductions for all consolidated return years of the group under paragraph (a) of this section are based on the aggregate amounts of income, gain, deduction, and loss of the members of the SRLY subgroup for the relevant consolidated return years (as provided in paragraph (c)(1)(i)(C) of this section). For an illustration of aggregate amounts during the relevant consolidated return years following the year in which a member of a SRLY subgroup ceases to be a member of the group, see paragraph (c)(2)(viii) *Example 4* of this section. A SRLY subgroup may exist only for a carryover or carryback arising in a year that is not a SRLY (and is not treated as a SRLY under paragraph (c)(1)(ii) of this section) with respect to another group (the former group), whether or not the group is a consolidated group, or for a carryover that was subject to the overlap rule described in paragraph (g)

of this section or § 1.1502-15(g) with respect to another group (the former group). A separate SRLY subgroup is determined for each such carryover or carryback. A consolidated group may include more than one SRLY subgroup, and a member may be a member of more than one SRLY subgroup. Solely for purposes of determining the members of a SRLY subgroup with respect to a loss:

(i) ***Carryovers.*** In the case of a carryover, the SRLY subgroup is composed of the member carrying over the loss (the loss member) and each other member that was a member of the former group that becomes a member of the group at the same time as the loss member. A member remains a member of the SRLY subgroup until it ceases to be affiliated with the loss member. The aggregate determination described in paragraph (c)(1) of this section and this paragraph (c)(2) includes the amounts of income, gain, deduction, and loss of each member of the SRLY subgroup for the consolidated return years during which it remains a member of the SRLY subgroup. For an illustration of the aggregate determination of a SRLY subgroup, see paragraph (c)(2)(viii) *Example 2* of this section.

(ii) ***Carrybacks.*** In the case of a carryback, the SRLY subgroup is composed of the member carrying back the loss (the loss member) and each other member of the group from which the loss is carried back that has been continuously affiliated with the loss member from the year to which the loss is carried through the year in which the loss arises.

(iii) ***Built-in losses.*** In the case of a built-in loss, the SRLY subgroup is composed of the member recognizing the loss (the loss member) and each other member that was part of the subgroup with respect to the loss determined under § 1.1502-15(c)(2) immediately before the members became members of the group. The principles of paragraphs (c)(2)(i) and (ii) of this section apply to determine the SRLY subgroup for the built-in loss that is, under paragraph (c)(1)(ii) of this section, treated as arising in a SRLY with respect to the group in which the loss is recognized. For this purpose and as the context requires, a reference in paragraphs (c)(2)(i) and (ii) of this section to a group or former group is a reference to the subgroup determined under § 1.1502-15(c)(2).

(iv) ***Principal purpose of avoiding or increasing a SRLY limitation.*** The members composing a SRLY subgroup are not treated as a SRLY subgroup if any of them is formed, acquired, or availed of with a principal purpose of avoiding the application of, or increasing any limitation under, this paragraph (c). Any member excluded from a SRLY subgroup, if excluded with a principal purpose of so avoiding or increasing any SRLY limitation, is treated as included in the SRLY subgroup.

(v) ***Coordination with other limitations.*** This paragraph (c)(2) does not allow a net operating loss to offset income to the extent inconsistent with other limitations or restrictions on the use of losses, such as a limitation based on the nature or activities of members. For example, a net operating loss may not offset income in excess of any limitations under section 172(a) and paragraph (a)(2) of this section. Additionally, any dual consolidated loss may not reduce the taxable income to an extent greater than that allowed under section 1503(d) and §§ 1.1503(d)-1 through 1.1503(d)-8. See also § 1.1502-47(k) (relating to preemption of rules for life-nonlife groups).

(vi) ***Anti-duplication.*** If the same item of income or deduction could be taken into account more than once in determining a limitation under this paragraph (c), or in a manner inconsistent with any other provision of the Internal Revenue Code or regulations incorporating this paragraph

(c), the item of income or deduction is taken into account only once and in such manner that losses are absorbed in accordance with the ordering rules in paragraph (b) of this section and the underlying purposes of this section.

(vii) ***Corporations that leave a SRLY subgroup.*** If a loss member ceases to be affiliated with a SRLY subgroup, the amount of the member's remaining SRLY loss from a specific year is determined pursuant to the principles of paragraphs (b)(2)(ii)(A) and (b)(2)(iv) of this section.

(viii) ***Examples.*** For purposes of the examples in this paragraph (c)(2)(viii), no corporation is a nonlife insurance company or has any farming losses. The principles of this paragraph (c)(2) are illustrated by the following examples:

(A) ***Example 1: Members of SRLY subgroups.***

(*1*) Individual A owns all of the stock of P, S, T and M. P and M are each the common parent of a consolidated group. During Year 1, P sustains a $50 net operating loss. At the beginning of Year 2, P acquires all the stock of S at a time when the aggregate basis of S's assets exceeds their aggregate value by $70, and S becomes a member of the P group. At the beginning of Year 3, P acquires all the stock of T, T has a $60 net operating loss carryover at the time of the acquisition, and T becomes a member of the P group. During Year 4, S forms S1 and T forms T1, each by contributing assets with built-in gains which are, in the aggregate, material. S1 and T1 become members of the P group. During Year 7, M acquires all of the stock of P, and the members of the P group become members of the M group for the balance of Year 7. The $50 and $60 loss carryovers of P and T are carried to Year 7 of the M group, and the value and basis of S's assets did not change after it became a member of the former P group. None of the transactions described above resulted in an ownership change under section 382(g).

(*2*) Under paragraph (c)(2) of this section, a separate SRLY subgroup is determined for each loss carryover and built-in loss. In the P group, P's $50 loss carryover is not treated as arising in a SRLY. See § 1.1502-1(f). Consequently, the carryover is not subject to limitation under paragraph (c) of this section in the P group.

(*3*) In the M group, P's $50 loss carryover is treated as arising in a SRLY and is subject to the limitation under paragraph (c) of this section, including the limitation under paragraph (c)(1)(i)(E) of this section. A SRLY subgroup with respect to that loss is composed of members which were members of the P group, the group as to which the loss was not a SRLY. The SRLY subgroup is composed of P, the member carrying over the loss, and each other member of the P group that became a member of the M group at the same time as P. A member of the SRLY subgroup remains a member until it ceases to be affiliated with P. For Year 7, the SRLY subgroup is composed of P, S, T, S1, and T1.

(*4*) In the P group, S's $70 unrealized loss, if recognized within the 5-year recognition period after S becomes a member of the P group, is subject to limitation under paragraph (c) of this section, including the limitation under paragraph (c)(1)(i)(E) of this section. See § 1.1502-15 and paragraph (c)(1)(ii) of this section. Because S was not continuously affiliated with P, T, or T1 for 60 consecutive months prior to joining the P group, these corporations cannot be included in a SRLY subgroup with respect to S's unrealized loss in the P group. See paragraph (c)(2)(iii) of this section. As a

successor to S, S1 is included in a subgroup with S in the P group, and, because 100 percent of S1's stock is owned directly by corporations that were members of the SRLY subgroup when the members of the SRLY subgroup became members of the P group, its net positive income is not excluded from the consolidated taxable income of the P group that may be offset by the built-in loss. See paragraph (f) of this section.

(*5*) In the M group, S's $70 unrealized loss, if recognized within the 5-year recognition period after S becomes a member of the M group, is subject to limitation under paragraph (c) of this section, including the limitation under paragraph (c)(1)(i)(E) of this section. Prior to becoming a member of the M group, S had been continuously affiliated with P (but not T or T1) for 60 consecutive months, and S1 is a successor that has remained continuously affiliated with S. Those members had a net unrealized built-in loss immediately before they became members of the group under § 1.1502-15(c). Consequently, in Year 7, S, S1, and P compose a subgroup in the M group with respect to S's unrealized loss. Because S1 was a member of the SRLY subgroup when it became a member of the M group and also because 100 percent of S1's stock is owned directly by corporations that were members of the SRLY subgroup when the members of the SRLY subgroup became members of the M group, its net positive income is not excluded from the consolidated taxable income of the M group that may be offset by the recognized built-in loss. See paragraph (f) of this section.

(*6*) In the P group, T's $60 loss carryover arose in a SRLY and is subject to limitation under paragraph (c) of this section, including the limitation under paragraph (c)(1)(i)(E) of this section. P, S, and S1 were not members of the group in which T's loss arose, and T's loss carryover was not subject to the overlap rule described in paragraph (g) of this section with respect to the P group (the former group). Thus, P, S, and S1 are not members of a SRLY subgroup with respect to the T carryover in the P group. See paragraph (c)(2)(i) of this section. As a successor to T, T1 is included in a SRLY subgroup with T in the P group, and, because 100 percent of T1's stock is owned directly by corporations that were members of the SRLY subgroup when the members of the SRLY subgroup became members of the P group, its net positive income is not excluded from the consolidated taxable income of the P group that may be offset by the carryover. See paragraph (f) of this section.

(*7*) In the M group, T's $60 loss carryover arose in a SRLY and is subject to limitation under paragraph (c) of this section, including the limitation under paragraph (c)(1)(i)(E) of this section. T and T1 remain the only members of a SRLY subgroup with respect to the carryover. Because T1 was a member of the SRLY subgroup when it became a member of the M group and also because 100 percent of T1's stock is owned directly by corporations that were members of the SRLY subgroup when the members of the SRLY subgroup became members of the M group, its net positive income is not excluded from the consolidated taxable income of the M group that may be offset by the carryover. See paragraph (f) of this section.

(B) ***Example 2: Computation of SRLY subgroup limitation.***

(*1*) Individual A owns all of the stock of S, T, P and M, none of which is a nonlife insurance company. P and M are each the common parent of a consolidated group. In Year 2, P acquires all the stock of S and T from Individual A, and S and T become members of the P group. For Year 3 (a taxable year beginning after December 31, 2020), the P group has a $45 CNOL, which is attributable to P, and which P carries forward. M is the common parent of another group. At the beginning of Year 4, M acquires all of the stock of P, and the former members of the P group become members of the M group. None of the transactions described above resulted in an ownership change under section 382(g).

(*2*) P's year to which the loss is attributable, Year 3, is a SRLY with respect to the M group. See § 1.1502-1(f)(1). However, P, S, and T compose a SRLY subgroup with respect to the Year 3 loss under paragraph (c)(2)(i) of this section because Year 3 is not a SRLY (and is not treated as a SRLY) with respect to the P group. P's loss is carried over to the M group's Year 4 and is therefore subject to the SRLY subgroup limitation in paragraph (c)(2) of this section.

(*3*) In Year 4, the M group has $10 of consolidated taxable income (computed without regard to the CNOL deduction for Year 4). That consolidated taxable income would be $45 if determined by reference only to the items of P, S, and T, the members included in the SRLY subgroup with respect to P's loss carryover. Therefore, the positive balance of the cumulative register of the P SRLY subgroup for Year 4 equals $45 and, due to the application of the 80-percent limitation under paragraph (c)(2)(v) of this section, the SRLY subgroup limitation under this paragraph (c)(2) is $36 ($45 × 80 percent). However, the M group has only $10 of consolidated taxable income in Year 4. Thus, due to the 80-percent limitation and the application of paragraph (b)(1) of this section, the M group's deduction of all net operating losses in Year 4 is limited to $8 ($10 × 80 percent). As a result, the M group deducts $8 of P's SRLY net operating loss carryover, and the remaining $37 is carried over to Year 5.

(*4*) After deduction of $8 of P's SRLY net operating loss in Year 4, the cumulative register of the P SRLY subgroup is adjusted pursuant to paragraph (c)(1)(i)(E) of this section. After taking into account the 80-percent limitation, the amount of income necessary to support this deduction is $10 ($10 × 80 percent = $8). Therefore, the cumulative register of the P SRLY subgroup is decreased by $10, and $35 remains in the cumulative register ($45−$10).

(*5*) In Year 5, the M group has $100 of consolidated taxable income (computed without regard to the CNOL deduction for Year 5). None of P, S, or T has any items of income, gain, deduction, or loss in Year 5. Although the members of the P SRLY subgroup do not contribute to the $100 of consolidated taxable income in Year 5, the positive balance of the cumulative register of the P SRLY subgroup for Year 5 is $35 and, due to the application of the 80-percent limitation under paragraph (c)(2)(v) of this section, the SRLY subgroup limitation under this paragraph (c)(2) is $28 ($35 × 80 percent). Because of the 80-percent limitation and the application of paragraph (b)(1) of this section, the M group's deduction of net operating losses in Year 5 is limited to $80 ($100 × 80 percent). Because the $28 of net operating loss available to be absorbed is less than 80 percent of the M group's consolidated taxable income, $28 of P's SRLY net operating loss is absorbed in Year 5, and the remaining $9 ($37−$28) is carried over to Year 6.

(6) After deduction of $28 of P's SRLY net operating loss in Year 5, the cumulative register of the P SRLY subgroup is adjusted pursuant to paragraph (c)(1)(i)(E) of this section. After taking into account the 80-percent limitation, the amount of income necessary to support this deduction is $35 ($35 × 80 percent = $28). Therefore, the cumulative register of the P SRLY subgroup is decreased by $35, and zero remains in the cumulative register ($35−$35).

(C) ***Example 3: Inclusion in more than one SRLY subgroup.***

(1) Individual A owns all of the stock of S, T, P and M. S, P, and M are each the common parent of a consolidated group. At the beginning of Year 1, S acquires all the stock of T from Individual A, and T becomes a member of the S group. For Year 1, the S group has a CNOL of $10, all of which is attributable to S and is carried over to Year 2. At the beginning of Year 2, P acquires all the stock of S, and S and T become members of the P group. For Year 2, the P group has a CNOL of $35, all of which is attributable to P and is carried over to Year 3. At the beginning of Year 3, M acquires all of the stock of P, and the former members of the P group become members of the M group. None of the transactions described above resulted in an ownership change under section 382(g).

(2) P's and S's net operating losses arising in SRLYs with respect to the M group are subject to limitation under paragraph (c) of this section. P, S, and T compose a SRLY subgroup for purposes of determining the limitation for P's $35 net operating loss carryover arising in Year 2 because, under paragraph (c)(2)(i) of this section, Year 2 is not a SRLY with respect to the P group. Similarly, S and T compose a SRLY subgroup for purposes of determining the limitation for S's $10 net operating loss carryover arising in Year 1 because Year 1 is not a SRLY with respect to the S group.

(3) S and T are members of both the SRLY subgroup with respect to P's losses and the SRLY subgroup with respect to S's losses. Under paragraph (c)(2) of this section, S's and T's items cannot be included in the determination of the SRLY subgroup limitation for both SRLY subgroups for the same consolidated return year; paragraph (c)(2)(vi) of this section requires the M group to consider the items of S and T only once so that the losses are absorbed in the order of the taxable years in which they were sustained. Because S's loss was incurred in Year 1, while P's loss was incurred in Year 2, the items will be added in the determination of the consolidated taxable income of the S and T SRLY subgroup to enable S's loss to be absorbed first. The taxable income of the P, S, and T SRLY subgroup is then computed by including the consolidated taxable income for the S and T SRLY subgroup less the amount of any net operating loss carryover of S that is absorbed after applying this section to the S subgroup for the year.

(D) ***Example 4: Corporation ceases to be affiliated with a SRLY subgroup.***

(1) Individual A owns all of the stock of P, and M. P and S are members of the P group and the P group has a CNOL of $30 in Year 1, all of which is attributable to P and carried over to Year 2. At the beginning of Year 2, M acquires all of the stock of P, and P and S become members of the M group. P and S compose a SRLY subgroup with respect to P's net operating loss carryover. For Year 2, consolidated taxable income of the M group determined by reference to only the items of P (and without regard to the CNOL deduction for Year 2) is $40. However, such consolidated taxable income

of the M group determined by reference to the items of both P and S is a loss of $20. Thus, the SRLY subgroup limitation under paragraph (c)(2) of this section prevents the M group from including any of P's net operating loss carryover in the CNOL deduction under paragraph (a) of this section in Year 2, and P carries the Year 1 loss to Year 3.

(2) At the end of Year 2, P sells all of the S stock, and S ceases to be a member of the M group and the P subgroup. For Year 3, consolidated taxable income of the M group is $50 (determined without regard to the CNOL deduction for Year 3), and such consolidated taxable income would be $10 if determined by reference to only items of P. However, the limitation under paragraph (c) of this section for Year 3 for P's net operating loss carryover still prevents the M group from including any of P's loss in the CNOL deduction under paragraph (a) of this section. The limitation results from the inclusion of S's items for Year 2 in the determination of the SRLY subgroup limitation for Year 3 even though S ceased to be a member of the M group (and the P subgroup) at the end of Year 2. Thus, the M group's consolidated taxable income determined by reference to only the SRLY subgroup members' items for all consolidated return years of the group through Year 3 (determined without regard to the CNOL deduction) is not a positive amount.

(ix) ***Application to other than loss carryovers.*** Paragraph (g) of this section and the phrase "or for a carryover that was subject to the overlap rule described in paragraph (g) of this section or § 1.1502-15(g) with respect to another group (the former group)" in this paragraph (c)(2) apply only to carryovers of net operating losses, net capital losses, and for taxable years for which the due date (without extensions) of the consolidated return is after May 25, 2000, to carryovers of credits described in section 383(a)(2). Accordingly, as the context may require, if another regulation references this section and such other regulation does not concern a carryover of net operating losses, net capital losses, or for taxable years for which the due date (without extensions) of the consolidated return is after May 25, 2000, carryovers of credits described in section 383(a)(2), then such reference does not include a reference to such paragraph or phrase.

(3) ***Cross-reference.*** For rules governing the application of a SRLY limitation to business interest expense for which a deduction is disallowed under section 163(j), see § 1.163(j)-5(d) and (f).

(d) [Reserved]

(e) ***Consolidated net operating loss.*** Any excess of deductions over gross income, as determined under § 1.1502-11(a) (without regard to any consolidated net operating loss deduction), is also referred to as the consolidated net operating loss (or CNOL).

(f) ***Predecessors and successors*** —

(1) ***In general.*** For purposes of this section, any reference to a corporation, member, common parent, or subsidiary, includes, as the context may require, a reference to a successor or predecessor, as defined in § 1.1502-1(f)(4).

(2) ***Limitation on SRLY subgroups*** —

(i) ***General rule.*** Except as provided in paragraph (f)(2)(ii) of this section, if a successor's items of income and gain exceed the successor's items of deduction and loss (net positive income), then the net positive income attributable to the successor is excluded from the computation of the consolidated taxable income of a SRLY subgroup.

(ii) ***Exceptions.*** A successor's net positive income is not excluded from the consolidated taxable income of a SRLY subgroup if—

(A) The successor acquires substantially all the assets and liabilities of its predecessor, and the predecessor ceases to exist;

(B) The successor was a member of the SRLY subgroup when the SRLY subgroup members became members of the group;

(C) 100 percent of the stock of the successor is owned directly by corporations that were members of the SRLY subgroup when the SRLY subgroup members became members of the group; or

(D) The Commissioner so determines.

(g) ***Overlap with section 382*** —

(1) ***General rule.*** The limitation provided in paragraph (c) of this section does not apply to net operating loss carryovers (other than a hypothetical carryover described in paragraph (c)(1)(i)(D) of this section and a carryover described in paragraph (c)(1)(ii) of this section) when the application of paragraph (c) of this section results in an overlap with the application of section 382. For a similar rule applying in the case of net operating loss carryovers described in paragraphs (c)(1)(i)(D) and (c)(1)(ii) of this section, see § 1.1502-15(g).

(2) ***Definitions*** —

(i) ***Generally.*** For purposes of this paragraph (g), the definitions and nomenclature contained in section 382, the regulations thereunder, and §§ 1.1502-90 through 1.1502-99 apply.

(ii) ***Overlap.***

(A) An overlap of the application of paragraph (c) of this section and the application of section 382 with respect to a net operating loss carryover occurs if a corporation becomes a member of a consolidated group (the SRLY event) within six months of the change date of an ownership change giving rise to a section 382(a) limitation with respect to that carryover (the section 382 event).

(B) If an overlap described in paragraph (g)(2)(ii)(A) of this section occurs with respect to net operating loss carryovers of a corporation whose SRLY event occurs within the six month period beginning on the date of a section 382 event, then an overlap is treated as also occurring with respect to that corporation's net operating loss carryover that arises within the period beginning with the section 382 event and ending with the SRLY event.

(C) For special rules in the event that there is a SRLY subgroup and/or a loss subgroup as defined in § 1.1502-91(d)(1) with respect to a carryover, see paragraph (g)(4) of this section.

(3) ***Operating rules*** —

(i) ***Section 382 event before SRLY event.*** If a SRLY event occurs on the same date as a section 382 event or within the six month period beginning on the date of the section 382 event, paragraph (g)(1) of this section applies beginning with the tax year that includes the SRLY event.

(ii) ***SRLY event before section 382 event.*** If a section 382 event occurs within the period beginning the day after the SRLY event and ending six months after the SRLY event, paragraph (g)(1) of this section applies starting with the first tax year that begins after the section 382 event.

(4) ***Subgroup rules.*** In general, in the case of a net operating loss carryover for which there is a SRLY subgroup and a loss subgroup (as defined in § 1.1502-91(d)(1)), the principles of this paragraph (g) apply to the SRLY subgroup, and not separately to its members. However, paragraph (g)(1) of this section applies—

(i) With respect to a carryover described in paragraph (g)(2)(ii)(A) of this section only if—

(A) All members of the SRLY subgroup with respect to that carryover are also included in a loss subgroup with respect to that carryover; and

(B) All members of a loss subgroup with respect to that carryover are also members of a SRLY subgroup with respect to that carryover; and

(ii) With respect to a carryover described in paragraph (g)(2)(ii)(B) of this section only if all members of the SRLY subgroup for that carryover are also members of a SRLY subgroup that has net operating loss carryovers described in paragraph (g)(2)(ii)(A) of this section that are subject to the overlap rule of paragraph (g)(1) of this section.

(5) ***Examples.*** The principles of this paragraph (g) are illustrated by the following examples:

(i) ***Example 1: Overlap—Simultaneous Acquisition.***

(A) Individual A owns all of the stock of P, which in turn owns all of the stock of S. P and S file a consolidated return. In Year 2, B, an individual unrelated to Individual A, forms T which incurs a $100 net operating loss for that year. At the beginning of Year 3, S acquires T.

(B) S's acquisition of T results in T becoming a member of the P group (the SRLY event) and also results in an ownership change of T, within the meaning of section 382(g), that gives rise to a limitation under section 382(a) (the section 382 event) with respect to the T carryover.

(C) Because the SRLY event and the change date of the section 382 event occur on the same date, there is an overlap of the application of the SRLY rules and the application of section 382.

(D) Consequently, under this paragraph (g), in Year 3 the SRLY limitation does not apply to the Year 2 $100 net operating loss.

(ii) ***Example 2: Overlap—Section 382 event before SRLY event.***

(A) Individual A owns all of the stock of P, which in turn owns all of the stock of S. P and S file a consolidated return. In Year 1, B, an individual unrelated to Individual A, forms T which incurs a $100 net operating loss for that year. On February 28 of Year 2, S purchases 55% of T from Individual B. On June 30, of Year 2, S purchases an additional 35% of T from Individual B.

(B) The February 28 purchase of 55% of T is a section 382 event because it results in an ownership change of T, under section 382(g), that gives rise to a section 382(a) limitation with respect to the T carryover. The June 30 purchase of 35% of T results in T becoming a member of the P group and is therefore a SRLY event.

(C) Because the SRLY event occurred within six months of the change date of the section 382 event, there is an overlap of the application of the SRLY rules and the application of section 382.

(D) Consequently, under paragraph (g) of this section, in Year 2 the SRLY limitation does not apply to the Year 1 $100 net operating loss.

(iii) ***Example 3: No overlap—Section 382 event before SRLY event.***

(A) The facts are the same as in *Example 2* except that Individual B does not sell the additional 35% of T to S until September 30, Year 2.

(B) The February 28 purchase of 55% of T is a section 382 event because it results in an ownership change of T, under section 382(g), that gives rise to a section 382(a) limitation with respect to the T carryover. The September 30 purchase of 35% of T results in T becoming a member of the P group and is therefore a SRLY event.

(C) Because the SRLY event did not occur within six months of the change date of the section 382 event, there is no overlap of the application of the SRLY rules and the application of section 382. Consequently, the Year 1 net operating loss is subject to a SRLY limitation and a section 382 limitation.

(iv) ***Example 4: Overlap—SRLY event before section 382 event.***

(A) P and S file a consolidated return. S has owned 40% of T for 6 years. For Year 6, T has a net operating loss of $500 that is carried forward. On March 31, Year 7, S acquires an additional 40% of T, and on August 31, Year 7, S acquires the remaining 20% of T.

(B) The March 31 purchase of 40% of T results in T becoming a member of the P group and is therefore a SRLY event. The August 31 purchase of 20% of T is a section 382 event because it results in an ownership change of T, under section 382(g), that gives rise to a section 382(a) limitation with respect to the T carryover.

(C) Because the SRLY event occurred within six months of the change date of the section 382 event, there is an overlap of the application of the SRLY rules and the application of section 382 within the meaning of this paragraph (g).

(D) Under this paragraph (g), the SRLY rules of paragraph (c) of this section will apply to the Year 7 tax year. Beginning in Year 8 (the year after the section 382 event), any unabsorbed portion of the Year 6 net operating loss will not be subject to a SRLY limitation.

(v) ***Example 5: Overlap—Coextensive subgroups.***

(A) Individual A owns all of the stock of S, which in turn owns all of the stock of T. S and T file a consolidated return beginning in Year 1. B, an individual unrelated to Individual A, owns all of the stock of P, the common parent of a consolidated group. In Year 2, the S group has a $200 consolidated net operating loss which is carried forward, of which $100 is attributable to S, and $100 is attributable to T. At the beginning of Year 3, the P group acquires all of the stock of S from Individual A.

(B) P's acquisition of S results in S and T becoming members of the P group (the SRLY event). With respect to the Year 2 net operating loss carryover, S and T compose a SRLY subgroup under paragraph (c)(2) of this section.

(C) S and T also compose a loss subgroup under § 1.1502-91(d)(1) with respect to the Year 2 net operating loss carryover. P's acquisition also results in an ownership change of S, the subgroup parent, within the meaning of section 382(g), that gives rise to a limitation under section 382(a) (the section 382 event) with respect to the Year 2 carryover.

(D) Because the SRLY event and the change date of the section 382 event occur on the same date, there is an overlap of the application of the SRLY rules and the application of section 382 within the meaning of paragraph (g) of this section. Because the SRLY subgroup and the loss subgroup are coextensive, under paragraph (g) of this section, the SRLY limitation does not apply to the Year 2 $200 net operating loss.

(vi) ***Example 6: No overlap—Different subgroups.***

(A) Individual B owns all of the stock of P, the common parent of a consolidated group. P owns all of the stock of S and all of the stock of T. Individual A owns all of the stock of X, the common parent of another consolidated group. In Year 1, the P group has a $200 consolidated net operating loss, of which $100 is attributable to S and $100 is attributable to T. At the beginning of Year 3, the X group acquires all of the stock of S and T from P and does not make an election under § 1.1502-91(d)(4) (concerning an election to treat the loss subgroup parent requirement as having been satisfied).

(B) X's acquisition of S and T results in S and T becoming members of the X group (the SRLY event). With respect to the Year 1 net operating loss, S and T compose a SRLY subgroup under paragraph (c)(2) of this section.

(C) S and T do not bear (and are not treated as bearing) a section 1504(a)(1) relationship. Therefore S and T do not qualify as a loss subgroup under § 1.1502-91(d)(1). X's acquisition of S and T results in separate ownership changes of S and T, that give rise to separate limitations under section 382(a) (the section 382 events) with respect to each of S and T's Year 1 net operating loss carryovers. See § 1.1502-94.

(D) The SRLY event and the change dates of the section 382 events occur on the same date. However, paragraph (g)(1) of this section does not apply because the SRLY subgroup (composed of S and T) is not coextensive with a loss subgroup with respect to the Year 1 carryovers. Consequently, the Year 1 net operating loss is subject to both a SRLY subgroup limitation and also separate section 382 limitations for each of S and T.

(vii) ***Example 7: No overlap—Different subgroups.***

(A) Individual A owns all of the stock of T and all of the stock of S, the common parent of a consolidated group. B, an individual unrelated to Individual A, owns all of the stock of P, the common parent of another consolidated group. In Year 1, T has a net operating loss of $100 that is carried forward. At the end of Year 2, S acquires all of the stock of T from Individual A. In Year 3, the S group sustains a $200 consolidated net operating loss that is carried forward. In Year 8, the P group acquires all of the stock of S from Individual A.

(B) S's acquisition of T in Year 1 results in T becoming a member of the S group. The acquisition, however, did not result in an ownership change under section 382(g). As a result, T's Year 1 net operating loss is subject to SRLY within the S group. At the end of Year 7, § 1.1502-96(a) treats T's Year 1 net operating loss as not having arisen in a SRLY with respect to the S group. Section 1.1502-96(a), however, applies only for purposes of §§ 1.1502-91 through 1.1502-96 and § 1.1502-98 but not for purposes of this section. See § 1.1502-96(a)(5).

(C) P's acquisition of S in Year 8 results in S and T becoming members of the P group (the SRLY event). With respect to the Year 1 net operating loss, S and T do not compose a SRLY subgroup under paragraph (c)(2) of this section.

(D) S and T compose a loss subgroup under § 1.1502-91(d)(1) with respect to the Year 1 net operating loss carryover. P's acquisition of S results in an ownership change of the loss subgroup, within the meaning of section 382(g), that gives rise to a subgroup limitation under section 382(a) (the section 382 event) with respect to that carryover.

(E) The SRLY event and the change date of the section 382 event occur on the same date. However, under paragraph (g)(4) of this section, because the SRLY subgroup and the loss subgroup are not coextensive, T's Year 1 net operating loss carryover is subject to a SRLY limitation.

(F) With respect to the Year 3 net operating loss carryover, S and T compose both a SRLY subgroup and a loss subgroup under § 1.1502-91(d)(1). Thus, paragraph (g)(1) of this section applies, and the S group's Year 3 net operating loss carryover is not subject to a SRLY limitation.

(viii) *Example 8: SRLY after overlap.*

(A) Individual A owns all of the stock of R and M, each the common parent of a consolidated group. B, an individual unrelated to Individual A, owns all of the stock of D. In Year 1, D incurs a $100 net operating loss that is carried forward. At the beginning of Year 3, R acquires all of the stock of D. In Year 5, M acquires all of the stock of R in a transaction that did not result in an ownership change of R.

(B) R's Year 3 acquisition of D results in D becoming a member of the R group (the SRLY event) and also results in an ownership change of D, that gives rise to a limitation under section 382(a) (the section 382 event) with respect to D's net operating loss carryover.

(C) Because the SRLY event and the change date of the section 382 event occur on the same date, there is an overlap of the application of paragraph (c) of this section and section 382 with respect to D's net operating loss. Consequently, under this paragraph (g), D's Year 1 $100 net operating loss is not subject to a SRLY limitation in the R group.

(D) M's Year 5 acquisition of R results in R and D becoming members of the M group (the SRLY event), but does not result in an ownership change of R or D that gives rise to a limitation under section 382(a). Because there is no section 382 event, the application of the SRLY rules and section 382 do not overlap. Consequently, D's Year 1 $100 net operating loss is subject to a SRLY limitation in the M group.

(E) Because D's Year 1 net operating loss carryover was subject to the overlap rule of paragraph (g) of this section when it joined the R group, under § 1.1502-21(c)(2), the SRLY subgroup with respect to that carryover includes all of the members of the R group that joined the M group at the same time as D.

(ix) *Example 9: Overlap—Interim losses.*

(A) Individual A owns all of the stock of P and S, each the common parent of a consolidated group. S owns all of the stock of T, its only subsidiary. B, an individual unrelated to Individual A, owns all of the stock of M, the common parent of a consolidated group. In Year 1, the S group has a $100 consolidated net operating loss. On January 1 of Year 2, P acquires all of the stock of S from Individual A. On December 31 of Year 2, M acquires 51% of the stock of P from Individual A. On May 31 of Year 3, M acquires the remaining 49% of the stock of P from Individual A. The P group, for the Year 3 period prior to June 1, had a $50 consolidated net operating loss, and under paragraph (b)(2)(iv) of this section, the loss is attributable entirely to S. Other than the losses described above, the P group does not have any other consolidated net operating losses.

(B) In the P group, S's $100 loss carryover is treated as arising in a SRLY and is subject to the limitation under paragraph (c) of this section. A SRLY subgroup with respect to that loss is composed of S and T, the members which were members of the S group as to which the loss was not a SRLY.

(C) M's December 31 purchase of 51% of P is a section 382 event because it results in an ownership change of the S loss subgroup that gives rise to a section 382(a) limitation (the section 382 event) with respect to the Year 1 net operating loss carryover. The purchase, however, does not result in an ownership change of P because it is not a loss corporation under section 382(k)(1). M's May 31 purchase of 49% of P results in P, S, and T becoming members of the M group and is therefore a SRLY event.

(D) With respect to the Year 1 net operating loss, S and T compose a SRLY subgroup under paragraph (c)(2) of this section and a loss subgroup under § 1.1502-91(d)(1). The loss subgroup does not include P because the only loss at the time of the section 382 event was subject to SRLY with respect to the P group. See § 1.1502-91(d)(1).

(E) Because the SRLY event occurred within six months of the change date of the section 382 event and the SRLY subgroup and loss subgroup are coextensive with respect to the Year 1 net operating loss carryover, there is an overlap of the application of the SRLY rules and the application of section 382 within the meaning of paragraph (g) of this section. Thus, the SRLY limitation does not apply to that carryover.

(F) The Year 3 net operating loss, which arose between the section 382 event and the SRLY event, is a net operating loss described in paragraph (g)(2)(ii)(B) of this section because it is the net operating loss of a corporation whose SRLY event occurs within the six month period beginning on the date of a section 382 event.

(G) With respect to the Year 3 net operating loss, P, S, and T compose a SRLY subgroup under paragraph (c)(2) of this section. Because P, a member of the SRLY subgroup for the Year 3 carryover, is not also a member of a SRLY subgroup that has net operating loss carryovers described in paragraph (g)(2)(ii)(A) of this section (the Year 1 net operating loss), the Year 3 carryover is subject to a SRLY limitation in the M group. See paragraph (g)(4)(ii) of this section.

(h) *Effective/applicability date* —

(1) ***In general.*** This section generally applies to taxable years for which the due date (without extensions) of the consolidated return is after June 25, 1999. However—

(i) In the event that paragraph (g)(1) of this section does not apply to a particular net operating loss carryover in the current group, then solely for purposes of applying paragraph (c) of this section to determine a limitation with respect to that carryover and with respect to which the SRLY register (consolidated taxable income determined by reference to only the member's or subgroup's items of income, gain, deduction, or loss) began in a taxable year for which the due date of the return was on or before June 25, 1999, paragraph (c)(2) of this section shall be applied without regard to the phrase "or for a carryover that was subject to the overlap rule described in paragraph (g) of this section or § 1.1502-15(g) with respect to another group (the former group)"; and

(ii) For purposes of paragraph (g) of this section, only an ownership change to which section 382(a), as amended by the Tax Reform Act of 1986, applies shall constitute a section 382 event.

(iii) Paragraphs (b)(2)(ii)(A) and (b)(2)(iv)(B)(2) of this section apply to taxable years for which the due date of the original return (without regard to extensions) is on or after September 17, 2008.

(2) ***SRLY limitation.*** Except in the case of those members (including members of a SRLY subgroup) described in paragraph (h)(3) of this section, a group does not take into account a consolidated taxable year beginning before January 1, 1997, in determining the aggregate of the consolidated taxable income under paragraph (c)(1) of this section (including for purposes of § 1.1502-15 and § 1.1502-22(c)) for the members (or SRLY subgroups).

(3) ***Prior retroactive election.*** A consolidated group that applied the rules of § 1.1502-21T(g)(3) in effect prior to June 25, 1999, as contained in 26 CFR part 1 revised April 1, 1999, to all consolidated return years ending on or after January 29, 1991, and beginning before January 1, 1997, does not take into account a consolidated taxable year beginning before January 29, 1991, in determining the aggregate of the consolidated taxable income under paragraph (c)(1) of this section (including for purposes of § 1.1502-15 and § 1.1502-22(c)) for the members (or SRLY subgroups).

(4) ***Offspring rule.*** Paragraph (b)(2)(ii)(B) of this section applies to net operating losses arising in taxable years ending on or after June 25, 1999.

(5) ***Waiver of carrybacks.*** Paragraph (b)(4) of this section (relating to the waiver of carrybacks for acquired members) applies to acquisitions occurring after June 25, 1999.

(6) ***Certain prior periods.*** Paragraphs (b)(1), (b)(2)(iv)(A), (b)(2)(iv)(B)(1), and (c)(2)(vii) of this section apply to taxable years for which the due date of the original return (without regard to extensions) is after March 21, 2005.

(7) ***Prior periods.*** For certain taxable years ending on or before June 25, 1999, see § 1.1502-21T in effect prior to June 25, 1999, as contained in 26 CFR part 1 revised April 1, 1999, as applicable.

(8) ***Losses treated as expired under § 1.1502-35(f)(1).*** For rules regarding losses treated as expired under § 1.1502-35(f) on or after March 10, 2006, *see* § 1.1502-21(b)(3)(v) as contained in 26 CFR part 1 in effect on April 1, 2006.

(9) ***Amended carryback rules.*** Paragraphs (b)(5) and (6) of this section apply to any CNOLs arising in a taxable year ending after July 2, 2020. However, taxpayers may apply paragraphs (b)(5) and (6) of this section to any CNOLs arising in a taxable year beginning after December 31, 2017.

(10) The rules of paragraphs (a), (b)(1), (b)(2)(iv), and (c)(1)(i)(E) of this section apply to taxable years beginning after December 31, 2020.

[T.D. 8823, 64 FR 36105, July 2, 1999]

Editorial Note: For FEDERAL REGISTER citations affecting § 1.1502-21, see the List of CFR Sections Affected, which appears in the Finding Aids section of the printed volume and at *www.govinfo.gov*.

§ 1.1502-22 Consolidated capital gain and loss.

(a) ***Capital gain.*** The determinations under section 1222, including capital gain net income, net long-term capital gain, and net capital gain, with respect to members during consolidated return years are not made separately. Instead, consolidated amounts are determined for the group as a whole. The consolidated capital gain net income for any consolidated return year is determined by reference to—

(1) The aggregate gains and losses of members from sales or exchanges of capital assets for the year (other than gains and losses to which section 1231 applies);

(2) The consolidated net section 1231 gain for the year (determined under § 1.1502-23); and

(3) The net capital loss carryovers or carrybacks to the year.

(b) ***Net capital loss carryovers and carrybacks*** —

(1) ***In general.*** The determinations under section 1222, including net capital loss and net short-term capital loss, with respect to members during consolidated return years are not made separately. Instead, consolidated amounts are determined for the group as a whole. Losses included in the consolidated net capital loss may be carried to consolidated return years, and, after apportionment, may be carried to separate return years. The net capital loss carryovers and carrybacks consist of—

(i) Any consolidated net capital losses of the group; and

(ii) Any net capital losses of the members arising in separate return years.

(2) ***Carryovers and carrybacks generally.*** The net capital loss carryovers and carrybacks to a taxable year are determined under the principles of section 1212 and this section. Thus, losses permitted to be absorbed in a consolidated return year generally are absorbed in the order of the taxable years in which they were sustained, and losses carried from taxable years ending on the same date, and which are available to offset consolidated capital gain net income, generally are absorbed on a pro rata basis. Additional rules provided under the Internal Revenue Code or regulations also apply, as well as the SRLY limitation under paragraph (c) of this section. See, e.g., section 382(l)(2)(B).

(3) ***Carryovers and carrybacks of consolidated net capital losses to separate return years.*** If any consolidated net capital loss that is attributable to a member may be carried to a separate return year under the principles of § 1.1502-21(b)(2), the amount of the consolidated net capital loss that is attributable to the member is apportioned and carried to the separate return year (apportioned loss).

(4) ***Special rules*** —

(i) ***Short years in connection with transactions to which section 381(a) applies.*** If a member distributes or transfers assets to a corporation that is a member immediately after the distribution or transfer in a transaction to which section 381(a) applies, the transaction does not cause the distributor or transferor to have a short year within the consolidated return year of the group in which the transaction occurred that is counted as a separate year for purposes of determining the years to which a net capital loss may be carried.

(ii) ***Special status losses.*** [Reserved]

(c) ***Limitations on net capital loss carryovers and carrybacks from separate return limitation years.*** The aggregate of the net capital losses of a member arising (or treated as arising) in SRLYs that are included in the determination of consolidated capital gain net income for all consolidated return years of the group under paragraph (a) of this section may not exceed the aggregate of the consolidated capital gain net income for all consolidated return years of the group determined by reference to only the member's items of gain and loss from capital assets as defined in section 1221 and trade or business assets defined in section 1231(b), including the member's losses actually absorbed by the group in the taxable year (whether or not absorbed by the member). The principles of § 1.1502-21(c) (including the SRLY subgroup principles under § 1.1502-21(c)(2)) apply with appropriate adjustments for purposes of applying this paragraph (c).

(d) [Reserved]

(e) ***Consolidated net capital loss.*** Any excess of losses over gains, as determined under paragraph (a) of this section (without regard to any carryovers or carrybacks), is also referred to as the consolidated net capital loss.

(f) ***Predecessors and successors.*** For purposes of this section, the principles of § 1.1502-21(f) apply with appropriate adjustments.

(g) ***Overlap with section 383*** —

(1) ***General rule.*** The limitation provided in paragraph (c) of this section does not apply to net capital loss carryovers ((other than a hypothetical carryover like those described in § 1.1502-21(c)(1)(i)(D) and a carryover like those described in § 1.1502-21(c)(1)(ii)) when the application of paragraph (c) of this section results in an overlap with the application of section 383. For a similar rule applying in the case of net capital loss carryovers like those described in §§ 1.1502-21(c)(1)(i)(D) and (c)(1)(ii), see § 1.1502-15(g).

(2) ***Definitions*** —

(i) ***Generally.*** For purposes of this paragraph (g), the definitions and nomenclature contained in sections 382 and 383, the regulations thereunder, and §§ 1.1502-90 through 1.1502-99 apply.

(ii) ***Overlap.***

(A) An overlap of the application of paragraph (c) of this section and the application of section 383 with respect to a net capital loss carryover occurs if a corporation becomes a member of the consolidated group (the SRLY event) within six months of the change date of an ownership change giving rise to a section 382 limitation with respect to that carryover (the section 383 event).

(B) If an overlap described in paragraph (g)(2)(ii)(A) of this section occurs with respect to net capital loss carryovers of a corporation whose SRLY event occurs within the six month period beginning on the date of a section 383 event, then an overlap is treated as also occurring with respect to that corporation's net capital loss carryover that arises within the period beginning with the section 383 event and ending with the SRLY event.

(C) For special rules in the event that there is a SRLY subgroup and/or a loss subgroup as defined in § 1.1502-91(d)(1) with respect to a carryover, see paragraph (g)(4) of this section.

(3) *Operating rules* —

(i) ***Section 383 event before SRLY event.*** If a SRLY event occurs on the same date as a section 383 event or within the six month period beginning on the date of the section 383 event, paragraph (g)(1) of this section applies beginning with the tax year that includes the SRLY event.

(ii) ***SRLY event before section 383 event.*** If a section 383 event occurs within the period beginning the day after the SRLY event and ending six months after the SRLY event, paragraph (g)(1) of this section applies starting with the first tax year that begins after the section 383 event.

(4) ***Subgroup rules.*** In general, in the case of a net capital loss carryover for which there is a SRLY subgroup and a loss subgroup (as defined in § 1.1502-91(d)(1)), the principles of this paragraph (g) apply to the SRLY subgroup, and not separately to its members. However, paragraph (g)(1) of this section applies—

(i) With respect to a carryover described in paragraph (g)(2)(ii)(A) of this section only if—

(A) All members of the SRLY subgroup with respect to that carryover are also included in a loss subgroup with respect to that carryover; and

(B) All members of a loss subgroup with respect to that carryover are also members of a SRLY subgroup with respect to that carryover; and

(ii) With respect to a carryover described in paragraph (g)(2)(ii)(B) of this section only if all members of the SRLY subgroup for that carryover are also members of a SRLY subgroup that has net capital loss carryovers described in paragraph (g)(2)(ii)(A) of this section that are subject to the overlap rule of paragraph (g)(1) of this section.

(h) *Effective date* —

(1) ***In general.*** This section generally applies to taxable years for which the due date (without extensions) of the consolidated return is after June 25, 1999. However—

(i) In the event that paragraph (g)(1) of this section does not apply to a particular net capital loss carryover in the current group, then solely for purposes of applying paragraph (c) of this section to determine a limitation with respect to that carryover and with respect to which the SRLY register (consolidated taxable income determined by reference to only the member's or subgroup's items of income, gain, deduction, or loss) began in a taxable year for which the due date of the return was on or before June 25, 1999, the principles of § 1.1502-21(c)(2) shall be applied without regard to the phrase “or for a carryover that was subject to the overlap rule described in paragraph (g) of this section or § 1.1502-15(g) with respect to another group (the former group)”; and

(ii) For purposes of paragraph (g) of this section, only an ownership change to which section 383, as amended by the Tax Reform Act of 1986, applies and which results in a section 382 limitation shall constitute a section 383 event.

(2) ***Prior periods.*** For certain taxable years ending on or before June 25, 1999, see § 1.1502-22T in effect prior to June 25, 1999, as contained in 26 CFR part 1 revised April 1, 1999, as applicable.

[T.D. 8823, 64 FR 36114, July 2, 1999, as amended by T.D. 10018, 89 FR 106868, Dec. 30, 2024]

§ 1.1502-23 Consolidated net section 1231 gain or loss.

(a) ***In general.*** Net section 1231 gains and losses of members arising during consolidated return years are not determined separately. Instead, the consolidated net section 1231 gain or loss is determined under this section for the group as a whole.

(b) ***Example.*** The following example illustrates the provisions of this section:

Example. Use of SRLY registers with net gains and net losses under section 1231. (i) In Year 1, T sustains a $20 net capital loss. At the beginning of Year 2, T becomes a member of the P group. T's capital loss carryover from Year 1 is subject to SRLY limits under § 1.1502-22(c). The members of the P group contribute the following to the consolidated taxable income for Year 2 (computed without regard to T's net capital loss carryover under § 1.1502-22):

	P	T
YEAR 1 (SRLY)		
Ordinary		
Capital		(20)
YEAR 2		
Ordinary	10	20
Capital	70	0
§ 1231	(60)	30

(ii) Under section 1231, if the section 1231 losses for any taxable year exceed the section 1231 gains for such taxable year, such gains and losses are treated as ordinary gains or losses. Because the P group's section 1231 losses, $(60), exceed the section 1231 gains, $30, the P group's net loss is treated as an ordinary loss. T's net section 1231 gain has the same character as the P group's consolidated net section 1231 loss, so T's $30 of section 1231 income is treated as ordinary income for purposes of applying § 1.1502-22(c). Under § 1.1502-22(c), the group's consolidated net capital gain determined by reference only to T's items is $0. None of T's capital loss carryover from Year 1 may be taken into account in Year 2.

(c) ***Recapture of ordinary loss.*** [Reserved]

(d) *Effective date* —

(1) ***In general.*** This section applies to gains and losses arising in the determination of consolidated net section 1231 gain or loss for taxable years for which the due date (without extensions) of the consolidated return is after June 25, 1999.

(2) ***Application to prior periods.*** See § 1.1502-21(h)(3) for rules applicable to groups that applied the rules of this section to consolidated return years ending on or after January 29, 1991, and beginning before January 1, 1997.

[T.D. 8823, 64 FR 36115, July 2, 1999; 64 FR 41784, Aug. 2, 1999]

§ 1.1502-24 Consolidated charitable contributions deduction.

(a) ***Determination of amount of consolidated charitable contributions deduction.*** The deduction allowed by section 170 for the taxable year shall be the lesser of:

(1) The aggregate deductions of the members of the group allowable under section 170 (determined without regard to section 170(b)(2)), plus the consolidated charitable contribution carryovers to such year, or

(2) The percentage limitation on the total charitable contribution deduction provided in section 170(b)(2)(A) applied to adjusted consolidated income as determined under paragraph (c) of this section.

(b) ***Carryover of excess charitable contributions.*** The consolidated charitable contribution carryovers to any consolidated return year shall consist of any excess consolidated charitable contributions of the group, plus any excess charitable contributions of members of the group arising in separate return years of such members, which may be carried over to the taxable year under the principles of section 170(b) (2) and (3). However, such consolidated carryovers shall not include any excess charitable contributions apportioned to a corporation for a separate return year pursuant to paragraph (e) of § 1.1502-79.

(c) ***Adjusted consolidated taxable income.*** For purposes of this section, the adjusted consolidated taxable income of the group for any consolidated return year is the consolidated taxable income computed without regard to this section, section 243(a)(2) and (3), and § 1.1502-26, and without regard to any consolidated net operating or net capital loss carrybacks to such year.

[T.D. 6894, 31 FR 11794, Sept. 8, 1966; as amended by T.D. 10018, 89 FR 106868, Dec. 30, 2024]

§ 1.1502-26 Consolidated dividends received deduction.

(a) ***In general.*** The consolidated dividends received deduction for the taxable year is the lesser of—

(1) The aggregate of the deduction of the members of the group allowable under sections 243(a)(1), 245(a) and (b), and 250 (computed without regard to the limitations provided in section 246(b)), or

(2) The aggregate amount described in section 246(b), determined by substituting, wherever it appears—

(i) The term *consolidated taxable income* for *taxable income,*

(ii) The term *consolidated net operating loss* for *net operating loss,* and

(iii) The term *consolidated net capital loss* for *capital loss.*

(b) ***Intercompany dividends.*** The deduction determined under paragraph (a) of this section is determined without taking into account intercompany dividends to the extent that, under § 1.1502-13(f)(2), they are not included in gross income. See § 1.1502-13 for additional rules relating to intercompany dividends.

(c) ***Examples.*** The provisions of this section may be illustrated by the following examples:

(1) ***Example 1.***

(i) Corporations P, S, and S-1 filed a consolidated return for the calendar year 2023 showing consolidated taxable income of $100,000 (determined without regard to the consolidated net operating loss deduction, and the consolidated dividends received deduction). These corporations received dividends during such year from less than 20-percent owned domestic corporations as follows:

TABLE 1 TO PARAGRAPH (c)(1)(i)

Corporation	Dividends
P	$6,000
S	10,000
S-1	34,000
Total	50,000

(ii) The dividends received deduction allowable to each member under section 243(a)(1) (computed without regard to the limitation in section 246(b)) is as follows: P has $3,000 (50 percent of $6,000), S has $5,000 (50 percent of $10,000), and S-1 has $17,000 (50 percent of $34,000), or a total of $25,000. Since $25,000 is less than $50,000 (50 percent of $100,000), the consolidated dividends received deduction is $25,000.

(2) ***Example 2.*** Assume the same facts as in paragraph (c)(1)(i) of this section (*Example 1*), except that consolidated taxable income (computed without regard to the consolidated net operating loss deduction and the consolidated dividends received deduction) was $40,000. The aggregate of the dividends received deductions, $42,500, computed without regard to section 246(b), results in a consolidated net operating loss of $2,500. *See* section 172(d)(5). Therefore, paragraph (a)(2) of this section does not apply and the consolidated dividends received deduction is $42,500.

[T.D. 6894, 31 FR 11794, Sept. 8, 1966, as amended by T.D. 7631, 44 FR 40497, July 11, 1979; T.D. 8597, 60 FR 36710, July 18, 1995; T.D. 8677, 61 FR 33323, June 27, 1996; T.D. 8823, 64 FR 36099, July 2, 1999; T.D. 10018, 89 FR 106868, Dec. 30, 2024]

§ 1.1502-28 Consolidated section 108.

(a) ***In general.*** This section sets forth rules for the application of section 108(a) and the reduction of tax attributes pursuant to section 108(b) when a member of the group realizes discharge of indebtedness income that is excluded from gross income under section 108(a) (excluded COD income).

(1) ***Application of section 108(a).*** Section 108(a)(1)(A) and (B) is applied separately to each member that realizes excluded COD income. Therefore, the limitation of section 108(a)(3) on the amount of discharge of indebtedness income that is treated as excluded COD income is determined based on the assets (including stock and securities of other members) and liabilities (including liabilities to other members) of only the member that realizes excluded COD income.

(2) ***Reduction of tax attributes attributable to the debtor*** —

(i) ***In general.*** With respect to a member that realizes excluded COD income in a taxable year, the tax attributes attributable to that member (and its direct and indirect subsidiaries to the extent required by section 1017(b)(3)(D) and paragraph (a)(3) of this section), including basis of assets and losses and credits arising in separate return limitation years, shall be reduced as provided in sections 108 and 1017 and this section. Basis of subsidiary stock, however, shall not be reduced below zero pursuant to paragraph (a)(2) of this section (including when subsidiary stock is treated as depreciable property under section 1017(b)(3)(D) when there is an election under section 108(b)(5)).

(ii) ***Consolidated tax attributes attributable to a member.*** For purposes of this section, the amount of a consolidated tax attribute (e.g., a consolidated net operating loss) that is attributable to a member shall be determined pursuant to the principles of § 1.1502-21(b)(2)(iv). In addition, if the member is a member of a separate return limitation year subgroup, the amount of a tax attribute that arose in a separate return limitation year that is attributable to that member shall also be determined pursuant to the principles of § 1.1502-21(b)(2)(iv).

(3) ***Look-through rules*** —

(i) ***Priority of section 1017(b)(3)(D).*** If a member treats stock of a subsidiary as depreciable property pursuant to section 1017(b)(3)(D), the basis of the depreciable property of such subsidiary shall be reduced pursuant to section 1017(b)(3)(D) prior to the application of paragraph (a)(3)(ii) of this section.

(ii) ***Application of additional look-through rule.*** If the basis of stock of a corporation (the lower-tier member) that is owned by another corporation (the higher-tier member) is reduced pursuant to sections 108 and 1017 and paragraph (a)(2) of this section (but not as a result of treating subsidiary stock as depreciable property pursuant to section 1017(b)(3)(D)), and both of such corporations are members of the same consolidated group on the last day of the higher-tier member's taxable year that includes the date on which the excluded COD income is realized or the first day of the higher-tier member's taxable year that follows the taxable year that includes the date on which the excluded COD income is realized, solely for purposes of sections 108 and 1017 and this section other than paragraphs (a)(4) and (b)(1) of this section, the lower-tier member shall be treated as realizing excluded COD income on the last day of the taxable year of the higher-tier member that includes the date on which the higher-tier member realized the excluded COD income. The amount of such excluded COD income shall be the amount of such basis reduction. Accordingly, the tax attributes attributable to such lower-tier member shall be reduced as provided in sections 108 and 1017 and this section. To the extent that the excluded COD income realized by the lower-tier member pursuant to this paragraph (a)(3) does not reduce a tax attribute attributable to the lower-tier member, such excluded COD income shall not be applied to reduce tax attributes attributable to any member under paragraph (a)(4) of this section and shall not cause an excess loss account to be taken into account under § 1.1502-19(b)(1) and (c)(1)(iii)(B).

(4) ***Reduction of certain tax attributes attributable to other members.*** To the extent that, pursuant to paragraph (a)(2) of this section, the excluded COD income is not applied to reduce the tax attributes attributable to the member that realizes the excluded COD income, after the application of paragraph (a)(3) of this section, such amount shall be applied to reduce the remaining consolidated tax attributes of the group, other than consolidated tax attributes to which a SRLY limitation applies, as provided in section 108 and this section. Such amount also shall be applied to reduce the tax attributes attributable to members that arose (or are treated as arising) in a separate return limitation year to the extent that the member that realizes excluded COD income is a member of the separate return limitation year subgroup with respect to such attribute if a SRLY limitation applies to the use of such attribute. In addition, such amount shall be applied to reduce the tax attributes attributable to members that arose in a separate return year or that arose (or are treated as arising) in a separate return limitation year if no SRLY limitation applies to the use of such attribute. The reduction of each tax attribute pursuant to the three preceding sentences shall be made in the order prescribed in section 108(b)(2) and pursuant to the principles of § 1.1502-21(b)(1). Except as otherwise provided in this paragraph (a)(4), a tax attribute that arose in a separate return year or that arose (or is treated as arising) in a separate return limitation year is not subject to reduction pursuant to this paragraph (a)(4). Basis in assets is not subject to reduction pursuant to this paragraph (a)(4). Finally, to the extent that the realization of excluded COD income by a member pursuant to paragraph (a)(3) does not reduce a tax attribute attributable to such lower-tier member, such excess shall not be applied to reduce tax attributes attributable to any member pursuant to this paragraph (a)(4).

(b) ***Special rules*** —

(1) ***Multiple debtor members*** —

(i) ***Reduction of tax attributes attributable to debtor members prior to reduction of consolidated tax attributes.*** If in a single taxable year multiple members realize excluded COD income, paragraphs (a)(2) and (3) of this section shall apply with respect to the excluded COD income of each such member before the application of paragraph (a)(4) of this section.

(ii) ***Reduction of higher-tier debtor's tax attributes.*** If in a single taxable year multiple members realize excluded COD income and one such member is a higher-tier member of another such member, paragraphs (a)(2) and (3) of this section shall be applied with respect to the excluded COD income of the higher-tier member before such paragraphs are applied to the excluded COD income of the other such member. In applying the rules of paragraph (a)(2) and (3) of this section with respect to the excluded COD income of the higher-tier member, the liabilities that give rise to the excluded COD income of the other such member shall not be treated as discharged for purposes of computing the limitation on basis reduction under section 1017(b)(2). A member (the first member) is a higher-tier member of another member (the second member) if the first member is the common parent or investment adjustments under § 1.1502-32 with respect to the stock of the second member would affect investment adjustments with respect to the stock of the first member.

(iii) ***Reduction of additional tax attributes.*** If more than one member realizes excluded COD income that has not been applied to reduce a tax attribute attributable to such member (the remaining COD amount) and the remaining tax attributes available for reduction under paragraph (a)(4) of this section are less than the aggregate of the remaining COD amounts, after the application of

paragraph (a)(2) of this section, each such member's remaining COD amount shall be applied on a pro rata basis (based on the relative remaining COD amounts), pursuant to paragraph (a)(4) of this section, to reduce such remaining available tax attributes.

(iv) ***Ownership of lower-tier member by multiple higher-tier members.*** If stock of a corporation is held by more than one higher-tier member of the group and more than one such higher-tier member reduces its basis in such stock, then under paragraph (a)(3) of this section the excluded COD income resulting from the stock basis reductions shall be applied on a pro rata basis (based on the amount of excluded COD income caused by each basis reduction) to reduce the attributes of the corporation.

(v) ***Ownership of lower-tier member by multiple higher-tier members in multiple groups.*** If a corporation is a member of one group (the first group) on the last day of the first group's higher-tier member's taxable year that includes the date on which that higher-tier member realizes excluded COD income and is a member of another group (the second group) on the following day and the first group's higher-tier member and the second group's higher-tier member both reduce their basis in the stock of such corporation pursuant to sections 108 and 1017 and this section, paragraph (a)(3) of this section shall first be applied in respect of the excluded COD income that results from the reduction of the basis of the corporation's stock owned by the first group's higher-tier member and then shall be applied in respect of the excluded COD income that results from the reduction of the basis of the corporation's stock owned by the second group's higher-tier member.

(2) ***Election under section 108(b)(5)*** —

(i) ***Availability of election.*** The group may make the election described in section 108(b)(5) for any member that realizes excluded COD income. The election is made separately for each member. Therefore, an election may be made for one member that realizes excluded COD income (either actually or pursuant to paragraph (a)(3) of this section) while another election, or no election, may be made for another member that realizes excluded COD income (either actually or pursuant to paragraph (a)(3) of this section). See § 1.108-4 for rules relating to the procedure for making an election under section 108(b)(5).

(ii) ***Treatment of shares with an excess loss account.*** For purposes of applying section 108(b)(5)(B), the basis of stock of a subsidiary that has an excess loss account shall be treated as zero.

(3) ***Application of section 1017*** —

(i) ***Timing of basis reduction.*** Basis of property shall be subject to reduction pursuant to the rules of sections 108 and 1017 and this section after the determination of the tax imposed by chapter 1 of the Internal Revenue Code for the taxable year during which the member realizes excluded COD income and any prior years and coincident with the reduction of other attributes pursuant to section 108 and this section. However, only the basis of property held as of the beginning of the taxable year following the taxable year during which the excluded COD income is realized is subject to reduction pursuant to sections 108 and 1017 and this section.

(ii) ***Limitation of section 1017(b)(2).*** The limitation of section 1017(b)(2) on the reduction in basis of property shall be applied by reference to the aggregate of the basis of the property held by the member that realizes excluded COD income, not the aggregate of the basis of the property held by all of the members of the group, and the liabilities of such member, not the aggregate liabilities of all of the members of the group.

(iii) ***Treatment of shares with an excess loss account.*** For purposes of applying section 1017(b)(2) and § 1.1017-1, the basis of stock of a subsidiary that has an excess loss account shall be treated as zero.

(4) ***Application of section 1245.*** Notwithstanding section 1017(d)(1)(B), a reduction of the basis of subsidiary stock is treated as a deduction allowed for depreciation only to the extent that the amount by which the basis of the subsidiary stock is reduced exceeds the total amount of the attributes attributable to such subsidiary that are reduced pursuant to the subsidiary's consent under section 1017(b)(3)(D) or as a result of the application of paragraph (a)(3)(ii) of this section.

(5) ***Reduction of basis of intercompany obligations and former intercompany obligations*** —

(i) ***Intercompany obligations that cease to be intercompany obligations.*** If excluded COD income is realized in a consolidated return year in which an intercompany obligation becomes an obligation that is not an intercompany obligation because the debtor or creditor becomes a nonmember, or because the assets of the debtor or the creditor are acquired by a nonmember in a transaction to which section 381 applies, then the basis of such intercompany obligation (or new obligation if the intercompany obligation is deemed reissued under § 1.1502-13(g)(3)) is available for reduction in respect of such excluded COD income pursuant to sections 108 and 1017 and this section.

(ii) ***Intercompany obligations.*** The reduction of the basis of an intercompany obligation pursuant to sections 108 and 1017 and this section shall not result in the satisfaction and reissuance of the obligation under § 1.1502-13(g). Therefore, any income or gain (or reduction of loss or deduction) attributable to a reduction of the basis of an intercompany obligation will be taken into account when § 1.1502-13(g)(3) applies to such obligation. Furthermore, § 1.1502-13(c)(6)(i) (regarding the treatment of intercompany items if corresponding items are excluded or nondeductible) will not apply to exclude any amount of income or gain attributable to a reduction of the basis of an intercompany obligation pursuant to sections 108 and 1017 and this section. See § 1.1502-13(g)(3)(i)(A)(*1*) and (g)(4)(i)(A).

(6) ***Taking into account excess loss account*** —

(i) ***Determination of inclusion.*** The determination of whether any portion of an excess loss account in a share of stock of a subsidiary that realizes excluded COD income is required to be taken into account as a result of the application of § 1.1502-19(c)(1)(iii)(B) is made after the determination of the tax imposed by chapter 1 of the Internal Revenue Code for the year during which the member realizes excluded COD income (without regard to whether any portion of an excess loss account in a share of stock of the subsidiary is required to be taken into account) and any prior years, after the reduction of tax attributes pursuant to sections 108 and 1017 and this section, and after the adjustment of the basis of the share of stock of the subsidiary pursuant to § 1.1502-32 to reflect the amount of the subsidiary's deductions and losses that are absorbed in the computation of taxable income (or loss) for the year of the disposition and any prior years, and the excluded COD income applied to reduce attributes and the attributes reduced in respect thereof. See § 1.1502-11(c) for special rules related to the computation of tax that apply when an excess loss account is required to be taken into account.

(ii) ***Timing of inclusion.*** To the extent an excess loss account in a share of stock of a subsidiary that realizes excluded COD income is required to be taken into account as a result of the application of § 1.1502-19(c)(1)(iii)(B), such amount shall be included on the group's tax return for the taxable year that includes the date on which the subsidiary realizes such excluded COD income.

(7) ***Dispositions of stock.*** See § 1.1502-11(c) for limitations on the reduction of tax attributes when a member disposes of stock of another member (including dispositions that result from the application of § 1.1502-19(c)(1)(iii)(B)) during a taxable year in which any member realizes excluded COD income.

(8) ***Departure of member.*** If the taxable year of a member (the departing member) during which such member realizes excluded COD income ends on or prior to the last day of the consolidated return year and, on the first day of the taxable year of such member that follows the taxable year during which such member realizes excluded COD income, such member is not a member of the group and does not have a successor member (within the meaning of paragraph (b)(10) of this section), all tax attributes listed in section 108(b)(2) that remain after the determination of the tax imposed that belong to members of the group (including the departing member and subsidiaries of the departing member) shall be subject to reduction as provided in section 108 and the regulations promulgated thereunder (including § 1.108-7(c), if applicable) and this section.

(9) ***Intragroup reorganization*** —

(i) ***In general.*** If the taxable year of a member during which such member realizes excluded COD income ends prior to the last day of the consolidated return year and, on the first day that follows the taxable year of such member during which such member realizes excluded COD income, such member has a successor member, for purposes of applying the rules of sections 108 and 1017 and this section, notwithstanding § 1.108-7, the successor member shall be treated as the member that realized the excluded COD income. Thus, all attributes attributable to the successor member listed in section 108(b)(2) (including attributes that were attributable to the successor member prior to the date such member became a successor member) are available for reduction under paragraph (a)(2) of this section.

(ii) ***Group structure change.*** If a member that realizes excluded COD income acquires the assets of the common parent of the consolidated group in a transaction to which section 381(a) applies and succeeds such common parent under the principles of § 1.1502-75(d)(2) as the common parent of the consolidated group, the member's attributes that remain after the determination of tax for the group for the consolidated return year during which the excluded COD income is realized (and any prior years) (including attributes that were attributable to the former common parent prior to the date of the transaction to which section 381(a) applies) shall be available for reduction under paragraph (a)(2) of this section.

(10) ***Definition of successor member.*** A successor member means a person to which the member that realizes excluded COD income (or a successor member) transfers its assets in a transaction to which section 381(a) applies if such transferee is a member of the group immediately after the transaction.

(11) ***Non-application of next day rule.*** For purposes of applying the rules of sections 108 and 1017 and this section, the next day rule of § 1.1502-76(b)(1)(ii)(B) shall not apply to treat a member's excluded COD income as realized at the beginning of the day following the day on which such member's status as a member changes.

(c) ***Examples.*** The principles of paragraphs (a) and (b) of this section are illustrated by the following examples. Unless otherwise indicated, no election under section 108(b)(5) has been made and the taxable year of all consolidated groups is the calendar year. The examples are as follows:

Example 1. (i) *Facts.* P is the common parent of a consolidated group that includes subsidiary S1. P owns 80 percent of the stock of S1. In Year 1, the P group sustained a $250 consolidated net operating loss. Under the principles of § 1.1502-21(b)(2)(iv), of that amount, $125 was attributable to P and $125 was attributable to S1. On Day 1 of Year 2, P acquired 100 percent of the stock of S2, and S2 joined the P group. As of the beginning of Year 2, S2 had a $50 net operating loss carryover from Year 1, a separate return limitation year. In Year 2, the P group sustained a $200 consolidated net operating loss. Under the principles of § 1.1502-21(b)(2)(iv), of that amount, $90 was attributable to P, $70 was attributable to S1, and $40 was attributable to S2. In Year 3, S2 realized $200 of excluded COD income from the discharge of non-intercompany indebtedness. In that same year, the P group sustained a $50 consolidated net operating loss, of which $40 was attributable to S1 and $10 was attributable to S2 under the principles of § 1.1502-21(b)(2)(iv). As of the beginning of Year 4, S2 had Asset A with a fair market value of $10. After the computation of tax imposed for Year 3 and before the application of sections 108 and 1017 and this section, Asset A had a basis of $40 and S2 had no liabilities.
(ii) *Analysis*—(A) *Reduction of tax attributes attributable to debtor.* Pursuant to paragraph (a)(2) of this section, the tax attributes attributable to S2 must first be reduced to take into account its excluded COD income in the amount of $200.

(*1*) *Reduction of net operating losses.* Pursuant to section 108(b)(2)(A) and paragraph (a) of this section, the net operating loss and the net operating loss carryovers attributable to S2 under the principles of § 1.1502-21(b)(2)(iv) are reduced in the order prescribed by section 108(b)(4)(B). Accordingly, the consolidated net operating loss for Year 3 is reduced by $10, the portion of the consolidated net operating loss attributable to S2, to $40. Then, again pursuant to section 108(b)(4)(B), S2's net operating loss carryover of $50 from its separate return limitation year is reduced to $0. Finally, the consolidated net operating loss carryover from Year 2 is reduced by $40, the portion of that consolidated net operating loss carryover attributable to S2, to $160.

(*2*) *Reduction of basis.* Following the reduction of the net operating loss and the net operating loss carryovers attributable to S2, S2 reduces its basis in its assets pursuant to section 1017 and § 1.1017-1. Accordingly, S2 reduces its basis in Asset A by $40, from $40 to $0.

(B) *Reduction of remaining consolidated tax attributes.* The remaining $60 of excluded COD income then reduces consolidated tax attributes pursuant to paragraph (a)(4) of this section. In particular, the remaining $40 consolidated net operating loss for Year 3 is reduced to $0. Then, the consolidated net operating loss carryover from Year 1 is reduced by $20 from $250 to $230. Pursuant to paragraph (a)(4) of this section, a pro rata amount of the consolidated net operating

loss carryover from Year 1 that is attributable to each of P and S1 is treated as reduced. Therefore, $10 of the consolidated net operating loss carryover from Year 1 that is attributable to each of P and S1 is treated as reduced.

Example 2. (i) *Facts.* P is the common parent of a consolidated group that includes subsidiaries S1 and S2. P owns 100 percent of the stock of S1 and S1 owns 100 percent of the stock of S2. None of P, S1, or S2 has a separate return limitation year. In Year 1, the P group sustained a $50 consolidated net operating loss. Under the principles of § 1.1502-21(b)(2)(iv), of that amount, $10 was attributable to P, $20 was attributable to S1, and $20 was attributable to S2. In Year 2, the P group sustained a $70 consolidated net operating loss. Under the principles of § 1.1502-21(b)(2)(iv), of that amount, $30 was attributable to P, $30 was attributable to S1, and $10 was attributable to S2. In Year 3, S1 realized $170 of excluded COD income from the discharge of non-intercompany indebtedness. In that same year, the P group sustained a $50 consolidated net operating loss, of which $10 was attributable to S1 and $40 was attributable to S2 under the principles of § 1.1502-21(b)(2)(iv). As of the beginning of Year 4, S1's sole asset was the stock of S2, and S2 had Asset A with a $10 value. After the computation of tax imposed for Year 3 and before the application of sections 108 and 1017 and this section, S1 had an $80 basis in the S2 stock, Asset A had a basis of $0, and neither S1 nor S2 had any liabilities.
(ii) *Analysis*—(A) *Reduction of tax attributes attributable to debtor.* Pursuant to paragraph (a)(2) of this section, the tax attributes attributable to S1 must first be reduced to take into account its excluded COD income in the amount of $170.

(*1*) *Reduction of net operating losses.* Pursuant to section 108(b)(2)(A) and paragraph (a) of this section, the net operating loss and the net operating loss carryovers attributable to S1 under the principles of § 1.1502-21(b)(2)(iv) are reduced in the order prescribed by section 108(b)(4)(B). Accordingly, the consolidated net operating loss for Year 3 is reduced by $10, the portion of the consolidated net operating loss for Year 3 attributable to S1, to $40. Then, the consolidated net operating loss carryover from Year 1 is reduced by $20, the portion of that consolidated net operating loss carryover attributable to S1, to $30, and the consolidated net operating loss carryover from Year 2 is reduced by $30, the portion of that consolidated net operating loss carryover attributable to S1, to $40.

(*2*) *Reduction of basis.* Following the reduction of the net operating loss and the net operating loss carryovers attributable to S1, S1 reduces its basis in its assets pursuant to section 1017 and § 1.1017-1. Accordingly, S1 reduces its basis in the stock of S2 by $80, from $80 to $0.

(*3*) *Tiering down of stock basis reduction.* Pursuant to paragraph (a)(3) of this section, for purposes of sections 108 and 1017 and this section, S2 is treated as realizing $80 of excluded COD income. Pursuant to section 108(b)(2)(A) and paragraph (a) of this section, therefore, the net operating loss and net operating loss carryovers attributable to S2 under the principles of § 1.1502-21(b)(2)(iv) are reduced in the order prescribed by section 108(b)(4)(B). Accordingly, the

consolidated net operating loss for Year 3 is reduced by an additional $40, the portion of the consolidated net operating loss for Year 3 attributable to S2, to $0. Then, the consolidated net operating loss carryover from Year 1 is reduced by $20, the portion of that consolidated net operating loss carryover attributable to S2, to $10. Then, the consolidated net operating loss carryover from Year 2 is reduced by $10, the portion of that consolidated net operating loss carryover attributable to S2, to $30. S2's remaining $10 of excluded COD income does not reduce consolidated tax attributes attributable to P or S1 under paragraph (a)(4) of this section.

(B) *Reduction of remaining consolidated tax attributes.* Finally, pursuant to paragraph (a)(4) of this section, S1's remaining $30 of excluded COD income reduces the remaining consolidated tax attributes. In particular, the remaining $10 consolidated net operating loss carryover from Year 1 is reduced by $10 to $0, and the remaining $30 consolidated net operating loss carryover from Year 2 is reduced by $20 to $10.

Example 3. (i) *Facts.* P is the common parent of a consolidated group that includes subsidiaries S1, S2, and S3. P owns 100 percent of the stock of S1, S1 owns 100 percent of the stock of S2, and S2 owns 100 percent of the stock of S3. None of P, S1, S2, or S3 had a separate return limitation year prior to Year 1. In Year 1, the P group sustained a $150 consolidated net operating loss. Under the principles of § 1.1502-21(b)(2)(iv), of that amount, $50 was attributable to S2, and $100 was attributable to S3. In Year 2, the P group sustained a $50 consolidated net operating loss. Under the principles of § 1.1502-21(b)(2)(iv), of that amount, $40 was attributable to S1 and $10 was attributable to S2. In Year 3, S1 realized $170 of excluded COD income from the discharge of non-intercompany indebtedness. In that same year, the P group sustained a $50 consolidated net operating loss, of which $10 was attributable to S1, $20 was attributable to S2, and $20 was attributable to S3 under the principles of § 1.1502-21(b)(2)(iv). At the beginning of Year 4, S1's only asset was the stock of S2, and S2's only asset was the stock of S3 with a value of $10. After the computation of tax imposed for Year 3 and before the application of sections 108 and 1017 and this section, S1's stock of S2 had a basis of $120 and S2's stock of S3 had a basis of $180. In addition, none of S1, S2, and S3 had any liabilities.
(ii) *Analysis*—(A) *Reduction of tax attributes attributable to debtor.* Pursuant to paragraph (a)(2) of this section, the tax attributes attributable to S1 must first be reduced to take into account its excluded COD income in the amount of $170.

(*1*) *Reduction of net operating losses.* Pursuant to section 108(b)(2)(A) and paragraph (a) of this section, the net operating loss and the net operating loss carryovers attributable to S1 under the principles of § 1.1502-21(b)(2)(iv) are reduced in the order prescribed by section 108(b)(4)(B). Accordingly, the consolidated net operating loss for Year 3 is reduced by $10, the portion of the consolidated net operating loss attributable to S1, to $40. Then, the consolidated net operating loss carryover from Year 2 is reduced by $40, the portion of that consolidated net operating loss carryover attributable to S1, to $10.

(*2*) *Reduction of basis.* Following the reduction of the net operating loss and the net operating loss carryovers attributable to S1, S1 reduces its basis in its assets pursuant to section 1017 and § 1.1017-1. Accordingly, S1 reduces its basis in the stock of S2 by $120, from $120 to $0.

(B) *Tiering down of stock basis reduction to S2.* Pursuant to paragraph (a)(3) of this section, for purposes of sections 108 and 1017 and this section, S2 is treated as realizing $120 of excluded COD income. Pursuant to section 108(b)(2)(A) and paragraph (a) of this section, therefore, the net operating loss and net operating loss carryovers attributable to S2 under the principles of § 1.1502-21(b)(2)(iv) are reduced in the order prescribed by section 108(b)(4)(B). Accordingly, the consolidated net operating loss for Year 3 is further reduced by $20, the portion of the consolidated net operating loss attributable to S2, to $20. Then, the consolidated net operating loss carryover from Year 1 is reduced by $50, the portion of that consolidated net operating loss carryover attributable to S2, to $100. Then, the consolidated net operating loss carryover from Year 2 is further reduced by $10, the portion of that consolidated net operating loss carryover attributable to S2, to $0. Following the reduction of the net operating loss and the net operating loss carryovers attributable to S2, S2 reduces its basis in its assets pursuant to section 1017 and § 1.1017-1. Accordingly, S2 reduces its basis in its S3 stock by $40 to $140.

(C) *Tiering down of stock basis reduction to S3.* Pursuant to paragraph (a)(3) of this section, for purposes of sections 108 and 1017 and this section, S3 is treated as realizing $40 of excluded COD income. Pursuant to section 108(b)(2)(A) and paragraph (a) of this section, therefore, the net operating loss and the net operating loss carryovers attributable to S3 under the principles of § 1.1502-21(b)(2)(iv) are reduced in the order prescribed by section 108(b)(4)(B). Accordingly, the consolidated net operating loss for Year 3 is further reduced by $20, the portion of the consolidated net operating loss attributable to S3, to $0. Then, the consolidated net operating loss carryover from Year 1 is reduced by $20, the lesser of the portion of that consolidated net operating loss carryover attributable to S3 and the remaining excluded COD income, to $80.

Example 4. (i) *Facts.* P is the common parent of a consolidated group that includes subsidiaries S1, S2, and S3. P owns 100 percent of the stock of each of S1 and S2. Each of S1 and S2 owns stock of S3 that represents 50 percent of the value of the stock of S3. None of P, S1, S2, or S3 had a separate return limitation year prior to Year 1. In Year 1, the P group sustained a $160 consolidated net operating loss. Under the principles of § 1.1502-21(b)(2)(iv), of that amount, $10 was attributable to P, $50 was attributable to S2, and $100 was attributable to S3. In Year 2, the P group sustained a $110 consolidated net operating loss. Under the principles of § 1.1502-21(b)(2)(iv), of that amount, $40 was attributable to S1 and $70 was attributable to S2. In Year 3, S1 realized $200 of excluded COD income from the discharge of non-intercompany indebtedness, and S2 realized $270 of excluded COD income from the discharge of non-intercompany indebtedness. In that same year, the P group sustained a $50 consolidated net operating loss, of which $10 was attributable to S1, $20 was attributable to S2, and $20 was attributable to S3 under the principles of § 1.1502-21(b)(2)(iv). At the beginning of Year 4, S3 had

one asset with a value of $10. After the computation of tax imposed for Year 3 and before the application of sections 108 and 1017 and this section, S1's basis in its S3 stock was $60, S2's basis in its S3 stock was $120, and S3's asset had a basis of $200. In addition, none of S1, S2, and S3 had any liabilities.

(ii) *Analysis*—(A) *Reduction of tax attributes attributable to debtors.* Pursuant to paragraph (b)(1)(i) of this section, the tax attributes attributable to each of S1 and S2 are reduced pursuant to paragraph (a)(2) of this section. Then, pursuant to paragraph (a)(3) of this section, the tax attributes attributable to S3 are reduced so as to reflect a reduction of S1's and S2's basis in the stock of S3. Then, paragraph (a)(4) is applied to reduce additional tax attributes.

(1) *Reduction of net operating losses generally.* Pursuant to section 108(b)(2)(A) and paragraph (a) of this section, the net operating losses and the net operating loss carryovers attributable to S1 and S2 under the principles of § 1.1502-21(b)(2)(iv) are reduced in the order prescribed by section 108(b)(4)(B).

(2) *Reduction of net operating losses attributable to S1.* The consolidated net operating loss for Year 3 is reduced by $10, the portion of the consolidated net operating loss attributable to S1, to $40. Then, the consolidated net operating loss carryover from Year 2 is reduced by $40, the portion of that consolidated net operating loss carryover attributable to S1, to $70.

(3) *Reduction of net operating losses attributable to S2.* The consolidated net operating loss for Year 3 is also reduced by $20, the portion of the consolidated net operating loss attributable to S2, to $20. Then, the consolidated net operating loss carryover from Year 1 is reduced by $50, the portion of that consolidated net operating loss carryover attributable to S2, to $110. Then, the consolidated net operating loss carryover from Year 2 is reduced by $70, the portion of that consolidated net operating loss carryover attributable to S2, to $0.

(4) *Reduction of basis.* Following the reduction of the net operating losses and the net operating loss carryovers attributable to S1 and S2, S1 and S2 must reduce their basis in their assets pursuant to section 1017 and § 1.1017-1. Accordingly, S1 reduces its basis in the stock of S3 by $60, from $60 to $0, and S2 reduces its basis in the stock of S3 by $120, from $120 to $0.

(B) *Tiering down of basis reduction.* Pursuant to paragraph (a)(3) of this section, for purposes of sections 108 and 1017 and this section, S3 is treated as realizing $180 of excluded COD income. Pursuant to section 108(b)(2)(A) and paragraph (a) of this section, therefore, the net operating loss and the net operating loss carryovers attributable to S3 under the principles of § 1.1502-21(b)(2)(iv) are reduced in the order prescribed by section 108(b)(4)(B). Accordingly, the consolidated net operating loss for Year 3 is further reduced by $20, the portion of the consolidated net operating loss attributable to S3, to $0. Then, the consolidated net operating loss carryover from Year 1 is reduced by $100, the portion of that consolidated net operating loss

carryover attributable to S3, to $10. Following the reduction of the net operating loss and the net operating loss carryover attributable to S3, S3 reduces its basis in its asset pursuant to section 1017 and § 1.1017-1. Accordingly, S3 reduces its basis in its asset by $60, from $200 to $140.

(C) *Reduction of remaining consolidated tax attributes.* Finally, pursuant to paragraph (a)(4) of this section, the remaining $90 of S1's excluded COD income and the remaining $10 of S2's excluded COD income reduce the remaining consolidated tax attributes. In particular, the remaining $10 consolidated net operating loss carryover from Year 1 is reduced by $10 to $0. Because that amount is less than the aggregate amount of remaining excluded COD income, such income is applied on a pro rata basis to reduce the remaining consolidated tax attributes. Accordingly, $9 of S1's remaining excluded COD income and $1 of S2's remaining excluded COD income is applied to reduce the remaining consolidated net operating loss carryover from Year 1. Consequently, of S1's excluded COD income of $200, only $119 is applied to reduce tax attributes, and, of S2's excluded COD income of $270, only $261 is applied to reduce tax attributes.

Example 5. (i) *Facts.* P is the common parent of a consolidated group that includes subsidiaries S1, S2, and S3. P owns 100 percent of the stock of S1 and S2, and S1 owns 100 percent of the stock of S3. None of P, S1, S2, or S3 has a separate return limitation year prior to Year 1. In Year 1, the P group sustained a $90 consolidated net operating loss. Under the principles of § 1.1502-21(b)(2)(iv), of that amount, $10 was attributable to P, $15 was attributable to S1, $20 was attributable to S2, and $45 was attributable to S3. On January 1 of Year 2, P realized $140 of excluded COD income from the discharge of non-intercompany indebtedness. On December 31 of Year 2, S1 issued stock representing 50 percent of the vote and value of its outstanding stock to a person that was not a member of the group. As a result of the issuance of stock, S1 and S3 ceased to be members of the P group. For the consolidated return year of Year 2, the P group sustained a $60 consolidated net operating loss, of which $5 was attributable to S1, $40 was attributable to S2, and $15 was attributable to S3 under the principles of § 1.1502-21(b)(2)(iv). As of the beginning of Year 3, P's only assets were the stock of S1 and S2, S1's sole asset was the stock of S3, S2 had Asset A with a value of $10, and S3 had Asset B with a value of $10. After the computation of tax imposed for Year 2 and before the application of sections 108 and 1017 and this section, P had a $80 basis in the S1 stock and a $50 basis in the S2 stock, S1 had a $80 basis in the S3 stock, and Asset A and B each had a basis of $10. In addition, none of P, S1, S2, and S3 had any liabilities.
(ii) *Analysis.* Pursuant to paragraph (a)(2) of this section, the tax attributes attributable to P must first be reduced to take into account its excluded COD income in the amount of $140.

(A) *Reduction of net operating losses.* Pursuant to section 108(b)(2)(A) and paragraph (a) of this section, the net operating loss and the net operating loss carryover attributable to P under the principles of § 1.1502-21(b)(2)(iv) are reduced in the order prescribed by section 108(b)(4)(B). Accordingly, the consolidated net operating loss carryover from Year 1 is reduced by $10, the portion of that consolidated net operating loss carryover attributable to P, to $80.

(B) *Reduction of basis.* Following the reduction of the net operating loss and the net operating loss carryover attributable to P, P reduces its basis in its assets pursuant to section 1017 and § 1.1017-1. Accordingly, P reduces its basis in the stock of S1 by $80, from $80 to $0, and its basis in the stock of S2 by $50, from $50 to $0.

(C) *Tiering down of stock basis reduction to S1.* Pursuant to paragraph (a)(3) of this section, for purposes of sections 108 and 1017 and this section, S1 is treated as realizing $80 of excluded COD income, despite the fact that it ceases to be a member of the group at the end of the day on December 31 of Year 2. Pursuant to section 108(b)(2)(A) and paragraph (a) of this section, therefore, the net operating loss and net operating loss carryovers attributable to S1 under the principles of § 1.1502-21(b)(2)(iv) are reduced in the order prescribed by section 108(b)(4)(B). Accordingly, the consolidated net operating loss for Year 2 is reduced by $5, the portion of the consolidated net operating loss for Year 2 attributable to S1, to $55. Then, the consolidated net operating loss carryover from Year 1 is reduced by an additional $15, the portion of that consolidated net operating loss carryover attributable to S1, to $65. Following the reduction of the net operating loss and the net operating loss carryover attributable to S1, S1 reduces its basis in its assets pursuant to section 1017 and § 1.1017-1. Accordingly, S1 reduces its basis in the stock of S3 by $60, from $80 to $20.

(D) *Tiering down of stock basis reduction to S2.* Pursuant to paragraph (a)(3) of this section, for purposes of sections 108 and 1017 and this section, S2 is treated as realizing $50 of excluded COD income. Pursuant to section 108(b)(2)(A) and paragraph (a) of this section, therefore, the net operating loss and net operating loss carryovers attributable to S2 under the principles of § 1.1502-21(b)(2)(iv) are reduced in the order prescribed by section 108(b)(4)(B). Accordingly, the consolidated net operating loss for Year 2 is reduced by an additional $40, the portion of the consolidated net operating loss for Year 2 attributable to S2, to $15. Then, the consolidated net operating loss carryover from Year 1 is reduced by an additional $10, a portion of the consolidated net operating loss carryover attributable to S2, to $55.

(E) *Tiering down of stock basis reduction to S3.* Pursuant to paragraph (a)(3) of this section, for purposes of sections 108 and 1017 and this section, S3 is treated as realizing $60 of excluded COD income (by reason of S1's reduction in its basis of its S3 stock). Pursuant to section 108(b)(2)(A) and paragraph (a) of this section, therefore, the net operating loss and net operating loss carryovers attributable to S3 under the principles of § 1.1502-21(b)(2)(iv) are reduced in the order prescribed by section 108(b)(4)(B). Accordingly, the consolidated net operating loss for Year

2 is reduced by an additional $15, the portion of the consolidated net operating loss for Year 2 attributable to S3, to $0. Then, the consolidated net operating loss carryover from Year 1 is reduced by an additional $45, the portion of that consolidated net operating loss carryover attributable to S3, to $10.

Example 6. (i) *Facts.* P1 is the common parent of a consolidated group that includes subsidiaries S1, S2, and S3. P1 owns 100 percent of the stock of S1 and S2. S1 owns 100 percent of the stock of S3. None of P1, S1, S2, or S3 has a separate return limitation year prior to Year 1. In Year 1, the P1 group sustained a $120 consolidated net operating loss. Under the principles of § 1.1502-21(b)(2)(iv), of that amount, $40 was attributable to P1, $35 was attributable to S1, $30 was attributable to S2, and $15 was attributable to S3. On January 1 of Year 2, S3 realized $65 of excluded COD income from the discharge of non-intercompany indebtedness. On June 30 of Year 2, S3 issued stock representing 80 percent of the vote and value of its outstanding stock to P2, the common parent of another group. As a result of the issuance of stock, S3 ceased to be a member of the P1 group and became a member of the P2 group. For the consolidated return year of Year 2, the P1 group sustained a $50 consolidated net operating loss, of which $5 was attributable to S1, $40 was attributable to S2, and $5 was attributable to S3 under the principles of § 1.1502-21(b)(2)(iv). As of the beginning of its taxable year beginning on July 1 of Year 2, S3's sole asset was Asset A with a $10 value. After the computation of tax imposed for Year 2 on the P1 group and before the application of sections 108 and 1017 and this section and the computation of tax imposed for Year 2 on the P2 group, Asset A had a basis of $0. In addition, S3 had no liabilities. On January 1 of Year 3, P1 sold all of its stock of S1.
(ii) *Analysis*—(A) *Reduction of tax attributes attributable to debtor.* Pursuant to paragraph (a)(2) of this section, the tax attributes attributable to S3 must first be reduced to take into account its excluded COD income in the amount of $65. Pursuant to section 108(b)(2)(A) and paragraph (a) of this section, the net operating loss and the net operating loss carryover attributable to S3 under the principles of § 1.1502-21(b)(2)(iv) are reduced in the order prescribed by section 108(b)(4)(B). Accordingly, the consolidated net operating loss for Year 2 is reduced by $5, the portion of the consolidated net operating loss for Year 2 attributable to S3, to $45. Then, the consolidated net operating loss carryover from Year 1 is reduced by $15, the portion of that consolidated net operating loss carryover attributable to S3, to $105.

(B) *Reduction of remaining consolidated tax attributes.* Pursuant to paragraphs (a)(4) and (b)(8) of this section, S3's remaining $45 of excluded COD income reduces the remaining consolidated tax attributes in the P1 group. In particular, the remaining $45 consolidated net operating loss for Year 2 is reduced by an additional $45 to $0.

(C) *Basis Adjustments.* For purposes of computing P1's gain or loss on the sale of the S1 stock in Year 3, P1's basis in its S1 stock will reflect a net positive adjustment of $40, which is the excess of the amount of S3's excluded COD income that is applied to reduce attributes ($65) over the reduction of S1's and S3's attributes in respect of such excluded COD income ($25).

Example 7. (i) *Facts.* P is the common parent of a consolidated group that includes subsidiaries S1 and S2. P owns 100 percent of the stock of S1, and S1 owns 100 percent of the stock of S2. None of P, S1, or S2 has a separate return limitation year prior to Year 1. In Year 1, the P group sustained a $50 consolidated net operating loss. Under the principles of § 1.1502-21(b)(2)(iv), of that amount, $10 was attributable to P, $20 was attributable to S1, and $20 was attributable to S2. On January 1 of Year 2, S1 realized $55 of excluded COD income from the discharge of non-intercompany indebtedness. On June 30 of Year 2, P transferred all of its assets to S1 in a transaction to which section 381(a) applied. As a result of that transaction, pursuant to § 1.1502-75(d)(2)(ii), S1 succeeded P as the common parent of the group. Pursuant to § 1.1502-75(d)(2)(iii), S1's taxable year closed on the date of the acquisition. However, P's taxable year did not close. On the consolidated return for Year 2, the group sustained a $50 consolidated net operating loss. Under the principles of § 1.1502-21(b)(2)(iv), of that amount, $10 was attributable to S1 for its taxable year that ended on June 30, $15 was attributable to S1 as the successor of P, and $25 was attributable to S2.
(ii) *Analysis.* Pursuant to paragraph (a)(2) of this section, the tax attributes attributable to S1 must first be reduced to take into account its excluded COD income in the amount of $55. For this purpose, S1's attributes that remain after the determination of tax for the group for Year 2 are subject to reduction. Pursuant to section 108(b)(2)(A) and paragraph (a) of this section, the net operating loss and the net operating loss carryover attributable to S1 under the principles of § 1.1502-21(b)(2)(iv) are reduced. Accordingly, the consolidated net operating loss for Year 2 is reduced by $25, the portion of the consolidated net operating loss for Year 2 attributable to S1, to $25. Then, the consolidated net operating loss carryover from Year 1 is reduced by $30, the portion of that consolidated net operating loss carryover attributable to S1 (which includes the portion attributable to P), to $20.

(d) ***Effective dates.*** This section applies to discharges of indebtedness that occur after March 21, 2005. Groups, however, may apply this section in whole, but not in part, to discharges of indebtedness that occur on or before March 21, 2005, and after August 29, 2003. For discharges of indebtedness occurring on or before March 21, 2005, and after August 29, 2003, with respect to which a group chooses not to apply this section, see § 1.1502-28T as contained in 26 CFR part 1 revised as of April 1, 2004. Furthermore, groups may apply paragraph (b)(4) of this section to discharges of indebtedness that occur on or before August 29, 2003, in cases in which section 1017(b)(3)(D) was applied. Paragraph (b)(5)(i) of this section and the last sentence of paragraph (b)(5)(ii) of this section applies to transactions occurring in consolidated return years beginning on or after December 24, 2008.

[T.D. 9192, 70 FR 14404, Mar. 22, 2005, as amended by T.D. 9442, 73 FR 79334, Dec. 29, 2008]

BASIS, STOCK OWNERSHIP, AND EARNINGS AND PROFITS RULES

§ 1.1502-30 Stock basis after certain triangular reorganizations.

(a) ***Scope.*** This section provides rules for determining the basis of the stock of an acquiring corporation as a result of a triangular reorganization. The definitions and nomenclature contained in § 1.358-6 apply to this section.

(b) ***General rules*** —

(1) ***Forward triangular merger, triangular C reorganization, or triangular B reorganization. P*** adjusts its basis in the stock of S as a result of a forward triangular merger, triangular C reorganization, or triangular B reorganization under § 1.358-6(c) and (d), except that § 1.358-6 (c)(1)(ii) and (d)(2) do not apply. Instead, *P* adjusts such basis by taking into account the full amount of—

(i) ***T*** liabilities assumed by *S* or the amount of liabilities to which the *T* assets acquired by *S* are subject, and

(ii) The fair market value of any consideration not provided by *P* pursuant to the plan of reorganization.

(2) ***Reverse triangular merger.*** If *P* adjusts its basis in the *T* stock acquired as a result of a reverse triangular merger under § 1.358-6 (c)(2)(i) and (d), § 1.358-6 (c)(1)(ii) and (d)(2) do not apply. Instead, *P* adjusts such basis by taking into account the full amount of—

(i) ***T*** liabilities deemed assumed by *S* or the amount of liabilities to which the *T* assets deemed acquired by *S* are subject, and

(ii) The fair market value of any consideration not provided by *P* pursuant to the plan of reorganization.

(3) ***Excess loss accounts.*** Negative adjustments under this section may exceed *P*'s basis in its *S* or *T* stock. The resulting negative amount is *P*'s excess loss account in its *S* or *T* stock. See § 1.1502-19 for rules treating excess loss accounts as negative basis, and treating references to stock basis as including references to excess loss accounts.

(4) ***Application of other rules of law.*** If a transaction otherwise subject to this section is also a group structure change subject to § 1.1502-31, the provisions of § 1.1502-31 and not this section apply to determine stock basis. See § 1.1502-80(a) regarding the general applicability of other rules of law and a limitation on duplicative adjustments. See § 1.1502-80(d) for the non-application of section 357(c) to P.

(5) ***Examples.*** The rules of this paragraph (b) are illustrated by the following examples. For purposes of these examples, *P, S,* and *T* are domestic corporations, *P* and *S* file consolidated returns, *P* owns all of the only class of *S* stock, the *P* stock exchanged in the transaction satisfies the requirements of the applicable triangular reorganization provisions, the facts set forth the only corporate activity, and tax liabilities are disregarded.

> *Example 1. Liabilities.* (a) *Facts. T* has assets with an aggregate basis of $60 and fair market value of $100. *T*'s assets are subject to $70 of liabilities. Pursuant to a plan, *P* forms *S* with $5 of cash (which S retains), and *T* merges into *S.* In the merger, the *T* shareholders receive *P* stock worth $30 in exchange for their *T* stock. The transaction is a reorganization to which

sections 368 (a)(1)(A) and (a)(2)(D) apply.
(b) *Basis adjustment.* Under § 1.358-6, *P* adjusts its $5 basis in the *S* stock as if *P* had acquired the *T* assets with a carryover basis under section 362 and transferred these assets to *S* in a transaction in which *P* determines its basis in the *S* stock under section 358. Under the rules of this section, the limitation described in § 1.358-6(c)(1)(ii) does not apply. Thus, *P* adjusts its basis in the *S* stock by -$10 (the aggregate adjusted basis of *T*'s assets decreased by the amount of liabilities to which the *T* assets are subject). Consequently, as a result of the reorganization, *P* has an excess loss account of $5 in its *S* stock.

Example 2. Consideration not provided by P. (a) *Facts. T* has assets with an aggregate basis of $10 and fair market value of $100 and no liabilities. *S* is an operating company with substantial assets that has been in existence for several years. *P* has a $5 basis in its *S* stock. Pursuant to a plan, *T* merges into *S* and the *T* shareholders receive $70 of *P* stock provided by *P* pursuant to the plan of reorganization and $30 of cash provided by *S* in exchange for their *T* stock. The transaction is a reorganization to which sections 368 (a)(1)(A) and (a)(2)(D) apply.
(b) *Basis adjustment.* Under § 1.358-6, *P* adjusts its $5 basis in the *S* stock as if *P* had acquired the *T* assets with a carryover basis under section 362 and transferred these assets to *S* in a transaction in which *P* determines its basis in the *S* stock under section 358. Under the rules of this section, the limitation described in § 1.358-6(d)(2) does not apply. Thus, *P* adjusts its basis in the *S* stock by -$20 (the aggregate adjusted basis of *T*'s assets decreased by the fair market value of the consideration provided by *S*). As a result of the reorganization, *P* has an excess loss account of $15 in its *S* stock.

(c) *Appreciated asset.* The facts are the same as in paragraph (a) of this *Example 2,* except that in the reorganization *S* provides an asset with a $20 adjusted basis and $30 fair market value instead of $30 cash. The basis is adjusted in the same manner as in paragraph (b) of this *Example 2.* In addition, because *S* recognizes a $10 gain from the asset under section 1001, *P*'s basis in its *S* stock is increased under § 1.1502-32(b) by *S*'s $10 gain. Consequently, as a result of the reorganization, *P* has an excess loss account of $5 in its *S* stock. (The results would be the same if the appreciated asset provided by *S* was *P* stock with respect to which *S* recognized gain. See § 1.1032-2(c)).

Example 3. Reverse triangular merger. (a) *Facts. T* has assets with an aggregate basis of $60 and fair market value of $100. *T*'s assets are subject to $70 of liabilities. *P* owns all of the only class of *S* stock. *P* has a $5 basis in its *S* stock. Pursuant to a plan, *S* merges into *T* with *T* surviving. In the merger, the *T* shareholders exchange their *T* stock for $2 cash from *P* and $28 worth of *P* stock provided by *P* pursuant to the plan. The transaction is a reorganization to which sections 368 (a)(1)(A) and (a)(2)(E) apply.

(b) *Basis adjustment.* Under § 1.358-6, *P*'s basis in the *T* stock acquired equals its $5 basis in its *S* stock immediately before the transaction adjusted by the $60 basis in the *T* assets deemed transferred, and the $70 of liabilities to which the *T* assets are subject. Under the rules of this section, the limitation described in § 1.358-6(c)(1)(ii) does not apply. Consequently, *P* has an excess loss account of $5 in its *T* stock as a result of the transaction.

(c) ***Effective/applicability date.*** This section applies to reorganizations occurring on or after December 21, 1995. However, paragraph (b)(4) of this section applies to reorganizations occurring on or after September 17, 2008.

[T.D. 8648, 60 FR 66082, Dec. 21, 1995, as amended by T.D. 9424, 73 FR 53949, Sept. 17, 2008]

§ 1.1502-31 Stock basis after a group structure change.

(a) ***In general*** —

(1) ***Overview.*** If one corporation (P) succeeds another corporation (T) under the principles of § 1.1502-75(d) (2) or (3) as the common parent of a consolidated group in a group structure change, the basis of members in the stock of the former common parent (or the stock of a successor) is adjusted or determined under this section. See § 1.1502-33(f)(1) for the definition of group structure change. For example, if P owns all of the stock of another corporation (S), and T merges into S in a group structure change that is a reorganization described in section 368(a)(2)(D) in which P becomes the common parent of the T group, P's basis in S's stock must be adjusted to reflect the change in S's assets and liabilities. The rules of this section coordinate with the earnings and profits adjustments required under § 1.1502-33(f)(1), generally conforming the results of transactions in which the T group continues under § 1.1502-75 with P as the common parent. By preserving in P the relationship between T's earnings and profits and asset basis, these adjustments limit possible distortions under section 1502 (e.g., in the deconsolidation rules for earnings and profits under § 1.1502-33(e), and the continued filing requirements under § 1.1502-75(a)). This section applies whether or not T continues to exist after the group structure change.

(2) ***Application of other rules of law.*** If a transaction subject to this section is also a triangular reorganization otherwise subject to § 1.1502-30, the provisions of this section and not those of § 1.1502-30 apply to determine stock basis. See § 1.1502-80(a) regarding the general applicability of other rules of law and a limitation on duplicative adjustments.

(b) ***General rules.*** Except as otherwise provided in this section—

(1) ***Asset acquisitions.*** If a corporation acquires the former common parent's assets (and any liabilities assumed or to which the assets are subject) in a group structure change, the basis of members in the stock of the acquiring corporation is adjusted immediately after the group structure change to reflect the acquiring corporation's allocable share of the former common parent's net asset basis as determined under paragraph (c) of this section. For example, if S acquires all of T's assets in a group structure change that is a reorganization described in section 368(a)(2)(D), P's basis in S's stock is adjusted to reflect T's net asset basis. If P owned some of T's stock before the group structure change, the results would be the same because P's basis in the T stock is not taken into account in determining P's basis in S's stock. If T's net asset basis is a negative amount, it reduces P's basis in

S's stock and, if the reduction exceeds P's basis in S's stock, the excess is P's excess loss account in S's stock. See § 1.1502-19 for rules treating P's excess loss account as negative basis, and treating a reference to P's basis in S's stock as including an excess loss account.

(2) ***Stock acquisitions.*** If a corporation acquires stock of the former common parent in a group structure change, the basis of the members in the former common parent's stock immediately after the group structure change (including any stock of the former common parent owned before the group structure change) that is, or would otherwise be, transferred basis property is redetermined in accordance with the results for an asset acquisition described in paragraph (b)(1) of this section. For example, if all of T's stock is contributed to P in a group structure change to which section 351 applies, P's basis in T's stock is T's net asset basis, rather than the amount determined under section 362. Similarly, if S merges into T in a group structure change described in section 368(a)(2)(E) and P acquires all of the T stock, P's basis in T's stock is the basis that P would have in S's stock under paragraph (b)(1) of this section if T had merged into S in a group structure change described in section 368(a)(2)(D).

(c) ***Net asset basis.*** The former common parent's net asset basis is the basis it would have in the stock of a newly formed subsidiary, if—

(1) The former common parent transferred its assets (and any liabilities assumed or to which the assets are subject) to the subsidiary in a transaction to which section 351 applies;

(2) The former common parent and the subsidiary were members of the same consolidated group (see § 1.1502-80(d) for the non-application of section 357(c) to the transfer); and

(3) The asset basis taken into account is each asset's basis immediately after the group structure change (e.g., taking into account any income or gain recognized in the group structure change and reflected in the asset's basis).

(d) ***Additional adjustments.*** In addition to the adjustments in paragraph (b) of this section, the following adjustments are made:

(1) ***Consideration not provided by P.*** The basis is reduced to reflect the fair market value of any consideration not provided by the member. For example, if S acquires T's assets in a group structure change described in section 368(a)(2)(D), and S provides an appreciated asset (e.g., stock of P) as partial consideration in the transaction, P's basis in S's stock is reduced by the fair market value of the asset.

(2) ***Allocable share*** —

(i) ***Asset acquisitions.*** If a corporation receives less than all of the former common parent's assets and liabilities in the group structure change, the former common parent's net asset basis taken into account under paragraph (b)(1) of this section is adjusted accordingly.

(ii) ***Stock acquisitions.*** If less than all of the former common parent's stock is subject to the redetermination described in paragraph (b)(2) of this section, the percentage of the former common parent's net asset basis taken into account in the redetermination equals the percentage (by fair market value) of the former common parent's stock subject to the redetermination. For example, if P owns less than all of the former common parent's stock immediately after the group structure change and such stock would otherwise be transferred basis property, only an allocable part of the basis determined under this section is reflected in the shares owned by P (and the amount allocable to shares owned by nonmembers has no

effect on the basis of their shares). Alternatively, if P acquired 10 percent of the former common parent's stock in a transaction in which the stock basis was determined by P's cost, and P later acquires the remaining 90 percent of the former common parent's stock in a separate transaction that is described in paragraph (b)(2) of this section, P retains its cost basis in its original stock and the basis of P's newly acquired shares reflects only an allocable part of the former common parent's net asset basis.

(3) ***Allocation among shares of stock.*** The basis determined under this section is allocated among shares under the principles of section 358. For example, if P owns multiple classes of the former common parent's stock immediately after the group structure change, only an allocable part of the basis determined under this section is reflected in the basis of each share. See § 1.1502-19(d), for special allocations with respect to excess loss accounts.

(4) ***Higher-tier members.*** To the extent that the former common parent is owned by members other than the new common parent, the basis of members in the stock of all subsidiaries owning, directly or indirectly, in whole or in part, an interest in the former common parent's assets or liabilities is adjusted in accordance with the principles of this section. The adjustments are applied in the order of the tiers, from the lowest to the highest.

(e) ***Waiver of loss carryovers of former common parent*** —

(1) ***General rule.*** An irrevocable election may be made to treat all or any portion of a loss carryover attributable to the common parent as expiring for all Federal income tax purposes immediately before the group structure change. Thus, if the loss carryover is treated as expiring under the election, it will not result in a negative adjustment to the basis of P's stock under § 1.1502-32(b).

(2) ***Election.*** The election described in paragraph (e)(1) of this section must be made in a separate statement entitled, "ELECTION TO TREAT LOSS CARRYOVER AS EXPIRING UNDER § 1.1502-31(e)." The election must be filed by including the statement on or with the consolidated group's income tax return for the year that includes the group structure change. The statement must identify the amount of each loss carryover deemed to expire (or the amount of each loss carryover deemed not to expire, with any balance of any loss carryovers being deemed to expire).

(f) ***Predecessors and successors.*** For purposes of this section, any reference to a corporation includes a reference to a successor or predecessor as the context may require. See § 1.1502-32(f) for definitions of predecessor and successor.

(g) ***Examples.*** For purposes of the examples in this section, unless otherwise stated, all corporations have only one class of stock outstanding, the tax year of all persons is the calendar year, all persons use the accrual method of accounting, the facts set forth the only corporate activity, all transactions are between unrelated persons, and tax liabilities are disregarded. The principles of this section are illustrated by the following examples:

> *Example 1. Forward triangular merger.* (i) *Facts.* P is the common parent of one group and T is the common parent of another. T has assets with an aggregate basis of $60 and fair market value of $100 and no liabilities. T's shareholders have an aggregate basis of $50 in T's stock. In Year 1, pursuant to a plan, P forms S and T merges into S with the T shareholders receiving $100 of P stock in exchange for their T stock. The transaction is a reorganization described in section 368(a)(2)(D). The transaction is also a reverse acquisition under § 1.1502-75(d)(3) because the T shareholders, as a result of owning T's stock, own more than 50% of the value of P's stock

immediately after the transaction. Thus, the transaction is a group structure change under § 1.1502-33(f)(1), and P's earnings and profits are adjusted to reflect T's earnings and profits immediately before T ceases to be the common parent of the T group.
(ii) *Analysis.* Under paragraph (b)(1) of this section, P's basis in S's stock is adjusted to reflect T's net asset basis. Under paragraph (c) of this section, T's net asset basis is $60, the basis T would have in the stock of a subsidiary under section 358 if T had transferred all of its assets and liabilities to the subsidiary in a transaction to which section 351 applies. Thus, P has a $60 basis in S's stock.

(iii) *Pre-existing S.* The facts are the same as in paragraph (i) of this *Example 1,* except that P has owned the stock of S for several years and P has a $50 basis in the S stock before the merger with T. Under paragraph (b)(1) of this section, P's $50 basis in S's stock is adjusted to reflect T's net asset basis. Thus, P's basis in S's stock is $110 ($50 plus $60).

(iv) *Excess loss account included in former common parent's net asset basis.* The facts are the same as in paragraph (i) of this *Example 1,* except that T has two assets, an operating asset with an $80 basis and $90 fair market value, and stock of a subsidiary with a $20 excess loss account and $10 fair market value. Under paragraph (c) of this section, T's net asset basis is $60 ($80 minus $20). *See* sections 351 and 358, and § 1.1502-19. Consequently, P has a $60 basis in S's stock. Under section 362 and § 1.1502-19, S has an $80 basis in the operating asset and a $20 excess loss account in the stock of the subsidiary.

(v) *Liabilities in excess of basis.* The facts are the same as in paragraph (i) of this *Example 1,* except that T's assets have a fair market value of $170 (and $60 basis) and are subject to $70 of liabilities. Under paragraph (c) of this section, T's net asset basis is negative $10 ($60 minus $70). *See* sections 351 and 358, and §§ 1.1502-19 and 1.1502-80(d). Thus, P has a $10 excess loss account in S's stock. Under section 362, S has a $60 basis in its assets (which are subject to $70 of liabilities). (Under paragraph (a)(2) of this section, because the liabilities are taken into account in determining net asset basis under paragraph (c) of this section, the liabilities are not also taken into account as consideration not provided by P under paragraph (d)(1) of this section.)

(vi) *Consideration provided by S.* The facts are the same as in paragraph (i) of this *Example 1,* except that P forms S with a $100 contribution at the beginning of Year 1, and during Year 6, pursuant to a plan, S purchases $100 of P stock and T merges into S with the T shareholders receiving P stock in exchange for their T stock. Under paragraph (b)(1) of this section, P's $100 basis in S's stock is increased by $60 to reflect T's net asset basis. Under paragraph (d)(1) of this section, P's basis in S's stock is decreased by $100 (the fair market value of the P stock) because the P stock purchased by S and used in the transaction is consideration not provided by P.

(vii) *Appreciated asset provided by S.* The facts are the same as in paragraph (i) of this *Example 1*, except that P has owned the stock of S for several years, and the shareholders of T receive $60 of P stock and an asset of S with a $30 adjusted basis and $40 fair market value. S recognizes a $10 gain from the asset under section 1001. Under paragraph (b)(1) of this section, P's basis in S's stock is increased by $60 to reflect T's net asset basis. Under paragraph (d)(1) of this section, P's basis in S's stock is decreased by $40 (the fair market value of the asset provided by S). In addition, P's basis in S's stock is increased under § 1.1502-32(b) by S's $10 gain.

(viii) *Depreciated asset provided by S.* The facts are the same as in paragraph (i) of this *Example 1*, except that P has owned the stock of S for several years, and the shareholders of T receive $60 of P stock and an asset of S with a $50 adjusted basis and $40 fair market value. S recognizes a $10 loss from the asset under section 1001. Under paragraph (b)(1) of this section, P's basis in S's stock is increased by $60 to reflect T's net asset basis. Under paragraph (d)(1) of this section, P's basis in S's stock is decreased by $40 (the fair market value of the asset provided by S). In addition, S's $10 loss is taken into account under § 1.1502-32(b) in determining P's basis adjustments under that section.

Example 2. Stock acquisition. (i) *Facts.* P is the common parent of one group and T is the common parent of another. T has assets with an aggregate basis of $60 and fair market value of $100 and no liabilities. T's shareholders have an aggregate basis of $50 in T's stock. Pursuant to a plan, P forms S and S acquires all of T's stock in exchange for P stock in a transaction described in section 368(a)(1)(B). The transaction is also a reverse acquisition under § 1.1502-75(d)(3). Thus, the transaction is a group structure change under § 1.1502-33(f)(1), and the earnings and profits of P and S are adjusted to reflect T's earnings and profits immediately before T ceases to be the common parent of the T group.
(ii) *Analysis.* Under paragraph (d)(4) of this section, although S is not the new common parent of the T group, adjustments must be made to S's basis in T's stock in accordance with the principles of this section. Although S's basis in T's stock would ordinarily be determined under section 362 by reference to the basis of T's shareholders in T's stock immediately before the group structure change, under the principles of paragraph (b)(2) of this section, S's basis in T's stock is determined by reference to T's net asset basis. Thus, S's basis in T's stock is $60.

(iii) *Higher-tier adjustments.* Under paragraph (d)(4) of this section, P's basis in S's stock is increased by $60 (to be consistent with the adjustment to S's basis in T's stock).

(iv) *Cross ownership.* The facts are the same as in paragraph (i) of this *Example 2*, except S purchased 10% of T's stock from an unrelated person for cash. In an unrelated transaction, S acquires the remaining 90% of T's stock in exchange for P stock. S's basis in the initial 10% of T's stock is not redetermined under this section. However, S's basis in the additional 90% of T's stock is redetermined under this section. S's basis in that stock is adjusted to $54 (90% of T's net asset basis).

(v) *Allocable share.* The facts are the same as in paragraph (i) of this *Example 2,* except that P owns only 90% of S's stock immediately after the group structure change. S's basis in T's stock is the same as in paragraph (ii) of this *Example 2.* Under paragraph (d)(2) of this section, P's basis in its S stock is increased by $54 (90% of S's $60 adjustment).

Example 3. Taxable stock acquisition. (i) *Facts.* P is the common parent of one group and T is the common parent of another. T has assets with an aggregate basis of $60 and fair market value of $100 and no liabilities. T's shareholders have an aggregate basis of $50 in T's stock. Pursuant to a plan, P acquires all of T's stock in exchange for $70 of P's stock and $30 in a transaction that is a group structure change under § 1.1502-33(f)(1). P's acquired T stock is not transferred basis property. (Because of P's use of cash, the acquisition is not a transaction described in section 368(a)(1)(B).)
(ii) *Analysis.* The rules of this section do not apply to determine P's basis in T's stock. Therefore, P's basis in T's stock is $100.

(h) ***Effective/applicability dates*** —

(1) ***General rule.*** This section applies to group structure changes that occur after April 26, 2004. However, a group may apply this section to group structure changes that occurred on or before April 26, 2004, and in consolidated return years beginning on or after January 1, 1995. In addition, paragraph (a)(2) of this section applies to group structure changes that occurred on or after September 17, 2008. Paragraph (e)(2) of this section applies to any original consolidated Federal income tax return due (without extensions) after June 14, 2007. For original consolidated Federal income tax returns due (without extensions) after May 30, 2006, and on or before June 14, 2007, see § 1.1502-31T as contained in 26 CFR part 1 in effect on April 1, 2007. For original consolidated Federal income tax returns due (without extensions) on or before May 30, 2006, see § 1.1502-31 as contained in 26 CFR part 1 in effect on April 1, 2006.

(2) ***Prior law.*** For group structure changes that occur on or before April 26, 2004, and in consolidated return years beginning on or after January 1, 1995, with respect to which the group does not elect to apply the provisions of this section, see § 1.1502-31 as contained in the 26 CFR part 1 edition revised as of April 1, 2003. For group structure changes that occur in consolidated return years beginning before January 1, 1995, see § 1.1502-31T as contained in the 26 CFR part 1 edition revised as of April 1, 1994.

[T.D. 8560, 59 FR 41683, Aug. 15, 1994, as amended by T.D. 9122, 69 FR 22400, Apr. 26, 2004; T.D. 9264, 71 FR 30602, May 30, 2006; T.D. 9329, 72 FR 32804, June 14, 2007; T.D. 9424, 73 FR 53949, Sept. 17, 2008]

§ 1.1502-32 Investment adjustments.

(a) ***In general*** —

(1) ***Purpose.*** This section provides rules for adjusting the basis of the stock of a subsidiary (S) owned by another member (M). These rules modify the determination of M's basis in S's stock under applicable rules of law by adjusting M's basis to reflect S's distributions and S's items of income, gain, deduction, and loss taken into account for the period that S is a member of the consolidated group. The purpose of the adjustments is to treat M and S as a single entity so that consolidated

taxable income reflects the group's income. For example, if M forms S with a $100 contribution, and S takes into account $10 of income, M's $100 basis in S's stock under section 358 is increased by $10 under this section to prevent S's income from being taken into account a second time on M's disposition of S's stock. Comparable adjustments are made for tax-exempt income and noncapital, nondeductible expenses that S takes into account, to preserve their treatment under the Internal Revenue Code.

(2) ***Application of other rules of law, duplicative adjustments.*** See § 1.1502-80(a) regarding the general applicability of other rules of law and a limitation on duplicative adjustments. The rules of this section are in addition to other rules of law. See, e.g., section 358 (basis determinations for distributees), section 1016 (adjustments to basis), § 1.1502-11(b) (limitations on the use of losses), § 1.1502-19 (treatment of excess loss accounts), § 1.1502-31 (basis after a group structure change), and § 1.1502-35 (additional rules relating to stock loss, including losses attributable to worthlessness and certain dispositions not followed by a separate return year). M's basis in S's stock must not be adjusted under this section and other rules of law in a manner that has the effect of duplicating an adjustment.

(3) ***Overview*** —

(i) ***In general.*** The amount of the stock basis adjustments and their timing are determined under paragraph (b) of this section. Under paragraph (c) of this section, the amount of the adjustment is allocated among the shares of S's stock. Paragraphs (d) through (g) of this section provide definitions, an anti-avoidance rule, successor rules, and recordkeeping requirements.

(ii) ***Excess loss account.*** Negative adjustments under this section may exceed M's basis in S's stock. The resulting negative amount is M's excess loss account in S's stock. See § 1.1502-19 for rules treating excess loss accounts as negative basis, and treating references to stock basis as including references to excess loss accounts.

(iii) ***Tiering up of adjustments.*** The adjustments to S's stock under this section are taken into account in determining adjustments to higher-tier stock. The adjustments are applied in the order of the tiers, from the lowest to the highest. For example, if M is also a subsidiary, M's adjustment to S's stock is taken into account in determining the adjustments to stock of M owned by other members.

(b) ***Stock basis adjustments*** —

(1) ***Timing of adjustments*** —

(i) ***In general.*** Adjustments under this section are made as of the close of each consolidated return year, and as of any other time (an interim adjustment) if a determination at that time is necessary to determine a tax liability of any person. For example, adjustments are made as of M's sale of S's stock in order to measure M's gain or loss from the sale, and if M's interest in S's stock is not uniform throughout the year (e.g., because M disposes of a portion of its S stock, or S issues additional shares to another person), the adjustments under this section are made by taking into account the varying interests. An interim adjustment may be necessary even if tax liability is not affected until a later time. For example, if M sells only 50% of S's stock and S becomes a nonmember, adjustments must be made for the retained stock as of the disposition (whether or not M has an excess loss account in that stock). Similarly, if S liquidates during a consolidated return year, adjustments must be made as of the liquidation (even if the liquidation is tax free under section 332).

(ii) ***Special rule for discharge of indebtedness income.*** Adjustments under this section resulting from the realization of discharge of indebtedness income of a member that is excluded from gross income under section 108(a) (excluded COD income) and from the reduction of attributes in respect thereof pursuant to sections 108 and 1017 and § 1.1502-28 (including reductions in the basis of property) when a member (the departing member) ceases to be a member of the group on or prior to the last day of the consolidated return year that includes the date the excluded COD income is realized are made immediately after the determination of tax for the group for the taxable year during which the excluded COD income is realized (and any prior years) and are effective immediately before the beginning of the taxable year of the departing member following the taxable year during which the excluded COD income is realized. Such adjustments when a corporation (the new member) is not a member of the group on the last day of the consolidated return year that includes the date the excluded COD income is realized but is a member of the group at the beginning of the following consolidated return year are also made immediately after the determination of tax for the group for the taxable year during which the excluded COD income is realized (and any prior years) and are effective immediately before the beginning of the taxable year of the new member following the taxable year during which the excluded COD income is realized. If the new member was a member of another group immediately before it became a member of the group, such adjustments are treated as occurring immediately after it ceases to be a member of the prior group.

(iii) ***Allocation of items.*** If § 1.1502-76(b) applies to S for purposes of an adjustment before the close of the group's consolidated return year, the amount of the adjustment is determined under that section. If § 1.1502-76(b) does not apply to the interim adjustment, the adjustment is determined under the principles of § 1.1502-76(b), consistently applied, and ratable allocation under the principles of § 1.1502-76(b)(2)(ii) or (iii) may be used without filing an election under § 1.1502-76(b)(2). The principles would apply, for example, if M becomes a nonmember but S remains a member.

(2) ***Amount of adjustments.*** M's basis in S's stock is increased by positive adjustments and decreased by negative adjustments under this paragraph (b)(2). The amount of the adjustment, determined as of the time of the adjustment, is the net amount of S's—

(i) Taxable income or loss;

(ii) Tax-exempt income;

(iii) Noncapital, nondeductible expenses; and

(iv) Distributions with respect to S's stock.

(3) ***Operating rules.*** For purposes of determining M's adjustments to the basis of S's stock under paragraph (b)(2) of this section—

(i) ***Taxable income or loss.*** S's taxable income or loss is consolidated taxable income (or loss) determined by including only S's items of income, gain, deduction, and loss taken into account in determining consolidated taxable income (or loss), treating S's deductions and losses as taken into account to the extent they are absorbed by S or any other member. For this purpose:

(A) To the extent that S's deduction or loss is absorbed in the year it arises or is carried forward and absorbed in a subsequent year (e.g., under section 172, 465, or 1212), the deduction or loss is taken into account under paragraph (b)(2) of this section in the year in which it is absorbed.

(B) To the extent that S's deduction or loss is carried back and absorbed in a prior year (whether consolidated or separate), the deduction or loss is taken into account under paragraph (b)(2) of this section in the year in which it arises and not in the year in which it is absorbed.

(ii) *Tax-exempt income* —

(A) ***In general.*** S's tax-exempt income is its income and gain which is taken into account but permanently excluded from its gross income under applicable law, and which increases, directly or indirectly, the basis of its assets (or an equivalent amount). For example, S's dividend income to which § 1.1502-13(f)(2)(ii) applies, and its interest excluded from gross income under section 103, are treated as tax-exempt income. However, S's income not recognized under section 1031 is not treated as tax- exempt income because the corresponding basis adjustments under section 1031(d) prevent S's nonrecognition from being permanent. Similarly, S's tax-exempt income does not include gain not recognized under section 332 from the liquidation of a lower-tier subsidiary, or not recognized under section 118 or section 351 from a transfer of assets to S.

(B) ***Equivalent deductions.*** To the extent that S's taxable income or gain is permanently offset by a deduction or loss that does not reduce, directly or indirectly, the basis of S's assets (or an equivalent amount), the income or gain is treated as tax-exempt income and is taken into account under paragraph (b)(3)(ii)(A) of this section. In addition, the income and the offsetting item are taken into account under paragraph (b)(3)(i) of this section. For example, if S receives a $100 dividend with respect to which a $70 dividends received deduction is allowed under section 243, $70 of the dividend is treated as tax-exempt income. Accordingly, M's basis in S's stock increases by $100 because the $100 dividend and $70 deduction are taken into account under paragraph (b)(3)(i) of this section (resulting in $30 of the increase), and $70 of the dividend is also taken into account under paragraph (b)(3)(ii)(A) of this section as tax-exempt income (resulting in $70 of the increase). (See paragraph (b)(3)(iii) of this section if there is a corresponding negative adjustment under section 1059.) Similarly, income from mineral properties is treated as tax-exempt income to the extent it is offset by deductions for depletion in excess of the basis of the property.

(C) *Discharge of indebtedness income* —

(*1*) ***In general.*** Excluded COD income is treated as tax-exempt income only to the extent the discharge is applied to reduce tax attributes attributable to any member of the group under section 108, section 1017 or § 1.1502-28. However, if S is treated as realizing excluded COD income pursuant to § 1.1502-28(a)(3), S shall not be treated as realizing excluded COD income for purposes of the preceding sentence.

(*2*) ***Expired loss carryovers.*** If the amount of the discharge exceeds the amount of the attribute reduction under sections 108 and 1017, and § 1.1502-28, the excess nevertheless is treated as applied to reduce tax attributes to the extent a loss carryover attributable to S expired without tax benefit, the expiration was taken into account as a noncapital, nondeductible expense under paragraph (b)(3)(iii) of this section, and the loss carryover would have been reduced had it not expired.

(D) ***Basis shifts.*** An increase in the basis of S's assets (or an equivalent as described in paragraph (b)(3)(iv)(B) of this section) is treated as tax-exempt income to the extent that the increase is not otherwise taken into account in determining stock basis, it corresponds to a negative adjustment that is taken into account by the group under this paragraph (b) (or incurred by the common parent), and it has the effect (viewing the group in the aggregate) of a permanent recovery of the reduction. For example, S's basis increase under section 50(c)(2) is treated as tax-exempt income to the extent the preceding basis reduction under section 50(c)(1) is reflected in the basis of a member's stock. On the other hand, if S increases the basis of an asset as the result of an accounting method change, and the related positive section 481(a) adjustment is taken into account over time, the basis increase is not treated as tax-exempt income.

(E) [Reserved]

(iii) ***Noncapital, nondeductible expenses*** —

(A) ***In general.*** S's noncapital, nondeductible expenses are its deductions and losses that are taken into account but permanently disallowed or eliminated under applicable law in determining its taxable income or loss, and that decrease, directly or indirectly, the basis of its assets (or an equivalent amount). For example, S's Federal taxes described in section 275 and loss not recognized under section 311(a) are noncapital, nondeductible expenses. Similarly, if a loss carryover (e.g., under section 172 or 1212) attributable to S expires or is reduced under section 108(b) and § 1.1502-28, it becomes a noncapital, nondeductible expense at the close of the last tax year to which it may be carried. However, when a tax attribute attributable to S is reduced as required pursuant to § 1.1502-28(a)(3), the reduction of the tax attribute is not treated as a noncapital, nondeductible expense of S. Finally, if S sells and repurchases a security subject to section 1091, the disallowed loss is not a noncapital, nondeductible expense because the corresponding basis adjustments under section 1091(d) prevent the disallowance from being permanent.

(B) ***Nondeductible basis recovery.*** Any other decrease in the basis of S's assets (or an equivalent as described in paragraph (b)(3)(iv)(B) of this section) may be a noncapital, nondeductible expense to the extent that the decrease is not otherwise taken into account in determining stock basis and is permanently eliminated for purposes of determining S's taxable income or loss. Whether a decrease is so treated is determined by taking into account both the purposes of the Code or regulatory provision resulting in the decrease and the purposes of this section. For example, S's noncapital, nondeductible expenses include any basis reduction under section 50(c)(1), section 1017, section 1059, § 1.1502-35(b) or (f)(2). Also included as a noncapital, nondeductible expense is the amount of any gross-up for taxes paid by another taxpayer that S is treated as having paid (e.g., income included under section 78, or the portion of an undistributed capital gain dividend that is treated as tax deemed to have been paid by a shareholder under section 852(b)(3)(D)(ii), whether or not any corresponding amount is claimed as a tax credit). In contrast, a decrease generally is not a noncapital, nondeductible expense if it results because S redeems stock in a transaction to which section 302(a) applies, S receives assets in a liquidation to which section 332 applies and its basis in the assets is less than its basis in the stock canceled, or S distributes the stock of a subsidiary in a distribution to which section 355 applies.

(C) [Reserved]

(iv) ***Special rules for tax-exempt income and noncapital, nondeductible expenses.*** For purposes of paragraphs (b)(3)(ii) and (iii) of this section:

(A) ***Treatment as permanent.*** An amount is permanently excluded from gross income, or permanently disallowed or eliminated, if it is so treated by S even though another person may take a corresponding amount into account. For example, if S sells property to a nonmember at a loss that is disallowed under section 267(a), S's loss is a noncapital, nondeductible expense even though under section 267(d) the nonmember may treat a corresponding amount of gain as not recognized. (If the nonmember is a subsidiary in another consolidated group, its gain not recognized under section 267(d) is tax-exempt income under paragraph (b)(3)(ii)(A) of this section.)

(B) ***Amounts equivalent to basis and adjustments to basis.*** Amounts equivalent to basis include the amount of money, the amount of a loss carryover, and the amount of an adjustment to gain or loss under section 475(a) for securities described in section 475(a)(2). An equivalent to a basis increase includes a decrease in an excess loss account, and an equivalent to a basis decrease includes the denial of basis for taxable income.

(C) ***Timing.*** An amount is taken into account in the year in which it would be taken into account under paragraph (b)(3)(i) of this section if it were subject to Federal income taxation.

(D) ***Tax sharing agreements.*** Taxes are taken into account by applying the principles of section 1552 and the percentage method under § 1.1502-33(d)(3) (and by assuming a 100% allocation of any decreased tax liability). The treatment of amounts allocated under this paragraph (b)(3)(iv)(D) is analogous to the treatment of allocations under § 1.1552-1(b)(2). For example, if one member owes a payment to a second member, the first member is treated as indebted to the second member. The right to receive payment is treated as a positive adjustment under paragraph (b)(3)(ii) of this section, and the obligation to make payment is treated as a negative adjustment under paragraph (b)(3)(iii) of this section. If the obligation is not paid, the amount not paid generally is treated as a distribution, contribution, or both, depending on the relationship between the members.

(v) ***Distributions.*** Distributions taken into account under paragraph (b)(2) of this section are distributions with respect to S's stock to which section 301 applies and all other distributions treated as dividends (e.g., under section 356(a)(2)). See § 1.1502-13(f)(2)(iv) for taking into account distributions to which section 301 applies (but not other distributions treated as dividends) under the entitlement rule.

(4) ***Waiver of loss carryovers from separate return limitation years*** —

(i) ***General rule.*** If S has a loss carryover from a separate return limitation year when it becomes a member of a consolidated group, the group may make an irrevocable election to treat all or any portion of the loss carryover as expiring for all Federal income tax purposes immediately before S becomes a member of the consolidated group (deemed expiration). If S was a member of another group immediately before it became a member of the consolidated group, the expiration is also treated as occurring immediately after it ceases to be a member of the prior group.

(ii) ***Stock basis adjustments from a waiver*** —

(A) ***Qualifying transactions.*** If S becomes a member of the consolidated group in a qualifying cost basis transaction and an election under this paragraph (b)(4) is made, the noncapital, nondeductible expense resulting from the deemed expiration does not result in a corresponding stock basis adjustment for any member under this section. A qualifying cost basis transaction is the purchase (i.e., a transaction in which basis is determined under section 1012) by members of the acquiring consolidated group (while they are members) in a 12-month period of an amount of S's stock satisfying the requirements of section 1504(a)(2).

(B) ***Nonqualifying transactions.*** If S becomes a member of the consolidated group other than in a qualifying cost basis transaction and an election under this paragraph (b)(4) is made, the basis of its stock that is owned by members immediately after it becomes a member is subject to reduction under the principles of this section to reflect the deemed expiration. The reduction occurs immediately before S becomes a member, but after it ceases to be a member of any prior group, and it therefore does not result in a corresponding stock basis adjustment for any higher-tier member of the transferring or acquiring consolidated group. Any basis reduction under this paragraph (b)(4)(ii)(B) is taken into account in making determinations of basis under the Code with respect to S's stock (e.g., a determination under section 362 because the stock is acquired in a transaction described in section 368(a)(1)(B)), but it does not result in corresponding stock basis adjustments under this section for any higher-tier member. If the basis reduction exceeds the basis of S's stock, the excess is treated as an excess loss account to which the members owning S's stock succeed.

(C) ***Higher-tier corporations.*** If S becomes a member of the consolidated group as a result, in whole or in part, of a higher-tier corporation becoming a member (whether or not in a qualifying cost basis transaction), additional adjustments are required. The highest-tier corporation (T) whose becoming a member resulted in S becoming a member, and T's chain of lower-tier corporations that includes S, are subject to the adjustment. The deemed expiration of S's loss carryover that results in a negative adjustment for the first higher-tier corporation is treated as an expiring loss carryover of that higher-tier corporation for purposes of applying paragraph (b)(4)(ii)(B) of this section to that corporation. For example, if M purchases all of the stock of T, T owns all of the stock of T1, T1 owns all of the stock of S, S becomes a member as a result of T becoming a member, and the election under this paragraph (b)(4) is made, the basis of the S stock is reduced and the reduction tiers up to T1, T1 treats the negative adjustment to its basis in S's stock as an expiring loss carryover of T1, and T then adjusts its basis in T1's stock. In addition, if T becomes a member of the acquiring group in a transaction other than a qualifying cost basis transaction, the amount that tiers up to T also reduces the basis of its stock under paragraph (b)(4)(ii)(B) of this section (but the amount does not tier up to higher-tier members).

(iii) ***Net asset basis limitation.*** Basis reduced under this paragraph (b)(4) is restored before S becomes a member (and before the basis of S's stock is taken into account in determining basis under the Code) to the extent necessary to conform a share's basis to its allocable portion of net asset basis. In the case of higher-tier corporations under paragraph (b)(4)(ii)(C) of this section, the restoration does not tier up but is instead applied separately to each higher-

tier corporation. For purposes of determining each corporation's net asset basis (including the basis of stock in lower-tier corporations), the restoration is applied in the order of tiers, from the lowest to the highest. For purposes of the restoration:

(A) A member's net asset basis is the positive or negative difference between the adjusted basis of its assets (and the amount of any of its loss carryovers that are not deemed to expire) and its liabilities. Appropriate adjustments must be made, for example, to disregard liabilities that subsequently will give rise to deductions (e.g., liabilities to which section 461(h) applies).

(B) Within a class of stock, each share has the same allocable portion of net asset basis. If there is more than one class of common stock, the net asset basis is allocated to each class by taking into account the terms of each class and all other facts and circumstances relating to the overall economic arrangement.

(iv) ***Election.*** The election described in paragraph (b)(4) of this section must be made in a separate statement entitled, "ELECTION TO TREAT LOSS CARRYOVER OF [INSERT NAME AND EMPLOYER IDENTIFICATION NUMBER OF S] AS EXPIRING UNDER § 1.1502-32(b)(4)." The election must be filed by including a statement on or with the consolidated group's income tax return for the year S becomes a member. A separate statement must be made for each member whose loss carryover is deemed to expire. The statement must identify the amount of each loss carryover deemed to expire (or the amount of each loss carryover deemed not to expire, with any balance of any loss carryovers being deemed to expire) and the basis of any stock reduced as a result of the deemed expiration.

(v) ***Special rule for loss carryovers of a subsidiary acquired in a transaction for which an election under § 1.1502-20(i)(2) is made. See*** paragraph (b)(4)(v) of this section as contained in 26 CFR part 1 revised as of April 1, 2005.

(vi) ***Special rules in the case of certain transactions subject to § 1.1502-35.*** If a member of a consolidated group transfers stock of a subsidiary and such stock has a basis that exceeds its value immediately before such transfer or a subsidiary is deconsolidated and any stock of such subsidiary owned by members of the group immediately before such deconsolidation has a basis that exceeds its value, all members of the group are subject to the provisions of § 1.1502-35(b), which generally require a redetermination of members' basis in all shares of subsidiary stock.

(vii) ***Special rules for amending waiver of loss carryovers from separate return limitation year relating to the acquisition of a subsidiary in a transaction subject to § 1.1502-20. See*** paragraph (b)(4)(vii) of this section as contained in 26 CFR part 1 revised as of April 1, 2005.

(5) ***Examples*** —

(i) ***In general.*** For purposes of the examples in this section, unless otherwise stated, M owns all of the only class of S's stock, the stock is owned for the entire year, S owns no stock of lower-tier members, the tax year of all persons is the calendar year, all persons use the accrual method of accounting, the facts set forth the only corporate activity, preferred stock is described in section 1504(a)(4), all transactions are between unrelated persons, and tax liabilities are disregarded.

(ii) ***Stock basis adjustments.*** The principles of this paragraph (b) are illustrated by the following examples.

(A) *Example 1. Taxable income* —

(*1*) ***Current taxable income.*** For Year 1, the M group has $100 of taxable income when determined by including only S's items of income, gain, deduction, and loss taken into account. Under paragraph (b)(1) of this section, M's basis in S's stock is adjusted under this section as of the close of Year 1. Under paragraph (b)(2) of this section, M's basis in S's stock is increased by the amount of the M group's taxable income determined by including only S's items taken into account. Thus, M's basis in S's stock is increased by $100 as of the close of Year 1.

(*2*) ***Intercompany gain that is not taken into account.*** The facts are the same as in paragraph (b)(5)(ii)(A)(*1*) of this section (*Example 1*), except that S also sells property to another member at a $25 gain in Year 1, the gain is deferred under § 1.1502-13 and taken into account in Year 3, and M sells 10% of S's stock to nonmembers in Year 2. Under paragraph (b)(3)(i) of this section, S's deferred gain is not additional taxable income for Year 1 or 2 because it is not taken into account in determining the M group's consolidated taxable income for either of those years. The deferred gain is not tax-exempt income under paragraph (b)(3)(ii) of this section because it is not permanently excluded from S's gross income. The deferred gain does not result in a basis adjustment until Year 3, when it is taken into account in determining the M group's consolidated taxable income. Consequently, M's basis in the S shares sold is not increased to reflect S's gain from the intercompany sale of the property. In Year 3, the deferred gain is taken into account, but the amount allocable to the shares sold by M does not increase their basis because these shares are held by nonmembers.

(*3*) ***Intercompany gain taken into account.*** The facts are the same as in paragraph (b)(5)(ii)(A)(*2*) of this section (*Example 1*), except that M sells all of S's stock in Year 2 (rather than only 10%). Under § 1.1502-13, S takes the $25 gain into account immediately before S becomes a nonmember. Thus, M's basis in S's stock is increased to reflect S's gain from the intercompany sale of the property.

(B) *Example 2. Tax loss* —

(*1*) ***Current absorption.*** For Year 2, the M group has a $50 consolidated net operating loss when determined by taking into account only S's items of income, gain, deduction, and loss. S's loss is absorbed by the M group in Year 2, offsetting M's income for that year. Under paragraph (b)(3)(i)(A) of this section, because S's loss is absorbed in the year it arises, M has a $50 negative adjustment with respect to S's stock. Under paragraph (b)(2) of this section, M reduces its basis in S's stock by $50. Under paragraph (a)(3)(ii) of this section, if the decrease exceeds M's basis in S's stock, the excess is M's excess loss account in S's stock.

(*2*) ***Interim determination from stock sale.*** The facts are the same as in paragraph (b)(5)(ii)(B)(*1*) of this section (*Example 2*), except that S's Year 2 loss arises in the first half of the calendar year, M sells 50% of S's stock on July 1 of Year 2, and M's income for Year 2 does not arise until after the sale of S's stock. M's income for Year 2 (exclusive of the sale of S's stock) is offset by S's loss, even though the income arises after the stock sale, and no loss remains to be apportioned to S. *See* §§ 1.1502-11 and 1.1502-21(b). Under paragraph (b)(3)(i)(A) of this section, because S's $50 loss is absorbed in the year it arises, it reduces M's basis in the S shares sold by

$25 immediately before the stock sale. Because S becomes a nonmember, the loss also reduces M's basis in the retained S shares by $25 immediately before S becomes a nonmember.

(*3*) ***Loss carryback.*** The facts are the same as in paragraph (b)(5)(ii)(B)(*1*) of this section (*Example 2*), except that M has no income or loss for Year 2, S's $50 loss is carried back and absorbed by the M group in Year 1 (offsetting the income of M or S), and the M group receives a $17 tax refund in Year 2 that is paid to S. Under paragraph (b)(3)(i)(B) of this section, because the $50 loss is carried back and absorbed in Year 1, it is treated as a tax loss for Year 2 (the year in which it arises). Under paragraph (b)(3)(ii) of this section, the refund is treated as tax-exempt income of S. Under paragraph (b)(3)(iv)(C) of this section, the tax-exempt income is taken into account in Year 2 because that is the year it would be taken into account under S's method of accounting if it were subject to Federal income taxation. Thus, under paragraph (b)(2) of this section, M reduces its basis in S's stock by $33 as of the close of Year 2 (the $50 tax loss, less the $17 tax refund).

(*4*) ***Loss carryforward.*** The facts are the same as in paragraph (b)(5)(ii)(B)(*1*) of this section (*Example 2*), except that M has no income or loss for Year 2, and S's loss is carried forward and absorbed by the M group in Year 3 (offsetting the income of M or S). Under paragraph (b)(3)(i)(A) of this section, the loss is not treated as a tax loss under paragraph (b)(2) of this section until Year 3.

(C) ***Example 3. Tax-exempt income and noncapital, nondeductible expenses*** —

(*1*) ***Facts.*** For Year 1, the M group has $500 of consolidated taxable income. However, the M group has a $100 consolidated net operating loss when determined by including only S's items of income, gain, deduction, and loss taken into account. Also for Year 1, S has $80 of interest income that is permanently excluded from gross income under section 103, and S incurs $60 of related expense for which a deduction is permanently disallowed under section 265.

(*2*) ***Analysis.*** Under paragraph (b)(3)(i)(A) of this section, S has a $100 tax loss for Year 1. Under paragraph (b)(3)(ii)(A) of this section, S has $80 of tax-exempt income. Under paragraph (b)(3)(iii)(A) of this section, S has $60 of noncapital, nondeductible expense. Under paragraph (b)(3)(iv)(C) of this section, the tax-exempt income and noncapital, nondeductible expense are taken into account in Year 1 because that is the year they would be taken into account under S's method of accounting if they were subject to Federal income taxation. Thus, under paragraph (b) of this section, M reduces its basis in S's stock as of the close of Year 1 by an $80 net amount (the $100 tax loss, less $80 of tax-exempt income, plus $60 of noncapital, nondeductible expenses).

(D) ***Example 4. Discharge of indebtedness*** —

(*1*) ***Facts.*** M forms S on January 1 of Year 1 and S borrows $200. During Year 1, S's assets decline in value and the M group has a $100 consolidated net operating loss. Of that amount, $10 is attributable to M and $90 is attributable to S under the principles of § 1.1502-21(b)(2)(iv). None of the loss is absorbed by the group in Year 1, and S is discharged from $100 of indebtedness at the close of Year 1. M has a $0 basis in the S stock. M and S have no attributes other than the consolidated net

operating loss. Under section 108(a), S's $100 of discharge of indebtedness income is excluded from gross income because of insolvency. Under section 108(b) and § 1.1502-28, the consolidated net operating loss is reduced to $0.

(*2*) ***Analysis.*** Under paragraph (b)(3)(iii)(A) of this section, the reduction of $90 of the consolidated net operating loss attributable to S is treated as a noncapital, nondeductible expense in Year 1 because that loss is permanently disallowed by section 108(b) and § 1.1502-28. Under paragraph (b)(3)(ii)(C)(*1*) of this section, all $100 of S's discharge of indebtedness income is treated as tax-exempt income in Year 1 because the discharge results in a $100 reduction to the consolidated net operating loss. Consequently, the loss and the cancellation of the indebtedness result in a net positive $10 adjustment to M's basis in its S stock.

(*3*) ***Insufficient attributes.*** The facts are the same as in paragraph (b)(5)(ii)(D)(*1*) of this section (*Example 4*), except that S is discharged from $120 of indebtedness at the close of Year 1. Under section 108(a), S's $120 of discharge of indebtedness income is excluded from gross income because of insolvency. Under section 108(b) and § 1.1502-28, the consolidated net operating loss is reduced by $100 to $0 after the determination of tax for Year 1. Under paragraph (b)(3)(iii)(A) of this section, the reduction of $90 of the consolidated net operating loss attributable to S is treated as a noncapital, nondeductible expense. Under paragraph (b)(3)(ii)(C)(*1*) of this section, only $100 of the discharge is treated as tax-exempt income because only that amount is applied to reduce tax attributes. The remaining $20 of discharge of indebtedness income excluded from gross income under section 108(a) has no effect on M's basis in S's stock.

(*4*) ***Purchase price adjustment.*** Assume instead that S buys land in Year 1 in exchange for S's $100 purchase money note (bearing interest at a market rate of interest in excess of the applicable Federal rate, and providing for a principal payment at the end of Year 10), and the seller agrees with S in Year 4 to discharge $60 of the note as a purchase price adjustment to which section 108(e)(5) applies. S has no discharge of indebtedness income that is treated as tax-exempt income under paragraph (b)(3)(ii) of this section. In addition, the $60 purchase price adjustment is not a noncapital, nondeductible expense under paragraph (b)(3)(iii) of this section. A purchase price adjustment is not equivalent to a discharge of indebtedness that is offset by a deduction or loss. Consequently, the purchase price adjustment results in no net adjustment to M's basis in S's stock under paragraph (b) of this section.

(E) ***Example 5. Distributions*** —

(*1*) ***Amounts declared and distributed.*** For Year 1, the M group has $120 of consolidated taxable income when determined by including only S's items of income, gain, deduction, and loss taken into account. S declares and makes a $10 dividend distribution to M at the close of Year 1. Under paragraph (b) of this section, M increases its basis in S's stock as of the close of Year 1 by a $110 net amount ($120 of taxable income, less a $10 distribution).

(*2*) ***Distributions in later years.*** The facts are the same as in paragraph (b)(5)(ii)(E)(*1*) of this section (*Example 5*), except that S does not declare and distribute the $10 until Year 2. Under paragraph (b) of this section, M increases its basis in S's stock by $120 as of the close of Year 1, and decreases its basis by $10 as of the close of Year 2. (If

M were also a subsidiary, the basis of its stock would also be increased in Year 1 to reflect M's $120 adjustment to basis of S's stock; the basis of M's stock would not be changed as a result of S's distribution in Year 2, because M's $10 of tax-exempt dividend income under paragraph (b)(3)(ii) of this section would be offset by the $10 negative adjustment to M's basis in S's stock for the distribution.)

(*3*) ***Amounts declared but not distributed.*** The facts are the same as in paragraph (b)(5)(ii)(E)(*1*) of this section (*Example 5*), except that, during December of Year 1, S declares (and M becomes entitled to) another $70 dividend distribution with respect to its stock, but M does not receive the distribution until after it sells all of S's stock at the close of Year 1. Under § 1.1502-13(f)(2)(iv), S is treated as making a $70 distribution to M at the time M becomes entitled to the distribution. (If S is distributing an appreciated asset, its gain under section 311 is also taken into account under paragraph (b)(3)(i) of this section at the time M becomes entitled to the distribution.) Consequently, under paragraph (b) of this section, M increases its basis in S's stock as of the close of Year 1 by only a $40 net amount ($120 of taxable income, less two distributions totaling $80). Any further adjustments after S ceases to be a member and the $70 distribution is made would be duplicative, because the stock basis has already been adjusted for the distribution. Accordingly, the distribution will not result in further adjustments or gain, even if the distribution is a payment to which section 301(c)(2) or (3) applies.

(F) ***Example 6. Reorganization with boot —***

(*1*) ***Facts.*** M owns all the stock of S and T. M owns ten shares of the same class of common stock of S and ten shares of the same class of common stock of T. The fair market value of each share of S stock is $10 and the fair market value of each share of T stock is $10. On January 1 of Year 1, M has a $5 basis in each of its ten shares of S stock and a $10 basis in each of its ten shares of T stock. S and T have no items of income, gain, deduction, or loss for Year 1. S and T each have substantial earnings and profits. At the close of Year 1, T merges into S in a reorganization described in section 368(a)(1)(A) (and in section 368(a)(1)(D)). M receives no additional S stock, but does receive $10 which is treated as received by M in a separate transaction occurring immediately after the merger of T into S.

(*2*) ***Analysis.*** The merger of T into S is a transaction to which § 1.1502-13(f)(3) applies. Under §§ 1.1502-13(f)(3) and 1.358-2(a)(2)(iii), M is deemed to receive ten additional shares of S stock with a total fair market value of $100 (the fair market value of the T stock surrendered by M). Under § 1.358-2(a)(2)(i), M will have a basis of $10 in each share of S stock deemed received in the reorganization. Under § 1.358-2(a)(2)(iii), M is deemed to surrender all twenty shares of its S stock in a recapitalization under section 368(a)(1)(E) in exchange for the ten shares of S stock, the number of shares of S stock held by M immediately after the transaction. Thus, under § 1.358-2(a)(2)(i), M has five shares of S stock each with a basis of $10 and five shares of S stock each with a basis of $20. The $10 M received is treated as a dividend distribution under section 301 and, under paragraph (b)(3)(v) of this section, the $10 is a distribution to which paragraph (b)(2)(iv) of this section applies. Accordingly, M's total basis in the S stock is decreased by the $10 distribution.

(G) ***Example 7. Tiering up of basis adjustments.*** M owns all of S's stock, and S owns all of T's stock. For Year 1, the M group has $100 of consolidated taxable income when determined by including only T's items of income, gain, deduction, and loss taken into account, and $50 of consolidated taxable income when determined by including only S's items taken into account. S increases its basis in T's stock by $100 under paragraph (b) of this section. Under paragraph (a)(3) of this section, this $100 basis adjustment is taken into account in determining M's adjustments to its basis in S's stock. Thus, M increases its basis in S's stock by $150 under paragraph (b) of this section.

(H) ***Example 8. Allocation of items —***

(*1*) ***Acquisition in mid-year.*** M is the common parent of a consolidated group, and S is an unaffiliated corporation filing separate returns on a calendar-year basis. M acquires all of S's stock and S becomes a member of the M group on July 1 of Year 1. For the entire calendar Year 1, S has $100 of ordinary income and under § 1.1502-76(b) $60 is allocated to the period from January 1 to June 30 and $40 to the period from July 1 to December 31. Under paragraph (b) of this section, M increases its basis in S's stock by $40.

(*2*) ***Sale in mid-year.*** The facts are the same as in paragraph (b)(5)(ii)(H)(*1*) of this section (*Example 8*), except that S is a member of the M group at the beginning of Year 1 but ceases to be a member on June 30 as a result of M's sale of S's stock. Under paragraph (b) of this section, M increases its basis in S's stock by $60 immediately before the stock sale. (M's basis increase would be the same if S became a nonmember because S issued additional shares to nonmembers.)

(*3*) ***Absorption of loss carryovers.*** Assume instead that S is a member of the M group at the beginning of Year 1 but ceases to be a member on June 30 as a result of M's sale of S's stock, and a $100 consolidated net operating loss attributable to S is carried over by the M group to Year 1. The consolidated net operating loss may be apportioned to S for its first separate return year only to the extent not absorbed by the M group during Year 1. Under paragraph (b)(3)(i) of this section, if the loss is absorbed by the M group in Year 1, whether the offsetting income arises before or after M's sale of S's stock, the absorption of the loss carryover is included in the determination of S's taxable income or loss for Year 1. Thus, M's basis in S's stock is adjusted under paragraph (b) of this section to reflect any absorption of the loss by the M group.

(I) ***Example 9. Gross-ups —***

(*1*) ***Facts.*** M owns all of the stock of S, and S owns all of the stock of T, a newly formed controlled foreign corporation that is not a passive foreign investment company. In Year 1, T has $100 of subpart F income and pays $34 of foreign income tax, leaving T with $66 of earnings and profits. The M group has $100 of consolidated taxable income when determined by taking into account only S's items (the inclusion under section 951(a), taking into account the section 78 gross-up). As a result of the section 951(a) inclusion, S increases its basis in T's stock by $66 under section 961(a).

(2) ***Analysis.*** Under paragraph (b)(3)(i) of this section, S has $100 of taxable income. Under paragraph (b)(3)(iii)(B) of this section, the $34 gross-up for taxes paid by T that S is treated as having paid is a noncapital, nondeductible expense (whether or not any corresponding amount is claimed by the M group as a tax credit). Thus, M increases its basis in S's stock under paragraph (b) of this section by the net adjustment of $66.

(3) ***Subsequent distribution.*** The facts are the same as in paragraph (b)(5)(ii)(I)(*1*) of this section (*Example 9*), except that T distributes its $66 of earnings and profits in Year 2. The $66 distribution received by S is excluded from S's income under section 959(a) because the distribution represents earnings and profits attributable to amounts that were included in S's income under section 951(a) for Year 1. In addition, S's basis in T's stock is decreased by $66 under section 961(b). The excluded distribution is not tax-exempt income under paragraph (b)(3)(ii) of this section because of the corresponding reduction to S's basis in T's stock. Consequently, M's basis in S's stock is not adjusted under paragraph (b) of this section for Year 2.

(J) ***Example 10. Recapture of tax-exempt items*** —

(1) ***Facts.*** S is a life insurance company. For Year 1, the M group has $200 of consolidated taxable income, determined by including only S's items of income, gain, deduction, and loss taken into account (including a $300 small company deduction under section 806). In addition, S has $100 of tax-exempt interest income, $60 of which is S's company share. The remaining $40 of tax-exempt income is the policyholders' share that reduces S's deduction for increase in reserves.

(2) ***Tax-exempt items generally.*** Under paragraph (b)(3)(i) of this section, S has $200 of taxable income for Year 1. Also for Year 1, S has $100 of tax-exempt income under paragraph (b)(3)(ii)(A) of this section, and another $300 is treated as tax-exempt income under paragraph (b)(3)(ii)(B) of this section because of the deduction under section 806. Under paragraph (b)(3)(iii) of this section, S has $40 of noncapital, nondeductible expenses for Year 1 because S's deduction under section 807 for its increase in reserves has been permanently reduced by the $40 policyholders' share of the tax-exempt interest income. Thus, M increases its basis in S's stock by $560 under paragraph (b) of this section.

(3) ***Recapture.*** Assume instead that S is a property and casualty company and, for Year 1, S accrues $100 of estimated salvage recoverable under section 832. Of this amount, $87 (87% of $100) is excluded from gross income because of the “fresh start” provisions of Sec. 11305(c) of Public Law 101-508 (the Omnibus Budget Reconciliation Act of 1990). Thus, S has $87 of tax-exempt income under paragraph (b)(3)(ii)(A) of this section that increases M's basis in S's stock for Year 1. (S also has $13 of taxable income over the period of inclusion under section 481.) In Year 5, S determines that the $100 salvage recoverable was overestimated by $30 and deducts $30 for the reduction of the salvage recoverable. However, S has $26.10 (87% of $30) of taxable income in Year 5 due to the partial recapture of its fresh start. Because S has no basis corresponding to this income, S is treated under paragraph (b)(3)(iii)(B) of this section as having a $26.10 noncapital, nondeductible

expense in Year 5. This treatment is necessary to reflect the elimination of the erroneous fresh start in S's stock basis and causes a decrease in M's basis in S's stock by $30 for Year 5 (a $3.90 taxable loss and a $26.10 special adjustment).

(c) ***Allocation of adjustments among shares of stock*** —

(1) ***In general*** —

(i) ***Distributions.*** The adjustment that is described in paragraph (b)(2)(iv) of this section (negative adjustments for distributions) is allocated to the shares of S stock to which the distribution relates.

(ii) ***Special rules applicable in the case of certain loss transfers of subsidiary stock*** —

(A) ***Losses reattributed pursuant to an election under § 1.1502-36(d)(6)*** —

(*1*) ***General rule.*** If a member transfers loss shares of S stock and the common parent elects under § 1.1502-36(d)(6) to reattribute all or a portion of S's attributes, S's resulting noncapital, nondeductible expense is allocated to all loss shares of S stock transferred by members in the transaction. The expense is allocated among those S shares in proportion to the loss in the shares. The tier-up of that expense is included in the remaining adjustment (see paragraph (c)(1)(iii) of this section).

(*2*) ***Reattribution of attributes of a subsidiary that is lower-tier to S.*** If a member transfers loss shares of S stock and the common parent elects under § 1.1502-36(d)(6) to reattribute attributes of a subsidiary (S2) that is lower-tier to S, S2's resulting noncapital, nondeductible expense is allocated among S2 shares held by members as of the transaction, other than those transferred in the transaction and with respect to which gain or loss was recognized (recognition transfer), in a manner that permits the full amount of the expense to tier up and be applied to the bases of the loss shares of S stock transferred by members in the transaction. The expense is allocated among those S2 shares with positive basis in a manner that, first, reduces the bases of S2's preferred shares to equalize and then eliminate loss and, second, reduces the bases of S2's common shares in a manner that reduces disparity among the bases of those common shares to the greatest extent possible. The noncapital, nondeductible expense applied to the S2 shares tiers up and is applied to the stock of any subsidiaries that are lower-tier to S (middle-tier subsidiaries) in a manner that will permit the full amount of this expense to be applied to reduce the bases of the loss shares of S stock transferred by members in the transaction. Similar to the allocation among the S2 shares, the tier-up of this expense is allocated among the middle-tier subsidiary shares held by members as of the transaction, other than those transferred in a recognition transfer, in a manner that permits the full amount of the expense to tier up and be applied to the bases of the loss shares of S stock transferred by members in the transaction. The tier-up of this expense is allocated among those middle-tier subsidiary shares with positive basis in a manner that, first, reduces the bases of the middle-tier subsidiary's preferred shares to equalize and then eliminate loss and, second, reduces the bases of the middle-tier subsidiary's common shares in a manner that reduces disparity among the bases of those common shares to the greatest extent possible. The tier-up of this expense is allocated to the loss shares of S stock transferred by members in the transaction in

the same manner as provided in paragraph (c)(1)(ii)(A)(*1*) of this section, and thereafter the tier-up of that expense is included in the remaining adjustment (see paragraph (c)(1)(iii) of this section).

(*3*) ***Example.*** The following example illustrates the rules of this paragraph (c)(1)(ii)(A).

Example. Assume P owns M1, P and M1 own M2, M2 owns S, M1 and S own S1, and M1 and S1 own S2. If S sells a portion of the S1 shares at a gain and M2 sells all of the S stock at a net loss (after adjusting the basis for the gain recognized by S on the sale of the S1 shares), and P elects under § 1.1502-36(d)(6) to reattribute attributes of S2, the resulting noncapital, nondeductible expense is allocated entirely to the S2 shares held by S1 with positive basis in a manner that reduces the disparity in those bases to the greatest extent possible. The tier-up of this amount is allocated entirely to the S1 shares held by S (excluding the S1 shares sold) with positive basis in a manner that reduces the disparity in those bases to the greatest extent possible. The tier-up of this amount is allocated to the loss shares of S stock sold by M2 in proportion to the loss in those shares. The tier-up of this amount is then included in the remaining adjustment and tiers up from M2 to M1 and P, and from M1 to P under the general rules of this section.

(B) ***Tier-up of reallocated investment adjustments subject to prior use limitation.*** If the reallocation of an investment adjustment under § 1.1502-36(b)(2) is subject to the prior use limitation in § 1.1502-36(b)(2)(iii)(B)(2), no amount of the tier-up of such reallocated investment adjustment shall be allocated to any share whose prior use resulted in the application of the limitation. Thereafter, the tier-up of this amount is included in the remaining adjustment (see paragraph (c)(1)(iii) of this section).

(iii) ***Remaining adjustment.*** The *remaining adjustment* is the adjustment that consists of the items described in paragraphs (b)(2)(i) through (b)(2)(iii) of this section (adjustments for taxable income or loss, tax-exempt income, and noncapital, nondeductible expenses), including adjustments to lower-tier stock basis that tier up under paragraph (a)(3)(iii) of this section, but only to the extent not specially allocated under paragraph (c)(1)(ii) of this section. The remaining adjustment is allocated among the shares of S stock as provided in paragraphs (c)(2) through (c)(4) of this section. If the remaining adjustment is positive, it is allocated first to any preferred stock as provided in paragraph (c)(3) of this section, and then to the common stock as provided in paragraph (c)(2) of this section. If the remaining adjustment is negative, it is allocated only to common stock as provided in paragraph (c)(2) of this section.

(iv) ***Nonmember shares.*** No adjustment under this section that is allocated to a share for the period it is owned by a nonmember affects the basis of the share.

(v) ***Cross-references.*** See paragraph (c)(4) of this section for the reallocation of adjustments, and paragraph (d) of this section for definitions. See § 1.1502-19(d) for special allocations of basis determined or adjusted under the Internal Revenue Code (Code) with respect to excess loss accounts.

(2) ***Common stock —***

(i) ***Allocation within a class.*** The remaining adjustment described in paragraph (c)(1)(iii) of this section that is allocable to a class of common stock is generally allocated equally to each share within the class. However, if a member has an excess loss account in a share of a class

of common stock at the time a positive remaining adjustment is to be allocated, the portion of the positive remaining adjustment allocable to the member with respect to the class is allocated first to equalize and then eliminate that member's excess loss accounts. It is then allocated equally among the members' shares in that class. Similarly, the portion of any negative remaining adjustment allocable to the member with respect to the class is allocated equally to the member's shares with positive bases, eliminating all positive basis in shares of the class before creating or increasing any excess loss accounts. After positive basis is eliminated, any remaining portion of the negative remaining adjustment is allocated to equalize the member's excess loss accounts in the shares of that class to the greatest extent possible. Distributions and any adjustments or determinations under the Internal Revenue Code (for example, under section 358, including any modifications under § 1.1502-19(d)) are taken into account before the allocation is made under this paragraph (c)(2)(i).

(ii) ***Allocation among classes*** —

(A) ***General rule.*** If S has more than one class of common stock, the extent to which the remaining adjustment described in paragraph (c)(1)(iii) of this section is allocated to each class is determined, based on consistently applied assumptions, by taking into account the terms of each class and all other facts and circumstances relating to the overall economic arrangement. The allocation generally must reflect the manner in which the classes participate in the economic benefit or burden (if any) corresponding to the items of income, gain, deduction, or loss allocated. In determining participation, any differences in voting rights are not taken into account, and the following factors are among those to be considered—

(*1*) The interest of each share in economic profits and losses (if different from the interest in taxable income);

(*2*) The interest of each share in cash flow and other non-liquidating distributions; and

(*3*) The interest of each share in distributions in liquidation.

(B) ***Distributions and Code adjustments.*** Distributions and any adjustments or determinations under the Internal Revenue Code are taken into account before the allocation is made under this paragraph (c)(2)(ii).

(3) ***Preferred stock.*** If the remaining adjustment described in paragraph (c)(1)(iii) of this section is positive, it is allocated to preferred stock to the extent required (when aggregated with prior allocations to the preferred stock during the period that S is a member of the consolidated group) to reflect distributions described in section 301 (and all other distributions treated as dividends) to which the preferred stock becomes entitled, and arrearages arising, during the period that S is a member of the consolidated group. For this purpose, the preferred stock is treated as entitled to a distribution no later than the time the distribution is taken into account under the Internal Revenue Code (e.g., under section 305). If the amount of distributions and arrearages exceeds the positive amount (when aggregated with prior allocations), the positive amount is first allocated among classes of preferred stock to reflect their relative priorities, and the amount allocated to each class is then allocated pro rata within the class. An allocation to a share with respect to arrearages and distributions for the period the share is owned by a nonmember is not reflected in the basis of the share under paragraph (b) of this section. However, if M and S cease to be members of one consolidated group and remain affiliated as members of another consolidated group, M's ownership

of S's stock during consolidated return years of the prior group is treated for this purpose as ownership by a member to the extent that the adjustments during the prior consolidated return years are still reflected in the basis of the preferred stock.

(4) ***Cumulative redetermination*** —

(i) ***General rule.*** A member's basis in each share of S preferred and common stock must be redetermined whenever necessary to determine the tax liability of any person. See paragraph (b)(1) of this section. The redetermination is made by reallocating S's adjustments described in paragraphs (c)(1)(ii)(B) (specially allocated adjustments for tier-up of reallocated investment adjustments subject to prior use limitation) and (c)(1)(iii) (remaining adjustments) of this section for each consolidated return year (or other applicable period) of the group by taking into account all of the facts and circumstances affecting allocations under this paragraph (c) as of the redetermination date with respect to all of the S shares. For this purpose:

(A) Amounts may be reallocated from one class of S's stock to another class, but not from one share of a class to another share of the same class.

(B) If there is a change in the equity structure of S (e.g., as the result of S's issuance, redemption, or recapitalization of shares), a cumulative redetermination is made for the period before the change. If a reallocation is required by another redetermination after a change, amounts arising after the change are reallocated before amounts arising before the change.

(C) If S becomes a nonmember as a result of a change in its equity structure, any reallocation is made only among the shares of S's stock immediately before the change. For example, if S issues stock to a nonmember creditor in exchange for its debt, and the exchange results in S becoming a nonmember, any reallocation is only among the shares of S's stock immediately before the exchange.

(D) Any reallocation is treated for all purposes after it is made (including subsequent redeterminations) as the original allocation of an amount under this paragraph (c), but the reallocation does not affect any prior period.

(ii) ***Prior use of allocations.*** An amount may not be reallocated under paragraph (c)(4)(i) of this section to the extent that the amount has been used before the reallocation. For this purpose, an amount has been used to the extent it has been taken into account, directly or indirectly, by any member in determining income, gain, deduction, or loss, or in determining the basis of any property that is not subject to this section (e.g., stock of a corporation that has become a nonmember). For example, if M sells a share of S stock, an amount previously allocated to the share cannot be reallocated to another share of S stock, but an amount allocated to another share of S stock can still be reallocated to the sold share because the reallocated amount has not been taken into account; however, any adjustment reallocated to the sold share may effectively be eliminated, because the reallocation was not in effect when the share was previously sold and M's gain or loss from the sale is not redetermined. If, however, M sells the share of S stock to another member, the amount is not used until M's gain or loss is taken into account under § 1.1502-13.

(5) ***Examples.*** The principles of this paragraph (c) are illustrated by the following examples.

> *Example 1. Ownership of less than all the stock.* (a) *Facts.* M owns 80% of S's only class of

stock with an $800 basis. For Year 1, S has $100 of taxable income.
(b) *Analysis.* Under paragraph (c)(1) of this section, the $100 positive adjustment under paragraph (b) of this section for S's taxable income is allocated among the shares of S's stock, including shares owned by nonmembers. Under paragraph (c)(2)(i) of this section, the adjustment is allocated equally to each share of S's stock. Thus, M increases its basis in S's stock under paragraph (b) of this section as of the close of Year 1 by $80. (The basis of the 20% of S's stock owned by nonmembers is not adjusted under this section.)

(c) *Varying interest.* The facts are the same as in paragraph (a) of this *Example 1,* except that M buys the remaining 20% of S's stock at the close of business on June 30 of Year 1 for $208. Under paragraph (b)(1) of this section and the principles of § 1.1502-76(b), S's $100 of taxable income is allocable $40 to the period from January 1 to June 30 and $60 to the period from July 1 to December 31. Thus, for the period ending June 30, M is treated as having a $32 adjustment with respect to the S stock that M has owned since January 1 (80% of $40) and, under paragraph (c)(2)(i) of this section, the adjustment is allocated equally among those shares. For the period ending December 31, M is treated as having a $60 adjustment (100% of $60) that is also allocated equally among M's shares of S's stock owned after June 30. M's basis in the shares owned as of the beginning of the year therefore increases by $80 (the sum of 80% of $40 and 80% of $60), from $800 to $880, and M's basis in the shares purchased on June 30 increases by $12 (20% of $60), from $208 to $220. Thus, M's aggregate basis in S's stock as of the end of Year 1 is $1,100.

(d) *Tax liability.* The facts are the same as in paragraph (a) of this *Example 1,* except that M pays S's $34 share of the group's consolidated tax liability resulting from S's taxable income, and S does not reimburse M. S's $100 of taxable income results in a positive adjustment under paragraph (b)(3)(i) of this section, and S's $34 of tax liability results in a negative adjustment under paragraph (b)(3)(iv)(D) of this section and the principles of section 1552. Because S does not make any payment in recognition of the additional tax liability, by analogy to the treatment under § 1.1552-1(b)(2), S is treated as having made a $34 payment that is described in paragraph (b)(3)(iii) of this section (noncapital, nondeductible expenses) and as having received an equal amount from M as a capital contribution. Thus, M increases its basis in its S stock by $52.80 (80% of the $100 of taxable income, less 80% of the $34 tax payment). In addition, M increases its basis in S's stock by $34 under the Internal Revenue Code and paragraph (a)(2) of this section to reflect the capital contribution. In the aggregate, M increases its basis in S's stock by $86.80. (If, as in paragraph (c) of this *Example 1,* M buys the remaining 20% of S's stock at the close of business on June 30, M increases its basis in S's stock by another $7.90 for the additional 20% interest in S's income after June 30 ($60 multiplied by 20%, less 20% of the $20.40 tax payment on $60); the $34 capital contribution by M is reflected in all of its S shares (not just the original 80%), and M's aggregate basis adjustment under this section is $94.70 ($86.80 plus $7.90).)

Example 2. Preferred stock. (a) *Facts.* M owns all of S's common stock with an $800 basis, and nonmembers own all of S's preferred stock. The preferred stock was issued for $200, has a $20 annual, cumulative preference as to dividends, and has an initial liquidation preference of $200. For Year 1, S has $50 of taxable income and no distributions are declared or made. (b) *Analysis of arrearages.* Under paragraphs (c) (1) and (3) of this section, $20 of the $50 positive adjustment under paragraph (b) of this section is allocated first to the preferred stock to reflect the dividend arrearage arising in Year 1. The remaining $30 of the positive adjustment is allocated to the common stock, increasing M's basis from $800 to $830 as of the close of Year 1. (The basis of the preferred stock owned by nonmembers is not adjusted under this section.)

(c) *Current distribution.* The facts are the same as in paragraph (a) of this *Example 2,* except that S declares and makes a $20 distribution with respect to the preferred stock during Year 1 in satisfaction of its preference. The results are the same as in paragraph (b) of this *Example 2.*

(d) *Varying interest.* The facts are the same as in paragraph (a) of this *Example 2,* except that S has no income or loss for Years 1 and 2, M purchases all of S's preferred stock at the beginning of Year 3 for $240, and S has $70 of taxable income for Year 3. Under paragraph (c)(3) of this section, $60 of the $70 positive adjustment under paragraph (b) of this section is allocated to the preferred stock to reflect the dividends arrearages for Years 1 through 3, but only the $20 for Year 3 is reflected in the basis of the preferred stock under paragraph (b) of this section. (The remaining $40 is not reflected because the preferred stock was owned by nonmembers during Years 1 and 2.) Thus, M increases its basis in S's preferred stock from $240 to $260, and its basis in S's common stock from $800 to $810, as of the close of Year 3. (If M had acquired all of S's preferred stock in a transaction to which section 351 applies, and M's initial basis in S's preferred stock was $200 under section 362, M's basis in S's preferred stock would increase from $200 to $220.)

(e) *Varying interest with current distributions.* The facts are the same as in paragraph (d) of this *Example 2,* except that S declares and makes a $20 distribution with respect to the preferred stock in each of Years 1 and 2 in satisfaction of its preference, and M purchases all of S's preferred stock at the beginning of Year 3 for $200. Under paragraph (c)(3) of this section, $40 of the $70 positive adjustment under paragraph (b) of this section is allocated to the preferred stock to reflect the distributions in Years 1 and 2, and $20 of the $70 is allocated to the preferred stock to reflect the arrearage for Year 3. However, as in paragraph (d) of this *Example 2,* only the $20 attributable to Year 3 is reflected in the basis of the preferred stock under paragraph (b) of this section. Thus, M increases its basis in S's preferred stock from $200 to $220, and M increases its basis in S's common stock from $800 to $810.

Example 3. Cumulative redetermination. (a) *Facts.* M owns all of S's common and preferred stock. The preferred stock has a $100 annual, cumulative preference as to dividends. For Year 1, S has $200 of taxable income, the first $100 of which is allocated to the preferred stock and the remaining $100 of which is allocated to the common stock. For Year 2, S has no adjustment under paragraph (b) of this section, and M sells all of S's common stock at the close of Year 2.
(b) *Analysis.* Under paragraph (c)(4) of this section, M's basis in S's common stock must be redetermined as of the sale of the stock. The redetermination is made by reallocating the $200 positive adjustment under paragraph (b) of this section for Year 1 by taking into account all of the facts and circumstances affecting allocations as of the sale. Thus, the $200 positive adjustment for Year 1 is reallocated entirely to the preferred stock to reflect the dividend arrearages for Years 1 and 2. The reallocation away from the common stock reflects the fact that, because of the additional amount of arrearage in Year 2, the common stock is not entitled to any part of the $200 of taxable income from Year 1. Thus, the common stock has no positive or negative adjustment, and the preferred stock has a $200 positive adjustment. These reallocations are treated as the original allocations for Years 1 and 2. (The results for the common stock would be the same if the common and preferred stock were not owned by the same member, or the preferred stock were owned by nonmembers.)

(c) *Preferred stock issued after adjustment arises.* The facts are the same as in paragraph (a) of this *Example 3,* except that S does not issue its preferred stock until the beginning of Year 2, S has no further adjustment under paragraph (b) of this section for Years 2 and 3, and M sells S's common stock at the close of Year 3. Under paragraphs (c) (1) and (2) of this section, the $200 positive adjustment for Year 1 is initially allocated entirely to the common stock. Under paragraph (c)(4) of this section, the $200 adjustment is reallocated to the preferred stock to reflect the arrearages for Years 2 and 3. Thus, the common stock has no positive or negative adjustment.

(d) *Common stock issued after adjustment arises.* The facts are the same as in paragraph (a) of this *Example 3,* except that S has no preferred stock, S issues additional common stock of the same class at the beginning of Year 2, S has no further adjustment under paragraph (b) of this section in Years 2 and 3, and M sells its S common stock at the close of Year 3. Under paragraphs (c) (1) and (2) of this section, the $200 positive adjustment for Year 1 is initially allocated entirely to the original common stock. Under paragraph (c)(4)(i)(A) of this section, the $200 adjustment is not reallocated among the original common stock and the additional stock. Unlike the preferred stock in paragraph (c) of this *Example 3,* the additional common stock is of the same class as the original stock, and there is no reallocation between shares of the same class.

(e) *Positive and negative adjustments.* The facts are the same as in paragraph (a) of this *Example 3,* except that S has a $200 loss for Year 2 that results in a negative adjustment to the common stock before any redetermination. For purposes of the basis redetermination under paragraph (c)(4) of this section, the Year 1 and 2 adjustments under paragraph (b) of this section are not netted. Thus, as in paragraph (b) of this *Example 3,* the redetermination is made by reallocating the $200 positive adjustment for Year 1 entirely to the preferred stock. The $200 negative adjustment for Year 2 is allocated entirely to the common stock. Consequently, the preferred stock has a $200 positive cumulative adjustment, and the common stock has a $200 negative cumulative adjustment. (The results would be the same if there were no other adjustments described in paragraph (b) of this section, M sells S's common stock at the close of Year 3 rather than Year 2, and an additional $100 arrearage arises in Year 3; only adjustments under paragraph (b) of this section may be reallocated, and there is no additional adjustment for Year 3.)

(f) *Current distributions.* The facts are the same as in paragraph (a) of this *Example 3,* except that, during Year 1, S declares and makes a distribution to M of $100 as a dividend on the preferred stock and $100 as a dividend on the common stock. The taxable income and distributions result in no Year 1 adjustment under paragraph (b) of this section for either the common or preferred stock. For example, if T merges into S, S is treated, as the context may require, as a successor to T and as becoming a member of the group. However, as in paragraph (b) of this *Example 3,* the redetermination under paragraph (c)(4) of this section is made by reallocating a $200 positive adjustment for Year 1 (S's net adjustment described in paragraph (b) of this section, determined without taking distributions into account) to the preferred stock. Consequently, the preferred stock has a $100 positive cumulative adjustment ($200 of taxable income, less a $100 distribution with respect to the preferred stock) and the common stock has a $100 negative cumulative adjustment (for the distribution).

(g) *Convertible preferred stock.* The facts are the same as in paragraph (a) of this *Example 3,* except that the preferred stock is convertible into common stock that is identical to the common stock already outstanding, the holders of the preferred stock convert the stock at the close of Year 2, and no stock is sold until the close of Year 5. Under paragraph (c)(4) of this section, the $200 positive adjustment for Year 1 is reallocated entirely to the preferred stock immediately before the conversion. The newly issued common stock is treated as a second class of S common stock, and adjustments under paragraph (b) of this section are allocated between the original and the new common stock under paragraph (c)(2)(ii) of this section. Although the preferred stock is converted to common stock, the $200 adjustment to the preferred stock is not subsequently reallocated between the original and the new common stock. Because the original and the new stock are equivalent, adjustments under paragraph (b) of this section for subsequent periods are allocated equally to each share.

(h) *Prior use of allocations.* The facts are the same as in paragraph (a) of this *Example 3,* except that M sells 10% of S's common stock at the close of Year 1, and the remaining 90% at the close of Year 2. M's basis in the common stock sold in Year 1 reflects $10 of the adjustment allocated to the common stock for Year 1. Under paragraph (c)(4)(ii) of this section, because $10 of the Year 1 adjustment was used in determining M's gain or loss, only $90 is reallocated to the preferred stock, and $10 remains allocated to the common stock sold.

(i) *Lower-tier members.* The facts are the same as in paragraph (a) of this *Example 3,* except that M owns only S's common stock, and M is also a subsidiary. If there is a redetermination under paragraph (c)(4) of this section by a member owning M's stock, a redetermination with respect to S's stock must be made first, and the effect of that redetermination on M's adjustments is taken into account under paragraph (b) of this section. However, as in paragraph (h) of this *Example 3,* to the extent an amount of the initial adjustments with respect to S's common stock have already been tiered up and used by a member owning M's stock, that amount remains with S's common stock (and the higher-tier member using the adjustment with respect to M's stock), and may not be reallocated to S's preferred stock.

Example 4. Allocation to preferred stock between groups. (a) *Facts.* M owns all of S's only class of stock, and S owns all of T's common and preferred stock. The preferred stock has a $100 annual, cumulative preference as to dividends. For Year 1, T has $200 of taxable income, the first $100 of which is allocated to the preferred stock and the remaining $100 of which is allocated to the common stock, and S has no adjustments other than the amounts tiered up from T. S and T have no adjustments under paragraph (b) of this section for Years 2 and 3. X, the common parent of another consolidated group, purchases all of S's stock at the close of Year 3, and S and T become members of the X group. For Year 4, T has $200 of taxable income, and S has no adjustments other than the amounts tiered up from T.
(b) *Analysis for Years 1 through 3.* Under paragraph (c)(4) of this section, the allocation of S's adjustments under paragraph (b) of this section (determined without taking distributions into account) must be redetermined as of the time M sells S's stock. As a result of this redetermination, T's common stock has no positive or negative adjustment and the preferred stock has a $200 positive adjustment.

(c) *Analysis for Year 4.* Under paragraph (c)(3) of this section, the allocation of T's $200 positive adjustment in Year 4 to T's preferred stock with respect to arrearages is made by taking into account the consolidated return years of both the M group and the X group. Thus, the allocation of the $200 positive adjustment for Year 4 to T's preferred stock is not treated as an allocation for a period for which the preferred stock is owned by a nonmember. Thus, the $200 adjustment is reflected in S's basis in T's preferred stock under paragraph (b) of this section.

(d) ***Definitions.*** For purposes of this section—

(1) ***Class.*** The shares of a member having the same material terms (without taking into account voting rights) are treated as a single class of stock.

(2) ***Preferred stock.*** Preferred stock is stock that is limited and preferred as to dividends and has a liquidation preference. A class of stock that is not described in section 1504(a)(4), however, is not treated as preferred stock for purposes of paragraph (c) of this section if members own less than 80% of each class of common stock (determined without taking this paragraph (d)(2) into account).

(3) ***Common stock.*** Common stock is stock that is not preferred stock.

(4) ***Becoming a nonmember.*** A member is treated as becoming a nonmember if it has a separate return year (including another group's consolidated return year). For example, S may become a nonmember if it issues additional stock to nonmembers, but S does not become a nonmember as a result of its complete liquidation.

(e) ***Anti-avoidance rule*** —

(1) ***General rule.*** If any person acts with a principal purpose contrary to the purposes of this section, to avoid the effect of the rules of this section or apply the rules of this section to avoid the effect of any other provision of the consolidated return regulations, adjustments must be made as necessary to carry out the purposes of this section.

(2) ***Examples.*** The principles of this paragraph (e) are illustrated by the following examples.

> *Example 1. Preferred stock treated as common stock.* (a) *Facts.* S has 100 shares of common stock and 100 shares of preferred stock described in section 1504(a)(4). M owns 80 shares of S's common stock and all of S's preferred stock. The shareholders expect that S will have negative adjustments under paragraph (b) of this section for Years 1 and 2 (all of which will be allocable to S's common stock), the negative adjustments will have no significant effect on the value of S's stock, and S will have offsetting positive adjustments thereafter. When the preferred stock was issued, M intended to cause S to recapitalize the preferred stock into additional common stock at the end of Year 2 in a transaction described in section 368(a)(1)(E). M's temporary ownership of the preferred stock is with a principal purpose to limit M's basis reductions under paragraph (b) of this section to 80% of the anticipated negative adjustments. The recapitalization is intended to cause significantly more than 80% of the anticipated positive adjustments to increase M's basis in S's stock because of M's increased ownership of S's common stock immediately after the recapitalization.
> (b) *Analysis.* S has established a transitory capital structure with a principal purpose to enhance M's basis in S's stock under this section. Under paragraph (e)(1) of this section, all of S's common and preferred stock is treated as a single class of common stock in Years 1 and 2 for purposes of this section. Thus, S's items are allocated under the principles of paragraph (c)(2)(ii) of this section, and M decreases its basis in both the common and preferred stock accordingly.

> *Example 2. Contribution of appreciated property.* (a) *Facts.* M owns all of the stock of S and

T, and S and T each own 50% of the stock of U. M's S stock has a $150 basis and $200 value, and M's T stock has a $200 basis and $200 value. With a principal purpose to eliminate M's gain from an anticipated sale of S's stock, T contributes to U an asset with a $100 value and $0 basis, and S contributes $100 cash. U sells T's asset and recognizes a $100 gain that results in a $100 positive adjustment under paragraph (b) of this section.
(b) *Analysis.* Under paragraph (c)(2) of this section, U's adjustment ordinarily would be allocated equally to each share of U's stock. If so allocated, M's basis in S's stock would increase from $150 to $200 and M would recognize no gain from the sale of S's stock for $200. Under paragraph (e)(1) of this section, however, because T transferred an appreciated asset to U with a principal purpose to shift a portion of the stock basis increase from M's stock in T to M's stock in S, the allocation of the $100 positive adjustment under paragraph (c) of this section between the shares of U's stock must take into account the contribution. Consequently, all $100 of the positive adjustment is allocated to the U stock owned by T, rather than $50 to the U stock owned by S and $50 to the U stock owned by T. M's basis in S's stock remains $150, and its basis in T's stock increases to $300. Thus, M recognizes a $50 gain from its sale of S's stock for $200.

Example 3. Reorganizations. (a) *Facts.* M forms S with an $800 contribution, $200 of which is in exchange for S's preferred stock described in section 1504(a)(4) and the balance of which is for S's common stock. For Years 1 through 3, S has a total of $160 of ordinary income, $60 of which is distributed with respect to the preferred stock in satisfaction of its $20 annual preference as to dividends. Under this section, M's basis in S's preferred stock is unchanged, and its basis in S's common stock is increased from $600 to $700. To reduce its gain from an anticipated sale of S's preferred stock, M forms T at the close of Year 3 with a contribution of all of S's stock in exchange for corresponding common and preferred stock of T in a transaction to which section 351 applies. At the time of the contribution, the fair market value of the common stock is $700 and the fair market value of the preferred stock is $300 (due to a decrease in prevailing market interest rates). M subsequently sells T's preferred stock for $300.
(b) *Analysis.* Under section 358(b), M ordinarily has a $630 basis in T's common stock (70% of the $900 aggregate stock basis) and a $270 basis in T's preferred stock (30% of the $900 aggregate stock basis). However, because M transferred S's stock to T with a principal purpose to shift the allocation of basis adjustments under this section, adjustments are made under paragraph (e)(1) of this section to preserve the allocation under this section. Thus, M has a $700 basis in T's common stock and a $200 basis in T's preferred stock. Consequently, M recognizes a $100 gain from the sale of T's preferred stock.

Example 4. Post-deconsolidation basis adjustments. (a) *Facts.* For Year 1, the M group has $40 of taxable income when determined by including only S's items of income, gain, deduction, and loss taken into account, and M increases its basis in S's stock by $40 under

paragraph (b) of this section. M anticipates that S will have a $40 ordinary loss for Year 2 that will be carried back and offset S's income in Year 1 and result in a $40 reduction to M's basis in S's stock for Year 2 under paragraph (b) of this section. With a principal purpose to avoid the reduction, M causes S to issue voting preferred stock that results in S becoming a nonmember at the beginning of Year 2. As anticipated, S has a $40 loss for Year 2, which is carried back to Year 1 and offsets S's income from Year 1.
(b) *Analysis.* Under paragraph (e)(1) of this section, because M caused S to become a nonmember with a principal purpose to absorb S's loss but avoid the corresponding negative adjustment under this section, and M bears a substantial portion of the loss because of its continued ownership of S common stock, the basis of M's common stock in S is decreased by $40 for Year 2. (If M has less than a $40 basis in the retained S stock, M must recognize income for Year 2 to the extent of the excess.) Section 1504(a)(3) limits the ability of S to subsequently rejoin the M group's consolidated return.

(c) *Carryback to pre-consolidation year.* The facts are the same as in paragraph (a) of this *Example 4,* except that M anticipates that S's loss will be carried back and absorbed in a separate return year of S before Year 1 (rather than to the M group's consolidated return for Year 1). Although M causes S to become a nonmember with a principal purpose to avoid the negative adjustment under this section, and M bears a substantial portion of the loss because of its continued ownership of S common stock, both S's income and loss are taken into account under the separate return rules. Consequently, no one has acted with a principal purpose contrary to the purposes of this section, and no adjustments are necessary to carry out the purposes of this section.

Example 5. Pre-consolidation basis adjustments. (a) *Facts.* M forms S with a $100 contribution, and S becomes a member of the M affiliated group which does not file consolidated returns. For Years 1 through 3, S earns $300. M anticipates that it will elect under section 1501 for the M group to begin filing consolidated returns in Year 5. In anticipation of filing consolidated returns, and to avoid the negative stock basis adjustment that would result under paragraph (b) of this section from distributing S's earnings after Year 5, M causes S to distribute $300 during Year 4 as a qualifying dividend within the meaning of section 243(b). There is no plan or intention to recontribute the funds to S after the distribution.
(b) *Analysis.* Although S's distribution of $300 is with a principal purpose to avoid a corresponding negative adjustment under this section, the $300 was both earned and distributed entirely under the separate return rules. Consequently, M and S have not acted with a principal purpose contrary to the purposes of this section, and no adjustments are necessary to carry out the purposes of this section.

(f) ***Predecessors and successors.*** For purposes of this section, any reference to a corporation or to a share of stock includes a reference to a successor or predecessor as the context may require. A corporation is a successor if the basis of its assets is determined, directly or indirectly, in whole or in part, by reference to the basis of another corporation (the predecessor). For example, if T merges into S, S is treated, as the context may require, as a successor to T and as becoming a member of the group. A share is a successor if its basis is determined, directly or indirectly, in whole or in part, by reference to the basis of another share (the predecessor).

(g) ***Recordkeeping.*** Adjustments under this section must be reflected annually on permanent records (including work papers). See also section 6001, requiring records to be maintained. The group must be able to identify from these permanent records the amount and allocation of adjustments, including the nature of any tax-exempt income and noncapital, nondeductible expenses, so as to permit the application of the rules of this section for each year.

(h) ***Effective/applicability date*** —

(1) ***General rule.*** Except as provided in paragraph (h)(8) of this section, this section applies with respect to determinations of the basis of the stock of a subsidiary (e.g., for determining gain or loss from a disposition of stock), in consolidated return years beginning on or after January 1, 1995. If this section applies, basis must be determined or redetermined as if this section were in effect for all years (including, for example, the consolidated return years of another consolidated group to the extent adjustments from those years are still reflected). For example, if the portion of a consolidated net operating loss carryover attributable to S expired in 1990 and is treated as a noncapital, nondeductible expense under paragraph (b) of this section, it is taken into account in tax years beginning on or after January 1, 1995 as a negative adjustment for 1990. Any such determination or redetermination does not, however, affect any prior period. Thus, the negative adjustment for S's noncapital, nondeductible expense is not taken into account for tax years beginning before January 1, 1995.

(2) ***Dispositions of stock before effective date*** —

(i) ***In general.*** If M disposes of stock of S in a consolidated return year beginning before January 1, 1995, the amount of M's income, gain, deduction, or loss, and the basis reflected in that amount, are not redetermined under this section.

(ii) ***Lower-tier members.*** Although M disposes of S's stock in a tax year beginning before January 1, 1995, S's determinations or adjustments with respect to the stock of a lower-tier member with which it continues to file a consolidated return are redetermined in accordance with the rules of this section (even if they were previously taken into account by M and reflected in income, gain, deduction, or loss from the disposition of S's stock). For example, assume that M owns all of S's stock, S owns all of T's stock, and T owns all of U's stock. If S sells 80% of T's stock in a tax year beginning before January 1, 1995 (the effective date), the amount of S's income, gain, deduction, or loss from the sale, and the stock basis adjustments reflected in that amount, are not redetermined if M sells S's stock after the effective date. If S sells the remaining 20% of T's stock after the effective date, S's stock basis adjustments with respect to that T stock are also not redetermined because T became a nonmember before the effective date. However, if T and U continue to file a consolidated return with each other and T sells U's stock after the effective date, T's stock basis adjustments with respect to U's stock are redetermined (even though some of those adjustments may have been taken into account by S in its prior sale of T's stock before the effective date).

(iii) ***Deferred amounts.*** For purposes of this paragraph (h)(2), a disposition does not include a transaction to which § 1.1502-13, § 1.1502-13T, § 1.1502-14, or § 1.1502-14T applies. Instead, the transaction is deemed to occur as the income, gain, deduction, or loss (if any) is taken into account.

(3) ***Distributions —***

(i) ***Deemed dividend elections.*** If there is a deemed distribution and recontribution pursuant to § 1.1502-32(f)(2) as contained in the 26 CFR part 1 edition revised as of April 1, 1994 in a consolidated return year beginning before January 1, 1995, the deemed distribution and recontribution under the election are treated as an actual distribution by S and recontribution by M as provided under the election.

(ii) ***Affiliated earnings and profits.*** This section does not apply to reduce the basis in S's stock as a result of a distribution of earnings and profits accumulated in separate return years, if the distribution is made in a consolidated return year beginning before January 1, 1995, and the distribution does not cause a negative adjustment under the investment adjustment rules in effect at the time of the distribution. See paragraph (h)(5) of this section for the rules in effect with respect to the distribution.

(4) ***Expiring loss carryovers.*** If S became a member of a consolidated group in a consolidated return year beginning before January 1, 1995, and S had a loss carryover from a separate return limitation year at that time, the group does not treat any expiration of the loss carryover (even if in a tax year beginning on or after January 1, 1995) as a noncapital, nondeductible expense resulting in a negative adjustment under this section. If S becomes a member of a consolidated group in a consolidated return year beginning on or after January 1, 1995, and S has a loss carryover from a separate return limitation year at that time, adjustments with respect to the expiration are determined under this section.

(5) ***Continuing basis reductions for certain deconsolidated subsidiaries.*** If a subsidiary ceases to be a member of a group in a consolidated return year beginning before January 1, 1995, and its basis was subject to reduction under § 1.1502-32T or § 1.1502-32(g) as contained in the 26 CFR part 1 edition revised as of April 1, 1994, its basis remains subject to reduction under those principles. For example, if S ceased to be a member in 1990, and M's basis in any retained S stock was subject to a basis reduction account, the basis remains subject to reduction. Similarly, if an election could be made to apply § 1.1502-32T instead of § 1.1502-32(g), the election remains available. However, §§ 1.1502-32T and 1.1502-32(g) do not apply as a result of a subsidiary ceasing to be a member in tax years beginning on or after January 1, 1995.

(6) ***Loss suspended under § 1.1502-35(c) or disallowed under § 1.1502-35(g)(3)(iii).*** Paragraphs (a)(2), (b)(3)(iii)(C) and (D), and (b)(4)(vi) of this section are applicable on and after March 10, 2006.

(7) ***Rules related to discharge of indebtedness income excluded from gross income.*** Paragraphs (b)(1)(ii), (b)(3)(ii)(C)(*1*), (b)(3)(iii)(A), and (b)(5)(ii), *Example 4,* paragraphs (a), (b), and (c) of this section apply with respect to determinations of the basis of the stock of a subsidiary in consolidated return years the original return for which is due (without regard to extensions) after March 21, 2005. However, groups may apply those provisions with respect to determinations of the basis of the stock of a subsidiary in consolidated return years the original return for which is due (without regard to extensions) on or before March 21, 2005, and after August 29, 2003.

(8) ***Determination of stock basis in reorganization with boot.*** Paragraph (b)(5)(ii)(F) of this section (*Example 6*) applies only with respect to determinations of the basis of the stock of a subsidiary on or after January 23, 2006.

(9) ***Allocations of investment adjustments, including adjustments attributable to certain loss transfers; certain conforming amendments.*** Paragraphs (a)(2), (b)(3)(ii)(C)(2), (c)(1), (c)(2)(i), (c)(2)(ii)(A), (c)(3), and (c)(4)(i) of this section are applicable for determinations of the basis of stock of a subsidiary on or after September 17, 2008.

(i) [Reserved]. For further guidance, see § 1.1502-32T(i) through (j)(1).

(10) ***Election to treat loss carryover as expiring.*** Paragraph (b)(4)(iv) of this section applies to any original consolidated Federal income tax return due (without extensions) after June 14, 2007. For original consolidated Federal income tax returns due (without extensions) after May 30, 2006, and on or before June 14, 2007, *see* § 1.1502-32T as contained in 26 CFR part 1 in effect on April 1, 2007.

[T.D. 8560, 59 FR 41685, Aug. 15, 1994]

Editorial Note: For FEDERAL REGISTER citations affecting § 1.1502-32, see the List of CFR Sections Affected, which appears in the Finding Aids section of the printed volume and at *www.govinfo.gov*.

§ 1.1502-33 Earnings and profits.

(a) ***In general*** —

(1) ***Purpose.*** This section provides rules for adjusting the earnings and profits of a subsidiary (S) and any member (P) owning S's stock. These rules modify the determination of P's earnings and profits under applicable rules of law, including section 312, by adjusting P's earnings and profits to reflect S's earnings and profits for the period that S is a member of the consolidated group. The purpose for modifying the determination of earnings and profits is to treat P and S as a single entity by reflecting the earnings and profits of lower-tier members in the earnings and profits of higher-tier members and consolidating the group's earnings and profits in the common parent. References in this section to earnings and profits include deficits in earnings and profits.

(2) ***Application of other rules of law, duplicative adjustments.*** See § 1.1502-80(a) regarding the general applicability of other rules of law and a limitation on duplicative adjustments. The rules of this section are in addition to other rules of law. For example, the allowance for depreciation is determined in accordance with section 312(k). P's earnings and profits must not be adjusted under this section and other rules of law in a manner that has the effect of duplicating an adjustment. For example, if S's earnings and profits are reflected in P's earnings and profits under paragraph (b) of this section, and S transfers its assets to P in a liquidation to which section 332 applies, S's earnings and profits that P succeeds to under section 381 must be adjusted to prevent duplication.

(b) ***Tiering up earnings and profits*** —

(1) ***General rule.*** P's earnings and profits are adjusted under this section to reflect changes in S's earnings and profits in accordance with the applicable principles of § 1.1502-32, consistently applied, and an adjustment to P's earnings and profits for a tax year under this paragraph (b)(1) is treated as earnings and profits of P for the tax year in which the adjustment arises. Under these principles, for example, the adjustments are made as of the close of each consolidated return year, and as of any other time if a determination at that time is necessary to determine the earnings and

profits of any person. Similarly, S's earnings and profits are allocated under the principles of § 1.1502-32(c), and the adjustments are applied in the order of the tiers, from the lowest to the highest. However, modifications to the principles include:

(i) The amount of P's adjustment is determined by reference to S's earnings and profits, rather than S's taxable and tax-exempt items (and therefore, for example, the deferral of a negative adjustment for S's unabsorbed losses does not apply).

(ii) The tax sharing rules under paragraph (d) of this section apply rather than those of § 1.1502-32(b)(3)(iv)(D).

(2) ***Affiliated earnings and profits.*** The reduction in S's earnings and profits under section 312 from a distribution of earnings and profits accumulated in separate return years of S that are not separate return limitation years does not tier up to P's earnings and profits. Thus, the increase in P's earnings and profits under section 312 from receipt of the distribution is not offset by a corresponding reduction.

(3) ***Examples*** —

(i) ***In general.*** For purposes of the examples in this section, unless otherwise stated, P owns all of the only class of S's stock, the stock is owned for the entire year, S owns no stock of lower-tier members, the tax year of all persons is the calendar year, all persons use the accrual method of accounting, the facts set forth the only corporate activity, preferred stock is described in section 1504(a)(4), all transactions are between unrelated persons, and tax liabilities are disregarded.

(ii) ***Tiering up earnings and profits.*** The principles of this paragraph (b) are illustrated by the following examples.

> *Example 1. Tier-up and distribution of earnings and profits.* (a) *Facts.* P forms S in Year 1 with a $100 contribution. S has $100 of earnings and profits for Year 1 and no earnings and profits for Year 2. During Year 2, S declares and distributes a $50 dividend to P.
>
> (b) *Analysis.* Under paragraph (b)(1) of this section, S's $100 of earnings and profits for Year 1 increases P's earnings and profits for Year 1. P has no additional earnings and profits for Year 2 as a result of the $50 distribution in Year 2, because there is a $50 increase in P's earnings and profits as a result of the receipt of the dividend and a corresponding $50 decrease in S's earnings and profits under section 312(a) that is reflected in P's earnings and profits under paragraph (b)(1) of this section.
>
> (c) *Distribution of current earnings and profits.* The facts are the same as in paragraph (a) of this *Example 1,* except that S distributes the $50 dividend at the end of Year 1 rather than during Year 2. Under paragraph (b)(1) of this section, P's earnings and profits are increased by $100 (S's $50 of undistributed earnings and profits, plus P's receipt of the $50 distribution). Thus, S's earnings and profits increase by $50 and P's earnings and profits increase by $100.

(d) *Affiliated earnings and profits.* The facts are the same as in paragraph (a) of this *Example 1,* except that P and S do not begin filing consolidated returns until Year 2. Because P and S file separate returns for Year 1, P's basis in S's stock remains $100 under § 1.1502-32 and this section, S has $100 of earnings and profits, and none of S's earnings and profits is reflected in P's earnings and profits under paragraph (b) of this section. S's distribution in Year 2 ordinarily would reduce S's earnings and profits but not increase P's earnings and profits. (P's $50 of earnings and profits from the dividend would be offset by S's $50 reduction in earnings and profits that tiers up under paragraph (b) of this section.) However, under paragraph (b)(2) of this section, the negative adjustment for S's distribution to P does not apply. Thus, S's distribution reduces its earnings and profits by $50 but increases P's earnings and profits by $50. (If S's earnings and profits had been accumulated in a separate return limitation year, paragraph (b)(2) of this section would not apply and the distribution would reduce S's earnings and profits but not increase P's earnings and profits.)

(e) *Earnings and profits deficit.* Assume instead that after P forms S in Year 1 with a $100 contribution, S borrows additional funds and has a $150 deficit in earnings and profits for Year 1. The corresponding loss for tax purposes is not absorbed in Year 1, and is included in the group's consolidated net operating loss carried forward to Year 2. Under paragraph (b)(1) of this section, however, S's $150 deficit in earnings and profits decreases P's earnings and profits for Year 1 by $150. (Absorption of the loss in a later tax year has no effect on the earnings and profits of P and S.)

Example 2. Section 355 distribution. (a) *Facts.* P owns all of S's stock and S owns all of T's stock. For Year 1, T has $100 of earnings and profits. Under paragraph (b)(1) of this section, the earnings and profits of T tier up to S and to P. S and P have no other earnings and profits for Year 1. S distributes T's stock to P at the end of Year 1 in a distribution to which section 355 applies.
(b) *Analysis.* Because S's distribution of T's stock is a distribution to which section 355 applies, the applicable principles of § 1.1502-32(b)(2)(iv) do not require P's earnings and profits to be adjusted by reason of the distribution. In addition, although S's earnings and profits may be reduced under section 312(h) as a result of the distribution, the applicable principles of § 1.1502-32(b)(3)(iii) do not require P's earnings and profits to be adjusted to reflect this reduction in S's earnings and profits.

Example 3. Allocating earnings and profits among shares. P owns 80% of S's stock throughout Year 1. For Year 1, S has $100 of earnings and profits. Under paragraph (b)(1) of this section, $80 of S's earnings and profits is allocated to P based on P's ownership of S's stock. Accordingly, $80 of S's earnings and profits for Year 1 is reflected in P's earnings and profits for Year 1.

(c) ***Special rules.*** For purposes of this section—

(1) ***Stock of members.*** For purposes of determining P's earnings and profits from the disposition of S's stock, P's basis in S's stock is adjusted to reflect S's earnings and profits determined under paragraph (b) of this section, rather than under § 1.1502-32. For example, P's basis in S's stock is increased by positive earnings and profits and decreased by deficits in earnings and profits. Similarly, P's basis in S's stock is not reduced for distributions to which paragraph (b)(2) of this section applies (affiliated earnings and profits). P may have an excess loss account in S's stock for earnings and profits purposes (whether or not there is an excess loss account under § 1.1502-32), and the excess loss account is determined, adjusted, and taken into account in accordance with the principles of §§ 1.1502-19 and 1.1502-32.

(2) ***Intercompany transactions.*** Intercompany items and corresponding items are not reflected in earnings and profits before they are taken into account under § 1.1502-13. See § 1.1502-13 for the applicable rules and definitions.

(3) ***Example.*** The principles of this paragraph (c) are illustrated by the following example.

> *Example. Adjustments to stock basis.* (a) *Facts.* P forms S in Year 1 with a $100 contribution. For Year 1, S has $75 of taxable income and $100 of earnings and profits. For Year 2, S has no taxable income or earnings and profits, and S declares and distributes a $50 dividend to P. P sells all of S's stock for $150 at the end of Year 2.
> (b) *Analysis.* Under paragraph (c)(1) of this section, P's basis in S's stock for earnings and profits purposes immediately before the sale is $150 (the $100 initial basis, plus S's $100 of earnings and profits for Year 1, minus the $50 distribution of earnings and profits in Year 2). Thus, P recognizes no gain or loss from the sale of S's stock for earnings and profits purposes.
>
> (c) *Earnings and profits deficit.* Assume instead that S has a $100 tax loss and earnings and profits deficit for Year 1. The tax loss is not absorbed in Year 1 and is included in the group's consolidated net operating loss carried forward to Year 2. Under paragraph (b) of this section, S's $100 deficit in earnings and profits decreases P's earnings and profits for Year 1. Under paragraph (c) of this section, P decreases its basis in S's stock for purposes of determining earnings and profits from $100 to $0. (If S had borrowed an additional $50 that it also lost in Year 1, P would have decreased its earnings and profits for Year 1 by the additional $50, and P would have had a $50 excess loss account in S's stock for earnings and profits purposes, which would be taken into account in determining P's earnings and profits from its sale of S's stock.)
>
> (d) *Affiliated earnings and profits.* Assume instead that P and S do not begin filing consolidated returns until Year 2. Under paragraph (b) of this section, the negative adjustment under § 1.1502-32(b) for distributions does not apply to S's distribution of earnings and profits accumulated in a separate return year that is a not separate return limitation year. Thus, P's basis in S's stock for earnings and profits purposes remains $100, and P has $50 of earnings and profits from the sale of S's stock.

(d) *Federal income tax liability* —

(1) *In general* —

(i) ***Extension of tax allocations.*** Section 1552 allocates the tax liability of a consolidated group among its members for purposes of determining the amounts by which their earnings and profits are reduced for taxes. Section 1552 does not reflect the absorption by one member of another member's tax attributes (e.g., losses, deductions and credits). For example, if P's $100 of income is offset by S's $100 of deductions, consolidated tax liability is $0 and no amount is allocated under section 1552. However, the group may elect under this paragraph (d) to allocate additional amounts to reflect the absorption by one member of the tax attributes of another member. Permissible methods are set forth in paragraphs (d)(2) through (4) of this section, and election procedures are provided in paragraph (d)(5) of this section. Allocations under this paragraph (d) must be reflected annually on permanent records (including work papers). Any computations of separate return tax liability are subject to the principles of section 1561.

(ii) ***Effect of extended tax allocations.*** The amounts allocated under this paragraph (d) are treated as allocations of tax liability for purposes of § 1.1552-1(b)(2). For example, if P's taxable income is offset by S's loss, and tax liability is allocated under the percentage method of paragraph (d)(3) of this section, P's earnings and profits are reduced as if its income were subject to tax, P is treated as liable to S for the amount of the tax, and corresponding adjustments are made to S's earnings and profits. If the liability of one member to another is not paid, the amount not paid generally is treated as a distribution, contribution, or both, depending on the relationship between the members.

(2) ***Wait-and-see method.*** The wait-and-see method under this paragraph (d)(2) is derived from Securities and Exchange Commission procedures. In the year that a member's tax attribute is absorbed, the group's consolidated tax liability is allocated in accordance with the group's method under section 1552. When, in effect, the member with the tax attribute could have absorbed the attribute on a separate return basis in a later year, a portion of the group's consolidated tax liability for the later year that is otherwise allocated to members under section 1552 is reallocated. The reallocation takes into account all consolidated return years to which this paragraph (d) applies (the computation period), and is determined by comparing the tax allocated to a member during the computation period with the member's tax liability determined as if it had filed separate returns during the computation period.

(i) ***Cap on allocation under section 1552.*** A member's allocation under section 1552 for a tax year may not exceed the excess, if any, of—

(A) The total of the tax liabilities of the member for the computation period (including the current year), determined as if the member had filed separate returns; over

(B) The total amount allocated to the member under section 1552 and this paragraph (d) for the computation period (except the current year).

(ii) ***Reallocation of capped amounts.*** To the extent that the amount allocated to a member under section 1552 exceeds the limitation under paragraph (d)(2)(i) of this section, the excess is allocated among the remaining members in proportion to (but not to exceed the amount of) each member's excess, if any, of—

(A) The total of the tax liabilities of the member for the computation period (including the current year), determined as if the member had filed separate returns; over

(B) The total amount allocated to the member under section 1552 and this paragraph (d) for the computation period (including for the current year only the amount allocated under section 1552).

(iii) ***Reallocation of excess capped amounts.*** If the reductions under paragraph (d)(2)(i) of this section exceed the amounts allocable under paragraph (d)(2)(ii) of this section, the excess is allocated among the members in accordance with the group's method under section 1552 without taking this paragraph (d)(2) into account.

(3) ***Percentage method.*** The percentage method under this paragraph (d)(3) allocates tax liability based on the absorption of tax attributes, without taking into account the ability of any member to subsequently absorb its own tax attributes. The allocation under this method is in addition to the allocation under section 1552.

(i) ***Decreased earnings and profits.*** A member's allocation under section 1552 for any year is increased, thereby decreasing its earnings and profits, by a fixed percentage (not to exceed 100%) of the excess, if any, of—

(A) The member's separate return tax liability for the consolidated return year as determined under § 1.1552-1(a)(2)(ii); over

(B) The amount allocated to the member under section 1552.

(ii) ***Increased earnings and profits.*** An amount equal to the total decrease in earnings and profits under paragraph (d)(3)(i) of this section (including amounts allocated as a result of a carryback) increases the earnings and profits of the members whose attributes are absorbed, and is allocated among them in a manner that reasonably reflects the absorption of the tax attributes.

(4) ***Additional methods.*** The absorption by one member of the tax attributes of another member may be reflected under any other method approved in writing by the Commissioner.

(5) ***Election of allocation method*** —

(i) ***In general.*** Tax liability may be allocated under this paragraph (d) only if an election is filed with the group's first return. The election must—

(A) Be made in a separate statement entitled "ELECTION TO ALLOCATE TAX LIABILITY UNDER § 1.1502-33(d)";

(B) State the allocation method elected under § 1.1502-33(d) and under section 1552;

(C) If the percentage method is elected, state the percentage (not to exceed 100%) to be used; and

(D) If a method is permitted under paragraph (d)(4) of this section, provide the date and control number of the private letter ruling issued by the Internal Revenue Service approving such method.

(ii) ***Consent*** —

(A) ***Electing or changing methods.*** An election for a later year, or an election to change methods, may be made only with the written consent of the Commissioner.

(B) ***Prior law elections.*** An election in effect for the last tax year beginning before January 1, 1995, remains in effect under this section. However, a group may elect to conform its earnings and profits computations to the method described in § 1.1502-32(b)(3)(iv)(D) (the percentage method, using a 100% allocation), whether or not it has previously made an election for earnings and profits purposes. If a conforming election is made, the group must make all adjustments necessary to prevent amounts from being duplicated or omitted. The conforming election is made by attaching a statement entitled "ELECTION TO CONFORM TAX ALLOCATIONS UNDER §§ 1.1502-32 and 1.1502-33(d)" to the consolidated group's return for its first tax year beginning on or after January 1, 1995. The statement must be signed by the common parent, and must specify whether the method is conformed only for years beginning on or after January 1, 1995 or as if the method were in effect for all prior years. The statement must also describe the adjustments made by reason of the change (e.g., to reflect prior use of earnings and profits).

(6) ***Examples.*** The principles of this paragraph (d) are illustrated by the following examples.

Example 1. Wait-and-see method. (a) *Facts.* P owns all of the stock of S1 and S2. The P group uses the wait-and-see method of allocation under paragraph (d)(2) of this section in conjunction with § 1.1552-1(a)(1). For Year 1, each member's taxable income, both for purposes of § 1.1552-1(a)(1) and redetermined as if the member had filed separate returns, is as follows: P $0, S1 $2,000, and S2 ($1,000). Thus, the P group's consolidated tax liability for Year 1 is $340 (assuming a 34% tax rate).
(b) *Analysis.* Under § 1.1552-1(a)(1)(i), the tax liability of the P group is allocated among the members in accordance with the portion of the consolidated taxable income attributable to each member having taxable income. Thus, all of the P group's $340 consolidated tax liability is allocated to S1. As a result, S1 decreases its earnings and profits under section 1552 by $340 (even if S1 does not pay the tax liability). No further allocations are made under paragraph (d)(2) of this section because S2 cannot yet absorb its loss on a separate return basis.

(c) *Payment of tax liability.* If S1 pays the $340 tax liability, there is no further effect on the income, earnings and profits, or stock basis of any member. If P pays the $340 tax liability (and the payment is not a loan from P to S1), P is treated as making a $340 contribution to the capital of S1; if S2 pays the $340 tax liability (and the payment is not a loan from S2 to S1), S2 is treated as making a $340 distribution to P with respect to its stock, and P is treated as making a $340 contribution to the capital of S1. See § 1.1552-1(b)(2).

(d) *Year 2.* For Year 2, each member's taxable income, under § 1.1552-1(a)(1)(ii) and redetermined as if the member had filed separate returns, without taking into account any carryover from Year 1, is as follows: P $0, S1 $1,000, and S2 $3,000. Thus, the P group's consolidated tax liability for Year 2 is $1,360 (assuming a 34% tax rate). Of this amount,

section 1552 would allocate $340 to S1 and $1,020 to S2. However, under paragraph (d)(2)(i) of this section, no more than $680 may be allocated to S2. This is because S2 would have had an aggregate tax liability of $680 if it had filed separate returns for Years 1 and 2 (a $0 tax liability for Year 1, and a $680 tax liability for Year 2, taking into account a $1,000 net operating loss carryover from Year 1). Under paragraph (d)(2)(ii) of this section, the entire excess of $340 which would otherwise be allocated to S2 under § 1.1552-1(a)(1) is allocated to S1. This is because S1 would have had an additional $340 of aggregate tax liability if it had filed separate returns for Years 1 and 2 (a $680 tax liability for Year 1, and a $340 tax liability for Year 2, not taking into account S2's $1,000 net operating loss for Year 1). The effect of the allocation of $680 to S1 and $680 to S2 is determined under § 1.1552-1(b)(2).

Example 2. Percentage method. (a) *Facts.* The facts are the same as in *Example 1,* but the P group uses the percentage method of allocation under paragraph (d)(3) of this section, with a percentage of 100%. In addition, the taxable incomes and losses of the members are the same if computed as provided in § 1.1552-1(a)(2)(ii).
(b) *Analysis.* Under § 1.1552-1(a)(2)(ii), $340 of tax liability is allocated to S1 for Year 1. Under paragraph (d)(3)(i) of this section, S1 is allocated another $340 of tax liability because S1 would have had a $680 tax liability if it had filed separate returns but only $340 is allocated to S1 under section 1552. Thus, S1's earnings and profits are decreased by the $680 total. Under paragraph (d)(3)(ii) of this section, S2's earnings and profits are increased by $340 because the additional $340 allocated to S1 under paragraph (d)(3)(i) of this section is attributable to the absorption of S2's losses.

(c) *Payment of tax liability.* If S1 pays the $340 tax liability of the P group and pays $340 to S2, the Year 1 tax liability results in no further adjustments to the income, earnings and profits, or basis of any member's stock. If S1 pays the $340 tax liability of the P group and pays the other $340 to P instead of S2 because, for example, of an agreement among the members, S2 is treated as distributing $340 to P with respect to its stock in the year that S1 makes the payment to P. See § 1.1552-1(b)(2).

(d) *Year 2.* For Year 2, $340 is allocated to S1 and $1,020 is allocated to S2 under section 1552. No additional amounts are allocated under paragraph (d)(3) of this section.

(e) ***Deconsolidations*** —

(1) ***In general.*** Immediately before it becomes a nonmember, S's earnings and profits are eliminated to the extent they were taken into account by any member under this section. If S's earnings and profits are eliminated under this paragraph (e)(1), no corresponding adjustment is made to the earnings and profits of P (or any other member) under paragraph (b) of this section or to any basis in a member's stock under paragraph (c) of this section. For this purpose, S is treated as becoming a nonmember on the first day of its first separate return year (including another group's consolidated return year).

(2) ***Acquisition of group*** —

(i) ***Application.*** This paragraph (e)(2) applies only if a consolidated group (the terminating group) ceases to exist as a result of—

(A) The acquisition of either the assets of the common parent of the terminating group in a reorganization described in section 381(a)(2), or the stock of the common parent of the terminating group; or

(B) The application of the principles of § 1.1502-75(d)(2) or (d)(3).

(ii) ***General rule.*** Paragraph (e)(1) of this section does not apply solely by reason of the termination of a group because it is acquired, if there is a surviving group that is, immediately thereafter, a consolidated group. Instead, the surviving group is treated as the terminating group for purposes of applying this paragraph (e) to the terminating group. This treatment does not apply, however, to members of the terminating group that are not members of the surviving consolidated group immediately after the terminating group ceases to exist (e.g., under section 1504(a)(3) relating to reconsolidation, or section 1504(c) relating to includible insurance companies).

(3) ***Certain corporate separations and reorganizations.*** The adjustments under paragraph (e)(1) of this section must be modified to the extent necessary to effectuate the principles of section 312(h). Thus, P's earnings and profits rather than S's earnings and profits may be eliminated immediately before S becomes a nonmember. P's earnings and profits are eliminated to the extent that its earnings and profits reflect S's earnings and profits after applying section 312(h) immediately after S becomes a nonmember (determined without taking this paragraph (e) into account).

(4) ***Special uses of earnings and profits.*** Paragraph (e)(1) of this section does not apply for purposes of determining—

(i) The extent to which a distribution is charged to reserve accounts under section 593(e);

(ii) The extent to which a distribution is taxable to the recipient under sections 805(a)(4) and 832; and

(iii) Any other special use identified in guidance published in the Internal Revenue Bulletin.

(5) ***Example.*** The principles of this paragraph (e) are illustrated by the following example.

> *Example.* (a) *Facts.* Individuals A and B own all of P's stock, and P owns all of the stock of S and T, each with a $500 basis. For Year 1, S has $100 of earnings and profits and T has $50 of earnings and profits. Under paragraph (b)(1) of this section, the earnings and profits of S and T tier up to P, and P has $150 of earnings and profits for Year 1. P sells all of S's stock for $600 at the close of Year 1.
> (b) *Analysis.* Under paragraph (e)(1) of this section, S's $100 of earnings and profits is eliminated immediately before S becomes a nonmember because the earnings and profits are taken into account under paragraph (b) of this section in P's earnings and profits. However, no corresponding adjustment is made to P's earnings and profits or to P's basis in S's stock for purposes of earnings and profits. P's earnings and profits for Year 1 remain $150 following the sale of S's stock.

(c) *Forward merger.* The facts are the same as in paragraph (a) of this *Example,* except that, rather than P selling S's stock, S merges into a nonmember in a transaction described in section 368(a)(2)(D). Under paragraph (h) of this section, the nonmember is treated as a successor to S. Thus, as in paragraph (b) of this *Example,* S's $100 of earnings and profits is eliminated immediately before S ceases to be a member.

(d) *Acquisition of entire group.* The facts are the same as in paragraph (a) of this *Example,* except that X, the common parent of another consolidated group, purchases all of P's stock at the close of Year 1, and P sells S's stock during Year 3. Under paragraph (e)(2) of this section, the earnings and profits of S and T are not eliminated as a result of X purchasing P's stock. However, S's earnings and profits from consolidated return years of both the P group and the X group are eliminated immediately before S becomes a nonmember of the X group.

(e) *Earnings and profits deficit.* The facts are the same as in paragraph (d) of this *Example,* except that S has a $550 deficit in earnings and profits for Year 1. The effect of paragraph (e)(1) of this section is the same. Under paragraph (c)(1) of this section, P would have an excess loss account in S's stock for earnings and profits purposes under the principles of §§ 1.1502-19 and 1.1502-32, and, under the principles of § 1.1502-19(c)(2), the excess loss account is not taken into account as a result of X's purchase of P's stock. Under paragraph (e)(2) of this section, S's deficit is not eliminated under paragraph (e)(1) of this section immediately before X's purchase of P's stock. However, S's earnings and profits (or deficit) is eliminated immediately before S becomes a nonmember of the X group.

(f) *Section 355 distribution.* The facts are the same as in paragraph (a) of this *Example,* except that, rather than selling S's stock, P distributes S's stock to A at the close of Year 1 in a distribution to which section 355 applies. Under paragraph (e)(3) of this section, P's earnings and profits may be reduced under section 312(h) as a result of the distribution. To the extent that P's earnings and profits are reduced, S's earnings and profits are not eliminated under paragraph (e)(1) of this section.

(f) ***Changes in the structure of the group*** —

(1) ***Changes in the common parent*** —

(i) ***General rule.*** If P succeeds another corporation under the principles of § 1.1502-75(d) (2) or (3) as the common parent of a consolidated group (a group structure change), the earnings and profits of P are adjusted immediately after P becomes the new common parent to reflect the earnings and profits of the former common parent immediately before the former common parent ceases to be the common parent. The adjustment is made as if P succeeds to the earnings and profits of the former common parent in a transaction described in section 381(a). See § 1.1502-31 for the basis of the stock of members following a group structure change.

(ii) ***Minority shareholders.*** If the former common parent's stock is not wholly owned by members of the consolidated group immediately after the former common parent ceases to be the common parent, appropriate adjustments must be made to reflect in the new common parent only an allocable part of the former common parent's earnings and profits.

(iii) ***Higher-tier members.*** To the extent that earnings and profits are adjusted under this paragraph (f)(1), and the former common parent is owned by members other than P, the earnings and profits of the intermediate subsidiaries must be adjusted in accordance with the principles of this section.

(iv) ***Example.*** The principles of this paragraph (f)(1) are illustrated by the following example.

> *Example.* (a) *Facts.* X is the common parent of a consolidated group with $100 of earnings and profits, and P is the common parent of another consolidated group with $20 of earnings and profits. P acquires all of X's stock at the close of Year 1 in exchange for 70% of P's stock. The exchange is a reverse acquisition under § 1.1502-75(d)(3), and the X group is treated as remaining in existence with P as its new common parent.
> (b) *Adjustments for X group earnings and profits.* Under paragraph (f)(1) of this section, P's earnings and profits are adjusted immediately after P becomes the new common parent, to reflect X's $100 of earnings and profits immediately before X ceases to be the common parent. The adjustment is made as if P succeeds to X's earnings and profits in a transaction described in section 381(a). Thus, immediately after the acquisition, P has $120 of accumulated earnings and profits and X continues to have $100 of accumulated earnings and profits.
>
> (c) *Adjustments for P group earnings and profits.* Although the P group terminates on P's acquisition of X's stock, under paragraph (e)(2) of this section, no adjustments are made to the earnings and profits of any subsidiaries in the terminating P group.
>
> (d) *Acquisition of separate return corporation.* The facts are the same as in paragraph (a) of this *Example,* except that, immediately before the acquisition of its stock by P, X is not affiliated with any other corporation. The exchange is a reverse acquisition under § 1.1502-75(d)(3), and P is treated as the common parent of the X group. Consequently, the results are the same as in paragraphs (b) and (c) of this *Example.*

(2) ***Change in the location of subsidiaries.*** If the location of a member within a group changes, appropriate adjustments must be made to the earnings and profits of the members to prevent the earnings and profits from being eliminated. For example, if P transfers all of S's stock to another member in a transaction to which section 351 and § 1.1502-13 apply, the transferee's earnings and profits are adjusted immediately after the transfer to reflect S's earnings and profits immediately before the transfer from consolidated return years. On the other hand, if the transferee purchases S's stock from P, the transferee's earnings and profits are not adjusted.

(g) ***Anti-avoidance rule.*** If any person acts with a principal purpose contrary to the purposes of this section, to avoid the effect of the rules of this section or apply the rules of this section to avoid the effect of any other provision of the consolidated return regulations, adjustments must be made as necessary to carry out the purposes of this section.

(h) ***Predecessors and successors.*** For purposes of this section, any reference to a corporation or to a share includes a reference to a successor or predecessor as the context may require. A corporation is a successor if its earnings and profits are determined, directly or indirectly, in whole or in part, by reference to the earnings and profits of another corporation (the predecessor). A share is a successor if its basis is determined, directly or indirectly, in whole or in part, by reference to the basis of another share (the predecessor).

(i) [Reserved]

(j) ***Effective/applicability date*** —

(1) ***General rule.*** This section applies with respect to determinations of the earnings and profits of a member (e.g., for purposes of a characterizing a distribution to which section 301 applies) in consolidated return years beginning on or after January 1, 1995. If this section applies, earnings and profits must be determined or redetermined as if this section were in effect for all years (including, for example, the consolidated return years of another consolidated group to the extent the earnings and profits from those years are still reflected). For example, if a distribution by P to a nonmember shareholder in 1990 was a dividend because of an unabsorbed loss carryover attributable to S, P's earnings and profits in tax years beginning after January 1, 1995 are redetermined by taking into account a negative adjustment in the tax year S's loss arose and in 1990 for P's distribution, and any subsequent absorption of the loss has no effect on earnings and profits. Any such determination or redetermination does not, however, affect any prior period. Thus, the shareholder's treatment in 1990 of the distribution as a dividend (and the effect of the distribution on stock basis) is not redetermined under this section. Paragraphs (a)(2) and (e)(2)(i)(A) of this section apply with respect to determinations of the earnings and profits of a member in consolidated return years beginning on or after September 17, 2008. However, taxpayers may apply paragraph (e)(2)(i)(A) of this section with respect to determinations of the earnings and profits of a member in consolidated return years beginning prior to September 17, 2008.

(2) ***Dispositions of stock before effective date*** —

(i) ***In general.*** If P disposes of stock of S in a consolidated return year beginning before January 1, 1995, the amount of P's earnings and profits with respect to S are not redetermined under paragraph (j)(1) of this section. See § 1.1502-19 as contained in the 26 CFR part 1 edition revised as of April 1, 1994 for the definition of disposition, and paragraph (j)(5) of this section for the rules applicable to such dispositions.

(ii) ***Lower-tier members.*** Although P disposes of S's stock in a tax year beginning before January 1, 1995, S's determinations or adjustments with respect to lower-tier members with which it continues to file a consolidated return are redetermined in accordance with the rules of this section (even if S's earnings and profits were previously taken into account by P). For example, assume that P owns all of S's stock, S owns all of T's stock, and T owns all of U's stock. If S sells 80% of T's stock in a tax year beginning before January 1, 1995 (the effective date), the amount of S's earnings and profits from the sale, and the adjustments to stock basis for earnings and profits purposes that are reflected in that amount, are not redetermined if P sells S's stock after the effective date. If S sells the remaining 20% of T's stock after the effective

date, S's stock basis adjustments with respect to that T stock are also not redetermined because T became a nonmember before the effective date. However, if T and U continue to file a consolidated return with each other, paragraph (e)(1) of this section did not apply, and T sells U's stock after the effective date, T's earnings and profits with respect to U are redetermined (even though some of the earnings and profits may have been taken into account by S in its prior sale of T's stock before the effective date).

(iii) ***Deferred amounts.*** For purposes of this paragraph (j)(2), a disposition does not include a transaction to which § 1.1502-13, § 1.1502-13T, § 1.1502-14, or § 1.1502-14T applies. Instead, the transaction is deemed to occur as the earnings and profits (if any) are taken into account.

(3) ***Deconsolidations and group structure changes*** —

(i) ***In general.*** Paragraphs (e) and (f) of this section apply with respect to deconsolidations and group structure changes occurring in consolidated return years beginning on or after January 1, 1995.

(ii) ***Prior period group structure changes.*** If there was a group structure change in a consolidated return year beginning before January 1, 1995, and earnings and profits were not determined under § 1.1502-33T(a) as contained in the 26 CFR part 1 edition revised as of April 1, 1994, a distribution in a tax year ending after September 7, 1988, of earnings and profits that are not reflected in the earnings and profits of the distributee member, but would have been so reflected if § 1.1502-33T(a) as contained in the 26 CFR part 1 edition revised as of April 1, 1994 had applied, the negative adjustment under paragraph (b) of this section for distributions does not apply (and there is therefore no offset to the increase in the earnings and profits of the distributee).

(4) ***Deemed dividend elections.*** If there is a deemed distribution and recontribution pursuant to § 1.1502-32(f)(2) as contained in the 26 CFR part 1 edition revised as of April 1, 1994 in a consolidated return year beginning before January 1, 1995, the deemed distribution and recontribution under the election are treated as an actual distribution by S and recontribution by P as provided under the election.

(5) ***Prior law.*** For prior determinations, see prior regulations under section 1502 as in effect with respect to the determination. See, e.g., §§ 1.1502-33 and 1.1502-33T as contained in the 26 CFR part 1 edition revised as of April 1, 1994.

(k) ***Effective/applicability date.*** Paragraph (d)(5)(i)(D) of this section applies to any original consolidated Federal income tax return due (without extensions) after June 14, 2007. For original consolidated Federal income tax returns due (without extensions) after May 30, 2006, and on or before June 14, 2007, see § 1.1502-33T as contained in 26 CFR part 1 in effect on April 1, 2007. For original consolidated Federal income tax returns due (without extensions) on or before May 30, 2006, see § 1.1502-33 as contained in 26 CFR part 1 in effect on April 1, 2006.

[T.D. 8560, 59 FR 41695, Aug. 15, 1994, as amended by T.D. 8597, 60 FR 36710, July 18, 1995; T.D. 9264, 71 FR 30603, May 30, 2006; T.D. 9329, 72 FR 32805, June 14, 2007; T.D. 9424, 73 FR 53951, Sept. 17, 2008; 73 FR 62204, Oct. 20, 2008]

§ 1.1502-34 Special aggregate stock ownership rules.

(a) ***Determination of stock ownership.*** For purposes of the consolidated return regulations, in determining the stock ownership of a member of a group in another corporation (issuing corporation) for purposes of determining the application of section 165(g)(3)(A), 332(b)(1), 351(a), 732(f), or 904(f) in a consolidated return year, stock in the issuing corporation owned by all other members of the group is included. For the determination of whether a member of the group is an 80-percent distributee, *see* section 337(c) (providing that, for purposes of section 337, the determination of whether any corporation is an 80-percent distributee is made without regard to any consolidated return regulation).

(b) ***Example regarding liquidation of member.*** The following example illustrates the stock ownership aggregation rule set forth in paragraph (a) of this section.

(1) ***Facts.*** P wholly owns A, B, and C, each of which is a member of the P group. A, B, and C each owns $33^{1}/_{3}$ percent of the stock of D. D liquidates in a transaction purported to qualify under section 332.

(2) ***Analysis.*** For purposes of determining satisfaction of the 80-percent stock ownership requirement under section 332(b)(1), under the stock ownership aggregation rule set forth in paragraph (a) of this section: A is treated as owning all of the D stock owned by B and C; B is treated as owning all of the D stock owned by A and C; and C is treated as owning all of the D stock owned by A and B. Therefore, each of A, B, and C is treated as owning 100 percent of the stock of D and thus meeting the 80-percent stock ownership requirement for purposes of section 332. However, none of A, B, or C is treated as an 80-percent distributee for purposes of section 337. *See* section 337(c). Therefore, section 337(a) does not apply.

[T.D. 10018, 89 FR 106871, Dec. 30, 2024]

§ 1.1502-35 Transfers of subsidiary stock and deconsolidations of subsidiaries.

(a) ***In general*** —

(1) ***Purpose.*** The purpose of this section is to prevent a group from obtaining more than one tax benefit from a single economic loss. The provisions of this section shall be construed in a manner that is consistent with that purpose and in a manner that reasonably carries out that purpose.

(2) ***Dates of applicability.*** This section applies if—

(i) On or after March 7, 2002, a member recognizes a loss on the disposition of a share of stock of a subsidiary (or, on or after April 10, 2007, a share of stock of a former subsidiary) or a carryover basis asset (subject to paragraph (c)(6) of this section),

(ii) The member's loss on the share of subsidiary stock or the carryover basis asset is allowed on or before the date that is ten years after the disposition of the share or carryover basis asset, and

(iii) If the disposition is of a share of subsidiary stock, it is not a transfer to which § 1.1502-36 applies.

(b) ***Redetermination of basis on certain nondeconsolidating transfers of subsidiary stock and on certain deconsolidations of subsidiaries*** —

(1) ***Redetermination of basis on certain nondeconsolidating transfers of subsidiary stock.*** Except as provided in paragraph (b)(3)(i) of this section, if, immediately after a transfer of stock of a subsidiary that has a basis that exceeds its value, the subsidiary remains a member of the group, then the basis in each share of subsidiary stock owned by each member of the group shall be redetermined in accordance with the provisions of this paragraph (b)(1) immediately before such transfer. All of the members' bases in the shares of subsidiary stock immediately before such transfer shall be aggregated. Such aggregated basis shall be allocated first to the shares of the subsidiary's preferred stock that are owned by the members of the group immediately before such transfer, in proportion to, but not in excess of, the value of those shares at such time. After allocation of the aggregated basis to all shares of the preferred stock of the subsidiary pursuant to the preceding sentence, any remaining basis shall be allocated among all common shares of subsidiary stock held by members of the group immediately before the transfer, in proportion to the value of such shares at such time.

(2) ***Redetermination of basis on certain deconsolidations of subsidiaries*** —

(i) ***Allocation of reallocable basis amount.*** Except as provided in paragraph (b)(3)(ii) of this section, if, immediately before a deconsolidation of a subsidiary, any share of stock of such subsidiary owned by a member of the group has a basis that exceeds its value, then the basis in each share of the subsidiary's stock owned by each member of the group shall be redetermined in accordance with the provisions of this paragraph (b)(2) immediately before such deconsolidation. The basis in each share of the subsidiary's stock held by members of the group immediately before the deconsolidation that has a basis in excess of value at such time shall be reduced, but not below such share's value, in a manner that, to the greatest extent possible, causes the ratio of the basis to the value of each such share to be the same; provided, however, that the aggregate amount of such reduction shall not exceed the reallocable basis amount (as computed pursuant to paragraph (b)(2)(ii) of this section). Then, to the extent of the reallocable basis amount, the basis of each share of the preferred stock of the subsidiary that are held by members of the group immediately before the deconsolidation shall be increased, but not above such share's value, in a manner that, to the greatest extent possible, causes the ratio of the basis to the value of each such share to be the same. Then, to the extent that the reallocable basis amount does not increase the basis of shares of preferred stock of the subsidiary pursuant to the third sentence of this paragraph (b)(2)(i), such amount shall increase the basis of all common shares of the subsidiary's stock held by members of the group immediately before the deconsolidation in a manner that, to the greatest extent possible, causes the ratio of the basis to the value of each such share to be the same.

(ii) ***Calculation of reallocable basis amount.*** The reallocable basis amount shall equal the lesser of—

(A) The aggregate of all amounts by which, immediately before the deconsolidation, the basis exceeds the value of a share of subsidiary stock owned by any member of the group at such time; and

(B) The total of the subsidiary's (and any predecessor's) items of deduction and loss, and the subsidiary's (and any predecessor's) allocable share of items of deduction and loss of all lower-tier subsidiaries, that were taken into account in computing the adjustment under § 1.1502-32 to the bases of shares of stock of the subsidiary (and any predecessor) held by members of the group immediately before the deconsolidation, other than shares that have bases in excess of value immediately before the deconsolidation.

(3) ***Exceptions to application of redetermination rules.***

(i) Paragraph (b)(1) of this section shall not apply to a transfer of subsidiary stock if—

(A) During the taxable year of such transfer, in one or more fully taxable transactions, the members of the group dispose of all of the shares of the subsidiary stock that they own immediately before the transfer, other than the shares the transfer of which would otherwise trigger the application of paragraph (b)(1) of this section, to a person or persons that are not members of the group;

(B) During the taxable year of such transfer, the members of the group are allowed a worthless stock loss under section 165(g) (taking into account the provisions of § 1.1502-80(c)) with respect to all of the shares of subsidiary stock that they own immediately before the transfer, other than the shares the transfer of which would otherwise trigger the application of paragraph (b)(1) of this section; or

(C) Such transfer is to a member of the group and section 332 (provided the stock is transferred to an 80-percent distributee), section 351, section 354, or section 361 applies to such transfer.

(ii) Paragraph (b)(2) of this section shall not apply to a deconsolidation of a subsidiary if—

(A) During the taxable year of such deconsolidation, in one or more fully taxable transactions, the members of the group dispose of all of the shares of the subsidiary stock that they own immediately before the deconsolidation to a person or persons that are not members of the group;

(B) Such deconsolidation results from a fully taxable disposition, to a person or persons that are not members of the group, of some of the shares of the subsidiary, and, during the taxable year of such deconsolidation, the members of the group are allowed a worthless stock loss under section 165(g) with respect to all of the shares of the subsidiary stock that they own immediately after the deconsolidation;

(C) The members of the group are allowed a worthless stock loss under section 165(g) with respect to all of the shares of the subsidiary stock that they own immediately before the deconsolidation;

(D) The deconsolidation of the subsidiary results from the deconsolidation of a higher-tier subsidiary and, immediately after the deconsolidation of the subsidiary, none of the stock of the subsidiary is owned by a group member; or

(E) The deconsolidation of the subsidiary results from a termination of the group.

(4) ***Special rule for lower-tier subsidiaries.*** If, immediately after a transfer of subsidiary stock or a deconsolidation of a subsidiary, a lower-tier subsidiary some of the stock of which is owned by the subsidiary is a member of the group, then, for purposes of applying this paragraph (b), the subsidiary shall be treated as having transferred its stock of the lower-tier subsidiary. This principle shall apply to stock of subsidiaries that are owned by such lower-tier subsidiary.

(5) ***Stock basis adjustments for higher-tier stock.*** The basis adjustments required under this paragraph (b) result in basis adjustments to higher-tier member stock. The adjustments are applied in the order of the tiers, from the lowest to highest. For example, if a common parent owns stock of a subsidiary that owns stock of a lower-tier subsidiary and the subsidiary recognizes a loss on the disposition of

a portion of its shares of the lower-tier subsidiary stock, the common parent must adjust its basis in its subsidiary stock under the principles of § 1.1502-32 to reflect the adjustments that the subsidiary must make to its basis in its stock of the lower-tier subsidiary.

(6) ***Ordering rules.***

(i) The rules of this paragraph (b) apply after the rules of § 1.1502-32 are applied.

(ii) The rules of this paragraph (b) apply before the rules of § 1.337(d)-2 and paragraphs (c) and (f) of this section are applied.

(iii) This paragraph (b) (and any resulting basis adjustments to higher-tier member stock made pursuant to paragraph (b)(5) of this section) applies to redetermine the basis of stock of a lower-tier subsidiary before this paragraph (b) applies to a higher-tier member of such lower-tier subsidiary.

(c) ***Loss suspension*** —

(1) ***General rule.*** Any loss recognized by a member of a consolidated group with respect to the disposition of a share of subsidiary stock shall be suspended to the extent of the duplicated loss with respect to such share of stock if, immediately after the disposition, the subsidiary is a member of the consolidated group of which it was a member immediately prior to the disposition (or any successor group).

(2) ***Special rule for lower-tier subsidiaries.*** This paragraph (c)(2) applies if neither paragraph (c)(1) nor (f) of this section applies to a member's disposition of a share of stock of a subsidiary (the departing member), a loss is recognized on the disposition of such share, and the departing member owns stock of one or more other subsidiaries (a remaining member) that is a member of such group immediately after the disposition. In that case, such loss shall be suspended to the extent the duplicated loss with respect to the departing member stock disposed of is attributable to the remaining member or members.

(3) ***Treatment of suspended loss*** —

(i) ***General rule.*** For purposes of the rules of § 1.1502-32, any loss suspended pursuant to paragraph (c)(1) or (c)(2) of this section is treated as a noncapital, nondeductible expense of the member that disposes of subsidiary stock, incurred during the taxable year that includes the date of the disposition of stock to which paragraph (c)(1) or (c)(2) of this section applies. See § 1.1502-32(b)(3)(iii)(C). Consequently, the basis of a higher-tier member's stock of the member that disposes of subsidiary stock is reduced by the suspended loss in the year it is suspended.

(ii) ***Location of suspended loss following deconsolidation of selling member.*** If a member recognizes a loss that is suspended under this paragraph (c) but that member ceases to be a member of the group before the loss is allowable, the common parent is treated as succeeding to the loss in a transaction to which section 381(a) applies.

(4) ***Reduction of suspended loss*** —

(i) ***General rule.*** The amount of any loss suspended pursuant to paragraph (c)(1) or (c)(2) of § 1.1502-35 shall be reduced, but not below zero, by the subsidiary's (and any successor's) items of deduction and loss, and the subsidiary's (and any successor's) allocable share of items of deduction and loss of all lower-tier subsidiaries, that are allocable to the period beginning on

the date of the disposition that gave rise to the suspended loss and ending on the day before the first date on which the subsidiary (and any successor) is not a member of the group of which it was a member immediately prior to the disposition (or any successor group), and that are taken into account in determining consolidated taxable income (or loss) of such group for any taxable year that includes any date on or after the date of the disposition and before the first date on which the subsidiary (and any successor) is not a member of such group; provided, however, that such reduction shall not exceed the excess of the amount of such items over the amount of such items that are taken into account in determining the basis adjustments made under § 1.1502-32 to stock of the subsidiary (or any successor) owned by members of the group. The preceding sentence shall not apply to items of deduction and loss to the extent that the group can establish that all or a portion of such items was not reflected in the computation of the duplicated loss with respect to the subsidiary on the date of the disposition of stock that gave rise to the suspended loss.

(ii) *Operating rules* —

(A) ***Year in which deduction or loss is taken into account.*** For purposes of paragraph (c)(4)(i) of this section, a subsidiary's (or any successor's) deductions and losses are treated as taken into account when and to the extent they are absorbed by the subsidiary (or any successor) or any other member. To the extent that the subsidiary's (or any successor's) deduction or loss is absorbed in the year it arises or is carried forward and absorbed in a subsequent year (e.g., under section 172, 465, or 1212), the deduction is treated as taken into account in the year in which it is absorbed. To the extent that a subsidiary's (or any successor's) deduction or loss is carried back and absorbed in a prior year (whether consolidated or separate), the deduction or loss is treated as taken into account in the year in which it arises and not in the year in which it is absorbed.

(B) ***Determination of items that are allocable to the post-disposition, pre-deconsolidation period.*** For purposes of paragraph (c)(4)(i) of this section, the determination of whether a subsidiary's (or any successor's) items of deduction and loss and allocable share of items of deduction and loss of all lower-tier subsidiaries are allocable to the period beginning on the date of the disposition of subsidiary stock that gave rise to the suspended loss and ending on the day before the first date on which the subsidiary (or any successor) is not a member of the consolidated group of which it was a member immediately prior to the disposition (or any successor group) is determined pursuant to the rules of § 1.1502-76(b)(2), without regard to § 1.1502-76(b)(2)(ii)(D), as if the subsidiary ceased to be a member of the group at the end of the day before the disposition and filed separate returns for the period beginning on the date of the disposition and ending on the day before the first date on which it is not a member of such group.

(5) *Allowable loss* —

(i) ***General rule.*** To the extent not reduced under paragraph (c)(4) of this section, any loss suspended pursuant to paragraph (c)(1) or (c)(2) of this section shall be allowed, to the extent otherwise allowable under applicable provisions of the Internal Revenue Code and regulations, on a return filed by the group of which the subsidiary was a member on the date of the disposition of subsidiary stock that gave rise to the suspended loss (or any successor group) for the taxable year that includes the earlier of—

(A) The day before the first date on which the subsidiary (and any successor) is not a member of such group or the date the group is allowed a worthless stock loss under section 165 (taking into account the provisions of § 1.1502-80(c)) with respect to all of the subsidiary stock owned by members and;

(B) The date that is ten years after the date of the disposition of subsidiary stock that gave rise to the suspended loss.

(ii) ***No tiering up of certain adjustments.*** No adjustments shall be made to a member's basis of stock of a subsidiary (or any successor) for a suspended loss that is taken into account under paragraph (c)(5)(i) of this section. See § 1.1502-32(a)(2).

(iii) ***Statement of allowed loss.*** Paragraph (c)(5)(i) of this section applies only if the separate statement required under this paragraph (c)(5)(iii) is filed with, or as part of, the taxpayer's return for the year in which the loss is allowable. The statement must be entitled "ALLOWED LOSS UNDER § 1.1502-35(c)(5)" and must contain the name and employer identification number of the subsidiary the stock of which gave rise to the loss.

(6) ***Special rule for dispositions of certain carryover basis assets.*** If—

(i) A member of a group recognizes a loss on the disposition of an asset other than stock of a subsidiary;

(ii) Such member's basis in the asset disposed of was determined, directly or indirectly, in whole or in part, by reference to the basis of stock of a subsidiary and, at the time of the determination of the member's basis in the asset disposed of, there was a duplicated loss with respect to such stock of the subsidiary; and

(iii) Immediately after the disposition, the subsidiary is a member of such group, then such loss shall be suspended pursuant to the principles of paragraphs (c)(1) and (c)(2) of this section to the extent of the duplicated loss with respect to such stock at the time of the determination of basis of the asset disposed of. Principles similar to those set forth in paragraphs (c)(3), (c)(4), and (c)(5) of this section shall apply to a loss suspended pursuant to this paragraph (c)(6).

(7) ***Coordination with loss deferral, loss disallowance, and other rules*** —

(i) ***In general.*** Loss recognized on the disposition of subsidiary stock or another asset is subject to redetermination, deferral, or disallowance under other applicable provisions of the Internal Revenue Code and regulations thereunder, including sections 267(f) and 482. Paragraphs (c)(1), (c)(2), and (c)(6) of this section do not apply to a loss that is disallowed under any other provision. If loss is deferred under any other provision, paragraphs (c)(1), (c)(2), and (c)(6) of this section apply when the loss would otherwise be taken into account under such other provision. However, if an overriding event described in paragraph (c)(7)(ii) of this section occurs before the deferred loss is taken into account, paragraphs (c)(1), (c)(2), and (c)(6) of this section apply to the loss immediately before the event occurs, even though the loss may not be taken into account until a later time.

(ii) ***Overriding events.*** For purposes of paragraph (c)(7)(i) of this section, the following are overriding events—

(A) The stock ceases to be owned by a member of the consolidated group;

(B) The stock is canceled or redeemed (regardless of whether it is retired or held as treasury stock); or

(C) The stock is treated as disposed of under § 1.1502-19(c)(1)(ii)(B) or (c)(1)(iii).

(8) ***No elimination of economic loss.*** This paragraph (c) shall not be applied in a manner that permanently disallows a deduction for an economic loss, provided that such deduction is otherwise allowable. If the application of any provision of this paragraph (c) results in such a disallowance, proper adjustment may be made to prevent such a disallowance. Whether a provision of this paragraph (c) has resulted in such a disallowance is determined on the date on which the subsidiary (or any successor) the disposition of the stock of which gave rise to a suspended stock loss is not a member of the group or the date the group is allowed a worthless stock loss under section 165(g) (taking into account the provisions of § 1.1502-80(c)) with respect to all of such subsidiary stock owned by members. Proper adjustment in such cases shall be made by restoring the suspended stock loss immediately before the subsidiary ceases to be a member of the group or the group is allowed a worthless stock loss under section 165(g) (taking into account the provisions of § 1.1502-80(c)) with respect to all of such subsidiary stock owned by members, to the extent that its reduction pursuant to paragraph (c)(4) of this section had the result of permanently disallowing a deduction for an economic loss.

(9) ***Ordering rule.*** The rules of this paragraph (c) apply after the rules of paragraph (b) of this section and § 1.337(d)-2 are applied.

(d) ***Definitions*** —

(1) ***Disposition*** means any event in which gain or loss is recognized, in whole or in part.

(2) ***Deconsolidation*** means any event that causes a subsidiary to no longer be a member of the consolidated group.

(3) ***Value*** means fair market value.

(4) ***Duplicated loss*** —

(i) ***In general.*** Duplicated loss is determined immediately after a disposition and equals the excess, if any, of—

(A) The sum of—

(*1*) The aggregate adjusted basis of the subsidiary's assets other than any stock that subsidiary owns in another subsidiary;

(*2*) Any losses attributable to the subsidiary and carried to the subsidiary's first taxable year following the disposition; and

(*3*) Any deductions of the subsidiary that have been recognized but are deferred under a provision of the Internal Revenue Code (such as deductions deferred under section 469); over

(B) The sum of—

(*1*) The value of the subsidiary's stock; and

(*2*) Any liabilities of the subsidiary that have been taken into account for tax purposes.

(ii) ***Special rules.***

(A) The amounts determined under paragraph (d)(4)(i) (other than amounts described in paragraph (d)(4)(i)(B)(1)) of this section with respect to a subsidiary include its allocable share of corresponding amounts with respect to all lower-tier subsidiaries. If 80 percent or more in value of the stock of a subsidiary is acquired by purchase in a single transaction (or in a series of related transactions during any 12-month period), the value of the subsidiary's stock may not exceed the purchase price of the stock divided by the percentage of the stock (by value) so purchased. For this purpose, stock is acquired by purchase if the transferee is not related to the transferor within the meaning of sections 267(b) and 707(b)(1), using the language "10 percent" instead of "50 percent" each place that it appears, and the transferee's basis in the stock is determined wholly by reference to the consideration paid for such stock.

(B) The amounts determined under paragraph (d)(4)(i) of this section are not applied more than once to suspend a loss under this section.

(5) ***Predecessor and successor.*** A predecessor is a transferor of assets to a transferee (the successor) in a transaction—

(i) To which section 381(a) applies;

(ii) In which substantially all of the assets of the transferor are transferred to members in a complete liquidation;

(iii) In which the successor's basis in assets is determined (directly or indirectly, in whole or in part) by reference to the transferor's basis in such assets, but the transferee is a successor only with respect to the assets the basis of which is so determined; or

(iv) Which is an intercompany transaction, but only with respect to assets that are being accounted for by the transferor in a prior intercompany transaction.

(6) ***Successor group.*** A surviving group is treated as a successor group of a consolidated group (the terminating group) that ceases to exist as a result of—

(i) The acquisition by a member of another consolidated group of either the assets of the common parent of the terminating group in a reorganization described in section 381(a)(2), or the stock of the common parent of the terminating group; or

(ii) The application of the principles of § 1.1502-75(d)(2) or (3).

(7) ***Preferred stock, common stock.*** Preferred stock and common stock shall have the meanings set forth in § 1.1502-32(d)(2) and (3), respectively.

(8) ***Higher-tier.*** A subsidiary is higher-tier with respect to a member if or to the extent investment adjustments under § 1.1502-32 with respect to the stock of the latter member would affect investment adjustments with respect to the stock of the former member.

(9) ***Lower-tier.*** A subsidiary is lower-tier with respect to a member if or to the extent investment basis adjustments under § 1.1502-32 with respect to the stock of the former member would affect investment adjustments with respect to the stock of the latter member.

(e) ***Examples.*** For purposes of the examples in this section, unless otherwise stated, all groups file consolidated returns on a calendar-year basis, the facts set forth the only corporate activity, all transactions are between unrelated persons, and tax liabilities are disregarded. In addition, all

transactions described in section 362(a) are completed before October 22, 2004, and therefore are not subject to section 362(e)(2). The principles of paragraphs (a) through (d) of this section are illustrated by the following examples:

Example 1. Nondeconsolidating sale of preferred stock of lower-tier subsidiary. (i) *Facts.* P owns 100 percent of the common stock of each of S1 and S2. S1 and S2 each have only one class of stock outstanding. P's basis in the stock of S1 is $100 and the value of such stock is $130. P's basis in the stock of S2 is $120 and the value of such stock is $90. P, S1, and S2 are all members of the P group. S1 and S2 form S3. In Year 1, in transfers to which section 351 applies, S1 contributes $100 to S3 in exchange for all of the common stock of S3 and S2 contributes an asset with a basis of $50 and a value of $20 to S3 in exchange for all of the preferred stock of S3. S3 becomes a member of the P group. In Year 3, in a transaction that is not part of the plan that includes the contributions to S3, S2 sells the preferred stock of S3 for $20. Immediately after the sale, S3 is a member of the P group.
(ii) *Application of basis redetermination rule.* Because S2's basis in the preferred stock of S3 exceeds its value immediately prior to the sale and S3 is a member of the P group immediately after the sale, all of the P group members' bases in the stock of S3 is redetermined pursuant to paragraph (b)(1) of this section. Of the group members' total basis of $150 in the S3 stock, $20 is allocated to the preferred stock, the fair market value of the preferred stock on the date of the sale, and $130 is allocated to the common stock. S2's sale of the preferred stock results in the recognition of $0 of gain/loss. Pursuant to paragraph (b)(5) of this section, the redetermination of S1's and S2's bases in the stock of S3 results in adjustments to P's basis in the stock of S1 and S2. In particular, P's basis in the stock of S1 is increased by $30 to $130 and its basis in the stock of S2 is decreased by $30 to $90.

Example 2. Deconsolidating sale of common stock. (i) *Facts.* In Year 1, in a transfer to which section 351 applies, P contributes Asset A with a basis of $900 and a value of $200 to S in exchange for one share of S common stock (CS1). In Years 2 and 3, in successive but unrelated transfers to which section 351 applies, P transfers $200 to S in exchange for one share of S common stock (CS2), Asset B with a basis of $300 and a value of $200 in exchange for one share of S common stock (CS3), and Asset C with a basis of $1000 and a value of $200 in exchange for one share of S common stock (CS4). In Year 4, S sells Asset A for $200, recognizing $700 of loss that is used to offset income of P recognized during Year 4. As a result of the sale of Asset A, the basis of each of P's four shares of S common stock is reduced by $175. Therefore, the basis of CS1 is $725. The basis of CS2 is $25. The basis of CS3 is $125, and the basis of CS4 is $825. In Year 5 in a transaction that is not part of a plan that includes the Year 1 contribution, P sells CS4 for $200. Immediately after the sale of CS4, S is not a member of the P group.
(ii) *Application of basis redetermination rule.* Because P's basis in each of CS1 and CS4 exceeds its value immediately prior to the deconsolidation of S, P's basis in its shares of S common stock is redetermined pursuant to paragraph (b)(2) of this section. Pursuant to paragraph (b)(2)(ii) of this section, the reallocable basis amount is $350 (the lesser of $1150, the gross loss inherent in the

stock of S owned by P immediately before the sale, and $350, the aggregate amount of S's items of deduction and loss that were previously taken into account in the computation of the adjustment to the basis of the stock of S that P did not hold at a loss immediately before the deconsolidation). Pursuant to paragraph (b)(2)(i) of this section, first, P's basis in CS1 is reduced from $725 to $600 and P's basis in CS4 is reduced from $825 to $600. Then, the reallocable basis amount increases P's basis in CS2 from $25 to $250 and P's basis in CS3 from $125 to $250. P recognizes $400 of loss on the sale of CS4. The loss suspension rule does not apply because S is no longer a member of the P group. Thus, the loss is allowable at that time.

Example 3. Nondeconsolidating sale of common stock. (i) *Facts.* In Year 1, P forms S with a contribution of $80 in exchange for 80 shares of the common stock of S, which at that time represents all of the outstanding stock of S. S becomes a member of the P group. In Year 2, P contributes Asset A with a basis of $50 and a value of $20 in exchange for 20 shares of the common stock of S in a transfer to which section 351 applies. In Year 4, in a transaction that is not part of the plan that includes the Year 2 contribution, P sells the 20 shares of the common stock of S that it acquired in Year 2 for $20. Immediately after the Year 4 stock sale, S is a member of the P group. At the time of the Year 4 stock sale, S has $80 and Asset A. In Year 5, S sells Asset A, the basis and value of which have not changed since its contribution to S. On the sale of Asset A for $20, S recognizes a $30 loss. The P group cannot establish that all or a portion of the $30 loss was not reflected in the calculation of the duplicated loss of S on the date of the Year 4 stock sale. The $30 loss is used on the P group return to offset income of P. In Year 6, P sells its remaining S common stock for $80.
(ii) *Application of basis redetermination and loss suspension rules.* Because P's basis in the common stock sold exceeds its value immediately prior to the sale and S is a member of the P group immediately after the sale, P's basis in all of the stock of S is redetermined pursuant to paragraph (b)(1) of this section. Of P's total basis of $130 in the S common stock, a proportionate amount is allocated to each of the 100 shares of S common stock. Accordingly, $26 is allocated to the common stock of S that is sold and $104 is allocated to the common stock of S that is retained. On P's sale of the 20 shares of the common stock of S for $20, P recognizes a loss of $6. Because the sale of the 20 shares of common stock of S does not result in the deconsolidation of S, under paragraph (c)(1) of this section, that loss is suspended to the extent of the duplicated loss with respect to the shares sold. The duplicated loss with respect to the shares sold is $6. Therefore, the entire $6 loss is suspended.

(iii) *Effect of subsequent asset sale on stock basis.* Of the $30 loss recognized on the sale of Asset A, $24 is taken into account in determining the basis adjustments made under § 1.1502-32 to the stock of S owned by P. Accordingly, P's basis in its S stock is reduced by $24 from $104 to $80.

(iv) *Effect of subsequent asset sale on suspended loss.* Because P cannot establish that all or a portion of the loss recognized on the sale of Asset A was not reflected in the calculation of the duplicated loss of S on the date of the Year 4 stock sale and such loss is allocable to the period

beginning on the date of the Year 4 disposition of the S stock and ending on the day before the first date on which S is not a member of the P group and is taken into account in determining consolidated taxable income (or loss) of the P group for a taxable year that includes a date on or after the date of the Year 4 disposition and before the first date on which S is not a member of the P group, such asset loss reduces the suspended loss pursuant to paragraph (c)(4) of this section. The amount of such reduction, however, cannot exceed $6, the excess of the amount of such loss, $30, over the amount of such loss that is taken into account in determining the basis adjustment made to the stock of S owned by P, $24. Therefore, the suspended loss is reduced to zero.

(v) *Effect of subsequent stock sale.* P recognizes $0 gain/loss on the Year 6 sale of its remaining S common stock. No amount of suspended loss remains to be allowed under paragraph (c)(5) of this section.

Example 4. Nondeconsolidating sale of common stock of lower-tier subsidiary. (i) *Facts.* In Year 1, P forms S1 with a contribution of $200 in exchange for all of the common stock of S1, which represents all of the outstanding stock of S1. In the same year, S1 forms S2 with a contribution of $80 in exchange for 80 shares of the common stock of S2, which at that time represents all of the outstanding stock of S2. S1 and S2 become members of the P group. In the same year, S2 purchases Asset A for $80. In Year 2, S1 contributes Asset B with a basis of $50 and a value of $20 in exchange for 20 shares of the common stock of S2 in a transfer to which section 351 applies. In Year 4, S1 sells the 20 shares of the common stock of S2 that it acquired in Year 2 for $20. Immediately after the Year 4 stock sale, S2 is a member of the P group. At the time of the Year 4 stock sale, the bases and values of Asset A and Asset B are unchanged. In Year 5, S2 sells Asset B for $45, recognizing a $5 loss. The P group cannot establish that all or a portion of the $5 loss was not reflected in the calculation of the duplicated loss of S2 on the date of the Year 4 stock sale. The $5 loss is used on the P group return to offset income of P. In Year 6, S1 sells its remaining S2 common stock for $100.
(ii) *Application of basis redetermination and loss suspension rules.* Because S1's basis in the S2 common stock sold exceeds its value immediately prior to the sale and S2 is a member of the P group immediately after the sale, S1's basis in all of the stock of S2 is redetermined pursuant to paragraph (b)(1) of this section. Of S1's total basis of $130 in the S2 common stock, a proportionate amount is allocated to each of the 100 shares of S2 common stock. Accordingly, a total of $26 is allocated to the common stock of S2 that is sold and $104 is allocated to the common stock of S2 that is retained. On S1's sale of the 20 shares of the common stock of S2 for $20, S1 recognizes a loss of $6. Because the sale of the 20 shares of common stock of S2 does not result in the deconsolidation of S2, under paragraph (c)(1) of this section, that loss is suspended to the extent of the duplicated loss with respect to the shares sold. The duplicated loss with respect to the shares sold is $6. Therefore, the entire $6 loss is suspended. Pursuant to paragraph (c)(3) of this section and § 1.1502-32(b)(3)(iii)(C), the suspended loss is treated as a

noncapital, nondeductible expense incurred by S1 during the tax year that includes the date of the disposition of stock to which paragraph (c)(1) of this section applies. Accordingly, P's basis in its S1 stock is reduced from $200 to $194.

(iii) *Effect of subsequent asset sale on stock basis.* Of the $5 loss recognized on the sale of Asset B, $4 is taken into account in determining the basis adjustments made under § 1.1502-32 to the stock of S2 owned by S1. Accordingly, S1's basis in its S2 stock is reduced by $4 from $104 to $100 and P's basis in its S1 stock is reduced by $4 from $194 to $190.

(iv) *Effect of subsequent asset sale on suspended loss.* Because P cannot establish that all or a portion of the loss recognized on the sale of Asset B was not reflected in the calculation of the duplicated loss of S2 on the date of the Year 4 stock sale and such loss is allocable to the period beginning on the date of the Year 4 disposition of the S2 stock and ending on the day before the first date on which S2 is not a member of the P group and is taken into account in determining consolidated taxable income (or loss) of the P group for a taxable year that includes a date on or after the date of the Year 4 disposition and before the first date on which S2 is not a member of the P group, such asset loss reduces the suspended loss pursuant to paragraph (c)(4) of this section. The amount of such reduction, however, cannot exceed $1, the excess of the amount of such loss, $5, over the amount of such loss that is taken into account in determining the basis adjustment made to the stock of S2 owned by members of the P group, $4. Therefore, the suspended loss is reduced to $5.

(v) *Effect of subsequent stock sale.* In year 6, when S1 sells its remaining S2 stock for $100, it recognizes $0 gain/loss. Pursuant to paragraph (c)(5) of this section, the remaining $5 of the suspended loss is allowed on the P group's return for Year 6 when S1 sells its remaining S2 stock.

Example 5. Deconsolidating sale of subsidiary owning stock of another subsidiary that remains in group. (i) *Facts.* In Year 1, P forms S1 with a contribution of Asset A with a basis of $50 and a value of $20 in exchange for 100 shares of common stock of S1 in a transfer to which section 351 applies. Also in Year 1, P and S1 form S2. P contributes $80 to S2 in exchange for 80 shares of common stock of S2. S1 contributes Asset A to S2 in exchange for 20 shares of common stock of S2 in a transfer to which section 351 applies. In Year 3, in a transaction that is not part of a plan that includes the Year 1 contributions, P sells its 100 shares of S1 common stock for $20. Immediately after the Year 3 stock sale, S2 is a member of the P group. At the time of the Year 3 stock sale, S1 owns 20 shares of common stock of S2, and S2 has $80 and Asset A. In Year 4, S2 sells Asset A, the basis and value of which have not changed since its contribution to S2. On the sale of Asset A for $20, S2 recognizes a $30 loss. That $30 loss is used on the P group return to offset income of P. In Year 5, P sells its S2 common stock for $80.
(ii) *Application of basis redetermination and loss suspension rules.* Pursuant to paragraph (b)(4) of this section, because immediately before P's transfer of S1 stock S1 owns stock of S2 (another subsidiary of the same group) that has a basis that exceeds its value, paragraph (b) of this section

applies as if S1 had transferred its stock of S2. Because S2 is a member of the group immediately after the transfer of the S1 stock, the group member's basis in the S2 stock is redetermined pursuant to paragraph (b)(1) of this section immediately prior to the sale of the S1 stock. Of the group members' total basis of $130 in the S2 stock, $26 is allocated to S1's 20 shares of S2 common stock and $104 is allocated to P's 80 shares of S2 common stock. Pursuant to paragraph (b)(5) of this section, the redetermination of S1's basis in the stock of S2 results in an adjustment to P's basis in the stock of S1. In particular, P's basis in the stock of S1 is decreased by $24 to $26. On P's sale of its 100 shares of S1 common stock for $20, P recognizes a loss of $6. Because S1 is not a member of the P group immediately after P's sale of the S1 stock, paragraph (c)(1) of this section does not apply to suspend such loss. However, because P recognizes a loss with respect to the disposition of the S1 stock and S1 owns stock of S2 (which is a member of the P group immediately after the disposition), paragraph (c)(2) of this section does apply to suspend up to $6 of that loss, an amount equal to the amount by which the duplicated loss with respect to the stock of S1 sold is attributable to S2's adjusted basis in its assets, loss carryforwards, and deferred deductions.

(iii) *Effect of subsequent asset sale on stock basis.* Of the $30 loss recognized on the sale of Asset A, $24 is taken into account in determining the basis adjustments made under § 1.1502-32 to the stock of S2 owned by P. Accordingly, P's basis in its S2 stock is reduced by $24 from $104 to $80.

(iv) *Effect of subsequent asset sale on suspended loss.* Because P cannot establish that all or a portion of the loss recognized on the sale of Asset A was not reflected in the calculation of the duplicated loss of S2 on the date of the Year 3 stock sale and such loss is allocable to the period beginning on the date of the Year 3 deemed disposition of the S2 stock and ending on the day before the first date on which S2 is not a member of the P group and is taken into account in determining consolidated taxable income (or loss) of the P group for a taxable year that includes a date on or after the date of the Year 3 deemed disposition and before the first date on which S2 is not a member of the P group, such asset loss reduces the suspended loss pursuant to paragraph (c)(4) of this section. The amount of such reduction, however, cannot exceed $6, the excess of the amount of such loss, $30, over the amount of such loss that is taken into account in determining the basis adjustment made to the stock of S2 owned by P, $24. Therefore, the suspended loss is reduced to zero.

(v) *Effect of subsequent stock sale.* P recognizes $0 gain/loss on the Year 5 sale of its remaining S2 common stock. No amount of suspended loss remains to be allowed under paragraph (c)(5) of this section.

Example 6. Loss recognized on asset with basis determined by reference to stock basis of subsidiary. (i) *Facts.* In Year 1. P forms S with a contribution of $80 in exchange for 80 shares of common stock of S which at that time represents all of the outstanding stock of S. S becomes a member of the P group. In Year 2, P contributes Asset A with a basis of $50 and a value of $20 in

exchange for 20 shares of common stock of S in a transfer to which section 351 applies. In Year 4, in a transaction that is not part of a plan that includes the Year 1 and Year 2 contributions, P contributes the 20 shares of S common stock it acquired in Year 2 to PS, a partnership, in exchange for a 20 percent capital and profits interest in a transaction described in section 721. Immediately after the contribution to PS, S is a member of the P group. In Year 5, P sells its interest in PS for $20.

(ii) *Application of basis redetermination rule upon nonrecognition transfer.* Because P's basis in the S common stock contributed to PS exceeds its value immediately prior to the transfer and S is a member of the P group immediately after the transfer, P's basis in all of the S stock is redetermined pursuant to paragraph (b)(1) of this section. Of P's total basis of $130 in the common stock of S, a proportionate amount is allocated to each share of S common stock. Accordingly, $26 is allocated to the S common stock that is contributed to PS and, under section 722, P's basis in its interest in PS is $26.

(iii) *Application of loss suspension rule on disposition of asset with basis determined by reference to stock basis of subsidiary.* P recognizes a $6 loss on its disposition of its interest in PS. Because P's basis in its interest in PS was determined by reference to the basis of S stock and at the time of the determination of P's basis in its interest in PS such S stock had a duplicated loss of $6, and, immediately after the disposition, S is a member of the P group, such loss is suspended to the extent of such duplicated loss. Principles similar to those of paragraphs (c)(3), (c)(4), and (c)(5) of this section shall apply to such suspended loss.

(f) ***Worthlessness not followed by separate return years.*** Notwithstanding any other provision in the regulations under section 1502, if a member of a group (the claiming group) treats stock of a subsidiary as worthless under section 165 (taking into account the provisions of § 1.1502-80(c)) and, on the day following the last day of the claiming group's taxable year in which the worthless stock deduction is claimed, the subsidiary (or its successor, determined without regard to paragraphs (d)(5)(iii) and (iv) of this section) is a member of a group that includes any corporation that, during that taxable year, was a member of the claiming group (other than a lower-tier subsidiary of the subsidiary) or is a successor (determined without regard to paragraphs (d)(5)(iii) and (iv) of this section) of such a member, then all losses treated as attributable to the subsidiary under the principles of § 1.1502-21(b)(2)(iv) shall be treated as expired as of the beginning of the day following the last day of the claiming group's taxable year in which the worthless stock deduction is claimed. In addition, notwithstanding any other provision in the regulations under section 1502, if a member recognizes a loss with respect to subsidiary stock and on the following day the subsidiary is not a member of the group and does not have a separate return year, then all losses treated as attributable to the subsidiary under the principles of § 1.1502-21(b)(2)(iv) shall be treated as expired as of the beginning of the day following the last day of the group's taxable year in which the stock loss is claimed. For purposes of this paragraph (f), the determination of the losses attributable to the subsidiary shall be made after computing the taxable income of the group for the taxable year in which the group treats the stock of the subsidiary as worthless or the subsidiary liquidates and after computing the taxable income for any taxable year to which such losses may be carried back. The loss treated as expired under this paragraph (f) shall not be treated as a noncapital, nondeductible expense under § 1.1502-32(b)(2)(iii). This paragraph (f) applies to worthlessness determinations and

liquidations that occur on or after March 10, 2006. For rules applicable to worthless determinations and liquidations before March 10, 2006, see § 1.1502-35T(f)(1) and (2) as contained in 26 CFR part 1 in effect on January 1, 2006.

(g) *Anti-avoidance rules* —

(1) ***Transfer of share without a loss in avoidance.*** If a share of subsidiary stock has a basis that does not exceed its value and the share is transferred with a view to avoiding application of the rules of paragraph (b) of this section prior to the transfer of a share of subsidiary stock that has a basis that does exceed its value or a deconsolidation of a subsidiary, the rules of paragraph (b) of this section shall apply immediately prior to the transfer of stock that has a basis that does not exceed its value.

(2) ***Transfers of loss property in avoidance.*** If a member of a consolidated group contributes an asset with a basis that exceeds its value to a partnership in a transaction described in section 721 or a corporation that is not a member of such group in a transfer described in section 351, such partnership or corporation contributes such asset to a subsidiary in a transfer described in section 351, and such contributions are undertaken with a view to avoiding the rules of paragraph (b) or (c) of this section, adjustments must be made to carry out the purposes of this section.

(3) *Anti-loss reimportation rule* —

(i) ***Conditions for application.*** This paragraph (g)(3) applies when—

(A) A member of a group (selling group) recognized and was allowed a loss with respect to a share of stock of S, a subsidiary or former subsidiary of the selling group;

(B) That stock loss was duplicated (in whole or in part) in S's attributes (duplicating items) at the earlier of the time that the loss was recognized or that S ceased to be a member; and

(C) Within ten years of the date that S ceased to be a member, there is a reimportation event. For this purpose, a reimportation event is any event after which a duplicating item is a reimported item. A reimported item is any duplicating item that is reflected in the attributes of any member of the selling group, including S, or, if not reflected in the attributes, would be properly taken into account by any member of the selling group (for example as the result of a carryback).

(ii) ***Effect of application.*** Immediately before the time that a reimported item (or any portion of a reimported item) would be properly taken into account (but for the application of this paragraph (g)(3)), such item (or such portion of the item) is reduced to zero and no deduction or loss is allowed, directly or indirectly, with respect to that item.

(iii) ***Operating rules.*** For purposes of this paragraph (g)(3)—

(A) The terms *member, subsidiary,* and *group* include their predecessors and successors to the extent necessary to effectuate the purposes of this section; and

(B) The reduction of a reimported item (other than duplicating items that are carried back to a consolidated return year of the selling group) is a noncapital, nondeductible expense within the meaning of § 1.1502-32(b)(3)(iii).

(4) ***Avoidance of recognition of gain.***

(i) If a transaction is structured with a view to, and has the effect of, deferring or avoiding the recognition of gain on a disposition of stock by invoking the application of paragraph (b)(1) of this section to redetermine the basis of stock of a subsidiary, and the stock loss that gives rise to the application of paragraph (b)(1) of this section is not significant, paragraphs (b) and (c) of this section shall not apply.

(ii) If a transaction is structured with a view to, and has the effect of, deferring or avoiding the recognition of gain on a disposition of stock by invoking the application of paragraph (b)(2) of this section to redetermine the basis of stock of a subsidiary, and the duplicated loss of the subsidiary that is reflected in stock of the subsidiary owned by members of the group immediately before the deconsolidation is not significant, paragraphs (b) and (c) of this section shall not apply.

(5) ***Examples.*** For purposes of the examples in this section, all transactions described in section 362(a) are completed before October 22, 2004, and therefore are not subject to section 362(e)(2). The principles of this paragraph (g) are illustrated by the following examples:

> *Example 1. Transfers of property in the avoidance of basis redetermination rule.* (i) *Facts.* In Year 1, P forms S with a contribution of $100 in exchange for 100 shares of common stock of S which at that time represents all of the outstanding stock of S. S becomes a member of the P group. In Year 2, P contributes 20 shares of common stock of S to PS, a partnership, in exchange for a 20 percent capital and profits interest in a transaction described in section 721. In Year 3, P contributes Asset A with a basis of $50 and a value of $20 to PS in exchange for an additional capital and profits interest in PS in a transaction described in section 721. Also in Year 3, PS contributes Asset A to S and P contributes an additional $80 to S in transfers to which section 351 applies. In Year 4, S sells Asset A for $20, recognizing a loss of $30. The P group uses that loss to offset income of P. In Year 5, P sells its entire interest in PS for $40.
> (ii) *Analysis.* Pursuant to paragraph (g)(2) of this section, if P's contributions of S stock and Asset A to PS were undertaken with a view to avoiding the application of the basis redetermination or the loss suspension rule, adjustments must be made such that the group does not obtain more than one tax benefit from the $30 loss inherent in Asset A.

> *Example 2. Transfers effecting a reimportation of loss.* (i) *Facts.* In Year 1, P forms S with a contribution of Asset A with a value of $100 and a basis of $120, Asset B with a value of $50 and a basis of $70, and Asset C with a value of $90 and a basis of $100 in exchange for all of the common stock of S and S becomes a member of the P group. In Year 2, in a transaction that is not part of a plan that includes the contribution, P sells the stock of S for $240, recognizing a loss of $50. At such time, the bases and values of Assets A, B, and C have not changed since their contribution to S. In Year 3, S sells Asset A, recognizing a $20 loss. In Year 3, S merges into M in a reorganization described in section 368(a)(1)(A). In Year 8, P purchases all of the stock of M for $300. At that time, M has a $10 net operating loss. In addition, M owns Asset D, which was acquired in an exchange described in section 1031 in

connection with the surrender of Asset B. Asset C has a value of $80 and a basis of $100. Asset D has a value of $60 and a basis of $70. In Year 9, P has operating income of $100 and M recognizes $20 of loss on the sale of Asset C. In Year 10, P has operating income of $50 and M recognizes $50 of loss on the sale of Asset D.
(ii) *Analysis.* P's $50 loss on the sale of S stock is entirely attributable to duplicated loss. Therefore, pursuant to paragraph (g)(3) of this section, assuming the P group cannot establish otherwise, M's $10 net operating loss is treated as attributable to assets that were owned by S on the date of the disposition and that had bases in excess of value on such date. Without regard to any other limitations on the group's use of M's net operating loss, the P group cannot use M's $10 net operating loss pursuant to paragraph (g)(3)(iii)(D) of this section. Pursuant to paragraph (g)(3)(iv) of this section and § 1.1502-32(b)(3)(iii)(D), such loss is treated as a noncapital, nondeductible expense of M incurred during the taxable year that it would otherwise be absorbed, namely in Year 9. In addition, the P group is denied the use of $10 of the loss recognized on the sale of Asset C. Finally, the P group is denied the use of $10 of the loss recognized on the sale of Asset D. Pursuant to paragraph (g)(3)(iv) of this section and § 1.1502-32(b)(3)(iii)(D), each such disallowed loss is treated as a noncapital, nondeductible expense of M incurred during the taxable year that includes the date of the disposition of the asset with respect to which such loss was recognized.

Example 3. Transfers to avoid recognition of gain. (i) *Facts.* P owns all of the stock of S1 and S2. The S2 stock has a basis of $400 and a value of $500. S1 owns 50% of the S3 common stock with a basis of $150. S2 owns the remaining 50% of the S3 common stock with a basis of $100 and a value of $200 and one share of S3 preferred stock with a basis of $10 and a value of $9. P intends to sell all of its S2 stock to an unrelated buyer. P, therefore, engages in the following steps to dispose of S2 without recognizing a substantial portion of the built-in gain in S2. First, P causes a recapitalization of S3 in which S2's S3 common stock is exchanged for new S3 preferred shares. P then sells all of its S2 stock. Immediately after the sale of the S2 stock, S3 is a member of the P group.
(ii) *Analysis.* Pursuant to paragraph (b)(4) of this section, because S2 owns stock of S3 (another subsidiary of the same group) and, immediately after the sale of the S2 stock, S3 is a member of the group, then for purposes of applying paragraph (b) of this section, S2 is deemed to have transferred its S3 stock. Because S3 is a member of the group immediately after the transfer of the S2 stock and the S3 stock deemed transferred has a basis in excess of value, the group in the S3 stock is redetermined pursuant to paragraph (b)(1) of this section immediately prior to the sale of the S2 stock. Accordingly, P would recognize only $1 of gain on the sale of its S2 stock. However, because the recapitalization of the S3 was structured with a view to, and has the effect of, avoiding the recognition of gain on a disposition of stock by invoking the application of paragraph (b) of this section, paragraph (g)(4)(i) of this section applies. Accordingly, paragraph (b) of this section does not apply upon P's disposition of the S2 stock and P recognizes $100 gain on the disposition of the S2 stock.

(6) ***General anti-avoidance rule.*** If a taxpayer acts with a view to avoid the purposes of this section, appropriate adjustments will be made to carry out the purposes of this section.

(h) ***Application of other rules of law.*** See § 1.1502-80(a) regarding the general applicability of other rules of law.

(i) [Reserved]

(j) ***Effective/applicability dates.*** This section applies after September 16, 2008. For prior law, see §§ 1.1502-35 and 1.1502-35T as contained in 26 CFR part 1 in effect on April 1, 2008.

[T.D. 9254, 71 FR 13010, Mar. 14, 2006, as amended by T.D. 9264, 71 FR 30603, 30607, May 30, 2006; T.D. 9254, 71 FR 48473, Aug. 21, 2006; T.D. 9322, 72 FR 17805, Apr. 10, 2007; T.D. 9342, 72 FR 39736, July 20, 2007; T.D. 9424, 73 FR 53951, Sept. 17, 2008; 75 FR 10172, Mar. 5, 2010]

§ 1.1502-36 Unified loss rule.

(a) ***In general*** —

(1) ***Scope.*** This section provides rules for adjusting members' bases in stock of a subsidiary (S) and for reducing S's attributes when a member (M) transfers a loss share of S stock. See paragraph (f) of this section for definitions of the terms used in this section, including *transfer* and *value*.

(2) ***Purpose.*** The rules in this section have two principal purposes. The first is to prevent the consolidated return provisions from reducing a group's consolidated taxable income through the creation and recognition of noneconomic loss on S stock. The second is to prevent members (including former members) of the group from collectively obtaining more than one tax benefit from a single economic loss. Additional purposes are set forth in other paragraphs of this section. The rules of this section must be interpreted and applied in a manner that is consistent with and reasonably carries out the purposes of this section.

(3) ***Overview*** —

(i) ***General application of section.*** This section applies when M transfers a share of S stock and, after taking into account the effects of all applicable rules of law (even if the adjustments required by such provisions are not deemed effective until after the transfer, such as certain adjustments required under sections 108 and 1017 and § 1.1502-28), the share is a loss share. When this section applies, paragraph (b) of this section applies first and may redetermine members' bases in their shares of S stock. If the transferred share is a loss share after any basis redetermination under paragraph (b) of this section, paragraph (c) of this section applies and may reduce M's basis in the transferred loss share. If the transferred share is a loss share after any basis reduction required by paragraph (c) of this section, paragraph (d) of this section applies and may reduce attributes of S and subsidiaries that are lower-tier to S. Although the determination of whether there is a transfer of a loss share is made as of the transfer, this section applies, and any adjustments it requires are given effect, immediately before the transfer. Paragraphs (e), (f), and (g) of this section provide general operating rules (including rules for transfers of S stock between members), definitions, and an anti-abuse rule, respectively.

(ii) ***Stock of multiple subsidiaries transferred in the transaction*** —

(A) ***Initial application of section to transferred shares in lowest tier.*** If shares of stock of more than one subsidiary are transferred in a transaction, the application of this section begins at the lowest tier. If no transferred shares of stock of the lowest-tier subsidiary (S2) are loss shares, any gain recognized with respect to the S2 shares immediately tiers up and adjusts members' bases in subsidiary stock under § 1.1502-32. However, if any of the transferred S2 shares are loss shares, paragraph (b) of this section applies with respect to those shares. If, after the application of paragraph (b) of this section, any transferred S2 shares are still loss shares, paragraph (c) of this section applies with respect to those shares. If, after the application of paragraph (c) of this section, any transferred S2 shares are still loss shares and P makes an election under paragraph (d)(6) of this section with respect to those S2 shares, then paragraph (d) of this section applies with respect to those shares, but only to the extent necessary to give effect to the election. After taking into account the effects of any adjustments required by this initial application of this section, recognized gain or loss is computed on all transferred S2 shares. Any adjustments under paragraph (b) or (c) of this section, the effect of any election under paragraph (d)(6) of this section, any gain or loss recognized on the transferred S2 shares (whether allowed or disallowed), and any other related or resulting adjustments then tier-up and apply to adjust members' bases in subsidiary stock under § 1.1502-32.

(B) ***Initial application of section to transferred shares in higher tiers.*** After taking into account the effects of any adjustments described in paragraph (a)(3)(ii)(A) of this section, transferred shares in the next higher tier, and then in each next higher tier successively, other than the transferred loss shares at the highest tier, are treated in the manner described in paragraph (a)(3)(ii)(A) of this section.

(C) ***Application of section to transferred shares in highest tier.*** After paragraphs (b) and (c) of this section, and, to the extent necessary to give effect to any election under paragraph (d)(6) of this section, paragraph (d) of this section, have been applied to or with respect to all lower-tier transferred loss shares, and after all lower-tier adjustments have been taken into account (whether resulting from the application of paragraph (b) or (c) of this section, an election under paragraph (d)(6) of this section, the recognition of gain or loss on a transfer, or otherwise), paragraphs (b), then (c), and then (d) of this section apply with respect to the highest-tier shares that are transferred loss shares.

(D) ***Final application of section to transferred shares in lower tiers.*** After paragraph (d) of this section has been applied with respect to transferred loss shares in the highest tier, it is applied with respect to transferred shares in each next lower tier, successively, to the extent such shares are loss shares after the application of paragraph (d) of this section.

(4) ***Other rules of law and coordination with deferral and disallowance provisions.*** In general, this section applies and has effect immediately upon the transfer of a loss share even if the loss is deferred, disallowed, or otherwise not taken into account under any other applicable rules of law. However, see paragraph (e)(3) of this section for special rules applicable to shares of S stock transferred in an intercompany transaction. See section § 1.1502-80(a) for the general applicability of other rules of law and a limitation on duplicative adjustments.

(5) ***Nomenclature, factual assumptions adopted in this section.*** Unless otherwise stated, for purposes of this section, the following nomenclature and assumptions are adopted. P is the common parent of a consolidated group of which S, M, and M1 are members. X is not a member of the P group. If a corporation has preferred stock outstanding, it is stock described in section 1504(a)(4). The

examples set forth the only facts, elections, and activities relevant to the example. All transactions are between unrelated persons and are independent of each other. Tax liabilities and their effect, and the application of any other loss disallowance or deferral provisions of the Internal Revenue Code (Code) or regulations, including but not limited to section 267, are disregarded. All persons report on a calendar year basis and use the accrual method of accounting. All parties comply with filing and other requirements of this section and all other provisions of the Code and regulations.

(b) ***Basis redetermination to reduce disparity*** —

(1) ***In general*** —

(i) ***Purpose and scope.*** The rules of this paragraph (b) reduce the extent to which there is disparity in members' bases in shares of S stock. These rules supplement the operation of the investment adjustment system; their purpose is to prevent the realization of noneconomic loss and facilitate the elimination of duplicated loss when members hold S shares with disparate bases. The rules of this paragraph (b) only reallocate investment adjustments previously applied to members' bases in shares of S stock, thus they do not alter the aggregate amount of basis in shares of S stock held by members or the aggregate amount of investment adjustments applied to shares of S stock.

(ii) ***Special rules for applicability of redetermination rule.*** Notwithstanding the general rule in paragraph (b)(2) of this section, members' bases in shares of S stock are not redetermined under this paragraph (b) if—

(A) There is no disparity among members' bases in shares of S common stock and no member owns a share of S preferred stock with respect to which there is unrecognized gain or loss; or

(B) All the shares of S stock held by members are transferred to one or more nonmembers, become worthless under section 165 (taking into account the provisions of § 1.1502-80(c)), or a combination thereof, in one fully taxable transaction. However, in such a case, P may elect to redetermine such bases under this paragraph (b). Such an election is made in the manner provided in paragraph (e)(5) of this section. If stock of more than one subsidiary is transferred in the transaction, the election may be made with respect to one or more of such subsidiaries.

(iii) ***Investment adjustment.*** For purposes of this paragraph (b), the term *investment adjustment* includes adjustments specially allocated under § 1.1502-32(c)(1)(ii)(B) and remaining adjustments described in § 1.1502-32(c)(1)(iii). In applying any provision of this section, the term includes all such adjustments reflected in the basis of the share as of the application of the provision, whether originally allocated under § 1.1502-32 or otherwise. The term therefore includes adjustments previously reallocated to the share, and it does not include adjustments previously reallocated from the share, whether pursuant to this section or any other provision of law. It also includes the proportionate amount of adjustments reflected in the exchanged basis of a share, such as the basis determined under section 358 in connection with a reorganization or a transaction qualifying under section 355.

(2) ***Basis redetermination rule.*** If M transfers a loss share of S stock, all members' bases in all their shares of S stock are subject to redetermination under this paragraph (b). The determination of whether a share is a loss share is made as of the transfer, taking into account the effects of all applicable rules of law. The redeterminations are made immediately before applying paragraph (c) of this section and in accordance with the following:

(i) *Decreasing the bases of transferred loss shares* —

(A) ***Removing positive investment adjustments from transferred loss shares of common stock.*** M's basis in each of its transferred loss shares of S common stock is first reduced, but not below value, by removing positive investment adjustments previously applied to the basis of the share. The positive investment adjustments removed from transferred loss shares of S common stock are reallocated under paragraph (b)(2)(ii) of this section after negative investment adjustments are reallocated under paragraph (b)(2)(i)(B) of this section.

(B) ***Reallocating negative investment adjustments from shares of S common stock.*** If a transferred share is still a loss share after applying paragraph (b)(2)(i)(A) of this section, M's basis in the share is reduced, but not below value, by reallocating negative investment adjustments to the transferred loss share (whether common or preferred stock) from members' shares of S common stock that are not transferred loss shares. The adjustments reallocated under this paragraph (b)(2)(i)(B) are reallocated and applied first to M's bases in transferred loss shares of S preferred stock and then to M's bases in transferred loss shares of S common stock. Reallocations under this paragraph (b)(2)(i)(B) are made in a manner that, to the greatest extent possible, reduces the disparity among members' bases in all transferred loss shares of S preferred stock, and reduces the disparity among members' bases in all shares of S common stock.

(ii) *Increasing the bases of gain preferred and all common shares* —

(A) ***Preferred stock.*** After the application of paragraph (b)(2)(i) of this section, the positive investment adjustments removed from transferred loss shares of S common stock under paragraph (b)(2)(i)(A) of this section are reallocated and applied to increase, but not above value, members' bases in shares of S preferred stock (without regard to whether such shares are transferred in the transaction). Reallocations under this paragraph (b)(2)(ii)(A) are made in a manner that, to the greatest extent possible, reduces the disparity among members' bases in all shares of S preferred stock.

(B) ***Common stock.*** Any positive investment adjustments removed from transferred loss shares of S common stock under paragraph (b)(2)(i)(A) of this section and not reallocated and applied to S preferred shares are reallocated and applied to increase members' bases in shares of S common stock. Reallocations are made to shares of S common stock without regard to whether a particular share is a loss share or a transferred share, and without regard to the share's value. Reallocations under this paragraph (b)(2)(ii)(B) are made in a manner that, to the greatest extent possible, reduces the disparity among members' bases in all shares of S common stock.

(iii) *Operating rules* —

(A) ***Method.*** In general, reallocations should be made first with respect to the earliest available adjustments. However, the overall application of this paragraph (b) to a transaction must be made in a manner that, to the greatest extent possible, reduces basis disparity (as provided in paragraphs (b)(2)(i)(B) and (b)(2)(ii) of this section). The specific reallocation of an investment adjustment under this paragraph (b) may be made using any reasonable method or formula that is consistent with the provisions of this paragraph (b)(2) and furthers the purposes of this section.

(B) *Limits on reallocation* —

(1) ***Restriction to members' outstanding shares.*** Investment adjustments can only be reallocated to shares that were held by members at the time the adjustment was originally applied.

(2) ***Limitation by prior use*** —

(i) ***In general.*** In order to prevent the reallocation of investment adjustments from either increasing or decreasing members' aggregate bases in subsidiary stock, no investment adjustment (positive or negative) may be reallocated under this paragraph (b)(2) to the extent that it was (or would have been) used prior to the time that it would otherwise be reallocated under this paragraph (b)(2). For this purpose, an investment adjustment was used (or would have been used) to the extent that it was reflected in (or would have been reflected in) the basis of a share of subsidiary stock and the basis of that share has already been taken into account, directly or indirectly, in determining income, gain, deduction, or loss (including by affecting the application of this section to a prior transfer of subsidiary stock) or in determining the basis of any property that is not subject to § 1.1502-32. However, if the prior use was in an intercompany transaction, an investment adjustment may be reallocated to the extent that § 1.1502-13 has prevented the gain or loss on the transaction from being taken into account. (In that case, appropriate adjustments must be made to the intercompany item from the prior intercompany transaction that has not yet been taken into account.) Further, if an investment adjustment was reflected in (or would have been reflected in) the basis of a share that has been taken into account, the limitation on reallocation under this paragraph (b)(2)(iii)(B)(2) does not apply to the extent the basis of that share would not change as a result of the reallocation (for example, because the reallocation is between shares that are both lower-tier to the share with the previously used basis). See § 1.1502-32(c)(1)(ii)(B) regarding special allocations applicable to the tier-up of the reallocated investment adjustment if the reallocation is limited under this paragraph (b)(2)(iii)(B)(2) due to prior use at a higher tier.

(ii) ***Example.*** The application of this paragraph (b)(2)(iii)(B)(2) is illustrated by the following example:

> *Example.* (i) *Facts.* P owns all 20 shares of M stock, and 10 shares of S stock. M owns the remaining 10 shares of S stock. In year 1, S recognizes $200 of income that results in a $10 positive investment adjustment being allocated to each share of S stock. The group does not recognize any other items. The $100 positive adjustment to M's basis in the S stock tiers up, and results in a $5 positive adjustment to each share of M stock. In year 2, P sells one share of M stock and recognizes a gain. In year 3, M sells one loss share of S stock, and this paragraph (b) applies and requires a reallocation of the year 1 positive investment adjustment applied to the basis of the transferred S share.

(ii) *Application of limitation by prior use.* M's basis in the transferred loss share of S stock reflects a $10 positive investment adjustment attributable to S's year 1 income. Under the general rule of this paragraph (b), that $10 would be subject to reallocation to reduce basis disparity. However, that $10 adjustment had originally tiered up to adjust P's basis in its M shares and, as a result, $.50 of that adjustment was reflected in P's basis in each share of M stock. When P sold the share of M stock, the basis of that share (which included the tiered-up $.50) was used in determining the gain on the sale. Thus, $.50 of the $10 investment adjustment originally allocated to the transferred S share that tiered-up to the sold M share was previously used and, as such, cannot be reallocated in a manner that would (if it were the original allocation) affect the basis of the sold M share. Accordingly, no more than $9.50 of the adjustment to M's transferred S share could be reallocated to P's shares of S stock. If so, under the special allocation rule in § 1.1502-32(c)(1)(ii)(B), the tier-up of this $9.50 would only be allocated among P's remaining 19 shares of M stock. Alternatively, all $10 of the investment adjustment could be reallocated to M's other S shares (because the tier-up to P's M shares would have been the same regardless which of M's shares of S stock were adjusted).

(iii) *Application of limitation where adjustment would have been used.* The facts are the same as in paragraph (i) of this *Example* except that M does not sell any shares of S stock and, in year 3, P sells a loss share of S stock. As in paragraph (i) of this *Example*, when P sold the share of M stock, the basis of that share was used in determining the gain on the share. When P sells the loss share of S stock, the $10 positive investment adjustment from S's year 1 income cannot be reallocated in a manner that would (if it were the original adjustment) affect the basis of the sold M share. If this $10 positive investment adjustment had originally been allocated to the S shares held by M, $.50 of the $10 investment adjustment would have tiered up to the M share that P sold, would have been reflected in P's basis in that M share, and would have been used in determining P's gain or loss on the sale. Accordingly, up to $9.50 of the $10 investment adjustment applied to the basis of P's transferred S share could be reallocated to M's shares of S stock. If so, under the special allocation rule in § 1.1502-32(c)(1)(ii)(B), the tier-up of this $9.50 would only be allocated among P's remaining 19 shares of M stock. Alternatively, all $10 of the investment adjustment could be reallocated to P's other S shares.

(3) ***Examples.*** The general application of this paragraph (b) is illustrated by the following examples:

Example 1. Transfer of stock received in section 351 exchange. (i) *Redetermination to prevent noneconomic loss.* (A) *Facts.* For many years, M has owned two assets, Asset 1 and Asset 2. On January 1, year 1, M receives the only four outstanding shares of S common stock (Block 1 shares) in exchange for Asset 1, which has a basis and value of $80. Section 351 applies to the exchange and, therefore, under section 358, M's aggregate basis in the Block 1 shares is $80 ($20 per share). On July 1, year 2, M receives another share of S common stock (Block 2 share) in exchange for Asset 2, which has a basis of $0 and value of $20. Section 351 applies to this exchange and, under section 358, M's basis in the Block 2 share is $0. On October 1, year 3, S sells Asset 2 for $20, recognizing a $20 gain. On December 31, year 3, M sells one of its Block 1 shares to X for $20. After taking into account the effects of all applicable rules of law, M's basis in each Block 1 share is $24 (M's original $20 basis increased under § 1.1502-32 by $4, the share's allocable portion of the $20 gain recognized on the sale of Asset 2). In addition, M's basis in its Block 2 share is $4 (M's original $0 basis increased under § 1.1502-32 by $4 (the share's allocable portion of the $20 gain recognized on the sale of Asset 2)). M's sale of the Block 1 share is a transfer of a loss share and therefore subject to this section.
(B) *Basis redetermination under this paragraph (b).* Under this paragraph (b), M's bases in all its shares of S stock are subject to redetermination. First, paragraph (b)(2)(i)(A) of this section applies to reduce M's basis in the transferred loss share, but not below value, by removing positive investment adjustments applied to the basis of the share. Accordingly, M's basis in the transferred Block 1 share is reduced by $4 (the amount of the positive investment adjustment applied to the share), from $24 to $20. Even if there were negative investment adjustments applied to adjust the bases of nontransferred common shares, no further reduction to the basis of the share would be required under this paragraph (b) because the basis of the transferred share is then equal to the share's value. Under paragraph (b)(2)(ii)(B) of this section, the positive investment adjustment removed from the transferred loss share is reallocated and applied to increase M's bases in its S common shares in a manner that reduces disparity in M's bases in all the S common shares, to the greatest extent possible. Accordingly, the $4 positive investment adjustment removed from the Block 1 share is reallocated and applied to the basis of the Block 2 share, increasing it from $4 to $8.

(C) *Application of paragraphs (c) and (d) of this section.* Because M's sale of the Block 1 share is not a transfer of a loss share after the application of this paragraph (b), neither paragraph (c) of this section nor paragraph (d) of this section applies to the transfer.

(ii) *Redetermination to eliminate duplicated loss.* (A) *Facts.* The facts are the same as in paragraph (i)(A) of this *Example 1*, except that, at the time of the second contribution, the value of Asset 1 had declined to $20 and so, instead of contributing Asset 2, M contributed Asset 3 to S in exchange for the Block 2 share. At the time of that exchange, Asset 3 had a

basis and value of $5. On October 1, year 3, S sells Asset 1 for $20, recognizing a $60 loss that is absorbed by the group. On December 31, year 3, M sells one of its Block 1 shares to X for $5. After taking into account the effects of all applicable rules of law, M's basis in each Block 1 share is $8 (M's original $20 basis decreased under § 1.1502-32 by $12 (the share's allocable portion of the $60 loss recognized on the sale of Asset 1)). M's basis in its Block 2 share is an excess loss account of $7 (M's original basis of $5 reduced under § 1.1502-32 by $12, the share's allocable portion of the loss recognized on the sale of Asset 1). M's sale of the Block 1 share is a transfer of a loss share and therefore subject to this section.

(B) *Basis redetermination under this paragraph (b).* Under this paragraph (b), M's bases in all its shares of S stock are subject to redetermination. There are no positive investment adjustments and so there is no adjustment under paragraph (b)(2)(i)(A) of this section. However, under paragraph (b)(2)(i)(B) of this section, M's basis in the transferred Block 1 share is reduced, but not below value, by reallocating negative investment adjustments from common shares that are not transferred loss shares. In total, there were $48 of negative investment adjustments applied to common shares that are not transferred loss shares. Accordingly, M's basis in the Block 1 share is reduced by $3, from $8 to its value of $5. Under paragraph (b)(2)(i)(B) of this section, the negative investment adjustments applied to the transferred share are reallocated from (and therefore cause an increase in the basis of) S common shares that are not transferred loss shares in a manner that reduces disparity among members' bases in all S common shares to the greatest extent possible. Accordingly, the $3 negative investment adjustment reallocated and applied to the transferred Block 1 share is reallocated entirely from the Block 2 share, increasing the basis in the Block 2 share from an excess loss account of $7 to an excess loss account of $4.

(C) *Application of paragraphs (c) and (d) of this section.* Because M's sale of the Block 1 share is not a transfer of a loss share after the application of this paragraph (b), neither paragraph (c) of this section nor paragraph (d) of this section applies to the transfer.

(iii) *Nonapplicability of redetermination rule to sale of entire interest.* The facts are the same as in paragraph (ii)(A) of this *Example 1*, except that, on December 31, year 3, M sells all its shares of S stock to X for $25. M's sale of the S stock to X is a transfer of all of the shares of S stock held by members to one or more nonmembers in one fully taxable transaction and, therefore, basis is not redetermined under this paragraph (b). Accordingly, the sale of the Block 1 shares remains a transfer of loss shares and, as such, subject to paragraphs (c) and (d) of this section. However, paragraphs (c)(7) and (d)(3)(i)(A) of this section apply netting principles to prevent adjustments under either paragraph (c) or paragraph (d) of this section, respectively. Alternatively, the group could elect to apply this paragraph (b). In that case, the $12 negative adjustment applied to the Block 2 shares would be reallocated to the Block 1

shares with the result that there would be no loss (or gain) on any of the transferred shares following the application of this paragraph (b). In that case, there would be no further application of this section to the transfer.

(iv) *Transfer of entire interest, partially taxable.* The facts are the same as in paragraph (iii) of this *Example 1*, except that, instead of selling the Block 2 share to X, M contributes the share to a nonmember in a section 351 exchange that is part of the same transaction. Although all the S shares held by members are transferred in the transaction, not all the shares are transferred to one or more nonmembers in one fully taxable transaction. Therefore, paragraph (b)(1)(ii)(B) of this section does not apply and M must redetermine its bases in its shares of S stock under this paragraph (b). In total, there were $12 of negative investment adjustments applied to common shares that are not transferred loss shares (the Block 2 share, a gain share). Accordingly, M's basis in each of the Block 1 shares is reduced by $3, from $8 to its value of $5. Under paragraph (b)(2)(i)(B) of this section, the negative investment adjustments applied to the transferred shares are reallocated from (and therefore cause an increase in the basis of) S shares that are not transferred loss shares in a manner that reduces disparity among members' bases in all S common shares to the greatest extent possible. Accordingly, the $12 negative investment adjustment reallocated and applied to the transferred Block 1 shares is reallocated entirely from the Block 2 share, increasing the basis in the Block 2 share from an excess loss account of $7 to a basis of $5. Because M's transfer is not a transfer of loss shares after the application of this paragraph (b), neither paragraph (c) of this section nor paragraph (d) of this section applies to the transfer.

Example 2. Redetermination increases basis of transferred loss share. (i) *Facts.* On January 1, year 1, M owns all 10 outstanding shares of S common stock. Five of the shares have a basis of $20 per share (Block 1 shares) and five of the shares have a basis of $10 per share (Block 2 shares). S's only asset, Asset 1, has a basis of $50. S has no other attributes. On October 1, year 1, S sells Asset 1 for $100, recognizing a $50 gain. On December 31, year 2, M sells one Block 1 share and one Block 2 share to X for $10 per share. After taking into account the effects of all applicable rules of law, M's basis in each Block 1 share is $25 (M's original $20 basis increased under § 1.1502-32 by $5, the share's allocable portion of the $50 gain recognized on the sale of Asset 1), and M's basis in each Block 2 share is $15 (M's original $10 basis increased under § 1.1502-32 by $5, the share's allocable portion of the $50 gain recognized on the sale of Asset 1). M's sale of the Block 1 and Block 2 shares is a transfer of loss shares and therefore subject to this section.
(ii) *Basis redetermination under this paragraph (b).* Under this paragraph (b), M's bases in all its shares of S stock are subject to redetermination. First, paragraph (b)(2)(i)(A) of this section applies to reduce M's basis in the transferred Block 1 and Block 2 shares, but not below value, by removing the positive investment adjustments applied to the bases of the transferred loss shares. Accordingly, the basis of the transferred Block 1 share is reduced by $5, from $25 to $20. The basis of the transferred Block 2 share is also reduced by $5, from $15 to $10.

(Although the transferred Block 1 share is still a loss share, there is no reduction to its basis under paragraph (b)(2)(i)(B) of this section because there were no negative investment adjustments applied to the bases of the S common shares that are not transferred loss shares.) Next, paragraph (b)(2)(ii)(B) of this section applies to reallocate and apply the $10 of positive investment adjustments removed from the transferred loss shares to increase M's bases in its S common shares in a manner that reduces the disparity in its bases in all S common shares to the greatest extent possible. Accordingly, of the $10 of positive investment adjustments to be reallocated, $6 is reallocated and applied to the basis of the transferred Block 2 share (increasing it from $10 to $16) and $4 is reallocated and applied equally to the basis of each of the four retained Block 2 shares (increasing the basis of each from $15 to $16). After giving effect to the reallocations under this paragraph (b), M's basis in each retained Block 1 share is $25, M's basis in the transferred Block 1 share is $20, and M's basis in each Block 2 share is $16.

(iii) *Application of paragraph (c) of this section.* After the application of this paragraph (b), M's sale of the Block 1 and Block 2 shares is still a transfer of loss shares and, accordingly, subject to paragraph (c) of this section. No adjustment is required to the basis of the transferred Block 1 share under paragraph (c) of this section because, after its basis is redetermined under this paragraph (b), the net positive adjustment to the basis of the share is $0. See paragraph (c)(3) of this section. However, under paragraph (c) of this section M's basis in the transferred Block 2 share is reduced by $6 (the lesser of its net positive adjustment, $6, and its disconformity amount, $6), from $16 to $10, its value. See paragraph (c)(2) of this section.

(iv) *Application of paragraph (d) of this section.* After the application of paragraph (c) of this section, M's sale of the Block 1 share is still a transfer of a loss share and, accordingly, subject to paragraph (d) of this section. No adjustment is required under paragraph (d) of this section because there is no aggregate inside loss. See paragraph (d)(3)(iii) of this section. Because M's sale of the Block 2 share is no longer a transfer of a loss share after the application of paragraph (c) of this section, paragraph (d) of this section does not apply to the transfer of the Block 2 share.

Example 3. Tiered subsidiaries. (i) *Transfer of all shares of common stock.* (A) *Facts.* P owns the sole outstanding share of S stock with a basis of $100, and the sole outstanding share of M stock with a basis of $300. M has $200 and owns an asset with a basis of $0. S owns one asset, Asset 1, with a basis of $100. At a time when Asset 1 has a value of $200, S issues a second share of common stock to M in exchange for $200. Later S sells Asset 1 for $200, recognizing a $100 gain. After taking into account the effects of all applicable rules of law, P's basis in its S stock is $150 (P's original $100 basis increased under § 1.1502-32 by $50, the share's allocable portion of the $100 gain recognized on the sale of Asset 1), M's basis in its S stock is $250 (M's original $200 basis increased under § 1.1502-32 by $50, the share's

allocable portion of the $100 gain recognized on the sale of Asset 1), and P's basis in its M stock is $350 (P's original $300 basis increased under § 1.1502-32 by $50, the tier-up of M's increase in its basis in its S stock). P then sells its M share and its S share to X for $300 and $200, respectively. M and S are not members of the same consolidated group immediately after the sale. Therefore, the M share and both of the S shares are transferred in the transaction. Regarding P's sale of its share of S stock and its share of M stock, see paragraph (f)(10)(i)(A) of this section (ceasing to own a share in a taxable transaction) and paragraph (f)(10)(i)(C) of this section (nonmember acquires share); regarding M's share of S stock, see paragraph (f)(10)(i)(B) of this section (ceasing to be members of the same group). The application of this section begins with respect to the stock of S, the subsidiary at the lowest tier in which there is a transfer of subsidiary stock. See paragraph (a)(3)(ii) of this section. Although both P and M transfer their S shares, only M's S share is a loss share. Thus, only M's transfer is a transfer of a loss share of S stock and only M's transfer is subject to this section. (B) *Application of section to transferred S shares.* Although only M's transfer is subject to this section, all members' bases in their shares of S stock are subject to redetermination under this paragraph (b). First, paragraph (b)(2)(i)(A) of this section applies to reduce M's basis in its transferred S share, but not below value, by removing the positive investment adjustment applied to that share. Accordingly, the basis of M's S share is reduced by $50, from $250 to $200 (under § 1.1502-32, that redetermination adjustment tiers up to reduce P's basis in its M stock by $50, from $350 to $300). Because there are no negative adjustments to reallocate under paragraph (b)(2)(i)(B) of this section, paragraph (b)(2)(ii)(B) of this section then applies to reallocate and apply the $50 positive investment adjustment removed from the transferred loss S share to increase P's basis in its S share in a manner that reduces disparity among members' bases in all S common shares to the greatest extent possible. Accordingly, all $50 of the positive investment adjustment is reallocated and applied to P's basis in its S share (increasing the basis from $150 to $200). Because M's transfer of its S share is not a transfer of a loss share after the application of this paragraph (b), neither paragraph (c) of this section nor paragraph (d) of this section applies to that transfer.

(C) *Application of section to transfers at next higher tier.* After the adjustments to M's share of S stock are given effect, P's transfer of its share of M stock is not a transfer of a loss share and so this section does not apply to that transfer.

(D) *Result of application of section.* After the application of this section, P recognizes no gain or loss on its sale of either the S share or the M share. In addition, the unrecognized (noneconomic) loss in M's basis in its S share is eliminated. The results would be the same if, in addition to the facts in paragraph (i)(A) of this *Example 3*, M transferred its S share to X in a fully taxable transaction and, as permitted under paragraph (b)(1)(ii)(B) of this section, P elected to redetermine basis under this paragraph (b).

(ii) *Transfer of less than all lower-tier shares of stock.* (A) *Facts.* The facts are the same as in paragraph (i)(A) of this *Example 1*, except that M and S are members of the same consolidated group immediately after the sale. Therefore, in this case, M's S share is not transferred and so this section has no application with respect to M's S share. P's transfer of its S share is not a transfer of a loss share and so is also not subject to this section. However, P's sale of its share of M stock is a transfer of a loss share and is subject to this section.

(B) *Basis redetermination under this paragraph (b).* Although P's transfer of its share of M stock is subject to this section, this paragraph (b) does not apply to the transfer because there is only one share of M stock outstanding (and so there can be no disparity among members' bases in common shares and there are no outstanding preferred shares with respect to which there can be unrecognized gain or loss). Accordingly, after the application of this paragraph (b), P's sale of its M share is still a transfer of a loss share and therefore subject to paragraph (c) of this section.

(C) *Application of paragraphs (c) and (d) of this section.* Under paragraph (c) of this section, P must reduce its basis in its M share by $50, the lesser of its net positive adjustment ($50, see paragraph (c)(3) of this section) and its disconformity amount ($150, see paragraphs (c)(4), (c)(5), and (c)(6) of this section). As a result, the share is no longer a loss share and the transfer is not subject to paragraph (d) of this section.

(D) *Result of application of section.* After the application of this section, P recognizes a $50 gain on its sale of the S share and no loss on its sale of the M share. Although there is unrecognized loss preserved in M's basis in its S share, if M later transfers the share when it is a loss share, that transfer will be subject to this section.

Example 4. Application to outstanding common and preferred shares. (i) *Facts.* P owns all the stock of M and all eight outstanding shares of S common stock. S also has two shares of nonvoting preferred stock outstanding; the preferred shares each have a $100 annual, cumulative preference as to dividends. M owns one of the preferred shares (PS1) and P owns the other (PS2). On January 1, year 1, the bases and values of the outstanding S shares are:

	Preferred		Common							
	PS1 (M)	PS2 (P)	CS1 (P)	CS2 (P)	CS3 (P)	CS4 (P)	CS5 (P)	CS6 (P)	CS7 (P)	CS8 (P)
Basis	1250	990	1025	710	550	400	375	250	215	100
Value	1000	1000	375	375	375	375	375	375	375	375

(A) As of January 1, year 1, there are no arrearages on the preferred stock. In year 1, S has a $1100 capital loss and $100 of ordinary income. The group absorbs the loss and the negative remaining adjustment of $1000 is allocable entirely to the common stock, equally to each common share ($125 per share). See § 1.1502-32(c)(1)(iii) and (c)(2).
(B) In year 2, S has $700 of ordinary income and a $100 ordinary loss. Also, on October 1, year 2, S declares and makes a $200 dividend distribution with respect to the preferred stock ($100 per share). Under § 1.1502-32(c)(1)(i), a negative adjustment of $100 is first allocated to each of the preferred shares to reflect the declaration of the dividend. The $600 positive remaining adjustment determined under § 1.1502-32(c)(1)(iii) (reflecting S's net income reduced by the distribution) is then allocated to each of the preferred shares to the extent of its entitlement to dividends accruing in year 1 and year 2 ($200 per share). See § 1.1502-32(c)(1)(iii) and (c)(3). The $200 of the positive remaining adjustment not allocated to the preferred shares is then allocated to the common stock, equally to each common share ($25 per share). See § 1.1502-32(c)(1)(iii) and (c)(2). After taking into account the effects of all applicable rules of law, the adjusted bases and the values of the shares as of January 1, year 3, are:

	Preferred		Common							
	PS1 (M)	PS2 (P)	CS1 (P)	CS2 (P)	CS3 (P)	CS4 (P)	CS5 (P)	CS6 (P)	CS7 (P)	CS8 (P)
Basis	1250	990	1025	710	550	400	375	250	215	100
Year 1§ 1.1502-32 adjustments	N/A	N/A	−125	−125	−125	−125	−125	−125	−125	−125
Year 2§ 1.1502-32 adjustments	−100	−100	+ 25	+ 25	+ 25	+ 25	+ 25	+ 25	+ 25	+ 25
	+ 200	+ 200								
	+ 100	+ 100								
Adjusted basis	1350	1090	925	610	450	300	275	150	115	0
Value	1100	1100	275	275	275	275	275	275	275	275
Unrecognized gain/(loss)	(250)	10	(650)	(335)	(175)	(25)	0	125	160	275

(C) On January 1, year 3, M sells PS1 for $1100 and P sells CS2 for $275. The sales of PS1 and CS2 are transfers of loss shares and therefore subject to this section.
(ii) *Basis redetermination under this paragraph (b).* Under this paragraph (b), all members' bases in shares of S stock are subject to redetermination in accordance with the following:

(A) *Removing positive investment adjustments from transferred loss common shares.* First, paragraph (b)(2)(i)(A) of this section applies to reduce P's basis in CS2, but not below value, by removing the positive investment adjustment applied to the basis of the share. Accordingly, P's basis in CS2 is reduced by $25, from $610 to $585.

(B) *Reallocating negative investment adjustments from common shares that are not transferred loss shares.* Because the transferred shares remain loss shares after the removal of positive investment adjustments, their bases are further reduced under paragraph (b)(2)(i)(B) of this section, but not below value, by reallocating negative investment adjustments applied to common shares that are not transferred loss shares. Reallocations are made first to preferred shares and then to the common shares, in a manner that reduces disparity among members' bases in transferred loss preferred shares, and reduces disparity among members' bases in all common shares, to the greatest extent possible. The loss on PS1 is $250, the remaining loss on CS2 is $310, and the total amount of negative investment adjustments applied to shares that are not transferred loss shares is $875 (the sum of the negative adjustments applied to all common shares other than CS2). Thus, $250 of negative investment adjustments are reallocated and applied to the basis of PS1, reducing it to the share's value, $1100. The negative investment adjustments are reallocated from the common shares that are not transferred loss shares in a manner that reduces disparity among members' bases in all common shares to the greatest extent possible. The negative investment adjustments may be reallocated to PS1 from the common shares that are not transferred loss shares as follows: $125 from each of CS7 and CS8. Such reallocations increase the basis of CS7 by $125, from $115 to $240, and increase the basis of CS8 by $125, from $0 to $125. Negative investment adjustments are then reallocated to CS2 from the common shares that are not transferred loss shares in a manner that reduces disparity among members' bases in all common shares to the greatest extent possible. The negative investment adjustments may be reallocated to CS2 from the other common shares as follows: $80 from CS4, $105 from CS5, and $125 from CS6. Such reallocations reduce the basis of CS2 by $310, from $585 to $275, increase the basis of CS4 by $80, from $300 to $380, increase the basis of CS5 by $105, from $275 to $380, and increase the basis of CS6 by $125, from $150 to $275. However, there may be other reasonable reallocations.

(C) *Increasing basis by reallocated positive investment adjustments.* Under paragraph (b)(2)(ii)(A) of this section, the $25 positive investment adjustment removed from CS2 (the transferred loss common share) is then reallocated and applied to increase the basis of

preferred shares, but not above value. Accordingly, $10 of that amount is reallocated to PS2, increasing its basis from $1090 to $1100, its value. Under paragraph (b)(2)(ii)(B) of this section, the remaining $15 is reallocated and applied to the common shares in a manner that reduces disparity among members' bases in all common shares to the greatest extent possible. The $15 positive investment adjustment that is reallocated to common shares may be reallocated entirely to CS8, increasing its basis from $125 to $140. However, there may be other reasonable reallocations.

(D) *Summary of the reallocation of adjustments.* The adjustments made under this paragraph (b) are:

	Preferred		Common							
	PS1 (M)	PS2 (P)	CS1 (P)	CS2 (P)	CS3 (P)	CS4 (P)	CS5 (P)	CS6 (P)	CS7 (P)	CS8 (P)
Adjusted basis before redetermination	1350	1090	925	610	450	300	275	150	115	0
Removing positive adjustments from transferred loss shares				−25						
Reallocating negative adjustments	−250			−310		+ 80	+ 105	+ 125	+ 125	+ 125
Applying positive adjustments removed from transferred loss shares		+ 10								+ 15
Basis after redetermination	1100	1100	925	275	450	380	380	275	240	140
Value	1100	1100	275	275	275	275	275	275	275	275
Gain/(loss)	0	0	(650)	0	(175)	(105)	(105)	0	35	135

(iii) *Application of paragraphs (c) and (d) of this section.* Because M's sale of PS1 and P's sale of CS2 are not transfers of loss shares after the application of this paragraph (b), paragraphs (c) and (d) of this section do not apply.
(iv) *Higher-tier effects.* The $250 reduction in the basis of PS1 under this paragraph (b) is a noncapital, nondeductible expense under § 1.1502-32(b)(3)(iii)(B) that will be included in the year 3 investment adjustment to be applied to P's basis in its M stock.

(c) ***Stock basis reduction to prevent noneconomic loss*** —

(1) ***In general.*** The rules of this paragraph (c) reduce M's basis in a transferred share of S stock to prevent noneconomic stock loss and thus promote the clear reflection of the group's income. These rules limit the reduction to M's basis in the S share to the amount of net unrealized appreciation reflected in the share's basis as of the transfer (the disconformity amount). These rules also limit the reduction to M's basis in the S share to the portion of the share's basis that is attributable to investment adjustments made pursuant to the consolidated return regulations.

(2) ***Basis reduction rule.*** This paragraph (c) applies if M transfers a share of S stock and, after taking into account the effects of all applicable rules of law, including any adjustments under paragraph (b) of this section, the share is a loss share. Under this paragraph (c), M's basis in the share is reduced, but not below value, by the lesser of—

(i) The share's net positive adjustment (as defined in paragraph (c)(3) of this section); and

(ii) The share's disconformity amount (as defined in paragraph (c)(4) of this section).

(3) ***Net positive adjustment.*** A share's *net positive adjustment* is the greater of—

(i) Zero; and

(ii) The sum of all investment adjustments reflected in the basis of the share. The term *investment adjustment* has the same meaning as in paragraph (b)(1)(iii) of this section, except that it includes all adjustments specially allocated under § 1.1502-32(c)(1)(ii).

(4) ***Disconformity amount.*** A share's *disconformity amount* is the excess, if any, of—

(i) M's basis in the share; over

(ii) The share's allocable portion of S's net inside attribute amount (as defined in paragraph (c)(5) of this section).

(5) ***Net inside attribute amount.*** S's *net inside attribute amount* is determined as of the transfer, taking into account all applicable rules of law (even if the adjustments required by such rules are not deemed effective until after the transfer, such as certain adjustments required under sections 108 and 1017 and § 1.1502-28). S's net inside attribute amount is the sum of S's net operating and capital loss carryovers, deferred deductions, money, and basis in assets other than money, reduced by the amount of S's liabilities. For this purpose, S's basis in any share of lower-tier subsidiary stock is generally S's basis in that share, adjusted to reflect any gain or loss recognized in the transaction with respect to the share and any other related or resulting adjustments to the basis of the share. However, see paragraph (c)(6) of this section for special rules regarding the computation of S's net

inside attribute amount for purposes of this paragraph (c) if S holds stock of a subsidiary that is not transferred in the transaction. See paragraph (f) of this section for definitions of “allocable portion,” “deferred deduction,” “liability,” “loss carryover,” and other relevant terms.

(6) ***Determination of S's net inside attribute amount if S owns stock of a lower-tier subsidiary*** —

(i) ***Overview.*** If a loss share of S stock is transferred when S holds a share of stock of another subsidiary (S1) and the S1 share is not transferred in the same transaction, S's net inside attribute amount is determined by treating S's basis in its S1 share as tentatively reduced under this paragraph (c)(6). The purpose of this rule is to reduce the extent to which S1's investment adjustments increase noneconomic loss on S stock (as a result of S1's recognition of items that are indirectly reflected in a member's basis in a share of S stock).

(ii) ***General rule for nontransferred shares of lower-tier subsidiary stock.*** For purposes of determining the disconformity amount of a share of S stock, S's basis in a nontransferred share of S1 stock is treated as reduced by the share's tentative reduction amount. The tentative reduction amount is the lesser of the S1 share's net positive adjustment and the S1 share's disconformity amount.

(iii) ***Multiple tiers of nontransferred shares.*** If S directly or indirectly owns nontransferred shares of stock of subsidiaries in multiple tiers, then, subject to the limitations in paragraph (c)(6)(iv) of this section (regarding nontransferred shares that are lower-tier to transferred shares), the rules of this paragraph (c)(6) first apply to determine the tentatively reduced basis of stock of the subsidiary at the lowest tier. These rules then apply to determine the tentatively reduced basis of nontransferred shares of stock of subsidiaries successively at each next higher tier that is lower-tier to S. The tentative reductions at each tier are treated as noncapital, nondeductible expenses that tier up under the principles of § 1.1502-32, and, as such, result in a tentative reduction of basis and any net positive adjustment of subsidiary shares that are lower-tier to S.

(iv) ***Nonapplicability of tentative basis reduction rule to transferred shares.*** The tentative basis reduction rule in this paragraph (c)(6) does not apply to any share of stock of a lower-tier subsidiary (S1) that is transferred in the same transaction in which the S share is transferred. Further, for purposes of determining the S share's disconformity amount, the tentative basis reduction rule in this paragraph (c)(6) only applies with respect to stock of a lower-tier subsidiary if such stock is lower-tier to a nontransferred S1 share. The purpose of this rule is to prevent tentative adjustments to the bases of lower-tier shares if this paragraph (c) has already applied with respect to the shares, without regard to whether such application resulted in the reduction of the basis of any share.

(v) ***Example.*** The rules of this paragraph (c)(6) are illustrated by the following example:

> *Example.* (i) *Facts.* M owns the sole outstanding share of S stock, S owns the sole outstanding share of S1 stock, S1 owns all five outstanding shares of S2 stock (the bases of which are equal), and S2 owns the sole outstanding share of S3 stock. The basis of each of the shares reflects its allocable portion of a $5 positive investment adjustment attributable to income recognized by S3. The basis of the S share exceeds its value by $10 and the basis of the S1 share exceeds its value by $5. The basis of each S2 share is $1 less than its value. In one transaction, M sells its S share to X, S1 issues new shares in an amount that prevents S and S1 from being members of the same

group, and S1 sells one of its S2 shares to an unrelated individual. S1, S2, and S3 elect to file a consolidated return following the transaction.

(ii) *General applicability of section.* As a result of the transaction, there is a transfer of the S share and the S2 share that was sold (because both shares were sold to nonmembers) and of the S1 share (because S and S1 cease to be members of the same group as a result of the stock issuance). The transfer of the S2 share is not a transfer of a loss share, and so this section does not apply to that transfer. The transfers of the S and S1 shares are transfers of loss shares, and so this section applies to those transfers. The S3 share and the four retained S2 shares are not transferred in the transaction. Under paragraph (a)(3)(ii)(A) of this section, this section applies first to the transfer of the S1 share because it is the lowest-tier transferred loss share.

(iii) *Application of paragraph (b) of this section and this paragraph (c) to transfer of S1 stock.* First, the $1 gain recognized on the transfer of the S2 share tiers up to adjust the basis of each upper-tier share. The transferred S1 share is still a loss share (by $4) and is therefore subject to this section. Although the transfer is subject to paragraph (b) of this section, there is no basis redetermination under paragraph (b) of this section because there is only one share of S1 stock outstanding (and so there can be no disparity among members' bases in common shares and there are no outstanding preferred shares with respect to which there can be unrecognized gain or loss). See paragraph (b)(1)(ii)(A) of this section. Therefore, after the application of paragraph (b) of this section, the S1 share is still a loss share and, as such, subject to this paragraph (c). In determining the amount of any basis reduction under this paragraph (c), the disconformity amount of the S1 share is computed by comparing S's basis in its S1 share to S1's net inside attribute amount (because there is only one S1 share outstanding, the entire amount is allocable to that share). In determining S1's net inside attribute amount, the tentative reduction rule in this paragraph (c)(6) applies to nontransferred lower-tier shares (provided they are lower-tier to nontransferred shares). Thus, the rule applies to S1's four retained shares of S2 stock and to S2's share of S3 stock. The tentative reduction begins at the lowest level (S2's share of S3 stock) and any tentative reduction amount tiers up as a noncapital, nondeductible expense under the principles of § 1.1502-32, tentatively reducing the bases of any upper tier nontransferred shares that are lower-tier to the transferred loss share (the S1 share). Accordingly, each of S1's nontransferred share of S2 stock is tentatively reduced by its portion of the tentative reduction to S2's share of S3 stock. S1 then applies the tentative reduction rule to its four nontransferred S2 shares. S1's net inside attribute amount is the sum of its basis in each of its nontransferred S2 shares, as tentatively reduced under this paragraph (c)(6) and S1's actual basis in the transferred S2 share, increased to reflect the gain recognized on the sale of that share. After the application of this paragraph (c) to the transfer of the S1 share, paragraph (b) of this section applies to M's transfer of the S share.

(iv) *Application of section to transfer of S stock.* Because the S share is still a loss share after applying paragraph (b) of this section and this paragraph (c) to the transfer of the S1 stock, this section applies to M's transfer of the S share. Although paragraph (b) of this section applies to the transfer, there is no basis redetermination under paragraph (b) of this section because there is only one share of S stock outstanding (and so there can be no disparity among members' bases in common shares and there are no outstanding preferred shares with respect to which there can be unrecognized gain or loss). See paragraph (b)(1)(ii)(A) of this section. Therefore, after the application of paragraph (b) of this section, the share is still a loss share and, as such, subject to this paragraph (c). In determining the disconformity amount of the S share, S's net inside attribute amount is determined using S's actual basis in the transferred S1 stock (after any reduction under this paragraph (c)), because the tentative reduction rule in this paragraph (c)(6) does not apply to shares that are transferred in the transaction. All other shares are lower-tier to the transferred S1 share and are therefore also not subject to tentative reduction for purposes of determining the disconformity amount of the S share. After the application of this paragraph (c) to the transfer of the S share, paragraph (d) of this section applies with respect to M's transfer of the S share. After the application of paragraph (d) of this section with respect to the transfer of the S share, if the S1 share is still a loss share, paragraph (d) of this section applies with respect to S's transfer of the S1 share.

(7) ***Netting of gains and losses taken into account*** —

(i) ***General rule.*** Solely for purposes of computing the basis reduction required under this paragraph (c), the basis of each transferred loss share of S stock is treated as reduced proportionately (as to loss) by the amount of income or gain taken into account by members with respect to transferred shares of S stock, provided that—

(A) The shares are transferred in one transaction; and

(B) The gain is taken into account as of the transaction.

(ii) ***Example.*** The netting rule of this paragraph (c)(7) is illustrated by the following example:

Example. Disposition of gain and loss shares. (i) *Facts.* M owns the only three outstanding shares of S stock. Share A has a basis of $54, Share B has a basis of $100, and Share C has a basis of $80. In the same transaction, M sells all three S shares to X for $60 each. M realizes a gain of $6 on Share A, a loss of $40 on Share B, and a loss of $20 on Share C. M's sales of Share B and Share C are transfers of loss shares and therefore subject to this section. M's sale is a transfer of all of the shares of S stock held by members to one or more nonmembers in one fully taxable transaction and, therefore, basis is not redetermined under paragraph (b) of this section. See paragraph (b)(1)(ii)(B) of this section. The transfer is then subject to this paragraph (c). However, for this purpose, M treats its bases in Share B and Share C as reduced by the $6 gain taken into account on Share A. The gain is allocated to Share B and Share C proportionately based

on the amount of loss in each share. Thus, $4 of gain ($40/$60 × $6) is treated as allocated to Share B and $2 of gain ($20/$60 × $6) is treated as allocated to Share C. Accordingly, M computes the basis reduction required under this paragraph (c) by treating its basis in Share B as $96 ($100 less $4) and its basis in Share C as $78 ($80 less $2). If, after the application of this paragraph (c), the sales of Share B and Share C are still transfers of loss shares, then the transfers are subject to paragraph (d) of this section. (Although the bases of Share B and Share C are not actually reduced by any portion of the gain, paragraph (d)(3)(i)(A) of this section applies netting principles to limit adjustments under paragraph (d) of this section.)

(ii) *Disposition of stock with deferred gain.* The facts are the same as in paragraph (i) of this *Example,* except that M sells the gain share to another member. Under § 1.1502-13, M's gain recognized on Share A is not taken into account in the taxable year of the transfer and therefore cannot be treated as reducing M's loss recognized on Share B and Share C for purposes of this paragraph (c). The applicability of this section to the transfer of Share A is determined as of the time that the intercompany item (the gain on M's sale to the other member) is taken into account; see paragraph (e)(3) of this section. However, if Share B (instead of Share A) were sold to a member, the entire gain on Share A would be treated as reducing the loss on Share C for purposes of applying this paragraph (c); see paragraph (e)(3) of this section.

(8) ***Examples.*** The application of this paragraph (c) is illustrated by the following examples.

Example 1. Appreciation reflected in stock basis at acquisition. (i) *Appreciation recognized as gain.* (A) *Facts.* On January 1, year 1, M purchases the sole outstanding share of S stock for $100. At that time, S owns two assets, Asset 1 with a basis of $0 and a value of $40, and Asset 2 with a basis and value of $60. In year 1, S sells Asset 1 for $40, recognizing a $40 gain. On December 31, year 1, M sells its S share for $100. After taking into account the effects of all applicable rules of law, M's basis in the S share is $140 (M's original $100 basis increased under § 1.1502-32 by $40, the share's allocable portion of the gain recognized on the sale of Asset 1). M's sale of the S share is a transfer of a loss share and therefore subject to this section.

(B) *Application of paragraph (b) of this section.* Although the transfer is subject to this section, there is no basis redetermination under paragraph (b) of this section because there is only one share of S stock outstanding (and so there can be no disparity among members' bases in common shares and there are no outstanding preferred shares with respect to which there can be unrecognized gain or loss). See paragraph (b)(1)(ii)(A) of this section. Therefore, after the application of paragraph (b) of this section, the share is still a loss share and, as such, subject to this paragraph (c).

(C) *Basis reduction under this paragraph (c).* Under this paragraph (c), M's basis in the S share, $140, is reduced, but not below value, $100, by the lesser of the share's net positive adjustment and disconformity amount. The share's net positive adjustment is the greater of zero and the sum of all investment adjustments (as defined in paragraph (b)(1)(iii) of this section) applied to the basis of the share. The only investment adjustment applied to the basis of the share is the $40 adjustment attributable to the gain recognized on the sale of Asset 1. Thus, the share's net positive adjustment is $40. The share's disconformity amount is the excess, if any, of its basis, $140, over its allocable portion of S's net inside attribute amount. S's net inside attribute amount is the sum of S's money ($40 from the sale of Asset 1) and S's basis in Asset 2, $60, or $100. The share is the only outstanding S share and so its allocable portion of the $100 net inside attribute amount is the entire $100. Thus, the share's disconformity amount is $40, the excess of $140 over $100. The lesser of the net positive adjustment, $40, and the share's disconformity amount, $40, is $40. Accordingly, immediately before the application of paragraph (d) of this section, M's basis in the share is reduced by $40, from $140 to $100.

(D) *Application of paragraph (d) of this section.* Because M's sale of the S share is not a transfer of a loss share after the application of this paragraph (c), paragraph (d) of this section does not apply to the transfer.

(ii) *Appreciation recognized as income earned in the consumption of built-in gain.* The facts are the same as in paragraph (i)(A) of this *Example 1,* except that, instead of selling Asset 1, the value of Asset 1 is consumed in the production of $40 of income in year 1 (reducing the value of Asset 1 to $0). Because the net positive adjustment includes items of income as well as items of gain, the results are the same as those described in paragraph (i) of this *Example 1*.

(iii) *Post-acquisition appreciation eliminates stock loss.* The facts are the same as in paragraph (i)(A) of this *Example 1* except that, in addition, the value of Asset 2 increases to $100 before the stock is sold. As a result, M sells the S share for $140. Because M's sale of the S share is not a transfer of a loss share, this section does not apply to the transfer, notwithstanding that P's basis in the S share was increased by the gain recognized on Asset 1.

(iv) *Distributions.* (A) *Facts.* The facts are the same as in paragraph (i)(A) of this *Example 1* except that, in addition, S declares and makes a $10 dividend distribution before the end of year 1. As a result, the value of the share decreases and M sells the share for $90. After taking into account the effects of all applicable rules of law, M's basis in the S share is $130 (M's original $100 basis increased under § 1.1502-32 by $30, the $10 distribution on the share reduced by the share's allocable portion of the $40 gain recognized on the sale of Asset 1). M's sale of the S share is a transfer of a loss share and therefore subject to this section.

(B) *Application of paragraph (b) of this section.* Although the transfer is subject to this section, there is no basis redetermination under paragraph (b) of this section for the reasons set forth in paragraph (i)(B) of this *Example 1.* Therefore, after the application of paragraph (b) of this section, the share is still a loss share and, as such, subject to this paragraph (c).

(C) *Basis reduction under this paragraph (c).* Under this paragraph (c), M's basis in the S share, $130, is reduced, but not below value, $90, by the lesser of the share's net positive adjustment and disconformity amount. The share's net positive adjustment is $40 (the sum of all investment adjustments (as defined in paragraph (b)(1)(iii) of this section) applied to the basis of the share). The share's disconformity amount is the excess of its basis, $130, over its allocable portion of S's net inside attribute amount. S's net inside attribute amount is $90, the sum of S's money ($30, the $40 sale proceeds less the $10 distribution) and S's basis in Asset 2, $60. The share is the only outstanding S share and so its allocable portion of the $90 net inside attribute amount is the entire $90. The lesser of the share's net positive adjustment, $40, and its disconformity amount, $40, is $40. Accordingly, immediately before the application of paragraph (d) of this section, the basis in the share is reduced by $40, from $130 to $90.

(D) *Application of paragraph (d) of this section.* Because M's sale of the S share is not a transfer of a loss share after the application of this paragraph (c), paragraph (d) of this section does not apply to the transfer.

Example 2. Loss of appreciation reflected in basis. (i) *Facts.* On January 1, year 1, M purchases the sole outstanding share of S stock for $100. At that time, S owns two assets, Asset 1 with a basis of $0 and a value of $40, and Asset 2 with a basis and value of $60. The value of Asset 1 declines to $0 and M sells its S share for $60. After taking into account the effects of all applicable rules of law, M's basis in the S share is $100. M's sale of the S share is a transfer of a loss share and therefore subject to this section.
(ii) *Application of paragraph (b) of this section.* Although the transfer is subject to this section, there is no basis redetermination under paragraph (b) of this section because there is only one share of S stock outstanding (and so there can be no disparity among members' bases in common shares and there are no outstanding preferred shares with respect to which there can be unrecognized gain or loss). See paragraph (b)(1)(ii)(A) of this section. Therefore, after the application of paragraph (b) of this section, the share is still a loss share and, as such, subject to this paragraph (c).

(iii) *Basis reduction under this paragraph (c).* Under this paragraph (c), M's $100 basis in the S share is reduced, but not below its $60 value by the lesser of the share's net positive adjustment and disconformity amount. There were no investment adjustments applied to M's basis in the share and so the share's net positive adjustment is $0. Thus, although the share's

disconformity amount is $40 (the excess of M's $100 basis in the share over the share's $60 allocable portion of S's net inside attribute amount), no basis reduction is required under this paragraph (c).

(iv) *Application of paragraph (d) of this section.* After the application of this paragraph (c), M's sale of the S share is still a transfer of a loss share, and, accordingly, subject to paragraph (d) of this section. No adjustment is required under paragraph (d) of this section because there is no aggregate inside loss. See paragraph (d)(3)(iii) of this section.

Example 3. Items accruing after S becomes a member. (i) *Recognition of loss accruing after S becomes a member.* (A) *Facts.* On January 1, year 1, M purchases the sole outstanding share of S stock for $100. At that time, S owns two assets, Asset 1, with a basis of $0 and a value of $40, and Asset 2, with a basis and value of $60. In year 1, S sells Asset 1 for $40, recognizing a $40 gain. Also in year 1, the value of Asset 2 declines and S sells Asset 2 for $20, recognizing a $40 loss that is absorbed by the group. On December 31, year 1, M sells its S share for $60. After taking into account the effects of all applicable rules of law, M's basis in the S share is $100 (M's original $100 basis, unadjusted under § 1.1502-32 because the $40 gain recognized on the sale of Asset 1 and the $40 loss on the sale of Asset 2 net, resulting in an adjustment of $0). M's sale of the S share is a transfer of a loss share and therefore subject to this section.
(B) *Application of paragraph (b) of this section.* Although the transfer is subject to this section, there is no basis redetermination under paragraph (b) of this section because there is only one share of S stock outstanding (and so there can be no disparity among members' bases in common shares and there are no outstanding preferred shares with respect to which there can be unrecognized gain or loss). See paragraph (b)(1)(ii)(A) of this section. Therefore, after the application of paragraph (b) of this section, the share is still a loss share and, as such, subject to this paragraph (c).

(C) *Basis reduction under this paragraph (c).* Under this paragraph (c), M's basis in the S share is reduced, but not below the share's $60 value, by the lesser of the share's net positive adjustment and disconformity amount. The share's net positive adjustment is $0. Thus, although the share has a disconformity amount of $40 (the excess of M's basis in the share, $100, over the share's allocable portion of S's net inside attribute amount, $60), no basis reduction is required under this paragraph (c).

(D) *Application of paragraph (d) of this section.* After the application of this paragraph (c), M's sale of the S share is still a transfer of a loss share, and, accordingly, subject to paragraph (d) of this section. No adjustment is required under paragraph (d) of this section because there is no aggregate inside loss. See paragraph (d)(3)(iii) of this section.

(ii) *Recognition of gain accruing after S becomes a member.* (A) *Facts.* The facts are the same as in paragraph (i)(A) of this *Example 3*, except that M does not sell the S share and S does not sell either asset in year 1. In addition, in year 2, the value of Asset 1 declines to $0, the value of Asset 2 returns to $60, and S creates Asset 3 (with a basis of $0). In year 3, S sells Asset 3 for $40, recognizing a $40 gain. On December 31, year 3, M sells its S share for $100. After taking into account the effects of all applicable rules of law, M's basis in the S share is $140 (M's original $100 basis increased under § 1.1502-32 by $40 (the share's allocable portion of the gain recognized on the sale of Asset 3 in year 3)). M's sale of the S share is a transfer of a loss share and therefore subject to this section.

(B) *Application of paragraph (b) of this section.* Although the transfer is subject to this section, there is no basis redetermination under paragraph (b) of this section for the reasons set forth in paragraph (i)(B) of this *Example 3.* Therefore, after the application of paragraph (b) of this section, the share is still a loss share and, as such, subject to this paragraph (c).

(C) *Basis reduction under this paragraph (c).* Under this paragraph (c), M's basis in the S share, $140, is reduced, but not below value, $100, by the lesser of the share's net positive adjustment and disconformity amount. The share's net positive adjustment is $40 (the year 3 investment adjustment). The share's disconformity amount is the excess of its basis, $140, over its allocable portion of S's net inside attribute amount. S's net inside attribute amount is $100, the sum of S's money ($40 from the sale of Asset 3) and its basis in its assets ($60 (the sum of Asset 1's basis of $0 and Asset 2's basis of $60)). S's $100 net inside attribute amount is allocable entirely to the sole outstanding S share. Thus, the share's disconformity amount is the excess of $140 over $100, or $40. The lesser of the share's net positive adjustment, $40, and its disconformity amount, $40, is $40. Accordingly, the basis in the share is reduced by $40, from $140 to $100.

(D) *Application of paragraph (d) of this section.* Because M's sale of the S share is not a transfer of a loss share after the application of this paragraph (c), paragraph (d) of this section does not apply to the transfer.

(iii) *Recognition of income earned after S becomes a member.* The facts are the same as in paragraph (ii)(A) of this *Example 3*, except that instead of creating Asset 3, S earns $40 of income from services provided in year 3. Because the net positive adjustment includes items of income as well as items of gain, the results are the same as those described in paragraph (ii) of this *Example 3.*

Example 4. Computing the disconformity amount. (i) *Unrecognized loss reflected in stock basis.* (A) *Facts.* M owns the sole outstanding share of S stock with a basis of $100. S owns two assets, Asset 1 with a basis of $20 and a value of $60, and Asset 2 with a basis of $60 and a value of $40. In year 1, S sells Asset 1 for $60, recognizing a $40 gain. On December 31,

year 1, M sells the S share for $100. After taking into account the effects of all applicable rules of law, M's basis in the S share is $140 (M's original $100 basis increased under § 1.1502-32 by $40, the share's allocable portion of the gain recognized on the sale of Asset 1). M's sale of the S share is a transfer of a loss share and therefore subject to this section.
(B) *Application of paragraph (b) of this section.* Although the transfer is subject to this section, there is no basis redetermination under paragraph (b) of this section because there is only one share of S stock outstanding (and so there can be no disparity among members' bases in common shares and there are no outstanding preferred shares with respect to which there can be unrecognized gain or loss). See paragraph (b)(1)(ii)(A) of this section. Therefore, after the application of paragraph (b) of this section, the share is still a loss share and, as such, subject to this paragraph (c).

(C) *Basis reduction under this paragraph (c).* Under this paragraph (c), M's basis in the S share, $140, is reduced, but not below the share's $100 value, by the lesser of the share's net positive adjustment and disconformity amount. The share's net positive adjustment is $40 (the year 1 investment adjustment). The share's disconformity amount is the excess of its basis, $140, over its allocable portion of S's net inside attribute amount. S's net inside attribute amount is $120, the sum of S's money ($60 from the sale of Asset 1) and S's basis in Asset 2, $60. S's net inside attribute amount is allocable entirely to the sole outstanding S share. Thus, the share's disconformity amount is $20, the excess of $140 over $120. The lesser of the share's net positive adjustment, $40, and its disconformity amount, $20, is $20. Accordingly, the basis in the share is reduced by $20, from $140 to $120.

(D) *Application of paragraph (d) of this section.* After the application of this paragraph (c), M's sale of the S share is still a transfer of a loss share, and, accordingly, S's attributes (to the extent of the $20 duplicated loss) are subject to reduction under paragraph (d) of this section.

(ii) *Loss carryover.* The facts are the same as in paragraph (i)(A) of this *Example 4*, except that Asset 2 has a basis of $0 (rather than $60) and S has a $60 loss carryover (as defined in paragraph (f)(6) of this section). The analysis is the same as paragraph (i) of this *Example 4.* Furthermore, the analysis of the application of this paragraph (c) would be the same if the $60 loss carryover were subject to a section 382 limitation from a prior ownership change, or if, instead, the $60 loss carryover were subject to the limitation in § 1.1502-21(c) on losses carried from separate return limitation years.

(iii) *Liabilities.* The facts are the same as in paragraph (i)(A) of this *Example 4*, except that S borrows $100 before M sells the S share. S's net inside attribute amount remains $120, computed as the sum of S's money ($160, $60 from the sale of Asset 1 plus the $100

borrowed) and S's basis in Asset 2, $60, less its liabilities, $100. Thus, the S share's disconformity amount remains the excess of $140 over $120, or $20. The results are the same as in paragraph (i) of this *Example 4*.

Example 5. Computing the allocable portion of the net inside attribute amount. (i) *Facts.* On January 1, year 1, M owns all five outstanding shares of S stock with a basis of $20 per share. S owns Asset with a basis of $0. In year 1, S sells Asset for $100, recognizing a $100 gain. On December 31, year 1, M sells one of the S shares, Share 1, for $20. After taking into account the effects of all applicable rules of law, M's basis in Share 1 is $40 (M's original $20 basis increased under § 1.1502-32 by $20 (the share's allocable portion of the gain recognized on the sale of Asset)). M's sale of Share 1 is a transfer of a loss share and therefore subject to this section.
(ii) *Application of paragraph (b) of this section.* Although the transfer is subject to this section, basis is not redetermined under paragraph (b) of this section because there is no disparity among M's bases in shares of S common stock and there are no shares of S preferred stock outstanding (so there can be no unrecognized gain or loss with respect to preferred shares). See paragraph (b)(1)(ii)(A) of this section. After the application of paragraph (b) of this section, M's sale of Share 1 is still a transfer of a loss share and therefore subject to this paragraph (c).

(iii) *Basis reduction under this paragraph (c).* Under this paragraph (c), M's $40 basis in Share 1 is reduced, but not below its $20 value by the lesser of the share's net positive adjustment and disconformity amount. Share 1's net positive adjustment is $20 (the year 1 investment adjustment). Share 1's disconformity amount is the excess of its $40 basis over its allocable portion of S's net inside attribute amount. S's net inside attribute amount is equal to the amount of S's money ($100 from the sale of the asset). Share 1's allocable portion of S's $100 net inside attribute amount is $20 (1/5 × $100). Thus, Share 1's disconformity amount is the excess of $40 over $20, or $20. The lesser of the share's $20 net positive adjustment and its $20 disconformity amount is $20. Accordingly, the basis in the share is reduced by $20, from $40 to $20.

(iv) *Application of paragraph (d) of this section.* Because M's sale of Share 1 is not a transfer of a loss share after the application of this paragraph (c), paragraph (d) of this section does not apply to the transfer.

Example 6. Liabilities. (i) *In general.* (A) *Facts.* On January 1, year 1, M purchases the sole outstanding share of S stock for $100. At that time, S owns Asset, with a basis of $0 and value of $100, and $100 cash. S also has a $100 liability. In year 1, S declares and makes a $60 dividend distribution to M and recognizes $20 of income. The value of Asset declines to $60 and, on December 31, year 1, M sells the S share for $20. After taking into account the effects of all applicable rules of law, M's basis in the S share is $60 (M's original $100 basis

decreased under § 1.1502-32 by $40 (the net of the $60 distribution and the $20 income recognized)). M's sale of the S share is a transfer of a loss share and therefore subject to this section.

(B) *Application of paragraph (b) of this section.* Although the transfer is subject to this section, there is no basis redetermination under paragraph (b) of this section because there is only one share of S stock outstanding (and so there can be no disparity among members' bases in common shares and there are no outstanding preferred shares with respect to which there can be unrecognized gain or loss). See paragraph (b)(1)(ii)(A) of this section. Therefore, after the application of paragraph (b) of this section, the share is still a loss share and, as such, subject to this paragraph (c).

(C) *Basis reduction under this paragraph (c).* Under this paragraph (c), M's basis in the S share, $60, is reduced, but not below value, $20, by the lesser of the share's net positive adjustment and disconformity amount. The share's net positive adjustment is $20 (the year 1 investment adjustment, as defined in paragraph (b)(1)(iii) of this section). The share's disconformity amount is the excess of its basis, $60, over its allocable portion of S's net inside attribute amount. S's net inside attribute amount is negative $40, computed as the sum of S's money ($60 ($100 less the $60 distribution plus the $20 income recognized)) and S's basis in Asset, $0, less S's liability, $100. S's net inside attribute amount is allocable entirely to the sole outstanding S share. Thus, the share's disconformity amount is the excess of $60 over negative $40, or $100. The lesser of the share's net positive adjustment, $20, and its disconformity amount, $100, is $20. Accordingly, the basis in the share is reduced by $20, from $60 to $40.

(D) *Application of paragraph (d) of this section.* After the application of this paragraph (c), the S share is still a loss share and, accordingly, S's attributes are subject to reduction under paragraph (d) of this section. No adjustment is required under paragraph (d) of this section, however, because there is no aggregate inside loss. See paragraph (d)(3)(iii) of this section.

(ii) *Excluded cancellation of indebtedness income—insufficient attributes available for reduction under sections 108 and 1017, and § 1.1502-28.* (A) *Facts.* The facts are the same as in paragraph (i)(A) of this *Example 6*, except that M does not sell the S share. Instead, in year 4, Asset is destroyed in a fire and S spends its $60 on deductible expenses that are not absorbed by the group. S's loss becomes part of the consolidated net operating loss (CNOL). In year 5, S becomes insolvent and S's debt is discharged. Because of S's insolvency, S's discharge of indebtedness income is excluded under section 108 and, as a result, S's attributes are subject to reduction under sections 108 and 1017, and § 1.1502-28. S's only attribute is the portion of the CNOL attributable to S, $60, and it is reduced to $0. There are no other consolidated attributes. In year 5, the S stock (which is treated as a capital asset) becomes worthless under section 165, taking into account § 1.1502-80(c). After taking into account the effects of all applicable rules of law, M's basis in the S share is $60 (M's original

$100 basis decreased under § 1.1502-32 by the year 1 investment adjustment of $40 (the net of the $60 distribution and the $20 income recognized). The investment adjustment for year 5 is $0 (the net of the $60 tax exempt income from the excluded COD applied to reduce attributes and the $60 noncapital, nondeductible expense from the reduction of S's portion of the CNOL). Under paragraph (f)(10)(i)(D) of this section, a share is transferred on the last day of the taxable year during which it becomes worthless under section 165 if the share is treated as a capital asset, or the date the share becomes worthless if the share is not treated as a capital asset, taking into account § 1.1502-80(c). Accordingly, M transfers the loss share of S stock on December 31, year 5, and the transfer is therefore subject to this section.

(B) *Application of paragraph (b) of this section.* Although the transfer is subject to this section, there is no basis redetermination under paragraph (b) of this section for the reasons set forth in paragraph (i)(B) of this *Example 6.* Therefore, after the application of paragraph (b) of this section, the share is still a loss share and, as such, subject to this paragraph (c).

(C) *Basis reduction under this paragraph (c).* Under this paragraph (c), M's basis in its S share, $60, is reduced, but not below value, $0, by the lesser of the share's net positive adjustment and disconformity amount. The share's net positive adjustment is $20 (the year 1 investment adjustment, as defined in paragraph (b)(1)(iii) of this section). The share's disconformity amount is the excess of its basis, $60, over its allocable portion of S's net inside attribute amount. S's net inside attribute amount is $0. (The effects of the attribute reduction required under sections 108 and 1017 and § 1.1502-28 are taken into account in applying this section; therefore, for purposes of this section, S's portion of the CNOL is treated as eliminated under section 108 and § 1.1502-28.) S's net inside attribute amount is allocable entirely to the sole outstanding S share. Thus, the share's disconformity amount is the excess of $60 over $0, or $60. The lesser of the share's net positive adjustment, $20, and its disconformity amount, $60, is $20. Accordingly, the basis in the share is reduced by $20, from $60 to $40, immediately before the transfer.

(D) *Application of paragraph (d) of this section.* After the application of this paragraph (c), the S share is still a loss share, and, accordingly, S's attributes are subject to reduction under paragraph (d) of this section. No adjustment is required under paragraph (d) of this section, however, because there is no aggregate inside loss. See paragraph (d)(3)(iii) of this section.

(iii) *Excluded cancellation of indebtedness income—full attribute reduction under sections 108 and 1017, and § 1.1502-28 (using attributes attributable to another member).* (A) *Facts.* The facts are the same as in paragraph (ii)(A) of this *Example 6* except that M loses the $60 distributed in year 1 and the group does not absorb the loss. Thus, as of December 31, year 5, the CNOL is $120, attributable $60 to S and $60 to P. As a result, under § 1.1502-28(a)(4), after the portion of the CNOL attributable to S is reduced to $0, the remaining $40 of excluded COD applies to the portion of the CNOL attributable to P, reducing it from $60 to $20. After

taking into account the effects of all applicable rules of law, M's basis in the S share at the end of year 5 is $100 (M's original $100 basis decreased under § 1.1502-32 by $40 at the end of the year 1 and then increased under § 1.1502-32 by $40 at end of the year 5 (the net of the $100 tax exempt income from the excluded COD applied to reduce attributes and the $60 noncapital, nondeductible expense from the reduction of S's portion of the CNOL)). Under paragraph (f)(10)(i)(D) of this section, a share is transferred on the last day of the taxable year during which it becomes worthless under section 165 if the share is treated as a capital asset, or the date the share becomes worthless if the share is not treated as a capital asset, taking into account § 1.1502-80(c). Accordingly, M transfers the loss share of S stock on December 31, year 5, and the transfer is therefore subject to this section.

(B) *Application of paragraph (b) of this section.* Although the transfer is subject to this section, there is no basis redetermination under paragraph (b) of this section for the reasons set forth in paragraph (i)(B) of this *Example 6.* Therefore, after the application of paragraph (b) of this section, the share is still a loss share and, as such, subject to this paragraph (c).

(C) *Basis reduction under this paragraph (c).* Under this paragraph (c), M's basis in the S share, $100, is reduced, but not below value, $0, by the lesser of the share's net positive adjustment and disconformity amount. The share's net positive adjustment is $60 (the sum of the year 1 investment adjustment, as defined in paragraph (b)(1)(iii) of this section, $20, and the year 5 investment adjustment, $40). The share's disconformity amount is the excess of its basis, $100, over its allocable portion of S's net inside attribute amount. S's net inside attribute amount is $0 (taking into account the effects of the attribute reduction required under sections 108 and 1017 and § 1.1502-28). S's net inside attribute amount is allocable entirely to the sole outstanding S share. The share's disconformity amount is therefore $100. The lesser of the share's net positive adjustment, $60, and its disconformity amount, $100, is $60. Accordingly, M's basis in the share is reduced by $60, from $100 to $40, immediately before the transfer.

(D) *Application of paragraph (d) of this section.* After the application of this paragraph (c), the S share is still a loss share, and, accordingly, S's attributes are subject to reduction under paragraph (d) of this section. No adjustment is required under paragraph (d) of this section, however, because there is no aggregate inside loss. See paragraph (d)(3)(iii) of this section.

Example 7. Lower-tier subsidiary (no transfer of lower-tier stock). (i) *Facts.* M owns the sole outstanding share of S stock with a basis of $160. S owns two assets, Asset 1 with a basis and value of $100, and the sole outstanding share of S1 stock with a basis of $60. S1 owns one asset, Asset 2, with a basis of $20 and value of $60. In year 1, S1 sells Asset 2 to X for $60, recognizing a $40 gain. On December 31, year 1, M sells its S share to Y, a member of another consolidated group, for $160. After taking into account the effects of all applicable rules of law, M's basis in the S share is $200 (M's original $160 basis increased under §

1.1502-32 by $40 (to reflect the tier-up of the adjustment to S's basis in the S1 stock for the gain recognized on S1's sale of Asset 2)). M's sale of the S share is a transfer of a loss share and therefore subject to this section. (S does not transfer the S1 share because S and S1 are members of the same group following the transfer. See paragraph (f)(10) of this section.)
(ii) *Application of paragraph (b) of this section.* Although the transfer is subject to this section, there is no basis redetermination under paragraph (b) of this section because there is only one share of S stock outstanding (and so there can be no disparity among members' bases in common shares and there are no outstanding preferred shares with respect to which there can be unrecognized gain or loss). See paragraph (b)(1)(ii)(A) of this section. Therefore, after the application of paragraph (b) of this section, the share is still a loss share and, as such, subject to this paragraph (c).

(iii) *Basis reduction under this paragraph (c).* (A) *In general.* Under this paragraph (c), M's basis in the S share, $200, is reduced, but not below value, $160, by the lesser of the share's net positive adjustment and disconformity amount. The S share's net positive adjustment is $40. The share's disconformity amount is the excess of its basis, $200, over the share's allocable portion of S's net inside attribute amount. S's net inside attribute amount is the sum of S's basis in Asset 1, $100, and S's basis in the S1 share.

(B) *S's basis in the S1 share.* Although S's actual basis in the S1 share is $100 (S's original $60 basis increased under § 1.1502-32 by $40 (the share's allocable portion of the gain recognized on the sale of Asset 2)), for purposes of computing the S share's disconformity amount, S's net inside attribute amount is determined by treating S's basis in the S1 share as tentatively reduced by the lesser of the S1 share's net positive adjustment and the S1 share's disconformity amount. The S1 share's net positive adjustment is $40 (the year 1 investment adjustment). The S1 share's disconformity amount is the excess of its basis, $100, over the share's allocable portion of S1's net inside attribute amount. S1's net inside attribute amount is equal to the amount of S1's money ($60 from the sale of Asset 2), and is allocable entirely to the sole outstanding S1 share. Thus, the S1 share's disconformity amount is the excess of $100 over $60, or $40. The lesser of the S1 share's net positive adjustment, $40, and its disconformity amount, $40, is $40. Accordingly, for purposes of computing the disconformity amount of the S share, S's net inside attribute amount is determined by treating S's basis in its S1 share as tentatively reduced by $40, from $100 to $60.

(C) *The disconformity amount of M's S share.* S's net inside attribute amount is treated as the sum of its basis in Asset 1, $100, and its tentatively reduced basis in the S1 share, $60, or $160. S's net inside attribute amount is allocable entirely to the sole outstanding S share. Thus, the S share's disconformity amount is the excess of $200 over $160, or $40.

(D) *Amount of reduction.* M's basis in its S share is reduced by the lesser of the S share's net positive adjustment, $40, and disconformity amount, $40, or $40. Accordingly, M's basis in the S share is reduced by $40, from $200 to $160.

(E) *Effect on S's basis in its S1 share.* The tentative reduction under this paragraph (c) has no effect on S's actual basis in the S1 share. Thus, after the application of this paragraph (c), S owns the S1 share with a basis of $100 (S's original $60 basis increased under § 1.1502-32 by $40 (the share's allocable portion of the gain recognized on the sale of Asset 2)).

(iv) *Application of paragraph (d) of this section.* Because M's sale of the S share is not a transfer of a loss share after the application of this paragraph (c), paragraph (d) of this section does not apply to the transfer.

(d) ***Attribute reduction to prevent duplication of loss*** —

(1) ***In general.*** The rules of this paragraph (d) reduce attributes of S and its lower-tier subsidiaries to the extent they duplicate a net loss on shares of S stock transferred by members in one transaction. This rule furthers single-entity principles by preventing S (or its lower-tier subsidiaries) from using deductions and losses to the extent that the group or its members (including former members) have either used, or preserved for later use, a corresponding loss in S shares.

(2) ***Attribute reduction rule*** —

(i) ***General rule.*** If a transferred share is a loss share after taking into account the effects of all applicable rules of law, including any adjustments under paragraph (b), (c), or (d)(5)(iii) of this section, S's attributes are reduced by S's attribute reduction amount immediately before the transfer. S's attribute reduction amount is determined under paragraph (d)(3) of this section and applied in accordance with the provisions of paragraphs (d)(4), (d)(5), and (d)(6) of this section. In addition, paragraph (d)(7) of this section provides for additional attribute reduction in the case of certain transfers due to worthlessness and certain transfers not followed by a separate return year.

(ii) ***Attribute reduction amount less than five percent of value.*** This paragraph (d) generally does not apply to a transaction if the aggregate attribute reduction amount in the transaction is less than five percent of the aggregate value of the shares transferred by members in the transaction. However, in such a case, P may elect to apply this paragraph (d) to the transaction. If such an election is made, this paragraph (d) will apply with respect to the entire aggregate attribute reduction amount determined in the transaction. Such an election is made in the manner provided in paragraph (e)(5) of this section.

(3) ***Attribute reduction amount*** —

(i) ***In general.*** S's *attribute reduction amount* is the lesser of—

(A) The net stock loss (as defined in paragraph (d)(3)(ii) of this section); and

(B) S's aggregate inside loss (as defined in paragraph (d)(3)(iii) of this section).

(ii) ***Net stock loss.*** The *net stock loss* is the excess, if any, of—

(A) The aggregate basis of all shares of S stock transferred by members in the transaction; over

(B) The aggregate value of those shares.

(iii) ***Aggregate inside loss*** —

(A) ***In general.*** S's *aggregate inside loss* is the excess, if any, of—

(*1*) S's net inside attribute amount; over

(*2*) The value of all outstanding shares of S stock.

(B) ***Net inside attribute amount.*** S's *net inside attribute amount* generally has the same meaning as in paragraph (c)(5) of this section. However, if S holds stock of a lower-tier subsidiary, the provisions of paragraph (d)(5) of this section (and not the provisions of paragraph (c)(6) of this section) modify the computation of S's net inside attribute amount for purposes of this paragraph (d).

(iv) ***Lower-tier subsidiaries.*** See paragraph (d)(5) of this section for special rules relating to the application of this paragraph (d) if S owns shares of stock of a subsidiary.

(4) ***Application of attribute reduction amount*** —

(i) ***Attributes available for reduction.*** S's attributes available for reduction under this paragraph (d) are—

(A) ***Category A.*** Capital loss carryovers;

(B) ***Category B.*** Net operating loss carryovers;

(C) ***Category C.*** Deferred deductions; and

(D) ***Category D.*** Basis of assets other than assets identified as Class I assets in § 1.338-6(b)(1).

(ii) ***Rules of application*** —

(A) ***Category A, Category B, and Category C attributes.*** S's attribute reduction amount is first allocated and applied to reduce the attributes in Category A, Category B, and Category C.

(*1*) ***Attribute reduction amount less than total attributes in Category A, Category B, and Category C.*** If S's attribute reduction amount is less than S's total attributes in Category A, Category B, and Category C, all of S's attribute reduction amount will be applied to reduce such attributes. However, P may specify the allocation of S's attribute reduction amount among such attributes. An election to specify the allocation of S's attribute reduction amount is made in the manner provided in paragraph (e)(5) of this section. To the extent that P does not specify an allocation of S's attribute reduction amount, S's attribute reduction amount will be applied to reduce any Category A attributes not reduced as a result of the specific allocation of S's attribute reduction amount, from oldest to newest, until they are eliminated. Then, any remaining attribute reduction amount will be applied to reduce any Category B attributes not reduced as a result of the specific allocation of S's attribute reduction amount, from oldest to newest, until they are eliminated. Finally, any remaining

attribute reduction amount will be applied to reduce any Category C attributes not reduced as a result of the specific allocation of S's attribute reduction amount, proportionately.

(2) ***Attribute reduction amount not less than the total attributes in Category A, Category B, and Category C.*** If S's attribute reduction amount equals or exceeds S's total attributes in Category A, Category B, and Category C, all such attributes are eliminated and any remaining attribute reduction amount is allocated and applied as provided in paragraphs (d)(4)(ii)(B) and (d)(4)(ii)(C) of this section.

(B) ***Category D attributes.*** Any attribute reduction amount not applied to reduce S's Category A, Category B, and Category C attributes is allocated and applied as provided in this paragraph (d)(4)(ii)(B) and, to the extent applicable, paragraph (d)(5) of this section.

(1) ***Allocation if S holds stock of another subsidiary.*** If S holds shares of stock of another subsidiary, the attribute reduction amount not applied to reduce S's Category A, Category B, and Category C attributes is first allocated between S's shares of lower-tier subsidiary stock and S's other Category D assets in the manner provided in paragraph (d)(5)(ii) of this section. S's attribute reduction amount allocated to shares of lower-tier subsidiary stock is applied to reduce S's bases in those shares, becomes an attribute reduction amount of the lower-tier subsidiary, and, subject to certain limitations, reduces the lower-tier subsidiary's attributes. See paragraphs (d)(5)(iii) through (d)(5)(vi) of this section.

(2) ***Allocation and application of attribute reduction amount not applied to lower-tier subsidiary stock.*** Any portion of S's attribute reduction amount not applied to reduce S's Category A, Category B, and Category C attributes and not allocated to lower-tier subsidiary stock is allocated to S's Category D assets other than lower-tier subsidiary stock in the manner provided in this paragraph (d)(4)(ii)(B)(2). Such amount is first allocated to S's bases (if any) in its assets identified as Class VII assets in § 1.338-6(b)(2)(vii). If the attribute reduction amount allocated to Class VII assets is less than S's aggregate basis in those assets, it is applied proportionately (by basis) to reduce the bases of such assets. If the attribute reduction amount allocated to Class VII assets equals or exceeds S's aggregate basis in those assets, it is applied to reduce the bases of such assets to zero. Any remaining attribute reduction amount is then allocated and applied in the same manner to reduce S's bases (if any) in assets identified as Class VI assets in § 1.338-6(b)(2)(vi), and then to reduce S's bases (if any) in its assets identified in § 1.338-6(b)(2) as Class V, Class IV, Class III, and Class II, successively.

(C) ***Attribute reduction amount exceeding attributes available for reduction.*** If the amount to be allocated and applied to attributes in Category D other than lower-tier subsidiary stock exceeds the amount of attributes in that category, then—

(1) To the extent of any liabilities of S that are not taken into account for tax purposes before the transfer, such excess amount is suspended. The suspended amount is applied proportionately to reduce any amounts attributable to S that would be deductible or capitalizable as a result of such liabilities being taken into account by S or any other person. Solely for purposes of this paragraph (d)(4)(ii)(C)(1) and paragraph (d)(5)(ii)(B) of this section, the term *liability* means any liability or

obligation the satisfaction of which would be required to be capitalized as an assumed liability by a person that purchased all of S's assets and assumed all of S's liabilities in a single transaction.

(2) To the extent such excess amount is greater than any amount suspended under paragraph (d)(4)(ii)(C)(1) of this section, it is disregarded and has no further effect.

(iii) ***Time and effect of attribute reduction.*** In general, the reduction of attributes is effective immediately before the transfer of a loss share of S stock. If the reduction to a member's basis in a share of lower-tier subsidiary stock exceeds the basis of that share, to the extent the excess is not restored under paragraph (d)(5)(vi) of this section it is an excess loss account in that share (and such excess loss account is not taken into account under § 1.1502-19 or otherwise as a result of the transaction). The reductions to attributes required under this paragraph (d)(4), including by reason of paragraph (d)(5)(v) of this section (tier down of attribute reduction amounts to lower-tier subsidiaries), are not noncapital, nondeductible expenses described in § 1.1502-32(b)(2)(iii).

(5) ***Special rules applicable if S holds stock of another subsidiary.*** If S holds shares of stock of any other subsidiary (S1) as of a transfer of loss shares of S stock, the rules of this paragraph (d)(5) apply with respect to each such subsidiary.

(i) ***Treatment of lower-tier subsidiary stock for computation of S's attribute reduction amount.*** For purposes of determining S's net inside attribute amount and attribute reduction amount under paragraph (d)(3) of this section—

(A) ***Single share.*** All of S's shares of S1 stock held as of the transfer of S stock (whether or not transferred in, or held by S immediately after, the transaction) are treated as a single share of stock (generally referred to as the S1 stock); and

(B) ***Deemed basis.*** S's basis in its S1 stock is treated as its *deemed basis* in the stock, which is equal to the greater of—

(1) The sum of S's basis in each share of S1 stock (adjusted to reflect any gain or loss recognized on the transfer of any S1 shares in the transaction, whether allowed or disallowed); and

(2) The portion of S1's net inside attribute amount allocable to S's shares of S1 stock.

(C) ***Multiple tiers.*** For purposes of computing deemed basis under paragraph (d)(5)(i)(B) of this section, a subsidiary's basis in stock of a lower-tier subsidiary is the deemed basis in that lower-tier subsidiary stock. Thus, if stock is held in multiple tiers, the computation of deemed basis begins at the lowest tier, so that the computation of deemed basis at each tier takes into account the deemed basis of all lower-tier shares.

(ii) ***Allocation of S's attribute reduction amount between lower-tier subsidiary stock and other Category D assets.*** The portion of S's attribute reduction amount that is not applied to reduce S's Category A, Category B, and Category C attributes must be allocated between each of S's deemed single shares of S1 stock and all of S's other Category D assets. For this purpose, S's Category D assets other than lower-tier subsidiary stock are treated as one asset with a basis equal to the aggregate bases of all Category D assets other than lower-tier subsidiary stock (non-stock Category D asset). S's attribute reduction amount is allocated proportionately (by basis) between (among) the non-stock Category D asset and S's deemed single share(s) of

subsidiary stock. (See paragraphs (d)(4)(ii)(B)(*2*) and (d)(4)(ii)(C) of this section regarding the portion of S's attribute reduction amount allocated to the Category D assets other than lower-tier subsidiary stock.) For allocation purposes, S's basis in each deemed single share of S1 stock is its deemed basis (determined under paragraphs (d)(5)(i)(B) and (d)(5)(i)(C) of this section), reduced by—

(A) The value of S's transferred shares of S1 stock; and

(B) The nontransferred S1 shares' allocable portion of the excess of S1's non-loss assets over S1's liabilities (including liabilities described in paragraph (d)(4)(ii)(C)(*1*) of this section). For this purpose, S1's non-loss assets are—

(*1*) S1's assets identified as Class I assets in § 1.338-6(b)(1),

(*2*) The value of S1's transferred shares of lower-tier subsidiary stock, and

(*3*) The nontransferred lower-tier subsidiary shares' allocable portions of lower-tier non-loss assets (net of liabilities, including liabilities described in paragraph (d)(4)(ii)(C)(*1*) of this section) of all lower-tier subsidiaries.

(iii) ***Application of attribute reduction amount to S's S1 stock.*** The portion of S's attribute reduction amount allocated under paragraph (d)(5)(ii) of this section to each deemed single share of S1 stock (allocated attribute reduction amount) is apportioned among, and applied to reduce S's bases in, individual S1 shares in accordance with the following—

(A) No portion of the allocated attribute reduction amount is apportioned to an individual share of transferred S1 stock if gain or loss is recognized on its transfer (recognition transfer);

(B) The allocated attribute reduction amount is apportioned among all of S's other shares of S1 stock in a manner that, first reduces the loss in and disparity among S's bases in loss shares of S1 preferred stock to the greatest extent possible, and then reduces the disparity among S's bases in the shares of S1 common stock (other than those transferred in a recognition transfer) to the greatest extent possible;

(C) The allocated attribute reduction amount apportioned to an individual S1 share is applied to reduce the basis of that share to, but not below, value if the share is either a preferred share or a common share that is transferred other than in a recognition transfer; and

(D) The allocated attribute reduction amount apportioned to an individual S1 share is applied to reduce the basis of that share without regard to value if the share is a common share that is not transferred in the transaction.

(iv) ***Unapplied allocated attribute reduction amount.*** Any portion of the allocated attribute reduction amount that is not applied to reduce S's basis in a share of S1 stock has no effect on any other attributes of S, it is not a noncapital, nondeductible expense of S, and it does not cause S to recognize income or gain. However, such amounts continue to be part of the allocated attribute reduction amount for purposes of the tier down rule in paragraph (d)(5)(v) of this section.

(v) ***Tier down of attribute reduction amount*** —

(A) ***General rule.*** The allocated attribute reduction amount of each deemed single share of S1 stock is an attribute reduction amount of S1 (tier-down attribute reduction amount). Accordingly, the tier-down attribute reduction amount, in combination with any attribute

reduction amount computed with respect to the transferred S1 shares (if any) (direct S1 attribute reduction amount), applies to reduce S1's attributes under the provisions of this paragraph (d). The tier-down attribute reduction amount is an attribute reduction amount of S1 that must be allocated to S1's assets, and may become an allocated attribute reduction amount of lower-tier subsidiary stock (and thus a tier-down attribute reduction amount of a lower-tier subsidiary), even if its application to S1's attributes is limited under paragraph (d)(5)(v)(B) of this section.

(B) ***Conforming limitation on reduction of lower-tier subsidiary's attributes.*** Notwithstanding the general rule in paragraph (d)(5)(v)(A) of this section, and unless P elects otherwise in the manner provided in paragraph (e)(5) of this section, the application of S1's tier-down attribute reduction amount to S1's attributes is limited to an amount equal to the excess of the portion of S1's net inside attribute amount that is allocable to all S1 shares held by members as of the transaction (whether or not transferred in the transaction) over the sum of—

(*1*) Any direct S1 attribute reduction amount;

(*2*) The aggregate value of all S1 shares transferred by members in the transaction with respect to which gain or loss was recognized (recognition transfer);

(*3*) The sum of all members' bases (after any reduction under this section, including this paragraph (d)) in any shares of S1 stock transferred by members in the transaction (other than in a recognition transfer), reduced by any direct S1 attribute reduction amount computed with respect to the transfer of such S1 shares; and

(*4*) The sum of all members' bases (after any reduction under this section, including this paragraph (d)) in any nontransferred shares of S1 stock held as of the transaction.

(vi) ***Stock basis restoration*** —

(A) ***In general.*** After paragraph (d)(5)(v) of this section has applied with respect to all shares of subsidiary stock transferred in the transaction, lower-tier subsidiary stock basis is restored under this paragraph (d)(5)(vi). Under this paragraph (d)(5)(vi), the reductions to members' bases in shares of lower-tier subsidiary stock under paragraph (d)(5)(iii) of this section are reversed to the extent necessary to restore such bases to an amount that conforms the basis of each such share to its allocable portion of the subsidiary's net inside attribute amount, taking into account any reductions under this paragraph (d). Restoration adjustments are first made at the lowest tier and then at each next higher tier successively. Restoration adjustments do not tier up to affect the bases of higher-tier shares. Rather, restoration is computed and applied separately at each tier. For purposes of this rule, when computing a subsidiary's net inside attribute amount—

(*1*) The subsidiary's basis in stock of a lower-tier subsidiary is the actual basis of the stock after application of this paragraph (d); and

(*2*) Any attribute reduction amount allocated to the subsidiary's Category D assets other than lower-tier subsidiary stock that is suspended under paragraph (d)(4)(ii)(C)(*1*) of this section is treated as reducing the subsidiary's net inside attribute amount.

(B) ***Election not to restore basis.*** Notwithstanding paragraph (d)(5)(vi)(A) of this section, P may elect not to restore basis in stock of a lower-tier subsidiary that was reduced under paragraph (d)(5)(iii) of this section. An election not to restore lower-tier subsidiary stock basis is made in the manner provided in paragraph (e)(5) of this section.

(6) ***Elections to reduce the potential for loss duplication*** —

(i) ***In general.*** Notwithstanding the general operation of this paragraph (d), P may elect to reduce the potential for loss duplication, and thereby reduce or avoid attribute reduction. To the extent of S's attribute reduction amount tentatively computed without regard to any election under this paragraph (d)(6), P may elect—

(A) To reduce all or any portion (including any portion in excess of a specified amount) of members' bases in transferred loss shares of S stock;

(B) To reattribute all or any portion (including any portion in excess of a specified amount) of S's Category A, Category B, and Category C attributes (including such attributes of lower-tier subsidiaries), to the extent they would otherwise be subject to reduction under this paragraph (d); or

(C) Any combination thereof.

(ii) ***Manner and effect of election.*** An election to reduce loss duplication under this paragraph (d)(6) is made in the manner provided in paragraph (e)(5) of this section. Although such elections are irrevocable, they have no effect—

(A) If there is no attribute reduction amount; or

(B) To the extent S's attribute reduction amount is less than the amount specified in the election.

(iii) ***Order of application*** —

(A) ***Stock of one subsidiary transferred in the transaction.*** If shares of stock of only one subsidiary are transferred in the transaction, any stock basis reduction and reattribution of attributes (including from lower-tier subsidiaries) is deemed to occur immediately before the application of this paragraph (d). If a transferred share is still a loss share after giving effect to this election, the other provisions of this paragraph (d) then apply with respect to that share.

(B) ***Stock of multiple subsidiaries transferred in the transaction.*** If shares of stock of more than one subsidiary are transferred in the transaction and elections under this paragraph (d)(6) are made with respect to transfers of stock of subsidiaries in multiple tiers, effect is given to the elections from the lowest tier to the highest tier in the manner provided in this paragraph (d)(6)(iii)(B). The amount of the election for the transfer at the lowest tier is determined by applying this paragraph (d) with respect to the transferred loss shares of this lowest-tier subsidiary immediately after applying paragraphs (b) and (c) of this section to the stock of such subsidiary. The effect of any stock basis reduction or reattribution of losses immediately tiers up under § 1.1502-32 to adjust members' bases in higher-tier shares. Elections and adjustments are then made with respect to transfers at each next higher tier successively.

(iv) ***Special rules for reattribution elections*** —

(A) ***In general.*** Because the reattribution election is intended to provide the group a means to retain certain S attributes, and not to change the location of attributes where S continues to be a member of the same group as P, the election to reattribute attributes may only be made if S becomes a nonmember (within the meaning of § 1.1502-19(c)(2)) as a result of the transaction and S does not become a member of any group that includes P. The election to reattribute S's attributes can only be made for attributes in Category A, Category B, and Category C. The attributes that would otherwise be reduced under paragraph (d)(4) of this section may be reattributed to P. Accordingly, P may specify the attributes in Category A, Category B, and Category C to be reattributed. Such an election is made in the manner provided in paragraph (e)(5) of this section. To the extent that P elects to reattribute attributes but does not specify the attributes to be reattributed, any attributes not specifically reattributed will be reattributed in the default amount, order, and category described in paragraph (d)(4)(ii)(A)(*1*) of this section. P succeeds to reattributed attributes as if such attributes were succeeded to in a transaction to which section 381(a) applies. Any owner shift of the subsidiary (including any deemed owner shift resulting from section 382(g)(4)(D) or section 382(l)(3)) in connection with the transaction is not taken into account under section 382 with respect to the reattributed attributes. (See § 1.1502-96(d) for rules relating to section 382 and the reattribution of losses under this paragraph (d)(6).) The reattribution of S's attributes is a noncapital, nondeductible expense described in § 1.1502-32(b)(2)(iii). See § 1.1502-32(c)(1)(ii)(A) regarding special allocations applicable to such noncapital, nondeductible expense. If P elects to reattribute S attributes (including attributes of a lower-tier subsidiary) and reduce S stock basis, the reattribution is given effect before the stock basis reduction.

(B) ***Insolvency limitation.*** If S, or any higher-tier subsidiary, is insolvent within the meaning of section 108(d)(3) at the time of the transfer, S's losses may be reattributed only to the extent they exceed the sum of the separate insolvencies of any subsidiaries (taking into account only S and its higher-tier subsidiaries) that are insolvent. For purposes of determining insolvency, liabilities owed to higher-tier members are not taken into account, and stock of a subsidiary that is limited and preferred as to dividends and that is not owned by higher-tier members is treated as a liability to the extent of the amount of preferred distributions to which the stock would be entitled if the subsidiary were liquidated on the date of the transfer.

(C) ***Limitation on reattribution from lower-tier subsidiaries.*** P's ability to reattribute attributes of lower-tier subsidiaries is limited under this paragraph (d)(6)(iv)(C) in order to prevent circular computations of the attribute reduction amount. Accordingly, attributes that would otherwise be reduced as a result of tier-down attribute reduction under paragraph (d)(5)(v) of this section may only be reattributed to the extent that the reduction in the basis of any lower-tier subsidiary stock resulting from the noncapital, nondeductible expense (as allocated under § 1.1502-32(c)(1)(ii)(A)(*2*)) will not create an excess loss account in any such stock.

(v) ***Special rules for stock basis reduction elections*** —

(A) ***In general.*** An election to reduce basis in S stock is made with respect to all members' bases in loss shares of S stock that are transferred in the transaction. The reduction is allocated among all such shares in proportion to the amount of loss on each share. This reduction in S stock basis is a noncapital, nondeductible expense described in § 1.1502-32(b)(2)(iii) of the transferring member.

(B) ***Adjustment to the attribute reduction amount.*** The attribute reduction amount (determined under paragraph (d)(3)(i) of this section) is treated as reduced by the amount of any elective reduction in the basis of the S stock under this paragraph (d)(6). Accordingly, the election to reduce stock basis under this paragraph (d)(6) is treated as reducing or eliminating the duplication even if the shares of S stock are loss shares after giving effect to the election.

(C) ***Deemed stock basis reduction election in the case of certain disallowed stock losses.*** If there is a net stock loss in transferred shares after taking into account any actual elections under this paragraph (d)(6), and the stock loss would otherwise be permanently disallowed (for example, under section 311(a)), P will be deemed to have made a stock basis reduction election equal to such net stock loss.

(7) ***Additional attribute reduction in the case of certain transfers due to worthlessness and certain transfers not followed by a separate return year*** —

(i) ***In general.*** Notwithstanding any other provision of this paragraph (d), if a transfer is subject to this paragraph (d)(7) any of S's Category A, Category B, and Category C attributes not otherwise reduced or reattributed under this paragraph (d), and any credit carryover attributable to S, including any consolidated credits that would be apportioned to S under the principles of § 1.1502-79 if S had a separate return year, are eliminated. Attributes other than consolidated tax attributes are eliminated under this paragraph (d)(7)(i) immediately before the transfer subject to this paragraph (d)(7)(i). The elimination of attributes under this paragraph (d)(7)(i) is not a noncapital, nondeductible expense described in § 1.1502-32(b)(2)(iii).

(ii) ***Transfers subject to this paragraph (d)(7).*** A transfer is subject to this paragraph (d)(7) if—

(A) M transfers a share of S stock solely by reason of a transfer defined in paragraph (f)(10)(i)(D) of this section (worthlessness where the provisions of § 1.1502-80(c) are satisfied), M recognizes a net deduction or loss on the share, and S is a member of the group on the day following the last day of the group's taxable year during which the share becomes worthless under section 165 (taking into account the provisions of § 1.1502-80(c)), or

(B) M recognizes a net deduction or loss on the stock of S in a transaction in which S ceases to be a member and does not become a nonmember within the meaning of § 1.1502-19(c)(2).

(iii) ***Example.*** The application of this paragraph (d) to transfers due to worthlessness and to loss transfers not followed by separate return years is illustrated by the following example.

> *Example.* (i) *Worthlessness where S continues as a member.* M owns the sole share of S stock. The share is worthless under section 165. In addition, S has disposed of all its assets within the meaning of § 1.1502-19(c)(1)(iii)(A) and therefore satisfies the provisions of § 1.1502-80(c). M claims a worthless securities deduction with respect to the share. The worthlessness is a transfer of the S share, a loss share, and therefore subject to this section. After the application of paragraphs (b) and (c) of this section, M's basis in the share (and therefore M's net stock loss) is $75. The portion of the consolidated net operating loss attributable to S is $100. Under the general rules of this

paragraph (d), S's attribute reduction amount is $75 (the lesser of M's $75 net stock loss and S's $100 aggregate inside loss ($100 net inside attribute amount over $0 value of S share)). S's attributes are reduced by $75, from $100 to $25. In addition, if S remains a member of the P group, this paragraph (d)(7) applies to eliminate the remaining $25 of the consolidated net operating loss attributable to S because the S share is worthless, and M recognizes a deduction (taking into account § 1.1502-80(c)) with respect to the share. Accordingly, after the application of this section, M recognizes a $75 worthless securities deduction, S has $0 net inside attributes, and the consolidated net operating loss is reduced by a total of $100.

(ii) *Dissolution of insolvent subsidiary.* The facts are the same as in paragraph (i) of this *Example,* except that S is insolvent, does not dispose of all its assets within the meaning of § 1.1502-19(c)(1)(iii)(A), M causes S to be legally dissolved, and the S share held by M is cancelled without consideration. Under paragraph (d)(7)(ii)(B) of this section, the dissolution of S is subject to this paragraph (d)(7) and the result is the same as in paragraph (i) of this *Example.* The result would also be the same if instead of being legally dissolved, S was converted into an entity that is disregarded as separate from M.

(iii) *Stock cancelled in connection with a section 381(a) transaction with another member.* M owns the sole share of S common stock with a basis of $75. M1 owns the sole share of S preferred stock. The value of S's assets (net of liabilities) is less than the liquidation preference on the S preferred stock. In a reorganization described in section 368(a)(1)(D), S transfers all of its assets to M2 in exchange for M2 common stock and M2's assumption of S's liabilities, S distributes all of the M2 common stock received in the exchange to M1 in exchange for M1's S preferred stock, the S common stock held by M is cancelled without consideration, and S ceases to exist. Notwithstanding that M is not entitled to treat its common share of S stock as worthless until § 1.1502-80(c) is satisfied, M's share is transferred within the meaning of paragraph (f)(10)(i)(A) of this section because M ceases to own the share in a transaction in which, but for this section (and notwithstanding the deferral of any amount recognized on the transfer, other than by reason of § 1.1502-13), M would recognize a loss or deduction with respect to the share. Accordingly, there is a transfer of the S common share and this section applies to the transfer. There are no adjustments under paragraphs (b) or (c) of this section because no investment adjustments have been applied to the bases of the shares. The transfer of the S common stock is subject to the general rules of this paragraph (d), but is not subject to the additional attribute reduction under this paragraph (d)(7) because the transfer was not solely by reason of worthlessness where § 1.1502-80(c) is satisfied, and S did not cease to be a member because M2 is a successor to S.

(iv) *Stock cancelled in connection with a section 381(a) transaction with a nonmember.* The facts are the same as in paragraph (iii) of this *Example,* except that the S preferred share is held by X, instead of M2 acquiring S's assets, S merges into Y in a

reorganization described in section 368(a)(1)(A), M1 receives all of the Y stock issued in the merger in exchange for M1's S preferred stock, and Y does not become a member as a result of the transaction. M treats the cancelled S common stock as worthless, and § 1.1502-80(c) is satisfied because S ceases to be a member. In this case, there is a transfer of M's S common share because it becomes worthless (taking into account § 1.1502-80(c)); because M ceases to own the share in a transaction in which, but for this section (and notwithstanding the deferral of any amount recognized on the transfer, other than by reason of § 1.1502-13), M would recognize a loss or deduction with respect to the share; and because M and S cease to be members of the same group. The transfer of the S common stock is subject to the general rules of this paragraph (d), but is not subject to the additional attribute reduction under this paragraph (d)(7) because the transfer was not solely by reason of worthlessness where § 1.1502-80(c) is satisfied and, although S did cease to be a member, S became a nonmember within the meaning of § 1.1502-19(c)(2) because Y is a successor to S.

(8) ***Examples.*** The application of this paragraph (d) is illustrated by the following examples:

Example 1. Computation of attribute reduction amount. (i) *Transfer of all S shares.* (A) *Facts.* M owns all 100 of the outstanding shares of S stock with a basis of $2 per share. S owns land with a basis of $100, has a $120 loss carryover, and has no liabilities. Each share has a value of $1. M sells 30 of the S shares to X for $30. As a result of the sale, M and S cease to be members of the same group. Accordingly, all 100 of the S shares are transferred. See paragraphs (f)(10)(i)(A), (f)(10)(i)(B), and (f)(10)(i)(C) (with respect to the 30 S shares sold to X) of this section. M's transfer of the S shares is a transfer of loss shares and therefore subject to this section.
(B) *Application of paragraphs (b) and (c) of this section.* Although the transfer is subject to this section, there is no basis redetermination under paragraph (b) of this section because there is no disparity among M's bases in shares of S common stock and there are no shares of S preferred stock outstanding (so there can be no unrecognized gain or loss on preferred stock). See paragraph (b)(1)(ii)(A) of this section. Therefore, after the application of paragraph (b) of this section, the share is still a loss share and, as such, subject to paragraph (c) of this section. No adjustment is required under paragraph (c) of this section because the net positive adjustment is $0. See paragraph (c)(3) of this section. Thus, after the application of paragraph (c) of this section, M's transfer of the S shares is still a transfer of loss shares and, accordingly, subject to this paragraph (d).

(C) *Attribute reduction under this paragraph (d).* Under this paragraph (d), S's attributes are reduced by S's attribute reduction amount. Paragraph (d)(3) of this section provides that S's attribute reduction amount is the lesser of the net stock loss and S's aggregate inside loss. The net stock loss is the excess of the $200 aggregate bases of the transferred shares over the $100 aggregate value of the transferred shares, or $100. S's aggregate inside loss is the

excess of its $220 net inside attribute amount (the sum of the $100 basis in the land and the $120 loss carryover) over the $100 value of all outstanding S shares, or $120. The attribute reduction amount is therefore the lesser of the $100 net stock loss and the $120 aggregate inside loss, or $100. Under paragraph (d)(4) of this section, S's $100 attribute reduction amount is allocated and applied to reduce S's $120 loss carryover to $20. Under paragraph (d)(4)(iii) of this section, the reduction of the loss carryover is not a noncapital, nondeductible expense and has no effect on M's basis in the S stock.

(ii) *Transfer of less than all S shares.* (A) *Facts.* The facts are the same as in paragraph (i)(A) of this *Example 1*, except that M only sells 20 S shares to X. M's sale of the 20 S shares is a transfer of loss shares and therefore subject to this section. See paragraph (f)(10)(i)(A) and (f)(10)(i)(C) of this section. (There is no transfer of the remaining shares because S and M remain members of the same group.)

(B) *Application of paragraphs (b) and (c) of this section.* No adjustment is required under paragraph (b) or paragraph (c) of this section for the reasons set forth in paragraph (i)(B) of this *Example 1.* Thus, after the application of paragraph (c) of this section, M's transfer of the S shares is still a transfer of loss shares and, accordingly, subject to this paragraph (d).

(C) *Attribute reduction under this paragraph (d).* Under this paragraph (d), S's attributes are reduced by S's attribute reduction amount. Paragraph (d)(3) of this section provides that S's attribute reduction amount is the lesser of the net stock loss and S's aggregate inside loss. The net stock loss is $20, the excess of the $40 aggregate bases of the transferred shares over the $20 aggregate value of the transferred shares. S's aggregate inside loss is $120, the excess of its $220 net inside attribute amount (the sum of the $100 basis in the land and the $120 loss carryover) over the $100 value of all outstanding S shares. The attribute reduction amount is therefore $20, the lesser of the $20 net stock loss and the $120 aggregate inside loss. Under paragraph (d)(4) of this section, S's $20 attribute reduction amount is allocated and applied to reduce S's $120 loss carryover to $100.

Example 2. Proportionate allocation of attribute reduction amount. (i) *Facts.* M owns the sole outstanding share of S stock with a basis of $150. S owns land with a basis of $60, a factory with a basis of $30, publicly traded property with a basis of $30 and goodwill with a basis of $30. M sells its S share for $90. M's sale of the S share is a transfer of a loss share and therefore subject to this section. See paragraphs (f)(10)(i)(A), (f)(10)(i)(B), and (f)(10)(i)(C) of this section.
(ii) *Application of paragraphs (b) and (c) of this section.* Although the transfer is subject to this section, there is no basis redetermination under paragraph (b) of this section because there is only one share of S stock outstanding (and so there can be no disparity among members' bases in common shares and there are no outstanding preferred shares with respect to which there can be unrecognized gain or loss). See paragraph (b)(1)(ii)(A) of this section. Therefore,

after the application of paragraph (b) of this section, the share is still a loss share and, as such, subject to paragraph (c) of this section. No adjustment is required under paragraph (c) of this section because both the disconformity amount and the net positive adjustment are $0. See paragraph (c)(3) of this section. Thus, after the application of paragraph (c) of this section, M's sale of the S share is still a transfer of a loss share and, accordingly, subject to this paragraph (d).

(iii) *Attribute reduction under this paragraph (d).* Under paragraph (d)(3) of this section, S's attribute reduction amount is determined to be $60, the lesser of the $60 net stock loss ($150 basis over $90 value) and S's $60 aggregate inside loss (the excess of S's $150 net inside attribute amount (the $60 basis of the land, plus the $30 basis of the factory, plus the $30 basis of the publicly traded property, plus the $30 basis of the goodwill) over the $90 value of the S share). Under paragraph (d)(4)(ii)(B)(2) of this section, the $60 attribute reduction amount is allocated and applied to reduce S's bases in its Category D assets, S's only attributes available for reduction, as follows:

Available attributes, basis in Category D assets	Attribute amount	Allocable portion of attribute reduction amount	Adjusted attribute amount
Class VII, Goodwill	$30	$30	$0
Class V:			
Land	60	(60/90 × 60) 40	20
Factory	30	(30/90 × 60) 20	10
Total Class V	90	60	30
Class II, publicly traded property	30	0	30
Totals	150	60	90

Example 3. Attribute reduction amount less than total attributes in Category A, Category B, and Category C. (i) *No election to prescribe the allocation of S's attribute reduction amount.* (A) *Facts.* P owns the sole outstanding share of M stock with a basis of $1,000 and M owns the sole outstanding share of S stock with a basis of $210. M sells its S share to X for $100. M's sale of the S share is a transfer of a loss share and therefore subject to this section. See paragraphs (f)(10)(i)(A), (f)(10)(i)(B), and (f)(10)(i)(C) of this section. At the time of the sale, S

has no liabilities and the following attributes:

Category	Attribute	Attribute amount
Category A	Capital loss carryover	$10
Category B	NOL carryover	200
Category C	Deferred deductions	40
Category D, Class V	Basis in Land	50
Total Attributes		300

(B) *Application of paragraphs (b) and (c) of this section.* Although the transfer is subject to this section, there is no basis redetermination under paragraph (b) of this section because there is only one share of S stock outstanding (and so there can be no disparity among members' bases in common shares and there are no outstanding preferred shares with respect to which there can be unrecognized gain or loss). See paragraph (b)(1)(ii)(A) of this section. Therefore, after the application of paragraph (b) of this section, the share is still a loss share and, as such, subject to paragraph (c) of this section. No adjustment is required under paragraph (c) of this section because both the disconformity amount and the net positive adjustment are $0. See paragraph (c)(3) of this section. Thus, after the application of paragraph (c) of this section, M's transfer of the S share is still a transfer of a loss share and, accordingly, subject to this paragraph (d).

(C) *Attribute reduction under this paragraph (d).* (*1*) *Computation of attribute reduction amount.* Under paragraph (d)(3) of this section, S's attribute reduction amount is the lesser of the $110 net stock loss ($210 basis over $100 value) and S's aggregate inside loss. S's aggregate inside loss is $200 (S's $300 net inside attribute amount (the $10 capital loss carryover, plus the $200 NOL carryover, plus the $40 deferred deductions, plus the $50 basis in land) less the $100 value of all outstanding S shares). Thus, the attribute reduction amount is $110, the lesser of the $110 net stock loss and S's $200 aggregate inside loss. Under paragraph (d)(4)(ii)(A)(*1*) of this section, the $110 attribute reduction amount is allocated and applied to reduce S's attributes as follows:

Category	Attribute	Attribute amount	Allocation of attribute reduction amount	Adjusted attribute amount
Category A	Capital loss carryover	$10	$10	$0
Category B	NOL carryover	200	100	100

Category	Attribute	Attribute amount	Allocation of attribute reduction amount	Adjusted attribute amount
Category C	Deferred deductions	40	0	40
Category D, Class V	Basis in land	50	0	50
Totals		300	110	190

(ii) *Election to prescribe the allocation of attribute reduction amount.* (A) *Facts.* The facts are the same as in paragraph (i)(A) of this *Example 3,* except that P elects to allocate the attribute reduction amount to eliminate the Category C attributes, preserve the capital loss carryover, and reduce Category B attributes.
(B) *Application of paragraphs (b) and (c) of this section.* No adjustment is required under paragraph (b) or paragraph (c) of this section for the reasons set forth in paragraph (i)(B) of this *Example 3.* Thus, after the application of paragraph (c) of this section, M's sale of the S share is still a transfer of a loss share, and accordingly, subject to this paragraph (d).

(C) *Attribute reduction under this paragraph (d).* For the reasons set forth in paragraph (i)(C) of this *Example 3,* under this paragraph (d)(3), S's attribute reduction amount is determined to be $110. M elects to apply S's $110 attribute reduction amount as follows:

Category	Attribute	Attribute amount	Allocation of attribute reduction amount	Adjusted attribute amount
Category A	Capital loss carryover	$10	$0	$10
Category B	NOL carryover	200	70	130
Category C	Deferred deductions	40	40	0
Category D, Class V	Basis of land	50	0	50
Totals		300	110	190

Example 4. Attributes attributable to liability not taken into account. (i) *S operates one business.* (A) *Facts.* On January 1, year 1, M forms S by exchanging $150 for the sole outstanding share of S stock. In year 1, S earns $500, purchases land for $50, spends $100 to build a factory on that land, and then purchases publicly traded property for $250. In year 2, S earns a section 38 general business credit of $50. However, pollution generated by S's business gives rise to an environmental remediation liability under Federal law that would be

required to be capitalized if a person purchased S's assets and assumed the liability. Before any amounts have been taken into account with respect to the environmental remediation liability, when the liability has a present value of $500, M sells its S share to X for $150. After giving effect to all other provisions of law, M's basis in the S share is $650 (the original basis of $150 increased under § 1.1502-32 by $500 for the income earned). The sale is therefore a transfer of a loss share of subsidiary stock and subject to this section. See paragraphs (f)(10)(i)(A), (f)(10)(i)(B), and (f)(10)(i)(C) of this section.

(B) *Application of paragraphs (b) and (c) of this section.* Although the transfer is subject to this section, there is no basis redetermination under paragraph (b) of this section because there is only one share of S stock outstanding (and so there can be no disparity among members' bases in common shares and there are no outstanding preferred shares with respect to which there can be unrecognized gain or loss). See paragraph (b)(1)(ii)(A) of this section. Therefore, after the application of paragraph (b) of this section, the share is still a loss share and, as such, subject to paragraph (c) of this section. No adjustment to basis is made under paragraph (c) of this section because, although the net positive adjustment is $500, the disconformity amount is $0. See paragraph (c)(3) of this section. Thus, after the application of paragraph (c) of this section, M's sale of the S share is still a transfer of a loss share and, accordingly, subject to this paragraph (d).

(C) *Attribute reduction under this paragraph (d).* (*1*) Under paragraph (d)(3) of this section, S's attribute reduction amount is the lesser of the $500 net stock loss ($650 basis over $150 value) and the aggregate inside loss. The aggregate inside loss is $500, computed as the excess of S's $650 net inside attribute amount (the sum of S's $100 basis in the factory, $50 basis in the land, $250 basis in the publicly traded property, and $250 cash remaining after the purchases) over the $150 value of the S share. Thus, S's attribute reduction amount is $500, the lesser of the $500 net stock loss and the $500 aggregate inside loss. Under paragraph (d)(4)(ii)(B)(*2*) of this section, S's $500 attribute reduction amount is allocated and applied to reduce S's attributes as follows:

Available attributes	Attribute amount	Allocable portion of attribute reduction amount	Adjusted attribute amount
Category D:			
Class V Assets:			
Basis of factory	$100	$100	$0
Basis of land	50	50	0
Class II Assets:			

Available attributes	Attribute amount	Allocable portion of attribute reduction amount	Adjusted attribute amount
Publicly traded property	250	250	0

(*2*) The remaining $100 attribute reduction amount is not applied to S's $250 cash (Class I asset) or to S's $50 general business tax credit. Under the general rule of this paragraph (d), that remaining $100 attribute reduction amount would have no further effect on S's attributes. However, S has a $500 liability that has not been taken into account. Therefore, under paragraph (d)(4)(ii)(C)(*1*) of this section, the remaining $100 attribute reduction amount is suspended and will be allocated and applied to reduce any amounts that become deductible or capitalizable as a result of the environmental remediation liability later being taken into account. If the liability is satisfied for an amount that is less than $100, under paragraph (d)(4)(ii)(C)(*2*) of this section the remaining portion of that $100 suspended attribute reduction amount is disregarded and has no further effect.
(ii) *Lower-tier subsidiary with additional liability.* (A) *Facts.* The facts are the same as in paragraph (i)(A) of *Example 4,* except that, in addition, S exchanged $50 for the sole outstanding share of stock of S1. S1 has $50 and equipment with an aggregate basis of $0. S1 also has employee medical expense liabilities that have not been taken into account and that would be required to be capitalized if a person purchased S1's assets and assumed the liabilities. At the time of the sale, S's environmental remediation liability had a present value of $475 and S1's employee medical expenses had a present value of $25. For the reasons set forth in paragraph (i)(A) of this *Example 4,* M's sale of the S share is a transfer of a loss share and therefore subject to this section.

(B) *Application of paragraphs (b) and (c) of this section.* No adjustment is made under paragraph (b) or paragraph (c) of this section for the reasons set forth in paragraph (i)(B) of this *Example 4.* Thus, after the application of paragraph (c) of this section, M's sale of the S share is still a transfer of a loss share and, accordingly, subject to this paragraph (d).

(C) *Attribute reduction under this paragraph (d).* (*1*) *Computation of attribute reduction amount.* Under paragraph (d)(3) of this section, S's attribute reduction amount is the lesser of the $500 net stock loss ($650 basis over $150 value) and the aggregate inside loss. The aggregate inside loss is the excess of S's net inside attribute amount over the value of the S share. Under paragraphs (d)(3)(iii)(B) and (d)(5)(i)(B) of this section, S's net inside attribute amount is determined by using S's $50 deemed basis in the S1 share (the greater of S's $50 actual basis in the share and S1's $50 net inside attribute amount). Accordingly, S's net inside attribute amount is $650 (the sum of its $100 basis in the factory, $50 basis in the land, $250 basis in the publicly traded property, $200 cash, and $50 deemed basis in its S1 share). The

aggregate inside loss is $500, the excess of S's $650 net inside attribute amount over the $150 value of the S share. Thus, S's attribute reduction amount is $500, the lesser of the $500 net stock loss and S's $500 aggregate inside loss.

(*2*) *Allocation, apportionment, and application of attribute reduction amount.* Under paragraphs (d)(4) and (d)(5)(ii) of this section, S's $500 attribute reduction amount is allocated proportionately (by basis) between its S1 share and its non-stock Category D asset (consisting of all S's Category D assets other than its share of S1 stock, with a basis equal to $600, the aggregate basis of S's non-stock assets). However, under paragraph (d)(5)(ii) of this section, for purposes of allocating S's attribute reduction amount between its non-stock Category D asset and the S1 share, S's $50 deemed basis in its S1 share is treated as reduced by S1's $25 net non-loss assets (its Class I asset, $50 cash over S1's liabilities (which, for this purpose include the $25 of employee medical expense liabilities not taken into account as of the transfer)). As a result, S's attribute reduction amount is allocated $480 (600/625 × 500) to S's non-stock Category D asset and $20 (25/625 × 500) to the S1 share. The $480 attribute reduction amount allocated to S's non-stock Category D asset produces the same reduction in the bases of S's assets (other than the S1 stock) as in paragraph (i)(C) of this *Example 4;* in addition, the $80 attribute reduction amount not applied to reduce S's attributes is suspended and applied to reduce any amounts that become deductible or capitalizable as a result of the environmental remediation liability later being taken into account. If the liability is satisfied for an amount that is less than $80, under paragraph (d)(4)(ii)(C)(*2*) of this section the remaining portion of that $80 suspended attribute reduction amount is disregarded and has no further effect. Because the S1 share is not transferred within the meaning of paragraph (f)(10) of this section, the allocated attribute reduction amount apportioned to the S1 share is applied fully to reduce the basis of the S1 share to $30. See paragraph (d)(5)(iii) of this section.

(D) *Tier down of S's attribute reduction amount.* The $20 portion of S's attribute reduction amount allocated to the S1 share is an attribute reduction amount of S1. Because S1 holds only cash, it has no attributes available for reduction under this paragraph (d). However, because S1 has a $25 liability not taken into account for tax purposes, paragraph (d)(4)(ii)(C)(*1*) of this section requires that $20 of the unapplied attribute reduction amount be suspended and then allocated and applied to reduce any amounts that become deductible or capitalizable as a result of the employee medical expense liabilities later being taken into account. If these liabilities are satisfied for an amount that is less than $20, under paragraph (d)(4)(ii)(C)(*2*) of this section the remaining portion of that $20 suspended attribute reduction amount is disregarded and has no further effect.

Example 5. Wholly owned lower-tier subsidiary (no lower-tier transfer). (i) *Application of conforming limitation.* (A) *Facts.* M owns the sole outstanding share of S stock with a basis of $250. S owns Asset with a basis of $100 and the only two outstanding shares of S1 stock (Share A has a basis of $40 and Share B has a basis of $60). S1 owns Asset 1 with a basis of

$50. M sells its S share to P1, the common parent of another consolidated group, for $50. The sale is a transfer of a loss share and therefore subject to this section. See paragraphs (f)(10)(i)(A), (f)(10)(i)(B), and (f)(10)(i)(C) of this section.

(B) *Application of paragraphs (b) and (c) of this section.* Although the transfer is subject to this section, there is no basis redetermination under paragraph (b) of this section because there is only one share of S stock outstanding (and so there can be no disparity among members' bases in common shares and there are no outstanding preferred shares with respect to which there can be unrecognized gain or loss). See paragraph (b)(1)(ii)(A) of this section. Therefore, after the application of paragraph (b) of this section, the share is still a loss share and, as such, subject to paragraph (c) of this section. No adjustment is required under paragraph (c) of this section because, although there is a $50 disconformity amount, the net positive adjustment is $0. See paragraph (c)(3) of this section. Thus, after the application of paragraph (c) of this section, M's sale of the S share is still a transfer of a loss share and, accordingly, subject to this paragraph (d).

(C) *Attribute reduction under this paragraph (d).* (*1*) *Computation of attribute reduction amount.* Under paragraph (d)(3) of this section, S's attribute reduction amount is the lesser of M's net stock loss and S's aggregate inside loss. M's net stock loss is $200 ($250 basis over $50 value). S's aggregate inside loss is the excess of S's net inside attribute amount over the value of the S share. Under paragraphs (d)(3)(iii)(B) and (d)(5)(i)(B) of this section, S's net inside attribute amount is $200, computed as the sum of S's $100 basis in Asset and its $100 deemed basis in the deemed single share of S1 stock (computed as the greater of S's $100 aggregate basis in the S1 shares and S1's $50 basis in Asset 1). S's aggregate inside loss is therefore $150, $200 net inside attribute amount over the $50 value of the S share. Accordingly, S's attribute reduction amount is $150, the lesser of the $200 net stock loss and the $150 aggregate inside loss.

(*2*) *Allocation, apportionment, and application of S's attribute reduction amount.* Under paragraphs (d)(4) and (d)(5)(ii) of this section, S's $150 attribute reduction amount is allocated proportionately (by basis) between Asset (non-stock Category D asset) with a basis of $100, and the S1 stock (treated as a single share with a deemed basis of $100). Accordingly, $75 of the attribute reduction amount ($100/$200 × $150) is allocated to Asset and $75 of the attribute reduction amount ($100/$200 × $150) is allocated to the S1 stock. The $75 of the attribute reduction amount allocated to Asset is applied to reduce S's basis in Asset from $100 to $25. The $75 of the attribute reduction amount allocated to the S1 stock is first apportioned between the shares in a manner that reduces disparity to the greatest extent possible. Thus, of the total $75 allocated to the S1 stock, $27.50 is apportioned to Share A and $47.50 is apportioned to Share B. Because neither of the S1 shares is transferred within the meaning of paragraph (f)(10) of this section, the allocated attribute reduction amount apportioned to each of the individual S1 shares is applied fully to reduce the basis of

each share to $12.50. See paragraph (d)(5)(iii) of this section. As a result, immediately after the allocation, apportionment, and application of S's attribute reduction amount, S's basis in Asset is $25 and S's basis in each of the S1 shares is $12.50.

(*3*) *Tier down of S's attribute reduction amount, application of conforming limitation.* Under paragraph (d)(5)(v)(A) of this section, the $75 portion of S's attribute reduction amount allocated to the S1 stock is an attribute reduction amount of S1 (regardless of the extent, if any, to which it is apportioned and applied to reduce the basis of any shares of S1 stock). Under the general rules of this paragraph (d), the $75 tier-down attribute reduction amount would be allocated and applied to reduce S1's basis in Asset 1 from $50 to $0. However, under paragraph (d)(5)(v)(B) of this section, S1's attributes can be reduced by only $25, the excess of the $50 portion of S1's net inside attribute amount that is allocable to all S1 shares held by members as of the transaction over $25, the aggregate amount of members' bases in nontransferred S1 shares after reduction under this paragraph (d). Thus, of S1's $75 tier-down attribute reduction amount, only $25 is applied to reduce S1's basis in Asset 1, from $50 to $25. The $50 unapplied portion of the tier-down attribute reduction amount subject to the conforming limitation has no further effect.

(ii) *Application of basis restoration rule.* (A) *Facts.* The facts are the same as in paragraph (i)(A) of this *Example 5,* except that S's basis in Share A is $15 and S's basis in Share B is $35, and S1's basis in Asset 1 is $100.

(B) *Basis redetermination and basis reduction under paragraphs (b) and (c) of this section.* No adjustment is required under paragraph (b) or paragraph (c) of this section for the reasons set forth in paragraph (i)(B) of this *Example 5.* Thus, after the application of paragraph (c) of this section, M's transfer of the S share is still a transfer of a loss share and, accordingly, subject to this paragraph (d).

(C) *Attribute reduction under this paragraph (d).* (*1*) *Computation of attribute reduction amount.* Under paragraph (d)(3) of this section, S's attribute reduction amount is the lesser of M's net stock loss and S's aggregate inside loss. M's net stock loss is $200 ($250 basis over $50 value). S's aggregate inside loss is the excess of S's net inside attribute amount over the value of the S share. Under paragraphs (d)(3)(iii)(B) and (d)(5)(i)(B) of this section, S's net inside attribute amount is $200, the sum of S's $100 basis in Asset and its $100 deemed basis in the deemed single share of S1 stock (computed as the greater of S's $50 aggregate basis in the S1 shares and S1's $100 basis in Asset 1). S's aggregate inside loss is therefore $150, $200 net inside attribute amount over the $50 value of the S share. Accordingly, S's attribute reduction amount is $150, the lesser of the $200 net stock loss and the $150 aggregate inside loss.

(*2*) *Allocation, apportionment, and application of S's attribute reduction amount.* Under paragraphs (d)(4) and (d)(5)(ii) of this section, S's $150 attribute reduction amount is allocated proportionately (by basis) between Asset (non-stock Category D asset) with a basis of $100, and the S1 stock (treated as a single share with a deemed basis of $100). Accordingly, $75 of the attribute reduction amount ($100/$200 × $150) is allocated to Asset and $75 of the attribute reduction amount ($100/$200 × $150) is allocated to the S1 stock. The $75 of the attribute reduction amount allocated to Asset is applied to reduce S's basis in Asset from $100 to $25. The $75 of the attribute reduction amount allocated to the S1 stock is first apportioned between the shares in a manner that reduces disparity to the greatest extent possible. Thus, of the total $75 allocated to the S1 stock, $27.50 is apportioned to Share A and $47.50 is apportioned to Share B. Because neither of the S1 shares is transferred within the meaning of paragraph (f)(10) of this section, the allocated attribute reduction amount apportioned to each of the individual S1 shares is applied fully to reduce the basis of each share to an excess loss account of $12.50. See paragraph (d)(5)(iii) of this section. As a result, immediately after the allocation, apportionment, and application of S's attribute reduction amount, S's basis in Asset is $25 and S's basis in each of the S1 shares is an excess loss account of $12.50.

(*3*) *Tier down of S's attribute reduction amount.* Under paragraph (d)(5)(v)(A) of this section, the $75 portion of S's attribute reduction amount allocated to S1 stock is an attribute reduction amount of S1 (regardless of the extent, if any, to which it is apportioned and applied to reduce the basis of any shares of S1 stock). Accordingly, under the general rules of this paragraph (d), the $75 tier-down attribute reduction amount is applied to reduce S1's basis in Asset 1 from $100 to $25.

(*4*) *Basis restoration.* Under paragraph (d)(5)(vi)(A) of this section, after this paragraph (d) has been applied with respect to all transfers of subsidiary stock, any reduction made to the basis of a share of lower-tier subsidiary stock under paragraph (d)(5)(iii) of this section is reversed to the extent necessary to conform the basis of that share to the share's allocable portion of the subsidiary's net inside attribute amount (after reduction). S1's net inside attribute amount after the application of this paragraph (d) is $25 and thus each of the two S1 share's allocable portion of S1's net inside attribute amount is $12.50. Accordingly, the reductions to Share A and to Share B under paragraph (d)(5)(iii) of this section are reversed to the extent necessary to restore the basis of each share to $12.50. Thus, $25 of the $27.50 of reduction to the basis of Share A, and $25 of the $47.50 of reduction to the basis of share B, is reversed, restoring the basis of each share to $12.50.

Example 6. Multiple blocks of lower-tier subsidiary stock outstanding. (i) *Excess loss account taken into account (transfer of upper-tier share causes disposition within the meaning of § 1.1502-19(c)(1)(ii)(B)).* (A) *Facts.* M owns the sole outstanding share of S stock with a basis of $200. S holds all five outstanding shares of S1 common stock (Shares A, B, C, D, and

E). S has an excess loss account of $20 in Share A and a positive basis of $20 in each of the other shares. The only investment adjustment applied to any S1 share was a negative $20 investment adjustment applied to Share A when it was the only outstanding share, and this amount tiered up and adjusted M's basis in the S share. S1 owns one asset with a basis of $250. M sells its S share to P1, the common parent of a consolidated group, for $20. The sale of the S share is a disposition of Share A under § 1.1502-19(c)(1)(ii)(B) (S1 becomes a nonmember because it will have a separate return year as a member of the P1 group). Accordingly, under § 1.1502-19(b)(1)(i) and paragraph (a)(3)(i) of this section, before the application of this section, S's excess loss account in Share A is taken into account, increasing S's basis in Share A to $0 and M's basis in its S share to $220. After giving effect to the recognition of the excess loss account, M's sale of the S share is a transfer of a loss share and therefore subject to this section. See paragraphs (f)(10)(i)(A), (f)(10)(i)(B), and (f)(10)(i)(C) of this section.

(B) *Basis redetermination and basis reduction under paragraphs (b) and (c) of this section.* Although the transfer is subject to this section, there is no basis redetermination under paragraph (b) of this section because there is only one share of S stock outstanding (and so there can be no disparity among members' bases in common shares and there are no outstanding preferred shares with respect to which there can be unrecognized gain or loss). See paragraph (b)(1)(ii)(A) of this section. Therefore, after the application of paragraph (b) of this section, the share is still a loss share and, as such, subject to paragraph (c) of this section. No adjustment is made under paragraph (c) of this section because, even though there is a disconformity amount of $140, the net positive adjustment is $0. See paragraph (c)(3) of this section. Thus, after the application of paragraph (c) of this section, M's sale of the S share remains a transfer of a loss share and, accordingly, subject to this paragraph (d).

(C) *Attribute reduction under this paragraph (d).* (*1*) *Computation of attribute reduction amount.* Under paragraph (d)(3) of this section, S's attribute reduction amount is the lesser of M's net stock loss and S's aggregate inside loss. M's net stock loss is $200 ($220 basis over $20 value). S's aggregate inside loss is the excess of S's net inside attribute amount over the value of the S share. Under paragraphs (d)(3)(iii)(B) and (d)(5)(i)(B) of this section, S's net inside attribute amount is $250, S's $250 deemed basis in the deemed single share of S1 stock (computed as the greater of S's $80 aggregate basis in the S1 shares ($0 basis in Share A plus $20 basis in each of the four other shares) and S1's $250 basis in its asset). S's aggregate inside loss is therefore $230, $250 net inside attribute amount over the $20 value of the S share. Accordingly, S's attribute reduction amount is $200, the lesser of the $200 net stock loss and the $230 aggregate inside loss.

(*2*) *Allocation, apportionment, and application of S's attribute reduction amount.* Under paragraphs (d)(4) and (d)(5)(ii) of this section, S's $200 attribute reduction amount is allocated entirely to the S1 stock (treated as a single share) and then apportioned among the shares in a manner that reduces disparity to the greatest extent possible. Thus, $24 is

apportioned to Share A and $44 is apportioned to each of the other shares. Because none of the S1 shares are transferred within the meaning of paragraph (f)(10) of this section (notwithstanding that there is a disposition under § 1.1502-19(c)(1)(ii)(B)), the allocated attribute reduction amount apportioned to each of the individual S1 shares is applied fully to reduce the basis of each share to an excess loss account of $24. See paragraph (d)(5)(iii) of this section.

(*3*) *Tier down of S's attribute reduction amount.* Under paragraph (d)(5)(v)(A) of this section, the $200 of S's attribute reduction amount allocated to the S1 shares is an attribute reduction amount of S1 (regardless of the extent, if any, to which it is apportioned and applied to reduce the basis of any shares of S1 stock). Under the general rules of this paragraph (d), S1's $200 tier-down attribute reduction amount is allocated and applied to reduce S1's basis in its asset from $250 to $50.

(*4*) *Basis restoration.* Under paragraph (d)(5)(vi)(A) of this section, after this paragraph (d) has been applied with respect to all transfers of subsidiary stock, any reduction made to the basis of a share of lower-tier subsidiary stock under paragraph (d)(5)(iii) of this section is reversed to the extent necessary to conform the basis of that share to the share's allocable portion of the subsidiary's net inside attribute amount (after reduction). S1's net inside attribute amount after the application of this paragraph (d) is $50 and thus each of the five S1 share's allocable portion of S1's net inside attribute amount is $10. Accordingly, the reductions to the bases of S1 shares under paragraph (d)(5)(iii) of this section are reversed to the extent necessary to restore (to the extent possible) the basis of each share to $10. Thus, $24 of the $24 of reduction to the basis of Share A is reversed, restoring the basis of Share A to $0, and $34 of the $44 of reduction to the basis of each other share is reversed, restoring the basis of each of those shares to $10.

(ii) *Sale of gain share to member.* (A) *Facts.* The facts are the same as in paragraph (i)(A) of this *Example 6,* except that M owns Shares A, B, C, and D, S owns Share E, S has a liability of $20, and S1's basis in its asset is $500. Also, as part of the transaction, S sells Share E to M for $40. Unlike under the facts of paragraph (i)(A) of this *Example 6,* there is no disposition of Share A within the meaning of § 1.1502-19(c)(1)(ii)(B) (S1 continues to be a member of the group, and thus does not have a separate return year). As a result, the Share A excess loss account is not taken into account. Although S's sale of Share E is a transfer of that share, the share is not a loss share and thus the transfer is not subject to this section. M's sale of the S share, however, is a transfer of a loss share and therefore subject to this section. See paragraphs (f)(10)(i)(A), (f)(10)(i)(B), and (f)(10)(i)(C) of this section.

(B) *Transfer in lowest tier (gain share).* S's sale of Share E is the lowest-tier transfer in the transaction. Under paragraph (a)(3)(ii)(A) of this section, because there are no transfers of loss shares at that tier, no adjustments are required under paragraph (b) or (c) of this section.

However, S's gain recognized on the transfer of Share E is computed and immediately adjusts members' bases in subsidiary stock under § 1.1502-32 (because M and S are not members of the same group immediately after the transaction, the sale is not an intercompany transaction subject to § 1.1502-13). Accordingly, M's basis in its S share is increased by $20, from $200 to $220.

(C) *Transfers in next higher tier, application of paragraphs (b) and (c) of this section.* The next higher tier transfer is M's sale of the S stock. The sale is a transfer of a loss share and therefore subject to this section. Although the transfer is subject to this section, there is no basis redetermination under paragraph (b) of this section because there is only one share of S stock outstanding (and so there can be no disparity among members' bases in common shares and there are no outstanding preferred shares with respect to which there can be unrecognized gain or loss). See paragraph (b)(1)(ii)(A) of this section. Therefore, after the application of paragraph (b) of this section, the share is still a loss share and, as such, subject to paragraph (c) of this section. Under paragraph (c) of this section, M's basis in its S share is decreased by $20, the lesser of S's $200 disconformity amount (computed as the excess of M's $220 basis in the S stock over S's $20 net inside attribute amount (computed as the $20 basis in Share E, increased by $20 to reflect the gain recognized with respect to the share, less the $20 liability)), and the $20 net positive adjustment. Thus, after the application of paragraph (c) of this section, M's basis in the S share is $200, and the sale remains a transfer of a loss share. There are no higher tier transfers and, therefore, M's transfer of the S share is then subject to this paragraph (d).

(D) *Attribute reduction under this paragraph (d).* (*1*) *Computation of attribute reduction amount.* Under paragraph (d)(3) of this section, S's attribute reduction amount is the lesser of M's net stock loss and S's aggregate inside loss. M's net stock loss is $180 ($200 basis over $20 value). S's aggregate inside loss is the excess of S's net inside attribute amount over the value of the S share. Under paragraphs (d)(3)(iii)(B) and (d)(5)(i)(B) of this section, S's net inside attribute amount is $80, computed as $100 (S's deemed basis in Share E (the greater of $40 (S's $20 basis in Share E, adjusted for the $20 gain recognized with respect to the share), and Share E's allocable portion of S1's net inside attribute amount of $100 (1/5 of S1's $500 basis in its asset)), less S's $20 liability. Accordingly, S's aggregate inside loss is $60 ($80 net inside attribute amount over the $20 value of the S stock). S's attribute reduction amount is therefore $60, the lesser of $180 net stock loss and $60 aggregate inside loss.

(*2*) *Allocation, apportionment, and application of S's attribute reduction amount.* Under paragraphs (d)(4) and (d)(5)(ii) of this section, S's $60 attribute reduction amount is allocated entirely to its S1 stock, Share E. However, because Share E was transferred within the meaning of paragraph (f)(10) of this section and gain was recognized on its transfer, none of the allocated amount is apportioned to, or applied to reduce the basis of Share E. See

paragraph (d)(5)(iii)(A) of this section. Under paragraph (d)(5)(iv) of this section, the $60 allocated attribute reduction amount not apportioned or applied to Share E has no effect on S or S's attributes.

(*3*) *Tier down of S's attribute reduction amount.* Notwithstanding the fact that no portion of the allocated attribute reduction amount was apportioned to or applied to reduce the basis of Share E, the entire $60 allocated attribute reduction amount is an attribute reduction amount of S1. See paragraph (d)(5)(v)(A) of this section. Under the general rules of this paragraph (d), S1's $60 tier-down attribute reduction amount is allocated and applied to reduce S1's basis in its asset from $500 to $440.

(*4*) *Basis restoration.* Under paragraph (d)(5)(vi)(A) of this section, after this paragraph (d) has been applied with respect to all transfers of subsidiary stock, any reduction made to the basis of a share of subsidiary stock under paragraph (d)(5)(iii) of this section is reversed to the extent necessary to conform the basis of that share to the share's allocable portion of the subsidiary's net inside attribute amount. No reduction was made to the basis of the S1 stock under paragraph (d)(5)(iii) of this section. Therefore, no stock basis is increased under the basis restoration rule in paragraph (d)(5)(vi)(A) of this section.

Example 7. Allocation of attribute reduction if lower-tier subsidiary has non-loss assets or liabilities. (i) *S1 holds cash.* (A) *Facts.* M owns the sole outstanding share of S stock with a basis of $800. S owns Asset with a basis of $400 and the sole outstanding share of S1 stock with a basis of $300. S1 holds Asset 1 with a basis of $50, and $100 cash. M sells its S share to P1, the common parent of a consolidated group, for $100. The sale is not a transfer of the S1 share because S and S1 are members of the same group following the transaction. However, the sale is a transfer of the S share, a loss share, and therefore subject to this section. See paragraphs (f)(10)(i)(A), (f)(10)(i)(B), and (f)(10)(i)(C) of this section.
(B) *Application of paragraphs (b) and (c) of this section.* Although the transfer is subject to this section, there is no basis redetermination under paragraph (b) of this section because there is only one share of S stock outstanding (and so there can be no disparity among members' bases in common shares and there are no outstanding preferred shares with respect to which there can be unrecognized gain or loss). See paragraph (b)(1)(ii)(A) of this section. Therefore, after the application of paragraph (b) of this section, the share is still a loss share and, as such, subject to the provisions of this paragraph (c). No adjustment is required under paragraph (c) of this section because, even though there is a disconformity amount of $100, the net positive adjustment is $0. See paragraph (c)(3) of this section. Thus, after the application of paragraph (c) of this section, M's sale of the S share is still a transfer of a loss share and, accordingly, subject to this paragraph (d).

(C) *Attribute reduction under this paragraph (d).* (*1*) *Computation of attribute reduction amount.* Under paragraph (d)(3) of this section, S's attribute reduction amount is the lesser of M's net stock loss and S's aggregate inside loss. M's net stock loss is $700 ($800 basis over $100 value). S's aggregate inside loss is the excess of S's net inside attribute amount over the value of the S share. Under paragraphs (d)(3)(iii)(B) and (d)(5)(i)(B) of this section, S's net inside attribute amount is $700, the sum of its $400 basis in Asset and its $300 deemed basis in the S1 share (computed as the greater of S's $300 basis in the S1 share and S1's $150 net inside attribute amount (reflecting the sum of S1's $50 basis in Asset 1 and S1's $100 cash)). Therefore, S's aggregate inside loss is $600 ($700 net inside attribute amount over the $100 value of the S stock). S's attribute reduction amount is $600, the lesser of the $700 net stock loss and the $600 aggregate inside loss.

(*2*) *Allocation, apportionment, and application of S's attribute reduction amount.* Under paragraphs (d)(4) and (d)(5)(ii) of this section, S's $600 attribute reduction amount is allocated proportionately (by basis) between S's $400 basis in Asset (non-stock Category D asset) and its deemed basis in the S1 share. However, under paragraph (d)(5)(ii) of this section, for purposes of allocating the attribute reduction amount, S's $300 deemed basis in the S1 share is treated as reduced by S1's net non-loss assets (its Class I asset, $100 cash) to $200. Thus, the $600 is allocated $400 to Asset ($400/$600 × $600) and $200 to the S1 share ($200/$600 × $600). The $400 allocated to Asset is applied to reduce S's basis in Asset from $400 to $0. Because the S1 share is not transferred within the meaning of paragraph (f)(10) of this section, the allocated attribute reduction amount apportioned to the S1 share is applied fully to reduce the basis of the S1 share to $100. See paragraph (d)(5)(iii) of this section.

(*3*) *Tier down of S's attribute reduction amount.* Under paragraph (d)(5)(v)(A) of this section, the $200 portion of S's attribute reduction amount allocated to the S1 stock is an attribute reduction amount of S1 (regardless of the extent, if any, to which it is apportioned and applied to reduce the basis of any shares of S1 stock). Under the general rules of this paragraph (d), S1's $200 tier-down attribute reduction amount is allocated and applied to reduce S1's basis in Asset 1 (S1's only attribute available for reduction) from $50 to $0. The $150 unapplied attribute reduction amount is disregarded and has no further effect.

(*4*) *Basis restoration.* Under paragraph (d)(5)(vi)(A) of this section, after this paragraph (d) has been applied with respect to all transfers of subsidiary stock, any reduction made to the basis of a share of subsidiary stock under paragraph (d)(5)(iii) of this section is reversed to the extent necessary to conform the basis of that share to the share's allocable portion of the subsidiary's net inside attribute amount. There is only one share of S1 stock outstanding and so S1's entire $100 net inside attribute amount is allocable to that share. Because S's $100

basis in the S1 share (as reduced under this paragraph (d)) is already conformed with its $100 allocable portion of S1's net inside attribute amount, there is no restoration under paragraph (d)(5)(vi)(A) of this section.

(ii) *S1 borrows cash.* The facts are the same as in paragraph (i)(A) of this *Example 7* except that, in addition, S1 borrows $50 from X immediately before M sells the S share. The computation of the attribute reduction amount is the same as in paragraph (i)(C) of this *Example 7* (the $50 cash from the loan proceeds and the $50 liability offset in the computation of S1's net inside attribute amount and so the net amount is unaffected, and the computation of S's deemed basis in the S1 stock is unaffected). Similarly, for purposes of allocating the attribute reduction amount between the non-stock Category D asset and the S1 stock, paragraph (d)(5)(ii) of this section requires S's deemed basis in the S1 share to be treated as reduced by S1's net non-loss assets (S1's non-loss assets over S1's liabilities). Accordingly, the additional $50 cash proceeds is offset by the $50 liability and there is no effect on the allocation of the attribute reduction amount. The results are the same as in paragraph (i) of this *Example 7*.

(iii) *S1 has a liability not taken into account for tax purposes.* (A) *Facts.* The facts are the same as in paragraph (ii) of this *Example 7* except that, in addition, S1 has a $40 liability that is not taken into account for tax purposes as of the transfer and that would be required to be capitalized if a person purchased S1's assets and assumed the liability.

(B) *Application of paragraphs (b) and (c) of this section.* No adjustment is required under paragraph (b) or paragraph (c) of this section for the reasons set forth in paragraph (i)(B) of this *Example 7*. Thus, after the application of paragraph (c) of this section, P's sale of the S share is still a transfer of a loss share and, accordingly, subject to this paragraph (d).

(C) *Attribute reduction under this paragraph (d).* (*1*) *Computation of attribute reduction amount.* The attribute reduction amount is the same as computed in paragraph (i)(C)(*1*) of this *Example 7* (under paragraph (f)(5) of this section, the term liability does not include liabilities not taken into account for tax purposes and so the additional $40 liability not yet taken into account for tax purposes does not affect the computation of S's attribute reduction amount).

(*2*) *Allocation, apportionment, and application of S's attribute reduction amount.* Under paragraphs (d)(4) and (d)(5)(ii) of this section, S's $600 attribute reduction amount is allocated proportionately (by basis) between S's $400 basis in Asset 1 (non-stock Category D asset) and its deemed basis in the S1 share. However, under paragraph (d)(5)(ii) of this section, for purposes of allocating the attribute reduction amount, S's $300 deemed basis in the S1 share is treated as reduced by S1's net non-loss assets (S1's non-loss assets over S1's liabilities). For this purpose, the term liabilities includes liabilities not taken into account for tax purposes, as described in paragraph (d)(4)(ii)(C)(*1*) of this section (generally, liabilities

that, if assumed in a purchase, would give rise to a capitalized amount when satisfied). Thus, for this purpose, S's $300 deemed basis in the S1 share is reduced by S1's $60 net non-loss assets (the excess of S1's $150 non-loss assets (its Class I asset, $150 cash) over S1's $90 liabilities ($50 loan and $40 liability not yet taken into account for tax purposes)), to $240. Accordingly, S's $600 attribute reduction amount is allocated and applied $375 ($400/$640 × $600) to Asset (reducing S's basis in Asset from $400 to $25) and $225 ($240/$640 × $600) to the S1 share. Because the S1 share is not transferred within the meaning of paragraph (f)(10) of this section, the allocated attribute reduction amount apportioned to the S1 share is applied fully to reduce the basis of the S1 share to $75. See paragraph (d)(5)(iii) of this section.

(*3*) *Tier down of S's attribute reduction amount, application of conforming limitation.* Under paragraph (d)(5)(v)(A) of this section, the $225 portion of S's attribute reduction amount allocated to the S1 stock is an attribute reduction amount of S1 (regardless of the extent, if any, to which it is apportioned and applied to reduce the basis of any shares of S1 stock). Under the general rules of this paragraph (d), S1's $225 tier-down attribute reduction amount would be allocated and applied to reduce S1's attributes. However, under paragraph (d)(5)(v)(B) of this section, S1's attributes can be reduced by only $75, the excess of the $150 portion of S1's net inside attribute amount that is allocable to all S1 shares held by members as of the transaction over $75, the aggregate amount of members' bases in nontransferred S1 shares, after reduction under this paragraph (d). Thus, of S1's $225 tier-down attribute reduction amount, $50 is applied to reduce S1's basis in Asset 1, from $50 to $0. Although the $25 unapplied attribute reduction amount not subject to the conforming limitation would generally be disregarded without further effect, because S1 has a $40 liability not taken into account for tax purposes, paragraph (d)(4)(ii)(C)(*1*) of this section requires that the $25 of the unapplied attribute reduction amount not subject to the conforming limitation be suspended and then allocated and applied to reduce any amounts that become deductible or capitalizable as a result of that liability later being taken into account. If the liability is satisfied for an amount that is less than $25, under paragraph (d)(4)(ii)(C)(*2*) of this section the remaining portion of that $25 suspended attribute reduction amount is disregarded and has no further effect. The $150 unapplied portion of the tier-down attribute reduction amount subject to the conforming limitation has no further effect.

(*4*) *Basis restoration.* Under paragraph (d)(5)(vi)(A) of this section, after this paragraph (d) has been applied with respect to all transfers of subsidiary stock, any reduction made to the basis of a share of lower-tier subsidiary stock under paragraph (d)(5)(iii) of this section is reversed to the extent necessary to conform the basis of that share to the share's allocable portion of the subsidiary's net inside attribute amount. Paragraph (d)(5)(vi)(A) provides that, for this purpose, S1's net inside attribute amount is its net inside attribute amount, taking into account any reductions under this paragraph (d) and treating it as reduced by any attribute reduction amount suspended under paragraph (d)(4)(ii)(C)(*1*) of this section. Because S's $75

basis in its S1 stock (after application of this paragraph (d)) is already conformed with its $75 allocable portion of S1's net inside attribute amount ($100 net inside attributes after reduction, reduced by S1's $25 suspended attribute reduction amount), there is no restoration under paragraph (d)(5)(vi)(A) of this section.

Example 8. Election to reduce stock basis or reattribute attributes under paragraph (d)(6) of this section. (i) *Deconsolidating sale.* (A) *Facts.* P owns the sole outstanding share of M stock with a basis of $1,000. M owns all 100 outstanding shares of S stock with a basis of $2.10 per share ($210 total). M sells all its S shares to X for $1 per share ($100 total). M's sale of the S shares is a transfer of loss shares and therefore subject to this section. See paragraphs (f)(10)(i)(A), (f)(10)(i)(B), and (f)(10)(i)(C) of this section. At the time of the sale, S has no liabilities and the following:

Category	Attribute	Attribute amount
Category A	Capital loss carryover	$10
Category B	NOL carryover	90
Category C	Deferred deduction	40
Total Category A, Category B, and Category C Attributes	140	
Category D, Class V	Basis in land	70
Total Attributes	210	

(B) *Application of paragraphs (b) and (c) of this section.* Although the transfer is subject to this section, there is no basis redetermination under paragraph (b) of this section because there is no disparity among M's bases in shares of S common stock and there are no shares of S preferred stock outstanding (so there can be no unrecognized gain or loss with respect to preferred shares). See paragraph (b)(1)(ii)(A) of this section. No adjustment is required under paragraph (c) of this section because both the disconformity amount and the net positive adjustment are $0. See paragraph (c)(3) of this section. Thus, after the application of paragraph (c) of this section, M's transfer of the S shares is still a transfer of loss shares and, accordingly, subject to this paragraph (d).
(C) *Attribute reduction under this paragraph (d).* (*1*) *Computation of attribute reduction amount.* Under paragraph (d)(3) of this section, S's attribute reduction amount is the lesser of the $110 net stock loss ($210 aggregate basis over the $100 aggregate value) and S's aggregate inside loss. S's aggregate inside loss is $110 (S's $210 net inside attribute amount (the $10 capital

loss carryover, plus the $90 NOL carryover, plus the $40 deferred deduction, plus the $70 basis in the land) over the $100 value of all outstanding S shares). S's attribute reduction amount is $110, the lesser of the $110 net stock loss and the $110 aggregate inside loss.

(*2*) *Application of attribute reduction amount.* (*i*) S's $110 attribute reduction amount is applied as follows:

Category	Attribute	Attribute amount	Allocation of attribute reduction amount	Adjusted attribute amount
Category A	Capital loss carryover	$10	$10	$0
Category B	NOL carryover	90	90	0
Category C	Deferred deduction	40	10	30
Category D, Class V	Basis in land	70	0	70
Totals	210	110	100	

(*ii*) Alternatively, under paragraph (d)(4)(ii)(A)(*1*) of this section, P could specify the allocation of S's $110 attribute reduction amount among S's $10 capital loss carryover, S's $90 NOL carryover, and S's $40 deferred deduction.
(D) *Results.* The P group recognizes a $110 loss on M's sale of the S shares that is absorbed by the group, which reduces P's basis in the M share under § 1.1502-32 from $1,000 to $890. Immediately after the transaction, the entities own the following:

Entity	Asset	Basis
P	M share	$890
X	100 S shares	100
S	Category C, deferred deduction	30
	Category D, Class V Asset (land)	70

(E) *Election to reduce stock basis.* The facts are the same as in paragraph (i)(A) of this *Example 8* except that P elects under paragraph (d)(6) of this section to reduce M's basis in the S shares by the full attribute reduction amount of $110, in lieu of S reducing its attributes. The election is effective for all transferred loss shares and is allocated to those shares in proportion to the loss in each. See paragraph (d)(6)(v)(A) of this section. Accordingly, the basis of each of the 100 transferred shares is reduced from $2.10 to $1.00. After giving effect

to the election, the S shares are not loss shares and this section has no further application to the transfer. The $110 reduction in M's basis in the S shares pursuant to the election under paragraph (d)(6) of this section is a noncapital, nondeductible expense of M that will reduce P's basis in the M share. See paragraph (d)(6)(v)(A) of this section. Immediately after the transaction, the entities own the following:

Entity	Asset	Basis/ attribute
P	M share	$890
X	100 S shares	100
S	Category A, capital loss carryover	10
	Category B, NOL carryover	90
	Category C, deferred deduction	40
	Category D, Class V Asset (land)	70

(F) *Election to reattribute losses.* The facts are the same as in paragraph (i)(A) of this *Example 8* except that P elects under paragraph (d)(6) of this section to reattribute S's attributes. S's attribute reduction amount is $110, and P can reattribute all or any portion of the attributes in Category A, Category B, and Category C to the extent of $110. P elects to reattribute the $90 NOL, and, as a result, S's NOL is $0. Under paragraph (d)(6)(iv)(A) of this section, the reattribution of the $90 NOL is a noncapital, nondeductible expense of S. Under § 1.1502-32(c)(1)(ii)(A)(*1*) this $90 expense is allocated to the transferred loss shares of S stock in proportion to the loss in the shares, or $.90 per share. Further, this expense tiers up under § 1.1502-32 and reduces P's basis in the M stock by $90. After giving effect to the election, the P group would recognize a $20 loss on M's sale of the S shares, S would have an aggregate inside loss of $20 (S's $120 net inside attribute amount (the $10 capital loss carryover, plus the $40 deferred deduction, plus the $70 basis in the land) over the $100 value of all outstanding S shares), and S's attribute reduction amount would be $20 (applied $10 to the $10 capital loss carryover and $10 to the $40 deferred deduction). (Alternatively, under paragraph (d)(4)(ii)(A)(*1*) of this section, P could specify the allocation of S's $20 attribute reduction amount between S's $10 capital loss carryover and S's $40 deferred deduction. Further, P could elect to reduce M's remaining basis in the S shares by any amount up to the $20 attribute reduction amount, thereby reducing or eliminating S's attribute reduction amount.)

(ii) *Nondeconsolidating sale.* (A) *Facts.* The facts are the same as in paragraph (i)(A) of this *Example 8*, except that M only sells 20 S shares ($20 total).

(B) *Application of paragraphs (b) and (c) of this section.* No adjustment is required under paragraph (b) or paragraph (c) of this section for the reasons set forth in paragraph (i)(B) of this *Example 8.* Thus, after the application of paragraph (c) of this section, M's sale of the S shares is still a transfer of loss shares and, accordingly, subject to this paragraph (d).

(C) *Attribute reduction under this paragraph (d).* (*1*) *Computation of attribute reduction amount.* Under paragraph (d)(3) of this section, S's attribute reduction amount is the lesser of the $22 net stock loss ($42 aggregate basis over $20 aggregate value) and S's $110 aggregate inside loss (as calculated in paragraph (i)(C)(*1*) of this *Example 8*). S's attribute reduction amount is $22, the lesser of the $22 net stock loss and the $110 aggregate inside loss.

(*2*) *Application of attribute reduction amount.* (*i*) S's $22 attribute reduction amount is applied as follows:

Category	Attribute	Attribute amount	Allocation of attribute reduction amount	Adjusted attribute amount
Category A	Capital loss carryover	$10	$10	$0
Category B	NOL carryover	90	12	78
Category C	Deferred deduction	40	0	40
Category D, Class V	Land	70	0	70

(*ii*) Alternatively, under paragraph (d)(4)(ii)(A)(*1*) of this section, P could specify the allocation of S's $22 attribute reduction amount among S's $10 capital loss carryover, S's $90 NOL carryover, and S's $40 deferred deduction.
(D) *Results.* The P group recognizes a $22 loss on M's sale of the S shares that is absorbed by the group, which reduces P's basis in the M share under § 1.1502-32 from $1,000 to $978. Immediately after the transaction, the entities have the following:

Entity	Asset	Basis
P	M share	$978
X	20 S shares	20
S	Category B, NOL carryover	78
	Category C, deferred deduction	40

Entity	Asset	Basis
	Category D, Class V Asset (land)	70

(E) *Election to reduce stock basis.* The facts are the same as in paragraph (ii)(A) of this *Example 8*, except that P elects under paragraph (d)(6) of this section to reduce M's basis in the S shares by the full attribute reduction amount of $22, in lieu of S reducing its attributes. The election is effective for all transferred loss shares and is allocated to such shares in proportion to the loss in each share. See paragraph (d)(6)(v)(A) of this section. Accordingly, the basis of each of the 20 transferred shares is reduced from $2.10 to $1.00. After giving effect to the election, the transferred S shares are not loss shares and this section has no further application to the transfer. The $22 reduction in M's basis in the S shares pursuant to the election under paragraph (d)(6) of this section is a noncapital, nondeductible expense of M that will reduce P's basis in the M share. See paragraph (d)(6)(v)(A) of this section. Immediately after the transaction, the entities have the following:

Entity	Asset	Basis/ attribute
P	M share	$978
M	80 S shares	168
X	20 S shares	20
S	Category A, capital loss carryover	10
	Category B, NOL	90
	Category C, deferred deduction	40
	Category D Class V Asset (land)	70

(F) *Election to reattribute attributes.* The facts are the same as in paragraph (ii)(A) of this *Example 8.* Because S remains a member of the same group as P following M's sale of S stock, P cannot elect under paragraph (d)(6) of this section to reattribute any portion of S's attributes in lieu of attribute reduction.

Example 9. Transfers at multiple tiers, gain and loss shares. (i) *Facts.* M owns the sole outstanding share of S stock with a basis of $700. S owns Asset 1 (basis of $170) and all ten outstanding shares of S1 common stock ($170 basis in share 1, $10 basis in share 2, and $15 basis in each of share 3 through share 10). S1 owns the sole outstanding share of S2 ($0 basis), the sole outstanding share of S3 ($60 basis), and the sole outstanding share of S4

($100 basis). S2's sole asset is Asset 2 ($75 basis). S3's sole asset is Asset 3 ($75 basis). S4's sole asset is Asset 4 ($80 basis). In one transaction, M sells its S share to P1 (the common parent of a consolidated group) for $240, S sells S1 share 1 to X for $20, S contributes S1 share 2 to a partnership in a section 721 transaction, and S1 sells its S2 share to Y for $50. M's sale of the S share and S1's sale of the S2 share are transfers under paragraphs (f)(10)(i)(A), (f)(10)(i)(B), and (f)(10)(i)(C) of this section. S's sale of S1 share 1 to X is a transfer under paragraphs (f)(10)(i)(A) and (f)(10)(i)(C) of this section. S's contribution of S1 share 2 to the partnership is a transfer under paragraph (f)(10)(i)(C) of this section.
(ii) *Transfer in lowest tier (gain share).* However, S1's gain recognized on the transfer of the S2 share is computed and immediately adjusts members' bases in subsidiary stock under § 1.1502-32. Under paragraph (a)(3)(ii)(A) of this section, because there are no transfers of loss shares at that tier, no adjustments are required under paragraph (b) or (c) of this section. However, S1's gain recognized on the transfer of the S2 share is computed and immediately adjusts members bases in subsidiary stock under § 1.1502-32. Accordingly, $5 is allocated to each of 10 S1 shares, increasing the basis of share 1 to $175, the basis of share 2 to $15, and the basis of each other share to $20. The $50 applied to S's bases in the S1 shares then tiers up to increase P's basis in the S share from $700 to $750.

(iii) *Transfers in next highest tier (loss share).* S's sale of the S1 share 1 and S's transfer of the S1 share 2 to a partnership are both transfers of stock in the next higher tier. However, only the S1 share 1 is a loss share and so this section only applies with respect to the transfer of that share.

(A) *Basis redetermination under paragraph (b) of this section.* Under paragraph (b)(2)(i)(A) of this section, members' bases in S1 shares are redetermined by first removing the positive investment adjustments applied to the bases of transferred loss common shares. Accordingly, the $5 positive investment adjustment applied to the basis of S1 share 1 is removed, reducing the basis of S1 share 1 from $175 to $170. Because there were no negative adjustments applied to the bases of S1 shares, there are no negative adjustments that can be reallocated to further reduce the basis of S1 share 1 under paragraph (b)(2)(i)(B) of this section. Finally, under paragraph (b)(2)(ii)(B) of this section, the $5 positive investment adjustment removed from S1 share 1 is reallocated and applied to increase the bases of other S1 common shares in a manner that reduces disparity to the greatest extent possible. Accordingly, the entire $5 investment adjustment removed from S1 share 1 is reallocated and applied to increase the basis of S1 share 2, from $15 to $20. After basis is redetermined under paragraph (b) of this section, the S1 share 1 is still a loss share and therefore subject to basis reduction under paragraph (c) of this section. (Because the S1 share 2 is not a loss share, this section does not apply with respect to the transfer of that share.)

(B) *Basis reduction under paragraph (c) of this section.* No adjustment is required to the basis of S1 share 1 under paragraph (c) of this section. The S1 share 1 has a disconformity amount of $149. This $149 disconformity amount is computed as the excess of the $170 basis in the S1 share 1 over the S1 share 1's $21 allocable portion (1/10) of S1's $210 net inside attribute amount. S1's $210 net inside attribute amount is determined under paragraph (c)(5) of this section as the sum of $50 (S1's $0 basis in the S2 share, adjusted for the $50 gain recognized with respect to that share), S1's $60 basis in the S3 stock, and S1's $100 basis in the S4 stock. (In computing the disconformity amount, the basis of the S2 share is not treated as tentatively reduced because that share is transferred in the transaction, and the bases of the S3 and S4 shares are not treated as tentatively reduced because no positive investment adjustments were applied to the bases of those shares.) However, the S1 share 1's net positive adjustment is $0 because the $5 positive investment adjustment originally allocated to S1 share 1 was reallocated to S1 share 2 under paragraph (b) of this section. See paragraph (c)(3) of this section. No adjustment is required to the basis of S1 share 2 under paragraph (c) of this section because S1 share 2 is not a loss share.

(C) *Computation of loss, adjustments to stock basis.* S recognizes a loss of $150 on the sale of the S1 share 1 ($170 basis over $20 amount realized) that is absorbed by the group. Under § 1.1502-32, M's basis in its S share is therefore decreased by $100, the net of the $150 loss recognized by S on the sale of the S1 share, and the $50 gain that tiered up from S1 (as a result of S1's sale of the S2 share). Following these adjustments, M's basis in the S share is $600 and the sale of the S share is still a transfer of a loss share.

(iv) *Transfer in highest tier (loss share).* The sale of the S share is a transfer in the next higher tier, which is the highest tier in this transaction. Because the sale is a transfer of a loss share, it is subject to this section.

(A) *Basis redetermination and basis reduction under paragraphs (b) and (c) of this section.* Although the transfer is subject to this section, there is no basis redetermination under paragraph (b) of this section because there is only one share of S stock outstanding (and so there can be no disparity among members' bases in common shares and there are no outstanding preferred shares with respect to which there can be unrecognized gain or loss). See paragraph (b)(1)(ii)(A) of this section. Therefore, after the application of paragraph (b) of this section, the share is still a loss share and, as such, subject to paragraph (c) of this section. In addition, no adjustment is required under paragraph (c) of this section. The S share has a disconformity amount of $230. This $230 disconformity amount is computed as the excess of the $600 basis in the S share over the S share's $370 allocable portion (1/1) of S's $370 net inside attribute amount. S's $370 net inside attribute amount is determined under paragraph (c)(5) of this section as the sum of $200 (S's $170 basis in the S1 share 1, adjusted for the $150 loss recognized with respect to that share, and S's $20 basis in each of S1 share 2 through share 10), and S's $170 basis in Asset 1. (In computing the disconformity

amount, the bases of S1 share 1 and share 2 are not treated as tentatively reduced because those shares are transferred in the transaction, and the bases of S1 share 3 through share 10 are not treated as tentatively reduced because none of those shares have a disconformity amount—each share has a basis of $20 and a $21 allocable portion (1/10) of S1's $210 net inside attribute amount, as determined in paragraph (iii)(B) of this *Example 9.*) However, the S share's net positive adjustment is $0 (the S share's net adjustment is negative $100). See paragraph (c)(3) of this section. Accordingly, the sale of the S share is still a transfer of a loss share. Because there are no higher-tier loss shares transferred in the transaction, this paragraph (d) then applies with respect to the transfer of the S share.

(B) *Attribute reduction under this paragraph (d).* (*1*) *Computation of S's attribute reduction amount.* Under paragraph (d)(3) of this section, S's attribute reduction amount is the lesser of P's net stock loss and S's aggregate inside loss. P's net stock loss is $360 ($600 basis over $240 amount realized). S's aggregate inside loss is the excess of S's net inside attribute amount over the value of the S share. S's net inside attribute amount is the sum of its bases in its assets, treating its S1 shares as a single share (the S1 stock) and treating S's deemed basis in the S1 stock as its basis in that stock. Under paragraph (d)(5)(i)(C) of this section, when subsidiaries are owned in multiple tiers, deemed basis is first determined for shares at the lowest tier, and then for stock in each next higher tier. Under paragraph (d)(5)(i)(B) of this section, S1's deemed basis in the S2 stock is $75 (computed as the greater of $50 (S1's $0 basis in the S2 share, adjusted for the $50 gain recognized with respect to the share) and $75 (S2's net inside attribute amount, the basis in Asset 2)). S1's deemed basis in the S3 stock is $75 (computed as the greater of $60 (S1's basis in the S3 share) and $75 (S3's net inside attribute amount, the basis in Asset 3)). S1's deemed basis in the S4 stock is $100 (computed as the greater of $100 (S1's basis in the S4 share) and $80 (S4's net inside attribute amount, the basis in Asset 4)). Accordingly, S1's net inside attribute amount is $250 ($75 deemed basis in the S2 stock plus $75 deemed basis in the S3 stock plus $100 deemed basis in the S4 stock). S's deemed basis in the S1 stock is the greater of the sum of S's actual basis in each share of S1 stock (adjusted for any gain or loss recognized) and S1's net inside attribute amount. S's actual basis in the S1 stock, adjusted for the loss recognized, is $200 (the sum of S's $170 basis in the S1 share 1, adjusted by the $150 loss recognized with respect to the share, and S's $20 basis in each of S1 share 2 through share 10). Thus, S's deemed basis in the S1 stock is $250, the greater of $200 (aggregate basis in S1 shares, adjusted for loss recognized) and $250 (S1's net inside attribute amount). As a result, S's net inside attribute amount is $420, the sum of S's $250 deemed basis in the S1 stock and S's $170 basis in Asset 1. Accordingly, the aggregate inside loss is $180, the excess of S's $420 net inside attribute amount over the $240 value of all of the S stock. S's attribute reduction amount is therefore $180, the lesser of the $360 net stock loss and the $180 aggregate inside loss.

(2) *Allocation, apportionment, and application of S's attribute reduction amount.* Under paragraphs (d)(4) and (d)(5)(ii) of this section, S's $180 attribute reduction amount is allocated proportionately (by basis) between Asset 1 (non-stock Category D asset) and the S1 stock. However, under paragraph (d)(5)(ii) of this section, for purposes of allocating S's $180 attribute reduction amount between S's non-stock Category D asset and the S1 stock, S's $250 deemed basis in the S1 stock is reduced by the $40 value of the transferred S1 shares (S1 share 1 and share 2) and the nontransferred S1 shares' $40 allocable portion (8/10) of S1's $50 net non-loss assets. S1's net non-loss assets is the $50 value of S1's transferred S2 shares. (S1 has no other non-loss assets, and there are no non-loss assets held by lower-tier subsidiaries.) Accordingly, for this purpose, S's deemed basis in the S1 stock is reduced by $80, from $250 to $170. Thus, $90 of the attribute reduction amount ($170/$340 × $180) is allocated to Asset 1 (reducing S's basis in Asset 1 from $170 to $80) and $90 of the attribute reduction amount ($170/$340 × $180) is allocated to the S1 stock. Under paragraph (d)(5)(iii)(A) of this section, none of the $90 allocated attribute reduction amount is apportioned to S1 share 1 because loss is recognized on the transfer of S1 share 1. Under paragraph (d)(5)(iii)(B) of this section, the $90 allocated attribute reduction amount is apportioned among the other nine shares of S1 common stock in a manner that reduces disparity to the greatest extent possible. Accordingly, of the total $90 allocated amount, $10 is apportioned to each of the remaining nine shares of S1 stock. Under paragraph (d)(5)(iii)(C) of this section, the allocated attribute reduction amount apportioned to an individual share cannot be applied to reduce the basis of the share below its value if the share is transferred other than in a recognition transfer. Because the S1 share 2 is transferred (contributed to the partnership) and the basis of S1 share 2 is already equal to its value, none of the $10 allocated attribute reduction amount apportioned to S1 share 2 is applied to reduce its basis. Because none of S1 share 3 through share 10 are transferred within the meaning of paragraph (f)(10) of this section, the $10 allocated attribute reduction amount apportioned to each of S1 share 3 through share 10 is applied fully to reduce the basis of each of those shares from $20 to $10. As a result, immediately after the allocation and application of S's attribute reduction amount, S's basis in Asset 1 is $80 ($170 minus $90), its bases in S1 share 1 and share 2 are not adjusted under paragraph (d)(5)(iii), and its basis in each of S1 share 3 through share 10 is $10. Under paragraph (d)(5)(v)(A) of this section, the entire $90 of S's attribute reduction amount that was allocated to the S1 stock is an attribute reduction amount of S1, regardless of the fact that none of the allocated amount was apportioned to S1 share 1 and none of the amount apportioned to S1 share 2 was applied to reduce the basis of S1 share 2.

(v) *Attribute reduction under this paragraph (d) in next lower tier. (A) Computation of S1's attribute reduction amount.* S's sale of S1 share 1 is a transfer of a loss share and it is in the next lower tier. Thus, this paragraph (d) next applies with respect to S's transfer of S1 share 1. S1's attribute reduction amount will include both the $90 attribute reduction amount that tiered down from S and any attribute reduction amount resulting from the application of this

paragraph (d) with respect to S's transfer of S1 share 1 and share 2 (S1's direct attribute reduction amount). Under paragraph (d)(3) of this section, S1's direct attribute reduction amount is the lesser of the net stock loss on transferred S1 shares and S1's aggregate inside loss. The net stock loss on transferred S1 shares is $150, computed as the excess of S's $190 adjusted bases in transferred shares of S1 stock ($170 in S1 share 1 plus $20 in S1 share 2) over the $40 aggregate value of those shares. S1's aggregate inside loss is $50, the excess of S1's $250 net inside attribute amount (as calculated in paragraph (iv)(B)(*1*) of this *Example 9*) over the $200 value of all outstanding S1 shares. Therefore, S1's direct attribute reduction amount is $50, the lesser of the $150 net stock loss and S1's $50 aggregate inside loss. S1's total attribute reduction amount is thus $140, the sum of the $90 tier-down attribute reduction amount and the $50 direct attribute reduction amount.

(B) *Allocation, apportionment, and application of S1's attribute reduction amount.* Under paragraphs (d)(4) and (d)(5)(ii) of this section, S1's $140 attribute reduction amount is allocated proportionately (by basis) among the S2 stock, the S3 stock, and the S4 stock. However, under paragraph (d)(5)(ii) of this section, for purposes of allocating S1's $140 attribute reduction amount among S1's lower-tier subsidiary stock, S1's $75 deemed basis in the S2 stock is reduced by the $50 value of the transferred S2 share. Accordingly, for this purpose, S1's deemed basis in the S2 stock is reduced by $50, from $75 to $25. Thus, $17.50 of S1's attribute reduction amount ($25/$200 × $140) is allocated to the S2 stock, $52.50 of S1's attribute reduction amount ($75/$200 × $140) is allocated to the S3 stock, and $70 of S1's attribute reduction amount ($100/$200 × $140) is allocated to the S4 stock. Under paragraph (d)(5)(iii)(A) of this section, none of the $17.50 of S1's attribute reduction amount allocated to S2 stock is apportioned to the S2 share because gain was recognized on the transfer of the S2 share. Because neither the S3 share nor the S4 share is transferred within the meaning of paragraph (f)(10) of this section, the $52.50 of S1's attribute reduction amount allocated to the S3 stock, and the $70 of S1's attribute reduction amount allocated to the S4 stock, is apportioned to and applied fully to reduce the basis of such shares. Thus, S1's basis in the S3 share is reduced by $52.50, from $60 to $7.50, and S1's basis in the S4 stock is reduced by $70, from $100 to $30. (Note: The conforming limitation in paragraph (d)(5)(v)(B) of this section limits the application of the $90 tier down attribute reduction amount to $80, the amount by which the portion (10/10) S1's $250 net inside attribute amount attributable to S1 shares held by members exceeds $170 (the sum of the $50 direct attribute reduction amount, the $20 value of the S1 share 1 transferred in a recognition transfer, the $20 basis (after reduction) in the S1 share 2 transferred other than in a recognition transfer, and the $80 aggregate basis (after reduction) in the nontransferred S1 shares held by members). However, the conforming limitation does not limit the application of S1's $90 tier-down attribute reduction amount because none of the $17.50 of S1's total attribute reduction amount allocated to the S2 share was applied to reduce the basis of the share. Accordingly, only $78.75 ($90—($17.50 × ($90/$140)) of the $90 tier-down attribute reduction was applied to reduce S1's attributes.) Under paragraph (d)(5)(v)(A) of this section,

the attribute reduction amount allocated to the S2 stock, the S3 stock, and the S4 stock becomes an attribute reduction amount of S2, S3, and S4, respectively (even though the amount allocated to S2 stock was not apportioned to or applied to reduce the basis of the S2 share).

(vi) *Attribute reduction under this paragraph (d) in lowest tier.* Although the sale of the S2 share is a transfer of subsidiary stock at the next lower tier, the S2 share is not a loss share. Thus, this paragraph (d) does not apply with respect to that transfer. However, S2, S3, and S4 have attribute reduction amounts that tiered down from S1 and that are applied to reduce attributes under this paragraph (d).

(A) *Tier down of S1's attribute reduction amount to S2.* Under the general rules of this paragraph (d), S2's $17.50 tier-down attribute reduction amount is allocated and applied to reduce S2's basis in Asset 2 from $75 to $57.50.

(B) *Tier down of S1's attribute reduction amount to S3.* Under the general rules of this paragraph (d), S3's $52.50 tier-down attribute reduction amount is allocated and applied to reduce S3's basis in Asset 3 from $75 to $22.50.

(C) *Tier down of S1's attribute reduction amount to S4, application of conforming limitation.* Under the general rules of this paragraph (d), S4's $70 tier-down attribute reduction amount is allocated to, and would be applied to reduce, S4's basis in Asset 4. However, under paragraph (d)(5)(v)(B) of this section, the reduction is limited to the excess of S4's $80 net inside attribute amount over the $30 basis of the S4 share (after reduction under this paragraph (d)). As a result, only $50 (the excess of $80 over $30) of S4's $70 attribute reduction amount is applied to S4's basis in Asset 4, reducing it from $80 to $30. The $20 unapplied portion of S4's tier-down attribute reduction amount subject to the conforming limitation is disregarded and has no further effect.

(vii) *Application of basis restoration rule.* Under paragraph (d)(5)(vi)(A) of this section, after this paragraph (d) has been applied with respect to all transfers of subsidiary stock, any reduction made to the basis of a share of lower-tier subsidiary stock under paragraph (d)(5)(iii) of this section is reversed to the extent necessary to conform the basis of that share to the share's allocable portion of the subsidiary's net inside attribute amount. Restoration adjustments are first made at the lowest tier and then at each next higher tier successively.

(A) *Basis restoration at lowest tier.* The basis of the S2 share was not reduced under paragraph (d)(5)(iii) of this section and so there is no restoration of any basis in the S2 share. S3's $22.50 net inside attribute amount (after reduction under this paragraph (d)) exceeds S1's $7.50 basis in the S3 share (after reduction under this paragraph (d)) by $15. To conform

S1's basis in the S3 share to S3's net inside attribute amount, the $52.50 reduction to the basis of the S3 share under paragraph (d)(5)(iii) of this section is reversed by $15 (restoring S1's basis in the S3 share to $22.50). The restoration of S1's basis in the S3 share does not tier up to affect the basis in stock of any other subsidiary. S1's $30 basis in the S4 share (after reduction under this paragraph (d)) is already conformed with S4's $30 net inside attribute amount (after reduction under this paragraph (d)) and so there is no restoration of any basis in the S4 share.

(B) *Basis restoration at next higher tier.* Each share of S1 stock has an allocable portion of S1's net inside attribute amount (after reduction) equal to $10.25 (1/10 × $102.50, the sum of S1's $0 basis in the S2 stock, adjusted for the $50 gain recognized with respect to the share, S1's $22.50 basis in the S3 stock (after restoration), and S1's $30 basis in the S4 stock). Neither S's basis in S1 share 1 nor S's basis in S1 share 2 was reduced under paragraph (d)(5)(iii) of this section. Accordingly, there is no restoration of any basis in either S1 share 1 or share 2. However, S's basis in each of S1 share 3 through share 10 was reduced under paragraph (d)(5)(iii) of this section by $10, from $20 to $10. Accordingly, the $10 reduction to the basis of each of those shares is reversed to the extent of $.25, to restore the basis of each such share to $10.25 (its allocable portion of S1's net inside attribute amount).

(viii) *Results.* After the application of this section, P recognizes a loss of $360 on the sale of the S share, S recognizes a loss of $150 on the sale of S1 share 1, and S1 recognizes a $50 gain on the sale of the S2 share. Immediately after the transaction, the entities each directly own the following:

Entity	Asset	Basis	Value
P1	S share	$240	$240
P	Proceeds of the sale of S share	240	240
S	Proceeds of sale of S1 share 1	20	20
	Partnership interest received for S1 share 2	20	20
	S1 share 3 through share 10	82 ($10.25 per share)	
	Asset 1	80	
S1	Proceeds of sale of S2 share	50	50
	The S3 share	22.50	
	The S4 share	30	
S2	Asset 2	57.50	
S3	Asset 3	22.50	
S4	Asset 4	30	
X	S1 share 1	20	20
Partnership	S1 share 2	20	20

Entity	Asset	Basis	Value
Y	The S2 share	50	50

(e) *Operating rules* —

(1) ***Predecessors, successors.*** This section applies to predecessor or successor persons, groups, and assets to the extent necessary to effectuate the purposes of this section.

(2) ***Adjustments for prior transactions that altered stock basis or other attributes.*** In certain situations, M's basis in S stock or S's attributes may be adjusted in a manner that alters the relationship between stock basis and inside attributes and prevents that relationship from identifying the extent to which stock basis reflects unrecognized gain and duplicated loss. The provisions of this paragraph (e)(2) modify the computations in paragraphs (c) and (d) of this section to adjust for the effects of such adjustments.

(i) ***Prior reductions to S's basis in assets or other attributes pursuant to section 362(e)(2)(A).*** If M transferred loss property to S in an intercompany transaction subject to section 362(e)(2) (for example, if the transfer was prior to September 17, 2008, no election was made to apply § 1.1502-80(h), and, as a result, S's attributes were reduced under section 362(e)(2)), then the disconformity amount of the S shares received in the section 362(e)(2) transaction is reduced by the amount that the basis in such shares would have been reduced under section 362(e)(2)(C) had such an election been made. In addition, for purposes of determining the attribute reduction amount under paragraph (d) of this section resulting from the transfer of any S shares received (or deemed received) in such a transfer, and for purposes of applying paragraph (d)(5)(v)(B) of this section (conforming limitation) to S, the bases in such shares is treated as reduced by the amount the bases in such shares would have been reduced under section 362(e)(2)(C) had such an election been made.

(ii) ***Prior reductions to the basis of any share of S stock pursuant to an election under section 362(e)(2)(C).*** If M transferred loss property to S in an intercompany transaction subject to section 362(e)(2) and the basis of any share of S stock was reduced as the result of an election under section 362(e)(2)(C) (including in the hands of a predecessor, to the extent that the effect of the election remains reflected in the basis of the S stock), then, for purposes of computing either any S share's disconformity amount or S's aggregate inside loss, and for purposes of applying paragraph (d)(5)(vi)(A) of this section (stock basis restoration) to S, S's net inside attribute amount is treated as reduced by the amount that S's attributes would have been reduced under section 362(e)(2)(A) in the absence of an election under section 362(e)(2)(C). Notwithstanding the general rule of this paragraph (e)(2)(ii), no reduction will be required to the extent that the group can establish that the net loss in the S shares transferred by M is no longer reflected in S's net inside attributes.

(iii) ***Other adjustments.*** Appropriate adjustments will be made in any other case in which an adjustment to S's net inside attributes or to M's basis in a share of S stock alters the relationship between such amounts, and the adjustment does not relate to the extent to which loss reflected in M's basis in S stock is noneconomic or duplicated within the meaning of this section.

(3) ***Special rules for subsidiary stock transferred in an intercompany transaction*** —

(i) ***In general.*** This section applies with respect to M's transfer of a share of S stock to another member in an intercompany transaction in which M's intercompany item is deferred under § 1.1502-13 (and to any subsequent transfer of that share by a member) as of the time M's intercompany item is taken into account under § 1.1502-13. In determining the application of this section, all transferor-members are treated as divisions of a single corporation. Appropriate adjustments will be made to the intercompany item(s), any member's basis in an S share, to S's attributes, or any combination thereof, to further the purposes of this section and § 1.1502-13.

(ii) ***Certain prior intercompany transactions.*** If M transferred a share of S stock to another member before September 17, 2008 and M's intercompany item related to the transfer is taken into account on or after September 17, 2008, P may elect to apply this paragraph (e)(3) to the transfer. The election is made in the manner provided in paragraph (e)(5) of this section.

(iii) ***Examples.*** The application of this paragraph (e)(3) is illustrated by the following examples:

> *Example 1. Intercompany sale with duplicated loss.* (i) *Buying member later sells at gain.* (A) *Facts.* M owns the sole outstanding share of stock of S with a basis of $100. S has one asset with a basis of $100. M sells the S share to M1 for $70, recognizing a loss of $30. While owned by M1, S recognizes $10 of depreciation deductions that are absorbed by the group. S's basis in the asset is reduced by $10 (from $100 to $90), and M1's basis in the S stock is reduced under § 1.1502-32 by $10 (from $70 to $60). Later, M1 sells the S share to X, an unrelated person, for $80.
> (B) *Analysis.* M's sale of its S share to M1 is a transfer of the share, but this section applies as of the time M's intercompany item is taken into account under § 1.1502-13, as if M and M1 were divisions of a single corporation. If M and M1 were divisions of a single corporation, the S share's basis would be $90 ($100 reduced by $10 for the depreciation deductions absorbed by the group) and the group would recognize a $10 loss on the sale of the share that is potentially subject to this section. Thus, the sale would be a transfer of a loss share (to the extent of $10) and would be subject to this section (to the extent of that $10). Although the transfer would be subject to this section, there would be no adjustment under paragraph (b) of this section (S has only one share outstanding and so there is no disparity in bases of common shares and no unrecognized gain or loss with respect to preferred) or under paragraph (c) of this section (S has no net positive adjustment). Thus, after the application of paragraph (c) of this section, the share would still be a loss share and would therefore be subject to paragraph (d) of this section. Under paragraph (d) of this section, S would be subject to $10 of attribute reduction (the lesser of the $10 net stock loss and S's $10 aggregate inside loss), allocable to the basis in S's asset. Accordingly, S's basis in its asset is reduced by $10, from $90 to $80, M takes its $30 intercompany stock loss into account, and M1 recognizes a $20 stock gain.

(ii) *Selling member deconsolidates.* Assume the same facts as in paragraph (i)(A) of this *Example 1,* except that M1 does not sell the S share and M ceases to be a member of the group when the value of the S share is $80. Under § 1.1502-13, M's deconsolidation causes M's intercompany loss to be taken into account and this section applies at that time. At the time that M deconsolidates, if M and M1 were divisions of a single corporation, the basis in the S share would be $90 ($100 reduced by $10 for the depreciation deductions absorbed by the group) and the group would recognize a $10 loss on the sale of the share that is potentially subject to this section. Such a sale would be a transfer of a loss share (to the extent of $10) and would be subject to this section (to the extent of that $10). The analysis is then the same as in paragraph (i)(B) of this *Example 1.* As a result, S's basis in its asset is reduced from $90 to $80, M takes its $30 intercompany stock loss into account, and M1 holds the S stock with a basis of $60 (and an unrecognized gain of $20).

(iii) *M1 sells the S share at a loss.* Assume the same facts as in paragraph (i)(A) of this *Example 1,* except that S declines in value and M1 sells the S share to X for $50, realizing a $10 loss. In this case, if M and M1 were divisions of a single corporation, the share's basis would be $90 ($100 reduced by $10 for the depreciation deductions absorbed by the group) and the group would recognize a $40 loss on the sale of the share that is potentially subject to this section. Thus, the sale would be a transfer of a loss share (to the extent of $40) and would be subject to this section (to the extent of that $40). Although the transfer would be subject to this section, for the reasons set forth in paragraph (i)(B) of this *Example 1*, there would be no adjustment under either paragraph (b) or paragraph (c) of this section. Thus, after the application of paragraph (c), the share would still be a loss share and would therefore be subject to paragraph (d) of this section. Under paragraph (d) of this section, S would be subject to $40 of attribute reduction (the lesser of the $40 net stock loss and S's $40 aggregate inside loss), allocable to the basis in S's asset. Accordingly, S's basis in its asset is reduced by $40, from $90 to $50, M takes its $30 intercompany stock loss into account, and M1 recognizes a $10 stock loss.

Example 2. Intercompany sale of built-in gain stock. (i) *Facts.* M owns the sole outstanding share of stock of S with a basis of $100. S's sole asset has a basis of $0. S sells its asset for $100 and recognizes a $100 gain that increases M's basis in its S share under § 1.1502-32 to $200. M sells the S share to M1 for $100 and recognizes a $100 intercompany loss. Later, M1 sells the S share to X, an unrelated person, for $120. (ii) *Analysis.* M's sale of the S share to M1 is a transfer of the share, but this section applies as of the time M's intercompany item is taken into account under § 1.1502-13, as if M and M1 were divisions of a single corporation. If M and M1 were divisions of a single corporation, the S share's basis would be $200 ($100 increased by $100 for the gain recognized on the sale of the asset) and the group would recognize an $80 loss on

the sale of the share that is potentially subject to this section. Thus, the sale would be a transfer of a loss share (to the extent of $80) and would be subject to this section (to the extent of that $80). Although the transfer would be subject to this section, there would be no adjustment under paragraph (b) of this section (S has only one share outstanding and so there is no disparity in bases of common shares and no unrecognized gain or loss with respect to preferred). Thus, after the application of paragraph (b), the share would still be a loss share and would therefore be subject to paragraph (c) of this section. Under paragraph (c) of this section, the basis in the S share would be reduced, but not below its $120 value, by the lesser of the $100 disconformity amount and the $100 net positive adjustment that was applied to the share when held by M. Accordingly, the basis in the S share would be reduced by $80, to $120. Because the S share would not be a loss share after the application of paragraph (c) of this section, paragraph (d) of this section would not apply to the transfer. As a result, because the positive adjustment was applied to the share when held by M, M's intercompany item is adjusted to reflect what it would have been had M's basis in its S share been reduced by $80 immediately before its sale to M1. Thus, M's intercompany loss is reduced to $20 and M takes this loss into account, and M1 recognizes a gain of $20.

Example 3. Intercompany sale creates built-in gain stock. (i) *Facts.* M owns the sole outstanding share of stock of S with a basis of $0. S's sole asset has a basis of $0. M sells the S share to M1 for $100 and recognizes a $100 intercompany gain. While owned by M1, S sells its asset for $100, recognizing a $100 gain that increases M1's basis in the S share under § 1.1502-32 to $200. Later, M1 sells the S share to X for $120.
(ii) *Analysis.* M's sale of its S share to M1 is a transfer of the share, but this section applies as of the time M's intercompany item is taken into account under § 1.1502-13, as if M and M1 were divisions of a single corporation. If M and M1 were divisions of a single corporation, the S share's basis would be $100 ($0 increased by $100 for the gain recognized on the sale of the asset) and the group would recognize a $20 gain on the sale of the share. Thus, the sale would not be a transfer of a loss share and this section would not apply to the transfer. Accordingly, under this paragraph (e)(3), no portion of M1's $80 loss is subject to this section. M takes its $100 intercompany stock gain into account, and M1 recognizes an $80 loss.

Example 4. Disparate bases in members' shares. (i) *Facts.* M holds Share A, one of the two outstanding shares of S stock, with a basis of $50 and M1 holds Share B, the other outstanding share of S stock with a basis of $0. S has $50 cash and an asset with a basis of $0. S sells the asset for $50, recognizing a $50 gain that increases M's basis in its S share under § 1.1502-32 by $25 (from $50 to $75) and increases M1's basis under § 1.1502-32 by $25 (from $0 to $25). Later, M sells its Share A to M1 for $50 and recognizes a $25 intercompany loss. Later, M1 sells both S shares to X for $100.

(ii) *Analysis.* M's sale of its Share A to M1 is a transfer of the share, but this section applies as of the time M's intercompany item is taken into account under § 1.1502-13, as if M and M1 were divisions of a single corporation. If M and M1 were divisions of a single corporation, the basis of Share A would be $75 ($50 increased by $25 for its share of the gain recognized on the sale of the asset), the basis of Share B would be $25, and the group would recognize a $25 loss on the sale of Share A that is potentially subject to this section and a $25 gain on the sale of Share B. Thus, the sale would be a transfer of a loss share (to the extent of $25) and would be subject to this section (to the extent of that $25). Although the transfer is subject to this section, there would be no adjustment under paragraph (b) of this section (all S shares held by members are transferred to a nonmember in one taxable transaction). Thus, after the application of paragraph (b), Share A would still be a loss share and therefore subject to paragraph (c) of this section. Under paragraph (c)(7) of this section, the basis of Share A would be treated as reduced by the gain recognized and taken into account with respect to the transfer of Share B in the same transaction, and so Share A would not be a loss share for purposes of paragraph (c) of this section. Although the share would be a loss share after the application of paragraph (c) of this section, no adjustment would be required under paragraph (d) of this section because there would be no net stock loss in the transaction. Because no adjustment would be made under this section if M and M1 were divisions of a single corporation, M takes its $25 intercompany stock loss into account and M1 recognizes a gain of $25. Alternatively, if the group elects to apply paragraph (b) of this section, M's intercompany item would be adjusted to reflect what it would have been had the $25 investment adjustment applied to Share A been reallocated to Share B, and M1's basis in Share B would be increased by that amount. If so, M's $25 intercompany loss would be reduced to zero, M1's basis in Share B would be increased from $25 to $50, and there would be no gain or loss recognized on either share.

Example 5. Subsidiary with built-in gain and built-in loss assets. (i) *Facts.* M owns the sole outstanding share of stock of S with a basis of $100. S has two assets, Asset 1 with a basis of $0 and Asset 2 with a basis of $80. M sells the S share to M1 for $90 and recognizes a $10 intercompany loss. While owned by M1, S sells Asset 1 for $60, recognizing a $60 gain that increases M1's basis in the S share under § 1.1502-32 to $150. Later, M1 sells the S share to X for $90.
(ii) *Analysis.* M's sale of the S share to M1 is a transfer of the share, but this section applies as of the time M's intercompany item is taken into account under § 1.1502-13, as if M and M1 were divisions of a single corporation. If M and M1 were divisions of a single corporation, the S share's basis would be $160 ($100 increased by $60 for the gain recognized on the sale of Asset 1) and the group would recognize a $70 loss on the sale of the share that is potentially subject to this section. Thus, the sale would be a transfer of a loss share (to the extent of $70) and would be subject to this section (to the extent of that $70). Although the transfer is subject to this section, there would be no

adjustment under paragraph (b) of this section (S has only one share outstanding and so there is no disparity in bases of common shares and no unrecognized gain or loss with respect to preferred). Thus, after the application of paragraph (b), the share would still be a loss share and would therefore be subject to paragraph (c) of this section. Under paragraph (c) of this section, the basis in the S share would be reduced, but not below its $90 value, by the lesser of the $20 disconformity amount ($160 stock basis over $140 net inside attribute amount) and the $60 net positive adjustment that was applied to the share when held by M1. Accordingly, the basis in the S share would be reduced by $20, to $140. Because the S share would still be a loss share after the application of paragraph (c) of this section, paragraph (d) of this section would apply to the transfer. Under paragraph (d) of this section, S would have an attribute reduction amount of $50, the lesser of the $50 net stock loss ($140 basis over $90 value) and S's $50 aggregate inside loss (the excess of the sum of S's $80 basis in Asset 2 and S's $60 cash from the sale of Asset 1, over the $90 value of the S share). The adjustments required under this section are applied as follows: because the positive adjustment was applied to the share when held by M1, the $20 basis reduction required under paragraph (c) of this section is applied to M1's basis in its S share immediately before its sale to X, reducing it from $150 to $130. In addition, pursuant to paragraph (d) of this section, S's basis in Asset 2 is reduced by $50, from $80 to $30. M takes its $10 intercompany stock loss into account and M1 recognizes a loss of $40.

(iii) *Allocation of basis reduction.* Assume the same facts as in paragraph (i) of this *Example 5,* except that, while S is held by M, S earns $30 (consuming a portion of Asset 1) and, while S is held by M1, S earns $20 (consuming a portion of Asset 1) and sells Asset 1 for $10. Thus, M's basis in the S share immediately before the sale to M1 is $130, and M recognizes a $40 intercompany stock loss, and M1's basis in the S share immediately before the sale to X is $120. The analysis regarding the application of this section is the same as in paragraph (ii) of this *Example 5.* On a separate entity basis, M's basis in the S share would be subject to a $20 reduction under paragraph (c) of this section (at the time M transferred the S share the share had a $30 net positive adjustment and a $20 disconformity amount), and M1's basis in the S share would not be subject to reduction under paragraph (c) of this section (at the time M1 transferred the S share the share had a $30 net positive adjustment and a $20 negative disconformity amount). Therefore, the $20 basis reduction required under paragraph (c) of this section is allocated entirely to M. Accordingly, M's intercompany item is adjusted to reflect what it would have been had the entire $20 basis reduction been applied to the S share while held by M, and M1's basis in the S share is not reduced. Thus, M's intercompany stock loss is reduced by $20 to $20 and M takes this loss into account, and M1 recognizes a $30 loss. S's basis in Asset 2 is reduced by $50, from $80 to $30.

(4) ***Limited application to multiple-member section 332 liquidations.*** If more than one member owns shares of S stock, paragraphs (c) and (d) of this section do not apply to any transfer of S shares resulting from a liquidation of S to which section 332 applies.

(5) ***Form and manner of election(s) under this section.*** The elections provided in this section are irrevocable and made in the form of a statement titled "Section 1.1502-36 Statement." The statement must be included on or with the group's timely filed return (original or amended, if filed by the due date for the return, including extensions) for the taxable year of the transfer of the subsidiary stock to which the election relates or, in the case of an intercompany transfer, the year in which the intercompany item from the transfer is taken into account. The statement must include—

(i) The name and employer identification number (E.I.N.) of each subsidiary with respect to which an election is being made;

(ii) If P is electing under paragraph (b)(1)(ii) of this section to redetermine basis with respect to the transfer of stock of one or more subsidiaries, a statement that members' bases in shares of [name of subsidiary or subsidiaries] stock are being redetermined notwithstanding that all members' shares of [name of subsidiary or subsidiaries] are being transferred to one or more nonmembers in one fully taxable transaction;

(iii) If P is electing under paragraph (d)(2)(ii) of this section (attribute reduction amount less than five percent of value) to apply the attribute reduction provisions, a statement that paragraph (d) of this section is being applied to the transfer of shares of stock of [names of all subsidiaries whose shares are transferred] notwithstanding that the aggregate attribute reduction amount in the transaction is less than five percent of the aggregate value of the stock of [names of all subsidiaries whose shares are transferred] transferred by members in the transaction;

(iv) If P is electing under paragraph (d)(4)(ii)(A)(*1*) of this section to specify the allocation of the attribute reduction amount, a statement (for each subsidiary for which the election is being made) that the attribute reduction amount of [name of subsidiary] is being applied (or not applied) to reduce [identify the attributes in Category A, Category B, and Category C, and the amount of each, with respect to which the election is being made];

(v) If P is electing under paragraph (d)(5)(v)(B) of this section not to apply the conforming limitation on tier-down attribute reduction with respect to one or more subsidiaries, a statement that the conforming limitation in paragraph (d)(5)(v)(B) of this section is not being applied with respect to [name of subsidiary or subsidiaries];

(vi) If P is electing under paragraph (d)(5)(vi)(B) of this section not to restore lower-tier subsidiary stock basis with respect to one or more subsidiaries, a statement that members' bases in [name of subsidiary or subsidiaries] is not being restored under paragraph (d)(5)(vi)(A) of this section;

(vii) If P is electing under paragraph (d)(6) of this section to reattribute attributes, a statement (for each subsidiary for which the election is being made) that [identify the attributes in Category A, Category B, and Category C, and the amount of each or the amount in excess of an amount, with respect to which the election is being made] of [name of subsidiary] are being reattributed (or not) to P;

(viii) If P is electing under paragraph (d)(6) of this section to reduce stock basis, a statement (for each subsidiary for which the election is being made) that members' bases in shares of stock of [name of subsidiary] are being reduced by [specify amount or the amount in excess of an amount];

(ix) If P is electing under paragraph (e)(3)(ii) of this section to apply paragraph (e)(3) of this section to an intercompany transfer that occurred before September 17, 2008, a statement that paragraph (e)(3) of this section is being elected to apply to the transfer of stock of [name of subsidiary] by [name of transferor subsidiary] to [name of transferee subsidiary] on [date of transfer]; and

(x) If P is electing under § 1.1502-96(d)(5) to reattribute to itself all or any part of a section 382 limitation, a statement that P is electing to reattribute a section 382 limitation with respect to losses of [name of subsidiary or, if two or more subsidiaries are members of a loss subgroup, the name of each subsidiary in the loss subgroup]. A separate statement is made for each subsidiary or loss subgroup for which an election is being made. Each statement must include—

(A) The date of the ownership change giving rise to the separate section 382 limitation or subgroup section 382 limitation that is being apportioned;

(B) The amount of the separate (or subgroup) section 382 limitation for the taxable year in which the reattribution occurs (determined without reference to any apportionment under this section or § 1.1502-95(c)); and

(C) The amount of each net operating loss carryover, capital loss carryover, or deferred deduction, and the year in which it arose, of the subsidiary (or subsidiaries) that is subject to the separate section 382 limitation or subgroup section 382 limitation that is being apportioned to the common parent, and the amount of the value element and adjustment element of that limitation that is apportioned to the common parent.

(f) ***Definitions.*** In addition to the definitions in other paragraphs of this section and in other provisions of the regulations under section 1502, the following definitions apply for purposes of this section.

(1) ***Allocable portion*** has the same meaning as in § 1.1502-32(b)(4)(iii)(B). Thus, for example, within a class of stock, each share has the same allocable portion of the net inside attribute amount and, if there is more than one class of stock, the net inside attribute amount is allocated to each class by taking into account the terms of each class and all other facts and circumstances relating to the overall economic arrangement.

(2) ***Deferred deduction*** means any deduction for expenses or loss that would be taken into account under general tax accounting principles as of the time of the transfer of the share, but that is nevertheless not taken into account immediately after the transfer by reason of the application of a deferral provision. Such provisions include, for example, sections 163(j), 267(f), and 469, and § 1.1502-13. “Deferred deduction” also includes S's portion of such consolidated tax attributes, for example consolidated excess charitable contributions that would be apportioned to S under the principles of § 1.1502-79(e) if S had a separate return year. Additionally, it includes amounts equivalent to deductions, such as negative adjustments under section 475 (mark to market accounting method for dealers in securities) and section 481 (adjustments required by changes in method of accounting).

(3) ***Distribution*** has the same meaning as in § 1.1502-32(b)(3)(v).

(4) ***Higher-tier, lower-tier.*** A subsidiary (S1) (and its shares of stock) is "higher-tier" with respect to another subsidiary (S2) (and its shares of stock) if investment adjustments made to the bases of shares of S2 stock under § 1.1502-32 affect the investment adjustments made to the bases of shares of S1 stock. A subsidiary (S1) (and its shares of stock) is "lower-tier" with respect to another subsidiary (S) (and its shares of stock) if investment adjustments made to the bases of shares of S1 stock affect the investment adjustments made to the bases of shares of S stock. The term *lowest-tier subsidiary* generally refers to a subsidiary that owns no stock of another subsidiary. The term *highest-tier subsidiary* generally refers to a subsidiary the stock of which is not lower tier to any shares transferred in the transaction.

(5) ***Liability*** means a liability that has been incurred within the meaning of section 461(h), except to the extent otherwise provided in paragraph (d)(4)(ii)(C)(*1*) of this section.

(6) ***Loss carryover*** means any net operating or capital loss carryover that is attributable to S, including any losses that would be apportioned to S under the principles of § 1.1502-21(b)(2) if S had a separate return year. However, solely for purposes of applying paragraph (d) of this section, loss carryovers do not include the amount of any losses waived under § 1.1502-32(b)(4).

(7) ***Loss share, gain share.*** A *loss share* is a share of stock with a basis that exceeds its value. A *gain share* is a share of stock with a value that exceeds its basis.

(8) ***Preferred stock, common stock. Preferred stock*** and *common stock* have the same meanings as in § 1.1502-32(d)(2) and (3), respectively.

(9) ***Transaction*** includes all the steps taken pursuant to the same plan or arrangement.

(10) ***Transfer*** —

(i) ***Definition.*** Except as provided in paragraph (f)(10)(ii) of this section, for purposes of this section, M transfers a share of S stock on the earliest of—

(A) The date that M ceases to own the share as a result of a transaction in which, but for the application of this section (and notwithstanding the deferral of any amount recognized on the transfer, other than by reason of § 1.1502-13), M would recognize income, gain, loss or deduction with respect to the share (see paragraph (e)(3) of this section in the case of a transfer in an intercompany transaction);

(B) The date that M and S cease to be members of the same group;

(C) The date that a nonmember acquires the share from M; and

(D) The last day of the taxable year during which the share becomes worthless under section 165 (taking into account the provisions of § 1.1502-80(c)) if the share is treated as a capital asset, or the date the share becomes worthless (taking into account the provisions of § 1.1502-80(c)) if the share is not treated as a capital asset.

(ii) ***Excluded transactions.*** Notwithstanding paragraph (f)(10)(i) of this section, M does not transfer a share of S stock if—

(A) M ceases to own the share as a result of a transaction to which section 381(a) applies and in which either a member acquires assets from S or S acquires assets from M, provided that—

(*1*) M recognizes no income, gain, loss, or deduction with respect to the share, and

(2) If the transaction is a liquidation to which section 332 applies, M is the only member that owns shares of S stock (if another member owns shares of S stock, see paragraph (e)(4) of this section for a limitation on the application of this section); or

(B) M ceases to own the share as a result of a distribution of the share to a nonmember in a transaction to which section 355 applies, and in which the share is treated as qualified property for purposes of section 355(c) or section 361(c).

(11) ***Value*** means the amount realized, if any, or otherwise the fair market value.

(g) ***Anti-abuse rule*** —

(1) ***General rule.*** If a taxpayer acts with a view to avoid the purposes of this section or to apply the rules of this section to avoid the purposes of any other rule of law, appropriate adjustments will be made to carry out the purposes of this section or such other rule of law.

(2) ***Examples.*** The following examples illustrate the principles of the anti-abuse rule in this paragraph (g). No implication is intended regarding the potential applicability of any other anti-abuse rules:

> *Example 1. Loss Trafficking.* (i) *Facts.* M purchases the sole outstanding share of S stock for $100. At that time, S owns Asset 1 with a basis of $0. S sells Asset 1 for $100. Later, S purchases the sole outstanding share of X stock, a corporation with losses, with a view to liquidating X in a transaction to which section 332 applies in order to reduce S's disconformity amount. S purchases the X share for $1, and X has a $100 NOL and an asset with a basis of $1. Subsequently, M sells its S share for $100. After taking into account the effects of all applicable rules of law, M's basis in the S share is $200 (M's original $100 basis, increased under § 1.1502-32 to reflect the $100 gain recognized on the sale of Asset 1). M's sale of the S share is a transfer of a loss share and therefore subject to this section.
> (ii) *Analysis.* Although M's transfer of the S share is subject to this section, there is no adjustment under paragraph (b) of this section (S has only one share outstanding and so there is no disparity in bases of common shares and no shares of S preferred stock outstanding (and so there is no unrecognized gain or loss on S preferred stock)). See paragraph (b)(1)(ii)(A) of this section. Accordingly, after the application of paragraph (b) of this section, M's sale of the S share is still a transfer of a loss share and therefore subject to paragraph (c) of this section. Under paragraph (c) of this section, M's $200 basis in the S share is reduced, but not below the share's $100 value, by the lesser of the share's net positive adjustment and disconformity amount. The share's net positive adjustment is $100, the positive adjustment attributable to the gain recognized on the sale of Asset 1. The share's disconformity amount is $0, the excess of M's $200 basis in the S share over S's $200 net inside attribute amount. Thus, the reduction to basis under paragraph (c) of this section would be $0. However, because S purchased the X stock and liquidated X with a view to avoiding the purposes of this section (by using X's attributes to minimize the disconformity amount of the S share), the attributes acquired from X are disregarded for purposes of applying this section. Accordingly, S's net inside attribute amount is limited to the $100 of attributes S would have had absent the purchase of the X stock, S's money ($100 from the

sale of Asset 1). The loss share's disconformity amount is therefore the excess of $200 over $100, or $100. The lesser of the share's $100 net positive adjustment and $100 disconformity amount is $100. As a result, M's $200 basis in the S share is reduced by $100, to $100, and M recognizes no gain or loss on the sale of the S share.

Example 2. Use of a partnership to prevent current attribute reduction. (i) *Facts.* M owns all 5 outstanding shares of S common stock with a basis of $200 each. S owns Asset 1 with a basis of $1000. In year 1, with a view to preventing a current reduction in the basis of Asset 1, S contributes Asset 1 to a partnership in a transaction in which S recognizes no gain or loss. On December 31, year 2, M sells one S share for $20. After taking into account the effects of all applicable rules of law, M's basis in each S share is $200. M's sale of the S share is a transfer of a loss share and therefore subject to this section.
(ii) *Analysis.* Although M's transfer of the S share is subject to this section, there is no basis redetermination under paragraph (b) of this section because there is no disparity among M's bases in its shares of S common stock and there are no shares of S preferred stock outstanding (and so there is no unrecognized gain or loss on S preferred stock). See paragraph (b)(1)(ii)(A) of this section. Accordingly, after the application of paragraph (b) of this section, M's sale of the S share is still a transfer of a loss share and therefore subject to paragraph (c) of this section. However, no adjustment is required under paragraph (c) of this section because both the disconformity amount and the net positive adjustment are $0. See paragraph (c)(3) of this section. Under paragraph (d) of this section, S's attribute reduction amount is $180 (the lesser of the $180 net stock loss and S's $900 aggregate inside loss ($1000 of attributes over $100 value of all of the S shares)). Absent the application of this paragraph (g), the $180 attribute reduction amount would be applied to reduce S's basis in the partnership interest. However, because S acted with a view to avoiding a current reduction in the basis of Asset 1 under paragraph (d) of this section, this section is applied by treating S as if it held Asset 1 at the time of the stock sale. The basis of Asset 1 is reduced by $180, to $820, effective immediately before the transfer to the partnership and, as a result, S's basis in its partnership interest is $820.

Example 3. Creation of an intercompany receivable to mitigate attribute reduction. (i) *Facts.* M owns all five outstanding shares of S common stock each with equal basis that exceeds value. S holds cash and Asset 1 with a basis that exceeds value. In year 1, with a view to mitigating a reduction in the basis of Asset 1, S lends the cash to M1. Asset 1 and the intercompany note received from M1 are assets of the same class under § 1.338-6(b)(2). On December 31, year 2, M sells one of its S shares and, without regard to this section, recognizes a loss. M's sale of the S share is a transfer of a loss share and therefore subject to this section.

(ii) *Analysis.* Although M's transfer of the S share is subject to this section, no adjustment is required under paragraph (b) of this section because there is no disparity among M's bases in shares of S common stock and there are no shares of S preferred stock outstanding (and so there is no unrecognized gain or loss on S preferred stock). See paragraph (b)(1)(ii)(A) of this section. Accordingly, after the application of paragraph (b) of this section, M's sale of the S shares is still a transfer of a loss share and therefore subject to paragraph (c) of this section. However, there is no adjustment under paragraph (c) of this section because the net positive adjustment is $0. See paragraph (c)(3) of this section. Under paragraph (d) of this section, S's attribute reduction amount would be applied to reduce S's basis in Asset 1 and the intercompany receivable in proportion to basis. However, because S acted with a view to mitigating the reduction in the basis of Asset 1 under paragraph (d) of this section, this section is applied without regard to the intercompany receivable. Accordingly, S's basis in Asset 1 is reduced by the full attribute reduction amount.

Example 4. Use of a partnership to reduce net stock loss. (i) *Facts.* M owns all ten outstanding shares of S common stock, one share (Share 1) has a basis of $0, and one share (Share 2) has a basis of $160. S has an aggregate inside loss of $80. In one transaction and with a view to mitigating a reduction in S's attributes, M contributes Share 1 to a partnership, recognizing no gain or loss, and sells Share 2 for $80. M's contribution of Share 1 to the partnership is a transfer, but the share is not a loss share and so the transfer is not subject to this section. M's sale of Share 2 is a transfer of a loss share and is therefore subject to this section.
(ii) *Analysis.* Although M's transfer of Share 2 is subject to this section, there is no adjustment under paragraph (b) of this section because there are no investment adjustments that have been applied to the shares. Accordingly, after the application of paragraph (b) of this section, M's sale of Share 2 is still a transfer of a loss share and therefore subject to paragraph (c) of this section. There is no adjustment under paragraph (c) of this section because the net positive adjustment is $0. See paragraph (c)(3) of this section. Accordingly, after the application of paragraph (c) of this section, M's sale of Share 2 is still a transfer of loss shares and therefore subject to paragraph (d) of this section. Under paragraph (d) of this section, the net stock loss would be determined to be $0, the excess of the $160 aggregate basis in all of the transferred shares over the $160 aggregate value of those shares. S's attribute reduction amount would be determined to be $0, the lesser of the $0 net stock loss and S's $80 aggregate inside loss. Thus, there would be no reduction of attributes under this paragraph (d) of this section. However, because M acted with a view to reducing the attribute reduction amount by transferring a gain share to a partnership while avoiding the recognition of the gain on the share, this section is applied without regard to the transfer of the gain share. Accordingly, the net stock loss is determined to be $80, and the attribute reduction amount is determined to be $80.

Example 5. Stuffing gain asset. (i) *Facts.* M owns the sole outstanding share of S stock

(Share 1) with a basis of $100. S owns Asset 1 with a basis of $100 and a value of $20. With a view to avoid the purposes of this section, M transfers Asset 2 with a basis of $0 and a value of $80 to S in exchange for four additional shares of S stock (Share 2 through Share 5) in a transaction to which section 351 applies. M later sells Share 1 to X for $20. M's sale of Share 1 is a transfer of a loss share and therefore subject to this section.
(ii) *Analysis.* Although M's transfer of the Share 1 is subject to this section, there is no adjustment under paragraph (b) of this section because no investment adjustments have been applied to the basis of any S shares. Thus, after the application of paragraph (b) of this section, M's sale of the S share is still a transfer of a loss share and therefore subject to paragraph (c) of this section. There is no adjustment under paragraph (c) of this section because the net positive adjustment is $0. Accordingly, after the application of paragraph (c) of this section, M's sale of the S share is still a transfer of a loss share and therefore subject to paragraph (d) of this section. Under paragraph (d) of this section, S's attribute reduction amount would be $0, the lesser of the $80 net stock loss and S's $0 aggregate inside loss ($100 of attributes does not exceed the $100 value of all of the S shares). However, because M transferred Asset 2 to S with a view to avoid the purposes of this section, the application of this section to M's transfer of Share 1 is made without regard to the transfer of Asset 2. Accordingly, under paragraph (d) of this section, S's attribute reduction amount is $80, the lesser of the $80 net stock loss and S's $80 aggregate inside loss (computed without regard to Asset 2). S's basis in Asset 1 is therefore reduced by $80, from $100 to $20, under paragraph (d) of this section.

(iii) *Transfer of all S shares.* Assume the same facts as in paragraph (i) of this *Example 5,* except that M sells all five S shares to X, recognizing both the gain and the loss on the S shares. The transfer of Share 1 is still a transfer of a loss share and therefore subject to this section. However, because all the shares are transferred, the group's income is clearly reflected. Therefore, the purposes of this section are not avoided and this section applies without modification. S's attribute reduction amount is $0, the lesser of the $0 net stock loss and S's $0 aggregate inside loss.

(h) ***Applicability date*** —

(1) ***In general.*** This section applies to transfers of shares of subsidiary stock on or after September 17, 2008 unless the transfer was made pursuant to a binding agreement that was in effect prior to September 17, 2008 and at all times thereafter. For transfers of shares of subsidiary stock that are not subject to this section, see §§ 1.337(d)-2 and 1.1502-35.

(2) ***Definition in paragraph (f)(2) of this section.*** Paragraph (f)(2) of this section applies to taxable years beginning on or after November 13, 2020. For taxable years beginning before November 13, 2020, see § 1.1502-36 as contained in 26 CFR part 1, revised April 1, 2019. However, taxpayers and their related parties, within the meaning of sections 267(b) and 707(b)(1), may choose to apply the rules of this section to a taxable year beginning after December 31, 2017, and before November 13, 2020, so long as the taxpayers and their related parties consistently apply the rules of this section, the section 163(j) regulations (as defined in § 1.163(j)-1(b)(37)), and, if applicable, §§ 1.263A-9,

1.263A-15, 1.381(c)(20)-1, 1.382-1, 1.382-2, 1.382-5, 1.382-6, 1.382-7, 1.383-0, 1.383-1, 1.469-9, 1.469-11, 1.704-1, 1.882-5, 1.1362-3, 1.1368-1, 1.1377-1, 1.1502-13, 1.1502-21, 1.1502-79, 1.1502-91 through 1.1502-99 (to the extent they effectuate the rules of §§ 1.382-2, 1.382-5, 1.382-6, 1.382-7, and 1.383-1), and 1.1504-4, to that taxable year.

[T.D. 9424, 73 FR 53952, Sept. 17, 2008, as amended at 73 FR 62204, Oct. 20, 2008; 73 FR 65982, Nov. 6, 2008; T.D. 9905, 85 FR 56843, Sept. 14, 2020]

SPECIAL TAXES AND TAXPAYERS

§ 1.1502-43 Consolidated accumulated earnings tax.

(a) ***Group subject to tax*** —

(1) ***General rule.*** For a group filing a consolidated return for the taxable year, the accumulated earnings tax under section 531 is imposed on consolidated accumulated taxable income (as defined in paragraph (b) of this section). This tax applies to any group that is formed or availed of to avoid or prevent the imposition of the individual income tax on the shareholders of either any of its members or any other corporation by permitting earnings and profits to accumulate instead of dividing or distributing them. Section 531 and this section do not apply to a group that is treated as a "personal holding company" under section 542(a)(1) as a result of the application of section 542(b)(1). Special rules are provided in this section for other groups which include one or more personal holding companies.

(2) ***Evidence of purpose to avoid income tax.***

(i) Under section 533(a), the fact that the group's earnings and profits are permitted to accumulate beyond the reasonable needs of its business is determinative of the purpose to avoid the income tax with respect to shareholders, unless the group by the preponderance of the evidence proves to the contrary.

(ii) The fact that a group is a mere holding or investment group is prima facie evidence of the group's purpose to avoid the income tax with respect to the shareholders. The activities of a member which is a personal holding company are not taken into account in determining if the group is a mere holding or investment group.

(3) ***Earnings and profits.*** For purposes of this paragraph (a) and paragraph (d) of this section, the following rules apply:

(i) If no member of the group is a personal holding company, the group's earnings and profits are the aggregate of the earnings and profits (or deficit) of each corporation that is a member at the close of the taxable year, determined in accordance with § 1.1502-33.

(ii) Earnings and profits resulting from the application of § 1.1502-33(b) are not taken into account.

(iii) Earnings and profits resulting from the disposition of a member's stock are determined without regard to the stock basis adjustments under §§ 1.1502-32 and 1.1502-33(c)(1).

(4) ***Reasonable needs of the business.*** The reasonable needs of the group's business include the reasonable needs of the business of any corporation (other than a personal holding company) that is a member at the close of the taxable year. Thus, the earnings and profits of one member may be accumulated with respect to the reasonable business needs of another member. If under §

1.537-3(b) the business of a nonmember corporation is considered the business of a member, then the earnings and profits of any member may be accumulated with respect to such nonmember's reasonable business needs.

(5) ***Burden of proof.*** The notification described in section 534(b) and the statement described in section 534(c) are made to or by the common parent corporation in accordance with § 1.1502-77.

(b) ***Consolidated accumulated taxable income*** —

(1) ***In general.*** "Consolidated accumulated taxable income" is the group's consolidated taxable income determined under § 1.1502-11 adjusted in the manner provided in paragraph (b)(2) of this section, minus the sum of—

(i) The consolidated dividends paid deduction determined under paragraph (c) of this section and

(ii) The consolidated accumulated earnings credit determined under paragraph (d) of this section.

(2) ***Adjustments to consolidated taxable income.*** For purposes of paragraph (b)(1) of this section, consolidated taxable income is adjusted as follows:

(i) Under section 535(b)(1), the deduction for taxes is the excess of—

(A) The consolidated liability for tax determined without § 1.1502-2(a)(2) through (4), and without the foreign tax credit provided by section 27, over

(B) The consolidated foreign tax credit determined pursuant to § 1.1502-4. Foreign taxes deductible under § 1.535-2(a)(2) are also allowed as a deduction under section 535(b)(1).

(ii) The consolidated charitable contributions deduction under § 1.1502-24 does not apply. Under section 535(b)(2), there shall be allowed the aggregate charitable contributions of the members allowable under section 170, determined without section 170 (b)(2) and (d)(2).

(iii) Under section 535(b)(3), the deduction determined under § 1.1502-26 is not allowed.

(iv) Under section 535(b)(4), the consolidated net operating loss deduction described in § 1.1502-21(a) is not allowed.

(v) Under section 535(b)(5), there is allowed as a deduction the consolidated net capital loss, determined under § 1.1502-22(a).

(vi) Under section 535(b)(6), there is allowed as a deduction an amount equal to—

(A) The consolidated capital gain net income for the taxable year (determined under § 1.1502-22(a) and without the consolidated net capital loss carryovers and carrybacks to the taxable year), minus

(B) The taxes attributable to such gain.

(vii) Under section 535(b)(7), the consolidated net capital loss carryovers and carrybacks are not allowed. *See* § 1.1502-22(b).

(viii) Section 1.1502-15 does not apply.

(3) ***Personal holding company a member.*** If a member is a personal holding company for the taxable year—

(i) [Reserved]

(ii) In applying paragraph (b)(2)(i) of this section, consolidated liability for tax (as determined under that paragraph (b)(2)(i)) is reduced by the portion thereof allocable to that member under section 1552(a) (1), (2), (3), or (4) (or § 1.1502-33(d)), whichever is applicable. The consolidated foreign tax credit is computed by excluding the taxable income and any foreign taxes paid or accrued by that member, and foreign taxes deductible under § 1.535-2(a)(2) do not include foreign taxes attributable to that member.

(c) ***Consolidated dividends paid deduction*** —

(1) ***General rule.*** For purposes of this section, the consolidated dividends paid deduction is the aggregate of the members' deductions under section 561(a) (1) and (2). This deduction is determined by excluding deductions for dividends paid to other members.

(2) ***Exception for certain personal holding companies.*** [Reserved]

(3) ***Dividends paid defined.*** For purposes of this paragraph (c), "dividends paid" and "dividend (or portion thereof) paid" include amounts treated as dividends paid during the taxable year under sections 562(b)(1), 563, and 565 (relating respectively to liquidating distributions, dividends paid after year end, and consent dividends).

(4) ***Examples.*** This paragraph (c) can be illustrated by the following examples:

Example 1. Corporations P and S constitute an affiliated group which files a consolidated return on a calendar year basis for 1984 and 1985. P owns all of S's stock and two individuals own all of P's stock. Neither member of the group is a personal holding company for 1984. Assume that on December 15, 1984, S pays a dividend (as defined in section 316 (a)) of $2,000 to P, and P pays a dividend (as so defined) of $3,000 on January 15, 1985, to its individual shareholders. All dividends are paid in cash and are pro rata with no preference as to any shares or class of stock. For purposes of this paragraph (c), the consolidated dividends paid deduction for 1984 is $3,000, *i.e.,* the dividend paid on January 15, 1985, by P to its nonmember shareholders. See section 563 (a). The $2,000 dividend paid by S to P is not taken into account in computing the consolidated dividends paid deduction.

Example 2. [Reserved]

(d) ***Consolidated accumulated earnings credit*** —

(1) ***In general.*** [Reserved]

(2) ***Special rule if a consolidated group is part of a controlled group.*** If a consolidated group is treated collectively as being one component member of a controlled group, or if each member of a consolidated group is treated as being a separate component member of a controlled group, see section 1561 for determining the portion of the accumulated earnings credit to be allocated to such group or to such members.

(e) ***Effective/applicability date.*** This section applies to any consolidated Federal income tax return due (without extensions) on or after December 21, 2009.

[T.D. 7937, 49 FR 3462, Jan. 27, 1984, as amended by T.D. 8560, 59 FR 41674, Aug. 15, 1994; T.D. 8677, 61 FR 33324, June 27, 1996; T.D. 8560, 62 FR 12098, Mar. 14, 1997; T.D. 8823, 64 FR 36100, July 2, 1999; T.D. 9304, 71 FR 76907, Dec. 22, 2006; T.D. 9476, 74 FR 68532, Dec. 28, 2009; T.D. 9885, 84 FR 67039, Dec. 6, 2019; T.D. 10018, 89 FR 106872, Dec. 30, 2024]

§ 1.1502-44 Percentage depletion for independent producers and royalty owners.

(a) ***In general.*** The sum of the percentage depletion deductions for the taxable year for all oil or gas property owned by all members, plus any carryovers under section 613A(d)(1) or paragraph (d) of this section from a prior taxable year, may not exceed 65 percent of the group's adjusted consolidated taxable income (under paragraph (b) of this section) for the consolidated return year.

(b) ***Adjusted consolidated taxable income.*** For purposes of this section, adjusted consolidated taxable income is an amount (not less than zero) equal to the group's consolidated taxable income determined without—

(1) Any depletion with respect to an oil or gas property (other than a gas property with respect to which the depletion allowance for all production is determined pursuant to section 613A(b)) for which percentage depletion would exceed cost depletion in the absence of the depletable quantity limitations contained in section 613A(c)(1) and (6) and the consolidated taxable income limitation contained in paragraph (a) of this section;

(2) Any consolidated net operating loss carryback to the consolidated return year under § 1.1502-21; and

(3) Any consolidated net capital loss carryback to the consolidated return year under § 1.1502-22.

(c) ***Allocation to oil and gas properties.*** The maximum amount allowable as a deduction under section 613A(c), after the application of paragraph (a) of this section, is allocated to properties held by members in accordance with the regulations under section 613A(d). Those regulations provide for an initial allocation and possible reallocation of the maximum allowable percentage depletion deduction among oil and gas properties. Thus, if, after the initial allocation, cost depletion exceeds the percentage depletion that would be allowable for a particular oil or gas property, cost depletion must be used for that property and the maximum amount of percentage depletion allowable as a deduction for the group is reallocated among only the remaining properties held by all members.

(d) ***Carryover for disallowed amounts.***

(1) If any amount is disallowed as a deduction for the taxable year by reason of section 613A(d)(1) or paragraph (a) of this section, the disallowed amount for each oil or gas property is treated as an amount allowed as a deduction under section 613A(c), for the following taxable year for the member that owned the property, in accordance with the regulations under section 613A and paragraphs (a) and (d)(2) of this section.

(2) Any amount that was disallowed as a deduction in a separate return limitation year of a member may be carried to a consolidated return year only to the extent that 65 percent of the excess determined under paragraph (d)(3) of this section exceeds the sum of the otherwise allowable percentage depletion deductions for the member's oil and gas properties for the year.

(3) The excess determined in this subparagraph (3) for a member is the excess, if any, of adjusted consolidated taxable income for the year under paragraph (b) of this section over that income recomputed by excluding the items of income and deductions of the member.

(e) ***Effective date.*** This section applies to taxable years for which the due date (without extensions) for filing returns is after September 30, 1980.

[T.D. 7725, 45 FR 65561, Oct. 3, 1980, as amended by T.D. 8677, 61 FR 33324, June 27, 1996; T.D. 8823, 64 FR 36100, July 2, 1999; T.D. 10018, 89 FR 106872, Dec. 30, 2024]

§ 1.1502-45 Limitation on losses to amount at risk.

(a) *In general* —

(1) *Scope.* This section applies to a loss of any subsidiary if the common parent's stock meets the stock ownership requirement described in section 465(a)(1)(B).

(2) *Limitation on use of losses.* Except as provided in paragraph (a)(4) of this section, a loss from an activity of a subsidiary during a consolidated return year is includible in the computation of consolidated taxable income (or consolidated net operating loss) and consolidated capital gain net income (or consolidated net capital loss) only to the extent the loss does not exceed the amount that the parent is at risk in the activity at the close of that subsidiary's taxable year. In addition, the sum of a subsidiary's losses from all its activities is includible only to the extent that the parent is at risk in the subsidiary at the close of that year. Any excess may not be taken into account for the consolidated return year but will be treated as a deduction allocable to that activity of the subsidiary in the first succeeding taxable year.

(3) *Amount parent is at risk in subsidiary's activity.* The amount the parent is at risk in an activity of a subsidiary is the lesser of the amount the parent is at risk in the subsidiary, or the amount the subsidiary is at risk in the activity. These amounts are determined under paragraph (b) of this section and the principles of section 465. *See* section 465 and the regulations thereunder and the examples in paragraph (e) of this section.

(4) *Excluded activities.* The limitation on the use of losses in paragraph (a)(2) of this section does not apply to a loss attributable to an activity described in section 465(c)(4).

(5) *Substance over form.* Any transaction or arrangement between members (or between a member and a person that is not a member) which does not cause the parent to be economically at risk in an activity of a subsidiary will be treated in accordance with the substance of the transaction or arrangement notwithstanding any other provision of this section.

(b) *Rules for determining amount at risk* —

(1) *Excluded amounts.* The amount a parent is at risk in an activity of a subsidiary at the close of the subsidiary's taxable year does not include any amount that would not be taken into account under section 465 were the subsidiary not a separate corporation. Thus, for example, if the amount a parent is at risk in the activity of a subsidiary is attributable to nonrecourse financing, the amount at risk is not more than the fair market value of the property (other than the subsidiary's stock or debt or assets) pledged as security.

(2) *Guarantees.* If a parent guarantees a loan by a person other than a member to a subsidiary, the loan increases the amount the parent is at risk in the activity of the subsidiary.

(c) *Application of section 465.* This section applies in a manner consistent with the provisions of section 465. Thus, for example, the recapture of losses provided in section 465(e) applies if the amount the parent is at risk in the activity of a subsidiary is reduced below zero.

(d) *Other consolidated return provisions unaffected.* This section limits only the extent to which losses of a subsidiary may be used in a consolidated return year. This section does not apply for other purposes, such as §§ 1.1502-32 and 1.1502-19, relating to investment in stock of a subsidiary and excess loss accounts, respectively. Thus, a loss which reduces a subsidiary's earnings and profits in a consolidated

return year, but is disallowed as a deduction for the year by reason of this section, may nonetheless result in a negative adjustment to the basis of an owning member's stock in the subsidiary or create (or increase) an excess loss account.

(e) ***Examples.*** The provisions of this section may be illustrated by the examples in this paragraph (e). In each example, the stock ownership requirement of section 465(a)(1)(B) is met for the stock of the parent (P), and each affiliated group files a consolidated return on a calendar year basis and comprises only the members described.

(1) ***Example 1.*** In 2022, P forms S with a contribution of $200 in exchange for all of S's stock. During the year, S borrows $400 from a commercial lender and P guarantees $100 of the loan. S uses $500 of its funds to acquire a motion picture film. S incurs a loss of $120 for the year with respect to the film. At the close of 2022, the amount P is at risk in S's activity is $300 ($200 contribution plus $100 guarantee). If S has no gain or loss in 2023, and there are no contributions from or distributions to P, at the close of 2023 P's amount at risk in S's activity will be $180.

(2) ***Example 2.*** P forms S-1 with a capital contribution of $1 on January 1, 2023. On February 1, 2023. S-1 borrows $100 with full recourse and contributes all $101 to its newly formed subsidiary S-2. S-2 uses the proceeds to explore for natural oil and gas resources. S-2 incurs neither gain nor loss from its explorations during the taxable year. As of December 31, 2023, P is at risk in the exploration activity of S-2 only to the extent of $1.

(f) ***Applicability date.*** This section applies to consolidated return years for which the due date of the income tax return (without regard to extensions) is after December 30, 2024.

[T.D. 10018, 89 FR 106872, Dec. 30, 2024]

§ 1.1502-47 Consolidated returns by life-nonlife groups.

(a) ***Scope*** —

(1) ***In general.*** Under section 1504(b)(2), insurance companies that are taxed under section 801 (relating to life insurance companies) are not treated as includible corporations for purposes of determining under section 1504(a) the existence of an affiliated group and the composition of its membership. Section 1504(c)(2) provides an election whereby certain life insurance companies may be treated as includible corporations, and thus members, of a group composed of other includible corporations. This section provides regulations for the making of this election and for the determination of an electing group's composition, its consolidated taxable income (or loss), and its consolidated tax liability.

(2) ***General method of consolidation*** —

(i) ***Subgroup method.*** The regulations adopt a subgroup method to determine consolidated taxable income. One subgroup is the group's nonlife companies. The other subgroup is the group's life insurance companies. Initially, the nonlife subgroup computes nonlife consolidated taxable income and the life subgroup computes consolidated LICTI. A subgroup's income may in effect be reduced by a loss of the other subgroup, subject to the limitations in sections 172 and 1503(c). The life subgroup losses consist of life consolidated net operating loss, consolidated operations loss carryovers from taxable years beginning before January 1, 2018 (consolidated operations loss carryovers), and life consolidated net capital loss. The nonlife subgroup losses consist of nonlife consolidated net operating loss and nonlife consolidated net capital loss.

Consolidated taxable income is therefore defined in pertinent part as the sum of nonlife consolidated taxable income and consolidated LICTI, reduced by life subgroup losses and/or nonlife subgroup losses.

(ii) ***Subgroup loss.*** A subgroup loss does not actually affect the computation of nonlife consolidated taxable income or consolidated LICTI. It merely constitutes a bottom-line adjustment in reaching consolidated taxable income. Furthermore, the amount of a subgroup's loss, if any, that is eligible to be carried back to a prior taxable year first must be carried back against income of the same subgroup before it may be used as a setoff against the other subgroup's income in the taxable year the loss arose. (See sections 172(b)(1) and 1503(c)(1); see also § 1.1502-21(b).) The carryback of losses from one subgroup may not be used to offset income of the other subgroup in the year to which the loss is to be carried. This carryback of one subgroup's loss may "bump" the other subgroup's loss that, in effect, previously reduced the income of the first subgroup. The subgroup's loss that is bumped in appropriate cases may, in effect, reduce a succeeding year's income of either subgroup. This approach gives the group the tax savings of the use of losses, but the bumping rule assures that, insofar as possible, life deductions will be matched against life income and nonlife deductions against nonlife income.

(iii) ***Carryover of subgroup loss.*** A subgroup's loss may be used in a succeeding year, but in any particular succeeding year the loss must be used to reduce the income of the same subgroup before it may be used as a setoff against the other subgroup's income.

(3) ***Other provisions.*** The provisions of the consolidated return regulations apply unless this section provides otherwise. Further, unless otherwise indicated in this section, a term used in this section has the same meaning as in sections 801-848.

(b) ***Definitions.*** For purposes of this section:

(1) ***Life company.*** The term *life company* means a life insurance company as defined in section 816 and subject to tax under section 801. Section 816 applies to each company separately.

(2) Nonlife *insurance company.* The term *nonlife insurance company* has the meaning provided in § 1.1502-1(k).

(3) ***Life insurance company taxable income.*** The term *life insurance company taxable income* or *LICTI* has the meaning provided in section 801(b).

(4) ***Group.*** The term *group* has the meaning provided in § 1.1502-1(a). Unless otherwise indicated in this section, a group's composition is determined without regard to section 1504(b)(2).

(5) ***Member.*** The term *member* has the meaning provided in § 1.1502-1(b). A life company is tentatively treated as a member for any taxable year for purposes of determining if it is an eligible corporation under paragraph (b)(12) of this section and, therefore, if it is an includible corporation under section 1504(c)(2). If such a company is eligible and includible (under section 1504(c)(2)), it will actually be treated as a member of the group.

(6) ***Life member.*** A life member is a member of the group that is a life company.

(7) ***Nonlife member.*** A nonlife member is a member of the group that is not a life company.

(8) ***Life subgroup.*** A life subgroup is composed of those members that are life members. If the group has only one life member, it constitutes a life subgroup.

(9) ***Nonlife subgroup.*** A nonlife subgroup is composed of those members that are nonlife members. If the group has only one nonlife member, it constitutes a nonlife subgroup.

(10) ***Separate return year.*** The term *separate return year* has the meaning provided in § 1.1502-1(e). For purposes of this paragraph (b)(10), the term *group* is defined with regard to section 1504(b)(2) for years in which an election under section 1504(c)(2) is not in effect. Thus, a separate return year includes a taxable year for which that election is not in effect.

(11) ***Separate return limitation year.*** Section 1.1502-1(f)(2) provides exceptions to the definition of the term separate return limitation year. For purposes of applying those exceptions to this section, the term *group* is defined without regard to section 1504(b)(2), and the definition in this paragraph (b)(11) applies separately to the nonlife subgroup in determining nonlife consolidated taxable income under paragraph (f) of this section and to the life subgroup in determining consolidated LICTI under paragraph (g) of this section. Paragraph (h)(3)(ix) of this section defines the term separate return limitation year for purposes of determining whether the losses of one subgroup may be used against the income of the other subgroup.

(12) ***Eligible corporations*** —

(i) ***In general.*** A corporation is an eligible corporation for a taxable year of a group only if, throughout every day of the base period the corporation:

(A) Was in existence and a member of the group determined without the exclusions in section 1504(b)(2) (see paragraphs (b)(12) (iii) through (vi) of this section),

(B) Was engaged in the active conduct of a trade or business ("active business"),

(C) Did not experience a change in tax character (see paragraph (b)(12)(vii) of this section), and

(D) Did not undergo disproportionate asset acquisitions (see paragraph (b)(12)(viii) of this section).

(ii) ***Base period.*** The base period consists of the common parent's five taxable years immediately preceding the group's taxable year for which the consolidated return and the determination of eligibility are made. Eligibility is determined for each consolidated return year beginning with the first year for which the election under section 1504(c)(2) is effective.

(iii) ***In existence.*** Except as provided in paragraphs (b)(12) (v) and (vi) of this section, a corporation organized after the base period begins is not eligible even though it is a member of the group immediately after its organization. For purposes of this paragraph (b)(12)(iii), a corporation that was a party to a reorganization described in section 368(a)(1)(F) shall be treated as the same entity both before and after the reorganization.

(iv) ***Membership period.*** Except as provided in paragraphs (b)(12) (v) and (vi) of this section, a corporation must have been a member of the group throughout the base period to be eligible. Thus, an ineligible corporation includes one whose stock was acquired from outside the group at any time during the base period or one which was a member of a different group (whether by application of reverse acquisition rules in § 1.1502-75(d)(3) or otherwise) at any time during the base period. For purposes of this subdivision (iv), the common parent of a group is treated as constituting a group (and hence is a member) during any period when it was not a member of an affiliated group within the meaning of section 1504(a) (applied without section 1504(b)(2)).

(v) ***Tacking rule.*** The period during which an old corporation is in existence and a member of the group engaged in active business is included in (or tacks onto) the period for the new corporation if the following four conditions listed in this paragraph (b)(12)(v) are met. For purposes of this paragraph (b)(12)(v), a new corporation is a corporation (whether or not newly organized) during the period its eligibility depends upon the tacking rule. The four conditions are as follows—

(A) The first condition is that, at any time, 80 percent or more of the new corporation's assets it acquired (other than in the ordinary course of its trade or business) were acquired from the old corporation in one or more transactions described in section 351(a) or 381(a). This asset test is applied by using the fair market values of assets on the date they were acquired and without regard to liabilities. Assets acquired in the ordinary course of business will be excluded from total assets only if they were acquired after the new corporation became a member of the group (determined without section 1504(b)(2)). In addition, assets that the old corporation acquired from outside the group in transactions not conducted in the ordinary course of its trade or business are not included in the 80 percent (but are included in total assets) if the old corporation acquired those assets within five calendar years before the date of their transfer to the new corporation.

(B) The second condition is that at the end of the taxable year during which the first condition is first met, the old corporation and the new corporation must both have the same tax character. For purposes of this paragraph (b)(12), a corporation's tax character is the section under which it would be taxed (for example, section 11, section 801, or section 831) if it filed a separate return. If the old corporation is not in existence (or adopts a plan of complete liquidation) at the end of that taxable year, this paragraph (b)(12)(v)(B) will apply to the old corporation's taxable year immediately preceding the beginning of the taxable year during which the first condition is first met.

(C) The third condition is that, at the end of the taxable year during which the first condition is first met, the new corporation does not undergo a disproportionate asset acquisition under paragraph (b)(12)(viii) of this section.

(D) The fourth condition is that, if there is more than one old corporation, the first two conditions apply to all of the corporations. Thus, the second condition (tax character) must be met by all of the old corporations transferring assets taken into account in meeting the test in paragraph (b)(12)(v)(A) of this section.

(vi) ***Old group remaining in existence.*** If the common parent of a group (or a new common parent) became the common parent in a transaction described in § 1.1502-75 (d)(2) or (d)(3) where a group remained in existence, then paragraph (b)(12) (ii) through (iv) of this section apply by treating that common parent as if it were also the previous common parent of the group that remains in existence. If this paragraph (b)(12)(vi) applies to a transaction, the tacking rule in paragraph (b)(12)(v) of this section does not apply to the transaction.

(vii) ***Change in tax character.*** A corporation must not experience during the base period a change in tax character (as defined in paragraph (b)(12)(v)(B) of this section) if the change is attributable to an acquisition of assets from outside the group in transactions not conducted in the ordinary course of its trade or business. However, if a new corporation relies on the tacking rules in paragraph (b)(12)(v) of this section, this paragraph (b)(12)(vii) shall apply during the base period and the current consolidated return year even if the change in tax character is attributable to an asset acquisition from within the group.

(viii) ***Disproportionate asset acquisition.*** To be eligible, a corporation must not undergo during the base period disproportionate asset acquisitions which are attributable to an acquisition (or a series of acquisitions) of assets from outside the group in transactions not conducted in the ordinary course of its trade or business (special acquisition). Whether special acquisitions are disproportionate is determined at the end of each base period. Whether an acquisition results in a disproportionate asset acquisition depends on all of the facts and circumstances including the following factors and rules:

(A) One factor is the portion of the insurance reserves (that is, total reserves in section 816(c), as modified by section 816(h)) of the acquiring company at the end of the base period which is attributable to special acquisitions.

(B) A second factor is the portion of the fair market value of the assets (without reduction for liabilities) of the acquiring company at the end of the base period that is attributable to special acquisitions.

(C) A third factor is the portion of the premiums generated during the last taxable year of the base period which are attributable to special acquisitions.

(D) A corporation will not experience a disproportionate asset acquisition unless 75 percent of one factor (whether or not listed in this paragraph (b)(12)(viii)) is attributable to special acquisitions.

(E) Money or other property contributed to a corporation by a shareholder that is not a member of the group (without section 1504(b)(2)) is not a special acquisition.

(F) If a new corporation relies on the tacking rules in paragraph (b)(12)(v) of this section, this paragraph (b)(12)(viii) applies to that corporation during a consolidated return year. Thus, if at any time during a consolidated return year, a new corporation undergoes a disproportionate asset acquisition, the corporation becomes ineligible at that time.

(13) ***Ineligible corporation.*** A corporation that is not an eligible corporation is ineligible. If a life company is ineligible, it is not treated under section 1504(c)(2) as an includible corporation. Losses of a nonlife member arising in years when it is ineligible may not be used under section 1503(c)(2) and paragraph (g) of this section to set off the income of a life member. If a life company is ineligible and is the common parent of the group (without regard to section 1504(b)(2)), the election under section 1504(c)(2) may not be made.

(14) ***Examples*** The following examples illustrate this paragraph (b). In each example, L indicates a life company, another letter indicates a nonlife company, and each corporation uses the calendar year as its taxable year.

(i) ***Example 1.*** P has owned all of the stock of S since 2012. On January 1, 2018, P purchased all of the stock of L_1 which owns all of the stock of L_2 and S_2. L_1 and L_2 are treated as members for purposes of determining if they are eligible for 2020. However, for 2020, L_1, L_2, and S_2 are ineligible because none of them has been a member of the group for P's five taxable years preceding 2020. For 2020, L_1 and L_2 may elect to file a consolidated return because they constitute an affiliated group under section 1504(c)(1), and P and S may file a consolidated return. S_2 must file its own separate return for 2020.

(ii) ***Example 2.*** Since 2012, L1 has been a life company owning all the stock of L2. In 2018, L1 transfers assets to S1, a new nonlife insurance company subject to taxation under section 831(a). For 2020, only L1 and L2 are eligible corporations. The tacking rule in paragraph (b)(12)(v) of this section does not apply in 2020 because the old corporation (L1) and the new corporation (S1) do not have the same tax character.

(iii) ***Example 3.*** Since 2012, L has owned all the stock of L_1, which has owned all the stock of S_1, a nonlife insurance company. L_1 writes some accident and health insurance business. In 2018, L_1 transfers this business, and S_1 transfers some of its business, to a new nonlife insurance company, S_2, in a transaction described in section 351(a). The property transferred to S_2 by L_1 had a fair market value of $50 million. The property transferred by S_1 had a fair market value of $40 million. S_2 is ineligible for 2020 because the tacking rule in paragraph (b)(12)(v) of this section does not apply. The old corporations (L_1 and S_1) and the new corporation (S_2) do not all have the same tax character. *See* paragraph (b)(12)(v)(B) and (D) of this section. The result would be the same if L_1 transferred other property (for example, stock and securities) with the same value, rather than accident and health insurance contracts, to S_2.

(iv) ***Example 4.*** Since 2012, P has owned all the stock of S and L_1. L_1 is a large life company engaged in active business since 2012. On January 1, 2020, L_1 transfers in a section 351 (a) transaction assets (not acquired from outside the group) to a new life company, L_2. For 2020, L_2 is eligible because under paragraph (b)(12)(v) of this section, L_2 is considered to have been in existence and a member of the group engaged in the active business since 2012 which is the period L_1, the old corporation, was in existence and a member of the group so engaged.

(v) ***Example 5.*** The facts are the same as in example (4). Assume that the fair market value of the assets L_1 transferred to L_2 was $10 million on January 1, 2020 and that L_2 acquired no other assets prior to June 30, 2021. Assume further that on January 1, 2021, L_1 acquires (other than in the ordinary course of its trade or business) assets having a fair market value of $40 million from L_3, an unrelated life company. On June 30, 2021, L_1 transfers those assets to L_2. L_2 becomes ineligible on June 30, 2021. Since by fair market values, 80 percent (in other words, 40/50) of L_2's assets are attributable to special acquisitions, L_2 has undergone a disproportionate asset acquisition at that time. See paragraph (b)(12)(viii)(B), (D), and (F) of this section.

(vi) ***Example 6.*** The facts are the same as in example (5) except that L_1 transfers assets (other than life insurance contracts) having a fair market value of $40 million to L_2 and L_2 purchases the assets of L_3 on June 30, 2021. the result of the 2021 acquisition is the same as in example (5).

(vii) ***Example 7.*** The facts are the same as in example (5) except the acquired assets acquired by L_2 in 2021 from L_1 have a fair market value of $20 million. In 2021, L_2 had $1 million of premiums on its pre-existing contracts but premiums generated by the acquired business for the entire year would have been $2 million. L_2 is eligible in 2021 because it did not experience a disproportionate asset acquisition on June 30, 2021.

(viii) ***Example 8.*** Since 2012, L, a State A corporation, has owned all of the stock of L_1 and S_1. On January 1, 2020, L merges into L_3, a smaller State B corporation, which owns the stock of S_2. The transaction is a reverse acquisition described in § 1.1502-75(d)(3) and the group of which L was the common parent remains in existence. Under paragraph (b)(12)(vi) of this section, L_3 is eligible for 2020. However, S_2 is ineligible in 2020 under paragraph (b)(12)(iv) of this section.

(ix) ***Example 9.*** The facts are the same as in example (8) except that L acquires the stock of L_3. L_3 and S_2 are both ineligible for 2020. On January 1, 2021, the fair market value of L_3's assets are $5 million (without liabilities) and on that date L transfers assets (not acquired from outside the group) having a fair market value of $95 million (without liabilities) to L_3. L and L_3 are life companies at the end of 2021. L_3 is eligible in 2021 under the tacking rule in paragraph (b)(12)(v) of this section. S_2 is ineligible in that year. The result would be the same if L_3 was not a life company prior to January 1, 2021. See paragraph (b)(12)(v)(B) of this section.

(x) ***Example 10.*** Since 2012, X, a foreign corporation, has owned all the stock of S_2 and S_1, and S_1 has owned all of the stock of L_1. On January 1, 2020, X incorporates a new U.S. company P, and transfers the stock of S_1 and S_2 to P. Assume that under § 1.1502-75(d)(3) (relating to reverse acquisitions), the S_1-L_1 affiliated group remains in existence. Under paragraph (b)(12)(vi) of this section, P, S_1, and L_1 are eligible but S_2 is ineligible. The result would be the same if X were an individual.

(xi) ***Example 11.*** **The facts are the same as in *Example (10)*** except that X owns all of the stock of S_1, L_1, and S_2. In addition, on January 1, 2020, X transfers the stock of S_1 and S_2 to L_1. L_1 is eligible in 2020 under paragraph (b)(12)(iv) of this section. L_1 would still be eligible even if it owned a subsidiary during the base period but sold the subsidiary prior to January 1, 2020. S_1 and S_2 are ineligible in 2020.

(xii) ***Example 12.*** Since 2012, S_1 has owned all of the stock of L_1. S_2, an unrelated company, has owned all of the stock of L_2 and S_3 for 10 years. S_1 and S_2 are active nonlife insurance companies and not holding companies. On January 1, 2020, S_1 and S_2 merge into a new nonlife insurance company, S, in a transaction described in § 1.1502-75(d)(3) so that the group of which S_1 was the common parent remains in existence. S and L_1 are eligible in 2020 under paragraph (b)(12)(vi) of this section. L_2 and S_3 are ineligible.

(xiii) ***Example 13.*** **The facts are the same as in *Example (12)*** except that S_2 (the first corporation in § 1.1502-75(d)(3)) acquires the stock of S_1 in exchange for the stock of S_2. The result is that only S_2, S_1, and L_1 are eligible in 2020.

(c) ***Election —***

(1) ***In general.*** The election under section 1504(c)(2) may not be made if the group's common parent is an ineligible life company. The election under section 1504(c)(2) may only be made by the common parent of the group (as defined in section 1504(c)(2) without the exclusions in section 1504(b)(2)). For example, assume that P owns all of the stock of L_1, an eligible life company, which owns the stock of S_1. Assume further that P also owns the stock of L_2, an ineligible life member, which (for more than five years) has owned the stock of a nonlife company, S_2. Only P may make the election and, if it does so, P, L_1, and S_1 may file a consolidated return under this section. L_2 may not make the election under section 1504(c)(2) and may not file a consolidated return with S_2.

(2) ***How election is made —***

(i) ***General rule.*** The election under section 1504(c)(2) is generally made by the group's common parent in the same manner (and it has the same effect) as the election to file a consolidated return is made under § 1.1502-75 (a) and (b) for a group which did not file a consolidated return for the immediately preceding taxable year. The procedure for making the election under section 1504(c)(2) is the same whether or not a consolidated return was filed by the life members or the nonlife members for the immediately preceding taxable year.

(ii) ***Special rule.*** Notwithstanding the general rule, however, if the nonlife members in the group filed a consolidated return for the immediately preceding taxable year and had executed and filed a Form 1122 (or successor form) that is effective for the preceding year, then such members will be treated as if they filed a Form 1122 (or successor form) when they join in the filing of a consolidated return under section 1504(c)(2) and they will be deemed to consent to the regulations under this section. However, an affiliation schedule (Form 851, or any successor form) must be filed by the group and the life members must execute a Form 1122 (or successor form) in the manner prescribed in § 1.1502-75(h)(2).

(3) ***Irrevocability.*** Except as provided in § 1.1502-75(c), the election under section 1504(c)(2) is irrevocable.

(4) ***Cross reference.*** If an election is made under section 1504(c)(2), see § 1.1502-75 (e) and (f) for rules that apply for not including (or including) a member or a nonmember in the consolidated return.

(d) ***Effect of election.*** If the common parent makes the election under section 1504(c)(2), the following rules apply:

(1) ***Termination of group.*** A mere election under section 1504(c)(2) will not cause the creation of a new group or the termination of an affiliated group that files a consolidated return in the immediately preceding taxable year.

(2) ***Effect of eligibility.*** If a life member is eligible after an election under section 1504(c)(2), it may not be included as a member of an affiliated group as defined in section 1504(c)(1).

(3) ***Eligible and ineligible life companies.*** If any life company was a member of an affiliated group of life companies (as defined in section 1504(c)(1)) but is ineligible for a taxable year for which the election under section 1504(c)(2) is effective, that year is not a separate return year merely by reason of the election under section 1504(c)(2) in applying §§ 1.1502-13 and 1.1502-19 to transactions occurring in prior consolidated return years of that affiliated group. In addition, if more than one ineligible life member of the group (as defined in section 1504(c)(1)) joined in the filing of a consolidated return in the taxable year immediately preceding the year for which the election under section 1504(c)(2) is effective and, solely as a result of the election, one of the ineligible life members becomes the common parent of such a group (section 1504(c)(1)), the group must continue to file a consolidated return. For example, assume that L_1 owns all of the stock of S_1 and all of the stock of L_2. L_2 owns the stock of L_3. L_1, L_2, and L_3 are life companies and S_1 is a nonlife company. Assume further that in 2019, L_1, L_2, and L_3 file a consolidated return but L_1 makes the election under section 1504(c)(2) for 2020 and L_2 and L_3 are ineligible. L_2 and L_3 must continue to file a consolidated return in 2020. Moreover, L_2 could elect in 2020 to file a consolidated return (section 1504(c)(1)) with L_3 even if they did not file a consolidated return in 2019 with L_1.

(4) ***Inclusion of life company.*** If a life company is ineligible in the consolidated return year for which the election is effective, it will be treated as an includible corporation for the common parent's first taxable year in which the company becomes eligible.

(5) ***Dividends received deduction*** —

(i) ***Dividends received by an includible insurance company.*** Dividends received by an includible member insurance company, taxed under either section 801 or section 831, from another includible member of the group are treated for Federal income tax purposes as if the group did

not file a consolidated return. See sections 818(e)(2) and 805(a)(4) for rules regarding a member taxed under section 801, and see sections 832(g) and 832(b)(5)(B) through (E) for rules regarding a member taxed under section 831.

(ii) ***Other dividends.*** Dividends received from a life company member of the group that are not subject to paragraph (d)(5)(i) of this section are not included in gross income of the distributee member. See section 1504(c)(2)(B)(i). If the distributee corporation is a nonlife insurance company subject to tax under section 831, the rules of section 832(b)(5)(B) through (E) apply.

(6) ***Controlled group.*** Sections 1563 (a)(4), (b)(2)(D), and (b)(3)(C) (insofar as it applies to corporations described in section 1563(b)(2)(D)) do not apply to any eligible or ineligible life company that is a member of the group for a taxable year during which the election is effective.

(7) ***Consolidated tax.*** The tax liability of a group for a consolidated return year (before application of credits against that tax) is computed on a consolidated basis by adding together the following taxes:

(i) The tax imposed under section 11 on consolidated taxable income (as determined under paragraph (e) of this section). The taxes imposed under sections 801(a) and 831(a) will each be treated as a tax imposed under section 11.

(ii) Any taxes described in § 1.1502-2 (other than in § 1.1502-2(a)(1), (a)(6), and (a)(7)).

(e) ***Consolidated taxable income.*** The consolidated taxable income is the sum of the following two amounts:

(1) ***Nonlife consolidated taxable income.*** The nonlife consolidated taxable income (as defined in paragraph (f) of this section) of the nonlife subgroup, as set off by the life subgroup losses as provided in paragraph (j) of this section. The amount in this paragraph (e)(1) may not be less than zero.

(2) ***Consolidated LICTI.*** The consolidated LICTI (as defined in paragraph (g)(1) of this section) of the life subgroup, as set off by the nonlife subgroup losses as provided in paragraph (h) of this section. The amount in this paragraph (e)(2) may not be less than zero.

(f) ***Nonlife consolidated taxable income*** —

(1) ***In general.*** Nonlife consolidated taxable income is the consolidated taxable income of the nonlife subgroup, computed under § 1.1502-11 as modified by this paragraph (f). For this purpose, separate taxable income of a member includes insurance company taxable income (as defined in section 832).

(2) ***Nonlife consolidated net operating loss deduction*** —

(i) ***In general.*** In applying § 1.1502-21, the rules in this paragraph (f)(2) apply in determining for the nonlife subgroup the nonlife net operating loss and the portion of the nonlife net operating loss carryovers and carrybacks to the taxable year.

(ii) ***Nonlife CNOL.*** The nonlife consolidated net operating loss is determined under § 1.1502-21(e) by treating the nonlife subgroup as the group.

(iii) ***Carrybacks.*** The portion of the nonlife consolidated net operating loss for the nonlife subgroup described in paragraph (f)(2)(vi) of this section, if any, that is eligible to be carried back to prior taxable years under § 1.1502-21 is carried back to the appropriate years (whether consolidated or separate) before the nonlife consolidated net operating loss may be used as a nonlife subgroup loss under paragraphs (e)(2) and (h) of this section to set off consolidated LICTI in

the year the loss arose. The election under section 172(b)(3) to relinquish the entire carryback period for the net operating loss of the nonlife subgroup may be made by the agent for the group within the meaning of § 1.1502-77.

(iv) ***Subgroup rule.*** In determining the portion of the nonlife consolidated net operating loss that is absorbed when the loss is carried back to a consolidated return year, § 1.1502-21 is applied by treating the nonlife subgroup as the group. Therefore, the absorption is determined without taking into account any life subgroup losses that were previously reported on a consolidated return as setting off nonlife consolidated taxable income for the year to which the nonlife subgroup loss is carried back.

(v) ***Carryover.*** The portion of the nonlife consolidated net operating loss that is not absorbed in a prior year as a carryback, or as a nonlife subgroup loss that set off consolidated LICTI for the year the loss arose, constitutes a nonlife carryover under this paragraph (f)(2) to reduce nonlife consolidated taxable income before that portion may constitute a nonlife subgroup loss that sets off consolidated LICTI for a particular year. For limitations on the use of nonlife carryovers to offset nonlife consolidated taxable income or consolidated LICTI, see § 1.1502-21.

(vi) ***Portion of nonlife consolidated net operating loss that is carried back to prior taxable years.*** The portion of the nonlife consolidated net operating loss that (absent an election to waive carrybacks) is carried back to the two preceding taxable years is the sum of the nonlife subgroup's farming loss (within the meaning of section 172(b)(1)(B)(ii)) and the amount of the subgroup's net operating loss that is attributable to nonlife insurance companies (as determined under § 1.1502-21). For rules governing the absorption of net operating loss carrybacks, including limitations on the amount of net operating loss carrybacks that may be absorbed in prior taxable years, see § 1.1502-21(b).

(vii) ***Example.*** P, a holding company that is not an insurance company, owns all of the stock of S, a nonlife insurance company, and L1, a life insurance company. L1 owns all of the stock of L2, a life insurance company. Both L1 and L2 satisfy the eligibility requirements of § 1.1502-47(b)(12). Each corporation uses the calendar year as its taxable year, and no corporation has incurred farming losses (within the meaning of section 172(b)(1)(B)(ii)). For 2021, the group first files a consolidated return for which the election under section 1504(c)(2) is effective. P and S filed consolidated returns for 2019 and 2020. In 2021, the P-S group sustains a nonlife consolidated net operating loss that is attributable entirely to S (see § 1.1502-21(b)). The election in 2021 under section 1504(c)(2) does not result under paragraph (d)(1) of this section in the creation of a new group or the termination of the P-S group. The loss is carried back to the consolidated return years 2019 and 2020 of P and S. Pursuant to § 1.1502-21(b), the loss may be used to offset S's income in 2019 and 2020 without limitation, and the loss may be used to offset P's income in those years, subject to the limitation in section 172(a) (see § 1.1502-21(b)). The portion of the loss not absorbed in 2019 and 2020 may serve as a nonlife subgroup loss in 2021 that may set off the consolidated LICTI of L1 and L2 under paragraphs (e)(2) and (h) of this section.

(3) ***Nonlife consolidated capital gain net income or loss*** —

(i) ***In general.*** In applying § 1.1502-22, the rules in this paragraph (f)(3) apply in determining for the nonlife subgroup the nonlife consolidated capital gain net income or loss and the portion of the nonlife net capital loss carryovers and carrybacks to the taxable year. In particular, the nonlife consolidated capital gain net income and nonlife consolidated net capital loss are determined under the principles of § 1.1502-22 by treating the nonlife subgroup as the group.

(ii) ***Additional principles.*** In applying § 1.1502-22 to nonlife consolidated net capital loss carryovers and carrybacks, the principles set forth in paragraph (f)(2)(iii) through (v) of this section for applying § 1.1502-21 to nonlife consolidated net operating loss carryovers and carrybacks also apply, without regard to the limitation in paragraph (f)(2)(vi) of this section.

(iii) ***Special rules.*** The nonlife consolidated net capital loss is reduced, for purposes of determining the carryovers and carrybacks under § 1.1502-22(b) by the lesser of:

(A) The aggregate of the additional capital loss deductions allowed under section 832(c)(5), or

(B) The nonlife consolidated taxable income computed without capital gains and losses.

(g) ***Consolidated LICTI*** —

(1) ***General rule.*** Consolidated LICTI is the consolidated taxable income of the life subgroup, computed under § 1.1502-11 as modified by this paragraph (g).

(2) ***Life consolidated net operating loss deduction*** —

(i) ***In general.*** In applying § 1.1502-21, the rules in this paragraph (g)(2) apply in determining for the life subgroup the life net operating loss and the portion of the life net operating loss carryovers and carrybacks to the taxable year.

(ii) ***Life CNOL.*** The life consolidated net operating loss is determined under § 1.1502-21(e) by treating the life subgroup as the group.

(iii) ***Carrybacks*** —

(A) ***General rule.*** The portion of the life consolidated net operating loss for the life subgroup, if any, that is eligible to be carried back under § 1.1502-21 is carried back to the appropriate years (whether consolidated or separate) before the life consolidated net operating loss may be used as a life subgroup loss under paragraphs (e)(1) and (j) of this section to set off nonlife consolidated taxable income in the year the loss arose. The election under section 172(b)(3) to relinquish the entire carryback period for the consolidated net operating loss of the life subgroup may be made by the agent for the group within the meaning of § 1.1502-77.

(B) ***Special rule for life consolidated net operating losses arising in 2018, 2019, or 2020.*** If a life consolidated net operating loss arising in a taxable year beginning after December 31, 2017, and before January 1, 2021, is carried back to a life insurance company taxable year beginning before January 1, 2018, then such life consolidated net operating loss is treated as an operations loss carryback (within the meaning of section 810, as in effect prior to its repeal) of such company to such taxable year.

(iv) ***Subgroup rule.*** In determining the portion of the life consolidated net operating loss that is absorbed when the loss is carried back to a consolidated return year, § 1.1502-21 is applied by treating the life subgroup as the group. Therefore, the absorption is determined without taking into account any nonlife subgroup losses that were previously reported on a consolidated return as setting off life consolidated taxable income for the year to which the life subgroup loss is carried back.

(v) ***Carryovers.*** The portion of the life consolidated net operating loss that is not absorbed in a prior year as a carryback, or as a life subgroup loss that set off nonlife consolidated taxable income for the year the loss arose, constitutes a life carryover under this paragraph (g)(2) to reduce consolidated LICTI before that portion may constitute a life subgroup loss that sets off nonlife consolidated taxable income for that particular year. For limitations on the use of life carryovers to offset nonlife consolidated taxable income or consolidated LICTI, see § 1.1502-21(b).

(3) ***Life consolidated capital gain net income or loss*** —

(i) [Reserved].

(ii) ***Life consolidated net capital loss carryovers and carrybacks.*** The life consolidated net capital loss carryovers and carrybacks for the life subgroup are determined by applying the principles of § 1.1502-22 as modified by the following rules in this paragraph (g)(3)(ii):

(A) Life consolidated net capital loss is first carried back (or apportioned to the life members for separate return years) to be absorbed by life consolidated capital gain net income without regard to any nonlife subgroup capital losses and before the life consolidated net capital loss may serve as a life subgroup capital loss that sets off nonlife consolidated capital gain net income in the year the life consolidated net capital loss arose.

(B) If a life consolidated net capital loss is not carried back or is not a life subgroup loss that sets off nonlife consolidated capital gain net income in the year the life consolidated net capital loss arose, then it is carried over to the particular year under this paragraph (g)(3)(ii) first against life consolidated capital gain net income before it may serve as a life subgroup capital loss that sets off nonlife consolidated capital gain net income in that particular year.

(h) ***Consolidated LICTI setoff by nonlife subgroup losses*** —

(1) ***In general.*** The nonlife subgroup losses consist of the nonlife consolidated net operating loss and the nonlife consolidated net capital loss. Under paragraph (e)(2) of this section, consolidated LICTI is set off by the amounts of these two consolidated losses specified in paragraph (h)(2) of this section. The setoff is subject to the rules and limitations in paragraph (h)(3) of this section.

(2) ***Amount of setoff*** —

(i) ***Current year.*** Consolidated LICTI for the current taxable year is set off by the portion of the nonlife consolidated net operating loss and nonlife consolidated net capital loss arising in that year that cannot be carried back under paragraph (f) of this section to prior taxable years (whether consolidated or separate return years) of the nonlife subgroup.

(ii) ***Carryovers.*** The portion of the offsettable nonlife consolidated net operating loss or nonlife consolidated net capital loss that has not been used as a nonlife subgroup loss setoff against consolidated LICTI in the year it arose may be carried over to succeeding taxable years under the principles of § 1.1502-21 (relating to net operating loss deduction) or § 1.1502-22 (as appropriate) (relating to net capital loss carryovers). However, in any particular succeeding year, the losses will be used under paragraph (f) of this section in computing nonlife consolidated taxable income before being used in that year as a nonlife subgroup loss that sets off consolidated LICTI. Additionally, the amount of consolidated LICTI that may be offset by nonlife consolidated net operating loss carryovers may be subject to limitation (see section 172 and § 1.1502-21).

(3) ***Nonlife subgroup loss rules and limitations.*** The nonlife subgroup losses are subject to the following operating rules and limitations:

(i) ***Separate return years.*** The carryovers in paragraph (h)(2)(ii) of this section may include net operating losses and net capital losses of the nonlife members arising in separate return years, that may be carried over to a succeeding year under the principles (including limitations) of §§ 1.1502-21 and 1.1502-22. *But see* paragraph (h)(3)(ix) of this section.

(ii) ***Capital loss.*** Nonlife consolidated net capital loss sets off consolidated LICTI only to the extent of life consolidated capital gain net income (as determined under paragraph (g)(3) of this section) and this setoff applies before any nonlife consolidated net operating loss sets off consolidated LICTI.

(iii) ***Capital gain.*** Life consolidated capital gain net income is zero in any taxable year in which the life subgroup has a life consolidated net operating loss and, in any taxable year, it may not exceed consolidated LICTI.

(iv) ***Ordering rule.*** Consolidated LICTI for a consolidated return year is set off by nonlife subgroup losses for that year before being set off (under paragraph (h)(2)(ii) of this section) by a carryover of a nonlife subgroup loss to that year. The amount of consolidated LICTI that may be offset by nonlife consolidated net operating loss carryovers may be subject to limitation (see section 172 and § 1.1502-21).

(v) ***Setoff at bottom line.*** The setoff of nonlife subgroup losses against consolidated LICTI does not affect life member deductions that depend in whole or in part on taxable income. Thus, the setoff does not affect the amount of consolidated LICTI for any for any taxable year but it merely constitutes an adjustment in arriving at the group's consolidated taxable income under paragraph (e) of this section.

(vi) ***Ineligible nonlife member.***

(A) The offsetable nonlife consolidated net operating loss that arises in any consolidated return year (that may be set off against consolidated LICTI in the current taxable year or in a succeeding taxable year) is the amount computed under paragraph (f)(2)(ii) of this section reduced by the ineligible NOL. For purposes of this paragraph (h)(3), the “ineligible NOL” is in the year the loss arose the amount of the separate net operating loss (determined under §§ 1.1502-21(b) of any nonlife member that is ineligible in that year (and not the portion of the nonlife consolidated net operating loss attributable under §§ 1.1502-21(b) to such a member).

(B) The carryovers of offsetable nonlife net operating losses under paragraph (h)(2)(ii) of this section do not include an ineligible NOL arising in a consolidated return year or a loss attributable to an ineligible member arising in a separate return year. See section 1503(c)(2).

(C) For absorption within the nonlife subgroup of an ineligible NOL arising in a consolidated return year or a loss of an ineligible member arising in a separate return year which is not a separate return limitation year under paragraph (h)(3)(ix) of this section, see paragraph (h)(3)(vii) of this section.

(vii) ***Absorption of ineligible NOL.***

(A) If all or a portion of a nonlife member's ineligible NOL (determined under paragraph (h)(3)(vi)(A) of this section) may be carried back or carried over under paragraph (f)(2) of this section to a particular consolidated return year of the nonlife subgroup (absorption year), then notwithstanding § 1.1502-21(b), the amount carried to the absorption year will be absorbed by that member's contribution (to the extent thereof) to nonlife consolidated taxable income for that year, subject to the limitation in section 172(a).

(B) For purposes of paragraph (h)(3)(vii)(A) of this section, a member's contribution to nonlife consolidated taxable income for an absorption year is the amount of such income (computed without the portion of the nonlife consolidated net operating loss deduction attributable to taxable years subsequent to the year the loss arose), minus such consolidated taxable income recomputed by excluding both that member's items of income and deductions for the absorption year. The deductions of the member include the prior application of this paragraph (h)(3)(vii) to the absorption of the nonlife consolidated net operating loss deduction for losses arising in taxable years prior to the particular loss year.

(viii) ***Election to relinquish carryback.*** The offsetable nonlife consolidated net operating loss does not include the amount that could be carried back under paragraph (f)(2) of this section but for the election by the agent for the group (within the meaning of § 1.1502-77) under section 172(b)(3) to relinquish the carryback. See section 1503(c)(1).

(ix) ***Separate return limitation year.*** The offsetable nonlife consolidated net operating and capital loss carryovers do not include any losses attributable to a nonlife member that were sustained

(A) in a separate return limitation year (determined without section 1504(b)(2)) of that member (or a predecessor), or

(B) in a separate return year, in which an election was in effect under neither section 1504(c)(2) nor section 243(b)(3).

(x) ***Percentage limitation.*** The offsetable nonlife consolidated net operating losses that may be set off against consolidated LICTI in a particular year may not exceed a percentage limitation. This limitation is the applicable percentage in section 1503(c)(1) of the lesser of two amounts—

(A) The first amount is the sum of the offsetable nonlife consolidated net operating losses under paragraph (h)(2) of this section that may serve in the particular year (determined without this limitation) as a setoff against consolidated LICTI.

(B) The second amount is consolidated LICTI in the particular year reduced by any nonlife consolidated net capital loss that sets off consolidated LICTI in that year.

(xi) ***Further limitation.*** Any offsetable nonlife consolidated net operating loss remaining after applying the percentage limitation that is carried over to a succeeding taxable year may not be set off against the consolidated LICTI attributable to a life member that was not an eligible life member in the year the loss arose. See section 1503(c)(2).

(xii) ***Restoration rule.*** The carryback of a life consolidated net operating loss or life consolidated net capital loss under paragraph (g) of this section that reduces consolidated LICTI (or life consolidated capital gain net income) for a prior year may reduce the amount of nonlife subgroup losses that would offset consolidated LICTI in that prior year. Thus, that amount may

be carried over under paragraph (f)(2) or (3) of this section from that prior year in determining nonlife consolidated taxable income in a succeeding year or serve as offsetable nonlife subgroup losses in a succeeding year.

(4) ***Examples.*** The following examples illustrate the principles of this paragraph (h). In the examples, L indicates a life company, S is a nonlife insurance company, another letter indicates a nonlife company that is not an insurance company, no company has farming losses (within the meaning of section 172(b)(1)(B)(ii)), and each corporation uses the calendar year as its taxable year.

(i) ***Example 1.*** P owns all of the stock of L and S. S owns all of the stock of I, a nonlife member that is an ineligible corporation for 2021 under paragraph (b)(13) of this section. For 2021, the group elects under section 1504(c)(2) to file a consolidated return. For 2021, assume that any nonlife consolidated net operating loss may not be carried back to a prior taxable year. Other facts are summarized in the following table.

	Separate taxable income (loss)
P	$100
S	(100)
I	(100)
Nonlife consolidated net operating loss	(100)

Under paragraph (h)(3)(vi) of this section, P's separate income is considered to absorb the loss of S, an eligible member, first and the offsetable nonlife consolidated net operating loss is zero, that is, the consolidated net operating loss ($100) reduced by I's loss ($100). The consolidated net operating loss ($100) may be carried over, but since it is entirely attributable to I (an ineligible member that is not a nonlife insurance company) its use is subject to the restrictions in paragraph (h)(3)(vi) of this section and section 172(a). The result would be the same if the group contained two additional members, S_1, an eligible member, and I_1, an ineligible member, where S_1 had a loss of ($100) and I_1 had income of $100.

(ii) ***Example 2.***

(A) The facts are the same as in paragraph (h)(4)(i) of this section (*Example 1*), except that, for 2021, S's separate net operating loss is $200. Assume further that L's consolidated LICTI is $200. Under paragraph (h)(3)(vi) of this section, the offsetable nonlife consolidated net operating loss is $100 (the nonlife consolidated net operating loss computed under paragraph (f)(2)(ii) of this section ($200), reduced by the separate net operating loss of I ($100)). The offsetable nonlife consolidated net operating loss that may be set off against consolidated LICTI in 2021 is $35 (35 percent of the lesser of the offsetable $100 or consolidated LICTI of $200). *See* section 1503(c)(1) and paragraph (h)(3)(x) of this section. S carries over a loss of $65, and I carries over a loss of $100, to 2022 under paragraph (f)(2) of this section to be used against nonlife consolidated taxable income (consolidated net operating loss ($200) less amount used in 2021 ($35)). Under

paragraph (h)(2)(ii) of this section, the offsetable nonlife consolidated net operating loss that may be carried to 2022 is $65 ($100 minus $35). The facts and results are summarized in the following table.

TABLE 1 TO PARAGRAPH (h)(4)(ii)(A)

	Facts (a)	Offsetable (b)	Limit (c)	Unused loss (d)
P	100			
S	(200)	(100)		(65)
I	(100)			(100)
Nonlife subgroup	(200)	(100)	(100)	(165)
L	200		200	
35% of the lower of line 4(c) or 5(c)			35	
Unused offsetable loss				(65)

(B) Accordingly, under paragraph (e) of this section, consolidated taxable income is $165 (line 5(a) minus line 6(c)).

(iii) ***Example 3.*** The facts are the same as in paragraph (h)(4)(ii) of this section (*Example 2*), with the following additions for 2022. The nonlife subgroup has nonlife consolidated taxable income of $50 (all of which is attributable to I) before the nonlife consolidated net operating loss deduction under paragraph (f)(2) of this section. Consolidated LICTI is $100. Under paragraph (f)(2) of this section, $50 of the nonlife consolidated net operating loss carryover ($165) is used in 2022 and, under paragraph (h)(3)(vi) and (vii) of this section, the portion used in 2022 is attributable to I, the ineligible nonlife member. Accordingly, the offsetable nonlife consolidated net operating loss from 2021 under paragraph (h)(3)(ii) of this section is $65, the unused loss from 2021. The offsetable nonlife consolidated net operating loss in 2022 is $22.75 (35 percent of the lesser of the offsetable loss of $65 or consolidated LICTI of $100). Accordingly, under paragraph (e) of this section, consolidated taxable income is $77.25 (consolidated LICTI of $100 minus the offsetable loss of $22.75).

(iv) ***Example 4.*** P owns all of the stock of S and L. For 2021, all corporations are eligible corporations, and the group elects under section 1504(c)(2) to file a consolidated return, the nonlife consolidated net operating loss is $100, and the nonlife consolidated net capital loss is

$50. Assume that the losses may not be carried back and the capital losses are not attributable to built-in deductions under paragraph (h)(3)(ix) of this section. Other facts and the results are set forth in the following table:

	P-S	L
1. Nonlife consolidated net operating loss	($100)	
2. Nonlife consolidated capital loss	(50)	
3. Consolidated LICTI		$100
4. Life consolidated capital gain net income included in line 3		50
5. Offsetable:		
(a) 35% of lower of line (1) or line (3)-(4)	(17.5)	
(b) Line 2	(50)	
(c) Total	(67.5)	
6. Unused losses available to be carried over:		
(a) From line 1 (line 1 minus line 5 (a))	(82.5)	
(b) From line 2 (line 2 minus line 5 (b))	0	

Accordingly, under paragraph (e) of this section consolidated taxable income is $32.5, that is, line 3 minus line 5(c).

(i) [Reserved]

(j) ***Nonlife consolidated taxable income set off by life subgroup losses*** —

(1) In *general.* The life subgroup losses consist of the life consolidated net operating loss and consolidated operations loss carryovers and the life consolidated net capital loss. Under paragraph (e)(1) of this section, nonlife consolidated taxable income is set off by the amounts of these two consolidated losses specified in paragraph (j)(2) of this section, subject to the rules and limitations in paragraph (j)(3) of this section.

(2) ***Amount of setoff.*** The portion of the life consolidated net operating loss and consolidated operations loss carryovers or life consolidated net capital loss that may be set off against nonlife consolidated taxable income (determined under paragraph (f) of this section) is determined by applying the rules prescribed in paragraphs (h)(2) and (3) of this section in the following manner:

(i) Substitute the term “life” for “nonlife”, and vice versa.

(ii) Substitute the term “nonlife consolidated taxable income” for “consolidated LICTI”, and vice versa.

(iii) Substitute the term “life consolidated net operating loss and consolidated operations loss carryovers” for “nonlife consolidated net operating loss”, and “paragraph (g)” for “paragraph (f)”.

(iv) Paragraphs (h)(3)(vi), (vii), (x), and (xi) of this section do not apply to a life consolidated net operating loss and consolidated operations loss carryovers.

(v) The setoff of life subgroup losses against nonlife consolidated taxable income does not affect nonlife member deductions that depend in whole or in part on taxable income.

(3) ***Examples.*** The following examples illustrate the principles of this paragraph (j). In the examples, L indicates a life company, S is a nonlife insurance company, another letter indicates a nonlife company that is not an insurance company, no company has farming losses (within the meaning of section 172(b)(1)(B)(ii)), and each corporation uses the calendar year as its taxable year.

(i) ***Example 1.*** P, S, L1 and L2 constitute a group that elects under section 1504(c)(2) to file a consolidated return for 2021. In 2021, the nonlife subgroup consolidated taxable income is $100 and there is $20 of nonlife consolidated net capital loss that cannot be carried back under paragraph (f) of this section to taxable years (whether consolidated or separate) preceding 2021. The nonlife subgroup has no carryover from years prior to 2021. The life consolidated net operating loss is $150, which under paragraph (g) of this section includes life consolidated capital gain net income of $25. Since life consolidated capital gain net income is zero for 2021 (see paragraph (h)(3)(iii) of this section), the nonlife capital loss offset is zero (see paragraph (h)(3)(ii) of this section). However, $100 of life consolidated net operating loss sets off the $100 nonlife consolidated taxable income in 2021. The life subgroup carries under paragraph (g)(2) of this section to 2022 $50 of the life consolidated net operating loss ($150 minus $100). The $50 carryover will be used in 2022 (subject to the limitation in section 172(a)) against life subgroup income before it may be used in 2022 to setoff nonlife consolidated taxable income.

(ii) ***Example 2.*** The facts are the same as in paragraph (j)(3)(i) of this section, except that, for 2021, the nonlife consolidated taxable income is $150 (this amount is entirely attributable to S and includes nonlife consolidated capital gain net income of $50), consolidated LICTI is $200, and a life consolidated net capital loss is $50. The $50 life consolidated net capital loss sets off the $50 nonlife consolidated capital gain net income. Consolidated taxable income under paragraph (e) of this section is $300 (nonlife consolidated taxable income ($150) minus the setoff of the life consolidated net capital loss ($50), plus consolidated LICTI ($200)).

(iii) ***Example 3.*** The facts are the same as in paragraph (j)(3)(ii) of this section, except that, for 2022, the nonlife consolidated net operating loss is $150. This entire amount is attributable to S; thus, it is eligible to be carried back to 2021 against nonlife consolidated taxable income under paragraph (f)(2) of this section and § 1.1502-21(b). If P, the agent for the group within the meaning of § 1.1502-77, does not elect to relinquish the carryback under section 172(b)(3), the entire $150 will be carried back, reducing 2021 nonlife consolidated taxable income to zero and nonlife consolidated capital gain net income to zero. Under paragraph (h)(3)(xii) of this section, the setoff in 2021 of the nonlife consolidated capital gain net income ($50) by the life consolidated net capital loss ($50) is restored. Accordingly, the 2021 life consolidated net capital loss may be carried over by the life subgroup to 2022. Under paragraph (e) of this section, after the carryback, consolidated taxable income for 2021 is $200 (nonlife consolidated taxable income ($0) plus consolidated LICTI ($200)).

(iv) ***Example 4.*** The facts are the same as in paragraph (j)(3)(iii) of this section, except that P elects under section 172(b)(3) to relinquish the carryback of $150 arising in 2022. The setoff in Example 2 is not restored. However, the offsettable nonlife consolidated net operating loss for 2022 (or that may be carried over from 2022) is zero. See paragraph (h)(3)(viii) of this section. Nevertheless, the $150 nonlife consolidated net operating loss may be carried over to be used by the nonlife group.

(v) ***Example 5.*** P owns all of the stock of S1 and of L1. On January 1, 2017, L1 purchases all of the stock of L2. For 2021, the group elects under section 1504(c)(2) to file a consolidated return. For 2021, L1 is an eligible corporation under paragraph (b)(12) of this section but L2 is ineligible. Thus, L1 but not L2 is a member for 2021. For 2021, L2 sustains a net operating loss, which cannot be carried back (see section 172(b)). For 2021, L2 is treated under paragraph (d)(6) of this section as a member of a controlled group of corporations under section 1563 with P, S, and L1. For 2022, L2 is eligible and is included on the group's consolidated return. L2's net operating loss for 2021 that may be carried to 2022 is not treated under paragraph (b)(11) of this section as having been sustained in a separate return limitation year for purposes of computing consolidated LICTI of the L1-L2 life subgroup for 2022. Furthermore, the portion of L2's net operating loss not used under paragraph (g)(2) of this section against life subgroup income in 2022 may be included in offsettable life consolidated net operating loss under paragraph (j)(2) and (h)(3)(i) of this section that reduces in 2022 nonlife consolidated taxable income (subject to the limitation in section 172(a)) because L2's loss in 2021 was not sustained in a separate return limitation year under paragraph (j)(2) and (h)(3)(ix)(A) of this section or in a separate return year (2021) when an election was in effect under neither section 1504(c)(2) nor section 243(b)(3).

(k) ***Preemption.*** The rules in this section preempt any inconsistent rules in other sections of the consolidated return regulations. For example, the rules in paragraph (h)(3)(vi) of this section apply notwithstanding § 1.1502-21.

(l) ***Other consolidation principles.*** The fact that this section treats the life and nonlife members as separate groups in computing, respectively, consolidated LICTI (or life consolidated net operating loss) and nonlife consolidated taxable income (or loss) does not affect the usual rules in the consolidated return regulations unless this section provides otherwise. Thus, the usual rules in § 1.1502-13 (relating to intercompany transactions) apply to both the life and nonlife members by treating them as members of one affiliated group.

(m) ***Filing requirements*** —

(1) ***In general.*** To file a consolidated income tax return for a life-nonlife consolidated group, the common parent shall—

(i) File the applicable consolidated corporate income tax return: a Form 1120-L, *U.S. Life Insurance Company Income Tax Return,* where the common parent is a life insurance company; a Form 1120-PC, *U.S. Property and Casualty Insurance Company Income Tax Return,* where the common parent is an insurance company, other than a life insurance company; a Form 1120, *U.S. Corporation Income Tax Return,* where the common parent is any other type of corporation; or any successor form;

(ii) Indicate clearly on the face of this return that such corporate tax return is a life-nonlife return;

(iii) Show any set offs required by paragraphs (e), (h), and (j) of this section;

(iv) Report separately the nonlife consolidated taxable income or loss, determined under paragraph (f) of this section, on a Form 1120 or 1120-PC (or any successor forms) (whether filed by the common parent or as an attachment to the consolidated return), as the case may be, of all nonlife members of the consolidated group; and

(v) Report separately the consolidated Life Insurance Company Taxable Income or life consolidated net operating loss, on a Form 1120-L (or any successor form) (whether filed by the common parent or as an attachment to the consolidated return), of all life members of the consolidated group.

(2) ***Cross reference.*** See § 1.1502-75(j), regarding the inclusion in a corporate tax return of the required statements and schedules for subsidiaries.

(n) ***Effective/applicability dates.*** The rules of this section apply to taxable years beginning after December 31, 2020. However, a taxpayer may choose to apply the rules of this section to taxable years beginning on or before December 31, 2020. If a taxpayer makes the choice described in the previous sentence, the taxpayer must apply those rules in their entirety and consistently with the provisions of subchapter L of the Internal Revenue Code applicable to the years at issue.

(Secs. 1502 and 7805 of the Internal Revenue Code of 1954 (68A Stat. 637, 917; 26 U.S.C. 1502, 7805))

[T.D. 7877, 48 FR 11441, Mar. 18, 1983]

Editorial Notes: 1. For FEDERAL REGISTER citations affecting § 1.1502-47, see the List of CFR Sections Affected, which appears in the Finding Aids section of the printed volume and at *www.govinfo.gov.*.
2. By T.D. 9927, 85 FR 67988, Oct. 27, 2020, § 1.1502-47 was amended; however, a portion of the amendment could not be incorporated due to inaccurate amendatory instruction.

§ 1.1502-50 Consolidated section 250.

(a) ***In general*** —

(1) ***Scope.*** This section provides rules for applying section 250 and §§ 1.250-1 through 1.250(b)-6 (the *section 250 regulations*) to a member of a consolidated group (*member*). Paragraph (b) of this section provides rules for the determination of the amount of the deduction allowed to a member under section 250(a)(1). Paragraph (c) of this section provides rules governing the impact of intercompany transactions on the determination of a member's qualified business asset investment (QBAI) and the effect of intercompany transactions on the determination of a member's foreign-derived deduction eligible income (FDDEI). Paragraph (d) of this section provides rules governing basis adjustments to member stock resulting from the application of paragraph (b)(1) of this section. Paragraph (e) of this section provides definitions. Paragraph (f) of this section provides examples illustrating the rules of this section. Paragraph (g) of this section provides an applicability date.

(2) ***Overview.*** The rules of this section ensure that the aggregate amount of deductions allowed under section 250 to members appropriately reflects the income, expenses, gains, losses, and property of all members. Paragraph (b) of this section allocates the consolidated group's overall deduction amount under section 250 to each member on the basis of its contribution to the consolidated foreign-derived deduction eligible income (consolidated FDDEI) and consolidated global intangible low-taxed income (consolidated GILTI). The definitions in paragraph (e) of this section provide for the aggregation of the deduction eligible income (DEI), FDDEI, deemed tangible income return, and global intangible low-taxed income (GILTI) of all members in order to calculate the consolidated group's overall deduction amount under section 250.

(b) ***Allowance of deduction*** —

(1) ***In general.*** A member is allowed a deduction for a consolidated return year under section 250. See § 1.250(a)-1(b). The amount of the deduction is equal to the sum of—

(i) The product of the consolidated FDII deduction amount and the member's FDII deduction allocation ratio; and

(ii) The product of the consolidated GILTI deduction amount and the member's GILTI deduction allocation ratio.

(2) ***Consolidated taxable income limitation.*** For purposes of applying the limitation described in § 1.250(a)-1(b)(2) to the determination of the consolidated FDII deduction amount and the consolidated GILTI deduction amount of a consolidated group for a consolidated return year—

(i) The consolidated foreign-derived intangible income (consolidated FDII) (if any) is reduced (but not below zero) by an amount which bears the same ratio to the consolidated section 250(a)(2) amount that such consolidated FDII bears to the sum of the consolidated FDII and the consolidated GILTI; and

(ii) The consolidated GILTI (if any) is reduced (but not below zero) by the excess of the consolidated section 250(a)(2) amount over the reduction described in paragraph (b)(2)(i) of this section.

(c) ***Impact of intercompany transactions*** —

(1) ***Impact on qualified business asset investment determination*** —

(i) ***In general.*** For purposes of determining a member's QBAI, the basis of specified tangible property does not include an amount equal to any gain or loss recognized with respect to such property by another member in an intercompany transaction (as defined in § 1.1502-13(b)(1)) until the time that such gain or loss is no longer deferred under § 1.1502-13. Thus, for example, if a selling member owns specified tangible property with an adjusted basis (within the meaning of section 1011) of $60x and an adjusted basis (for purposes of calculating QBAI) of $80x, and sells it for $50x to the purchasing member (and the intercompany loss remains deferred), the basis of such property for purposes of computing the purchasing member's QBAI is $80x.

(ii) ***Partner-specific QBAI basis.*** A member's partner-specific QBAI basis (as defined in § 1.250(b)-2(g)(7)) includes a basis adjustment under section 743(b) resulting from an intercompany transaction only at the time, and to the extent, gain or loss, if any, is recognized in the transaction and no longer deferred under § 1.1502-13.

(2) ***Impact on foreign-derived deduction eligible income characterization.*** For purposes of redetermining attributes of members from an intercompany transaction as FDDEI, see § 1.1502-13(c)(1)(i) and (c)(7)(ii)(R) (*Example 18).*

(d) ***Adjustments to the basis of a member.*** For adjustments to the basis of a member related to paragraph (b)(1) of this section, see § 1.1502-32(b)(3)(ii)(B).

(e) ***Definitions.*** The following definitions apply for purposes of this section.

(1) ***Consolidated deduction eligible income (consolidated DEI).*** With respect to a consolidated group for a consolidated return year, the term *consolidated deduction eligible income* or *consolidated DEI* means the greater of the sum of the DEI (whether positive or negative) of all members or zero.

(2) ***Consolidated deemed intangible income.*** With respect to a consolidated group for a consolidated return year, the term *consolidated deemed intangible income* means the excess (if any) of the consolidated DEI, over the consolidated deemed tangible income return.

(3) ***Consolidated deemed tangible income return.*** With respect to a consolidated group for a consolidated return year, the term *consolidated deemed tangible income return* means the sum of the deemed tangible income return of all members.

(4) ***Consolidated FDII deduction amount.*** With respect to a consolidated group for a consolidated return year, the term *consolidated FDII deduction amount* means the product of the FDII deduction rate and the consolidated FDII, as adjusted by paragraph (b)(2) of this section.

(5) ***Consolidated foreign-derived deduction eligible income (consolidated FDDEI).*** With respect to a consolidated group for a consolidated return year, the term *consolidated foreign-derived deduction eligible income* or *consolidated FDDEI* means the greater of the sum of the FDDEI (whether positive or negative) of all members or zero.

(6) ***Consolidated foreign-derived intangible income (consolidated FDII).*** With respect to a consolidated group for a consolidated return year, the term *consolidated foreign-derived intangible income* or *consolidated FDII* means the product of the consolidated deemed intangible income and the consolidated foreign-derived ratio.

(7) ***Consolidated foreign-derived ratio.*** With respect to a consolidated group for a consolidated return year, the term *consolidated foreign-derived ratio* means the ratio (not to exceed one) of—

(i) The consolidated FDDEI; to

(ii) The consolidated DEI.

(8) ***Consolidated GILTI deduction amount.*** With respect to a consolidated group for a consolidated return year, the term *consolidated GILTI deduction amount* means the product of the GILTI deduction rate and the sum of the consolidated GILTI, as adjusted by paragraph (b)(2) of this section, and the amounts treated as dividends received by the members under section 78 which are attributable to their GILTI for the consolidated return year.

(9) ***Consolidated global intangible low-taxed income (consolidated GILTI).*** With respect to a consolidated group for a consolidated return year, the term *consolidated global intangible low-taxed income* or *consolidated GILTI* means the sum of the GILTI of all members.

(10) ***Consolidated section 250(a)(2) amount.*** With respect to a consolidated group for a consolidated return year, the term *consolidated section 250(a)(2) amount* means the excess (if any) of the sum of the consolidated FDII and the consolidated GILTI (determined without regard to section 250(a)(2) and paragraph (b)(2) of this section), over the consolidated taxable income of the consolidated group (within the meaning of § 1.1502-11).

(11) ***Deduction eligible income (DEI).*** With respect to a member for a consolidated return year, the term *deduction eligible income* or *DEI* means the member's gross DEI for the year (within the meaning of § 1.250(b)-1(c)(15)) reduced (including below zero) by the deductions properly allocable to gross DEI for the year (as determined under § 1.250(b)-1(d)(2)).

(12) ***Deemed tangible income return.*** With respect to a member for a consolidated return year, the term *deemed tangible income return* means an amount equal to 10 percent of the member's QBAI, as adjusted by paragraph (c)(1) of this section.

(13) ***FDII deduction allocation ratio.*** With respect to a member for a consolidated return year, the term *FDII deduction allocation ratio* means the ratio of—

(i) The member's positive FDDEI (if any); to

(ii) The sum of the positive FDDEI of all members.

(14) ***FDII deduction rate.*** The term *FDII deduction rate* means 37.5 percent for consolidated return years beginning before January 1, 2026, and 21.875 percent for consolidated return years beginning after December 31, 2025.

(15) ***Foreign-derived deduction eligible income (FDDEI).*** With respect to a member for a consolidated return year, the term *foreign-derived deduction eligible income* or *FDDEI* means the member's gross FDDEI for the year (within the meaning of § 1.250(b)-1(c)(16)) reduced (including below zero) by the deductions properly allocable to gross FDDEI for the year (as determined under § 1.250(b)-1(d)(2)).

(16) ***GILTI deduction allocation ratio.*** With respect to a member for a consolidated return year, the term *GILTI deduction allocation ratio* means the ratio of—

(i) The sum of the member's GILTI and the amount treated as a dividend received by the member under section 78 which is attributable to its GILTI for the consolidated return year; to

(ii) The sum of consolidated GILTI and the amounts treated as dividends received by the members under section 78 which are attributable to their GILTI for the consolidated return year.

(17) ***GILTI deduction rate.*** The term *GILTI deduction rate* means 50 percent for consolidated return years beginning before January 1, 2026, and 37.5 percent for consolidated return years beginning after December 31, 2025.

(18) ***Global intangible low-taxed income (GILTI).*** With respect to a member for a consolidated return year, the term *global intangible low-taxed income* or *GILTI* means the sum of the member's GILTI inclusion amount under § 1.1502-51(b) and the member's distributive share of any domestic partnership's GILTI inclusion amount under § 1.951A-5(b)(2).

(19) ***Qualified business asset investment (QBAI).*** The term *qualified business asset investment* or *QBAI* has the meaning provided in § 1.250(b)-2(b).

(20) ***Specified tangible property.*** The term *specified tangible property* has the meaning provided in § 1.250(b)-2(c)(1).

(f) ***Examples.*** The following examples illustrate the rules of this section.

(1) ***Example 1: Calculation of deduction attributable to FDII*** —

(i) ***Facts.*** P is the common parent of the P group and owns all of the only class of stock of subsidiaries USS1 and USS2. The consolidated return year of all persons is the calendar year. In 2018, P has DEI of $400x, FDDEI of $0, and QBAI of $0; USS1 has DEI of $200x, FDDEI of $200x, and QBAI of $600x; and USS2 has DEI of −$100x, FDDEI of $100x, and QBAI of $400x. The P group has consolidated taxable income that is sufficient to make inapplicable the limitation in paragraph (b)(2) of this section. No member of the P group has GILTI.

(ii) ***Analysis*** —

(A) ***Consolidated DEI.*** Under paragraph (e)(1) of this section, the P group's consolidated DEI is $500x, the greater of the sum of the DEI (whether positive or negative) of all members ($400x + $200x−$100x) or zero.

(B) ***Consolidated FDDEI.*** Under paragraph (e)(5) of this section, the P group's consolidated FDDEI is $300x, the greater of the sum of the FDDEI (whether positive or negative) of all members ($0 + $200x + $100x) or zero.

(C) ***Consolidated deemed tangible income return.*** Under paragraph (e)(12) of this section, a member's deemed tangible income return is 10 percent of its QBAI. Therefore, P's deemed tangible income return is $0 (0.10 × $0), USS1's deemed tangible income return is $60x (0.10 × $600x), and USS2's deemed tangible income return is $40x (0.10 × $400x). Under paragraph (e)(3) of this section, the P group's consolidated deemed tangible income return is $100x, the sum of the deemed tangible income return of all members ($0 + $60x + $40x).

(D) ***Consolidated deemed intangible income.*** Under paragraph (e)(2) of this section, the P group's consolidated deemed intangible income is $400x, the excess of its consolidated DEI over its consolidated deemed tangible income return ($500x −$100x).

(E) ***Consolidated FDII.*** Under paragraph (e)(7) of this section, the P group's consolidated foreign-derived ratio is 0.60, the ratio of its consolidated FDDEI to its consolidated DEI ($300x/$500x). Under paragraph (e)(6) of this section, the P group's consolidated FDII is $240x, the product of its consolidated deemed intangible income and its consolidated foreign-derived ratio ($400x × 0.60).

(F) ***Consolidated FDII deduction amount.*** Under paragraph (e)(4) of this section, the P group's consolidated FDII deduction amount is $90x, the product of the FDII deduction rate and the consolidated FDII (0.375 × $240x).

(G) ***Member's deduction attributable to consolidated FDII deduction amount.*** Under paragraph (b)(1) of this section, a member is allowed a deduction equal, in part, to the product of the consolidated FDII deduction amount of the consolidated group to which the member belongs and the member's FDII deduction allocation ratio. Under paragraph (e)(13) of this section, a member's FDII deduction allocation ratio is the ratio of its positive FDDEI to the sum of each member's positive FDDEI for such consolidated return year. As a result, the FDII deduction allocation ratios of P, USS1, and USS2 are 0 ($0/$300x), $^{2}/_{3}$ ($200x/$300x), and $^{1}/_{3}$ ($100x/$300x), respectively. Therefore, P, USS1, and USS2 are permitted deductions under paragraph (b)(1) of this section in the amount of $0 (0 × $90x), $60x ($^{2}/_{3}$ × $90x), and $30x ($^{1}/_{3}$ × $90x), respectively.

(2) ***Example 2: Limitation on consolidated foreign-derived deduction eligible income*** —

(i) ***Facts.*** The facts are the same as in paragraph (f)(1)(i) of this section (the facts in *Example 1*), except that P's FDDEI is $300x.

(ii) ***Analysis*** —

(A) ***Consolidated DEI and consolidated deemed tangible income return.*** As in paragraphs (f)(1)(ii)(A) and (C) of this section (the analysis in *Example 1*), the P group's consolidated DEI is $500x and the P group's consolidated deemed tangible income return is $100x.

(B) ***Consolidated FDDEI.*** Under paragraph (e)(5) of this section, the P group's consolidated FDDEI is $600x, the greater of the sum of the FDDEI (whether positive or negative) of all members ($300x + $200x + $100x) or zero.

(C) ***Consolidated deemed intangible income and consolidated FDII.*** Under paragraph (e)(2) of this section, the P group's consolidated deemed intangible income is $400x ($500x − $100x). Under paragraph (e)(7) of this section, the P group's consolidated foreign-derived ratio is 1.00 ($600x/$500x, but not in excess of one). Under paragraph (e)(6) of this section, the P group's consolidated FDII is $400x ($400x × 1.00).

(D) ***Consolidated FDII deduction amount and member's deduction attributable to consolidated FDII deduction amount.*** Under paragraph (e)(4) of this section, the P group's consolidated FDII deduction amount is $150x (0.375 × $400x). Under paragraph (e)(13) of this section, the FDII deduction allocation ratios of P, USS1, and USS2 are $^1/_2$ ($300/$600x), $^1/_3$ ($200x/$600x), and $^1/_6$ ($100x/$600x), respectively. Therefore, P, USS1, and USS2 are permitted deductions under paragraph (b)(1) of this section in the amounts of $75x ($^1/_2$ × $150x), $50x ($^1/_3$ × $150x), and $25x ($^1/_6$ × $150x), respectively.

(3) ***Example 3: Member with negative FDDEI —***

(i) ***Facts.*** The facts are the same as in paragraph (f)(1)(i) of this section (the facts in *Example 1*), except that P's FDDEI is -$100x.

(ii) ***Analysis —***

(A) ***Consolidated DEI and consolidated deemed tangible income return.*** As in paragraphs (f)(1)(ii)(A) and (C) of this section (the facts in *Example 1*), the P group's consolidated DEI is $500x and the P group's consolidated deemed tangible income return is $100x.

(B) ***Consolidated FDDEI.*** Under paragraph (e)(5) of this section, the P group's consolidated FDDEI is $200x, the greater of the sum of the FDDEI (whether positive or negative) of all members (−$100x + $200x + $100x) or zero.

(C) ***Consolidated deemed intangible income and consolidated FDII.*** Under paragraphs (e)(2) and (6) of this section, the P group's consolidated deemed intangible income is $400x ($500x −$100x), and the P group's consolidated FDII is $160x ($400x × ($200x/$500x)).

(D) ***Consolidated FDII deduction amount and member's deduction attributable to consolidated FDII deduction amount.*** Under paragraph (e)(4) of this section, the P group's consolidated FDII deduction amount is $60x (0.375 × $160x). Under paragraph (e)(13) of this section, the FDII deduction allocation ratios of P, USS1, and USS2 are 0 ($0/$300x), $^2/_3$ ($200x/$300x), and $^1/_3$ ($100x/$300x), respectively. Therefore, P, USS1, and USS2 are permitted deductions under paragraph (b)(1) of this section in the amounts of $0 (0 × $60x), $40x ($^2/_3$ × $60x), and $20x ($^1/_3$ × $60x), respectively.

(4) ***Example 4: Calculation of deduction attributable to GILTI —***

(i) ***Facts.*** The facts are the same as in paragraph (f)(1)(i) of this section (the facts in *Example 1*), except that USS1 owns CFC1 and USS2 owns CFC2. USS1 and USS2 have GILTI of $65x and $20x, respectively, and amounts treated as dividends received under section 78 attributable to their GILTI of $10x and $5x, respectively.

(ii) ***Analysis —***

(A) ***Consolidated GILTI.*** Under paragraph (e)(9) of this section, the P group's consolidated GILTI is $85x, the sum of the GILTI of all members ($0 + $65x + $20x).

(B) ***Consolidated GILTI deduction amount.*** Under paragraph (e)(8) of this section, the P group's consolidated GILTI deduction amount is $50x, the product of the GILTI deduction rate and the sum of its consolidated GILTI and the amounts treated as dividends received by the members under section 78 which are attributable to their GILTI for the consolidated return year (0.50 × ($85x + $10x + $5x)).

(C) ***Member's deduction attributable to consolidated GILTI deduction amount.*** Under paragraph (b)(1) of this section, a member is allowed a deduction equal, in part, to the product of the consolidated GILTI deduction amount of the consolidated group to which the member belongs and the member's GILTI deduction allocation ratio. Under paragraph (e)(16) of this section, a member's GILTI deduction allocation ratio is the ratio of the sum of its GILTI and the amount treated as a dividend received by the member under section 78 which is attributable to its GILTI for the consolidated return year to the sum of the consolidated GILTI and the amounts treated as dividends received by the members under section 78 which are attributable to their GILTI for the consolidated return year. As a result, the GILTI deduction allocation ratios of P, USS1, and USS2 are 0 ($0/($85x + $10x + $5x)), $^{3}/_{4}$ (($65x + $10x)/($85x + $10x + $5x)), and $^{1}/_{4}$ (($20x + $5x)/($85x + $10x + $5x)), respectively. Therefore, P, USS1, and USS2 are permitted deductions of $0 (0 × $50x), $37.50x ($^{3}/_{4}$ × $50x), and $12.50x ($^{1}/_{4}$ × $50x), respectively.

(D) ***Member's deduction under section 250.*** Under paragraph (b)(1) of this section, a member is allowed a deduction equal to the sum of the member's deduction attributable to the consolidated FDII deduction amount and the member's deduction attributable to the consolidated GILTI deduction amount. As a result P, USS1, and USS2 are entitled to deductions under paragraph (b)(1) of this section of $0 ($0 + $0), $97.50x ($60x + $37.50x), and $42.50x ($30x + $12.50x), respectively.

(5) ***Example 5: Taxable income limitation*** —

(i) ***Facts.*** The facts are the same as in paragraph (f)(4)(i) of this section (the facts in *Example 4*), except that the P group's consolidated taxable income (within the meaning of paragraph (e)(10) of this section) is $300x.

(ii) ***Analysis*** —

(A) ***Determination of whether the limitation described in paragraph (b)(2) of this section applies.*** Under paragraph (b)(2) of this section, in the case of a consolidated group with a consolidated section 250(a)(2) amount for a consolidated year, the amount of the consolidated FDII and the consolidated GILTI otherwise taken into account in the determination of the consolidated FDII deduction amount and the consolidated GILTI deduction amount are subject to reduction. As in paragraph (f)(1)(ii)(E) of this section (the facts in *Example 1*), the P group's consolidated FDII is $240x. As in paragraph (f)(4)(ii)(A) of this section (the analysis in *Example 4*), the P group's consolidated GILTI is $85x. The P group's consolidated taxable income is $300x. Under paragraph (e)(10) of this section, the P group's consolidated section 250(a)(2) amount is $25x (($240x + $85x) − $300x), the excess of the sum of the consolidated FDII and the consolidated GILTI, over the P group's consolidated taxable income. Therefore, the limitation described in paragraph (b)(2) of this section applies.

(B) ***Allocation of reduction.*** Under paragraph (b)(2)(i) of this section, the P group's consolidated FDII is reduced by an amount which bears the same ratio to the consolidated section 250(a)(2) amount as the consolidated FDII bears to the sum of the consolidated FDII and consolidated GILTI, and the P group's consolidated GILTI is reduced by the excess of the consolidated section 250(a)(2) amount over the reduction described in paragraph (b)(2)(i) of this section. Therefore, for purposes of determining the P group's consolidated FDII deduction amount and consolidated GILTI deduction amount, its consolidated FDII is reduced to $221.54x ($240x −($25x × ($240x/$325x))) and its consolidated GILTI is reduced to $78.46x ($85x −($25x −($25x × ($240x/$325x)))).

(C) ***Calculation of consolidated FDII deduction amount and consolidated GILTI deduction amount.*** Under paragraph (e)(4) of this section, the P group's consolidated FDII deduction amount is $83.08x ($221.54x × 0.375). Under paragraph (e)(8) of this section, the P group's consolidated GILTI deduction amount is $46.73x (($78.46x + 10x + 5x) × 0.50).

(D) ***Member's deduction attributable to the consolidated FDII deduction amount.*** As in paragraph (f)(1)(ii)(G) of this section (the analysis in *Example 1*), the FDII deduction allocation ratios of P, USS1, and USS2 are 0, $^{2}/_{3}$, and $^{1}/_{3}$, respectively. Therefore, P, USS1, and USS2 are permitted deductions attributable to the consolidated FDII deduction amount of $0 (0 × $83.08x), $55.39x ($^{2}/_{3}$ × $83.08x), and $27.69x ($^{1}/_{3}$ × $83.08x), respectively.

(E) ***Member's deduction attributable to the consolidated GILTI deduction amount.*** As in paragraph (f)(4)(ii)(C) of this section (the analysis in *Example 4*), the GILTI deduction allocation ratios of P, USS1, and USS2 are 0, $^{3}/_{4}$, and $^{1}/_{4}$, respectively. Therefore, P, USS1, and USS2 are permitted deductions attributable to the consolidated GILTI deduction amount of $0 (0 × $46.73x), $35.05x ($^{3}/_{4}$ × $46.73x), and $11.68x ($^{1}/_{4}$ × $46.73x), respectively.

(F) ***Member's deduction pursuant section 250.*** Under paragraph (b)(1) of this section, a member is allowed a deduction equal to the sum of the member's deduction attributable to the consolidated FDII deduction amount and the member's deduction attributable to the consolidated GILTI deduction amount. As a result, P, USS1, and USS2 are entitled to deductions under paragraph (b)(1) of this section of $0 ($0 + $0), $90.44x ($55.39x + $35.05x), and $39.37 × ($27.69x + $11.68x), respectively.

(g) ***Applicability date.*** This section applies to consolidated return years beginning on or after January 1, 2021. A taxpayer that chooses to apply the rules in §§ 1.250(a)-1 and 1.250(b)-1 through 1.250(b)-6 to taxable years beginning before January 1, 2021, pursuant to § 1.250-1(b), must also apply the rules of this section in their entirety to consolidated return years beginning after December 31, 2017, and before January 1, 2021.

[T.D. 9901, 85 FR 43113, July 15, 2020]

§ 1.1502-51 Consolidated section 951A.

(a) ***In general.*** This section provides rules for applying section 951A to each member of a consolidated group (each, a *member*) that is a United States shareholder of any controlled foreign corporation. Paragraph (b) of this section describes the inclusion of the GILTI inclusion amount by a member of a consolidated

group. Paragraphs (c) and (d) of this section are reserved. Paragraph (e) of this section provides definitions for purposes of this section. Paragraph (f) of this section provides examples illustrating the rules of this section. Paragraph (g) of this section provides an applicability date.

(b) ***Calculation of the GILTI inclusion amount for a member of a consolidated group.*** Each member who is a United States shareholder of any controlled foreign corporation includes in gross income in the U.S. shareholder inclusion year the member's GILTI inclusion amount, if any, for the U.S. shareholder inclusion year. See section 951A(a) and § 1.951A-1(b). The GILTI inclusion amount of a member for a U.S. shareholder inclusion year is the excess (if any) of the member's net CFC tested income for the U.S. shareholder inclusion year, over the member's net deemed tangible income return for the U.S. shareholder inclusion year, determined using the definitions provided in paragraph (e) of this section. In addition, see § 1.951A-1(e) (cross-referencing § 1.958-1(d)).

(c)-(d) [Reserved]

(e) ***Definitions.*** Any term used but not defined in this section has the meaning set forth in §§ 1.951A-1 through 1.951A-6. In addition, the following definitions apply for purposes of this section.

(1) ***Aggregate tested income.*** With respect to a member, the term *aggregate tested income* means the aggregate of the member's pro rata share (determined under § 1.951A-1(d)(2)) of the tested income of each tested income CFC for a CFC inclusion year that ends with or within the U.S. shareholder inclusion year.

(2) ***Aggregate tested loss.*** With respect to a member, the term *aggregate tested loss* means the aggregate of the member's pro rata share (determined under § 1.951A-1(d)(4)) of the tested loss of each tested loss CFC for a CFC inclusion year that ends with or within the U.S. shareholder inclusion year.

(3) ***Allocable share.*** The term *allocable share* means, with respect to a member that is a United States shareholder and a U.S. shareholder inclusion year—

(i) With respect to consolidated QBAI, the product of the consolidated QBAI of the member's consolidated group and the member's GILTI allocation ratio.

(ii) With respect to consolidated specified interest expense, the product of the consolidated specified interest expense of the member's consolidated group and the member's GILTI allocation ratio.

(iii) With respect to consolidated tested loss, the product of the consolidated tested loss of the member's consolidated group and the member's GILTI allocation ratio.

(4) ***Consolidated QBAI.*** With respect to a consolidated group, the term *consolidated QBAI* means the sum of each member's pro rata share (determined under § 1.951A-1(d)(3)) of the qualified business asset investment of each tested income CFC for a CFC inclusion year that ends with or within the U.S. shareholder inclusion year.

(5) ***Consolidated specified interest expense.*** With respect to a consolidated group, the term *consolidated specified interest expense* means the excess (if any) of—

(i) The sum of each member's pro rata share (determined under § 1.951A-1(d)(5)) of the tested interest expense of each controlled foreign corporation for a CFC inclusion year that ends with or within the U.S. shareholder inclusion year, over

(ii) The sum of each member's pro rata share (determined under § 1.951A-1(d)(6)) of the tested interest income of each controlled foreign corporation for a CFC inclusion year that ends with or within the U.S. shareholder inclusion year.

(6) ***Consolidated tested income.*** With respect to a consolidated group, the term *consolidated tested income* means the sum of each member's aggregate tested income for the U.S. shareholder inclusion year.

(7) ***Consolidated tested loss.*** With respect to a consolidated group, the term *consolidated tested loss* means the sum of each member's aggregate tested loss for the U.S. shareholder inclusion year.

(8) ***Controlled foreign corporation.*** The term *controlled foreign corporation* has the meaning provided in § 1.951A-1(f)(2).

(9) ***Deemed tangible income return.*** With respect to a member, the term *deemed tangible income return* means 10 percent of the member's allocable share of the consolidated QBAI.

(10) ***GILTI allocation ratio.*** With respect to a member, the term *GILTI allocation ratio* means the ratio of—

(i) The aggregate tested income of the member for the U.S. shareholder inclusion year, to

(ii) The consolidated tested income of the consolidated group of which the member is a member for the U.S. shareholder inclusion year.

(11) ***GILTI inclusion amount.*** With respect to a member, the term *GILTI inclusion amount* has the meaning provided in paragraph (b) of this section.

(12) ***Net CFC tested income.*** With respect to a member, the term *net CFC tested income* means the excess (if any) of—

(i) The member's aggregate tested income, over

(ii) The member's allocable share of the consolidated tested loss.

(13) ***Net deemed tangible income return.*** With respect to a member, the term *net deemed tangible income return* means the excess (if any) of the member's deemed tangible income return over the member's allocable share of the consolidated specified interest expense.

(14) through (16) [Reserved]

(17) ***Qualified business asset investment.*** The term qualified business asset investment has the meaning provided in § 1.951A-3(b).

(18) ***Tested income.*** The term *tested income* has the meaning provided in § 1.951A-2(b)(1).

(19) ***Tested income CFC.*** The term *tested income CFC* has the meaning provided in § 1.951A-2(b)(1).

(20) ***Tested interest expense.*** The term *tested interest expense* has the meaning provided in § 1.951A-4(b)(1).

(21) ***Tested interest income.*** The term *tested interest income* has the meaning provided in § 1.951A-4(b)(2).

(22) ***Tested loss.*** The term *tested loss* has the meaning provided in § 1.951A-2(b)(2).

(23) ***Tested loss CFC.*** The term *tested loss CFC* has the meaning provided in § 1.951A-2(b)(2).

(24) ***United States shareholder.*** The term *United States shareholder* has the meaning provided in § 1.951A-1(f)(6).

(25) ***U.S. shareholder inclusion year.*** The term *U.S. shareholder inclusion year* has the meaning provided in § 1.951A-1(f)(7).

(f) ***Examples.*** The following examples illustrate the rules of this section. For purposes of the examples in this section, unless otherwise stated: P is the common parent of the P consolidated group; P owns all of the single class of stock of subsidiaries USS1, USS2, and USS3, all of whom are members of the P consolidated group; CFC1, CFC2, CFC3, and CFC4 are all controlled foreign corporations (within the meaning of paragraph (e)(8) of this section); and the taxable year of all persons is the calendar year.

(1) ***Example 1: Calculation of net CFC tested income within a consolidated group when all CFCs are wholly owned by a member —***

(i) ***Facts.*** USS1 owns all of the single class of stock of CFC1. USS2 owns all of the single class of stock of each of CFC2 and CFC3. USS3 owns all of the single class of stock of CFC4. In Year 1, CFC1 has tested loss of $100x, CFC2 has tested income of $200x, CFC3 has tested loss of $200x, and CFC4 has tested income of $600x. None of CFC1, CFC2, CFC3, or CFC4 has qualified business asset investment in Year 1.

(ii) ***Analysis —***

(A) ***Consolidated tested income and GILTI allocation ratio.*** USS1 has no aggregate tested income; USS2's aggregate tested income is $200x, its pro rata share (determined under § 1.951A-1(d)(2)) of CFC2's tested income; and USS3's aggregate tested income is $600x, its pro rata share (determined under § 1.951A-1(d)(2)) of CFC4's tested income. Therefore, under paragraph (e)(6) of this section, the P consolidated group's consolidated tested income is $800x ($200x + $600x). As a result, the GILTI allocation ratios of USS1, USS2, and USS3 are 0 ($0/$800x), 0.25 ($200x/$800x), and 0.75 ($600x/$800x), respectively.

(B) ***Consolidated tested loss.*** Under paragraph (e)(7) of this section, the P consolidated group's consolidated tested loss is $300x ($100x + $200x), the sum of USS1's aggregate tested loss, which is equal to its pro rata share (determined under § 1.951A-1(d)(4)) of CFC1's tested loss ($100x), and USS2's aggregate tested loss, which is equal to its pro rata share (determined under § 1.951A-1(d)(4)) of CFC3's tested loss ($200x). Under paragraph (e)(3)(iii) of this section, a member's allocable share of the consolidated tested loss is the product of the consolidated tested loss of the member's consolidated group and the member's GILTI allocation ratio. Therefore, the allocable shares of the consolidated tested loss of USS1, USS2, and USS3 are $0 (0 × $300x), $75x (0.25 × $300x), and $225x (0.75 × $300x), respectively.

(C) ***Calculation of net CFC tested income.*** Under paragraph (e)(12) of this section, a member's net CFC tested income is the excess (if any) of the member's aggregate tested income over the member's allocable share of the consolidated tested loss. As a result, the net CFC tested income of USS1, USS2, and USS3 are $0 ($0−$0), $125x ($200x−$75x), and $375x ($600x−$225x), respectively.

(2) ***Example 2: Calculation of net CFC tested income within a consolidated group when ownership of a tested loss CFC is split between members —***

(i) ***Facts.*** The facts are the same as in paragraph (f)(1)(i) of this section (the facts in *Example 1*), except that USS2 and USS3 each own 50% of the single class of stock of CFC3.

(ii) ***Analysis.*** As in paragraph (f)(1)(ii)(A) of this section (paragraph (A) of the analysis in *Example 1*), USS1 has no aggregate tested income and a GILTI allocation ratio of 0, USS2 has $200x of aggregate tested income and a GILTI allocation ratio of 0.25, and USS3 has $600x of aggregate tested income and a GILTI allocation ratio of 0.75. Additionally, the P consolidated group's consolidated tested loss is $300x (the aggregate of USS1's aggregate tested loss, which is equal to its pro rata share (determined under § 1.951A-1(d)(4)) of CFC1's tested loss ($100x); USS2's aggregate tested loss, which is equal to its pro rata share (determined under § 1.951A-1(d)(4)) of CFC3's tested loss ($100x); and USS3's aggregate tested loss, which is equal to its pro rata share (determined under § 1.951A-1(d)(4)) of CFC3's tested loss ($100x)). As a result, under paragraph (e)(12) of this section, as in paragraph (f)(1)(ii)(C) of this section (paragraph (C) of the analysis in *Example 1*), the net CFC tested income of USS1, USS2, and USS3 are $0 ($0−$0), $125x ($200x−$75x), and $375x ($600x−$225x), respectively.

(3) ***Example 3: Calculation of GILTI inclusion amount*** —

(i) ***Facts.*** The facts are the same as in paragraph (f)(1)(i) of this section (the facts in *Example 1*), except that CFC2 and CFC4 have qualified business asset investment of $500x and $2,000x, respectively, for Year 1. In Year 1, CFC1 and CFC4 each have tested interest expense (within the meaning of § 1.951A-4(b)(1)) of $25x, and none of CFC1, CFC2, CFC3, and CFC4 have tested interest income (within the meaning of § 1.951A-4(b)(2)). CFC1's tested loss of $100x and CFC4's tested income of $600x take into account the tested interest expense.

(ii) ***Analysis*** —

(A) ***GILTI allocation ratio.*** As in paragraph (f)(1)(ii)(A) of this section (paragraph (A) of the analysis in *Example 1*), the GILTI allocation ratios of USS1, USS2, and USS3 are 0 ($0/$800x), 0.25 ($200x/$800x), and 0.75 ($600x/$800x), respectively.

(B) ***Consolidated QBAI.*** Under paragraph (e)(4) of this section, the P consolidated group's consolidated QBAI is $2,500x ($500x + $2,000x), the aggregate of USS2's pro rata share (determined under § 1.951A-1(d)(3)) of the qualified business asset investment of CFC2 and USS3's pro rata share (determined under § 1.951A-1(d)(3)) of the qualified business asset investment of CFC4. Under paragraph (e)(3)(i) of this section, a member's allocable share of consolidated QBAI is the product of the consolidated QBAI of the member's consolidated group and the member's GILTI allocation ratio. Therefore, the allocable shares of the consolidated QBAI of each of USS1, USS2, and USS3 are $0 (0 × $2,500x), $625x (0.25 × $2,500x), and $1,875x (0.75 × $2,500x), respectively.

(C) ***Consolidated specified interest expense*** —

(*1*) ***Pro rata share of tested interest expense.*** USS1's pro rata share (determined under § 1.951A-1(d)(5)) of the tested interest expense of CFC1 is $25x, the amount by which the tested interest expense increases USS1's pro rata share of CFC1's tested loss (from $75x to $100x) for Year 1. USS3's pro rata share (determined under § 1.951A-1(d)(5)) of the tested interest expense of CFC4 is also $25x, the amount by which the tested interest expense decreases USS3's pro rata share of CFC4's tested income (from $625x to $600x).

(2) ***Consolidated specified interest expense.*** Under paragraph (e)(5) of this section, the P consolidated group's consolidated specified interest expense is $50x, the excess of the sum of each member's pro rata share of the tested interest expense of each controlled foreign corporation ($50x, $25x from USS1 + $25x from USS3), over the sum of each member's pro rata share of tested interest income ($0). Under paragraph (e)(3)(ii) of this section, a member's allocable share of consolidated specified interest expense is the product of the consolidated specified interest expense of the member's consolidated group and the member's GILTI allocation ratio. Therefore, the allocable shares of consolidated specified interest expense of USS1, USS2, and USS3 are $0 (0 × $50x), $12.50x (0.25 × $50x), and $37.50x (0.75 × $50x), respectively.

(D) ***Calculation of deemed tangible income return.*** Under paragraph (e)(9) of this section, a member's deemed tangible income return means 10 percent of the member's allocable share of the consolidated QBAI. As a result, the deemed tangible income returns of USS1, USS2, and USS3 are $0 (0.1 × $0), $62.50x (0.1 × $625x), and $187.50x (0.1 × $1,875x), respectively.

(E) ***Calculation of net deemed tangible income return.*** Under paragraph (e)(13) of this section, a member's net deemed tangible income return means the excess (if any) of a member's deemed tangible income return over the member's allocable share of the consolidated specified interest expense. As a result, the net deemed tangible income returns of USS1, USS2, and USS3 are $0 ($0−$0), $50x ($62.50x−$12.50x), and $150x ($187.50x−$37.50x), respectively.

(F) ***Calculation of GILTI inclusion amount.*** Under paragraph (b) of this section, a member's GILTI inclusion amount for a U.S. shareholder inclusion year is the excess (if any) of the member's net CFC tested income for the U.S. shareholder inclusion year, over the shareholder's net deemed tangible income return for the U.S. shareholder inclusion year. As described in paragraph (f)(1)(ii)(C) of this section (paragraph (C) of the analysis in *Example 1*), the net CFC tested income of USS1, USS2, and USS3 are $0, $125x, and $375x, respectively. As described in paragraph (f)(3)(ii)(E) of this section (paragraph (E) of the analysis in this example), the net deemed tangible income returns of USS1, USS2, and USS3 are $0, $50x, and $150x, respectively. As a result, under paragraph (b) of this section, the GILTI inclusion amounts of USS1, USS2, and USS3 are $0 ($0−$0), $75x ($125x−$50x), and $225x ($375x−$150x), respectively.

(g) ***Applicability date*** —

(1) ***In general.*** Except as otherwise provided in this paragraph (g), this section applies to taxable years of United States shareholders for which the due date (without extensions) of the consolidated return is after June 21, 2019. However, a consolidated group may apply the rules of this section in their entirety to all taxable years of its members that are described in § 1.951A-7(a). In such a case, the consolidated group must apply the rules of this section to all taxable years described in § 1.951A-7(a) and with respect to all members.

(2) [Reserved]

[T.D. 9866, 84 FR 29367, June 21, 2019, as amended by T.D. 9902, 85 FR 44649, July 23, 2020; T.D. 9960, 87 FR 3656, Jan. 25, 2022]

§ 1.1502-55 Computation of alternative minimum tax of consolidated groups.

(a)-(h) (3) [Reserved]

(h) (4) *Separate return year minimum tax credit.*

(i)-(ii) [Reserved]

(iii)

(A) ***Limitation on portion of separate return year minimum tax credit arising in separate return limitation years.*** The aggregate of a member's minimum tax credits arising in SRLYs that are included in the consolidated minimum tax credits for all consolidated return years of the group may not exceed—

(*1*) The aggregate for all consolidated return years of the member's contributions to the consolidated section 53(c) limitation for each consolidated return year; reduced by

(*2*) The aggregate of the member's minimum tax credits arising and absorbed in all consolidated return years (whether or not absorbed by the member).

(B) ***Computational rules*** —

(*1*) ***Member's contribution to the consolidated section 53(c) limitation.*** Except as provided in the special rule of paragraph (h)(4)(iii)(B)(*2*) of this section, a member's contribution to the consolidated section 53(c) limitation for a consolidated return year equals the member's share of the consolidated net regular tax liability minus its share of consolidated tentative minimum tax. The group computes the member's shares by applying to the respective consolidated amounts the principles of section 1552 and the percentage method under § 1.1502-33(d)(3), assuming a 100% allocation of any decreased tax liability. The group makes proper adjustments so that taxes and credits not taken into account in computing the limitation under section 53(c) are not taken into account in computing the member's share of the consolidated net regular tax, etc. (See, for example, the taxes described in section 26(b) that are disregarded in computing regular tax liability.)

(*2*) ***Adjustment for year in which alternative minimum tax is paid.*** For a consolidated return year for which consolidated tentative minimum tax is greater than consolidated regular tax liability, the group reduces the member's share of the consolidated tentative minimum tax by the member's share of the consolidated alternative minimum tax for the year. The group determines the member's share of consolidated alternative minimum tax for a year using the same method it uses to determine the member's share of the consolidated minimum tax credits for the year.

(*3*) ***Years included in computation.*** For purposes of computing the limitation under this paragraph (h)(4)(iii), the consolidated return years of the group include only those years, including the year to which a credit is carried, that the member has been continuously included in the group's consolidated return, but exclude any years after the year to which the credit is carried.

(*4*) ***Subgroup principles.*** The SRLY subgroup principles under § 1.1502-21(c)(2) apply for purposes of this paragraph (h)(4)(iii). The predecessor and successor principles under § 1.1502-21(f) also apply for purposes of this paragraph (h)(4)(iii).

(5) ***Overlap with section 383.*** The principles under § 1.1502-21(g) apply for purposes of this paragraph (h)(4)(iii). For example, an overlap of this paragraph (h)(4)(iii) and the application of section 383 with respect to a credit carryover occurs if a corporation becomes a member of a consolidated group (the SRLY event) within six months of the change date of an ownership change giving rise to a section 383 credit limitation with respect to that carryover (the section 383 event), with the result that the limitation of this paragraph (h)(4)(iii) does not apply. See §§ 1.1502-21(g)(2)(ii)(A) and 1.383-1; see also § 1.1502-21(g)(4) (subgroup rules).

(C) ***Effective date—(1) In general.*** This paragraph (h)(4)(iii) generally applies to consolidated return years for which the due date of the income tax return (without extensions) is after March 13, 1998. See § 1.1502-3(d)(4) for an optional effective date rule (generally making this paragraph (h)(4)(iii) also applicable to a consolidated return year beginning on or after January 1, 1997, if the due date of the income tax return (without extensions) was on or before March 13, 1998).

(*i*) ***Contribution years.*** In general, a group does not take into account a consolidated taxable year for which the due date of the income tax return (without extensions) is on or before March 13, 1998, in determining a member's (or subgroup's) contributions to the consolidated section 53(c) limitation under this paragraph (h)(4)(iii). However, if a consolidated group chooses to apply the optional effective date rule, the consolidated group shall not take into account a consolidated taxable year beginning before January 1, 1997 in determining a member's (or subgroup's) contributions to the consolidated section 53(c) limitation under this paragraph (h)(4)(iii).

(*ii*) *Special subgroup rule.* In the event that the principles of § 1.1502-21(g)(1) do not apply to a particular credit carryover in the current group, then solely for purposes of applying this paragraph (h)(4)(iii) to determine the limitation with respect to that carryover and with respect to which the SRLY register (the aggregate of the member's or subgroup's contribution to consolidated section 53(c) limitation reduced by the aggregate of the member's or subgroup's minimum tax credits arising and absorbed in all consolidated return years) began in a taxable year for which the due date of the return is on or before May 25, 2000, the principles of § 1.1502-21(c)(2) shall be applied without regard to the phrase “or for a carryover that was subject to the overlap rule described in paragraph (g) of this section or § 1.1502-15(g) with respect to another group (the former group).”

(*2*) *Overlap rule.* Paragraph (h)(4)(iii)(B)(*5*) of this section (relating to overlap with section 383) applies to taxable years for which the due date (without extensions) of the consolidated return is after May 25, 2000. For purposes of paragraph (h)(4)(iii)(B)(*5*) of this section, only an ownership change to which section 383, as amended by the Tax Reform Act of 1986 (100 Stat. 2095), applies and which results in a section 383 credit limitation shall constitute a section 383 event. The optional effective date rule of § 1.1502-3(d)(4) (generally making this paragraph (h)(4)(iii) also applicable to a consolidated return year beginning on or after January 1, 1997, if the due date of the income tax return (without extensions) was on or before March 13, 1998) does not apply with respect to paragraph (h)(4)(iii)(B)(*5*) of this section (relating to the overlap rule).

[T.D. 8884, 65 FR 33759, May 25, 2000]

§ 1.1502-59A Application of section 59A to consolidated groups.

(a) ***Scope.*** This section provides rules for the application of section 59A and the regulations thereunder (the *section 59A regulations*) to consolidated groups and their members (as defined in § 1.1502-1(h) and (b), respectively). Rules in the section 59A regulations apply to consolidated groups except as modified in this section. Paragraph (b) of this section provides rules treating a consolidated group (rather than each

member of the group) as a single taxpayer, and a single applicable taxpayer, as relevant, for certain purposes. Paragraph (c) of this section coordinates the application of the business interest stacking rule under § 1.59A-3(c)(4) to consolidated groups. Paragraph (d) of this section addresses how the base erosion minimum tax amount is allocated among members of the consolidated group. Paragraph (e) of this section coordinates the application of this section and § 1.1502-47. Paragraph (f) of this section sets forth definitions. Paragraph (g) of this section provides examples. Paragraph (h) of this section provides the applicability date.

(b) ***Consolidated group as the applicable taxpayer*** —

(1) ***In general.*** For purposes of determining whether the consolidated group is an applicable taxpayer (within the meaning of § 1.59A-2(b)) and the amount of tax due pursuant to section 59A(a), all members of a consolidated group are treated as a single taxpayer. Thus, for example, members' deductions are aggregated in making the required computations under section 59A. In addition, to ensure that intercompany transactions (as defined in § 1.1502-13(b)(1)(i)) do not affect the consolidated group's base erosion percentage or base erosion minimum tax amount, items resulting from intercompany transactions are not taken into account in making such computations under section 59A. For example, additional depreciation deductions resulting from intercompany asset sales are not taken into account for purposes of applying the base erosion percentage test under § 1.59A-2(e).

(2) ***Consolidated group as member of the aggregate group.*** The consolidated group is treated as a single member of an aggregate group for purposes of § 1.59A-2(c).

(3) ***Related party determination.*** For purposes of section 59A and the section 59A regulations, if a person is a related party with respect to any member of a consolidated group, that person is a related party of the group and of each of its members.

(c) ***Coordination of section 59A(c)(3) and section 163(j) in a consolidated group*** —

(1) ***Overview.*** This paragraph (c) provides rules regarding the application of § 1.59A-3(c)(4) to a consolidated group's section 163(j) interest deduction. The classification rule in paragraph (c)(3) of this section addresses how to determine if, and to what extent, the group's section 163(j) interest deduction is a base erosion tax benefit. These regulations contain a single-entity classification rule with regard to the deduction of the consolidated group's aggregate current year business interest expense ("BIE"), but a separate-entity classification rule for the deduction of the consolidated group's disallowed BIE carryforwards. Paragraph (c)(3) of this section classifies the group's aggregate current year BIE deduction, in conformity with § 1.59A-3(c)(4), as constituting domestic related current year BIE deduction, foreign related current year BIE deduction, or unrelated current year BIE deduction. The allocation rules in paragraph (c)(4) of this section then allocate to specific members of the group the domestic related current year BIE deduction, foreign related current year BIE deduction, and unrelated current year BIE deduction taken in the taxable year. Any member's current year BIE that is carried forward to the succeeding taxable year as a disallowed BIE carryforward is allocated a status as domestic related BIE carryforward, foreign related BIE carryforward, or unrelated BIE carryforward under paragraph (c)(5) of this section. The status of any disallowed BIE carryforward deducted by a member in a later year is classified on a separate-entity basis by the deducting member under paragraph (c)(3) of this section, based on the status allocated to the member's disallowed BIE carryforward under paragraph (c)(5) of this section. This paragraph (c) also provides rules regarding the consequences of the deconsolidation of a corporation that has been allocated a domestic related BIE carryforward status, a foreign related BIE carryforward status,

or an unrelated BIE carryforward status; and the consolidation of a corporation with a disallowed BIE carryforward classified as from payments to a domestic related party, foreign related party, or unrelated party.

(2) ***Absorption rule for the group's business interest expense.*** To determine the amount of the group's section 163(j) interest deduction, and to determine the year in which the member's business interest expense giving rise to the deduction was incurred or accrued, see §§ 1.163(j)-4(d) and 1.163(j)-5(b)(3).

(3) ***Classification of the group's section 163(j) interest deduction*** —

(i) ***In general.*** Consistent with § 1.59A-3(c)(4)(i) and paragraph (b) of this section, the classification rule of this paragraph (c)(3) determines whether the consolidated group's section 163(j) interest deduction is a base erosion tax benefit. To the extent the consolidated group's business interest expense is permitted as a deduction under section 163(j)(1) in a taxable year, the deduction is classified first as from business interest expense paid or accrued to a foreign related party and business interest expense paid or accrued to a domestic related party (on a pro-rata basis); any remaining deduction is treated as from business interest expense paid or accrued to an unrelated party.

(ii) ***Year-by-year application of the classification rule.*** If the consolidated group's section 163(j) interest deduction in any taxable year is attributable to business interest expense paid or accrued in more than one taxable year (for example, the group deducts the group's aggregate current year BIE, the group's disallowed BIE carryforward from year 1, and the group's disallowed BIE carryforward from year 2), the classification rule in paragraph (c)(3)(i) of this section applies separately to each of those years, pursuant to paragraphs (c)(3)(iii) and (iv) of this section.

(iii) ***Classification of current year BIE deductions.*** Current year BIE deductions are classified under the section 59A regulations and this paragraph (c) as if the consolidated group were a single taxpayer that had paid or accrued the group's aggregate current year BIE to domestic related parties, foreign related parties, and unrelated parties. The rules of paragraph (c)(4) of this section apply for allocating current year BIE deductions among members of the consolidated group. To the extent the consolidated group's aggregate current year BIE exceeds its section 163(j) limitation, the rules of paragraph (c)(5) of this section apply.

(iv) ***Classification of deductions of disallowed BIE carryforwards.*** Each member of the group applies the classification rule in this paragraph (c)(3) to its deduction of any part of a disallowed BIE carryforward from a year, after the group applies paragraph (c)(5) of this section to the consolidated group's disallowed BIE carryforward from that year. Therefore, disallowed BIE carryforward that is actually deducted by a member is classified based on the status of the components of that carryforward, assigned pursuant to paragraph (c)(5) of this section.

(4) ***Allocation of domestic related current year BIE deduction status and foreign related current year BIE deduction status among members of the consolidated group*** —

(i) ***In general.*** This paragraph (c)(4) applies if the group has domestic related current year BIE deductions, foreign related current year BIE deductions, or both, as a result of the application of the classification rule in paragraph (c)(3) of this section. Under this paragraph (c)(4), the domestic related current year BIE, foreign related current year BIE, or both, that is treated as

deducted in the current year are deemed to have been incurred pro-rata by all members that have current year BIE deduction in that year, regardless of which member or members actually incurred the current year BIE to a domestic related party or a foreign related party.

(ii) ***Domestic related current year BIE deduction*** —

(A) ***Amount of domestic related current year BIE deduction status allocable to a member.*** The amount of domestic related current year BIE deduction status that is allocated to a member is determined by multiplying the group's domestic related current year BIE deduction (determined pursuant to paragraph (c)(3) of this section) by the percentage of current year BIE deduction allocable to such member in that year.

(B) ***Percentage of current year BIE deduction allocable to a member.*** The percentage of current year BIE deduction allocable to a member is equal to the amount of the member's current year BIE deduction divided by the amount of the group's aggregate current year BIE deduction.

(iii) ***Amount of foreign related current year BIE deduction status allocable to a member.*** The amount of foreign related current year BIE deduction status that is allocated to a member is determined by multiplying the group's foreign related current year BIE deduction (determined pursuant to paragraph (c)(3) of this section) by the percentage of current year BIE deduction allocable to such member (defined in paragraph (c)(4)(ii)(B) of this section).

(iv) ***Treatment of amounts as having unrelated current year BIE deduction status.*** To the extent the amount of a member's current year BIE that is absorbed under paragraph (c)(2) of this section exceeds the domestic related current year BIE deduction status and foreign related current year BIE deduction status allocated to the member under paragraph (c)(4)(ii) and (iii) of this section, such excess amount is treated as from payments or accruals to an unrelated party.

(5) ***Allocation of domestic related BIE carryforward status and foreign related BIE carryforward status to members of the group*** —

(i) ***In general.*** This paragraph (c)(5) applies in any year the consolidated group's aggregate current year BIE exceeds its section 163(j) limitation. After the application of paragraph (c)(4) of this section, any remaining domestic related current year BIE, foreign related current year BIE, and unrelated current year BIE is deemed to have been incurred pro-rata by members of the group pursuant to the rules in paragraph (c)(5)(ii), (iii), and (iv) of this section, regardless of which member or members actually incurred the business interest expense to a domestic related party, foreign related party, or unrelated party.

(ii) ***Domestic related BIE carryforward*** —

(A) ***Amount of domestic related BIE carryforward status allocable to a member.*** The amount of domestic related BIE carryforward status that is allocated to a member equals the group's domestic related BIE carryforward from that year multiplied by the percentage of disallowed BIE carryforward allocable to the member.

(B) ***Percentage of disallowed BIE carryforward allocable to a member.*** The percentage of disallowed BIE carryforward allocable to a member for a taxable year equals the member's disallowed BIE carryforward from that year divided by the consolidated group's disallowed BIE carryforwards from that year.

(iii) ***Amount of foreign related BIE carryforward status allocable to a member.*** The amount of foreign related BIE carryforward status that is allocated to a member equals the group's foreign related BIE carryforward from that year multiplied by the percentage of disallowed BIE carryforward allocable to the member (as defined in paragraph (c)(5)(ii)(B) of this section).

(iv) ***Treatment of amounts as having unrelated BIE carryforward status.*** If a member's disallowed BIE carryforward for a year exceeds the amount of domestic related BIE carryforward status and foreign related BIE carryforward status that is allocated to the member pursuant to paragraphs (c)(5)(ii) and (iii) of this section, respectively, the excess carryforward amount is treated as from payments or accruals to an unrelated party.

(v) ***Coordination with section 381.*** If a disallowed BIE carryforward is allocated a status as a domestic related BIE carryforward, foreign related BIE carryforward, or unrelated BIE carryforward under the allocation rule of paragraph (c)(5) of this section, the acquiring corporation in a transaction described in section 381(a) will succeed to and take into account the allocated status of the carryforward for purposes of section 59A. See § 1.381(c)(20)-1.

(6) ***Member deconsolidates from a consolidated group*** —

(i) ***General rule.*** When a member deconsolidates from a group (the original group), the member's disallowed BIE carryforwards retain their allocated status, pursuant to paragraph (c)(5) of this section, as a domestic related BIE carryforward, foreign related BIE carryforward, or unrelated BIE carryforward (as applicable). Following the member's deconsolidation, the status of the disallowed BIE carryforwards of the remaining members is not redetermined.

(ii) ***Gross receipts exception.*** This paragraph (c)(6)(ii) applies if the original group had insufficient gross receipts to satisfy the gross receipts test under § 1.59A-2(d) and thus was not an applicable taxpayer in the year in which the deconsolidating member's disallowed BIE carryforward was incurred. If this paragraph (c)(6)(ii) applies, the deconsolidating member may determine the status of its disallowed BIE carryforward from that year by applying the classification rule of § 1.59A-3(c)(4) solely to the interest payments or accruals of the deconsolidating member, rather than by applying § 1.1502-59A(c)(3).

(iii) ***Failure to substantiate.*** If the deconsolidating member fails to substantiate a disallowed BIE carryforward as a domestic related BIE carryforward, foreign related BIE carryforward, or unrelated BIE carryforward, then the disallowed BIE carryforward is treated as a foreign related BIE carryforward.

(7) ***Corporation joins a consolidated group.*** If a corporation joins a consolidated group (the acquiring group), and that corporation was allocated a domestic related BIE carryforward status, foreign related BIE carryforward status, or unrelated BIE carryforward status pursuant to paragraph (c)(5) of this section from another consolidated group (the original group), or separately has a disallowed BIE carryforward that is classified as from payments or accruals to a domestic related party, foreign related party, or unrelated party, the status of the carryforward is taken into account in determining the acquiring group's base erosion tax benefit when the corporation's disallowed BIE carryforward is absorbed.

(d) ***Allocation of the base erosion minimum tax amount to members of the consolidated group.*** For rules regarding the allocation of the base erosion minimum tax amount, see section 1552. Allocations under section 1552 take into account the classification and allocation provisions of paragraphs (c)(3) through (5) of this section.

(e) [Reserved]

(f) ***Definitions.*** The following definitions apply for purposes of this section—

(1) ***Aggregate current year BIE.*** The consolidated group's *aggregate current year BIE* is the aggregate of all members' current year BIE.

(2) ***Aggregate current year BIE deduction.*** The consolidated group's *aggregate current year BIE deduction* is the aggregate of all members' current year BIE deductions.

(3) ***Applicable taxpayer.*** The term *applicable taxpayer* has the meaning provided in § 1.59A-2(b).

(4) ***Base erosion minimum tax amount.*** The consolidated group's *base erosion minimum tax amount* is the tax imposed under section 59A.

(5) ***Base erosion tax benefit.*** The term *base erosion tax benefit* has the meaning provided in § 1.59A-3(c)(1).

(6) ***Business interest expense.*** The term *business interest expense,* with respect to a member and a taxable year, has the meaning provided in § 1.163(j)-1(b)(3), and with respect to a consolidated group and a taxable year, has the meaning provided in § 1.163(j)-4(d)(2)(iii).

(7) ***Consolidated group's disallowed BIE carryforwards.*** The term *consolidated group's disallowed BIE carryforwards* has the meaning provided in § 1.163(j)-5(b)(3)(i).

(8) ***Current year BIE.*** A member's *current year BIE* is the member's business interest expense that would be deductible in the current taxable year without regard to section 163(j) and that is not a disallowed business interest expense carryforward from a prior taxable year.

(9) ***Current year BIE deduction.*** A member's *current year BIE deduction* is the member's current year BIE that is permitted as a deduction in the taxable year.

(10) ***Domestic related BIE carryforward.*** The consolidated group's *domestic related BIE carryforward* for any taxable year is the excess of the group's domestic related current year BIE over the group's domestic related current year BIE deduction (if any).

(11) ***Domestic related current year BIE.*** The consolidated group's *domestic related current year BIE* for any taxable year is the consolidated group's aggregate current year BIE paid or accrued to a domestic related party.

(12) ***Domestic related current year BIE deduction.*** The consolidated group's *domestic related current year BIE deduction* for any taxable year is the portion of the group's aggregate current year BIE deduction classified as from interest paid or accrued to a domestic related party under paragraph (c)(3) of this section.

(13) ***Domestic related party.*** A *domestic related party* is a related party that is not a foreign related party and is not a member of the same consolidated group.

(14) ***Disallowed BIE carryforward.*** The term *disallowed BIE carryforward* has the meaning provided in § 1.163(j)-1(b)(11).

(15) ***Foreign related BIE carryforward.*** The consolidated group's *foreign related BIE carryforward* for any taxable year, is the excess of the group's foreign related current year BIE over the group's foreign related current year BIE deduction (if any).

(16) ***Foreign related current year BIE.*** The consolidated group's *foreign related current year BIE* for any taxable year is the consolidated group's aggregate current year BIE paid or accrued to a foreign related party.

(17) ***Foreign related current year BIE deduction.*** The consolidated group's *foreign related current year BIE deduction* for any taxable year is the portion of the consolidated group's aggregate current year BIE deduction classified as from interest paid or accrued to a foreign related party under paragraph (c)(3) of this section.

(18) ***Foreign related party.*** A *foreign related party* has the meaning provided in § 1.59A-1(b)(12).

(19) ***Related party.*** The term *related party* has the meaning provided in § 1.59A-1(b)(17), but excludes members of the same consolidated group.

(20) ***Section 163(j) interest deduction.*** The term *section 163(j) interest deduction* means, with respect to a taxable year, the amount of the consolidated group's business interest expense permitted as a deduction pursuant to § 1.163(j)-5(b)(3) in the taxable year.

(21) ***Section 163(j) limitation.*** The term *section 163(j) limitation* has the meaning provided in § 1.163(j)-1(b)(36).

(22) ***Unrelated BIE carryforward.*** The consolidated group's *unrelated BIE carryforward* for any taxable year is the excess of the group's unrelated current year BIE over the group's unrelated current year BIE deduction.

(23) ***Unrelated current year BIE.*** The consolidated group's *unrelated current year BIE* for any taxable year is the consolidated group's aggregate current year BIE paid or accrued to an unrelated party.

(24) ***Unrelated current year BIE deduction.*** The consolidated group's *unrelated current year BIE deduction* for any taxable year is the portion of the group's aggregate current year BIE deduction classified as from interest paid or accrued to an unrelated party under paragraph (c)(3) of this section.

(25) ***Unrelated party.*** An *unrelated party* is a party that is not a related party.

(g) ***Examples.*** The following examples illustrate the general application of this section. For purposes of the examples, a foreign corporation (FP) wholly owns domestic corporation (P), which in turn wholly owns S1 and S2. P, S1, and S2 are members of a consolidated group. The consolidated group is a calendar year taxpayer.

(1) ***Example 1: Computation of the consolidated group's base erosion minimum tax amount.***

(i) ***The consolidated group is the applicable taxpayer*** —

(A) ***Facts.*** The members have never engaged in intercompany transactions. For the 2019 taxable year, P, S1, and S2 were permitted the following amounts of deductions (within the meaning of section 59A(c)(4)), $2,400x, $1,000x, and $2,600x; those deductions include base erosion tax benefits of $180x, $370x, and $230x. The group's consolidated taxable income for the year is $150x. In addition, the group satisfies the gross receipts test in § 1.59A-2(d).

(B) ***Analysis.*** Pursuant to paragraph (b) of this section, the receipts and deductions of P, S1, and S2 are aggregated for purposes of making the computations under section 59A. The group's base erosion percentage is 13% (($180x + $370x + $230x)/($2,400x + $1,000x + $2,600x)). The consolidated group is an applicable taxpayer under § 1.59A-2(b) because

the group satisfies the gross receipts test and the group's base erosion percentage (13%) is higher than 3%. The consolidated group's modified taxable income is computed by adding back the members' base erosion tax benefits (and, when the consolidated group has consolidated net operating loss available for deduction, the consolidated net operating loss allowed multiplied by the base erosion percentage) to the consolidated taxable income, $930x ($150x + $180x + $370x + $230x). The group's base erosion minimum tax amount is then computed as 10 percent of the modified taxable income less the regular tax liability, $61.5x ($930x × 10%−$150x × 21%).

(ii) ***The consolidated group engages in intercompany transactions*** —

(A) ***Facts.*** The facts are the same as in paragraph (g)(1)(i)(A) of this section (the facts in *Example 1*(i)), except that S1 sold various inventory items to S2 during 2019. Such items are depreciable in the hands of S2 (but would not have been depreciable in the hands of S1) and continued to be owned by S2 during 2019.

(B) ***Analysis.*** The result is the same as paragraph (g)(1)(i)(A) of this section (the facts in *Example 1*(i)). Pursuant to paragraph (b)(2) of this section, items resulting from the intercompany sale (for example, gross receipts, depreciation deductions) are not taken into account in computing the group's gross receipts under § 1.59A-2(d) and base erosion percentage under § 1.59A-2(e)(3).

(2) ***Example 2: Business interest expense subject to section 163(j) and the group's domestic related current year BIE and foreign related current year BIE for the year equals its section 163(j) limitation*** —

(i) ***Facts.*** During the current year (Year 1), P incurred $150x of business interest expense to domestic related parties; S1 incurred $150x of business interest expense to foreign related parties; and S2 incurred $150x of business interest expense to unrelated parties. The group's section 163(j) limitation for the year is $300x. After applying the rules in § 1.163(j)-5(b)(3), the group deducts $150x of P's Year 1 business interest expense, and $75x each of S1 and S2's Year 1 business interest expense. Assume the group is an applicable taxpayer for purposes of section 59A.

(ii) ***Analysis*** —

(A) ***Application of the absorption rule in paragraph (c)(2) of this section.*** Following the rules in section 163(j), the group's section 163(j) interest deduction for Year 1 is $300x, and the entire amount is from members' Year 1 business interest expense.

(B) ***Application of the classification rule in paragraph (c)(3) of this section.*** Under paragraph (c)(3) of this section, the group's aggregate current year BIE deduction of $300x is first classified as payments or accruals to related parties (pro-rata among domestic related parties and foreign related parties), and second as payments or accruals to unrelated parties. For Year 1, the group has $150x of domestic related current year BIE and $150x of foreign related current year BIE, and the group's aggregate current year BIE deduction will be classified equally among the related party expenses. Therefore, $150x of the group's deduction is classified as domestic related current year BIE deduction and $150x is classified as a foreign related current year BIE deduction.

(C) ***Application of the allocation rule in paragraph (c)(4) of this section.*** After the application of the classification rule in paragraph (c)(3) of this section, the group has $150x each of domestic related current year BIE deduction and foreign related current year BIE deduction

from the group's aggregate current year BIE in Year 1. The domestic related current year BIE deduction and foreign related current year BIE deduction will be allocated to P, S1, and S2 based on each member's deduction of its Year 1 business interest expense.

(1) ***Allocations to P.*** The percentage of current year BIE deduction attributable to P is 50% (P's deduction of its Year 1 current year BIE, $150x, divided by the group's aggregate current year BIE deduction for Year 1, $300x). Thus, the amount of domestic related current year BIE deduction status allocated to P is $75x (the group's domestic related current year BIE deduction, $150x, multiplied by the percentage of current year BIE deduction allocable to P, 50%); and the amount of foreign related current year BIE deduction status allocated to P is $75x (the group's foreign related current year BIE deduction, $150x, multiplied by the percentage of current year BIE deduction allocable to P, 50%).

(2) ***Allocations to S1 and S2.*** The percentage of current year BIE deduction attributable to S1 is 25% (S1's deduction of its Year 1 current year BIE, $75x, divided by the group's aggregate current year BIE deduction for Year 1, $300x). Thus, the amount of domestic related current year BIE deduction status allocated to S1 is $37.5x (the group's domestic related current year BIE deduction, $150x, multiplied by the percentage of current year BIE deduction allocable to S1, 25%); and the amount of foreign related current year BIE deduction status allocated to S1 is $37.5x (the group's foreign related current year BIE deduction, $150x, multiplied by the percentage of current year BIE deduction allocable to S1, 25%). Because S2 also deducted $75 of its Year 1 current year BIE, S2's deductions are allocated the same pro-rata status as those of S1 under this paragraph (f)(2)(ii)(C)(2).

(D) ***Application of the allocation rule in paragraph (c)(5) of this section.*** Although the group will have disallowed BIE carryforwards after Year 1 (the group's aggregate current year BIE of $450x ($150x + $150x + $150x) exceeds the section 163(j) limitation of $300x), all of the domestic related current year BIE and foreign related current year BIE in Year 1 has been taken into account pursuant to the classification rule in paragraph (c)(3) of this section. Thus, under paragraph (c)(5)(iv) of this section, each member's disallowed BIE carryforward is treated as from payments or accruals to unrelated parties.

(3) ***Example 3: Business interest expense subject to section 163(j)*** —

(i) ***The group's domestic related current year BIE and foreign related current year BIE for the year exceeds its section 163(j) limitation.***

(A) ***Facts.*** During the current year (Year 1), P incurred $60x of business interest expense to domestic related parties; S1 incurred $40x of business interest expense to foreign related parties; and S2 incurred $80x of business interest expense to unrelated parties. The group's section 163(j) limitation for the year is $60x. After applying the rules in § 1.163(j)-5(b)(3), the group deducts $20x each of P, S1, and S2's current year business interest expense. Assume the group is an applicable taxpayer for purposes of section 59A.

(B) ***Analysis*** —

(1) ***Application of the absorption rule in paragraph (c)(2) of this section.*** Following the rules in section 163(j), the group's section 163(j) interest deduction is $60x, and the entire amount is from members' Year 1 business interest expense.

(2) ***Application of the classification rule in paragraph (c)(3) of this section.*** Under paragraph (c)(3) of this section, the group's $60x of aggregate current year BIE deduction is first classified as payments or accruals to related parties (pro-rata among domestic related parties and foreign related parties), and second as payments or accruals from unrelated parties. The group's total related party interest expense in Year 1, $100x (sum of the group's Year 1 domestic related current year BIE, $60x, and the group's Year 1 foreign related current year BIE, $40x), exceeds the group's aggregate current year BIE deduction of $60x. Thus, the group's aggregate current year BIE deduction will be classified, pro-rata, as from payments or accruals to domestic related parties and foreign related parties. Of the group's aggregate current year BIE deduction in Year 1, $36x is classified as a domestic related current year BIE deduction (the group's aggregate current year BIE deduction, $60x, multiplied by the ratio of domestic related current year BIE over the group's total Year 1 related party interest expense ($60x/($60x + $40x))); and $24x of the group's aggregate current year BIE deduction is classified as a foreign related current year BIE deduction (the group's section 163(j) interest deduction, $60x, multiplied by the ratio of foreign related current year BIE over the group's total Year 1 related party interest expense ($40x/($60x + $40x))).

(3) ***Application of the allocation rule in paragraph (c)(4) of this section.*** After the application of the classification rule in paragraph (c)(3) of this section, the group has $36x of domestic related current year BIE deduction and $24x of foreign related current year BIE deduction from the group's aggregate current year BIE in Year 1. The domestic related current year BIE deduction and foreign related current year BIE deduction will be allocated to P, S1, and S2 based on each member's current year BIE deduction in Year 1.

(*i*) ***Allocation of the group's domestic related current year BIE deduction status.*** Because each member is deducting $20x of its Year 1 business interest expense, all three members have the same percentage of current year BIE deduction attributable to them. The percentage of current year BIE deduction attributable to each of P, S1, and S2 is 33.33% (each member's current year BIE deduction in Year 1, $20x, divided by the group's aggregate current year BIE deduction for Year 1, $60x). Thus, the amount of domestic related current year BIE deduction status allocable to each member is $12x (the group's domestic related current year BIE deduction, $36x, multiplied by the percentage of current year BIE deduction allocable to each member, 33.33%).

(*ii*) ***Allocations of the group's foreign related current year BIE deduction status.*** The amount of foreign related current year BIE deduction status allocable to each member is $8x (the group's foreign related current year BIE deduction, $24x, multiplied by the percentage of current year BIE deduction allocable to each member, 33.33%, as computed earlier in paragraph (f)(3) of this section (*Example 3*).

(4) ***Application of the allocation rule in paragraph (c)(5) of this section.*** In Year 1 the group has $60x of domestic related current year BIE, of which $36x is deducted in the year (by operation of the classification rule). Therefore, the group has $24x of domestic related BIE carryforward. Similarly, the group has $40x of foreign related current year BIE in Year 1, of which $24x is deducted in the year. Therefore, the group has $16x of

foreign related BIE carryforward. The $24x domestic related BIE carryforward status and $16x foreign related BIE carryforward status will be allocated to P, S1, and S2 in proportion to the amount of each member's disallowed BIE carryforward.

(*i*) ***Allocation to P.*** The percentage of disallowed BIE carryforward allocable to P is 33.33% (P's Year 1 disallowed BIE carryforward, $40x ($60x − $20x), divided by the group's Year 1 disallowed BIE carryforward, $120x ($60x + $40x + 80x − $60x)). Thus, the amount of domestic related BIE carryforward status allocated to P is $8x (the group's domestic related BIE carryforward, $24x, multiplied by the percentage of disallowed BIE carryforward allocable to P, 33.33%); and the amount of foreign related BIE carryforward status allocated to P is $5.33x (the group's foreign related BIE carryforward, $16x, multiplied by the percentage of disallowed BIE carryforward allocable to P, 33.33%). Under paragraph (c)(5)(iv) of this section, P's disallowed BIE carryforward that has not been allocated a status as either a domestic related BIE carryforward or a foreign related BIE carryforward will be treated as interest paid or accrued to an unrelated party. Therefore, $26.67x ($40x P's disallowed BIE carryforward −$8x domestic related BIE carryforward status allocated to P −$5.33x foreign related BIE carryforward status allocated to P) is treated as interest paid or accrued to an unrelated party.

(*ii*) ***Allocation to S1.*** The percentage of disallowed BIE carryforward allocable to S1 is 16.67% (S1's Year 1 disallowed BIE carryforward, $20x ($40x − $20x), divided by the group's Year 1 disallowed BIE carryforward, $120x ($60x + $40x + 80x − $60x). Thus, the amount of domestic related BIE carryforward status allocated to S1 is $4x (the group's domestic related BIE carryforward, $24x, multiplied by the percentage of disallowed BIE carryforward allocable to S1, 16.67%); and the amount of foreign related BIE carryforward status allocated to S1 is $2.67x (the group's foreign related BIE carryforward, $16x, multiplied by the percentage of disallowed BIE carryforward allocable to S1, 16.67%). Under paragraph (c)(5)(iv) of this section, S1's disallowed BIE that has not been allocated a status as either a domestic related BIE carryforward or a foreign related BIE carryforward will be treated as interest paid or accrued to an unrelated party. Therefore, $13.33x ($20x S1's disallowed BIE carryforward −$4x domestic related BIE carryforward status allocated to S1 − $2.67x foreign related BIE carryforward status allocated to S1) is treated as interest paid or accrued to an unrelated party.

(*iii*) ***Allocation to S2.*** The percentage of disallowed BIE carryforward allocable to S2 is 50% (S2's Year 1 disallowed BIE carryforward, $60x ($80x − $20x), divided by the group's Year 1 disallowed BIE carryforward, $120x ($60x + $40x + 80x − $60x). Thus, the amount of domestic related BIE carryforward status allocated to S2 is $12x (the group's domestic related BIE carryforward, $24x, multiplied by the percentage of disallowed BIE carryforward allocable to S2, 50%); and the amount of foreign related BIE carryforward status allocated to S2 is $8x (the group's foreign related BIE carryforward, $16x, multiplied by the percentage of disallowed BIE carryforward allocable to S2, 50%). Under paragraph (c)(5)(iv) of this section, S2's disallowed BIE that has not been allocated a status as either a domestic related BIE carryforward or a foreign related BIE carryforward will be

treated as interest paid or accrued to an unrelated party. Therefore, $40x ($60x S2's disallowed BIE carryforward −$12x domestic related BIE carryforward status allocated to S2 − $8x foreign related BIE carryforward status allocated to S2) is treated as interest paid or accrued to an unrelated party.

(ii) ***The group deducting its disallowed BIE carryforwards*** —

(A) ***Facts.*** The facts are the same as in paragraph (g)(3)(i)(A) of this section (the facts in *Example 3*(i)), and in addition, none of the members incurs any business interest expense in Year 2. The group's section 163(j) limitation for Year 2 is $30x.

(B) ***Analysis*** —

(*1*) ***Application of the absorption rule in paragraph (c)(2) of this section.*** Following the rules in section 163(j), each member of the group is deducting $10x of its disallowed BIE carryforward from Year 1. Therefore, the group's section 163(j) deduction for Year 2 is $30x.

(*2*) ***Application of the classification rule in paragraph (c)(3) of this section.*** Under paragraph (c)(3)(iv) of this section, to the extent members are deducting their Year 1 disallowed BIE carryforward in Year 2, the classification rule will apply to the deduction in Year 2 after the allocation rule in paragraph (c)(5) of this section has allocated the related and unrelated party status to the member's disallowed BIE carryforward in Year 1. The allocation required under paragraph (c)(5) of this section is described in paragraph (f)(3)(i)(B)(*4*) of this section.

(*i*) ***Use of P's allocated domestic related BIE carryforward status and foreign related BIE carryforward status.*** P has $40x of Year 1 disallowed BIE carryforward, and P was allocated $8x of domestic related BIE carryforward status and $5.33x of foreign related BIE carryforward status. In Year 2, P deducts $10x of its Year 1 disallowed BIE carryforward. Under the classification rule of paragraph (c)(3) of this section, P is treated as deducting pro-rata from its allocated status of domestic related BIE carryforward and foreign related BIE carryforward. Therefore, P is treated as deducting $6x of its allocated domestic related BIE carryforward ($10x × $8x/($8x + $5.33x)), and $4x of its allocated foreign related BIE carryforward ($10x × $5.33x/$8x + $5.33x)). After Year 2, P has remaining $30x of Year 1 disallowed BIE carryforward, of which $2x has a status of domestic related BIE carryforward, $1.33x has the status of foreign related BIE carryforward, and $26.67x of interest treated as paid or accrued to unrelated parties.

(*ii*) ***Use of S1's allocated domestic related BIE carryforward status and foreign related BIE carryforward status.*** S1 has $20x of Year 1 disallowed BIE carryforward, and S1 was allocated $4x of domestic related BIE carryforward status and $2.67x of foreign related BIE carryforward status. In Year 2, S2 deducts $10x of its Year 1 disallowed BIE carryforward. Because S2's deduction of its Year 1 disallowed BIE carryforward, $10x, exceeds its allocated domestic related BIE carryforward status ($4x) and foreign related BIE carryforward status ($2.67x), all of the allocated related party status are used up. After Year 2, all of S1's Year 1 disallowed BIE carryforward, $10x, is treated as interest paid or accrued to an unrelated party.

(*iii*) ***Use of S2's allocated domestic related BIE carryforward status and foreign related BIE carryforward status.*** S2 has $60x of Year 1 disallowed BIE carryforward, and S2 was allocated $12x of domestic related BIE carryforward status and $8x of foreign related BIE carryforward status. In Year 2, S2 deducts $10x of its Year 1 disallowed BIE carryforward. Under the classification rule of paragraph (c)(3) of this section, S2 is treated as deducting $6x of its allocated domestic related BIE carryforward ($10x × $12x/($12x + $8x)), and $4x of its allocated foreign related BIE carryforward ($10x × $8x/$8x + $12x)). After Year 2, P has remaining $50x of Year 1 disallowed BIE carryforward, of which $6x has a status of domestic related BIE carryforward, $4x has the status of foreign related BIE carryforward, and $40x of interest treated as paid or accrued to unrelated parties.

(h) ***Applicability date.*** This section applies to taxable years for which the original consolidated Federal income tax return is due (without extensions) after December 6, 2019.

[T.D. 9885, 84 FR 67039, Dec. 6, 2019; 85 FR 49595, Aug. 14, 2020, as amended by T.D 9910, 85 FR 64369, Oct. 9, 2020]

§ 1.1502-68 Additional first year depreciation deduction for property acquired and placed in service after September 27, 2017.

(a) ***In general*** —

(1) ***Overview.*** This section provides rules governing the availability of the additional first year depreciation deduction allowable under section 168(k) for qualified property that is acquired and placed in service after September 27, 2017, by a member of a consolidated group. Except as otherwise provided in paragraph (c) of this section, the rules in § 1.168(k)-2 apply to members of a consolidated group in addition to the rules in this section. Paragraph (a)(2) of this section provides definitions of terms used in this section. Paragraph (b) of this section provides rules addressing the application of § 1.168(k)-2(b)(3)(iii)(A)(*1*) (requiring that a taxpayer claiming the additional first year depreciation deduction for used property not previously have used the property) to members of a consolidated group. Paragraph (c) of this section provides rules addressing certain transfers of eligible property (as defined in paragraph (a)(2)(vii) of this section) between members of a consolidated group if the transferee member (as defined in paragraph (a)(2)(xii) of this section) leaves the group pursuant to the same series of related transactions. Paragraph (d) of this section provides examples illustrating the application of the rules of this section. Paragraph (e) of this section provides the applicability dates.

(2) ***Definitions.*** The following definitions apply for purposes of this section.

(i) ***Consolidated Asset Acquisition Rule.*** The term *Consolidated Asset Acquisition Rule* refers to the rule set forth in paragraph (c)(1)(i) of this section addressing certain intercompany transfers of eligible property.

(ii) ***Consolidated Deemed Acquisition Rule.*** The term *Consolidated Deemed Acquisition Rule* refers to the rule set forth in paragraph (c)(2)(i) of this section addressing certain intercompany transfers of the stock of target (as defined in paragraph (a)(2)(xi) of this section).

(iii) ***Deconsolidation date.*** The term *deconsolidation date* means the date on which a transferee member ceases to be a member of a consolidated group.

(iv) ***Designated transaction.*** The term *designated transaction* has the meaning provided in paragraph (c)(4)(i) of this section.

(v) ***Deemed replacement property.*** The term *deemed replacement property* means used property that is identical to (but is separate and distinct from) the eligible property that the transferee member or target is deemed to sell to an unrelated party under the Consolidated Asset Acquisition Rule or the Consolidated Deemed Acquisition Rule. For all Federal income tax purposes, the deemed purchase of deemed replacement property by the transferee member or target under paragraph (c)(1)(i)(B) or (c)(2)(i)(B) of this section, respectively, does not result in the basis in such property being determined, in whole or in part, by reference to the basis of other property held at any time by the transferee member or target. See section 179(d)(3) and § 1.168(k)-2(b)(3)(iii)(A)(*3*).

(vi) ***Deemed sale amount.*** The term *deemed sale amount* means an amount equal to the transferee member's or the target's adjusted basis in the eligible property immediately before the transferee member or target is deemed to sell the property to an unrelated party under the Consolidated Asset Acquisition Rule or the Consolidated Deemed Acquisition Rule.

(vii) ***Eligible property.*** The term *eligible property* means depreciable property (as defined in § 1.168(b)-1(a)(1)) that meets the requirements in § 1.168(k)-2(b)(2), determined without regard to § 1.168(k)-2(b)(2)(ii)(C) (property subject to an election not to claim the additional first year depreciation for a class of property) except on the day after the deconsolidation date.

(viii) ***Group Prior Use Rule.*** The term *Group Prior Use Rule* refers to the rule set forth in paragraph (b)(1) of this section addressing when a member of a consolidated group is attributed another member's depreciable interest in property.

(ix) ***Lookback Period.*** The term *lookback period* means, with respect to a member of a consolidated group, the period that includes the five calendar years immediately prior to the current calendar year in which the property is placed in service by such member, as well as the portion of such current calendar year before the date on which the member placed the property in service (without taking into account the applicable convention).

(x) ***Stock and Asset Acquisition Rule.*** The term *Stock and Asset Acquisition Rule* refers to the rule set forth in paragraph (b)(2) of this section addressing when a member of a consolidated group is attributed a new member's depreciable interest in property.

(xi) ***Target.*** The term *target* means the member whose stock is transferred in a transaction that is subject to the Consolidated Deemed Acquisition Rule.

(xii) ***Transferee member.*** The term *transferee member* means the member that acquires eligible property or target stock, respectively, in a transaction that is subject to the Consolidated Asset Acquisition Rule or the Consolidated Deemed Acquisition Rule.

(xiii) ***Transferor member.*** The term *transferor member* means the member that transfers eligible property or target stock, respectively, in a transaction that is subject to the Consolidated Asset Acquisition Rule or the Consolidated Deemed Acquisition Rule.

(b) ***Acquisitions of depreciable property by a member of a consolidated group*** —

(1) ***General rule (Group Prior Use Rule).*** Solely for purposes of applying § 1.168(k)-2(b)(3)(iii)(A)(*1*), if a member of a consolidated group acquires depreciable property in which the group had a depreciable interest at any time within the lookback period, the member is treated as having a depreciable

interest in the property prior to the acquisition. For purposes of this paragraph (b)(1), a consolidated group is treated as having a depreciable interest in property during the time any current or previous member of the group had a depreciable interest in the property while a member of the group. For special rules that apply when a member of a consolidated group acquires depreciable property in an intercompany transaction (as defined in § 1.1502-13(b)(1)(i)) and then leaves the group pursuant to the same series of related transactions, see paragraph (c) of this section.

(2) ***Certain acquisitions pursuant to a series of related transactions (Stock and Asset Acquisition Rule).*** Solely for purposes of applying § 1.168(k)-2(b)(3)(iii)(A)(*1*), if a series of related transactions includes one or more transactions in which property is acquired by a member of a consolidated group, and one or more transactions in which a corporation that had a depreciable interest in the property (determined without regard to the application of the Group Prior Use Rule) within the lookback period becomes a member of the group, then the member that acquires the property is treated as having a depreciable interest in the property prior to the acquisition.

(c) ***Certain intercompany transfers of eligible property followed by deconsolidation*** —

(1) ***Acquisition of eligible property by a member that leaves the group*** —

(i) ***General rule (Consolidated Asset Acquisition Rule).*** This paragraph (c)(1) applies to certain transactions pursuant to which one member of a consolidated group (transferee member) acquires from another member of the same consolidated group (transferor member) eligible property. Except as otherwise provided in paragraph (c)(3) or (4) of this section, if a transaction satisfies the requirements of paragraph (c)(1)(ii) of this section, then § 1.168(k)-2(b)(3)(iii)(C) (providing special rules when depreciable property is acquired as part of a series of related transactions) does not apply to the transaction, and for all Federal income tax purposes—

(A) The transferee member is treated as selling the eligible property to an unrelated person on the day after the deconsolidation date in exchange for an amount of cash equal to the deemed sale amount; and

(B) Immediately after the deemed sale in paragraph (c)(1)(i)(A) of this section, the transferee member is treated as purchasing deemed replacement property from an unrelated person for an amount of cash equal to the deemed sale amount.

(ii) ***Requirements.*** A transaction satisfies the requirements of this paragraph (c)(1)(ii) if—

(A) The transferee member's acquisition of the eligible property meets the requirements of § 1.168(k)-2(b)(3)(iii)(A) without regard to section 179(d)(2)(A) or (B) and § 1.179-4(c)(1)(ii) or (iii) or the Group Prior Use Rule;

(B) As part of the same series of related transactions that includes the acquisition, the transferee member ceases to be a member of the consolidated group and ceases to be related, within the meaning of section 179(d)(2)(A) or (B) and § 1.179-4(c)(1)(ii) or (iii), to the transferor member; and

(C) The acquired eligible property continues to be eligible property on the deconsolidation date and the day after the deconsolidation date.

(2) ***Deemed acquisition of eligible property pursuant to an election under section 338 or 336(e) by a member that leaves the group*** —

(i) ***General rule (Consolidated Deemed Acquisition Rule).*** This paragraph (c)(2) applies to certain transactions pursuant to which a transferee member acquires from a transferor member the stock of another member of the same consolidated group that holds eligible property (target) in either a qualified stock purchase for which a section 338 election is made or a qualified stock disposition described in § 1.336-2(b)(1) for which a section 336(e) election is made. Except as otherwise provided in paragraph (c)(3) or (4) of this section, if a transaction satisfies the requirements of paragraph (c)(2)(ii) of this section, then § 1.168(k)-2(b)(3)(iii)(C) does not apply to the transaction, and for all Federal income tax purposes—

(A) The target is treated as selling the eligible property to an unrelated person on the day after the deconsolidation date in exchange for an amount of cash equal to the deemed sale amount; and

(B) Immediately after the deemed sale in paragraph (c)(2)(i)(A) of this section, the target is treated as purchasing deemed replacement property from an unrelated person for an amount of cash equal to the deemed sale amount.

(ii) ***Requirements.*** A transaction satisfies the requirements of this paragraph (c)(2)(ii) if:

(A) The target's acquisition of the eligible property meets the requirements of § 1.168(k)-2(b)(3)(iii)(A) without regard to the Group Prior Use Rule;

(B) As part of the same series of related transactions that includes the qualified stock purchase or qualified stock disposition, the transferee member and the target cease to be members of the transferor member's consolidated group and cease to be related, within the meaning of section 179(d)(2)(A) or (B) and § 1.179-4(c)(1)(ii) or (iii), to the transferor member; and

(C) The target's eligible property on the acquisition date (within the meaning of § 1.338-2(c)(1)) or the disposition date (within the meaning of § 1.336-1(b)(8)) continues to be eligible property on the deconsolidation date and the day after the deconsolidation date.

(3) ***Disposition of depreciable property pursuant to the same series of related transactions.*** Paragraph (c)(1) of this section does not apply if, following the acquisition of eligible property, the transferee member disposes of such property pursuant to the same series of related transactions that includes the property acquisition. Paragraph (c)(2) of this section does not apply if, following the deemed acquisition of eligible property, the target disposes of such property pursuant to the same series of related transactions that includes the qualified stock purchase or qualified stock disposition. See § 1.168(k)-2(b)(3)(iii)(C) for rules regarding the transfer of property in a series of related transactions. See also § 1.168(k)-2(g)(1) for rules regarding property placed in service and disposed of in the same taxable year. For purposes of this paragraph (c)(3), the deemed sale of eligible property by the transferee member or the target pursuant to paragraph (c)(1)(i)(A) or (c)(2)(i)(A) of this section is not treated as a “disposition” of such property.

(4) ***Election to not apply paragraph (c)(1)(i) or (c)(2)(i) of this section*** —

(i) ***In general.*** If a transaction satisfies the requirements of the Consolidated Asset Acquisition Rule or the Consolidated Deemed Acquisition Rule in paragraph (c)(1)(ii) or (c)(2)(ii) of this section, respectively, the transferee member or the target nonetheless may elect not to apply the Consolidated Asset Acquisition Rule or the Consolidated Deemed Acquisition Rule,

respectively, to all eligible property that is acquired or deemed acquired in such transaction. If a transferee member or target makes an election under this paragraph (c)(4) with respect to any transaction (designated transaction), then—

(A) The transferee member or target is deemed to have made such an election for all other transactions—

(*1*) That satisfy the requirements of the Consolidated Asset Acquisition Rule or the Consolidated Deemed Acquisition Rule;

(*2*) That are part of the same series of related transactions as the designated transaction; and

(*3*) In which the transferee member or target either is the same transferee member or target as in the designated transaction or is related, within the meaning of section 179(d)(2)(A) or (B) and § 1.179-4(c)(1)(ii) or (iii), to the transferee member or target in the designated transaction immediately after the end of the series of related transactions; and

(B) Any eligible property acquired or deemed acquired in the designated transaction and in any transactions described in paragraph (c)(4)(i)(A) of this section does not satisfy either the original use requirement or the used property acquisition requirements in § 1.168(k)-2(b)(3) and, thus, is not "qualified property" within the meaning of § 1.168(k)-2(b)(1).

(ii) ***Time and manner for making election*** —

(A) ***Time to make election.*** An election under this paragraph (c)(4) must be made by the due date, including extensions, for the Federal tax return for the taxable year of the transferee member or target that begins on the day after the deconsolidation date.

(B) ***Manner of making election.*** A transferee member or target, as applicable, makes the election under this paragraph (c)(4) by attaching a statement to its return for the taxable year that begins on the day after the deconsolidation date. The statement must describe the transaction(s) to which the Consolidated Asset Acquisition Rule or Consolidated Deemed Acquisition Rule otherwise would apply and state that the transferee member or the target, as applicable, is not claiming the additional first year depreciation deduction for any eligible property transferred in such transaction(s). If, at the time the election is made, the transferee member or the target is a member of a consolidated group, the statement is made by the agent for the group (within the meaning of § 1.1502-77(a) and (c)) on behalf of the transferee member or the target and is attached to the consolidated return of the group for the taxable year of the group that includes the taxable year of the transferee member or target that begins on the day after the deconsolidation date.

(C) ***Additional procedural guidance.*** The IRS may publish procedural guidance in the Internal Revenue Bulletin (see § 601.601(d)(2)(ii)(*b*) of this chapter) that provides alternative procedures for complying with paragraph (c)(4)(ii)(A) or (B) of this section.

(iii) ***Revocation of election.*** An election specified in this paragraph (c)(4), once made, may be revoked only by filing a request for a private letter ruling and obtaining the Commissioner of Internal Revenue's written consent to revoke the election. The Commissioner may grant a request to revoke the election if the taxpayer acted reasonably and in good faith, and the

revocation will not prejudice the interests of the Government. See generally § 301.9100-3 of this chapter. An election specified in this paragraph (c)(4) may not be revoked through a request under section 446(e) to change the taxpayer's method of accounting.

(d) ***Examples.*** For purposes of the examples in this section, unless otherwise stated: Parent, S, B, Controlled, and T are members of a consolidated group of which Parent is the common parent (Parent group); Parent owns all of the only class of stock of each of S, B, Controlled, and T; X is the common parent of the X consolidated group (X group); no member of the X group is related, within the meaning of section 179(d)(2)(A) or (B) and § 1.179-4(c)(1)(ii) or (iii) (Related), to any member of the Parent group; G and U are corporations that are not Related to each other or to any member of the Parent group or the X group; the Equipment in each example is eligible property; no member of the Parent group or the X group has had a depreciable interest in the Equipment within the lookback period; § 1.168(k)-2(b)(3)(iii)(A)(*1*) is referred to as the No Prior Use Requirement; and § 1.168(k)-2(b)(3)(iii)(A)(*2*) is referred to as the Unrelated Party Requirement. The rules of this section are illustrated by the following examples.

(1) ***Example 1: Intercompany sale of eligible property*** —

(i) ***Facts.*** S has a depreciable interest in Equipment #1. In 2018, S sells Equipment #1 to B, and B places Equipment #1 in service in the same year.

(ii) ***Analysis.*** B's acquisition of Equipment #1 does not satisfy either the No Prior Use Requirement or the Unrelated Party Requirement. Under the Group Prior Use Rule, B is treated as previously having a depreciable interest in Equipment #1 because B (a member of the Parent group) acquired Equipment #1 and S, while a member of the Parent group, had a depreciable interest in Equipment #1 within the lookback period. In addition, B acquires Equipment #1 from S, and B and S are Related at the time of the acquisition. Accordingly, B is not eligible to claim the additional first year depreciation deduction for Equipment #1 in 2018.

(2) ***Example 2: Sale outside of the consolidated group followed by a reacquisition within the lookback period*** —

(i) ***Facts.*** S has a depreciable interest in Equipment #2. In 2018, S sells Equipment #2 to G. In 2019, in an unrelated transaction, B acquires Equipment #2 from G and places it in service in the same year.

(ii) ***Analysis.*** B's acquisition of Equipment #2 does not satisfy the No Prior Use Requirement as a result of the Group Prior Use Rule. Pursuant to the Group Prior Use Rule, B is treated as previously having a depreciable interest in Equipment #2 because B is a member of the Parent group and S, while a member of the Parent group, had a depreciable interest in Equipment #2 within the lookback period. Thus, B is not eligible to claim the additional first year depreciation deduction for Equipment #2 in 2019. The result would be the same if, after selling Equipment #2 to G, S had ceased to be a member of the Parent group prior to B's acquisition of Equipment #2.

(iii) ***Sale outside of the consolidated group followed by a reacquisition beyond the lookback period.*** The facts are the same as in paragraph (d)(2)(i) of this section, except that B acquires Equipment #2 and places it in service in 2024 instead of 2019. B's acquisition of Equipment #2 satisfies the No Prior Use Requirement. B would not be treated as previously having a depreciable interest in Equipment #2 under the Group Prior Use Rule because the Parent group did not have a depreciable interest in Equipment #2 within the lookback period. Further, B itself did not have a prior depreciable interest in Equipment #2 within the lookback period. Assuming

all other requirements in § 1.168(k)-2 are satisfied, B is eligible to claim the additional first year depreciation deduction for Equipment #2 in 2024. The result would be the same if S, rather than B, acquired and placed in service Equipment #2 in 2024.

(3) ***Example 3: Acquisition of eligible property by the consolidated group followed by a corporation with a prior depreciable interest joining the group as part of the same series of related transactions*** —

(i) ***Facts.*** G has a depreciable interest in Equipment #3. During 2018, G sells Equipment #3 to U. In a series of related transactions that does not include the 2018 sale, Parent acquires all of the stock of G in 2019. Later in 2019, B purchases Equipment #3 from U and places it in service immediately thereafter.

(ii) ***Analysis.*** B's acquisition of Equipment #3 does not satisfy the No Prior Use Requirement as a result of the Stock and Asset Acquisition Rule. In a series of related transactions, G became a member of the Parent group and B acquired Equipment #3. Because G had a depreciable interest in Equipment #3 within the lookback period, B is treated as having a depreciable interest in Equipment #3 under the Stock and Asset Acquisition Rule. Thus, B is not eligible to claim the additional first year depreciation deduction for Equipment #3 in 2019.

(iii) ***B purchases Equipment #3 in 2024.*** The facts are the same as in paragraph (d)(3)(i) of this section, except that B acquires and places in service Equipment #3 in 2024 instead of 2019. B is not treated under the Stock and Asset Acquisition Rule as having a prior depreciable interest in Equipment #3 because G (which sold Equipment #3 to U in 2018) did not have a depreciable interest in Equipment #3 within the lookback period. In addition, B is not treated under the Group Prior Use Rule as having a prior depreciable interest in Equipment #3 at the time of the purchase because neither G nor any other member of the Parent group had a depreciable interest in Equipment #3 while a member of the Parent group within the lookback period. Further, B itself did not have a depreciable interest in Equipment #3 within the lookback period. Accordingly, B's acquisition of Equipment #3 satisfies the No Prior Use Requirement. Assuming all other requirements in § 1.168(k)-2 are satisfied, B is eligible to claim the additional first year depreciation deduction for Equipment #3 in 2024.

(iv) ***No series of related transactions.*** The facts are the same as in paragraph (d)(3)(i) of this section, except that Parent's acquisition of the G stock and B's purchase of Equipment #3 are not part of the same series of related transactions. Because B's purchase of Equipment #3 and Parent's acquisition of the G stock did not occur pursuant to the same series of related transactions, the Stock and Asset Acquisition Rule does not apply. In addition, B is not treated under the Group Prior Use Rule as having a prior depreciable interest in Equipment #3 at the time of the purchase because neither G nor any other member of the Parent group had a depreciable interest in Equipment #3 while a member of the Parent group within the lookback period. Further, B itself did not have a depreciable interest in Equipment #3 within the lookback period. Accordingly, B's acquisition of Equipment #3 satisfies the No Prior Use Requirement. Assuming all other requirements in § 1.168(k)-2 are satisfied, B is eligible to claim the additional first year depreciation deduction for Equipment #3 in 2019.

(4) ***Example 4: Termination of the consolidated group*** —

(i) ***Facts.*** S owns Equipment #4. In 2018, S sells Equipment #4 to U. In 2019, X acquires all of the stock of Parent in a transaction that causes the Parent group to terminate and Parent, B, and S to become members of the X group. In 2020, in a transaction that is not part of a series of related transactions, B purchases Equipment #4 from U and places it in service in the same year.

(ii) ***Analysis.*** B's acquisition of Equipment #4 satisfies the No Prior Use Requirement. The Group Prior Use Rule does not apply to treat B as having a prior depreciable interest in Equipment #4 because B is a member of the X group and no member of the X group had a depreciable interest in Equipment #4 while a member of the X group within the lookback period. Further, B itself did not have a prior depreciable interest in Equipment #4 within the lookback period. Assuming all other requirements in § 1.168(k)-2 are satisfied, B is eligible to claim the additional first year depreciation deduction for Equipment #4 in 2020.

(iii) ***S purchases Equipment #4 in 2020.*** The facts are the same as in paragraph (d)(4)(i) of this section, except that S rather than B purchases and places in service Equipment #4 in 2020. S's purchase of Equipment #4 does not satisfy the No Prior Use Requirement because S had a depreciable interest in Equipment #4 within the lookback period. Thus, S is not eligible to claim the additional first year depreciation deduction for Equipment #4 in 2020.

(iv) ***Acquisitions are part of the same series of related transactions.*** The facts are the same as in paragraph (d)(4)(i) of this section, except that X's acquisition of the Parent stock and B's purchase of Equipment #4 are part of the same series of related transactions. Thus, pursuant to the same series of related transactions, S became a member of the X group and B (another member of the X group) acquired Equipment #4. Because S had a depreciable interest in Equipment #4 within the lookback period, B is treated as having a depreciable interest in Equipment #4 under the Stock and Asset Acquisition Rule. As a result, B's acquisition of Equipment #4 does not satisfy the No Prior Use Requirement, and B is not eligible to claim the additional first year depreciation deduction for Equipment #4 in 2020.

(5) ***Example 5: Intercompany sale of eligible property followed by sale of B stock as part of the same series of related transactions —***

(i) ***Facts.*** S has a depreciable interest in Equipment #5. On January 1, 2019, B purchases Equipment #5 from S and places it in service. On June 1, 2019, as part of the same series of related transactions that includes B's purchase of Equipment #5, Parent sells all of the stock of B to X. Thus, B leaves the Parent group at the end of the day on June 1, 2019, and B is a member of the X group starting June 2, 2019. See § 1.1502-76(b). As of June 1, 2019, Equipment #5 remains eligible property.

(ii) ***Analysis —***

(A) ***Application of the Consolidated Asset Acquisition Rule.*** B was a member of the Parent group when it acquired Equipment #5. Because S, another member of the Parent group, had a depreciable interest in Equipment #5 while a member of the group within the lookback period, B would be treated as having a prior depreciable interest in Equipment #5 under the Group Prior Use Rule and B's acquisition of Equipment #5 would not satisfy the No Prior Use Requirement. However, B's acquisition of Equipment #5 satisfies the requirements of the Consolidated Asset Acquisition Rule in paragraph (c)(1)(ii) of this section. First, B's acquisition of Equipment #5 meets the requirements of § 1.168(k)-2(b)(3)(iii)(A) without regard to the related-party tests under section 179(d)(2)(A)

or (B) and § 1.179-4(c)(1)(ii) or (iii) or the Group Prior Use Rule. Second, as part of the same series of related transactions that includes B's acquisition of Equipment #5, B ceases to be a member of the Parent group and ceases to be Related to S. Third, Equipment #5 continues to be eligible property on the deconsolidation date (June 1, 2019).

(B) ***Consequences of the Consolidated Asset Acquisition Rule.*** Under the Consolidated Asset Acquisition Rule, B is treated for all Federal income tax purposes as transferring Equipment #5 to an unrelated person on June 2, 2019, in exchange for an amount of cash equal to the deemed sale amount and, immediately thereafter, acquiring deemed replacement property (New Equipment #5) from an unrelated person for an amount of cash equal to the deemed sale amount. Accordingly, assuming all other requirements in § 1.168(k)-2 are satisfied, B is eligible to claim the additional first year depreciation for an amount equal to the deemed sale amount for the taxable year in which it places New Equipment #5 in service.

(iii) ***Distribution of B.*** The facts are the same as in paragraph (d)(5)(i) of this section, except that, on June 1, 2019, Parent distributes the stock of B to its shareholders (which are not Related to S) in a distribution that qualifies for nonrecognition under section 355(a). Accordingly, the Consolidated Asset Acquisition Rule applies. As in paragraph (d)(5)(ii)(B) of this section, assuming all other requirements in § 1.168(k)-2 are satisfied, B is eligible to claim the additional first year depreciation deduction for an amount equal to the deemed sale amount for the taxable year in which it places New Equipment #5 in service.

(iv) ***Equipment #5 ceases to be eligible property.*** The facts are the same as in paragraph (d)(5)(i) of this section, except that, on June 1, 2019, Equipment #5 is no longer eligible property. The Consolidated Asset Acquisition Rule does not apply because B's acquisition of Equipment #5 fails to satisfy the requirement in paragraph (c)(1)(ii)(C) of this section that the acquired eligible property continue to be eligible property on the deconsolidation date. Therefore, B's acquisition of Equipment #5 on January 1, 2019, fails to satisfy the No Prior Use Requirement. Under the Group Prior Use Rule, B is treated as having a prior depreciable interest in Equipment #5 because B is a member of the Parent group and S, while a member of the Parent group, had a depreciable interest in Equipment #5 within the lookback period. Accordingly, B is not eligible to claim the additional first year depreciation deduction with respect to Equipment #5 in 2019.

(6) ***Example 6: Intercompany sale of member stock for which a section 338(h)(10) election is made followed by sale of B stock as part of a series of related transactions*** —

(i) ***Facts.*** S owns all of the stock of T, which has a depreciable interest in Equipment #6. On January 1, 2019, B purchases all of the T stock from S in a qualified stock purchase for which a section 338(h)(10) election is made. On June 1, 2019, as part of the same series of related transactions that includes B's purchase of the T stock, Parent sells all of the stock of B to X. Thus, B and T leave the Parent group at the end of the day on June 1, 2019, and B and T are members of the X group starting June 2, 2019. See § 1.1502-76(b). As of June 1, 2019, Equipment #6 remains eligible property.

(ii) ***Analysis*** —

(A) ***Section 338(h)(10) election.*** Pursuant to the section 338(h)(10) election, Old T is treated as transferring all of its assets, including Equipment #6, to an unrelated person in a single transaction in exchange for consideration at the close of the acquisition date (January 1,

2019), and New T is treated as acquiring all of its assets, including Equipment #6, from an unrelated person in exchange for consideration. Old T is deemed to liquidate following the deemed asset sale. See § 1.338-1(a)(1).

(B) ***Application of the Consolidated Deemed Acquisition Rule.*** New T was a member of the Parent group when New T acquired Equipment #6 from an unrelated person. Because Old T, another member of the Parent group, had a depreciable interest in Equipment #6 while a member of the group within the lookback period, New T would be treated as having a prior depreciable interest in Equipment #6 under the Group Prior Use Rule and New T's acquisition of Equipment #6 would not satisfy the No Prior Use Requirement. However, New T's acquisition of Equipment #6 satisfies the requirements of the Consolidated Deemed Acquisition Rule in paragraph (c)(2)(ii) of this section. First, New T's acquisition of Equipment #6 meets the requirements of § 1.168(k)-2(b)(3)(iii)(A) without regard to the Group Prior Use Rule. Second, as part of the same series of related transactions that includes B's qualified stock purchase of the T stock, B and New T cease to be members of the Parent group and cease to be Related to S. Third, Equipment #6 continues to be eligible property on the deconsolidation date (June 1, 2019).

(C) ***Consequences of the Consolidated Deemed Acquisition Rule.*** Under the Consolidated Deemed Acquisition Rule, New T is treated for all Federal income tax purposes as transferring Equipment #6 to an unrelated person on June 2, 2019, in exchange for an amount of cash equal to the deemed sale amount and, immediately thereafter, acquiring deemed replacement property (New Equipment #6) from an unrelated person for an amount of cash equal to the deemed sale amount. Accordingly, assuming all other requirements in § 1.168(k)-2 are satisfied, New T is eligible to claim the additional first year depreciation deduction for an amount equal to the deemed sale amount for the taxable year in which it places New Equipment #6 in service.

(iii) ***T owns multiple assets.*** The facts are the same as in paragraph (d)(6)(i) of this section, except that, in addition to Equipment #6, T also owns Asset A (depreciable real estate that is not eligible property). With respect to Equipment #6, the results are the same as in paragraph (d)(6)(ii) of this section. However, the Consolidated Deemed Acquisition Rule does not apply to Asset A because it is not eligible property. Accordingly, New T is not treated as transferring Asset A to an unrelated person on June 2, 2019 and then, immediately thereafter, acquiring deemed replacement property for Asset A. If Equipment #6 had ceased to be eligible property as of June 1, 2019, the Consolidated Deemed Acquisition Rule also would not apply to Equipment #6.

(7) ***Example 7: Section 355 transaction following a section 338(h)(10) transaction pursuant to the same series of related transactions*** —

(i) ***Facts.*** T has a depreciable interest in Equipment #7. On January 1, 2019, Parent contributes all of the stock of T to B in exchange for common and non-voting preferred stock of B and sells the non-voting preferred stock of B to U pursuant to a binding commitment entered into prior to the contribution (T Exchange). The non-voting preferred stock is not treated as “stock” for purposes of section 1504(a). See section 1504(a)(4). Parent and B jointly make an election under section 338(h)(10) with respect to the T Exchange. On June 1, 2019, as part of the same series of related transactions that includes the T Exchange, Parent contributes the stock of B and assets comprising an active trade or business (within the meaning of section 355(b)) to Controlled in exchange for Controlled common stock and then distributes the Controlled common stock to

Parent's shareholders in a distribution qualifying under section 355(a) (Controlled Distribution). In the Controlled Distribution, T and B cease to be Related to Parent. Equipment #7 remains eligible property on June 1, 2019.

(ii) ***Section 338(h)(10) election.*** Immediately after the Controlled Distribution, Parent and B are not related as determined under section 338(h)(3)(A)(iii). Further, B's basis in the T stock is not determined, in whole or in part, by reference to the adjusted basis of the T stock in the hands of Parent, and the stock is not acquired in an exchange to which section 351, 354, 355, or 356 applies. Accordingly, the T Exchange qualifies as a "purchase" within the meaning of section 338(h)(3). Pursuant to the section 338(h)(10) election, Old T is treated as transferring all of its assets, including Equipment #7, to an unrelated person in a single transaction in exchange for consideration at the close of the acquisition date (January 1, 2019), and New T is treated as acquiring all of its assets, including Equipment #7, from an unrelated person in exchange for consideration. Old T is deemed to liquidate following the deemed asset sale. See § 1.338-1(a)(1).

(iii) ***Application of the Consolidated Deemed Acquisition Rule.*** New T was a member of the Parent group when New T acquired Equipment #7 from an unrelated person. Because Old T, another member of the Parent group, had a depreciable interest in Equipment #7 while a member of the group within the lookback period, New T would be treated as having a prior depreciable interest in Equipment #7 under the Group Prior Use Rule and New T's acquisition of Equipment #7 would not satisfy the No Prior Use Requirement. However, New T's acquisition of Equipment #7 satisfies the requirements of the Consolidated Deemed Acquisition Rule in paragraph (c)(2)(ii) of this section. Thus, New T is treated for all Federal income tax purposes as transferring Equipment #7 to an unrelated person on June 2, 2019, in exchange for an amount of cash equal to the deemed sale amount and, immediately thereafter, acquiring deemed replacement property (New Equipment #7) from an unrelated person for an amount of cash equal to the deemed sale amount. Accordingly, assuming all other requirements in § 1.168(k)-2 are satisfied, New T is eligible to claim the additional first year depreciation deduction for an amount equal to the deemed sale amount for the taxable year in which it places New Equipment #7 in service.

(e) ***Applicability dates*** —

(1) ***In general.*** Except as provided in paragraph (e)(2) of this section, this section applies to—

(i) Depreciable property acquired after September 27, 2017, by the taxpayer and placed in service by the taxpayer during or after the taxpayer's taxable year that begins on or after January 1, 2021;

(ii) A specified plant for which the taxpayer properly made an election to apply section 168(k)(5) and that is planted, or grafted to a plant that was previously planted, by the taxpayer during or after the taxpayer's taxable year that begins on or after January 1, 2021; and

(iii) Components acquired or self-constructed after September 27, 2017, of larger self-constructed property described in § 1.168(k)-2(c)(2) and placed in service by the taxpayer during or after the taxpayer's taxable year that begins on or after January 1, 2021.

(2) ***Early application of this section and § 1.168(k)-2*** —

(i) ***In general.*** Subject to paragraphs (e)(2)(ii) and (iii) of this section, and provided that all members of a consolidated group consistently apply the same set of rules, a taxpayer may choose to apply both the rules of this section and the rules of § 1.168(k)-2, in their entirety and in a consistent manner, to—

(A) Depreciable property acquired after September 27, 2017, by the taxpayer and placed in service by the taxpayer during a taxable year ending on or after September 28, 2017;

(B) A specified plant for which the taxpayer properly made an election to apply section 168(k)(5) and that is planted, or grafted to a plant that was previously planted, after September 27, 2017, by the taxpayer during a taxable year ending on or after September 28, 2017; and

(C) Components acquired or self-constructed after September 27, 2017, of larger self-constructed property described in § 1.168(k)-2(c)(2) and placed in service by the taxpayer during a taxable year ending on or after September 28, 2017.

(ii) ***Early application to certain transactions.*** In the case of property described in paragraph (e)(2)(i) of this section that is acquired in a transaction that satisfies the requirements of paragraph (c)(1)(ii) or (c)(2)(ii) of this section, the taxpayer may apply the rules of this section and the rules of § 1.168(k)-2, in their entirety and in a consistent manner, to such property only if those rules are applied, in their entirety and in a consistent manner, by all parties to the transaction (including the transferor member, the transferee member, and the target, as applicable) and the consolidated groups of which they are members, for the taxable year(s) in which the transaction occurs and the taxable year(s) that includes the day after the deconsolidation date.

(iii) ***Bound by early application.*** Once a taxpayer applies the rules of this section and the rules of § 1.168(k)-2, in their entirety, for a taxable year, the taxpayer must continue to apply the rules of this section and the rules of § 1.168(k)-2, in their entirety, for the taxpayer's subsequent taxable years.

[T.D. 9916, 85 FR 71765, Nov. 10, 2020]

ADMINISTRATIVE PROVISIONS AND OTHER RULES

§ 1.1502-75 Filing of consolidated returns.

(a) ***Privilege of filing consolidated returns*** —

(1) ***Exercise of privilege for first consolidated return year.*** A group which did not file a consolidated return for the immediately preceding taxable year may file a consolidated return in lieu of separate returns for the taxable year, provided that each corporation which has been a member during any part of the taxable year for which the consolidated return is to be filed consents (in the manner provided in paragraph (b) of this section) to the regulations under section 1502. If a group wishes to exercise its privilege of filing a consolidated return, such consolidated return must be filed not later than the last day prescribed by law (including extensions of time) for the filing of the common parent's return. Such consolidated return may not be withdrawn after such last day (but the group may change the basis of its return at any time prior to such last day).

(2) ***Continued filing requirement.*** A group which filed (or was required to file) a consolidated return for the immediately preceding taxable year is required to file a consolidated return for the taxable year unless it has an election to discontinue filing consolidated returns under paragraph (c) of this section.

(b) ***How consent for first consolidated year exercised*** —

(1) ***General rule.*** The consent of a corporation referred to in paragraph (a)(1) of this section is made by such corporation joining in the making of the consolidated return for such year. A corporation is deemed to have joined in the making of such return for such year if it files a Form 1122 (or successor form) in the manner specified in paragraph (h)(2) of this section.

(2) ***Consent under facts and circumstances*** —

(i) ***In general.*** If a member of the group fails to file Form 1122 (or successor form), the Commissioner may under the facts and circumstances determine that such member has joined in the making of a consolidated return by such group. The following circumstances, among others, will be taken into account in making this determination—

(A) Whether or not the income and deductions of the member were included in the consolidated return;

(B) Whether or not a separate return was filed by the member for that taxable year; and

(C) Whether or not the member was included in the affiliations schedule, Form 851 (or successor form).

(ii) ***Treatment of member.*** If the Commissioner determines that the member described in paragraph (b)(1)(i) of this section has joined in the making of the consolidated return, such member is treated as if it had filed a Form 1122 (or successor form) for such year for purposes of paragraph (h)(2) of this section.

(3) ***Failure to consent due to mistake.*** If any member has failed to join in the making of a consolidated return under either paragraph (b)(1) or (2) of this section, then the tax liability of each member of the group is determined on the basis of separate returns unless the common parent corporation establishes to the satisfaction of the Commissioner that the failure of such member to join in the making of the consolidated return was due to a mistake of law or fact, or to inadvertence. In such case, such member is treated as if it had filed a Form 1122 (or successor form) for such year for purposes of paragraph (h)(2) of this section, and thus joined in the making of the consolidated return for such year.

(c) ***Election to discontinue filing consolidated returns*** —

(1) ***Good cause*** —

(i) ***In general.*** Notwithstanding that a consolidated return is required for a taxable year, the Commissioner, upon application by the common parent, may for good cause shown grant permission to a group to discontinue filing consolidated returns. Any such application must be made through a letter ruling request filed not later than the 90th day before the due date of the consolidated return for the taxable year (including extensions). In addition, if an amendment of the Code, or other law affecting the computation of tax liability, is enacted and the enactment is effective for a taxable year ending before or within 90 days after the date of enactment, then application for such a taxable year may be made not later than the 180th day after the date of

enactment, and if the application is approved the permission to discontinue filing consolidated returns will apply to such taxable year notwithstanding that a consolidated return has already been filed for such year.

(ii) ***Substantial adverse change in law affecting tax liability.*** Ordinarily, the Commissioner will grant a group permission to discontinue filing consolidated returns if the net result of all amendments to the Code or regulations with effective dates commencing within the taxable year has a substantial adverse effect on the consolidated tax liability of the group for such year relative to what the aggregate tax liability would be if the members of the group filed separate returns for such year. Thus, for example, assume P and S filed a consolidated return for the calendar year 1966 and that the provisions of the Code have been amended by a bill which was enacted by Congress in 1966, but which is first effective for taxable years beginning on or after January 1, 1967. Assume further that P makes a timely application to discontinue filing consolidated returns. In order to determine whether the amendments have a substantial adverse effect on the consolidated tax liability for 1967, relative to what the aggregate tax liability would be if the members of the group filed separate returns for 1967, the difference between the tax liability of the group computed on a consolidated basis and taking into account the changes in the law effective for 1967 and the aggregate tax liability of the members of the group computed as if each such member filed separate returns for such year (also taking into account such changes) shall be compared with the difference between the tax liability of such group for 1967 computed on a consolidated basis without regard to the changes in the law effective in such year and the aggregate tax liability of the members of the group computed as if separate returns had been filed by such members for such year without regard to the changes in the law effective in such year.

(iii) ***Other factors.*** In addition, the Commissioner will take into account other factors in determining whether good cause exists for granting permission to discontinue filing consolidated returns beginning with the taxable year, including:

(*a*) Changes in law or circumstances, including changes which do not affect Federal income tax liability,

(*b*) Changes in law which are first effective in the taxable year and which result in a substantial reduction in the consolidated net operating loss (or consolidated unused investment credit) for such year relative to what the aggregate net operating losses (or investment credits) would be if the members of the group filed separate returns for such year, and

(*c*) Changes in the Code or regulations which are effective prior to the taxable year but which first have a substantial adverse effect on the filing of a consolidated return relative to the filing of separate returns by members of the group in such year.

(2) ***Discretion of Commissioner to grant blanket permission*** —(i)

(i) ***Permission to all groups.*** The Commissioner, in the Commissioner's discretion, may grant all groups permission to discontinue filing consolidated returns if any provision of the Code or regulations has been amended and such amendment is of the type which could have a substantial adverse effect on the filing of consolidated returns by substantially all groups, relative to the filing of separate returns. Ordinarily, the permission to discontinue applies with respect to the taxable year of each group which includes the effective date of such an amendment.

(ii) ***Permission to a class of groups.*** The Commissioner, in the Commissioner's discretion, may grant a particular class of groups permission to discontinue filing consolidated returns if any provision of the Code or regulations has been amended and such amendment is of the type which could have a substantial adverse effect on the filing of consolidated returns by substantially all such groups relative to the filing of separate returns. Ordinarily, the permission to discontinue applies with respect to the taxable year of each group within the class which includes the effective date of such an amendment.

(3) ***Time and manner for exercising election.*** If, under subparagraph (1) or (2) of this paragraph, a group has an election to discontinue filing consolidated returns for any taxable year and such group wishes to exercise such election, then the common parent must file a separate return for such year on or before the last day prescribed by law (including extensions of time) for the filing of the consolidated return for such year. See section 6081 (relating to extensions of time for filing returns).

(d) ***When a group remains in existence*** —

(1) ***General rule.*** A group remains in existence for a tax year if the common parent remains as the common parent and at least one subsidiary that was affiliated with it at the end of the prior year remains affiliated with it at the beginning of the year, whether or not one or more corporations have ceased to be subsidiaries at any time after the group was formed. Thus, for example, assume that corporation P acquires the sole outstanding share of stock of S on January 1, year 1, and that P and S file a consolidated return for the year 1 calendar year. On May 1, year 2, P acquires the sole outstanding share of stock of S1 and, on July 1, year 2, P sells the S share. The group (consisting originally of P and S) remains in existence in year 2 because P remained the common parent and, S, a subsidiary that was affiliated with P at the end of year 1, remained affiliated with P at the beginning of year 2.

(2) ***Common parent no longer in existence*** —

(i) ***Mere change in identity.*** For purposes of this paragraph, the common parent corporation shall remain as the common parent irrespective of a mere change in identity, form, or place of organization of such common parent corporation (see section 368(a)(1)(F)).

(ii) ***Transfer of assets to subsidiary.*** The group shall be considered as remaining in existence notwithstanding that the common parent is no longer in existence if the members of the affiliated group succeed to and become the owners of substantially all of the assets of such former parent and there remains one or more chains of includible corporations connected through stock ownership with a common parent corporation which is an includible corporation and which was a member of the group prior to the date such former parent ceases to exist. For purposes of applying paragraph (f)(2)(i) of § 1.1502-1 to separate return years ending on or before the date on which the former parent ceases to exist, such former parent, and not the new common parent, shall be considered to be the corporation described in such paragraph.

(iii) ***Taxable years.*** If a transfer of assets described in subdivision (ii) of this subparagraph is an acquisition to which section 381(a) applies and if the group files a consolidated return for the taxable year in which the acquisition occurs, then for purposes of section 381:

(*a*) The former common parent shall not close its taxable year merely because of the acquisition, and all taxable years of such former parent ending on or before the date of acquisition shall be treated as taxable years of the acquiring corporation, and

(*b*) The corporation acquiring the assets shall close its taxable year as of the date of acquisition, and all taxable years of such corporation ending on or before the date of acquisition shall be treated as taxable years of the transferor corporation.

(iv) ***Exception.*** With respect to acquisitions occurring before January 1, 1971, subdivision (iii) of this subparagraph shall not apply if the group, in its income tax return, treats the taxable year of the former common parent as having closed as of the date of acquisition.

(3) ***Reverse acquisitions*** —

(i) ***In general.*** If a corporation (hereinafter referred to as the "first corporation") or any member of a group of which the first corporation is the common parent acquires after October 1, 1965:

(*a*) Stock of another corporation (hereinafter referred to as the second corporation), and as a result the second corporation becomes (or would become but for the application of this subparagraph) a member of a group of which the first corporation is the common parent, or

(*b*) Substantially all the assets of the second corporation,

in exchange (in whole or in part) for stock of the first corporation, and the stockholders (immediately before the acquisition) of the second corporation, as a result of owning stock of the second corporation, own (immediately after the acquisition) more than 50 percent of the fair market value of the outstanding stock of the first corporation, then any group of which the first corporation was the common parent immediately before the acquisition shall cease to exist as of the date of acquisition, and any group of which the second corporation was the common parent immediately before the acquisition shall be treated as remaining in existence (with the first corporation becoming the common parent of the group). Thus, assume that corporations P and S comprised group PS (P being the common parent), that P was merged into corporation T (the common parent of a group composed of T and corporation U), and that the shareholders of P immediately before the merger, as a result of owning stock in P, own 90 percent of the fair market value of T's stock immediately after the merger. The group of which P was the common parent is treated as continuing in existence with T and U being added as members of the group, and T taking the place of P as the common parent.

For purposes of determining under (*a*) of this subdivision whether the second corporation becomes (or would become) a member of the group of which the first corporation is the common parent, and for purposes of determining whether the former stockholders of the second corporation own more than 50 percent of the outstanding stock of the first corporation, there shall be taken into account any acquisitions or redemptions of the stock of either corporation which are pursuant to a plan of acquisition described in (*a*) or (*b*) of this subdivision.

(ii) ***Prior ownership of stock.*** For purposes of subdivision (i) of this subparagraph, if the first corporation, and any members of a group of which the first corporation is the common parent, have continuously owned for a period of at least 5 years ending on the date of the acquisition an aggregate of at least 25 percent of the fair market value of the outstanding stock of the second corporation, then the first corporation (and any subsidiary which owns stock of the second corporation immediately before the acquisition) shall, as a result of owning such stock, be treated as owning (immediately after the acquisition) a percentage of the fair market value of the first corporation's outstanding stock which bears the same ratio to

(*a*) the percentage of the fair market value of all the stock of the second corporation owned immediately before the acquisition by the first corporation and its subsidiaries as

(*b*) the fair market value of the total outstanding stock of the second corporation immediately before the acquisition bears to

(*c*) the sum of

(*1*) the fair market value, immediately before the acquisition, of the total outstanding stock of the first corporation, and

(*2*) the fair market value, immediately before the acquisition, of the total outstanding stock of the second corporation (other than any such stock owned by the first corporation and any of its subsidiaries). For example, assume that corporation P owns stock in corporation T having a fair market value of $100,000, that P acquires the remaining stock of T from individuals in exchange for stock of P, that immediately before the acquisition the total outstanding stock of T had a fair market value of $150,000, and that immediately before the acquisition the total outstanding stock of P had a fair market value of $200,000. Assuming P owned at least 25 percent of the fair market value of T's stock for 5 years, then for purposes of this subparagraph, P is treated as owning (immediately after the acquisition) 40 percent of the fair market value of its own outstanding stock, determined as follows:

$$[\$150,000/(\$200,000 + \$50,000)] \times 662/3\% = 40\%.$$

Thus, if the former individual stockholders of T own, immediately after the acquisition more than 10 percent of the fair market value of the outstanding stock of P as a result of owning stock of T, the group of which T was the common parent is treated as continuing in existence with P as the common parent, and the group of which P was the common parent before the acquisition ceases to exist.

(iii) ***Election.*** The provisions of subdivision (ii) of this subparagraph shall not apply to any acquisition occurring in a taxable year ending after October 7, 1969, unless the first corporation elects to have such subdivision apply. The election shall be made by means of a statement, signed by any officer who is duly authorized to act on behalf of the first corporation, stating that the corporation elects to have the provisions of § 1.1502-75(d)(3)(ii) apply and identifying the acquisition to which such provisions will apply. The statement shall be filed, on or before the due date (including extensions of time) of the return for the group's first consolidated return year ending after the date of the acquisition, with the internal revenue officer with whom such return is required to be filed.

(iv) ***Transfer of assets to subsidiary.*** This subparagraph shall not apply to a transaction to which subparagraph (2)(ii) of this paragraph applies.

(v) ***Taxable years.*** If, in a transaction described in subdivision (i) of this subparagraph, the first corporation files a consolidated return for the first taxable year ending after the date of acquisition, then:

(*a*) The first corporation, and each corporation which, immediately before the acquisition, is a member of the group of which the first corporation is the common parent, shall close its taxable year as of the date of acquisition, and each such corporation shall, immediately after the acquisition, change to the taxable year of the second corporation, and

(*b*) If the acquisition is a transaction described in section 381(a)(2), then for purposes of section 381:

(*1*) All taxable years ending on or before the date of acquisition, of the first corporation and each corporation which, immediately before the acquisition, is a member of the group of which the first corporation is the common parent, shall be treated as taxable years of the transferor corporation, and

(*2*) The second corporation shall not close its taxable year merely because of such acquisition, and all taxable years ending on or before the date of acquisition, of the second corporation and each corporation which, immediately before the acquisition, is a member of any group of which the second corporation is the common parent, shall be treated as taxable years of the acquiring corporation.

(vi) ***Exception.*** With respect to acquisitions occurring before April 17, 1968, subdivision (v) of this subparagraph shall not apply if the parties to the transaction, in their income tax returns, treat subdivision (i) as not affecting the closing of taxable years or the operation of section 381.

(4) [Reserved]

(e) ***Failure to include subsidiary.*** If a consolidated return is required for the taxable year under the provisions of paragraph (a)(2) of this section, the tax liability of all members of the group for such year shall be computed on a consolidated basis even though:

(1) Separate returns are filed by one or more members of the group, or

(2) There has been a failure to include in the consolidated return the income of any member of the group.

If subparagraph (1) of this paragraph applies, the amounts assessed or paid upon the basis of separate returns shall be considered as having been assessed or paid upon the basis of a consolidated return.

(f) ***Inclusion of one or more corporations not members of the group*** —

(1) ***Method of determining tax liability.*** If a consolidated return includes the income of a corporation which was not a member of the group at any time during the consolidated return year, the tax liability of such corporation will be determined upon the basis of a separate return (or a consolidated return of another group, if paragraph (a)(2) or (b)(3) of this section applies), and the consolidated return will be considered as including only the income of the corporations which were members of the group during that taxable year. If a consolidated return includes the income of two or more corporations which were not members of the group but which constitute another group, the tax liability of such corporations will be computed in the same manner as if separate returns had been made by such corporations unless the Commissioner upon application approves the making of a consolidated return for the other group or unless under paragraph (a)(2) of this section a consolidated return is required for the other group.

(2) ***Allocation of tax liability.*** In any case in which amounts have been assessed and paid upon the basis of a consolidated return and the tax liability of one or more of the corporations included in the consolidated return is to be computed in the manner described in subparagraph (1) of this paragraph, the amounts so paid shall be allocated between the group composed of the corporations properly included in the consolidated return and each of the corporations the tax liability of which is to be computed on a separate basis (or on the basis of a consolidated return of another group) in such manner as the corporations which were included in the consolidated return may, subject to the approval of the Commissioner, agree upon or in the absence of an agreement upon the method used in allocating the tax liability of the members of the group under the provisions of section 1552(a).

(g) ***Computing periods of limitation*** —

(1) ***Income incorrectly included in consolidated return.*** If:

(i) A consolidated return is filed by a group for the taxable year, and

(ii) The tax liability of a corporation whose income is included in such return must be computed on the basis of a separate return (or on the basis of a consolidated return with another group), then for the purpose of computing any period of limitation with respect to such separate return (or such other consolidated return), the filing of such consolidated return by the group shall be considered as the making of a return by such corporation.

(2) ***Income incorrectly included in separate returns.*** If a consolidated return is required for the taxable year under the provisions of paragraph (a)(2) of this section, the filing of separate returns by the members of the group for such year shall not be considered as the making of a return for the purpose of computing any period of limitation with respect to such consolidated return unless there is attached to each such separate return a statement setting forth:

(i) The most recent taxable year of the member for which its income was included in a consolidated return, and

(ii) The reasons for the group's belief that a consolidated return is not required for the taxable year.

(h) ***Method of filing return and forms*** —

(1) ***Consolidated return made by common parent or agent.*** The consolidated return must be made on Form 1120, *U.S. Corporation Income Tax Return* (or any successor form), for the group by the common parent or the agent for the group as provided in § 1.1502-77(c). The consolidated return, with Form 851, *Affiliations Schedule* (or any successor form), attached, must be filed with the service center with which the common parent would have filed a separate return.

(2) ***Filing of Form 1122 for first year.*** If, under the provisions of paragraph (a)(1) of this section, a group wishes to file a consolidated return for a taxable year, then a Form 1122 (*Authorization and Consent of Subsidiary Corporation To Be Included in a Consolidated Income Tax Return*) (or successor form) must be executed by each subsidiary. The group must attach either executed Forms 1122 (or successor forms) or unsigned copies of the completed Forms 1122 (or successor forms) to the consolidated return. If the group submits unsigned Forms 1122 (or successor forms) with its return, it must retain the signed originals in its records in the manner required by § 1.6001-1(e). Form 1122 (or any successor form) is not required for a taxable year if a consolidated return was filed (or was required to be filed) by the group for the immediately preceding taxable year.

(3) ***Persons qualified to execute returns and forms.*** Each return or form required to be made or prepared by a corporation must be executed by the person authorized under section 6062 to execute returns of separate corporations.

(i) [Reserved]

(j) ***Statements and schedules for subsidiaries.*** The statement of gross income and deductions and the schedules required by the instructions on the return shall be prepared and filed in columnar form so that the details of the items of gross income, deductions, and credits for each member may be readily audited. Such statements and schedules shall include in columnar form a reconciliation of surplus for each corporation, and a reconciliation of consolidated surplus. Consolidated balance sheets as of the beginning and close of the taxable year of the group, taken from the books of the members, shall accompany the consolidated return and shall be prepared in a form similar to that required for reconciliation of surplus.

(k) ***Cross-reference.*** See § 1.338(h)(10)-1(d)(7) for special rules regarding filing consolidated returns when a section 338(h)(10) election is made for a target acquired from a selling consolidated group.

(l) ***Effective/applicability dates.*** Paragraph (d)(1) of this section applies to taxable years for which the due date of the original return (without regard to extensions) is on or after September 17, 2008.

[T.D. 6894, 31 FR 11794, Sept. 8, 1966]

Editorial Note: For FEDERAL REGISTER citations affecting § 1.1502-75, see the List of CFR Sections Affected, which appears in the Finding Aids section of the printed volume and at *www.govinfo.gov*.

§ 1.1502-76 Taxable year of members of group.

(a) ***Taxable year of members of group.*** The consolidated return of a group must be filed on the basis of the common parent's taxable year, and each subsidiary must adopt the common parent's annual accounting period for the first consolidated return year for which the subsidiary's income is includible in the consolidated return. If any member is on a 52-53-week taxable year, the rule of the preceding sentence will, with the advance consent of the Commissioner, be deemed satisfied if the taxable years of all members of the group end within the same 7-day period. Any request for such consent must be requested at the time and in the manner that the Commissioner of Internal Revenue may prescribe by Internal Revenue Service forms and instructions or by publication in the Internal Revenue Bulletin (*see* § 601.601(d)(2)(ii) of this chapter).

(b) ***Items included in the consolidated return*** —

(1) ***General rules*** —

(i) ***In general.*** A consolidated return must include the common parent's items of income, gain, deduction, loss, and credit for the entire consolidated return year, and each subsidiary's items for the portion of the year for which it is a member. If the consolidated return includes the items of a corporation for only a portion of its tax year determined without taking this section into account, items for the portion of the year not included in the consolidated return must be included in a separate return (including the consolidated return of another group). The rules of this paragraph (b) must be applied to prevent the duplication or elimination of the corporation's items.

(ii) *The day a corporation becomes or ceases to be a member* —

(A) *End of the day rule.*

(*1*) ***In general.*** If a corporation (S), other than one described in paragraph (b)(1)(ii)(A)(*2*) of this section, becomes or ceases to be a member during a consolidated return year, it becomes or ceases to be a member at the end of the day on which its status as a member changes, and its tax year ends for all Federal income tax purposes at the end of that day. Appropriate adjustments must be made if another provision of the Internal Revenue Code or the regulations thereunder contemplates the event occurring before or after S's change in status. For example, S's items restored under § 1.1502-13 immediately before it becomes a nonmember are taken into account in determining the basis of S's stock under § 1.1502-32. On the other hand, if a section 338(g) election is made in connection with S becoming a member, the deemed asset sale under that section takes place before S becomes a member. See § 1.338-10(a)(5) (deemed sale excluded from purchasing corporation's consolidated return.)

(*2*) ***Special rule for former S corporations.*** If S becomes a member in a transaction other than in a qualified stock purchase for which an election under section 338(g) is made, and immediately before becoming a member an election under section 1362(a) was in effect, then S will become a member at the beginning of the day the termination of its S corporation election is effective. S's tax year ends for all Federal income tax purposes at the end of the preceding day.

(B) ***Next day rule.*** If, on the day of S's change in status as a member, a transaction occurs that is properly allocable to the portion of S's day after the event resulting in the change, S and all persons related to S under section 267(b) immediately after the event must treat the transaction for all Federal income tax purposes as occurring at the beginning of the following day. A determination as to whether a transaction is properly allocable to the portion of S's day after the event will be respected if it is reasonable and consistently applied by all affected persons. In determining whether an allocation is reasonable, the following factors are among those to be considered—

(*1*) Whether income, gain, deduction, loss, and credit are allocated inconsistently (e.g., to maximize a seller's stock basis adjustments under § 1.1502-32);

(*2*) If the item is from a transaction with respect to S stock, whether it reflects ownership of the stock before or after the event (e.g., if a member transfers encumbered land to nonmember S in exchange for additional S stock in a transaction to which section 351 applies and the exchange results in S becoming a member of the consolidated group, the applicability of section 357(c) to the exchange must be determined under § 1.1502-80(d) by treating the exchange as occurring after the event; on the other hand, if S is a member but has a minority shareholder and becomes a nonmember as a result of its redemption of stock with appreciated property, S's gain under section 311 is treated as from a transaction occurring before the event);

(*3*) Whether the allocation is inconsistent with other requirements under the Internal Revenue Code and regulations promulgated thereunder (e.g., if a section 338(g) election is made in connection with a group's acquisition of S, the deemed asset sale must take place before S becomes a member and S's gain or loss with respect to its

assets must be taken into account by S as a nonmember (but see § 1.338-1(d)), or if S realizes discharge of indebtedness income that is excluded from gross income under section 108(a) on the day it becomes a nonmember, the discharge of indebtedness income must be treated as realized by S as a member (see § 1.1502-28(b)(11))); and

(*4*) Whether other facts exist, such as a prearranged transaction or multiple changes in S's status, indicating that the transaction is not properly allocable to the portion of S's day after the event resulting in S's change.

(C) ***Successor corporations.*** For purposes of this paragraph (b)(1)(ii), any reference to a corporation includes a reference to a successor or predecessor as the context may require. A corporation is a successor if the basis of its assets is determined, directly or indirectly, in whole or in part, by reference to the basis of the assets of another corporation (the predecessor). For example, if a member forms S, S is treated as a member from the beginning of its existence.

(iii) ***Group structure changes.*** If the common parent ceases to be the common parent but the group remains in existence, adjustments must be made in accordance with the principles of § 1.1502-75(d)(2) and (3).

(2) ***Determination of items included in separate and consolidated returns*** —

(i) ***In general.*** The returns for the years that end and begin with S becoming (or ceasing to be) a member are separate tax years for all Federal income tax purposes. The returns are subject to the rules of the Internal Revenue Code applicable to short periods, as if S ceased to exist on becoming a member (or first existed on becoming a nonmember). For example, cost recovery deductions under section 168 must be allocated for short periods. On the other hand, annualization under section 443 is not required of S solely because it has a short year as a result of becoming a member. (Similarly, section 443 applies with respect to a consolidated return only to the extent that the group's return is for a short period and section 443 applies without taking this paragraph (b) into account.)

(ii) ***Ratable allocation of a year's items*** —

(A) ***Application.*** Although the periods ending and beginning with S's change in status are different tax years, items (other than extraordinary items) may be ratably allocated between the periods if—

(*1*) S is not required to change its annual accounting period or its method of accounting as a result of its change in status (e.g., because its stock is sold between consolidated groups that have the same annual accounting periods); and

(*2*) An irrevocable ratable allocation election is made under paragraph (b)(2)(ii)(D) of this section.

(B) ***General rule*** —

(*1*) ***Allocation within original year.*** Under a ratable allocation election, paragraph (b)(2) of this section applies by allocating to each day of S's original year (S's tax year determined without taking this section into account) an equal portion of S's items taken into account in the original year, except that extraordinary items must be

allocated to the day that they are taken into account. All persons affected by the election must take into account S's extraordinary items and the ratable allocation of S's remaining items in a manner consistent with the election.

(2) ***Items to be allocated.*** Under ratable allocation, the items to be allocated and their timing, location, character, and source are generally determined by treating the original year as a single tax year, and the items are not subject to the rules of the Internal Revenue Code applicable to short periods (unless the original year is a short period). However, the years ending and beginning with S's change in status are treated as different tax years (and as short periods) with respect to any item carried to or from these years (e.g., a net operating loss carried under section 172) and with respect to the application of section 481.

(3) ***Multiple applications.*** If this paragraph (b) applies more than once with respect to an original year, adjustments must be made in accordance with the principles of this paragraph (b). For example, if S becomes a member of two different consolidated groups during the same original year and ratable allocation is elected with respect to both groups, ratable allocation is generally determined for both groups by treating the original year as a single tax year; however, if ratable allocation is elected only with respect to the first group, the ratable allocation is determined by treating the original year as a short period that does not include the period that S is a member of the second group. Ratable allocation is not a method of accounting, and ratable allocation with respect to one application of this paragraph (b) to S does not require ratable allocation to be subsequently applied with respect to S.

(C) ***Extraordinary items.*** An extraordinary item is—

(1) Any item from the disposition or abandonment of a capital asset as defined in section 1221 (determined without the application of any other rules of law);

(2) Any item from the disposition or abandonment of property used in a trade or business as defined in section 1231(b) (determined without the application of any holding period requirement);

(3) Any item from the disposition or abandonment of an asset described in section 1221(1), (3), (4), or (5), if substantially all the assets in the same category from the same trade or business are disposed of or abandoned in one transaction (or series of related transactions);

(4) Any item from assets disposed of in an applicable asset acquisition under section 1060(c);

(5) Any item carried to or from any portion of the original year (e.g., a net operating loss carried under section 172), and any section 481(a) adjustment;

(6) The effects of any change in accounting method initiated by the filing of the appropriate form after S's change in status;

(7) Any item from the discharge or retirement of indebtedness (e.g., cancellation of indebtedness income or a deduction for retirement at a premium);

(8) Any item from the settlement of a tort or similar third-party liability;

(*9*) Any compensation-related deduction in connection with S's change in status (including, for example, deductions from bonus, severance, and option cancellation payments made in connection with S's change in status);

(*10*) Any dividend income from a nonmember that S controls within the meaning of section 304 at the time the dividend is taken into account;

(*11*) Any deemed income inclusion from a foreign corporation, or any deferred tax amount on an excess distribution from a passive foreign investment company under section 1291;

(*12*) Any interest expense allocable under section 172(h) to a corporate equity reduction transaction causing this paragraph (b) to apply;

(*13*) Any credit, to the extent it arises from activities or items that are not ratably allocated (e.g., the rehabilitation credit under section 47, which is based on placement in service); and

(*14*) Any item which, in the opinion of the Commissioner, would, if ratably allocated, result in a substantial distortion of income in any consolidated return or separate return in which the item is included.

(D) ***Election*** —

(*1*) ***Statement.*** The election to ratably allocate items under this paragraph (b)(2)(ii) must be made in a separate statement entitled, "THIS IS AN ELECTION UNDER § 1.1502-76(b)(2)(ii) TO RATABLY ALLOCATE THE YEAR'S ITEMS OF [INSERT NAME AND EMPLOYER IDENTIFICATION NUMBER OF THE MEMBER]." The election must be filed by including a statement on or with the returns including the items for the years ending and beginning with S's change in status. If two or more members of the same consolidated group, as a consequence of the same plan or arrangement, cease to be members of that group and remain affiliated as members of another consolidated group, an election under this paragraph (b)(2)(ii)(D)(*1*) may be made only if it is made by each such member. Each statement must also indicate that an agreement, as described in paragraph (b)(2)(ii)(D)(*2*) of this section, has been entered into. Each party signing the agreement must retain either the original or a copy of the agreement as part of its records. See § 1.6001-1(e).

(*2*) ***Agreement.*** For each election under this paragraph (b)(2)(ii), the member and the common parent of each affected group must sign and date an agreement. The agreement must—

(*i*) Identify the extraordinary items, their amounts, and the separate or consolidated returns in which they are included;

(*ii*) Identify the aggregate amount to be ratably allocated, and the portion of the amount included in the separate and consolidated returns; and

(*iii*) Include the name and employer identification number of the common parent (if any) of each group that must take the items into account.

(iii) ***Ratable allocation of a month's items.*** If ratable allocation under paragraph (b)(2)(ii) of this section is not elected (e.g., because S is required to change its annual accounting period), this paragraph (b)(2)(iii) may be applied to ratably allocate only S's items taken into account in the month of its change in status, but only if the allocation is consistently applied by all affected persons. The ratable allocation is made by applying the principles of paragraph (b)(2)(ii) of this section under any reasonable method. For example, S may close its books both at the end of the preceding month and at the end of the month of the change, and allocate only its items (other than extraordinary items) from the month of the change. See paragraph (b)(1)(ii)(B) of this section for factors to be considered in determining whether the method is reasonable.

(iv) ***Taxes.*** To the extent properly taken into account during the member's tax year (determined without the application of this paragraph (b)), Federal, state, local, and foreign taxes are allocated under paragraph (b)(2) of this section on the basis of the items or activities to which the taxes relate. Thus, income tax is allocated based on the inclusion of the income (determined under the principles of this paragraph (b)) to which the tax relates. For example, if a calendar-year domestic corporation has $100 of foreign source dividend income (determined in accordance with United States tax accounting principles but without taking this paragraph (b) into account) that is passive income for purposes of section 904, and $60 of the income is allocated under this paragraph (b) to the period of the calendar year after it becomes a member of a consolidated group, then 60% of the corporation's deemed paid foreign tax credit associated with its dividend income for the calendar year is taken into account in computing the group's passive basket consolidated foreign tax credit. Similarly, property taxes relate to the ownership of property and are allocated over the period that the property is owned. This paragraph (b)(2)(iv) applies without regard to any determination or allocation by another taxing jurisdiction.

(v) ***Acquisition of S corporation.*** If a corporation is acquired in a transaction to which paragraph (b)(1)(ii)(A)(2) of this section applies, then paragraphs (b)(2)(ii) and (iii) of this section do not apply and items of income, gain, loss, deduction, and credit are assigned to each short taxable year on the basis of the corporation's normal method of accounting as determined under section 446.

(vi) ***Passthrough entities*** —

(A) ***In general.*** If S is a partner in a partnership or an owner of a similar interest with respect to which items of the entity are taken into account by S, S is treated, solely for purposes of determining the year to which the entity's items are allocated under paragraph (b)(2) of this section, as selling or exchanging its entire interest in the entity immediately before S's change in status.

(B) ***Treatment as a conduit.*** For purposes of this paragraph (b)(2), if a member (together with other members) would be treated under section 318(a)(2) as owning an aggregate of at least 50% of any stock owned by the passthrough entity, the method that is used to determine the inclusion of the entity's items in the consolidated or separate return must be the same method that is used to determine the inclusion of the member's items in the consolidated or separate return.

(C) ***Exception for certain foreign entities.*** This paragraph (b)(2)(v) does not apply to any foreign corporation generating the deemed inclusion of income, or to any passive foreign investment company generating a deferred tax amount on an excess distribution under section 1291.

(3) ***Anti-avoidance rule.*** If any person acts with a principal purpose contrary to the purposes of this paragraph (b), to substantially reduce the Federal income tax liability of any person, adjustments must be made as necessary to carry out the purposes of this section.

(4) ***Determination of due date for separate return.*** Paragraph (c) of this section contains rules for the filing of the separate return referred to in this paragraph (b). In applying paragraph (c) of this section, the due date for the filing of S's separate return shall also be determined without regard to the ending of the tax year under paragraph (b)(1)(ii) of this section or the deemed cessation of its existence under paragraph (b)(2)(i) of this section.

(5) ***Examples.*** For purposes of the examples in this paragraph (b), unless otherwise stated, P and X are common parents of calendar-year consolidated groups, P owns all of the only class of T's stock, T owns no stock of lower-tier members, all persons use the accrual method of accounting, the facts set forth the only corporate activity, all transactions are between unrelated persons, tax liabilities are disregarded, and any election required under paragraph (b)(2) of this section is properly made. The principles of this paragraph (b) are illustrated by the following examples.

> *Example 1. Items allocated between consolidated and separate returns.* (a) *Facts.* P and S are the only members of the P group. P sells all of S's stock to individual A on June 30, and therefore S becomes a nonmember on July 1 of Year 2.
> (b) *Analysis.* Under paragraph (b)(1) of this section, the P group's consolidated return for Year 2 includes P's income for the entire tax year and S's income for the period from January 1 to June 30, and S must file a separate return for the period from July 1 to December 31.
>
> (c) *Acquisition of another subsidiary before end of tax year.* The facts are the same as in paragraph (a) of this *Example 1,* except that on July 31 P acquires all the stock of T (which filed a separate return for its year ending on November 30 of Year 1) and T therefore becomes a member on August 1 of Year 2. Under § 1.1502-75(d) and paragraph (b)(1) of this section, the P group's consolidated return for Year 2 includes P's income for the entire year, S's income from January 1 to June 30, and T's income from August 1 to December 31. S must file a separate return that includes its income from July 1 to December 31, and T must file a separate return that includes its income from December 1 of Year 1 to July 31 of Year 2. (If P had acquired T after December 31, the P group that included S is a different group from the P group that includes T, and, for example, the P group that includes T must make a separate election under section 1501 and § 1.1502-75 if consolidated returns are to be filed.)

> *Example 2. Group structure change.* (a) *Facts.* P owns all of the stock of S and T. Shortly after the beginning of Year 1, P merges into T in a reorganization described in section 368(a)(1)(A) (and in section 368(a)(1)(D)), and P's shareholders receive T's stock in exchange for all of P's stock. The P group is treated under § 1.1502-75(d)(2)(ii) as remaining in existence with T as its common parent.
> (b) *Analysis.* Under paragraph (b)(1) of this section, the P group's return must include the common parent's items for the entire consolidated return year and, if the common parent ceases to be the common parent but the group remains in existence, appropriate

adjustments must be made. Consequently, although P did not exist for all of Year 1, P's items for the portion of Year 1 ending with the merger are treated as the items of the common parent that must be included in the P group's return for Year 1.

(c) *Reverse acquisition.* Assume instead that X acquires all of P's assets in exchange for more than 50% of X's stock in a reorganization described in section 368(a)(1)(D). The reorganization constitutes a reverse acquisition under § 1.1502-75(d)(3), with the X group terminating and the P group surviving with X as its common parent. Consequently, P's items for the portion of Year 1 ending with the acquisition are treated as the items of the common parent that must be included in the P group's return for Year 1, and X's items are treated for purposes of paragraph (b)(1) of this section as the items of a subsidiary included in the P group's return for the portion of Year 1 for which X is a member.

Example 3. Ratable allocation. (a) *Facts.* P sells all of T's stock to X, and T becomes a nonmember on July 1 of Year 1. T engages in the production and sale of merchandise throughout Year 1 and is required to use inventories. The sale is treated as causing T's tax year to end on June 30, and the periods beginning and ending with the sale are treated as two tax years for Federal income tax purposes.
(b) *Analysis.* If ratable allocation under paragraph (b)(2)(ii) of this section is not elected, T must perform an inventory valuation as of the acquisition and also as of the end of Year 1. If ratable allocation is elected, T must perform an inventory valuation only as of the close of Year 1, and T's income from inventory is ratably allocated, along with T's other items that are not extraordinary items, between the P and X consolidated returns.

(c) *Merger into nonmember.* Assume instead that T merges into a wholly owned subsidiary of X in a reorganization described in section 368(a)(2)(D), and P receives 10% of X's stock in exchange for all of T's stock. Under paragraph (b)(2)(ii)(B) of this section, because T's tax year ends on June 30 under section 381(b)(1), T's original year determined without taking paragraph (b) of this section into account also ends on June 30. Consequently, a ratable allocation under paragraph (b)(2)(ii) of this section is the same as an allocation based on closing the books.

Example 4. Net operating loss. P sells all of T's stock to X, T becomes a nonmember on June 30 of Year 1, and ratable allocation under paragraph (b)(2)(ii) of this section is elected. Under ratable allocation, the X group has a $100 consolidated net operating loss for Year 1, all of which is attributable to T. However, because of extraordinary items, T has $100 of income for the portion of Year 1 that T is a member of the P group. Under paragraph (b)(2)(ii)(B)(2) of this section, T's loss may be carried back from the X group to the portion of Year 1 that T was a member of the P group. See also section 172 and § 1.1502-21(b). Under paragraph (b)(2)(ii)(C)(5) of this section, any item carried to or from any portion of the original year is an extraordinary item, and the loss therefore is not taken into account again in determining the ratable allocation under paragraph (b)(2)(ii) of this section.

Example 5. Employee benefit plans. (a) *Facts.* P sells all of T's stock to X, and T becomes a nonmember on June 30 of Year 1. On March 15 of Year 2, T contributes $100 to its retirement plan, which is a qualified plan under section 401(a). T is not required to make quarterly contributions to the plan for Year 1 under section 412(m). The contribution is made on account of T's taxable period beginning on July 1 of Year 1, and is deemed in accordance with section 404(a)(6) to have been made on the last day of T's taxable period beginning on July 1 of Year 1. Ratable allocation under paragraph (b)(2)(ii) of this section is not elected.
(b) *Analysis.* Under paragraph (b) of this section, the sale is treated as causing T's tax year to end on June 30, and the period beginning on July 1 is treated as a separate annual accounting period for all Federal income tax purposes. T's income from January 1 to June 30 is included in the P group's Year 1 return, and T's income from July 1 to December 31 is included in the X group's Year 1 return. Thus, the $100 contribution is deductible by T for the period of Year 1 that it is a member of the X group, subject to the applicable limitations of section 404, if a contribution on the last day of that period would otherwise be deductible.

(c) The facts are the same as in paragraph (a) of this *Example 5,* except that, in accordance with section 404(a)(6), $40 of the $100 contribution is made on account of T's taxable period beginning on January 1 of Year 1 and is deemed to be made on the last day of T's taxable period beginning on January 1 of Year 1. The remaining $60 is made on account of T's taxable period beginning on July 1 of Year 1 and is deemed to be made on the last day of T's taxable period beginning on July 1 of Year 1. As in paragraph (b) of this *Example 5,* under paragraph (b) of this section, the sale is treated as causing T's tax year to end on June 30, and the period beginning on July 1 is treated as a separate annual accounting period for all Federal income tax purposes. The $40 portion of the contribution is deductible by T for the period of Year 1 that it is a member of the P group, subject to the applicable limitations of section 404 and provided that a $40 contribution on the last day of that period would otherwise be deductible for that period, and the $60 portion is deductible by T for the period of Year 1 that it is a member of the X group, subject to the same conditions.

(d) *Ratable allocation.* The facts are the same as in paragraph (a) of this *Example 5,* except that P, T, and X elect ratable allocation under paragraph (b)(2)(ii) of this section and T's deduction for the retirement plan contribution is not an extraordinary item. T's deduction may be ratably allocated, subject to the applicable limitations of section 404, and is allowable only if a contribution on the last day of Year 1 otherwise would be deductible for any period in the year. (The results would be the same if S were an unaffiliated corporation when acquired by X, and the due date of its last separate return (including extensions) were before the pension contribution was made on March 15 of Year 2.)

Example 6. Allocation of partnership items. (a) *Facts.* P sells all of T's stock to X, and T becomes a nonmember on June 30 of Year 1. T has a 10% interest in the capital and profits of a calendar-year partnership.
(b) *Analysis.* Under paragraph (b)(2)(vi)(A) of this section, T is treated, solely for purposes of determining T's tax year in which the partnership's items are included, as selling or exchanging its entire interest in the partnership as of P's sale of T's stock. Thus, the deemed disposition is not taken into account under section 708, it does not result in gain or loss being recognized by T, and T's holding period is unaffected. However, under section 706(a), in determining T's income, T is required to include its distributive share of partnership items for the partnership's year ending within or with T's tax year. Under section 706(c)(2), the partnership's tax year is treated as closing with respect to T for this purpose as of P's sale of T's stock. The allocation of T's distributive share of partnership items must be made under § 1.706-1(c)(2)(ii).

(c) *Controlled partnership.* The facts are the same as in paragraph (a) of this *Example 6,* except that T has a 75% interest in the capital and profits of the partnership. Under paragraph (b)(2)(vi)(B) of this section, T's distributive share of the partnership items is treated as T's items for purposes of paragraph (b)(2) of this section. Thus, if ratable allocation under paragraph (b)(2)(ii) of this section is not elected, T's distributive share of the partnership's items must be determined under § 1.706-1(c)(2)(ii) by an interim closing of the partnership's books. Similarly, if ratable allocation is elected for T's items that are not extraordinary items, T's distributive share of the partnership's nonextraordinary items must also be ratably allocated under § 1.706-1(c)(2)(ii).

Example 7. Acquisition of S corporation. (a) *Facts.* Z is a small business corporation for which an election under section 1362(a) was in effect at all times since Year 1. At all times, Z had only 100 shares of stock outstanding, all of which were owned by individual A. On July 1 of Year 3, P acquired all of the Z stock. P does not make an election under section 338(g) with respect to its purchase of the Z stock.
(b) *Analysis.* As a result of P's acquisition of the Z stock, Z's election under section 1362(a) terminates. See sections 1361(b)(1)(B) and 1362(d)(2). Z is required to join in the filing of the P consolidated return. See § 1.1502-75. Z's tax year ends for all Federal income tax purposes on June 30 of Year 3. If no extension of time is sought, Z must file a separate return for the period from January 1 through June 30 of Year 3 on or before March 15 of Year 4. See paragraph (b)(4) of this section. Z will become a member of the P consolidated group as of July 1 of Year 3. See paragraph (b)(1)(ii)(A)(2) of this section. P group's Year 3 consolidated return will include Z's items from July 1 to December 31 of Year 3.

(6) ***Applicability date.*** Except as provided in paragraphs (b)(1)(ii)(A)(2) and (b)(2)(v) of this section, this paragraph (b) applies to corporations becoming or ceasing to be members of consolidated groups on or after January 1, 1995.

(c) ***Time for making separate returns for periods not included in consolidated return*** —

(1) ***Consolidated return filed by due date for separate return.*** If the group has filed a consolidated return on or before the due date for the filing of a subsidiary's separate return (including extensions of time and determined without regard to any change of its taxable year required under paragraph (a) of this section), then the separate return for any portion of the subsidiary's taxable year for which its income is not included in the consolidated return of the group must be filed no later than the due date of such consolidated return (including extensions of time).

(2) ***Consolidated return not filed by due date for separate return.*** If the group has not filed a consolidated return on or before the due date for the filing of a subsidiary corporation's separate return (including extensions of time and determined without regard to any change of its taxable year required under paragraph (a) of this section), then on or before such due date such subsidiary shall file a separate return either for the portion of its taxable year for which its income would not be included in a consolidated return if such a return were filed, or for its complete taxable year. However, if a separate return is filed for such portion of its taxable year and the group subsequently does not file a consolidated return, such subsidiary corporation shall file a substituted return for its complete taxable year not later than the due date (including extensions of time) prescribed for the filing of the common parent's return. On the other hand, if the return is filed for the subsidiary's complete taxable year and the group later files a consolidated return, such subsidiary must file an amended return not later than the due date (including extensions of time) for the filing of the consolidated return of the group. Such amended return shall be for that portion of such subsidiary's taxable year which is not included in the consolidated return. If, under this subparagraph, a substituted return must be filed, then the return previously filed shall not be considered a return within the meaning of section 6011. If, under this subparagraph, a substituted or amended return must be filed, then, for purposes of sections 6513(a) and 6601(a), the last date prescribed for payment of tax shall be the due date (not including extensions of time) for the filing of the subsidiary's separate return (determined without regard to this subparagraph and without regard to any change of its taxable year required under paragraph (a) of this section).

(3) ***Examples.*** The provisions of this paragraph (c) may be illustrated by the following examples:

(i) ***Example 1.*** Corporation P, which filed a separate return for the calendar year 2022, acquires all of the stock of corporation S as of the close of December 31, 2022. Corporation S reports its income on the basis of a fiscal year ending March 31. On July 15, 2023, the due date for the filing of a separate return by S (assuming no extensions of time), a consolidated return has not been filed for the group (P and S). On such date S may either file a return for the period April 1, 2022, through December 31, 2022, or it may file a return for the complete fiscal year ending March 31, 2023. If S files a return for the short period ending December 31, 2022, and if the group elects not to file a consolidated return for the calendar year 2023, S, on or before April 15, 2024 (the due date of P's return, assuming no extensions of time), must file a substituted return for the complete fiscal year ending March 31, 2023, in lieu of the return previously filed for the short period. Interest is computed from July 15, 2023. If, however, S files a return for the complete fiscal year ending March 31, 2023, and the group elects to file a consolidated return

for the calendar year 2023, then S must file an amended return covering the period from April 1, 2022, through December 31, 2022, in lieu of the return previously filed for the complete fiscal year. Interest is computed from July 15, 2023.

(ii) ***Example 2.*** Assume the same facts as in paragraph (c)(3)(i) of this section (*Example 1*), except that corporation P acquires all of the stock of corporation S at the close of September 30, 2023, and P files a consolidated return for the group for 2023 on April 15, 2024 (not having obtained any extensions of time). Since a consolidated return has been filed on or before the due date (July 15, 2024) for the filing of the separate return for the taxable year ending March 31, 2024, the return of S for the short taxable year beginning April 1, 2023, and ending September 30, 2023, should be filed no later than April 15, 2024.

(d) ***Applicability date*** —

(1) ***Taxable years of members of group applicability date.*** Paragraph (a) of this section applies to any original consolidated Federal income tax return due (without extensions) after July 20, 2007.

(2) ***Election to ratably allocate items applicability date.*** Paragraph (b)(2)(ii)(D) of this section applies to any original consolidated Federal income tax return due (without extensions) after July 20, 2007.

[T.D. 6894, 31 FR 11794, Sept. 8, 1966]

Editorial Note: For FEDERAL REGISTER citations affecting § 1.1502-76, see the List of CFR Sections Affected, which appears in the Finding Aids section of the printed volume and at *www.govinfo.gov*.

§ 1.1502-77 Agent for the group.

(a) ***Agent for the group*** —

(1) ***Sole agent.*** Except as provided in paragraphs (e) and (f)(2) of this section, one entity (the agent) is the sole agent that is authorized to act in its own name regarding all matters relating to the federal income tax liability for the consolidated return year for each member of the group and any successor or transferee of a member (and any subsequent successors and transferees thereof). The identity of that agent is determined under the rules of paragraph (c) of this section.

(2) ***Agent for each consolidated return year.*** Agency for the group is established for each consolidated return year and is not affected by the status or membership of the group in later years. Thus, subject to the rules of paragraph (c) of this section, the agent will generally remain agent for that consolidated return year regardless of whether one or more subsidiaries later cease to be members of the group, whether the group files a consolidated return for any subsequent year, whether the agent ceases to be the agent or a member of the group in any subsequent year, or whether the group continues pursuant to § 1.1502-75(d) with a new common parent in any subsequent year.

(3) ***Communications under this section.*** Any designation, notification, objection, request, or other communication made to or by the Commissioner pursuant to paragraphs (c) and (f)(2) of this section must be made in accordance with procedures prescribed by the Commissioner in the Internal Revenue Bulletin (see § 601.601(d)(2)(ii) of this chapter), forms, instructions, or other appropriate guidance.

(b) ***Definitions.*** The following definitions apply for purposes of this section only—

(1) ***Successor.*** A *successor* is an individual or entity (including a disregarded entity as defined in paragraph (b)(3) of this section) that is primarily liable, pursuant to applicable law (including, for example, by operation of a state or federal merger statute), for the tax liability of a corporation that was a member of the group but is no longer in existence under applicable law. The determination of tax liability is made without regard to § 1.1502-1(f)(4) or § 1.1502-6(a). (For inclusion of a successor in references to a subsidiary or member, see paragraph (b)(5)(iii) of this section.)

(2) ***Entity.*** The term *entity* includes any corporation, limited liability company, or partnership formed under any state, federal, or foreign jurisdiction. The term entity includes a disregarded entity (as defined in paragraph (b)(3) of this section). The term entity does not include an entity that has terminated even if it is in a winding up period under the law under which it is organized.

(3) ***Disregarded entity.*** The term *disregarded entity* includes any of the following types of entities that are disregarded as separate from their owners—

(i) Qualified real estate investment trust subsidiaries (within the meaning of section 856(i)(2));

(ii) Qualified subchapter S subsidiaries (within the meaning of section 1361(b)(3)(B)); and

(iii) Eligible entities with a single owner (within the meaning of § 301.7701-3 of this chapter).

(4) ***Default successor.*** A successor to the agent is the *default successor* if it is an entity (whether domestic or foreign) that is the sole successor to the agent. A partnership is treated as a sole successor with primary liability notwithstanding that one or more partners may also be primarily liable by virtue of being partners.

(5) ***Member or subsidiary.*** All references to a member or subsidiary for a consolidated return year include—

(i) Each corporation that was a member of the group during any part of such year (except that any reference to a subsidiary does not include the common parent);

(ii) Each corporation whose income was included in the consolidated return for such year, notwithstanding that the tax liability of such corporation should have been computed on the basis of a separate return, or as a member of another consolidated group, under the provisions of § 1.1502-75; and

(iii) Except as indicated otherwise, a successor of any of the foregoing corporations.

(6) ***Completed year.*** A *completed year* is a consolidated return year that has ended, or will end at the time of the referenced event.

(7) ***Current year.*** A *current year* is a consolidated return year that is not a completed year.

(c) ***Identity of the agent*** —

(1) ***In general.*** Except as otherwise provided in this section, the agent for a current year is the common parent and the agent for a completed year is the common parent at the close of the completed year or its default successor, if any. Except as specifically provided otherwise in this paragraph (c), any entity that is an agent pursuant to paragraph (c)(3) of this section (agent following group structure change), paragraph (c)(5) of this section (agent designated by agent terminating without default successor), paragraph (c)(6) of this section (agent designated by Commissioner), or paragraph (c)(7) of this section (agent designated by resigning agent), or any entity subsequently serving as agent following such agent, acts as an agent for and under the same terms and conditions that

apply to a common parent. For example, such an agent would generally be able to designate an agent if it terminates without a default successor; however, an entity that became agent pursuant to a designation by the Commissioner under paragraphs (c)(6)(i)(A)(*2*), (*3*), or (*4*) of this section is not permitted to designate an agent if it terminates without a default successor. Other special rules described in this paragraph (c) apply.

(2) ***Purported agent.*** If any entity files a consolidated return, or takes any other action related to the tax liability for the consolidated return year, purporting to be the agent but is subsequently determined not to have been the agent with respect to the claimed group, that entity is treated, to the extent necessary to avoid prejudice to the Commissioner, as if it were the agent.

(3) ***New common parent after a group structure change.*** If the group continues in existence after a group structure change (as described in § 1.1502-33(f)(1)), the former common parent is the agent until the group structure change, and the new common parent becomes the agent after the group structure change. Following the group structure change, the new common parent is the agent with respect to the entire current year (including the period before the group structure change) and the former common parent is no longer the agent for that year. However, actions taken by the former common parent as the agent before the group structure change are not nullified when the new common parent becomes the agent with respect to the entire consolidated return year. Following the group structure change, the new common parent continues as the agent for succeeding years subject to the rules of this section.

(4) ***Notification by default successor*** —

(i) ***In general.*** Failure to provide notice to the Commissioner pursuant to this paragraph (c)(4)(i) does not invalidate an entity's status as the default successor. However, until the Commissioner receives notification in writing that an entity is the default successor—

(A) Any notice of deficiency or other communication mailed to the predecessor agent, even if no longer in existence, is considered as having been properly mailed to the agent; and

(B) The Commissioner is not required to act on any communication (including, for example, a claim for refund) submitted on behalf of the group by any person (including the default successor) other than the predecessor agent.

(ii) ***Conversions and continuances.*** For purposes of the notice requirements under paragraph (c)(4)(i) of this section, any entity that results from the agent's conversion or continuance by operation of state law and that qualifies as a default successor under paragraph (b)(4) of this section is treated as a default successor for purposes of the notice provisions of paragraph (c)(4)(i) of this section, even if applicable state or local law may treat the converted or continued entity as not ceasing to exist.

(5) ***Designation by terminating agent*** —

(i) ***In general.*** Prior to the termination of its existence without a default successor, an agent may designate an entity described in paragraph (c)(5)(ii) of this section to act as agent for any completed year. This designation is effective upon the termination of the designating agent's existence. However, this paragraph (c)(5) does not apply to, and no designation can be made by, an agent that was designated by the Commissioner under paragraphs (c)(6)(i)(A)(*2*), (*3*), or (*4*) of this section, or any successor of such an agent; in such a case, the terminating agent should request that the Commissioner designate an agent pursuant to paragraph (c)(6)(i)(B) of this section.

(ii) ***Permissible agents*** —

(A) The terminating agent may designate as agent a member of the group during any part of the completed year, or an entity (whether domestic or foreign) that is a successor of such a member, including an entity that will become a successor at the time the agent's existence terminates.

(B) The terminating agent may not designate as agent any entity that was previously replaced as agent by the Commissioner pursuant to paragraphs (c)(6)(i)(A)(*2*), (*3*), or (*4*) of this section, or any successor of such an agent. However, the terminating agent may submit a request pursuant to paragraph (c)(6)(i)(B) of this section that the Commissioner designate such an entity as agent.

(iii) ***Notification of designation.*** The terminating agent must notify the Commissioner in writing of its designation of an entity as agent pursuant to paragraph (c)(5)(i) of this section and provide a statement executed by the designated entity acknowledging that it will serve as the agent for each specified completed year for which it is designated as the agent. If the designated entity was not itself a member of the group during any specified year (because it is a successor of a member), the notification must include a statement acknowledging that the designated entity is or will be primarily liable for the tax liability for the specified completed year as a successor of a member.

(iv) ***Failure to designate an agent.*** If the agent terminates without a default successor, and no agent is designated pursuant to this paragraph (c)(5)—

(A) Any notice of deficiency or other communication mailed to the agent, even if no longer in existence, is considered as having been properly mailed to the agent; and

(B) The Commissioner is not required to act on any communication (including, for example, a claim for refund) submitted on behalf of the group by any person.

(6) ***Designation by the Commissioner*** —

(i) ***In general.*** The Commissioner has the authority to designate an entity to act as the agent under the circumstances prescribed in this paragraph (c)(6)(i). The designated agent for a completed year must be an entity described in paragraph (c)(5)(ii)(A) of this section when the designation becomes effective. The designated agent for a current year must be a member of the group when the designation becomes effective. If, pursuant to this paragraph (c)(6), the Commissioner replaces the common parent or another entity as the agent, the common parent or other entity, or any successor thereof, may not later act as the agent unless so designated by the Commissioner.

(A) ***On Commissioner's own accord.*** With or without a request from any member of the group, the Commissioner may designate an entity to act as the agent if—

(*1*) The agent's existence terminates, other than in a group structure change, without there being a default successor and without any designation made under paragraph (c)(5)(i) of this section;

(*2*) An agent previously designated by the Commissioner is no longer a member of the group in the current year and does not have a default successor that is a member of the group;

(3) The Commissioner believes that the agent or its default successor exists but such entity has either not timely responded to the Commissioner's notices (sent to the last known address on file for the entity or left at the usual place of business for such entity) or has failed to perform its obligations as agent as prescribed by the Internal Revenue Code (Code) or regulations promulgated thereunder; or

(4) The agent is or becomes a foreign entity as a result of any action or transaction (including, for example, a continuance into a foreign jurisdiction or certain inversion transactions subject to section 7874 in which a foreign parent is treated as a domestic corporation).

(B) ***Written request from any member.*** At the request of any member, in a circumstance not described in paragraph (c)(6)(i)(A) of this section, the Commissioner may, but is not required to, replace an agent previously designated under this paragraph (c)(6).

(ii) ***Notification by Commissioner.*** The Commissioner will notify the designated entity in writing of the Commissioner's designation of the entity as agent pursuant to paragraph (c)(6)(i) of this section, and the designation will be effective as prescribed by the Commissioner. The designated entity should give notice of the designation by the Commissioner pursuant to paragraph (c)(6)(i) of this section to each member of the group during any part of the consolidated return year. However, a failure by the designated entity to notify any such member of the group does not invalidate the designation by the Commissioner.

(iii) ***Term and effect of designation.*** Unless otherwise provided by the Commissioner in the designation, any agent designated by the Commissioner pursuant to paragraph (c)(6)(i) of this section (new agent) is the agent with respect to the entire consolidated return year for which it is designated and successive years, subject to the rules of this section. An agent immediately preceding a new agent (former agent) ceases to be the agent for a particular consolidated return year once the new agent has been designated for that year, but the designation of the new agent does not nullify actions taken on behalf of the group by the former agent while it was agent. If there is more than one new agent designated by the Commissioner for a consolidated return year, the new agent that is designated last in time by the Commissioner is the agent with respect to the entire consolidated return year. A designation pursuant to this paragraph (c)(6) is effective as prescribed by the Commissioner in such designation or the Internal Revenue Bulletin (see § 601.601(d)(2)(ii) of this chapter), forms, instructions, or other appropriate guidance.

(iv) ***Request by member of the group where agent previously designated by the Commissioner is no longer a member.*** If an agent at any time after it is designated as agent by the Commissioner pursuant to paragraph (c)(6)(i) of this section is no longer a member of the group for any current year, and its default successor, if any, is not a member of the group at that time, a member of the group, including the agent that will cease to be a member, should request, in writing, that the Commissioner designate a member of the group to be the new agent pursuant to paragraph (c)(6)(i)(A)(2) of this section. Until such a request is made—

(A) Any notice of deficiency or other communication mailed to the agent, even if no longer a member, is considered as having been properly mailed to the agent; and

(B) The Commissioner is not required to act on any communication (including, for example, a claim for refund) submitted on behalf of the group by any person.

(7) ***Agent resigns*** —

(i) ***In general.*** The agent may resign for a completed year if—

(A) It provides written notice to the Commissioner that it no longer intends to be the agent for that completed year;

(B) An entity described in paragraph (c)(5)(ii)(A) of this section consents, in writing, to be the agent with respect to that completed year;

(C) Immediately after its resignation takes effect, the resigning agent will not be the agent for the current year; and

(D) The Commissioner does not object to the agent's resignation.

(ii) ***Notification by agent that replaces agent that resigns.*** If the Commissioner does not object to the agent's resignation, the agent that replaces the agent that resigns should give written notice that it is the new agent to each member of the group for any part of the completed year for which it is designated the agent.

(8) ***Transactions under the Code.*** Notwithstanding section 338(a)(2), a target corporation for which an election is made under section 338 is not deemed to terminate for purposes of this section.

(d) ***Examples of matters subject to agency.*** With respect to any consolidated return year for which it is the agent—

(1) The agent makes any election (or similar choice of a permissible option) that is available to a subsidiary in the computation of its separate taxable income, and any change in an election (or similar choice of a permissible option) previously made by or for a subsidiary, including, for example, a request to change a subsidiary's method or period of accounting;

(2) All correspondence concerning the income tax liability for the consolidated return year is carried on directly with the agent;

(3) The agent files for all extensions of time, including extensions of time for payment of tax under section 6164, and any extension so filed is considered as having been filed by each member;

(4) The agent gives waivers, gives bonds, and executes closing agreements, offers in compromise, and all other documents, and any waiver or bond so given, or agreement, offer in compromise, or any other document so executed, is considered as having also been given or executed by each member;

(5) The agent files claims for refund, and any refund is made directly to and in the name of the agent and discharges any liability of the Government to any member with respect to such refund;

(6) The agent takes any action on behalf of a member of the group with respect to a foreign corporation including, for example, elections by, and changes to the method of accounting of, a controlled foreign corporation in accordance with § 1.964-1(c)(3);

(7) Notices of claim disallowance are mailed only to the agent, and the mailing to the agent is considered as a mailing to each member;

(8) Notices of deficiencies are mailed only to the agent (except as provided in paragraph (f)(3) of this section), and the mailing to the agent is considered as a mailing to each member;

(9) Notices of final partnership administrative adjustment under section 6223 with respect to any partnership in which a member of the group is a partner may be mailed to the agent, and, if so, the mailing to the agent is considered as a mailing to each member that is a partner entitled to receive such notice (for other rules regarding partnership proceedings, see paragraph (f)(2)(iii) of this section);

(10) The agent files petitions and conducts proceedings before the United States Tax Court, and any such petition is considered as also having been filed by each member;

(11) Any assessment of tax may be made in the name of the agent, and an assessment naming the agent is considered as an assessment with respect to each member; and

(12) Notice and demand for payment of taxes is given only to the agent, and such notice and demand is considered as a notice and demand to each member.

(e) ***Matters reserved to subsidiaries.*** Except as provided in this paragraph (e) and paragraph (f)(2) of this section, no subsidiary (unless it is or becomes an agent pursuant to paragraph (c) of this section) has authority to act for or to represent itself in any matter related to the tax liability for the consolidated return year. The following matters, however, are reserved exclusively to each subsidiary—

(1) The making of the consent required by § 1.1502-75(a)(1);

(2) Any action with respect to the subsidiary's liability for a federal tax other than the income tax imposed by chapter 1 of the Code (including, for example, employment taxes under chapters 21 through 25 of the Code, and miscellaneous excise taxes under chapters 31 through 47 of the Code); and

(3) The making of an election to be treated as a Domestic International Sales Corporation under § 1.992-2.

(f) ***Dealings with members*** —

(1) ***Identifying members in notice of a lien.*** Notwithstanding any other provisions of this section, any notice of a lien, any levy, or any other proceeding to collect the amount of any assessment, after the assessment has been made, must name the entity from which such collection is to be made.

(2) ***Direct dealing with a member*** —

(i) ***Several liability.*** The Commissioner may, upon issuing to the agent written notice that expressly invokes the authority of this provision, deal directly with any member of the group with respect to its liability under § 1.1502-6 for the consolidated tax of the group, in which event such member has sole authority to act for itself with respect to that liability. However, if the Commissioner believes or has reason to believe that the existence of the agent has terminated without an agent being identified under this section, the Commissioner may, if the Commissioner deems it advisable, deal directly with any member with respect to that member's liability under § 1.1502-6 without issuing notice to any other entity.

(ii) ***Information requests.*** The Commissioner may, upon issuing to the agent written notice, request information relevant to the consolidated tax liability from any member of the group. However, if the Commissioner believes or has reason to believe that the existence of the agent has terminated without an agent being identified under this section, the Commissioner may request such information from any member of the group without issuing notice to any other entity.

(iii) ***Members as partners in partnerships subject to the provisions of the Code.*** Except as otherwise provided in this paragraph (f)(2)(iii), the general rule of paragraph (a)(1) of this section applies so that the agent is the agent for any subsidiary member that for any part of the consolidated return year is a partner in a partnership subject to the provisions of sections 6221 through 6234 of the Code (as originally enacted by the Tax Equity and Fiscal Responsibility Act of 1982 and subsequently amended) and the accompanying regulations (TEFRA partnership). However—

(A) Any subsidiary or any disregarded entity owned by a subsidiary that is designated as tax matters partner of a TEFRA partnership will act in its own name and perform its responsibilities under sections 6221 through 6234 and the accompanying regulations without requiring any action by the agent (but see paragraph (d)(9) of this section regarding the mailing of a final partnership administrative adjustment to the agent); and

(B) The Commissioner may at any time communicate directly with a subsidiary or a disregarded entity owned by a subsidiary that is a partner in a TEFRA partnership, without having to deal with each member separately pursuant to paragraph (f)(2)(i) of this section, whenever the Commissioner determines that such direct communication will facilitate the conduct of an examination, appeal, or settlement with respect to the partnership.

(3) ***Copy of notice of deficiency to entity that has ceased to be a member of the group.*** A subsidiary that ceases to be a member of the group during or after a consolidated return year may file a written notice of that fact with the Commissioner and request a copy of any notice of deficiency with respect to the tax for a consolidated return year during which it was a member, or a copy of any notice and demand for payment of such deficiency, or both. Such filing does not limit the scope of the agency of the agent provided for in this section. Any failure by the Commissioner to comply with such request does not limit the subsidiary's tax liability under § 1.1502-6.

(g) ***Examples.*** Unless otherwise indicated, all entities are domestic and have a calendar year taxable year, and each of P, S, S-1, S-2, S-3, T, U, V, W, W-1, Y, Z, and Z-1 is a corporation. For none of the consolidated return years at issue does the Commissioner exercise the authority under paragraph (f)(2) of this section to deal with any member separately. Any surviving entity in a merger is either a successor as described in paragraph (b)(1) of this section, or a default successor as described in paragraph (b)(4) of this section, as the case may be. Except as otherwise indicated, no agent will be replaced under paragraph (c)(6) of this section or will resign under paragraph (c)(7) of this section, and all communications to and from the Commissioner are made in accordance with procedures prescribed by the Commissioner.

(1) ***Example 1*** *—Disposition of all group members where the agent remains the agent.*

(i) ***Facts.*** As of January 1 of Year 1, P is the common parent and agent for the P consolidated group, consisting of P and its two subsidiaries, S and S-1. P files consolidated returns for the P group in Years 1 and 2. On December 31 of Year 1, P sells all the stock of S-1 to X. On December 31 of Year 2, P distributes all the stock of S to P's shareholders. P files a separate return for Year 3.

(ii) ***Analysis.*** Although the consolidated group terminates after Year 2 under § 1.1502-75(d)(1) and P is no longer the common parent nor the agent for years after Year 2, P remains the agent for the P group for Years 1 and 2 under paragraph (a)(2) of this section. Accordingly, for as long as P remains in existence, P is the agent for the P group under paragraphs (a)(1) and (2) and (c)(1) of this section for Years 1 and 2.

(2) ***Example 2*** *—Acquisition of the agent by another group where the agent remains the agent.*

(i) ***Facts.*** The facts are the same as in paragraph (g)(1)(i) of this section (*Example 1*), except on January 1 of Year 3, all of the outstanding stock of P is acquired by Y, which is the common parent and agent of the Y consolidated group. P thereafter joins in the Y group's consolidated return as a member of the Y group.

(ii) ***Analysis.*** Although P is a member of the Y group in Year 3 and succeeding years, P remains the agent for the P group for Years 1 and 2 under paragraph (a)(2) of this section. Accordingly, for as long as P remains in existence, P is the agent for the P group under paragraphs (a)(1) and (2) and (c)(1) of this section for Years 1 and 2.

(3) ***Example 3*** *—Reverse triangular merger of the agent where the agent remains the agent.*

(i) ***Facts.*** As of January 1 of Year 1, P is the common parent and agent for the P consolidated group consisting of P and its two subsidiaries, S and S-1. P files consolidated returns for the P group in Years 1 and 2. On March 1 of Year 3, W-1, a subsidiary of W, merges into P in a reverse triangular merger qualifying as a reorganization under section 368(a)(1)(A) and (a)(2)(E). P survives the merger with W-1. The transaction constitutes a reverse acquisition under § 1.1502-75(d)(3)(i) because P's shareholders receive more than 50 percent of W's stock in exchange for all of P's stock. The transaction is therefore a group structure change as described in paragraph (c)(3) of this section.

(ii) ***Analysis.*** Because the transaction constitutes a reverse acquisition that results in a group structure change, the P group is treated as remaining in existence with W as its common parent and agent. Under paragraphs (a)(1) and (2) and (c)(1) of this section, P remains the agent for the P group for Years 1 and 2 for as long as P remains in existence, even though the P group continues with W as its new common parent pursuant to § 1.1502-75(d)(3)(i). Until the merger of W-1 and P on March 1 of Year 3, P is the agent for the P group for Year 3. From the time of that merger, W, as common parent of the P group, becomes the agent for the P group with respect to all of Year 3 (including the period through March 1) and succeeding consolidated return years. The actions taken by P before the merger as agent for the P group for Year 3 are not nullified by the fact that W becomes the agent for all of Year 3.

(4) ***Example 4*** *—Reverse triangular merger of the agent—subsequent distribution of agent where the agent remains the agent.*

(i) ***Facts.*** The facts are the same as in paragraph (g)(3)(i) of this section (*Example 3*), except that on April 1 of Year 4, in a transaction unrelated to the March 1, Year 3 reverse acquisition, P distributes the stock of its subsidiaries S and S-1 to W, and W then distributes the stock of P to the W shareholders.

(ii) ***Analysis.*** Although P is no longer a member of the P group after the Year 4 distribution, P remains the agent for the P group under paragraphs (a)(1) and (2) and (c)(1) of this section for Years 1 and 2 for as long as P remains in existence.

(5) ***Example 5*** *—Agent Resigns.*

(i) ***Facts.*** The facts are the same as in paragraph (g)(4) of this section (*Example 4*), except that on August 1 of Year 4, P provides written notice to the Commissioner that it resigns as the agent for Years 1 and 2. Included with the written notice is a statement executed by either S or S-1 consenting to be the agent for the P group for Years 1 and 2.

(ii) ***Analysis.*** Pursuant to paragraph (c)(7) of this section, because P is not the agent in Year 4, the current year, it will not be the agent immediately after its resignation takes effect. Accordingly, if the Commissioner does not object to P's resignation, P may resign with respect to Years 1 and 2, both of which are completed years, and either S or S-1, each an entity described in paragraph (c)(5)(ii)(A) of this section, can be the agent for the P group for Years 1 and 2 if it consents in writing. W cannot be the agent for the P group for Years 1 and 2 because it is not an entity described in paragraph (c)(5)(ii)(A) of this section with respect to the P group for Years 1 and 2.

(6) ***Example 6*** *—Qualified stock purchase and section 338 election where the agent remains the agent.*

(i) ***Facts.*** As of January 1 of Year 1, P is the common parent and agent for the P consolidated group consisting of P and its two subsidiaries, S and S-1. P files consolidated returns for the P group in Years 1 and 2. On March 31 of Year 2, V purchases the stock of P in a qualified stock purchase (within the meaning of section 338(d)(3)), and V makes a timely election pursuant to section 338(g) with respect to P.

(ii) ***Analysis.*** Although section 338(a)(2) provides that P is treated as a new corporation as of the beginning of the day after the acquisition date for purposes of subtitle A, paragraph (c)(8) of this section provides that P's existence is not deemed to terminate for purposes of this section notwithstanding the general rule of section 338(a)(2). Accordingly, new P is the agent for the P group for Year 1 and the period ending March 31 of Year 2 regardless of the election under section 338(g).

(7) ***Example 7*** *—Change in the agent's federal income tax classification to a partnership and the resulting partnership continues as the agent.*

(i) ***Facts.*** P, a State M limited liability partnership with two partners that is formed on January 1 of Year 1, elects pursuant to § 301.7701-3(c) of this chapter to be an association taxable as a corporation for federal income tax purposes effective on the date of formation. P is the common parent and agent for the P consolidated group consisting of P and its two subsidiaries, S and S-1. P files consolidated returns for the P group in Years 1 through 6. On January 1 of Year 7, P elects pursuant to § 301.7701-3(c) of this chapter to be treated as a partnership. P remains in existence under applicable law.

(ii) ***Analysis.*** The P group terminates and P is no longer the common parent of a consolidated group after its election to be treated as a partnership for federal income tax purposes. Because P remains in existence under applicable law, P is the agent for the P group under paragraphs (a)(1) and (2) and (c)(1) of this section for Years 1 through 6. If P merged into a foreign partnership instead of converting to a partnership, the foreign partnership would be P's default successor and agent for the P group for Years 1 through 6. See paragraphs (b)(4) and (c)(1) of this section.

(8) ***Example 8*** *—Forward triangular merger of agent—successor as default successor.*

(i) ***Facts.*** As of January 1 of Year 1, P is the common parent and agent for the P consolidated group consisting of P and its two subsidiaries, S and S-1. P files a consolidated return for the P group for Year 1. On January 1 of Year 3, P merges with and into Z-1, a subsidiary of Z, in a forward triangular merger qualifying as a reorganization under section 368(a)(1)(A) and (a)(2)(D). The transaction constitutes a reverse acquisition under § 1.1502-75(d)(3)(i) resulting in a group structure change as described in paragraph (c)(3) of this section because P's

shareholders receive more than 50 percent of Z's stock in exchange for all of P's stock. Z-1, the corporation that survives the merger and the successor of P, is the default successor for the P group for Years 1 and 2.

(ii) ***Analysis.*** Although Z is the new common parent for the P group (which continues pursuant to § 1.1502-75(d)(3)(i)) for consolidated return years after the merger, and, as a consequence, Z is the new agent as a result of this group structure change, P may not designate an agent for Years 1 or 2 because Z-1 is P's default successor and the agent for the P group for Years 1 and 2. Z-1 must file the P group's consolidated return for Year 2. See paragraphs (b)(4) and (c)(1) of this section.

(9) ***Example 9*** *—Merger of the agent into a disregarded entity in exchange for stock of owner in a transaction qualifying as a reorganization under the Code where successor is the default successor.*

(i) ***Facts.*** As of January 1 of Year 1, P is the common parent and agent for the P consolidated group consisting of P and its two subsidiaries, S and S-1. P files a consolidated return for the P group in Year 1. On January 1 of Year 2, the shareholders of P form Y, a State M corporation. On the same date, Y forms Y-1, a State M limited liability company that is a disregarded entity (as defined in paragraph (b)(3) of this section) for federal income tax purposes, and P merges into Y-1 under State M law. In the merger, the P shareholders receive all of the Y stock. Y (through Y-1) is treated as acquiring the assets of P in a transaction qualifying as a reorganization of P into Y under section 368(a)(1)(F), and the P group continues under § 1.1502-75(d)(2) with Y as the common parent and, as a consequence, the transaction is treated as a group structure change as described in paragraph (c)(3) with Y as the P group's agent for Year 2. In Year 4, the Commissioner seeks to extend the period of limitations on assessment with respect to Year 1 of the P group. In Year 5, the Commissioner seeks to extend the period of limitations on assessment with respect to Year 2 of the Y group (formerly the P group).

(ii) ***Analysis.***

(A) ***Year 1 extension.*** As a result of the January 1, Year 2 merger, Y-1 is the default successor of P, and the agent for the P group for Year 1. See paragraphs (b)(4) and (c)(1) of this section. Therefore, Y-1 is the only party that can sign the extension with respect to the P group for Year 1.

(B) ***Year 2 extension.*** Because the January 1, Year 2 merger qualified as a reorganization under section 368(a)(1)(F), the P group remains in existence with Y as the common parent. Therefore, Y, the common parent of the P group after the merger, is the P group's agent for all of Year 2 (see paragraph (c)(3) of this section) and is the only party that can sign the extension with respect to the P group for that year and in succeeding years. See paragraphs (a)(1) and (2) and (c)(1) of this section.

(10) ***Example 10*** *—Designation of agent where there is no default successor.*

(i) ***Facts.*** P is incorporated under the laws of State X. Fifty percent of its stock is owned at all times by A, an individual, and 50 percent by BCD, a partnership. On January 1 of Year 1, P forms two subsidiaries, S and T, and becomes the common parent of the P group. P files consolidated returns for the P group beginning in Year 1 and is the agent for the P consolidated group beginning on January 1 of Year 1. On November 30 of Year 3, P dissolves under X law. Under X law, A and BCD are primarily liable for the federal income tax liability of dissolved corporation P. State X law allows the officers of a dissolved corporation to perform certain actions incident to the winding up of its affairs after its dissolution, including the filing of tax returns.

(ii) ***Analysis.*** Upon P's dissolution, there is no default successor to P, pursuant to paragraph (b)(4) of this section, because there are two successors. Prior to its dissolution on November 30 of Year 3, pursuant to paragraph (c)(5)(i) of this section, P may designate an agent for the P group for Years 1 and 2 and the short taxable year ending on November 30 of Year 3, to be effective upon P's dissolution. P may designate S or T, pursuant to paragraph (c)(5)(ii)(A) of this section (because they are members of the former group), or BCD (because it is an entity that is a successor to P pursuant to paragraph (b)(1) of this section). P cannot designate A pursuant to paragraph (c)(5)(ii) of this section, because A is not an entity. Under paragraph (b)(2) of this section, the officers of P cannot designate an agent for the P group after P dissolves on November 30 of Year 3, notwithstanding the winding up provisions of State X law. Accordingly, P should designate an agent prior to its dissolution to ensure that there is an agent authorized to file the short Year 3 consolidated return. If P does not designate an agent prior to dissolution under paragraph (c)(5)(i) of this section, the Commissioner may designate an agent under paragraph (c)(6)(i)(A)(*1*) of this section from among S, T, or BCD, upon their request or otherwise. If any of S, T, A, or BCD realizes that P has dissolved without designating an agent, it should request, in writing, a designation of an agent by the Commissioner as soon as possible.

(11) ***Example 11*** *—Commissioner designates a new agent.*

(i) ***Agent fails to fulfill its obligations.***

(A) ***Facts.*** P is the common parent and agent for the P consolidated group consisting of P and its two subsidiaries, S-1 and S-2, each a State Y corporation. P files a consolidated return for the P group in Year 1. In Year 2, S-3, also a State Y corporation, joins the P group. The P group continues as a consolidated group in Years 2, 3, and 4. As of Year 4, P has failed to file the P group consolidated returns for Years 2 and 3.

(B) ***Analysis.***

(*1*) ***Scope of designation.*** Because P failed to perform its obligations as agent as prescribed by federal tax law, the Commissioner may, under the authority of paragraph (c)(6)(i)(A)(*3*) of this section, on the Commissioner's own accord, with or without a written request from a member, designate another entity described in paragraph (c)(6)(i) of this section to act as the agent for not just Years 2 and 3, but any of Years 1 through 4.

(*2*) ***Year 1 designation.*** The Commissioner may designate either S-1 or S-2, both of which are entities described in paragraphs (c)(6)(i) and (c)(5)(ii)(A) of this section, to act as the agent for the P group for Year 1. Because S-3 was not a member of the group in Year 1, it is not an entity described in paragraphs (c)(6)(i) and (c)(5)(ii)(A) of this section for Year 1 and therefore cannot be the agent for Year 1. Unless otherwise provided in the designation, the designation of either S-1 or S-2 will also be effective for Years 2, 3, and 4 and all succeeding consolidated return years of the group.

(*3*) ***Year 2 designation.*** The Commissioner may designate either S-1, S-2, or S-3, all of which are entities described in paragraph (c)(5)(ii)(A) of this section, to act as the agent for the P group for Year 2. Unless otherwise provided in the designation, the designation of either S-1, S-2, or S-3 will also be effective for Years 3 and 4 and all succeeding consolidated return years of the group.

(*4*) ***Year 3 designation.*** The Commissioner may designate any of S-1, S-2, or S-3 as the agent for Year 3. Unless otherwise provided in the designation, the designation of either S-1, S-2, or S-3 will also be effective for Year 4 and all succeeding consolidated return years of the group.

(*5*) ***Year 4 designation.*** The Commissioner may designate any of S-1, S-2, or S-3 as the agent for Year 4. Unless otherwise provided in the designation, the designation of either S-1, S-2, or S-3 will also be effective for all succeeding consolidated return years of the group.

(ii) ***Member requests replacement of designated agent.***

(A) ***Facts.*** The facts are the same as in paragraph (g)(11)(i)(A) of this section, except that in Year 4 the Commissioner designates S-1 as agent for Years 1 and succeeding years to replace P for P's failure to fulfill its obligations. After receiving notification that S-1 has been designated, S-3 submits a request in Year 4, pursuant to paragraph (c)(6)(i)(B) of this section, that the Commissioner designate S-2 as the agent because S-1 does not have ready access to the group's books and records, which are located in another state and are in the possession of S-2.

(B) ***Analysis.*** In light of S-3's request, the Commissioner may, under the authority of paragraph (c)(6)(i)(B) of this section, designate either S-2 (for all or any years) or S-3 (for any year or years other than Year 1) as agent in lieu of the previously designated agent, S-1. However, notwithstanding S-3's request, the Commissioner is not required to replace S-1 as agent for any of the consolidated return years for which S-1 was designated.

(12) ***Example 12*** *—Designated agent ceases to be a member of the group.*

(i) ***Facts.*** The facts are the same as in paragraph (g)(11)(ii)(A) of this section (*Example 11*), except that in Year 4 no member requests that the Commissioner replace S-1, which accordingly continues to be the agent for the P group in Year 5 pursuant to paragraph (c)(6)(iii) of this section. On May 2 of Year 5, S-1 converts under State Y law into S-1 LLC, a limited liability company that is an entity that is treated as a disregarded entity (as defined in paragraph (b)(3) of this section) and, as a consequence, is no longer a member of the P group after the conversion.

(ii) ***Analysis for completed years.*** S-1 LLC, the disregarded entity resulting from the conversion, becomes S-1's default successor. As such, S-1 LLC is the agent for Years 1-4.

(iii) ***Analysis for current and succeeding years.*** S-1 is an agent designated by the Commissioner pursuant to paragraph (c)(6)(i)(A)(*3*) of this section. Because S-1 is no longer a member of the P group after May 2 of Year 5, S-1 is the agent for the P group for Year 5 only while it remains a member (see paragraphs (c)(6)(i) and (iii) of this section). According to paragraph (c)(6)(i) of this section, although S-1 LLC is S-1's default successor, it is not a member of the group for the current year and therefore cannot be its agent. Furthermore, S-1 cannot designate an agent for Year 5 under paragraph (c)(5)(i) of this section because that paragraph pertains only to designations for completed years for which there is no default successor. In addition, S-1 cannot designate an agent for Year 5 under paragraph (c)(5)(i) of this section because S-1 was previously designated by the Commissioner under paragraph (c)(6)(i)(A)(*3*) of this section.

(iv) ***Member's notice to Commissioner for Commissioner to designate a member of the group for a current year.*** A member of the group in Year 5 should request that the Commissioner designate, pursuant to paragraphs (c)(6)(i)(A)(2) and (c)(6)(iv) of this section, another member of the P group to be the agent of the group for Year 5. The Commissioner may then, pursuant to paragraph (c)(6)(i)(A)(2) of this section, designate either S-2, S-3, or P to be the agent for the P group and, once so designated, that member will be, effective on May 3 of Year 5, the agent for all of Year 5 and for succeeding years (subject to the rules of this section) pursuant to paragraph (c)(6)(iii) of this section. No actions taken by S-1 on behalf of the P group through May 2, Year 5, are nullified by the Commissioner's designation of another agent even though the agent so designated will be the agent for all of Year 5.

(13) ***Example 13*** *—Fraudulent conveyance of assets.*

(i) ***Facts.*** As of January 1 of Year 1, P is the common parent and agent for the P consolidated group consisting of P and its two subsidiaries, S and S-1. On April 15 of Year 2, P files a consolidated return that includes the income of S and S-1 for Year 1. On December 1 of Year 2, S-1 transfers assets having a fair market value of $100x to U in exchange for $10x. This transfer of assets for less than fair market value constitutes a fraudulent conveyance under applicable state law. On March 1 of Year 5, P executes a waiver extending to December 31 of Year 6 the period of limitations on assessment with respect to the P group's Year 1 consolidated return. On February 1 of Year 6, the Commissioner issues a notice of deficiency to P asserting a deficiency of $30x for the P group's Year 1 consolidated tax liability. P does not file a petition for redetermination in the Tax Court, and the Commissioner makes a timely assessment against the P group. P, S, and S-1 are all insolvent and are unable to pay the deficiency. On February 1 of Year 8, the Commissioner sends a notice of transferee liability to U, which does not file a petition in the Tax Court. On August 1 of Year 8, the Commissioner assesses the amount of the P group's deficiency against U. Under section 6901(c), the Commissioner may assess U's transferee liability within one year after the expiration of the period of limitations against the transferor, S-1. By operation of section 6213(a) and 6503(a), the issuance of the notice of deficiency to P and the expiration of the 90-day period for filing a petition in the Tax Court have the effect of further extending by 150 days the P group's limitations period on assessment from the previously extended date of December 31 of Year 6 to May 30 of Year 7.

(ii) ***Analysis.*** Pursuant to paragraph (a)(1) of this section, the waiver executed by P on March 1 of Year 5 to extend the period of limitations on assessment to December 31 of Year 6 and the further extension of the P group's limitations period to May 30 of Year 7 (by operation of sections 6213(a) and 6503(a)) have the derivative effect of extending the period of limitations on assessment of U's transferee liability to May 30 of Year 8. By operation of section 6901(f), the issuance of the notice of transferee liability to U and the expiration of the 90-day period for filing a petition in the Tax Court have the effect of further extending the limitations period on assessment of U's liability as a transferee by 150 days, from May 30 of Year 8 to October 27 of Year 8. Accordingly, the Commissioner may send a notice of transferee liability to U at any time on or before May 30 of Year 8 and assess the unpaid liability against U at any time on or before October 27 of Year 8. The result would be the same even if S-1 ceased to exist before March 1 of Year 5, the date P executed the waiver.

(14) ***Example 14*** *—Consent to extend the statute of limitations for a partnership where a member of the consolidated group is a partner of such partnership subject to the provisions of the Code and the tax matters partner is not a member of the group.*

(i) ***Facts.*** P is the common parent and agent for the P consolidated group consisting of P and its two subsidiaries, S and S-1. The P group has a November 30 fiscal year end and P files consolidated returns for the P group for the years ending November 30, Year 1 and November 30, Year 2. S-1 is a partner in the PRS partnership, which is subject to the provisions of sections 6221 through 6234. PRS has a calendar year end and A, an individual, is the tax matters partner of the PRS partnership. PRS files a partnership return for the year ending December 31, Year 1. On January 10, Year 5, A, as the tax matters partner for the PRS partnership, executes a consent to extend the period for assessment of partnership items of PRS for all partners, and the Commissioner co-executes the consent on the same day for the year ending December 31, Year 1.

(ii) ***Analysis.*** A's consent to extend the statute of limitations for the partnership items of PRS partnership for the year ending December 31, Year 1, extends the statute of limitations with respect to the partnership items for all members of the P group, including P, S, and S-1 for the consolidated return year ending November 30, Year 2. This is because S-1 is a partner in the PRS partnership for which A, the tax matters partner for the PRS partnership, consents, pursuant to section 6229(b)(1)(B), to extend the statute of limitations for the year ending December 31, Year 1. However, under paragraph (f)(2)(iii) of this section, such agreement with respect to the statute of limitations for the PRS partnership for the year ending December 31, Year 1 does not obviate the need to obtain a consent from P, the agent for the P consolidated group, to extend the statute of limitations for the P consolidated group for the P group's consolidated return years ending November 30, Year 1 and November 30, Year 2 regarding any items other than partnership items or affected items of the PRS partnership.

(15) ***Example 15*** *—Contacting subsidiary member in order to facilitate the conduct of an examination, appeal, or settlement where a member of the consolidated group is a partner of a partnership subject to the provisions of the Code.*

(i) ***Facts.*** P is the common parent and agent for the P consolidated group consisting of P and its two subsidiaries, S and S-1. The P group has a November 30 fiscal year end, and P files consolidated returns for the P group for the years ending November 30, Year 1 and November 30, Year 2. S-1 is a partner in the PRS partnership, which is subject to the provisions of sections 6221 through 6234. PRS has a calendar year end and A, an individual, is the tax matters partner of the PRS partnership. PRS files a partnership return for the year ending December 31, Year 1. The Commissioner, on January 10, Year 4, in the course of an examination of the PRS partnership for the year ending December 31, Year 1, seeks to obtain information in the course of that examination to resolve the audit.

(ii) ***Analysis.*** Because the direct contact with a subsidiary member of a consolidated group that is a partner in a partnership subject to the provisions under sections 6221 through 6234 may facilitate the conduct of an examination, appeal, or settlement, the Commissioner, under paragraph (f)(2)(iii) of this section, may communicate directly with either S-1, P, or A regarding the PRS partnership without breaking agency pursuant to paragraph (f)(2)(i) of this section. However, if the Commissioner were instead seeking to execute a settlement agreement with respect to S-1 as a partner with respect to its liability as a partner in PRS partnership, P would need to execute such settlement agreement for all members of the group including the partner subsidiary.

(h) ***Cross-reference.*** For further rules applicable to groups that include insolvent financial institutions, see § 301.6402-7 of this chapter.

(i) [Reserved]

(j) *Effective/applicability date* —

(1) ***In general.*** The rules of this section apply to consolidated return years beginning on or after April 1, 2015. For prior years beginning before June 28, 2002, see § 1.1502-77A. For prior years beginning on or after June 28, 2002, and before April 1, 2015, see § 1.1502-77B.

(2) ***Application of this section to prior years.*** Notwithstanding paragraph (j)(1) of this section, an agent may apply the rules of paragraph (c)(7) of this section to resign as agent for a completed year that began before April 1, 2015.

[T.D. 9715, 80 FR 17318, Apr. 1, 2015, as amended at 80 FR 23237, Apr. 27, 2015; T.D. 10018, 89 FR 106876, Dec. 30, 2024]

§ 1.1502-78 Tentative carryback adjustments.

(a) ***General rule.*** If a group has a consolidated net operating loss, a consolidated net capital loss, or a consolidated unused business credit for any taxable year, then any application under section 6411 for a tentative carryback adjustment of the taxes for a consolidated return year or years preceding such year shall be made by the common parent corporation for the carryback year (or the agent determined under § 1.1502-77(c) or § 1.1502-77B(d) for the carryback year) to the extent such loss or unused business credit is not apportioned to a corporation for a separate return year pursuant to § 1.1502-21(b), 1.1502-22(b), or 1.1502-79(c). In the case of the portion of a consolidated net operating loss or consolidated net capital loss or consolidated unused business credit to which the preceding sentence does not apply and that is to be carried back to a corporation that was not a member of a consolidated group in the carryback year, the corporation to which such loss or credit is attributable shall make any application under section 6411. In the case of a net capital loss or net operating loss or unused business credit arising in a separate return year that may be carried back to a consolidated return year, after taking into account the application of § 1.1502-21(b)(4) with respect to any net operating loss arising in another consolidated group, the common parent for the carryback year (or the agent determined under § 1.1502-77(c) or § 1.1502-77B(d) for the carryback year) shall make any application under section 6411.

(b) *Special rules* —

(1) ***Payment of refund.*** Any refund allowable under an application referred to in paragraph (a) of this section shall be made directly to and in the name of the corporation filing the application, except that in all cases where a loss is deducted from the consolidated taxable income or a credit is allowed in computing the consolidated tax liability for a consolidated return year, any refund shall be made directly to and in the name of the common parent corporation for the carryback year (or the agent determined under § 1.1502-77(c) or § 1.1502-77B(d) for the carryback year). The payment of any such refund shall discharge any liability of the Government with respect to such refund.

(2) ***Several liability.*** If a group filed a consolidated return for a taxable year for which there was an adjustment by reason of an application under section 6411, and if a deficiency is assessed against such group under section 6213(b)(3), then each member of such group shall be severally liable for such deficiency including any interest or penalty assessed in connection with such deficiency.

(3) ***Groups that include insolvent financial institutions.*** For further rules applicable to groups that include insolvent financial institutions, see § 301.6402-7 of this chapter.

(c) ***Examples.*** The provisions of paragraphs (a) and (b) of this section may be illustrated by the following examples:

Example 1. Corporations P, S, and S-1 filed a consolidated return for the calendar year 2003. P, S, and S-1 also filed a consolidated return for the calendar year 2006. The group incurred a consolidated net operating loss in 2006 attributable to S-1 which may be carried back to 2003 as a consolidated net operating loss carryback. If a tentative carryback adjustment is desired, P, the common parent for the carryback year, must file an application under section 6411 and any refund will be made to P.

Example 2. Assume the same facts as in example (1) except that P, S, and S-1 filed separate returns for the calendar year 2006, even though they were members of the same group for such year. P incurred a net operating loss in 1969 which may be carried back to 2003. If a tentative carryback adjustment is desired, P must file an application under section 6411 and any refund from such application will be made to P.

Example 3. Corporations X, Y, and Z filed a consolidated return for the calendar year 2003. Z ceased to be a member of the group in 2004. Z filed a separate return for 2005 while X and Y filed a consolidated return for such year. The group incurred a consolidated net operating loss in 2005 attributable to Y, which may be carried back to 2003. Z also incurred a net operating loss for 2005 which may be carried back to 2003. If a tentative carryback adjustment is claimed with respect to the consolidated net operating loss, X, the common parent, must file an application under section 6411. If a tentative carryback adjustment is desired with respect to Z's loss, X must file an application. Any refunds attributable to either application will be made to X. If an assessment is made under section 6213(b)(3) to recover an excessive tentative allowance made with respect to calendar year 2003, X, Y, and Z are severally liable for such assessment.

Example 4. Corporations L and M filed a consolidated return for the calendar year 2003. Corporation N filed a separate return for such year. Later, N became a member of the group and filed a consolidated return with the group for the calendar year 2005. The group incurred a consolidated net operating loss in 2005 attributable to N which may be carried back to N's separate return for 2003. If a tentative carryback adjustment is desired, N must file an application under section 6411 and any refund will be made directly to N.

(d) ***Adjustments of overpayments of estimated income tax.*** If a group paid its estimated income tax on a consolidated basis, then any application under section 6425 for an adjustment of overpayment of estimated income tax shall be made by the common parent corporation. If the members of a group paid estimated income taxes on a separate basis, then any application under section 6425 shall be made by the member of the group which claims an overpayment on a separate basis. Any refund allowable under an application under section 6425 shall be made directly to and in the name of the corporation filing the application.

(e) ***Time for filing application*** —

(1) ***General rule.*** The provisions of section 6411(a) apply to the filing of an application for a tentative carryback adjustment by a consolidated group.

(2) ***Special rule for new members*** —

(i) ***New member.*** A new member is a corporation that, in the preceding taxable year, did not qualify as a member, as defined in § 1.1502-1(b), of the consolidated group that it now joins.

(ii) ***End of taxable year.*** Solely for the purpose of complying with the twelve-month requirement for making an application for a tentative carryback adjustment under section 6411(a), the separate return year of a qualified new member shall be treated as ending on the same date as the end of the current taxable year of the consolidated group that the qualified new member joins.

(iii) ***Qualified new member.*** A new member of a consolidated group qualifies for purposes of the provisions of this paragraph (e)(2) if, immediately prior to becoming a new member, either—

(A) It was the common parent of a consolidated group; or

(B) It was not required to join in the filing of a consolidated return.

(iv) ***Examples.*** The provisions of this paragraph (e)(2) may be illustrated by the following examples:

Example 1. Individual A owns 100 percent of the stock of X, a corporation that is not a member of a consolidated group and files separate tax returns on a calendar year basis. On January 31 of year 1, X becomes a member of the Y consolidated group, which also files returns on a calendar year basis. X is a qualified new member as defined in paragraph (e)(2)(iii)(B) of this section because, immediately prior to becoming a new member of the Y consolidated group, X was not required to join in the filing of a consolidated return. As a result of its becoming a new member of Group Y, X's separate return for the short taxable year (January 1 of year 1 through January 31 of year 1) is due September 15 of year 2 (with extensions). See § 1.1502-76(c). Group Y's consolidated return is also due September 15 of year 2 (with extensions). See § 1.1502-76(c). Solely for the purpose of complying with the twelve-month requirement for making an application for a tentative carryback adjustment under section 6411(a), X's taxable year for the separate return year is treated as ending on December 31 of year 1. X's application for a tentative carryback adjustment is therefore due on or before December 31 of year 2.

Example 2. Assume the same facts as in *Example 1* except that immediately prior to becoming a new member of Group Y, X was a member of the Z consolidated group. Because X was required to join in the filing of the consolidated return for Group Z, X is not a qualified new member as defined in paragraph (e)(2)(iii) of this section. X's items for the one-month period will be included in the consolidated return for Group Z. Group Z's application for a tentative carryback adjustment, if any, continues to be due within 12 months of the end of its taxable year, which is not affected by X's change in status as a new member of Group Y.

(f) ***Applicability date.*** This section applies to taxable years to which a loss or credit may be carried back and for which the due date (without extensions) of the original return is after June 28, 2002, except that the provisions of paragraph (e)(2) of this section apply for applications by new members of consolidated groups for tentative carryback adjustments resulting from net operating losses, net capital losses, or unused business credits arising in separate return years of new members that begin on or after January 1, 2001.

(2) ***Prior law.*** For taxable years to which a loss or credit may be carried back and for which the due date (without extensions) of the original return is on or before June 28, 2002, *see* § 1.1502-78 in effect prior to June 28, 2002, as contained in 26 CFR part 1 revised April 1, 2002.

[T.D. 6894, 31 FR 11794, Sept. 3, 1966, as amended by T.D. 7059, 35 FR 14546, Sept. 17, 1970; T.D. 7246, 38 FR 767, Jan. 4, 1973; T.D. 8387, 56 FR 67489, Dec. 31, 1991; T.D. 8446, 57 FR 53034, Nov. 6, 1992; T.D. 8677, 61 FR 33324, June 27, 1996; T.D. 8823, 64 FR 36100, July 2, 1999; T.D. 8950, 66 FR 33463, June 22, 2001; T.D. 9002, 67 FR 43544, June 28, 2002; 67 FR 77678, Dec. 19, 2002; T.D. 9715, 80 FR 17324, Apr. 1, 2015; T.D. 9977, 88 FR 44216, July 12, 2023; T.D. 10018, 89 FR 106876, Dec. 30, 2024]

§ 1.1502-79 Separate return years.

(a) ***Carryover and carryback of consolidated net operating losses to separate return years.*** For rules regarding the carryover and carryback of consolidated net operating losses to separate return years, *see* § 1.1502-21(b).

(b) ***Carryover and carryback of consolidated net capital loss to separate return years.*** For rules regarding the carryover and carryback of consolidated net capital losses to separate return years, *see* § 1.1502-22(b).

(c) ***Carryover and carryback of consolidated unused investment credit to separate return years*** —

(1) ***In general.*** If a consolidated unused investment credit can be carried under the principles of section 46(b) and paragraph (b) of § 1.1502-3 to a separate return year of a corporation (or could have been so carried if such corporation were in existence) which was a member of the group in the year in which such unused credit arose, then the portion of such consolidated unused credit attributable to such corporation (as determined under subparagraph (2) of this paragraph) shall be apportioned to such corporation (and any successor to such corporation in a transaction to which section 381(a) applies) under the principles of § 1.1502-21(b) (or §§ 1.1502-79A(a)(1) and (2), as appropriate) and shall be an investment credit carryover or carryback to such separate return year.

(2) ***Portion of consolidated unused investment credit attributable to a member*** —

(i) ***Investment credit carryback.*** In the case of a consolidated unused credit which is an investment credit carryback, the portion of such consolidated unused credit attributable to a member of the group is an amount equal to such consolidated unused credit multiplied by a fraction, the numerator of which is the credit earned of such member for the consolidated unused credit year, and the denominator of which is the consolidated credit earned for such unused credit year.

(ii) ***Investment credit carryover.*** In the case of a consolidated unused credit which is an investment credit carryover, the portion of such consolidated unused credit attributable to a member of the group is an amount equal to such consolidated unused credit multiplied by a fraction, the numerator of which is the credit earned with respect to any section 38 property placed in service in the consolidated unused credit year and owned by such member (whether or not placed in service by such member) at the close of the last day as of which the taxable income of such member is included in a consolidated return filed by the group, and the denominator of which is the consolidated credit earned for such unused credit year.

(d) ***Carryover and carryback of consolidated unused foreign tax*** —

(1) ***In general.*** If a consolidated unused foreign tax can be carried under the principles of section 904(c) and § 1.1502-4(d) to a separate return year of a corporation (or could have been so carried if such corporation were in existence) that was a member of the group in the year in which the unused foreign tax arose, then the portion of the consolidated unused foreign tax attributable to the corporation (as determined under paragraph (d)(2) of this section) is apportioned to the corporation (and any successor to that corporation in a transaction to which section 381(a) applies) under the principles of § 1.1502-21(b) and is deemed paid or accrued in such separate return year to the extent provided in section 904(c).

(2) ***Portion of consolidated unused foreign tax attributable to a member.*** The portion of a consolidated unused foreign tax for any year attributable to a member is an amount equal to the consolidated unused foreign tax multiplied by a fraction. The numerator of the fraction is the foreign taxes paid or

accrued by the member for the year (including those taxes deemed paid or accrued, other than by reason of section 904(c)). The denominator of the fraction is the aggregate of all such taxes paid or accrued for the year (including those taxes deemed paid or accrued, other than by reason of section 904(c)) by all members of the group.

(e) ***Carryover of consolidated excess charitable contributions to separate return years*** —

(1) ***In general.*** If the consolidated excess charitable contributions for any taxable year can be carried under the principles of section 170(b)(2) and § 1.1502-24(b) to a separate return year of a corporation (or could have been so carried if such corporation were in existence) which was a member of the group in the year in which such excess contributions arose, then the portion of such consolidated excess charitable contributions attributable to such corporation (as determined under paragraph (e)(2) of this section) is apportioned to such corporation (and any successor to such corporation in a transaction to which section 381(a) applies) under the principles of § 1.1502-21(b) and is a charitable contribution carryover to such separate return year.

(2) ***Portion of consolidated excess charitable contributions attributable to a member.*** The portion of the consolidated excess charitable contributions for any year attributable to a member is an amount equal to the consolidated excess contributions multiplied by a fraction. The numerator of the fraction is the charitable contributions paid by the member for the year. The denominator of the fraction is the aggregate of all charitable contributions paid for the year by all members of the group.

(f) ***Disallowed business interest expense carryforwards.*** For the treatment of disallowed business interest expense carryforwards (as defined in § 1.163(j)-1(b)(11)) of a member arising in a separate return limitation year, see § 1.163(j)-5(d) and (f).

[T.D. 6894, 31 FR 11794, Sept. 8, 1966, as amended by T.D. 7728, 45 FR 72650, Nov. 3, 1980; T.D. 8294, 55 FR 9438, Mar. 14, 1990; T.D. 8319, 55 FR 49038, Nov. 26, 1990; T.D. 8364, 56 FR 47402, Sept. 19, 1991; T.D. 8597, 60 FR 36710, July 18, 1995; T.D. 8677, 61 FR 33324, 33325, 33334, June 27, 1996; T.D. 8823, 64 FR 36100, July 2, 1999; T.D. 9905, 85 FR 56843, Sept. 14, 2020; T.D. 10018, 89 FR 106876, Dec. 30, 2024]

§ 1.1502-80 Applicability of other provisions of law.

(a) ***In general*** —

(1) ***Application of other provisions.*** The Internal Revenue Code (Code), or other law, shall be applicable to the group to the extent the regulations do not exclude its application. To the extent not excluded, other rules operate in addition to, and may be modified by, these regulations. Thus, for example, in a transaction to which section 381(a) applies, the acquiring corporation will succeed to the tax attributes described in section 381(c). Furthermore, sections 269 and 482 apply for any consolidated return year. However, in a recognition transaction otherwise subject to section 1001, for example, the rules of section 1001 continue to apply, but may be modified by the intercompany transaction regulations under § 1.1502-13.

(2) ***No duplicative adjustments.*** Nothing in these regulations shall be interpreted or applied to require an adjustment, inclusion, or other item to the extent it would have the effect of duplicating any other adjustment, inclusion, or other item required under the Code or other rule of law, including other provisions of these regulations.

(3) ***Application of single-entity principles.*** If two or more adjustments, inclusions, or other items are subject to paragraph (a)(2) of this section, the determination of which adjustment, inclusion, or other item is treated as applied or taken into account is made by taking into account the purposes of the provisions and applying single-entity principles as appropriate.

(4) ***Effective/applicability dates.*** This paragraph (a) is applicable with respect to transactions and determinations on or after September 17, 2008.

(b) ***Non-applicability of section 304.*** Section 304 does not apply to any acquisition of stock of a corporation in an intercompany transaction or to any intercompany item from such transaction occurring on or after July 24, 1991.

(c) ***Deferral of section 165*** —

(1) ***General rule.*** Subsidiary stock is not treated as worthless under section 165 until immediately before the earlier of the time—

(i) The stock is worthless within the meaning of § 1.1502-19(c)(1)(iii); or

(ii) The subsidiary for any reason ceases to be a member of the group.

(2) ***Cross reference. See*** § 1.1502-36 for additional rules relating to worthlessness of subsidiary stock.

(3) ***Effective/applicability date.*** This paragraph (c) applies to taxable years for which the original consolidated Federal income tax return is due (without extensions) after July 18, 2007. However, taxpayers may apply this paragraph (c) to taxable years beginning on or after January 1, 1995.

(d) ***Non-applicability of section 357(c)*** —

(1) ***In general.*** Section 357(c) does not apply to any transaction to which § 1.1502-13, § 1.1502-13T, § 1.1502-14, or § 1.1502-14T applies, if it occurs in a consolidated return year beginning on or after January 1, 1995. For example, P, S, and T are members of a consolidated group, P owns all of the stock of S and T with bases of $30 and $20, respectively, S has a $30 basis in its assets and $40 of liabilities, and S merges into T in a transaction described in section 368(a)(1)(A) (and in section 368(a)(1)(D)); section 357(c) does not apply to the merger, P's basis in T's stock increases to $50 ($30 plus $20), and T succeeds to S's $30 basis in the assets transferred subject to the $40 liability. Similarly, if S instead transferred its assets and liabilities to a newly formed subsidiary in a transaction to which section 351 applies, section 357(c) does not apply and S's basis in the subsidiary's stock is a $10 excess loss account. This paragraph (d) does not apply to a transaction if the transferor or transferee becomes a nonmember as part of the same plan or arrangement. The transferor (or transferee) is treated as becoming a nonmember once it is no longer a member of a consolidated group that includes the transferee (or transferor). For purposes of this paragraph (d), any reference to a transferor or transferee includes, as the context may require, a reference to a successor or predecessor.

(2) ***Prior period transactions.*** If, in a tax year beginning before January 1, 1995, a member's stock with an excess loss account is transferred in a transaction to which § 1.1502-13, § 1.1502-13T, § 1.1502-14, or § 1.1502-14T applies, paragraph (d)(1) of this section applies to the stock transfer to the extent that the income, gain, deduction, or loss (if any) is not taken into account in a tax year beginning before January 1, 1995. For example, if P, S, and T, are members of a consolidated group, T's stock has an excess loss account, and P transfers the T stock to S in 1993 in a transaction to which section 351 and § 1.1502-13 apply, section 357(c) applies to the transfer only to the extent P's gain is taken into account in tax years beginning before January 1, 1995.

(e) ***Non-applicability of section 163(e)(5).*** Section 163(e)(5) does not apply to any intercompany obligation (within the meaning of § 1.1502-13(g)) issued in a consolidated return year beginning on or after July 12, 1995.

(f) ***Non-applicability of section 1031.*** Section 1031 does not apply to any intercompany transaction occurring in consolidated return years beginning on or after July 12, 1995.

(g) ***Special rules for liquidations to which section 332 applies.*** Notwithstanding the general rule of section 381, if multiple members (distributee members) acquire assets of a corporation in a liquidation to which section 332 applies (regardless of whether any single member owns stock in the liquidating corporation meeting the requirements of section 1504(a)(2)), such members succeed to and take into account the items of the liquidating corporation (including items described in section 381(c), but excluding intercompany items under § 1.1502-13) as provided in this paragraph (g) to the extent not otherwise prohibited by any applicable provision of law. This paragraph (g) does not apply to the intercompany items of the liquidating corporation. See § 1.1502-13(j)(2)(ii).

(1) ***Income offset items and deferred income.*** Except as otherwise provided in this paragraph (g)(1), each distributee member succeeds to and takes into account the items of the liquidating corporation that could be used to offset the income of the group or any member (including deferred deductions, net operating loss carryovers, and capital loss carryovers) (income offset items) to the extent that such items would have been reflected in investment adjustments to the stock of the liquidating corporation owned by such distributee member under § 1.1502-32(c) if, immediately prior to the liquidation, any stock of the liquidating corporation owned by nonmembers had been redeemed and then such items had been taken into account. However, each distributee member succeeds to the full amount of any deferred deduction or deferred income item attributable to the particular property or business operations distributed to such distributee in the liquidation to the extent that such item is not taken into account in the determination of the income or loss of the liquidating corporation with regard to the liquidation under chapter 1 of the Internal Revenue Code (Code). If the liquidating corporation is not a member of the group at the time of the liquidation, the rules of this paragraph (g)(1) are applied as if the liquidating corporation had been a member of the group.

(2) ***Accounting for deferred income items.*** Solely for the purpose of determining whether deferred income items of a liquidating corporation are taken into account under applicable principles of law as a result of a liquidation to which section 332 applies, the transfer of property to, and the assumption of liabilities by, a distributee member that does not own stock in the liquidating corporation meeting the requirements of section 1504(a)(2) without regard to the application of § 1.1502-34 immediately prior to the liquidation is not treated as part of a transaction to which section 381(a) applies. In addition, section 332(a) does not apply in determining the recognition or nonrecognition of any income realized by the distributee member under applicable principles of law on account of consideration received (or deemed received) on the assumption of the liquidating corporation's obligation or liability attributable to any deferred income item.

(3) ***Credits and earnings and profits.*** Each distributee member succeeds to and takes into account a percentage of each credit of the liquidating corporation equal to the value of the stock of the liquidating corporation owned by such distributee at the time of the liquidation divided by the total value of all the stock of the liquidating corporation owned by members of the group at the time of the liquidation. Except to the extent that the distributee member's earnings and profits already reflect the liquidating corporation's earnings and profits, each distributee member succeeds to and takes into account under the principles of § 1.1502-32(c) the earnings and profits, or deficit in earnings and profits, of the liquidating corporation (determined after taking into account the amount of

earnings and profits properly applicable to distributions to non-member shareholders under § 1.381(c)(2)-1(c)(2)). If the liquidating corporation is not a member of the group at the time of the liquidation, the rules of this paragraph (g)(3) are applied as if the liquidating corporation had been a member of the group.

(4) ***Other items.*** With regard to items to which neither paragraph (g)(1) nor (g)(3) of this section applies, a distributee member that, immediately prior to the liquidation, owns stock in the liquidating corporation meeting the requirements of section 1504(a)(2) without regard to the application of § 1.1502-34 succeeds to the items of the liquidating corporation in accordance with section 381 and other applicable principles. A distributee member that, immediately prior to the liquidation, does not own stock in the liquidating corporation meeting the requirements of section 1504(a)(2) without regard to the application of § 1.1502-34 succeeds to the items of the liquidating corporation to the extent that it would have succeeded to those items if it had purchased, in a taxable transaction, the assets or businesses of the liquidating corporation that it received in the liquidation and had assumed the liabilities that it assumed in the liquidation.

(5) ***Determination of the items of a liquidating subsidiary.*** For purposes of this section, the items of a liquidating subsidiary include the amount of any consolidated tax attribute attributable to the liquidating subsidiary that is determined pursuant to the principles of § 1.1502-21(b)(2)(iv). In addition, if the liquidating subsidiary is a member of a separate return limitation year subgroup, the amount of a tax attribute that arose in a separate return limitation year that is attributable to that member shall also be determined pursuant to the principles of § 1.1502-21(b)(2)(iv).

(6) ***Examples.*** The following examples illustrate the application of this paragraph (g):

Example 1. Liquidation—80 percent distributee. (i) *Facts.* X has only common stock outstanding. On January 1 of year 1, X acquired equipment with a 10-year recovery period and elected to depreciate the equipment using the straight-line method of depreciation. On January 1 of year 7, M1 and M2 own 80 percent and 20 percent, respectively, of X's stock. X is a domestic corporation but is not a member of the group that includes M1 and M2. On that date, X distributes all of its assets to M1 and M2 in complete liquidation. The equipment is distributed to M1. Under section 334(b), M1's basis in the equipment is the same as it would be in X's hands. After computing its tax liability for the taxable year that includes the liquidation, X has net operating losses of $100, business credits of $40, and earnings and profits of $80.

(ii) *Succession to items described in section 381(c).* (A) *Losses.* Under paragraph (g)(1) of this section, each distributee member succeeds to X's items that could be used to offset the income of the group or any member to the extent that such items would have been reflected in investment adjustments to the stock of X it owned under § 1.1502-32(c) if, immediately prior to the liquidation, such items had been taken into account. Accordingly, M1 and M2 succeed to $80 and $20, respectively, of X's net operating loss.

(B) *Credits and earnings and profits.* Under paragraph (g)(3) of this section, because, immediately prior to the liquidation, M1 and M2 hold 80 percent and 20 percent, respectively, of the value of the stock of X, M1 and M2 succeed to $32 and $8, respectively, of X's $40 of

business credits. In addition, because M1's and M2's earnings and profits do not reflect X's earnings and profits, X's earnings and profits are allocated to M1 and M2 under the principles of § 1.1502-32(c). Therefore, M1 and M2 succeed to $64 and $16, respectively, of X's earnings and profits.

(C) *Depreciation of equipment's basis.* Under paragraph (g)(4) of this section, because M1 owns stock in X meeting the requirements of section 1504(a)(2) without regard to the application of § 1.1502-34, M1 is required to continue to depreciate the equipment using the straight-line method of depreciation over the remaining recovery period of 4.5 years (assuming X used a half-year convention).

Example 2. Liquidation-no 80 percent distributee. (i) *Facts.* The facts are the same as in *Example 1* except that M1 and M2 own 60 percent and 40 percent, respectively, of X's stock. In addition, on January 1 of year 6, X entered into a long-term contract with Y, an unrelated party. The total contract price is $1000, and X estimates the total allocable contract costs to be $500. At the time of the liquidation, X had received $250 in progress payments under the contract and incurred costs of $125. X accounted for the contract under the percentage of completion method described in section 460(b). In the liquidation, M1 assumes X's contract obligations and rights.
(ii) *Succession to items described in section 381(c).* (A) *Losses.* Under paragraph (g)(1) of this section, each distributee member succeeds to X's items that could be used to offset the income of the group or any member to the extent that such items would have been reflected in investment adjustments to the stock of X it owned under § 1.1502-32(c) if, immediately prior to the liquidation, such items had been taken into account. Accordingly, M1 and M2 succeed to $60 and $40, respectively, of X's net operating loss.

(B) *Credits and earnings and profits.* Under paragraph (g)(3) of this section, because, immediately prior to the liquidation, M1 and M2 hold 60 percent and 40 percent, respectively, of the value of the stock of X, M1 and M2 succeed to $24 and $16, respectively, of X's $40 of business credits. In addition, because M1's and M2's earnings and profits do not reflect X's earnings and profits, X's earnings and profits are allocated to M1 and M2 under the principles of § 1.1502-32(c). Therefore, M1 and M2 succeed to $48 and $32, respectively, of X's earnings and profits.

(C) *Depreciation of equipment's basis.* Under section 334(a), M1's basis in the equipment is its fair market value at the time of the distribution. Pursuant to section 168(i)(7), to the extent that M1's basis in the equipment does not exceed X's adjusted basis in the equipment at the time of the transfer, M1 is required to continue to depreciate the equipment using the straight-line method of depreciation over the remaining recovery period of 4.5 years (assuming X used a half-year convention). Any portion of M1's basis in the equipment that exceeds X's adjusted

basis in the equipment at the time of the transfer is treated as being placed in service by M1 in the year of the transfer. Thus, M1 may choose any applicable depreciation method, recovery period, and convention under section 168 for such excess basis.

(D) *Method of accounting for long-term contract.* Under paragraph (g)(4) of this section, M1 does not succeed to X's method of accounting for the contract. Rather, under § 1.460-4(k)(2), M1 is treated as having entered into a new contract on the date of the liquidation. Under § 1.460-4(k)(2)(iii), M1 must evaluate whether the new contract should be classified as a long-term contract within the meaning of § 1.460-1(b) and account for the contract under a permissible method of accounting.

Example 3. Liquidation—deferred items. (i) *Facts.* X has only common stock outstanding, and M1 and M2 (who are members of the same group) own 80 percent and 20 percent, respectively, of X's stock. X operates two divisions, each of which defers prepaid subscription income pursuant to an election under section 455. X distributes all of its assets in complete liquidation. M1 receives all of the assets of Division 1, including prepaid subscription income, and assumes X's liability to furnish or deliver the newspaper, magazine, or other periodical to which the prepaid subscription income received by M1 relates. M2 receives all of the assets of Division 2, including prepaid subscription income, and assumes X's liability to furnish or deliver the newspaper, magazine, or other periodical to which the prepaid subscription income received by M2 relates.
(ii) *Acceleration of deferred income items and succession to other deferred items.* Under paragraph (g)(1) of this section, M1 succeeds to the full amount of the deferred prepaid subscription income of X attributable to Division 1. Under applicable law, X does not recognize the deferred prepaid subscription income attributable to Division 1 because X's liability to furnish or deliver the newspaper, magazine, or other periodical ends as a result of a transaction to which section 381(a) applies. Under paragraph (g)(2) of this section, solely for purposes of determining whether the deferred income items of X attributable to Division 2 are taken into account as a result of the liquidation, the distribution of property to M2 is not treated as a transaction to which section 381(a) applies. Therefore, under applicable law, X's deferred prepaid subscription income attributable to Division 2 is taken into account in the determination of X's income or loss with regard to the liquidation. Further, under paragraph (g)(2) of this section, section 332(a) does not apply in determining the recognition or nonrecognition of any income that M2 realizes on account of consideration received (or deemed received) on its assumption of X's liability to furnish or deliver the newspaper, magazine, or other periodical to which the prepaid subscription income relates.

(7) ***Effective/applicability date.*** This paragraph (g) applies to transactions occurring after April 14, 2008.

(h) ***Non-applicability of section 362(e)(2)*** —

(1) ***General rule.*** Section 362(e)(2) does not apply to any intercompany transaction occurring on or after September 17, 2008. Taxpayers may apply this paragraph (h) to intercompany transactions occurring on or after October 22, 2004, and in such case, any election made under section 362(e)(2)(C) will have no effect. The purpose of this paragraph (h) is to facilitate the application of the consolidated return provisions addressing the duplication of loss between members of a consolidated group.

(2) ***Anti-abuse rule*** —

(i) ***General rule.*** If a taxpayer engages in a transaction to which section 362(e)(2) would apply but for the application of paragraph (h)(1) of this section, and acts with a view to prevent the consolidated return provisions from properly addressing loss duplication, appropriate adjustments will be made to clearly reflect the income of the group.

(ii) ***Example.*** The following example illustrates the principle of the anti-abuse rule in this paragraph (h)(2).

> *Example.* (A) *Facts.* P, the common parent of a consolidated group, owns the four outstanding shares of S stock (Share 1 through Share 4) with an aggregate basis of $0 and value of $80. S owns Asset 1 with a basis of $0 and a value of $80. With a view to prevent the consolidated return provisions from addressing the duplication of loss, P transfers Asset 2 with a basis of $100 and a value of $20 to S in exchange for an additional share of S stock (Share 5) in a transaction to which section 351 applies. P later sells Share 5 to X, an unrelated person, for $20 at a time when S's basis in Asset 2 was still $100. The sale is a transfer of a loss share and therefore subject to § 1.1502-36.
>
> (B) *Analysis.* Although the sale would be subject to § 1.1502-36, that section would not prevent the stock loss or reduce S's attributes (to prevent duplication of the stock loss) because neither § 1.1502-36(b) nor § 1.1502-36(c) would adjust the basis of the transferred share (because there are no investment adjustments) and § 1.1502-36(d) would not reduce S's attributes (because S's aggregate inside loss is $0). However, because P acted with a view to prevent the consolidated return provisions from addressing the duplication of the loss on Asset 2, P's transfer of Asset 2 to S is subject to the anti-abuse rule in this paragraph (h)(2). Accordingly, effective immediately before the transfer of Share 5 to X, either P's basis in Share 5 or S's basis in Asset 2 must be adjusted to reflect what it would have been had section 362(e)(2) been applied at the time P transferred Asset 2 to S (taking into account the interim facts and circumstances). Accordingly, S must either reduce its basis in Asset 2 by $80 to $20 (eliminating the duplicated loss) or P must reduce its basis in Share 5 by $80 to $20 (eliminating the duplicated loss).
>
> (C) *Transfer of all S shares.* Assume the same facts as those in paragraph (A) of this *Example,* except that P sells all five S shares to X. Although P's transfer of Asset 2 to S results in the duplication of an $80 loss, because all the shares are transferred, the transaction does not prevent the consolidated return provisions from properly

> addressing loss duplication. P's $80 duplicated loss is offset by an $80 duplicated gain, and the group recognizes the offsetting stock gain and loss. Accordingly, this paragraph (h)(2) does not apply to P's transfer of Asset 2 to S.

(i) [Reserved]

(j) *Special rules for application of section 951(a)(2)(B) to distributions to which section 959(b) applies* —

(1) ***Single United States shareholder treatment.*** In determining the amount described in section 951(a)(2)(B) that is attributable to distributions to which section 959(b) applies, members of a group are treated as a single United States shareholder (within the meaning of section 951(b) (or section 953(c)(1)(A), if applicable)) for purposes of determining the part of the year during which such shareholder did not own (within the meaning of section 958(a)) the stock described in section 951(a)(2)(A). The purpose of this paragraph (j) is to facilitate the clear reflection of income of a consolidated group by ensuring that the location of ownership of stock of a foreign corporation within the group does not affect the amount of the group's income by reason of sections 951(a)(1)(A) and 951A(a).

(2) ***Examples.*** The following examples illustrate the application of paragraph (j)(1) of this section. For purposes of the examples in this paragraph (j)(2): M1 and M2 are members of a consolidated group of which P is the common parent (P group); each of CFC1, CFC2, and CFC3 is a controlled foreign corporation (within the meaning of section 957(a)) with the U.S. dollar as its functional currency (within the meaning of section 985); the taxable year of all entities is the calendar year for Federal income tax purposes; and a reference to stock owned means stock owned within the meaning of section 958(a). These examples do not address common law doctrines or other authorities that might apply to recast a transaction or to otherwise affect the tax treatment of a transaction.

(i) *Example 1: Intercompany transfer of stock of a controlled foreign corporation* —

(A) ***Facts.*** Throughout Year 1, M1 directly owns all the stock of CFC1, which directly owns all the stock of CFC2. In Year 1, CFC2 has $100x of subpart F income (as defined in section 952). M1's pro rata share of CFC2's subpart F income for Year 1 is $100x, which M1 includes in its gross income under section 951(a)(1)(A). In Year 2, CFC2 has $80x of subpart F income and distributes $80x to CFC1 (the CFC2 Distribution). Section 959(b) applies to the entire CFC2 Distribution. On December 29, Year 2, M1 transfers all of its CFC1 stock to M2 in an exchange described in section 351(a). As a result, on December 31, Year 2 (the last day of Year 2 on which CFC2 is a controlled foreign corporation), M2 owns 100% of the stock of CFC1, which owns 100% of the stock of CFC2.

(B) ***Analysis.*** Under paragraph (j)(1) of this section, in determining the amount described in section 951(a)(2)(B) that is attributable to the CFC2 Distribution, all members of the P group are treated as a single United States shareholder for purposes of determining the part of Year 2 during which such shareholder did not own the stock of CFC2. Thus, the ratio of the number of days in Year 2 that such United States shareholder did not own the stock of CFC2 to the total number of days in Year 2 is 0/365. The amount described in section 951(a)(2)(B) is $0, M2's pro rata share of CFC2's subpart F income for Year 2 is $80x ($80x-$0), and M2 must include $80x in its gross income under section 951(a)(1)(A).

(ii) *Example 2: Transfer of stock of a controlled foreign corporation between controlled foreign corporations* —

(A) ***Facts.*** The facts are the same as in paragraph (j)(2)(i)(A) of this section (the facts in *Example 1*), except that M1 does not transfer its CFC1 stock to M2. Additionally, throughout Year 1 and from January 1, Year 2, to December 29, Year 2, M2 directly owns all 90 shares of the only class of stock of CFC3. Further, on December 29, Year 2, CFC3 acquires all the CFC2 stock from CFC1 in exchange for 10 newly issued shares of the same class of CFC3 stock in a transaction described in section 368(a)(1)(B). As a result, on December 31, Year 2, M1 owns 10% of the stock of CFC2, and M2 owns 90% of the stock of CFC2.

(B) ***Analysis.*** Under paragraph (j)(1) of this section, in determining the amount described in section 951(a)(2)(B) that is attributable to the portion of the CFC2 Distribution with respect to each of the CFC2 stock that M1 owns on December 31, Year 2, and the CFC2 stock that M2 owns on that day, all members of the P group are treated as a single United States shareholder for purposes of determining the part of Year 2 during which such shareholder did not own such stock. In each case, the ratio of the number of days in Year 2 that such United States shareholder did not own such stock to the total number of days in Year 2 is 0/365, and the amount described in section 951(a)(2)(B) is $0. M1's and M2's pro rata shares of CFC2's subpart F income for Year 2 are $8x ($8x−$0) and $72x ($72x−$0), respectively, and M1 and M2 must include $8x and $72x in gross income under section 951(a)(1)(A), respectively.

(3) ***Applicability date.*** This paragraph (j) applies to taxable years for which the original consolidated Federal income tax return is due (without extensions) after February 23, 2023.

[T.D. 8402, 57 FR 9385, Mar. 18, 1992]

Editorial Note: For FEDERAL REGISTER citations affecting § 1.1502-80, see the List of CFR Sections Affected, which appears in the Finding Aids section of the printed volume and at *www.govinfo.gov*.

§ 1.1502-90 Table of contents.

The following list contains the major headings in §§ 1.1502-91 through 1.1502-99:

§ 1.1502-91 Application of section 382 with respect to a consolidated group.

(a) Determination and effect of an ownership change.

(1) In general.

(2) Special rule for post-change year that includes the change date.

(3) Cross-reference.

(b) Definitions and nomenclature.

(c) Loss group.

(1) Defined.

(2) Coordination with rule that ends separate tracking.

(3) Example.

(d) Loss subgroup.

(1) Net operating loss carryovers.

(2) Net unrealized built-in loss.

(3) Loss subgroup parent.

(4) Election to treat loss subgroup parent requirement as satisfied.

(5) Principal purpose of avoiding a limitation.

(6) Special rules.

(7) Examples.

(e) Pre-change consolidated attribute.

(1) Defined.

(2) Example.

(f) Pre-change subgroup attribute.

(1) Defined.

(2) Example.

(g) Net unrealized built-in gain and loss.

(1) In general.

(2) Members included.

(i) Consolidated group with a net operating loss.

(ii) Determination whether a consolidated group has a net unrealized built-in loss.

(iii) Loss subgroup with net operating loss carryovers.

(iv) Determination whether subgroup has a net unrealized built-in loss.

(v) Separate determination of section 382 limitation for recognized built-in losses and net operating losses.

(3) Coordination with rule that ends separate tracking.

(4) Acquisitions of built-in gain or loss assets.

(5) Indirect ownership.

(6) Common parent not common parent for five years.

(h) Recognized built-in gain or loss.

(1) In general. [Reserved]

(2) Disposition of stock or an intercompany obligation of a member.

(3) Intercompany transactions.

(4) Exchanged basis property.

(i) [Reserved]

(j) Predecessor and successor corporations.

§ 1.1502-92 Ownership change of a loss group or a loss subgroup.

(a) Scope.

(b) Determination of an ownership change.

(1) Parent change method.

(i) Loss group.

(ii) Loss subgroup.

(iii) Special rule if election regarding section 1504(a)(1) relationship is made.

(2) Examples.

(3) Special adjustments.

(i) Common parent succeeded by a new common parent.

(ii) Newly created loss subgroup parent.

(iii) Examples.

(4) End of separate tracking of certain losses.

(c) Supplemental rules for determining ownership change.

(1) Scope.

(2) Cause for applying supplemental rule.

(3) Operating rules.

(4) Supplemental ownership change rules.

(i) Additional testing dates for the common parent (or loss subgroup parent).

(ii) Treatment of subsidiary stock as stock of the common parent (or loss subgroup parent).

(iii) Different testing periods.

(iv) Disaffiliation of a subsidiary.

(v) Subsidiary stock acquired first.

(vi) Anti-duplication rule.

(5) Examples.

(d) Testing period following ownership change under this section.

(e) Information statements.

(1) Common parent of a loss group.

(2) Abbreviated statement with respect to loss subgroups.

§ 1.1502-93 Consolidated section 382 limitation (or subgroup section 382 limitation).

(a) Determination of the consolidated section 382 limitation (or subgroup section 382 limitation).

(1) In general.

(2) Coordination with apportionment rule.

(b) Value of the loss group (or loss subgroup).

(1) Stock value immediately before ownership change.

(2) Adjustment to value.

(i) In general.

(ii) Anti-duplication.

(3) Examples.

(c) Recognized built-in gain of a loss group or loss subgroup.

(1) In general.

(2) Adjustments.

(d) Continuity of business.

(1) In general.

(2) Example.

(e) Limitations of losses under other rules.

§ 1.1502-94 Coordination with section 382 and the regulations thereunder when a corporation becomes a member of a consolidated group.

(a) Scope.

(1) In general.

(2) Successor corporation as new loss member.

(3) Coordination in the case of a loss subgroup.

(4) End of separate tracking of certain losses.

(5) Cross-reference.

(b) Application of section 382 to a new loss member.

(1) In general.

(2) Adjustment to value.

(3) Pre-change separate attribute defined.

(4) Examples.

(c) Built-in gains and losses.

(d) Information statements.

§ 1.1502-95 Rules on ceasing to be a member of a consolidated group (or loss subgroup).

(a) In general.

(1) Consolidated group.

(2) Election by common parent.

(3) Coordination with §§ 1.1502-91 through 1.1502-93.

(b) Separate application of section 382 when a member leaves a consolidated group.

(1) In general.

(2) Effect of a prior ownership change of the group.

(3) Application in the case of a loss subgroup.

(4) Examples.

(c) Apportionment of a consolidated section 382 limitation.

(1) In general.

(2) Amount which may be apportioned.

(i) Consolidated section 382 limitation.

(ii) Net unrealized built-in gain.

(3) Effect of apportionment on the consolidated group.

(i) Consolidated section 382 limitation.

(ii) Net unrealized built-in gain.

(4) Effect on corporations to which an apportionment is made.

(i) Consolidated section 382 limitation.

(ii) Net unrealized built-in gain.

(5) Deemed apportionment when loss group terminates.

(6) Appropriate adjustments when former member leaves during the year.

(7) Examples.

(d) Rules pertaining to ceasing to be a member of a loss subgroup.

(1) In general.

(2) Exceptions.

(3) Examples.

(e) Allocation of net unrealized built-in loss.

(1) In general.

(2) Amount of allocation.

(i) In general.

(ii) Transferred basis property and deferred gain or loss.

(iii) Assets for which gain or loss has been recognized.

(iv) Exchanged basis property.

(v) Two or more members depart during the same year.

(vi) Anti-abuse rule.

(3) Effect of the allocation on the consolidated group.

(4) Effect on corporations to which the allocation is made.

(5) Subgroup principles.

(6) Apportionment of consolidated section 382 limitation (or subgroup section 382 limitation).

(i) In general.

(ii) Special rule for former members that become members of the same consolidated group.

(7) Examples.

(8) Reporting requirements.

(i) Common parent.

(ii) Former member.

(iii) Exception.

(f) Filing the election to apportion the section 382 limitation and net unrealized built-in gain.

(1) Form of the election to apportion.

(i) Statement.

(ii) Agreement.

(2) Signing the agreement.

(3) Filing the election.

(i) Filing by the common parent.

(ii) Filing by the former member.

(4) Revocation of election.

(g) Effective/applicability date.

§ 1.1502-96 Miscellaneous rules.

(a) End of separate tracking of losses.

(1) Application.

(2) Effect of end of separate tracking.

(i) Net operating loss carryovers.

(ii) Net unrealized built-in losses.

(iii) Common parent not common parent for five years.

(3) Continuing effect of end of separate tracking.

(i) In general.

(ii) Example.

(4) Special rule for testing period.

(5) Limits on effects of end of separate tracking.

(b) Ownership change of subsidiary.

(1) Ownership change of a subsidiary because of options or plan or arrangement.

(2) Effect of the ownership change.

(i) In general.

(ii) Pre-change losses.

(3) Coordination with §§ 1.1502-91, 1.1502-92, and 1.1502-94.

(4) Example.

(c) Continuing effect of an ownership change.

(d) Losses reattributed under § 1.1502-36(d)(6).

(1) In general.

(2) Deemed section 381(a) transaction.

(3) Rules relating to owner shifts.

(i) In general.

(ii) Examples.

(4) Rules relating to the section 382 limitation.

(i) Reattributed loss is a pre-change separate attribute of a new loss member.

(ii) Reattributed loss is a pre-change subgroup attribute.

(iii) Potential application of section 382(l)(1).

(iv) Duplication or omission of value.

(v) Special rule for continuity of business requirement.

(5) Election to reattribute section 382 limitation.

(i) Effect of election.

(ii) Examples.

(e) Time and manner of making election under § 1.1502-91(d)(4).

(1) In general.

(2) Election statement.

§ 1.1502-97 Special rules under section 382 for members under the jurisdiction of a court in a title 11 or similar case. [Reserved]

§ 1.1502-98 Coordination with sections 383 and 163(j).

§ 1.1502-99 Effective/applicability dates.

(a) In general.

(b) Reattribution of losses under § 1.1502-36(d)(6).

(c) Application to section 163(j).

(1) Sections 1.382-2 and 1.382-5.

(2) Sections 1.382-6 and 1.383-1.

[T.D. 8824, 64 FR 36128, July 2, 1999, as amended by T.D. 9304, 71 FR 76907, Dec. 22, 2006; T.D. 9329, 72 FR 32805, June 14, 2007; T.D. 9424, 73 FR 53986, Sept. 17, 2008; T.D. 9905, 85 FR 56843, Sept. 14, 2020; T.D. 10018, 89 FR 106877, Dec. 30, 2024]

§ 1.1502-91 Application of section 382 with respect to a consolidated group.

(a) ***Determination and effect of an ownership change*** —

(1) ***In general.*** This section and §§ 1.1502-92 and 1.1502-93 set forth the rules for determining an ownership change under section 382 for members of consolidated groups and the section 382 limitations with respect to attributes described in paragraphs (e) and (f) of this section. These rules generally provide that an ownership change and the section 382 limitation are determined with respect to these attributes for the group (or loss subgroup) on a single entity basis and not for its members separately. Following an ownership change of a loss group (or a loss subgroup) under § 1.1502-92, the amount of consolidated taxable income for any post-change year which may be offset by pre-change consolidated attributes (or pre-change subgroup attributes) shall not exceed the consolidated section 382 limitation (or subgroup section 382 limitation) for such year as determined under § 1.1502-93.

(2) ***Special rule for post-change year that includes the change date.*** If the post-change year includes the change date, section 382(b)(3)(A) is applied so that the consolidated section 382 limitation (or subgroup section 382 limitation) does not apply to the portion of consolidated taxable income that

is allocable to the period in the year on or before the change date. See generally § 1.382-6 (relating to the allocation of income and loss). The allocation of consolidated taxable income for the post-change year that includes the change date must be made before taking into account any consolidated net operating loss deduction (as defined in § 1.1502-21(a)).

(3) ***Cross-reference.*** See §§ 1.1502-94 and 1.1502-95 for rules that apply section 382 to a corporation that becomes or ceases to be a member of a group or loss subgroup.

(b) ***Definitions and nomenclature.*** For purposes of this section and §§ 1.1502-92 through 1.1502-99, unless otherwise stated:

(1) The definitions and nomenclature contained in section 382 and the regulations thereunder (including the nomenclature and assumptions relating to the examples in § 1.382-2T(b)) and this section and §§ 1.1502-92 through 1.1502-99 apply.

(2) In all examples, all groups file consolidated returns, all corporations file their income tax returns on a calendar year basis, the only 5-percent shareholder of a corporation is a public group, the facts set forth the only owner shifts during the testing period, no election is made under paragraph (d)(4) of this section, and each asset of a corporation has a value equal to its adjusted basis.

(c) ***Loss group*** —

(1) ***Defined.*** A loss group is a consolidated group that—

(i) Is entitled to use a net operating loss carryover to the taxable year that did not arise (and is not treated under § 1.1502-21(c) as arising) in a SRLY;

(ii) Has a consolidated net operating loss for the taxable year in which a testing date of the common parent occurs (determined by treating the common parent as a loss corporation); or

(iii) Has a net unrealized built-in loss (determined under paragraph (g) of this section by treating the date on which the determination is made as though it were a change date).

(2) ***Coordination with rule that ends separate tracking.*** A consolidated group may be a loss group because a member's losses that arose in (or are treated as arising in) a SRLY are treated as described in paragraph (c)(1)(i) of this section. See § 1.1502-96(a).

(3) ***Example.*** The following example illustrates the principles of this paragraph (c):

> *Example. Loss group.* (i) L and L1 file separate returns and each has a net operating loss carryover arising in Year 1 that is carried over to Year 2. A owns 40 shares and L owns 60 shares of the 100 outstanding shares of L1 stock. At the close of Year 1, L buys the 40 shares of L1 stock from A. For Year 2, L and L1 file a consolidated return. The following is a graphic illustration of these facts:

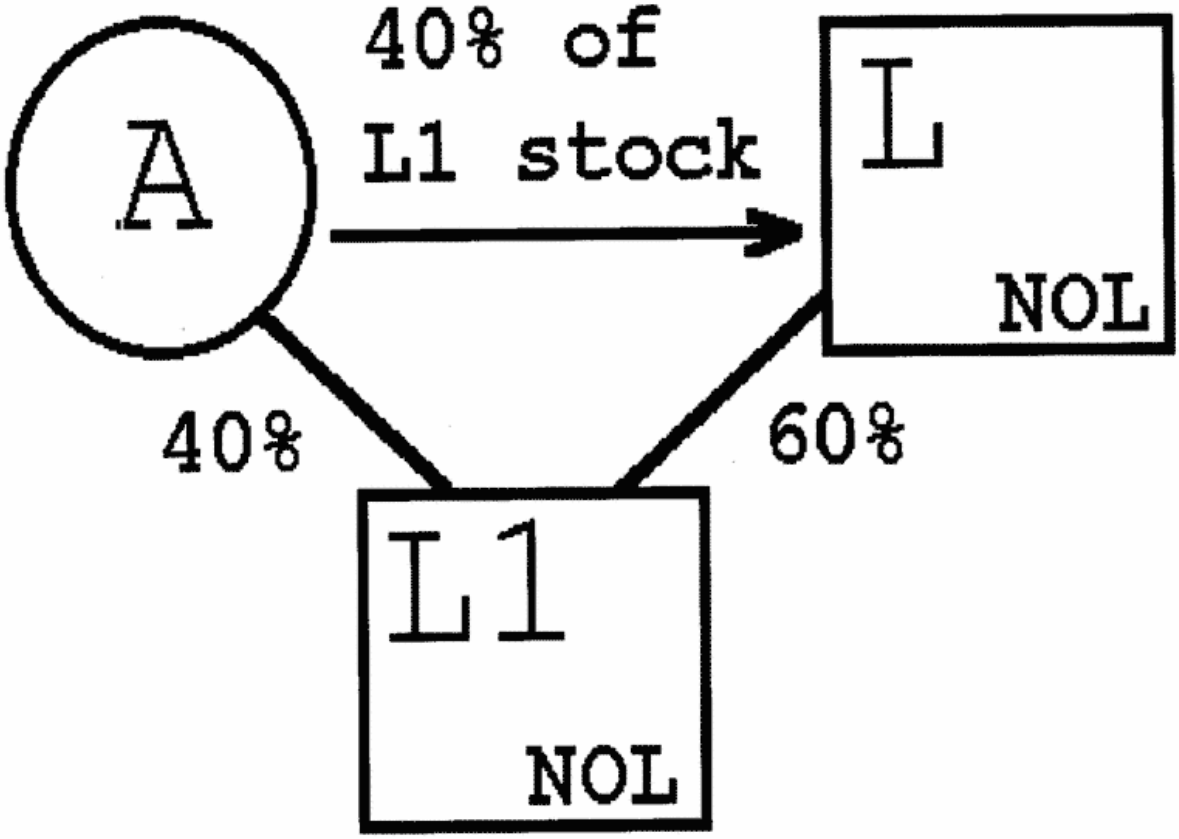
40% of
L1 stock
A
L
NOL
40%
60%
L1
NOL

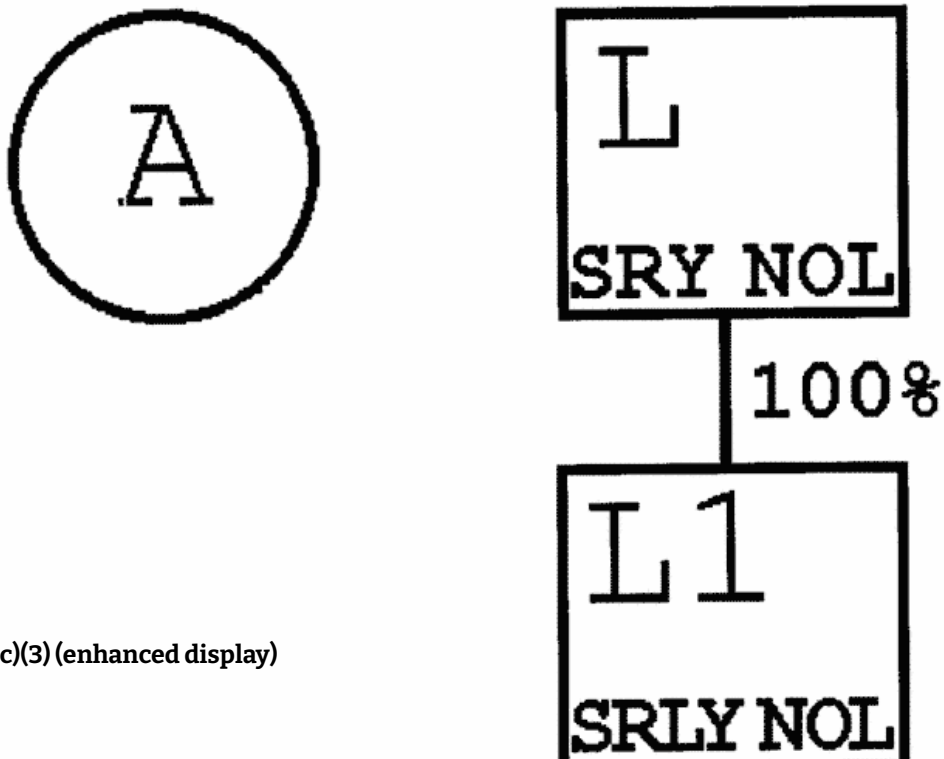
A
L
SRY NOL
100%
L1
SRLY NOL

(ii) L and L1 become a loss group at the beginning of Year 2 because the group is entitled to use the Year 1 net operating loss carryover of L, the common parent, which did not arise (and is not treated under § 1.1502-21(c) as arising) in a SRLY. See § 1.1502-94 for rules relating to the application of section 382 with respect to L1's net operating loss carryover from Year 1 which did arise in a SRLY.

(d) ***Loss subgroup*** —

(1) ***Net operating loss carryovers.*** Two or more corporations that become members of a consolidated group (the current group) compose a loss subgroup if—

(i) They were affiliated with each other in another group (the former group), whether or not the group was a consolidated group;

(ii) They bear the relationship described in section 1504(a)(1) to each other through a loss subgroup parent immediately after they become members of the current group (or are deemed to bear that relationship as a result of an election described in paragraph (d)(4) of this section); and

(iii) At least one of the members carries over a net operating loss that did not arise (and is not treated under § 1.1502-21(c) as arising) in a SRLY with respect to the former group.

(2) ***Net unrealized built-in loss.*** Two or more corporations that become members of a consolidated group compose a loss subgroup if they—

(i) Have been continuously affiliated with each other for the 5 consecutive year period ending immediately before they become members of the group;

(ii) Bear the relationship described in section 1504(a)(1) to each other through a loss subgroup parent immediately after they become members of the current group (or are deemed to bear that relationship as a result of an election described in paragraph (d)(4) of this section); and

(iii) Have a net unrealized built-in loss (determined under paragraph (g) of this section on the day they become members of the group by treating that day as though it were a change date).

(3) ***Loss subgroup parent.*** A loss subgroup parent is the corporation that bears the same relationship to the other members of the loss subgroup as a common parent bears to the members of a group.

(4) ***Election to treat loss subgroup parent requirement as satisfied*** —

(i) ***In general.*** Solely for purposes of paragraphs (d)(1)(i) and (2)(ii) of this section, two or more corporations that become members of a consolidated group at the same time and that were affiliated with each other immediately before becoming members of the group are deemed to bear a section 1504(a)(1) relationship to each other immediately after they become members of the group if the common parent of that group makes an election under this paragraph (d)(4) with respect to those members. See § 1.1502-96(e) for the time and manner of making the election.

(ii) ***Members included.*** An election under this paragraph (d)(4) includes all corporations that become members of the current group at the same time and that were affiliated with each other immediately before they become members of the current group.

(iii) ***Each member included treated as loss subgroup parent.*** If the members to which this election applies are a loss subgroup described in paragraph (d)(1) or (2) of this section, then each member is treated as a loss subgroup parent. See § 1.1502-92(b)(1)(iii) for special rules relating to an ownership change of a loss subgroup if the election under this paragraph (d)(4) is made.

(5) ***Principal purpose of avoiding a limitation.*** The corporations described in paragraphs (d)(1) or (2) of this section do not compose a loss subgroup if any one of them is formed, acquired, or availed of with a principal purpose of avoiding the application of, or increasing any limitation under, section 382. Instead, § 1.1502-94 applies with respect to the attributes of each such corporation. Any member excluded from a loss subgroup, if excluded with a principal purpose of so avoiding or increasing any section 382 limitation, is treated as included in the loss subgroup. This paragraph (d)(5) does not apply solely because, in connection with becoming members of the group, the members of a group (or loss subgroup) are rearranged (or, in the case of the preceding sentence, are not rearranged) to bear a relationship to the other members described in section 1504(a)(1).

(6) ***Special rules.*** See § 1.1502-95(d) for rules concerning when a corporation ceases to be a member of a loss subgroup, and for certain exceptions that may apply if a member does not continue to satisfy the loss subgroup parent requirement within the current group. See also § 1.1502-96(a) for a special rule regarding the end of separate tracking of SRLY losses of a member that has an ownership change or that has been a member of a group for at least 5 consecutive years.

(7) ***Examples.*** The following examples illustrate the principles of this paragraph (d):

> *Example 1. Loss subgroup.* (i) P owns all the L stock and L owns all the L1 stock. The P group has a consolidated net operating loss arising in Year 1 that is carried to Year 2. On May 2, Year 2, P sells all the stock of L to A, and L and L1 thereafter file consolidated returns. A portion of the Year 1 consolidated net operating loss is apportioned under § 1.1502-21(b) to each of L and L1, which they carry over to Year 2. The following is a graphic illustration of these facts:

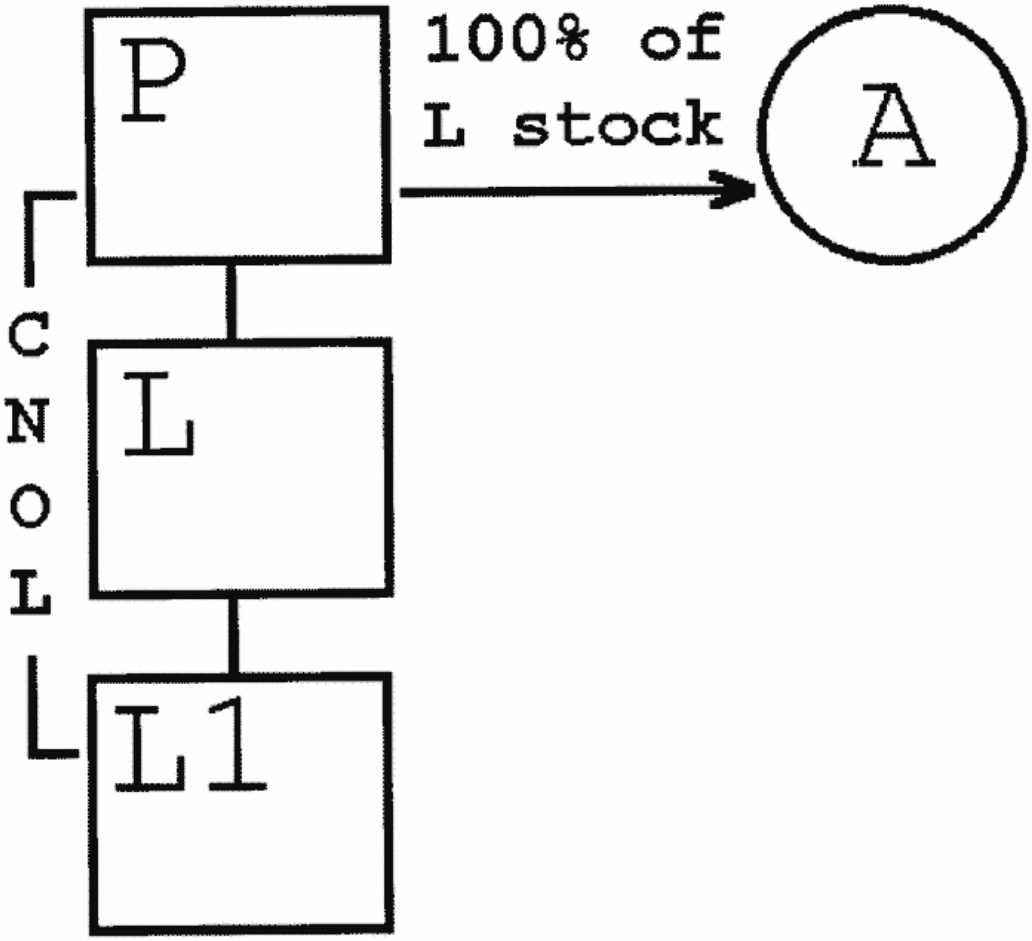
P
100% of
L stock
A
CNOL
L
L1

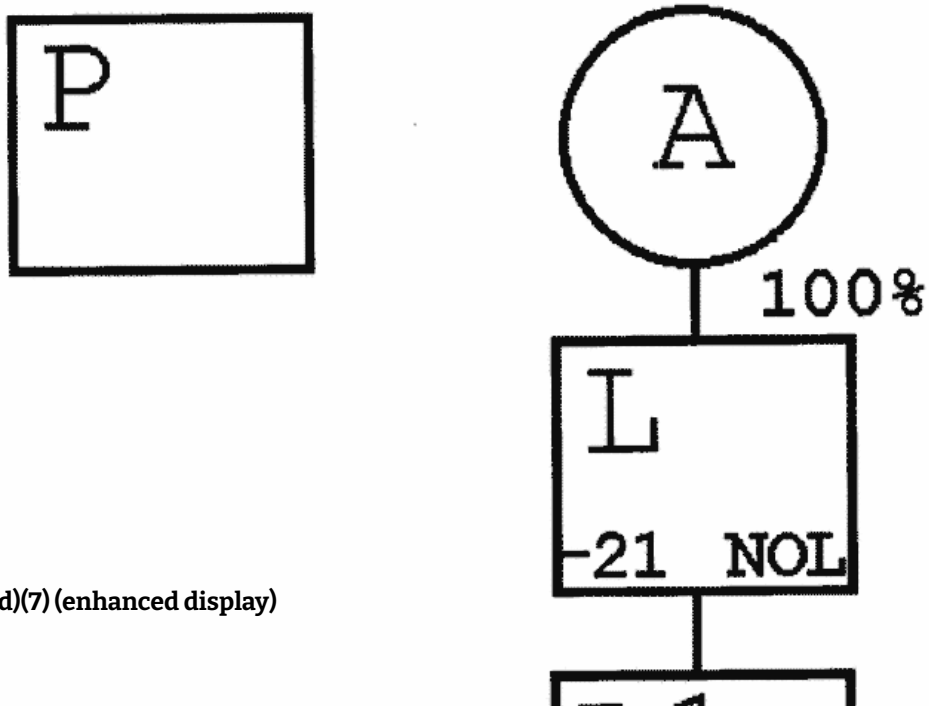
P
A
100%
L
21 NOL

(ii) (a) L and L1 compose a loss subgroup within the meaning of paragraph (d)(1) of this section because—
(A) They were affiliated with each other in the P group (the former group);

(B) They bear a relationship described in section 1504(a)(1) to each other through a loss subgroup parent (L) immediately after they became members of the L group; and

(C) At least one of the members (here, both L and L1) carries over a net operating loss to the L group (the current group) that did not arise in a SRLY with respect to the P group.

(b) Under paragraph (d)(3) of this section, L is the loss subgroup parent of the L loss subgroup.

Example 2. Loss subgroup—section 1504(a)(1) relationship. (i) P owns all the stock of L and L1. L owns all the stock of L2. L1 and L2 own 40 percent and 60 percent of the stock of L3, respectively. The P group has a consolidated net operating loss arising in Year 1 that is carried over to Year 2. On May 22, Year 2, P sells all the stock of L and L1 to P1, the common parent of another consolidated group. The Year 1 consolidated net operating loss is apportioned under § 1.1502-21(b), and each of L, L1, L2, and L3 carries over a portion of such loss to the first consolidated return year of the P1 group ending after the acquisition. The following is a graphic illustration of these facts:

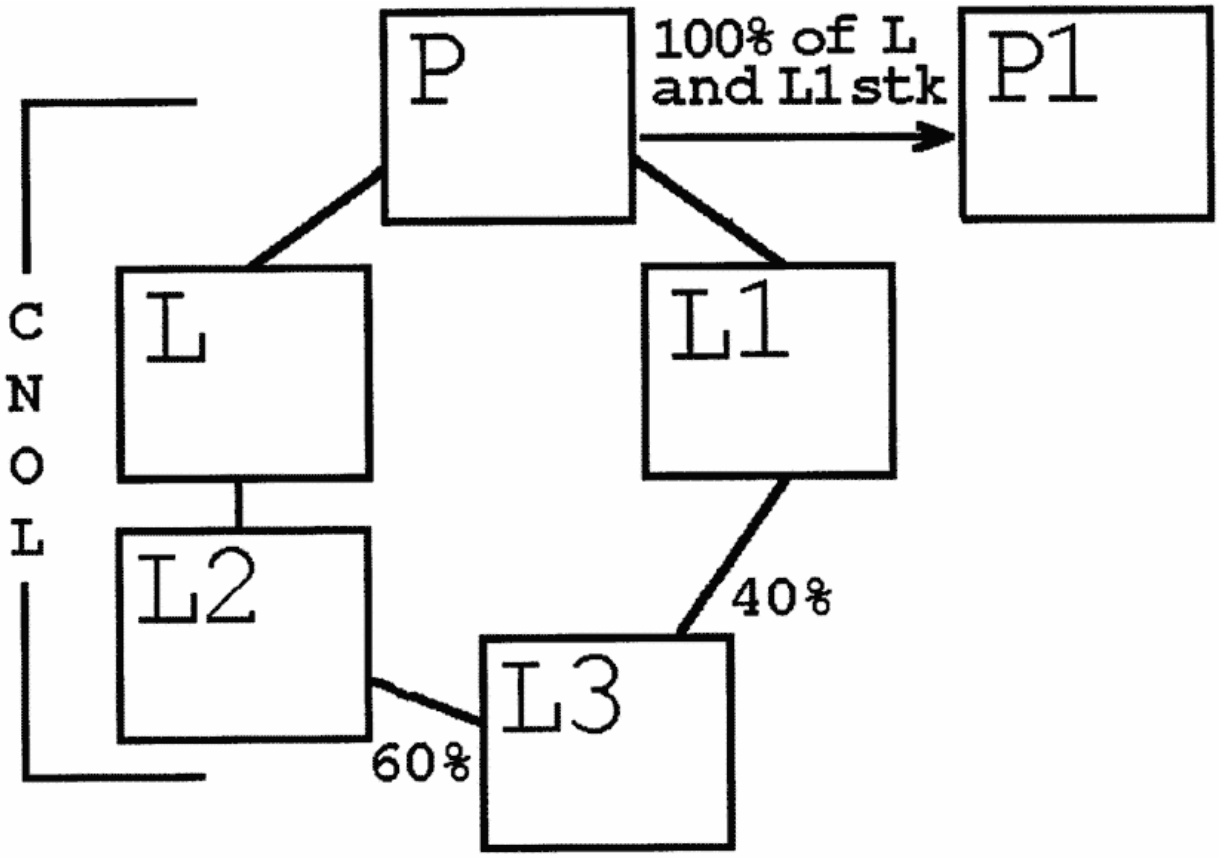
P
100% of L
and L1 stk
P1
CNOL
L
L1
L2
40%
L3
60%

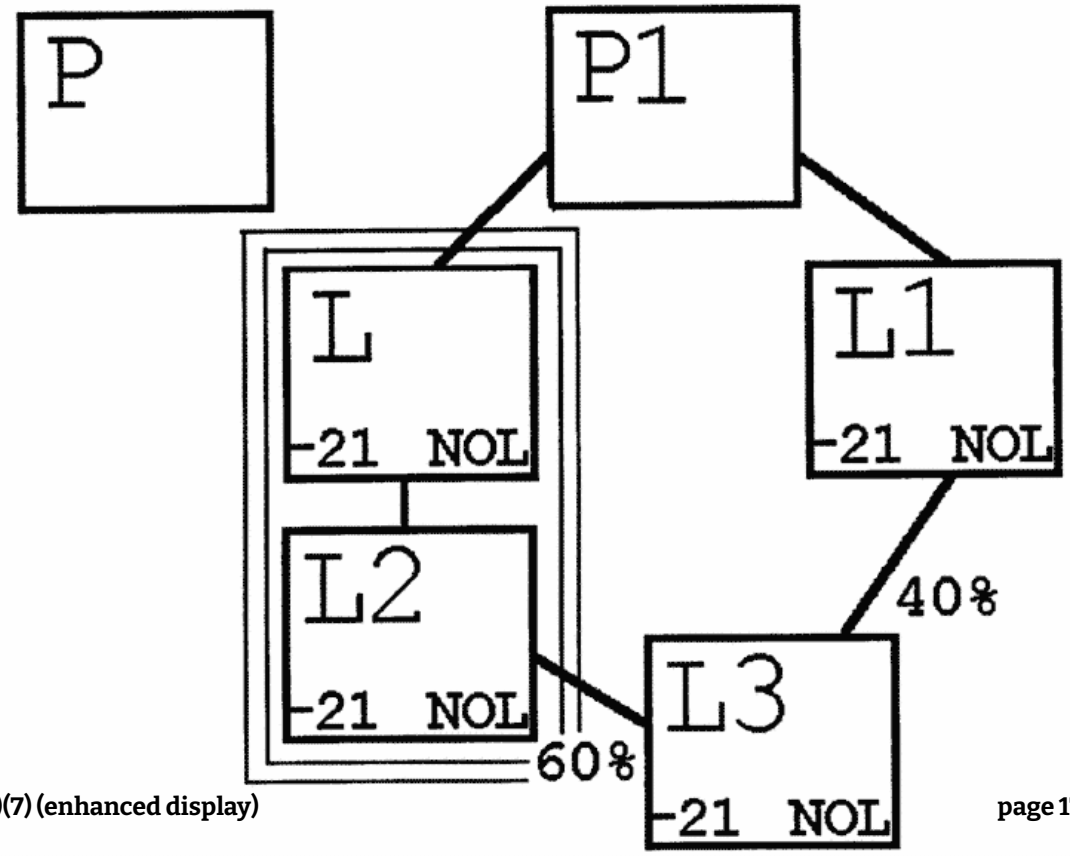
P
P1
L
-21 NOL
L1
-21 NOL
L2
-21 NOL
40%
L3
-21 NOL
60%

(ii) L and L2 compose a loss subgroup within the meaning of paragraph (d)(1) of this section. Neither L1 nor L3 is included in a loss subgroup because neither bears a relationship described in section 1504(a)(1) through a loss subgroup parent to any other member of the former group immediately after becoming members of the P1 group.

Example 3. Loss subgroup—section 1504(a)(1) relationship. The facts are the same as in *Example 2,* except that the stock of L1 is transferred to L in connection with the sale of the L stock to P1. L, L1, L2, and L3 compose a loss subgroup within the meaning of paragraph (d)(1) of this section because—

(i) They were affiliated with each other in the P group (the former group);

(ii) They bear a relationship described in section 1504(a)(1) to each other through a loss subgroup parent (L) immediately after they become members of the P1 group; and

(iii) At least one of the members (here, each of L, L1, L2, and L3) carries over a net operating loss to the P1 group (the current group).

Example 4. Loss subgroup—elective section 1504(a)(1) relationship. The facts are the same as in *Example 2,* except that P1 makes the election under paragraph (d)(4) of this section. The election includes L, L1, L2, and L3 (even though L and L2 would compose a loss subgroup without regard to the election) because they become members of the current group (the P1 group) at the same time and were affiliated with each other in the P group immediately before they became members of the P1 group. As a result of the election, L, L1, L2, and L3 are treated as satisfying the requirement that they bear the relationship described in section 1504(a)(1) to each other through a loss subgroup parent immediately after they become members of the P1 group. L, L1, L2, and L3 compose a loss subgroup within the meaning of paragraph (d)(1) of this section.

(e) ***Pre-change consolidated attribute*** —

(1) ***Defined.*** A pre-change consolidated attribute of a loss group is—

(i) Any loss described in paragraph (c)(1)(i) or (ii) of this section (relating to the definition of loss group) that is allocable to the period ending on or before the change date; and

(ii) Any recognized built-in loss of the loss group.

(2) ***Example*** —

(i) ***Facts.*** The L group has a consolidated net operating loss arising in Year 1 that is carried over to Year 2. The L loss group has an ownership change at the beginning of Year 2.

(ii) ***Analysis.*** The net operating loss carryover of the L loss group from Year 1 is a pre-change consolidated attribute because the L group was entitled to use the loss in Year 2 and therefore the loss was described in paragraph (c)(1)(i) of this section. Under paragraph (a)(2)(i) of this section, the amount of consolidated taxable income of the L group for Year 2 that may be

offset by this loss carryover may not exceed the consolidated section 382 limitation of the L group for that year. See § 1.1502-93 for rules relating to the computation of the consolidated section 382 limitation.

(iii) ***Business interest expense.*** The facts are the same as in the *Example* in paragraph (e)(2)(i) of this section, except that, rather than a consolidated net operating loss, a member of the L group pays or accrues a business interest expense in Year 1 for which a deduction is disallowed in that year under section 163(j) and § 1.163(j)-2(b). The disallowed business interest expense is carried over to Year 2 under section 163(j)(2) and § 1.163(j)-2(c). Thus, the disallowed business interest expense carryforward is a pre-change loss. Under section 163(j), the L loss group is entitled to deduct the carryforward in Year 2; however, the amount of consolidated taxable income of the L group for Year 2 that may be offset by this carryforward may not exceed the consolidated section 382 limitation of the L group for that year. See § 1.1502-98(b) (providing that §§ 1.1502-91 through 1.1502-96 apply section 382 to business interest expense, with appropriate adjustments).

(f) ***Pre-change subgroup attribute*** —

(1) ***Defined.*** A pre-change subgroup attribute of a loss subgroup is—

(i) Any net operating loss carryover described in paragraph (d)(1)(iii) of this section (relating to the definition of loss subgroup); and

(ii) Any recognized built-in loss of the loss subgroup.

(2) ***Example.*** The following example illustrates the principle of this paragraph (f):

> *Pre-change subgroup attribute.* (i) P is the common parent of a consolidated group. P owns all the stock of L, and L owns all the stock of L1. L2 is not a member of an affiliated group, and has a net operating loss arising in Year 1 that is carried over to Year 2. On December 11, Year 2, L1 acquires all the stock of L2, causing an ownership change of L2. During Year 2, the P group has a consolidated net operating loss that is carried over to Year 3. On November 2, Year 3, M acquires all the L stock from P. M, L, L1, and L2 thereafter file consolidated returns. All of the P group Year 2 consolidated net operating loss is apportioned under § 1.1502-21(b) to L and L2, which they carry over to the M group.
> (ii)(a) L, L1, and L2 compose a loss subgroup because—
>
> (1) They were affiliated with each other in the P group (the former group);
>
> (2) They bear a relationship described in section 1504(a)(1) to each other through a loss subgroup parent (L) immediately after they became members of the L group; and
>
> (3) At least one of the members (here, both L and L2) carries over a net operating loss to the M group (the current group) that is described in paragraph (d)(1)(iii) of this section.

(b) For this purpose, L2's loss from Year 1 that was a SRLY loss with respect to the P group (the former group) is described in paragraph (d)(1)(iii) of this section because L2 had an ownership change on becoming a member of the P group (see § 1.1502-96(a)) on December 11, Year 2. Starting on December 12, Year 2, the P group no longer separately tracked owner shifts of the stock of L1 with respect to the Year 1 loss. M's acquisition results in an ownership change of L, and therefore the L loss subgroup under § 1.1502-92(a)(2). See § 1.1502-93 for rules governing the computation of the subgroup section 382 limitation.

(iii) In the M group, L2's Year 1 loss continues to be subject to a section 382 limitation resulting from the ownership change that occurred on December 11, Year 2. See § 1.1502-96(c).

(g) ***Net unrealized built-in gain and loss*** —

(1) ***In general.*** The determination whether a consolidated group (or loss subgroup) has a net unrealized built-in gain or loss under section 382(h)(3) is based on the aggregate amount of the separately computed net unrealized built-in gains or losses of each member that is included in the group (or loss subgroup) under paragraph (g)(2) of this section, including items of built-in income and deduction described in section 382(h)(6). Thus, for example, amounts deferred under section 267, or under § 1.1502-13 (other than amounts deferred with respect to the stock of a member (or an intercompany obligation) included in the group (or loss subgroup) under paragraph (g)(2) of this section) are built-in items. The threshold requirement under section 382(h)(3)(B) applies on an aggregate basis and not on a member-by-member basis. The separately computed amount of a member included in a group or loss subgroup does not include any unrealized built-in gain or loss on stock (including stock described in section 1504(a)(4) and § 1.382-2T(f)(18)(ii) and (iii)) of another member included in the group or loss subgroup (or an intercompany obligation). However, a member of a group or loss subgroup includes in its separately computed amount the unrealized built-in gain or loss on stock (but not on an intercompany obligation) of another member not included in the group or loss subgroup. If a member is not included in the determination whether a group (or subgroup) has a net unrealized built-in loss under paragraph (g)(2)(ii) or (iv) of this section, that member is not included in the loss group or loss subgroup. See § 1.1502-94(c) (relating to built-in gain or loss of a new loss member) and § 1.1502-96(a) (relating to the end of separate tracking of certain losses).

(2) ***Members included*** —

(i) ***Consolidated group with a net operating loss.*** The members included in the determination whether a consolidated group described in paragraph (c)(1)(i) or (ii) of this section (relating to loss groups with net operating losses) has a net unrealized built-in gain are all members of the consolidated group on the day that the determination is made.

(ii) ***Determination whether a consolidated group has a net unrealized built-in loss.*** The members included in the determination whether a consolidated group is a loss group described in paragraph (c)(1)(iii) of this section are—

(A) The common parent and all other members that have been affiliated with the common parent for the 5 consecutive year period ending on the day that the determination is made;

(B) Any other member that has a net unrealized built-in loss determined under paragraph (g)(1) of this section on the date that the determination is made, and that is neither a new loss member described in § 1.1502-94(a)(1)(ii) nor a member of a loss subgroup described in paragraph (d)(2) of this section;

(C) Any new loss member described in § 1.1502-94(a)(1)(ii) that has a net unrealized built-in gain determined under paragraph (g)(1) of this section on the day that the determination is made; and

(D) The members of a loss subgroup described in paragraph (d)(2) of this section if the members of the subgroup have, in the aggregate, a net unrealized built-in gain on the day that the determination is made.

(iii) ***Loss subgroup with net operating loss carryovers.*** The members included in the determination whether a loss subgroup described in paragraph (d)(1) of this section (relating to loss subgroups with net operating loss carryovers) has a net unrealized built-in gain are all members of the loss subgroup on the day that the determination is made.

(iv) ***Determination whether subgroup has a net unrealized built-in loss.*** The members included in the determination whether a subgroup has a net unrealized built-in loss are those members described in paragraphs (d)(2)(i) and (ii) of this section.

(v) ***Separate determination of section 382 limitation for recognized built-in losses and net operating losses.*** In determining whether a loss group described in paragraph (c)(1)(i) or (ii) of this section (relating to loss groups that have net operating loss carryovers) has a net unrealized built-in gain which, if recognized, increases the consolidated section 382 limitation, the group includes, under paragraph (g)(2)(i) of this section, all of its members on the day the determination is made. Under paragraph (g)(2)(ii) of this section, however, for purposes of determining whether a group has a net unrealized built-in loss described in paragraph (c)(1)(iii) of this section, not all members of the consolidated group may be included. Thus, a consolidated group may have recognized built-in gains that increase the amount of consolidated taxable income that may be offset by its pre-change net operating loss carryovers that did not arise (and are not treated as arising) in a SRLY, and also may have recognized built-in losses the absorption of which is limited. Similar results may obtain for loss subgroups under paragraphs (g)(2)(iii) and (iv) of this section. See § 1.1502-93(c)(2) for rules prohibiting the use of recognized built-in gains to increase the amount of consolidated taxable income that can be offset by recognized built-in losses.

(3) ***Coordination with rule that ends separate tracking.*** See § 1.1502-96(a) for special rules relating to members (or loss subgroups) that have an ownership change within six months before, on, or after becoming a member of the group.

(4) ***Acquisitions of built-in gain or loss assets.*** A member of a consolidated group (or loss subgroup) may not, in determining its separately computed net unrealized built-in gain or loss, include any gain or loss with respect to assets acquired with a principal purpose to affect the amount of its net unrealized built-in gain or loss. A group (or loss subgroup) may not, in determining its net unrealized built-in gain or loss, include any gain or loss of a member acquired with a principal purpose to affect the amount of its net unrealized built-in gain or loss.

(5) ***Indirect ownership.*** A member's separately computed net unrealized built-in gain or loss is adjusted to the extent necessary to prevent any duplication of unrealized gain or loss attributable to the member's indirect ownership interest in another member through a nonmember if the member has a 5-percent or greater ownership interest in the nonmember.

(6) ***Common parent not common parent for five years.*** If the common parent has become the common parent of an existing group within the previous 5 year period in a transaction described in § 1.1502-75(d)(2)(ii) or (3), appropriate adjustments must be made in applying paragraph (g)(2)(ii)(A) of this section so that corporations that have not been members of the group for five years are not included. In such a case, references to the common parent in paragraph (g)(2)(ii)(A) of this section are to the former common parent. Thus, members of the group remaining in existence (including the new common parent) that have not been affiliated with the former common parent (or that have not been members of that group) for the five consecutive year period ending on the day that the determination is made are not included under paragraph (g)(2)(ii)(A) of this section. See, however, § 1.1502-96(a)(2) for special rules relating to members (or loss subgroups) that have an ownership change within six months before, on, or after the time that the member becomes a member of the group.

(h) ***Recognized built-in gain or loss —***

(1) ***In general.*** [Reserved]

(2) ***Disposition of stock or an intercompany obligation of a member.*** Gain or loss recognized by a member on the disposition of stock (including stock described in section 1504(a)(4) and § 1.382-2T(f)(18)(ii) and (iii)) of another member is treated as a recognized gain or loss for purposes of section 382(h)(2) (unless disallowed) even though gain or loss on such stock was not included in the determination of a net unrealized built-in gain or loss under paragraph (g)(1) of this section. Gain or loss recognized by a member with respect to an intercompany obligation is treated as recognized gain or loss only to the extent (if any) the transaction gives rise to aggregate income or loss within the consolidated group. The first sentence of this paragraph (h)(2) is applicable on or after September 17, 2008.

(3) ***Intercompany transactions.*** Gain or loss that is deferred under provisions such as section 267 and § 1.1502-13 is treated as recognized built-in gain or loss only to the extent taken into account by the group during the recognition period. See also § 1.1502-13(c)(7) *Example 10.*

(4) ***Exchanged basis property.*** If the adjusted basis of any asset is determined, directly or indirectly, in whole or in part, by reference to the adjusted basis of another asset held by the member at the beginning of the recognition period, the asset is treated, with appropriate adjustments, as held by the member at the beginning of the recognition period.

(i) [Reserved]

(j) ***Predecessor and successor corporations.*** A reference in this section and §§ 1.1502-92 through 1.1502-99 to a corporation, member, common parent, loss subgroup parent, or subsidiary includes, as the context may require, a reference to a predecessor or successor corporation as defined in § 1.1502-1(f)(4). For example, the determination whether a successor satisfies the continuous affiliation requirement of paragraph (d)(2)(i) or (g)(2)(ii) of this section is made by reference to its predecessor.

[T.D. 8824, 64 FR 36129, July 2, 1999, as amended by T.D. 9048, 68 FR 12291, Mar. 14, 2003; T.D. 9187, 70 FR 10326, Mar. 3, 2005; T.D. 9254, 71 FR 13018, Mar. 14, 2006; T.D. 9424, 73 FR 53984, Sept. 17, 2008; T.D. 9905, 85 FR 56844, Sept. 14, 2020; T.D. 10018, 89 FR 106877, Dec. 30, 2024]

§ 1.1502-92 Ownership change of a loss group or a loss subgroup.

(a) ***Scope.*** This section provides rules for determining if there is an ownership change for purposes of section 382 with respect to a loss group or a loss subgroup. See § 1.1502-94 for special rules for determining if there is an ownership change with respect to a new loss member and § 1.1502-96(b) for special rules for determining if there is an ownership change of a subsidiary.

(b) ***Determination of an ownership change*** —

(1) ***Parent change method*** —

(i) ***Loss group.*** A loss group has an ownership change if the loss group's common parent has an ownership change under section 382 and the regulations thereunder. Solely for purposes of determining whether the common parent has an ownership change—

(A) The losses described in § 1.1502-91(c) are treated as net operating losses (or a net unrealized built-in loss) of the common parent; and

(B) The common parent determines the earliest day that its testing period can begin by reference to only the attributes that make the group a loss group under § 1.1502-91(c).

(ii) ***Loss subgroup.*** A loss subgroup has an ownership change if the loss subgroup parent has an ownership change under section 382 and the regulations thereunder. The principles of § 1.1502-95(b) (relating to ceasing to be a member of a consolidated group) apply in determining whether the loss subgroup parent has an ownership change. Solely for purposes of determining whether the loss subgroup parent has an ownership change—

(A) The losses described in § 1.1502-91(d) are treated as net operating losses (or a net unrealized built-in loss) of the loss subgroup parent;

(B) The day that the members of the loss subgroup become members of the group (or a loss subgroup) is treated as a testing date within the meaning of § 1.382-2(a)(4); and

(C) The loss subgroup parent determines the earliest day that its testing period can begin under § 1.382-2T(d)(3) by reference to only the attributes that make the members a loss subgroup under § 1.1502-91(d).

(iii) ***Special rule if election regarding section 1504(a)(1) relationship is made*** —

(A) ***Ownership change of deemed loss subgroup parent is an ownership change of loss subgroup.*** If the common parent makes an election under § 1.1502-91(d)(4), each of the members in the loss subgroup is treated as the loss subgroup parent for purposes of determining whether the loss subgroup has an ownership change under section 382 and the regulations thereunder on or after the day the members become members of the group.

(B) ***Exception.*** Paragraph (b)(1)(iii)(A) of this section does not apply to cause an ownership change of a loss subgroup if a deemed loss subgroup parent has an ownership change upon (or after) ceasing to be a member of the current group.

(2) ***Examples.*** The following examples illustrate the principles of this paragraph (b):

> *Example 1. Loss group—ownership change of the common parent.* (i) A owns all the L stock. L owns 80 percent and B owns 20 percent of the L1 stock. For Year 1, the L group has a

consolidated net operating loss that resulted from the operations of L1 and that is carried over to Year 2. The value of the L stock is $1000. The total value of the L1 stock is $600 and the value of the L1 stock held by B is $120. The L group is a loss group under § 1.1502-91(c)(1) because it is entitled to use its net operating loss carryover from Year 1. On August 15, Year 2, A sells 51 percent of the L stock to C. The following is a graphic illustration of these facts:

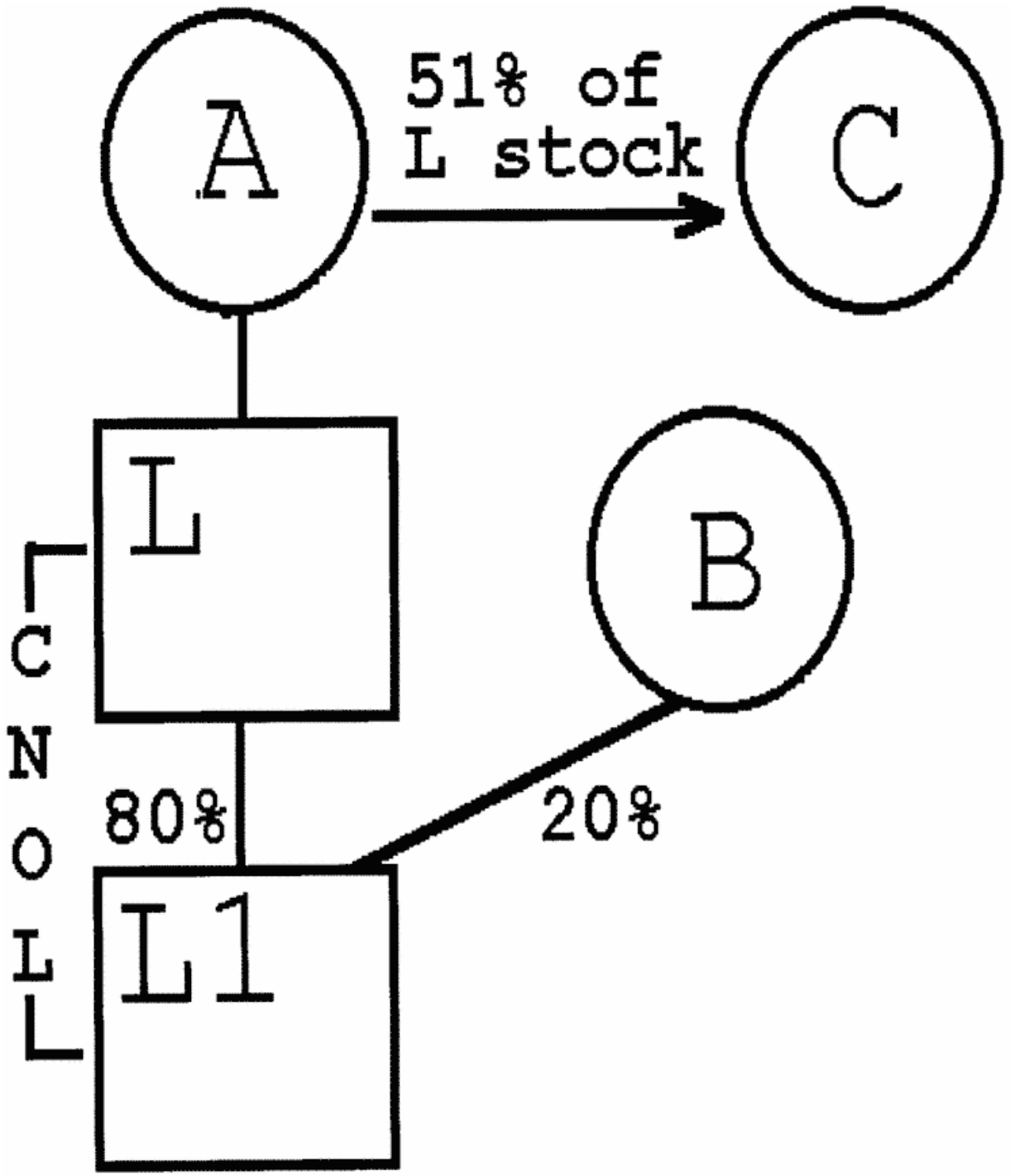

(ii) Under paragraph (b)(1)(i) of this section, section 382 and the regulations thereunder are applied to L to determine whether it (and therefore the L loss group) has an ownership

change with respect to its net operating loss carryover from Year 1 attributable to L1 on August 15, Year 2. The sale of the L stock to C causes an ownership change of L under § 1.382-2T and of the L loss group under paragraph (b)(1)(i) of this section. The amount of consolidated taxable income of the L loss group for any post-change taxable year that may be offset by its pre-change consolidated attributes (that is, the net operating loss carryover from Year 1 attributable to L1) may not exceed the consolidated section 382 limitation for the L loss group for the taxable year.

Example 2. Loss group—owner shifts of subsidiaries disregarded. (i) The facts are the same as in *Example 1*, except that on August 15, Year 2, A sells only 49 percent of the L stock to C and, on December 12, Year 3, in an unrelated transaction, B sells the 20 percent of the L1 stock to D. A's sale of the L stock to C does not cause an ownership change of L under § 1.382-2T nor of the L loss group under paragraph (b)(1)(i) of this section. The following is a graphic illustration of these facts:

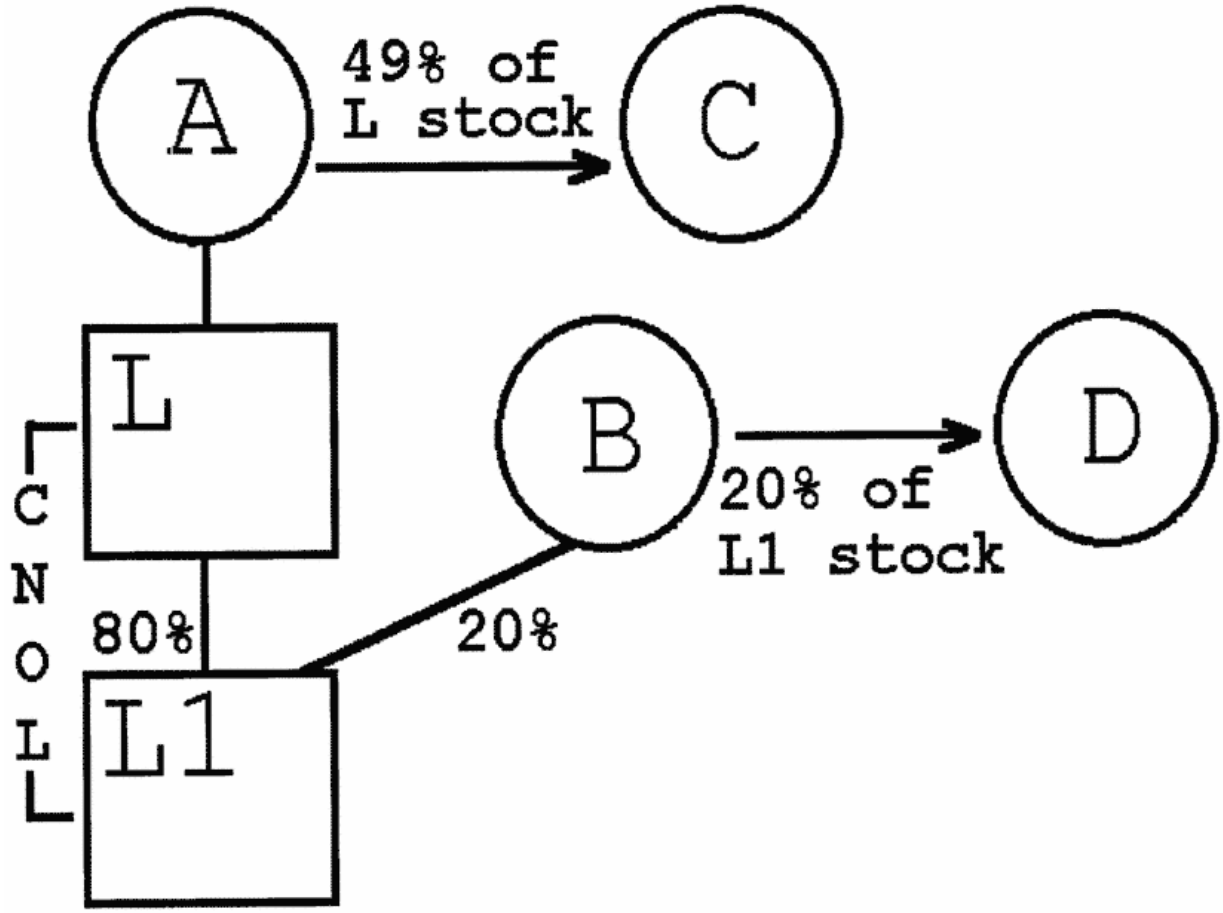

(ii) B's subsequent sale of L1 stock is not taken into account for purposes of determining whether the L loss group has an ownership change under paragraph (b)(1)(i) of this section, and, accordingly, there is no ownership change of the L loss group. See paragraph (c) of this section, however, for a supplemental ownership change method that would apply to cause an ownership change if the purchases by C and D were pursuant to a plan or arrangement and

certain other conditions are satisfied.

Example 3. Loss subgroup—ownership change of loss subgroup parent controls. (i) P owns all the L stock. L owns 80 percent and A owns 20 percent of the L1 stock. The P group has a consolidated net operating loss arising in Year 1 that is carried over to Year 2. On September 9, Year 2, P sells 51 percent of the L stock to B, and L1 is apportioned a portion of the Year 1 consolidated net operating loss under § 1.1502-21(b), which it carries over to its next taxable year. L and L1 file a consolidated return for their first taxable year ending after the sale to B. The following is a graphic illustration of these facts:

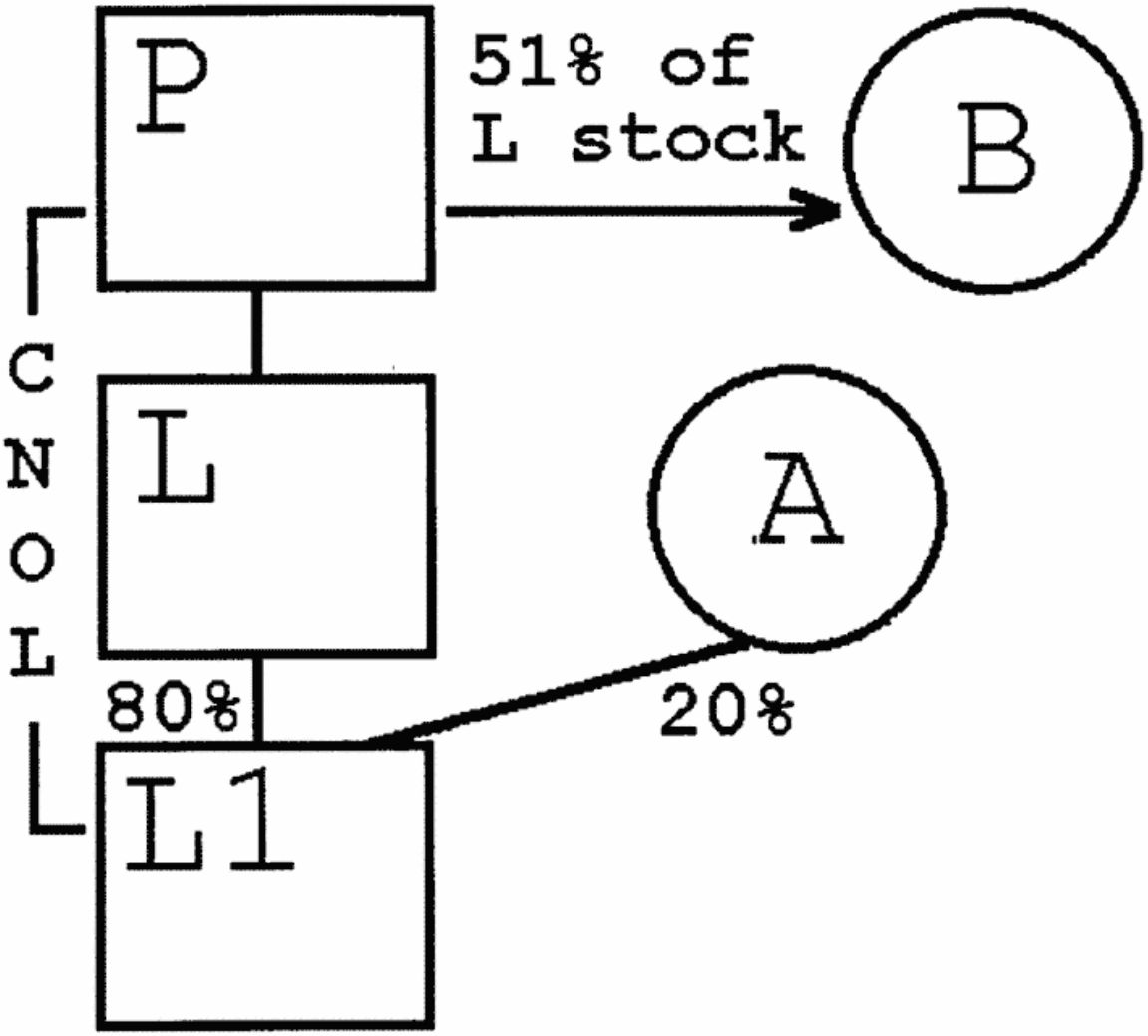
P
51% of
L stock
B
CNOL
L
A
80%
20%
L1

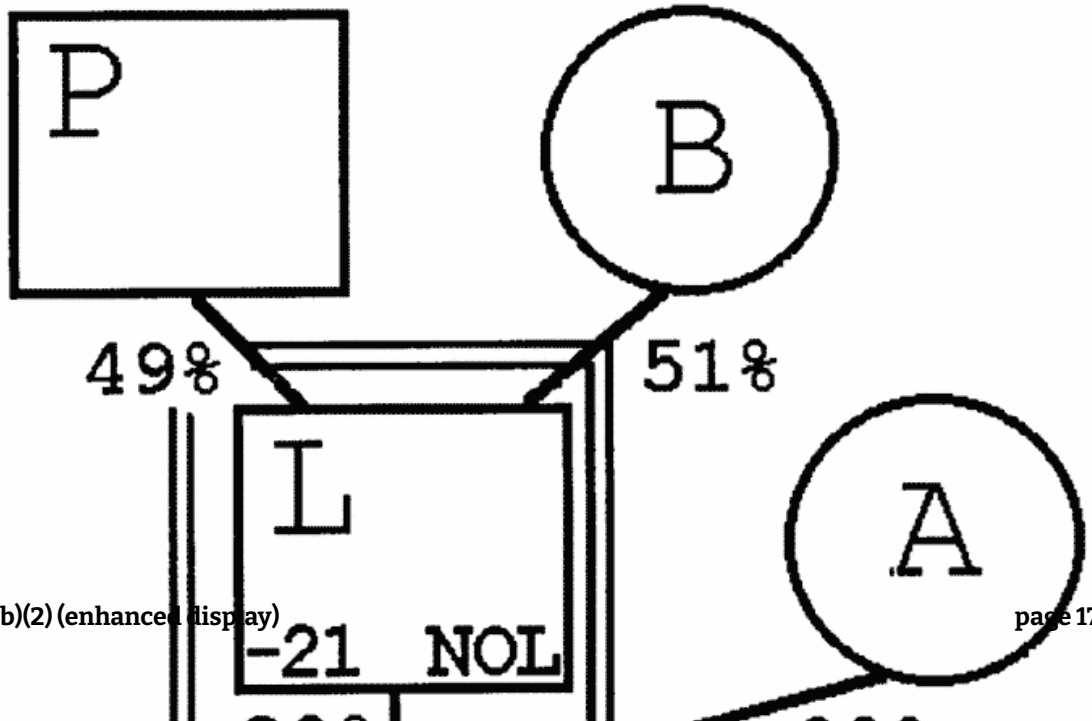
P
B
49%
51%
L
A
-21 NOL

(ii) Under § 1.1502-91(d)(1), L and L1 compose a loss subgroup on September 9, Year 2, the day that they become members of the L group. Under paragraph (b)(1)(ii) of this section, section 382 and the regulations thereunder are applied to L to determine whether it (and therefore the L loss subgroup) has an ownership change with respect to the portion of the Year 1 consolidated net operating loss that is apportioned to L1 on September 9, Year 2. L has an ownership change resulting from P's sale of 51 percent of the L stock to A. Therefore, the L loss subgroup has an ownership change with respect to that loss.

Example 4. Loss group and loss subgroup—contemporaneous ownership changes. (i) A owns all the stock of corporation M, M owns 35 percent and B owns 65 percent of the L stock, and L owns all the L1 stock. The L group has a consolidated net operating loss arising in Year 1 that is carried over to Year 2. On May 19, Year 2, B sells 45 percent of the L stock to M for cash. M, L, and L1 thereafter file consolidated returns. L and L1 are each apportioned a portion of the Year 1 consolidated net operating loss, which they carry over to the M group's Year 2 and Year 3 consolidated return years. The M group has a consolidated net operating loss arising in Year 2 that is carried over to Year 3. On June 9, Year 3, A sells 70 percent of the M stock to C. The following is a graphic illustration of these facts:

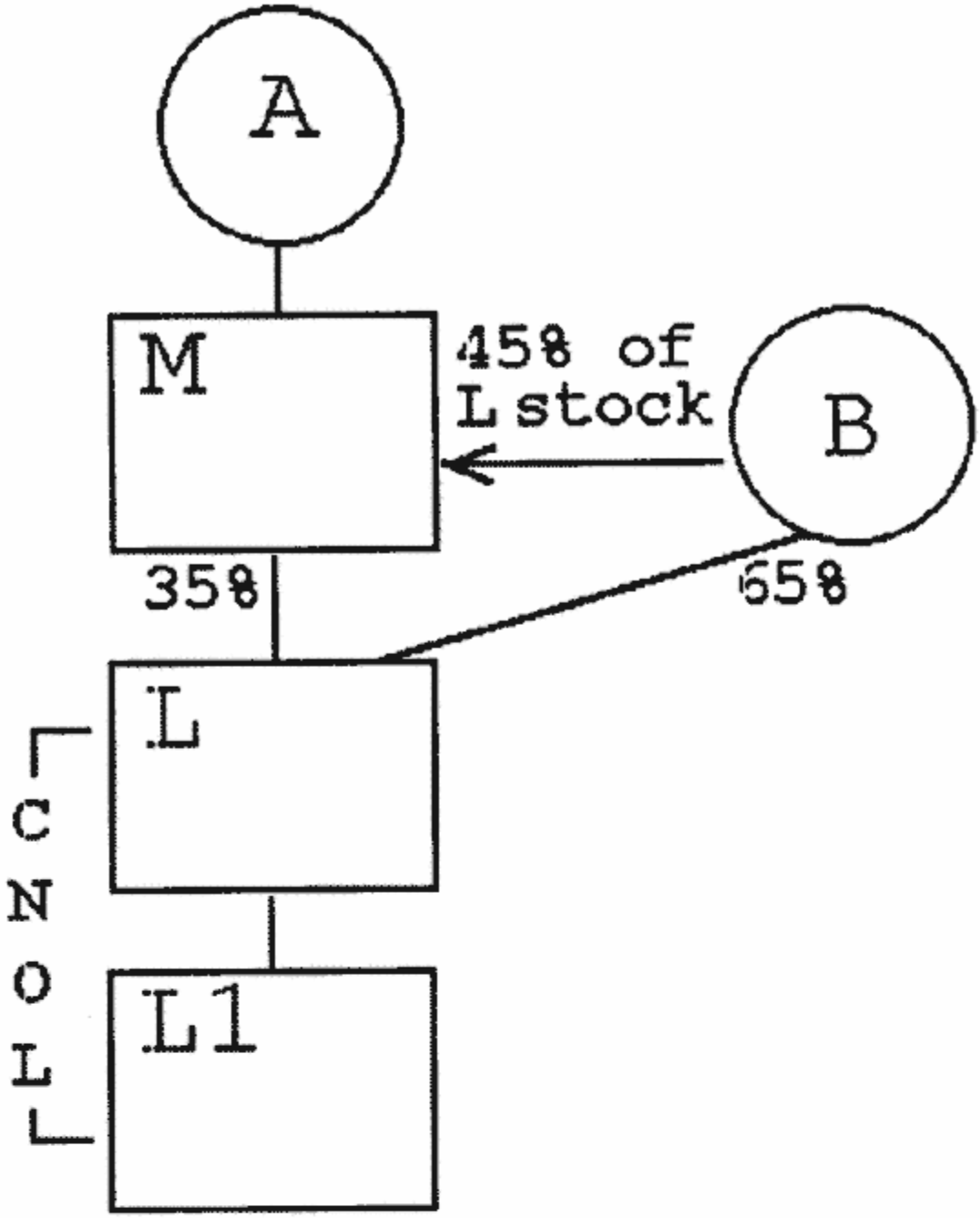
A
M
45% of
L stock
B
35%
65%
L
CNOL
L1

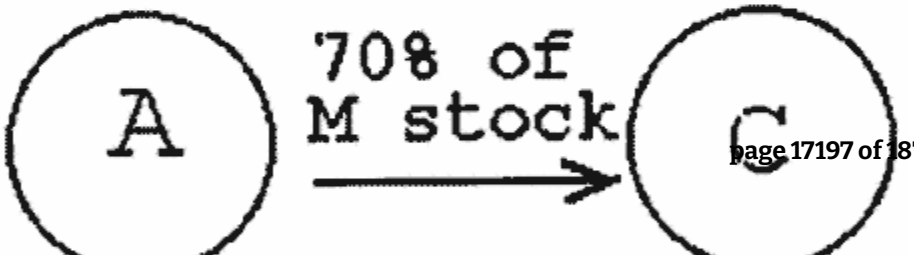
A
70% of
M stock
C

(ii) Under § 1.1502-91(d)(1), L and L1 compose a loss subgroup on May 19, Year 2, the day they become members of the M group. Under paragraph (b)(1)(ii) of this section, section 382 and the regulations thereunder are applied to L to determine whether L (and therefore the L loss subgroup) has an ownership change with respect to the loss carryovers from Year 1 on May 19, Year 2, a testing date because of B's sale of L stock to M. The sale of L stock to M results in only a 45 percentage point increase in A's ownership of L stock. Thus, there is no ownership change of L (or the L loss subgroup) with respect to those loss carryovers under paragraph (b)(1)(ii) of this section on that day.
(iii) June 9, Year 3, is also a testing date with respect to the L loss subgroup because of A's sale of M stock to C. The sale results in a 56 percentage point increase in C's ownership of L stock, and L has an ownership change. Therefore, the L loss subgroup has an ownership change on that day with respect to the loss carryovers from Year 1.

(iv) Paragraph (b)(1)(i) of this section requires that section 382 and the regulations thereunder be applied to M to determine whether M (and therefore the M loss group) has an ownership change with respect to the net operating loss carryover from Year 2 on June 9, Year 3, a testing date because of A's sale of M stock to C. The sale results in a 70 percentage point increase in C's ownership of M stock, and M has an ownership change. Therefore, the M loss group has an ownership change on that day with respect to that loss carryover.

Example 5. Deemed subgroup parent. (i) P owns all the stock of L and L1 and 80 percent of the stock of T. A owns the remaining 20 percent of the stock of T. L1 owns all the stock of L2. P1, which owns 60 percent of the stock of P, acquires, at the beginning of Year 2, the T, L, and L1 stock owned by P, and T, L, L1, and L2 become members of the P1 group. The P group has a consolidated net operating loss arising in Year 1 that is carried over to Year 2. L, L1, and L2 are each apportioned a portion of the Year 1 consolidated net operating loss under § 1.1502-21(b), which they carry over to the P1 group's Year 2 and Year 3 consolidated return years. P1 makes the election described in § 1.1502-91(d)(4) to treat T, L, L1 and L2 as meeting the section 1504(a)(1) requirement of § 1.1502-91(d)(1)(ii). As a result of the election, T, L, L1 and L2 compose a loss subgroup and T, L, L1, and L2 are each treated as the loss subgroup parent for purposes of this paragraph (b). Because of P1's indirect ownership of T, L, L1, and L2 prior to P1's acquisition of the T, L, and L1 stock, P1's acquisition does not cause an ownership change of the loss subgroup.
(ii) On February 2, Year 3, L1 sells all of the stock of L2 to B. Although L2 is treated as a loss subgroup parent, the determination whether the loss subgroup comprised of T, L, and L1 has an ownership change under this paragraph (b) is made without regard to the sale of L2 because L2's ownership change occurred upon ceasing to be a member of the P1 group. See § 1.1502-95(b) to determine the application of section 382 to L2 when L2 ceases to be a member of the P1 group and the T, L, L1 and L2 loss subgroup.

(iii) On March 26, Year 3, A sells her 20 percent minority stock interest in T to C . C's purchase, together with the 32 percentage point owner shift effected by P1's acquisition of the T stock at the beginning of Year 2, causes an ownership change of T, and therefore of the loss subgroup comprised of T, L, and L1.

(3) *Special adjustments* —

(i) ***Common parent succeeded by a new common parent.*** For purposes of determining if a loss group has an ownership change, if the common parent of a loss group is succeeded or acquired by a new common parent and the loss group remains in existence, the new common parent is treated as a continuation of the former common parent with appropriate adjustments to take into account shifts in ownership of the former common parent during the testing period (including shifts that occur incident to the common parent's becoming the former common parent). A new common parent may be a continuation of the former common parent even if, under § 1.1502-91(g)(2)(ii), the new common parent is not included in determining whether the group has a net unrealized built-in loss.

(ii) ***Newly created loss subgroup parent.*** For purposes of determining if a loss subgroup has an ownership change, if the member that is the loss subgroup parent has not been the loss subgroup parent for at least 3 years as of a testing date, appropriate adjustments must be made to take into account owner shifts of members of the loss subgroup so that the structure of the loss subgroup does not have the effect of avoiding an ownership change under section 382. (See paragraph (b)(3)(iii), *Example 3* of this section.)

(iii) ***Examples.*** The following examples illustrate the principles of this paragraph (b)(3):

(A) ***Example 1.*** *—New common parent acquires old common parent.*

(*1*) A, who owns all the L stock, sells 30 percent of the L stock to B on August 26, Year 1. L owns all the L1 stock. The L group has a consolidated net operating loss arising in Year 1 that is carried over to Year 3. On July 16, Year 2, A and B transfer their L stock to a newly created holding company, HC, in exchange for 70 percent and 30 percent, respectively, of the HC stock. HC, L, and L1 thereafter file consolidated returns. Under the principles of § 1.1502-75(d), the L loss group is treated as remaining in existence, with HC taking the place of L as the new common parent of the loss group. The following is a graphic illustration of these facts:

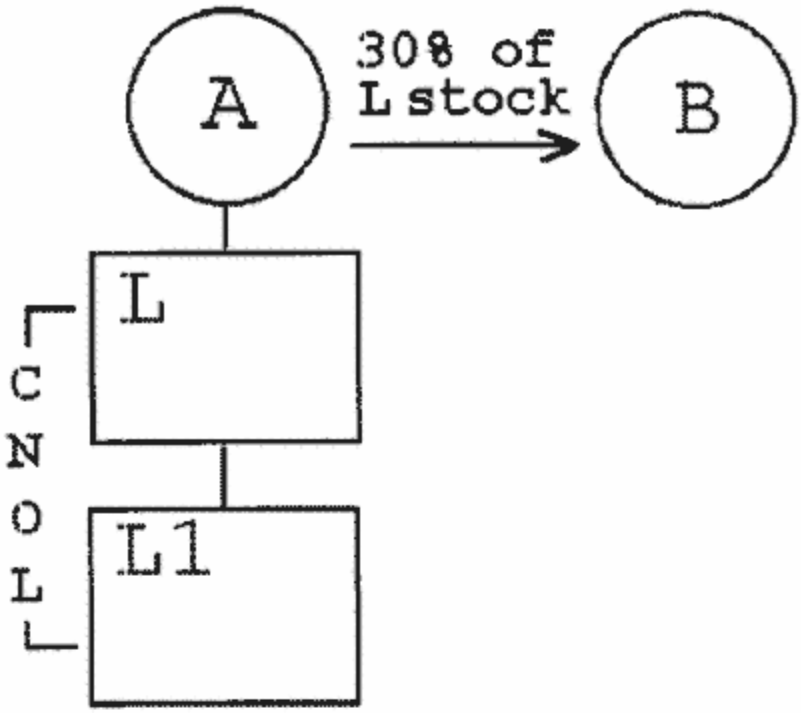
A
30% of
L stock
B
L
CNOL
L1

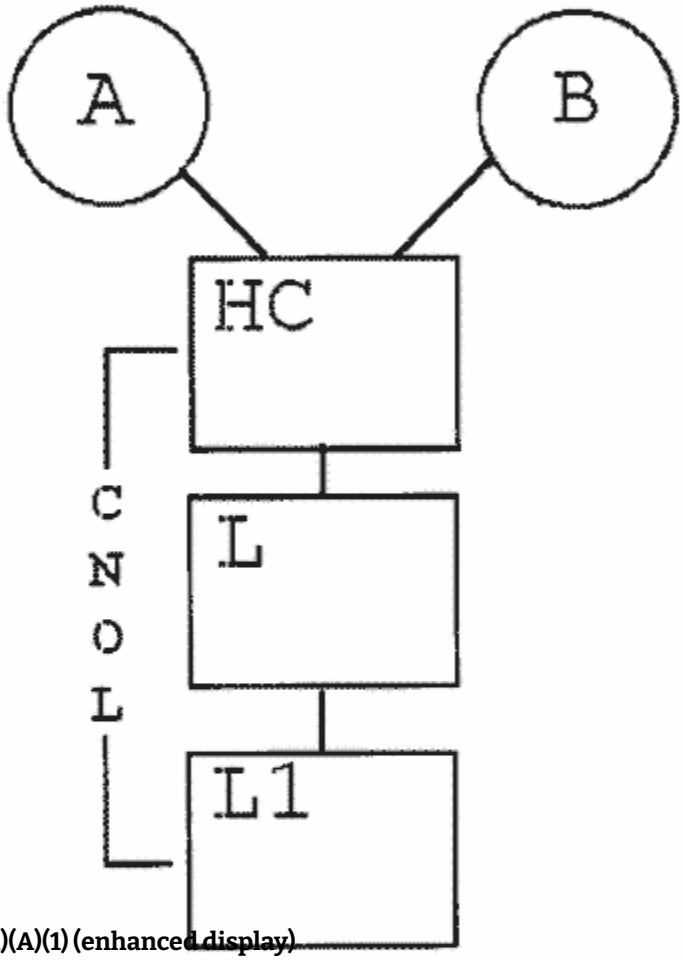
A
B
HC
CNOL
L
L1

(2) On November 11, Year 3, A sells 25 percent of the HC stock to B. For purposes of determining if the L loss group has an ownership change under paragraph (b)(1)(i) of this section on November 11, Year 3, HC is treated as a continuation of L under paragraph (b)(4)(i) of this section because it acquired L and became the common parent without terminating the L loss group. Accordingly, HC's testing period commences on January 1, Year 1, the first day of the taxable year of the L loss group in which the consolidated net operating loss that is carried over to Year 3 arose (see § 1.382-2T(d)(3)(i)). Immediately after the close of November 11, Year 3, B's percentage ownership interest in the common parent of the loss group (HC) has increased by 55 percentage points over its lowest percentage ownership during the testing period (zero percent). Accordingly, HC and the L loss group have an ownership change on that day.

(B) ***Example 2.*** *—New common parent in case in which common parent ceases to exist.*

(1) A, B, and C each own one-third of the L stock. L owns all the L1 stock. The L group has a consolidated net operating loss arising in Year 2 that is carried over to Year 3. On November 22, Year 3, L is merged into P, a corporation owned by D, and L1 thereafter files consolidated returns with P. A, B, and C, as a result of owning stock of L, own 90 percent of P's stock after the merger. D owns the remaining 10 percent of P's stock. The merger of L into P qualifies as a reverse acquisition of the L group under § 1.1502-75(d)(3)(i), and the L loss group is treated as remaining in existence, with P taking the place of L as the new common parent of the L group. The following is a graphic illustration of these facts:

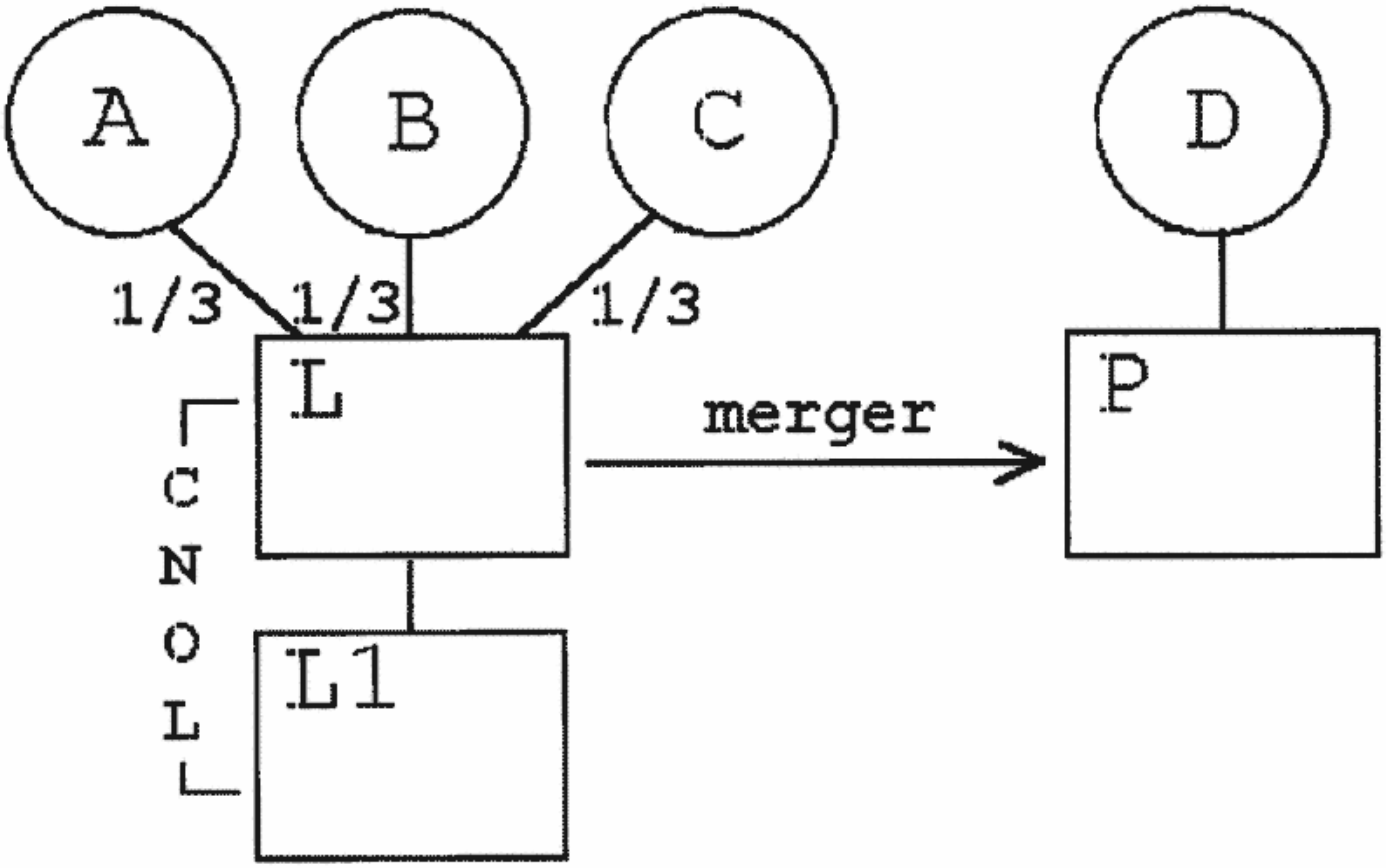
A
B
C
D
1/3
1/3
1/3
L
merger
P
CNOL
L1

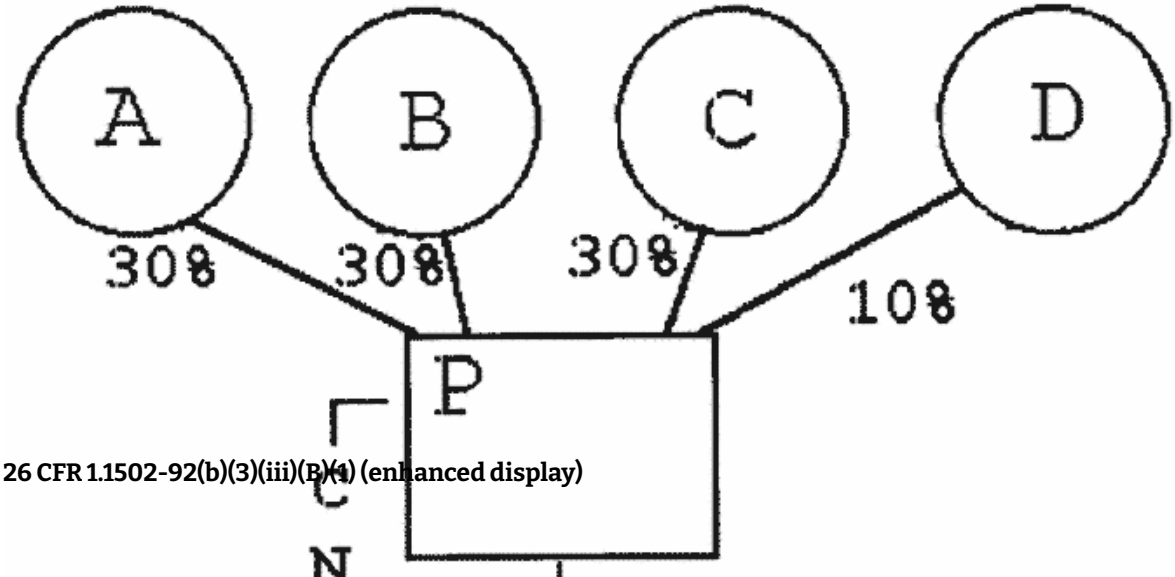
A
B
C
D
30%
30%
30%
10%
P
CNOL

(*2*) For purposes of determining if the L loss group has an ownership change on November 22, Year 3, the day of the merger, P is treated as a continuation of L so that the testing period for P begins on January 1, Year 2, the first day of the taxable year of the L loss group in which the consolidated net operating loss that is carried over to Year 3 arose. Immediately after the close of November 22, Year 3, D is the only 5-percent shareholder that has increased its ownership interest in P during the testing period (from zero to 10 percentage points).

(*3*) The facts are the same as in paragraph (b)(3)(iii)(B)(*1*) of this section (*Example 2*), except that A has held $23^{1}/_{3}$ shares ($23^{1}/_{3}$ percent) of L's stock for five years, and A purchased an additional 10 shares of L stock from E two years before the merger. Immediately after the close of the day of the merger (a testing date), A's ownership interest in P, the common parent of the L loss group, has increased by $6^{2}/_{3}$ percentage points over A's lowest percentage ownership during the testing period ($23^{1}/_{3}$ percent to 30 percent).

(*4*) The facts are the same as in paragraph (b)(3)(iii)(B)(*1*) of this section (*Example 2*), except that P has a net operating loss arising in Year 1 that is carried to the first consolidated return year ending after the day of the merger. Solely for purposes of determining whether the L loss group has an ownership change under paragraph (b)(1)(i) of this section, the testing period for P commences on January 1, Year 2. P does not determine the earliest day for its testing period by reference to its net operating loss carryover from Year 1, which §§ 1.1502-1(f)(3) and 1.1502-75(d)(3)(i) treat as arising in a SRLY. *See* § 1.1502-94 to determine the application of section 382 with respect to P's net operating loss carryover.

(C) ***Example 3.*** *—Newly acquired loss subgroup parent.*

(*1*) P owns all the L stock and L owns all the L1 stock. The P group has a consolidated net operating loss arising in Year 1 that is carried over to Year 3. On January 19, Year 2, L issues a 20 percent stock interest to B. On February 5, Year 3, P contributes its L stock to a newly formed subsidiary, HC, in exchange for all the HC stock, and distributes the HC stock to its sole shareholder A. HC, L, and L1 thereafter file consolidated returns. A portion of the P group's Year 1 consolidated net operating loss is apportioned to L and L1 under § 1.1502-21(b) and is carried over to the HC group's year ending after February 5, Year 3. HC, L, and L1 compose a loss subgroup within the meaning of § 1.1502-91(d) with respect to the net operating loss carryovers from Year 1. The following is a graphic illustration of these facts:

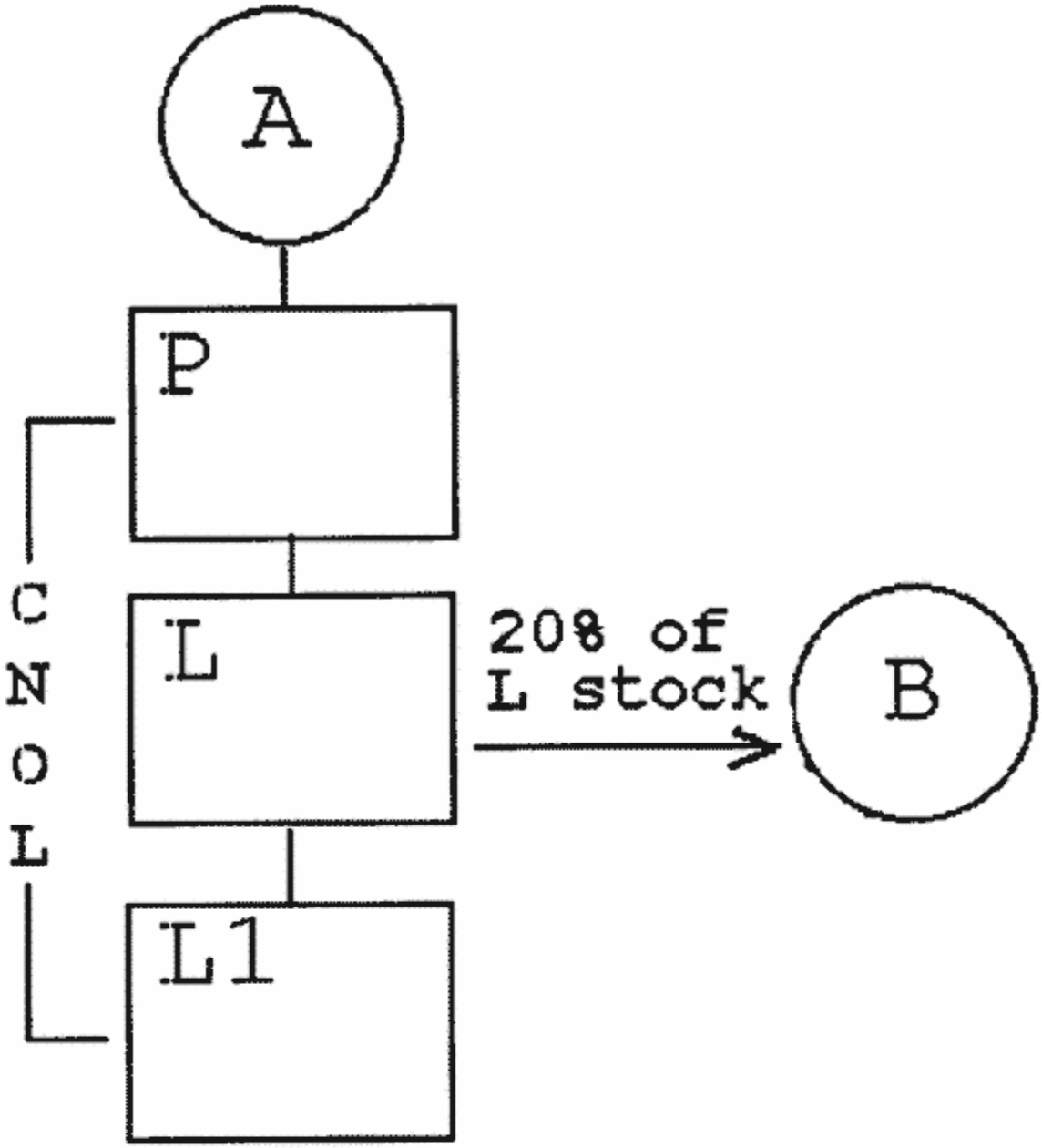
A
P
CNOL
L
20% of
L stock
B
L1

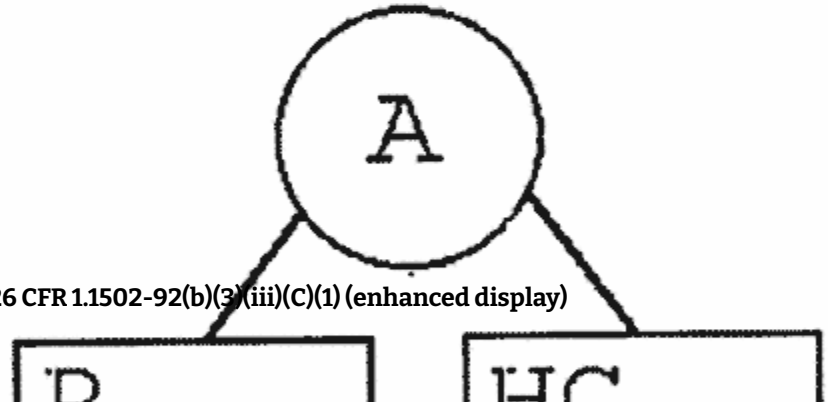
A

(2) February 5, Year 3, is a testing date for HC as the loss subgroup parent with respect to the net operating loss carryovers of L and L1 from Year 1. See paragraph (b)(1)(ii)(B) of this section. For purposes of determining whether HC has an ownership change on the testing date, appropriate adjustments must be made with respect to the changes in the percentage ownership of the stock of HC because HC was not the loss subgroup parent for at least 3 years prior to the day on which it became a member of the HC loss subgroup (a testing date). The appropriate adjustments include adjustments so that HC succeeds to the owner shifts of other members of the former group. Thus, HC succeeds to the owner shift of L that resulted from the sale of the 20 percent interest to B in determining whether the HC loss subgroup has an ownership change on February 5, Year 3, and on any subsequent testing date that includes January 19, Year 2.

(4) ***End of separate tracking of certain losses.*** If § 1.1502-96(a) (relating to the end of separate tracking of attributes) applies to a loss subgroup, then, while one or more members that were included in the loss subgroup remain members of the consolidated group, there is an ownership change with respect to their attributes described in § 1.1502-96(a)(2) only if the consolidated group is a loss group and has an ownership change under paragraph (b)(1)(i) of this section (or such a member has an ownership change under § 1.1502-96(b) (relating to ownership changes of subsidiaries)). If, however, the loss subgroup has had an ownership change before § 1.1502-96(a) applies, see § 1.1502-96(c) for the continuing application of the subgroup's section 382 limitation with respect to its pre-change subgroup attributes.

(c) ***Supplemental rules for determining ownership change*** —

(1) ***Scope.*** This paragraph (c) contains a supplemental rule for determining whether there is an ownership change of a loss group (or loss subgroup). It applies in addition to, and not instead of, the rules of paragraph (b) of this section. Thus, for example, if the common parent of the loss group has an ownership change under paragraph (b) of this section, the loss group has an ownership change even if, by applying this paragraph (c), the common parent would not have an ownership change. This paragraph (c) does not apply in determining an ownership change of a loss subgroup for which an election under § 1.1502-91(d)(4) is made.

(2) ***Cause for applying supplemental rule.*** This paragraph (c) applies to a loss group (or loss subgroup) if—

(i) Any 5-percent shareholder of the common parent (or loss subgroup parent) increases its percentage ownership interest in the stock of both—

(A) A subsidiary of the loss group (or loss subgroup) other than by a direct or indirect acquisition of stock of the common parent (or loss subgroup parent); and

(B) The common parent (or loss subgroup parent);

(ii) Those increases occur within a 3 year period ending on any day of a consolidated return year or, if shorter, the period beginning on the first day following the most recent ownership change of the loss group (or loss subgroup); and

(iii) Either—

(A) The common parent (or loss subgroup parent) has actual knowledge of the increase in the 5-percent shareholder's ownership interest in the stock of the subsidiary (or has actual knowledge of the plan or arrangement described in paragraph (c)(3)(i) of this section) before the date that the group's income tax return is filed for the taxable year that includes the date of that increase; or

(B) At any time during the period described in paragraph (c)(2)(ii) of this section, the 5-percent shareholder of the common parent is also a 5-percent shareholder of the subsidiary (determined without regard to paragraph (c)(3)(i) of this section) whose percentage increase in the ownership of the stock of the subsidiary would be taken into account in determining if the subsidiary has an ownership change (determined as if the subsidiary was a loss corporation and applying the principles of § 1.382-2T(k), including the principles relating to duty to inquire).

(3) ***Operating rules.*** Solely for purposes of this paragraph (c)—

(i) A 5-percent shareholder of the common parent (or loss subgroup parent) is treated as increasing its ownership interest in the stock of a subsidiary to the extent, if any, that another person or persons increases its percentage ownership interest in the stock of a subsidiary pursuant to a plan or arrangement under which the 5-percent shareholder increases its percentage ownership interest in the common parent (or loss subgroup parent);

(ii) The rules in section 382(l)(3) and §§ 1.382-2T(h) and 1.382-4(d) (relating to constructive ownership) apply with respect to the stock of the subsidiary by treating such stock as stock of a loss corporation; and

(iii) In the case of a loss subgroup, a subsidiary includes any member of the loss subgroup other than the loss subgroup parent. (A loss subgroup parent is, however, a subsidiary of the loss group of which it is a member.)

(4) ***Supplemental ownership change rules.*** The determination whether the common parent (or loss subgroup parent) has an ownership change is made by applying paragraph (b)(1) of this section as modified by the following additional rules:

(i) ***Additional testing dates for the common parent (or loss subgroup parent).*** A testing date for the common parent (or loss subgroup parent) also includes—

(A) Each day on which there is an increase in the percentage ownership of stock of a subsidiary as described in paragraph (c)(2) of this section; and

(B) The first day of the first consolidated return year for which the group is a loss group (or the members compose a loss subgroup).

(ii) ***Treatment of subsidiary stock as stock of the common parent (or loss subgroup parent).*** The common parent (or loss subgroup parent) is treated as though it had issued to the person acquiring (or deemed to acquire) the subsidiary stock an amount of its own stock (by value) that equals the value of the subsidiary stock represented by the percentage increase in that person's ownership of the subsidiary (determined on a separate entity basis). Similar principles apply if the increase in percentage ownership interest is effected by a redemption or similar transaction.

(iii) ***Different testing periods.*** Stock treated as issued under paragraph (c)(4)(ii) of this section on a testing date is not treated as so issued for purposes of applying the ownership change rules of this paragraph (c) and paragraph (b)(1) of this section in a testing period that does not include that testing date.

(iv) ***Disaffiliation of a subsidiary.*** If a deemed issuance of stock under paragraph (c)(4)(ii) of this section would not cause the loss group (or loss subgroup) to have an ownership change before the day (if any) on which the subsidiary ceases to be a member of the loss group (or subgroup), then paragraph (c)(4) of this section shall not apply.

(v) ***Subsidiary stock acquired first.*** If an increase of subsidiary stock described in paragraph (c)(2)(i)(A) of this section occurs before the date that the 5-percent shareholder increases its percentage ownership interest in the stock of the common parent (or loss subgroup parent), then the deemed issuance of stock is treated as occurring on that later date, but in an amount equal to the value of the subsidiary stock on the date it was acquired.

(vi) ***Anti-duplication rule.*** If two or more 5-percent shareholders are treated as increasing their percentage ownership interests pursuant to the same plan or arrangement described in paragraph (c)(3)(i) of this section, appropriate adjustments must be made so that the amount of stock treated as issued is not taken into account more than once.

(5) ***Examples.*** The following examples illustrate the principles of this paragraph (c):

> *Example 1. Stock of the common parent under supplemental rules.* (i) A owns all the L stock. L is not a member of an affiliated group and has a net operating loss carryover arising in Year 1 that is carried over to Year 6. On September 20, Year 6, L transfers all of its assets and liabilities to a newly created subsidiary, S, in exchange for S stock. L and S thereafter file consolidated returns. On November 23, Year 6, B contributes cash to L in exchange for a 45 percent ownership interest in L and contributes cash to S for a 20 percent ownership interest in S.
> (ii) During the 3 year period ending on November 23, Year 6, B is a 5% shareholder of L and of S that increases its ownership interest in L and S during that period. Under paragraph (c)(4)(ii) of this section, the determination whether L (the common parent of a loss group) has an ownership change on November 23, Year 6 (or, subject to paragraph (c)(4)(iv) of this section, on any testing date in the testing period which includes November 23, Year 6), is made by applying paragraph (b)(1)(i) of this section and by treating the value of B's 20 percent ownership interest in S as if it were L stock issued to B. Because B is a 5% shareholder of both L and S during the 3 year period ending on November 23, Year 6, and B's increase in its percentage ownership in the stock of S would be taken into account in determining if S (if it were a loss corporation) had an ownership change, it is not relevant whether L has actual knowledge of B's acquisition of S stock.

> *Example 2. Plan or arrangement—public offering of subsidiary stock.* (i) A owns all the stock of L and L owns all the stock of L1. The L group has a consolidated net operating loss arising in Year 1 that resulted from the operations of L1 and that is carried over to Year 2. On

> October 7, Year 2, A sells 49 percent of the L stock to B. As part of a plan that includes the sale of L stock, A causes a public offering of L1 stock on November 6, Year 2. L has actual knowledge of the plan. The following is a graphic illustration of these facts:

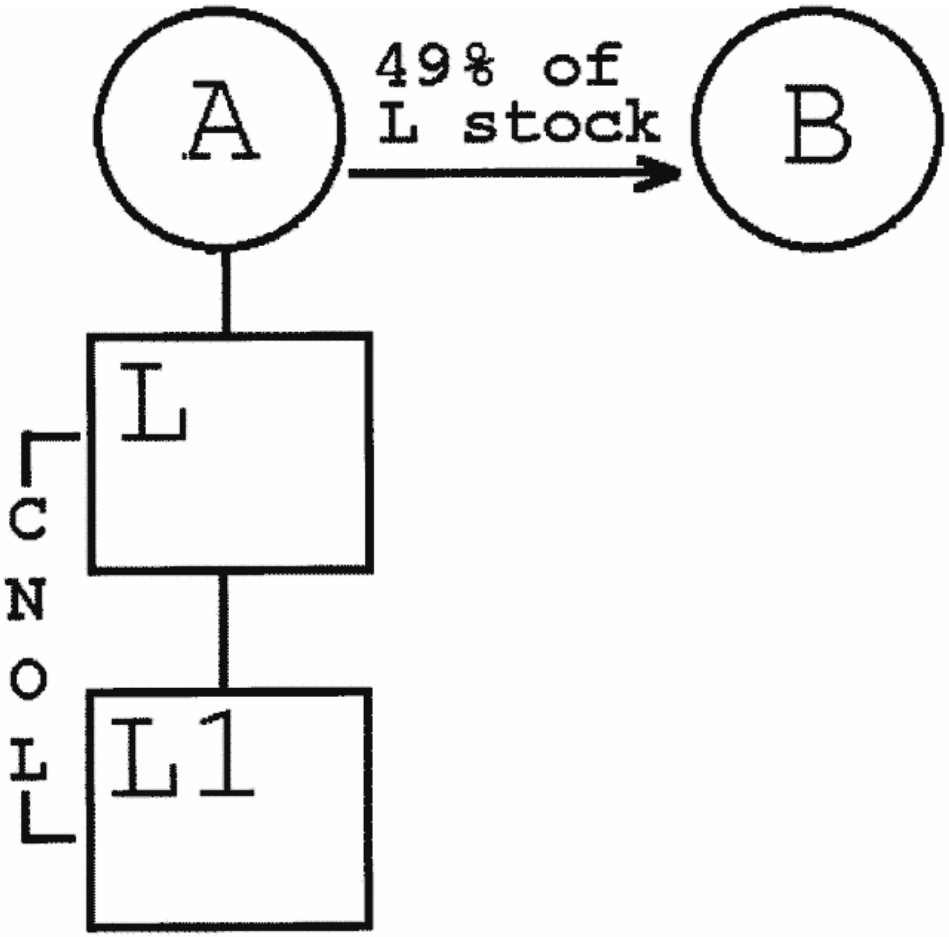
A
49% of
L stock
B
L
CNOL
L1

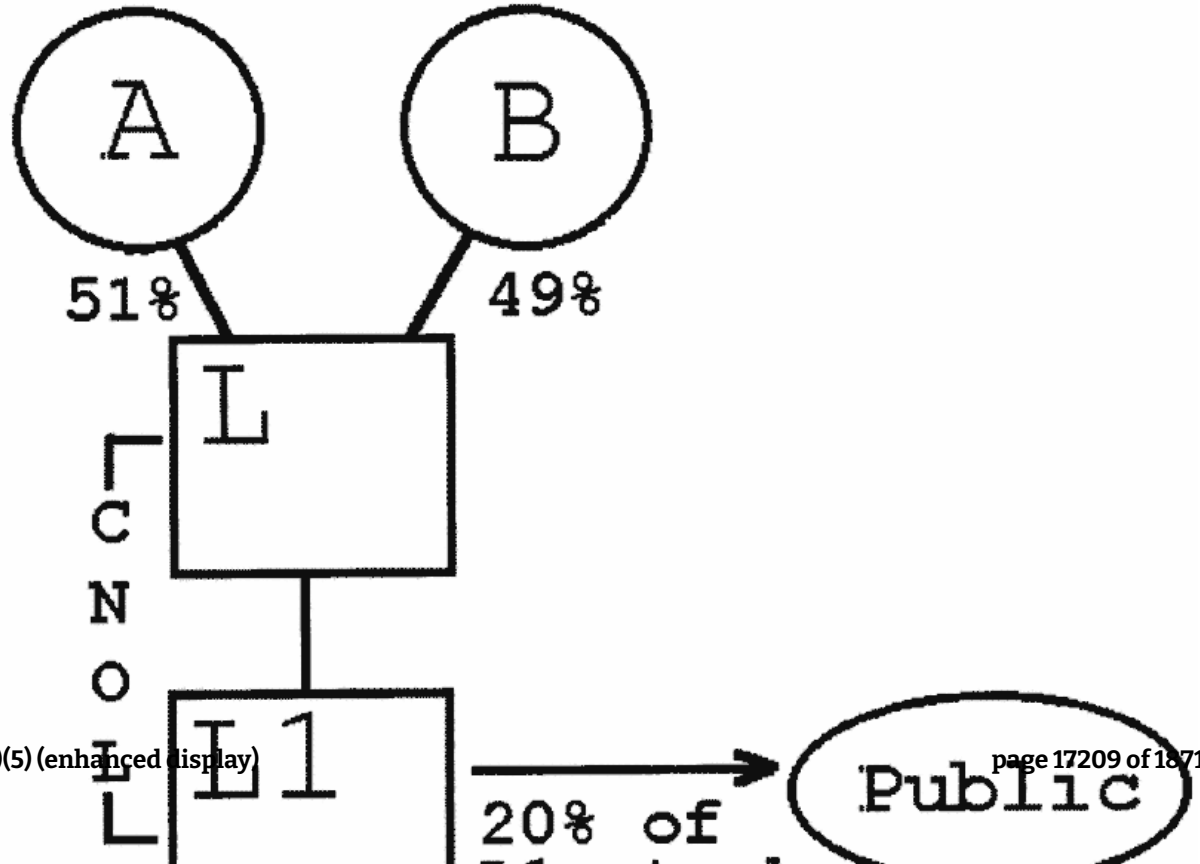
A
B
51%
49%
L
CNOL
L1
20% of
Public

(ii) A's sale of the L stock to B does not cause an ownership change of the L loss group on October 7, Year 2, under the rules of § 1.382-2T and paragraph (b)(1)(i) of this section.
(iii) Because the issuance of L1 stock to the public occurs as part of the same plan as B's acquisition of L stock, and L has knowledge of the plan, paragraph (c)(4) of this section applies to determine whether the L loss group has an ownership change on November 6, Year 2 (or, subject to paragraph (c)(4)(iv) of this section, on any testing date for which the testing period includes November 6, Year 2).

(d) ***Testing period following ownership change under this section.*** If a loss group (or a loss subgroup) has had an ownership change under this section, the testing period for determining a subsequent ownership change with respect to pre-change consolidated attributes (or pre-change subgroup attributes) begins no earlier than the first day following the loss group's (or loss subgroup's) most recent change date.

(e) ***Information statements*** —

(1) ***Common parent of a loss group.*** The common parent of a loss group must file the information statement required by § 1.382-11(a) for a consolidated return year because of any owner shift, equity structure shift, or other transaction described in § 1.382-2T(a)(2)(i)—

(i) With respect to the common parent and with respect to any subsidiary stock subject to paragraph (c) of this section; and

(ii) With respect to an ownership change described in § 1.1502-96(b) (relating to ownership changes of subsidiaries).

(2) ***Abbreviated statement with respect to loss subgroups.*** The common parent of a consolidated group that has a loss subgroup during a consolidated return year must file the information statement required by § 1.382-11(a) because of any owner shift, equity structure shift, or other transaction described in § 1.382-2T(a)(2)(i) with respect to the loss subgroup parent and with respect to any subsidiary stock subject to paragraph (c) of this section. Instead of filing a separate statement for each loss subgroup parent, the common parent (which is treated as a loss corporation) may file the single statement described in paragraph (e)(1) of this section. In addition to the information concerning stock ownership of the common parent, the single statement must identify each loss subgroup parent and state which loss subgroups, if any, have had ownership changes during the consolidated return year. The loss subgroup parent is, however, still required to maintain the records necessary to determine if the loss subgroup has an ownership change. This paragraph (e)(2) applies with respect to the attributes of a loss subgroup until, under § 1.1502-96(a), the attributes are no longer treated as described in § 1.1502-91(d) (relating to the definition of loss subgroup). After that time, the information statement described in paragraph (e)(1) of this section must be filed with respect to those attributes.

[T.D. 8824, 64 FR 36137, July 2, 1999, as amended by T.D. 9264, 71 FR 30608, May 30, 2006; T.D. 9329, 72 FR 32807, June 14, 2007; T.D. 10018, 89 FR 106877, Dec. 30, 2024]

§ 1.1502-93 Consolidated section 382 limitation (or subgroup section 382 limitation).

(a) ***Determination of the consolidated section 382 limitation (or subgroup section 382 limitation)*** —

(1) ***In general.*** Following an ownership change, the consolidated section 382 limitation (or subgroup section 382 limitation) for any post-change year is an amount equal to the value of the loss group (or loss subgroup), as defined in paragraph (b) of this section, multiplied by the long-term tax-exempt rate that applies with respect to the ownership change, and adjusted as required by section 382 and the regulations thereunder. See, for example, section 382(b)(2) (relating to the carryforward of unused section 382 limitation), section 382(b)(3)(B) (relating to the section 382 limitation for the post-change year that includes the change date), section 382(h) (relating to recognized built-in gains and section 338 gains), and section 382(m)(2) (relating to short taxable years). For special rules relating to the recognized built-in gains of a loss group (or loss subgroup), see paragraph (c)(2) of this section.

(2) ***Coordination with apportionment rule.*** For special rules relating to apportionment of a consolidated section 382 limitation (or a subgroup section 382 limitation) or net unrealized built-in gain when one or more corporations cease to be members of a loss group (or a loss subgroup) and to aggregation of amounts so apportioned, see § 1.1502-95(c).

(b) ***Value of the loss group (or loss subgroup)*** —

(1) ***Stock value immediately before ownership change.*** Subject to any adjustment under paragraph (b)(2) of this section, the value of the loss group (or loss subgroup) is the value, immediately before the ownership change, of the stock of each member, other than stock that is owned directly or indirectly by another member. For this purpose—

(i) Ownership is determined under § 1.382-2T;

(ii) A member is considered to indirectly own stock of another member through a nonmember only if the member has a 5-percent or greater ownership interest in the nonmember; and

(iii) Stock includes stock described in section 1504(a)(4) and § 1.382-2T(f)(18)(ii) and (iii).

(2) ***Adjustment to value*** —

(i) ***In general.*** The value of the loss group (or loss subgroup), as determined under paragraph (b)(1) of this section, is adjusted under any rule in section 382 or the regulations thereunder requiring an adjustment to such value for purposes of computing the amount of the section 382 limitation. See, for example, section 382(e)(2) (redemptions and corporate contractions), section 382(l)(1) (certain capital contributions) and section 382(l)(4) (ownership of substantial nonbusiness assets). For purposes of section 382(e)(2), redemptions and corporate contractions that do not effect a transfer of value outside of the loss group (or loss subgroup) are disregarded. For purposes of section 382(l)(1), capital contributions between members of the loss group (or loss subgroup) (or a contribution of stock to a member made solely to satisfy the loss subgroup parent requirement of paragraph (d)(1)(ii) or (2)(ii) of this section), are not taken into account. Also, the substantial nonbusiness asset test of section 382(l)(4) is applied on a group (or subgroup) basis, and is not applied separately to its members.

(ii) ***Anti-duplication.*** Appropriate adjustments must be made to the extent necessary to prevent any duplication of the value of the stock of a member, even though corporations that do not file consolidated returns may not be required to make such an adjustment. In making these adjustments, the group (or loss subgroup) may apply the principles of § 1.382-8 (relating to controlled groups of corporations) in determining the value of a loss group (or loss subgroup) even if that section would not apply if separate returns were filed. Also, the principles of § 1.382-5(d) (relating to successive ownership changes and absorption of a section 382

limitation) may apply to adjust the consolidated section 382 limitation (or subgroup section 382 limitation) of a loss group (or loss subgroup) to avoid a duplication of value if there are simultaneous (rather than successive) ownership changes.

(3) ***Examples.*** The following examples illustrate the principles of this paragraph (b):

Example 1. Basic case. (i) L, L1, and L2 compose a loss group. L has outstanding common stock, the value of which is $100. L1 has outstanding common stock and preferred stock that is described in section 1504(a)(4). L owns 90 percent of the L1 common stock, and A owns the remaining 10 percent of the L1 common stock plus all the preferred stock. The value of the L1 common stock is $40, and the value of the L1 preferred stock is $30. L2 has outstanding common stock, 50 percent of which is owned by L and 50 percent by L1. The L group has an ownership change. The following is a graphic illustration of these facts:

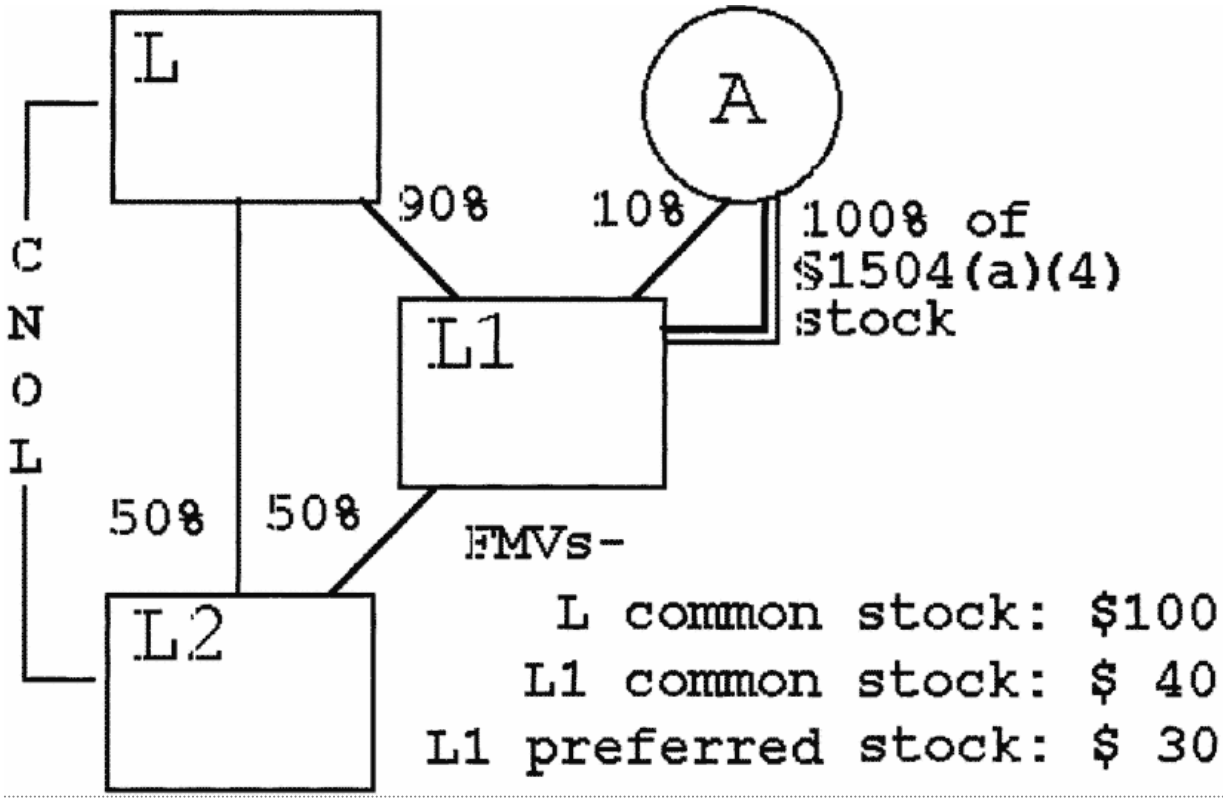

(ii) Under paragraph (b)(1) of this section, the L group does not include the value of the stock of any member that is owned directly or indirectly by another member in computing its consolidated section 382 limitation. Accordingly, the value of the stock of the loss group is $134, the sum of the value of—

(a) The common stock of L ($100);

(b) The 10 percent of the L1 common stock ($4) owned by A; and

(c) The L1 preferred stock ($30) owned by A.

Example 2. Indirect ownership. (i) L and L1 compose a consolidated group. L's stock has a

value of $100. L owns 80 shares (worth $80) and corporation M owns 20 shares (worth $20) of the L1 stock. L also owns 79 percent of the stock of corporation M. The L group has an ownership change. The following is a graphic illustration of these facts:

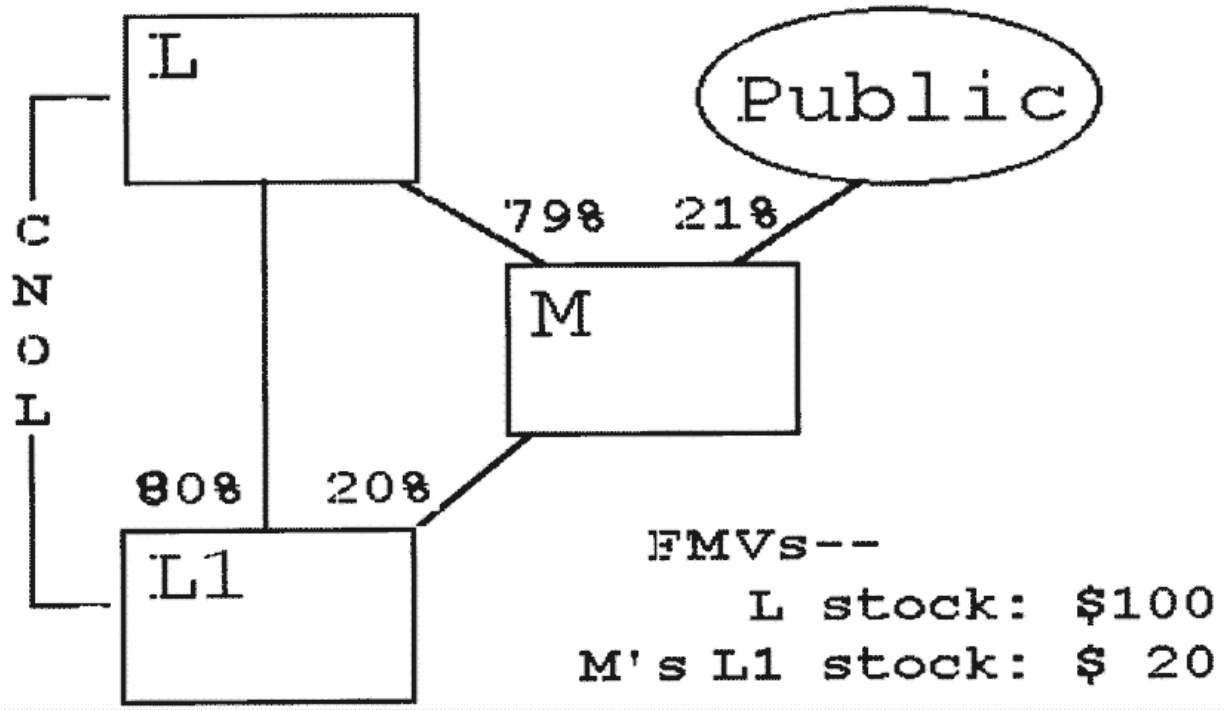

(ii) Under paragraph (b)(1) of this section, because of L's more than 5 percent ownership interest in M, a nonmember, L is considered to indirectly own 15.8 shares of the L1 stock held by M (79% × 20 shares). The value of the L loss group is $104.20, the sum of the values of—

(a) The L stock ($100); and

(b) The L1 stock not owned directly or indirectly by L (21% × $20, or $4.20).

(c) *Recognized built-in gain of a loss group or loss subgroup* —

(1) ***In general.*** If a loss group (or loss subgroup) has a net unrealized built-in gain, any recognized built-in gain of the loss group (or loss subgroup) is taken into account under section 382(h) in determining the consolidated section 382 limitation (or subgroup section 382 limitation).

(2) ***Adjustments.*** Appropriate adjustments must be made so that any recognized built-in gain of a member that increases more than one section 382 limitation (whether consolidated, subgroup, or separate) does not effect a duplication in the amount of consolidated taxable income that can be offset by pre-change net operating losses. For example, a consolidated section 382 limitation that is increased by recognized built-in gains is reduced to the extent that pre-change net operating losses of a loss subgroup absorb additional consolidated taxable income because the same recognized built-in gains caused an increase in that loss subgroup's section 382 limitation. In addition, recognized built-in gain may not increase the amount of consolidated taxable income that can be offset by recognized built-in losses.

(d) *Continuity of business* —

(1) ***In general.*** A loss group (or a loss subgroup) is treated as a single entity for purposes of determining whether it satisfies the continuity of business enterprise requirement of section 382(c)(1).

(2) ***Example.*** The following example illustrates the principle of this paragraph (d):

Example. Continuity of business enterprise. L owns all the stock of two subsidiaries, L1 and L2. The L group has an ownership change. It has pre-change consolidated attributes attributable to L2. Each of the members has historically conducted a separate line of business. Each line of business is approximately equal in value. One year after the ownership change, L discontinues its separate business and the business of L2. The separate business of L1 is continued for the remainder of the 2 year period following the ownership change. The continuity of business enterprise requirement of section 382(c)(1) is met even though the separate businesses of L and L2 are discontinued.

(e) ***Limitations of losses under other rules.*** If a section 382 limitation for a post-change year exceeds the consolidated taxable income that may be offset by pre-change attributes for any reason, including the application of the limitation of § 1.1502-21(c), the amount of the excess is carried forward under section 382(b)(2) (relating to the carryforward of unused section 382 limitation).

[T.D. 8824, 64 FR 36153, July 2, 1999]

§ 1.1502-94 Coordination with section 382 and the regulations thereunder when a corporation becomes a member of a consolidated group.

(a) ***Scope*** —

(1) ***In general.*** This section applies section 382 and the regulations thereunder to a corporation that is a new loss member of a consolidated group. A corporation is a new loss member if it—

(i) Carries over a net operating loss that arose (or is treated under § 1.1502-21(c) as arising) in a SRLY with respect to the current group, and that is not described in § 1.1502-91(d)(1); or

(ii) Has a net unrealized built-in loss (determined under paragraph (c) of this section immediately before it becomes a member of the current group by treating that day as a change date) that is not taken into account under § 1.1502-91(d)(2) in determining whether two or more corporations compose a loss subgroup.

(2) ***Successor corporation as new loss member.*** A new loss member also includes any successor to a corporation that has a net operating loss carryover arising in a SRLY and that is treated as remaining in existence under § 1.382-2(a)(1)(ii) following a transaction described in section 381(a).

(3) ***Coordination in the case of a loss subgroup.*** For rules regarding the determination of whether there is an ownership change of a loss subgroup with respect to a net operating loss or a net unrealized built-in loss described in § 1.1502-91(d) (relating to the definition of loss subgroup) and the computation of a subgroup section 382 limitation following such an ownership change, see §§ 1.1502-92 and 1.1502-93.

(4) ***End of separate tracking of certain losses.*** If § 1.1502-96(a) (relating to the end of separate tracking of attributes) applies to a new loss member, then, while that member remains a member of the consolidated group, there is an ownership change with respect to its attributes described in § 1.1502-96(a)(2) only if the consolidated group is a loss group and has an ownership change under § 1.1502-92(b)(1)(i) (or that member has an ownership change under § 1.1502-96(b) (relating to

ownership changes of subsidiaries)). If, however, the new loss member has had an ownership change before § 1.1502-96(a) applies, see § 1.1502-96(c) for the continuing application of the section 382 limitation with respect to the member's pre-change losses.

(5) ***Cross-reference.*** See section 382(a) and § 1.1502-96(c) for the continuing effect of an ownership change after a corporation becomes or ceases to be a member.

(b) ***Application of section 382 to a new loss member*** —

(1) ***In general.*** Section 382 and the regulations thereunder apply to a new loss member to determine, on a separate entity basis, whether and to what extent a section 382 limitation applies to limit the amount of consolidated taxable income that may be offset by the new loss member's pre-change separate attributes. For example, if an ownership change with respect to the new loss member occurs under section 382 and the regulations thereunder, the amount of consolidated taxable income for any post-change year that may be offset by the new loss member's pre-change separate attributes shall not exceed the section 382 limitation as determined separately under section 382(b) with respect to that member for such year. If the post-change year includes the change date, section 382(b)(3)(A) is applied so that the section 382 limitation of the new loss member does not apply to the portion of the taxable income for such year that is allocable to the period in such year on or before the change date. See generally § 1.382-6 (relating to the allocation of income and loss).

(2) ***Adjustment to value.*** Appropriate adjustments must be made to the extent necessary to prevent any duplication of the value of the stock of a member, even though corporations that do not file consolidated returns may not be required to make such an adjustment. For example, the principles of § 1.1502-93(b)(2)(ii) (relating to adjustments to value) apply in determining the value of a new loss member.

(3) ***Pre-change separate attribute defined.*** A pre-change separate attribute of a new loss member is—

(i) Any net operating loss carryover of the new loss member described in paragraph (a)(1) of this section; and

(ii) Any recognized built-in loss of the new loss member.

(4) ***Examples.*** The following examples illustrate the principles of this paragraph (b):

> *Example 1. Basic case.* (i) A and P each own 50 percent of the L stock. On December 19, Year 6, P purchases 30 percent of the L stock from A for cash. L has net operating losses arising in Year 1 and Year 2 that it carries over to Year 6 and Year 7. The following is a graphic illustration of these facts:

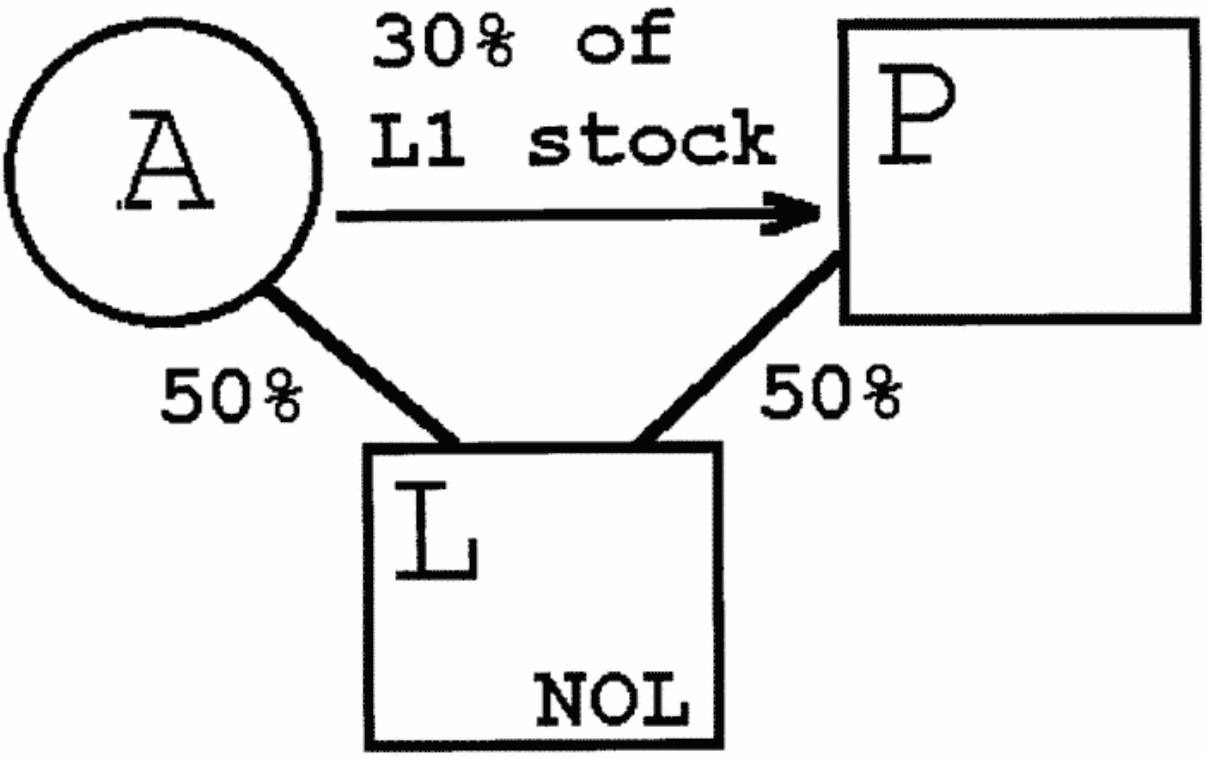
30% of
L1 stock
A
P
50%
50%
L
NOL

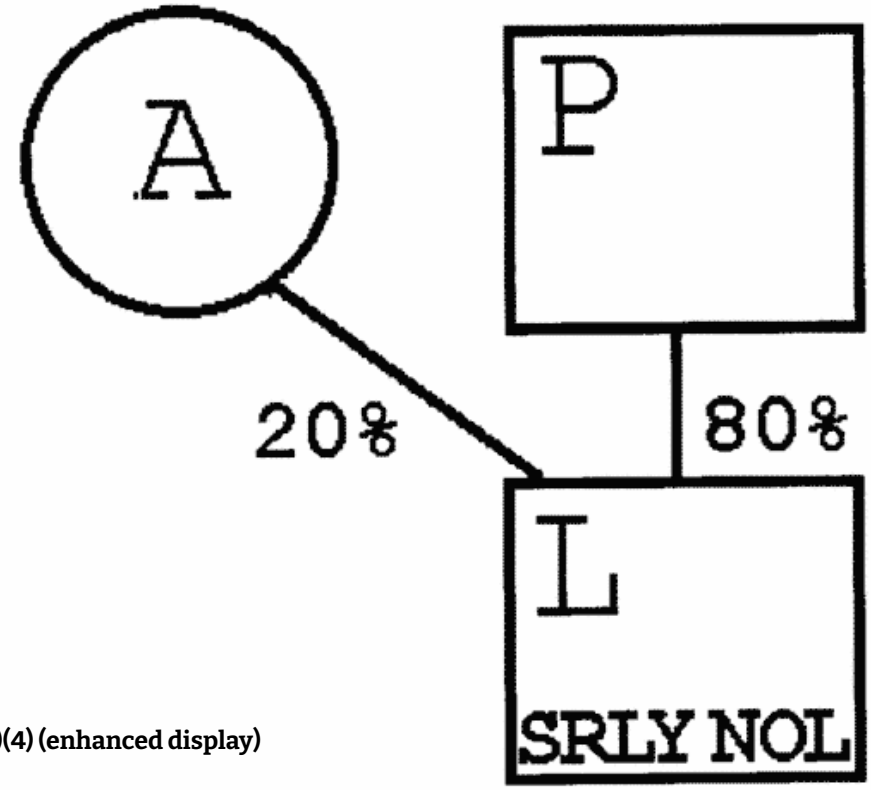
A
P
20%
80%
L
SRLY NOL

(ii) L is a new loss member because it has net operating loss carryovers that arose in a SRLY with respect to the P group and L is not a member of a loss subgroup under § 1.1502-91(d). Under section 382 and the regulations thereunder, L is a loss corporation on December 19, Year 6, that day is a testing date for L, and the testing period for L commences on December 20, Year 3.
(iii) P's purchase of L stock does not cause an ownership change of L on December 19, Year 6, with respect to the net operating loss carryovers from Year 1 and Year 2 under section 382 and § 1.382-2T. The use of the loss carryovers, however, is subject to limitation under § 1.1502-21(c).

Example 2. Multiple new loss members. (i) The facts are the same as in *Example 1,* and, on December 31, Year 6, L purchases all the stock of L1 from B for cash. L1 has a net operating loss of $40 arising in Year 3 that it carries over to Year 7. The following is a graphic illustration of these facts:

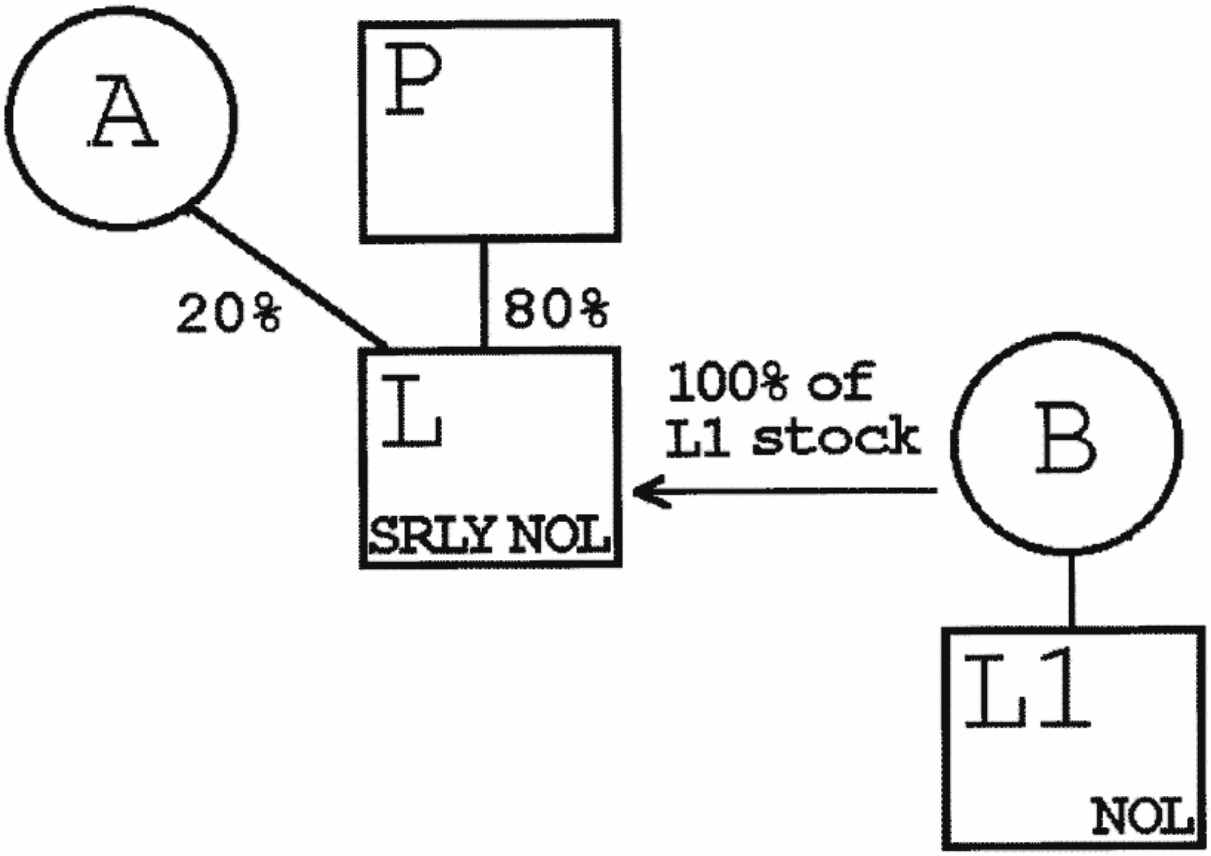
A
P
20%
80%
L
SRLY NOL
100% of
L1 stock
B
L1
NOL

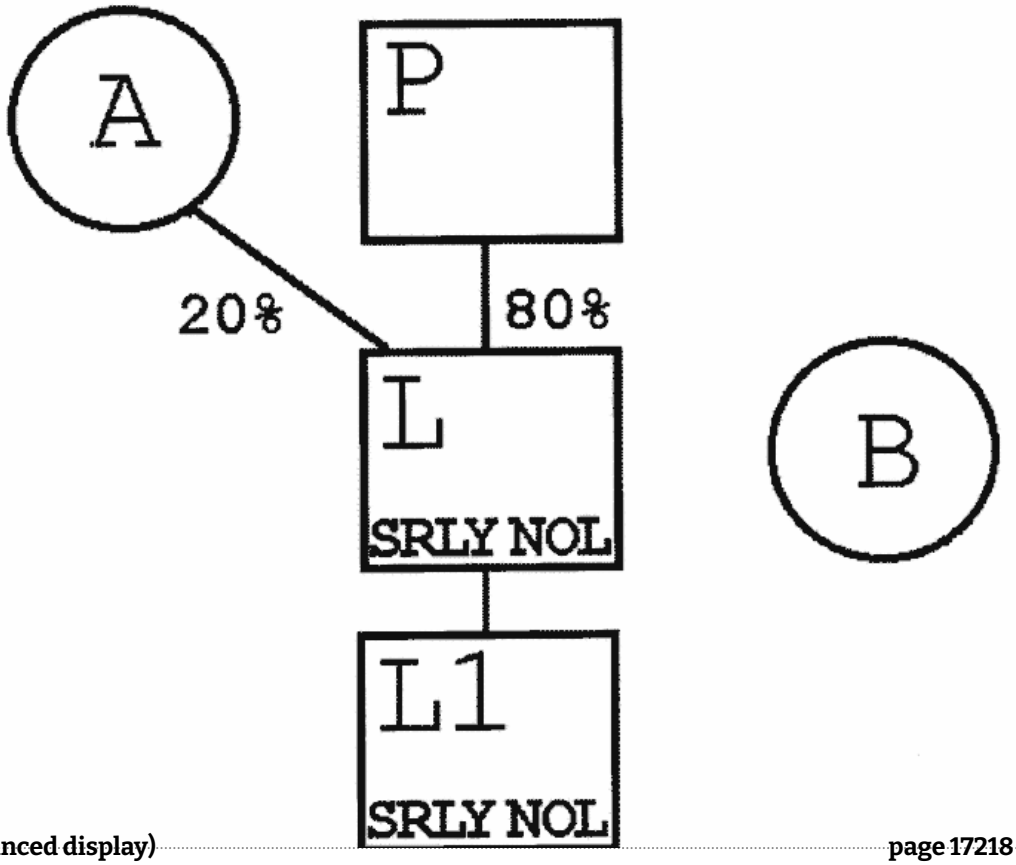
A
P
20%
80%
L
SRLY NOL
B
L1
SRLY NOL

(ii) L1 is a new loss member because it has a net operating loss carryover from Year 3 that arose in a SRLY with respect to the P group and L1 is not a member of a loss subgroup under § 1.1502-91(d)(1).
(iii) L's purchase of all the stock of L1 causes an ownership change of L1 on December 31, Year 6, under section 382 and § 1.382-2T. Accordingly, a section 382 limitation based on the value of the L1 stock immediately before the ownership change limits the amount of consolidated taxable income of the P group for any post-change year that may be offset by L1's loss from Year 3.

(iv) L1's ownership change upon becoming a member of the P group is an ownership change described in § 1.1502-96(a). Thus, starting on January 1, Year 7, the P group no longer separately tracks owner shifts of the stock of L1 with respect to L1's loss from Year 3, and the P group is a loss group because L1's Year 3 loss is treated as a loss described in § 1.1502-91(c).

Example 3. Ownership changes of new loss members. (i) The facts are the same as in Example 2, and, on July 30, Year 7, C purchases all the stock of P for cash.
(ii) L is a new loss member on July 30, Year 7, because its Year 1 and Year 2 losses arose in SRLYs with respect to the P group and it is not a member of a loss subgroup under § 1.1502-91(d)(1). The testing period for L commences on August 1, Year 4. C's purchase of all the P stock causes an ownership change of L on July 30, Year 7, under section 382 and § 1.382-2T with respect to its Year 1 and Year 2 losses. Accordingly, a section 382 limitation based on the value of the L stock immediately before the ownership change limits the amount of consolidated taxable income of the P group for any post-change year that may be offset by L's Year 1 and Year 2 losses. See § 1.1502-21(c) for rules relating to an additional limitation.

(iii) The P group is a loss group on July 30, Year 7, because it is entitled to use L1's loss from Year 3, and such loss is no longer treated as a loss of a new loss member starting the day after L1's ownership change on December 31, Year 6. See §§ 1.1502-96(a) and 1.1502-91(c)(2). C's purchase of all the P stock causes an ownership change of P, and therefore the P loss group, on July 30, Year 7, with respect to L1's Year 3 loss. Accordingly, a consolidated section 382 limitation based on the value of the P stock immediately before the ownership change limits the amount of consolidated taxable income of the P group for any post-change year that may be offset by L1's Year 3 loss.

(c) ***Built-in gains and losses.*** As the context may require, the principles of §§ 1.1502-91(g) and (h) and 1.1502-93(c) (relating to built-in gains and losses) apply to a new loss member on a separate entity basis. See § 1.1502-91(g)(4). See § 1.1502-13 (including *Example 10* of § 1.1502-13(c)(7)) for rules relating to the treatment of intercompany transactions.

(d) ***Information statements.*** The common parent of a consolidated group that has a new loss member subject to paragraph (b)(1) of this section during a consolidated return year must file the information statement required by § 1.382-11(a) because of any owner shift, equity structure shift, or other transaction described in § 1.382-2T(a)(2)(i). Instead of filing a separate statement for each new loss member, the common parent may file a single statement described in § 1.382-11(a) with respect to the stock ownership of the common parent (which is treated as a loss corporation). In addition to the information concerning stock ownership of the common parent, the single statement must identify each new loss member and state which new loss members, if any, have had ownership changes during the consolidated return year. The new loss member is, however, required to maintain the records necessary to determine if it has an ownership change. This paragraph (d) applies with respect to the attributes of a new loss member until an event occurs which ends separate tracking under § 1.1502-96(a). After that time, the information statement described in § 1.1502-92(e)(1) must be filed with respect to these attributes.

[T.D. 8824, 64 FR 36155, July 2, 1999, as amended by T.D. 9264, 71 FR 30608, May 30, 2006; T.D. 9329, 72 FR 32807, June 14, 2007]

§ 1.1502-95 Rules on ceasing to be a member of a consolidated group (or loss subgroup).

(a) ***In general*** —

(1) ***Consolidated group.*** This section provides rules for applying section 382 on or after the day that a member ceases to be a member of a consolidated group (or loss subgroup). The rules concern how to determine whether an ownership change occurs with respect to losses of the member, and how a consolidated section 382 limitation (or subgroup section 382 limitation) and a loss group's (or loss subgroup's) net unrealized built-in gain or loss is apportioned to the member. As the context requires, a reference in this section to a loss group, a member, or a corporation also includes a reference to a loss subgroup, and a reference to a consolidated section 382 limitation also includes a reference to a subgroup section 382 limitation.

(2) ***Election by common parent.*** Only the common parent (not the loss subgroup parent) may make the election under paragraph (c) of this section to apportion a consolidated section 382 limitation (or subgroup section 382 limitation) or a loss group's (or loss subgroup's) net unrealized built-in gain.

(3) ***Coordination with §§ 1.1502-91 through 1.1502-93.*** For rules regarding the determination of whether there is an ownership change of a loss subgroup and the computation of a subgroup section 382 limitation following such an ownership change, see §§ 1.1502-91 through 1.1502-93.

(b) ***Separate application of section 382 when a member leaves a consolidated group*** —

(1) ***In general.*** Except as provided in §§ 1.1502-91 through 1.1502-93 (relating to rules applicable to loss groups and loss subgroups), section 382 and the regulations thereunder apply to a corporation on a separate entity basis after it ceases to be a member of a consolidated group (or loss subgroup). Solely for purposes of determining whether a corporation has an ownership change—

(i) Any portion of a consolidated net operating loss that is apportioned to the corporation under § 1.1502-21(b) is treated as a net operating loss of the corporation beginning on the first day of the taxable year in which the loss arose;

(ii) The testing period may include the period during which (or before which) the corporation was a member of the group (or loss subgroup); and

(iii) Except to the extent provided in § 1.1502-96(d) (relating to reattributed losses), the day it ceases to be a member of a consolidated group is treated as a testing date of the corporation within the meaning of § 1.382-2(a)(4).

(2) ***Effect of a prior ownership change of the group.*** If a loss group has had an ownership change under § 1.1502-92 before a corporation ceases to be a member of a consolidated group (the former member)—

(i) Any pre-change consolidated attribute that is subject to a consolidated section 382 limitation continues to be treated as a pre-change loss with respect to the former member after it is apportioned to the former member and, if any net unrealized built-in loss is allocated to the former member under paragraph (e) of this section, any recognized built-in loss of the former member is a pre-change loss of the member;

(ii) The section 382 limitation with respect to such pre-change attribute is zero unless the common parent, under paragraph (c) of this section, apportions to the former member all or part of the consolidated section 382 limitation applicable to such attribute. The limitation applicable to a pre-change attribute other than a recognized built-in loss may be increased to the extent that the common parent has apportioned all or part of the loss group's net unrealized built-in gain to the former member, and the former member recognizes built-in gain during the recognition period;

(iii) The testing period for determining a subsequent ownership change with respect to such pre-change attribute (or such net unrealized built-in loss, if any) begins no earlier than the first day following the loss group's most recent change date; and

(iv) As generally provided under section 382, an ownership change of the former member that occurs on or after the day it ceases to be a member of a loss group may result in an additional, lesser limitation amount with respect to such losses.

(3) ***Application in the case of a loss subgroup.*** If two or more former members are included in the same loss subgroup immediately after they cease to be members of a consolidated group, the principles of paragraphs (b), (c) and (e) of this section apply to the loss subgroup. Therefore, for example, an apportionment by the common parent under paragraph (c) of this section is made to the loss subgroup rather than separately to its members. If the common parent of the consolidated group apportions all or part of a limitation (or net unrealized built-in gain) separately to one or more former members that are included in a loss subgroup because the common parent of the acquiring group makes an election under § 1.1502-91(d)(4) with respect to those members, the aggregate of those separate amounts is treated as the amount apportioned to the loss subgroup. Such separate apportionment may occur, for example, because the election under § 1.1502-91(d)(4) has not been filed at the time that the election of apportionment is made under paragraph (f) of this section.

(4) ***Examples.*** The following examples illustrate the principles of this paragraph (b):

(i) ***Example 1: Treatment of departing member as a separate corporation throughout the testing period.***

(A) A owns all the L stock. L owns all the stock of L1 and L2. The L group has a consolidated net operating loss arising in Year 1 that is carried over to Year 3. On January 12, Year 2, A sells 30 percent of the L stock to B. On February 7, Year 3, L sells 40 percent of the L2 stock to C, and L2 ceases to be a member of the group. A portion of the Year 1

consolidated net operating loss is apportioned to L2 under § 1.1502-21(b) and is carried to L2's first separate return year, which ends December 31, Year 3. The following is a graphic illustration of these facts:

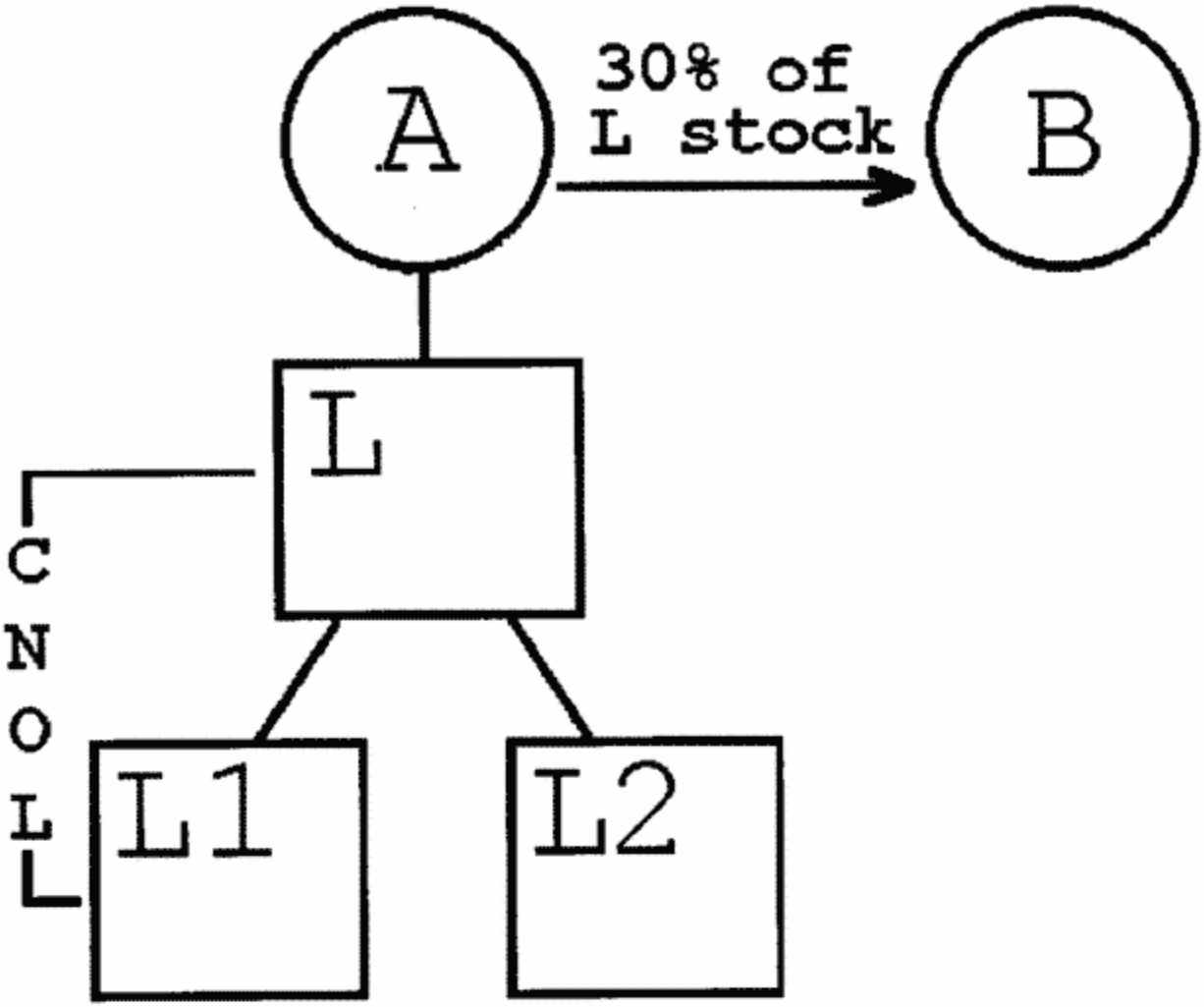
A
30% of
L stock
B
L
CNOL
L1
L2

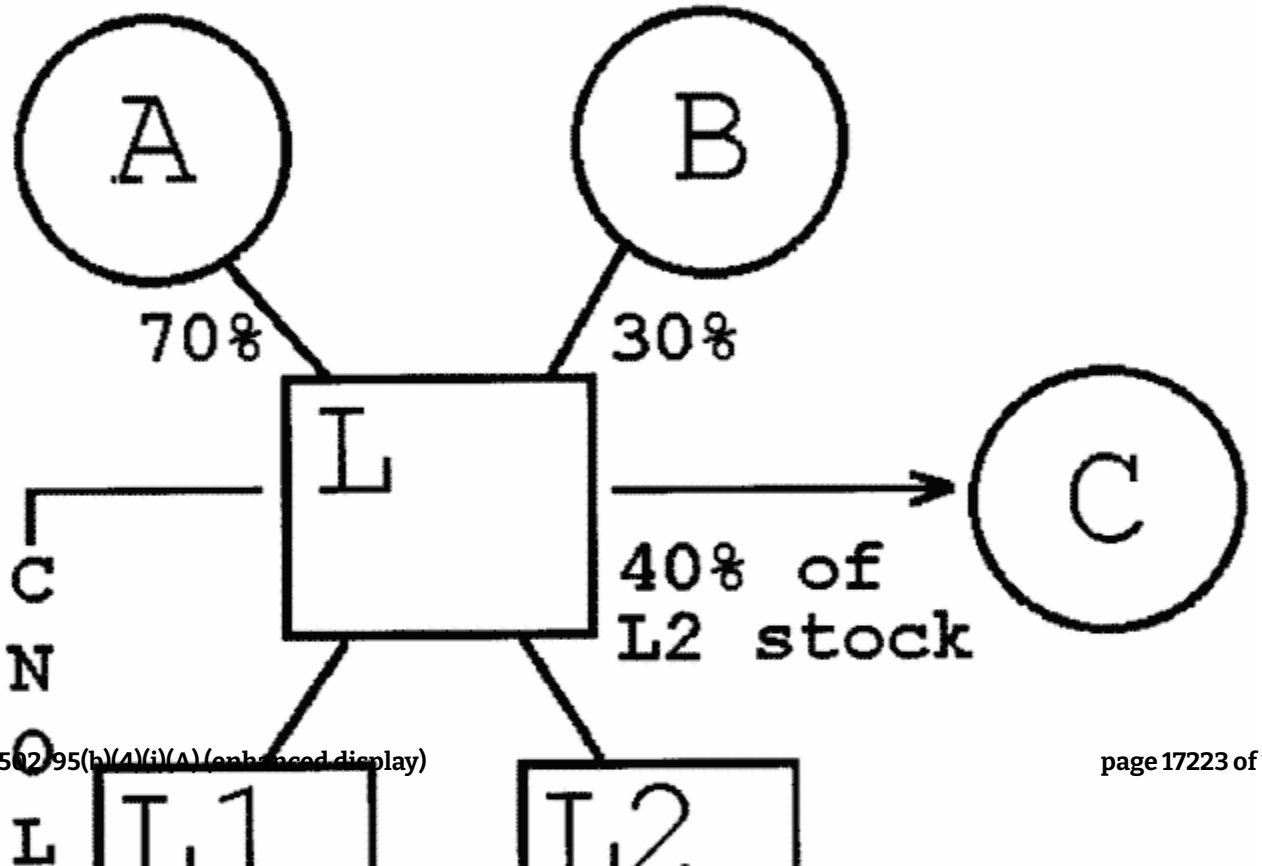
A
B
70%
30%
L
C
40% of
L2 stock
CNOL
L1
L2

(B) Under paragraph (b)(1) of this section, L2 is a loss corporation on February 7, Year 3. Under paragraph (b)(1)(iii) of this section, February 7, Year 3, is a testing date. Under paragraph (b)(1)(ii) of this section, the testing period for L2 with respect to this testing date commences on January 1, Year 1, the first day of the taxable year in which the portion of the consolidated net operating loss apportioned to L2 arose. Therefore, in determining whether L2 has an ownership change on February 7, Year 3, B's purchase of 30 percent of the L stock and C's purchase of 40 percent of the L2 stock are each owner shifts. L2 has an ownership change under section 382(g) and § 1.382-2T because B and C have increased their ownership interests in L2 by 18 and 40 percentage points, respectively, during the testing period.

(ii) *Example 2: Effect of prior ownership change of loss group.*

(A) L owns all the L1 stock and L1 owns all the L2 stock. The L loss group had an ownership change under § 1.1502-92 in Year 2 with respect to a consolidated net operating loss arising in Year 1 and carried over to Year 2 and Year 3. The consolidated section 382 limitation computed solely on the basis of the value of the stock of L is $100. On December 31, Year 2, L1 sells 25 percent of the stock of L2 to B. L2 is apportioned a portion of the Year 1 consolidated net operating loss which it carries over to its first separate return year ending after December 31, Year 2. L2's separate section 382 limitation with respect to this loss is zero unless L elects to apportion all or a part of the consolidated section 382 limitation to L2. (See paragraph (c) of this section for rules regarding the apportionment of a consolidated section 382 limitation.) L apportions $50 of the consolidated section 382 limitation to L2, and the remaining $50 of the consolidated section 382 limitation stays with the loss group composed of L and L1.

(B) On December 31, Year 3, L1 sells its remaining 75 percent stock interest in L2 to C, resulting in an ownership change of L2. L2's section 382 limitation computed on the change date with respect to the value of its stock is $30. Accordingly, L2's section 382 limitation for post-change years ending after December 31, Year 3, with respect to its pre-change losses, including the consolidated net operating losses apportioned to it from the L group, is $30, adjusted for a short taxable year, carryforward of unused limitation, or any other adjustment required under section 382. The analysis would be similar if the L loss group had an ownership change under § 1.1502-92 in Year 2 with respect to disallowed business interest expense paid or accrued by L2 in Year 1 and carried forward under section 163(j)(2) to Year 2 and Year 3. See § 1.1502-98(b) (providing that §§ 1.1502-91 through 1.1502-96 apply section 382 to business interest expense, with appropriate adjustments).

(c) *Apportionment of a consolidated section 382 limitation* —

(1) *In general.* The common parent may elect to apportion all or any part of a consolidated section 382 limitation to a former member (or loss subgroup). The common parent also may elect to apportion all or any part of the loss group's net unrealized built-in gain to a former member (or loss subgroup).

(2) *Amount which may be apportioned* —

(i) *Consolidated section 382 limitation.* The common parent may apportion all or part of each element of the consolidated section 382 limitation determined under § 1.1502-93. For this purpose, the consolidated section 382 limitation consists of two elements—

(A) The value element, which is the element of the limitation determined under section 382(b)(1) (relating to value multiplied by the long-term tax-exempt rate) without regard to such adjustments as those described in section 382(b)(2) (relating to the carryforward of unused section 382 limitation), section 382(b)(3)(B)(relating to the section 382 limitation for the post-change year that includes the change date), section 382(h)(relating to built-in gains and section 338 gains), and section 382(m)(2)(relating to short taxable years); and

(B) The adjustment element, which is so much (if any) of the limitation for the taxable year during which the former member ceases to be a member of the consolidated group that is attributable to a carryover of unused limitation under section 382(b)(2) or to recognized built-in gains under 382(h).

(ii) ***Net unrealized built-in gain.*** The aggregate amount of the loss group's net unrealized built-in gain that may be apportioned to one or more former members that cease to be members during the same consolidated return year cannot exceed the loss group's excess, immediately after the close of that year, of net unrealized built-in gain over recognized built-in gain, determined under section 382(h)(1)(A)(ii) (relating to a limitation on recognized built-in gain). For this purpose, net unrealized built-in gain apportioned to former members in prior consolidated return years is treated as recognized built-in gain in those years.

(3) Effect of apportionment on the consolidated group—

(i) Consolidated section 382 limitation. The value element of the consolidated section 382 limitation for any post-change year ending after the day that a former member (or loss subgroup) ceases to be a member(s) is reduced to the extent that it is apportioned under this paragraph (c). The consolidated section 382 limitation for the post-change year in which the former member (or loss subgroup) ceases to be a member(s) is also reduced to the extent that the adjustment element for that year is apportioned under this paragraph (c).

(ii) ***Net unrealized built-in gain.*** The amount of the loss group's net unrealized built-in gain that is apportioned to the former member (or loss subgroup) is treated as recognized built-in gain for a prior taxable year ending in the recognition period for purposes of applying the limitation of section 382(h)(1)(A)(ii) to the loss group's recognition period taxable years beginning after the consolidated return year in which the former member (or loss subgroup) ceases to be a member.

(4) ***Effect on corporations to which an apportionment is made*** —

(i) ***Consolidated section 382 limitation.*** The amount of the value element that is apportioned to a former member (or loss subgroup) is treated as the amount determined under section 382(b)(1) for purposes of determining the amount of that corporation's (or loss subgroup's) section 382 limitation for any taxable year ending after the former member (or loss subgroup) ceases to be a member(s). Appropriate adjustments must be made to the limitation based on the value element so apportioned for a short taxable year, carryforward of unused limitation, or any other adjustment required under section 382. The adjustment element apportioned to a former member (or loss subgroup) is treated as an adjustment under section 382(b)(2) or section 382(h), as appropriate, for the first taxable year after the member (or members) ceases to be a member (or members).

(ii) ***Net unrealized built-in gain.*** For purposes of determining the amount by which the former member's (or loss subgroup's) section 382 limitation for any taxable year beginning after the former member (or loss subgroup) ceases to be a member(s) is increased by its recognized built-in gain—

(A) The amount of net unrealized built-in gain apportioned to a former member (or loss subgroup) is treated as if it were an amount of net unrealized built-in gain determined under section 382(h)(1)(A)(i)(without regard to the threshold of section 382(h)(3)(B)) with respect to such member or loss subgroup, and that amount is not reduced under section 382(h)(1)(A)(ii) by the loss group's recognized built-in gain;

(B) The former member's (or loss subgroup's) 5 year recognition period begins on the loss group's change date;

(C) In applying section 382(h)(1)(A)(ii), the former member (or loss subgroup) takes into account only its prior taxable years that begin after it ceases to be a member of the loss group; and

(D) The former member's (or loss subgroup's) recognized built-in gain on the disposition of an asset is determined under section 382(h)(2)(A), treating references to the change date in that section as references to the loss group's change date.

(5) ***Deemed apportionment when loss group terminates.*** If a loss group terminates, to the extent the consolidated section 382 limitation or net unrealized built-in gain is not apportioned under paragraph (c)(1) of this section, the consolidated section 382 limitation or net unrealized built-in gain is deemed to be apportioned to the loss subgroup that includes the common parent, or, if there is no loss subgroup that includes the common parent immediately after the loss group terminates, to the common parent. A loss group terminates on the first day of the first taxable year that is a separate return year with respect to each member of the former loss group.

(6) ***Appropriate adjustments when former member leaves during the year.*** Appropriate adjustments are made to the consolidated section 382 limitation for the consolidated return year during which the former member (or loss subgroup) ceases to be a member(s) to reflect the inclusion of the former member in the loss group for a portion of that year.

(7) ***Examples.*** The following examples illustrate the principles of this paragraph (c):

> *Example 1. Consequence of apportionment.* (i) L owns all the L1 stock and L1 owns all the L2 stock. The L group has a $200 consolidated net operating loss arising in Year 1 that is carried over to Year 2. At the close of December 31, Year 1, the group has an ownership change under § 1.1502-92. The ownership change results in a consolidated section 382 limitation of $10 based on the value of the stock of the group. On August 29, Year 2, L1 sells 30 percent of the stock of L2 to A. L2 is apportioned $90 of the group's $200 consolidated net operating loss under § 1.1502-21(b). L, the common parent, elects to apportion $6 of the consolidated section 382 limitation to L2. The following is a graphic illustration of these facts:

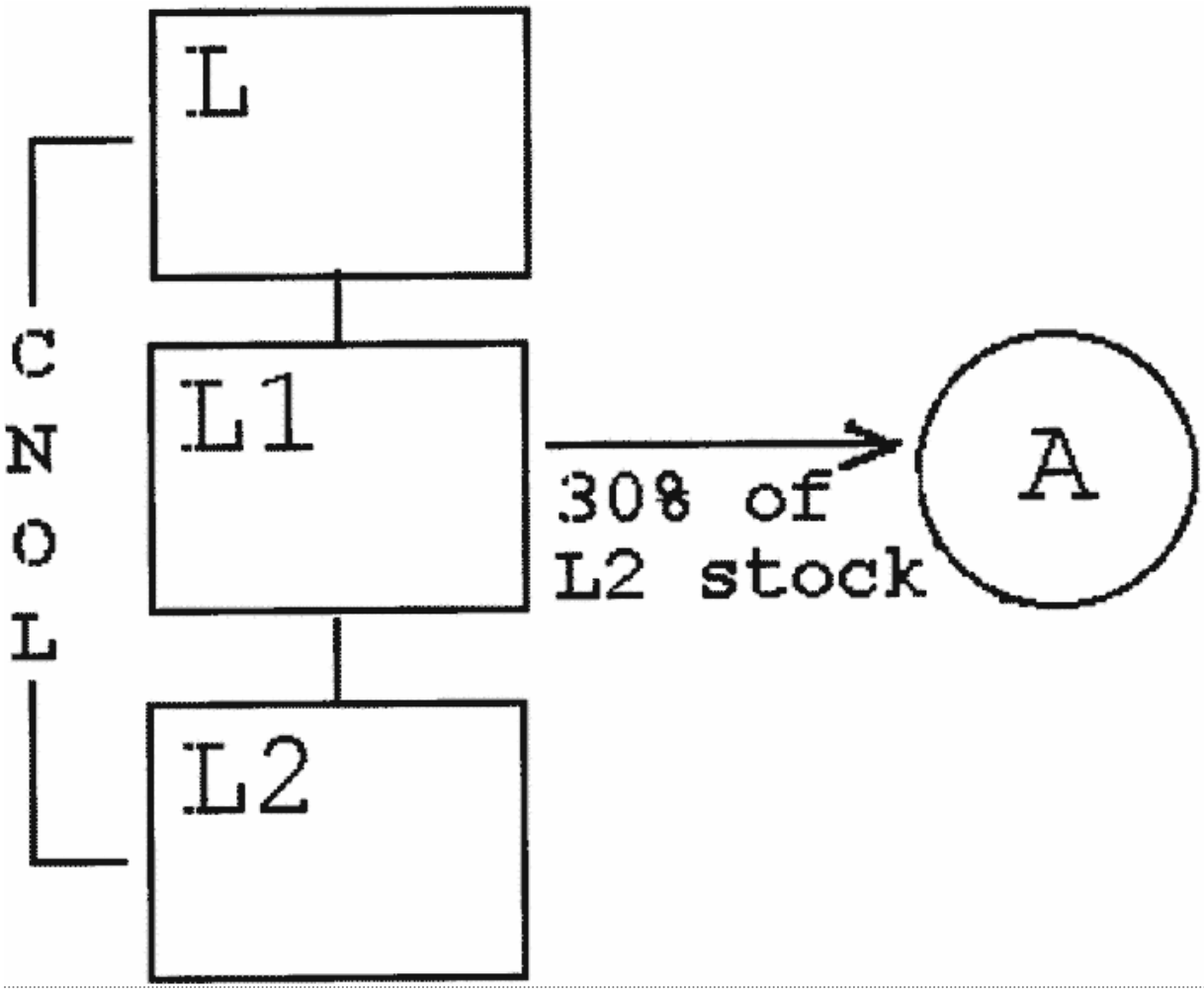

(ii) For its separate return years ending after December 31, Year 2, L2's section 382 limitation with respect to the $90 of the group's net operating loss apportioned to it is $6, adjusted, as appropriate, for any short taxable year, unused section 382 limitation, or other adjustment. For its consolidated return year ending December 31, Year 2 the L group's consolidated section 382 limitation with respect to the remaining $110 of pre-change consolidated attribute is $4 ($10 minus the $6 value element apportioned to L2), adjusted, as appropriate, for any short taxable year, unused section 382 limitation, or other adjustment.

(iii) For the L group's consolidated return year ending December 31, Year 2, the value element of its consolidated section 382 limitation is increased by $4 (rounded to the nearest dollar), to account for the period during which L2 was a member of the L group ($6, the consolidated section 382 limitation apportioned to L2, times 241/365, the ratio of the number of days during Year 2 that L2 is a member of the group to the number of days in the group's consolidated return year). See paragraph (c)(6) of this section. Therefore, the value element of the consolidated section 382 limitation for Year 2 of the L group is $8 (rounded to the nearest dollar).

(iv) The section 382 limitation for L2's short taxable year ending December 31, Year 2, is $2 (rounded to the nearest dollar), which is the amount that bears the same relationship to $6, the value element of the consolidated section 382 limitation apportioned to L2, as the number of days during that short taxable year, 124 days, bears to 365. See § 1.382-5(c).

Example 2. Consequence of no apportionment. The facts are the same as in *Example 1,* except that L does not elect to apportion any portion of the consolidated section 382 limitation to L2. For its separate return years ending after August 29, Year 2, L2's section 382 limitation with respect to the $90 of the group's pre-change consolidated attribute apportioned to L2 is zero under paragraph (b)(2)(ii) of this section. Thus, the $90 consolidated net operating loss apportioned to L2 cannot offset L2's taxable income in any of its separate return years ending after August 29, Year 2. For its consolidated return years ending after August 29, Year 2, the L group's consolidated section 382 limitation with respect to the remaining $110 of pre-change consolidated attribute is $10, adjusted, as appropriate, for any short taxable year, unused section 382 limitation, or other adjustment.

Example 3. Apportionment of adjustment element. The facts are the same as in *Example 1,* except that L2 ceases to be a member of the L group on August 29, Year 3, and the L group has a $4 carryforward of an unused consolidated section 382 limitation (under section 382(b)(2)) to the Year 3 consolidated return year. The carryover of unused limitation increases the consolidated section 382 limitation for the Year 3 consolidated return year from $10 to $14. L may elect to apportion all or any portion of the $10 value element and all or any portion of the $4 adjustment element to L2.

(d) ***Rules pertaining to ceasing to be a member of a loss subgroup*** —

(1) ***In general.*** A corporation ceases to be a member of a loss subgroup on the earlier of—

(i) The first day of the first taxable year for which it files a separate return; or

(ii) The first day that it ceases to bear a relationship described in section 1504(a)(1) to the loss subgroup parent (treating for this purpose the loss subgroup parent as the common parent described in section 1504(a)(1)(A)).

(2) ***Exceptions.*** Paragraph (d)(1)(ii) of this section does not apply to a member of a loss subgroup while that member remains a member of the current group—

(i) If an election under § 1.1502-91(d)(4)(relating to treating the subgroup parent requirement as satisfied) applies to the members of the loss subgroup;

(ii) Starting on the day after the change date (but not earlier than the date the loss subgroup becomes a member of the group), if there is an ownership change of the loss subgroup within six months before, on, or after becoming members of the group; or

(iii) Starting the day after the period of 5 consecutive years following the day that the loss subgroup become members of the group during which the loss subgroup has not had an ownership change.

(3) ***Examples.*** The principles of this paragraph (d) are illustrated by the following examples:

Example 1. Basic case. (i) P owns all the L stock, L owns all the L1 stock and L1 owns all the

L2 stock. The P group has a consolidated net operating loss arising in Year 1 that is carried over to Year 2. On December 11, Year 2, P sells all the stock of L to corporation M. Each of L, L1, and L2 is apportioned a portion of the Year 1 consolidated net operating loss, and thereafter each joins with M in filing consolidated returns. Under § 1.1502-92, the L loss subgroup has an ownership change on December 11, Year 2. The L loss subgroup has a subgroup section 382 limitation of $100. The following is a graphic illustration of these facts:

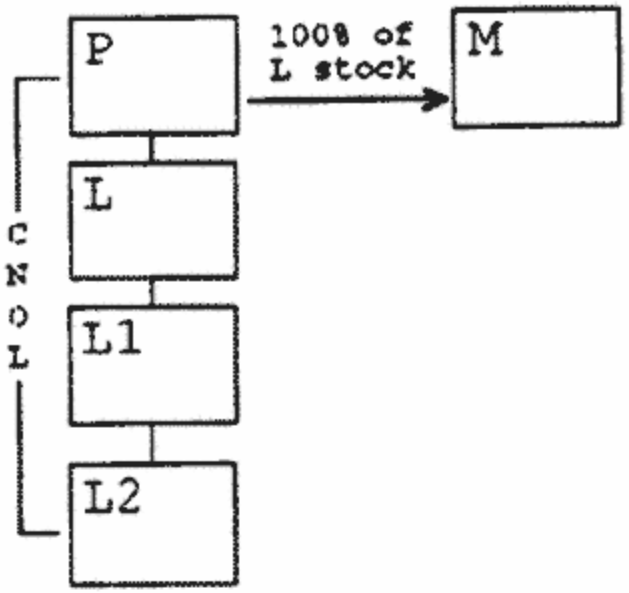
P
100% of
L stock
M
L
CNOL
L1
L2

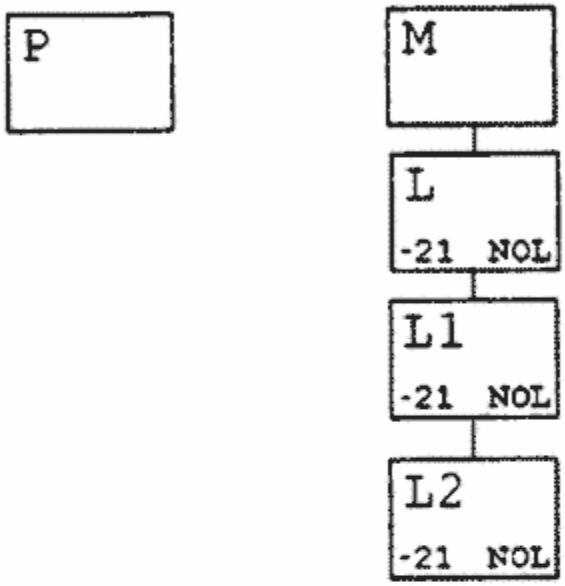
P
M
L
-21 NOL
L1
-21 NOL
L2
-21 NOL

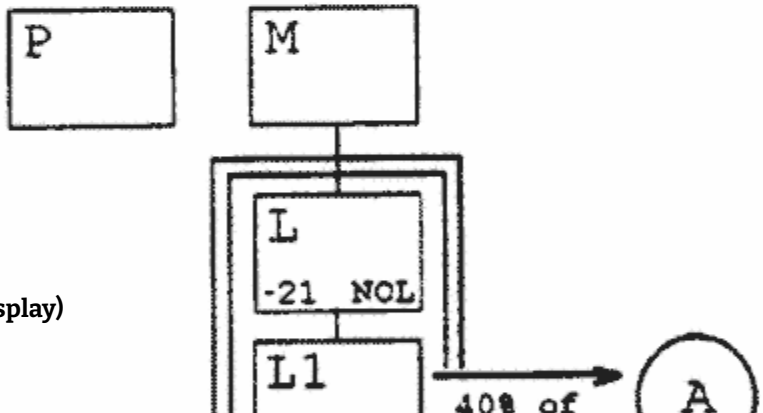
P
M
L
-21 NOL
L1
40% of
A

(ii) On May 22, Year 3, L1 sells 40 percent of the L2 stock to A. L2 carries over a portion of the P group's net operating loss from Year 1 to its separate return year ending December 31, Year 3. Under paragraph (d)(1) of this section, L2 ceases to be a member of the L loss subgroup on May 22, Year 3, which is both (1) the first day of the first taxable year for which it files a separate return and (2) the day it ceases to bear a relationship described in section 1504(a)(1) to the loss subgroup parent, L. The net operating loss of L2 that is carried over from the P group is treated as a pre-change loss of L2 for its separate return years ending after May 22, Year 3. Under paragraphs (a)(2) and (b)(2) of this section, the separate section 382 limitation with respect to this loss is zero unless M elects to apportion all or a part of the subgroup section 382 limitation of the L loss subgroup to L2.

Example 2. Formation of a new loss subgroup. The facts are the same as in *Example 1,* except that A purchases 40 percent of the L1 stock from L rather than purchasing L2 stock from L1. L1 and L2 file a consolidated return for their first taxable year ending after May 22, Year 3, and each of L1 and L2 carries over a part of the net operating loss of the P group that arose in Year 1. Under paragraph (d)(1) of this section, L1 and L2 cease to be members of the L loss subgroup on May 22, Year 3. The net operating losses carried over from the P group are treated as pre-change subgroup attributes of the loss subgroup composed of L1 and L2. The subgroup section 382 limitation with respect to those losses is zero unless M elects to apportion all or part of the subgroup section 382 limitation of the L loss subgroup to the L1 loss subgroup. The following is a graphic illustration of these facts:

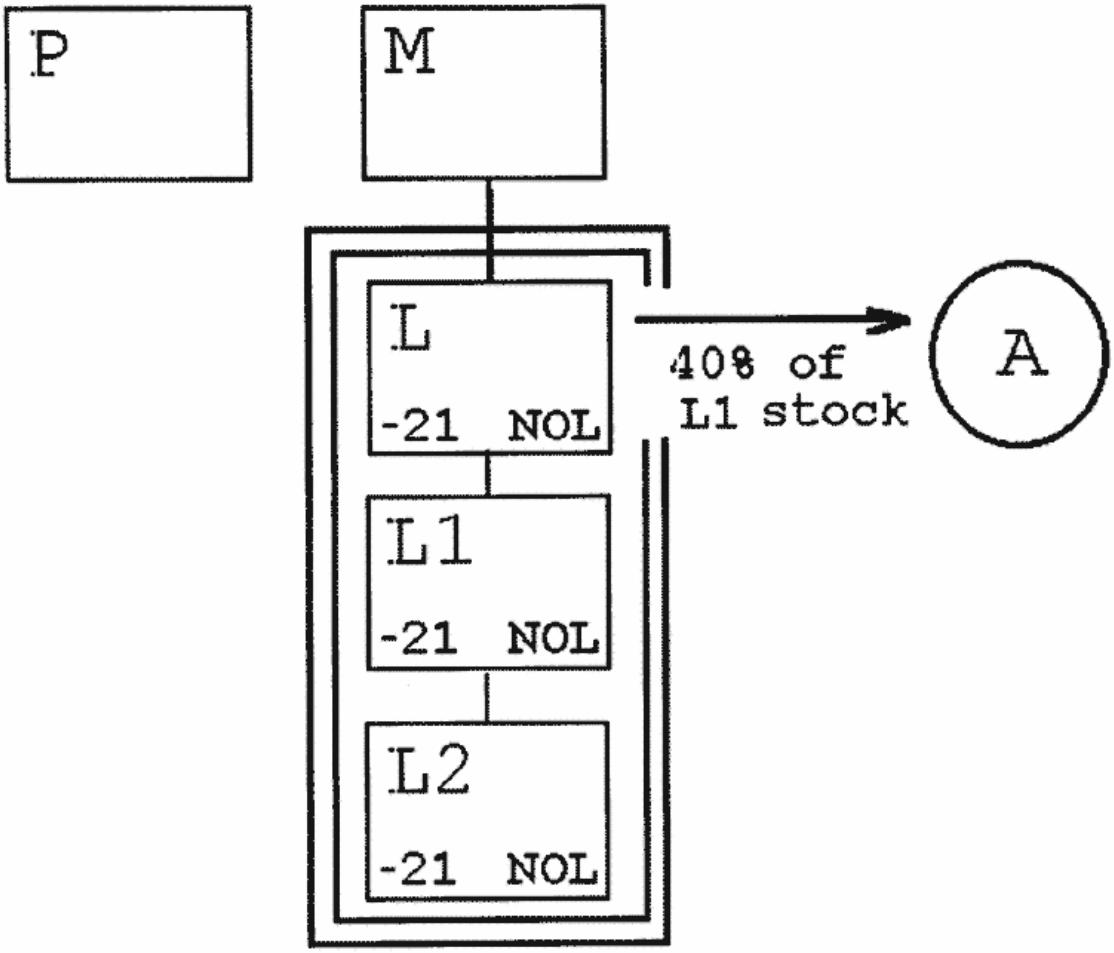
P
M
L
-21 NOL
L1
-21 NOL
L2
-21 NOL
40% of
L1 stock
A

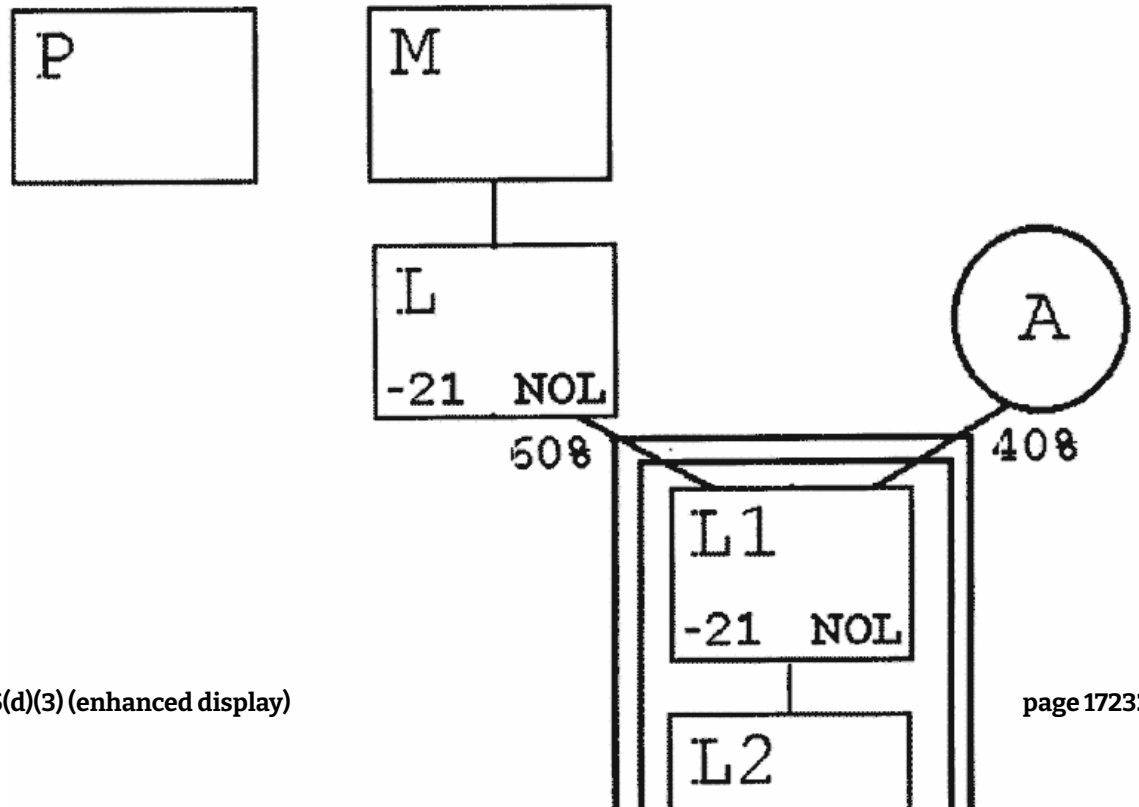
P
M
L
-21 NOL
A
60%
40%
L1
-21 NOL
L2

Example 3. Ownership change upon becoming members of the group. (i) A owns all the stock of P, and P owns all the stock of L1 and L2. The P group has a consolidated net operating loss arising in Year 1 that is carried over to Year 3 and Year 4. Corporation M acquires all the stock of P on November 11, Year 3, and P, L1, and L2 thereafter file consolidated returns with M. M's acquisition results in an ownership change of the P loss subgroup under § 1.1502-92(b)(1)(ii).
(ii) P distributes the L2 stock to M on October 7, Year 4, and L2 ceases to bear the relationship described in section 1504(a)(1) to P, the P loss subgroup parent. However, under paragraph (d)(2) of this section, L2 does not cease to be a member of the P loss subgroup because the P loss subgroup had an ownership change upon becoming members of the M group and L2 remains in the M group.

Example 4. Ceasing to bear a section 1504 (a)(1) to the loss subgroup parent. (i) A owns all the stock of P, and P owns all the stock of L1 and L2. The P group has a consolidated net operating loss arising in Year 1 that is carried over to Year 7. At the close of Year 2, X acquires all of the stock of P, causing an ownership change of the loss subgroup composed of P, L1 and L2 under § 1.1502-92(b)(1)(ii). In Year 4, M, which is owned by the same person that owns X, acquires all of the stock of P, and the M acquisition does not cause a second ownership change of the P loss subgroup.
(ii) P distributes the L2 stock to M on February 3, Year 6 (less than 5 years after the P loss subgroup became members of the M group) and L2 ceases to bear the relationship described in section 1504(a)(1) to P, the loss subgroup parent. Thus, the section 382 limitation from the Year 2 ownership change that applies with respect to the pre-change attributes attributable to L2 is zero except to the extent M elects to apportion all or part of the P loss subgroup section 382 limitation to L2.

Example 5. Relationship through a successor. The facts are the same as in *Example 3,* except that M's acquisition of the P stock does not result in an ownership change of the P loss subgroup, and, instead of P's distributing the stock of L2, L2 merges into L1 on October 7, Year 4. L1 (as successor to L2 in the merger within the meaning of § 1.1502-1(f)(4)) continues to bear a relationship described in section 1504(a)(1) to P, the loss subgroup parent. Thus, L2 does not cease to be a member of the P loss subgroup as a result of the merger.

Example 6. Reattribution of net operating loss carryover under § 1.1502-36(d)(6). The facts are the same as in *Example 3,* except that, instead of distributing the L2 stock to M, P sells that stock to B, and, under § 1.1502-36(d)(6), M reattributes $10 of L2's net operating loss carryover to itself. Under § 1.1502-36(d)(6)(iv)(A), M succeeds to the reattributed loss as if the loss were succeeded to in a transaction to which section 381(a) applies. M, as successor to L2, does not cease to be a member of the P loss subgroup.

(e) ***Allocation of net unrealized built-in loss —***

(1) ***In general.*** This paragraph (e) provides rules for the allocation of a loss group's (or loss subgroup's) net unrealized built-in loss if a member ceases to be a member of a loss group (or loss subgroup). This paragraph (e) applies if—

(i) A loss group (or loss subgroup) has a net unrealized built-in loss on a change date; and

(ii) Immediately after the close of the consolidated return year in which the departing member ceases to be a member, the amount of the loss group's (or loss subgroup's) excess of net unrealized built-in loss over recognized built-in loss, determined under section 382(h)(1)(B)(ii) (relating to a limitation on recognized built-in loss), is greater than zero. (The amount of such excess is referred to as the remaining NUBIL balance.) In applying section 382(h)(1)(B)(ii) for this purpose, net unrealized built-in loss allocated to departing members in prior consolidated return years is treated as recognized built-in loss in those years.

(2) ***Amount of allocation*** —

(i) ***In general.*** The amount of net unrealized built-in loss allocated to a departing member is equal to the remaining NUBIL balance, multiplied by a fraction. The numerator of the fraction is the amount of the built-in loss, taken into account on the change date under § 1.1502-91(g), in the assets held by the departing member immediately after the member ceases to be a member of the loss group (or loss subgroup). The denominator of the fraction is the sum of the numerator, plus the amount of the built-in loss, taken into account under § 1.1502-91(g) on the change date, in the assets held by the loss group (or loss subgroup) immediately after the close of the taxable year in which the departing member ceases to be a member. (Fluctuations in value of the assets between the change date and the date that the member ceases to be a member of the group (or loss subgroup), or the close of the taxable year in which the member ceases to be a member of the loss group, are disregarded.) Because the amount of built-in loss on the change date with respect to a departing member's assets is taken into account (rather than that member's separately computed net unrealized built-in loss on the change date), a departing member can be apportioned all or part of the loss group's net unrealized built-in loss, even if the departing member had a separately computed net unrealized built-in gain on the change date. Amounts taken into account under section 382(h)(6)(C) (relating to certain deduction items) are treated as if they were assets in determining the numerator and denominator of the fraction.

(ii) ***Transferred basis property and deferred gain or loss.*** For purposes of paragraph (b)(2)(i) of this section, assets held by the departing member immediately after it ceases to be a member of the group (or by other members immediately after the close of the taxable year) include—

(A) Assets held at that time that are transferred basis property that was held by any member of the group (or loss subgroup) on the change date; and

(B) Assets held at that time by any member of the consolidated group with respect to which gain or loss of the group member or loss subgroup member at issue has been deferred in an intercompany transaction and has not been taken into account.

(iii) ***Assets for which gain or loss has been recognized.*** For purposes of paragraph (b)(2)(i) of this section, assets held by the departing member immediately after it ceases to be a member of the group (or by other members immediately after the close of the taxable year) do not include assets with respect to which gain or loss has previously been recognized and taken into account during the recognition period (including gain or loss recognized in an intercompany

transaction and taken into account immediately before the member leaves the group). Appropriate adjustments must be made if gain or loss on an asset has been only partially recognized and taken into account.

(iv) ***Exchanged basis property.*** The rules of § 1.1502-91(h) apply for purposes of this paragraph (e) (disregarding stock received from the departing member or another member that is a member immediately after the close of the taxable year).

(v) ***Two or more members depart during the same year.*** If two or more members cease to be members during the same consolidated return year, appropriate adjustments must be made to the denominator of the fraction for each departing member by treating the other departing members as if they had not ceased to be members during that year and as if the assets held by those other departing members immediately after they cease to be members of the group (or loss subgroup) are assets held by the group immediately after the close of the taxable year.

(vi) ***Anti-abuse rule.*** If assets are transferred between members or a member ceases to be a member with a principal purpose of causing or affecting the allocation of amounts under this paragraph (e), appropriate adjustments must be made to eliminate any benefit of such acquisition, disposition, or allocation.

(3) ***Effect of allocation on the consolidated group.*** The amount of the net unrealized built-in loss that is allocated to the former member is treated as recognized built-in loss for a prior taxable year ending in the recognition period for purposes applying the limitation of section 382(h)(1)(B)(ii) to a loss group's (or loss subgroup's) recognition period taxable years beginning after the consolidated return year in which the former member ceases to be a member.

(4) ***Effect on corporations to which the allocation is made.*** For purposes of determining the amount of the former member's recognized built-in losses in any taxable year beginning after the former member ceases to be a member—

(i) The amount of the loss group's (or loss subgroup's) net unrealized built-in loss that is allocated to the former member is treated as if it were an amount of net unrealized built-in loss determined under section 382(h)(1)(B)(i)(without regard to the threshold of section 382(h)(3)(B)) with respect to such member or loss subgroup, and that amount is not reduced under section 382(h)(1)(B)(ii) by the loss group's (or loss subgroup's) recognized built-in losses;

(ii) The former member's 5 year recognition period begins on the loss group's (or loss subgroup's) change date;

(iii) In applying section 382(h)(1)(B)(ii), the former member takes into account only its prior taxable years that begin after it ceases to be a member of the loss group (or loss subgroup); and

(iv) The former member's recognized built-in loss on the disposition of an asset is determined under section 382(h)(2)(B), treating references to the change date in that section as references to the loss group's (or loss subgroup's) change date.

(5) ***Subgroup principles.*** If two or more former members are members of the same consolidated group (the second group) immediately after they cease to be members of the current group, the principles of paragraphs (e)(1), (2) and (4) of this section apply to those former members on an aggregate basis. Thus, for example, the amount of net unrealized built-in loss allocated to those members is based on the assets held by those members immediately after they cease to be members of the current group and the limitation of section 382(h)(1)(B)(ii) on recognized built-in losses is applied by

taking into account the aggregate amount of net unrealized built-in loss allocated to the former members and the aggregate recognized losses of those members in taxable years beginning after they cease to be members of the current group. If one or more of such members cease to be members of the second group, the principles of this paragraph (e) are applied with respect to those members to allocate to them all or part of any remaining unrecognized amount of net unrealized built-in loss allocated to the members that became members of the second group.

(6) ***Apportionment of consolidated section 382 limitation (or subgroup section 382 limitation)*** —

(i) ***In general.*** For rules relating to the apportionment of a consolidated section 382 limitation (or subgroup section 382 limitation) to a former member, see paragraph (c) of this section.

(ii) ***Special rule for former members that become members of the same consolidated group.*** If recognized built-in losses of one or more former members would be subject to a consolidated section 382 limitation (or subgroup section 382 limitation) if recognized immediately before the member (or members) cease to be members of the group, an apportionment of that limitation may be made, under paragraph (c) of this section, to a loss subgroup that includes such member (or members), and the recognized built-in losses (if any) of that member (or members) will be subject to that apportioned limitation. If two or more of such former members are not included in a loss subgroup immediately after they cease to be members of the group (for example, because they do not have net operating loss carryovers or, in the aggregate, a net unrealized built-in loss), but are members of the same consolidated group, an apportionment of the consolidated section 382 limitation (or subgroup section 382 limitation) may be made to them as if they were a loss subgroup.

(7) ***Examples.*** The following examples illustrate the principles of this paragraph (e):

> *Example 1. Basic allocation case.* (i) P owns all of the stock of L1 and L2. On September 4, Year 1, A purchases all of the P stock, causing an ownership change of the P group. On that date P has two assets (other than the L1 and L2 stock), asset 1 with an adjusted basis of $40 and a fair market value of $15 and asset 2 with an adjusted basis of $50 and a fair market value of $100. L1 has two assets, asset 3 , with a fair market value of $50 and an adjusted basis of $100, and asset 4, with an adjusted basis of $125 and a fair market value of $75. L2 has two assets, asset 5, with a fair market value of $150 and an adjusted basis of $100, and asset 6, with an adjusted basis of $90 and a fair market value of $40. Thus, the P loss group has a net unrealized built-in loss of $75.
> (ii) On March 19, Year 3, P sells all of the L2 stock to M. At that time, asset 5, which has appreciated in value, has a fair market value of $250 and an adjusted basis of $100. Asset 6, which has declined in value, has an adjusted basis of $90 and a fair market value of $10.
>
> (iii) On April 8, Year 3, P sells asset 1, and has a recognized built-in loss of $25 that is subject to the P group's section 382 limitation. On November 11, Year 4, L2 sells asset 6 for its then fair market value, $10, recognizing a loss of $80. On June 3, Year 5, L1 sells asset 4, recognizing a loss of $50.

(iv) Immediately after the close of Year 3, the P loss group's remaining NUBIL balance is $50 ($75 net unrealized built-in loss reduced by the $25 recognized built-in loss of P). The portion of the remaining NUBIL balance that is allocated to L2 is $17 (rounded to the nearest dollar). Seventeen dollars is the product obtained by multiplying $50 (the remaining NUBIL balance) by $50/$150. The numerator of the fraction ($50) is the amount of built-in loss in asset 6, taken into account on the change date under § 1.1502-91(g). The denominator ($150) is the sum of the numerator ($50) and the amount of built-in loss in assets 3 and 4, taken into account on the change date under § 1.1502-91(g) ($100). The built-in loss in asset 1 is not included in the denominator of the fraction because it is not held by the P group immediately after the close of Year 3.

(v) Seventeen dollars of L2's $80 loss on the sale of asset 6 is a recognized built-in loss and subject to a section 382 limitation of zero, unless P apportions some or all of the P group's consolidated section 382 limitation to L2 (adjusted for a short taxable year, carryover of unused limitation, or any other adjustment required under section 382).

(vi) Thirty-three dollars of L1's $50 loss on the sale of asset 4 is subject to the P group's consolidated section 382 limitation, reduced by the amount of such limitation apportioned to L2, and adjusted for any short taxable year, a carryforward of unused limitation, or other adjustment. (In applying section 382(h)(1)(B)(ii) with respect to Year 5, the P group's net unrealized built-in loss is reduced by P's $25 recognized built-in loss in Year 3 and the $17 of net unrealized built-in loss allocated to L2, thus limiting the P group's recognized built-in loss in Year 5 to $33.)

Example 2. Two members depart in the same year. The facts are the same as in *Example 1,* except that P sells all of the stock of L1 to C on November 1, Year 3. The amount of net unrealized built-in loss apportioned to L2 (rounded to the nearest dollar) is $17 ($50 remaining NUBIL balance × $50/$150). The amount of net unrealized built-in loss apportioned to L1 (rounded to the nearest dollar) is $33 ($50 remaining NUBIL balance × $100/$150).

(8) ***Reporting requirements*** —

(i) ***Common Parent.*** Except as provided in paragraph (e)(8)(iii) of this section, if a net unrealized built-in loss is allocated under paragraph (e) of this section, the common parent must include a statement entitled, "STATEMENT OF NET UNREALIZED BUILT-IN LOSS ALLOCATION PURSUANT TO § 1.1502-95(e)," on or with its income tax return for the taxable year in which the former member(s) (or a new loss subgroup that includes that member) ceases to be a member. The statement must include—

(A) The name and employer identification number of the departing member;

(B) The amount of the remaining NUBIL balance for the taxable year in which the member departs;

(C) The amount of the net unrealized built-in loss allocated to the departing member; and

(D) A representation that the common parent has delivered a copy of the statement to the former member (or the common parent of the group of which the former member is a member) on or before the day the group files its income tax return for the consolidated return year that the former member ceases to be a member.

(ii) ***Former member.*** Except as provided in paragraph (e)(8)(iii) of this section, the former member must include a statement on or with its first income tax return (or the first return in which the former member joins) that is filed after the close of the consolidated return year of the group of which the former member (or a new loss subgroup that includes that member) ceases to be a member. The statement will be identical to the statement filed by the common parent under paragraph (e)(8)(i) of this section except that instead of including the information described in paragraph (e)(8)(i)(A) of this section the former member must provide the name, employer identification number and tax year of the former common parent, and instead of the representation described in paragraph (e)(8)(i)(D) of this section the former member must represent that it has received and retained the copy of the statement delivered by the common parent as part of its records. See § 1.6001-1(e).

(iii) ***Exception.*** This paragraph (e)(8) does not apply if the required information (other than the amount of the remaining NUBIL balance) is included in a statement of election under paragraph (f) of this section (relating to apportioning a section 382 limitation).

(f) ***Filing the election to apportion the section 382 limitation and net unrealized built-in gain*** —

(1) ***Form of the election to apportion*** —

(i) ***Statement.*** An election under paragraph (c) of this section must be made in the form set forth in this paragraph (f)(1)(i). The election must be made by the common parent and the party described in paragraph (f)(2) of this section. It must be filed in accordance with paragraph (f)(3) of this section and be entitled, "THIS IS AN ELECTION UNDER § 1.1502-95 TO APPORTION ALL OR PART OF THE [INSERT THE CONSOLIDATED SECTION 382 LIMITATION, THE SUBGROUP SECTION 382 LIMITATION, THE LOSS GROUP'S NET UNREALIZED BUILT-IN GAIN, OR THE LOSS SUBGROUP'S NET UNREALIZED BUILT-IN GAIN, AS APPROPRIATE] IN THE AMOUNT OF [INSERT THE AMOUNT OF THE LOSS LIMITATION OR NET UNREALIZED BUILT-IN GAIN] TO [INSERT NAME(S) AND EMPLOYER IDENTIFICATION NUMBER(S) OF THE CORPORATION (OR THE CORPORATIONS THAT COMPOSE A NEW LOSS SUBGROUP) TO WHICH ALLOCATION IS MADE]." The statement must also indicate that an agreement, as described in paragraph (f)(1)(ii) of this section, has been entered into.

(ii) ***Agreement.*** Both the common parent and the party described in paragraph (f)(2) of this section must sign and date the agreement. The agreement must include, as appropriate—

(A) The date of the ownership change that resulted in the consolidated section 382 limitation (or subgroup section 382 limitation) or the loss group's (or loss subgroup's) net unrealized built-in gain;

(B) The amount of the departing member's (or loss subgroup's) pre-change net operating loss carryovers and the taxable years in which they arose that will be subject to the limitation that is being apportioned to that member (or loss subgroup);

(C) The amount of any net unrealized built-in loss allocated to the departing member (or loss subgroup) under paragraph (e) of this section, which, if recognized, can be a pre-change attribute subject to the limitation that is being apportioned;

(D) If a consolidated section 382 limitation (or subgroup section 382 limitation) is being apportioned, the amount of the consolidated section 382 limitation (or subgroup section 382 limitation) for the taxable year during which the former member (or new loss subgroup) ceases to be a member of the consolidated group (determined without regard to any apportionment under this section);

(E) If any net unrealized built-in gain is being apportioned, the amount of the loss group's (or loss subgroup's) net unrealized built-in gain (as determined under paragraph (c)(2)(ii) of this section) that may be apportioned to members that ceased to be members during the consolidated return year;

(F) The amount of the value element and adjustment element of the consolidated section 382 limitation (or subgroup section 382 limitation) that is apportioned to the former member (or new loss subgroup) pursuant to paragraph (c) of this section;

(G) The amount of the loss group's (or loss subgroup's) net unrealized built-in gain that is apportioned to the former member (or new loss subgroup) pursuant to paragraph (c) of this section;

(H) If the former member is allocated any net unrealized built-in loss under paragraph (e) of this section, the amount of any adjustment element apportioned to the former member that is attributable to recognized built-in gains (determined in a manner that will enable both the group and the former member to apply the principles of § 1.1502-93(c)); and

(1) The name and employer identification number of the common parent making the apportionment.

(2) ***Signing the agreement.*** The agreement must be signed by both the common parent and the former member (or, in the case of a loss subgroup, the common parent and the loss subgroup parent) by persons authorized to sign their respective income tax returns. If the allocation is made to a loss subgroup for which an election under § 1.1502-91(d)(4) is made, and not separately to its members, the agreement under this paragraph (f) must be signed by the common parent and any member of the new loss subgroup by persons authorized to sign their respective income tax returns. Each party signing the agreement must retain either the original or a copy of the agreement as part of its records. See § 1.6001-1(e).

(3) ***Filing of the election*** —

(i) ***Filing by the common parent.*** The election must be filed by the common parent of the group that is apportioning the consolidated section 382 limitation (or the subgroup section 382 limitation) or the loss group's net unrealized built-in gain (or loss subgroup's net unrealized built-in gain) by including the statement on or with its income tax return for the taxable year in which the former member (or new loss subgroup) ceases to be a member.

(ii) ***Filing by the former member.*** An identical statement must be included on or with the first return of the former member (or the first return in which the former member, or the members of a new loss subgroup, join) that is filed after the close of the consolidated return year of the group of which the former member (or the members of a new loss subgroup) ceases to be a member.

(4) ***Revocation of election.*** An election statement made under paragraph (c) of this section is revocable only with the consent of the Commissioner.

(g) ***Effective/applicability date.*** Paragraphs (e)(8) and (f) of this section apply to any original consolidated Federal income tax return due (without extensions) after June 14, 2007. For original consolidated Federal income tax returns due (without extensions) after May 30, 2006, and on or before June 14, 2007, see § 1.1502-95T as contained in 26 CFR part 1 in effect on April 1, 2007. For original consolidated Federal income tax returns due (without extensions) on or before May 30, 2006, see § 1.1502-95 as contained in 26 CFR part 1 in effect on April 1, 2006.

[T.D. 8824, 64 FR 36159, July 2, 1999, as amended by T.D. 9264, 71 FR 30604, 30608, May 30, 2006; T.D. 9329, 72 FR 32805, 32807, June 14, 2007; T.D. 9424, 73 FR 53985, Sept. 17, 2008; T.D. 9905, 85 FR 56844, Sept. 14, 2020]

§ 1.1502-96 Miscellaneous rules.

(a) ***End of separate tracking of losses*** —

(1) ***Application.*** This paragraph (a) applies to a member (or a loss subgroup) with a net operating loss carryover that arose (or is treated under § 1.1502-21(c) as arising) in a SRLY, or a member (or loss subgroup) with a net unrealized built-in loss determined at the time that the member (or loss subgroup) becomes a member of the consolidated group if there is—

(i) An ownership change of the member (or loss subgroup) within six months before, on, or after becoming a member of the group; or

(ii) A period of 5 consecutive years following the day that the member (or loss subgroup) becomes a member of a group during which the member (or loss subgroup) has not had an ownership change.

(2) ***Effect of end of separate tracking*** —

(i) ***Net operating loss carryovers.*** If this paragraph (a) applies with respect to a member (or loss subgroup) with a net operating loss carryover, then, starting on the day after the earlier of the change date (but not earlier than the day the member (or loss subgroup) becomes a member of the consolidated group) or the last day of the 5 consecutive year period described in paragraph (a)(1)(ii) of this section, such loss carryover is treated as described in § 1.1502-91(c)(1)(i). The preceding sentence also applies for purposes of determining whether there is an ownership change with respect to such loss carryover following such change date or 5 consecutive year period. Thus, for example, starting the day after the change date (but not earlier than the day the member (or loss subgroup) becomes a member of the consolidated group) or the end of the 5 consecutive year period—

(A) The consolidated group which includes the new loss member or loss subgroup is no longer required to separately track owner shifts of the stock of the new loss member or subgroup parent to determine if an ownership change occurs with respect to the loss carryover of the new loss member or members included in the loss subgroup;

(B) The group is a loss group because the member's loss carryover is treated as a loss described in § 1.1502-91(c)(1)(i);

(C) There is an ownership change with respect to such loss carryover only if the group has an ownership change; and

(D) If the group has an ownership change, such loss carryover is a pre-change consolidated attribute subject to the loss group's consolidated section 382 limitation.

(ii) ***Net unrealized built-in losses.*** If this paragraph (a) applies with respect to a new loss member described in § 1.1502-94(a)(1)(ii) (or a loss subgroup described in § 1.1502-91(d)(2)) then, starting on the day after the earlier of the change date (but not earlier than the day the member (or loss subgroup) becomes a member of the group) or the last day of the 5 consecutive year period described in paragraph (a)(1)(ii) of this section, the member (or members of the loss subgroup) are treated, for purposes of applying § 1.1502-91(g)(2)(ii), as if they have been affiliated with the common parent for 5 consecutive years. Starting on that day, the member's (or the members of the loss subgroup's) separately computed net unrealized built-in loss is included in the determination whether the group has a net unrealized built-in loss, and there is an ownership change with respect to the member's separately computed net unrealized built-in loss only if the group (including the member) has a net unrealized built-in loss and has an ownership change. Thus, for example, starting the day after the change date (but not earlier than the day the member (or loss subgroup) becomes a member of the consolidated group), or the end of the 5 consecutive period

(A) The consolidated group which includes the new loss member or loss subgroup is no longer required to separately track owner shifts of the stock of the new loss member or subgroup parent to determine if an ownership change occurs with respect to the net unrealized built-in loss of the new loss member or members of the loss subgroup;

(B) The group includes the member's (or the loss subgroup members') separately computed net unrealized built-in loss in determining whether it is a loss group under § 1.1502-91(c)(1)(iii);

(C) There is an ownership change with respect to such net unrealized built-in loss only if the group is a loss group and has an ownership change; and

(D) If the group has an ownership change, the member's separately computed net unrealized built-in loss and its assets are taken into account in determining the group's pre-change consolidated attributes described in § 1.1502-91(e)(1) (relating to recognized built-in losses) that are subject to the group's consolidated section 382 limitation.

(iii) ***Common parent not common parent for five years.*** If the common parent has become the common parent of an existing group within the previous 5-year period in a transaction described in § 1.1502-75(d)(2)(ii) or (3), appropriate adjustments must be made in applying paragraphs (a)(2)(ii) and (3) of this section. In such a case, as the context requires, references to the common parent are to the former common parent.

(3) ***Continuing effect of end of separate tracking*** —

(i) ***In general.*** As the context may require, a current group determines which of its members are included in a loss subgroup on any testing date by taking into account the application of this section in the former group. See the example in § 1.1502-91(f)(2). For this purpose, corporations that are treated under paragraph (a)(2)(ii) of this section as having been affiliated with the common parent of the former group for 5 consecutive years are also treated as having been affiliated with any other members that have been (or are treated as having been) affiliated with the common parent. The corporations are treated as having been affiliated with such other members for the same period of time that those members have been (or are treated as having been) affiliated with the common parent. If two or more corporations become members of the group at the same time, but paragraph (a)(1) of this section does not apply to every such corporation, then immediately after the corporations become members of the group, the

corporations to which paragraph (a)(1) of this section applied are treated as not having been previously affiliated, for purposes of applying this paragraph (a)(3), with the corporations to which paragraph (a)(2)(ii) of this section did not apply.

(ii) ***Example.*** The following example illustrates the principles of this paragraph (a)(3):

Example. (i) L has owned all the stock of L1 for three years. At the close of December 31, Year 1, the M group purchases all the L stock, and L and L1 become members of the M group. Other than the stock of L1, L has one asset (the L loss asset) with a net unrealized built-in loss of $200 on this date. L1 has one asset with a net unrealized built-in gain of $50 (the L1 gain asset). L and L1 do not compose a loss subgroup because they do not meet the five year affiliation requirement of § 1.1502-91(d)(2)(i). L is a new loss member, and M's purchase of L causes an ownership change of L. At the close of December 31, Year 4, at a time when L1 has been affiliated with the M group for three years and has been affiliated with L for six years, the S group purchases all the M stock. On this date, the L loss asset has a net unrealized built-in loss of $300, the L1 gain asset has a net unrealized built-in gain of $80, and M, the common parent of the M group, has one asset with a net unrealized built-in gain of $200.
(ii) Paragraph (a)(1) of this section applies to L because L is a new loss member described in § 1.1502-94(a)(1)(ii) that has an ownership change upon becoming a member of the M group on December 31, Year 1. Accordingly, L is treated as having been affiliated with M for 5 consecutive years, and the L loss asset with a net unrealized built-in loss of $300 is included in the determination whether the M group has a net unrealized built-in loss.

(iii) The S group determines which of its members are included in a loss subgroup by taking into account application of paragraph (a) of this section in the M group. For this purpose, application of paragraph (a) of this section causes L to be treated as having been affiliated with M (or as having been a member of the M group) for 5 consecutive years as of January 1, Year 2. Therefore, the S group includes L in the determination whether the M subgroup acquired by S on December 31, Year 4, has a net unrealized built-in loss.

(iv) Because paragraph (a)(1) of this section applied to L when L became a member of the M group, but did not apply to L1, L is treated as not having been affiliated with L1 before L and L1 joined the M group. Also, L1 is not included in the determination whether the M subgroup has a net unrealized built-in loss because L1 has not been continuously affiliated with members of the M group for the five consecutive year period ending immediately before they become members of the S group. See § 1.1502-91(g)(2).

(4) ***Special rule for testing period.*** For purposes of determining the beginning of the testing period for a loss group, the member's (or loss subgroup's) net operating loss carryovers (or net unrealized built-in loss) described in paragraph (a)(2) of this section are considered to arise—

(i) In a case described in paragraph (a)(1)(i) of this section, in a taxable year that begins not earlier than the later of the day following the change date or the day that the member becomes a member of the group; and

(ii) In a case described in paragraph (a)(1)(ii) of this section, in a taxable year that begins 3 years before the end of the 5 consecutive year period.

(5) ***Limits on effects of end of separate tracking.*** The rule contained in this paragraph (a) applies solely for purposes of §§ 1.1502-91 through 1.1502-95 and this section (other than paragraph (b)(2)(ii)(B) of this section (relating to the definition of pre-change attributes of a subsidiary)) and § 1.1502-98, and not for purposes of other provisions of the consolidated return regulations. However, the rule contained in this paragraph (a) does apply in §§ 1.1502-15(g), 1.1502-21(g) and 1.1502-22(g) for purposes of determining the composition of loss subgroups defined in § 1.1502-91(d). See also paragraph (c) of this section for the continuing effect of an ownership change with respect to pre-change attributes.

(b) ***Ownership change of subsidiary*** —

(1) ***Ownership change of a subsidiary because of options or plan or arrangement.*** Notwithstanding § 1.1502-92, a subsidiary may have an ownership change for purposes of section 382 with respect to its attributes which a group or loss subgroup includes in making a determination under § 1.1502-91(c)(1) (relating to the definition of loss group) or § 1.1502-91(d) (relating to the definition of loss subgroup). The subsidiary has such an ownership change if it has an ownership change under the principles of § 1.1502-95(b) and section 382 and the regulations thereunder (determined on a separate entity basis by treating the subsidiary as not being a member of a consolidated group) in the event of—

(i) The deemed exercise under § 1.382-4(d) of an option or options (other than an option with respect to stock of the common parent) held by a person (or persons acting pursuant to a plan or arrangement) to acquire more than 20 percent of the stock of the subsidiary; or

(ii) An increase by 1 or more 5-percent shareholders, acting pursuant to a plan or arrangement to avoid an ownership change of a subsidiary, in their percentage ownership interest in the subsidiary by more than 50 percentage points during the testing period of the subsidiary through the acquisition (or deemed acquisition pursuant to § 1.382-4(d)) of ownership interests in the subsidiary and in higher-tier members with respect to the subsidiary.

(2) ***Effect of the ownership change*** —

(i) ***In general.*** If a subsidiary has an ownership change under paragraph (b)(1) of this section, the amount of consolidated taxable income for any post-change year that may be offset by the pre-change losses of the subsidiary shall not exceed the section 382 limitation for the subsidiary. For purposes of this limitation, the value of the subsidiary is determined solely by reference to the value of the subsidiary's stock.

(ii) ***Pre-change losses.*** The pre-change losses of a subsidiary are—

(A) Its allocable part of any consolidated net operating loss which is attributable to it under § 1.1502-21(b) (determined on the last day of the consolidated return year that includes the change date) that is not carried back and absorbed in a taxable year prior to the year including the change date;

(B) Its net operating loss carryovers that arose (or are treated under § 1.1502-21(c) as having arisen) in a SRLY; and

(C) Its recognized built-in loss with respect to its separately computed net unrealized built-in loss, if any, determined on the change date.

(3) ***Coordination with §§ 1.1502-91, 1.1502-92, and 1.1502-94.*** If an increase in percentage ownership interest causes an ownership change with respect to an attribute under this paragraph (b) and under § 1.1502-92 on the same day, the ownership change is considered to occur only under § 1.1502-92 and not under this paragraph (b). See § 1.1502-94 for anti-duplication rules relating to value.

(4) ***Example.*** The following example illustrates paragraph (b)(1)(ii) of this section:

> *Example. Plan to avoid an ownership change of a subsidiary.* (i) L owns all the stock of L1, L1 owns all the stock of L2, L2 owns all the stock of L3, and L3 owns all the stock of L4. The L group has a consolidated net operating loss arising in Year 1 that is carried over to Year 2. L has assets other than its L1 stock with a value of $900. L1, L2, and L3 own no assets other than their L2, L3, and L4 stock. L4 has assets with a value of $100. During Year 2, A, B, C, and D, acting pursuant to a plan to avoid an ownership change of L4, acquire the following ownership interests in the members of the L loss group: (A) on September 11, Year 2, A acquires 20 percent of the L1 stock from L and B acquires 20 percent of the L2 stock from L1; and (B) on September 20, Year 2, C acquires 20 percent of the stock of L3 from L2 and D acquires 20 percent of the stock of L4 from L3.
> (ii) The acquisitions by A, B, C, and D pursuant to the plan have increased their respective percentage ownership interests in L4 by approximately 10, 13, 16, and 20 percentage points, for a total of approximately 59 percentage points during the testing period. This more than 50 percentage point increase in the percentage ownership interest in L4 causes an ownership change of L4 under paragraph (b)(2) of this section.

(c) ***Continuing effect of an ownership change.*** A loss corporation (or loss subgroup) that is subject to a limitation under section 382 with respect to its pre-change losses continues to be subject to the limitation regardless of whether it becomes a member or ceases to be a member of a consolidated group. See § 1.382-5(d) (relating to successive ownership changes and absorption of a section 382 limitation).

(d) ***Losses reattributed under § 1.1502-36(d)(6)*** —

(1) ***In general.*** This paragraph (d) contains rules relating to net operating carryovers, capital loss carryovers, and deferred deductions (collectively, loss or losses) that are reattributed to the common parent under § 1.1502-36(d)(6). References in this paragraph (d) to a subsidiary are references to the subsidiary (or lower-tier subsidiary) whose loss is reattributed to the common parent.

(2) ***Deemed section 381(a) transaction.*** Under § 1.1502-36(d)(6)(iv)(A), the common parent succeeds to the reattributed losses as if the losses were succeeded to in a transaction to which section 381(a) applies. In general, §§ 1.1502-91 through 1.1502-95, this section, and § 1.1502-98 are applied to the reattributed losses in accordance with that characterization. See generally, § 1.382-2(a)(1)(ii) (relating to distributor or transferor loss corporations in transactions under section 381), § 1.1502-1(f)(4) (relating to the definition of predecessor and successor) and § 1.1502-91(j) (relating to predecessor and successor corporations). For example, if the reattributed loss is a pre-change attribute subject to a section 382 limitation, it remains subject to that limitation following the reattribution. In certain cases, the limitation applicable to the reattributed loss is zero unless the common parent apportions all or part of the limitation to itself. (See paragraph (d)(4) of this section.)

(3) ***Rules relating to owner shifts*** —

(i) ***In general.*** Any owner shift of the subsidiary (including any deemed owner shift resulting from section 382(g)(4)(D) or 382(l)(3)) in connection with the disposition of the stock of the subsidiary is not taken into account in determining whether there is an ownership change with respect to the reattributed loss. However, any owner shift with respect to the successor corporation that is treated as continuing in existence under § 1.382-2(a)(1)(ii) must be taken into account for such purpose if such owner shift is effected by the reattribution and an owner shift of the stock of the subsidiary not held directly or indirectly by the common parent would have been taken into account if such shift had occurred immediately before the reattribution. See paragraph (d)(3)(ii) *Example 2* of this section.

(ii) ***Examples.*** The following examples illustrate the principles of this paragraph (d)(3):

> *Example 1. No owner shift for reattributed loss.* (i) *Facts.* P, the common parent of a consolidated group, owns 60% of the stock of L, and B owns the remaining 40%. L has a net operating loss carryover of $100 from year 1 that it carries over to years 2, 3, and 4. At the beginning of year 2, P purchases 40% of the L stock from B, which does not cause an ownership change of L. On December 31, year 3, P sells all of the L stock to M. Pursuant to § 1.1502-36(d)(6), P reattributes $10 of L's $100 net operating loss carryover to itself, and L carries $90 of its net operating loss carryover to its year 4.
> (ii) *Analysis.* The sale of the L stock to M does not cause an owner shift that is taken into account in determining if there is an ownership change with respect to the $10 reattributed loss. Following the reattribution, § 1.1502-94(b) continues to apply to determine if there is an ownership change with respect to the $10 reattributed loss, until, under paragraph (a) of this section, the loss is treated as described in § 1.1502-91(c)(1)(i). In applying § 1.1502-94(b), the 40 percentage point increase by the P shareholders prior to the reattribution is taken into account. The sale of the L stock to M does cause an ownership change of L with respect to the $90 of its net operating loss that it carries over to year 4.

Example 2. Owner shift for reattributed loss. The facts are the same as in *Example 1,* except that P only purchases 20% of the L stock from B and sells 80% of the L stock to M. L is a new loss member, and, under § 1.1502-94(b)(1), an owner shift of the stock of L not held

directly or indirectly by the common parent (the 20% of L stock still held by B) would have been taken into account if such shift had occurred immediately before the reattribution. Following the reattribution, § 1.1502-94(b) continues to apply to determine if there is an ownership change with respect to the $10 reattributed loss, until, under paragraph (a) of this section, the loss is treated as described in § 1.1502-91(c)(1)(i). With respect to the $10 reattributed loss, the P shareholders have increased their percentage ownership interest by 40 percentage points. The P shareholders have increased their ownership interests by 20 percentage points as a result of P's purchase of stock from B, and, under § 1.382-2(a)(1)(ii), are treated as increasing their interests by an additional 20 percentage points as a result of the reattribution. (The acquisition of the L stock by M does not, however, effect an owner shift for the $10 of reattributed loss.) The sale of the L stock to M causes an ownership change of L with respect to the $90 of net operating loss that L carries over to Year 4.

(4) ***Rules relating to the section 382 limitation*** —

(i) ***Reattributed loss is a pre-change separate attribute of a new loss member.*** If the reattributed loss is a pre-change separate attribute of a new loss member that is subject to a separate section 382 limitation prior to the disposition of subsidiary stock, the common parent's limitation with respect to that loss is zero, except to the extent that the common parent apportions to itself, under paragraph (d)(5) of this section, all or part of such limitation. A separate section 382 limitation is the limitation described in § 1.1502-94(b) that applies to a pre-change separate attribute.

(ii) ***Reattributed loss is a pre-change subgroup attribute.*** If the reattributed loss is a pre-change subgroup attribute subject to a subgroup section 382 limitation prior to the disposition of subsidiary stock, and, immediately after the reattribution, the common parent is not a member of the loss subgroup, the section 382 limitation with respect to that loss is zero, except to the extent that the common parent apportions to itself, under paragraph (d)(5) of this section, all or part of the subgroup section 382 limitation. See, however, § 1.1502-95(d)(3) *Example 6*, for an illustration of a case where the common parent, as successor to the subsidiary, is a member of the loss subgroup immediately after the reattribution.

(iii) ***Potential application of section 382(l)(1).*** In general, the value of the stock of the common parent is used to determine the section 382 limitation for an ownership change with respect to the reattributed loss that occurs at the time of, or after, the reattribution. For example, if the loss is a pre-change consolidated attribute, the value of the stock of the common parent is used to determine the section 382 limitation, and no adjustment to that value is required because of the deemed section 381(a) transaction. However, if the loss is a pre-change separate attribute of a new loss member (or is a pre-change attribute of a loss subgroup member and the common parent was not the loss subgroup parent immediately before the reattribution), the deemed section 381(a) transaction is considered to constitute a capital contribution with respect to the new loss member (or loss subgroup member) for purposes of section 382(l)(1). Accordingly, if that section applies because the deemed capital contribution is (or is considered under section 382(l)(1)(B) to be) part of a plan described in section 382(l)(1)(A), the value of the stock of the common parent after the deemed section 381(a) transaction must be adjusted to reflect the capital contribution. Ordinarily, this will require the value of the stock of the common parent to be reduced to an amount that represents the value of the stock of the subsidiary (or loss subgroup of which the subsidiary was a member) when the reattribution occurred.

(iv) ***Duplication or omission of value.*** In determining any section 382 limitation with respect to the reattributed loss and with respect to other pre-change losses, appropriate adjustments must be made so that value is not improperly omitted or duplicated as a result of the reattribution. For example, if the subsidiary has an ownership change upon its departure, and the common parent (as successor) has an ownership change with respect to the reattributed pre-change separate attribute upon its reattribution under paragraph (d)(3)(i) of this section, proper adjustments must be made so that the value of the subsidiary is not taken into account more than once in determining the section 382 limitation for the reattributed loss and the loss that is not reattributed.

(v) ***Special rule for continuity of business requirement.*** If the reattributed loss is a pre-change attribute of new loss member and the reattribution occurs within the two-year period beginning on the change date, then, starting immediately after the reattribution, the continuity of business requirement of section 382(c)(1) is applied with respect to the business enterprise of the common parent. Similar principles apply if the reattributed loss is a pre-change subgroup attribute and, on the day after the reattribution, the common parent is not a member of the loss subgroup.

(5) ***Election to reattribute section 382 limitation*** —

(i) ***Effect of election.*** The common parent may elect to apportion to itself all or part of any separate section 382 limitation or subgroup section 382 limitation to which the loss is subject immediately before the reattribution. However, no net unrealized built-in gain of the member (or loss subgroup) whose loss is reattributed can be apportioned to the common parent. The principles of § 1.1502-95(c) apply to the apportionment, treating, as the context requires, references to the former member as references to the common parent, and references to the consolidated section 382 limitation as references to the separate section 382 limitation (or subgroup section 382 limitation) that is being apportioned. Thus, for example, the common parent can reattribute to itself all or part of the value element or adjustment element of the limitation, and any part of such element that is apportioned requires a corresponding reduction in such element of the separate section 382 limitation of the subsidiary whose loss is reattributed (or in the subgroup section 382 limitation if the reattributed loss is a pre-change subgroup attribute). Appropriate adjustments must be made to the separate section 382 limitation (or subgroup section 382 limitation) for the consolidated return year in which the reattribution is made to reflect that the reattributed loss is an attribute acquired by the common parent during the year in a transaction to which section 381(a) applies. The election is made by the common parent as part of the election to reattribute the loss. See § 1.1502-36(e)(5)(x) for the time and manner of making the election.

(ii) ***Examples.*** The following examples illustrate the principles of this paragraph (d)(5):

> *Example 1. Consequence of apportionment.* (i) Facts. P, the common parent of a consolidated group, purchases all of the stock of L on December 31, year 1. L carries over a net operating loss arising in year 1 to each of the next 5 taxable years. The purchase of the L stock causes an ownership change of L, and results in a separate section 382 limitation of $10 for L's net operating loss carryover based on the value of the L stock. On July 2, year 3, P sells 30% of the L stock to A. Under § 1.1502-36(d)(6), P elects to reattribute to itself $110 of L's $200 net operating loss carryover. P also elects

to apportion to itself $6 of the $10 value element of the separate section 382 limitation.
(ii) *Analysis.* (A) *P's separate section 382 limitation.* For the consolidated return years ending after December 31, year 3, P's separate section 382 limitation with respect to the reattributed net operating loss carryover is $6, adjusted as appropriate for any short taxable year, unused section 382 limitation, or other adjustment. For the P group's consolidated return year ending December 31, year 3, the separate section 382 limitation for L's net operating loss carryover is $8, the sum of $5 and $3. Five dollars of the limitation is the amount that bears the same relationship to $10 as the number of days in the period ending with the deemed section 381(a) transaction, 183 days, bears to 365. Three dollars of the limitation is the amount that bears the same relationship to $6 as the number of days in the period between July 3 and December 31, 182, bears to 365.

(B) *L's separate section 382 limitation.* For L's taxable years ending after December 31, year 3, L's separate section 382 limitation for its $90 of net operating loss carryover that was not reattributed to P is $4, adjusted as appropriate for any short taxable year, unused section 382 limitation, or other adjustment. For L's short taxable year ending December 31, year 3, the section 382 limitation for its $90 of net operating loss carryover is $2, the amount that bears the same relationship to $4 (the portion of the value element that was not apportioned to P), as the number of days during the short taxable year, 182 days, bears to 365. See § 1.382-5(c).

Example 2. No apportionment required for consolidated pre-change attribute. (i) *Facts.* P, the common parent of a consolidated group, forms L. For year 1, L has an operating loss of $70 that is not absorbed and is included in the group's consolidated net operating loss that is carried over to subsequent years. On January 1 of year 3, A buys all of the P stock and the P group has an ownership change. The consolidated section 382 limitation based on the value of the P stock is $10.
(ii) *Analysis.* On April 13 of year 4, P sells all of the stock of L to B and, under § 1.1502-36(d)(6), elects to reattribute to itself $45 of L's net operating loss carryover. Following the reattribution, the $45 portion of the year 1 net operating loss carryover retains its character as a pre-change consolidated attribute, and remains subject to so much of the $10 consolidated section 382 limitation as P does not elect to apportion to L under § 1.1502-95(c).

(e) ***Time and manner of making election under § 1.1502-91(d)(4)*** —

(1) ***In general.*** This paragraph (e) prescribes the time and manner of making the election under § 1.1502-91(d)(4), relating to treating two or more corporations as treating the section 1504(a)(1) requirement of § 1.1502-91(d)(1)(ii) and (d)(2)(ii) as satisfied.

(2) ***Election statement.*** An election under § 1.1502-91(d)(4) must be made by the common parent. The election must be made in the form of the following statement: "THIS IS AN ELECTION UNDER § 1.1502-91(d)(4) TO TREAT THE FOLLOWING CORPORATIONS AS MEETING THE REQUIREMENTS OF

§ 1.1502-91 (d)(1)(ii) AND (d)(2)(ii) IMMEDIATELY AFTER THEY BECAME MEMBERS OF THE GROUP." [List separately the name of each corporation, its E.I.N., and the date that it became a member of the group]. If separate elections are being made for corporations that became members at different times or that were acquired from different affiliated groups, provide a separate statement and list for each election.

(3) The election statement must be filed by the common parent with its income tax return for the consolidated return year in which the members with respect to which the election is made become members of the group. Such election must be filed on or before the due date for such income tax return, including extensions.

(4) An election made under this paragraph (e) is irrevocable.

[T.D. 8824, 64 FR 36170, July 2, 1999, as amended by T.D. 9424, 73 FR 53985, Sept. 17, 2008]

§ 1.1502-97 Special rules under section 382 for members under the jurisdiction of a court in a title 11 or similar case. [Reserved]

§ 1.1502-98 Coordination with sections 383 and 163(j).

(a) ***Coordination with section 383.*** The rules contained in §§ 1.1502-91 through 1.1502-96 also apply for purposes of section 383, with appropriate adjustments to reflect that section 383 applies to credits and net capital losses. For example, subgroups with respect to the carryover of general business credits, minimum tax credits, unused foreign tax, and net capital loss are determined by applying the principles of § 1.1502-91(d)(1). Similarly, in the case of net capital losses, general business credits, and excess foreign taxes that are pre-change attributes, § 1.383-1 applies the principles of §§ 1.1502-91 through 1.1502-96. For example, if a loss group has an ownership change under § 1.1502-92 and has a carryover of unused general business credits from a pre-change consolidated return year to a post-change consolidated return year, the amount of the group's regular tax liability for the post-change year that can be offset by the carryover cannot exceed the consolidated section 383 credit limitation for that post-change year, determined by applying the principles of §§ 1.383-1(c)(6) and 1.1502-93 (relating to the computation of the consolidated section 382 limitation).

(b) ***Application to section 163(j)*** —

(1) ***In general.*** The regulations in this part under sections 163(j), 382, and 383 of the Code contain rules governing the application of section 382 to interest expense governed by section 163(j) and the regulations in this part under section 163(j) of the Code. See, for example, §§ 1.163(j)-11(c), 1.382-2, 1.382-6, 1.382-7, and 1.383-1. The rules contained in §§ 1.1502-91 through 1.1502-96 apply these rules to members of a consolidated group, or corporations that join or leave a consolidated group, with appropriate adjustments. For example, for purposes of §§ 1.1502-91 through 1.1502-96, the term *loss group* includes a consolidated group in which any member is entitled to use a disallowed business interest expense carryforward, as defined in § 1.163(j)-1(b)(11), that did not arise, and is not treated as arising, in a SRLY with regard to that group. Additionally, a reference to net operating loss carryovers in §§ 1.1502-91 through 1.1502-96 generally includes a reference to disallowed business interest expense carryforwards. References to a loss or losses in §§ 1.1502-91 through 1.1502-96 include references to disallowed business interest expense carryforwards or section 382 disallowed business interest carryforwards, within the meaning of § 1.382-2(a)(7), as appropriate.

(2) ***Appropriate adjustments.*** For purposes of applying the rules in §§ 1.1502-91 through 1.1502-96 to current-year business interest expense (as defined in § 1.163(j)-1(b)(9)), disallowed business interest expense carryforwards, and section 382 disallowed business interest carryforwards, appropriate adjustments are required.

[T.D. 8824, 64 FR 36174, July 2, 1999, as amended by T.D. 8884, 65 FR 33760, May 25, 2000; T.D. 9905, 85 FR 56844, Sept. 14, 2020]

§ 1.1502-99 Effective/applicability dates.

(a) ***In general.*** Sections 1.1502-91 through 1.1502-96 and § 1.1502-98 apply to any testing date that is on or after June 25, 1999. Sections 1.1502-94 through 1.1502-96 also apply to a corporation that becomes a member of a group or ceases to be a member of a group (or loss subgroup) on or after June 25, 1999.

(b) ***Reattribution of losses under § 1.1502-36(d)(6).*** Section 1.1502-96(d) applies to reattributions of net operating loss carryovers, capital loss carryovers, and deferred deductions in connection with a transfer of stock to which § 1.1502-36 applies, and the election under § 1.1502-96(d)(5) (relating to an election to reattribute section 382 limitation) can be made with an election under § 1.1502-36(d)(6) to reattribute a loss to the common parent that is filed at the time and in the manner provided in § 1.1502-36(e)(5)(x).

(c) ***Application to section 163(j)*** —

(1) ***Sections 1.382-2 and 1.382-5.*** To the extent the rules of §§ 1.1502-91 through 1.1502-99 effectuate the rules of §§ 1.382-2 and 1.382-5, the provisions apply with respect to ownership changes occurring on or after November 13, 2020. For loss corporations that have ownership changes occurring before November 13, 2020, see §§ 1.1502-91 through 1.1502-99 as contained in 26 CFR part 1, revised April 1, 2019. However, taxpayers and their related parties, within the meaning of sections 267(b) and 707(b)(1), may choose to apply the rules of §§ 1.1502-91 through 1.1502-99 to the extent they apply the rules of §§ 1.382-2 and 1.382-5, to ownership changes occurring during a taxable year beginning after December 31, 2017, as well as consistently applying the rules of the §§ 1.1502-91 through 1.1502-99 (to the extent they effectuate the rules of §§ 1.382-6 and 1.383-1), the section 163(j) regulations (as defined in § 1.163(j)-1(b)(37)), and, if applicable, §§ 1.263A-9, 1.263A-15, 1.381(c)(20)-1, 1.382-7, 1.469-9, 1.469-11, 1.704-1, 1.882-5, 1.1362-3, 1.1368-1, 1.1377-1, 1.1502-13, 1.1502-21, 1.1502-79, and 1.1504-4, to that taxable year.

(2) ***Sections 1.382-6 and 1.383-1.*** To the extent the rules of §§ 1.1502-91 through 1.1502-98 effectuate the rules of §§ 1.382-6 and 1.383-1, the provisions apply with respect to ownership changes occurring during a taxable year beginning on or after November 13, 2020. For the application of these rules to an ownership change with respect to an ownership change occurring during a taxable year beginning before November 13, 2020, see §§ 1.1502-91 through 1.1502-99 as contained in 26 CFR part 1, revised April 1, 2019. However, taxpayers and their related parties, within the meaning of sections 267(b) and 707(b)(1), may choose to apply the rules of §§ 1.1502-91 through 1.1502-99 (to the extent that those rules effectuate the rules of §§ 1.382-6 and 1.383-1), to ownership changes occurring during a taxable year beginning after December 31, 2017, so long as the taxpayers and their related parties consistently apply the rules of 1.1502-91 through 1.1502-99 (to the extent that those rules effectuate the rules of §§ 1.382-2 and 1.382-5), the section 163(j) regulations (as defined in § 1.163(j)-1(b)(37)), and, if applicable, §§ 1.263A-9, 1.263A-15, 1.381(c)(20)-1, 1.382-7, 1.469-9, 1.469-11, 1.704-1, 1.882-5, 1.1362-3, 1.1368-1, 1.1377-1, 1.1502-13, 1.1502-21, 1.1502-36, 1.1502-79, and 1.1504-4, to a taxable year beginning after December 31, 2017.

[T.D. 8824, 64 FR 36174, July 2, 1999, as amended by T.D. 9424, 73 FR 53986, Sept. 17, 2008; T.D. 9905, 85 FR 56844, Sept. 14, 2020; T.D. 10018, 89 FR 106877, Dec. 30, 2024]

§ 1.1502-100 Corporations exempt from tax.

(a) ***In general*** —

(1) ***Computation of tax liability.*** The tax liability for a consolidated return year of a group of two or more corporations described in section 1504(e) which are exempt from taxation under section 501 (hereinafter referred to in this section as "exempt group") shall be determined on a consolidated basis by applying the provisions of subchapter F of chapter 1 of the code in the manner provided in this section. See section 1504(e) for tax-exempt corporations eligible to file a consolidated return.

(2) ***Applicability of other consolidated return provisions.*** The provisions of the consolidated return regulations are applicable to an exempt group to the extent they are not inconsistent with the provisions of this section or the provisions of subchapter F of chapter 1 of the Code. For purposes of applying the provisions of the consolidated return regulations to an exempt group, the following substitutions must be made—

(i) The term "exempt group" is substituted for the term "group";

(ii) The terms "unrelated business taxable income", "separate unrelated business taxable income", and "consolidated unrelated business taxable income" are substituted for the terms "taxable income", "separate taxable income", and "consolidated taxable income"; and

(iii) The term *consolidated liability for tax determined under § 1.1502-2* (or an equivalent term) means the consolidated liability for tax of an exempt group determined under paragraph (b) of this section.

(b) The tax liability for a consolidated return year of an exempt group is the tax imposed by section 511(a) on the consolidated unrelated taxable income for the year (determined under paragraph (c) of this section), and by allowing the credits provided in § 1.1502-2(b).

(c) ***Consolidated unrelated business taxable income.*** The consolidated unrelated business taxable income for a consolidated return year shall be determined by taking into account:

(1) The separate unrelated business taxable income of each member of the exempt group (determined under paragraph (d) of this section);

(2) Any consolidated net operating loss deduction (determined under § 1.1502-21) subject to the limitations provided in section 512(b)(6);

(3) Any consolidated charitable contribution deduction (determined under § 1.1502-24) subject to the limitations provided in section 512(b)(10); and

(4) Any consolidated net gain or net loss from the disposition of debt-financed property (as defined in section 514(b)) taken into account as provided by section 514(a), or from the cutting of timber to which section 631 applies.

(d) ***Separate unrelated business taxable income*** —

(1) ***In general.*** The separate unrelated business taxable income of a member of an exempt group must be computed in accordance with the provisions of section 512 covering the determination of unrelated business taxable income of separate corporations, except that:

(i) The provisions of paragraphs (a) through (d), (f) through (k), and (o) of § 1.1502-12 apply; and

(ii) No charitable contributions deduction is taken into account under section 512(b)(10).

(2) ***Section 501(c)(2) organizations. See*** sections 511(c) and 512(a)(3)(C) for special rules applicable to organizations described in section 501(c)(2). .

See sections 511(c) and 512(a)(3)(C) for special rules applicable to organizations described in section 501(c)(2).

[T.D. 7595, 44 FR 10382, Feb. 20, 1979, as amended by T.D. 8677, 61 FR 33325, June 27, 1996; T.D. 8823, 64 FR 36101, July 2, 1999; T.D. 9885, 84 FR 67044, Dec. 6, 2019; T.D. 10018, 89 FR 106878, Dec. 30, 2024]

§ 1.1503-1 Computation and payment of tax.

(a) ***General rule.*** In any case in which a consolidated return is filed or required to be filed, the tax shall be determined, computed, assessed, collected, and adjusted in accordance with the regulations prescribed under section 1502 promulgated prior to the last date prescribed by law for the filing of such return.

(b) ***Limitation.*** If the affiliated group includes one or more Western Hemisphere trade corporations (as defined in section 921) or one or more regulated public utilities (as defined in section 1503 (c)), the increase in tax described in section 1503 (a) shall be applied in a manner provided in the regulations under section 1502.

[T.D. 6500, 25 FR 12105, Nov. 26, 1960, as amended by T.D. 7244, 37 FR 28897, Dec. 30, 1972]

§ 1.1503(d)-0 Table of contents.

This section lists the captions contained in §§ 1.1503(d)-1 through 1.1503(d)-8.

§ 1.1503(d)-1 Definitions and special rules for filings under section 1503(d).

(a) In general.

(b) Definitions.

(1) Domestic corporation.

(2) Dual resident corporation.

(3) Hybrid entity.

(4) Separate unit.

(i) In general.

(ii) Separate unit combination rule.

(iii) Business operations that do not constitute a permanent establishment.

(iv) Foreign branch separate units held by dual resident corporations or hybrid entities in the same foreign country.

(5) Dual consolidated loss.

(6) Subject to tax.

(7) Foreign country.

(8) Consolidated group.

(9) Domestic owner.

(10) Affiliated dual resident corporation and affiliated domestic owner.

(11) Unaffiliated dual resident corporation, unaffiliated domestic corporation, and unaffiliated domestic owner.

(12) Domestic affiliate.

(13) Domestic use.

(14) Foreign use.

(15) Grantor trust.

(16) Transparent entity.

(i) In general.

(ii) Example.

(17) Disregarded entity.

(18) Partnership.

(19) Indirectly.

(20) Certification period.

(c) Special rules for filings under section 1503(d).

(1) Reasonable cause exception.

(2) Requirements for reasonable cause relief.

(i) Time of submission.

(ii) Notice requirement.

(3) Signature requirement.

§ 1.1503(d)-2 Domestic use.

§ 1.1503(d)-3 Foreign use.

(a) Foreign use.

(1) In general.

(2) Indirect use.

(i) General rule.

(ii) Exception.

(iii) Examples.

(3) Deemed use.

(b) Available for use.

(c) Exceptions.

(1) In general.

(2) Election or merger required to enable foreign use.

(3) Presumed use where no foreign country rule for determining use.

(4) Certain interests in partnerships or grantor trusts.

(i) General rule.

(ii) Combined separate unit.

(iii) Reduction in interest.

(5) De minimis reduction of an interest in a separate unit.

(i) General rule.

(ii) Limitations.

(iii) Reduction in interest.

(iv) Examples and coordination with exceptions to other triggering events.

(6) Certain asset basis carryovers.

(7) Assumption of certain liabilities.

(i) In general.

(ii) Ordinary course limitation.

(8) Multiple-party events.

(9) Additional guidance.

(d) Ordering rules for determining the foreign use of losses.

(e) Mirror legislation rule.

(1) In general.

(2) Stand-alone exception.

(i) In general.

(ii) Stand-alone domestic use agreement.

(iii) Termination of stand-alone domestic use agreement.

§ 1.1503(d)-4 Domestic use limitation and related operating rules.

(a) Scope.

(b) Limitation on domestic use of a dual consolidated loss.

(c) Effect of a dual consolidated loss on a consolidated group, unaffiliated dual resident corporation, or unaffiliated domestic owner.

(1) Dual resident corporation.

(2) Separate unit.

(3) SRLY limitation.

(4) Items of a dual consolidated loss used in other taxable years.

(5) Reconstituted net operating losses.

(d) Elimination of a dual consolidated loss after certain transactions.

(1) General rule.

(i) Transactions described in section 381(a).

(ii) Cessation of separate unit status.

(2) Exceptions.

(i) Certain section 368(a)(1)(F) reorganizations.

(ii) Acquisition of a dual resident corporation by another dual resident corporation.

(iii) Acquisition of a separate unit by a domestic corporation.

(A) Acquisition by a corporation that is not a member of the same consolidated group.

(B) Acquisition by a member of the same consolidated group.

(iv) Special rules for foreign insurance companies.

(e) Special rule denying the use of a dual consolidated loss to offset tainted income.

(1) In general.

(2) Tainted income.

(i) Definition.

(ii) Income presumed to be derived from holding tainted assets.

(3) Tainted assets defined.

(4) Exceptions.

(f) Computation of foreign tax credit limitation.

§ 1.1503(d)-5 Attribution of items and basis adjustments.

(a) In general.

(b) Determination of amount of income or dual consolidated loss of a dual resident corporation.

(1) In general.

(2) Exceptions.

(c) Determination of amount of income or dual consolidated loss attributable to a separate unit, and income or loss attributable to an interest in a transparent entity.

(1) In general.

(i) Scope and purpose.

(ii) Only items of domestic owner taken into account.

(iii) Separate application.

(2) Foreign branch separate unit.

(i) In general.

(ii) Principles of § 1.882-5.

(iii) Exception where foreign country attributes interest expense solely by reference to books and records.

(3) Hybrid entity separate unit and an interest in a transparent entity.

(i) General rule.

(ii) Interests in certain disregarded entities, partnerships, and grantor trusts owned by a hybrid entity or transparent entity.

(4) Special rules.

(i) Allocation of items between certain tiered separate units and interests in transparent entities.

(A) Foreign branch separate unit.

(B) Hybrid entity separate unit or interest in a transparent entity.

(ii) Combined separate unit.

(iii) Gain or loss on the direct or indirect disposition of a separate unit or an interest in a transparent entity.

(A) In general.

(B) Multiple separate units or interests in transparent entities.

(iv) Inclusions on stock.

(v) Foreign currency gain or loss recognized under section 987.

(vi) Recapture of dual consolidated loss.

(d) Foreign tax treatment disregarded.

(e) Items generated or incurred while a dual resident corporation, a separate unit, or a transparent entity.

(f) Assets and liabilities of a separate unit or an interest in a transparent entity.

(g) Basis adjustments.

(1) Affiliated dual resident corporation or affiliated domestic owner.

(2) Interests in hybrid entities that are partnerships or interests in partnerships through which a separate unit is owned indirectly.

(i) Scope.

(ii) Determination of basis of partner's interest.

(3) Combined separate units.

§ 1.1503(d)-6 Exceptions to the domestic use limitation rule.

(a) In general.

(1) Scope and purpose.

(2) Absence of foreign affiliate or foreign consolidation regime.

(3) Foreign insurance companies treated as domestic corporations.

(b) Elective agreement in place between the United States and a foreign country.

(1) In general.

(2) Application to combined separate units.

(c) No possibility of foreign use.

(1) In general.

(2) Statement.

(d) Domestic use election.

(1) In general.

(2) No domestic use election available if there is a triggering event in the year the dual consolidated loss is incurred.

(e) Triggering events requiring the recapture of a dual consolidated loss.

(1) Events.

(i) Foreign use.

(ii) Disaffiliation.

(iii) Affiliation.

(iv) Transfer of assets.

(v) Transfer of an interest in a separate unit.

(vi) Conversion to a foreign corporation.

(vii) Conversion to a regulated investment company, a real estate investment trust, or an S corporation.

(viii) Failure to certify.

(ix) Cessation of stand-alone status.

(2) Rebuttal.

(i) General rule.

(ii) Certain asset transfers.

(iii) Reporting.

(iv) Examples.

(f) Triggering event exceptions.

(1) Continuing ownership of assets or interests.

(i) Disaffiliation as a result of a transaction described in section 381.

(ii) Continuing ownership by consolidated group.

(iii) Continuing ownership by unaffiliated dual resident corporation or unaffiliated domestic owner.

(2) Transactions requiring a new domestic use agreement.

(i) Multiple-party events.

(ii) Events resulting in a single consolidated group.

(iii) Requirements.

(A) New domestic use agreement.

(B) Statement filed by original elector.

(3) Certain transfers qualifying for the de minimis exception to foreign use.

(4) Deemed transactions as a result of certain transfers that do not result in a foreign use.

(5) Compulsory transfers.

(6) Subsequent triggering events.

(g) Annual certification reporting requirement.

(h) Recapture of dual consolidated loss and interest charge.

(1) Presumptive rules.

(i) Amount of recapture.

(ii) Interest charge.

(2) Reduction of presumptive recapture amount and presumptive interest charge.

(i) Amount of recapture.

(ii) Interest charge.

(3) Rules regarding multiple-party event exceptions to triggering events.

(i) Scope.

(ii) Original elector and prior subsequent electors not subject to recapture or interest charge.

(iii) Recapture tax amount and required statement.

(A) In general.

(B) Recapture tax amount.

(iv) Tax assessment and collection procedures.

(A) In general.

(B) Collection from original elector and prior subsequent electors; joint and several liability.

(C) Allocation of partial payments of tax.

(D) Refund.

(v) Definition of income tax liability.

(vi) Example.

(4) Computation of taxable income in year of recapture.

(i) Presumptive rule.

(ii) Exception to presumptive rule.

(5) Character and source of recapture income.

(6) Reconstituted net operating loss.

(i) General rule.

(ii) Exception.

(iii) Special rule for recapture following multiple-party event exception to a triggering event.

(i) [Reserved]

(j) Termination of domestic use agreement and annual certifications.

(1) Rebuttals, exceptions to triggering events, and recapture.

(2) Termination of ability for foreign use.

(i) In general.

(ii) Statement.

(3) Agreements filed in connection with stand-alone exception.

§ 1.1503(d)-7 Examples.

(a) In general.

(b) Presumed facts for examples.

(c) Examples.

§ 1.1503(d)-8 Effective dates.

(a) General rule.

(b) Special rules.

(1) Reduction of term of agreements filed under §§ 1.1503-2A(c)(3), 1.1503-2A(d)(3), 1.1503-2(g)(2)(i), or 1.1503-2T(g)(2)(i).

(2) Reduction of term of agreements filed under §§ 1.1503-2(g)(2)(iv)(B)(*2*)(*i*) (1992), 1.1503-2(g)(2)(iv)(B)(*3*)(*i*), or Rev. Proc. 2000-42.

(3) Relief for untimely filings.

(i) General rule.

(ii) Closing agreements.

(iii) Pending requests for relief.

(4) Multiple-party event exception to triggering events.

(5) Basis adjustment rules.

[T.D. 9315, 72 FR 12914, Mar. 19, 2007; 72 FR 20424, Apr. 23, 2007]

§ 1.1503(d)-1 Definitions, special rules, and filings.

(a) ***In general.*** This section and §§ 1.1503(d)-2 through 1.1503(d)-8 provide rules concerning the determination and use of dual consolidated losses pursuant to section 1503(d). Paragraph (b) of this section provides definitions that apply for purposes of this section and §§ 1.1503(d)-2 through 1.1503(d)-8. Paragraph (c) of this section provides rules for a domestic consenting corporation. Paragraph (d) of this section provides rules for disregarded payment losses. Paragraph (e) of this section provides relief for certain compliance failures due to reasonable cause, and a signature requirement for filings. Paragraph (f) of this section provides an anti-avoidance rule.

(b) ***Definitions.*** The following definitions apply for purposes of this section and §§ 1.1503(d)-2 through 1.1503(d)-8:

(1) ***Domestic corporation*** means an entity classified as a domestic corporation under section 7701(a)(3) and (4) or otherwise treated as a domestic corporation by the Internal Revenue Code, including, but not limited to, sections 269B, 953(d), 1504(d), and 7874. However, solely for purposes of section 1503(d), the term domestic corporation shall not include a regulated investment company as defined in section 851, a real estate investment trust as defined in section 856, or an S corporation as defined in section 1361.

(2) ***Dual resident corporation*** means—

(i) A domestic corporation that is subject to an income tax of a foreign country on its worldwide income or on a residence basis. A corporation is taxed on a residence basis if it is taxed as a resident under the laws of the foreign country;

(ii) A foreign insurance company that makes an election to be treated as a domestic corporation pursuant to section 953(d) and is treated as a member of an affiliated group for purposes of chapter 6, even if such company is not subject to an income tax of a foreign country on its worldwide income or on a residence basis. See section 953(d)(3); and

(iii) A domestic consenting corporation (as defined in § 301.7701-3(c)(3)(i) of this chapter), as provided in paragraph (c)(1) of this section. See § 1.1503(d)-7(c)(41) for an example illustrating the application of section 1503(d) to a domestic consenting corporation.

(3) ***Hybrid entity*** means an entity that is not taxable as an association for Federal tax purposes, but is subject to an income tax of a foreign country as a corporation (or otherwise at the entity level) either on its worldwide income or on a residence basis.

(4) ***Separate unit*** —

(i) ***In general.*** The term *separate unit* means either of the following that is carried on or owned, as applicable, directly or indirectly, by a domestic corporation (including a dual resident corporation):

(A) Except to the extent provided in paragraph (b)(4)(iii) of this section, a business operation outside the United States that, if carried on by a U.S. person, would constitute a foreign branch as defined in § 1.367(a)-6T(g)(1) (foreign branch separate unit).

(B) An interest in a hybrid entity (hybrid entity separate unit).

(ii) ***Separate unit combination rule.*** Except as otherwise provided in this paragraph, if a domestic owner, or two or more domestic owners that are members of the same consolidated group, have two or more separate units (individual separate units), then all such individual separate units that are located (in the case of a foreign branch separate unit) or subject to an income tax either on their worldwide income or on a residence basis (in the case of a hybrid entity an interest in which is a hybrid entity separate unit) in the same foreign country shall be treated as one separate unit (combined separate unit). See § 1.1503(d)-7(c) *Example 1.* Separate units of a foreign insurance company that is a dual resident corporation under paragraph (b)(2)(ii) of this section, however, shall not be combined with separate units of any other domestic corporation. Except as specifically provided in this section or §§ 1.1503(d)-2 through 1.1503(d)-8, any individual separate unit composing a combined separate unit loses its character as an individual separate unit.

(iii) ***Business operations that do not constitute a permanent establishment.*** A business operation carried on by a domestic corporation that is not a dual resident corporation shall not constitute a foreign branch separate unit, provided the business operation:

(A) Is not carried on indirectly through a hybrid entity or a transparent entity; and

(B) Is conducted in a country with which the United States has entered into an income tax convention and is not treated as a permanent establishment pursuant to that convention, or is not otherwise subject to tax on a net basis under that convention. See § 1.1503(d)-7(c) *Example 2.*

(iv) ***Foreign branch separate units held by dual resident corporations or hybrid entities in the same foreign country.*** A foreign branch separate unit may be owned by a dual resident corporation, or through a hybrid entity (an interest in which is a separate unit), even where the foreign branch is located in the same foreign country that subjects such dual resident corporation or hybrid entity to tax on its worldwide income or on a residence basis. But see the rule under paragraph (b)(4)(ii) of this section that combines certain same-country hybrid entity separate units and foreign branch separate units. See also § 1.1503(d)-7(c) *Example 1.*

(5) ***Dual consolidated loss*** means—

(i) In the case of a dual resident corporation, and except to the extent provided in § 1.1503(d)-5(b), the net operating loss (as defined in section 172(c) and the related regulations) incurred in a year in which the corporation is a dual resident corporation; and

(ii) In the case of a separate unit, the net loss attributable to the separate unit under § 1.1503(d)-5(c) through (e).

(6) ***Subject to tax.*** For purposes of determining whether a domestic corporation or another entity is subject to an income tax of a foreign country on its income, the fact that it has no actual income tax liability to the foreign country for a particular taxable year shall not be taken into account.

(7) ***Foreign country*** includes any U.S. territory (as defined in § 1.1502-1(l)).

(8) ***Consolidated group*** has the meaning provided in § 1.1502-1(h).

(9) ***Domestic owner*** means—

(i) A domestic corporation (including a dual resident corporation) that has one or more separate units or interests in a transparent entity; and

(ii) In the case of a combined separate unit, a domestic corporation (including a dual resident corporation) that has one or more individual separate units that are treated as part of the combined separate unit under paragraph (b)(4)(ii) of this section.

(10) ***Affiliated dual resident corporation*** and *affiliated domestic owner* mean a dual resident corporation and a domestic owner, respectively, that is a member of a consolidated group.

(11) ***Unaffiliated dual resident corporation*** , *unaffiliated domestic corporation*, and *unaffiliated domestic owner* mean a dual resident corporation, domestic corporation, and domestic owner, respectively, that is not a member of a consolidated group.

(12) ***Domestic affiliate*** means—

(i) A member of an affiliated group, without regard to the exceptions contained in section 1504(b) (other than section 1504(b)(3)) relating to includible corporations;

(ii) A domestic owner;

(iii) A separate unit; or

(iv) An interest in a transparent entity, as defined in paragraph (b)(16) of this section.

(13) ***Domestic use.*** See § 1.1503(d)-2.

(14) ***Foreign use.*** See § 1.1503(d)-3.

(15) ***Grantor trust*** means a trust, any portion of which is treated as being owned by the grantor or another person under subpart E of subchapter J of this chapter.

(16) ***Transparent entity*** —

(i) ***In general.*** The term *transparent entity* means an entity described in this paragraph (b)(16) where all or a portion of its interests are owned, directly or indirectly, by a domestic corporation. An entity is described in this paragraph (b)(16) if the entity—

(A) Is not taxable as an association for Federal tax purposes;

(B) Is not subject to income tax in a foreign country as a corporation (or otherwise at the entity level) either on its worldwide income or on a residence basis; and

(C) Is not a pass-through entity under the laws of the applicable foreign country. For purposes of applying the preceding sentence, the applicable foreign country is the foreign country in which the relevant foreign branch separate unit is located, or the foreign country that subjects the relevant hybrid entity (an interest in which is a separate unit) or dual resident corporation to an income tax either on its worldwide income or on a residence basis.

(ii) ***Example.*** A U.S. limited liability company (LLC) does not elect to be taxed as an association for Federal tax purposes and is not subject to income tax in a foreign country as a corporation (or otherwise at the entity level) either on its worldwide income or on a residence basis. The LLC is owned by a hybrid entity (an interest in which is a separate unit) that is the relevant hybrid entity. Provided the LLC is not treated as a pass-through entity by the applicable foreign country that subjects the relevant hybrid entity to an income tax either on its worldwide income or on a residence basis, the LLC would qualify as a transparent entity. See also § 1.1503(d)-7(c) *Example 26.*

(17) ***Disregarded entity*** means an entity that is disregarded as an entity separate from its owner, under §§ 301.7701-1 through 301.7701-3 of this chapter, for Federal tax purposes.

(18) ***Partnership*** means an entity that is classified as a partnership, under §§ 301.7701-1 through 301.7701-3 of this chapter, for Federal tax purposes.

(19) ***Indirectly*** , when used in reference to ownership, means ownership through a partnership, a disregarded entity, or a grantor trust, regardless of whether the partnership, disregarded entity, or grantor trust is a U.S. person.

(20) ***Certification period*** means the period of time up to and including the fifth taxable year following the year in which the dual consolidated loss that is the subject of a domestic use agreement (as described in § 1.1503(d)-6(d)(1)) was incurred.

(c) ***Treatment of domestic consenting corporation as a dual resident corporation*** —

(1) ***Rule.*** A domestic consenting corporation is treated as a dual resident corporation under paragraph (b)(2)(iii) of this section for a taxable year if, on any day during the taxable year, the following requirements are satisfied:

(i) Under the tax law of a foreign country where a specified foreign tax resident is tax resident, the specified foreign tax resident derives or incurs (or would derive or incur) items of income, gain, deduction, or loss of the domestic consenting corporation (because, for example, the domestic consenting corporation is fiscally transparent under such tax law).

(ii) The specified foreign tax resident bears a relationship to the domestic consenting corporation that is described in section 267(b) or 707(b). See § 1.1503(d)-7(c)(41) for an example illustrating the application of paragraph (c) of this section.

(2) ***Definitions.*** The following definitions apply for purposes of this paragraph (c).

(i) The term *fiscally transparent* means, with respect to a domestic consenting corporation or an intermediate entity, fiscally transparent as determined under the principles of § 1.894-1(d)(3)(ii) and (iii), without regard to whether a specified foreign tax resident is a resident of a country that has an income tax treaty with the United States.

(ii) The term *specified foreign tax resident* means a body corporate or other entity or body of persons liable to tax under the tax law of a foreign country as a resident.

(d) ***Disregarded payment loss (DPL) rules*** —

(1) ***In general.*** The disregarded payment loss rules of this paragraph (d) only apply to a domestic corporation (including a dual resident corporation) that directly or indirectly owns an interest in a disregarded entity, regardless of whether the disregarded entity is domestic or foreign (such a domestic corporation, a *disregarded payment entity owner,* or *DPE owner*). If these rules apply to a DPE owner, then the DPE owner determines disregarded payment income or disregarded payment loss of its disregarded payment entities (if any) described in paragraph (d)(5)(i)(A), (B), (C), or (D) of this section in accordance with paragraph (d)(5)(ii) of this section and, in the case of a disregarded payment loss for which a triggering event occurs under paragraph (d)(3) of this section, includes an amount equal to the DPL inclusion amount in gross income and establishes a suspended deduction in accordance with paragraph (d)(2) of this section. The inclusion required under this paragraph (d)(1) and paragraph (d)(2)(i) of this section is included in the taxable year of the DPE owner in which the triggering event occurs, and the corresponding suspended deduction under this paragraph (d)(1) and paragraph (d)(2)(ii) of this section is established in the subsequent taxable year of the DPE owner. See § 1.1503(d)-7(c)(42) for an example illustrating the application of the disregarded payment loss rules.

(2) ***DPL amounts*** —

(i) ***DPL inclusion amount.*** A *DPL inclusion amount* means, with respect to a disregarded payment loss as to which a triggering event occurs during the DPL certification period, an amount equal to the disregarded payment loss. Such amount is reduced (but not below zero) to the extent of the balance in the DPL cumulative register of the disregarded payment entity if the certification requirement under paragraph (d)(4)(iii) of this section is satisfied.

(ii) ***Suspended deduction.*** With respect to a DPL inclusion amount, a DPE owner establishes a suspended deduction in an amount equal to the DPL inclusion amount. The suspended deduction is allowed as a deduction under the principles of § 1.1503(d)-6(h)(6) by treating the suspended deduction as if it were a reconstituted net operating loss that becomes deductible only to the extent of disregarded payment income derived in the taxable year in which the

suspended deduction is established or subsequent taxable years (as measured by the disregarded payment entity's DPL cumulative register), provided that the certification requirement under paragraph (d)(4)(iv) of this section is satisfied.

(iii) ***DPL cumulative register.*** The term *DPL cumulative register* means, with respect to the disregarded payment entity, an account the balance of which is computed at the end of each foreign taxable year of the entity, and which is—

(A) Increased by the amount of disregarded payment income of the entity for the foreign taxable year, and then, after determining the DPL inclusion amount for the year,

(B) Decreased by the amount of the cumulative register balance that is used under paragraph (d)(2)(i) or (ii) of this section.

(iv) ***Character and source*** —

(A) ***DPL inclusion amount.*** A DPE owner's income inclusion for a DPL inclusion amount is, for all U.S. tax purposes, treated as ordinary income, and characterized and sourced, including for purposes of sections 904(d) and 907, in the same manner as if the disregarded payment entity were a foreign corporation and the amount were interest or royalty income paid by the foreign corporation (taking into account, for example, section 904(d)(3) if such foreign corporation would be a controlled foreign corporation). For these purposes, the DPL inclusion amount is considered comprised of interest or royalty income based on the proportion of interest or royalty deductions taken into account, respectively, in computing the disregarded payment loss relative to all the deductions taken into account in computing the disregarded payment loss. Further, for these purposes, a deduction attributable to a structured payment or a deduction with respect to equity is treated as an interest deduction.

(B) ***Suspended deduction.*** A DPE owner's deduction with respect to a suspended deduction is, for all U.S. tax purposes, characterized and sourced in the same manner as the income for the DPL inclusion amount to which it relates. If the income from the DPL inclusion amount is assigned to multiple statutory and residual groupings, the deduction is allocated and apportioned to each grouping in the same proportions as the DPL inclusion amount.

(3) ***Triggering events.*** An event described in paragraph (d)(3)(i) or (ii) of this section is a triggering event with respect to a disregarded payment loss of a disregarded payment entity.

(i) ***Foreign use.*** A foreign use of the disregarded payment loss. For this purpose, a foreign use is determined under the principles of § 1.1503(d)-3 (including the exceptions in § 1.1503(d)-3(c)), by treating the disregarded payment loss as a dual consolidated loss, treating the disregarded payment entity as a separate unit (or, in the case of a disregarded payment entity that is a dual resident corporation, by treating the disregarded payment entity as a dual resident corporation), and, in § 1.1503(d)-3(a)(1)(i) and (ii), only taking into account a person that is related to the DPE owner of the disregarded payment entity. Thus, for example, a foreign use of a disregarded payment loss occurs if, under a relevant foreign tax law, any portion of the foreign law deduction taken into account in computing the disregarded payment loss is made available (including by reason of a foreign consolidation regime or similar regime, or a sale, merger, or similar transaction) to offset an item of income that, for U.S. tax purposes, is an item of a foreign corporation, but only if such foreign corporation is related to the DPE owner of the disregarded payment entity. When applying the principles of the deemed ordering rule in § 1.1503(d)-3(c)(3), items of income or gain are taken into account only to the extent such items

are described in paragraph (d)(5)(ii)(D) of this section; thus, for example, such items include items of income that are or would be taken into account in determining the amount of disregarded payment loss or disregarded payment income, and exclude items that are regarded for U.S. tax purposes.

(ii) ***Failure to comply with certification requirements.*** A failure by the DPE owner of the disregarded payment entity to comply with the certification requirements of paragraphs (d)(4)(i) and (ii) of this section.

(4) ***Certification requirements.*** Except as otherwise provided in publications, forms, instructions, or other guidance, a DPE owner of a disregarded payment entity is subject to the certification requirements of this paragraph (d)(4) with respect to a disregarded payment loss of the disregarded payment entity.

(i) For its taxable year that includes the date on which the foreign taxable year in which a disregarded payment loss is incurred ends, the DPE owner must attach with its timely filed tax return a certification labeled "Initial Disregarded Payment Loss Certification Under Section 1503(d)," which must contain—

(A) The information set forth in § 1.1503(d)-6(c)(2)(ii) (determined by substituting the phrase "disregarded payment entity" for the phrase "separate unit");

(B) A statement of the amount of the disregarded payment loss; and

(C) A statement that a foreign use of the disregarded payment loss has not occurred during the DPL certification period.

(ii) During the DPL certification period, for each of its taxable years after the taxable year described in paragraph (d)(4)(i) of this section that includes a date on which a foreign taxable year ends, the DPE owner must attach with its timely filed tax return a certification labeled "Annual Disregarded Payment Loss Certification Under Section 1503(d)" and satisfying the requirements of this paragraph (d)(4)(ii). Certifications with respect to multiple disregarded payment losses may be combined in a single certification, but each disregarded payment loss must be separately identified. To satisfy the requirements of this paragraph (d)(4)(ii), the certification must—

(A) Identify the disregarded payment loss to which it pertains by setting forth the foreign taxable year in which the disregarded payment loss was incurred and the amount of such disregarded payment loss;

(B) State that there has been no foreign use of the disregarded payment loss; and

(C) Warrant that arrangements have been made to ensure that there will be no foreign use of the disregarded payment loss and that the DPE owner will be informed of any such foreign use.

(iii) If a disregarded payment entity has a balance in its DPL cumulative register upon a DPL triggering event and the DPE owner includes in gross income a DPL inclusion amount that is less than the amount of the disregarded payment loss, the DPE owner of the disregarded payment entity must attach a statement labeled "Reduction of Disregarded Payment Loss Amount Under Section 1503(d)" to its income tax return for the taxable year in which the triggering event occurs and provide any other information as requested by the Commissioner. The statement must show the disregarded payment income or disregarded payment loss of the

disregarded payment entity for each foreign taxable year (other than a foreign taxable year where the entity or branch is not a disregarded payment entity) up to and including the foreign taxable year with respect to which the triggering event occurs.

(iv) If a DPE owner claims an allowed deduction with respect to a suspended deduction, the DPE owner must attach a statement labeled "Release of Suspended Deduction Under Section 1503(d)" to the income tax return for the taxable year in which the deduction is allowed and provide any other information as requested by the Commissioner, including in regulations, forms, instructions or other guidance. The statement must describe the DPE owner's DPL inclusion amount to which the suspended deduction relates and show the disregarded payment income or disregarded payment loss of the disregarded payment entity for each foreign taxable year up to and including the foreign taxable year during which the deduction is allowed.

(5) ***Definitions.*** The following definitions apply for purposes of this paragraph (d).

(i) The term *disregarded payment entity* means, with respect to a DPE owner, any entity, foreign branch, or dual resident corporation described in paragraph (d)(5)(i)(A), (B), (C) or (D) of this section.

(A) A disregarded entity that is a foreign tax resident and related to the DPE owner, provided that the DPE owner directly or indirectly owns interests in the disregarded entity.

(B) A foreign branch of the DPE owner and a foreign branch of an entity that is related to the DPE owner and in which the DPE owner directly or indirectly owns an interest.

(C) An entity that is treated as a partnership for U.S. tax purposes that is a foreign tax resident and related to the DPE owner, provided that the DPE owner directly or indirectly owns an interest in the entity.

(D) The DPE owner itself if it is a dual resident corporation.

(ii) The terms *disregarded payment income* and *disregarded payment loss* have the meanings set forth in this paragraph (d)(5)(ii). For purposes of computing the disregarded payment income or disregarded payment loss of a disregarded payment entity, a DPE owner takes into account the disregarded payment income or disregarded payments loss of each disregarded payment entity for each foreign taxable year that ends with or within its U.S. taxable year and an item is taken into account only if it gives rise to income or a deduction under the relevant foreign tax law during the portion of the foreign taxable year in which the entity or foreign branch is a disregarded payment entity; for purposes of allocating an item to a period, the principles of § 1.1502-76(b) apply. Thus, for example, if a DPE owner with a calendar U.S. taxable year becomes subject to the disregarded payment loss rules for the U.S. taxable year beginning on January 1, 2026, the disregarded payment income or disregarded payment loss of a disregarded payment entity of the DPE owner with a foreign taxable year ending on June 30, 2026, excludes items allocated (under the principles of § 1.1502-76(b)) to the pre-January 1, 2026, portion of that foreign taxable year. Items taken into account in computing disregarded payment income or disregarded payment loss are calculated in the currency used to determine tax under the relevant foreign tax law. See § 1.1503(d)-7(c)(46) for an example illustrating items that are taken into account in determining disregarded payment income or disregarded payment loss.

(A) ***Disregarded payment income.*** Disregarded payment income means, with respect to a disregarded payment entity and a foreign taxable year of the entity, the excess (if any) of the sum of the items described in paragraph (d)(5)(ii)(D) of this section over the sum of the items described in paragraph (d)(5)(ii)(C) of this section.

(B) ***Disregarded payment loss.*** Subject to the de minimis rule set forth in paragraph (d)(6)(vii) of this section, a disregarded payment loss means, with respect to a disregarded payment entity and a foreign taxable year of the entity, the excess (if any) of the sum of the items described in paragraph (d)(5)(ii)(C) of this section over the sum of the items described in paragraph (d)(5)(ii)(D) of this section.

(C) ***Items of deduction.*** With respect to a disregarded payment entity and a foreign taxable year of the entity, an item is described in this paragraph (d)(5)(ii)(C) to the extent that it satisfies all of the requirements set forth in paragraphs (d)(5)(ii)(C)(*1*) through (*3*) of this section. In addition, an item of a disregarded payment entity described in paragraph (d)(5)(i)(A) of this section is described in this paragraph (d)(5)(ii)(C) if, under the relevant foreign tax law, it is a deduction with respect to equity (including deemed equity) allowed to the entity in such taxable year (for example, a notional interest deduction) or a deduction for an imputed interest payment with respect to a debt instrument (such as a deduction for an imputed interest payment with respect to an interest-free loan).

(*1*) Under the relevant foreign tax law, the disregarded payment entity is allowed a deduction in such taxable year for the item.

(*2*) The payment, accrual, or other transaction giving rise to the item is disregarded for U.S. tax purposes as a transaction between a disregarded entity and its tax owner or between disregarded entities with the same tax owner (for example, a payment by a disregarded entity to its tax owner or to another disregarded entity owned by its tax owner, a payment from a dual resident corporation or partnership to a disregarded entity it owns, or a payment from the home office of a foreign branch to a disregarded entity the home office owns that is attributable to the foreign branch).

(*3*) If the payment, accrual, or other transaction were regarded for U.S. tax purposes, it would be interest, a structured payment, or a royalty within the meaning of § 1.267A-5(a)(12), (b)(5)(ii), or (a)(16), respectively.

(D) ***Items of income.*** With respect to a disregarded payment entity and a foreign taxable year of the entity, an item is described in this paragraph (d)(5)(ii)(D) to the extent that it satisfies all of the requirements set forth in paragraphs (d)(5)(ii)(D)(*1*) through (*3*) of this section.

(*1*) Under the relevant foreign tax law, the disregarded payment entity includes the item in income in such taxable year.

(*2*) The payment, accrual, or other transaction giving rise to the item is disregarded for U.S. tax purposes as a transaction between a disregarded entity and its tax owner or between disregarded entities with the same tax owner (for example, because it is a payment to a disregarded entity from the disregarded entity's tax owner or from another disregarded entity of its tax owner, a payment to a dual resident corporation or partnership from a disregarded entity it owns, or a payment from a disregarded entity to the home office of a foreign branch that is attributable to the foreign branch).

(3) If the payment, accrual, or other transaction were regarded for U.S. tax purposes, it would be interest, a structured payment, or a royalty with the meaning of § 1.267A-5(a)(12), (b)(5)(ii), or (a)(16), respectively.

(E) ***Translation into U.S. dollars.*** The amount of disregarded payment income or disregarded payment loss with respect to a foreign taxable year of a disregarded payment entity is translated into U.S. dollars using the yearly average exchange rate (within the meaning of § 1.987-1(c)(2)) for that foreign taxable year.

(F) ***Royalties under pre-August 6, 2024 licenses excluded.*** Royalties paid or accrued pursuant to a license agreement entered into before August 6, 2024, are not taken into account when determining the amount of disregarded payment income or disregarded payment loss. The preceding sentence ceases to apply with respect to any such agreement upon the significant modification of any terms of the agreement, such as a change in the licensor or licensee or a significant modification of the rights in consideration for which the royalties are paid. In such case, any amounts paid or accrued on or after the date of the significant modification are taken into account when determining the amount of disregarded payment income or disregarded payment loss. Termination of a license agreement and re-entry into a license agreement between the same parties and with the same terms (other than the term governing the period covered by the agreement), an extension of the period covered by a license agreement without modification of other terms, or an alteration of a legal right or obligation that occurs by operation of the terms of the license agreement (for example, where the license agreement provides for updating the royalty based on updated transfer pricing studies), will not be considered a significant modification of the first license agreement. For purposes of this paragraph (d)(5)(ii)(F), a combined disregarded payment entity is treated as a single licensor or licensee, as the case may be.

(iii) The term *DPL certification period* includes, with respect to a disregarded payment loss, the foreign taxable year in which the disregarded payment loss is incurred, any prior foreign taxable years, and, except as provided in paragraph (d)(6)(iii) of this section, the 60-month period following the foreign taxable year in which the disregarded payment loss is incurred.

(iv) The term *foreign branch* means a branch (within the meaning of § 1.267A-5(a)(2)) that gives rise to a taxable presence under the tax law of the foreign country where the branch is located.

(v) The term *foreign taxable year* means, with respect to a disregarded payment entity, the entity's taxable year for purposes of a relevant foreign tax law.

(vi) The term *foreign tax resident* means a tax resident (within the meaning of § 1.267A-5(a)(23)(i)) of a foreign country.

(vii) The term *related* has the meaning provided in this paragraph (d)(5)(vii). A person is related to a DPE owner if the person is a related person within the meaning of section 954(d)(3) and the regulations thereunder, determined by treating the person as the “controlled foreign corporation” referred to in that section. In addition, for purposes of determining relatedness, a disregarded entity is treated as a corporation.

(viii) The term *relevant foreign tax law* means, with respect to a disregarded payment entity, any tax law of a foreign country of which the entity is a tax resident (within the meaning of § 1.267A-5(a)(23)(i)) or, in the case of a disregarded payment entity that is a foreign branch, the tax law of the foreign country where the branch is located.

(ix) The term *DPE owner* has the meaning provided in paragraph (d)(1) of this section, and includes any successor to the corporation described paragraph (d)(1) of this section.

(6) *Special rules* —

(i) ***Disregarded payment entity combination rule.*** For purposes of this paragraph (d), disregarded payment entities for which the relevant foreign tax law is the same (for example, because the entities are tax residents of the same foreign country) are combined and treated as a combined disregarded payment entity under the principles of paragraph (b)(4)(ii) of this section, provided that the entities have the same foreign taxable year and are owned, or interests in which are directly or indirectly owned, either by the same DPE owner or by DPE owners that are members of the same consolidated group. However, this paragraph (d)(6)(i) does not apply with respect to a dual resident corporation treated as a disregarded payment entity pursuant to paragraph (d)(5)(i)(D) of this section. In determining the disregarded payment income or disregarded payment loss of a combined disregarded payment entity, the principles of § 1.1503(d)-5(c)(4)(ii) apply. Thus, for example, if multiple individual disregarded payment entities are treated as a combined disregarded payment entity pursuant to this paragraph (d)(6)(i), then the combined disregarded payment entity has either a single amount of disregarded payment income or a single amount of disregarded payment loss.

(ii) ***Partial ownership of disregarded payment entity.*** If a DPE owner of a disregarded payment entity indirectly owns through a partnership less than all the interests in that disregarded payment entity, then the rules of this paragraph (d) are applied based on the DPE owner's proportionate interest in the disregarded payment entity. In such a case, as to the DPE owner, only a proportionate share of the disregarded payment entity's items of deduction or income are taken into account in computing disregarded payment income or disregarded payment loss of the entity. In addition, with respect to the disregarded payment loss as so computed, the DPE owner must comply with the certification requirements of paragraph (d)(4) of this section and, upon a triggering event, directly include in gross income an amount equal to the DPL inclusion amount.

(iii) ***Termination of DPL certification period.*** With respect to a disregarded payment loss of a disregarded payment entity, the DPL certification period does not include any date after the end of the DPE owner's taxable year during which the DPE owner, or a person related to the DPE owner, no longer owns directly or indirectly any of the interests in the disregarded payment entity, or, in the case of a disregarded payment entity that is a foreign branch, substantially all of the assets of the foreign branch. In such a case, the DPE owner ceases to be subject to the rules of paragraph (d) of this section with respect to the disregarded payment loss; thus, for example, after the end of such taxable year the DPE owner is not subject to the certification requirements of paragraph (d)(4)(ii) of this section with respect to the loss, and will not be required to include in gross income the DPL inclusion amount with respect to such loss. The DPL certification period will also terminate with respect to a disregarded payment loss upon a DPE owner's inclusion of the DPL inclusion amount attributable to the disregarded payment loss.

(iv) ***Agent for a consolidated group.*** If a DPE owner is a member of a consolidated group, see § 1.1502-77 for agent of the group rules (generally treating the common parent as the agent of its consolidated group).

(v) ***Coordination with foreign hybrid mismatch rules.*** Whether a disregarded payment entity is allowed a deduction under a relevant foreign tax law is determined with regard to hybrid mismatch rules, if any, under the relevant foreign tax law. Thus, for example, if a relevant foreign tax law denies a deduction for an item to prevent a deduction/no-inclusion outcome (that is, a payment that is deductible for the payer jurisdiction and is not included in the ordinary income of the payee), the item is not taken into account for purposes of computing the amount of disregarded payment income or disregarded payment loss. For this purpose, the term *hybrid mismatch rules* has the meaning provided in § 1.267A-5(a)(10).

(vi) ***DPL inclusion amount and suspended deduction not taken into account for dual consolidated loss purposes.*** A DPL inclusion amount included in the gross income of a DPE owner, and any allowed amount of a suspended deduction attributable to a DPL inclusion amount, are not taken into account for purposes of determining the income or dual consolidated loss of the dual resident corporation, or the income or dual consolidated loss attributable to the separate unit, under § 1.1503(d)-5(b) or (c).

(vii) ***De minimis rule.*** A disregarded payment entity will be deemed to have no disregarded payment loss with respect to a foreign taxable year in which the conditions in paragraphs (d)(6)(vii)(A) and (B) of this section are satisfied.

(A) The items that compose the disregarded payment loss are incurred in connection with the conduct of an active trade or business (within the meaning of § 1.367(a)-2(d)(2) and (3), but for this purpose treating the disregarded payment entity as the foreign corporation referenced therein) carried on by the disregarded payment entity. For purposes of the preceding sentence, the determination of whether items are incurred in connection with an active trade or business is made under § 1.367(a)-2(d)(5), but for this purpose by treating the property received by the disregarded payment entity pursuant to the arrangement that gave rise to the item (such as cash or the rights to use the intangible property) as the property described in such section.

(B) The amount of the disregarded payment loss is less than the lesser of $3 million or 10 percent of the aggregate amount of all the items of the disregarded payment entity for the foreign taxable year that satisfy the condition described in paragraph (d)(5)(ii)(C)(1) of this section. For this purpose, the items of the disregarded payment entity may include, for example, items that are regarded for both U.S. and foreign tax purposes, or foreign law items that if regarded for U.S. tax purposes would not be treated as interest, a structured payment, or a royalty within the meaning of § 1.267A-5(a)(12), (b)(5)(ii), or (a)(16), respectively.

(e) ***Special rules for filings.*** —

(1) ***Reasonable cause exception.*** A person that is permitted or required to file an election, agreement, statement, rebuttal, computation, or other information pursuant to this section and §§ 1.1503(d)-2 through 1.1503(d)-8, that fails to make such filing in a timely manner, shall be considered to have satisfied the timeliness requirement with respect to such filing if the person is able to demonstrate, to the Area Director, Field Examination, Small Business/Self Employed or the Director of Field Operations, Large and Mid-Size Business (Director) having jurisdiction of the taxpayer's tax return for the taxable year, that such failure was due to reasonable cause and not willful neglect. In determining whether the taxpayer has reasonable cause, the Director shall consider whether the taxpayer acted reasonably and in good faith. In general, the taxpayer must demonstrate that it exercised ordinary care and prudence in meeting its tax obligations but nonetheless did not comply

with the prescribed duty within the prescribed time. Whether the taxpayer acted reasonably and in good faith will be determined after considering all the facts and circumstances. The Director shall notify the person in writing within 120 days of the filing if it is determined that the failure to comply was not due to reasonable cause, or if additional time will be needed to make such determination. For this purpose, the 120-day period shall begin on the date the taxpayer is notified in writing that the request has been received and assigned for review. If, once such period commences, the taxpayer is not again notified within 120 days, then the taxpayer shall be deemed to have established reasonable cause. The reasonable cause exception of this paragraph (d) shall only apply if, once the person becomes aware of its failure to file the election, agreement, statement, rebuttal, computation or other information in a timely manner, the person complies with the requirements of paragraph (d)(2) of this section.

(2) ***Requirements for reasonable cause relief*** —

(i) ***Time of submission.*** Requests for reasonable cause relief will only be considered if once the person becomes aware of the failure to file the election, agreement, statement, rebuttal, computation or other information, the person attaches all the documents that should have been filed, as well as a written statement setting forth the reasons for the failure to timely comply, to an amended return that amends the return to which the documents should have been attached pursuant to the rules of this section and §§ 1.1503(d)-2 through 1.1503(d)-8.

(ii) ***Notice requirement.*** In addition to the requirements of paragraph (d)(2)(i) of this section, the taxpayer must provide a copy of the amended return and all required attachments to the Director as follows:

(A) If the taxpayer is under examination for any taxable year when the taxpayer requests relief, the taxpayer must provide a copy of the amended return and attachments to the personnel conducting the examination.

(B) If the taxpayer is not under examination for any taxable year when the taxpayer requests relief, the taxpayer must provide a copy of the amended return and attachments to the Director having jurisdiction of the taxpayer's return.

(3) ***Signature requirement.*** When an election, agreement, statement, rebuttal, computation, or other information is required pursuant to this section and §§ 1.1503(d)-2 through 1.1503(d)-8 to be attached to and filed by the due date (including extensions) of a U.S. tax return and signed under penalties of perjury by the person who signs the return, the attachment and filing of an unsigned copy is considered to satisfy such requirement, provided the taxpayer retains the original in its records in the manner specified by § 1.6001-1(e).

(f) ***Anti-avoidance rule*** —

(1) ***In general.*** Except to the extent provided in paragraph (f)(2) of this section, if a transaction, series of transactions, plan, or arrangement is engaged in with a view to avoid the purposes of the rules in this section and §§ 1.1503(d)-2 through 1.1503(d)-8, then appropriate adjustments will be made. A transaction, series of transactions, plan, or arrangement (including an arrangement to reflect, or not reflect, items on books and records) is engaged in with a view to avoid the purposes of this section and §§ 1.1503(d)-2 through 1.1503(d)-8 only if it results in a double deduction or similar outcome (for example, by putting an item of deduction or loss that composes (or would compose) a dual consolidated loss to both a domestic use and a foreign use (determined under §§ 1.1503(d)-2 and 1.1503(d)-3, respectively) or putting a foreign law item of deduction or loss that is disregarded for U.S. tax purposes to a foreign use). The appropriate adjustments may include adjustments to

disregard the transaction, series of transactions, plan, or arrangement, or adjustments to modify the items that are taken into account for purposes of determining the income or dual consolidated loss of or attributable to a dual resident corporation or a separate unit, or for purposes of determining income or loss of an interest in a transparent entity under § 1.1503(d)-5. See § 1.1503(d)-7(c)(43) through (45) for examples illustrating the application of this paragraph (f).

(2) ***Exceptions.*** The anti-avoidance rule in paragraph (f)(1) of this section does not apply to a reduction or elimination of a dual consolidated loss solely by reason of intercompany transactions as described in § 1.1502-13, items of income arising from the ownership of stock and taken into account under § 1.1503(d)-5(b)(1) or (c)(4)(iv), or the attribution to a hybrid entity separate unit or an interest in a transparent entity of items that have not been and will not be reflected on the entity's books and records. The anti-avoidance rule in paragraph (f)(1) of this section also does not apply with respect to the application of the dual consolidated loss rules to the GloBE Model Rules, or to cause a foreign use of a dual consolidated loss to occur solely in a period before the taxable year in which such loss was incurred.

[T.D. 9315, 72 FR 12914, Mar. 19, 2007, as amended by T.D. 9896, 85 FR 19855, Apr. 8, 2020; T.D. 10018, 89 FR 106878, Dec. 30, 2024; T.D. 10026, 90 FR 3014, Jan. 14, 2025]

§ 1.1503(d)-2 Domestic use.

A *domestic use* of a dual consolidated loss shall be deemed to occur when the dual consolidated loss is made available to offset, directly or indirectly, the income of a domestic affiliate (other than the dual resident corporation or separate unit that, in each case, incurred the dual consolidated loss) in the taxable year in which the dual consolidated loss is recognized, or in any other taxable year, regardless of whether the dual consolidated loss offsets income under the income tax laws of a foreign country and regardless of whether any income that the dual consolidated loss may offset in the foreign country is, has been, or will be subject to tax in the United States. A domestic use shall be deemed to occur in the year the dual consolidated loss is included in the computation of the taxable income of a consolidated group, unaffiliated dual resident corporation, or an unaffiliated domestic owner, as applicable, even if no tax benefit results from such inclusion in that year. See § 1.1503(d)-7(c) *Examples 2* through *4*.

[T.D. 9315, 72 FR 12914, Mar. 19, 2007]

§ 1.1503(d)-3 Foreign use.

(a) ***Foreign use*** —

(1) ***In general.*** Except as provided in paragraph (c) of this section, a *foreign use* of a dual consolidated loss shall be deemed to occur when any portion of a deduction or loss taken into account in computing the dual consolidated loss is made available under the income tax laws of a foreign country to offset or reduce, directly or indirectly, any item that is recognized as income or gain under such laws and that is, or would be, considered under U.S. tax principles to be an item of—

(i) A foreign corporation as defined in section 7701(a)(3) and (a)(5); or

(ii) A direct or indirect owner of an interest in a hybrid entity, provided such interest is not a separate unit. See § 1.1503(d)-7(c) *Examples 5* through *10* and *37*.

(2) ***Indirect use*** —

(i) ***General rule.*** Except to the extent provided in paragraph (a)(2)(ii) of this section, an item of deduction or loss shall be deemed to be made available indirectly if—

(A) One or more items are taken into account as deductions or losses for foreign tax purposes, but do not give rise to corresponding items of income or gain for U.S. tax purposes; and

(B) The item or items described in paragraph (a)(2)(i)(A) of this section have the effect of making an item of deduction or loss composing the dual consolidated loss available for a foreign use as described in paragraph (a)(1) of this section.

(ii) ***Exception.*** The general rule provided in paragraph (a)(2)(i) of this section shall not apply if the consolidated group, unaffiliated domestic owner, or unaffiliated dual resident corporation demonstrates, to the satisfaction of the Commissioner, that the item or items described in paragraph (a)(2)(i)(A) of this section that gave rise to the indirect foreign use—

(A) Were not incurred, or taken into account, with a principal purpose of avoiding the provisions of section 1503(d). For purposes of this paragraph (a)(2)(ii), an item incurred or taken into account as interest for foreign tax purposes, but disregarded for U.S. tax purposes, shall be deemed to have been incurred, or taken into account, with a principal purpose of avoiding the provisions of section 1503(d). Similarly, for purposes of this paragraph (a)(2)(ii), an item incurred or taken into account as the result of an instrument that is treated as debt for foreign tax purposes and equity for U.S. tax purposes, shall be deemed to have been incurred, or taken into account, with a principal purpose of avoiding the provisions of section 1503(d); and

(B) Were incurred, or taken into account, in the ordinary course of the dual resident corporation's or separate unit's trade or business.

(iii) ***Examples.*** See § 1.1503(d)-7(c) *Examples 6* through *8*.

(3) ***Deemed use.*** See paragraph (e) of this section for a deemed foreign use pursuant to the mirror legislation rule.

(b) ***Available for use.*** A foreign use shall be deemed to occur in the year in which any portion of a deduction or loss taken into account in computing the dual consolidated loss is made available for an offset described in paragraph (a) of this section, regardless of whether it actually offsets or reduces any items of income or gain under the income tax laws of the foreign country in such year, and regardless of whether any of the items that may be so offset or reduced are regarded as income under U.S. tax principles.

(c) ***Exceptions*** —

(1) ***In general.*** Paragraphs (c)(2) through (9) of this section provide exceptions to the general definition of foreign use set forth in paragraphs (a) and (b) of this section. These exceptions only apply to a foreign use that occurs solely as a result of the conditions or circumstances described therein, and do not apply if a foreign use occurs in any other case or by any other means. For example, the exception under paragraph (c)(4) of this section (regarding certain interests in partnerships or grantor trusts) shall not apply where the item of deduction or loss is made available through a foreign consolidation regime (or similar method). In addition, these exceptions do not apply when attempting to demonstrate that no foreign use of a dual consolidated loss can occur in any other

year by any means under § 1.1503(d)-6(c), (e)(2)(i), or (j)(2). But see § 1.1503(d)-6(e)(2)(ii), which takes into account the exception under paragraph (c)(7) of this section for purposes of rebutting certain asset transfers.

(2) ***Election or merger required to enable foreign use.*** Where the laws of a foreign country provide an election that would enable a foreign use, a foreign use shall be considered to occur only if the election is made. Similarly, where the laws of a foreign country would enable a foreign use through a sale, merger, or similar transaction, a foreign use shall be considered to occur only if the sale, merger, or similar transaction occurs.

(3) ***Deemed ordering rule*** —

(i) ***In general.*** This paragraph (c)(3) applies if the losses or deductions composing the dual consolidated loss are made available under the laws of a foreign country both in part to offset income or gain that would constitute a foreign use and in part to offset income or gain that would not constitute a foreign use. In such a case, the losses or deductions shall be deemed to be made available to offset the income or gain that does not constitute a foreign use, to the extent of such income or gain, before being considered to be made available to offset the income or gain that does constitute a foreign use. See § 1.1503(d)-7(c)(11) (*Example 11*).

(ii) ***Limitation.*** For purposes of applying this paragraph (c)(3), items of income or gain are taken into account only to the extent such items are or would be taken into account in determining the amount of income or dual consolidated loss under § 1.1503(d)-5(b) or (c). Thus, for example, this paragraph does not apply with respect to items of income or gain that are otherwise disregarded for U.S. tax purposes. But see § 1.1503(d)-1(d)(3)(i), which provides that when applying the principles of this rule for purposes of the disregarded payment loss rules, the only relevant items are those that are or would be taken into account for purposes of determining a disregarded payment loss or disregarded payment income.

(4) ***Certain interests in partnerships or grantor trusts*** —

(i) ***General rule.*** Except to the extent provided in paragraph (c)(4)(iii) of this section, this paragraph (c)(4)(i) applies to a dual consolidated loss attributable to an interest in a hybrid entity partnership or a hybrid entity grantor trust, or to a separate unit owned indirectly through a partnership or grantor trust. In such a case, a foreign use will not be considered to occur if the foreign use is solely the result of another person's ownership of an interest in the partnership or grantor trust, as applicable, and the allocation or carry forward of an item of deduction or loss composing such dual consolidated loss as a result of such ownership. See § 1.1503(d)-7(c) *Example 13*.

(ii) ***Combined separate unit.*** This paragraph applies to a dual consolidated loss attributable to a combined separate unit that includes an individual separate unit to which paragraph (c)(4)(i) of this section would apply, but for the application of the separate unit combination rule provided under § 1.1503(d)-1(b)(4)(ii). In such a case, paragraph (c)(4)(i) of this section shall apply to the portion of the dual consolidated loss of such combined separate unit that is attributable, as provided under § 1.1503(d)-5(c) through (e), to the individual separate unit (otherwise described in paragraph (c)(4)(i) of this section) that is a component of the combined separate unit. See § 1.1503(d)-7(c) *Example 14*.

(iii) ***Reduction in interest.*** The exception under paragraph (c)(4)(i) of this section shall not apply if, at any time following the year in which the dual consolidated loss is incurred, there is more than a *de minimis* reduction in the domestic owner's percentage interest in the partnership or grantor

trust, as applicable, as described in paragraph (c)(5) of this section. In such a case, a foreign use shall be deemed to occur at the time the reduction in interest exceeds the *de minimis* amount. See § 1.1503(d)-7(c) *Example 13*.

(5) ***De minimis reduction of an interest in a separate unit*** —

(i) ***General rule.*** This paragraph applies to a *de minimis* reduction of a domestic owner's interest in a separate unit (including an interest described in paragraph (c)(4)(i) of this section). Except to the extent provided in paragraph (c)(5)(ii) of this section, no foreign use shall be considered to occur with respect to a dual consolidated loss as a result of an item of deduction or loss composing such dual consolidated loss being made available solely as a result of a reduction in the domestic owner's interest in the separate unit, as provided under paragraph (c)(5)(iii) of this section. See § 1.1503(d)-7(c) *Example 5*.

(ii) ***Limitations.*** The exception provided in paragraph (c)(5)(i) of this section shall not apply if—

(A) During any 12-month period the domestic owner's percentage interest in the separate unit is reduced by 10 percent or more, as determined by reference to the domestic owner's interest at the beginning of the 12-month period; or

(B) At any time the domestic owner's percentage interest in the separate unit is reduced by 30 percent or more, as determined by reference to the domestic owner's interest at the end of the taxable year in which the dual consolidated loss was incurred.

(iii) ***Reduction in interest.*** The following rules apply for purposes of paragraphs (c)(4) and (5) of this section. A reduction of a domestic owner's interest in a separate unit shall include a reduction resulting from another person acquiring through sale, exchange, contribution, or other means, an interest in the foreign branch or hybrid entity, as applicable. A reduction may occur either directly or indirectly, including through an interest in a partnership, a disregarded entity, or a grantor trust through which a separate unit is carried on or owned. In the case of an interest in a hybrid entity partnership or a separate unit all or a portion of which is carried on or owned through a partnership, an interest in such separate unit (or portion of such separate unit) is determined by reference to the owner's interest in the profits or the capital in the separate unit. In the case of an interest in a hybrid entity grantor trust or a separate unit all or a portion of which is carried on or owned through a grantor trust, an interest in such separate unit (or portion of such separate unit) is determined by reference to the domestic owner's share of the assets and liabilities of the separate unit.

(iv) ***Examples and coordination with exceptions to other triggering events.*** See § 1.1503(d)-7(c) *Examples 5*, *13*, and *14*. See also § 1.1503(d)-6(f)(3) and (f)(5) for rules that coordinate the de minimis exception to foreign use with exceptions to other triggering events described in § 1.1503(d)-6(e)(1), and provide an exception to foreign use following certain compulsory transfers.

(6) ***Certain asset basis carryovers.*** No foreign use shall be considered to occur with respect to a dual consolidated loss solely as a result of items of deduction or loss composing such dual consolidated loss being made available as a result of the transfer of assets of a dual resident corporation or separate unit, provided—

(i) Such items of loss and deduction are made available solely as a result of the basis of the transferred assets being determined, under foreign law, in whole or in part by reference to the basis of the assets in the hands of the dual resident corporation or separate unit;

(ii) The aggregate adjusted basis, as determined under U.S. tax principles, of all the assets so transferred during any 12-month period is less than 10 percent of the aggregate adjusted basis, as determined under U.S. tax principles, of all the dual resident corporation's or separate unit's assets, determined by reference to the assets held at the beginning of such 12-month period; and

(iii) The aggregate adjusted basis, as determined under U.S. tax principles, of all the assets so transferred at any time is less than 30 percent of the aggregate adjusted basis, as determined under U.S. tax principles, of all the dual resident corporation's or separate unit's assets, determined by reference to the assets held at the end of the taxable year in which the dual consolidated loss was generated. See § 1.1503(d)-7(c) *Example 15.*

(7) ***Assumption of certain liabilities*** —

(i) ***In general.*** Except to the extent provided in paragraph (c)(7)(ii) of this section, no foreign use shall be considered to occur with respect to any dual consolidated loss solely as a result of an item of deduction or loss composing such dual consolidated loss being made available following the assumption of liabilities of a dual resident corporation or separate unit, provided such availability arises solely as the result of an item of deduction or loss incurred with respect to, or as a result of, such liabilities. See § 1.1503(d)-7(c) *Example 16.*

(ii) ***Ordinary course limitation.*** Paragraph (c)(7)(i) of this section shall apply only to the extent the liabilities assumed were incurred in the ordinary course of the dual resident corporation's, or separate unit's, trade or business. For purposes of this paragraph, liabilities incurred in the ordinary course of a trade or business shall include debt incurred to finance the trade or business of the dual resident corporation or separate unit.

(8) ***Multiple-party events.*** This paragraph applies to a transaction that qualifies for the triggering event exception described in § 1.1503(d)-6(f)(2)(i)(B) where the acquiring unaffiliated domestic corporation or consolidated group owns, directly or indirectly, more than 90 percent, but less than 100 percent, of the transferred assets or interests immediately after the transaction. In such a case, no foreign use shall be considered to occur with respect to a dual consolidated loss of the dual resident corporation or separate unit whose assets or interests were acquired, solely as a result of the less than 10 percent direct or indirect ownership of the acquired assets or interests by persons other than the acquiring unaffiliated domestic corporation or consolidated group, as applicable, immediately after the transaction. See § 1.1503(d)-7(c) *Example 37.*

(9) ***Additional guidance.*** The Commissioner may provide, by guidance published in the Internal Revenue Bulletin, that certain events or transactions do or do not result in a foreign use. Such guidance may also modify the triggering events and rebuttals described in § 1.1503(d)-6(e), and the exceptions thereto under § 1.1503(d)-6(f), as appropriate.

(d) ***Ordering rules for determining the foreign use of losses.*** If the laws of a foreign country provide for the foreign use of losses of a dual resident corporation or a separate unit, but do not provide applicable rules for determining the order in which such losses are used in a taxable year, the following rules shall apply:

(1) Any net loss, or net income, that the dual resident corporation or separate unit has in a taxable year shall first be used to offset net income, or loss, recognized by its affiliates in the same taxable year before any carry over of its losses is considered to be used to offset any income from the taxable year.

(2) If under the laws of the foreign country the dual resident corporation or separate unit has losses from different taxable years, it shall be deemed to use first the losses which would not constitute a triggering event that would result in the recapture of a dual consolidated loss pursuant to § 1.1503(d)-6(h). Thereafter, it shall be deemed to use first the losses from the most recent taxable year from which a loss may be carried forward or back for foreign law purposes.

(3) Where different losses or deductions (for example, capital losses and ordinary losses) of a dual resident corporation or separate unit incurred in the same taxable year are available for foreign use, the different losses shall be deemed to be used on a pro rata basis. See § 1.1503(d)-7(c) *Example 12*.

(e) ***Mirror legislation rule*** —

(1) ***In general.*** Except as provided in paragraph (e)(2) or (3) of this section and § 1.1503(d)-6(b) (relating to agreements entered into between the United States and a foreign country), a foreign use shall be deemed to occur if the income tax laws of a foreign country would deny any opportunity for the foreign use of the dual consolidated loss in the year in which the dual consolidated loss is incurred (mirror legislation), determined by assuming that such foreign country had recognized the dual consolidated loss in such year, for any of the following reasons:

(i) The dual resident corporation or separate unit that incurred the loss is subject to income taxation by another country (for example, the United States) on its worldwide income or on a residence basis.

(ii) The loss may be available to offset income (other than income of the dual resident corporation or separate unit) under the laws of another country (for example, the United States).

(iii) The deductibility of any portion of a deduction or loss taken into account in computing the dual consolidated loss depends on whether such amount is deductible under the laws of another country (for example, the United States). See § 1.1503(d)-7(c) *Examples 17* through *19*.

(2) ***Stand-alone exception*** —

(i) ***In general.*** This paragraph (e)(2) applies if, in the absence of the mirror legislation described in paragraph (e)(1) of this section, no item of deduction or loss composing the dual consolidated loss of such dual resident corporation or separate unit would otherwise be available for a foreign use in the taxable year in which such dual consolidated loss is incurred. This determination is made without regard to whether such availability is limited by election (or other similar procedure). However, for purposes of this paragraph (e)(2)(i), no item of deduction or loss composing the dual consolidated loss of a dual resident corporation or separate unit is considered to be made available for foreign use solely because the laws of a foreign country would enable a foreign use through a sale, merger, or similar transaction (provided no such sale, merger, or similar transaction actually occurs). In such a case, no foreign use shall be considered to occur pursuant to paragraph (e)(1) of this section with respect to the dual consolidated loss, provided the requirements of paragraph (e)(2)(ii) of this section are satisfied. See § 1.1503(d)-7(c) *Examples 17* through *19*.

(ii) ***Stand-alone domestic use agreement.*** In order to qualify for the exception under paragraph (e)(2)(i) of this section, the consolidated group, unaffiliated dual resident corporation, or unaffiliated domestic owner, as the case may be, must enter into a domestic use agreement in accordance with the provisions of § 1.1503(d)-6(d) and, in addition, must include the following items in such domestic use agreement:

(A) A statement that the document is also being submitted under the provisions of paragraph (e)(2) of this section.

(B) A certification that the conditions of paragraph (e)(2)(i) of this section are satisfied during the taxable year in which the dual consolidated loss is incurred.

(C) An agreement to include with each annual certification required under § 1.1503(d)-6(g), a certification that the conditions described in paragraph (e)(2)(i) of this section are satisfied during the taxable year of each such certification.

(iii) ***Termination of stand-alone domestic use agreement.*** This paragraph (e)(2)(iii) applies to a consolidated group, unaffiliated dual resident corporation, or unaffiliated domestic owner, as the case may be, that entered into a domestic use agreement pursuant to paragraph (e)(2)(ii) of this section, with respect to a dual consolidated loss, and which subsequently makes an election pursuant to § 1.1503(d)-6(b) (relating to agreements entered into between the United States and a foreign country) with respect to such dual consolidated loss. In such a case, the dual consolidated loss shall be subject to the election under § 1.1503(d)-6(b) (and any related agreements, representations and conditions), and the domestic use agreement entered into pursuant to paragraph (e)(2)(ii) of this section shall terminate and have no further effect.

(3) ***Exception for domestic consenting corporations.*** Paragraph (e)(1) of this section will not apply so as to deem a foreign use of a dual consolidated loss incurred by a domestic consenting corporation that is a dual resident corporation under § 1.1503(d)-1(b)(2)(iii).

(4) ***Exception for disregarded payment losses.*** Paragraph (e)(1) of this section will not apply so as to deem a foreign use of a disregarded payment loss (within the meaning of § 1.1503(d)-1(d)(5)(ii)(B)).

[T.D. 9315, 72 FR 12914, Mar. 19, 2007, as amended by T.D. 9896, 85 FR 19855, Apr. 8, 2020; T.D. 10026, 90 FR 3018, Jan. 14, 2025]

§ 1.1503(d)-4 Domestic use limitation and related operating rules.

(a) ***Scope.*** This section prescribes rules that apply when the general limitation on the domestic use of a dual consolidated loss under paragraph (b) of this section applies. Thus, the rules of this section do not apply when an exception to the domestic use limitation applies (for example, as a result of a domestic use election under § 1.1503(d)-6(d)). In general, when the domestic use limitation applies, the dual consolidated loss of a dual resident corporation or separate unit is subject to the separate return limitation year (SRLY) provisions of § 1.1502-21(c), as modified under this section. Paragraph (c) of this section provides rules that determine the effect of a dual consolidated loss on a consolidated group, an unaffiliated dual resident corporation, or an unaffiliated domestic owner. Paragraph (d) of this section provides rules that eliminate dual consolidated losses following certain transactions or events. Paragraph (e) of this section contains provisions that prevent dual consolidated losses from offsetting tainted income. Finally, paragraph (f) of this section provides rules for computing foreign tax credits.

(b) ***Limitation on domestic use of a dual consolidated loss.*** Except as provided in § 1.1503(d)-6, the domestic use of a dual consolidated loss is not permitted. See § 1.1503(d)-2 for the definition of a domestic use. See also § 1.1503(d)-7(c) *Examples 2* through *4*.

(c) ***Effect of a dual consolidated loss on a consolidated group, unaffiliated dual resident corporation, or unaffiliated domestic owner.*** For any taxable year in which a dual resident corporation or separate unit has a dual consolidated loss that is subject to the domestic use limitation of paragraph (b) of this section, the following rules shall apply:

(1) ***Dual resident corporation.*** This paragraph (c)(1) applies to a dual consolidated loss of a dual resident corporation. The unaffiliated dual resident corporation, or consolidated group that includes the dual resident corporation, shall compute its taxable income (or loss), or consolidated taxable income (or loss), respectively, without taking into account those items of deduction and loss that compose the dual resident corporation's dual consolidated loss. For this purpose, the dual consolidated loss shall be treated as composed of a pro rata portion of each item of deduction and loss of the dual resident corporation taken into account in calculating the dual consolidated loss. The dual consolidated loss is subject to the limitations on its use contained in paragraph (c)(3) of this section and, subject to such limitations, may be carried over or back for use in other taxable years as a separate net operating loss carryover or carryback of the dual resident corporation arising in the year incurred. If the dual resident corporation owns a separate unit or an interest in a transparent entity, the limitations contained in paragraph (c)(3) of this section shall apply to the dual resident corporation as if the separate unit or interest in a transparent entity were a separate domestic corporation that filed a consolidated return with the unaffiliated dual resident corporation, or with the consolidated group of the affiliated dual resident corporation, as applicable.

(2) ***Separate unit.*** This paragraph (c)(2) applies to a dual consolidated loss that is attributable to a separate unit. The unaffiliated domestic owner of a separate unit, or the consolidated group of an affiliated domestic owner of a separate unit, shall compute its taxable income (or loss) or consolidated taxable income (or loss), respectively, without taking into account those items of deduction and loss that compose the separate unit's dual consolidated loss. For this purpose, the dual consolidated loss shall be treated as composed of a pro rata portion of each item of deduction and loss of the separate unit taken into account in calculating the dual consolidated loss. The dual consolidated loss is subject to the limitations contained in paragraph (c)(3) of this section as if the separate unit to which the dual consolidated loss is attributable were a separate domestic corporation that filed a consolidated return with its unaffiliated domestic owner or with the consolidated group of its affiliated domestic owner, as applicable. Subject to such limitations, the dual consolidated loss may be carried over or back for use in other taxable years as a separate net operating loss carryover or carryback of the separate unit arising in the year incurred. See § 1.1503(d)-7(c) *Examples 29* and *38*.

(3) ***SRLY limitation.*** The dual consolidated loss shall be treated as a loss incurred by the dual resident corporation or separate unit in a separate return limitation year and shall be subject to all of the limitations of § 1.1502-21(c) (SRLY limitation), subject to the following modifications—

(i) Notwithstanding § 1.1502-1(f)(2)(i), the SRLY limitation is applied to any dual consolidated loss of a common parent that is a dual resident corporation, or any dual consolidated loss attributable to a separate unit of a common parent;

(ii) The SRLY limitation is applied without regard to § 1.1502-21(c)(2) (SRLY subgroup limitation) and 1.1502-21(g) (overlap with section 382);

(iii) For purposes of calculating the general SRLY limitation under § 1.1502-21(c)(1)(i), the calculation of aggregate consolidated taxable income shall only include items of income, gain, deduction, and loss generated—

(A) In the case of a hybrid entity separate unit, in years in which the hybrid entity (an interest in which is a separate unit) is taxed as a corporation (or otherwise at the entity level) either on its worldwide income or as a resident in the same foreign country in which it was so taxed during the year in which the dual consolidated loss was generated; and

(B) In the case of a foreign branch separate unit, in years in which the foreign branch qualified as a separate unit in the same foreign country in which it so qualified during the year in which the dual consolidated loss was generated;

(iv) For purposes of calculating the general SRLY limitation under § 1.1502-21(c)(1)(i), the calculation of aggregate consolidated taxable income shall not include any amount included in income pursuant to § 1.1503(d)-6(h) (relating to the recapture of a dual consolidated loss).

(v) The SRLY limitation is applied without regard to § 1.1502-21(c)(1)(i)(E) (section 172(a) limitation applicable to a SRLY member).

(4) ***Items of a dual consolidated loss used in other taxable years.*** A pro rata portion of each item of deduction or loss that composes the dual consolidated loss shall be considered to be used when the dual consolidated loss is used in other taxable years. See § 1.1503(d)-7(c) *Examples 29* and *38*.

(5) ***Reconstituted net operating losses.*** For additional rules and limitations that apply to reconstituted net operating losses, see § 1.1503(d)-6(h)(6).

(d) ***Elimination of a dual consolidated loss after certain transactions*** —

(1) ***General rule.*** In general, a dual resident corporation has a net operating loss (and, therefore, a dual consolidated loss) only if it sustains such loss, or succeeds to such loss as a result of acquiring the assets of a corporation that sustained the loss in a transaction described in section 381(a). Similarly, a net loss generally is attributable to a separate unit of a domestic owner (and therefore is a dual consolidated loss) only if the domestic owner incurs the deductions or losses, or succeeds to such deductions or losses in a transaction described in section 381(a). Except as provided in § 1.1503(d)-6(h)(6)(iii), section 1503(d) and these regulations do not alter these general rules. Thus, the provisions of §§ 1.1503(d)-1 through 1.1503(d)-8 generally do not cause a corporation to have a dual consolidated loss if it did not sustain (or inherit) the loss. Instead, these regulations either eliminate a dual consolidated loss that a corporation sustained (or inherited), or prevent the carryover of a dual consolidated loss under section 381 that would ordinarily occur, as a result of certain transactions.

(i) ***Transactions described in section 381(a).*** This paragraph (d)(1)(i) applies to a dual consolidated loss of a dual resident corporation, or of a domestic owner attributable to a separate unit, that is subject to the domestic use limitation rule of paragraph (b) of this section. In such a case, and except as provided in paragraph (d)(2) of this section, the dual consolidated loss shall not carry over to another corporation in a transaction described in section 381(a) and, as a result, shall be eliminated. See § 1.1503(d)-7(c) *Example 20*.

(ii) ***Cessation of separate unit status.*** This paragraph (d)(1)(ii) applies when a separate unit of an unaffiliated domestic owner ceases to be a separate unit of its domestic owner, or when a separate unit of an affiliated domestic owner ceases to be a separate unit with respect to its domestic owner and all other members of the affiliated domestic owner's consolidated group. In such a case, and except as provided in paragraph (d)(2)(iii) of this section, a dual consolidated loss of the domestic owner attributable to such separate unit, that is subject to the domestic use limitation of paragraph (b) of this section, shall be eliminated. For purposes of this paragraph (d)(1)(ii), a separate unit may cease to be a separate unit if, for example, such separate unit is terminated, dissolved, liquidated, sold, or otherwise disposed of. See § 1.1503(d)-7(c) *Example 21*.

(2) ***Exceptions*** —

(i) ***Certain section 368(a)(1)(F) reorganizations.*** Paragraph (d)(1)(i) of this section (relating to transactions described in section 381(a)) shall not apply to a dual consolidated loss of a dual resident corporation that undergoes a reorganization described in section 368(a)(1)(F) in which the resulting corporation is a domestic corporation. In such a case, the dual consolidated loss of the resulting corporation continues to be subject to the limitations of paragraphs (b) and (c) of this section, applied as if the resulting corporation incurred the dual consolidated loss.

(ii) ***Acquisition of a dual resident corporation by another dual resident corporation.*** If a dual resident corporation transfers its assets to another dual resident corporation in a transaction described in section 381(a), and the transferee corporation is a resident of (or is taxed on its worldwide income by) the same foreign country of which the transferor was a resident (or was taxed on its worldwide income), then paragraph (d)(1)(i) of this section shall not apply with respect to dual consolidated losses of the dual resident corporation, and income generated by the transferee may be offset by the carryover dual consolidated losses of the transferor, subject to the limitations of paragraphs (b) and (c) of this section applied as if the transferee incurred the dual consolidated loss. Dual consolidated losses of the transferor dual resident corporation may not, however, be used to offset income attributable to separate units or interests in transparent entities owned by the transferee because they constitute domestic affiliates under § 1.1503(d)-1(b)(12)(iii) and (iv), respectively.

(iii) ***Acquisition of a separate unit by a domestic corporation.*** This paragraph (d)(2)(iii) provides exceptions to the general rules in paragraphs (d)(1)(i) and (ii) of this section that eliminate the dual consolidated loss of a domestic owner that is attributable to a separate unit following certain transactions or events. The exceptions set forth in this paragraph (d)(2)(iii) shall only apply where a domestic owner transfers its assets to a domestic corporation (transferee corporation) in a transaction described in section 381(a).

(A) ***Acquisition by a corporation that is not a member of the same consolidated group*** —

(1) ***General rule.*** If a domestic owner transfers either an individual separate unit or a combined separate unit to a transferee corporation that is not a member of its consolidated group in a transaction described in section 381(a), and the transferee corporation, or a member of the transferee's consolidated group, is a domestic owner of the transferred separate unit immediately after the transaction, then paragraphs (d)(1)(i) and (ii) of this section shall not apply to such transfer. In addition, income of the transferee, or a member of the transferee's consolidated group, that is attributable to the transferred separate unit may be offset by the carryover dual consolidated losses of the transferor domestic owner that were attributable to the transferred separate unit, subject to the limitations of paragraphs (b) and (c) of this section applied as if the transferee incurred the dual consolidated losses and such losses were attributable to the separate unit. See § 1.1503(d)-7(c) *Example 21*.

(2) ***Combination with separate units of the transferee.*** This paragraph (d)(2)(iii)(A)(*2*) applies to a transaction described in paragraph (d)(2)(iii)(A)(*1*) of this section where the transferred separate unit is combined with another separate unit of the transferee, or another member of the transferee's consolidated group, immediately after the transfer as provided under § 1.1503(d)-1(b)(4)(ii). In such a case, income generated by the transferee, or another member of the transferee's consolidated group, that is attributable to the combined separate unit may be offset by the carryover dual consolidated losses that were attributable to the transferred separate

unit, subject to the limitations of paragraphs (b) and (c) of this section, applied as if the transferee incurred the dual consolidated losses and such losses were attributable to the combined separate unit.

(B) ***Acquisition by a member of the same consolidated group.*** If an affiliated domestic owner transfers its assets to another member of its consolidated group in a transaction described in section 381(a), and the transferee corporation or another member of such consolidated group is a domestic owner of the separate unit to which the dual consolidated loss was attributable, then paragraphs (d)(1)(i) and (ii) of this section shall not apply. In addition, income generated by the transferee that is attributable to the transferred separate unit may be offset by the carryover dual consolidated losses that were attributable to the transferred separate unit, subject to the limitations of paragraphs (b) and (c) of this section, applied as if the transferee incurred the dual consolidated losses and such losses were attributable to the separate unit. See § 1.1503(d)-7(c) *Example 21*.

(iv) ***Special rules for foreign insurance companies.*** See § 1.1503(d)-6(a) for additional limitations that apply where the transferor is a foreign insurance company that is a dual resident corporation under § 1.1503(d)-1(b)(2)(ii).

(e) ***Special rule denying the use of a dual consolidated loss to offset tainted income*** —

(1) ***In general.*** Dual consolidated losses incurred by a dual resident corporation that are subject to the domestic use limitation rule under paragraph (b) of this section shall not be used to offset income it earns after it ceases to be a dual resident corporation to the extent that such income is tainted income.

(2) ***Tainted income*** —

(i) ***Definition.*** For purposes of paragraph (e)(1) of this section, the term *tainted income* means—

(A) Income or gain recognized on the sale or other disposition of tainted assets; and

(B) Income derived as a result of holding tainted assets.

(ii) ***Income presumed to be derived from holding tainted assets.*** In the absence of evidence establishing the actual amount of income that is attributable to holding tainted assets, the portion of a corporation's income in a particular taxable year that is treated as tainted income derived as a result of holding tainted assets shall be an amount equal to the corporation's taxable income for the year (other than income described in paragraph (e)(2)(i)(A) of this section) multiplied by a fraction, the numerator of which is the fair market value of all tainted assets acquired by the corporation (determined at the time such assets were so acquired) and the denominator of which is the fair market value of the total assets owned by the corporation at the end of such taxable year. To establish the actual amount of income that is attributable to holding tainted assets, documentation must be attached to, and filed by the due date (including extensions) of, the domestic corporation's tax return or the consolidated tax return of an affiliated group of which it is a member, as the case may be, for the taxable year in which the income is generated. See § 1.1503(d)-7(c) *Example 22*.

(3) ***Tainted assets defined.*** For purposes of paragraph (e)(2) of this section, tainted assets are any assets acquired by a domestic corporation in a nonrecognition transaction, as defined in section 7701(a)(45), any assets otherwise transferred to the corporation as a contribution to capital, or any

assets otherwise received from a separate unit or a transparent entity owned by such domestic corporation, at any time during the three taxable years immediately preceding the taxable year in which the corporation ceases to be a dual resident corporation or at any time thereafter.

(4) ***Exceptions.*** Income derived from assets acquired by a domestic corporation shall not be subject to the limitation described in paragraph (e)(1) of this section, and in addition shall not be treated as tainted assets as defined in paragraph (e)(3) of this section, if—

(i) For the taxable year in which the assets were acquired, the corporation did not have a dual consolidated loss (or a carryforward of a dual consolidated loss to such year); or

(ii) The assets were acquired as replacement property in the ordinary course of business.

(f) ***Computation of foreign tax credit limitation.*** If a dual consolidated loss is subject to the domestic use limitation rule under paragraph (b) of this section, the consolidated group, unaffiliated dual resident corporation, or unaffiliated domestic owner shall compute its foreign tax credit limitation by applying the limitations of paragraph (c) of this section. Thus, the items constituting the dual consolidated loss are not taken into account until the year in which such items are absorbed.

[T.D. 9315, 72 FR 12914, Mar. 19, 2007, as amended by T.D. 9927, 85 FR 67988, Oct. 27, 2020]

Editorial Note: By T.D. 9927, 85 FR 67988, Oct. 27, 2020, § 1.1503(d)-4 was amended; however, a portion of the amendment could not be incorporated due to inaccurate amendatory instruction.

§ 1.1503(d)-5 Attribution of items and basis adjustments.

(a) ***In general.*** This section provides rules for determining the amount of income or dual consolidated loss of a dual resident corporation. This section also provides rules for determining the income or dual consolidated loss attributable to a separate unit, as well as the income or loss attributable to an interest in a transparent entity. Paragraph (b) of this section provides rules with respect to dual resident corporations. Paragraph (c) of this section provides rules with respect to separate units and interests in transparent entities. These determinations are required for various purposes under section 1503(d). For example, it is necessary for purposes of applying the domestic use limitation rule under § 1.1503(d)-4(b) to a dual consolidated loss, and for determining the extent to which a dual consolidated loss is available to offset income as provided under § 1.1503(d)-4(c). These determinations are also necessary for purposes of determining whether the amount subject to recapture may be reduced pursuant to § 1.1503(d)-6(h)(2). Paragraph (d) of this section provides rules with respect to the foreign tax treatment of items. Paragraph (e) of this section provides rules regarding the treatment of items where a dual resident corporation, separate unit, or transparent entity only qualified as such during a portion of a taxable year. Paragraph (f) of this section provides rules for determining the assets and liabilities of a separate unit. Finally, paragraph (g) of this section provides rules for making basis adjustments to stock of certain members of a consolidated group and to certain interests in partnerships. The rules in this section apply for purposes of §§ 1.1503(d)-1 through 1.1503(d)-7.

(b) ***Determination of amount of income or dual consolidated loss of a dual resident corporation*** —

(1) ***In general.*** For purposes of determining whether a dual resident corporation has income or a dual consolidated loss for the taxable year, and except as provided in paragraph (b)(2) of this section, the dual resident corporation shall compute its income or dual consolidated loss taking into account only those items of income, gain, deduction, and loss from such year (including any items

recognized by such corporation as a result of an election under section 338). In the case of an affiliated dual resident corporation, such calculation shall be made in accordance with the rules set forth in the regulations under section 1502 governing the computation of consolidated taxable income. See also paragraphs (d) and (e) of this section.

(2) ***Exceptions.*** For purposes of determining the income or dual consolidated loss of a dual resident corporation, the following shall not be taken into account—

(i) Any net capital loss of the dual resident corporation;

(ii) Any carryover or carryback losses; or

(iii) Any items of income, gain, deduction, and loss that are attributable to a separate unit or an interest in a transparent entity of the dual resident corporation.

(c) ***Determination of amount of income or dual consolidated loss attributable to a separate unit, and income or loss attributable to an interest in a transparent entity*** —

(1) ***In general*** —

(i) ***Scope and purpose.*** Paragraphs (c) through (e) of this section apply for purposes of determining the income or dual consolidated loss attributable to a separate unit, and the income or loss attributable to an interest in a transparent entity, for the taxable year. In the case of an affiliated domestic owner, this determination shall be made in accordance with the rules set forth in the regulations under section 1502 governing the computation of consolidated taxable income. These rules apply solely for purposes of section 1503(d).

(ii) ***Only items of domestic owner taken into account.*** The computation made under paragraphs (c) through (e) of this section shall be made using only those existing items of income, gain, deduction, and loss of the separate unit's or transparent entity's domestic owner (or owners, in the case of certain combined separate units), as determined for U.S. tax purposes. These items must be translated into U.S. dollars (if necessary) at the appropriate exchange rate provided under section 989(b), as modified by regulations. The computation shall be made as if the separate unit or interest in a transparent entity were a domestic corporation, using items that are attributable to the separate unit or interest in a transparent entity. However, for purposes of making this computation, net capital losses, and carryover or carryback losses, of the domestic owner shall not be taken into account. Items of income, gain, deduction, and loss that are otherwise disregarded for U.S. tax purposes shall not be regarded or taken into account for purposes of this section. See § 1.1503(d)-7(c) *Examples 6* and *23* through *25.*

(iii) ***Separate application.*** The attribution rules of this section shall apply separately to each separate unit or interest in a transparent entity. Thus, an item of income, gain, deduction, or loss shall not be considered attributable to more than one separate unit or interest in a transparent entity. In addition, for purposes of this section items of income, gain, deduction, and loss attributable to a separate unit or an interest in a transparent entity shall not offset items of income, gain, deduction, and loss of another separate unit or interest in a transparent entity. See § 1.1503(d)-7(c) *Example 24.* See also the separate unit combination rule in § 1.1503(d)-1(b)(4)(ii).

(2) ***Foreign branch separate unit*** —

(i) ***In general.*** Except to the extent provided in paragraph (c)(4) of this section, for purposes of determining the items of income, gain, deduction (other than interest), and loss of a domestic owner that are attributable to the domestic owner's foreign branch separate unit, the principles of section 864(c)(2), (c)(4), and (c)(5), as set forth in § 1.864-4(c), and §§ 1.864-5 through 1.864-7, shall apply. The principles apply without regard to limitations imposed on the effectively connected treatment of income, gain, or loss under the trade or business safe harbors in section 864(b) and the limitations for treating foreign source income as effectively connected under section 864(c)(4)(D). Except as provided in paragraph (c)(2)(iii) of this section, for purposes of determining the domestic owner's interest expense that is attributable to a foreign branch separate unit, the principles of § 1.882-5, as modified in paragraph (c)(2)(ii) of this section, shall apply. When applying the principles of section 864(c) (as modified by this paragraph) and § 1.882-5 (as modified in paragraph (c)(2)(ii) of this section), the foreign branch separate unit's domestic owner shall be treated as a foreign corporation, the foreign branch separate unit shall be treated as a trade or business within the United States, and the other assets of the domestic owner shall be treated as assets that are not U.S. assets.

(ii) ***Principles of § 1.882-5.*** For purposes of paragraph (c)(2)(i) of this section, the principles of § 1.882-5 shall be applied, subject to the following modifications—

(A) Except as otherwise provided in this section, only the assets, liabilities, and interest expense of the domestic owner shall be taken into account in the § 1.882-5 formula;

(B) Except as provided under paragraph (c)(2)(ii)(C) of this section, a taxpayer may use the alternative tax book value method under § 1.861-9(i) for purposes of determining the value of its U.S. assets pursuant to § 1.882-5(b)(2) and its worldwide assets pursuant to § 1.882-5(c)(2);

(C) For purposes of determining the value of a U.S. asset pursuant to § 1.882-5(b)(2), and worldwide assets pursuant to § 1.882-5(c)(2), the taxpayer must use the same methodology under § 1.861-9T(g) (that is, tax book value, alternative tax book value, or fair market value) that the taxpayer uses for purposes of allocating and apportioning interest expense for the taxable year under section 864(e);

(D) Asset values shall be determined pursuant to § 1.861-9T(g)(2); and

(E) For purposes of determining the step-two U.S. connected liabilities, the amounts of worldwide assets and liabilities under § 1.882-5(c)(2)(iii) and (iv) must be determined in accordance with U.S. tax principles, rather than substantially in accordance with U.S. tax principles.

(iii) ***Exception where foreign country attributes interest expense solely by reference to books and records.*** The principles of § 1.882-5 shall not apply if the foreign country in which the foreign branch separate unit is located determines, for purposes of computing taxable income (or loss) of a permanent establishment or branch of a nonresident corporation under the laws of the foreign country, the interest expense of the foreign branch separate unit by taking into account only the items of interest expense reflected on the foreign branch separate unit's books and records. In such a case, only those items of the domestic owner's interest expense reflected on the foreign branch separate unit's books and records (as provided in paragraph (c)(3)(i) of this section), adjusted to conform to U.S. tax principles, shall be attributable to the foreign branch separate unit. This paragraph shall not apply where the foreign country does not use a method of attributing interest based solely on the interest that is reflected on the books and records.

For example, this paragraph does not apply if the foreign country uses a method for attributing interest expense similar to § 1.882-5 or that set forth in the Organization for Economic Co-operation and Development Report on the Attribution of Profits to Permanent Establishments, Part II (Banks), December 2006. See *http://www.oecd.org*.

(3) ***Hybrid entity separate unit and an interest in a transparent entity*** —

(i) ***General rule.*** This paragraph (c)(3) applies to determine the items of income, gain, deduction, and loss of a domestic owner that are attributable to a hybrid entity separate unit, or an interest in a transparent entity, of such domestic owner. Except to the extent provided in paragraph (c)(4) of this section, the domestic owner's items of income, gain, deduction, and loss are attributable to the extent they are reflected on the books and records of the hybrid entity or transparent entity, as applicable, as adjusted to conform to U.S. tax principles. See § 1.1503(d)-7(c) *Examples 23* through *26*. For purposes of this paragraph (c)(3), the term "books and records" has the meaning provided under § 1.989(a)-1(d). The treatment of items for foreign tax purposes, including under any type of foreign anti-deferral regime, is not relevant for purposes of determining whether items are reflected on the books and records of the entity, or for purposes of making adjustments to such items to conform to U.S. tax principles. The method described in the second sentence of this paragraph shall not apply to the extent that the Commissioner determines that booking practices are employed with a principal purpose of avoiding the principles of section 1503(d), including inconsistently treating the same or similar items of income, gain, deduction, and loss. In such a case, the Commissioner may reallocate the items of income, gain, deduction, and loss between or among a domestic owner, its hybrid entities, its transparent entities (and interests therein), its separate units, or any other entity, as applicable, in a manner consistent with the principles of section 1503(d) and which properly reflects income (or loss).

(ii) ***Interests in certain disregarded entities, partnerships, and grantor trusts owned by a hybrid entity or transparent entity.*** This paragraph (c)(3)(ii) applies if a hybrid entity or transparent entity to which paragraph (c)(3)(i) of this section applies owns, directly or indirectly (other than through a hybrid entity or transparent entity), an interest in an entity that is treated as a disregarded entity, partnership, or grantor trust for U.S. tax purposes, but is not a hybrid entity or a transparent entity. For example, the rules of this paragraph would apply when a hybrid entity holds an interest in a limited partnership created in the United States and, for both U.S. and foreign tax purposes the entity is considered a partnership. In such a case, and except to the extent provided in paragraph (c)(4) of this section, items of income, gain, deduction, and loss that are reflected on the books and records of such disregarded entity, partnership or grantor trust, as determined under paragraph (c)(3)(i) of this section, shall be treated as being reflected on the books and records of the hybrid entity or transparent entity for purposes of applying paragraph (c)(3)(i) of this section. See § 1.1503(d)-7(c) *Example 26*.

(4) ***Special rules.*** The following special rules shall apply for purposes of attributing items to separate units or interests in transparent entities under this section:

(i) ***Allocation of items between certain tiered separate units and interests in transparent entities*** —

(A) ***Foreign branch separate unit.*** This paragraph (c)(4)(i) applies where a hybrid entity or transparent entity owns directly or indirectly (other than through a hybrid entity or a transparent entity), a foreign branch separate unit. For purposes of determining items of income, gain, deduction, and loss of the domestic owner that are attributable to the domestic owner's foreign branch separate unit described in the preceding sentence, only

items of income, gain, deduction, and loss that are attributable to the domestic owner's interest in the hybrid entity, or transparent entity, as provided in paragraph (c)(3) of this section, shall be taken into account. Further, only assets, liabilities, and activities of the domestic owner's interest in the hybrid entity or the transparent entity shall be taken into account under paragraph (c)(2) of this section when applying the principles of 864(c)(2), (c)(4), (c)(5) (as set forth in § 1.864-4(c), and §§ 1.864-5 through 1.864-7), and § 1.882-5 (as modified in paragraph (c)(2)(ii) of this section). See § 1.1503(d)-7(c) *Examples 25* and *26*.

(B) ***Hybrid entity separate unit or interest in a transparent entity.*** For purposes of determining items of income, gain, deduction, and loss that are attributable to a hybrid entity separate unit or an interest in a transparent entity described in paragraph (c)(3) of this section, such items shall not be taken into account to the extent they are attributable to a foreign branch separate unit pursuant to paragraph (c)(4)(i)(A) of this section. See § 1.1503(d)-7(c) *Examples 25* and *26*.

(ii) ***Combined separate unit.*** If two or more individual separate units defined in § 1.1503(d)-1(b)(4)(i) are treated as one combined separate unit pursuant to § 1.1503(d)-1(b)(4)(ii), the items of income, gain, deduction, and loss that are attributable to the combined separate unit shall be determined as follows:

(A) Items of income, gain, deduction, and loss are first attributed to each individual separate unit without regard to § 1.1503(d)-1(b)(4)(ii), pursuant to the rules of paragraphs (c) through (e) of this section.

(B) The combined separate unit then takes into account all of the items of income, gain, deduction, and loss attributable to its individual separate units pursuant to paragraph (c)(4)(ii)(A) of this section. See § 1.1503(d)-7(c) *Examples 25* and *26*.

(iii) ***Gain or loss on the direct or indirect disposition of a separate unit or an interest in a transparent entity —***

(A) ***In general.*** This paragraph (c)(4)(iii) applies for purposes of attributing items of income, gain, deduction, and loss that are recognized on the sale, exchange, or other disposition of a separate unit or an interest in a transparent entity (or an interest in a disregarded entity, partnership, or grantor trust that owns, directly or indirectly, a separate unit or an interest in a transparent entity). For purposes of this paragraph (c)(4)(iii), items taken into account on the sale, exchange, or other disposition include loss recapture income or gain under section 367(a)(3)(C) or 904(f)(3), and gain or loss recognized by the domestic owner as the result of an election under section 338. In cases where this paragraph (c)(4)(iii)(A) applies, items taken into account on the sale, exchange, or other disposition shall be attributable to the separate unit or the interest in the transparent entity to the extent of gain or loss that would have been recognized had the separate unit or transparent entity sold all its assets (as determined in paragraph (f) of this section) in a taxable exchange, immediately before the sale, exchange, or other disposition (deemed sale). For purposes of a deemed sale described in this paragraph (c)(4)(iii), the assets are treated as being sold for an amount equal to their fair market value, plus the assumption of the liabilities of the separate unit or interest in a transparent entity (as determined in paragraph (f) of this section). See § 1.1503(d)-7(c) *Example 27*.

(B) ***Multiple separate units or interests in transparent entities.*** This paragraph (c)(4)(iii)(B) applies to a sale, exchange, or other disposition described in paragraph (c)(4)(iii)(A) of this section that results in more than one separate unit or interest in a transparent entity being, directly or indirectly, disposed of. In such a case, items of income, gain, deduction, and loss recognized on such sale, exchange, or other disposition are allocated and attributed to each separate unit or interest in a transparent entity, based on the relative gain or loss that would have been recognized by each separate unit or interest in a transparent entity pursuant to a deemed sale of their assets. See § 1.1503(d)-7(c) *Example 28*.

(iv) ***Inclusions on stock.*** Any amount included in income of a domestic owner arising from ownership of stock in a foreign corporation (for example, under sections 78, 951, or 986(c)) through a separate unit, or interest in a transparent entity, shall be attributable to the separate unit or interest in a transparent entity, if an actual dividend from such foreign corporation would have been so attributed. See § 1.1503(d)-7(c) *Example 24*.

(v) ***Foreign currency gain or loss recognized under section 987.*** Foreign currency gain or loss of a domestic owner recognized under section 987 as a result of a transfer or remittance shall not be attributable to a separate unit or an interest in a transparent entity.

(vi) ***Recapture of dual consolidated loss.*** If all or a portion of a dual consolidated loss that was attributable to a separate unit is included in the gross income of a domestic owner under the recapture provisions of § 1.1503(d)-6(h), such amount shall be attributable to the separate unit that incurred the dual consolidated loss being recaptured. See § 1.1503(d)-7(c) *Examples 38* and *40*.

(d) ***Foreign tax treatment disregarded.*** The fact that a particular item taken into account in computing the income or dual consolidated loss of a dual resident corporation or a separate unit, or the income or loss of an interest in a transparent entity, is not taken into account in computing income (or loss) subject to a foreign country's income tax shall not cause such item to be excluded from being taken into account under paragraph (b), (c), or (e) of this section.

(e) ***Items generated or incurred while a dual resident corporation, a separate unit, or a transparent entity.*** For purposes of determining the amount of the dual consolidated loss of a dual resident corporation for the taxable year, only the items of income, gain, deduction, and loss generated or incurred during the period the dual resident corporation qualified as such shall be taken into account. For purposes of determining the amount of income of a dual resident corporation for the taxable year, all the items of income, gain, deduction, and loss generated or incurred during the year shall be taken into account. For purposes of determining the amount of the income or dual consolidated loss attributable to a separate unit, or the income or loss attributable to an interest in a transparent entity, for the taxable year, only the items of income, gain, deduction, and loss generated or incurred during the period the separate unit or the interest in the transparent entity qualified as such shall be taken into account. For purposes of this paragraph (e), the allocation of items to periods shall be made under the principles of § 1.1502-76(b).

(f) ***Assets and liabilities of a separate unit or an interest in a transparent entity.*** A separate unit or an interest in a transparent entity shall be treated as owning assets to the extent items of income, gain, deduction, and loss from such assets would be attributable to the separate unit or interest in the transparent entity under paragraphs (c) through (e) of this section. Similarly, liabilities shall be treated as liabilities of a separate unit, or an interest in a transparent entity, to the extent interest expense incurred on such liabilities would be attributable to the separate unit, or the interest in a transparent entity, under paragraphs (c) through (e) of this section.

(g) *Basis adjustments* —

(1) ***Affiliated dual resident corporation or affiliated domestic owner.*** If a member of a consolidated group owns stock in an affiliated dual resident corporation or an affiliated domestic owner that is a member of the same consolidated group, the member shall adjust the basis of the stock in accordance with the provisions of § 1.1502-32. Corresponding adjustments shall be made to the stock of other members in accordance with the provisions of § 1.1502-32. In the case where two or more individual separate units are treated as a combined separate unit pursuant to § 1.1503(d)-1(b)(4)(ii), see paragraph (g)(3) of this section.

(2) ***Interests in hybrid entities that are partnerships or interests in partnerships through which a separate unit is owned indirectly*** —

(i) ***Scope.*** This paragraph (g)(2) applies for purposes of determining the adjusted basis of an interest in—

(A) A hybrid entity that is a partnership; and

(B) A partnership through which a domestic owner indirectly owns a separate unit.

(ii) ***Determination of basis of partner's interest.*** The adjusted basis of an interest described in paragraph (g)(2)(i) of this section shall be adjusted in accordance with section 705 and this paragraph (g)(2). The adjusted basis shall not be decreased for any amount of a dual consolidated loss that is attributable to the partnership interest, or separate unit owned indirectly through the partnership interest, as applicable, that is not absorbed as a result of the application of § 1.1503(d)-4(b) and (c). The adjusted basis shall, however, be decreased for the amount of such dual consolidated loss that is absorbed in a carryover or carryback taxable year. The adjusted basis shall be increased for any amount included in income pursuant to § 1.1503(d)-6(h) as a result of the recapture of a dual consolidated loss that was attributable to the interest in the hybrid partnership, or separate unit owned indirectly through the partnership interest, as applicable.

(3) ***Combined separate units.*** This paragraph (g)(3) applies where two or more individual separate units of one or more affiliated domestic owners are treated as one combined separate unit pursuant to § 1.1503(d)-1(b)(4)(ii). In such a case, a member owning stock in an affiliated domestic owner of the combined separate unit shall adjust the basis in the stock of such domestic owner as provided in paragraph (g)(1) of this section, and an affiliated domestic owner shall adjust its basis in a partnership, as provided in paragraph (g)(2) of this section, taking into account only those items of income, gain, deduction, or loss attributable to each individual separate unit, prior to combination. For purposes of this rule, if the dual consolidated loss attributable to a combined separate unit is subject to the domestic use limitation of § 1.1503(d)-4(b), then for purposes of this paragraph (g) and § 1.1502-32, the dual consolidated loss shall be allocated to an individual separate unit to the extent such individual separate unit contributed items of deduction or loss giving rise to the dual consolidated loss. In addition, if one or more affiliated domestic owners are required to recapture all or a portion of a dual consolidated loss pursuant to paragraph (h) of this section, such recapture amount shall be allocated to the affiliated domestic owner of the individual separate units composing the combined separate unit, to the extent such individual separate units contributed items of deduction or loss giving rise to the recaptured dual consolidated loss.

[T.D. 9315, 72 FR 12914, Mar. 19, 2007; 72 FR 20424, Apr. 25, 2007]

§ 1.1503(d)-6 Exceptions to the domestic use limitation rule.

(a) *In general* —

(1) ***Scope and purpose.*** This section provides certain exceptions to the domestic use limitation rule of § 1.1503(d)-4(b). Paragraph (b) of this section provides an exception for bilateral elective agreements. Paragraph (c) of this section provides rules regarding an exception that applies when there is no possibility of a foreign use. Paragraphs (d) through (h) of this section provide rules for an exception where a domestic use election is made. Paragraph (e) of this section provides rules with respect to triggering events, and paragraph (f) of this section provides rules regarding exceptions to triggering events. Paragraph (g) of this section provides rules with respect to the annual certification reporting requirement. Paragraph (h) of this section provides rules regarding the recapture of dual consolidated losses. Finally, paragraph (j) of this section provides rules regarding the termination of domestic use agreements and the annual certification requirement.

(2) ***Absence of foreign affiliate or foreign consolidation regime.*** The absence of a foreign affiliate or a foreign consolidation regime alone does not constitute an exception to the domestic use limitation rule. This is the case because it is still possible that all or a portion of the dual consolidated loss may be put to a foreign use. For example, there may be a foreign use with respect to an affiliate acquired in a year subsequent to the year in which the dual consolidated loss was incurred. In addition, a foreign use may occur in the absence of a foreign consolidation regime through a sale, merger, or similar transaction. See § 1.1503(d)-7(c) *Example 2.*

(3) ***Foreign insurance companies treated as domestic corporations.*** The exceptions contained in this section shall not apply to losses of a foreign insurance company that is a dual resident corporation under § 1.1503(d)-1(b)(2)(ii), or to losses attributable to any separate unit of such foreign insurance company. In addition, these exceptions shall not apply to losses described in the preceding sentence that, subject to the rules of § 1.1503(d)-4(d), carry over to a domestic corporation pursuant to a transaction described in section 381(a).

(b) *Elective agreement in place between the United States and a foreign country* —

(1) ***In general.*** The domestic use limitation rule of § 1.1503(d)-4(b) shall not apply to a dual consolidated loss to the extent the consolidated group, unaffiliated dual resident corporation, or unaffiliated domestic owner, as the case may be, elects to deduct the loss in the United States pursuant to an agreement entered into between the United States and a foreign country that puts into place an elective procedure through which losses in a particular year may be used to offset income in only one country. This exception shall apply only if all the terms and conditions required under such agreement are satisfied, including any reporting or filing requirements. See § 1.1503(d)-3(e)(2)(iii) for the effect of an agreement described in this paragraph on a stand-alone domestic use agreement.

(2) ***Application to combined separate units.*** This paragraph (b)(2) applies where two or more individual separate units are treated as one combined separate unit pursuant to § 1.1503(d)-1(b)(4)(ii), and an agreement described in paragraph (b)(1) of this section would apply to at least one of the individual separate units. In such a case, and except to the extent provided in the agreement, the consolidated group, unaffiliated dual resident corporation, or unaffiliated domestic owner, as the case may be, may apply the agreement to the individual separate units, as applicable, provided the terms and conditions of the agreement are otherwise satisfied. See § 1.1503(d)-7(c) *Example 19.*

(c) *No possibility of foreign use* —

(1) ***In general.*** The domestic use limitation rule of § 1.1503(d)-4(b) shall not apply to a dual consolidated loss if the consolidated group, unaffiliated dual resident corporation, or unaffiliated domestic owner, as the case may be—

(i) Demonstrates, to the satisfaction of the Commissioner, that no foreign use (as defined in § 1.1503(d)-3) of the dual consolidated loss occurred in the year in which it was incurred, and that no foreign use can occur in any other year by any means; and

(ii) Prepares a statement described in paragraph (c)(2) of this section that is attached to, and filed by the due date (including extensions) of, its U.S. income tax return for the taxable year in which the dual consolidated loss is incurred. See § 1.1503(d)-7(c) *Examples 2, 30,* and *31*.

(2) ***Statement.*** The statement described in this paragraph (c)(2) must be signed under penalties of perjury by the person who signs the tax return. The statement must be labeled "No Possibility of Foreign Use of Dual Consolidated Loss Statement" at the top of the page and must include the following items, in paragraphs labeled to correspond with the items set forth in paragraphs (c)(2)(i) through (iv) of this section:

(i) A statement that the document is submitted under the provisions of paragraph (c) of this section.

(ii) The name, address, taxpayer identification number, and place and date of incorporation of the dual resident corporation, and the country or countries that tax the dual resident corporation on its worldwide income or on a residence basis, or, in the case of a separate unit, identification of the separate unit, including the name under which it conducts business, its principal activity, and the country in which its principal place of business is located. In the case of a combined separate unit, such information must be provided for each individual separate unit that is treated as part of the combined separate unit under § 1.1503(d)-1(b)(4)(ii).

(iii) A statement of the amount of the dual consolidated loss at issue.

(iv) An analysis, in reasonable detail and specificity, of the treatment of the losses and deductions composing the dual consolidated loss under the relevant facts. The analysis must include the reasons supporting the conclusion that no foreign use of the dual consolidated loss can occur as described in paragraph (c)(1)(i) of this section. The analysis must be supported with official or certified English translations of the relevant provisions of foreign law. The analysis may, for example, be based on the taxpayer's interpretation of foreign law, on advice received from local tax advisers in an opinion, or on a ruling from local country tax authorities. In all cases, however, the determination must be made to the satisfaction of the Commissioner.

(d) ***Domestic use election*** —

(1) ***In general.*** The domestic use limitation rule of § 1.1503(d)-4(b) shall not apply to a dual consolidated loss if an election to be bound by the provisions of paragraphs (d) through (j) of this section is made by the consolidated group, unaffiliated dual resident corporation, or unaffiliated domestic owner, as the case may be (elector). In order to elect such relief, an agreement described in this paragraph (d)(1) (domestic use agreement) must be attached to, and filed by the due date (including extensions) of, the U.S. income tax return of the elector for the taxable year in which the dual consolidated loss is incurred. The domestic use agreement must be signed under penalties of perjury by the person who signs the return. If dual consolidated losses of more than one dual resident corporation or separate unit requires the filing of domestic use agreements by the same elector, the agreements may be combined in a single document, but the information required by

paragraphs (d)(1)(ii) and (iv) of this section must be provided separately with respect to each dual consolidated loss. The domestic use agreement must be labeled "Domestic Use Election and Agreement" at the top of the page and must include the following items, in paragraphs labeled to correspond with the following:

(i) A statement that the document submitted is an election and an agreement under the provisions of paragraph (d) of this section.

(ii) The information required by paragraph (c)(2)(ii) of this section.

(iii) An agreement by the elector to comply with all of the provisions of paragraphs (d) through (j) of this section, as applicable.

(iv) A statement of the amount of the dual consolidated loss at issue.

(v) A certification that there has not been, and will not be, a foreign use (as defined in § 1.1503(d)-3) during the certification period (as defined in § 1.1503(d)-1(b)(20)).

(vi) A certification that arrangements have been made to ensure that there will be no foreign use of the dual consolidated loss during the certification period, and that the elector will be informed of any such foreign use of the dual consolidated loss during such period.

(vii) If applicable, a notification that an excepted triggering event under paragraph (f)(2) of this section has occurred with respect to the dual consolidated loss within the taxable year in which the loss is incurred. See paragraph (g) of this section for notification of excepted triggering events occurring during the certification period.

(2) ***No domestic use election available if there is a triggering event in the year the dual consolidated loss is incurred.*** Except as otherwise provided in this section, if a dual resident corporation or separate unit incurs a dual consolidated loss in a taxable year and a triggering event, as described in paragraph (e)(1) of this section, occurs (and no exception applies) with respect to the dual consolidated loss in such taxable year, then the consolidated group, unaffiliated dual resident corporation, or unaffiliated domestic owner, as the case may be, may not make a domestic use election with respect to such dual consolidated loss and the loss will be subject to the domestic use limitation rule of § 1.1503(d)-4(b). See § 1.1503(d)-7(c) *Examples 5* through *7.* See also § 1.1503(d)-4(d) for rules that eliminate a dual consolidated loss after certain transactions.

(e) ***Triggering events requiring the recapture of a dual consolidated loss*** —

(1) ***Events.*** Except as provided under paragraphs (e)(2) (rebuttal of triggering events) and (f) (exceptions to triggering events) of this section, if there is a triggering event described in this paragraph (e)(1) with respect to a dual consolidated loss of a dual resident corporation or a separate unit during the certification period (as defined in § 1.1503(d)-1(b)(20)), the elector will recapture and report as ordinary income the amount of such dual consolidated loss as provided in paragraph (h) of this section on its tax return for the taxable year in which the triggering event occurs (or, when the triggering event is a foreign use of the dual consolidated loss, the taxable year that includes the last day of the foreign taxable year during which such use occurs). In addition, the elector must pay any applicable interest charge required by paragraph (h) of this section. For purposes of this section, any of the following events shall constitute a triggering event:

(i) ***Foreign use.*** A foreign use (as defined in § 1.1503(d)-3) of the dual consolidated loss. See § 1.1503(d)-3(c) for exceptions to foreign use.

(ii) ***Disaffiliation.*** An affiliated dual resident corporation or affiliated domestic owner that incurred directly or through a separate unit, respectively, a dual consolidated loss that is subject to a domestic use election, ceases to be a member of the consolidated group that made the domestic use election. For purposes of this paragraph (e)(1)(ii), an affiliated dual resident corporation or affiliated domestic owner shall be considered to cease to be a member of the consolidated group if it is no longer a member of the group within the meaning of § 1.1502-1(b), or if the group ceases to exist (for example, when the group no longer files a consolidated return). See § 1.1503(d)-7(c) *Example 34.* Any consequences resulting from this triggering event (for example, recapture of a dual consolidated loss) shall be taken into account on the tax return of the consolidated group for the taxable year that includes the date on which the affiliated dual resident corporation or affiliated domestic owner ceases to be a member of the consolidated group. This paragraph (e)(1)(ii) shall not apply to an acquisition described in § 1.1502-75(d)(3) where the consolidated group that includes the affiliated dual resident corporation or affiliated domestic owner, as applicable, is treated as remaining in existence.

(iii) ***Affiliation.*** An unaffiliated dual resident corporation or unaffiliated domestic owner becomes a member of a consolidated group. Any consequences resulting from this triggering event (for example, recapture of a dual consolidated loss) shall be taken into account on the tax return of the unaffiliated dual resident corporation or unaffiliated domestic owner for the taxable year that ends at the end of the day on which such corporation becomes a member of the consolidated group.

(iv) ***Transfer of assets.*** Fifty percent or more of the dual resident corporation's or separate unit's gross assets (measured by the fair market value of the assets at the time of such transaction or, for multiple transactions, at the time of the first transaction) is sold or otherwise disposed of in either a single transaction or a series of transactions within a twelve-month period. See § 1.1503(d)-7(c) *Examples 5* and *35* through *37.* In determining whether fifty percent or more of such assets is sold or otherwise disposed of, any dispositions occurring in the ordinary course of the dual resident corporation's or separate unit's trade or business shall be disregarded. In addition, for purposes of this paragraph (e)(1)(iv), an interest in another separate unit and the shares of a dual resident corporation shall not be treated as assets of a separate unit or a dual resident corporation.

(v) ***Transfer of an interest in a separate unit.*** Fifty percent or more of the interest in a separate unit (measured by voting power or value at the time of such transaction, or for multiple transactions, at the time of the first transaction) of the domestic owner, as determined by reference to such domestic owner's percentage interest on the last day of the taxable year in which the dual consolidated loss was incurred, is sold or otherwise disposed of either in a single transaction or a series of transactions within a twelve-month period. See § 1.1503(d)-7(c) *Examples 5* and *35* through *37.*

(vi) ***Conversion to a foreign corporation.*** An unaffiliated dual resident corporation, unaffiliated domestic owner, or hybrid entity an interest in which is a separate unit, that incurred the dual consolidated loss, becomes a foreign corporation (for example, as a result of a reorganization or an election to be classified as a corporation under § 301.7701-3(c) of this chapter).

(vii) ***Conversion to a regulated investment company, a real estate investment trust, or an S corporation.*** An unaffiliated dual resident corporation or unaffiliated domestic owner elects to be a regulated investment company pursuant to section 851(b)(1), a real estate investment trust pursuant to section 856(c)(1), or an S corporation pursuant to section 1362(a).

(viii) ***Failure to certify.*** The elector fails to file a certification with respect to a dual consolidated loss as required under paragraph (g) of this section.

(ix) ***Cessation of stand-alone status.*** In the case of a dual consolidated loss that is subject to the stand-alone exception described in § 1.1503(d)-3(e)(2), the conditions described in § 1.1503(d)-3(e)(2)(i) are no longer satisfied. See § 1.1503(d)-7(c) *Example 18*.

(2) ***Rebuttal*** —

(i) ***General rule.*** An event described in paragraph (e)(1) of this section shall not constitute a triggering event if the elector demonstrates, to the satisfaction of the Commissioner, that there can be no foreign use (as defined in § 1.1503(d)-3) of the dual consolidated loss during the remaining certification period by any means. See paragraph (j)(1) of this section for rules regarding the termination of domestic use agreements and annual certifications following rebuttals under this general rule.

(ii) ***Certain asset transfers.*** An event described in paragraph (e)(1)(iv) of this section shall not constitute a triggering event if the elector demonstrates, to the satisfaction of the Commissioner, that the transfer of assets did not result in a carryover under foreign law of the dual resident corporation's, or separate unit's, losses, expenses, or deductions to the transferee of the assets. For purposes of this determination, the exception to foreign use in § 1.1503(d)-3(c)(7) shall be taken into account. Following rebuttal under this paragraph (e)(2)(ii), the domestic use agreement continues in effect.

(iii) ***Reporting.*** In order to satisfy the requirements of paragraph (e)(2)(i) or (ii) of this section, the elector must prepare a statement, labeled “Rebuttal of Triggering Event” at the top of the page, that indicates that it is submitted under the provisions of this paragraph (e)(2). The statement must include the information described in paragraphs (c)(2)(ii) and (iii) of this section. The statement must also include the information described in paragraph (c)(2)(iv) of this section that supports the conclusions under paragraph (e)(2)(i) or (ii) of this section, as applicable. The statement must be attached to, and filed by the due date (including extensions) of, the elector's income tax return for the taxable year in which the presumed triggering event occurs.

(iv) ***Examples.*** See § 1.1503(d)-7(c) *Examples 32* and *33*.

(f) ***Triggering event exceptions*** —

(1) ***Continuing ownership of assets or interests.*** The following events shall not constitute triggering events, requiring the recapture of the dual consolidated loss under paragraph (h) of this section:

(i) ***Disaffiliation as a result of a transaction described in section 381.*** An affiliated dual resident corporation or affiliated domestic owner ceases to be a member of a consolidated group solely by reason of a transaction in which a member of the same consolidated group succeeds to the tax attributes of the dual resident corporation or domestic owner under the provisions of section 381.

(ii) ***Continuing ownership by consolidated group.*** This paragraph (f)(1)(ii) applies when assets of an affiliated dual resident corporation, or assets of, or interests in, a separate unit of an affiliated domestic owner are sold or otherwise disposed of. In such a case, the sale or disposition shall not be treated as a triggering event to the extent the assets or interests are acquired by one or more members of the consolidated group that includes the affiliated dual resident corporation

or affiliated domestic owner, or by a partnership or a grantor trust, but only if immediately after the acquisition more than 90 percent of the partnership's or grantor trust's interests is owned, directly or indirectly, by members of such consolidated group.

(iii) ***Continuing ownership by unaffiliated dual resident corporation or unaffiliated domestic owner.*** This paragraph (f)(1)(iii) applies when assets of an unaffiliated dual resident corporation, or assets of, or interests in, a separate unit of an unaffiliated domestic owner, are sold or otherwise disposed of. In such a case, the sale or disposition shall not be a triggering event to the extent such assets or interests are acquired by the unaffiliated dual resident corporation, or unaffiliated domestic owner, as applicable, or by a partnership or grantor trust, but only if immediately after the acquisition more than 90 percent of the partnership's or grantor trust's interests is owned, directly or indirectly, by the unaffiliated dual resident corporation or unaffiliated domestic owner. For example, this paragraph (f)(1)(iii) applies when an unaffiliated domestic owner acquires direct ownership of the assets of a separate unit that it had immediately before owned indirectly through a partnership.

(2) ***Transactions requiring a new domestic use agreement*** —

(i) ***Multiple-party events.*** If all the requirements of paragraph (f)(2)(iii) of this section are satisfied, the following events shall not constitute triggering events requiring the recapture of the dual consolidated loss under paragraph (h) of this section:

(A) An affiliated dual resident corporation or affiliated domestic owner becomes an unaffiliated domestic corporation or a member of a new consolidated group (other than in a transaction described in paragraph (f)(2)(ii)(B) of this section).

(B) Assets of a dual resident corporation or assets of, or interests in, a separate unit, are sold or otherwise disposed of in a transaction in which such assets or interests are acquired by an unaffiliated domestic corporation, one or more members of a new consolidated group, or by a partnership or grantor trust, but only if immediately after the sale or disposition more than 90 percent of the partnership's or grantor trust's interests is owned, directly or indirectly, by the unaffiliated domestic owner or by members of a new consolidated group, as applicable. See the related exception to foreign use provided under § 1.1503(d)-3(c)(8). See also § 1.1503(d)-7(c) *Examples 36* and *37*.

(ii) ***Events resulting in a single consolidated group.*** If the requirements of paragraph (f)(2)(iii)(A) of this section are satisfied, the following events shall not constitute triggering events requiring the recapture of the dual consolidated loss under paragraph (h) of this section:

(A) An unaffiliated dual resident corporation or unaffiliated domestic owner becomes a member of a consolidated group.

(B) A consolidated group ceases to exist as a result of a transaction described in § 1.1502-13(j)(5)(i) (relating to acquisitions of the common parent of the consolidated group), other than a transaction in which any member of the terminating group, or the successor-in-interest of such member, is not a member of the surviving group immediately after the terminating group ceases to exist. See § 1.1503(d)-7(c) *Example 34*.

(iii) ***Requirements*** —

(A) ***New domestic use agreement.*** The unaffiliated domestic corporation or new consolidated group (subsequent elector) must file an agreement described in paragraph (d)(1) of this section (new domestic use agreement). The new domestic use agreement must be labeled "New Domestic Use Agreement" at the top of the page, and must be attached to and filed by the due date (including extensions) of, the subsequent elector's income tax return for the taxable year in which the event described in paragraph (f)(2)(i) or (f)(2)(ii) of this section occurs. The new domestic use agreement must be signed under penalties of perjury by the person who signs the return and must include the following items:

(*1*) A statement that the document submitted is an election and agreement under the provisions of paragraph (f)(2) of this section.

(*2*) An agreement to assume the same obligations with respect to the dual consolidated loss as the unaffiliated dual resident corporation, unaffiliated domestic owner, or consolidated group, as applicable, that filed the original domestic use agreement (original elector) with respect to that loss. In such a case, obligations of an elector provided under this section shall also be considered to be obligations of a subsequent elector.

(*3*) In the event of a transaction described in section 384(a) involving the subsequent elector, an agreement to treat any potential recapture amount under paragraph (h) of this section with respect to the dual consolidated loss as unrealized built-in gain for purposes of section 384(a), subject to any applicable exceptions (for example, the threshold requirements under section 382(h)(3)(B)). The potential recapture amount treated as unrealized built-in gain under this paragraph (f)(2)(iii)(A)(*3*) may be reduced to the extent permitted by paragraph (h)(2)(i) of this section.

(*4*) In the case of a multiple-party event described in paragraph (f)(2)(i) of this section, an agreement to be subject to the rules provided in paragraph (h)(3) of this section.

(*5*) The name, U.S. taxpayer identification number, and address of the original elector and prior subsequent electors, if any, with respect to the dual consolidated loss.

(B) ***Statement filed by original elector.*** In the case of a multiple-party event described in paragraph (f)(2)(i) of this section, the original elector must file a statement that is attached to and filed by the due date (including extensions) of its income tax return for the taxable year in which the event occurs. The statement must be labeled "Original Elector Statement" at the top of the page, must be signed under penalties of perjury by the person who signs the tax return, and must include the following items:

(*1*) A statement that the document submitted is an election and agreement under the provisions of paragraph (f)(2) of this section.

(*2*) An agreement to be subject to the rules provided in paragraph (h)(3) of this section.

(*3*) The name, U.S. taxpayer identification number, and address of the subsequent elector.

(3) ***Certain transfers qualifying for the de minimis exception to foreign use.*** If a transaction or event qualifies for the de minimis exception to foreign use described in § 1.1503(d)-3(c)(5), the transaction or event shall not constitute a triggering event under paragraph (e)(1)(iv) (transfers of assets) or (v) (transfers of an interest in a separate unit) of this section. For purposes of the preceding sentence,

the transaction or event shall include deemed transfers that occur as a result of the transaction or event. See, for example, deemed transfers occurring pursuant to Rev. Rul. 99-5 (1999-1 CB 434), see § 601.601(d)(2)(ii)(*b*), and section 708 and the related regulations. See also § 1.1503(d)-7 *Example 5.* This paragraph (f)(3) only applies if the entire transaction or event qualifies for the de minimis exception to foreign use. For example, if a domestic owner sells five percent of a separate unit to a foreign corporation, which would qualify for the de minimis exception to foreign use if it were the only transfer, but pursuant to the same transaction also sells 70 percent of the same separate unit to another corporation in a manner that results in a triggering event under paragraph (e)(1)(v) of this section, this paragraph shall not apply to prevent the transaction from resulting in a triggering event.

(4) ***Deemed transactions as a result of certain transfers that do not result in a foreign use.*** The rules in this paragraph (f)(4) apply where the assets of, or the interests in, a separate unit are transferred in a transaction that would not result in a foreign use and, but for resulting deemed transactions or events, would not result in a triggering event described in paragraph (e)(1) of this section. For purposes of this paragraph (f)(4), deemed transactions or events shall include transactions or events that are deemed to occur pursuant to Rev. Rul. 99-5 and section 708 and the related regulations. In such a case, the deemed transactions shall not result in a triggering event under paragraph (e)(1)(iv) (transfers of assets) or (v) (transfers of an interest in a separate unit) of this section. See also § 1.1503(d)-7 *Example 35.*

(5) ***Compulsory transfers.*** Transfers of the assets or stock of a dual resident corporation, or of the assets or interests in a separate unit, shall not constitute a triggering event (including a foreign use that occurs as a result of, or following, the transfer) if such transfers are—

(i) Legally required by a government of a country as a necessary condition of doing business in the country;

(ii) Compelled by a genuine threat of immediate expropriation by a government of a country; or

(iii) The result of the expropriation of assets by a government of a country.

(6) ***Subsequent triggering events.*** Any triggering event described in paragraph (e) of this section that occurs subsequent to one of the transactions described in this paragraph (f), and that itself does not meet any of the exceptions provided in this paragraph (f), shall require recapture under paragraph (h) of this section by the elector or subsequent elector, as applicable.

(g) ***Annual certification reporting requirement.*** Unless and until the domestic use agreement is terminated pursuant to paragraph (j) of this section, the elector must file a certification, labeled “Certification of Dual Consolidated Loss” at the top of the page, that is attached to, and filed by the due date (including extensions) of, its income tax return for each taxable year during the certification period. The certification must provide that there has been no foreign use of the dual consolidated loss. The certification must identify the dual consolidated loss to which it pertains by setting forth the elector's year in which the loss was incurred and the amount of such loss. In addition, the certification must warrant that arrangements have been made to ensure that there will be no foreign use of the dual consolidated loss and that the elector will be informed of any such foreign use. If applicable, the certification must include a notification that an excepted triggering event under paragraph (f)(2) of this section has occurred with respect to the dual consolidated loss within the taxable year being certified. If dual consolidated losses of more than one taxable year are subject to the rules of this paragraph (g), the certification for those years may be combined in a single document, but each dual consolidated loss must be separately identified. See § 1.1503(d)-3(e)(2)(ii) for additional certifications required where taxpayers elect the stand-alone exception of § 1.1503(d)-3(e)(2).

(h) *Recapture of dual consolidated loss and interest charge* —

(1) *Presumptive rules* —

(i) ***Amount of recapture.*** Except as otherwise provided in this section, upon the occurrence of a triggering event described in paragraph (e) of this section that does not meet any of the exceptions provided in paragraph (f) of this section, the dual resident corporation or domestic owner of the separate unit shall recapture as gross income the total amount of the dual consolidated loss to which the triggering event applies on its income tax return for the taxable year in which the triggering event occurs (or, when the triggering event is a foreign use of the dual consolidated loss, the taxable year that includes the last day of the foreign taxable year during which such foreign use occurs). See § 1.1503(d)-5(c)(4)(vi) for rules with respect to the attribution of recapture income to a separate unit. See also § 1.1503(d)-7 *Examples 38* through *40*.

(ii) ***Interest charge.*** In connection with the recapture, the elector shall pay an interest charge. An interest charge may be due even if the amount of recapture income is reduced to zero pursuant to paragraph (h)(2)(i) of this section. See § 1.1503(d)-7(c) *Example 39.* Except as otherwise provided in this section, the amount of the interest shall be computed under the rules of section 6601(a) by treating the additional tax resulting from the recapture as though it had been due and unpaid as of the date for payment of the tax for the taxable year in which the taxpayer received a tax benefit from the dual consolidated loss. For purposes of this paragraph (h)(1)(ii), a tax benefit shall be considered to have arisen in a taxable year in which the losses or deductions taken into account in computing the dual consolidated loss reduced U.S. taxable income. For the purpose of computing the interest charge, the additional tax resulting from the recapture is determined by treating the recapture income as the last income earned in the year of recapture. The interest shall be computed to the date for payment of the tax for the year of recapture and the interest thus computed becomes a part of the tax liability for that taxable year. See section 6601 for the computation of interest on a tax liability that it is not paid timely. The recapture interest charge shall be deductible to the same extent as interest under section 6601.

(2) *Reduction of presumptive recapture amount and presumptive interest charge* —

(i) ***Amount of recapture.*** The dual resident corporation or domestic owner may recapture an amount less than the total dual consolidated loss if the elector demonstrates, to the satisfaction of the Commissioner, the lesser amount described in this paragraph (h)(2)(i). The reduction in the amount of recapture is the amount by which the dual consolidated loss would have offset other taxable income reported on a timely filed U.S. income tax return for any taxable year up to and including the taxable year of the triggering event (or, when the triggering event is a foreign use of the dual consolidated loss, the taxable year that includes the last day of the foreign taxable year during which such foreign use occurs) if no domestic use election had been made for the loss such that it was subject to the domestic use limitation of § 1.1503(d)-4(b) (and therefore subject to the limitation under § 1.1503(d)-4(c)). For this purpose, the rules for attributing items of income, gain, deduction, and loss under § 1.1503(d)-5 shall apply. An elector using this rebuttal rule must prepare a separate accounting showing the income for each year that would have offset the dual resident corporation's or separate unit's recapture amount if no domestic use election had been made for the dual consolidated loss. The separate accounting must be signed under penalties of perjury by the person who signs the elector's tax return, must be labeled “Reduction of Recapture Amount” at the top of the page,

and must indicate that it is submitted under the provisions of this paragraph (h)(2)(i). The accounting must be attached to, and filed by the due date (including extensions) of, the elector's income tax return for the taxable year in which the triggering event occurs. See § 1.1503(d)-7(c) *Examples 38* through *40*.

(ii) ***Interest charge.*** The interest charge imposed under this section may be reduced if the elector demonstrates, to the satisfaction of the Commissioner, that the net interest owed would have been less than that provided in paragraph (h)(1)(ii) of this section if the elector had filed an amended return for the taxable year in which the recaptured dual consolidated loss was incurred, and for any other affected taxable years up to and including the taxable year of recapture, if no domestic use election had been made for the dual consolidated loss such that it had been subject to the restrictions of § 1.1503(d)-4(b) (and therefore subject to the limitations under § 1.1503(d)-4(c)). An elector using this rebuttal rule must prepare a computation demonstrating the reduction in the net interest owed as a result of treating the dual consolidated loss as a loss subject to the restrictions of § 1.1503(d)-4(b) (and therefore subject to the limitations under § 1.1503(d)-4(c)). The computation must be labeled "Reduction of Interest Charge" at the top of the page and must indicate that it is submitted under the provisions of this paragraph (h)(2)(ii). The computation must be signed under penalties of perjury by the person who signs the elector's tax return, and must be attached to, and filed by the due date (including extensions) of, the elector's income tax return for the taxable year in which the triggering event occurs. See § 1.1503(d)-7(c) *Examples 39* and *40*.

(3) ***Rules regarding multiple-party event exceptions to triggering events*** —

(i) ***Scope.*** The rules of this paragraph (h)(3) apply when, after a triggering event described in paragraph (e) of this section with respect to which the requirements of paragraph (f)(2)(i) of this section were met (excepted event), a triggering event under paragraph (e) of this section occurs, and no exception applies to such triggering event under paragraph (f) of this section (subsequent triggering event). See § 1.1503(d)-7(c) *Examples 36* and *37*.

(ii) ***Original elector and prior subsequent electors not subject to recapture or interest charge*** —

(A) Except to the extent otherwise provided in this paragraph (h)(3), neither the original elector nor any prior subsequent elector shall be subject to the rules of this paragraph (h) with respect to dual consolidated losses subject to the original domestic use agreement.

(B) In the case of a dual consolidated loss with respect to which multiple excepted events have occurred, only the subsequent elector that owns the dual resident corporation or separate unit at the time of the subsequent triggering event shall be subject to the recapture rules of this paragraph (h). For purposes of this paragraph (h), the term prior subsequent elector refers to all other subsequent electors.

(iii) ***Recapture tax amount and required statement*** —

(A) ***In general.*** If a subsequent triggering event occurs, the subsequent elector shall take into account the recapture tax amount as determined under paragraph (h)(3)(iii)(B) of this section. The subsequent elector must prepare a statement that computes the recapture tax amount, as provided under paragraph (h)(3)(iii)(B) of this section, with respect to the dual consolidated loss subject to the new domestic use agreement. This statement must be attached to, and filed by the due date (including extensions) of, the subsequent elector's income tax return for the taxable year in which the subsequent triggering event occurs (or, when the subsequent triggering event is a foreign use of the dual consolidated

loss, the taxable year that includes the last day of the foreign taxable year during which such foreign use occurs). The statement must be signed under penalties of perjury by the person who signs the return. The statement must be labeled "Statement Identifying Liability" at the top and, in addition to the calculation of the recapture tax amount, must include the following items, in paragraphs labeled to correspond with the items set forth in paragraphs (h)(3)(iii)(A)(*1*) through (*3*) of this section:

(*1*) A statement that the document is submitted under the provisions of § 1.1503(d)-6(h)(3)(iii).

(*2*) A statement identifying the amount of the dual consolidated losses at issue and the taxable years in which they were used.

(*3*) The name, address, and taxpayer identification number of the original elector and all prior subsequent electors.

(B) ***Recapture tax amount.*** The recapture tax amount equals the excess (if any) of—

(*1*) The income tax liability of the subsequent elector for the taxable year that includes the amount of recapture and related interest charge with respect to the dual consolidated losses that are recaptured as a result of the subsequent triggering event, as provided under paragraphs (h)(1) and (h)(2) of this section; over

(*2*) The income tax liability of the subsequent elector for such taxable year, computed by excluding the amount of recapture and related interest charge described in paragraph (h)(3)(iii)(B)(*1*) of this section.

(iv) ***Tax assessment and collection procedures*** —

(A) ***In general*** —

(*1*) ***Subsequent elector.*** An assessment identifying an income tax liability of the subsequent elector is considered an assessment of the recapture tax amount where the recapture tax amount is part of the income tax liability being assessed and the recapture tax amount is reflected in a statement attached to the subsequent elector's income tax return as provided under paragraph (h)(3)(iii) of this section.

(*2*) ***Original elector and prior subsequent electors.*** The assessment of the recapture tax amount as set forth in paragraph (h)(3)(iv)(A)(*1*) of this section shall be considered as having been properly assessed as an income tax liability of the original elector and of each prior subsequent elector, if any. The date of such assessment shall be the date the income tax liability of the subsequent elector was properly assessed. The Commissioner may collect all or a portion of such recapture tax amount from the original elector and/or the prior subsequent electors under the circumstances set forth in paragraph (h)(3)(iv)(B) of this section.

(B) ***Collection from original elector and prior subsequent electors; joint and several liability*** —

(*1*) ***In general.*** If the subsequent elector does not pay in full the income tax liability that includes a recapture tax amount, the Commissioner may collect that portion of the unpaid balance of such income tax liability attributable to the recapture tax amount in full or in part from the original elector and/or from any prior subsequent elector, provided that the following conditions are satisfied with respect to such elector:

(*i*) The Commissioner properly has assessed the recapture tax amount pursuant to paragraph (h)(3)(iv)(A)(*1*) of this section.

(*ii*) The Commissioner has issued a notice and demand for payment of the recapture tax amount to the subsequent elector in accordance with § 301.6303-1 of this chapter.

(*iii*) The subsequent elector has failed to pay all of the recapture tax amount by the date specified in such notice and demand.

(*iv*) The Commissioner has issued a notice and demand for payment of the unpaid portion of the recapture tax amount to the original elector, or prior subsequent elector (as the case may be), in accordance with § 301.6303-1 of this chapter.

(*2*) ***Joint and several liability.*** The liability imposed under this paragraph (h)(3)(iv)(B) on the original elector and each prior subsequent elector shall be joint and several.

(C) ***Allocation of partial payments of tax.*** If the subsequent elector's income tax liability for a taxable period includes a recapture tax amount, and if such income tax liability is satisfied in part by payment, credit, or offset, such payment, credit or offset shall be allocated first to that portion of the income tax liability that is not attributable to the recapture tax amount, and then to that portion of the income tax liability that is attributable to the recapture tax amount.

(D) ***Refund.*** If the Commissioner makes a refund of any income tax liability that includes a recapture tax amount, the Commissioner shall allocate and pay the refund to each elector who paid a portion of such income tax liability as follows:

(*1*) The Commissioner shall first determine the total amount of recapture tax paid by and/or collected from the original elector and from any prior subsequent electors. The Commissioner shall then allocate and pay such refund to the original elector and prior subsequent electors, with each such elector receiving an amount of such refund on a pro rata basis, not to exceed the amount of recapture tax paid by and/or collected from such elector.

(*2*) The Commissioner shall pay the balance of such refund, if any, to the subsequent elector.

(v) ***Definition of income tax liability.*** Solely for purposes of paragraph (h)(3) of this section, the term *income tax liability* means the income tax liability imposed on a domestic corporation under title 26 of the United States Code for a taxable year, including additions to tax, additional amounts, penalties, and any interest charge related to such income tax liability.

(vi) ***Example.*** See § 1.1503(d)-7(c) *Example 36.*

(4) ***Computation of taxable income in year of recapture*** —

(i) ***Presumptive rule.*** Except to the extent provided in paragraph (h)(4)(ii) of this section, for purposes of computing the taxable income for the year of recapture, no current, carryover or carryback losses may offset and absorb the recapture amount.

(ii) ***Exception to presumptive rule.*** The recapture amount included in gross income may be offset and absorbed by that portion of the elector's net operating loss carryover that is attributable to the dual resident corporation or separate unit that incurred the dual consolidated loss being

recaptured, if the elector demonstrates, to the satisfaction of the Commissioner, the amount of such portion of the carryover. The principles of § 1.1502-21(b)(2)(iv) shall apply for purposes of determining whether any portion of a net operating loss carryover is attributable to the dual resident corporation or separate unit. In the case of a separate unit, such determination shall be made by treating the separate unit as a domestic corporation and a member of the consolidated group composing its unaffiliated domestic owner, or members of the consolidated group of which its affiliated domestic owner is a member, as appropriate. An elector utilizing this rebuttal rule must prepare a computation demonstrating the amount of net operating loss carryover that, under this paragraph (h)(4)(ii), may absorb the recapture amount included in gross income. Such computation must be signed under penalties of perjury and attached to and filed by the due date (including extensions) of, the income tax return for the taxable year in which the triggering event occurs (or, when the triggering event is a foreign use of the dual consolidated loss, the taxable year that includes the last day of the foreign taxable year during which such foreign use occurs).

(5) ***Character and source of recapture income.*** The amount recaptured under this paragraph (h) shall be treated as ordinary income. Except as provided in the prior sentence, such income shall be treated, as applicable, as income from the same source, having the same character, and falling within the same separate category, for all purposes, including sections 904(d) and 907, to which the items of deduction or loss composing the dual consolidated loss were allocated and apportioned, as provided under sections 861(b), 862(b), 863(a), 864(e), 865, and the related regulations. For this determination, the pro rata computation of the items of deduction or loss composing the dual consolidated loss as described in § 1.1503(d)-4(c)(4) shall apply. See § 1.1503(d)-7(c) *Example 38*.

(6) ***Reconstituted net operating loss*** —

(i) ***General rule.*** Except as provided in paragraphs (h)(6)(ii) and (iii) of this section, commencing in the taxable year immediately following the year in which the dual consolidated loss is recaptured, the dual resident corporation, or the domestic owner of the separate unit, that incurred the dual consolidated loss that is recaptured shall be treated as having a net operating loss (reconstituted net operating loss) in an amount equal to the amount actually recaptured under this paragraph (h). If a domestic corporation (transferee) acquires the assets of the dual resident corporation or domestic owner in a transaction described in section 381(a), the preceding sentence shall be applied by treating the transferee as the dual resident corporation or domestic owner, as applicable. In a case to which this paragraph (h)(6) applies, the transferee corporation shall be treated as having a reconstituted net operating loss in an amount equal to the amount actually recaptured under this paragraph (h). In no event, however, shall more than one corporation be treated as having a reconstituted net operating loss as a result of a single dual consolidated loss being recaptured. A reconstituted net operating loss of a domestic owner shall be attributable under § 1.1503(d)-5 to the separate unit that incurred the dual consolidated loss that was recaptured. Moreover, a reconstituted net operating loss shall be subject to the domestic use limitation of § 1.1503(d)-4(b) (and therefore subject to the limitation under § 1.1503(d)-4(c)), without regard to the exceptions contained in paragraphs (b) through (d) of this section (relating to elective agreements in place between the United States and a foreign country, the ability to demonstrate no possibility of a foreign use, and a domestic use election, respectively). The reconstituted net operating loss shall be available only for carryover, under section 172(b), to taxable years following the taxable year of recapture. For purposes of determining the remaining carryover period, the reconstituted net operating loss

shall be treated as if it had been recognized in the taxable year in which the dual consolidated loss that is the basis of the recapture amount was incurred. See § 1.1503(d)-7(c) *Examples 36, 38,* and *40*.

(ii) ***Exception.*** Paragraph (h)(6)(i) of this section shall not apply to the extent the dual consolidated loss that is the basis of the recapture amount would have been eliminated pursuant to § 1.1503(d)-4(d) if no domestic use election had been made for such loss. See § 1.1503(d)-7(c) *Example 40*.

(iii) ***Special rule for recapture following multiple-party event exception to a triggering event.*** This paragraph applies to an excepted event described in paragraph (f)(2)(i)(B) of this section that is followed by a subsequent triggering event requiring recapture as described in paragraph (f)(6) of this section. In such a case, the domestic corporation that owns, directly or indirectly, the assets of the dual resident corporation, or the assets of or the interests in a separate unit, immediately following the excepted event shall be treated as if it incurred the dual consolidated loss that is recaptured for purposes of applying paragraph (h)(6)(i) of this section. See § 1.1503(d)-7(c) *Example 36*.

(i) [Reserved]

(j) ***Termination of domestic use agreement and annual certifications*** —

(1) ***Rebuttals, exceptions to triggering events, and recapture.*** The domestic use agreement filed with respect to a dual consolidated loss shall terminate prior to the end of the certification period and have no further effect if—

(i) An elector is able to rebut the presumption of a triggering event pursuant to the general rule in paragraph (e)(2)(i) of this section;

(ii) An event described in paragraph (e)(1) of this section is not a triggering event as a result of the application of paragraphs (f)(2)(i) or (ii) (relating to events requiring a new domestic use agreement) of this section; this paragraph (j)(1)(ii) does not, however, apply to terminate the new domestic use agreement filed in connection with the event pursuant to paragraph (f)(2)(iii)(A) of this section. See also paragraph (h)(3)(iv) of this section regarding collection from the original elector and prior subsequent electors in certain cases; or

(iii) A dual consolidated loss is recaptured pursuant to paragraph (h) of this section. See § 1.1503(d)-7(c) *Examples 32* through *34*.

(2) ***Termination of ability for foreign use*** —

(i) ***In general.*** A domestic use agreement filed with respect to a dual consolidated loss shall terminate and have no further effect as of the end of a taxable year if the elector—

(A) Demonstrates, to the satisfaction of the Commissioner, that as of the end of such taxable year no foreign use (as defined in § 1.1503(d)-3) of the dual consolidated loss can occur in any other year by any means; and

(B) Prepares a statement described in paragraph (j)(2)(ii) of this section that is attached to, and filed by the due date (including extensions) of, its U.S. income tax return for such taxable year.

(ii) ***Statement.*** The statement described in this paragraph (j)(2)(ii) must be signed under penalties of perjury by the person who signs the return. The statement must be labeled "Termination of Ability for Foreign Use" at the top of the page and must include the following information, in paragraphs labeled to correspond with the following:

(A) A statement that the document is submitted under the provisions of paragraph (j)(2) of this section.

(B) The information required by paragraph (c)(2)(ii) of this section.

(C) A statement of the amount of the dual consolidated loss at issue and the year in which such dual consolidated loss was incurred.

(D) The information described in paragraph (c)(2)(iv) of this section that supports the conclusion that no foreign use can occur as provided in paragraph (j)(2)(i)(A) of this section.

(3) ***Agreements filed in connection with stand-alone exception.*** See § 1.1503(d)-3(e)(2)(iii) for the termination of domestic use agreements filed in connection with the stand-alone exception to the mirror legislation rule when a subsequent election is made under paragraph (b) of this section (relating to agreements entered into between the United States and a foreign country).

[T.D. 9315, 72 FR 12914, Mar. 19, 2007, as amended by T.D. 9896, 85 FR 19855, Apr. 8, 2020]

§ 1.1503(d)-7 Examples.

(a) ***In general.*** This section provides examples that illustrate the application of §§ 1.1503(d)-1 through 1.1503(d)-6. This section also provides facts that are presumed for such examples.

(b) ***Presumed facts for examples.*** For purposes of the examples in this section, unless otherwise indicated, the following facts are presumed:

(1) Each entity has only a single class of equity outstanding, all of which is held by a single owner.

(2) P, a domestic corporation and the common parent of the P consolidated group, owns S, a domestic corporation and a member of the P consolidated group.

(3) DRC_X, a domestic corporation, is subject to Country X tax on its worldwide income or on a residence basis, and is a dual resident corporation.

(4) $DE1_X$ and $DE2_X$ are both Country X entities, subject to Country X tax on their worldwide income or on a residence basis, and disregarded as entities separate from their owners for U.S. tax purposes. $DE3_Y$ is a Country Y entity, subject to Country Y tax on its worldwide income or on a residence basis, and disregarded as an entity separate from its owner for U.S. tax purposes. All the interests in $DE1_X$, $DE2_X$, and $DE3_Y$ constitute hybrid entity separate units.

(5) FB_X is a Country X business operation that, if carried on by a U.S. person, would constitute a foreign branch, as defined in § 1.367(a)-6T(g)(1), and is a Country X foreign branch separate unit.

(6) Neither the assets nor the activities of an entity constitute a foreign branch separate unit.

(7) FS_X is a Country X entity that is subject to Country X tax on its worldwide income or on a residence basis and is classified as a foreign corporation for U.S. tax purposes.

(8) The applicable foreign country has a consolidation regime that—

(i) Includes as members of a consolidated group any commonly controlled branches and permanent establishments in such jurisdiction, and entities that are subject to tax in such jurisdiction on their worldwide income or on a residence basis; and

(ii) Allows the losses of members of consolidated groups to offset income of other members.

(9) There is no mirror legislation, within the meaning of § 1.1503(d)-3(e)(1), in the applicable foreign country.

(10) There is no elective agreement described in § 1.1503(d)-6(b) between the United States and the applicable foreign country.

(11) There is no income tax convention between the United States and the applicable foreign country.

(12) If a domestic use election, within the meaning of § 1.1503(d)-6(d), is made, all the necessary filings related to such election are properly completed on a timely basis.

(13) If there is a triggering event requiring recapture of a dual consolidated loss, the amount of recapture is not reduced pursuant to § 1.1503(d)-6(h)(2).

(14) There are no other items of income, gain, deduction, and loss. In addition, the United States and the applicable foreign country recognize the same items of income, gain, deduction, and loss in each taxable year.

(15) All taxpayers use the calendar year as their taxable year.

(c) ***Examples.*** The following examples illustrate the application of §§ 1.1503(d)-1 through 1.1503(d)-6:

(1) ***Example 1. Separate unit combination rule*** —

(i) ***Facts.*** P owns $DE3_Y$ which, in turn, owns $DE1_X$. $DE1_X$ owns FB_X. PRS, an entity treated as a partnership for both U.S. and Country X tax purposes, is owned 50 percent by P and 50 percent by an unrelated foreign person. PRS carries on a business operation in Country X that, if carried on by a U.S. person, would constitute a foreign branch within the meaning of § 1.367(a)-6T(g)(1). In addition, P owns DRC_X, a member of the consolidated group of which P is the parent, which carries on business operations in Country X that constitute a foreign branch within the meaning of § 1.367(a)-6T(g)(1). S owns $DE2_X$.

(ii) ***Result.*** Pursuant to § 1.1503(d)-1(b)(4)(ii), the interest in $DE1_X$, the interest in $DE2_X$, FB_X, P's share of the Country X business operations carried on by PRS (which is owned by P indirectly through its interest in PRS), and DRC_X's Country X business operations are combined and treated as a single separate unit of the consolidated group of which P is the parent. This is the case regardless of whether the losses of each individual separate unit are made available to offset the income of the other individual separate units under Country X tax laws. Because DRC_X is a dual resident corporation, it is not combined and treated as part of this combined separate unit and, as a result, DRC_X's income or dual consolidated loss is not taken into account in determining the income or dual consolidated loss of the combined separate unit. In addition, P's interest in $DE3_Y$ is not combined and is another separate unit because it is subject to tax in Country Y, rather than Country X.

(2) ***Example 2. Definition of a separate unit and application of domestic use limitation—foreign branch separate unit*** —

(i) ***Facts.*** P carries on business operations in Country X that constitute a permanent establishment under the U.S.-Country X income tax convention. In year 1, a loss is attributable to P's Country X permanent establishment, as determined under § 1.1503(d)-5.

(ii) ***Result.*** Under §§ 1.1503(d)-1(b)(4)(i)(A) and 1.367(a)-6T(g)(1), P's Country X permanent establishment constitutes a foreign branch separate unit. Therefore, the year 1 loss attributable to the foreign branch separate unit constitutes a dual consolidated loss pursuant to § 1.1503(d)-1(b)(5)(ii). The dual consolidated loss rules apply to the dual consolidated loss even though there is no affiliate of the foreign branch separate unit in Country X, because it is still possible that all or a portion of the dual consolidated loss can be put to a foreign use. For example, there may be a foreign use with respect to a Country X affiliate acquired in a year subsequent to the year in which the dual consolidated loss was incurred. See § 1.1503(d)-6(a)(2). Accordingly, unless an exception under § 1.1503(d)-6 applies (such as a domestic use election), the year 1 dual consolidated loss attributable to P's Country X permanent establishment is subject to the domestic use limitation rule of § 1.1503(d)-4(b). As a result, pursuant to § 1.1503(d)-4(c), the year 1 dual consolidated loss cannot offset income of P that is not attributable to its Country X foreign branch separate unit, nor can it offset income of any other domestic affiliate. The loss can, however, offset income of the Country X foreign branch separate unit, subject to the application of § 1.1503(d)-4(c). The result would be the same even if Country X did not have a consolidation regime that includes as members of consolidated groups Country X branches or permanent establishments of nonresident corporations. The dual consolidated loss rules apply even in the absence of a consolidation regime in the foreign country because it is possible that all or a portion of a dual consolidated loss can be put to a foreign use by other means, such as through a sale, merger, or similar transaction. See § 1.1503(d)-6(a)(2).

(iii) ***Alternative facts.*** The facts are the same as in paragraph (c)(2)(i) of this section, except that P's Country X business operations constitute a foreign branch as defined in § 1.367(a)-6T(g)(1), but do not constitute a permanent establishment under the U.S.-Country X income tax convention. Although the activities carried on by P in Country X would otherwise constitute a foreign branch separate unit as described in § 1.1503(d)-1(b)(4)(i)(A), the exception under § 1.1503(d)-1(b)(4)(iii) applies because the activities do not constitute a permanent establishment under the U.S.-Country X income tax convention. Thus, the Country X business operations do not constitute a foreign branch separate unit, and the year 1 loss is not subject to the dual consolidated loss rules. If P instead carried on its Country X business operations through $DE1_X$, then the exception under § 1.1503(d)-1(b)(4)(iii) would not apply because P carries on the business operations through a hybrid entity and, as a result, the business operations would constitute a foreign branch separate unit. Thus, in such a case the year 1 loss would be subject to the dual consolidated loss rules.

(3) ***Example 3. Domestic use limitation—foreign branch separate unit owned through a partnership*** —

(i) ***Facts.*** P and S organize a partnership, PRS_X, under the laws of Country X. PRS_X is treated as a partnership for both U.S. and Country X tax purposes. PRS_X owns FB_X. PRS_X earns U.S. source income that is unconnected with its FB_X branch operations, and such income is not subject to tax by Country X. In addition, such U.S. source income is not attributable to FB_X under § 1.1503(d)-5.

(ii) ***Result.*** Under § 1.1503(d)-1(b)(4)(i)(A), P's and S's shares of FB_X owned indirectly through their interests in PRS_X are individual foreign branch separate units. Pursuant to § 1.1503(b)-1(b)(4)(ii), these individual separate units are combined and treated as a single separate unit of the consolidated group of which P is the parent. Unless an exception under § 1.1503(d)-6 applies, any dual consolidated loss attributable to FB_X cannot offset income of P or S (other than income attributable to FB_X, subject to the application of § 1.1503(d)-4(c)), including their distributive share of the U.S. source income earned through their interests in PRS_X, nor can it offset income of any other domestic affiliates.

(4) ***Example 4. Definition of a separate unit and domestic use limitation—interest in hybrid entity partnership and indirectly owned foreign branch separate unit*** —

(i) ***Facts.*** HPS_X is a Country X entity that is subject to Country X tax on its worldwide income. HPS_X is classified as a partnership for Federal tax purposes. P, S, and FS_X, are the sole partners of HPS_X. For U.S. tax purposes, P, S, and FS_X each has an equal interest in each item of HPS_X's profit or loss. HPS_X carries on operations in Country Y that, if carried on by a U.S. person, would constitute a foreign branch within the meaning of § 1.367(a)-6T(g)(1).

(ii) ***Result.*** Under § 1.1503(d)-1(b)(4)(i)(B), the partnership interests in HPS_X held by P and S are individual hybrid entity separate units. These individual separate units are combined into a single separate unit under § 1.1503(d)-1(b)(4)(ii). In addition, P's and S's share of the Country Y operations owned indirectly through their interests in HPS_X are individual foreign branch separate units under § 1.1503(d)-1(b)(4)(i)(B). These individual separate units are also combined into a single separate unit under § 1.1503(d)-1(b)(4)(ii). Unless an exception under § 1.1503(d)-6 applies, dual consolidated losses attributable to P's and S's combined interests in HPS_X can only be used to offset income attributable to their combined interests in HPS_X (other than income attributable to P's and S's combined interests in the Country Y foreign branch separate unit), subject to the application of § 1.1503(d)-4(c). Similarly, dual consolidated losses attributable to P's and S's combined interests in the Country Y operations of HPS_X can only be used to offset income attributable to their combined interests in such Country Y operations, subject to the application of § 1.1503(d)-4(c). Neither FS_X's interest in HPS_X, nor its share of the Country Y operations owned by HPS_X, is a separate unit because FS_X is not a domestic corporation.

(5) ***Example 5. Foreign use—general rule and de minimis reduction exception*** —

(i) ***Facts.*** P owns $DE1_X$. $DE1_X$ owns FS_X. In year 1, there is a $100x loss attributable to P's interest in $DE1_X$ that is a dual consolidated loss. Also in year 1, FS_X earns $200x of income. $DE1_X$ and FS_X file a Country X consolidated tax return. For Country X tax purposes, the year 1 $100x loss of $DE1_X$ is used to offset $100x of year 1 income generated by FS_X. Under Country X tax law, unused losses are carried forward and available to offset income in subsequent taxable years.

(ii) ***Result.*** The $100x loss attributable to P's interest in $DE1_X$ is available to, and in fact does, offset FS_X's income under the laws of Country X. In addition, under U.S. tax principles, such income is considered to be an item of FS_X, a foreign corporation. As a result, under § 1.1503(d)-3(a), there has been a foreign use of the year 1 dual consolidated loss attributable to P's interest in $DE1_X$. Therefore, P cannot make a domestic use election with respect to the loss as provided under § 1.1503(d)-6(d)(2), and such loss will be subject to the domestic use limitation rule of § 1.1503(d)-4(b). The result would be the same even if FS_X, under Country X tax law, had no income against which the dual consolidated loss of $DE1_X$ could be offset (unless FS_X's ability to use the loss under Country X tax law requires an election, and no such election is made).

(iii) ***Alternative facts.*** The facts are the same as in paragraph (c)(5)(i) of this section, except that FS_X cannot use the loss of $DE1_X$ under Country X tax law without an election, and no such election is made. Pursuant to the exception in § 1.1503(d)-3(c)(2), there is no foreign use of the year 1 dual consolidated loss attributable to P's interest in $DE1_X$. In addition, P files a domestic use election with respect to the year 1 dual consolidated loss attributable to its interest in $DE1_X$ and, at the beginning of year 3, P sells its interest in $DE1_X$ to F, a Country Y entity that is a foreign corporation. The sale of the interest in $DE1_X$ to F results in a foreign use triggering event pursuant to § 1.1503(d)-6(e)(1)(i) because, immediately after the sale, the loss attributable to the interest in $DE1_X$ carries over under Country X law and, therefore, is available under U.S. tax principles to offset income of the owner of the interest in $DE1_X$ which, in the hands of F, is not a separate unit. It is also a foreign use because the loss is available under U.S. tax principles to offset the income of F, a foreign corporation. See § 1.1503(d)-3(a)(1). Finally, the transfer is a triggering event pursuant to § 1.1503(d)-6(e)(1)(iv) and (v).

(iv) ***Alternative facts.*** The facts are the same as in paragraph (c)(5)(iii) of this section, except that P only sells 5 percent of its interest in $DE1_X$ to F. Pursuant to Rev. Rul. 99-5 (1999-1 CB 434), see § 601.601(d)(2)(ii)(*b*) of this chapter, the transaction is treated as if P sold 5 percent of its interest in each of $DE1_X$'s assets to F, and then immediately thereafter P and F transferred their interests in the assets of $DE1_X$ to a partnership in exchange for an ownership interest therein. The sale of the 5 percent interest in $DE1_X$ generally results in a foreign use triggering event because a portion of the dual consolidated loss carries over under Country X tax law and is available under U.S. tax principles to offset income of the owner of the interest in $DE1_X$, a hybrid entity, which in the hands of F is not a separate unit. It is also a foreign use because the loss is available under U.S. tax principles to offset the income of F, a foreign corporation. See § 1.1503(d)-3(a)(1). However, pursuant to the exception under § 1.1503(d)-3(c)(5) (relating to a de minimis reduction of an interest in a separate unit), such availability does not result in a foreign use. In addition, pursuant to § 1.1503(d)-6(f)(1) and (3), the deemed transfers pursuant to Rev. Rul. 99-5 as a result of the sale are not treated as triggering events described in § 1.1503(d)-6(e)(1)(iv) or

(v) .

(6) ***Example 6. Foreign use and indirect foreign use—foreign reverse hybrid structure and disregarded payments —***

(i) ***Facts.*** P owns $DE1_X$. $DE1_X$ owns 99 percent and S owns 1 percent of FRH_X, a Country X partnership that elected to be treated as a corporation for U.S. tax purposes. FRH_X conducts a trade or business in Country X. In year 1, $DE1_X$ incurs interest expense on a third-party loan, which constitutes a dual consolidated loss attributable to P's interest in $DE1_X$. In year 1, for Country X tax purposes, $DE1_X$ takes into account its distributive share of income generated by FRH_X and offsets such income with its interest expense.

(ii) ***Result.*** In year 1, the dual consolidated loss attributable to P's interest in $DE1_X$ is available to, and in fact does, offset income recognized in Country X and, under U.S. tax principles, the income is considered to be income of FRH_X, a foreign corporation. Accordingly, pursuant to § 1.1503(d)-3(a)(1), there is a foreign use of the dual consolidated loss. Therefore, P cannot make a domestic use election with respect to the year 1 dual consolidated loss attributable to its interest in $DE1_X$, as provided under § 1.1503(d)-6(d)(2), and such loss will be subject to the domestic use limitation rule of § 1.1503(d)-4(b).

(iii) ***Alternative facts.***

(A) The facts are the same as in paragraph (c)(6)(i) of this section, except as follows. Instead of owning $DE1_X$, P owns $DE3_Y$ which, in turn, owns $DE1_X$. In addition, $DE3_Y$, rather than $DE1_X$, is the obligor on the third-party loan and therefore incurs the interest expense on such loan. Finally, $DE3_Y$ on-lends the loan proceeds from the third-party loan to $DE1_X$, and $DE1_X$ pays interest to $DE3_Y$ on such loan that is generally disregarded for U.S. tax purposes.

(B) Pursuant to § 1.1503(d)-5(c)(1)(ii), for purposes of calculating income or a dual consolidated loss, $DE3_Y$ and $DE1_X$ do not take into account interest income or interest expense, respectively, with respect to amounts paid on the disregarded loan from $DE3_Y$ to $DE1_X$. But see § 1.1503(d)-1(d), which takes into account certain payments that are otherwise disregarded for purposes of section 1503(d) and the regulations thereunder. As a result, such items neither create a dual consolidated loss with respect to the interest in $DE1_X$, nor do they reduce (or eliminate) the dual consolidated loss attributable to the interest in $DE3_Y$. Thus, in year 1, there is a dual consolidated loss attributable to P's interest in $DE3_Y$, but not to P's indirect interest in $DE1_X$.

(C) In year 1, interest expense paid by $DE1_X$ to $DE3_Y$ on the disregarded loan is taken into account as a deduction in computing $DE1_X$'s taxable income for Country X tax purposes, but does not give rise to a corresponding item of income or gain for U.S. tax purposes (because it is generally disregarded). In addition, such interest has the effect of making an item of deduction or loss composing the dual consolidated loss attributable to P's interest in $DE3_Y$ available for a foreign use. This is the case because it may reduce or offset items of deduction or loss composing the dual consolidated loss for foreign tax purposes, and creates another deduction or loss that may reduce or offset income of $DE1_X$ for foreign tax purposes that, under U.S. tax principles, is treated as income of FRH_X, a foreign corporation. Moreover, because the disregarded item is incurred or taken into account as interest for foreign tax purposes, it is deemed to have been incurred or taken into account with a principal purpose of avoiding the provisions of section 1503(d). Accordingly, there is an indirect foreign use of the year 1 dual consolidated loss attributable to P's interest in $DE3_Y$, and P cannot make a domestic use election with respect to such loss as provided under § 1.1503(d)-6(d)(2). Thus, the loss will be subject to the domestic use limitation rule of § 1.1503(d)-4(b).

(7) ***Example 7. Indirect foreign use—hybrid instrument*** —

(i) ***Facts.*** P owns $DE1_X$ which, in turn, owns FS_X. $DE1_X$ borrows cash from an unrelated lender and transfers the cash to FS_X in exchange for an instrument (hybrid instrument). The hybrid instrument is treated as equity for U.S. tax purposes and debt for Country X tax purposes. Interest expense on the loan from the unrelated lender results in a dual consolidated loss being attributable to P's interest in $DE1_X$ in year 1. $DE1_X$ does not elect under Country X law to consolidate with FS_X. In year 1, FS_X distributes its stock as a payment on the hybrid instrument to $DE1_X$. For U.S. tax purposes, such payment is excluded from P's gross income under section 305. However, for Country X tax purposes, such payment is treated as interest and gives rise to a deduction taken into account in computing FS_X's Country X tax liability; the payment also gives rise to interest income to $DE1_X$ for Country X tax purposes.

(ii) ***Result.*** The payment on the hybrid instrument does not give rise to an item of income or gain for U.S. tax purposes and therefore does not reduce (or eliminate) the dual consolidated loss attributable to P's interest in $DE1_X$. In addition, such payment is taken into account as a

deduction in computing FS_X's taxable income for Country X tax purposes. Moreover, such payment has the effect of making an item of deduction or loss composing the dual consolidated loss attributable to P's interest in $DE1_X$ available for a foreign use. This is the case because it may reduce or offset items of deduction or loss composing the dual consolidated loss for foreign tax purposes, and creates a deduction that reduces or offsets income of FS_X for foreign tax purposes that, under U.S. tax principles, is income of a foreign corporation. Further, because the item is incurred, or taken into account, using an instrument that is treated as equity for U.S. tax purposes and debt for foreign tax purposes, it is deemed to have been engaged in with the principal purpose of avoiding the provisions of section 1503(d). As a result, there has been an indirect foreign use of the year 1 dual consolidated loss, and P cannot make a domestic use election with respect to such loss, as provided under § 1.1503(d)-6(d)(2). Thus, the year 1 dual consolidated loss will be subject to the domestic use limitation rule of § 1.1503(d)-4(b).

(8) ***Example 8. No indirect foreign use—transaction entered into in the ordinary course of business*** —

(i) ***Facts.*** P owns $DE1_X$ and FB_Y. FB_Y is a foreign branch separate unit located in Country Y. $DE1_X$ owns FB_X and FS_X. P's interest in $DE1_X$ and FB_X are combined and treated as a single separate unit (Country X separate unit) pursuant to § 1.1503(d)-1(b)(4)(ii). Under Country X tax laws, $DE1_X$ elects to consolidate with FS_X. FB_Y engages in the business of providing services and, in connection with its ordinary course of business, provides services to unrelated third parties and to $DE1_X$. As compensation for services, $DE1_X$ makes a payment to FB_Y. Under Country X tax law, the payment is deductible. However, the payment is generally disregarded for U.S. tax purposes and, pursuant to § 1.1503(d)-5(c)(1)(ii), is not taken into account in calculating the income or dual consolidated loss attributable to the Country X separate unit or FB_Y. In year 1, the Country X separate unit and FB_Y each has a dual consolidated loss. The dual consolidated loss attributable to the Country X separate unit is subject to the domestic use limitation under § 1.1503(d)-4(b) because $DE1_X$ and FS_X elect to consolidate and, as a result, the dual consolidated loss is put to a foreign use.

(ii) ***Result.*** The payment made by $DE1_X$ to FB_Y in connection with the performance of services is taken into account as a deduction in computing $DE1_X$'s taxable income for Country X tax purposes, but does not give rise to an item of income or gain for U.S. tax purposes. In addition, such payment has the effect of making an item of deduction or loss composing the dual consolidated loss attributable to FB_Y available for a foreign use. This is the case because it may reduce or offset items of deduction or loss composing the dual consolidated loss of FB_Y for foreign tax purposes, and creates another deduction that reduces or offsets income of FS_X for foreign tax purposes (because $DE1_X$ and FS_X elect to file a consolidated return) that, under U.S. tax principles, is income of a foreign corporation. However, the transaction between $DE1_X$ and FB_Y was entered into in the ordinary course of FB_Y's trade or business. As a result, if P can demonstrate to the satisfaction of the Commissioner that the transaction was not entered into with a principal purpose of avoiding the provisions of section 1503(d), FB_Y's year 1 dual consolidated loss will not be treated as having been made available for an indirect foreign use. In such a case, P would be entitled to make a domestic use election with respect to such loss.

(9) ***Example 9. Foreign use—dual resident corporation with hybrid entity joint venture*** —

(i) ***Facts.*** P owns DRC_X, a member of the P consolidated group. DRC_X owns 80 percent of HPS_X, a Country X entity that is subject to Country X tax on its worldwide income. HPS_X is classified as a partnership for U.S. tax purposes. FS_X owns the remaining 20 percent of HPS_X. In year 1,

DRC_X generates a $100x net operating loss (without regard to items attributable to DRC_X's interest in HPS_X). Also in year 1, HPS_X generates $100x of income, $80x of which is attributable to DRC_X's interest in HPS_X. DRC_X and HPS_X file a consolidated tax return for Country X tax purposes, and HPS_X offsets its $100x of income with the $100x loss generated by DRC_X.

(ii) ***Result.*** DRC_X and its interest in HPS_X are not combined because DRC_X is a dual resident corporation and the combination rule under § 1.1503(d)-1(b)(4)(ii) only applies to separate units. The $100x year 1 net operating loss incurred by DRC_X (without regard to items attributable to DRC_X's interest in HPS_X) is a dual consolidated loss. In addition, HPS_X is a hybrid entity and DRC_X's interest in HPS_X is a hybrid entity separate unit; however, there is no dual consolidated loss attributable to such separate unit in year 1 (instead, there is $80x of income attributable to such separate unit). DRC_X's year 1 dual consolidated loss offsets $100x of income for Country X purposes, and $20x of such income is, under U.S. tax principles, income of FS_X, which owns an interest in HPS_X that is not a separate unit (in addition, FS_X is a foreign corporation). As a result, pursuant to § 1.1503(d)-3(a), there is a foreign use of the year 1 dual consolidated loss of DRC_X, and P cannot make a domestic use election with respect to such loss pursuant to § 1.1503(d)-6(d)(2). Therefore, such loss will be subject to the domestic use limitation rule of § 1.1503(d)-4(b). The result would be the same even if HPS_X, under Country X laws, had no income against which the dual consolidated loss could be offset (unless the ability to use the loss under Country X laws required an election, and no such election is made).

(10) ***Example 10. Foreign use—foreign parent corporation*** —

(i) ***Facts.*** F1 and F2, nonresident alien individuals, each owns 50 percent of FP_X, a Country X entity that is subject to Country X tax on its worldwide income. FP_X is classified as a foreign corporation for U.S. tax purposes. FP_X owns DRC_X. DRC_X is the parent of a consolidated group that includes as a member DS, a domestic corporation. In year 1, DRC_X incurs a dual consolidated loss of $100x and, for Country X tax purposes, FP_X generates $100x of income. In year 1, FP_X elects to consolidate with DRC_X for Country X tax purposes, and the $100x year 1 loss of DRC_X is used to offset the income of FP_X under the laws of Country X. For U.S. tax purposes, the items of FP_X do not constitute items of income in year 1.

(ii) ***Result.*** The year 1 dual consolidated loss of DRC_X offsets the income of FP_X under the laws of Country X. Pursuant to § 1.1503(d)-3(a), the offset constitutes a foreign use because the items constituting such income are considered under U.S. tax principles to be items of a foreign corporation. This is the case even though the United States does not recognize such items as income in year 1. Therefore, DRC_X cannot make a domestic use election with respect to its year 1 dual consolidated loss pursuant to § 1.1503(d)-6(d)(2). As a result, such loss will be subject to the domestic use limitation rule of § 1.1503(d)-4(b).

(iii) ***Alternative facts.*** The facts are the same as in paragraph (c)(10)(i) of this section, except that FP_X is classified as a partnership for U.S. tax purposes. The result would be the same as in paragraph (c)(10)(ii) of this section, because the offset of the income generated by FP_X is a foreign use pursuant to § 1.1503(d)-3(a). This is the case because the items constituting such income are considered under U.S. tax principles to be items of F1 and F2, the owners of interests in FP_X (a hybrid entity), that are not separate units. Moreover, the result would be the same if F1 and F2 owned their interests in FP_X indirectly through another partnership.

(11) ***Example 11. No foreign use—deemed ordering rule.*** —

(i) ***Facts.*** P owns $DE1_X$ and DRC_X. DRC_X is a member of the P consolidated group and owns FS_X. $DE1_X$ owns FB_X. P's interest in $DE1_X$ and P's indirect interest in FB_X are individual separate units that are combined into a single separate unit (Country X separate unit) pursuant to § 1.1503(d)-1(b)(4)(ii). In year 1, DRC_X incurs a $200x net operating loss and $200x of income is attributable to P's Country X separate unit. The $200x net operating loss incurred by DRC_X is a dual consolidated loss. FS_X also earns $200x of income in year 1. DRC_X, $DE1_X$, and FS_X file a Country X consolidated tax return.

(ii) ***Result.*** Under § 1.1503(d)-3(c)(3)(i), DRC_X's $200x loss shall be treated as having been made available to offset the $200x of income attributable to P's Country X separate unit. P's Country X separate unit is not, under U.S. tax principles, a foreign corporation, and there is no interest in $DE1_X$ (which is a hybrid entity) that is not a separate unit. As a result, DRC_X's loss being made available to offset the income attributable to P's Country X separate unit is not considered a foreign use of such loss. Therefore, P can make a domestic use election with respect to DRC_X's year 1 dual consolidated loss.

(iii) ***Alternative facts.*** The facts are the same as in paragraph (c)(11)(i) of this section, except that in year 1 only $150x of income is attributable to P's Country X separate unit. Because only $150x of income is attributed to P's Country X separate unit, $50x of DRC_X's year 1 dual consolidated loss is treated as being made available to offset the income of FS_X, a foreign corporation, and therefore constitutes a foreign use. As a result, DRC_X cannot make a domestic use election with respect to its year 1 dual consolidated loss pursuant to § 1.1503(d)-6(d)(2), and such loss will be subject to the domestic use limitation rule of § 1.1503(d)-4(b).

(12) ***Example 12. No foreign use—absence of foreign loss usage ordering rules*** —

(i) ***Facts.***

(A) P owns DRC_X, a member of the P consolidated group. DRC_X owns FS_X. Under the Country X consolidation regime, a consolidated group may elect in any given year to use all or a portion of the losses of one consolidated group member to offset income of other consolidated group members. If no such election is made in a year in which losses are generated by a consolidated member, such losses carry forward and are available, at the election of the consolidated group, to offset income of consolidated group members in subsequent taxable years. Country X law does not provide ordering rules for determining when a loss from a particular taxable year is used because, under Country X law, losses never expire. In addition, Country X law does not provide ordering rules for determining when a particular type of loss (for example, capital or ordinary) is used.

(B) In year 1, DRC_X incurs a capital loss of $80x which, under § 1.1503(d)-5(b)(2), is not a dual consolidated loss. DRC_X also incurs a net operating loss of $80x in year 1 which is a dual consolidated loss. FS_X generates $60x of capital gain in year 1 which, for Country X purposes, can be offset by capital losses and net operating losses. Under the laws of Country X, DRC_X elects to use $60x of its total year 1 loss of $160x to offset the $60x of capital gain generated by FS_X in year 1; the remaining $100x of year 1 loss carries forward. In both year 2 and year 3, DRC_X incurs a net operating loss of $100x, while FS_X incurs no income or loss in years 2 and 3. DRC_X's $100x losses incurred in year 2 and year 3 are dual consolidated losses. Because DRC_X does not elect under the laws of Country X to use all or a portion of its year 2 or year 3 net operating losses of $100x to offset the income of other members of the Country X consolidated group, P is permitted to make (and in fact does make) a domestic use election with respect to both the year 2 and year 3 dual

consolidated losses of DRC_X. In year 4, DRC_X has a net operating loss of $10x and FS_X generates $125x of income. Country X law permits, upon an election, FS_X's $125x of income generated in year 4 to be offset by losses (including carryover losses from prior years) of other group members. Accordingly, in year 4, DRC_X elects to use $125x of its accumulated losses to offset the $125x of year 4 income generated by FS_X.

(ii) ***Result.***

(A) Under the ordering rules of § 1.1503(d)-3(d)(3), a pro rata amount of DRC_X's year 1 net operating loss ($30x) and capital loss ($30x) is considered to be used to offset FS_X's year 1 $60x capital gain. As a result, P cannot make a domestic use election with respect to DRC_X's year 1 $80x dual consolidated loss because a portion of such loss is put to a foreign use.

(B) DRC_X's $10x year 4 net operating loss is also a dual consolidated loss. Under the ordering rules of § 1.1503(d)-3(d)(1), such loss is considered to be used to offset $10x of FS_X's year 4 $125x of income. Consequently, P cannot make a domestic use election with respect to such loss. Under the ordering rules of § 1.1503(d)-3(d)(2), $50x of capital loss carryover and $50x of ordinary loss from year 1 will be considered to offset $100x of FS_X's year 4 income because the income is first deemed to have been offset by losses the use of which would not constitute a triggering event that would result in the recapture of a dual consolidated loss. The remaining $15x of FS_X's year 4 income is considered to be offset by losses from year 3 because it is the most recent taxable year from which a loss may be carried forward. Thus, a portion of the year 3 dual consolidated loss has been put to a foreign use and the entire year 3 dual consolidated loss is recaptured. However, none of DRC_X's $100x year 2 net operating loss will be deemed to offset FS_X's year 4 income. As a result, DRC_X's year 2 dual consolidated loss will not be recaptured.

(13) ***Example 13. Exception to foreign use through partnership interest*** —

(i) ***Facts.***

(A) P owns 80 percent of HPS_X, a Country X entity subject to Country X tax on its worldwide income. FS_Z, an unrelated foreign corporation, owns the remaining 20 percent of HPS_X. HPS_X is classified as a partnership for Federal tax purposes and carries on operations in Country X that, if carried on by a U.S. person, would constitute a foreign branch within the meaning of § 1.367(a)-6T(g)(1). P's interest in HPS_X and P's indirect interest in the Country X branch are individual separate units that are combined into a single separate unit (Country X separate unit) pursuant to § 1.1503(d)-1(b)(4)(ii).

(B) In year 1, HPS_X incurs a loss of $100x, $80x of which is attributable to P's Country X separate unit. The $80x of loss attributable to P's Country X separate unit constitutes a dual consolidated loss and P makes a domestic use election with respect to such loss. In year 2, HPS_X generates $50x of income, $40x of which is attributable to P's interest in the Country X separate unit. Under Country X income tax laws, the $100x of year 1 loss incurred by HPS_X is carried forward and offsets the $50x of income generated by HPS_X in year 2; the remaining $50x of loss is carried forward and is available to offset income generated by HPS_X in subsequent years. P and FS_Z maintain their ownership interests in HPS_X throughout years 1 and 2.

(ii) ***Result.*** In year 2, under the laws of Country X, the $100x of year 1 loss, which includes the $80x dual consolidated loss attributable to P's Country X separate unit, is made available to offset income of HPS_X. Such income is attributable to P's interest in HPS_X, which is a separate unit. Such income also is income of FS_Z, a foreign corporation that is an owner of an interest in HPS_X, which is not a separate unit. However, pursuant to § 1.1503(d)-3(c)(4), there is no foreign use of the year 1 dual consolidated loss in year 2. This is the case because P's interest in HPS_X as of the end of year 1 has not been reduced by more than a de minimis amount, and the portion of the $80x dual consolidated loss was made available for a foreign use in year 2 solely as a result of FS_Z's ownership in HPS_X and the allocation or carry forward of the dual consolidated loss as a result of such ownership.

(iii) ***Alternative facts.*** The facts are the same as in paragraph (c)(13)(i) of this section, except that P also owns FS_X. In addition, FS_X and HPS_X elect to file a consolidated return under Country X law. The exception to foreign use under § 1.1503(d)-3(c)(4) does not apply because there is a foreign use other than by reason of the dual consolidated loss being made available as a result of FS_Z's ownership in HPS_X and the allocation or carry forward of the dual consolidated loss as a result of such ownership. That is, the exception does not apply because there is also a foreign use of the dual consolidated loss as a result of FS_X and HPS_X filing a consolidated return under Country X law.

(iv) ***Alternative facts.*** The facts are the same as in paragraph (c)(13)(i) of this section, except that at the end of year 2, FS_Z contributes cash to HPS_X in exchange for additional equity of HPS_X. As a result of the contribution, FS_Z's interest in HPS_X increases from 20 percent to 30 percent, and P's interest in HPS_X decreases from 80 percent to 70 percent. P's interest in HPS_X is reduced within a single 12-month period by 12.5 percent (10/80), as compared to P's interest in HPS_X as of the beginning of such 12-month period. Accordingly, pursuant to § 1.1503(d)-3(c)(4)(iii), the exception to foreign use provided under § 1.1503(d)-3(c)(4)(i) does not apply. Therefore, in year 2 there is a foreign use of the $80x year 1 dual consolidated loss attributable to P's Country X separate unit. Such foreign use constitutes a triggering event in year 2 and the $80x year 1 dual consolidated loss is recaptured. Alternatively, if FS_Z were a domestic corporation, there would not be a foreign use of the $80x year 1 dual consolidated loss because the loss would not be available to offset income that, under U.S. tax principles, is income of a foreign corporation or a direct or indirect owner of an interest in a hybrid entity that is not a separate unit.

(14) ***Example 14. Exception to foreign use through partnership interest—combination rule*** —

(i) ***Facts.***

(A) P and FS_X form PRS_X. P and FS_X each own 50 percent of PRS_X throughout years 1 and 2. PRS_X is treated as a partnership for both U.S. and Country X tax purposes. PRS_X owns DE_Y. DE_Y is a Country Y entity subject to Country Y tax on its worldwide income and disregarded as an entity separate from its owner for U.S. tax purposes. DE_Y conducts business operations in Country Y that, if carried on by a U.S. person, would constitute a foreign branch as defined in § 1.367(a)-6T(g)(1). P's interest in the Country Y operations conducted by DE_Y is an individual foreign branch separate unit. P's interest in DE_Y, owned indirectly through PRS_X, is a hybrid entity individual separate unit. P also owns FB_Y, a Country Y foreign branch individual separate unit. Under § 1.1503(d)-1(b)(4)(ii), FB_Y and P's indirect interests in DE_Y and DE_Y's Country Y business operations are treated as a combined separate unit (Country Y separate unit).

(B) In year 1, there is a $100x loss attributable to the Country Y business operations conducted by DE_Y. Thus, there is a $50x loss attributable to P's interest in DE_Y's Country Y business operations in year 1. Also in year 1, there is a $200x loss attributable to FB_Y. No income or loss is attributable to P's interest in DE_Y in year 1. Under § 1.1503(d)-5(c)(4)(ii), the dual consolidated loss attributable to P's combined Country Y separate unit is $250x ($50x loss attributable to P's indirect interest in DE_Y's Country Y operations, plus $200x loss attributable to FB_Y). In year 2, neither DE_Y nor DE_Y's Country Y operations generates income or loss. Under Country Y law, the $100x of year 1 loss incurred by DE_Y is carried forward and is available to offset income of DE_Y in year 2.

(ii) ***Result.*** As a result of the carryover of the year 1 $100x loss (which includes $50x of the year 1 dual consolidated loss) under Country Y law, a portion of such loss will be available to offset income of DE_Y that is attributable to P's interest in DE_Y owned indirectly through PRS_X. A portion of such loss will also be available to offset income of DE_Y that is attributable to FS_X's indirect ownership of DE_Y. Accordingly, under § 1.1503(d)-3(a), there would be a foreign use of a portion of P's $250x year 1 dual consolidated loss because it is available to offset an item of income of the owner of an interest in a hybrid entity, which is not a separate unit (there would also be a foreign use in this case because FS_X is a foreign corporation). However, there has not been a reduction of P's interest in DE_Y, DE_Y has not consolidated under the laws of Country Y, and there has not been any other foreign use of the dual consolidated losses. As a result, no foreign use occurs as a result of the carryforward pursuant to § 1.1503(d)-3(c)(4)(i) and (ii).

(15) ***Example 15. No foreign use—asset basis carryover exception*** —

(i) ***Facts.*** P owns FB_X and FS_X. In year 1, there is a dual consolidated loss attributable to FB_X. P's items of income, gain, deduction, and loss that are taken into account in calculating FB_X's dual consolidated loss include depreciation deductions attributable to FB_X's assets. P makes a domestic use election under § 1.1503(d)-6(d) with respect to the year 1 dual consolidated loss of FB_X. At the end of year 2, P contributes a portion of FB_X's assets to FS_X, in exchange for stock in FS_X. The aggregate adjusted basis of the assets transferred by P to FS_X is less than 10 percent of the aggregate adjusted basis of all of FB_X's assets held at the beginning of year 2. In addition, no other assets of FB_X are transferred during the certification period. Under Country X law, FS_X's basis in the transferred assets is determined by reference to P's basis in such assets. In addition, under Country X law, a portion of the depreciation deductions that were taken into account in year 1 for U.S. tax purposes, are taken into account in year 2 for Country X tax purposes.

(ii) ***Result.*** As a result of the transfer of assets from P to FS_X, a portion of the year 1 dual consolidated loss is available for a foreign use. This is the case because a portion of the basis in FB_X's assets, which gave rise to depreciation deductions that were taken into account in computing the year 1 dual consolidated loss, will give rise to a depreciation deduction under Country X laws that will be available, under U.S. tax principles, to offset the income of FS_X, a foreign corporation, in year 2. However, the aggregate adjusted basis of all the assets transferred by P to FS_X, within the 12-month period ending at the end of year 2, is less than 10 percent of the aggregate adjusted basis of all of FB_X's assets at the beginning of such 12-month period. Moreover, the aggregate adjusted basis of the assets transferred by P to FS_X at any time during the certification period is less than 30 percent of the aggregate adjusted basis of FB_X's assets held at the end of year 1. In addition, the item of deduction giving rise to the foreign use is being made available solely as a result of the adjusted basis of the

transferred assets being determined in whole, or in part, by reference to the adjusted basis of such transferred assets in the hands of FB_X. As a result, this transfer will not result in a foreign use pursuant to § 1.1503(d)-3(c)(6).

(16) ***Example 16. No foreign use—liability assumption exception*** —

(i) ***Facts.*** P owns FB_X. In year 1, there is a dual consolidated loss attributable to FB_X for which P makes a domestic use election under § 1.1503(d)-6(d). The dual consolidated loss includes a deduction for salary expense that was deductible for U.S. tax purposes at the end of year 1, even though it was not paid until year 2. The deduction was incurred in the ordinary course of FB_X's trade or business. During year 2, and before the accrued salary expense liability was paid, P sells all the assets of FB_X to FS_X in exchange for cash and FS_X's assumption of the liabilities of the FB_X trade or business, including the obligation to pay the accrued salary expense. Under Country X law, the accrued salary expense of FB_X is deductible, and is taken into account for purposes of computing the taxable income of FB_X, when paid. FB_X pays the accrued salary expense after the sale of FB_X to FS_X.

(ii) ***Result.***

(A) As a result of FS_X's assumption of the FB_X liabilities, including the accrued salary expense, a portion of the dual consolidated loss is available for a foreign use in year 2. This is the case because the deduction that was taken into account in year 1 in computing the dual consolidated loss under U.S. tax principles will, under Country X tax law, be taken into account and will be available to offset the income of FS_X, a foreign corporation, in year 2. However, because this item of expense is made available solely as a result of the assumption of a liability of FB_X, and such liability was incurred in the ordinary course of FB_X's trade or business, there will not be a foreign use of the year 1 dual consolidated loss pursuant to § 1.1503(d)-3(c)(7).

(B) The transfer of all the assets of FB_X to FS_X is a triggering event under § 1.1503(d)-6(e)(1)(iv), unless P can rebut the triggering event under § 1.1503(d)-6(e)(2). For purposes of determining whether, under § 1.1503(d)-6(e)(2)(ii), the transfer of assets resulted in a carryover under foreign law of FB_X's losses, expenses, or deductions, the exception to foreign use for the assumption of liabilities is taken into account. However, the other exceptions to foreign use do not apply for this purpose (or for purposes of demonstrating that no foreign use of a dual consolidated loss can occur in any other year under § 1.1503(d)-6(c), (e)(2)(i) or (j)(2)). See § 1.1503(d)-3(c)(1). Provided the other requirements of § 1.1503(d)-6(e)(2)(ii) and (iii) are satisfied, P may be able to rebut the occurrence of a triggering event upon the transfer of FB_X's assets to FS_X.

(17) ***Example 17. Mirror legislation rule—dual resident corporation and hybrid entity separate unit*** —

(i) ***Facts.*** P owns DRC_X, a member of the P consolidated group. DRC_X owns FS_X. In year 1, DRC_X incurs a $100x net operating loss that is a dual consolidated loss. To prevent corporations like DRC_X from offsetting losses both against income of affiliates in Country X and against income of foreign affiliates under the tax laws of another country, Country X mirror legislation prevents a corporation that is subject to the income tax of another country on its worldwide income or on a residence basis from using the Country X form of consolidation. Accordingly, the Country X mirror legislation prevents the loss of DRC_X from being made available to offset income of FS_X.

(ii) ***Result.*** Under § 1.1503(d)-3(e), because the losses of DRC_X are subject to Country X's mirror legislation, there is a deemed foreign use of DRC_X's year 1 dual consolidated loss. The stand-alone exception to the mirror rule in § 1.1503(d)-3(e)(2) does not apply because, absent the mirror legislation, DRC_X's year 1 dual consolidated loss would be available for a foreign use (as defined in § 1.1503(d)-3), without regard to whether such availability is limited by election or similar procedure. That is, absent the mirror legislation, all or a portion of the dual consolidated loss would be available to offset the income of FS_X under the Country X consolidation regime. This is the case even if Country X did not recognize DRC_X as having a loss in year 1. Therefore, P may not make a domestic use election with respect to DRC_X's year 1 dual consolidated loss pursuant to § 1.1503(d)-3(d)(2).

(iii) ***Alternative facts.*** The facts are the same as in paragraph (c)(17)(i) of this section, except that P owns $DE1_X$ (rather than DRC_X) and, in year 1, there is a $100 dual consolidated loss attributable to P's interest in $DE1_X$ (rather than of DRC_X). The Country X mirror legislation only applies to Country X dual resident corporations and, therefore, does not apply to losses attributable to P's interest in $DE1_X$. As a result, the mirror legislation rule under § 1.1503(d)-3(e) would not deny the opportunity of such loss from being put to a foreign use (for example, by offsetting the income of FS_X through the Country X consolidation regime). Therefore, a domestic use election can be made with respect to the dual consolidated loss (provided the conditions for such an election are otherwise satisfied).

(18) ***Example 18. Mirror legislation rule—standalone foreign branch separate unit*** —

(i) ***Facts.*** P owns FB_X. In year 1, there is a $100x dual consolidated loss attributable to FB_X. Country X enacted mirror legislation to prevent Country X branches and permanent establishments of nonresident corporations from offsetting losses both against income of Country X affiliates and against other income of its owner (or foreign affiliates thereof) under the tax laws of another country. The Country X mirror legislation prevents a Country X branch or permanent establishment of a nonresident corporation from offsetting its losses against the income of Country X affiliates if such losses may be deductible against income (other than income of the Country X branch or permanent establishment) under the laws of another country.

(ii) ***Result.*** In general, under § 1.1503(d)-3(e), because the losses of FB_X are subject to Country X's mirror legislation, there is a deemed foreign use of FB_X's year 1 dual consolidated loss. However, in the absence of the Country X mirror legislation, no item of deduction or loss composing FB_X's year 1 dual consolidated loss would be available in the year incurred for a foreign use (as defined in § 1.1503(d)-3), without regard to whether such availability is limited by election or otherwise. This is the case because there is no Country X entity through which the dual consolidated loss could be put to a foreign use (absent a sale, merger, or similar transaction involving FB_X). As a result, the stand-alone exception in § 1.1503(d)-3(e)(2) may apply, provided P complies with the requirements of § 1.1503(d)-3(e)(2)(ii). Accordingly, P may make a domestic use election with respect to the year 1 dual consolidated loss of FB_X pursuant to § 1.1503(d)-6(d). If, however, any item of the dual consolidated loss would otherwise be available for a foreign use during the certification period (for example, as a result of P acquiring a foreign corporation that is organized under the laws of Country X such that losses of FB_X could be put to a foreign use through consolidation or similar means), then such loss would be recaptured pursuant to § 1.1503(d)-6(e)(1)(ix).

(iii) ***Alternative facts.*** The facts are the same as in paragraph (c)(18)(i) of this section, except that the Country X mirror legislation operates in a manner similar to the rules under section 1503(d). That is, it allows the taxpayer to elect to use the loss to either offset income of an affiliate in Country X, or income of an affiliate (or other income of the owner of the Country X branch or permanent establishment) in the other country, but not both. Because the Country X mirror legislation permits the taxpayer to choose to put the dual consolidated loss to a foreign use, it does not deny the opportunity to put the loss to a foreign use. Therefore, there is no deemed foreign use of the dual consolidated loss pursuant to § 1.1503(d)-4(e) and a domestic use election can be made for such loss.

(19) ***Example 19. Application of mirror legislation rule to combined separate unit*** —

(i) ***Facts.*** P owns FB_X, FS_X, and $DE1_X$. In year 1, there is a $50x dual consolidated loss attributable to FB_X and $10x of income attributable to P's interest in $DE1_X$. FS_X has income of $100x. Pursuant to § 1.1503(d)-1(b)(4)(ii), FB_X and P's interest in $DE1_X$ are combined and treated as a single separate unit (Country X separate unit) which has a year 1 dual consolidated loss of $40x. Country X enacted mirror legislation to prevent Country X branches or permanent establishments of nonresident corporations from offsetting losses both against income of Country X affiliates and against other income of its owner (or foreign affiliates thereof) under the tax laws of another country. The Country X mirror legislation prevents a Country X branch or permanent establishment of a nonresident corporation from offsetting its losses against the income of Country X affiliates if such losses may be deductible against income (other than income of the Country X branch or permanent establishment) under the laws of another country. However, the United States and Country X have entered into an agreement described in § 1.1503(d)-6(b) pursuant to the U.S.-Country X income tax convention (mirror agreement). The mirror agreement applies to Country X foreign branch separate units of domestic corporations, but not to Country X hybrid entity separate units. The mirror agreement provides that neither the Country X mirror legislation nor the mirror legislation rule under § 1.1503(d)-3(e) will apply to losses attributable to Country X foreign branch separate units, provided certain conditions and reporting requirements are satisfied (including a domestic use election, if the loss is to be used to offset income of a domestic affiliate). Thus, losses attributable to Country X foreign branch separate units can, subject to the requirements of the mirror agreement, be used to offset income of a domestic affiliate or a Country X affiliate (but not both).

(ii) ***Result.*** The Country X mirror legislation only applies to Country X foreign branch separate units and does not apply to hybrid entity separate units. In addition, if P complies with the terms and conditions of the mirror agreement, the Country X mirror legislation would not apply to FB_X. As a result, the income tax laws of Country X would not deny the opportunity of a loss of either individual separate unit that composes P's combined Country X separate unit from being put to a foreign use. Therefore, notwithstanding § 1.1503(d)-3(e), a domestic use election can be made with respect to the dual consolidated loss attributable to P's Country X separate unit, provided the terms and conditions of the mirror agreement are satisfied. See § 1.1503(d)-6(b)(2).

(iii) ***Alternative facts.*** The facts are the same as in paragraph (c)(19)(i) of this section, except that the Country X mirror legislation also applies to losses attributable to $DE1_X$, but the mirror agreement does not apply to such losses. The mirror legislation rule would apply with respect to P's interest in $DE1_X$ and, as a result, there is a deemed foreign use of the dual consolidated loss attributable to the Country X separate unit and a domestic use election cannot be made for such loss. This is the case even though, pursuant to § 1.1503(d)-5(c)(4)(ii)(A), P's interest in

$DE1_X$ (which is subject to the Country X mirror legislation) does not, as an individual separate unit, have a dual consolidated loss in year 1. Further, the stand-alone exception to the mirror legislation rule in § 1.1503(d)-3(e)(2) does not apply because, absent the mirror legislation, the Country X combined separate unit's dual consolidated loss would be available in the year incurred for a foreign use (as defined in § 1.1503(d)-3) because it could be used to offset income of FS_X under the Country X consolidation regime. This is the case even if Country X requires an election to consolidate and no such election is made. The result would be the same even if Country X did not recognize $DE1_X$ as having a loss.

(20) ***Example 20. Dual consolidated loss limitation after section 381 transaction. disposition of assets and subsequent liquidation of dual resident corporation*** —

(i) ***Facts.*** P owns DRC_X, a member of the P consolidated group. In year 1, DRC_X incurs a dual consolidated loss and P does not make a domestic use election with respect to such loss. Under § 1.1503(d)-4(b), DRC_X's year 1 dual consolidated loss is subject to the limitations under § 1.1503(d)-4(c) and, therefore, may not be used to offset the income of P or S (or any other domestic affiliate) on the group's U.S. income tax return. At the beginning of year 2, DRC_X sells all of its assets for cash and distributes the cash to P pursuant to a liquidation that qualifies under section 332.

(ii) ***Result.*** In general, under section 381, P would succeed to, and be permitted to use, DRC_X's net operating loss carryover. However, § 1.1503(d)-4(d)(1)(i) prohibits the dual consolidated loss of DRC_X from carrying over to P. Therefore, DRC_X's year 1 net operating loss carryover is eliminated.

(21) ***Example 21. Dual consolidated loss limitation applied to a separate unit transferred in a section 381 transaction*** —

(i) ***Facts.*** S owns $DE1_X$ which, in turn, owns FB_X. S's interest in $DE1_X$ and its indirect interest in FB_X are combined and treated as a single separate unit (Country X separate unit) pursuant to § 1.1503(d)-1(b)(4)(ii). In year 1, a dual consolidated loss is attributable to the Country X separate unit, and P does not make a domestic use election with respect to such loss. Under § 1.1503(d)-4(b), the year 1 dual consolidated loss attributable to the Country X separate unit may not be used to offset the income of P or S (other than income attributable to the Country X separate unit, subject to the application of § 1.1503(d)-4(c)) on the group's consolidated U.S. income tax return (nor may it be used to offset the income of any other domestic affiliates). At the beginning of year 2, S transfers its entire interest in $DE1_X$, and thus its entire indirect interest in FB_X, to FS_X in a transaction described in section 381.

(ii) ***Result.*** Section 1.1503(d)-4(d)(1)(ii) provides that the dual consolidated loss attributable to a separate unit that is subject to the domestic use limitation under § 1.1503(d)-4(b) is eliminated if the separate unit ceases to be a separate unit of its affiliated domestic owner and all other members of the affiliated domestic owner's separate group. As a result of the transfer of the Country X separate unit to FS_X, the Country X separate unit ceases to be a separate unit of S, and is not a separate unit of any other member of the P consolidated group. In addition, the exceptions in § 1.1503(d)-4(d)(2)(iii) do not apply because FS_X is not a domestic corporation. Thus, the year 1 dual consolidated loss attributable to the Country X separate unit is eliminated.

(iii) ***Alternative facts.*** Assume the same facts as in paragraph (c)(21)(i) of this section, except S transfers its assets to DC, a domestic corporation that is not a member of the P consolidated group, in a transaction described in section 381(a). Immediately after the transaction, the

Country X separate unit is a separate unit of DC. Under § 1.1503(d)-4(d)(1)(ii), the year 1 dual consolidated loss of the Country X separate unit would be eliminated because it ceases to be a separate unit of S, and is not a separate unit of any other member of the P consolidated group. However, because the transferee is a domestic corporation and the Country X separate unit is a separate unit in the hands of DC immediately after the transaction, the exception under § 1.1503(d)-4(d)(2)(iii)(A) applies. As a result, the year 1 dual consolidated loss of the Country X separate unit is not eliminated and any income generated by DC that is attributable to the Country X separate unit following the transfer may be offset by the carryover dual consolidated losses attributable to the Country X separate unit, subject to the limitations of § 1.1503(d)-4(b) and (c) applied as if DC generated the dual consolidated loss and such loss was attributable to the Country X separate unit.

(iv) ***Alternative facts.*** Assume the same facts as in paragraph (c)(21)(iii) of this section, except that P owns $DE2_X$ and the interest in $DE2_X$ is combined with and therefore included in the Country X separate unit. In addition, a portion of the dual consolidated loss of the Country X separate unit is attributable to P's interest in $DE2_X$. Pursuant to § 1.1503(d)-4(d)(2)(iii)(A), the result would be the same as in paragraph (c)(21)(iii) of this section, with respect to the portion of the dual consolidated loss attributable to the combined separate unit that is succeeded to and taken into account by DC pursuant to section 381. The portion of the dual consolidated loss attributable to P's interest in $DE2_X$, however, does not carry over to DC but is retained by P and continues to be subject to the limitations of § 1.1503(d)-4(b) and (c) with respect to P's interest in $DE2_X$.

(v) ***Alternative facts.*** Assume the same facts as in paragraph (c)(21)(iv) of this section, except that DC is a member of the P consolidated group. Pursuant to § 1.1503(d)-4(d)(2)(iii)(B), the dual consolidated loss of the Country X separate unit is not eliminated and income attributable to the Country X separate unit may continue to be offset by the dual consolidated loss that is succeeded to and taken into account by DC pursuant to section 381, subject to the limitations of § 1.1503(d)-4(b) and (c). The result would be the same even if the interest in $DE1_X$ ceased to be a separate unit in the hands of DC (for example, because it dissolved under Country X law in connection with the transaction), provided P, or another member of the P consolidated group, continued to own a portion of the Country X separate unit.

(22) ***Example 22. Tainted income —***

(i) ***Facts.*** P owns 100 percent of DRC_Z, a domestic corporation that is included as a member of the P consolidated group. DRC_Z conducts a business in the United States. During year 1, DRC_Z was managed and controlled in Country Z and therefore was subject to tax as a resident of Country Z and was a dual resident corporation. In year 1, DRC_Z incurred a dual consolidated loss of $200x, and P did not make a domestic use election with respect to such loss. As a result, such loss is subject to the domestic use limitation rule of § 1.1503(d)-4(b). At the end of year 1, DRC_Z moved its management and control to the United States and, as a result, ceased being a dual resident corporation. At the beginning of year 2, P transferred asset A, a non-depreciable asset, to DRC_Z in exchange for common stock in a transaction that qualified for nonrecognition under section 351. At the time of the transfer, P's tax basis in asset A equaled $50x and the fair market value of asset A equaled $100x. The tax basis of asset A in the hands of DRC_Z immediately after the transfer equaled $50x pursuant to section 362. Asset A did not constitute replacement property acquired in the ordinary course of business. DRC_Z did not generate income or gain during years 2, 3, or 4. On June 30, year 5, DRC_Z sold asset A to a third party for $100x, its fair market value at the time of the sale, and recognized $50x of income on such

sale. In addition to the $50x income generated on the sale of asset A, DRC_Z generated $100x of operating income in year 5. At the end of year 5, the fair market value of all the assets of DRC_Z was $400x.

(ii) ***Result.*** DRC_Z ceased being a dual resident corporation at the end of year 1. Therefore, its year 1 dual consolidated loss cannot be offset by tainted income. Asset A is a tainted asset because it was acquired in a nonrecognition transaction after DRC_Z ceased being a dual resident corporation (and was not replacement property acquired in the ordinary course of business). As a result, the $50x of income recognized by DRC_Z on the disposition of asset A is tainted income and cannot be offset by the year 1 dual consolidated loss of DRC_Z. In addition, absent evidence establishing the actual amount of tainted income, $25x of the $100x year 5 operating income of DRC_Z (($100x/$400x) × $100x) also is treated as tainted income and cannot be offset by the year 1 dual consolidated loss of DRC_Z under § 1.1503(d)-4(e)(2)(ii). Therefore, $75x of the $150x year 5 income of DRC_Z constitutes tainted income and may not be offset by the year 1 dual consolidated loss of DRC_Z; however, the remaining $75x of year 5 income of DRC_Z may be offset by such dual consolidated loss. The result would be the same if, instead of P transferring asset A to DRC_Z, such asset was received from a separate unit or a transparent entity of DRC_Z.

(23) ***Example 23. Treatment of disregarded item and books and records of a hybrid entity*** —

(i) ***Facts.*** P owns $DE1_X$ which, in turn, owns FS_X. In year 1, P borrows from a third party and on-lends the proceeds to $DE1_X$. In year 1, P incurs interest expense attributable to the third-party loan. Also in year 1, $DE1_X$ incurs interest expense attributable to its loan from P, but such expense is generally disregarded for U.S. tax purposes because $DE1_X$ is disregarded as an entity separate from P. The third-party loan and related interest expense are reflected on the books and records of P (and not on the books and records of $DE1_X$). The loan from P to $DE1_X$ and related interest expense are reflected on the books and records of $DE1_X$. There are no other items of income, gain, deduction, or loss reflected on the books and records of $DE1_X$ in year 1.

(ii) ***Result.*** Because the interest expense on P's third-party loan is not reflected on the books and records of $DE1_X$, no portion of such expense is attributable to P's interest in $DE1_X$ pursuant to § 1.1503(d)-5(c)(3) for purposes of calculating the year 1 dual consolidated loss, if any, attributable to such interest. In addition, even though P's interest in $DE1_X$ is treated as a separate domestic corporation for purposes of determining the amount of income or dual consolidated loss attributable to it pursuant to § 1.1503(d)-5(c)(1)(ii), such treatment does not cause the interest expense incurred on the loan from P to $DE1_X$ that is generally disregarded for U.S. tax purposes to be regarded for purposes of calculating the year 1 dual consolidated loss, if any, attributable to P's interest in $DE1_X$. As a result, even though the disregarded interest expense is reflected on the books and records of $DE1_X$, it is not taken into account for purposes of calculating income or a dual consolidated loss. But see § 1.1503(d)-1(d), which takes into account certain payments that are otherwise disregarded for purposes of section 1503(d) and the regulations thereunder. Therefore, there is no dual consolidated loss attributable to P's interest in $DE1_X$ in year 1.

(24) ***Example 24. Dividend income attributable to a separate unit*** —

(i) ***Facts.*** P owns $DE1_X$ which, in turn, owns FB_X. P's interest in $DE1_X$ and its indirect interest in FB_X are combined and treated as a single separate unit (Country X separate unit) pursuant to § 1.1503(d)-1(b)(4)(ii). $DE1_X$ owns $DE3_Y$. $DE3_Y$ owns the stock of FS_X. P's Country X separate unit would, without regard to year 1 dividend income (or related section 78 gross-up) received from FS_X, have a dual consolidated loss of $75x in year 1. In year 1, FS_X distributes $50x to $DE3_Y$ that

is taxable as a dividend. $DE3_Y$ distributes the same amount to $DE1_X$. P computes foreign taxes deemed paid on the dividend under section 902 of $25x and includes that amount in gross income under section 78.

(ii) ***Result.*** The $50x dividend is reflected on the books and records of $DE3_Y$ and, therefore, is attributable to P's interest in $DE3_Y$ pursuant to § 1.1503(d)-5(c)(3)(i). In addition, the $25x section 78 gross-up is attributable to P's interest in $DE3_Y$ pursuant to § 1.1503(d)-5(c)(4)(iv). The distribution of $50x from $DE3_Y$ to $DE1_X$ is generally disregarded for U.S. tax purposes and, therefore, does not give rise to an item that is taken into account for purposes of calculating income or a dual consolidated loss. This is the case even though the item would be reflected on the books and records of $DE1_X$. In addition, pursuant to § 1.1503(d)-5(c)(1)(iii), each separate unit must calculate its own income or dual consolidated loss, and each item of income, gain, deduction, and loss must be taken into account only once. As a result, the dual consolidated loss of $75x attributable to P's Country X separate unit in year 1 is not reduced by the amount of dividend income attributable to P's indirect interest in $DE3_Y$.

(25) ***Example 25. Items reflected on books and records of a combined separate unit*** —

(i) ***Facts.*** P owns $DE1_X$ which, in turn, owns FB_X. P's interest in $DE1_X$ and its indirect interest in FB_X are combined and treated as a single separate unit (Country X separate unit) pursuant to § 1.1503(d)-1(b)(4)(ii). The following items are reflected on the books and records of $DE1_X$ in year 1: Sales, depreciation expense, a political contribution, royalty expense paid to P, repairs and maintenance expense paid to a third party, and Country X income tax expense. The amount of sales under U.S. tax principles equals the amount of sales reported for accounting purposes. The depreciation expense is calculated on a straight-line basis over the useful life of the asset for accounting purposes, but is subject to accelerated depreciation for U.S. tax purposes. In addition, the repairs and maintenance expense, which is deducted when paid for accounting purposes, is properly capitalized and amortized over five years for U.S. tax purposes. Finally, P elects to claim as a credit under section 901 the Country X income tax expense that was paid in year 1.

(ii) ***Result.***

(A) For purposes of determining the income or dual consolidated loss attributable to P's Country X separate unit, items of income, gain, deduction, and loss must first be attributed to the individual separate units (that is, P's interest in $DE1_X$ and its indirect interest in FB_X). For purposes of attributing items to P's interest in $DE1_X$, P's items that are reflected on $DE1_X$'s books and records, as adjusted to conform to U.S. tax principles, are taken into account. See § 1.1503(d)-5(c)(3)(i). For purposes of attributing items (other than interest expense) to FB_X, the principles of section 864(c)(2), (c)(4), and (c)(5) (as set forth in § 1.864-4(c) and §§ 1.864-5 through 1.864-7) must be applied and, for interest expense, the principles of § 1.882-5, as modified under § 1.1503(d)-5(c)(2)(ii), must be applied; however, for these purposes, pursuant to § 1.1503(d)-5(c)(4)(i)(A), FB_X only takes into account items attributable to P's interest in $DE1_X$ and the assets, liabilities, and activities of such interest. In addition, to the extent such items are taken into account by FB_X, they are not taken into account in determining the items attributable to P's interest in $DE1_X$. § 1.1503(d)-5(c)(4)(i)(B). Because P's interest in $DE1_X$ has no assets or liabilities, and conducts no activities, other than through its ownership of FB_X, all of the items that are reflected on the books and records of $DE1_X$, as adjusted to conform to U.S. tax principles, are attributable to FB_X; no items are attributable to P's interest in $DE1_X$.

(B) The items reflected on the books and records of $DE1_X$ must be adjusted to conform to U.S. tax principles. No adjustment is required to sales because the amount of sales under U.S. tax principles equals the amount of sales for accounting purposes. The amount of straight-line depreciation expense reflected on $DE1_X$'s books and records must be adjusted to reflect the amount of depreciation on the asset that is allowable for U.S. tax purposes. The political contribution is not taken into account because it is not deductible for U.S. tax purposes. Similarly, because the royalty expense is paid to P, and therefore is generally disregarded for U.S. tax purposes, it is not taken into account. But see § 1.1503(d)-1(d), which takes into account certain payments that are otherwise disregarded for purposes of section 1503(d) and the regulations thereunder. The repair and maintenance expense that is deducted in year 1 for accounting purposes also must be adjusted to conform to U.S. tax principles. Thus, the repair and maintenance expense will be taken into account in computing the income or dual consolidated loss attributable to P's Country X separate unit over five years (even though no item related to such expense would be reflected on the books and records of $DE1_X$ for years 2 through 5). Finally, because P elected to claim as a credit the Country X foreign taxes paid during year 1, no deduction is allowed for such amount pursuant to section 275(a)(4) and, therefore, the Country X tax expense is not taken into account.

(C) Pursuant to § 1.1503(d)-5(c)(4)(ii)(B), the combined Country X separate unit of P calculates its income or dual consolidated loss by taking into account all the items of income, gain, deduction, and loss that were separately attributable to P's interest in $DE1_X$ and FB_X. However, in this case, there are no items attributable to P's interest in $DE1_X$. Therefore, the items attributable to the Country X separate unit are the items attributable to FB_X.

(26) ***Example 26. Items attributable to a combined separate unit —***

(i) ***Facts.*** P owns $DE1_X$. $DE1_X$ owns a 50 percent interest in PRS_Z, a Country Z entity that is classified as a partnership both for Country Z tax purposes and for U.S. tax purposes. FS_X, which is unrelated to P, owns the remaining 50 percent interest in PRS_Z. PRS_Z carries on operations in Country X that, if carried on by a U.S. person, would constitute a foreign branch as defined in § 1.367(a)-6T(g)(1). Therefore, P's share of the Country X operations carried on by PRS_Z constitutes a foreign branch separate unit. PRS_Z also owns assets that do not constitute a part of its Country X branch, including all of the interests in TE_T, a disregarded entity. TE_T is an entity incorporated under the laws of Country T, a country that does not have an income tax. Under the laws of Country X, an interest holder of TE_T does not take into account on a current basis the interest holder's share of items of income, gain, deduction, and loss of TE_T.

(ii) ***Result.***

(A) Pursuant to § 1.1503(d)-1(b)(4)(ii), P's interest in $DE1_X$, and P's indirect ownership of a portion of the Country X operations carried on by PRS_Z, are combined and treated as a single separate unit (Country X separate unit). Pursuant to § 1.1503(d)-5(c)(4)(ii)(A), for purposes of determining P's items of income, gain, deduction, and loss attributable to the Country X separate unit, the items of P are first attributed to each separate unit that composes the Country X separate unit.

(B) Pursuant to § 1.1503(d)-5(c)(2)(i), the principles of section 864(c)(2), (c)(4), and (c)(5) (as set forth in § 1.864-4(c) and §§ 1.864-5 through 1.864-7), apply for purposes of determining P's items of income, gain, deduction (other than interest expense), and loss

that are attributable to P's indirect interest in the Country X operations carried on by PRS_Z. For purposes of determining P's interest expense that is attributable to P's indirect interest in the Country X operations carried on by PRS_Z, the principles of § 1.882-5, as modified under § 1.1503(d)-5(c)(2)(ii), shall apply. For purposes of applying these rules, P is treated as a foreign corporation, the Country X operations carried on by PRS_Z are treated as a trade or business within the United States, and the assets of P (including its share of the PRS_Z assets, other than those of the Country X operations) are treated as assets that are not U.S. assets. In addition, because P carries on its share of the Country X operations through $DE1_X$, a hybrid entity, § 1.1503(d)-5(c)(4)(i)(A) provides that only the items attributable to P's interest in $DE1_X$, and only the assets, liabilities, and activities of P's interest in $DE1_X$, are taken into account for purposes of this determination.

(C) TE_T is a transparent entity as defined in § 1.1503(d)-1(b)(16) because it is not taxable as an association for Federal tax purposes, is not subject to income tax in a foreign country as a corporation (or otherwise at the entity level) either on its worldwide income or on a residence basis, and is not treated as a pass-through entity under the laws of Country X (the applicable foreign country). TE_T is not a pass-through entity under the laws of Country X because a Country X holder of an interest in TE_T does not take into account on a current basis the interest holder's share of items of income, gain, deduction, and loss of TE_T. For purposes of determining P's items of income, gain, deduction, and loss that are attributable to P's interest in TE_T, only those items of P that are reflected on the books and records of TE_T, as adjusted to conform to U.S. tax principles, are taken into account. § 1.1503(d)-5(c)(3)(i). Because the interest in TE_T is not a separate unit, a loss attributable to such interest is not a dual consolidated loss and is not subject to section 1503(d) and these regulations. Items must nevertheless be attributed to the interests in TE_T. For example, such attribution is required for purposes of calculating the income or dual consolidated loss attributable to the Country X separate unit, and for purposes of applying the domestic use limitation under § 1.1503(d)-4(b) to a dual consolidated loss attributable to the Country X separate unit.

(D) For purposes of determining P's items of income, gain, deduction, and loss that are attributable to P's interest in $DE1_X$, only those items of P that are reflected on the books and records of $DE1_X$, as adjusted to conform to U.S. tax principles, are taken into account. § 1.1503(d)-5(c)(3)(i). For this purpose, $DE1_X$'s distributive share of the items of income, gain, deduction, and loss that are reflected on the books and records of PRS_Z, as adjusted to conform to U.S. tax principles, are treated as being reflected on the books and records of $DE1_X$, except to the extent such items are taken into account by the Country X operations of PRS_Z. See § 1.1503(d)-5(c)(3)(ii) and (4)(i)(B). Because TE_T is a transparent entity, the items reflected on its books and records are not treated as being reflected on the books and records of $DE1_X$.

(E) Pursuant to § 1.1503(d)-5(c)(4)(ii)(B), the combined Country X separate unit of P calculates its income or dual consolidated loss by taking into account all the items of income, gain, deduction, and loss that were separately attributable to P's interest in $DE1_X$ and the Country X operations of PRS_Z owned indirectly by P.

(27) *Example 27. Sale of separate unit by another separate unit* —

(i) ***Facts.*** P owns $DE3_Y$ which, in turn, owns $DE1_X$. $DE3_Y$ also owns other assets that do not constitute a foreign branch separate unit. $DE1_X$ owns FB_X. Pursuant to § 1.1503(d)-1(b)(4)(ii), P's indirect interests in $DE1_X$ and FB_X are combined and treated as one Country X separate unit (Country X separate unit). $DE3_Y$ sells its interest in $DE1_X$ at the end of year 1 to an unrelated foreign person for cash. The sale results in an ordinary loss of $30x. Items of income, gain, deduction, and loss derived from the assets that gave rise to the $30x loss would be attributable to the Country X separate unit under § 1.1503(d)-5(c) through (e). Without regard to the sale of $DE1_X$, no items of income, gain, deduction, and loss are attributable to P's Country X separate unit in year 1.

(ii) ***Result.*** Pursuant to § 1.1503(d)-5(c)(4)(iii)(A), the $30x ordinary loss recognized on the sale is attributable to the Country X separate unit, and not P's interest in $DE3_Y$. This is the case because the Country X separate unit is treated as owning the assets that gave rise to the loss under § 1.1503(d)-5(f). Thus, the loss attributable to the sale creates a year 1 dual consolidated loss attributable to the Country X separate unit. In addition, pursuant to § 1.1503(d)-6(d)(2), P cannot make a domestic use election with respect to the dual consolidated loss because the sale of the interest in $DE1_X$ is a triggering event described in § 1.1503(d)-6(e)(1)(iv) and (v). Further, although the year 1 dual consolidated loss would otherwise be subject to the domestic use limitation rule of § 1.1503(d)-4(b), it is eliminated pursuant to § 1.1503(d)-4(d)(1)(ii). Finally, if there were a dual consolidated loss attributable to P's interest in $DE3_Y$, the sale of the interest in $DE1_X$ would not be taken into account for purposes of determining whether there is an asset triggering event with respect to such dual consolidated loss under § 1.1503(d)-6(e)(1)(iv).

(28) ***Example 28. Gain on sale of tiered separate units*** —

(i) ***Facts.*** P owns 75 percent of HPS_X, a Country X entity subject to Country X tax on its worldwide income. FS_X owns the remaining 25 percent of HPS_X. HPS_X is classified as a partnership for Federal tax purposes. HPS_X carries on operations in Country Y that, if carried on by a U.S. person, would constitute a foreign branch within the meaning of § 1.367(a)-6T(g)(1). HPS_X also owns assets that do not constitute a part of its Country Y operations and would not themselves constitute a foreign branch within the meaning of § 1.367(a)-6T(g)(1) if owned by a U.S. person. Neither HPS_X nor the Country Y operations has liabilities. P's indirect interest in the Country Y operations carried on by HPS_X, and P's interest in HPS_X, are each separate units. P sells its interest in HPS_X and recognizes a gain of $150x on such sale. Immediately prior to P's sale of its interest in HPS_X, P's portion of the assets of the Country Y operations (that is, assets the income, gain, deduction and loss from which would be attributable to P's Country Y foreign branch separate unit) had a built-in gain of $200x, and P's portion of HPS_X's other assets (that is, assets the income, gain, deduction and loss from which would be attributable to P's interest in HPS_X) had a built-in gain of $100x.

(ii) ***Result.*** Pursuant to § 1.1503(d)-5(c)(4)(iii)(B), $100x of the total $150x of gain recognized ($200x/$300x × $150x) is attributable to P's indirect interest in its share of the Country Y operations carried on by HPS_X. Similarly, $50x of such gain ($100x/$300x × $150x) is attributable to P's interest in HPS_X.

(29) ***Example 29. Effect on domestic affiliate*** —

(i) ***Facts.***

(A) P owns $DE1_X$ which, in turn, owns FB_X. P's interest in $DE1_X$ and its indirect interest in FB_X are combined and treated as a single separate unit (Country X separate unit) pursuant to § 1.1503(d)-1(b)(4)(ii). In years 1 and 2, the items of income, gain, deduction, and loss that are attributable to P's Country X separate unit pursuant to § 1.1503(d)-5 are as follows:

TABLE 1 TO PARAGRAPH (c)(29)(i)(A)

Item	Year 1	Year 2
Sales income	$100x	$160x
Salary expense	($75x)	($75x)
Research and experimental expense	($50x)	($50x)
Interest expense	($25x)	($25x)
Income/(dual consolidated loss)	($50x)	$10x

(B) P does not make a domestic use election with respect to the year 1 dual consolidated loss attributable to its Country X separate unit. Pursuant to § 1.1503(d)-4(b) and (c)(2), the year 1 dual consolidated loss of $50x is treated as a loss incurred by a separate domestic corporation and is subject to the limitations under § 1.1503(d)-4(c)(3). The P consolidated group has $100x of consolidated taxable income in year 2.

(ii) *Result.*

(A) P must compute its taxable income for year 1 without taking into account the $50x dual consolidated loss, pursuant to § 1.1503(d)-4(c)(2). Such amount consists of a pro rata portion of the expenses that were taken into account in calculating the year 1 dual consolidated loss. Thus, the items of the dual consolidated loss that are not taken into account by P in computing its taxable income are as follows: $25x of salary expense ($75x/$150x × $50x); $16.67x of research and experimental expense ($50x/$150x × $50x); and $8.33x of interest expense ($25x/$150x × $50x). The remaining amounts of each of these items, together with the $100x of sales income, are taken into account by P in computing its taxable income for year 1 as follows: $50x of salary expense ($75x − $25x); $33.33x of research and experimental expense ($50x − $16.67x); and $16.67x of interest expense ($25x − $8.33x).

(B) Subject to the limitations provided under § 1.1503(d)-4(c), the year 1 $50x dual consolidated loss is carried forward and is available to offset the $10x of income attributable to the Country X separate unit in year 2. Pursuant to § 1.1503(d)-4(c)(4), a pro rata portion of each item of deduction or loss included in such dual consolidated loss is considered to be used to offset the $10x of income, as follows: $5x of salary expense ($25x / $50x × $10x); $3.33x of research and experimental expense ($16.67x/$50x × $10x); and $1.67x of interest expense ($8.33x / $50x × $10x). The remaining amount of each item shall continue to be subject to the limitations under § 1.1503(d)-4(c).

(30) *Example 30. Exception to domestic use limitation—no possibility of foreign use because items are not deducted or capitalized under foreign law —*

(i) ***Facts.*** P owns $DE1_X$ which, in turn, owns FS_X. In year 1, the sole item of income, gain, deduction, and loss attributable to P's interest in $DE1_X$, as provided under § 1.1503(d)-5, is $100x of interest expense paid on a loan to an unrelated lender. For Country X tax purposes, the $100x interest expense attributable to P's interest in $DE1_X$ in year 1 is treated as a repayment of principal and therefore cannot be deducted (at any time) or capitalized.

(ii) ***Result.*** The $100x of interest expense attributable to P's interest in $DE1_X$ constitutes a dual consolidated loss. However, because the sole item constituting the dual consolidated loss cannot be deducted or capitalized (at any time) for Country X tax purposes, P can demonstrate that there can be no foreign use of the dual consolidated loss at any time. As a result, pursuant to § 1.1503(d)-6(c)(1), if P prepares a statement described in § 1.1503(d)-6(c)(2) and attaches it to its timely filed tax return, the year 1 dual consolidated loss attributable to P's interest in $DE1_X$ will not be subject to the domestic use limitation rule of § 1.1503(d)-4(b).

(31) ***Example 31. No exception to domestic use limitation—inability to demonstrate no possibility of foreign use —***

(i) ***Facts.*** P owns $DE1_X$ which, in turn, owns FB_X. P's interest in $DE1_X$ and its indirect interest in FB_X are combined and treated as a single separate unit (Country X separate unit) pursuant to § 1.1503(d)-1(b)(4)(ii). In year 1, the sole items of income, gain, deduction, and loss attributable to P's Country X separate unit, as provided under § 1.1503(d)-5, are $75x of sales income and $100x of depreciation expense. For Country X tax purposes, $DE1_X$ also generates $75x of sales income in year 1, but the $100x of depreciation expense is not deductible until year 2.

(ii) ***Result.*** The year 1 $25x net loss attributable to P's interest in the Country X separate unit constitutes a dual consolidated loss. In addition, even though $DE1_X$ has positive income in year 1 for Country X tax purposes, P cannot demonstrate that there is no possibility of foreign use with respect to the Country X separate unit's dual consolidated loss as provided under § 1.1503(d)-6(c)(1)(i). P cannot make such a demonstration because the depreciation expense, an item composing the year 1 dual consolidated loss, is deductible (in a later year) for Country X tax purposes and, therefore, may be available to offset or reduce income for Country X purposes that would constitute a foreign use. For example, if $DE1_X$ elected to be classified as a corporation pursuant to § 301.7701-3(c) of this chapter effective as of the end of year 1, and the deferred depreciation expense were available for Country X tax purposes to offset year 2 income of $DE1_X$, an entity treated as a foreign corporation in year 2 for U.S. tax purposes, there would be a foreign use.

(iii) ***Alternative facts.***

(A) The facts are the same as in paragraph (c)(31)(i) of this section, except as follows. In year 1, the sole items of income, gain, deduction, and loss attributable to P's Country X separate unit, as provided in § 1.1503(d)-5, are $75x of sales income, $100x of interest expense, and $25x of depreciation expense. For Country X tax purposes, $DE1_X$ generates $75x of sales income in year 1; the $100x interest expense is treated as a repayment of principal and therefore cannot be deducted or capitalized (at any time); and the $25x of depreciation expense is not deductible in year 1, but is deductible in year 2.

(B) In year 1, the $50x net loss attributable to P's Country X separate unit constitutes a dual consolidated loss. Even though the $100x interest expense, a nondeductible and noncapital item for Country X tax purposes, exceeds the $50x year 1 dual consolidated loss attributable to P's Country X separate unit, P cannot demonstrate that there is no

possibility of foreign use of the dual consolidated loss as provided under § 1.1503(d)-6(c)(1)(i). P cannot make such a demonstration because the $25x depreciation expense, an item of deduction or loss composing the year 1 dual consolidated loss, is deductible under Country X law (in year 2) and, therefore, may be available to offset or reduce income for Country X tax purposes that would constitute a foreign use.

(32) ***Example 32. Triggering event rebuttal—expiration of losses in foreign country*** —

(i) ***Facts.*** P owns DRC_X, a member of the P consolidated group. In year 1, DRC_X incurs a dual consolidated loss of $100x. P makes a domestic use election with respect to DRC_X's year 1 dual consolidated loss and such loss therefore is included in the computation of the P group's consolidated taxable income. DRC_X has no income or loss in year 2 through year 5. In year 5, P sells the stock of DRC_X to FS_X. At the time of the sale of the stock of DRC_X, all of the losses and deductions that were included in the computation of the year 1 dual consolidated loss of DRC_X had expired for Country X tax purposes because the laws of Country X only provide for a three-year carryover period for such items.

(ii) ***Result.*** The sale of DRC_X to FS_X generally would be a triggering event under § 1.1503(d)-6(e)(1)(ii), which would require DRC_X to recapture the year 1 dual consolidated loss (and pay an applicable interest charge) on the P consolidated group's tax return for the year that includes the date on which DRC_X ceases to be a member of the P consolidated group. However, upon adequate documentation that the losses and deductions have expired for Country X tax purposes, P can rebut the presumption that a triggering event has occurred pursuant to § 1.1503(d)-6(e)(2)(i). If the triggering event presumption is rebutted, the domestic use agreement filed by the P consolidated group with respect to the year 1 dual consolidated loss of DRC_X is terminated and has no further effect pursuant to § 1.1503(d)-6(j)(1)(i). If the presumptive triggering event is not rebutted, the domestic use agreement would terminate and have no further effect pursuant to § 1.1503(d)-6(j)(1)(iii) because the dual consolidated loss would be recaptured.

(33) ***Example 33. Triggering events and rebuttals—tax basis carryover transaction*** —

(i) ***Facts.***

(A) P owns $DE1_X$. $DE1_X$'s sole asset is A, which it acquired at the beginning of year 1 for $100x. $DE1_X$ does not have any liabilities. For U.S. tax purposes, $DE1_X$'s tax basis in A at the beginning of year 1 is $100x and $DE1_X$'s sole item of income, gain, deduction, and loss for year 1 is a $20x depreciation deduction attributable to A. As a result, the $20x depreciation deduction constitutes a dual consolidated loss attributable to P's interest in $DE1_X$. P makes a domestic use election with respect to the year 1 dual consolidated loss.

(B) For Country X tax purposes, $DE1_X$ has a $100x tax basis in A at the beginning of year 1, but A is not a depreciable asset. As a result, $DE1_X$ does not have any items of income, gain, deduction, and loss in year 1 for Country X tax purposes.

(C) During year 2, P sells its interest in $DE1_X$ to FS_X for $80x. P's disposition of its interest in $DE1_X$ constitutes a presumptive triggering event under § 1.1503(d)-6(e)(1)(iv) and (v) requiring the recapture of the year 1 $20x dual consolidated loss (plus the applicable interest charge). For Country X tax purposes, $DE1_X$ retains its tax basis of $100x in A following the sale.

(ii) ***Result.*** The year 1 dual consolidated loss is a result of the $20x depreciation deduction attributable to A. Although no item of deduction or loss was recognized by $DE1_X$ at the time of the sale for Country X tax purposes, the deduction composing the dual consolidated loss was retained by $DE1_X$ after the sale in the form of tax basis in A. As a result, a portion of the dual consolidated loss may be available to offset income for Country X tax purposes in a manner that would constitute a foreign use. For example, if $DE1_X$ were to dispose of A, the amount of gain recognized by $DE1_X$ would be reduced (or an amount of loss recognized by $DE1_X$ would be increased) and, therefore, an item composing the dual consolidated loss would be available, under U.S. tax principles, to reduce income of a foreign corporation (and an owner of an interest in a hybrid entity that is not a separate unit). Thus, P cannot demonstrate pursuant to § 1.1503(d)-6(e)(2)(i) that there can be no foreign use of the year 1 dual consolidated loss following the triggering event, and must recapture the year 1 dual consolidated loss. Pursuant to § 1.1503(d)-6(j)(1)(iii), the domestic use agreement filed by the P consolidated group with respect to the year 1 dual consolidated loss is terminated and has no further effect.

(iii) ***Alternative facts.*** The facts are the same as paragraph (c)(33)(i) of this section, except that instead of P selling its interest in $DE1_X$ to FS_X, $DE1_X$ sells asset A to FS_X for $80x and, for Country X tax purposes, FS_X's tax basis in A immediately after the sale is $80x. P's disposition of Asset A constitutes a presumptive triggering event under § 1.1503(d)-6(e)(1)(iv) requiring the recapture of the year 1 $20x dual consolidated loss (plus the applicable interest charge). For Country X tax purposes, FS_X's tax basis in A was not determined, in whole or in part, by reference to the basis of A in the hands of $DE1_X$. As a result, the deduction composing the dual consolidated loss will not give rise to an item of deduction or loss in the form of tax basis for Country X tax purposes (for example, when FS_X disposes of A). Therefore, P may be able to demonstrate (for example, by obtaining the opinion of a Country X tax advisor) pursuant to § 1.1503(d)-6(e)(2)(i) that there can be no foreign use of the year 1 dual consolidated loss and, thus, would not be required to recapture the year 1 dual consolidated loss.

(34) ***Example 34. Triggering event resulting in a single consolidated group where acquirer files a new domestic use agreement*** —

(i) ***Facts.*** P owns DRC_X, a member of the P consolidated group. In year 1, DRC_X incurs a dual consolidated loss and P makes a domestic use election with respect to such loss. No member of the P consolidated group incurs a dual consolidated loss in year 2. At the end of year 2, T, the parent of the T consolidated group, acquires all the stock of P, and all the members of the P group, including DRC_X, become members of a consolidated group of which T is the common parent.

(ii) ***Result.***

(A) Under § 1.1503(d)-6(f)(2)(ii)(B), the acquisition by T of the P consolidated group is not an event described in § 1.1503(d)-6(e)(1)(ii) requiring the recapture of the year 1 dual consolidated loss of DRC_X (and the payment of an interest charge), provided that the T consolidated group files a new domestic use agreement described in § 1.1503(d)-6(f)(2)(iii)(A). If a new domestic use agreement is filed, then pursuant to § 1.1503(d)-6(j)(1)(ii), the domestic use agreement filed by the P consolidated group with respect to the year 1 dual consolidated loss of DRC_X is terminated and has no further effect.

(B) Assume that T files a new domestic use agreement and a triggering event occurs at the end of year 3. As a result, the T consolidated group must recapture the dual consolidated loss that DRC_X incurred in year 1 (and pay an interest charge), as provided in § 1.1503(d)-6(h). Each member of the T consolidated group, including DRC_X and any former members of the P consolidated group, is severally liable for the additional tax (and the interest charge) due upon the recapture of the dual consolidated loss of DRC_X. In addition, pursuant to § 1.1503(d)-6(j)(1)(iii), the new domestic use agreement filed by the T group with respect to the year 1 dual consolidated loss of DRC_X is terminated and has no further effect.

(35) *Example 35. Triggering event exceptions for certain deemed transfers* —

(i) ***Facts.*** P owns $DE1_X$. In year 1, there is a $100x dual consolidated loss attributable to P's interest in $DE1_X$. P files a domestic use agreement under § 1.1503(d)-6(d) with respect to such loss. During year 2, P sells 33 percent of its interest in $DE1_X$ to T, an unrelated domestic corporation.

(ii) ***Result.*** Pursuant to Rev. Rul. 99-5, the transaction is treated as if P sold 33 percent of its interest in each of $DE1_X$'s assets to T and then immediately thereafter P and T transferred their interests in the assets of $DE1_X$ to a partnership in exchange for an ownership interest therein. Upon the transfer of 33 percent of P's interest to T, a domestic corporation, no foreign use occurs and, therefore, there is no foreign use triggering event. However, P's deemed transfer of 67 percent of its interest in the assets of $DE1_X$ to a partnership is nominally a triggering event under § 1.1503(d)-6(e)(1)(iv). Because the initial transfer of 33 percent of $DE1_X$'s interest was to a domestic corporation and there is only a triggering event because of the deemed transfer under Rev. Rul. 99-5, the deemed asset transfer is not treated as resulting in a triggering event pursuant to § 1.1503(d)-6(f)(4).

(iii) ***Alternative facts.*** The facts are the same as in paragraph (c)(35)(i) of this section, except that P sells 60 percent (rather than 33 percent) of its interest in $DE1_X$ to T. The sale is a triggering event under § 1.1503(d)-6(e)(1)(iv) and (v) without regard to the occurrence of a deemed transaction. Therefore, § 1.1503(d)-6(f)(4) does not apply.

(36) *Example 36. Triggering event exception involving multiple parties* —

(i) ***Facts.*** P owns $DE1_X$ which, in turn, owns FB_X. P's interest in $DE1_X$ and its indirect interest in FB_X are combined and treated as a single separate unit (Country X separate unit) pursuant to § 1.1503(d)-1(b)(4)(ii). In year 1, there is a $100x dual consolidated loss attributable to P's Country X separate unit and P makes a domestic use election with respect to such loss. No member of the P consolidated group incurs a dual consolidated loss in year 2. At the end of year 2, T, the parent of the T consolidated group, acquires all of P's interest in $DE1_X$ for cash.

(ii) ***Result.***

(A) Under § 1.1503(d)-6(f)(2)(i)(B), the acquisition by T of the interest in $DE1_X$ is not an event described in § 1.1503(d)-6(e)(1)(iv) or (v) requiring the recapture of the year 1 dual consolidated loss attributable to the Country X separate unit (and the payment of an interest charge), provided: (1) the T consolidated group files a new domestic use agreement described in § 1.1503(d)-6(f)(2)(iii)(A) with respect to the year 1 dual consolidated loss of the Country X separate unit; and (2) the P consolidated group files a statement described in § 1.1503(d)-6(f)(2)(iii)(B) with respect to the year 1 dual consolidated loss. If these requirements are satisfied, then pursuant to § 1.1503(d)-6(j)(1)(ii) the domestic use agreement filed by the P consolidated group with

respect to the year 1 dual consolidated loss is terminated and has no further effect (if these requirements are not satisfied such that the P consolidated group recaptures the dual consolidated loss, the domestic use agreement would terminate pursuant to § 1.1503(d)-6(j)(1)(iii)).

(B) Assume a triggering event occurs at the end of year 3 that requires recapture by the T consolidated group of the year 1 dual consolidated loss, as well as the payment of an interest charge, as provided in § 1.1503(d)-6(h). T continues to own the Country X separate unit after the triggering event. In that case, each member of the T consolidated group is severally liable for the additional tax (and the interest charge) due upon the recapture of the year 1 dual consolidated loss. The T consolidated group must prepare a statement that computes the recapture tax amount as provided under § 1.1503(d)-6(h)(3)(iii). Pursuant to § 1.1503(d)-6(h)(3)(iv)(A), the recapture tax amount is assessed as an income tax liability of the T consolidated group and is considered as having been properly assessed as an income tax liability of the P consolidated group. If the T consolidated group does not pay in full the income tax liability attributable to the recapture tax amount, the unpaid balance of such recapture tax amount may be collected from the P consolidated group in accordance with the provisions of § 1.1503(d)-6(h)(3)(iv)(B). Pursuant to § 1.1503(d)-6(j)(1)(iii), the new domestic use agreement filed by the T consolidated group is terminated and has no further effect. Finally, pursuant to § 1.1503(d)-6(h)(6)(iii), T is treated as if it incurred the dual consolidated loss that is recaptured for purposes of applying § 1.1503(d)-6(h)(6)(i). Thus, T has a reconstituted net operating loss equal to the amount of the year 1 dual consolidated loss that was recaptured, and such loss is attributable to the Country X separate unit (and subject to the rules and limitations under § 1.1503(d)-6(h)(6)(i)). Because T is treated as if it incurred the year 1 dual consolidated loss, P shall not be treated as having a net operating loss under § 1.1503(d)-6(h)(6)(i).

(37) ***Example 37. No foreign use following multiple-party event exception to triggering event*** —

(i) ***Facts.*** P owns $DE1_X$ which, in turn, owns FB_X. P's interest in $DE1_X$ and its indirect interest in FB_X are combined and treated as a single separate unit (Country X separate unit) pursuant to § 1.1503(d)-1(b)(4)(ii). In year 1, there is a $100x dual consolidated loss attributable to P's Country X separate unit and P makes a domestic use election with respect to such loss. T, a domestic corporation unrelated to P, owns 95 percent of PRS, a partnership. FS_X owns the remaining 5 percent of PRS. At the beginning of year 3, PRS purchases 100 percent of the interest in $DE1_X$ from P for cash. For Country X tax purposes, the $100x loss incurred by $DE1_X$ in year 1 carries forward and is available to offset income of $DE1_X$ in subsequent years.

(ii) ***Result.*** P's sale of its interest in $DE1_X$ is a triggering event under § 1.1503(d)-6(e)(1)(iv) and (v). However, if P and T comply with the requirements under § 1.1503(d)-6(f)(2)(iii), the sale would qualify for the multiple-party event exception under § 1.1503(d)-6(f)(2)(i). In addition, because the $100x loss of $DE1_X$ carries forward to subsequent years for Country X purposes and is available to offset income of $DE1_X$, there would be a foreign use of the dual consolidated loss immediately after the sale pursuant to § 1.1503(d)-3(a)(1). This is the case because the dual consolidated loss would be available to offset or reduce income that is considered, under U.S. tax principles, to be an item of FS_X, a foreign corporation (it would also be a foreign use because FS_X is an indirect owner of an interest in a hybrid entity that is not a separate unit). However, there is no foreign use in this case as a result of FS_X's 5 percent interest in $DE1_X$ pursuant to § 1.1503(d)-3(c)(8).

(38) *Example 38. Character and source of recapture income* —

(i) *Facts.*

(A) P owns FB_X. In year 1, the items of income, gain, deduction, and loss that are attributable to FB_X for purposes of determining whether it has a dual consolidated loss are as follows:

TABLE 2 TO PARAGRAPH (c)(38)(i)(A)

Sales income	$100x
Salary expense	($75x)
Interest expense	($50x)
Dual consolidated loss	($25x)

(B) P makes a domestic use election with respect to the year 1 dual consolidated loss attributable to FB_X and, thus, the $25x dual consolidated loss is used to offset the P group's consolidated taxable income.

(C) Pursuant to § 1.861-8, the $75x of salary expense incurred by FB_X is allocated and apportioned entirely to foreign source general limitation income. Pursuant to § 1.861-9T, $25x of the $50x interest expense attributable to FB_X is allocated and apportioned to domestic source income, $15x of such interest expense is allocated and apportioned to foreign source general limitation income, and the remaining $10x of such interest expense is allocated and apportioned to foreign source passive income.

(D) During year 2, $5x of income is attributable to FB_X under the rules of § 1.1503(d)-5, and the P consolidated group has $100x of consolidated taxable income. At the end of year 2, FB_X undergoes a triggering event described in § 1.1503(d)-6(e)(1), and P continues to own FB_X following the triggering event. Pursuant to § 1.1503(d)-6(h)(2)(i), P is able to demonstrate to the satisfaction of the Commissioner that the $25x dual consolidated loss attributable to FB_X in year 1 would have offset the $5x of income attributable to FB_X in year 2, if no domestic use election were made with respect to the year 1 loss such that it was subject to the limitations of § 1.1503(d)-4(b) and (c).

(ii) ***Result.*** P must recapture and report as ordinary income $20x ($25x − $5x) of FB_X's year 1 dual consolidated loss, plus applicable interest. The $20x recapture income is attributable to FB_X pursuant to § 1.1503(d)-5(c)(4)(vi). Pursuant to § 1.1503(d)-6(h)(5), the recapture income is treated as ordinary income whose source and character (including section 904 separate limitation character) is determined by reference to the manner in which the recaptured items of expense or loss taken into account in calculating the dual consolidated loss were allocated and apportioned. Further, pursuant to § 1.1503(d)-6(h)(5), the pro rata computation described in § 1.1503(d)-4(c)(4) shall apply. Thus, the character and source of the recapture income is determined in the same proportion as each item of deduction or loss that contributed to the dual consolidated loss being recaptured. Accordingly, P's $20x of recapture income is characterized and sourced as follows: $4x of domestic source income (($25x/$125x) × $20x); $14.4x of foreign source general limitation income (($75x + $15x)/$125x) × $20x); and $1.6x of

foreign source passive income (($10x/$125x) × $20x). Pursuant to § 1.1503(d)-6(h)(6)(i), commencing in year 3, the $20x recapture amount is reconstituted and treated as a net operating loss incurred by FB_X in a separate return limitation year, subject to the limitation under § 1.1503(d)-4(b) (and therefore subject to the restrictions of § 1.1503(d)-4(c)). Pursuant to § 1.1503(d)-6(j)(1)(iii), the domestic use agreement filed by the P consolidated group with respect to the year 1 dual consolidated loss of FB_X is terminated and has no further effect.

(39) ***Example 39. Interest charge without recapture*** —

(i) ***Facts.*** P owns $DE1_X$ which, in turn, owns FB_X. P's interest in $DE1_X$ and its indirect interest in FB_X are combined and treated as a single separate unit (Country X separate unit) pursuant to § 1.1503(d)-1(b)(4)(ii). In year 1, a dual consolidated loss of $100x is attributable to P's Country X separate unit. P makes a domestic use election with respect to such loss and uses the loss to offset the P group's consolidated taxable income. In year 2, there is $100x of income attributable to P's Country X separate unit and the P consolidated group has $200x of consolidated taxable income. At the end of year 2, the Country X separate unit undergoes a triggering event within the meaning of § 1.1503(d)-6(e)(1). P demonstrates, to the satisfaction of the Commissioner, that if no domestic use election were made with respect to the year 1 dual consolidated loss such that it was subject to the limitations of § 1.1503(d)-4(b) and (c), the year 1 $100x dual consolidated loss would have been offset by the $100x of year 2 income.

(ii) ***Result.*** There is no recapture of the year 1 dual consolidated loss attributable to P's Country X separate unit because it is reduced to zero under § 1.1503(d)-6(h)(2)(i). However, P is liable for one year of interest charge under § 1.1503(d)-6(h)(1)(ii), even though P's recapture amount is zero. This is the case because the P consolidated group had the benefit of the dual consolidated loss in year 1, and the income that offset the recapture income was not recognized until year 2. Pursuant to § 1.1503(d)-6(j)(1)(iii), the domestic use agreement filed by the P consolidated group with respect to the year 1 dual consolidated loss is terminated and has no further effect.

(40) ***Example 40. Reduced recapture and interest charge, and reconstituted dual consolidated loss*** —

(i) ***Facts.*** S owns $DE1_X$ which, in turn, owns FB_X. S's interest in $DE1_X$ and its indirect interest in FB_X are combined and treated as a single separate unit (Country X separate unit) pursuant to § 1.1503(d)-1(b)(4)(ii). In year 1, there is a $100x dual consolidated loss attributable to S's Country X separate unit, and P earns $100x. P makes a domestic use election with respect to the Country X separate unit's year 1 dual consolidated loss. Therefore, the consolidated group is permitted to offset P's $100x of income with the Country X separate unit's $100x dual consolidated loss. In year 2, $30x of income is attributable to the Country X separate unit under the rules of § 1.1503(d)-5 and such income is offset by a $30x net operating loss incurred by P in such year. In year 3, $25x of income is attributable to the Country X separate unit under the rules of § 1.1503(d)-5, and P earns $15x of income. In addition, at the end of year 3 there is a foreign use of the year 1 dual consolidated loss that constitutes a triggering event. S continues to own the Country X separate unit after the triggering event.

(ii) ***Result.***

(A) Under the presumptive rule of § 1.1503(d)-6(h)(1)(i), S must recapture $100x (plus applicable interest). However, under § 1.1503(d)-6(h)(2)(i), S may be able to demonstrate that a lesser amount is subject to recapture. The lesser amount is the amount of the

$100x dual consolidated loss that would have remained subject to § 1.1503(d)-4(c) at the time of the foreign use triggering event if a domestic use election had not been made for such loss.

(B) Although the combined separate unit earned $30x of income in year 2, there was no consolidated taxable income in such year. As a result, as of the end of year 2 the $100x dual consolidated loss would continue to be subject to § 1.1503(d)-4(c) if a domestic use election had not been made for such loss. However, the $30x earned in year 2 can be carried forward to subsequent taxable years and may reduce the recapture income to the extent of consolidated taxable income generated in subsequent years. In year 3, $25x of income was attributable to the Country X separate unit and P earns $15x of income. Thus, the P consolidated group has $40x of consolidated taxable income in year 3. As a result, the $100x of recapture income can be reduced by $40x. This is the case because if a domestic use election had not been made for the $100x year 1 dual consolidated loss such that it was subject to the limitations of § 1.1503(d)-4(b) and (c), only $60x of the loss would have remained subject to such limitations at the time of the foreign use triggering event. Accordingly, if S can adequately document the lesser amount, the amount of recapture income is $60x ($100x − $40x). The $60x recapture income is attributable to the Country X separate unit pursuant to § 1.1503(d)-5(c)(4)(vi).

(C) Pursuant to § 1.1503(d)-6(h)(6)(i), commencing in year 4, the $60x recapture amount is reconstituted and treated as a net operating loss incurred by the Country X separate unit of S in a separate return limitation year, subject to the limitation under § 1.1503(d)-4(b) (and therefore subject to the restrictions of § 1.1503(d)-4(c)). The loss is only available for carryover to taxable years after year 3 (and is not available for carryback). The carryover period of the loss, for purposes of section 172(b), will start from year 1, when the dual consolidated loss that was subject to recapture was incurred. In addition, such reconstituted net operating loss is not eligible for the exceptions contained in § 1.1503(d)-6(b) through (d). Pursuant to § 1.1503(d)-6(j)(1)(iii), the domestic use agreement filed by the P consolidated group with respect to the year 1 dual consolidated loss of the Country X separate unit is terminated and has no further effect.

(iii) ***Alternative facts.*** The facts are the same as in paragraph (c)(40)(i) of this section, except that the triggering event that occurs at the end of year 3 is a sale by S of its entire interest in $DE1_X$ to B, an unrelated domestic corporation. The sale does not qualify as a transaction described in section 381. The results are the same as in paragraph (c)(40)(ii) of this section, except that pursuant to § 1.1503(d)-6(h)(6)(ii) the $60x net operating loss is not reconstituted (with respect to either S or B). The loss is not reconstituted with respect to S because the Country X separate unit ceases to be a separate unit of S (or any other member of the consolidated group that includes S) and therefore would have been eliminated pursuant to § 1.1503(d)-4(d)(1)(ii) if no domestic use election had been made with respect to such loss. The loss is not reconstituted with respect to B because B was not the domestic owner of the combined separate unit when the dual consolidated loss that is recaptured was incurred, and B did not acquire the Country X separate unit in a section 381 transaction.

(41) ***Example 41. Domestic consenting corporation—treated as dual resident corporation*** —

(i) ***Facts.*** FSZ1, a Country Z entity that is subject to Country Z tax on its worldwide income or on a residence basis and is classified as a foreign corporation for U.S. tax purposes, owns all the interests in DCC, a domestic eligible entity that has filed an election to be classified as an

association. Under Country Z tax law, DCC is fiscally transparent. For taxable year 1, DCC's only item of income, gain, deduction, or loss is a $100x deduction and such deduction comprises a $100x net operating loss of DCC. For Country Z tax purposes, FSZ1's only item of income, gain, deduction, or loss, other than the $100x loss attributable to DCC, is $60x of operating income.

(ii) ***Result.*** DCC is a domestic consenting corporation because by electing to be classified as an association, it consents to be treated as a dual resident corporation for purposes of section 1503(d). *See* § 301.7701-3(c)(3) of this chapter. For taxable year 1, DCC is treated as a dual resident corporation under § 1.1503(d)-1(b)(2)(iii) because FSZ1 (a specified foreign tax resident that bears a relationship to DCC that is described in section 267(b) or 707(b)) derives or incurs items of income, gain, deduction, or loss of DCC. *See* § 1.1503(d)-1(c). FSZ1 derives or incurs items of income, gain, deduction, or loss of DCC because, under Country Z tax law, DCC is fiscally transparent. Thus, DCC has a $100x dual consolidated loss for taxable year 1. *See* § 1.1503(d)-1(b)(5). Because the loss is available to, and in fact does, offset income of FSZ1 under Country Z tax law, there is a foreign use of the dual consolidated loss in year 1. Accordingly, the dual consolidated loss is subject to the domestic use limitation rule of § 1.1503(d)-4(b). The result would be the same if FSZ1 were to indirectly own its DCC stock through an intermediate entity that is fiscally transparent under Country Z tax law, or if an individual were to wholly own FSZ1 and FSZ1 were a disregarded entity. In addition, the result would be the same if FSZ1 had no items of income, gain, deduction, or loss, other than the $100x loss attributable to DCC.

(iii) ***Alternative facts—DCC not treated as a dual resident corporation.*** The facts are the same as in paragraph (c)(41)(i) of this section, except that DCC is not fiscally transparent under Country Z tax law and thus under Country Z tax law FSZ1 does not derive or incur items of income, gain, deduction, or loss of DCC. Accordingly, DCC is not treated as a dual resident corporation under § 1.1503(d)-1(b)(2)(iii) for year 1 and, consequently, its $100x net operating loss in that year is not a dual consolidated loss.

(iv) ***Alternative facts—mirror legislation.*** The facts are the same as in paragraph (c)(41)(i) of this section, except that, under provisions of Country Z tax law that constitute mirror legislation under § 1.1503(d)-3(e)(1) and that are substantially similar to the recommendations in Chapter 6 of OECD/G-20, *Neutralising the Effects of Hybrid Mismatch Arrangements, Action 2: 2015 Final Report* (October 2015), Country Z tax law prohibits the $100x loss attributable to DCC from offsetting FSZ1's income that is not also subject to U.S. tax. As is the case in paragraph (c)(41)(ii) of this section, DCC is treated as a dual resident corporation under § 1.1503(d)-1(b)(2)(iii) for year 1 and its $100x net operating loss is a dual consolidated loss. Pursuant to § 1.1503(d)-3(e)(3), however, the dual consolidated loss is not deemed to be put to a foreign use by virtue of the Country Z mirror legislation. Therefore, DCC is eligible to make a domestic use election for the dual consolidated loss.

(42) ***Example 42. Disregarded payment loss rules—triggering event resulting in DPL inclusion amount and suspended deduction*** —

(i) ***Facts.*** P owns DE1X, and DE1X owns FSX. In year 1, DE1X pays $100x to P pursuant to a note. For U.S. tax purposes, the payment is disregarded as a transaction between DE1X and P, but if the payment were regarded it would be interest within the meaning of § 1.267A-5(a)(12). Under Country X tax law, the $100x is interest for which DE1X is allowed a deduction in year 1. In year 1, pursuant to a Country X group relief regime, DE1X's $100x deduction is made available to offset income of FSX. At the end of year 1, DE1X extinguishes the note by repaying the

outstanding principal. In year 2, P enters into a licensing arrangement with DE1X pursuant to which P makes a $60x payment to DE1X in each of years 2 and 3. For U.S. tax purposes, the payment is disregarded as a transaction between DE1X and P, but if the payment were regarded it would be a royalty within the meaning of § 1.267A-5(a)(16). Under Country X tax law, the $60x is a royalty and included in the income of DE1X in years 2 and 3.

(ii) ***Result.*** —

(A) ***Year 1.*** Because P owns all of the interests in DE1X, a disregarded entity, P is a DPE owner. See § 1.1503(d)-1(d)(1). In addition, DE1X, a disregarded payment entity with respect to P, incurs a $100x disregarded payment loss with respect to its Country X taxable year for year 1. See § 1.1503(d)-1(d)(5)(i)(A) and (d)(5)(ii)(B). DE1X's $100x deduction being made available to offset income of FSX pursuant to the Country X group relief regime constitutes a foreign use of, and thus a triggering event with respect to, the disregarded payment loss during the DPL certification period. See § 1.1503(d)-1(d)(3)(i) and (d)(5)(iii). As a result, in year 1, P must include in gross income $100x, the DPL inclusion amount with respect to the disregarded payment loss. See § 1.1503(d)-1(d)(1) and (d)(2)(i). The $100x DPL inclusion amount is treated for U.S. tax purposes as ordinary interest income, the source and character of which is determined as if DE1X were a foreign corporation, and the amount were interest income paid by the foreign corporation to P. See § 1.1503(d)-1(d)(2)(iv)(A). The result would be the same if DE1X recognized income in year 1 that was regarded for both U.S. and Country X tax purposes, or if P made payments (other than interest, structured payments, or royalties) to DE1X that were disregarded for U.S. tax purposes but regarded for Country X tax purposes. See § 1.1503(d)-1(d)(3)(i) (describing the application of the principles of the deemed ordering rule in § 1.1503(d)-3(c)(3)).

(B) ***Years 2 and 3.*** In year 2, P establishes a suspended deduction of $100x related to the year 1 DPL inclusion amount. See § 1.1503(d)-1(d)(1) and (d)(2)(ii). In each of years 2 and 3, DE1X derives $60x of disregarded payment income with respect to its Country X taxable year. See § 1.1503(d)-1(d)(5)(ii)(A). For year 2, P is allowed a $60x deduction with respect to the suspended deduction, and $40x remains suspended. See § 1.1503(d)-1(d)(2)(ii). For year 3, P is allowed a $40x deduction with respect to the suspended deduction. See *id.* Thus, in years 2 and 3 P is allowed a $60x deduction and $40x deduction, respectively, with respect to the suspended deduction relating to the year 1 DPL inclusion amount. The deductions are treated as interest deductions the source and character of which are determined in the same manner as the income for the DPL inclusion amount to which they relate. See § 1.1503(d)-1(d)(2)(iv)(B). At the end of year 3, the DPL cumulative register is $20x (that is, the $120x of disregarded payment income for years 2 and 3, less the $100 of DPL cumulative register that is used under § 1.1503(d)-1(d)(2)(ii) in years 2 and 3). See § 1.1503(d)-1(d)(2)(iii).

(43) ***Example 43. Income from U.S. business operations to avoid the purposes of the dual consolidated loss rules*** —

(i) ***Facts.*** P owns DE1X. DE1X owns FSX. DE1X and FSX file a consolidated tax return for Country X tax purposes such that deductions and losses of DE1X are available to offset income of FSX. P conducts business operations in the United States that are expected to generate items of income or gain (U.S. business operations). With a view to avoid the purposes of the rules under §§ 1.1503(d)-1 through 1.1503(d)-8 by eliminating what would otherwise be a dual

consolidated loss and obtaining a double deduction outcome, P transfers the U.S. business operations to DE1X. But for P's items of income or gain from the U.S. business operations (held indirectly through DE1X), there would be a dual consolidated loss attributable to P's interest in DE1X and a foreign use of that dual consolidated loss (as a result of the Country X consolidation regime). For purposes of determining taxable income under the income tax laws of Country X, items of income, gain, deduction, and loss attributable to a permanent establishment (or similar taxable presence) in another country, which would include the U.S. business operations, are not taken into account.

(ii) ***Result.*** Because P transferred the U.S. business operations to DE1X with a view to avoid the purposes of the rules under §§ 1.1503(d)-1 through 1.1503(d)-8, and the transfer would otherwise result in a double deduction outcome (that is, in effect putting DE1X's items of deduction or loss that would compose a dual consolidated loss to both a domestic use and a foreign use), the anti-avoidance rule in § 1.1503(d)-1(f)(1) applies. As a result, the income or gain that P takes into account from the U.S. business operations (held indirectly through DE1X) is not taken into account for purposes of determining the amount of income or dual consolidated loss attributable to P's interest in DE1X under § 1.1503(d)-5(c). The result would be the same if, instead of the income tax laws of Country X not taking into account the items of income, gain, deduction, and loss attributable to a permanent establishment (or similar taxable presence) in another country for purposes of determining taxable income, the income tax laws of Country X took such items into account for this purpose but provided a foreign tax credit with respect to taxes paid on the taxable income determined by taking such items into account.

(44) ***Example 44. Disallowed interest deductions*** —

(i) ***Facts.*** P owns S. S owns DE1X, a disregarded entity and, thus, is a DPE owner. See § 1.1503(d)-1(d)(1). DE1X owns FSX. DE1X and FSX file a consolidated tax return for Country X tax purposes such that deductions and losses of DE1X are available to offset income of FSX. With a view to avoid the purposes of the rules under §§ 1.1503(d)-1 through 1.1503(d)-8, and obtain a double deduction or similar outcome, P transfers cash to DE1X in exchange for an interest-bearing note. Under the terms of the note, payments of interest are made in cash or, at the option of DE1X, in stock of S. In year 1, DE1X accrues $100x of interest expense under the note. The taxpayer takes the position that for U.S. tax purposes, the interest expense deductions are disallowed under section 163(l) because DE1X has the option to pay the interest with S stock. Further, because S's interest expense deductions on the note held by P are disallowed, the taxpayer takes the position that P's interest income on the loan is treated as tax-exempt income under the intercompany transaction rules in § 1.1502-13. In year 1, DE1X is allowed a $100x interest expense deduction for Country X tax purposes; the $100x deduction is available to offset FSX's income for Country X tax purposes.

(ii) ***Result.*** DE1X issued the note to P in exchange for cash with a view to avoid the purposes of §§ 1.1503(d)-1 through 1.1503(d)-8. Moreover, under the taxpayer's position, the issuance would otherwise result in a double deduction or similar outcome (that is, a foreign use of DE1X's $100x interest expense deduction where P does not recognize a corresponding income inclusion for U.S. tax purposes). Accordingly, the anti-avoidance rule in § 1.1503(d)-1(f)(1) applies. As a result, adjustments are made such that the $100x interest expense deduction is treated as a disregarded payment loss of DE1X, a disregarded payment entity. This is the case even though the $100x interest payment is not disregarded for U.S. tax purposes as a transaction between a disregarded entity and its tax owner or between disregarded entities with the same tax owner under § 1.1503(d)-1(d)(5)(ii)(C)(2). Because the $100x disregarded

payment loss is made available under the Country X consolidation regime to offset income of FSX, a foreign corporation, a foreign use triggering event (within the meaning of § 1.1503(d)-1(d)(3)(i)) occurs. As a result, S includes in income a $100x DPL inclusion amount in year 1 and establishes a suspended deduction of $100x in year 2. See § 1.1503(d)-1(d)(1), (d)(2)(i), and (d)(2)(ii).

(45) *Example 45. Restructuring to avoid the application of the DPL rules* —

(i) ***Facts.*** P owns DE1X and S. DE1X owns FSX. DE1X and FSX file a consolidated tax return for Country X tax purposes such that deductions and losses of DE1X are available to offset income of FSX. P holds an interest-bearing note issued by DE1X. For U.S. tax purposes, interest accrued and paid on the note is disregarded. For Country X tax purposes, DE1X is allowed a $100x interest expense deduction each year for interest accrued under the note. At the end of year 1, and with a view to avoid the application of the disregarded payment loss rules under § 1.1503(d)-1(d) in year 2, P transfers the note to S. In year 2, DE1X is allowed a $100x interest expense deduction for Country X tax purposes. For U.S. tax purposes, the $100x interest expense deduction in year 2 gives rise to a dual consolidated loss attributable to P's interest in DE1X, a hybrid entity separate unit, and that loss is subject to the domestic use limitation rule of § 1.1503(d)-4(b).

(ii) ***Result.*** Although P transferred the note to S with a view to avoid the application of the disregarded payment loss rules under § 1.1503(d)-1(d), the anti-avoidance rule in § 1.1503(d)-1(f)(1) does not apply with respect to the transfer. This is because the resulting year 2 $100x dual consolidated loss is subject to the domestic use limitation rule of § 1.1503(d)-4(b) (or the terms of a domestic use agreement, if a domestic use election were to be made) and thus cannot be put to both a domestic use and a foreign use (that is, it does not result in a double deduction or similar outcome). The same result would obtain if, instead of P transferring the note to S at the end of year 1, DE1X extinguished the note at the end of year 1 such that there are no disregarded payments in year 2 and, thus, no double non-taxation outcome.

(iii) ***Alternative facts.*** The facts are the same as in paragraph (c)(45)(i) of this section, except that P does not transfer the note to S in year 1. Instead, with a view to prevent a foreign use of a disregarded payment loss attributable to DE1X, at the end of year 1 FSX distributes all its property to DE1X in a complete liquidation described in section 332. The anti-avoidance rule in § 1.1503(d)-1(f)(1) does not apply because the disregarded payment loss is not put to a foreign use (that is, there is no double deduction or similar outcome).

(46) *Example 46. Disregarded payment loss rules—scope* —

(i) ***Facts.*** P owns DE1X. DE1X owns FBZ. FBZ is a foreign branch, within the meaning of § 1.1503(d)-1(d)(5)(iv), located in Country Z. DE1X makes a $10x payment to P, which, under the laws of Country Z, gives rise to a $10x deduction allowable to FBZ. If such payment were regarded for U.S. tax purposes, it would be interest within the meaning of § 1.267A-5(a)(12). In addition, under the laws of Country Z, FBZ is allowed a $60x interest deduction for an accrual or other transaction between FBZ and DE1X, and if such item were regarded for U.S. tax purposes, it would be interest within the meaning of § 1.267A-5(a)(12).

(ii) ***Result.*** P is a DPE owner because it owns DE1X, a disregarded entity. See § 1.1503(d)-1(d)(1). As such, P determines disregarded payment income or disregarded payment loss of DE1X, a disregarded payment entity described in § 1.1503(d)-1(d)(5)(i)(A), and of FBZ, a disregarded

payment entity described in § 1.1503(d)-1(d)(5)(i)(B). See § 1.1503(d)-1(d)(1). The payment from DE1X to P is disregarded for U.S. tax purposes as a transaction between a disregarded entity (DE1X) and its tax owner (P) and therefore satisfies the condition in § 1.1503(d)-1(d)(5)(ii)(C)(*2*). The payment also satisfies the conditions described in § 1.1503(d)-1(d)(5)(ii)(C)(*1*) and (*3*) because FBZ is allowed a deduction under Country Z law for a payment that, if regarded for U.S. tax purposes, would be interest within the meaning of § 1.267A-5(a)(12). As such, the $10x deduction attributable to the payment from DE1X to P is taken into account in determining whether FBZ has disregarded payment income or a disregarded payment loss under § 1.1503(d)-1(d)(5)(ii)(A) and (B), respectively. The $60x item of deduction allowed to FBZ, however, does not satisfy the condition described in § 1.1503(d)-1(d)(5)(ii)(C)(*2*), because the accrual or other transaction giving rise to the deduction is not between a disregarded entity and its tax owner (here, P), or between disregarded entities with the same tax owner. Accordingly, the $60x item of deduction is not taken into account in determining whether FBZ has disregarded payment income or a disregarded payment loss. The result would be the same with respect to the $60x deduction allowed to FBZ under the laws of Country Z if, instead of P owning FBZ indirectly through DE1X, P owned FBZ directly and the accrual or other transaction giving rise to the deduction is between FBZ and P.

[T.D. 9315, 72 FR 12914, Mar. 19, 2007; 72 FR 20424, Apr. 25, 2007, as amended by T.D. 9896, 85 FR 19855, Apr. 8, 2020; 85 FR 48651, Aug. 12, 2020; T.D. 10026, 90 FR 3018, Jan. 14, 2025]

§ 1.1503(d)-8 Applicability dates.

(a) ***General rule.*** Except as provided in paragraph (b) of this section, this paragraph (a) provides the dates of applicability of §§ 1.1503(d)-1 through 1.1503(d)-7. Sections 1.1503(d)-1 through 1.1503(d)-7 apply to dual consolidated losses incurred in taxable years beginning on or after April 18, 2007. However, a taxpayer may apply §§ 1.1503(d)-1 through 1.1503(d)-7, in their entirety, to dual consolidated losses incurred in taxable years beginning on or after January 1, 2007, by filing its return and attaching to such return the domestic use agreements, certifications, or other information in accordance with these regulations. For purposes of this section, the term application date means either April 18, 2007, or, if the taxpayer applies these regulations pursuant to the preceding sentence, January 1, 2007. Section 1.1503-2, as contained in 26 CFR part 1, revised as of April 1, 2024, applies for dual consolidated losses incurred in taxable years beginning on or after October 1, 1992, and before the application date.

(b) ***Special rules*** —

(1)-(2) [Reserved]

(3) ***Relief for untimely filings.*** Paragraphs (b)(3)(i) through (iii) of this section set forth the effective dates for rules that provide relief for the failure to make timely filings of an election, agreement, statement, rebuttal, computation, closing agreement, or other information, pursuant to section 1503(d) and these regulations.

(i) ***General rule.*** Except as provided in paragraphs (b)(3)(ii) and (iii) of this section, the reasonable cause relief standard of § 1.1503(d)-1(d) applies for all untimely filings with respect to dual consolidated losses, including with respect to dual consolidated losses incurred in taxable years beginning before the application date.

(ii)-(iii) [Reserved]

(4) [Reserved]

(5) ***Basis adjustment rules.*** Taxpayers may apply the basis adjustment rules of § 1.1503(d)-5(g) for all open years in which such basis is relevant, even if the basis adjustment is attributable to a dual consolidated loss incurred (or recaptured) in a closed taxable year. Taxpayers applying the provisions of § 1.1503(d)-5(g), however, must do so consistently for all open years.

(6) ***Rules regarding domestic consenting corporations.*** Section 1.1503(d)-1(b)(2)(iii) and (c), as well § 1.1503(d)-3(e)(1) and (3), apply to determinations under §§ 1.1503(d)-1 through 1.1503(d)-7 relating to taxable years ending on or after December 20, 2018. For taxable years ending before December 20, 2018, see § 1.1503(d)-3(e)(1) as contained in 26 CFR part 1 revised as of April 1, 2018.

(7) ***Compulsory transfer triggering event exception.*** Section 1.1503(d)-6(f)(5)(i) through (iii) applies to transfers that occur on or after December 20, 2018. For transfers occurring before December 20, 2018, see § 1.1503(d)-6(f)(5)(i) through (iii) as contained in 26 CFR part 1 revised as of April 1, 2018. However, taxpayers may consistently apply § 1.1503(d)-6(f)(5)(i) through (iii) to transfers occurring before December 20, 2018.

(8) ***Rule providing that SRLY limitation applies without regard to § 1.1502-21(c)(1)(i)(E).*** Section 1.1503(d)-4(c)(3)(v) applies to any period to which § 1.1502-21(c)(1)(i)(E) applies.

(9)-(10) [Reserved]

(11) ***Disregarded payment loss rules.*** Section 1.1503(d)-1(d) applies to taxable years beginning on or after January 1, 2026. See also § 301.7701-2(e)(10) of this chapter (applicability dates for the entity classification provisions relevant to the disregarded payment loss rules).

(12)-(14) [Reserved]

(15) ***Anti-avoidance rule.*** Section 1.1503(d)-1(f) applies to dual consolidated losses incurred in taxable years ending on or after August 6, 2024, and to disregarded payment losses in taxable years beginning on or after January 1, 2026.

(16) [Reserved].

(17) ***Deemed ordering rule.*** Section 1.1503(d)-3(c)(3) applies to dual consolidated losses incurred in taxable years beginning on or after January 1, 2026, and to disregarded payment losses in taxable years beginning on or after January 1, 2026. For the application of the deemed ordering rule to dual consolidated losses incurred in taxable years beginning before January 1, 2026, but on or after April 18, 2007, see § 1.1503(d)-3(c)(3) as contained in 26 CFR part 1 revised as of April 1, 2024.

[T.D. 9315, 72 FR 12914, Mar. 19, 2007; 72 FR 20424, Apr. 25, 2007, as amended by T.D. 9896, 85 FR 19856, Apr. 8, 2020; T.D. 9927, 85 FR 67988, Oct. 27, 2020; T.D. 10018, 89 FR 106878, Dec. 30, 2024; T.D. 10026, 90 FR 3020, Jan. 14, 2025]

§ 1.1504-0 Outline of provisions.

In order to facilitate the use of §§ 1.1504-1 through 1.1504-4, this section lists the captions contained in §§ 1.1504-1 through 1.1504-4.

§ 1.1504-1 Definitions.

§§ 1.1504-2—1.1504-3 [Reserved]

§ 1.1504-4 Treatment of warrants, options, convertible obligations, and other similar interests.

(a) Introduction.

(1) General rule.

(2) Exceptions.

(b) Options not treated as stock or as exercised.

(1) General rule.

(2) Options treated as exercised.

(i) In general.

(ii) Aggregation of options.

(iii) Effect of treating option as exercised.

(A) In general.

(B) Cash settlement options, phantom stock, stock appreciation rights, or similar interests.

(iv) Valuation.

(3) Example.

(c) Definitions.

(1) Issuing corporation.

(2) Related or sequential option.

(3) Related persons.

(4) Measurement date.

(i) General rule.

(ii) Issuances, transfers, or adjustments not treated as measurement dates.

(iii) Transactions increasing likelihood of exercise.

(iv) Measurement date for options issued pursuant to a plan.

(v) Measurement date for related or sequential options.

(vi) Example.

(5) In-the-money.

(d) Options.

(1) Instruments treated as options.

(2) Instruments generally not treated as options.

(i) Options on section 1504(a)(4) stock.

(ii) Certain publicly traded options.

(A) General rule.

(B) Exception.

(iii) Stock purchase agreements.

(iv) Escrow, pledge, or other security agreements.

(v) Compensatory options.

(A) General rule.

(B) Exceptions.

(vi) Options granted in connection with a loan.

(vii) Options created pursuant to a title 11 or similar case.

(viii) Convertible preferred stock.

(ix) Other enumerated instruments.

(e) Elimination of federal income tax liability.

(f) Substantial amount of federal income tax liability.

(g) Reasonable certainty of exercise.

(1) Generally.

(i) Purchase price.

(ii) In-the-money option.

(iii) Not in-the-money option.

(iv) Exercise price.

(v) Time of exercise.

(vi) Related or sequential options.

(vii) Stockholder rights.

(viii) Restrictive covenants.

(ix) Intention to alter value.

(x) Contingencies.

(2) Cash settlement options, phantom stock, stock appreciation rights, or similar interests.

(3) Safe harbors.

(i) Options to acquire stock.

(ii) Options to sell stock.

(iii) Options exercisable at fair market value.

(iv) Exceptions.

(v) Failure to satisfy safe harbor.

(h) Examples.

(i) Effective date.

[T.D. 8462, 57 FR 61800, Dec. 29, 1992]

§ 1.1504-1 Definitions.

The privilege of filing consolidated returns is extended to all includible corporations constituting affiliated groups as defined in section 1504. See the regulations under § 1.1502 for a description of an affiliated group and the corporations which may be considered as includible corporations.

[T.D. 6500, 25 FR 12106, Nov. 26, 1960]

§ 1.1504-2 [Reserved]

§ 1.1504-3 Treatment of stock in a QOF C corporation for purposes of consolidation.

(a) *Scope and definitions* —

(1) *Scope.* This section provides rules regarding the treatment of stock in a QOF C corporation for purposes of determining whether such corporation can join in the filing of a consolidated return. Paragraph (b) of this section generally prevents a subsidiary QOF C corporation from joining in the filing of a consolidated return, but it provides an election to consolidate a subsidiary QOF C corporation (subject to certain conditions). Paragraph (c) of this section provides instructions for making the election provided by paragraph (b) of this section. Paragraph (d) of this section provides an example. Paragraph (e) of this section provides the applicability dates.

(2) *Definitions.* The definitions provided in §§ 1.1400Z2(a)-1(b) and 1.1502-14Z(a)(2)(ii) apply for purposes of this section.

(b) *QOF stock not stock for purposes of consolidation* —

(1) *In general.* Except as otherwise provided in paragraph (b)(2) of this section, stock in a QOF C corporation (whether qualifying QOF stock or otherwise) is not treated as stock under section 1504 for purposes of determining whether any corporation may join in the filing of a consolidated return under section 1501. Therefore, a QOF C corporation can be the common parent of a consolidated group, and a QOF C corporation generally can be a member of an affiliated group for purposes of section 1504, but a QOF C corporation cannot join in the filing of a consolidated return as a subsidiary member (except as provided in paragraph (b)(2) of this section).

(2) *Election to consolidate a subsidiary QOF C corporation* —

(i) *In general.* Notwithstanding paragraph (b)(1) of this section, a consolidated group may elect to consolidate a subsidiary QOF C corporation that was formed, or section 1504 control of which was acquired, by the consolidated group after May 1, 2019, and that otherwise meets the affiliation requirements under section 1504. If a pre-existing corporation was a member of the consolidated group prior to becoming a QOF C corporation, a consolidated group may elect to continue to consolidate such pre-existing corporation if it self-certified to be a QOF after May 1, 2019. The consolidated group must make the election under this paragraph (b)(2) with regard to the first taxable year during which the subsidiary QOF C corporation otherwise meets the section 1504 affiliation requirements (without regard to paragraph (b)(1) of this section). See § 1.1502-14Z(f)(3) for an election available with regard to a subsidiary QOF C corporation that met the section 1504 affiliation requirements as of May 1, 2019. The election under this paragraph (b)(2) is effective on the later of May 1, 2019, or the first date on which the QOF C corporation otherwise meets the requirements of section 1504. If a consolidated group makes

the election under this paragraph (b)(2), then the conditions in paragraph (b)(2)(ii) of this section apply to the consolidated group and to the QOF member. See paragraph (c) of this section for the form and manner of making this election.

(ii) ***Conditions to consolidate a subsidiary QOF C corporation*** —

(A) ***Ownership status of QOF investor member.*** On and at all times after the date of the investment, the common parent must directly or indirectly own all shares of all classes of stock (including non-qualified preferred stock) issued by any QOF investor member.

(B) ***Direct investment.*** Except as provided in § 1.1502-14Z(c), each QOF investor member must maintain direct ownership of its qualifying investment (see, for example, § 1.1400Z2(b)-1(c), which generally treats transfers of a qualifying investment as an inclusion event). See § 1.1502-14Z(c)(4) for rules regarding the treatment of intercompany transfers as qualifying investments in a QOF member. See also § 1.1502-14Z(c)(2) and (c)(3)(ii) for rules regarding actual and deemed intercompany transfers of qualifying investments.

(3) ***Failure of continued qualification.*** Consolidation of a subsidiary QOF C corporation is contingent upon continued satisfaction of all of the conditions of paragraph (b)(2)(ii) of this section. The requirements of paragraph (b)(2) of this section continue to apply (with appropriate modifications to reflect single-entity treatment) following any intercompany transfer of the QOF member stock that is subject to § 1.1502-14Z(c)(3)(ii). For example, following an intercompany transfer of the QOF member stock that is subject to § 1.1502-14Z(c)(3)(ii), the buying member must maintain a direct investment in the QOF member. On the failure to satisfy any condition of paragraph (b)(2), the QOF member will deconsolidate, and § 1.1502-14Z(g) will apply with respect to such deconsolidation.

(c) ***Election under paragraph (b)(2) of this section to consolidate a subsidiary QOF C corporation*** —

(1) ***In general.*** The election under paragraph (b)(2) of this section is irrevocable and is made in the form provided in paragraph (c)(2) of this section.

(2) ***Form of election.*** The election under paragraph (b)(2) of this section must be made in the form of a statement titled "THIS IS AN ELECTION UNDER § 1.1504-3(b)(2) TO CONSOLIDATE [insert name and employer identification number (E.I.N.) of subsidiary QOF C corporation] as of [insert date]." The statement must be included with the consolidated group's timely filed return (original, superseding, or amended return, as applicable, including extensions) for the year the election under § 1.1504-3(b)(2) is made.

(d) ***Example.*** The following example illustrates the treatment of QOF stock as not stock for purposes of affiliation as described in paragraph (b)(1) of this section.

(1) ***QOF stock as not stock for purposes of affiliation to join in the filing of a consolidated return*** —

(i) ***Facts.*** P wholly owns S, which wholly owns corporation Q1. P, S, and Q1 are members of the P group. In 2021, S sells an asset to an unrelated party and realizes $500x of eligible gain. S contributes $500x to Q1 and properly elects to defer the eligible gain under section 1400Z-2(a) and § 1.1400Z2(a)-1. At such time, Q1 qualifies and elects to be treated as a QOF, but the P group does not elect to consolidate Q1 under paragraph (b)(2) of this section.

(ii) ***Analysis.*** Under paragraph (b)(1) of this section, stock of a QOF C corporation (qualifying or otherwise) is not treated as stock for purposes of determining whether the QOF C corporation may join in the filing of a consolidated return. Thus, because no election has been made under

paragraph (b)(2) of this section, once Q1 becomes a QOF, Q1 ceases to be affiliated with the P group members for purposes of section 1501, and it deconsolidates from the P group. *See* the consolidated return regulations generally for the consequences of deconsolidation.

(2) [Reserved]

(e) ***Applicability dates*** —

(1) ***In general.*** This section applies for taxable years beginning after March 13, 2020.

(2) ***Prior periods.*** With respect to the portion of a consolidated group's first taxable year ending after December 21, 2017, and for taxable years beginning after December 21, 2017, and on or before March 13, 2020, a consolidated group may choose either—

(i) To apply the section 1400Z-2 regulations, if applied in a consistent manner for all such taxable years; or

(ii) To rely on the rules in proposed § 1.1400Z2(g)-1 contained in the notice of proposed rulemaking (REG-120186-18) published on May 1, 2019, but only if applied in a consistent manner for all such taxable years.

[T.D. 9889, 85 FR 2000, Jan. 13, 2020; 85 FR 19086, Apr. 6, 2020; T.D. 10018, 89 FR 106878, Dec. 30, 2024]

§ 1.1504-4 Treatment of warrants, options, convertible obligations, and other similar interests.

(a) ***Introduction*** —

(1) ***General rule.*** This section provides regulations under section 1504(a)(5) (A) and (B) regarding the circumstances in which warrants, options, obligations convertible into stock, and other similar interests are treated as exercised for purposes of determining whether a corporation is a member of an affiliated group. The fact that an instrument may be treated as an option under these regulations does not prevent such instrument from being treated as stock under general principles of law. Except as provided in paragraph (a)(2) of this section, this section applies to all provisions under the Internal Revenue Code and the regulations to which affiliation within the meaning of section 1504(a) (with or without the exceptions in section 1504(b)) is relevant, including those provisions that refer to section 1504(a)(2) (with or without the exceptions in section 1504(b)) without referring to affiliation, provided that the 80 percent voting power and 80 percent value requirements of section 1504(a)(2) are not modified therein.

(2) ***Exceptions.*** This section does not apply to sections 864(e) or 904(i) or to the regulations thereunder. This section also does not apply to any other provision specified by the Internal Revenue Service in regulations, a revenue ruling, or revenue procedure. See § 601.601(d)(2)(ii)(*b*) of this chapter.

(b) ***Options not treated as stock or as exercised*** —

(1) ***General rule.*** Except as provided in paragraph (b)(2) of this section, an option is not considered either as stock or as exercised. Thus, options are disregarded in determining whether a corporation is a member of an affiliated group unless they are described in paragraph (b)(2) of this section.

(2) ***Options treated as exercised*** —

(i) ***In general.*** Solely for purposes of determining whether a corporation is a member of an affiliated group, an option is treated as exercised if, on a measurement date with respect to such option—

(A) It could reasonably be anticipated that, if not for this section, the issuance or transfer of the option in lieu of the issuance, redemption, or transfer of the underlying stock would result in the elimination of a substantial amount of federal income tax liability (as described in paragraphs (e) and (f) of this section); and

(B) It is reasonably certain that the option will be exercised (as described in paragraph (g) of this section).

(ii) ***Aggregation of options.*** All options with the same measurement date are aggregated in determining whether the issuance or transfer of an option in lieu of the issuance, redemption, or transfer of the underlying stock would result in the elimination of a substantial amount of federal income tax liability.

(iii) ***Effect of treating option as exercised*** —

(A) ***In general.*** An option that is treated as exercised is treated as exercised for purposes of determining the percentage of the value of stock owned by the holder and other parties, but is not treated as exercised for purposes of determining the percentage of the voting power of stock owned by the holder and other parties.

(B) ***Cash settlement options, phantom stock, stock appreciation rights, or similar interests.*** If a cash settlement option, phantom stock, stock appreciation right, or similar interest is treated as exercised, the option is treated as having been converted into stock of the issuing corporation. If the amount to be received upon the exercise of such an option is determined by reference to a multiple of the increase in the value of a share of the issuing corporation's stock on the exercise date over the value of a share of the stock on the date the option is issued, the option is treated as converted into a corresponding number of shares of such stock. Appropriate adjustments must be made in any situation in which the amount to be received upon exercise of the option is determined in another manner.

(iv) ***Valuation.*** For purposes of section 1504(a)(2)(B) and this section, all shares of stock within a single class are considered to have the same value. Thus, control premiums and minority and blockage discounts within a single class are not taken into account.

(3) ***Example.*** The provisions of paragraph (b)(2) of this section may be illustrated by the following example:

> *Example.* (i) Corporation P owns all 100 shares of the common stock of Corporation S, the only class of S stock outstanding. Each share of S stock has a fair market value of $10 and has one vote. On June 30, 1992, P issues to Corporation X an option to acquire 80 shares of the S stock from P.
> (ii) If, under the provisions of this section, the option is treated as exercised, then, solely for purposes of determining affiliation, P is treated as owning only 20 percent of the value of the outstanding S stock and X is treated as owing the remaining 80 percent of the value of the S stock. P is still treated as owning all of the voting power of S. Accordingly, because P is treated as owning less than 80 percent of the value of the outstanding S stock, P and S are no longer affiliated. However, because X is not treated as owning any of the voting power of S, X and S are also not affiliated.

(c) ***Definitions.*** For purposes of this section—

(1) ***Issuing corporation.*** "Issuing corporation" means the corporation whose stock is subject to an option.

(2) ***Related or sequential option.*** "Related or sequential option" means an option that is one of a series of options issued to the same or related persons. For purposes of this section, any options issued to the same person or related persons within a two-year period are presumed to be part of a series of options. This presumption may be rebutted if the facts and circumstances clearly establish that the options are not part of a series of options. Any options issued to the same person or related persons more than two years apart are presumed not to be part of a series of options. This presumption may be rebutted if the facts and circumstances clearly establish that the options are part of a series of options.

(3) ***Related persons.*** Persons are related if they are related within the meaning of section 267(b) (without the application of sections 267(c) and 1563(e)(1)) or 707(b)(1), substituting "10 percent" for "50 percent" wherever it appears.

(4) ***Measurement date*** —

(i) ***General rule.*** "Measurement date" means a date on which an option is issued or transferred or on which the terms of an existing option or the underlying stock are adjusted (including an adjustment pursuant to the terms of the option or the underlying stock).

(ii) ***Issuances, transfers, or adjustments not treated as measurement dates.*** A measurement date does not include a date on which—

(A) An option is issued or transferred by gift, at death, or between spouses or former spouses under section 1041;

(B) An option is issued or transferred—

(*1*) Between members of an affiliated group (determined with the exceptions in section 1504(b) and without the application of this section); or

(*2*) Between persons none of which is a member of the affiliated group (determined without the exceptions in section 1504(b) and without the application of this section), if any, of which the issuing corporation is a member, unless—

(*i*) Any such person is related to (or acting in concert with) the issuing corporation or any member of its affiliated group; and

(*ii*) The issuance or transfer is pursuant to a plan a principal purpose of which is to avoid the application of section 1504 and this section;

(C) An adjustment occurs in the terms or pursuant to the terms of an option or the underlying stock that does not materially increase the likelihood that the option will be exercised; or

(D) A change occurs in the exercise price of an option or in the number of shares that may be issued or transferred pursuant to the option as determined by a bona fide, reasonable, adjustment formula that has the effect of preventing dilution of the interests of the holders of the options.

(iii) ***Transactions increasing likelihood of exercise.*** If a change or alteration referred to in this paragraph (c)(4)(iii) is made for a principal purpose of increasing the likelihood that an option will be exercised, a measurement date also includes any date on which—

(A) The capital structure of the issuing corporation is changed; or

(B) The fair market value of the stock of the issuing corporation is altered through a transfer of assets to or from the issuing corporation (other than regular, ordinary dividends) or by any other means.

(iv) ***Measurement date for options issued pursuant to a plan.*** In the case of options issued pursuant to a plan, a measurement date for any of the options constitutes a measurement date for all options issued pursuant to the plan that are outstanding on the measurement date.

(v) ***Measurement date for related or sequential options.*** In the case of related or sequential options, a measurement date for any of the options constitutes a measurement date for all related or sequential options that are outstanding on the measurement date.

(vi) ***Example.*** The provisions of paragraph (c)(4)(v) of this section may be illustrated by the following example.

> *Example.* (i) Corporation P owns all 80 shares of the common stock of Corporation S, the only class of S stock outstanding. On January 1, 1992, S issues a warrant, exercisable within 3 years, to U, an unrelated corporation, to acquire 10 newly issued shares of S common stock. On July 1, 1992, S issues a second warrant to U to acquire 10 additional newly issued shares of S common stock. On January 1, 1993, S issues a third warrant to T, a wholly owned subsidiary of U, to acquire 10 newly issued shares of S common stock. Assume that the facts and circumstances do not clearly establish that the options are not part of a series of options.
> (ii) January 1, 1992, July 1, 1992, and January 1, 1993, constitute measurement dates for the first warrant, the second warrant, and the third warrant, respectively, because the warrants were issued on those dates.
>
> (iii) Because the first and second warrants were issued within two years of each other, and both warrants were issued to U, the warrants constitute related or sequential options. Accordingly, July 1, 1992, constitutes a measurement date for the first warrant as well as for the second warrant.
>
> (iv) Because the first, second, and third warrants were all issued within two years of each other, and were all issued to the same or related persons, the warrants constitute related or sequential options. Accordingly, January 1, 1993, constitutes a measurement date for the first and second warrants, as well as for the third warrant.

(5) ***In-the-money.*** "In-the-money" means the exercise price of the option is less than (or in the case of an option to sell stock, greater than) the fair market value of the underlying stock.

(d) ***Options*** —

(1) ***Instruments treated as options.*** For purposes of this section, except to the extent otherwise provided in this paragraph (d), the following are treated as options:

(i) A call option, warrant, convertible obligation, put option, redemption agreement (including a right to cause the redemption of stock), or any other instrument that provides for the right to issue, redeem, or transfer stock (including an option on an option); and

(ii) A cash settlement option, phantom stock, stock appreciation right, or any other similar interest (except for stock).

(2) ***Instruments generally not treated as options.*** For purposes of this section, the following will not be treated as options:

(i) ***Options on section 1504(a)(4) stock.*** Options on stock described in section 1504(a)(4);

(ii) ***Certain publicly traded options*** —

(A) ***General rule.*** Options which on the measurement date are traded on (or subject to the rules of) a qualified board or exchange as defined in section 1256(g)(7), or on any other exchange, board of trade, or market specified by the Internal Revenue Service in regulations, a revenue ruling, or revenue procedure. See § 601.601(d)(2)(ii)(*b*) of this chapter;

(B) ***Exception.*** Paragraph (d)(2)(ii)(A) of this section does not apply to options issued, transferred, or listed with a principal purpose of avoiding the application of section 1504 and this section. For example, a principal purpose of avoiding the application of section 1504 and this section may exist if warrants, convertible or exchangeable debt instruments, or other similar instruments have an exercise price (or, in the case of convertible or exchangeable instruments, a conversion or exchange premium) that is materially less than, or a term that is materially longer than, those that are customary for publicly traded instruments of their type. A principal purpose may also exist if a large percentage of an issuance of an instrument is placed with one investor (or group of investors) and a very small percentage of the issuance is traded on a qualified board or exchange;

(iii) ***Stock purchase agreements.*** Stock purchase agreements or similar arrangements whose terms are commercially reasonable and in which the parties' obligations to complete the transaction are subject only to reasonable closing conditions;

(iv) ***Escrow, pledge, or other security agreements.*** Agreements for holding stock in escrow or under a pledge or other security agreement that are part of a typical commercial transaction and that are subject to customary commercial conditions;

(v) ***Compensatory options*** —

(A) ***General rule.*** Stock appreciation rights, warrants, stock options, phantom stock, or other similar instruments provided to employees, directors, or independent contractors in connection with the performance of services for the corporation or a related corporation (and that is not excessive by reference to the services performed) and which—

(*1*) Are nontransferable within the meaning of § 1.83-3(d); and

(*2*) Do not have a readily ascertainable fair market value as defined in § 1.83-7(b) on the measurement date;

(B) ***Exceptions.***

(1) Paragraph (d)(2)(v)(A) of this section does not apply to options issued or transferred with a principal purpose of avoiding the application of section 1504 and this section; and

(2) Paragraph (d)(2)(v)(A) of this section ceases to apply to options that become transferable;

(vi) ***Options granted in connection with a loan.*** Options granted in connection with a loan if the lender is actively and regularly engaged in the business of lending and the options are issued in connection with a loan to the issuing corporation that is commercially reasonable. This paragraph (d)(2)(vi) continues to apply if the option is transferred with the loan (or if a portion of the option is transferred with a corresponding portion of the loan). However, if the option is transferred without a corresponding portion of the loan, this paragraph (d)(2)(vi) ceases to apply;

(vii) ***Options created pursuant to a title 11 or similar case.*** Options created by the solicitation or receipt of acceptances to a plan of reorganization in a title 11 or similar case (within the meaning of section 368(a)(3)(A)), the option created by the confirmation of the plan, and any option created under the plan prior to the time the plan becomes effective;

(viii) ***Convertible preferred stock.*** Convertible preferred stock, provided the terms of the conversion feature do not permit or require the tender of any consideration other than the stock being converted; and

(ix) ***Other enumerated instruments.*** Any other instruments specified by the Internal Revenue Service in regulations, a revenue ruling, or revenue procedure. See § 601.601(d)(2)(ii)(*b*) of this chapter.

(e) ***Elimination of federal income tax liability.*** For purposes of this section, the elimination of federal income tax liability includes the elimination or deferral of federal income tax liability. In determining whether there is an elimination of federal income tax liability, the tax consequences to all involved parties are considered. Examples of elimination of federal income tax liability include the use of a loss or deduction that would not otherwise be utilized, the acceleration of a loss or deduction to a year earlier than the year in which the loss or deduction would otherwise be utilized, the deferral of gain or income to a year later than the year in which the gain or income would otherwise be reported, and the acceleration of gain or income to a year earlier than the year in which the gain or income would otherwise be reported, if such gain or income is offset by a net operating loss or net capital loss that would otherwise expire unused. The elimination of federal income tax liability does not include the deferral of gain with respect to the stock subject to the option that would be recognized if such stock were sold on a measurement date.

(f) ***Substantial amount of federal income tax liability.*** The determination of what constitutes a substantial amount of federal income tax liability is based on all the facts and circumstances, including the absolute amount of the elimination, the amount of the elimination relative to overall tax liability, and the timing of items of income and deductions, taking into account present value concepts.

(g) ***Reasonable certainty of exercise*** —

(1) ***Generally.*** The determination of whether, as of a measurement date, an option is reasonably certain to be exercised is based on all the facts and circumstances, including:

(i) ***Purchase price.*** The purchase price of the option in absolute terms and in relation to the fair market value of the stock or the exercise price of the option;

(ii) ***In-the-money option.*** Whether and to what extent the option is in-the-money on the measurement date;

(iii) ***Not in-the-money option.*** If the option is not in-the-money on the measurement date, the amount or percentage by which the exercise price of the option is greater than (or in the case of an option to sell stock, is less than) the fair market value of the underlying stock;

(iv) ***Exercise price.*** Whether the exercise price of the option is fixed or fluctuates depending on the earnings, value, or other indication of economic performance of the issuing corporation;

(v) ***Time of exercise.*** The time at which, or the period of time during which, the option can be exercised;

(vi) ***Related or sequential options.*** Whether the option is one in a series of related or sequential options;

(vii) ***Stockholder rights.*** The existence of an arrangement (either within the option agreement or in a related agreement) that, directly or indirectly, affords managerial or economic rights in the issuing corporation that ordinarily would be afforded to owners of the issuing corporation's stock (e.g., voting rights, dividend rights, or rights to proceeds on liquidation) to the person who would acquire the stock upon exercise of the option or a person related to such person. For this purpose, managerial or economic rights in the issuing corporation possessed because of actual stock ownership in the issuing corporation are not taken into account;

(viii) ***Restrictive covenants.*** The existence of restrictive covenants or similar arrangements (either within the option agreement or in a related agreement) that, directly or indirectly, prevent or limit the ability of the issuing corporation to undertake certain activities while the option is outstanding (e.g., covenants limiting the payment of dividends or borrowing of funds);

(ix) ***Intention to alter value.*** Whether it was intended that through a change in the capital structure of the issuing corporation or a transfer of assets to or from the issuing corporation (other than regular, ordinary dividends) or by any other means, the fair market value of the stock of the issuing corporation would be altered for a principal purpose of increasing the likelihood that the option would be exercised; and

(x) ***Contingencies.*** Any contingency (other than the mere passage of time) to which the exercise of the option is subject (e.g., a public offering of the issuing corporation's stock or reaching a certain level of earnings).

(2) ***Cash settlement options, phantom stock, stock appreciation rights, or similar interests.*** A cash settlement option, phantom stock, stock appreciation right, or similar interest is treated as reasonably certain to be exercised if it is reasonably certain that the option will have value at some time during the period in which the option may be exercised.

(3) ***Safe harbors*** —

(i) ***Options to acquire stock.*** Except as provided in paragraph (g)(3)(iv) of this section, an option to acquire stock is not considered reasonably certain, as of a measurement date, to be exercised if—

(A) The option may be exercised no more than 24 months after the measurement date and the exercise price is equal to or greater than 90 percent of the fair market value of the underlying stock on the measurement date; or

(B) The terms of the option provide that the exercise price of the option is equal to or greater than the fair market value of the underlying stock on the exercise date.

(ii) ***Options to sell stock.*** Except as provided in paragraph (g)(3)(iv) of this section, an option to sell stock is not considered reasonably certain, as of a measurement date, to be exercised if—

(A) The option may be exercised no more than 24 months after the measurement date and the exercise price is equal to or less than 110 percent of the fair market value of the underlying stock on the measurement date; or

(B) The terms of the option provide that the exercise price of the option is equal to or less than the fair market value of the underlying stock on the exercise date.

(iii) ***Options exercisable at fair market value.*** For purposes of paragraphs (g)(3)(i)(B) and (g)(3)(ii)(B) of this section, an option whose exercise price is determined by a formula is considered to have an exercise price equal to the fair market value of the underlying stock on the exercise date if the formula is agreed upon by the parties when the option is issued in a bona fide attempt to arrive at fair market value on the exercise date and is to be applied based upon the facts in existence on the exercise date.

(iv) ***Exceptions.*** The safe harbors of this paragraph (g)(3) do not apply if—

(A) An arrangement exists that provides the holder or a related party with stockholder rights described in paragraph (g)(1)(vii) of this section (except for rights arising upon a default under the option or a related agreement);

(B) It is intended that through a change in the capital structure of the issuing corporation or a transfer of assets to or from the issuing corporation (other than regular, ordinary dividends) or by any other means, the fair market value of the stock of the issuing corporation will be altered for a principal purpose of increasing the likelihood that the option will be exercised; or

(C) The option is one in a series of related or sequential options, unless all such options satisfy paragraph (g)(3) (i) or (ii) of this section.

(v) ***Failure to satisfy safe harbor.*** Failure of an option to satisfy one of the safe harbors of this paragraph (g)(3) does not affect the determination of whether an option is treated as reasonably certain to be exercised.

(h) ***Examples.*** The provisions of this section may be illustrated by the following examples. These examples assume that the measurement dates set forth in the examples are the only measurement dates that have taken place or will take place.

> *Example 1.* (i) P is the common parent of a consolidated group, consisting of P, S, and T. P owns all 100 shares of S's only class of stock, which is voting common stock. P also owns all the stock of T. On June 30, 1992, when the fair market value of the S stock is $40 per share, P sells to U, an unrelated corporation, an option to acquire 40 shares of the S stock that P owns at an exercise price of $30 per share, exercisable at any time within 3 years after the granting of the option. P and T have had substantial losses for 5 consecutive years while S has had substantial income during the same period. Because P, S, and T have been filing consolidated returns, P and T have been able to use all of their losses to offset S's income. It is anticipated that P, S, and T will continue their

earnings histories for several more years. On July 31, 1992, S declares and pays a dividend of $1 per share to P.
(ii) If P, S, and T continue to file consolidated returns after June 30, 1992, it could reasonably be anticipated that P, S, and T would eliminate a substantial amount of federal income tax liability by using P's and T's future losses to offset S's income in consolidated returns. Furthermore, based on the difference between the exercise price of the option and the fair market value of the S stock, it is reasonably certain, on June 30, 1992, a measurement date, that the option will be exercised. Therefore, the option held by U is treated as exercised. As a result, for purposes of determining whether P and S are affiliated, P is treated as owning only 60 percent of the value of outstanding shares of S stock and U is treated as owning the remaining 40 percent. P is still treated as owning 100 percent of the voting power. Because members of the P group are no longer treated as owning stock possessing 80 percent of the total value of the S stock as of June 30, 1992, S is no longer a member of the P group. Additionally, P is not entitled to a 100 percent dividends received deduction under section 243(a)(3) because P and S are also treated as not affiliated for purposes of section 243. P is only entitled to an 80 percent dividends received deduction under section 243(c).

Example 2. (i) The facts are the same as in *Example 1* except that rather than P issuing an option to acquire 40 shares of S stock to U on June 30, 1992, P, pursuant to a plan, issues an option to U1 on July 1, 1992, to acquire 20 shares of S stock, and issues an option to U2 on July 2, 1992, to acquire 20 shares of S stock.
(ii) Because the options issued to U1 and U2 were issued pursuant to a plan, July 2, 1992, constitutes a measurement data for both options. Therefore, both options are aggregated in determining whether the issuance of the options, rather than the sale of the S stock, would result in the elimination of a substantial amount of federal income tax liability. Accordingly, as in *Example 1,* because the continued affiliation of P, S, and T could reasonably be anticipated to result in the elimination of a substantial amount of federal income tax liability and the options are reasonably certain to be exercised, the options are treated as exercised for purposes of determining whether P and S are affiliated, and P and S are no longer affiliated as of July 2, 1992.

Example 3. (i) The facts are the same as in *Example 1* except that the option gives U the right to acquire all 100 shares of the S stock, and U is the common parent of a consolidated group. The U group has had substantial losses for 5 consecutive years and it is anticipated that the U group will continue its earnings history for several more years.
(ii) If P sold the S stock, in lieu of the option, to U, S would become a member of the U group. Because the U group files consolidated returns, if P sold the S stock to U, U would be able to use its future losses to offset future income of S. When viewing the transaction from the effect on all parties, the sale of the option, in lieu of the underlying S stock, does not result in the elimination of federal income tax liability because S's income would be offset by the losses of members of either the P or U group. Accordingly, the option is disregarded and S remains a member of the P group.

Example 4. (i) P is the common parent of a consolidated group, consisting of P and S. P owns 90 of the 100 outstanding shares of S's only class of stock, which is voting common stock, and U, an unrelated corporation, owns the remaining 10 shares. On August 31, 1992, when the fair market value of the S stock is $100 per share, P sells a call option to U that entitles U to purchase 20 shares of S stock from P, at any time before August 31, 1993, at an exercise price of $115 per share. The call option does not provide U with any voting rights, dividend rights, or any other managerial or economic rights ordinarily afforded to owners of the S stock. There is no intention on August 31, 1992, to alter the value of S to increase the likelihood of the exercise of the call option.
(ii) Because the exercise price of the call option is equal to or greater than 90 percent of the fair market value of the S stock on August 31, 1992, a measurement date, the option may be exercised no more than 24 months after the measurement date, and none of the items described in paragraph (g)(3)(iv) of this section that preclude application of the safe harbor are present, the safe harbor of paragraph (g)(3)(i) of this section applies and the call option is treated as if it is not reasonably certain to be exercised. Therefore, regardless of whether the continued affiliation of P and S would result in the elimination of a substantial amount of federal income tax liability, the call option is disregarded in determining whether S remains a member of the P group.

Example 5. (i) The facts are the same as in *Example 4* except that the call option gives U the right to vote similar to that of a shareholder.
(ii) Under paragraph (g)(3)(iv) of this section, the safe harbor of paragraph (g)(3)(i) of this section does not apply because the call option entitles U to voting rights equivalent to that of a shareholder. Accordingly, all of the facts and circumstances surrounding the sale of the call option must be taken into consideration in determining whether it is reasonably certain that the call option will be exercised.

Example 6. (i) In 1992, two unrelated corporations, X and Y, decide to engage jointly in a new business venture. To accomplish this purpose, X organizes a new corporation, S, on September 30, 1992. X acquires 100 shares of the voting common stock of S, which are the only shares of S stock outstanding. Y acquires a debenture of S which is convertible, on September 30, 1995, into 100 shares of S common stock. If the conversion right is not exercised, X will have the right, on September 30, 1995, to put 50 shares of its S stock to Y in exchange for 50 percent of the debenture held by Y. The likelihood of the success of the venture is uncertain. It is anticipated that S will generate substantial losses in its early years of operation. X expects to have substantial taxable income during the three years following the organization of S.
(ii) Under the terms of this arrangement, it is reasonably certain on September 30, 1992, a measurement date, that on September 30, 1995, either through Y's exercise of its conversion right or X's right to put S stock to Y, that Y will own 50 percent of the S stock. Additionally, it could reasonably be anticipated, on September 30, 1992, a measurement date, that the affiliation of X and S would result in the elimination of a substantial amount of federal income tax liability.

Accordingly, for purposes of determining whether X and S are affiliated, X is treated as owning only 50 percent of the value of the S stock as of September 30, 1992, a measurement date, and S is not a member of the X affiliated group.

Example 7. (i) The facts are the same as in *Example 6* except that rather than acquiring 100 percent of the S stock and the right to put S stock to Y, X acquires only 80 percent of the S stock, while S, rather than acquiring a convertible debenture, acquires 20 percent of the S stock, and an option to acquire an additional 30 percent of the S stock. The terms of the option are such that the option will only be exercised if the new business venture succeeds.
(ii) In contrast to *Example 6,* because of the true business risks involved in the start-up of S and whether the business venture will ultimately succeed, along with the fact that X does not have an option to put S stock to Y, it is not reasonably certain on September 30, 1992, a measurement date, that the option will be exercised and that X will only own 50 percent of the S stock on September 30, 1995. Accordingly, the option is disregarded in determining whether S is a member of the X group.

(i) ***Effective date.*** This section applies, generally, to options with a measurement date on or after February 28, 1992. This section does not apply to options issued prior to February 28, 1992, which have a measurement date on or after February 28, 1992, if the measurement date for the option occurs solely because of an adjustment in the terms of the option pursuant to the terms of the option as it existed on February 28, 1992. Paragraph (b)(2)(iv) of this section applies to stock outstanding on or after February 28, 1992. Paragraph (a)(2) of this section applies with respect to taxable years beginning on or after November 13, 2020. However, taxpayers and their related parties, within the meaning of sections 267(b) and 707(b)(1), may choose to apply the rules of this section to a taxable year beginning after December 31, 2017, so long as the taxpayers and their related parties consistently apply the rules of this section, the section 163(j) regulations (as defined in § 1.163(j)-1(b)(37)), and, if applicable, §§ 1.263A-9, 1.263A-15, 1.381(c)(20)-1, 1.382-1, 1.382-2, 1.382-5, 1.382-6, 1.382-7, 1.383-0, 1.383-1, 1.469-9, 1.469-11, 1.704-1, 1.882-5, 1.1362-3, 1.1368-1, 1.1377-1, 1.1502-13, 1.1502-21, 1.1502-36, 1.1502-79, 1.1502-91 through 1.1502-99 (to the extent they effectuate the rules of §§ 1.382-2, 1.382-5, 1.382-6, 1.382-7, and 1.383-1), to that taxable year.

[T.D. 8462, 57 FR 61801, Dec. 29, 1992; 58 FR 7041, Feb. 3, 1993, as amended by T.D. 9905, 85 FR 56845, Sept. 14, 2020]

Regulations Applicable for Tax Years for Which a Return Is Due on or Before August 11, 1999Regulations Applicable to Taxable Years Before January 1, 1997

Regulations Applicable to Taxable Years Beginning Before June 28, 2002

§ 1.1502-77A Common parent agent for subsidiaries applicable for consolidated return years beginning before June 28, 2002.

(a) ***Scope of agency of common parent corporation.*** The common parent, for all purposes (other than the making of the consent required by paragraph (a)(1) of § 1.1502-75, the making of an election under section 936(e), the making of an election to be treated as a DISC under § 1.992-2, and a change of the annual accounting period pursuant to paragraph (b)(3)(ii) of § 1.991-1) shall be the sole agent for each

subsidiary in the group, duly authorized to act in its own name in all matters relating to the tax liability for the consolidated return year. Except as provided in the preceding sentence, no subsidiary shall have authority to act for or to represent itself in any such matter. For example, any election available to a subsidiary corporation in the computation of its separate taxable income must be made by the common parent, as must any change in an election previously made by the subsidiary corporation; all correspondence will be carried on directly with the common parent; the common parent shall file for all extensions of time including extensions of time for payment of tax under section 6164; notices of deficiencies will be mailed only to the common parent, and the mailing to the common parent shall be considered as a mailing to each subsidiary in the group; notice and demand for payment of taxes will be given only to the common parent and such notice and demand will be considered as a notice and demand to each subsidiary; the common parent will file petitions and conduct proceedings before the Tax Court of the United States, and any such petition shall be considered as also having been filed by each such subsidiary. The common parent will file claims for refund or credit, and any refund will be made directly to and in the name of the common parent and will discharge any liability of the Government in respect thereof to any such subsidiary; and the common parent in its name will give waivers, give bonds, and execute closing agreements, offers in compromise, and all other documents, and any waiver or bond so given, or agreement, offer in compromise, or any other document so executed, shall be considered as having also been given or executed by each such subsidiary. Notwithstanding the provisions of this paragraph, any notice of deficiency, in respect of the tax for a consolidated return year, will name each corporation which was a member of the group during any part of such period (but a failure to include the name of any such member will not affect the validity of the notice of deficiency as to the other members); any notice and demand for payment will name each corporation which was a member of the group during any part of such period (but a failure to include the name of any such member will not affect the validity of the notice and demand as to the other members); and any levy, any notice of a lien, or any other proceeding to collect the amount of any assessment, after the assessment has been made, will name the corporation from which such collection is to be made. The provisions of this paragraph shall apply whether or not a consolidated return is made for any subsequent year, and whether or not one or more subsidiaries have become or have ceased to be members of the group at any time. Notwithstanding the provisions of this paragraph, the Commissioner may, upon notifying the common parent, deal directly with any member of the group in respect of its liability, in which event such member shall have full authority to act for itself.

(b) ***Notification of deficiency to corporation which has ceased to be a member of the group.*** If a subsidiary has ceased to be a member of the group and if such subsidiary files written notice of such cessation with the Commissioner, then the Commissioner upon request of such subsidiary will furnish it with a copy of any notice of deficiency in respect of the tax for a consolidated return year for which it was a member and a copy of any notice and demand for payment of such deficiency. The filing of such written notification and request by a corporation shall not have the effect of limiting the scope of the agency of the common parent provided for in paragraph (a) of this section and a failure by the Commissioner to comply with such written request shall not have the effect of limiting the tax liability of such corporation provided for in § 1.1502-6.

(c) ***Effect of waiver given by common parent.*** Unless the Commissioner agrees to the contrary, an agreement entered into by the common parent extending the time within which an assessment may be made or levy or proceeding in court begun in respect of the tax for a consolidated return year shall be applicable:

(1) To each corporation which was a member of the group during any part of such taxable year, and

(2) To each corporation the income of which was included in the consolidated return for such taxable year, notwithstanding that the tax liability of any such corporation is subsequently computed on the basis of a separate return under the provisions of § 1.1502-75.

(d) ***Effect of dissolution of common parent corporation.*** If the common parent corporation contemplates dissolution, or is about to be dissolved, or if for any other reason its existence is about to terminate, it must forthwith notify the Commissioner of such fact and designate, subject to the approval of the Commissioner, another member to act as agent in its place to the same extent and subject to the same conditions and limitations as are applicable to the common parent. If the notice thus required is not given by the common parent, or the designation is not approved by the Commissioner, the remaining members may, subject to the approval of the Commissioner, designate another member to act as such agent, and notice of such designation must be given to the Commissioner. Until a notice in writing designating a new agent has been approved by the Commissioner, any notice of deficiency or other communication mailed to the common parent will be considered as having been properly mailed to the agent of the group; or, if the Commissioner has reason to believe that the existence of the common parent has terminated, the Commissioner may deal directly with any member in respect of its liability.

(e) ***General rules*** —

(1) ***Scope.*** This section applies if the corporation that is the common parent of the group ceases to be the common parent, whether or not the group remains in existence under § 1.1502-75(d).

(2) ***Notice of deficiency.*** A notice of deficiency mailed to any one or more corporations referred to in paragraph (e)(4) of this section is deemed for purposes of § 1.1502-77A to be mailed to the agent of the group. If the group has designated an agent that has been approved by the Commissioner under § 1.1502-77A(d), a notice of deficiency shall be mailed to that designated agent in addition to any other corporation referred to in paragraph (e)(4) of this section. However, failure by the Commissioner to mail a notice of deficiency to that designated agent shall not invalidate the notice of deficiency mailed to any other corporation referred to in paragraph (e)(4) of this section.

(3) ***Waiver of statute of limitations.*** A waiver of the statute of limitations with respect to the group given by any one or more corporations referred to in paragraph (e)(4) of this section is deemed to be given by the agent of the group.

(4) ***Alternative agents.*** The corporations referred to in paragraph (e) (2) and (3) of this section are—

(i) The common parent of the group for all or any part of the year to which the notice or waiver applies,

(ii) A successor to the former common parent in a transaction to which section 381(a) applies,

(iii) The agent designated by the group under § 1.1502-77A(d), or

(iv) If the group remains in existence under § 1.1502-75(d) (2) or (3), the common parent of the group at the time the notice is mailed or the waiver given.

(f) ***Cross-reference.*** For further rules applicable to groups that include insolvent financial institutions, see § 301.6402-7 of this chapter.

(g) ***Effective/applicability dates.*** This section applies to taxable years beginning before June 28, 2002, except paragraph (e) of this section applies to statutory notices and waivers of the statute of limitations for taxable years for which the due date (without extensions) of the consolidated return is after September 7, 1988, and which begin before June 28, 2002.

[T.D. 6894, 31 FR 11794, Sept. 8, 1966, as amended by T.D. 7323, 39 FR 34409, Sept. 25, 1974; T.D. 7673, 45 FR 8588, Feb. 8, 1980; T.D. 8226, 53 FR 34733, Sept. 8, 1988; T.D. 8446, 57 FR 53034, Nov. 6, 1992. Redesignated and amended by T.D. 9002, 67 FR 43540, 43544, June 28, 2002; T.D. 9715, 80 FR 17318, Apr. 1, 2015; T. D. 10018, 89 FR 106876, Dec. 30, 2024]

REGULATIONS APPLICABLE TO TAXABLE YEARS BEGINNING ON OR AFTER JUNE 28, 2002, AND BEFORE APRIL 1, 2015

§ 1.1502-77B Agent for the group applicable for consolidated return years beginning on or after June 28, 2002, and before April 1, 2015.

(a) *Scope of agency* —

(1) *In general* —

(i) ***Common parent.*** Except as provided in paragraphs (a)(3) and (6) of this section, the common parent (or a substitute agent described in paragraph (a)(1)(ii) of this section) for a consolidated return year is the sole agent (agent for the group) that is authorized to act in its own name with respect to all matters relating to the tax liability for that consolidated return year, for—

(A) Each member in the group; and

(B) Any successor (see paragraph (a)(1)(iii) of this section) of a member.

(ii) ***Substitute agents.*** For purposes of this section, any corporation designated as a substitute agent pursuant to paragraph (d) of this section to replace the common parent or a previously designated substitute agent acts as agent for the group to the same extent and subject to the same limitations as are applicable to the common parent, and any reference in this section to the common parent includes any such substitute agent.

(iii) ***Successor.*** For purposes of this section only, the term *successor* means an individual or entity (including a disregarded entity) that is primarily liable, pursuant to applicable law (including, for example, by operation of a state or Federal merger statute), for the tax liability of a member of the group. Such determination is made without regard to § 1.1502-1(f)(4) or 1.1502-6(a). (For inclusion of a successor in references to a subsidiary or member, see paragraph (c)(2) of this section.)

(iv) ***Disregarded entity.*** If a subsidiary of a group becomes, or its successor is or becomes, a disregarded entity for Federal tax purposes, the common parent continues to serve as the agent with respect to that subsidiary's tax liability under § 1.1502-6 for consolidated return years during which it was included in the group, even though the entity generally is not treated as a person separate from its owner for Federal tax purposes.

(v) ***Transferee liability.*** For purposes of assessing, paying and collecting transferee liability, any exercise of or reliance on the common parent's agency authority pursuant to this section is binding on a transferee (or subsequent transferees) of a member, regardless of whether the member's existence terminates prior to such exercise or reliance.

(vi) ***Purported common parent.*** If any corporation files a consolidated return purporting to be the common parent of a consolidated group but is subsequently determined not to have been the common parent of the claimed group, that corporation is treated, to the extent necessary to avoid prejudice to the Commissioner, as if it were the common parent.

(2) ***Examples of matters subject to agency.*** With respect to any consolidated return year for which it is the common parent—

(i) The common parent makes any election (or similar choice of a permissible option) that is available to a subsidiary in the computation of its separate taxable income, and any change in an election (or similar choice of a permissible option) previously made by or for a subsidiary, including, for example, a request to change a subsidiary's method or period of accounting;

(ii) All correspondence concerning the income tax liability for the consolidated return year is carried on directly with the common parent;

(iii) The common parent files for all extensions of time, including extensions of time for payment of tax under section 6164, and any extension so filed is considered as having been filed by each member;

(iv) The common parent gives waivers, gives bonds, and executes closing agreements, offers in compromise, and all other documents, and any waiver or bond so given, or agreement, offer in compromise, or any other document so executed, is considered as having also been given or executed by each member;

(v) The common parent files claims for refund, and any refund is made directly to and in the name of the common parent and discharges any liability of the Government to any member with respect to such refund;

(vi) The common parent takes any action on behalf of a member of the group with respect to a foreign corporation, for example, elections by, and changes to the method of accounting of, a controlled foreign corporation in accordance with § 1.964-1(c)(3);

(vii) Notices of claim disallowance are mailed only to the common parent, and the mailing to the common parent is considered as a mailing to each member;

(viii) Notices of deficiencies are mailed only to the common parent (except as provided in paragraph (b) of this section), and the mailing to the common parent is considered as a mailing to each member;

(ix) Notices of final partnership administrative adjustment under section 6223 with respect to any partnership in which a member of the group is a partner may be mailed to the common parent, and, if so, the mailing to the common parent is considered as a mailing to each member that is a partner entitled to receive such notice (for other rules regarding partnership proceedings, see paragraphs (a)(3)(v) and (a)(6)(iii) of this section);

(x) The common parent files petitions and conducts proceedings before the United States Tax Court, and any such petition is considered as also having been filed by each member;

(xi) Any assessment of tax may be made in the name of the common parent, and an assessment naming the common parent is considered as an assessment with respect to each member; and

(xii) Notice and demand for payment of taxes is given only to the common parent, and such notice and demand is considered as a notice and demand to each member.

(3) ***Matters reserved to subsidiaries.*** Except as provided in this paragraph (a)(3) and paragraph (a)(6) of this section, no subsidiary has authority to act for or to represent itself in any matter related to the tax liability for the consolidated return year. The following matters, however, are reserved exclusively to each subsidiary—

(i) The making of the consent required by § 1.1502-75(a)(1);

(ii) Any action with respect to the subsidiary's liability for a federal tax other than the income tax imposed by chapter 1 of the Internal Revenue Code (including, for example, employment taxes under chapters 21 through 25 of the Internal Revenue Code, and miscellaneous excise taxes under chapters 31 through 47 of the Internal Revenue Code);

(iii) The making of an election under section 936(e);

(iv) The making of an election to be treated as a DISC under § 1.992-2; and

(v) Any actions by a subsidiary acting as tax matters partner under sections 6221 through 6234 and the accompanying regulations (but see paragraph (a)(2)(ix) of this section regarding the mailing of a final partnership administrative adjustment to the common parent).

(4) *Term of agency* —

(i) ***In general.*** Except as provided in paragraph (a)(4)(iii) of this section, the common parent for the consolidated return year remains the agent for the group with respect to that year until the common parent's existence terminates, regardless of whether one or more subsidiaries in that year cease to be members of the group, whether the group files a consolidated return for any subsequent year, whether the common parent ceases to be the common parent or a member of the group in any subsequent year, or whether the group continues pursuant to § 1.1502-75(d) with a new common parent in any subsequent year.

(ii) ***Replacement of substitute agent designated by Commissioner.*** If the Commissioner replaces a previously designated substitute agent pursuant to paragraph (d)(3)(ii) of this section, the replaced substitute agent ceases to be the agent after the Commissioner designates another substitute agent.

(iii) ***New common parent after a group structure change.*** If the group continues in existence with a new common parent pursuant to § 1.1502-75(d) during a consolidated return year, the common parent at the beginning of the year is the agent for the group through the date of the § 1.1502-75(d) transaction, and the new common parent becomes the agent for the group beginning the day after the transaction, at which time it becomes the agent for the group with respect to the entire consolidated return year (including the period through the date of the transaction) and the former common parent is no longer the agent for that year.

(5) ***Identifying members in notice of a lien.*** Notwithstanding any other provisions of this paragraph (a), any notice of a lien, any levy or any other proceeding to collect the amount of any assessment, after the assessment has been made, must name the entity from which such collection is to be made.

(6) *Direct dealing with a member* —

(i) ***Several liability.*** The Commissioner may, upon issuing to the common parent written notice that expressly invokes the authority of this provision, deal directly with any member of the group with respect to its liability under § 1.1502-6 for the consolidated tax of the group, in which event such member has sole authority to act for itself with respect to that liability. However, if the Commissioner believes or has reason to believe that the existence of the common parent has terminated, the Commissioner may deal directly with any member with respect to that member's liability under § 1.1502-6 without giving the notice required by this provision.

(ii) ***Information requests.*** The Commissioner may, upon informing the common parent, request information relevant to the consolidated tax liability from any member of the group. However, if the Commissioner believes or has reason to believe that the existence of the common parent has terminated, the Commissioner may request such information from any member of the group without informing the common parent.

(iii) ***Members as partners in partnerships.*** The Commissioner generally will deal directly with any member in its capacity as a partner of a partnership that is subject to the provisions of sections 6221 through 6234 and the accompanying regulations (but see paragraph (a)(2)(ix) of this section regarding the mailing of a final partnership administrative adjustment to the common parent). However, if requested to do so in accordance with the provisions of § 301.6223(c)-1(b) of this chapter, the Commissioner may deal with the common parent as agent for such member on any matter related to the partnership, except in regards to a settlement under section 6224(c) and except to the extent the member acts as tax matters partner of the partnership.

(b) ***Copy of notice of deficiency to entity that has ceased to be a member of the group.*** An entity that ceases to be a member of the group during or after a consolidated return year may file a written notice of that fact with the Commissioner and request a copy of any notice of deficiency with respect to the tax for a consolidated return year during which the entity was a member, or a copy of any notice and demand for payment of such deficiency, or both. Such filing does not limit the scope of the agency of the common parent provided for in paragraph (a) of this section. Any failure by the Commissioner to comply with such request does not limit an entity's tax liability under § 1.1502-6. For purposes of this paragraph (b), references to an entity include a successor of such entity.

(c) ***References to member or subsidiary.*** For purposes of this section, all references to a member or subsidiary for a consolidated return year include—

(1) Each corporation that was a member of the group during any part of such year (except that any reference to a subsidiary does not include the common parent);

(2) Except as indicated otherwise, a successor (as defined in paragraph (a)(1)(iii) of this section) of any corporation described in paragraph (c)(1) of this section; and

(3) Each corporation whose income was included in the consolidated return for such year, notwithstanding that the tax liability of such corporation should have been computed on the basis of a separate return, or as a member of another consolidated group, under the provisions of § 1.1502-75.

(d) ***Termination of common parent*** —

(1) ***Designation of substitute agent by common parent.***

(i) If the common parent's existence terminates, it may designate a substitute agent for the group and notify the Commissioner, as provided in this paragraph (d)(1).

(A) Subject to the Commissioner's approval under paragraph (d)(1)(ii) of this section, before the common parent's existence terminates, the common parent may designate, for each consolidated return year for which it is the common parent and for which the period of limitations either for assessment, for collection after assessment, or for claiming a credit or refund has not expired, one of the following to act as substitute agent in its place—

(1) Any corporation that was a member of the group during any part of the consolidated return year and, except as provided in paragraph (e)(3)(ii) of this section, has not subsequently been disregarded as an entity separate from its owner or reclassified as a partnership for Federal tax purposes; or

(2) Any successor (as defined in paragraph (a)(1)(iii) of this section) of such a corporation or of the common parent that is a domestic corporation (and, except as provided in paragraph (e)(3)(ii) of this section, is not disregarded as an entity separate from its owner or classified as a partnership for Federal tax purposes), including a corporation that will become a successor at the time that the common parent's existence terminates.

(B) The common parent must notify the Commissioner in writing (under procedures prescribed by the Commissioner) of the designation and provide the following—

(1) An agreement executed by the designated corporation agreeing to serve as the group's substitute agent; and

(2) If the designated corporation was not itself a member of the group during the consolidated return year (because the designated corporation is a successor of a member of the group for the consolidated return year), a statement by the designated corporation acknowledging that it is or will be primarily liable for the consolidated tax as a successor of a member.

(ii) A designation under paragraph (d)(1)(i)(A) of this section does not apply unless and until it is approved by the Commissioner. The Commissioner's approval of such a designation is not effective before the existence of the common parent terminates.

(2) ***Default substitute agent.*** If the common parent fails to designate a substitute agent for the group before its existence terminates and if the common parent has a single successor that is a domestic corporation, such successor becomes the substitute agent for the group upon termination of the common parent's existence. However, see paragraph (d)(4) of this section regarding the consequences of the successor's failure to notify the Commissioner of its status as default substitute agent in accordance with procedures established by the Commissioner.

(3) ***Designation by the Commissioner.***

(i) In the event the common parent's existence terminates and no designation is made and approved under paragraph (d)(1) of this section and the Commissioner believes or has reason to believe that there is no successor of the common parent that satisfies the requirements of paragraph (d)(2) of this section (or the Commissioner believes or has reason to believe there is such a successor but has no last known address on file for such successor), the Commissioner may, at any time, with or without a request from any member of the group, designate a corporation described in paragraph (d)(1)(i)(A) of this section to act as the substitute agent. The Commissioner will notify the designated substitute agent in writing of its designation, and the designation is effective upon receipt by the designated substitute agent of such notice. The designated substitute agent must give notice of the designation to each corporation that was a member of the group during any part of the consolidated return year, but a failure by the designated substitute agent to notify any such member of the group does not invalidate the designation.

(ii) At the request of any member, the Commissioner may, but is not required to, replace a substitute agent previously designated under paragraph (d)(3)(i) of this section with another corporation described in paragraph (d)(1)(i)(A) of this section.

(4) ***Absence of designation or notification of default substitute agent.*** Until a designation of a substitute agent for the group under paragraph (d)(1) of this section has become effective, the Commissioner has received notification in accordance with procedures established by the Commissioner that a successor qualifying under paragraph (d)(2) of this section has become the substitute agent by default, or the Commissioner has designated a substitute agent under paragraph (d)(3) of this section—

(i) Any notice of deficiency or other communication mailed to the common parent, even if no longer in existence, is considered as having been properly mailed to the agent for the group; and

(ii) The Commissioner is not required to act on any communication (including, for example, a claim for refund) submitted on behalf of the group by any person other than the common parent (including a successor of the common parent qualifying as a default substitute agent under paragraph (d)(2) of this section).

(e) ***Termination of a corporation's existence*** —

(1) ***In general.*** For purposes of paragraphs (a)(1)(v), (a)(4)(i), (d), and (j) of this section, the existence of a corporation is deemed to terminate if—

(i) Its existence terminates under applicable law; or

(ii) Except as provided in paragraph (e)(3) of this section, it becomes, for Federal tax purposes, either—

(A) An entity that is disregarded as an entity separate from its owner; or

(B) An entity that is reclassified as a partnership.

(2) ***Purported agency.*** If the existence of the agent for the group terminates under circumstances described in paragraph (e)(1)(ii) of this section, until the Commissioner has approved the designation of a substitute agent for the group pursuant to paragraph (d)(1) of this section or the Commissioner designates a substitute agent and notifies the designated substitute agent pursuant to paragraph (d)(3) of this section, any post-termination action by that purported agent on behalf of the group has the same effect, to the extent necessary to avoid prejudice to the Commissioner, as if the agent's corporate existence had not terminated.

(3) ***Exceptions where no eligible corporation exists.***

(i) For purposes of the common parent's term as agent under paragraph (a)(4)(i) of this section and the term as agent of the substitute agent designated under paragraph (d) of this section, if a corporation either becomes disregarded as an entity separate from its owner or is reclassified as a partnership for Federal tax purposes, its existence is not deemed to terminate if the effect of such termination would be that no corporation remains eligible to serve as the substitute agent for the group's consolidated return year.

(ii) Similarly, for purposes of paragraph (d) of this section, an entity that is either disregarded as an entity separate from its owner or reclassified as a partnership for Federal tax purposes is not precluded from designation as a substitute agent merely because of such classification if the effect of the inability to make such designation would be that no corporation remains eligible to serve as the substitute agent for the group's consolidated return year.

(iii) Any entity described in paragraphs (e)(3)(i) or (ii) of this section that remains or becomes the agent for the group is treated as a corporation for purposes of this section.

(4) ***Exception for section 338 transactions.*** Notwithstanding section 338(a)(2), a target corporation for which an election is made under section 338 is not deemed to terminate for purposes of this section.

(f) ***Examples.*** The following examples illustrate the principles of this section. Unless otherwise indicated, each example addresses the question of which corporation is the proper party to execute a consent to waive the statute of limitations for Years 1 and 2 or the more general question of which corporation may be designated as a substitute agent for the group for Years 1 and 2. In each example, as of January 1 of Year 1, the P group consists of P and its two subsidiaries, S and S-1. P, as the common parent of the P group, files consolidated returns for the P group in Years 1 and 2. On January 1 of Year 1, domestic corporations S-2, U, V, W, W-1, X, Y, Z and Z-1 are not related to P or the members of the P group. All corporations are calendar year taxpayers. For none of the tax years at issue does the Commissioner exercise the authority under paragraph (a)(6) of this section to deal with any member separately. Any surviving corporation in a merger is a successor as described in paragraph (a)(1)(iii) of this section. Any notification to the Commissioner of the designation of the P group's substitute agent also contains a statement signed on behalf of the designated agent that it agrees to act as the group's substitute agent and, in the case of a successor, that it is primarily liable as a successor of a member. The examples are as follows:

Example 1. Disposition of all group members. On December 31 of Year 1, P sells all the stock of S-1 to X. On December 31 of Year 2, P distributes all the stock of S to P's shareholders. P files a separate return for Year 3. Although P is no longer a common parent after Year 2, P remains the agent for the P group for Years 1 and 2. For as long as P remains in existence, only P may execute a waiver of the period of limitations on assessment on behalf of the group for Years 1 and 2.

Example 2. Acquisition of common parent by another group. The facts are the same as in *Example 1,* except on January 1 of Year 3, all of the outstanding stock of P is acquired by Y. P thereafter joins in the Y group consolidated return as a member of Y group. Although P is a member of Y group in Year 3, P remains the agent for the P group for Years 1 and 2. For as long as P remains in existence, only P may execute a waiver of the period of limitations on assessment on behalf of the P group for Years 1 and 2.

Example 3. Merger of common parent—designation of remaining member as substitute agent. On December 31 of Year 1, P sells all the stock of S-1 to X. On July 1 of Year 2, P acquires all the stock of S-2. On November 30 of Year 2, P distributes all the stock of S to P's shareholders. On January 1 of Year 3, P merges into Y corporation. Just before the merger, P notifies the Commissioner in writing of the planned merger and of its designation of S as the substitute agent for the P group for Years 1 and 2. S is the only member that P can designate as the substitute agent for both Years 1 and 2 because it is the only subsidiary that was a member of the P group during part of both years. Although S-2 is the only remaining subsidiary of the P group when P merges into Y, S-2 was a member of the P group only in Year 2. For that reason, S-2 cannot be the substitute agent for the P group for Year 1.

Alternatively, P could designate a different substitute agent for each year, selecting S or S-1 as the substitute agent for Year 1, and S or S-2 as the substitute agent for Year 2. P could also designate its successor Y as the substitute agent for both Years 1 and 2.

Example 4. Forward triangular merger of common parent. On January 1 of Year 3, P merges with and into Z-1, a subsidiary of Z, in a forward triangular merger described in section 368(a)(1)(A) and (a)(2)(D). The transaction constitutes a reverse acquisition under § 1.1502-75(d)(3)(i) because P's shareholders receive more than 50% of Z's stock in exchange for all of P's stock. Just before the merger, P notifies the Commissioner in writing of the planned merger and its designation of Z-1, the corporation that will survive the planned merger, as the substitute agent of the P group for Years 1 and 2. Because Z-1 will be P's successor (within the meaning of paragraph (a)(1) of this section) after the planned merger, P may designate Z-1 as the substitute agent for the P group for Years 1 and 2, pursuant to paragraph (d)(1) of this section. Alternatively, P could have designated S or S-1 as the substitute agent for the P group for Years 1 and 2. Although Z is the new common parent of the P group, which continues pursuant to § 1.1502-75(d)(3)(i), P may not designate Z as the substitute agent for Years 1 and 2 because Z was not a member of the group during any part of Years 1 or 2 and is not a successor of P or any other member of P group.

Example 5. Reverse triangular merger of common parent. On March 1 of Year 3, W-1, a subsidiary of W, merges into P, in a reverse triangular merger described in section 368(a)(1)(A) and (a)(2)(E). P survives the merger with W-1. The transaction constitutes a reverse acquisition under § 1.1502-75(d)(3)(i) because P's shareholders receive more than 50% of W's stock in exchange for all of P's stock. Under paragraph (a) of this section, P remains the agent for the P group for Years 1 and 2, even though the P group continues with W as its new common parent pursuant to § 1.1502-75(d)(3)(i). Because the transaction constitutes a reverse acquisition, the P group is treated as remaining in existence with W as its common parent. Before March 2 of Year 3, P is the agent for the P group for Year 3. Beginning on March 2 of Year 3, W becomes the agent for the P group with respect to all of Year 3 (including the period through March 1) and subsequent consolidated return years. For as long as P remains in existence, P remains the agent of the P group under paragraph (a) of this section for Years 1 and 2, and therefore only P may execute a waiver of the period of limitations on assessment on behalf of the P group for Years 1 and 2.

Example 6. Reverse triangular merger of common parent-subsequent spinoff of common parent. The facts are the same as in *Example 5,* except that on April 1 of Year 4, in a transaction unrelated to the Year 3 reverse acquisition, P distributes the stock of its subsidiaries S and S-1 to W, and W then distributes the stock of P to the W shareholders. Beginning on March 2 of Year 3, W becomes the agent for the P group with respect to Year 3 (including the period through March 1) and subsequent consolidated return years. Although P is no longer a member of the P group after the Year 4 spinoff, P remains the agent for the P group under paragraph (a) of this section for Years 1 and 2. Thus, for as long as P remains in existence, only P may execute a waiver of the period of limitations on assessment on behalf of the P group for Years 1 and 2.

Example 7. Qualified stock purchase and section 338 election. On March 31 of Year 2, V purchases the stock of P in a qualified stock purchase (within the meaning of section 338(d)(3)), and V makes a timely election pursuant to section 338(g) with respect to P. Although section 338(a)(2) provides that P is treated as a new corporation as of the beginning of the day after the acquisition date for purposes of subtitle A, paragraph (e)(4) of this section provides that P's existence is not deemed to terminate for purposes of this section notwithstanding the general rule of section 338(a)(2). Therefore, the election under section 338(g) does not result in a termination of P under paragraph (e) of this

section, and new P remains the agent of the P group for Year 1 and the period ending March 31 of Year 2 (short Year 2). For as long as new P remains in existence, only new P may execute a waiver of the period of limitations on assessment on behalf of the P group for Year 1 and short Year 2.

Example 8. Fraudulent conveyance of assets. On March 15 of Year 2, P files a consolidated return that includes the income of S and S-1 for Year 1. On December 1 of Year 2, S-1 transfers assets having a fair market value of $100x to U in exchange for $10x. This transfer of assets for less than fair market value constitutes a fraudulent conveyance under applicable state law. On March 1 of Year 5, P executes a waiver extending to December 31 of Year 6 the period of limitations on assessment with respect to the group's Year 1 consolidated return. On February 1 of Year 6, the Commissioner issues a notice of deficiency to P asserting a deficiency of $30x for the P group's Year 1 consolidated tax liability. P does not file a petition for redetermination in the Tax Court, and the Commissioner makes a timely assessment against the P group. P, S and S-1 are all insolvent and are unable to pay the deficiency. On February 1 of Year 8, the Commissioner sends a notice of transferee liability to U, which does not file a petition in the Tax Court. On August 1 of Year 8, the Commissioner assesses the amount of the P group's deficiency against U. Under section 6901(c), the Commissioner may assess U's transferee liability within one year after the expiration of the period of limitations against the transferor S-1. By operation of section 6213(a) and 6503(a), the issuance of the notice of deficiency to P and the expiration of the 90-day period for filing a petition in the Tax Court have the effect of further extending by 150 days the P group's limitations period on assessment from the previously extended date of December 31 of Year 6 to May 30 of Year 7. Pursuant to paragraph (a)(1)(v) of this section, the waiver executed by P on March 1 of Year 5 to extend the period of limitations on assessment to December 31 of Year 6 and the further extension of the P group's limitations period to May 30 of Year 7 (by operation of sections 6213(a) and 6503(a)) have the derivative effect of extending the period of limitations on assessment of U's transferee liability to May 30 of Year 8. By operation of section 6901(f), the issuance of the notice of transferee liability to U and the expiration of the 90-day period for filing a petition in the Tax Court have the effect of further extending the limitations period on assessment of U's liability as a transferee by 150 days, from May 30 of Year 8 to October 27 of Year 8. Accordingly, the Commissioner may send a notice of transferee liability to U at any time on or before May 30 of Year 8 and assess the unpaid liability against U at any time on or before October 27 of Year 8. The result would be the same even if S-1 ceased to exist before March 1 of Year 5, the date P executed the waiver.

(g) ***Cross-reference.*** For further rules applicable to groups that include insolvent financial institutions, see § 301.6402-7 of this chapter.

(h) ***Effective/applicability date*** —

(1) ***Application*** —

(i) ***In general.*** This section applies to consolidated return years beginning on or after June 28, 2002, and before April 1, 2015. For instructions regarding communications relating to the determination of a substitute agent and other matters under this section, see Rev. Proc. 2002-43, 2002-2 CB 99 (see § 601.601(d)(2)(ii)(*b*) of this chapter). For rules governing the resignation of certain agents for the group subject to this section, see § 1.1502-77(c)(7) and (j)(2).

(ii) ***Election to apply for prior taxable years.*** Notwithstanding paragraphs (h)(1)(i) and (h)(2) of this section, the common parent may elect to apply paragraph (d)(1) of this section in lieu of § 1.1502-77A(d) in designating a substitute agent for taxable years beginning before June 28, 2002. The common parent makes such an election by expressly referring to the election under

this paragraph (h)(1)(ii) in notifying the Commissioner of the designation of the substitute agent. Once made, such election applies to any subsequent designation of a substitute agent for the consolidated return year(s) subject to the election.

(2) ***Prior law.*** For taxable years beginning before June 28, 2002, see § 1.1502-77A.

(3) ***Designation of a domestic substitute agent*** —

(i) ***In general.*** The provisions of paragraphs (e)(1) and (j) of this section apply to taxable years for which the consolidated Federal income tax return is due (without extensions) after July 23, 2007.

(ii) ***Prior law.*** For taxable years for which the consolidated Federal income tax return is due (without extensions) on or before July 23, 2007, see § 1.1502-77(e)(1) as contained in the 26 CFR part 1 edition revised as of April 1, 2007. For taxable years for which the consolidated Federal income tax return is due (without extensions) after March 14, 2006, and on or before July 23, 2007, see § 1.1502-77T as contained in the 26 CFR part 1 edition revised as of April 1, 2007.

(i) [Reserved]

(j) ***Designation by Commissioner if common parent is treated as a domestic corporation under section 7874 or section 953(d)*** —

(1) ***In general.*** If the common parent is an entity created or organized under the law of a foreign country and is treated as a domestic corporation by reason of section 7874 (or regulations under that section) or a section 953(d) election (a foreign common parent), the Commissioner may at any time, with or without a request from any member of the group, designate another member of the group to act as the agent for the group (a domestic substitute agent) for any taxable year for which the consolidated Federal income tax return is due (without extensions) after July 23, 2007, and the foreign common parent would otherwise be the agent for the group. For each such year, the domestic substitute agent will be the sole agent for the group even though the foreign common parent remains in existence. The foreign common parent ceases to be the agent for the group when the Commissioner's designation of a domestic substitute agent becomes effective. The Commissioner may designate a domestic substitute agent for the term of a single taxable year, multiple years, or on a continuing basis.

(2) ***Domestic substitute agent.*** The domestic substitute agent, by designation or by succession, shall be a domestic corporation described in paragraph (d)(1)(i)(A) of this section (determined without regard to section 7874, a section 953(d) election or section 1504(d)).

(3) ***Designation by the Commissioner.*** The Commissioner will notify the domestic substitute agent in writing by mail or faxed transmission of the designation. The domestic substitute agent's designation is effective on the earliest of the 14th day following the date of a mailing, the 4th day following a faxed transmission, or the date the Commissioner receives written confirmation of the designation by a duly authorized officer of the domestic substitute agent (within the meaning of section 6062). The domestic substitute agent must give notice of its designation to the foreign common parent and each corporation that was a member of the group during any part of any consolidated return year for which the domestic substitute agent will be the agent. A failure of the domestic substitute agent to notify the foreign common parent or any member of the group does not invalidate the designation. The Commissioner will send a copy of the notification to the foreign common parent, and if applicable, to any domestic substitute agent the designation replaces; a failure to send a copy of the notification does not invalidate the designation.

(4) *Term of agency* —

(i) ***Taxable years for which domestic substitute agent is the agent.*** If the Commissioner designates a domestic substitute agent for one or more taxable years, unless the designation is expressly limited to such term, such domestic substitute agent will continue as the group's sole agent for subsequent taxable years until the domestic substitute agent ceases to be a member of the continuing group, is replaced by a new domestic common parent (as provided in paragraph (j)(4)(iv)(A) of this section), is replaced by the Commissioner, or is replaced by a default substitute agent (as provided in paragraph (j)(5)(ii) of this section). If during the course of a consolidated return year the domestic substitute agent ceases to be a member of the continuing group or is replaced, it shall no longer act as agent for such taxable year or subsequent taxable years in any matter.

(ii) ***Continuing agency for prior taxable years.*** Unless replaced by a default substitute agent (as provided in paragraph (j)(5)(ii) of this section) or by the Commissioner, the domestic substitute agent at the end of a taxable year of the group will remain the agent for such year until its existence terminates, even if the group subsequently ceases to exist or the domestic substitute agent subsequently ceases to be a member of the group.

(iii) ***Replacement of a § 1.1502-77(d)(1) agent.*** If, pursuant to paragraph (d)(1) of this section, the common parent of the group designates a foreign common parent as the agent for the group for any taxable year, the Commissioner may, at any time, designate a domestic substitute agent to replace the foreign common parent, even if the Commissioner approved the terminating common parent's designation.

(iv) *Group continues with a new common parent* —

(A) ***Year the new common parent becomes the common parent.*** If the group has a domestic substitute agent and the group continues in existence with a new common parent during a consolidated return year, and such new common parent is a domestic corporation (determined without regard to section 7874 or a section 953(d) election), the domestic substitute agent at the beginning of the year is the agent for the group through the date of the transaction in which the new common parent becomes the common parent, and the new common parent becomes the agent for the group beginning the day after the transaction, at which time it becomes the agent for the group with respect to the entire consolidated return year (including the period through the date of the transaction) and the former domestic substitute agent will no longer be the agent for the group for that year.

(B) ***Years preceding the year the new common parent becomes the common parent.*** If after the Commissioner's designation of a domestic substitute agent the group remains in existence with a new common parent, and such new common parent is a domestic corporation (determined without regard to section 7874 or a section 953(d) election), the Commissioner may designate the new common parent as the sole agent for the group for any of the group's prior taxable years (for which the consolidated Federal income tax return is due (without extensions) after July 23, 2007) in which the new common parent was a member of the group. For this purpose, the new common parent is treated as having been a member of the group for any taxable year it is primarily liable for the group's income tax liability.

(v) ***Replacement of domestic substitute agent by the Commissioner.*** The Commissioner may at any time, with or without a request from any member of the group, designate a replacement for a domestic substitute agent (or a successor to such agent).

(5) ***Deemed § 1.1502-77(d) designation*** —

(i) ***In general.*** If the Commissioner designates a domestic substitute agent under this paragraph (j), it will be treated as a designation of a substitute agent under paragraph (d) of this section.

(ii) ***Default substitute agent.*** If the domestic substitute agent's existence terminates and it has a single successor that is a domestic corporation (without regard to section 269B) that is eligible to be a domestic substitute agent, such successor becomes the domestic substitute agent and is treated as a default substitute agent under paragraph (d)(2) of this section. See paragraph (d)(4) of this section regarding the consequences of the successor's failure to notify the Commissioner of its status as a default substitute agent. The default substitute agent shall use procedures in section 9 of Rev. Proc. 2002-43 (2002-2 CB 99) or a corresponding provision of a successor revenue procedure for notification. (See § 601.601(d)(2)(ii)(*b*) of this chapter.)

(6) ***Request that IRS designate a domestic substitute agent*** —

(i) ***Original designation.*** If the common parent of the group is a foreign common parent, and the IRS has not designated a domestic substitute agent, one or more members of the group may request the IRS to make a designation for taxable years for which the consolidated Federal income tax return is due (without extensions) after July 23, 2007. Such request is deemed to be a request under paragraph (d)(3)(i) of this section. Members of the group shall use the procedures in section 10 of Rev. Proc. 2002-43 (2002-2 CB 99) or a corresponding provision of a successor revenue procedure for this purpose. (See § 601.601(d)(2)(ii)(*b*) of this chapter.)

(ii) ***Request that IRS replace a previously designated substitute agent.*** If the IRS designates a domestic substitute agent pursuant to this paragraph (j), one or more members of the group may request that the IRS replace the designated domestic substitute agent with another member (or successor to another member). Such a request is deemed to be a request pursuant to paragraph (d)(3)(ii) of this section. Members of the group shall use the procedures in section 11 of Rev. Proc. 2002-43 (2002-2 CB 99) or a corresponding provision of a successor revenue procedure for this purpose. (See § 601.601(d)(2)(ii)(*b*) of this chapter.)

[T.D. 9002, 67 FR 43540, June 28, 2002, as amended by T.D. 9255, 71 FR 13002, Mar. 14, 2006; T.D. 9343, 72 FR 40067, July 23, 2007. Redesignated and amended by T.D. 9715, 80 FR 17318, Apr. 1, 2015; T.D. 10018, 89 FR 106876, Dec. 30, 2024]

Regulations Applicable to Taxable Years Before January 1, 1997Regulations Applying Section 382 With Respect to Testing Dates (and Corporations Joining or Leaving Consolidated Groups) Before June 25, 1999Dual Consolidated Losses Incurred in Taxable Years Beginning Before October 1, 1992

§ 1.1551-1 Disallowance of surtax exemption and accumulated earnings credit.

(a) ***In general.*** If:

(1) Any corporation transfers, on or after January 1, 1951, and before June 13, 1963, all or part of its property (other than money) to a transferee corporation,

(2) Any corporation transfers, directly or indirectly, after June 12, 1963, all or part of its property (other than money) to a transferee corporation, or

(3) Five or fewer individuals are in control of a corporation and one or more of them transfer, directly or indirectly, after June 12, 1963, property (other than money) to a transferee corporation, and the transferee was created for the purpose of acquiring such property or was not actively engaged in business at the time of such acquisition, and if after such transfer the transferor or transferors are in control of the transferee during any part of the taxable year of the transferee, then for such taxable year of the transferee the Secretary or his delegate may disallow the surtax exemption defined in section 11(d) or the accumulated earnings credit of $150,000 ($100,000 in the case of taxable years beginning before January 1, 1975) provided in paragraph (2) or (3) of section 535(c), unless the transferee establishes by the clear preponderance of the evidence that the securing of such exemption or credit was not a major purpose of the transfer.

(b) ***Purpose of section 1551.*** The purpose of section 1551 is to prevent avoidance or evasion of the surtax imposed by section 11(c) or of the accumulated earnings tax imposed by section 531. It is not intended, however, that section 1551 be interpreted as delimiting or abrogating any principle of law established by judicial decision, or any existing provisions of the Code, such as sections 269 and 482, which have the effect of preventing the avoidance or evasion of income taxes. Such principles of law and such provisions of the Code, including section 1551, are not mutually exclusive, and in appropriate cases they may operate together or they may operate separately.

(c) ***Application of section 269(b) to cases covered by section 1551.*** The provisions of section 269(b) and the authority of the district director thereunder, to the extent not inconsistent with the provisions of section 1551, are applicable to cases covered by section 1551. Pursuant to the authority provided in section 269(b) the district director may allow to the transferee any part of a surtax exemption or accumulated earnings credit for a taxable year for which such exemption or credit would otherwise be disallowed under section 1551(a); or he may apportion such exemption or credit among the corporations involved. For example, corporation A transfers on January 1, 1955, all of its property to corporations B and C in exchange for all of the stock of such corporations. Immediately thereafter, corporation A is dissolved and its stockholders become the sole stockholders of corporations B and C. Assuming that corporations B and C are unable to establish by the clear preponderance of the evidence that the securing of the surtax exemption defined in section 11(d) or the accumulated earnings credit provided in section 535, or both, was not a major purpose of the transfer, the district director is authorized under sections 1551(c) and 269(b) to allow one such exemption and credit and to apportion such exemption and credit between corporations B and C.

(d) ***Actively engaged in business.*** For purposes of this section, a corporation maintaining an office for the purpose of preserving its corporate existence is not considered to be “actively engaged in business” even though such corporation may be deemed to be “doing business” for other purposes. Similarly, for purposes of this section, a corporation engaged in winding up its affairs, prior to an acquisition to which section 1551 is applicable, is not considered to be “actively engaged in business.”

(e) ***Meaning and application of the term “control”*** —

(1) ***In general.*** For purposes of this section, the term “control” means:

(i) With respect to a transferee corporation described in paragraph (a) (1) or (2) of this section, the ownership by the transferor corporation, its shareholders, or both, of stock possessing either (*a*) at least 80 percent of the total combined voting power of all classes of stock entitled to vote, or (*b*) at least 80 percent of the total value of shares of all classes of stock.

(ii) With respect to each corporation described in paragraph (a)(3) of this section, the ownership by five or fewer individuals of stock possessing (*a*) at least 80 percent of the total combined voting power of all classes of stock entitled to vote or at least 80 percent of the total value of shares of all classes of the stock of each corporation, and (*b*) more than 50 percent of the total combined voting power of all classes of stock entitled to vote or more than 50 percent of the total value of shares of all classes of stock of each corporation, taking into account the stock ownership of each such individual only to the extent such stock ownership is identical with respect to each such corporation.

(2) ***Special rules.*** In determining for purposes of this section whether stock possessing at least 80 percent (or more than 50 percent in the case of subparagraph (1)(ii)(*b*) of this paragraph) of the total combined voting power of all classes of stock entitled to vote is owned, all classes of such stock shall be considered together; it is not necessary that at least 80 percent (or more than 50 percent) of each class of voting stock be owned. Likewise, in determining for purposes of this section whether stock possessing at least 80 percent (or more than 50 percent) of the total value of shares of all classes of stock is owned, all classes of stock of the corporation shall be considered together; it is not necessary that at least 80 percent (or more than 50 percent) of the value of shares of each class be owned. The fair market value of a share shall be considered as the value to be used for purposes of this computation. With respect to transfers described in paragraph (a) (2) or (3) of this section, the ownership of stock shall be determined in accordance with the provisions of section 1563(e) and the regulations thereunder. With respect to transfers described in paragraph (a)(1) of this section, the ownership of stock shall be determined in accordance with the provisions of section 544 and the regulations thereunder, except that constructive ownership under section 544(a)(2) shall be determined only with respect to the individual's spouse and minor children. In determining control, no stock shall be excluded because such stock was acquired before January 1, 1951 (the effective date of section 1551(a)(1)), or June 13, 1963 (the effective date of section 1551(a) (2) and (3)).

(3) ***Example.*** This paragraph may be illustrated by the following example:

> *Example.* On January 1, 1964, individual A, who owns 50 percent of the voting stock of corporation X, and individual B, who owns 30 percent of such voting stock, transfer property (other than money) to corporation Y (newly created for the purpose of acquiring such property) in exchange for all of Y's voting stock. After the transfer, A and B own the voting stock of corporations X and Y in the following proportions:

Individual	Corp. X	Corp. Y	Identical ownership
A	50	30	30
B	30	50	30

Individual	Corp. X	Corp. Y	Identical ownership
Total	80	80	60

The transfer of property by A and B to corporation Y is a transfer described in paragraph (a)(3) of this section since (i) A and B own at least 80 percent of the voting stock of corporations X and Y, and (ii) taking into account each such individual's stock ownership only to the extent such ownership is identical with respect to each such corporation, A and B own more than 50 percent of the voting stock of corporations X and Y.

(f) ***Taxable year of allowance or disallowance*** —

(1) ***In general.*** The district director's authority with respect to cases covered by section 1551 is not limited to the taxable year of the transferee corporation in which the transfer of property occurs. Such authority extends to the taxable year in which the transfer occurs or any subsequent taxable year of the transferee corporation if, during any part of such year, the transferor or transferors are in control of the transferee.

(2) ***Examples.*** This paragraph may be illustrated by the following examples:

Example 1. On January 1, 1955, corporation D transfers property (other than money) to corporation E, a corporation not actively engaged in business at the time of the acquisition of such property, in exchange for 60 percent of the voting stock of E. During a later taxable year of E, corporation D acquires an additional 20 percent of such voting stock. As a result of such additional acquisition, D owns 80 percent of the voting stock of E. Accordingly, section 1551(a)(1) is applicable for the taxable year in which the later acquisition of stock occurred and for each taxable year thereafter in which the requisite control continues.

Example 2. On June 20, 1963, individual A, who owns all of the stock of corporation X, transfers property (other than money) to corporation Y, a corporation not actively engaged in business at the time of the acquisition of such property, in exchange for 60 percent of the voting stock of Y. During a later taxable year of Y, A acquires an additional 20 percent of such voting stock. After such acquisition A owns at least 80 percent of the voting stock of corporations X and Y. Accordingly, section 1551(a)(3) is applicable for the taxable year in which the later acquisition of stock occurred and for each taxable year thereafter in which the requisite control continues.

Example 3. Individuals A and B each owns 50 percent of the stock of corporation X. On January 15, 1964, A transfers property (other than money) to corporation Y (newly created by A for the purpose of acquiring such property) in exchange for all the stock of Y. In a subsequent taxable year of Y, individual B buys 50 percent of the stock which A owns in Y (or he transfers money to Y in exchange for its stock, as a result of which he owns 50 percent of Y's stock). Immediately thereafter the stock ownership of A and B in corporation Y is identical to their stock ownership in corporation X. Accordingly, section 1551(a)(3) is applicable for the taxable year in which B acquires stock in corporation Y (see paragraph (g)(3) of this section) and for each taxable year thereafter in which the requisite control continues. Moreover, if B's acquisition of stock in Y is pursuant to a preexisting agreement with A, A's transfer to Y and B's acquisition of Y's stock are

considered a single transaction and section 1551(a)(3) also would be applicable for the taxable year in which A's transfer to Y took place and for each taxable year thereafter in which the requisite control continues.

(g) *Nature of transfer* —

(1) ***Corporate transfers before June 13, 1963.*** A transfer made before June 13, 1963, by any corporation of all or part of its assets, whether or not such transfer qualifies as a reorganization under section 368, is within the scope of section 1551(a)(1), except that section 1551(a)(1) does not apply to a transfer of money only. For example, the transfer of cash for the purpose of expanding the business of the transferor corporation through the formation of a new corporation is not a transfer within the scope of section 1551(a)(1), irrespective of whether the new corporation uses the cash to purchase from the transferor corporation stock in trade or similar property.

(2) ***Corporate transfers after June 12, 1963.*** A direct or indirect transfer made after June 12, 1963, by any corporation of all or part of its assets to a transferee corporation, whether or not such transfer qualifies as a reorganization under section 368, is within the scope of section 1551(a)(2) except that section 1551(a)(2) does not apply to a transfer of money only. For example, if a transferor corporation transfers property to its shareholders or to a subsidiary, the transfer of that property by the shareholders or the subsidiary to a transferee corporation as part of the same transaction is a transfer of property by the transferor corporation to which section 1551(a)(2) applies. A transfer of property pursuant to a purchase by a transferee corporation from a transferor corporation controlling the transferee is within the scope of section 1551(a)(2), whether or not the purchase follows a transfer of cash from the controlling corporation.

(3) ***Other transfers after June 12, 1963.*** A direct or indirect transfer made after June 12, 1963, by five or fewer individuals to a transferee corporation, whether or not such transfer qualifies under one or more other provisions of the Code (for example, section 351), is within the scope of section 1551(a)(3) except that section 1551(a)(3) does not apply to a transfer of money only. Thus, if one of five or fewer individuals who are in control of a corporation transfers property (other than money) to a controlled transferee corporation, the transfer is within the scope of section 1551(a)(3) notwithstanding that the other individuals transfer nothing or transfer only money.

(4) ***Examples.*** This paragraph may be illustrated by the following examples:

Example 1. Individuals A and B each owns 50 percent of the voting stock of corporation X. On January 15, 1964, A and B each acquires property (other than money) from X and, as part of the same transaction, each transfers such property to his wholly owned corporation (newly created for the purpose of acquiring such property). A and B retain substantial continuing interests in corporation X. The transfers to the two newly created corporations are within the scope of section 1551(a)(2).

Example 2. Corporation W organizes corporation X, a wholly owned subsidiary, for the purpose of acquiring the properties of corporation Y. Pursuant to a reorganization qualifying under section 368(a)(1)(C), substantially all of the properties of corporation Y are transferred on June 15, 1963, to corporation X solely in exchange for voting stock of corporation W. There is a transfer of property from W to X within the meaning of section 1551(a)(2).

Example 3. Individuals A and B, each owning 50 percent of the voting stock of corporation X, organize corporation Y to which each transfers money only in exchange for 50 percent of the stock of Y. Subsequently, Y uses such money to acquire other property from A and B after June 12, 1963. Such acquisition is within the scope of section 1551(a)(3).

Example 4. Individual A owns 55 percent of the stock of corporation X. Another 25 percent of corporation X's stock is owned in the aggregate by individuals B, C, D, and E. On June 15, 1963, individual A transfers property to corporation Y (newly created for the purpose of acquiring such property) in exchange for 60 percent of the stock of Y, and B, C, and D acquire all of the remaining stock of Y. The transfer is within the scope of section 1551(a)(3).

(h) ***Purpose of transfer.*** In determining, for purposes of this section, whether the securing of the surtax exemption or accumulated earnings credit constituted "a major purpose" of the transfer, all circumstances relevant to the transfer shall be considered. "A major purpose" will not be inferred from the mere purchase of inventory by a subsidiary from a centralized warehouse maintained by its parent corporation or by another subsidiary of the parent corporation. For disallowance of the surtax exemption and accumulated earnings credit under section 1551, it is not necessary that the obtaining of either such credit or exemption, or both, have been the sole or principal purpose of the transfer of the property. It is sufficient if it appears, in the light of all the facts and circumstances, that the obtaining of such exemption or credit, or both, was one of the major considerations that prompted the transfer. Thus, the securing of the surtax exemption or the accumulated earnings credit may constitute "a major purpose" of the transfer, notwithstanding that such transfer was effected for a valid business purpose and qualified as a reorganization within the meaning of section 368. The taxpayer's burden of establishing by the clear preponderance of the evidence that the securing of either such exemption or credit or both was not "a major purpose" of the transfer may be met, for example, by showing that the obtaining of such exemption, or credit, or both, was not a major factor in relationship to the other consideration or considerations which prompted the transfer.

[T.D. 6911, 32 FR 3214, Feb. 24, 1967, as amended by T.D. 7376, 40 FR 42745, Sept. 16, 1975]

§ 1.1552-1 Earnings and profits.

(a) ***General rule.*** For the purpose of determining the earnings and profits of each member of an affiliated group which is required to be included in a consolidated return for such group filed for a taxable year beginning after December 31, 1953, and ending after August 16, 1954, the tax liability of the group shall be allocated among the members of the group in accordance with one of the following methods, pursuant to an election under paragraph (c) of this section:

(1)

(i) The tax liability of the group shall be apportioned among the members of the group in accordance with the ratio which that portion of the consolidated taxable income attributable to each member of the group having taxable income bears to the consolidated taxable income.

(ii) For consolidated return years beginning after December 31, 1965, a member's portion of the tax liability of the group under the method of allocation provided by subdivision (i) of this subparagraph is an amount equal to the tax liability of the group multiplied by a fraction, the numerator of which is the taxable income of such member, and the denominator of which is the sum of the taxable incomes of all the members. For purposes of this subdivision the taxable income of a member shall be the separate taxable income determined under § 1.1502-12, adjusted for the following items taken into account in the computation of consolidated taxable income:

(A) The portion of the consolidated net operating loss deduction, the consolidated charitable contributions deduction, the consolidated dividends received deduction, the consolidated section 247 deduction, the consolidated section 582(c) net loss, and the consolidated section 922 deduction, attributable to such member;

(B) Such member's capital gain net income (determined without regard to any net capital loss carryover attributable to such member);

(C) Such member's net capital loss and section 1231 net loss, reduced by the portion of the consolidated net capital loss attributable to such member; and

(D) The portion of any consolidated net capital loss carryover attributable to such member which is absorbed in the taxable year.

If the computation of the taxable income of a member under this subdivision results in an excess of deductions over gross income, then for purposes of this subdivision such member's taxable income shall be zero.

(2)

(i) The tax liability of the group shall be allocated to the several members of the group on the basis of the percentage of the total tax which the tax of such member if computed on a separate return would bear to the total amount of the taxes for all members of the group so computed.

(ii) For consolidated return years beginning after December 31, 1965, a member's portion of the tax liability of the group under the method of allocation provided by subdivision (i) of this subparagraph is an amount equal to the tax liability of the group multiplied by a fraction, the numerator of which is the separate return tax liability of such member, and the denominator of which is the sum of the separate return tax liabilities of all the members. For purposes of this subdivision the separate return tax liability of a member is its tax liability computed as if it has filed a separate return for the year except that:

(A) Gains and losses on intercompany transactions shall be taken into account as provided in § 1.1502-13 as if a consolidated return had been filed for the year;

(B) [Reserved]

(C) Transactions with respect to stock, bonds, or other obligations of members shall be reflected as provided in § 1.1502-13 (f) and (g) as if a consolidated return had been filed for the year;

(D) Excess losses shall be included in income as provided in § 1.1502-19 as if a consolidated return had been filed for the year;

(E) In the computation of the deduction under section 167, property shall not lose its character as new property as a result of a transfer from one member to another member during the year;

(F) A dividend distributed by one member to another member during the year shall not be taken into account in computing the deductions under section 243(a)(1), 244(a), 245, or 247 (relating to deductions with respect to dividends received and dividends paid);

(G) Basis shall be determined under §§ 1.1502-31 and 1.1502-32, and earnings and profits shall be determined under § 1.1502-33, as if a consolidated return had been filed for the year;

(H) Subparagraph (2) of § 1.1502-3(f) shall apply as if a consolidated return had been filed for the year; and

(I) For purposes of subtitle A of the Code, if two or more taxable income brackets are set forth in section 11(b) of the Code, the amount in each taxable income bracket is divided by the number of members (or such portion of each bracket which is apportioned to the member pursuant to a schedule attached to the consolidated return for the consolidated return year). However, if for the taxable year some or all of the members are component members of a controlled group of corporations (within the meaning of section 1563) and if there are other such component members which do not join in filing the consolidated return for such year, the amount to be divided among the members filing the consolidated return is (in lieu of the taxable income brackets) the sum of the amounts apportioned to the component members which join in filing the consolidated return.

(3)

(i) The tax liability of the group (excluding the tax increases arising from the consolidation) shall be allocated on the basis of the contribution of each member of the group to the consolidated taxable income of the group. Any tax increases arising from the consolidation shall be distributed to the several members in direct proportion to the reduction in tax liability resulting to such members from the filing of the consolidated return as measured by the difference between their tax liabilities determined on a separate return basis and their tax liabilities (determined without regard to the 2-percent increase provided by section 1503(a) and paragraph (a) of § 1.1502-30A (as contained in the 26 CFR edition revised as of April 1, 1996) for taxable years beginning before January 1, 1964) based on their contributions to the consolidated taxable income.

(ii) For consolidated return years beginning after December 31, 1965, a member's portion of the tax liability of the group under the method of allocation provided by subdivision (i) of this subparagraph shall be determined by:

(*a*) Allocating the tax liability of the group in accordance with subparagraph (1)(ii) of this paragraph, but

(*b*) The amount of tax liability allocated to any member shall not exceed the separate return tax liability of such member, determined in accordance with subparagraph (2)(ii) of this paragraph, and

(*c*) The sum of the amounts which would be allocated to the members but for (*b*) of this subdivision (ii) shall be apportioned among the other members in direct proportion to, but limited to, the reduction in tax liability resulting to such other members. Such reduction for any member shall be the excess, if any, of (*1*) its separate this paragraph.

(4) The tax liability of the group shall be allocated in accordance with any other method selected by the group with the approval of the Commissioner. No method of allocation may be approved under this subparagraph which may result in the allocation of a positive tax liability for a taxable year, among the members who are allocated a positive tax liability for such year, in a total amount which is more or less than the tax liability of the group for such year. (However, see paragraph (d) of § 1.1502-33.)

(b) *Application of rules* —

(1) ***Tax liability of the group.*** For purposes of section 1552 and this section, the tax liability of the group for a taxable year shall consist of the Federal income tax liability of the group for such year determined in accordance with § 1.1502-2 or § 1.1502-30A (as contained in the 26 CFR edition revised as of April 1, 1996), which-ever is applicable. Thus, in the case of a carryback of a loss or credit to such year, although the earnings and profits of the members of the group may not be adjusted until the subsequent taxable year from which the loss or credit was carried back, the effect of the carryback, for purposes of this section, shall be determined by allocating the amount of the adjustment as a part of the tax liability of the group for the taxable year to which the loss or credit is carried. For example, if a consolidated net operating loss is carried back from 1969 to 1967, the allocation of the tax liability of the group for 1967 shall be recomputed in accordance with the method of allocation used for 1967, and the changes resulting from such recomputation shall, for accrual method taxpayers, be reflected in the earnings and profits of the appropriate members in 1969.

(2) ***Effect of allocation.*** The amount of tax liability allocated to a corporation as its share of the tax liability of the group, pursuant to this section, shall

(i) result in a decrease in the earnings and profits of such corporation in such amount, and

(ii) be treated as a liability of such corporation for such amount. If the full amount of such liability is not paid by such corporation, pursuant to an agreement among the members of the group or otherwise, the amount which is not paid will generally be treated as a distribution with respect to stock, a contribution to capital, or a combination thereof, as the case may be.

(c) ***Method of election.***

(1) The election under paragraph (a) (1), (2), or (3) of this section shall be made not later than the time prescribed by law for filing the first consolidated return of the group for a taxable year beginning after December 31, 1953, and ending after August 16, 1954 (including extensions thereof). If the group elects to allocate its tax liability in accordance with the method prescribed in paragraph (a) (1), (2), or (3) of this section, a statement shall be attached to the return stating which method is elected. Such statement shall be made by the common parent corporation and shall be binding upon all members of the group. In the event that the group desires to allocate its tax liability in accordance with any other method pursuant to paragraph (a)(4) of this section, approval of such method by the Commissioner must be obtained within the time prescribed above. If such approval is not obtained in such time, the group shall allocate in accordance with the method prescribed in paragraph (a)(1) of this section. The request shall state fully the method which the group wishes to apply in apportioning the tax liability. Except as provided in subparagraph (2) of this paragraph, an election once made shall be irrevocable and shall be binding upon the group with respect to the year for which made and for all future years for which a consolidated return is filed or required to be filed unless the Commissioner authorizes a change to another method prior to the time prescribed by law for filing the return for the year in which such change is to be effective.

(2) Each group may make a new election to use any one of the methods prescribed in paragraph (a) (1), (2), or (3) of this section for its first consolidated return year beginning after December 31, 1965, or in conjunction with an election under paragraph (d) of § 1.1502-33, or may request the Commissioner's approval of a method under paragraph (a)(4) of this section for its first consolidated return year beginning after December 31, 1965, irrespective of its previous method of allocation under this section. If such new election is not made in conjunction with an election under paragraph

(d) of § 1.1502-33, it shall be effective for the first consolidated return year beginning after December 31, 1965, and all succeeding years. (See § 1.1502-33 for the method of making such new election in conjunction with an election under paragraph (d) of § 1.1502-33.) Any other such new election (or request for the Commissioner's approval of a method under paragraph (a)(4) of this section) shall be made within the time prescribed by law for filing the consolidated return for the first taxable year beginning after December 31, 1965 (including extensions thereof), or within 60 days after July 3, 1968, whichever is later. Such new election shall be made by attaching a statement to the consolidated return for the first taxable year beginning after December 31, 1965, or if such election is made within the time prescribed above but after such return is filed, by filing a statement with the internal revenue officer with whom such return was filed.

(d) ***Failure to elect.*** If a group fails to make an election in its first consolidated return, or any other election, in accordance with paragraph (c) of this section, the method prescribed under paragraph (a)(1) of this section shall be applicable and shall be binding upon the group in the same manner as if an election had been made to so allocate.

(e) ***Definitions.*** Except as otherwise provided in this section, the terms used in this section shall have the same meaning as provided in the regulations under section 1502.

(f) ***Example.*** The provisions of this section may be illustrated by the following example:

Example. Corporation P is the common parent owning all of the stock of corporations S1 and S2, members of an affiliated group. A consolidated return is filed for the taxable year ending December 31, 1966, by P, S1, and S2. For 1966 such corporations had the following taxable incomes or losses computed in accordance with paragraph (a)(1)(ii) of this section: P0 S1$2,000 S2(1,000)The group has not made an election under paragraph (c) of this section or paragraph (d) of § 1.1502-33. Accordingly, the method of allocation provided by paragraph (a)(1) of this section is in effect for the group. Assuming that the consolidated taxable income is equal to the sum of the members taxable income and losses, or $1,000, the tax liability of the group for the year (assuming a 22-percent rate) is $220, all of which is allocated to S1. S1 accordingly reduces its earnings and profits in the amount of $220, irrespective of who actually pays the tax liability. If S1 pays the $220 tax liability there will be no further effect upon the income, earnings and profits, or the basis of stock of any member. If, however, P pays the $220 tax liability (and such payment is not in fact a loan from P to S1), then P shall be treated as having made a contribution to the capital of S1 in the amount of $220. On the other hand, if S2 pays the $220 tax liability (and such payment is not in fact a loan from S2), then S2 shall be treated as having made a distribution with respect to its stock to P in the amount of $220, and P shall be treated as having made a contribution to the capital of S1 in the amount of $220.

(g) ***Applicability date.*** This section applies to taxable years beginning on or after January 1, 2025. *See 26* CFR 1.1552-1, as revised April 1, 2024, for rules applicable prior to January 1, 2025.

[T.D. 6962, 33 FR 9655, July 3, 1968, as amended by T.D. 7825, 42 FR 64694, Dec. 28, 1977; T.D. 7728, 45 FR 72650, Nov. 3, 1980; T.D. 8560, 59 FR 41675, Aug. 15, 1994; T.D. 8597, 60 FR 36680, July 18, 1995; T.D. 8677, 61 FR 33325, June 27, 1996; T.D. 10018, 89 FR 106878, Dec. 30, 2024]

CERTAIN CONTROLLED CORPORATIONS

§ 1.1561-0 Table of contents.

This section lists the table of contents for §§ 1.1561-1 through 1.1561-3.

§ 1.1561-1 General rules regarding certain tax benefits available to the component members of a controlled group of corporations.

(a) In general.

(1) Limitation.

(2) Definitions.

(b) Special rules.

(1) S Corporation.

(2) 52-53-week taxable year.

(c) Tax avoidance.

(d) Effective/applicability date.

§ 1.1561-2 Special rules for allocating reductions of certain Section 1561(a) tax-benefit items.

(a) Additional tax.

(1) Calculation.

(2) Apportionment.

(3) Examples.

(b) Reduction to the amount exempted from the alternative minimum tax.

(1) Calculation.

(2) Apportionment.

(3) Examples.

(c) Accumulated earnings credit.

(d) [Reserved]

(e) Short taxable year not including a December 31st date.

(1) General rule.

(2) Additional rules.

(3) Calculation of the additional tax.

(4) Calculation of the alternative minimum tax.

(5) Examples.

(f) Effective/applicability date.

§ 1.1561-3 Allocation of the section 1561(a) tax items.

(a) Filing of form.

(1) In general.

(2) Exception for component members that are members of a consolidated group.

(b) No apportionment plan in effect.

(c) Apportionment plan in effect.

(1) Adoption of plan.

(2) Limitation on adopting a plan.

(3) Termination of plan.

(d) Effective/applicability date.

[T.D. 9476, 74 FR 68532, Dec. 28, 2009]

§ 1.1561-1 General rules regarding certain tax benefits available to the component members of a controlled group of corporations.

(a) ***In general*** —

(1) —*Limitation.* Part II (section 1561 and following) of subchapter B of chapter 6 of the Internal Revenue Code (Code) (part II) provides rules to limit the amounts of certain specified tax benefit items of component members of a controlled group of corporations for their tax years which include a particular December 31st date, or, in the case of a short taxable year member (see section 1561(b) and § 1.1561-2(e)), the date substituted for that December 31st date. The amount of the tax items enumerated in section 1561(a) available to any of the component members of a controlled group shall be determined for purposes of subtitle A of the Code as if the component members were a single corporation. Certain other tax items also set forth in section 1561(a) (for example, the additional tax imposed by section 11(b)(1) and the section 55(d)(3) phase out of the alternative

minimum tax exemption amount) will be determined by combining the positive taxable income or positive alternative minimum taxable income of the component members of such a group and then allocating the amount of such items among those members.

(2) ***Definitions.*** For certain definitions (including the definition of a *controlled group of corporations* and a *component member*) and special rules for purposes of this part II see section 1563.

(b) ***Special rules*** —

(1) ***S Corporation.*** For purposes of this part II, the term *corporation* includes a small business corporation (as defined in section 1361). However, for the treatment of such a corporation as an *excluded member* of a controlled group of corporations see § 1.1563-1(b)(2)(ii)(C).

(2) ***52-53-week taxable year.*** In the case of corporations electing a 52-53-week taxable year under section 441(f)(1), the provisions of this part II shall be applied in accordance with the special rule of section 441(f)(2)(A). See § 1.441-2.

(c) ***Tax avoidance.*** The provisions of this part II do not delimit or abrogate any principle of law established by judicial decision, or any existing provisions of the Code, such as sections 269, 482, and 1551, which serve to prevent any avoidance or evasion of income taxes.

(d) ***Effective/applicability date.*** This section applies to any tax year beginning on or after December 21, 2009. However, taxpayers may apply this section to any Federal income tax return filed on or after December 21, 2009. For tax years beginning before December 21, 2009, see § 1.1561-1T as contained in 26 CFR part 1 in effect on April 1, 2009.

[T.D. 9476, 74 FR 68532, Dec. 28, 2009]

§ 1.1561-2 Special rules for allocating reductions of certain section 1561(a) tax-benefit items.

(a) ***Additional tax*** —

(1) ***Calculation*** —

(i) ***In general.*** For the purpose of determining the amount, if any, of the additional tax imposed by section 11(b)(1) (the additional tax), the taxable incomes of all of the component members of a controlled group of corporations shall be combined to determine whether either of the income thresholds for imposing the additional tax have been attained.

(ii) ***Special rules.*** For purposes of paragraph (a)(1)(i) of this section—

(A) ***Component member*** means a corporation that is apportioned some part of any applicable tax bracket amount; and

(B) ***Taxable income*** means the positive taxable income of a component member for its entire tax year (even if it was not a member of the group for each day of that tax year) that includes the same December 31st testing date, which is also applicable to the other component members of that same controlled group.

(2) ***Apportionment*** —

(i) ***General rule.*** Any additional tax determined under paragraph (a)(1) of this section shall be apportioned among such members in the same manner as the corresponding tax bracket of section 11(b)(1) is apportioned. For rules to apportion the section 11(b)(1) tax brackets among the component members of a controlled group, see § 1.1561-3(b) or (c).

(ii) ***Apportionment methods.*** Unless the component members of a controlled group elect to use the first-in-first-out (FIFO) method described in paragraph (a)(2)(ii)(B) of this section, such members are required to apportion the amount of the additional tax using the proportionate method described in paragraph (a)(2)(ii)(A) of this section. These component members may elect the FIFO method by specifically adopting such method in their apportionment plan.

(A) ***Proportionate method.*** Under the proportionate method, the additional tax is allocated to each component member in the same proportion as the portion of the tax-benefit amount that inured to a member from utilizing lower tax brackets bears to the amount of the group's total tax-benefit amount inuring to it from utilizing those lower tax brackets. The tax-benefit amount that inures to a corporation from using a particular tax bracket is the tax savings that such corporation realizes from having a portion of its taxable income taxed at the lower rate attributed to that tax bracket instead of the high tax rates to which it would otherwise be subject. The steps for applying the proportionate method of allocation are as follows:

(*1*) ***Step 1.*** The regular tax (not including the additional tax) owed by a component member under a particular tax bracket is divided by the total tax owed by all component members under that tax bracket;

(*2*) ***Step 2.*** The percentage calculated under *Step 1* is multiplied by the total tax-benefit amount inuring to all the members of the group from their use of this tax bracket. This computed amount equals the portion of the group's tax-benefit amount that inured to such member from using its portion of this tax bracket;

(*3*) ***Step 3.*** The amount determined under *Step 2* is divided by the total tax-benefit amount, inuring to all the component members of the group from using all the tax brackets to which any component member's income was subject;

(*4*) ***Step 4.*** The percentage calculated under *Step 3* is multiplied by the amount of the group's additional tax. The amount determined under this *Step 4* equals the amount of the additional tax apportioned to such member for that tax bracket; and

(*5*) ***Step 5.*** If a component member is liable for regular tax (not including the additional tax) under more than one tax bracket, that member must calculate the amount of the additional tax apportioned to it with respect to each tax bracket. Accordingly, steps 1 through 4 must be applied for each tax bracket applicable to that member. The sum of all the apportioned amounts of additional tax from each tax bracket for which the member is subject is the total amount of the additional tax apportioned to that member.

(B) ***FIFO method.*** Under the FIFO method, the first dollars of the additional tax are to be allocated proportionately to the members starting with the lowest tax bracket (that is, the first tax bracket), up to the amount of the tax benefit inuring to those members from using that tax bracket. Any remaining amount of additional tax is then allocated proportionately among the component members who use the next higher tax bracket, and so on, until the entire amount of the additional tax has been fully apportioned among the members. For

example, the first $9,500 of the additional tax liability of a controlled group is apportioned entirely to the member(s) that availed themselves of the benefit of the 15 percent tax bracket.

(3) ***Examples.*** The provisions of this paragraph (a) may be illustrated by the following examples:

Example 1. (i) *Facts.* A controlled group of corporations consists of three members: X, Y and Z. X owns all the stock of Y and Z. Each corporation files its separate return on a calendar year basis. For calendar year 2007, the component members of the controlled group have an apportionment plan in effect. The members apportioned 80% of the 15 percent tax-bracket amount ($40,000) to X and the remaining 10% ($10,000) to Y. The members apportioned 100% of the 25 percent tax-bracket amount ($25,000) to Y. However, these members have not adopted the FIFO method for apportioning the additional taxes. Therefore, they must follow the proportionate method. For 2007, X had taxable income (TI) of $40,000, Y had TI of $60,000 and Z had TI of $100,000. Thus the total TI of the group is $200,000.
(ii) *Calculating the tax from the tax brackets and the tax benefit derived from such tax.* (A) *Regular tax of group subject to a 15 percent tax rate.* (*1*) *Calculating the group's tax which resulted from applying a 15 percent tax rate.* The amount of tax under the 15 percent tax bracket is $7,500 (15% × $50,000).

(*2*) *The tax-benefit amount inuring to the group from using the 15 percent tax bracket.* A tax benefit inures to those members of the group who avail themselves of the 15 percent tax bracket. That tax benefit results from having the first $50,000 of its income taxed at the 15 percent tax rate, instead of at the 34 percent tax rate. Thus, the tax-benefit amount inuring to this group from using the 15 percent tax bracket is $9,500 ($17,000 (34% × $50,000) minus $7,500 (15% × $50,000)).

(B) *Regular tax of group subject to a 25 percent tax rate.* (*1*) *Calculating the group's tax which resulted from applying a 25 percent tax rate.* The amount of tax under the 25 percent tax bracket is $6,250 (25% × $25,000 ($75,000−$50,000)).

(*2*) *The tax-benefit amount inuring to the group from using the 25 percent tax bracket.* A tax benefit inures to those members of the group who avail themselves of the 25 percent tax bracket. That tax benefit results from having $25,000 of its income taxed at the 25 percent tax rate, instead of at the 34 percent tax rate. Thus, the tax-benefit amount inuring to this group from using the 25 percent tax bracket is $2,250 ($8,500 (34% × $25,000) minus $6,250 (25% × $25,000)).

(C) *Regular tax of group subject to a 34 percent tax rate.* (*1*) *Calculating the group's tax which resulted from applying a 34 percent tax rate.* The amount of tax under the 34 percent tax bracket is $42,500 (34% × $125,000 ($200,000 (total TI)−$75,000) (amount taxed at lower rates)).

(2) *The tax-benefit amount inuring to the group from using the 34 percent tax bracket.* The group's total TI of $200,000 is less than the $15,000,000 income threshold for imposing any 3 percent additional tax on the group. Therefore, there is no tax benefit inuring to the members of this group for using the 34 percent tax bracket.

(D) *The computation of the additional tax.* Since the combined TI of the group exceeds $100,000, a 5 percent additional tax is imposed on the group. That 5 percent additional tax is the lesser amount of 5 percent of the group's taxable income exceeding $100,000 or $11,750. Five percent of that excess amount of taxable income is $5,000 (5% × $100,000 ($200,000−$100,000)). Since $5,000 is less than $11,750, the group's 5 percent additional tax is $5,000.

(iii) *Apportioning the amount of additional tax to each applicable tax bracket.* (A) *The apportioned tax under each bracket.* The amount of tax owed by each member under each tax bracket pursuant to the apportionment plan is as follows:

Name of component member	Amount of tax owed under the 15% tax bracket	Amount of tax owed under the 25% tax bracket	Amount of tax owed under the 34% tax bracket
X	$6,000	0	0
Y	1,500	$6,250	$8,500
Z	0	0	34,000

(B) *Apportioning the 5 percent additional tax among the component members of the controlled group.* Since the group did not elect to adopt the FIFO method of apportionment, it is required to apportion the $5,000 of its 5 percent additional tax pursuant to the proportionate method in the following manner:
(1) *Amount of the additional tax apportioned to X.* Pursuant to the plan, X was liable for $6,000 of the group's $7,500 regular tax (80%) owed under the 15 percent tax bracket (and X is not liable for any regular tax under any higher tax bracket). See *Step 1* of paragraph (a)(2)(ii)(A) of this section. X's portion of the group's tax benefit which it derived from using the 15 percent tax rate is $7,600 (0.8 × $9,500). See *Step 2.* The tax benefit inuring to the entire group from using the 15 percent and 25 percent tax brackets is $11,750 ($9,500 (from the 15 percent tax bracket) + $2,250 (from the 25 percent tax bracket)). So, X's percentage portion of the group's total tax benefit is $7,600/$11,750 (64.68%). See *Step 3.* Thus, X's allocated portion of the 5 percent additional tax from using the 15 percent tax bracket is $3,234 (0.6468 × $5,000). See *Step 4.*

(*2*) *Amount of the additional tax apportioned to Y.* (*i*) *Regular tax apportioned to Y from using the 15 percent tax bracket.* Pursuant to the plan, Y was liable for the remaining $1,500 of the group's $7,500 regular tax (20%) owed under the 15 percent tax bracket. See *Step 1.* Y's portion of the group's tax benefit which it derived from using the 15 percent tax rate is $1,900 ($9,500−$7,600, or 0.2 × $9,500). See *Step 2.* So, Y's percentage portion of the group's total tax benefit is $1,900/$11,750 (16.17%). See *Step 3.* Thus, Y's allocated portion of the 5 percent additional tax from using the 15 percent tax bracket is $809 (0.1617 × $5,000). See *Step 4.*

(*ii*) *Regular tax apportioned to Y from using the 25 percent tax bracket.* Pursuant to the plan, Y was liable for 100% of the group's regular tax owed under the 25 percent tax bracket, an amount of $6,250. See *Step 1.* Y is, therefore, entitled to 100% of the group's tax benefit which it derived from using this tax bracket, an amount of $2,250. See *Step 2.* So, Y's percentage portion of the group's total tax benefit is $2,250/$11,750 (19.15%). See *Step 3.* Thus, Y's allocated portion of the 5 percent additional tax from using the 25 percent tax bracket is $957 (0.1915 × $5,000). See *Step 4.* Y's total allocated portion of the additional tax is $1,766 ($809 + $957). See *Step 5.*

Example 2. (i) *Facts.* The facts are the same as in *Example 1,* except that on August 31, 2007, X of the X-Y-Z controlled group sold all of the stock of Z to M of the M-N controlled group, a pair of corporations unrelated to the X-Y group. Pursuant to the terms of the sales agreement, the members of the M-N group properly notified the members of the X-Y group on a timely basis that Z's taxable income for its 2007 tax year, as based on the group's December 31st testing date, was $100,000.
(ii) *Controlled group analysis.* On December 31st, 2007, X and Y are members of the selling controlled group and M, N and Z are members of the buying controlled group. However, pursuant to section 1563(b)(3), Z is treated as an additional member of the X-Y group on December31st 2007, since it was a member for at least one-half the number of days (243 out of 364) during the period beginning on January 1 and ending on December 30, 2007. Conversely, pursuant to section 1563(b)(2)(A), Z is treated as an excluded member of the M-N controlled group. Therefore, on December 31st, 2007, X, Y, and Z qualify as component members of the selling group, and only M and N qualify as component members of the buying group.

(iii) *Additional tax analysis.* With regard to X and Y's 2007 tax years, X and Y together owed $5,000 of additional tax, as calculated in *Example 1.* X's allocated portion of the additional tax is $3,234, as calculated in the manner set forth in *Example 1.* Y's allocated portion of the additional tax is $1,766, also as calculated in the manner set forth in *Example 1.*

Example 3. (i) *Facts.* The facts are the same as in *Example 2,* except that in 2012, pursuant to an IRS audit, Z's 2007 taxable income was re-determined. It was adjusted by an income

increase of $10,000. Pursuant to the terms of the sales agreement, the members of the M-N group timely notified the members of the X-Y group of Z's income adjustment.
(ii) *Additional tax analysis.* For 2007 the X-Y-Z group owed a revised additional tax in the amount of $5,500, allocated as follows: $3,557.40 to X and $1,942.60 to Y. X and Y each filed an amended 2007 tax return to report their portions of the $500 increase to the group's additional tax. Pursuant to their apportionment plan for allocating their regular tax, and as a result of defaulting to the proportionate method for allocating the group's additional tax, X reported $323.40 as its share of the group's increase to its additional tax and Y reported $176.60 as its share of the group's increase to its additional tax.

Example 4. The facts are the same as in *Example 1,* except that the members elected in their apportionment plan to adopt the FIFO method for apportioning the additional tax. Under the FIFO method, the 5 percent additional tax amount of $5,000 will be apportioned entirely to those members who would benefit from using the 15 percent tax bracket, by reason that $5,000 of the group's additional tax is less than $9,500, which is the full tax-benefit amount inuring to a controlled group from having a 15 percent tax rate applied to the full income bracket subject to that rate. Since X derived 80 percent of the group's tax benefit by its use of the 15 percent tax bracket, its share of the group's 5 percent additional tax is $4,000 (80% × $5,000), and Y's share of the group's 5 percent additional tax is, therefore, $1,000, which is the remaining amount of the group's 5 percent additional tax, attributable to the 15 percent tax bracket.

(b) ***Reduction to the amount exempted from the alternative minimum tax*** —

(1) ***Calculation.*** The alternative minimum taxable incomes of the component members of a controlled group of corporations shall be taken into account in calculating the reduction set forth in section 55(d)(3) to the amount exempted from the alternative minimum tax (the exemption amount). For purposes of the preceding sentence, *alternative minimum taxable income* means the positive alternative minimum taxable income of a component member for its entire tax year (even if it was not a member of the group for each day of that tax year) that includes the same December 31st testing date, which is also applicable to the other component members of that same controlled group.

(2) ***Apportionment.*** Any reduction to the exemption amount shall be apportioned to the component members of a controlled group in the same manner that the amount of the exemption (provided in section 55(d)(2)) to the alternative minimum tax was allocated under section 1561(a). For rules to apportion the section 55(d)(2) exemption amount among the component members of a controlled group, see § 1.1561-3(b) or (c).

(3) ***Examples.*** The provisions of this paragraph (b) may be illustrated by the following example:

Example. (i) *Facts.* A controlled group of corporations consists of three members: X, Y and Z. X owns all of the stock of Y and Z. Each corporation files its separate return on a calendar year basis. For calendar year 2007, the component members of this controlled group have an apportionment plan in effect. The group has chosen to apportion the entire section 55(d)(2) exemption amount of $40,000 to Z. For 2007, X had alternative minimum taxable income (AMTI) of $40,000, Y had AMTI of $60,000 and Z had AMTI of $100,000. Thus the total AMTI

of the group is $200,000.
(ii) *Calculating the reduction to the exemption amount.* Section 55(d)(3)(A) provides that the section 55(d)(2) exemption amount shall be reduced (but not below zero) by an amount equal to 25 percent of the amount by which the AMTI of a corporation exceeds $150,000. For the purpose of computing the group's AMTI, the AMTI of each of the component members, for their tax years that have the same December 31st testing date, shall be taken into account. In accordance with these provisions, the $40,000 exemption amount is reduced by $12,500 (25% × $50,000 ($200,000−$150,000)). Pursuant to the group's allocation plan, the entire $12,500 reduction to the exemption amount is allocated to Z. Thus, after such allocation, Z's $40,000 exemption amount is reduced to $27,500 ($40,000−$12,500).

(c) ***Accumulated earnings credit.*** The component members of a controlled group of corporations are permitted to allocate the amount of the accumulated earnings credit unequally if they have an apportionment plan in effect.

(d) [Reserved]

(e) ***Short taxable years not including a December 31st date*** —

(1) ***General rule.*** If a corporation has a short taxable year not including a December 31st date and, after applying the rules of section 1561(b) and paragraph (e)(2)(i) of this section, it qualifies as a component member of the group with respect to its short taxable year (short-year member), then, for purposes of subtitle A of the Internal Revenue Code, the amount of any tax-benefit item described in section 1561(b) allocated to that component member's short taxable year shall be the amount specified in section 1561(a) for that item, divided by the number of corporations which are component members of that group on the last day of that component member's short taxable year. The component members of such group may not apportion, by an apportionment plan, an amount of such tax-benefit item to any short-year member that differs from equal apportionment of that item.

(2) ***Additional rules.*** For purposes of paragraph (e)(1) of this section—

(i) Section 1563(b) shall be applied as if the last day of the taxable year of a short-year member were substituted for December 31st; and

(ii) The term short taxable year does not refer to any portion of a tax year of a corporation for which its income is required to be included in a consolidated return pursuant to § 1.1502-76(b).

(3) ***Calculation of the additional tax.*** A short-year member (as defined in paragraph (e)(1) of this section) for its short taxable year calculates its additional tax liability imposed by section 11(b)(1) only on its own income, and therefore the subsequent calculation of the additional tax liability with regard to the remaining members of the group will not include the income of this short-year member.

(4) ***Calculation of the alternative minimum tax.*** If a component member has a tax year of less than 12 months, whether or not such tax year includes a December 31st date, see section 443(d) for the annualization method required for calculating the alternative minimum tax.

(5) ***Examples.*** The provisions of this paragraph (e) may be illustrated by the following examples:

Example 1. Formation of a new member of a controlled group—(i) Facts. On January 2, 2007, corporation X transfers cash to newly formed corporation Y (which begins business on that date) and receives all of the

stock of Y in return. X also owns all of the stock of corporation Z on each day of 2006 and 2007. X, Y and Z have an apportionment plan in effect, apportioning the 15 percent taxbracket amount as follows: 40% ($20,000) to each of X and Y and 20% ($10,000) to Z. X, Y and Z each file a separate return with respect to the group's December 31st, 2007 testing date. X is on a calendar tax year and Z is on a fiscal tax year ending on March 31. Y adopts a fiscal year ending on June 30 and timely files a tax return for its short taxable year beginning on January 2, 2007, and ending on June 30, 2007. (ii) *Y's short taxable year.* On June 30, 2007, Y is a component member of a parentsubsidiary controlled group of corporations composed of X, Y and Z. Pursuant to paragraph (e)(1) of this section, the group may not apportion any amount of the 15 percent tax bracket to Y's short taxable year ending on June 30, 2007. Rather, Y is entitled to exactly $^{1}/_{3}$ of such bracket amount, or $16,667.

(iii) *The members' subsequent tax years.* On December 31st, 2007, X, Y and Z are component members of a parent-subsidiary controlled group of corporations. For their tax years that include December 31st, 2007 (X's calendar year ending December 31st, 2007, Z's fiscal year ending March 31, 2008 and Y's fiscal year ending June 30, 2008), X, Y and Z apportion among themselves the full amount of all of the applicable tax brackets pursuant to their apportionment plan. For example, 40% of the 15 percent tax-bracket amount, or $20,000, was apportioned to each of X and Y, and the remaining 10%, or $10,000, was apportioned to Z.

Example 2. Allocating a tax bracket to the short taxable year of a liquidated member of a controlled group—(i) Facts. On January 1, 2007, corporation P owns all of the stock of corporations S_1, S_2 and S_3 (the P group). Each of these four component members of the P group, with respect to the group's December 31st, 2007 testing date, files its separate return on a calendar year basis. These members have an apportionment plan in effect (the P group plan) under which S_1 and S_2 are each entitled to 40% of the 15 percent tax-bracket amount ($20,000), and P and S_3 are each entitled to 10% of the 15 percent tax-bracket amount ($5,000). On May 31, 2007, S_1 liquidates and therefore files a return for the short taxable year beginning on January 1, 2007, and ending on May 31, 2007. On July 31, 2007, S_2 liquidates and therefore files a return for the short taxable year beginning on January 1, 2007 and ending on July 31, 2007. P and S_3 each file a return for their 2007 calendar tax years. (ii) *Apportionment of the 15 percent tax bracket to S_1 for its short taxable year.* On May 31, 2007, S_1 is a component member of the P group composed of P, S_1, S_2 and S_3. Pursuant to paragraph (e)(1) of this section, the group may not apportion any amount of the 15 percent tax bracket to S_1's short taxable year ending on June 30, 2007. Rather, S_1 is entitled to exactly $^{1}/_{4}$ of such bracket amount, or $12,500.

(iii) *Apportionment of the 15 percent tax bracket to S_2 for its short taxable year.* On July 31, 2007, S_2 is a component member of the P group composed of P, S_2 and S_3. Pursuant to paragraph (e)(1) of this section, the group may not apportion any amount of the 15 percent tax bracket to S_2's short taxable year ending on June 30, 2007. Rather, S_2 is entitled to exactly $^{1}/_{4}$ of such bracket amount, or $16,667.

(iv) *Apportionment of the 15 percent tax bracket to P and S_3 for each of their calendar tax years.* On December 31st, 2007, P and S_3 are component members of the P group. Accordingly, for P and S_3's 2007 calendar tax year, they are each apportioned $25,000 of the 15 percent tax bracket, pursuant to the applicable P group plan.

Example 3. Liquidation of member after its transfer to another controlled group—(i) Facts. The facts are the same as in Example 2, except that P, on April 30, 2007, sold all of the stock of S_2 to the M-N controlled group. At the time of the sale, M and N are both unrelated to any members of the P group. As in Example 2, S_2 liquidates on July 31, 2007, and therefore files a tax return for its short taxable year beginning on January 1, 2007, and ending on July 31, 2007. Pursuant to the sales agreement, the N-M group timely notified P that S_2 had liquidated. (ii) *Controlled group analysis.* On April 30, 2007, the date of the sale of S_2, the P group reasonably expected that S_2 would be treated as an excluded member with respect to its December 31st, 2007 testing date. On that April 30th date, S_2 had been a member of the P group for less than one-half the number of days of what it expected would be a full 2007 calendar tax year preceding December 31st, 2007 (120 days (January 1-April 30) out of 364 days (January 1-December 30)). Yet, as a result of S_2's subsequent liquidation by the M-N group prior to December 31st, 2007, S_2 became a component member of the P group with respect to the P group's December 31st, 2007 testing date. With respect to that December 31st testing date, S_2 thus was a member of the P group for more than one-half of the number of days of its tax year ending on July 31, 2007, which days proceeded December 31st, 2007 (120 days (January 1-April 30 of 2007) out of 211 days (January 1-July 30 of 2007)). The allocation of the 15 percent tax-bracket amount to the P group members is determined in the same manner as in Example 2 and, therefore, the bracket amounts allocated to P, S_1, S_2 and S_3 are the same as determined in Example 2. The allocation of the bracket amounts would be the same if, at the time P sold all of the S_2 stock, the parties had made a section 338(h)(10) election.

Example 4. Short tax year including a December 31st date. Corporation X owns all of the stock of corporations Y and Z. X, Y and Z each file separate returns. X and Y are on a calendar tax year and Z is on a fiscal tax year beginning October 1 and ending September 30. On January 2, 2007, Z liquidates. Because Z's final tax year (beginning on October 1, 2006 and ending on January 2, 2007) includes a December 31st date, that is, December 31, 2006, it is therefore not subject to the short taxable year rule provided by section 1561(b) and paragraph (e) of this section. Accordingly, Z is a component member of the X-Y-Z group, for the group's December 31st, 2006 testing date. Thus, the rules of this paragraph (e) do not limit the amount of any of the tax-benefit items of section 1561(a) available to Z or to this controlled group.
(f) *Effective/applicability date.* This section applies to any tax year beginning on or after December 21, 2009. However, taxpayers may apply this section to any Federal income tax return filed on or after December 21, 2009. For tax years beginning before December 21, 2009, see § 1.1561-2T as contained in 26 CFR part 1 in effect on April 1, 2009.

[T.D. 9476, 74 FR 68533, Dec. 28, 2009]

§ 1.1561-3 Allocation of the section 1561(a) tax items.

(a) *Filing of form* —

(1) ***In general.*** For each tax year that a corporation is a component member of the same controlled group of corporations on a December 31st (its testing date), or, in the case of a short-year member (see section 1561(b) and § 1.1561-2(e)), the date substituted for that December 31st date (its testing date), such corporation and all the other component members of such group each must file the required form (that is, Schedule O or any successor form) with the Federal income tax return for that component member's tax year that includes a particular testing date. Each such corporation must file that form with its return whether or not—

(i) An apportionment plan is in effect; or

(ii) Any change is made to the group's apportionment of its section 1561(a) tax benefit items from the previous year.

(2) ***Exception for component members that are members of a consolidated group.*** If any of the component members of a controlled group of corporations are also members of a consolidated group, the parent of such consolidated group shall file only one form on behalf of all such members. Such form shall contain the information required for each such member.

(b) ***No apportionment plan in effect.*** If the component members of a controlled group of corporations do not have an apportionment plan in effect, the amounts of the section 1561(a) items must be divided equally among all such members. For purposes of the preceding sentence, if any of the component members of a controlled group of corporations are also members of a consolidated group, such members will each be treated as a separate component member of the controlled group.

(c) *Apportionment plan in effect* —

(1) ***Adoption of plan.*** The component members of a controlled group of corporations consent to the adoption (or amendment) of an apportionment plan by checking the box to that effect on such form. For purposes of this paragraph (c)—

(i) An apportionment plan that is adopted (including a plan that has been amended) continues in effect until it is terminated;

(ii) A consolidated group is treated collectively as one component member of such group. This treatment occurs even where a member of that consolidated group has joined or left the group, if after such corporation joins or leaves the consolidated group, that group remains in existence, pursuant to § 1.1502-75(d); and

(iii) The members must allocate the amounts of the section 1561(a) items between/among themselves as described in the plan.

(2) *Limitation on adopting a plan* —

(i) ***Sufficient statute of limitations period for making an assessment of tax.*** The members may only adopt or amend such a plan if there is at least one year remaining in the statutory period (including any extensions thereof) for the assessment of a deficiency against every member the tax liability of which would be increased by the adoption of such a plan.

(ii) ***Insufficient statute of limitations period for making an assessment of tax.*** If any member cannot satisfy the requirement of paragraph (c)(2)(i) of this section, the members may not adopt or amend such a plan unless the member not satisfying such requirement has entered into an agreement with the Internal Revenue Service to extend the statute of limitations for the limited purpose of assessing any deficiency against such member attributable to the adoption of such a plan.

(3) ***Termination of plan.*** An apportionment plan that is in effect for the component members of a controlled group with respect to a preceding December 31st is terminated with respect to the current December 31st if—

(i) Each member of such group consents to the termination of such a plan for the current December 31st by checking the box to that effect on its form;

(ii) The controlled group ceases to remain in existence (within the meaning of section 1563(a)) during the calendar year ending on the current December 31st;

(iii) Any corporation which was a component member of such group on the preceding December 31st is not a component member of such group on the current December 31st; or

(iv) Any corporation which was not a component member of such group on the preceding December 31st is a component member of such group on the current December 31st.

(d) ***Effective/applicability date.*** This section applies to any tax year beginning on or after December 21, 2009. However, taxpayers may apply this section to any Federal income tax return filed on or after December 21, 2009. For tax years beginning before December 21, 2009, *see* § 1.1561-3T as contained in 26 CFR part 1 in effect on April 1, 2009.

[T.D. 9476, 74 FR 68536, Dec. 28, 2009]

§ 1.1563-1 Definition of controlled group of corporations and component members and related concepts.

(a) ***Controlled group of corporations*** —

(1) ***In general*** —

(i) ***Types of controlled groups.*** For purposes of sections 1561 through 1563, the term *controlled group of corporations* means any group of corporations which is—

(A) A *parent-subsidiary controlled group* (as defined in paragraph (a)(2) of this section);

(B) A *brother-sister controlled group* (as defined in paragraph (a)(3)(i) of this section);

(C) A *combined group* (as defined in paragraph (a)(4) of this section); or

(D) A *life insurance controlled group* (as defined in paragraph (a)(5) of this section).

(ii) ***Special rules.*** In determining whether a corporation is included in a controlled group of corporations, section 1563(b) and paragraph (b) of this section shall not be taken into account. For rules defining a component member of a controlled group of corporations, including rules defining an excluded member and an additional member, see section 1563(b) and paragraph (b) of this section.

(iii) ***Cross reference.*** For the exclusion of certain stock for purposes of applying the definitions contained in this paragraph, see section 1563(c) and § 1.1563-2.

(2) ***Parent-subsidiary controlled group*** —

(i) ***Definition.*** The term *parent-subsidiary controlled group* means one or more chains of corporations connected through stock ownership with a common parent corporation if—

(A) Stock possessing at least 80 percent of the total combined voting power of all classes of stock entitled to vote or at least 80 percent of the total value of shares of all classes of stock of each of the corporations, except the common parent corporation, is owned (directly and with the application of § 1.1563-3(b)(1), (2), and (3)) by one or more of the other corporations; and

(B) The common parent corporation owns (directly and with the application of § 1.1563-3(b)(1), (2), and (3)) stock possessing at least 80 percent of the total combined voting power of all classes of stock entitled to vote or at least 80 percent of the total value of shares of all classes of stock of at least one of the other corporations, excluding, in computing such voting power or value, stock owned directly by such other corporations.

(ii) ***Examples.*** The definition of a parent-subsidiary controlled group of corporations may be illustrated by the following examples:

Example 1. P Corporation owns stock possessing 80 percent of the total combined voting power of all classes of stock entitled to vote of S Corporation. P is the common parent of a parent-subsidiary controlled group consisting of member corporations P and S.

Example 2. Assume the same facts as in *Example 1.* Assume further that S owns stock possessing 80 percent of the total value of shares of all classes of stock of X Corporation. P is the common parent of a parent-subsidiary controlled group consisting of member corporations P, S, and X. The result would be the same if P, rather than S, owned the X stock.

Example 3. P Corporation owns 80 percent of the only class of stock of S Corporation and S, in turn, owns 40 percent of the only class of stock of X Corporation. P also owns 80 percent of the only class of stock of Y Corporation and Y, in turn, owns 40 percent of the only class of stock of X. P is the common parent of a parent-subsidiary controlled group consisting of member corporations P, S, X, and Y.

Example 4. P Corporation owns 75 percent of the only class of stock of Y and Z Corporations; Y owns all the remaining stock of Z; and Z owns all the remaining stock of Y. Since intercompany stockholdings are excluded (that is, are not treated as outstanding) for purposes of determining whether P owns stock possessing at least 80 percent of the voting power or value of at least one of the other corporations, P is treated as the owner of stock possessing 100 percent of the voting power and value of Y and of Z for purposes of paragraph (a)(2)(i)(B) of this section. Also, stock possessing 100 percent of the voting power and value of Y and Z is owned by the other corporations in the group within the meaning of paragraph (a)(2)(i)(A) of this section. (P and Y together own stock possessing 100 percent of the voting power and value of Z, and P and Z together own stock possessing 100 percent of the voting power and value of Y.) Therefore, P is the common parent of a parent-subsidiary controlled group of corporations consisting of member corporations P, Y, and Z.

(3) *Brother-sister controlled group* —

(i) ***Definition.*** The term *brother-sister controlled group* means two or more corporations if the same five or fewer persons who are individuals, estates, or trusts own (directly and with the application of the rules contained in § 1.1563-3(b)) stock possessing more than 50 percent of the total combined voting power of all classes of stock entitled to vote or more than 50 percent of the total value of shares of all classes of stock of each corporation, taking into account the stock ownership of each such person only to the extent such stock ownership is identical with respect to each such corporation.

(ii) ***Additional stock ownership requirement for purposes of certain other provisions of law.*** For purposes of any provision of law (other than sections 1561 through 1563) that incorporates the section 1563(a) definition of a controlled group, the term *brother-sister controlled group* means two or more corporations if the same five or fewer persons who are individuals, estates, or trusts own (directly and with the application of the rules contained in § 1.1563-3(b)) stock possessing—

(A) At least 80 percent of the total combined voting power of all classes of stock entitled to vote or at least 80 percent of the total value of shares of all classes of stock of each corporation (the 80 percent requirement);

(B) More than 50 percent of the total combined voting power of all classes of stock entitled to vote or more than 50 percent of the total value of shares of all classes of stock of each corporation, taking into account the stock ownership of each such person only to the extent such stock ownership is identical with respect to each such corporation (the more-than-50 percent identical ownership requirement); and

(C) The five or fewer persons whose stock ownership is considered for purposes of the 80 percent requirement must be the same persons whose stock ownership is considered for purposes of the more-than-50 percent identical ownership requirement.

(iii) ***Examples.*** The principles of paragraph (a)(3)(ii) of this section may be illustrated by the following examples:

Example 1. (i) The outstanding stock of corporations P, W, X, Y, and Z, which have only one class of stock outstanding, is owned by the following unrelated individuals:

Individuals	P (%)	W (%)	X (%)	Y (%)	Z (%)	Identical ownership
A	55	51	55	55	55	51.
B	45	49				(45% in P and W).
C			45			
D				45		
E					45	

Individuals	P (%)	W (%)	X (%)	Y (%)	Z (%)	Identical ownership
Total	100	100	100	100	100	

(ii) Corporations P and W are members of a brother-sister controlled group of corporations. Although the more-than-50 percent identical ownership requirement is met for all 5 corporations, corporations X, Y, and Z are not members because at least 80 percent of the stock of each of those corporations is not owned by the same 5 or fewer persons whose stock ownership is considered for purposes of the more-than-50 percent identical ownership requirement.

Example 2. (i) The outstanding stock of corporations X and Y, which have only one class of stock outstanding, is owned by the following unrelated individuals:

Individuals	Corporations	
	X (%)	Y (%)
A	12	12
B	12	12
C	12	12
D	12	12
E	13	13
F	13	13
G	13	13
H	13	13
Total	100	100

(ii) Any group of five of the shareholders will own more than 50 percent of the stock in each corporation, in identical holdings. However, X and Y are not members of a brother-sister controlled group because at least 80 percent of the stock of each corporation is not owned by the same five or fewer persons.

Example 3. (i) Corporation X and Y each have two classes of stock outstanding, voting common and non-voting common. (None of this stock is excluded from the definition of stock under section 1563(c).) Unrelated individuals A and B own the following percentages of the class of stock entitled to vote (voting) and of the total value of

shares of all classes of stock (value) in each of corporations X and Y:

Individuals	Corporations	
	X	Y
A	100% voting; 60% value	75% voting; 60% value.
B	0% voting; 10% value	25% voting; 10% value.

(ii) No other shareholder of X owns (or is considered to own) any stock in Y. X and Y are a brother-sister controlled group of corporations. The group meets the more-than-50 percent identical ownership requirement because A and B own more than 50 percent of the total value of shares of all classes of stock of X and Y in identical holdings. (The group also meets the more-than-50 percent identical ownership requirement because of A's voting stock ownership.) The group meets the 80 percent requirement because A and B own at least 80 percent of the total combined voting power of all classes of stock entitled to vote.

Example 4. Assume the same facts as in *Example 3* except that the value of the stock owned by A and B is not more than 50 percent of the total value of shares of all classes of stock of each corporation in identical holdings. X and Y are not a brother-sister controlled group of corporations. The group meets the more-than-50 percent identical ownership requirement because A owns more than 50 percent of the total combined voting power of the voting stock of each corporation. For purposes of the 80 percent requirement, B's voting stock in Y cannot be combined with A's voting stock in Y since B, who does not own any voting stock in X, is not a person whose ownership is considered for purposes of the more-than-50 percent identical ownership requirement. Because no other shareholder owns stock in both X and Y, these other shareholders' stock ownership is not counted towards meeting either the more-than-50 percent identical ownership requirement or the 80 percent ownership requirement.

(iv) ***Special rule if prior law applies.*** Paragraph (a)(3)(ii) of this section, as amended by TD 8179, applies to taxable years ending on or after December 31, 1970. See, however, the transitional rule in paragraph (d) of this section.

(4) ***Combined group*** —

(i) ***Definition.*** The term *combined group* means any group of three or more corporations if—

(A) Each such corporation is a member of either a parent-subsidiary controlled group of corporations or a brother-sister controlled group of corporations; and

(B) At least one of such corporations is the common parent of a parent-subsidiary controlled group and also is a member of a brother-sister controlled group.

(ii) ***Examples.*** The definition of a combined group of corporations may be illustrated by the following examples:

> *Example 1.* A, an individual, owns stock possessing 80 percent of the total combined voting power of all classes of the stock of corporations X and Y. Y, in turn, owns stock possessing 80 percent of the total combined voting power of all classes of the stock of corporation Z. X, Y, and Z are members of the same combined group since—
> (i) X, Y, and Z are each members of either a parent-subsidiary or brother-sister controlled group of corporations; and
>
> (ii) Y is the common parent of a parent-subsidiary controlled group of corporations consisting of Y and Z, and also is a member of a brother-sister controlled group of corporations consisting of X and Y.

Example 2. Assume the same facts as in *Example 1,* and further assume that corporation X owns 80 percent of the total value of shares of all classes of stock of corporation S. X, Y, Z, and S are members of the same combined group.

(5) ***Life insurance controlled group*** —

(i) ***Definition.*** The term *life insurance controlled group* means two or more life insurance companies each of which is a member of a controlled group of corporations described in paragraph (a)(2), (a)(3)(i), or (a)(4) of this section and to which § 1.1502-47(f)(6) does not apply. Such insurance companies shall be treated as a controlled group of corporations separate from any other corporations which are members of a controlled group described in such paragraph (a)(2), (a)(3)(i), or (a)(4) of this section. For purposes of this section, the common parent of the controlled group described in paragraph (a)(2) of this section shall be referred to as the common parent of the life insurance controlled group.

(ii) ***Examples.*** The following examples illustrate the definition of a *life insurance controlled group.* In these examples, L indicates a life company, another letter indicates a nonlife company and each corporation uses the calendar year as its taxable year:

Example 1. Since January 1, 1999, corporation P has owned all the stock of corporations L_1 and Y, and L_1 has owned all the stock of corporation X. On January 1, 2005, Y acquired all of the stock of corporation L_2. Since L_1 and L_2 are members of a parent-subsidiary controlled group of corporations, such companies are treated as members of a life insurance controlled group separate from the parent-subsidiary controlled group consisting of P, X and Y. For purposes of this section, P is referred to as the common parent of the life insurance controlled group even though P is not a member of such group.

Example 2. The facts are the same as in *Example 1,* except that, beginning with the 2005 tax year, the P affiliated group elected to file a consolidated return and P made a section 1504(c)(2) election. Pursuant to paragraph (a)(5)(i) of this section, L_1 and L_2 are not members of a separate life insurance controlled group. Instead, P, X, Y, L_1 and L_2 constitute one controlled group. See § 1.1502-47(f)(6).

(6) ***Voting power of stock.*** For purposes of this section, and §§ 1.1563-2 and 1.1563-3, in determining whether the stock owned by a person (or persons) possesses a certain percentage of the total combined voting power of all classes of stock entitled to vote of a corporation, consideration will be given to all the facts and circumstances of each case. A share of stock will generally be considered as possessing the voting power accorded to such share by the corporate charter, by-laws, or share

certificate. On the other hand, if there is any agreement, whether express or implied, that a shareholder will not vote the shareholder's stock in a corporation, the formal voting rights possessed by the shareholder's stock may be disregarded in determining the percentage of the total combined voting power possessed by the stock owned by other shareholders in the corporation, if the result is that the corporation becomes a component member of a controlled group of corporations. Moreover, if a shareholder agrees to vote the shareholder's stock in a corporation in the manner specified by another shareholder in the corporation, the voting rights possessed by the stock owned by the first shareholder may be considered to be possessed by the stock owned by such other shareholder if the result is that the corporation becomes a component member of a controlled group of corporations.

(b) ***Component members*** —

(1) ***In general*** —

(i) ***Definition.*** For purposes of sections 1561 through 1563, a corporation is with respect to its taxable year a component member of a controlled group of corporations for the group's testing date if such corporation—

(A) Is a member of such controlled group on such testing date and is not treated as an excluded member under paragraph (b)(2) of this section; or

(B) Is not a member of such controlled group on such testing date but is treated as an additional member under paragraph (b)(3) of this section.

(ii) ***Member of a controlled group of corporations.*** For purposes of sections 1561 through 1563, a member of a controlled group is a corporation connected with other member(s) of a controlled group under the stock ownership rules and the stock qualification rules set forth in section 1563. Under these rules, for a corporation to qualify as a component member of the group with respect to a group's December 31st testing date (or the short-year testing date for a short-year member), that corporation does not have to be a member of that group on that group's testing date. In addition, a corporation that is a member of a controlled group on the group's testing date does not necessarily qualify as a component member of that group with respect to that testing date.

(iii) ***Additional concepts used in applying the controlled group rules.***

(A) The term *testing date* means the date used for determining the status of controlled group members as either component members or excluded members. That testing date is then also used to determine which taxable years of those component members are to be subjected to the controlled group rules. Generally, a member's testing date is the December 31st date included within that member's taxable year, whether such member is on a calendar or fiscal taxable year. However, if a component member of a controlled group has a short taxable year that does not include a December 31st date, then the last day of that short taxable year becomes that member's testing date.

(B) The term *testing period* means the time period used for determining the status of controlled group members as either component members or excluded members. The testing period begins on the first day of a member's taxable year and ends on the day before its testing date. (Generally, the testing date is December 31st, but for a component member having a short taxable year not ending on December 31st, the testing date for the short taxable year of that member (and only that member) becomes the last day of that

member's short taxable year.) Thus, for a member on a fiscal taxable year, the portion of its taxable year beginning on December 31st and ending on the last day of its taxable year is not taken into account for determining its status as a component member or an excluded member.

(2) *Excluded members* —

(i) ***Temporal test.*** A corporation, which is a member of a controlled group of corporations on the group's testing date, a date included within that member's taxable year, but who was a member of such group for less than one-half of the number of days of its testing period, shall be treated as an excluded member of such group for that group's testing date.

(ii) ***Qualification test.*** A corporation which is a member of a controlled group of corporations on a testing date shall be treated as an excluded member of such group on such date if, for its taxable year including such date, such corporation is—

(A) Exempt from taxation under section 501(a) (except a corporation which is subject to tax on its unrelated business taxable income under section 511) or 521 for such taxable year;

(B) A foreign corporation not subject to taxation under section 882(a) for the taxable year;

(C) An S corporation (as defined in section 1361) for purposes of any tax benefit item described in section 1561(a) to which it is not subject;

(D) A franchised corporation (as defined in section 1563(f)(4) and § 1.1563-4); or

(E) An insurance company subject to taxation under section 801, unless such insurance company (without regard to this paragraph (b)(2)(ii)(E)) is a component member of a life insurance controlled group described in paragraph (a)(5)(i) of this section or unless § 1.1502-47(f)(6) applies (which treats a life insurance company, for which a section 1504(c)(2) election is effective, as a member (whether eligible or ineligible) of a life-nonlife affiliated group).

(3) ***Additional members.*** A corporation shall be treated as an additional member of a controlled group of corporations, that is, an additional component member, on the group's testing date if it—

(i) Is not a member of such group on such date;

(ii) Is not described, with respect to such taxable year, in paragraph (b)(2)(ii)(A), (b)(2)(ii)(B), (b)(2)(ii)(C), (b)(2)(ii)(D), or (b)(2)(ii)(E) of this section; and

(iii) Was a member of such group for one-half (or more) of the number of days in its testing period.

(4) ***Examples.*** The provisions of this paragraph (b) may be illustrated by the following examples:

(i) ***Example 1.*** B, an individual, owns all of the stock of corporations W and X on each day of 1964. W and X each use the calendar year as their taxable year. On January 1, 1964, B also owns all the stock of corporation Y (a fiscal year corporation with a taxable year beginning on July 1, 1964, and ending on June 30, 1965), which stock B sells on October 15, 1964. On December 1, 1964, B purchases all the stock of corporation Z (a fiscal year corporation with a taxable year beginning on September 1, 1964, and ending on August 31, 1965). On December 31, 1964, W, X, and Z are members of the same controlled group. However, the component members of the group on such December 31st are W, X, and Y. Under paragraph (b)(2)(i) of this section, Z is treated as an excluded member of the group on December 31, 1964, since Z was a member of

the group for less than one-half of the number of days (29 out of 121 days) during the period beginning on September 1, 1964 (the first day of its taxable year) and ending on December 30, 1964. Under paragraph (b)(3) of this section, Y is treated as an additional member of the group on December 31, 1964, since Y was a member of the group for at least one-half of the number of days (107 out of 183 days) during the period beginning on July 1, 1964 (the first day of its taxable year) and ending on December 30, 1964.

(ii) ***Example 2.*** On January 1, 1964, corporation P owns all the stock of corporation S, which in turn owns all the stock of corporation S-1. On November 1, 1964, P purchases all of the stock of corporation X from the public and sells all of the stock of S to the public. Corporation X owns all the stock of corporation Y during 1964. P, S, S-1, X, and Y file their returns on the basis of the calendar year. On December 31, 1964, P, X, and Y are members of a parent-subsidiary controlled group of corporations; also, corporations S and S-1 are members of a different parent-subsidiary controlled group on such date. However, since X and Y have been members of the parent-subsidiary controlled group of which P is the common parent for less than one-half the number of days during the period January 1 through December 30, 1964, they are not component members of such group on such date. On the other hand, X and Y have been members of a parent-subsidiary controlled group of which X is the common parent for at least one-half the number of days during the period January 1 through December 30, 1964, and therefore they are component members of such group on December 31, 1964. Also since S and S-1 were members of the parent-subsidiary controlled group of which P is the common parent for at least one-half the number of days in the taxable years of each such corporation during the period January 1 through December 30, 1964, P, S, and S-1 are component members of such group on December 31, 1964.

(iii) ***Example 3.*** Throughout 1964, corporation M owns all the stock of corporation F which, in turn, owns all the stock of corporations L_1, L_2, X, and Y. M is a domestic mutual insurance company subject to taxation under section 821, F is a foreign corporation not engaged in a trade or business within the United States, L_1 and L_2 are domestic life insurance companies subject to taxation under section 802, and X and Y are domestic corporations subject to tax under section 11 of the Code. Each corporation uses the calendar year as its taxable year. On December 31, 1964, M, F, L_1, L_2, X, and Y are members of a parent-subsidiary controlled group of corporations. However, under paragraph (b)(2)(ii) of this section, M, F, L_1, and L_2 are treated as excluded members of the group on December 31, 1964. Thus, on December 31, 1964, the component members of the parent-subsidiary controlled group of which M is the common parent include only X and Y.

Furthermore, since paragraph (b)(2)(ii)(E) of this section does not result in L_1 and L_2 being treated as excluded members of a life insurance controlled group, L_1 and L_2 are component members of a life insurance controlled group on December 31, 1964.

(iv) ***Example 4.*** Individual A owns all of the stock of corporations X, Y and Z. Each of these corporations is an S corporation. X, Y, and Z are each members of a brother-sister controlled group, even though each such corporation is treated as an excluded member of such group. See § 1.1563-1(b)(2)(ii)(C).

(5) ***Application of constructive ownership rules.*** For purposes of paragraphs (b)(2)(i) and (b)(3)(iii) of this section, it is necessary to determine whether a corporation was a member of a controlled group of corporations for one-half (or more) of the number of days in its taxable year which precede the December 31st falling within such taxable year. Therefore, the constructive ownership rules

contained in § 1.1563-3(b) (to the extent applicable in making such determination) must be applied on a day-by-day basis. For example, if P Corporation owns all the stock of X Corporation on each day of 1964, and on December 30, 1964, acquires an option to purchase all the stock of Y Corporation (a calendar-year taxpayer which has been in existence on each day of 1964), the application of § 1.1563-3(b)(1) on a day-by-day basis results in Y being a member of the brother-sister controlled group on only one day of Y's 1964 year which precedes December 31, 1964. Accordingly, since Y is not a member of such group for one-half or more of the number of days in its 1964 year preceding December 31, 1964, Y is treated as an excluded member of such group on December 31, 1964.

(c) ***Overlapping groups*** —

(1) ***In general.*** If on a December 31st a corporation is a component member of a controlled group of corporations by reason of ownership of stock possessing at least 80 percent of the total value of shares of all classes of stock of the corporation, and if on such December 31st such corporation is also a component member of another controlled group of corporations by reason of ownership of other stock (that is, stock not used to satisfy the at-least-80 percent total value test) possessing at least 80 percent of the total combined voting power of all classes of stock of the corporation entitled to vote, then such corporation shall be treated as a component member only of the controlled group of which it is a component member by reason of the ownership of at least 80 percent of the total value of its shares.

(2) ***Brother-sister controlled groups*** —

(i) ***One corporation.*** If on a December 31st, a corporation would, without the application of this paragraph (c)(2), be a component member of more than one brother-sister controlled group on such date, the corporation will be treated as a component member of only one such group on such date. Such corporation may elect the group in which it is to be included by including on or with its income tax return for the taxable year that includes such date a statement entitled, “STATEMENT TO ELECT CONTROLLED GROUP PURSUANT TO § 1.1563-1(c)(2).” This statement must include—

(A) A description of each of the controlled groups in which the corporation could be included. The description must include the name and employer identification number of each component member of each such group and the stock ownership of the component members of each such group; and

(B) The following representation: [INSERT NAME AND EMPLOYER IDENTIFICATION NUMBER OF CORPORATION] ELECTS TO BE TREATED AS A COMPONENT MEMBER OF THE [INSERT DESIGNATION OF GROUP].

(ii) ***Multiple corporations.*** If more than one corporation would, without the application of this paragraph (c)(2), be a component member of more than one controlled group, those corporations electing to be component members of the same group must file a single statement. The statement must contain the information described in paragraph (c)(2)(i) of this section, plus the names and employer identification numbers of all other corporations designating the same group. The original statement must be included on or with the original Federal income tax return (including any amended return filed on or before the due date (including extensions) of such return) of the corporation that, among those corporations which would (without the application of this paragraph (c)(2)) belong to more than one group, has the taxable year including such December 31st which ends on the earliest date. That corporation

must provide a copy of the statement to each other corporation included in the statement and represent in its statement that it has done so. Either the original or a copy of the statement must be retained by each corporation as part of its records. See § 1.6001-1(e) of this chapter.

(iii) ***Election.***

(A) An election filed under this paragraph (c)(2) is irrevocable and effective until a change in the stock ownership of the corporation results in termination of membership in the controlled group in which such corporation has been included.

(B) In the event no election is filed in accordance with the provisions of this paragraph (c)(2), then the Internal Revenue Service will determine the group in which such corporation is to be included. Such determination will be binding for all subsequent years unless the corporation files a valid election with respect to any such subsequent year or until a change in the stock ownership of the corporation results in termination of membership in the controlled group in which such corporation has been included.

(iv) ***Examples.*** The provisions of this paragraph (c)(2) may be illustrated by the following examples (in which it is assumed that all the individuals are unrelated):

Example 1. (i) On each day of 1970 all the outstanding stock of corporations X, Y, and Z is held in the following manner:

Individuals	Corporations		
	X (%)	Y (%)	Z (%)
A	55	40	5
B	40	20	40
C	5	40	55

(ii) Since the more-than-50 percent identical ownership requirement of section 1563(a)(2) is met with respect to corporations X and Y and with respect to corporations Y and Z, but not with respect to corporations X, Y, and Z, corporation Y would, without the application of this paragraph (c)(2), be a component member on December 31, 1970, of overlapping groups consisting of X and Y and of Y and Z. If Y does not file an election in accordance with paragraph (c)(2)(i) of this section, the Internal Revenue Service will determine the group in which Y is to be included.

Example 2. (i) On each day of 1970, all the outstanding stock of corporations V, W, X, Y,

and Z is held in the following manner:

Individuals	Corporations				
	V	W	X	Y	Z
D	52	52	52	52	52
E	40	2	2	2	2
F	2	40	2	2	2
G	2	2	40	2	2
H	2	2	2	40	2
I	2	2	2	2	40

(ii) On December 31, 1970, the more-than-50 percent identical ownership requirement of section 1563(a)(2) may be met with regard to any combination of the corporations but all five corporations cannot be included as component members of a single controlled group because the inclusion of all the corporations in a single group would be dependent upon taking into account the stock ownership of more than five persons. Therefore, if the corporations do not file a statement in accordance with paragraph (c)(2)(ii) of this section, the Internal Revenue Service will determine the group in which each corporation is to be included. The corporations or the Internal Revenue Service, as the case may be, may designate that three corporations be included in one group and two corporations in another, or that any four corporations be included in one group and that the remaining corporation not be included in any group.

(d) *Transitional rules* —

(1) ***In general.*** Treasury decision 8179 amended paragraph (a)(3)(ii) of this section to revise the definition of a brother-sister controlled group of corporations. In general, those amendments are effective for taxable years ending on or after December 31, 1970.

(2) *Limited nonretroactivity* —

(i) ***Old group.*** Under the authority of section 7805(b), the Internal Revenue Service will treat an old group as a brother-sister controlled group corporations for purposes of applying sections 401, 404(a), 408(k), 409A, 410, 411, 412, 414, 415, and 4971 of the Internal Revenue Code (Code) and sections 202, 203, 204, and 302 of the Employment Retirement Income Security Act of 1974 (ERISA) in a plan year or taxable year beginning before March 2, 1988, to the extent necessary to prevent an adverse effect on any old member (or any other corporation), or on any plan or other entity described in such sections (including plans, etc., of corporations not part of such old group), that would result solely from the retroactive effect of the amendment to this section by TD 8179. An adverse effect includes the disqualification of a plan or the

disallowance of a deduction or credit for a contribution to a plan. The Internal Revenue Service, however, will not treat an old member as a member of an old group to the extent that such treatment will have an adverse effect on that old member.

(ii) ***Old member of old group.*** Section 7805(b) will not be applied pursuant to paragraph (d)(2)(i) of this section to treat an old member of an old group as a member of a brother-sister controlled group to prevent an adverse effect for a taxable year if, for that taxable year, that old member treats or has treated itself as not being a member of that old group for purposes of sections 401, 404(a), 408(k), 409A, 410, 411, 412, 414, 415, and 4971 of the Code and sections 202, 203, 204, and 302 and title IV of ERISA for such taxable year (such as by filing, with respect to such taxable year, a return, amended return, or claim for credit or refund in which the amount of any deduction, credit, limitation, or tax due is determined by treating itself as not being a member of the old group for purposes of those sections). However, the fact that one or more (but not all) of the old members do not qualify for section 7805(b) treatment because of the preceding sentence will not preclude that old member (or members) from being treated as a member of the old group under paragraph (d)(2)(i) of this section in order to prevent the disallowance of a deduction or credit of another old member (or other corporation) or to prevent the disqualification of, or other adverse effect on, another old member's plan (or other entity) described in the sections of the Code and ERISA enumerated in such paragraph.

(3) ***Election of general nonretroactivity.*** In the case of a taxable year ending on or after December 31, 1970, and before March 2, 1988, an old group will be treated as a brother-sister controlled group of corporations for all purposes of the Code for such taxable year if—

(i) Each old member files a statement consenting to such treatment for such taxable year with the District Director having audit jurisdiction over its return within six months after March 2, 1988; and

(ii) No old member—

(A) Files or has filed, with respect to such taxable year, a return, amended return, or claim for credit or refund in which the amount of any deduction, credit, limitation, or tax due is determined by treating any old member as not a member of the old group; or

(B) Treats the employees of all members of the old group as not being employed by a single employer for purposes of sections 401, 404(a), 408(k), 409A, 410, 411, 412, 414, 415, and 4971 of the Code and sections 202, 203, 204, and 302 of ERISA for such taxable year.

(4) ***Definitions.*** For purposes of this paragraph (d)—

(i) An *old group* is a brother-sister controlled group of corporations, determined by applying paragraph (a)(3)(ii) of this section as in effect before the amendments made by TD 8179, that is not a brother-sister controlled group of corporations, determined by applying paragraph (a)(3)(ii) of this section as amended by such Treasury decision; and

(ii) An *old member* is any corporation that is a member of an old group.

(5) ***Election to choose between membership in more than one controlled group*** —

(i) ***In general.*** A corporation may make an election under paragraph (c)(2) of this section by filing an amended return on or before September 2, 1988 if—

(A) An old member has filed an election under paragraph (c)(2) of this section to be treated as a component member of an old group for a December 31st before March 2, 1988; and

(B) That corporation would (without regard to such paragraph (c)(2)) be a component member of more than one brother-sister controlled group (not including an old group) on December 31st.

(ii) ***Exception.*** This paragraph (d)(5) does not apply to a corporation that is treated as a member of an old group under paragraph (d)(3) of this section.

(6) ***Refunds.*** See section 6511(a) for period of limitation on filing claims for credit or refund.

(e) ***Applicability dates*** —

(1) ***In general.*** Except as provided in paragraph (e)(2) of this section, this section applies to taxable years beginning on or after May 26, 2009. However, taxpayers may apply this section to taxable years beginning before May 26, 2009. For taxable years beginning before May 26, 2009, *see* § 1.1563-1T as contained in 26 CFR part 1 in effect on April 1, 2009.

(2) ***Exceptions.***

(i) Paragraph (a)(1)(ii) of this section applies to taxable years beginning on or after April 11, 2011.

(ii) Paragraphs (a)(2)(i)(A) and (B), (a)(6), and (b)(4) of this section apply to taxable years beginning on or after December 30, 2024.

[T.D. 9451, 74 FR 25148, May 27, 2009, as amended by T.D. 9522, 76 FR 19907, Apr. 11, 2011; T.D. 10018, 89 FR 106879, Dec. 30, 2024]

§ 1.1563-2 Excluded stock.

(a) ***Certain stock excluded.*** For purposes of sections 1561 through 1563 and the regulations thereunder, the term “stock” does not include:

(1) Nonvoting stock which is limited and preferred as to dividends, and

(2) Treasury stock.

(b) ***Stock treated as excluded stock*** —

(1) ***Parent-subsidiary controlled group.*** If a corporation (hereinafter in this paragraph referred to as “parent corporation”) owns 50 percent or more of the total combined voting power of all classes of stock entitled to vote or 50 percent or more of the total value of shares of all classes of stock in another corporation (hereinafter in this paragraph referred to as “subsidiary corporation”), the provisions of subparagraph (2) of this paragraph shall apply. For purposes of this subparagraph, stock owned by a corporation means stock owned directly plus stock owned with the application of the constructive ownership rules of paragraph (b) (1) and (4) of § 1.1563-3, relating to options and attribution from corporations. In determining whether the stock owned by a corporation possesses the requisite percentage of the total combined voting power of all classes of stock entitled to vote of another corporation, see paragraph (a)(6) of § 1.1563-1.

(2) ***Stock treated as not outstanding.*** If the provisions of this subparagraph apply, then for purposes of determining whether the parent corporation or the subsidiary corporation is a member of a parent-subsidiary controlled group of corporations within the meaning of paragraph (a)(2) of § 1.1563-1, the following stock of the subsidiary corporation shall, except as otherwise provided in paragraph (c) of this section, be treated as if it were not outstanding:

(i) ***Plan of deferred compensation.*** Stock in the subsidiary corporation held by a trust which is part of a plan of deferred compensation for the benefit of the employees of the parent corporation or the subsidiary corporation. The term "plan of deferred compensation" shall have the same meaning such term has in section 406(a)(3) and the regulations thereunder.

(ii) ***Principal stockholders and officers.*** Stock in the subsidiary corporation owned (directly and with the application of the rules contained in paragraph (b) of § 1.1563-3) by an individual who is a principal stockholder or officer of the parent corporation. A principal stockholder of the parent corporation is an individual who owns (directly and with the application of the rules contained in paragraph (b) of § 1.1563-3) 5 percent or more of the total combined voting power of all classes of stock entitled to vote or 5 percent or more of the total value of shares of all classes of stock of the parent corporation. An officer of the parent corporation includes the president, vice-presidents, general manager, treasurer, secretary, and comptroller of such corporation, and any other person who performs duties corresponding to those normally performed by persons occupying such positions.

(iii) ***Employees.*** Stock in the subsidiary corporation owned (directly and with the application of the rules contained in § 1.1563-3(b)) by an employee of the subsidiary corporation if such stock is subject to conditions which substantially restrict or limit the employee's right (or if the employee constructively owns such stock, the direct owner's right) to dispose of such stock and which run in favor of the parent or subsidiary corporation. In general, any condition which extends, directly or indirectly, to the parent corporation or the subsidiary corporation preferential rights with respect to the acquisition of the employee's (or direct owner's) stock will be considered to be a condition described in the preceding sentence. It is not necessary, in order for a condition to be considered to be in favor of the parent corporation or the subsidiary corporation, that the parent or subsidiary be extended a discriminatory concession with respect to the price of the stock. For example, a condition whereby the parent corporation is given a right of first refusal with respect to any stock of the subsidiary corporation offered by an employee for sale is a condition which substantially restricts or limits the employee's right to dispose of such stock and runs in favor of the parent corporation. Moreover, any legally enforceable condition which prohibits the employee from disposing of the employee's stock without the consent of the parent (or a subsidiary of the parent) will be considered to be a substantial limitation running in favor of the parent corporation.

(iv) ***Controlled exempt organization.*** Stock in the subsidiary corporation owned (directly and with the application of the rules contained in paragraph (b) of § 1.1563-3) by an organization (other than the parent corporation):

(*a*) To which section 501 (relating to certain educational and charitable organizations which are exempt from tax) applies, and

(*b*) Which is controlled directly or indirectly by the parent corporation or subsidiary corporation, by an individual, estate, or trust that is a principal stockholder of the parent corporation, by an officer of the parent corporation, or by any combination thereof.

The terms “principal stockholder of the parent corporation” and “officer of the parent corporation” shall have the same meanings in this subdivision as in subdivision (ii) of this subparagraph. The term “control” as used in this subdivision means control in fact and the determination of whether the control requirement of (*b*) of this subdivision is met will depend upon all the facts and circumstances of each case, without regard to whether such control is legally enforceable and irrespective of the method by which such control is exercised or exercisable.

(3) ***Brother-sister controlled group.*** If five or fewer persons (hereinafter referred to as common owners) who are individuals, estates, or trusts own (directly and with the application of the rules contained in paragraph (b) of § 1.1563-3) stock possessing 50 percent or more of the total combined voting power of all classes of stock entitled to vote or 50 percent or more of the total value of shares of all classes of stock in a corporation, the provisions of subparagraph (4) of this paragraph shall apply. In determining whether the stock owned by such person or persons possesses the requisite percentage of the total combined voting power of all classes of stock entitled to vote of a corporation, see paragraph (a)(6) of § 1.1563-1.

(4) ***Stock treated as not outstanding.*** If the provisions of this subparagraph apply, then for purposes of determining whether a corporation is a member of a brother-sister controlled group of corporations within the meaning of paragraph (a)(3) of § 1.1563-1, the following stock of such corporation shall, except as otherwise provided in paragraph (c) of this section, be treated as if it were not outstanding:

(i) ***Exempt employees' trust.*** Stock in such corporation held by an employees' trust described in section 401(a) which is exempt from tax under section 501(a), if such trust is for the benefit of the employees of such corporation.

(ii) ***Employees.*** Stock in such corporation owned (directly and with the application of the rules contained in § 1.1563-3(b)) by an employee of such corporation if such stock is subject to conditions which run in favor of a common owner of such corporation (or in favor of such corporation) and which substantially restrict or limit the employee's right (or if the employee constructively owns such stock, the record owner's right) to dispose of such stock. The principles of paragraph (b)(2)(iii) of this section apply in determining whether a condition satisfies the requirements of the preceding sentence. Thus, in general, a condition which extends, directly or indirectly, to a common owner or such corporation preferential rights with respect to the acquisition of the employee's (or record owner's) stock will be considered to be a condition which satisfies such requirements. For purposes of this paragraph (b)(4)(ii), if a condition which restricts or limits an employee's right (or record owner's right) to dispose of the employee's (or record owner's) stock also applies to the stock in such corporation held by such common owner pursuant to a bona fide reciprocal stock purchase arrangement, such condition is not treated as one which restricts or limits the employee's (or record owner's) right to dispose of such stock. An example of a reciprocal stock purchase arrangement is an agreement whereby a common owner and the employee are given a right of first refusal with respect to stock of the employer corporation owned by the other party. If, however, the agreement also provides that the common owner has the right to purchase the stock of the employer corporation owned by the employee in the event that the corporation should discharge the employee for reasonable cause, the purchase arrangement would not be reciprocal within the meaning of this paragraph (b)(4)(ii).

(iii) ***Controlled exempt organization.*** Stock in such corporation owned (directly and with the application of the rules contained in paragraph (b) of § 1.1563-3) by an organization:

(*a*) To which section 501(c)(3) (relating to certain educational and charitable organizations which are exempt from tax) applies, and

(*b*) Which is controlled directly or indirectly by such corporation, by an individual, estate, or trust that is a principal stockholder of such corporation, by an officer of such corporation, or by any combination thereof.

The terms "principal stockholder" and "officer" shall have the same meanings in this subdivision as in subparagraph (2)(ii) of this paragraph. The term "control" as used in this subdivision means control in fact and the determination of whether the control requirement of (*b*) of this subdivision is met will depend upon all the facts and circumstances of each case, without regard to whether such control is legally enforceable and irrespective of the method by which such control is exercised or exercisable.

(5) ***Other controlled groups.*** The provisions of subparagraphs (1), (2), (3), and (4) of this paragraph shall apply in determining whether a corporation is a member of a combined group (within the meaning of paragraph (a)(4) of § 1.1563-1) or an insurance group (within the meaning of paragraph (a)(5) of § 1.1563-1). For example, under paragraph (a)(4) of § 1.1563-1, in order for a corporation to be a member of a combined group such corporation must be a member of a parent-subsidiary group or a brother-sister group. Accordingly, the excluded stock rules provided by this paragraph are applicable in determining whether the corporation is a member of such group.

(6) ***Meaning of employee.*** For purposes of this section §§ 1.1563-3 and 1.1563-4, the term "employee" has the same meaning such term is given in section 3306(i) of the Code (relating to definitions for purposes of the Federal Unemployment Tax Act). Accordingly, the term employee as used in such sections includes an officer of a corporation.

(7) ***Examples.*** The provisions of this paragraph may be illustrated by the following examples:

(i) ***Example 1.*** Corporation P owns 70 of the 100 shares of the only class of stock of corporation S. The remaining shares of S are owned as follows: 4 shares by Jones (the general manager of P), and 26 shares by Smith (who also owns 5 percent of the total combined voting power of the stock of P). P satisfies the 50 percent stock ownership requirement of subparagraph (1) of this paragraph with respect to S. Since Jones is an officer of P and Smith is a principal stockholder of P, under subparagraph (2)(ii) of this paragraph the S stock owned by Jones and Smith is treated as not outstanding for purposes of determining whether P and S are members of a parent-subsidiary controlled group of corporations within the meaning of paragraph (a)(2) of § 1.1563-1. Thus, P is considered to own stock possessing 100 percent (70 ÷ 70) of the total voting power and value of all the S stock. Accordingly, P and S are members of a parent-subsidiary controlled group of corporations.

(ii) ***Example 2.*** The facts are the same as in paragraph (b)(7)(i) of this section (*Example 1*), except that Jones owns 15 shares of the 100 shares of the only class of stock of corporation S-1, and corporation S owns 75 shares of such stock. P satisfies the 50 percent stock ownership requirement of paragraph (b)(1) of this section with respect to S-1 since P is considered as owning 52.5 percent (70 percent × 75 percent) of the S-1 stock with the application of § 1.1563-3(b)(4). Since Jones is an officer of P, under paragraph (b)(2)(ii) of this section, the S-1 stock owned by Jones is treated as not outstanding for purposes of determining whether S-1 is

a member of the parent-subsidiary controlled group of corporations. Thus, S is considered to own stock possessing 88.2 percent (75 ÷ 85) of the voting power and value of the S-1 stock. Accordingly, P, S, and S-1 are members of a parent-subsidiary controlled group of corporations.

(iii) ***Example 3.*** Corporation X owns 60 percent of the only class of stock of corporation Y. D, the president of Y, owns the remaining 40 percent of the stock of Y. D has agreed that, if D offers D's stock in Y for sale, D will first offer the stock to X at a price equal to the fair market value of the stock on the first date the stock is offered for sale. Since D is an employee of Y within the meaning of section 3306(i) of the Code, and D's stock in Y is subject to a condition which substantially restricts or limits D's right to dispose of such stock and runs in favor of X, under paragraph (b)(2)(iii) of this section such stock is treated as if it were not outstanding for purposes of determining whether X and Y are members of a parent-subsidiary controlled group of corporations. Thus, X is considered to own stock possessing 100 percent of the voting power and value of the stock of Y. Accordingly, X and Y are members of a parent-subsidiary controlled group of corporations. The result would be the same if D's spouse, instead of D, owned directly the 40 percent stock interest in Y and such stock was subject to a right of first refusal running in favor of X.

(c) ***Exception —***

(1) ***General.*** If stock of a corporation is owned by a person directly or with the application of the rules contained in paragraph (b) of § 1.1563-3 and such ownership results in the corporation being a component member of a controlled group of corporations on a December 31, then the stock shall not be treated as excluded stock under the provisions of paragraph (b) of this section if the result of applying such provisions is that such corporation is not a component member of a controlled group of corporations on such December 31.

(2) ***Illustration.*** The provisions of this paragraph may be illustrated by the following example:

Example. On each day of 1965, corporation P owns directly 50 of the 100 shares of the only class of stock of corporation S. Jones, an officer of P, owns directly 30 shares of S stock and P has an option to acquire such 30 shares from Jones. The remaining shares of S are owned by unrelated persons. If, pursuant to the provisions of paragraph (b)(2)(ii) of this section, the 30 shares of S stock owned directly by Jones is treated as not outstanding, the result is that P would be treated as owning stock possessing only 71 percent (50 ÷ 70) of the total voting power and value of S stock, and S would not be a component member of a controlled group of corporations on December 31, 1965. However, since P is considered as owning the 30 shares of S stock with the application of paragraph (b)(1) of this section, and such ownership plus the S stock directly owned by P (50 shares) results in S being a component member of a controlled group of corporations on December 31, 1965, the provisions of this paragraph apply. Therefore, the provisions of paragraph (b)(2)(ii) of this section do not apply with respect to the 30 shares of S stock, and on December 31, 1965, S is a component member of a controlled group of corporations consisting of P and S.

(d) ***Applicability date.*** This section applies to taxable years beginning on or after December 30, 2024. For taxable years beginning before December 30, 2024, *see* § 1.1563-2 as contained in 26 CFR part 1 in effect on April 1, 2024.

[T.D. 6845, 30 FR 9753, Aug. 5, 1965, as amended by T.D. 7181, 37 FR 8070, Apr. 4, 1972; T.D. 10018, 89 FR 106879, Dec. 30, 2024]

§ 1.1563-3 Rules for determining stock ownership.

(a) ***In general.*** In determining stock ownership for purposes of §§ 1.1562-5, 1.1563-1, 1.1563-2, and this section, the constructive ownership rules of paragraph (b) of this section apply to the extent such rules are referred to in such sections. The application of such rules shall be subject to the operating rules and special rules contained in paragraphs (c) and (d) of this section.

(b) ***Constructive ownership*** —

(1) ***Options.*** If a person has an option to acquire any outstanding stock of a corporation, such stock shall be considered as owned by such person. For purposes of this subparagraph, an option to acquire such an option, and each one of a series of such options, shall be considered as an option to acquire such stock. For example, assume Smith owns an option to purchase 100 shares of the outstanding stock of M Corporation. Under this subparagraph, Smith is considered to own such 100 shares. The result would be the same if Smith owned an option to acquire the option (or one of a series of options) to purchase 100 shares of M stock.

(2) ***Attribution from partnerships.***

(i) ***Rule.*** Stock owned, directly or indirectly, by or for a partnership is considered as owned by any partner having an interest of 5 percent or more in either the capital or profits of the partnership in proportion to the partner's interest in capital or profits, whichever such proportion is the greater.

(ii) ***Example*** —

(A) ***Facts.*** Green, Jones, and White are unrelated individuals and are partners in the GJW partnership. The partners' interests in the capital and profits of the partnership are as follows:

TABLE 1 TO PARAGRAPH (b)(2)(ii)(A)

Partner	Capital percent	Profit percent
Green	36	25
Jones	60	71
White	4	4

(B) ***Analysis.*** The GJW partnership owns the entire outstanding stock (100 shares) of X Corporation. Under this paragraph (b)(2), Green is considered to own the X stock owned by the partnership in proportion to Green's interest in capital (36 percent) or profits (25 percent), whichever such proportion is the greater. Therefore, Green is considered to own 36 shares of the X stock. However, since Jones has a greater interest in the profits of the partnership, Jones is considered to own the X stock in proportion to Jones's interest in

such profits. Therefore, Jones is considered to own 71 shares of the X stock. Since White does not have an interest of 5 percent or more in either the capital or profits of the partnership, White is not considered to own any shares of the X stock.

(3) *Attribution from estates or trusts.*

(i) Stock owned, directly or indirectly, by or for an estate or trust is considered as owned by any beneficiary who has an actuarial interest of 5 percent or more in such stock, to the extent of such actuarial interest. For purposes of this paragraph (b)(3)(i), the actuarial interest of each beneficiary is determined by assuming the maximum exercise of discretion by the fiduciary in favor of such beneficiary and the maximum use of such stock to satisfy the beneficiary's rights as a beneficiary. A beneficiary of an estate or trust who cannot under any circumstances receive any interest in stock held by the estate or trust, including the proceeds from the disposition thereof, or the income therefrom, does not have an actuarial interest in such stock. Thus, where stock owned by a decedent's estate has been specifically bequeathed to certain beneficiaries and the remainder of the estate is bequeathed to other beneficiaries, the stock is attributable only to the beneficiaries to whom it is specifically bequeathed. Similarly, a remainderman of a trust who cannot under any circumstances receive any interest in the stock of a corporation which is a part of the corpus of the trust (including any accumulated income therefrom or the proceeds from a disposition thereof) does not have an actuarial interest in such stock. However, an income beneficiary of a trust does have an actuarial interest in stock if that beneficiary has any right to the income from such stock even though under the terms of the trust instrument such stock can never be distributed to that beneficiary. The factors and methods prescribed in § 20.2031-7 of this chapter (Estate Tax Regulations) for use in ascertaining the value of an interest in property for estate tax purposes must be used for purposes of this paragraph (b)(3)(i) in determining a beneficiary's actuarial interest in stock owned directly or indirectly by or for a trust.

(ii) For the purposes of this paragraph (b)(3), property of a decedent is considered as owned by the decedent's estate if such property is subject to administration by the executor or administrator for the purposes of paying claims against the estate and expenses of administration notwithstanding that, under local law, legal title to such property vests in the decedent's heirs, legatees or devisees immediately upon death. With respect to an estate, the term *beneficiary* includes any person entitled to receive property of the decedent pursuant to a will or pursuant to laws of descent and distribution. A person no longer is considered a beneficiary of an estate when all the property to which the person is entitled has been received by the person, when the person no longer has a claim against the estate arising out of having been a beneficiary, and when there is only a remote possibility that it will be necessary for the estate to seek the return of property or to seek payment from the person by contribution or otherwise to satisfy claims against the estate or expenses of administration. When pursuant to the preceding sentence, a person ceases to be a beneficiary, stock owned by the estate is not thereafter considered owned by the person.

(iii) Stock owned, directly or indirectly, by or for any portion of a trust of which a person is considered the owner under Subpart E, Part I, Subchapter J of the Code (relating to grantors and others treated as substantial owners) is considered as owned by such person.

(iv) This subparagraph does not apply to stock owned by any employees' trust described in section 401(a) which is exempt from tax under section 501(a).

(4) *Attribution from corporations.*

(i) Stock owned, directly or indirectly, by or for a corporation shall be considered as owned by any person who owns (within the meaning of section 1563(d)) 5 percent or more in value or its stock in that proportion which the value of the stock which such person so owns bears to the value of all the stock in such corporation.

(ii) ***Example.*** Brown, an individual, owns 60 shares of the 100 shares of the only class of outstanding stock of corporation P. Smith, an individual, owns 4 shares of the P stock, and corporation X owns 36 shares of the P stock. Corporation P owns, directly and indirectly, 50 shares of the stock of corporation S. Under this paragraph (b)(4), Brown is considered to own 30 shares of the S stock (60/100 × 50), and X is considered to own 18 shares of the S stock (36/100 × 50). Since Smith does not own 5 percent or more in value of the P stock, Smith is not considered as owning any of the S stock owned by P. If, in this example, Smith's spouse had owned directly 1 share of the P stock, Smith (and Smith's spouse) would each own 5 shares of the P stock, and therefore Smith (and Smith's spouse) would be considered as owning 2.5 shares of the S stock (5/100 × 50).

(5) ***Spouse.***

(i) Except as provided in paragraph (b)(5)(ii) of this section, an individual is considered to own the stock owned, directly or indirectly, by or for the individual's spouse, other than a spouse who is legally separated from the individual under a decree of divorce, whether interlocutory or final, or a decree of separate maintenance.

(ii) An individual is not considered to own stock in a corporation owned, directly or indirectly, by or for the individual's spouse on any day of a taxable year of such corporation, provided that each of the following conditions are satisfied with respect to such taxable year:

(A) Such individual does not, at any time during such taxable year, own directly any stock in such corporation.

(B) Such individual is not a member of the board of directors or an employee of such corporation and does not participate in the management of such corporation at any time during such taxable year.

(C) Not more than 50 percent of such corporation's gross income for such taxable year was derived from royalties, rents, dividends, interest, and annuities.

(D) Such stock in such corporation is not, at any time during such taxable year, subject to conditions which substantially restrict or limit the spouse's right to dispose of such stock and which run in favor of the individual or the individual's children who have not attained the age of 21 years. The principles of § 1.1563-2(b)(2)(iii) apply in determining whether a condition is a condition described in the preceding sentence.

(iii) For purposes of subdivision (ii)(*c*) of this subparagraph, the gross income of a corporation for a taxable year shall be determined under section 61 and the regulations thereunder. The terms “royalties”, “rents”, “dividends”, “interest”, and “annuities” shall have the same meanings such terms are given for purposes of section 1244(c). See paragraph (e)(1)(ii), (iii), (iv), (v), and (vi) of § 1.1244(c)-1.

(6) ***Children, grandchildren, parents, and grandparents.***

(i) An individual is considered to own the stock owned, directly or indirectly, by or for the individual's children who have not attained the age of 21 years, and, if the individual has not attained the age of 21 years, the stock owned, directly or indirectly, by or for the individual's parents.

(ii) If an individual owns (directly, and with the application of the rules of this paragraph but without regard to this paragraph (b)(6)(ii)) stock possessing more than 50 percent of the total combined voting power of all classes of stock entitled to vote or more than 50 percent of the total value of shares of all classes of stock in a corporation, then such individual is considered to own the stock in such corporation owned, directly or indirectly, by or for the individual's parents, grandparents, grandchildren, and children who have attained the age of 21 years. In determining whether the stock owned by an individual possesses the requisite percentage of the total combined voting power of all classes of stock entitled to vote of a corporation, *see* § 1.1563-1(a)(6).

(iii) For purposes of section 1563, and §§ 1.1563-1 through 1.1563-4, a legally adopted child of an individual shall be treated as a child of such individual by blood.

(iv) ***Example*** —

(A) ***Facts.*** Individual B owns directly 40 shares of the 100 shares of the only class of stock of Z Corporation. B's child, M (20 years of age), owns directly 30 shares of such stock, and B's child, A (30 years of age), owns directly 20 shares of such stock. The remaining 10 shares of the Z stock are owned by an unrelated person.

(B) ***B's ownership.*** Individual B owns 40 shares of the Z stock directly and is considered to own the 30 shares of Z stock owned directly by M. Since, for purposes of the more-than-50-percent stock ownership test contained in paragraph (b)(6)(ii) of this section, B is treated as owning 70 shares or 70 percent of the total voting power and value of the Z stock, B is also considered as owning the 20 shares owned by B's adult child, A. Accordingly, B is considered as owning a total of 90 shares of the Z stock.

(C) ***M's ownership.*** Minor child, M, owns 30 shares of the Z stock directly, and is considered to own the 40 shares of Z stock owned directly by B. However, M is not considered to own the 20 shares of Z stock owned directly by M's sibling, A, and constructively by B, because stock constructively owned by B by reason of family attribution is not considered as owned by M for purposes of making another member of B's family the constructive owner of such stock. *See* paragraph (c)(2) of this section. Accordingly, M owns and is considered as owning a total of 70 shares of the Z stock.

(D) ***A's ownership.*** Adult child, A, owns 20 shares of the Z stock directly. Since, for purposes of the more-than-50-percent stock ownership test contained in paragraph (b)(6)(ii) of this section, A is treated as owning only the Z stock which A owns directly, A does not satisfy the condition precedent for the attribution of Z stock from B. Accordingly, A is treated as owning only the 20 shares of Z stock which A owns directly.

(c) ***Operating rules and special rules*** —

(1) ***In general.*** Except as provided in subparagraph (2) of this paragraph, stock constructively owned by a person by reason of the application of subparagraph (1), (2), (3), (4), (5), or (6) of paragraph (b) of this section shall, for purposes of applying such subparagraphs, be treated as actually owned by such person.

(2) ***Members of family.*** Stock constructively owned by an individual by reason of the application of paragraph (b)(5) or (6) of this section is not treated as owned by the individual for purposes of again applying such paragraphs in order to make another the constructive owner of such stock.

(3) ***Precedence of option attribution.*** For purposes of this section, if stock may be considered as owned by a person under subparagraph (1) of paragraph (b) of this section (relating to option attribution) and under any other subparagraph of such paragraph, such stock shall be considered as owned by such person under subparagraph (1) of such paragraph.

(4) ***Examples.*** The provisions of this paragraph (c) may be illustrated by the following examples:

(i) ***Example 1.*** A, 30 years of age, has a 90 percent interest in the capital and profits of a partnership. The partnership owns all the outstanding stock of corporation X and X owns 60 shares of the 100 outstanding shares of corporation Y. Under paragraph (c)(1) of this section, the 60 shares of Y constructively owned by the partnership by reason of paragraph (b)(4) of this section is treated as actually owned by the partnership for purposes of applying paragraph (b)(2) of this section. Therefore, A is considered as owning 54 shares of the Y stock (90 percent of 60 shares).

(ii) ***Example 2.*** The facts are the same as in paragraph (c)(4)(i) of this section (*Example 1*), except that that B, who is 20 years of age and the sibling of A, directly owns 40 shares of Y stock. Although the stock of Y owned by B is considered as owned by C (the parent of A and B) under paragraph (b)(6)(i) of this section, under paragraph (c)(2) of this section such stock may not be treated as owned by C for purposes of applying paragraph (b)(6)(ii) of this section in order to make A the constructive owner of such stock.

(iii) ***Example 3.*** The facts are the same as in paragraph (c)(4)(ii) of this section (*Example 2*), except that that C has an option to acquire the 40 shares of Y stock owned by B. The rule contained in paragraph (c)(2) of this section does not prevent the reattribution of such 40 shares to A because, under paragraph (c)(3) of this section, C is considered as owning the 40 shares by reason of option attribution and not by reason of family attribution. Therefore, since A satisfies the more-than-50-percent stock ownership test contained in paragraph (b)(6)(ii) of this section with respect to Y, the 40 shares of Y stock constructively owned by C are reattributed to A, and A is considered as owning a total of 94 shares of Y stock.

(d) ***Special rule of section 1563 (f)(3)(B)*** —

(1) ***In general.*** If the same stock of a corporation is owned (within the meaning of section 1563(d)) by two or more persons, then such stock shall be treated as owned by the person whose ownership of such stock results in the corporation being a component member of a controlled group on a December 31 which has at least one other component member on such date.

(2) ***Component member of more than one group.***

(i) If, by reason of subparagraph (1) of this paragraph, a corporation would (but for this subparagraph) become a component member of more than one controlled group on a December 31, such corporation shall be treated as a component member of only one such controlled group on such date. The determination as to which group such corporation is treated as a component member of shall be made in accordance with the rules contained in paragraphs (d)(2)(ii), (iii) and (iv) of this section.

(ii) In any case in which a corporation is a component member of a controlled group of corporations on a December 31 as a result of treating each share of its stock as owned only by the person who owns such share directly, then each such share shall be treated as owned by the person who owns such share directly.

(iii) If the application of subdivision (ii) of this subparagraph does not result in a corporation being treated as a component member of only one controlled group on a December 31, then the stock of such corporation described in subparagraph (1) of this paragraph shall be treated as owned by the one person described in such subparagraph who owns, directly and with the application of the rules contained in paragraph (b) (1), (2), (3), and (4) of this section, the stock possessing the greatest percentage of the total value of shares of all classes of stock of the corporation.

(iv) ***Statement.*** If the application of paragraph (d)(2)(ii) or (iii) of this section does not result in a corporation being treated as a component member of only one controlled group of corporations on a December 31, then such corporation will be treated as a component member of only one such group on such date. Such corporation may elect the group in which it is to be included by including on or with its income tax return a statement entitled, "STATEMENT TO ELECT CONTROLLED GROUP PURSUANT TO § 1.1563-3(d)(2)(iv)." The statement must include—

(A) A description of each of the controlled groups in which the corporation could be included. The description must include the name and employer identification number of each component member of each such group and the stock ownership of the component members of each such group; and

(B) The following representation: [INSERT NAME AND EMPLOYER IDENTIFICATION NUMBER OF CORPORATION] ELECTS TO BE TREATED AS A COMPONENT MEMBER OF THE [INSERT DESIGNATION OF GROUP].

(v) ***Election*** —

(A) ***Election filed.*** An election filed under paragraph (d)(2)(iv) of this section is irrevocable and effective until paragraph (d)(2)(ii) or (iii) of this section applies or until a change in the stock ownership of the corporation results in termination of membership in the controlled group in which such corporation has been included.

(B) ***Election not filed.*** In the event no election is filed in accordance with the provisions of paragraph (d)(2)(iv) of this section, then the Internal Revenue Service will determine the group in which such corporation is to be included. Such determination will be binding for all subsequent years unless the corporation files a valid election with respect to any such subsequent year or until a change in the stock ownership of the corporation results in termination of membership in the controlled group in which such corporation has been included.

(3) ***Examples.*** The provisions of this paragraph (d) may be illustrated by the following examples, in which each corporation referred to uses the calendar year as its taxable year and the stated facts are assumed to exist on each day of 1970 (unless otherwise provided in the example):

(i) ***Example 1.*** Jones owns all the stock of corporation X and has an option to purchase from Smith all the outstanding stock of corporation Y. Smith owns all the outstanding stock of corporation Z. Since the Y stock is considered as owned by two or more persons, under paragraph (d)(2)(ii) of this section, the Y stock is treated as owned only by Smith since Smith has direct ownership

of such stock. Therefore, on December 31, 1970, Y and Z are component members of the same brother-sister controlled group. If, however, Smith had owned Smith's stock in corporation Z for less than one-half of the number of days of Z's 1970 taxable year, then under paragraph (d)(1) of this section, the Y stock would be treated as owned only by Jones since Jones's ownership results in Y being a component member of a controlled group on December 31,1970.

(ii) ***Example 2.*** Individual A owns directly all the outstanding stock of corporation M. B (the spouse of A) owns directly all the outstanding stock of corporation N. Neither spouse is considered as owning the stock directly owned by the other because each of the conditions prescribed in paragraph (b)(5)(ii) of this section is satisfied with respect to each corporation's 1970 taxable year. A owns directly 60 percent of the only class of stock of corporation P and B owns the remaining 40 percent of the P stock. Under paragraph (d)(2)(iii) of this section, the stock of P is treated as owned only by A since A owns (directly and with the application of the rules contained in paragraphs (b)(1) through (4) of this section) the stock possessing the greatest percentage of the total value of shares of all classes of stock of P. Accordingly, on December 31, 1970, P is treated as a component member of a brother-sister group consisting of M and P.

(iii) ***Example 3.*** Unrelated individuals A and B each own 49 percent of all the outstanding stock of corporation R, which in turn owns 70 percent of the only class of outstanding stock of corporation S. The remaining 30 percent of the stock of corporation S is owned by unrelated individual C. C also owns the remaining 2 percent of the stock of corporation R. Under the attribution rule of paragraph (b)(4) of this section, A and B are each considered to own 34.3 percent of the stock of corporation S. Accordingly, since five or fewer persons own at least 80 percent of the stock of corporations R and S and also own more than 50 percent identically (A's and B's identical ownership each is 34.3 percent, C's identical ownership is 2 percent), on December 31, 1970, corporations R and S are treated as component members of the same brother-sister controlled group for purposes of § 1.1563-1(a)(3)(ii).

(e) ***Applicability dates.*** This section applies to taxable years beginning on or after December 30, 2024. For taxable years beginning before December 30, 2024, *see* § 1.1563-3 as contained in 26 CFR part 1 in effect on April 1, 2024.

[T.D. 6845, 30 FR 9755, Aug. 5, 1965, as amended by T.D. 7181, 37 FR 8070, Apr. 25, 1972; T.D. 7779, 46 FR 29474, June 2, 1981; T.D. 8179, 53 FR 6613, Mar. 2, 1988; T.D. 9264, 71 FR 30606, 30608, May 30, 2006; T.D. 9304, 71 FR 76913, Dec. 22, 2006; T.D. 9329, 72 FR 32806, 32807, June 14, 2007; T.D. 9451, 74 FR 25148, May 27, 2009; T.D. 10018, 89 FR 106880, Dec. 30, 2024]

§ 1.1563-4 Franchised corporations.

(a) ***In general.*** For purposes of paragraph (b)(2)(ii)(*d*) of § 1.1563-1, a member of a controlled group of corporations shall be considered to be a franchised corporation for a taxable year if each of the following conditions is satisfied for one-half (or more) of the number of days preceding the December 31 included within such taxable year (or, if such taxable year does not include a December 31, for one-half or more of the number of days in such taxable year preceding the last day of such year):

(1) Such member is franchised to sell the products of another member, or the common owner, of such controlled group.

(2) More than 50 percent (determined on the basis of cost) of all the goods held by such member primarily for sale to its customers are acquired from members or the common owner of the controlled group, or both.

(3) The stock of such member is to be sold to an employee (or employees) of such member pursuant to a bona fide plan designed to eliminate the stock ownership of the parent corporation (as defined in paragraph (b)(1) of § 1.1563-2) or of the common owner (as defined in paragraph (b)(3) of § 1.1563-2) in such member.

(4) Such employee owns (or such employees in the aggregate own) directly more than 20 percent of the total value of shares of all classes of stock of such member. For purposes of this subparagraph, the determination of whether an employee (or employees) owns the requisite percentage of the total value of the stock of the member shall be made without regard to paragraph (b) of § 1.1563-2, relating to certain stock treated as excluded stock. Furthermore, if the corporation has more than one class of stock outstanding, the relative voting rights as between each such class of stock shall be disregarded in making such determination.

(b) ***Plan for elimination of stock ownership.***

(1) A plan referred to in paragraph (a)(3) of this section must:

(i) Provide a reasonable selling price for the stock of the member, and

(ii) Require that a portion of the employee's compensation or dividends, or both, from such member be applied to the purchase of such stock (or to the purchase of notes, bonds, debentures, or similar evidences of indebtedness of such member held by the parent corporation or the common owner).

It is not necessary, in order to satisfy the requirements of subdivision (ii) of this subparagraph, that the plan require that a percentage of every dollar of the compensation and dividends be applied to the purchase of the stock (or the indebtedness). The requirements of such subdivision are satisfied if an otherwise qualified plan provides that under certain specified conditions (such as a requirement that the member earn a specified profit) no portion of the compensation and/or dividends need be applied to the purchase of the stock (or indebtedness), provided such conditions are reasonable.

(2) A plan for the elimination of the stock ownership of the parent corporation or of the common owner will satisfy the requirements of paragraph (a)(3) of this section and subparagraph (1) of this paragraph even though it does not require that the stock of the member be sold to an employee (or employees) if it provides for the redemption of the stock of the member held by the parent or common owner and under the plan the amount of such stock to be redeemed during any period is calculated by reference to the profits of such member during such period.

[T.D. 6845, 30 FR 9757, Aug. 5, 1965]

INDIVIDUAL SHARED RESPONSIBILITY PAYMENT FOR NOT MAINTAINING MINIMUM ESSENTIAL COVERAGE

PROCEDURE AND ADMINISTRATION

INFORMATION AND RETURNS

§ 1.5000A-0 Table of contents.

This section lists the captions contained in §§ 1.5000A-1 through 1.5000A-5.

§ 1.5000A-1 Maintenance of minimum essential coverage and liability for the shared responsibility payment.

(a) In general.

(b) Coverage under minimum essential coverage.

(1) In general.

(2) Special rule for United States citizens or residents residing outside the United States or residents of territories.

(c) Liability for shared responsibility payment.

(1) In general.

(2) Liability for dependents.

(i) In general.

(ii) Special rules for dependents adopted or placed in foster care during the taxable year.

(A) Taxpayers adopting an individual.

(B) Taxpayers placing an individual for adoption.

(C) Examples.

(3) Liability of individuals filing a joint return.

(d) Definitions.

(1) Affordable Care Act.

(2) Employee.

(3) Exchange.

(4) Family.

(5) Family coverage.

(6) Group health insurance coverage.

(7) Group health plan.

(8) Health insurance coverage.

(9) Health insurance issuer.

(10) Household income.

(i) In general.

(ii) Modified adjusted gross income.

(11) Individual market.

(12) Large and small group market.

(13) Month.

(14) Qualified health plan.

(15) Rating area.

(16) Self-only coverage.

(17) Shared responsibility family.

(18) State.

§ 1.5000A-2 Minimum essential coverage.

(a) In general.

(b) Government-sponsored program.

(1) In general.

(i) Medicare.

(ii) Medicaid.

(iii) Children's Health Insurance Program.

(iv) TRICARE.

(v) Veterans programs.

(vi) Peace Corp program.

(vii) Nonappropriated Fund Health Benefits Program.

(2) Certain health care coverage not minimum essential coverage under a government-sponsored program.

(c) Eligible employer-sponsored plan.

(1) In general.

(2) Government-sponsored program generally not an eligible employer-sponsored plan.

(d) Plan in the individual market.

(1) In general.

(2) Qualified health plan offered by an Exchange.

(e) Grandfathered health plan.

(f) Other coverage that qualifies as minimum essential coverage.

(g) Excepted benefits not minimum essential coverage.

§ 1.5000A-3 Exempt individuals.

(a) Members of recognized religious sects.

(1) In general.

(2) Exemption certification.

(b) Member of health care sharing ministries.

(1) In general.

(2) Health care sharing ministry.

(c) Exempt noncitizens.

(1) In general.

(2) Exempt noncitizens.

(d) Incarcerated individuals.

(1) In general.

(2) Incarcerated.

(e) Individuals with no affordable coverage.

(1) In general.

(2) Required contribution percentage.

(i) In general.

(ii) Indexing.

(iii) Plan year.

(3) Individuals eligible for coverage under eligible employer-sponsored plans.

(i) Eligibility.

(A) In general.

(B) Multiple eligibility.

(C) Special rule for post-employment coverage.

(ii) Required contribution for individuals eligible for coverage under an eligible employer-sponsored plan.

(A) Employees.

(B) Individuals related to employees.

(C) Required contribution for part-year period.

(D) Employer contributions to health reimbursement arrangements.

(E) Wellness program incentives.

(iii) Examples.

(4) Individuals ineligible for coverage under eligible employer-sponsored plans.

(i) Eligibility for coverage other than an eligible employer-sponsored plan.

(ii) Required contribution for individuals ineligible for coverage under eligible employer-sponsored plans.

(A) In general.

(B) Applicable plan.

(*1*) In general.

(2) Lowest cost bronze plan does not cover all individuals included in the taxpayer's nonexempt family.

(*i*) In general.

(*ii*) Optional simplified method for applicable plan identification.

(C) Wellness program incentives.

(D) Credit allowable under section 36B.

(E) Required contribution for part-year period.

(iii) Examples.

(f) Household income below filing threshold.

(1) In general.

(2) Applicable filing threshold.

(i) In general.

(ii) Certain dependents.

(3) Manner of claiming the exemption.

(g) Members of Indian tribes.

(h) Individuals with hardship exemption certification.

(1) In general.

(2) Hardship exemption certification.

(3) Hardship exemption without hardship exemption certification.

(i) [Reserved]

(j) Individuals with certain short coverage gaps.

(1) In general.

(2) Short coverage gap.

(i) In general.

(ii) Coordination with other exemptions.

(iii) More than one short coverage gap during calendar year.

(3) Continuous period.

(i) In general.

(ii) Continuous period straddling more than one taxable year.

(4) Examples.

§ 1.5000A-4 Computation of shared responsibility payment.

(a) In general.

(b) Monthly penalty amount.

(1) In general.

(2) Flat dollar amount.

(i) In general.

(ii) Applicable dollar amount.

(iii) Special applicable dollar amount for individuals under age 18.

(iv) Indexing of applicable dollar amount.

(3) Excess income amount.

(i) In general.

(ii) Income percentage.

(c) Monthly national average bronze plan premium.

(d) Examples.

§ 1.5000A-5 Administration and procedure.

(a) In general.

(b) Special rules.

(1) Waiver of criminal penalties.

(2) Limitations on liens and levies.

(3) Authority to offset against overpayment.

(c) Effective/applicability date.

[T.D. 9632, 78 FR 53655, Aug. 30, 2013, as amended at 78 FR 78255, Dec. 26, 2013; T.D. 9705, 79 FR 70468, Nov. 26, 2014]

§ 1.5000A-1 Maintenance of minimum essential coverage and liability for the shared responsibility payment.

(a) ***In general.*** For each month during the taxable year, a nonexempt individual must have minimum essential coverage or pay the shared responsibility payment. For a month, a nonexempt individual is an individual in existence for the entire month who is not an exempt individual described in § 1.5000A-3.

(b) ***Coverage under minimum essential coverage*** —

(1) ***In general.*** An individual has minimum essential coverage for a month in which the individual is enrolled in and entitled to receive benefits under a program or plan identified as minimum essential coverage in § 1.5000A-2 for at least one day in the month.

(2) ***Special rule for United States citizens or residents residing outside the United States or residents of territories.*** An individual is treated as having minimum essential coverage for a month—

(i) If the month occurs during any period described in section 911(d)(1)(A) or section 911(d)(1)(B) that is applicable to the individual; or

(ii) If, for the month, the individual is a bona fide resident of a possession of the United States (as determined under section 937(a)).

(c) ***Liability for shared responsibility payment*** —

(1) ***In general.*** A taxpayer is liable for the shared responsibility payment for a month for which—

(i) The taxpayer is a nonexempt individual without minimum essential coverage; or

(ii) A nonexempt individual for whom the taxpayer is liable under paragraph (c)(2) or (c)(3) of this section does not have minimum essential coverage.

(2) ***Liability for dependents*** —

(i) ***In general.*** For a month when a nonexempt individual does not have minimum essential coverage, if the nonexempt individual is a dependent (as defined in section 152) of another individual for the other individual's taxable year including that month, the other individual is liable for the shared responsibility payment attributable to the dependent's lack of coverage. An individual is a dependent of a taxpayer for a taxable year if the individual satisfies the definition of dependent under section 152, regardless of whether the taxpayer claims the individual as a dependent on a Federal income tax return for the taxable year. If an individual may be claimed as a dependent by more than one taxpayer in the same calendar year, the taxpayer who properly claims the individual as a dependent for the taxable year is liable for the shared responsibility payment attributable to the individual. If more than one taxpayer may claim an individual as a

dependent in the same calendar year but no one claims the individual as a dependent, the taxpayer with priority under the rules of section 152 to claim the individual as a dependent is liable for the shared responsibility payment for the individual.

(ii) ***Special rules for dependents adopted or placed in foster care during the taxable year*** —

(A) ***Taxpayers adopting an individual.*** If a taxpayer adopts a nonexempt dependent (or accepts a nonexempt dependent who is an eligible foster child as defined in section 152(f)(1)(C)) during the taxable year and is otherwise liable for the nonexempt dependent under paragraph (c)(2)(i) of this section, the taxpayer is liable under paragraph (c)(2)(i) of this section for the nonexempt dependent only for the full months in the taxable year that follow the month in which the adoption or acceptance occurs.

(B) ***Taxpayers placing an individual for adoption.*** If a taxpayer who is otherwise liable for a nonexempt dependent under paragraph (c)(2)(i) of this section places (or, by operation of law, must place) the nonexempt dependent for adoption or foster care during the taxable year, the taxpayer is liable under paragraph (c)(2)(i) of this section for the nonexempt dependent only for the full months in the taxable year that precede the month in which the adoption or foster care placement occurs.

(C) ***Examples.*** The following examples illustrate the provisions of this paragraph (c)(2)(ii). In each example the taxpayer's taxable year is a calendar year.

> *Example 1. Taxpayers adopting a child.* (i) E and F, married individuals filing a joint return, initiate proceedings for the legal adoption of a 2-year old child, G, in January 2016. On May 15, 2016, G becomes the adopted child (within the meaning of section 152(f)(1)(B)) of E and F, and resides with them for the remainder of 2016. Prior to the adoption, G resides with H, an unmarried individual, with H providing all of G's support. For 2016 G meets all requirements under section 152 to be E and F's dependent, and not H's dependent.
> (ii) Under paragraph (c)(2) of this section, E and F are not liable for a shared responsibility payment attributable to G for January through May of 2016, but are liable for a shared responsibility payment attributable to G, if any, for June through December of 2016. H is not liable for a shared responsibility payment attributable to G for any month in 2016, because G is not H's dependent for 2016 under section 152.

> *Example 2. Taxpayers placing a child for adoption.* (i) The facts are the same as *Example 1,* except the legal adoption occurs on August 15, 2016, and, for 2016, G meets all requirements under section 152 to be H's dependent, and not E and F's dependent.
> (ii) Under paragraph (c)(2) of this section, H is liable for a shared responsibility payment attributable to G, if any, for January through July of 2016, but is not liable for a shared responsibility payment attributable to G for August through December

> of 2016. E and F are not liable for a shared responsibility payment attributable to G for any month in 2016, because G is not E and F's dependent for 2016 under section 152.

(3) ***Liability of individuals filing a joint return.*** Married individuals (within the meaning of section 7703) who file a joint return for a taxable year are jointly liable for any shared responsibility payment for a month included in the taxable year.

(d) ***Definitions.*** The definitions in this paragraph (d) apply to this section and §§ 1.5000A-2 through 1.5000A-5.

(1) ***Affordable Care Act. Affordable Care Act*** refers to the Patient Protection and Affordable Care Act, Public Law 111-148 (124 Stat. 119 (2010)), and the Health Care and Education Reconciliation Act of 2010, Public Law 111-152 (124 Stat. 1029 (2010)), as amended.

(2) ***Employee. Employee*** includes former employees.

(3) ***Exchange. Exchange*** has the same meaning as in 45 CFR 155.20.

(4) ***Family.*** A taxpayer's family means the individuals for whom the taxpayer properly claims a deduction for a personal exemption under section 151 for the taxable year.

(5) ***Family coverage. Family coverage*** means health insurance that covers more than one individual.

(6) ***Group health insurance coverage. Group health insurance coverage*** has the same meaning as in section 2791(b)(4) of the Public Health Service Act (42 U.S.C. 300gg-91(b)(4)).

(7) ***Group health plan. Group health plan*** has the same meaning as in section 2791(a)(1) of the Public Health Service Act (42 U.S.C. 300gg-91(a)(1)).

(8) ***Health insurance coverage. Health insurance coverage*** has the same meaning as in section 2791(b)(1) of the Public Health Service Act (42 U.S.C. 300gg-91(b)(1)).

(9) ***Health insurance issuer. Health insurance issuer*** has the same meaning as in section 2791(b)(2) of the Public Health Service Act (42 U.S.C. 300gg-91(b)(2)).

(10) ***Household income*** —

(i) ***In general. Household income*** means the sum of—

(A) A taxpayer's modified adjusted gross income; and

(B) The aggregate modified adjusted gross income of all other individuals who—

(*1*) Are included in the taxpayer's family under paragraph (d)(4) of this section; and

(*2*) Are required to file a Federal income tax return for the taxable year.

(ii) ***Modified adjusted gross income. Modified adjusted gross income*** means adjusted gross income (within the meaning of section 62) increased by—

(A) Amounts excluded from gross income under section 911; and

(B) Tax-exempt interest the taxpayer receives or accrues during the taxable year.

(11) ***Individual market. Individual market*** has the same meaning as in section 1304(a)(2) of the Affordable Care Act (42 U.S.C. 18024(a)(2)).

(12) ***Large and small group market. Large group market*** and *small group market* have the same meanings as in section 1304(a)(3) of the Affordable Care Act (42 U.S.C. 18024(a)(3)).

(13) ***Month. Month*** means calendar month.

(14) ***Qualified health plan. Qualified health plan*** has the same meaning as in section 1301(a) of the Affordable Care Act (42 U.S.C. 18021(a)).

(15) ***Rating area. Rating area*** has the same meaning as in § 1.36B-1(n).

(16) ***Self-only coverage. Self-only coverage*** means health insurance that covers one individual.

(17) ***Shared responsibility family. Shared responsibility family*** means, for a month, all nonexempt individuals for whom the taxpayer (and the taxpayer's spouse, if the taxpayer is married and files a joint return with the spouse) is liable for the shared responsibility payment under paragraph (c) of this section.

(18) ***State. State*** means each of the 50 states and the District of Columbia.

[T.D. 9632, 78 FR 53655, Aug. 30, 2013, as amended at 78 FR 78255, Dec. 26, 2013]

§ 1.5000A-2 Minimum essential coverage.

(a) ***In general. Minimum essential coverage*** means coverage under a government-sponsored program (described in paragraph (b) of this section), an eligible employer-sponsored plan (described in paragraph (c) of this section), a plan in the individual market (described in paragraph (d) of this section), a grandfathered health plan (described in paragraph (e) of this section), or other health benefits coverage (described in paragraph (f) of this section). Minimum essential coverage does not include coverage described in paragraph (g) of this section. All terms defined in this section apply for purposes of this section and § 1.5000A-1 and §§ 1.5000A-3 through 1.5000A-5.

(b) ***Government-sponsored program*** —

(1) ***In general.*** Except as provided in paragraph (2), *government-sponsored program* means any of the following:

(i) ***Medicare.*** The Medicare program under part A of Title XVIII of the Social Security Act (42 U.S.C. 1395c and following sections);

(ii) ***Medicaid.*** The Medicaid program under Title XIX of the Social Security Act (42 U.S.C. 1396 and following sections);

(iii) ***Children's Health Insurance Program.*** The Children's Health Insurance Program (CHIP) under Title XXI of the Social Security Act (42 U.S.C. 1397aa and following sections);

(iv) ***TRICARE.*** Medical coverage under chapter 55 of Title 10, U.S.C., including coverage under the TRICARE program;

(v) ***Veterans programs.*** The following health care programs under chapter 17 or 18 of Title 38, U.S.C.:

(A) The medical benefits package authorized for eligible veterans under 38 U.S.C. 1710 and 38 U.S.C. 1705;

(B) The Civilian Health and Medical Program of the Department of Veterans Affairs (CHAMPVA) authorized under 38 U.S.C. 1781; and

(C) The comprehensive health care program authorized under 38 U.S.C. 1803 and 38 U.S.C. 1821 for certain children of Vietnam Veterans and Veterans of covered service in Korea who are suffering from spina bifida.

(vi) ***Peace Corp program.*** A health plan under section 2504(e) of Title 22, U.S.C. (relating to Peace Corps volunteers); and

(vii) ***Nonappropriated Fund Health Benefits Program.*** The Nonappropriated Fund Health Benefits Program of the Department of Defense, established under section 349 of the National Defense Authorization Act for Fiscal Year 1995 (Pub. L. 103-337; 10 U.S.C. 1587 note).

(2) ***Certain health care coverage not minimum essential coverage under a government-sponsored program. Government-sponsored program*** does not mean any of the following:

(i) Optional coverage of family planning services under section 1902(a)(10)(A)(ii)(XXI) of the Social Security Act (42 U.S.C. 1396a(a)(10)(A)(ii)(XXI));

(ii) Optional coverage of tuberculosis-related services under section 1902(a)(10)(A)(ii)(XII) of the Social Security Act (42 U.S.C. 1396a(a)(10)(A)(ii)(XII));

(iii) Coverage of pregnancy-related services under section 1902(a)(10)(A)(i)(IV) and (a)(10)(A)(ii)(IX) of the Social Security Act (42 U.S.C. 1396a(a)(10)(A)(i)(IV), (a)(10)(A)(ii)(IX));

(iv) Coverage limited to treatment of emergency medical conditions in accordance with 8 U.S.C. 1611(b)(1)(A), as authorized by section 1903(v) of the Social Security Act (42 U.S.C. 1396b(v));

(v) Coverage for medically needy individuals under section 1902(a)(10)(C) of the Social Security Act (42 U.S.C. 1396a(a)(10)(C)) and 42 CFR 435.300 and following sections;

(vi) Coverage authorized under section 1115(a) of the Social Security Act (42 U.S.C. 1315(a));

(vii) Coverage under 10 U.S.C. 1079(a), 1086(c)(1), or 1086(d)(1) that is solely limited to space available care in a facility of the uniformed services for individuals excluded from TRICARE coverage for care from private sector providers;

(viii) Coverage under 10 U.S.C. 1074a and 1074b for an injury, illness, or disease incurred or aggravated in the line of duty for individuals who are not on active duty; and

(ix) Medicaid coverage limited to COVID-19 testing and diagnostic services provided under section 6004(a)(3) of the Families First Coronavirus Response Act, Pub. L. 116-127, 134 Stat. 178 (March 18, 2020).

(c) ***Eligible employer-sponsored plan*** —

(1) ***In general. Eligible employer-sponsored plan*** means, with respect to any employee:

(i) Group health insurance coverage offered by, or on behalf of, an employer to the employee that is—

(A) A governmental plan (within the meaning of section 2791(d)(8) of the Public Health Service Act (42 U.S.C. 300gg-91(d)(8)));

(B) Any other plan or coverage offered in the small or large group market within a State; or

(C) A grandfathered health plan (within the meaning of paragraph (e) of this section) offered in a group market; or

(ii) A self-insured group health plan under which coverage is offered by, or on behalf of, an employer to the employee.

(2) ***Government-sponsored program generally not an eligible employer-sponsored plan.*** Except for the program identified in paragraph (b)(1)(vii) of this section, a government-sponsored program described in paragraph (b) of this section is not an eligible employer-sponsored plan.

(d) ***Plan in the individual market*** —

(1) ***In general. Plan in the individual market*** means health insurance coverage offered to individuals in the individual market within a state, other than short-term limited duration insurance within the meaning of section 2791(b)(5) of the Public Health Service Act (42 U.S.C. 300gg-91(b)(5)).

(2) ***Qualified health plan offered by an Exchange.*** A qualified health plan offered by an Exchange is a plan in the individual market. If a territory of the United States elects to establish an Exchange under section 1323(a)(1) and (b) of the Affordable Care Act (42 U.S.C. 18043(a)(1), (b)), a qualified health plan offered by that Exchange is a plan in the individual market.

(e) ***Grandfathered health plan. Grandfathered health plan*** means any group health plan or group health insurance coverage to which section 1251 of the Affordable Care Act (42 U.S.C. 18011) applies.

(f) ***Other coverage that qualifies as minimum essential coverage.*** Minimum essential coverage includes any plan or arrangement recognized by the Secretary of Health and Human Services, in coordination with the Secretary of the Treasury, as minimum essential coverage.

(g) ***Excepted benefits not minimum essential coverage.*** Minimum essential coverage does not include any coverage that consists solely of excepted benefits described in section 2791(c)(1), (c)(2), (c)(3), or (c)(4) of the Public Health Service Act (42 U.S.C. 300gg-91(c)).

[T.D. 9632, 78 FR 53655, Aug. 30, 2013, as amended at 78 FR 78255, Dec. 26, 2013; T.D. 9705, 79 FR 70469, Nov. 26, 2014; T.D. 9970, 87 FR 76575, Dec. 15, 2022]

§ 1.5000A-3 Exempt individuals.

(a) ***Members of recognized religious sects*** —

(1) ***In general.*** An individual is an exempt individual for a month that includes a day on which the individual has in effect a religious conscience exemption certification described in paragraph (a)(2) of this section.

(2) ***Exemption certification.*** A religious conscience exemption certification is issued by an Exchange in accordance with the requirements of section 1311(d)(4)(H) of the Affordable Care Act (42 U.S.C. 18031(d)(4)(H)), 45 CFR 155.605(c), and 45 CFR 155.615(b) and certifies that an individual is—

(i) A member of a recognized religious sect or division of the sect that is described in section 1402(g)(1); and

(ii) An adherent of established tenets or teachings of the sect or division as described in that section.

(b) ***Member of health care sharing ministries*** —

(1) ***In general.*** An individual is an exempt individual for a month that includes a day on which the individual is a member of a health care sharing ministry.

(2) ***Health care sharing ministry.*** For purposes of this section, *health care sharing ministry* means an organization—

(i) That is described in section 501(c)(3) and is exempt from tax under section 501(a);

(ii) Members of which share a common set of ethical or religious beliefs and share medical expenses among themselves in accordance with those beliefs and without regard to the state in which a member resides or is employed;

(iii) Members of which retain membership even after they develop a medical condition;

(iv) That (or a predecessor of which) has been in existence at all times since December 31, 1999;

(v) Members of which have shared medical expenses continuously and without interruption since at least December 31, 1999; and

(vi) That conducts an annual audit performed by an independent certified public accounting firm in accordance with generally accepted accounting principles and makes the annual audit report available to the public upon request.

(c) ***Exempt noncitizens*** —

(1) ***In general.*** An individual is an exempt individual for a month that the individual is an exempt noncitizen.

(2) ***Exempt noncitizens.*** For purposes of this section, an individual is an exempt noncitizen for a month if the individual—

(i) Is not a U.S. citizen or U.S. national for any day during the month; and

(ii) Is either—

(A) A nonresident alien (within the meaning of section 7701(b)(1)(B)) for the taxable year that includes the month; or

(B) An individual who is not lawfully present (within the meaning of 45 CFR 155.20) on any day in the month.

(d) ***Incarcerated individuals*** —

(1) ***In general.*** An individual is an exempt individual for a month that includes a day on which the individual is incarcerated.

(2) ***Incarcerated.*** For purposes of this section, the term *incarcerated* means confined, after the disposition of charges, in a jail, prison, or similar penal institution or correctional facility.

(e) ***Individuals with no affordable coverage*** —

(1) ***In general.*** An individual is an exempt individual for a month in which the individual lacks affordable coverage. For purposes of this paragraph (e), an individual lacks affordable coverage in a month if the individual's required contribution (determined on an annual basis) for minimum essential coverage for the month exceeds the required contribution percentage (as defined in paragraph (e)(2)

of this section) of the individual's household income. For purposes of this paragraph (e), an individual's household income is increased by any amount of the required contribution made through a salary reduction arrangement that is excluded from gross income.

(2) ***Required contribution percentage*** —

(i) ***In general.*** Except as provided in paragraph (e)(2)(ii) of this section, the required contribution percentage is 8 percent.

(ii) ***Indexing.*** For plan years beginning in any calendar year after 2014, the required contribution percentage is the percentage determined by the Department of Health and Human Services that reflects the excess of the rate of premium growth between the preceding calendar year and 2013 over the rate of income growth for the period.

(iii) ***Plan year.*** For purposes of this paragraph (e), *plan year* means the eligible employer-sponsored plan's regular 12-month coverage period, or for a new employee or an individual who enrolls during a special enrollment period, the remainder of a 12-month coverage period.

(3) ***Individuals eligible for coverage under eligible employer-sponsored plans*** —

(i) ***Eligibility*** —

(A) ***In general.*** Except as provided in paragraph (e)(3)(i)(B) of this section, an employee or related individual (as defined in paragraph (e)(3)(ii)(B) of this section) is treated as eligible for coverage under an eligible employer-sponsored plan for a month during a plan year if the employee or related individual could have enrolled in the plan for any day in that month during an open or special enrollment period, regardless of whether the employee or related individual is eligible for any other type of minimum essential coverage.

(B) ***Multiple eligibility.*** For purposes of this paragraph (e)(3), an employee eligible for coverage under an eligible employer-sponsored plan offered by the employee's employer is not treated as eligible as a related individual for coverage under an eligible employer-sponsored plan (for example, an eligible employer-sponsored plan offered by the employer of the employee's spouse) for any month included in the plan year of the eligible employer-sponsored plan offered by the employee's employer.

(C) ***Special rule for post-employment coverage.*** A former employee or an individual related to a former employee, who may enroll in continuation coverage required under Federal law or a state law that provides comparable continuation coverage, or in retiree coverage under an eligible employer-sponsored plan, is eligible for coverage under an eligible employer-sponsored plan only if the individual enrolls in the coverage.

(ii) ***Required contribution for individuals eligible for coverage under an eligible employer-sponsored plan*** —

(A) ***Employees.*** In the case of an employee who is eligible to purchase coverage under an eligible employer-sponsored plan sponsored by the employee's employer, the required contribution is the portion of the annual premium that the employee would pay (whether through salary reduction or otherwise) for the lowest cost self-only coverage.

(B) ***Individuals related to employees.*** In the case of an individual who is eligible for coverage under an eligible employer-sponsored plan because of a relationship to an employee and for whom a personal exemption deduction under section 151 is claimed on the employee's

Federal income tax return (related individual), the required contribution is the portion of the annual premium that the employee would pay (whether through salary reduction or otherwise) for the lowest cost family coverage that would cover the employee and all related individuals who are included in the employee's family and are not otherwise exempt under § 1.5000A-3.

(C) ***Required contribution for part-year period.*** For each individual described in paragraph (e)(3)(ii)(A) or (e)(3)(ii)(B) of this section, affordability under this paragraph (e)(3) is determined separately for each employment period that is less than a full calendar year or for the portions of an employer's plan year that fall in different taxable years of the individual. Coverage under an eligible employer-sponsored plan is affordable for a part-year period if the annualized required contribution for self-only coverage (in the case of the employee) or family coverage (in the case of a related individual) under the plan for the part-year period does not exceed the required contribution percentage of the individual's household income for the taxable year. The annualized required contribution is the required contribution determined under paragraph (e)(3)(ii)(A) or (e)(3)(ii)(B) of this section for the part-year period times a fraction, the numerator of which is 12 and the denominator of which is the number of months in the part-year period during the individual's taxable year. Only full calendar months are included in the computation under this paragraph (e)(3)(ii)(C).

(D) ***Employer contributions to health reimbursement arrangements.*** Amounts newly made available for the current plan year under a health reimbursement arrangement that an employee may use to pay premiums, or may use to pay cost-sharing or benefits not covered by the primary plan in addition to premiums, are counted toward the employee's required contribution if the health reimbursement arrangement would be integrated, as that term is used in Notice 2013-54 (2013-40 IRB 287) or in any successor published guidance (see § 601.601(d) of this chapter), with an eligible employer-sponsored plan for an employee enrolled in the plan. The eligible employer-sponsored plan and the health reimbursement arrangement must be offered by the same employer. Employer contributions to a health reimbursement arrangement count toward an employee's required contribution only to the extent the amount of the annual contribution is required under the terms of the plan or otherwise determinable within a reasonable time before the employee must decide whether to enroll in the eligible employer-sponsored plan.

(E) ***Employer contributions to cafeteria plans.*** Amounts made available for the current plan year under a cafeteria plan, within the meaning of section 125, are taken into account in determining an employee's or a related individual's required contribution if:

(*1*) The employee may not opt to receive the amount as a taxable benefit;

(*2*) The employee may use the amount to pay for minimum essential coverage; and

(*3*) The employee may use the amount exclusively to pay for medical care, within the meaning of section 213.

(F) ***Wellness program incentives.*** Nondiscriminatory wellness program incentives, within the meaning of § 54.9802-1(f) of this chapter, offered by an eligible employer-sponsored plan that affect premiums are treated as earned in determining an employee's required contribution for purposes of affordability of an eligible employer-sponsored plan to the extent the incentives relate exclusively to tobacco use. Wellness program incentives that

do not relate to tobacco use or that include a component unrelated to tobacco use are treated as not earned for this purpose. For purposes of this section, the term *wellness program incentive* has the same meaning as the term *reward* in § 54.9802-1(f)(1)(i) of this chapter.

(G) ***Opt-out arrangements.*** [Reserved]

(iii) ***Examples.*** The following examples illustrate the application of this paragraph (e)(3). Unless stated otherwise, in each example, each individual's taxable year is a calendar year, the individual is ineligible for any other exemptions described in this section for a month, the rate of premium growth has not exceeded the rate of income growth since 2013, and the individual's employer offers a single plan that uses a calendar plan year and is an eligible employer-sponsored plan as described in § 1.5000A-2(c).

Example 1. Unmarried employee with no dependents. Taxpayer A is an unmarried individual with no dependents. In November 2015, A is eligible to enroll in self-only coverage under a plan offered by A's employer for calendar year 2016. If A enrolls in the coverage, A is required to pay $5,000 of the total annual premium. In 2016, A's household income is $60,000. Under paragraph (e)(3)(ii)(A) of this section, A's required contribution is $5,000, the portion of the annual premium A pays for self-only coverage. Under paragraph (e)(1) of this section, A lacks affordable coverage for 2016 because A's required contribution ($5,000) is greater than 8% of A's household income ($4,800).

Example 2. Married employee with dependents. Taxpayers B and C are married and file a joint return for 2016. B and C have two children, D and E. In November 2015, B is eligible to enroll in self-only coverage under a plan offered by B's employer for calendar year 2016 at a cost of $5,000 to B. C, D, and E are eligible to enroll in family coverage under the same plan for 2016 at a cost of $20,000 to B. B, C, D, and E's household income for 2016 is $90,000. Under paragraph (e)(3)(ii)(A) of this section, B's required contribution is B's share of the cost for self-only coverage, $5,000. Under paragraph (e)(1) of this section, B has affordable coverage for 2016 because B's required contribution ($5,000) does not exceed 8% of B's household income ($7,200). Under paragraph (e)(3)(ii)(B) of this section, the required contribution for C, D, and E is B's share of the cost for family coverage, $20,000. Under paragraph (e)(1) of this section, C, D, and E lack affordable coverage for 2016 because their required contribution ($20,000) exceeds 8% of their household income ($7,200).

Example 3. Plan year is a fiscal year. (i) Taxpayer F is an unmarried individual with no dependents. In June 2015, F is eligible to enroll in self-only coverage under a plan offered by F's employer for the period July 2015 through June 2016 at a cost to F of $4,750. In June 2016, F is eligible to enroll in self-only coverage under a plan offered by F's employer for the period July 2016 through June 2017 at a cost to F of $5,000. In 2016, F's household income is $60,000.

(ii) Under paragraph (e)(3)(ii)(C) of this section, F's annualized required contribution for the period January 2016 through June 2016 is $4,750 ($2,375 paid for premiums in 2016 × 12/6). Under paragraph (e)(1) of this section, F has affordable coverage for January 2016 through June 2016 because F's annualized required contribution ($4,750) does not exceed 8% of F's household income ($4,800).

(iii) Under paragraph (e)(3)(ii)(C) of this section, F's annualized required contribution for the period July 2016 to December 2016 is $5,000 ($2,500 paid for premiums in 2016 × 12/6). Under paragraph (e)(1) of this section, F lacks affordable coverage for July 2016 through December 2016 because F's annualized required contribution ($5,000) exceeds 8% of F's household income ($4,800).

Example 4. Eligibility for coverage under an eligible employer-sponsored plan and under government sponsored coverage.

Taxpayer G is unmarried and has one child, H. In November 2015, H is eligible to enroll in family coverage under a plan offered by G's employer for 2016. H is also eligible to enroll in the CHIP program for 2016. Under paragraph (e)(3)(i) of this section, H is treated as eligible for coverage under an eligible employer-sponsored plan for each month in 2016, notwithstanding that H is eligible to enroll in government sponsored coverage for the same period.

(4) ***Individuals ineligible for coverage under eligible employer-sponsored plans*** —

(i) ***Eligibility for coverage other than an eligible employer-sponsored plan.*** An individual is treated as ineligible for coverage under an eligible employer-sponsored plan for a month that is not described in paragraph (e)(3)(i) of this section.

(ii) ***Required contribution for individuals ineligible for coverage under eligible employer-sponsored plans*** —

(A) ***In general.*** In the case of an individual who is ineligible for coverage under an eligible employer-sponsored plan, the required contribution is the premium for the applicable plan, reduced by the maximum amount of any credit allowable under section 36B for the taxable year, determined as if the individual was covered for the entire taxable year by a qualified health plan offered through the Exchange serving the rating area where the individual resides.

(B) ***Applicable plan*** —(*1*) *In general.* Except as provided in paragraph (e)(4)(ii)(B)(*2*) of this section, *applicable plan* means the single lowest cost bronze plan available in the individual market through the Exchange serving the rating area in which the individual resides (without regard to whether the individual purchased a qualified health plan through the Exchange) that would cover all individuals in the individual's nonexempt family. For purposes of this paragraph (e)(4), an individual's *nonexempt family* means the family (as defined in § 1.5000A-1(d)(4)) that includes the individual, excluding any family members who are otherwise exempt under section 1.5000A-3 or are treated as eligible for coverage

under an eligible employer-sponsored plan under paragraph (e)(3)(i) of this section. The premium for the applicable plan takes into account rating factors (for example, an individual's age or tobacco use) that an Exchange would use to determine the cost of coverage.

(*2*) *Lowest cost bronze plan does not cover all individuals included in the taxpayer's nonexempt family*—(*i*) *In general.* If the Exchange serving the rating area where the individual resides does not offer a single bronze plan covering all individuals included in the individual's nonexempt family, the premium for the applicable plan is the sum of the premiums for the lowest cost bronze plans that are offered through the Exchanges serving the rating areas where one or more of the individuals reside that would cover in the aggregate all the individuals in the individual's nonexempt family. For instance, coverage offered through the Exchange in a rating area might not cover a family member living in different rating area or a single policy might not cover all the members in a taxpayer's household.

(*ii*) *Optional simplified method for applicable plan identification.* [Reserved]

(C) ***Wellness programs incentives.*** [Reserved]

(D) ***Credit allowable under section 36B.*** For purposes of paragraph (e)(4)(ii)(A) of this section, *maximum amount of any credit allowable under section 36B* means the maximum amount of the credit that would be allowable to the individual, or to the taxpayer who can properly claim the individual as a dependent, under section 36B if all members of the individual's nonexempt family enrolled in a qualified health plan through the Exchange serving the rating area where the individual resides.

(E) ***Required contribution for part-year period.*** For each individual, affordability under paragraph (e)(4) of this section is determined separately for each period described in paragraph (e)(4)(ii)(E) of this section that is less than a 12-month period. Coverage under a plan is affordable for a part-year period if the annualized required contribution for coverage under the plan for the part-year period does not exceed the required contribution percentage of the individual's household income for the taxable year. The annualized required contribution is the required contribution determined under paragraph (e)(4)(ii)(A) of this section for the part-year period times a fraction, the numerator of which is 12 and the denominator of which is the number of months in the part-year period during the individual's taxable year. Only full calendar months are included in the computation under this paragraph (e)(4)(ii)(D).

(iii) ***Examples.*** The following examples illustrate the provisions of this paragraph (e)(4). Unless stated otherwise, in each example the taxpayer's taxable year is a calendar year, the rate of premium growth has not exceeded the rate of income growth since 2013, and the taxpayer is ineligible for any of the exemptions described in paragraphs (a) through (d) and (f) through (j) of this section for a month.

> *Example 1. Unmarried individual with no dependents.* (i) Taxpayer G is an unmarried individual with no dependents. G is ineligible to enroll in any minimum essential coverage other than coverage in the individual market for all months in 2016. The annual premium for the lowest cost bronze self-only plan in G's rating area (G's applicable plan)

is $5,000. The adjusted annual premium for the second lowest cost silver self-only plan in G's rating area (G's applicable benchmark plan within the meaning of § 1.36B-3(f)) is $5,500. In 2016 G's household income is $40,000, which is 358% of the Federal poverty line for G's family size for the taxable year.
(ii) Under paragraph (e)(4)(ii)(C) of this section, the credit allowable under section 36B is determined pursuant to section 36B. With household income at 358% of the Federal poverty line, G's applicable percentage is 9.5. Because each month in 2016 is a coverage month (within the meaning of § 1.36B-3(c)), G's maximum credit allowable under section 36B is the excess of G's premium for the applicable benchmark plan over the product of G's household income and G's applicable percentage ($1,700). Therefore, under paragraph (e)(4)(ii)(A) of this section, G's required contribution is $3,300. Under paragraph (e)(1) of this section, G lacks affordable coverage for 2016 because G's required contribution ($3,300) exceeds 8% of G's household income ($3,200).

Example 2. Family. (i) In 2016 Taxpayers M and N are married and file a joint return. M and N have two children, P and Q. M, N, P, and Q are ineligible to enroll in minimum essential coverage other than coverage in the individual market for a month in 2016. The annual premium for M, N, P, and Q's applicable plan is $20,000. The adjusted annual premium for M, N, P, and Q's applicable benchmark plan (within the meaning of § 1.36B-3(f)) is $25,000. M and N's household income is $80,000, which is 347% of the Federal poverty line for a family size of 4 for the taxable year.
(ii) Under paragraph (e)(4)(ii)(C) of this section, the credit allowable under section 36B is determined pursuant to section 36B. With household income at 347% of the Federal poverty line, the applicable percentage is 9.5. Because each month in 2016 is a coverage month (within the meaning of § 1.36B-3(c)), the maximum credit allowable under section 36B is the excess of the premium for the applicable benchmark plan over the product of the household income and the applicable percentage ($17,400). Therefore, under paragraph (e)(4)(ii)(A) of this section, the required contribution for M, N, P, and Q is $2,600. Under paragraph (e)(1) of this section, M, N, P, and Q have affordable coverage for 2016 because their required contribution ($2,600) does not exceed 8% of their household income ($6,400).

Example 3. Family with some members eligible for government-sponsored coverage. (i) In 2016 Taxpayers U and V are married and file a joint return. U and V have two children, W and X. U and V are ineligible to enroll in minimum essential coverage other than coverage in the individual market for all months in 2016; however, W and X are eligible for coverage under CHIP for 2016. The annual premium for U, V, W, and X's applicable plan is $20,000. The adjusted annual premium for the second lowest cost silver plan that would cover U and V (the applicable benchmark plan within the meaning of § 1.36B-3(f)) is $12,500. U and V's household income is $50,000, which is 217% of the

Federal poverty line for a family size of 4 for the taxable year. W and X do not enroll in CHIP coverage.

(ii) Under paragraph (e)(4)(ii)(C) of this section, the credit allowable under section 36B is determined pursuant to section 36B. With household income at 217% of the Federal poverty line, the applicable percentage is 6.89. Each month in 2016 is a coverage month (within the meaning of § 1.36B-3(c)) for U and V, but no months in 2016 are coverage months for W and X because they are eligible for CHIP coverage. The maximum credit allowable under section 36B is the excess of the premium for the applicable benchmark plan over the product of the household income and the applicable percentage ($9,055). Therefore, under paragraph (e)(4)(ii)(A) of this section, the required contribution is $10,945. Under paragraph (e)(1) of this section, U, V, W, and X lack affordable coverage for 2016 because their required contribution ($10,945) exceeds 8% of their household income ($4,000).

Example 4. Family with some members enrolled in government-sponsored minimum essential coverage. The facts are the same as *Example 3,* except W and X enroll in CHIP coverage on January 1, 2016. Under paragraph (e)(4)(ii)(B), U, V, W, and X are members of U and V's nonexempt family for 2016. Therefore, the annual premium for the applicable plan is the same as in *Example 3* ($20,000). The maximum credit allowable under section 36B is also the same as in *Example 3* ($9,055). Under paragraph (e)(4)(ii)(A) of this section, the required contribution is $10,945. Under paragraph (e)(1) of this section, U and V lack affordable coverage for 2016 because their required contribution ($10,945) exceeds 8% of their household income ($4,000).

(f) ***Household income below filing threshold*** —

(1) ***In general.*** An individual is an exempt individual for any taxable year for which the individual's household income is less than the applicable filing threshold.

(2) ***Applicable filing threshold*** —

(i) ***In general.*** For purposes of this section, *applicable filing threshold* means the amount of gross income that would trigger an individual's requirement to file a Federal income tax return under section 6012(a)(1).

(ii) ***Certain dependents.*** The applicable filing threshold for an individual who is properly claimed as a dependent by another taxpayer is equal to the other taxpayer's applicable filing threshold.

(3) ***Manner of claiming the exemption.*** A taxpayer is not required to file a Federal income tax return solely to claim the exemption described in this paragraph (f). If a taxpayer has a household income below the applicable filing threshold and nevertheless files a Federal income tax return, the taxpayer may claim the exemption described in this paragraph (f) on the return.

(g) ***Members of Indian tribes.*** An individual is an exempt individual for a month that includes a day on which the individual is a member of an Indian tribe. For purposes of this section, *Indian tribe* means a group or community described in section 45A(c)(6).

(h) ***Individuals with hardship exemption certification*** —

(1) ***In general.*** Except as provided in paragraph (h)(3) of this section, an individual is an exempt individual for a month that includes a day on which the individual has in effect a hardship exemption certification described in paragraph (h)(2) of this section.

(2) ***Hardship exemption certification.*** A hardship exemption certification is issued by an Exchange under section 1311(d)(4)(H) of the Affordable Care Act (42 U.S.C. 18031(d)(4)(H)), 45 CFR 155.605(g)(1), (g)(2), (g)(4) and (g)(6), 45 CFR 155.610(i), and 45 CFR 155.615(f), and certifies that an individual has suffered a hardship (as that term is defined in 45 CFR 155.605(g)) affecting the capability to obtain minimum essential coverage.

(3) ***Hardship exemption without hardship exemption certification.*** An individual may claim an exemption without obtaining a hardship exemption certification described in paragraph (h)(2) of this section for any month that includes a day on which the individual meets the requirements of any hardship for which:

(i) The Secretary of HHS issues guidance of general applicability describing the hardship and indicating that an exemption for such hardship can be claimed on a Federal income tax return pursuant to guidance published by the Secretary; and

(ii) The Secretary issues published guidance of general applicability, see § 601.601(d)(2) of this chapter, allowing an individual to claim the hardship exemption on a return without obtaining a hardship exemption from an Exchange.

(i) [Reserved]

(j) ***Individuals with certain short coverage gaps*** —

(1) ***In general.*** An individual is an exempt individual for a month the last day of which is included in a short coverage gap.

(2) ***Short coverage gap*** —

(i) ***In general. Short coverage gap*** means a continuous period of less than three months in which the individual is not covered under minimum essential coverage. If the individual does not have minimum essential coverage for a continuous period of three or more months, none of the months included in the continuous period are treated as included in a short coverage gap.

(ii) ***Coordination with other exemptions.*** For purposes of this paragraph (j), an individual is treated as having minimum essential coverage for a month in which an individual is exempt under any of paragraphs (a) through (h) of this section.

(iii) ***More than one short coverage gap during calendar year.*** If a calendar year includes more than one short coverage gap, the exemption provided by this paragraph (j) only applies to the earliest short coverage gap.

(3) ***Continuous period*** —

(i) ***In general.*** Except as provided in paragraph (j)(3)(ii) of this section, the number of months included in a continuous period is determined without regard to the calendar years in which months included in that period occur. For purposes of paragraph (j) of this section, a continuous period begins no earlier than January 1, 2014.

(ii) ***Continuous period straddling more than one taxable year.*** If an individual does not have minimum essential coverage for a continuous period that begins in one taxable year and ends in the next, for purposes of applying this paragraph (j) to the first taxable year, the months in the second taxable year included in the continuous period are disregarded. For purposes of applying this paragraph (j) to the second taxable year, the months in the first taxable year included in the continuous period are taken into account.

(4) ***Examples.*** The following examples illustrate the provisions of this paragraph (j). Unless stated otherwise, in each example the taxpayer's taxable year is a calendar year and the taxpayer is ineligible for any of the exemptions described in paragraphs (a) through (h) of this section for a month.

Example 1. Short coverage gap. Taxpayer D has minimum essential coverage in 2016 from January 1 through March 2. After March 2, D does not have minimum essential coverage until D enrolls in an eligible employer-sponsored plan effective June 15. Under § 1.5000A-1(b), for purposes of section 5000A, D has minimum essential coverage for January, February, March, and June through December. D's continuous period without coverage is 2 months, April and May. April and May constitute a short coverage gap under paragraph (j)(2)(i) of this section.

Example 2. Continuous period of 3 months or more. The facts are the same as in *Example 1,* except D's coverage is not effective until July 1. D's continuous period without coverage is 3 months, April, May, and June. Under paragraph (j)(2)(i) of this section, April, May, and June are not included in a short coverage gap.

Example 3. Short coverage gap following exempt period. Taxpayer E is incarcerated from January 1 through June 2. E enrolls in an eligible employer-sponsored plan effective September 15. Under paragraph (d) of this section, E is exempt for the period January through June. Under paragraph (j)(2)(ii) of this section, E is treated as having minimum essential coverage for this period, and E's continuous period without minimum essential coverage is 2 months, July and August. July and August constitute a short coverage gap under paragraph (j)(2)(i) of this section.

Example 4. Continuous period covering more than one taxable year. Taxpayer F, an unmarried individual with no dependents, has minimum essential coverage for the period January 1 through October 15, 2016. F is without coverage until February 15, 2017. F files his Federal income tax return for 2016 on March 10, 2017. Under paragraph (j)(3)(ii) of this section, November and December of 2016 are treated as a short coverage gap. However, November and December of 2016 are included in the continuous period that includes January 2017. The continuous period for 2017 is not less than 3 months and, therefore, January is not a part of a short coverage gap.

Example 5. Enrollment following loss of coverage. The facts are the same as in *Example 4* except F loses coverage on June 15, 2017. F enrolls in minimum essential coverage effective September 15, 2017. The continuous period without minimum essential coverage in July and August of 2017 is two months and, therefore, is a short coverage gap. Because January 2017 was not part of a short coverage gap, the earliest short coverage gap occurring in 2017 is the gap that includes July and August.

Example 6. Multiple coverage gaps. (i) The facts are the same as in *Example 5* except F has minimum essential coverage for November 2016. Under paragraph (j)(3)(ii) of this section, December 2016 is treated as a short coverage gap.

> (ii) December 2016 is included in the continuous period that includes January 2017. This continuous period is two months and, therefore, January 2017 is the earliest month in 2017 that is included in a short coverage gap. Under paragraph (j)(2)(iii) of this section, the exemption under this paragraph (j) applies only to January 2017. Thus, the continuous period without minimum essential coverage in July and August of 2017 is not a short coverage gap.

[T.D. 9632, 78 FR 53655, Aug. 30, 2013, as amended at 78 FR 78255, Dec. 26, 2013; T.D. 9705, 79 FR 70469, Nov. 26, 2014; T.D. 9804, 81 FR 91768, Dec. 19, 2016]

§ 1.5000A-4 Computation of shared responsibility payment.

(a) ***In general.*** For each taxable year, the shared responsibility payment imposed on a taxpayer in accordance with § 1.5000A-1(c) is the lesser of—

(1) The sum of the monthly penalty amounts; or

(2) The sum of the monthly national average bronze plan premiums for the shared responsibility family.

(b) ***Monthly penalty amount*** —

(1) ***In general. Monthly penalty amount*** means, for a month that a nonexempt individual is not covered under minimum essential coverage, 1/12 multiplied by the greater of—

(i) The flat dollar amount; or

(ii) The excess income amount.

(2) ***Flat dollar amount*** —

(i) ***In general. Flat dollar amount*** means the lesser of—

(A) The sum of the applicable dollar amounts for all individuals included in the taxpayer's shared responsibility family; or

(B) 300 percent of the applicable dollar amount (determined without regard to paragraph (b)(2)(iii) of this section) for the calendar year with or within which the taxable year ends.

(ii) ***Applicable dollar amount.*** Except as provided in paragraphs (b)(2)(iii) and (b)(2)(iv) of this section, the applicable dollar amount is—

(A) $95 in 2014;

(B) $325 in 2015; or

(C) $695 in 2016.

(iii) ***Special applicable dollar amount for individuals under age 18.*** If an individual has not attained the age of 18 before the first day of a month, the applicable dollar amount for the individual is equal to one-half of the applicable dollar amount (as expressed in paragraph (b)(2)(ii) of this section) for the calendar year in which the month occurs. For purposes of this paragraph (b)(2)(iii), an individual attains the age of 18 on the anniversary of the date when the individual was born. For example, an individual born on March 1, 1999, attains the age of 18 on March 1, 2017.

(iv) ***Indexing of applicable dollar amount.*** In any calendar year after 2016, the applicable dollar amount is $695 as increased by the product of $695 and the cost-of-living adjustment determined under section 1(f)(3) for the calendar year. For purposes of this paragraph (b)(2)(iv), the cost-of-living adjustment is determined by substituting "calendar year 2015" for "calendar year 1992" in section 1(f)(3)(B). If any increase under this paragraph (b)(2)(iv) is not a multiple of $50, the increase is rounded down to the next lowest multiple of $50.

(3) ***Excess income amount*** —

(i) ***In general. Excess income amount*** means the product of—

(A) The excess of the taxpayer's household income over the taxpayer's applicable filing threshold (as defined in § 1.5000A-3(f)(2)); and

(B) The income percentage.

(ii) ***Income percentage.*** For purposes of this section, *income percentage* means—

(A) 1.0 percent for taxable years beginning in 2013;

(B) 1.0 percent for taxable years beginning in 2014;

(C) 2.0 percent for taxable years beginning in 2015; or

(D) 2.5 percent for taxable years beginning after 2015.

(c) ***Monthly national average bronze plan premium. Monthly national average bronze plan premium*** means, for a month for which a shared responsibility payment is imposed, $^{1}/_{12}$ of the annual national average premium for qualified health plans that have a bronze level of coverage, would provide coverage for the taxpayer's shared responsibility family members who do not have minimum essential coverage for the month, and are offered through Exchanges for plan years beginning in the calendar year with or within which the taxable year ends.

(d) ***Examples.*** The following examples illustrate the provisions of this section. In each example the taxpayer's taxable year is a calendar year and all members of the taxpayer's shared responsibility family are ineligible for any of the exemptions described in § 1.5000A-3 for a month.

> *Example 1. Unmarried taxpayer without minimum essential coverage.* (i) In 2016, Taxpayer G is an unmarried individual with no dependents. G does not have minimum essential coverage for any month in 2016. G's household income is $120,000. G's applicable filing threshold is $12,000. The annual national average bronze plan premium for G is $5,000.
> (ii) For each month in 2016, under paragraph (b)(2)(ii) of this section, G's applicable dollar amount is $695. Under paragraph (b)(2)(i) of this section, G's flat dollar amount is $695 (the lesser of $695 and $2,085 ($695 × 3)). Under paragraph (b)(3) of this section, G's excess income amount is $2,700 (($120,000 − $12,000) × 0.025). Therefore, under paragraph (b)(1) of this section, the monthly penalty amount is $225 (the greater of $58 ($695/12) or $225 ($2,700/12)).

(iii) The sum of the monthly penalty amounts is $2,700 ($225 × 12). The sum of the monthly national average bronze plan premiums is $5,000 ($5,000/12 × 12). Therefore, under paragraph (a) of this section, the shared responsibility payment imposed on G for 2016 is $2,700 (the lesser of $2,700 or $5,000).

Example 2. Part-year coverage. The facts are the same as in *Example 1,* except G has minimum essential coverage for January through June. The sum of the monthly penalty amounts is $1,350 ($225 × 6). The sum of the monthly national average bronze plan premiums is $2,500 ($5,000/12 × 6). Therefore, under paragraph (a) of this section, the shared responsibility payment imposed on G for 2016 is $1,350 (the lesser of $1,350 or $2,500).

Example 3. Family without minimum essential coverage. (i) In 2016, Taxpayers H and J are married and file a joint return. H and J have three children: K, age 21, L, age 15, and M, age 10. No member of the family has minimum essential coverage for any month in 2016. H and J's household income is $250,000. H and J's applicable filing threshold is $24,000. The annual national average bronze plan premium for a family of 5 (3 adults, 2 children) is $15,000.
(ii) For each month in 2016, under paragraphs (b)(2)(ii) and (b)(2)(iii) of this section, the applicable dollar amount is $2,780 (($695 × 3 adults) + (($695/2) × 2 children)). Under paragraph (b)(2)(i) of this section, the flat dollar amount is $2,085 (the lesser of $2,780 and $2,085 ($695 × 3)). Under paragraph (b)(3) of this section, the excess income amount is $5,650 (($250,000−$24,000) × 0.025). Therefore, under paragraph (b)(1) of this section, the monthly penalty amount is $470.83 (the greater of $173.75 ($2,085/12) or $470.83 ($5,650/12)).

(iii) The sum of the monthly penalty amounts is $5,650 ($470.83 × 12). The sum of the monthly national average bronze plan premiums is $15,000 ($15,000/12 × 12). Therefore, under paragraph (a) of this section, the shared responsibility payment imposed on H and J for 2016 is $5,650 (the lesser of $5,650 or $15,000).

Example 4. Change in shared responsibility family during the year. (i) The facts are the same as in *Example 3,* except J has minimum essential coverage for January through June. The annual national average bronze plan premium for a family of 4 (2 adults, 2 children) is $10,000.
(ii) For the period January through June 2016, under paragraphs (b)(2)(ii) and (b)(2)(iii) of this section the applicable dollar amount is $2,085 (($695 × 2 adults) + (($695/2) × 2 children)). Under paragraph (b)(2)(i) of this section, the flat dollar amount is $2,085 (the lesser of $2,085 or $2,085 ($695 × 3)).

(iii) For the period July through December 2016, the applicable dollar amount is $2,780 (($695 × 3 adults) + (($695/2) × 2 children)). Under paragraph (b)(2) of this section, the flat dollar amount is $2,085 (the lesser of $2,780 or $2,085 ($695 × 3)). Under paragraph (b)(3) of this section, the excess income amount is $5,650 (($250,000−$24,000) × 0.025). Therefore, under paragraph (b)(1) of this section, for January through June the monthly penalty amount is $470.83 (the greater of $173.75 ($2,085/12) or $470.83 ($5,650/12)). The monthly penalty amount for July through December is $470.83 (the greater of $173.75 ($2,085/12) or $470.83 ($5,650/12)).

(iv) The sum of the monthly penalty amounts is $5,650 ($470.83 × 12). The sum of the monthly national average bronze plan premiums is $12,500 ((($10,000/12) × 6) + (($15,000/12) × 6))). Therefore, under paragraph (a) of this section, the shared responsibility payment imposed on H and J for 2016 is $5,650 (the lesser of $5,650 or $12,500).

Example 5. Eighteenth birthday during the year. (i) In 2016 Taxpayers S and T are married and file a joint return. S and T have one child, U, who turns 18 years old on June 28. S, T, and U do not enroll in, and as a result are not eligible to receive benefits under, affordable employer-sponsored coverage offered by T's employer for 2016. S and T's household income is $60,000. S and T's applicable filing threshold is $24,000. The annual national average bronze plan premium for a family of 3 (2 adults, 1 child) is $11,000.
(ii) For the period January through June 2016, under paragraphs (b)(2)(ii) and (b)(2)(iii) of this section, the applicable dollar amount is $1,737.50 (($695 × 2 adults) + ($695/2) × 1 child)). Under paragraph (b)(2) of this section, the flat dollar amount is $1,737.50 (the lesser of $1,737.50 or $2,085 ($695 × 3)).

(iii) For the period July through December 2016, the applicable dollar amount is $2,085 ($695 × 3). Under paragraph (b)(2)(i) of this section, the flat dollar amount is $2,085 (the lesser of $2,085 or $2,085 ($695 × 3)). Under paragraph (b)(3) of this section, the excess income amount is $900 (($60,000−$24,000) × 0.025). Therefore, under paragraph (b)(1) of this section, for January through June the monthly penalty amount is $144.79 (the greater of $144.79 ($1,737.50/12) or $75 ($900/12)). The monthly penalty amount for July through December is $173.75 (the greater of $173.75 ($2,085/12) or $75 ($900/12)).

(iv) The sum of the monthly penalty amounts is $1,911.24 (($144.79 × 6) + ($173.75 × 6)). The sum of the monthly national average bronze plan premiums is $11,000 ($11,000/12 × 12). Therefore, under paragraph (a) of this section, the shared responsibility payment imposed on S and T for 2016 is $1,911.24 (the lesser of $1,911.24 or $11,000).

[T.D. 9632, 78 FR 53655, Aug. 30, 2013, as amended at 78 FR 78255, Dec. 26, 2013; T.D. 9705, 79 FR 70469, Nov. 26, 2014]

§ 1.5000A-5 Administration and procedure.

(a) ***In general.*** A taxpayer's liability for the shared responsibility payment for a month must be reported on the taxpayer's Federal income tax return for the taxable year that includes the month. The period of limitations for assessing the shared responsibility payment is the same as that prescribed by section 6501 for the taxable year to which the Federal income tax return on which the shared responsibility payment is to be reported relates. The shared responsibility payment is payable upon notice and demand by the Secretary, and except as provided in paragraph (b) of this section, is assessed and collected in the same manner as an assessable penalty under subchapter B of chapter 68 of the Internal Revenue Code. The shared responsibility payment is not subject to deficiency procedures of subchapter B of chapter 63 of the Internal Revenue Code. Interest on this payment accrues in accordance with the rules in section 6601.

(b) ***Special rules.*** Notwithstanding any other provision of law—

(1) ***Waiver of criminal penalties.*** In the case of a failure by a taxpayer to timely pay the shared responsibility payment, the taxpayer is not subject to criminal prosecution or penalty for the failure.

(2) ***Limitations on liens and levies.*** If a taxpayer fails to pay the shared responsibility payment imposed by this section and §§ 1.5000A-1 through 1.5000A-4, the Secretary will not file notice of lien on any property of the taxpayer, or levy on any property of the taxpayer for the failure.

(3) ***Authority to offset against overpayment.*** Nothing in this section prohibits the Secretary from offsetting any liability for the shared responsibility payment against any overpayment due the taxpayer, in accordance with section 6402(a) and its corresponding regulations.

(c) ***Applicability date.*** Except as otherwise provided in this paragraph (c), this section and §§ 1.5000A-1 through 1.5000A-4 apply for months beginning after December 31, 2013. Section 1.5000A-2(b)(2)(ix) applies for months beginning after September 28, 2020.

[T.D. 9632, 78 FR 53655, Aug. 30, 2013, as amended by T.D. 9970, 87 FR 76575, Dec. 15, 2022]

Tax on Certain Foreign Procurement

§ 1.5000C-0 Outline of regulation provisions for section 5000C.

This section lists the captions contained in §§ 1.5000C-1 through 1.5000C-7.

§ 1.5000C-1 Tax on specified Federal procurement payments.

(a) Overview.

(b) Imposition of tax.

(c) Definitions.

(d) Exemptions.

(1) Simplified acquisitions.

(2) Emergency acquisitions.

(3) Certain personal service contracts.

(4) Certain foreign humanitarian assistance contracts.

(5) Certain international agreements.

(6) Goods manufactured or produced or services provided in the United States.

(7) Goods manufactured or produced or services provided in a country that is a party to an international procurement agreement.

(e) Country in which goods are manufactured or produced or services provided.

(1) Goods manufactured or produced.

(2) Provision of services.

(3) Allocation of total contract price to determine the nonexempt amount.

(4) Reduction or elimination of withholding by an acquiring agency.

§ 1.5000C-2 Withholding on specified Federal procurement payments.

(a) In general.

(b) Steps in determining the obligation to withhold under section 5000C.

(1) Determine whether the payment is pursuant to a contract for goods or services.

(2) Determine whether the payment is made pursuant to a contract with a U.S. person.

(3) Determine whether the payment is for purchases under the simplified acquisition procedures.

(4) Determine whether the payment is for emergency acquisitions.

(5) Determine whether the payment is for personal services under the simplified acquisition threshold.

(6) Determine whether the payment is pursuant to a foreign humanitarian assistance contract.

(7) Determine whether the foreign contracting party is entitled to relief pursuant to an international agreement.

(8) Determine whether the contract is for goods manufactured or produced or services provided in the United States or in a foreign country that is a party to an international procurement agreement.

(9) Compute amounts to withhold.

(10) Deposit and report amounts withheld.

(c) Determining whether the contracting party is a U.S. person.

(1) In general.

(2) Determination based on Taxpayer Identification Number (TIN).

(3) Determination based on the Form W-9.

(4) Contracting party treated as a foreign contracting party.

(d) Withholding when a foreign contracting party submits a Section 5000C Certificate.

(1) In general.

(2) Exemption for a foreign contracting party entitled to the benefit of relief pursuant to certain international agreements.

(3) Exemption when goods are manufactured or produced or services provided in the United States, or in a foreign country that is a party to an international procurement agreement.

(4) Information required for Section 5000C Certificate.

(5) Validity period of Section 5000C Certificate.

(6) Change in circumstances.

(7) Form W-14.

(8) Time for submitting Section 5000C Certificate.

(e) Offset for underwithholding or overwithholding.

(1) In general.

(2) Underwithholding.

(3) Overwithholding.

§ 1.5000C-3 Payment and returns of tax withheld by the acquiring agency.

(a) In general.

(b) Deposit rules.

(1) Acquiring agency with a chapter 3 deposit requirement treats amounts withheld as under chapter 3.

(2) Acquiring agency with no chapter 3 filing obligation deposits withheld amounts monthly.

(c) Return requirements.

(1) In general.

(2) Classified or confidential contracts.

(d) Special arrangement for certain contracts.

§ 1.5000C-4 Requirement for the foreign contracting party to file a return and pay tax, and procedures for the contracting party to seek a refund.

(a) In general.

(b) Tax obligation of foreign contracting party independent of withholding.

(c) Return of tax by the foreign contracting party.

(d) Time and manner of paying tax.

(e) Refund requests when amount withheld exceeds tax liability.

§ 1.5000C-5 Anti-abuse rule.

§ 1.5000C-6 Examples.

§ 1.5000C-7 Effective/applicability date.

[T.D. 9782, 81 FR 55137, Aug. 18, 2016]

§ 1.5000C-1 Tax on specified Federal procurement payments.

(a) ***Overview.*** This section provides definitions and general rules relating to the imposition of, and exemption from, the tax on specified Federal procurement payments under section 5000C. Section 1.5000C-2 provides rules concerning withholding under section 5000C(d)(1), including the steps that must be taken to determine the obligation to withhold and whether an exemption from withholding applies. Section 1.5000C-3 provides the time and manner for depositing the amounts withheld under section 5000C and the related reporting requirements. Section 1.5000C-4 contains the rules that apply to a foreign contracting party that must pay and report the tax under section 5000C when the tax obligation under section 5000C is not fully satisfied by withholding, as well as procedures by which a contracting party may seek a refund when the amount withheld exceeds its tax liability under section 5000C. Section 1.5000C-5 contains an anti-abuse rule. Section 1.5000C-6 contains examples illustrating the principles of §§ 1.5000C-1 through 1.5000C-4. Finally, § 1.5000C-7 contains the effective/applicability date for §§ 1.5000C-1 through 1.5000C-7.

(b) ***Imposition of tax.*** Except as otherwise provided, section 5000C imposes on any foreign contracting party a tax equal to 2 percent of the amount of a specified Federal procurement payment. In general, the tax imposed under section 5000C applies to specified Federal procurement payments received pursuant to contracts entered into on and after January 2, 2011. Specified Federal procurement payments received by a nominee or agent on behalf of a contracting party are considered to be received by that contracting party. The tax imposed under section 5000C is to be applied in a manner consistent with U.S. obligations under international agreements. Payments for the purchase or lease of land or an interest in land are not subject to the tax imposed under section 5000C.

(c) ***Definitions.*** Solely for purposes of section 5000C and §§ 1.5000C-1 through 1.5000C-7, the following definitions apply:

(1) The term *acquiring agency* means the U.S. government department, agency, independent establishment, or corporation described in paragraph (c)(7) of this section that is a party to the contract. To the extent that a U.S. government department or agency, other than the acquiring agency, is making the payments pursuant to the contract, that department or agency is also considered to be the acquiring agency.

(2) The term *contract* has the same meaning as provided in 48 CFR 2.101, and thus does not include a grant agreement or a cooperative agreement within the meaning of 31 U.S.C. 6304 and 6305, respectively. A contract may include an agreement that is not executed under the Federal Acquisition Regulations (FAR), 48 CFR Chapter 1.

(3) The term *contract ratio* refers to the nonexempt amount over the total contract price.

(4) The term *contracting party* means any person that is a party to a contract with the U.S. government that is entered into on or after January 2, 2011. See § 1.5000C-1(b) for situations involving a nominee or agent.

(5) The term *foreign contracting party* means a contracting party that is a foreign person.

(6) The term *foreign person* means any person other than a United States person (as defined in section 7701(a)(30)).

(7) The term *Government of the United States* or *U.S. government* means the executive departments specified in 5 U.S.C. 101, the military departments specified in 5 U.S.C. 102, the independent establishments specified in 5 U.S.C. 104(1), and wholly owned government corporations specified in 31 U.S.C. 9101(3). Unless otherwise specified in 5 U.S.C. 101, 102, or 104(1), or 31 U.S.C. 9101(3), the term Government of the United States or U.S. government does not include any quasi-governmental entities or instrumentalities of the U.S. government.

(8) The term *international procurement agreement* means the World Trade Organization Government Procurement Agreement within the meaning of 48 CFR 25.400(a)(1) and any free trade agreement to which the United States is a party that includes government procurement obligations that provide appropriate competitive government procurement opportunities to U.S. goods, services, and suppliers. A party to an international procurement agreement is a signatory to the agreement and does not include a country that is merely an observer with respect to the agreement.

(9) The term *nonexempt amount* means the portion of the contract price allocated to nonexempt goods and nonexempt services.

(10) The term *nonexempt goods* means goods manufactured or produced in a foreign country that is not a party to an international procurement agreement with the United States.

(11) The term *nonexempt services* means services provided in a foreign country that is not a party to an international procurement agreement with the United States.

(12) The term *outlying areas* has the same meaning as set forth in 48 CFR 2.101(b), which includes Puerto Rico, the Northern Mariana Islands, American Samoa, Guam, the Virgin Islands, Baker Island, Howland Island, Jarvis Island, Johnston Atoll, Kingman Reef, Midway Islands, Navassa Island, Palmyra Atoll, and Wake Atoll.

(13) The term *qualified income tax treaty* means a U.S. income tax treaty in force that contains a nondiscrimination provision that applies to the tax imposed under section 5000C and prohibits taxation that is more burdensome on a foreign national than a U.S. national (or in the case of certain income tax treaties, taxation that is more burdensome on a foreign citizen than a U.S. citizen), regardless of its residence.

(14) The term *Section 5000C Certificate* means a written statement that includes the information described in § 1.5000C-2(d) that the foreign contracting party submits to an acquiring agency for the purposes of demonstrating that the foreign contracting party is eligible for certain exemptions from

withholding (in whole or in part) under section 5000C with respect to a contract. The term may also include any form that the Internal Revenue Service may prescribe as a substitute for the Section 5000C Certificate, such as Form W-14, "Certificate of Foreign Contracting Party Receiving Federal Procurement Payments."

(15) The term *specified Federal procurement payment* means any payment made pursuant to a contract with a foreign contracting party that is for goods manufactured or produced or services provided in a foreign country that is not a party to an international procurement agreement with the United States. For purposes of the prior sentence, a foreign country does not include an outlying area.

(16) The term *Taxpayer Identification Number* or *TIN* means the identifying number assigned to a person under section 6109, as defined in section 7701(a)(41).

(17) The term *total contract price* means the total cost to the U.S. Government of the goods and services procured under a contract and paid to the contracting party.

(d) ***Exemptions.*** The tax imposed under paragraph (b) of this section does not apply to the payments made in the following situations. For the exemptions in paragraphs (d)(5), (6) and (7) of this section, see § 1.5000C-2(d) for the procedures to eliminate withholding by an acquiring agency.

(1) ***Simplified acquisitions.*** Payments for purchases under the simplified acquisition procedures that do not exceed the simplified acquisition threshold as described in 48 CFR 2.101.

(2) ***Emergency acquisitions.*** Payments made pursuant to a contract if the contract is—

(i) Awarded under the "unusual and compelling urgency" authority of 48 CFR 6.302-2, or

(ii) Entered into under the emergency acquisition flexibilities as defined in 48 CFR part 18.

(3) ***Certain personal service contracts.*** Payments for services provided by, and under contracts with, a single individual in which the payments do not (and will not) exceed on an annual calendar year basis the simplified acquisition threshold as described in 48 CFR 2.101 for all years of the contract. Payments that satisfy this exemption remain exempt if the contract is later renegotiated so that future payments under the contract do not meet this exemption.

(4) ***Certain foreign humanitarian assistance contracts.*** Payments made by the U.S. government pursuant to a contract with a foreign contracting party to obtain goods or services described in or authorized under 7 U.S.C. 1691, *et seq.*, 22 U.S.C. 2151, *et seq.*, 22 U.S.C. 2601 *et seq.*, 22 U.S.C. 5801 *et seq.*, 22 U.S.C. 5401 *et seq.*, 10 U.S.C. 402, 10 U.S.C. 404, 10 U.S.C. 407, 10 U.S.C. 2557, and 10 U.S.C. 2561, if the acquiring agency determines that the payment is for the purpose of providing foreign humanitarian assistance.

(5) ***Certain international agreements.*** Payments made by the U.S. government pursuant to a contract with a foreign contracting party when the payments are entitled to relief from the tax imposed under section 5000C pursuant to an international agreement with the United States, including relief pursuant to a nondiscrimination provision of a qualified income tax treaty, because the foreign contracting party is entitled to the benefit of that provision.

(6) ***Goods manufactured or produced or services provided in the United States.*** A payment made pursuant to a contract to the extent that the payment is for goods manufactured or produced or services provided in the United States.

(7) ***Goods manufactured or produced or services provided in a country that is a party to an international procurement agreement.*** A payment made pursuant to a contract to the extent the payment is for goods manufactured or produced or services provided in a country that is a party to an international procurement agreement, as defined in paragraph (c)(8) of this section.

(e) ***Country in which goods are manufactured or produced or services provided*** —

(1) ***Goods manufactured or produced.*** Solely for purposes of section 5000C, goods are manufactured or produced in the country (or countries)—

(i) Where property has been substantially transformed into the goods that are procured pursuant to a contract; or

(ii) Where there has been assembly or conversion of component parts (involving activities that are substantial in nature and generally considered to constitute the manufacture or production of property) into the final product that constitutes the goods procured pursuant to a contract.

(2) ***Provision of services.*** Solely for purposes of section 5000C, services are considered to be provided in the country where the individuals performing the services are physically located when they perform their duties pursuant to the contract.

(3) ***Allocation of total contract price to determine the nonexempt amount.*** If, pursuant to a contract, goods are manufactured or produced, or services are provided, in multiple countries and only a portion of the goods manufactured or produced, or the services provided, pursuant to the contract are nonexempt goods or nonexempt services, a foreign contracting party may use a reasonable allocation method to determine the nonexempt amount. A reasonable allocation method would include taking into account the proportionate costs (including the cost of labor and raw materials) incurred to manufacture or produce the goods in each country, or taking into account the proportionate costs incurred to provide the services in each country.

(4) ***Reduction or elimination of withholding by an acquiring agency.*** For procedures to reduce or eliminate withholding by an acquiring agency based on where goods are manufactured or produced or where services are provided, including as a result of an allocation under this paragraph (e), see § 1.5000C-2(d).

[T.D. 9782, 81 FR 55138, Aug. 18, 2016]

§ 1.5000C-2 Withholding on specified Federal procurement payments.

(a) ***In general.*** Except as otherwise provided in this section, every acquiring agency making a specified Federal procurement payment on which tax is imposed under section 5000C and §§ 1.5000C-1 through 1.5000C-7 must deduct and withhold an amount equal to 2 percent of the payment. For rules relating to the liability of a foreign contracting party with respect to specified Federal procurement payments not fully withheld upon at source, see § 1.5000C-4. An acquiring agency may rely upon any information furnished by a contracting party under this section unless the acquiring agency has reason to know that the information is incorrect or unreliable. An acquiring agency has reason to know that the information is incorrect or unreliable if it has knowledge of relevant facts or statements contained in the submitted information such that a reasonably prudent person in the position of the acquiring agency would know that the information provided is incorrect or unreliable.

(b) ***Steps in determining the obligation to withhold under section 5000C.*** An acquiring agency generally determines its obligation to withhold under section 5000C according to the steps described in this paragraph (b). See, however, paragraph (e) of this section for situations in which withholding may be increased in the case of underwithholding, or may be decreased in the case of overwithholding.

(1) ***Determine whether the payment is pursuant to a contract for goods or services.*** The acquiring agency determines whether it is making a payment pursuant to a contract for goods or services. To the extent that the acquiring agency is making a payment for any other purpose, it does not have an obligation to withhold under section 5000C on the payment.

(2) ***Determine whether the payment is made pursuant to a contract with a U.S. person.*** The acquiring agency determines whether the payment is made pursuant to a contract with a person considered to be a United States person (U.S. person) in accordance with paragraph (c) of this section. If the other contracting party is a U.S. person, the acquiring agency does not have an obligation to withhold under section 5000C on the payment.

(3) ***Determine whether the payment is for purchases under the simplified acquisition procedures.*** The acquiring agency determines whether the payment is for purchases under the simplified acquisitions procedures that do not exceed the simplified acquisition threshold as described in 48 CFR 2.101. If it is, the acquiring agency does not have an obligation to withhold under section 5000C on the payment.

(4) ***Determine whether the payment is for emergency acquisitions.*** The acquiring agency determines whether the payment is made for certain emergency acquisitions within the meaning of § 1.5000C-1(d)(2). If it is, the acquiring agency does not have an obligation to withhold under section 5000C on the payment.

(5) ***Determine whether the payment is for personal services under the simplified acquisition threshold.*** The acquiring agency determines whether payments for services under contracts with a single individual do not exceed the simplified acquisition threshold as described in 48 CFR 2.101 on an annual basis for all years of the contract. If that is the case, the acquiring agency does not have an obligation to withhold under section 5000C on the payment.

(6) ***Determine whether the payment is pursuant to a foreign humanitarian assistance contract.*** The acquiring agency determines whether the payment is made pursuant to a foreign humanitarian assistance contract described in § 1.5000C-1(d)(4). If it is, the acquiring agency does not have an obligation to withhold under section 5000C on the payment.

(7) ***Determine whether the foreign contracting party is entitled to relief pursuant to an international agreement.*** If the foreign contracting party submits a Section 5000C Certificate in accordance with paragraph (d) of this section representing that the foreign contracting party is entitled to relief from the tax imposed under section 5000C pursuant to an international agreement with the United States (such as relief pursuant to the nondiscrimination provision of a qualified income tax treaty), the acquiring agency does not have an obligation to withhold under section 5000C on the payment.

(8) ***Determine whether the contract is for goods manufactured or produced or services provided in the United States or in a foreign country that is a party to an international procurement agreement.*** If the foreign contracting party submits a Section 5000C Certificate in accordance with paragraph (d) of this section that represents that the contract is for goods manufactured or produced or services provided in the United States, or in a foreign country that is a party to an international procurement agreement, the acquiring agency does not have an obligation to withhold. If the Section 5000C

Certificate provides that payments under the contract are only partially exempt from withholding under section 5000C, the acquiring agency must withhold to the extent described in paragraph (b)(8) of this section.

(9) ***Compute amounts to withhold.*** If, after evaluating each step described in this paragraph (b), the acquiring agency determines that it has an obligation to withhold, the acquiring agency computes the amount of withholding by multiplying the amount of the payment by 2 percent, unless the foreign contracting party has provided a Section 5000C Certificate or the payment is only in part for goods or services. In cases in which the Section 5000C Certificate demonstrates that the exemption in Step 8 applies, the acquiring agency generally computes the amount of withholding by multiplying the amount of the payment by the contract ratio provided on the most recent Section 5000C Certificate, the product of which is multiplied by 2 percent. However, in cases in which the exemption in Step 8 applies and the requirements of paragraph (d)(4)(iii)(B)(2) of this section are met, the acquiring agency computes the amount of withholding based on the payment for the specifically identified items, which may be identified by the contract line item number, or CLIN. In the case in which the payment is only in part for goods or services, the acquiring agency reduces the amount of the payment subject to the tax to the extent it is for something other than goods or services. The acquiring agency withholds the computed amount from the payment.

(10) ***Deposit and report amounts withheld.*** The acquiring agency deposits and reports the amounts determined in the prior step in accordance with § 1.5000C-3.

(c) ***Determining whether the contracting party is a U.S. person*** —

(1) ***In general.*** An acquiring agency must rely on the provisions of this paragraph (c) to determine the status of the contracting party as a U.S. person for purposes of withholding under section 5000C.

(2) ***Determination based on Taxpayer Identification Number (TIN).*** An acquiring agency must treat a contracting party as a U.S. person if the U.S. government information system (such as the System for Award Management (SAM)) indicates that the contracting party is a corporation (for example, because the name listed in SAM contains the term “Corporation,” “Inc.,” or “Corp.”) and that it has a TIN that begins with two digits other than “98” (a limited liability company or LLC is not treated as a corporation for purposes of this paragraph (c)(2)). Further, an acquiring agency must treat a contracting party as a U.S. person if the acquiring agency has access to a U.S. government information system that indicates that the contracting party is an individual with a TIN that begins with a digit other than “9”.

(3) ***Determination based on the Form W-9.*** An acquiring agency must treat a contracting party as a U.S. person if the person has submitted to it a valid Form W-9, “Request for Taxpayer Identification Number (TIN) and Certificate” (or valid substitute form described in § 31.3406(h)-3(c)(2) of this chapter), signed under penalties of perjury.

(4) ***Contracting party treated as a foreign contracting party.*** If an acquiring agency cannot determine that a contracting party is a U.S. person based on application of paragraph (c)(2) or (3) of this section, then the contracting party is treated as a foreign contracting party for purposes of this section.

(d) ***Withholding when a foreign contracting party submits a Section 5000C Certificate*** —

(1) ***In general.*** Unless the acquiring agency has reason to know that the information is incorrect or unreliable, the acquiring agency may rely on a claim that a foreign contracting party is entitled to an exemption (in whole or in part) from withholding on payments pursuant to a contract if the foreign contracting party provides a Section 5000C Certificate to the acquiring agency as prescribed in this

paragraph (d). When a Section 5000C Certificate is furnished, the acquiring agency does not withhold, or must reduce the amount of withholding, on payments made to a foreign person if the certificate establishes that the foreign person is wholly or partially exempt from withholding. An acquiring agency may establish a system for a foreign contracting party to electronically furnish a Section 5000C Certificate.

(2) ***Exemption for a foreign contracting party entitled to the benefit of relief pursuant to certain international agreements.*** An acquiring agency does not withhold on payments pursuant to a contract with a foreign contracting party when the payment is entitled to relief from the tax imposed under section 5000C pursuant to an international agreement, including relief pursuant to a nondiscrimination provision of a qualified income tax treaty, because the foreign contracting party is entitled to the benefit of that agreement and the foreign contracting party has submitted a Section 5000C Certificate that includes all of the information described in paragraphs (d)(4)(i) and (ii) of this section.

(3) ***Exemption when goods are manufactured or produced or services provided in the United States, or in a foreign country that is a party to an international procurement agreement.*** An acquiring agency does not withhold on payments pursuant to a contract with a foreign contracting party to the extent that the payments are for goods manufactured or produced or services provided in the United States or in a foreign country that is a party to an international procurement agreement with the United States, provided that the foreign contracting party has submitted a Section 5000C Certificate that includes all of the information described in paragraphs (d)(4)(i) and (iii) of this section. If the Section 5000C Certificate provides that the payment is only partially exempt from withholding under section 5000C, the acquiring agency must withhold to the extent that the payment is not exempt.

(4) ***Information required for Section 5000C Certificate*** —

(i) ***In general.*** The Section 5000C Certificate must be signed under penalties of perjury by the foreign contracting party and contain—

(A) The name of the foreign contracting party, country of organization (if applicable), and permanent residence address of the foreign contracting party;

(B) The mailing address of the foreign contracting party (if different than the permanent residence address);

(C) The TIN assigned to the foreign contracting party (if any);

(D) The identifying or reference number on the contract (if known);

(E) The name and address of the acquiring agency;

(F) A statement that the person signing the Section 5000C Certificate is the foreign contracting party listed in paragraph (d)(4)(i)(A) of this section (or is authorized to sign on behalf of the foreign contracting party);

(G) A statement that the foreign contracting party is not acting as an agent or nominee for another foreign person with respect to the goods manufactured or produced or services provided under the contract;

(H) A statement that the foreign contracting party agrees to pay an amount equal to any tax (including any applicable penalties and interest) due under section 5000C that the acquiring agency does not withhold under section 5000C;

(I) A statement that the foreign contracting party acknowledges and understands the rules in § 1.5000C-4 relating to procedural obligations related to section 5000C; and

(J) A statement that the foreign contracting party has not engaged in a transaction (or series of transactions) with a principal purpose of avoiding the tax imposed under section 5000C as defined in § 1.5000C-5.

(ii) ***Additional information required for claiming an exemption based on certain international agreements with the United States.*** In addition to the information required by paragraph (d)(4)(i) of this section, a foreign contracting party claiming an exemption from withholding in reliance on a provision of an international agreement with the United States, including a qualified income tax treaty, must provide—

(A) The name of the international agreement under which the foreign contracting party is claiming benefits;

(B) The specific provision of the international agreement relied upon (for example, the nondiscrimination article of a qualified income tax treaty); and

(C) The basis on which it is entitled to the benefits of that provision (for example, because the foreign contracting party is a corporation organized in a foreign country that has in force a qualified income tax treaty with the United States that covers all nationals, regardless of their residence).

(iii) ***Additional required information for claiming exemption based on country where goods are manufactured or services provided.***

(A) ***In general.*** In addition to the information required by paragraph (d)(4)(i) of this section, a foreign contracting party claiming an exemption from withholding (in whole or in part) because payments will be pursuant to a contract for goods manufactured or produced or services provided in the United States, or a foreign country that is party to an international procurement agreement, must describe on the Section 5000C Certificate the relevant goods or services and the country (or countries) in which they are manufactured or produced, or are provided, and must include the name of the international procurement agreement or agreements (if relevant).

(B) ***Information on allocation to exempt and nonexempt amounts.***

(*1*) ***In general.*** In situations in which a foreign contracting party claims the exemption in paragraph (d)(3) of this section with respect to only a portion of the payments received under the contract, the Section 5000C Certificate must include an explanation of the method used by the foreign contracting party to allocate the total contract price among the countries, as described in § 1.5000C-1(e)(3), if applicable. In general, the Section 5000C Certificate also must include the total contract price and the nonexempt amount; however, when necessary, an estimate of the total contract price or the nonexempt amount may be used. For example, total contract price may be estimated when a Section 5000C Certificate is being completed with respect to payments to be made pursuant to a cost-reimbursement contract that is paid on the basis of actual incurred costs and the total amount of such costs is not known at the time the certificate is provided.

(2) ***Specific identification of exempt items.*** If agreed to by the acquiring agency, the Section 5000C Certificate may identify specific exempt and nonexempt amounts. For example, specific contract line items (such as a contract line item number or CLIN) identified in the contract may be listed on the Section 5000C Certificate as exempt and nonexempt amounts (in whole or in part), as applicable. When this paragraph applies, and whether or not the contract identifies exempt and nonexempt amounts, a foreign contracting party must provide the information required by paragraphs (d)(4)(iii)(A) and (d)(4)(iii)(B)(*1*) of this section, on the Section 5000C Certificate to explain why the contract line items are eligible for an exemption; however, the foreign contracting party is not required to include information about the total contract price under this paragraph. In these circumstances, only one Section 5000C Certificate is required to be provided identifying the exempt and nonexempt contract line items that relate to the contract (for example, a spreadsheet may be attached to the Section 5000C Certificate that identifies the contract line items with an explanation for the treatment as exempt or nonexempt).

(5) ***Validity period of Section 5000C Certificate.*** Except as otherwise provided in paragraph (d)(6) of this section, the Section 5000C Certificate is valid for the term of the contract.

(6) ***Change in circumstances.*** A foreign contracting party must submit a revised Section 5000C Certificate within 30 days of a change in circumstances that causes the information in a Section 5000C Certificate held by the acquiring agency to be incorrect with respect to the acquiring agency's determination of whether to withhold or the amount of withholding under Section 5000C. An acquiring agency must request a new Section 5000C Certificate from a contracting party in circumstances in which it knows (or has reason to know) that a previously submitted Section 5000C Certificate becomes incorrect or unreliable. An acquiring agency may request an updated Section 5000C Certificate at any time, including when other documentation is required under the contract, such as the annual representations and certifications required in 48 CFR 4.1201. *See* § 1.5000C-6, *Example 6,* for an illustration of this paragraph (6).

(7) ***Form W-14.*** A foreign contracting party may choose to use Form W-14, "Certificate of Foreign Contracting Party Receiving Federal Procurement Payments" (or other form that the IRS may prescribe), as its Section 5000C Certificate, provided that it includes all the necessary information required by this paragraph (d).

(8) ***Time for submitting Section 5000C Certificate.*** A contracting party must submit the Section 5000C Certificate (such as Form W-14 or Form W-9) as early as practicable (for example, when the offer for the contract is submitted to the U.S. government). In all cases, however, the Section 5000C Certificate must be submitted to the acquiring agency no later than the date of execution of the contract.

(e) ***Offset for underwithholding or overwithholding*** —

(1) ***In general.*** If the foreign contracting party discovers that amounts withheld on prior payments either were insufficient or in excess of the amount required to satisfy its tax liability under section 5000C, the foreign contracting party may request the acquiring agency to increase or decrease the amount of withholding on future payments for which withholding is required under section 5000C. The request must be in writing, signed under penalties of perjury, contain the amount by which the foreign contracting party requests to increase or decrease future amounts withheld under section 5000C, and explain the reason for the request. The request may be submitted in conjunction with an original or updated Section 5000C Certificate.

(2) ***Underwithholding.*** Upon receipt of a request described in paragraph (e)(1) of this section, acquiring agencies may increase the amount of withholding under this paragraph to correct underwithholding only if the payment for which the increase is applied is otherwise subject to withholding under section 5000C and made before the date that Form 1042, "Annual Withholding Tax Return for U.S. Source Income of Foreign Persons," is required to be filed (not including extensions) with respect to the payment for which the underwithholding occurred. Amounts withheld under this paragraph must be deposited and reported in the time and manner as prescribed by § 1.5000C-3. *See* § 1.5000C-4 for procedures for a foreign contracting party that must pay tax due when its tax liability under section 5000C was not fully satisfied by withholding by an acquiring agency.

(3) ***Overwithholding.*** Upon receipt of a request described in paragraph (e)(1) of this section, acquiring agencies may decrease the amount of withholding on subsequent payments made to the foreign contracting party that are otherwise subject to withholding under section 5000C provided that the payment for which the decrease is applied is made on or before the date on which Form 1042, "Annual Withholding Tax Return for U.S. Source Income of Foreign Persons," is required to be filed (not including extensions) with respect to the payment for which the overwithholding occurred. *See* § 1.5000C-4(e) for procedures for foreign contracting parties to file a claim for refund for the overwithheld amount under section 5000C.

[T.D. 9782, 81 FR 55138, Aug. 18, 2016]

§ 1.5000C-3 Payment and returns of tax withheld by the acquiring agency.

(a) ***In general.*** This section provides administrative procedures that acquiring agencies must follow to satisfy their obligations to deposit and report amounts withheld under § 1.5000C-2. An acquiring agency with a section 5000C withholding obligation must increase the amount it deducts and withholds under chapter 3 for fixed or determinable annual or periodical income (FDAP income) by the amount it must withhold under § 1.5000C-2. Accordingly, this section generally applies the administrative provisions of chapter 3 for FDAP income relating to the deposit, payment, and reporting for amounts withheld under § 1.5000C-2, and contains some variation from those provisions to take into account the nature of the tax imposed under section 5000C.

(b) ***Deposit rules*** —

(1) ***Acquiring agency with a chapter 3 deposit requirement treats amounts withheld as under chapter 3.*** If an acquiring agency has a chapter 3 deposit obligation for a period, it must treat any amount withheld under § 1.5000C-2 as an additional amount of tax withheld under chapter 3 for purposes of the deposit rules of § 1.6302-2. Thus, depending on the combined amount withheld under chapter 3 and § 1.5000C-2, an acquiring agency subject to this paragraph (b)(1) must make monthly deposits, quarter-monthly deposits, or annual deposits under the rules in § 1.6302-2. To the extent provided in forms, instructions, or publications prescribed by the Internal Revenue Service (IRS), acquiring agencies must deposit all withheld amounts by *electronic funds transfer,* as that term is defined in § 31.6302-1(h)(4)(i) of this chapter.

(2) ***Acquiring agency with no chapter 3 filing obligation deposits withheld amounts monthly.*** If an acquiring agency has no chapter 3 deposit obligation to which the deposit rules of § 1.6302-2 apply for a calendar month, it must make monthly deposits of the amounts withheld under the rules in this paragraph (b)(2). Thus, an acquiring agency with no chapter 3 deposit obligations and that has withheld any amount under § 1.5000C-2 during any calendar month must deposit that amount by the

15th day of the month following the payment. To the extent provided in forms, instructions, or publications prescribed by the Internal Revenue Service (IRS), acquiring agencies must deposit all withheld amounts by *electronic funds transfer,* as that term is defined in § 31.6302-1(h)(4)(i) of this chapter.

(c) ***Return requirements*** —

(1) ***In general.*** Except as provided in paragraph (c)(2) of this section, an acquiring agency that withholds an amount pursuant to section 5000C generally must file Form 1042-S, "Foreign Person's U.S. Source Income Subject to Withholding," and Form 1042, "Annual Withholding Tax Return for U.S. Source Income of Foreign Persons," each year, or other such forms as the IRS may prescribe, to report information related to amounts withheld under section 5000C. The acquiring agency must prepare a Form 1042-S for each contracting party reporting the amount withheld under section 5000C for the preceding calendar year. The Form 1042 must show the aggregate amounts withheld under section 5000C that were required to be reported on Forms 1042-S (including those amounts withheld under section 5000C for which a Form 1042-S is not required to be filed pursuant to paragraph (c)(2) of this section). The Form 1042 must also include the information required by the form and accompanying instructions. Further, any forms required under this paragraph (c) are due at the same time, at the same place, and eligible for the same extended due dates and may be amended in the same manner as Form 1042 and Form 1042-S (or such other forms as the IRS may prescribe related to chapter 3). The acquiring agency must furnish a copy of the Form 1042-S (or such other form as the IRS may prescribe for the same purpose) to the contracting party for whom the form is prepared on or before March 15 of the calendar year following the year in which the amount subject to reporting under section 5000C was paid. It must be filed with a transmittal form as provided in the instructions for Form 1042-S and to the transmittal form. Section 5000C Certificates or other statements or information as prescribed by § 1.5000C-2 that are provided to the acquiring agency are not required to be attached to the Form 1042 filed with the IRS. However, an acquiring agency that is required to file Form 1042 must retain a copy of Form 1042, Form 1042-S, the Section 5000C Certificates, or other statements or information prescribed by § 1.5000C-2 for at least three years from the original due date of Form 1042 or the date it was filed, whichever is later. An acquiring agency that is not required to file Form 1042 must retain any Section 5000C Certificates or other statements or information as prescribed by § 1.5000C-2 for at least three years from the date the Form 1042 would have been due had the acquiring agency had an obligation to file.

(2) ***Classified or confidential contracts.*** An acquiring agency is not required to report information otherwise required by this section on Form 1042-S for payments made pursuant to classified or confidential contracts (as described in section 6050M(e)(3)), unless the acquiring agency determines that the information reported on the Form 1042-S does not compromise the safeguarding of classified information or national security.

(d) ***Special arrangement for certain contracts.*** In limited circumstances, the IRS may authorize the amount otherwise required to be withheld under section 5000C to be deposited in the time and manner mutually agreed upon by the acquiring agency and the foreign contracting party. In these circumstances, the IRS may in its sole discretion also modify any reporting or return requirements of the acquiring agency or the foreign contracting party.

[T.D. 9782, 81 FR 55138, Aug. 18, 2016]

§ 1.5000C-4 Requirement for the foreign contracting party to file a return and pay tax, and procedures for the contracting party to seek a refund.

(a) ***In general.*** For purposes of subtitle F of the Internal Revenue Code ("Procedure and Administration"), the tax imposed under section 5000C on foreign persons is treated as a tax imposed under subtitle A. Except as provided elsewhere in the regulations under section 5000C, forms, or accompanying instructions, the tax imposed on foreign contracting parties under section 5000C is administered in a manner similar to gross basis income taxes. This section provides procedures that a foreign contracting party must follow to satisfy its obligations to report and deposit tax due under § 1.5000C-1 as well as procedures for contracting parties to seek a refund of amounts overwithheld.

(b) ***Tax obligation of foreign contracting party independent of withholding.*** A foreign contracting party subject to tax under section 5000C and §§ 1.5000C-1 through 1.5000C-7 remains liable for the tax unless its tax obligation was fully satisfied by withholding by an acquiring agency in accordance with §§ 1.5000C-2 and 1.5000C-3.

(c) ***Return of tax by the foreign contracting party.*** If the tax liability under § 1.5000C-1 relating to a payment is not fully satisfied by withholding in accordance with §§ 1.5000C-2 and 1.5000C-3 (including as a result of the use of an estimated nonexempt amount or estimated total contract price in computing the contract ratio), a foreign contracting party subject to tax under § 1.5000C-1 during a calendar year must make a return of tax on, for example, Form 1120-F, "U.S. Income Tax Return of a Foreign Corporation," or such other form as the Internal Revenue Service (IRS) may prescribe to report the amount of tax due under section 5000C (required return). A foreign contracting party with no other U.S. tax filing obligation other than with respect to its liability for the tax imposed under section 5000C must file its required return on or before the fifteenth day of the sixth month following the close of its taxable year. The required return must include the information required by the form and accompanying instructions. The required return must be filed at the place and time (including any extension of time to file) provided by the form and accompanying instructions. Penalties for failure to file contained in Subtitle F can apply to foreign contracting parties who fail to file the required return. A foreign contracting party must attach copies of all Forms 1042-S, "Foreign Person's U.S. Source Income Subject to Withholding," received from acquiring agencies (if any) to the required return.

(d) ***Time and manner of paying tax.*** A foreign contracting party must pay the tax imposed under section 5000C in the manner provided and in the time prescribed in the required return and accompanying instructions. In general, the foreign contracting party must pay the tax at the time that the required return is due, excluding extensions. To the extent provided in forms, instructions, or publications prescribed by the IRS, each foreign contracting party must deposit tax due under section 5000C by *electronic funds transfer,* as that term is defined in § 31.6302-1(h)(4)(i) of this chapter. A foreign contracting party that fails to pay tax in the time and manner prescribed in this section (or under forms, instructions, or publications prescribed by the IRS under this section) may be subject to penalties and interest under Subtitle F.

(e) ***Refund requests when amount withheld exceeds tax liability.*** After taking into account any offsets pursuant to § 1.5000C-2(e)(3), if the acquiring agency has overwithheld amounts under section 5000C and has made a deposit of the amounts under § 1.5000C-3(b), the contracting party may claim a refund of the amount overwithheld pursuant to the procedures described in chapter 65. The contracting party's claim for refund must meet the requirements of section 6402 and the regulations thereunder, as applicable, and must be filed before the expiration of the period of limitations on refund in section 6511 and the regulations thereunder. In general, the contracting party making a refund claim must file the required return to claim a refund, stating the grounds upon which the claim is based. A Section 5000C Certificate

and a copy of the Form 1042-S received from the acquiring agency must be attached to the required return. For purposes of this section, an amount is overwithheld if the amount withheld from the payment pursuant to section 5000C and §§ 1.5000C-1 through 1.5000C-7 exceeds the contracting party's tax liability under § 1.5000C-1, regardless of whether the overwithholding was in error or appeared correct when it occurred. A U.S. person may seek a refund under this paragraph (e) even if it was treated as a foreign person under the rules in § 1.5000C-2 (for example, because it neither had a taxpayer identification number on file in the System for Award Management nor submitted Form W-9, "Request for Taxpayer Identification Number (TIN) and Certification," to the acquiring agency).

[T.D. 9782, 81 FR 55138, Aug. 18, 2016]

§ 1.5000C-5 Anti-abuse rule.

If a foreign person engages in a transaction (or series of transactions) with a principal purpose of avoiding the tax imposed under section 5000C, the transaction (or series of transactions) may be disregarded or the arrangement may be recharacterized (including disregarding an intermediate entity), in accordance with its substance. If this section applies, the foreign person remains liable for any tax (including any tax obligation unsatisfied as a result of underwithholding) and the Internal Revenue Service retains all other rights and remedies under any applicable law available to collect any tax imposed on the foreign contracting party by section 5000C.

[T.D. 9782, 81 FR 55138, Aug. 18, 2016]

§ 1.5000C-6 Examples.

The rules of §§ 1.5000C-1 through 1.5000C-4 are illustrated by the following examples. For purposes of the examples: All contracts are executed with acquiring agencies on or after January 2, 2011, and are for the provision of either goods or services; none of the exemptions described in § 1.5000C-1(d) apply, unless otherwise explicitly stated; the acquiring agencies have no other withholding obligations under chapter 3 of the Code and have no other contracts subject to section 5000C; the foreign contracting parties do not have any U.S. source income or a U.S. tax return filing obligation other than a tax return filing obligation that arises based on the facts described in the particular example; and none of the contracts are classified or confidential contracts as described in section 6050M(e)(3).

> *Example 1. U.S. person not subject to tax; no withholding.* (i) *Facts.* Company A Inc., a domestic corporation and the contracting party, enters into a contract with Agency L, the acquiring agency. Before making its first payment under the contract (for example, on the date of execution of the contract), pursuant to the first step in § 1.5000C-2(b), Agency L determines that the contract will be for services. Under the second step, Agency L reviews Company A Inc.'s record in the System for Award Management (SAM) and determines that Company A is a corporation and is considered to be a U.S. person because Agency L's records demonstrate that Company A Inc. is a business entity treated as a corporation for tax purposes that has a TIN that does not begin with "98."
> (ii) *Analysis.* Company A Inc. is a U.S. person and thus is not subject to the tax under section 5000C. Moreover, because Company A Inc. is a corporation for tax purposes that has a TIN that does not begin with "98," Agency L is able to determine that it has no obligation to withhold any amounts under section 5000C on the payment made to Company A Inc. For purposes of section 5000C, Company A Inc. could

also establish that it is a U.S. person by providing a Form W-9, "Request for Taxpayer Identification Number (TIN) and Certification," to Agency L. Company A Inc. does not need to file a Section 5000C Certificate to demonstrate its eligibility for an exemption from withholding.

Example 2. Foreign national entitled to the benefit of a nondiscrimination provision of a treaty; no withholding. (i) *Facts.* Company B, a foreign contracting party and a national of Country T, provides goods to Agency M, the acquiring agency. Company B determines that it is exempt from tax under section 5000C because it is entitled to the benefit of the nondiscrimination article of a qualified income tax treaty between the United States and Country T. Company B submits a Section 5000C Certificate to Agency M when the contract is executed. Company B uses Form W-14, "Certificate of Foreign Contracting Party Receiving Federal Procurement Payments," and properly fills the relevant sections stating the name of the treaty, the specific article relied upon, and the basis on which it is entitled to the benefits of that article. Following the steps in § 1.5000C-2, Agency M determines that the nondiscrimination provision of the Country T-United States income tax treaty applies to exempt Company B from the tax imposed under section 5000C. Agency M makes one lump sum payment of $50 million to Company B pursuant to the contract.
(ii) *Analysis.* Company B has no liability for tax under section 5000C because it is entitled to the benefit of a nondiscrimination article of a qualified income tax treaty. Because Company B submitted a Section 5000C Certificate meeting the requirements in § 1.5000C-2 and Agency M does not have reason to know that the submitted information is incorrect or unreliable, Agency M is not required to withhold under section 5000C. Agency M must retain the Section 5000C Certificate for at least three years pursuant to § 1.5000C-3(c)(1) from the due date for the Form 1042 (if it were required).

Example 3. Foreign treaty beneficiary does not submit Section 5000C Certificate; withholding required. (i) *Facts.* The facts are the same as in *Example 2,* except that Company B does not submit a Section 5000C Certificate to Agency M before Agency M makes the $50 million payment.
(ii) *Analysis.* Company B is not subject to tax under section 5000C, but Agency M must nevertheless withhold on the payment made to Company B because Agency M did not receive a Section 5000C Certificate from Company B in the time and manner required pursuant to § 1.5000C-2(d). Agency M must withhold $1 million (2 percent of $50 million) on the payment, and deposit that amount under the rules in § 1.5000C-3 no later than the 15th day of the month following the month in which the payment was made. Agency M must also complete Forms 1042, "Annual Withholding Tax Return for U.S. Source Income of Foreign Persons," and 1042-S, "Foreign Person's U.S. Source Income Subject to Withholding," on or before the date specified on those forms and the accompanying instructions. Agency M must furnish copies of Form 1042-S to Company B. Agency M must retain a copy of the Form 1042 and the Form 1042-S for 3 years from the due date for the Form 1042 pursuant to § 1.5000C-3(c)(1). As Company B is not liable for the tax, it may later file a claim for refund pursuant to the procedures described in chapter 65.

Example 4. Foreign contracting party partially exempt from tax under section 5000C when goods are manufactured in different countries. (i) *Facts.* Company C, a foreign contracting party, provides goods to

Agency N in 2015. The terms of the contract require that payment be made to Company C by Agency N in two $5 million installments in 2015. Company C has a TIN that begins with "98" and is not entitled to relief pursuant to an international agreement with the United States, such as relief pursuant to a nondiscrimination provision of a qualified income tax treaty. Some of the goods are manufactured in Country R, which is a party to an international procurement agreement with the United States, with the remainder being manufactured in Country S, a country that is not a party to an international procurement agreement with the United States. Company C uses a reasonable allocation method based on the information available to it at the time in accordance with § 1.5000C-1(e)(3) to estimate that $3 million is the nonexempt amount that is allocated to the goods produced in Country S. Company C submits a valid and complete Section 5000C Certificate to Agency N in the time and manner required by §§ 1.5000C-1 through 1.5000C-7 that provides that the nonexempt amount is $3 million. In 2015, Agency N pays Company C in two installments pursuant to the terms of the contract.
(ii) *Analysis.* Using a reasonable allocation method to determine the estimated nonexempt amount, Company C determines that pursuant to section 5000C and §§ 1.5000C-1 through 1.5000C-7, tax of $30,000 (2 percent of the $5 million payment, or $100,000 multiplied by a fraction, the numerator of which is the estimated nonexempt amount, $3 million, and the denominator of which is the estimated total contract price, or $10 million) is imposed on each payment made to Company C. Because Company C has timely submitted a Section 5000C Certificate explaining the basis for this allocation, Agency N withholds $30,000 on each payment made to Company C. Agency N must deposit each $30,000 withholding tax under the rules in § 1.5000C-3 no later than the 15th day of the month following the month in which each payment is made. Agency N must also complete Forms 1042 and 1042-S and furnish copies of Form 1042-S to Company C. Agency N must retain a copy of the Form 1042 and the Form 1042-S for at least three years from the due date for the Form 1042 pursuant to § 1.5000C-3(c)(1). Provided that Agency N properly withholds on the nonexempt portion as required under section 5000C and §§ 1.5000C-1 through 1.5000C-7 and that Company C's estimate of the nonexempt amount is the actual nonexempt amount, Company C does not have an additional tax liability or a U.S. tax return filing obligation as a result of receiving the payments.

Example 5. Foreign contracting party liable for additional tax under Section 5000C not fully withheld upon due to errors on the Section 5000C Certificate. (i) *Facts.* The facts are the same as in *Example 4,* except that the Section 5000C Certificate submitted to Agency N by Company C erroneously provides that the estimated nonexempt amount is $1.5 million instead of $3 million. As a result, Agency N only withholds $15,000 (2 percent of the $5 million payment multiplied by a fraction (the numerator of which is the estimated nonexempt amount stated on the Section 5000C Certificate, $1.5 million, and the denominator of which is the estimated total contract price, or $10 million)) on each payment made to Company C. Agency N neither discovered nor had reason to know that the information on the Section 5000C Certificate was incorrect or unreliable. After both payments have been made and after the filing due date for Form 1042 for 2015, Company C determines that the estimated nonexempt amount should have been stated as $3 million on the Section 5000C Certificate.

(ii) *Analysis.* The tax imposed under section 5000C on Company C as a result of the receipt of specified Federal procurement payments is $60,000 and this amount has not been fully satisfied by withholding by Agency N. Accordingly, Company C must remit additional tax of $30,000 ($60,000 tax liability less $30,000 amounts already withheld by Agency N) and file its required return, a Form 1120-F, "U.S. Income Tax Return of a Foreign Corporation," for 2015 to report this tax liability, as required by § 1.5000C-4. Company C must explain its corrected allocation method in its Form 1120-F. Company C must also attach a copy of the Form 1042-S it received from Agency N to Form 1120-F.

Example 6. Foreign contracting party submits revised Section 5000C Certificate due to change in circumstances. (i) *Facts.* The facts are the same as in *Example 4,* except that, after the first payment, Company C changes its business so that all of the goods manufactured with respect to the second payment are manufactured in Country R. Prior to the second payment, Company C submits a revised Section 5000C Certificate indicating this change in circumstance pursuant to § 1.5000C-2(d)(6).
(ii) *Analysis.* Agency N withholds $30,000 on the first payment made to Company C and does not withhold on the second payment. Company C does not have an additional tax liability or a U.S. tax return filing obligation as a result of receiving the payments.

[T.D. 9782, 81 FR 55138, Aug. 18, 2016]

§ 1.5000C-7 Effective/applicability date.

Section 5000C applies to specified Federal procurement payments received pursuant to contracts entered into on and after January 2, 2011. Sections 1.5000C-1 through 1.5000C-7 apply on and after November 16, 2016. Contracting parties and acquiring agencies may rely upon the rules in the regulations before such date. If a foreign contracting party fully satisfies its tax and filing obligations under section 5000C with respect to any payments received in tax years ending before November 16, 2016 on or before the later of November 16, 2016 or the due date for the foreign person's income tax return for the year in which the payment was received in a manner consistent with the final regulations, penalties will not be asserted on the foreign contracting parties with respect to those payments or returns.

[T.D. 9782, 81 FR 55138, Aug. 18, 2016]

Returns and Records

Source: Sections 1.6001-1 through 1.6091-4 contained in T.D. 6500, 25 FR 12108, Nov. 26, 1960, unless otherwise noted.

RECORDS, STATEMENTS, AND SPECIAL RETURNS

§ 1.6001-1 Records.

(a) ***In general.*** Except as provided in paragraph (b) of this section, any person subject to tax under subtitle A of the Code (including a qualified State individual income tax which is treated pursuant to section 6361(a) as if it were imposed by chapter 1 of subtitle A), or any person required to file a return of information with

respect to income, shall keep such permanent books of account or records, including inventories, as are sufficient to establish the amount of gross income, deductions, credits, or other matters required to be shown by such person in any return of such tax or information.

(b) ***Farmers and wage-earners.*** Individuals deriving gross income from the business of farming, and individuals whose gross income includes salaries, wages, or similar compensation for personal services rendered, are required with respect to such income to keep such records as will enable the district director to determine the correct amount of income subject to the tax. It is not necessary, however, that with respect to such income individuals keep the books of account or records required by paragraph (a) of this section. For rules with respect to the records to be kept in substantiation of traveling and other business expenses of employees, see § 1.162-17.

(c) ***Exempt organizations.*** In addition to such permanent books and records as are required by paragraph (a) of this section with respect to the tax imposed by section 511 on unrelated business income of certain exempt organizations, every organization exempt from tax under section 501(a) shall keep such permanent books of account or records, including inventories, as are sufficient to show specifically the items of gross income, receipts and disbursements. Such organizations shall also keep such books and records as are required to substantiate the information required by section 6033. See section 6033 and §§ 1.6033-1 through 1.6033-3.

(d) ***Notice by district director requiring returns statements, or the keeping of records.*** The district director may require any person, by notice served upon him, to make such returns, render such statements, or keep such specific records as will enable the district director to determine whether or not such person is liable for tax under subtitle A of the Code, including qualified State individual income taxes, which are treated pursuant to section 6361(a) as if they were imposed by chapter 1 of subtitle A.

(e) ***Retention of records.*** The books or records required by this section shall be kept at all times available for inspection by authorized internal revenue officers or employees, and shall be retained so long as the contents thereof may become material in the administration of any internal revenue law.

[T.D. 6500, 25 FR 12108, Nov. 26, 1960, as amended by T.D. 7122, 36 FR 11025, June 8, 1971; T.D. 7577, 43 FR 59357, Dec. 20, 1978; T.D. 8308, 55 FR 35593, Aug. 31, 1990]

§ 1.6001-2 Returns.

For rules relating to returns required to be made by every individual, estate, or trust which is liable for one or more qualified State individual income taxes, as defined in section 6362, for a taxable year, see paragraph (b) of § 301.6361-1 of this chapter (Regulations on procedure and Administration).

[T.D. 7577, 43 FR 59357, Dec. 20, 1978]

TAX RETURNS OR STATEMENTS

§ 1.6011-1 General requirement of return, statement, or list.

(a) ***General rule.*** Every person subject to any tax, or required to collect any tax, under Subtitle A of the Code, shall make such returns or statements as are required by the regulations in this chapter. The return or statement shall include therein the information required by the applicable regulations or forms.

(b) ***Use of prescribed forms.*** Copies of the prescribed return forms will so far as possible be furnished taxpayers by district directors. A taxpayer will not be excused from making a return, however, by the fact that no return form has been furnished to him. Taxpayers not supplied with the proper forms should make application therefor to the district director in ample time to have their returns prepared, verified, and filed on or before the due date with the internal revenue office where such returns are required to be filed. Each taxpayer should carefully prepare his return and set forth fully and clearly the information required to be included therein. Returns which have not been so prepared will not be accepted as meeting the requirements of the Code. In the absence of a prescribed form, a statement made by a taxpayer disclosing his gross income and the deductions therefrom may be accepted as a tentative return, and, if filed within the prescribed time, the statement so made will relieve the taxpayer from liability for the addition to tax imposed for the delinquent filing of the return, provided that without unnecessary delay such a tentative return is supplemented by a return made on the proper form.

(c) ***Tax withheld on nonresident aliens and foreign corporations.*** For requirements respecting the return of the tax required to be withheld under chapter 3 of the Code on nonresident aliens and foreign corporations and tax-free covenant bonds, see § 1.1461-2.

[T.D. 6500, 25 FR 12108, Nov. 26, 1960, as amended by T.D. 6922, 32 FR 8713, June 17, 1967]

§ 1.6011-2 Returns, etc., of DISC's and former DISC's.

(a) ***Records and information.*** Every DISC and former DISC (as defined in section 992(a)) must comply with section 6001 and the regulations thereunder, relating to required records, statements, and special returns. Thus, for example, a DISC is required to maintain the books of account or records described in § 1.6001-1(a). In addition, every DISC must furnish to each of its shareholders on or before the last day of the second month following the close of the taxable year of the DISC a copy of Schedule K (Form 1120-DISC) disclosing the amounts of actual distributions and deemed distributions from the DISC to such shareholder for the taxable year of the DISC. In the case of a deficiency distribution to meet qualification requirements, see § 1.992-3(a)(4) for requirements that distribution be designated in the form of a communication sent to a shareholder and service center at the time of distribution.

(b) ***Returns*** —

(1) ***Requirement of return.*** Every DISC (as defined in section 992(a)(1)) shall make a return of income. A former DISC (as defined in section 992(a)(3)) shall also make a return of income in addition to any other return required. The return required of a DISC or former DISC under this section shall be made on Form 1120-DISC. The provisions of § 1.6011-1 shall apply with respect to a DISC and former DISC. A former DISC should indicate clearly on Form 1120-DISC that it is making a return of income as a former DISC (for example, by labeling at the top of the Form 1120-DISC “Former DISC”). In the case of a former DISC, those items on the form which pertain to the computation of taxable income shall not be completed, but Schedules J, K, L, and M must be completed. Except as otherwise specifically provided in the Code or regulations, the return of a DISC or former DISC is considered to be an income tax return.

(2) ***Existence of DISC.*** A corporation which is a DISC and which is in existence during any portion of a taxable year is required to make a return for that fractional part of its taxable year during which it was in existence.

[T.D. 7533, 43 FR 6603, Feb. 15, 1978]

§ 1.6011-3 Requirement of statement from payees of certain gambling winnings.

(a) ***General rule.*** Except as provided in paragraph (c) of this section, any person receiving a payment with respect to a wager in a sweepstakes, wagering pool, lottery, or other wagering transaction (including a parimutuel pool with respect to horse races, dog races, or jai alai) shall make a statement to the payer of such winnings upon the payer's demand. Such statements shall accompany the payer's return made with respect to the payment as required pursuant to section 3402(q) or 6041, as the case may be.

(b) ***Contents of statement.*** The statement referred to in paragraph (a) shall contain information (in addition to that required under section 6041(c)) as to the amount, if any, of winnings from identical wagers to which the recipient is entitled. If any person other than the recipient is entitled to all or a portion of the payment, the statement shall also include information as to the amount, if any, of winnings from identical wagers to which each such person is entitled. The statement shall be provided on Form W-2G or, if persons other than the recipient are entitled to all or a portion of such payment, on Form 5754.

(c) ***Exception.*** The requirement of paragraph (a) of this section does not apply with respect to any payment of winnings—

(1) From a slot machine play, or a bingo or keno game,

(2) Which is subject to withholding under section 3402(q) without regard to the existence of winnings from identical wagers, or

(3) For which no return of information under section 6041 is required of the payer.

(d) ***Meaning of terms,*** For purposes of this section, the terms “sweepstakes”, “wagering pool”, “lottery”, “other wagering transaction” and “identical wagers” shall have the same meanings as ascribed to them under § 31.3402(q)-1.

[T.D. 7919, 48 FR 46297, Oct. 12, 1983]

§ 1.6011-4 Requirement of statement disclosing participation in certain transactions by taxpayers.

(a) ***In general.*** Every taxpayer that has participated, as described in paragraph (c)(3) of this section, in a reportable transaction within the meaning of paragraph (b) of this section and who is required to file a tax return must file within the time prescribed in paragraph (e) of this section a disclosure statement in the form prescribed by paragraph (d) of this section. The fact that a transaction is a reportable transaction shall not affect the legal determination of whether the taxpayer's treatment of the transaction is proper.

(b) ***Reportable transactions*** —

(1) ***In general.*** A reportable transaction is a transaction described in any of the paragraphs (b)(2) through (7) of this section. The term transaction includes all of the factual elements relevant to the expected tax treatment of any investment, entity, plan, or arrangement, and includes any series of steps carried out as part of a plan.

(2) ***Listed transactions.*** A listed transaction is a transaction that is the same as or substantially similar to one of the types of transactions that the Internal Revenue Service (IRS) has determined to be a tax avoidance transaction and identified by notice, regulation, or other form of published guidance as a listed transaction.

(3) ***Confidential transactions*** —

(i) ***In general.*** A confidential transaction is a transaction that is offered to a taxpayer under conditions of confidentiality and for which the taxpayer has paid an advisor a minimum fee.

(ii) ***Conditions of confidentiality.*** A transaction is considered to be offered to a taxpayer under conditions of confidentiality if the advisor who is paid the minimum fee places a limitation on disclosure by the taxpayer of the tax treatment or tax structure of the transaction and the limitation on disclosure protects the confidentiality of that advisor's tax strategies. A transaction is treated as confidential even if the conditions of confidentiality are not legally binding on the taxpayer. A claim that a transaction is proprietary or exclusive is not treated as a limitation on disclosure if the advisor confirms to the taxpayer that there is no limitation on disclosure of the tax treatment or tax structure of the transaction.

(iii) ***Minimum fee.*** For purposes of this paragraph (b)(3), the minimum fee is—

(A) $250,000 for a transaction if the taxpayer is a corporation;

(B) $50,000 for all other transactions unless the taxpayer is a partnership or trust, all of the owners or beneficiaries of which are corporations (looking through any partners or beneficiaries that are themselves partnerships or trusts), in which case the minimum fee is $250,000.

(iv) ***Determination of minimum fee.*** For purposes of this paragraph (b)(3), in determining the minimum fee, all fees for a tax strategy or for services for advice (whether or not tax advice) or for the implementation of a transaction are taken into account. Fees include consideration in whatever form paid, whether in cash or in kind, for services to analyze the transaction (whether or not related to the tax consequences of the transaction), for services to implement the transaction, for services to document the transaction, and for services to prepare tax returns to the extent return preparation fees are unreasonable in light of the facts and circumstances. For purposes of this paragraph (b)(3), a taxpayer also is treated as paying fees to an advisor if the taxpayer knows or should know that the amount it pays will be paid indirectly to the advisor, such as through a referral fee or fee-sharing arrangement. A fee does not include amounts paid to a person, including an advisor, in that person's capacity as a party to the transaction. For example, a fee does not include reasonable charges for the use of capital or the sale or use of property. The IRS will scrutinize carefully all of the facts and circumstances in determining whether consideration received in connection with a confidential transaction constitutes fees.

(v) ***Related parties.*** For purposes of this paragraph (b)(3), persons who bear a relationship to each other as described in section 267(b) or 707(b) will be treated as the same person.

(4) ***Transactions with contractual protection*** —

(i) ***In general.*** A transaction with contractual protection is a transaction for which the taxpayer or a related party (as described in section 267(b) or 707(b)) has the right to a full or partial refund of fees (as described in paragraph (b)(4)(ii) of this section) if all or part of the intended tax consequences from the transaction are not sustained. A transaction with contractual protection also is a transaction for which fees (as described in paragraph (b)(4)(ii) of this section) are contingent on the taxpayer's realization of tax benefits from the transaction. All the facts and circumstances relating to the transaction will be considered when determining whether a fee is refundable or contingent, including the right to reimbursements of amounts that the parties to the transaction have not designated as fees or any agreement to provide services without reasonable compensation.

(ii) *Fees.* Paragraph (b)(4)(i) of this section only applies with respect to fees paid by or on behalf of the taxpayer or a related party to any person who makes or provides a statement, oral or written, to the taxpayer or related party (or for whose benefit a statement is made or provided to the taxpayer or related party) as to the potential tax consequences that may result from the transaction.

(iii) *Exceptions* —

(A) *Termination of transaction.* A transaction is not considered to have contractual protection solely because a party to the transaction has the right to terminate the transaction upon the happening of an event affecting the taxation of one or more parties to the transaction.

(B) *Previously reported transaction.* If a person makes or provides a statement to a taxpayer as to the potential tax consequences that may result from a transaction only after the taxpayer has entered into the transaction and reported the consequences of the transaction on a filed tax return, and the person has not previously received fees from the taxpayer relating to the transaction, then any refundable or contingent fees are not taken into account in determining whether the transaction has contractual protection. This paragraph (b)(4) does not provide any substantive rules regarding when a person may charge refundable or contingent fees with respect to a transaction. See Circular 230, 31 CFR part 10, for the regulations governing practice before the IRS.

(5) *Loss transactions* —

(i) *In general.* A loss transaction is any transaction resulting in the taxpayer claiming a loss under section 165 of at least—

(A) $10 million in any single taxable year or $20 million in any combination of taxable years for corporations;

(B) $10 million in any single taxable year or $20 million in any combination of taxable years for partnerships that have only corporations as partners (looking through any partners that are themselves partnerships), whether or not any losses flow through to one or more partners; or

(C) $2 million in any single taxable year or $4 million in any combination of taxable years for all other partnerships, whether or not any losses flow through to one or more partners;

(D) $2 million in any single taxable year or $4 million in any combination of taxable years for individuals, S corporations, or trusts, whether or not any losses flow through to one or more shareholders or beneficiaries; or

(E) $50,000 in any single taxable year for individuals or trusts, whether or not the loss flows through from an S corporation or partnership, if the loss arises with respect to a section 988 transaction (as defined in section 988(c)(1) relating to foreign currency transactions).

(ii) *Cumulative losses.* In determining whether a transaction results in a taxpayer claiming a loss that meets the threshold amounts over a combination of taxable years as described in paragraph (b)(5)(i) of this section, only losses claimed in the taxable year that the transaction is entered into and the five succeeding taxable years are combined.

(iii) *Section 165 loss* —

(A) For purposes of this section, in determining the thresholds in paragraph (b)(5)(i) of this section, the amount of a section 165 loss is adjusted for any salvage value and for any insurance or other compensation received. See § 1.165-1(c)(4). However, a section 165 loss does not take into account offsetting gains, or other income or limitations. For example, a section 165 loss does not take into account the limitation in section 165(d) (relating to wagering losses) or the limitations in sections 165(f), 1211, and 1212 (relating to capital losses). The full amount of a section 165 loss is taken into account for the year in which the loss is sustained, regardless of whether all or part of the loss enters into the computation of a net operating loss under section 172 or a net capital loss under section 1212 that is a carryback or carryover to another year. A section 165 loss does not include any portion of a loss, attributable to a capital loss carryback or carryover from another year, that is treated as a deemed capital loss under section 1212.

(B) For purposes of this section, a section 165 loss includes an amount deductible pursuant to a provision that treats a transaction as a sale or other disposition, or otherwise results in a deduction under section 165. A section 165 loss includes, for example, a loss resulting from a sale or exchange of a partnership interest under section 741 and a loss resulting from a section 988 transaction.

(6) ***Transactions of interest.*** A transaction of interest is a transaction that is the same as or substantially similar to one of the types of transactions that the IRS has identified by notice, regulation, or other form of published guidance as a transaction of interest.

(7) [Reserved]

(8) ***Exceptions*** —

(i) ***In general.*** A transaction will not be considered a reportable transaction, or will be excluded from any individual category of reportable transaction under paragraphs (b)(3) through (7) of this section, if the Commissioner makes a determination by published guidance that the transaction is not subject to the reporting requirements of this section. The Commissioner may make a determination by individual letter ruling under paragraph (f) of this section that an individual letter ruling request on a specific transaction satisfies the reporting requirements of this section with regard to that transaction for the taxpayer who requests the individual letter ruling.

(ii) ***Special rule for RICs.*** For purposes of this section, a regulated investment company (RIC) as defined in section 851 or an investment vehicle that is owned 95 percent or more by one or more RICs at all times during the course of the transaction is not required to disclose a transaction that is described in any of paragraphs (b)(3) through (5) and (b)(7) of this section unless the transaction is also a listed transaction or a transaction of interest.

(c) ***Definitions.*** For purposes of this section, the following definitions apply:

(1) ***Taxpayer.*** The term *taxpayer* means any person described in section 7701(a)(1), including S corporations. Except as otherwise specifically provided in this section, the term *taxpayer* also includes an affiliated group of corporations that joins in the filing of a consolidated return under section 1501.

(2) ***Corporation.*** When used specifically in this section, the term *corporation* means an entity that is required to file a return for a taxable year on any 1120 series form, or successor form, excluding S corporations.

(3) *Participation* —

(i) *In general* —

(A) ***Listed transactions.*** A taxpayer has participated in a listed transaction if the taxpayer's tax return reflects tax consequences or a tax strategy described in the published guidance that lists the transaction under paragraph (b)(2) of this section. A taxpayer also has participated in a listed transaction if the taxpayer knows or has reason to know that the taxpayer's tax benefits are derived directly or indirectly from tax consequences or a tax strategy described in published guidance that lists a transaction under paragraph (b)(2) of this section. Published guidance may identify other types or classes of persons that will be treated as participants in a listed transaction. Published guidance also may identify types or classes of persons that will not be treated as participants in a listed transaction.

(B) ***Confidential transactions.*** A taxpayer has participated in a confidential transaction if the taxpayer's tax return reflects a tax benefit from the transaction and the taxpayer's disclosure of the tax treatment or tax structure of the transaction is limited in the manner described in paragraph (b)(3) of this section. If a partnership's, S corporation's or trust's disclosure is limited, and the partner's, shareholder's, or beneficiary's disclosure is not limited, then the partnership, S corporation, or trust, and not the partner, shareholder, or beneficiary, has participated in the confidential transaction.

(C) ***Transactions with contractual protection.*** A taxpayer has participated in a transaction with contractual protection if the taxpayer's tax return reflects a tax benefit from the transaction and, as described in paragraph (b)(4) of this section, the taxpayer has the right to the full or partial refund of fees or the fees are contingent. If a partnership, S corporation, or trust has the right to a full or partial refund of fees or has a contingent fee arrangement, and the partner, shareholder, or beneficiary does not individually have the right to the refund of fees or a contingent fee arrangement, then the partnership, S corporation, or trust, and not the partner, shareholder, or beneficiary, has participated in the transaction with contractual protection.

(D) ***Loss transactions.*** A taxpayer has participated in a loss transaction if the taxpayer's tax return reflects a section 165 loss and the amount of the section 165 loss equals or exceeds the threshold amount applicable to the taxpayer as described in paragraph (b)(5)(i) of this section. If a taxpayer is a partner in a partnership, shareholder in an S corporation, or beneficiary of a trust and a section 165 loss as described in paragraph (b)(5) of this section flows through the entity to the taxpayer (disregarding netting at the entity level), the taxpayer has participated in a loss transaction if the taxpayer's tax return reflects a section 165 loss and the amount of the section 165 loss that flows through to the taxpayer equals or exceeds the threshold amounts applicable to the taxpayer as described in paragraph (b)(5)(i) of this section. For this purpose, a tax return is deemed to reflect the full amount of a section 165 loss described in paragraph (b)(5) of this section allocable to the taxpayer under this paragraph (c)(3)(i)(D), regardless of whether all or part of the loss enters into the computation of a net operating loss under section 172 or net capital loss under section 1212 that the taxpayer may carry back or carry over to another year.

(E) ***Transactions of interest.*** A taxpayer has participated in a transaction of interest if the taxpayer is one of the types or classes of persons identified as participants in the transaction in the published guidance describing the transaction of interest.

(F) [Reserved]

(G) *Shareholders of foreign corporations* —

(1) ***In general.*** A reporting shareholder of a foreign corporation participates in a transaction described in paragraphs (b)(2) through (5) and (b)(7) of this section if the foreign corporation would be considered to participate in the transaction under the rules of this paragraph (c)(3) if it were a domestic corporation filing a tax return that reflects the items from the transaction. A reporting shareholder of a foreign corporation participates in a transaction described in paragraph (b)(6) of this section only if the published guidance identifying the transaction includes the reporting shareholder among the types or classes of persons identified as participants. A reporting shareholder (and any successor in interest) is considered to participate in a transaction under this paragraph (c)(3)(i)(G) only for its first taxable year with or within which ends the first taxable year of the foreign corporation in which the foreign corporation participates in the transaction, and for the reporting shareholder's five succeeding taxable years.

(2) ***Reporting shareholder.*** The term *reporting shareholder* means a United States shareholder (as defined in section 951(b)) in a controlled foreign corporation (as defined in section 957) or a 10 percent shareholder (by vote or value) of a qualified electing fund (as defined in section 1295).

(ii) ***Examples.*** The following examples illustrate the provisions of paragraph (c)(3)(i) of this section:

> ***Example 1.*** Notice 2003-55 (2003-2 CB 395), which modified and superseded Notice 95-53 (1995-2 CB 334) (see § 601.601(d)(2) of this chapter), describes a lease stripping transaction in which one party (the transferor) assigns the right to receive future payments under a lease of tangible property and treats the amount realized from the assignment as its current income. The transferor later transfers the property subject to the lease in a transaction intended to qualify as a transferred basis transaction, for example, a transaction described in section 351. The transferee corporation claims the deductions associated with the high basis property subject to the lease. The transferor's and transferee corporation's tax returns reflect tax positions described in Notice 2003-55. Therefore, the transferor and transferee corporation have participated in the listed transaction. In the section 351 transaction, the transferor will have received stock with low value and high basis from the transferee corporation. If the transferor subsequently transfers the high basis/low value stock to a taxpayer in another transaction intended to qualify as a transferred basis transaction and the taxpayer uses the stock to generate a loss, and if the taxpayer knows or has reason to know that the tax loss claimed was derived indirectly from the lease stripping transaction, then the taxpayer has participated in the listed transaction. Accordingly, the taxpayer must disclose the transaction and the manner of the taxpayer's participation in the transaction under the rules of this section. For purposes of this example, if a bank lends money to the transferor, transferee corporation, or taxpayer for use in their transactions, the bank has not participated in the listed transaction because the bank's tax return does not reflect tax consequences or a tax strategy described in the listing notice (nor does the bank's tax return reflect a tax benefit derived from tax consequences or a tax strategy described in the listing notice) nor is the bank described as a participant in the listing notice.

> *Example 2.* XYZ is a limited liability company treated as a partnership for tax purposes. X, Y, and Z are members of XYZ. X is an individual, Y is an S corporation, and Z is a partnership. XYZ enters into a confidential transaction under paragraph (b)(3) of this section. XYZ and X are bound by the confidentiality agreement, but Y and Z are not bound by the agreement. As a result of the transaction, XYZ, X, Y, and Z all reflect a tax benefit on their tax returns. Because XYZ's and X's disclosure of the tax treatment and tax structure are limited in the manner described in paragraph (b)(3) of this section and their tax returns reflect a tax benefit from the transaction, both XYZ and X have participated in the confidential transaction. Neither Y nor Z has participated in the confidential transaction because they are not subject to the confidentiality agreement.

> *Example 3.* P, a corporation, has an 80% partnership interest in PS, and S, an individual, has a 20% partnership interest in PS. P, S, and PS are calendar year taxpayers. In 2006, PS enters into a transaction and incurs a section 165 loss (that does not meet any of the exceptions to a section 165 loss identified in published guidance) of $12 million and offsetting gain of $3 million. On PS' 2006 tax return, PS includes the section 165 loss and the corresponding gain. PS must disclose the transaction under this section because PS' section 165 loss of $12 million is equal to or greater than $2 million. P is allocated $9.6 million of the section 165 loss and $2.4 million of the offsetting gain. P does not have to disclose the transaction under this section because P's section 165 loss of $9.6 million is not equal to or greater than $10 million. S is allocated $2.4 million of the section 165 loss and $600,000 of the offsetting gain. S must disclose the transaction under this section because S's section 165 loss of $2.4 million is equal to or greater than $2 million.

(4) ***Substantially similar.*** The term *substantially similar* includes any transaction that is expected to obtain the same or similar types of tax consequences and that is either factually similar or based on the same or similar tax strategy. Receipt of an opinion regarding the tax consequences of the transaction is not relevant to the determination of whether the transaction is the same as or substantially similar to another transaction. Further, the term *substantially similar* must be broadly construed in favor of disclosure. For example, a transaction may be substantially similar to a listed transaction even though it involves different entities or uses different Internal Revenue Code provisions. (See for example, Notice 2003-54 (2003-2 CB 363), describing a transaction substantially similar to the transactions in Notice 2002-50 (2002-2 CB 98), and Notice 2002-65 (2002-2 CB 690).) The following examples illustrate situations where a transaction is the same as or substantially similar to a listed transaction under paragraph (b)(2) of this section. (Such transactions may also be reportable transactions under paragraphs (b)(3) through (7) of this section.) See § 601.601(d)(2)(ii)(*b*) of this chapter. The following examples illustrate the provisions of this paragraph (c)(4):

Example 1. Notice 2000-44 (2000-2 CB 255) (see § 601.601(d)(2)(ii)(*b*) of this chapter), sets forth a listed transaction involving offsetting options transferred to a partnership where the taxpayer claims basis in the partnership for the cost of the purchased options but does not adjust basis under section 752 as a result of the partnership's assumption of the taxpayer's obligation with respect to the options. Transactions using short sales, futures, derivatives or any other type of offsetting obligations to inflate basis in a partnership interest would be the same as or substantially similar to the transaction described in Notice 2000-44. Moreover, use of the

inflated basis in the partnership interest to diminish gain that would otherwise be recognized on the transfer of a partnership asset would also be the same as or substantially similar to the transaction described in Notice 2000-44. See § 601.601(d)(2)(ii)(*b*).

Example 2. Notice 2001-16 (2001-1 CB 730) (see § 601.601(d)(2)(ii)(*b*) of this chapter), sets forth a listed transaction involving a seller (X) who desires to sell stock of a corporation (T), an intermediary corporation (M), and a buyer (Y) who desires to purchase the assets (and not the stock) of T. M agrees to facilitate the sale to prevent the recognition of the gain that T would otherwise report. Notice 2001-16 describes M as a member of a consolidated group that has a loss within the group or as a party not subject to tax. Transactions utilizing different intermediaries to prevent the recognition of gain would be the same as or substantially similar to the transaction described in Notice 2001-16. An example is a transaction in which M is a corporation that does not file a consolidated return but which buys T stock, liquidates T, sells assets of T to Y, and offsets the gain on the sale of those assets with currently generated losses. See § 601.601(d)(2)(ii)(*b*).

(5) ***Tax.*** The term *tax* means Federal income tax.

(6) ***Tax benefit.*** A tax benefit includes deductions, exclusions from gross income, nonrecognition of gain, tax credits, adjustments (or the absence of adjustments) to the basis of property, status as an entity exempt from Federal income taxation, and any other tax consequences that may reduce a taxpayer's Federal income tax liability by affecting the amount, timing, character, or source of any item of income, gain, expense, loss, or credit.

(7) ***Tax return.*** The term *tax return* means a Federal income tax return and a Federal information return.

(8) ***Tax treatment.*** The tax treatment of a transaction is the purported or claimed Federal income tax treatment of the transaction.

(9) ***Tax structure.*** The tax structure of a transaction is any fact that may be relevant to understanding the purported or claimed Federal income tax treatment of the transaction.

(d) ***Form and content of disclosure statement.*** A taxpayer required to file a disclosure statement under this section must file a completed Form 8886, "Reportable Transaction Disclosure Statement" (or a successor form), in accordance with this paragraph (d) and the instructions to the form. The Form 8886 (or a successor form) is the disclosure statement required under this section. The form must be attached to the appropriate tax return(s) as provided in paragraph (e) of this section. If a copy of a disclosure statement is required to be sent to the Office of Tax Shelter Analysis (OTSA) under paragraph (e) of this section, it must be sent in accordance with the instructions to the form. To be considered complete, the information provided on the form must describe the expected tax treatment and all potential tax benefits expected to result from the transaction, describe any tax result protection (as defined in § 301.6111-3(c)(12) of this chapter) with respect to the transaction, and identify and describe the transaction in sufficient detail for the IRS to be able to understand the tax structure of the reportable transaction and the identity of all parties involved in the transaction. An incomplete Form 8886 (or a successor form) containing a statement that information will be provided upon request is not considered a complete disclosure statement. If the form is not completed in accordance with the provisions in this paragraph (d) and the instructions to the form, the taxpayer will not be considered to have complied with the disclosure requirements of this section. If a taxpayer receives one or more reportable transaction numbers for a reportable transaction, the taxpayer must include the reportable transaction number(s) on the Form 8886 (or a successor form). See § 301.6111-3(d)(2) of this chapter.

(e) ***Time of providing disclosure*** —

(1) ***In general.*** The disclosure statement for a reportable transaction must be attached to the taxpayer's tax return for each taxable year for which a taxpayer participates in a reportable transaction. In addition, a disclosure statement for a reportable transaction must be attached to each amended return that reflects a taxpayer's participation in a reportable transaction. A copy of the disclosure statement must be sent to OTSA at the same time that any disclosure statement is first filed by the taxpayer pertaining to a particular reportable transaction. If a reportable transaction results in a loss which is carried back to a prior year, the disclosure statement for the reportable transaction must be attached to the taxpayer's application for tentative refund or amended tax return for that prior year. In the case of a taxpayer that is a partnership, an S corporation, or a trust, the disclosure statement for a reportable transaction must be attached to the partnership, S corporation, or trust's tax return for each taxable year in which the partnership, S corporation, or trust participates in the transaction under the rules of paragraph (c)(3)(i) of this section. If a taxpayer who is a partner in a partnership, a shareholder in an S corporation, or a beneficiary of a trust receives a timely Schedule K-1 less than 10 calendar days before the due date of the taxpayer's return (including extensions) and, based on receipt of the timely Schedule K-1, the taxpayer determines that the taxpayer participated in a reportable transaction within the meaning of paragraph (c)(3) of this section, the disclosure statement will not be considered late if the taxpayer discloses the reportable transaction by filing a disclosure statement with OTSA within 60 calendar days after the due date of the taxpayer's return (including extensions). The Commissioner in his discretion may issue in published guidance other provisions for disclosure under § 1.6011-4.

(2) ***Special rules*** —

(i) ***Listed transactions and transactions of interest.*** In general, if a transaction becomes a listed transaction or a transaction of interest after the filing of a taxpayer's tax return (including an amended return) reflecting the taxpayer's participation in the listed transaction or transaction of interest and before the end of the period of limitations for assessment of tax for any taxable year in which the taxpayer participated in the listed transaction or transaction of interest, then a disclosure statement must be filed, regardless of whether the taxpayer participated in the transaction in the year the transaction became a listed transaction or a transaction of interest, with OTSA within 90 calendar days after the date on which the transaction became a listed transaction or a transaction of interest. The Commissioner also may determine the time for disclosure of listed transactions and transactions of interest in the published guidance identifying the transaction.

(ii) ***Loss transactions.*** If a transaction becomes a loss transaction because the losses equal or exceed the threshold amounts as described in paragraph (b)(5)(i) of this section, a disclosure statement must be filed as an attachment to the taxpayer's tax return for the first taxable year in which the threshold amount is reached and to any subsequent tax return that reflects any amount of section 165 loss from the transaction.

(3) ***Multiple disclosures.*** The taxpayer must disclose the transaction in the time and manner provided for under the provisions of this section regardless of whether the taxpayer also plans to disclose the transaction under other published guidance, for example, § 1.6662-3(c)(2).

(4) ***Example.*** The following example illustrates the application of this paragraph (e):

Example. In January of 2008, F, a calendar year taxpayer, enters into a transaction that at the time is not a listed transaction and is not a transaction described in any of the paragraphs (b)(3) through (7) of this section. All the tax benefits from the transaction are reported on F's 2008 tax return filed timely in April 2009. On May 2, 2011, the IRS publishes a notice identifying the

transaction as a listed transaction described in paragraph (b)(2) of this section. Upon issuance of the May 2, 2011 notice, the transaction becomes a reportable transaction described in paragraph (b) of this section. The period of limitations on assessment for F's 2008 taxable year is still open. F is required to file Form 8886 for the transaction with OTSA within 90 calendar days after May 2, 2011.

(f) ***Rulings and protective disclosures*** —

(1) ***Rulings.*** If a taxpayer requests a ruling on the merits of a specific transaction on or before the date that disclosure would otherwise be required under this section, and receives a favorable ruling as to the transaction, the disclosure rules under this section will be deemed to have been satisfied by that taxpayer with regard to that transaction, so long as the request fully discloses all relevant facts relating to the transaction which would otherwise be required to be disclosed under this section. If a taxpayer requests a ruling as to whether a specific transaction is a reportable transaction on or before the date that disclosure would otherwise be required under this section, the Commissioner in his discretion may determine that the submission satisfies the disclosure rules under this section for the taxpayer requesting the ruling for that transaction if the request fully discloses all relevant facts relating to the transaction which would otherwise be required to be disclosed under this section. The potential obligation of the taxpayer to disclose the transaction under this section will not be suspended during the period that the ruling request is pending.

(2) ***Protective disclosures.*** If a taxpayer is uncertain whether a transaction must be disclosed under this section, the taxpayer may disclose the transaction in accordance with the requirements of this section and comply with all the provisions of this section, and indicate on the disclosure statement that the disclosure statement is being filed on a protective basis. The IRS will not treat disclosure statements filed on a protective basis any differently than other disclosure statements filed under this section. For a protective disclosure to be effective, the taxpayer must comply with these disclosure regulations by providing to the IRS all information requested by the IRS under this section.

(g) ***Retention of documents.***

(1) In accordance with the instructions to Form 8886 (or a successor form), the taxpayer must retain a copy of all documents and other records related to a transaction subject to disclosure under this section that are material to an understanding of the tax treatment or tax structure of the transaction. The documents must be retained until the expiration of the statute of limitations applicable to the final taxable year for which disclosure of the transaction was required under this section. (This document retention requirement is in addition to any document retention requirements that section 6001 generally imposes on the taxpayer.) The documents may include the following:

(i) Marketing materials related to the transaction;

(ii) Written analyses used in decision-making related to the transaction;

(iii) Correspondence and agreements between the taxpayer and any advisor, lender, or other party to the reportable transaction that relate to the transaction;

(iv) Documents discussing, referring to, or demonstrating the purported or claimed tax benefits arising from the reportable transaction; and documents, if any, referring to the business purposes for the reportable transaction.

(2) A taxpayer is not required to retain earlier drafts of a document if the taxpayer retains a copy of the final document (or, if there is no final document, the most recent draft of the document) and the final document (or most recent draft) contains all the information in the earlier drafts of the document that is material to an understanding of the purported tax treatment or tax structure of the transaction.

(h) *Effective/applicability date* —

(1) ***In general.*** This section applies to transactions entered into on or after August 3, 2007. However, this section applies to transactions of interest entered into on or after November 2, 2006. Paragraph (f)(1) of this section applies to ruling requests received on or after November 1, 2006. Otherwise, the rules that apply with respect to transactions entered into before August 3, 2007, are contained in § 1.6011-4 in effect prior to August 3, 2007 (see 26 CFR part 1 revised as of April 1, 2007).

(2) [Reserved]

[T.D. 9350, 72 FR 43149, Aug. 3, 2007, as amended at 75 FR 26061, May 11, 2010]

§ 1.6011-5 Required use of magnetic media for corporate income tax returns.

The return of a corporation that is required to be filed on magnetic media under § 301.6011-5 of this chapter must be filed in accordance with Internal Revenue Service revenue procedures, publications, forms, or instructions, including those posted electronically. (See § 601.601(d)(2) of this chapter).

[T.D. 9364, 72 FR 63810, Nov. 13, 2007]

§ 1.6011-6 [Reserved]

§ 1.6011-7 Specified tax return preparers required to file individual income tax returns using magnetic media.

Individual income tax returns that are required to be filed on magnetic media by tax return preparers under section 6011(e)(3) and § 301.6011-7 of this chapter must be filed in accordance with Internal Revenue Service regulations, revenue procedures, revenue rulings, publications, forms or instructions, including those posted electronically.

[T.D. 9518, 76 FR 17528, Mar. 30, 2011]

§ 1.6011-8 Requirement of income tax return for taxpayers who claim the premium tax credit under section 36B.

(a) ***Requirement of return.*** Except as otherwise provided in this paragraph (a), a taxpayer who receives the benefit of advance payments of the premium tax credit (advance credit payments) under section 36B must file an income tax return for that taxable year on or before the due date for the return (including extensions of time for filing) and reconcile the advance credit payments. However, if advance credit payments are made for coverage of an individual who is not included in any taxpayer's family, as defined in § 1.36B-1(d), the taxpayer who attested to the Exchange to the intention to include such individual in the taxpayer's family as part of the advance credit payment eligibility determination for coverage of the individual must file a tax return and reconcile the advance credit payments.

(b) *Applicability dates* —

(1) ***In general.*** Except as provided in paragraph (b)(2) of this section, paragraph (a) of this section applies for taxable years ending on or after December 31, 2020.

(2) ***Prior periods.*** Paragraph (a) of this section as contained in 26 CFR part 1 edition revised as of April 1, 2016, applies to taxable years ending after December 31, 2013, and beginning before January 1, 2017. Paragraph (a) of this section as contained in 26 CFR part 1 edition revised as of April 1, 2020, applies to taxable years beginning after December 31, 2016, and ending before December 31, 2020.

[T.D. 9912, 85 FR 76978, Dec. 1, 2020]

§ 1.6011-9 Syndicated conservation easement listed transactions.

(a) ***Identification as listed transaction.*** Transactions that are the same as, or substantially similar to, a transaction described in paragraph (b) of this section are identified as listed transactions for purposes of § 1.6011-4(b)(2).

(b) ***Syndicated conservation easement transaction.*** The term *syndicated conservation easement transaction* means a transaction in which the following steps occur (regardless of the order in which they occur)—

(1) A taxpayer receives promotional materials that offer investors in a pass-through entity the possibility of being allocated a charitable contribution deduction the amount of which equals or exceeds an amount that is two and one-half times the amount of the taxpayer's investment, as determined in paragraph (d)(4) of this section, in the pass-through entity, as determined under paragraph (d) of this section (2.5 times rule);

(2) The taxpayer acquires an interest, directly or indirectly through one or more tiers of pass-through entities, in the pass-through entity that owns or acquires real property (that is, becomes an investor in the entity);

(3) The pass-through entity that owns the real property contributes an easement on such real property, which it treats as a conservation easement, to a qualified organization and allocates, directly or through one or more tiers of pass-through entities, a charitable contribution deduction to the taxpayer; and

(4) The taxpayer claims a charitable contribution deduction with respect to the contribution of the real property interest on the taxpayer's Federal income tax return.

(c) ***Definitions.*** The following definitions apply for purposes of this section:

(1) ***Charitable contribution deduction.*** The term *charitable contribution deduction* means a deduction under section 170 of the Internal Revenue Code (Code), which includes a deduction arising from a qualified conservation contribution as defined in section 170(h)(1) of the Code.

(2) ***Conservation easement.*** The term *conservation easement* means a restriction (granted in perpetuity) on the use which may be made of the real property, within the meaning of section 170(h)(2)(C) of the Code, exclusively for conservation purposes, within the meaning of section 170(h)(1)(C) and (h)(4) of the Code.

(3) ***Pass-through entity.*** The term *pass-through entity* means a partnership, S corporation, or trust (other than a grantor trust within the meaning of subchapter J of chapter 1 of the Code).

(4) ***Promotional materials.*** The term *promotional materials* includes materials described in § 301.6112-1(b)(3)(iii)(B) of this chapter and any other written or oral communication regarding the transaction provided to investors, such as marketing materials, appraisals (including preliminary appraisals, draft appraisals, and the appraisal that is attached to the taxpayer's return), websites, transactional documents such as deeds of conveyance, private placement memoranda, tax opinions, operating agreements, subscription agreements, statements of the anticipated value of the conservation easement, and statements of the anticipated amount of the charitable contribution deduction.

(5) ***Qualified organization.*** The term *qualified organization* means an organization described in section 170(h)(3) of the Code.

(6) ***Real property.*** The term *real property* includes all land, structures, and buildings, including a certified historic structure defined in section 170(h)(4)(C) of the Code.

(7) ***Substantially similar.*** The term *substantially similar* is defined in § 1.6011-4(c)(4). For example, transactions that meet the elements of paragraph (b) of this section, except that the pass-through entity contributes a fee simple interest in real property or a real property interest described in section 170(h)(2)(A) or (B) of the Code rather than a conservation easement, are substantially similar to the listed transaction identified in this section.

(d) ***Application of the 2.5 times rule*** —

(1) ***Bright-line rule.*** Transactions for which the promotional materials offer the taxpayer the possibility of being allocated a charitable contribution deduction of only an amount less than 2.5 times the taxpayer's investment and for which the taxpayer is actually allocated a charitable contribution deduction of an amount less than 2.5 times the taxpayer's investment (so that the rebuttable presumption in paragraph (d)(3) of this section does not apply) are generally not considered *substantially similar* to the listed transaction identified in this section. However, if a pass-through entity engages in a series of transactions with a principal purpose of avoiding the application of the bright-line rule in this paragraph (d)(1), the series of transactions may be disregarded or the arrangement may be recharacterized in accordance with its substance. Whether a series of transactions has a principal purpose of avoiding the application of this bright-line rule is determined based on all the facts and circumstances.

(2) ***Multiple suggested contribution amounts.*** If the promotional materials suggest or imply a range of possible charitable contribution deduction amounts that may be allocated to the taxpayer, the highest suggested or implied contribution amount determines whether the 2.5 times rule in this paragraph (d) is met. In addition, if one piece of promotional materials (for example, an appraisal or oral statement) states a higher charitable contribution deduction amount than stated by other promotional materials, then the highest stated charitable contribution deduction amount determines whether the 2.5 times rule is met.

(3) ***Rebuttable presumption.*** The 2.5 times rule in this paragraph (d) is deemed to be met if the pass-through entity donates a real property interest within three years following the taxpayer's investment in the pass-through entity, the pass-through entity allocates a charitable contribution deduction to the taxpayer the amount of which equals or exceeds two and one-half times the amount of the taxpayer's investment, and the taxpayer claims a charitable contribution deduction the amount of which equals or exceeds two and one-half times the amount of the taxpayer's investment. This presumption may be rebutted if the taxpayer establishes to the satisfaction of the Commissioner

that none of the promotional materials contained a suggestion or implication that investors might be allocated a charitable contribution deduction that equals or exceeds an amount that is two and one-half times the amount of their investment in the pass-through entity.

(4) ***Determining the amount of the taxpayer's investment in the pass-through entity*** —

(i) ***In general.*** A taxpayer may determine the amount of the taxpayer's investment in the pass-through entity for purposes of paragraph (b) of this section using either the anti-stuffing method in paragraph (d)(4)(ii) of this section or, for contributions made after December 29, 2022, the relevant basis method in paragraph (d)(4)(iii) of this section. No other methods may be used.

(ii) ***Anti-stuffing method.*** Under the anti-stuffing method, the amount of a taxpayer's investment in the pass-through entity is the portion of the cash or fair market value of the assets the taxpayer uses to acquire its interest in the pass-through entity that is attributable to the real property on which a conservation easement is placed (or the portion thereof, if an easement is placed on a portion of the real property) that gives rise to the charitable contribution described in paragraph (b)(3) of this section. For example, if a portion of the taxpayer's cost of acquiring the taxpayer's interest in the pass-through entity is attributable to property held directly or indirectly by the pass-through entity other than the real property on which a conservation easement is placed as described in paragraph (b)(3) of this section (such other property may include other real property, cash, cash equivalents, digital assets, marketable securities, or other tangible or intangible assets), that portion of the taxpayer's acquisition cost is not considered part of the taxpayer's investment for purposes of this section because it is not attributable to the portion of the real property on which a conservation easement is placed as described in paragraph (b)(3) of this section. For purposes of this paragraph (d)(4)(ii), assets retained to pay for costs related to the operation and maintenance of the real property on which the conservation easement is placed, including costs that may be incurred in future years, are not attributable to the real property on which a conservation easement is placed as described in paragraph (b)(3) of this section. In the case of a substantially similar transaction described in paragraph (c)(7) of this section, the rules in this paragraph (d)(4)(ii) apply except that the relevant real property that gives rise to the charitable contribution deduction described in paragraph (b)(3) of this section is the real property donated.

(iii) ***Relevant basis method.*** For contributions made after December 29, 2022, taxpayers may use their relevant basis, as determined in accordance with section 170(h)(7)(B) of the Code and § 1.170A-14(k), as the amount of their investment for purposes of paragraph (b) of this section.

(5) ***Examples.*** For the examples in this paragraph (d)(5), assume that the partnerships are respected for Federal tax purposes, and that the partnership allocations comply with the rules of subchapter K of chapter 1 of the Code.

(i) ***Example 1*** —

(A) ***Facts.*** Individual A purchased an interest in P, a partnership that owns real property with a fair market value of $500,000 and marketable securities with a fair market value of $500,000. A is one of four equal investors in P, each of whom purchased its interest in P for $250,000 of cash. With respect to an investor's $250,000 payment for its interest in P, the promotional materials stated that P expected to allocate a $500,000 charitable contribution deduction to the investor (that is, a charitable contribution deduction that is two times the amount an investor paid for its interest in P). After all four investors have

purchased their interests in P, P donates a conservation easement on all of its real property to a qualified organization as defined in section 170(h)(3) of the Code and reports a $2,000,000 charitable contribution on its Form 1065, *U.S. Return of Partnership Income,* based on P obtaining an appraisal indicating that the value of the conservation easement is $2,000,000. The Schedule K-1 (Form 1065) that P furnishes to A indicates that P allocated a charitable contribution deduction to A for the taxable year. A claims a charitable contribution deduction with respect to the charitable contribution on A's Federal income tax return.

(B) ***Analysis.*** A's cost of acquiring its interest in P is $250,000. The real property on which a conservation easement was placed and that gave rise to the charitable contribution deduction described in paragraph (b)(3) of this section was P's property valued at $500,000. P's only other asset was marketable securities worth $500,000. Accordingly, half of A's share of the value of the assets held by P was attributable to the real property on which P placed a conservation easement and that gave rise to the charitable contribution deduction described in paragraph (b)(3) of this section. Therefore, under paragraph (d)(4)(i) of this section, for purposes of paragraph (b) of this section, the amount of A's investment in P is $125,000 (that is, half of A's $250,000 acquisition cost, which is the portion of A's acquisition cost that is attributable to the real property on which P placed a conservation easement and that gave rise to the charitable contribution deduction described in paragraph (b)(3) of this section). Because A's investment for purposes of the 2.5 times rule is $125,000 and A's expected charitable contribution deduction, based on the promotional materials, is $500,000 (that is, an expected deduction that is four times A's investment), the 2.5 times rule of paragraph (b)(1) of this section is met. The transaction also meets the other elements of a syndicated conservation easement within the meaning of paragraph (b) of this section and therefore is a listed transaction for purposes of § 1.6011-4(b)(2).

(ii) ***Example 2*** —

(A) ***Facts.*** Individual B acquires a ten percent interest in InvestCo, a partnership, by making a $250,000 cash contribution. Immediately after B's acquisition, InvestCo's only asset is $2,500,000 of cash. The promotional materials state that InvestCo expects to allocate a $500,000 charitable contribution deduction to B with respect to B's partnership interest. InvestCo pays $600,000 to purchase marketable securities. InvestCo also purchases an interest in another partnership, PropCo, for $1,900,000 from one of PropCo's partners. At the same time as the purchase, InvestCo also contributes $100,000 of its marketable securities to PropCo. Immediately after InvestCo's purchase and contribution, PropCo's only assets are real property worth $2,400,000 and the marketable securities worth $100,000. PropCo donates its entire interest in the real property (a fee simple interest) to a qualified organization as defined in section 170(h)(3) of the Code and reports a $6,250,000 charitable contribution on its Form 1065, *U.S. Return of Partnership Income,* based on PropCo obtaining an appraisal indicating that the value of the real property is $6,250,000. PropCo allocates a portion of the charitable contribution deduction to InvestCo. The Schedule K-1 (Form 1065) that InvestCo furnishes to B indicates that InvestCo allocated a charitable contribution deduction to B for the taxable year. B claims a charitable contribution deduction with respect to the contribution on B's Federal income tax return.

(B) ***Analysis.*** Immediately after InvestCo's acquisition of its interest in PropCo, InvestCo's only assets were its interest in PropCo and $500,000 in marketable securities. Accordingly, eighty percent of InvestCo's funds ($2,000,000/$2,500,000) were used to acquire its interest in PropCo. B's investment in InvestCo is $250,000; therefore, eighty percent of that amount, $200,000, is attributable to InvestCo's interest in PropCo. Immediately after InvestCo's acquisition of its interest in PropCo, PropCo had real property worth $2,400,000 and marketable securities worth $100,000. As such, ninety-six percent ($2,400,000/$2,500,000) of PropCo's assets were the real property that was subsequently donated. Therefore, under paragraph (d)(4)(i) of this section, for purposes of paragraph (b) of this section, the amount of B's investment in InvestCo that is attributable to the donated real property that gave rise to the charitable contribution deduction described in paragraph (b)(3) of this section is $200,000 multiplied by ninety-six percent, or $192,000. Because B's investment for purposes of the 2.5 times rule is $192,000 and B's expected charitable contribution deduction, based on the promotional materials, is $500,000 (that is, an expected deduction that is at least 2.5 times B's investment), the 2.5 times rule of paragraph (b)(1) of this section is met. The transaction also meets the other elements of a syndicated conservation easement within the meaning of paragraph (b) of this section, except that PropCo contributed a fee simple interest in real property rather than a conservation easement. Under paragraph (c)(7) of this section, the transaction is substantially similar to the listed transaction described in paragraph (b) of this section and, therefore, under paragraph (a) of this section, the transaction in this example is a listed transaction for purposes of § 1.6011-4(b)(2).

(e) ***Participation in a syndicated conservation easement transaction*** —

(1) ***In general.*** Whether a taxpayer has participated in a syndicated conservation easement transaction described in paragraph (b) of this section is determined under § 1.6011-4(c)(3)(i)(A).

(2) ***Class of participants.*** For purposes of § 1.6011-4(c)(3)(i)(A), participants in a transaction that is the same as, or substantially similar to, a syndicated conservation easement transaction described in paragraph (b) of this section include—

(i) An owner of a pass-through entity;

(ii) A pass-through entity; and

(iii) Any other taxpayer whose Federal income tax return reflects tax consequences or a tax strategy arising from a transaction that is the same as, or substantially similar to, the transaction described in paragraph (b) of this section.

(3) ***Exclusion.*** A qualified organization to which the conservation easement is donated is not treated as a participant under § 1.6011-4(c)(3)(i)(A) in a syndicated conservation easement transaction described in paragraph (b) of this section.

(f) ***Application of section 4965.*** A qualified organization to which the real property interest is donated is not treated under section 4965 of the Code as a party to the transaction described in paragraph (b) of this section.

(g) ***Disclosures under Notice 2017-10.*** A taxpayer who disclosed their participation in a transaction pursuant to Notice 2017-10 and in accordance with § 1.6011-4 before October 8, 2024, is treated as having made the disclosure required under this section and § 1.6011-4, for the years covered by that disclosure, as of the date of the disclosure under Notice 2017-10.

(h) *Applicability date* —

(1) ***In general.*** This section's identification of transactions that are the same as, or substantially similar to, the transactions described in paragraph (b) of this section as listed transactions for purposes of § 1.6011-4(b)(2) and sections 6111 and 6112 of the Code is effective October 8, 2024.

(2) ***Applicability date for material advisors.*** Notwithstanding § 301.6111-3(b)(4)(i) and (iii) of this chapter, material advisors are required to disclose only if they have made a tax statement on or after October 8, 2018.

[T.D. 10007, 89 FR 81355, Oct. 8, 2024]

§ 1.6011-10 Micro-captive listed transaction.

(a) ***Identification as listed transaction.*** Transactions that are the same as, or Substantially Similar to, transactions described in paragraph (c) of this section are identified as listed transactions for purposes of § 1.6011-4(b)(2), except as provided in paragraph (d) of this section.

(b) ***Definitions.*** The definitions in this paragraph (b) apply for purposes of this section:

(1) ***Captive.*** The term *Captive* means any entity that is described in each of the paragraphs (b)(1)(i), (ii), and (iii) of this section.

(i) The entity elects under section 831(b) of the Internal Revenue Code (Code) to include in taxable income only taxable investment income (defined in section 834 of the Code) in lieu of the tax imposed under section 831(a).

(ii) The entity issues a Contract to an Insured, reinsures a Contract of an Insured issued by an Intermediary, or both.

(iii) At least 20 percent of the entity's assets or the voting power or value of its outstanding stock or equity interests is directly or indirectly owned, individually or collectively, by an Insured, an Owner, or persons Related to an Insured or an Owner. For purposes of this paragraph (b)(1)(iii), the rules of paragraph (b)(1)(iii)(A) or (B) of this section apply to the extent application of a rule (or rules) would increase such direct or indirect ownership.

(A) A person that holds a derivative is treated as indirectly owning the assets referenced by the derivative.

(B) The interest of each beneficiary of a trust or estate in the assets of such trust or estate must be determined by assuming the maximum exercise of discretion by the fiduciary in favor of such beneficiary and the maximum use of the trust's or estate's interest in the company to satisfy the interests of such beneficiary.

(2) *Computation periods* —

(i) ***Financing Computation Period.*** The term *Financing Computation Period* means the most recent five taxable years (including the most recent concluded taxable year) of a Captive (or all taxable years of a Captive if the Captive has been in existence for less than five taxable years).

(ii) ***Listed Transaction Loss Ratio Computation Period.*** The term *Listed Transaction Loss Ratio Computation Period* is the most recent ten taxable years (including the most recent concluded taxable year) of Captive. A Captive that does not have at least ten taxable years cannot have a Listed Transaction Loss Ratio Computation Period, and therefore is not described in paragraph (c)(2) of this section.

(iii) ***Taxable years.*** For purposes of paragraphs (b)(2)(i) and (ii) of this section:

(A) Each short taxable year is a separate taxable year.

(B) If the Captive is a successor to one or more other Captives, taxable years of each such other Captive are treated as taxable years of the Captive.

(iv) ***Successors.*** The term *successor* means any entity described in paragraph (b)(2)(iv)(A), (B), or (C) of this section.

(A) A successor corporation as defined in § 1.382-2(a)(5).

(B) An entity that, directly or indirectly, acquires (or is deemed to acquire) the assets of another entity and succeeds to and takes into account the other entity's earnings and profits or deficit in earnings and profits.

(C) An entity that receives (or is deemed to receive) any assets from another entity if such entity's basis in such assets is determined, directly or indirectly, in whole or in part, by reference to the other entity's basis in such assets.

(3) ***Contract.*** The term *Contract* means any contract that is treated by a party to the contract as an insurance contract or reinsurance contract for Federal income tax purposes.

(4) ***Insured.*** The term *Insured* means any person that conducts a trade or business, enters into a Contract with a Captive or enters into a Contract with an Intermediary that is directly or indirectly reinsured by a Captive, and treats amounts paid under the Contract as insurance premiums for Federal income tax purposes.

(5) ***Intermediary.*** The term *Intermediary* means any entity that issues a Contract to an Insured or reinsures a Contract that is issued to an Insured, and such Contract is reinsured, directly or indirectly, by a Captive. A transaction may have more than one Intermediary.

(6) ***Owner.*** The term *Owner* means any person who, directly or indirectly, holds an ownership interest in an Insured or its assets. For purposes of this paragraph (b)(6), the rules of paragraph (b)(6)(i) or (ii) of this section apply to the extent application of a rule (or rules) would increase such direct or indirect ownership.

(i) The interest of a person that holds a derivative must be determined as provided in paragraph (b)(1)(iii)(A) of this section.

(ii) The interest of each beneficiary of a trust or estate in the assets of such trust or estate must be determined as provided in paragraph (b)(1)(iii)(B) of this section.

(7) ***Recipient.*** The term *Recipient* means any Owner, Insured, or person Related to an Owner or an Insured engaged in a transaction described in paragraph (c)(1) of this section.

(8) ***Related.*** The term *Related* means having a relationship described in one or more of sections 267(b), 707(b), 2701(b)(2)(C), and 2704(c)(2) of the Code.

(9) ***Seller.*** The term *Seller* means a service provider, dealer (including an automobile dealer), lender, wholesaler, or retailer that sells products or services to customers who purchase insurance contracts in connection with those products or services and at least 95 percent of sales of products or services by Seller for the taxable year to persons who purchase such insurance contracts are sales to Unrelated Customers.

(10) ***Seller's Captive.*** The term *Seller's Captive* means a Captive Related to Seller, an owner of Seller, or individuals or entities Related to Seller or owners of Seller.

(11) ***Substantially Similar.*** The term *Substantially Similar* is defined in § 1.6011-4(c)(4).

(12) ***Unrelated Customers.*** The term *Unrelated Customers* means persons who do not own an interest in, and are not wholly or partially owned by, Seller, an owner of Seller, or individuals or entities Related to Seller or owners of Seller.

(c) ***Transaction description.*** A transaction is described in this paragraph (c) if the transaction is described in both paragraphs (c)(1) and (2) of this section.

(1) The transaction involves a Captive that, at any time during the Captive's Financing Computation Period, directly or indirectly, engages in a transaction described in paragraph (c)(1)(i) of this section, taking into account paragraph (c)(1)(ii) of this section.

(i) The Captive made available as financing or otherwise conveyed or agreed to make available or convey to a Recipient, in a transaction that did not result in taxable income or gain to the Recipient, in whole or in part, any portion of the amounts received under a Contract, such as through a guarantee, a loan, or other transfer of Captive's capital, or made such financings or conveyances prior to the Financing Computation Period that remain outstanding or in effect at any point in the taxable year for which disclosure is required.

(ii) Any amounts that a Captive made available as financing or otherwise conveyed or agreed to make available or convey to a Recipient are presumed to be portions of the amounts received under a Contract to the extent that such amounts, when made available or conveyed, are in excess of Captive's cumulative after-tax net investment earnings minus any outstanding financings or conveyances.

(2) The transaction involves a Captive for which the amount described in paragraph (c)(2)(i) of this section is less than 30 percent of the amount described in paragraph (c)(2)(ii) of this section.

(i) The amount of liabilities incurred for insured losses and claim administration expenses during the Listed Transaction Loss Ratio Computation Period.

(ii) The amount equal to premiums earned by the Captive during the Listed Transaction Loss Ratio Computation Period, less policyholder dividends paid by the Captive during the Listed Transaction Loss Ratio Computation Period.

(d) ***Exceptions.*** A transaction described in paragraph (c) of this section is not identified as a listed transaction for purposes of this section and § 1.6011-4(b)(2) if the transaction:

(1) Provides insurance for employee compensation or benefits and is one for which the Employee Benefits Security Administration of the U.S. Department of Labor has issued a Prohibited Transaction Exemption under the procedures provided at 29 CFR 2570.30 through 2570.52; or

(2) Is an arrangement in which a Captive meets all of the requirements described in this paragraph (d)(2).

(i) The Captive is a Seller's Captive.

(ii) The Seller's Captive issues or reinsures some or all of the Contracts purchased by Unrelated Customers in connection with the products or services being sold by the Seller.

(iii) 100 percent of the business of the Seller's Captive is issuing or reinsuring Contracts in connection with products or services being sold by the Seller or persons Related to the Seller.

(iv) At least 95 percent of the Seller's Captive's business for the taxable year is issuing or reinsuring Contracts purchased by Unrelated Customers in connection with products or services sold by Seller or persons Related to Seller.

(e) ***Bright-line rules.*** A transaction is not considered Substantially Similar (as defined in paragraph (b)(11) of this section) to the listed transaction identified in this section if the transaction:

(1) Does not involve an entity that has elected under section 831(b) to include in taxable income only taxable investment income (defined in section 834) in lieu of the tax imposed under section 831(a); or

(2) Involves a Captive for which the amount described in paragraph (c)(2)(i) of this section is 30 percent or more of the amount described in paragraph (c)(2)(ii) of this section.

(f) ***Special participation rules*** —

(1) ***In general.*** Whether a taxpayer has participated in the listed transaction identified in paragraph (a) of this section, including Substantially Similar transactions, will be determined under § 1.6011-4(c)(3)(i)(A). Participants include, but are not limited to, any Owner, Insured, Captive, or Intermediary with respect to the transaction whose tax return reflects tax consequences or a tax strategy identified in paragraph (a), except as otherwise provided in paragraphs (f)(2) and (3) of this section.

(2) ***Disclosure safe harbor for Owners.*** An Owner who, solely by reason of the Owner's direct or indirect ownership interest in an Insured, has participated in the listed transaction described in this section will not be required to disclose participation in the transaction under section 6011(a) of the Code, notwithstanding § 1.6011-4(c)(3), if the Owner receives acknowledgement, in writing or electronically, from the Insured that the Insured has or will comply with the Insured's separate disclosure obligation under § 1.6011-4 with respect to the transaction and the Insured discloses the transaction in a timely manner. The acknowledgment can be a copy of the Form 8886, *Reportable Transaction Disclosure Statement* (or successor form), filed (or to be filed) by the Insured and must be received by the Owner prior to the time set forth in § 1.6011-4(e) in which the Owner would otherwise be required to provide disclosure. Owners who meet the requirements of the safe harbor in this paragraph (f)(2) will not be treated as having participated in an undisclosed listed transaction for purposes of § 1.6664-2(c)(3)(ii) or as having failed to include information on any return or statement with respect to a listed transaction for purposes of section 6501(c)(10) of the Code.

(3) ***Disclosure safe harbor for taxpayers in transactions with revoked section 831(b) elections.*** If the Captive has revoked its section 831(b) election, taxpayers who participated in the listed transaction with respect to that Captive, including any Insureds, Owners, and Intermediaries, will not be considered participants in the transaction under section 6011(a), notwithstanding § 1.6011-4(c)(3), for any taxable year in which the section 831(b) revocation is effective, provided that a successor Captive has not been established as described in paragraph (b)(2)(iv) of this section. In addition, if the Captive has revoked its section 831(b) election, taxpayers who meet the requirements of this

safe harbor, for any taxable year in which the section 831(b) revocation is effective, will not be treated as having participated in an undisclosed listed transaction for purposes of § 1.6664-2(c)(3)(ii) or as having failed to include information on any return or statement with respect to a listed transaction for purposes of section 6501(c)(10).

(g) *Disclosure requirements* —

(1) ***Information required of all participants.*** Participants must provide the information required under § 1.6011-4(d) and the Instructions to Form 8886 (or successor form). For all participants, describing the transaction in sufficient detail includes, but is not limited to, describing on Form 8886 (or successor form) when, how, and from whom the participant became aware of the transaction, and how the participant participated in the transaction (for example, as an Insured, a Captive, or other participant). Paragraphs (g)(2) and (3) of this section describe additional information required of a Captive and an Insured, respectively.

(2) ***Additional information required of a Captive.*** For a Captive, describing the transaction in sufficient detail includes, but is not limited to, describing on Form 8886 (or successor form) the items described in each of the paragraphs (g)(2)(i) through (v) of this section.

(i) All the type(s) of policies issued or reinsured by the Captive during the year of participation or each year of participation (if disclosure pertains to multiple years).

(ii) The amounts treated by the Captive as premiums written for coverage provided by Captive during the year of participation or each year of participation (if disclosure pertains to multiple years).

(iii) The name and contact information of each and every actuary or underwriter who assisted in the determination of the amounts treated as premiums for coverage provided by the Captive during the year or each year of participation (if disclosure pertains to multiple years).

(iv) The total amounts of claims paid by the Captive during the year of participation or each year of participation (if disclosure pertains to multiple years).

(v) The name and percentage of interest directly or indirectly held by each person whose interest in the Captive meets the 20 percent threshold or is taken into account in meeting the 20 percent threshold under paragraph (b)(1)(iii) of this section.

(3) ***Additional information required of Insured.*** For Insured, describing the transaction in sufficient detail includes, but is not limited to, describing on Form 8886 (or successor form) the amounts treated by Insured as premiums paid for coverage provided to Insured, directly or indirectly, by the Captive or by each Captive (if disclosure pertains to multiple Captives) during the year or each year of participation (if disclosure pertains to multiple years), as well as the identity of all persons identified as Owners to whom the Insured provided an acknowledgment described in paragraph (f)(2) of this section.

(h) *Applicability date* —

(1) ***In general.*** This section identifies transactions that are the same as, or Substantially Similar to, the transactions identified in paragraph (a) of this section as listed transactions for purposes of § 1.6011-4(b)(2), effective January 14, 2025, except as otherwise provided in this paragraph (h)(1). If, on or before the date prescribed for filing disclosure statements with the Office of Tax Shelter

Analysis under § 1.6011-4(e), the Captive involved in the transaction has requested the consent of the Secretary to revoke its section 831(b) election, the transaction is not identified as a listed transaction for purposes of this section and § 1.6011-4(b)(2) for taxable years ending before January 1, 2026.

(2) ***Obligations of participants with respect to prior periods.*** Pursuant to § 1.6011-4(d) and (e), taxpayers who have filed a tax return (including an amended return) reflecting their participation in transactions described in paragraph (a) of this section prior to January 14, 2025, must disclose the transactions as required by § 1.6011-4(d) and (e) provided that the period of limitations for assessment of tax (as determined under section 6501, including section 6501(c)) for any taxable year in which the taxpayer participated has not ended on or before January 14, 2025, except as otherwise provided in this paragraph (h)(2). Taxpayers who have finalized a settlement agreement with the Internal Revenue Service with respect to the transaction, in examination or litigation, will be treated as having made the disclosure for years subject to that agreement.

(3) ***Obligations of material advisors with respect to prior periods.*** Material advisors defined in § 301.6111-3(b) of this chapter who have previously made a tax statement with respect to a transaction described in paragraph (a) of this section have disclosure and list maintenance obligations as described in §§ 301.6111-3 and 301.6112-1 of this chapter, respectively. Notwithstanding § 301.6111-3(b)(4)(i) and (iii) of this chapter, material advisors are required to disclose only if they have made a tax statement on or after the date that is six years before January 14, 2025. Material advisors that are uncertain whether the transaction they are required to disclose should be reported under this section or § 1.6011-11 should disclose under this section and will not be required to disclose a second time if it is later determined that the transaction should have been disclosed under § 1.6011-11.

[T.D. 10029, 90 FR 3559, Jan. 14, 2025]

§ 1.6011-11 Micro-captive transaction of interest.

(a) ***Identification as transaction of interest.*** Transactions that are the same as, or Substantially Similar to, transactions described in paragraph (c) of this section are identified as transactions of interest for purposes of § 1.6011-4(b)(6), except as provided in paragraph (d) of this section.

(b) ***Definitions.*** The definitions in this paragraph (b) apply for purposes of this section.

(1) ***Captive. Captive*** has the same meaning as provided in § 1.6011-10(b)(1).

(2) ***Computation periods*** —

(i) ***Financing Computation Period. Financing Computation Period*** has the same meaning as provided in § 1.6011-10(b)(2)(i).

(ii) ***Transaction of Interest Loss Ratio Computation Period.*** The term *Transaction of Interest Loss Ratio Computation Period* means—

(A) The most recent ten taxable years of a Captive; or

(B) In the case of a Captive that has been in existence for less than ten taxable years, all taxable year(s) of the Captive.

(iii) ***Rules for computation periods.*** The rules provided in § 1.6011-10(b)(2)(iii) and (iv) for computation periods apply for purposes of this paragraph (b)(2).

(3) ***Contract. Contract*** has the same meaning as provided in § 1.6011-10(b)(3).

(4) ***Insured. Insured*** has the same meaning as provided in § 1.6011-10(b)(4).

(5) ***Intermediary. Intermediary*** has the same meaning as provided in § 1.6011-10(b)(5).

(6) ***Owner. Owner*** has the same meaning as provided in § 1.6011-10(b)(6).

(7) ***Recipient. Recipient*** has the same meaning as provided in § 1.6011-10(b)(7).

(8) ***Related. Related*** has the same meaning as provided in § 1.6011-10(b)(8).

(9) ***Seller. Seller*** has the same meaning as provided in § 1.6011-10(b)(9).

(10) ***Seller's Captive. Seller's Captive*** has the same meaning as provided in § 1.6011-10(b)(10).

(11) ***Substantially Similar. Substantially Similar*** has the same meaning as provided in § 1.6011-10(b)(11).

(12) ***Unrelated Customers. Unrelated Customers*** has the same meaning as provided in § 1.6011-10(b)(12).

(c) ***Transaction description.*** A transaction is described in this paragraph (c) if the transaction is described in paragraph (c)(1) of this section, paragraph (c)(2) of this section, or both.

(1) The transaction involves a Captive that, at any time during the Captive's Financing Computation Period, directly or indirectly, engages in a transaction described in paragraph (c)(1)(i) of this section, taking into account paragraph (c)(1)(ii) of this section.

(i) The Captive made available as financing or otherwise conveyed or agreed to make available or convey to a Recipient, in a transaction that did not result in taxable income or gain to the Recipient, in whole or in part, any portion of the amounts received under a Contract, such as through a guarantee, a loan, or other transfer of Captive's capital, or made such financings or conveyances prior to the Financing Computation Period that remain outstanding or in effect at any point in the taxable year for which disclosure is required.

(ii) Any amounts that a Captive made available as financing or otherwise conveyed or agreed to make available or convey to a Recipient are presumed to be portions of the amounts received under a Contract to the extent such amounts, when made available or conveyed are in excess of a Captive's cumulative after-tax net investment earnings minus any outstanding financings or conveyances.

(2) The transaction involves a Captive for which the amount described in paragraph (c)(2)(i) of this section is less than 60 percent of the amount described in paragraph (c)(2)(ii) of this section.

(i) The amount of liabilities incurred for insured losses and claim administration expenses during the Transaction of Interest Loss Ratio Computation Period.

(ii) The amount equal to premiums earned by the Captive during the Transaction of Interest Loss Ratio Computation Period, less policyholder dividends paid by the Captive during the Transaction of Interest Loss Ratio Computation Period.

(d) ***Exceptions.*** A transaction described in paragraph (c) of this section is not identified as a transaction of interest for purposes of this section and § 1.6011-4(b)(6) if the transaction:

(1) Is described in § 1.6011-10(d)(1);

(2) Is described in § 1.6011-10(d)(2); or

(3) Is identified as a listed transaction in § 1.6011-10(a), in which case the transaction must be reported as a listed transaction under § 1.6011-10.

(e) ***Bright-line rules.*** A transaction is not considered Substantially Similar (as defined in paragraph (b)(11) of this section) to the transaction of interest identified in this section if the transaction:

(1) Does not involve an entity that has elected under section 831(b) of the Internal Revenue Code (Code) to include in taxable income only taxable investment income (defined in section 834 of the Code) in lieu of the tax imposed under section 831(a); or

(2) Involves a Captive for which the amount described in paragraph (c)(2)(i) of this section is 60 percent or more of the amount described in paragraph (c)(2)(ii) of this section.

(f) ***Special participation rules*** —

(1) ***In general.*** Whether a taxpayer has participated in the transaction of interest identified in paragraph (a) of this section, including Substantially Similar transactions, will be determined under § 1.6011-4(c)(3)(i)(E). Participants include, but are not limited to, any Owner, Insured, Captive, or Intermediary with respect to the transaction whose tax return reflects tax consequences or a tax strategy identified in paragraph (a), except as otherwise provided in paragraphs (f)(2) and (3) of this section.

(2) ***Disclosure safe harbor for Owners.*** An Owner who, solely by reason of the Owner's direct or indirect ownership interest in an Insured, has participated in the transaction of interest described in this section will not be required to disclose participation in the transaction under section 6011(a), notwithstanding § 1.6011-4(c)(3), if the Owner receives acknowledgment, in writing or electronically, from the Insured that the Insured has or will comply with Insured's separate disclosure obligation under § 1.6011-4 with respect to the transaction and the Insured discloses the transaction in a timely manner. The acknowledgment can be a copy of the Form 8886, *Reportable Transaction Disclosure Statement* (or successor form), filed (or to be filed) by the Insured and must be received by the Owner prior to the time set forth in § 1.6011-4(e) in which the Owner would otherwise be required to provide disclosure.

(3) ***Disclosure safe harbor for taxpayers in transactions with revoked section 831(b) elections.*** If the Captive has revoked its section 831(b) election, taxpayers who participated in the transaction of interest with respect to that Captive, including any Insureds, Owners, and Intermediaries, will not be considered participants in the transaction under section 6011(a), notwithstanding § 1.6011-4(c)(3), for any taxable year in which the section 831(b) revocation is effective, provided that a successor Captive has not been established as described in paragraph (b)(2)(iii) of this section (referencing § 1.6011-10(b)(2)(iii) and (iv)).

(g) ***Disclosure requirements.*** Participants must provide the information required under § 1.6011-4(d) and the Instructions to Form 8886 (or successor form). For all participants, describing the transaction in sufficient detail includes, but is not limited to, describing on Form 8886 (or successor form) when, how, and from whom the participant became aware of the transaction, and how the participant participated in the transaction (for example, as an Insured, a Captive, or other participant). A Captive and an Insured must also provide the information required in § 1.6011-10(g)(2) and (3), respectively.

(h) ***Applicability date*** —

(1) ***In general.*** This section identifies transactions that are the same as, or Substantially Similar to, the transaction identified in paragraph (a) of this section as transactions of interest for purposes of § 1.6011-4(b)(6) effective January 14, 2025, except as otherwise provided in this paragraph (h)(1). If, on or before the date prescribed for filing disclosure statements with the Office of Tax Shelter Analysis under § 1.6011-4(e), the Captive involved in the transaction has requested the consent of the Secretary to revoke its section 831(b) election, the transaction is not identified as a transaction of interest for purposes of this section and § 1.6011-4(b)(6) for participants with respect to that Captive for taxable years ending before January 1, 2026.

(2) ***Obligations of participants with respect to prior periods.*** Pursuant to § 1.6011-4(d) and (e), taxpayers who have filed a tax return (including an amended return) reflecting their participation in transactions described in paragraph (a) of this section prior to January 14, 2025, must disclose the transactions as required by § 1.6011-4(d) and (e) provided that the period of limitations for assessment of tax (as determined under section 6501 of the Code, including section 6501(c)) for any taxable year in which the taxpayer participated has not ended on or before January 14, 2025, except as otherwise provided in this paragraph (h)(2). Taxpayers who have finalized a settlement agreement with the Internal Revenue Service with respect to the transaction, in examination or litigation, will be treated as having made the disclosure for years subject to that agreement. Taxpayers who have filed a disclosure statement regarding their participation in the transaction with the Office of Tax Shelter Analysis pursuant to Notice 2016-66, 2016-47 I.R.B. 745, will be treated as having made the disclosure pursuant to the final regulations for the taxable years for which the taxpayer filed returns before January 14, 2025. If a taxpayer described in the preceding sentence participates in the Micro-captive Transaction of Interest in a taxable year for which the taxpayer files a return on or after January 14, 2025, the taxpayer must file a disclosure statement with the Office of Tax Shelter Analysis at the same time the taxpayer files their return for the first such taxable year.

(3) ***Obligations of material advisors with respect to prior periods.*** Material advisors defined in § 301.6111-3(b) of this chapter who have previously made a tax statement with respect to a transaction described in paragraph (a) of this section have disclosure and list maintenance obligations as described in §§ 301.6111-3 and 301.6112-1 of this chapter, respectively. Notwithstanding § 301.6111-3(b)(4)(i) and (iii) of this chapter, material advisors are required to disclose only if they have made a tax statement on or after the date that is six years before January 14, 2025. Material advisors that are uncertain whether the transaction they are required to disclose should be reported under this section or § 1.6011-10 should disclose under § 1.6011-10 and will not be required to disclose a second time if it is later determined that the transaction should have been disclosed under this section.

[T.D. 10029, 90 FR 3562, Jan. 14, 2025]

§ 1.6011-18 Certain partnership related-party basis adjustment transactions as transactions of interest.

(a) ***Identification as transaction of interest.*** Transactions that are the same as or substantially similar (within the meaning of § 1.6011-4(c)(4)) to the transactions described in paragraph (c) of this section are identified as transactions of interest for purposes of § 1.6011-4(b)(6). Transactions that are substantially similar (within the meaning of § 1.6011-4(c)(4)) to the transactions described in paragraph (c) of this section include, but are not limited to, transactions described in paragraph (d) of this section.

(b) ***Definitions.*** The following definitions apply for purposes of this section:

(1) ***Code*** means the Internal Revenue Code.

(2) ***Nonrecognition transaction*** means a nonrecognition transaction within the meaning of section 7701(a)(45) of the Code.

(3) ***Participating partner*** means—

(i) Except as provided in paragraph (b)(3)(ii), (iii), or (iv) of this section, any partner that directly receives a distribution of property from, or an interest in, a participating partnership, or directly transfers an interest in a participating partnership, in a transaction described in paragraph (c) or (d) of this section, including a person that becomes or ceases to be a partner as a result of such transaction.

(ii) In the case of a participating partnership interest held by an entity that is disregarded as separate from its owner within the meaning of § 301.7701-2(c)(2)(i) of this chapter, *participating partner* means the owner of the disregarded entity for Federal income tax purposes.

(iii) In the case of a participating partnership interest held by a trust for which the grantor or another person is treated as the owner of the trust that holds the participating partnership interest as provided in section 671 of the Code, *participating partner* means the grantor or other person designated under sections 671 through 679 of the Code as the owner of the trust that holds the participating partnership interest.

(iv) In the case of a publicly traded partnership within the meaning of section 7704 of the Code, *participating partner* means a partner of the publicly traded partnership but only to the extent that the partner engages in a private transfer (as described in § 1.7704-1(e)), redemption or repurchase agreement (as described in § 1.7704-1(f)), or private placement (as described in § 1.7704-1(h)) of a partnership interest with a related partner and the transaction is not otherwise excluded as a transaction described in paragraph (c) or (d) of this section.

(4) ***Participating partnership*** means any partnership—

(i) That makes a distribution of property to a participating partner in a transaction described in paragraph (c)(1) or (d)(1) of this section, or

(ii) A partnership interest in which is transferred by a participating partner in a transaction described in paragraph (c)(2) or (d)(2) of this section.

(5) ***Participating partnership interest*** means any partnership interest in a participating partnership.

(6) ***Recognition transaction*** means a transaction other than a nonrecognition transaction within the meaning of paragraph (b)(2) of this section.

(7) ***Recoverable property*** means property of a character subject to an allowance for depreciation, amortization, or depletion under subtitle A of the Code (subtitle A).

(8) ***Related*** means having a relationship described in section 267(b) of the Code (without regard to section 267(c)(3)) or section 707(b)(1) of the Code.

(9) ***Related partners*** means:

(i) In the case of a transaction described in paragraph (c)(1) of this section, two or more direct partners of a partnership that are related immediately before or immediately after a transaction described in paragraph (c)(1) of this section.

(ii) In the case of a transaction described in paragraph (c)(2) or (d)(2) of this section, a transferor and transferee of a partnership interest that are related to each other immediately before or immediately after a transaction described in paragraph (c)(2) of this section.

(10) ***Related subsequent transferee*** means any person that is related to a participating partner and directly received in a nonrecognition transaction a transfer (including a distribution) of property that was subject to an increase in basis from a transaction described in paragraph (c) or (d) of this section.

(11) ***Six-year lookback period*** means the seventy-two months immediately preceding the first month of the taxpayer's most recent taxable year that began before January 14, 2025.

(12) ***Tax-indifferent party*** means a person that is either not liable for Federal income tax by reason of the person's tax-exempt or, in certain cases, foreign status, or to which any gain, or portion of any gain, that would have resulted from a transaction described in paragraph (d)(1) of this section if the property subject to a basis decrease in such transaction were sold immediately after such transaction would not result in Federal income tax liability for the person's taxable year within which such gain would have been recognized, and whose status as a tax-indifferent party is known or should be known to any other person that participates in a transaction described in paragraph (d)(1) of this section or to a partner in a partnership that participates in such a transaction. A tax-indifferent party does not include a partnership or S corporation except in a case in which a principal purpose of the use of the partnership or S corporation is to avoid tax-indifferent party status.

(13) ***Transfer on the death of a partner*** means a transfer of a partnership interest from a partner to the partner's estate or a deemed transfer from a grantor trust owned by the partner to a trust that becomes a separate entity for Federal income tax purposes by reason of the partner's death.

(c) ***Transaction description.*** A transaction is described in this paragraph (c) if the factual elements of the transaction described in paragraph (c)(1)(i) through (iii) or (c)(2) of this section are met.

(1) ***Distributions by a partnership.*** A partnership with two or more related partners engages in any of the transactions described in paragraphs (c)(1)(i) through (iii) of this section as follows:

(i) The partnership distributes property to one of the related partners in a current or liquidating distribution, the partnership increases the basis of one or more of its remaining properties under section 734(b) and (c) of the Code, and the applicable threshold described in paragraph (c)(3) of this section is met.

(ii) The partnership distributes property to one of the related partners in liquidation of that person's partnership interest (or in complete liquidation of the partnership), the basis of one or more of those distributed properties is increased under section 732(b) and (c) of the Code, and the applicable threshold described in paragraph (c)(3) of this section is met.

(iii) The partnership distributes property to one of the related partners, the basis of one or more of those distributed properties is increased under section 732(d) of the Code, the distributee acquired all or a part of its interest in the partnership in a transaction that would have been a transaction described in paragraph (c)(2) of this section if the partnership had a section 754 election in effect for the year of transfer, and the applicable threshold described in paragraph (c)(3) of this section is met.

(2) ***Transfers of a partnership interest*** —

(i) ***In general.*** Except as otherwise provided in paragraph (c)(2)(ii) or (c)(4) of this section, a partner transfers all or a portion of a partnership interest to a related partner in a nonrecognition transaction, the basis of one or more partnership properties is increased under section 743(b)(1) and (c) of the Code, and the applicable threshold described in paragraph (c)(3) of this section is met.

(ii) ***Subsequent nonrecognition transfers*** —

(A) ***In general.*** If a partner receives an interest in a partnership from a person in a recognition transaction (first transfer) and the basis of one or more partnership properties is increased under section 743(b)(1) and (c) of the Code, and subsequently the partner (transferor) transfers the partnership interest to a person related to the transferor (transferee) in a transaction described in paragraph (c)(2)(i) of this section (subsequent transfer), the subsequent transfer is a transaction described in paragraph (c)(2)(i) of this section only to the extent, if any, that the transferee's basis adjustment under section 743(b)(1) and (c) resulting from the subsequent transfer exceeds the amount of the transferor's remaining basis adjustment described in paragraph (c)(2)(ii)(B) of this section that is attributable to the transferred partnership interest (excess amount), and the applicable threshold described in paragraph (c)(3) of this section is met. Only the excess amount is counted towards the applicable threshold described in paragraph (c)(3) of this section.

(B) ***Transferor's remaining basis adjustment.*** A *transferor's remaining basis adjustment* is equal to the amount of the transferor's basis adjustment under section 743(b)(1) and (c) resulting from the first transfer as adjusted under section 1016(a)(2) of the Code to reflect the recovery of the basis adjustment or as otherwise adjusted prior to the subsequent transfer.

(3) ***Applicable threshold*** —

(i) ***In general.*** Except as otherwise provided in paragraph (c)(3)(ii) of this section, for determining whether a transaction is described in paragraph (c)(1) or (2), (d)(1) or (2) of this section, the applicable threshold is met for a taxable year if the sum of all basis increases resulting from all such transactions of a partnership or partner during the taxable year (without netting for any basis adjustment that results in a basis decrease in the same transaction or another transaction) exceeds by at least $10 million the gain recognized from such transactions during the same taxable year, if any, on which tax imposed under subtitle A is required to be paid by any of the related partners (or tax-indifferent party, in the case of a transaction described in paragraph (d)(1) of this section) who are a party to such transactions.

(ii) ***Six-year lookback period threshold.*** In the case of a transaction described in (c) or (d) of this section that occurred within the six-year lookback period, paragraph (c)(3)(i) applies by substituting “$25 million” for “$10 million” for determining whether the applicable threshold is met for a taxable year.

(iii) ***Basis increase under section 734(b) and (c) only for shares of basis increase to related partners.*** In the case of a transaction described in paragraph (c)(1)(i) of this section for determining whether the applicable threshold is met for a taxable year, a basis increase is an increase to the adjusted basis of the partnership's property under section 734(b)(1) and (c) only to the extent

of a related partner's share of the basis increase. For purposes of this paragraph (c)(3)(iii), a partner's share of a basis increase is determined immediately after the distribution under rules similar to the rules of § 1.197-2(h)(12)(iv)(D).

(iv) ***Basis increase under sections 732(b) or (c) only for shares of corresponding basis decreases under section 734(b) to related partners or tax-indifferent parties.*** In the case of a transaction described in paragraph (c)(1)(ii) of this section for determining whether the applicable threshold is met for a taxable year, a basis increase is an increase to the basis of property distributed to one of the related partners under section 732(b) or (c), but excluding the amount of any basis increase that corresponds to a decrease to the basis of property distributed to unrelated partners (other than tax-indifferent parties) under section 732(b) and (c) or to unrelated partners' (other than tax-indifferent parties') shares of a corresponding decrease to the basis of the partnership's remaining property under section 734(b)(2) and (c). For purposes of this paragraph (c)(3)(iv), a partner's share of a basis decrease is determined immediately after the distribution under rules similar to the rules of § 1.197-2(h)(12)(iv)(D). In the case of a transaction described in paragraph (d)(1) of this section, for purposes of determining whether the applicable threshold is met for a taxable year, a basis increase is an increase to the basis of property distributed to one of the partners under section 732(b) or (c) only to the extent of a corresponding decrease to the basis of property distributed to a tax-indifferent party under section 732(b) and (c) or to one or more tax-indifferent party's shares of a corresponding decrease to the basis of the partnership's remaining property under section 734(b)(2) and (c).

(4) ***Exclusion of a transfer on the death of a partner.*** A transaction described in paragraph (c)(2) or (d)(2) of this section does not include a transfer of a partnership interest that is a transfer on the death of a partner within the meaning of paragraph (b)(13) of this section.

(d) ***Substantially similar transaction.*** A transaction that is substantially similar (within the meaning of § 1.6011-4(c)(4)) to a transaction described in paragraph (c) of this section includes, but is not limited to:

(1) A transaction that is described in paragraph (c)(1)(i) or (ii) of this section except that the partners of the partnership are not related and one or more partners of the partnership is a tax-indifferent party that facilitates an increase in the basis of partnership property or an increase in the basis of property held by another partner in the partnership by receiving a distribution of property from the partnership or having a share of a corresponding decrease to the basis of partnership property, and the applicable threshold described in paragraph (c)(3) of this section is met; and

(2) A transaction in which a transferor transfers an interest in a partnership to a transferee that is related to the transferor in a recognition transaction, and the applicable threshold described in paragraph (c)(3) of this section is met.

(e) ***Participation*** —

(1) ***In general.*** Whether a taxpayer has participated in a transaction of interest described in paragraph (c) of this section or a substantially similar transaction described in paragraph (d) of this section during a taxable year is determined under this paragraph (e).

(2) ***Participating partners.*** A participating partner participates in a transaction of interest described in paragraph (c)(1) of this section or a substantially similar transaction described in paragraph (d)(1) of this section in any taxable year in which the partner directly receives a distribution of property, or directly transfers or receives an interest in a participating partnership, in a transaction described in paragraph (c)(2) of this section or a substantially similar transaction described in paragraph (d)(2) of this section.

(3) ***Participating partnerships.*** A participating partnership participates in a transaction of interest described in paragraph (c) or a substantially similar transaction described in paragraph (d) of this section in any taxable year in which the partnership makes a distribution of property to a participating partner in a transaction described in paragraph (c)(1) or (d)(1) of this section, or a participating partnership interest is transferred in a transaction described in paragraph (c)(2) or (d)(2) of this section.

(4) ***Related subsequent transferees.*** A related subsequent transferee participates in a transaction of interest described in paragraph (c) of this section or a substantially similar transaction described in paragraph (d) of this section in any taxable year in which the related subsequent transferee directly receives, in a nonrecognition transaction, a transfer (including a distribution) of property that was subject to an increase in basis as a result of a transaction described in paragraph (c) or (d) of this section that was required to be disclosed under paragraph (f) of this section.

(5) ***Subsequent realization of tax benefit.*** A participating partnership, participating partner, or related subsequent transferee also participates in a transaction of interest described in paragraph (c) or a substantially similar transaction described in paragraph (d) of this section in any taxable year in which its tax return reflects the tax consequences of a basis increase resulting from a transaction of interest described in paragraph (c) or (d) of this section, taking into account the limitations provided in paragraphs (c)(3)(iii) and (iv) of this section. For example, if a participating partner sells property the basis of which has been increased as a result of a transaction of interest described in paragraph (c) of this section during a taxable year after the taxable year in which the transaction of interest occurred, the participating partner participates in a transaction of interest described in paragraph (c) of this section in the taxable year of the basis increase and in the taxable year of the sale.

(f) ***Disclosure requirements*** —

(1) ***In general.*** Except as otherwise provided in this paragraph (f)(1), participants must provide the information required under § 1.6011-4(d) and the Instructions to Form 8886, *Reportable Transaction Disclosure Statement* (or successor form), and in the manner described in § 1.6011-4(e), for each taxable year in which the participant participated in a transaction described in paragraph (c) or (d) of this section as determined under paragraph (e) of this section. For all participants, describing the transaction in sufficient detail includes describing the information described in paragraphs (f)(1)(i) through (iii) of this section, as applicable, on Form 8886 (or successor form) for the taxable year of a transaction described in paragraph (c) or (d) of this section. In the case of a participant that is a tax-indifferent party, the disclosure requirements of this paragraph (f) apply only if the tax-indifferent party is otherwise required to file a tax return (or an information return) for the taxable year of the transaction described in paragraph (d)(1) of this section.

(i) The names and identifying numbers of all participants, including the participating partnership, participating partners and any related subsequent transferees.

(ii) All basis adjustments resulting from a transaction described in paragraph (c) or (d) of this section, including—

(A) Basis information, including the participating partnership's adjusted basis in the distributed property immediately before the distribution,

(B) Any adjustments to basis under section 732(a)(2), (b), (d) or section 734(b),

(C) Any adjustments to basis under section 743(b) with respect to a participating partner that is transferred an interest in a participating partnership, and

(D) With respect to a participating partner that transfers an interest in a participating partnership, that participating partner's adjusted basis in the participating partnership interest and share of the participating partnership's adjusted basis in its property immediately before the transfer.

(iii) Any Federal income tax consequences realized during the taxable year as a result of a transaction described in paragraph (c) or (d) of this section, including any cost recovery allowances attributable to any increase in basis as a result of a transaction described in paragraph (c) of this section, and any gain or loss attributable to the disposition of property that was subject to an increase in basis as a result of a transaction described in paragraph (c) or (d) of this section. The Federal income tax consequences attributable to an increase in basis resulting from a transaction described in paragraph (c) or (d) of this section are limited to those attributable to the increase in basis, taking into account the limitations of paragraph (c)(3)(iii) or (iv) of this section. For example, in the case of a distribution of depreciable property that was subject to an increase in basis because of a transaction described in paragraph (c) or (d) of this section, the Federal income tax consequences realized during the taxable year include the basis increase and cost recovery allowances attributable to the basis increase during the taxable year.

(2) ***Six-year lookback period for taxable years described in special rule of § 1.6011-4(e)(2)(i).*** For purposes of the special rule of § 1.6011-4(e)(2)(i) (describing the disclosure requirement with respect to a transaction that is identified as a transaction of interest after the filing of the taxpayer's tax return (including an amended return) reflecting the taxpayer's participation in the transaction of interest but before the end of the period of limitations for assessment of tax for such taxable year), a participant must provide the information described in paragraph (f)(1) of this section for such open years only if the transaction described in paragraph (c) or (d) of this section occurred within the six-year lookback period described in paragraph (b)(11) of this section.

(g) ***Examples.*** The following examples illustrate the provisions of this section.

(1) ***Example 1: Reporting by a participating partner and participating partnership in the taxable year of the transaction, including cost recovery allowances —***

(i) ***Facts.*** ABC Partnership is owned by partners A, B, and C. Partners A, B, and C are related within the meaning of paragraphs (b)(8) and (9) of this section. At the beginning of taxable year 2025, ABC Partnership distributes a depreciable asset, Property X, to Partner A in liquidation of Partner A's interest in ABC Partnership. The distribution is a transaction described in paragraph (c)(1)(ii) of this section. As a result of the distribution, the basis of Property X is increased by $10 million in Partner A's hands. On its tax return for taxable year 2025, Partner A reports deductions for depreciation expense attributable to the $10 million increase in the basis of Property X resulting from the transaction under paragraph (c)(1)(ii) of this section. In addition, ABC Partnership must reduce the basis of its remaining property under section 734(b)(2) as a result of the distribution of Property X to Partner A by $10 million. ABC Partnership and Partner A use the calendar year as their taxable year.

(ii) ***Analysis.*** Partner A is a participant during taxable year 2025 within the meaning of paragraph (e) of this section because it is a participating partner within the meaning of paragraph (b)(3) of this section since it directly received a distribution of property during taxable year 2025 in a transaction described in paragraph (c) of this section. ABC Partnership is a participant during taxable year 2025 within the meaning of paragraph (e) of this section because it is a participating partnership within the meaning of paragraph (b)(4) of this section since it made a

distribution of property to a participating partner during taxable year 2025 in a transaction described in paragraph (c) of this section. As part of its disclosure requirements under paragraph (f) of this section and § 1.6011-4(d) and (e), Partner A must disclose the distribution as a transaction of interest under this section on Form 8886 (or successor form) and file the form with its tax return for taxable year 2025. Partner A must include the information described in paragraph (f) of this section, including the amount of the deductions attributable to the $10 million increase in the basis of Property X resulting from the transaction described in paragraph (c)(1)(ii) of this section. As part of its disclosure requirements under paragraph (f) of this section and § 1.6011-4(d) and (e), ABC Partnership must disclose the distribution as a transaction of interest under this section on Form 8886 (or successor form) and file the form with its tax return for taxable year 2025, including the information described in paragraph (f) of this section. In addition, Partner A and ABC Partnership must send a copy of their respective Form 8886 (or successor form) to the Office of Tax Shelter Analysis (OTSA).

(2) ***Example 2: Reporting of the Federal income tax consequences (cost recovery allowances) of the transaction in all taxable years*** —

(i) ***Facts.*** Under the same facts as in paragraph (g)(1)(i) of this section (*Example 1),* on its tax returns for taxable years 2026 through 2030, Partner A reports deductions for depreciation expense attributable to the $10 million increase in the basis of Property X related to the transaction described in paragraph (c)(1)(ii) of this section, which occurred in taxable year 2025.

(ii) ***Analysis.*** As part of its disclosure requirements under paragraph (f) of this section and § 1.6011-4(d) and (e), Partner A must disclose the deductions on Form 8886 (or successor form) for taxable years 2026 through 2030 as the Federal income tax consequences of the transaction described in paragraph (c)(1)(ii) of this section. As a result, for each of taxable years 2026 through 2030, Partner A must file the form with its tax return for the taxable year with the information described in paragraph (f) of this section, including the amount of the deductions for the taxable year attributable to the $10 million increase in the basis of Property X resulting from the transaction described in paragraph (c)(1)(ii) of this section.

(3) ***Example 3: Reporting by a participating partner, participating partnership, and related subsequent transferee in the taxable year of the transaction*** —

(i) ***Facts.*** The facts are the same as in paragraph (g)(1)(i) of this section (*Example 1),* except that at the beginning of taxable year 2025, instead of distributing a depreciable asset, ABC Partnership distributes a nondepreciable asset, Land with an adjusted basis of $5 million, to Partner A in liquidation of Partner A's interest in ABC Partnership. The distribution is a transaction described in paragraph (c)(1)(ii) of this section. As a result of the distribution, the basis of Land is increased to $15 million in Partner A's hands. Subsequently in the same taxable year 2025, Partner A contributes Land to another partnership, AX Partnership, in a transfer that is treated as a contribution of property under section 721(a). Partner A and AX Partnership are related within the meaning of paragraph (b)(8) of this section. ABC Partnership, Partner A and AX Partnership use the calendar year as their taxable year.

(ii) ***Analysis.*** Partner A is a participant during taxable year 2025 within the meaning of paragraph (e) of this section because it is a participating partner within the meaning of paragraph (b)(3) of this section since Partner A directly received a distribution of property during taxable year 2025 in a transaction described in paragraph (c) of this section. ABC Partnership is a participant during taxable year 2025 within the meaning of paragraph (e) of this section because it is a

participating partnership within the meaning of paragraph (b)(4) of this section since it made a distribution of property to a participating partner during taxable year 2025 in a transaction described in paragraph (c) of this section. AX Partnership is a participant during taxable year 2025 within the meaning of paragraph (e) of this section because it is a related subsequent transferee within the meaning of paragraph (b)(10) of this section since it directly received in a nonrecognition transaction a transfer of property during taxable year 2025 that was subject to an increase in basis because of a transaction described in paragraph (c) of this section. As part of its disclosure requirements under paragraph (f) of this section and § 1.6011-4(d) and (e), Partner A must disclose the distribution as a transaction of interest under this section on Form 8886 (or successor form) and file the form with its tax return for taxable year 2025. Partner A must include the information described in paragraph (f) of this section. As part of its disclosure requirements under paragraph (f) of this section and § 1.6011-4(d) and (e), ABC Partnership must disclose the distribution as a transaction of interest under this section on Form 8886 (or successor form) and file the form with its tax return for taxable year 2025, including the information described in paragraph (f) of this section. Further, AX Partnership is subject to the disclosure requirements under paragraph (f) of this section and § 1.6011-4(d) and (e). AX Partnership must disclose that it is a related subsequent transferee within the meaning of paragraph (b)(10) of this section that received, in a nonrecognition transaction, a transfer of property that was distributed in a transaction of interest under this section on Form 8886 (or successor form) and file the form with its tax return for taxable year 2025. In addition, Partner A, ABC Partnership and AX Partnership must send a copy of their respective Form 8886 (or successor form) to the OTSA.

(4) ***Example 4: Reporting of the Federal income tax consequences (reduced taxable gain) of the transaction in the taxable year of disposition of the property*** —

(i) ***Facts.*** Under the same facts as in paragraph (g)(3)(i) of this section (*Example 3),* in taxable year 2026, AX Partnership disposes of Land in a taxable sale for its fair market value of $15 million and recognizes no gain or loss.

(ii) ***Analysis.*** As part of its disclosure requirements under paragraph (f) of this section and § 1.6011-4(d) and (e), AX Partnership must disclose the taxable gain (zero) on the disposition of Land on Form 8886 (or successor form) for taxable year 2026 as the Federal income tax consequences of the transaction described in paragraph (c)(1)(ii) of this section. AX Partnership must file the form with its tax return for taxable year 2026. Partner A does not have a disclosure requirement with respect to AX Partnership's disposition of Land because the disposition is a subsequent realization of a tax benefit within the meaning of paragraph (e)(5) of this section with respect to AX Partnership.

(5) ***Example 5. Reporting of a transaction of interest that occurred within the six-year lookback period*** —

(i) ***Facts.*** The facts are the same as in paragraph (g)(1)(i) of this section (*Example 1),* except that instead of ABC Partnership distributing Property X in taxable year 2025, the distribution is made in May of taxable year 2022, which is within the six-year lookback period described in paragraph (b)(11) of this section. That is, the distribution occurred within the seventy-two months immediately preceding January 2025, the first month of the taxpayer's most recent taxable year that began before January 14, 2025. Further, taxable year 2022 is an open taxable year subject to the special rule of § 1.6011-4(e)(2)(i). Additionally, neither Partner A nor ABC Partnership engages in any other transaction described in paragraph (c) or (d) of this section for taxable year 2022.

(ii) ***Analysis.*** Because the transaction occurred within the six-year lookback period described in paragraph (b)(11) of this section, the applicable threshold described in paragraph (c)(3)(i) of this section is $25 million as provided in paragraph (c)(3)(ii) of this section. The distribution of Property X to Partner A is not a transaction described in paragraph (c)(1)(ii) of this section with respect to either Partner A or ABC Partnership because the applicable threshold is not met for taxable year 2022. Had the applicable threshold for taxable year 2022 been met, all the information required by paragraph (f)(1) of this section must be reported in its disclosure for taxable year 2022 and for any subsequent taxable year for which the taxpayer's return reflected the tax consequences of the transaction.

(6) ***Example 6. No reporting of a transaction of interest for transaction that occurred prior to the six-year lookback period —***

(i) ***Facts.*** The facts are the same as in paragraph (g)(1)(i) of this section (*Example 1),* except that as a result of the distribution of Property X to Partner A, the basis of Property X is increased by $30 million, and the distribution occurred in December of taxable year 2018, which is prior to the six-year lookback period described in paragraph (b)(11) of this section. That is, the transaction occurred prior to January 2019, which is the beginning of the seventy-two-month period that ends in December 2024. In addition, taxable year 2018 is an open taxable year subject to the special rule of § 1.6011-4(e)(2)(i). Further, Partner A realized Federal income tax consequences (depreciation expense) in taxable year 2019 attributable to the $30 million increase to the basis of Property X and taxable year 2019 is an open taxable year subject to the special rule of § 1.6011-4(e)(2)(i).

(ii) ***Analysis.*** Because taxable year 2018 is not within the six-year lookback period, under paragraph (f)(2) of this section, neither the distribution of Property X to Partner A, nor any of the Federal income tax consequences arising in that taxable year or later taxable years (such as depreciation expense in taxable year 2019 or any later taxable year) from such distribution, is required to be disclosed under paragraph (f) of this section and §§ 1.6011-4(d) and (e).

(7) ***Example 7. Corresponding basis decrease under section 734(b)(2)(B) shared by an unrelated partner —***

(i) ***Facts.*** The facts are the same as in paragraph (g)(1)(i) of this section (*Example 1),* except Partner C is unrelated to Partners A and B and is not a tax-indifferent party. As a result of the distribution of Property X to Partner A, and the increase to the basis of Property X by $10 million in Partner A's hands, ABC Partnership is required to reduce the adjusted basis of its remaining properties under section 734(b)(2)(B) by $10 million. Partner B's and Partner C's share of ABC Partnership's basis decrease to its remaining properties is $5 million each. Neither Partner A nor ABC Partnership engages in any other transaction described in paragraph (c) of this section for taxable year 2025.

(ii) ***Analysis.*** For purposes of paragraphs (c)(1)(ii) and (c)(3)(i) of this section, under paragraph (c)(3)(iv) of this section, only $5 million of the $10 million basis increase to Property X counts toward the applicable threshold because $5 million of the basis increase corresponds to unrelated Partner C's share of the decrease to the basis of ABC Partnership's remaining properties under section 734(b)(2)(B) and thus, is excluded from the calculation of the applicable threshold. Thus, the distribution of Property X to Partner A is not a transaction described in paragraph (c)(1)(ii) of this section with respect to either Partner A or ABC Partnership because the applicable threshold is not met for taxable year 2025.

(h) ***Extension of time—***

(1) *Taxpayer disclosures.* Taxpayers will be treated as having met their requirements to disclose timely under § 1.6011-4(e)(2)(i) if they file their disclosure with the OTSA by July 14, 2025.

(2) *Material advisor disclosures.* Material advisors who have made a tax statement before January 14, 2025 will be treated as having met their requirements to disclose timely under § 301.6111-3(e) of this chapter if they file their disclosure with the OTSA by the date that is an additional 90 days beyond the last day for filing specified in § 301.6111-3(e) of this chapter.

(i) *Applicability date* —

(1) *In general.* This section's identification of transactions that are the same as or substantially similar (within the meaning of § 1.6011-4(c)(4)) to the transactions described in paragraph (c) of this section as transactions of interest for purposes of § 1.6011-4(b)(6) and sections 6111 and 6112 of the Code is effective January 14, 2025.

(2) *Material advisors.* Notwithstanding § 301.6111-3(b)(4)(i) and (iii) of this chapter, material advisors are required to disclose only if they have made a tax statement on or after January 14, 2019.

[T.D. 10028, 90 FR 2972, Jan. 14, 2025]

§ 1.6012-1 Individuals required to make returns of income.

(a) *Individual citizen or resident* —

(1) *In general.* Except as provided in subparagraph (2) of this paragraph, an income tax return must be filed by every individual for each taxable year beginning before January 1, 1973, during which he receives $600 or more of gross income, and for each taxable year beginning after December 31, 1972, during which he receives $750 or more of gross income, if such individual is:

(i) A citizen of the United States, whether residing at home or abroad,

(ii) A resident of the United States even though not a citizen thereof, or

(iii) An alien bona fide resident of Puerto Rico or any section 931 possession, as defined in § 1.931-1(c)(1), during the entire taxable year

(2) *Special rules.*

(i) For taxable years beginning before January 1, 1970, an individual who is described in subparagraph (1) of this paragraph and who has attained the age of 65 before the close of his taxable year must file an income tax return only if he receives $1,200 or more of gross income during his taxable year.

(ii) For taxable years beginning after December 31, 1969, and before January 1, 1973, an individual described in subparagraph (1) of this paragraph (other than an individual referred to in section 142(b)):

(*a*) Who is not married (as determined by applying section 143(a) and the regulations thereunder) must file an income tax return only if he receives $1,700 or more of gross income during his taxable year, except that if such an individual has attained the age of 65 before the close of his taxable year an income tax return must be filed by such individual only if he receives $2,300 or more of gross income during his taxable year.

(*b*) Who is entitled to make a joint return under section 6013 and the regulations thereunder must file an income tax return only if his gross income received during his taxable year, when combined with the gross income of his spouse received during his taxable year, is $2,300 or more. However, if such individual or his spouse has attained the age of 65 before the close of the taxable year an income tax return must be filed by such individual only if their combined gross income is $2,900 or more. If both the individual and his spouse have attained the age of 65 before the close of the taxable year such return must be filed only if their combined gross income is $3,500 or more. However, this subdivision (ii)(*b*) shall not apply if the individual and his spouse did not have the same household as their home at the close of their taxable year, if such spouse files a separate return for a taxable year which includes any part of such individual's taxable year, or if any other taxpayer is entitled to an exemption for such individual or his spouse under section 151(e) for such other taxpayer's taxable year beginning in the calendar year in which such individual's taxable year begins. For example, a married student more than half of whose support is furnished by his father must file an income tax return if he receives $600 or more of gross income during his taxable year.

(iii) For taxable years beginning after December 31, 1972, an individual described in subparagraph (1) of this paragraph (other than an individual referred to in section 142(b)):

(*a*) Who is not married (as determined by applying section 143(a) and the regulations thereunder) must file an income tax return only if he receives $1,750 or more of gross income during his taxable year, except that if such an individual has attained the age of 65 before the close of his taxable year an income tax return must be filed by such individual only if he receives $2,500 or more of gross income during his taxable year.

(*b*) Who is entitled to make a joint return under section 6013 and the regulations thereunder must file an income tax return only if his gross income received during his taxable year, when combined with the gross income of his spouse received during his taxable year, is $2,500 or more. However, if such individual or his spouse has attained the age of 65 before the close of the taxable year an income tax return must be filed by such individual only if their combined gross income is $3,250 or more. If both the individual and his spouse attain the age of 65 before the close of the taxable year such return must be filed only if their combined gross income is $4,000 or more. However, this subdivision (iii)(*b*) shall not apply if the individual and his spouse did not have the same household as their home at the close of their taxable year, if such spouse files a separate return for a taxable year which includes any part of such individual's taxable year, or if any other taxpayer is entitled to an exemption for the taxpayer or his spouse under section 151(e) for such other taxpayer's taxable year beginning in the calendar year in which such individual's taxable year begins. For example, a married student more than half of whose support is furnished by his father must file an income tax return if he receives $750 or more of gross income during the taxable year.

(iv) For purposes of section 6012(a)(1)(A)(ii) and subdivisions (ii)(*b*) and (iii)(*b*) of this subparagraph, an individual and his spouse are considered to have the same household as their home at the close of a taxable year if the same household constituted the principal place of abode of both the individual and his spouse at the close of such taxable year (or on the date of death, if the individual or his spouse died within the taxable year). The individual and his spouse will be considered to have the same household as their home at the close of the taxable year notwithstanding a temporary absence from the household due to special circumstances, as, for

example, in the case of a nonpermanent failure on the part of the individual and his spouse to have a common abode by reason of illness, education, business, vacation, or military service. For example, A, a calendar-year individual under 65 years of age, is married to B, also under 65 years of age, and is a member of the Armed Forces of the United States. During 1970 A is transferred to an overseas base. A and B give up their home, which they had jointly occupied until that time; B moves to the home of her parents for the duration of A's absence. They fully intend to set up a new joint household upon A's return. Neither A nor B must file a return for 1970 if their combined gross income for the year is less than $2,300 and if no other taxpayer is entitled to a dependency exemption for A or B under section 151(e).

(v) In the case of a short taxable year referred to in section 443(a)(1), an individual described in subparagraph (1) of this paragraph shall file an income tax return if his gross income received during such short taxable year equals or exceeds his own personal exemption allowed by section 151(b) (prorated as provided in section 443(c)) and, when applicable, his additional exemption for age 65 or more allowed by section 151(c)(1) (prorated as provided in section 443(c)).

(vi) For rules relating to returns required to be made by every individual who is liable for one or more qualified State individual income taxes, as defined in section 6362, for a taxable year, see paragraph (b) of § 301.6361-1 of this chapter (Regulations on Procedure and Administration).

(vii) For taxable years beginning after December 31, 1978, an individual who receives payments during the calendar year in which the taxable year begins under section 3507 (relating to advance payment of earned income credit) must file an income tax return.

(viii) For rules relating to returns required of taxpayers who receive advance payments of the premium tax credit under section 36B, see § 1.6011-8(a).

(3) ***Earned income from without the United States and gain from sale of residence.*** For the purpose of determining whether an income tax return must be filed for any taxable year beginning after December 31, 1957, gross income shall be computed without regard to the exclusion provided for in section 911 (relating to earned income from sources without the United States). For the purpose of determining whether an income tax return must be filed for any taxable year ending after December 31, 1963, gross income shall be computed without regard to the exclusion provided for in section 121 (relating to sale of residence by individual who has attained age 65). In the case of an individual claiming an exclusion under section 121, he shall attach Form 2119 to the return required under this paragraph and in the case of an individual claiming an exclusion under section 911, he shall attach Form 2555 to the return required under this paragraph.

(4) ***Return of income of minor.*** A minor is subject to the same requirements and elections for making returns of income as are other individuals. Thus, for example, for a taxable year beginning after December 31, 1972, a return must be made by or for a minor who has an aggregate of $1,750 of gross income from funds held in trust for him and from his personal services, regardless of the amount of his taxable income. The return of a minor must be made by the minor himself or must be made for him by his guardian or other person charged with the care of the minor's person or property. See paragraph (b)(3) of § 1.6012-3. See § 1.73-1 for inclusion in the minor's gross income of amounts received for his personal services. For the amount of tax which is considered to have been properly assessed against the parent, if not paid by the child, see section 6201(c) and paragraph (c) of § 301.6201-1 of this chapter (Regulations on Procedure and Administration).

(5) ***Returns made by agents.*** The return of income may be made by an agent if, by reason of disease or injury, the person liable for the making of the return is unable to make it. The return may also be made by an agent if the taxpayer is unable to make the return by reason of continuous absence from the United States (including Puerto Rico as if a part of the United States) for a period of at least 60 days prior to the date prescribed by law for making the return. In addition, a return may be made by an agent if the taxpayer requests permission, in writing, of the district director for the internal revenue district in which is located the legal residence or principal place of business of the person liable for the making of the return, and such district director determines that good cause exists for permitting the return to be so made. However, assistance in the preparation of the return may be rendered under any circumstances. Whenever a return is made by an agent it must be accompanied by a power of attorney (or copy thereof) authorizing him to represent his principal in making, executing, or filing the return. A form 2848, when properly completed, is sufficient. In addition, where one spouse is physically unable by reason of disease or injury to sign a joint return, the other spouse may, with the oral consent of the one who is incapacitated, sign the incapacitated spouse's name in the proper place on the return followed by the words “By _____ Husband (or Wife),” and by the signature of the signing spouse in his own right, provided that a dated statement signed by the spouse who is signing the return is attached to and made a part of the return stating:

(i) The name of the return being filed,

(ii) The taxable year,

(iii) The reason for the inability of the spouse who is incapacitated to sign the return, and

(iv) That the spouse who is incapacitated consented to the signing of the return.

The taxpayer and his agent, if any, are responsible for the return as made and incur liability for the penalties provided for erroneous, false, or fraudulent returns.

(6) ***Form of return.*** Form 1040 is prescribed for general use in making the return required under this paragraph. Form 1040A is an optional short form which, in accordance with paragraph (a)(7) of this section, may be used by certain taxpayers. A taxpayer otherwise entitled to use Form 1040A as his return for any taxable year may not make his return on such form if he elects not to take the standard deduction provided in section 141, and in such case he must make his return on Form 1040. For taxable years beginning before January 1, 1970, a taxpayer entitled under section 6014 and § 1.6014-1 to elect not to show his tax on his return must, if he desires to exercise such election, make his return on Form 1040A. Form 1040W is an optional short form which, in accordance with paragraph (a)(8) of this section, may be used only with respect to taxable years beginning after December 31, 1958, and ending before December 31, 1961.

(7)

(i) ***Use of Form 1040A.*** Form 1040A may be filed only by those individuals entitled to use such form as provided by and in accordance with the instructions for such form.

(ii) ***Computation and payment of tax.*** Unless a taxpayer is entitled to elect under section 6014 and § 1.6014-1 not to show the tax on Form 1040A and does so elect, he shall compute and show on his return on Form 1040A the amount of the tax imposed by subtitle A of the Code and shall, without notice and demand therefor, pay any unpaid balance of such tax not later than the date fixed for filing the return.

(iii) ***Change of election to use Form 1040A.*** A taxpayer who has elected to make his return on Form 1040A may change such election. Such change of election shall be within the time and subject to the conditions prescribed in section 144(b) and § 1.144-2 relating to change of election to take, or not to take the standard deduction.

(8) ***Use of Form 1040W for certain taxable years*** —

(i) ***In general.*** An individual may use Form 1040W as his return for any taxable year beginning after December 31, 1958, and ending before December 31, 1961, in which the gross income of the individual, regardless of the amount thereof:

(*a*) Consists entirely of remuneration for personal services performed as an employee (whether or not such remuneration constitutes wages as defined in section 3401(a)), dividends, or interest, and

(*b*) Does not include more than $200 from dividends and interest.

For purposes of determining whether gross income from dividends and interest exceeds $200, dividends from domestic corporations are taken into account to the extent that they are includible in gross income. For purposes of this subparagraph, any reference to Form 1040 in §§ 1.4-2, 1.142-1, and 1.144-1 and this section shall also be deemed a reference to Form 1040W.

(ii) ***Change of election to use Form 1040W.*** A taxpayer who has elected to make his return on Form 1040W may change such election. Such change of election shall be within the time and subject to the conditions prescribed in section 144(b) and § 1.144-2, relating to change of election to take, or not to take, the standard deduction.

(iii) ***Joint return of husband and wife on Form 1040W.*** A husband and wife, eligible under section 6013 and the regulations thereunder to file a joint return for the taxable year, may, subject to the provisions of this subparagraph, make a joint return on Form 1040W for any taxable year beginning after December 31, 1958, and ending before December 31, 1961, in which the aggregate gross income of the spouses (regardless of amount) consists entirely of remuneration for personal services performed as an employee (whether or not such remuneration constitutes wages as defined in section 3401(a)), dividends, or interest, and does not include more than $200 from dividends and interest. For purposes of determining whether gross income from sources to which the $200 limitation applies exceeds such amount in cases where both spouses receive dividends from domestic corporations, the amount of such dividends received by each spouse is taken into account to the extent that such dividends are includible in gross income. See section 116 and §§ 1.116-1 and 1.116-2. If a joint return is made by husband and wife on Form 1040W, the liability for the tax shall be joint and several.

(9) ***Items of tax preference.*** For a taxable year ending after December 31, 1969, an individual shall attach Form 4625 to the return required by this paragraph if during the year the individual:

(i) Has items of tax preference (described in section 57) in excess of its minimum tax exemption (determined under § 1.58-1) or

(ii) Uses a net operating loss carryover from a prior taxable year in which it deferred minimum tax under section 56(b).

(b) ***Return of nonresident alien individual*** —

(1) *Requirement of return* —

(i) ***In general.*** Except as otherwise provided in subparagraph (2) of this paragraph, every nonresident alien individual (other than one treated as a resident under section 6013 (g) or (h)) who is engaged in trade or business in the United States at any time during the taxable year or who has income which is subject to taxation under subtitle A of the Code shall make a return on Form 1040NR. For this purpose it is immaterial that the gross income for the taxable year is less than the minimum amount specified in section 6012(a) for making a return. Thus, a nonresident alien individual who is engaged in a trade or business in the United States at any time during the taxable year is required to file a return on Form 1040 NR even though

(*a*) he has no income which is effectively connected with the conduct of a trade or business in the United States,

(*b*) he has no income from sources within the United States, or

(*c*) his income is exempt from income tax by reason of an income tax convention or any section of the Code. However, if the nonresident alien individual has no gross income for the taxable year, he is not required to complete the return schedules but must attach a statement to the return indicating the nature of any exclusions claimed and the amount of such exclusions to the extent such amounts are readily determinable.

(ii) ***Treaty income.*** If the gross income of a nonresident alien individual includes treaty income, as defined in paragraph (b)(1) of § 1.871-12, a statement shall be attached to the return on Form 1040NR showing with respect to that income:

(*a*) The amounts of tax withheld,

(*b*) The names and post office addresses of withholding agents, and

(*c*) Such other information as may be required by the return form, or by the instructions issued with respect to the form, to show the taxpayer's entitlement to the reduced rate of tax under the tax convention.

(2) *Exceptions* —

(i) ***Return not required when tax is fully paid at source.*** A nonresident alien individual (other than one treated as a resident under section 6013 (g) or (h)) who at no time during the taxable year is engaged in a trade or business in the United States is not required to make a return for the taxable year if his tax liability for the taxable year is fully satisfied by the withholding of tax at source under chapter 3 of the Code. This subdivision does not apply to a nonresident alien individual who has income for the taxable year which is treated under section 871 (c) or (d) and § 1.871-9 (relating to students or trainees) or § 1.871-10 (relating to real property income) as income which is effectively connected for the taxable year with the conduct of a trade or business in the United States by that individual, or to a nonresident alien individual making a claim under § 301.6402-3 of this chapter (Procedure and Administration Regulations) for the refund of an overpayment of tax for the taxable year. In addition, this subdivision does not apply to a nonresident alien individual who has income for the taxable year that is treated under section 871(b)(1) as effectively connected with the conduct of a trade or business within the

United States by reason of the operation of section 897. For purposes of this subdivision, some of the items of income from sources within the United States upon which the tax liability will not have been fully satisfied by the withholding of tax at source under chapter 3 of the Code are:

(*a*) Interest upon so-called tax-free covenant bonds upon which, in accordance with section 1451 and § 1.1451-1, a tax of only 2 percent is required to be withheld at the source,

(*b*) In the case of bonds or other evidences of indebtedness issued after September 28, 1965, amounts described in section 871(a)(1)(C),

(*c*) Capital gains described in section 871(a)(2) and paragraph (d) of § 1.871-7, and

(*d*) Accrued interest received in connection with the sale of bonds between interest dates, which, in accordance with paragraph (h) of § 1.1441-4, is not subject to withholding of tax at the source.

(ii) ***Return of individual for taxable year of change of U.S. citizenship or residence*** —

(*a*) If an alien individual becomes a citizen or resident of the United States during the taxable year and is a citizen or resident of the United States on the last day of such year, he must make a return on Form 1040 for the taxable year. However, a separate schedule is required to be attached to this return to show the income tax computation for the part of the taxable year during which the alien was neither a citizen nor resident of the United States, unless an election under section 6013 (g) or (h) is in effect for the alien. A Form 1040NR, clearly marked “Statement” across the top, may be used as such a separate schedule.

(*b*) If an individual abandons his U.S. citizenship or residence during the taxable year and is not a citizen or resident of the United States on the last day of such year, he must make a return on Form 1040NR for the taxable year, even if an election under section 6013(g) was in effect for the taxable year preceding the year of abandonment. However, a separate schedule is required to be attached to this return to show the income tax computation for the part of the taxable year during which the individual was a citizen or resident of the United States. A Form 1040, clearly marked “Statement” across the top, may be used as such a separate schedule.

(*c*) A return is required under this subdivision (ii) only if the individual is otherwise required to make a return for the taxable year.

(iii) ***Beneficiaries of estates or trusts.*** A nonresident alien individual who is a beneficiary of an estate or trust which is engaged in trade or business in the United States is not required to make a return for the taxable year merely because he is deemed to be engaged in trade or business within the United States under section 875(2). However, such nonresident alien beneficiary will be required to make a return if he otherwise satisfies the conditions of subparagraph (1)(i) of this paragraph for making a return.

(iv) ***Certain alien residents of Puerto Rico.*** This paragraph does not apply to a nonresident alien individual who is a bona fide resident of Puerto Rico during the taxable year. See section 876 and paragraph (a)(1)(iii) of this section.

(3) ***Representative or agent for nonresident alien individual*** —

(i) ***Cases where power of attorney is not required.*** The responsible representative or agent within the United States of a nonresident alien individual shall make on behalf of his nonresident alien principal a return of, and shall pay the tax on, all income coming within his control as representative or agent which is subject to the income tax under subtitle A of the Code. The agency appointment will determine how completely the agent is substituted for the principal for tax purposes. Any person who collects interest or dividends on deposited securities of a nonresident alien individual, executes ownership certificates in connection therewith, or sells such securities under special instructions shall not be deemed merely by reason of such acts to be the responsible representative or agent of the nonresident alien individual. If the responsible representative or agent does not have a specific power of attorney from the nonresident alien individual to file a return in his behalf, the return shall be accompanied by a statement to the effect that the representative or agent does not possess specific power of attorney to file a return for such individual but that the return is being filed in accordance with the provisions of this subdivision.

(ii) ***Cases where power of attorney is required.*** Whenever a return of income of a nonresident alien individual is made by an agent acting under a duly authorized power of attorney for that purpose, the return shall be accompanied by the power of attorney in proper form, or a copy thereof, specifically authorizing him to represent his principal in making, executing, and filing the income tax return. Form 2848 may be used for this purpose. The agent, as well as the taxpayer, may incur liability for the penalties provided for erroneous, false, or fraudulent returns. For the requirements regarding signing of returns, see § 1.6061-1. The rules of paragraph (e) of § 601.504 of this chapter (Statement of Procedural Rules) shall apply under this subparagraph in determining whether a copy of a power of attorney must be certified.

(iii) ***Limitation.*** A return of income shall be required under this subparagraph only if the nonresident alien individual is otherwise required to make a return in accordance with this paragraph.

(4) ***Disallowance of deductions and credits.*** For provisions disallowing deductions and credits when a return of income has not been filed by or on behalf of a nonresident alien individual, see section 874(a) and the regulations thereunder.

(5) ***Effective date.*** This paragraph shall apply for taxable years beginning after December 31, 1966, except that it shall not be applied to require

(i) the filing of a return for any taxable year ending before January 1, 1974, which, pursuant to instructions applicable to the return, is not required to be filed or

(ii) the amendment of a return for such a taxable year which, pursuant to such instructions, is required to be filed. For corresponding rules applicable to taxable years beginning before January 1, 1967, see 26 CFR 1.6012-1(b) (Revised as of January 1, 1967).

(c) ***Cross reference.*** For returns by fiduciaries for individuals, estates, and trusts, see § 1.6012-3.

(Sec. 1445 (98 Stat. 655; 26 U.S.C. 1445), sec. 6012 (68A Stat. 732; 26 U.S.C. 6012), and 7805 (68A Stat. 917; 26 U.S.C. 7805) of the Internal Revenue Code of 1954)

[T.D. 6500, 25 FR 12108, Nov. 26, 1960]

Editorial Note: For FEDERAL REGISTER citations affecting § 1.6012-1, see the List of CFR Sections Affected, which appears in the Finding Aids section of the printed volume and at *www.govinfo.gov*.

§ 1.6012-2 Corporations required to make returns of income.

(a) *In general* —

(1) ***Requirement of return.*** Except as provided in paragraphs (e) and (g)(1) of this section with respect to charitable and other organizations having unrelated business income and to certain foreign corporations, respectively, every corporation, as defined in section 7701(a)(3), subject to taxation under subtitle A of the Code shall make a return of income regardless of whether it has taxable income or regardless of the amount of its gross income.

(2) ***Existence of corporation.*** A corporation in existence during any portion of a taxable year is required to make a return. If a corporation was not in existence throughout an annual accounting period (either calendar year or fiscal year), the corporation is required to make a return for that fractional part of a year during which it was in existence. A corporation is not in existence after it ceases business and dissolves, retaining no assets, whether or not under State law it may thereafter be treated as continuing as a corporation for certain limited purposes connected with winding up its affairs, such as for the purpose of suing and being sued. If the corporation has valuable claims for which it will bring suit during this period, it has retained assets and therefore continues in existence. A corporation does not go out of existence if it is turned over to receivers or trustees who continue to operate it. If a corporation has received a charter but has never perfected its organization and has transacted no business and has no income from any source, it may upon presentation of the facts to the district director be relieved from the necessity of making a return. In the absence of a proper showing of such facts to the district director, a corporation will be required to make a return.

(3) ***Form of return.*** The return required of a corporation under this section shall be made on Form 1120 unless the corporation is a type for which a special form is prescribed. The special forms of returns and schedules required of particular types of corporations are set forth in paragraphs (b) to (g), inclusive, of this section.

(4) ***Disclosure of uncertain tax positions.*** A corporation required to make a return under this section shall attach Schedule UTP, Uncertain Tax Position Statement, or any successor form, to such return, in accordance with forms, instructions, or other appropriate guidance provided by the IRS.

(5) ***Effective/applicability date.*** Paragraph (a)(4) of this section applies to returns filed for tax years beginning on or after January 1, 2010.

(b) ***Personal holding companies.*** A personal holding company, as defined in section 542, including a foreign corporation within the definition of such section, shall attach Schedule PH, Computation of U.S. Personal Holding Company Tax, to the return required by paragraph (a) or (g), as the case may be, of this section.

(c) *Insurance companies* —

(1) *Domestic life insurance companies* —

(i) ***In general.*** A life insurance company subject to tax under section 801 shall make a return on Form 1120-L, "U.S. Life Insurance Company Income Tax Return." Except as provided in paragraph (c)(4) of this section, such company shall file with its return—

(A) A copy of its annual statement which shows the reserves used by the company in computing the taxable income reported on its return; and

(B) A copy of Schedule A (real estate) and of Schedule D (bonds and stocks), or any successor thereto, of such annual statement.

(ii) ***Mutual savings banks.*** Mutual savings banks conducting life insurance business and meeting the requirements of section 594 are subject to partial tax computed on Form 1120, "U.S. Corporation Income Tax Return," and partial tax computed on Form 1120-L. The Form 1120-L is attached as a schedule to Form 1120, together with the annual statement and schedules required to be filed with Form 1120-L.

(2) ***Domestic nonlife insurance companies.*** Every domestic insurance company other than a life insurance company shall make a return on Form 1120-PC, "U.S. Property and Casualty Insurance Company Income Tax Return." This includes organizations described in section 501(m)(1) that provide commercial-type insurance and organizations described in section 833. Except as provided in paragraph (c)(4) of this section, such company shall file with its return a copy of its annual statement (or a pro forma annual statement), including the underwriting and investment exhibit (or any successor thereto) for the year covered by such return.

(3) ***Foreign insurance companies.*** The provisions of paragraphs (c)(1) and (c)(2) of this section concerning the returns and statements of insurance companies subject to tax under section 801 or section 831 also apply to foreign insurance companies subject to tax under those sections, except that the copy of the annual statement required to be submitted with the return shall, in the case of a foreign insurance company that is not required to file an annual statement, be a copy of the pro forma annual statement relating to the United States business of such company.

(4) ***Special rule for insurance companies filing their Federal income tax returns electronically.*** If an insurance company described in paragraph (c)(1), (2), or (3) of this section files its Federal income tax return electronically, it must include on or with such return its annual statement (or pro forma annual statement), or a portion thereof, as and to the extent required by forms or instructions. If the full annual statement is not required to be included with the return, such statement must be available at all times for inspection by authorized Internal Revenue Service officers or employees and retained for so long as such statements may be material in the administration of any internal revenue law. See § 1.6001-1(e).

(5) ***Definition.*** For purposes of this section, the term *annual statement* means the annual statement, the form of which is approved by the National Association of Insurance Commissioners (NAIC), which is filed by an insurance company for the year with the insurance departments of States, Territories, and the District of Columbia. The term annual statement also includes a pro forma annual statement if the insurance company is not required to file the NAIC annual statement.

(d) ***Affiliated groups.*** For the forms to be used by affiliated corporations filing a consolidated return, see § 1.1502-75.

(e) ***Charitable and other organizations with unrelated business income.*** Every organization described in section 511(a)(2) which is subject to the tax imposed by section 511(a)(1) on its unrelated business taxable income shall make a return on Form 990-T for each taxable year if it has gross income, included in computing unrelated business taxable income for such taxable year, of $1,000 or more. The filing of a return of unrelated business income does not relieve the organization of the duty of filing other required returns.

(f) ***Subchapter T cooperatives*** —

(1) ***In general.*** For taxable years ending on or after December 31, 2007, a cooperative organization described in section 1381 (including a farmers' cooperative exempt from tax under section 521) is required to make a return, whether or not it has taxable income and regardless of the amount of its gross income, on Form 1120-C, "U.S. Income Tax Return for Cooperative Associations," or such other form as may be designated by the Commissioner.

(2) ***Farmers' cooperatives.*** For taxable years ending before December 31, 2007, a farmers' cooperative organization described in section 521(b)(1) (including a farmers' cooperative that is not exempt from tax under section 521) is required to make a return on Form 990-C, "Farmers' Cooperative Association Income Tax Return."

(3) ***Effective/applicability date.*** This paragraph (f) is applicable on or after July 30, 2007.

(g) ***Returns by foreign corporations*** —

(1) ***Requirement of return*** —

(i) ***In general.*** Except as otherwise provided in subparagraph (2) of this paragraph, every foreign corporation which is engaged in trade or business in the United States at any time during the taxable year or which has income which is subject to taxation under subtitle A of the Code (relating to income taxes) shall make a return on Form 1120-F. Thus, for example, a foreign corporation which is engaged in trade or business in the United States at any time during the taxable year is required to file a return on Form 1120-F even though

(*a*) it has no income which is effectively connected with the conduct of a trade or business in the United States,

(*b*) it has no income from sources within the United States, or

(*c*) its income is exempt from income tax by reason of an income tax convention or any section of the Code. However, if the foreign corporation has no gross income for the taxable year, it is not required to complete the return schedules but must attach a statement to the return indicating the nature of any exclusions claimed and the amount of such exclusions to the extent such amounts are readily determinable.

(ii) ***Treaty income.*** If the gross income of a foreign corporation includes treaty income, as defined in paragraph (b)(1) of § 1.871-12, a statement shall be attached to the return on Form 1120-F showing with respect to that income:

(*a*) The amounts of tax withheld,

(*b*) The names and post office addresses of withholding agents, and

(*c*) Such other information as may be required by the return form or by the instructions issued with respect to the form, to show the taxpayer's entitlement to the reduced rate of tax under the tax convention.

(iii) ***Balance sheet and reconciliation of income.*** At the election of the taxpayer, the balance sheets and reconciliation of income, as shown on Form 1120-F, may be limited to:

(*a*) The assets of the corporation located in the United States and to its other assets used in the trade or business conducted in the United States, and

(*b*) Its income effectively connected with the conduct of a trade or business in the United States and its other income from sources within the United States.

(2) *Exceptions* —

(i) ***Return not required when tax is fully paid at source*** —

(*a*) ***In general.*** A foreign corporation which at no time during the taxable year is engaged in a trade or business in the United States is not required to make a return for the taxable year if its tax liability for the taxable year is fully satisfied by the withholding of tax at source under chapter 3 of the Code. For purposes of this subdivision, some of the items of income from sources within the United States upon which the tax liability will not have been fully satisfied by the withholding of tax at source under chapter 3 of the Code are:

(*1*) Interest upon so-called tax-free covenant bonds upon which, in accordance with section 1451 and § 1.1451-1, a tax of only 2 percent is required to be withheld at source,

(*2*) In the case of bonds or other evidence of indebtedness issued after September 25, 1965, amounts described in section 881(a)(3),

(*3*) Accrued interest received in connection with the sale of bonds between interest dates, which, in accordance with paragraph (h) of § 1.1441-4, is not subject to withholding of tax at source.

(*b*) ***Corporations not included.*** This subdivision (i) shall not apply:

(*1*) To a foreign corporation which has income for the taxable year which is treated under section 882(d) or (e) and § 1.882-2 as income which is effectively connected for the taxable year with the conduct of a trade or business in the United States by that corporation,

(*2*) To a foreign corporation making a claim under § 301.6402-3 of this chapter (Procedure and Administration Regulations) for the refund of an overpayment of tax for the taxable year, or

(*3*) To a foreign corporation described in paragraph (c)(2)(i) of § 1.532-1 whose accumulated taxable income for the taxable year is determined under paragraph (b)(2) of § 1.535-1.

(ii) ***Beneficiaries of estates or trusts.*** A foreign corporation which is a beneficiary of an estate or trust which is engaged in trade or business in the United States is not required to make a return for the taxable year merely because it is deemed to be engaged in trade or business within the United States under section 875(2). However, such foreign corporation will be required to make a return if it otherwise satisfies the conditions of subparagraph (1)(i) of this paragraph for making a return.

(iii) ***Special returns and schedules.*** The provisions of paragraphs (b) through (f) of this section shall apply to a foreign corporation except that a foreign corporation which is an insurance company to which paragraph (c)(3) of this section applies shall make a return on Form 1120-F and not on Form 1120. If a foreign corporation which is an insurance company to which paragraph (c) (1) or (2) of this section applies has income for the taxable year from sources within the United States which is not effectively connected for that year with the conduct of a trade or business in the United States by that corporation, the corporation shall attach to its return on Form 1120L

or 1120M, as the case may be, a separate schedule showing the nature and amount of the items of such income, the rate of tax applicable thereto, and the amount of tax withheld therefrom under chapter 3 of the Code.

(3) ***Representative or agent for foreign corporation*** —

(i) ***Cases where power of attorney is not required.*** The responsible representative or agent within the United States of a foreign corporation shall make on behalf of his principal a return of, and shall pay the tax on, all income coming within his control as representative or agent which is subject to the income tax under subtitle A of the Code. The agency appointment will determine how completely the agent is substituted for the principal for tax purposes. Any person who collects interest or dividends on deposited securities of a foreign corporation, executes ownership certificates in connection therewith, or sells such securities under special instructions shall not be deemed merely by reason of such acts to be the responsible representative or agent of the foreign corporation. If the responsible representative or agent does not have a specific power of attorney from the foreign corporation to file a return in its behalf, the return shall be accompanied by a statement to the effect that the representative or agent does not possess specific power of attorney to file a return for such corporation but that the return is being filed in accordance with the provisions of this subdivision.

(ii) ***Cases where power of attorney is required.*** Whenever a return of income of a foreign corporation is made by an agent acting under a duly authorized power of attorney for that purpose, the return shall be accompanied by the power of attorney in proper form, or a copy thereof specifically authorizing him to represent his principal in making, executing, and filing the income tax return. Form 2848 may be used for this purpose. The agent, as well as the taxpayer, may incur liability for the penalties provided for erroneous, false, or fraudulent returns. For the requirements regarding signing of returns, see § 1.6062-1. The rules of paragraph (e) of § 601.504 of this chapter (Statement of Procedural Rules) shall apply under this subparagraph in determining whether a copy of a power of attorney must be certified.

(iii) ***Limitation.*** A return of income shall be required under this subparagraph only if the foreign corporation is otherwise required to make a return in accordance with this paragraph.

(4) ***Disallowance of deductions and credits.*** For provisions disallowing deductions and credits when a return of income has not been filed by or on behalf of a foreign corporation, see section 882(c)(2) and the regulations thereunder, and paragraph (b) (2) and (3) of § 1.535-1.

(5) ***Effective date.*** This paragraph shall apply for taxable years beginning after December 31, 1966, except that it shall not be applied to require

(i) the filing of a return for any taxable year ending before January 1, 1974, which, pursuant to instructions applicable to the return, is not required to be filed or

(ii) the amendment of a return for such a taxable year which, pursuant to such instructions, is required to be filed. For corresponding rules applicable to taxable years beginning before January 1, 1967, see 26 CFR 1.6012-2(g) (Revised as of January 1, 1967).

(h) ***Electing small business corporations.*** An electing small business corporation, whether or not subject to the tax imposed by section 1378, shall make a return on Form 1120-S. See also section 6037 and the regulations thereunder.

(i) ***Hospital organizations with noncompliant hospital facilities.*** Every hospital organization (as defined in § 1.501(r)-1(b)(18)) that is subject to the tax imposed by § 1.501(r)-2(d) shall make a return on Form 990-T. The filing of a return to pay the tax described in § 1.501(r)-2(d) does not relieve the organization of the duty of filing other required returns.

(j) ***Items of tax preference*** —

(1) ***In general.*** Every corporation required to make a return under this section, and having items of tax preference (described in section 57 and the regulation thereunder) in an amount specified by Form 4626, shall file such form as part of its return.

(2) ***Organizations with unrelated business income and foreign corporations.*** Regardless of the provisions of paragraphs (e) and (g) of this section, any organization described in either such paragraph having items of tax preference (described in section 57 and the regulations thereunder) in any amount entering into the computation or unrelated business income is required to make a return on form 990-T or form 120F, respectively, and to attach the required form as part of such return.

(k) ***Other provisions.*** For returns by fiduciaries or corporations, see § 1.6012-3. For information returns by corporations regarding payments of dividends, see §§ 1.6042-1 through 1.6042-3, inclusive; regarding corporate dissolutions or liquidations, see § 1.6043-1; regarding distributions in liquidation, see § 1.6043-2; regarding payments of patronage dividends, see §§ 1.6044-1 through 1.6044-4, inclusive; and regarding certain payments of interest, see §§ 1.6049-1 and 1.6049-1. For returns as to formation or reorganization of foreign corporations, see §§ 1.6046-1 through 1.6046-3, inclusive.

(l) ***Applicability date.*** Paragraph (c) of this section applies to any taxable year beginning after *October 13, 2020.* For taxable years beginning on or before *October 13, 2020,* see paragraph (c) of this section as contained in 26 CFR part 1 in effect on April 1, 2020.

[T.D. 6500, 25 FR 12108, Nov. 26, 1960]

Editorial Note: For FEDERAL REGISTER citations affecting § 1.6012-2, see the List of CFR Sections Affected, which appears in the Finding Aids section of the printed volume and at *www.govinfo.gov*.

§ 1.6012-3 Returns by fiduciaries.

(a) ***For estates and trusts*** —

(1) ***In general.*** Every fiduciary, or at least one of joint fiduciaries, must make a return of income on form 1041 (or by use of a composite return pursuant to § 1.6012-5) and attach the required form if the estate or trust has items of tax preference (as defined in section 57 and the regulations thereunder) in any amount:

(i) For each estate for which he acts if the gross income of such estate for the taxable year is $600 or more;

(ii) For each trust for which he acts, except a trust exempt under section 501(a), if such trust has for the taxable year any taxable income, or has for the taxable year gross income of $600 or more regardless of the amount of taxable income; and

(iii) For each estate and each trust for which he acts, except a trust exempt under section 501(a), regardless of the amount of income for the taxable year, if any beneficiary of such estate or trust is a nonresident alien.

(iv) For each trust electing to be taxed as, or as part of, an estate under section 645 for which a trustee acts, and for each related estate joining in a section 645 election for which an executor acts, if the aggregate gross income of the electing trust(s) and related estate, if any, joining in the election for the taxable year is $600 or more. (For the respective filing requirements of the trustee of each electing trust and executor of any related estate, see § 1.645-1).

(2) ***Wills and trust instruments.*** At the request of the Internal Revenue Service, a copy of the will or trust instrument (including any amendments), accompanied by a written declaration of the fiduciary under the penalties of perjury that it is a true and complete copy, shall be filed together with a statement by the fiduciary indicating the provisions of the will or trust instrument (including any amendments) which, in the fiduciary's opinion, determine the extent to which the income of the estate or trust is taxable to the estate or trust, the beneficiaries, or the grantor, respectively.

(3) ***Domiciliary and ancillary representatives.*** In the case of an estate required to file a return under subparagraph (1) of this paragraph, having both domiciliary and ancillary representatives, the domiciliary and ancillary representatives must each file a return on Form 1041. The domiciliary representative is required to include in the return rendered by him as such domiciliary representative the entire income of the estate. The return of the ancillary representative shall be filed with the district director for his internal revenue district and shall show the name and address of the domiciliary representative, the amount of gross income received by the ancillary representative, and the deductions to be claimed against such income, including any amount of income properly paid or credited by the ancillary representative to any legatee, heir, or other beneficiary. If the ancillary representative for the estate of a nonresident alien is a citizen or resident of the United States, and the domiciliary representative is a nonresident alien, such ancillary representative is required to render the return otherwise required of the domiciliary representative.

(4) ***Two or more trusts.*** A trustee of two or more trusts must make a separate return for each trust, even though such trusts were created by the same grantor for the same beneficiary or beneficiaries.

(5) ***Trusts with unrelated business income.*** Every fiduciary for a trust described in section 511(b)(2) which is subject to the tax imposed on its unrelated business taxable income by section 511(b)(1) shall make a return on Form 990-T for each taxable year if the trust has gross income, included in computing unrelated business taxable income for such taxable year, of $1,000 or more. The filing of a return of unrelated business income does not relieve the fiduciary of such trust from the duty of filing other required returns.

(6) ***Charitable remainder trusts.*** Every fiduciary for a charitable remainder annuity trust (as defined in § 1.664-2) or a charitable remainder unitrust (as defined in § 1.664-3) shall make a return on Form 1041-B for each taxable year of the trust even though it is nonexempt because it has unrelated business taxable income. The return on Form 1041-B shall be made in accordance with the instructions for the form and shall be filed with the designated Internal Revenue office on or before the 15th day of the fourth month following the close of the taxable year of the trust. A copy of the instrument governing the trust, accompanied by a written declaration of the fiduciary under the penalties of perjury that it is a true and complete copy, shall be attached to the return for the first taxable year of the trust.

(7) ***Certain trusts described in section 4947(a)(1).*** For taxable years beginning after December 31, 1980, in the case of a trust described in section 4947(a)(1) which has no taxable income for a taxable year, the filing requirements of section 6012 and this section shall be satisfied by the filing, pursuant to § 53.6011-1 of this chapter (Foundation Excise Tax Regulations) and § 1.6033-2(a), by the fiduciary of such trust of—

(i) Form 990-PF if such trust is treated as a private foundation, or

(ii) Form 990 if such trust is not treated as a private foundation.

When the provisions of this paragraph (a)(7) are met, the fiduciary shall not be required to file Form 1041.

(8) ***Estate and trusts liable for qualified tax.*** In the case of an estate or trust which is liable for one or more qualified State individual income taxes, as defined in section 6362, for a taxable year, see paragraph (b) of § 301.6361-1 of this chapter (Regulations on Procedure and Administration) for rules relating to returns required to be made.

(9) ***A trust any portion of which is treated as owned by the grantor or another person pursuant to sections 671 through 678.*** In the case of a trust any portion of which is treated as owned by the grantor or another person under the provisions of subpart E (section 671 and following) part I, subchapter J, chapter 1 of the Internal Revenue Code see § 1.671-4.

(10) ***Hospital organizations organized as trusts with noncompliant hospital facilities.*** Every fiduciary for a hospital organization (as defined in § 1.501(r)-1(b)(18)) organized as a trust described in section 511(b)(2) that is subject to the tax imposed by § 1.501(r)-2(d) shall make a return on Form 990-T. The filing of a return to pay the tax described in § 1.501(r)-2(d) does not relieve the organization of the duty of filing other required returns.

(b) ***For other persons*** —

(1) ***Decedents.*** The executor or administrator of the estate of a decedent, or other person charged with the property of a decedent, shall make the return of income required in respect of such decedent. For the decedent's taxable year which ends with the date of his death, the return shall cover the period during which he was alive. For the filing of returns of income for citizens and alien residents of the United States, and alien residents of Puerto Rico, see paragraph (a) of § 1.6012-1. For the filing of a joint return after death of spouse, see paragraph (d) of § 1.6013-1.

(2) ***Nonresident alien individuals*** —

(i) ***In general.*** A resident or domestic fiduciary or other person charged with the care of the person or property of a nonresident alien individual shall make a return for that individual and pay the tax unless:

(*a*) The nonresident alien individual makes a return of, and pays the tax on, his income for the taxable year,

(*b*) A responsible representative or agent in the United States of the nonresident alien individual makes a return of, and pays the tax on, the income of such alien individual for the taxable year, or

(*c*) The nonresident alien individual has appointed a person in the United States to act as his agent for the purpose of making a return of income and, if such fiduciary is required to file a Form 1041 for an estate or trust of which such alien individual is a beneficiary, such fiduciary attaches a copy of the agency appointment to his return on Form 1041.

(ii) ***Income to be returned.*** A return of income shall be required under this subparagraph only if the nonresident alien individual is otherwise required to make a return in accordance with paragraph (b) of § 1.6012-1. The provisions of that paragraph shall apply in determining the form of return to be used and the income to be returned.

(iii) ***Disallowance of deductions and credits.*** For provisions disallowing deductions and credits when a return of income has not been filed by or on behalf of a nonresident alien individual, see section 874 and the regulations thereunder.

(iv) ***Alien resident of Puerto Rico.*** This subparagraph shall not apply to the return of a nonresident alien individual who is a bona fide resident of Puerto Rico during the entire taxable year. See § 1.876-1.

(v) ***Cross reference.*** For requirements of withholding tax at source on nonresident alien individuals and of returns with respect to such withheld taxes, see §§ 1.1441-1 to 1.1465-1, inclusive.

(3) ***Persons under a disability.*** A fiduciary acting as the guardian of a minor, or as the guardian or committee of an insane person, must make the return of income required in respect of such person unless, in the case of a minor, the minor himself makes the return or causes it to be made.

(4) ***Corporations.*** A receiver, trustee in dissolution, trustee in bankruptcy, or assignee, who, by order of a court of competent jurisdiction, by operation of law or otherwise, has possession of or holds title to all or substantially all the property or business of a corporation, shall make the return of income for such corporation in the same manner and form as corporations are required to make such returns. Such return shall be filed whether or not the receiver, trustee, or assignee is operating the property or business of the corporation. A receiver in charge of only a small part of the property of a corporation, such as a receiver in mortgage foreclosure proceedings involving merely a small portion of its property, need not make the return of income. See also § 1.6041-1, relating to returns regarding information at source; §§ 1.6042-1 to 1.6042-3, inclusive, relating to returns regarding payments of dividends; §§ 1.6044-1 to 1.6044-4, inclusive, relating to returns regarding payments of patronage dividends; and §§ 1.6049-1 and 1.6049-2, relating to returns regarding certain payments of interest.

(5) ***Individuals in receivership.*** A receiver who stands in the place of an individual must make the return of income required in respect of such individual. A receiver of only part of the property of an individual need not file a return, and the individual must make his own return.

(c) ***Joint fiduciaries.*** In the case of joint fiduciaries, a return is required to be made by only one of such fiduciaries. A return made by one of joint fiduciaries shall contain a statement that the fiduciary has sufficient knowledge of the affairs of the person for whom the return is made to enable him to make the return, and that the return is, to the best of his knowledge and belief, true and correct.

(d) ***Other provisions.*** For the definition of the term “fiduciary”, see section 7701(a)(6) and the regulations thereunder. For information returns required to be made by fiduciaries under section 6041, see § 1.6041-1. As to further duties and liabilities of fiduciaries, see section 6903 and § 301.6903-1 of this chapter (Regulations on Procedure and Administration).

[T.D. 6500, 25 FR 12108, Nov. 26, 1960]

Editorial Note: For FEDERAL REGISTER citations affecting § 1.6012-3, see the List of CFR Sections Affected, which appears in the Finding Aids section of the printed volume and at *www.govinfo.gov*.

§ 1.6012-4 Miscellaneous returns.

For returns by regulated investment companies of tax on undistributed capital gain designated for special treatment under section 852(b)(3)(D), see § 1.852-9. For returns with respect to tax withheld on nonresident aliens and foreign corporations and on tax-free covenant bonds, see §§ 1.1461-1 to 1.1465-1, inclusive. For the requirement of an

annual report by persons completing a Government contract, see 26 CFR (1939) 17.16 (Treasury Decision 4906, approved June 23, 1939), and 26 CFR (1939) 16.15 (Treasury Decision 4909, approved June 28, 1939) , as made applicable to section 1471 of the 1954 Code by Treasury Decision 6091, approved August 16, 1954 (19 FR 5167, C.B. 1954-2, 47). See also § 1.1471-1.

[T.D. 7332, 39 FR 44231, Dec. 23, 1974, as amended by T.D. 9849, 84 FR 9237, Mar. 14, 2019]

Editorial Note: For the convenience of the user §§ 16.15 and 17.16 of 26 CFR (1939) are set forth below:

§ 16.15 Annual reports for income taxable years.

(a) *General requirements.* Every contracting party completing a contract or subcontract within the contracting party's income-taxable year ending after April 3, 1939 shall file with the district director of internal revenue for the internal revenue district in which the contracting party's Federal income tax returns are required to be filed an annual report on the prescribed form of the profit and excess profit on all contracts and subcontracts coming within the scope of the act and the regulations in this part and completed within the particular income-taxable year. There shall be included as a part of such a report a statement, preferably in columnar form, showing separately for each such contract or subcontract completed by the contracting party within the income-taxable year the total contract price, the cost of performing the contract or subcontract and the resulting profit or loss on each contract or subcontract together with a summary statement showing in detail the computation of the net profit or net loss upon all contracts and subcontracts completed within the income-taxable year and the amount of the excess profit, if any, for the income-taxable year covered by the report. A copy of the report made to the Secretary of the Army (see § 16.14) with respect to each contract or subcontract covered in the annual report, shall be filed as a part of such annual report. In case the income-taxable year of the contracting party is a period of less than twelve months (see § 16.1), the report required by this section shall be made for such period and not for a full year.

(b) *Time for filing annual reports.* Annual reports of contracts and subcontracts coming within the scope of the act and the regulations in this part completed by a contracting party within an income-taxable year must be filed on or before the 15th day of the ninth month following the close of the contracting party's income-taxable year. It is important that the contracting party render on or before the due date an annual report as nearly complete and final as it is possible for the contracting party to prepare. An extension of time granted the contracting party for filing its Federal income tax return does not serve to extend the time for filing the annual report required by this section. Authority consistent with authorizations for granting extensions of time for filing Federal income tax returns is hereby delegated to the various collectors of internal revenue for granting extensions of time for filing the reports required by this section. Application for extensions of time for filing such reports should be addressed to the district director of internal revenue for the district in which the contracting party files its Federal income tax returns and must contain a full recital of the causes for the delay.

§ 17.16 Annual reports for income-taxable years.

(a) *General requirements.* Every contracting party completing a contract or subcontract within the contracting party's income-taxable year ending after April 3, 1939 shall file, with the district director of internal revenue for the internal revenue district in which the contracting party's Federal income tax return is required to be filed, annual reports on the prescribed forms of the profit and excess profit on all contracts and subcontracts coming within the scope of the act. If any contracts or subcontracts so completed by the contracting party were entered into for the construction or manufacture of any complete naval vessel or any portion thereof, the

profit and excess profit on all such contracts and subcontracts completed within the income-taxable year ending after April 3, 1939 shall be computed in accordance with the provisions of § 17.6. If any contracts or subcontracts so completed by the contracting party were entered into for the construction or manufacture of any complete naval aircraft or any portion thereof, the profit and excess profit on all such contracts and subcontracts completed within the income-taxable year ending after April 3, 1939 shall be computed in accordance with the provisions of § 17.7. There shall be included as a part of the annual report a statement, preferably in columnar form, showing separately for each contract or subcontract completed by the contracting party within the income-taxable year and covered by the report, the total contract price, the cost of performing the contract or subcontract and resulting profit or loss on each contract or subcontract together with a summary statement showing in detail the computation of the net profit or net loss upon each group of contracts and subcontracts covered by the report and the amount of the excess profit, if any, with respect to each group of contracts and subcontracts covered by the report. A copy of the report made to the Secretary of the Navy (see § 17.15) with respect to each contract or subcontract covered in the annual report, shall be filed as a part of such annual report. In case the income-taxable year of the contracting party is a period of less than twelve months (see § 17.1), the reports required by this section shall be made for such period and not for a full year.

(b) *Time for filing annual reports.* Annual reports of contracts and subcontracts completed by a contracting party within an income-taxable year ending after April 3, 1939 shall be filed on or before the 15th day of the ninth month following the close of the contracting party's income-taxable year. It is important that the contracting party render on or before the due date annual reports as nearly complete and final as it is possible for the contracting party to prepare. An extension of time granted the contracting party for filing its Federal income tax return does not serve to extend the time for filing the annual reports required by this section. Authority consistent with authorizations for granting extensions of time for filing Federal income tax returns is hereby delegated to the various district directors of internal revenue for granting extensions of time for filing the reports required by this section. Application for extension of time for filing such reports should be addressed to the district director of internal revenue for the district in which the contracting party files its Federal income tax returns and must contain a full recital of the causes for the delay.

§ 1.6012-5 Composite return in lieu of specified form.

The Commissioner may authorize the use, at the option of a person required to make a return, of a composite return in lieu of any form specified in this part for use by such a person, subject to such conditions, limitations, and special rules governing the preparation, execution, filing, and correction thereof as the Commissioner may deem appropriate. Such composite return shall consist of a form prescribed by the Commissioner and an attachment or attachments of magnetic tape or other approved media. Notwithstanding any provisions in this part to the contrary, a single form and attachment may comprise the returns of more than one such person. To the extent that the use of a composite return has been authorized by the Commissioner, references in this part to a specific form for use by such a person shall be deemed to refer also to a composite return under this section.

[T.D. 7200, 37 FR 16544, Aug. 16, 1972]

§ 1.6012-6 Returns by political organizations.

(a) ***Requirement of return*** —

(1) ***In general.*** For taxable years beginning after December 31, 1974, every political organization described in section 527(e)(1), and every fund described in section 527(f)(3) or section 527(g), and every organization described in section 501(c) and exempt from taxation under section 501(a) shall, if a tax is imposed on such an organization or fund by section 527(b), make a return of income on or before the fifteenth day of the fourth month following the close of the taxable year.

(2) ***Taxable years beginning after December 31, 1971, and before January 1, 1975.*** For taxable years beginning after December 31, 1971, and before January 1, 1975, any political organization which would be described in section 527(e)(1) if such section applied to such years shall not be required to make a return if such organization would not be required to make a return under paragraph (a)(1) of this section.

(b) ***Form of return.*** The return required by an organization or fund upon which a tax is imposed by section 527(b) shall be made on Form 1120-POL.

(c) ***Applicability date.*** This section applies to returns filed on or after January 30, 2020. Section 1.6012-6T (as contained in 26 CFR part 1, revised April 2019) applies to returns filed before January 30, 2020.

[T.D. 7516, 42 FR 57312, Nov. 2, 1977; 43 FR 2721, Jan. 19, 1978; T.D. 9821, 82 FR 33444, July 20, 2017; T.D. 9892, 85 FR 5324, Jan. 30, 2020]

§ 1.6013-1 Joint returns.

(a) ***In general.***

(1) A husband and wife may elect to make a joint return under section 6013(a) even though one of the spouses has no gross income or deductions. For rules for determining whether individuals occupy the status of husband and wife for purposes of filing a joint return, see paragraph (a) of § 1.6013-4. For any taxable year with respect to which a joint return has been filed, separate returns shall not be made by the spouses after the time for filing the return of either has expired. See, however, paragraph (d)(5) of this section for the right of an executor to file a late separate return for a deceased spouse and thereby disaffirm a timely joint return made by the surviving spouse.

(2) A joint return of a husband and wife (if not made by an agent of one or both spouses) shall be signed by both spouses. The provisions of paragraph (a)(5) of § 1.6012-1, relating to returns made by agents, shall apply where one spouse signs a return as agent for the other, or where a third party signs a return as agent for one or both spouses.

(b) ***Nonresident alien.*** A joint return shall not be made if either the husband or wife at any time during the taxable year is a nonresident alien, unless an election is in effect for the taxable year under section 6013 (g) or (h) and the regulations thereunder.

(c) ***Different taxable years.*** Except as otherwise provided in this section, a husband and wife shall not file a joint return if they have different taxable years.

(d) ***Joint return after death.***

(1) Section 6013(a)(2) provides that a joint return may be made for the survivor and the deceased spouse or for both deceased spouses if the taxable years of such spouses begin on the same day and end on different days only because of the death of either or both. Thus, if a husband and wife make this return on a calendar year basis, and the wife dies on August 1, 1956, a joint return may be made with respect to the calendar year 1956 of the husband and the taxable year of the wife

beginning on January 1, 1956, and ending with her death on August 1, 1956. Similarly, if husband and wife both make their returns on the basis of a fiscal year beginning on July 1 and the wife dies on October 1, 1956, a joint return may be made with respect to the fiscal year of the husband beginning on July 1, 1956, and ending on June 30, 1957, and with respect to the taxable year of the wife beginning on July 1, 1956, and ending with her death on October 1, 1956.

(2) The provision allowing a joint return to be made for the taxable year in which the death of either or both spouses occurs is subject to two limitations. The first limitation is that if the surviving spouse remarries before the close of his taxable year, he shall not make a joint return with the first spouse who died during the taxable year. In such a case, however, the surviving spouse may make a joint return with his new spouse provided the other requirements with respect to the filing of a joint return are met. The second limitation is that the surviving spouse shall not make a joint return with the deceased spouse if the taxable year of either spouse is a fractional part of a year under section 443(a)(1) resulting from a change of accounting period. For example, if a husband and wife make their returns on the calendar year basis and the wife dies on March 1, 1956, and thereafter the husband receives permission to change his annual accounting period to a fiscal year beginning July 1, 1956, no joint return shall be made for the short taxable year ending June 30, 1956. Similarly, if a husband and wife who make their returns on a calendar year basis receive permission to change to a fiscal year beginning July 1, 1956, and the wife dies on June 1, 1956, no joint return shall be made for the short taxable year ending June 30, 1956.

(3) Section 6013(a)(3) provides for the method of making a joint return in the case of the death of one spouse or both spouses. The general rule is that, in the case of the death of one spouse, or of both spouses, the joint return with respect to the decedent may be made only by his executor or administrator, as defined in paragraph (c) of § 1.6013-4. An exception is made to this general rule whereby, in the case of the death of one spouse, the joint return may be made by the surviving spouse with respect to both him and the decedent if all the following conditions exist:

(i) No return has been made by the decedent for the taxable year in respect of which the joint return is made;

(ii) No executor or administrator has been appointed at or before the time of making such joint return; and

(iii) No executor or administrator is appointed before the last day prescribed by law for filing the return of the surviving spouse.

These conditions are to be applied with respect to the return for each of the taxable years of the decedent for which a joint return may be made if more than one such taxable year is involved. Thus, in the case of husband and wife on the calendar year basis, if the wife dies in February 1957, a joint return for the husband and wife for 1956 may be made if the conditions set forth in this subparagraph are satisfied with respect to such return. A joint return also may be made by the survivor for both himself and the deceased spouse for the calendar year 1957 if it is separately determined that the conditions set forth in this subparagraph are satisfied with respect to the return for such year. If, however, the deceased spouse should, prior to her death, make a return for 1956, the surviving spouse may not thereafter make a joint return for himself and the deceased spouse for 1956.

(4) If an executor or administrator is appointed at or before the time of making the joint return or before the last day prescribed by law for filing the return of the surviving spouse, the surviving spouse cannot make a joint return for himself and the deceased spouse whether or not a separate return for

the deceased spouse is made by such executor or administrator. In such a case, any return made solely by the surviving spouse shall be treated as his separate return. The joint return, if one is to be made, must be made by both the surviving spouse and the executor or administrator. In determining whether an executor or administrator is appointed before the last day prescribed by law for filing the return of the surviving spouse, an extension of time for making the return is included.

(5) If the surviving spouse makes the joint return provided for in subparagraph (3) of this paragraph and thereafter an executor or administrator of the decedent is appointed, the executor or administrator may disaffirm such joint return. This disaffirmance, in order to be effective, must be made within one year after the last day prescribed by law for filing the return of the surviving spouse (including any extension of time for filing such return) and must be made in the form of a separate return for the taxable year of the decedent with respect to which the joint return was made. In the event of such proper disaffirmance the return made by the survivor shall constitute his separate return, that is, the joint return made by him shall be treated as his return and the tax thereon shall be computed by excluding all items properly includible in the return of the deceased spouse. The separate return made by the executor or administrator shall constitute the return of the deceased spouse for the taxable year.

(6) The time allowed the executor or administrator to disaffirm the joint return by the making of a separate return does not establish a new due date for the return of the deceased spouse. Accordingly, the provisions of sections 6651 and 6601, relating to delinquent returns and delinquency in payment of tax, are applicable to such return made by the executor in disaffirmance of the joint return.

(e) ***Return of surviving spouse treated as joint return.*** For provisions relating to the treatment of the return of a surviving spouse as a joint return for each of the next two taxable years following the year of the death of the spouse, see section 2 and § 1.2-2.

[T.D. 6500, 25 FR 12108, Nov. 26, 1960, as amended by T.D. 7274, 38 FR 11345, May 7, 1973; T.D. 7670, 45 FR 6929, Jan. 31, 1980]

§ 1.6013-2 Joint return after filing separate return.

(a) ***In general.***

(1) Where an individual has filed a separate return for a taxable year for which a joint return could have been made by him and his spouse under section 6013(a), and the time prescribed by law for filing the return for such taxable year has expired, such individual and his spouse may, under conditions hereinafter set forth, make a joint return for such taxable year. The joint return filed pursuant to section 6013(b) shall constitute the return of the husband and wife for such year, and all payments, credits, refunds, or other repayments, made or allowed with respect to the separate return of either spouse are to be taken into account in determining the extent to which the tax based on the joint return has been paid.

(2) If a joint return is made under section 6013(b), any election, other than the election to file a separate return, made by either spouse in his separate return for the taxable year with respect to the treatment of any income, deduction, or credit of such spouse shall not be changed in the making of the joint return where such election would have been irrevocable if the joint return had not been made. Thus, if one spouse has made an irrevocable election to adopt and use the last-in, first-out inventory method under section 472, this election may not be changed upon making the joint return under section 6013(b).

(3) A joint return made under section 6013(b) after the death of either spouse shall, with respect to the decedent, be made only by his executor or administrator. Thus, where no executor or administrator has been appointed, a joint return cannot be made under section 6013(b).

(4) A nonresidential alien treated as a resident under section 6013 (g) or (h) for any taxable year ending on or after December 31, 1975, and the alien's U.S. citizen or resident spouse may file a joint return for that taxable year, even though one or both of the spouses have previously filed separate returns for that taxable year. In this case, the rule in paragraph (a)(3) of this section does not apply.

(b) ***Limitations with respect to making of election.*** A joint return shall not be made under section 6013(b)(1) with respect to a taxable year:

(1) Beginning on or before July 30, 1996, unless there is paid in full at or before the time of the filing of the joint return the amount shown as tax upon such joint return; or

(2) After the expiration of three years from the last day prescribed by law for filing the return for such taxable year determined without regard to any extension of time granted to either spouse; or

(3) After there has been mailed to either spouse, with respect to such taxable year, a notice of deficiency under section 6212, if the spouse, as to such notice, files a petition with the Tax Court of the United States within the time prescribed in section 6213; or

(4) After either spouse has commenced a suit in any court for the recovery of any part of the tax for such taxable year; or

(5) After either spouse has entered into a closing agreement under section 7121 with respect to such taxable year, or after any civil or criminal case arising against either spouse with respect to such taxable year has been compromised under section 7122.

(c) ***When return deemed filed; assessment and collection; credit or refund.***

(1) For the purpose of section 6501, relating to the period of limitations upon assessment and collection, and section 6651, relating to delinquent returns, a joint return made under section 6013(b) shall be deemed to have been filed, giving due regard to any extension of time granted to either spouse, on the following date:

(i) Where both spouses filed separate returns, prior to making the joint return under section 6013(b), on the date the last separate return of either spouse was filed for the taxable year, but not earlier than the last date prescribed by law for the filing of the return of either spouse;

(ii) Where only one spouse was required and did file a return prior to the making of the joint return under section 6013(b), on the date of the filing of the separate return, but not earlier than the last day prescribed by law for the filing of such return; or

(iii) Where both spouses were required to file a return, but only one spouse did so file, on the date of the filing of the joint return under section 6013(b).

(2) For the purpose of section 6511, relating to refunds and credits, a joint return made under section 6013(b) shall be deemed to have been filed on the last date prescribed by law for filing the return for such taxable year, determined without regard to any extension of time granted to either spouse for filing the return or paying the tax.

(d) ***Additional time for assessment.*** In the case of a joint return made under section 6013(b), the period of limitations provided in sections 6501 and 6502 shall not be less than one year after the date of the actual filing of such joint return. The expiration of the one year is to be determined without regard to the rules provided in paragraph (c)(1) of this section, relating to the application of sections 6501 and 6651 with respect to a joint return made under section 6013(b).

(e) ***Additions to the tax and penalties.***

(1) Where the amount shown as the tax by the husband and wife on a joint return made under section 6013(b) exceeds the aggregate of the amounts shown as tax on the separate return of each spouse, and such excess is attributable to negligence, intentional disregard of rules and regulations, or fraud at the time of the making of such separate return, there shall be assessed, collected, and paid in the same manner as if it were a deficiency an additional amount as provided by the following:

(i) If any part of such excess is attributable to negligence, or intentional disregard of rules and regulations, at the time of the making of such separate return, but without any intent to defraud, this additional amount shall be 5 percent of the total amount of the excess.

(ii) If any part of such excess is attributable to fraud with intent to evade tax at the time of the making of such separate return, this additional amount shall be 50 percent of the total amount of the excess. The latter addition is in lieu of the 50 percent addition to the tax provided in section 6653(b).

(2) For purposes of section 7206 (1) and (2) and section 7207 (relating to criminal penalties in the case of fraudulent returns), the term “return” includes a separate return filed by a spouse with respect to a taxable year for which a joint return is made under section 6013(b) after the filing of a separate return.

[T.D. 6500, 25 FR 12108, Nov. 26, 1960, as amended by T.D. 7670, 45 FR 6929, Jan. 31, 1980; T.D. 8725, 62 FR 39117, July 22, 1997]

§ 1.6013-3 Treatment of joint return after death of either spouse.

For purposes of section 21 (relating to change in rates during a taxable year), section 443 (relating to returns for a period of less than 12 months), and section 7851(a)(1)(A) (relating to the applicability of certain provisions of the Internal Revenue Code of 1954 and the Internal Revenue Code of 1939), where the husband and wife have different taxable years because of death of either spouse, the joint return shall be treated as if the taxable years of both ended on the date of the closing of the surviving spouse's taxable year. Thus, in cases where the Internal Revenue Code of 1939 otherwise would apply to the taxable year of the decedent spouse and the Internal Revenue Code of 1954 would apply to the taxable year of the surviving spouse, this provision makes the Internal Revenue Code of 1954 applicable to the taxable years of both spouses if a joint return is filed.

§ 1.6013-4 Applicable rules.

(a) ***Status as husband and wife.*** For the purpose of filing a joint return under section 6013, the status as husband and wife of two individuals having taxable years beginning on the same day shall be determined:

(1) If the taxable year of each individual is the same, as of the close of such year; and

(2) If the close of the taxable year is different by reason of the death of one spouse, as of the time of such death.

An individual legally separated from his spouse under a decree of divorce or of separate maintenance shall not be considered as married. However, the mere fact that spouses have not lived together during the course of the taxable year shall not prohibit them from making a joint return. A husband and wife who are separated under an interlocutory decree of divorce retain the relationship of husband and wife until the decree becomes final. The fact that the taxpayer and his spouse are divorced or legally separated at any time after the close of the taxable year shall not deprive them of their right to file a joint return for such taxable year under section 6013.

(b) ***Computation of income, deductions, and tax.*** If a joint return is made, the gross income and adjusted gross income of husband and wife on the joint return are computed in an aggregate amount and the deductions allowed and the taxable income are likewise computed on an aggregate basis. Deductions limited to a percentage of the adjusted gross income, such as the deduction for charitable, etc., contributions and gifts, under section 170, will be allowed with reference to such aggregate adjusted gross income. A similar rule is applied in the case of the limitation of section 1211(b) on the allowance of losses resulting from the sale or exchange of capital assets (see § 1.1211-1). Although there are two taxpayers on a joint return, there is only one taxable income. The tax on the joint return shall be computed on the aggregate income and the liability with respect to the tax shall be joint and several. For computation of tax in the case of a joint return, see § 1.2-1. For tax in the case of a joint return of husband and wife electing to pay the optional tax under section 3, see § 1.3-1. For the election not to show on a joint return the amount of tax due in connection therewith, see paragraph (c) of § 1.6014-1 and paragraph (d) of § 1.6014-2. For separate computations of the self-employment tax of each spouse on a joint return, see paragraph (b) of § 1.6017-1.

(c) ***Definition of executor or administrator.*** For purposes of section 6013 the term "executor or administrator" means the person who is actually appointed to such office and not a person who is merely in charge of the property of the decedent.

(d) ***Return signed under duress.*** If an individual asserts and establishes that he or she signed a return under duress, the return is not a joint return. The individual who signed such return under duress is not jointly and severally liable for the tax shown on the return or any deficiency in tax with respect to the return. The return is adjusted to reflect only the tax liability of the individual who voluntarily signed the return, and the liability is determined at the applicable rates in section 1(d) for married individuals filing separate returns. Section 6212 applies to the assessment of any deficiency in tax on such return.

[T.D. 6500, 25 FR 12108, Nov. 26, 1960, as amended by T.D. 7102, 36 FR 5497, Mar. 24, 1971; T.D. 9003, 67 FR 47285, July 18, 2002]

§ 1.6013-6 Election to treat nonresident alien individual as resident of the United States.

(a) ***Election for special treatment*** —

(1) ***In general.*** Two individuals who are husband and wife at the close of a taxable year ending on or after December 31, 1975, may make an election under this section for that taxable year if, at the close of that year, one spouse is a citizen or resident of the United States and the other spouse is a nonresident alien. The effect of the election is that each spouse is treated as a resident of the United States for purposes of chapters 1, 5, and 24 and sections 6012, 6013, 6072, and 6091 of the Code for the entire taxable year. An election made under this section is in effect for the taxable year for which made and for all subsequent years of the husband and wife, except:

(i) Any taxable year for which the election is suspended, as described in paragraph (a)(3) of this section, and

(ii) Any taxable year for which the election is terminated in accordance with paragraph (b) of this section and all subsequent taxable years.

A husband and wife may not make an election if an election previously made under this section by either spouse has been terminated under paragraph (b) of this section.

(2) ***Particular rules.***

(i) As used in paragraph (a)(3) of this section, the term "U.S. spouse" means any married individual who is a citizen or resident of the United States at any time during a taxable year.

(ii) An individual's residence is determined by application of the principles of §§ 301.7701(b)-1 through 301.7701(b)-9 of this chapter relating to what constitutes residence in the United States by an alien individual.

(iii) Whether two individuals are married at the close of a taxable year is determined by application of the rules in § 1.6013-4(a).

(iv) The provisions of section 879 and the regulations thereunder shall not apply for any taxable year for which an election under this section is in effect.

(v) An individual who makes an election under this section may not, for United States income tax purposes, claim under any United States income tax treaty not to be a U.S. resident. The relationship of U.S. income tax treaties and the election under this section is illustrated by the following example.

Example. H, a U.S. citizen, is married to W, a nonresident alien of the United States and a domiciliary of country X. H and W maintain their only permanent home in country X. W receives both U.S. source and country X source interest during the taxable year. The interest is not effectively connected with a permanent establishment or a fixed base in any country. H and W make the section 6013 (g) election. Under article ii (1) of the United States—country X Income Tax Convention interest derived and beneficially owned by a resident of one contracting state is exempt from tax in the other contracting state. Article 4 (1) of the treaty provides that an individual is a resident of a contracting state if subject to tax in that country by reason of the individual's domicile, residence, or citizenship. Under article 4 (1) of the treaty, W is a resident of country X by virtue of her domicile in country X and also of the United States by virtue of the section 6013 (g) election. Article 4 (2) of the treaty provides that if an individual is a resident of both the United States and country X by reason of article 4 (1), the individual shall be deemed to be a resident of the contracting state in which he or she has a permanent home available. Because W's sole permanent home is in country X, under article 4 (2) of the treaty W is treated as a resident of country X for purposes of the treaty. Because W has elected under section 6013(g) to be treated as a U.S. resident (and thus to be taxed on worldwide income), W may not, for U.S. income tax purposes, claim under the treaty not to be a U.S. resident. W, therefore, is subject to U.S. income tax on the interest. For purposes of country X income tax, W is considered a resident of country X under the treaty.

(3) ***Suspension of election.***

(i) An election made under this section is suspended and is not in effect for a taxable year subsequent to the first taxable year for which made if neither spouse is a U.S. spouse during that subsequent taxable year. Thus, for example, the election is in suspense if both spouses are nonresident aliens for the entire taxable year.

(ii) If either spouse dies during any taxable year for which the election under this section is in effect, other than the first taxable year for which the election is to be in effect, the taxable year shall include, solely for purposes of this paragraph (a)(3), only those days during the taxable year on which both spouses are alive. Thus, for example, if the U.S. spouse dies during the taxable year, the election is not suspended for that year even if the surviving nonresident alien spouse never acquires U.S. citizenship or residency. Similarly, if the nonresident alien spouse dies during the taxable year, the election is not suspended for that year even if the surviving U.S. spouse subsequently abandons U.S. citizenship or residency. However, if neither spouse was a U.S. spouse at any time during the period of the taxable year when both spouses were alive, the election is suspended for that year even if the surviving spouse subsequently acquires U.S. citizenship or residency.

For the effect of the death of either spouse on the status of the election in subsequent taxable years, see paragraph (b)(2) of this section.

(4) ***Time and manner of making an election.***

(i) A husband and wife shall make the election under this section by attaching a statement to a joint return for the first taxable year for which the election is to be in effect. The election must be made before the expiration of the period prescribed by section 6511(a) (or section 6511(c) if the period is extended by agreement) for making a claim for credit or refund. If either or both spouses die after the close of the taxable year but before the joint return is filed, the election may be made by the executor, administrator, or other person charged with the property of the deceased spouse. If the election is made with a joint amended return, the amended return should be made on Form 1040 or 1040A, the word “Amended” should be written clearly on the front of the return, and an amended return also must be filed for each subsequent taxable year as to which a return previously has been filed by either spouse.

(ii) The statement must contain a declaration that the election is being made and that the requirements of paragraph (a)(1) of this section are met for the taxable year. The statement must also contain the name, address, and taxpayer identifying number of each spouse. If the election is being made on behalf of a deceased spouse, the statement must contain the name and address of the executor, administrator, or other person making the election on behalf of the decreased spouse. The statement must be signed by both persons making the election.

(b) ***Termination of election*** —

(1) ***Revocation.***

(i) An election under this section shall terminate if either spouse revokes the election. An election that is revoked terminates as of the first taxable year for which the last day prescribed by section 6072(a) and 6081(a) for filing the return of tax has not yet occurred.

(ii) Revocation of the election is made by filing a statement of revocation in the following manner. If the spouse revoking the election is required to file a return under section 6012, the statement is filed by attaching it to the return for the first taxable year to which the revocation applies. If the spouse revoking the election is not required to file a return under section 6012, but files a claim for refund under section 6511, the statement is filed by attaching it to the claim for refund. If the spouse revoking the election is not required to file a return and does not file a claim for refund, the statement is filed by submitting it to the service center director with whom was filed the most recent joint return of the spouses. The revocation may, if the revoking spouse dies

after the close of the first taxable year to which the revocation applies but before the return, claim for refund, or statement of revocation is filed, be made by the executor, administrator or other person charged with the property of the deceased spouse.

(iii) A revocation of the election is effective as of a particular taxable year if it is filed on or before the last day prescribed by section 6072(a) and 6081(a) for filing the return of tax for that taxable year. However, the revocation is not final until that last day.

(iv) The statement of revocation must contain a declaration that the election under this section is being revoked. The statement must also contain the name, address, and taxpayer identifying number of each spouse. If the revocation is being made on behalf of a deceased spouse, the statement must contain the name and address of the executor, administrator, or other person revoking the election on behalf of the deceased spouse. The statement must also include a list of the States, foreign countries, and possessions of the United States which have community property laws and in which:

(A) Each spouse is domiciled, or

(B) real property is located from which either of the spouses receives income.

The statement must be signed by the person revoking the election.

(2) ***Death.*** An election under this section shall terminate if either spouse dies. An election that terminates on account of death terminates as of the first taxable year of the surviving spouse following the taxable year in which the death occurred. However, if the surviving spouse is a citizen or resident of the United States who is entitled to the benefits of section 2, the election terminates as of the first taxable year following the last taxable year for which the surviving spouse is entitled to the benefits of section 2. If both spouses die within the same taxable year, the election terminates as of the first day after the close of the taxable year in which the deaths occurred.

(3) ***Legal separation.*** An election under this section terminates if the spouses legally separate under a degree of divorce or of separate maintenance. An election that terminates on account of legal separation terminates as of the close of the taxable year preceding the taxable year in which the separation occurs. The rules in § 1.6013-4(a) are relevant in determining whether two spouses are legally separated.

(4) ***Inadequate records.*** An election under this section may be terminated by the Commissioner if it is determined that either spouse has failed to keep adequate records. An election that is terminated on account of inadequate records terminates as of the close of the taxable year preceding the taxable year for which the Commissioner determines that the election should be terminated. Adequate records are the books, records, and other information reasonably necessary to ascertain the amount of liability for taxes under chapters 1, 5, and 24 of the code of either spouse for the taxable year. Adequate records also includes the granting of access to the books and records.

(c) ***Illustrations.*** The application of this section is illustrated by the following examples. In each case the individual's taxable year is the calendar year and the spouses are not legally separated.

Example 1. W, a U.S. citizen for the entire taxable year 1979, is married to H, a nonresident alien individual. W and H may make the section 6013(g) election for 1979 by filing the statement of election with a joint return. If W and H make the election, income from sources within and without the United States received

by W and H in 1979 and subsequent years must be included in gross income for each taxable year unless the election later is terminated or suspended. While W and H must file a joint return for 1979, joint or separate returns may be filed for subsequent years.

Example 2. H and W are husband and wife and are both nonresident alien individuals. In June 1980 H becomes a U.S. resident and remains a resident for the balance of the year. H and W may make the section 6013(g) election for 1980. If H and W make the election, income from sources within and without the United States received by H and W for the entire taxable year 1980 and subsequent years must be included in gross income for each taxable year, unless the election later is terminated or suspended.

Example 3. W, a U.S. resident on December 31, 1981, is married to H, a nonresident alien. W and H make the section 6013(g) election and file joint returns for 1981 and succeeding years. On January 10, 1987, W becomes a nonresident alien. H has remained a nonresident alien. W and H may file a joint return or separate returns for 1987. As neither W or H is a U.S. resident at any time during 1988, their election is suspended for 1988. If W and H have U.S. source or foreign source income effectively connected with the conduct of a U.S. trade or business in 1988, they must file separate returns as nonresident aliens. W becomes a U.S. resident again on January 5, 1990. Their election no longer is in suspense. Income from sources within and without the United States received by W or H in the years their election is not suspended must be included in gross income for each taxable year.

Example 4. H, a U.S. citizen for the entire taxable year 1979, is married to W, who is not a U.S. citizen. While W believes that she is a U.S. resident, H and W make the section 6013(g) election for 1979 to cover the possibility that later it would be determined that she is a nonresident alien during 1979. The election for 1979 will not be considered evidence that W was a nonresident alien in prior years. Income from sources within and without the United States received by H and W in 1979 and subsequent years must be included in gross income for each taxable year, unless the election later is terminated or suspended.

[T.D. 7670, 45 FR 6929, Jan. 31, 1980, as amended by T.D. 7842, 47 FR 49842, Nov. 3, 1982; T.D. 8411, 57 FR 15241, Apr. 27, 1992]

§ 1.6013-7 Joint return for year in which nonresident alien becomes resident of the United States.

(a) ***Election for special treatment*** —

(1) ***In general.*** Two individuals who are husband and wife at the close of a taxable year ending on or after December 31, 1975, may make an election under this section for that taxable year if one spouse is a citizen or resident of the United States on the last day of that taxable year and the other spouse is a nonresident alien at the beginning of that taxable year and a citizen or resident of the United States at the close of that taxable year. Two married individuals who are nonresident aliens at the beginning of a taxable year and who are U.S. citizens or residents on the last day of that taxable year qualify for the election. The effect of the election is that each spouse is treated as a resident of the United States for purposes of chapters 1, 5, and 24 and sections 6012, 6013, 6072, and 6091 of the code for all of that taxable year. A husband and wife may not make an election if an election has previously been made under this section by either spouse.

(2) ***Particular rules.*** The rules in subdivisions (ii) through (v) of § 1.6013-6(a)(2) are applicable to this section.

(3) ***Time and manner of making an election.*** A husband and wife shall make the election under this section in accordance with the rules in § 1.6013-6(a)(4).

(b) ***Section 6013(g) election in effect.*** If an election under section 6013(g) is in effect for a year subsequent to the first taxable year for which made and during that subsequent year the husband and wife meet the requirements of section 6013(h) and paragraph (a)(1) of this section, then the election under section 6013(g) shall apply to that subsequent taxable year. A separate election under section 6013(h) is not required for that subsequent taxable year.

[T.D. 7670, 45 FR 6931, Jan. 31, 1980]

§ 1.6014-1 Tax not computed by taxpayer for taxable years beginning before January 1, 1970.

(a) ***In general.*** If an individual is entitled under paragraph (a)(7) of § 1.6012-1 to use as his return Form 1040A, he may elect not to show thereon the amount of the tax due in connection with such return if his gross income is less than $5,000.

(b) ***Computation and payment of tax.*** A taxpayer who, in accordance with paragraph (a) of this section, elects not to show the tax on Form 1040A is not required to pay the unpaid balance of such tax at the time he files the return. In such case, the tax will be computed for the taxpayer by the Internal Revenue Service, and a notice will be mailed to the taxpayer stating the amount of tax due. Where it is determined that a refund of tax is due, the Internal Revenue Service will send such refund to the taxpayer. See paragraph (c) of § 301.6402-3 of this chapter (Regulations on Procedure and Administration).

(c) ***Joint return.***

(1) A husband and wife who, pursuant to paragraph (a)(7) of § 1.6012-1, file a joint return on Form 1040A may elect not to show the tax on such return if their aggregate gross income for the taxable year is less than $5,000.

(2) The tax computed for the taxpayer who files Form 1040A and elects not to show thereon the tax due shall be the lesser of the following amounts:

(i) A tax computed as though the return on Form 1040A constituted the separate returns of the spouses, or

(ii) A tax computed as though the return on Form 1040A constituted a joint return.

(d) ***Married individuals filing separate returns.*** In the case of a married individual who files a separate return and who elects under this section not to show his tax on Form 1040A his tax shall be computed with reference to the 10-percent standard deduction rather than the minimum standard deduction.

(e) This section shall apply to taxable years beginning before January 1, 1970.

[T.D. 6500, 25 FR 12108, Nov. 26, 1960, as amended by T.D. 6581, 26 FR 11678, Dec. 6, 1961; T.D. 6792, 30 FR 531, Jan. 15, 1965; T.D. 7102, 36 FR 5497, Mar. 24, 1971]

§ 1.6014-2 Tax not computed by taxpayer for taxable years beginning after December 31, 1969.

(a) ***In general.*** An individual subject to the tax imposed by section 1 of the Code may, in accordance with the instructions applicable to the income tax return to be filed, elect, for any taxable year beginning after December 31, 1969, not to show on his income tax return for such year the amount of tax due in connection with such return.

(b) ***Restriction on making an election.*** The election pursuant to this section shall not be made by an individual who does not file his return (or amended return) making such election on or before the date prescribed in section 6072(a) for the filing of the original return (determined without regard to any extension of time).

(c) ***Effects of election.***

(1) A taxpayer who, in accordance with the provisions of this section, elects not to show the tax on his income tax return is not required to pay the unpaid balance of such tax at the time he files the return. In such case, the tax will be computed for the taxpayer by the Internal Revenue Service, and a notice will be mailed to the taxpayer stating the amount of tax due. Where it is determined that a refund of tax is due, the Internal Revenue Service will send such refund to the taxpayer. See paragraph (c) of § 301.6402-3 of this chapter (Regulations on Procedure and Administration). The computation of tax by the Internal Revenue Service shall be treated for purposes of this chapter as if made by the taxpayer, and such computation or the issuance of a notice or refund pursuant thereto shall not relieve the taxpayer of liability for any deficiency (although the deficiency is based upon an amount of tax different from that computed for the taxpayer by the Internal Revenue Service) or affect the rights of the Internal Revenue Service with respect to any subsequent audit or other review of the taxpayer's return.

(2) Where the election provided for in this section is made by a taxpayer who takes the standard deduction and who has adjusted gross income of less than $10,000, such election constitutes an election to pay the tax imposed by section 3.

(3) A taxpayer who makes an election under section 6014 shall not be precluded from claiming:

(i) Status as a head of household or a surviving spouse;

(ii) The credit under section 31 (relating to tax withheld on wages);

(iii) The credit under section 37 (relating to retirement income);

(iv) The credit under section 38 (relating to investment in certain depreciable property);

(v) The credit under section 39 (relating to certain uses of gasoline and lubricating oil);

(vi) The credit under section 41 (relating to contributions to candidates for public office);

(vii) The credit under section 42 (relating to personal exemptions);

(viii) The credit under section 43 (relating to earned income);

(ix) The credit under section 44 (relating to purchase of new principal residence); or

(x) The credit under section 45 (relating to overpayments of tax).

(d) ***Joint returns.***

(1) A husband and wife who file a joint return may elect not to show the tax on such return in accordance with the rules prescribed in paragraphs (a) and (b) of this section.

(2) The tax computed for a husband and wife who elect pursuant to this section not to show their tax on their joint income tax return shall be the lesser of the following amounts:

(i) A tax computed as though the return of income constituted a joint return, or

(ii) If sufficient information is provided for the taxable income of each spouse to be determined, a tax computed as though the return of income constituted the separate returns of the spouses.

(e) ***Married individuals filing separate returns.*** This section shall apply to married individuals filing separate returns unless otherwise provided in the instructions accompanying a return. The instructions may require the taxpayer to attach to his return a statement to the effect that his tax and the tax of his spouse were determined in accordance with the rules of sections 141(d) and 142(a).

(f) ***Revocation of election.*** An election pursuant to this section may be revoked on an amended return (whether such return is filed before or after the date prescribed in section 6072(a) for filing the original return).

[T.D. 7102, 36 FR 5497, Mar. 24, 1971, as amended by T.D. 7298, 38 FR 35234, Dec. 26, 1973; T.D. 7391, 40 FR 55856, Dec. 2, 1975]

§ 1.6015-0 Table of contents.

This section lists captions contained in §§ 1.6015-1 through 1.6015-9.

§ 1.6015-1 Relief from joint and several liability on a joint return.

(a) In general.

(b) Duress.

(c) Prior closing agreement or offer in compromise.

(1) In general.

(2) Exception for agreements relating to TEFRA partnership proceedings.

(3) Examples.

(d) Fraudulent scheme.

(e) Res judicata and collateral estoppel.

(f) Community property laws.

(1) In general.

(2) Example.

(g) Scope of this section and §§ 1.6015-2 through 1.6015-9.

(h) Definitions.

(1) Requesting spouse.

(2) Nonrequesting spouse.

(3) Item.

(4) Erroneous item.

(5) Election or request.

(i) [Reserved]

(j) Transferee liability.

(1) In general.

(2) Example.

§ 1.6015-2 Relief from liability applicable to all qualifying joint filers.

(a) In general.

(b) Understatement.

(c) Knowledge or reason to know.

(d) Inequity.

(e) Partial relief.

(1) In general.

(2) Example.

§ 1.6015-3 Allocation of liability for individuals who are no longer married, are legally separated, or are not members of the same household.

(a) Election to allocate liability.

(b) Definitions.

(1) Divorced.

(2) Legally separated.

(3) Members of the same household.

(i) Temporary absences.

(ii) Separate dwellings.

(c) Limitations.

(1) No refunds.

(2) Actual knowledge.

(i) In general.

(A) Omitted income.

(B) Deduction or credit.

(*1*) Erroneous deductions in general.

(*2*) Fictitious or inflated deduction.

(ii) Partial knowledge.

(iii) Knowledge of the source not sufficient.

(iv) Factors supporting actual knowledge.

(v) Abuse exception.

(3) Disqualified asset transfers.

(i) In general.

(ii) Disqualified asset defined.

(iii) Presumption.

(4) Examples.

(d) Allocation.

(1) In general.

(2) Allocation of erroneous items.

(i) Benefit on the return.

(ii) Fraud.

(iii) Erroneous items of income.

(iv) Erroneous deduction items.

(3) Burden of proof.

(4) General allocation method.

(i) Proportionate allocation.

(ii) Separate treatment items.

(iii) Child's liability.

(iv) Allocation of certain items.

(A) Alternative minimum tax.

(B) Accuracy-related and fraud penalties.

(5) Examples.

(6) Alternative allocation methods.

(i) Allocation based on applicable tax rates.

(ii) Allocation methods provided in subsequent published guidance.

(iii) Example.

§ 1.6015-4 Equitable relief.

§ 1.6015-5 Time and manner for requesting relief.

(a) Requesting relief.

(b) Time period for filing a request for relief.

(1) In general.

(2) Definitions.

(i) Collection activity.

(ii) Section 6330 notice.

(3) Requests for relief made before commencement of collection activity.

(4) Examples.

(5) Premature requests for relief.

(c) Effect of a final administrative determination.

§ 1.6015-6 Nonrequesting spouse's notice and opportunity to participate in administrative proceedings.

(a) In general.

(b) Information submitted.

(c) Effect of opportunity to participate.

(2) Waiver of the restrictions on collection.

§ 1.6015-7 Tax Court review.

(a) In general.

(b) Time period for petitioning the Tax Court.

(c) Restrictions on collection and suspension of the running of the period of limitations.

(1) Restrictions on collection under § 1.6015-2 or 1.6015-3.

(2) Waiver of the restrictions on collection.

(3) Suspension of the running of the period of limitations.

(i) Relief under § 1.6015-2 or 1.6015-3.

(ii) Relief under § 1.6015-4.

(4) Definitions.

(i) Levy.

(ii) Proceedings in court.

(iii) Assessment to which the election relates.

§ 1.6015-8 Applicable liabilities.

(a) In general.

(b) Liabilities paid on or before July 22, 1998.

(c) Examples.

§ 1.6015-9 Effective date.

[T.D. 9003, 67 FR 47285, July 18, 2002]

§ 1.6015-1 Relief from joint and several liability on a joint return.

(a) ***In general.***

(1) An individual who qualifies and elects under section 6013 to file a joint Federal income tax return with another individual is jointly and severally liable for the joint Federal income tax liabilities for that year. A spouse or former spouse may be relieved of joint and several liability for Federal income tax for that year under the following three relief provisions:

(i) Innocent spouse relief under § 1.6015-2.

(ii) Allocation of deficiency under § 1.6015-3.

(iii) Equitable relief under § 1.6015-4.

(2) A requesting spouse may submit a single claim electing relief under both or either §§ 1.6015-2 and 1.6015-3, and requesting relief under § 1.6015-4. However, equitable relief under § 1.6015-4 is available only to a requesting spouse who fails to qualify for relief under §§ 1.6015-2 and 1.6015-3. If a requesting spouse elects the application of either § 1.6015-2 or 1.6015-3, the Internal Revenue Service will consider whether relief is appropriate under the other elective provision and, to the extent relief is unavailable under either, under § 1.6015-4. If a requesting spouse seeks relief only under § 1.6015-4, the Secretary may not grant relief under § 1.6015-2 or 1.6015-3 in the absence of an affirmative election made by the requesting spouse under either of those sections. If in the course of reviewing a request for relief only under § 1.6015-4, the IRS determines that the requesting spouse may qualify for relief under § 1.6015-2 or 1.6015-3 instead of § 1.6015-4, the Internal Revenue Service will correspond with the requesting spouse to see if the requesting spouse would like to amend his or her request to elect the application of § 1.6015-2 or 1.6015-3. If the requesting spouse chooses to amend the claim for relief, the requesting spouse must submit an affirmative election under § 1.6015-2 or 1.6015-3. The amended claim for relief will relate back to the original claim for purposes of determining the timeliness of the claim.

(3) Relief is not available for liabilities that are required to be reported on a joint Federal income tax return but are not income taxes imposed under Subtitle A of the Internal Revenue Code (e.g., domestic service employment taxes under section 3510).

(b) ***Duress.*** For rules relating to the treatment of returns signed under duress, see § 1.6013-4(d).

(c) ***Prior closing agreement or offer in compromise*** —

(1) ***In general.*** A requesting spouse is not entitled to relief from joint and several liability under § 1.6015-2, 1.6015-3, or 1.6015-4 for any tax year for which the requesting spouse has entered into a closing agreement with the Commissioner that disposes of the same liability that is the subject of the claim for relief. In addition, a requesting spouse is not entitled to relief from joint and several

liability under § 1.6015-2, 1.6015-3, or 1.6015-4 for any tax year for which the requesting spouse has entered into an offer in compromise with the Commissioner. For rules relating to the effect of closing agreements and offers in compromise, see sections 7121 and 7122, and the regulations thereunder.

(2) ***Exception for agreements relating to TEFRA partnership proceedings.*** The rule in paragraph (c)(1) of this section regarding the unavailability of relief from joint and several liability when the liability to which the claim for relief relates was the subject of a prior closing agreement entered into by the requesting spouse, shall not apply to an agreement described in section 6224(c) with respect to partnership items (or any penalty, addition to tax, or additional amount that relates to adjustments to partnership items) that is entered into while the requesting spouse is a party to a pending partnership-level proceeding conducted under the provisions of subchapter C of chapter 63 of subtitle F of the Internal Revenue Code (TEFRA partnership proceeding). If, however, a requesting spouse enters into a closing agreement pertaining to any penalty, addition to tax, or additional amount that relates to adjustments to partnership items, at a time when the requesting spouse is not a party to a pending TEFRA partnership proceeding (e.g., in connection with an affected items proceeding), then the provisions of paragraph (c)(1) shall apply. Similarly, if a requesting spouse enters into a closing agreement with respect to both partnership items (including affected items) and nonpartnership items, while the requesting spouse is a party to a pending TEFRA partnership proceeding, the provisions of paragraph (c)(1) shall apply to the portion of the closing agreement that relates to nonpartnership items and the provisions of this paragraph (c)(2) shall apply to the remainder of the closing agreement.

(3) ***Examples.*** The following examples illustrate the rules of this paragraph (c):

Example 1. H and W file joint returns for taxable years 2002-2004, on which they claim losses attributable to H's limited partnership interest in Partnership A. In January 2006, the Internal Revenue Service commences an audit under the provisions of subchapter C of chapter 63 of subtitle F of the Internal Revenue Code (TEFRA partnership proceeding) regarding Partnership A's 2002-2004 taxable years, and sends H and W a notice under section 6223(a)(1). In September 2007, H files a bankruptcy petition under chapter 7 of the Bankruptcy Code and receives a discharge in April 2008. In August 2008, H and W enter into a closing agreement with the Internal Revenue Service, in which H and W agree to the disallowance of some of the claimed losses from Partnership A for taxable years 2002 through 2007. W may not later claim relief from joint and several liability under section 6015 as to the disallowed losses attributable to Partnership A for taxable years 2002 to 2007. This is because at the time W entered into the closing agreement, H's partnership items attributable to Partnership A had converted to nonpartnership items as a result of H's filing of the bankruptcy petition. The conversion of H's items also terminated W's status as a partner in the TEFRA partnership proceeding regarding Partnership A. Consequently, the closing agreement did not pertain to partnership items and W was not a party to a pending partnership-level proceeding regarding Partnership A when she entered into the closing agreement. Accordingly, the exception in paragraph (c)(2) of this section for agreements relating to TEFRA partnership proceedings does not apply.

Example 2. H and W file a joint return for taxable year 2002, on which they claim $25,000 in losses attributable to H's general partnership interest in Partnership B. In November 2003, the Service proposes a deficiency in tax relating to H's and W's 2002 joint return arising from omitted taxable interest income in the amount of $2,000 that is attributable to H. In July 2005, the Internal Revenue Service commences a TEFRA partnership proceeding regarding Partnership B's 2002 and 2003 taxable years, and sends H and W a notice under section 6223(a)(1). In

March 2006, H and W enter into a closing agreement with the Service. The closing agreement provides for the disallowance of the claimed losses from Partnership B in excess of H's and W's out-of-pocket expenditures relating to Partnership B for taxable year 2002 and any subsequent year(s) in which H and W claimed losses from Partnership B. In addition, H and W agree to the imposition of the accuracy-related penalty under section 6662 with respect to the disallowed losses attributable to partnership B. In the closing agreement, H and W also agree to the deficiency resulting from the omitted interest income for taxable year 2002. W may not later claim relief from joint and several liability under section 6015 as to the deficiency in tax attributable to the omitted income of $2,000 for taxable year 2002, because this portion of the closing agreement pertains to nonpartnership items. In contrast, W may claim relief from joint and several liability as to the disallowed losses and accuracy-related penalty attributable to Partnership B for taxable year 2002 or any subsequent year(s). This is because this portion of the closing agreement pertains to partnership and affected items and was entered into at a time when W was a party to the pending partnership-level proceeding regarding Partnership B. Consequently, W never had the opportunity to raise the innocent spouse defense in the course of that TEFRA partnership proceeding. (See § 1.6015-5(b)(5) relating to premature claims).

(d) ***Fraudulent scheme.*** If the Secretary establishes that a spouse transferred assets to the other spouse as part of a fraudulent scheme, relief is not available under section 6015, and section 6013(d)(3) applies to the return. For purposes of this section, a fraudulent scheme includes a scheme to defraud the Service or another third party, including, but not limited to, creditors, ex-spouses, and business partners.

(e) ***Res judicata and collateral estoppel.*** A requesting spouse is barred from relief from joint and several liability under section 6015 by res judicata for any tax year for which a court of competent jurisdiction has rendered a final decision on the requesting spouse's tax liability if relief under section 6015 was at issue in the prior proceeding, or if the requesting spouse meaningfully participated in that proceeding and could have raised relief under section 6015. A requesting spouse has not meaningfully participated in a prior proceeding if, due to the effective date of section 6015, relief under section 6015 was not available in that proceeding. Also, any final decisions rendered by a court of competent jurisdiction regarding issues relevant to section 6015 are conclusive and the requesting spouse may be collaterally estopped from relitigating those issues.

(f) ***Community property laws*** —

(1) ***In general.*** In determining whether relief is available under § 1.6015-2, 1.6015-3, or 1.6015-4, items of income, credits, and deductions are generally allocated to the spouses without regard to the operation of community property laws. An erroneous item is attributed to the individual whose activities gave rise to such item. See § 1.6015-3(d)(2).

(2) ***Example.*** The following example illustrates the rule of this paragraph (f):

> *Example.* (i) H and W are married and have lived in State A (a community property state) since 1987. On April 15, 2003, H and W file a joint Federal income tax return for the 2002 taxable year. In August 2005, the Internal Revenue Service proposes a $17,000 deficiency with respect to the 2002 joint return. A portion of the deficiency is attributable to $20,000 of H's unreported interest income from his individual bank account. The remainder of the deficiency is attributable to $30,000 of W's disallowed business expense deductions. Under the laws of State A, H and W each own 1/2 of all income earned and property acquired during the

marriage.
(ii) In November 2005, H and W divorce and W timely elects to allocate the deficiency. Even though the laws of State A provide that 1/2 of the interest income is W's, for purposes of relief under this section, the $20,000 unreported interest income is allocable to H, and the $30,000 disallowed deduction is allocable to W. The community property laws of State A are not considered in allocating items for this purpose.

(g) ***Scope of this section and §§ 1.6015-2 through 1.6015-9.*** This section and §§ 1.6015-2 through 1.6015-9 do not apply to any portion of a liability for any taxable year for which a claim for credit or refund is barred by operation of law or rule of law.

(h) ***Definitions*** —

(1) ***Requesting spouse.*** A requesting spouse is an individual who filed a joint return and elects relief from Federal income tax liability arising from that return under § 1.6015-2 or 1.6015-3, or requests relief from Federal income tax liability arising from that return under § 1.6015-4.

(2) ***Nonrequesting spouse.*** A nonrequesting spouse is the individual with whom the requesting spouse filed the joint return for the year for which relief from liability is sought.

(3) ***Item.*** An item is that which is required to be separately listed on an individual income tax return or any required attachments. Items include, but are not limited to, gross income, deductions, credits, and basis.

(4) ***Erroneous item.*** An erroneous item is any item resulting in an understatement or deficiency in tax to the extent that such item is omitted from, or improperly reported (including improperly characterized) on an individual income tax return. For example, unreported income from an investment asset resulting in an understatement or deficiency in tax is an erroneous item. Similarly, ordinary income that is improperly reported as capital gain resulting in an understatement or deficiency in tax is also an erroneous item. In addition, a deduction for an expense that is personal in nature that results in an understatement or deficiency in tax is an erroneous item of deduction. An erroneous item is also an improperly reported item that affects the liability on other returns (e.g., an improper net operating loss that is carried back to a prior year's return). Penalties and interest are not erroneous items. Rather, relief from penalties and interest will generally be determined based on the proportion of the total erroneous items from which the requesting spouse is relieved. If a penalty relates to a particular erroneous item, see § 1.6015-3(d)(4)(iv)(B).

(5) ***Election or request.*** A qualifying election under § 1.6015-2 or 1.6015-3, or request under § 1.6015-4, is the first timely claim for relief from joint and several liability for the tax year for which relief is sought. A qualifying election also includes a requesting spouse's second election to seek relief from joint and several liability for the same tax year under § 1.6015-3 when the additional qualifications of paragraphs (h)(5)(i) and (ii) of this section are met—

(i) The requesting spouse did not qualify for relief under § 1.6015-3 when the Internal Revenue Service considered the first election solely because the qualifications of § 1.6015-3(a) were not satisfied; and

(ii) At the time of the second election, the qualifications for relief under § 1.6015-3(a) are satisfied.

(i) [Reserved]

(j) *Transferee liability* —

(1) ***In general.*** The relief provisions of section 6015 do not negate liability that arises under the operation of other laws. Therefore, a requesting spouse who is relieved of joint and several liability under § 1.6015-2, 1.6015-3, or 1.6015-4 may nevertheless remain liable for the unpaid tax (including additions to tax, penalties, and interest) to the extent provided by Federal or state transferee liability or property laws. For the rules regarding the liability of transferees, see sections 6901 through 6904 and the regulations thereunder. In addition, the requesting spouse's property may be subject to collection under Federal or state property laws.

(2) ***Example.*** The following example illustrates the rule of this paragraph (j):

Example. H and W timely file their 1998 joint income tax return on April 15, 1999. H dies in March 2000, and the executor of H's will transfers all of the estate's assets to W. In July 2001, the Internal Revenue Service assesses a deficiency for the 1998 return. The items giving rise to the deficiency are attributable to H. W is relieved of the liability under section 6015, and H's estate remains solely liable. The Internal Revenue Service may seek to collect the deficiency from W to the extent permitted under Federal or state transferee liability or property laws.

[T.D. 9003, 67 FR 47285, July 18, 2002]

§ 1.6015-2 Relief from liability applicable to all qualifying joint filers.

(a) ***In general.*** A requesting spouse may be relieved of joint and several liability for tax (including additions to tax, penalties, and interest) from an understatement for a taxable year under this section if the requesting spouse elects the application of this section in accordance with §§ 1.6015-1(h)(5) and 1.6015-5, and—

(1) A joint return was filed for the taxable year;

(2) On the return there is an understatement attributable to erroneous items of the nonrequesting spouse;

(3) The requesting spouse establishes that in signing the return he or she did not know and had no reason to know of the understatement; and

(4) It is inequitable to hold the requesting spouse liable for the deficiency attributable to the understatement.

(b) ***Understatement.*** The term *understatement* has the meaning given to such term by section 6662(d)(2)(A) and the regulations thereunder.

(c) ***Knowledge or reason to know.*** A requesting spouse has knowledge or reason to know of an understatement if he or she actually knew of the understatement, or if a reasonable person in similar circumstances would have known of the understatement. For rules relating to a requesting spouse's actual knowledge, see § 1.6015-3(c)(2). All of the facts and circumstances are considered in determining whether a requesting spouse had reason to know of an understatement. The facts and circumstances that are considered include, but are not limited to, the nature of the erroneous item and the amount of the erroneous item relative to other items; the couple's financial situation; the requesting spouse's educational background and business experience; the extent of the requesting spouse's participation in the activity that resulted in the erroneous item; whether the requesting spouse failed to inquire, at or before the time the return was signed, about items on the return or omitted from the return that a

reasonable person would question; and whether the erroneous item represented a departure from a recurring pattern reflected in prior years' returns (e.g., omitted income from an investment regularly reported on prior years' returns).

(d) ***Inequity.*** All of the facts and circumstances are considered in determining whether it is inequitable to hold a requesting spouse jointly and severally liable for an understatement. One relevant factor for this purpose is whether the requesting spouse significantly benefitted, directly or indirectly, from the understatement. A significant benefit is any benefit in excess of normal support. Evidence of direct or indirect benefit may consist of transfers of property or rights to property, including transfers that may be received several years after the year of the understatement. Thus, for example, if a requesting spouse receives property (including life insurance proceeds) from the nonrequesting spouse that is beyond normal support and traceable to items omitted from gross income that are attributable to the nonrequesting spouse, the requesting spouse will be considered to have received significant benefit from those items. Other factors that may also be taken into account, if the situation warrants, include the fact that the requesting spouse has been deserted by the nonrequesting spouse, the fact that the spouses have been divorced or separated, or that the requesting spouse received benefit on the return from the understatement. For guidance concerning the criteria to be used in determining whether it is inequitable to hold a requesting spouse jointly and severally liable under this section, see Rev. Proc. 2000-15 (2000-1 C.B. 447), or other guidance published by the Treasury and IRS (see § 601.601(d)(2) of this chapter).

(e) ***Partial relief*** —

(1) ***In general.*** If a requesting spouse had no knowledge or reason to know of only a portion of an erroneous item, the requesting spouse may be relieved of the liability attributable to that portion of that item, if all other requirements are met with respect to that portion.

(2) ***Example.*** The following example illustrates the rules of this paragraph (e):

Example. H and W are married and file their 2004 joint income tax return in March 2005. In April 2006, H is convicted of embezzling $2 million from his employer during 2004. H kept all of his embezzlement income in an individual bank account, and he used most of the funds to support his gambling habit. H and W had a joint bank account into which H and W deposited all of their reported income. Each month during 2004, H transferred an additional $10,000 from the individual account to H and W's joint bank account. W paid the household expenses using this joint account, and regularly received the bank statements relating to the account. W had no knowledge or reason to know of H's embezzling activities. However, W did have knowledge and reason to know of $120,000 of the $2 million of H's embezzlement income at the time she signed the joint return because that amount passed through the couple's joint bank account. Therefore, W may be relieved of the liability arising from $1,880,000 of the unreported embezzlement income, but she may not be relieved of the liability for the deficiency arising from $120,000 of the unreported embezzlement income of which she knew and had reason to know.

[T.D. 9003, 67 FR 47285, July 18, 2002]

§ 1.6015-3 Allocation of deficiency for individuals who are no longer married, are legally separated, or are not members of the same household.

(a) ***Election to allocate deficiency.*** A requesting spouse may elect to allocate a deficiency if, as defined in paragraph (b) of this section, the requesting spouse is divorced, widowed, or legally separated, or has not been a member of the same household as the nonrequesting spouse at any time during the 12-month period ending on the date an election for relief is filed. For purposes of this section, the marital status of a deceased requesting spouse will be determined on the earlier of the date of the election or the date of death in accordance with section 7703(a)(1). Subject to the restrictions of paragraph (c) of this section, an eligible requesting spouse who elects the application of this section in accordance with §§ 1.6015-1(h)(5) and 1.6015-5 generally may be relieved of joint and several liability for the portion of any deficiency that is allocated to the nonrequesting spouse pursuant to the allocation methods set forth in paragraph (d) of this section. Relief may be available to both spouses filing the joint return if each spouse is eligible for and elects the application of this section.

(b) ***Definitions*** —

(1) ***Divorced.*** A determination of whether a requesting spouse is divorced for purposes of this section will be made in accordance with section 7703 and the regulations thereunder. Such determination will be made as of the date the election is filed.

(2) ***Legally separated.*** A determination of whether a requesting spouse is legally separated for purposes of this section will be made in accordance with section 7703 and the regulations thereunder. Such determination will be made as of the date the election is filed.

(3) ***Members of the same household*** —

(i) ***Temporary absences.*** A requesting spouse and a nonrequesting spouse are considered members of the same household during either spouse's temporary absences from the household if it is reasonable to assume that the absent spouse will return to the household, and the household or a substantially equivalent household is maintained in anticipation of such return. Examples of temporary absences may include, but are not limited to, absence due to incarceration, illness, business, vacation, military service, or education.

(ii) ***Separate dwellings.*** A husband and wife who reside in the same dwelling are considered members of the same household. In addition, a husband and wife who reside in two separate dwellings are considered members of the same household if the spouses are not estranged or one spouse is temporarily absent from the other's household within the meaning of paragraph (b)(3)(i) of this section.

(c) ***Limitations*** —

(1) ***No refunds.*** Relief under this section is only available for unpaid liabilities resulting from understatements of liability. Refunds are not authorized under this section.

(2) ***Actual knowledge*** —

(i) ***In general.*** If, under section 6015(c)(3)(C), the Secretary demonstrates that, at the time the return was signed, the requesting spouse had actual knowledge of an erroneous item that is allocable to the nonrequesting spouse, the election to allocate the deficiency attributable to that item is invalid, and the requesting spouse remains liable for the portion of the deficiency

attributable to that item. The Service, having both the burden of production and the burden of persuasion, must establish, by a preponderance of the evidence, that the requesting spouse had actual knowledge of the erroneous item in order to invalidate the election.

(A) ***Omitted income.*** In the case of omitted income, knowledge of the item includes knowledge of the receipt of the income. For example, assume W received $5,000 of dividend income from her investment in X Co. but did not report it on the joint return. H knew that W received $5,000 of dividend income from X Co. that year. H had actual knowledge of the erroneous item (i.e., $5,000 of unreported dividend income from X Co.), and no relief is available under this section for the deficiency attributable to the dividend income from X Co. This rule applies equally in situations where the other spouse has unreported income although the spouse does not have an actual receipt of cash (e.g., dividend reinvestment or a distributive share from a flow-through entity shown on Schedule K-1, “Partner's Share of Income, Credits, Deductions, etc.”).

(B) ***Deduction or credit*** —

(*1*) ***Erroneous deductions in general.*** In the case of an erroneous deduction or credit, knowledge of the item means knowledge of the facts that made the item not allowable as a deduction or credit.

(*2*) ***Fictitious or inflated deduction.*** If a deduction is fictitious or inflated, the IRS must establish that the requesting spouse actually knew that the expenditure was not incurred, or not incurred to that extent.

(ii) ***Partial knowledge.*** If a requesting spouse had actual knowledge of only a portion of an erroneous item, then relief is not available for that portion of the erroneous item. For example, if H knew that W received $1,000 of dividend income and did not know that W received an additional $4,000 of dividend income, relief would not be available for the portion of the deficiency attributable to the $1,000 of dividend income of which H had actual knowledge. A requesting spouse's actual knowledge of the proper tax treatment of an item is not relevant for purposes of demonstrating that the requesting spouse had actual knowledge of an erroneous item. For example, assume H did not know W's dividend income from X Co. was taxable, but knew that W received the dividend income. Relief is not available under this section. In addition, a requesting spouse's knowledge of how an erroneous item was treated on the tax return is not relevant to a determination of whether the requesting spouse had actual knowledge of the item. For example, assume that H knew of W's dividend income, but H failed to review the completed return and did not know that W omitted the dividend income from the return. Relief is not available under this section.

(iii) ***Knowledge of the source not sufficient.*** Knowledge of the source of an erroneous item is not sufficient to establish actual knowledge. For example, assume H knew that W owned X Co. stock, but H did not know that X Co. paid dividends to W that year. H's knowledge of W's ownership in X Co. is not sufficient to establish that H had actual knowledge of the dividend income from X Co. In addition, a requesting spouse's actual knowledge may not be inferred when the requesting spouse merely had reason to know of the erroneous item. Even if H's knowledge of W's ownership interest in X Co. indicates a reason to know of the dividend income, actual knowledge of such dividend income cannot be inferred from H's reason to know. Similarly, the IRS need not establish that a requesting spouse knew of the source of an erroneous item in order to establish that the requesting spouse had actual knowledge of the

item itself. For example, assume H knew that W received $1,000, but he did not know the source of the $1,000. W and H omit the $1,000 from their joint return. H has actual knowledge of the item giving rise to the deficiency ($1,000), and relief is not available under this section.

(iv) ***Factors supporting actual knowledge.*** To demonstrate that a requesting spouse had actual knowledge of an erroneous item at the time the return was signed, the IRS may rely upon all of the facts and circumstances. One factor that may be relied upon in demonstrating that a requesting spouse had actual knowledge of an erroneous item is whether the requesting spouse made a deliberate effort to avoid learning about the item in order to be shielded from liability. This factor, together with all other facts and circumstances, may demonstrate that the requesting spouse had actual knowledge of the item, and the requesting spouse's election would be invalid with respect to that entire item. Another factor that may be relied upon in demonstrating that a requesting spouse had actual knowledge of an erroneous item is whether the requesting spouse and the nonrequesting spouse jointly owned the property that resulted in the erroneous item. Joint ownership is a factor supporting a finding that the requesting spouse had actual knowledge of an erroneous item. For purposes of this paragraph, a requesting spouse will not be considered to have had an ownership interest in an item based solely on the operation of community property law. Rather, a requesting spouse who resided in a community property state at the time the return was signed will be considered to have had an ownership interest in an item only if the requesting spouse's name appeared on the ownership documents, or there otherwise is an indication that the requesting spouse asserted dominion and control over the item. For example, assume H and W live in State A, a community property state. After their marriage, H opens a bank account in his name. Under the operation of the community property laws of State A, W owns $^{1}/_{2}$ of the bank account. However, W does not have an ownership interest in the account for purposes of this paragraph (c)(2)(iv) because the account is not held in her name and there is no other indication that she asserted dominion and control over the item.

(v) ***Abuse exception.*** If the requesting spouse establishes that he or she was the victim of domestic abuse prior to the time the return was signed, and that, as a result of the prior abuse, the requesting spouse did not challenge the treatment of any items on the return for fear of the nonrequesting spouse's retaliation, the limitation on actual knowledge in this paragraph (c) will not apply. However, if the requesting spouse involuntarily executed the return, the requesting spouse may choose to establish that the return was signed under duress. In such a case, § 1.6013-4(d) applies.

(3) ***Disqualified asset transfers*** —

(i) ***In general.*** The portion of the deficiency for which a requesting spouse is liable is increased (up to the entire amount of the deficiency) by the value of any disqualified asset that was transferred to the requesting spouse. For purposes of this paragraph (c)(3), the value of a disqualified asset is the fair market value of the asset on the date of the transfer.

(ii) ***Disqualified asset defined.*** A disqualified asset is any property or right to property that was transferred from the nonrequesting spouse to the requesting spouse if the principal purpose of the transfer was the avoidance of tax or payment of tax (including additions to tax, penalties, and interest).

(iii) ***Presumption.*** Any asset transferred from the nonrequesting spouse to the requesting spouse during the 12-month period before the mailing date of the first letter of proposed deficiency (e.g., a 30-day letter or, if no 30-day letter is mailed, a notice of deficiency) is presumed to be a

disqualified asset. The presumption also applies to any asset that is transferred from the nonrequesting spouse to the requesting spouse after the mailing date of the first letter of proposed deficiency. The presumption does not apply, however, if the requesting spouse establishes that the asset was transferred pursuant to a decree of divorce or separate maintenance or a written instrument incident to such a decree. If the presumption does not apply, but the Internal Revenue Service can establish that the purpose of the transfer was the avoidance of tax or payment of tax, the asset will be disqualified, and its value will be added to the amount of the deficiency for which the requesting spouse remains liable. If the presumption applies, a requesting spouse may still rebut the presumption by establishing that the principal purpose of the transfer was not the avoidance of tax or payment of tax.

(4) ***Examples.*** The following examples illustrate the rules in this paragraph (c):

Example 1. Actual knowledge of an erroneous item. (i) H and W file their 2001 joint Federal income tax return on April 15, 2002. On the return, H and W report W's self-employment income, but they do not report W's self-employment tax on that income. H and W divorce in July 2003. In August 2003, H and W receive a 30-day letter from the Internal Revenue Service proposing a deficiency with respect to W's unreported self-employment tax on the 2001 return. On November 4, 2003, H files an election to allocate the deficiency to W. The erroneous item is the self-employment income, and it is allocable to W. H knows that W earned income in 2001 as a self-employed musician, but he does not know that self-employment tax must be reported on and paid with a joint return.
(ii) H's election to allocate the deficiency to W is invalid because, at the time H signed the joint return, H had actual knowledge of W's self-employment income. The fact that H was unaware of the tax consequences of that income (i.e., that an individual is required to pay self-employment tax on that income) is not relevant.

Example 2. Actual knowledge not inferred from a requesting spouse's reason to know. (i) H has long been an avid gambler. H supports his gambling habit and keeps all of his gambling winnings in an individual bank account, held solely in his name. W knows about H's gambling habit and that he keeps a separate bank account, but she does not know whether he has any winnings because H does not tell her, and she does not otherwise know of H's bank account transactions. H and W file their 2001 joint Federal income tax return on April 15, 2002. On October 31, 2003, H and W receive a 30-day letter proposing a $100,000 deficiency relating to H's unreported gambling income. In February 2003, H and W divorce, and in March 2004, W files an election under section 6015(c) to allocate the $100,000 deficiency to H.
(ii) While W may have had reason to know of the gambling income because she knew of H's gambling habit and separate account, W did not have actual knowledge of the erroneous item (i.e., the gambling winnings). The Internal Revenue Service may not infer actual knowledge from W's reason to know of the income. Therefore, W's election to allocate the $100,000 deficiency to H is valid.

Example 3. Actual knowledge and failure to review return. (i) H and W are legally separated.

In February 1999, W signs a blank joint Federal income tax return for 1998 and gives it to H to fill out. The return was timely filed on April 15, 1999. In September 2001, H and W receive a 30-day letter proposing a deficiency relating to $100,000 of unreported dividend income received by H with respect to stock of ABC Co. owned by H. W knew that H received the $100,000 dividend payment in August 1998, but she did not know whether H reported that payment on the joint return.
(ii) On January 30, 2002, W files an election to allocate the deficiency from the 1998 return to H. W claims she did not review the completed joint return, and therefore, she had no actual knowledge that there was an understatement of the dividend income. W's election to allocate the deficiency to H is invalid because she had actual knowledge of the erroneous item (dividend income from ABC Co.) at the time she signed the return. The fact that W signed a blank return is irrelevant. The result would be the same if W had not reviewed the completed return or if W had reviewed the completed return and had not noticed that the item was omitted.

Example 4. Actual knowledge of an erroneous item of income. (i) H and W are legally separated. In June 2004, a deficiency is proposed with respect to H's and W's 2002 joint Federal income tax return that is attributable to $30,000 of unreported income from H's plumbing business that should have been reported on a Schedule C. No Schedule C was attached to the return. At the time W signed the return, W knew that H had a plumbing business but did not know whether H received any income from the business. W's election to allocate to H the deficiency attributable to the $30,000 of unreported plumbing income is valid.
(ii) Assume the same facts as in paragraph (i) of this *Example 5* except that, at the time W signed the return, W knew that H received $20,000 of plumbing income. W's election to allocate to H the deficiency attributable to the $20,000 of unreported plumbing income (of which W had actual knowledge) is invalid. W's election to allocate to H the deficiency attributable to the $10,000 of unreported plumbing income (of which W did not have actual knowledge) is valid.

(iii) Assume the same facts as in paragraph (i) of this *Example 5* except that, at the time W signed the return, W did not know the exact amount of H's plumbing income. W did know, however, that H received at least $8,000 of plumbing income. W's election to allocate to H the deficiency attributable to $8,000 of unreported plumbing income (of which W had actual knowledge) is invalid. W's election to allocate to H the deficiency attributable to the remaining $22,000 of unreported plumbing income (of which W did not have actual knowledge) is valid.

(iv) Assume the same facts as in paragraph (i) of this *Example 5* except that H reported $26,000 of plumbing income on the return and omitted $4,000 of plumbing income from the return. At the time W signed the return, W knew that H was a plumber, but she did not know

that H earned more than $26,000 that year. W's election to allocate to H the deficiency attributable to the $4,000 of unreported plumbing income is valid because she did not have actual knowledge that H received plumbing income in excess of $26,000.

(v) Assume the same facts as in paragraph (i) of this *Example 5* except that H reported only $20,000 of plumbing income on the return and omitted $10,000 of plumbing income from the return. At the time W signed the return, W knew that H earned at least $26,000 that year as a plumber. However, W did not know that, in reality, H earned $30,000 that year as a plumber. W's election to allocate to H the deficiency attributable to the $6,000 of unreported plumbing income (of which W had actual knowledge) is invalid. W's election to allocate to H the deficiency attributable to the $4,000 of unreported plumbing income (of which W did not have actual knowledge) is valid.

Example 5. Actual knowledge of a deduction that is an erroneous item. (i) H and W are legally separated. In February 2005, a deficiency is asserted with respect to their 2002 joint Federal income tax return. The deficiency is attributable to a disallowed $1,000 deduction for medical expenses H claimed he incurred. At the time W signed the return, W knew that H had not incurred any medical expenses. W's election to allocate to H the deficiency attributable to the disallowed medical expense deduction is invalid because W had actual knowledge that H had not incurred any medical expenses.
(ii) Assume the same facts as in paragraph (i) of this *Example 6* except that, at the time W signed the return, W did not know whether H had incurred any medical expenses. W's election to allocate to H the deficiency attributable to the disallowed medical expense deduction is valid because she did not have actual knowledge that H had not incurred any medical expenses.

(iii) Assume the same facts as in paragraph (i) of this *Example 6* except that the Internal Revenue Service disallowed $400 of the $1,000 medical expense deduction. At the time W signed the return, W knew that H had incurred some medical expenses but did not know the exact amount. W's election to allocate to H the deficiency attributable to the disallowed medical expense deduction is valid because she did not have actual knowledge that H had not incurred medical expenses (in excess of the floor amount under section 213(a)) of more than $600.

(iv) Assume the same facts as in paragraph (i) of this *Example 6* except that H claims a medical expense deduction of $10,000 and the Internal Revenue Service disallows $9,600. At the time W signed the return, W knew H had incurred some medical expenses but did not know the exact amount. W also knew that H incurred medical expenses (in excess of the floor amount under section 213(a)) of no more than $1,000. W's election to allocate to H the

deficiency attributable to the portion of the overstated deduction of which she had actual knowledge ($9,000) is invalid. W's election to allocate the deficiency attributable to the portion of the overstated deduction of which she had no knowledge ($600) is valid.

Example 6. Disqualified asset presumption. (i) H and W are divorced. In May 1999, W transfers $20,000 to H, and in April 2000, H and W receive a 30-day letter proposing a $40,000 deficiency on their 1998 joint Federal income tax return. The liability remains unpaid, and in October 2000, H elects to allocate the deficiency under this section. Seventy-five percent of the net amount of erroneous items are allocable to W, and 25% of the net amount of erroneous items are allocable to H.
(ii) In accordance with the proportionate allocation method (see paragraph (d)(4) of this section), H proposes that $30,000 of the deficiency be allocated to W and $10,000 be allocated to himself. H submits a signed statement providing that the principal purpose of the $20,000 transfer was not the avoidance of tax or payment of tax, but he does not submit any documentation indicating the reason for the transfer. H has not overcome the presumption that the $20,000 was a disqualified asset. Therefore, the portion of the deficiency for which H is liable ($10,000) is increased by the value of the disqualified asset ($20,000). H is relieved of liability for $10,000 of the $30,000 deficiency allocated to W, and remains jointly and severally liable for the remaining $30,000 of the deficiency (assuming that H does not qualify for relief under any other provision).

Example 7. Disqualified asset presumption inapplicable. On May 1, 2001, H and W receive a 30-day letter regarding a proposed deficiency on their 1999 joint Federal income tax return relating to unreported capital gain from H's sale of his investment in Z stock. W had no actual knowledge of the stock sale. The deficiency is assessed in November 2001, and in December 2001, H and W divorce. According to a decree of divorce, H must transfer $^{1}/_{2}$ of his interest in mutual fund A to W. The transfer takes place in February 2002. In August 2002, W elects to allocate the deficiency to H. Although the transfer of $^{1}/_{2}$ of H's interest in mutual fund A took place after the 30-day letter was mailed, the mutual fund interest is not presumed to be a disqualified asset because the transfer of H's interest in the fund was made pursuant to a decree of divorce.

Example 8. Overcoming the disqualified asset presumption. (i) H and W are married for 25 years. Every September, on W's birthday, H gives W a gift of $500. On February 28, 2002, H and W receive a 30-day letter from the Internal Revenue Service relating to their 1998 joint individual Federal income tax return. The deficiency relates to H's Schedule C business, and W had no knowledge of the items giving rise to the deficiency. H and W are legally separated in June 2003, and, despite the separation, H continues to give W $500 each year for her birthday. H is not required to give such amounts pursuant to a decree of divorce or separate maintenance.
(ii) On January 27, 2004, W files an election to allocate the deficiency to H. The $1,500 transferred from H to W from February 28, 2001 (a year before the 30-day letter was mailed) to the present is presumed disqualified. However, W may overcome the

> presumption that such amounts were disqualified by establishing that such amounts were birthday gifts from H and that she has received such gifts during their entire marriage. Such facts would show that the amounts were not transferred for the purpose of avoidance of tax or payment of tax.

(d) ***Allocation*** —

(1) ***In general.***

(i) An election to allocate a deficiency limits the requesting spouse's liability to that portion of the deficiency allocated to the requesting spouse pursuant to this section.

(ii) Only a requesting spouse may receive relief. A nonrequesting spouse who does not also elect relief under this section remains liable for the entire amount of the deficiency. Even if both spouses elect to allocate a deficiency under this section, there may be a portion of the deficiency that is not allocable, for which both spouses remain jointly and severally liable.

(2) ***Allocation of erroneous items.*** For purposes of allocating a deficiency under this section, erroneous items are generally allocated to the spouses as if separate returns were filed, subject to the following four exceptions:

(i) ***Benefit on the return.*** An erroneous item that would otherwise be allocated to the nonrequesting spouse is allocated to the requesting spouse to the extent that the requesting spouse received a tax benefit on the joint return.

(ii) ***Fraud.*** The Internal Revenue Service may allocate any item between the spouses if the Internal Revenue Service establishes that the allocation is appropriate due to fraud by one or both spouses.

(iii) ***Erroneous items of income.*** Erroneous items of income are allocated to the spouse who was the source of the income. Wage income is allocated to the spouse who performed the services producing such wages. Items of business or investment income are allocated to the spouse who owned the business or investment. If both spouses owned an interest in the business or investment, the erroneous item of income is generally allocated between the spouses in proportion to each spouse's ownership interest in the business or investment, subject to the limitations of paragraph (c) of this section. In the absence of clear and convincing evidence supporting a different allocation, an erroneous income item relating to an asset that the spouses owned jointly is generally allocated 50% to each spouse, subject to the limitations in paragraph (c) of this section and the exceptions in paragraph (c)(2)(iv) of this section. For rules regarding the effect of community property laws, see § 1.6015-1(f) and paragraph (c)(2)(iv) of this section.

(iv) ***Erroneous deduction items.*** Erroneous deductions related to a business or investment are allocated to the spouse who owned the business or investment. If both spouses owned an interest in the business or investment, an erroneous deduction item is generally allocated between the spouses in proportion to each spouse's ownership interest in the business or investment. In the absence of clear and convincing evidence supporting a different allocation, an erroneous deduction item relating to an asset that the spouses owned jointly is generally allocated 50% to each spouse, subject to the limitations in paragraph (c) of this section and the

exceptions in paragraph (d)(4) of this section. Deduction items unrelated to a business or investment are also generally allocated 50% to each spouse, unless the evidence shows that a different allocation is appropriate.

(3) ***Burden of proof.*** Except for establishing actual knowledge under paragraph (c)(2) of this section, the requesting spouse must prove that all of the qualifications for making an election under this section are satisfied and that none of the limitations (including the limitation relating to transfers of disqualified assets) apply. The requesting spouse must also establish the proper allocation of the erroneous items.

(4) ***General allocation method*** —

(i) ***Proportionate allocation.***

(A) The portion of a deficiency allocable to a spouse is the amount that bears the same ratio to the deficiency as the net amount of erroneous items allocable to the spouse bears to the net amount of all erroneous items. This calculation may be expressed as follows:

$$X = (\text{deficiency}) \times \frac{\text{net amount of erroneous items allocable to the spouse}}{\text{net amount of all erroneous items}}$$

where X = the portion of the deficiency allocable to the spouse.

(B) The proportionate allocation applies to any portion of the deficiency other than—

(*1*) Any portion of the deficiency attributable to erroneous items allocable to the nonrequesting spouse of which the requesting spouse had actual knowledge;

(*2*) Any portion of the deficiency attributable to separate treatment items (as defined in paragraph (d)(4)(ii) of this section);

(*3*) Any portion of the deficiency relating to the liability of a child (as defined in paragraph (d)(4)(iii) of this section) of the requesting spouse or nonrequesting spouse;

(*4*) Any portion of the deficiency attributable to alternative minimum tax under section 55;

(*5*) Any portion of the deficiency attributable to accuracy-related or fraud penalties;

(*6*) Any portion of the deficiency allocated pursuant to alternative allocation methods authorized under paragraph (d)(6) of this section.

(ii) ***Separate treatment items.*** Any portion of a deficiency that is attributable to an item allocable solely to one spouse and that results from the disallowance of a credit, or a tax or an addition to tax (other than tax imposed by section 1 or section 55) that is required to be included with a joint return (a separate treatment item) is allocated separately to that spouse. If such credit or tax is attributable in whole or in part to both spouses, then the IRS will determine on a case by case basis how such item will be allocated. Once the proportionate allocation is made, the liability for the requesting spouse's separate treatment items is added to the requesting spouse's share of the liability.

(iii) ***Child's liability.*** Any portion of a deficiency relating to the liability of a child of the requesting and nonrequesting spouse is allocated jointly to both spouses. For purposes of this paragraph, a child does not include the taxpayer's stepson or stepdaughter, unless such child was legally adopted by the taxpayer. If the child is the child of only one of the spouses, and the other spouse had not legally adopted such child, any portion of a deficiency relating to the liability of such child is allocated solely to the parent spouse.

(iv) ***Allocation of certain items*** —

(A) ***Alternative minimum tax.*** Any portion of a deficiency relating to the alternative minimum tax under section 55 will be allocated appropriately.

(B) ***Accuracy-related and fraud penalties.*** Any accuracy-related or fraud penalties under section 6662 or 6663 are allocated to the spouse whose item generated the penalty.

(5) ***Examples.*** The following examples illustrate the rules of this paragraph (d). In each example, assume that the requesting spouse or spouses qualify to elect to allocate the deficiency, that any election is timely made, and that the deficiency remains unpaid. In addition, unless otherwise stated, assume that neither spouse has actual knowledge of the erroneous items allocable to the other spouse. The examples are as follows:

> *Example 1. Allocation of erroneous items.* (i) H and W file a 2003 joint Federal income tax return on April 15, 2004. On April 28, 2006, a deficiency is assessed with respect to their 2003 return. Three erroneous items give rise to the deficiency—
> (A) Unreported interest income, of which W had actual knowledge, from H's and W's joint bank account;
>
> (B) A disallowed business expense deduction on H's Schedule C; and
>
> (C) A disallowed Lifetime Learning Credit for W's post-secondary education, paid for by W.
>
> (ii) H and W divorce in May 2006, and in September 2006, W timely elects to allocate the deficiency. The erroneous items are allocable as follows:
>
> (A) The interest income would be allocated $^1/_2$ to H and $^1/_2$ to W, except that W has actual knowledge of it. Therefore, W's election to allocate the portion of the deficiency attributable to this item is invalid, and W remains jointly and severally liable for it.
>
> (B) The business expense deduction is allocable to H.
>
> (C) The Lifetime Learning Credit is allocable to W.

> *Example 2. Proportionate allocation.* (i) W and H timely file their 2001 joint Federal income tax return on April 15, 2002. On August 16, 2004, a $54,000 deficiency is assessed with respect to their 2001 joint return. H and W divorce on October 14, 2004, and W timely elects to allocate the deficiency. Five erroneous items give rise to the deficiency—

(A) A disallowed $15,000 business deduction allocable to H;

(B) $20,000 of unreported income allocable to H;

(C) A disallowed $5,000 deduction for educational expense allocable to H;

(D) A disallowed $40,000 charitable contribution deduction allocable to W; and

(E) A disallowed $40,000 interest deduction allocable to W.

(ii) In total, there are $120,000 worth of erroneous items, of which $80,000 are attributable to W and $40,000 are attributable to H.

W's items		H's items	
$40,000	charitable deduction	$15,000	business deduction
40,000	interest deduction	20,000	unreported income
		5,000	education deduction
$80,000		$40,000	

(iii) The ratio of erroneous items allocable to W to the total erroneous items is $^{2}/_{3}$ ($80,000/$120,000). W's liability is limited to $36,000 of the deficiency ($^{2}/_{3}$ of $54,000). The Internal Revenue Service may collect up to $36,000 from W and up to $54,000 from H (the total amount collected, however, may not exceed $54,000). If H also made an election, there would be no remaining joint and several liability, and the Internal Revenue Service would be permitted to collect $36,000 from W and $18,000 from H.

Example 3. Proportionate allocation with joint erroneous item. (i) On September 4, 2001, W elects to allocate a $3,000 deficiency for the 1998 tax year to H. Three erroneous items give rise to the deficiency—

(A) Unreported interest in the amount of $4,000 from a joint bank account;

(B) A disallowed deduction for business expenses in the amount of $2,000 attributable to H's business; and

(C) Unreported wage income in the amount of $6,000 attributable to W's second job.

(ii) The erroneous items total $12,000. Generally, income, deductions, or credits from jointly held property that are erroneous items are allocable 50% to each spouse. However, in this case, both spouses had actual knowledge of the unreported interest income. Therefore, W's

election to allocate the portion of the deficiency attributable to this item is invalid, and W and H remain jointly and severally liable for this portion. Assume that this portion is $1,000. W may allocate the remaining $2,000 of the deficiency.

H's items		W's items	
$2,000	business deduction	$6,000	wage income

Total allocable items: $8,000

(iii) The ratio of erroneous items allocable to W to the total erroneous items is $^{3}/_{4}$ ($6,000/$8,000). W's liability is limited to $1,500 of the deficiency ($^{3}/_{4}$ of $2,000) allocated to her. The Internal Revenue Service may collect up to $2,500 from W ($^{3}/_{4}$ of the total allocated deficiency plus $1,000 of the deficiency attributable to the joint bank account interest) and up to $3,000 from H (the total amount collected, however, cannot exceed $3,000).

(iv) Assume H also elects to allocate the 1998 deficiency. H is relieved of liability for $^{3}/_{4}$ of the deficiency, which is allocated to W. H's relief totals $1,500 ($^{3}/_{4}$ of $2,000). H remains liable for $1,500 of the deficiency ($^{1}/_{4}$ of the allocated deficiency plus $1,000 of the deficiency attributable to the joint bank account interest).

Example 4. Separate treatment items (STIs). (i) On September 1, 2006, a $28,000 deficiency is assessed with respect to H's and W's 2003 joint return. The deficiency is the result of 4 erroneous items—

(A) A disallowed Lifetime Learning Credit of $2,000 attributable to H;

(B) A disallowed business expense deduction of $8,000 attributable to H;

(C) Unreported income of $24,000 attributable to W; and

(D) Unreported self-employment tax of $14,000 attributable to W.

(ii) H and W both elect to allocate the deficiency.

(iii) The $2,000 Lifetime Learning Credit and the $14,000 self-employment tax are STIs totaling $16,000. The amount of erroneous items included in computing the proportionate allocation ratio is $32,000 ($24,000 unreported income and $8,000 disallowed business expense deduction). The amount of the deficiency subject to proportionate allocation is reduced by the amount of STIs ($28,000−$16,000 = $12,000).

(iv) Of the $32,000 of proportionate allocation items, $24,000 is allocable to W, and $8,000 is allocable to H.

W's share of allocable items	H's share of allocable items
$^{3}/_{4}$ ($24,000/$32,000)	$^{1}/_{4}$ ($8,000/$32,000)

(v) W's liability for the portion of the deficiency subject to proportionate allocation is limited to $9,000 ($^{3}/_{4}$ of $12,000) and H's liability for such portion is limited to $3,000 ($^{1}/_{4}$ of $12,000).
(vi) After the proportionate allocation is completed, the amount of the STIs is added to each spouse's allocated share of the deficiency.

	W's share of total deficiency		H's share of total deficiency
$ 9,000	allocated deficiency	$3,000	allocated deficiency
14,000	self-employment tax	2,000	Lifetime Learning Credit
$23,000		$5,000	

(vii) Therefore, W's liability is limited to $23,000 and H's liability is limited to $5,000.

Example 5. Requesting spouse receives a benefit on the joint return from the nonrequesting spouse's erroneous item. (i) In 2001, H reports gross income of $4,000 from his business on Schedule C, and W reports $50,000 of wage income. On their 2001 joint Federal income tax return, H deducts $20,000 of business expenses resulting in a net loss from his business of $16,000. H and W divorce in September 2002, and on May 22, 2003, a $5,200 deficiency is assessed with respect to their 2001 joint return. W elects to allocate the deficiency. The deficiency on the joint return results from a disallowance of all of H's $20,000 of deductions.
(ii) Since H used only $4,000 of the disallowed deductions to offset gross income from his business, W benefitted from the other $16,000 of the disallowed deductions used to offset her wage income. Therefore, $4,000 of the disallowed deductions are allocable to H and $16,000 of the disallowed deductions are allocable to W. W's liability is limited to $4,160 ($^{4}/_{5}$ of $5,200). If H also elected to allocate the deficiency, H's election to allocate the $4,160 of the deficiency to W would be invalid because H had actual knowledge of the erroneous items.

Example 6. Calculation of requesting spouse's benefit on the joint return when the nonrequesting spouse's erroneous item is partially disallowed.

Assume the same facts as in Example 5, except that H deducts $18,000 for business expenses on the joint return, of which $16,000 are disallowed. Since H used only $2,000 of the $16,000

disallowed deductions to offset gross income from his business, W received benefit on the return from the other $14,000 of the disallowed deductions used to offset her wage income. Therefore, $2,000 of the disallowed deductions are allocable to H and $14,000 of the disallowed deductions are allocable to W. W's liability is limited to $4,550 ($^{7}/_{8}$ of $5,200).

(6) ***Alternative allocation methods*** —

(i) ***Allocation based on applicable tax rates.*** If a deficiency arises from two or more erroneous items that are subject to tax at different rates (e.g., ordinary income and capital gain items), the deficiency will be allocated after first separating the erroneous items into categories according to their applicable tax rate. After all erroneous items are categorized, a separate allocation is made with respect to each tax rate category using the proportionate allocation method of paragraph (d)(4) of this section.

(ii) ***Allocation methods provided in subsequent published guidance.*** Additional alternative methods for allocating erroneous items under section 6015(c) may be prescribed by the Treasury and IRS in subsequent revenue rulings, revenue procedures, or other appropriate guidance.

(iii) ***Example.*** The following example illustrates the rules of this paragraph (d)(6):

Example. Allocation based on applicable tax rates. H and W timely file their 1998 joint Federal income tax return. H and W divorce in 1999. On July 13, 2001, a $5,100 deficiency is assessed with respect to H's and W's 1998 return. Of this deficiency, $2,000 results from unreported capital gain of $6,000 that is attributable to W and $4,000 of capital gain that is attributable to H (both gains being subject to tax at the 20% marginal rate). The remaining $3,100 of the deficiency is attributable to $10,000 of unreported dividend income of H that is subject to tax at a marginal rate of 31%. H and W both timely elect to allocate the deficiency, and qualify under this section to do so. There are erroneous items subject to different tax rates; thus, the alternative allocation method of this paragraph (d)(6) applies. The three erroneous items are first categorized according to their applicable tax rates, then allocated. Of the total amount of 20% tax rate items ($10,000), 60% is allocable to W and 40% is allocable to H. Therefore, 60% of the $2,000 deficiency attributable to these items (or $1,200) is allocated to W. The remaining 40% of this portion of the deficiency ($800) is allocated to H. The only 31% tax rate item is allocable to H. Accordingly, H is liable for $3,900 of the deficiency ($800 + $3,100), and W is liable for the remaining $1,200.

[T.D. 9003, 67 FR 47285, July 18, 2002]

§ 1.6015-4 Equitable relief.

(a) A requesting spouse who files a joint return for which a liability remains unpaid and who does not qualify for full relief under § 1.6015-2 or 1.6015-3 may request equitable relief under this section. The Internal Revenue Service has the discretion to grant equitable relief from joint and several liability to a requesting spouse when, considering all of the facts and circumstances, it would be inequitable to hold the requesting spouse jointly and severally liable.

(b) This section may not be used to circumvent the limitation of § 1.6015-3(c)(1) (i.e., no refunds under § 1.6015-3). Therefore, relief is not available under this section to obtain a refund of liabilities already paid, for which the requesting spouse would otherwise qualify for relief under § 1.6015-3.

(c) For guidance concerning the criteria to be used in determining whether it is inequitable to hold a requesting spouse jointly and severally liable under this section, see Rev. Proc. 2000-15 (2000-1 C.B. 447), or other guidance published by the Treasury and IRS (see § 601.601(d)(2) of this chapter).

[T.D. 9003, 67 FR 47285, July 18, 2002]

§ 1.6015-5 Time and manner for requesting relief.

(a) ***Requesting relief.*** To elect the application of § 1.6015-2 or 1.6015-3, or to request equitable relief under § 1.6015-4, a requesting spouse must file Form 8857, "Request for Innocent Spouse Relief" (or other specified form); submit a written statement containing the same information required on Form 8857, which is signed under penalties of perjury; or submit information in the manner prescribed by the Treasury and IRS in forms, relevant revenue rulings, revenue procedures, or other published guidance (see § 601.601(d)(2) of this chapter).

(b) ***Time period for filing a request for relief*** —

(1) ***In general.*** To elect the application of § 1.6015-2 or 1.6015-3, or to request equitable relief under § 1.6015-4, a requesting spouse must file Form 8857 or other similar statement with the Internal Revenue Service no later than two years from the date of the first collection activity against the requesting spouse after July 22, 1998, with respect to the joint tax liability.

(2) ***Definitions*** —

(i) ***Collection activity.*** For purposes of this paragraph (b), collection activity means a section 6330 notice; an offset of an overpayment of the requesting spouse against a liability under section 6402; the filing of a suit by the United States against the requesting spouse for the collection of the joint tax liability; or the filing of a claim by the United States in a court proceeding in which the requesting spouse is a party or which involves property of the requesting spouse. Collection activity does not include a notice of deficiency; the filing of a Notice of Federal Tax Lien; or a demand for payment of tax. The term *property of the requesting spouse,* for purposes of this paragraph (b), means property in which the requesting spouse has an ownership interest (other than solely through the operation of community property laws), including property owned jointly with the nonrequesting spouse.

(ii) ***Section 6330 notice.*** A section 6330 notice refers to the notice sent, pursuant to section 6330, providing taxpayers notice of the Service's intent to levy and of their right to a collection due process (CDP) hearing.

(3) ***Requests for relief made before commencement of collection activity.*** An election or request for relief may be made before collection activity has commenced. For example, an election or request for relief may be made in connection with an audit or examination of the joint return or a demand for payment, or pursuant to the CDP hearing procedures under section 6320 in connection with the filing of a Notice of Federal Tax Lien. For more information on the rules regarding collection due process for liens, see the Treasury regulations under section 6320. However, no request for relief may be made before the date specified in paragraph (b)(5) of this section.

(4) ***Examples.*** The following examples illustrate the rules of this paragraph (b):

Example 1. On January 11, 2000, a section 6330 notice is mailed to H and W regarding their 1997 joint Federal income tax liability. The Internal Revenue Service levies on W's employer on June 5, 2000. The Internal Revenue Service levies on H's employer on July 10, 2000. An election or request for relief must be made by January 11, 2002, which is two years after the Internal Revenue Service sent the section 6330 notice.

Example 2. The Internal Revenue Service offsets an overpayment against a joint liability for 1995 on January 12, 1998. The offset only partially satisfies the liability. The Internal Revenue Service takes no other collection actions. On July 24, 2001, W elects relief with respect to the unpaid portion of the 1995 liability. W's election is timely because the Internal Revenue Service has not taken any collection activity after July 22, 1998; therefore, the two-year period has not commenced.

Example 3. Assume the same facts as in *Example 2,* except that the Internal Revenue Service sends a section 6330 notice on January 22, 1999. W's election is untimely because it is filed more than two years after the first collection activity after July 22, 1998.

Example 4. H and W do not remit full payment with their timely filed joint Federal income tax return for the 1989 tax year. No collection activity is taken after July 22, 1998, until the United States files a suit against both H and W to reduce the tax assessment to judgment and to foreclose the tax lien on their jointly-held business property on July 1, 1999. H elects relief on October 2, 2000. The election is timely because it is made within two years of the filing of a collection suit by the United States against H.

Example 5. W files a Chapter 7 bankruptcy petition on July 10, 2000. On September 5, 2000, the United States files a proof of claim for her joint 1998 income tax liability. W elects relief with respect to the 1998 liability on August 20, 2002. The election is timely because it is made within two years of the date the United States filed the proof of claim in W's bankruptcy case.

(5) ***Premature requests for relief.*** The Internal Revenue Service will not consider premature claims for relief under § 1.6015-2, 1.6015-3, or 1.6015-4. A premature claim is a claim for relief that is filed for a tax year prior to the receipt of a notification of an audit or a letter or notice from the IRS indicating that there may be an outstanding liability with regard to that year. Such notices or letters do not include notices issued pursuant to section 6223 relating to TEFRA partnership proceedings. A premature claim is not considered an election or request under § 1.6015-1(h)(5).

(c) ***Effect of a final administrative determination*** —

(1) ***In general.*** A requesting spouse is entitled to only one final administrative determination of relief under § 1.6015-1 for a given assessment, unless the requesting spouse properly submits a second request for relief that is described in § 1.6015-1(h)(5).

(2) ***Example.*** The following example illustrates the rule of this paragraph (c):

Example: In January 2001, W becomes a limited partner in partnership P, and in February 2001, she starts her own business from which she earns $100,000 of net income for the year. H and W file a joint return for tax year 2001, on which they claim $20,000 in losses from their investment in P, and they omit W's self-employment tax. In March 2003, the Internal Revenue Service commences an audit under the provisions of subchapter C of chapter 63 of subtitle F of the Internal Revenue Code (TEFRA partnership proceeding) and sends H and W a notice under section 6223(a)(1). In September 2003, the Internal Revenue Service audits H's and W's 2001 joint return regarding the omitted self-employment tax. H may file a claim for relief from joint

and several liability for the self-employment tax liability because he has received a notification of an audit indicating that there may be an outstanding liability on the joint return. However, his claim for relief regarding the TEFRA partnership proceeding is premature under paragraph (b)(5) of this section. H will have to wait until the Internal Revenue Service sends him a notice of computational adjustment or assesses the liability resulting from the TEFRA partnership proceeding before he files a claim for relief with respect to any such liability. The assessment relating to the TEFRA partnership proceeding is separate from the assessment for the self-employment tax; therefore, H's subsequent claim for relief for the liability from the TEFRA partnership proceeding is not precluded by his previous claim for relief from the self-employment tax liability under this paragraph (c).

[T.D. 9003, 67 FR 47285, July 18, 2002, as amended at 67 FR 54735, Aug. 26, 2002]

§ 1.6015-6 Nonrequesting spouse's notice and opportunity to participate in administrative proceedings.

(a) ***In general.***

(1) When the Internal Revenue Service receives an election under § 1.6015-2 or 1.6015-3, or a request for relief under § 1.6015-4, the Internal Revenue Service must send a notice to the nonrequesting spouse's last known address that informs the nonrequesting spouse of the requesting spouse's claim for relief. For further guidance regarding the definition of last known address, see § 301.6212-2 of this chapter. The notice must provide the nonrequesting spouse with an opportunity to submit any information that should be considered in determining whether the requesting spouse should be granted relief from joint and several liability. A nonrequesting spouse is not required to submit information under this section. Upon the request of either spouse, the Internal Revenue Service will share with one spouse the information submitted by the other spouse, unless such information would impair tax administration.

(2) The Internal Revenue Service must notify the nonrequesting spouse of the Service's preliminary and final determinations with respect to the requesting spouse's claim for relief under section 6015.

(b) ***Information submitted.*** The Internal Revenue Service will consider all of the information (as relevant to each particular relief provision) that the nonrequesting spouse submits in determining whether relief from joint and several liability is appropriate, including information relating to the following—

(1) The legal status of the requesting and nonrequesting spouses' marriage;

(2) The extent of the requesting spouse's knowledge of the erroneous items or underpayment;

(3) The extent of the requesting spouse's knowledge or participation in the family business or financial affairs;

(4) The requesting spouse's education level;

(5) The extent to which the requesting spouse benefitted from the erroneous items;

(6) Any asset transfers between the spouses;

(7) Any indication of fraud on the part of either spouse;

(8) Whether it would be inequitable, within the meaning of §§ 1.6015-2(d) and 1.6015-4, to hold the requesting spouse jointly and severally liable for the outstanding liability;

(9) The allocation or ownership of items giving rise to the deficiency; and

(10) Anything else that may be relevant to the determination of whether relief from joint and several liability should be granted.

(c) ***Effect of opportunity to participate.*** The failure to submit information pursuant to paragraph (b) of this section does not affect the nonrequesting spouse's ability to seek relief from joint and several liability for the same tax year. However, information that the nonrequesting spouse submits pursuant to paragraph (b) of this section is relevant in determining whether relief from joint and several liability is appropriate for the nonrequesting spouse should the nonrequesting spouse also submit an application for relief.

[T.D. 9003, 67 FR 47285, July 18, 2002]

§ 1.6015-7 Tax Court review.

(a) ***In general.*** Requesting spouses may petition the Tax Court to review the denial of relief under § 1.6015-1.

(b) ***Time period for petitioning the Tax Court.*** Pursuant to section 6015(e), the requesting spouse may petition the Tax Court to review a denial of relief under § 1.6015-1 within 90 days after the date notice of the Service's final determination is mailed by certified or registered mail (90-day period). If the IRS does not mail the requesting spouse a final determination letter within 6 months of the date the requesting spouse files an election under § 1.6015-2 or 1.6015-3, the requesting spouse may petition the Tax Court to review the election at any time after the expiration of the 6-month period, and before the expiration of the 90-day period. The Tax Court also may review a claim for relief if Tax Court jurisdiction has been acquired under another section of the Internal Revenue Code such as section 6213(a) or 6330(d).

(c) ***Restrictions on collection and suspension of the running of the period of limitations*** —

(1) ***Restrictions on collection under § 1.6015-2 or 1.6015-3.*** Unless the Internal Revenue Service determines that collection will be jeopardized by delay, no levy or proceeding in court shall be made, begun, or prosecuted against a requesting spouse electing the application of § 1.6015-2 or 1.6015-3 for the collection of any assessment to which the election relates until the expiration of the 90-day period described in paragraph (b) of this section, or if a petition is filed with the Tax Court, until the decision of the Tax Court becomes final under section 7481. For more information regarding the date on which a decision of the Tax Court becomes final, see section 7481 and the regulations thereunder. Notwithstanding the above, if the requesting spouse appeals the Tax Court's decision, the Internal Revenue Service may resume collection of the liability from the requesting spouse on the date the requesting spouse files the notice of appeal, unless the requesting spouse files an appeal bond pursuant to the rules of section 7485. Jeopardy under this paragraph (c)(1) means conditions exist that would require an assessment under section 6851 or 6861 and the regulations thereunder.

(2) ***Waiver of the restrictions on collection.*** A requesting spouse may, at any time (regardless of whether a notice of the Service's final determination of relief is mailed), waive the restrictions on collection in paragraph (c)(1) of this section.

(3) ***Suspension of the running of the period of limitations*** —

(i) ***Relief under § 1.6015-2 or 1.6015-3.*** The running of the period of limitations in section 6502 on collection against the requesting spouse of the assessment to which an election under § 1.6015-2 or 1.6015-3 relates is suspended for the period during which the Internal Revenue Service is prohibited by paragraph (c)(1) of this section from collecting by levy or a proceeding in court and for 60 days thereafter. However, if the requesting spouse signs a waiver of the

restrictions on collection in accordance with paragraph (c)(2) of this section, the suspension of the period of limitations in section 6502 on collection against the requesting spouse will terminate on the date that is 60 days after the date the waiver is filed with the Internal Revenue Service.

(ii) ***Relief under § 1.6015-4.*** If a requesting spouse seeks only equitable relief under § 1.6015-4, the restrictions on collection of paragraph (c)(1) of this section do not apply. Accordingly, the request for relief does not suspend the running of the period of limitations on collection.

(4) ***Definitions*** —

(i) ***Levy.*** For purposes of this paragraph (c), levy means an administrative levy or seizure described by section 6331.

(ii) ***Proceedings in court.*** For purposes of this paragraph (c), proceedings in court means suits filed by the United States for the collection of Federal tax. Proceedings in court does not refer to the filing of pleadings and claims and other participation by the Internal Revenue Service or the United States in suits not filed by the United States, including Tax Court cases, refund suits, and bankruptcy cases.

(iii) ***Assessment to which the election relates.*** For purposes of this paragraph (c), the assessment to which the election relates is the entire assessment of the deficiency to which the election relates, even if the election is made with respect to only part of that deficiency.

[T.D. 9003, 67 FR 47285, July 18, 2002]

§ 1.6015-8 Applicable liabilities.

(a) ***In general.*** Section 6015 applies to liabilities that arise after July 22, 1998, and to liabilities that arose prior to July 22, 1998, that were not paid on or before July 22, 1998.

(b) ***Liabilities paid on or before July 22, 1998.*** A requesting spouse seeking relief from joint and several liability for amounts paid on or before July 22, 1998, must request relief under section 6013(e) and the regulations thereunder.

(c) ***Examples.*** The following examples illustrate the rules of this section:

Example 1. H and W file a joint Federal income tax return for 1995 on April 15, 1996. There is an understatement on the return attributable to an omission of H's wage income. On October 15, 1998, H and W receive a 30-day letter proposing a deficiency on the 1995 joint return. W pays the outstanding liability in full on November 30, 1998. In March 1999, W files Form 8857, requesting relief from joint and several liability under section 6015(b). Although W's liability arose prior to July 22, 1998, it was unpaid as of that date. Therefore, section 6015 is applicable.

Example 2. H and W file their 1995 joint Federal income tax return on April 15, 1996. On October 14, 1997, a deficiency of $5,000 is assessed regarding a disallowed business expense deduction attributable to H. On June 30, 1998, the Internal Revenue Service levies on the $3,000 in W's bank account in partial satisfaction of the outstanding liability. On August 31, 1998, W files a request for relief from joint and several liability. The liability arose prior to July 22, 1998. Section 6015 is applicable to the $2,000 that remained unpaid as of July 22, 1998, and section 6013(e) is applicable to the $3,000 that was paid prior to July 22, 1998.

[T.D. 9003, 67 FR 47285, July 18, 2002]

§ 1.6015-9 Effective date.

Sections 1.6015-0 through 1.6015-9 are applicable for all elections under § 1.6015-2 or 1.6015-3 or any requests for relief under § 1.6015-4 filed on or after July 18, 2002.

[T.D. 9003, 67 FR 47285, July 18, 2002]

§ 1.6016-1 Declarations of estimated income tax by corporations.

(a) ***Requirement.*** For taxable years ending on or after December 31, 1955, a declaration of estimated tax shall be made by every corporation (including unincorporated business enterprises electing to be taxed as domestic corporations under section 1361), which is subject to taxation under section 11 or 1201(a), or subchapter L, chapter 1 of the Code (relating to insurance companies), if its income tax under such sections or such subchapter L for the taxable year can reasonably be expected to exceed the sum of $100,000 plus the amount of any estimated credits allowable under section 32 (relating to tax withheld at source on nonresident aliens and foreign corporations and on tax-free covenant bonds), section 33 (relating to taxes of foreign countries and possessions of the United States), and section 38 (relating to investment in certain depreciable property).

(b) ***Definition of estimated tax.*** The term “estimated tax”, in the case of a corporation, means the excess of the amount which such corporation estimates as its income tax liability for the taxable year under section 11 or 1201(a), or subchapter L, chapter 1 of the Code, over the sum of $100,000 and any estimated credits under sections 32, 33, and 38. However, for the rule with respect to the limitation upon the $100,000 exemption for members of certain electing affiliated groups, see section 243(b)(3)(C)(v) and the regulations thereunder.

(c) ***Examples.*** The application of this section may be illustrated by the following examples:

Example 1. M, a corporation subject to tax under section 11, reasonably anticipates that it will have taxable income of $224,000 for the calendar year 1964. The normal tax and surtax result in an expected liability of $105,000. M determines that it will not have any allowable credits under sections 32, 33, and 38 for 1964. Since M's expected tax ($105,000) exceeds the exemption ($100,000), a declaration of estimated tax is required to be filed, reporting an estimated tax of $5,000 ($105,000−$100,000) for the calendar year 1964.

Example 2. Under the facts stated in example (1), except that M estimates it will have an allowable foreign tax credit under section 33 in the amount of $4,000 and an allowable investment credit under section 38 in the amount of $3,000, no declaration is required, since M's expected tax ($105,000) does not exceed the $100,000 plus the allowable credits totaling $7,000.

[T.D. 6768, 29 FR 14921, Nov. 4, 1964]

§ 1.6016-2 Contents of declaration of estimated tax.

(a) ***In general.*** The declaration of estimated tax by a corporation shall be made on Form 1120-ES. For the purpose of making the declaration, the estimated tax should be based upon the amount of gross income which the taxpayer can reasonably be expected to receive or accrue as the case may be, depending upon the method of accounting upon the basis of which the taxable income is computed, and the amount of the estimated allowable deductions and credits to be taken into account. Such amounts of gross income,

deductions, and credits should be determined upon the basis of facts and circumstances existing as at the time prescribed for the filing of the declaration as well as those reasonably to be anticipated for the taxable year.

(b) ***Use of prescribed form.*** Copies of Form 1120-ES will so far as possible be furnished taxpayers by district directors. A taxpayer will not be excused from making a declaration, however, by the fact that no form has been furnished. Taxpayers not supplied with the proper form should make application therefor to the district director in ample time to have their declarations prepared, verified, and filed with the district director on or before the date prescribed for filing the declaration. If the prescribed form is not available a statement disclosing the estimated income tax after the exemption and the credits, if any, should be filed as a tentative declaration within the prescribed time, accompanied by the payment of the required installment. Such tentative declaration should be supplemented, without unnecessary delay, by a declaration made on the proper form.

§ 1.6016-3 Amendment of declaration.

In the making of a declaration of estimated tax the corporation is required to take into account the then existing facts and circumstances as well as those reasonably to be anticipated relating to prospective gross income, allowable deductions, and estimated credits for the taxable year. Amended or revised declarations may be made in any case in which the corporation estimates that its gross income, deductions, or credits will materially change the estimated tax reported in the previous declaration. However, for the rule with respect to the number of amended declarations which may be filed for taxable years beginning after December 31, 1963, see paragraph (d)(2) of § 1.6074-1. Such amended declaration may be made on either Form 1120-ES (marked “Amended”) or on the reverse side of the installment notice furnished the corporation by the district director. See, however, paragraph (b) of § 1.6016-2 for procedure to be followed if the prescribed form is not available.

[T.D. 6768, 29 FR 14922, Nov. 4, 1964]

§ 1.6016-4 Short taxable year.

(a) ***Requirement of declaration.*** No declaration may be made for a period of more than 12 months. For purposes of this section a taxable year of 52 or 53 weeks, in the case of a corporation which computes its taxable income in accordance with the election permitted by section 441(f), shall be deemed a period of 12 months. For special rules affecting the time for filing declarations and paying estimated tax by such corporation, see paragraph (b) of § 1.441-2. A separate declaration is required where a corporation is required to submit an income tax return for a period of less than 12 months, but only if such short period ends on or after December 31, 1955. However, no declaration is required if the short taxable year:

(1) Begins on or before December 31, 1963, and is:

(i) A period of less than 9 months, or

(ii) A period of 9 or more months but less than 12 months and the requirements of section 6016(a) are not met before the 1st day of the last month in the short taxable year, or

(2) Begins after December 31, 1963, and is:

(i) A period of less than 4 months, or

(ii) A period of 4 or more months but less than 12 months and the requirements of section 6016(a) are not met before the 1st day of the last month in the short taxable year.

(b) ***Income placed on an annual basis.*** In cases where the short taxable year results from a change of annual accounting period, for the purpose of determining whether the anticipated income for a short taxable year will result in an estimated tax liability requiring the filing of a declaration, such income shall be placed on an annual basis in the manner prescribed in section 443(b)(1). If a tax computed on such annualized income exceeds the sum of $100,000 and any credits under part IV, of subchapter A, chapter 1 of the Code, the estimated tax shall be the same part of the excess so computed as the number of months in the short period is of 12 months. Thus, for example, a corporation which changes from a calendar year basis to a fiscal year basis beginning October 1, 1956, will have a short taxable year beginning January 1, 1956, and ending September 30, 1956. If on or before August 31, 1956, the taxpayer anticipates that it will have income of $264,000 for the 9-month taxable year the estimated tax is computed as follows:

(1) Anticipated taxable income for 9 months	$264,000
(2) Annualized income ($264,000 × 12 ÷ 9)	352,000
(3) Tax liability on item (2)	177,540
(4) Item (3) reduced by $100,000 (there are no credits under part IV, subchapter A, chapter 1 of the Code)	77,540
(5) Estimated tax for 9-month period ($77,540 × 9 ÷ 12)	58,155

Since the tax liability on the annualized income is in excess of $100,000, a declaration is required to be filed, reporting an estimated tax of $58,155 for the 9-month taxable period. This paragraph has no application where the short taxable year does not result from a change in the taxpayer's annual accounting period.

[T.D. 6500, 25 FR 12108, Nov. 26, 1960, as amended by T.D. 6768, 29 FR 14922, Nov. 4, 1964]

§ 1.6017-1 Self-employment tax returns.

(a) ***In general.***

(1) Every individual, other than a nonresident alien, having net earnings from self-employment, as defined in section 1402, of $400 or more for the taxable year shall make a return of such earnings. For purposes of this section, an individual who is a resident of the Virgin Islands, Puerto Rico, or (for any taxable year beginning after 1960) Guam or American Samoa is not to be considered a nonresident alien individual. See paragraph (d) of § 1.1402(b)-1. A return is required under this section if an individual has self-employment income, as defined in section 1402(b), even though he may not be required to make a return under section 6012 for purposes of the tax imposed by section 1 or 3. Provisions applicable to returns under section 6012(a) shall be applicable to returns under this section.

(2) Except as otherwise provided in this subparagraph, the return required by this section shall be made on Form 1040. The form to be used by residents of the Virgin Islands, Guam, or American Samoa is From 1040SS. In the case of a resident of Puerto Rico who is not required to make a return of income under section 6012(a), the form to be used is Form 1040SS, except that Form 1040PR shall be used if it is furnished by the Internal Revenue Service to such resident for use in lieu of Form 1040SS.

(b) ***Joint returns.***

(1) In the case of a husband and wife filing a joint return under section 6013, the tax on self-employment income is computed on the separate self-employment income of each spouse, and not on the aggregate of the two amounts. The requirement of section 6013(d)(3) that in the case of a joint return the tax is computed on the aggregate income of the spouses is not applicable with respect to the tax on self-employment income. Where the husband and wife each has net earnings from self-employment of $400 or more, it will be necessary for each to complete separate schedules of the computation of self-employment tax with respect to the net earnings of each spouse, despite the fact that a joint return is filed. If the net earnings from self-employment of either the husband or the wife are less than $400, such net earnings are not subject to the tax on self-employment income, even though they must be shown on the joint return for purposes of the tax imposed by section 1 or 3.

(2) Except as otherwise expressly provided, section 6013 is applicable to the return of the tax on self-employment income; therefore, the liability with respect to such tax in the case of a joint return is joint and several.

(c) ***Social security account numbers.***

(1) Every individual making a return of net earnings from self-employment for any period commencing before January 1, 1962, is required to show thereon his social security account number, or, if he has no such account number, to make application therefor on Form SS-5 before filing such return. However, the failure to apply for or receive a social security account number will not excuse the individual from the requirement that he file such return on or before the due date thereof. Form SS-5 may be obtained from any district office of the Social Security Administration or from any district director. The application shall be filed with a district office of the Social Security Administration or, in the case of an individual not in the United States, with the district office of the Social Security Administration at Baltimore, Md. An individual who has previously secured a social security account number as an employee shall use that account number on his return of net earnings from self-employment.

(2) For provisions applicable to the securing of identifying numbers and the reporting thereof on returns and schedules for periods commencing after December 31, 1961, see § 1.6109-1.

(d) ***Declaration of estimated tax with respect to taxable years beginning after December 31, 1966.*** For taxable years beginning after December 31, 1966, section 6015 provides that the term “estimated tax” includes the amount which an individual estimates as the amount of self-employment tax imposed by chapter 2 for the taxable year. Thus, individuals upon whom self-employment tax is imposed by section 1401 must make a declaration of estimated tax if they meet the requirements of section 6015(a); except as otherwise provided under section 6015(i).

[T.D. 6500, 25 FR 12108, Nov. 26, 1960, as amended by T.D. 6691, 28 FR 12816, Dec. 3, 1963; T.D. 7427, 41 FR 34028, Aug. 12, 1976]

INFORMATION RETURNS

§ 1.6031(a)-1 Return of partnership income.

(a) ***Domestic partnerships —***

(1) ***Return required.*** Except as provided in paragraphs (a)(3) and (c) of this section, every domestic partnership must file a return of partnership income under section 6031 (partnership return) for each taxable year on the form prescribed for the partnership return. The partnership return must be filed for the taxable year of the partnership regardless of the taxable years of the partners. For taxable years of a partnership and of a partner, see section 706 and § 1.706-1. For the rules governing partnership statements to partners and nominees, see § 1.6031(b)-1T. For the rules requiring the disclosure of certain transactions, see § 1.6011-4T.

(2) ***Content of return.*** The partnership return must contain the information required by the prescribed form and the accompanying instructions.

(3) ***Special rule.***

(i) A partnership that has no income, deductions, or credits for federal income tax purposes for a taxable year is not required to file a partnership return for that year.

(ii) The Commissioner may, in guidance published in the Internal Revenue Bulletin (*see* § 601.601(d)(2)(ii)(*b*) of this chapter), provide for an exception to partnership reporting under section 6031 and for conditions for the exception, if all or substantially all of a partnership's income is derived from the holding or disposition of tax-exempt obligations (as defined in section 1275(a)(3) and § 1.1275-1(e)) or shares in a regulated investment company (as defined in section 851(a)) that pays exempt-interest dividends (as defined in section 852(b)(5)).

(4) ***Failure to file.*** For the consequences of a failure to comply with the requirements of section 6031(a) and this paragraph (a), see sections 6229(a), 6231(f), 6698, and 7203.

(b) ***Foreign partnerships*** —

(1) ***General rule.***

(i) ***Filing requirement.*** A foreign partnership is not required to file a partnership return, if the foreign partnership does not have gross income that is (or is treated as) effectively connected with the conduct of a trade or business within the United States (ECI) and does not have gross income (including gains) derived from sources within the United States (U.S.-source income). Except as provided in paragraphs (b)(2) and (3) of this section, a foreign partnership that has ECI or has U.S.-source income that is not ECI must file a partnership return for its taxable year in accordance with the rules for domestic partnerships in paragraph (a) of this section.

(ii) ***Special rule.*** For purposes of this paragraph (b)(1) and paragraph (b)(3)(iii) of this section, a foreign partnership will not be considered to have derived income from sources within the United States solely because a U.S. partner marks to market his pro rata share of PFIC stock held by the foreign partnership pursuant to an election under section 1296.

(2) ***Foreign partnerships with de minimis U.S.-source income and de minimis U.S. partners.*** A foreign partnership (other than a withholding foreign partnership, as defined in § 1.1441-5(c)(2)(i)) that has $20,000 or less of U.S.-source income and has no ECI during its taxable year is not required to file a partnership return if, at no time during the partnership taxable year, one percent or more of any item of partnership income, gain, loss, deduction, or credit is allocable in the aggregate to direct United States partners. The United States partners must directly report their shares of the allocable items of partnership income, gain, loss, deduction, and credit.

(3) ***Filing obligations for certain other foreign partnerships with no ECI*** —

(i) ***General requirements for modified filing obligations.*** A foreign partnership will be subject to the modified filing obligations in paragraphs (b)(3)(ii) and (iii) of this section if, in addition to satisfying the requirements contained in paragraphs (b)(3)(ii) and (iii) of this section—

(A) The partnership is not a withholding foreign partnership as defined in § 1.1441-5(c)(2)(i);

(B) Forms 1042 and 1042-S are filed by the partnership with respect to the amounts subject to reporting under § 1.1461-1(b) and (c), unless the partnership is not required to file such returns under § 1.1461-1(b)(2) and (c)(4), in which case Forms 1042 and 1042-S must be filed by another withholding agent or agents; and

(C) The tax liability of the partners with respect to such amounts has been fully satisfied by the withholding of tax at the source, if applicable, under chapter 3 of the Internal Revenue Code.

(ii) ***Foreign partnerships with U.S.-source income but no U.S. partners.*** A foreign partnership that has U.S.-source income is not required to file a partnership return if the partnership has no ECI and no United States partners at any time during the partnership's taxable year.

(iii) ***Foreign partnerships with U.S.-source income and U.S. partners.*** Except as provided in paragraph (b)(2) of this section, a foreign partnership with one or more United States partners that has U.S.-source income but no ECI must file a partnership return. However, such a foreign partnership need not file Statements of Partner's Share of Income, Credit, Deduction, etc. (Schedules K-1) for any partners other than its direct United States partners and its passthrough partners (whether U.S. or foreign) through which United States partners hold an interest in the foreign partnership. Schedules K-1 that are not excepted from filing under this paragraph (b)(3)(iii) must contain the same information required of a domestic partnership filing under paragraph (a) of this section.

(4) ***Information or returns required of partners who are United States persons*** —

(i) ***In general.*** If a United States person is a partner in a partnership that is not required to file a partnership return, the district director or director of the relevant service center may require that person to render the statements or provide the information necessary to verify the accuracy of the reporting by that person of any items of partnership income, gain, loss, deduction, or credit.

(ii) ***Controlled foreign partnerships.*** Certain United States persons who are partners in a foreign partnership controlled (within the meaning of section 6038(e)(1)) by United States persons may be required to provide information with respect to the partnership under section 6038.

(5) ***Certain partnership elections.*** For a partnership that is not otherwise required to file a partnership return, if an election that can only be made by the partnership under section 703 (affecting the computation of taxable income derived from a partnership) is to be made by or for the partnership, a return on the form prescribed for the partnership return must be filed for the partnership. Unless otherwise provided in the form or the accompanying instructions, a return filed solely to make an election need only contain a written statement citing paragraph (b)(5)(ii) of this section, listing the name and address of the partnership making the election, and clearly identifying the specific election being made. A return filed under paragraph (b)(5)(ii) of this section solely to make an election is not a partnership return. Thus, such a return is not a return filed under section 6031(a) for purposes of sections 6501 (except regarding the specific election issue), 6231(a)(1)(A), and 6233. The return must be signed by—

(i) Each partner that is a partner in the partnership at the time the election is made; or

(ii) Any partner of the partnership who is authorized (under local law or the partnership's organizational documents) to make the election and who represents to having such authorization under penalties of perjury.

(6) ***Exclusion for certain organizations.*** The return requirement of section 6031 and this section does not apply to the International Telecommunications Satellite Organization, the International Maritime Satellite Organization, or any organization that is a successor of either.

(7) ***Filing obligation for certain partners of certain foreign partnerships with respect to base erosion payments.*** If a foreign partnership is not required to file a partnership return and the foreign partnership has made a payment or accrual that is treated as a base erosion payment of a partner as provided in § 1.59A-7(c), a partner in the foreign partnership who is a person required to file a Form 8991 (or successor) must include the information necessary to report those base erosion payments and base erosion tax benefits on Form 8991 (or successor) in accordance with the related instructions. A partner with a Form 8991 (or successor) filing requirement who is a partner in a foreign partnership that is not required to file a partnership return must obtain the necessary information to report any base erosion payments on Form 8991 (or successor) from the foreign partnership or from any other reliable records of these payments. This paragraph does not apply to any partner described in § 1.59A-7(d)(2).

(c) ***Partnerships excluded from the application of subchapter K of the Internal Revenue Code*** —

(1) ***Wholly excluded*** —

(i) ***Year of election.*** An eligible partnership as described in § 1.761-2(a) that elects to be excluded from all the provisions of subchapter K of chapter 1 of the Internal Revenue Code in the manner specified by § 1.761-2(b)(2)(i) must timely file the form prescribed for the partnership return for the taxable year for which the election is made. In lieu of the information otherwise required, the return must contain or be accompanied by the information required by § 1.761-2(b)(2)(i).

(ii) ***Subsequent years.*** Except as otherwise provided in paragraph (c)(1)(i) of this section, an eligible partnership that elects to be wholly excluded from the application of subchapter K is not required to file a partnership return.

(2) ***Deemed excluded.*** An eligible partnership that is deemed to have elected exclusion from the application of subchapter K beginning with its first taxable year, as specified in § 1.761-2(b)(2)(ii), is not required to file a partnership return.

(d) ***Definitions*** —

(1) ***Partnership.*** For the meaning of the term partnership, see § 1.761-1(a).

(2) ***United States person.*** In applying this section, a United States person is a person described in section 7701(a)(30); the government of the United States, a State, or the District of Columbia (including an agency or instrumentality thereof); or a corporation created or organized in Guam, the Commonwealth of Northern Mariana Islands, the U.S. Virgin Islands, and American Samoa, if the requirements of section 881(b)(1)(A), (B), and (C) are met for such corporation. The term does not include an alien individual who is a resident of Puerto Rico, Guam, the Commonwealth of Northern Mariana Islands, the U.S. Virgin Islands, or American Samoa, as determined under § 301.7701(b)-1(d) of this chapter.

(3) ***United States partner.*** In applying this section, a United States partner is any United States person who holds a direct or indirect interest in the partnership.

(4) ***Indirect interest.*** An indirect interest is any interest held through one or more passthrough partners, as defined in section 6231(a)(9).

(e) ***Procedural requirements*** —

(1) ***Place for filing.*** The return of a partnership must be filed with the service center prescribed in the relevant IRS revenue procedure, publication, form, or instructions to the form (see § 601.601(d)(2)).

(2) ***Time for filing.*** The return of a partnership must be filed on or before the date prescribed by section 6072(b).

(3) ***Magnetic media filing.*** For magnetic media filing requirements with respect to partnerships, see section 6011(e)(2) and the regulations thereunder.

(f)

(1) ***Applicability date.*** This section applies to returns filed on or after January 30, 2020. Section 1.6031(a)-1T (as contained in 26 CFR part 1, revised April 2019) applies to returns filed before January 30, 2020.

(2) ***Applicability date.*** Paragraph (b)(7) of this section applies to taxable years ending on or after *October 9, 2020.*

[T.D. 8841, 64 FR 61500, Nov. 12, 1999, as amended by T.D. 9000, 67 FR 41328, June 18, 2002; T.D. 9094, 68 FR 63734, Nov. 10, 2003; 68 FR 70584, Dec. 18, 2003; T.D. 9123, 69 FR 24078, May 3, 2004; T.D. 9177, 70 FR 7176, Feb. 11, 2005; T.D. 9821, 82 FR 33444, July 20, 2017; T.D. 9892, 85 FR 5324, Jan. 30, 2020; T.D. 9910, 85 FR 64369, Oct. 9, 2020]

§ 1.6031(b)-1T Statements to partners (temporary).

(a) ***Statement required to be furnished to partners*** —

(1) ***In general.*** Except as provided in this paragraph (a)(1) and paragraph (a)(2)(ii) of this section, any partnership required under section 6031(a) and the regulations thereunder to file a partnership return for a taxable year shall furnish to every person who was a partner (within the meaning of section 7701(a)(2)) at any time during the taxable year a written statement containing the information described in paragraph (a)(3) of this section. This section shall not apply to a real estate mortgage investment conduit (REMIC) treated as a partnership under subtitle F of the Code by reason of section 860F(e). For the reporting requirements applicable to REMICs see § 1.6031(b)-2T.

(2) ***Special rules applicable to partnership interests held by nominees*** —

(i) ***Statements furnished to nominees.*** For any partnership taxable year beginning after October 22, 1986, a partnership shall provide a person that holds (directly or indirectly) an interest in such partnership as a nominee on behalf of another person at any time during such year with a statement under paragraph (a)(1) of this section with respect to such interest if—

(A) Such nominee has not furnished the statement required under § 1.6031(c)-1T(a)(1)(i) to the partnership with respect to such other person;

(B) Such nominee either holds legal title to such partnership interest in its own name or is identified in a statement provided to the partnership pursuant to § 1.6031(c)-1T(a)(1)(i) by another nominee as the person on whose behalf such other nominee holds such interest; and

(C) Such nominee is not a person described in § 1.6031(c)-1T(a)(2) (relating to the special rule for clearing agencies).

In such case, the partnership shall assume, for purposes of this section, that the nominee is the beneficial owner of the partnership interest.

(ii) ***Statements not required to be furnished to partners holding partnership interests through nominees.*** A partnership shall not be required to furnish a statement under paragraph (a)(1) of this section to a partner with respect to any portion of such partner's interest in the partnership that is owned through a nominee if—

(A) Such nominee has not furnished (or is not required to furnish under § 1.6031(c)-1T(a)(2)), a statement to the partnership under § 1.6031(c)-1T(a)(1)(i) with respect to such partner; and

(B) Such partner has not furnished (or is not required to furnish) a statement to the partnership under § 1.6031(c)-1T(a)(3), with respect to such interest in the partnership.

(3) ***Contents of statement.*** The statement required under paragraph (a)(1) of this section shall include the following information:

(i) The partner's distributive share of partnership income, gain, loss, deduction, or credit required to be shown on the partnership return (or, for taxable years beginning before January 1, 1987, the partner's distributive share of partnership income, gain, loss, deduction, or credit shown on the partnership return); and

(ii) To the extent provided by form or the accompanying instructions, any additional information that may be required to apply particular provisions of subtitle A of the Code to the partner with respect to items related to the partnership.

(b) ***Time for furnishing statement.*** The statement required to be furnished by the partnership under paragraph (a)(1) of this section shall be furnished on or before the day on which the partnership return for that taxable year is required to be filed (determined with regard to extensions). For partnership returns the due date for which (determined without regard to extensions) is before January 1, 1987, the statement required to be furnished by the partnership under paragraph (a)(1) of this section shall be furnished on or before the day on which the partnership return is filed.

(c) ***Statement may be provided to agent.*** If a partner designates another person, such as an attorney or an investment advisor, as the partner's (or nominee's) agent in dealing with the partnership, the partnership may provide the statement required under paragraph (a)(1) of this section with respect to such partner to such other person instead of the partner.

(d) ***Penalties.*** For penalties for failure to comply with the requirements of section 6031(b) and paragraph (a) of this section, see section 6722(a).

(e) ***Effective date.*** Except as otherwise provided in this section, the provisions of this section apply to partnership taxable years beginning after September 3, 1982.

[T.D. 8225, 53 FR 34490, Sept. 7, 1988]

§ 1.6031(b)-2T REMIC reporting requirements (temporary). [Reserved]

§ 1.6031(c)-1T Nominee reporting of partnership information (temporary).

(a) ***Statements required to be furnished to partnership*** —

(1) ***Statement from nominee*** —

(i) ***In general.*** Except as otherwise provided in this section, any person who holds, directly or indirectly, an interest in a partnership (required under section 6031(a) and the regulations thereunder to file a partnership return for a taxable year) as a nominee on behalf of another person at any time during the partnership taxable year shall furnish to the partnership a written statement (or statements) for that taxable year with respect to such other person containing the information described in paragraph (a)(1)(ii) of this section.

(ii) ***Contents of statement.*** The statement required under paragraph (a)(1)(i) of this section shall, except as otherwise provided in paragraph (a)(4) of this section, include the following information:

(A) The name, address, and taxpayer identification number of the nominee;

(B) The name, address, and taxpayer identification number of such other person;

(C) Whether such other person is—

(*1*) A person that is not a United States person;

(*2*) A foreign government, an international organization, or any wholly-owned agency or instrumentality of either of the foregoing; or

(*3*) A tax-exempt entity (within the meaning of section 168(h)(2));

(D) A description of any interest in the partnership held by the nominee on behalf of such other person at the beginning of the partnership taxable year;

(E) A description of any interest in the partnership that the nominee acquires (within the meaning of paragraph (g)(1) of this section) on behalf of such other person during the partnership taxable year, the method of acquisition (e.g., purchase, exchange, acquisition at death, gift, or commencement of nominee relationship) and acquisition cost (within the meaning of paragraph (g)(2) of this section) of such interest, and the date of the acquisition of such interest; and

(F) A description of any interest in the partnership that the nominee transfers (within the meaning of paragraph (g)(5) of this section) on behalf of such other person during the partnership taxable year, the net proceeds from the transfer (within the meaning of paragraph (g)(6) of this section) of such interest, and the date of the transfer of such interest.

A description of a partnership interest must include sufficient detail to enable the partnership to furnish to such other person the statement required under § 1.6031(b)-1T (a).

(2) ***Special rule for clearing agencies.*** A clearing agency registered pursuant to the provisions of section 17A of the Securities Exchange Act of 1934 (or its nominee) that holds an interest in a partnership as a nominee on behalf of another person shall not be required to furnish any statement described in paragraph (a)(1)(i) of this section with respect to such interest.

(3) ***Special rule for brokers and financial institutions*** —

(i) ***Additional statement required.*** Any broker (within the meaning of paragraph (g)(3) of this section) or financial institution (within the meaning of paragraph (g)(4) of this section) that holds an interest in a partnership indirectly through a nominee described in paragraph (a)(2) of this section at any time during a partnership taxable year shall furnish (in addition to any statement (or statements) required under paragraph (a)(1)(i) of this section) to the partnership a written statement (or statements) containing the information described in paragraph (a)(3)(ii) of this section with respect to any interest in such partnership that it holds (directly or indirectly) for its own account at any time during such partnership taxable year.

(ii) ***Contents of statement.*** The statement required under paragraph (a)(3)(i) of this section shall, except as otherwise provided in paragraph (a)(4) of this section, include the following information:

(A) The name, address, and taxpayer identification number of the broker or financial institution;

(B) Whether such broker of financial institution is a person that is not a United States person;

(C) A description of any interest in the partnership held by the broker or financial institution for its own account at the beginning of the partnership taxable year;

(D) A description of any interest in the partnership that the broker or financial institution acquires for its own account during the partnership taxable year, the method of acquisition and acquisition cost of such interest, and the date of the acquisition of such interest; and

(E) A description of any interest in the partnership that the broker or financial institution transfers for its own account during the partnership taxable year, the net proceeds from the transfer of such interest, and the date of the transfer of such interest.

A description of a partnership interest held by a broker or financial institution for its own account must include sufficient detail to enable the partnership to furnish to the broker or financial institution the statement required under § 1.6031(b)-1T (a).

(4) ***Exception*** —

(i) ***In general.*** Except as otherwise provided in this paragraph (a)(4), any statement required under paragraph (a) (1)(i) or (3)(i) of this section for a taxable year is not required to include—

(A) That part of the information described in paragraph (a) (1)(ii)(E) and (3)(ii)(D) of this section regarding the method of acquisition and acquisition cost; or

(B) That part of the information described in paragraph (a)(1)(ii)(F) and (3)(ii)(E) of this section regarding the net proceeds from the transfer;

to the extent that, prior to the beginning of the partnership taxable year, the partnership has provided the nominee with a written statement that the nominee need not provide such information to the partnership, and the partnership has not modified or revoked such statement. For purposes of the preceding sentence, the modification or revocation of a statement furnished to a nominee is effective for a partnership taxable year if and only if the partnership notifies the nominee of such modification or revocation by a written statement more than 60 days before the beginning of the partnership taxable year. The nominee shall retain a copy of any statement that is furnished to it by the partnership under this paragraph (a)(4) in the nominee's records so long as the contents thereof may become material in the administration of any internal revenue law.

(ii) ***Effect of election under section 754.*** Paragraph (a)(4)(i)(A) of this section shall not apply to a partnership taxable year if—

(A) The partnership has an election in effect under section 754 (relating to optional adjustment to basis of partnership property) for such taxable year; and

(B) The nominee knows or has reason to know of such election more than 60 days before the beginning of such taxable year.

(5) ***Examples.*** The following examples illustrate the application of this paragraph (a):

Example 1. B, a broker, holds 50 units of interest in Partnership P, a calendar year partnership, in street name for customer A, the beneficial owner. B holds the units on behalf of A at all times during 1989. B must furnish a statement to P for calendar year 1989 under paragraph (a)(1)(i) of this section that includes the information required under paragraph (a)(1)(ii) (A) through (D) of this section. The description of the partnership interest held by B on A's behalf on January 1, 1989, must identify the number of units of P held by B on A's behalf at that time (50), and the class of the partnership interest (including the Committee on Uniform Security Identification Procedures (CUSIP) number of the partnership interest, if known).

Example 2. The facts are the same as in example (1), except that pursuant to A's instructions, B sells 25 of A's units of interest in P on August 1, 1989, receiving net proceeds from the transfer of $500. In addition to the information described in example (1), the statement that B must furnish to P must include the class of the partnership interest transferred (including the CUSIP number of the partnership interest, if known), the number of units transferred (25), the net proceeds from the transfer ($500), and the date of the transfer (August 1, 1989.)

Example 3. The facts are the same as in example (1), except that A is not the beneficial owner, but rather holds the units as a nominee on behalf of C, the beneficial owner, at all times during 1989. In addition to the statement that B must furnish to P (as described in Example (1) of this paragraph (a)(5)), A must furnish a statement to P for calendar year 1989 under paragraph (a)(1)(i) of this section that includes the information required under paragraph (a)(1)(ii) (A) through (D) of this section. If both A and B provide P with the statement required under paragraph (a)(1)(i) of this section, P must provide C with the statement required under § 1.6031(b)-1T (a)(1).

(b) ***Time for furnishing statements.*** A nominee may furnish to the partnership any statement required under paragraph (a) of this section annually, quarterly, monthly, or on any other basis, provided that all statements required to be furnished under paragraph (a) of this section for a partnership taxable year shall be furnished on or before the last day of the first month following the close of such partnership taxable year.

(c) ***Use of magnetic media.*** A nominee required to furnish a written statement under paragraph (a) of this section, may, in lieu of furnishing such written statement, furnish the required information on magnetic tape or by other media if the partnership and the nominee so agree.

(d) ***Use of single document.*** Any person who holds interests in a partnership as a nominee on behalf of more than one other person during the partnership taxable year, may, in lieu of furnishing to the partnership a separate statement for each such other person, furnish to the partnership a single document which includes, for each such other person, the information described in paragraph (a)(1)(ii) of this section. To the extent that a single document is used, references in this section to the statement required under paragraph (a)(1)(i) of this section shall be deemed to refer also to the information included in a single document under this paragraph (d).

(e) ***Retention of information.*** The nominee shall retain a copy of any statement that is furnished to the partnership under this section in the nominee's records so long as the contents thereof may become material in the administration of any internal revenue law.

(f) ***Use of agent.*** If a partnership has designated another person, such as a clearing organization, as the partnership's agent for purposes of receiving the statements required under paragraph (a) of this section, such statements may be furnished to that other person instead of the partnership. If a nominee has designated another person as its agent for purposes of furnishing to the partnership (or its agent) the statements required under paragraph (a) of this section, that other person may furnish such statements to the partnership (or its agent) on behalf of the nominee.

(g) ***Meaning of terms.*** For purposes of this section, the following terms have the meanings set forth below:

(1) The term *acquires* means—

(i) A purchase or other acquisition of a partnership interest; or

(ii) The commencement of a nominee relationship, including the substitution of one nominee for another.

(2) The term *acquisition cost* means the sum of any money paid and the fair market value of any property (other than money) transferred to acquire a partnership interest increased by any expenses paid or incurred with respect to the acquisition (such as broker's fees or commissions).

(3) The term *broker* shall have the meaning set forth in paragraph (a)(1) of § 1.6045ca-1.

(4) The term *financial institution* means a financial institution such as a bank, mutual savings bank, savings and loan association, building and loan association, cooperative bank, homestead association, credit union, industrial loan association or bank or other similar organization.

(5) The term *transfer* means—

(i) A sale, exchange, or other disposition of a partnership interest; or

(ii) The termination of a nominee relationship, including the substitution of one nominee for another.

(6) The term *net proceeds from the transfer* means the sum of any money and the fair market value of any property (other than money) received in connection with a transfer of a partnership interest reduced by any expenses paid or incurred with respect to the transfer (such as broker's fees or commissions).

(7) The term *person* includes the United States, a State, the District of Columbia, a foreign government, a political subdivision of a State or foreign government, or an international organization.

(h) ***Statement required by nominees that do not comply with § 1.6031(c)-1T (a)*** —

(1) ***In general.*** Any person that—

(i) Holds an interest in a partnership as a nominee (other than a nominee described in paragraph (a)(3) of this section) on behalf of another person at any time during the partnership taxable year;

(ii) Does not furnish to such partnership the statement required under paragraph (a)(1)(i) of this section for such other person with respect to such interest in the partnership; and

(iii) Receives from such partnership the statement described in paragraph (a)(1) of § 1.6031(b)-1T with respect to such interest in the partnership;

shall furnish to such other person a written statement containing the information described in paragraph (h)(2) of this section with respect to such interest in the partnership.

(2) ***Contents of statement.*** The statement required under paragraph (h)(1) of this section shall contain the following information:

(i) The distributive share of partnership income, gain, loss, deduction or credit required to be shown on the partnership return that is allocable to such interest in the partnership; and

(ii) Any additional information that may be required to apply particular provisions of subtitle A of the Code to the beneficial owner of such interest in the partnership in connection with items related to the partnership.

(3) ***Time for furnishing statements.*** A nominee shall furnish the statement required under paragraph (h)(1) of this section within 30 days after receiving the statement described in paragraph (a) of § 1.6031(b)-1T.

(i) ***REMICs.*** This section shall not apply with respect to any interest in a real estate mortgage investment conduit (REMIC) treated as a partnership under subtitle F of the Code by reason of section 860F(e). For the nominee reporting requirements with respect to REMICs see § 1.6031(c)-2T.

(j) ***Penalties.*** [Reserved]

(k) ***Effective date*** —

(1) ***In general.*** Except as otherwise provided in paragraph (k)(2) of this section, the provisions of this section shall apply to partnership taxable years beginning after October 22, 1986.

(2) ***Transitional rule for taxable years beginning before January 1, 1989.*** For partnership taxable years beginning before January 1, 1989,—

(i) Any statement that a nominee is required to furnish to a partnership under paragraph (a)(1) of this section shall not be required to include the following information:

(A) The information described in paragraph (a)(1)(ii)(C) of this section;

(B) That part of the information described in paragraph (a)(1)(ii)(E) of this section regarding the method of acquisition and acquisition cost of a partnership interest; or

(C) That part of the information described in paragraph (a)(1)(ii)(F) of this section regarding the net proceeds from the transfer of a partnership interest.

(ii) A broker or financial institution shall not be required to furnish the additional statement described in paragraph (a)(3)(i) of this section.

[T.D. 8225, 53 FR 34491, Sept. 7, 1988]

§ 1.6031(c)-2T Nominee reporting of REMIC information (temporary). [Reserved]

§ 1.6032-1 Returns of banks with respect to common trust funds.

(a) Every bank (as defined in section 581) maintaining a common trust fund shall make a return of income of the common trust fund, regardless of the amount of its taxable income. Member banks of an affiliated group that serve as co-trustees with respect to a common trust fund must act jointly in making a return for the fund. If a bank maintains more than one common trust fund, a separate return shall be made for each. No particular form is prescribed for making the return under this section, but Form 1065 may be used if it is designated by the bank as the return of a common trust fund. The return shall be made for the taxable year of the common trust fund and shall be filed on or before the date prescribed by section 6072(b) with the service center prescribed in the relevant Internal Revenue Service revenue procedure, publication, form, or instructions to the form (see § 601.601(d)(2) of this chapter). Such return shall state specifically with respect to the fund the items of gross income and the deductions allowed by subtitle A of the Internal Revenue Code, shall include each participant's name and address, the participant's proportionate share of taxable income or net loss (exclusive of gains and losses from sales or exchanges of capital assets), the participant's proportionate share of gains and losses from sales or exchanges of capital assets, and the participant's share of items which enter into the determination of the tax imposed by section 56. See §§ 1.584-2 and 1.58-5. If the common trust fund is maintained by two or more banks that are members of the same affiliated group, the return must also identify the member bank in the group that has contributed each participant's property or money to the fund. A copy of the plan of the common trust fund must be filed with the return. If, however, a copy of such plan has once been filed with a return, it need not again be filed if the return contains a statement showing when and where it was filed. If the plan is amended in any way after such copy has been filed, a copy of the amendment must be filed with the return for the taxable year in which the amendment was made. For the signing of a return of a bank with respect to common trust funds, see § 1.6062-1, relating to the manner prescribed for the signing of a return of a corporation.

(b) This section applies to returns filed on or after January 30, 2020. Section 1.6032-1T (as contained in 26 CFR part 1, revised April 2019) applies to taxable years beginning before January 30, 2020.

[T.D. 9892, 85 FR 5324, Jan. 30, 2020]

§ 1.6033-1 Returns by exempt organizations; taxable years beginning before January 1, 1970.

(a) ***In general.***

(1) Except as provided in section 6033(a) and paragraph (g) of this section, every organization exempt from taxation under section 501(a) shall file an annual return of information specifically stating its items of gross income, receipts and disbursements, and such other information as may be prescribed in the instructions issued with respect to the return. Such information return shall be filed annually regardless of the amount or source of the income or receipts of the organization. Except as

provided in paragraph (d) of this section, such return shall be filed annually regardless of whether such organization is chartered by, or affiliated or associated with, any central, parent, or other organization.

(2)

(i) Except as otherwise provided in this subparagraph, every organization exempt from taxation under section 501 (a), and required to file a return under section 6033 and this section, other than an organization described in section 401 (a), 501(c)(3), or 501(d), shall file its annual return on Form 990. However, such an exempt organization, instead of filing Form 990, may file its annual return on Form 990 (SF), a short form, if its gross receipts for the taxable year do not exceed $10,000 and its total assets on the last day of its taxable year do not exceed $10,000.

(ii) For purposes of this subparagraph and subparagraph (4) of this paragraph, “gross receipts” means the gross amount received by the organization during its annual accounting period from all sources without reduction for any costs or expenses including, for example, cost of goods or assets sold, cost of operations, or expenses of earning, raising, or collecting such amounts. Thus, “gross receipts” includes, but is not limited to,

(*a*) the gross amount received as contributions, gifts, grants, and similar amounts without reduction for the expenses of raising and collecting such amounts,

(*b*) the gross amount received as dues or assessments from members or affiliated organizations without reduction for expenses attributable to the receipt of such amounts,

(*c*) gross sales or receipts from business activities (including business activities unrelated to the purpose for which the organization received an exemption, the net income or loss from which may be required to be reported on Form 990-T),

(*d*) the gross amount received from the sale of assets without reduction for cost or other basis and expenses of sale, and

(*e*) the gross amount received as investment income such as interest, dividends, rents, and royalties.

(3) Every employees' trust described in section 401 (a) which is exempt from taxation under section 501 (a) shall file an annual return on Form 990-P. The return shall include the information required by paragraph (b)(5)(ii) of § 1.401-1. In addition, the trust must file the information required to be filed by the employer pursuant to the provisions of § 1.404(a)-2, unless the employer has notified the trustee in writing that he has or will timely file such information. If the trustee has received such notification from the employer, then such notification, or a copy thereof, shall be retained by the trust as a part of its records.

(4) Except as otherwise provided in this subparagraph, every organization described in section 501(c)(3), which is required to file a return under section 6033 and this section, shall file its annual return on Form 990-A. However, such an exempt organization, instead of filing Form 990-A, may file its annual return on Form 990-A (SF), a short form, if its gross receipts for the taxable year do not exceed $10,000 and its total assets on the last day of its taxable year do not exceed $10,000. For purposes of this subparagraph, “gross receipts” shall be defined in the manner prescribed in subparagraph (2)(ii) of this paragraph. The forms prescribed by this subparagraph shall be as follows:

(i) Form 990-A shall consist of parts I and II. Part I shall contain, in addition to information required in part II, such information as may be prescribed in the return and instructions which is required to be furnished by section 6033(a) or which is necessary to show whether or not such organization is exempt from tax under section 501(a). Part II, which shall be open to public inspection pursuant to section 6104 and other applicable sections and the regulations thereunder, shall contain principally the information required by section 6033(b) and the regulations thereunder. The information contained in part II, to be furnished by the organization in duplicate in the manner prescribed by the instructions issued with respect to the return, is as follows:

(*a*) Its gross income for the year. For this purpose, gross income includes tax-exempt income, but does not include contributions, gifts, grants, and similar amounts received. Whether or not an item constitutes a contribution, gift, grant, or similar amount, depends upon all the surrounding facts and circumstances.

(*b*) Its expenses attributable to such income and incurred within the year.

(*c*) Its disbursements out of income (including prior years' accumulations) made within the year for the purposes for which it is exempt. Information shall be included as to the class of activity with a separate total for each activity as well as the name, address, and amount received by each individual or organization receiving cash, other property, or services within the taxable year. If the donee is related by blood, marriage, adoption, or employment (including children of employees) to any person or corporation having an interest in the exempt organization, such as a creator, donor, director, trustee, or officer, the relationship of the donee shall be stated. Activities shall be classified according to purpose in greater detail than merely charitable, educational, religious, or scientific. For example, payments for nursing service, for laboratory construction, for fellowships, or for assistance to indigent families shall be so identified. Where the fair market value of the property at the time of disbursement is used as the measure of the disbursement, the book value of such property (and a statement of how book value was determined) shall also be furnished, and any difference between the fair market value at the time of disbursement and the book value should be reflected in the books of account. The expenses allocable to making the disbursements shall be set forth in such detail as is prescribed by the form or instructions.

(*d*) Its accumulation of income within the year. The amount of such accumulation is obtained by subtracting from the amount in (*a*) of this subdivision the sum of the amounts determined in (*b*) and (*c*) of this subdivision and the expenses allocable to carrying out the purposes for which it is exempt.

(*e*) Its aggregate accumulation of income at the beginning and end of the year. The aggregate accumulation of income shall be divided between that which is attributable to the gain or loss on the sale of assets (excluding inventory items) and that which is attributable to all other income. For this purpose expenses and disbursements shall be allocated on the basis of accounting records, the governing instrument, or applicable local law.

(*f*) Its disbursements out of principal in the current and prior years for the purposes for which it is exempt. In addition, the same type of information shall be required with respect to disbursements out of principal made in the current year as is prescribed by (*c*) of this subdivision with respect to disbursements out of income.

(*g*) A balance sheet showing its assets, liabilities, and net worth as of the beginning and end of such year. Detailed information on the assets, liabilities, and net worth shall be furnished on the schedule provided for this purpose on the Form 990-A. Such schedule shall be supplemented by attachments where appropriate.

(*h*) The total of the contributions and gifts received by it during the year. A statement shall be included showing the gross amount of contributions and gifts collected by the organization, the expenses incurred by the organization in collecting such amount, and the net proceeds.

(*i*) In addition to the information required in (*a*) through (*h*) of this subdivision, the organization shall furnish such specific information and answer such specific questions as are required by the form or instructions.

(ii) Form 990-A (SF) is a short form consisting of a single part which contains such information as may be prescribed in the return and instructions which is required to be furnished by section 6033(a) or which is necessary to show whether or not such organization is exempt from tax under section 501(a). In addition, Form 990-A (SF) shall contain the information required by section 6033(b) which must be furnished in the manner prescribed in the instructions issued with respect to the return. Form 990-A (SF) shall be open to public inspection pursuant to section 6104 and other applicable sections and the regulations thereunder.

(5)

(i) Every religious or apostolic association or corporation described in section 501 (d) which is exempt from taxation under section 501(a) shall file a return on Form 1065 for each taxable year, stating specifically the items of gross income and deductions, and its taxable income. There shall be attached to the return as a part thereof a statement showing the name and address of each member of the association or corporation and the amount of his distributive share of the taxable income of the association or corporation for such year.

(ii) If the taxable year of any member is different from the taxable year of the association or corporation, the distributive share of the taxable income of the association or corporation to be included in the gross income of the member for his taxable year shall be based upon the taxable income of the association or corporation for its taxable year ending with or within the taxable year of the member.

(b) ***Accounting period for filing return.*** A return on Form 990, 990-A, 990 (SF), 990-A (SF), or 990-P shall be on the basis of the established annual accounting period of the organization. If the organization has no such established accounting period, such return shall be on the basis of the calendar year.

(c) ***Returns when exempt status not established.*** An information return on Form 990, 990-A, 990 (SF), or 990-A (SF) is not required to be filed by an organization claiming an exempt status under section 501(a) prior to the establishment by the organization of such exempt status under section 501 and § 1.501(a)-1. If the date for filing an income tax return and paying the tax occurs before the tax-exempt status of the organization has been established, the organization is required to file the income tax return and pay the tax. However, see sections 6081 and 6161 and the regulations thereunder for extensions of time for filing the return and paying the tax. Upon establishment of its exempt status, the organization may file a claim for a refund of income taxes paid for the period for which its exempt status is established.

(d) ***Group returns.***

(1) A central, parent, or like organization (referred to in this paragraph as "central organization"), exempt under section 501(a) and described in section 501(c), although required to file a separate annual return for itself under section 6033 and paragraph (a) of this section, may file annually, in addition to such separate annual return, a group return on Form 990 or 990-A, 990 (SF), or 990-A (SF), as may be appropriate. Form 990 (SF) or 990-A (SF) may be used where each local organization qualifies under paragraph (a) of this section. Such group return may be filed for two or more of the local organizations, chapters, or the like (referred to in this paragraph as "local organizations") which are

(i) affiliated with such central organization at the close of its annual accounting period,

(ii) subject to the general supervision or control of the central organization, and

(iii) exempt from taxation under the same paragraph of section 501(c) of the Code, although the local organizations are not necessarily exempt under the paragraph under which the central organization is exempt.

(2)

(i) The filing of the group return shall be in lieu of the filing of a separate return by each of the local organizations included in the group return. The group return shall include only those local organizations which in writing have authorized the central organization to include them in the group return, and which have made and filed, with the central organization, their statements, specifically stating their items of gross income, receipts, and disbursements, and such other information relating to them as is required to be stated in the group return. Such an authorization by a local organization shall be made annually, under the penalties of perjury, and shall be signed by a duly authorized officer of the local organization in his official capacity and shall contain the following statement, or a statement of like import: "I hereby declare under the penalties of perjury that this authorization (including any accompanying schedules and statements) has been examined by me and to the best of my knowledge and belief is true, correct and complete and made in good faith for the taxable year stated." Such authorizations and statements shall be permanently retained by the central organization.

(ii) There shall be attached to the group return and made a part thereof a schedule showing the name and address of each of the local organizations and the total number thereof included in such return, and a schedule showing the name and address of each of the local organizations and the total number thereof not included in the group return.

(3) The group return shall be on the basis of the established annual accounting period of the central organization. Where such central organization has no established annual accounting period, such return shall be on the basis of the calendar year. The same income, receipts, and disbursements of a local organization shall not be included in more than one group return.

(4) The group return shall be filed in accordance with these regulations and the instructions issued with respect to Form 990, 990-A, 990 (SF), or 990-A (SF), whichever is appropriate, and shall be considered the return of each local organization included therein. The tax-exempt status of a local organization must be established under a group exemption letter issued to the central organization before a group return including the local organization will be considered as the return of the local organization. See § 1.501(a)-1 for requirements for establishing a tax-exempt status.

(e) ***Time and place for filing.*** The annual return of information on Form 990, 990-A, 990 (SF), 990-A (SF), or 990-P shall be filed on or before the 15th day of the fifth calendar month following the close of the period for which the return is required to be filed. The annual return on Form 1065 required to be filed by a

religious or apostolic association or corporation shall be filed on or before the 15th day of the fourth month following the close of the taxable year for which the return is required to be filed. Each such return shall be filed in accordance with the instructions applicable thereto.

(f) ***Penalties.*** For criminal penalties for failure to file a return and filing a false or fraudulent return, see sections 7203, 7206, and 7207.

(g) ***Organizations not required to file annual returns.***

(1)

(i) Annual returns on Form 990-A or Form 990-A (SF) are not required to be filed by an organization described in section 501(c)(3) which has established its right to exemption from taxation under section 501 (a) and which is:

(*a*) Organized and operated exclusively for religious purposes;

(*b*) Operated, supervised, or controlled by or in connection with an organization which is organized and operated exclusively for religious purposes;

(*c*) An educational organization which normally maintains a regular faculty and curriculum and normally has a regularly organized body of pupils or students in attendance at the place where its educational activities are regularly carried on; or

(*d*) A charitable organization, or an organization for the prevention of cruelty to children or animals, which is supported, in whole or in part, by funds contributed by the United States or any State or political subdivision thereof, or which is primarily supported by contributions of the general public.

(ii) An educational organization which normally maintains and has a regular faculty, curriculum, and student body and meets the conditions of subdivision (i)(*c*) of this subparagraph, which relieves it from the requirement of filing annual returns, shall not be considered as having thereafter failed to continue meeting such conditions if it is temporarily compelled to curtail or discontinue its normal and regular activities during the existence of abnormal circumstances and conditions.

(iii) An organization organized and operated exclusively for charitable purposes or for the prevention of cruelty to children or animals is “primarily supported by contributions of the general public” for any accounting period if more than 50 percent of its income and receipts for such period is actually derived from voluntary contributions and gifts made by the general public, as distinguished from a few contributors or donors or from related or associated persons. For purposes of this subdivision, the words “related or associated persons” refer to persons of a particular group who are connected with or are interested in the activities of the organization, such as founders, incorporators, shareholders, members, fiduciaries, officers, employees, or the like, or who are connected with such persons by family or business relationships. An organization claiming an exception from the filing of an information return under this subdivision must maintain adequate records in order to substantiate such claim. Furthermore, if it is doubtful to an organization that it falls within this exception for filing annual information returns, it must file the return on Form 990-A or Form 990-A (SF).

(2) The annual return on Form 990 or Form 990 (SF) need not be filed by:

(i) A fraternal beneficiary society, order, or association, described in section 501(c)(8), or

(ii) An organization described in section 501(c)(1) if it is a corporation wholly owned by the United States or any agency or instrumentality thereof, or is a wholly owned subsidiary of such a corporation,

which has established its exemption from tax under section 501(a).

(3) The provisions of section 6033(a) relieving certain specified types of organizations exempt from tax under section 501(a) from filing annual returns do not abridge or impair in any way the powers and authority of district directors or directors of service centers provided for in other provisions of the Code and in the regulations thereunder to require the filing of such returns by such organizations. See section 6001 and § 1.6001-1.

(h) ***Records, statements, and other returns of tax-exempt organizations.***

(1) An organization which has established its right to exemption from tax under section 501(a) and has also established that it is not required to file annually the return of information on Form 990, 990-A, 990 (SF), or 990-A (SF) shall immediately notify in writing the district director for the internal revenue district in which its principal office is located of any changes in its character, operations, or purpose for which it was originally created.

(2) Every organization which has established its right to exemption from tax, whether or not it is required to file an annual return of information, shall submit such additional information as may be required by the district director for the purpose of enabling him to inquire further into its exempt status and to administer the provisions of subchapter F (section 501 and following), chapter 1 of the Code, and of section 6033. See section 6001 and § 1.6001-1 with respect to the authority of the district director or directors of service centers to require such additional information and with respect to the permanent books of account or records to be kept by such organizations.

(3) An organization which has established its right to exemption from tax under section 501(a), including an organization which is relieved under section 6033 and this section from filing annual returns of information, is not, however, relieved from the duty of filing other returns of information. See, for example, sections 6041 and 6051 and the regulations thereunder.

(i) ***Unrelated business tax returns.*** In addition to the foregoing requirements of this section, certain organizations otherwise exempt from tax under section 501(a) and described in section 501(c) (2), (3), (5), (6), or (17) or section 401(a) which are subject to tax on unrelated business taxable income are also required to file returns on Form 990-T. See paragraph (e) of § 1.6012-2 and paragraph (a)(5) of § 1.6012-3 for requirements with respect to such returns.

(j) ***Effective date.*** The provisions of this section shall apply with respect to returns filed for taxable years beginning before January 1, 1970.

[T.D. 6500, 25 FR 12108, Nov. 26, 1960, as amended by T.D. 6722, 29 FR 5075, Apr. 14, 1964; T.D. 6972, 33 FR 12907, Sept. 12, 1968; T.D. 6980, 33 FR 16446, Nov. 9, 1968; T.D. 7122, 36 FR 11026, June 8, 1971]

§ 1.6033-2 Returns by exempt organizations and returns by certain nonexempt organizations.

(a) ***In general.***

(1) Except as provided in section 6033(a)(3) and paragraph (g) of this section, every organization exempt from taxation under section 501(a) shall file an annual information return specifically setting forth its items of gross income, gross receipts and disbursements, and such other information as

may be prescribed in the instructions, issued with respect to the return. Except as provided in paragraph (d) of this section, such return shall be filed annually regardless of whether such organization is chartered by, or affiliated or associated with, any central, parent, or other organization.

(2)

(i) Except as otherwise provided in this paragraph and paragraph (g) of this section, every organization exempt from taxation under section 501(a), and required to file a return under section 6033 and this section (including, for taxable years ending before December 31, 1972, private foundations, as defined in section 509(a)), other than an organization described in section 401(a) or 501(d), shall file its annual return on Form 990. For taxable years ending on or after December 31, 1972, every private foundation shall file Form 990-PF as its annual information return. For taxable years beginning after December 31, 1977, every section 501(c)(21) black lung trust shall file an annual information return on Form 990-BL or any other form prescribed by the Internal Revenue Service for that purpose.

(ii) Subject to paragraph (a)(1) of this section, the information generally required to be furnished by an organization exempt under section 501(a) is:

(A) Its gross income for the year. For this purpose, gross income includes tax-exempt income, but does not include contributions, gifts, grants, and similar amounts received. Whether an item constitutes a contribution, gift, grant, or similar amount depends upon all the surrounding facts and circumstances. The computation of gross income shall be made by subtracting the cost of goods sold from all receipts other than gross contributions, gifts, grants, and similar amounts received and nonincludible dues and assessments from members and affiliates.

(B) To the extent not included in gross income, its dues and assessments from members and affiliates for the year.

(C) Its expenses incurred within the year attributable to gross income.

(D) Its disbursements (including prior years' accumulations) made within the year for the purposes for which it is exempt.

(E) A balance sheet showing its assets, liabilities, and net worth as of the beginning and end of such year. Detailed information relating to the assets, liabilities, and net worth shall be furnished on the schedule provided for this purpose on the return required by this section. Such schedule shall be supplemented by attachments where appropriate.

(F) The total of the contributions, gifts, grants, and similar amounts received by it during the taxable year, and, in the case of an organization described in section 501(c)(3), the names and addresses of all persons that contributed, bequeathed, or devised $5,000 or more (in money or other property) during the taxable year. In the case of a private foundation (as defined in section 509(a)), the names and addresses of all persons who became substantial contributors (as defined in section 507(d)(2)) during the taxable year shall be furnished. In addition, for its first taxable year beginning after December 31, 1969, each private foundation shall furnish the names and addresses of all persons who became substantial contributors before such taxable year. For special rules with respect to contributors and donors, see paragraph (a)(2)(iii) of this section.

(G) The names and addresses of all officers, directors, or trustees (or any person having responsibilities or powers similar to those of officers, directors or trustees) of the organization, and, in the case of a private foundation, all persons who are foundation managers, within the meaning of section 4946(b)(1). Organizations must also attach a schedule showing the names and addresses and/or total numbers of key employees, highly compensated employees, and independent contractors as prescribed by publication, form, or instructions.

(H) A schedule showing the compensation and other payments made to each person whose name is required to be listed pursuant to paragraph (a)(2)(ii)(G) of this section during the calendar year ending within the organization's annual accounting period, or during such other period as prescribed by publication, form, or instructions.

(I) For any taxable year ending on or after December 31, 1971, such information as is required by Forms 4848 and 4849 and, only with respect to any such taxable year ending before December 31, 1972, such information as is required by Form 2950. Such forms are required by this section to be filed by an organization exempt from tax under section 501(a) which is an employer who maintains a funded pension or annuity plan for its employees. See paragraph (g) of this section for exceptions from filing. Form 4849 need not be filed by the organization if the fiduciary for the plan has given written notification to the organization that such form will be filed as an attachment to Form 990-P filed by the fiduciary. Form 4848 (and Form 4849 if required to be filed by the organization) shall be filed as a separate return on or before the due date for Form 990. For rules relating to the extension of time for filing, see section 6081 and the regulations thereunder and the instructions for Form 4848. A central organization which files Form 990 as a group return under paragraph (d) of this section may also file Form 4848 as a group return. The rules provided by paragraph (d) of this section with respect to a group return filed on Form 990 shall apply to a group return filed on Form 4848. Unless otherwise expressly provided therein, an authorization to include a local organization in a group for purposes of filing Form 990 as a group return shall be treated as an authorization to include such local organization in a group for purposes of filing Form 4848 as a group return. A group return on Form 4848 shall be filed in accordance with this section and the instructions to Form 4848 and shall be considered the return of each local organization included therein. In addition to the information required to be furnished by Forms 4848 and 4849, the district director may require any further information that he considers necessary to determine qualification of the plan under section 401 or the taxability under section 403(b) of a beneficiary under an annuity purchased by a section 501(c)(3) organization.

(J) In the case of a private foundation liable for tax imposed under chapter 42, such information as is required by Form 4720.

(K) In the case of an organization described in section 501(c)(3), the respective amounts (if any) of the taxes imposed on the organization, or any organization manager of the organization, during the taxable year under any of the following provisions (and the respective amounts (if any) of reimbursements paid by the organization during the taxable year with respect to taxes imposed on any such organization manager under any of such provisions):

(*1*) Section 4911 (relating to tax on excess expenditures to influence legislation);

(2) Section 4912 (relating to tax on disqualifying lobbying expenditures of certain organizations); and

(3) Section 4955 (relating to taxes on political expenditures of section 501(c)(3) organizations), except to the extent that, by reason of section 4962, the taxes imposed under such section are not required to be paid or are credited or refunded.

(L) In the case of organizations described in section 501(c)(3), (4), or (29), the respective amounts (if any) of—

(1) The taxes imposed with respect to the organization on any organization manager, or any disqualified person, during the taxable year under section 4958 (relating to taxes on excess benefit transactions); and

(2) Reimbursements paid by the organization during the taxable year with respect to taxes imposed under such section, except to the extent that, by reason of section 4962, the taxes imposed under such section are not required to be paid or are credited or refunded.

(M) Its lobbying expenditures, grass roots expenditures, exempt purpose expenditures, lobbying nontaxable amount, and grass roots nontaxable amount for the taxable year and for prior taxable years that are base years (within the meaning of § 1.501(h)-3(c)(7)), if the organization has an election under section 501(h) in effect for the taxable year. An organization that is a member of an affiliated group of organizations (as defined in § 56.4911-7(e)) but that is not a member of a limited affiliated group (as defined in § 56.4911-10(b)) shall report this information based on the expenditures of all members of the group during the taxable year of the group that ends with or within the member's taxable year and for prior taxable years of the group that are base years (within the meaning of § 56.4911-9(b)). For additional information required to be furnished by members of an affiliated group of organizations, and by controlling members in a limited affiliated group, see §§ 56.4911-9(d) and 56.4911-10(f)(1), respectively.

(N) In the case of a hospital organization (as defined in § 1.501(r)-1(b)(18)) described in section 501(c)(3) during the taxable year—

(1) A copy of its audited financial statements for the taxable year (or, in the case of an organization the financial statements of which are included in consolidated financial statements with other organizations, such consolidated financial statements);

(2) Either a copy of the most recently adopted implementation strategy, within the meaning of § 1.501(r)-3(c), for each hospital facility it operates or the URL of each Web page where it has made each such implementation strategy widely available on a Web site within the meaning of § 1.501(r)-1(b)(29) along with or as part of the report documenting the community health needs assessment (CHNA) to which the implementation strategy relates;

(3) For each hospital facility it operates, a description of the actions taken during the taxable year to address the significant health needs identified through its most recently conducted CHNA, within the meaning of § 1.501(r)-3(b), or, if no actions were taken with respect to one or more of these health needs, the reason(s) why no actions were taken; and

(4) The amount of the excise tax imposed on the organization under section 4959 during the taxable year.

(iii) ***Special rules.*** In providing the names and addresses of contributors and donors under paragraph (a)(2)(ii)(F) of this section:

(A) An organization described in section 501(c)(3) which meets the $33^{1}/_{3}$ percent-of-support test of the regulations under section 170(b)(1)(A)(vi) (without regard to whether such organization otherwise qualifies as an organization described in section 170(b)(1)(A)) is required to provide the name and address of a person who contributed, bequeathed, or devised $5,000 or more during the year only if his amount is in excess of 2 percent of the total contributions, bequests and devises received by the organization during the year.

(B) An organization other than a private foundation is required to report only the names and addresses of contributors of whom it has actual knowledge. For instance, an organization need not require an employer who withholds contributions from the compensation of employees and pays over to the organization periodically the total amounts withheld, to specify the amounts paid over with respect to a particular employee. In such case, unless the organization has actual knowledge that a particular employee gave more than $5,000 (and in excess of 2 percent if paragraph (a)(2)(iii)(A) of this section is applicable), the organization need report only the name and address of the employer, and the total amount paid over by the employer.

(C) Separate and independent gifts made by one person in a particular year need be aggregated to determine whether his contributions and bequests exceed $5,000 (and are in excess of 2 percent if paragraph (a)(2)(iii)(A) of this section is applicable), only if such gifts are of $1,000 or more.

(D)

(1) Organizations described in section 501(c)(7), (8), or (10) that receive contributions or bequests to be used exclusively for purposes described in section 170(c)(4), 2055(a)(3), or 2522(a)(3), must attach a schedule with respect to all gifts that aggregate more than $1,000 from any one person showing the total amount of the contributions or bequests from each such person, the specific purpose or purposes for which such amount was received, and the specific use or uses to which such amount was put. In the case of an amount set aside for such purposes, the organization shall indicate the manner in which such amount is held (for instance, whether such amount is commingled with amounts held for other purposes). If the contribution or bequest was transferred to another organization, the schedule must include the name of the transferee organization, a description of the nature of such organization, and a description of the relationship between the transferee and transferor organizations.

(2) For taxable years beginning after December 31, 1970, such organizations must also attach a statement showing the total dollar amount of contributions and bequests received for such purposes which are $1,000 or less.

(iv) ***Listing of States.*** A private foundation is required to attach to its return required by this section a list of all States:

(A) To which the organization reports in any fashion concerning its organization, assets, or activities, or

(B) With which the organization has registered (or which it has otherwise notified in any manner) that it intends to be, or is, a charitable organization or a holder of property devoted to a charitable purpose.

(3)

(i) For taxable years beginning after December 31, 1969, and ending before December 31, 1971, every employee's trust described in section 401(a) which is exempt from taxation under section 501(a) shall file an annual return on Form 990-P. The return shall include the information required by paragraph (b)(5)(ii) of § 1.401-1. For such years, in addition, the trust must file the information required to be filed by the employer pursuant to the provisions of § 1.404(a)-2, unless the employer has notified the trustee in writing that he has filed or will timely file such information. If the trustee has received such notification from the employer, then such notification, or a copy thereof, shall be retained by the trust as a part of its records.

(ii) For taxable years ending on or after December 31, 1971, and before December 31, 1975, every employee's trust described in section 401(a) which is exempt from taxation under section 501(a) shall file an annual return on Form 990-P. The trust shall furnish such information as is required by such form and the instructions issued with respect thereto.

(4) For taxable years beginning after December 31, 1980, trusts described in section 4947(a)(1) and nonexempt private foundations shall comply with the requirements of section 6033 and this section in the same manner as organizations described in section 501(c)(3) which are exempt from tax under section 501(a). This section shall be applied for taxable years beginning after December 31, 1980 as if trusts described in section 4947(a)(1) and nonexempt private foundations were described in section 501(c)(3). Therefore, for purposes of this section, all references to exempt organizations shall include section 4947(a)(1) trusts and nonexempt private foundations and all references to private foundations shall include section 4947(a)(1) trusts that would be private foundations if they were described in section 501(c)(3) and all nonexempt private foundations. Similarly, for purposes of paragraph (a)(2)(ii)(d), the purposes for which a section 4947(a)(1) trust or a nonexempt private foundation is organized shall be treated as the purposes for which it is exempt. Similarly, for purposes of paragraph (a)(2)(ii)(D) of this section, the purposes for which a section 4947(a)(1) trust or a nonexempt private foundation is organized shall be treated as the purposes for which it is exempt. See section 509(b) and § 1.509(b)-1. See also section 642(c)(6) and § 1.642(c)-4.

(5) Political organizations, as defined by section 527(e)(1), that have gross receipts of $25,000 or more for the taxable year (or in the case of a qualified State or local political organization, as defined in section 527(e)(5), that has gross receipts of $100,000 or more for the taxable year) generally must comply with the requirements of section 6033 and this section in the same manner as organizations exempt from tax under section 501(a), except to the extent that the Commissioner may modify such requirements through forms, instructions to forms, or guidance published in the Internal Revenue Bulletin as appropriate for carrying out the purposes of section 527. For the purposes of this section, all references to organizations exempt from tax under section 501(a) shall include political organizations referred to in section 6033(g), other than those referred to in section 6033(g)(3) and except to the extent the Commissioner exercises discretion under section 6033(g)(4). This discretion may be exercised through forms, instructions to forms, or guidance published in the Internal Revenue Bulletin. In addition to the reporting requirements applicable to organizations

exempt under section 501(a), such political organizations generally must report the names and addresses of all persons that contributed, bequeathed, or devised $5,000 or more (in money or other property) during the taxable year.

(6) Each controlling organization (within the meaning of section 512(b)(13)) that is subject to the requirements of section 6033(a) shall include on its annual return such information required by that return regarding—

(i) Any interest, annuities, royalties, or rents received from each controlled entity (within the meaning of section 512(b)(13));

(ii) Any loans made to each such controlled entity; and

(iii) Any transfers of funds between such controlling organization and each such controlled entity.

(7) Every organization described in section 4966(d)(1) shall, on its annual return for the taxable year—

(i) List the total number of donor advised funds (as defined in section 4966(d)(2)) it owns at the end of such taxable year;

(ii) Report the aggregate value of assets held in such funds at the end of such taxable year; and

(iii) Report the aggregate contributions to and grants made from such funds during such taxable year.

(8) Every organization described in section 509(a)(3) shall, on its annual return—

(i) List the supported organizations (as defined in section 509(f)(3)) with respect to which such organization provides support;

(ii) Specify whether the organization meets the requirements of clause (i), (ii), or (iii) of section 509(a)(3)(B); and

(iii) Certify that the organization meets the requirements of section 509(a)(3)(C).

(b) ***Accounting period for filing return.*** A return required by this section shall be on the basis of the established annual accounting period of the organization. If the organization has no such established accounting period, such return shall be on the basis of the calendar year.

(c) ***Returns when exempt status not established.*** An organization claiming an exempt status under section 501(a) prior to the establishment of such exempt status under section 501 and § 1.501(a)-1, shall file a return required by this section in accordance with the instructions applicable thereto. In such case the organization must indicate on such return that it is being filed in the belief that the organization is exempt under section 501(a), but that the Internal Revenue Service has not yet recognized such exemption.

(d) ***Group returns.***

(1) A central, parent, or like organization (referred to in this paragraph as “central organization”), exempt under section 501(a) and described in section 501(c) (other than a private foundation), although required to file a separate annual return for itself under section 6033 and paragraph (a) of this section, may file annually, in addition to such separate annual return, a group return on Form 990. Such group return may be filed for two or more of the local organizations, chapters, or the like (referred to in this paragraph as “local organizations”) which are

(i) affiliated with such central organization at the close of its annual accounting period,

(ii) subject to the general supervision or control of the central organization, and

(iii) exempt from taxation under the same paragraph of section 501(c) of the Code, although the local organizations are not necessarily exempt under the paragraph under which the central organization is exempt. Such group return may not be filed for a local organization which is a private foundation.

(2)

(i) The filing of the group return shall be in lieu of the filing of a separate return by each of the local organizations included in the group return. The group return shall include only those local organizations which in writing have authorized the central organization to include them in the group return, and which have made and filed, with the central organization, their statements, specifically stating their items of gross income, receipts, and disbursements, and such other information relating to them as is required to be stated in the group return. Such an authorization and statement by a local organization shall be made under the penalties of perjury, shall be signed by a duly authorized officer of the local organization in his official capacity, and shall contain the following statement, or a statement of like import: “I hereby declare under the penalties of perjury that this authorization (including any accompanying schedules and statements) has been examined by me and to the best of my knowledge and belief is true, correct and complete and made in good faith.” Such authorization and statement with respect to a local organization shall be retained by the central organization until the expiration of 6 years after the last taxable year for which a group return filed by such central organization includes such local organization.

(ii) There shall be attached to the group return and made a part thereof a schedule showing the name, address, and employer identification number of each of the local organizations and the total number thereof included in such return, and a schedule showing the name, address, and employer identification number of each of the local organizations and the total number thereof not included in the group return.

(3) The group return shall be on the basis of the established annual accounting period of the central organization. Where such central organization has no established annual accounting period, such return shall be on the basis of the calendar year. The same income, receipts, and disbursements of a local organization shall not be included in more than one group return.

(4) The group return shall be filed in accordance with these regulations and the instructions issued with respect to Form 990, and shall be considered the return of each local organization included therein. The tax exempt status of a local organization must be established under a group exemption letter issued to the central organization before a group return including the local organization will be considered as the return of the local organization. See § 1.501(a)-1 for requirements for establishing a tax-exempt status.

(5) In providing the information required by paragraphs (a)(2)(ii)(F), (G), and (H) of this section, such information may be provided:

(i) With respect to the central or parent organization on its Form 990, and with respect to the local organizations on separate schedules attached to the group return for the year, or

(ii) On a consolidated basis for all the local organizations and the central or parent organization on the group return.

Such information need be provided only with respect to those local organizations which are not excepted from filing under the provisions of paragraph (g) of this section. A central or parent organization shall indicate whether it has provided such information in the manner described in paragraphs (d)(5)(i) or (ii) of this section, and may not change the manner in which it provides such information without the consent of the Commissioner.

(e) ***Time and place for filing.*** The annual return required by this section shall be filed on or before the 15th day of the fifth month following the close of the period for which the return is required to be filed. The annual return on Form 1065 required to be filed by a religious or apostolic association or corporation shall be filed on or before the date prescribed by section 6072(b). Each such return shall be filed in accordance with the instructions applicable thereto.

(f) ***Penalties and additions to tax.*** For penalties and additions to tax for failure to file a return and filing a false or fraudulent return, see sections 6652, 7203, 7206, and 7207.

(g) ***Organizations not required to file annual returns.***

(1) Annual returns required by this section are not required to be filed by an organization exempt from taxation under section 501(a) which is:

(i) A church, an interchurch organization of local units of a church, a convention or association of churches, or an integrated auxiliary of a church (as defined in paragraph (h) of this section);

(ii) An exclusively religious activity of any religious order;

(iii) Except as provided in paragraph (g)(1)(viii) of this section, an organization described in section 501(c) (other than a private foundation or a supporting organization described in section 509(a)(3)) the gross receipts of which in each taxable year are normally not more than $50,000 (as described in paragraph (g)(3) of this section);

(iv) A mission society (other than an organization described in section 509(a)(3)) sponsored by or affiliated with one or more churches or church denominations, more than one-half of the activities of which society are conducted in, or directed at persons in foreign countries;

(v) A State institution, the income of which is excluded from gross income under section 115(a);

(vi) An organization described in section 501(c)(1);

(vii) An educational organization (below college level) that is described in section 170(b)(1)(A)(ii), that has a program of a general academic nature, and that is affiliated (within the meaning of paragraph (h)(2) of this section) with a church or operated by a religious order; or

(viii) A foreign organization (described in paragraph (k)(1) of this section) or a United States possession organization (described in paragraph (k)(2) of this section) (other than a private foundation or a supporting organization described in section 509(a)(3))—

(A) The gross receipts of which in each taxable year from sources within the United States (as determined under paragraph (k)(3) of this section) are normally not more than $50,000 (as described in paragraph (g)(3) of this section); and

(B) That has no significant activity (including lobbying and political activity and the operation of a trade or business, but excluding investment activity) in the United States.

(2) The provisions of section 6033(a) relieving certain specified types of organizations exempt from taxation under section 501(a) from filing annual returns do not abridge or impair in any way the powers and authority of district directors or directors of service centers provided for in other provisions of the Code and in regulations thereunder to require the filing of returns or notices by such organizations. See section 6001 and § 1.6001-1.

(3) For purposes of paragraphs (g)(1)(iii) and (viii) of this section, the gross receipts (as defined in paragraph (g)(4) of this section) of an organization are normally not more than $50,000 if:

(i) In the case of an organization that has been in existence for 1 year or less, the organization has received, or donors have pledged to give, gross receipts of $75,000 or less during the first taxable year of the organization;

(ii) In the case of an organization that has been in existence for more than one but less than 3 years, the average of the gross receipts received by the organization in its first 2 taxable years is $60,000 or less; and

(iii) In the case of an organization that has been in existence for 3 years or more, the average of the gross receipts received by the organization in the immediately preceding 3 taxable years, including the year for which the return would be required to be filed, is $50,000 or less.

(4) For purposes of this paragraph and paragraph (a)(2) of this section, “gross receipts” means the gross amount received by the organization during its annual accounting period from all sources without reduction for any costs or expenses including, for example, cost of goods or assets sold, cost of operations, or expenses of earning, raising, or collecting such amounts. Thus “gross receipts” includes, but is not limited to

(i) the gross amount received as contributions, gifts, grants, and similar amounts without reduction for the expenses of raising and collecting such amounts,

(ii) the gross amount received as dues or assessments from members or affiliated organizations without reduction for expenses attributable to the receipt of such amounts,

(iii) gross sales or receipts from business activities (including business activities unrelated to the purpose for which the organization qualifies for exemption, the net income or loss from which may be required to be reported on Form 990-T),

(iv) the gross amount received from the sale of assets without reduction for cost or other basis and expenses of sale, and

(v) the gross amount received as investment income, such as interest, dividends, rents, and royalties.

(5) An organization that is not required to file an annual return by virtue of paragraphs (g)(1)(iii) and (viii) of this section must submit an annual electronic notification as described in section 6033(i). See § 1.6033-6.

(6) The Commissioner may relieve any organization or class of organizations (other than an organization described in section 509(a)(3)) from filing, in whole or in part the annual return required by this section where he determines that such returns are not necessary for the efficient administration of the internal revenue laws. This discretion may be exercised through forms, instructions to forms, or guidance published in the Internal Revenue Bulletin.

(h) *Integrated auxiliary* —

(1) ***In general.*** For purposes of this title, the *term integrated auxiliary of a church* means an organization that is—

(i) Described both in sections 501(c)(3) and 509(a) (1), (2), or (3);

(ii) Affiliated with a church or a convention or association of churches; and

(iii) Internally supported.

(2) ***Affiliation.*** An organization is affiliated with a church or a convention or association of churches, for purposes of paragraph (h)(1)(ii) of this section, if—

(i) The organization is covered by a group exemption letter issued under applicable administrative procedures, (such as Rev. Proc. 80-27 (1980-1 C.B. 677); See § 601.601(a)(2)(ii)(*b*)), to a church or a convention or association of churches;

(ii) The organization is operated, supervised, or controlled by or in connection with (as defined in § 1.509(a)-4) a church or a convention or association of churches; or

(iii) Relevant facts and circumstances show that it is so affiliated.

(3) ***Facts and circumstances.*** For purposes of paragraph (h)(2)(iii) of this section, relevant facts and circumstances that indicate an organization is affiliated with a church or a convention or association of churches include the following factors. However, the absence of one or more of the following factors does not necessarily preclude classification of an organization as being affiliated with a church or a convention or association of churches—

(i) The organization's enabling instrument (corporate charter, trust instrument, articles of association, constitution or similar document) or by-laws affirm that the organization shares common religious doctrines, principles, disciplines, or practices with a church or a convention or association of churches;

(ii) A church or a convention or association of churches has the authority to appoint or remove, or to control the appointment or removal of, at least one of the organization's officers or directors;

(iii) The corporate name of the organization indicates an institutional relationship with a church or a convention or association of churches;

(iv) The organization reports at least annually on its financial and general operations to a church or a convention or association of churches;

(v) An institutional relationship between the organization and a church or a convention or association of churches is affirmed by the church, or convention or association of churches, or a designee thereof; and

(vi) In the event of dissolution, the organization's assets are required to be distributed to a church or a convention or association of churches, or to an affiliate thereof within the meaning of this paragraph (h).

(4) ***Internal support.*** An organization is internally supported, for purposes of paragraph (h)(1)(iii) of this section, unless it both—

(i) Offers admissions, goods, services or facilities for sale, other than on an incidental basis, to the general public (except goods, services, or facilities sold at a nominal charge or for an insubstantial portion of the cost); and

(ii) Normally receives more than 50 percent of its support from a combination of governmental sources, public solicitation of contributions, and receipts from the sale of admissions, goods, performance of services, or furnishing of facilities in activities that are not unrelated trades or businesses.

(5) ***Special rule.*** Men's and women's organizations, seminaries, mission societies, and youth groups that satisfy paragraphs (h)(1) (i) and (ii) of this section are integrated auxiliaries of a church regardless of whether such an organization meets the internal support requirement under paragraph (h)(1)(iii) of this section.

(6) ***Effective date.*** This paragraph (h) applies for returns filed for taxable years beginning after December 31, 1969. For returns filed for taxable years beginning after December 31, 1969 but beginning before December 20, 1995, the definition for the term *integrated auxiliary of a church* set forth in § 1.6033-2(g)(5) (as contained in the 26 CFR edition revised as of April 1, 1995) may be used as an alternative definition to such term set forth in this paragraph (h).

(7) ***Examples of internal support.*** The internal support test of this paragraph (h) is illustrated by the following examples, in each of which it is assumed that the organization's provision of goods and services does not constitute an unrelated trade or business:

Example 1. Organization A is described in sections 501(c)(3) and 509(a)(2) and is affiliated (within the meaning of this paragraph (h)) with a church. Organization A publishes a weekly newspaper as its only activity. On an incidental basis, some copies of Organization A's publication are sold to nonmembers of the church with which it is affiliated. Organization A advertises for subscriptions at places of worship of the church. Organization A is internally supported, regardless of its sources of financial support, because it does not offer admissions, goods, services, or facilities for sale, other than on an incidental basis, to the general public. Organization A is an integrated auxiliary.

Example 2. Organization B is a retirement home described in sections 501(c)(3) and 509(a)(2). Organization B is affiliated (within the meaning of this paragraph (h)) with a church. Admission to Organization B is open to all members of the community for a fee. Organization B advertises in publications of general distribution appealing to the elderly and maintains its name on non-denominational listings of available retirement homes. Therefore, Organization B offers its services for sale to the general public on more than an incidental basis. Organization B receives a cash contribution of $50,000 annually from the church. Fees received by Organization B from its residents total $100,000 annually. Organization B does not receive any government support or contributions from the general public. Total support is $150,000 ($100,000 + $50,000), and $100,000 of that total is from receipts from the performance of services ($66^2/_3$% of total support). Therefore, Organization B receives more than 50 percent of its support from receipts from the performance of services. Organization B is not internally supported and is not an integrated auxiliary.

Example 3. Organization C is a hospital that is described in sections 501(c)(3) and 509(a)(1). Organization C is affiliated (within the meaning of this paragraph (h)) with a church. Organization C is open to all persons in need of hospital care in the community, although most of Organization C's patients are members of the same denomination as the church with which Organization C is affiliated. Organization C maintains its name on hospital listings used by the general public, and participating doctors are allowed to admit all patients. Therefore, Organization C offers its services for sale to the general public on more than an incidental basis. Organization C annually receives $250,000 in support from the church, $1,000,000 in payments from patients and third party payors (including Medicare, Medicaid and other insurers) for patient care, $100,000 in contributions from the public, $100,000 in grants from the federal government (other than Medicare and Medicaid payments) and

$50,000 in investment income. Total support is $1,500,000 ($250,000 + $1,000,000 + $100,000 + $100,000 + $50,000), and $1,200,000 ($1,000,000 + $100,000 + $100,000) of that total is support from receipts from the performance of services, government sources, and public contributions (80% of total support). Therefore, Organization C receives more than 50 percent of its support from receipts from the performance of services, government sources, and public contributions. Organization C is not internally supported and is not an integrated auxiliary.

(i) ***Records, statements, and other returns of tax-exempt organizations.***

(1) An organization that is exempt from taxation under section 501(a) and is not required to file annually an information return required by this section shall immediately notify in writing Exempt Organizations Determinations, at an address prescribed by publication (including publication on the Internal Revenue Service Web site), of any changes in its character, operations, or purpose for which it was originally created.

(2) Every organization which is exempt from tax, whether or not it is required to file an annual information return, shall submit such additional information as may be required by the Internal Revenue Service for the purpose of inquiring into its exempt status and administering the provisions of subchapter F (section 501 and following), chapter 1 of subtitle A of the Code, section 6033, and chapter 42 of subtitle D of the Code. See section 6001 and § 1.6001-1 with respect to the authority of the district directors or directors of service centers to require such additional information and with respect to the books of account or records to be kept by such organizations.

(3) An organization which has established its exemption from taxation under section 501(a), including an organization which is relieved under section 6033 and this section from filing annual returns of information, is not relieved of the duty of filing other returns of information. See, for example, sections 6041, 6043, 6051, 6057, and 6058 and the regulations thereunder.

(j) ***Unrelated business tax returns.*** In addition to the foregoing requirements of this section, certain organizations otherwise exempt from tax under section 501(a) which are subject to tax on unrelated business taxable income are also required to file returns on Form 990-T. See paragraph (e) of § 1.6012-2 and paragraph (a)(5) of § 1.6012-3 for requirements with respect to such returns.

(k) ***Foreign organizations and United States possession organizations*** —

(1) ***Foreign organization.*** For purposes of this section, a *foreign organization* is any organization not described in section 170(c)(2)(A).

(2) ***United States possession organization.*** For purposes of this section, a *United States possession organization* is any organization created or organized in a possession of the United States.

(3) ***Source of funds.*** For purposes of paragraph (g)(1)(viii) of this section, the source of an organization's gross receipts from gifts, grants, contributions or membership fees is determined by applying the rules found in § 53.4948-1(b) of this chapter. For purposes of paragraph (g)(1)(viii) of this section, the source of an organization's gross receipts other than gifts, grants, contributions, and membership fees is determined by applying the rules in sections 861 through 865 and the regulations in this part issued under section 861 through 865. For purposes of applying this paragraph (k)(3) regarding United States possession organizations, a United States person does not include individuals who are *bona fide* residents of a United States possession.

(l) ***Applicability date*** —

(1) ***Generally.*** This section applies to returns filed on or after January 30, 2020. Section 1.6033-2T (as contained in 26 CFR part 1, revised April 2019) applies to returns filed before January 30, 2020.

(2) Paragraphs (a)(2)(ii)(F), (a)(2)(iii)(D)(*1*), (g)(1)(iii) and (viii), and (g)(3) of this section apply to annual information returns filed after May 28, 2020. Under section 7805(b)(7) an organization may choose to apply the paragraphs listed in this paragraph (l)(2) to returns filed after September 6, 2019.

[T.D. 7122, 36 FR 11026, June 8, 1971]

Editorial Note: For FEDERAL REGISTER citations affecting § 1.6033-2, see the List of CFR Sections Affected, which appears in the Finding Aids section of the printed volume and at *www.govinfo.gov*.

§ 1.6033-3 Additional provisions relating to private foundations.

(a) ***In general.*** The foundation managers (as defined in section 4946(b)) of every organization (including a trust described in section 4947(a)(1)) which is (or is treated as) a private foundation (as defined in section 509) the assets of which are at least $5,000 at any time during a taxable year shall include the following information on its annual return in addition to that information required under § 1.6033-2(a):

(1) An itemized statement of its securities and all other assets at the close of the year, showing both book and market value,

(2) An itemized list of all grants and contributions made or approved for future payment during the year, showing the amount of each such grant or contribution, the name and address of the recipient (other than a recipient who is not a disqualified person and who receives, from the foundation, grants to indigent or needy persons that, in the aggregate, do not exceed $1,000 during the year), any relationship between any individual recipient and the foundation's managers or substantial contributors, and a concise statement of the purpose of each such grant or contribution,

(3) The address of the principal office of the foundation and (if different) of the place where its books and records are maintained,

(4) The names and addresses of its foundation managers (within the meaning of section 4946(b)), that are substantial contributors (within the meaning of section 507(d)(2)) or that own 10 percent or more of the stock of any corporation of which the foundation owns 10 percent or more of the stock, or corresponding interests in partnerships or other entities, in which the foundation has a 10 percent or greater interest.

For purposes of subparagraph (2) of this paragraph, the business address of an individual grant recipient or foundation manager may be used by the foundation in its annual return in lieu of the home address of such recipient or manager, and the term “relationship” shall include, but is not limited to, any case in which an individual recipient of a grant or contribution by a private foundation is (i) a member of the family (as defined in section 4946(d)) of a substantial contributor or foundation manager of such foundation, (ii) a partner of such substantial contributor or foundation manager, or (iii) an employee of such substantial contributor or foundation manager or of an organization which is effectively controlled (within the meaning of section 4946(a)(1)(H)(i) and the regulations thereunder), directly or indirectly, by one or more such substantial contributors or foundation managers.

(b) ***Notice to public of availability of annual return.*** A copy of the notice required by section 6104(d) (relating to public inspection of private foundations' annual returns), and proof of publication thereof, shall be filed with the annual return required by § 1.6033-2(a). A copy of such notice as published, and a statement

signed by a foundation manager stating that such notice was published, setting forth the date of publication and the publication in which it appeared, shall be sufficient proof of publication for purposes of this paragraph.

(c) *Special rules* —

(1) ***Furnishing of copies to State officers.*** The foundation managers of a private foundation shall furnish a copy of the annual return required by section 6033 and § 1.6033-2 to the Attorney General of:

(i) Each State which the foundation is required to list on its return pursuant to § 1.6033-2(a)(2)(iv),

(ii) The State in which is located the principal office of the foundation, and

(iii) The State in which the foundation was incorporated or created.

The annual return shall be sent to each Attorney General described in paragraphs (c)(1) (i), (ii), or (iii) of this section at the same time as it is sent to the Internal Revenue Service. Upon request the foundation managers shall also furnish a copy of the annual return to the Attorney General or other appropriate State officer (within the meaning of section 6104 (c)(2)) of any State. The foundation managers shall attach to each copy of the annual return sent to State officers under this subparagraph a copy of the Form 4720, if any, filed by the foundation for the year.

(2) ***Cross-reference.*** For additional rules with respect to private foundations' returns and the public inspection of such returns, see section 6104(d) and the regulations thereunder.

(d) ***Special rules for certain foreign organizations.*** The provisions of paragraphs (b) and (c) of this section shall not apply with respect to an organization described in section 4948(b). The foundation managers of such organizations are not required to publish notice of availability of the annual return for inspection, to make the annual return available at the principal office of the foundation for public inspection under section 6104(d), or to send copies of the annual return to State officers.

(e) ***Effective date.*** The provisions of this section shall apply with respect to returns filed for taxable years beginning after December 31, 1980.

[T.D. 8026, 50 FR 20756, May 20, 1985]

§ 1.6033-4 Required filing in electronic form for returns by organizations required to file returns under section 6033.

(a) ***In general.*** The return of an organization that is required to be filed in electronic form under § 301.6033-4 of this chapter must be filed in accordance with IRS revenue procedures, publications, forms, instructions, or other guidance.

(b) ***Applicability date.*** The rules of this section apply for returns required to be filed for taxable years ending on or after February 23, 2023.

[T.D. 9972, 88 FR 11764, Feb. 23, 2023]

§ 1.6033-5 Disclosure by tax-exempt entities that are parties to certain reportable transactions.

(a) ***In general.*** Every tax-exempt entity (as defined in section 4965(c)) shall file with the IRS on Form 8886-T, “Disclosure by Tax-Exempt Entity Regarding Prohibited Tax Shelter Transaction” (or a successor form), in accordance with this section and the instructions to the form, a disclosure of—

(1) Such entity's being a party (as defined in § 53.4965-4 of this chapter) to a prohibited tax shelter transaction (as defined in section 4965(e)); and

(2) The identity of any other party (whether taxable or tax-exempt) to such transaction that is known to the tax-exempt entity.

(b) ***Frequency of disclosure.*** A single disclosure is required for each prohibited tax shelter transaction.

(c) ***By whom disclosure is made*** —

(1) ***Tax-exempt entities referred to in section 4965(c)(1), (2) or (3).*** In the case of tax-exempt entities referred to in section 4965(c)(1), (2) or (3), the disclosure required by this section must be made by the entity.

(2) ***Tax-exempt entities referred to in section 4965(c)(4), (5), (6) or (7).*** In the case of tax-exempt entities referred to in section 4965(c)(4), (5), (6) or (7), including a fully self-directed qualified plan, IRA, or other savings arrangement, the disclosure required by this section must be made by the entity manager (as defined in section 4965(d)(2)) of the entity.

(d) ***Time and place for filing*** —

(1) ***In general.*** The disclosure required by this section shall be filed on or before May 15 of the calendar year following the close of the calendar year during which the tax-exempt entity entered into the prohibited tax shelter transaction.

(2) ***Subsequently listed transactions.*** In the case of subsequently listed transactions (as defined in section 4965(e)(2)), the disclosure required by this section shall be filed on or before May 15 of the calendar year following the close of the calendar year during which the transaction was identified by the Secretary as a listed transaction.

(3) ***Transition rule.*** If a tax-exempt entity entered into a prohibited tax shelter transaction after May 17, 2006, and before January 1, 2007, the disclosure required by this section shall be filed on or before November 2, 2007.

(4) ***No disclosure.*** Disclosure is not required with respect to any prohibited tax shelter transaction entered into by a tax-exempt entity on or before May 17, 2006.

(e) ***Penalty for failure to provide disclosure statement.*** See section 6652(c)(3) for the penalty applicable to the failure to disclose a prohibited tax shelter transaction in accordance with this section.

(f) ***Effective date/applicability date.*** This section applies with respect to transactions entered into by a tax-exempt entity after May 17, 2006.

[T.D. 9492, 75 FR 38702, July 6, 2010]

§ 1.6033-6 Notification requirement for entities not required to file an annual information return under section 6033(a)(1) (taxable years beginning after December 31, 2006).

(a) ***In general.*** Except as otherwise provided in this paragraph, every organization exempt from taxation under section 501(a) that is not required to file a return described in § 1.6033-2(a)(2), other than an organization described in section 401(a) or 501(d), shall submit annually, in electronic form, a notification setting forth the items described in paragraph (c) of this section and such other information as may be prescribed in the instructions and publications issued with respect to the notification.

(b) *Organizations not required to submit annual electronic notification.*

(1) An organization exempt from taxation under section 501(a) that is required to file or files an annual information return under section 6033(a)(1) shall not submit an annual electronic notification under section 6033(i). This includes the following types of organizations:

(i) Any organization included in a group return for that year under § 1.6033-2(d).

(ii) All private foundations required to file under § 1.6033-2(a)(2)(i) Form 990-PF, "Return of Private Foundation or Section 4947(a)(1) Nonexempt Charitable Trust Treated as a Private Foundation."

(iii) Section 509(a)(3) supporting organizations required to file under § 1.6033-2(a)(2)(i) Form 990, "Return of Organization Exempt From Income Tax," or Form 990-EZ, "Short Form Return of Organization Exempt From Income Tax."

(iv) A section 501(c)(21) black lung trust required to file under § 1.6033-2(a)(2)(i) Form 990-BL, "Information and Initial Excise Tax Return for Black Lung Benefit Trusts and Certain Related Persons."

(v) Any organization that is required to file or files an annual information return under section 6033(a)(1) on any other form prescribed by the Internal Revenue Service for that purpose.

(2) An organization exempt from taxation under section 501(a) that is not required to file a return under section 6033(a)(1) is also not required to submit an annual electronic notification under section 6033(i). This includes the following types of organizations:

(i) A church, an interchurch organization of local units of a church, a convention or association of churches, or an integrated auxiliary of a church (as defined in § 1.6033-2(h)).

(ii) An exclusively religious activity of any religious order.

(iii) A mission society sponsored by or affiliated with one or more churches or church denominations, more than one-half of the activities of which society are conducted in, or directed at persons in, foreign countries.

(iv) An educational organization (below college level) described in section 170(b)(1)(A)(ii), that has a program of a general academic nature, and that is affiliated (within the meaning of § 1.6033-2(h)(2)) with a church or operated by a religious order.

(v) A State institution, the income of which is excluded from gross income under section 115(a).

(vi) An organization described in section 501(c)(1).

(vii) An organization that is a governmental unit or an affiliate of a governmental unit exempt from Federal income tax under section 501(a).

(3) If an organization exempt from taxation under section 501(a) is not described in paragraph (b)(1) or (2) of this section, the organization must submit an annual electronic notification. Thus, a black lung trust that normally has gross receipts of $25,000 or less is not required to file Form 990-BL but is required to submit an annual electronic notification. A section 509(a)(3) supporting organization of a religious organization that normally has gross receipts of $5,000 or less is not required to file Form 990 or Form 990-EZ but is required to submit an annual electronic notification.

(c) *Additional notification requirements* —

(1) ***In general.*** Any organization described in paragraph (a) of this section shall submit an annual electronic notification described in section 6033(i)(1). The annual electronic notification shall—

(i) Be in electronic form; and

(ii) Set forth—

(A) The legal name of the organization;

(B) Any name under which the organization operates or does business;

(C) The organization's mailing address and Internet Web site address (if any);

(D) The organization's taxpayer identification number;

(E) The name and address of a principal officer;

(F) Evidence of the continuing basis for the organization's exemption from the filing requirements under section 6033(a)(1); and

(G) Additional information necessary to process the notification.

(2) The mailing address required by section 6033(i)(1)(C) and submitted in the annual electronic notification shall be the organization's last known address as provided by § 301.6212-2(a) of this chapter. This last known address may be updated as provided under § 301.6212-2 of this chapter, or by clear and concise notification. The Internal Revenue Service will use this last known address as the organization's address of record and will direct all mailings to this address.

(3) By submitting the annual electronic notification described in paragraph (c)(1) of this section, an organization acknowledges that it is not required to file a return under section 6033(a) because its annual gross receipts are not normally in excess of $25,000. In order to make this determination, the organization must keep records that enable it to calculate its gross receipts. All organizations are required to maintain records under section 6001. These records will provide evidence of the continuing basis for the organization's exemption from the filing requirements under section 6033(a)(1).

(4) If an organization that is required to submit an annual electronic notification files a complete Form 990 or Form 990-EZ, the annual electronic notification requirement shall be deemed satisfied. The annual electronic notification requirement is not satisfied if the Form 990 or Form 990-EZ contains only those items of information that would have been required by submitting the notification in electronic form. Also, the filing of a complete Form 990 or Form 990-EZ, rather than the submission of an annual electronic notification, is the filing of a return that starts the period of limitations for assessment under section 6501(g)(2).

(d) ***No effect on other filing requirements.*** An organization that is relieved from filing an information return under section 6033(a) is still subject to the requirements of §§ 1.6033-2(i) and (j), concerning: notice regarding changes in character, operations, or purpose; provision of additional information; duty to file other returns of information; and duty to file unrelated business tax returns. If an organization is required to file an unrelated business tax return, Form 990-T, “Exempt Organization Business Income Tax Return,” the filing of that return does not relieve the organization from the requirement of submitting an annual electronic notification under section 6033(i).

(e) ***Accounting period for submitting annual electronic notification.*** An annual electronic notification required by this section shall be on the basis of the established annual accounting period of the organization. If the organization has no established accounting period, the annual electronic notification shall be on the basis of the calendar year.

(f) ***Time and place for submitting annual electronic notification.*** The annual electronic notification required by this section shall be submitted on or before the 15th day of the fifth calendar month following the close of the period for which the notification is required to be submitted. Thus, an organization with an accounting period ending December 31, 2007, is required to submit an annual electronic notification by May 15, 2008. The notification shall be submitted in accordance with instructions and publications, including those provided at the Internal Revenue Service Web site for exempt organizations.

(g) ***Effective/applicability date.*** These regulations are applicable to annual periods beginning after 2006.

[T.D. 9454, 74 FR 36396, July 23, 2009]

§ 1.6034-1 Information returns required of trusts described in section 4947(a)(2) or claiming charitable or other deductions under section 642(c).

(a) ***In general.*** Every trust (other than a trust described in paragraph (b) of this section) claiming a charitable or other deduction under section 642(c) for the taxable year shall file, with respect to such taxable year, a return of information on form 1041-A. In addition, for taxable years beginning after December 31, 1969, every trust (other than a trust described in paragraph (b) of this section) described in section 4947(a)(2) (including trusts described in section 664) shall file such return for each taxable year, unless all transfers in trust occurred before May 27, 1969. The return shall set forth the name and address of the trust and the following information concerning the trust in such detail as is prescribed by the form or in the instructions issued with respect to such form:

(1) The amount of the charitable or other deduction taken under section 642(c) for the taxable year (and, for taxable years beginning prior to January 1, 1970, showing separately for each class of activity for which disbursements were made (or amounts were permanently set aside) the amounts which, during such year, were paid out (or which were permanently set aside) for charitable or other purposes under section 642(c));

(2) The amount paid out during the taxable year which represents amounts permanently set aside in prior years for which charitable or other deductions have been taken under section 642(c), and separately listing for each class of activity, for which disbursements were made, the total amount paid out;

(3) The amount for which charitable or other deductions have been taken in prior years under section 642(c) and which had not been paid out at the beginning of the taxable year;

(4)

(i) The amount paid out of principal in the taxable year for charitable, etc., purposes, and separately listing for each such class of activity, for which disbursements were made, the total amount paid out;

(ii) The total amount paid out of principal in prior years for charitable, etc., purposes;

(5) The gross income of the trust for the taxable year and the expenses attributable thereto, in sufficient detail to show the different categories of income and of expense; and

(6) A balance sheet showing the assets, liabilities, and net worth of the trust as of the beginning of the taxable year.

(b) *Exceptions* —

(1) ***In general.*** A trust is not required to file a Form 1041-A for any taxable year with respect to which the trustee is required by the terms of the governing instrument and applicable local law to distribute currently all of the income of the trust. For this purpose, the income of the trust shall be determined in accordance with section 643(b) and §§ 1.643(b)-1 and 1.643(b)-2.

(2) ***Trusts described in section 4947(a)(1).*** For taxable years beginning after December 31, 1980, a trust described in section 4947(a)(1) is not required to file a Form 1041-A.

(c) ***Time and place for filing return.*** The return on form 1041-A shall be filed on or before the 15th day of the 4th month following the close of the taxable year of the trust, with the internal revenue officer designated by the instructions applicable to such form. For extensions of time for filing returns under this section, see § 1.6081-1.

(d) ***Other provisions.*** For publicity of information on Form 1041-A, see section 6104 and the regulations thereunder in part 301 of this chapter. For provisions relating to penalties for failure to file a return required by this section, see section 6652(d). For the criminal penalties for a willful failure to file a return and filing a false or fraudulent return, see sections 7203, 7206, and 7207.

[T.D. 6500, 25 FR 12108, Nov. 26, 1960, as amended by T.D. 7563, 43 FR 40221, Sept. 11, 1978; T.D. 8026, 50 FR 20757, May 20, 1985]

§ 1.6035-0 Table of contents.

This section lists the captions contained in §§ 1.6035-1 and 1.6035-2.

§ 1.6035-1 Basis information to persons acquiring property from decedent.

(a) Overview.

(b) Applicability of section 6035 reporting requirements.

(1) In general.

(2) Executor(s) subject to section 6035 reporting requirements.

(3) Examples.

(c) Required Information Return and Statement(s).

(1) Required Information Return.

(2) Required Statement(s).

(3) Due dates.

(4) Acquiring an interest in property.

(5) Option to furnish Statement(s) prior to the acquisition of property by a beneficiary.

(6) Example.

(d) Duty to supplement.

(1) Duty to supplement to report changes to the information reported on the Information Return or Statement(s).

(2) Changes requiring supplemental reporting.

(3) Exceptions; no duty to supplement despite certain changes.

(4) Due date of supplemental reporting.

(5) Duration of duty to supplement.

(6) Examples.

(e) Property for which reporting is required.

(1) In general.

(2) Examples.

(f) Excepted property requiring only limited reporting.

(1) Excepted property.

(2) List of excepted property.

(3) United States dollars defined.

(4) Examples.

(g) Beneficiaries.

(1) In general.

(2) Required Statement to beneficiary trust.

(3) Required Statement to the holder of a split interest in property, not in trust.

(4) Reporting for a missing beneficiary.

(h) Reporting requirements applicable to trustees.

(1) Circumstances under which trustees of beneficiary trusts and other trusts are subject to reporting.

(2) Required reporting.

(3) Example.

(i) Penalties.

(j) Applicability date.

§ 1.6035-2 Transitional relief.

(a) Statements due before June 30, 2016.

(b) Applicability date.

[T.D. 9991, 89 FR 76379, Sept. 17, 2024]

§ 1.6035-1 Basis information to persons acquiring property from decedent.

(a) ***Overview.*** This section implements the reporting requirements under section 6035 of the Internal Revenue Code (Code) applicable to executors and certain trustees. In general, the reporting requirements of this section require providing information to the IRS on the identity of persons acquiring property from a decedent and providing basis information to persons acquiring that property from the decedent. Basis information is needed by certain persons acquiring property from a decedent in order to comply with the consistent basis requirement of section 1014(f) of the Code. *See* § 1.1014-10 for rules applicable to the consistent basis requirement.

(b) ***Applicability of section 6035 reporting requirements*** —

(1) ***In general.*** The reporting requirements under section 6035 of the Code apply only in the case of an estate in which the executor is required to file an estate tax return under section 6018 of the Code (determined without regard to § 20.2010-2(a)(1) of this chapter) (*required estate tax return*) and the executor files that return after July 31, 2015. The requirements do not apply in the case of an estate whose required estate tax return is filed on or before July 31, 2015, even if the due date of the return is after July 31, 2015, or if one or more supplements to that return are filed with the IRS after July 31, 2015. Whether an estate tax return is a required estate tax return depends on the relevant factors identified in section 6018 and the corresponding regulations, including the date of death value of property includible in the decedent's gross estate, the amount of adjusted taxable gifts, and the applicable filing threshold. An election under section 2032 or 2032A of the Code to determine the value of the gross estate in accordance with those respective provisions is not relevant to whether an executor is required to file an estate tax return under section 6018. If an estate tax return is not required to be filed under section 6018 based on the relevant factors identified in section 6018, then an estate tax return filed for another purpose (such as to make a portability election under section 2010(c)(5) of the Code, an allocation or election under section 2632 of the Code with regard to a decedent's generation-skipping transfer tax exemption, or a protective filing to avoid a penalty or satisfy a State law requirement) is not a required estate tax return for purposes of this section.

(2) ***Executor(s) subject to section 6035 reporting requirements.*** For purposes of this section, the term *executor* has the same meaning as in section 2203 of the Code, as expanded to include all persons required under section 6018(b) to file an estate tax return. Thus, more than one person may be subject to the reporting requirements for the same decedent's estate. If one executor is unable to file a complete estate tax return (for example, if the executor has insufficient information about property in the decedent's gross estate that is not in the possession of that executor), each person required to file a return is subject to the reporting requirements of this section only with regard to the property reported (or required to be reported) on the estate tax return required to be filed by that person. Similarly, if no executor is appointed by a court, each person in actual or constructive possession of any property of the decedent is an executor for purposes of this section and is subject to the reporting requirements of this section, but only with regard to the property reported or required to be reported on the estate tax return required to be filed by that executor under section 6018(b).

(3) ***Examples.*** The following examples, in which the decedent D was a United States citizen at the time of the decedent's death, illustrates the application of this paragraph (b).

(i) ***Example 1*** *—Executor required to file a return under section 6018.* The value at death of property includible in D's gross estate exceeds the basic exclusion amount in effect for the year of D's death under section 2010(c). On the timely-filed estate tax return, D's executor makes a valid alternate valuation election under section 2032 to value the property of D's gross estate as of a date subsequent to the date of death. As a result, the value of property includible in D's gross estate is decreased to a value that is less than the basic exclusion amount in effect for the year of D's death. Because D's executor is required to file an estate tax return under section 6018, D's executor also is subject to the reporting requirements of section 6035. This is true even though no estate tax liability was incurred, and the requirements of section 1014(f) do not apply to any property includible in D's gross estate. *See* § 1.1014-10(c)(1).

(ii) ***Example 2*** *—Executor not required to file a return under section 6018.* The value at death of property includible in D's gross estate does not exceed the basic exclusion amount in effect for the year of D's death under section 2010(c) of the Code. In accordance with the terms of D's will, D's executor distributes D's entire estate to D's only child. D's executor files an estate tax return solely for the purpose of making a portability election under section 2010(c)(5). Because D's executor is not required to file an estate tax return under section 6018, D's executor is not subject to the reporting requirements of section 6035.

(iii) ***Example 3*** *—No executor appointed.* The value at death of property includible in D's gross estate exceeds the basic exclusion amount in effect for the year of D's death under section 2010(c) and consists entirely of D's interests in Property A and Property B that D owned with Nephew A and Nephew B, respectively, as joint tenants with rights of survivorship. Pursuant to local law, Nephew A becomes the sole owner of Property A and Nephew B becomes the sole owner of Property B upon D's death. No executor or administrator is appointed, qualified, or acting within the United States for D's estate on the due date of D's estate tax return. Because Nephew A has actual or constructive possession of Property A, Nephew A is an executor described in paragraph (b)(2) of this section with regard to D's interest in Property A. Because Nephew A is required to file an estate tax return under section 6018 with regard to D's interest in Property A, Nephew A also is subject to the reporting requirements of section 6035 with respect to Property A. Similarly, because Nephew B has actual or constructive possession of Property B on the due date of D's estate tax return, Nephew B is an executor described in paragraph (b)(2)

of this section with regard to D's interest in Property B. Because Nephew B is required to file an estate tax return under section 6018 with regard to D's interest in Property B, Nephew B also is subject to the reporting requirements of section 6035 with respect to Property B.

(iv) ***Example 4*** *—Executor unable to make a complete return.* The value at death of property includible in D's gross estate exceeds the basic exclusion amount in effect for the year of D's death under section 2010(c). E is appointed the executor of D's estate. During the administration of D's estate, E discovers that D has made transfers each year for the past ten years to T as trustee of Trust. E contacts T, but T refuses to provide E with any information regarding Trust. E timely files D's estate tax return reporting the value of all of the property in D's gross estate except Trust. Pursuant to § 20.6018-2 of this chapter, E includes with the return a statement that gives T's name and contact information and the date and amount of each transfer from D to T as trustee of Trust, which is all the information E has about Trust. The IRS provides notice to T of T's obligation to make D's estate return as to Trust. Because E is required to file an estate tax return under section 6018, E is subject to the reporting requirements of section 6035 as to the property reported on the estate tax return filed by E. Because T is required to file an estate tax return under section 6018, T is subject to the reporting requirements of section 6035 as to Trust.

(c) ***Required Information Return and Statement*** (*s*) — (1) *Required Information Return.* An executor required to file an estate tax return under section 6018 must file with the IRS an Information Return by the date required under paragraph (c)(3) of this section. The term *Information Return* refers to the Form 8971, *Information Regarding Beneficiaries Acquiring Property from a Decedent,* and all required attachments. Required attachments include a copy of each Statement described in paragraph (c)(2) of this section (if any) required to be furnished to a beneficiary who acquires property within the meaning of paragraph (c)(4) of this section on or before the due date of the estate tax return or, if earlier, the date on which the estate tax return is filed with the IRS. Required attachments also include a copy of each Statement (if any) furnished pursuant to paragraph (c)(5) of this section before the filing of the Information Return. The term *Information Return* also refers to any successor form or procedure designated by the IRS for this purpose. The Information Return must identify each beneficiary who has acquired or will acquire property subject to reporting (under paragraph (e) of this section), as well as other information prescribed by the Information Return and the instructions for that form. For the duty to supplement the Information Return in the event such property is acquired by a beneficiary after the filing of the estate tax return, see paragraph (c)(3)(ii) of this section. For the duty to supplement the Information Return in the event of a change to the information required to be reported, see paragraph (d) of this section.

(2) ***Required Statement*** (*s*). An executor required to file an estate tax return under section 6018 also must furnish a Statement to each beneficiary who acquires property subject to reporting under paragraph (e) of this section. For purposes of this section, the term *Statement* refers to the payee statement described as Schedule A of the Information Return to be furnished to a beneficiary, or any successor form, schedule, or procedure designated by the IRS for this purpose. The Statement furnished to a beneficiary must identify that beneficiary's acquired property and its value and other information prescribed by the Statement and the instructions for that form. For each property reported on a Statement, the value the executor reports on that Statement is the value of the property as reported on the estate tax return filed with the IRS. Generally, this is the value of the property on the date of the decedent's death, except in the case of an election in which the value is determined under section 2032 or 2032A, in which case it is the value determined under the applicable provision. If different interests in the same property pass from the decedent to one or more income beneficiaries or life tenants and remaindermen, the value to be reported is the value of

the entire property and each recipient will be responsible for identifying his or her respective share of uniform basis. For the duty to supplement the Statement in the event of a change to the information required to be reported, including a change in the identified value of property reported on a Statement, see paragraph (d) of this section.

(3) *Due dates* —

(i) ***General rule.*** Except as provided in paragraphs (c)(3)(ii) and (iii) of this section and in § 1.6035-2, the executor must file the Information Return with the IRS on or before the due date specified in this paragraph (c)(3)(i). In addition, each Statement, a copy of which is required to be attached to the Information Return, must be furnished to the named beneficiary on or before this same due date. The Information Return must be filed, and each such Statement (if any) must be furnished to its named beneficiary, on or before the earlier of—

(A) The date that is 30 days after the due date of the estate tax return required under section 6018 (including extensions, if any); or

(B) The date that is 30 days after the date on which that estate tax return is filed with the IRS.

(ii) ***Due date and applicable rules if property is acquired subsequently by beneficiary.*** If a beneficiary acquires property subject to reporting after the due date of the estate tax return (or the earlier filing of the Information Return), the executor must furnish a Statement to that beneficiary with regard to that acquired property on or before January 31 of the year following the beneficiary's acquisition of that property. By that same January 31, the executor also must attach a copy of the Statement to a supplement to the Information Return (a supplemental Information Return) and must file the supplemental Information Return with the IRS. The supplemental Information Return must include a copy of each Statement required to be furnished for that year pursuant to this paragraph (c)(3)(ii), as well as a copy of each Statement (if any) furnished in accordance with paragraph (c)(5) of this section that has not already been filed with the IRS as an attachment to the Information Return or a supplement to the Information Return. The requirements of this paragraph (c)(3)(ii) do not apply if the property already has been reported on a Statement furnished pursuant to paragraph (c)(5) of this section. See this paragraph (c)(3) and paragraph (d)(4) of this section for the due date of other required supplements to this reporting.

(iii) ***Transition rule.*** If the due date of an estate tax return required to be filed by section 6018 is on or before July 31, 2015, but the executor does not file the estate tax return with the IRS until after July 31, 2015, then the Information Return and all required Statements are due on or before the date that is 30 days after the date on which the estate tax return is filed, except as provided in § 1.6035-2.

(4) ***Acquiring an interest in property.*** For purposes of this section, the term *acquired property* refers to property subject to reporting under paragraph (e) of this section that a beneficiary acquires. A beneficiary acquires such property when, under local law, title vests in the beneficiary or when the beneficiary otherwise has sufficient control over or connection with the property that the beneficiary is able to take action related to the property for which basis is relevant for Federal income tax purposes (such as, for example, to sell or depreciate the property). In many cases, a beneficiary's acquisition of property occurs upon an executor's or trustee's distribution of the property. For property passing by contract or by operation of law, the beneficiary's acquisition of that property generally occurs automatically upon the death of the decedent.

(5) ***Option to furnish Statement(s) prior to the acquisition of property by a beneficiary.*** An executor may satisfy the requirement in paragraph (c)(2) of this section to furnish a Statement to a beneficiary by furnishing the Statement to the beneficiary prior to the beneficiary's acquisition of the property subject to reporting under paragraph (e) of this section, provided that the executor has reason to believe that the beneficiary will acquire that property. The Statement furnished to such a beneficiary must identify the property the beneficiary is expected to acquire as well as the value of that property and other information prescribed by the Statement and the instructions for that form (and must include information relating to other property actually acquired by such beneficiary as may be required under paragraph (c)(2) of this section). If, after satisfying the requirements of this paragraph (c)(5), the property is acquired by a different beneficiary, the executor must update the beneficiary information in the Information Return and furnish a Statement to that beneficiary pursuant to the duty to supplement to report a change in beneficiary information as described in paragraph (d)(2)(i) of this section. The executor additionally is subject to the duty to supplement to report other changes to the information required to be reported as identified in paragraph (d) of this section.

(6) ***Example.*** The following example illustrates the application of this paragraph (c).

(i) The decedent D was a United States citizen at the time of D's death and the executor of D's estate E is required to file an estate tax return under section 6018. The terms of D's will provide for D's entire estate to be distributed to a marital trust. Prior to timely filing the estate tax return for D's estate, E funded the marital trust with a portion of the property, the value of which is included in D's gross estate. Under paragraph (c)(4) of this section, the marital trust has acquired this property upon the funding of the trust by E. Under paragraphs (c)(1) and (c)(3)(i) of this section, within 30 days of filing the estate tax return, E must file with the IRS the Information Return identifying the marital trust as the beneficiary (as well as other information prescribed by the Information Return or instructions) and must include with the Information Return all required attachments. Under paragraphs (c)(2) and (c)(3)(i) of this section, by the same date, E must furnish to the marital trust the Statement identifying the portion of the property distributed to the marital trust and its estate tax value (as well as any other information prescribed by the Statement or instructions). A copy of the Statement is a required attachment to be included with the Information Return. Pursuant to paragraph (c)(5) of this section, E may choose to expand the property identified on the Statement to also include the property the marital trust is expected to acquire subsequently. If E so chooses, the Statement to be furnished to the marital trust will identify all such property and its value at the date of death and, except in the case of any changes to the information required to be reported, no further Statement will be required at the time of the completion of the funding of the trust.

(ii) However, if E chooses not to expand the reporting to property not yet acquired by the marital trust, then, once the marital trust has acquired additional property, E is subject to further reporting. Under paragraph (c)(3)(ii) of this section, in each year that E distributes additional property to the marital trust, E must furnish, by January 31 of the following year, a Statement to the marital trust identifying all of the property the marital trust has acquired from D's estate that year and the property's estate tax value (as well as any other information prescribed by the Statement or instructions). By the same date, E must file with the IRS a supplemental Information Return and attach a copy of that Statement as well as any other required attachments.

(d) ***Duty to supplement*** —

(1) ***Duty to supplement to report changes to the information reported on the Information Return or Statement*** (*s*). An executor to whom the reporting requirements of this section apply must file a supplemental Information Return with the IRS and furnish a Statement or supplemental Statement to each affected beneficiary if a change to the information required to be reported on the Information Return or Statement (or supplement to either) causes the information as reported to be incorrect or incomplete. The executor must file the supplemental Information Return with the IRS, including copies of each Statement or supplemental Statement furnished to affected beneficiaries, and must furnish a Statement or supplemental Statement to each affected beneficiary, by the due date described in paragraph (d)(4) of this section.

(2) ***Changes requiring supplement.*** This paragraph (d)(2) provides a nonexhaustive list of changes that require supplemental reporting under paragraph (d)(1) of this section.

(i) ***Change in beneficiary information.*** The receipt, discovery, or acquisition by the executor of information that changes the beneficiary to whom property is to be distributed (pursuant to a death, disclaimer, bankruptcy, or otherwise), or corrects or completes other beneficiary information originally reported, will give rise to a duty to supplement.

(ii) ***Change in the identified value of property.*** The supplementing of an estate tax return to report a corrected estate tax value of property that was previously reported on an estate tax return and a Statement will give rise to a duty to supplement. In addition, a final determination of value of property for Federal estate tax purposes (within the meaning of § 1.1014-10(b)(1)) that differs from the value provided on a Statement or supplement to a Statement will give rise to a duty to supplement.

(iii) ***Change or addition of property subject to reporting.*** The supplementing of an estate tax return to report the estate tax value of property subject to reporting under paragraph (e) of this section, if that property and/or its value previously was not reported on an estate tax return or supplement to the estate tax return, will give rise to a duty to supplement. A duty to supplement also will arise if such property or its value that previously was not reported on an estate tax return or supplement to the estate tax return is included in the decedent's gross estate pursuant to an examination by the IRS or otherwise.

(iv) ***Change in property to be acquired by beneficiary.*** A duty to supplement will arise if an executor furnishes a Statement to a beneficiary prior to the beneficiary's acquisition of property pursuant to paragraph (c)(5) of this section and the beneficiary ultimately acquires property different from the property identified on that Statement. A beneficiary's acquisition of different property may occur for any reason, including an executor's receipt of different property in a transaction in which the basis of the new property received by the executor is determined, in whole or in part, by reference to the final value of property acquired from or as a result of the death of the decedent (for example, as the result of a like-kind exchange under section 1031 or an involuntary conversion).

(3) ***Exceptions; no duty to supplement despite certain changes.*** Notwithstanding paragraph (d)(2) of this section, no supplemental reporting under this section is required for:

(i) Inconsequential errors or omissions within the meaning of § 301.6722-1(b) of this chapter;

(ii) Changes resulting from an event that triggers an additional estate tax under section 2032A, including changes in value in the event of a beneficiary election under section 1016(c) of the Code;

(iii) Adjustments to the basis of property pursuant to sections of the Code other than section 1014(f); and

(iv) Any other change that is identified as requiring no supplemental reporting under this section in published guidance in the FEDERAL REGISTER or in the Internal Revenue Bulletin (*see* § 601.601(d)(2)(ii)(*b*) of this chapter).

(4) ***Due date of supplemental reporting.*** The supplemental reporting required by this paragraph (d) must be filed with the IRS and furnished to each affected beneficiary on or before 30 days after the date on which information becomes available to the executor from which the executor can conclude that a change to the information provided on the Information Return or Statement (or supplement to either) requires supplemental reporting. For changes occurring as a result of supplementing the estate tax return, the date on which the information becomes available to the executor is deemed to be the filing date of the supplemental information. Therefore, for changes occurring as a result of supplementing the estate tax return, the due date of the supplemental reporting required by this paragraph (d) is 30 days after the filing date of the supplemental information. For changes occurring as a result of a determination of final value, the date on which the information becomes available to the executor is deemed to be the date a value becomes the final value under § 1.1014-10(b)(1). Therefore, for changes occurring as a result of a determination of final value, the due date of the supplemental reporting required by this paragraph (d) is 30 days after the date a value becomes the final value under § 1.1014-10(b)(1). However, with regard to property that has not been acquired by a beneficiary on or before the due date described in this paragraph (d)(4) and for which a Statement was not provided to the beneficiary pursuant to paragraph (c)(5) of this section, the due date may be delayed until the due date described in paragraph (c)(3)(ii) of this section.

(5) ***Duration of duty to supplement.*** An executor's duty to supplement as described in this section continues to apply until a final determination of value for Federal estate tax purposes (a final value within the meaning of § 1.1014-10(b)(1)) is determined for all property subject to reporting (under paragraph (e) of this section) or, if later, until such property has been acquired by a beneficiary. Therefore, the executor's final supplemental reporting is the reporting to the IRS and the furnishing of Statements to beneficiaries with regard to the last to occur of these two events, assuming that either event would create a change requiring supplemental reporting.

(6) ***Examples.*** The following examples illustrate the application of this paragraph (d). In each case, the decedent D was a U.S. citizen and D's executor E was required under section 6018 to file an estate tax return.

(i) ***Example 1*** *—Change in identified value of property.* D's estate includes stock in a closely-held corporation. E distributes the stock to a beneficiary B of the estate before the due date of the estate tax return. D's executor reports the value of the stock at $14 million on D's estate tax return and on the Statement furnished to B. On examination of D's estate tax return, the IRS adjusts the value of the closely-held stock to $18 million. A court subsequently determines that the fair market value of the closely-held stock for Federal estate tax purposes is $17 million and the court's decision becomes final on June 15th. On or before July 15th of the same year, E must furnish a supplemental Statement to B showing the final value of $17 million for the closely-held stock, and must attach a copy of that supplemental Statement to a supplemental Information Return and file it with the IRS.

(ii) ***Example 2*** *—Duration of the duty to supplement.* D's gross estate includes stock in closely-held corporation X, stock in closely-held corporation Y, and cash. D's will directs E to distribute 50% of the value of D's estate to A and 50% to B in any manner to which A and B agree. A and B

agree that A will take the stock in corporation X and B will take stock in corporation Y and they will divide the cash in such amounts as to cause each to take an equal share of the value D's estate. E timely files D's estate tax return and furnishes a Statement to A and to B pursuant to paragraph (c)(5) of this section. The IRS accepts the return as filed and the period of limitations on assessment of estate tax expires. Thereafter, A and B agree to revise their agreement. E distributes the stock in corporation X to B and the stock in corporation Y to A in accordance with a revised agreement between A and B. E's final supplemental reporting is the filing of a supplemental Information Return and furnishing of a supplemental Statement to A describing the shares and value of stock distributed to A and a supplemental Statement to B describing the shares and value of stock distributed to B.

(e) ***Property for which reporting is required*** —

(1) ***In general.*** Except for excepted property subject to only limited reporting as described in paragraph (f) of this section, the property subject to reporting under this section is *included property* and any other property the basis of which is determined, in whole or in part, by reference to the basis of the included property (for example, property acquired in a like-kind exchange or an involuntary conversion). For purposes of this section, *included property* is property the value of which is included in the value of the decedent's gross estate as defined in section 2031 or 2103. Generally, included property refers to property whose value is reported on an estate tax return, but it also refers to property whose value otherwise is included in the total value of the gross estate (for example, during examination by the IRS). Thus, included property includes property that qualified, in whole or in part, for an estate tax marital deduction under section 2056, 2056A, or 2106(a)(3) or for an estate tax charitable deduction under section 2055 or 2106(a)(2). It further includes property included in the decedent's gross estate that is distributed to a surviving spouse in satisfaction of that surviving spouse's interest in community property not included in the gross estate that the executor has distributed to a non-spouse pursuant to State law properly applied. However, included property does not include property whose value is not reported on an estate tax return and whose value is not otherwise included in the value of the decedent's gross estate, such as the property of a deceased nonresident noncitizen that is not subject to United States estate tax, and the surviving spouse's share of community property described in section 1014(b)(6).

(2) ***Examples.*** The following examples illustrate the application of this paragraph (e). In each case, the decedent D was a U.S. citizen and D's executor E was required under section 6018 to file an estate tax return.

(i) ***Example 1*** —*Included property.* Pursuant to the terms of D's will, a trust is established and funded with property, the value of which is includible in D's gross estate under section 2031. The trust is a charitable remainder annuity trust described in section 664(d)(1). The terms of the trust provide that, in each taxable year during the lifetime of D's surviving spouse S, the trustee must pay to S an annuity of 5% of the initial net fair market value of all property passing to the trust as finally determined for Federal estate tax purposes. Upon the death of S, the trustee must distribute all of the then-principal and income of the trust to organizations described in sections 170(c), 2055(a) and 2522(a) as the trustee selects, in the trustee's sole discretion. The property used to fund the trust is included property and is subject to the reporting requirements of this section. This is true whether or not the requirements of section 1014(f) apply to the property transferred to the trust. *See* § 1.1014-10(d)(4).

(ii) ***Example 2*** *—Property the basis of which is determined by reference to the basis of included property.* D's gross estate includes the value of Property A. Before the due date for filing the estate tax return, E exchanges Property A for Property B in a like-kind exchange pursuant to section 1031, for which D's estate recognizes no gain or loss. Property B is property subject to reporting as prescribed in this section. With respect to Property B, the value E reports on the Statement is the value reported for Property A on the estate tax return filed with the IRS.

(f) ***Excepted property requiring only limited reporting*** —

(1) ***Excepted property.*** Certain included property that is described in paragraph (f)(2) of this section (excepted property) is subject to more limited reporting than the reporting required under paragraph (c) of this section. The requirement to file an Information Return with the IRS as described in paragraph (c)(1) of this section remains the same even if all property subject to reporting under paragraph (e) of this section is excepted property. However, the executor is not required to identify or provide any other information for excepted property on the Information Return, and the executor is not required to furnish a Statement to the beneficiary with regard to that property. Instead, the executor is required only to report on the Information Return, in accordance with the instructions for that form, that some or all of the property subject to reporting is excepted property described in this paragraph (f). Further, the executor is not required to identify or provide any other information for excepted property on any Statement furnished to a beneficiary and, if this property is the only property that a beneficiary has acquired, an executor is not required to furnish a Statement to that beneficiary.

(2) ***List of excepted property.*** Excepted property includes—

(i) United States dollars (as defined in paragraph (f)(3) of this section).

(ii) United States dollar-denominated demand deposits.

(iii) Certificates of deposit denominated in United States dollars.

(iv) Cash collateral denominated in United States dollars held by a third party to secure a liability (such as a deposit of purchase money or a security deposit).

(v) Shares of a registered investment company priced in United States dollars that is a money market fund under Rule 2a-7 under the Investment Company Act of 1940 (17 CFR 270.2a).

(vi) Life insurance proceeds on the life of the decedent payable in a lump sum in United States dollars.

(vii) Federal, State, and local tax refunds and other refunds payable in United States dollars.

(viii) Notes that are forgiven in full by the decedent upon the decedent's death, whether or not denominated in United States dollars.

(ix) Household and personal effects for which an appraisal is not required under § 20.2031-6(b) of this chapter.

(x) Property that, prior to distribution from the estate or the decedent's revocable trust, is completely sold, exchanged, or otherwise disposed of in one or more transactions that are recognition events for Federal income tax purposes (whether or not resulting in a gain or loss, and whether or not any gain is capital or ordinary). Such property includes, but is not limited to—

(A) Property distributed in satisfaction of a pecuniary bequest on which the estate recognizes any gain or loss pursuant to § 1.661(a)-2(f);

(B) Property for which an election under section 643(e)(3) has been made for the estate to recognize any gain or loss;

(C) Interests in a business entity that are redeemed for United States dollars prior to being distributed to the beneficiary;

(D) Property disposed of in a transaction described in section 267(a) and (b)(13); and

(E) Property subject to the mark to market accounting method at the time of distribution from the estate or from the decedent's revocable trust.

(xi) Other property having an initial basis that is not in any way determined with regard to or derived from the property's fair market value for Federal estate tax purposes. For purposes of this section, such property includes but is not limited to—

(A) Annuity contracts subject to section 72 and amounts received as an annuity subject to section 72;

(B) An interest in property that consists entirely of the right to receive an item of income in respect of a decedent as defined in section 691;

(C) Amounts received under installment obligations arising from a transaction for which the installment method for determining gain under section 453 applies;

(D) Appreciated property described in section 1014(e) that is acquired by the decedent within 1 year of death;

(E) Stock of a passive foreign investment company subject to section 1296(i), but only if the basis of such stock is the adjusted basis in the hands of the decedent immediately before the decedent's death; and

(F) Interests in and distributions from retirement plans and deferred compensation plans, including individual retirement arrangements as defined in sections 408 and 408A, that are expressed entirely in United States dollars.

(xii) Bonds to the extent that they are redeemed by the issuer for United States dollars prior to being distributed to a beneficiary so that any resulting gain or loss is recognized by the estate.

(xiii) Property included in the gross estate of a beneficiary who died before the due date of the Information Return.

(xiv) Any other property that is identified as excepted property in published guidance in the FEDERAL REGISTER or in the Internal Revenue Bulletin (*see* § 601.601(d)(2)(ii)(*b*) of this chapter).

(3) ***United States dollars defined.*** For purposes of this paragraph (f), the term *United States dollars* means the official currency of the United States. The term United States dollars includes physical bills and coins for which the value of each bill or coin is equivalent to the face amount of that bill or coin. This definition does not include other physical United States bills or coins with numismatic value because these bills or coins typically do not have a value equal to their face value.

(4) ***Examples.*** The following examples illustrate the application of this paragraph (f). In each case, the decedent D was a U.S. citizen and D's executor E is required under section 6018 to file an estate tax return.

(i) ***Example 1*** *—Reporting household and personal effects.* Included in D's gross estate are D's household and personal effects. The only item included in D's household and personal effects with a value in excess of $3,000 is a painting. E attaches to D's estate tax return an appraisal of the painting prepared in accordance with § 20.2031-6(b) of this chapter and a room-by-room itemization of D's other household and personal effects prepared in accordance with § 20.2031-6(a) of this chapter. E must furnish to the beneficiary of the painting the Statement required by paragraph (c)(2) of this section. E is not required to report on a Statement furnished to any beneficiary any information about D's other household and personal effects. If a beneficiary of D's household effects, other than the beneficiary of the painting, has acquired no other property, E is not required to furnish a Statement to that beneficiary. E is required to file the Information Return required by section (c)(1) of this section and attach to that Information Return a copy of the Statement furnished to the beneficiary of the painting. E must disclose on the Information Return that some or all of the property included in D's gross estate is excepted property described in this paragraph (f).

(ii) ***Example 2*** *—Reporting if property is disposed of in taxable transaction.* Included in D's estate are shares in X, a publicly traded company. Shortly after D's death but prior to the filing of the estate tax return for D's estate, X is acquired by T, also a publicly traded company. In exchange for the shares in X, the estate receives shares in T and cash in a fully taxable transaction. E is required to report on the Information Return required by paragraph (c)(1) of this section that some or all of the property included in D's gross estate is excepted property described in this paragraph (f). E is not required to furnish a Statement to any recipient with respect to the cash, X stock, or T stock.

(iii) ***Example 3*** *—Reporting if estate is liquidated prior to distribution.* Property A is the only property in D's estate. Prior to filing the estate tax return for D's estate, E sells Property A for $15,000,000. D's estate recognizes gain on the sale of Property A for income tax purposes. E distributes the $15,000,000 among the beneficiaries of D's estate. E must file the Information Return required by paragraph (c)(1) of this section even though all of the property included in D's gross estate is excepted property within the meaning of this paragraph (f). E is not required to furnish to the beneficiaries of D's estate a Statement with regard to Property A, and therefore is not required to attach a copy of any Statement to the Information Return. E is required to file an Information Return with the IRS indicating that all of the property included in D's gross estate is excepted property described in this paragraph (f), and must provide other information as required by the Information Return and the instructions.

(g) ***Beneficiaries*** *—*

(1) ***In general.*** Each person who acquires (or will acquire) property from a decedent or by reason of the decedent's death that is subject to the reporting described in paragraph (e) of this section is a beneficiary for purposes of this section and thus is a person to be listed on the Information Return and, except with respect to excepted property (described in paragraph (f) of this section), is a person to whom the executor must furnish a required Statement. Thus, a beneficiary may be:

(i) An individual, including one who is both the executor and a beneficiary, who acquires (or will acquire) property subject to reporting not in trust;

(ii) The estate of a deceased individual who survived the decedent if such individual or estate acquires (or will acquire) property subject to reporting not in trust;

(iii) A trust, whether foreign or domestic, including without limitation a grantor retained annuity trust, charitable remainder trust, and charitable lead trust (each referred to in this section as *beneficiary trusts*); or

(iv) An entity other than a trust, including without limitation a business entity or an organization described in section 501(c).

(2) ***Required Statement to beneficiary trust*** —

(i) ***In general.*** If a beneficiary trust is the beneficiary to be identified on the Information Return pursuant to paragraph (g)(1) of this section, the executor must furnish the Statement described in paragraph (c)(2) of this section to the trustee rather than to the beneficiaries of the trust. However, if the executor reasonably believes that it is unlikely that the beneficiary trust will depreciate, sell, or otherwise dispose of the property subject to reporting in a recognition event for income tax purposes but instead will distribute the property in kind to the trust beneficiaries, the executor instead may furnish the Statement described in paragraph (c)(2) of this section to each of the trust beneficiaries, with copies of the Statements to the trustee. For this purpose, the trust beneficiaries include all potential current income beneficiaries and each remainderman who would have had a current interest in the trust if one or more of the income beneficiaries had died immediately after the decedent. For purposes of determining the due date of such Statements, each trust beneficiary will be deemed to have acquired the trust property when the trust acquired that property.

(ii) ***Beneficiary trust not yet established.*** If, by the date required for filing the Information Return with the IRS, a beneficiary trust does not have at least one trustee and a tax identification number, an executor must report on the Information Return that the beneficiary trust has not yet been established in accordance with the instructions. Once the beneficiary trust has been established and the trust information becomes available to the executor, the executor must supplement the required reporting as described in paragraph (d) of this section to update the beneficiary information on the Information Return and Statement.

(3) ***Required Statement to the holder of a split interest in property, not in trust.*** The beneficiary of a life estate not in trust, and thus the beneficiary to whom the executor is to furnish any required Statement, is the life tenant. Similarly, the beneficiary of a remainder interest not in trust is each remainderman identified as if the life tenant were to die immediately after the decedent. For purposes of determining the due date of the Statements reporting these interests under paragraph (c)(3) of this section, each beneficiary will be deemed to have acquired the property subject to reporting on the date of the decedent's death. The beneficiary of a contingent interest, not in trust, is a beneficiary only if the contingency occurs before the end of the period during which the executor has an obligation to supplement the reporting as provided in paragraph (d)(5) of this section. If the contingency occurs during this period, the executor must update the beneficiary information on the Information Return and furnish a Statement to that beneficiary pursuant to the executor's duty to supplement to report a change in beneficiary information as described in paragraph (d) of this section. Usufruct interests are treated in the same manner.

(4) ***Reporting for a missing beneficiary.*** If the executor is unable to locate a beneficiary by the date required for filing the Information Return with the IRS, the executor must report on the Information Return the failure to locate the beneficiary and the efforts the executor has made to locate the

beneficiary. The executor must supplement the Information Return and must furnish the required Statement, as provided in paragraph (d) of this section, to report the subsequent location of the beneficiary or, if the beneficiary is not located, to report the distribution of the property subject to reporting to a different beneficiary.

(h) *Reporting requirements applicable to trustees* —

(1) ***Circumstances under which trustees of beneficiary trusts and other trusts are subject to reporting.*** Trustees of beneficiary trusts making a distribution of property that was reported on a Statement furnished to those trustees, or of any other property the basis of which is determined, in whole or in part, by reference to the basis of property subject to reporting under paragraph (e) of this section, are subject to the reporting requirements described in paragraph (h)(2) of this section and the supplemental reporting requirements described in paragraph (d) of this section (to the extent applicable) with respect to such property. In addition, trustees of trusts that receive a distribution of such property, whether from a beneficiary trust or from any other trust that has received such property, either directly or indirectly, also are subject to these reporting requirements when making a distribution of that property. This reporting obligation imposed on trustees continues to apply for each subsequent transfer or distribution until the property is distributed to a beneficiary not in trust. However, no trustee of a beneficiary trust or of a subsequent recipient trust is subject to the reporting requirements described in paragraph (h)(2) of this section for a disposition of property in a transaction that is a recognition event for income tax purposes (whether or not resulting in a gain or loss) that results in the entire property having a basis that no longer is related, in whole or in part, to the property's final value or, if applicable, reported value (within the meaning of § 1.1014-10(b)(1) or (2), respectively).

(2) ***Required reporting.*** On or before January 31 of the calendar year immediately following the year during which occurs a distribution of property subject to reporting under this paragraph (h), the trustee making the distribution must file an Information Return in accordance with the instructions for that form and must furnish a Statement to each recipient of the distribution. For purposes of this section, each recipient is a beneficiary.

(3) ***Example.*** The following example illustrates the application of this paragraph (h). Decedent D was a U.S. citizen and D's executor E was required under section 6018 to file an estate tax return. Pursuant to the will of D, E distributed 100 shares of publicly traded stock in Company X to a trust (Children's Trust) for the benefit of D's two children A and B and their respective issue. E provided a Statement to the trustee of Children's Trust in accordance with the requirements of paragraph (c)(2) of this section. Shortly thereafter, pursuant to the terms of Children's Trust, Children's Trust terminates with the 100 shares of Company X stock being distributed in equal shares between Trust A, for the benefit of A and A's issue, and Trust B, for the benefit of B and B's issue. Pursuant to paragraph (h)(2) of this section, the trustee of Children's Trust files an Information Return with the IRS and furnishes a Statement to the trustees of Trust A and Trust B. Several years later, the trustee of Trust A distributes its 50 shares of Company X stock to C, the only child of A. Pursuant to this paragraph (h), the trustee of Trust A files an Information Return with the IRS and furnishes a Statement to C. Shortly thereafter, C gives the 50 shares of Company X stock, outright, to C's nephew N. C has no obligation to file an Information Return with the IRS or furnish a Statement to N to report the distribution of the 50 shares of Company X stock to N.

(i) ***Penalties.*** For the penalties applicable to the filing of Information Returns and the furnishing of Statements required by this section, including waivers for reasonable cause, *see* sections 6721 through 6724 and the regulations in part 301 under sections 6721 through 6724.

(j) ***Applicability date.*** This section applies to executors of the estate of a decedent who are required to file a Federal estate tax return under section 6018 if that return is filed after September 17, 2024, and to trustees receiving certain property included in the gross estate of such a decedent.

[T.D. 9991, 89 FR 76380, Sept. 17, 2024]

§ 1.6035-2 Transitional relief.

(a) ***Statements due before June 30, 2016.*** Executors and other persons required to file or furnish a statement under section 6035(a)(1) or (2) after July 31, 2015 and before June 30, 2016, need not have done so until June 30, 2016.

(b) ***Applicability Date.*** This section is applicable to executors and other persons who file a return required by section 6018(a) or (b) after July 31, 2015.

[T.D. 9797, 81 FR 86955, Dec. 2, 2016]

§ 1.6036-1 Notice of qualification as executor or receiver.

For provisions relating to the notice required of fiduciaries, see the regulations under section 6036 contained in part 301 of this chapter (Regulations on Procedure and Administration).

§ 1.6037-1 Return of electing small business corporation.

(a) ***In general.*** Every small business corporation (as defined in section 1371(a)) which has made an election under section 1372(a) not to be subject to the tax imposed by chapter 1 of the Code shall file, with respect to each taxable year for which the election is in effect, a return of income on Form 1120-S. The return shall set forth the items of gross income and the deductions allowable in computing taxable income as required by the return form or in the instructions issued with respect thereto and shall be signed in accordance with section 6062 by the person authorized to sign a return. The return shall also set forth the following information concerning the electing small business corporation:

(1) The names and addresses of all persons owning stock in the corporation at any time during the taxable year;

(2) The number of shares of stock owned by each shareholder at all times during the taxable year;

(3) The amount of money and other property distributed by the corporation during the taxable year to each shareholder;

(4) The date of each distribution of money and other property; and

(5) Such other information as is required by the form or by the instructions issued with respect to such form.

(b) ***Time and place for filing return.*** The return shall be filed on or before the 15th day of the third month following the close of the taxable year with the internal revenue officer designated in the instructions applicable to Form 1120-S. (See section 6072.)

(c) ***Other provisions.*** The return on Form 1120-S will be treated as a return filed by the corporation under section 6012, relating to persons required to make returns of income, for purposes of the provisions of chapter 66 of the Code, relating to limitations. Thus, for example, the period of limitation on assessment

and collection of any corporate tax found to be due upon a subsequent determination that the corporation was not entitled to the benefits of subchapter S, chapter 1 of the Code, will run from the date of filing the return under section 6037, or from the date prescribed for filing such return, whichever is the later. For the rules requiring the disclosure of certain transactions, see § 1.6011-4T.

(d) ***Penalties.*** For criminal penalties for failure to file a return, supply information, or pay tax, and for filing a false or fraudulent return, statement, or other document, see sections 7203, 7206, and 7207.

[T.D. 6500, 25 FR 12108, Nov. 26, 1960, as amended by T.D. 7012, 34 FR 7690, May 15, 1969; T.D. 9000, 67 FR 41328, June 18, 2002]

§ 1.6037-2 Required use of electronic form for income tax returns of electing small business corporations.

(a) ***In general.*** The return of an electing small business corporation that is required to be filed electronically under § 301.6037-2 of this chapter must be filed in accordance with IRS revenue procedures, publications, forms, or instructions, including those posted electronically.

(b) ***Applicability date.*** The rules of this section apply to returns required to be filed for taxable years ending on or after December 31, 2023.

[T.D. 9972, 88 FR 11764, Feb. 23, 2023]

§ 1.6038-1 Information returns required of domestic corporations with respect to annual accounting periods of certain foreign corporations beginning before January 1, 1963.

(a) ***Requirement of return.*** For taxable years beginning after December 31, 1960, every domestic corporation shall make a separate annual information return on Form 2952, in duplicate, with respect to each foreign corporation which it controls, as defined in paragraph (b) of this section, and with respect to each foreign subsidiary, as defined in paragraph (c) of this section, for each annual accounting period (described in paragraph (d) of this section) of each such controlled foreign corporation or foreign subsidiary beginning after December 31, 1960, and before January 1, 1963. Such information shall not be required to be furnished, however, with respect to a corporation defined in section 1504(d) of the Code which makes a consolidated return for the taxable year. For annual accounting periods beginning after December 31, 1962, see § 1.6038-2.

(b) ***Control.*** A domestic corporation shall be deemed to be in control of a foreign corporation if at any time during its taxable year it owns more than 50 percent of the voting stock of such foreign corporation.

(c) ***Foreign subsidiary.*** A foreign corporation more than 50 percent of the voting stock of which is owned by a controlled foreign corporation at any time during the annual accounting period of such controlled foreign corporation shall be considered a foreign subsidiary.

(d) ***Period covered by return*** —

(1) ***Controlled foreign corporation.*** The information with respect to a controlled foreign corporation shall be furnished for its annual accounting period ending with or within the domestic corporation's taxable year.

(2) ***Foreign subsidiary.*** The information with respect to a foreign subsidiary shall be furnished for such subsidiary's annual accounting period ending with or within the controlled foreign corporation's annual accounting period.

(3) ***Annual accounting period defined.*** For purposes of this section, the annual accounting period of a controlled foreign corporation or of a foreign subsidiary is the annual period on the basis of which the controlled foreign corporation or foreign subsidiary regularly computes its income in keeping its books. The term "annual accounting period" may refer to a period of less than 1 year, where for example the foreign income, war profits, and excess profits taxes are determined on the basis of an accounting period of less than 1 year as described in section 902(c)(2).

(e) ***Contents of return.*** The return on Form 2952 shall contain the following information with respect to each controlled corporation and each foreign subsidiary:

(1) The name and address of the corporation;

(2) The principal place of business of the corporation;

(3) The date of incorporation and the country under whose laws incorporated;

(4) The nature of the corporation's business;

(5) As regards the outstanding stock of the corporation:

(i) A description of each class of the corporation's stock, and

(ii) The number of shares of each class outstanding at the beginning and the end of the annual accounting period;

(6) A list showing the name and address of, and the number of shares of each class of the corporation's stock held by, each citizen or resident of the United States, and each domestic corporation, who is a shareholder of record owning at any time during the annual accounting period 5 percent or more in value of any class of the corporation's outstanding stock;

(7) The amount of the corporation's gross receipts, net profits before taxes and provision for foreign income taxes, for the annual accounting period, as reflected on the financial statements required under paragraph (f) of this section to be filed with the return; and

(8) A summary showing the total amount of each of the following types of transactions of the corporation, which took place during the annual accounting period, with the domestic corporation or any shareholder of the domestic corporation owning at the time of the transaction 10 percent or more of the value of any class of stock outstanding of the domestic corporation:

(i) Sales and purchases of stock in trade;

(ii) Purchases of property of a character which is subject to the allowance for depreciation;

(iii) Compensation paid and compensation received for the rendition of technical, managerial, engineering, construction, scientific, or like services;

(iv) Commissions paid and commissions received;

(v) Rents and royalties paid and rents and royalties received;

(vi) Amounts loaned and amounts borrowed (other than open accounts which arise and are collected in the ordinary course of business);

(vii) Dividends paid and dividends received;

(viii) Interest paid and interest received; and

(ix) Premiums received for insurance or reinsurance.

If the domestic corporation is a bank, as defined in section 581, or is controlled within the meaning of section 368(c) by a bank, the term "transactions" shall not, as to a corporation with respect to which a return is filed, include banking transactions entered into on behalf of customers; in any event, however, deposits in accounts between a controlled foreign corporation or a foreign subsidiary and the domestic corporation or a 10-percent shareholder described in this subparagraph and withdrawals from such accounts shall be summarized by reporting end-of-month balances.

(f) ***Financial statements.*** The following information with respect to each controlled foreign corporation and each foreign subsidiary shall be attached to and filed as part of the return required by this section:

(1) A statement of the corporation's profit and loss for the annual accounting period;

(2) A balance sheet as of the end of the annual accounting period of the corporation showing:

(i) The corporation's assets,

(ii) The corporation's liabilities, and

(iii) The corporation's net worth; and

(3) An analysis of changes in the corporation's surplus accounts during the annual accounting period including both opening and closing balances.

The statements listed in subparagraphs (1), (2), and (3) of this paragraph shall be prepared in conformity with generally accepted accounting principles, and in such form and detail as is customary for the corporation's accounting records.

(g) ***Method of reporting.*** All amounts furnished under paragraphs (e) and (f) of this section shall be expressed in United States currency with a statement of the exchange rates used.

(h) ***Time and place for filing return.*** Returns on Form 2952 required under paragraph (a) of this section shall be filed with the domestic corporation's income tax return on or before the fifteenth day of the third month following the close of such corporation's taxable year.

(i) ***Extensions of time for filing.*** District directors are authorized to grant reasonable extensions of time for filing returns on Form 2952 in accordance with the applicable provisions of § 1.6081-1. An application by a domestic corporation for an extension of time for filing a return of income shall also be considered as an application for an extension of time for filing returns on Form 2952.

(j) ***Failure to furnish information*** —

(1) ***Effect on foreign tax credit.***

(i) Failure by a domestic corporation to furnish, in accordance with the provisions of this section, any return or any information in any return, required to be filed for a taxable year under authority of section 6038 on or before the date prescribed in paragraph (h) of this section (determined with regard to any extension of time for such filing) shall affect the application of section 902 as provided in subparagraph (2) of this paragraph. Such failure shall affect the application of

section 902 to such domestic corporation or to any person who acquires from any person any portion (but only to the extent of such portion) of the interest of such domestic corporation in any controlled foreign corporation or foreign subsidiary.

(ii) Where the domestic corporation, having filed the return required by this section except for an omission of, or error with respect to, some of the information referred to in paragraphs (e) and (f) of this section, establishes to the satisfaction of the Commissioner that such omission or error was inadvertent or for reasonable cause and that such domestic corporation has substantially complied with this section, such omission or error shall not constitute a failure under this section.

(2) ***Reduction of foreign taxes.*** In the application of section 902 to the domestic corporation or person referred to in subparagraph (1)(i) of this paragraph for any taxable year, the amount of taxes paid or deemed paid by each controlled foreign corporation and each foreign subsidiary for the accounting period or periods for which the domestic corporation was required for the taxable year of the failure to furnish information under this section shall be reduced by 10 percent. The 10 percent reduction is not limited to the taxes paid or deemed paid by the controlled foreign corporation or foreign subsidiary with respect to which there is a failure to file information but shall apply to the taxes paid or deemed paid by all controlled foreign corporations and foreign subsidiaries.

(3) ***Reduction for continued failure.***

(i) If the failure, referred to in subparagraph (1)(i) of this paragraph, continues for 90 days or more after date of written notice by the district director to the domestic corporation, then the amount of the reduction referred to in subparagraph (2) of this paragraph shall be 10 percent plus an additional 5 percent for each 3-month period, or fraction thereof, during which such failure continues after the expiration of such 90-day period.

(ii) Taxes paid by a foreign subsidiary when once reduced for a failure shall not be reduced again for the same failure in their status as taxes deemed paid by a controlled foreign corporation. Where a failure continues, each additional periodic 5 percent reduction, referred to in subdivision (i) of this subparagraph, shall be considered as part of the one reduction.

(4) ***Reasonable cause.***

(i) For purposes of subsection (b) of section 6038 and this section the time prescribed for furnishing information under this paragraph, and the beginning of the 90-day period after notice by the district director, shall be treated as being not earlier than the last day on which (as shown to the satisfaction of the district director) reasonable cause existed for failure to furnish such information.

(ii) A domestic corporation, which wishes to avoid a reduction in foreign tax credit as provided in subparagraphs (2) and (3) of this paragraph for failure to furnish information in accordance with this section, must make an affirmative showing of all facts alleged as a reasonable cause for such failure in the form of a written statement containing a declaration that it is made under the penalties of perjury.

(5) ***Penalties.*** The information required by section 6038 of the Code must be furnished even though there are no foreign taxes which would be reduced under the provisions of subparagraph (2) of this paragraph. For criminal penalties for failure to file a return and filing a false or fraudulent return, see sections 7203, 7206, and 7207 of the Code.

[T.D. 6506, 25 FR 12241, Nov. 30, 1960, as amended by T.D. 6621, 27 FR 11878, Dec. 1, 1962]

§ 1.6038-2 Information returns required of United States persons with respect to annual accounting periods of certain foreign corporations.

(a) ***Requirement of return.*** Every U.S. person shall make a separate annual information return with respect to each annual accounting period (described in paragraph (e) of this section) of each foreign corporation which that person controls (as defined in paragraph (b) of this section) at any time during such annual accounting period.

(1) Form 2952, "Information Return with Respect to Controlled Foreign Corporations," if such taxable year ends before December 31, 1982;

(2) Form 5471, "Information Return of U.S. Persons with Respect to Certain Foreign Corporations," if such taxable year ends on or after December 31, 1983; or

(3) Either Form 5471 or Form 2952 if such taxable year ends on or after December 31, 1982 and before December 31, 1963.

(b) ***Control.*** A person shall be deemed to be in control of a foreign corporation if at any time during that person's taxable year it owns stock possessing more than 50 percent of the total combined voting power of all classes of stock entitled to vote, or more than 50 percent of the total value of shares of all classes of stock of the foreign corporation. A person in control of a corporation which, in turn, owns more than 50 percent of the combined voting power, or of the value, of all classes of stock of another corporation is also treated as being in control of such other corporation. The provisions of this paragraph may be illustrated by the following example:

Example. Corporation A owns 51 percent of the voting stock in Corporation B. Corporation B owns 51 percent of the voting stock in Corporation C. Corporation C in turn owns 51 percent of the voting stock in Corporation D. Corporation D is controlled by Corporation A.

(c) ***Attribution rules.*** For the purpose of determining control of domestic or foreign corporations the constructive ownership rules of section 318(a) shall apply except that:

(1) Stock owned by or for a partner or a beneficiary of an estate or trust shall not be considered owned by the partnership, estate, or trust when the effect is to consider a United States person as owning stock owned by a person who is not a United States person;

(2) A corporation will not be considered as owning stock owned by or for a 50 percent or more shareholder when the effect is to consider a United States person as owning stock owned by a person who is not a United States person; and

(3) If 10 percent or more in value of the stock in a corporation is owned, directly or indirectly, by or for any person, section 318(a)(2)(C) shall apply.

The constructive ownership rules of section 318(a) apply only for purposes of determining control as defined in paragraph (b) of this section.

(d) ***U.S. person*** —

(1) ***In general.*** For purposes of section 6038 and this section, the term *United States person* has the meaning assigned to it by section 7701(a)(30), except as provided in paragraphs (d)(2) and (3) of this section.

(2) ***Special rule for individuals residing in certain possessions.***

(i) With respect to an individual who is a bona fide resident of Puerto Rico, the term *United States person* has the meaning assigned to it by § 1.957-3 except that the rules of § 1.937-2(g)(1) will apply.

(ii) With respect to an individual who is a bona fide resident of any section 931 possession, as defined in § 1.931-1(c)(1), the term *United States person* has the meaning assigned to it by § 1.957-3.

(3) ***Special rule for certain nonresident aliens.*** An individual for whom an election under section 6013(g) or (h) is in effect will, subject to the exceptions contained in paragraph (d)(2) of this section, be considered a United States person for purposes of section 6038 and this section.

(e) ***Period covered by return.*** The information required under paragraphs (f) and (g) of this section with respect to a foreign corporation shall be furnished for the annual accounting period of the foreign corporation ending with or within the United States person's taxable year. For purposes of this section, the annual accounting period of a foreign corporation is the annual period on the basis of which that corporation regularly computes its income in keeping its books. In the case of a specified foreign corporation (as defined in section 898), the taxable year of such corporation shall be treated as its annual accounting period. The term *annual accounting period* may refer to a period of less than one year, where, for example, the foreign income, war profits, and excess profits taxes are determined on the basis of an accounting period of less than one year as described in section 902(c)(5). If more than one annual accounting period ends with or within the United States person's taxable year, separate annual information returns shall be submitted for each annual accounting period.

(f) ***Contents of return.*** The return on Form 5471 shall contain so much of the following information, and in such form or manner, as the form shall prescribe with respect to each foreign corporation:

(1) The name, address, and employer identification number, if any, of the corporation;

(2) The principal place of business of the corporation;

(3) The date of incorporation and the country under whose laws incorporated;

(4) The name and address of the foreign corporation's statutory or resident agent in the country of incorporation;

(5) The name, address, and identifying number of any branch office or agent of the foreign corporation located in the United States;

(6) The name and address of the person (or persons) having custody of the books of account and records of the foreign corporation, and the location of such books and records if different from such address;

(7) The nature of the corporation's business and the principal places where conducted;

(8) As regards the outstanding stock of the corporation—

(i) A description of each class of the corporation's stock, and

(ii) The number of shares of each class outstanding at the beginning and end of the annual accounting period;

(9) A list showing the name, address, and identifying number of, and the number of shares of each class of the corporation's stock held by, each United States person who is a shareholder owning at any time during the annual accounting period 5 percent or more in value of any class of the corporation's outstanding stock;

(10) For the annual accounting period, the amount of the corporation's:

(i) Current earnings and profits;

(ii) Foreign income, war profits, and excess profits taxes paid or accrued;

(iii) Distributions out of current earnings and profits for the period;

(iv) Distributions other than those described in paragraph (f)(10)(iii) of this section and the source thereof; and

(v) For Forms 5471 filed for taxable years ending after December 15, 1990, such earnings and profits information as the form shall prescribe, including post-1986 undistributed earnings described in section 902(c)(1), pre-1987 amounts, total earnings and profits, and previously taxed earnings and profits described in section 959(c); and

(11) ***Transactions with certain related parties.***

(i) A summary showing the total amount of each of the following types of transactions of the corporation, which took place during the annual accounting period, with the person required to file this return, any other corporation or partnership controlled by that person, or any United States person owning at the time of the transaction 10 percent or more in value of any class of stock outstanding of the foreign corporation, or of any corporation controlling that foreign corporation—

(A) Sales and purchases of stock in trade;

(B) Sales and purchases of tangible property other than stock in trade;

(C) Sales and purchases of patents, inventions, models, or designs (whether or not patented), copyrights, trademarks, secret formulas or processes, or any other similar property rights;

(D) Compensation paid and compensation received for the rendition of technical, managerial, engineering, construction, scientific, or like services;

(E) Commissions paid and commissions received;

(F) Rents and royalties paid and rents and royalties received;

(G) Amounts loaned and amounts borrowed (except open accounts resulting from sales and purchases reported under other items listed in this paragraph (f)(11) that arise and are collected in full in the ordinary course of business);

(H) Dividends paid and dividends received;

(I) Interest paid and interest received; and

(J) Premiums paid and premiums received for insurance or reinsurance.

(ii) ***Special rule for banks.*** For purposes of this paragraph (f)(11), if the United States person is a bank, as defined in section 581, or is controlled within the meaning of section 368(c) by a bank, the term transactions shall not, as to a corporation with respect to which a return is filed,

include banking transactions entered into on behalf of customers; in any event, however, deposits in accounts between a foreign corporation, controlled (within the meaning of paragraph (b) of this section) by a United States person, and a person described in this paragraph (f)(11) and withdrawals from such accounts shall be summarized by reporting end-of-month balances.

(12) ***Accrued payments and receipts.*** For purposes of the required summary under paragraph (f)(11) of this section, a corporation that uses an accrual method of accounting shall use accrued payments and accrued receipts for purposes of computing the total amount of each of the types of transactions listed.

(13) ***Amounts involving hybrid transactions or hybrid entities under section 267A.*** If for the annual accounting period, the corporation pays or accrues interest or royalties for which a deduction is disallowed under section 267A and the regulations in this part under section 267A of the Internal Revenue Code, then Form 5471 (or successor form) must contain such information about the disallowance in the form and manner and to the extent prescribed by the form, instruction, publication, or other guidance.

(14) ***Hybrid dividends under section 245A(e).*** If for the annual accounting period, the corporation pays or receives a hybrid dividend or a tiered hybrid dividend under section 245A(e) and the regulations in this part under section 245A(e) of the Internal Revenue Code, then Form 5471 (or successor form) must contain such information about the hybrid dividend or tiered hybrid dividend in the form and manner and to the extent prescribed by the form, instruction, publication, or other guidance. Form 5471 (or successor form) must also contain any other information relating to the rules of section 245A(e) and the regulations in this part under section 245A(e) of the Internal Revenue Code (including information related to a specified owner's hybrid deduction account), as prescribed by the form, instruction, publication, or other guidance.

(15) ***Information reporting under section 250.*** If the person required to file Form 5471 (or any successor form) claims a deduction under section 250(a) that is determined, in whole or part, by reference to its foreign-derived intangible income, and any amount required to be reported under paragraph (f)(11) of this section is included in its computation of foreign-derived deduction eligible income, such person will provide on Form 5471 (or any successor form) such information that is prescribed by the form, instructions to the form, publication, or other guidance published in the Internal Revenue Bulletin.

(16) ***Amounts related to extraordinary dispositions and extraordinary reductions.*** The corporation must report the information in the form and manner and to the extent prescribed by the form, instructions to the form, publication, or other guidance published in the Internal Revenue Bulletin if any of the following conditions are met during the corporation's annual accounting period—

(i) The corporation distributes or receives a dividend that gives rise to an ineligible amount (as defined in § 1.245A-5(i)(12)), a tiered extraordinary disposition amount (as defined in § 1.245A-5(i)(25)), or a tiered extraordinary reduction amount (as defined in § 1.245A-5(i)(26));

(ii) A section 245A shareholder with respect to the corporation has an extraordinary disposition account (as defined in § 1.245A-5(i)(6)); or

(iii) The corporation would have been deemed to have undertaken an extraordinary disposition (as defined in § 1.245A-5(i)(5)) but for the application of § 1.245A-5(c)(3)(ii)(C)(2).

(17) ***Reporting of disqualified basis and disqualified payments.*** If for the annual accounting period of a corporation it holds an item of property having disqualified basis within the meaning of § 1.951A-3(h)(2)(ii) or § 1.951A-2(c)(5), or incurs an item of deduction or loss related to a disqualified payment (within the meaning of § 1.951A-2(c)(6)(ii)(A)), then Form 5471 (or successor form) must contain such information about the disqualified basis, or such information relating to the disqualified payment, in the form and manner and to the extent prescribed by the form, instructions to the form, publication, or other guidance published in the Internal Revenue Bulletin.

(18) ***Adjustments to extraordinary disposition accounts and disqualified basis.*** If for the annual accounting period a section 245A shareholder of the corporation reduces its extraordinary disposition account pursuant to § 1.245A-7(c) or § 1.245A-8(c), as applicable, or the corporation reduces the disqualified basis in an item of specified property pursuant to § 1.245A-7(b) or § 1.245A-8(b), as applicable, then Form 5471 (or a successor form) must contain such information about the reduction to the extraordinary disposition account or disqualified basis, as applicable, in the form and manner and to the extent prescribed by the form, instructions to the form, publication, or other guidance published in the Internal Revenue Bulletin.

(g) ***Financial statements.*** The following information with respect to the foreign corporation shall be attached to and filed as part of the return required by this section. Forms 5471 filed after September 30, 1991, shall contain this information in such form or manner as the form shall prescribe with respect to each foreign corporation:

(1) A statement of the corporation's profit and loss for the annual accounting period;

(2) A balance sheet as of the end of the annual accounting period of the corporation showing—

(i) The corporation's asset;

(ii) The corporation's liabilities; and

(iii) The corporation's net worth; and

(3) An analysis of changes in the corporation's surplus accounts during the annual accounting period including both opening and closing balances.

The information listed in this paragraph (g) shall be prepared in conformity with generally accepted accounting principles, and in such detail as is customary for the corporation's accounting records.

(h) ***Method of reporting.*** Except as provided in this paragraph (h), all amounts furnished under paragraphs (f) and (g) of this section shall be expressed in United States dollars with a statement of the exchange rates used. The following rules shall apply for taxable years ending after December 31, 1994, with respect to returns filed after December 31, 1995. All amounts furnished under paragraph (g) of this section shall be expressed in United States dollars computed and translated in conformity with United States generally accepted accounting principles. Amounts furnished under paragraph (g)(1) of this section shall also be furnished in the foreign corporation's functional currency as required on the form. Earnings and profits amounts furnished under paragraphs (f)(10) (i), (iii), (iv), and (v) of this section shall be expressed in the foreign corporation's functional currency except to the extent the form requires specific items to be translated into United States dollars. Tax amounts furnished under paragraph (f)(10)(ii) of this section shall be furnished in the foreign currency in which the taxes are payable and in United States dollars translated in accordance with section 986(a). All amounts furnished under paragraph (f)(11) of this section shall be expressed in U.S. dollars translated from functional currency at the weighted average

exchange rate for the year as defined in § 1.989(b)-1. The foreign corporation's functional currency is determined under section 985. All statements submitted on or with the return required under this section shall be rendered in the English language.

(i) ***Time and place for filing return.*** Returns on Form 5471 required under paragraph (a) of this section shall be filed with the United States person's income tax return on or before the date required by law for the filing of that person's income tax return. Directors of Field Operations and Field Directors are authorized to grant reasonable extensions of time for filing returns on Form 5471 in accordance with the applicable provisions of § 1.6081-1 of this chapter. An application for an extension of time for filing a return of income shall also be considered as an application for an extension of time for filing returns on Form 5471.

(j) ***Two or more persons required to submit the same information*** —

(1) ***Return jointly made.*** If two or more persons are required to furnish information with respect to the same foreign corporation for the same period, such persons may, in lieu of making separate returns, jointly make one return. Such joint return shall be filed with the income tax return of any one of the persons making such joint return.

(2) ***Persons excepted from furnishing information*** —

(i) ***Conditions.*** Any person required to furnish information under this section with respect to a foreign corporation need not furnish that information provided all of the following conditions are met:

(A) Such person does not directly own an interest in the foreign corporation;

(B) Such person is required to furnish the information solely by reason of attribution of stock ownership from a United States person under paragraph (c) of this section; and

(C) The person from whom the stock ownership is attributed furnishes all of the information required under this section of the person to whom the stock ownership is attributed. (For a rule regarding attribution from a nonresident alien, see paragraph (l) of this section).

(ii) If an individual who is a United States person required to furnish information with respect to a foreign corporation under section 6038 is entitled under a treaty to be treated as a nonresident of the United States, and if the individual claims this treaty benefit, and if there are no other United States persons that are required to furnish information under section 6038 with respect to the foreign corporation, then the individual may satisfy the requirements of paragraphs (f)(10), (f)(11), (g), and (h) of this section by filing the audited foreign financial statements of the foreign corporation with the individual's return required under section 6038.

(iii) ***Illustrations.*** The rule of this paragraph (j)(2) is illustrated by the following examples:

Example 1. A, a U.S. person owns 100 percent of the stock of M, a domestic corporation. A also owns 100 percent of the stock of N, a foreign corporation organized under the laws of foreign country Y. A, in filing the information return required by this section with respect to N Corporation, in fact furnishes all of the information required of M Corporation with respect to N Corporation. M Corporation need not file the information.

Example 2. X, a domestic corporation owns 100 percent of the stock of Y, a domestic corporation, Y Corporation owns 100 percent of the stock of Z, a foreign corporation. X Corporation is not excused by this paragraph (j)(2) from filing information with respect to Z Corporation because X Corporation is deemed to control Z Corporation under the provisions of paragraph (b) of this section without recourse to the attribution rules in paragraph (c) of this section.

(3) ***Statement required.*** Any United States person required to furnish information under this section with his return who does not do so by reason of the provisions of paragraph (j)(1) of this section shall file a statement with his income tax return indicating that such requirement has been (or will be) satisfied and identifying the return with which the information was or will be filed and the place of filing.

(k) ***Failure to furnish information*** —

(1) ***Dollar amount penalty*** —

(i) ***In general.*** If any person required to file Form 5471 under section 6038 and this section fails to furnish any information described in paragraphs (f) and (g) of this section within the time prescribed by paragraph (i) of this section, such person shall pay a penalty of $10,000 for each annual accounting period of each foreign corporation with respect to which such failure occurs.

(ii) ***Increase in penalty for continued failure after notification.*** If a failure described in paragraph (k)(1)(i) of this section continues for more than 90 days after the date on which the Director of Field Operations, Area Director, or Director of Compliance Campus Operations mails notice of such failure to the person required to file Form 5471, such person shall pay a penalty of $10,000, in addition to the penalty imposed by section 6038(b)(1) and paragraph (k)(1)(i) of this section, for each 30-day period (or a fraction of) during which such failure continues after such 90-day period has expired. The additional penalty imposed by section 6038(b)(2) and this paragraph (k)(1)(ii) shall be limited to a maximum of $50,000 for each failure.

(2) ***Penalty of reducing foreign tax credit*** —

(i) ***Effect on foreign tax credit.*** Failure of a United States person to furnish, in accordance with the provisions of this section, any return or any information in any return, required to be filed for a taxable year under authority of section 6038 on or before the date prescribed in paragraph (i) of this section may affect the application of section 901 as provided in paragraph (k)(2)(ii) of this section and may affect the application of sections 902 and 960 as provided in paragraph (k)(2)(iii) of this section. Such failure may affect the application of sections 902 and 960 to any such United States person which is a corporation or to any person who acquires from any other person any portion (but only to the extent of such portion) of the interest of such other person in any such foreign corporation.

(ii) ***Application of section 901.*** In the application of section 901 to a United States person referred to in paragraph (k)(2)(i) of this section, the amount of taxes paid or deemed paid by such person for any taxable year, with or within which the annual accounting period of a foreign corporation for which such person failed to furnish information required under this section ended, may be reduced by 10 percent. However, no tax reduced under paragraph (k)(2)(iii) of this section or deemed paid under section 904(c) shall be reduced under the provisions of this paragraph (k)(2)(ii).

(iii) ***Application of sections 902 and 960.*** In the application of sections 902 and 960 to a United States person referred to in paragraph (k)(2)(i) of this section for any taxable year, the amount of taxes paid or deemed paid by each foreign corporation for the accounting period or periods for which such person was required for the taxable year of the failure to furnish information under this section may be reduced by 10 percent. The 10-percent reduction is not limited to the taxes paid or deemed paid by the foreign corporation with respect to which there is a failure to file information but may apply to the taxes paid or deemed paid by all foreign corporations controlled by that person. In applying subsections (a) and (b) of section 902, and in applying subsection (a) of section 960, the reduction provided by this paragraph (k)(2) shall not apply for purposes of determining the amount of accumulated profits in excess of income, war profits, and excess profits taxes.

(iv) ***Reduction for continued failure after notice.***

(A) If the failure referred to in paragraph (k)(2)(i) of this section continues for more than 90 days after the date on which the Director of Field Operations mails notice of such failure to such United States person, then the amount of the reduction referred to in paragraphs (k)(2) (ii) and (iii) of this section may be 10 percent plus an additional 5 percent for each 3-month period, or fraction thereof, during which such failure continues after the expiration of such 90-day period.

(B) No taxes shall be reduced under this paragraph (k)(2) more than once for the same failure. Taxes paid by a foreign corporation when once reduced for a failure shall not be reduced again for the same failure in their status as taxes deemed paid by a corporate shareholder. Where a failure continues, each additional periodic 5-percent reduction, referred to in paragraph (k)(2)(iv)(A) of this section, shall be considered as part of the one reduction.

(v) ***Limitation on reduction of foreign tax credit.*** The amount of the reduction under this paragraph (k)(2) for each failure to furnish information with respect to a foreign corporation as required under this section shall not exceed the greater of:

(A) $10,000, or

(B) The income of the foreign corporation for its annual accounting period with respect to which the failure occurs. For purposes of this section if a person is required to furnish information with respect to more than one foreign corporation, controlled (within the meaning of paragraph (b) of this section) by that person, each failure to submit information for each such corporation constitutes a separate failure.

(vi) ***Offset for dollar amount penalty imposed.*** The total amount of the reduction or reductions which, but for this paragraph (k)(2)(vi), may be made under this paragraph (k)(2) with respect to any separate failure, shall not exceed the maximum amount of such reductions which may be imposed, reduced (but not below zero) by the amount of the dollar amount penalty imposed by paragraph (k)(1) of this section with respect to such separate failure.

(3) ***Reasonable cause.***

(i) For purposes of section 6038 (b) and (c) and this section, the time prescribed for furnishing information under paragraph (i) of this section, and the beginning of the 90-day period after mailing of notice by the Director of Field Operations under paragraphs (k)(1)(ii) and (2)(iv)(A) of this section, shall be treated as being not earlier than the last day on which reasonable cause existed for failure to furnish the information.

(ii) To show that reasonable cause existed for failure to furnish information as required by section 6038 and this section, the person required to report such information must make an affirmative showing of all facts alleged as reasonable cause for such failure in a written statement containing a declaration that it is made under the penalties of prejury. The statement must be filed with the district director for the district or the director of the service center where the return is required to be filed. The district director or the director of the service center shall determine whether the failure to furnish information was due to reasonable cause, and if so, the period of time for which such reasonable cause existed. In the case of a return that has been filed as required by this section except for an omission of, or error with respect to, some of the information required, if the person who filed the return establishes to the satisfaction of the district director or the director of the service center that the person has substantially complied with this section, then the omission or error shall not constitute a failure under this section.

(4) ***Other penalties.*** The information required by section 6038 and this section must be furnished even though there are no foreign taxes which would be reduced under the provisions of this section, and even though the information required may not affect the amount of any tax due under the Internal Revenue Code. For criminal penalties for failure to file a return and filing a false or fraudulent return, see sections 7203, 7206, and 7207 of the Code.

(5) ***Illustrations.*** The provisions of this paragraph may be illustrated by the following examples.

Example 1. M, a domestic corporation owns 100 percent of the stock of N, a foreign corporation. Both M and N use the calendar year as a taxable year and annual accounting period, and all of the following events occur in or with respect to the 1980 taxable year. The dividend from N is the only dividend from a foreign corporation received by M during the taxable year, and the foreign taxes listed are the only foreign taxes paid or deemed paid by M and N for the taxable year. On March 15, 1981, M filed its income tax return and paid its income tax, but M did not file Form 2952 with respect to N's 1980 annual accounting period. On June 1, 1961, the district director mailed notice to M of M's failure to file Form 2952 with respect to N. On November 30, 1981, M filed a complete Form 2952 with respect to N's 1980 annual accounting period.

(a) Gains, profits, and income of N	$100,000
(b) Foreign tax paid by N with respect to such gains, profits, and income	40,000
(c) Reduction of foreign tax paid by N (for purposes of M's section 902 deemed paid credit) resulting from M's failure to file information with respect to N as required under section 6038(a) and this section: failure to file within the time prescribed in paragraph (i) of this section, 10-percent reduction; continued failure for one additional 3-month period after 90-day period after notice mailed, 5-percent reduction; total reduction, 15 percent ($40,000 times 15 percent)	6,000
(d) Foreign tax paid by N after section 6038(c)(1)(B) reduction	34,000
(e) Dividend paid by N to M	45,000

(f) Accumulated profits of N as defined in section 902(c)(1) (determined without regard to the section 6038(c)(1)(B) reduction)	100,000
(g) Accumulated profits of N as described in section 902(a) (determined without regard to the section 6038(c)(1)(B) reduction)	60,000
(h) For purposes of the section 902 credit, M is deemed to have paid the same proportion of foreign taxes paid (reduced as provided under section 6038(c)) with respect to the accumulated profits described in section 902(a) (determined without regard to the reduction provided under section 6038(c)) as the amount of the dividend (determined without regard to section 78) bears to such amount of accumulated profits	25,500

(45,000 ÷ 60,000) × 34,000 = 25,500

M must include $25,500 in gross income as a dividend under the provisions of section 78 of the Code. This example illustrates that the reductions in foreign taxes paid by the foreign corporation provided under section 8038(c) are taken into account in determining the amount included in gross income of the domestic corporation under section 78 of the Code as foreign taxes deemed paid, but such reductions are not taken into account in computing accumulated profits for purposes of determining the portion of foreign taxes deemed paid with respect to a particular dividend. The dollar amount penalty imposed by section 8038 (b) and paragraph (k)(1) of this section does not apply with respect to information for annual accounting periods ending before September 4, 1982, and therefore does not apply to M with respect to M's failure to file Form 2952 in this example.

Example 2. The facts are the same as in example (1) except that all of the events occur in or with respect to the 1982 taxable year. On March 15, 1983. M filed its income tax return and paid its income tax, but M did not file Form 2952 or Form 5471 with respect to N's 1982 annual accounting period. On June 1, 1983, the district director mailed notice to M of M's failure to file Form 2952 or Form 5471 with respect to N. On November 30, 1983, M filed a complete Form 5471 with respect to N's 1982 annual accounting period. Under paragraph (k)(1)(i) of this section, M is subject to a penalty of $1,000. Under paragraph (k)(1)(ii) of this section, that penalty is increased by $4,000 because the failure continued for 92 days (three full 30-day periods and a fraction of a fourth 30-day period) after the end of the 90-day period following mailing of the notice by the district director, bringing M's dollar amount penalty under paragraph (k)(1) of this section to $5,000. For purpose of determining the foreign tax credit available to M, there may be imposed a reduction of foreign tax paid by N of $6,000, which would be the total of reductions under paragraph (k)(2) of this section with respect to M's failure to file under section 6038 for N's 1982 annual accounting period, before application of paragraph (k)(2)(vi) of this section. Under said paragraph (k)(2)(vi), the amount of the foreign tax reduction imposed is reduced by the amount of the dollar amount penalty, leaving a foreign tax reduction penalty of $1,000 which may be imposed in addition to the $5,000 dollar amount penalty. If imposed, the $1,000 tax reduction would then be applied in the calculation of taxes deemed paid by M under section 902 as in example (1), items (c), (d), and (h).

Example 3. A, a U.S. person, owns 100 percent of the stock of FC. On April 15, 2008, A timely filed its 2007 income tax return but did not file Form 5471 with respect to FC's 2007 annual accounting period. On June 1, 2008, the Director of Field Operations mailed a notice to A of A's failure to file Form 5471 for 2007 with respect to FC. On August 1, 2008, A submits a written statement asserting facts for reasonable cause for failure to file the 2007 Form 5471 for FC. Based on A's statement and discussions with A, the Director of Field Operations agrees that A had reasonable cause for failure to file FC's 2007 Form 5471 and determined that it is reasonable for A to file FC's 2007 Form 5471 by September 15, 2008. The time prescribed for furnishing information under paragraph (i) of this section is September 15, 2008, and the 90-day period described under paragraphs (k)(1)(ii) and (k)(2)(iv)(A) of this section begins on that same date. Thus, if A files a completed Form 5471 by September 15, 2008, A is not subject to the penalties under paragraphs (k)(1) and (k)(2) of this section. If A does not file a completed Form 5471 by December 14, 2008, in addition to the penalties under paragraphs (k)(1) and (k)(2) of this section, A will also be subject to the penalties for continued failure under paragraphs (k)(1)(ii) and (k)(2)(iv)(A) of this section.

Example 4. The facts are the same as in *Example 3* except A submits the written statement to the Director before a notice of failure to furnish information is mailed to A. The notice is mailed to A on September 7, 2008. Under these facts, the time prescribed for furnishing information under paragraph (i) of this section is September 15, 2008, and the 90-day period after mailing of notice of failure under paragraphs (k)(1)(ii) and (k)(2)(iv)(A) of this section begins on that same date.

(l) ***Other persons excepted from filing.*** For tax years of foreign corporations ending on or after December 29, 1999, any person required to furnish information under this section with respect to a foreign corporation does not have to furnish that information if the following conditions are met—

(1) Such person does not own a direct or indirect interest in the foreign corporation; and

(2) Such person is required to furnish information solely by reason of attribution of stock ownership from a nonresident alien(s) under paragraph (c) of this section.

(m) ***Applicability dates*** —

(1) ***In general.*** This section applies to taxable years of foreign corporations beginning on or after October 3, 2018. See 26 CFR 1.6038-2 (revised as of April 1, 2018) for rules applicable to taxable years of foreign corporations beginning before such date.

(2) ***Special rule for paragraph (f)(16) of this section.*** Paragraph (f)(16) of this section applies with respect to information for annual accounting periods to which § 1.245A-5 applies.

(3) ***Rules relating to certain hybrid arrangements.*** Paragraphs (f)(13) and (14) of this section apply with respect to information for annual accounting periods beginning on or after December 20, 2018.

(4) Paragraph (f)(15) of this section applies with respect to information for annual accounting periods beginning on or after March 4, 2019.

(5) ***Special rule for paragraphs (f)(17) and (18) of this section.*** Paragraphs (f)(17) and (18) of this section apply with respect to information for annual accounting periods beginning after December 1, 2020. In addition, as provided in § 1.245A-11(b), paragraph (f)(18) of this section applies with respect to information for an annual accounting period that includes a taxable year for which a taxpayer has chosen to apply §§ 1.245A-6 through 1.245A-11 pursuant to § 1.245A-11(b).

[T.D. 8040, 50 FR 30163, July 24, 1985, as amended by T.D. 8573, 59 FR 64302, Dec. 14, 1994; T.D. 8733, 62 FR 53385, Oct. 14, 1997; T.D. 8850, 64 FR 72550, Dec. 28, 1999; T.D. 9194, 70 FR 18946, Apr. 11, 2005; T.D. 9268, 71 FR 35525, June 21, 2006; T.D. 9338, 72 FR 38475, July 13, 2007; T.D. 9391, 73 FR 19376, Apr. 9, 2008; T.D. 9650, 78 FR 79611, Dec. 31, 2013; T.D. 9806, 81 FR 95470, Dec. 28, 2016; T.D. 9866, 84 FR 29369, June 21, 2019; T.D. 9896, 85 FR 19856, Apr. 8, 2020; T.D. 9909, 85 FR 53097, Aug. 27, 2020; T.D. 9901, 85 FR 43116, July 15, 2020; T.D. 9934, 85 FR 76975, Dec. 1, 2020]

§ 1.6038-3 Information returns required of certain United States persons with respect to controlled foreign partnerships (CFPs).

(a) ***Persons required to make return*** —

(1) ***Controlling fifty-percent partners.*** The term *controlling fifty-percent partner* means a United States person that controlled (as defined in paragraph (b)(1) of this section) the foreign partnership at any time during the partnership's tax year (as defined in paragraph (b)(8) of this section). Except as provided in paragraph (c), (d), or (e) of this section, for each tax year of a foreign partnership during which the partnership has one or more controlling fifty-percent partners, each controlling fifty-percent partner must complete and file Form 8865, "Return of U.S. Persons With Respect to Certain Foreign Partnerships," containing the information described in paragraph (g) of this section.

(2) ***Controlling ten-percent partners.*** If at any point during a foreign partnership's tax year (as defined in paragraph (b)(8) of this section) a United States person owned a ten-percent or greater interest in the partnership while the partnership was controlled by United States persons owning ten-percent or greater interests, such United States person is a controlling ten-percent partner. See paragraph (b)(1) of this section for the definition of control. However, a United States person is not a controlling ten-percent partner with respect to a particular foreign partnership for a particular tax year of the foreign partnership if at any point during that year the partnership had a controlling fifty-percent partner, as defined in paragraph (a)(1) of this section. Except as provided in paragraph (c), (d), or (e) of this section, for each tax year of a partnership during which the partnership has controlling ten-percent partners, each controlling ten-percent partner must complete and file Form 8865 containing the information described in paragraph (g)(1) of this section.

(3) ***Separate returns for each partnership.*** A United States person required to report under this paragraph (a) must file a separate Form 8865 for each foreign partnership with respect to which the person is a controlling fifty-percent partner or a controlling ten-percent partner.

(b) ***Ownership determinations and definitions*** —

(1) ***Control.*** Control of a foreign partnership is ownership of more than a fifty-percent interest in the partnership.

(2) ***Fifty-percent interest.*** A fifty-percent interest in a partnership is an interest equal to fifty percent of the capital interest in such partnership, an interest equal to fifty percent of the profits interest in such partnership, or an interest to which fifty percent of the deductions or losses of such partnership are allocated.

(3) ***Ten-percent interest.*** A ten-percent interest in a partnership is an interest equal to ten percent of the capital interest in such partnership, an interest equal to ten percent of the profits interest in such partnership, or an interest to which ten percent of the deductions or losses of such partnership are allocated.

(4) ***Constructive ownership rules.*** For purposes of determining an interest in a partnership, the constructive ownership rules of section 267(c) (other than section 267(c)(3)) apply, taking into account that such rules refer to corporations and not to partnerships. However, an interest will be attributed from a nonresident alien under the family attribution rules of section 267(c)(2) and (4) only if the person to whom the interest is attributed owns a direct or indirect (under the rules of 267(c)(1) or (5)) interest in the foreign partnership.

(5) ***Determination of amount of interest.*** Whether a person owns a fifty-percent interest, or a ten-percent interest, as described in paragraphs (b)(2) and (3) of this section, is determined for each tax year of the foreign partnership by reference to the agreement of the partners relating to such interests during that tax year.

(6) ***Definition of United States person.*** The term *United States person* is defined in section 7701(a)(30).

(7) ***Definition of a foreign partnership.*** A foreign partnership is a partnership described in section 7701(a)(5).

(8) ***Tax year of a foreign partnership.*** The tax year of a foreign partnership is determined under section 706.

(9) ***Examples.*** The rules of paragraph (a) of this section and this paragraph (b) are illustrated by the following examples:

Example 1. Sole U.S. partner does not own more than a fifty-percent interest. No United States person owns any interest (directly or constructively) in *FPS,* a foreign partnership whose tax year under section 706 is the calendar year. On January 1, 2001, *US,* a United States person with the calendar year as its tax year, contributes property to *FPS* in exchange for a 40% interest in a section 721 transaction. No United States persons acquire directly or constructively any other interests in *FPS* during *FPS*'s 2001 tax year. *US* is not a controlling fifty-percent partner during *FPS*'s 2001 tax year. *US* did not own during that tax year, either directly or constructively, more than a 50% interest in the partnership under paragraphs (b)(2) and (4) of this section. Also, *US* is not a controlling ten-percent partner; although *US* owned a 10% or greater interest, *US* persons owning at least 10% interests did not control *FPS.* Therefore, *US* does not have to file with its 2001 income tax return a Form 8865 with respect to *FPS* under section 6038. (But see section 6038B for the reporting obligations of *US* with respect to its transfer of property to *FPS* and section 6046A for the reporting obligation of *US* with respect to its acquisition of an interest in *FPS.* See also § 1.6046A-1(f)(1) regarding the overlap between sections 6038B and 6046A.

Example 2. Controlling ten-percent partners. Assume the same facts as in *Example 1.* In addition, on January 1, 2002, *US1,* a United States person unrelated to *US* and a calendar year taxpayer, purchases a 15% interest in *FPS* from a foreign partner of *FPS.* Neither *US* nor *US1* is a controlling fifty-percent partner during *FPS*'s 2002 tax year because neither one owns more than a 50% percent interest in *FPS* during that year. However, *US* and *US1* are controlling ten-percent partners for that year because each owns at least a 10% interest (*US* owns a 40% interest and *US1* owns a 15% interest) and together they control *FPS* because collectively they own more than a 50% interest in *FPS.* As controlling ten-percent partners, under section 6038, each is required to file a Form 8865 with its 2002 income tax return. (*US1* must also report its acquisition of the 15% interest in *FPS* under section 6046A on its Form 8865 filed with its 2002 income tax return.)

Example 3. Constructive ownership rules. Assume the same facts as in *Example 2.* In addition, on January 1, 2003, *US2,* a United States person and the brother of *US,* purchases 50% of the stock of *FC,* a foreign corporation. *FC* owns a 20% interest in *FPS.* Thus, under sections 6038(e)(3) and 267(c)(1), *US2* indirectly owns a 10% interest in *FPS* (10% is *US2*'s proportionate share of *FC*'s 20% interest in *FPS*), and under sections 6038(e)(3) and 267(c)(2), *US2* is attributed *US*'s 40% interest. Additionally, *US* directly owns a 40% interest in *FPS* and is attributed *US2*'s 10% interest pursuant to section 6038(e)(3) and section 267(c)(2). Therefore, *US2* is considered to own a 50% interest (10% indirectly and 40% from *US*) in *FPS,* and *US* is considered to own a 50% interest in *FPS* (40% directly and 10% from *US2*). *FPS* has no controlling fifty-percent partners, because neither *US, US1,* nor *US2,* owns a greater than 50% interest. However, *US, US1,* and *US2* are each controlling ten-percent partners and each must file Form 8865 pursuant to section 6038 for *FPS*'s 2003 tax year ending December 31, 2003. Each must attach Form 8865 to its tax return for its 2003 tax year.

Example 4. Controlling fifty-percent partners. Assume the same facts as in *Example 3.* In addition, on June 1, 2004, *US* acquires an additional 1% direct interest in *FPS. US* is now a controlling fifty-percent partner of *FPS,* because *US* owns a 41% interest directly and a 10% interest constructively from *US2. US2* is also a controlling fifty-percent partner, because *US2* owns 10% indirectly and 41% constructively from *US.* Both *US* and *US2* are required to file Form 8865 containing all the information required to be submitted by controlling fifty-percent partners. (But see paragraph (c)(1) of this section, which contains filing exceptions when there are multiple controlling fifty-percent partners). *US1* is no longer a controlling ten-percent partner because *FPS* now has at least one controlling fifty-percent partner, and *US1* does not qualify as a controlling fifty-percent partner. Therefore, *US1* is not required to file Form 8865 under section 6038.

Example 5. Constructive ownership from a nonresident alien. *US,* a United States person, does not own directly or constructively an interest in *FPS,* a foreign partnership. The tax year of *FPS* is the calendar year. *NRA,* a nonresident alien, is the mother of *US.* In 2002, *NRA* acquires a 55% interest in *FPS.* Because *US* owns neither a direct nor a constructive interest in *FPS* under sections 6038(e)(3) and 267(c)(1) or (5), *NRA*'s interest is not attributed to *US* under sections 6038(e)(3) and 267(c)(2). If in 2003 *NRA* becomes a United States person, *NRA*'s interest will be attributed to *US.* However, *US* is excused from filing Form 8865 if *US* satisfies the requirements of the constructive owners exception in paragraph (c)(2) of this section. In 2003, *NRA* is a controlling fifty-percent partner and must file a Form 8865 under section 6038 for *FPS*'s 2003 tax year.

(c) ***Exceptions when more than one United States person is required to file Form 8865 pursuant to section 6038*** —

(1) ***Multiple controlling fifty-percent partners*** —

(i) ***In general.*** If, with respect to the same foreign partnership for the same tax year, more than one United States person is a controlling fifty-percent partner, then in lieu of each controlling fifty-percent partner filing a separate Form 8865, only one Form 8865 from one of the controlling fifty-percent partners is required, provided all of the requirements of paragraph (c)(1)(ii) of this section are satisfied. A person that is a controlling fifty-percent partner solely because of an interest to which deductions or losses are allocated may file the single return only if there is no United States person that is a controlling fifty-percent partner by reason of an interest in capital or profits.

(ii) ***Requirements*** —

(A) The person undertaking the filing obligation must file Form 8865 with that person's income tax return in the manner provided by Form 8865 and the accompanying instructions. The return must contain all of the information that would have been required to be reported by this section if each controlling fifty-percent partner had filed its own Form 8865.

(B) Any controlling fifty-percent partner not filing Form 8865 must file with its income tax return a statement titled "Controlled Foreign Partnership Reporting" containing the following information—

(*1*) A statement that the person qualified as a controlling fifty-percent partner, but is not submitting Form 8865 pursuant to the multiple controlling fifty-percent partners exception;

(*2*) The name, address, and taxpayer identification number (if any) of the foreign partnership of which the person qualified as a controlling fifty-percent partner;

(*3*) A representation that the filing requirement has been or will be satisfied;

(*4*) The name and address of the person filing the single return;

(*5*) The Internal Revenue Service Center where the single return is required to be filed; and

(*6*) Any additional information that Form 8865 and the accompanying instructions require.

(iii) ***Penalties.*** If the requirements listed in paragraph (c)(1)(ii) of this section are not satisfied, a United States person that did not file a Form 8865 pursuant to this paragraph will be subject to the penalties in paragraph (k) of this section, unless the reasonable cause provision in paragraph (k)(4) of this section is satisfied.

(2) ***Certain constructive owners excepted from furnishing information*** —

(i) ***In general.*** A United States person that does not own a direct interest in the foreign partnership and that is required to file Form 8865 under this section solely by reason of constructive ownership from a United States person(s) pursuant to paragraph (b)(4) of this section (an indirect partner) is not required to file Form 8865 if all of the requirements listed in paragraph (c)(2)(ii) of this section are met.

(ii) ***Requirements*** —

(A) The United States person(s) whose interest the indirect partner constructively owns reports all the information such person(s) is required to submit under this section, unless such person also is required to file solely by reason of constructive ownership from a United States person(s) pursuant to paragraph (b)(4) of this section, or another person reports the information pursuant to paragraph (c)(1) of this section.

(B) The indirect partner files with its income tax return a statement titled "Controlled Foreign Partnership Reporting" containing the following information—

(*1*) A representation that the indirect partner was required to file Form 8865, but is not doing so pursuant to the constructive owners exception;

(2) The names and addresses of the United States persons whose interests the indirect partner constructively owns;

(3) The name and address of the foreign partnership with respect to which the indirect partner would have had to have filed Form 8865 but for this exception; and

(4) Any additional information that Form 8865 and the accompanying instructions require.

(iii) ***Penalties.*** A United States person that pursuant to this paragraph (c)(2) does not file a return will be subject to the penalties in paragraph (k) of this section if the requirements listed in paragraph (c)(2)(ii) of this section are not satisfied, unless such failure is due to reasonable cause, as defined in paragraph (k)(4) of this section.

(iv) ***Overlap with multiple controlling fifty-percent partners exception*** —

(A) If a United States person qualifies for both the exception in paragraph (c)(1) of this section and the exception in this paragraph (c)(2), such person may only utilize the multiple controlling fifty-percent partners exception in paragraph (c)(1) of this section to avoid filing Form 8865.

(B) ***Example.*** The following example illustrates the operation of this paragraph (c)(2)(iv):

Example. US is a U.S. citizen. *US* owns 100% of the stock of *DC,* a domestic corporation. *DC* owns a 60% direct interest in *FPS,* a foreign partnership. *DC* and *US* are the only U.S. persons that own interests directly or constructively in *FPS. DC* owns directly a greater than 50% interest in *FPS. US* constructively owns *DC*'s interest pursuant to sections 6038(e)(3) and 267(c)(1). Therefore, both *DC* and *US* are controlling fifty-percent partners. *US* qualifies for both the exception in paragraph (c)(1) of this section (multiple controlling fifty-percent partners) and the exception in paragraph (c)(2) of this section (constructive owner exception). *US* may only utilize the paragraph (c)(1) exception to avoid its filing obligation. Accordingly, *DC* may file a single Form 8865 on behalf of *US* and itself. However, that form must contain all the information that would have been submitted had *DC* and *US* each submitted a separate Form 8865.

(3) ***Members of an affiliated group of corporations filing a consolidated return.*** If one or more members of an affiliated group of corporations filing a consolidated return are required under section 6038 to file a Form 8865 for a particular foreign partnership, the common parent corporation may file one Form 8865 on behalf of all of the members of the group required to report under section 6038. Except with respect to group members who also qualify under the exception in paragraph (c)(2) of this section, the Form 8865 must contain all the information that would have been required to be submitted if each group member were required to file its own Form 8865.

(d) ***Exception for certain trusts.*** Trusts relating to state and local government employee retirement plans are not required to report under this section, unless the instructions to Form 8865 provide otherwise.

(e) ***Reporting under this section not required with respect to partnerships excluded from the application of subchapter K.*** The reporting requirements of this section will not apply to any United States person in respect of an eligible partnership as described in § 1.761-2(a) if such partnership has validly elected to be excluded from all of the provisions of subchapter K of chapter 1 of the Internal Revenue Code in the

manner specified in § 1.761-2(b)(2)(i), or such partnership is deemed to have elected to be excluded from all of the provisions of subchapter K of chapter 1 of the Internal Revenue Code in accordance with the provisions of § 1.761-2(b)(2)(ii).

(f) ***Period covered by return.*** The information required under this section must be furnished for the tax year of the foreign partnership ending with or within the United States person's tax year. See section 706 for rules regarding tax years of partnerships.

(g) ***Contents of return*** —

(1) ***Information required to be submitted by controlling fifty-percent partners and controlling ten-percent partners.*** All controlling fifty-percent partners and all controlling ten-percent partners must submit the following information on Form 8865 in the form and manner and to the extent prescribed by Form 8865 and its instructions—

(i) The name, address, and taxpayer identification number (if any) of the foreign partnership of which the person qualified as a controlling fifty-percent partner or a controlling ten-percent partner;

(ii) A statement of the income, gain, losses, deductions and credits allocated to the direct interest in the partnership of the person reporting under section 6038;

(iii) A list of all partnerships (foreign or domestic) in which the foreign partnership owned a direct interest, or owned a constructive interest of ten percent of more under the rules of section 267(c)(1) or (5), during the partnership's tax year for which the Form 8865 is being filed;

(iv) Information about all foreign entities that were disregarded as entities separate from their owner under §§ 301.7701-2 and 301.7701-3 that were owned by the foreign partnership during the partnership's tax year for which the Form 8865 is being filed;

(v) A summary of the transactions that took place during the partnership's tax year between the partnership and the person filing the return, between the partnership and any other partnership of which the person filing the return is a controlling fifty-percent partner, and between the partnership and any corporation controlled (under section 6038(e)(2) and the regulations thereunder) by the person filing the return; and

(vi) Any other information that Form 8865 or its accompanying instructions require to be submitted.

(2) ***Additional information required to be submitted by controlling fifty-percent partners.*** In addition to the information required pursuant to paragraph (g)(1) of this section, controlling fifty-percent partners must also submit the following information in the form and manner and to the extent required by Form 8865 and its instructions—

(i) A list of the names, addresses and tax identification numbers (if any) of each United States person that owned a direct interest of ten percent or more in the partnership during the partnership's tax year, and of each United States and foreign person whose interests in the partnership the controlling fifty-percent partner constructively owned under paragraph (b)(4) of this section during the partnership's tax year;

(ii) A list of transactions between the partnership and any United States person owning at the time of the transaction at least a 10-percent direct interest (as defined in paragraph (b)(3) of this section) in the foreign partnership;

(iii) A statement of the aggregate of the partners' distributive shares of items of income, gain, losses, deductions and credits;

(iv) A statement of income, gain, losses, deductions and credits allocated to each United States person holding a direct interest in the foreign partnership of ten percent or more; and

(v) Any other information Form 8865 or its accompanying instructions require controlling fifty-percent partners to submit.

(3) ***Amounts involving hybrid transactions or hybrid entities under section 267A.*** In addition to the information required pursuant to paragraphs (g)(1) and (2) of this section, if, during the partnership's taxable year for which the Form 8865 is being filed, the partnership paid or accrued interest or royalties for which a deduction is disallowed under section 267A and the regulations in this part under section 267A, the controlling fifty-percent partners must provide information about the disallowance in the form and manner and to the extent prescribed by Form 8865 (or successor form), instruction, publication, or other guidance.

(4) ***Additional information required to be submitted by a controlling ten-percent or a controlling fifty-percent partner that has a deduction under section 250 by reason of FDII.*** In addition to the information required pursuant to paragraphs (g)(1), (2), and (3) of this section, if, with respect to the partnership's tax year for which the Form 8865 is being filed, a controlling ten-percent partner or a controlling fifty-percent partner has a deduction under section 250 (by reason of having foreign-derived intangible income), determined, in whole or in part, by reference to the income, assets, or activities of the partnership, or transactions between the controlling-ten percent partner or controlling fifty-percent partner and the partnership, the controlling ten-percent partner or controlling fifty-percent partner must provide its share of the partnership's gross DEI, gross FDDEI, deductions that are properly allocable to the partnership's gross DEI and gross FDDEI, and partnership QBAI (as those terms are defined in the section 250 regulations) in the form and manner and to the extent prescribed by Form 8865 (or any successor form), instructions to the form, publication, or other guidance published in the Internal Revenue Bulletin. To the extent that the partnership amounts described in the previous sentence cannot be determined, the controlling ten-percent partner or controlling fifty-percent partner must provide its share of the partnership's attributes that the partner uses to determine the partner's gross DEI, gross FDDEI, deductions that are properly allocable to the partner's gross DEI and gross FDDEI, and the partner's adjusted bases in partnership specified tangible property.

(h) ***Method of reporting.*** Except as otherwise provided on Form 8865 or the accompanying instructions, all amounts required to be furnished on Form 8865 must be expressed in United States dollars. All statements required on or with Form 8865 pursuant to this section must be in English.

(i) ***Time and place for filing return*** —

(1) ***In general.*** Form 8865 must be filed with the United States person's income tax return on or before the due date (including extensions) of that return. If the United States person is not required to file an income tax return for its tax year with which or within which the foreign partnership's tax year ends, but is required to file an information return for that year (for example, Form 1065, “U.S. Partnership Return of Income,” or Form 990, “Return of Organization Exempt from Income Tax”), the Form 8865 must be filed with the United States person's information return filed on or before the due date (including extensions) of that return.

(2) ***Duplicate return.*** If required by the instructions to Form 8865, a duplicate Form 8865 (including attachments and schedules) must also be filed.

(j) ***Overlap with section 6031.*** A partner may be required to file Form 8865 under this section and the foreign partnership in which it is a partner may also be required to file a Form 1065 or Form 1065-B under section 6031(e) for the same partnership tax year. For cases where a United States person is a controlling fifty-percent partner or a controlling ten-percent partner with respect to a foreign partnership, and that foreign partnership completes and files Form 1065 or Form 1065-B, the instructions for Form 8865 will specify the filing requirements that address this overlap in reporting obligations.

(k) ***Failure to comply with reporting requirement*** —

(1) ***In general.*** Any United States person required to file Form 8865 under Section 6038 and this section that fails to comply (as defined in paragraph (k)(2) of this section) with the reporting requirements of this section, will be subject to the penalties described in paragraph (k)(3) of this section.

(2) ***Failure to comply.*** A failure to comply is separately determined for each foreign partnership for which a United States person has a section 6038 reporting obligation. A failure to comply with the requirements of section 6038 includes the following—

(i) The failure to report at the proper time and in the proper manner any information required to be reported under the rules of this section; or

(ii) The provision of false or inaccurate information in purported compliance with the requirements of this section.

(3) ***Penalties.*** A United States person that fails to comply (as defined in paragraph (k)(2) of this section) with the reporting requirements of this section must pay the following penalties, subject to the reasonable cause exception in paragraph (k)(4) of this section:

(i) ***Dollar amount penalty*** —

(A) ***$10,000 penalty.*** A penalty of $10,000 shall be imposed for each tax year of each foreign partnership with respect to which a failure to comply occurs.

(B) ***Increase in penalty.*** If a failure to comply with the applicable reporting requirements of section 6038 and this section continues for more than 90 days after the date on which the Commissioner or the Commissioner's delegate mails notice of the failure to the United States person required to file Form 8865, the person must pay an additional penalty of $10,000 for each 30-day period (or fraction thereof) during which the failure continues after the 90-day period has expired.

(C) ***Limitation.*** The additional penalty imposed on any United States person by section 6038(b)(2) and paragraph (k)(3)(i)(B) of this section is limited to a maximum of $50,000 for each partnership for each tax year with respect to which the failure occurs.

(ii) ***Penalty of reducing foreign tax credit*** —

(A) ***Effect on foreign tax credit.*** Failure to comply with the reporting requirements of section 6038 and this section may cause a reduction of foreign tax credits under section 901 (taxes of foreign countries and of possessions of the United States). In applying section 901 to a United States person for any tax year with or within which its foreign partnership's tax year ended, the amount of taxes paid (and deemed paid under sections 902 and 960) by the United States person will be reduced by 10 percent if the person fails to comply. However, no tax deemed paid under section 904(c) will be reduced under the provisions of this paragraph (k)(3)(ii).

(B) ***Reduction for continued failure.*** If a failure to comply with the reporting requirements of section 6038 and this section continues for more than 90 days after the date on which the Commissioner or the Commissioner's delegate mails notice of the failure to the person required to file Form 8865, then the amount of the reduction in paragraph (k)(3)(ii)(A) of this section will be 10 percent, plus an additional 5 percent for each 3-month period (or fraction thereof) during which the failure continues after the 90-day period has expired.

(C) ***Limitation on reduction.*** The amount of the reduction under paragraphs (k)(3)(ii)(A) and (B) of this section for each failure to furnish information required under this section will not exceed the greater of $10,000, or the gross income of the foreign partnership for its tax year with respect to which the failure occurred.

(D) ***Offset for dollar amount penalty imposed.*** The total amount of the reduction which, but for this paragraph (k)(3)(ii)(D), may be made under this paragraph (k)(3)(ii) with respect to any separate failure, may not exceed the maximum amount of the reductions that may be imposed, reduced (but not below zero) by the dollar amount penalty imposed by paragraph (k)(3)(i) of this section with respect to the failure.

(4) ***Reasonable cause limitation.*** The time prescribed for filing a complete Form 8865, and the beginning of the 90-day period after the Commissioner or the Commissioner's delegate mails notice under paragraphs (k)(3)(i)(B) and (ii)(B) of this section, will be treated as being not earlier than the last day on which reasonable cause existed for failure to furnish the information. The United States person may show reasonable cause by providing a written statement to the Commissioner's delegate having jurisdiction over the person's return to which the Form 8865 should have been attached, setting forth the reasons for the failure to comply. Whether a failure to comply was due to reasonable cause will be determined by the Commissioner, or the Commissioner's delegate, under all the facts and circumstances.

(5) ***Statute of limitations.*** For exceptions to the limitations on assessment in the event of a failure to provide information under section 6038, see section 6501(c)(8).

(l) ***Applicability dates.*** Except as otherwise provided, this section shall apply for tax years of a foreign partnership ending on or after December 31, 2000. For tax years of a foreign partnership ending before December 23, 2002, *see* § 1.6038-3(j) in effect prior to the amendments made by T.D. 9033 (see 26 CFR part 1 revised April 1, 2002). Paragraph (g)(3) of this section applies for taxable years of a foreign partnership beginning on or after December 20, 2018. Paragraph (g)(4) of this section applies for tax years of a foreign partnership beginning on or after March 4, 2019.

[T.D. 8850, 64 FR 72550, Dec. 28, 1999, as amended by T.D. 9033, 67 FR 78175, Dec. 23, 2002; T.D. 9065, 68 FR 39012, July 1, 2003; T.D. 9896, 85 FR 19857, Apr. 8, 2020; T.D. 9901, 85 FR 43116, July 15, 2020]

§ 1.6038-4 Information returns required of certain United States persons with respect to such person's U.S. multinational enterprise group.

(a) ***Requirement of return.*** Except as provided in paragraph (h) of this section, every ultimate parent entity of a U.S. multinational enterprise (MNE) group must make an annual return on Form 8975, *Country-by-Country Report,* setting forth the information described in paragraph (d) of this section, and any other information required by Form 8975, with respect to the reporting period described in paragraph (c) of this section.

(b) ***Definitions*** —

(1) ***Ultimate parent entity of a U.S. MNE group.*** An ultimate parent entity of a U.S. MNE group is a U.S. business entity that:

(i) Owns directly or indirectly a sufficient interest in one or more other business entities, at least one of which is organized or tax resident in a tax jurisdiction other than the United States, such that the U.S. business entity is required to consolidate the accounts of the other business entities with its own accounts under U.S. generally accepted accounting principles, or would be so required if equity interests in the U.S. business entity were publicly traded on a U.S. securities exchange; and

(ii) Is not owned directly or indirectly by another business entity that consolidates the accounts of such U.S. business entity with its own accounts under generally accepted accounting principles in the other business entity's tax jurisdiction of residence, or would be so required if equity interests in the other business entity were traded on a public securities exchange in its tax jurisdiction of residence.

(2) ***Business entity.*** For purposes of this section, a business entity generally is any entity recognized for federal tax purposes that is not properly classified as a trust under § 301.7701-4 of this chapter. However, any grantor trust within the meaning of section 671, all or a portion of which is owned by a person other an individual, is a business entity for purposes of this section. Additionally, the term business entity includes any entity with a single owner that may be disregarded as an entity separate from its owner under § 301.7701-3 of this chapter and a permanent establishment, as defined in paragraph (b)(3) of this section, that prepares financial statements separate from those of its owner for financial reporting, regulatory, tax reporting, or internal management control purposes. A business entity does not include a decedent's estate or a bankruptcy estate described in section 1398.

(3) ***Permanent establishment.*** For purposes of this section, the term permanent establishment includes:

(i) A branch or business establishment of a constituent entity in a tax jurisdiction that is treated as a permanent establishment under an income tax convention to which that tax jurisdiction is a party;

(ii) A branch or business establishment of a constituent entity that is liable to tax in the tax jurisdiction in which it is located pursuant to the domestic law of such tax jurisdiction; or

(iii) A branch or business establishment of a constituent entity that is treated in the same manner for tax purposes as an entity separate from its owner by the owner's tax jurisdiction of residence.

(4) ***U.S. business entity.*** A U.S. business entity is a business entity that is organized or has its tax jurisdiction of residence in the United States. For purposes of this section, foreign insurance companies that elect to be treated as domestic corporations under section 953(d) are U.S. business entities that have their tax jurisdiction of residence in the United States.

(5) ***U.S. MNE group.*** A U.S. MNE group comprises the ultimate parent entity of a U.S. MNE group as defined in paragraph (b)(1) of this section and all of the business entities required to consolidate their accounts with the ultimate parent entity's accounts under U.S. generally accepted accounting principles, or that would be so required if equity interests in the ultimate parent entity were publicly traded on a U.S. securities exchange, regardless of whether any such business entities could be excluded from consolidation solely on size or materiality grounds.

(6) ***Constituent entity.*** With respect to a U.S. MNE group, a constituent entity is any separate business entity of such U.S. MNE group, except that the term constituent entity does not include a foreign corporation or foreign partnership for which the ultimate parent entity is not required to furnish information under section 6038(a) (determined without regard to §§ 1.6038-2(j) and 1.6038-3(c)) or any permanent establishment of such foreign corporation or foreign partnership.

(7) ***Tax jurisdiction.*** For purposes of this section, a tax jurisdiction is a country or a jurisdiction that is not a country but that has fiscal autonomy. For purposes of this section, a U.S. territory or possession of the United States is considered to have fiscal autonomy.

(8) ***Tax jurisdiction of residence.*** A business entity is considered a resident in a tax jurisdiction if, under the laws of that tax jurisdiction, the business entity is liable to tax therein based on place of management, place of organization, or another similar criterion. A business entity will not be considered a resident in a tax jurisdiction if the business entity is liable to tax in such tax jurisdiction only by reason of a tax imposed by reference to gross amounts of income without any reduction for expenses, provided such tax applies only with respect to income from sources in such tax jurisdiction or capital situated in such tax jurisdiction. If a business entity is resident in more than one tax jurisdiction, then the applicable income tax convention rules, if any, should be applied to determine the business entity's tax jurisdiction of residence. If a business entity is resident in more than one tax jurisdiction and no applicable income tax convention exists between those tax jurisdictions, or if the applicable income tax convention provides that the determination of residence is based on a determination by the competent authorities of the relevant tax jurisdictions and no such determination has been made, the business entity's tax jurisdiction of residence is the tax jurisdiction of the business entity's place of effective management determined in accordance with Article 4 of the Organisation for Economic Co-operation and Development Model Tax Convention on Income and on Capital 2014, or as provided by Form 8975. A corporation that is organized or managed in a tax jurisdiction that does not impose an income tax on corporations will be treated as resident in that tax jurisdiction, unless such corporation is treated as resident in another tax jurisdiction under another provision of this section. The tax jurisdiction of residence of a permanent establishment is the jurisdiction in which the permanent establishment is located. If a business entity does not have a tax jurisdiction of residence, then solely for purposes of paragraph (b)(1) of this section, the tax jurisdiction of residence is the business entity's country of organization.

(9) ***Applicable financial statements.*** An applicable financial statement is a certified audited financial statement that is accompanied by a report of an independent certified public accountant or similarly qualified independent professional that is used for purposes of reporting to shareholders, partners, or similar persons; for purposes of reporting to creditors in connection with securing or maintaining financing; or for any other substantial non-tax purpose.

(10) ***U.S. territory or possession of the United States.*** The term U.S. territory or possession of the United States means American Samoa, Guam, the Northern Mariana Islands, Puerto Rico, or the U.S. Virgin Islands.

(11) ***U.S. territory ultimate parent entity.*** A U.S. territory ultimate parent entity is a business entity organized in a U.S. territory or possession of the United States that controls (as defined in section 6038(e)) a U.S. business entity and that is not owned directly or indirectly by another business entity that consolidates the accounts of the U.S. territory ultimate parent entity with its accounts under generally accepted accounting principles in the other business entity's tax jurisdiction of residence, or would be so required if equity interests in the other business entity were traded on a public securities exchange in its tax jurisdiction of residence.

(c) ***Reporting period.*** The reporting period covered by Form 8975 is the period of the ultimate parent entity's applicable financial statement prepared for the 12-month period (or a 52-53 week period described in section 441(f)) that ends with or within the ultimate parent entity's taxable year. If the ultimate parent entity does not prepare an annual applicable financial statement, then the reporting period covered by Form 8975 is the 12-month period (or a 52-53 week period described in section 441(f)) that ends on the last day of the ultimate parent entity's taxable year.

(d) ***Contents of return*** —

(1) ***Constituent entity information.*** The return on Form 8975 must contain so much of the following information with respect to each constituent entity of the U.S. MNE group, and in such form or manner, as Form 8975 prescribes:

(i) The complete legal name of the constituent entity;

(ii) The tax jurisdiction, if any, in which the constituent entity is resident for tax purposes;

(iii) The tax jurisdiction in which the constituent entity is organized or incorporated (if different from the tax jurisdiction of residence);

(iv) The tax identification number, if any, used for the constituent entity by the tax administration of the constituent entity's tax jurisdiction of residence; and

(v) The main business activity or activities of the constituent entity.

(2) ***Tax jurisdiction of residence information.*** The return on Form 8975 must contain so much of the following information with respect to each tax jurisdiction in which one or more constituent entities of a U.S. MNE group is resident, presented as an aggregate of the information for the constituent entities resident in each tax jurisdiction, and in such form or manner, as Form 8975 prescribes:

(i) Revenues generated from transactions with other constituent entities;

(ii) Revenues not generated from transactions with other constituent entities;

(iii) Profit or loss before income tax;

(iv) Total income tax paid on a cash basis to all tax jurisdictions, and any taxes withheld on payments received by the constituent entities;

(v) Total accrued tax expense recorded on taxable profits or losses, reflecting only operations in the relevant annual period and excluding deferred taxes or provisions for uncertain tax liabilities;

(vi) Stated capital, except that the stated capital of a permanent establishment must be reported in the tax jurisdiction of residence of the legal entity of which it is a permanent establishment unless there is a defined capital requirement in the permanent establishment tax jurisdiction for regulatory purposes;

(vii) Total accumulated earnings, except that accumulated earnings of a permanent establishment must be reported by the legal entity of which it is a permanent establishment;

(viii) Total number of employees on a full-time equivalent basis; and

(ix) Net book value of tangible assets, which, for purposes of this section, does not include cash or cash equivalents, intangibles, or financial assets.

(3) *Special rules* —

(i) ***Constituent entity with no tax jurisdiction of residence.*** The information listed in paragraph (d)(2) of this section also must be provided, in the aggregate, for any constituent entity or entities that have no tax jurisdiction of residence. In addition, if a constituent entity is an owner of a constituent entity that does not have a jurisdiction of tax residence, then the owner's share of such entity's revenues and profits will be aggregated with the information for the owner's tax jurisdiction of residence.

(ii) ***Definition of revenue.*** For purposes of this section, the term revenue includes all amounts of revenue, including revenue from sales of inventory and property, services, royalties, interest, and premiums. The term revenue does not include payments received from other constituent entities that are treated as dividends in the payor's tax jurisdiction of residence. Distributions and remittances from partnerships and other fiscally transparent entities and permanent establishments that are constituent entities are not considered revenue of the recipient-owner. The term revenue also does not include imputed earnings or deemed dividends received from other constituent entities that are taken into account solely for tax purposes and that otherwise would be included as revenue by a constituent entity. With respect to a constituent entity that is an organization exempt from taxation under section 501(a) because it is an organization described in section 501(c), 501(d), or 401(a), a state college or university described in section 511(a)(2)(B), a plan described in section 403(b) or 457(b), an individual retirement plan or annuity as defined in section 7701(a)(37), a qualified tuition program described in section 529, a qualified ABLE program described in section 529A, or a Coverdell education savings account described in section 530, the term revenue includes only revenue that is reflected in unrelated business taxable income as defined in section 512.

(iii) ***Number of employees.*** For purposes of this section, the number of employees on a full-time equivalent basis may be reported as of the end of the accounting period, on the basis of average employment levels for the annual accounting period, or on any other reasonable basis consistently applied across tax jurisdictions and from year to year. Independent contractors participating in the ordinary operating activities of a constituent entity may be reported as employees of such constituent entity. Reasonable rounding or approximation of the number of employees is permissible, provided that such rounding or approximation does not materially distort the relative distribution of employees across the various tax jurisdictions. Consistent approaches should be applied from year to year and across entities.

(iv) ***Income tax paid and accrued tax expense of permanent establishment.*** In the case of a constituent entity that is a permanent establishment, the amount of income tax paid and the amount of accrued tax expense referred to in paragraphs (d)(2)(iv) and (v) of this section should not include the income tax paid or tax expense accrued by the business entity of which the permanent establishment would be a part, but for the third sentence of paragraph (b)(2) of this section, in that business entity's tax jurisdiction of residence on the income derived by the permanent establishment.

(v) ***Certain transportation income.*** If a constituent entity of a U.S. MNE group derives income from international transportation or transportation in inland waterways that is covered by income tax convention provisions that are specific to such income and under which the taxing rights on such income are allocated exclusively to one tax jurisdiction, then the U.S. MNE group should

report the information required under paragraph (d)(2) of this section with respect to such income for the tax jurisdiction to which the relevant income tax convention provisions allocate these taxing rights.

(e) ***Reporting of financial amounts*** —

(1) ***Reporting in U.S. dollars required.*** All amounts furnished under paragraph (d)(2) of this section, other than paragraph (d)(2)(viii) of this section, must be expressed in U.S. dollars. If an exchange rate is used other than in accordance with U.S. generally accepted accounting principles for conversion to U.S. dollars, the exchange rate must be indicated.

(2) ***Sources of financial amounts.*** All amounts furnished under paragraph (d)(2) of this section, other than paragraph (d)(2)(viii) of this section, should be based on applicable financial statements, books and records maintained with respect to the constituent entity, regulatory financial statements, or records used for tax reporting or internal management control purposes for an annual period of each constituent entity ending with or within the period described in paragraph (c) of this section.

(f) ***Time and manner for filing.*** Returns on Form 8975 required under paragraph (a) of this section for a reporting period must be filed with the ultimate parent entity's income tax return for the taxable year, in or with which the reporting period ends, on or before the due date (including extensions) for filing that person's income tax return or as otherwise prescribed by Form 8975.

(g) ***Maintenance of records.*** The U.S. person filing Form 8975 as an ultimate parent entity of a U.S. MNE group must maintain records to support the information provided on Form 8975. However, the U.S. person is not required to create and maintain records that reconcile the amounts provided on Form 8975 with the tax returns of any tax jurisdiction or applicable financial statements.

(h) ***Exceptions to furnishing information.*** An ultimate parent entity of a U.S. MNE group is not required to report information under this section for the reporting period described in paragraph (c) of this section if the annual revenue of the U.S. MNE group for the immediately preceding reporting period was less than $850,000,000.

(i) [Reserved]

(j) ***U.S. territories and possessions of the United States.*** A U.S. territory ultimate parent entity may designate a U.S. business entity that it controls (as defined in section 6038(e)) to file Form 8975 on the U.S. territory ultimate parent entity's behalf with respect to such U.S. territory ultimate parent entity and the business entities that would be required to consolidate their accounts with such U.S. territory ultimate parent entity under U.S. generally accepted accounting principles, or would be so required if equity interests in the U.S. territory ultimate parent entity were publicly traded on a U.S. securities exchange.

(k) ***Applicability dates.*** The rules of this section apply to reporting periods of ultimate parent entities of U.S. MNE groups that begin on or after the first day of a taxable year of the ultimate parent entity that begins on or after June 30, 2016.

[T.D. 9773, 81 FR 42489, June 30, 2016; 81 FR 64061, Sept. 19, 2016]

§ 1.6038-5 Information returns required of certain United States persons to report amounts determined with respect to certain foreign corporations for global intangible low-taxed income (GILTI) purposes.

(a) ***Requirement of return.*** Except as provided in paragraph (d) of this section, each United States person who is a United States shareholder (as defined in section 951(b)) of any controlled foreign corporation (as defined in section 957) must make an annual return on Form 8992, "U.S. Shareholder Calculation of Global Intangible Low-Taxed Income (GILTI)," (or successor form) for each U.S. shareholder inclusion year (as defined in § 1.951A-1(f)(7)) setting forth the information with respect to each such controlled foreign corporation, in such form and manner, as Form 8992 (or successor form) prescribes.

(b) ***Time and manner for filing.*** Returns on Form 8992 (or successor form) required under paragraph (a) of this section for a taxable year must be filed with the United States person's income tax return on or before the due date (taking into account extensions) for filing that person's income tax return.

(c) ***Failure to furnish information*** —

(1) ***Penalties.*** If any person required to file Form 8992 (or successor form) under section 6038 and this section fails to furnish the information prescribed on Form 8992 within the time prescribed by paragraph (b) of this section, the penalties imposed by section 6038(b) and (c) apply.

(2) ***Increase in penalty.*** If a failure described in paragraph (c)(1) of this section continues for more than 90 days after the date on which the Director of Field Operations, Area Director, or Director of Compliance Campus Operations mails notice of such failure to the person required to file Form 8992, such person shall pay a penalty of $10,000, in addition to the penalty imposed by section 6038(b)(1), for each 30-day period (or a fraction of) during which such failure continues after such 90-day period has expired. The additional penalty imposed by section 6038(b)(2) and this paragraph (c)(2) shall be limited to a maximum of $50,000 for each failure.

(3) ***Reasonable cause*** —

(i) For purposes of section 6038(b) and (c) and this section, the time prescribed for furnishing information under paragraph (b) of this section, and the beginning of the 90-day period after mailing of notice by the director under paragraph (c)(2) of this section, shall be treated as being not earlier than the last day on which reasonable cause existed for failure to furnish the information.

(ii) To show that reasonable cause existed for failure to furnish information as required by section 6038 and this section, the person required to report such information must make an affirmative showing of all facts alleged as reasonable cause for such failure in a written statement containing a declaration that it is made under the penalties of perjury. The statement must be filed with the director where the return is required to be filed. The director shall determine whether the failure to furnish information was due to reasonable cause, and if so, the period of time for which such reasonable cause existed. In the case of a return that has been filed as required by this section except for an omission of, or error with respect to, some of the information required, if the person who filed the return establishes to the satisfaction of the director that the person has substantially complied with this section, then the omission or error shall not constitute a failure under this section.

(d) ***Exception from filing requirement.*** Any United States person that does not own, within the meaning of section 958(a), stock of a controlled foreign corporation in which the United States person is a United States shareholder for a taxable year is not required to file Form 8992. For this purpose, whether a U.S. person owns, within the meaning of section 958(a), stock of a controlled foreign corporation is determined under § 1.951A-1(e).

(e) ***Applicability date.*** This section applies to taxable years of controlled foreign corporations beginning on or after October 3, 2018.

[T.D. 9866, 84 FR 29369, June 21, 2019]

§ 1.6038A-0 Table of contents.

This section lists the captions that appear in the regulations under section 6038A.

§ 1.6038A-1 General requirements and definitions.

(a) Purpose and scope.

(b) In general.

(c) Reporting corporation.

(1) In general.

(2) 25-percent foreign-owned.

(3) 25-percent foreign shareholder.

(i) In general.

(ii) Total voting power and value.

(iii) Direct 25-percent foreign shareholder.

(iv) Indirect 25-percent foreign shareholder.

(4) Application to prior open years.

(5) Exceptions.

(i) Treaty country residents having no permanent establishment.

(ii) Qualified exempt shipping income.

(iii) Status as a foreign related party.

(d) Related party.

(e) Attribution rules.

(1) Attribution under section 318.

(2) Attribution of transactions with related parties engaged in by a partnership.

(f) Foreign person.

(g) Foreign related party.

(h) Small corporation exception.

(i) Safe harbor for reporting corporations with related party transactions of *de minimis* value.

(1) In general.

(2) Aggregate value of gross payments made or received.

(j) Related reporting corporations.

(k) Consolidated return groups.

(1) Required information.

(2) Maintenance of records and authorization of agent.

(3) Monetary penalties.

(l) District Director.

(m) Examples.

(n) Effective dates.

(1) Section 1.6038A-1.

(2) Section 1.6038A-2.

(3) Section 1.6038A-3.

(4) Section 1.6038A-4.

(5) Section 1.6038A-5.

(6) Section 1.6038A-6.

(7) Section 1.6038A-7.

§ 1.6038A-2 Requirement of return.

(a) Form 5472 required.

(1) In general.

(2) Reportable transaction.

(b) Contents of return.

(1) Reporting corporation.

(2) Related party.

(3) Foreign related party transactions for which only monetary consideration is paid or received by the reporting corporation.

(4) Foreign related party transactions involving nonmonetary consideration or less than full consideration.

(5) Additional information.

(6) Reasonable estimate.

(i) Estimate within 25 percent of actual amount.

(ii) Other estimates.

(7) Small amounts.

(8) Accrued payments and receipts.

(9) Examples.

(c) Method of reporting.

(d) Time and place for filing returns.

(e) Untimely filed return.

(f) Exceptions.

(1) No reportable transactions.

(2) Transactions solely with a domestic reporting corporation.

(3) Transactions with a corporation subject to reporting under section 6038.

(4) Transactions with a foreign sales corporation.

(g) Filing Form 5472 when transactions with related parties engaged in by a partnership are attributed to a reporting corporation.

(h) Effective dates for certain reporting corporations.

§ 1.6038A-3 Record maintenance.

(a) General maintenance requirements.

(1) Section 6001 and section 6038A.

(2) Safe harbor.

(3) Examples.

(b) Other maintenance requirements.

(1) Indirectly related records.

(2) Foreign related party or third-party maintenance.

(3) Translation of records.

(4) Exception for foreign governments.

(c) Specific records to be maintained for safe harbor.

(1) In general.

(2) Descriptions of categories of documents to be maintained.

(i) Original entry books and transaction records.

(ii) Profit and loss statements.

(iii) Pricing documents.

(iv) Foreign country and third party filings.

(v) Ownership and capital structure records.

(vi) Records of loans, services, and other non-sales transactions.

(3) Material profit and loss statements.

(4) Existing records test.

(5) Significant industry segment test.

(i) In general.

(ii) Form of the statements.

(iii) Special rule for component sales.

(iv) Level of specificity required.

(v) Examples.

(6) High profit test.

(i) In general.

(ii) Return on assets test.

(iii) Additional rules.

(7) Definitions.

(i) U.S.-connected products or services.

(ii) Industry segment.

(iii) Gross revenue of an industry segment.

(iv) Identifiable assets of an industry segment.

(v) Operating profit of an industry segment.

(vi) Product.

(vii) Related products or services.

(viii) Model.

(ix) Product line.

(8) Example.

(i) Facts.

(ii) Existing records test.

(iii) Significant industry segments.

(iv) High profit test.

(v) Material profit and loss statements.

(d) Liability for certain partnership record maintenance.

(e) Agreements with the District Director or the Assistant Commissioner (International).

(1) In general.

(2) Content of agreement.

(i) In general.

(ii) Significant industry segment test.

(iii) Example.

(3) Circumstances of agreement.

(4) Agreement as part of APA process.

(f) U.S. maintenance.

(1) General rule.

(2) Non-U.S. maintenance requirements.

(3) Prior taxable years.

(4) Scheduled production for high volume or other reasons.

(5) Required U.S. maintenance.

(g) Period of retention.

(h) Application of record maintenance rules to banks and other financial institutions. [Reserved]

(i) Effective dates.

§ 1.6038A-4 Monetary penalty.

(a) Imposition of monetary penalty.

(1) In general.

(2) Liability for certain partnership transactions.

(3) Calculation of monetary penalty.

(b) Reasonable cause.

(1) In general.

(2) Affirmative showing required.

(i) In general.

(ii) Small corporations.

(iii) Facts and circumstances taken into account.

(c) Failure to maintain records or to cause another to maintain records.

(d) Increase in penalty where failure continues after notification.

(1) In general.

(2) Additional penalty for another failure.

(3) Cessation of accrual.

(4) Continued failures.

(e) Other penalties.

(f) Examples.

Example (1)—Failure to file Form 5472.

Example (2)—Failure to maintain records.

(g) Effective dates.

§ 1.6038A-5 Authorization of agent.

(a) Failure to authorize.

(b) Authorization by related party.

(1) In general.

(2) Authorization for prior years.

(c) Foreign affiliated groups.

(1) In general.

(2) Application of noncompliance penalty adjustment.

(d) Legal effect of authorization of agent.

(1) Agent for purposes of commencing judicial proceedings.

(2) Foreign related party found where reporting corporation found.

(e) Successors in interest.

(f) Deemed compliance.

(1) In general.

(2) Reason to know.

(3) Effect of deemed compliance.

(g) Effective dates.

§ 1.6038A-6 Failure to furnish information.

(a) In general.

(b) Coordination with treaties.

(c) Enforcement proceeding not required.

(d) *De minimis* failure.

(e) Suspension of statute of limitations.

(f) Effective dates.

§ 1.6038A-7 Noncompliance.

(a) In general.

(b) Determination of the amount.

(c) Separate application.

(d) Effective dates.

[T.D. 8353, 56 FR 28060, June 19, 1991, as amended by T.D. 9796, 81 FR 89850, Dec. 13, 2016]

§ 1.6038A-1 General requirements and definitions.

(a) ***Purpose and scope.*** This section and §§ 1.6038A-2 through 1.6038A-7 provide rules for certain foreign-owned U.S. corporations and foreign corporations engaged in trade or business within the United States (reporting corporations) relating to information that must be furnished, records that must be maintained, and the authorization of the reporting corporation to act as agent for related foreign persons for purposes of sections 7602, 7603, and 7604 that must be executed. Section 6038A(a) and this section require that a reporting corporation furnish certain information annually and maintain certain records relating to transactions between the reporting corporation and certain related parties. This section also provides definitions of terms used in section 6038A. Section 1.6038A-2 provides guidance concerning the information to be submitted and the filing of the required return. Section 1.6038A-3 provides guidance concerning the maintenance of records. Section 1.6038A-4 provides guidance concerning the application of the monetary penalty for the failure either to furnish information or to maintain records. Section 1.6038A-5 provides guidance concerning the authorization of an agent for purposes of sections 7602, 7603, and 7604. Section 1.6038A-6 provides guidance concerning the failure to furnish information requested by a summons. Finally, § 1.6038A-7 provides guidance concerning the application of the noncompliance penalty for failure by the related party to authorize an agent or by the reporting corporation to substantially comply with a summons.

(b) ***In general.*** A reporting corporation must furnish the information described in § 1.6038A-2 by filing an annual information return (Form 5472 or any successor), and must maintain records as described in § 1.6038A-3.

(c) ***Reporting corporation*** —

(1) ***In general.*** For purposes of section 6038A, a reporting corporation is either a domestic corporation that is 25-percent foreign-owned as defined in paragraph (c)(2) of this section, or a foreign corporation that is 25-percent foreign-owned and engaged in trade or business within the United States. After November 4, 1990, a foreign corporation engaged in a trade or business within the United States at any time during a taxable year is a reporting corporation. See section 6038C. A domestic business entity that is wholly owned by one foreign person and that is otherwise classified under § 301.7701-3(b)(1)(ii) of this chapter as disregarded as an entity separate from its owner is treated as an entity separate from its owner and classified as a domestic corporation for purposes of section 6038A. *See* § 301.7701-2(c)(2)(vi) of this chapter.

(2) ***25-percent foreign-owned.*** A corporation is 25-percent foreign-owned if it has at least one direct or indirect 25-percent foreign shareholder at any time during the taxable year.

(3) ***25-percent foreign shareholder*** —

(i) ***In general.*** A foreign person is a 25-percent foreign shareholder of a corporation if the person owns at least 25 percent of—

(A) The total voting power of all classes of stock of the corporation entitled to vote, or

(B) The total value of all classes of stock of the corporation.

(ii) ***Total voting power and value.*** In determining whether one foreign person owns 25 percent of the total voting power of all classes of stock of a corporation entitled to vote or 25 percent of the total value of all classes of stock of a corporation, consideration will be given to all the facts and circumstances of each case, under principles similar to § 1.957-1(b)(2) (consideration of arrangements to shift formal voting power away from a foreign person).

(iii) ***Direct 25-percent foreign shareholder.*** A foreign person is a direct 25-percent foreign shareholder if it owns directly at least 25 percent of the stock of the reporting corporation, either by vote or by value.

(iv) ***Indirect 25-percent foreign shareholder.*** A foreign person is an indirect 25-percent foreign shareholder if it owns indirectly (or under the attribution rules of section 318 is considered to own indirectly) at least 25 percent of the stock of the reporting corporation, either by vote or by value.

(4) ***Application to prior open years.*** For taxable years beginning before July 11, 1989, the definition of a reporting corporation under this paragraph applies in determining whether a foreign-owned corporation is a reporting corporation. An examination may be reopened if the statute of limitations period for that taxable year has not expired. A taxable year may not be reopened under section 6038A for examination purposes if the taxable year is open under section 6511 only for purposes of the carryback of net operating losses or net capital losses.

(5) ***Exceptions*** —

(i) ***Treaty country residents having no permanent establishment.*** A foreign corporation that has no permanent establishment in the United States under an applicable income tax convention is not a reporting corporation for purposes of section 6038A and this section. Accordingly, such a foreign corporation is not subject to §§ 1.6038A-2, 1.6038A-3, and 1.6038A-5. It must timely and fully provide the required notice to the Commissioner under section 6114. See section 6114 and the regulations thereunder for the notice that such a corporation must file and the applicable penalties for failure to file such notice.

(ii) ***Qualified exempt shipping income.*** A foreign corporation whose gross income is exempt from U.S. taxation under section 883 is not a reporting corporation provided that it timely and fully complies with the reporting requirements required to claim such exemption. In the event that such a corporation does not timely and fully comply with the reporting requirements under sections 887 and 883, it will be a reporting corporation subject to section 6038A, including the application of the monetary penalty for failure to file required information.

(iii) ***Status as foreign related party.*** Nothing in this paragraph affects the determination of whether a person is a foreign related party as defined in paragraph (g) of this section.

(d) ***Related party.*** The term “related party” means—

(1) Any direct or indirect 25-percent foreign shareholder of the reporting corporation,

(2) Any person who is related within the meaning of sections 267(b) or 707(b)(1) to the reporting corporation or to a 25-percent foreign shareholder of the reporting corporation, or

(3) Any other person who is related to the reporting corporation within the meaning of section 482 and the regulations thereunder. However, the term "related party" does not include any corporation filing a consolidated federal income tax return with the reporting corporation.

(e) ***Attribution rules*** —

(1) ***Attribution under section 318.*** For purposes of determining whether a corporation is 25-percent foreign-owned and whether a person is a related party under section 6038A, the constructive ownership rules of section 318 shall apply, and the attribution rules of section 267(c) also shall apply to the extent they attribute ownership to persons to whom section 318 does not attribute ownership. However, "10 percent" shall be substituted for "50 percent" in section 318(a)(2)(C), and section 318(a)(3) (A), (B), and (C) shall not be applied so as to consider a U.S. person as owning stock that is owned by a person who is not a U.S. person. Additionally, section 318(a)(3)(C) and § 1.318-1(b) shall not be applied so as to consider a U.S. corporation as being a reporting corporation if, but for the application of such sections, the U.S. corporation would not be 25-percent foreign owned.

(2) ***Attribution of transactions with related parties engaged in by a partnership.*** The transactions in which a domestic or foreign partnership engages shall be attributed to any reporting corporation whose interest in the capital or profits of the partnership, either directly or indirectly, combined with the interests of all related parties of the reporting corporation partner, equals 25 percent or more of the total partnership interests. Attribution of such transactions shall be made only to the extent of the partnership interest held by that reporting corporation partner. See sections 875 and 702(a) and the regulations thereunder. (Attribution shall not be made however, of transactions directly between the partnership and a reporting corporation.) Accordingly, a reporting corporation partner that is deemed to engage in transactions with related parties under this rule is subject to the information reporting requirements of § 1.6038A-2, to the record maintenance requirements of § 1.6038A-3, to the monetary penalty under § 1.6038A-4, to the requirement of authorization of agent under § 1.6038A-5, to the rules of § 1.6038A-6 relating to the requirement to produce records, and to the noncompliance penalty adjustment under § 1.6038A-7.

(f) ***Foreign person.*** For purposes of section 6038A, a foreign person is—

(1) Any individual who is not a citizen or resident of the United States, but not including any individual for whom an election under section 6013 (g) or (h) (relating to an election to file a joint return) is in effect;

(2) Any individual who is a citizen of any possession of the United States and who is not otherwise a citizen or resident of the United States;

(3) Any partnership, association, company, or corporation that is not created or organized in the United States or under the law of the United States or any State thereof;

(4) Any foreign trust or foreign estate, as defined in section 7701(a)(31); or

(5) Any foreign government (or agency or instrumentality thereof). To the extent that a foreign government is engaged in the conduct of commercial activity as defined under section 892 and the regulations thereunder, it will be treated as a foreign person under section 6038A and this section only for purposes of the information reporting requirements of § 1.6038A-2. A foreign government will not be treated as a foreign related party for purposes of §§ 1.6038A-3 and 1.6038A-5.

For purposes of section 6038A, a possession of the United States shall be considered to be a foreign country.

(g) ***Foreign related party.*** A foreign related party is a foreign person as defined under paragraph (f) of this section that is also a related party as defined under paragraph (d) of this section.

(h) ***Small corporation exception.*** A reporting corporation (other than an entity that is a reporting corporation as a result of being treated as a corporation under § 301.7701-2(c)(2)(vi) of this chapter) that has less than $10,000,000 in U.S. gross receipts for a taxable year is not subject to §§ 1.6038A-3 and 1.6038A-5 for that taxable year. Such a corporation, however, remains subject to the information reporting requirements of § 1.6038A-2 and the general record maintenance requirements of section 6001. For purposes of this paragraph, U.S. gross receipts includes all amounts received or accrued to the extent that such amounts are taken into account for the determination and computation of the gross income of the corporation. For purposes of this test, the U.S. gross receipts of all related reporting corporations shall be aggregated.

(i) ***Safe harbor for reporting corporations with related party transactions of de minimis value*** —

(1) ***In general.*** A reporting corporation (other than an entity that is a reporting corporation as a result of being treated as a corporation under § 301.7701-2(c)(2)(vi) of this chapter) is not subject to §§ 1.6038A-3 and 1.6038A-5 for any taxable year in which the aggregate value of all gross payments it makes to and receives from foreign related parties with respect to related party transactions (including monetary consideration, nonmonetary consideration, and the value of transactions involving less than full consideration) is not more than $5,000,000 and is less than 10 percent of its U.S. gross income. Such a corporation, however, remains subject to the information reporting requirements of § 1.6038A-2 and the general record maintenance requirements of section 6001. For purposes of this paragraph, U.S. gross income means the gross income reportable by the reporting corporation (or the aggregate gross income reportable by all related reporting corporations) for U.S. income tax purposes. Gross payments made to or received from foreign related parties cannot be netted; rather, the gross payments made to and received from foreign related parties are to be aggregated. Thus, for example, if a reporting corporation receives $4,700,000 of gross payments from a related party and makes $500,000 of gross payments to the same related party, it has aggregate gross payments of $5,200,000, and, therefore, does not qualify for the safe harbor under this paragraph.

(2) ***Aggregate value of gross payments made or received.*** The aggregate value of gross payments made to (or received from) a foreign related party with respect to foreign related party transactions is determined by totaling the dollar amounts of foreign related party transactions as described in § 1.6038A-2(b) (3) and (4) on all Forms 5472 filed by the reporting corporation or related reporting corporations.

(j) ***Related reporting corporations.*** A reporting corporation is related to another reporting corporation if it is related to that other reporting corporation under the principles described in paragraphs (d) and (e) of this section.

(k) ***Consolidated return groups*** —

(1) ***Required information.*** If a reporting corporation is a member of an affiliated group for which a U.S. consolidated income tax return is filed, the return requirement of § 1.6038A-2 may be satisfied by filing a consolidated Form 5472. The common parent, as identified on Form 851, must attach a schedule to the consolidated Form 5472 stating which members of the U.S. affiliated group are reporting corporations under section 6038A, and which of those are joining in the consolidated Form 5472. The schedule must provide the name, address, and taxpayer identification number of each

member whose transactions are included on the consolidated Form 5472. A member is not required to join in filing a consolidated Form 5472 merely because other members of the group choose to file one or more Forms 5472 on a consolidated basis.

(2) ***Maintenance of records and authorization of agent.*** Either the common parent or the principal operating company of an affiliated group filing a consolidated income tax return may be authorized under § 1.6038A-5 to act as the agent for foreign related persons engaged in transactions with members of the group solely for purposes of section 7602, 7603, and 7604 under section 6038A(e)(1) and § 1.6038A-5. Each member of the group, however, must maintain the records required under section 6038A (a) and § 1.6038A-3 relating to its related party transactions.

(3) ***Monetary penalties.*** The common parent (or principal operating company) and all reporting corporations that join in the filing of a consolidated Form 5472 are liable jointly and severally for penalties for failure to file Form 5472 and for failure to mantain records under section 6038A(d) and § 1.6038A-4(e). See § 1.1502-77(a) regarding the scope of agency of the common parent corporation.

(l) ***District Director.*** For purposes of the regulations under section 6038A, the term “District Director” means any District Director, or the Assistant Commissioner (International) when performing duties similar to those of a District Director with respect to any person over which the Assistant Commissioner (International) has appropriate jurisdiction.

(m) ***Examples.*** The following examples illustrate the rules of this section.

Example 1. P, a U.S. partnership that is engaged in a U.S. trade or business, is 75 percent owned by FC1, a foreign corporation that, in turn, is wholly owned by another foreign corporation, FC2. The remaining 25 percent of P is owned by Corp, a domestic corporation, that is wholly owned by FC3. P engages in transactions solely with FC2 and FC3. These transactions are attributed to FC1 and Corp. Under section 875, FC1 is considered as being engaged in a U.S. trade or business. For purposes of section 6038A and this section, FC1 and Corp are reporting corporations and must report their pro rata shares of the value of the transactions with FC2 and FC3. Thus, Corp must report 25 percent of P's transactions with FC3 and FC1 must report 75 percent of P's transactions with FC2.

Example 2. FC2 and FC3 are both foreign corporations that are wholly owned by FC1, also a foreign corporation. FC2 engages in a trade or business in the United States through a branch. The branch engages in related party transactions with FC1. FC2 is a reporting corporation. FC3 is a foreign related party. FC1 is a direct 25-percent foreign shareholder of both FC2 and FC3. Neither FC1 nor FC3 is a reporting corporation.

Example 3. FC1 owns 25 percent of total voting power in each of FC2 and FC3. FC2 and FC3 each own 20 percent of the total voting power of Corp, a domestic corporation. The remaining stock of Corp is owned by an unrelated domestic corporation. Neither FC2 nor FC3 is engaged in a U.S. trade or business. Under section 318(a)(2)(C) and paragraph (e) of this section, FC1 constructively owns its proportionate share of the stock of Corp owned directly by FC2 and FC3. Thus, FCl is treated as constructively owning five percent of Corp through each of FC2 and FC3 or a total of 10 percent of the Corp stock. Consequently, Corp is not a reporting corporation because no 25 percent shareholder exists.

Example 4. FP owns 100 percent of FCl which, in turn, owns 100 percent of FC2. FC2 owns 100 percent of FC3 which owns 100 percent of RC. FP, FC1, and FC2 are indirect 25-percent foreign shareholders of RC, and FC3 is a direct 25-percent foreign shareholder.

Example 5. FP owns 100 percent of USS, a U.S. corporation, and 25 percent of FS, a foreign corporation. The remaining 75 percent of FS is publicly owned by numerous small shareholders. Sales transactions occur between USS and FS. Applying the rules of this section, USS is a reporting corporation. It is determined that USS and FS are each controlled by FP under section 482 and the regulations thereunder. Therefore, FS is related to USS within the meaning of section 482 and is a related party to USS. Accordingly, the sales transactions between USS and FS are subject to section 6038A.

Example 6. The facts are the same as in *Example 5,* except that the remaining 75 percent of FS is owned by one shareholder that is unrelated to the FP group and it is determined that FS is not controlled by FP for purposes of section 482. Under these facts, FS is not a related party of either FP or USS. Accordingly, section 6038A does not apply to the sales transactions between FS and USS.

Example 7. P, a U.S. multinational, is a holding company that wholly owns X, a U.S. operating company, which in turn wholly owns FS, a controlled foreign corporation. Applying the rule of section 318(a)(3)(C), FS is deemed to own the stock of X that is actually held by P. However, under the rules of paragraph (e) of this section, X will not be a reporting corporation by reason of section 318.

(n) ***Effective dates*** —

(1) ***Section 1.6038A-1.*** Paragraphs (c) (relating to the definition of a reporting corporation), (d) (relating to the definition of a related party), (e)(1) (relating to the application of section 318), and (f) (relating to the definition of a foreign person) of this section are effective for taxable Years beginning after July 10, 1989. The remaining paragraphs of this section are effective December 10, 1990, without regard to when the taxable year began. However, § 1.6038A-1 as it applies to entities that are reporting corporations as a result of being treated as a corporation under § 301.7701-2(c)(2)(vi) of this chapter applies to taxable years of such reporting corporations beginning after December 31, 2016, and ending on or after December 13, 2017.

(2) (*Section 1.6038A-2*—

(i) ***In general.*** Section 1.6038A-2 (relating to the requirement to file Form 5472) generally applies for taxable years beginning after July 10, 1989. However, § 1.6038A-2 as it applies to reporting corporations whose sole trade or business in the United States is a banking, financing, or similar business as defined in § 1.864-4(c)(5)(i) applies for taxable years beginning after December 10, 1990. Section 1.6038A-2(d) applies for taxable years ending on or after June 10, 2011. For taxable years ending on or after June 10, 2011, but before December 24, 2014, see § 1.6038A-2(e) as contained in 26 CFR part 1 revised as of April 1, 2014. For taxable years ending before June 10, 2011, see § 1.6038A-2(d) and (e) as contained in 26 CFR part 1 revised as of April 1, 2011. Section 1.6038A-2 as it applies to entities that are reporting corporations as a result of being treated as a corporation under § 301.7701-2(c)(2)(vi) of this chapter applies to taxable years of such reporting corporations beginning after December 31, 2016, and ending on or after December 13, 2017. Section 1.6038A-2(a)(3), (b)(6), and (b)(7) apply to taxable years ending on or after December 17, 2018. However, taxpayers may apply these final regulations in their entirety for taxable years ending before December 17, 2018.

(ii) ***Transition rule.*** No penalty under sections 6038A(d) or 6038C(c) will apply to a failure solely under § 1.6038A-2(a)(3), (b)(6), or (b)(7) that is corrected by March 6, 2020.

(3) ***Section 1.6038A-4.*** Section 1.6038A-4 (relating to the monetary penalty) is generally effective for taxable years beginning after July 10, 1989, for the failure to file Form 5472. For the failure to maintain records or the failure to produce documents under § 1.6038A-4(f)(2), the section is

effective December 10, 1990, without regard to when the taxable year to which the records relate began. For taxable years ending on or before December 31, 2017, see § 1.6038A-4 as contained in 26 CFR part 1 revised as of April 1, 2018.

(4) ***Section 1.6038A-5.*** Section 1.6038A-5 (relating to the authorization of agent requirement) is effective December 10, 1990, without regard to when the taxable year to which the records relate began.

(5) ***Section 1.6038A-6.*** Section 1.6038A-6 (relating to the failure to furnish information under a summons) is effective November 6, 1990, without regard to when the taxable year to which the summons relates began.

(6) ***Section 1.6038A-7.*** Section 1.6038A-7 (relating to the noncompliance penalty adjustment) is effective December 10, 1990, without regard to when the taxable year began.

[T.D. 8353, 56 FR 28061, June 19, 1991; T.D. 8353, 56 FR 41792, Aug. 23, 1991, as amended by T.D. 9161, 69 FR 55500, Sept. 15, 2004; T.D. 9456, 74 FR 38875, Aug. 4, 2009; T.D. 9529, 76 FR 33999, June 10, 2011; T.D. 9667, 78 FR 32644, June 6, 2014; T.D. 9707, 79 FR 77388, Dec. 24, 2014; T.D. 9796, 81 FR 89850, Dec. 13, 2016; T.D. 9885, 84 FR 67044, Dec. 6, 2019]

§ 1.6038A-2 Requirement of return.

(a) ***Forms required*** —

(1) ***Form 5472.*** Each reporting corporation as defined in § 1.6038A-1(c) (or members of an affiliated group filing together as described in § 1.6038A-1(k)) shall make a separate annual information return on Form 5472 with respect to each related party as defined in § 1.6038A-1(d) with which the reporting corporation (or any group member joining in a consolidated Form 5472) has had any reportable transaction during the taxable year. The information required by section 6038A and this section must be furnished even though it may not affect the amount of any tax due under the Code.

(2) ***Reportable transaction.*** A reportable transaction is any transaction of the types listed in paragraphs (b)(3) and (4) of this section, and, in the case of a reporting corporation that is an applicable taxpayer, as defined under § 1.59A-2(b), any other arrangement that, to prevent avoidance of the purposes of section 59A, is identified on Form 5472 as a reportable transaction. However, except as the Secretary may prescribe otherwise for an applicable taxpayer, the transaction is not a reportable transaction if neither party to the transaction is a United States person as defined in section 7701(a)(30) (which, for purposes of section 6038A, includes an entity that is a reporting corporation as a result of being treated as a corporation under § 301.7701-2(c)(2)(vi) of this chapter) and the transaction—

(i) Will not generate in any taxable year gross income from sources within the United States or income effectively connected, or treated as effectively connected, with the conduct of a trade or business within the United States, and

(ii) Will not generate in any taxable year any expense, loss, or other deduction that is allocable or apportionable to such income.

(3) ***Form 8991.*** Each reporting corporation that is an applicable taxpayer, as defined under § 1.59A-2(b), must make an annual information return on Form 8991. The obligation of an applicable taxpayer to report on Form 8991 does not depend on applicability of tax under section 59A or obligation to file Form 5472.

(b) ***Contents of return*** —

(1) ***Reporting corporation.*** Form 5472 must provide the following information in the manner the form prescribes with respect to each reporting corporation:

(i) Its name, address (including mailing code), and U.S. taxpayer identification number; each country in which the reporting corporation files an income tax return as a resident under the tax laws of that country; its country or countries of organization, and incorporation; its total assets for U.S. reporting corporation; the places where it conducts its business; and its principal business activity.

(ii) The name, address, and U.S. taxpayer identification number, if applicable, of all its direct and indirect foreign shareholders (for an indirect 25-percent foreign shareholder, explain the attribution of ownership); whether any 25-percent foreign shareholder is a surrogate foreign corporation under section 7874(a)(2)(B) or a member of an expanded affiliated group as defined in section 7874(c)(1); each country in which each 25-percent foreign shareholder files an income tax return as a resident under the tax laws of that country; the places where each 25-percent shareholder conducts its business; and the country or countries of organization, citizenship, and incorporation of each 25-percent foreign shareholder.

(iii) The number of Forms 5472 filed for the taxable year and the aggregate value in U.S. dollars of gross payments as defined in § 1.6038A-1(h)(2) made with respect to all foreign related party transactions reported on all Forms 5472.

(2) ***Related party.*** The reporting corporation must provide information on Form 5472, set forth in the manner the form prescribes, about each related party, whether foreign or domestic, with which the reporting corporation had a transaction of the types described in paragraphs (b) (3) and (4) of this section during its taxable year, including the following information:

(i) The name, U.S. taxpayer identification number, if applicable, and address of the related party.

(ii) The nature of the reated party's business and the principal place or places where it conducts its business.

(iii) Each country in which the related party files an income tax return as a resident under the tax laws of that country.

(iv) The relationship of the reporting corporation to the related party (including, to the extent the form may prescribe, any intermediate relationships).

(3) ***Foreign related party transactions for which only monetary consideration is paid or received by the reporting corporation.*** If the related party is a foreign person, the reporting corporation must set forth on Form 5472 the dollar amounts of all reportable transactions for which monetary consideration (including U.S. and foreign currency) was the sole consideration paid or received during the taxable year of the reporting corporation. The total amount of such transactions, as well as the separate amounts for each type of transaction described below, and, to the extent the form may prescribe, any further description, categorization, or listing of transactions within these types, must be reported on Form 5472, in the manner the form or its instructions may prescribe. Where actual amounts are not determinable, a reasonable estimate (as described in paragraph (b)(6) of this section) is permitted. The types of transactions described in this paragraph are:

(i) Sales and purchases of stock in trade (inventory);

(ii) Sales and purchases of tangible property other than stock in trade;

(iii) Rents and royalties paid and received (other than amounts reported under paragraph (b)(3)(iv) of this section);

(iv) Sales, purchases, and amounts paid and received as consideration for the use of all intangible property, including (but not limited to) copyrights, designs, formulas, inventions, models, patents, processes, trademarks, and other similar intangible property rights;

(v) Consideration paid and received for technical, managerial, engineering, construction, scientific, or other services;

(vi) Commissions paid and received;

(vii) Amounts loaned and borrowed (except open accounts resulting from sales and purchases reported under other items listed in this paragraph (b)(3) that arise and are collected in full in the ordinary course of business), to be reported as monthly averages or outstanding balances at the beginning and end of the taxable year, as the form shall prescribe;

(viii) Interest paid and received;

(ix) Premiums paid and received for insurance and reinsurance;

(x) Other amounts paid or received not specifically identified in this paragraph (b)(3) to the extent that such amounts are taken into account for the determination and computation of the taxable income of the reporting corporation; and

(xi) With respect to an entity that is a reporting corporation as a result of being treated as a corporation under § 301.7701-2(c)(2)(vi) of this chapter, any other transaction as defined by § 1.482-1(i)(7), such as amounts paid or received in connection with the formation, dissolution, acquisition and disposition of the entity, including contributions to and distributions from the entity.

(4) ***Foreign related party transactions involving nonmonetary consideration or less than full consideration.*** If the related party is a foreign person, the reporting corporation must provide on Form 5472 a description of any reportable transaction, or group of reportable transactions, listed in paragraph (b)(3) of this section, for which any part of the consideration paid or received was not monetary consideration, or for which less than full consideration was paid or received. A description required under paragraph (b)(4) of this section shall include sufficient information from which to determine the nature and approximate monetary value of the transaction or group of transactions, and shall include:

(i) A description of all property (including monetary consideration), rights, or obligations transferred from the reporting corporation to the foreign related party and from the foreign related party to the reporting corporation;

(ii) A description of all services performed by the reporting corporation for the foreign related party and by the foreign related party for the reporting corporation; and

(iii) A reasonable estimate of the fair market value of all properties and services exchanged, if possible, or some other reasonable indicator of value.

If, for any transaction, the entire consideration received includes both tangible and intangible property and the consideration paid is solely monetary consideration, the transaction should be reported under paragraph (b)(3) of this section if the intangible property was related and incidental to the transfer of the tangible property (for example, a right to warranty services.)

(5) ***Additional information.*** In addition to the information required under paragraphs (b) (3) and (4) of this section, a reporting corporation must provide on Form 5472, in the manner the form prescribes, the following information:

(i) If the reporting corporation imports goods from a foreign related party, whether the costs taken into account in computing the basis or inventory cost of such goods are greater than the costs taken into account in computing the valuation of the goods for customs purposes, adjusted pursuant to section 1059A and the regulations thereunder, and if so, the reasons for the difference.

(ii) If the costs taken into account in computing the basis or inventory cost of such goods are greater than the costs taken into account in computing the valuation of the goods for customs purposes, whether the documents supporting the reporting corporation's treatment of the items set forth in paragraph (b)(5)(i) of this section are in existence and available in the United States at the time Form 5472 is filed.

(iii) If, for the taxable year, a reporting corporation pays or accrues interest or royalties for which a deduction is disallowed under section 267A and the regulations in this part under section 267A, then the reporting corporation must provide such information about the disallowance in the form and manner and to the extent prescribed by Form 5472 (or successor form), instruction, publication, or other guidance.

(iv) If, for the taxable year, the reporting corporation has a deduction under section 250 (by reason of having foreign-derived intangible income) with respect to any amount required to be reported under paragraph (b)(3) or (4) of this section, the reporting corporation will provide on Form 5472 (or any successor form) such information about the deduction in the form and manner and to the extent prescribed by Form 5472 (or any successor form), instructions to the form, publication, or other guidance published in the Internal Revenue Bulletin.

(6) ***Compilation of reportable transactions across multiple related parties.*** A reporting corporation must, to the extent and in the manner Form 5472 or its instructions may prescribe, include a schedule tabulating information with respect to related parties for which the reporting corporation is required to file Forms 5472. The schedule will not require information (beyond totaling) that is not required for the individual Forms 5472. The schedule may include the following:

(i) The identity and status of the related parties;

(ii) The reporting corporation's relationship to the related parties;

(iii) The reporting corporation's reportable transactions with the related parties; and

(iv) Other items required to be reported on Form 5472.

(7) ***Information on Form 5472 and Form 8991 regarding base erosion payments.*** If any reporting corporation is an applicable taxpayer, as defined under § 1.59A-2(b), it must report the information required by Form 8991 and by any Form 5472 it is required to file (including the information required by their accompanying instructions), regarding:

(i) Determination of whether a taxpayer is an applicable taxpayer;

(ii) Computation of base erosion minimum tax amount, including computation of regular tax liability as adjusted for purposes of computing base erosion minimum tax amount;

(iii) Computation of modified taxable income;

(iv) Base erosion tax benefits;

(v) Base erosion percentage calculation;

(vi) Base erosion payments;

(vii) Amounts with respect to services as described in § 1.59A-3(b)(3)(i), including a breakdown of the amount of the total services cost and any mark-up component;

(viii) Arrangements or transactions described in § 1.59A-9;

(ix) Any qualified derivative payment, including:

(A) The aggregate amount of qualified derivative payments for the taxable year; and

(B) A representation that all payments satisfy the requirements of § 1.59A-6(b)(2); and

(x) Any other information necessary to carry out section 59A.

(8) ***Reasonable estimate*** —

(i) ***Estimate within 25 percent of actual amount.*** Any amount reported under this section is considered to be a reasonable estimate if it is at least 75 percent and not more than 125 percent of the actual amount.

(ii) ***Other estimates.*** If any amount reported under this paragraph (b) of this section fails to meet the reasonable estimate test of paragraph (b)(6)(i) of this section, the reporting corporation nevertheless may show that such amount is a reasonable estimate by making an affirmative showing of relevant facts and circumstances in a written statement containing a declaration that it is made under the penalties of perjury. The District Director shall determine whether the amount reported was a reasonable estimate.

(9) ***Small amounts.*** If any actual amount required under this section does not exceed $50,000, the amount may be reported as "$50,000 or less."

(10) ***Accrued payments and receipts.*** For purposes of this section, a reporting corporation that uses an accrual method of accounting shall use accrued payments and accrued receipts for purposes of computing the total amount of each of the types of transactions listed in this section.

(11) ***Examples.*** The following examples illustrate the application of paragraph (b)(3) of this section:

> *Example 1.* (i) In year 1, W, a foreign corporation, forms and contributes assets to X, a domestic limited liability company that does not elect to be treated as a corporation under § 301.7701-3(c) of this chapter. In year 2, W contributes funds to X. In year 3, X makes a payment to W. In year 4, X, in liquidation, distributes its assets to W.
> (ii) In accordance with § 301.7701-3(b)(1)(ii) of this chapter, X is disregarded as an entity separate from W. In accordance with § 301.7701-2(c)(2)(vi) of this chapter, X is treated as an entity separate from W and classified as a domestic corporation for purposes of section 6038A. In accordance with paragraphs (a)(2) and (b)(3) of this section, each of the transactions in years 1 through 4 is a reportable transaction with respect to X. Therefore, X has a section 6038A reporting and record maintenance requirement for each of those years.

Example 2. (i) The facts are the same as in *Example 1* of this paragraph (b)(9) except that, in year 1, W also forms and contributes assets to Y, another domestic limited liability company that does not elect to be treated as a corporation under § 301.7701-3(c) of this chapter. In year 1, X and Y form and contribute assets to Z, another domestic limited liability company that does not elect to be treated as a corporation under § 301.7701-3(c) of this chapter. In year 2, X transfers funds to Z. In year 3, Z makes a payment to Y. In year 4, Z distributes its assets to X and Y in liquidation.
(ii) In accordance with § 301.7701-3(b)(1)(ii) of this chapter, Y and Z are disregarded as entities separate from each other, W, and X. In accordance with § 301.7701-2(c)(2)(vi) of this chapter, Y, Z and X are treated as entities separate from each other and W, and are classified as domestic corporations for purposes of section 6038A. In accordance with paragraph (b)(3) of this section, each of the transactions in years 1 through 4 involving Z is a reportable transaction with respect to Z. Similarly, W's contribution to Y and Y's contribution to Z in year 1, the payment to Y in year 3, and the distribution to Y in year 4 are reportable transactions with respect to Y. Moreover, X's contribution to Z in Year 1, X's funds transfer to Z in year 2, and the distribution to X in year 4 are reportable transactions with respect to X. Therefore, Z has a section 6038A reporting and record maintenance requirement for years 1 through 4; Y has a section 6038A reporting and record maintenance requirement for years 1, 3, and 4; and X has a section 6038A reporting and record maintenance requirement in years 1, 2, and 4 in addition to its section 6038A reporting and record maintenance described in *Example 1* of this paragraph (b)(9).

(c) ***Method of reporting.*** All statements required on or with the Form 5472 or Form 8991 under this section and § 1.6038A-5 must be in the English language. All amounts required to be reported under paragraph (b) of this section must be expressed in United States currency, with a statement of the exchange rates used, and, to the extent the forms may require, must indicate the method by which the amount of a reportable transaction or item was determined.

(d) ***Time for filing returns.*** A Form 5472 and Form 8991 required under this section must be filed with the reporting corporation's income tax return for the taxable year by the due date (including extensions) of that return. In the case of an entity that is a reporting corporation as a result of being treated as a corporation under § 301.7701-2(c)(2)(vi) of this chapter, Form 5472 must be filed at such time and in such manner as the Commissioner may prescribe in forms or instructions.

(e) ***Exceptions*** —

(1) ***No reportable transactions.*** A reporting corporation is not required to file Form 5472 if it has no transactions of the types listed in paragraphs (b) (3) and (4) of this section during the taxable year with any related party.

(2) ***Transactions solely with a domestic reporting corporation.*** If all of a foreign reporting corporation's reportable transactions are with one or more related domestic reporting corporations that are not members of the same affiliated group, the foreign reporting corporation shall furnish on Form 5472 only the information required under paragraphs (b) (1) and (2) of this section, if the domestic reporting corporations provide the information required under paragraphs (b) (3) through (5) of this section. Such a foreign reporting corporation nonetheless is subject to the record maintenance

requirements of § 1.6038A-3 and the requirements of §§ 1.6038A-5 and 1.6038A-6. The name, address, and taxpayer identification number of each domestic reporting corporation that provided such information must be indicated on Form 5472 in the space provided for the information under paragraphs (b) (1) and (2) of this section.

(3) ***Transactions with a corporation subject to reporting under section 6038.*** A reporting corporation (other than an entity that is a reporting corporation as a result of being treated as a corporation under § 301.7701-2(c)(2)(vi) of this chapter) is not required to make a return of information on Form 5472 with respect to a related foreign corporation for a taxable year for which a U.S. person that controls the foreign related corporation makes a return of information on Form 5471 that is required under section 6038 and this section, if that return contains information required under § 1.6038-2(f)(11) with respect to the reportable transactions between the reporting corporation and the related corporation for that taxable year. Such a reporting corporation also is not subject to §§ 1.6038A-3 and 1.6038A-5. It remains subject to the general record maintenance requirements of section 6001.

(4) ***Transactions with a foreign sales corporation.*** A reporting corporation (other than an entity that is a reporting corporation as a result of being treated as a corporation under § 301.7701-2(c)(2)(vi) of this chapter) is not required to make a return of information on Form 5472 with respect to a related corporation that qualifies as a foreign sales corporation for a taxable year for which the foreign sales corporation files Form 1120-FSC.

(f) ***Filing Form 5472 when transactions with related parties engaged in by a partnership are attributed to a reporting corporation.*** If transactions engaged in by a partnership are attributed under § 1.6038A-1(e)(2) to a reporting corporation, the reporting corporation need report on Form 5472 only the percentage of the value of the transaction or transactions equal to the percentage of its partnership interest. Thus, for example, if a partnership buys $1000 of widgets from the foreign parent of a reporting corporation whose partnership interest in the partnership equals 50 percent of the partnership interests (and the remaining 50 percent is held by unrelated parties), the reporting corporation must report $500 of purchases from a foreign related party on Form 5472.

(g) ***Effective/applicability date.*** Except as otherwise provided, for applicability dates for this section for certain reporting corporations, see § 1.6038A-1(n). Paragraph (b)(10) of this section applies with respect to information for annual accounting periods beginning on or after June 21, 2006. Paragraph (b)(7)(ix) of this section applies to payments made in taxable years beginning on or after January 1, 2027. Before these final regulations are applicable, a taxpayer will be treated as satisfying the reporting requirement described in § 1.59A-6(b)(2) only to the extent that it reports the aggregate amount of qualified derivative payments on Form 8991. *See* § 1.59A-6(b)(2)(iv) (transition period for qualified derivative payment reporting). Paragraph (b)(5)(iii) of this section applies with respect to information for annual accounting periods beginning on or after December 20, 2018. Paragraph (b)(5)(iv) of this section applies with respect to information for annual accounting periods beginning on or after March 4, 2019.

[T.D. 8353, 56 FR 28063, June 19, 1991, as amended by T.D. 9113, 69 FR 5932, Feb. 9, 2004; T.D. 9161, 69 FR 55500, Sept. 15, 2004; T.D. 9268, 71 FR 35526, June 21, 2006; T.D. 9338, 72 FR 38476, July 13, 2007; T.D. 9529, 76 FR 33999, June 10, 2011; T.D. 9667, 78 FR 32645, June 6, 2014; T.D. 9707, 79 FR 77389, Dec. 24, 2014; T.D. 9796, 81 FR 89851, Dec. 13, 2016; T.D. 9885, 84 FR 67044, Dec. 6, 2019; T.D. 9885, 85 FR 9370, Feb. 19, 2020; T.D. 9896, 85 FR 19857, Apr. 8, 2020; T.D. 9901, 85 FR 43117, July 15, 2020; T.D. 10041, 90 FR 59051, Dec. 18, 2025]

§ 1.6038A-3 Record maintenance.

(a) *General maintenance requirements* —

(1) Section 6001 and section 6038A. A reporting corporation must keep the permanent books of account or records as required by section 6001 that are sufficient to establish the correctness of the federal income tax return of the corporation, including information, documents, or records ("records") to the extent they may be relevant to determine the correct U.S. tax treatment of transactions with related parties. Under section 6001, the District Director may require any person to make such returns, render such statements, or keep such specific records as will enable the District Director to determine whether or not that person is liable for any of the taxes to which the regulations under part I have application. See section 6001 and the regulations thereunder. Such records must be permanent, accurate, and complete, and must clearly establish income, deductions, and credits. Additionally, in appropriate cases, such records include sufficient relevant cost data from which a profit and loss statement may be prepared for products or services transferred between a reporting corporation and its foreign related parties. This requirement includes records of the reporting corporation itself, as well as to records of any foreign related party that may be relevant to determine the correct U.S. tax treatment of transactions between the reporting corporation and foreign related parties. The relevance of such records with respect to related party transactions shall be determined upon the basis of all the facts and circumstances. Section 6038A and this section provide detailed guidance regarding the required maintenance of records with respect to such transactions and specify penalties for noncompliance. Banks and other financial institutions shall follow the specific record maintenance rules described in paragraph (h) of this section.

(2) ***Safe harbor.*** A safe harbor for record maintenance is provided under paragraph (c) of this section, which sets forth detailed guidance concerning the types of records to be maintained with respect to related party transactions. The safe harbor consists of an all-inclusive list of record types that could be relevant to different taxpayers under a variety of facts and circumstances. It does not constitute a checklist of records that every reporting corporation must maintain or that generally should be requested by the Service. A specific reporting corporation is required to maintain, and the Service will request, only those records enumerated in the safe harbor (including material profit and loss statements) that may be relevant to its business or industry and to the correct U.S. tax treatment of its transactions with its foreign related parties. Accordingly, not every item listed in the safe harbor must be maintained by every reporting corporation. A corporation that maintains or causes another person to maintain the records listed in paragraph (c)(2) of this section that may be relevant to its foreign related party transactions and to its business or industry will be deemed to have met the record maintenance requirements of section 6038A.

(3) ***Examples.*** The following examples illustrate the rules of this paragraph.

Example 1. RC, a U.S. reporting corporation, is owned by two shareholders, F and P. F is a foreign corporation that owns 30 percent of the stock of RC. P is a domestic corporation that owns the remaining 70 percent. RC purchases tangible property from F; however, the only potential audit issue with respect to these transactions is their treatment under section 482. It is determined that F does not in fact control RC and the two corporations do not constitute a group of "controlled taxpayers" for purposes of section 482 and the regulations thereunder. There are no other reportable transactions between RC and F. Under § 1.6038A-1(g), F is a foreign related party with respect to RC. Accordingly, RC is required to report its purchases of property from F under the reporting requirements of § 1.6038A-2. Nevertheless, because section 482 is not applicable to the transactions between RC and F, the records created by F with respect to its

sales to RC are not relevant for purposes of determining the correct tax treatment of these transactions. RC is required to maintain its own records of these transactions under the requirements of section 6001, but the transactions are not subject to the record maintenance requirements of this section. If, however, on audit it is determined that F does control RC, all records relevant to determining the arm's length consideration for the tangible property under section 482 will be subject to these requirements.

Example 2. FP, a foreign person, owns 30 percent of the stock of RC, a reporting corporation. The remaining 70 percent of RC stock is held by persons that are not 25-percent foreign shareholders. It is determined that FP is related to RC within the meaning of section 482 and the regulations thereunder. The only transactions between FP and RC are FP's capital contributions, dividends paid from RC to FP, and loans from FP to RC. Under section 6001, RC is required to maintain all documentation necessary to establish the U.S. tax treatment of the capital contributions, dividends, and loans. RC is not required to maintain records in other categories listed in paragraph (c)(3) of this section because they are not relevant to the transactions between FP and RC. Records of FP not related to these transactions are not subject to the record maintenance requirements under section 6038A(a) and this section.

Example 3. G, a foreign multinational group, creates Sub, a wholly-owned U.S. subsidiary, in order to purchase tangible property from unrelated parties in the United States and resell such property to G. The property purchased by Sub is either used in G's business or resold to other unrelated parties by G. Sub's sole function is to act as a buyer for G and these purchases are the only transactions that G has with any U.S. affiliates. Under all the facts and circumstances of this case, it is determined that an analysis of the group's worldwide profit attributable to the property it purchases from Sub is not relevant for purposes of determining the tax treatment of the sales from Sub to G. Therefore, the records with respect to the profitability of G are not subject to the record maintenance requirements of this section. However, all records related to the appropriate method under section 482 for determining an arm's-length consideration for the property sold by Sub to G are subject to the record maintenance requirements of this section.

Example 4. S, a U.S. reporting corporation, provides computer consulting services for its foreign parent, X. Based on the application of section 482 and the regulations, it is determined that the cost of services plus method, as described in § 1.482-9(e), will provide the most reliable measure of an arm's length result, based on the facts and circumstances of the controlled transaction between S and X. S is required to maintain records to permit verification upon audit of the comparable transactional costs (as described in § 1.482-9(e)(2)(iii)) used to calculate the arm's length price. Based on the facts and circumstances, if it is determined that X's records are relevant to determine the correct U.S. tax treatment of the controlled transaction between S and X, the record maintenance requirements under section 6038A(a) and this section will be applicable to the records of X.

(b) ***Other maintenance requirements*** —

(1) ***Indirectly related records.*** This section applies to records that are directly or indirectly related to transactions between the reporting corporation and any foreign related parties. An example of records that are indirectly related to such transactions is records possessed by a foreign subsidiary of a foreign related party that document the raw material or component costs of a product that is manufactured or assembled by the subsdiary and sold as a finished product by the foreign related party to the reporting corporation.

(2) ***Foreign related party or third-party maintenance.*** If records that are required to be maintained under this section are in the control of a foreign related party, the records may be obtained or compiled (if not already in the possession of the foreign related party or already compiled) under the direction of the reporting corporation and then maintained by the reporting corporation, the foreign related party, or a third party. Thus, for example, a foreign related party may either itself maintain such records outside the United States or permit a third party to maintain such records outside the United States, provided that the conditions described in paragraph (f) of this section are met. Upon a request for such records by the Service, a foreign related party or third party may make arrangements with the District Director to furnish the records directly, rather than through the reporting corporation.

(3) ***Translation of records.*** When records are provided to the Service under a request for production, any portion of such records must be translated into the English language within 30 days of a request for translation of that portion by the District Director. To the extent that any requested documents are identical to documents that have already been translated, an explanation of how such documents are identical instead may be provided. An extension of this time period may be requested under paragraph (f)(4) of this section. Appropriate extensions will be liberally granted for translation requests where circumstances warrant. If a good faith effort is made to translate accurately the requested documents within the specified time period, the reporting corporation will not be subject to the penalties in §§ 1.6038A-4 and 1.6038A-7.

(4) ***Exception for foreign governments.*** A foreign government is not subject to the obligation to maintain records under this section.

(5) ***Records relating to conduit financing arrangements.*** See § 1.881-4 relating to conduit financing arrangements.

(c) ***Specific records to be maintained for safe harbor*** —

(1) ***In general.*** A reporting corporation that maintains or causes another person to maintain the records specified in this paragraph (c) that are relevant to its business or industry and to the correct U.S. tax treatment of its transactions with its foreign related parties will deemed to have met the record maintenance requirements of this section. This paragraph provides general descriptions of the categories of records to be maintained; the particular title or label applied by a reporting corporation or related party does not control. Functional equivalents of the specified documents are acceptable. Record maintenance in accordance with this safe harbor, however, requires only the maintenance of types of documents described in paragraph (c)(2) of this section that are directly or indirectly related to transactions between the reporting corporation and any foreign related party. Additionally, to the extent the reporting corporation establishes that records in a particular category are not applicable to the industry or business of the reporting corporation and any foreign related party, maintenance of such records is not required under this paragraph. Record maintenance in accordance with this paragraph (c) generally does not require the original creation of records that are ordinarily not created by the reporting corporation or its related parties. (If, however, a document that is actually created is described in this paragraph (c), it is to be maintained even if the document is not of the type ordinarily created by the reporting corporation or its related parties.) There are two exceptions to the rule. First, basic accounting records that are sufficient to document the U.S. tax effects of transactions between related parties must be created and retained, if they do not otherwise exist. Second, records sufficient to produce material profit and loss statements as described in paragraphs (c)(2)(ii) and (3) of this section that are relevant for determining the U.S. tax treatment of

transactions between the reporting corporation and foreign related parties must be created if such records are not ordinarily maintained. All internal records storage and retrieval systems used for each taxable year must be retained.

(2) ***Descriptions of categories of documents to be maintained.*** The following records must be maintained in order to satisfy this paragraph (c) to the extent they may be relevant to determine the correct U.S. tax treatment of transactions between the reporting corporation and any foreign related party.

(i) ***Original entry books and transaction records.*** This category includes books and records of original entry or their functional equivalents, however designated or labelled, that are relevant to transactions between any foreign related party and the reporting corporation. Examples include, but are not limited to, general ledgers, sales journals, purchase order books, cash receipts books, cash disbursement books, canceled checks and bank statements, workpapers, sales contracts, and purchase invoices. Descriptive material to explicate entries in the foregoing types of records, such as a chart of accounts or an accounting policy manual, is included in this category.

(ii) ***Profit and loss statements.*** This category includes records from which the reporting corporation can compile and supply, within a reasonable time, material profit and loss statements of the reporting corporation and all related parties as defined in § 1.6038A-1 (d) (the "related party group") that reflect profit or loss of the related party group attributable to U.S.-connected products or services as defined in paragraph (c)(7)(i) of this section. The determination of whether a profit and loss statement is material is made under the rules provided in paragraph (c)(3) of this section. The material profit and loss statements described in this paragraph (c)(2)(ii) must reflect the consolidated revenue and expenses of all members of the related party group. Thus, records in this category include the documentation of the cost of raw materials used by a related party to manufacture finished goods that are then sold by another related party to the reporting corporation. The records should be kept under U.S. generally accepted accounting principles if they are ordinarily maintained in such manner; if not, an explanation of the material differences between the accounting principles used and U.S. generally accepted accounting principles must be made available. The statements need not reflect tracing of the actual costs borne by the group with respect to its U.S.-connected products or services; rather, any reasonable method may be used to allocate the group's worldwide costs to the revenues generated by the sales of those products or services. An explanation of the methods used to allocate specific items to a particular profit and loss statement must be made available. The explanation of material differences between accounting principles and the explanation of allocation methods must be sufficient to permit a comparison of the profitability of the group to that of the reporting corporation attributable to the provision of U.S.-connected products or services.

(iii) ***Pricing documents.*** This category includes all documents relevant to establishing the appropriate price or rate for transactions between the reporting corporation and any foreign related party. Examples include, but are not limited to, documents related to transactions involving the same or similar products or services entered into by the reporting corporation or a foreign related party with related and unrelated parties; shipping and export documents; commission agreements; documents relating to production or assembly facilities; third-party and intercompany purchase invoices; manuals, specifications, and similar documents relating to or describing the performance of functions conducted at particular locations; intercompany correspondence discussing any instructions or assistance relating to such transactions provided to the reporting corporations by the related foreign person (or vice versa);

intercompany and intracompany correspondence concerning the price or the negotiation of the price used in such transactions; documents related to the value and ownership of intangibles used or developed by the reporting corporation or the foreign related party; documents related to cost of goods sold and other expenses; and documents related to direct and indirect selling, and general and administrative expenses (for example, relating to advertising, sales promotions, or warranties).

(iv) ***Foreign country and third party filings.*** This category includes financial and other documents relevant to transactions between a reporting corporation and any foreign related party filed with or prepared for any foreign government entity, any independent commission, or any financial institution.

(v) ***Ownership and capital structure records.*** This category includes records or charts showing the relationship between the reporting corporation and the foreign related party; the location, ownership, and status (for example, joint venture, partnership, branch, or division) of all entities and offices directly or indirectly involved in the transactions between the reporting corporation and any foreign related party; a worldwide organization chart; records showing the management structure of all foreign affiliates; and loan documents, agreements, and other documents relating to any transfer of the stock of the reporting corporation that results in the change of the status of a foreign person as a foreign related party.

(vi) ***Records of loans, services, and other non-sales transactions.*** This category includes relevant documents relating to loans (including all deposits by one foreign related party or reporting corporation with an unrelated party and a subsequent loan by that unrelated party to a foreign related party or reporting corporation that is in substance a direct loan between a reporting corporation and a foreign related party); guarantees of a foreign related party of debts of the reporting corporation, and vice versa; hedging arrangements or other risk shifting or currency risk shifting arrangements involving the reporting corporation and any foreign related party; security agreements between the reporting corporation and any foreign related party; research and development expense allocations between any foreign related party and the reporting corporation; service transactions between any foreign related party and the reporting corporation, including, for example, a description of the allocation of charges for management services, time or travel records, or allocation studies; import and export transactions between a reporting corporation and any foreign related party; the registration of patents and copyrights with respect to transactions between the reporting corporation and any foreign related party: and documents regarding lawsuits in foreign countries that relate to such transactions between a reporting corporation and any foreign related party (for example, product liability suits for U.S. products).

(vii) ***Records relating to conduit financing arrangements.*** See § 1.881-4 relating to conduit financing arrangements.

(3) ***Material profit and loss statements.*** For purposes of paragraph (c)(2)(ii) of this section, the determination of whether a profit and loss statement is material will be made according to the following rules. An agreement between the reporting corporation and the District Director as described in paragraph (e) of this section may identify material profit and loss statements of the related party group and describe the items to be included in any profit and loss statements for which records are to be maintained to satisfy the requirements of paragraph (c)(2)(ii) of this section. In the absence of such an agreement, a profit and loss statement will be material if it meets any of the

following tests: the existing records test described in paragraph (c)(4) of this section, the significant industry segment test described in paragraph (c)(5) of this section, or the high profit test described in paragraph (c)(6) of this section.

(4) ***Existing records test.*** A profit and loss statement is material under the existing records test described in this paragraph (c)(4) if any member of the related party group creates or compiles such statement in the course of its business operations and the statement reflects the profit or loss of the related party group attributable to the provision of U.S.-connected products or services (regardless of whether the profit and loss attributable to U.S.-connected products or services is shown separately or included within the calculation of aggregate figures on the statement). For example, a profit and loss statement is described in this paragraph if it was produced for internal accounting or management purposes, or for disclosure to shareholders, financial institutions, government agencies, or any other persons. Such existing statements and the records from which they were complied (to the extent such records relate to profit and loss attributable to U.S.-connected products or services) are subject to the record maintenance requirements described in paragraph (c)(2)(ii) of this section.

(5) ***Significant industry segment test*** —

(i) ***In general.*** A profit and loss statement is material under the significant industry segment test described in this paragraph (c)(5) if—

(A) The statement reflects the profit or loss of the related party group attributable to the group's provision of U.S.-connected products or services within a single industry segment (as defined in paragraph (c)(7)(ii) of this section);

(B) The worldwide gross revenue attributable to such industry segment is 10 percent or more of the worldwide gross revenue attributable to the group's combined industry segments; and

(C) The amount of gross revenue earned by the group from the provision of U.S.-connected products or services within such industry segment is $25 million or more in the taxable year.

(ii) ***Form of the statements.*** Profit and loss statements compiled for the group's provision of U.S.-connected products or services in each significant industry segment must reflect revenues and expenses attributable to the operations in such segment by all members of the related party group. Statements may show each related party's revenues and expenses separately, or may be prepared in a consolidated format. Any reasonable method may be used to allocate the group's worldwide costs within the industry segment to the U.S.-connected products or services within that segment. An explanation of the methods used to prepare consolidated statements and to allocate specific items to a particular profit and loss statement must be made available, and the records from which the consolidations and allocations were prepared must be maintained.

(iii) ***Special rule for component sales.*** Where the U.S.-connected products or services consist of components that are incorporated into other products or services before sale to customers, the portion of the total gross revenue derived from sales of the finished products or services attributable to the components may be determined on the basis of relative costs of production. Thus, where relevant for determining whether the $25 million threshold in paragraph (c)(5)(i)(C) of this section has been met, the amount of gross revenue derived by the related party group from the provision of the finished products or services may be reduced by multiplying it by a fraction, the numerator of which is the costs of production of the related party group

attributable to the component products or services that constitute U.S.-connected products or services and the denominator of which is the costs of production of the related party group attributable to the finished products in which such components are incorporated.

(iv) ***Level of specificity required.*** In applying the significant industry segment test of this paragraph (c)(5), groups of related products and services must be chosen to provide a reasonable level of specificity that results in the greatest number of separate significant industry segments in comparison to other possible classifications. This determination must be made on the basis of the particular facts presented by the operations of the related party group. The following rules, however, provide general guidelines for making such classifications. First, the related party group's operations that involve the provision of U.S.-connected products should be grouped into product lines. The rules of this paragraph (c)(5) should then be applied to determine if any such product line would, standing alone, constitute a significant industry segment when compared to the related party group's operations as a whole. Any significant industry segments determined at the level of product lines should be further segregated, and tested for significant industry segments, at the level of separate products. Finally, any significant industry segments determined at the level of separate products should be segregated, and tested for significant industry segments, at the level of separate models. Similar principles should be applied in classifying and testing types of services. A profit and loss statement reflecting the related party group's provision of any product or service (or group of products or services as classified under these rules) that constitutes a significant industry segment will be considered material for purposes of this paragraph (c)(5). For definitions of the terms “product”, “related products or services”, “model”, and ”product line”, see paragraph (c)(7) of this section.

(v) ***Examples.*** The rules for determining reasonable levels of specificity for significant industry segments may be illustrated by the following examples.

Example 1. A related party group is engaged in the manufacture and worldwide sales of automobiles and aftermarket parts. The group's operations within the categories of “automobiles” and “aftermarket parts”. are each sufficient to constitute significant industry segments for the group under the rules of this paragraph (c)(5). No narrower classification of aftermarket parts results in any significant industry segments. Automobiles produced by the group are generally classified for marketing purposes by trade names; aggregating groups of automobiles by these trade names results in three significant industry segments, those for trade names A, B, and C. Finally, two car models sold under the trade name A (“A1” and “A2”) and one car model sold under the trade name B (“B3”), produce sufficient revenue to constitute significant industry segments. Such classifications into trade names and car models are generally used in the related party group's industry; moreover, different types of classifications would produce fewer significant industry segments. Accordingly, a reasonable level of specificity for this related party group's industry segments would be eight categories of products consisting of “automobiles”, “aftermarket parts”, “A”, “B”, “C”, “A1”, “A2”, and “B3”.

Example 2. A related party group is engaged in manufacturing electronic goods that are distributed at retail in the United States by the reporting corporation. The group sells three types of products in the United States: televisions, radios, and video cassette recorders (VCRs). Each of these three broad product areas constitutes a significant industry segment for the group as a whole. VCRs can be further segregated by price into high-end and low-end models, and the provision of each constitutes a significant industry segment for the group. Revenues from only one VCR model, model number VCRX-10, are

sufficiently large to make the provision of that model a significant industry segment. With respect to televisions, the group normally accounts for these products by size. Using this classification, portable televisions, medium-sized televisions, and consoles each constitute significant industry segments. Narrower classifications by television model numbers result in no additional significant industry segments. Finally, a single radio product line, those sold under the trade name R, produces sufficient revenue to constitute a significant industry segment, but no other radio models or product groups are large enough to constitute a significant industry segment. In each case, these classifications conform to normal business practices in the industry and result in the greatest possible number of significant industry segments for this related party group. Accordingly, a reasonable level of specificity for this related party group's industry segments would include the ten categories consisting of “VCRs”, “high-end VCRs”, “low-end VCRs”, “model number VCRX-10”, “televisions”, “portable televisions”, “medium-sized televisions”, “console televisions”, “radios”, and “radio trade name R”.

(6) ***High profit test*** —

(i) ***In general.*** A profit and loss statement is material under the high profit test described in this paragraph (c)(6) if—

(A) The statement reflects the profit or loss of the related party group attributable to the group's provision of U.S.-connected products or services within a single industry segment (as defined in paragraph (c)(7)(ii) of this section);

(B) The amount of gross revenue earned by the group from the provision of U.S.-connected products or services within such industry segment is $100 million or more in the taxable year; and

(C) The return on assets test described in paragraph (c)(6)(ii) of this section is satisfied with respect to the products and services attributable to such segment.

Accordingly, a significant industry segment (as determined under paragraph (c)(5) of this section) must be divided into any narrower industry segments that meet the high profit test of this paragraph (c)(6), even if such narrower segments would not, standing alone, meet the significant industry segment test of paragraph (c)(5) of this section.

(ii) ***Return on assets test.*** An industry segment meets the return on assets test if the rate of return on assets earned by the related party group on its worldwide operations within this industry segment exceeds 15 percent, and is at least 200 percent of the return on assets earned by the group in all industry segments combined. For purposes of this paragraph, the rate of return on assets earned by an industry segment is determined by dividing that segment's operating profit (as defined in paragraph (c)(7)(v) of this section) by its identifiable assets (as defined in paragraph (c)(7)(iv) of this section).

(iii) ***Additional rules.*** The rules in paragraphs (c)(5)(ii) through (iv) of this section describing the application of the significant industry segment test shall apply in a similar manner for purposes of the high profit test.

(7) ***Definitions.*** The following definitions apply for purposes of paragraphs (c)(2)(ii), (c)(5), and (c)(6) of this section.

(i) ***U.S.-connected products or services.*** The term *U.S.-connected products or services* means products or services that are imported to or exported from the United States by transfers between the reporting corporation and any of its foreign related parties.

(ii) ***Industry segment.*** An industry segment is a segment of the related party group's combined operations that is engaged in providing a product or service or a group of related products or services (as defined in paragraph (c)(7)(vii) of this section) primarily to customers that are not members of the related party group.

(iii) ***Gross revenue of an industry segment.*** Gross revenue of an industry segment includes receipts (prior to reduction for cost of goods sold) both from sales to customers outside of the related party group and from sales or transfers to other industry segments within the related party group (but does not include sales or transfers between members of the related party group within the same industry segment). Interest from sources outside the related party group and interest earned on trade receivables between industry segments is included in gross revenue if the asset on which the interest is earned is included among the industry segment's identifiable assets, but interest earned on advances or loans to other industry segments is not included.

(iv) ***Identifiable assets of an industry segment.*** The identifiable assets of an industry segment are those tangible and intangible assets of the related party group that are used by the industry segment, including assets that are used exclusively by that industry segment and an allocated portion of assets used jointly by two or more industry segments. The value of an identifiable asset may be determined using any reasonable method (such as book value or fair market value) applied consistently. Any allocation of assets among industry segments must be made on a reasonable basis, and a description of such basis must be provided. Assets of an industry segment that transfers products or services to another industry segment shall not be allocated to the receiving segment. Assets that represent part of the related party group's investment in an industry segment, such as goodwill, shall be included in the industry segment's identifiable assets. Assets maintained for general corporate purposes (that is, those not used in the operations of any industry segment) shall not be allocated to industry segments.

(v) ***Operating profit of an industry segment.*** The operating profit of an industry segment is its gross revenue (as defined in paragraph (c)(7)(iii) of this section) minus all operating expenses. None of the following shall be added or deducted in computing the operating profit of an industry segment: revenue earned at the corporate level and not derived from the operations of any industry segment; general corporate expenses; interest expense; domestic and foreign income taxes; and other extraordinary items not reflecting the ongoing business operations of the industry segment.

(vi) ***Product.*** The term *product* means an item of property (or combination of component parts) that is the result of a production process, is primarily sold to unrelated parties (or incorporated by the related party group into other products sold to unrelated parties), and performs a specific function.

(vii) ***Related products or services.*** The term *related products or services* means groupings of products and types of services that reflect reasonable accounting, marketing, or other business practices within the industries in which the related party group operates.

(viii) ***Model.*** The term *model* means a classification of products that incorporate particular components, options, styles, and any other unique features resulting in product differentiation. Examples of models are electronic products that are sold or accounted for under a single model number and automobiles sold under a single model name.

(ix) ***Product line.*** The term *product line* means a group of products that are aggregated into a single classification for accounting, marketing, or other business purposes. Examples of product lines are groups of products that perform similar functions; products that are marketed under the same trade names, brand names, or trademarks; and products that are related economically (that is, having similar rates of profitability, similar degrees of risk, and similar opportunities for growth).

(8) ***Example.*** The application of the rules for determining material profit and loss statements under paragraphs (c)(4) through (7) of this section is illustrated by the following example.

Example. (i) *Facts.* A multinational enterprise manufactures 50 different agricultural and chemical products that are sold through Subl, its wholly owned U.S. subsidiary, and other subsidiaries located in foreign countries. The parent company of the enterprise, P, is a foreign corporation. The corporations participating in the enterprise form a related party group, and Subl is a reporting corporation for purposes of section 6038A. Under the facts and circumstances of this case, an analysis of the group's worldwide profit attributable to its products sold in the U.S. is relevant for determining an arm's length consideration under section 482 for the transfers of goods between Subl and its foreign affiliates.
(ii) *Existing records test.* For management purposes, the group prepares profit and loss statements that are segmented by sales in different geographic markets. One of these statements shows the combined worldwide profitability of the group. Another statement shows the profitability of the group attributable to its North American sales. Both of these profit and loss statements reflect aggregate figures that include sales to unrelated parties of products that have been transferred from P and other group members to Subl (that is, the group's “U.S.-connected products”). The two statements meet the existing records test described in paragraph (c)(4) of this section.

(iii) *Significant industry segments.* The group's worldwide gross revenue in all industry segments is $2 billion. An analysis of the group's 50 products demonstrates that they are reasonably grouped into eight industry segments (each of which earns roughly $250 million in worldwide gross revenue). Segments 1 through 6 relate to agricultural products and Segments 7 and 8 relate to other chemical products. More specific categories would result in groupings that generate less than 10 percent of the group's worldwide gross revenue (that is, less than $200 million each); these narrower categories would thus fail the gross revenue percentage test of paragraph (c)(5)(i)(B) of this section. The gross revenue in each of the eight segments from the sale to unrelated parties of U.S.-connected products is as follows: $180 million for Segment 1; $30 million for Segment 2; and less than $25 million for each of Segments 3 through 8. Under the $25 million threshold test of paragraph (c)(5)(i)(C) of this section, the group's significant industry segments are thus limited to Segments 1 and 2. In

addition, the combined operations of the group related to agricultural products (encompassing Segments 1 through 6 on an aggregated basis), constitute a single significant industry segment.

(iv) *High profit test.* One highly profitable product line within Segment 1, HPPL, accounts for $120 million gross revenue from Sub1's domestic sales of U.S.-connected products (and thus exceeds the $100 million gross revenue threshold in paragraph (c)(6)(i)(B) of this section). The return on the identifiable assets attributable to the HPPL product line is 85 percent, which is more than 15 percent and more than twice the return on assets earned by the group from its worldwide operations in its combined industry segments. The group's industry segment for HPPL thus meets the high profit test described in paragraph (c)(6) of this section.

(v) *Material Profit and Loss Statements.* The group's material profit and loss statements consist of statements for combined worldwide sales and North American sales (under the existing records test); Segment 1, Segment 2, and aggregated Segments 1-6 (under the significant industry segment test); and HPPL (under the high profit test). Under paragraph (c) of this section, Subl is required to retain the combined worldwide sales and North American sales profit and loss statements and to maintain sufficient records so that it can compile and supply upon request statements of the group's profitability from sales of its U.S.-connected products within Segment l, Segment 2, aggregated Segments 1-6, and HPPL. These records need not be in the possession of Subl and may be kept under the control of and produced by P or any third party. The statements for Segment l, Segment 2, aggregated Segments 1-6, and HPPL do not require tracing of actual costs to the U.S.-connected products; rather, these statements may be prepared by using any reasonable method to allocate a portion of the industry segment's overall operating costs to the sales of U.S.-connected products within that segment.

(d) ***Liability for certain partnership record maintenance.*** A reporting corporation to which transactions engaged in by a partnership are attributed under § 1.6038A-1 (e)(2) is subject to the record maintenance requirements of this section to the extent of the transactions so attributed.

(e) ***Agreements with the District Director*** —

(1) ***In general.*** The District Director who has audit jurisdiction over the reporting corporation may negotiate and enter into an agreement with a reporting corporation that establishes the records the reporting corporation must maintain or cause another to maintain, how the records must be maintained, the period of retention for the records, and by whom the records must be maintained in order to satisfy the reporting corporation's obligations under this section.

(2) ***Content of agreement*** —

(i) ***In general.*** The agreement may include provisions relating to the authorization of agent requirement, the record maintenance requirement, and the production and translation time periods that vary the rules contained in these regulations under section 6038A. The District Director will generally require a reporting corporation to maintain only those records specified

under the safe harbor provisions of paragraph (c) of this section that permit an adequate audit of the income tax return of the reporting corporation and to provide such authorizations of agent that permit adequate access to such records. In most instances, required record maintenance for a particular reporting corporation under a negotiated agreement will be less than the broad range of records described under the safe harbor provisions. Additionally, a provision specifying the effective date and the expiration date of the agreement that may vary the effective date of the regulations may be included.

(ii) ***Significant industry segment test.*** A District Director may determine which industry segment profit and loss statements are material for purposes of requiring the maintenance of records (under either paragraph (a)(1) of this section or the safe harbor described in paragraph (a)(2) of this section). The industry segments that the District Director determines are material need not be the industry segments that meet the significant industry segment test under paragraph (c)(5) of this section or the high profit test under paragraph (c)(6) of this section. For this purpose, a reporting corporation will be required to maintain only those records from which profit and loss statements for the related party group may be constructed with respect to industry segments identified by the District Director. To the extent that existing profit and loss statements are similar in scope and level of detail to statements for industry segments that would otherwise be described under the tests of paragraphs (c)(5) and (6) of this section, the District Director shall accept the existing statements instead of the statements that would otherwise be required under paragraphs (c)(5) and (6) of this section.

(iii) ***Example.*** The following example illustrates the rules of paragraph (e)(2)(ii) of this section.

Example. The District Director determines that RC, a reporting corporation that is a manufacturer of related chemical products, has two industry segments, Segment 1 and Segment 2. While both industry segments meet the significant industry segment test of paragraph (c)(5) of this section, Segment 1 has a relatively low volume of sales to foreign related parties. Additionally, Segment 1 consists of products that produce only a small profit margin because the product is generic and other companies also sell the product. The District Director enters into an agreement with RC that requires only records from which a profit and loss statement for the related party group can be constructed for Segment 2. Therefore, RC is not required to maintain records for Segment 1 from which a profit and loss statement for the related party group can be constructed. The other record maintenance requirements under this section apply, however.

(3) ***Circumstances of agreement.*** The District Director generally will enter into an agreement under this paragraph (e) upon request by the reporting corporation when the District Director believes that the District has or can obtain sufficient knowledge of the business or industry of the reporting corporation to limit the record maintenance requirement to particular documents.

(4) ***Agreement as part of APA process.*** An agreement with a reporting corporation under this paragraph (e) may be entered into as a part of the Advance Pricing Agreement (APA) process at any time during the APA process, insofar as the agreement relates to the subject matter of the APA.

(f) ***U.S. maintenance*** —

(1) ***General rule.*** Records that must be maintained under this section must be maintained within the United States, unless the conditions described in paragraph (f)(2) of this section are met.

(2) ***Non-U.S. maintenance requirements.*** A reporting corporation may maintain outside the United States records not ordinarily maintained in the United States but required to be maintained in the United States under this section. However, the reporting corporation must either:

(i) Deliver to the Service the original documents (or duplicates) requested within 60 days of the request by the Service for such records and provide translations of such documents within 30 days of a request for translations of specific documents; or

(ii) Move the original documents (or duplicates) requested to the United States within 60 days of the request of the Service for such records; provide the Service with an index to the requested records, the name and address of a custodian located within the United States having control over the records, and the address where the records are located within 60 days of the Service's request for the records; and continue to maintain the records within the United States throughout the period of retention described in paragraph (g) of this section. For summons procedures with respect to records that have been moved to the United States, see sections 6038A(e), 7602, 7603, and 7604.

With respect to any material profit and loss statements required to be created (either under paragraph (c) of this section or under an agreement with the District Director), unless otherwise specified, “120 days” shall be substituted for “60 days” in this paragraph (f)(2), and labels and text with respect to such statements must be in the English language.

(3) ***Prior taxable years.*** The non-U.S. maintenance requirements described in paragraph (f)(2) of this section apply to records located outside the United States that were in existence on or after March 20, 1990, without regard to the taxable year to which such records relate.

(4) ***Scheduled production for high volume or other reasons.*** Upon a written request, for good cause shown, the District Director may grant an extension of the time for the production or translation of the requested documents. Such requests should be made within 30 days of the request for records by the Service. If an extension is needed because of the volume of records requested or the amount of translation requested, the District Director may allow production or translation to be scheduled over a period of time so that not all records need be produced or translated at the same time.

(5) ***Required U.S. maintenance.*** The District Director (with the concurrence of the Assistant Commissioner (International)), may require, for cause, the maintenance within the United States of any records specified in paragraph (f)(1) of this section. Such a requirement will be imposed only if there exists a clear pattern of failure to maintain or timely produce the required records. The assessment of a monetary penalty under section 6038A(d) and § 1.6038A-4 for failure to maintain records is not necessarily sufficient to require the maintenance of records within the United States.

(g) ***Period of retention.*** Records required to be maintained by section 6038A(a) and this section shall be kept as long as they may be relevant or material to determining the correct tax treatment of any transaction between the reporting corporation and a related party, but in no case less than the applicable statute of limitations on assessment and collection with respect to the taxable year in which the transaction or item to which the records relate affects the U.S. tax liability of the reporting corporation. *See* section 6001 and the regulations thereunder.

(h) ***Application of record maintenance rules to banks and other financial institutions.*** [Reserved]

(i) ***Effective/applicability date*** —

(1) ***In general.*** This section is generally applicable on December 10, 1990. However, records described in this section in existence on or after March 20, 1990, must be maintained, without regard to when the taxable year to which the records relate began. Paragraph (a)(3) *Example 4* of this section is generally applicable for taxable years beginning after July 31, 2009.

(2) ***Election to apply regulation to earlier taxable years.*** A person may elect to apply the provisions of paragraph (a)(3) *Example 4* of this section to earlier taxable years in accordance with the rules set forth in § 1.482-9(n)(2).

[T.D. 8353, 56 FR 28065, June 19, 1991; T.D. 8353, 56 FR 41792, Aug. 23, 1991, as amended by T.D. 8611, 60 FR 41015, Aug. 11, 1995; T.D. 9278, 71 FR 44518, Aug. 4, 2006; T.D. 9456, 74 FR 38875, Aug. 4, 2009]

§ 1.6038A-4 Monetary penalty.

(a) ***Imposition of monetary penalty*** —

(1) ***In general.*** If a reporting corporation fails to furnish the information described in § 1.6038A-2 within the time and manner prescribed in § 1.6038A-2(d), fails to maintain or cause another to maintain records as required by § 1.6038A-3, or (in the case of records maintained outside the United States) fails to meet the non-U.S. record maintenance requirements within the applicable time prescribed in § 1.6038A-3(f), a penalty of $25,000 shall be assessed for each taxable year with respect to which such failure occurs. The filing of a substantially incomplete Form 5472 constitutes a failure to file Form 5472. Where, however, the information described in § 1.6038A-2(b)(3) through (5) is not required to be reported, a Form 5472 filed without such information is not a substantially incomplete Form 5472.

(2) ***Liability for certain partnership transactions.*** A reporting corporation to which transactions engaged in by a partnership are attributed under § 1.6038A-1(e)(2) is subject to the rules of this section to the extent failures occur with respect to the partnership transactions so attributed.

(3) ***Calculation of monetary penalty.*** If a reporting corporation fails to maintain records as required by § 1.6038A-3 of transactions with multiple related parties, the monetary penalty may be assessed for each failure to maintain records with respect to each related party. The monetary penalty, however, shall be imposed on a reporting corporation only once for a taxable year with respect to each related party for a failure to furnish the information required on Form 5472, for a failure to maintain or cause another to maintain records, or for a failure to comply with the non-U.S. maintenance requirements described in § 1.6038A-3(f). An additional penalty for another failure may be imposed, however, under the rules of paragraph (d)(2) of this section. Thus, unless such failures continue after notification as described in paragraph (d) of this section, the maximum penalty under this paragraph with respect to each related party for all such failures in a taxable year is$25,000. The members of a group of corporations filing a consolidated return are jointly and severally liable for any monetary penalty that may be imposed under this section.

(b) ***Reasonable cause*** —

(1) ***In general.*** Certain failures may be excused for reasonable cause, including not timely filing Form 5472, not maintaining or causing another to maintain records as required by § 1.6038A-3, and not complying with the non-U.S. maintenance requirements described in § 1.6038A-3(f). If an affirmative showing is made that the taxpayer acted in good faith and there is reasonable cause for a failure that results in the assessment of the monetary penalty, the period during which reasonable cause exists shall be treated as beginning on the day reasonable cause is established and ending not

earlier than the last day on which reasonable cause existed for any such failure. Additionally, the beginning of the 90-day period after mailing of a notice by the District Director or the Director of an Internal Revenue Service Center of a failure described in paragraph (d) of this section shall be treated as not earlier than the last day on which reasonable cause existed.

(2) *Affirmative showing required* —

(i) ***In general.*** To show that reasonable cause exists for purposes of paragraph (b)(1) of this section, the reporting corporation must make an affirmative showing of all the facts alleged as reasonable cause for the failure in a written statement containing a declaration that it is made under penalties of perjury. The statement must be filed with the District Director (in the case of failure to maintain or furnish requested information permitted to be maintained outside the United States within the time required under § 1.6038A-3(f) or a failure to file Form 5472) or the Director of the Internal Revenue Service Center where the Form 5472 is required to be filed (in the case of failure to file Form 5472). The District Director or the Director of the Internal Revenue Service Center where the Form 5472 is required to be filed, as appropriate, shall determine whether the failure was due to reasonable cause, and if so, the period of time for which reasonable cause existed. If a return has been filed as required by § 1.6038A-2 or records have been maintained as required by § 1.6038A-3, except for an omission of, or error with respect to, some of the information required or a record to be maintained, the omission or error shall not constitute a failure for purposes of section 6038A(d) if the reporting corporation that filed the return establishes to the satisfaction of the District Director or the Director of the Internal Revenue Service Center that it has substantially complied with the filing of Form 5472 or the requirement to maintain records.

(ii) ***Small corporations.*** The District Director shall apply the reasonable cause exception liberally in the case of a small corporation that had no knowledge of the requirements imposed by section 6038A; has limited presence in and contact with the United States; and promptly and fully complies with all requests by the District Director to file Form 5472, and to furnish books, records, or other materials relevant to the reportable transaction. A small corporation is a corporation whose gross receipts for a taxable year are $20,000,000 or less.

(iii) ***Facts and circumstances taken into account.*** The determination of whether a taxpayer acted with reasonable cause and in good faith is made on a case-by-case basis, taking into account all pertinent facts and circumstances. Circumstances that may indicate reasonable cause and good faith include an honest misunderstanding of fact or law that is reasonable in light of the experience and knowledge of the taxpayer. Isolated computational or transcriptional errors generally are not inconsistent with reasonable cause and good faith. Reliance upon an information return or on the advice of a professional (such as an attorney or accountant) does not necessarily demonstrate reasonable cause and good faith. Similarly, reasonable cause and good faith is not necessarily indicated by reliance on facts that, unknown to the taxpayer, are incorrect. Reliance on an information return, professional advice or other facts, however, constitutes reasonable cause and good faith if, under all the circumstances, the reliance was reasonable. A taxpayer, for example, may have reasonable cause for not filing a Form 5472 or for not maintaining records under section 6038A if the taxpayer has a reasonable belief that it is not owned by a 25-percent foreign shareholder. A reasonable belief means that the taxpayer does not know or has no reason to know that it is owned by a 25-percent foreign shareholder. For example, a reporting corporation would not know or have reason to know that it is owned by a 25-percent foreign shareholder if its belief that it is not so owned is consistent with other information reported or otherwise furnished to or known by the reporting corporation. A

taxpayer may have reasonable cause for not treating a foreign corporation as a related party for purposes of section 6038A where the foreign corporation is a related party solely by reason of § 1.6038A-1(d)(3) (under the principles of section 482), and the taxpayer had a reasonable belief that its relationship with the foreign corporation did not meet the standards for related parties under section 482.

(c) ***Failure to maintain records or to cause another to maintain records.*** A failure to maintain records or to cause another to maintain records is determined by the District Director upon the basis of the reporting corporation's overall compliance (including compliance with the non-U.S. maintenance requirements under § 1.6038A-3(f)(2)) with the record maintenance requirements. It is not an item-by-item determination. Thus, for example, a failure to maintain a single or small number of items may not constitute a failure for purposes of section 6038A(d), unless the item or items are essential to the correct determination of transactions between the reporting corporation and any foreign related parties. The District Director shall notify the reporting corporation in writing of any determination that it has failed to comply with the record maintenance requirement.

(d) ***Increase in penalty where failure continues after notification*** —

(1) ***In general.*** If any failure described in this section continues for more than 90 days after the day on which the District Director or the Director of the Internal Revenue Service Center where the Form 5472 is required to be filed mails notice of the failure to the reporting corporation, the reporting corporation shall pay a penalty (in addition to the penalty described in paragraph (a) of this section) of $25,000 with respect to each related party for which a failure occurs for each 30-day period during which the failure continues after the expiration of the 90-day period. Any uncompleted fraction of a 30-day period shall count as a 30-day period for purposes of this paragraph (d).

(2) ***Additional penalty for another failure.*** An additional penalty for a taxable year may be imposed, however, if at a time subsequent to the time of the imposition of the monetary penalty described in paragraph (a) of this section, a second failure is determined and the second failure continues after notification under paragraph (d)(1) of this section. Thus, if a taxpayer fails to file Form 5472 and is assessed a monetary penalty and later, upon audit, is determined to have failed to maintain records, an additional penalty for the failure to maintain records may be assessed under the rules of this paragraph if the failure to maintain records continues after notification under this paragraph.

(3) ***Cessation of accrual.*** The monetary penalty will cease to accrue if the reporting corporation either files Form 5472 (in the case of a failure to file Form 5472), furnishes information to substantially complete Form 5472, or demonstrates compliance with respect to the maintenance of records (in the case of a failure to maintain records) for the taxable year in which the examination occurs and subsequent years to the satisfaction of the District Director. The monetary penalty also will cease to accrue if requested information, documents, or records, kept outside the United States under the requirements of § 1.6038A-3(f) and not produced within the time specified are produced or moved to the United States under the rules of paragraph (f)(2)(ii) of this section.

(4) ***Continued failures.*** If a failure under this section relating to a taxable year beginning before July 11, 1989 occurs, and if the failure continues following 90 days after the notice of failure under this paragraph is sent, the amount of the additional penalty to be assessed under this paragraph is $25,000 for each 30-day period beginning after November 5, 1990, during which the failure continues. There is no limitation on the amount of the monetary penalty that may be assessed after November 5, 1990.

(e) ***Other penalties.*** For criminal penalties for failure to file a return and filing a false or fraudulent return, see sections 7203 and 7206 of the Code. For the penalty relating to an underpayment of tax, see section 6662.

(f) ***Examples.*** The following examples illustrate the rules of this section.

(1) ***Failure to file Form 5472.*** Corp X, a U.S. reporting corporation, engages in related party transactions with FC. Corp X does not timely file a Form 5472 or maintain records relating to the transactions with FC for Year 1 or subsequent years. The Service Center with which Corp X files its income tax return imposes a $25,000 penalty for each of Years 1, 2, and 3 under section 6038A (d) and this section for failure to provide information as required on Form 5472 and mails a notice of failure to provide inrormation. Corp X does not file Form 5472. Ninety days following the mailing of the notice of failure to Corp X an additional penaly of $25,000 is imposed. On the 135th day following the mailing of the notice of failure, Corp X files Form 5472 for Years 1, 2, and 3. The total penalty owed by Corp X for Year 1 is $75,000. ($25,000 for not timely filing Form 5472, $25,000 for the first 30-day period following the expiration of the 90-day period, and $25,000 for the fraction of the second 30-day period). The penalty for Years 2 and 3 for the failure to file Form 5472 is also $75,000 for each year, calculated in the same manner as for Year 1. The total penalty for failure to file Form 5472 for Years 1, 2, and 3 is $225,000.

(2) ***Failure to maintain records.***

Assume the same facts as in *Example 1.* In Year 5, Corp X is audited for Years 1 through 3. Corp X has not been maintaining records relating to the transactions with FC. The District Director issues a notice of failure to maintain records. Corp X has already been subject to the monetary penalty of $25,000 for each of Years 1, 2, and 3 for failure to file Form 5472 and, therefore, a monetary penalty under paragraph (a) of this section for failure to maintain records is not assessed. However, an additional penalty is assessed after the 90th day following the mailing of the notice of failure to maintain records. Corp X develops a record maintenance system as required by section 6038A and § 1.6038A-3. On the 180th day following the mailing of the notice of failure to maintain records, Corp X demonstrates to the satisfaction of the District Director that the newly developed record maintenance system will comply with the requirements of § 1.6038A-3 and the increase in the monetary penalty after notification ceases to accrue. The additional penalty for failure to maintain records is $75,000. An additional penalty of $75,000 per year is assessed for each of years 2 and 3 for the failure to maintain records for a total of $225,000.

(g) ***Effective dates.*** For effective dates for this section, see § 1.6038A-1(n).

[T.D. 8353, 56 FR 28072, June 19, 1991, as amended by T.D. 9707, 79 FR 77389, Dec. 24, 2014; T.D. 9885, 84 FR 67045, Dec. 6, 2019]

§ 1.6038A-5 Authorization of agent.

(a) ***Failure to authorize.*** The rules of § 1.6038A-7 shall apply to any transaction between a foreign related party and a reporting corporation (including any transaction engaged in by a partnership that is attributed to the reporting corporation under § 1.6038A-1(e)(2)), unless the foreign related party authorizes (in the manner described in paragraph (b) of this section) the reporting corporation to act as its limited agent solely for purposes of sections 7602, 7603, and 7604 with respect to any request by the Service to examine records or produce testimony that may be relevant to the tax treatment of such a transaction or with respect to any summons by the Service for such records or testimony. The fact that a reporting

corporation is authorized to act as an agent for a foreign related party is to be disregarded for purposes of determining whether the foreign related party either has a trade or business in the United States for purposes of the Code or a permanent establishment or fixed base in the United States for purposes of an income tax treaty.

(b) ***Authorization by related party*** —

(1) ***In general.*** Upon request by the Service, a foreign related party shall authorize as its agent (solely for purposes of sections 7602, 7603, and 7604) the reporting corporation with which it engages in transactions. The authorization must be signed by the foreign related party or an officer of the foreign related party possessing the authority to authorize an agent for purposes of Rule 4 of the Federal Rules of Civil Procedure. The reporting corporation will accept this appointment by providing a statement to that effect, signed by an officer of the reporting corporation possessing the authority to accept such an appointment. The agency shall be effective at all times. For taxable years beginning after July 10, 1989, the authorization and acceptance must be provided to the Service within 30 days of a request by the Service to the reporting corporation for such an authorization. The authorization must contain a heading and statement as set forth below. A foreign government is not subject to the authorization of agent requirement.

AUTHORIZATION OF AGENT

"[Name of foreign related party] hereby expressly authorizes [name of reporting corporation] to act as its agent solely for purposes of sections 7602, 7603, and 7604 of the Internal Revenue Code with respect to any request to examine records or produce testimony that may be relevant to the U.S. income tax treatment of any transaction between [name of the above-named foreign related party] and [name of reporting corporation] or with respect to any summons for such records or testimony.

_____

Signature of or for [name of foreign related party]

_____

(Title)

_____

(Date)

(If signed by a corporate officer, partner, or fiduciary on behalf of a foreign related party: I certify that I have the authority to execute this authorization of agent to act on behalf of [name of foreign related party]).

_____

Type or print your name below if signing for a foreign related party that is not an individual.

_____

[Name of reporting corporation] accepts this appointment to act as agent for [name of foreign related party] for the above purpose.

_____

Signature for (Name of Reporting Corporation]

_____

(Title)

_____

(Date)

I certify that I have the authority to accept this appointment to act as agent on behalf of (name of foreign related party] and agree to accept service of process for the above purposes.

Type or print your name below.

_____

(2) ***Authorization for prior years.*** A foreign related party shall authorize a reporting corporation to act as its agent with respect to taxable years for which a Form 5472 is required to be filed prior to the date on which the final regulations under section 6038A are published by providing the above executed authorization of agent within 30 days of a request by the Service for such an authorization.

(c) ***Foreign affiliated groups*** —

(1) ***In general.*** A foreign corporation that has effective legal authority to make the authorization of agent under paragraph (b) of this section on behalf of any group of foreign related parties may execute such an authorization for any members of the group. A single authorization may be made on a consolidated basis. In such a case, the common parent must attach a schedule to the authorization of agent stating which members of the group would otherwise be required to separately authorize the reporting corporation as agent. The schedule must provide the name, address, relationship to the reporting corporation, and U.S. taxpayer identification number, if applicable, of each member.

(2) ***Application of noncompliance penalty adjustment.*** In circumstances where a consolidated authorization of agent has been executed, if the agency authorization for any member of the group is not legally effective for purposes of sections 7602, 7603, and 7604, the noncompliance penalty adjustment under section 6038A(e) and § 1.6038A-7 shall apply.

(d) ***Legal effect of authorization of agent.*** The legal consequences of a foreign related party authorizing a reporting corporation to act as its agent for purposes of sections 7602, 7603, and 7604 of the Code are as follows.

(1) ***Agent for purposes of commencing judicial proceedings.*** A reporting corporation that is authorized by a foreign related party to act as its agent for purposes of sections 7602, 7603, and 7604 (including service of process) is also the agent of the foreign related party for purposes of—

(i) The filing of a petition to quash under section 6038A(e)(4)(A) or a petition to review an Internal Revenue Service determination of noncompliance under section 6038A(e)(4)(B), and

(ii) The commencement of a judicial proceeding to enforce a summons under section 7604, whether commenced in conjunction with a petition to quash under section 6038A(e)(4)(A) or commenced as a separate proceeding in the federal district court for the district in which the person to whom the summons is issued resides or is found.

(2) ***Foreign related party found where reporting corporation found.*** For any purposes relating to sections 7602, 7603, or 7604 (including service of process), a foreign related party that authorizes a reporting corporation to act on its behalf under section 6038A(e)(1) and this section may be found anywhere where the reporting corporation has residence or is found.

(e) ***Successors in interest.*** A successor in interest to a related party must execute the authorization of agent as described in paragraph (b) of this section.

(f) ***Deemed compliance*** —

(1) ***In general.*** In exceptional circumstances, the District Director may treat a reporting corporation as authorized to act as agent for a related party for purposes of sections 7602, 7603, and 7604 in the absence of an actual agency appointment by the foreign related party, in circumstances where the actual absence of an appointment is reasonable. Factors to be considered include—

(i) If neither the reporting corporation nor the other party to the transaction knew or had reason to know that the two parties were related at the time of the transaction, and

(ii) The extent to which the taxpayer establishes to the satisfaction of the District Director that all transactions between the reporting corporation and the related party were on arm's length terms and did not involve the participation of any known related party.

(2) ***Reason to know.*** Whether the reporting corporation or other party had reason to know that the two parties were related at the time of the transaction will be determined by all the facts and circumstances.

(3) ***Effect of deemed compliance.*** If a reporting corporation is deemed under this paragraph (f) to have been authorized to act as an agent for a foreign related party for purposes of sections 7602, 7603, and 7604, such deemed compliance is applicable only for that particular transaction and other reportable transactions entered into prior to the time when the reporting corporation knew or had reason to know that the related party, in fact, was related. The noncompliance rule of § 1.6038A-7 shall apply to any transaction subsequent to that time with the same related party, unless the related party actually authorizes the reporting corporation to act as its agent under paragraph (a) of this section. In addition, the record maintenance requirements of § 1.6038A-3 will apply to all subsequent transactions and, with respect to prior transactions, will apply to relevant records in existence at the time the relationship was discovered.

(g) ***Effective dates.*** For effective dates for this section, see § 1.6038A-1(n).

[T.D. 8353, 56 FR 28073, June 19, 1991; T.D. 8353, 56 FR 41792, Aug. 23, 1991]

§ 1.6038A-6 Failure to furnish information.

(a) ***In general.*** The rules of § 1.6038A-7 may be applied with respect to a transaction between a foreign related party and the reporting corporation (including any transaction engaged in by a partnership that is attributed to the reporting corporation under § 1.6038A-1(e)(2)) if a summons is issued to the reporting corporation to produce any records or testimony, either directly or as agent for such related party, to determine the correct treatment under title 1 of the Code of such a transaction between the reporting corporation and the related party; and if—

(1)

(i) The summons is not quashed in a proceeding, if any, begun under section 6038A(e)(4) and is not determined to be invalid in a proceeding, if any, begun under section 7604 to enforce such summons; and

(ii) The reporting corporation does not substantially and timely comply with the summons, and the District Director has sent by certified or registered mail a notice under section 6038A(e)(2)(C) to the reporting corporation that it has not so complied; or

(2) The reporting corporation fails to maintain or to cause another to maintain records as required by § 1.6038A-3, and by reason of that failure, the summons is quashed in a proceeding under section 6038A(e)(4) or in a proceeding begun under section 7604 to enforce the summons, or the reporting corporation is not able to provide the records requested in the summons.

(b) ***Coordination with treaties.*** Where records of a related party are obtainable on a timely and efficient basis under information exchange procedures provided under a tax treaty or tax information exchange agreement (TIEA), the Service generally will make use of such procedures before issuing a summons. The absence or pendency of a treaty or TIEA request may not be asserted as grounds for refusing to comply with a summons or as a defense against the assertion of the noncompliance penalty adjustment under § 1.6038A-7. For purposes of this paragraph, information is available on a timely and efficient basis if it can be obtained within 180 days of the request.

(c) ***Enforcement proceeding not required.*** The District Director is not required to begin an enforcement proceeding to enforce the summons in order to apply the rules of § 1.6038A-7.

(d) ***De minimis failure.*** Where a reporting corporation's failure to comply with the requirement to furnish information under this section is *de minimis,* the District Director, in the exercise of discretion, may choose not to apply the noncompliance penalty. Thus, for example, in cases where a particular document or group of documents is not furnished upon request or summons, the District Director (in the District Director's sole discretion), may choose not to apply the noncompliance penalty if the District Director deems the document or documents not to have significant or sufficient value in the determination of the correctness of the tax treatment of the related party transaction.

(e) ***Suspension of statute of limitations.*** If the reporting corporation brings an action under section 6038A(e)(4)(A) (proceeding to quash) or (e)(4)(B) (review of secretarial determination of noncompliance), the running of any period of limitation under section 6501 (relating to assessment and collection of tax) or under section 6531 (relating to criminal prosecutions) for the taxable year or years to which the summons that is the subject of such proceeding relates shall be suspended for the period during which such proceeding, and appeals therein, are pending. In no event shall any such period expire before the 90th day after the day on which there is a final determination in such proceeding.

(f) ***Effective dates.*** For effective dates for this section, see § 1.6038A-1(n).

[T.D. 8353, 56 FR 28075, June 19, 1991]

§ 1.6038A-7 Noncompliance.

(a) ***In general.*** In the case of any failure described in § 1.6038A-5 or § 1.6038A-6, the rules of this § 1.6038A-7 apply to the reporting corporation. In such a case—

(1) The amount of the deduction allowed under subtitle A for any amount paid or incurred by the reporting corporation to the related party in connection with such transaction, and

(2) The cost to the reporting corporation of any property acquired in such transaction from the related party or transferred by such corporation in such transaction to the related party, may be determined by the District Director.

(b) ***Determination of the amount.*** The amount of the deduction or the cost to the reporting corporation shall be the amount determined by the District Director (in the District Director's sole discretion) from the District Director's own knowledge or from such information as the District Director may choose to obtain through testimony or otherwise. The District Director shall consider any information or materials that have been submitted by the reporting corporation or a foreign related party. The District Director, however, may disregard any information, documents, or records submitted by the reporting corporation or the related party if (in the District Director's sole discretion) the District Director deems that they are insufficiently probative of the relevant facts.

(c) ***Separate application.*** If the noncompliance penalty of this section applies with respect to transactions with a related party of the reporting corporation, it will not be applied with respect to any other related parties of the reporting corporation solely upon the basis of that failure. Thus, for example, if a reporting corporation engages in transactions with related party A and related party B, and the reporting corporation does not respond to a summons for records related to the transactions between the reporting corporation and related party A, the noncompliance penalty imposed as a result of such failure will not apply to the transactions between the reporting corporation and related party B. If a separate summons is issued for records relating to the transactions between the reporting corporation and related party B and the reporting corporation does not produce such records, the noncompliance penalty may be applied to those transactions.

(d) ***Effective dates.*** For effective dates for this section, see § 1.6038A-1(n).

[T.D. 8353, 56 FR 28075, June 19, 1991]

§ 1.6038B-1 Reporting of certain transfers to foreign corporations.

(a) ***Purpose and scope.*** This section sets forth information reporting requirements under section 6038B concerning certain transfers of property to foreign corporations. Paragraph (b) of this section provides general rules explaining when and how to carry out the reporting required under section 6038B with respect to the transfers to foreign corporations. Paragraph (c) of this section and § 1.6038B-1T(d) specify the information that is required to be reported with respect to certain transfers of property that are described in section 6038B(a)(1)(A) and 367(d), respectively. Section 1.6038B-1(e) describes the filing requirements for property transfers described in section 367(e). Paragraph (f) of this section sets forth the consequences of a failure to comply with the requirements of section 6038B and this section. For effective dates, see paragraph (g) of this section. For rules regarding transfers to foreign partnerships, see section 6038B(a)(1)(B) and any regulations thereunder.

(b) ***Time and manner of reporting*** —

(1) ***In general*** —

(i) ***Reporting procedure.*** Except for stock or securities qualifying under the special reporting rule of § 1.6038B-1(b)(2), and certain exchanges described in section 354 or 356 (listed below), any U.S. person that makes a transfer described in section 6038B(a)(1)(A), 367(d) or (e), is required to report pursuant to section 6038B and the rules of § 1.6038B-1 and must attach the required information to Form 926, “Return by a U.S. Transferor of Property to a Foreign Corporation.” In addition, if the U.S. person files a statement under § 1.367(a)-3(d)(2)(vi)(C), a gain recognition

agreement under § 1.367(a)-8, or a liquidation document under § 1.367(e)-2(b), such person must comply in all material respects with the requirements of such section pursuant to the terms of the statement, gain recognition agreement, or liquidation document, as applicable, in order to satisfy a reporting obligation under section 6038B. For special rules regarding cash transfers made in tax years beginning after February 5, 1999, see paragraphs (b)(3) and (g) of this section. For purposes of determining a U.S. transferor that is subject to section 6038B, the rules of §§ 1.367(a)-1(c) and 1.367(a)-3(d) shall apply with respect to a transfer described in section 367(a), and the rules of § 1.367(a)-1(c) shall apply with respect to a transfer described in section 367(d). Additionally, if in an exchange described in section 354 or 356, a U.S. person exchanges stock or securities of a foreign corporation in a reorganization described in section 368(a)(1)(E), or a U.S. person exchanges stock or securities of a domestic or foreign corporation pursuant to an asset reorganization described in section 368(a)(1) (involving a transfer of assets under section 361) that is not treated as an indirect stock transfer under § 1.367(a)-3(d), then the U.S. person exchanging stock or securities is not required to report under section 6038B. Notwithstanding any statement to the contrary on Form 926, the form and attachments must be attached to, and filed by the due date (including extensions) of the transferor's income tax return for the taxable year that includes the date of the transfer (as defined in § 1.6038B-1T(b)(4)). For taxable years beginning before January 1, 2003, any attachment to Form 926 required under the rules of this section is filed subject to the transferor's declaration under penalties of perjury on Form 926 that the information submitted is true, correct and complete to the best of the transferor's knowledge and belief. For taxable years beginning after December 31, 2002, Form 926 and any attachments shall be verified by signing the income tax return with which the form and attachments are filed.

(ii) ***Reporting by corporate transferor.*** For transfers by corporations in taxable years beginning before January 1, 2003, Form 926 must be signed by an authorized officer of the corporation if the transferor is not a member of an affiliated group under section 1504(a)(1) that files a consolidated Federal income tax return and by an authorized officer of the common parent corporation if the transferor is a member of such an affiliated group. For transfers by corporations in taxable years beginning after December 31, 2002, Form 926 shall be verified by signing the income tax return to which the form is attached.

(iii) ***Transfers of jointly-owned property.*** If two or more persons transfer jointly-owned property to a foreign corporation in a transfer with respect to which a notice is required under this section, then each person must report with respect to the particular interest transferred, specifying the nature and extent of the interest. However, a husband and wife who jointly file a single Federal income tax return may file a single Form 926 with their tax return.

(2) ***Exceptions and special rules for transfers of stock or securities under section 367(a)*** —

(i) ***Transfers on or after July 20, 1998.*** A U.S. person that transfers stock or securities on or after July 20, 1998 in a transaction described in section 6038B(a)(1)(A) will be considered to have satisfied the reporting requirement under section 6038B and paragraph (b)(1) of this section if either—

(A) The U.S. transferor owned less than 5 percent of both the total voting power and the total value of the transferee foreign corporation immediately after the transfer (taking into account the attribution rules of section 318 as modified by section 958(b)), and either:

(*1*) The U.S. transferor qualified for nonrecognition treatment with respect to the transfer (i.e., the transfer was not taxable under §§ 1.367(a)-3(b) or (c)); or

(*2*) The U.S. transferor is a tax-exempt entity and the income was not unrelated business income; or

(*3*) The transfer was taxable to the U.S. transferor under § 1.367(a)-3(c), and such person properly reported the income from the transfer on its timely-filed (including extensions) Federal income tax return for the taxable year that includes the date of the transfer; or

(*4*) The transfer is considered to be to a foreign corporation solely by reason of § 1.83-6(d)(1) and the fair market value of the property transferred did not exceed $100,000; or

(B) The U.S. transferor owned 5 percent or more of the total voting power or the total value of the transferee foreign corporation immediately after the transfer (taking into account the attribution rules of section 318 as modified by section 958(b)) and either:

(*1*) Except as provided in paragraph (b)(2)(iii) of this section, the U.S. transferor (or one or more successors) filed an initial gain recognition agreement under § 1.367(a)-8, and filed Form 926 in accordance with paragraph (b)(2)(iv) of this section; or

(*2*) The transferor is a tax-exempt entity and the income was not unrelated business income; or

(*3*) The transferor properly reported the income from the transfer on its timely-filed (including extensions) Federal income tax return for the taxable year that includes the date of the transfer; or

(*4*) The transfer is considered to be to a foreign corporation solely by reason of § 1.83-6(d)(1) and the fair market value of the property transferred did not exceed $100,000.

(ii) ***Transfers before July 20, 1998.*** With respect to transfers occurring after December 16, 1987, and prior to July 20, 1998, a U.S. transferor that transferred U.S. or foreign stock or securities in a transfer described in section 367(a) is not subject to section 6038B if such person is described in paragraph (b)(2)(i)(A) of this section.

(iii) ***Timely filed initial gain recognition agreement.*** Paragraph (b)(2)(i)(B)(*1*) of this section will not apply unless the initial gain recognition agreement is timely filed as determined under § 1.367(a)-8(d)(1), but for purposes of this section, determined without regard to § 1.367(a)-8(p). However, see paragraph (f)(3) of this section for certain relief that may be available.

(iv) ***Satisfaction of section 6038B reporting if a gain recognition agreement is timely filed.*** If the U.S. transferor is described in paragraph (b)(2)(i)(B)(*1*) of this section and is not otherwise required to file a Form 926 with respect to a transfer of assets other than the stock or securities to the transferee foreign corporation, the requirements of this section are satisfied with respect to the transfer of the stock or securities by completing Part I and Part II of Form 926, noting on the Form 926 that a gain recognition agreement is being filed pursuant to § 1.367(a)-8; reporting on the Form 926 the fair market value, adjusted tax basis, and gain recognized with respect to the transferred stock or securities; submitting on the Form 926 any other information that Form 926, its accompanying instructions, or other applicable guidance require to be submitted with respect to the transfer of the stock or securities; and attaching a signed copy of the Form 926 to its timely filed U.S. income tax return (including extensions) for the year of the transfer. If the

U.S. transferor is required to file Form 926 with respect to a transfer of assets in addition to the stock or securities, the requirements of this section are satisfied with respect to the transfer of the stock or securities by noting on the Form 926 that a gain recognition agreement is being filed pursuant to § 1.367(a)-8; reporting on the Form 926 the fair market value, adjusted tax basis, and gain recognized with respect to the transferred stock or securities; and submitting on the Form 926 any other information that Form 926, its accompanying instructions, or other applicable guidance require to be submitted with respect to the transfer of the stock or securities.

(3) ***Special rule for transfers of cash.*** A U.S. person that transfers cash to a foreign corporation in a transfer described in section 6038B(a)(1)(A) must report the transfer if—

(i) Immediately after the transfer such person holds directly, indirectly, or by attribution (determined under the rules of section 318(a), as modified by section 6038(e)(2)) at least 10 percent of the total voting power or the total value of the foreign corporation; or

(ii) The amount of cash transferred by such person or any related person (determined under section 267(b)(1) through (3) and (10) through (12)) to such foreign corporation during the 12-month period ending on the date of the transfer exceeds $100,000.

(4) [Reserved]. For further guidance, see § 1.6038B-1T(b)(4).

(c) ***Information required with respect to transfers described in section 6038B(a)(1)(A).*** A United States person that transfers property to a foreign corporation in an exchange described in section 6038B(a)(1)(A) (including cash transferred in taxable years beginning after February 5, 1999, and other unappreciated property) must provide the following information, in paragraphs labeled to correspond with the number or letter set forth in this paragraph (c) and § 1.6038B-1T(c)(1) through (5). If a particular item is not applicable to the subject transfer, the taxpayer must list its heading and state that it is not applicable. For special rules applicable to transfers of stock or securities, see paragraph (b)(2)(ii) of this section.

(1) through (4) introductory text [Reserved]. For further guidance, see § 1.6038B-1T(c)(1) through (4) introductory text.

(i) ***Active business property.*** Describe any transferred property that qualifies under § 1.367(a)-2(a)(2). Provide here a general description of the business conducted (or to be conducted) by the transferee, including the location of the business, the number of its employees, the nature of the business, and copies of the most recently prepared balance sheet and profit and loss statement. Property listed within this category may be identified by general type. For example, upon the transfer of the assets of a manufacturing operation, a reasonable description of the property to be used in the business might include the categories of office equipment and supplies, computers and related equipment, motor vehicles, and several major categories of manufacturing equipment. However, any property that is includible in both paragraphs (c)(4)(i) and (iii) of this section (property subject to depreciation recapture under § 1.367(a)-4(a)) must be identified in the manner required in paragraph (c)(4)(iii) of this section. If property is considered to be transferred for use in the active conduct of a trade or business under a special rule in paragraph (e), (f), or (g) of § 1.367(a)-2, specify the applicable rule and provide information supporting the application of the rule.

(ii) ***Stock or securities.*** Describe any transferred stock or securities, including the class or type, amount, and characteristics of the transferred stock or securities, as well as the name, address, place of incorporation, and general description of the corporation issuing the stock or securities.

(iii) ***Depreciated property.*** Describe any property that is subject to depreciation recapture under § 1.367(a)-4(a). Property within this category must be separately identified to the same extent as was required for purposes of the previously claimed depreciation deduction. Specify with respect to each such asset the relevant recapture provision, the number of months that such property was in use within the United States, the total number of months the property was in use, the fair market value of the property, a schedule of the depreciation deduction taken with respect to the property, and a calculation of the amount of depreciation required to be recaptured.

(iv) ***Property not transferred for use in the active conduct of a trade or business.*** Describe any property that is eligible property, as defined in § 1.367(a)-2(b) taking into account the application of § 1.367(a)-2(c), that was transferred to the foreign corporation but not for use in the active conduct of a trade or business outside the United States (and was therefore not listed under paragraph (c)(4)(i) of this section).

(v) ***Property transferred under compulsion.*** If property qualifies for the exception of § 1.367(a)-2(a)(2) under the rules of paragraph (h) of that section, provide information supporting the claimed application of such exception.

(vi) ***Certain ineligible property.*** Describe any property that is described in § 1.367(a)-2(c) and that therefore cannot qualify under § 1.367(a)-2(a)(2) regardless of its use in the active conduct of a trade or business outside of the United States. The description must be divided into the relevant categories, as follows:

(A) ***Inventory, etc.*** Property described in § 1.367(a)-2(c)(1);

(B) ***Installment obligations, etc.*** Property described in § 1.367(a)-2(c)(2);

(C) ***Foreign currency, etc.*** Property described in § 1.367(a)-2(c)(3); and

(D) ***Leased property.*** Property described in § 1.367(a)-2(c)(4).

(vii) ***Other property that is ineligible property.*** Describe any property, other than property described in § 1.367(a)-2(c), that cannot qualify under § 1.367(a)-2(a)(2) regardless of its use in the active conduct of a trade or business outside of the United States and that is not subject to the rules of section 367(d) under § 1.367(a)-1(b)(5) (treatment of certain property as subject to section 367(d)). Each item of property must be separately identified.

(viii) [Reserved]. For further guidance, see § 1.6038B-1T(c)(4)(viii).

(5) ***Transfer of foreign branch with previously deducted losses.*** If the property transferred is property of a foreign branch with previously deducted losses subject to §§ 1.367(a)-6 and -6T, provide the following information:

(i) through (iv) [Reserved]. For further information, see § 1.6038B-1T(c)(5)(i) through (iv).

(6) ***Transfers subject to section 367(a)(5)*** —

(i) ***In general.*** This paragraph (c)(6) applies to a domestic corporation (U.S. transferor) that transfers section 367(a) property (as defined in § 1.367(a)-7(f)(10)) to a foreign corporation in a section 361 exchange (as defined in § 1.367(a)-7(f)(8)) and to which the provisions of §

1.367(a)-7(c) apply. Paragraph (c)(6)(ii) of this section establishes the time and manner for the U.S. transferor to elect to apply the provisions of § 1.367(a)-7(c). Paragraph (c)(6)(iii) of this section establishes the manner for the U.S. transferor to satisfy the requirement of § 1.367(a)-7(c)(4).

(ii) ***Election.*** The U.S. transferor elects to apply the provisions of § 1.367(a)-7(c) by including a statement entitled, "ELECTION TO APPLY EXCEPTION UNDER § 1.367(a)-7(c)," with its timely filed return (within the meaning of § 1.367(a)-7(f)(12)) for the taxable year during which the reorganization occurs and that includes the information described in paragraphs (c)(6)(ii)(A), (c)(6)(ii)(B), (c)(6)(ii)(C), (c)(6)(ii)(D), (c)(6)(ii)(E), (c)(6)(ii)(F), (c)(6)(ii)(G), and (c)(6)(ii)(H) of this section. See § 1.367(a)-7(c)(5)(ii) for the statement required to be filed by a control group member (as defined in § 1.367(a)-7(f)(1)) or final distributee (as defined in § 1.367(a)-7(d)).

(A) The name and taxpayer identification number (if any) of each control group member and final distributee (if any), the foreign acquiring corporation, and in the case of a triangular reorganization (within the meaning of § 1.358-6(b)(2)) the corporation that controls the foreign acquiring corporation, and the ownership interest percentage (as defined in § 1.367(a)-7(f)(7)) in the U.S. transferor of each control group member.

(B) A calculation of the gain recognized (if any) by the U.S. transferor under § 1.367(a)-7(c)(2)(i) and (c)(2)(ii), and the basis adjustments (if any) required to be made by each control group member under § 1.367(a)-7(c)(3).

(C) The date on which the U.S. transferor and each control group member or final distributee entered into the written agreement described in § 1.367(a)-7(c)(5)(iv).

(D) The amount of any deductible liability (as defined by § 1.367(a)-7(f)(2)).

(E) The fair market value (as defined by § 1.367(a)-7(f)(3)) of property transferred to the foreign acquiring corporation in the section 361 exchange.

(F) The inside basis (as defined by § 1.367(a)-7(f)(4)).

(G) The inside gain (as defined by § 1.367(a)-7(f)(5)).

(H) The section 367(a) percentage (as defined by § 1.367(a)-7(f)(9)).

(iii) ***Agreement to amend U.S. transferor's tax return.*** The U.S. transferor complies with the requirement of § 1.367(a)-7(c)(4)(i) by attaching a statement to its timely filed return (within the meaning of § 1.367(a)-7(f)(12)) for the taxable year in which the reorganization occurs, entitled "STATEMENT UNDER § 1.367(a)-7(c)(4) FOR TRANSFERS OF ASSETS TO A FOREIGN CORPORATION IN A SECTION 361 EXCHANGE." The statement must certify that if a significant amount of the section 367(a) property received by the foreign acquiring corporation from the U.S. transferor in the section 361 exchange is disposed of, directly or indirectly, in one or more related transactions described in paragraph (c)(6)(iii)(B) of this section occurring within the sixty (60) month period that begins on the date of distribution or transfer (within the meaning of § 1.381(b)-1(b)), then the exception provided in § 1.367(a)-7(c) will not apply to the section 361 exchange. Accordingly, the U.S. transferor will recognize the gain realized but not recognized in the section 361 exchange, computed as if the exception provided in § 1.367(a)-7(c) had never applied. A U.S. income tax return (or amended U.S. income tax return, as the case may be) for the year in which the reorganization occurred reporting the gain must be filed. If the section 361 exchange occurs in connection with a triangular reorganization (within the meaning of §

1.358-6(b)(2)) and the corporation that controls the foreign acquiring corporation is foreign, an indirect disposition of the section 367(a) property includes the disposition by such controlling foreign corporation of the stock of the foreign acquiring corporation.

(A) ***Disposition of a significant amount*** —

(*1*) ***General rule.*** Except as provided in paragraphs (c)(6)(iii)(A)(*2*) and (c)(6)(iii)(A)(*3*) of this section, for purposes of this paragraph (c)(6)(iii), a disposition of a significant amount occurs if, in one or more related transactions, the foreign acquiring corporation disposes of an amount of the section 367(a) property received from the U.S. transferor in the section 361 exchange that is greater than 40 percent of the fair market value of all of the section 367(a) property transferred in the section 361 exchange.

(*2*) ***Exception for certain nonrecognition exchanges.*** Section 367(a) property that is subsequently transferred (retransferred property) pursuant to a nonrecognition provision is not treated as disposed of for purposes of paragraph (c)(6)(iii)(A)(*1*) of this section, provided such transfer satisfies, and is treated in a manner consistent with the principles underlying § 1.367(a)-8(k). Thus, for example, if section 367(a) property is subsequently transferred to a foreign corporation in exchange solely for stock in a transaction described in section 351, such retransferred property is not treated as disposed of for purposes of paragraph (c)(6)(iii)(A)(*1*) of this section; in such a case, however, a subsequent disposition of either the retransferred property by the transferee foreign corporation, or of the stock of the transferee foreign corporation received in exchange for the retransferred property, is subject to the provisions of paragraph (c)(6)(iii)(A)(*1*) of this section.

(*3*) ***Exception for dispositions occurring in the ordinary course of business.*** Dispositions of section 367(a) property described in section 1221(a)(2) occurring in the ordinary course of business of the foreign acquiring corporation are not treated as disposed of for purposes of paragraph (c)(6)(iii)(A)(*1*) of this section.

(B) ***Gain recognition transaction*** —

(*1*) ***General rule.*** A transaction is described in this paragraph (c)(6)(iii)(B) if the transaction is entered into with a principal purpose of avoiding the U.S. tax that would have been imposed on the U.S. transferor on the disposition of the property transferred to the foreign acquiring corporation in the section 361 exchange. A disposition may have a principal purpose of tax avoidance even if the tax avoidance purpose is outweighed by other purposes when taken together.

(*2*) ***Presumptive tax avoidance.*** For purposes of this paragraph (c)(6)(iii)(B), the principal purpose of the foreign acquiring corporation's disposition of a significant amount of the section 367(a) property within the two-year period that begins on the date of distribution or transfer (within the meaning of § 1.381(b)-1(b)) (whether in a recognition or nonrecognition transaction) will be presumed to be the avoidance of the U.S. tax that would have been imposed on the U.S. transferor on the disposition of the property transferred to the foreign acquiring corporation in the section 361 exchange. However, this presumption will not apply if it is demonstrated to the

satisfaction of the Director of Field Operations, Large Business & International (or any successor to the roles and responsibilities of such person (Director) that the avoidance of U.S. tax was not a principal purpose of the disposition.

(3) ***Interest.*** If additional tax is required to be paid as a result of a transaction described in paragraph (c)(6)(iii)(B) of this section, then interest must be paid on that amount at rates determined under section 6621 with respect to the period between the date prescribed for filing the U.S. transferor's income tax return for the year in which the reorganization occurs and the date on which the additional tax for that year is paid.

(d) ***Transfers subject to section 367(d)*** —

(1) ***Initial transfer.*** For further guidance, see § 1.6038B-1T(d)(1) introductory text through (d)(1)(iii).

(i) through (iii) [Reserved]

(iv) ***Intangible property transferred.*** Provide a description of the intangible property transferred, including its adjusted basis. Generally, each item of intangible property must be separately identified, including intangible property described in § 1.367(d)-1(g)(2)(i). Identify all property that is subject to the rules of section 367(d) under § 1.367(a)-1(b)(5) (treatment of certain property as subject to section 367(d)). Describe any property for which the income required to be taken into account under section 367(d) and the regulations thereunder will be recognized over a 20-year period pursuant to § 1.367(d)-1(c)(3)(ii). Estimate the anticipated income or cost reductions attributable to the intangible property's use beyond the 20-year period.

(v)-(vi) [Reserved]. For further guidance, see § 1.6038B-1T(d)(1)(v) through (1)(vi).

(vii) ***Coordination with loss rules.*** List any intangible property subject to section 367(d) the transfer of which also gives rise to the recognition of gain under section 904(f)(3) or §§ 1.367(a)-6 or -6T. Provide a calculation of the gain required to be recognized with respect to such property, in accordance with the provisions of § 1.367(d)-1(g)(3).

(viii) ***Other intangibles.*** For further guidance, see § 1.6038B-1T(d)(1)(viii).

(2) ***Subsequent transfers.*** For additional, *see* § 1.6038B-1T(d)(2) introductory text through (d)(2)(ii).

(i) through (ii) [Reserved]

(iii) ***Subsequent transfer.*** Except for a subsequent transfer described in paragraph (d)(2)(iv) of this section, provide the following information concerning the subsequent transfer:

(A) For further guidance, *see* § 1.6038B-1T(d)(2)(iii)(A) through (C).

(B) through (C) [Reserved]

(iv) ***Subsequent transfer of intangible property to a qualified domestic person.*** Provide the following information concerning a subsequent transfer of intangible property described in § 1.367(d)-1(f)(4)(i):

(A) A statement providing that § 1.367(d)-1(f)(4)(i)(B) applies to the subsequent transfer;

(B) A general description of the subsequent transfer and any wider transaction of which it forms a part, including the U.S. transferor's former adjusted basis in the intangible property and the transferee foreign corporation's adjusted basis in the intangible property (as determined immediately before the subsequent transfer), the amount and

computation of any gain recognized by the U.S. transferor under § 1.367(d)-1(f)(4)(i)(A), and a description of whether the intangible property was, or is expected to be, subsequently transferred to one or more other persons (as described in § 1.367(d)-1(f)(4)(v));

(C) A description of the intangible property;

(D) A copy of the Form 926 with respect to the original transfer of the intangible property and any attachments identifying the intangible property as within the scope of section 367(d);

(E) The name, address, and taxpayer identification number of the qualified domestic person that receives the intangible property, including a statement describing the relationship between the U.S. transferor and the qualified domestic person, and, if applicable, such information regarding any other persons described in § 1.367(d)-1(f)(4)(v); and

(F) Any other information as may be prescribed by the Commissioner in publications, forms, instructions, or other guidance.

(e) *Transfers subject to section 367(e)* —

(1) ***In general.*** If a domestic corporation (distributing corporation) makes a distribution described in section 367(e)(1) or section 367(e)(2), the distributing corporation must comply with the reporting requirements of this paragraph (e). Unless otherwise provided in this section, a distributing corporation making a distribution described in sections 367(e)(1) or 367(e)(2) must file a Form 926, "Return by a U.S. Transferor of Property to a Foreign Corporation (under section 367)," as amended and modified by this section.

(2) ***Reporting requirements for section 367(e)(1) distributions of domestic controlled corporations.*** A domestic distributing corporation making a distribution of the stock or securities of a domestic corporation under section 355 is not required to file a Form 926, as described in paragraph (e)(1) of this section, and shall have no other reporting requirements under section 6038B.

(3) ***Reporting requirements for section 367(e)(1) distributions of foreign controlled corporations.*** If the distributing corporation makes a section 355 distribution of the stock or securities of a foreign controlled corporation to distributee shareholders who are not qualified U.S. persons, as defined in § 1.367(e)-1(b)(1), then the distributing corporation shall complete Part 1 of the Form 926 and attach a signed copy of such form to its U.S. income tax return for the year of the distribution. The distributing corporation shall also attach to its U.S. income tax return for the year of distribution a statement signed under the penalties of perjury entitled, "Addendum to Form 926." The addendum shall contain a brief description of the transaction, state the number of shares distributed to distributees who are not qualified U.S. persons (applying the rules contained in § 1.367(e)-1(d)), and state the basis and fair market value of the distributed stock or securities (including a list stating the amounts that were distributed to distributees who were not qualified U.S. persons and distributees who were qualified U.S. persons).

(4) ***Reporting rules for section 367(e)(2) distributions by domestic liquidating corporations*** —

(i) ***General rule.*** Except as provided in paragraph (e)(4)(ii) of this section, if the distributing corporation makes a distribution of property in complete liquidation under section 332 to a foreign distributee corporation that meets the stock ownership requirements of section 332(b) with respect to the stock of the distributing corporation, then the distributing corporation must complete a Form 926 and attach a signed copy of such form to its timely filed U.S. income tax

return (including extensions) for the taxable years that include one or more liquidating distributions. The property description contained in Part III of the Form 926 must contain a description, including the adjusted tax basis and fair market value, of all property distributed by the distributing corporation (regardless of whether the distribution of the property qualifies for nonrecognition treatment). The description must also identify the items of property for which nonrecognition treatment is claimed under § 1.367(e)-2(b)(2)(ii) or (iii), as applicable.

(ii) ***Special rule.*** Except as provided in paragraph (e)(4)(iii) of this section, if the distributing corporation distributes items of property that will be used by the foreign distributee corporation in the conduct of a trade or business in the United States and the distributing corporation does not recognize gain or loss on such distribution under § 1.367(e)-2(b)(2)(i) with respect to such property, then the distributing corporation may satisfy the requirements of this section by completing Part I and Part II of Form 926, noting in Part III that the information required by Form 926 is contained in a statement required by § 1.367(e)-2(b)(2)(i)(C)(*2*), and attaching a signed copy of Form 926 to its timely filed U.S. income tax return (including extensions) for each taxable year that includes one or more distributions in liquidation. In addition, if the distributing corporation distributes stock of a domestic subsidiary corporation and does not recognize gain or loss on such distribution under § 1.367(e)-2(b)(2)(iii) with respect to such stock, then the distributing corporation may satisfy the requirements of this section by completing Part I and Part II of Form 926, noting in Part III that the information required by Form 926 is contained in a statement required by § 1.367(e)-2(b)(2)(iii)(D), and attaching a signed copy of Form 926 to its timely filed U.S. income tax return (including extensions) for the taxable years that include one or more distributions of domestic subsidiary stock.

(iii) ***Properly filed statement.*** Paragraph (e)(4)(ii) will not apply if there is a failure to file an initial liquidation document as determined under § 1.367(e)-2(e)(3)(i), but for purposes of this section, determined without regard to § 1.367(e)-2(f). However, see paragraph (f)(3) of this section for certain relief that may be available.

(f) ***Failure to comply with reporting requirements*** —

(1) ***Consequences of failure.*** If a U.S. person is required to file a notice (or otherwise comply) under paragraph (b) of this section and fails to comply with the applicable requirements of section 6038B and this section, then with respect to the particular property as to which there was a failure to comply—

(i) The U.S. person shall pay a penalty under section 6038B(b)(1) equal to 10 percent of the fair market value of the transferred property at the time of the exchange, but in no event shall the penalty exceed $100,000 unless the failure with respect to such exchange was due to intentional disregard (described under paragraph (g)(4) of this section); and

(ii) The period of limitations on assessment of tax upon the transfer of that property does not expire before the date which is 3 years after the date on which the Secretary is furnished the information required to be reported under this section. See section 6501(c)(8) and any regulations thereunder.

(2) ***Failure to comply.*** A failure to comply with the requirements of section 6038B is—

(i) The failure to report at the proper time and in the proper manner any material information required to be reported under the rules of this section; or

(ii) The provision of false or inaccurate information in purported compliance with the requirements of this section. Thus, a transferor that timely files Form 926 with the attachments required under the rules of this section shall, nevertheless, have failed to comply if, for example, the transferor reports therein that property will be used in the active conduct of a trade or business outside of the United States, but in fact the property continues to be used in a trade or business within the United States.

(iii) With respect to an initial gain recognition agreement filed under § 1.367(a)-8, a failure to comply as determined under § 1.367(a)-8(j)(8), but for purposes of this section, determined without regard to the application of § 1.367(a)-8(p).

(iv) With respect to an initial liquidation document filed under § 1.367(e)-2(b)(2), a failure to comply as determined under § 1.367(e)-2(e)(4)(i), but for purposes of this section, determined without regard to the application of § 1.367(e)-2(f).

(3) ***Reasonable cause for failure to comply*** —

(i) ***Request for relief.*** If the U.S. transferor fails to comply with any requirement of section 6038B and this section, the failure shall be deemed not to have occurred if the U.S. transferor is able to demonstrate that the failure was due to reasonable cause and not willful neglect using the procedure set forth in paragraph (f)(3)(ii) of this section. Whether the failure to timely comply was due to reasonable cause and not willful neglect will be determined by the Director of Field Operations, Cross Border Activities Practice Area of Large Business & International (Director) based on all the facts and circumstances.

(ii) ***Procedures for establishing that a failure to timely comply was due to reasonable cause and not willful neglect*** —

(A) ***Time of submission.*** A U.S. transferor's statement that the failure to timely comply was due to reasonable cause and not willful neglect will be considered only if, promptly after the U.S. transferor becomes aware of the failure, an amended return is filed for the taxable year to which the failure relates that includes the information that should have been included with the original return for such taxable year or that otherwise complies with the rules of this section, and that includes a written statement explaining the reasons for the failure to timely comply.

(B) ***Notice requirement.*** In addition to the requirements of paragraph (f)(3)(ii)(A) of this section, the U.S. transferor must comply with the notice requirements of this paragraph (f)(3)(ii)(B). If any taxable year of the U.S. transferor is under examination when the amended return is filed, a copy of the amended return and any information required to be included with such return must be delivered to the Internal Revenue Service personnel conducting the examination. If no taxable year of the U.S. transferor is under examination when the amended return is filed, a copy of the amended return and any information required to be included with such return must be delivered to the Director.

(4) ***Definition of intentional disregard.*** If the transferor fails to qualify for the exception under paragraph (f)(3) of this section and if the taxpayer knew of the rule or regulation that was disregarded, the failure will be considered an intentional disregard of section 6038B, and the monetary penalty under paragraph (f)(1)(ii) of this section will not be limited to $100,000. See § 1.6662-3(b)(2).

(g) ***Effective/applicability dates.***

(1) This section applies to transfers occurring on or after July 20, 1998, except as provided in paragraphs (g)(2) through (g)(7) of this section, and except for transfers of cash made in tax years beginning on or before February 5, 1999 (which are not required to be reported under section 6038B), and transfers described in paragraph (e) of this section (which applies to transfers that are subject to §§ 1.367(e)-1(f) and 1.367(e)-2(e)). See § 1.6038B-1T for transfers occurring prior to July 20, 1998. See also § 1.6038B-1T(e) in effect prior to August 9, 1999 (as contained in 26 CFR part 1 revised April 1, 1999), for transfers described in section 367(e) that are not subject to §§ 1.367(e)-1(f) and 1.367(e)-2(e).

(2) The rules of paragraph (b)(1)(i) of this section as they apply to section 368(a)(1)(A) reorganizations (including reorganizations described in section 368(a)(2)(D) or (E)) apply to transfers occurring on or after January 23, 2006.

(3) The rules of paragraph (b)(1)(i) of this section that provide an exception from reporting under section 6038B for transfers of stock or securities in a section 354 or 356 exchange, pursuant to a section 368(a)(1)(G) reorganization that is not treated as an indirect stock transfer under § 1.367(a)-3(d), apply to transfers occurring on or after January 23, 2006.

(4) The rules of paragraph (b)(1)(i) of this section that provide an exception from reporting under section 6038B for transfers of stock in a section 354 or 356 exchange, pursuant to a section 368(a)(1)(E) reorganization or an asset reorganization under section 368(a)(1) that is not treated as an indirect stock transfer under § 1.367(a)-3(d), apply to transfers occurring on or after January 23, 2006. The rules of paragraph (b)(1)(i) of this section that provide an exception from reporting under section 6038B for transfers of securities in a section 354 or 356 exchange, pursuant to a section 368(a)(1)(E) reorganization or an asset reorganization under section 368(a)(1) that is not treated as an indirect stock transfer under § 1.367(a)-3(d), apply only to transfers occurring after January 5, 2005 (although taxpayers may apply such provision to transfers of securities occurring on or after July 20, 1998 and on or before January 5, 2005 if done consistently to all transactions). See § 1.6038-1T(b)(i), as contained in 26 CFR part 1 revised as of April 1, 2005, for transfers occurring prior to the effective dates described in paragraphs (g)(2) through (4) of this section.

(5) Paragraphs (c)(6) and (f)(3) of this section apply to transfers occurring on or after April 18, 2013. For guidance with respect to paragraphs (c)(6) and (f)(3) of this section before April 18, 2013, see 26 CFR part 1 revised as of April 1, 2012.

(6) The second sentence of paragraph (b)(1)(i) and paragraphs (b)(2)(i)(B)(*1*), (b)(2)(iii), (b)(2)(iv), (c), (e)(4), (f)(2)(iii), and (f)(2)(iv) of this section will apply to transfers for which documents are required to be filed on or after November 19, 2014, as well as to transfers that are the subject of requests for relief submitted on or after November 19, 2014. The second sentence of paragraph (b)(1)(i) and paragraphs (b)(2)(i)(B)(*1*), (b)(2)(iii), (b)(2)(iv), (c), and (f)(2)(iii) of this section will also apply to any transfer that is the subject of a request for relief submitted pursuant to § 1.367(a)-8(r)(3).

(7) Paragraphs (c)(4)(i) through (vii), (c)(5), and (d)(1)(iv) and (vii) of this section apply to transfers occurring on or after September 14, 2015, and to transfers occurring before September 14, 2015, resulting from entity classification elections made under § 301.7701-3 that are filed on or after September 14, 2015. For guidance with respect to paragraphs (c)(4), (c)(5), and (d)(1) of this section before this section is applicable, see §§ 1.6038B-1 and 1.6038B-1T as contained in 26 CFR part 1 revised as of April 1, 2016.

(8) Paragraphs (d)(2)(iii) introductory text and (d)(2)(iv) of this section apply to transfers occurring on or after October 10, 2024.

[T.D. 8770, 63 FR 33568, June 19, 1998]

Editorial Note: For FEDERAL REGISTER citations affecting § 1.6038B-1, see the List of CFR Sections Affected, which appears in the Finding Aids section of the printed volume and at *www.govinfo.gov*.

§ 1.6038B-1T Reporting of certain transactions to foreign corporations (temporary).

(a) through (b) (3) [Reserved]. For further guidance, see § 1.6038B-1(a) through (b)(3).

(4) ***Date of transfer*** —

(i) ***In general.*** For purposes of this section, the date of a transfer described in section 367 is the first date on which title to, possession of, or rights to the use of stock, securities, or other property passes pursuant to the plan for purposes of subtitle A of the Internal Revenue Code. A transfer will not be considered to begin with a decision of a board of directors or similar action unless the transaction otherwise takes effect for purposes of subtitle A of the Internal Revenue Code on that date.

(ii) ***Termination of section 1504(d) election.*** A transfer deemed to occur as a result of the termination of an election under section 1504(d) will be considered to occur on the date the contiguous country corporation first fails to continue to qualify for the election under section 1504(d). The rule of this paragraph (b)(3)(ii) is illustrated by the following example.

Example. Domestic corporation W previously made a valid election under section 1504(d) to have its Mexican subsidiary S treated as a domestic corporation. On August 1, 1986, W disposes of its right, title, and interest in 10 percent of the stock of S by selling such stock to an unrelated United States person who is not a director of S. S first fails to continue to qualify for the election under section 1504(d) on August 1, 1986, since on such date it ceases to be directly or indirectly wholly owned or controlled by W. The constructive transfer of assets from “domestic” corporation S to Mexican corporation S is considered to occur on that date.

(iii) ***Change in classification.*** A transfer deemed to occur as a result of a change in classification of an entity caused by a change in the governing documents, articles, or agreements of the entity (as described in § 1.367(a)-1T(c)(6)) will be considered to occur on the date that such changes take effect for purposes of subtitle A of the Internal Revenue Code.

(iv) ***U.S. resident under section 6013 (g) or (h).*** A transfer made by an alien individual who is considered to be a U.S. resident by reason of a timely election under section 6013 (g) or (h) will be considered to occur, for purposes of this section (but not for purposes of section 367), on the later of—

(A) The date on which the election under section 6013 (g) or (h) is made; or

(B) The date on which the transfer would otherwise be considered to occur under the rules of this paragraph (b)(3).

The rule of this paragraph (b)(3)(iv) is illustrated by the following example.

Example. D is a nonresident alien individual who is married to a United States citizen. On March 1, 1986, D transfers property to a foreign corporation in an exchange described in section 351. On April 15, 1987, D and the spouse timely file with their tax return for the taxable year ended December 31,

1986, an election under section 6013(g) for D to be treated as a United States resident. The election is effective on January 1, 1986. For purposes of section 6038 B, the transfer described in section 367(a) made by D in connection with the section 351 exchange is considered to occur on April 15, 1987, the date on which the timely election was made under section 6013(g).

(c) Introductory text [Reserved]. For further guidance, see § 1.6038B-1(c).

(1) ***Transferor.*** Provide the name, U.S. taxpayer identification number, and address of the U.S. person making the transfer.

(2) ***Transfer.*** Provide the following information concerning the transfer:

(i) Name, U.S. taxpayer identification number (if any), address, and country of incorporation of transferee foreign corporation;

(ii) A general description of the transfer, and any wider transaction of which it forms a part, including a chronology of the transfers involved and an identification of the other parties to the transaction to the extent known.

(3) ***Consideration received.*** Provide a description of the consideration received by the U.S. person making the transfer, including its estimated fair market value and, in the case of stock or securities, the class or type, amount, and characteristics of the interest received.

(4) ***Property transferred.*** Provide a description of the property transferred. The description must be divided into the following categories, and must include the estimated fair market value and adjusted basis of the property, as well as any additional information specified below.

(i) through (c) (5) introductory text [Reserved]

(i) ***Branch operation.*** Describe the foreign branch the property of which is transferred, in accordance with the definition of § 1.367(a)-6T(g).

(ii) ***Branch property.*** Describe the property of the foreign branch, including its adjusted basis and fair market value. For this purpose property must be identified with reasonable particularity, but may be identified by category rather than listing every asset separately. Substantially similar property may be listed together for this purpose, and property of minor value may be grouped into functional categories. For example, a reasonable description of the property of a business office might include the following categories: Word processing or data processing equipment, other office equipment and furniture, and office supplies.

(iii) ***Previously deducted losses.*** Set forth a detailed calculation of the sum of the losses incurred by the foreign branch before the transfer, and a detailed calculation of any reduction of such losses, in accordance with § 1.367(a)-6T (d) and (e).

(iv) ***Character of gain.*** Set forth a statement of the character of the gain required to be recognized, in accordance with § 1.367(a)-6T(c)(1).

(6) [Reserved]. For further guidance, see § 1.6038B-1(c)(6).

(d) ***Transfers subject to section 367(d)*** —

(1) ***Initial transfer.*** A U.S. person that transfers inntangible property to a foreign corporation in an exchange described in section 351 or 361 must provide the following information in paragraphs labelled to correspond with the number or letter set forth below. If a particular item is not applicable to the subject transfer, list its heading and state that it is not applicable. The information required by

subdivisions (i) through (iii) need only be provided if such information was not otherwise provided under paragraph (c) of this section. (Note that the U.S. transferor may subsequently be required to file another return under paragraph (d)(2) of this section.)

(i) ***Transferor.*** Provide the name, U.S. taxpayer identification number, and address of the U.S. person making the transfer.

(ii) ***Transfer.*** Provide information concerning the transfer, including:

(A) Name, U.S. taxpayer identification number (if any), address, and country of incorporation of the transferee foreign corporation;

(B) A general description of the transfer, and any wider transaction of which it forms a part, including a chronology of the transfers involved and an identification of the other parties to the transaction to the extent known.

(iii) ***Consideration received.*** Provide a description of the consideration received by the U.S. person making the transfer, including its estimated fair market value and, in the case of stock or securities, the class or type, amount, and characteristics of the interest received.

(iv) [Reserved]

(v) ***Annual payment.*** Provide and explain the calculation of the annual deemed payment for the use of the intangible property required to be recognized by the transferor under the rules of section 367(d).

(vi) ***Election to treat as sale.*** List any intangible with respect to which an election is being made under § 1.367(d)-1T(g)(2) to treat the transfer as a sale. Include the fair market value of the intangible on the date of the transfer and a calculation of the gain required to be recognized in the year of the transfer by reason of the election.

(vii) [Reserved]

(viii) ***Other intangibles.*** Describe any intangible property sold or licensed by the transferor to the transferee foreign corporation, and set forth the general terms of each sale or license.

(2) ***Subsequent transfers.*** If a U.S. person transfers intangible property to a foreign corporation in an exchange described in section 351 or 361, and at any time thereafter (within the useful life of the intangible property) either that U.S. person disposes of the stock of the transferee foreign corporation or the transferee foreign corporation disposes of the transferred intangible, then the U.S. person must provide the following information in paragraphs labelled to correspond with the number or letter set forth below. The information required by subdivisions (i) and (ii) need only be provided if such information was not otherwise provided in the same return, pursuant to paragraph (c) or (d)(1) of this section. For purposes of determining the date on which a return under this subparagraph (2) is required to be filed, the date of transfer is the date of the subsequent transfer of stock or intangible property.

(i) ***Transferor.*** Provide the name, U.S. taxpayer identification number, and address of the U.S. person making the transfer.

(ii) ***Initial transfer.*** Provide the following information concerning the initial transfer:

(A) The date of the transfer;

(B) The name, U.S. taxpayer identification number (if any), address, and country of incorporation of the transferee foreign corporation; and

(C) A general description of the transfer and any wider transaction of which it formed a part.

(iii) ***Subsequent transfer.*** For further guidance, see § 1.6038B-1T(d)(2)(iii) introductory text:

(A) A general description of the subsequent transfer and any wider transaction of which it forms a part;

(B) A calculation of any gain required to be recognized by the U.S. person under the rules of § 1.367(d)-1T (d) through (f); and

(C) The name, address, and identifying number of each person that under the rules of § 1.367(d)-1T (e) or (f) will be considered to receive contingent annual payments for the use of the intangible property.

(e) [Reserved]. For further guidance, see § 1.6038B-1(e).

(f)

(1) through(f)(3) [Reserved] For further guidance, see § 1.6038B-1(f)(1) through (f)

(2) .

(f) (4) [Reserved] For further guidance, see § 1.6038B-1T(f)(4).

(g) ***Effective date.*** This section applies to transfers occurring after December 31, 1984. See § 1.6038B-1T(a) through (b)(2), (c) introductory text, and (f) (26 CFR part 1, revised April 1, 1998) for transfers occurring prior to July 20, 1998. See § 1.6038B-1 for transfers occurring on or after July 20, 1998.

[T.D. 8087, 51 FR 17957, May 16, 1986, as amended by T.D. 8682, 61 FR 42177, Aug. 14, 1996; T.D. 8770, 63 FR 33570, June 19, 1998; T.D. 8834, 64 FR 43083, Aug. 9, 1999; T.D. 9100, 68 FR 70708, Dec. 19, 2003; 69 FR 5017, Feb. 3, 2004; T.D. 9243, 71 FR 4294, Jan. 26, 2006; T.D. 9300, 71 FR 71045, Dec. 8, 2006; T.D. 9615, 78 FR 17064, Mar. 19, 2013; T.D. 9760, 81 FR 15169, Mar. 22, 2016; T.D. 9803, 81 FR 91032, Dec. 16, 2016; T.D. 9994, 89 FR 82170, Oct. 10, 2024]

§ 1.6038B-2 Reporting of certain transfers to foreign partnerships.

(a) ***Reporting requirements*** —

(1) ***Requirement to report transfers.*** A United States person that transfers property to a foreign partnership in a contribution described in section 721 (including section 721(b)) must report that transfer on Form 8865 “Information Return of U.S. Persons With Respect to Certain Foreign Partnerships” pursuant to section 6038B and the rules of this section, if—

(i) Immediately after the transfer, the United States person owns, directly, indirectly, or by attribution, at least a 10-percent interest in the partnership, as defined in section 6038(e)(3)(C) and the regulations thereunder;

(ii) The value of the property transferred, when added to the value of any other property transferred in a section 721 contribution by such person (or any related person) to the partnership during the 12-month period ending on the date of the transfer, exceeds $100,000; or

(iii) The United States person is a U.S. transferor (as defined in § 1.721(c)-1(b)(18)) that makes a gain deferral contribution and is required to report under § 1.721(c)-6(b)(2). The reporting required under this paragraph (a) includes the annual reporting required by § 1.721(c)-6(b)(3). For purposes of applying this paragraph (a)(1)(iii) to partnerships formed on or after January 18, 2017, a domestic partnership is treated as a foreign partnership pursuant to section 7701(a)(4).

(2) ***Indirect transfer through a domestic partnership*** —For purposes of this section, if a domestic partnership transfers property to a foreign partnership in a section 721 transaction, the domestic partnership's partners shall be considered to have transferred a proportionate share of the property to the foreign partnership. However, if the domestic partnership properly reports all of the information required under this section with respect to the contribution, no partner of the transferor partnership, whether direct or indirect (through tiers of partnerships), is also required to report under this section. For illustrations of this rule, see *Examples 4* and *5* of paragraph (a)(7) of this section.

(3) ***Indirect transfer through a foreign partnership.*** Solely for purposes of this section, if a foreign partnership transfers section 721(c) property (as defined in § 1.721(c)-1(b)(15)) to another foreign partnership in a transfer described in § 1.721(c)-3(d) (tiered-partnership rules), then the transferor foreign partnership's partners will be considered to have transferred a proportionate share of the property to the foreign partnership.

(4) ***Requirement to report dispositions*** —

(i) ***In general.*** If a United States person was required to report a transfer to a foreign partnership of appreciated property under paragraph (a)(1) or (2) of this section, and the foreign partnership disposes of the property while such United States person remains a direct or indirect partner, that United States person must report the disposition by filing Form 8865. The form must be attached to, and filed by the due date (including extensions) of, the United States person's income tax return for the year in which the disposition occurred.

(ii) ***Disposition of contributed property in nonrecognition transaction.*** If a foreign partnership disposes of contributed appreciated property in a nonrecognition transaction and substituted basis property is received in exchange, and the substituted basis property has built-in gain under § 1.704-3(a)(8), the original transferor is not required to report the disposition. However, the transferor must report the disposition of the substituted basis property in the same manner as provided for the contributed property.

(5) ***Time for filing Form 8865.*** The Form 8865 on which a transfer is reported must be attached to the transferor's timely filed (including extensions) income tax return for the tax year that includes the date of the transfer. If the person required to report under this section is not required to file an income tax return for its tax year during which the transfer occurred, but is required to file an information return for that year (for example, Form 1065, “U.S. Partnership Return of Income,” or Form 990, “Return of Organization Exempt from Income Tax”), the person should attach the Form 8865 to its information return.

(6) ***Returns to be made*** —

(i) ***Separate returns for each partnership.*** If a United States person transfers property reportable under this section to more than one foreign partnership in a taxable year, the United States person must submit a separate Form 8865 for each partnership.

(ii) ***Duplicate form to be filed.*** If required by the instructions accompanying Form 8865, a duplicate Form 8865 (including attachments and schedules) must also be filed by the due date for submitting the original Form 8865 under paragraph (a)(5)(i) or (ii) of this section, as applicable.

(7) ***Examples.*** The application of this paragraph (a) may be illustrated by the following examples:

Example 1. On November 1, 2001, *US,* a United States person that uses the calendar year as its taxable year, contributes $200,000 to *FP,* a foreign partnership, in a transaction subject to section 721. After the contribution, *US* owns a 5% interest in *FP. US* must report the contribution by filing Form 8865 for its taxable year ending December 31, 2001. On March 1, 2002, *US* makes a $40,000 section 721 contribution to *FP,* after which *US* owns a 6% interest in *FP. US* must report the $40,000 contribution by filing Form 8865 for its taxable year ending December 31, 2002, because the contribution, when added to the value of the other property contributed by *US* to *FP* during the 12-month period ending on the date of the transfer, exceeds $100,000.

Example 2. F, a nonresident alien, is the brother of *US,* a United States person. *F* owns a 15% interest in *FP,* a foreign partnership. *US* contributes $99,000 to *FP,* in exchange for a 1-percent partnership interest. Under sections 6038(e)(3)(C) and 267(c)(2), *US* is considered to own at least a 10-percent interest in *FP* and, therefore, *US* must report the $99,000 contribution under this section.

Example 3. US, a United States person, owns 40 percent of *FC,* a foreign corporation. *FC* owns a 20-percent interest in *FP,* a foreign partnership. Under section 267(c)(1), *US* is considered to own 8 percent of *FP* due to its ownership of *FC. US* contributes $50,000 to *FP* in exchange for a 5-percent partnership interest. Immediately after the contribution, *US* is considered to own at least a 10-percent interest in *FP* and, therefore, must report the $50,000 contribution under this section.

Example 4. US, a United States person, owns a 60-percent interest in *USP,* a domestic partnership. On March 1, 2001, *USP* contributes $200,000 to *FP,* a foreign partnership, in exchange for a 5-percent partnership interest. Under paragraph (a)(2) of this section, *US* is considered as having contributed $120,000 to *FP* ($200,000 × 60%). However, under paragraph (a)(2), if *USP* properly reports the contribution to *FP, US* is not required to report its $120,000 contribution. If *US* directly contributes $5,000 to *FP* on June 10, 2001, *US* must report the $5,000 contribution because *US* is considered to have contributed more than $100,000 to *FP* in the 12-month period ending on the date of the $5,000 contribution.

Example 5. US, a United States person, owns an 80-percent interest in *USP,* a domestic partnership. *USP* owns an 80-percent interest in *USP1,* a domestic partnership. On March 1, 2001, *USP1* contributes $200,000 to *FP,* a foreign partnership, in exchange for a 3-percent partnership interest. Under paragraph (a)(2) of this section, *USP* is considered to have contributed $160,000 ($200,000 × 80%) to *FP. US* is considered to have contributed $128,000 to *FP* ($200,000 × 80% × 80%). However, if *USP1* reports the transfer of the $200,000 to *FP,* neither *US* nor *USP* are required to report under this section the amounts they are considered to have contributed. Additionally, regardless of whether *USP1* reports the $200,000 contribution, if *USP* reports the $160,000 contribution it is considered to have made, *US* does not have to report under this section the $128,000 contribution *US* is considered to have made.

(b) ***Transfers by trusts relating to state and local government employee retirement plans.*** Trusts relating to state and local government employee retirement plans are not required to report transfers under this section, unless otherwise specified in the instructions to Form 8865.

(c) ***Information required with respect to transfers of property.*** With respect to transfers required to be reported under paragraph (a)(1) or (2) of this section, the return must contain information in such form or manner as Form 8865 (and its accompanying instructions) prescribes with respect to reportable events, including—

(1) The name, address, and U.S. taxpayer identification number of the United States person making the transfer;

(2) The name, U.S. taxpayer identification number (if any), and address of the transferee foreign partnership, and the type of entity and country under whose laws the partnership was created or organized;

(3) A general description of the transfer, and of any wider transaction of which it forms a part, including the date of transfer;

(4) The names and addresses of the other partners in the foreign partnership, unless the transfer is solely of cash and the transferor holds less than a ten-percent interest in the transferee foreign partnership immediately after the transfer. However, for tax years of U.S. persons beginning on or after January 1, 2000, the person reporting pursuant to section 6038B (the transferor) must provide the names and addresses of each United States person that owned a ten-percent or greater direct interest in the foreign partnership during the transferor's tax year in which the transfer occurred, and the names and addresses of any other United States or foreign persons that were direct partners in the foreign partnership during that tax year and that were related to the transferor during that tax year. See paragraph (i)(4) of this section for the definition of a related person;

(5) A description of the partnership interest received by the United States person, including a change in partnership interest;

(6) A separate description of each item of contributed property that is appreciated property subject to the allocation rules of section 704(c) (except to the extent that the property is permitted to be aggregated in making allocations under section 704(c)), or is intangible property, including its estimated fair market value and adjusted basis;

(7) A description of other contributed property, not specified in paragraph (c)(6) of this section, aggregated by the following categories (with, in each case, a brief description of the property)—

(i) Stock in trade of the transferor (inventory);

(ii) Tangible property (other than stock in trade) used in a trade or business of the transferor;

(iii) Cash;

(iv) Stock, notes receivable and payable, and other securities; and

(v) Other property;

(8) With respect to reporting required under § 1.721(c)-6(b)(2) and paragraph (a)(1)(iii) of this section with regard to a gain deferral contribution, the information required by § 1.721(c)-6(b)(2); and

(9) With respect to section 721(c) property for which reporting is required under § 1.721(c)-6(b)(3) and paragraph (a)(1)(iii) of this section, the information required by § 1.721(c)-6(b)(3).

(d) ***Information required with respect to dispositions of property.*** In respect of dispositions required to be reported under paragraph (a)(4) of this section, the return must contain information in such form or manner as Form 8865 (and its accompanying instructions) prescribes with respect to reportable events, including—

(1) The date and manner of disposition;

(2) The gain and depreciation recapture amounts, if any, realized by the partnership; and

(3) Any such amounts allocated to the United States person.

(e) ***Method of reporting.*** Except as otherwise provided on Form 8865, or the accompanying instructions, all amounts reported as required under this section must be expressed in United States currency, with a statement of the exchange rates used. All statements required on or with Form 8865 pursuant to this section must be in the English language.

(f) ***Reporting under this section not required of partnerships excluded from the application of subchapter K*** —

(1) ***Election to be wholly excluded.*** The reporting requirements of this section will not apply to any United States person in respect of an eligible partnership as described in § 1.761-2(a), if such partnership has validly elected to be excluded from all of the provisions of subchapter K of chapter 1 of the Internal Revenue Code in the manner specified in § 1.761-2(b)(2)(i).

(2) ***Deemed excluded.*** The reporting requirements of this section will not apply to any United States person in respect of an eligible partnership as described in § 1.761-2(a), if such partnership is validly deemed to have elected to be excluded from all of the provisions of subchapter K of chapter 1 of the Internal Revenue Code in accordance with the provisions of § 1.761-2(b)(2)(ii).

(g) ***Deemed contributions.*** Deemed contributions resulting from IRS-initiated section 482 adjustments are not required to be reported under section 6038B. However, taxpayers must report deemed contributions resulting from taxpayer-initiated adjustments. Such information will be furnished timely if filed by the due date, including extensions, for filing the taxpayer's income tax return for the year in which the adjustment is made.

(h) ***Failure to comply with reporting requirements*** —

(1) ***Consequences of a failure.*** If a United States person is required to file a return under paragraph (a) of this section and fails to comply with the reporting requirements of section 6038B and this section, or § 1.721(c)-6, then that person is subject to the following penalties:

(i) The United States person is subject to a penalty equal to 10 percent of the fair market value of the property at the time of the contribution. Such penalty with respect to a particular transfer is limited to $100,000, unless the failure to comply with respect to such transfer was due to intentional disregard.

(ii) The United States person must recognize gain (reduced by the amount of any gain recognized, with respect to that property, by the transferor after the transfer) as if the contributed property had been sold for fair market value at the time of the contribution. Adjustments to the basis of the partnership's assets and any relevant partner's interest as a result of gain being recognized under this provision will be made as though the gain was recognized in the year in which the failure to report was finally determined.

(2) ***Failure to comply.*** A failure to comply with the requirements of section 6038B includes—

(i) The failure to report at the proper time and in the proper manner any information required to be reported under the rules of this section; and

(ii) The provision of false or inaccurate information in purported compliance with the requirements of this section.

(3) ***Reasonable cause exception.*** Under section 6038B(c)(2) and this section, the provisions of paragraph (h)(1) of this section will not apply if the United States person shows, in a timely manner, that a failure to comply was due to reasonable cause and not willful neglect. A United States person's statement that the failure to comply was due to reasonable cause and not willful neglect will be considered timely only if, promptly after the United States person becomes aware of the failure, an amended return is filed for the taxable year to which the failure relates that includes the information that should have been included with the original return for such taxable year or that otherwise complies with the rules of this section, and that includes a written statement explaining the reasons for the failure to comply. If any taxable year of the United States person is under examination when the amended return is filed, a copy of the amended return must be delivered to the Internal Revenue Service personnel conducting the examination when the amended return is filed. If no taxable year of the United States person is under examination when the amended return is filed, a copy of the amended return must be delivered to the Director of Field Operations, Cross Border Activities Practice Area of Large Business & International (or any successor to the roles and responsibilities of such position, as appropriate) (Director). Whether a failure to comply was due to reasonable cause and not willful neglect will be determined by the Director under all the facts and circumstances.

(4) ***Statute of limitations.*** For exceptions to the limitations on assessment in the event of a failure to provide information under section 6038B, see section 6501(c)(8).

(i) ***Definitions*** —

(1) ***Appreciated property.*** Appreciated property is property that has a fair market value in excess of basis.

(2) ***Domestic partnership.*** A domestic partnership is a partnership described in section 7701(a)(4).

(3) ***Foreign partnership.*** A foreign partnership is a partnership described in section 7701(a)(5).

(4) ***Related person.*** Persons are related persons if they bear a relationship described in section 267(b)(1) through (3) or (10) through (12), after application of section 267(c) (except for (c)(3)), or in section 707(b)(1)(B).

(5) ***Substituted basis property.*** Substituted basis property is property described in section 7701(a)(42).

(6) ***Taxpayer-initiated adjustment.*** A taxpayer-initiated adjustment is a section 482 adjustment that is made by the taxpayer pursuant to § 1.482-1(a)(3).

(7) ***United States person.*** A United States person is a person described in section 7701(a)(30).

(j) ***Effective dates*** —

(1) ***In general.*** Except as otherwise provided in this section, this section applies to transfers made on or after January 1, 1998. However, for a transfer made on or after January 1, 1998, but before January 1, 1999, the filing requirements of this section may be satisfied by—

(i) Filing a Form 8865 with the taxpayer's income tax return (including a partnership return of income) for the first taxable year beginning on or after January 1, 1999; or

(ii) Filing a Form 926 (modified to reflect that the transferee is a partnership, not a corporation) with the taxpayer's income tax return (including a partnership return of income) for the taxable year in which the transfer occurred.

(2) ***Transfers made between August 5, 1997 and January 1, 1998.*** A United States person that made a transfer of property between August 5, 1997, and January 1, 1998, that is required to be reported under section 6038B may satisfy its reporting requirement by reporting in accordance with the provisions of this section or in accordance with the provisions of Notice 98-17 (1998-11 IRB 6)(see § 601.601(d)(2) of this chapter).

(3) ***Special rule for transfers made before January 1, 2000.*** Even if not reported in accordance with the rules provided in paragraph (a)(5) of this section, or paragraph (j) (1) or (2) of this section, a transfer that occurred before January 1, 2000 will nevertheless be considered timely reported if the transferor reports it on a Form 8865 attached to an amended tax return for the transferor's tax year in which the transfer occurred, provided such amended return is filed no later than September 15, 2000.

(4) ***Transfers of section 721(c) property.*** Paragraph (c)(8) of this section applies to transfers occurring on or after August 6, 2015, and to transfers that occurred before August 6, 2015 resulting from an entity classification election made under § 301.7701-3 of this chapter that was effective on or before August 6, 2015 but was filed on or after August 6, 2015. Paragraphs (a)(1)(iii), (a)(3), and (c)(9) of this section apply to transfers occurring on or after January 18, 2017, and to transfers that occurred before January 18, 2017 resulting from entity classification elections made under § 301.7701-3 of this chapter that were effective on or before January 18, 2017 but were filed on or after January 18, 2017.

(5) ***Reasonable cause exception.*** Paragraph (h)(3) of this section applies to all requests for relief for transfers of property to partnerships filed on or after January 18, 2017.

[T.D. 8817, 64 FR 5715, Feb. 5, 1999; 64 FR 15686, Apr. 1, 1999; T.D. 8850, 64 FR 72554, Dec. 28, 1999, as amended by T.D. 9814, 82 FR 7610, Jan. 19, 2017; T.D. 9891, 85 FR 3851, Jan. 23, 2020]

§ 1.6038D-0 Outline of regulation provisions.

This section lists the table of contents for §§ 1.6038D-1 through 1.6038D-8.

§ 1.6038D-1 Reporting with respect to specified foreign financial assets, definition of terms.

(a) In general.

(1) Specified person.

(2) Specified individual.

(3) Resident alien.

(4) Bona fide resident of a U.S. possession.

(5) U.S. possession.

(6) Specified foreign financial asset.

(7) Financial account.

(8) Financial institution.

(9) Foreign financial institution.

(10) Foreign entity.

(11) Annual return.

(12) Specified domestic entity.

(13) Model 1 IGA and Model 2 IGA.

(b) Effective/applicability dates.

(1) In general.

(2) Financial accounts.

§ 1.6038D-2 Requirement to report specified foreign financial assets.

(a) Reporting requirement.

(1) In general.

(2) Special rule for married specified individuals filing a joint annual return.

(3) Special rule for certain specified individuals living abroad.

(4) Special rule for married specified individuals filing a joint annual return and living abroad.

(5) Assets with no positive value.

(6) Aggregate value calculation in case of specified foreign financial asset excluded from reporting.

(i) Specified individual.

(ii) Specified domestic entity.

(7) Form 8938 filed with annual return.

(i) General rule.

(ii) Consolidated returns.

(8) Reporting required regardless of tax result.

(9) Reporting period.

(10) Successor forms.

(b) Interest in a specified foreign financial asset.

(1) In general.

(2) Property transferred in connection with the performance of services.

(3) Special rule for parent making an election under section 1(g)(7).

(4) Entities.

(i) In general.

(ii) Specified foreign financial assets held by certain trusts.

(iii) Specified foreign financial assets held by a disregarded entity.

(iv) Interest in a foreign trust or foreign estate.

(c) Special rules for joint interests.

(1) In general.

(i) Determining aggregate value of assets.

(ii) Reporting maximum value.

(2) Aggregate asset value for married specified individuals filing a joint annual return.

(3) Aggregate asset value for married specified individuals filing a separate annual return.

(i) Both spouses are specified individuals.

(ii) One spouse is not a specified individual.

(d) Annual return filed by a married specified individual.

(1) Joint annual return.

(2) Separate annual return.

(e) Special rules for dual resident taxpayers.

(1) In general.

(2) Dual resident taxpayer filing as a nonresident alien at end of taxable year.

(3) Dual resident taxpayer filing as a resident alien at end of taxable year.

(f) Example.

(1) Facts.

(2) Filing requirement.

(i) Married specified individuals filing separate annual returns.

(ii) Married specified individuals filing a joint annual return.

(g) Effective/applicability dates.

§ 1.6038D-3 Specified foreign financial assets.

(a) Financial accounts.

(1) In general.

(2) Financial account in a U.S. possession.

(3) Excepted financial accounts.

(i) Accounts maintained by U.S. payors.

(ii) Mark-to-market election under section 475.

(b) Other specified foreign financial assets.

(1) In general.

(2) Mark-to-market election under section 475.

(3) Held for investment.

(4) Trade-or-business test.

(5) Direct relationship between holding an asset and a trade or business.

(i) In general.

(ii) Presumption of direct relationship.

(c) Special rule for interests in foreign trusts and foreign estates.

(d) Examples.

(e) Effective/applicability dates.

§ 1.6038D-4 Information required to be reported.

(a) Required information.

(b) Effective/applicability dates.

§ 1.6038D-5 Valuation guidelines.

(a) Fair market value.

(b) Valuation of assets.

(1) Maximum value.

(2) U.S. dollars.

(3) Asset with no positive value.

(c) Foreign currency conversion.

(1) In general.

(2) Other publicly available exchange rate.

(3) Currency exchange rate.

(4) Determination date.

(d) Financial accounts.

(e) Asset held in a financial account.

(f) Other specified foreign financial assets.

(1) General rule.

(2) Interests in trusts that are specified foreign financial assets.

(i) Maximum value.

(ii) Reporting threshold.

(3) Interests in estates, pension plans, and deferred compensation plans.

(i) Maximum value.

(ii) Reporting threshold.

(g) Effective/applicability dates.

§ 1.6038D-6 Specified domestic entities.

(a) Specified domestic entity.

(b) Corporations and partnerships.

(1) Formed or availed of.

(2) Closely held.

(i) Domestic corporation.

(ii) Domestic partnership.

(iii) Constructive ownership.

(3) Determination of passive income and assets.

(i) Definition of passive income.

(ii) Exception from passive income treatment for dealers.

(iii) Related entities.

(4) Examples.

(c) Domestic trusts.

(d) Excepted domestic entities.

(1) Certain persons described in section 1473(3).

(2) Certain domestic trusts.

(3) Domestic trusts owned by one or more specified persons.

(e) Effective/applicability dates.

§ 1.6038D-7 Exceptions from the reporting of certain assets under section 6038D.

(a) Elimination of duplicative reporting of assets.

(1) In general.

(2) Foreign grantor trusts.

(3) Joint Form 5471 or Form 8865 filing.

(b) Owner of certain trusts.

(c) Special rules for bona fide residents of a U.S. possession.

(d) Effective/applicability dates.

§ 1.6038D-8 Penalties for failure to disclose.

(a) In general.

(b) Married specified individuals filing a joint annual return.

(c) Increase in penalty.

(d) Presumption of aggregate value.

(e) Reasonable cause exception.

(1) In general.

(2) Affirmative showing required.

(3) Facts and circumstances taken into account.

(f) Penalties for underpayments attributable to undisclosed foreign financial assets.

(1) Accuracy related penalty.

(2) Criminal penalties.

(g) Effective/applicability dates.

[T.D. 9706, 79 FR 73824, Dec. 12, 2014, as amended by T.D. 9752, 81 FR 8838, Feb. 23, 2016]

§ 1.6038D-1 Reporting with respect to specified foreign financial assets, definition of terms.

(a) ***In general.*** The following definitions apply for purposes of section 6038D and the regulations—

(1) ***Specified person.*** The term *specified person* means a specified individual or a specified domestic entity.

(2) ***Specified individual.*** The term *specified individual* means an individual who is a—

(i) U.S. citizen;

(ii) Resident alien of the United States for any portion of the taxable year;

(iii) Nonresident alien for whom an election under section 6013(g) or (h) is in effect; or

(iv) Nonresident alien who is a bona fide resident of Puerto Rico or a section 931 possession (as defined in § 1.931-1(c)(1)).

(3) ***Resident alien.*** The term *resident alien* has the meaning set forth in section 7701(b) and §§ 301.7701(b)-1 through 301.7701(b)-9 of this chapter.

(4) ***Bona fide resident of a U.S. possession.*** The term *bona fide resident of a U.S. possession* means an individual who is a "bona fide resident" under section 937(a) and § 1.937-1.

(5) ***U.S. possession.*** The term *U.S. possession* means American Samoa, Guam, the Northern Mariana Islands, Puerto Rico, or the U.S. Virgin Islands.

(6) ***Specified foreign financial asset.*** The term *specified foreign financial asset* has the meaning set forth in § 1.6038D-3.

(7) ***Financial account.*** The term *financial account* has the meaning set forth in § 1.1471-5(b), provided, however, that the exclusions of retirement and pension accounts and non-retirement savings accounts under § 1.1471-5(b)(2)(i) and retirement and pension accounts, non-retirement savings accounts, and accounts satisfying similar conditions in an applicable Model 1 IGA or Model 2 IGA under § 1.1471-5(b)(2)(vi) shall not apply (see the section 6038D coordination rule in § 1.1471-5(b)(2)(i)(D)). See § 1.6038D-3(a)(2) relating to financial accounts maintained by a financial institution that is organized under the laws of a U.S. possession.

(8) ***Financial institution.*** The term *financial institution* has the meaning set forth in section 1471(d)(5) and the regulations thereunder.

(9) ***Foreign financial institution.*** The term *foreign financial institution* has the meaning set forth in § 1.1471-5(d).

(10) ***Foreign entity.*** The term *foreign entity* has the meaning set forth in § 1.1473-1(e).

(11) ***Annual return.*** The term *annual return* means an annual federal income tax return of a specified individual or an annual federal income tax return or information return of a specified domestic entity filed with the Internal Revenue Service under section 876, 6011, 6012, 6013, 6031, or 6037, and the regulations.

(12) ***Specified domestic entity.*** The term *specified domestic entity* has the meaning set forth in § 1.6038D-6.

(13) ***Model 1 IGA*** and *Model 2 IGA.* The terms *Model 1 IGA* and *Model 2 IGA* have the meanings set forth in § 1.1471-1(b)(78) and (79), respectively.

(b) ***Effective/applicability dates*** —

(1) ***In general.*** Except as otherwise provided in this paragraph (b), this section applies to taxable years ending after December 19, 2011. Taxpayers may elect to apply the rules of this section to taxable years ending prior to December 19, 2011.

(2) ***Financial accounts.*** For purposes of applying the financial account definition in § 1.6038D-1(a)(7), the treatment under § 1.1471-5(b)(2)(vi) of retirement and pension accounts, non-retirement savings accounts, and accounts satisfying similar conditions in an applicable Model 1 IGA or Model 2 IGA (see § 1.1471-1(b)(78) and (79)) as financial accounts for purposes of the reporting required under section 6038D and § 1.6038D-2(a) shall apply to taxable years beginning after *December 12, 2014.*

[T.D. 9706, 79 FR 73825, Dec. 12, 2014, as amended by T.D. 9752, 81 FR 8838, Feb. 23, 2016]

§ 1.6038D-2 Requirement to report specified foreign financial assets.

(a) ***Reporting requirement*** —

(1) ***In general.*** Except as otherwise provided, a specified person that has any interest in a specified foreign financial asset during the taxable year must attach Form 8938, "Statement of Specified Foreign Financial Assets," to that specified person's annual return for the taxable year to report the information required by section 6038D and § 1.6038D-4 if the aggregate value of all such assets exceeds—

(i) $50,000 on the last day of the taxable year; or

(ii) $75,000 at any time during the taxable year.

(2) ***Special rule for married specified individuals filing a joint annual return.*** Except as provided in paragraph (a)(4) of this section, married specified individuals who file a joint annual return for the taxable year must attach a single Form 8938 to their joint annual return for the taxable year to report the information required by section 6038D and § 1.6038D-4 if the aggregate value of all of the specified foreign financial assets in which either married specified individual has an interest exceeds—

(i) $100,000 on the last day of the taxable year; or

(ii) $150,000 at any time during the taxable year.

(3) ***Special rule for certain specified individuals living abroad.*** Except as provided in paragraph (a)(4) of this section, a specified individual who is a qualified individual under section 911(d)(1) for the taxable year must attach a Form 8938 to his or her annual return for the taxable year to report the information required by section 6038D and § 1.6038D-4 if the aggregate value of the specified foreign financial assets in which the specified individual has an interest exceeds—

(i) $200,000 on the last day of the taxable year; or

(ii) $300,000 at any time during the taxable year.

(4) ***Special rule for married specified individuals filing a joint annual return and living abroad.*** A specified individual who is a qualified individual under section 911(d)(1) for the taxable year and the qualified individual's spouse who file a joint annual return for the taxable year must attach a single Form 8938 to their return for the taxable year to report the information required by section 6038D and § 1.6038D-4 if the aggregate value of the all of the specified foreign financial assets in which either married individual has an interest exceeds—

(i) $400,000 on the last day of the taxable year; or

(ii) $600,000 at any time during the taxable year.

(5) ***Assets with no positive value.*** A specified foreign financial asset is subject to reporting even if the specified foreign financial asset does not have a positive value. See § 1.6038D-5(b)(3) to determine the maximum value of a specified foreign financial asset that does not have a positive value during the taxable year.

(6) ***Aggregate value calculation in case of specified foreign financial asset excluded from reporting*** —

(i) ***Specified individual.*** The value of any specified foreign financial asset in which a specified individual has an interest and that is excluded from reporting on Form 8938 pursuant to § 1.6038D-7(a) (concerning certain assets reported on another form) is included for purposes of determining the aggregate value of specified foreign financial assets. The value of any specified foreign financial asset in which a specified individual has an interest and that is excluded from reporting under § 1.6038D-7(b) (concerning assets held by certain domestic trusts) or § 1.6038D-7(c) (concerning certain assets owned by a bona fide resident of a U.S. possession) is excluded for purposes of determining the aggregate value of specified foreign financial assets.

(ii) ***Specified domestic entity.*** The value of any specified foreign financial asset in which a specified domestic entity has an interest and that is excluded from reporting on Form 8938 pursuant to § 1.6038D-7(a) (concerning certain assets reported on another form) is excluded for purposes of determining the aggregate value of specified foreign financial assets. For purposes of determining the aggregate value of specified foreign financial assets, a specified domestic entity that is a corporation or partnership and that has an interest in any specified foreign financial asset is treated as owning all the specified foreign financial assets (excluding specified foreign financial assets excluded from reporting on Form 8938 pursuant to § 1.6038D-7(a)) held by all domestic corporations and domestic partnerships that are closely held by the same specified individual as determined under § 1.6038D-6(b)(2).

(7) ***Form 8938 filed with annual return*** —

(i) ***General rule.*** A specified person, including a specified individual who is a bona fide resident of a U.S. possession, is not required to file Form 8938 with respect to a taxable year if the specified person is not required to file an annual return with the Internal Revenue Service with respect to such taxable year.

(ii) ***Consolidated returns.*** If a specified domestic entity is a member of an affiliated group of corporations that files a consolidated income tax return, the Form 8938 of the specified domestic entity must be filed with the affiliated group's annual return.

(8) ***Reporting required regardless of tax result.*** The Form 8938 required by section 6038D and this section must be furnished by a specified person even if none of the specified foreign financial assets that must be reported affect the specified person's tax liability under the Internal Revenue Code for the taxable year.

(9) ***Reporting period.*** The reporting period covered by Form 8938 is the specified person's taxable year, except the reporting period for a specified person that is a specified individual for less than an entire taxable year is the portion of the taxable year that the specified person is a specified individual.

(10) ***Successor forms.*** References to Form 8938 include any successor form.

(b) *Interest in a specified foreign financial asset* —

(1) ***In general.*** A specified person has an interest in a specified foreign financial asset if any income, gains, losses, deductions, credits, gross proceeds, or distributions attributable to the holding or disposition of the specified foreign financial asset are or would be required to be reported, included, or otherwise reflected by the specified person on an annual return. A specified person has an interest in a specified foreign financial asset even if no income, gains, losses, deductions, credits, gross proceeds, or distributions are attributable to the holding or disposition of the specified foreign financial asset for the taxable year.

(2) ***Property transferred in connection with the performance of services.*** A specified person that is transferred property in connection with the performance of personal services is first considered to have an interest in the property for purposes of section 6038D on the first date that the property is substantially vested (within the meaning of § 1.83-3(b)) or, in the case of property with respect to which a specified person makes a valid election under section 83(b), on the date of transfer of the property.

(3) ***Special rule for parent making election under section 1(g)(7).*** A parent who makes an election under section 1(g)(7) to include certain unearned income of a child in the parent's gross income has an interest in any specified foreign financial asset held by the child for the purposes of section 6038D and the regulations.

(4) *Entities* —

(i) ***In general.*** Except as provided in this paragraph (b)(4), a specified person is not treated as having an interest in any specified foreign financial assets held by a corporation, partnership, trust, or estate solely as a result of the specified person's status as a shareholder, partner, or beneficiary of such entity.

(ii) ***Specified foreign financial assets held by certain trusts.*** A specified person that is treated as the owner of a trust or any portion of a trust under sections 671 through 679, other than a domestic liquidating trust under § 301.7701-4(d) of this chapter created pursuant to a court order issued in a bankruptcy under Chapter 7 (11 U.S.C. 701 *et seq.*) or a confirmed plan under Chapter 11 (11 U.S.C. 1101 *et seq.*) of the Bankruptcy Code, or a domestic widely held fixed investment trust under § 1.671-5, is treated as having an interest in any specified foreign financial assets held by the trust or the portion of the trust.

(iii) ***Specified foreign financial assets held by a disregarded entity.*** A specified person that owns a foreign or domestic entity that is disregarded as an entity separate from its owner as described in § 301.7701-2 of this chapter (a disregarded entity) is treated as having an interest in any specified foreign financial assets held by the disregarded entity.

(iv) ***Interest in a foreign trust or foreign estate.*** See § 1.6038D-3(c) to determine whether an interest in a foreign trust or foreign estate is a specified foreign financial asset. See § 1.6038D-5(f) to determine the maximum value of an interest in a foreign trust or foreign estate.

(c) *Special rules for joint interests* —

(1) *In general* —

(i) ***Determining aggregate value of assets.*** Except as otherwise provided in this paragraph (c), each specified person that is a joint owner of a specified foreign financial asset (whether with a spouse or other person) must include the entire value of the specified foreign financial asset

(and not the value of the specified person's interest) for purposes of determining whether the aggregate value of the specified person's specified foreign financial assets exceeds the reporting thresholds set forth in § 1.6038D-2(a).

(ii) ***Reporting maximum value.*** Except as provided in paragraph (d) of this section, a specified person that is a joint owner of a specified foreign financial asset must report the entire value of each jointly owned specified foreign financial asset on Form 8938.

(2) ***Aggregate asset value for married specified individuals filing a joint annual return.*** Married specified individuals who file a joint annual return must include the value of each specified foreign financial asset that they jointly own or in which both have an interest under paragraph (b)(1) of this section only once in determining whether the aggregate value of all of the specified foreign financial assets in which either married specified individual has an interest exceeds the reporting thresholds set forth in § 1.6038D-2(a).

(3) ***Aggregate asset value for married specified individual filing a separate annual return*** —

(i) ***Both spouses are specified individuals.*** If a married specified individual files a separate annual return and his or her spouse is a specified individual, the married specified individual must include one-half of the value of a specified foreign financial asset that the married specified individual jointly owns with his or her spouse in determining whether the married specified individual has an interest in specified foreign financial assets the aggregate value of which exceeds the reporting thresholds set forth in § 1.6038D-2(a).

(ii) ***One spouse is not a specified individual.*** If a married specified individual files a separate annual return and his or her spouse is not a specified individual, the married specified individual must include the entire value of a specified foreign financial asset that the married specified individual jointly owns with his or her spouse in determining whether the married specified individual has an interest in specified foreign financial assets the aggregate value of which exceeds the reporting thresholds set forth in § 1.6038D-2(a).

(d) ***Annual return filed by a married specified individual*** —

(1) ***Joint annual return.*** Married specified individuals who file a joint annual return must file a single Form 8938 to fulfill their reporting requirements under section 6038D and § 1.6038D-2(a). The single Form 8938 must report all of the specified foreign financial assets in which either married specified individual has an interest. If both married specified individuals jointly own a specified foreign financial asset or if they have an interest in a specified foreign financial asset under paragraph (b)(1) of this section, the asset must be reported only once on the single Form 8938 filed for the taxable year.

(2) ***Separate annual return.*** A married specified individual who files a separate annual return for the taxable year must fulfill the reporting requirements under section 6038D and § 1.6038D-2(a) by filing a separate Form 8938 with his or her return that reports all of the specified foreign financial assets in which the married specified individual has an interest, including each of the assets jointly owned with the married specified individual's spouse or with another person. If both of the spouses are specified individuals, each specified individual must report the entire value of each specified foreign financial asset that the spouses jointly own on Form 8938, not the value taken into account under paragraph (c)(3)(i) of this section for purposes of applying the applicable reporting thresholds.

(e) ***Special rules for dual resident taxpayers*** —

(1) ***In general.*** Subject to the provisions of paragraphs (e)(2) and (3) of this section, a specified individual is not required to report specified foreign financial assets on Form 8938 for a taxable year or any portion of a taxable year that the individual is a dual resident taxpayer (within the meaning of § 301.7701(b)-7(a)(1) of this chapter) who is treated as a nonresident alien pursuant to § 301.7701(b)-7 of this chapter for purposes of computing his or her U.S. tax liability with respect to the portion of the taxable year the individual is considered a dual resident taxpayer.

(2) ***Dual resident taxpayer filing as a nonresident alien at end of taxable year.*** If a specified individual to whom this paragraph (e) applies computes his or her U.S. income tax liability as a nonresident alien on the last day of the taxable year and complies with the filing requirements of § 301.7701(b)-7(b) and (c) of this chapter and, in particular, such individual timely files with the Internal Revenue Service Form 1040NR, "U.S. Nonresident Alien Income Tax Return," or Form 1040NR-EZ, "U.S. Income Tax Return for Certain Nonresident Aliens With No Dependents," as applicable, and attaches thereto Form 8833, "Treaty-Based Return Position Disclosure Under Section 6114 or 7701(b)," such individual will not be required to report specified foreign financial assets on Form 8938 with respect to the portion of the taxable year covered by Form 1040NR (or Form 1040NR-EZ).

(3) ***Dual resident taxpayer filing as resident alien at end of taxable year.*** If a specified individual to whom this paragraph (e) applies computes his or her U.S. income tax liability as a resident alien on the last day of the taxable year and complies with the filing requirements of § 1.6012-1(b)(2)(ii)(a) and, in particular, such individual timely files with the Internal Revenue Service Form 1040, "U.S. Individual Income Tax Return," or Form 1040EZ, "Income Tax Return for Single and Joint Filers With No Dependents," as applicable, and attaches a properly completed Form 8833 to the schedule required by § 1.6012-1(b)(2)(ii)(a), such individual will not be required to report specified foreign financial assets on Form 8938 with respect to the portion of the individual's taxable year reflected on the schedule to such Form 1040 or Form 1040EZ required by § 1.6012-1(b)(2)(ii)(a).

(f) ***Example.*** The following example illustrates the application of paragraph (c) of this section:

> *Example.* (1) *Facts.* Two married specified individuals, H and W, jointly own a specified foreign financial asset with a value of $90,000 at all times during the taxable year. H separately has an interest in a specified foreign financial asset with a value of $10,000 at all times during the taxable year. W separately has an interest in a specified foreign financial asset with a value of $1,000 at all times during the taxable year.
> (2) *Filing requirement*—(i) *Married specified individuals filing separate annual returns.* If H and W file separate annual returns, the aggregate value of the specified foreign financial assets in which H has an interest at the end of the taxable year is $55,000, comprising one-half of the value of the jointly owned asset, $45,000, and the value of H's separately owned specified foreign financial asset, $10,000. The aggregate value of the specified foreign financial assets in which W has an interest at the end of the taxable year is $46,000, comprising one-half of the value of the jointly owned asset, $45,000, and the value of W's separately owned specified foreign financial asset, $1,000. H must file Form 8938 with his annual return for the taxable year because the aggregate value of the specified foreign financial assets in which H has an interest exceeds the applicable reporting threshold ($50,000) set forth in § 1.6038D-2(a)(1). H must report the maximum value of the entire jointly owned asset, $90,000, and the maximum value of the separately owned asset, $10,000. See § 1.6038D-5(b) regarding the maximum value of a jointly owned specified foreign

financial asset to be reported by a specified person, including a married specified individual, that is a joint owner of an asset. The aggregate value of the specified foreign financial assets in which W has an interest, $46,000, does not exceed the applicable reporting threshold set forth in § 1.6038D-2(a)(1). W is not required to file Form 8938 with her separate annual return.

(ii) *Married specified individuals filing a joint annual return.* If H and W file a joint annual return, they must file a single Form 8938 with their joint annual return for the taxable year because the aggregate value of all of the specified foreign financial assets in which either H or W have an interest ($90,000 (included only once), $10,000, and $1000, or $101,000) exceeds the applicable reporting threshold ($100,000) set forth in § 1.6038D-2(a)(2). The single Form 8938 must report the maximum value of the jointly owned specified foreign financial asset, $90,000, and the maximum value of the specified foreign financial assets separately owned by H and W, $10,000 and $1,000, respectively.

(g) ***Effective/applicability dates.*** This section, with the exception of § 1.6038D-2(a)(6)(ii), applies to taxable years ending after December 19, 2011. Section 1.6038D-2(a)(6)(ii) applies to taxable years beginning after December 31, 2015. Taxpayers may elect to apply the rules of this section, with the exception of § 1.6038D-2(a)(6)(ii), to taxable years ending on or prior to December 19, 2011.

[T.D. 9706, 79 FR 73826, Dec. 12, 2014, as amended by T.D. 9752, 81 FR 8838, Feb. 23, 2016]

§ 1.6038D-3 Specified foreign financial assets.

(a) ***Financial accounts*** —

(1) ***In general.*** Except as otherwise provided in this section, a specified foreign financial asset includes any financial account maintained by a foreign financial institution. An asset held in a financial account maintained by a foreign financial institution is not required to be separately reported on Form 8938, "Statement of Specified Foreign Financial Assets."

(2) ***Financial account in a U.S. possession.*** A specified foreign financial asset includes a financial account maintained by a financial institution that is organized under the laws of a U.S. possession.

(3) ***Excepted financial accounts*** —

(i) ***Accounts maintained by U.S. payors.*** A financial account maintained by a U.S. payor as defined in § 1.6049-5(c)(5)(i) (including assets held in such an account) is not a specified foreign financial asset for purposes of section 6038D and the regulations.

(ii) ***Mark-to-market election under section 475.*** A financial account is not a specified foreign financial asset if the rules of section 475(a) apply to all of the holdings in the account or an election under section 475(e) or (f) is made with respect to all of the holdings in the account.

(b) ***Other specified foreign financial assets*** —

(1) ***In general.*** Except as otherwise provided in this section, a specified foreign financial asset includes any of the following assets that are not financial accounts and that are held for investment and not held in an account maintained by a financial institution—

(i) Stock or securities issued by a person other than a United States person (including stock or securities issued by a person organized under the laws of a U.S. possession);

(ii) A financial instrument or contract that has an issuer or counterparty which is other than a United States person (including a financial instrument or contract issued by a person organized under the laws of a U.S. possession); and

(iii) An interest in a foreign entity.

(2) ***Mark-to-market election under section 475.*** An asset is not a specified foreign financial asset if the rules of section 475(a) apply to the asset or an election under section 475(e) or (f) is made with respect to the asset.

(3) ***Held for investment.*** An asset is held for investment for purposes of section 6038D and the regulations if that asset is not used in, or held for use in, the conduct of a trade or business of a specified person.

(4) ***Trade-or-business test.*** For purposes of section 6038D and the regulations, an asset is used in, or held for use in, the conduct of a trade or business and not held for investment if the asset is—

(i) Held for the principal purpose of promoting the present conduct of the trade or business;

(ii) Acquired and held in the ordinary course of the trade or business, as, for example, in the case of an account or note receivable arising from that trade or business; or

(iii) Otherwise held in a direct relationship to the trade or business as determined under paragraph (b)(5) of this section.

(5) ***Direct relationship between holding an asset and a trade or business*** —

(i) ***In general.*** In determining whether an asset is held in a direct relationship to the conduct of a trade or business by a specified person, principal consideration will be given to whether the asset is needed in the trade or business of the specified person. An asset shall be considered needed in the trade or business, for this purpose, only if the asset is held to meet the present needs of that trade or business and not its anticipated future needs. An asset shall be considered as needed in the trade or business if, for example, the asset is held to meet the operating expenses of the trade or business. Conversely, an asset shall be considered as not needed in the trade or business if, for example, the asset is held for the purpose of providing for future diversification into a new trade or business, future plant replacement, or future business contingencies. Stock is never considered used or held for use in a trade or business for purposes of applying this test.

(ii) ***Presumption of direct relationship.*** An asset will be treated as held in a direct relationship to the conduct of a trade or business of a specified person if—

(A) The asset was acquired with funds generated by the trade or business of the specified person or the affiliated group of the specified person, if any;

(B) The income from the asset is retained or reinvested in the trade or business; and

(C) Personnel who are actively involved in the conduct of the trade or business exercise significant management and control over the investment of such asset.

(c) ***Special rule for interests in foreign trusts and foreign estates.*** An interest in a foreign trust or a foreign estate is not a specified foreign financial asset of a specified person unless the person knows, or has reason to know based on readily accessible information, of the interest. Receipt of a distribution from the foreign trust or foreign estate constitutes actual knowledge for this purpose.

(d) ***Examples.*** Examples of assets other than financial accounts that may be considered other specified foreign financial assets include, but are not limited to—

(1) Stock issued by a foreign corporation;

(2) A capital or profits interest in a foreign partnership;

(3) A note, bond, debenture, or other form of indebtedness issued by a foreign person;

(4) An interest in a foreign trust;

(5) An interest rate swap, currency swap, basis swap, interest rate cap, interest rate floor, commodity swap, equity swap, equity index swap, credit default swap, or similar agreement with a foreign counterparty; and

(6) Any option or other derivative instrument with respect to any of the items listed as examples in this paragraph or with respect to any currency or commodity that is entered into with a foreign counterparty or issuer.

(e) ***Effective/applicability dates.*** This section applies to taxable years ending after December 19, 2011. Taxpayers may elect to apply the rules of this section to taxable years ending prior to December 19, 2011.

[T.D. 9706, 79 FR 73828, Dec. 12, 2014]

§ 1.6038D-4 Information required to be reported.

(a) ***Required information.*** The following information must be reported on Form 8938, "Statement of Specified Foreign Financial Assets," with respect to each specified foreign financial asset:

(1) In the case of a financial account, the name and address of the foreign financial institution with which the account is maintained and the account number of the financial account;

(2) In the case of stock or securities, the name and address of the issuer, and information that identifies the class or issue of which the stock or security is a part;

(3) In the case of a financial instrument or contract, information that identifies the financial instrument or contract, including the names and addresses of all issuers and counterparties;

(4) In the case of an interest in a foreign entity, information that identifies the interest, including the name and address of the foreign entity in which the interest is held;

(5) The maximum value of the specified foreign financial asset during the portion of the taxable year in which the specified person has an interest in the asset;

(6) In the case of a financial account that is a depository account as defined in § 1.1471-5(b)(3)(i) or a custodial account as defined in § 1.1471-5(b)(3)(ii), whether the account was opened or closed during the taxable year;

(7) The date, if any, on which the specified foreign financial asset, other than a financial account that is a depository account as defined in § 1.1471-5(b)(3)(i) or a custodial account as defined in § 1.1471-5(b)(3)(ii), was either acquired or disposed of (or both) during the taxable year;

(8) The amount of any income, gain, loss, deduction, or credit recognized for the taxable year with respect to the reported specified foreign financial asset, and the schedule, form, or return filed with the Internal Revenue Service on which the income, gain, loss, deduction, or credit, if any, is reported or included by the specified person;

(9) The foreign currency in which the account is maintained or the asset is denominated, the foreign currency exchange rate and, if the source of such rate is other than as described in § 1.6038D-5(c)(1), the source of the rate used to determine the specified foreign financial asset's U.S. dollar value, including maximum value;

(10) For any specified foreign financial asset excepted from reporting on Form 8938 under § 1.6038D-7(a), the specified person must report the number of Forms 3520, "Annual Return To Report Transactions With Foreign Trusts and Receipt of Certain Foreign Gifts," Forms 3520-A, "Annual Information Return of Foreign Trust With a U.S. Owner," Forms 5471, "Information Return of U.S. Persons With Respect To Certain Foreign Corporations," Forms 8621, "Return by a Shareholder of a Passive Foreign Investment Company or a Qualified Electing Fund," Forms 8865, "Return of U.S. Persons With Respect To Certain Foreign Partnerships," and, solely for taxable years beginning after March 18, 2010, and ending on or before December 31, 2013, Forms 8891, "U.S. Information Return for Beneficiaries of Certain Canadian Registered Retirement Plans," or such other form under Title 26 of the United States Code identified by the Secretary under § 1.6038D-7(a), timely filed with the Internal Revenue Service on which excepted foreign financial assets are reported or reflected for the taxable year; and

(11) Such other information as may be required by Form 8938 or its instructions or other guidance.

(b) ***Effective/applicability dates.*** This section applies to taxable years ending after December 19, 2011. Taxpayers may elect to apply the rules of this section to taxable years ending prior to December 19, 2011.

[T.D. 9706, 79 FR 73829, Dec. 12, 2014]

§ 1.6038D-5 Valuation guidelines.

(a) ***Fair market value.*** Except as provided in paragraphs (c) and (e) of this section, the value of a specified foreign financial asset for purposes of determining the aggregate value of specified foreign financial assets held by a specified person and the maximum value of a specified foreign financial asset required to be reported on Form 8938, "Statement of Specified Foreign Financial Assets," is the asset's fair market value.

(b) ***Valuation of assets*** —

(1) ***Maximum value.*** Except as provided in this section, the maximum value of a specified foreign financial asset means a reasonable estimate of the asset's maximum fair market value during the taxable year.

(2) ***U.S. dollars.*** For purposes of determining the aggregate value of specified foreign financial assets in which a specified person has an interest and determining the maximum value of a specified foreign financial asset, the value of a specified foreign financial asset denominated in a foreign currency during the taxable year must be determined in the foreign currency and then converted to U.S. dollars.

(3) ***Asset with no positive value.*** If the maximum fair market value of a specified foreign financial asset is zero or less than zero, then the asset's value is treated as zero for purposes of determining the aggregate value of specified foreign financial assets in which a specified person has an interest, and the maximum value of the specified foreign financial asset is zero for purposes of reporting under § 1.6038D-4(a)(5).

(c) ***Foreign currency conversion*** —

(1) ***In general.*** Except as provided in paragraphs (c)(2) and (d) of this section, the U.S. Treasury Department's Bureau of the Fiscal Service foreign currency exchange rate is to be used to convert the value of a specified foreign financial asset into U.S. dollars for purposes of determining the aggregate value of specified foreign financial assets in which a specified person has an interest and determining the maximum value of a specified foreign financial asset.

(2) ***Other publicly available exchange rate.*** If no U.S. Treasury Department Bureau of the Fiscal Service foreign currency exchange rate is available for a particular currency, another publicly available foreign currency exchange rate may be used to convert the value of a specified foreign financial asset into U.S. dollars. In such case, the source of the foreign currency exchange rate must be disclosed on Form 8938.

(3) ***Currency exchange rate.*** In converting the currency of a foreign country, the foreign currency exchange rate applicable for converting the currency into U.S. dollars (that is, to purchase U.S. dollars) must be used.

(4) ***Determination date.*** In converting the currency of a foreign country into U.S. dollars for purposes of determining the maximum value of a specified foreign financial asset and determining the aggregate value of specified foreign financial assets in which a specified person has an interest, the applicable foreign currency exchange rate is the rate on the last day of the taxable year of the specified person, even if the specified person sold or otherwise disposed of a specified foreign financial asset prior to the last day of such year.

(d) ***Financial accounts.*** A specified person may rely upon periodic account statements that are provided at least annually by or on behalf of a financial institution maintaining an account, including the foreign currency conversion reflected in those statements, to determine the financial account's maximum value unless the specified person has actual knowledge, or reason to know based on readily accessible information, that the statements do not reflect a reasonable estimate of the maximum account value during the taxable year.

(e) ***Asset held in a financial account.*** The value of an asset held in a financial account maintained by a foreign financial institution is included in determining the value of that financial account for purposes of § 1.6038D-5(a).

(f) ***Other specified foreign financial assets*** —

(1) ***General rule.*** Except as provided in paragraphs (f)(2) and (3) of this section, for specified foreign financial assets that are not financial accounts and that are held for investment and not held in an account maintained by a financial institution, a specified person may use the value of the asset as of the last day of the taxable year on which the specified person has an interest in the asset as the maximum value of that asset, unless the specified person has actual knowledge, or reason to know based on readily accessible information, that the value does not reflect a reasonable estimate of the maximum value of the asset during the taxable year.

(2) ***Interests in trusts that are specified foreign financial assets*** —

(i) ***Maximum value.*** If a specified person is a beneficiary of a foreign trust, the maximum value of the specified person's interest in the trust is the sum of—

(A) The fair market value, determined as of the last day of the taxable year, of all of the currency or other property distributed from the foreign trust during the taxable year to the specified person as a beneficiary; and

(B) The value, determined as of the last day of the taxable year, of the specified person's right as a beneficiary to receive mandatory distributions from the foreign trust as determined under section 7520.

(ii) ***Reporting threshold.*** For purposes of determining the aggregate value of specified foreign financial assets in which a specified person has an interest, if the specified person does not know, or have reason to know based on readily accessible information, the fair market value of the person's interest in a foreign trust during the taxable year, the value to be included in determining the aggregate value of the specified foreign financial assets is the maximum value of the specified person's interest in the foreign trust under paragraph (f)(2)(i) of this section.

(3) ***Interests in estates, pension plans, and deferred compensation plans*** —

(i) ***Maximum value.*** The maximum value of a specified person's interest in a foreign estate, foreign pension plan, or foreign deferred compensation plan is the fair market value, determined as of the last day of the taxable year, of the specified person's beneficial interest in the assets of the foreign estate, foreign pension plan, or foreign deferred compensation plan. If the specified person does not know, or have reason to know based on readily accessible information, such fair market value, the maximum value to be reported is the fair market value, determined as of the last day of the taxable year, of the currency and other property distributed during the taxable year to the specified person as a beneficiary or participant.

(ii) ***Reporting threshold.*** For purposes of determining the aggregate value of specified foreign financial assets in which a specified person has an interest, if the specified person does not know, or have reason to know based on readily accessible information, the fair market value of the person's interest in a foreign estate, foreign pension plan, or foreign deferred compensation plan during the taxable year, the value to be included in determining the aggregate value of the specified foreign financial assets is the fair market value, determined as of the last day of the taxable year, of the currency and other property distributed during the taxable year to the specified person as a beneficiary or participant.

(g) ***Effective/applicability dates.*** This section applies to taxable years ending after December 19, 2011. Taxpayers may elect to apply the rules of this section to taxable years ending prior to December 19, 2011.

[T.D. 9706, 79 FR 73830, Dec. 12, 2014]

§ 1.6038D-6 Specified domestic entities.

(a) ***Specified domestic entity.*** A specified domestic entity is a domestic corporation, a domestic partnership, or a trust described in section 7701(a)(30)(E), if such corporation, partnership, or trust is formed or availed of for purposes of holding, directly or indirectly, specified foreign financial assets. Whether a domestic corporation, a domestic partnership, or a trust described in section 7701(a)(30)(E) is a specified domestic entity is determined annually.

(b) ***Corporations and partnerships*** —

(1) ***Formed or availed of.*** Except as otherwise provided in paragraph (d) of this section, a domestic corporation or a domestic partnership is formed or availed of for purposes of holding, directly or indirectly, specified foreign financial assets if and only if—

(i) The corporation or partnership is closely held by a specified individual as determined under paragraph (b)(2) of this section; and

(ii) At least 50 percent of the corporation's or partnership's gross income for the taxable year is passive income or at least 50 percent of the assets held by the corporation or partnership for the taxable year are assets that produce or are held for the production of passive income as determined under paragraph (b)(3) of this section (passive assets). For purposes of this paragraph (b)(1)(ii), the percentage of passive assets held by a corporation or partnership for a taxable year is the weighted average percentage of passive assets (weighted by total assets and measured quarterly), and the value of assets of a corporation or partnership is the fair market value of the assets or the book value of the assets that is reflected on the corporation's or partnership's balance sheet (as determined under either a U.S. or an international financial accounting standard).

(2) ***Closely held*** —

(i) ***Domestic corporation.*** A domestic corporation is closely held by a specified individual if at least 80 percent of the total combined voting power of all classes of stock of the corporation entitled to vote, or at least 80 percent of the total value of the stock of the corporation, is owned, directly, indirectly, or constructively, by a specified individual on the last day of the corporation's taxable year.

(ii) ***Domestic partnership.*** A partnership is closely held by a specified individual if at least 80 percent of the capital or profits interest in the partnership is held, directly, indirectly, or constructively, by a specified individual on the last day of the partnership's taxable year.

(iii) ***Constructive ownership.*** For purposes of this paragraph (b)(2), sections 267(c) and (e)(3) apply for the purpose of determining the constructive ownership of a specified individual in a corporation or partnership, except that section 267(c)(4) is applied as if the family of an individual includes the spouses of the individual's family members.

(3) ***Determination of passive income and assets*** —

(i) ***Definition of passive income.*** Except as provided in paragraph (b)(3)(ii) of this section, for purposes of paragraph (b)(1)(ii) of this section, passive income means the portion of gross income that consists of—

(A) Dividends, including substitute dividends;

(B) Interest;

(C) Income equivalent to interest, including substitute interest;

(D) Rents and royalties, other than rents and royalties derived in the active conduct of a trade or business conducted, at least in part, by employees of the corporation or partnership;

(E) Annuities;

(F) The excess of gains over losses from the sale or exchange of property that gives rise to passive income described in paragraphs (b)(3)(i)(A) through (b)(3)(i)(E) of this section;

(G) The excess of gains over losses from transactions (including futures, forwards, and similar transactions) in any commodity, but not including—

(1) Any commodity hedging transaction described in section 954(c)(5)(A), determined by treating the corporation or partnership as a controlled foreign corporation; or

(2) Active business gains or losses from the sale of commodities, but only if substantially all the corporation or partnership's commodities are property described in paragraph (1), (2), or (8) of section 1221(a);

(H) The excess of foreign currency gains over foreign currency losses (as defined in section 988(b)) attributable to any section 988 transaction; and

(I) Net income from notional principal contracts as defined in § 1.446-3(c)(1).

(ii) ***Exception from passive income treatment for dealers.*** Notwithstanding paragraph (b)(3)(i) of this section, in the case of a corporation or partnership that regularly acts as a dealer in property described in paragraph (b)(3)(i)(F) of this section (referring to the sale or exchange of property that gives rise to passive income), forward contracts, option contracts, or similar financial instruments (including notional principal contracts and all instruments referenced to commodities), the term passive income does not include—

(A) Any item of income or gain (other than any dividends or interest) from any transaction (including hedging transactions and transactions involving physical settlement) entered into in the ordinary course of such dealer's trade or business as such a dealer; and

(B) If such dealer is a dealer in securities (within the meaning of section 475(c)(2)), any income from any transaction entered into in the ordinary course of such trade or business as a dealer in securities.

(iii) ***Related entities.*** For purposes of applying the passive income and asset thresholds of paragraph (b)(1)(ii) of this section, all domestic corporations and domestic partnerships that are closely held by the same specified individual as determined under paragraph (b)(2) of this section and that are connected through stock or partnership interest ownership with a common parent corporation or partnership are treated as owning the combined assets and receiving the combined income of all members of that group. For purposes of the preceding sentence, assets relating to any contract, equity, or debt existing between members of such a group, as well as any items of gross income arising under or from such contract, equity, or debt, are eliminated. A domestic corporation or a domestic partnership is considered connected through stock or partnership interest ownership with a common parent corporation or partnership if stock representing at least 80 percent of the total combined voting power of all classes of stock of the corporation entitled to vote or of the value of such corporation, or partnership interests representing at least 80 percent of the profits interests or capital interests of such

partnership, in each case other than stock of or partnership interests in the common parent, is owned by one or more of the other connected corporations, connected partnerships, or the common parent.

(4) ***Examples.*** The following examples illustrate the application of this section:

Example 1. Closely held and constructive ownership. (i) *Facts.* DC1 is a domestic corporation the total value of the stock of which is owned 60% by A, a specified individual, 30% by B, a member of A's family for purposes of section 267(c)(2) who is not a specified individual, and 10% by FC1, a foreign corporation. DC1 owns 90% of the total value of the stock of DC2, a domestic corporation. FC2, a foreign corporation, owns 10% of DC2. Neither A nor B owns, directly, indirectly, or constructively, any stock in FC1 or FC2.
(ii) *Closely held ownership determination.* A is considered to own 90% and 81% of the total value of DC1 and DC2, respectively, by application of the rules of section 267(c) and this section. DC1 and DC2 are closely held by A within the meaning of paragraph (b)(2) of this section because A, a specified individual, is considered to own more than 80% of their total value.

Example 2. Application of aggregation rule and reporting threshold. (i) *Facts.* L is a specified individual. In Year X, L wholly owns DC1, a domestic corporation, and also owns a 90% capital interest in DP, a domestic partnership. DC1 owns 80% of the sole class of stock of DC2, a domestic corporation. DC1 has no assets other than its interest in DC2. DC2's only assets are assets that produce passive income, with a maximum value in Year X of $40,000 on October 12. DC2's assets are comprised in relevant part of specified foreign financial assets with a maximum value in Year X of $15,000 on October 12. DP's only assets are assets that produce passive income and that are specified foreign financial assets with a maximum value of $90,000 in Year X on October 12.
(ii) *Specified domestic entity status*—(A) *DC1 and DC2.* DC1 and DC2 are closely held by a specified individual for purposes of paragraph (b)(2) of this section. DC1 and DC2 are considered related entities that are connected through stock ownership with a common parent corporation under paragraph (b)(3)(iii) of this section, because DC1 and DC2 are closely held by L, and DC2 is connected with DC1 through DC1's ownership of stock of DC2 representing at least 80% of the voting power or value of DC2. As a result, for purposes of applying paragraph (b)(1)(ii) of this section, each of DC1 and DC2 is considered as owning the combined assets, and receiving the combined income, of both DC1 and DC2; however, DC1's equity interest in DC2 is disregarded for this purpose under paragraph (b)(3)(iii) of this section. Therefore, DC1 and DC2 each satisfies the passive asset threshold of paragraph (b)(1)(ii) of this section, because 100 percent of each company's assets is passive. DC1 and DC2 are specified domestic entities for Year X.

(B) *DP.* DP is closely held by a specified individual for purposes of paragraph (b)(2) of this section. DP is not considered a related entity with DC1 and DC2 under paragraph (b)(3)(iii) of this section, because DC1 and DP are not owned by a common parent corporation or partnership. As a result, whether the passive income or passive asset threshold of paragraph (b)(1)(ii) of this section is met with respect to DP is determined solely by reference to DP's separately earned passive income and separately held passive assets. DP holds only passive assets during Year X and therefore satisfies paragraph (b)(1)(ii) of this section. DP is a specified domestic entity for Year X.

(iii) *Reporting requirements*—(A) *DC1.* Under § 1.6038D-2(a)(6)(ii), DC1 is not treated as owning the specified foreign financial assets held by DC2 and DP for purposes of applying the reporting threshold of § 1.6038D-2(a)(1), because DC1 does not have an interest in any specified foreign financial assets. DC1 is not required to file Form 8938 because DC1 does not satisfy the reporting threshold of § 1.6038D-2(a)(1).

(B) *DC2 and DP.* Under § 1.6038D-3, DC2 and DP each has an interest in specified foreign financial assets. For purposes of applying the reporting threshold of § 1.6038D-2(a)(1), § 1.6038D-2(a)(6)(ii) provides that DC2 is treated as owning in addition to its own assets the assets of DP, and DP is treated as owning in addition to its own assets the assets of DC2. As a result, DC2 and DP each satisfies the reporting threshold of § 1.6038D-2(a)(1), because the value of the specified foreign financial assets each is considered as owning for purposes of § 1.6038D-2(a)(1) is $105,000 on October 12, Year X, which exceeds DC2's and DP's $75,000 reporting threshold. DC2 and DP must each file Form 8938 for Year X to report their respective specified foreign financial assets in which they have an interest and disclose their maximum values as provided in § 1.6038D-4 ($15,000 in the case of DC2 and $90,000 in the case of DP).

Example 3. Application of aggregation rule and entity with an active trade or business. (i) *Facts.* The facts are the same as in *Example 2,* except that DC2 also owns an active business. The assets attributable to the business are not passive assets and constitute at least 60% of the value of DC2's assets at all times during Year X. The income from the business is not passive income and constitutes at least 60% of the gross income generated by DC2 in Year X. (ii) *Specified domestic entity status*—(A) *DC1 and DC2.* DC1 and DC2 are considered related entities that are connected through stock ownership with a common parent corporation under paragraph (b)(3)(iii) of this section because DC1 and DC2 are closely held by L, and DC2 is connected with DC1 though DC1's ownership of stock of DC2 representing at least 80% of the voting power or value of DC2. As a result, for purposes of applying paragraph (b)(1)(ii) of this section, each of DC1 and DC2 is treated as owning the combined assets, and receiving the combined income, of both DC1 and DC2; however, DC1's equity interest in DC2 is disregarded for this purpose under paragraph (b)(3)(iii) of this section. As a result, no more than 40 percent of the value of DC1's and DC2's assets at all times during Year X are passive

and no more than 40 percent of DC1's and DC2's gross income for Year X is passive. DC1 and DC2 do not satisfy the passive income or passive asset threshold in paragraph (b)(1)(ii) of this section for Year X. DC1 and DC2 are not specified domestic entities for Year X.

(B) *DP.* For the reasons described in paragraph (ii)(B) of *Example 2,* DP is a specified domestic entity for Year X.

(iii) *Reporting requirements*—(A) *DC1 and DC2.* DC1 and DC2 are not specified domestic entities for Year X, and are not required to file Form 8938.

(B) *DP.* Under § 1.6038D-3, DP has an interest in specified foreign financial assets. Under § 1.6038D-2(a)(6)(ii), DP is treated as owning in addition to its own assets the assets of DC2. As a result, DP satisfies the reporting threshold of § 1.6038D-2(a)(1) because the value of the specified foreign financial assets it is considered to own for purposes of § 1.6038D-2(a)(1) is $105,000 on October 12, Year X, which exceeds DP's $75,000 reporting threshold. DP must file Form 8938 for Year X to report the specified foreign financial assets in which it has an interest and disclose their maximum values as provided in § 1.6038D-4, which is $90,000.

(c) ***Domestic trusts.*** Except as otherwise provided in paragraph (d) of this section, a trust described in section 7701(a)(30)(E) is formed or availed of for purposes of holding, directly or indirectly, specified foreign financial assets if and only if the trust has one or more specified persons as a current beneficiary. The term current beneficiary means, with respect to the taxable year, any person who at any time during such taxable year is entitled to, or at the discretion of any person may receive, a distribution from the principal or income of the trust (determined without regard to any power of appointment to the extent that such power remains unexercised at the end of the taxable year). The term current beneficiary also includes any holder of a general power of appointment, whether or not exercised, that was exercisable at any time during the taxable year, but does not include any holder of a general power of appointment that is exercisable only on the death of the holder.

(d) ***Excepted domestic entities.*** An entity is not considered to be a specified domestic entity if the entity is—

(1) ***Certain persons described in section 1473(3).*** An entity, except for a trust that is exempt from tax under section 664(c), that is excepted from the definition of the term “specified United States person” under section 1473(3) and the regulations issued under that section;

(2) ***Certain domestic trusts.*** A trust described in section 7701(a)(30)(E) provided that the trustee of the trust—

(i) Has supervisory authority over or fiduciary obligations with regard to the specified foreign financial assets held by the trust;

(ii) Timely files (including any applicable extensions) annual returns and information returns on behalf of the trust; and

(iii) Is—

(A) A bank that is examined by the Office of the Comptroller of the Currency, the Board of Governors of the Federal Reserve System, the Federal Deposit Insurance Corporation, or the National Credit Union Administration;

(B) A financial institution that is registered with and regulated or examined by the Securities and Exchange Commission; or

(C) A domestic corporation described in section 1473(3)(A) or (B), and the regulations issued with respect to those provisions.

(3) ***Domestic trusts owned by one or more specified persons.*** A trust described in section 7701(a)(30)(E) to the extent such trust or any portion thereof is treated as owned by one or more specified persons under sections 671 through 678 and the regulations issued under those sections.

(e) ***Effective/applicability dates.*** This section applies to taxable years beginning after December 31, 2015.

[T.D. 9752, 81 FR 8838, Feb. 23, 2016]

§ 1.6038D-7 Exceptions from the reporting of certain assets under section 6038D.

(a) ***Elimination of duplicative reporting of assets*** —

(1) ***In general.*** A specified person is not required to report a specified foreign financial asset on Form 8938, "Statement of Specified Foreign Financial Assets," if the specified person—

(i) Reports the asset on at least one of the following forms timely filed with the Internal Revenue Service for the taxable year—

(A) Form 3520, "Annual Return To Report Transactions With Foreign Trusts and Receipt of Certain Foreign Gifts" (in the case of a specified person that is the beneficiary of a foreign trust);

(B) Form 5471, "Information Return of U.S. Persons With Respect To Certain Foreign Corporations";

(C) Form 8621, "Return by a Shareholder of a Passive Foreign Investment Company or Qualified Electing Fund";

(D) Form 8865, "Return of U.S. Persons With Respect To Certain Foreign Partnerships";

(E) For taxable years beginning after March 18, 2010, and ending on or before December 31, 2013, Form 8891, "U.S. Information Return for Beneficiaries of Certain Canadian Registered Retirement Plans"; or

(F) Any other form under Title 26 of the United States Code timely filed with the Internal Revenue Service and identified for this purpose by the Secretary in regulations or other guidance; and

(ii) Reports on Form 8938 the filing of the form on which the asset is reported.

(2) ***Foreign grantor trusts.*** A specified person that is treated as an owner of a foreign trust or any portion of a foreign trust under sections 671 through 679 is not required to report any specified foreign financial assets held by the foreign trust on Form 8938, provided—

(i) The specified person reports the trust on a Form 3520 timely filed with the Internal Revenue Service for the taxable year;

(ii) The trust timely files Form 3520-A, "Annual Information Return of Foreign Trust With a U.S. Owner," with the Internal Revenue Service for the taxable year; and

(iii) The Form 8938 filed by the specified person for the taxable year reports the filing of the Form 3520 and Form 3520-A.

(3) ***Joint Form 5471 or Form 8865 filing.*** A specified person that is included as part of a joint Form 5471 filing pursuant to § 1.6038-2(j) or a joint Form 8865 filing pursuant to § 1.6038-3(c) and who notifies the Internal Revenue Service as required by § 1.6038-2(i) or § 1.6038D-(3)(c) will be considered to have filed a Form 5471 or Form 8865 for purposes of paragraph (a)(1) of this section.

(b) ***Owner of certain trusts.*** A specified person that is treated as an owner of any portion of a domestic trust under sections 671 through 678 is not required to file Form 8938 to report any specified foreign financial asset held by the trust if the trust is—

(1) A widely-held fixed investment trust under § 1.671-5; or

(2) A liquidating trust within the meaning of § 301.7701-4(d) of this chapter that is created pursuant to a court order issued in a bankruptcy under Chapter 7 (11 U.S.C. 701 *et seq.*) or a confirmed plan under Chapter 11 (11 U.S.C. 1101 *et seq.*) of the Bankruptcy Code.

(c) ***Special rules for bona fide residents of a U.S. possession.*** A specified individual who is a bona fide resident of a U.S. possession is not required to include the following specified foreign financial assets in the determination of the aggregate value of his or her specified foreign financial assets and, if required to file Form 8938 with the Internal Revenue Service, is not required to report the following specified foreign financial assets:

(1) A financial account maintained by a financial institution organized under the laws of the U.S. possession of which the specified individual is a bona fide resident;

(2) A financial account maintained by a branch of a financial institution not organized under the laws of the U.S. possession of which the specified individual is a bona fide resident, if the branch is subject to the same tax and information reporting requirements applicable to a financial institution organized under the laws of the U.S. possession;

(3) Stock or securities issued by an entity organized under the laws of the U.S. possession of which the specified individual is a bona fide resident;

(4) An interest in an entity organized under the laws of the U.S. possession of which the specified individual is a bona fide resident; and

(5) A financial instrument or contract held for investment, provided each issuer or counterparty that is not a United States person is—

(i) An entity organized under the laws of the U.S. possession of which the specified individual is a bona fide resident; or

(ii) A bona fide resident of the U.S. possession of which the specified individual is a bona fide resident.

(d) ***Effective/applicability dates.*** This section applies to taxable years ending after December 19, 2011. Taxpayers may elect to apply the rules of this section to taxable years ending prior to December 19, 2011.

[T.D. 9706, 79 FR 73831, Dec. 12, 2014]

§ 1.6038D-8 Penalties for failure to disclose.

(a) ***In general.*** If a specified person fails to file a Form 8938, "Statement of Specified Foreign Financial Assets," that includes the information required by section 6038D(c) and § 1.6038D-4 with respect to any taxable year at the time and in the manner described in section 6038D(a) and § 1.6038D-2, a penalty of $10,000 will apply to that specified person.

(b) ***Married specified individuals filing a joint annual return.*** Married specified individuals who file a joint annual return and fail to file a required Form 8938 that includes the information required by section 6038D(c) and § 1.6038D-4 with respect to any taxable year at the time and in the manner described in section 6038D(a) and § 1.6038D-2 are subject to penalties under this section as if the married specified individuals are a single specified individual. The liability of married specified individuals who file a joint annual return with respect to any penalties under this section is joint and several.

(c) ***Increase in penalty.*** If any failure to comply with the applicable reporting requirement of section 6038D and the regulations continues for more than 90 days after the day on which the Commissioner or his delegate mails a notice of the failure to the specified person required to file the Form 8938, the specified person is required to pay an additional penalty of $10,000 for each 30-day period (or fraction thereof) during which the failure continues after the 90-day period has expired. The additional penalty imposed by section 6038D(d)(2) and this paragraph (c) is limited to a maximum of $50,000 for each such failure.

(d) ***Presumption of aggregate value.*** For the purpose of assessing penalties imposed under section 6038D(d), if the Commissioner or his delegate determines that a specified person has an interest in one or more specified foreign financial assets and the specified person does not provide sufficient information to demonstrate the aggregate value of the assets upon request by the Commissioner or his delegate, then the aggregate value of the assets is treated as being in excess of the applicable reporting threshold set forth in § 1.6038D-2(a).

(e) ***Reasonable cause exception*** —

(1) ***In general.*** If the failure to report the information required in section 6038D(c) and § 1.6038D-4 is shown to be due to reasonable cause and not due to willful neglect, no penalty will be imposed under section 6038D(d) or this section.

(2) ***Affirmative showing required.*** In order to show that the failure to report the information required in section 6038D(c) and § 1.6038D-4 is due to reasonable cause and not due to willful neglect for purposes of section 6038D(g) and this section, the specified person must make an affirmative showing of all the facts alleged as reasonable cause for the failure to disclose.

(3) ***Facts and circumstances taken into account.*** The determination of whether a failure to disclose a specified foreign financial asset on Form 8938 was due to reasonable cause and not due to willful neglect is made on a case-by-case basis, taking into account all pertinent facts and circumstances. The fact that a foreign jurisdiction would impose a civil or criminal penalty on the specified person (or any other person) for disclosing the required information is not reasonable cause.

(f) ***Penalties for underpayments attributable to undisclosed foreign financial assets*** —

(1) ***Accuracy-related penalty.*** For application of the accuracy-related penalty in the case of any portion of an underpayment attributable to any undisclosed foreign financial asset understatement, see section 6662(j).

(2) ***Criminal penalties.*** In addition to other penalties, failure to comply with the reporting requirements of section 6038D and the regulations, or any underpayment related to such failure, may result in criminal penalties under sections 7201, 7203, 7206, *et seq.,* or other provisions of Federal law.

(g) ***Effective/applicability dates.*** This section applies to taxable years ending after December 19, 2011. Taxpayers may elect to apply the rules of this section to taxable years ending prior to December 19, 2011.

[T.D. 9706, 79 FR 73832, Dec. 12, 2014]

§ 1.6039-1 Returns required in connection with certain options.

(a) ***Requirement of return with respect to incentive stock options under section 6039(a)(1).***

(1) Every corporation which in any calendar year transfers to any person a share of stock pursuant to such person's exercise of an incentive stock option shall, for such calendar year, file a return with respect to each transfer made during such year. This return must include the following information—

(i) The name, address, and employer identification number of the corporation transferring the stock;

(ii) If other than the corporation identified in paragraph (a)(1)(i) of this section, the name, address and employer identification number of the corporation whose stock is being transferred;

(iii) The name, address, and identifying number of the person to whom the share or shares of stock were transferred pursuant to the exercise of the option;

(iv) The date the option was granted to the person;

(v) The exercise price per share;

(vi) The date the option was exercised by the person;

(vii) The fair market value of a share of stock on the date the option was exercised by the person; and

(viii) The number of shares of stock transferred to the person pursuant to the exercise of the option.

(2) Each return required by this paragraph (a) shall be made on Form 3921, Exercise of an Incentive Stock Option Under Section 422(b) (or its designated successor) and shall be filed in such manner as provided in the instructions thereto.

(b) ***Requirement of return with respect to stock purchased under an employee stock purchase plan under section 6039(a)(2).***

(1) Every corporation which in any calendar year records, or has by its agent recorded, a transfer of the legal title of a share of stock acquired by the transferor (person who acquires the shares pursuant to the exercise of the option) pursuant to the transferor's exercise of an option granted under an employee stock purchase plan as described in section 423(c) and where the exercise price is less than 100 percent of the value of the stock on date of grant or is not fixed or determinable on the date of the grant, shall, for such calendar year, file a return with respect to each transfer made during such year. This return must include the following information—

(i) The name, address, and identifying number of the transferor;

(ii) The name, address and employer identification number of the corporation whose stock is being transferred;

(iii) The date the option was granted to the transferor;

(iv) The fair market value of the stock on the date the option was granted;

(v) The actual exercise price paid per share;

(vi) The exercise price per share determined as if the option were exercised on the date the option was granted to the transferor (to be provided only if the exercise price per share is not fixed or determinable on the date the option was granted);

(vii) The date the option was exercised by the transferor;

(viii) The fair market value of the stock on the date the option was exercised by the transferor;

(ix) The date the legal title of the shares was transferred by the transferor (see paragraph (b)(3) of this section); and

(x) The number of shares to which legal title was transferred by the transferor.

(2) Each return required by this paragraph (b) shall be made on Form 3922, Transfer of Stock Acquired Through an Employee Stock Purchase Plan Under Section 423(c) (or its designated successor) and shall be filed in such manner as provided in the instructions thereto.

(3) A return is required by reason of a transfer described in section 6039(a)(2) only with respect to the first transfer of legal title of the shares by the transferor, including the first transfer of legal title to a recognized broker or financial institution. If a contractual agreement exists or is entered into with a recognized broker or financial institution pursuant to which shares acquired upon exercise of the option will be immediately deposited into a brokerage account established on behalf of the transferor, then the deposit of shares by the transferor into the brokerage account following the exercise of the option is the first transfer of legal title of the shares acquired by the transferor, and the corporation is only required to file a return relating to such transfer of legal title.

(4) Every corporation that transfers any share of stock pursuant to the exercise of an option described in this paragraph shall identify such stock in a manner sufficient to enable the accurate reporting of the transfer of legal title to such shares. Such identification may be accomplished by assigning to the certificates of stock issued pursuant to the exercise of such options a special serial number or color.

(c) ***Time for filing returns.*** Each return required by this section for a calendar year must be filed in accordance with the guidelines and procedures set forth in the instructions to Form 3921 and Form 3922.

(d) ***Penalty.*** For provisions relating to the penalty applicable to the failure to file a return under this section, see section 6721.

(e) ***Exception to return requirements of section 6039(a) for certain nonresident aliens*** —

(1) ***Return requirement under section 6039(a)(1).*** The return requirement of section 6039(a)(1) is not applicable to the exercise of an incentive stock option by an employee who is a nonresident alien (as defined in section 7701(b)) and to whom the corporation is not required to provide a Form W-2, Wage and Tax Statement (or its designated successor) for any calendar year within the time period beginning with the first day of the calendar year in which the option was granted to the employee and ending on the last day of the calendar year in which the employee exercised the option.

(2) ***Return requirement under section 6039(a)(2).*** The return requirement of section 6039(a)(2) is not applicable to the first transfer of legal title of a share of stock by an employee who is a nonresident alien (as defined in section 7701(b)) and to whom the corporation is not required to provide a Form W-2 for any calendar year within the time period beginning with the first day of the calendar year in which the option was granted to the employee and ending on the last day of the calendar year in which the employee first transferred legal title to shares acquired under the option as described in paragraph (b)(3) of this section.

(3) For purposes of this paragraph (e), the term *corporation* is defined in section 7701(a) and includes, but is not limited to, the corporation issuing the stock, a related corporation of the corporation, any agent of the corporation, any party distributing shares of stock or other payments in connection with the plan (for example, a brokerage firm), and any party in control of the payment of remuneration for employment to the employee.

(f) ***Effective/applicability date*** —

(1) ***In general.*** This section is effective on November 17, 2009. This section will apply as of January 1, 2007.

(2) ***Transition period.*** Taxpayers are not required to comply with the return requirements of paragraphs (a) and (b) of this section for stock transfers that occur during the 2007, 2008 and 2009 calendar years.

[T.D. 9470, 74 FR 59090, Nov. 17, 2009]

§ 1.6039-2 Statements to persons with respect to whom information is reported.

(a) ***Requirement of statement with respect to incentive stock options under section 6039(b).***

(1) Every corporation filing a return under § 1.6039-1(a) shall furnish to each person whose name is set forth in such return a written statement with respect to the transfer or transfers made to such person during such year. This statement must include the information described in § 1.6039-1(a)(1).

(2) Each statement required by this paragraph (a) to be furnished to any person must be furnished to such person on Form 3921, Exercise of an Incentive Stock Option Under Section 422(b) (or its designated successor) and be delivered at such time and in such manner as provided in the instructions thereto.

(b) ***Requirement of statement with respect to stock purchased under an employee stock purchase plan under section 6039(b).***

(1) Every corporation filing a return under § 1.6039-1(b) shall furnish to each person whose name is set forth in such return a written statement with respect to the transfer or transfers made by such person during such year. This statement must include the information described in § 1.6039-1(b)(1).

(2) Each statement required by this paragraph (b) to be furnished to any person must be furnished to such person on Form 3922, Transfer of Stock Acquired Through an Employee Stock Purchase Plan Under Section 423(c) (or its designated successor) and be delivered at such time and in such manner as provided in the instructions thereto.

(3) If the statement required by this paragraph is made by the authorized transfer agent of the corporation, it is deemed to have been made by the corporation. The term *transfer agent,* as used in this section, means any designee authorized to keep the stock ownership records of a corporation and to record a transfer of title of the stock of such corporation on behalf of such corporation.

(c) *Time for furnishing statements* —

(1) ***In general.*** Each statement required by this section to be furnished to any person for a calendar year must be furnished to such person on or before January 31 of the year following the year for which the statement is required. However, for a statement required to be furnished after December 31, 2008, the February 15 due date under section 6045 applies to the statement if the statement is furnished in a consolidated reporting statement under section 6045. *See* §§ 1.6045-1(k)(3), 1.6045-2(d)(2), 1.6045-3(e)(2), 1.6045-4(m)(3), and 1.6045-5(a)(3)(ii).

(2) ***Extension of time.*** An extension of time to furnish statements required by this section may be granted in accordance with the guidelines and procedures set forth in the instructions to Form 3921 and Form 3922.

(d) ***Penalty.*** For provisions relating to the penalty applicable to the failure to furnish a statement under this section, see section 6722.

(e) *Effective/applicability date* —

(1) ***In general.*** This section is effective on November 17, 2009. This section will apply as of January 1, 2007.

(2) ***Reliance and transition period.*** Notwithstanding § 1.6039-1(f), corporations must furnish information statements to employees in accordance with this section for stock transfers that are subject to § 1.6039-1(a) and (b), and occur during the 2007, 2008 and 2009 calendar years. For purposes of furnishing information statements for stock transfers that occur during the 2007 or 2008 calendar years, taxpayers may rely on § 1.6039-1 of the 2004 final regulations (69 FR 46401) or § 1.6039-2 of the 2008 proposed regulations (REG-103146-08) (73 FR 40999). For purposes of furnishing information statements for stock transfers that occur during the 2009 calendar year, taxpayers may rely on § 1.6039-1 of the 2004 final regulations (69 FR 46401), § 1.6039-2 of the 2008 proposed regulations (REG-103146-08) (73 FR 40999), or this section.

[T.D. 9470, 74 FR 59091, Nov. 17, 2009, as amended at 74 FR 67973, Dec. 22, 2009; T.D. 9504, 75 FR 64090, Oct. 18, 2010]

§ 1.6039I-1 Reporting of certain employer-owned life insurance contracts.

(a) ***Requirement to report.*** Section 6039I requires every taxpayer that is an applicable policyholder owning one or more employer-owned life insurance contracts issued after August 17, 2006, to file a return showing the following information for each year the contracts are owned—

(1) The number of employees of the applicable policyholder at the end of the year;

(2) The number of such employees insured under such contracts at the end of the year;

(3) The total amount of insurance in force at the end of the year under such contracts;

(4) The name, address, and taxpayer identification number of the applicable policyholder and the type of business in which the policyholder is engaged; and

(5) That the applicable policyholder has a valid consent for each insured employee (or, if all such consents are not obtained, the number of insured employees for whom such consent was not obtained).

(b) ***Time and manner of reporting.*** Applicable policyholders owning one or more employer-owned life insurance contracts issued after August 17, 2006, must provide the information required under § 6039I by attaching Form 8925, "Report of Employer-Owned Life Insurance Contracts", to the policyholder's income tax return by the due date of that return, or by filing such other form at such time and in such manner as the Commissioner may in the future prescribe.

(c) ***Effective/applicability date.*** These regulations are applicable for tax years ending after November 6, 2008.

[T.D. 9431, 73 FR 65982, Nov. 6, 2008]

§ 1.6041-1 Return of information as to payments of $600 or more.

(a) ***General rule*** —

(1) ***Information returns required*** —

(i) ***Payments required to be reported.*** Except as otherwise provided in §§ 1.6041-3 and 1.6041-4, every person engaged in a trade or business shall make an information return for each calendar year with respect to payments it makes during the calendar year in the course of its trade or business to another person of fixed or determinable income described in paragraph (a)(1)(i) (A) or (B) of this section. For purposes of the regulations under this section, the person described in this paragraph (a)(1)(i) is a payor.

(A) Salaries, wages, commissions, fees, and other forms of compensation for services rendered aggregating $600 or more.

(B) Interest (including original issue discount), rents, royalties, annuities, pensions, and other gains, profits, and income aggregating $600 or more.

(ii) ***Information returns required under other provisions of the Internal Revenue Code.*** The payments described in paragraphs (a)(1)(i)(A) and (B) of this section shall not include any payments of amounts with respect to which an information return is required by, or may be required under authority of, section 6042(a) (relating to dividends), section 6043(a)(2) (relating to distributions in liquidation), section 6044(a) (relating to patronage dividends), section 6045 (relating to brokers' transactions with customers and certain other transactions), sections 6049(a)(1) and (2) (relating to interest), section 6050N(a) (relating to royalties), or section 6050P(a) or (b) (relating to cancellation of indebtedness). For information returns required under section 6045(f) (relating to payments to attorneys), see special rules in §§ 1.6041-1(a)(1)(iii) and 1.6045-5(c)(4). For payment card transactions (as described in § 1.6050W-1(b)) and third party network transactions (as defined in § 1.6050W-1(c)) required to be reported on information returns required under section 6050W (relating to payment card and third party network transactions), see special rules in § 1.6041-1(a)(1)(iv).

(iii) Information returns required under section 6045(f) on or after January 1, 2007. For payments made on or after January 1, 2007 to which section 6045(f) (relating to payments to attorneys) applies, the following rules apply. Not withstanding the provisions of paragraph (a)(1)(ii) of this section, payments to an attorney that are described in paragraph (a)(1)(i) of this section but which otherwise would be reportable under section 6045(f) are reported under section 6041

and this section and not section 6045(f). This exception applies only if the payments are reportable with respect to the same payee under both sections. Thus, a person who, in the course of a trade or business, pays $600 of taxable damages to a claimant by paying that amount to the claimant's attorney is required to file an information return under section 6041 with respect to the claimant, as well as another information return under section 6045(f) with respect to the claimant's attorney. For provisions relating to information reporting for payments to attorneys, see § 1.6045-5.

(iv) ***Information returns required under section 6050W for calendar years beginning after December 31, 2010.*** For payments made by payment card (as defined in § 1.6050W-1(b)(3)) or through a third party payment network (as defined in § 1.6050W-1(c)(3)) after December 31, 2010, that are required to be reported on an information return under section 6050W (relating to payment card and third party network transactions), the following rule applies. Transactions that are described in paragraph (a)(1)(ii) of this section that otherwise would be subject to reporting under both sections 6041 and 6050W are reported under section 6050W and not section 6041. For provisions relating to information reporting for payment card and third party network transactions, see § 1.6050W-1. Solely for purposes of this paragraph, the de minimis threshold for third party network transactions in § 1.6050W-1(c)(4) is disregarded in determining whether the transaction is subject to reporting under section 6050W.

(v) ***Examples.*** The provisions of paragraph (a)(1)(iv) of this section are illustrated by the following examples:

Example 1. Restaurant owner A, in the course of business, pays $600 of fixed or determinable income to B, a repairman, by credit card. B is one of a network of unrelated persons that has agreed to accept A's credit card as payment under an agreement that provides standards and mechanisms for settling the transactions between a merchant acquiring bank and the persons who accept the cards. Merchant acquiring bank Y is responsible for making the payment to B. Under paragraph (a)(1)(iv) of this section, A, as payor, is not required to file an information return under section 6041 with respect to the transaction because Y, as the payment settlement entity for the payment card transaction, is required to file an information return under section 6050W.

Example 2. Restaurant owner A, in the course of business, pays $600 of fixed or determinable income to B, a repairman, through a third party payment network. B is one of a substantial number of persons who have established accounts with Y, a third party settlement organization that provides standards and mechanisms for settling the transactions and guarantees payments to those persons for goods or services purchased through the network. Y is responsible for making the payment to B. Under paragraph (a)(1)(iv) of this section, A, as payor, is not required to file an information return under section 6041 with respect to the transaction because the transaction is a third party network transaction that is subject to reporting under section 6050W. Solely for purposes of determining whether A is eligible for relief from reporting under section 6041, the de minimis threshold for third party network transactions in § 1.6050W-1(c)(4) is disregarded.

(2) ***Prescribed form.*** The return required by subparagraph (1) of this paragraph shall be made on Forms 1096 and 1099 except that

(i) the return with respect to distributions to beneficiaries of a trust or of an estate shall be made on Form 1041, and

(ii) the return with respect to certain payments of compensation to an employee by his employer shall be made on Forms W-3 and W-2 under the provisions of § 1.6041-2 (relating to return of information as to payments to employees). Where Form 1099 is required to be filed under this section, a separate Form 1099 shall be furnished for each person to whom payments described in subdivision (i), (ii), or

(iii) of subparagraph (1) of this paragraph are made. For time and place for filing Forms 1096 and 1099, see § 1.6041-6. For the requirement to submit the information required by Form 1099 on magnetic media for payments after December 31, 1983, see section 6011(e) and § 301.6011-2 of this chapter (Procedure and Administration Regulations).

(b) *Persons engaged in trade or business* —

(1) ***In general.*** The term "all persons engaged in a trade or business", as used in section 6041(a), includes not only those so engaged for gain or profit, but also organizations the activities of which are not for the purpose of gain or profit. Thus, the term includes the organizations referred to in section 401(a), 501(c), 501(d) and 521 and in paragraph (i) of this section. On the other hand, section 6041(a) applies only to payments in the course of trade or business; hence it does not apply to an amount paid by the proprietor of a business to a physician for medical services rendered by the physician to the proprietor's child.

(2) ***Special rule for REMICs.*** For purposes of chapter 1 subtitle F, chapter 61A, part IIIB, the terms "all persons engaged in a trade or business" and "any service-recipient engaged in a trade or business" includes a real estate mortgage investment conduit or REMIC (as defined in section 860D).

(c) ***Fixed or determinable income.*** Income is fixed when it is to be paid in amounts definitely predetermined. Income is determinable whenever there is a basis of calculation by which the amount to be paid may be ascertained. The income need not be paid annually or at regular intervals. The fact that the payments may be increased or decreased in accordance with the happening of an event does not for purposes of this section make the payments any the less determinable. A payment made jointly to two or more payees may be fixed and determinable income to one payee even though the payment is not fixed and determinable income to another payee. For example, property insurance proceeds paid jointly to the owner of damaged property and to a contractor that repairs the property may be fixed and determinable income to the contractor but not fixed and determinable income to the owner, and should be reported to the contractor. A salesman working by the month for a commission on sales which is paid or credited monthly receives determinable income.

(d) *Payments specifically included* —

(1) ***In general.*** Amounts paid in respect of life insurance, endowment, or annuity contracts are required to be reported in returns of information under this section—

(i) Unless the payment is made in respect of a life insurance or endowment contract by reason of the death of the insured and is not required to be reported by paragraph (b) of § 1.6041-2,

(ii) Unless the payment is made by reason of the surrender prior to maturity or lapse of a policy, other than a policy which was purchased (*a*) by a trust described in section 401(a) which is exempt from tax under section 501(a), (*b*) as part of a plan described in section 403(a), or (*c*) by an employer described in section 403(b)(1)(A),

(iii) Unless the payment is interest as defined in § 1.6049-2 and is made after December 31, 1962,

(iv) Unless the payment is a payment with respect to which a return is required by § 1.6047-1, relating to employee retirement plans covering owner-employees,

(v) Unless the payment is payment with respect to which a return is required by § 1.6052-1, relating to payment of wages in the form of group-term life insurance.

(2) ***Professional fees.*** Fees for professional services paid to attorneys, physicians, and members of other professions are required to be reported in returns of information if paid by persons engaged in a trade or business and paid in the course of such trade or business.

(3) ***Prizes and awards.*** Amounts paid as prizes and awards that are required to be included in gross income under section 74 and § 1.74-1 when paid in the course of a trade or business are required to be reported in returns of information under this section.

(4) ***Disability payments.*** Amounts paid as disability payments under section 105(d) are required to be reported in returns of information under this section.

(5) ***Notional principal contracts.*** Except as provided in paragraphs (b)(5)(i) and (ii) of this section, amounts paid after December 31, 2000, with respect to notional principal contracts referred to in § 1.863-7 or 1.988-2(e) to persons who are not described in § 1.6049-4(c)(1)(ii) are required to be reported in returns of information under this section. The amount required to be reported under this paragraph (d)(5) is limited to the amount of cash paid from the notional principal contract as described in § 1.446-3(d). A non-periodic payment is reportable for the year in which an actual payment is made. Any amount of interest determined under the provisions of § 1.446-3(g)(4) (dealing with interest in the case of a significant non-periodic payment) is reportable under this paragraph (d)(5) and not under section 6049 (see § 1.6049-5(b)(15)). See § 1.6041-4(a)(4) for reporting exceptions regarding payments to foreign persons. See, however, § 1.1461-1(c)(1) for reporting amounts described under this paragraph (d)(5) that are paid to foreign persons. The provisions of § 1.6049-5(d) shall apply for determining whether a payment with respect to a notional principal contract is made to a foreign person. See § 1.6049-4(a) for a definition of payor. For purposes of this paragraph (d)(5), a payor includes a middleman defined in § 1.6049-4(f)(4).

(i) An amount paid with respect to a notional principal contract is not required to be reported if the amount is paid by a non-U.S. payor or a non-U.S. middleman and is paid and received outside the United States (as defined in § 1.6049-4(f)(16)).

(ii) An amount paid with respect to a notional principal contract is not required to be reported if the amount is paid by a payor that has no actual knowledge that the payee is a U.S. person and is paid and received outside the United States (as defined in § 1.6049-4(f)(16)), and the payor is—

(A) A U.S. payor or U.S. middleman that is not a U.S. person (such as a controlled foreign corporation defined in section 957(a) or certain foreign corporations or foreign partnerships engaged in a U.S. trade or business); or

(B) A foreign branch of a U.S. bank. See § 1.6049-5(c)(5) for a definition of a U.S. payor, a U.S. middleman, a non-U.S. payor, and a non-U.S. middleman.

(e) ***Payment made on behalf of another person*** —

(1) ***In general.*** A person that makes a payment in the course of its trade or business on behalf of another person is the payor that must make a return of information under this section with respect to that payment if the payment is described in paragraph (a) of this section and, under all the facts and circumstances, that person—

(i) Performs management or oversight functions in connection with the payment (this would exclude, for example, a person who performs mere administrative or ministerial functions such as writing checks at another's direction); or

(ii) Has a significant economic interest in the payment (i.e., an economic interest that would be compromised if the payment were not made, such as by creation of a mechanic's lien on property to which the payment relates, or a loss of collateral).

(2) ***Determination of payor obligated to report.*** If two or more persons meet the requirements for making a return of information with respect to a payment, as set forth in paragraph (e)(1) of this section, the person obligated to report the payment is the person closest in the chain to the payee, unless the parties agree in writing that one of the other parties meeting the requirements set forth in paragraph (e)(1) of this section will report the payment.

(3) ***Special rule for payment by employee to employer.*** Notwithstanding the provisions of paragraph (e)(1) of this section, an employee acting in the course of his employment who makes a payment to his employer on behalf of another person is not required to make a return of information with respect to that payment.

(4) ***Optional method to report.*** A person that makes a payment on behalf of another person but is not required to make an information return under paragraph (e)(1) of this section may elect to do so pursuant to the procedures established by the Commissioner. See, e.g., Rev. Proc. 84-33 (1984-1 C.B. 502) (optional method for a paying agent to report and deposit amounts withheld for payors under the statutory provisions of backup withholding) (see § 601.601(d)(2) of this chapter).

(5) ***Examples.*** The provisions of this paragraph (e) are illustrated by the following examples:

Example 1. Bank B provides financing to C, a real estate developer, for a construction project. B makes disbursements from the account for labor, materials, services, and other expenses related to the construction project. In connection with the payments, B performs the following functions: approves payments to the general contractor or subcontractors; ensures that loan proceeds are properly applied and that all approved bills are properly paid to avoid mechanics' or materialmen's liens; conducts site inspections to determine whether work has been completed (but does not check the quality of the work). B is performing management or oversight functions in connection with the payments and is subject to the information reporting requirements of section 6041 with respect to payments.

Example 2. Mortgage company D holds a mortgage on business property owned by E. When the property is damaged by a storm, E's insurance company issues a check payable to both D and E in settlement of E's claim. Pursuant to the contract between D and E, D holds the insurance proceeds in an escrow account and makes disbursements, according to E's instructions, to contractors and subcontractors performing repairs on the property. D is not performing management or oversight functions, but D has a significant economic interest in the payments because the purpose of the arrangement is to ensure that property on which D holds a mortgage is repaired or replaced. D is subject to the information reporting requirements of section 6041 with respect to the payments to contractors.

Example 3. Settlement agent F provides real estate closing services to real estate brokers and agents. F deposits money received from the buyer or lender in an escrow account and makes payments from the account to real estate agents or brokers, appraisers, land surveyors, building inspectors, or similar service providers according to the provisions of the real estate contract and written instructions from the lender. F may also make disbursements pursuant to oral

instructions of the seller or purchaser at closing. F is not performing management or oversight functions and does not have a significant economic interest in the payments, and is not subject to the information reporting requirements of section 6041. For the rules relating to F's obligation to report the gross proceeds of the sale, see section 6045(e) and § 1.6045-4.

Example 4. Assume the same facts as in *Example 3.* In addition, the seller instructs F to hire a contractor to perform repairs on the property. F selects the contractor, negotiates the cost, monitors the progress of the project, and inspects the work to ensure it complies with the contract. With respect to the payments to the contractor, F is performing management or oversight functions and is subject to the information reporting requirements of section 6041.

Example 5. G is a rental agent who manages certain rental property on behalf of property owner H. G finds tenants, arranges leases, collects rent, responds to tenant inquiries regarding maintenance, and hires and makes payments to repairmen. G subtracts her commission and any maintenance payments from rental payments and remits the remainder to H. With respect to payments to repairmen, G is performing management or oversight functions and is subject to the information reporting requirements of section 6041. With respect to the payment of rent to H, G is subject to the information reporting requirements of section 6041 regardless of whether she performs management or oversight functions or has a significant economic interest in the payment. See § 1.6041-3(d) for rules relating to rental agents. See § 1.6041-1(f) to determine the amount that G should report to H as rent.

Example 6. Literary agent J receives a payment from publisher L of fees earned by J's client, author K. J deposits the payment into a bank account in J's name. From time to time and as directed by K, J makes payments from these funds to attorneys, managers, and other third parties for services rendered to K. After subtracting J's commission, J pays K the net amount. J does not order or direct the provision of services by the third parties to K, and J exercises no discretion in making the payments to the third parties or to K. J is not performing management or oversight functions and does not have a significant economic interest in the payments and is not subject to the information reporting requirements of section 6041 in connection with the payments to K or to the third parties. For the rules relating to L's obligation to report the payment of the fees to K, see paragraphs (a)(1)(i) and (f) of this section. For the rules relating to K's obligation to report the payment of the commission to J and the payments to the third parties for services, see paragraphs (a)(1)(i) and (d)(2) of this section.

Example 7. Attorney P deposits into a client trust fund a settlement payment from R, the defendant in a breach of contract action for lost profits in which P represented plaintiff Q. P makes payments from the client trust fund to service providers such as expert witnesses and private investigators for expenses incurred in the litigation. P decides whom to hire, negotiates the amount of payment, and determines that the services have been satisfactorily performed. In the event of a dispute with a service provider, P withholds payment until the dispute is settled. With respect to payments to the service providers, P is performing management or oversight functions and is subject to the information reporting requirements of section 6041.

Example 8. Assume the same facts as in *Example 7.* In addition, assume that after paying the service providers and deducting his legal fee, P pays Q the remaining funds that P had received from the settlement with R. With respect to the payment to Q, P is not performing management or oversight functions, does not have a significant economic interest in the payment, and is not subject to the information reporting requirements of section 6041. For the rules relating to R's obligation to report the payment of the settlement proceeds to P, see section 6045(f) and the

regulations thereunder. For the rules relating to R's obligation to report the payment of the settlement proceeds to Q, see paragraphs (a)(1)(i) and (f) of this section. For the rules relating to Q's obligation to report the payment of attorney fees to P, see paragraphs (a)(1)(i) and (d)(2) of this section.

Example 9. Medical insurer S operates as the administrator of a health care program under a contract with a state. S makes payments of government funds to health care providers who provide care to eligible patients. S receives and reviews claims submitted by patients or health care providers, determines if the claims meet all the requirements of the program (e.g., that the care is authorized and that the patients are eligible beneficiaries), and determines the amount of payment. S is performing management or oversight functions and is subject to the information reporting requirements of section 6041 with respect to the payments.

Example 10. Race track employee T holds deposits made by horse owner U in a special escrow account in U's name. U enters into a contract with jockey V to ride U's horse in a race at the track. As directed by U, T pays V the fee for riding U's horse from U's escrow account. T is not performing management or oversight functions, does not have a significant economic interest in the payment, and is not subject to the information reporting requirements of section 6041. For the rules relating to U's obligation to report the payment of the fee to V, see paragraph (a)(1)(i) of this section.

Example 11. X is a certified public accountant employed by Firm Y, and is not a partner. Client Z pays X directly for accounting services. X remits the amount received to Y, as required by the terms of his employment. X does not have any reporting obligation with respect to the payment to Y. For the rules relating to Z's obligation to report the payment to Y for services, see paragraphs (a)(1)(i) and (d)(2) of this section.

Example 12. Bank contracts with Title Company with respect to the disbursement of funds on a construction loan. Pursuant to their arrangement, the contractor sends draw requests to Title Company, which inspects the work, verifies the amount requested, and then sends the draw request to Bank with supporting documents. Bank pays Title Company the amount of the draw request, and Title Company insures Bank against any loss if it cannot obtain the necessary lien waivers. Bank has a significant economic interest in the payment as a mortgagee, and Title Company exercises management or oversight over the payment. Since Title Company is closest in the chain to the contractor, Title Company should report the payment, unless the parties agree in writing that Bank will report the payment.

(f) ***Amount to be reported when fees, expenses or commissions are deducted*** —

(1) ***In general.*** The amount to be reported as paid to a payee is the amount includible in the gross income of the payee (which in many cases will be the gross amount of the payment or payments before fees, commissions, expenses, or other amounts owed by the payee to another person have been deducted), whether the payment is made jointly or separately to the payee and another person. The Commissioner may, by guidance published in the Internal Revenue Bulletin, illustrate the circumstances under which the gross amount or less than the gross amount may be reported.

(2) Examples. The provisions of this paragraph (f) are illustrated by the following examples:

Example 1. Attorney P represents client Q in a breach of contract action for lost profits against defendant R. R settles the case for $100,000 damages and $40,000 for attorney fees. Under applicable law, the full $140,000 is includible in Q's gross taxable income. R issues a check payable to P and Q in the

amount of $140,000. R is required to make an information return reporting a payment to Q in the amount of $140,000. For the rules with respect to R's obligation to report the payment to P, see section 6045(f) and the regulations thereunder.

Example 2. Assume the same facts as in *Example 1,* except that R issues a check to Q for $100,000 and a separate check to P for $40,000. R is required to make an information return reporting a payment to Q in the amount of $140,000. For the rules with respect to R's obligation to report the payment to P, see section 6045(f) and the regulations thereunder.

(g) ***Payment made in medium other than cash.*** If any payment required to be reported on Form 1099 is made in property other than money, the fair market value of the property at the time of payment is the amount to be included on such form.

(h) ***When payment deemed made.*** For purposes of a return of information, an amount is deemed to have been paid when it is credited or set apart to a person without any substantial limitation or restriction as to the time or manner of payment or condition upon which payment is to be made, and is made available to him so that it may be drawn at any time, and its receipt brought within his own control and disposition.

(i) ***Payments made by the United States or a State.*** Information returns on:

(1) Forms 1096 and 1099 and

(2) Forms W-3 and W-2 (when made under the provisions of § 1.6041-2)

of payments made by the United States or a State, or political subdivision thereof, or the District of Columbia, or any agency or instrumentality of any one or more of the foregoing, shall be made by the officer or employee of the United States, or of such State, or political subdivision, or of the District of Columbia, or of such agency or instrumentality, as the case may be, having control of such payments or by the officer or employee appropriately designated to make such returns.

(j) ***Effective/applicability date.*** This section applies to payments made on or after *January 6, 2017.* (For payments made after June 30, 2014, and before January 6, 2017, see this section as in effect and contained in 26 CFR part 1, as revised April 1, 2016. For payments made after December 31, 2010, and before July 1, 2014, see this section as in effect and contained in 26 CFR part 1, as revised April 1, 2013.)

[T.D. 6500, 25 FR 12108, Nov. 26, 1960]

Editorial Note: For FEDERAL REGISTER citations affecting § 1.6041-1, see the List of CFR Sections Affected, which appears in the Finding Aids section of the printed volume and at *www.govinfo.gov.*

§ 1.6041-2 Return of information as to payments to employees.

(a)

(1) ***In general.*** Wages, as defined in section 3401, paid to an employee are required to be reported on Form W-2. See section 6011 and the Employment Tax Regulations thereunder. All other payments of compensation, including the cash value of payments made in any medium other than cash, to an employee by his employer in the course of the trade or business of the employer must also be reported on Form W-2 if the total of such payments and the amount of the employee's wages (as defined in section 3401), if any, required to be reported on Form W-2 aggregates $600 or more in a calendar year. For example, if a payment of $700 was made to an employee and $400 thereof represents wages subject to withholding under section 3402 and the remaining $300 represents

compensation not subject to withholding, such wages and compensation must both be reported on Form W-2. A separate Form W-2 shall be furnished for each employee for whom a return must be made. At the election of the employer, components of amounts required to be reported on Form W-2 pursuant to the provisions of this subparagraph may be reported on more than one Form W-2.

(2) ***Transmittal form.*** The transmittal form for a return on Form W-2 made pursuant to the provisions of subparagraph (1) of this paragraph shall be Form W-3. In a case where an employer must file a Form W-3 under this paragraph and also under § 31.6011(a)-4 or § 31.6011(a)-5 of this chapter (Employment Tax Regulations), the Form W-3 filed under such § 31.6011(a)-4 or § 31.6011(a)-5 shall also be used as the transmittal form for a return on Form W-2 made pursuant to the provisions of this paragraph.

(3) ***Time for filing*** —

(i) ***General rule.*** In a case where an employer must file Forms W-3 and W-2 under this paragraph and also under § 31.6011(a)-4 or § 31.6011(a)-5 of this chapter (Employment Tax Regulations), the time for filing such forms under this paragraph shall be the same as the time (including extensions thereof) for filing such forms under § 31.6011(a)-4 or § 31.6011(a)-5.

(ii) ***Exception.*** In a case where an employer is not required to file Forms W-3 and W-2 under § 31.6011(a)-4 or § 31.6011(a)-5 of this chapter, returns on Forms W-3 and W-2 required under this paragraph (a) for any calendar year shall be filed on or before January 31 of the following year.

(iii) ***Cross reference.*** For extensions of time for filing returns, see section 6081 and the regulations thereunder.

(4) ***Place for filing.*** The returns on Forms W-3 and W-2 required under this paragraph shall be filed pursuant to the rules contained in § 31.6091-1 of this chapter (Employment Tax Regulations), relating to the place for filing certain returns.

(5) ***Statement for employees.*** An employer required under this paragraph (a) to file Form W-2 with respect to an employee is also required under sections 6041(d) and 6051 to furnish a written statement to the employee. This written statement must be furnished on Form W-2 in accordance with section 6051 and the regulations.

(b) ***Distributions under employees' trust or plan.***

(1) Amounts which are:

(i) Distributed or made available to a beneficiary, and to which section 402 (relating to employees' trusts) or section 403 (relating to employee annuity plans) applies, or

(ii) Described in section 72(m)(3)(B), shall be reported on Forms 1096 and 1099 to the extent such amounts are includible in the gross income of such beneficiary if the amounts so includible aggregate $600 or more in any calendar year. In addition, every trust described in section 501(c)(17) which makes one or more payments (including separation and sick and accident benefits) totaling $600 or more in 1 year to an individual must file an annual information return on Form 1096, accompanied by a statement on Form 1099, for each such individual. Payments made by an employer or a person other than the trustee of the trust should not be considered in determining whether the $600 minimum has been paid by the trustee. The provisions of this subparagraph shall not be applicable to payments of supplemental unemployment

compensation benefits made after December 31, 1970, which are treated as if they were wages for purposes of section 3401(a). Such amounts are required to be reported on Forms W-3 and W-2. See paragraph (b)(14) of § 31.3401(a)-1 of this chapter (Employment Tax Regulations).

(2) Any amount with respect to which a statement is required by § 1.6047-1, relating to employee retirement plans covering owner-employees, shall not be included in amounts required to be reported under section 6041.

(c) ***Payments to foreign persons.*** See § 1.6041-4 for reporting exemptions regarding payments to foreign persons. See § 1.6049-5(d) for determining whether a payment is made to a foreign person.

(d) ***Applicability date.*** This section applies to returns filed on or after January 30, 2020. Section 1.6041-2T (as contained in 26 CFR part 1, revised April 2019) applies to returns filed before January 30, 2020.

[T.D. 7284, 38 FR 20827, Aug. 3, 1973, as amended by T.D. 7580, 43 FR 60159, Dec. 26, 1978; T.D. 8734, 62 FR 53472, Oct. 14, 1997; T.D. 8895, 65 FR 50406, Aug. 18, 2000; T.D. 9114, 69 FR 7570, Feb. 18, 2004; T.D. 9821, 82 FR 33445, July 20, 2017; T.D. 9892, 85 FR 5325, Jan. 30, 2020]

§ 1.6041-3 Payments for which no return of information is required under section 6041.

Returns of information are not required under section 6041 and §§ 1.6041-1 and 1.6041-2 for payments described in paragraphs (a) through (q) of this section. See § 1.6041-4 for reporting exemptions regarding payments to foreign persons.

(a) Payments of income required to be reported on Forms 1120-S, 941, W-2, and W-3 (however, see § 1.6041-2(a) with respect to Forms W-2 and W-3).

(b) Payments by a broker to his customer (but for reporting requirements as to certain of such payments, see sections 6042, 6045, and 6049 and the regulations thereunder in this part).

(c) Payments of bills for merchandise, telegrams, telephone, freight, storage, and similar charges.

(d) Payments of rent made to rental agents (but the agent is required to report payments of rent to the landlord in accordance with § 1.6041-1(a)(1)(i)(B) and (2)).

(e) Payments representing earned income for services rendered without the United States made to a citizen of the United States, if it is reasonable to believe that such amounts will be excluded from gross income under the provisions of section 911 and the regulations thereunder.

(f) Compensation and profits paid or distributed by a partnership to the individual partners (but for reporting requirements, see § 1.6031-1).

(g) Payments of commissions to general agents by fire insurance companies or other companies insuring property, except when specifically directed by the Commissioner to be filed.

(h)

(1) ***In general.*** Payments made under reimbursement or other expense allowance arrangements that meet the requirements of section 62(c) of the Code and § 1.62-2, that do not exceed the amount of the expenses substantiated (i.e., amounts which are treated as paid under an accountable plan), and that are received by an employee on or after January 1, 1989, with respect to expenses paid or incurred on or after January 1, 1989.

(2) ***Transition rule.*** Payments made under reimbursement or other expense allowance arrangements that are received by an employee on or after January 1, 1989, but prior to July 1, 1990, to the extent that the employee is required to account (within the meaning of the term "account" as set forth in § 1.162-17(b)(4) or 1.274-5T(f)(4), whichever is applicable) and does so account to the payor for such expenses, provided the payor has made a reasonable, good faith effort to comply with the requirements of section 62(c). In general, compliance with the provisions of this section, as in effect for payments made under reimbursement or other expense allowance arrangements that were received by an employee before January 1, 1989, with respect to expenses paid or incurred before January 1, 1989, will constitute such reasonable good faith compliance. In no event, however, will reasonable good faith compliance exist if a payor fails to report payments made under an arrangement (other than a per diem or mileage allowance type arrangement) under which an employee is not required to substantiate expenses paid or incurred or is not required to return amounts in excess of the substantiated expenses.

(i) Payments of interest on obligations of the United States, or a State, Territory, or political subdivision thereof, or the District of Columbia, or any agency or instrumentality of any one or more of the foregoing (but for requirements for reporting certain such payments by the United States or any agency or instrumentality thereof, see §§ 1.1461-1 to 1.1461-3, inclusive).

(j) Payments of interest on corporate bonds (but for reporting requirements as to payments on certain corporate bonds, see § 1.6049-5.

(k) Amounts paid as an allowance or reimbursement for traveling or other bona fide ordinary and necessary expenses, including an allowance for meals and lodging or a per diem allowance in lieu of subsistence, to persons in the service of an international organization (without regard to whether there is a requirement to account for such amounts) if-

(1) The organization is designated as an international organization by the President of the United States in Executive Orders issued pursuant to 22 U.S.C. 288, and

(2) The organization has immunity with respect to the invoilability of its archives pursuant to an international agreement having full force and effect in the United States.

(l) A payment to an informer as an award, fee, or reward for information relating to criminal activity, but only if such payment is made by the United States, a State, Territory, or political subdivision thereof, or the District of Columbia, or any agency or instrumentality of any one or more of the foregoing, or, with respect to payments made after December 31, 1987, by an organization that is described in section 501(c)(3) and that makes such payments in furtherance of a charitable purpose to lessen the burdens of government within the meaning of § 1.501(c)(3)-1(d)(2).

(m) On and after September 9, 1968, payments by a person carrying on the banking business of interest on a deposit evidenced by a negotiable time certificate of deposit (but for reporting requirements as to payments made after December 31, 1962, of interest on certain deposits, see sec. 6049 and the regulations thereunder in this part).

(n) Payments to individuals as scholarships or fellowship grants within the meaning of section 117(b)(1), whether or not "qualified scholarships" as described in section 117(b). This exception does not apply to any amount of a scholarship or fellowship grant that represents payment for services within the meaning of section 117(c). Instead, these amounts are required to be reported as wages on Form W-2. See § 1.1461-1(c) for applicable reporting requirements for amounts paid to foreign persons.

(o) Per diem of certain alien trainees described under section 1441(c)(6).

(p) Payments made to the following persons:

(1) A corporation described in § 1.6049-4(c)(1)(ii)(A), except with respect to payments made to a corporation after December 31, 1997 for attorneys' fees, and except a corporation engaged in providing medical and health care services or engaged in the billing and collecting of payments in respect to the providing of medical and health care services. However, no reporting is required where payment is made to a hospital or extended care facility described in section 501(c)(3) which is exempt from taxation under section 501(a) or to a hospital or extended care facility owned and operated by the United States, a State, the District of Columbia, a possession of the United States, or a political subdivision, agency or instrumentality of any of the foregoing. For reporting requirements as to payments by cooperatives, and to certain other payments, see sections 6042, 6044, and 6049 and the regulations thereunder in this part.

(2) An organization exempt from taxation under section 501(a), as described in § 1.6049-4(c)(1)(ii)(B)(*1*), or an individual retirement plan, as described in § 1.6049-4(c)(1)(ii)(C).

(3) The United States, as described in § 1.6049-4(c)(1)(ii)(D).

(4) A State, the District of Columbia, a possession of the United States, or any political subdivision of any of the foregoing, as described in § 1.6049-4(c)(1)(ii)(E).

(5) A foreign government or political subdivision of a foreign government, as described in § 1.6049-4(c)(1)(ii)(F).

(6) An international organization, as described in § 1.6049-4(c)(1)(ii)(G).

(7) A foreign central bank of issue, as described in § 1.6049-4(c)(1)(ii)(H) and the Bank for International Settlements.

(8) Any wholly owned agency or instrumentality of any person described in paragraph (p) (2), (3), (4), (5), (6), or (7) of this section.

[T.D. 6500, 25 FR 12108, Nov. 26, 1960]

Editorial Note: For FEDERAL REGISTER citations affecting § 1.6041-3, see the List of CFR Sections Affected, which appears in the Finding Aids section of the printed volume and at *www.govinfo.gov*.

§ 1.6041-4 Foreign-related items and other exceptions.

(a) ***Exempted foreign-related items.***

(1) Returns of information are not required for payments that a payor can, prior to payment, reliably associate with documentation upon which it may rely to treat as made to a foreign beneficial owner in accordance with § 1.1441-1(e)(1)(ii) or as made to a foreign payee in accordance with § 1.6049-5(d)(1) or presumed to be made to a foreign payee under § 1.6049-5(d)(2), (3), (4), or (5). Returns of information are also not required for a payment that a payor or middleman can, prior to payment, reliably associate with documentation upon which it may rely to treat as made to a foreign intermediary or flow-through entity in accordance with § 1.1441-1(b) if it obtains from the intermediary or flow-through entity a withholding statement described in § 1.6049-5(b)(14) that allocates the payment to a chapter 4 withholding rate pool (as defined in § 1.6049-4(f)(5)) or specific payees to which withholding applies under chapter 4. Payments excepted from reporting under this paragraph (a)(1) may be reportable, for purposes of chapter 3 of the Internal Revenue Code (Code),

under § 1.1461-1(b) and (c) and, for purposes of chapter 4 of the Code, under § 1.1474-1(d)(2). The provisions in § 1.6049-5(c) regarding documentation of foreign status shall apply for purposes of this paragraph (a)(1). The provisions in § 1.6049-5(c)(5) regarding the definitions of U.S. payor and non-U.S. payor shall also apply for purposes of this paragraph (a)(1). See § 1.1441-1(b)(3)(iii)(B) and (C) for special payee rules regarding scholarships, grants, pensions, annuities, etc. The provisions of § 1.1441-1 shall apply by substituting the term "payor" for the term "withholding agent" and without regard to the fact that the provisions apply only to amounts subject to withholding under chapter 3 of the Code and the regulations under that chapter.

(2) Returns of information are not required for payments of amounts from sources outside the United States (determined under the provisions of part I, subchapter N, chapter 1 of the Code and the regulations under those provisions) paid by a non-U.S. payor or non-U.S. middleman and that are paid and received outside the United States. For a definition of non-U.S. payor and non-U.S. middleman, see § 1.6049-5(c)(5). For circumstances in which an amount is considered to be paid and received outside the United States, see § 1.6049-4(f)(16).

(3) If a foreign intermediary, as described in § 1.1441-1(c)(13), or a U.S. branch that is not treated as a U.S. person receives a payment from a payor, which payment the payor can reliably associate with a valid withholding certificate described in § 1.1441-1(e)(3)(ii) or (iii), or § 1.1441-1(e)(3)(v), respectively, furnished by such intermediary or branch, then the intermediary or branch is not required to report such payment when it, in turn, pays the amount, unless, and to the extent, the intermediary or branch knows that the payment is required to be reported under this section and was not so reported. For example, if a U.S. branch described in § 1.1441-1(b)(2)(iv) fails to provide information regarding U.S. persons that are not exempt from reporting under § 1.6041-3(q) to the person from whom the U.S. branch receives the payment, the U.S. branch must report the payment on an information return. See, however, paragraph (a)(7) of this section for when reporting under section 6041is coordinated with reporting under chapter 4 of the Code or an applicable IGA (as defined in § 1.6049-4(f)(7)). The exception described in this paragraph (a)(3) for amounts paid by a foreign intermediary shall not apply to a qualified intermediary that assumes reporting responsibility under chapter 61 of the Code with respect to amounts reportable under the agreement described in § 1.1441-1(e)(5)(iii).

(4) Returns of information are not required for amounts paid with respect to notional principal contracts referred to in § 1.863-7 or 1.988-2(e) which the payor may treat as effectively connected income of a foreign payee under the provisions of § 1.1441-4(a)(3) or if the payee provides a representation in a master agreement that governs the transactions in notional principal contracts between the parties (for example, an International Swap and Derivatives Association (ISDA) Agreement, including the Schedule thereto) or in the confirmation on the particular notional principal contract transaction that the counterparty is a foreign person. See, however, § 1.1461-1(c)(2)(i) for applicable reporting requirements.

(5) Returns of information are not required for the period that the amounts paid represent assets blocked as described in § 1.1441-2(e)(3). The exemption in this paragraph (a)(5) shall terminate when payment is deemed to occur in accordance with the provisions of § 1.1441-2(e)(3).

(6) For rules concerning direct sellers, see § 1.6041A-1(d)(3)(i)(C).

(7) Returns of information are not required for payments with respect to which a return is not required by applying the rules of § 1.6049-4(c)(4) (by substituting the term "a payment subject to reporting under section 6041" for the term "an interest payment").

(b) ***Joint owners.*** Amounts paid to joint owners for which a certificate or documentation is required as a condition for being exempt from reporting under paragraph (a) of this section are presumed made to U.S. payees who are not exempt recipients if, prior to payment, the payor or middleman cannot reliably associate the payment either with a Form W-9 furnished by one of the joint owners in the manner required in §§ 31.3406(d)-1 through 31.3406(d)-5, or with documentation described in paragraph (a)(1) of this section furnished by each joint owner upon which the payor or middleman can rely to treat each joint owner as a foreign payee or foreign beneficial owner. However, in the case of a withholdable payment (as defined in § 1.6049-4(f)(15)) made to joint payees, if any joint payee does not appear to be an individual, the payment is presumed made to a foreign payee that is a nonparticipating FFI (as defined in § 1.1471-1(b)(82)). See § 1.1471-3(f)(7).

(c) ***Conversion into United States dollars of amounts paid in foreign currency.*** For rules concerning foreign currency conversion, see § 1.6049-4(d)(3)(i).

(d) ***Effective/applicability date.*** This section applies to payments made on or after January 6, 2017. (For payments made after June 30, 2014, and before January 6, 2017, see this section as in effect and contained in 26 CFR part 1, as revised April 1, 2016. For payments made after December 31, 2002, and before July 1, 2014, see this section as in effect and contained in 26 CFR part 1, as revised April 1, 2013.)

[T.D. 8734, 62 FR 53473, Oct. 14, 1997, as amended by T.D. 8804, 63 FR 72188, Dec. 31, 1998; T.D. 8856, 64 FR 73412, Dec. 30, 1999; T.D. 8881, 65 FR 32205, May 22, 2000; T.D. 9658, 79 FR 12793, Mar. 6, 2014; T.D. 9808, 82 FR 2106, Jan. 6, 2017]

§ 1.6041-5 Information as to actual owner.

When a person receiving a payment described in section 6041 is not the actual owner of the income received, the name and address of the actual owner shall be furnished upon demand of the person paying the income, and in default of compliance with such demand the payee becomes liable for the penalties provided. See section 7203.

§ 1.6041-6 Returns made on Forms 1096 and 1099 under section 6041; contents and time and place for filing.

(a) ***In general.*** Except as provided in paragraph (b) of this section, returns made under section 6041 on Forms 1096 and 1099 for any calendar year shall be filed on or before February 28 (March 31 if filed electronically) of the following year with any of the Internal Revenue Service Centers, the addresses of which are listed in the instructions for such forms. The name and address of the person making the payment and the name and address of the recipient of the payment shall be stated on Form 1099. If the present address of the recipient is not available, the last known post office address must be given. See section 6109 and the regulations in part 301 of this title under section 6109 for rules requiring the inclusion of identifying numbers in Form 1099.

(b) ***Exception.*** Returns made on Form 1099 reporting nonemployee compensation shall be filed on or before January 31 of the year following the calendar year to which such returns relate.

(c) ***Applicability date.*** This section applies to returns filed on or after January 30, 2020. Section 1.6041-6T (as contained in 26 CFR part 1, revised April 2019) applies to returns filed before January 30, 2020.

[T.D. 9892, 85 FR 5325, Jan. 30, 2020]

§ 1.6041-7 Magnetic media requirement.

(a) ***General.*** For rules relating to permission to submit the information required by Form 1099 or W-2 on magnetic tape or other media, see § 1.9101-1. See also paragraph (b)(2) of § 31.6011(a)-7 of this chapter (Employment Tax Regulations) for additional rules relating to Form W-2. High-volume filers of information returns must file their returns on magnetic media. See section 6011(e) and § 301.6011-2 of this chapter (Procedure and Administration Regulations) for the requirements for filing on magnetic media.

(b) ***Returns on magnetic tape by departments of health care carriers.***

(1) For calendar years beginning on or after January 1, 1971, a health care carrier, or an agent thereof, making payment of fees or other compensation to providers of medical and health care services, may make a separate return on magnetic tape for each separate department within a specific line of such carrier's business, so long as all of such returns taken together contain all of the information required by section 6041 with respect to each provider of medical and health care services to whom such health care carrier makes payments aggregating $600 or more during the calendar year. Examples of separate departments within a specific line of such carrier's business (such as health and accident insurance) include, but are not limited to, separate departments to process claims of individual and group policyholders; and separate departments established along geographic lines.

(2) For purposes of this paragraph, the term “health care carrier” means any person making health care payments:

(i) In exchange for the payment of a premium,

(ii) in accordance with an employee benefit program, or

(iii) in connection with a government-sponsored health care program.

[T.D. 7106, 36 FR 6422, Apr. 3, 1971, as amended by T.D. 8734, 62 FR 53473, Oct. 14, 1997]

§ 1.6041-8 Cross-reference to penalties.

For provisions relating to the penalty provided for failure to file timely a correct information return required under section 6041(a) or (b), see § 301.6721-1 of this chapter (Procedure and Administration Regulations). For provisions relating to the penalty provided for failure to furnish timely a correct payee statement required under section 6041(d), see § 301.6722-1 of this chapter. See § 301.6724-1 of this chapter for the waiver of a penalty if the failure is due to reasonable cause and is not due to willful neglect.

[T.D. 8734, 62 FR 53474, Oct. 14, 1997]

§ 1.6041-9 Coordination with reporting rules for widely held fixed investment trusts under § 1.671-5.

See § 1.671-5 for the reporting rules for widely held fixed investment trusts (WHFIT) (as defined under that section). For purposes of section 6041, middlemen and trustees of WHFITs are deemed to have management and oversight functions in connection with payments made by the WHFIT.

[T.D. 9241, 71 FR 4024, Jan. 24, 2006]

§ 1.6041-10 Return of information as to payments of winnings from bingo, keno, and slot machine play.

(a) ***In general.*** Every person engaged in a trade or business (as defined in § 1.6041-1(b)) and who, in the course of such trade or business, makes a payment of reportable gambling winnings (defined in paragraph (b)(1) of this section) must make an information return with respect to such payment. Unless the provisions of paragraph (g) of this section (regarding aggregate reporting) apply, a separate information return is required with respect to each payment of reportable gambling winnings.

(b) ***Definitions*** —

(1) ***Reportable gambling winnings.***

(i) For purposes of this section, the term reportable gambling winnings is defined as follows:

(A) For bingo, the term "reportable gambling winnings" means winnings of $1,200 or more from one bingo game, without reduction for the amount wagered. All winnings received from all wagers made during one bingo game are combined (for example, all winnings from all cards played during one bingo game are combined).

(B) For keno, the term "reportable gambling winnings" means winnings of $1,500 or more from one keno game reduced by the amount wagered on the same keno game. All winnings received from all wagers made during one keno game are combined (for example, all winnings from all "ways" on a multi-way keno ticket are combined).

(C) For slot machine play, the term "reportable gambling winnings" means winnings of $1,200 or more from one slot machine play, without reduction for the amount wagered.

(ii) Winnings and wagers from different types of games are not combined to determine if the reporting threshold is satisfied. Bingo, keno, and slot machine play are different types of games.

(iii) Winnings include the fair market value of a payment in any medium other than cash.

(iv) The amount wagered in the case of a free play is zero.

(2) ***Information reporting period*** —

(i) ***In general.*** For purposes of paragraph (g) of this section, the "information reporting period" begins when a patron places the first wager on a particular type of game at a gaming establishment, as defined in paragraph (b)(2)(iv) of this section, and ends when the patron places his or her last wager on the same type of game at the same gaming establishment before the end of the "information reporting period." An information reporting period is a 24-hour period. A payor may select a calendar day (as defined in paragraph (b)(2)(ii) of this section) or a gaming day (as defined in paragraph (b)(2)(iii) of this section) as the information reporting period for purposes of the aggregate reporting method in paragraph (g) of this section. For purposes of this paragraph (b)(2), time is determined by the time zone of the location where the patron places the wager. A payor must use the same information reporting period (a calendar day or gaming day) to report all "reportable gambling winnings" paid during the calendar year. Once selected, a payor may not change its information reporting period during a calendar year. Any changes to a payor's information reporting period from one calendar year to another must be implemented on January 1.

(ii) ***Calendar day.*** A calendar day is determined with reference to a period beginning at 12 a.m. and ending no later than 11:59 p.m. of the same calendar day.

(iii) ***Gaming day*** —

(A) ***In general.*** A gaming day is a 24-hour period other than a calendar day (as defined in paragraph (b)(2)(ii) of this section) selected by the payor, subject to the special rules for December 31 and January 1 in paragraphs (b)(2)(iii)(B) and (C) of this section.

(B) ***Special rule for December 31.*** For purposes of paragraph (b)(2)(iii) of this section, the gaming day that begins on December 31 of any calendar year ends at 11:59 p.m. on December 31, regardless of the time on December 31 on which that gaming day began.

(C) ***Special rule for January 1.*** For purposes of paragraph (b)(2)(iii) of this section, the gaming day of January 1 begins at 12:00 a.m. on January 1, regardless of the time and calendar day on which that gaming day ends, and may extend beyond 24 hours.

(iv) ***Gaming establishment.*** For purposes of this section, a gaming establishment is a business entity of a payor of reportable gambling winnings with respect to bingo, keno, or slot machine play, and includes all gaming establishments owned by such payor using the same employer identification number (EIN) issued to such payor in accordance with section 6109.

(v) ***Examples.*** The following examples illustrate the provisions of paragraph (b)(2) of this section.

Example 1. Casino R uses the aggregate reporting method under paragraph (g) of this section to report certain reportable gambling winnings. For other regulatory purposes, Casino R uses a gaming day that begins at 3 a.m. and ends at 2:59 a.m. the following calendar day. Casino R chooses to use its gaming day as its information reporting period for purposes of paragraph (b)(2) of this section during Year 1. Accordingly, the information reporting period for purposes of paragraph (g) of this section for each day during Year 1 begins at 3 a.m. and ends at 2:59 a.m. the following day. The information reporting period for December 31 of Year 1 begins at 3 a.m. on December 31 of Year 1 and ends at 11:59 p.m. on December 31 of Year 1. The information reporting period for January 1 of Year 2 begins at 12 a.m. on January 1 of Year 2 and ends at 2:59 a.m. on January 2 of Year 2.

Example 2. The facts are the same as Example 1, except Casino R uses a calendar day as its information reporting period for purposes of paragraph (b)(2) of this section during Year 1. Accordingly, the information reporting period for purpose of paragraph (g) of this section for each day during Year 1 begins at 12 a.m. and ends at 11:59 p.m. on the same day.

Example 3. Casino R uses the aggregate reporting method under paragraph (g) of this section to report certain reportable gambling winnings. For other regulatory purposes, Casino R uses a gaming day that begins at 9:00 p.m. and ends at 8:59 p.m. the following calendar day. Casino R chooses to use its gaming day as its information reporting period for purposes of paragraph (b)(2) of this section during Year 1. Accordingly, the information reporting period for purposes of paragraph (g) of this section for each day during Year 1 begins at 9:00 p.m. and ends at 8:59 p.m. the following day. The information reporting period for December 31 of Year 1 begins at 9:00 p.m. on December 30 and ends at 8:59 p.m. on December 31. A second information reporting period for December 31 then begins at 9:00

p.m. on December 31 and ends at 11:59 p.m. on December 31. The information reporting period for January 1 of Year 2 begins at 12:00 a.m. on January 1 and ends at 8:59 p.m. on January 1 of Year 2.

Example 4. Casino R uses the aggregate reporting method under paragraph (g) of this section to report certain reportable gambling winnings. In Year 1, Casino R chooses to use a "gaming day" that begins at 3 a.m. and ends at 2:59 a.m. the following day as its information reporting period. During the course of Year 1, Casino R decides that it would like to change its information reporting period to instead begin at 5 a.m. and end at 4:59 a.m. the following day. Casino R must wait until January 1 of Year 2 to implement such a change. On January 1 of Year 2, Casino R's information reporting period will begin at 12 a.m. and end at 4:59 a.m. on January 2. On December 31 of Year 2, Casino R's information reporting period will begin at 5 a.m. and end at 11:59 p.m.

(3) ***Slot machine.*** The term "slot machine" means a device that, by application of the element of chance, may deliver, or entitle the person playing or operating the device to receive cash, premiums, merchandise, or tokens whether or not the device is operated by insertion of a coin, token, or similar object.

(c) ***Prescribed form; time and place for filing the return.*** The return described in paragraph (a) of this section is a Form W-2G, "Certain Gambling Winnings." The Form W-2G must be filed with the appropriate Internal Revenue Service location designated in the instructions to the form on or before February 28 (March 31, if filed electronically) of the year following the calendar year in which the reportable gambling winnings were paid. See section 6011 and § 1.6011-2 for requirements to file electronically.

(d) ***Information included on the return*** —

(1) ***In general.*** Each return required by paragraph (a) of this section must contain:

(i) The name, address, and taxpayer identification number of the payor;

(ii) The name, address, and taxpayer identification number of the payee;

(iii) A general description of the two types of identification (as described in paragraph (e) of this section), one of which must have the payee's photograph on it (except in the case of tribal member identification cards in certain circumstances as described in paragraph (d)(2) of this section) that the payor relied on to verify the payee's name, address, and taxpayer identification number;

(iv) The date and amount of payment;

(v) The type of wagering transaction (bingo, keno, or slot machine play);

(vi) In the case of a bingo or keno game, any number, color, or other designation assigned to the game for which the payment is made;

(vii) In the case of slot machine play, the identification number of the slot machine(s) (for example, location and asset number);

(viii) Any other information required by the forms, instructions, revenue procedures, or other applicable guidance published in the Internal Revenue Bulletin.

(2) ***Special rule for tribal member identification cards.*** A tribal member identification card need not contain the payee's photograph to meet the identification requirement described in paragraph (d)(1)(iii) of this section if:

(i) The payee is a member of a federally recognized Indian tribe;

(ii) The payee presents the payor with a tribal member identification card issued by a federally recognized Indian tribe stating that the payee is a member of such tribe; and

(iii) The payor is a gaming establishment (as described in paragraph (b)(2)(iv) of this section) owned or licensed (in accordance with 25 U.S.C. 2710) by the tribal government that issued the tribal member identification card referred to in (d)(2)(ii).

(3) ***Special rule for optional aggregate reporting method.*** In the case of aggregate reporting under paragraph (g) of this section, the amount of the payment in paragraph (d)(1)(iv) of this section is the aggregate amount of payments of reportable gambling winnings from the same type of game (bingo, keno, or slot machine play) made to the same payee during the same information reporting period (as defined in paragraph (b)(2) of this section). Unless otherwise provided in forms, instructions, or other guidance, in the case of aggregate reporting under paragraph (g) of this section, the information required by paragraphs (d)(1)(v) through (viii) of this section must be maintained by the payor as described in paragraph (g)(3) of this section.

(e) ***Identification.*** The following items are treated as identification for purposes of paragraph (d)(1)(iii) of this section—

(1) Government-issued identification (for example, a driver's license, passport, social security card, military identification card, tribal member identification card issued by a federally recognized Indian tribe, or voter registration card) in the name of the payee; and

(2) A Form W-9, “Request for Taxpayer Identification Number and Certification,” signed by the payee, that includes the payee's name, address, taxpayer identification number, and other information required by the form. A Form W-9 is not acceptable for this purpose if the payee has modified the form (other than pursuant to instructions to the form) or if the payee has deleted the jurat or other similar provisions by which the payee certifies or affirms the correctness of the statements contained on the form.

(f) ***Furnishing a statement to the payee.*** Every payor required to make a return under paragraph (a) of this section must also make and furnish to each payee, with respect to each payment of reportable gambling winnings, a written statement that contains the information that is required to be included on the return under paragraph (d) of this section. The payor must furnish the statement to the payee on or before January 31st of the year following the calendar year in which payment of the reportable gambling winnings is made. The statement will be considered furnished to the payee if it is provided to the payee at the time of payment or if it is mailed to the payee on or before January 31st of the year following the calendar year in which payment was made.

(g) ***Aggregate reporting of bingo, keno, and slot machine winnings*** —

(1) ***In general.*** In lieu of filing a separate information return for each payment of reportable gambling winnings as required by paragraph (a) of this section, a payor may use the aggregate reporting method (defined in paragraph (g)(2) of this section) to report reportable gambling winnings from

bingo, keno, or slot machine play. A payor using the aggregate reporting method to file information returns under paragraph (a) of this section must also furnish statements to the payee under paragraph (f) of this section using the aggregate reporting method.

(2) ***Aggregate reporting method defined.***

(i) The aggregate reporting method is a method of reporting more than one payment of reportable gambling winnings from the same type of game (bingo, keno, or slot machine play) made to the same payee during the same information reporting period (as defined in this paragraph (b)(2) of this section) on one information return or statement.

(ii) A payor may use the aggregate reporting method for payments to some payees and not others, at its own discretion. In addition, with respect to a single payee, the payor may use the aggregate reporting method to report winnings from one type of game, but not for winnings from another type of game.

(iii) Failure to report some reportable gambling winnings from a particular type of game during one information reporting period to a particular payee under the aggregate reporting method (for whatever reason, including because the winnings are not permitted to be reported using the aggregate reporting method under paragraph (g)(4) of this section) will not disqualify the payor from using the aggregate reporting method to report other reportable gambling winnings from that type of game during that information reporting period to that payee. The payor may stop using the aggregate reporting method for a particular payee or for all payees before the end of the payor's information reporting period for any reason.

(3) ***Recordkeeping under the aggregate reporting method.*** A payor using the aggregate reporting method must maintain a record of every payment of reportable gambling winnings from the same type of game made to the same payee during the information reporting period that will be reported using the aggregate reporting method. Every individual that the payor has determined is responsible for an entry in the record must confirm the information in the entry by signing the record in a manner that will enable the signature to be associated with the relevant entry. Each payment of a reportable gambling winning made to the same payee and reported under the aggregate reporting method must have its own entry in the record, however, the information required by paragraphs (d)(1)(i) through (iii) of this section is not required to be recorded more than one time per information reporting period. A payor that uses the aggregate reporting method must retain a copy of the record in its files. The record (which may be electronic provided the requirements set forth in forms, instructions, or guidance published in the Internal Revenue Bulletin are met) must include the following information about each payment:

(i) The payee's signature confirming the information in the record;

(ii) The information required under paragraph (d) of this section;

(iii) The time of the win resulting in the reportable gambling winnings;

(iv) The total amount of reportable gambling winnings with respect to all payments to the payee during the information reporting period;

(v) The amount of reportable gambling winnings with respect to each particular payment;

(vi) The method of payment to the payee (for example, cash, check, voucher, credit, token, or chips); and

(vii) The name and unique identification number of the individual who the payor has determined is responsible for ensuring that the entry with respect to the reportable gambling winnings (including the general description of two types of identification used to verify the payee's name, address, and taxpayer identification number) is complete and accurate and who is authorized to perform that function by the applicable gaming regulatory control authority. Such individual may or may not be the same individual who prepared the entry.

(4) ***When the aggregate reporting method may not be used.*** A payor cannot use the aggregate reporting method if—

(i) The payment is to a foreign person, as described in section 1.6041-10(h);

(ii) The payor knows or has reason to know that the person making the wager is not the person entitled to the winnings or is not the only person entitled to the winnings (regardless of whether the person making the wager furnishes a Form 5754, "Statement by Person(s) Receiving Gambling Winnings"); or

(iii) Backup withholding under section 3406(a) applies to the payment.

(5) ***Examples.*** The following examples illustrate the provisions of this section. For each example, assume that for purposes of the aggregate reporting method in paragraph (g) of this section, Casino R's "information reporting period" for all calendar years is a gaming day that begins at 3 a.m. and ends at 2:59 a.m. the following day (except for January 1 and December 31) and that individuals C, D, and E are U.S. persons.

Example 1. On Day 1, between 7 a.m. and 4 p.m., C places five wagers at casino R on five different slot machines. The first two wagers result in no win. The third wager results in a $1,500 win. The fourth wager results in a $2,500 win. The fifth wager results in an $800 win:
(i) Under paragraph (b)(1)(i)(C) of this section, there are reportable gambling winnings from the slot machine play of $4,000 ($1,500 + $2,500). The $800 win is not a reportable gambling winning from slot machine play because it does not equal or exceed the $1,200 threshold.

(ii) Because all of the amounts were won on the same type of game (even though each of the winnings occurred on different machines) during the same information reporting period, R is permitted to use the aggregate reporting method under this paragraph (g). If R decides not to use the aggregate reporting method, a separate Form W-2G would have to be filed and furnished for the payment of reportable gambling winnings of $1,500 and for the payment of reportable gambling winnings of $2,500. However, if R decides to use the aggregate reporting method, R may report total reportable gambling winnings from slot machine play of $4,000 ($1,500 + $2,500) on one Form W-2G.

Example 2. Assume the same facts as *Example 1,* except that in addition to the winnings described in *Example 1,* at 5 a.m. on Day 2, C wins $3,250 from one slot machine play at casino R. Even though C played the same type of game (slot machine play) on Day 1 and Day 2, under paragraph (b)(2) of this section, the win at 5 a.m. on Day 2 is a win during a separate information reporting period. Under paragraph (g)(2)(i) of this section, the $3,250 of reportable gambling winnings on Day 2 cannot be aggregated with the reportable gambling winnings of

$4,000 from Day 1 on a single Form W-2G. Accordingly, if R uses the aggregate reporting method, R must file two Forms W-2G with respect to C's reportable gambling winnings on Day 1 and Day 2. R must report $4,000 of reportable gambling winnings from slot machine play paid to C on Day 1 on the first Form W-2G, and $3,250 of reportable gambling winnings from slot machine play paid to C on Day 2 on the second Form W-2G.

Example 3. On December 31 of Year 1 at 4:00 p.m., C wins $10,000 from one slot machine play at casino R. At 12:30 a.m. on January 1 of Year 2, C wins $4,000 from one slot machine play at casino R. Under paragraphs (b)(2)(iii)(B) and (C) of this section, the win at 4 p.m. on December 31 of Year 1 and the win at 12:30 a.m. on January 1 of Year 2 are wins during different information reporting periods. Under paragraph (g)(2)(i) of this section, the $4,000 of reportable gambling winnings on January 1 cannot be aggregated with the reportable gambling winnings of $10,000 from December 31 on a single Form W-2G. Accordingly, if R uses the aggregate reporting method, R must file two Forms W-2G with respect to C's reportable gambling winnings on Day 1 and Day 2. R must report $10,000 of reportable gambling winnings from slot machine play paid to C on December 31 on the first Form W-2G and $4,000 of reportable gambling winnings from slot machine play paid to C on January 1 on the second Form W-2G.

Example 4. Assume the same facts as example 3, except that C also wins $5,000 from one slot machine play at 3:30 p.m. on January 1 and $7,000 from one slot machine play at 1:30 a.m. on January 2. Under the special rule of paragraph (b)(2)(iii) of this section, the "information reporting period" begins at 12:00 a.m. on January 1 and extends until the start of the next information reporting period, in this case 2:59 a.m. on January 2. Under paragraph (b)(1)(C) of this section, Casino R will pay C a total of $26,000 ($10,000 + $4,000 + $5,000 + $7,000) in reportable gambling winnings; however, $10,000 must be reported in Year 1, and $16,000 must be reported in Year 2. Because all of the amounts won in Year 2 were won on the same type of game and during the same information reporting period, R is permitted to use the aggregate reporting method under this paragraph (g). If R decides to use the aggregate reporting method, R may report $10,000 of reportable gambling winnings from slot machine play paid to C on December 31 on the first Form W-2G and $16,000 of total reportable gambling winnings from slot machine play paid to C on January 1 on the second Form W-2G.

Example 5. At 2 p.m. on Day 1, D won $2,000 (after reducing the amount of the win by the amount wagered) playing one keno game at casino R. D provides R with his driver's license. The driver's license has D's photograph on it, as well as D's name and address. The driver's license does not include D's social security number. D cannot remember his social security number and has no other identification at the time with his social security number on it. D does not provide R with his social security number before R pays the winnings to D. Because D cannot remember his social security number, D cannot complete and sign a Form W-9. R deducts and withholds $560 (28 percent of $2,000) under the backup withholding provisions of section 3406(a) and pays the remaining $1,440 in winnings to D. D returns to casino R and at 6 p.m. on Day 1 wins $1,500 (after reducing the amount of the win by the amount wagered) in one keno game. D provides R with his driver's license as well as D's social security card. R generally uses the aggregate reporting method and in all cases where it is used, R complies with the requirements of this paragraph (g). At 8 p.m. and 10 p.m. on Day 1, D wins an additional

$1,800 and $1,700 (after reducing the amount of the win by the amount wagered), respectively, from two different keno games. For each of these two wins, an employee of R obtains the information from D required by this paragraph (g):
(i) Under paragraph (b)(1)(i)(B) of this section, each of D's wins from the four games of keno on Day 1 ($2,000, $1,500, $1,800, and $1,700) are reportable gambling winnings. Because D's first win on Day 1 was at 2 p.m. and D's last win on Day 1 was at 10 p.m., all of D's reportable gambling winnings from keno are won during the same information reporting period. Because R satisfies the requirements of paragraph (g)(2)(i), R may use the aggregate reporting method to report D's reportable gambling winnings from keno. However, pursuant to paragraph (g)(4)(iii) of this section, the $2,000 payment made to D at 2 p.m. cannot be reported under the aggregate reporting method because that payment was subject to backup withholding. Accordingly, if R uses the aggregate reporting method under this paragraph (g), R will have to file two Forms W-2G with respect to D's reportable gambling winnings from keno on Day 1. On the first Form W-2G, R will report $2,000 of reportable gambling winnings and $560 of backup withholding with respect to the 2 p.m. win from keno, and, on the second Form W-2G, R will report $5,000 of reportable gambling winnings from keno (representing the three payments of $1,500, $1,800, and $1,700 that D won between 6 p.m. and 10 p.m. on Day 1).

Example 6. In one information reporting period on Day 1, E won five reportable gambling winnings from five different bingo games at a casino R. R generally uses the aggregate reporting method and in all cases where it is used, R complies with the requirements of this paragraph (g). Although E signed the entry in the record R maintains for payment of the first four reportable gambling winnings, E refuses to sign the entry in the record for the fifth payment of reportable gambling winnings. R may use the aggregate reporting method for the first four payments of reportable gambling winnings to E. However, because the entry in the record for the fifth payment of reportable gambling winnings does not include E's signature, as required by paragraph (g)(3)(i) of this section, that payment may not be reported under the aggregate reporting method. Accordingly, if R uses the aggregate reporting method under paragraph (g) of this section, R must prepare two Forms W-2G as follows: On the first Form W-2G, R must report the first four payments of reportable gambling winnings from bingo made to E on Day 1. On the second Form W-2G, R must report the fifth payment of reportable gambling winnings from bingo made to E on Day 1.

(h) ***Payments to foreign persons.*** See § 1.6041-4 regarding payments to foreign persons. See § 1.6049-5(d) for determining whether the payee is a foreign person.

(i) ***Effective/applicability date.*** Section 1.6041-10(b)(2), concerning payor-selected "information reporting periods," applies to payments of reportable gambling winnings from bingo, keno, or slot machine play made on or after January 1 of the year following the date these regulations are published in the FEDERAL REGISTER. All other sections contained herein apply to payments of reportable gambling winnings from bingo, keno, or slot machine play made on or after December 30, 2016.

(j) ***Cross-references for certain gambling winnings.*** For provisions relating to backup withholding for winnings from bingo, keno, and slot machine play and other reportable gambling winnings, see § 31.3406(g)-2(d). For provisions relating to withholding and reporting for gambling winnings from lotteries, sweepstakes, wagering pools, and other wagering transactions, including a wagering transaction in a parimutuel pool with respect to horse races, dog races, or jai alai, see § 31.3402(q)-1.

[T.D. 9807, 81 FR 96377, Dec. 30, 2016]

§ 1.6041A-1 Returns regarding payments of remuneration for services and certain direct sales.

(a) through (c) [Reserved]

(d) ***Exceptions to return requirement.*** [Reserved]

(1) and

(2) [Reserved]

(3) ***Foreign transactions*** —

(i) ***In general.*** No return shall be required under section 6041A with respect to payments described in this paragraph (d)(3).

(A) Returns of information are not required for payments that a payor can, prior to payment, associate with documentation upon which it may rely to treat as made to a foreign beneficial owner in accordance with § 1.1441-1(e)(1)(ii) or as made to a foreign payee in accordance with § 1.6049-5(d)(1) or presumed to be made to a foreign payee under § 1.6049-5(d)(2), (3), (4), or (5). However, such payments may be reportable under § 1.1461-1(b) and (c). For purposes of this paragraph (d)(3)(i)(A), the provisions in § 1.6049-5(c) (regarding rules applicable to documentation of foreign status and definition of U.S. payor and non-U.S. payor) shall apply. The provisions of § 1.1441-1 shall apply by substituting the term *payor* for the term *withholding agent*.

(B) Returns of information are not required for payments of remuneration for services from sources outside the United States (determined under the provisions of part I, subchapter N, chapter 1 of the Internal Revenue Code and the regulations under those provisions) if payments are made outside the United States by a non-U.S. payor or non U.S. middleman. For a definition of non U.S. payor or non-U.S. middleman, see § 1.6049-5(c)(5). For circumstances in which a payment is considered to be made outside the United States, see § 1.6049-5(e).

(C) Returns of information are not required under sections 6041 or 6041A for amounts paid outside of the United States (within the meaning of § 1.6049-5(e)) as remuneration for services as a direct seller (within the meaning of section 3508) performed outside of the United States or for sales described in section 6041A(b) made outside of the United States of consumer products for resale outside of the United States.

(ii) ***Payor.*** The term *payor* has the same meaning as described in § 1.6049-4(a)(2).

(iii) ***Joint owners.*** Amounts paid to joint owners for which a certificate or documentation is required as a condition for being exempt from reporting under paragraph (d)(3)(i) of this section are presumed made to U.S. payees who are not exempt recipients if, prior to payment, the payor or middleman cannot reliably associate the payment either with a Form W-9 furnished by one of

the joint owners in the manner required in §§ 31.3406(d)-1 through 31.3406(d)-5 of this chapter, or with documentation described in paragraph (d)(3)(i)(A) of this section furnished by each joint owner upon which it can rely to treat each joint owner as a foreign payee or foreign beneficial owner.

(iv) ***Conversion into United States dollars of amounts paid in foreign currency.*** For rules concerning foreign currency conversion, see § 1.6049-4(d)(3)(i).

(v) ***Effective date.*** The provisions of this paragraph (d)(3) apply to payments made after December 31, 2000.

(4) ***Information returns required under section 6050W for calendar years beginning after December 31, 2010.***

(i) For payments made by payment card (as defined in § 1.6050W-1(b)(3)) or through a third party payment network (as defined in § 1.6050W-1(c)(3)) after December 31, 2010, that are required to be reported on an information return under section 6050W (relating to payment card and third party network transactions), the following rule applies. Transactions that otherwise would be reportable under both sections 6041A(a) and 6050W are reported under section 6050W and not section 6041A(a). For provisions relating to information reporting for payment card transactions and third party network transactions, see § 1.6050W-1. Solely for purposes of this paragraph, the de minimis threshold for third party network transactions in § 1.6050W-1(c)(4) is disregarded in determining whether the transaction is subject to reporting under section 6050W.

(ii) ***Examples.*** The provisions of paragraph (d)(4) of this section are illustrated by the following examples:

Example 1. Service-recipient A, in the course of its business, pays remuneration of $600 to service provider B by credit card for services performed by B. B is one of a network of unrelated persons that has agreed to accept A's credit card as payment under an agreement that provides standards and mechanisms for settling the transactions between a merchant acquiring bank and the persons who accept the cards. Merchant acquiring bank Y is responsible for making the payment to B. Under paragraph (d)(4)(i) of this section, A is not required to file an information return under section 6041A(a) with respect to the transaction because Y, as the payment settlement entity for the payment card transaction, is required to file an information return under section 6050W.

Example 2. Service-recipient A, in the course of business, pays $600 of fixed or determinable income to B, a repairman, through a third party payment network. B is one of a substantial number of persons who have established accounts with Y, a third party settlement organization that provides standards and mechanisms for settling the transactions and guarantees payments to those persons for goods or services purchased through the network. Y is responsible for making the payment to B. Under paragraph (d)(4)(i) of this section, A is not required to file an information return under section 6041A(a) with respect to the transaction because the transaction is a third party network transaction that is subject to reporting under section 6050W. Solely for purposes of determining whether the transaction is subject to reporting under section 6050W, the de minimis threshold for third party network transactions in § 1.6050W-1(c)(4) is disregarded.

(iii) ***Effective/applicability date.*** Paragraph (d)(4) of this section applies to payments made by payment card or through a third party payment network after December 31, 2010.

(e) [Reserved]

(f) ***Statements to be furnished to persons with respect to whom information is required to be furnished*** —

(1) [Reserved]

(2) ***Time for furnishing statement.*** [Reserved]

(3) ***Contents of statement.*** [Reserved]

(g) [Reserved]

(h) ***Cross-reference to penalties.*** For provisions relating to the penalty provided for failure to file timely a correct information return required under section 6041A(a) or (b), see § 301.6721-1 of this chapter (Procedure and Administration Regulations). For provisions relating to the penalty provided for failure to furnish timely a correct payee statement required under section 6041A(e), see § 301.6722-1 of this chapter. See § 301.6724-1 of this chapter for the waiver of a penalty if the failure is due to reasonable cause and is not due to willful neglect.

[T.D. 8734, 62 FR 53474, Oct. 14, 1997, as amended by T.D. 8804, 63 FR 72188, Dec. 31, 1998; T.D. 8856, 64 FR 73412, Dec. 30, 1999; T.D. 8881, 65 FR 32205, May 22, 2000; T.D. 9496, 75 FR 49828, Aug. 16, 2010]

§ 1.6042-1 Return of information as to dividends paid in calendar years before 1963.

(a) ***Requirement of return*** —

(1) ***In general.*** Except as provided in subparagraphs (2) and (3) of this paragraph, every domestic corporation, or foreign corporation engaged in business within the United States or having an office or place of business or a fiscal or paying agent in the United States, making payments during any calendar year before 1963 of $10 or more of dividends and distributions (other than distributions in liquidation) to any shareholder who is an individual (citizen or resident of the United States), a resident fiduciary, or a resident partnership any member of which is a citizen or resident shall file for the calendar year a return setting forth the amount of such payments for such calendar year. A separate return on Form 1099, showing the name and address of the payer and the shareholder, and the amount paid, shall be prepared with respect to each shareholder. These returns shall be accompanied by transmittal Form 1096.

(2) ***Federal land bank associations and certain other corporations.*** A corporation described in section 501(c) (12), (15), or (16), or section 521(b)(1), or a Federal land bank association or a production credit association, making a payment of a dividend, or a distribution, to any shareholder in any calendar year before 1963 shall file an information return with respect to such payments when they total $100 or more during the calendar year.

(3) ***Savings and loan associations, etc.*** A savings and loan association, a cooperative bank, a homestead association, a credit union, or a building and loan association is required to file an information return with respect to distributions made to a shareholder during any calendar year before 1963 only if the amount thereof paid to the shareholder during the calendar year, or such amount when aggregated with other payments made to the shareholder during such year of interest, rents, royalties, annuities, pensions, and other gains, profits, and income, as described in paragraph (a)(2)(ii) of § 1.6041-1, totals $600 or more. For this purpose, the term “distributions to a shareholder” includes periodical distributions of earnings on running installment shares of stock paid or credited by a building and

loan association to its holders of that class of stock, and the sum received upon withdrawal from a building and loan association in excess of the amounts paid in on account of membership fees and stock subscriptions, consisting of accumulated profits.

(b) ***Nontaxable or partly nontaxable distributions.*** In the case of a distribution which is made from a depletion or depreciation reserve, or which for any other reason is deemed by the corporation to be nontaxable or partly nontaxable to its shareholders, the corporation shall fill in the information on both sides of Form 1096.

(c) ***Information as to actual owner*** —

(1) ***In general.*** When the person receiving a payment with respect to which an information return is required under authority of the Code is not the actual owner of the income received, the name and address of the actual owner or payee shall be furnished upon demand of the person paying the income, and in default of a compliance with such demand the payee becomes liable for the penalties provided. See section 7203. Dividends on stock are prima facie the income of the record owner of the stock. If a record owner of stock who is not the actual owner thereof receives dividends on such stock in any calendar year before 1963, he shall file a Form 1087 disclosing the name and address of the actual owner or payee, the name of the issuing corporation, the number of shares of such stock, and the amount of dividends received with respect to such stock during the calendar year. (For the reporting by a nominee of dividends received by him on behalf of another person in any calendar year after 1962, see § 1.6042-2.) Unless such a disclosure is made the record owner will be held liable for any tax based upon such dividends. A separate Form 1087 shall be filed by the record owner for each of the stockholdings of each actual owner for whom he acts as nominee. However, where the record owner is a banking institution, trust company, or brokerage firm, it may, provided it maintains such records as will permit a prompt substantiation of each payment of dividends made to the actual owner, file one Form 1087 for each actual owner for whom it acts as nominee and report thereon the total amount of the dividends paid to such actual owner (without itemization as to the issuing company, class of stock, etc.).

(2) ***Exceptions.*** The filing of Form 1087 is not required if:

(i) The record owner is required to file a fiduciary return on Form 1041, or a withholding return on Form 1042, disclosing the name and address of the actual owner or payee;

(ii) The actual owner or payee is a nonresident alien individual, foreign partnership, or foreign corporation and the tax has been withheld at the source before receipt of the dividends by the record owner;

(iii) The record owner is a banking institution, a trust company, or a brokerage firm which prepares the individual income tax return of the actual owner, provided the verification on the return with respect to the preparation thereof is executed by such record owner;

(iv) The record owner is a nominee of a banking institution or trust company exercising trust powers, and such banking institution or trust company is required to file a fiduciary return on Form 1041 which reflects the name and address of the actual owner or payee;

(v) The actual owner is an organization exempt from taxation under section 501(a) and is exempt from the requirement of filing a return under section 6033 and paragraph (g) of § 1.6033-1; or

(vi) The record owner is a banking institution or trust company exercising trust powers, or a nominee thereof, and the actual owner is an organization exempt from taxation under section 501(a) for which such banking institution or trust company files an annual return.

See § 1.1441-1, relating to withholding of tax on nonresident alien individuals, and § 1.1442-1, relating to withholding of tax on nonresident foreign corporations.

(d) ***Time and place for filing.*** Returns made under this section on Forms 1096 and 1099 and Form 1087 for any calendar year shall be filed on or before February 28 of the following year with any of the Internal Revenue Service Centers, the addresses of which are listed in the instructions for such forms.

[T.D. 6500, 25 FR 12108, Nov. 26, 1960, as amended by T.D. 6628, 27 FR 12795, Dec. 28, 1962]

§ 1.6042-2 Returns of information as to dividends paid.

(a) ***Requirement of reporting*** —

(1) ***In general.*** An information return on Form 1099 shall be made under section 6042(a) by—

(i) Every person who makes a payment of dividends (as defined in § 1.6042-3) to any other person during a calendar year. The information return shall show the aggregate amount of the dividends, the name, address, and taxpayer identifying number of the person to whom paid, the amount of tax deducted and withheld under section 3406 from the dividends, if any, and such other information as required by the forms. An information return is generally not required if the amount of dividends paid to the other person during the calendar year aggregates less than $10 or if the payment is made to a person who is an exempt recipient described in § 1.6049-4(c)(1)(ii) unless the payor backup withholds under section 3406 on such payment (because, for example, the payee has failed to furnish a Form W-9), in which case the payor must make a return under this section, unless the payor refunds the amount withheld pursuant to § 31.6413(a)-3 of this chapter. Further, a return of information is not required under this section for—

(A) Payments with respect to which a return is not required by applying the rules of § 1.6049-4(c)(4) (by substituting the term “dividend” for the term “interest”); or

(B) Payments made by a paying agent on behalf of a corporation described in section 1297(a) with respect to a shareholder of the corporation if—

(*1*) The paying agent obtains from the corporation a written certification signed by a person authorized to sign on behalf of the corporation, that states that the corporation is described in section 1297(a) for each calendar year during which the paying agent relies on the provisions of paragraph (a)(1)(i)(B) of this section, and the paying agent has no reason to know the written certification is unreliable or incorrect;

(*2*) The paying agent identifies, prior to payment, the corporation as a participating FFI (including a reporting Model 2 FFI) (as defined in § 1.6049-4(f)(10) or (14), respectively), or reporting Model 1 FFI (as defined in § 1.6049-4(f)(13)), in accordance with the requirements of § 1.1471-3(d)(4) (substituting the terms “paying agent” and “corporation” for the terms “withholding agent” and “payee,” respectively) and validates that status annually;

(3) The paying agent obtains a written certification representing that the corporation shall report the payment as part of its reporting obligations under chapter 4 of the Code or an applicable IGA (as defined in § 1.6049-4(f)(7)) with respect to its U.S. accounts and provided the paying agent does not know that the corporation is not reporting the payment as required. The paying agent may rely on the written certification until there is a change in circumstances or the paying agent knows or has reason to know that the statement is unreliable or incorrect. A paying agent that knows that the corporation is not reporting the payment as required under chapter 4 of the Code or an applicable IGA (as defined in § 1.6049-4(f)(7)) must report all payments reportable under this section that it makes during the year in which it obtains such knowledge; and

(4) The paying agent is not also acting in its capacity as a custodian, nominee, or other agent of the payee with respect to the payments.

(ii) Every person, except to the extent that he acts as a nominee described in paragraph (a)(1)(iii) of this section, who receives payments of dividends as a nominee on behalf of another person shall make a return of information under this section for the calendar year of the payment . The information return shall show the aggregate amount of the dividends, the name, address, and taxpayer identification number of the person on whose behalf the dividends are received, the amount of tax deducted and withheld under section 3406 from the dividends, if any, and such other information as required by the forms. An information return is generally not required if the amount of the dividends received on behalf of the other person during the calendar year aggregates less than $10. However, a return of information is not required under this section if—

(A) The record owner is, pursuant to section 6012(a) (3) or (4) and § 1.6012-3, required to file a fiduciary return on Form 1041 that is filed for the estate or trust disclosing the name, address, and identifying number of both the record owner and actual owner and furnishes Form K-1 to each actual owner containing the information required to be shown on the form, including amounts withheld under section 3406;

(B) The record owner is a nominee of a banking institution or trust company exercising trust powers, and such banking institution or trust company is, pursuant to section 6012(a) (3) or (4) and § 1.6012-3, required to file a fiduciary return on Form 1041 that is filed for the estate or trust disclosing the name, address, and identifying number of both the record owner and the actual owner and furnishes Form K-1 to each actual owner containing the information required to be shown on the form, including amounts withheld under section 3406; or

(C) The record owner is a banking institution or trust company exercising trust powers, or a nominee thereof, and the actual owner is an organization exempt from taxation under section 501(a) for which such banking institution or trust company files an annual return but only if the name, address, and identifying number of the record owner are included on or with the annual return filed for the tax exempt organization).

(iii) Every person who is a nominee acting as a custodian of a unit investment trust described in section 851(f)(1) and paragraph (d) of § 1.851-7 who, during a calendar year after 1968, receives payments of dividends in such capacity, shall make an information return on Forms 1096 and 1099, for such calendar year showing the information required by such forms and instructions thereto and the name, address, and identifying number of the nominee identified as

such. This subdivision shall not apply if the regulated investment company agrees with the nominee to satisfy the requirements of section 6042 and the regulations thereunder with respect to each holder of an interest in the unit investment trust whose shares are being held by the nominee as custodian and within the time limit for furnishing statements prescribed by § 1.6042-4, files with the Internal Revenue Service office where such company's return is to be filed for the taxable year, a statement that the holders of the unit investment trust with whom the agreement was made have been directly notified by the regulated investment company. Such statement shall include the name, sponsor, and custodian of each unit investment trust whose holders have been directly notified. The nominee's requirements under this subdivision shall be deemed met if the regulated investment company transmits a copy of such statement to the nominee within such period; provided, however, if the regulated investment company fails or is unable to satisfy the requirements of section 6042 with respect to the holders of interest in the unit investment trust, it shall so notify the Internal Revenue Service within 45 days following the close of its taxable year. The custodian shall, upon notice by the Internal Revenue Service that the regulated investment company has failed to comply with the agreement, satisfy the requirements of this subdivision within 30 days of such notice.

(2) ***Definitions.*** The term “person” when used in this section does not include the United States, a State, the District of Columbia, a foreign government, a political subdivision of a State or of a foreign government, or an international organization. Therefore, dividends paid by or to one of these entities need not be reported. For purposes of this section, a person who receives a dividend shall be considered to have received it as a nominee if he is not the actual owner of such dividend and if he was required under § 1.6109-1 to furnish his identifying number to the payer of the dividend (or would have been so required if the total of such dividends for the year had been $10 or more), and such number was (or would have been) required to be included on an information return filed by the payer with respect to the dividend. However, a person shall not be considered to be a nominee as to any portion of a dividend which is actually owned by another person whose name is also shown on the information return filed by the payer or nominee with respect to such dividend. Thus, in the case of stock jointly owned by a husband and wife, the husband will not be considered as receiving any portion of a dividend on that stock as a nominee for his wife if his wife's name is included on the information return filed by the payer with respect to the dividend.

(3) ***Determination of person to whom a dividend is paid or for whom it is received.*** For purposes of applying the provisions of this section, the person whose identifying number is required to be included by the payer of a dividend on an information return with respect to such dividend shall be considered the person to whom the dividend is paid. In the case of a dividend received by a nominee on behalf of another person, the person whose identifying number is required to be included on an information return made by the nominee with respect to such dividend shall be considered the person on whose behalf such dividend is received by the nominee. Thus, in the case of a dividend made payable to a person other than the record owner of the stock with respect to which the dividend is paid, the record owner of the stock shall be considered the person to whom the dividend is paid for purposes of applying the reporting requirements in this section, since his identifying number is required to be included on the information return filed under this section by the payer of the dividend. Similarly, if a stockbroker receives a dividend on stock held in street name for the joint account of a husband and wife, the dividend is considered as received on behalf of the husband since his identifying number should be shown on the information return filed by the nominee under this section. Thus, if the wife has a separate account with the same stockbroker, any dividends

received by the stockbroker for her separate account should not be aggregated with the dividends received for the joint account for purposes of information reporting. For regulations relating to the use of identifying numbers, see § 1.6109-1.

(4) ***Inclusion of other payments.*** The Form 1099 filed by any person with respect to payments of dividends to another person during a calendar year may, at the election of the maker, include other payments made by him to such other person during such year which are required to be reported on Form 1099. Similarly, the Form 1099 filed by a nominee with respect to payments of dividends received by him on behalf of any other person during a calendar year may include payments of interest received by him on behalf of such person during such year which are required to be reported on Form 1099.

(b) ***When payment deemed made.*** For purposes of a return of information, an amount is deemed to have been paid when it is credited or set apart to a person without any substantial limitation or restriction as to the time or manner of payment or condition upon which payment is to be made, and is made available to him so that it may be drawn at any time, and its receipt brought within his own control and disposition.

(c) ***Time and place for filing.*** The returns required under this section for any calendar year shall be filed after September 30 of such year, but not before the payer's final payment for the year, and on or before February 28 (March 31 if filed electronically) of the following year with any of the Internal Revenue Service Centers, the addresses of which are listed in the instructions for Form 1096. For extensions of time for filing returns under this section, see § 1.6081-1.

(d) ***Cross-reference to penalty.*** For provisions relating to the penalty provided for failure to file timely a correct information return required under section 6042(a), see § 301.6721-1 of this chapter (Procedure and Administration Regulations). See § 301.6724-1 of this chapter for the waiver of a penalty if the failure is due to reasonable cause and is not due to willful neglect.

(e) ***Magnetic media requirement.*** For rules relating to permission to submit the information required by Form 1087 or 1099 on magnetic tape or other media, see § 1.9101-1. For the requirement to submit the information required by Form 1099 on magnetic media for payments after December 31, 1983, see section 6011(e) and § 301.6011-2 of this chapter (Procedure and Administration Regulations).

(f) ***Effective/applicability date.*** This section applies to payments made on or after January 6, 2017. (For payments made after June 30, 2014, and before January 6, 2017, see this section as in effect and contained in 26 CFR part 1, as revised April 1, 2016. For payments made after December 31, 2000, and before July 1, 2014, see this section as in effect and contained in 26 CFR part 1, as revised April 1, 2013.)

[T.D. 6628, 27 FR 12796, Dec. 29, 1962, as amended by T.D. 6677, 28 FR 10147, Sept. 17, 1963; T.D. 6879, 31 FR 3493, Mar. 8, 1966; T.D. 6883, 31 FR 6589, May 3, 1966; T.D. 7000, 34 FR 996, Jan. 23, 1969; T.D. 7187, 37 FR 13258, July 6, 1972; T.D. 8734, 62 FR 53474, Oct. 14, 1997; T.D. 8804, 64 FR 11378, Mar. 9, 1999; T.D. 8895, 65 FR 50406, Aug. 18, 2000; T.D. 9658, 79 FR 12794, Mar. 6, 2014; T.D. 9808, 82 FR 2106, Jan. 6, 2017]

§ 1.6042-3 Dividends subject to reporting.

(a) ***In general.*** Except as provided in paragraph (b) of this section, the term *dividend* for purposes of this section and §§ 1.6042-2 and 1.6042-4 means the amounts described in the following paragraphs (a) (1) through (3) of this section—

(1) Any distribution made by a corporation to its shareholders which is a dividend as defined in section 316; and

(2) Any payment made by a stockbroker to any person as a substitute for a dividend. Such a payment includes any payment made in lieu of a dividend to a person whose stock has been borrowed. See § 1.6045-2(h) for coordination of the reporting requirements under sections 6042 and 6045(d) with respect to such payments; and

(3) A distribution from a regulated investment company (irrespective of the fact that any part of the distribution may not represent ordinary income (i.e., may, for example, represent a capital gain dividend as defined in section 852(b)(3)(C)).

(b) *Exceptions* —

(1) *In general.* For purposes of §§ 1.6042-2 and 1.6042-4, the amounts described in paragraphs (b)(1)(i) through (vii) of this section are not dividends.

(i) Amounts paid by an insurance company to a policyholder, other than a dividend upon its capital stock.

(ii) Payments (however denominated) by a mutual savings bank, savings and loan association, or similar organization, in respect of deposits, investment certificates, or withdrawable or repurchasable shares. See, however, section 6049 and the regulations under that section for provisions requiring reporting of these payments.

(iii) Distributions or payments that a payor can, prior to payment, reliably associate with documentation upon which it may rely to treat as made to a foreign beneficial owner in accordance with § 1.1441-1(e)(1)(ii) or as made to a foreign payee in accordance with § 1.6049-5(d)(1) or presumed to be made to a foreign payee under § 1.6049-5(d)(2), (3), (4), or (5). Returns of information are also not required for payments that a payor or middleman can, prior to payment, reliably associate with documentation upon which it may rely to treat as made to a foreign intermediary in accordance with § 1.1441-1(b) if it obtains from the intermediary entity a withholding statement (described in § 1.6049-5(b)(14)) that allocates the payment to a chapter 4 withholding rate pool (as defined in § 1.6049-4(f)(5)) or to specific payees to which withholding under chapter 4 applies. Payments excepted from reporting under this paragraph (b)(1)(iii) may be reportable, for purposes of chapter 3 of the Internal Revenue Code (Code), under § 1.1461-1(b) and (c) or, for chapter 4 purposes, under § 1.1474-1(d)(2). The provisions in § 1.6049-5(c) regarding documentation of foreign status shall apply for purposes of this paragraph (b)(1)(iii). The provisions in § 1.6049-5(c) regarding the definitions of U.S. payor and non-U.S. payor shall also apply for purposes of this paragraph (b)(1)(iii). The provisions of § 1.1441-1 shall apply by substituting the term *payor* for the term *withholding agent* and without regard to the fact that the provisions apply only to amounts subject to withholding under chapter 3 of the Code.

(iv) Distributions or payments from sources outside the United States (as determined under the provisions of part I, subchapter N, chapter 1 of the Code and the regulations under those provisions) that are paid by a non-U.S. payor or non-U.S. middleman and that are paid and received outside the United States. For a definition of non-U.S. payor and non-U.S. middleman, see § 1.6049-5(c)(5). For circumstances in which an amount is considered to be paid and received outside the United States, see § 1.6049-4(f)(16).

(v) Distributions or payments for the period that the amounts represent assets blocked as described in § 1.1441-2(e)(3). The exemption in this paragraph (b)(1)(v) shall terminate when payment is deemed to occur in accordance with the rules of § 1.1441-2(e)(3).

(vi) If a foreign intermediary, as described in § 1.1441-1(c)(13), or a U.S. branch that is not treated as a U.S. person receives a payment from a payor, which payment the payor can reliably associate with a valid withholding certificate described in § 1.1441-1(e)(3)(ii) or (iii), or § 1.1441-1(e)(3)(v), respectively, furnished by such intermediary or branch, then the intermediary or branch is not required to report such payment when it, in turn, pays the amount, unless, and to the extent, the intermediary or branch knows that the payment is required to be reported under this section and was not so reported. For example, if a U.S. branch described in § 1.1441-1(b)(2)(iv) fails to provide information regarding U.S. persons that are not exempt from reporting under § 1.6049-4(c)(1)(ii) to the person from whom the U.S. branch receives the payment, the amount paid by the U.S. branch to such person is a dividend. See, however, § 1.6042-2(a)(1)(i)(A) for when reporting under section 6042 is coordinated with reporting under chapter 4 of the Code or an applicable IGA (as defined in § 1.6049-4(f)(7)). The exception of this paragraph (b)(1)(vi) for amounts paid by a foreign intermediary shall not apply to a qualified intermediary that assumes reporting responsibility under chapter 61 of the Code with respect to amounts reportable under the agreement described in § 1.1441-1(e)(5)(iii).

(vii) With respect to amounts paid or credited after December 31, 1982, any amount paid or credited to any person described in § 1.6049-4(c)(1)(ii), unless a tax is withheld under section 3406 and is not refunded by the payor in accordance with § 31.6413(a)-3 of this chapter (Employment Tax Regulations).

(2) ***Payor.*** The term *payor* has the same meaning as described in § 1.6049-4(a)(2).

(3) ***Joint owners.*** Amounts paid to joint owners for which a certificate or documentation is required as a condition for being exempt from reporting under this paragraph (b) are presumed made to U.S. payees who are not exempt recipients if, prior to payment, the payor or middleman cannot reliably associate the payment either with a Form W-9 furnished by one of the joint owners in the manner required in §§ 31.3406(d)-1 through 31.3406(d)-5 of this chapter, or with documentation described in paragraph (b)(1)(iii) of this section furnished by each joint owner upon which it can rely to treat each joint owner as a foreign payee or foreign beneficial owner. However in the case of a withholdable payment (as defined in § 1.6049-4(f)(15)) made to joint payees, if any such joint payee does not appear to be an individual, the payment is presumed made to a foreign payee that is a nonparticipating FFI (as defined in § 1.1471-1(b)(82)). See § 1.1471-3(f)(7). For purposes of applying this paragraph (b)(3), the grace period described in § 1.6049-5(d)(2)(ii) shall apply only if each payee qualifies for such grace period.

(4) ***Conversion into United States dollars of amounts paid in foreign currency.*** For rules concerning foreign currency conversion, see § 1.6049-4(d)(3)(i).

(c) ***Special rule.*** If a person makes a payment which may be a dividend, or if a nominee receives a payment which may be a dividend, but such person or nominee is unable to determine the portion of the payment which is a dividend (as defined in paragraphs (a) and (b) of this section) at the time he files his return under § 1.6042-2, he shall, for purposes of such section, treat the entire amount of such payment as a dividend.

(d) ***Effective/applicability date.*** This section applies on or after January 6, 2017. (For payments made after June 30, 2014, and before January 6, 2017, see this section as in effect and contained in 26 CFR part 1, as revised April 1, 2016. For payments made after December 31, 2000, and before July 1, 2014, see this section as in effect and contained in 26 CFR part 1, as revised April 1, 2013).

[T.D. 6628, 27 FR 12797, Dec. 28, 1962, as amended by T.D. 6908, 31 FR 16774, Dec. 31, 1966; T.D. 7987, 49 FR 42719, Oct. 24, 1984; T.D. 8029, 50 FR 23680, June 5, 1985; T.D. 8734, 62 FR 53475, Oct. 14, 1997; T.D. 8804, 63 FR 72186, Dec. 31, 1998; 64 FR 73411, Dec. 30, 1999; T.D. 8881, 65 FR 32205, May 22, 2000; T.D. 9658, 79 FR 12794, Mar. 6, 2014; T.D. 9808, 82 FR 2107, Jan. 6, 2017]

§ 1.6042-4 Statements to recipients of dividend payments.

(a) ***Requirement.*** A person required to make an information return under section 6042(a)(1) and § 1.6042-2 must furnish a statement to each recipient whose identifying number is required to be shown on the related information return for dividend payments.

(b) ***Form and content of the statement.*** The statement required by paragraph (a) of this section must be either the official Form 1099 prescribed by the Internal Revenue Service for the respective calendar year or an acceptable substitute statement that contains provisions that are substantially similar to those of the official Form 1099 for the respective calendar year. For further guidance on how to prepare an acceptable substitute statement, see Rev. Proc. 2012-38, 2012-48 IRB 575, also published as Publication 1179, "General Rules and Specifications for Substitute Forms 1096, 1098, 1099, 5498, and Certain Other Information Returns," or any successor guidance. An IRS truncated taxpayer identifying number (TTIN) may be used as the identifying number of the recipient. For provisions relating to the use of TTINs, see § 301.6109-4 of this chapter (Procedure and Administration Regulations).

(c) ***Aggregation of payments.*** A payor may aggregate on one Form 1099 all payments made to a recipient with respect to each separate account during a calendar year.

(d) ***Manner of providing statements to recipients*** —

(1) ***In general.*** The Form 1099, or acceptable substitute statement, must be provided to the recipient either in person or by first-class mail to the recipient's last known address in a statement mailing.

(2) ***Statement mailing requirement.*** The mailing required under section 6042(c) of a Form 1099 to a payee-recipient must qualify as a statement mailing. A statement mailing must contain the required Form 1099 or acceptable substitute statement (written statement) and must comply with enclosure and envelope restrictions.

(i) ***Enclosure restrictions.*** To qualify as a statement mailing, the mailing cannot contain any enclosures except those listed in this paragraph (d)(2)(i). Moreover, no promotional or advertising material is permitted in the mailing of the written statement. Even a *de minimis* amount of promotional or advertising material violates the statement mailing requirement. However, a logo on the envelope containing the written statement and on nontax enclosures described in paragraph (d)(2)(i) (A) through (D) of this section does not violate the written statement requirement. The written statement required under section 6042(c) and paragraph (a) of this section may be perforated to a check or to a statement of the recipient-payee's specific account with the payor described in paragraph (d)(2)(i) (A) or (C) of this section. The enclosure to which the written statement is perforated must contain, in a bold and conspicuous type, the legend: "Important Tax Return Document Attached." The enclosures permitted in a mailing are limited to—

(A) A check with respect to the account reported on the written statement;

(B) A letter explaining why a check with respect to such account is not enclosed with the written statement (for example, because a dividend has not been declared payable);

(C) A statement of the taxpayer-recipient's specific account with the payor if payments on such account are reflected on the written statement;

(D) A letter limited to an explanation of the tax consequences of the information set forth on the enclosed written statement;

(E) Payee statements related to other Forms 1099, Form 1098, and Form 5498 (or the account balance on a Form 5498), Forms W-2 and W-2G; and

(F) Any document concerning the solicitation of the Form W-9, as described in § 31.3406(h)-3(a) of this chapter, or of the Form W-8 as described in § 1.1441-1(e)(1).

(ii) *Envelope and delivery restrictions* —

(A) ***Envelope restrictions.*** The outside of the envelope in which the written statement is mailed and each nontax enclosure enclosed in the envelope must contain, in a bold and conspicuous type, the legend: "Important Tax Return Document Enclosed." For purposes of this paragraph (d)(2)(ii), a nontax enclosure is any item listed in paragraphs (d)(2)(i)(A) through (C) of this section. However, a payor is not required to include the legend on the outside of an envelope containing only the enclosures in paragraph (d)(2)(i)(D) through (F) of this section.

(B) ***Delivery restrictions.*** The requirement to provide the written statement in person or by first-class mail may be satisfied by sending the written statement and any enclosures described in paragraph (d)(2)(i) of this section by intra-office mail, provided that intra-office mail is used by the payor in sending account activity, balance information, and other correspondence to the payee. If a payor does not personally deliver the written statement (i.e., the Form 1099 or its acceptable substitute) to the recipient or mail it to the recipient in a statement mailing as described in this paragraph (d), the payor is considered to have failed to mail the statement required under section 6042(c) and will be subject to the penalty under section 6722.

(e) *Time for furnishing statements* —

(1) ***In general.*** Each statement required by section 6042(c) and this section to be furnished to any person for a calendar year must be furnished to such person after November 30 of the year and on or before January 31 (February 10 in the case of a nominee filing under § 1.6042-2(a)(1)(iii)) of the following year, but no statement may be furnished before the final dividend for the calendar year has been paid. However, the statement may be furnished at any time after April 30 if it is furnished with the final dividend for the calendar year. For a statement required to be furnished after December 31, 2008, the February 15 due date under section 6045 applies to the statement if the statement is furnished in a consolidated reporting statement under section 6045. *See* §§ 1.6045-1(k)(3), 1.6045-2(d)(2), 1.6045-3(e)(2), 1.6045-4(m)(3), and 1.6045-5(a)(3)(ii).

(2) ***Extensions of time.*** For good cause upon written application of the person required to furnish statements under this section, the Director, Martinsburg Computing Center, may grant an extension of time not exceeding 30 days in which to furnish such statements. The application must be addressed to the Director, Martinsburg Computing Center, and must contain a full recital of the reasons for requesting the extension to aid the Director in determining the period of the extension, if any, that will be granted. Such a request in the form of a letter to the Director, Martinsburg Computing Center, signed by the applicant will suffice as an application. The application must be filed on or before the date prescribed in paragraph (e)(1) of this section.

(3) ***Last day for furnishing statement.*** For provisions relating to the time for performance of an act when the last day prescribed for performance falls on Saturday, Sunday, or a legal holiday, see section 7503 and § 301.7503-1 of this chapter (Regulations on Procedure and Administration).

(f) ***Cross-reference to penalty.*** For provisions relating to the penalty provided for failure to furnish timely a correct payee statement required under section 6042(c), see § 301.6722-1 of this chapter (Procedure and Administration Regulations). See § 301.6724-1 of this chapter for the waiver of a penalty if the failure is due to reasonable cause and is not due to willful neglect.

(g) ***Effective/applicability date.*** This section is effective for payee statements due after December 31, 1995, without regard to extensions. The amendments to paragraph (b) are effective for payee statements due after December 31, 2014. For payee statements due before January 1, 2015, § 1.6042-4(b) (as contained in 26 CFR part 1, revised April 2013) shall apply.

[T.D. 8637, 60 FR 66110, Dec. 21, 1995, as amended by T.D. 8734, 62 FR 53476, Oct. 14, 1997; T.D. 9504, 75 FR 64090, Oct. 18, 2010; T.D. 9675, 79 FR 41129, July 15, 2014]

§ 1.6042-5 Coordination with reporting rules for widely held fixed investment trusts under § 1.671-5.

See § 1.671-5 for the reporting rules for widely held fixed investment trusts (as defined under that section).

[T.D. 9241, 71 FR 4025, Jan. 24, 2006]

§ 1.6043-1 Return regarding corporate dissolution or liquidation.

(a) ***Requirement of returns.*** Within 30 days after the adoption of any resolution or plan for or in respect of the dissolution of a corporation or the liquidation of the whole or any part of its capital stock, the corporation shall file a return on Form 966, containing the information required by paragraph (b) of this section and by such form. Such return shall be filed with the district director for the district in which the income tax return of the corporation is filed. Further, if after the filing of a Form 966 there is an amendment of or supplement to the resolution or plan, an additional Form 966, based on the resolution or plan as amended or supplemented, must be filed within 30 days after the adoption of such amendment or supplement. A return must be filed under section 6043 and this section in respect of a liquidation whether or not any part of the gain or loss to the shareholders upon the liquidation is recognized under the provisions of section 1002.

(b) ***Contents of return —***

(1) ***In general.*** There shall be attached to and made a part of the return required by section 6043 and paragraph (a) of this section a certified copy of the resolution or plan, together with any amendments thereof or supplements thereto, and such return shall in addition contain the following information:

(i) The name and address of the corporation;

(ii) The place and date of incorporation;

(iii) The date of the adoption of the resolution or plan and the dates of any amendments thereof or supplements thereto; and

(iv) The internal revenue district in which the last income tax return of the corporation was filed and the taxable year covered thereby.

(2) ***Returns in respect of amendments or supplements.*** If a return has been filed pursuant to section 6043 and this section, any additional return made necessary by an amendment of or a supplement to the resolution or plan will be deemed sufficient if it gives the date the prior return was filed and contains a duly certified copy of the amendment or supplement and all other information required by this section and by Form 966 which was not given in the prior return.

[T.D. 6500, 25 FR 12108, Nov. 26, 1960, as amended by T.D. 6949, 33 FR 5531, Apr. 9, 1968; T.D. 7926, 48 FR 55847, Dec. 16, 1983]

§ 1.6043-2 Return of information respecting distributions in liquidation.

(a) Unless the distribution is one in respect of which information is required to be filed pursuant to § 1.332-6(b), § 1.368-3(a), or § 1.1081-11, every corporation making any distribution of $600 or more during a calendar year to any shareholder in liquidation of the whole or any part of its capital stock shall file a return of information on Forms 1096 and 1099, giving all the information required by such form and by the regulations in this part. A separate Form 1099 must be prepared for each shareholder to whom such distribution was made, showing the name and address of such shareholder, the number and class of shares owned by him in liquidation of which such distribution was made, and the total amount distributed to him on each class of stock. If the amount distributed to such shareholder on any class of stock consisted in whole or in part of property other than money, the return on such form shall in addition show the amount of money distributed, if any, and shall list separately each class of property other than money distributed, giving a description of the property in each such class and a statement of its fair market value at the time of the distribution. Such forms, accompanied by transmittal Form 1096 showing the number of Forms 1099 filed therewith, shall be filed on or before February 28 (March 31 if filed electronically) of the year following the calendar year in which such distribution was made with any of the Internal Revenue Service Centers, the addresses of which are listed in the instructions for Form 1096.

(b) If the distribution is in complete liquidation of a domestic corporation pursuant to a plan of liquidation in accordance with which all the capital stock of the corporation is cancelled or redeemed, and the transfer of all property under the liquidation occurs within some one calendar month pursuant to section 333, and any shareholder claims the benefit of such section, the return on Form 1096 shall show:

(1) The amount of earnings and profits of the corporation accumulated after February 28, 1913, determined as of the close of such calendar month, without diminution by reason of distributions made during such calendar month, but including in such computation all items of income and expense accrued up to the date on which the transfer of all the property under the liquidation is completed;

(2) The ratable share of such earnings and profits of each share of stock canceled or redeemed in the liquidation;

(3) The date and circumstances of the acquisition by the corporation of any or securities distributed to shareholders in the liquidation;

(4) If the liquidation is pursuant to section 333(g), a schedule showing the amount of earnings and profits to which the corporation has succeeded after December 31, 1963, pursuant to any corporate reorganization or pursuant to a liquidation to which section 332 applies, except earnings and profits

which on December 31, 1963, constituted earnings and profits of a corporation referred to in section 333(g)(3), and except earnings and profits which were earned after such date by a corporation referred to in section 333(g)(3); and

(5) If the liquidation occurs after December 31, 1966, and is pursuant to section 333(g)(2), the amount of earnings and profits of the corporation accumulated after February 28, 1913, and before January 1, 1967, and the ratable share of such earnings and profits of each share of stock canceled or redeemed in the liquidation.

[T.D. 6500, 25 FR 12108, Nov. 26, 1960, as amended by T.D. 6949, 33 FR 5531, Apr. 9, 1968; T.D. 8734, 62 FR 53476, Oct. 14, 1997; T.D. 8804, 63 FR 72188, Dec. 31, 1998; T.D. 8895, 65 FR 50406, Aug. 18, 2000; T.D. 9264, 71 FR 30608, May 30, 2006; T.D. 9329, 72 FR 32807, June 14, 2007]

§ 1.6043-3 Return regarding liquidation, dissolution, termination, or substantial contraction of organizations exempt from taxation under section 501(a).

(a) ***In general*** —

(1) ***Requirement to provide information.*** Except as provided in paragraph (b) of this section, for taxable years beginning after December 31, 1969, every organization which for any of its last 5 taxable years preceding any liquidation, dissolution, termination, or substantial contraction of the organization was exempt from taxation under section 501(a) shall provide the information will respect to such liquidation, dissolution, termination, or substantial contraction required by the instructions accompanying the organization's annual return of information. The information required by this section shall be provided with, and at the time prescribed for filing, the organization's annual return of information for the period during which any liquidation, dissolution (or the adopting of a resolution or plan for the dissolution or liquidation in whole or part), termination or substantial contraction occurred with respect to the organization. An organization which is no longer exempt from taxation under section 501(a) shall use the annual return of information it would have been required to file when the organization was exempt.

(2) ***Transitional rule.*** In the case of an annual return of information of an organization which was filed before September 11, 1978, if the organization had failed to provide the information with such return in accordance with paragraph (a)(1) of this section, the organization may comply with this section by providing the information with the organization's first annual return of information filed after such date.

(b) ***Exceptions.*** The following organizations are not required to provide the information under paragraph (a) of this section:

(1) Churches, their integrated auxiliaries, or conventions or associations of churches;

(2) Any organization which is not a private foundation (as defined in section 509(a)) and the gross receipts of which in each taxable year are normally not more than $5,000;

(3) Any organization which has terminated its private foundation status under section 507(b)(1)(B) with respect to a liquidation, dissolution, termination, or substantial contraction which is in connection with the termination under section 507(b)(1)(B);

(4) Any organization described in section 401(a) if the employer who established such organization files a return which provides the information under paragraph (a) of this section;

(5) Any organization described in section 501(c)(1) and any corporation described in section 501(c)(2) which holds title to property for such 501(c)(1) organizations;

(6) Any organization described in section 501(c)(14)(A) subject to a group exemption letter issued to a state regulatory body; and

(7) Any subordinate unit of a central organization (other than a private foundation) which established its exempt status under the group ruling procedure of regulations § 601.201 (n)(7), if the central or parent organization files an annual information return for the group in accordance with§ 1.6033-2(d); and

(8) Any organization no longer exempt from taxation under section 501(a) and that during the period of its exemption under such section was not an organization described in section 501(c)(3), a corporation described in section 501(c)(2) that held title to property for an organization described in section 501(c)(3), or an organization described in such other section as prescribed by publication, form, or instructions.

(9) The Commissioner may relieve any organization or class or organizations from filing the return required by section 6043(b) of this section, where it is determined that such information is not necessary for the efficient administration of the internal revenue laws.

(c) ***Penalties.*** For provisions relating to the penalty provided for failure to furnish any information required by this section, see section 6652(d) and the regulations thereunder.

(d) ***Definitions.***

(1) For the definition of the term “normally” as used in paragraph (b)(2) of this section, see § 1.6033-2(g)(3).

(2) For the definition of the term “integrated auxiliaries” as used in paragraph (b)(1) of this section, see § 1.6033-2(h).

(3) For returns filed for taxable years beginning before January 1, 2008, for purposes of this section the definition of the term “substantial contraction” set forth in § 1.6043-3(d)(1) (as contained in 26 CFR part 1 revised April 1, 2008) may be used.

(e) ***Effective/applicability date*** —

(1) ***Generally.*** The provisions of this section shall apply with respect to returns filed for taxable years beginning after December 31, 1969.

(2) Paragraphs (b)(8) and (d) of this section shall apply for taxable years beginning on or after January 1, 2008. For taxable years beginning before January 1, 2008, §§ 1.6043-3(b)(8) and 1.6043-3(d) (as contained in 26 CFR part 1 revised April 1, 2008) shall apply.

[T.D. 7563, 43 FR 40221, Sept. 11, 1978, as amended by T.D. 9423, 73 FR 52555, Sept. 9, 2008; T.D. 9549, 76 FR 55771, Sept. 8, 2011]

§ 1.6043-4 Information returns relating to certain acquisitions of control and changes in capital structure.

(a) ***Information returns for an acquisition of control or a substantial change in capital structure*** —

(1) ***General rule.*** If there is an acquisition of control (as defined in paragraph (c) of this section) or a substantial change in the capital structure (as defined in paragraph (d) of this section) of a domestic corporation (reporting corporation), the reporting corporation must file a completed Form 8806, "Information Return for Acquisition of Control or Substantial Change in Capital Structure," in accordance with the instructions to that form. The Form 8806 will request information with respect to the following and such other information specified in the instructions:

(i) ***Reporting corporation.*** The name, address, and taxpayer identification number (TIN) of the reporting corporation.

(ii) ***Common parent, if any, of the reporting corporation.*** If the reporting corporation was a subsidiary member of an affiliated group filing a consolidated return immediately prior to the acquisition of control or the substantial change in capital structure, the name, address, and TIN of the common parent of that affiliated group.

(iii) ***Acquiring corporation.*** The name, address and TIN of any corporation that acquired control of the reporting corporation within the meaning of paragraph (c) of this section or combined with or received assets from the reporting corporation pursuant to a substantial change in capital structure within the meaning of paragraph (d) of this section (acquiring corporation) and whether the acquiring corporation was newly formed prior to its involvement in the transaction.

(iv) ***Information about acquisition of control or substantial change in capital structure.***

(A) A description of the transaction or transactions that gave rise to the acquisition of control or the substantial change in capital structure of the corporation;

(B) The date or dates of the transaction or transactions that gave rise to the acquisition of control or the substantial change in capital structure; and

(C) A description of and a statement of the fair market value of any stock and other property, if any, provided to the reporting corporation's shareholders in exchange for their stock.

(2) ***Consent election.*** Form 8806 will provide the reporting corporation with the ability to elect to permit the Internal Revenue Service (IRS) to publish information that will inform brokers of the transaction and enable brokers to satisfy their reporting obligations under § 1.6045-3. The information to be published, whether on the IRS Web site or in an IRS publication, would be limited to the name and address of the corporation, the date of the transaction, a description of the shares affected by the transaction, and the amount of cash and the fair market value of stock or other property provided to each class of shareholders in exchange for a share.

(3) ***Time for making return.*** Form 8806 must be filed on or before the 45th day following the acquisition of control or substantial change in capital structure of the corporation, or, if earlier, on or before January 5th of the year following the calendar year in which the acquisition of control or substantial change in capital structure occurs.

(4) ***Exception where transaction is reported under section 6043(a).*** No reporting is required under this paragraph (a) with respect to a transaction for which information is required to be reported pursuant to section 6043(a), provided the transaction is properly reported in accordance with that section.

(5) ***Exception where shareholders are exempt recipients.*** No reporting is required under this paragraph (a) if the reporting corporation reasonably determines that all of its shareholders who receive cash, stock, or other property pursuant to the acquisition of control or substantial change in capital structure are exempt recipients under paragraph (b)(5) of this section.

(b) *Information returns regarding shareholders* —

(1) ***General rule.*** A corporation that is required to file Form 8806 pursuant to paragraph (a)(1) of this section shall file a return of information on Forms 1096, "Annual Summary and Transmittal of U.S. Information Returns," and 1099-CAP, "Changes in Corporate Control and Capital Structure," with respect to each shareholder of record in the corporation (before or after the acquisition of control or the substantial change in capital structure) who receives cash, stock, or other property pursuant to the acquisition of control or the substantial change in capital structure and who is not an exempt recipient as defined in paragraph (b)(5) of this section. A corporation is not required to file a Form 1096 or 1099-CAP with respect to a clearing organization if the corporation makes the election described in paragraph (a)(2) of this section.

(2) ***Time for making information returns.*** Forms 1096 and 1099-CAP must be filed on or before February 28 (March 31 if filed electronically) of the year following the calendar year in which the acquisition of control or the substantial change in capital structure occurs.

(3) ***Contents of return.*** A separate Form 1099-CAP must be filed with respect to amounts received by each shareholder (who is not an exempt recipient as defined in paragraph (b)(5) of this section). The Form 1099-CAP will request information with respect to the following and such other information as may be specified in the instructions:

(i) The name, address, telephone number and TIN of the reporting corporation;

(ii) The name, address and TIN of the shareholder;

(iii) The number and class of shares in the reporting corporation exchanged by the shareholder; and

(iv) The aggregate amount of cash and the fair market value of any stock or other property provided to the shareholder in exchange for its stock.

(4) ***Furnishing of forms to shareholders.*** The Form 1099-CAP filed with respect to each shareholder must be furnished to such shareholder on or before January 31 of the year following the calendar year in which the shareholder receives cash, stock, or other property as part of the acquisition of control or the substantial change in capital structure. The Form 1099-CAP filed with respect to a clearing organization must be furnished to the clearing organization on or before January 5th of the year following the calendar year in which the acquisition of control or substantial change in capital structure occurred. A Form 1099-CAP is not required to be furnished to a clearing organization if the reporting corporation makes the election described in paragraph (a)(2) of this section. An IRS truncated taxpayer identifying number (TTIN) may be used as the identifying number of the shareholder in lieu of the identifying number appearing on the Form 1099-CAP filed with the Internal Revenue Service. For provisions relating to the use of TTINs, see § 301.6109-4 of this chapter (Procedure and Administration Regulations).

(5) ***Exempt recipients.*** A corporation is not required to file a Form 1099-CAP pursuant to this paragraph (b) with respect to any of the following shareholders that is not a clearing organization:

(i) Any shareholder who receives stock in an exchange that is not subject to gain recognition under section 367(a) and the regulations.

(ii) Any shareholder if the corporation reasonably determines that the total amount of cash and the fair market value of stock and other property received by the shareholder does not exceed $1,000.

(iii) Any shareholder described in paragraphs (b)(5)(iii)(A) through (M) of this section if the corporation has actual knowledge that the shareholder is described in one of paragraphs (b)(5)(iii)(A) through (M) of this section or if the corporation has a properly completed exemption certificate from the shareholder (as provided in § 31.3406(h)-3 of this chapter). The corporation also may treat a shareholder as described in paragraphs (b)(5)(iii)(A) through (M) of this section based on the applicable indicators described in § 1.6049-4(c)(1)(ii).

(A) A corporation, as described in § 1.6049-4(c)(1)(ii)(A) (except for corporations for which an election under section 1362(a) is in effect).

(B) A tax-exempt organization, as described in § 1.6049-4(c)(1)(ii)(B)(*1*).

(C) An individual retirement plan, as described in § 1.6049-4(c)(1)(ii)(C).

(D) The United States, as described in § 1.6049-4(c)(1)(ii)(D).

(E) A state, as described in § 1.6049-4(c)(1)(ii)(E).

(F) A foreign government, as described in § 1.6049-4(c)(1)(ii)(F).

(G) An international organization, as described in § 1.6049-4(c)(1)(ii)(G).

(H) A foreign central bank of issue, as described in § 1.6049-4(c)(1)(ii)(H).

(I) A securities or commodities dealer, as described in § 1.6049-4(c)(1)(ii)(I).

(J) A real estate investment trust, as described in § 1.6049-4(c)(1)(ii)(J).

(K) An entity registered under the Investment Company Act of 1940 (15 U.S.C. 80a-1), as described in § 1.6049-4(c)(1)(ii)(K).

(L) A common trust fund, as described in § 1.6049-4(c)(1)(ii)(L).

(M) A financial institution such as a bank, mutual savings bank, savings and loan association, building and loan association, cooperative bank, homestead association, credit union, industrial loan association or bank, or other similar organization.

(iv) Any shareholder that the corporation, prior to the transaction, associates with documentation upon which the corporation may rely in order to treat payments to the shareholder as made to a foreign beneficial owner in accordance with § 1.1441-1(e)(1)(ii) or as made to a foreign payee in accordance with § 1.6049-5(d)(1) or presumed to be made to a foreign payee under § 1.6049-5(d)(2) or (3). For purposes of this paragraph (b)(5)(iv), the provisions in § 1.6049-5(c) (regarding rules applicable to documentation of foreign status and definition of U.S. payor and non-U.S. payor) shall apply. The provisions of § 1.1441-1 shall apply by using the terms “corporation” and “shareholder” in place of the terms “withholding agent” and “payee” and without regard to the fact that the provisions apply only to amounts subject to withholding under chapter 3 of the Internal Revenue Code. The provisions of § 1.6049-5(d) shall apply by using the terms “corporation” and “shareholder” in place of the terms “payor” and “payee”. Nothing in this paragraph (b)(5)(iv) shall be construed to relieve a corporation of its withholding obligations under section 1441.

(v) Any shareholder if, on January 31 of the year following the calendar year in which the shareholder receives cash, stock, or other property, the corporation did not know and did not have reason to know that the shareholder received such cash, stock, or other property in a transaction or series of related transactions that would result in an acquisition of control or a substantial change in capital structure within the meaning of this section.

(6) ***Coordination with other sections.*** In general, no reporting is required under this paragraph (b) with respect to amounts that are required to be reported under sections 6042 or 6045, unless the corporation knows or has reason to know that such amounts are not properly reported in accordance with those sections. A corporation must satisfy the requirements under this paragraph (b) with respect to any shareholder of record that is a clearing organization.

(c) ***Acquisition of control of a corporation*** —

(1) ***In general.*** For purposes of this section, an acquisition of control of a corporation (first corporation) occurs if, in a transaction or series of related transactions—

(i) Before an acquisition of stock of the first corporation (directly or indirectly) by a second corporation, the second corporation does not have control of the first corporation;

(ii) After the acquisition, the second corporation has control of the first corporation;

(iii) The fair market value of the stock acquired in the transaction and in any related transactions as of the date or dates on which such stock was acquired is $100 million or more;

(iv) The shareholders of the first corporation receive stock or other property pursuant to the acquisition; and

(v) The first corporation or any shareholder of the first corporation is required to recognize gain (if any) under section 367(a) and the regulations, as a result of the transaction.

(2) ***Control.*** For purposes of this section, control is determined in accordance with the first sentence of section 304(c)(1). For these purposes the rules of section 318 as modified by the rules of section 958(b) shall apply in determining the ownership of stock.

(d) ***Substantial change in capital structure of a corporation*** —

(1) ***In general.*** A corporation has a substantial change in capital structure if it has a change in capital structure (as defined in paragraph (d)(2) of this section) and the amount of any cash and the fair market value of any property (including stock) provided to the shareholders of such corporation pursuant to the change in capital structure, as of the date or dates on which the cash or other property is provided, is $100 million or more.

(2) ***Change in capital structure.*** For purposes of this section, a corporation has a change in capital structure if—

(i) The corporation in a transaction or series of transactions—

(A) Merges, consolidates or otherwise combines with another corporation or transfers all or substantially all of its assets to one or more corporations;

(B) Transfers all or part of its assets to another corporation in a title 11 or similar case and, in pursuance of the plan, distributes stock or securities of that corporation; or

(C) Changes its identity, form or place of organization; and

(ii) The corporation or any shareholder is required to recognize gain (if any) under section 367(a) and the regulations, as a result of the transaction.

(e) ***Reporting by successor entity.*** If a corporation (transferor) transfers all or substantially all of its assets to another entity (transferee) in a transaction that constitutes a substantial change in the capital structure of transferor, transferor must satisfy the reporting obligations in paragraph (a) and (b) of this section. If transferor does not satisfy one or both of those reporting obligations, then transferee must do so. If neither transferor nor transferee satisfies the reporting obligations in paragraphs (a) and (b) of this section, then transferor and transferee shall be jointly and severally liable for any applicable penalties (see paragraph (g) of this section).

(f) ***Receipt of property.*** For purposes of this section, a shareholder is treated as receiving property (or as having property provided to it) pursuant to an acquisition of control or a substantial change in capital structure if a liability of the shareholder is assumed in the transaction and, as a result of the transaction, an amount is realized by the shareholder from the sale or exchange of stock.

(g) ***Penalties for failure to file.*** For penalties for failure to file as required under this section, see section 6652(l). The information returns required to be filed under paragraphs (a) and (b) of this section shall be treated as one return for purposes of section 6652(l) and, accordingly, the penalty shall not exceed $500 for each day the failure continues (up to a maximum of $100,000) with respect to any acquisition of control or any substantial change in capital structure. Failure to file as required under this section also includes the failure to satisfy the requirement to file on magnetic media as required by section 6011(e) and § 1.6011-2. In addition, criminal penalties under sections 7203, 7206 and 7207 may apply in appropriate cases.

(h) ***Examples.*** The following examples illustrate the application of the rules of this section. For purposes of these examples, assume the transaction is not reported under sections 6042, 6043(a), or 6045, unless otherwise specified, and assume that the fair market value of the consideration provided to the shareholders exceeds $100 million. The examples are as follows:

Example 1. The shareholders of X, a domestic corporation and parent of an affiliated group, exchange their X stock for stock in Y, a foreign corporation, pursuant to sections 351 and 354. After the transaction, Y owns all the outstanding X stock. Assume that, under section 367(a) and the regulations, the X shareholders must recognize gain (if any) on the exchange of their stock. Because the transaction results in an acquisition of control of X, X must comply with the rules in paragraphs (a) and (b) of this section. X must file Form 8806 reporting the transaction. X must also file a Form 1099-CAP with respect to each shareholder who is not an exempt recipient showing the fair market value of the Y stock received by that shareholder, and X must furnish a copy of the Form 1099-CAP to that shareholder. If X elects on the Form 8806 to permit the IRS to publish information regarding the transaction, X is not required to file or furnish Forms 1099-CAP with respect to shareholders that are clearing organizations.

Example 2. The facts are the same as in *Example 1*, except X hires a transfer agent to effectuate the exchange. The transfer agent is treated as a broker under section 6045 and is required to report the fair market value of the Y stock received by X's shareholders under § 1.6045-3. Under paragraph (b)(6) of this section, X is not required to file information returns under paragraph (b) of this section with respect to a shareholder of record, unless X knows or has reason to know that the transfer agent does not satisfy its information reporting obligation under § 1.6045-3 with respect to that shareholder. Thus, if the transfer agent satisfies its information reporting requirements under § 1.6045-3 with respect to shareholder I, an individual who receives X stock, X is not required to file a Form 1099-CAP with respect to I. Conversely, if the transfer agent does not have an information

reporting obligation under § 1.6045-3 with respect to one of X's shareholders of record (for example, a clearing organization that is an exempt recipient under § 1.6045-3(b)(2)), or if X knows or has reason to know that the transfer agent has not satisfied its information reporting requirement with respect to a shareholder, then X must provide a Form 1099-CAP to that shareholder.

(i) ***Effective/applicability date.*** This section applies to transactions occurring after December 5, 2005. The amendments to paragraph (b)(4) are effective for any Form 1099-CAP required to be furnished after December 31, 2014. For any Form 1099-CAP required to be furnished before January 1, 2015, § 1.6043-4(b) (as contained in 26 CFR part 1, revised April 2013) shall apply.

[T.D. 9230, 70 FR 72378, Dec. 5, 2005, as amended by T.D. 9675, 79 FR 41129, July 15, 2014]

§ 1.6044-1 Returns of information as to patronage dividends with respect to patronage occurring in taxable years beginning before 1963.

(a) ***Requirement*** —

(1) ***In general.*** Except as provided in subparagraph (2) of this paragraph, any corporation allocating to any patron in respect of patronage occurring in any taxable year of the corporation beginning before January 1, 1963, amounts aggregating $100 or more during a calendar year as patronage dividends, rebates, or refunds (whether in cash, merchandise, capital stock, revolving fund certificates, retain certificates, letters of advice, or in some other manner that discloses to each patron the amount of such dividend, rebate, or refund) shall for each such calendar year file a return of information with respect to such allocation on Forms 1096 and 1099. A separate Form 1099 shall be prepared for each patron showing the name and address of the patron to whom such allocation is made, and the amount of the allocation. The allocation shall be reported for the calendar year during which the allocation is made, regardless of whether the allocation is deemed for the purpose of section 522 to be made at the close of a preceding taxable year of the corporation.

(2) ***Exception.*** A return is not required under this section in the case of any corporation (including any cooperative or nonprofit corporation engaged in rural electrification) described in section 501(c) (12) or (15) which is exempt from tax under section 501(a), or in the case of any corporation subject to a tax imposed by subchapter L, chapter 1, of the Code.

(b) ***Time and place for filing.*** Returns made under this section on Forms 1096 and 1099 for any calendar year shall be filed on or before February 28 of the following year with any of the Internal Revenue Service Centers, the addresses of which are listed in the instructions for such forms.

(c) ***Definitions.*** The terms "cooperative association", "patron", "patronage dividends, rebates, and refunds", and "allocation" are defined, for the purpose of this section, in paragraph (b) of § 1.522-1.

[T.D. 6500, 25 FR 12108, Nov. 26, 1960, as amended by T.D. 6628, 27 FR 12798, Dec. 28, 1962]

§ 1.6044-2 Returns of information as to payments of patronage dividends.

(a) ***Requirement of reporting*** —

(1) ***In general.*** Except as provided in § 1.6044-4, every organization described in paragraph (b) of this section which makes payments with respect to patronage occurring on or after the first day of the first taxable year of the organization beginning after December 31, 1962, of amounts described in § 1.6044-3 aggregating $10 or more to any person during any calendar year shall make an information

return on Forms 1096 and 1099 for the calendar year showing the aggregate amount of such payments, the name and address of the person to whom paid, the total of such payments for all persons, and such other information as is required by the forms. The organization is required to make an information return regardless of the amount of the payment if the tax imposed by section 3406 is required to be withheld. Thus, in the case of any amount subject to backup withholding under section 3406 and not refunded by the payor before the due date of the information return in accordance with the regulations under section 3406, an information return shall be made even if the payment is not generally reportable because it is made to an exempt recipient described in § 1.6049-4(c)(1)(ii) or the amount paid during the calendar year to the recipient aggregates less than $10.

(2) ***Definitions.*** The term "person" when used in this section does not include the United States, a State, the District of Columbia, a foreign government, a political subdivision of a State or of a foreign government, or an international organization. Therefore, payment of amounts described in § 1.6044-3 to one of these entities need not be reported.

(3) ***Determination of person to whom a patronage dividend is paid.*** For purposes of applying the provisions of this section, the person whose identifying number is required to be included by the cooperative on an information return with respect to a patronage dividend shall be considered the person to whom such dividend is paid. For regulations relating to the use of identifying numbers, see § 1.6109-1.

(4) ***Inclusion of other payments.*** The Form 1099 filed by an organization with respect to payments of patronage dividends made to any person during a calendar year may, at the election of the organization, include other payments made by it to such person during such year which are required to be reported on Form 1099.

(b) ***Organizations subject to reporting requirement.*** The organizations subject to the reporting requirements of paragraph (a) of this section are:

(1) Any organization exempt from tax under section 521 (relating to exemption of farmers' cooperatives from tax), and

(2) Any corporation operating on a cooperative basis other than an organization:

(i) Which is exempt from tax under chapter 1 (other than section 521), or

(ii) Which is subject to the provisions of part II of subchapter H of chapter 1 (relating to mutual savings banks, etc.), or subchapter L of chapter 1 (relating to insurance companies), or

(iii) Which is engaged in furnishing electric energy, or providing telephone service, to persons in rural areas.

(c) ***When payment deemed made.*** For purposes of this section, money or other property (except written notices of allocation) is deemed to have been paid when it is credited or set apart to a person without any substantial limitation or restriction as to the time or manner of payment or condition upon which payment is to be made, and is made available to him so that it may be drawn at any time, and its receipt brought within his own control and disposition. A written notice of allocation is considered to have been paid when it is issued by the organization to the distributee. Similarly, a qualified check (as defined in section 1388(d)(4)) is considered to have been paid when it is issued to the distributee.

(d) ***Time and place for filing.*** The return required under this section on Forms 1096 and 1099 for any calendar year shall be filed after September 30 of such year, but not before the payer's final payment for the year, and on or before February 28 (March 31 if filed electronically) of the following year, with any of the Internal Revenue Service Centers, the addresses of which are listed in the instructions for such forms. For extensions of time for filing returns under this section, see § 1.6081-1.

(e) ***Cross-reference to penalty.*** For provisions relating to the penalty provided for failure to file timely a correct information return required under section 6044(a), see § 301.6721-1 of this chapter (Procedure and Administration Regulations). See § 301.6724-1 of this chapter for the waiver of a penalty if the failure is due to reasonable cause and is not due to willful neglect.

(f) ***Magnetic media requirement.*** For the requirement to submit the information required by Form 1099 on magnetic media for payments after December 31, 1983, see section 6011(e) and § 301.6011-2 of this chapter (Procedure and Administration Regulations). For rules relating to permission to submit the information required by Form 1099 on magnetic tape or other media, see § 1.9101-1.

[T.D. 6628, 27 FR 12798, Dec. 28, 1962, as amended by T.D. 6677, 28 FR 10147, Sept. 17, 1963; T.D. 6879, 31 FR 3493, Mar. 8, 1966; T.D. 6883, 31 FR 6589, May 3, 1966; T.D. 8734, 62 FR 53476, Oct. 14, 1997; T.D. 8895, 65 FR 50407, Aug. 18, 2000]

§ 1.6044-3 Amounts subject to reporting.

(a) ***In general.*** Except as provided in paragraph (c) of this section, the amounts subject to reporting under § 1.6044-2 are:

(1) Payments by all organizations subject to such reporting requirements of:

(i) Patronage dividends (as defined in section 1388(a)) paid in money, qualified written notices of allocation (as defined in section 1388(c)), or other property (except nonqualified written notices of allocation as defined in section 1388(d)); and

(ii) Amounts described in section 1382(b)(2) (relating to redemption of nonqualified written notices of allocation previously paid as patronage dividends) paid in money or property (except written notices of allocation); and

(2) Payments by farmers' cooperatives exempt from tax under section 521 of:

(i) Amounts described in section 1382(c)(2)(A) (relating to distributions with respect to earnings derived from sources other than patronage) paid in money, qualified written notices of allocation, or other property (except nonqualified written notices of allocation); and

(ii) Amounts described in section 1382(c)(2)(B) (relating to redemption of nonqualified written notices of allocation previously paid as distributions with respect to earnings derived from sources other than patronage) paid in money or other property (except written notices of allocation).

(b) ***Special rules.***

(1) If an organization makes a distribution consisting in whole or in part of a written notice of allocation and a qualified check and, at the time it files its return under § 1.6044-2, is unable to determine whether such written notice of allocation and such check constitute nonqualified written notices of allocation, such organization shall for purposes of such return treat such written notice of allocation as a qualified written notice of allocation and such qualified check as a payment in money.

(2) An amount described in paragraph (a) of this section is subject to reporting even though the organization paying such amount is allowed no deduction for it because it was not paid within the time prescribed in section 1382. Thus, a patronage dividend of $25 paid by a marketing cooperative must be reported even though it is paid after the end of the payment period (see section 1382(d)) for the organization's taxable year in which the patronage occurred.

(c) ***Exceptions.*** An amount described in paragraph (a) of this section does not include—

(1) Any amount described in § 1.6042-3(b); or

(2) With respect to amounts paid or credited after December 31, 1982, any amount paid or credited to any person described in § 1.6049-4(c)(1)(ii).

(d) ***Determination of amount paid.*** For purposes of § 1.6044-2 and this section, in determining the amount of any payment subject to reporting under paragraph (a) of this section:

(1) Property (other than a qualified written notice of allocation) shall be taken into account at its fair market value, and

(2) A qualified written notice of allocation shall be taken into account at its stated dollar amount.

[T.D. 6628, 27 FR 12798, Dec. 28, 1962, as amended by T.D. 8734, 62 FR 53476, Oct. 14, 1997]

§ 1.6044-4 Exemption for certain consumer cooperatives.

(a) ***In general*** —

(1) ***Determination of exemption.*** Exemption from the reporting requirements of § 1.6044-2 shall, upon application therefor, be granted by the district director to any cooperative which he determines is primarily engaged in selling at retail goods or services of a type which is generally for personal, living, or family use. A cooperative is not exempt from the reporting requirements merely because it is an organization of a type to which section 6044(c) and this section relate. In order for the exemption from reporting to apply, it is necessary that the cooperative file an application in accordance with this section and obtain a determination of exemption.

(2) ***Basis for exemption.*** For a cooperative to qualify for the exemption from reporting provided by section 6044(c) and this section 85 percent of its gross receipts for the preceding taxable year, or 85 percent of its aggregate gross receipts for the preceding three taxable years, must have been derived from the sale at retail of goods or services of a type which is generally for personal, living, or family use. In determining whether an item is of a type that is generally for personal, living, or family use, an item which may be purchased either for such use or for business use and which when acquired for business purposes is generally purchased at wholesale will, when sold by a cooperative at retail, be treated as goods or services of a type generally for personal, living, or family use.

(3) ***Period of exemption.*** A determination of exemption from reporting shall apply beginning with the payments made during the calendar year in which the determination is made and shall automatically cease to be effective beginning with payments made after the close of the first taxable year of the cooperative in which less than 70 percent of its gross receipts is derived from the sale at retail of goods or services of a type which is generally for personal, living, or family use.

(b) ***Application for exemption.*** Application for exemption from the reporting requirements of section 6044 shall be made on Form 3491, and shall be filed with the district director for the internal revenue district in which the cooperative has its principal place of business.

[T.D. 6628, 27 FR 12799, Dec. 28, 1962]

§ 1.6044-5 Statements to recipients of patronage dividends.

(a) ***Requirement.*** A person required to make an information return under section 6044(a)(1) and § 1.6044-2 must furnish a statement to each recipient whose identifying number is required to be shown on the related information return for patronage dividends paid.

(b) ***Form, manner, and time for providing statements to recipients.*** The statement required by paragraph (a) of this section must be either the official Form 1099 prescribed by the Internal Revenue Service for the respective calendar year or an acceptable substitute statement. The rules under § 1.6042-4 (relating to statements with respect to dividends) apply comparably in determining the form of an acceptable substitute statement permitted by this section. Those rules also apply for purposes of determining the manner of and time for providing the Form 1099 or its acceptable substitute to a recipient under this section. However, each Form 1099 or acceptable substitute statement required by this section must be furnished on or before January 31 of the following year, but no statement may be furnished before the final payment has been made for the calendar year. For a statement required to be furnished after December 31, 2008, the February 15 due date under section 6045 applies to the statement if the statement is furnished in a consolidated reporting statement under section 6045. *See* §§ 1.6045-1(k)(3), 1.6045-2(d)(2), 1.6045-3(e)(2), 1.6045-4(m)(3), and 1.6045-5(a)(3)(ii). An IRS truncated taxpayer identifying number (TTIN) may be used as the identifying number of the recipient in lieu of the identifying number appearing on the corresponding information return filed with the Internal Revenue Service. For provisions relating to the use of TTINs, see § 301.6109-4 of this chapter (Procedure and Administration Regulations).

(c) ***Cross-reference to penalty.*** For provisions relating to the penalty provided for failure to furnish timely a correct payee statement required under section 6044(e), see § 301.6722-1 of this chapter (Procedure and Administration Regulations). See § 301.6724-1 of this chapter for the waiver of a penalty if the failure is due to reasonable cause and is not due to willful neglect.

(d) ***Effective/applicability date.*** This section is effective for payee statements due after December 31, 1995, without regard to extensions. The amendments to paragraph (b) are effective for payee statements due after December 31, 2014. For payee statements due before January 1, 2015, § 1.6044-5(b) (as contained in 26 CFR part 1, revised April 2013) shall apply.

[T.D. 8637, 60 FR 66111, Dec. 21, 1995, as amended by T.D. 8734, 62 FR 53476, Oct. 14, 1997; T.D. 9504, 75 FR 64090, Oct. 18, 2010; T.D. 9675, 79 FR 41129, July 15, 2014]

§ 1.6045-0 Table of contents.

In order to facilitate the use of § 1.6045-1, this section lists the paragraphs contained in § 1.6045-1.

§ 1.6045-1 Returns of information of brokers and barter exchanges.

(a) Definitions.

(1) Broker.

(2) Customer.

(i) In general.

(ii) Special rules for payment transactions involving digital assets.

(3) Security.

(4) Barter exchange.

(5) Commodity.

(6) Regulated futures contract.

(7) Forward contract.

(8) Closing transaction.

(9) Sale.

(i) In general.

(ii) Sales with respect to digital assets.

(A) In general.

(B) Dispositions of digital assets for certain property.

(C) Dispositions of digital assets for certain services.

(D) Special rule for sales effected by processors of digital asset payments.

(10) Effect.

(i) In general.

(ii) Actions relating to certain options and forward contracts.

(11) Foreign currency.

(12) Cash.

(13) Person.

(14) Specified security.

(15) Covered security.

(i) In general.

(ii) Acquired in an account.

(iii) Corporate actions and other events.

(iv) Exceptions.

(16) Noncovered security.

(17) Debt instrument, bond, debt obligation, and obligation.

(18) Securities futures contract.

(19) Digital asset.

(i) In general.

(ii) No inference.

(20) Digital asset address.

(21) Digital asset middleman.

(i) In general.

(ii) [Reserved]

(iii) Facilitative service.

(A) [Reserved]

(B) Special rule involving sales of digital assets under paragraphs (a)(9)(ii)(B) through (D) of this section.

(22) Processor of digital asset payments.

(23) Stored-value card.

(24) Transaction identification.

(25) Wallet, hosted wallet, unhosted wallet, and held in a wallet or account.

(i) Wallet.

(ii) Hosted wallet.

(iii) Unhosted wallet.

(iv) Held in a wallet or account.

(b) Examples.

(c) Reporting by brokers.

(1) Requirement of reporting.

(2) Sales required to be reported.

(3) Exceptions.

(i) Sales effected for exempt recipients.

(A) In general.

(B) Exempt recipient defined.

(C) Exemption certificate.

(*1*) In general.

(*2*) Limitation for corporate customers.

(*3*) Limitation for U.S. digital asset brokers.

(ii) Excepted sales.

(iii) Multiple brokers.

(A) In general.

(B) Special rule for sales of digital assets.

(iv) Cash on delivery transactions.

(v) Fiduciaries and partnerships.

(vi) Money market funds.

(A) In general.

(B) Effective/applicability date.

(vii) Obligor payments on certain obligations.

(viii) Foreign currency.

(ix) Fractional share.

(x) Certain retirements.

(xi) Short sales.

(A) In general.

(B) Short sale closed by delivery of a noncovered security.

(C) Short sale obligation transferred to another account.

(xii) Cross reference.

(xiii) Short-term obligations issued on or after January 1, 2014.

(xiv) Certain redemptions.

(4) Examples.

(5) Form of reporting for regulated futures contracts.

(i) In general.

(ii) Determination of profit or loss from foreign currency contracts.

(iii) Examples.

(6) Reporting periods and filing groups.

(i) Reporting period.

(A) In general.

(B) Election.

(ii) Filing group.

(A) In general.

(B) Election.

(iii) Example.

(7) Exception for certain sales of agricultural commodities and commodity certificates.

(i) Agricultural commodities.

(ii) Commodity Credit Corporation certificates.

(iii) Sales involving designated warehouses.

(iv) Definitions.

(A) Agricultural commodity.

(B) Spot sale.

(C) Forward sale.

(D) Designated warehouse.

(8) Special coordination rules for reporting digital assets that are dual classification assets.

(i) General rule for reporting dual classification assets as digital assets.

(ii) Reporting of dual classification assets that constitute contracts covered by section 1256(b) of the Code.

(iii) Reporting of dual classification assets cleared or settled on a limited-access regulated network.

(A) General rule.

(B) Limited-access regulated network.

(iv) Reporting of dual classification assets that are interests in money market funds.

(v) Example: Digital asset securities.

(d) Information required.

(1) In general.

(2) Transactional reporting.

(i) Required information.

(A) General rule for sales described in paragraph (a)(9)(i) of this section.

(B) Required information for digital asset transactions.

(C) Exception for certain sales effected by processors of digital asset payments.

(D) Acquisition information for sales of certain digital assets.

(ii) Specific identification of specified securities.

(A) In general.

(B) Identification of digital assets sold, disposed of, or transferred.

(*1*) No identification of units by customer.

(*2*) Adequate Identification of units by customer.

(*3*) Special rule for the identification of certain units withheld from a transaction.

(*4*) Customer-provided acquisition information for digital assets.

(iii) Penalty relief for reporting information not subject to reporting.

(A) Noncovered securities.

(B) Gross proceeds from digital assets sold before applicability date.

(iv) Information from other parties and other accounts.

(A) Transfer and issuer statements.

(v) Failure to receive a complete transfer statement for securities.

(vi) Reporting by other parties after a sale of securities.

(A) Transfer statements.

(B) Issuer statements.

(C) Exception.

(vii) Examples.

(3) Sales between interest payment dates.

(4) Sale date.

(i) In general.

(ii) Special rules for digital asset sales.

(5) Gross proceeds.

(i) In general.

(ii) Sales of digital assets.

(A) Determining gross proceeds.

(*1*) Determining fair market value.

(*2*) Consideration value not readily ascertainable.

(*3*) Reasonable valuation method for digital assets.

(B) Digital asset data aggregator.

(iii) Digital asset transactions effected by processors of digital asset payments.

(iv) Definition and allocation of digital asset transaction costs.

(A) Definition.

(B) General allocation rule.

(C) Special rule for allocation of certain cascading digital asset transaction costs.

(v) Examples.

(6) Adjusted basis.

(i) In general.

(ii) Initial basis.

(A) Cost basis for specified securities acquired for cash.

(B) Basis of transferred securities.

(*1*) In general.

(*2*) Securities acquired by gift.

(C) Digital assets acquired in exchange for property.

(*1*) In general.

(*2*) Allocation of digital asset transaction costs.

(iii) Adjustments for wash sales.

(A) Securities in the same account or wallet.

(*1*) In general.

(*2*) Special rules for covered securities that are also digital assets.

(B) Covered securities in different accounts or wallets.

(C) Effect of election under section 475(f)(1).

(D) Reporting at or near the time of sale.

(iv) Certain adjustments not taken into account.

(v) Average basis method adjustments.

(vi) Regulated investment company and real estate investment trust adjustments.

(vii) Treatment of de minimis errors.

(viii) Examples.

(ix) Applicability date.

(x) Examples.

(7) Long-term or short-term gain or loss.

(i) In general.

(ii) Adjustments for wash sales.

(A) Securities in the same account or wallet.

(*1*) In general.

(*2*) Special rules for covered securities that are also digital assets.

(B) Covered securities in different accounts or wallets.

(C) Effect of election under section 475(f)(1).

(D) Reporting at or near the time of sale.

(iii) Constructive sale and mark-to-market adjustments.

(iv) Regulated investment company and real estate investment trust adjustments.

(v) No adjustments for hedging transactions or offsetting positions.

(8) Conversion into United States dollars of amounts paid or received in foreign currency.

(i) Conversion rules.

(ii) Effect of identification under § 1.988-5(a), (b), or (c) when the taxpayer effects a sale and a hedge through the same broker.

(iii) Example.

(9) Coordination with the reporting rules for widely held fixed investment trusts under § 1.671-5.

(10) Optional reporting methods for qualifying stablecoins and specified nonfungible tokens.

(i) Optional reporting method for qualifying stablecoins.

(A) In general.

(B) Aggregate reporting method for designated sales of qualifying stablecoins.

(C) Designated sale of a qualifying stablecoin.

(D) Examples.

(ii) Qualifying stablecoin.

(A) Designed to track certain other currencies.

(B) Stabilization mechanism.

(C) Accepted as payment.

(D) Examples.

(iii) Optional reporting method for specified nonfungible tokens.

(A) In general.

(B) Reporting method for specified nonfungible tokens.

(C) Examples.

(iv) Specified nonfungible token.

(A) Indivisible.

(B) Unique.

(C) Excluded property.

(D) Examples.

(v) Joint accounts.

(11) Collection and retention of additional information with respect to the sale of a digital asset.

(e) Reporting of barter exchanges.

(1) Requirement of reporting.

(2) Exchanges required to be reported.

(i) In general.

(ii) Exemption.

(iii) Coordination rules for exchanges of digital assets made through barter exchanges.

(f) Information required.

(1) In general.

(2) Transactional reporting.

(i) In general.

(ii) Exception for corporate member or client.

(iii) Definition.

(3) Exchange date.

(4) Amount received.

(5) Meaning of terms.

(6) Reporting period.

(g) Exempt foreign persons.

(1) Brokers.

(2) Barter exchanges.

(3) Applicable rules.

(i) Joint owners.

(ii) Special rules for determining who the customer is.

(iii) Place of effecting sale.

(A) Sale outside the United States.

(B) Sale inside the United States.

(iv) Special rules where the customer is a foreign intermediary or certain U.S. branches.

(4) Rules for sales of digital assets.

(i) Definitions.

(A) U.S. digital asset broker.

(B) [Reserved]

(ii) Rules for U.S. digital asset brokers.

(A) Place of effecting sale.

(B) Determination of foreign status.

(iii) Rules for CFC digital asset brokers not conducting activities as money services businesses.

(iv) Rules for non-U.S. digital asset brokers not conducting activities as money services businesses.

(A) [Reserved]

(B) Sale treated as effected at an office inside the United States.

(*1*) [Reserved]

(*2*) U.S. indicia.

(C) Consequences of treatment as sale effected at an office inside the United States.

(v) [Reserved]

(vi) Rules applicable to brokers that obtain or are required to obtain documentation for a customer and presumption rules.

(A) In general.

(*1*) Documentation of foreign status.

(*2*) Presumption rules.

(*i*) In general.

(*ii*) Presumption rule specific to U.S. digital asset brokers.

(*iii*) [Reserved]

(*3*) Grace period to collect valid documentation in the case of indicia of a foreign customer.

(*4*) Blocked income.

(B) Reliance on beneficial ownership withholding certificates to determine foreign status.

(*1*) Collection of information other than U.S. place of birth.

(*i*) In general.

(*ii*) [Reserved]

(*2*) Collection of information showing U.S. place of birth.

(C) [Reserved]

(D) Joint owners.

(E) Special rules for customer that is a foreign intermediary, a flow-through entity, or certain U.S. branches.

(*1*) Foreign intermediaries in general.

(*i*) Presumption rule specific to U.S. digital asset brokers.

(*ii*) [Reserved]

(*2*) Foreign flow-through entities.

(*3*) U.S. branches that are not beneficial owners.

(F) Transition rule for obtaining documentation to treat a customer as an exempt foreign person.

(vii) Barter exchanges.

(5) Examples.

(h) Identity of customer.

(1) In general.

(2) Examples.

(i) [Reserved]

(j) Time and place for filing; cross-references to penalty and magnetic media filing requirements.

(k) Requirement and time for furnishing statement; cross-reference to penalty.

(1) General requirements.

(2) Time for furnishing statements.

(3) Consolidated reporting.

(4) Cross-reference to penalty.

(l) Use of magnetic media or electronic form.

(m) Additional rules for option transactions.

(1) In general.

(2) Scope.

(i) In general.

(ii) Delayed effective date for certain options.

(iii) Compensatory option.

(3) Option subject to section 1256.

(4) Option not subject to section 1256.

(i) Physical settlement.

(ii) Cash settlement.

(iii) Rules for warrants and stock rights acquired in a section 305 distribution.

(iv) Examples.

(5) Multiple options documented in a single contract.

(6) Determination of index status.

(n) Reporting for debt instrument transactions.

(1) In general.

(2) Debt instruments subject to January 1, 2014, reporting.

(i) In general.

(ii) Exceptions.

(iii) Remote or incidental.

(iv) Penalty rate.

(3) Debt instruments subject to January 1, 2016, reporting.

(4) Holder elections.

(i) Election to amortize bond premium.

(ii) Election to currently include accrued market discount.

(iii) Election to accrue market discount based on a constant yield.

(iv) Election to treat all interest as OID.

(v) Election to translate interest income and expense at the spot rate.

(5) Broker assumptions and customer notice to brokers.

(i) Broker assumptions if the customer does not notify the broker.

(ii) Effect of customer notification of an election or revocation.

(A) Election to amortize bond premium.

(B) Other debt elections.

(iii) Electronic notification.

(6) Reporting of accrued market discount.

(i) Sale.

(ii) Current inclusion election.

(7) Adjusted basis.

(i) Original issue discount.

(ii) Amortizable bond premium.

(A) Taxable bond.

(B) Tax-exempt bonds.

(iii) Acquisition premium.

(iv) Market discount.

(v) Principal and certain other payments.

(8) Accrual period.

(9) Premium on convertible bond.

(10) Effect of broker assumptions on customer.

(11) Additional rules for certain holder elections.

(i) In general.

(A) Election to treat all interest as OID.

(B) Election to accrue market discount based on a constant yield.

(ii) [Reserved]

(12) Certain debt instruments treated as noncovered securities.

(i) In general.

(ii) Effective/applicability date.

(o) [Reserved]

(p) Electronic filing.

(q) Applicability dates.

(r) Cross-references.

[T.D. 10000, 89 FR 56548, July 9, 2024, as amended by T.D. 10021, 89 FR 106958, Dec. 30, 2024; T.D. 10021, 90 FR 30825, July 11, 2025]

Editorial Note: At 90 FR 30825, July 11, 2025, as required by the Congressional Review Act and Public Law 119-5, the Internal Revenue Service removed all amendments to §§ 1.6045-0 and 1.6045-1 published at 89 FR 106928, Dec. 30, 2024.

§ 1.6045-1 Returns of information of brokers and barter exchanges.

(a) ***Definitions.*** The following definitions apply for purposes of this section and §§ 1.6045-2 and 1.6045-4.

(1) ***Broker.*** The term *broker* means any person (other than a person who is required to report a transaction under section 6043 of the Code), U.S. or foreign, that, in the ordinary course of a trade or business during the calendar year, stands ready to effect sales to be made by others. A broker includes an obligor that regularly issues and retires its own debt obligations, a corporation that regularly redeems its own stock, or a person that regularly offers to redeem digital assets that were created or issued by that person. A broker also includes a real estate reporting person under § 1.6045-4(e) who (without regard to any exceptions provided by § 1.6045-4(c) and (d)) would be required to make an information return with respect to a real estate transaction under § 1.6045-4(a). However, with respect to a sale (including a redemption or retirement) effected at an office outside the United States under paragraph (g)(3)(iii) of this section (relating to sales other than sales of digital assets), a broker includes only a person described as a U.S. payor or U.S. middleman in § 1.6049-5(c)(5). In the case of a sale of a digital asset, a broker includes only a U.S. digital asset broker as defined in paragraph (g)(4)(i)(A)(*1*) of this section. In addition, a broker does not include an international organization described in § 1.6049-4(c)(1)(ii)(G) that redeems or retires an obligation of which it is the issuer.

(2) ***Customer*** —

(i) ***In general.*** The term *customer* means, with respect to a sale effected by a broker, the person (other than such broker) that makes the sale, if the broker acts as—

(A) An agent for such person in the sale;

(B) A principal in the sale;

(C) The participant in the sale responsible for paying to such person or crediting to such person's account the gross proceeds on the sale; or

(D) A digital asset middleman, as defined in paragraph (a)(21) of this section, that effects the sale of a digital asset for such person.

(ii) ***Special rules for payment transactions involving digital assets.*** In addition to the persons defined as customers in paragraph (a)(2)(i) of this section, the term *customer* includes:

(A) The person who transfers digital assets in a sale described in paragraph (a)(9)(ii)(D) of this section to a processor of digital asset payments that has an agreement or other arrangement with such person for the provision of digital asset payment services that provides that the processor of digital asset payments may verify such person's identity or otherwise comply with anti-money laundering (AML) program requirements under 31 CFR part 1010, or any other AML program requirements, as are applicable to that processor of digital asset payments. For purposes of the previous sentence, an agreement or other arrangement includes any arrangement under which, as part of customary onboarding procedures, such person is treated as having agreed to general terms and conditions.

(B) The person who transfers digital assets or directs the transfer of digital assets—

(*1*) In exchange for property of a type the later sale of which, if effected by such broker, would constitute a sale of that property under paragraph (a)(9) of this section; or

(*2*) In exchange for the acquisition of services performed by such broker; and

(C) In the case of a real estate reporting person under § 1.6045-4(e) with respect to a real estate transaction as defined in § 1.6045-4(b)(1), the person who transfers digital assets or directs the transfer of digital assets to the transferor of real estate (or the seller's nominee or agent) to acquire such real estate.

(3) ***Security.*** The term *security* means:

(i) A share of stock in a corporation (foreign or domestic);

(ii) An interest in a trust;

(iii) An interest in a partnership;

(iv) A debt obligation;

(v) An interest in or right to purchase any of the foregoing in connection with the issuance thereof from the issuer or an agent of the issuer or from an underwriter that purchases any of the foregoing from the issuer;

(vi) An interest in a security described in paragraph (a)(3)(i) or (iv) of this section (but not including executory contracts that require delivery of such type of security);

(vii) An option described in paragraph (m)(2) of this section; or

(viii) A securities futures contract.

(4) ***Barter exchange.*** The term *barter exchange* means any person with members or clients that contract either with each other or with such person to trade or barter property or services either directly or through such person. The term does not include arrangements that provide solely for the informal exchange of similar services on a noncommercial basis.

(5) ***Commodity.*** The term *commodity* means:

(i) Any type of personal property or an interest therein (other than securities as defined in paragraph (a)(3) of this section), the trading of regulated futures contracts in which has been approved by or has been certified to the Commodity Futures Trading Commission (*see* 17 CFR 40.3 or 40.2);

(ii) Lead, palm oil, rapeseed, tea, tin, or an interest in any of the foregoing; or

(iii) Any other personal property or an interest therein that is of a type the Secretary determines is to be treated as a *commodity* under this section, from and after the date specified in a notice of such determination published in the FEDERAL REGISTER.

(6) ***Regulated futures contract.*** The term *regulated futures contract* means a regulated futures contract within the meaning of section 1256(b) of the Code.

(7) ***Forward contract.*** The term *forward contract* means:

(i) An executory contract that requires delivery of a commodity in exchange for cash and which contract is not a regulated futures contract;

(ii) An executory contract that requires delivery of personal property or an interest therein in exchange for cash, or a cash settlement contract, if such executory contract or cash settlement contract is of a type the Secretary determines is to be treated as a *forward contract* under this section, from and after the date specified in a notice of such determination published in the FEDERAL REGISTER; or

(iii) An executory contract that—

(A) Requires delivery of a digital asset in exchange for cash, stored-value cards, a different digital asset, or any other property or services described in paragraph (a)(9)(ii)(B) or (C) of this section; and

(B) Is not a regulated futures contract.

(8) ***Closing transaction.*** The term *closing transaction* means a lapse, expiration, settlement, abandonment, or other termination of a position. For purposes of the preceding sentence, a position includes a right or an obligation under a forward contract, a regulated futures contract, a securities futures contract, or an option.

(9) ***Sale*** —

(i) ***In general.*** The term *sale* means any disposition of securities, commodities, options, regulated futures contracts, securities futures contracts, or forward contracts, and includes redemptions of stock, retirements of debt instruments (including a partial retirement attributable to a principal payment received on or after January 1, 2014), and enterings into short sales, but only to the extent any of these actions are conducted for cash. In the case of an option, a regulated futures contract, a securities futures contract, or a forward contract, a sale includes any closing

transaction. When a closing transaction for a contract described in section 1256(b)(1)(A) involves making or taking delivery, there are two sales, one resulting in profit or loss on the contract, and a separate sale on the delivery. When a closing transaction for a contract described in section 988(c)(5) of the Code involves making delivery, there are two sales, one resulting in profit or loss on the contract, and a separate sale on the delivery. For purposes of the preceding sentence, a broker may assume that any customer's functional currency is the U.S. dollar. When a closing transaction in a forward contract involves making or taking delivery, the broker may treat the delivery as a sale without separating the profit or loss on the contract from the profit or loss on the delivery, except that taking delivery for U.S. dollars is not a sale. The term *sale* does not include entering into a contract that requires delivery of personal property or an interest therein, the initial grant or purchase of an option, or the exercise of a purchased call option for physical delivery (except for a contract described in section 988(c)(5)). For purposes of this section only, a constructive sale under section 1259 of the Code and a mark to fair market value under section 475 or 1296 of the Code are not sales.

(ii) ***Sales with respect to digital assets*** —

(A) ***In general.*** In addition to the specific rules provided in paragraphs (a)(9)(ii)(B) through (D) of this section, the term *sale* also includes:

(*1*) Any disposition of a digital asset in exchange for cash or stored-value cards;

(*2*) Any disposition of a digital asset in exchange for a different digital asset; and

(*3*) The delivery of a digital asset pursuant to the settlement of a forward contract, option, regulated futures contract, any similar instrument, or any other executory contract which would be treated as a sale of a digital asset under this paragraph (a)(9)(ii) if the contract had not been executory. In the case of a transaction involving a contract described in the previous sentence, *see* paragraph (a)(9)(i) of this section for rules applicable to determining whether a sale has occurred and how to report the making or taking delivery of the underlying asset.

(B) ***Dispositions of digital assets for certain property.*** Solely in the case of a broker that is a real estate reporting person defined in § 1.6045-4(e) with respect to real property or is in the business of effecting sales of property for others, which sales when effected would constitute sales under paragraph (a)(9)(i) of this section, the term *sale* also includes any disposition of a digital asset in exchange for such property.

(C) ***Dispositions of digital assets for certain services.*** The term *sale* also includes any disposition of a digital asset in consideration for any services provided by a broker that is a real estate reporting person defined in § 1.6045-4(e) with respect to real property or a broker that is in the business of effecting sales of property described in paragraph (a)(9)(i), paragraphs (a)(9)(ii)(A) and (B), or paragraph (a)(9)(ii)(D) of this section.

(D) ***Special rule for certain sales effected by processors of digital asset payments.*** In the case of a processor of digital asset payments as defined in paragraph (a)(22) of this section, the term *sale* also includes the payment by one party of a digital asset to a processor of digital asset payments in return for the payment of that digital asset, cash, or a different digital asset to a second party. If any sale of digital assets described in this paragraph (a)(9)(ii)(D) would also be subject to reporting under one of the definitions of sale

described in paragraphs (a)(9)(ii)(A) through (C) of this section as a sale effected by a broker other than as a processor of digital asset payments, the broker must treat the sale solely as a sale under such other paragraph and not as a sale under this paragraph (a)(9)(ii)(D).

(10) ***Effect*** —

(i) ***In general.*** The term *effect* means, with respect to a sale, to act as—

(A) An agent for a party in the sale wherein the nature of the agency is such that the agent ordinarily would know the gross proceeds from the sale;

(B) In the case of a broker described in the second sentence of paragraph (a)(1) of this section, a person that is an obligor retiring its own debt obligations, a corporation redeeming its own stock, or an issuer of digital assets redeeming those digital assets;

(C) A principal that is a dealer in such sale; or

(D) A digital asset middleman as defined in paragraph (a)(21) of this section for a party in a sale of digital assets.

(ii) ***Actions relating to certain options and forward contracts.*** For purposes of paragraph (a)(10)(i) of this section, acting as an agent, principal, or digital asset middleman with respect to grants or purchases of options, exercises of call options, or enterings into contracts that require delivery of personal property or an interest therein is not of itself effecting a sale. A broker that has on its books a forward contract under which delivery is made effects such delivery.

(11) ***Foreign currency.*** The term *foreign currency* means currency of a foreign country.

(12) ***Cash.*** The term *cash* means United States dollars or any convertible foreign currency that is issued by a government or a central bank, whether in physical or digital form.

(13) ***Person.*** The term *person* includes any governmental unit and any agency or instrumentality thereof.

(14) ***Specified security.*** The term *specified security* means:

(i) Any share of stock (or any interest treated as stock, including, for example, an American Depositary Receipt) in an entity organized as, or treated for Federal tax purposes as, a corporation, either foreign or domestic (provided that, solely for purposes of this paragraph (a)(14)(i), a security classified as stock by the issuer is treated as stock, and if the issuer has not classified the security, the security is not treated as stock unless the broker knows that the security is reasonably classified as stock under general Federal tax principles);

(ii) Any debt instrument described in paragraph (a)(17) of this section, other than a debt instrument subject to section 1272(a)(6) of the Code (certain interests in or mortgages held by a real estate mortgage investment conduit (REMIC), certain other debt instruments with payments subject to acceleration, and pools of debt instruments the yield on which may be affected by prepayments) or a short-term obligation described in section 1272(a)(2)(C);

(iii) Any option described in paragraph (m)(2) of this section;

(iv) Any securities futures contract;

(v) Any digital asset as defined in paragraph (a)(19) of this section; or

(vi) Any forward contract described in paragraph (a)(7)(iii) of this section requiring the delivery of a digital asset.

(15) ***Covered security.*** The term *covered security* means a specified security described in this paragraph (a)(15).

(i) ***In general.*** Except as provided in paragraph (a)(15)(iv) of this section, the following specified securities are covered securities:

(A) A specified security described in paragraph (a)(14)(i) of this section acquired for cash in an account on or after January 1, 2011, except stock for which the average basis method is available under § 1.1012-1(e).

(B) Stock for which the average basis method is available under § 1.1012-1(e) acquired for cash in an account on or after January 1, 2012.

(C) A specified security described in paragraphs (a)(14)(ii) and (n)(2)(i) of this section (not including the debt instruments described in paragraph (n)(2)(ii) of this section) acquired for cash in an account on or after January 1, 2014.

(D) A specified security described in paragraphs (a)(14)(ii) and (n)(3) of this section acquired for cash in an account on or after January 1, 2016.

(E) Except for an option described in paragraph (m)(2)(ii)(C) of this section (relating to an option on a digital asset), an option described in paragraph (a)(14)(iii) of this section granted or acquired for cash in an account on or after January 1, 2014.

(F) A securities futures contract described in paragraph (a)(14)(iv) of this section entered into in an account on or after January 1, 2014.

(G) A specified security transferred to an account if the broker or other custodian of the account receives a transfer statement (as described in § 1.6045A-1) reporting the security as a covered security.

(H) An option on a digital asset described in paragraphs (a)(14)(iii) and (m)(2)(ii)(C) of this section (other than an option described in paragraph (a)(14)(v) of this section) granted or acquired in an account on or after January 1, 2026.

(I) [Reserved]

(J) A specified security described in paragraph (a)(14)(v) of this section that is acquired in a customer's account by a broker providing custodial services for such specified security on or after January 1, 2026, in exchange for cash, stored-value cards, different digital assets, or any other property or services described in paragraph (a)(9)(ii)(B) or (C) of this section, respectively.

(K) A specified security described in paragraph (a)(14)(vi) of this section, not described in paragraph (a)(14)(v) of this section, that is entered into or acquired in an account on or after January 1, 2026.

(ii) ***Acquired in an account.*** For purposes of this paragraph (a)(15), a security is considered acquired in a customer's account at a broker or custodian if the security is acquired by the customer's broker or custodian or acquired by another broker and delivered to the customer's broker or custodian. Acquiring a security in an account includes granting an option and entering into a forward contract or short sale.

(iii) ***Corporate actions and other events.*** For purposes of this paragraph (a)(15), a security acquired due to a stock dividend, stock split, reorganization, redemption, stock conversion, recapitalization, corporate division, or other similar action is considered acquired for cash in an account.

(iv) ***Exceptions.*** Notwithstanding paragraph (a)(15)(i) of this section, the following specified securities are not covered securities:

(A) Stock acquired in 2011 that is transferred to a dividend reinvestment plan (as described in § 1.1012-1(e)(6)) in 2011. However, a covered security acquired in 2011 that is transferred to a dividend reinvestment plan after 2011 remains a covered security.

(B) A specified security, other than a specified security described in paragraph (a)(14)(v) or (vi) of this section, acquired through an event described in paragraph (a)(15)(iii) of this section if the basis of the acquired security is determined from the basis of a noncovered security.

(C) A specified security that is excepted at the time of its acquisition from reporting under paragraph (c)(3) or (g) of this section. However, a broker cannot treat a specified security as acquired by an exempt foreign person under paragraph (g)(1)(i) or paragraphs (g)(4)(ii) through (v) of this section at the time of acquisition if, at that time, the broker knows or should have known (including by reason of information that the broker is required to collect under section 1471 or 1472 of the Code) that the customer is not a foreign person.

(D) A security for which reporting under this section is required by § 1.6049-5(d)(3)(ii) (certain securities owned by a foreign intermediary or flow-through entity).

(E) Digital assets in a sale required to be reported under paragraph (g)(4)(vi)(E) of this section by a broker making a payment of gross proceeds from the sale to a foreign intermediary, flow-through entity, or U.S. branch.

(16) ***Noncovered security.*** The term *noncovered security* means any specified security that is not a covered security.

(17) ***Debt instrument, bond, debt obligation, and obligation.*** For purposes of this section, the terms *debt instrument, bond, debt obligation,* and *obligation* mean a debt instrument as defined in § 1.1275-1(d) and any instrument or position that is treated as a debt instrument under a specific provision of the Code (for example, a regular interest in a REMIC as defined in section 860G(a)(1) of the Code and § 1.860G-1). Solely for purposes of this section, a security classified as debt by the issuer is treated as debt. If the issuer has not classified the security, the security is not treated as debt unless the broker knows that the security is reasonably classified as debt under general Federal tax principles or that the instrument or position is treated as a debt instrument under a specific provision of the Code.

(18) ***Securities futures contract.*** For purposes of this section, the term *securities futures contract* means a contract described in section 1234B(c) of the Code whose underlying asset is described in paragraph (a)(14)(i) of this section and which is entered into on or after January 1, 2014.

(19) ***Digital asset*** —

(i) ***In general.*** For purposes of this section, the term *digital asset* means any digital representation of value that is recorded on a cryptographically secured distributed ledger (or any similar technology), without regard to whether each individual transaction involving that digital asset is actually recorded on that ledger, and that is not cash as defined in paragraph (a)(12) of this section.

(ii) ***No inference.*** Nothing in this paragraph (a)(19) or elsewhere in this section may be construed to mean that a digital asset is or is not properly classified as a security, commodity, option, securities futures contract, regulated futures contract, or forward contract for any other purpose of the Code.

(20) ***Digital asset address.*** For purposes of this section, the term *digital asset address* means the unique set of alphanumeric characters, in some cases referred to as a quick response or QR Code, that is generated by the wallet into which the digital asset will be transferred.

(21) ***Digital asset middleman*** —

(i) ***In general.*** The term *digital asset middleman* means any person who provides a facilitative service as described in paragraph (a)(21)(iii) of this section with respect to a sale of digital assets.

(ii) [Reserved]

(iii) ***Facilitative service.***

(A) [Reserved]

(B) ***Special rule involving sales of digital assets under paragraphs (a)(9)(ii)(B) through (D) of this section.*** A facilitative service means:

(*1*) The acceptance or processing of digital assets as payment for property of a type which when sold would constitute a sale under paragraph (a)(9)(i) of this section by a broker that is in the business of effecting sales of such property.

(*2*) Any service performed by a real estate reporting person as defined in § 1.6045-4(e) with respect to a real estate transaction in which digital assets are paid by the real estate buyer in full or partial consideration for the real estate, provided the real estate reporting person has actual knowledge or ordinarily would know that digital assets were used by the real estate buyer to make payment to the real estate seller. For purposes of this paragraph (a)(21)(iii)(B)(*2*), a real estate reporting person is considered to have actual knowledge that digital assets were used by the real estate buyer to make payment if the terms of the real estate contract provide for payment using digital assets.

(*3*) The acceptance or processing of digital assets as payment for any service provided by a broker described in paragraph (a)(1) of this section determined without regard to any sales under paragraph (a)(9)(ii)(C) of this section that are effected by such broker.

(4) Any payment service performed by a processor of digital asset payments described in paragraph (a)(22) of this section, provided the processor of digital asset payments has actual knowledge or ordinarily would know the nature of the transaction and the gross proceeds therefrom.

(5) The acceptance of digital assets in return for cash, stored-value cards, or different digital assets, to the extent provided by a physical electronic terminal or kiosk.

(22) ***Processor of digital asset payments.*** For purposes of this section, the term *processor of digital asset payments* means a person who in the ordinary course of a trade or business stands ready to effect sales of digital assets as defined in paragraph (a)(9)(ii)(D) of this section by regularly facilitating payments from one party to a second party by receiving digital assets from the first party and paying those digital assets, cash, or different digital assets to the second party.

(23) ***Stored-value card.*** For purposes of this section, the term *stored-value card* means a card, including any gift card, with a prepaid value in U.S. dollars, any convertible foreign currency, or any digital asset, without regard to whether the card is in physical or digital form.

(24) ***Transaction identification.*** For purposes of this section, the term *transaction identification,* or *transaction ID,* means the unique set of alphanumeric identification characters that a digital asset distributed ledger associates with a transaction involving the transfer of a digital asset from one digital asset address to another. The term transaction ID includes terms such as a *TxID* or *transaction hash*.

(25) ***Wallet, hosted wallet, unhosted wallet, and held in a wallet or account*** —

(i) ***Wallet.*** A *wallet* is a means of storing, electronically or otherwise, a user's private keys to digital assets held by or for the user.

(ii) ***Hosted wallet.*** A *hosted wallet* is a custodial service that electronically stores the private keys to digital assets held on behalf of others.

(iii) ***Unhosted wallet.*** An *unhosted wallet* is a non-custodial means of storing, electronically or otherwise, a user's private keys to digital assets held by or for the user. Unhosted wallets, sometimes referred to as self-hosted or self-custodial wallets, can be provided through software that is connected to the internet (a hot wallet) or through hardware or physical media that is disconnected from the internet (a cold wallet).

(iv) ***Held in a wallet or account.*** A digital asset is referred to in this section as *held in a wallet or account* if the wallet, whether hosted or unhosted, or account stores the private keys necessary to transfer control of the digital asset. A digital asset associated with a digital asset address that is generated by a wallet, and a digital asset associated with a sub-ledger account of a wallet, are similarly referred to as held in a wallet. References to variations of held in a wallet or account, such as held at a broker, held with a broker, held by the user of a wallet, held on behalf of another, acquired in a wallet or account, or transferred into a wallet or account, each have a similar meaning.

(b) ***Examples.*** The following examples illustrate the definitions in paragraph (a) of this section.

(1) ***Example 1.*** The following persons generally are brokers within the meaning of paragraph (a)(1) of this section—

(i) A mutual fund, an underwriter of the mutual fund, or an agent for the mutual fund, any of which stands ready to redeem or repurchase shares in such mutual fund.

(ii) A professional custodian (such as a bank) that regularly arranges sales for custodial accounts pursuant to instructions from the owner of the property.

(iii) A depositary trust or other person who regularly acts as an escrow agent in corporate acquisitions, if the nature of the activities of the agent is such that the agent ordinarily would know the gross proceeds from sales.

(iv) A stock transfer agent for a corporation, which agent records transfers of stock in such corporation, if the nature of the activities of the agent is such that the agent ordinarily would know the gross proceeds from sales.

(v) A dividend reinvestment agent for a corporation that stands ready to purchase or redeem shares.

(vi) A person who in the ordinary course of a trade or business provides users with hosted wallet services to the extent such person stands ready to effect the sale of digital assets on behalf of its customers, including by acting as an agent for a party in the sale wherein the nature of the agency is as described in paragraph (a)(10)(i)(A) of this section.

(vii) A processor of digital asset payments as described in paragraph (a)(22) of this section.

(viii) A person who in the ordinary course of a trade or business either owns or operates one or more physical electronic terminals or kiosks that stand ready to effect the sale of digital assets for cash, stored-value cards, or different digital assets, regardless of whether the other person is the disposer or the acquirer of the digital assets in such an exchange.

(ix) [Reserved]

(x) A person who in the ordinary course of a trade or business stands ready at a physical location to effect sales of digital assets on behalf of others.

(xi) [Reserved]

(2) *Example 2.* The following persons are not brokers within the meaning of paragraph (a)(1) of this section in the absence of additional facts that indicate the person is a broker—

(i) A stock transfer agent for a corporation, which agent daily records transfers of stock in such corporation, if the nature of the activities of the agent is such that the agent ordinarily would not know the gross proceeds from sales.

(ii) A person (such as a stock exchange) that merely provides facilities in which others effect sales.

(iii) An escrow agent or nominee if such agency is not in the ordinary course of a trade or business.

(iv) An escrow agent, otherwise a broker, which agent effects no sales other than such transactions as are incidental to the purpose of the escrow (such as sales to collect on collateral).

(v) A floor broker on a commodities exchange, which broker maintains no records with respect to the terms of sales.

(vi) A corporation that issues and retires long-term debt on an irregular basis.

(vii) A clearing organization.

(viii) A merchant who is not otherwise required to make a return of information under section 6045 of the Code and who regularly sells goods or other property (other than digital assets) or services in return for digital assets.

(ix) A person solely engaged in the business of validating distributed ledger transactions, through proof-of-work, proof-of-stake, or any other similar consensus mechanism, without providing other functions or services.

(x) A person solely engaged in the business of selling hardware or licensing software, the sole function of which is to permit a person to control private keys which are used for accessing digital assets on a distributed ledger, without providing other functions or services.

(3) ***Example 3: Barter exchange.*** A, B, and C belong to a carpool in which they commute to and from work. Every third day, each member of the carpool provides transportation for the other two members. Because the carpool arrangement provides solely for the informal exchange of similar services on a noncommercial basis, the carpool is not a barter exchange within the meaning of paragraph (a)(4) of this section.

(4) ***Example 4: Barter exchange.*** X is an organization whose members include retail merchants, wholesale merchants, and persons in the trade or business of performing services. X's members exchange property and services among themselves using credits on the books of X as a medium of exchange. Each exchange through X is reflected on the books of X by crediting the account of the member providing property or services and debiting the account of the member receiving such property or services. X also provides information to its members concerning property and services available for exchange through X. X charges its members a commission on each transaction in which credits on its books are used as a medium of exchange. X is a barter exchange within the meaning of paragraph (a)(4) of this section.

(5) ***Example 5: Commodity, forward contract.*** A warehouse receipt is an interest in personal property for purposes of paragraph (a) of this section. Consequently, a warehouse receipt for a quantity of lead is a commodity under paragraph (a)(5)(ii) of this section. Similarly, an executory contract that requires delivery of a warehouse receipt for a quantity of lead is a forward contract under paragraph (a)(7)(ii) of this section.

(6) ***Example 6: Customer.*** The only customers of a depositary trust acting as an escrow agent in corporate acquisitions, which trust is a broker, are shareholders to whom the trust makes payments or shareholders for whom the trust is acting as an agent.

(7) ***Example 7: Customer.*** The only customers of a stock transfer agent, which agent is a broker, are shareholders to whom the agent makes payments or shareholders for whom the agent is acting as an agent.

(8) ***Example 8: Customer.*** D, an individual not otherwise exempt from reporting, is the holder of an obligation issued by P, a corporation. R, a broker, acting as an agent for P, retires such obligation held by D. Such obligor payments from R represent obligor payments by P. D, the person to whom the gross proceeds are paid or credited by R, is the customer of R.

(9) ***Example 9: Covered security.*** E, an individual not otherwise exempt from reporting, maintains an account with S, a broker. On June 1, 2012, E instructs S to purchase stock that is a specified security for cash. S places an order to purchase the stock with T, another broker. E does not maintain an account with T. T executes the purchase. Custody of the purchased stock is transferred to E's

account at S. Under paragraph (a)(15)(ii) of this section, the stock is considered acquired for cash in E's account at S. Because the stock is acquired on or after January 1, 2012, under paragraph (a)(15)(i) of this section, it is a covered security.

(10) ***Example 10: Covered security.*** F, an individual not otherwise exempt from reporting, is granted 100 shares of stock in F's employer by F's employer. Because F does not acquire the stock for cash or through a transfer to an account with a transfer statement (as described in § 1.6045A-1), under paragraph (a)(15) of this section, the stock is not a covered security.

(11) ***Example 11: Covered security.*** G, an individual not otherwise exempt from reporting, owns 400 shares of stock in Q, a corporation, in an account with U, a broker. Of the 400 shares, 100 are covered securities and 300 are noncovered securities. Q takes a corporate action to split its stock in a 2-for-1 split. After the stock split, G owns 800 shares of stock. Because the adjusted basis of 600 of the 800 shares that G owns is determined from the basis of noncovered securities, under paragraphs (a)(15)(iii) and (a)(15)(iv)(B) of this section, these 600 shares are not covered securities and the remaining 200 shares are covered securities.

(12) ***Example 12: Processor of digital asset payments, sale, and customer*** —

(i) ***Facts.*** Company Z is an online merchant that accepts digital asset DE as a form of payment for the merchandise it sells. The merchandise Z sells does not include digital assets. Z does not provide any other service that could be considered as standing ready to effect sales of digital assets or any other property subject to reporting under section 6045. CPP is in the business of facilitating payments made by users of digital assets to merchants with which CPP has an account. CPP also has contractual arrangements with users of digital assets for the provision of digital asset payment services that provide that CPP may verify such user's identity pursuant to AML program requirements. Z contracts with CPP to help Z's customers to make payments to Z using digital assets. Under Z's agreement with CPP, when purchasers of merchandise initiate payment on Z's website using DE, they are directed to CPP's website to complete the payment part of the transaction. CPP is a third party settlement organization, as defined in § 1.6050W-1(c)(2), with respect to the payments it makes to Z. Customer R seeks to purchase merchandise from Z that is priced at $6,000 (which is 6,000 units of DE). After R initiates a purchase, R is directed to CPP's website where R is directed to enter into an agreement with CPP, which as part of CPP's customary onboarding procedures developed pursuant to AML program requirements, requires R to submit information to CPP to verify R's identity. Thereafter, R is instructed to transfer 6,000 units of DE to a digital asset address controlled by CPP. CPP then pays $6,000 in cash to Z, who in turn processes R's order.

(ii) ***Analysis.*** CPP is a processor of digital asset payments within the meaning of paragraph (a)(22) of this section because CPP, in the ordinary course of its business, regularly effects sales of digital assets as defined in paragraph (a)(9)(ii)(D) of this section by receiving digital assets from one party and paying those digital assets, cash, or different digital assets to a second party. Based on CPP's contractual relationship with Z, CPP has actual knowledge that R's payment was a payment transaction and the amount of gross proceeds R received as a result. Accordingly, CPP's services are facilitative services under paragraph (a)(21)(iii)(B) of this section and CPP is acting as a digital asset middleman under paragraph (a)(21) of this section to effect R's sale of digital assets under paragraph (a)(10)(i)(D) of this section. R's payment of 6,000 units of DE to CPP in return for the payment of $6,000 cash to Z is a sale of digital assets under paragraph (a)(9)(ii)(D) of this section. Additionally, because CPP has an arrangement with R for the provision of digital asset payment services that provides that CPP may verify R's

identity pursuant to AML program requirements, R is CPP's customer under paragraph (a)(2)(ii)(A) of this section. Finally, CPP is also required to report the payment to Z under § 1.6050W-1(a) because the payment is a third party network transaction under § 1.6050W-1(c). The answer would be the same if CPP paid Z the 6,000 units of DE or another digital asset instead of cash.

(13) ***Example 13: Broker.*** The facts are the same as in paragraph (b)(12)(i) of this section (the facts in *Example 12*), except that Z accepts digital asset DE from its purchasers directly without the services of CPP or any other processor of digital asset payments. To pay for the merchandise R purchases on Z's website, R is directed by Z to transfer 15 units of DE directly to Z's digital asset address. Z is not a broker under the definition of paragraph (a)(1) of this section because Z does not stand ready as part of its trade or business to effect sales as defined in paragraph (a)(9) of this section made by others. That is, the sales that Z is in the business of conducting are of property that is not subject to reporting under section 6045.

(14) ***Example 14: Processor of digital asset payments*** —

(i) ***Facts.*** Customer S purchases goods that are not digital assets with 10 units of digital asset DE from Merchant M using a digital asset DE credit card issued by Bank BK. BK has a contractual arrangement with customers using BK's credit cards that provides that BK may verify such customer identification information pursuant to AML program requirements. In addition, as part of BK's customary onboarding procedures, BK requires credit card applicants to submit information to BK to verify their identity. M is one of a network of unrelated persons that has agreed to accept digital asset DE credit cards issued by BK as payment for purchase transactions under an agreement that provides standards and mechanisms for settling the transaction between a merchant acquiring bank and the persons who accept the cards. Bank MAB is the merchant acquiring entity with the contractual obligation to make payments to M for goods provided to S in this transaction. To make payment for S's purchase of goods from M, S transfers 10 units of digital asset DE to BK. BK pays the 10 units of DE, less its processing fee, to Bank MAB, which amount Bank MAB pays, less its processing fee, to M.

(ii) ***Analysis.*** BK is a processor of digital asset payments as defined in paragraph (a)(22) of this section because BK, in the ordinary course of its business, regularly effects sales of digital assets as defined in paragraph (a)(9)(ii)(D) of this section by receiving digital assets from one party and paying those digital assets, cash, or different digital assets to a second party. Bank BK has actual knowledge that payment made by S is a payment transaction and also knows S's gross proceeds therefrom. Accordingly, BK's services are facilitative services under paragraph (a)(21)(iii)(B) of this section and BK is acting as a digital asset middleman under paragraph (a)(21) of this section to effect sales of digital assets under paragraph (a)(10)(i)(D) of this section. S's payment of 10 units of DE to BK for the payment of those units, less BK's processing fee, to Bank MAB is a sale by S of digital assets under paragraph (a)(9)(ii)(D) of this section. Additionally, because S transferred digital assets to BK in a sale described in paragraph (a)(9)(ii)(D) of this section and because BK has an arrangement with S for the provision of digital asset payment services that provides that BK may verify S's identity, S is BK's customer under paragraph (a)(2)(ii)(A) of this section.

(15) ***Example 15: Digital asset middleman and effect*** —

(i) ***Facts.*** SBK is in the business of effecting sales of stock and other securities on behalf of customers. To open an account with SBK, each customer must provide SBK with its name, address, and tax identification number. SBK accepts 20 units of digital asset DE from Customer P as payment for 10 shares of AB stock. Additionally, P pays SBK an additional 1 unit of digital asset DE as a commission for SBK's services.

(ii) ***Analysis.*** SBK's acceptance of 20 units of DE as payment for the AB stock is a facilitative service under paragraph (a)(21)(iii)(B) of this section because the payment is for property (the AB stock) that when sold would constitute a sale under paragraph (a)(9)(i) of this section by a broker that is in the business of effecting sales of stock and other securities. SBK's acceptance of 1 unit of DE as payment for SBK's commission is also a facilitative service under paragraph (a)(21)(iii)(B) of this section because SBK is a broker under paragraph (a)(1) of this section with respect to a sale of stock under paragraph (a)(9)(i) of this section. Accordingly, SBK is acting as a digital asset middleman to effect P's sale of 10 units of DE in return for the AB stock and P's sale of 1 unit of DE as payment for SBK's commission under paragraphs (a)(10)(i)(D) and (a)(21) of this section.

(16) ***Example 16: Digital asset middleman and effect*** —

(i) ***Facts.*** J, an unmarried individual not otherwise exempt from reporting, enters into a contractual agreement with B, an individual not otherwise exempt from reporting, to exchange J's principal residence, Blackacre, which has a fair market value of $225,000 for units of digital asset DE with a value of $225,000. Prior to closing, J provides closing agent CA, who is a real estate reporting person under § 1.6045-4(e), with the certifications required under § 1.6045-4(c)(2)(iv) (to exempt the transaction from reporting under § 1.6045-4(a) due to Blackacre being J's principal residence). Prior to closing, B transfers the digital assets directly from B's wallet to J's wallet, and J certifies to the closing agent (CA) that J received the digital assets required to be paid under the contract.

(ii) ***Analysis.*** CA is performing services as a real estate reporting person with respect to a real estate transaction in which the real estate buyer (B) pays digital assets in full or partial consideration for the real estate. In addition, CA has actual knowledge that payment made to B included digital assets because the terms of the real estate contract provide for such payment. Accordingly, the closing services provided by CA are facilitative services under paragraph (a)(21)(iii)(B)(*2*) of this section, and CA is acting as a digital asset middleman under paragraph (a)(21) of this section to effect B's sale of 1,000 DE units under paragraph (a)(10)(i)(D) of this section. These conclusions are not impacted by whether or not CA is required to report the sale of the real estate by J under § 1.6045-4(a).

(17) ***Example 17: Digital asset and cash*** —

(i) ***Facts.*** Y is a privately held corporation that issues DL, a digital representation of value designed to track the value of the U.S. dollar. DL is backed in part or in full by U.S. dollars held by Y, and Y offers to redeem units of DL for U.S. dollars at par at any time. Transactions involving DL utilize cryptography to secure transactions that are digitally recorded on a cryptographically secured distributed ledger called the DL blockchain. CRX is a digital asset broker that also provides hosted wallet services for its customers seeking to make trades of digital assets using CRX. R is a customer of CRX. R exchanges 100 units of DL for $100 in cash from CRX. CRX does not record this transaction on the DL blockchain, but instead records the transaction on CRX's own centralized private ledger.

(ii) ***Analysis.*** DL is not cash under paragraph (a)(12) of this section because it is not issued by a government or central bank. DL is a digital asset under paragraph (a)(19) of this section because it is a digital representation of value that is recorded on a cryptographically secured distributed ledger. The fact that CRX recorded R's transaction on its own private ledger and not on the DL blockchain does not change this conclusion.

(18) ***Example 18: Broker and effect*** —

(i) ***Facts.*** Individual J is an artist in the business of creating and selling nonfungible tokens that reference J's digital artwork. To find buyers and to execute these transactions, J uses the services of P2X, an unrelated digital asset marketplace that provides a service for nonfungible token sellers to find buyers and automatically executing contracts in return for a transaction fee. J does not perform any other services with respect to these transactions. Using P2X's platform, buyer K purchases J's newly created nonfungible token (DA-J) for 1,000 units of digital asset DE. Using the interface provided by P2X, J and K execute their exchange using an automatically executing contract, which automatically transfers DA-J to K and K's payment of DE units to J.

(ii) ***Analysis.*** Although J is a principal in the exchange of DA-J for 1,000 units of DE, J is not acting as an obligor retiring its own debt obligations, a corporation redeeming its own stock, or an issuer of digital assets that is redeeming those digital assets, as described in paragraph (a)(10)(i)(B) of this section. Because J created DA-J as part of J's business of creating and selling specified nonfungible tokens, J is also not acting in these transactions as a dealer as described in paragraph (a)(10)(i)(C) of this section, as an agent for another party as described in paragraph (a)(10)(i)(A) of this section, or as a digital asset middleman described in paragraph (a)(10)(i)(D) of this section. Accordingly, J is not a broker under paragraph (a)(1) of this section because J does not effect sales of digital assets on behalf of others under the definition of effect under paragraph (a)(10)(i) of this section.

(19) ***Example 19: Broker, sale, and effect*** —

(i) ***Facts.*** HWP is a person that regularly provides hosted wallet services for customers. HWP does not operate a digital asset trading platform, but at the direction of its customers regularly executes customer exchange orders using the services of digital asset trading platforms. Individual L maintains digital assets with HWP. L places an order with HWP to exchange 10 units of digital asset DE held by L with HWP for 100 units of digital asset RN. To execute the order, HWP places the order with PRX, a person, as defined in section 7701(a)(1) of the Code, that operates a digital asset trading platform. HWP debits L's account for the disposed DE units and credits L's account for the RN units received in exchange.

(ii) ***Analysis.*** The exchange of L's DE units for RN units is a sale under paragraph (a)(9)(ii)(A)(2) of this section. HWP acts as an agent for L in this sale, and the nature of this agency is such that HWP ordinarily would know the gross proceeds from the sale. Accordingly, HWP has effected the sale under paragraph (a)(10)(i)(A) of this section. Additionally, HWP is a broker under paragraph (a)(1) of this section because in the ordinary course of its trade or business, HWP stands ready to effect sales to be made by others. If PRX is also a broker, *see* the multiple broker rule in paragraph (c)(3)(iii)(B) of this section.

(20) ***Example 20: Digital asset and security.*** M owns 10 ownership units of a fund organized as a trust described in § 301.7701-4(c) of this chapter that was formed to invest in digital assets. M's units are held in a securities brokerage account and are not recorded using cryptographically secured

distributed ledger technology. Although the underlying investments are comprised of one or more digital assets, M's investment is in ownership units of a trust, and the units are not themselves digital assets under paragraph (a)(19) of this section because transactions involving these units are not secured using cryptography and are not digitally recorded on a distributed ledger, such as a blockchain. The answer would be the same if the fund is organized as a C corporation or partnership.

(21) ***Example 21: Forward contract, closing transaction, and sale*** —

(i) ***Facts.*** On February 24, Year 1, J contracts with broker CRX to sell J's 10 units of digital asset DE to CRX at an agreed upon price, with delivery under the contract to occur at 4 p.m. on March 10, Year 1. Pursuant to this agreement, J delivers the 10 units of DE to CRX, and CRX pays J the agreed upon price in cash.

(ii) ***Analysis.*** Under paragraph (a)(7)(iii) of this section, the contract between J and CRX is a forward contract. J's delivery of digital asset DE pursuant to the forward contract is a closing transaction described in paragraph (a)(8) of this section that is treated as a sale of the underlying digital asset DE under paragraph (a)(9)(ii)(A)(*3*) of this section. Pursuant to the rules of paragraphs (a)(9)(i) and (a)(9)(ii)(A)(*3*) of this section, CRX may treat the delivery of DE as a sale without separating the profit or loss on the forward contract from the profit or loss on the delivery.

(22) ***Example 22: Digital asset*** —

(i) ***Facts.*** On February 7, Year 1, J purchases a regulated futures contract on digital asset DE through futures commission merchant FCM. The contract is not recorded using cryptographically secured distributed ledger technology. The contract expires on the last Friday in June, Year 1. On May 1, Year 1, J enters into an offsetting closing transaction with respect to the regulated futures contract.

(ii) ***Analysis.*** Although the regulated futures contract's underlying assets are comprised of digital assets, J's investment is in the regulated futures contract, which is not a digital asset under paragraph (a)(19) of this section because transactions involving the contract are not secured using cryptography and are not digitally recorded using cryptographically secured distributed ledger technology, such as a blockchain. When J disposes of the contract, the transaction is a sale of a regulated futures contract covered by paragraph (a)(9)(i) of this section.

(23) ***Example 23: Closing transaction and sale*** —

(i) ***Facts.*** On January 15, Year 1, J purchases digital asset DE through Broker. On March 1, Year 1, J sells a regulated futures contract on DE through Broker. The contract expires on the last Friday in June, Year 1. On the last Friday in June, Year 1, J delivers the DE in settlement of the regulated futures contract.

(ii) ***Analysis.*** J's delivery of the DE pursuant to the regulated futures contract is a closing transaction described in paragraph (a)(8) of this section that is treated as a sale of the regulated futures contract under paragraph (a)(9)(i) of this section. In addition, under paragraph (a)(9)(ii)(A)(*3*) of this section, J's delivery of digital asset DE pursuant to the settlement of the regulated futures contract is a sale of the underlying digital asset DE.

(c) ***Reporting by brokers*** —

(1) ***Requirement of reporting.*** Any broker shall, except as otherwise provided, report in the manner prescribed in this section.

(2) ***Sales required to be reported.*** Except as provided in paragraphs (c)(3), (c)(5), and (g) of this section, a broker is required to make a return of information for each sale by a customer of the broker if, in the ordinary course of a trade or business in which the broker stands ready to effect sales to be made by others, the broker effects the sale or closes the short position opened by the sale.

(3) ***Exceptions*** —

(i) ***Sales effected for exempt recipients*** —

(A) ***In general.*** No return of information is required with respect to a sale effected for a customer that is an exempt recipient under paragraph (c)(3)(i)(B) of this section.

(B) ***Exempt recipient defined.*** The term *exempt recipient* means—

(*1*) A corporation as defined in section 7701(a)(3), whether domestic or foreign, except that this exclusion does not apply to sales of covered securities acquired on or after January 1, 2012, by an S corporation as defined in section 1361(a);

(*2*) An organization exempt from taxation under section 501(a) or an individual retirement plan;

(*3*) The United States or a State, the District of Columbia, the Commonwealth of Puerto Rico, Guam, the Commonwealth of Northern Mariana Islands, the U.S. Virgin Islands, or American Samoa, a political subdivision of any of the foregoing, a wholly owned agency or instrumentality of any one or more of the foregoing, or a pool or partnership composed exclusively of any of the foregoing;

(*4*) A foreign government, a political subdivision thereof, an international organization, or any wholly owned agency or instrumentality of the foregoing;

(*5*) A foreign central bank of issue as defined in § 1.895-1(b)(1) (*i.e.,* a bank that is by law or government sanction the principal authority, other than the government itself, issuing instruments intended to circulate as currency);

(*6*) A dealer in securities or commodities registered as such under the laws of the United States or a State;

(*7*) A futures commission merchant registered as such with the Commodity Futures Trading Commission;

(*8*) A real estate investment trust (as defined in section 856);

(*9*) An entity registered at all times during the taxable year under the Investment Company Act of 1940 (15 U.S.C. 80a-1, *et seq.*);

(*10*) A common trust fund (as defined in section 584(a));

(*11*) A financial institution such as a bank, mutual savings bank, savings and loan association, building and loan association, cooperative bank, homestead association, credit union, industrial loan association or bank, or other similar organization; or

(*12*) A U.S. digital asset broker as defined in paragraph (g)(4)(i)(A)(*1*) of this section other than an investment adviser registered either under the Investment Advisers Act of 1940 (15 U.S.C. 80b-1, *et seq.*) or with a state securities regulator and that investment adviser is not otherwise an exempt recipient in one or more of paragraphs (c)(3)(i)(B)(*1*) through (*11*) of this section.

(C) ***Exemption certificate*** —

(*1*) ***In general.*** Except as provided in paragraph (c)(3)(i)(C)(*2*) or (*3*) of this section, a broker may treat a person described in paragraph (c)(3)(i)(B) of this section as an exempt recipient based on a properly completed exemption certificate (as provided in § 31.3406(h)-3 of this chapter); the broker's actual knowledge that the customer is a person described in paragraph (c)(3)(i)(B) of this section; or the applicable indicators described in § 1.6049-4(c)(1)(ii)(A) through (M). A broker may require an exempt recipient to file a properly completed exemption certificate and may treat an exempt recipient that fails to do so as a recipient that is not exempt.

(*2*) ***Limitation for corporate customers.*** For sales of covered securities acquired on or after January 1, 2012, a broker may not treat a customer as an exempt recipient described in paragraph (c)(3)(i)(B)(*1*) of this section based on the indicators of corporate status described in § 1.6049-4(c)(1)(ii)(A). However, for sales of all securities and for sales of digital assets, a broker may treat a customer as an exempt recipient if one of the following applies—

(*i*) The name of the customer contains the term *insurance company, indemnity company, reinsurance company,* or *assurance company.*

(*ii*) The name of the customer indicates that it is an entity listed as a per se corporation under § 301.7701-2(b)(8)(i) of this chapter.

(*iii*) The broker receives a properly completed exemption certificate (as provided in § 31.3406(h)-3 of this chapter) that asserts that the customer is not an S corporation as defined in section 1361(a).

(*iv*) The broker receives a withholding certificate described in § 1.1441-1(e)(2)(i) that includes a certification that the person whose name is on the certificate is a foreign corporation.

(*3*) ***Limitation for U.S. digital asset brokers.*** For sales of digital assets, a broker may not treat a customer as an exempt recipient described in paragraph (c)(3)(i)(B)(*12*) of this section unless it obtains from that customer a certification on a properly completed exemption certificate (as provided in § 31.3406(h)-3 of this chapter) that the customer is a U.S. digital asset broker described in paragraph (g)(4)(i)(A)(*1*) of this section.

(ii) ***Excepted sales.*** No return of information is required with respect to a sale effected by a broker for a customer if the sale is an excepted sale. The inclusion in this paragraph (c)(3)(ii) of a digital asset transaction is not intended to create an inference that the transaction is a sale of a digital asset under paragraph (a)(9)(ii) of this section. For this purpose, a sale is an excepted sale if it is—

(A) So designated by the Internal Revenue Service in a revenue ruling or revenue procedure (*see* § 601.601(d)(2) of this chapter);

(B) A sale with respect to which a return is not required by applying the rules of § 1.6049-4(c)(4) (by substituting the term *a sale subject to reporting under section 6045* for the term *an interest payment*);

(C) A sale of digital asset units withheld by the broker from digital assets received by the customer in any underlying digital asset sale to pay for the customer's digital asset transaction costs;

(D) A sale for cash of digital asset units withheld by the broker from digital assets received by the customer in a sale of digital assets for different digital assets (underlying sale) that is undertaken immediately after the underlying sale to satisfy the broker's obligation under section 3406 of the Code to deduct and withhold a tax with respect to the underlying sale;

(E) A disposition of a digital asset representing loyalty program credits or loyalty program rewards offered by a provider of non-digital asset goods or services to its customers, in exchange for non-digital asset goods or services from the provider or other merchants participating with the developer as part of the program, provided that the digital asset is not capable of being transferred, exchanged, or otherwise used outside the cryptographically secured distributed ledger network of the loyalty program;

(F) A disposition of a digital asset created and designed for use within a video game or network of video games in exchange for different digital assets also created and designed for use within that video game or video game network, provided the disposed of digital assets are not capable of being transferred, exchanged, or otherwise used outside of the video game or video game network;

(G) Except in the case of digital assets cleared or settled on a limited-access regulated network as described in paragraph (c)(8)(iii) of this section, a disposition of a digital asset representing information with respect to payment instructions or the management of inventory that does not consist of digital assets, within a cryptographically secured distributed ledger (or network of interoperable distributed ledgers) that provides access only to users of such information provided the digital assets disposed of are not capable of being transferred, exchanged, or otherwise used outside such distributed ledger or network; or

(H) A disposition of a digital asset offered by a seller of goods or provider of services to its customers that can be exchanged or redeemed only by those customers for goods or services provided by such seller or provider if the digital asset is not capable of being transferred, exchanged, or otherwise used outside the cryptographically secured distributed ledger network of the seller or provider and cannot be sold or exchanged for cash, stored-value cards, or qualifying stablecoins at a market rate inside the seller or provider's distributed ledger network.

(iii) ***Multiple brokers*** —

(A) ***In general.*** If a broker is instructed to initiate a sale by a person that is an exempt recipient described in paragraph (c)(3)(i)(B)(*6*), (*7*), or (*11*) of this section, no return of information is required with respect to the sale by that broker. In a redemption of stock or retirement of securities, only the broker responsible for paying the holder redeemed or retired, or crediting the gross proceeds on the sale to that holder's account, is required to report the sale.

(B) ***Special rule for sales of digital assets.*** If more than one broker effects a sale of a digital asset on behalf of a customer, the broker responsible for first crediting the gross proceeds on the sale to the customer's wallet or account is required to report the sale. A broker that did not first credit the gross proceeds on the sale to the customer's wallet or account is not required to report the sale if prior to the sale that broker obtains a certification on a properly completed exemption certificate (as provided in § 31.3406(h)-3 of this chapter) that the broker first crediting the gross proceeds on the sale is a person described in paragraph (c)(3)(i)(B)(*12*) of this section.

(iv) ***Cash on delivery transactions.*** In the case of a sale of securities through a cash on delivery account, a delivery versus payment account, or other similar account or transaction, only the broker that receives the gross proceeds from the sale against delivery of the securities sold is required to report the sale. If, however, the broker's customer is another broker (second-party broker) that is an exempt recipient, then only the second-party broker is required to report the sale.

(v) ***Fiduciaries and partnerships.*** No return of information is required with respect to a sale effected by a custodian or trustee in its capacity as such or a redemption of a partnership interest by a partnership, provided the sale is otherwise reported by the custodian or trustee on a properly filed Form 1041, or the redemption is otherwise reported by the partnership on a properly filed Form 1065, and all Schedule K-1 reporting requirements are satisfied.

(vi) ***Money market funds*** —

(A) ***In general.*** No return of information is required with respect to a sale of shares in a regulated investment company that is permitted to hold itself out to investors as a money market fund under Rule 2a-7 under the Investment Company Act of 1940 (17 CFR 270.2a-7).

(B) ***Effective/applicability date.*** Paragraph (c)(3)(vi)(A) of this section applies to sales of shares in calendar years beginning on or after July 8, 2016. Taxpayers and brokers (as defined in § 1.6045-1(a)(1)), however, may rely on paragraph (c)(3)(vi)(A) of this section for sales of shares in calendar years beginning before July 8, 2016.

(vii) ***Obligor payments on certain obligations.*** No return of information is required with respect to payments representing obligor payments on—

(A) Nontransferable obligations (including savings bonds, savings accounts, checking accounts, and NOW accounts);

(B) Obligations as to which the entire gross proceeds are reported by the broker on Form 1099 under provisions of the Internal Revenue Code other than section 6045 (including stripped coupons issued prior to July 1, 1982); or

(C) Retirement of short-term obligations (*i.e.,* obligations with a fixed maturity date not exceeding 1 year from the date of issue) that have original issue discount, as defined in section 1273(a)(1), with or without application of the *de minimis* rule. The preceding sentence does not apply to a debt instrument issued on or after January 1, 2014. For a short-term obligation issued on or after January 1, 2014, *see* paragraph (c)(3)(xiii) of this section.

(D) Demand obligations that also are callable by the obligor and that have no premium or discount. The preceding sentence does not apply to a debt instrument issued on or after January 1, 2014.

(viii) ***Foreign currency.*** No return of information is required with respect to a sale of foreign currency other than a sale pursuant to a forward contract or regulated futures contract that requires delivery of foreign currency.

(ix) ***Fractional share.*** No return of information is required with respect to a sale of a fractional share of stock if the gross proceeds on the sale of the fractional share are less than $20.

(x) ***Certain retirements.*** No return of information is required from an issuer or its agent with respect to the retirement of book entry or registered form obligations as to which the relevant books and records indicate that no interim transfers have occurred. The preceding sentence does not apply to a debt instrument issued on or after January 1, 2014.

(xi) ***Short sales*** —

(A) ***In general.*** A broker may not make a return of information under this section for a short sale of a security entered into on or after January 1, 2011, until the year a customer delivers a security to satisfy the short sale obligation. The return must be made without regard to the constructive sale rule in section 1259 or to section 1233(h). In general, the broker must report on a single return the information required by paragraph (d)(2)(i)(A) of this section for the short sale except that the broker must report the date the short sale was closed in lieu of the sale date. In applying paragraph (d)(2)(i)(A) of this section, the broker must report the relevant information regarding the security sold to open the short sale and the adjusted basis of the security delivered to close the short sale and whether any gain or loss on the closing of the short sale is long-term or short-term (within the meaning of section 1222).

(B) ***Short sale closed by delivery of a noncovered security.*** A broker is not required to report adjusted basis and whether any gain or loss on the closing of the short sale is long-term or short-term if the short sale is closed by delivery of a noncovered security and the return so indicates. A broker that chooses to report this information is not subject to penalties under section 6721 or 6722 for failure to report this information correctly if the broker indicates on the return that the short sale was closed by delivery of a noncovered security.

(C) ***Short sale obligation transferred to another account.*** If a short sale obligation is satisfied by delivery of a security transferred into a customer's account accompanied by a transfer statement (as described in § 1.6045A-1(b)(7)) indicating that the security was borrowed, the broker receiving custody of the security may not file a return of information under this section. The receiving broker must furnish a statement to the transferor that reports the amount of gross proceeds received from the short sale, the date of the sale, the quantity of shares, units, or amounts sold, and the Committee on Uniform Security Identification Procedures (CUSIP) number of the sold security (if applicable) or other security identifier

number that the Secretary may designate by publication in the FEDERAL REGISTER or in the Internal Revenue Bulletin (*see* § 601.601(d)(2) of this chapter). The statement to the transferor also must include the transfer date, the name and contact information of the receiving broker, the name and contact information of the transferor, and sufficient information to identify the customer. If the customer subsequently closes the short sale obligation in the transferor's account with non-borrowed securities, the transferor must make the return of information required by this section. In that event, the transferor must take into account the information furnished under this paragraph (c)(3)(xi)(C) on the return unless the transferor knows that the information furnished under this paragraph (c)(3)(xi)(C) is incorrect or incomplete. A failure to report correct information that arises solely from this reliance is deemed to be due to reasonable cause for purposes of penalties under sections 6721 and 6722. *See* § 301.6724-1(a)(1) of this chapter.

(xii) ***Cross reference.*** For an exception for certain sales of agricultural commodities and certificates issued by the Commodity Credit Corporation after January 1, 1993, *see* paragraph (c)(7) of this section.

(xiii) ***Short-term obligations issued on or after January 1, 2014.*** No return of information is required under this section with respect to a sale (including a retirement) of a short-term obligation, as described in section 1272(a)(2)(C), that is issued on or after January 1, 2014.

(xiv) ***Certain redemptions.*** No return of information is required under this section for payments made by a stock transfer agent (as described in § 1.6045-1(b)(iv)) with respect to a redemption of stock of a corporation described in section 1297(a) with respect to a shareholder in the corporation if—

(A) The stock transfer agent obtains from the corporation a written certification signed by a person authorized to sign on behalf of the corporation, that states that the corporation is described in section 1297(a) for each calendar year during which the stock transfer agent relies on the provisions of this paragraph (c)(3)(xiv), and the stock transfer agent has no reason to know that the written certification is unreliable or incorrect;

(B) The stock transfer agent identifies, prior to payment, the corporation as a participating FFI (including a reporting Model 2 FFI) (as defined in § 1.6049-4(f)(10) or (14), respectively), or reporting Model 1 FFI (as defined in § 1.6049-4(f)(13)), in accordance with the requirements of § 1.1471-3(d)(4) (substituting the terms *stock transfer agent* and *corporation* for the terms *withholding agent* and *payee,* respectively) and validates that status annually;

(C) The stock transfer agent obtains a written certification representing that the corporation shall report the payment as part of its account holder reporting obligations under chapter 4 of the Code or an applicable IGA (as defined in § 1.6049-4(f)(7)) and provided the stock transfer agent does not know that the corporation is not reporting the payment as required. The paying agent may rely on the written certification until there is a change in circumstances or the paying agent knows or has reason to know that the statement is unreliable or incorrect. A stock transfer agent that knows that the corporation is not reporting the payment as required under chapter 4 of the Code or an applicable IGA must report all payments reportable under this section that it makes during the year in which it obtains such knowledge; and

(D) The stock transfer agent is not also acting in its capacity as a custodian, nominee, or other agent of the payee with respect to the payment.

(4) ***Examples.*** The following examples illustrate the application of the rules in paragraph (c)(3) of this section:

(i) ***Example 1.*** P, an individual who is not an exempt recipient, places an order with B, a person generally known in the investment community to be a federally registered broker/dealer, to effect a sale of P's stock in a publicly traded corporation. B, in turn, places an order to sell the stock with C, a second broker, who will execute the sale. B discloses to C the identity of the customer placing the order. C is not required to make a return of information with respect to the sale because C was instructed by B, an exempt recipient as defined in paragraph (c)(3)(i)(B)(*6*) of this section, to initiate the sale. B is required to make a return of information with respect to the sale because P is B's customer and is not an exempt recipient.

(ii) ***Example 2.*** Assume the same facts as in paragraph (c)(4)(i) of this section (the facts in *Example 1*) except that B has an omnibus account with C so that B does not disclose to C whether the transaction is for a customer of B or for B's own account. C is not required to make a return of information with respect to the sale because C was instructed by B, an exempt recipient as defined in paragraph (c)(3)(i)(B)(*6*) of this section, to initiate the sale. B is required to make a return of information with respect to the sale because P is B's customer and is not an exempt recipient.

(iii) ***Example 3.*** D, an individual who is not an exempt recipient, enters into a cash on delivery stock transaction by instructing K, a federally registered broker/dealer, to sell stock owned by D, and to deliver the proceeds to L, a custodian bank. Concurrently with the above instructions, D instructs L to deliver D's stock to K (or K's designee) against delivery of the proceeds from K. The records of both K and L with respect to this transaction show an account in the name of D. Pursuant to paragraph (h)(1) of this section, D is considered the customer of K and L. Under paragraph (c)(3)(iv) of this section, K is not required to make a return of information with respect to the sale because K will pay the gross proceeds to L against delivery of the securities sold. L is required to make a return of information with respect to the sale because D is L's customer and is not an exempt recipient.

(iv) ***Example 4.*** Assume the same facts as in paragraph (c)(4)(iii) of this section (the facts in *Example 3*) except that E, a federally registered investment adviser, instructs K to sell stock owned by D and to deliver the proceeds to L. Concurrently with the above instructions, E instructs L to deliver D's stock to K (or K's designee) against delivery of the proceeds from K. The records of both K and L with respect to the transaction show an account in the name of D. Pursuant to paragraph (h)(1) of this section, D is considered the customer of K and L. Under paragraph (c)(3)(iv) of this section, K is not required to make a return of information with respect to the sale because K will pay the gross proceeds to L against delivery of the securities sold. L is required to make a return of information with respect to the sale because D is L's customer and is not an exempt recipient.

(v) ***Example 5.*** Assume the same facts as in paragraph (c)(4)(iv) of this section (the facts in *Example 4*) except that the records of both K and L with respect to the transaction show an account in the name of E. Pursuant to paragraph (h)(1) of this section, E is considered the customer of K and L. Under paragraph (c)(3)(iv) of this section, K is not required to make a return of information with respect to the sale because K will pay the gross proceeds to L

against delivery of the securities sold. L is required to make a return of information with respect to the sale because E is L's customer and is not an exempt recipient. E is required to make a return of information with respect to the sale because D is E's customer and is not an exempt recipient.

(vi) *Example 6.* F, an individual who is not an exempt recipient, owns bonds that are held by G, a federally registered broker/dealer, in an account for F with G designated as nominee for F. Upon the retirement of the bonds, the gross proceeds are automatically credited to the account of F. G is required to make a return of information with respect to the retirement because G is the broker responsible for making payments of the gross proceeds to F.

(vii) *Example 7.* On June 24, 2010, H, an individual who is not an exempt recipient, opens a short sale of stock in an account with M, a broker. Because the short sale is entered into before January 1, 2011, paragraph (c)(3)(xi) of this section does not apply. Under paragraphs (c)(2) and (j) of this section, M must make a return of information for the year of the sale regardless of when the short sale is closed.

(viii) *Example 8* —

(A) *Facts.* On August 25, 2011, H opens a short sale of stock in an account with M, a broker. H closes the short sale with M on January 25, 2012, by purchasing stock of the same corporation in the account in which H opened the short sale and delivering the stock to satisfy H's short sale obligation. The stock H purchased is a covered security.

(B) *Analysis.* Because the short sale is entered into on or after January 1, 2011, under paragraphs (c)(2) and (c)(3)(xi) of this section, the broker closing the short sale must make a return of information reporting the sale for the year in which the short sale is closed. Thus, M is required to report the sale for 2012. M must report on a single return the relevant information for the sold stock, the adjusted basis of the purchased stock, and whether any gain or loss on the closing of the short sale is long-term or short-term (within the meaning of section 1222). Thus, M must report the information about the short sale opening and closing transactions on a single return for taxable year 2012.

(ix) *Example 9* —

(A) *Facts.* Assume the same facts as in paragraph (c)(4)(viii) of this section (the facts in *Example 8*) except that H also has an account with N, a broker, and satisfies the short sale obligation with M by borrowing stock of the same corporation from N and transferring custody of the borrowed stock from N to M. N indicates on the transfer statement that the transferred stock was borrowed in accordance with § 1.6045A-1(b)(7).

(B) *Analysis with respect to M.* Under paragraph (c)(3)(xi)(C) of this section, M may not file the return of information required under this section. M must furnish a statement to N that reports the gross proceeds from the short sale on August 25, 2011, the date of the sale, the quantity of shares sold, the CUSIP number or other security identifier number of the sold stock, the transfer date, the name and contact information of M and N, and information identifying H such as H's name and the account number from which H transferred the borrowed stock.

(C) ***Analysis with respect to N.*** N must report the gross proceeds from the short sale, the date the short sale was closed, the adjusted basis of the stock acquired to close the short sale, and whether any gain or loss on the closing of the short sale is long-term or short-term (within the meaning of section 1222) on the return of information N is required to file under paragraph (c)(2) of this section when H closes the short sale in the account with N.

(x) ***Example 10: Excepted sale of digital assets representing payment instructions*** —

(A) ***Facts.*** BNK is a bank that uses a cryptographically secured distributed ledger technology system (DLT) that provides access only to other member banks to securely transfer payment instructions that are not securities or commodities described in paragraph (c)(8)(iii) of this section. These payment instructions are exchanged between member banks through the use of digital asset DX. Dispositions of DX do not give rise to sales of other digital assets within the cryptographically secured distributed ledger (or network of interoperable distributed ledgers) and are not capable of being transferred, exchanged, or otherwise used, outside the DLT system. BNK disposes of DX using the DLT system to make a payment instruction to another bank within the DLT system.

(B) ***Analysis.*** BNK's disposition of DX using the DLT system to make a payment instruction to another bank within the DLT system is a disposition of a digital asset representing payment instructions that are not securities or commodities within a cryptographically secured distributed ledger that provides access only to users of such information. Because DX cannot be transferred, exchanged, or otherwise used, outside of DLT, and because the payment instructions are not dual classification assets under paragraph (c)(8)(iii) of this section, BNK's disposition of DX is an excepted sale under paragraph (c)(3)(ii)(G) of this section.

(xi) ***Example 11: Excepted sale of digital assets representing a loyalty program*** —

(A) ***Facts.*** S created a loyalty program as a marketing tool to incentivize customers to make purchases at S's store, which sells non-digital asset goods and services. Customers that join S's loyalty program receive 1 unit of digital asset LY at the end of each month for every $1 spent in S's store. Units of LY can only be disposed of within S's cryptographically secured distributed ledger (DLY) in exchange for goods or services provided by S or merchants, such as M, that have contractually agreed to provide goods or services to S's loyalty customers in exchange for a predetermined payment from S. Customer C is a participant in S's loyalty program and has earned 1,000 units of LY. C redeems 1,000 units of LY in exchange for non-digital asset goods in M's store.

(B) ***Analysis.*** Customer C's disposition of LY using the DLY system in exchange for non-digital asset goods in M's store is a disposition of a digital asset representing loyalty program credits in exchange for non-digital asset goods or services from M, a merchant participating with S's loyalty program. Because LY cannot be transferred, exchanged, or otherwise used outside of DLY, C's disposition of LY is an excepted sale under paragraph (c)(3)(ii)(E) of this section.

(xii) ***Example 12: Multiple brokers*** —

(A) ***Facts.*** L, an individual who is not an exempt recipient, maintains digital assets with HWP, a U.S. corporation that provides hosted wallet services. L also maintains an account at CRX, a U.S. corporation that operates a digital asset trading platform and that also provides custodial services for digital assets held by L. L places an order with HWP to exchange 10

units of digital asset DE for 100 units of digital asset RN. To effect the order, HWP places the order with CRX and communicates to CRX that the order is on behalf of L. Prior to initiating the transaction, CRX obtains a certification from HWP on a properly completed exemption certificate (as provided in § 31.3406(h)-3 of this chapter) that HWP is a U.S. digital asset broker described in paragraph (g)(4)(i)(A)(*1*) of this section. CRX completes the transaction and transfers the 100 units of RN to HWP. HWP, in turn, credits L's account with the 100 units of RN.

(B) ***Analysis.*** HWP is the broker responsible for first crediting the gross proceeds on the sale to L's wallet. Accordingly, because CRX has obtained from HWP a certification on a properly completed exemption certificate (as provided in § 31.3406(h)-3 of this chapter) that HWP is a U.S. digital asset broker described in paragraph (g)(4)(i)(A)(*1*) of this section, CRX is not required to make a return of information with respect to the sale of 100 units of RN effected on behalf of L under paragraph (c)(3)(iii)(B) of this section. In contrast, because HWP is the broker that credits the 100 units of RN to L's account, HWP is required to make a return of information with respect to the sale.

(xiii) ***Example 13: Multiple brokers*** —

(A) ***Facts.*** The facts are the same as in paragraph (c)(4)(xii)(A) of this section (the facts in *Example 12*), except that CRX deposits the 100 units of RN into L's account with CRX after the transaction is effected by CRX. Thereafter, L transfers the 100 units of RN in L's account with CRX to L's account with HWP. Prior to the transaction, HWP obtained a certification from CRX on a properly completed exemption certificate (as provided in § 31.3406(h)-3 of this chapter) that CRX is a U.S. digital asset broker described in paragraph (g)(4)(i)(A)(*1*) of this section.

(B) ***Analysis.*** Under paragraph (c)(3)(iii)(B) of this section, despite being instructed by HWP to make the sale of 100 units of RN on behalf of L, CRX is required to make a return of information with respect to the sale effected on behalf of L because CRX is the broker that credits the 100 units of RN to L's account. In contrast, HWP is not required to make a return of information with respect to the sale effected on behalf of L because HWP obtained from CRX a certification on a properly completed exemption certificate (as provided in § 31.3406(h)-3 of this chapter) that CRX is a U.S. digital asset broker described in paragraph (g)(4)(i)(A)(*1*) of this section.

(5) ***Form of reporting for regulated futures contracts*** —

(i) ***In general.*** A broker effecting closing transactions in regulated futures contracts shall report information with respect to regulated futures contracts solely in the manner prescribed in this paragraph (c)(5). In the case of a sale that involves making delivery pursuant to a regulated futures contract, only the profit or loss on the contract is reported as a transaction with respect to regulated futures contracts under this paragraph (c)(5); such sales are, however, subject to reporting under paragraph (d)(2)(i)(A). The information required under this paragraph (c)(5) must be reported on a calendar year basis, unless the broker is advised in writing by an account's owner that the owner's taxable year is other than a calendar year and the broker elects to report with respect to regulated futures contracts in such account on the basis of the owner's taxable year. The following information must be reported as required by Form 1099-B, *Proceeds From Broker and Barter Exchange Transactions,* or any successor form, with respect to regulated futures contracts held in a customer's account:

(A) The name, address, and taxpayer identification number of the customer.

(B) The net realized profit or loss from all regulated futures contracts closed during the calendar year.

(C) The net unrealized profit or loss in all open regulated futures contracts at the end of the preceding calendar year.

(D) The net unrealized profit or loss in all open regulated futures contracts at the end of the calendar year.

(E) The aggregate profit or loss from regulated futures contracts ((b) + (d)−(c)).

(F) Any other information required by Form 1099-B. *See* 17 CFR 1.33. For this purpose, the end of a year is the close of business of the last business day of such year. In reporting under this paragraph (c)(5), the broker shall make such adjustments for commissions that have actually been paid and for option premiums as are consistent with the books of the broker. No additional returns of information with respect to regulated futures contracts so reported are required.

(ii) ***Determination of profit or loss from foreign currency contracts.*** A broker effecting a closing transaction in foreign currency contracts (as defined in section 1256(g)) shall report information with respect to such contracts in the manner prescribed in paragraph (c)(5)(i) of this section. If a foreign currency contract is closed by making or taking delivery, the net realized profit or loss for purposes of paragraph (c)(5)(i)(B) of this section is determined by comparing the contract price to the spot price for the contract currency at the time and place specified in the contract. If a foreign currency contract is closed by entry into an offsetting contract, the net realized profit or loss for purposes of paragraph (c)(5)(i)(B) of this section is determined by comparing the contract price to the price of the offsetting contract. The net unrealized profit or loss in a foreign currency contract for purposes of paragraphs (c)(5)(i) (C) and (D) of this section is determined by comparing the contract price to the broker's price for similar contracts at the close of business of the relevant year.

(iii) ***Examples.*** The following examples illustrate the application of the rules in this paragraph (c)(5):

Example 1. On October 30, 1984, A, an individual who is a calendar year taxpayer not otherwise exempt from reporting, buys one March 1985 put on Treasury Bond futures (i.e. A purchases an option to enter into a short regulated futures contract of $100,000 face value U.S. Treasury bonds). A pays $500 for the option. On December 19, 1984, A, through B, exercises the option and enters into the futures contract. On February 15, 1985, A, through B, enters into a closing transaction with respect to the futures contract. These are A's only transactions in the account. Since B's books list A's regulated futures contract on December 31, 1984, B must report for A, for 1984, the unrealized profit or loss in the contract as of December 31, 1984. For 1985, B will report the same amount for A as the unrealized profit or loss at the beginning of 1985. The return of information for 1985 will also include the gain or loss from the contract in the net realized profit or loss from all regulated futures contracts sales during 1985.

Example 2. The facts are the same as in Example (1) except that A does not enter into the closing transaction, but instead, on March 20, 1985, B informs A that A will make delivery under the contract. On March 22, 1985, A does so; consequently, A becomes entitled to the gross proceeds. B enters the closing transaction on its books on March 20, 1985. In

addition to the returns of information required by paragraph (c)(5), as described in Example (1), B must report the March 22, 1985 delivery as a separate transaction. B may use as the sale date for the delivery either March 20, 1985, the date the transaction is entered on the books of B, or March 22, 1985, the date A becomes entitled to the gross proceeds. B may not deduct the $500 premium from the gross proceeds with respect to the March 22, 1985 delivery.

Example 3. The facts are the same as in Example (2) except that A buys a call on Treasury bond futures and takes delivery. B will supply the returns of information required by paragraph (c)(5), as described in Example (1). B is not required to make a return of information with respect to A's taking delivery.

Example 4. C, an individual who is a calendar year taxpayer not otherwise exempt from reporting, has an account with D, a broker. C trades both regulated futures contracts and forward contracts through C's account with D. D must report C's regulated futures contracts on an annual basis as required by paragraph (c)(5). With respect to C's forward contracts, D may elect to use the calendar month, quarter, or year as D's reporting period as provided in paragraph (c)(6).

(6) ***Reporting periods and filing groups*** —

(i) ***Reporting period*** —

(A) ***In general.*** A broker may elect to use the calendar month, quarter, or year as the broker's reporting period. A broker may separately elect a reporting period for each filing group.

(B) ***Election.*** For each calendar year, a broker shall elect a reporting period by filing Forms 1096 and 1099 in the manner elected. A different reporting period may be subsequently elected by filing in the manner subsequently elected, provided no duplication of reported transactions results.

(ii) ***Filing group*** —

(A) ***In general.*** A broker may elect to group customers or customer accounts by office, branch, department or other method of operational classification and separately file Forms 1096 and 1099 for each filing group.

(B) ***Election.*** For each calendar year, a broker shall elect filing groups by filing Forms 1096 and 1099 in the manner elected. Different filing groups may be subsequently elected by filing in the manner subsequently elected, provided no duplication of reported transactions results.

(iii) ***Example.*** The following example illustrates the rules of this paragraph (c)(6):

Example. The A department of C, a broker, files a separate report for each month of 1984, whereas the B department of C files one report for all of 1984. C makes no other reports or returns of information under section 6045 for 1984. C had thereby elected two filing groups for 1984, the A department and the B department. The A department has the calendar month as its 1984 reporting period, whereas the B department has the calendar year as its 1984 reporting period. The same result would occur if A and B were offices or branches of C.

(7) ***Exception for certain sales of agricultural commodities and commodity certificates*** —

(i) ***Agricultural commodities.*** No return of information is required under section 6045 for a spot or forward sale of an agricultural commodity. This paragraph (c)(7)(i) does not except from reporting sales of agricultural commodities pursuant to regulated futures contracts, sales of derivative interests in agricultural commodities, or sales described in paragraph (c)(7)(iii) of this section.

(ii) ***Commodity Credit Corporation certificates.*** Except as otherwise provided in a revenue ruling or revenue procedure, no return of information is required under section 6045 with respect to a sale of a commodity certificate issued by the Commodity Credit Corporation under 7 CFR 1470.4 (1990).

(iii) ***Sales involving designated warehouses.*** Paragraph (c)(7)(i) of this section does not apply to any sale involving a warehouse receipt for an agricultural commodity issued by a designated warehouse for an agricultural commodity of the type for which the warehouse is a designated warehouse.

(iv) ***Definitions.*** For purposes of this paragraph (c)(7):

(A) ***Agricultural commodity.*** An "agricultural commodity" includes, but is not limited to, a commodity within the meaning of paragraph (a)(5) of this section that is a grain, feed, livestock, meat, oil seed, timber, or fiber.

(B) ***Spot sale.*** A spot sale is a sale that results in the substantially contemporaneous delivery of a commodity.

(C) ***Forward sale.*** A forward sale is a sale pursuant to a forward contract within the meaning of paragraph (a)(7) of this section.

(D) ***Designated warehouse.*** A designated warehouse is a warehouse, depository, or other similar entity, designated by a commodity exchange under 7 CFR 1.43 (1992), in which or out of which a particular type of agricultural commodity is deliverable in satisfaction of a regulated futures contract.

(8) ***Special coordination rules for reporting digital assets that are dual classification assets*** —

(i) ***General rule for reporting dual classification assets as digital assets.*** Except in the case of a sale described in paragraph (c)(8)(ii), (iii), or (iv) of this section, for any sale of a digital asset under paragraph (a)(9)(ii) of this section that also constitutes a sale under paragraph (a)(9)(i) of this section, the broker must treat the transaction as set forth in paragraphs (c)(8)(i)(A) through (D). For purposes of this section, an asset described in this paragraph (c)(8)(i) is a dual classification asset.

(A) The broker must report the sale only as a sale of a digital asset under paragraph (a)(9)(ii) of this section and not as a sale under paragraph (a)(9)(i) of this section.

(B) The broker must treat the sale only as a sale of a specified security under paragraph (a)(14)(v) or (vi) of this section, as applicable, and not as a specified security under paragraph (a)(14)(i), (ii), (iii), or (iv) of this section.

(C) The broker must apply the reporting rules set forth in paragraphs (d)(2)(i)(B) through (D) of this section, as applicable, for the information required to be reported for such sale.

(D) For a sale of a dual classification asset that is treated as a tokenized security, the broker must report the information set forth in paragraph (c)(8)(i)(D)(*3*) of this section.

(*1*) A *tokenized security* is a dual classification asset that:

(*i*) Provides the holder with an interest in another asset that is a security described in paragraph (a)(3) of this section, other than a security that is also a digital asset; or

(*ii*) Constitutes an asset the offer and sale of which was registered with the U.S. Securities and Exchange Commission, other than an asset treated as a security for securities law purposes solely as an investment contract.

(*2*) For purposes of paragraph (c)(8)(i)(D)(*1*) of this section, a qualifying stablecoin is not treated as a tokenized security.

(*3*) In the case of a sale of a tokenized security, the broker must report the information set forth in paragraph (d)(2)(i)(B)(*6*) of this section, as applicable. In the case of a tokenized security that is a specified security under paragraph (a)(14)(i), (ii), (iii), or (iv) of this section, the broker must also report the information set forth in paragraph (d)(2)(i)(D)(*4*) of this section.

(ii) ***Reporting of dual classification assets that constitute contracts covered by section 1256(b) of the Code.*** For a sale of a digital asset on or after January 1, 2025, that is also a contract covered by section 1256(b), the broker must report the sale only under paragraph (c)(5) of this section including, as appropriate, the application of the rules in paragraph (m)(3) of this section.

(iii) ***Reporting of dual classification assets cleared or settled on a limited-access regulated network*** —

(A) ***General rule.*** The coordination rule of paragraph (c)(8)(i) of this section does not apply to any sale of a dual classification asset that is a digital asset solely because the sale of such asset is cleared or settled on a limited-access regulated network described in paragraph (c)(8)(iii)(B) of this section. In such case, the broker must report such sale only as a sale under paragraph (a)(9)(i) of this section and not as a sale under paragraph (a)(9)(ii) of this section and must treat the sale as a sale of a specified security under paragraph (a)(14)(i), (ii), (iii), or (iv) of this section, to the extent applicable, and not as a sale of a specified security under paragraph (a)(14)(v) or (vi) of this section. For all other purposes of this section including transfers, a dual classification asset that is a digital asset solely because it is cleared or settled on a limited-access regulated network is not treated as a digital asset and is not reportable as a digital asset. *See* paragraph (d)(2)(i)(A) of this section for the information required to be reported for such a sale.

(B) ***Limited-access regulated network.*** For purposes of this section, a limited-access regulated network is described in paragraph (c)(8)(iii)(B)(*1*) or (*2*) of this section.

(*1*) A cryptographically secured distributed ledger, or network of interoperable cryptographically secured distributed ledgers, that provides clearance or settlement services and that either:

(*i*) Provides access only to persons described in one or more of paragraphs (c)(3)(i)(B)(*6*), (*7*), (*10*), or (*11*) of this section; or

(*ii*) Is provided exclusively to its participants by an entity that has registered with the U.S. Securities and Exchange Commission as a clearing agency, or that has received an exemption order from the U.S. Securities and Exchange Commission as a clearing agency, under section 17A of the Securities Exchange Act of 1934.

(*2*) A cryptographically secured distributed ledger controlled by a single person described in one of paragraphs (c)(3)(i)(B)(*6*) through (*11*) of this section that permits the ledger to be used solely by itself and its affiliates, and therefore does not provide access to the ledger to third parties such as customers or investors, in order to clear or settle sales of assets.

(iv) ***Reporting of dual classification assets that are interests in money market funds.*** The coordination rule of paragraph (c)(8)(i) of this section does not apply to any sale of a dual classification asset that is a share in a regulated investment company that is permitted to hold itself out to investors as a money market fund under Rule 2a-7 under the Investment Company Act of 1940 (17 CFR 270.2a-7). In such case, the broker must treat such sale only as a sale under paragraph (a)(9)(i) of this section and not as a sale under paragraph (a)(9)(ii) of this section. *See* paragraph (c)(3)(vi) of this section, providing that no return of information is required for shares described in the first sentence of this paragraph (c)(8)(iv).

(v) ***Example: Digital asset securities*** —

(A) ***Facts.*** Brokers registered under the securities laws of the United States have formed a large network (broker network) that maintains accounts for customers seeking to purchase and sell stock. The broker network clears and settles sales of this stock using a cryptographically secured distributed ledger (DLN) that provides clearance or settlement services to the broker network. DLN may not be used by any person other than a registered broker in the broker network.

(B) ***Analysis.*** DLN is a limited-access regulated network described in paragraph (c)(8)(iii)(B)(*1*)(*i*) of this section because it is a cryptographically secured distributed ledger that provides clearance or settlement services and that provides access only to brokers described in paragraph (c)(3)(i)(B)(*6*) of this section. Additionally, sales of stock cleared on DLN are sales of securities under paragraph (a)(9)(i) of this section and sales of digital assets under paragraph (a)(9)(ii) of this section. Accordingly, sales of stock cleared on DLN are described in paragraph (c)(8)(iii) of this section and the coordination rule of paragraph (c)(8)(i) of this section does not apply to these sales. Therefore, the sales of stock cleared on DLN are reported only under paragraph (a)(9)(i) of this section. *See* paragraph (d)(2)(i)(A) of this section for the method for reporting the information required to be reported for such a sale.

(d) ***Information required*** —

(1) ***In general.*** A broker that is required to make a return of information under paragraph (c) of this section during a reporting period is required to report for each filing group on a separate Form 1096, "Annual Summary and Transmittal of U.S. Information Returns," or any successor form, the information required by the form in the manner and number of copies required by the form.

(2) ***Transactional reporting*** —

(i) ***Required information*** —

(A) ***General rule for sales described in paragraph (a)(9)(i) of this section.*** Except as provided in paragraph (c)(5) of this section, for each sale described in paragraph (a)(9)(i) of this section for which a broker is required to make a return of information under this section, the broker must report on Form 1099-B, *Proceeds From Broker and Barter Exchange Transactions,* or any successor form, the name, address, and taxpayer identification number of the customer, the property sold, the Committee on Uniform Security Identification Procedures (CUSIP) number of the security sold (if applicable) or other security identifier number that the Secretary may designate by publication in the FEDERAL REGISTER or in the Internal Revenue Bulletin (*see* § 601.601(d)(2) of this chapter), the adjusted basis of the security sold, whether any gain or loss with respect to the security sold is long-term or short-term (within the meaning of section 1222 of the Code), the gross proceeds of the sale, the sale date, and other information required by the form in the manner and number of copies required by the form. In addition, for a sale of a covered security on or after January 1, 2014, a broker must report on Form 1099-B whether any gain or loss is ordinary. *See* paragraph (m) of this section for additional rules related to options and paragraph (n) of this section for additional rules related to debt instruments. *See* paragraph (c)(8) of this section for rules related to sales of securities or sales of commodities under paragraph (a)(9)(i) of this section that are also sales of digital assets under paragraph (a)(9)(ii) of this section.

(B) ***Required information for digital asset transactions.*** Except in the case of a sale of a qualifying stablecoin or a specified nonfungible token for which the broker reports in the manner set forth in paragraph (d)(10) of this section and subject to the exception described in paragraph (d)(2)(i)(C) of this section for sales of digital assets described in paragraph (a)(9)(ii)(D) of this section (sales effected by processors of digital asset payments), for each sale of a digital asset described in paragraph (a)(9)(ii) of this section for which a broker is required to make a return of information under this section, the broker must report on Form 1099-DA, *Digital Asset Proceeds From Broker Transactions,* or any successor form, in the manner required by such form or instructions the following information:

(*1*) The name, address, and taxpayer identification number of the customer;

(*2*) The name and number of units of the digital asset sold;

(*3*) The sale date;

(*4*) The gross proceeds amount (after reduction for the allocable digital asset transaction costs as defined and allocated pursuant to paragraph (d)(5)(iv) of this section);

(*5*) Whether the sale was for cash, stored-value cards, or in exchange for services or other property;

(*6*) In the case of a sale that is reported as a digital asset sale pursuant to the rule in paragraph (c)(8)(i) of this section and is described as a tokenized security in paragraph (c)(8)(i)(D) of this section, the broker must also report to the extent required by Form 1099-DA or instructions: the CUSIP number of the security sold (if applicable) or other security identifier number that the Secretary may designate by publication in the FEDERAL REGISTER or in the Internal Revenue Bulletin (*see* § 601.601(d)(2) of this chapter); any information required under paragraph (m) of this

section (related to options); any information required under paragraph (n) of this section (related to debt instruments); and any other information required by the form or instructions;

(*7*) For each such sale of a digital asset that was held by the broker in a hosted wallet on behalf of a customer and was previously transferred into an account at the broker (transferred-in digital asset), the broker must also report the date of such transfer in and the number of units transferred in by the customer;

(*8*) Whether the broker took into account customer-provided acquisition information from the customer or the customer's agent as described in paragraph (d)(2)(ii)(B)(*4*) of this section when determining the identification of the units sold (without regard to whether the broker's determination with respect to the particular unit sold was derived from the broker's own records or from that information); and

(*9*) Any other information required by the form or instructions.

(C) ***Exception for certain sales effected by processors of digital asset payments.*** A broker is not required to report any information required by paragraph (d)(2)(i)(B) of this section with respect to a sale of a digital asset described in paragraph (a)(9)(ii)(D) of this section (sales effected by processors of digital asset payments) by a customer if the gross proceeds (after reduction for the allocable digital asset transaction costs) from all such sales of digital assets effected by that broker for the year by the customer do not exceed $600. Gross proceeds from sales of qualifying stablecoins or specified nonfungible tokens that are reported in the manner set forth in paragraph (d)(10) of this section are not included in determining if this $600 threshold has been met. For the rules applicable for determining who the customer is for purposes of calculating this $600 threshold in the case of a joint account, *see* paragraph (d)(10)(v) of this section.

(D) ***Acquisition information for sales of certain digital assets.*** Except in the case of a sale of a qualifying stablecoin or a specified nonfungible token for which the broker reports in the manner set forth in paragraph (d)(10) of this section, for each sale described in paragraph (a)(9)(ii) of this section on or after January 1, 2026, of a covered security defined in paragraph (a)(15)(i)(H), (J), or (K) of this section that was acquired by the broker for the customer and held in the customer's account, for which a broker is required to make a return of information under paragraph (d)(2)(i)(B) of this section, the broker must also report the following information:

(*1*) The adjusted basis of the covered security sold calculated in accordance with paragraph (d)(6) of this section;

(*2*) The date such covered security was purchased, and whether any gain or loss with respect to the covered security sold is long-term or short-term in accordance with paragraph (d)(7) of this section;

(*3*) For purpose of determining the information required in paragraphs (d)(2)(i)(D)(*1*) through (*2*) in the case of an option and any asset delivered in settlement of an option, the broker must apply any applicable rules set forth in paragraph (m) of this section; and

(*4*) In the case of a sale that is reported as a digital asset sale pursuant to the rule in paragraph (c)(8)(i) of this section and is described as a tokenized security in paragraph (c)(8)(i)(D) of this section, *see* paragraphs (d)(6)(iii)(A)(*2*) and (d)(7)(ii)(A)(*2*) of this section regarding the basis and holding period adjustments required for wash sales, paragraph (d)(6)(v) of this section for rules regarding the application of the average basis method, paragraph (m) of this section for rules related to options, paragraph (n) of this section for rules related to debt instruments, and any other information required by the form or instructions.

(ii) ***Specific identification of specified securities*** —

(A) ***In general.*** Except as provided in § 1.1012-1(e)(7)(ii), for a specified security described in paragraph (a)(14)(i) of this section sold on or after January 1, 2011, or for a specified security described in paragraph (a)(14)(ii) of this section sold on or after January 1, 2014, a broker must report a sale of less than the entire position in an account of a specified security that was acquired on different dates or at different prices consistently with a customer's adequate and timely identification of the security to be sold. *See* § 1.1012-1(c). If the customer does not provide an adequate and timely identification for the sale, the broker must first report the sale of securities in the account for which the broker does not know the acquisition or purchase date followed by the earliest securities purchased or acquired, whether covered securities or noncovered securities.

(B) ***Identification of digital assets sold, disposed of, or transferred.*** For a specified security described in paragraph (a)(14)(v) of this section, a broker must determine the unit sold, disposed of, or transferred, if less than the entire position in an account of such specified security that was acquired on different dates or at different prices, consistently with the adequate identification of the digital asset to be sold, disposed of, or transferred.

(*1*) ***No identification of units by customer.*** In the case of multiple units of the same digital asset that are held by a broker for a customer, if the customer does not provide the broker with an adequate identification of which units of a digital asset are sold, disposed of, or transferred by the date and time of the sale, disposition, or transfer, and the broker does not have adequate transfer-in date records and does not have or take into account customer-provided acquisition information as defined by paragraph (d)(2)(ii)(B)(*4*) of this section, then the broker must first report the sale, disposition, or transfer of units that were not acquired by the broker for the customer. After the disposition of all such units of digital assets, the broker must treat units as sold, disposed of, or transferred in order of time from the earliest date on which units of the same digital asset were acquired by the customer. *See* paragraph (d)(2)(ii)(B)(*4*) of this section for circumstances under which a broker may use information provided by the customer or the customer's agent to determine when units of a digital asset were acquired by the customer. If the broker does not receive customer-provided acquisition information with respect to digital assets that were transferred into the customer's account or otherwise does not take such information into account, the broker must treat those units as acquired as of the date and time of the transfer.

(*2*) ***Adequate identification of units by customer.*** Except as provided in paragraph (d)(2)(ii)(B)(*3*) of this section, when multiple units of the same digital asset are left in the custody of the broker, an adequate identification occurs if, no later than the date and time of the sale, disposition, or transfer, the customer specifies to the broker the

particular units of the digital asset to be sold, disposed of, or transferred by reference to any identifier that the broker designates as sufficiently specific to determine the units sold, disposed of, or transferred. For example, a customer's reference to the purchase date and time of the units to be sold may be designated by the broker as sufficiently specific to determine the units sold, disposed of, or transferred if no other unidentified units were purchased at that same purchase date and time or purchase price. To the extent permitted by paragraph (d)(2)(ii)(B)(*4*) of this section, a broker may take into account customer-provided acquisition information with respect to transferred-in digital assets for purposes of enabling a customer to make a sufficiently specific reference. A standing order or instruction for the specific identification of digital assets is treated as an adequate identification made at the date and time of sale, disposition, or transfer. In the case of a broker that offers only one method of making a specific identification, such method is treated as a standing order or instruction within the meaning of the prior sentence.

(*3*) ***Special rule for the identification of certain units withheld from a transaction.*** Notwithstanding paragraphs (d)(2)(ii)(B)(*1*) and (*2*) of this section, in the case of a sale of digital assets in exchange for other digital assets differing materially in kind or in extent and for which the broker withholds units of the digital assets received for either the broker's obligation to deduct and withhold a tax under section 3406, or for payment of the customer's digital asset transaction costs as defined in paragraph (d)(5)(iv)(A) of this section, the customer is deemed to have made an adequate identification, within the meaning of paragraph (d)(2)(ii)(B)(*2*) of this section, for such withheld units as from the units received in the underlying transaction regardless of any other adequate identification within the meaning of paragraph (d)(2)(ii)(B)(*2*) of this section designating other units of the same digital asset as the units sold, disposed of, or transferred.

(*4*) ***Customer-provided acquisition information for digital assets.*** For purposes of identifying which units are sold, disposed of, or transferred under paragraph (d)(2)(ii)(A) of this section, a broker is permitted, but not required, to take into account customer-provided acquisition information. For purposes of this section, customer-provided acquisition information means reasonably reliable information, such as the date and time of acquisition of units of a digital asset, provided by a customer or the customer's agent to the broker no later than the date and time of a sale, disposition, or transfer. Reasonably reliable information includes purchase or trade confirmations at other brokers or immutable data on a public distributed ledger. Solely for purposes of penalties under sections 6721 and 6722, a broker that takes into account customer-provided acquisition information for purposes of identifying which units are sold, disposed of, or transferred is deemed to have relied upon this information in good faith if the broker neither knows nor has reason to know that the information is incorrect. *See* § 301.6724-1(c)(6) of this chapter.

(iii) ***Penalty relief for reporting information not subject to reporting*** —

(A) ***Noncovered securities.*** A broker is not required to report adjusted basis and the character of any gain or loss for the sale of a noncovered security if the return identifies the sale as a sale of a noncovered security. A broker that chooses to report this information for a noncovered security is not subject to penalties under section 6721 or 6722 of the Code for failure to report this information correctly if the return identifies the sale as a sale of a

noncovered security. For purposes of this paragraph (d)(2)(iii)(A), a broker must treat a security for which a broker makes the single-account election described in § 1.1012-1(e)(11)(i) as a covered security.

(B) ***Gross proceeds from digital assets sold before applicability date.*** A broker is not required to report the gross proceeds from the sale of a digital asset as described in paragraph (a)(9)(ii) of this section if the sale is effected prior to January 1, 2025. A broker that chooses to report this information on either the Form 1099-B, or when available the Form 1099-DA, pursuant to paragraph (d)(2)(i)(B) of this section is not subject to penalties under section 6721 or 6722 for failure to report this information correctly. *See* paragraph (d)(2)(iii)(A) of this section for the reporting of adjusted basis and the character of any gain or loss for the sale of a noncovered security that is a digital asset.

(iv) ***Information from other parties and other accounts*** —

(A) ***Transfer and issuer statements.*** When reporting a sale of a covered security, a broker must take into account all information, other than the classification of the security (such as stock), furnished on a transfer statement (as described in § 1.6045A-1) and all information furnished or deemed furnished on an issuer statement (as described in § 1.6045B-1) unless the statement is incomplete or the broker has actual knowledge that it is incorrect. A broker may treat a customer as a minority shareholder when taking the information on an issuer statement into account unless the broker knows that the customer is a majority shareholder and the issuer statement reports the action's effect on the basis of majority shareholders. A failure to report correct information that arises solely from reliance on information furnished on a transfer statement or issuer statement is deemed to be due to reasonable cause for purposes of penalties under sections 6721 and 6722. *See* § 301.6724-1(a)(1) of this chapter.

(B) ***Other information with respect to securities.*** Except in the case of a covered security that is described in paragraph (a)(15)(i)(H), (J), or (K) of this section, a broker is permitted, but not required, to take into account information about a covered security other than what is furnished on a transfer statement or issuer statement, including any information the broker has about securities held by the same customer in other accounts with the broker. For purposes of penalties under sections 6721 and 6722, a broker that takes into account information with respect to securities described in the previous sentence that is received from a customer or third party other than information furnished on a transfer statement or issuer statement is deemed to have relied upon this information in good faith if the broker neither knows nor has reason to know that the information is incorrect. *See* § 301.6724-1(c)(6) of this chapter.

(v) ***Failure to receive a complete transfer statement for securities.*** A broker that has not received a complete transfer statement as required under § 1.6045A-1(a)(3) for a transfer of a specified security described in paragraphs (a)(14)(i) through (iv) of this section must request a complete statement from the applicable person effecting the transfer unless, under § 1.6045A-1(a), the transferor has no duty to furnish a transfer statement for the transfer. The broker is only required to make this request once. If the broker does not receive a complete transfer statement after requesting it, the broker may treat the security as a noncovered security upon its subsequent sale or transfer. A transfer statement for a covered security is complete if, in the

view of the receiving broker, it provides sufficient information to comply with this section when reporting the sale of the security. A transfer statement for a noncovered security is complete if it indicates that the security is a noncovered security.

(vi) ***Reporting by other parties after a sale of securities*** —

(A) ***Transfer statements.*** If a broker receives a transfer statement indicating that a security is a covered security after the broker reports the sale of the security, the broker must file a corrected return within thirty days of receiving the statement unless the broker reported the required information on the original return consistently with the transfer statement.

(B) ***Issuer statements.*** If a broker receives or is deemed to receive an issuer statement after the broker reports the sale of a covered security, the broker must file a corrected return within thirty days of receiving the issuer statement unless the broker reported the required information on the original return consistently with the issuer statement.

(C) ***Exception.*** A broker is not required to file a corrected return under this paragraph (d)(2)(vi) if the broker receives the transfer statement or issuer statement more than three years after the broker filed the return.

(vii) ***Examples.*** The following examples illustrate the rules of this paragraph (d)(2). Unless otherwise indicated, all events and transactions described in paragraphs (d)(2)(vii)(C) and (D) of this section (*Examples 3* and *4*) occur on or after January 1, 2026.

(A) ***Example 1*** —

(*1*) ***Facts.*** On February 22, 2012, K sells 100 shares of stock of C, a corporation, at a loss in an account held with F, a broker. On March 15, 2012, K purchases 100 shares of C stock for cash in an account with G, a different broker. Because K acquires the stock purchased on March 15, 2012, for cash in an account after January 1, 2012, under paragraph (a)(15) of this section, the stock is a covered security. K asks G to increase K's adjusted basis in the stock to account for the application of the wash sale rules under section 1091 to the loss transaction in the account held with F.

(*2*) ***Analysis.*** Under paragraph (d)(2)(iv)(B) of this section, G is not required to take into account the information provided by K when subsequently reporting the adjusted basis and whether any gain or loss on the sale is long-term or short-term. If G chooses to take this information into account, under paragraph (d)(2)(iv)(B) of this section, G is deemed to have relied upon the information received from K in good faith for purposes of penalties under sections 6721 and 6722 if G neither knows nor has reason to know that the information provided by K is incorrect.

(B) ***Example 2*** —

(*1*) ***Facts.*** L purchases shares of stock of a single corporation in an account with F, a broker, on April 17, 1969, April 17, 2012, April 17, 2013, and April 17, 2014. In January 2015, L sells all the stock.

(*2*) ***Analysis.*** Under paragraph (d)(2)(i)(A) of this section, F must separately report the gross proceeds and adjusted basis attributable to the stock purchased in 2014, for which the gain or loss on the sale is short-term, and the combined gross proceeds and adjusted basis attributable to the stock purchased in 2012 and 2013, for which the gain or loss on the sale is long-term. Under paragraph (d)(2)(iii)(A) of this section,

F must also separately report the gross proceeds attributable to the stock purchased in 1969 as the sale of noncovered securities in order to avoid treatment of this sale as the sale of covered securities.

(C) ***Example 3: Ordering rule*** —

(*1*) ***Facts.*** On August 1, Year 1, TP opens a hosted wallet account at CRX, a digital asset broker that owns and operates a digital asset trading platform, and purchases within the account 10 units of digital asset DE for $9 per unit. On January 1, Year 2, TP opens a hosted wallet account at BEX, another digital asset broker that owns and operates a digital asset trading platform, and purchases within this account 20 units of digital asset DE for $5 per unit. On August 1, Year 3, TP transfers the digital asset units held in TP's hosted wallet account with CRX into TP's hosted wallet account with BEX. On September 1, Year 3, TP directs BEX to sell 10 units of DE but does not specify which units are to be sold and does not provide to BEX purchase date and time information with respect to the DE units transferred into TP's account with BEX. BEX has adequate transfer-in date records with respect to TP's transfer of the 10 units of DE on August 1, Year 3. BEX effects the sale on TP's behalf for $10 per unit.

(*2*) ***Analysis.*** TP did not make an adequate identification of the units to be sold in a sale of DE units that was less than TP's entire position in digital asset DE. Therefore, BEX must treat the units of digital asset DE sold according to the ordering rule provided in paragraph (d)(2)(ii)(B) of this section. Pursuant to that rule, because BEX has adequate transfer-in date records with respect to TP's transfer of the 10 units of DE on August 1, Year 3, and because TP did not give BEX customer-provided acquisition information as defined by paragraph (d)(2)(ii)(B)(*4*) of this section with respect to the units transferred into TP's account at BEX, the units sold must be attributed to the earliest units of digital asset DE acquired by TP. Additionally, because TP did not give BEX customer-provided acquisition information, BEX must treat those units as acquired as of the date and time of the transfer (August 1, Year 3). Accordingly, the 10 units sold must be attributed to 10 of the 20 DE units purchased by TP on January 1, Year 2, in the BEX account because based on the information known to BEX these units were purchased prior to the date (August 1, Year 3) when TP transferred the other units purchased at CRX into the account. The DE units are digital assets that were acquired on or after January 1, 2026, for TP by a broker (BEX) providing custodial services, and, thus, constitute covered securities under paragraph (a)(15)(i)(J) of this section. Accordingly, in addition to the gross proceeds and other information required to be reported under paragraph (d)(2)(i)(B) of this section, BEX must also report the adjusted basis of the DE units sold, the date the DE units were purchased, and whether any gain or loss with respect to the DE units sold is long-term or short-term as required by paragraph (d)(2)(i)(D) of this section. Finally, because TP did not give BEX customer-provided acquisition information, TP will be required to treat different units as sold under the rules provided by § 1.1012-1(j)(3) from those units that BEX treats as sold under this section unless TP adopts a standing order to follow the ordering rule result required by BEX. *See* § 1.1012-1(j)(5)(iv) (*Example 4*).

(D) ***Example 4: Ordering rule*** —

(1) ***Facts.*** The facts are the same as in paragraph (d)(2)(vii)(C)(*1*) of this section (the facts in *Example 3*), except on September 1, Year 3, TP's agent (CRX) provides BEX with purchase confirmations showing that the 10 units TP transferred into TP's account at BEX were purchased on August 1, Year 1. BEX neither knows nor has reason to know that the information supplied by CRX is incorrect and chooses to take this information into account for purposes of identifying which of the TP's units are sold, disposed of, or transferred.

(2) ***Analysis.*** Because TP did not make an adequate identification of the units to be sold in a sale of DE units that was less than TP's entire position in digital asset DE, BEX must treat the units of digital asset DE sold as the earliest units of digital asset DE acquired by TP. The purchase confirmations (showing a purchase date of August 1, Year 1) for the 10 units that were transferred into TP's account at BEX constitute customer-provided acquisition information under paragraph (d)(2)(ii)(B)(*4*) of this section, which BEX is permitted, but not required, to take into account. Accordingly, BEX is permitted to treat the 10 units sold by TP as the 10 DE units TP purchased on August 1, Year 1 (and transferred into BEX's account on August 1, Year 3), because these were the earliest units of digital asset DE acquired by TP. The DE units are digital assets that were acquired on or after January 1, 2026, for TP by a broker (CRX) providing custodial services, and, thus, constitute covered securities under paragraph (a)(15)(i)(J) of this section. However, because these covered securities were not acquired and thereafter held by the selling broker (BEX), BEX is not required to report the acquisition information required by paragraph (d)(2)(i)(D) of this section. Finally, because TP provided the purchase information with respect to the transferred in units to BEX, the units determined as sold by BEX are the same units that TP must treat as sold under § 1.1012-1(j)(3)(i). *See* § 1.1012-1(j)(5)(iv) (*Example 4*).

(3) ***Sales between interest payment dates.*** For each sale of a debt instrument prior to maturity with respect to which a broker is required to make a return of information under this section, a broker must show separately on Form 1099 the amount of accrued and unpaid qualified stated interest as of the sale date that must be reported by the customer as interest income under § 1.61-7(d). *See* § 1.1273-1(c) for the definition of qualified stated interest. Such interest information must be shown in the manner and at the time required by Form 1099 and section 6049.

(4) ***Sale date*** —

(i) ***In general.*** For sales of property that are reportable under this section other than digital assets, a broker must report a sale as occurring on the date the sale is entered on the books of the broker.

(ii) ***Special rules for digital asset sales.*** For sales of digital assets that are effected when digitally recorded using cryptographically secured distributed ledger technology, such as a blockchain or similar technology, the broker must report the date of sale as the date when the transactions are recorded on the ledger. For sales of digital assets that are effected by a broker and recorded in the broker's books and records (commonly referred to as an *off-chain* transaction) and not directly on a distributed ledger or similar technology, the broker must report the date of sale as the date when the transactions are recorded on its books and records without regard to the date that the transactions may be later recorded on the distributed ledger or similar technology.

(5) *Gross proceeds* —

(i) ***In general.*** Except as otherwise provided in paragraph (d)(5)(ii) of this section with respect to digital asset sales, for purposes of this section, *gross proceeds* on a sale are the total amount paid to the customer or credited to the customer's account as a result of the sale reduced by the amount of any qualified stated interest reported under paragraph (d)(3) of this section and increased by any amount not paid or credited by reason of repayment of margin loans. In the case of a closing transaction (other than a closing transaction related to an option) that results in a loss, gross proceeds are the amount debited from the customer's account. For sales before January 1, 2014, a broker may, but is not required to, reduce gross proceeds by the amount of commissions and transfer taxes, provided the treatment chosen is consistent with the books of the broker. For sales on or after January 1, 2014, a broker must reduce gross proceeds by the amount of commissions and transfer taxes related to the sale of the security. For securities sold pursuant to the exercise of an option granted or acquired before January 1, 2014, a broker may, but is not required to, take the option premiums into account in determining the gross proceeds of the securities sold, provided the treatment chosen is consistent with the books of the broker. For securities sold pursuant to the exercise of an option granted or acquired on or after January 1, 2014, or for the treatment of an option granted or acquired on or after January 1, 2014, *see* paragraph (m) of this section. A broker must report the gross proceeds of identical stock (within the meaning of § 1.1012-1(e)(4)) by averaging the proceeds of each share if the stock is sold at separate times on the same calendar day in executing a single trade order and the broker executing the trade provides a single confirmation to the customer that reports an aggregate total price or an average price per share. However, a broker may not average the proceeds if the customer notifies the broker in writing of an intent to determine the proceeds of the stock by the actual proceeds per share and the broker receives the notification by January 15 of the calendar year following the year of the sale. A broker may extend the January 15 deadline but not beyond the due date for filing the return required under this section.

(ii) ***Sales of digital assets.*** The rules contained in paragraphs (d)(5)(ii)(A) and (B) of this section apply solely for purposes of this section.

(A) ***Determining gross proceeds.*** Except as otherwise provided in this section, gross proceeds from the sale of a digital asset are equal to the sum of the total cash paid to the customer or credited to the customer's account from the sale plus the fair market value of any property or services received (including services giving rise to digital asset transaction costs), reduced by the amount of digital asset transaction costs, as defined and allocated under paragraph (d)(5)(iv) of this section. In the case of a debt instrument issued in exchange for the digital asset and subject to § 1.1001-1(g), the amount realized attributable to the debt instrument is determined under § 1.1001-7(b)(1)(iv) rather than by reference to the fair market value of the debt instrument. *See* paragraph (d)(5)(iv)(C) of this section for a special rule setting forth how cascading digital asset transaction costs are to be allocated in certain exchanges of one digital asset for a different digital asset.

(1) ***Determining fair market value.*** Fair market value is measured at the date and time the transaction was effected. Except as provided in the next sentence, in determining the fair market value of services or property received or credited in exchange for a digital asset, the broker must use a reasonable valuation method that looks to contemporaneous evidence of value, such as the purchase price of the services, goods or other property, the exchange rate, and the U.S. dollar valuation applied by the broker to effect the exchange. In determining the fair market value of services

giving rise to digital asset transaction costs, the broker must look to the fair market value of the digital assets used to pay for such transaction costs. In determining the fair market value of a digital asset, the broker may perform its own valuations or rely on valuations performed by a digital asset data aggregator as defined in paragraph (d)(5)(ii)(B) of this section, provided such valuations apply a reasonable valuation method for digital assets as described in paragraph (d)(5)(ii)(A)(*3*) of this section.

(*2*) ***Consideration value not readily ascertainable.*** When valuing services or property (including digital assets) received in exchange for a digital asset, the value of what is received should ordinarily be identical to the value of the digital asset exchanged. If there is a disparity between the value of services or property received and the value of the digital asset exchanged, the gross proceeds received by the customer is the fair market value at the date and time the transaction was effected of the services or property, including digital assets, received. If the broker or digital asset data aggregator, in the case of digital assets, reasonably determines that the fair market value of the services or property received cannot be determined with reasonable accuracy, the fair market value of the received services or property must be determined by reference to the fair market value of the transferred digital asset at the time of the exchange. *See* § 1.1001-7(b)(4). If the broker or digital asset data aggregator, in the case of a digital asset, reasonably determines that neither the value of the received services or property nor the value of the transferred digital asset can be determined with reasonable accuracy, the broker must report that the received services or property has an undeterminable value.

(*3*) ***Reasonable valuation method for digital assets.*** A reasonable valuation method for digital assets is a method that considers and appropriately weighs the pricing, trading volumes, market capitalization and other factors relevant to the valuation of digital assets traded through digital asset trading platforms. A valuation method is not a reasonable valuation method for digital assets if it, for example, gives an underweight effect to exchange prices lying near the median price value, an overweight effect to digital asset trading platforms having low trading volume, or otherwise inappropriately weighs factors associated with a price that would make that price an unreliable indicator of value.

(B) ***Digital asset data aggregator.*** A digital asset data aggregator is an information service provider that provides valuations of digital assets based on any reasonable valuation method.

(iii) ***Digital asset transactions effected by processors of digital asset payments.*** The amount of gross proceeds under paragraph (d)(5)(ii) of this section received by a party who sells a digital asset under paragraph (a)(9)(ii)(D) of this section (effected by a processor of digital asset payments) is equal to: the sum of the amount paid in cash, and the fair market value of the amount paid in digital assets by that processor to a second party, plus any digital asset transaction costs and other fees charged to the second party that are withheld (whether withheld from the digital assets transferred by the first party or withheld from the amount due to the second party); and reduced by the amount of digital asset transaction costs paid by or withheld from the first party, as defined and allocated under the rules of paragraph (d)(5)(iv) of this section.

(iv) ***Definition and allocation of digital asset transaction costs*** —

(A) ***Definition.*** The term *digital asset transaction costs* means the amount paid in cash or property (including digital assets) to effect the sale, disposition, or acquisition of a digital asset. Digital asset transaction costs include transaction fees, transfer taxes, and commissions.

(B) ***General allocation rule.*** Except as provided in paragraph (d)(5)(iv)(C) of this section, in the case of a sale or disposition of digital assets, the total digital asset transaction costs paid by the customer are allocable to the sale or disposition of the digital assets.

(C) ***Special rule for allocation of certain cascading digital asset transaction costs.*** In the case of a sale of one digital asset in exchange for another digital asset differing materially in kind or in extent (original transaction) and for which digital assets received in the original transaction are withheld to pay digital asset transaction costs, the total digital asset transaction costs paid by the taxpayer to effect both the original transaction and the disposition of the withheld digital assets are allocable exclusively to the disposition of digital assets in the original transaction.

(v) ***Examples.*** The following examples illustrate the rules of this paragraph (d)(5). Unless otherwise indicated, all events and transactions in the following examples occur on or after January 1, 2025.

(A) ***Example 1: Determination of gross proceeds when digital asset transaction costs paid in digital assets —***

(*1*) ***Facts.*** CRX, a digital asset broker, buys, sells, and exchanges various digital assets for cash or different digital assets on behalf of its customers. For this service, CRX charges a transaction fee equal to 1 unit of CRX's proprietary digital asset CM per transaction. Using the services of CRX, customer K, an individual not otherwise exempt from reporting, purchases 15 units of CM and 10 units of digital asset DE. On April 28, Year 1, when the CM units have a value of $2 per unit, the DE units have a value of $8 per unit, and digital asset ST units have a value of $0.80 per unit, K instructs CRX to exchange K's 10 units of DE for 100 units of digital asset ST. CRX charges K one unit of CM as a transaction fee for the exchange.

(*2*) ***Analysis.*** Under paragraph (d)(5)(iv)(A) of this section, K has digital asset transaction costs of $2, which is the value of 1 CM unit. Under paragraph (d)(5)(ii)(A) of this section, the gross proceeds amount that CRX must report from K's sale of the 10 units of DE is equal to the fair market value of the 100 units of ST that K received (less the value of the CM unit sold to pay the digital asset transaction cost to CRX and allocable to the sale of the DE units). The fair market value of the 100 units of ST at the date and time the transaction was effected is equal to $80 (the product of $0.80 and 100 units). Accordingly, CRX must report gross proceeds of $78 from K's sale of the 10 units of DE. CRX must also report the gross proceeds from K's sale of one CM unit to pay for CRX's services. Under paragraph (d)(5)(ii)(A) of this section, the gross proceeds from K's sale of one unit of CM is equal to the fair market value of the digital assets used to pay for such transaction costs. Accordingly, CRX must report $2 as gross proceeds from K's sale of one unit of CM.

(B) ***Example 2: Determination of gross proceeds when digital asset transaction costs are withheld from transferred digital assets —***

(1) ***Facts.*** K owns a total of 10 units of digital asset A that K deposits with broker BEX that provides custodial services for digital assets. K directs BEX to effect the exchange of 10 units of K's digital asset A for 20 units of digital asset B. At the time of the exchange, each unit of digital asset A has a fair market value of $2 and each unit of digital asset B has a fair market value of $1. BEX charges a fee of $2 per transaction, which BEX withholds from the units of the digital asset A transferred. At the time of the transaction, BEX withholds 1 unit of digital asset A. TP exchanges the remaining 9 units of digital asset A for 18 units of digital asset B.

(2) ***Analysis.*** The withholding of 1 unit of digital asset A is a sale of a digital asset for BEX's services within the meaning of paragraph (a)(9)(ii)(C) of this section. Under paragraph (d)(5)(iv)(A) of this section, K has digital asset transaction costs of $2. Under paragraph (d)(5)(iv)(C) of this section, TP must allocate such costs to the disposition of the 10 units of digital asset A. Under paragraphs (d)(5)(ii)(A) and (d)(5)(iv)(C) of this section, TP's gross proceeds from the sale of the 10 units of digital asset A is $18, which is the excess of the fair market value of the 18 units of digital asset B received ($18) and the fair market value of the broker services received ($2) as of the date and time of the transaction over the allocated digital asset transaction costs ($2). Accordingly, BEX must report $18 as gross proceeds from K's sale of 10 units of digital asset A.

(C) ***Example 3: Determination of gross proceeds when digital asset transaction costs are withheld from acquired digital assets in an exchange of digital assets*** —

(1) ***Facts.*** The facts are the same as in paragraph (d)(5)(v)(B)(*1*) of this section (the facts in *Example 2*), except that BEX requires its payment be withheld from the units of the digital asset acquired. At the time of the transaction, BEX withholds 3 units of digital asset B, two units of which effect the exchange of digital asset A for digital asset B and one unit of which effects the disposition of digital asset B for payment of the transaction fees.

(2) ***Analysis.*** The withholding of 3 units of digital asset B is a disposition of digital assets for BEX's services within the meaning of paragraph (a)(9)(ii)(C) of this section. Under paragraph (d)(5)(iv)(A) of this section, K has digital asset transaction costs of $3. Under paragraph (d)(5)(iv)(C) of this section, K must allocate such costs to the disposition of the 10 units of digital asset A. Under paragraphs (d)(5)(ii)(A) and (d)(5)(iv)(C) of this section, K's gross proceeds from the sale of the 10 units of digital asset A is $17, which is the excess of the fair market value of the 20 units of digital asset B received ($20) as of the date and time of the transaction over the allocated digital asset transaction costs ($3). K's gross proceeds from the sale of the 3 units of digital asset B used to pay digital asset transaction costs is $3, which is the fair market value of BEX's services received at the time of the transaction. Accordingly, BEX must report $17 as gross proceeds from K's sale of 10 units of digital asset A. Additionally, pursuant to paragraph (c)(3)(ii)(C) of this section, BEX is not required to report K's sale of the 3 withheld units of digital asset B because the 3 units of digital asset B were units withheld from digital assets received by K to pay for K's digital asset transaction costs.

(D) ***Example 4: Determination of gross proceeds*** —

(1) ***Facts.*** CPP, a processor of digital asset payments, offers debit cards to its customers who hold digital asset FE in their accounts with CPP. The debit cards allow CPP's customers to use digital assets held in accounts with CPP to make payments to merchants who do not accept digital assets. CPP charges its card holders a 2% transaction fee for purchases made using the debit card and sets forth in its terms and conditions the process CPP will use to determine the exchange rate provided at the date and time of its customers' transactions. CPP has issued a debit card to B, an individual not otherwise exempt from reporting, who wants to make purchases using digital assets. B transfers 1,000 units of FE into B's account with CPP. B then uses the debit card to purchase merchandise from a U.S. merchant STR for $1,000. An exchange rate of 1 FE = $2 USD is applied to effect the transaction, based on the exchange rate at that date and time and pursuant to B's account agreement. To settle the transaction, CPP removes 510 units of FE from B's account equal to $1,020 ($1,000 plus a 2% transaction fee equal to $20). CPP then pays STR $1,000 in cash.

(2) ***Analysis.*** B paid $20 of digital asset transaction costs as defined in paragraph (d)(5)(iv)(A) of this section. Under paragraph (d)(5)(iii) of this section, the gross proceeds amount that CPP must report with respect to B's sale of the 510 units of FE to purchase the merchandise is $1,000, which is the sum of the amount of cash paid by CPP to STR plus the $20 digital asset transaction costs withheld by CPP, reduced by the $20 digital asset transaction costs as allocated under paragraph (d)(5)(iv)(B) of this section. CPP's payment of cash to STR is also a payment card transaction under § 1.6050W-1(b) subject to reporting under § 1.6050W-1(a).

(E) ***Example 5: Determination of gross proceeds*** —

(1) ***Facts.*** STR, a U.S. merchant corporation, advertises that it accepts digital asset FE as payment for its merchandise that is not digital assets. Customers making purchases at STR using digital asset FE are directed to create an account with CXX, a processor of digital asset payments, which, pursuant to a preexisting agreement with STR, accepts digital asset FE in return for payments in cash made to STR. CXX charges a 2% transaction fee, which is paid by STR and not STR's customers. S, an individual not otherwise exempt from reporting, seeks to purchase merchandise from STR for $10,000. To effect payment, S is directed by STR to CXX, with whom S has an account. An exchange rate of 1 FE = $2 USD is applied to effect the purchase transaction. Pursuant to this exchange rate, S then transfers 5,000 units of FE to CXX, which, in turn, pays STR $9,800 ($10,000 less a 2% transaction fee equal to $200).

(2) ***Analysis.*** Under paragraph (d)(5)(iii) of this section, the gross proceeds amount that CXX must report with respect to this sale is $10,000, which is the sum of the amount in U.S. dollars paid by CPP to STR ($9,800) plus the $200 digital asset transaction costs withheld from the payment due to STR. Because S does not have any digital asset transaction costs, the $9,800 amount is not reduced by any digital asset transaction costs charged to STR because that fee was not paid by S. In addition, CXX's payment of cash to STR (plus the withheld transaction fee) may be reportable under § 1.6050W-1(a) as a third party network transaction under § 1.6050W-1(c) if CXX is a third party settlement organization under the definition in § 1.6050W-1(c)(2).

(F) ***Example 6: Determination of gross proceeds in a real estate transaction*** —

(1) ***Facts.*** J, an unmarried individual not otherwise exempt from reporting, enters into a contractual agreement with B, an individual not otherwise exempt from reporting, to exchange J's principal residence, Blackacre, which has a fair market value of $300,000, for cash in the amount of $75,000 and units of digital asset DE with a value of $225,000. Prior to closing, B transfers the digital asset portion of the payment directly from B's wallet to J's wallet. At closing, J certifies to the closing agent (CA) that J received the DE units required to be paid under the contractual agreement. CA is also a real estate reporting person under § 1.6045-4, and a digital asset middleman under paragraph (a)(21) of this section with respect to the transaction.

(2) ***Analysis.*** CA is required to report on Form 1099-DA the gross proceeds received by B in exchange for B's sale of digital assets in this transaction. The gross proceeds amount to be reported under paragraph (d)(5)(ii)(A) of this section is equal to $225,000, which is the $300,000 value of Blackacre less $75,000 that B paid in cash. In addition, under § 1.6045-4, CA is required to report on Form 1099-S the $300,000 of gross proceeds received by J ($75,000 cash and $225,000 in digital assets) as consideration for J's disposition of Blackacre.

(6) ***Adjusted basis*** —

(i) ***In general.*** For purposes of this section, the adjusted basis of a specified security is determined from the initial basis under paragraph (d)(6)(ii) of this section as of the date the specified security is acquired in an account, increased by the commissions and transfer taxes related to its sale to the extent not accounted for in gross proceeds as described in paragraph (d)(5) of this section. A broker is not required to consider transactions or events occurring outside the account except for an organizational action taken by an issuer of a specified security other than a digital asset during the period the broker holds custody of the security (beginning with the date that the broker receives a transferred security) reported on an issuer statement (as described in § 1.6045B-1) furnished or deemed furnished to the broker. Except as otherwise provided in paragraph (n) of this section, a broker is not required to consider customer elections. For rules related to the adjusted basis of a debt instrument, *see* paragraph (n) of this section.

(ii) ***Initial basis*** —

(A) ***Cost basis for specified securities acquired for cash.*** For a specified security acquired for cash, the initial basis generally is the total amount of cash paid by the customer or credited against the customer's account for the specified security, increased by the commissions, transfer taxes, and digital asset transaction costs related to its acquisition. A broker may, but is not required to, take option premiums into account in determining the initial basis of securities purchased or acquired pursuant to the exercise of an option granted or acquired before January 1, 2014. For rules related to options granted or acquired on or after January 1, 2014, *see* paragraph (m) of this section. A broker may, but is not required to, increase initial basis for income recognized upon the exercise of a compensatory option or the vesting or exercise of other equity-based compensation arrangements, granted or acquired before January 1, 2014. A broker may not increase initial basis for income recognized upon the exercise of a compensatory option or the vesting or exercise of other equity-based compensation arrangements, granted or acquired on or after January 1, 2014, or upon the vesting or exercise of a digital asset-

based compensation arrangement granted or acquired on or after January 1, 2025. A broker must report the basis of identical stock (within the meaning of § 1.1012-1(e)(4)) by averaging the basis of each share if the stock is purchased at separate times on the same calendar day in executing a single trade order and the broker executing the trade provides a single confirmation to the customer that reports an aggregate total price or an average price per share. However, a broker may not average the basis if the customer timely notifies the broker in writing of an intent to determine the basis of the stock by the actual cost per share in accordance with § 1.1012-1(c)(1)(ii).

(B) ***Basis of transferred securities*** —

(*1*) ***In general.*** The initial basis of a security transferred to an account is generally the basis reported on the transfer statement (as described in § 1.6045A-1).

(*2*) ***Securities acquired by gift.*** If a transfer statement indicates that the security is acquired as a gift, a broker must apply the relevant basis rules for property acquired by gift in determining the initial basis, but is not required to adjust basis for gift tax. A broker must treat the initial basis as equal to the gross proceeds from the sale determined under paragraph (d)(5) of this section if the relevant basis rules for property acquired by gift prevent recognizing both gain and loss, or if the relevant basis rules treat the initial basis of the security as its fair market value as of the date of the gift and the broker neither knows nor can readily ascertain this value. If the transfer statement did not report a date for the gift, the broker must treat the settlement date for the transfer as the date of the gift.

(C) ***Digital assets acquired in exchange for property*** —

(*1*) ***In general.*** This paragraph (d)(6)(ii)(C) applies solely for purposes of this section. For a digital asset acquired in exchange for property that is not a debt instrument described in § 1.1012-1(h)(1)(v) or another digital asset differing materially in kind or extent, the initial basis of the digital asset is the fair market value of the digital asset received at the time of the exchange, increased by any digital asset transaction costs allocable to the acquisition of the digital asset. The fair market value of the digital asset received must be determined using a reasonable valuation method as of the date and time the exchange transaction was effected. In valuing the digital asset received, the broker may perform its own valuations or rely on valuations performed by a digital asset data aggregator as defined in paragraph (d)(5)(ii)(B) of this section, provided such valuations apply a reasonable valuation method for digital assets as described in paragraph (d)(5)(ii)(A)(*3*) of this section. If the broker or digital asset data aggregator reasonably determines that the fair market value of the digital asset received cannot be determined with reasonable accuracy, the fair market value of the digital asset received must be determined by reference to the property transferred at the time of the exchange. If the broker or digital asset data aggregator reasonably determines that neither the value of the digital asset received nor the value of the property transferred can be determined with reasonable accuracy, the fair market value of the received digital asset must be treated as zero. For a digital asset acquired in exchange for another digital asset differing materially in kind or extent, *see* paragraph (d)(6)(ii)(C)(*2*) of this section. For a digital asset acquired in exchange

for a debt instrument described in § 1.1012-1(h)(1)(v), the initial basis of the digital asset attributable to the debt instrument is the amount determined under § 1.1012-1(h)(1)(v).

(2) ***Allocation of digital asset transaction costs.*** Except as provided in the following sentence, in the case of a sale of one digital asset in exchange for another digital asset differing materially in kind or extent, the total digital asset transaction costs paid by the customer are allocable to the digital assets disposed. In the case of a transaction described in paragraph (d)(5)(iv)(C) of this section, the digital asset transaction costs paid by the customer to acquire the digital assets received are allocable as provided therein.

(iii) ***Adjustments for wash sales*** —

(A) ***Securities in the same account or wallet*** —

(1) ***In general.*** A broker must apply the wash sale rules under section 1091 if both the sale and purchase transactions are of covered securities, other than covered securities reportable as digital assets after the application of paragraph (c)(8) of this section, with the same CUSIP number or other security identifier number that the Secretary may designate by publication in the FEDERAL REGISTER or in the Internal Revenue Bulletin (*see* § 601.601(d)(2) of this chapter). When reporting the sale transaction that triggered the wash sale, the broker must report the amount of loss that is disallowed by section 1091 in addition to gross proceeds and adjusted basis. The broker must increase the basis of the purchased covered security by the amount of loss disallowed on the sale transaction.

(2) ***Special rules for covered securities that are also digital assets.*** In the case of a purchase or sale of a tokenized security described in paragraph (c)(8)(i)(D) of this section that is a stock or security for purposes of section 1091, a broker must apply the wash sale rules under section 1091 if both the sale and purchase transactions are of covered securities with the same CUSIP number or other security identifier number that the Secretary may designate by publication in the FEDERAL REGISTER or in the Internal Revenue Bulletin (*see* § 601.601(d)(2) of this chapter). When reporting the sale transaction that triggered the wash sale, the broker must report the amount of loss that is disallowed by section 1091 in addition to gross proceeds and adjusted basis. The broker must increase the basis of the purchased covered security by the amount of loss disallowed on the sale transaction.

(B) ***Covered securities in different accounts or wallets.*** A broker is not required to apply paragraph (d)(6)(iii)(A) of this section if the covered securities are purchased and sold from different accounts or wallets, if the purchased covered security is transferred to another account or wallet before the wash sale, or if the covered securities are treated as held in separate accounts under § 1.1012-1(e). A covered security is not purchased in an account or wallet if it is purchased in another account or wallet and transferred into the account or wallet.

(C) ***Effect of election under section 475(f)(1).*** A broker is not required to apply paragraph (d)(6)(iii)(A) of this section to securities in an account if a customer has in writing both informed the broker that the customer has made a valid and timely election under section 475(f)(1) and identified the account as solely containing securities subject to the election.

For purposes of this paragraph (d)(6)(iii)(C), a writing may be in electronic format. If a customer subsequently informs a broker that the election no longer applies to the customer or the account, the broker must prospectively apply paragraph (d)(6)(iii)(A) of this section but is not required to apply paragraph (d)(6)(iii)(A) of this section for the period covered by the customer's prior instruction to the broker. A taxpayer that is not a trader in securities within the meaning of section 475(f)(1) does not become a trader in securities, or create an inference that it is a trader in securities, by notifying a broker that it has made a valid and timely election under section 475(f)(1).

(D) ***Reporting at or near the time of sale.*** If a wash sale occurs after a broker has completed a return or statement reporting a sale of a covered security, the broker must redetermine adjusted basis under this paragraph (d)(6)(iii) and, if the return or statement included information inconsistent with this redetermination, correct the return or statement by the applicable original due date set forth in this section for the return or statement.

(iv) ***Certain adjustments not taken into account.*** A broker is not required to apply section 1259 (regarding constructive sales), section 475 (regarding the mark-to-market method of accounting), section 1296 (regarding the mark-to-market method of accounting for marketable stock in a passive foreign investment company), or section 1092 (regarding straddles) when reporting adjusted basis.

(v) ***Average basis method adjustments.*** For a covered security for which basis may be determined by the average basis method, a broker must compute basis using the average basis method if a customer validly elects that method for the covered securities sold or, in the absence of any instruction from the customer, if the broker chooses that method as its default basis determination method. *See* § 1.1012-1(e). The previous sentence applies to any stock that is also a tokenized security described in paragraph (c)(8)(i)(D) of this section.

(vi) ***Regulated investment company and real estate investment trust adjustments.*** A broker must adjust the basis of a covered security issued by a regulated investment company or real estate investment trust for the effects of undistributed capital gains reported to or by the broker under section 852(b)(3)(D) or section 857(b)(3)(D).

(vii) ***Treatment of de minimis errors.*** For purposes of this section, a customer's adjusted basis generally must be determined by treating any incorrect dollar amount that is not required to be corrected by reason of section 6721(c)(3) or 6722(c)(3) as the correct amount. However, if a broker, upon identifying a dollar amount as incorrect, voluntarily or is required to file a corrected information return and furnish the corresponding corrected payee statement showing the correct dollar amount, then regardless of any provision under section 6721 or 6722, the adjusted basis for purposes of this section must be based on and consistent with the correct dollar amount as reported on the corrected information return and corrected payee statement.

(viii) ***Examples.*** The following examples, in which all the securities are covered securities, illustrate the rules of this paragraph (d)(6):

(A) ***Example 1.*** *—1*) On September 21, 2012, P purchases 100 shares of stock in an account with J, a broker. On December 14, 2012, P purchases 100 shares of stock with the same CUSIP number in the same account. On January 4, 2013, P sells the 100 shares purchased on September 21, 2012, at a loss.

(2) Because the sale of stock on January 4, 2013, and the purchase of stock on December 14, 2012, are of covered securities with the same CUSIP number, under paragraph (d)(6)(iii)(A) of this section, J must report the amount of loss disallowed by section 1091 in addition to the gross proceeds of the sale and the adjusted basis of the September 21, 2012, stock.

(3) P later sells the stock acquired on December 14, 2012. When reporting the sale of the stock, under paragraph (d)(6)(iii)(A) of this section, J must increase the adjusted basis of the stock acquired on December 14, 2012, by the amount of loss disallowed on the January 4, 2013, sale.

(B) ***Example 2.*** Assume the same facts as in paragraph (d)(6)(viii)(A)(*1*) of this section (*Example 1*) except that the December 14, 2012, purchase occurs in another account P maintains with J. Because the December 14, 2012, purchase does not occur in the same account as the sale of the September 21, 2012, stock, under paragraph (d)(6)(iii)(B) of this section, J is not required to apply the wash sale rules in reporting the sale of stock acquired on September 21, 2012, or December 14, 2012. Under paragraphs (d)(2)(iii) and (d)(2)(iv)(B) of this section, J may choose to apply the wash sale rules as if the transactions occurred in the same account. The result is the same whether P keeps the stock purchased on December 14, 2012, in the other account or transfers the stock into the account from which P sells the stock sold on January 4, 2013.

(C) ***Example 3.*** —

(*1*) K, a regulated investment company, offers two funds for sale, Fund D and Fund E. On April 22, 2012, Q purchases shares of Fund D and pays a separate load charge. By paying the load charge, Q acquires a reinvestment right in shares of Fund E. On April 23, 2012, at the request of Q, Fund D redeems the shares. Q uses the proceeds to purchase shares of Fund E in a separate account. As a result of the reinvestment right, Q pays no load charge in purchasing the Fund E shares.

(2) Under paragraph (d)(6)(i) of this section, when reporting adjusted basis of the Fund D and Fund E shares at the time of their redemption, K is not required to adjust basis for any deferral of the load charge under section 852(f), because the transactions concerning Fund D and Fund E occur in separate accounts. Under paragraph (d)(2)(iv)(B) of this section, K may choose to apply the provisions of section 852(f).

(D) ***Example 4.*** R, an employee of C, a corporation, participates in C's stock option plan. On April 2, 2014, C grants R a nonstatutory option under the plan to buy 100 shares of stock. The option becomes substantially vested on April 2, 2015. On October 2, 2015, R exercises the option and purchases 100 shares. On December 2, 2015, R sells the 100 shares. Under paragraph (d)(6)(ii)(A) of this section, C is required to determine adjusted basis from the amount R pays under the terms of the option. Under paragraph (d)(6)(ii)(A) of this section, C is not permitted to adjust basis for any amount R must include as wage income with respect to the October 2, 2015, stock purchase.

(ix) ***Applicability date.*** Paragraph (d)(6)(vii) of this section applies with respect to information returns required to be filed and payee statements required to be furnished on or after January 1, 2024.

(x) ***Examples.*** The following examples illustrate the rules of paragraph (d)(5) of this section and this paragraph (d)(6) as applied to digital assets. Unless otherwise indicated, all events and transactions in the following examples occur using the services of CRX, an entity that owns and operates a digital asset trading platform and provides digital asset broker and hosted wallet services. In performing these services, CRX holds and records all customer purchase and sale transactions using CRX's centralized omnibus account. CRX does not record any of its customer's purchase or sale transactions on the relevant cryptographically secured distributed ledgers. Additionally, unless otherwise indicated, all events and transactions in the following examples occur on or after January 1, 2026.

(A) ***Example 1: Determination of gross proceeds and basis in digital assets*** —

(*1*) ***Facts.*** As a digital asset broker, CRX generally charges transaction fees equal to 1 unit of CRX's proprietary digital asset CM per transaction. CRX does not, however, charge transaction fees for the purchase of CM. On March 9, Year 1, K, an individual not otherwise exempt from reporting, purchases 20 units of CM for $20 in cash in K's account at CRX. A week later, on March 16, Year 1, K uses CRX's services to purchase 10 units of digital asset DE for $80 in cash. To pay for CRX's transaction fee, K directs CRX to debit 1 unit of CM (worth $1 at the time of transfer) from K's account.

(*2*) ***Analysis.*** Under paragraph (d)(2)(i)(B) of this section, CRX must report the gross proceeds from K's sale of 1 unit of CM. Additionally, because the units of CM were purchased in K's account at a broker providing custodial services for digital assets that are specified securities described in paragraph (a)(14)(v) of this section, the units of CM purchased by K are covered securities under paragraph (a)(15)(i)(J) of this section. Accordingly, under paragraphs (d)(2)(i)(D)(*1*) and (*2*) of this section, CRX must report K's adjusted basis in the 1 unit of CM and whether any gain or loss with respect to the CM unit sold is long-term or short-term. The gross proceeds from that sale is equal to the fair market value of the CM units on March 16, Year 1 ($1), and the adjusted basis of that unit is equal to the amount K paid in cash for the CM unit on March 9, Year 1 ($1). This reporting is required regardless of the fact that there is $0 of gain or loss associated with this sale. Additionally, K's adjusted basis in the 10 units of DE acquired is equal to the $81 initial basis in DE, which is $80 plus the $1 value of 1 unit of CM paid as a digital asset transaction cost for the purchase of the DE units.

(B) ***Example 2: Determination of gross proceeds and basis in digital assets*** —

(*1*) ***Facts.*** The facts are the same as in paragraph (d)(6)(x)(A)(*1*) of this section (the facts in *Example 1*), except that on June 12, Year 2, K instructs CRX to exchange K's 10 units of DE for 50 units of digital asset ST. CRX effects this exchange using its own omnibus account holdings of ST at an exchange rate of 1 DE = 5 ST. The total value of the 50 units of ST received by K is $100. K directs CRX to debit 1 CM unit (worth $2 at the time of the transfer) from K's account to pay CRX for the transaction fee.

(*2*) ***Analysis.*** K has digital asset transaction costs of $2 as defined in paragraph (d)(5)(iv)(A) of this section, which is the value of 1 unit of CM. Under paragraph (d)(2)(i)(B) of this section, CRX must report the gross proceeds from K's exchange of DE for ST (as a sale of K's 10 units of DE) and the gross proceeds from K's disposition of 1 unit of CM for CRX's services. Additionally, because the units of DE and CM were purchased in K's account at a broker providing custodial services for

digital assets that are specified securities described in paragraph (a)(14)(v) of this section, the units of DE and CM are covered securities under paragraph (a)(15)(i)(J) of this section, and, pursuant to paragraphs (d)(2)(i)(D)(*1*) and (*2*) of this section, CRX must report K's adjusted basis in the 10 units of DE and 1 unit of CM and whether any gain or loss with respect to the those units is long-term or short-term. Under paragraph (d)(5)(ii)(A) of this section, the gross proceeds from K's sale of the DE units is $98 (the fair market value of the 50 units of ST that K received less the $2 digital asset transaction costs paid by K using 1 unit of CM), that is allocable to the sale of the DE units. Under this paragraph (d)(6), K's adjusted basis in the 10 units of DE is $81 (which is $80 plus the $1 value of 1 unit of CM paid as a digital asset transaction cost for the purchase of the DE units), resulting in a long-term capital gain to K of $17 ($98-$81). The gross proceeds from K's sale of the single unit of CM is $2, and K's adjusted basis in the single unit of CM is $1, resulting in a long-term capital gain to K of $1 ($2-$1). K's adjusted basis in the ST units under paragraph (d)(6)(ii)(C) of this section is equal to the initial basis in ST, which is $100.

(C) ***Example 3: Determination of gross proceeds and basis when digital asset transaction costs are withheld from transferred digital assets*** —

(*1*) ***Facts.*** K has an account with digital asset broker BEX. On December 20, Year 1, K acquired 10 units of digital asset A, for $2 per unit, and 100 units of digital asset B, for $0.50 per unit. (Assume that K did not incur any digital asset transaction costs on the units acquired on December 20, Year 1.) On July 20, Year 2, K directs BEX to effect the exchange of 10 units of digital asset A for 50 units of digital asset B. At the time of the exchange, each unit of digital asset A has a fair market value of $5 per unit and each unit of digital asset B has a fair market value of $1 per unit. For the exchange of 10 units of digital asset A for 50 units of digital asset B, BEX charges K a transaction fee equal to 2 units of digital asset B, which BEX withholds from the units of the digital asset B credited to K's account on July 20, Year 2. For the disposition of 2 units of digital asset B withheld, BEX charges an additional transaction fee equal to 1 unit of digital asset B, which BEX also withholds from the units of digital asset B credited to K's account on July 20, Year 2. K has a standing order with BEX for the specific identification of digital assets as from the earliest units acquired.

(*2*) ***Reporting with respect to the disposition of the A units.*** The withholding of 3 units of digital asset B is a disposition of digital assets for BEX's services within the meaning of paragraph (a)(9)(ii)(C) of this section. Under paragraph (d)(5)(iv)(A) of this section, K has digital asset transaction costs of $3. Under paragraph (d)(5)(iv)(C) of this section, the exchange of 10 units of digital asset A for 50 units of digital asset B is the original transaction. Accordingly, BEX must allocate the digital asset transaction costs of $3 exclusively to the disposition of the 10 units of digital asset A. Additionally, because the units of A are specified securities described in paragraph (a)(14)(v) of this section and were purchased in K's account at BEX by a broker providing custodial services for such specified securities, the units of A are covered securities under paragraph (a)(15)(i)(J) of this section, and BEX must report K's adjusted basis in the 10 units of A. Under paragraphs (d)(5)(ii)(A) and (d)(5)(iv)(C) of this section, K's gross proceeds from the sale of the 10 units of digital asset A is $47, which is the excess of the fair market value of the 50 units of digital asset B received

($50) as of the date and time of the transaction over the allocated digital asset transaction costs ($3). Under this paragraph (d)(6), K's adjusted basis in the 10 units of A is $20, resulting in a short-term capital gain to K of $27 ($47-$20).

(3) ***Reporting with respect to the disposition of the withheld B units.*** K's gross proceeds from the sale of the 3 units of digital asset B used to pay digital asset transaction costs is $3, which is the fair market value of the digital assets used to pay for such transaction costs. Pursuant to the special rule for the identification of units withheld from digital assets received in a transaction to pay a customer's digital asset transaction costs under paragraph (d)(2)(ii)(B)(*3*) of this section and regardless of K's standing order, the withheld units sold are treated as from the units received in the original (A for B) transaction. Accordingly, the basis of the 3 withheld units of digital asset B is $3, which is the fair market value of the 3 units of digital asset B received. Finally, pursuant to paragraph (c)(3)(ii)(C) of this section, BEX is not required to report K's sale of the 3 withheld units of digital asset B because the 3 units of digital asset B were units withheld from digital assets received by K to pay for K's digital asset transaction costs.

(D) ***Example 4: Determination of gross proceeds and basis for digital assets*** —

(*1*) ***Facts.*** On August 26, Year 1, Customer P purchases 10 units of digital asset DE for $2 per unit in cash in an account at CRX. CRX charges P a fixed transaction fee of $5 in cash for the exchange. On October 26, Year 2, P directs CRX to exchange P's 10 units of DE for units of digital asset FG. At the time of the exchange, CRX determines that each unit of DE has a fair market value of $100 and each unit of FG has a fair market value of $50. As a result of this determination, CRX effects an exchange of P's 10 units of DE for 20 units of FG. CRX charges P a fixed transaction fee of $20 in cash for the exchange.

(*2*) ***Analysis.*** Under paragraph (d)(5)(iv)(B) of this section, P has digital asset transaction costs of $20 associated with the exchange of DE for FG which must be allocated to the sale of the DE units. For the transaction that took place on October 26, Year 2, under paragraph (d)(2)(i)(B) of this section, CRX must report the amount of gross proceeds from the sale of DE in the amount of $980 (the $1,000 fair market value of FG received on the date and time of transfer, less all of the digital asset transaction costs of $20 allocated to the sale). Under paragraph (d)(6)(ii)(C) of this section, the adjusted basis of P's DE units is equal to $25, which is the $20 paid in cash for the 10 units increased by the $5 digital asset transaction costs allocable to that purchase. Finally, P's adjusted basis in the 20 units of FG is equal to the fair market value of the FG received, $1,000, because none of the $20 transaction fee may be allocated under paragraph (d)(6)(ii)(C)(*2*) of this section to the acquisition of P's FG units.

(7) ***Long-term or short-term gain or loss*** —

(i) ***In general.*** In determining whether any gain or loss on the sale of a covered security is long-term or short-term within the meaning of section 1222 for purposes of this section, the following rules apply:

(A) A broker must consider the information reported on a transfer statement (as described in § 1.6045A-1).

(B) A broker is not required to consider transactions, elections, or events occurring outside the account except for an organizational action taken by an issuer during the period the broker holds custody of the covered security (beginning with the date that the broker receives a transferred security) reported on an issuer statement (as described in § 1.6045B-1) furnished or deemed furnished to the broker.

(C) A broker is required to apply the relevant rules for property acquired from a decedent or by gift for all covered securities.

(ii) ***Adjustments for wash sales*** —

(A) ***Securities in the same account or wallet*** —

(*1*) ***In general.*** A broker must apply the wash sale rules under section 1091 if both the sale and purchase transactions are of covered securities, other than covered securities reportable as digital assets after the application of paragraph (c)(8) of this section, with the same CUSIP number or other security identifier number that the Secretary may designate by publication in the FEDERAL REGISTER or in the Internal Revenue Bulletin (*see* § 601.601(d)(2) of this chapter).

(*2*) ***Special rules for covered securities that are also digital assets.*** In the case of a purchase or sale of a tokenized security described in paragraph (c)(8)(i)(D) of this section that is a stock or security for purposes of section 1091, a broker must apply the wash sale rules under section 1091 if both the sale and purchase transactions are of covered securities with the same CUSIP number or other security identifier number that the Secretary may designate by publication in the FEDERAL REGISTER or in the Internal Revenue Bulletin (*see* § 601.601(d)(2) of this chapter).

(B) ***Covered securities in different accounts or wallets.*** A broker is not required to apply paragraph (d)(7)(ii)(A) of this section if the covered securities are purchased and sold from different accounts or wallets, if the purchased covered security is transferred to another account or wallet before the wash sale, or if the covered securities are treated as held in separate accounts under § 1.1012-1(e). A covered security is not purchased in an account or wallet if it is purchased in another account or wallet and transferred into the account or wallet.

(C) ***Effect of election under section 475(f)(1).*** A broker is not required to apply paragraph (d)(7)(ii)(A) of this section to securities in an account if a customer has in writing both informed the broker that the customer has made a valid and timely election under section 475(f)(1) and identified the account as solely containing securities subject to the election. For purposes of this paragraph (d)(7)(ii)(C), a writing may be in electronic format. If a customer subsequently informs a broker that the election no longer applies to the customer or the account, the broker must prospectively apply paragraph (d)(7)(ii)(A) of this section but is not required to apply paragraph (d)(7)(ii)(A) of this section for the period covered by the customer's prior instruction to the broker. A taxpayer that is not a trader in securities within the meaning of section 475(f)(1) does not become a trader in securities, or create an inference that it is a trader in securities, by notifying a broker that it has made a valid and timely election under section 475(f)(1).

(D) ***Reporting at or near the time of sale.*** If a wash sale occurs after a broker has completed a return or statement reporting a sale of a covered security, the broker must redetermine whether gain or loss on the sale is long-term or short-term under this paragraph (d)(7)(ii)

and, if the return or statement included information inconsistent with this redetermination, correct the return or statement by the applicable original due date set forth in this section for the return or statement.

(iii) ***Constructive sale and mark-to-market adjustments.*** A broker is not required to apply section 1259 (regarding constructive sales), section 475 (regarding the mark-to-market method of accounting), or section 1296 (regarding the mark-to-market method of accounting for marketable stock in a passive foreign investment company) when determining whether any gain or loss on the sale of a security is long-term or short-term.

(iv) ***Regulated investment company and real estate investment trust adjustments.*** A broker is not required to apply sections 852(b)(4)(A) and 857(b)(8) (regarding effect of distributed and undistributed capital gain dividends on a loss on sale of regulated investment company or real estate investment trust shares held six months or less) or section 852(b)(4)(B) (regarding loss disallowance on sale of regulated investment company shares held six months or less due to receipt of tax-exempt dividends) when determining whether any gain or loss on the sale of a security is long-term or short-term.

(v) ***No adjustments for hedging transactions or offsetting positions.*** A broker is not required to apply section 1092 (regarding straddles), section 1233(b)(2) (regarding effect of short sale on holding period of substantially identical property), or § 1.1221-2(b) (regarding hedging transactions) when determining whether any gain or loss on the sale of a security is long-term or short-term.

(8) ***Conversion into United States dollars of amounts paid or received in foreign currency*** —

(i) ***Conversion rules.***

(A) When a payment other than a payment of interest is made in a foreign currency, a broker must determine the U.S. dollar amount of the payment by converting the foreign currency into U.S. dollars on the date it receives, credits, or makes the payment, as applicable, at the spot rate (as defined in § 1.988-1(d)(1)) or pursuant to a reasonable spot rate convention. (For interest payments, see paragraph (n)(4)(v) of this section concerning a customer's spot rate election.) When reporting the sale of a security traded on an established securities market, however, a broker must determine the U.S. dollar amounts at the spot rate or pursuant to a reasonable spot rate convention as of the settlement date of the purchase or sale, as applicable.

(B) A reasonable spot rate convention includes a month-end spot rate or a monthly average spot rate. A spot rate convention must be used consistently for all non-dollar amounts reported and from year to year. The convention may not be changed without the consent of the Commissioner or his or her delegate.

(ii) ***Effect of identification under § 1.988-5(a), (b), or (c) when the taxpayer effects a sale and a hedge through the same broker.*** In lieu of the amounts reportable under paragraph (d)(8)(i) of this section, the gross proceeds and adjusted basis must each be the integrated amount computed under § 1.988-5(a), (b) or (c) if—

(A) A taxpayer effects through a broker a sale or exchange of nonfunctional currency (as defined in § 1.988-1(c)) and hedges all or a part of the sale as provided in § 1.988-5(a), (b) or (c) with the same broker; and

(B) The taxpayer complies with the requirements of § 1.988-5(a), (b) or (c) and so notifies the broker prior to the end of the calendar year in which the sale occurs.

(iii) ***Example.*** The following example illustrates the rules of this paragraph (d)(8):

> *Example.* (i) Z, an individual, is a U.S. citizen. On July 4, 2012, Z purchases stock of C, SA, a French corporation traded on an established securities market, in an account with Q, a broker. Q uses a daily spot rate for converting euro and U.S. dollars. Z pays €1,200 for the stock. On the settlement date for the purchase, the spot rate is €1 = $1.30. On October 4, 2012, Z sells the stock for €1,000. On the settlement date for the sale, the spot rate is €1 = $1.35. On October 5, 2012, Z purchases additional shares of C, SA, that cause the €200 loss on the stock sold on October 4, 2012, to be disallowed under section 1091.
> (ii) Under paragraph (d)(8)(i)(A) of this section, Q must determine adjusted basis by converting the €1,200 paid on behalf of Z into U.S. dollars using the €1 = $1.30 spot rate on the settlement date of the purchase. Q must convert the €1,000 gross proceeds into U.S. dollars using the €1 = $1.35 spot rate on the settlement date for the sale. Thus, Q must report adjusted basis equal to $1,560, gross proceeds equal to $1,350, and $210 in loss disallowed by section 1091.

(9) ***Coordination with the reporting rules for widely held fixed investment trusts under § 1.671-5.*** Information required to be reported under section 6045(a) for a sale of a security or a digital asset in a widely held fixed investment trust (WHFIT) (as defined under § 1.671-5) and the sale of an interest in a WHFIT must be reported as provided by this section unless the information is also required to be reported under § 1.671-5. To the extent that this section requires additional information under section 6045(g), those requirements are deemed to be met through compliance with the rules in § 1.671-5.

(10) ***Optional reporting methods for qualifying stablecoins and specified nonfungible tokens.*** This paragraph (d)(10) provides optional reporting rules for sales of qualifying stablecoins as defined in paragraph (d)(10)(ii) of this section and sales of specified nonfungible tokens as defined in paragraph (d)(10)(iv) of this section. A broker may report sales of qualifying stablecoins or report sales of specified nonfungible tokens under the optional method provided in this paragraph (d)(10) instead of under paragraphs (d)(2)(i)(B) and (D) of this section for some or all customers and may change its reporting method for any customer from year to year; however, the method chosen for a particular customer must be applied for the entire year of that customer's sales.

(i) ***Optional reporting method for qualifying stablecoins*** —

(A) ***In general.*** In lieu of reporting all sales of qualifying stablecoins under paragraphs (d)(2)(i)(B) and (D) of this section, a broker may report designated sales of qualifying stablecoins, as defined in paragraph (d)(10)(i)(C) of this section, on an aggregate basis as provided in paragraph (d)(10)(i)(B) of this section. A broker reporting under this paragraph (d)(10)(i) is not required to report sales of qualifying stablecoins under this paragraph (d)(10)(i) or under paragraphs (d)(2)(i)(B) through (D) of this section if such sales are non-designated sales of qualifying stablecoins or if the gross proceeds (after reduction for the

allocable digital asset transaction costs) from all designated sales effected by that broker of qualifying stablecoins by the customer do not exceed $10,000 for the year as described in paragraph (d)(10)(i)(B) of this section.

(B) ***Aggregate reporting method for designated sales of qualifying stablecoins.*** If a customer's aggregate gross proceeds (after reduction for the allocable digital asset transaction costs) from all designated sales effected by that broker of qualifying stablecoins exceed $10,000 for the year, the broker must make a separate return for each qualifying stablecoin that includes the information set forth in this paragraph (d)(10)(i)(B). If the aggregate gross proceeds reportable under the previous sentence exceed $10,000, reporting is required with respect to each qualifying stablecoin for which there are designated sales even if the aggregate gross proceeds for a particular qualifying stablecoin does not exceed $10,000. A broker reporting under this paragraph (d)(10)(i)(B) must report the following information with respect to designated sales of each qualifying stablecoin on a separate Form 1099-DA or any successor form in the manner required by such form or instructions—

(*1*) The name, address, and taxpayer identification number of the customer;

(*2*) The name of the qualifying stablecoin sold;

(*3*) The aggregate gross proceeds for the year from designated sales of the qualifying stablecoin (after reduction for the allocable digital asset transaction costs as defined and allocated pursuant to paragraph (d)(5)(iv) of this section);

(*4*) The total number of units of the qualifying stablecoin sold in designated sales of the qualifying stablecoin;

(*5*) The total number of designated sale transactions of the qualifying stablecoin; and

(*6*) Any other information required by the form or instructions.

(C) ***Designated sale of a qualifying stablecoin.*** For purposes of this paragraph (d)(10), the term *designated sale of a qualifying stablecoin* means: any sale as defined in paragraphs (a)(9)(ii)(A) through (D) of this section of a qualifying stablecoin other than a sale of a qualifying stablecoin in exchange for different digital assets that are not qualifying stablecoins. In addition, the term *designated sale of a qualifying stablecoin* includes the delivery of a qualifying stablecoin pursuant to the settlement of any executory contract which would be treated as a designated sale of the qualifying digital asset under the previous sentence if the contract had not been executory. Finally, the term *non-designated sale of a qualifying stablecoin* means any sale of a qualifying stablecoin other than a designated sale of a qualifying stablecoin as defined in this paragraph (d)(10)(i)(C).

(D) ***Examples.*** For purposes of the following examples, assume that digital asset WW and digital asset YY are qualifying stablecoins, and digital asset DL is not a qualifying stablecoin. Additionally, assume that the transactions set forth in each example include all sales of qualifying stablecoins on behalf of the customer during Year 1, and that no transaction costs were imposed on the sales described therein.

(*1*) ***Example 1: Optional reporting method for qualifying stablecoins*** —

(*i*) ***Facts.*** CRX is a digital asset broker that provides services to customer K, an individual not otherwise exempt from reporting. CRX effects the following sales on behalf of K: sale of 1,000 units of WW in exchange for cash of $1,000; sale of 5,000 units of WW in exchange for YY, with a value of $5,000; sale of 10,000 units of WW in return for DL, with a value of $10,000; and sale of 3,000 units of YY in exchange for cash of $3,000.

(*ii*) ***Analysis.*** In lieu of reporting all of K's sales of WW and YY under paragraph (d)(2)(i)(B) of this section, CRX may report K's designated sales of WW and YY under the optional reporting method set forth in paragraph (d)(10)(i)(B) of this section. In this case, K's designated sales of qualifying stablecoins resulted in total gross proceeds of $9,000, which is the total of $1,000 from sale of WW for cash, $5,000 from the sale of WW in exchange for YY, and $3,000 from the sale of YY for cash. Because K's designated sales of WW and YY did not exceed $10,000, CRX is not required to make a return of information under this section for any of K's qualifying stablecoin sales. The $10,000 of gross proceeds from the sale of WW for DL, which is not a qualifying stablecoin, is not included in this calculation to determine if the *de minimis* threshold has been exceeded because that sale is not a designated sale and, as such, is not reportable.

(*2*) ***Example 2: Optional reporting method for qualifying stablecoins*** —

(*i*) ***Facts.*** The facts are the same as in paragraph (d)(10)(i)(D)(*1*)(*i*) of this section (the facts in *Example 1*), except that CRX also effects an additional sale of 4,000 units of YY in exchange for cash of $4,000 on behalf of K.

(*ii*) ***Analysis.*** In lieu of reporting all of K's sales of WW and YY under paragraph (d)(2)(i)(B) of this section, CRX may report K's designated sales of WW and YY under the optional reporting method set forth in paragraph (d)(10)(i)(B) of this section. In this case, K's designated sales of qualifying stablecoins resulted in total gross proceeds of $13,000, which is the total of $1,000 from sale of WW for cash, $5,000 from the sale of WW for YY, $3,000 from the sale of YY for cash, and $4,000 from the sale of YY for cash. Because K's designated sales of all types of qualifying stablecoins exceeds $10,000, CRX must make two returns of information under this section: one for all of K's designated sales of WW and another for all of K's designated sales of YY.

(ii) ***Qualifying stablecoin.*** For purposes of this section, the term *qualifying stablecoin* means any digital asset that satisfies the conditions set forth in paragraphs (d)(10)(ii)(A) through (C) of this section for the entire calendar year.

(A) ***Designed to track certain other currencies.*** The digital asset is designed to track on a one-to-one basis a single convertible currency issued by a government or a central bank (including the U.S. dollar).

(B) ***Stabilization mechanism.*** Either:

(*1*) The digital asset uses a stabilization mechanism that causes the unit value of the digital asset not to fluctuate from the unit value of the convertible currency it was designed to track by more than 3 percent over any consecutive 10-day period, determined using Coordinated Universal Time (UTC), during the calendar year; or

(2) The issuer of the digital asset is required by regulation to redeem a unit of the digital asset at any time on a one-to-one basis for the same convertible currency that the digital asset was designed to track.

(C) ***Accepted as payment.*** The digital asset is generally accepted as payment by persons other than the issuer. A digital asset that satisfies the conditions set forth in paragraphs (d)(10)(ii)(A) and (B) of this section that is accepted by a broker pursuant to a sale of another digital asset, or that is accepted by a second party pursuant to a sale effected by a processor of digital asset payments described in paragraph (a)(9)(ii)(D) of this section, meets the condition set forth in this paragraph (d)(10)(ii)(C).

(D) ***Examples —***

(1) ***Example 1 —***

(*i*) ***Facts.*** Y is a privately held corporation that issues DL1, a digital asset designed to track the value of the U.S. dollar. Pursuant to regulatory requirements, DL1 is backed in full by U.S. dollars and other liquid short-term U.S. dollar-denominated assets held by Y, and Y offers to redeem units of DL1 for U.S. dollars at par at any time. Y's retention of U.S. dollars and other liquid short-term U.S. dollar-denominated assets as collateral and Y's offer to redeem units of DL for U.S. dollars at par at any time are intended to cause DL1 to track the U.S. dollar on a one-to-one basis. Broker B accepts DL1 as payment in return for sales of other digital assets.

(*ii*) ***Analysis.*** DL1 satisfies the three conditions set forth in paragraphs (d)(10)(ii)(A) through (C) of this section. First, DL1 was designed to track on a one-to-one basis the U.S. dollar, which is a single convertible currency issued by a government or a central bank. Second, DL1 uses a stabilization mechanism, as described in paragraph (d)(10)(ii)(B)(2) of this section, that pursuant to regulatory requirements requires Y to offer to redeem one unit of DL1 for one U.S. dollar at any time. Finally, because B accepts DL1 as payment for sales of other digital assets, DL1 is generally accepted as payment by persons other than Y. Accordingly, DL1 is a qualifying stablecoin under this paragraph (d)(10)(ii).

(2) ***Example 2 —***

(*i*) ***Facts.*** Z is a privately held corporation that issues DL2, a digital asset designed to track the value of the U.S. dollar on a one-to-one basis that has a mechanism that is intended to effect that tracking. On April 28, Year X, Broker B effects the sale of units of DL2 for cash on behalf of customer C. During Year X, the unit value of DL2 did not fluctuate from the U.S. dollar by more than 3 percent over any consecutive 10-day period. Merchant M accepts payment in DL2 in return for goods and services in connection with sales effected by processors of digital asset payments.

(*ii*) ***Analysis.*** DL2 satisfies the three conditions set forth in paragraphs (d)(10)(ii)(A) through (C) of this section. First, DL2 was designed to track on a one-to-one basis the U.S. dollar, which is a single convertible currency issued by a government or a central bank. Second, DL2 uses a stabilization mechanism, as described in paragraph (d)(10)(ii)(B)(2) of this section, that results in the unit

value of DL2 not fluctuating from the U.S. dollar by more than 3 percent over any consecutive 10-day period during the calendar year (Year X). Third, Merchant M accepts payment in DL2 in return for goods and services in connection with sales effected by processors of digital asset payments DL2 is generally accepted as payment by persons other than Z. Accordingly, DL2 is a qualifying stablecoin under this paragraph (d)(10)(ii).

(iii) ***Optional reporting method for specified nonfungible tokens*** —

(A) ***In general.*** In lieu of reporting sales of specified nonfungible tokens under the reporting rules provided under paragraph (d)(2)(i)(B) of this section, a broker may report sales of specified nonfungible tokens as defined in paragraph (d)(10)(iv) of this section on an aggregate basis as provided in this paragraph (d)(10)(iii). Other digital assets, including nonfungible tokens that are not specified nonfungible tokens, are not eligible for the optional reporting method in this paragraph (d)(10)(iii).

(B) ***Reporting method for specified nonfungible tokens.*** A broker reporting under this paragraph (d)(10)(iii) must report sales of specified nonfungible tokens if the customer's aggregate gross proceeds (after reduction for the allocable digital asset transaction costs) from all sales of specified nonfungible tokens exceed $600 for the year. If the customer's aggregate gross proceeds (after reduction for the allocable digital asset transaction costs) from such sales effected by that broker do not exceed $600 for the year, no report is required. A broker reporting under this paragraph (d)(10)(iii)(B) must report on a Form 1099-DA or any successor form in the manner required by such form or instructions the following information with respect to the customer's sales of specified nonfungible tokens—

(*1*) The name, address, and taxpayer identification number of the customer;

(*2*) The aggregate gross proceeds for the year from all sales of specified nonfungible tokens (after reduction for the allocable digital asset transaction costs as defined and allocated pursuant to paragraph (d)(5)(iv) of this section);

(*3*) The total number of specified nonfungible token sales;

(*4*) To the extent ordinarily known by the broker, the aggregate gross proceeds that is attributable to the first sale by a creator or minter of the specified nonfungible token; and

(*5*) Any other information required by the form or instructions.

(C) ***Examples.*** The following examples illustrate the rules of this paragraph (d)(10)(iii).

(*1*) ***Example 1: Optional reporting method for specified nonfungible tokens*** —

(*i*) ***Facts.*** CRX is a digital asset broker that provides services to customer J, an individual not otherwise exempt from reporting. In Year 1, CRX sells on behalf of J, ten specified nonfungible tokens for a gross proceeds amount equal to $1,500. CRX does not sell any other specified nonfungible tokens for J during Year 1.

(*ii*) ***Analysis.*** In lieu of reporting J's sales of the ten specified nonfungible tokens under paragraph (d)(2)(i)(B) of this section, CRX may report these sales under the reporting method set forth in this paragraph (d)(10)(iii). In this case, J's sales of the ten specified nonfungible tokens gave rise to total gross proceeds of $1,500 for Year 1. Because the total gross proceeds from J's sales of the ten specified nonfungible tokens exceeds $600, CRX must make a single return of information under this section for these sales.

(*2*) ***Example 2: Optional reporting method for specified nonfungible tokens*** —

(*i*) ***Facts.*** The facts are the same as in paragraph (d)(10)(iii)(C)(*1*)(*i*) of this section (the facts in *Example 1*), except that the total gross proceeds from the sale of J's ten specified nonfungible tokens is $500.

(*ii*) ***Analysis.*** Because J's sales of the specified nonfungible tokens result in total gross proceeds of $500, CRX is not required to make a return of information under this section for J's sales of the specified nonfungible tokens.

(iv) ***Specified nonfungible token.*** For purposes of this section, the term *specified nonfungible token* means a digital asset that satisfies the conditions set forth in paragraphs (d)(10)(iv)(A) through (C) of this section.

(A) ***Indivisible.*** The digital asset cannot be subdivided into smaller units without losing its intrinsic value or function.

(B) ***Unique.*** The digital asset itself includes a unique digital identifier, other than a digital asset address, that distinguishes that digital asset from all other digital assets.

(C) ***Excluded property.*** The digital asset is not and does not directly or through one or more other digital assets that satisfy the conditions described in paragraphs (d)(10)(iv)(A) and (B) of this section, provide the holder with any interest in any of the following excluded property—

(*1*) A security under paragraph (a)(3) of this section;

(*2*) A commodity under paragraph (a)(5) of this section;

(*3*) A regulated futures contract under paragraph (a)(6) of this section;

(*4*) A forward contract under paragraph (a)(7) of this section; or

(*5*) A digital asset that does not satisfy the conditions described in paragraphs (d)(10)(iv)(A) and (B) of this section.

(D) ***Examples.*** The following examples illustrate the rules of this paragraph (d)(10)(iv).

(*1*) ***Example 1: Specified nonfungible token*** —

(*i*) ***Facts.*** Individual J is an artist in the business of creating and selling digital assets that reference J's artwork. J creates a unique digital asset (DA-J) that represents J's artwork. The digital asset includes a unique digital identifier, other than a digital asset address, that distinguishes DA-J from all other digital assets. DA-J cannot be subdivided into smaller units.

(*ii*) ***Analysis.*** DA-J is a digital asset that satisfies the three conditions described in paragraphs (d)(10)(iv)(A) through (C) of this section. DA-J cannot be subdivided into smaller units without losing its intrinsic value or function. Additionally, DA-J includes a unique digital identifier that distinguishes DA-J from all other digital assets. Finally, DA-J does not provide the holder with any interest in excluded property listed in paragraphs (d)(10)(iv)(C)(*1*) through (*5*) of this section Accordingly, DA-J is a specified nonfungible token under this paragraph (d)(10)(iv).

(*2*) ***Example 2: Specified nonfungible token*** —

(*i*) ***Facts.*** K creates a unique digital asset (DA-K) that provides the holder with the right to redeem DA-K for 100 units of digital asset DE. Units of DE can be subdivided into smaller units and do not include a unique digital identifier, other than a digital asset address, that distinguishes one unit of DE from any other unit of DE. DA-K cannot be subdivided into smaller units and includes a unique digital identifier, other than a digital asset address, that distinguishes DA-K from all other digital assets.

(*ii*) ***Analysis.*** DA-K provides its holder with an interest in 100 units of digital asset DE, which is excluded property, as described in paragraph (d)(10)(iv)(C)(*5*) of this section, because DE units can be subdivided into smaller units and do not include unique digital identifiers that distinguishes one unit of DE from any other unit of DE. Accordingly, DA-K is not a specified nonfungible token under this paragraph (d)(10)(iv).

(*3*) ***Example 3: Specified nonfungible token*** —

(*i*) ***Facts.*** The facts are the same as in paragraph (d)(10)(iv)(D)(*2*)(*i*) of this section (the facts in *Example 2*) except that in addition to providing its holder with an interest in the 100 units of DE, DA-K also provides rights to or access to a unique work of art.

(*ii*) ***Analysis.*** Because DA-K provides its holder with an interest in excluded property described in paragraph (d)(10)(iv)(C)(*5*) of this section, it is not a specified nonfungible token under paragraph this (d)(10)(iv) without regard to whether it also references property that is not excluded property.

(*4*) ***Example 4: Specified nonfungible token*** —

(*i*) ***Facts.*** B creates a unique digital asset (DA-B) that provides the holder with the right to redeem DA-B for physical merchandise in B's store. DA-B cannot be subdivided into smaller units and includes a unique digital identifier, other than a digital asset address, that distinguishes DA-B from all other digital assets.

(*ii*) ***Analysis.*** DA-B is a digital asset that satisfies the three conditions described in paragraphs (d)(10)(iv)(A) through (C) of this section. DA-B cannot be subdivided into smaller units without losing its intrinsic value or function. Additionally, DA-B includes a unique digital identifier that distinguishes DA-B from all other digital

assets. Finally, DA-B does not provide the holder with any interest in excluded property listed in paragraphs (d)(10)(iv)(C)(*1*) through (*5*) of this section. Accordingly, DA-B is a specified nonfungible token under this paragraph (d)(10)(iv).

(v) ***Joint accounts.*** For purposes of determining if the gross proceeds thresholds set forth in paragraphs (d)(10)(i)(B) and (d)(10)(iii)(B) of this section have been met for the customer, the customer is the person whose tax identification number would be required to be shown on the information return (but for the application of the relevant threshold) after the application of the backup withholding rules under § 31.3406(h)-2(a) of this chapter.

(11) ***Collection and retention of additional information with respect to the sale of a digital asset.*** A broker required to make an information return under paragraph (c) of this section with respect to the sale of a digital asset must collect the following additional information, retain it for seven years from the date of the due date for the information return required to be filed under this section, and make it available for inspection upon request by the Internal Revenue Service:

(i) The transaction ID as defined in paragraph (a)(24) of this section in connection with the sale, if any; and the digital asset address as defined in paragraph (a)(20) of this section (or digital asset addresses if multiple) from which the digital asset was transferred in connection with the sale, if any;

(ii) For each sale of a digital asset that was held by the broker in a hosted wallet on behalf of a customer and was previously transferred into an account at the broker (transferred-in digital asset), the transaction ID of such transfer in and the digital asset address (or digital asset addresses if multiple) from which the digital asset was transferred, if any.

(e) ***Reporting of barter exchanges*** —

(1) ***Requirement of reporting.*** A barter exchange shall, except as otherwise provided, report in the manner prescribed in this section.

(2) ***Exchanges required to be reported*** —

(i) ***In general.*** Except as provided in paragraphs (e)(2)(ii) and (g) of this section, a barter exchange must make a return of information for exchanges of personal property or services through the barter exchange during the calendar year among its members or clients or between these persons and the barter exchange. For this purpose, property or services are exchanged through a barter exchange if payment for property or services is made by means of a credit on the books of the barter exchange or scrip issued by the barter exchange or if the barter exchange arranges a direct exchange of property or services among its members or clients or exchanges property or services with a member or client.

(ii) ***Exemption.*** A barter exchange through which there are fewer than 100 exchanges during the calendar year is not required to report for, or make a return of information with respect to exchanges during, such calendar year. The Commissioner may require multiple barter exchanges to be combined for purposes of the proceeding sentence upon a determination that a material purpose for the formation or continuation of one or more of the barter exchanges to be combined was to receive one or more exemptions pursuant to this subparagraph.

(iii) ***Coordination rules for exchanges of digital assets made through barter exchanges.*** Exchange transactions involving the exchange of one digital asset held by one customer of a broker for a different digital asset held by a second customer of the same broker must be treated as a sale under paragraph (a)(9)(ii) of this section subject to reporting under paragraphs (c) and (d) of this section, and not as an exchange of personal property through a barter exchange subject to reporting under this paragraph (e) and paragraph (f) of this section, with respect to both customers involved in the exchange transaction. In the case of an exchange transaction that involves the transfer of a digital asset for personal property or services that are not also digital assets, if the digital asset payment also is a reportable payment transaction subject to reporting by the barter exchange under § 1.6050W-1(a)(1), the exchange transaction must be treated as a reportable payment transaction and not as an exchange of personal property through a barter exchange subject to reporting under this paragraph (e) and paragraph (f) of this section with respect to the member or client disposing of personal property or services. Additionally, an exchange transaction described in the previous sentence must be treated as a sale under paragraph (a)(9)(ii)(D) of this section subject to reporting under paragraphs (c) and (d) of this section and not as an exchange of personal property through a barter exchange subject to reporting under this paragraph (e) and paragraph (f) of this section with respect to the member or client disposing of the digital asset. Nothing in this paragraph (e)(2)(iii) may be construed to mean that any broker is or is not properly classified as a barter exchange.

(f) ***Information required*** —

(1) ***In general.*** A person that is a barter exchange during a calendar year shall report on Form 1096 showing the information required thereon for such year.

(2) ***Transactional reporting*** —

(i) ***In general.*** As to each exchange for which a barter exchange is required to make a return of information under this section, the barter exchange must show on Form 1099-B, "Proceeds From Broker and Barter Exchange Transactions," or any successor form the name, address, and taxpayer identification number of each member or client providing property or services in the exchange, the property or services provided, the amount received by the member or client for the property or services, the date on which the exchange occurred, and other information required by the form in the manner and number of copies required by the form.

(ii) ***Exception for corporate member or client.*** As to each corporate member or client providing property or services in an exchange for which a return of information is required under this section, the barter exchange may report the name, address, and taxpayer identification number of the corporate member or client, the aggregate amount received by the corporate member or client during the reporting period for property or services provided by such corporate member or client in exchange for which a return of information is required, and such other information as may be required by Form 1099, in the form, manner, and number of copies required by Form 1099.

(iii) ***Definition.*** For purposes of paragraph (f)(2)(ii) of this section, the term "corporate member or client" means a member or client of a barter exchange which is a corporation as defined in section 7701(a)(3) (including an insurance company). The term corporation includes a pool, syndicate, partnership, or unincorporated association composed exclusively of corporations. A barter exchange may treat a member or client as a corporation (and therefore as a corporate member or client) if such member or client provides an exemption certificate as described in § 31.3406(h)-3(a) of this chapter or provided that—

(A) The name of the member or client contains the term “insurance company,” “indemnity company,” “reinsurance company,” or “assurance company”;

(B) The name of the member or client contains one of the following unambiguous expressions of corporate status: Incorporated, Inc., Corporation, Corp., or P.C., but not Company or Co.; or

(C) The member or client is known to the barter exchange to be a corporation through a corporate resolution or similar document on file with the barter exchange clearly indicating corporate status.

(3) ***Exchange date.*** For purposes of this section an exchange is considered to occur with respect to a member or client of a barter exchange on the date cash, property, a credit, or scrip is actually or constructively received by the member or client as a result of the exchange. (See § 1.451-2 for rules pertaining to constructive receipt.)

(4) ***Amount received.*** The amount received by a member or client in an exchange includes cash received, the fair market value of any property or services received, and the fair market value of any credits to the account of the member or client on the books of the barter exchange or scrip issued to the member or client by the barter exchange, but does not include any amount received by the member or client in a subsequent exchange of credits or scrip. For purposes of this section, the fair market value of a credit or scrip is the value assigned to such credit or scrip by the issuing barter exchange for the purpose of exchanges unless the Commissioner requires the use of a different value that the Commissioner determines more accurately reflects fair market value.

(5) ***Meaning of terms.*** For purposes of this paragraph (f)—

(i) A credit is an amount on the books of the barter exchange that is transferable from one member or client of the barter exchange to another such member or client, or to the barter exchange in payment for property or services;

(ii) Scrip is a token issued by the barter exchange that is transferable from one member or client, of the barter exchange to another such member or client, or to the barter exchange, in payment for property or services; and

(iii) Property does not include a credit or scrip.

(6) ***Reporting period.*** A barter exchange shall use the calendar year as the reporting period.

(g) ***Exempt foreign persons*** —

(1) ***Brokers.*** No return of information is required to be made by a broker with respect to a customer who is considered to be an exempt foreign person under paragraphs (g)(1)(i) through (iii) or paragraph (g)(4) of this section. *See* paragraph (a)(1) of this section for when a person is not treated as a broker under this section for a sale effected at an office outside the United States. *See* paragraphs (g)(1)(i) through (g)(3) of this section for rules relating to sales as defined in paragraph (a)(9)(i) of this section and *see* paragraph (g)(4) of this section for rules relating to sales of digital assets as defined in paragraph (a)(9)(ii) of this section.

(i) With respect to a sale as defined in paragraph (a)(9)(i) of this section (relating to sales other than sales of digital assets) that is effected at an office of a broker either inside or outside the United States, the broker may treat the customer as an exempt foreign person if the broker can, prior to the payment, reliably associate the payment with documentation upon which it can rely

in order to treat the customer as a foreign beneficial owner in accordance with § 1.1441-1(e)(1)(ii), as made to a foreign payee in accordance with § 1.6049-5(d)(1), or presumed to be made to a foreign payee under § 1.6049-5(d)(2) or (3). For purposes of this paragraph (g)(1)(i), the provisions in § 1.6049-5(c) regarding rules applicable to documentation of foreign status shall apply with respect to a sale when the broker completes the acts necessary to effect the sale at an office outside the United States, as described in paragraph (g)(3)(iii)(A) of this section, and no office of the same broker within the United States negotiated the sale with the customer or received instructions with respect to the sale from the customer. The provisions in § 1.6049-5(c) regarding the definitions of *U.S. payor, U.S. middleman, non-U.S. payor,* and *non-U.S. middleman* shall also apply for purposes of this paragraph (g)(1)(i). The provisions of § 1.1441-1 shall apply by substituting the terms *broker* and *customer* for the terms *withholding agent* and *payee,* respectively, and without regard for the fact that the provisions apply to amounts subject to withholding under chapter 3 of the Code. The provisions of § 1.6049-5(d) shall apply by substituting the terms *broker* and *customer* for the terms *payor* and *payee,* respectively. For purposes of this paragraph (g)(1)(i), a broker that is required to obtain, or chooses to obtain, a beneficial owner withholding certificate described in § 1.1441-1(e)(2)(i) from an individual may rely on the withholding certificate only to the extent the certificate includes a certification that the beneficial owner has not been, and at the time the certificate is furnished, reasonably expects not to be present in the United States for a period aggregating 183 days or more during each calendar year to which the certificate pertains. The certification is not required if a broker receives documentary evidence under § 1.6049-5(c)(1) or (4).

(ii) With respect to a redemption or retirement of stock or an obligation (the interest or original issue discount on, which is described in § 1.6049-5(b)(6), (7), (10), or (11) or the dividends on, which are described in § 1.6042-3(b)(1)(iv)) that is effected at an office of a broker outside the United States by the issuer (or its paying or transfer agent), the broker may treat the customer as an exempt foreign person if the broker is not also acting in its capacity as a custodian, nominee, or other agent of the payee.

(iii) With respect to a sale as defined in paragraph (a)(9)(i) of this section (relating to sales other than sales of digital assets) that is effected by a broker at an office of the broker either inside or outside the United States, the broker may treat the customer as an exempt foreign person for the period that those proceeds are assets blocked as described in § 1.1441-2(e)(3). For purposes of this paragraph (g)(1)(iii) and section 3406, a sale is deemed to occur in accordance with paragraph (d)(4) of this section. The exemption in this paragraph (g)(1)(iii) shall terminate when payment of the proceeds is deemed to occur in accordance with the provisions of § 1.1441-2(e)(3).

(2) ***Barter exchange.*** No return of information is required by a barter exchange under the rules of paragraphs (e) and (f) of this section with respect to a client or a member that the barter exchange may treat as an exempt foreign person pursuant to the procedures described in paragraph (g)(1) of this section.

(3) ***Applicable rules*** —

(i) ***Joint owners.*** Amounts paid to joint owners for which a certificate or documentation is required as a condition for being exempt from reporting under paragraph (g)(1)(i) or (g)(2) of this section are presumed made to U.S. payees who are not exempt recipients if, prior to payment, the broker or barter exchange cannot reliably associate the payment either with a Form W-9 furnished by one of the joint owners in the manner required in §§ 31.3406(d)-1 through

31.3406(d)-5 of this chapter, or with documentation described in paragraph (g)(1)(i) of this section furnished by each joint owner upon which it can rely to treat each joint owner as a foreign payee or foreign beneficial owner. For purposes of applying this paragraph (g)(3)(i), the grace period described in § 1.6049-5(d)(2)(ii) shall apply only if each payee qualifies for such grace period.

(ii) ***Special rules for determining who the customer is.*** For purposes of paragraph (g)(1) of this section, the determination of who the customer is shall be made on the basis of the provisions in § 1.6049-5(d) by substituting in that section the terms *payor* and *payee* with the terms *broker* and *customer.*

(iii) ***Place of effecting sale*** —

(A) ***Sale outside the United States.*** For purposes of this paragraph (g), a sale as defined in paragraph (a)(9)(i) of this section (relating to sales other than sales of digital assets) is considered to be effected by a broker at an office outside the United States if, in accordance with instructions directly transmitted to such office from outside the United States by the broker's customer, the office completes the acts necessary to effect the sale outside the United States. The acts necessary to effect the sale may be considered to have been completed outside the United States without regard to whether—

(*1*) Pursuant to instructions from an office of the broker outside the United States, an office of the same broker within the United States undertakes one or more steps of the sale in the United States; or

(*2*) The gross proceeds of the sale are paid by a draft drawn on a United States bank account or by a wire or other electronic transfer from a United States account.

(B) ***Sale inside the United States.*** For purposes of this paragraph (g), a sale that is considered to be effected by a broker at an office outside the United States under paragraph (g)(3)(iii)(A) of this section shall nevertheless be considered to be effected by a broker at an office inside the United States if either—

(*1*) The customer has opened an account with a United States office of that broker;

(*2*) The customer has transmitted instructions concerning this and other sales to the foreign office of the broker from within the United States by mail, telephone, electronic transmission or otherwise (unless the transmissions from the United States have taken place in isolated and infrequent circumstances);

(*3*) The gross proceeds of the sale are paid to the customer by a transfer of funds into an account (other than an international account as defined in § 1.6049-5(e)(4)) maintained by the customer in the United States or mailed to the customer at an address in the United States;

(*4*) The confirmation of the sale is mailed to a customer at an address in the United States; or

(*5*) An office of the same broker within the United States negotiates the sale with the customer or receives instructions with respect to the sale from the customer.

(iv) ***Special rules where the customer is a foreign intermediary or certain U.S. branches.*** A foreign intermediary, as defined in § 1.1441-1(c)(13), is an exempt foreign person, except when the broker has actual knowledge (within the meaning of § 1.6049-5(c)(3)) that the person for whom the intermediary acts is a U.S. person that is not exempt from reporting under paragraph (c)(3) of this section or the broker is required to presume under § 1.6049-5(d)(3) that the payee is a U.S. person that is not an exempt recipient. If a foreign intermediary, as described in § 1.1441-1(c)(13), or a U.S. branch that is not treated as a U.S. person receives a payment from a payor or middleman (as defined in § 1.6049-4(a) and (f)(4)), which payment the payor or middleman can reliably associate with a valid withholding certificate described in § 1.1441-1(e)(3)(ii), (iii) or (v), respectively, furnished by such intermediary or branch, then the intermediary or branch is not required to report such payment when it, in turn, pays the amount, unless, and to the extent, the intermediary or branch knows that the payment is required to be reported under this section and was not so reported. For example, if a U.S. branch described in § 1.1441-1(b)(2)(iv) fails to provide information regarding U.S. persons that are not exempt from reporting under paragraph (c)(3) of this section to the person from whom the U.S. branch receives the payment, the U.S. branch must report the payment on an information return. *See,* however, paragraph (c)(3)(ii) of this section for when reporting under section 6045 is coordinated with reporting under chapter 4 of the Code or an applicable IGA (as defined in § 1.6049-4(f)(7)). The exception of this paragraph (g)(3)(iv) for amounts paid by a foreign intermediary shall not apply to a qualified intermediary that assumes reporting responsibility under chapter 61 of the Code except as provided under the agreement described in § 1.1441-1(e)(5)(iii).

(4) ***Rules for sales of digital assets.*** The rules of this paragraph (g)(4) apply to a sale of a digital asset as defined in paragraph (a)(9)(ii) of this section. *See* paragraph (a)(1) of this section for when a person is treated as a broker under this section with respect to a sale of a digital asset. *See* paragraph (c) of this section for rules requiring brokers to report sales. *See* paragraph (g)(1) of this section providing that no return of information is required to be made by a broker effecting a sale of a digital asset for a customer who is considered to be an exempt foreign person under this paragraph (g)(4).

(i) ***Definitions.*** The following definitions apply for purposes of this section.

(A) ***U.S. digital asset broker.*** A U.S. digital asset broker is a person that effects sales of digital assets on behalf of others and that is—

(*1*) A U.S. payor or U.S. middleman as defined in § 1.6049-5(c)(5)(i)(A) that is not a foreign branch or office of such person, § 1.6049-5(c)(5)(i)(B) or (F) that is not a territory financial institution described in § 1.1441-1(b)(2)(iv).

(*2*) [Reserved]

(B) [Reserved]

(ii) ***Rules for U.S. digital asset brokers*** —

(A) ***Place of effecting sale.*** For purposes of this section, a sale of a digital asset that is effected by a U.S. digital asset broker is considered a sale effected at an office inside the United States.

(B) ***Determination of foreign status.*** A U.S. digital asset broker may treat a customer as an exempt foreign person with respect to a sale effected at an office inside the United States provided that, prior to the payment to such customer of the gross proceeds from the sale,

the broker has a beneficial owner withholding certificate described in § 1.1441-1(e)(2)(i) that the broker may treat as valid under § 1.1441-1(e)(2)(ii) and that satisfies the requirements of paragraph (g)(4)(vi) of this section. Additionally, a U.S. digital asset broker may treat a customer as an exempt foreign person with respect to a sale effected at an office inside the United States under an applicable presumption rule as provided in paragraph (g)(4)(vi)(A)(*2*)(*i*) of this section. A beneficial owner withholding certificate provided by an individual must include a certification that the beneficial owner has not been, and at the time the certificate is furnished reasonably expects not to be, present in the United States for a period aggregating 183 days or more during each calendar year to which the certificate pertains. *See* paragraphs (g)(4)(vi)(A) through (D) of this section for additional rules applicable to withholding certificates, when a broker may rely on a withholding certificate, presumption rules that apply in the absence of documentation, and rules for customers that are joint account holders. *See* paragraph (g)(4)(vi)(E) of this section for the extent to which a U.S. digital asset broker may treat a customer as an exempt foreign person with respect to a payment treated as made to a foreign intermediary, flow-through entity or certain U.S. branches. *See* paragraph (g)(4)(vi)(F) of this section for a transition rule for preexisting accounts.

(iii) ***Rules for CFC digital asset brokers not conducting activities as money services businesses.***

(iv) ***Rules for non-U.S. digital asset brokers not conducting activities as money services businesses.***

(A) [Reserved]

(B) ***Sale treated as effected at an office inside the United States*** —

(*1*) [Reserved]

(*2*) ***U.S. indicia.*** The U.S. indicia relevant for purposes of this paragraph (g)(4)(iv)(B) are as follows—

(*i*) A permanent residence address (as defined in § 1.1441-1(c)(38)) in the U.S. or a U.S. mailing address for the customer, a current U.S. telephone number and no non-U.S. telephone number for the customer, or the broker's classification of the customer as a U.S. person in its records;

(*ii*) An unambiguous indication of a U.S. place of birth for the customer; or

(v) [Reserved]

(vi) ***Rules applicable to brokers that obtain or are required to obtain documentation for a customer and presumption rules*** —

(A) ***In general.*** Paragraph (g)(4)(vi)(A)(*1*) of this section describes rules applicable to documentation permitted to be used under this paragraph (g)(4) to determine whether a customer may be treated as an exempt foreign person. Paragraph (g)(4)(vi)(A)(*2*) of this section provides presumption rules that apply if the broker does not have documentation on which the broker may rely to determine a customer's status. Paragraph (g)(4)(vi)(A)(*3*) of this section provides a grace period for obtaining documentation in circumstances where there are indicia that a customer is a foreign person. Paragraph (g)(4)(vi)(A)(*4*) of this section provides rules relating to blocked income. Paragraph (g)(4)(vi)(B) of this section provides rules relating to reliance on beneficial ownership withholding certificates to determine whether a customer is an exempt foreign person. Paragraph (g)(4)(vi)(C) of

this section provides rules relating to reliance on documentary evidence to determine whether a customer is an exempt foreign person. Paragraph (g)(4)(vi)(D) of this section provides rules relating to customers that are joint account holders. Paragraph (g)(4)(vi)(E) of this section provides special rules for a customer that is a foreign intermediary, a flow-through entity, or certain U.S. branches. Paragraph (g)(4)(vi)(F) of this section provides a transition rule for obtaining documentation to treat a customer as an exempt foreign person.

(*1*) ***Documentation of foreign status.*** A broker may treat a customer as an exempt foreign person when the broker obtains valid documentation permitted to support a customer's foreign status as described in paragraph (g)(4)(ii), (iii), or (iv) of this section (as applicable) that the broker can reliably associate (within the meaning of § 1.1441-1(b)(2)(vii)(A)) with a payment of gross proceeds, provided that the broker is not required to treat the documentation as unreliable or incorrect under paragraph (g)(4)(vi)(B) or (C) of this section. For rules regarding the validity period of a withholding certificate, or of documentary evidence (when permitted to be relied upon under paragraph (g)(4)(vi)(C) of this section), retention of documentation, electronic transmission of documentation, information required to be provided on a withholding certificate, who may sign a withholding certificate, when a substitute withholding certificate may be accepted, and general reliance rules on documentation (including when a prior version of a withholding certificate may be relied upon), the provisions of §§ 1.1441-1(e)(4)(i) through (ix) and 1.6049-5(c)(1)(ii) apply, with the following modifications—

(*i*) The provisions in § 1.1441-1(e)(4)(i) through (ix) apply by substituting the terms *broker* and *customer* for the terms *withholding agent* and *payee,* respectively, and disregarding the fact that the provisions under § 1.1441-1 apply only to amounts subject to withholding under chapter 3 of the Code;

(*ii*) The provisions of § 1.6049-5(c)(1)(ii) (relating to general requirements for when a payor may rely upon and must maintain documentary evidence with respect to a payee) apply (as applicable to the broker) by substituting the terms *broker* and *customer* for the terms *payor* and *payee,* respectively;

(*iii*) To apply § 1.1441-1(e)(4)(viii) (reliance rules for documentation), the reference to § 1.1441-7(b)(4) through (6) is replaced by the provisions of paragraph (g)(4)(vi)(B) or (C) of this section, as applicable, and the reference to § 1.1441-6(c)(2) is disregarded; and

(*iv*) To apply § 1.1441-1(e)(4)(viii) (reliance rules for documentation) and (ix) (certificates to be furnished to a withholding agent for each obligation unless an exception applies), the provisions applicable to a financial institution apply to a broker described in this paragraph (g)(4) whether or not it is a financial institution.

(*2*) ***Presumption rules*** —

(*i*) ***In general.*** If a broker is not permitted to treat a customer as an exempt foreign person under paragraph (g)(4)(vi)(A)(*1*) of this section because the broker has not collected the documentation permitted to be collected under this paragraph (g)(4) or is not permitted to rely on the documentation it has collected, the

broker must determine the classification of a customer (as an individual, entity, etc.) by applying the presumption rules of § 1.1441-1(b)(3)(ii), except that references in § 1.1441-1(b)(3)(ii)(B) to exempt recipient categories under section 6049 are replaced by the exempt recipient categories in paragraph (c)(3)(i) of this section. With respect to a customer that a broker has classified as an entity, the broker must determine the status of the customer as U.S. or foreign by applying §§ 1.1441-1(b)(3)(iii)(A) and 1.1441-5(d) and (e)(6), except that § 1.1441-1(b)(3)(iii)(A)(*1*)(*iv*) does not apply. For presumption rules to treat a payment as made to an intermediary or flow-through entity and whether the payment is also treated as made to an exempt foreign person, *see* paragraph (g)(4)(vi)(E) of this section. Notwithstanding the provisions of this paragraph (g)(4)(vi)(A)(*2*), a broker may not treat a customer as a foreign person under this paragraph (g)(4)(vi)(A)(*2*) if the broker has actual knowledge or reason to know that the customer is a U.S. person. For purposes of applying the presumption rules of this paragraph (g)(4)(vi)(A)(*2*), a broker must identify its customer by applying the rules of § 1.6049-5(d)(1), substituting the terms *customer* and *broker* for the terms *payee* and *payor,* respectively.

(*ii*) ***Presumption rule specific to U.S. digital asset brokers.*** With respect to a customer that a U.S. digital asset broker has classified as an individual, the broker must treat the customer as a U.S. person.

(*3*) ***Grace period to collect valid documentation in the case of indicia of a foreign customer.*** If a broker has not obtained valid documentation that it can reliably associate with a payment of gross proceeds to a customer to treat the customer as an exempt foreign person, or if the broker is unable to rely upon documentation under the rules described in paragraph (g)(4)(vi)(A)(*1*) of this section or is required to treat documentation obtained for a customer as unreliable or incorrect (after applying paragraphs (g)(4)(vi)(B) and (C) of this section), the broker may apply the grace period described in § 1.6049-5(d)(2)(ii) (generally allowing in certain circumstances a payor to treat an account as owned by a foreign person for a 90 day period). In applying § 1.6049-5(d)(2)(ii), references to *securities described in § 1.1441-6(c)(2)* are replaced with *digital assets.*

(*4*) ***Blocked income.*** A broker may apply the provisions in paragraph (g)(1)(iii) of this section to treat a customer as an exempt foreign person when the proceeds are blocked income as described in § 1.1441-2(e)(3).

(B) ***Reliance on beneficial ownership withholding certificates to determine foreign status.*** For purposes of determining whether a customer may be treated as an exempt foreign person under this section, except as otherwise provided in this paragraph (g)(4)(vi)(B), a broker may rely on a beneficial owner withholding certificate described in paragraph (g)(4)(ii)(B) of this section unless the broker has actual knowledge or reason to know that the certificate is unreliable or incorrect. With respect to a U.S. digital asset broker described in paragraph (g)(4)(i)(A)(*1*) of this section, reason to know is limited to when the broker has any of the U.S. indicia set forth in paragraph (g)(4)(iv)(B)(*2*)(*i*) or (*ii*) of this section in its account opening files or other files pertaining to the account (account information), including documentation collected for purposes of an AML program or the beneficial owner withholding certificate. A broker will not be considered to have reason to know that a certificate is unreliable or incorrect based on documentation collected for an AML

program until the date that is 30 days after the account is opened. A broker may rely, however, on a beneficial owner withholding certificate notwithstanding the presence of any of the U.S. indicia set forth in paragraph (g)(4)(iv)(B)(*2*)(*i*) or (*ii*) of this section on the withholding certificate or in the account information for a customer in the circumstances described in paragraphs (g)(4)(vi)(B)(*1*) and (*2*) of this section.

(*1*) ***Collection of information other than U.S. place of birth*** —

(*i*) ***In general.*** With respect to any of the U.S. indicia described in paragraph (g)(4)(iv)(B)(*2*)(*i*) of this section, the broker has in its possession for a customer who is an individual documentary evidence establishing foreign status (as described in § 1.1471-3(c)(5)(i)) that does not contain a U.S. address and the customer provides the broker with a reasonable explanation (as defined in § 1.1441-7(b)(12)) from the customer, in writing, supporting the claim of foreign status. Notwithstanding the preceding sentence, in a case in which the broker classified an individual customer as a U.S. person in its account information, the broker may treat the customer as an exempt foreign person only if it has in its possession documentary evidence described in § 1.1471-3(c)(5)(i)(B) evidencing citizenship in a country other than the United States. In the case of a customer that is an entity, the broker may treat the customer as an exempt foreign person if it has in its possession documentation establishing foreign status that substantiates that the entity is actually organized or created under the laws of a foreign country.

(*ii*) [Reserved]

(*2*) ***Collection of information showing U.S. place of birth.*** With respect to the U.S. indicia described in paragraph (g)(4)(iv)(B)(*2*)(*ii*) of this section, the broker has in its possession documentary evidence described in § 1.1471-3(c)(5)(i)(B) evidencing citizenship in a country other than the United States and the broker has in its possession either a copy of the customer's Certificate of Loss of Nationality of the United States or a reasonable written explanation of the customer's renunciation of U.S. citizenship or the reason the customer did not obtain U.S. citizenship at birth.

(C) [Reserved]

(D) ***Joint owners.*** In the case of amounts paid to customers that are joint account holders for which a certificate or documentation is required as a condition for being exempt from reporting under this paragraph (g)(4), such amounts are presumed made to U.S. payees who are not exempt recipients (as defined in paragraph (c)(3)(i)(B) of this section) when the conditions of paragraph (g)(3)(i) of this section are met.

(E) ***Special rules for customer that is a foreign intermediary, a flow-through entity, or certain U.S. branches*** —

(*1*) ***Foreign intermediaries in general.*** For purposes of this paragraph (g)(4), a broker may determine the status of a customer as a foreign intermediary (as defined in § 1.1441-1(c)(13)) by reliably associating (under § 1.1441-1(b)(2)(vii)) a payment of gross proceeds with a valid foreign intermediary withholding certificate described in § 1.1441-1(e)(3)(ii) or (iii), without regard to whether the withholding certificate contains a withholding statement and withholding certificates or other documentation for each account holder. In the case of a payment of gross proceeds

from a sale of a digital asset that a broker treats as made to a foreign intermediary under this paragraph (g)(4)(vi)(E)(*1*), the broker must treat the foreign intermediary as an exempt foreign person except to the extent required by paragraph (g)(3)(iv) of this section (rules for when a broker is required to treat a payment as made to a U.S. person that is not an exempt recipient under paragraph (c)(3) of this section and for reporting that may be required by the foreign intermediary).

(*i*) ***Presumption rule specific to U.S. digital asset brokers.*** A U.S. digital asset broker that does not have a valid foreign intermediary withholding certificate or a valid beneficial owner withholding certificate described in paragraph (g)(4)(ii)(B) of this section for the customer applies the presumption rules in § 1.1441-1(b)(3)(ii)(B) (which would presume that the entity is not an intermediary). For purposes of applying the presumption rules referenced in the preceding sentence, a U.S. digital asset broker must identify its customer by applying the rules of § 1.6049-5(d)(1), substituting the terms *customer* and *U.S. digital asset broker* for the terms *payee* and *payor,* respectively. *See* § 1.1441-1(b)(3)(iii) for presumption rules relating to the U.S. or foreign status of a customer.

(*ii*) [Reserved]

(*2*) ***Foreign flow-through entities.*** For purposes of this paragraph (g)(4), a broker may determine the status of a customer as a foreign flow-through entity (as defined in § 1.1441-1(c)(23)) by reliably associating (under § 1.1441-1(b)(2)(vii)) a payment of gross proceeds with a valid foreign flow-through withholding certificate described in § 1.1441-5(c)(3)(iii) (relating to nonwithholding foreign partnerships) or § 1.1441-5(e)(5)(iii) (relating to foreign simple trusts and foreign grantor trusts that are nonwithholding foreign trusts), without regard to whether the withholding certificate contains a withholding statement and withholding certificates or other documentation for each partner. A broker may alternatively determine the status of a customer as a foreign flow-through entity based on the presumption rules in §§ 1.1441-1(b)(3)(ii)(B) (relating to entity classification), 1.1441-5(d) (relating to partnership status as U.S. or foreign) and 1.1441-5(e)(6) (relating to the status of trusts and estates as U.S. or foreign). For purposes of applying the presumption rules referenced in the preceding sentence, a broker must identify its customer by applying the rules of § 1.6049-5(d)(1), substituting the terms *customer* and *broker* for the terms *payee* and *payor,* respectively. In the case of a payment of gross proceeds from a sale of a digital asset that a broker treats as made to a foreign flow-through entity under this paragraph (g)(4)(vi)(E)(*2*), the broker must treat the foreign flow-through entity as an exempt foreign person except to the extent required by § 1.6049-5(d)(3)(ii) (rules for when a broker is required to treat a payment as made to a U.S. person other than an exempt recipient (substituting *exempt recipient under § 1.6045-1(c)(3)* for *exempt recipient described in § 1.6049-4(c)*)).

(*3*) ***U.S. branches that are not beneficial owners.*** For purposes of this paragraph (g)(4), a broker may determine the status of a customer as a U.S. branch (as described in § 1.1441-1(b)(2)(iv)) that is not a beneficial owner (as defined in § 1.1441-1(c)(6)) of a payment of gross proceeds by reliably associating (under § 1.1441-1(b)(2)(vii)) the payment with a valid U.S. branch withholding certificate described in § 1.1441-1(e)(3)(v) without regard to whether the withholding certificate contains a

withholding statement and withholding certificates or other documentation for each person for whom the branch receives the payment. If a U.S. branch certifies on a U.S. branch withholding certificate described in the preceding sentence that it agrees to be treated as a U.S. person under § 1.1441-1(b)(2)(iv)(A), the broker provided the certificate must treat the U.S. branch as an exempt foreign person. If a U.S. branch does not certify as described in the preceding sentence on its U.S. branch withholding certificate, the broker provided the certificate must treat the U.S. branch as an exempt foreign person except to the extent required by paragraph (g)(3)(iv) of this section (rules for when a broker is required to treat a payment as made to a U.S. person that is not an exempt recipient under paragraph (c)(3) of this section and for reporting that may be required by the U.S. branch). In a case in which a broker cannot reliably associate a payment of gross proceeds made to a U.S. branch with a U.S. branch withholding certificate described in § 1.1441-1(e)(3)(v) or a valid beneficial owner withholding certificate described in paragraph (g)(4)(ii)(B) of this section, *see* paragraph (g)(4)(vi)(E)(*1*) of this section for determining the status of the U.S. branch as a beneficial owner or intermediary.

(F) ***Transition rule for obtaining documentation to treat a customer as an exempt foreign person.*** Notwithstanding the rules of this paragraph (g)(4) for determining the status of a customer as an exempt foreign person, for a sale of a digital asset effected before January 1, 2027, that was held in an account established for the customer by a broker before January 1, 2026, the broker may treat the customer as an exempt foreign person provided that the customer has not previously been classified as a U.S. person by the broker, and the information that the broker has in the account opening files or other files pertaining to the account, including documentation collected for purposes of an AML program, includes a residence address for the customer that is not a U.S. address.

(vii) ***Barter exchanges.*** No return of information is required by a barter exchange under the rules of paragraphs (e) and (f) of this section with respect to a client or a member that the barter exchange may treat as an exempt foreign person pursuant to the procedures described in this paragraph (g)(4).

(5) ***Examples.*** The application of the provisions of paragraphs (g)(1) through (3) of this section may be illustrated by the following examples:

(i) ***Example 1.*** FC is a foreign corporation that is not a U.S. payor or U.S. middleman described in § 1.6049-5(c)(5) that regularly issues and retires its own debt obligations. A is an individual whose residence address is inside the United States, who holds a bond issued by FC that is in registered form (within the meaning of section 163(f) and the regulations under that section). The bond is retired by FP, a foreign corporation that is a broker within the meaning of paragraph (a)(1) of this section and the designated paying agent of FC. FP mails the proceeds to A at A's U.S. address. The sale would be considered to be effected at an office outside the United States under paragraph (g)(3)(iii)(A) of this section except that the proceeds of the sale are mailed to a U.S. address. For that reason, the sale is considered to be effected at an office of the broker inside the United States under paragraph (g)(3)(iii)(B) of this section. Therefore, FC is a broker under paragraph (a)(1) of this section with respect to this transaction because, although it is not a U.S. payor or U.S. middleman, as described in § 1.6049-5(c)(5), it is deemed to effect the sale in the United States. FP is a broker for the same reasons. However, under the multiple broker exception under paragraph (c)(3)(iii) of this section, FP, rather than FC, is required to report the payment because FP is responsible for paying the holder the proceeds

from the retired obligations. Under paragraph (g)(1)(i) of this section, FP may not treat A as an exempt foreign person and must make an information return under section 6045 with respect to the retirement of the FC bond, unless FP obtains the certificate or documentation described in paragraph (g)(1)(i) of this section.

(ii) ***Example 2.*** The facts are the same as in paragraph (g)(5)(i) of this section (the facts in *Example 1*) except that FP mails the proceeds to A at an address outside the United States. Under paragraph (g)(3)(iii)(A) of this section, the sale is considered to be effected at an office of the broker outside the United States. Therefore, under paragraph (a)(1) of this section, neither FC nor FP is a broker with respect to the retirement of the FC bond. Accordingly, neither is required to make an information return under section 6045.

(iii) ***Example 3.*** The facts are the same as in paragraph (g)(5)(ii) of this section (the facts in *Example 2*) except that FP is also the agent of A. The result is the same as in paragraph (g)(5)(ii) of this section (*Example 2*). Neither FP nor FC are brokers under paragraph (a)(1) of this section with respect to the sale since the sale is effected outside the United States and neither of them are U.S. payors (within the meaning of § 1.6049-5(c)(5)).

(iv) ***Example 4.*** The facts are the same as in paragraph (g)(5)(i) of this section (the facts in *Example 1*) except that the registered bond held by A was issued by DC, a domestic corporation that regularly issues and retires its own debt obligations. Also, FP mails the proceeds to A at an address outside the United States. Interest on the bond is not described in paragraph (g)(1)(ii) of this section. The sale is considered to be effected at an office outside the United States under paragraph (g)(3)(iii)(A) of this section. DC is a broker under paragraph (a)(1)(i)(B) of this section. DC is not required to report the payment under the multiple broker exception under paragraph (c)(3)(iii) of this section. FP is not required to make an information return under section 6045 because FP is not a U.S. payor described in § 1.6049-5(c)(5) and the sale is effected outside the United States. Accordingly, FP is not a broker under paragraph (a)(1) of this section.

(v) ***Example 5.*** The facts are the same as in paragraph (g)(5)(iv) of this section (the facts in *Example 4*) except that FP is also the agent of A. DC is a broker under paragraph (a)(1) of this section. DC is not required to report under the multiple broker exception under paragraph (c)(3)(iii) of this section. FP is not required to make an information return under section 6045 because FP is not a U.S. payor described in § 1.6049-5(c)(5) and the sale is effected outside the United States and therefore FP is not a broker under paragraph (a)(1) of this section.

(vi) ***Example 6.*** The facts are the same as in paragraph (g)(5)(iv) of this section (the facts in *Example 4*) except that the bond is retired by DP, a broker within the meaning of paragraph (a)(1) of this section and the designated paying agent of DC. DP is a U.S. payor under § 1.6049-5(c)(5). DC is not required to report under the multiple broker exception under paragraph (c)(3)(iii) of this section. DP is required to make an information return under section 6045 because it is the person responsible for paying the proceeds from the retired obligations unless DP obtains the certificate or documentary evidence described in paragraph (g)(1)(i) of this section.

(vii) ***Example 7*** —

(A) ***Facts.*** Customer A owns U.S. corporate bonds issued in registered form after July 18, 1984, and carrying a stated rate of interest. The bonds are held through an account with foreign bank, X, and are held in street name. X is a wholly-owned subsidiary of a U.S.

company and is not a qualified intermediary within the meaning of § 1.1441-1(e)(5)(ii). X has no documentation regarding A. A instructs X to sell the bonds. In order to effect the sale, X acts through its agent in the United States, Y. Y sells the bonds and remits the sales proceeds to X. X credits A's account in the foreign country. X does not provide documentation to Y and has no actual knowledge that A is a foreign person but it does appear that A is an entity (rather than an individual).

(B) ***Analysis with respect to Y's obligations to withhold and report.*** Y treats X as the customer, and not A, because Y cannot treat X as an intermediary because it has received no documentation from X. Y is not required to report the sales proceeds under the multiple broker exception under paragraph (c)(3)(iii) of this section, because X is an exempt recipient. Further, Y is not required to report the amount of accrued interest paid to X on Form 1042-S under § 1.1461-1(c)(2)(ii) because accrued interest is not an amount subject to reporting under chapter 3 unless the withholding agent knows that the obligation is being sold with a primary purpose of avoiding tax.

(C) ***Analysis with respect to X's obligations to withhold and report.*** Although X has effected, within the meaning of paragraph (a)(1) of this section, the sale of a security at an office outside the United States under paragraph (g)(3)(iii) of this section, X is treated as a broker, under paragraph (a)(1) of this section, because as a wholly-owned subsidiary of a U.S. corporation, X is a controlled foreign corporation and therefore is a U.S. payor. *See* § 1.6049-5(c)(5). Under the presumptions described in § 1.6049-5(d)(2) (as applied to amounts not subject to withholding under chapter 3), X must apply the presumption rules of § 1.1441-1(b)(3)(i) through (iii), with respect to the sales proceeds, to treat A as a partnership that is a U.S. non-exempt recipient because the presumption of foreign status for offshore obligations under § 1.1441-1(b)(3)(iii)(D) does not apply. *See* paragraph (g)(1)(i) of this section. Therefore, unless X is an FFI (as defined in § 1.1471-1(b)(47)) that is excepted from reporting the sales proceeds under paragraph (c)(3)(ii) of this section, the payment of proceeds to A by X is reportable on a Form 1099 under paragraph (c)(2) of this section. X has no obligation to backup withhold on the payment based on the exemption under § 31.3406(g)-1(e) of this chapter, unless X has actual knowledge that A is a U.S. person that is not an exempt recipient. X is also required to separately report the accrued interest (*see* paragraph (d)(3) of this section) on Form 1099 under section 6049 because A is also presumed to be a U.S. person who is not an exempt recipient with respect to the payment because accrued interest is not an amount subject to withholding under chapter 3 and, therefore, the presumption of foreign status for offshore obligations under § 1.1441-1(b)(3)(iii)(D) does not apply. *See* § 1.6049-5(d)(2)(i).

(viii) ***Example 8*** —

(A) ***Facts.*** The facts are the same as in paragraph (g)(5)(vii) of this section (the facts in *Example 7*) except that X is a foreign corporation that is not a U.S. payor under § 1.6049-5(c).

(B) ***Analysis with respect to Y's obligations to withhold and report.*** Y is not required to report the sales proceeds under the multiple broker exception under paragraph (c)(3)(iii) of this section, because X is the person responsible for paying the proceeds from the sale to A.

(C) ***Analysis with respect to X's obligations to withhold and report.*** Although A is presumed to be a U.S. payee under the presumptions of § 1.6049-5(d)(2), X is not considered to be a broker under paragraph (a)(1) of this section because it is a not a U.S. payor under § 1.6049-5(c)(5). Therefore, X is not required to report the sale under paragraph (c)(2) of this section.

(h) ***Identity of customer*** —

(1) ***In general.*** For purposes of this section, a broker or barter exchange shall treat the person who appears on the books and records of the broker or barter exchange with respect to property or services as the principals with respect thereto.

(2) ***Examples.*** The following examples illustrate the rule of this paragraph (h):

Example 1. The records of A, a broker, show an account in the name of "B". B is a nominee for C. All reporting with respect to such account shall treat B as the customer.

Example 2. J, an individual, places an order with H, a broker, to sell J's stock that is held by P, a broker/dealer, in an account for J with P designated as nominee for J, and to credit the gross proceeds from the sale to J's account with P. The account is in the name of P, so that H's customer is P.

(i) [Reserved]

(j) ***Time and place for filing; cross-references to penalty and magnetic media filing requirements.*** Forms 1096 and 1099 required under this section shall be filed after the last calendar day of the reporting period elected by the broker or barter exchange and on or before February 28 of the following calendar year with the appropriate Internal Revenue Service Center, the address of which is listed in the instructions for Form 1096. For a digital asset sale effected prior to January 1, 2025, for which a broker chooses under paragraph (d)(2)(iii)(B) of this section to file an information return, Form 1096 and the Form 1099-B, *Proceeds From Broker and Barter Exchange Transactions,* or the Form 1099-DA, *Digital Asset Proceeds from Broker Transactions,* must be filed on or before February 28 of the calendar year following the year of that sale. *See* paragraph (l) of this section for the requirement to file certain returns on magnetic media. For provisions relating to the penalty provided for the failure to file timely a correct information return under section 6045(a), *see* § 301.6721-1 of this chapter. *See* § 301.6724-1 of this chapter for the waiver of a penalty if the failure is due to reasonable cause and is not due to willful neglect.

(k) ***Requirement and time for furnishing statement; cross-reference to penalty*** —

(1) ***General requirements.*** A broker or barter exchange making a return of information under this section must furnish to the person whose identifying number is (or is required to be) shown on the return a written statement showing the information required by paragraph (c)(5), (d), or (f) of this section and containing a legend stating that the information is being reported to the Internal Revenue Service. If the return of information is not made on magnetic media, this requirement may be satisfied by furnishing to the person a copy of all Forms 1099 or any successor form for the person filed with the Internal Revenue Service Center. A statement is considered to be furnished to a person to whom a statement is required to be made under this paragraph (k) if it is mailed to the person at the last address of the person known to the broker or barter exchange.

(2) ***Time for furnishing statements.*** A broker or barter exchange may furnish the statements required under this paragraph (k) yearly, quarterly, monthly, or on any other basis, without regard to the reporting period the broker or barter exchange elects; however, all statements required to be furnished under this paragraph (k) for a calendar year must be furnished on or before February 15 of the following calendar year.

(3) ***Consolidated reporting.***

(i) The term *consolidated reporting statement* means a grouping of statements the same broker or barter exchange furnishes to the same customer or group of customers on the same date for the same reporting year that includes a statement required under this section. A consolidated reporting statement is limited to statements based on the same relationship of broker or barter exchange to customer as the statement required to be furnished under this section. For purposes of this paragraph (k)(3)(i), a broker may treat a shareholder of a broker as a customer of the broker and may treat a grouping of statements for a customer as including a statement required to be furnished under this section if the customer has an account with the broker for which a statement would be required to be furnished under this section if the customer purchased and sold stock in a corporation in the account during the year.

(ii) A consolidated reporting statement must be furnished on or before February 15 of the year following the calendar year reported. Any statement that otherwise must be furnished on or before January 31 must be furnished on or before February 15 if it is furnished in the consolidated reporting statement.

(iii) ***Examples.*** The following examples illustrate the rules of this paragraph (k)(3):

Example 1. D has a taxable account with B, a broker, consisting solely of stock in a single corporation. In 2010, D receives reportable dividends from this stock and sells the stock. Under this section and § 1.6042-4, B must furnish a Form 1099-B, “Proceeds From Broker and Barter Exchange Transactions,” and Form 1099-DIV, “Dividends and Distributions,” to D in 2011 for the sale and the dividends. Under paragraph (k)(2) of this section, B is required to furnish the required statement under this section to D by February 15, 2011. B must furnish the statement reporting the dividends by the January 31, 2011, due date provided in § 1.6042-4. However, under paragraph (k)(3)(ii) of this section, B must furnish the statement reporting the dividends by February 15, 2011, if furnished in a consolidated reporting statement as defined in paragraph (k)(3)(i) of this section.

Example 2. Assume the same facts as in *Example 1* except that D has invested solely in a money market fund for which sales are excepted from the reporting required under this section. B therefore is not required to issue a statement under this section if D sells an interest in the money market fund. Under paragraph (k)(3)(i) of this section, B may treat a grouping of statements for D as including a required statement under this section because D has an account for which a statement would be required under this section if D purchased and sold stock in a corporation in the account during the year. Therefore, under paragraph (k)(3)(ii) of this section, B must furnish the statement reporting the dividends by February 15, 2011.

Example 3. E has a nontaxable IRA account with B, a broker. This account is the only account E holds with B. E sells stock in 2010 in this account. E also receives a cash distribution from the account in 2010. The cash distribution from the IRA is reportable on Form 1099-R, “Distributions From Pensions, Annuities, Retirement or Profit-Sharing Plans, IRAs,

Insurance Contracts, etc.," under § 1.408-7. Because the account is not taxable, sales in the account are not subject to reporting under this section. Therefore, because no statement is required under this section, under paragraph (k)(3) of this section, B may not furnish any statements to E in a consolidated reporting statement. B must furnish the Form 1099-R by the date required under § 1.408-7.

Example 4. Assume the same facts as in *Example 3* except that E and F have a joint taxable account with B. Because sales in the joint taxable account are subject to reporting under this section, under paragraph (k)(3) of this section, B must furnish by February 15, 2011, all customer statements for 2010 that B otherwise must furnish jointly to E and F on or before January 31, 2011, if furnished on the same date in a consolidated reporting statement with the required statements under this section for any sales in the joint taxable account. However, B may not include any statement for E's IRA account in the consolidated reporting statement furnished jointly to E and F because the statements are not furnished to the same customer or group of customers.

(4) ***Cross-reference to penalty.*** For provisions for failure to furnish timely a correct payee statement, *see* § 301.6722-1 of this chapter (Procedure and Administration Regulations). *See* § 301.6724-1 of this chapter for the waiver of a penalty if the failure is due to reasonable cause and is not due to willful neglect.

(l) ***Use of magnetic media or electronic form. See*** § 301.6011-2 of this chapter for rules relating to filing information returns on magnetic media or in electronic form and for rules relating to waivers granted for undue hardship. A broker or barter exchange that fails to file a proper Form 1099 electronically, when required, may be subject to a penalty under section 6721 for each such failure. *See* paragraph (j) of this section.

(m) ***Additional rules for option transactions*** —

(1) ***In general.*** This paragraph (m) provides rules for a broker to determine and report the information required under this section for an option that is a covered security under paragraph (a)(15)(i)(E) or (H) of this section.

(2) ***Scope*** —

(i) ***In general.*** Paragraph (m) of this section applies to the following types of options granted or acquired on or after January 1, 2014:

(A) An option on one or more specified securities (which includes an index substantially all the components of which are specified securities);

(B) An option on financial attributes of specified securities, such as interest rates or dividend yields; or

(C) A warrant or a stock right.

(ii) ***Delayed effective date for certain options*** —

(A) Notwithstanding paragraph (m)(2)(i) of this section, if an option, stock right, or warrant is issued as part of an investment unit described in § 1.1273-2(h), paragraph (m) of this section applies to the option, stock right, or warrant if it is acquired on or after January 1, 2016.

(B) Notwithstanding paragraph (m)(2)(i) of this section, if the property referenced by an option (that is, the property underlying the option) is a debt instrument that is issued by a non-U.S. person or that provides for one or more payments denominated in, or determined by reference to, a currency other than the U.S. dollar, paragraph (m) of this section applies to the option if it is granted or acquired on or after January 1, 2016.

(C) Notwithstanding paragraph (m)(2)(i) of this section, if an option is an option on a digital asset or an option on derivatives with a digital asset as an underlying property, this paragraph (m) applies to the option if it is granted or acquired on or after January 1, 2026.

(iii) ***Compensatory option.*** Notwithstanding paragraphs (m)(2)(i) and (m)(2)(ii) of this section, paragraph (m) of this section does not apply to compensatory options.

(3) ***Option subject to section 1256.*** If an option described in paragraph (m)(2) of this section is also described in section 1256(b), a broker must apply the rules described in paragraph (c)(5) of this section by treating the option as if it were a regulated futures contract and must report the information required under paragraph (c)(5) of this section. A broker is permitted, but not required, to report the amounts for options and the amounts for regulated futures contracts determined under paragraph (c)(5) of this section as a net amount for each reportable item.

(4) ***Option not subject to section 1256.*** The following rules apply to an option that is described in paragraph (m)(2) of this section but is not also described in paragraph (m)(3) of this section:

(i) ***Physical settlement.*** For purposes of paragraph (d) of this section, if a specified security (other than an option) is acquired or disposed of pursuant to the exercise of an option, the broker must adjust the basis of the acquired asset or the gross proceeds amount as appropriate to account for any payment related to the option, including the premium.

(ii) ***Cash settlement.*** For purposes of paragraph (d) of this section, for an option that is settled for cash, a broker must reflect on Form 1099-B all payments made or received on the option. For a purchased option, a broker must report as basis the premium paid plus any costs (for example, commissions) related to the acquisition of the option and must report as proceeds the gross proceeds from settlement minus any costs related to the settlement of the option. For a written option, a broker must report as proceeds the premium received decreased by any amounts paid on the option and report $0 as the basis of the option.

(iii) ***Rules for warrants and stock rights acquired in a section 305 distribution.*** For a right (including a warrant) to acquire stock received in the same account as the underlying security in a distribution that is described in section 305(a), a broker is permitted, but not required, to apply the rules described in sections 305 and 307 when reporting or accounting for the basis of the option and the underlying equity. If a stock right or warrant is acquired from the initial distributee, the buyer or transferee must treat it as an option covered by either paragraph (m)(4)(i) or (m)(4)(ii) of this section.

(iv) ***Examples.*** The following examples illustrate the rules in this paragraph (m)(4):

> *Example 1.* (i) On January 15, 2014, C, an individual who is neither a dealer nor a trader in securities, writes a 2-year exchange-traded option on 100 shares of Company X through Broker D. C receives a premium for the option of $100 and pays no commission. In C's hands, the option produces capital gain or loss and Company X stock is a capital

asset. On December 16, 2014, C pays $110 to close out the option.
(ii) D is required to report information about the closing transaction because the option is a covered security as described in paragraph (a)(15)(i)(E) of this section and was part of a closing transaction described in paragraph (a)(8) of this section. Under paragraph (m)(4)(ii) of this section, D must report as gross proceeds on C's Form 1099-B -$10 (the $100 received as option premium minus the $110 C paid to close out the option) and report $0 in the basis box on the Form 1099-B. Under section 1234(b)(1) and paragraph (d)(2) of this section, D must also report the loss on the closing transaction as a short-term capital loss.

Example 2. (i) On January 15, 2014, E, an individual who is neither a dealer nor a trader in securities, buys a 2-year exchange-traded option on 100 shares of Company X through Broker F. E pays a premium of $100 for the option and pays no commission. In E's hands, both the option and Company X stock are capital assets. On December 16, 2014, E receives $110 to close out the option.
(ii) F is required to report information about the closing transaction because the option is a covered security as described in paragraph (a)(15)(i)(E) of this section and was part of a closing transaction described in paragraph (a)(8) of this section. Because the option is on the shares of a single company, it is an equity option described in section 1256(g)(6) and is not described in section 1256(b)(1)(C). Therefore, the rules of paragraph (m)(3) of this section do not apply, and F must report under paragraph (m)(4) of this section. Under paragraph (m)(4)(ii) of this section, F must report $110 as gross proceeds on the Form 1099-B for the gross proceeds E received and $100 in the basis box on the Form 1099-B to reflect the $100 option premium paid. Under section 1234(b)(1) and paragraph (d)(2) of this section, F must also report the gain on the closing transaction as a short-term capital gain.

(5) ***Multiple options documented in a single contract.*** If more than one option described in paragraph (m)(2) of this section is documented in a single contract, a broker must separately report the required information for each option as that option is sold.

(6) ***Determination of index status.*** Penalties will not be asserted under sections 6721 and 6722 if a broker in good faith determines that an index is, or is not, a narrow-based index described in section 1256(g)(6) and reports in a manner consistent with this determination.

(n) ***Reporting for debt instrument transactions*** —

(1) ***In general.*** For purposes of this section, this paragraph (n) provides rules for a broker to determine and report information for a debt instrument that is a covered security under paragraph (a)(15)(i)(C) or (D) of this section. Neither a debt instrument subject to section 1272(a)(6) nor a short-term obligation described in section 1272(a)(2)(C) is subject to this paragraph (n) because neither is a specified security under paragraph (a)(14)(ii) of this section (a requirement for a debt instrument to be a covered security).

(2) ***Debt instruments subject to January 1, 2014, reporting*** —

(i) ***In general.*** For purposes of paragraph (a)(15)(i)(C) of this section, except as provided in paragraph (n)(2)(ii) of this section, a debt instrument is described in this paragraph (n)(2)(i) if the debt instrument is one of the following:

(A) A debt instrument that provides for a single fixed payment schedule for which a yield and maturity can be determined for the instrument under § 1.1272-1(b);

(B) A debt instrument that provides for alternate payment schedules for which a yield and maturity can be determined for the instrument under § 1.1272-1(c); or

(C) A debt instrument for which the yield of the debt instrument can be determined under § 1.1272-1(d).

(ii) ***Exceptions.*** A debt instrument is not described in paragraph (n)(2)(i) of this section if the debt instrument is one of the following:

(A) A debt instrument that provides for more than one rate of stated interest (including a debt instrument that provides for stepped interest rates);

(B) A convertible debt instrument described in § 1.1272-1(e);

(C) A stripped bond or stripped coupon subject to section 1286;

(D) A debt instrument that requires payment of either interest or principal in a currency other than the U.S. dollar;

(E) A debt instrument that, at one or more times in the future, entitles a holder to a tax credit;

(F) A debt instrument that provides for a payment-in-kind (PIK) feature (that is, under the terms of the debt instrument, a holder may receive one or more additional debt instruments of the issuer);

(G) A debt instrument issued by a non-U.S. issuer;

(H) A debt instrument for which the terms of the instrument are not reasonably available to the broker within 90 days of the date the debt instrument was acquired by the customer;

(I) A debt instrument that is issued as part of an investment unit described in § 1.1273-2(h); or

(J) A debt instrument evidenced by a physical certificate unless such certificate is held (whether directly or through a nominee, agent, or subsidiary) by a securities depository or by a clearing organization described in § 1.1471-1(b)(18).

(iii) ***Remote or incidental.*** For purposes of paragraphs (n)(2)(i) and (n)(2)(ii) of this section, a remote or incidental contingency (as determined under § 1.1275-2(h)) is ignored.

(iv) ***Penalty rate.*** For purposes of paragraph (n)(2)(ii)(A) of this section, a debt instrument does not provide for more than one rate of stated interest merely because the instrument provides for a penalty interest rate or an adjustment to the stated interest rate in the event of a default or similar event.

(3) ***Debt instruments subject to January 1, 2016, reporting.*** For purposes of paragraph (a)(15)(i)(D) of this section, a debt instrument is described in this paragraph (n)(3) if it is described in paragraph (n)(2)(ii) of this section or it otherwise is not described in paragraph (n)(2)(i) of this section. For

example, this paragraph (n)(3) applies to variable rate debt instruments, inflation-indexed debt instruments, and contingent payment debt instruments because these instruments are not described in paragraph (n)(2)(i) of this section.

(4) ***Holder elections.*** For purposes of this section, a broker is required to take into account an election described in this paragraph (n)(4), and the broker must take the election into account in accordance with the rules in paragraph (n)(5) of this section. A broker, however, may not take into account any other election. See paragraph (n)(11) of this section for the treatment of an election described in paragraph (n)(4)(iii) of this section (election to accrue market discount based on a constant yield) and an election described in paragraph (n)(4)(iv) of this section (election to treat all interest as OID).

(i) ***Election to amortize bond premium.*** An election under section 171 and § 1.171-4 to amortize bond premium on a taxable debt instrument (this election applies to all taxable debt instruments held by a taxpayer during the taxable year the election is effective and thereafter; this election may be revoked with the consent of the Commissioner).

(ii) ***Election to currently include accrued market discount.*** An election under section 1278(b) to include market discount in income as it accrues (this election applies to all debt instruments acquired by a taxpayer during the taxable year the election is effective and thereafter; this election may be revoked with the consent of the Commissioner).

(iii) ***Election to accrue market discount based on a constant yield.*** An election under section 1276(b)(2) to compute accruals of market discount using a constant yield method (this election is generally made on an instrument-by-instrument basis and must be made for the earliest taxable year for which the taxpayer is required to determine accrued market discount on the debt instrument; this election may not be revoked).

(iv) ***Election to treat all interest as OID.*** An election under § 1.1272-3 to treat all interest on a taxable debt instrument (adjusted for any acquisition premium or premium) as original issue discount (this election is generally made on an instrument-by-instrument basis and must be made for the taxable year the debt instrument is acquired by the taxpayer; this election may be revoked with the consent of the Commissioner). However, see paragraph (n)(11)(i)(A) of this section for a debt instrument acquired on or after January 1, 2014.

(v) ***Election to translate interest income and expense at the spot rate.*** An election under § 1.988-2(b)(2)(iii)(B) to translate interest income and expense at the spot rate on the last day of the interest accrual period or, in the case of a partial accrual period, the last day of the taxable year (this election applies to all taxable debt instruments held by a taxpayer during the taxable year the election is effective and thereafter; this election may be revoked with the consent of the Commissioner).

(5) ***Broker assumptions and customer notice to brokers*** —

(i) ***Broker assumptions if the customer does not notify the broker.*** Except as provided in paragraph (n)(5)(ii)(A) of this section, a broker must report the information required under paragraph (d) of this section by assuming that a customer has made the election to amortize bond premium described in paragraph (n)(4)(i) of this section. In addition, except as provided in paragraph (n)(5)(ii)(B) of this section, a broker must report the information required under paragraph (d) of this section by assuming that a customer has not made an election described in paragraph (n)(4)(ii), (n)(4)(iii), (n)(4)(iv), or (n)(4)(v) of this section. However, see paragraph (n)(11) of this

section for the treatment of an election described in paragraph (n)(4)(iii) of this section (election to accrue market discount based on a constant yield) and an election described in paragraph (n)(4)(iv) of this section (election to treat all interest as OID).

(ii) ***Effect of customer notification of an election or revocation*** —

(A) ***Election to amortize bond premium.*** If a customer notifies a broker in writing that the customer does not want the broker to take into account the election to amortize bond premium, the broker must report the information required under paragraph (d) of this section without taking into account the election to amortize bond premium. The customer must provide this notification to the broker by the end of the calendar year for which the customer does not want to amortize bond premium. If for a subsequent calendar year, the customer wants the broker to take into account the election to amortize bond premium, the customer must notify the broker in writing by the end of the calendar year that the customer wants to amortize bond premium. If the customer provides such notification, the broker must report the information required under paragraph (d) of this section as if the customer made the election to amortize bond premium for that year.

(B) ***Other debt elections.*** If a customer notifies a broker in writing that the customer has made or will make an election described in paragraph (n)(4)(ii), (iii), (iv), or (v) of this section, the broker must report the information required under paragraph (d) of this section by taking into account the election. A customer must notify the broker in writing of the election by the end of the calendar year in which a debt instrument subject to the election is acquired in, or transferred into, an account with the broker or, if later, by the end of the calendar year for which the election is effective. If a customer has revoked or will revoke an election described in paragraph (n)(4)(ii), (n)(4)(iv), or (n)(4)(v) of this section for a calendar year, the customer must notify the broker of the revocation in writing by the end of the calendar year for which the revocation is effective. If the customer provides such notification, the broker must report the information required under paragraph (d) of this section by taking into account the revocation.

(iii) ***Electronic notification.*** For purposes of paragraph (n)(5)(ii) of this section, the written notification to the broker includes a writing in electronic format.

(6) ***Reporting of accrued market discount.*** In addition to the information required to be reported under paragraph (d) of this section, if a debt instrument is subject to the market discount rules in sections 1276 through 1278, a broker also must report the information described in paragraph (n)(6)(i) or (n)(6)(ii) of this section, whichever is applicable. Such information must be shown in the manner and at the time required by Form 1099 and section 6045.

(i) ***Sale.*** A broker must report the amount of market discount that has accrued on a debt instrument as of the date of the instrument's sale, as defined in paragraph (a)(9)(i) of this section. *See* paragraphs (n)(5) and (n)(11)(i)(B) of this section to determine whether the amount reported should take into account a customer election under section 1276(b)(2). *See* paragraph (n)(8) of this section to determine the accrual period to be used to compute the accruals of market discount. This paragraph (n)(6)(i) does not apply if the customer notifies the broker under the rules in paragraph (n)(5) of this section that the customer elects under section 1278(b) to include market discount in income as it accrues.

(ii) ***Current inclusion election.*** If a customer notifies a broker under the rules in paragraph (n)(5) of this section that the customer elects under section 1278(b) to include market discount in income as it accrues, the broker is required to report to the customer the amount of market discount that accrued on a debt instrument during a taxable year while held by the customer in the account. The broker also must adjust basis in accordance with section 1278(b)(4). If a customer notifies a broker under the rules in paragraph (n)(5) of this section that the customer is revoking its election under section 1278(b), the broker will not report the market discount accrued during the taxable year of the revocation and thereafter and will cease to adjust basis in accordance with section 1278(b)(4). See paragraph (n)(8) of this section to determine the accrual period to be used to compute the accruals of market discount. See paragraphs (n)(5) and (n)(11)(i)(B) of this section to determine whether the amount reported should take into account a customer election under section 1276(b)(2).

(7) ***Adjusted basis.*** For purposes of this section, a broker must use the rules in paragraph (n) of this section to determine the adjusted basis of a debt instrument.

(i) ***Original issue discount.*** If a debt instrument is subject to the original issue discount rules in sections 1271 through 1275, section 1286, or section 1288, a broker must increase a customer's basis in the debt instrument by the amount of original issue discount that accrued on the debt instrument while held by the customer in the account. See paragraph (n)(8) of this section to determine the accrual period to be used to compute the accruals of original issue discount.

(ii) ***Amortizable bond premium*** —

(A) ***Taxable bond.*** A broker is required to adjust the customer's basis for any taxable bond acquired at a premium and held in the account in accordance with § 1.1016-5(b). If a customer, however, informs a broker under the rules in paragraph (n)(5)(ii)(A) of this section that the customer does not want to amortize bond premium, the broker must not adjust the customer's basis for any premium.

(B) ***Tax-exempt bonds.*** A broker is required to adjust the customer's basis for any tax-exempt obligation acquired at a premium and held in the account in accordance with § 1.1016-5(b).

(iii) ***Acquisition premium.*** If a debt instrument is acquired at an acquisition premium (as determined under § 1.1272-2(b)(3)), a broker must decrease the customer's basis in the debt instrument by the amount of acquisition premium that is taken into account each year to reduce the amount of the original issue discount that is otherwise includible in the customer's income for that year. *See* § 1.1272-2(b)(4) to determine the amount of the acquisition premium taken into account each year. However, if a broker took into account a customer election under § 1.1272-3 in 2014, the broker must decrease the customer's basis in the debt instrument by the amount of acquisition premium that is taken into account each year to reduce the amount of the original issue discount that is otherwise includible in the customer's income for that year in accordance with §§ 1.1272-2(b)(5) and 1.1272-3.

(iv) ***Market discount.*** See paragraph (n)(6) of this section for rules to determine the adjusted basis of a debt instrument with market discount.

(v) ***Principal and certain other payments.*** A broker must decrease the customer's basis in a debt instrument by the amount of any payment made to the customer during the period the debt instrument is held in the account, other than a payment of qualified stated interest as defined in § 1.1273-1(c).

(8) ***Accrual period.*** For purposes of this section, a broker generally must use the same accrual period that is used to report any original issue discount or stated interest to a customer under section 6049 for a debt instrument. In any other situation, a broker must use a semi-annual accrual period or, if a debt instrument provides for scheduled payments of principal or interest at regular intervals of less than six months over the entire term of the debt instrument, a broker must use an accrual period equal in length to this shorter interval. For example, if a debt instrument provides for monthly payments of interest over the entire term of the debt instrument, the broker must use a monthly accrual period. The rules in § 1.1272-1(b)(4)(iii) apply for purposes of an initial short accrual period. In computing the length of an accrual period, any reasonable counting convention may be used (for example, 30 days per month/360 days per year, or actual days per month/365 days per year).

(9) ***Premium on convertible bond.*** If a customer acquires a convertible bond (as defined in § 1.171-1(e)(1)(iii)(C)) at a premium (as determined under § 1.171-1(d)), then, solely for purposes of this section and § 1.6049-9, a broker must assume that the premium is attributable to the conversion feature. Based on this assumption, no portion of the premium is amortizable for purposes of this section and § 1.6049-9.

(10) ***Effect of broker assumptions on customer.*** The rules in this paragraph (n) only apply for purposes of a broker's reporting obligation under section 6045. A customer is not bound by the assumptions that the broker uses to satisfy the broker's reporting obligations under section 6045. In addition, a notification to the broker under paragraph (n)(5) of this section does not constitute an effective election or revocation under the applicable rules for the election.

(11) ***Additional rules for certain holder elections*** —

(i) ***In general.*** For purposes of this section, the rules in this paragraph (n)(11) apply notwithstanding any other rule in paragraph (n) of this section.

(A) ***Election to treat all interest as OID.*** A broker must report the information required under paragraph (d) of this section without taking into account any election described in paragraph (n)(4)(iv) of this section (the election to treat all interest as OID in § 1.1272-3). As a result, for example, a broker must determine the amount of any acquisition premium taken into account each year for purposes of this section in accordance with § 1.1272-2(b)(4). This paragraph (n)(11)(i)(A) applies to a debt instrument acquired on or after January 1, 2015. A broker, however, may rely on this paragraph (n)(11)(i)(A) for a debt instrument acquired on or after January 1, 2014, and before January 1, 2015.

(B) ***Election to accrue market discount based on a constant yield.*** A broker must report the information required under paragraph (d) of this section by assuming that a customer has made the election described in paragraph (n)(4)(iii) of this section (the election to accrue market discount based on a constant yield). However, if a customer notifies a broker in writing that the customer does not want the broker to take into account this election, the broker must report the information required under paragraph (d) of this section without taking into account this election. The customer must provide this notification to the broker by the end of the calendar year in which the customer acquired the debt instrument in an account with the broker. This paragraph (n)(11)(i)(B) applies to a debt instrument acquired

on or after January 1, 2015. A broker, however, may rely on this paragraph (n)(11)(i)(B) to report accrued market discount for a debt instrument that is a covered security acquired on or after January 1, 2014, and before January 1, 2015, if the customer had not informed the broker that the customer had made a section 1278(b) election and there were no principal payments on the debt instrument during this period.

(ii) [Reserved].

(12) ***Certain debt instruments treated as noncovered securities*** —

(i) ***In general.*** Notwithstanding paragraph (a)(15) of this section, a debt instrument is treated as a noncovered security for purposes of this section if the terms of the debt instrument are not reasonably available to the broker within 90 days of the date the debt instrument was acquired by the customer and the debt instrument is either—

(A) A debt instrument issued by a non-U.S. issuer; or

(B) A tax-exempt obligation issued before January 1, 2014.

(ii) ***Effective/applicability date.*** Paragraph (n)(12)(i) of this section applies to a debt instrument described in paragraph (n)(12)(i)(A) or (B) of this section that is acquired on or after February 18, 2016. However, a broker may rely on paragraph (n)(12)(i) of this section for a debt instrument described in paragraph (n)(12)(i)(A) or (B) of this section acquired before February 18, 2016.

(o) ***Additional reporting by stock transfer agents.*** [Reserved]

(p) ***Electronic filing.*** Notwithstanding the time prescribed for filing in paragraph (j) of this section, Forms 1096 and 1099 required under this section for reporting periods ending during a calendar year shall, if filed electronically, be filed after the last calendar day of the reporting period elected by the broker or barter exchange and on or before March 31 of the following calendar year.

(q) ***Applicability dates.*** Except as otherwise provided in paragraphs (d)(6)(ix), (m)(2)(ii), and (n)(12)(ii) of this section, and in this paragraph (q), this section applies on or after January 6, 2017. Paragraphs (k)(4) and (l) of this section apply with respect to information returns required to be filed and payee statements required to be furnished on or after January 1, 2024. (For rules that apply after June 30, 2014, and before January 6, 2017, *see* 26 CFR 1.6045-1, as revised April 1, 2016.) Except in the case of a sale of digital assets for real property as described in paragraph (a)(9)(ii)(B) of this section, this section applies to sales of digital assets on or after January 1, 2025. In the case of a sale of digital assets for real property as described in paragraph (a)(9)(ii)(B) of this section, this section applies to sales of digital assets on or after January 1, 2026. For assets that are commodities pursuant to the Commodity Futures Trading Commission's certification procedures described in 17 CFR 40.2, this section applies to sales of such commodities on or after January 1, 2025, without regard to the date such certification procedures were undertaken. Paragraphs (a)(21), (b)(2)(ix) through (xi), and (b)(24) and (25) of this section apply to sales of digital assets on or after January 1, 2027.

(r) ***Cross-references.*** For provisions relating to backup withholding for reportable transactions under this section, *see* § 31.3406(b)(3)-2 of this chapter for rules treating gross proceeds as reportable payments, § 31.3406(d)-1 of this chapter for rules with respect to backup withholding obligations, and § 31.3406(h)-3 of this chapter for the prescribed form for the certification of information required under this section.

[T.D. 7873, 48 FR 10304, Mar. 11, 1983]

Editorial Note: For FEDERAL REGISTER citations affecting § 1.6045-1, see the List of CFR Sections Affected, which appears in the Finding Aids section of the printed volume and at *www.govinfo.gov*.

Editorial Note: At 90 FR 30825, July 11, 2025, as required by the Congressional Review Act and Public Law 119-5, the Internal Revenue Service removed all amendments to §§ 1.6045-0 and 1.6045-1 published at 89 FR 106928, Dec. 30, 2024.

§ 1.6045-2 Furnishing statement required with respect to certain substitute payments.

(a) ***Requirement of furnishing statements*** —

(1) ***In general.*** Any broker (as defined in paragraph (a)(4)(ii) of this section) that transfers securities (as defined in § 1.6045-1(a)(3)) of a customer (as defined in paragraph (a)(4)(iii) of this section) for use in a short sale and receives on behalf of the customer a substitute payment (as defined in paragraph (a)(4)(i)) shall, except as otherwise provided, furnish a statement to the customer identifying such payment as being a substitute payment.

(2) ***Special rule for transfers for broker's own use.*** Any broker that borrows securities of a customer for use in a short sale entered into for the broker's own account shall be deemed to have transferred the stock to itself and received on behalf of the customer any substitute payment made with respect to the transferred securities, and shall be required to furnish a statement with respect to such payments in accordance with paragraph (a)(1) of this section.

(3) ***Special rule for furnishing statements to individual customers with respect to payments in lieu of dividends*** —

(i) ***In general.*** Except as otherwise provided in paragraph (a)(3)(ii) of this section, for taxable years beginning before January 1, 2003, a broker that receives a substitute payment in lieu of a dividend on behalf of a customer who is an individual ("individual customer") need not furnish a statement to the customer.

(ii) ***Reporting for certain dividends.*** Any broker that receives on behalf of an individual customer a substitute payment in lieu of—

(A) An exempt-interest dividend (as defined in paragraph (a)(4)(vii) of this section);

(B) A capital gain dividend (as defined in paragraph (a)(4)(vi) of this section);

(C) A distribution treated as a return of capital under section 301(c)(2) or (c)(3); or

(D) An FTC dividend (as defined in paragraph (a)(4)(viii) of this section) shall furnish a statement to the individual customer identifying the payment as being a substitute payment as prescribed by this section, provided that the broker has reason to know not later than the record date of the dividend payment that the payment is a substitute payment in lieu of an exempt-interest dividend, a capital gain dividend, a distribution treated as a return of capital, or an FTC dividend.

(4) ***Meaning of terms.*** The following definitions apply for purposes of this section.

(i) The term *substitute payment* means a payment in lieu of—

(A) Tax-exempt interest, to the extent that interest has accrued on the obligation for the period during which the short sale is open;

(B) A dividend, the ex-dividend date for which occurs during the period after the transfer of stock for use in a short sale, and prior to the closing of the short sale; or

(C) Any other item specified in a rule-related notice published in the FEDERAL REGISTER (provided that such items shall be subject to the rules of this section only subsequent to the time of such publication).

For purposes of this section original issue discount accruing on an obligation (the interest upon which is exempt from tax under section 103) for the period during which the short sale is open shall be deemed a payment in lieu of tax-exempt interest.

(ii) The term *broker* means both a person described in § 1.6045-1(a)(1) and a person that, in the ordinary course of a trade or business during the calendar year, loans securities owned by others.

(iii) The term *customer* means, with respect to a transfer of securities for use in a short sale, the person that is the record owner of the securities so transferred.

(iv) The term *dividend* means a dividend (as defined in section 316) or a distribution that is treated as a return of capital under section 301(c)(2) or (c)(3).

(v) The term *tax-exempt interest* means interest to which the exception in section 6049 (b)(2)(B) applies.

(vi) The term *capital gain dividend* means a capital gain dividend as defined in section 852(b)(3)(C) or section 857(b)(3)(C).

(vii) The term *exempt-interest dividend* means an exempt-interest dividend as defined in section 852(b)(5)(A).

(viii) The term *FTC dividend* means a dividend with respect to which the recipient is entitled to claim a foreign tax credit under section 901 (but not by virtue of taxes deemed paid under section 902 or 960).

(5) ***Examples.*** The following examples illustrate the definition of a substitute payment in lieu of tax-exempt interest found in paragraph (a)(4)(i)(A) of this section.

Example 1. On September 1, 1984, L, a broker, borrows 200 State Q Bonds (the interest upon which is exempt from tax under section 103) held in street name for customer R and transfers the bonds to W for use in a short sale. The bonds each have a face value of $100 and bear 12% stated annual interest paid semiannually on January 1 and July 1 of each year. The bonds were not issued with original issue discount. On November 1, 1984, W closes the short sale and returns State Q Bonds to L. On January 1, 1985, L receives a $1200 interest payment (6% × $100 × 200 bonds = $1200) from State Q with respect to R's bonds. Four hundred dollars (2 months the bonds were on loan/6 months in the interest period = $^{1}/_{3}$ × $1200 = $400) of the interest payment represents accrued interest on the obligations for the period during which the short sale was open and is a substitute payment in lieu of tax-exempt interest within the meaning of paragraph (a)(4)(i)(A) of this section. L must furnish a statement under paragraph (a) of this section to R for calendar year 1985 with respect to the $400 substitute payment.

Example 2. Assume the same facts as in Example (1), except that W closes the short sale on February 1, 1985. On January 1, 1985, L receives a $1200 payment from W with respect to R's bonds. Eight hundred dollars (4 months the bonds were on loan prior to January 1, 1985/6 months in the interest period = $^{2}/_{3}$ × $1200 = $800) of the payment represents accrued interest on the obligation for the period during which the short sale was open and is a substitute payment in lieu of tax-exempt interest. On July 1, 1985, L receives a $1200 payment from State Q. Two hundred dollars (1 month the bonds were on loan after December 31, 1984/6 months in the interest period = $^{1}/_{6}$ × $1200 = $200) of the payment represents accrued interest on the obligation for the period during which the short sale was open and is a substitute payment in lieu of the tax-exempt interest. Because both payments are received by L in 1985, L must furnish a statement under paragraph (a) of this section to R for that year with respect to both payments.

(b) ***Exceptions*** —

(1) ***Minimal payments.*** No statement is required to be furnished under section 6045(d) or this section to any customer if the aggregate amount of the substitute payments received by a broker on behalf of the customer during a calendar year for which a statement must be furnished is less than $10.

(2) ***Exempt recipients*** —

(i) ***In general.*** A statement shall not be required to be furnished with respect to substitute payments made to a broker on behalf of—

(A) An organization exempt from taxation under section 501(a);

(B) An individual retirement plan;

(C) The United States, a possession of the United States, or an instrumentality or a political subdivision or a wholly-owned agency of the foregoing;

(D) A State, the District of Columbia, or a political subdivision or a wholly-owned agency or instrumentality of either of the foregoing;

(E) A foreign government or a political subdivision thereof;

(F) An international organization; or

(G) A foreign central bank of issue, as defined in § 1.6049-4(c)(1)(ii)(H), or the Bank for International Settlements.

(ii) ***Determination of whether a person is described in paragraph (b)(2)(i) of this section.*** The determination of whether a person is described in paragraph (b)(2)(i) of this section shall be made in the manner provided in § 1.6045-1(c)(3)(i)(B).

(3) ***Exempt foreign persons.*** A statement shall not be required to be furnished with respect to substitute payments made to a broker on behalf of a person that is an exempt foreign person as described in § 1.6045-1(g)

(c) ***Form of statement.*** A broker shall furnish the statement required by paragraph (a) of this section on Form 1099. The statement must show the aggregate dollar amount of all substitute payments received by the broker on behalf of a customer (for which the broker is required to furnish a statement) during a calendar year, and such other information as may be required by Form 1099. A statement shall be considered to be furnished to a customer if it is mailed to the customer at the last address of the customer known to the

broker. An IRS truncated taxpayer identifying number (TTIN) may be used as the identifying number of the customer in lieu of the identifying number appearing on the information return filed with the Internal Revenue Service. For provisions relating to the use of TTINs, see § 301.6109-4 of this chapter (Procedure and Administration Regulations).

(d) ***Time for furnishing statements*** —

(1) ***General requirements.*** A broker must furnish the statements required by paragraph (a) of this section for each calendar year. The statements must be furnished after April 30th of the calendar year but in no case before the final substitute payment for the calendar year is made, and on or before February 15 of the following calendar year.

(2) ***Consolidated reporting.***

(i) The term *consolidated reporting statement* means a grouping of statements the same broker furnishes to the same customer or group of customers on the same date for the same reporting year that includes a statement required under this section. A consolidated reporting statement is limited to statements based on the same relationship of broker to customer as the statement required to be furnished under this section.

(ii) A consolidated reporting statement must be furnished on or before February 15 of the year following the calendar year reported. Any statement that otherwise must be furnished on or before January 31 must be furnished on or before February 15 if it is furnished in the consolidated reporting statement.

(e) ***When substitute payment deemed received.*** A Broker is deemed to have received a substitute payment on behalf of a customer when the amount is paid or deemed paid to the broker (or as it accrues in the case of original issue discount deemed a payment in lieu of tax-exempt interest).

(f) ***Identification of customer and recordkeeping with respect to substitute payments*** —

(1) ***Payments in lieu of tax-exempt interest and exempt-interest dividends.*** A broker that receives substitute payments in lieu of tax-exempt interest, exempt-interest dividends, or other items (to the extent specified in a rule-related notice published pursuant to paragraph (a)(4)(i)(C) of this section) on behalf of a customer and is required to furnish a statement under paragraph (a) of this section must determine the identity of the customer whose security was transferred and on whose behalf the broker received such substitute payments by specific identification of the record owner of the security so transferred. A broker must keep adequate records of the determination so made.

(2) ***Payments in lieu of dividends other than exempt-interest dividends*** —

(i) ***Requirements and methods.*** A broker that receives substitute payments in lieu of dividends, other than exempt-interest dividends, on behalf of a customer and is required to furnish a statement under paragraph (a) of this section must make a determination of the identity of the customer whose stock was transferred and on whose behalf such broker receives substitute payments. Such determination must be made as of the record date with respect to the dividend distribution, and must be made in a consistent manner by the broker in accordance with any of the following methods:

(A) Specific identification of the record owner of the transferred stock;

(B) The method of allocation and selection specified in paragraph (f)(2)(ii) of this section; or

(C) Any other method, with the prior approval of the Commissioner.

A broker must keep adequate records of the determination so made.

(ii) ***Method of allocation and selection*** —

(A) ***Allocation to borrowed shares and individual and nonindividual pools.*** With respect to each substitute payment in lieu of a dividend received by a broker, the broker must allocate the transferred shares (*i.e.,* the shares giving rise to the substitute payment) among all shares of stock of the same class and issue as the transferred shares which were

(*1*) borrowed by the broker, and

(*2*) which the broker holds (or has transferred in a transaction described in paragraph (a)(1) of this section) and is authorized by its customers to transfer (including shares of stock of the same class and issue held for the broker's own account) ("loanable shares"). The broker may first allocate the transferred shares to any borrowed shares. Then to the extent that the number of transferred shares exceeds the number of borrowed shares (or if the broker does not allocate to the borrowed shares first), the broker must allocate the transferred shares between two pools, one consisting of the loanable shares of all individual customers (the "individual pool") and the other consisting of the loanable shares of all nonindividual customers (the "nonindividual pool"). The transferred shares must be allocated to the individual pool in the same proportion that the number of loanable shares held by individual customers bears to the total number of loanable shares available to the broker. Similarly, the transferred shares must be allocated to the nonindividual pool in the same proportion that the number of loanable shares held by nonindividual customers bears to the total number of loanable shares available to the broker.

(B) ***Selection of deemed transferred shares within the nonindividual pool.*** The broker must select which shares within the nonindividual pool are deemed transferred for use in a short sale (the "deemed transferred shares"). Selection of deemed transferred shares may be made either by purely random lottery or on a first-in-first-out ("FIFO") basis.

(C) ***Selection of deemed transferred shares within the individual pool.*** The broker must select which shares within the individual pool are deemed transferred shares (in the manner described in the preceding paragraph) only with respect to substitute payments as to which a statement is required to be furnished under paragraph (a)(2)(ii) of this section.

(3) ***Examples.*** The following examples illustrate the identification of customer rules of paragraph (f)(2):

Example 1. A, a broker, holds X corporation common stock (of which there is only a single class) in street name for five customers: C, a corporation; D, a partnership; E, a corporation; F, an individual; and G, a corporation. C owns 100 shares of X stock, D owns 50 shares of X stock, E owns 100 shares of X stock, F owns 50 shares of X stock, and G owns 100 shares of X stock. A is authorized to loan all of the X stock of C, D, E, and F. G, however, has not authorized A to loan its X stocks. A does not hold any X stock in its trading account nor has A borrowed any X stock from another broker. A transfers 150 shares of X stock to H for use in a short sale on July 1, 1985. A dividend of $2 per share is declared with respect to X stock on August 1, 1985, payable to the owners of record as of August 15, 1985 (the "record" date). A receives $2 per transferred share as a payment in lieu of a dividend with respect to X stock or a total of $300 on September 15, 1985. H closes the short sale and returns X stock to A on January 2, 1986. A's records specifically identify the owner of each loanable share of stock held in street name. From A's records it is determined that the shares transferred to H consisted of 100 shares owned by C,

25 shares owned by D, and 25 shares owned by F. The substitute payment in lieu of dividends with respect to X stock is therefore attributed to C, D and F based on the actual number of their shares that were transferred to H. Accordingly, C receives $200 (100 shares × $2 per share), and D and F each receive $50 (25 shares each × $2 per share). A must furnish statements identifying the payments as being in lieu of dividends to both C and D, unless they are exempt recipients as defined in paragraph (b)(2) of this section or exempt foreign persons as defined in paragraph (b)(3) of this section. Assuming that A had no reason to know on the record date of the payment that the dividend paid by X is of a type described in paragraphs (a)(3)(ii)(A) through (D) of this section, A need not furnish F with a statement under section 6045(d) because F is an individual. (However, A may be required to furnish F with a statement in accordance with section 6042 and the regulations thereunder. See paragraph (h) of this section.) By recording the ownership of each share transferred to H, A has complied with the identification requirement of paragraph (f)(2) of this section.

Example 2. Assume the same facts as in example (1), except that A's records do not specifically identify the record owner of each share of stock. Rather, all shares of X stock held in street name are pooled together. When A receives the $2 per share payment in lieu of a dividend, A determines the identity of the customers to which the payment relates by the method of allocation and selection prescribed in paragraph (f)(2)(ii) of this section. First, the transferred shares are allocated proportionately between the individual pool and the nonindividual pool. One-sixth of the transferred shares or 25 shares are allocated to the individual pool (50 loanable shares owned by individuals/300 total loanable shares- $^{1}/_{6}$; $^{1}/_{6}$ × 150 transferred shares = 25 shares). Assuming A has no reason to know by the record date of the payment that the payment is in lieu of a dividend of a type described in paragraphs (a)(3)(ii)(A) through (D) of this section, no selection of deemed transferred shares within the individual customer pool is required. (However, A may be required to furnish F with a statement under section 6042 and the regulations thereunder. See paragraph (h) of this section.) Five-sixths of the transferred shares or 125 shares are allocated to the nonindividual pool (250 loanable shares owned by nonindividuals/300 total loanable shares = $^{5}/_{6}$; $^{5}/_{6}$ × 150 transferred shares = 125 shares). A must select which 125 shares within the nonindividual pool are deemed to have been transferred. Using a purely random lottery, A selects 100 shares identified as being owned by C, and 25 shares identified as being owned by D. Accordingly, A is deemed to have transferred 100 shares and 25 shares owned by C and D respectively, and received substitute payments in lieu of dividends of $200 (100 shares × $2 per share) and $50 (25 shares × $2 per share) on behalf of C and D respectively. A must furnish statements to both C and D identifying such payments as being in lieu of dividends unless they are exempt recipients as defined in paragraph (b)(2) of this section or exempt foreign persons as defined in paragraph (b)(3) of this section. A has complied with the identification requirement of paragraph (f)(2) of this section.

(g) ***Reporting by brokers*** —

(1) ***Requirement of reporting.*** Any broker required to furnish a statement under paragraph (a) of this section shall report on Form 1096 showing such information as may be required by Form 1096, in the form, manner, and number of copies required by Form 1096. With respect to each customer for which a broker is required to furnish a statement, the broker shall make a return of information on Form 1099, in the form, manner and number of copies required by Form 1099.

(2) ***Reporting in electronic form.*** For information returns filed after December 31, 1996, see § 301.6011-2 of this chapter for rules relating to filing information returns in electronic form and for rules relating to waivers granted for undue hardship. A broker or barter exchange that fails to file a Form 1099 electronically, when required, may be subject to a penalty under section 6721 for each such failure. See paragraph (g)(4) of this section.

(3) ***Time and place of filing.*** The returns required under this paragraph (g) for any calendar year shall be filed after September 30 of such year, but not before the final substitute payment for the year is received by the broker, and on or before February 28 (March 31 if filed electronically) of the following year with any of the Internal Revenue Service Centers, the addresses of which are listed in the instructions for Form 1096.

(4) ***Cross-reference to penalties.*** For provisions relating to the penalty provided for failure to file timely a correct information return required under section 6045(d) and § 1.6045-2(g)(1), including a failure to file on magnetic media, see § 301.6721-1 of this chapter. For provisions relating to the penalty provided for failure to furnish timely a correct payee statement required under section 6045(d) and § 1.6045-2(a), see § 301.6722-1 of this chapter. See § 301.6724-1 of this chapter for the waiver of a penalty if the failure is due to reasonable cause and is not due to willful neglect.

(h) ***Coordination with section 6042.*** In cases in which reporting is required by both sections 6042 and 6045(d) with respect to the same substitute payment in lieu of a dividend, the provisions of section 6045(d) control, and no report or statement under section 6042 need be made. If reporting is not required under section 6045(d) with respect to a substitute payment in lieu of a dividend, a report under section 6042 must be made if required in accordance with the rules of section 6042 and the regulations thereunder. Thus, if a broker receives a substitute payment in lieu of a dividend on behalf of an individual customer and the broker does not have reason to know by the record date of the payment that the payment is in lieu of a dividend of a type described in paragraphs (a)(3)(ii)(A) through (D) of this section, the broker must report with respect to the substitute payment if required in accordance with section 6042 and the regulations thereunder.

(i) ***Applicability date.*** This section applies to substitute payments received by a broker after December 31, 1984. Section 1.6045-2(c) (as contained in 26 CFR part 1, revised July 15, 2014) applies to payee statements due after December 31, 2014. For payee statements due before January 1, 2015, § 1.6045-2(c) (as contained in 26 CFR part 1, revised April 2013) applies. Paragraph (g)(2) of this section applies to information returns required to be filed during calendar years beginning after December 31, 2023.

[T.D. 8029, 50 FR 23677, June 5, 1985, as amended by T.D. 8683, 61 FR 53060, Oct. 10, 1996; T.D. 8734, 62 FR 53480, Oct. 14, 1997; T.D. 8770, 63 FR 35519, June 30, 1998; T.D. 8895, 65 FR 50407, Aug. 18, 2000; T.D. 9010, 67 FR 48758, July 26, 2002; T.D. 9103, 68 FR 74848, Dec. 29, 2003; T.D. 9504, 75 FR 64097, Oct. 18, 2010; T.D. 9675, 79 FR 41129, July 15, 2014; T.D. 9972, 88 FR 11764, Feb. 23, 2023]

§ 1.6045-3 Information reporting for an acquisition of control or a substantial change in capital structure.

(a) ***In general.*** Any broker (as defined in § 1.6045-1(a)(1)) that holds shares on behalf of a customer in a corporation that the broker knows or has reason to know based on readily available information (including, for example, information from a clearing organization or from information published by the

Internal Revenue Service (IRS)) has engaged in a transaction described in § 1.6043-4(c) (acquisition of control) or § 1.6043-4(d) (substantial change in capital structure) shall file a return of information with respect to the customer, unless the customer is an exempt recipient as defined in paragraph (b) of this section.

(b) ***Exempt recipients.*** A broker is not required to file a return of information under this section with respect to the following customers:

(1) Any customer who receives only cash in exchange for its stock in the corporation, which must be reported by the broker pursuant to § 1.6045-1.

(2) Any customer who is an exempt recipient as defined in § 1.6043-4(b)(5) or § 1.6045-1(c)(3)(i).

(c) ***Form, manner and time for making information returns.*** The return required by paragraph (a) of this section must be on Forms 1096, "Annual Summary and Transmittal of U.S. Information Returns," and 1099-B, "Proceeds from Broker and Barter Exchange Transactions," or on an acceptable substitute statement. Such forms must be filed on or before February 28 (March 31 if filed electronically) of the year following the calendar year in which the acquisition of control or the substantial change in capital structure occurs.

(d) ***Contents of return.*** A separate Form 1099-B must be prepared for each customer. The Form 1099-B will request information with respect to the following and such other information as may be specified in the instructions:

(1) The name, address and taxpayer identification number (TIN) of the customer;

(2) The name of the corporation which engaged in the transaction described in § 1.6043-4(c) or (d);

(3) The number and class of shares in the corporation exchanged by the customer; and

(4) The aggregate amount of cash and the fair market value of any stock or other property provided to the customer in exchange for its stock.

(e) ***Furnishing of forms to customers*** —

(1) ***General requirements.*** A broker must furnish Form 1099-B to the customer on or before February 15 of the year following the calendar year in which the customer receives stock, cash or other property. An IRS truncated taxpayer identifying number (TTIN) may be used as the identifying number of the customer. For provisions relating to the use of TTINs, see § 301.6109-4 of this chapter (Procedure and Administration Regulations).

(2) ***Consolidated reporting.***

(i) The term *consolidated reporting statement* means a grouping of statements the same broker furnishes to the same customer or group of customers on the same date for the same reporting year that includes a statement required under this section. A consolidated reporting statement is limited to statements based on the same relationship of broker to customer as the statement required to be furnished under this section.

(ii) A consolidated reporting statement must be furnished on or before February 15 of the year following the calendar year reported. Any statement that otherwise must be furnished on or before January 31 must be furnished on or before February 15 if it is furnished in the consolidated reporting statement.

(f) ***Single Form 1099.*** If a broker is required to file a Form 1099-B with respect to a customer under §§ 1.6045-3 and 1.6045-1(c) with respect to the same transaction, the broker may satisfy the requirements of both sections by filing and furnishing one Form 1099-B that contains all the relevant information, as provided in the instructions to Form 1099-B.

(g) ***Effective/applicability date.*** This section applies with respect to any acquisition of control and any substantial change in capital structure occurring after December 5, 2005. The amendments to paragraph (e)(1) apply to payee statements due after December 31, 2014. For payee statements due before January 1, 2015, § 1.6045-3(e)(1) (as contained in 26 CFR part 1, revised April 2013) shall apply.

[T.D. 9230, 70 FR 72380, Dec. 5, 2005, as amended by T.D. 9504, 75 FR 64097, Oct. 18, 2010; T.D. 9675, 79 FR 41130, July 15, 2014]

§ 1.6045-4 Information reporting on real estate transactions.

(a) ***Requirement of reporting.*** Except as otherwise provided in paragraphs (c) and (d) of this section, a real estate reporting person ("reporting person") must make an information return with respect to a real estate transaction and, under paragraph (m) of this section, must furnish a statement to the transferor. A reporting person may also report with respect to transactions otherwise excepted in paragraphs (c) and (d) of this section. However, if the reporting person so elects, the return must be filed and the statement furnished in accordance with the provisions of this section. For the definition of a real estate transaction for purposes of these reporting requirements, see paragraph (b) of this section. For rules for determining the reporting person with respect to a real estate transaction, see paragraph (e) of this section.

(b) ***Definition of real estate transaction*** —

(1) ***In general.*** A transaction is a *real estate transaction* under this section if the transaction consists in whole or in part of the sale or exchange of *reportable real estate* (as defined in paragraph (b)(2) of this section) for money, indebtedness, property other than money, or services. The term *sale or exchange* shall include any transaction properly treated as a sale or exchange for Federal income tax purposes, whether or not the transaction is currently taxable. Thus, for example, a sale or exchange of a principal residence is a real estate transaction under this section even though the transferor may be entitled to the special exclusion of gain up to $250,000 (or $500,000 in the case of married persons filing jointly) from the sale or exchange of a principal residence provided by section 121 of the Code.

(2)

(i) ***Definition of reportable real estate.*** Except as otherwise provided in paragraph (c)(2) of this section, the term "reportable real estate" means any present or future ownership interest in—

(A) Land (whether improved or unimproved), including air space;

(B) Any inherently permanent structure, including any residential, commercial or industrial building;

(C) Any condominium unit, including appurtenant fixtures and common elements (including land); or

(D) Any stock in a cooperative housing corporation (as defined in section 216).

(E) Any non-contingent interest in standing timber.

(ii) For purposes of this section, the term "ownership interest" includes fee simple interests, life estates, reversions, remainders, and perpetual easements. In addition, the term "ownership interest" includes any previously created rights to possession or use for all or a portion of any particular year (*i.e.,* a leasehold, easement, or "timeshare"), with a remaining term of at least 30 years, including any period for which such rights may be renewed at the option of the holder of the rights, as determined on the date of closing (as defined in paragraph (h)(2)(ii) of this section). Thus, for example, a pre-existing leasehold on a building with an original term of 99 years is an ownership interest in real estate for purposes of this section if it has a remaining term of 35 years as of the date of closing, but not if it has a remaining term of only 10 years as of the date of closing. However, the term "ownership interest" does not include an option to acquire otherwise reportable real estate. Further, the term "ownership interest" includes any contractual interest in a sale or exchange of standing timber for a lump-sum payment that is fixed and not contingent.

(c) ***Exception for certain exempt transactions*** —

(1) ***Certain transfers.*** No return of information is required with respect to—

(i) A transaction that is not a sale or exchange (such as a gift (including a transaction treated as a gift under section 1041) or bequest, or a financing or refinancing that is not related to the acquisition of reportable real estate), even if the transaction involves reportable real estate, as defined in paragraph (b)(2) of this section;

(ii) A transfer in full or partial satisfaction of any indebtedness secured by the property so transferred including a foreclosure, a transfer in lieu of foreclosure or an abandonment; or

(iii) A transaction (a "de minimis transfer") in which it can be determined with certainty that the total consideration (in money, services and property), received or to be received in connection with the transaction is less than $600 in value (determined without regard to any allocation of gross proceeds among multiple transferors under paragraph (i)(5) of this section) as of the date of the closing (as defined in paragraph (h)(2)(ii) of this section), even if the transaction involves reportable real estate. Thus, for example, if a contract for sale of reportable real estate recites total consideration of "$1.00 plus other valuable consideration," the transfer is not a de minimis transfer unless the reporting person can determine that the "other valuable consideration" received or to be received is less than $599 in value as measured on the date of closing.

(2) ***Certain property.*** Notwithstanding the provisions of paragraph (b)(2) of this section, no return of information is required with respect to a sale or exchange of an interest in any of the following property—provided the sale or exchange of such property is not related to the sale or exchange of reportable real estate—

(i) An interest in surface or subsurface natural resources (for example, water, ores, and other natural deposits) or crops, whether or not such natural resources or crops are severed from the land. For purposes of this section, the terms "natural resources" and "crops" do not include standing timber;

(ii) A burial plot or vault;

(iii) A manufactured structure used as a dwelling that is manufactured and assembled at a location different from that where it is used, but only if such structure is not affixed, at the date of closing (as defined in paragraph (h)(2)(ii) of this section), to a foundation. Thus, a transfer of an unaffixed mobile home that is unrelated to the sale or exchange of reportable real estate is excepted from the reporting requirements of this section; or

(iv) A principal residence (including stock in a cooperative housing corporation) provided the reporting person obtain from the transferor a written certification consistent with guidance that the Secretary has designated or may designate by publication in the FEDERAL REGISTER or in the Internal Revenue Bulletin (*see* § 601.601(d)(2) of this chapter). If a residence has more than one owner, a real estate reporting person must either obtain a certification from each owner (whether married or not) or file an information return and furnish a payee statement for any owner that does not make the certification. The certification must be retained by the reporting person for four years after the year of the sale or exchange of the residence to which the certification applies. A reporting person who relies on a certification made in compliance with this paragraph (c)(2)(iv) will not be liable for penalties under section 6721 of the Code for failure to file an information return, or under section 6722 of the Code for failure to furnish a payee statement to the transferor, unless the reporting person has actual knowledge or reason to know that any assurance is incorrect.

(d) ***Exception for certain exempt transferors*** —

(1) ***General rule.*** No return of information is required with respect to a transferor that is a corporation under section 7701(a)(3) or section 7704(a) or is considered under paragraph (d)(2) of this section to be—

(i) A corporation;

(ii) A governmental unit; or

(iii) An exempt volume transferor.

In the case of a real estate transaction with respect to which there is one or more exempt transferor(s) and one or more non-exempt transferor(s), the reporting person is required to report with respect to any non-exempt transferor. The special rule for allocation of gross proceeds, as provided in paragraph (i)(5) of this section, applies to such a transaction.

(2) ***Treatment as exempt transferor.*** Absent actual knowledge to the contrary, a reporting person may treat a transferor as—

(i) A corporation if—

(A) The name of the transferor contains an unambiguous expression of corporate status, such as Incorporated, Inc., Corporation, Corp., or P.C. (but not Company or Co.);

(B) The name of the transferor contains the term “insurance company,” “reinsurance company,” or “assurance company”; or

(C) The transfer or loan documents clearly indicate the corporate status of the transferor;

(ii) A governmental unit if the transferor is—

(A) The United States or a State, the District of Columbia, the Commonwealth of Puerto Rico, Guam, the Commonwealth of Northern Mariana Islands, the U.S. Virgin Islands, or American Samoa, a political subdivision of any of the foregoing, or any wholly owned agency or instrumentality of any one or more of the foregoing; or

(B) A foreign government, a political subdivision thereof, an international organization, as defined in section 7701(a)(18), or any wholly-owned agency or instrumentality of the foregoing; or

(iii) An exempt volume transferor if, and only if, the reporting person receives a certification of exempt status under paragraph (d)(3) of this section.

(3) ***Certification of exempt status*** —

(i) ***In general.*** A certification of exempt status must contain—

(A) The name, address, and taxpayer identification number of the transferor (the address must be that of the permanent residence (in the case of an individual), that of the principal office (in the case of a corporation or partnership), or that of the permanent residence or principal office of any fiduciary (in the case of a trust or estate));

(B) Sufficient information to identify any otherwise reportable real estate not reported by virtue of the exempt status of the transferor; and

(C) A declaration that the transferor has sold or exchanged during either of the prior two calendar years, or previously sold or exchanged during the current calendar year, or, as of the date of closing (as defined in paragraph (h)(2)(ii) of this section), reasonably expects to sell or exchange during the current calendar year at least 25 separate items of reportable real estate (as defined in paragraph (b)(2) of this section) to at least 25 separate transferees, and that each such item, at the date of closing of the sale of such item was or will be held primarily for sale or resale to customers in the ordinary course of a trade or business. For example, the declaration may be worded as follows:

[Insert name of transferor]

[check one or more]:

(1) __ has sold or exchanged during either of the prior two calendar years,

(2) __ previously sold or exchanged during the current calendar year,

(3) __ on the date of closing expects to sell or exchange during the current calendar year,

at least 25 separate items of reportable real estate to at least 25 separate transferees and each such item, at the date of closing of such item was or will be held primarily for sale or resale to customers in the ordinary course of a trade or business.

(ii) ***Additional requirements.*** A certification of exempt status must be—

(A) Signed under penalties of perjury by the transferor or any person who is authorized to sign a declaration under penalties of perjury in behalf of the transferor as described in section 6061 and the regulations thereunder;

(B) Received by the reporting person no later than the time of closing; and

(C) Retained by the reporting person for four years following the close of the calendar year in which the date of closing (as determined under paragraph (h)(2)(ii) of this section) occurs.

(iii) ***Reporting person may accept or disregard certification.*** A reporting person may solicit or merely accept a certification of exempt status. Moreover, notwithstanding a transferor's furnishing of such certification, a reporting person may disregard the certification and, instead, report with respect to the transaction. See paragraph (a) of this section for the requirement that such elective reporting must be in compliance with the provisions of this section.

(e) ***Person required to report*** —

(1) ***In general.*** Although there may be other persons involved in a real estate transaction, only the reporting person is required to report with respect to any real estate transaction. Except as provided in a designation agreement under paragraph (e)(5) of this section, the reporting person with respect to a real estate transaction is—

(i) The person responsible for closing the transaction, as defined in paragraph (e)(3) of this section; or

(ii) If there is no person responsible for closing the transaction, the person determined to be the reporting person under paragraph (e)(4) of this section.

A person may be the reporting person with respect to a transaction whether or not such person performs or is licensed to perform real estate brokerage services for a commission or fee.

(2) ***Employees, agents, and partners.*** For purposes of this paragraph (e), if an employee, agent, or partner (other than an employee, agent, or partner of the transferor or the transferee) acting within the scope of such person's employment, agency, or partnership participates in a real estate transaction—

(i) Such participation shall be attributed to such person's employer, principal, or partnership; and

(ii) Only the employer, principal, or partnership (and not such person) may be the reporting person with respect to such transaction as a result of such participation.

However, the participation of a person described in paragraph (e)(3)(i) of this section (*i.e.,* a person listed on the Uniform Settlement Statement as the settlement agent) acting as an agent of another is not attributed to the principal.

(3) ***Person responsible for closing the transaction*** —

(i) ***Uniform Settlement Statement used.*** If a Uniform Settlement Statement prescribed under the Real Estate Settlement Procedures Act of 1974 (RESPA), 12 U.S.C. 2601 *et seq.* (a “Uniform Settlement Statement”), is used with respect to the real estate transaction and a person is listed as settlement agent on the statement, such person is the person responsible for closing the transaction. For purposes of this section, a Uniform Settlement Statement shall include any amendments or variations thereto, or substitutions therefore that may hereafter be prescribed

under RESPA, provided that any such amended, varied, or substituted form requires disclosure of the parties to the transaction, the application of the proceeds of the transaction, and the identity of the settlement agent or other person responsible for preparing the form.

(ii) ***Other closing statement used.*** If a Uniform Settlement Statement is not used, or if a Uniform Settlement Statement is used, but no person is listed as settlement agent, the person responsible for closing the transaction is the person who prepares a closing statement presented to the transferor and transferee at, or in connection with, the closing of the real estate transaction. For purposes of this section, a closing statement is any closing statement, settlement statement (including a Uniform Settlement Statement), or other written document that identifies the transferor and transferee, reasonably identifies the transferred real estate, and describes the manner in which the proceeds payable to the transferor are to be (or were) disbursed at, or in connection with, the closing.

(iii) ***No closing statement used or multiple closing statements used.*** If no closing statement is used or multiple closing statements are used, the person responsible for closing the transaction is the first-listed of the persons that participate in the transaction as—

(A) The attorney for the transferee who is present at the occasion of the delivery of either the transferee's note or a significant portion of the cash or digital asset proceeds to the transferor, or who prepares or reviews the preparation of the document(s) transferring legal or equitable ownership of the real estate;

(B) The attorney for the transferor who is present at the occasion of the delivery of either the transferee's note or a significant portion of the cash or digital asset proceeds to the transferor, or who prepares or reviews the preparation of the document(s) transferring legal or equitable ownership of the real estate; or

(C) The disbursing title or escrow company that is most significant in terms of gross proceeds disbursed.

If more than one attorney would be the person responsible for closing the transaction under the preceding sentence, the person among such attorneys who is considered responsible for closing the transaction under this paragraph (e)(3)(iii) is the person whose involvement in the transaction is most significant.

(4) ***Determination of the real estate reporting person in the absence of a person responsible for closing the transaction.*** If no person is responsible for closing the transaction (within the meaning of paragraph (e)(3) of this section), the reporting person with respect to the real estate transaction is the person first-listed below of the persons that participate in the transaction as—

(i) The mortgage lender (as defined in paragraph (e)(6)(i) of this section);

(ii) The transferor's broker (as defined in paragraph (e)(6)(ii) of this section);

(iii) The transferee's broker (as defined in paragraph (e)(6)(iii) of this section); or

(iv) The transferee (as defined in paragraph (e)(6)(iv) of this section).

(5) ***Designation agreement*** —

(i) ***In general.*** If a written designation agreement executed at or prior to the time of closing designates one of the persons described in paragraph (e)(5)(ii) of this section as the reporting person with respect to the transaction and the designated person is a party to the agreement, the designated person is the reporting person with respect to the transaction. It is not necessary that all parties to the transaction (or that more than one party) be parties to the agreement.

(ii) ***Persons eligible.*** A person may be designated as the reporting person under this paragraph (e)(5) only if the person is—

(A) The person responsible for closing the transaction (as defined in paragraph (e)(3) of this section);

(B) A person described in paragraph (e)(3)(iii) (A), (B) or (C) of this section (whether or not such person is responsible for closing the transaction); or

(C) The mortgage lender (as defined in paragraph (e)(6)(i) of this section).

(iii) ***Form of designation agreement.*** A designation agreement may be in any form that is consistent with the requirements of this paragraph (e)(5), and may be included on a closing statement with respect to the transaction. The designation agreement must, however, include the name and address of the transferor and transferee and the address and any additional information necessary to identify the real estate transferred. The agreement must identify, by name and address, the person designated as the reporting person with respect to the transaction, and all other parties (if any) to the agreement. All parties to the agreement must date and sign the agreement and must retain the agreement for four years following the close of the calendar year in which the date of closing (as determined under paragraph (h)(2)(ii) of this section) occurs. Upon request by the Internal Revenue Service, or any person involved in the transaction who did not participate in the designation agreement, the agreement must be made available for inspection.

(6) ***Meaning of terms*** —

(i) ***Mortgage lender.*** For purposes of this paragraph (e), the term “mortgage lender” means the person who lends new funds in connection with the transaction, but only if the repayment of such funds is secured in whole or in part by the real estate transferred. If new funds are advanced by more than one person, the mortgage lender is the person who advances the largest amount of new funds. If two or more persons advance equal amounts of new funds and no other person advances a greater amount of new funds, the mortgage lender among the persons advancing such equal amounts is the person with the security interest that is most senior in terms of priority. For purposes of this paragraph (e)(6)(i), any amounts advanced by the transferor are not treated as new funds.

(ii) ***Transferor's broker.*** For purposes of this paragraph (e), the term “transferor's broker” means only the broker that contracts with the transferor and is compensated in connection with the transaction.

(iii) ***Transferee's broker.*** For purposes of this paragraph (e), the term “transferee's broker” means only the broker that participates to a significant extent in the preparation of the transferee's offer to acquire the real estate or that presents such offer to the transferor. If more than one person is so described, the transferee's broker is the person whose participation in the

preparation of the transferee's offer to acquire the real estate is most significant or, in the event there is no such person, the person whose participation in the presentation of the offer is most significant.

(iv) ***Transferee.*** For purposes of this paragraph (e), the term "transferee" means the person who acquires the greatest interest in the real estate. If there is no such person, the transferee is the person listed first on the document(s) transferring legal or equitable ownership of the real estate.

(f) ***Multiple transferors*** —

(1) ***General rule.*** In the case of multiple transferors, each of which transfers an interest in the same reportable real estate, the reporting person shall make a separate information return with respect to each transferor. Paragraph (i)(5) of this section provides rules for the determination of gross proceeds to be reported in the case of multiple transferors.

(2) ***Rules for spouses.*** Transferors who are husband and wife at the time of closing and hold the reportable real estate as tenants in common, joint tenants, tenants by the entirety, or community property are treated as a single transferor for purposes of paragraphs (f)(1), (h)(1)(i), (i)(5) and (l)(1)(i) of this section, unless the reporting person receives, at or prior to the time of closing, an uncontested allocation of gross proceeds between them. In the case of a husband and wife treated as a single transferor, the reporting person may treat either as the transferor for purposes of paragraphs (h)(1)(i) and (l)(1) of this section, relating to reporting and soliciting taxpayer identification numbers.

(g) ***Prescribed form.*** Except as otherwise provided in paragraph (k) of this section, the information return required by paragraph (a) of this section shall be made on Form 1099-S, *Proceeds From Real Estate Transactions* or any successor form.

(h) ***Information required*** —

(1) ***In general.*** The following information must be set forth on the Form 1099-S required by this section:

(i) The name, address, and taxpayer identification number (TIN) of the transferor (*see* also paragraph (f)(2) of this section);

(ii) A general description of the real estate transferred (in accordance with paragraph (h)(2)(i) of this section);

(iii) The date of closing (as defined in paragraph (h)(2)(ii) of this section);

(iv) To the extent required by the Form 1099-S and its instructions, the entire gross proceeds with respect to the transaction (as determined under the rules of paragraph (i) of this section), and, in the case of multiple transferors, the gross proceeds allocated to the transferor (as determined under paragraph (i)(5) of this section);

(v) To the extent required by the Form 1099-S and its instructions, an indication that the transferor—

(A) Received (or will, or may, receive) property (other than cash, consideration treated as cash, and digital assets in computing gross proceeds) or services as part of the consideration for the transaction; or

(B) May receive property (other than cash and digital assets) or services in satisfaction of an obligation having a stated principal amount; or

(C) May receive, in connection with a contingent payment transaction, an amount of gross proceeds that cannot be determined with certainty using the method described in paragraph (i)(3)(iii) of this section and is therefore not included in gross proceeds under paragraphs (i)(3)(i) and (iii) of this section;

(vi) The real estate reporting person's name, address, and TIN;

(vii) In the case of a payment made to the transferor using digital assets, the name and number of units of the digital asset, and the date the payment was made;

(viii) [Reserved]

(ix) Any other information required by the Form 1099-S or its instructions.

(2) ***Meaning of terms*** —

(i) ***General description of the real estate transferred.*** A general description of the real estate transferred includes the complete address of the property. If the address would not sufficiently identify the property, a general description of the real estate also includes a legal description (e.g., section, lot, and block) of the property.

(ii) ***Date of closing.*** In the case of a real estate transaction with respect to which a Uniform Settlement Statement is used, the date of closing shall be the date (if any) properly described as the “Settlement Date” on such statement. In all other cases, the date of closing shall be the earlier of the date on which title is transferred or the date on which the economic burdens and benefits of ownership of the real estate shift from the transferor to the transferee.

(iii) ***Digital assets.*** For purposes of this section, a digital asset has the meaning set forth in § 1.6045-1(a)(19).

(3) ***Limitation on information provided.*** The information required in the case of payment made to the transferor using digital assets under paragraph (h)(1)(vii) of this section and the portion of any gross proceeds attributable to that payment required to be reported by paragraph (h)(1)(iv) of this section is not required unless the real estate reporting person has actual knowledge or ordinarily would know that digital assets were received by the transferor as payment. For purposes of this limitation, a real estate reporting person is considered to have actual knowledge that payment was made to the transferor using digital assets if the terms of the real estate contract provide for payment using digital assets.

(i) ***Gross proceeds*** —

(1) ***In general.*** Except as otherwise provided in this paragraph (i), the term *gross proceeds* means the total cash received, including cash received from a processor of digital asset payments as described in § 1.6045-1(a)(22), consideration treated as cash received, and the value of any digital asset received by or on behalf of the transferor in connection with the real estate transaction.

(i) ***Consideration treated as cash.*** For purposes of this paragraph (i), consideration treated as cash received by or on behalf of the transferor in connection with the real estate transaction includes the following amounts:

(A) The stated principal amount of any obligation to pay cash to or for the benefit of the transferor in the future (including any obligation having a stated principal amount that may be satisfied by the delivery of property (other than cash) or services);

(B) The amount of any liability of the transferor assumed by the transferee as part of the consideration for the transfer or of any liability to which the real estate acquired is subject (whether or not the transferor is personally liable for the debt); and

(C) In the case of a contingent payment transaction, as defined in paragraph (i)(3)(ii) of this section, the maximum determinable proceeds, as defined in paragraph (i)(3)(iii) of this section.

(ii) ***Digital assets received.*** For purposes of this paragraph (i), the value of any digital asset received means the fair market value in U.S. dollars of the digital asset actually received. Additionally, if the consideration received by the transferor includes an obligation to pay a digital asset to, or for the benefit of, the transferor in the future, the value of any digital asset received includes the fair market value, as of the date and time the obligation is entered into, of the digital assets to be paid as stated principal under such obligation. The fair market value of any digital asset received must be determined based on the valuation rules provided in § 1.6045-1(d)(5)(ii).

(iii) ***Other property.*** Gross proceeds does not include the value of any property (other than cash, consideration treated as cash, and digital assets) or services received by, or on behalf of, the transferor in connection with the real estate transaction. *See* paragraph (h)(1)(v) of this section for the information that must be included on the Form 1099-S required by this section in cases in which the transferor receives (or will, or may, receive) property (other than cash, consideration treated as cash, and digital assets) or services as part of the consideration for the transfer.

(2) ***Treatment of sales commissions and similar expenses.*** In computing gross proceeds, the total cash, consideration treated as cash, and digital assets received by or on behalf of the transferor shall not be reduced by expenses borne by the transferor (such as sales commissions, amounts paid or withheld from consideration received to effect the digital asset transfer as described in § 1.1001-7(b)(2), expenses of advertising the real estate, expenses of preparing the deed, and the cost of legal services in connection with the transfer).

(3) ***Special rules for contingent payments*** —

(i) ***In general.*** If a real estate transaction is a contingent payment transaction, gross proceeds consist of the maximum determinable proceeds, if any.

(ii) ***Contingent payment transaction.*** For purposes of this section, the term *contingent payment transaction* means a real estate transaction with respect to which the receipt, by or on behalf of the transferor, of cash, consideration treated as cash under paragraph (i)(1)(i)(A) of this section, or digital assets under paragraph (i)(1)(ii) of this section is subject to a contingency.

(iii) ***Maximum determinable proceeds.*** For purposes of this section, the term "maximum determinable proceeds" means the gross proceeds determined by assuming that all of the contingencies contemplated by the documents available at closing are met or otherwise resolved in a manner that will maximize the gross proceeds. If the maximum amount of gross proceeds cannot be determined with certainty using this method, the maximum determinable proceeds are the greatest amount that can be determined with certainty using this method. See

paragraph (h)(1)(v)(C) of this section for the information that must be included on the Form 1099 required by this section in cases in which the maximum amount of gross proceeds cannot, by using the method described in this paragraph (i)(3)(iii), be determined with certainty.

(4) ***Uniform Settlement Statement used.*** If a Uniform Settlement Statement is used with respect to a real estate transaction involving a transfer of reportable real estate solely for cash and consideration treated as cash in computing gross proceeds, the gross proceeds generally will be the same amount as the contract sales price properly shown on that statement.

(5) ***Special rules for multiple transferors*** —

(i) ***General rules.*** In the case of multiple transferors (within the meaning of paragraph (f) of this section) each of which transfers an interest in the same reportable real estate, the reporting person must request the transferors to provide an allocation of the gross proceeds among the transferors. The request must be made at or before the time of closing. Neither the request nor the response is required to be in writing. The reporting person must make a reasonable effort to contact all transferors of whom the reporting person has actual knowledge. The reporting person may, however, rely on the unchallenged response of any transferor and need not make additional efforts to contact other transferors after at least one complete allocation (whether or not contained in a single response) is received. Except as otherwise provided in this paragraph (i)(5), the reporting person shall report the gross proceeds in accordance with any allocation received at or before the time of closing. The reporting person may (but is not required to) report the gross proceeds in accordance with any allocation received after the time of closing and before the date (determined without regard to extensions) the Forms 1099 are required to be filed. The reporting person may not report the gross proceeds in accordance with any allocation received on or after the date (determined without regard to extensions) the Forms 1099 are required to be filed. If no gross proceeds are allocated to a transferor because no allocation or an incomplete allocation is received by the reporting person, the reporting person shall report the entire unallocated gross proceeds (if any) on the return of information made with respect to such transferor. If the reporting person receives conflicting allocations from the transferors, the reporting person shall report the entire gross proceeds on each return of information made with respect to the transaction.

(ii) ***Rules for spouses.*** The reporting person need not request an allocation of gross proceeds if the only transferors are husband and wife at the time of closing. If there are other transferors, the reporting person need only make a reasonable effort to contact either the husband or wife in connection with the request for an allocation. See paragraph (f)(2) of this section for rules that treat a husband and wife as multiple transferors if an uncontested allocation of gross proceeds is received by the reporting person at or prior to the time of closing.

(6) ***Multiple asset transactions.*** In the case of a real estate transaction reportable under this section that involves the transfer of reportable real estate and other assets, the amount attributable to both the real estate and other assets is treated as the gross proceeds with respect to that real estate transaction. No allocation of gross proceeds is made among the assets.

(j) ***Time and place for filing.*** A reporting person shall file the information returns required by this section with respect to a real estate transaction after December 31 of the calendar year that includes the date of closing (as determined under paragraph (h)(2)(ii) of this section) and on or before February 28 (March 31 if filed electronically) of the following calendar year. The returns shall be filed with the appropriate Internal Revenue Service Center at the address listed in the Instructions to Form 1099.

(k) [Reserved]

(l) *Requesting taxpayer identification numbers (TINS)* —

(1) *Solicitation* —

(i) ***General requirements.*** A reporting person who is required to make an information return with respect to a real estate transaction under this section must solicit a TIN from the transferor at or before the time of closing. The solicitation may be made in person or in a mailing that includes other items. Any person whose TIN is solicited under this paragraph (l) must furnish such TIN to the reporting person and certify that the TIN is correct. See paragraph (f)(2) of this section for rules that treat a husband and wife as a single transferor (and provide for the TIN solicitation of either) in the absence of an allocation of gross proceeds under paragraph (i)(5) of this section.

(ii) ***Content of solicitation.*** The solicitation shall be made by providing to the person from whom the TIN is solicited a written statement that the person is required by law to furnish a correct TIN to the reporting person, and that the person may be subject to civil or criminal penalties for failing to furnish a correct TIN. For example, the solicitation may be worded as follows:

> You are required by law to provide [insert name of reporting person] with your correct taxpayer identification number. If you do not provide [insert name of reporting person] with your correct taxpayer identification number, you may be subject to civil or criminal penalties imposed by law.

The solicitation shall contain space for the name, address, and TIN of the person from whom the TIN is solicited and for the person to certify under penalties of perjury that the TIN furnished is that person's correct TIN. The wording of the certification must be substantially similar to the following: “Under penalties of perjury, I certify that the number shown on this statement is my correct taxpayer identification number.” The requirements of this paragraph (l)(1)(ii) may be met by providing to the transferor a copy of Form W-9. In the case of a real estate transaction for which a Uniform Settlement Statement is used, the requirements of this paragraph (l)(1)(ii) may be met by providing to the transferor a copy of such statement that is modified to conform to the requirements of this paragraph (l)(1)(ii).

(iii) ***Retention requirement.*** The solicitation shall be retained by the reporting person for four years following the close of the calendar year that includes the date of closing (as determined under paragraph (h)(2)(ii) of this section). Such solicitation must be made available for inspection upon request by the Internal Revenue Service.

(2) ***No TIN provided.*** A reporting person that does not receive the transferor's TIN will not be subject to any penalty cross-referenced in paragraph (n) of this section by reason of failure to report such TIN if the reporting person has complied with the requirements of paragraph (l)(1) of this section in good faith (determined with proper regard for a course of conduct and the overall results achieved for the year).

(m) *Furnishing statements to transferors* —

(1)

(i) ***Requirement of furnishing statements.*** A reporting person who is required to make a return of information under paragraph (a) of this section shall furnish to the transferor whose TIN is required to be shown on the return a written statement of the information required to be shown

on such return. The written statement must bear either the legend shown on the recipient copy of Form 1099 or the following: "This is important tax information and is being furnished to the Internal Revenue Service. If you are required to file a return, a negligence penalty or other sanction may be imposed on you if this item is required to be reported and the IRS determines that it has not been reported."

(ii) This requirement may be satisfied by furnishing to the transferor a copy of a completed Form 1099 (or substitute Form 1099 that complies with current revenue procedures). An IRS truncated taxpayer identifying number (TTIN) may be used as the identifying number of the transferor in lieu of the identifying number appearing on the information return filed with the Internal Revenue Service. For provisions relating to the use of TTINs, see § 301.6109-4 of this chapter (Procedure and Administration Regulations).

(iii) In the case of a real estate transaction for which a Uniform Settlement Statement is used, this requirement also may be satisfied by furnishing to the transferor a copy of a completed statement that is modified to comply with the requirements of this paragraph (m), and by designating on the Uniform Settlement Statement the items of information (such as gross proceeds or allocated gross proceeds) required to be set forth on the Form 1099. For purposes of this paragraph (m), a statement shall be considered furnished to a transferor if it is given to the transferor in person, either at the closing or thereafter, or is mailed to the transferor at the transferor's last known address.

(2) ***Time for furnishing statement.*** The statement required under this paragraph (m) must be furnished to the transferor on or after the date of closing and on or before February 15 of the following calendar year.

(3) ***Consolidated reporting.***

(i) The term *consolidated reporting statement* means a grouping of statements the same reporting person furnishes to the same transferor or group of transferors on the same date for the same reporting year that includes a statement required under this section. A consolidated reporting statement is limited to statements based on the same relationship of reporting person to transferor as the statement required to be furnished under this section.

(ii) A consolidated reporting statement must be furnished on or before February 15 of the year following the calendar year reported. Any statement that otherwise must be furnished on or before January 31 must be furnished on or before February 15 if it is furnished in the consolidated reporting statement.

(n) ***Cross-reference to penalties.*** See the following sections regarding penalties for failure to comply with the requirements of section 6045(e) and this section:

(1) Section 6721 for failure to file a correct information return;

(2) Section 6722 for failure to furnish a correct statement to the transferor;

(3) Section 6723 for failure to comply with other information reporting requirements (including the requirement to furnish a TIN);

(4) Section 6724 for definitions and rules relating to waiver and payment; and

(5) Section 7203 for willful failure to supply information (including a taxpayer identification number).

(o) ***No separate charge.*** A reporting person may not separately charge any person involved in a real estate transaction for complying with any requirements of this section. A reporting person may, however, take into account its cost of complying with such requirements in establishing its fees (other than in charging a separate fee for complying with such requirements) to any customer for performing services in the case of a real estate transaction.

(p) ***Backup withholding requirements.*** [Reserved]

(q) ***Federally-subsidized indebtedness.*** [Reserved]

(r) ***Examples.*** The following examples illustrate the application of this section:

(1) ***Example 1. Sale or exchange.***

(i) On June 1, 1991, A, an individual, buys a house from B, an individual, for $200,000. The entire $200,000 is financed by B under an "installment land contract," whereby A takes possession and assumes all significant economic benefits and burdens of ownership of the house, and B retains legal title to the property until A fully performs under the contract. On June 1, 1994, A refinances his purchase of the house with Z, a financial institution. The balance owed to B is repaid and B relinquishes title to the house. A retains possession and the benefits and burdens of ownership of the house.

(ii) For federal income tax purposes, the transaction occurring on June 1, 1991 is considered a sale of the house by B, notwithstanding his retention of legal title to the property. B's sale is subject to information reporting under this section. However, the transaction occurring on June 1, 1994 is not a sale or exchange for federal income tax purposes, and notwithstanding the change in legal title upon the deeding over of the property, that transaction is not subject to information reporting under this section.

(2) ***Example 2. Sale or exchange.*** On August 10, 1991, C, an individual, accepts an offer from Y, a corporation that acts on behalf of T (C's employer) to facilitate moves of T's transferred employees from one part of the country to another. Under the offer, C transfers his residence to Y for $250,000 by executing a deed to the property in blank and giving Y a power of attorney to dispose of the residence. C also immediately vacates the residence, whereupon Y begins paying all costs associated with the residence and is entitled to all income from the residence, including sales proceeds. On October 1, 1991, Y sells the residence to D and inserts C's name in the deed previously executed by C. Thus, neither Y nor T ever become record owners of the residence. C's transfer of the residence to Y on August 10, 1991 is a sale of reportable real estate and is subject to information reporting under this section; however, the sale on October 1, 1991 is not required to be reported because Y (the transferor in that sale) is a corporation. See paragraph (d) of this section.

(3) ***Example 3. Definition of ownership interest.*** E, an individual, owns a perpetual timeshare interest in a residential unit of real property at an oceanfront resort. For consideration, on November 15, 1991, E sells her rights in the property for the period January 1, 1992 through December 31, 1992 to F. The transfer of E's property interest is not the transfer of an ownership interest, as defined in paragraph (b)(2) of this section and therefore is not reportable real estate under paragraph (b)(2) of this section. Accordingly, the transfer is not a real estate transaction under paragraph (b)(1) of this section, and no return of information is required with respect to E's property transfer.

(4) ***Example 4. Gross proceeds (exchange).***

(i) G, an individual, agrees to transfer Blackacre, which has a fair market value of $100,000, plus $10,000 cash to H, an individual, in exchange for Whiteacre, which as a fair market value of $120,000 and is encumbered by a $10,000 liability (which is assumed by G). No other liabilities are involved in the transaction. P is the reporting person with respect to both sides of the transaction.

(ii) With respect to the transfer of Blackacre by G to H, P must report gross proceeds of $-0- (even though the exchange agreement may recite total exchange value of $120,000). See paragraph (i)(1) of this section. In addition, (to the extent required by the Form 1099 and its instructions) P must indicate that G will receive property as part of the consideration for the transaction. See paragraph (h)(v)(A) of this section.

(iii) With respect to the transfer of Whiteacre by H to G, P must report gross proceeds of $20,000 (the amount received by H consisting of cash ($10,000) and consideration treated as cash ($10,000) under paragraph (i) of this section). No other amount is reported under paragraph (i)(1) of this section even though the exchange agreement may recite total exchange value of $120,000. In addition, (to the extent required by the Form 1099 and its instructions) P must indicate that H will receive property as part of the consideration for the transaction. See paragraph (h)(v)(A) of this section.

(5) [Reserved]

(6) ***Example 6. Gross proceeds (contingencies).*** K, an individual, sells an unencumbered apartment building to L for $500,000, payable at closing, plus an amount equal to 2% of gross rents from the apartment building for each of the next 5 years, the contingent payments to be made annually with adequate stated interest. The agreement provides that the maximum amount K may receive (including the downpayment but excluding the interest) is $600,000. Under paragraph (i)(3)(ii) of this section the real estate transaction is a “contingent payment transaction.” Under paragraph (i)(3)(iii) of this section, the maximum amount of gross proceeds determined by assuming all contingencies are satisfied is $600,000. Thus, $600,000 is the “maximum determinable proceeds” and is the amount reported.

(7) ***Example 7: Gross proceeds (contingencies).*** The facts are the same as in paragraph (r)(6) of this section (the facts in *Example 6*), except that the agreement does not provide for adequate stated interest. The result is the same as in paragraph (r)(6) of this section (the results in *Example 6*).

(8) ***Example 8. Gross proceeds (contingencies).*** The facts are same as in paragraph (r)(6) of this section (the facts in *Example 6*), except that no maximum amount is stated in the agreement (or any other document available at closing). Under paragraph (i)(3)(iii) of this section, assuming all contingencies are satisfied, the maximum amount of gross proceeds cannot be determined with certainty. The greatest amount that can be determined with certainty at the time of the closing, assuming all contingencies are satisfied, is $500,000, the cash downpayment. Therefore, $500,000 is the “maximum determinable proceeds” under paragraph (i)(3)(iii) of this section and is the amount reported. In addition, (to the extent required by the Form 1099 and its instructions) the reporting person must indicate that the gross proceeds cannot be determined with certainty. See paragraph (h)(1)(iv)(C) of this section.

(9) ***Example 9. Gross proceeds (contingencies).*** The facts are the same as in paragraph (r)(8) of this section (the facts in *Example 8*), except that the agreement provides that the minimum amount K will receive (including the downpayment) is $570,000. Thus, under paragraph (i)(3)(iii) of this section, assuming all contingencies are satisfied, the maximum amount of gross proceeds cannot be

determined with certainty. The greatest amount that can be determined with certainty at the time of the closing, assuming all contingencies are satisfied, is $570,000, the minimum amount stated in the agreement. Therefore, $570,000 is the "maximum determinable proceeds" under paragraph (i)(3)(iii) of this section and is the amount reported. In addition, (to the extent required by the Form 1099 and its instructions) the reporting person must indicate that the gross proceeds cannot be determined with certainty. See paragraph (h)(1)(iv)(C) of this section.

(10) ***Example 10: Gross proceeds (exchange involving digital assets)*** —

(i) ***Facts.*** K, an individual, agrees in a contract for sale to pay 140 units of digital asset DE with a total fair market value of $280,000 to J, an unmarried individual who is not an exempt transferor, in exchange for Whiteacre, which has a fair market value of $280,000. No liabilities are involved in the transaction. P is the reporting person with respect to both sides of the transaction.

(ii) ***Analysis.*** P has actual knowledge that payment was made to J using digital assets because the terms of the real estate contract provide for payment using digital assets. Accordingly, with respect to the payment by K of 140 units of digital asset DE to J, P must report gross proceeds received by J of $280,000 (140 units of DE) on Form 1099-S, *Proceeds From Real Estate Transactions.* Additionally, to the extent K is not an exempt recipient under § 1.6045-1(c) or an exempt foreign person under § 1.6045-1(g), P is required to report gross proceeds paid to K on Form 1099-DA, *Digital Asset Proceeds from Broker Transactions,* with respect to K's sale of 140 units of digital asset DE, in the amount of $280,000 pursuant to § 1.6045-1.

(s) ***Applicability date.*** This section applies for real estate transactions with dates of closing (as determined under paragraph (h)(2)(ii) of this section) that occur on or after January 1, 1991. Section 1.6045-4(b)(2)(i)(E), (b)(2)(ii), and (c)(2)(i) (as contained in 26 CFR part 1, revised May 28, 2009) applies to sales or exchanges of standing timber for lump-sum payments completed after May 28, 2009. Section 1.6045-4(m)(1) (as contained in 26 CFR part 1, revised July 15, 2014) applies to payee statements due after December 31, 2014. For payee statements due before January 1, 2015, § 1.6045-4(m)(1) (as contained in 26 CFR part 1, revised April 2013) applies. The removal of paragraph (k) of this section applies for information returns required to be filed during calendar years beginning after December 31, 2023. The amendments to paragraphs (b)(1), (c)(2)(iv), (d)(2)(ii), (e)(3)(iii), (h)(1)(v) through (ix), (h)(2)(iii), (i)(1) and (2), (i)(3)(ii), (o), and (r) of this section apply to real estate transactions with dates of closing occurring on or after January 1, 2026.

[T.D. 8323, 55 FR 51284, Dec. 13, 1990; 56 FR 559, Jan. 7, 1991; 56 FR 3419, Jan. 30, 1991; T.D. 8895, 65 FR 50407, Aug. 18, 2000; T.D. 9450, 74 FR 25430, May 28, 2009; T.D. 9504, 75 FR 64097, Oct. 18, 2010; T.D. 9675, 79 FR 41130, July 15, 2014; T.D. 9972, 88 FR 11764, Feb. 23, 2023; T.D. 10000, 89 FR 56578, July 9, 2024]

§ 1.6045-5 Information reporting on payments to attorneys.

(a) ***Requirement of reporting*** —

(1) ***In general.*** Except as provided in paragraph (c) of this section, every payor engaged in a trade or business who, in the course of that trade or business, makes payments aggregating $600 or more during a calendar year to an attorney in connection with legal services (whether or not the services are performed for the payor) must file an information return for such payments. The information return must be filed on the form and in the manner required by the Commissioner. For the time and place for filing the form, see § 1.6041-6. For definitions of the terms under this section, see paragraph (d) of this section. The requirements of this paragraph (a)(1) apply whether or not—

(i) A portion of a payment is kept by the attorney as compensation for legal services rendered; or

(ii) Other information returns are required with respect to some or all of a payment under other provisions of the Internal Revenue Code and the regulations thereunder.

(2) ***Information required.*** The information return required under paragraph (a)(1) of this section must include the following information:

(i) The name, address, and taxpayer identifying number (TIN) (as defined in section 7701(a)) of the payor;

(ii) The name, address, and TIN of the payee attorney;

(iii) The amount of the payment or payments (as defined in paragraph (d)(5) of this section); and

(iv) Any other information required by the Commissioner in forms, instructions or publications.

(3) ***Requirement to furnish statement*** —

(i) ***General requirements.*** A person required to file an information return under paragraph (a)(1) of this section must furnish to the attorney a written statement of the information required to be shown on the return. This requirement may be met by furnishing a copy of the return to the attorney. An IRS truncated taxpayer identifying number (TTIN) may be used as the identifying number of the attorney in lieu of the identifying number appearing on the information return filed with the Internal Revenue Service. For provisions relating to the use of TTINs, see § 301.6109-4 of this chapter (Procedure and Administration Regulations). The written statement must be furnished to the attorney on or before February 15 of the year following the calendar year in which the payment was made.

(ii) ***Consolidated reporting.***

(A) The term *consolidated reporting statement* means a grouping of statements the same payor furnishes to the same payee or group of payees on the same date for the same reporting year that includes a statement required under this section. A consolidated reporting statement is limited to statements based on the same relationship of payor to payee as the statement required to be furnished under this section.

(B) A consolidated reporting statement must be furnished on or before February 15 of the year following the calendar year reported. Any statement that otherwise must be furnished on or before January 31 must be furnished on or before February 15 if it is furnished in the consolidated reporting statement.

(b) ***Special rules*** —

(1) ***Joint or multiple payees*** —

(i) ***Check delivered to one payee attorney.*** If more than one attorney is listed as a payee on a check, an information return must be filed under paragraph (a)(1) of this section with respect to the payee attorney to whom the check is delivered.

(ii) ***Check delivered to payee nonattorney.*** If an attorney is listed as a payee on a check but the check is delivered to a nonattorney who is a payee on the check, an information return must be filed under paragraph (a)(1) of this section with respect to the payee attorney listed on the

check. If more than one attorney is listed as a payee on a check but the check is delivered to a nonattorney who is a payee on the check, the information return must be filed with respect to the first-listed payee attorney on the check.

(iii) ***Check delivered to nonpayee.*** If two or more attorneys are listed as payees on a check, but the check is delivered to a person who is not a payee on the check, an information return must be filed under paragraph (a)(1) of this section with respect to the first-listed payee attorney on the check.

(2) ***Attorney required to report payments made to other attorneys.*** If an information return is required to be filed with respect to a payee attorney under paragraph (b)(1) of this section, the attorney with respect to whom the information return is required to be filed (tier-one attorney) must file an information return under this section for any payment that the tier-one attorney makes to other payee attorneys with respect to that check, regardless of whether the tier-one attorney is a payor under paragraph (d)(3) of this section.

(c) ***Exceptions.*** Notwithstanding paragraphs (a) and (b) of this section, a return of information is not required under section 6045(f) with respect to the following payments:

(1) Payments of wages or other compensation paid to an attorney by the attorney's employer.

(2) Payments of compensation or profits paid or distributed to its partners by a partnership engaged in providing legal services.

(3) Payments of dividends or corporate earnings and profits paid to its shareholders by a corporation engaged in providing legal services.

(4) Payments made by a person to the extent that the person is required to report with respect to the same payee the payments or portions thereof under section 6041(a) and § 1.6041-1(a) (or would be required to so report the payments or portions thereof but for the dollar amount limitation contained in section 6041(a) and § 1.6041-1(a)).

(5) Payments made to a nonresident alien individual, foreign partnership, or foreign corporation that is not engaged in trade or business within the United States, and does not perform any labor or personal services in the United States, in the taxable year to which the payment relates. For how a payor determines whether a payment is subject to this exception, see § 1.6041-4(a)(1).

(6) Payments made to an attorney in the attorney's capacity as the person responsible for closing a transaction within the meaning of § 1.6045-4(e)(3) for the sale or exchange or financing of any present or future ownership interest in real estate described in § 1.6045-4(b)(2)(i) through (iv).

(7) Payments made to an attorney in the attorney's capacity as a trustee in bankruptcy under title 11, United States Code.

(d) ***Definitions.*** The following definitions apply for purposes of this section:

(1) ***Attorney*** means a person engaged in the practice of law, whether as a sole proprietorship, partnership, corporation, or joint venture.

(2) ***Legal services*** means all services related to, or in support of, the practice of law performed by, or under the supervision of, an attorney.

(3) ***Payor*** means a person who makes a payment if that person is an obligor on the payment, or the obligor's insurer or guarantor. For example, a payor includes—

(i) A person who pays a settlement amount to an attorney of a client who has asserted a tort, contract, violation of law, or workers' compensation claim against that person; and

(ii) The person's insurer if the insurer pays the settlement amount to the attorney.

(4) ***Payments to an attorney*** include payments by check or other method such as cash, wire or electronic transfer. Payment by check to an attorney means a check on which the attorney is named as a sole, joint, or alternative payee. The attorney is the payee on a check written to the attorney's client trust fund. However, the attorney is not a payee when the attorney's name is included on the payee line as "in care of," such as a check written to "client c/o attorney," or if the attorney's name is included on the check in any other manner that does not give the attorney the right to negotiate the check.

(5) ***Amount of the payment*** means the amount tendered (e.g., the amount of a check) plus the amount required to be withheld from the payment under section 3406(a)(1), because a condition for withholding exists with respect to the attorney for whom an information return is required to be filed under paragraph (a)(1) of this section.

(e) ***Attorney to furnish TIN.*** A payor that is required to file an information return under this section must solicit a TIN from the attorney at or before the time the payor makes a payment to the attorney. The attorney must furnish the correct TIN to the payor, but is not required to certify the TIN. A payment for which a return of information is required under this section is subject to backup withholding under section 3406 and the regulations thereunder.

(f) ***Examples.*** The following examples illustrate the provisions of this section. The examples assume that P is not a payor with respect to A, the attorney, under section 6041. See section 6041 and the regulations thereunder for rules regarding whether P is required under section 6041 to file information returns with respect to C. The examples are as follows:

Example 1. One check—joint payees—taxable to claimant. Employee C, who sues employer P for back wages, is represented by attorney A. P settles the suit for $300,000. The $300,000 represents taxable wages to C under existing legal principles. P writes a settlement check payable jointly to C and A in the amount of $200,000, net of income and FICA tax withholding with respect to C. P delivers the check to A. A retains $100,000 of the payment as compensation for legal services and disburses the remaining $100,000 to C. P must file an information return with respect to A for $200,000 under paragraph (a)(1) of this section. P also must file an information return with respect to C under sections 6041 and 6051, in the amount of $300,000. See §§ 1.6041-1(f) and 1.6041-2.

Example 2. One check—joint payees—excludable to claimant. C, who sues corporation P for damages on account of personal physical injuries, is represented by attorney A. P settles the suit for a $300,000 damage payment that is excludable from C's gross income under section 104(a)(2). P writes a $300,000 settlement check payable jointly to C and A and delivers the check to A. A retains $120,000 of the payment as compensation for legal services and remits the remaining $180,000 to C. P must file an information return with respect to A for $300,000 under paragraph (a)(1) of this section. P does not file an information return with respect to tax-free damages paid to C.

Example 3. Separate checks—taxable to claimant. C, an individual plaintiff in a suit for lost profits against corporation P, is represented by attorney A. P settles the suit for $300,000, all of which will be includible in C's gross income. A requests P to write two checks, one payable to A in the amount of $100,000 as compensation for legal services and the other payable to C in the amount of $200,000. P writes the checks in accordance with A's instructions and delivers both checks to A. P must file an information return with respect to A for $100,000 under paragraph (a)(1) of this section. Pursuant to § 1.6041-1(a) and (f), P must file an information return with respect to C for the $300,000.

Example 4. Check made payable to claimant, but delivered to nonpayee attorney. Corporation P is a defendant in a suit for damages in which C, the plaintiff, has been represented by attorney A throughout the proceeding. P settles the suit for $300,000. Pursuant to a request by A, P writes the $300,000 settlement check payable solely to C and delivers it to A at A's office. P is not required to file an information return under paragraph (a)(1) of this section with respect to A, because there is no payment to an attorney within the meaning of paragraph (d)(4) of this section.

Example 5. Multiple attorneys listed as payees. Corporation P, a defendant, settles a lost profits suit brought by C for $300,000 by issuing a check naming C's attorneys, Y, A, and Z, as payees in that order. Y, A, and Z do not belong to the same law firm. P delivers the payment to A's office. A deposits the check proceeds into a trust account and makes payments by separate checks to Y of $30,000 and to Z of $15,000, as compensation for legal services, pursuant to authorization from C to pay these amounts. A also makes a payment by check of $155,000 to C. A retains $100,000 as compensation for legal services. P must file an information return for $300,000 with respect to A under paragraphs (a)(1) and (b)(1)(i) of this section. A, in turn, must file information returns with respect to Y of $30,000 and to Z of $15,000 under paragraphs (a)(1) and (b)(2) of this section because A is not required to file information returns under section 6041 with respect to A's payments to Y and Z because A's role in making the payments to Y and Z is merely ministerial. See § 1.6041-1(e)(1), (e)(2) and (e)(5) *Example 7* for information reporting requirements with respect to A's payments to Y and Z. As described in *Example 3*, P must also file an information return with respect to C, pursuant to § 1.6041-1(a) and (f).

Example 6. Amount of the payment—attorney does not provide TIN. (i) Corporation P, a defendant, settles a suit brought by C for $300,000 of damages. P will pay the damages by a joint check to C and his attorney, A. A failed to furnish P with A's TIN. P is required to deduct and withhold 28 percent tax from the $300,000 under section 3406(a)(1)(A) and paragraph (e) of this section. P writes the check to C and A as joint payees, in the amount of $216,000. P also must file an information return with respect to A under paragraph (a)(1) of this section in the amount of $300,000, as prescribed in paragraph (d)(5) of this section. If the damages are reportable under section 6041 because they are not excludable from gross income under existing legal principles, and are not subject to any exception under section 6041, P must also file an information return with respect to C pursuant to § 1.6041-1(a) and (f) in the amount of $300,000.

(ii) Rather than paying by joint check to C and A, P will pay the damages by a joint check to C and F, A's law firm. F failed to furnish its TIN to P. P is required to deduct and withhold 28 percent tax from the $300,000 under section 3406(a)(1)(A) and paragraph (e) of this section. P writes the check to C and F as joint payees, in the amount of $216,000. P also must file an information return with respect to F under paragraph (a)(1) of this section in the amount of $300,000, as prescribed in paragraph (d)(5) of this section. If the damages are reportable under section 6041 because they are not excludable from gross income under existing legal principles, and are not subject to any exception under section 6041, P must also file an information return with respect to C pursuant to § 1.6041-1(a) and (f) in the amount of $300,000.

Example 7. Home mortgage lending transaction. (i) Individual P agrees to purchase a house that P will use solely as a residence. P obtains a loan from lender L to finance a portion of the cost of acquiring the house. L disburses loan proceeds of $300,000 to attorney A, who is the settlement agent, by a check naming A as the sole payee. A, in turn, writes checks from the loan proceeds and from other funds provided by P to the persons involved in the purchase of the house, including a check for $800 to attorney B, whom P hired to provide P with legal services relating to the closing.
(ii) P, not L, is the payor of the payment to A under paragraph (d)(3) of this section. P, however, is not required to file an information return with respect to A under paragraph (a)(1) of this section because the payment was not made in the course of P's trade or business. Even if P made the payment in the course of P's trade or business, P would not be required to file an information return under section 6045(f) with respect to A because P is excepted under paragraph (c)(6) of this section.

(iii) A is not required to file an information return under paragraph (a)(1) of this section with respect to the payment to B because A is not the payor as that term is defined under paragraph (d)(3) of this section. A is not required to file an information return under paragraph (b)(2) with respect to the payment to B because A was listed as sole payee on the check it received from P. See section 6041 and § 1.6041-1(e) for whether A or L must file information returns under that section. See section 6045(e) and § 1.6045-4 for whether A is required to file an information return under that section.

Example 8. Business mortgage lending transaction. The facts are the same as in *Example 7* except that P buys real property that P will use in a trade or business. P, not L, is the payor of the payment to A under paragraph (d)(3) of this section. P, however, is not required to file an information return under section 6045(f) with respect to A because P is excepted under paragraph (c)(6) of this section. A is not required to file an information return under paragraphs (a) or (b)(2) of this section with respect to the payment to B. See section 6041 and § 1.6041-1(e) to determine whether P or L must file an information return under that section with respect to the payment to A, and whether P or A must file a return with respect to the payment to B. See section 6045(e) for rules regarding whether A is required to file information returns under that section.

Example 9. Qualified settlement fund. Corporation P agrees to settle for $300,000 a class action lawsuit brought by attorney A on behalf of a claimant class. Pursuant to the settlement agreement and a preliminary order of approval by a court, A establishes a bank account in the name of Q Settlement Fund, which is a qualified settlement fund (QSF) under § 1.468B-1. A is also designated by the court as the administrator of the QSF. Corporation P transfers $300,000 by wire in Year 1 to A, who deposits the funds into the Q Settlement Fund. In Year 2, the court approves an award of attorney's fees of $105,000 for A. In Year 2, Q Settlement Fund delivers $105,000 to A. P is required to file an information return under paragraph (a) of this section with respect to A for Year 1 for the $300,000 payment it made to A. The Q Settlement Fund is required to file an information return under section 6041(a) and § 1.468B-2(l)(2) with respect to A for Year 2 for the $105,000 payment it made to A.

(g) ***Cross reference to penalties.*** See the following sections regarding penalties for failure to comply with the requirements of section 6045(f) and this section:

(1) Section 6721 for failure to file a correct information return.

(2) Section 6722 for failure to furnish a correct payee statement.

(3) Section 6723 for failure to comply with other information reporting requirements (including the requirement to furnish a TIN).

(4) Section 7203 for willful failure to supply information (including a TIN).

(h) ***Effective/applicability date.*** The rules in this section apply to payments made on or after January 1, 2007. The amendments to paragraph (a)(3)(i) apply to payee statements due after December 31, 2014. For payee statements due before January 1, 2015, § 1.6045-5(a)(3)(i) (as contained in 26 CFR part 1, revised April 2013) shall apply.

[T.D. 9270, 71 FR 39551, July 13, 2006, as amended at 71 FR 47080, Aug. 16, 2006; T.D. 9504, 75 FR 64097, Oct. 18, 2010; T.D. 9675, 79 FR 41130, July 15, 2014]

§ 1.6045A-1 Statements of information required in connection with transfers of securities.

(a) ***Duty to furnish transfer statement*** —

(1) ***In general*** —

(i) ***Transfers between accounts.*** Except as provided in paragraphs (a)(1)(ii) through (vi) of this section, every applicable person (transferor) (as described in paragraph (a)(4) of this section) that transfers custody of a specified security to a broker (as described in paragraph (a)(5) of this section) must furnish to the receiving broker a transfer statement that includes the information described in paragraph (b) of this section with respect to the transferred security. Except as provided in paragraphs (b)(1)(vii) and (b)(3) of this section (relating to noncovered securities and certain securities for which basis is determined under an average basis method), a transferor must furnish a separate statement for each security and, if transferring custody of the same security acquired on different dates or at different prices, for each acquisition.

(ii) ***Cash on delivery accounts and multiple broker arrangements*** —

(A) ***Sales.*** A custodian or other transferor that transfers custody of a security to a broker solely to effect a sale must furnish a transfer statement only to the broker that effects the sale. However, no transfer statement is required if the transferor itself either effects the sale or is required to report the sale of the security under § 1.6045-1.

(B) ***Purchases.*** A broker that effects a purchase but does not receive custody of the security must furnish a transfer statement to the broker receiving custody. However, no transfer statement is required if the broker effects the purchase solely at the instruction of the broker receiving custody.

(iii) ***Exempt recipients and exempt foreign payees.*** A transferor is not required to furnish a transfer statement for a security that, after the transfer, is held for a customer that is an exempt recipient under § 1.6045-1(c)(3)(i) or an exempt foreign person under § 1.6045-1(g)(1)(i).

(iv) ***Securities lending transactions—transferor as principal.*** A transferor that lends or borrows securities as a principal is not required to furnish a transfer statement for a security that is transferred pursuant to such lending or borrowing arrangement (for example, when a customer opens or closes a short sale). This exception does not apply when a transferor transfers a

security under a lending or borrowing arrangement of the customer. This exception also does not apply when a transferor transfers a previously borrowed security to another account of the same customer (for example, to satisfy an existing short sale obligation). *See* paragraph (b)(4) of this section.

(v) ***Certain money market funds.*** A transferor of stock in a regulated investment company described in § 1.6045-1(c)(3)(vi) is not required to furnish a transfer statement.

(vi) ***Exception for transfers of specified securities that are reportable as digital assets.*** No transfer statement is required under paragraph (a)(1)(i) of this section with respect to a specified security, the sale of which is reportable as a digital asset after the application of the special coordination rules under § 1.6045-1(c)(8). A transferor that chooses to provide a transfer statement with respect to a specified security described in the preceding sentence that is a tokenized security described in § 1.6045-1(c)(8)(i)(D) that reports some or all of the information described in paragraph (b) of this section is not subject to penalties under section 6722 of the Code for failure to report this information correctly.

(2) ***Format of transfer statement.*** The transfer statement must be furnished in writing unless both the transferor and the receiving broker agree to a different format or method before the transfer. If a transfer occurs between accounts at the same or affiliated entities, a transfer statement is deemed to have been furnished and received if the required information, including any required adjustments, is incorporated into the records for the recipient account.

(3) ***Time for furnishing statement.*** A transferor must furnish a transfer statement within fifteen days after the date of settlement for the transfer.

(4) ***Applicable person effecting transfer. Applicable person*** means any transferor who is a person described in § 1.6045-1(a)(1), a person that acts as a custodian of securities in the ordinary course of a trade or business, an issuer of securities, a trustee or custodian of an individual retirement plan, or any agent of these persons. Applicable person does not include the beneficial owner of a security or any agent substituted for an undisclosed beneficial owner, any governmental unit or agency or instrumentality of a governmental unit holding escheated securities, or any organization that holds and transfers obligations among members of the organization as a service to its members.

(5) ***Broker receiving custody.*** Solely for purposes of this section, *broker* means any person described in § 1.6045-1(a)(1), any person that acts as a custodian of securities in the ordinary course of a trade or business, any issuer of securities, and any agent of these persons. Broker does not include the beneficial owner of a security or any agent substituted for an undisclosed beneficial owner, any governmental unit or agency or instrumentality of a governmental unit holding escheated securities, or any organization that holds and transfers obligations among members of the organization as a service to its members.

(6) ***Other terms.*** For purposes of this section, the terms sale, specified security, covered security, noncovered security, and customer have the same meaning as in § 1.6045-1(a)(9), (a)(14), (a)(15), (a)(16), and (h)(1).

(7) ***Examples.*** The following examples illustrate the rules of this paragraph (a). Unless otherwise stated, in each example the customer is not treated as an exempt recipient under § 1.6045-1(c)(3)(i) or an exempt foreign person under § 1.6045-1(g)(1)(i). The examples are as follows:

Example 1. V, an entity treated as an exempt recipient under § 1.6045-1(c)(3)(i), owns a security in an account with E, a broker. On February 1, 2012, V instructs E to transfer custody of the security to an account V maintains with F, another broker. Because E may treat V as an exempt recipient under § 1.6045-1(c)(3)(i), under paragraph (a)(1)(iii) of this section, E is not required to furnish a transfer statement.

Example 2. W maintains an account with G, a custodial broker. On August 1, 2012, W instructs G to purchase a security. G places an order to purchase the security with H, a broker with which G has a clearing agreement. W does not maintain a direct account with H. H executes the purchase and has the security delivered to G. Under paragraph (a)(1)(ii)(B) of this section, H is not required to furnish a transfer statement because G received custody of the security and H purchased the security solely at the instruction of G.

Example 3. Assume the same facts as in *Example 2* except that W later instructs G to sell the security. G places an order with H to sell the security. H executes the sale. G delivers the security to settle the sale. G is required to report the sale of the security under § 1.6045-1. Therefore, under paragraph (a)(1)(ii)(A) of this section, G is not required to furnish a transfer statement.

> *Example 4.* (i) X maintains an account with J, an introducing broker. J contracts with K, a clearing broker, to allow K to execute trades on J's behalf under a clearing agreement. K uses L, a custodian of securities in the ordinary course of a trade or business, to hold custody of the securities of K's customers. K maintains a separate disclosed account for X as a clearing broker with custody at L. On May 1, 2012, X instructs J to purchase a security for X as the beneficial owner. J instructs K to purchase the security. K effects the purchase and has the security delivered to L.
> (ii) K is a broker and therefore is an applicable person that is a transferor within the meaning of paragraph (a)(4) of this section. L acts as a custodian of securities in the ordinary course of a trade or business and therefore is a broker within the meaning of paragraph (a)(5) of this section. Because K effects the purchase of the security but does not receive custody of the security, under paragraphs (a)(1)(i) and (a)(1)(ii)(B) of this section, K must furnish a transfer statement to L.

> *Example 5.* (i) Assume the same facts as in *Example 4* except that X later instructs J to sell the security. J instructs K to sell the security. K sells the security. L transfers custody of the security to settle X's sale in accordance with its custody arrangement with K by delivering the security to the purchasing broker. K deposits the sale proceeds in X's account with K. K is required to report the sale of the security under § 1.6045-1.
> (ii) L acts as a custodian of securities in the ordinary course of a trade or business and therefore is an applicable person that is a transferor within the meaning of paragraph (a)(4) of this section. Because L transfers custody of the security to the purchaser's broker solely to effect the sale, under paragraphs (a)(1)(i) and (a)(1)(ii)(A) of this section, L must furnish a transfer statement to K.

(iii) If the terms of their custody arrangement so provide, K may furnish the transfer statement as L's agent and satisfy L's duty to furnish the transfer statement under paragraphs (a)(1)(i) and (a)(1)(ii)(A) of this section. Under paragraph (a)(2) of this section, K may satisfy this duty by maintaining the information required on the transfer statement, including all required adjustments, in its records for X's account.

Example 6. (i) Y, an investment advisor, wants to purchase shares of stock in C, a corporation, for several of Y's customers. Y establishes a delivery-on-payment account with M, a broker, and provides M a standing instruction to deliver stock purchased in the account to Y's account at N, a custodian of securities in the ordinary course of a trade or business. On November 1, 2012, Y enters into a cash-on-delivery transaction by instructing M to purchase shares of C stock. M executes the purchase and effects delivery of the C stock to N.
(ii) M is a broker and therefore is an applicable person that is a transferor within the meaning of paragraph (a)(4) of this section. N acts as a custodian of securities in the ordinary course of a trade or business and therefore is a broker within the meaning of paragraph (a)(5) of this section. Because M effects the purchase of the stock and N receives custody of the stock, under paragraphs (a)(1)(i) and (a)(1)(ii)(B) of this section, M must furnish a transfer statement to N.

Example 7. (i) Z owns shares of stock in C, a corporation, in an account with O, a broker. On February 1, 2013, Z instructs O to transfer the C stock to C so that ownership is held on the books of the issuer. C has an arrangement with D, a transfer agent, to keep records of ownership of the company's stock, how that stock is held, and how many shares each investor owns. O transfers the stock to D.
(ii) O is a broker and therefore is an applicable person that is a transferor within the meaning of paragraph (a)(4) of this section. D is an agent of C, the issuer of the stock, and therefore is a broker within the meaning of paragraph (a)(5) of this section. Because O transfers custody of the stock to D, under paragraph (a)(1)(i) of this section, O must furnish a transfer statement to D.

Example 8. Assume the same facts as in *Example 7* except that Z later instructs D to transfer the stock to an account Z maintains with P, another broker. D transfers the stock to P. D is an agent of C, the issuer of the stock, and therefore is an applicable person that is a transferor within the meaning of paragraph (a)(4) of this section. Because P is a broker and D transfers custody of the stock to P, under paragraph (a)(1)(i) of this section, D must furnish a transfer statement to P.

(b) ***Information required*** —

(1) ***In general.*** For all specified securities, each transfer statement must include the information described in this paragraph (b)(1).

(i) ***Statement date.*** The date the statement is furnished.

(ii) ***Applicable person effecting transfer.*** The name, address, and telephone number of the applicable person furnishing the statement.

(iii) ***Broker receiving custody.*** The name, address, and telephone number of the broker receiving custody of the security.

(iv) ***Customers.*** The name and account number of the customer or customers for the account from which the security is transferred and, if different, the name and account number of the customer or customers for the account to which the security is transferred.

(v) ***Security identifiers.*** The Committee on Uniform Security Identification Procedures (CUSIP) number of the security transferred (if applicable) or other security identifier number that the Secretary may designate by publication in the FEDERAL REGISTER or in the Internal Revenue Bulletin (*see* § 601.601(d)(2) of this chapter), quantity of shares, units, or amounts, and classification of the security (such as stock or debt).

(vi) ***Transfer dates.*** The date the transfer was initiated and the settlement date of the transfer (if known when furnishing the statement).

(vii) ***Adjusted basis and acquisition date.*** The total adjusted basis of the security, the original acquisition date of the security, and, if applicable, the holding period adjustment required by section 1091. The transferor must determine this information as provided under §§ 1.6045-1(d), 1.6045-1(m), and 1.6045-1(n), including reporting the adjusted basis of the security in U.S. dollars. If the basis of the transferred security is determined using an average basis method (as described in § 1.1012-1(e)), the transferor may report any securities acquired more than five years before the transfer on a single statement on which the original acquisition date is reported as "VARIOUS" if the other information reported on the statement applies to all of the securities.

(2) ***Examples.*** The following examples illustrate the rules of paragraph (b)(1) of this section:

> *Example 1.* (i) In a single account with P, a broker, Q purchases three lots of 100 shares of stock each in C, a corporation, at different prices on April 2, 2012, July 2, 2012, and October 2, 2012. Q instructs P to enroll the shares of the C stock in P's dividend reinvestment plan and to average the basis of the shares of the C stock. All of the C stock purchased by P has the same CUSIP number. On September 13, 2013, less than five years after the acquisition dates for all three lots, Q transfers all 300 shares of the C stock to an account with another broker. (ii) Under paragraph (a)(1)(i) of this section, P must furnish three transfer statements. Under paragraph (b)(1) of this section, one statement must report the transfer of 100 shares with an original acquisition date of April 2, 2012, one statement must report the transfer of 100 shares with an original acquisition date of July 2, 2012, and one statement must report the transfer of 100 shares with an original acquisition date of October 2, 2012.

Example 2. Assume the same facts as in *Example 1* except that Q transfers the shares to the account with the other broker on September 13, 2017. For the 100 shares purchased on April 2, 2012, and the 100 shares purchased on July 2, 2012, under paragraph (b)(1)(vii) of this section, P may furnish a single transfer statement reporting the transfer of 200 shares with the original acquisition date as "VARIOUS" instead of furnishing two separate transfer statements.

Example 3. (i) Assume the same facts as in *Example 1* except that, on June 15, 2012, Q sells the 100 shares purchased on April 2, 2012, at a loss.
(ii) Under paragraph (a)(1)(i) of this section, P must furnish two transfer statements. Under paragraph (b)(1)(vii) of this section and § 1.6045-1(d)(6)(iii) and (d)(7)(ii), P must determine the average basis for the 200 transferred shares and the date for computing whether any gain or loss with respect to the stock purchased on July 2, 2012, is long-term or short-term by applying the rules for broker reporting of wash sales to the stock purchased on July 2, 2012. Therefore, on both transfer statements, P must increase the average basis of the stock by the amount of loss disallowed under section 1091 on the sale of the 100 shares purchased on April 2, 2012. On the transfer statement reporting the transfer of the 100 shares purchased on July 2, 2012, P must adjust the holding period of the July 2, 2012, shares in accordance with section 1091.

Example 4. (i) R, an employee of C, a corporation, participates in C's employee stock purchase program that satisfies the requirements of section 423. D administers the plan. R purchases stock in the plan at a 15 percent discount to the fair market value of the stock determined on the date of purchase. R purchases stock through the plan during 2012 until R terminates employment on October 15, 2012. R later instructs D to transfer the plan shares to S, a broker.
(ii) D is the agent of C, the issuer of the securities, and therefore is an applicable person within the meaning of paragraph (a)(4) of this section. Because S is a broker and D transfers custody of the stock to S, under paragraph (a)(1)(i) of this section, D must furnish a transfer statement to S.

(iii) Under paragraph (b)(1)(vii) of this section and § 1.6045-1(d)(6)(ii)(A), D must report adjusted basis on the transfer statement based on the amount paid by R. Under paragraph (b)(1)(vii) of this section and § 1.6045-1(d)(6)(ii)(A), D is permitted, but is not required, to increase the adjusted basis for the amount (if any) includible as wage income by R for R's purchases of the stock.

(3) ***Additional information required for a transfer of a debt instrument.*** In addition to the information required in paragraph (b)(1) of this section, for a transfer of a debt instrument that is a covered security, the following additional information is required:

(i) A description of the payment terms used by the broker to compute any basis adjustments under § 1.6045-1(n);

(ii) The issue price of the debt instrument;

(iii) The issue date of the debt instrument (if different from the original acquisition date of the debt instrument);

(iv) The adjusted issue price of the debt instrument as of the transfer date;

(v) The customer's initial basis in the debt instrument;

(vi) Any market discount that has accrued as of the transfer date (as determined under § 1.6045-1(n));

(vii) Any bond premium that has been amortized as of the transfer date (as determined under § 1.6045-1(n));

(viii) Any acquisition premium that has been amortized as of the transfer date (as determined under § 1.6045-1(n));

(ix) Whether the transferring broker has computed any of the information described in this paragraph (b)(3) by taking into account one or more elections described in § 1.6045-1(n), and, if so, which election or elections were taken into account by the transferring broker; and

(x) For a transfer that occurs on or after January 1, 2016, the last date on or before the transfer date that the transferor made an adjustment for a particular item (for example, the last date on or before the transfer date that bond premium was amortized). A broker, however, may rely on this paragraph (b)(3)(x) for a transfer of a covered security that occurs on or after June 30, 2015, and before January 1, 2016.

(4) ***Additional information required for option transfers.*** In addition to the information required in paragraph (b)(1) of this section, for a transfer of an option that is a covered security, the following additional information is required:

(i) The date of grant or acquisition of the option;

(ii) The amount of premium paid or received;

(iii) Any other information required to fully describe the option, which may include a security identifier used by option exchanges, or details about the underlying asset, quantity covered, exercise type, strike price, and maturity date; and

(iv) For a transfer of an option described in § 1.6045-1(m)(3) (section 1256 option) that occurs on or after January 1, 2016, the original basis of the option and the fair market value of the option as of the end of the prior calendar year.

(5) ***Format of identification.*** An applicable person furnishing a transfer statement and a broker receiving the transfer statement may agree to combine the information required in paragraphs (b)(1), (b)(3), and (b)(4) of this section in any format or to use a code in place of one or more required items. For example, a transferor and a receiving broker may agree to use a single code to represent the broker instead of the broker's name, address, and telephone number, or may use a security symbol or other identification number or scheme instead of the security identifier required by paragraphs (b)(1), (b)(3), and (b)(4) of this section. As another example, a transferor and a receiving broker may agree to use a security identifier for an exchange-traded option if that information would be sufficient to inform the receiving broker of the terms for that option.

(6) ***Transfers of noncovered securities.*** The information described in paragraphs (b)(1)(vii), (b)(3), (b)(4), (b)(8), and (b)(9) of this section is not required for a transfer of a noncovered security if the transfer statement identifies the security as a noncovered security. A transferor that chooses to report nonrequired information is not subject to penalties under section 6722 for failure to report this information correctly if the transfer statement identifies the security as a noncovered security. A single transfer statement may report the transfer of multiple noncovered securities if the transfer statement clearly conveys, either specifically or generally, the information described in paragraph

(b)(1)(v) of this section to identify each security. For purposes of this paragraph (b)(6), a transferor must treat a security for which a broker makes a single-account election described in § 1.1012-1(e)(11)(i) as a covered security.

(7) ***Transfers of borrowed securities.*** The transfer statement must indicate that a transferred security is borrowed if the transferor knows that the security is transferred pursuant to a lending or borrowing arrangement. The transfer statement must not report an adjusted basis If the transferor knows that the transferred security is lent or borrowed pursuant to a short sale. The receiving broker may be subject to special transfer reporting rules upon receipt of a borrowed security if the security is used to satisfy an existing short sale obligation. *See* § 1.6045-1(c)(3)(xi)(C).

(8) ***Transfers pursuant to an inheritance*** —

(i) ***In general.*** A transfer statement for a transfer of a security from a decedent or decedent's estate must indicate that the security is inherited. The transfer statement must report the date of death as the original acquisition date and must report adjusted basis according to the instructions or valuations furnished by an authorized representative of the estate, including any required adjustments to basis for property acquired from a decedent. If a transferor has not received instructions or valuations from an authorized representative, the transferor must report basis as the fair market value of the security on the date of death.

However, if the transferor neither knows nor can readily ascertain the fair market value of the security on the date of death at the time the transfer statement is prepared, the transfer statement must indicate that the transfer consists of an inherited security but may otherwise report the security as if it were a noncovered security. If the transferor cannot identify which securities in a joint account have been transferred from the decedent, the transferor must treat each security in the account as if it were a noncovered security but must not indicate that any security is an inherited security.

(ii) ***Transfers of securities to satisfy a cash legacy.*** If a security is transferred from a decedent or a decedent's estate to satisfy a cash legacy, paragraphs (b)(1), (b)(3), and (b)(4) of this section apply and paragraph (b)(8)(i) of this section does not apply.

(iii) ***Subsequent transfers of inherited securities.*** A transfer statement must indicate that the transfer consists of an inherited security if a prior transfer statement reported the security as inherited.

(9) ***Gift or deemed gift transfers*** —

(i) ***In general.*** A transfer statement for a security transferred to a different owner (other than a transfer that the transferor knows is pursuant to a lending or borrowing arrangement or is from a decedent or decedent's estate) must indicate that the security is a gift and must report the date of the gift (if known when furnishing the statement) and the fair market value of the gift on that date (if known or readily ascertainable at the time the transfer statement is prepared). The transfer statement must report the adjusted basis and original acquisition date of the security in the hands of the donor. However, if the transfer is between persons for whom gift-related basis adjustments are inapplicable or between accounts that share at least one common customer, the transferor must apply paragraph (b)(1) of this section as if the security were not a gift or deemed gift.

(ii) ***Subsequent transfers of gifts by the same customer.*** If a transferor transfers to a different account of the same customer a security that a prior transfer statement reported as a gifted security, the transferor must include on the transfer statement the information described in

paragraph (b)(9)(i) of this section for the date of the gift to the customer. If the prior transfer statement did not report a date for the gift, the transferor must treat the settlement date for the prior transfer as the date of the gift.

(iii) ***Examples.*** The following examples illustrate the rules of this paragraph (b)(9):

Example 1. X instructs S, a broker, to give to Y stock in a publicly traded company that X holds in an account with S. The stock is a covered security. On X's instruction, S transfers custody of the stock to T, Y's broker. The transfer settles on August 15, 2013. Under paragraph (b)(9)(i) of this section, S must provide a transfer statement to T that identifies the securities as gifted securities and indicates X's adjusted basis and original acquisition date. If S knows the settlement date, the transfer statement must also indicate that the date of the gift was August 15, 2013, and, because S can readily ascertain the fair market value of the stock on August 15, 2013, the fair market value of the stock on that date.

Example 2. Assume the same facts as in *Example 1* except that, one year later, Y transfers the stock to an account in his name with U, another broker. Under paragraph (b)(9)(ii) of this section, T must provide a transfer statement to U that identifies the securities as gifted securities and indicates X's adjusted basis and original acquisition date of the stock. The transfer statement must also indicate the date of the gift, August 15, 2013, and the fair market value of the stock on that date either by reporting the value that S reported to T or, because T can readily ascertain the fair market value of the stock on August 15, 2013, by determining the fair market value of the stock on that date.

(10) ***Specific identification of securities.*** Except as provided in § 1.1012-1(e)(7)(ii), a transfer statement must report a transfer of less than the entire position in an account of a security that was acquired on different dates or at different prices consistently with a customer's adequate and timely identification of the security to be transferred. *See* § 1.1012-1(c). If the customer does not provide an adequate and timely identification for the transfer, a transferor must first report the transfer of any securities in the account for which the transferor does not know the acquisition or purchase date followed by the earliest securities purchased or acquired, whether covered securities or noncovered securities.

(11) ***Information from other parties and other accounts*** —

(i) ***Transfer and issuer statements and transfers pursuant to an inheritance.*** When reporting a transfer of a covered security, a transferor must take into account all information, other than the classification of the security (such as stock), furnished on a transfer statement, all information furnished or deemed furnished on an issuer statement (as described in § 1.6045B-1), and all instructions and valuations furnished by an authorized representative of the estate of a decedent, unless the statement or instructions are incomplete or the broker has actual knowledge that they are incorrect. A transferor may treat a customer as a minority shareholder when taking the information on an issuer statement into account unless the transferor knows that the customer is a majority shareholder and the issuer statement reports the action's effect on the basis of majority shareholders. Any failure to report correct information that arises solely from reliance on information furnished on a transfer statement or issuer statement or by an authorized representative of the estate is deemed to be due to reasonable cause for purposes of penalties under section 6722. *See* § 301.6724-1(a)(1) of this chapter.

(ii) ***Other information.*** A transferor is permitted, but not required, to take into account information about a covered security other than what is furnished on a transfer statement or issuer statement or by an authorized representative of the estate of a decedent, including any information the transferor has about securities held by the same customer in other accounts with the transferor. For purposes of penalties under section 6722, a transferor that takes into account information received from a customer or third party other than information furnished on a transfer statement or issuer statement or by an authorized representative of the estate of a decedent is deemed to have relied upon this information in good faith if the transferor neither knows nor has reason to know that the information is incorrect. *See* § 301.6724-1(c)(6) of this chapter.

(12) ***Failure to receive a complete transfer statement*** —

(i) ***In general.*** A receiving broker that has not received a complete transfer statement as required under paragraph (a)(3) of this section for the transfer must request a complete statement from the transferor unless, under paragraph (a) of this section, the transferor has no duty to furnish a transfer statement for the transfer. The receiving broker is only required to make this request once. If the receiving broker does not receive a complete transfer statement after requesting it, the receiving broker may treat the security as a noncovered security upon its subsequent sale or transfer. A transfer statement for a covered security is complete if, in the view of the receiving broker, it provides sufficient information to comply with § 1.6045-1 when reporting the sale of the security. A transfer statement for a noncovered security is complete if it indicates that the security is a noncovered security.

(ii) ***Transition rules for transfers of debt instruments, options, and securities futures contracts.*** If an option described in § 1.6045-1(a)(14)(iii), a securities futures contract described in § 1.6045-1(a)(14)(iv), or a debt instrument described in § 1.6045-1(a)(15)(i)(C) is transferred in 2014 and no transfer statement is received, the receiving broker is not required to request a transfer statement from the transferor and may treat the security as a noncovered security. If a debt instrument described in § 1.6045-1(a)(15)(i)(D) is transferred in 2016 and no transfer statement is received, the receiving broker is not required to request a transfer statement from the transferor and may treat the security as a noncovered security.

(c) ***Reporting by other parties after a transfer*** —

(1) ***In general.*** A transferor that has furnished a transfer statement must furnish a corrected statement for a covered security within fifteen days of receiving a transfer statement, an issuer statement (as described in § 1.6045B-1), or instructions or valuations from an authorized representative of an estate, that provides information under paragraph (b) of this section that was not reported on the initial transfer statement.

(2) ***Exception.*** A transferor is not required to furnish a corrected transfer statement for a covered security under this paragraph (c) if the transferor receives the transfer statement or issuer statement or receives the instructions or valuations from an authorized representative of an estate more than eighteen months after the transferor furnished the transfer statement.

(d) ***Effective/applicability dates.*** This section applies to:

(1) A transfer on or after January 1, 2011, of stock other than stock in a regulated investment company within the meaning of § 1.1012-1(e)(5);

(2) A transfer on or after January 1, 2012, of stock in a regulated investment company;

(3) A transfer on or after January 1, 2015, of an option described in § 1.6045-1(a)(14)(iii), a securities futures contract described in § 1.6045-1(a)(14)(iv), or a debt instrument described in § 1.6045-1(a)(15)(i)(C); and

(4) A transfer on or after January 1, 2017, of a debt instrument described in § 1.6045-1(a)(15)(i)(D).

[T.D. 9504, 75 FR 64097, Oct. 18, 2010, as amended by T.D. 9616, 78 FR 23132, Apr. 18, 2013; T.D. 9713, 80 FR 13238, Mar. 13, 2015; T.D. 9750, 81 FR 8154, Feb. 18, 2016; 81 FR 24702, Apr. 27, 2016; T.D. 10000, 89 FR 56580, July 9, 2024]

§ 1.6045B-1 Returns relating to actions affecting basis of securities.

(a) *In general* —

(1) ***Information required.*** Except as provided in paragraphs (a)(4) and (5) of this section, an issuer of a specified security within the meaning of § 1.6045-1(a)(14)(i) through (iv) that takes an organizational action that affects the basis of the security must file an issuer return setting forth the following information and any other information specified in the return form and instructions:

(i) ***Reporting issuer.*** The name and taxpayer identification number of the reporting issuer.

(ii) ***Security identifiers.*** The identifiers of each security involved in the organizational action including, as applicable, the Committee on Uniform Security Identification Procedures (CUSIP) number or other security identifier number that the Secretary may designate by publication in the FEDERAL REGISTER or in the Internal Revenue Bulletin (*see* § 601.601(d)(2) of this chapter), classification of the security (such as stock), account number, serial number, and ticker symbol, as well as any descriptions about the class of security affected.

(iii) ***Contact at reporting issuer.*** The name, address, e-mail address, and telephone number of a contact person at the issuer.

(iv) ***Information about action.*** The type or nature of the organizational action including, as applicable, the date of the action or the date against which shareholders' ownership is measured for the action.

(v) ***Effect of the action.*** The quantitative effect of the organizational action on the basis of the security in the hands of a U.S. taxpayer as an adjustment per share or as a percentage of old basis, including a description of the calculation, the applicable Internal Revenue Code section and subsection upon which the tax treatment is based, the data supporting the calculation such as the market values of securities and valuation dates, any other information necessary to implement the adjustment including the reportable taxable year, and whether any resulting loss may be recognized.

(2) *Time for filing the return* —

(i) ***In general.*** An issuer must file an issuer return with the IRS pursuant to the prescribed form and instructions on or before the 45th day following the organizational action, or, if earlier, January 15 of the year following the calendar year of the organizational action. For purposes of this paragraph (a)(2), a redemption occurs on the last day a holder may redeem a security. The issuer may file the return before the organizational action if the quantitative effect on basis is determinable beforehand.

(ii) ***Reasonable assumptions.*** To report the quantitative effect on basis by the due date in paragraph (a)(2)(i) of this section, an issuer may make reasonable assumptions about facts that cannot be determined before the due date. An issuer must file a corrected return within forty-five days of determining facts that result in a different quantitative effect on basis from what the issuer previously reported. However, for purposes of this paragraph (a)(2)(ii), an issuer must treat a payment that may be a dividend consistently with its treatment of the payment under section 6042(b)(3) and § 1.6042-3(c).

(3) ***Exception for public reporting.*** An issuer is not required to file a return with the IRS under this paragraph (a) if, by the due date described in paragraph (a)(2)(i) of this section, the issuer posts the return with the required information in a readily accessible format in an area of its primary public Web site dedicated to this purpose and keeps the return accessible for ten years to the public on its primary public Web site or the primary public Web site of any successor organization. An issuer may electronically sign a return that is publicly reported in accordance with this paragraph (a)(3). The electronic signature must identify the individual who attests to the declaration in the jurat.

(4) ***Exception when holders are exempt recipients.*** No reporting is required under this paragraph (a) if the issuer reasonably determines that all of the holders of the security are exempt recipients under paragraph (b)(5) of this section.

(5) ***Exception for certain money market funds.*** No reporting is required under this paragraph (a) by a regulated investment company described in § 1.6045-1(c)(3)(vi).

(6) ***Reporting for certain specified securities that are digital assets.*** Unless otherwise excepted under this section, an issuer of a specified security described in paragraph (a)(1) of this section is required to report under this section without regard to whether the specified security is also described in § 1.6045-1(a)(14)(v) or (vi). If a specified security is described in § 1.6045-1(a)(14)(v) or (vi) but is not also described in § 1.6045-1(a)(14)(i), (ii), (iii) or (iv), the issuer of that specified security is permitted, but not required, to report under this section. An issuer that chooses to provide the reporting and furnish statements for a specified security described in the previous sentence is not subject to penalties under section 6721 or 6722 of the Code for failure to report this information correctly.

(b) ***Statements to nominees and certificate holders*** —

(1) ***In general.*** An issuer required to file an information return under this section must furnish a written statement with the same information to each holder of record of the security or to the holder's nominee. This issuer statement must indicate that the information is being reported to the IRS. An issuer may satisfy this requirement by furnishing a copy of the information return.

(2) ***Time for furnishing statements.*** An issuer must furnish each issuer statement on or before January 15 of the year following the calendar year of the organizational action. For purposes of this paragraph (b)(2), a redemption occurs on the last day a holder may redeem a security. An issuer may furnish the statement before the organizational action if the quantitative effect on basis is determinable beforehand. An issuer must furnish a statement that corresponds to a corrected return described in paragraph (a)(2)(ii) of this section by the later of the due date described in this paragraph (b)(2) or forty-five days after determining the facts that result in a different quantitative effect on basis from what the issuer previously reported on the return.

(3) ***Recipients of statements.*** An issuer must furnish a separate statement to each holder of record of the security as of the date of the organizational action and all subsequent holders of record up to the date the issuer furnishes the statement required under this section. If the issuer records the security

on its books in the name of a nominee, the issuer must furnish the statement to the nominee in lieu of the holder. However, if the nominee is the issuer, an agent of the issuer, or a plan operated by the issuer, the issuer must furnish the statement to the holder.

(4) ***Exception for public reporting.*** An issuer is deemed to furnish an issuer statement under this paragraph (b) to all holders and nominees if the issuer satisfies the public reporting requirements of paragraph (a)(3) of this section.

(5) ***Exempt recipients*** —

(i) ***In general.*** An issuer is not required to furnish an issuer statement to a holder or its nominee if the holder is an exempt recipient under § 1.6045-1(c)(3)(i)(B), provided the issuer has actual knowledge that the holder is described in that section or has a properly completed exemption certificate from the holder asserting that the holder is an exempt recipient (as provided in § 31.3406(h)-3 of this chapter). An issuer may treat a holder as an exempt recipient based on the applicable indicators described in § 1.6049-4(c)(1)(ii)(A) through (M).

(ii) ***Limitation for corporate holders.*** For an organizational action occurring on or after January 1, 2012, an issuer may treat a holder as an exempt recipient based on the indicator described in § 1.6049-4(c)(1)(ii)(A) only if one of the following applies:

(A) The name of the holder contains the term “insurance company,” “indemnity company,” “reinsurance company,” or “assurance company.”

(B) The name of the holder indicates that it is an entity listed as a per se corporation under § 301.7701-2(b)(8)(i) of this chapter.

(C) The issuer receives a properly completed exemption certificate (as provided in § 31.3406(h)-3 of this chapter) that asserts that the holder is not an S corporation as defined in section 1361(a).

(D) The issuer receives a withholding certificate described in § 1.1441-1(e)(2)(i) that includes a certification that the person whose name is on the certificate is a foreign corporation.

(iii) ***Foreign holders.*** An issuer may treat a holder as an exempt recipient if the issuer, prior to the transaction, associates the holder with documentation upon which the issuer may rely in order to treat payments to the holder as made to a foreign beneficial owner in accordance with § 1.1441-1(e)(1)(ii) or as made to a foreign payee in accordance with § 1.6049-5(d)(1) or presumed to be made to a foreign payee under § 1.6049-5(d)(2) or (3). For purposes of this paragraph (b)(5)(iii), the provisions in § 1.6049-5(c) (regarding rules applicable to documentation of foreign status and definition of U.S. payor and non-U.S. payor) apply. Rules similar to the rules of § 1.1441-1 apply by substituting the terms “issuer” and “holder” in place of the terms “withholding agent” and “payee” and without regard to the limitation to amounts subject to withholding under chapter 3 of the Internal Revenue Code. Rules similar to the rules of § 1.6049-5(d) apply by substituting the terms “issuer” and “holder” in place of the terms “payor” and “payee.”

(c) ***Special rule for S corporations.*** An S corporation (as defined in section 1361(a)) is deemed to satisfy the requirements of paragraphs (a) and (b) of this section for any organizational action affecting the basis of its stock if the corporation reports the effect of the organizational action on a timely filed Schedule K-1 (Form 1120S), “Shareholder's Share of Income, Deductions, Credits, etc.,” for each shareholder and timely furnishes copies of these schedules to all proper parties.

(d) ***Special rule for certain regulated investment companies and real estate investment trusts.*** A regulated investment company (RIC) that reports undistributed capital gains to shareholders under section 852(b)(3)(D) or a real estate investment trust (REIT) that reports undistributed capital gains to shareholders under section 857(b)(3)(D) is deemed to have satisfied the requirements of paragraphs (a) and (b) of this section for undistributed capital gains affecting the basis of its stock if the RIC or REIT timely files and furnishes the information returns required under section 852(b)(3)(D) or section 857(b)(3)(D) to all proper parties for the organizational action.

(e) ***Acquiring and successor entities.*** An acquiring or successor entity of an issuer that fails to satisfy the reporting obligations of paragraphs (a) or (b) of this section must satisfy these reporting obligations. If neither the issuer nor the acquiring or successor entity satisfies these reporting obligations, both parties are jointly and severally liable for any applicable penalties.

(f) ***Penalties.*** An issuer may use an agent to satisfy the requirements of this section for the issuer. Nonetheless, the issuer remains liable for penalty for any failure to comply unless it is shown that the failure is due to reasonable cause and not willful neglect. *See* sections 6721 through 6724.

(g) ***Examples.*** The following examples illustrate the rules of this section:

Example 1. (i) C, a corporation, distributes stock to shareholders on March 31, 2013.
(ii) Under paragraph (a)(2)(i) of this section, C must file an issuer return with the IRS on or before May 15, 2013 (45 days after the distribution date), reporting the quantitative effect of this distribution on the basis of C's stock. Under paragraph (b)(2) of this section, C must furnish issuer statements to its nominees and certificate holders on or before January 15, 2014.

(iii) Alternatively, under paragraphs (a)(3) and (b)(4) of this section, C may post by May 15, 2013, and maintain for ten years, the return with the required information in a readily accessible format in an area of its primary public Web site dedicated to this purpose.

Example 2. (i) D, a corporation, makes a cash distribution to shareholders on December 10, 2013.
(ii) Under paragraphs (a)(2)(i) and (b)(2) of this section, D is required to file an issuer return with the IRS and furnish issuer statements to its nominees and certificate holders on or before January 15, 2014.

(iii) On January 15, 2014, D is unsure whether the distribution will exceed its earnings and profits for the fiscal year. For purposes of section 6042(b)(3) and § 1.6042-3(c), D must treat the distribution as a dividend. Therefore, under paragraph (a)(2)(ii) of this section, D is not required to file an issuer return. If D later determines that dividend treatment was incorrect, D must file an issuer return reporting the correct quantitative effect on basis.

Example 3. E, a corporation, undertakes a stock split as of April 1, 2014. E furnishes issuer statements under paragraph (b) of this section on April 1, 2014, at which time the books and records of E show that 90 percent of its outstanding stock is owned by shareholders through a clearing organization as their nominee, 7 percent is owned by 5,000 individuals, and the remaining 3 percent is owned by a

dividend reinvestment plan operated by E that has 1,000 members. Under paragraph (b)(3) of this section, E must furnish statements to the clearing organization, the 5,000 individuals, and the 1,000 members of the dividend reinvestment plan.

(h) ***Rule for options*** —

(1) ***In general.*** For an option granted or acquired on or after January 1, 2014, if the original contract is replaced by a different number of option contracts, the following rules apply:

(i) If the option is an exchange-traded option, any clearinghouse or clearing facility that serves as a counterparty is treated as the issuer of the option for purposes of section 6045B.

(ii) If the option is not an exchange-traded option, the option writer is treated as the issuer of the option for purposes of section 6045B.

(2) ***Examples.*** The following examples illustrate the rules of paragraph (h)(1) of this section:

Example 1. On January 15, 2014, F, an individual, purchases a one-year exchange-traded call option on 100 shares of Company X stock, with a strike price of $110. The call option is cleared through Clearinghouse G. Company X executes a 2-for-1 stock split as of April 1, 2014. Due to the stock split, the terms of F's option are altered, resulting in two option contracts, each on 100 shares of Company X stock with a strike price of $55. All other terms remain the same. Under paragraph (h)(1)(i) of this section, Clearinghouse G is required to prepare an issuer report for F.

Example 2. On January 31, 2014, J, an individual, purchases from K a non-exchange traded 7-month call option on 100 shares of Company X stock, with a strike price of $110. Company X executes a 2-for-1 stock split as of April 1, 2014. Due to the stock split, the terms of J's option are altered, resulting in one option contract on 200 shares of Company X stock with a strike price of $55. All other terms of the option remain the same. Under paragraph (h)(1) of this section, because the number of option contracts did not change, K is not required to prepare an issuer report for J.

(i) [Reserved]

(j) ***Effective/applicability dates.*** This section applies to—

(1) Organizational actions occurring on or after January 1, 2011, that affect the basis of specified securities within the meaning of § 1.6045-1(a)(14)(i) other than stock in a regulated investment company within the meaning of § 1.1012-1(e)(5);

(2) Organizational actions occurring on or after January 1, 2012, that affect the basis of stock in a regulated investment company;

(3) Organizational actions occurring on or after January 1, 2014, that affect the basis of debt instruments described in § 1.6045-1(n)(2)(i) (not including the debt instruments described in § 1.6045-1(n)(2)(ii));

(4) Organizational actions occurring on or after January 1, 2016, that affect the basis of debt instruments described in § 1.6045-1(n)(3);

(5) Organizational actions occurring on or after January 1, 2014, that affect the basis of options described in § 1.6045-1(a)(14)(iii);

(6) Organizational actions occurring on or after January 1, 2014, that affect the basis of securities futures contracts described in § 1.6045-1(a)(14)(iv); and

(7) Organizational actions occurring on or after January 1, 2025, that affect the basis of digital assets described in § 1.6045-1(a)(14)(v) or (vi) that are also described in one or more paragraphs of § 1.6045-1(a)(14)(i) through (iv).

[T.D. 9504, 75 FR 64101, Oct. 18, 2010, as amended by T.D. 9616, 78 FR 23133, Apr. 18, 2013; T.D. 10000, 89 FR 56580, July 9, 2024]

§ 1.6046-1 Returns as to organization or reorganization of foreign corporations and as to acquisitions of their stock.

(a) *Officers or directors* —

(1) ***When liability arises on January 1, 1963.*** Each U.S. citizen or resident who is on January 1, 1963, an officer or director of a foreign corporation shall make a return on Form 5471 (or subsequent form) showing the name, address, and identifying number of each U.S. person who, on January 1, 1963, owns 5 percent or more in value of the outstanding stock of such foreign corporation.

(2) ***When liability arises after January 1, 1963*** —

(i) ***Requirement of return.*** Each United States citizen or resident who is at any time after January 1, 1963, an officer or director of a foreign corporation shall make a return on Form 5471 setting forth the information described in paragraph (a)(2)(ii) of this section with respect to each United States person who, during the time such citizen or resident is such an officer or director—

(*a*) Acquires (whether in one or more transactions) outstanding stock of such corporation which equals, or which when added to any such stock then owned by him equals, 10 percent or more of the total combined voting power of all classes of stock of the foreign corporation entitled to vote or the total value of the stock of the foreign corporation;

(*b*) Acquires (whether in one or more transactions) an additional 10 percent or more of the total combined voting power of all classes of stock of the foreign corporation entitled to vote or the total value of the stock of the foreign corporation; or

(*c*) Is not described in paragraph (a)(2)(i)(*a*) or (*b*) of this section, and who, at any time after January 1, 1987, is treated as a United States shareholder under section 953(c) with respect to such foreign corporation.

(ii) ***Information required to be shown on return.*** The return required under subdivision (i) of this subparagraph shall contain the following information:

(*a*) Name, address, and identifying number of each shareholder with respect to whom the return is filed;

(*b*) A statement showing that the shareholder is either described in subdivision (i)(*a*) or (i)(*b*) of this subparagraph; and

(*c*) The date on which the shareholder became a person described in subdivision (i)(*a*) or (i)(*b*) of this subparagraph.

(3) ***Application of rules.*** The provisions of this paragraph may be illustrated by the following examples:

Example 1. A, a United States citizen, is, on January 1, 1963, a director of M, a foreign corporation. X, on January 1, 1963, is a United States person owning 5 percent in value of the outstanding stock of M Corporation. A must file a return under the provisions of subparagraph (1) of this paragraph.

> *Example 2.* (i) *Facts.* A, a United States citizen, is, on January 1, 2014, a director of M Corporation, a foreign corporation. X, on January 1, 2014, is a United States person owning 4% of the outstanding stock of M Corporation. On July 1, 2014, X acquires 4% of the outstanding stock of M Corporation and on September 1, 2014, he acquires an additional 4% of such stock.
> (ii) *Results.* The July 1, 2014, transaction does not give rise to liability for A to file a return; however, A must file a return as a result of the September 1, 2014, transaction because X's holdings now exceed 10%.

> *Example 3.* (i) *Facts.* The facts are the same as in *Example 2* and, on September 15, 2014, X acquires an additional 8% in value of the outstanding stock of M Corporation. (X's total holdings are now 20%.) On November 1, 2014, X acquires an additional 4% of the outstanding stock of M Corporation.
> (ii) *Results.* The September 15, 2014, transaction does not give rise to liability to file a return since X has not acquired 10% in value of the outstanding stock of M Corporation since A last became liable to file a return. However, A must file a return as a result of the November 1, 2014, transaction because X has now acquired an additional 10% of the outstanding stock of M Corporation.

> *Example 4.* (i) *Facts.* The facts are the same as in *Examples 2* and *3* and, in addition, B, a United States citizen, becomes an officer of M Corporation on September 10, 2014.
> (ii) *Results.* B is not required to file a return either as a result of the facts set forth in *Example 2* or as a result of the September 15, 2014, transaction described in *Example 3.* However, B is required to file a return as a result of the November 1, 2014, transaction described in *Example 3* because X has acquired an additional 10% in value of the outstanding stock of M Corporation while B is an officer or director.

(b) ***Returns required of U.S. persons when liability to file arises on January 1, 1963.*** Each U.S. person who, on January 1, 1963, owns 5 percent or more in value of the outstanding stock of a foreign corporation, shall make a return on Form 959 with respect to such foreign corporation setting forth the following information:

(1) The name, address, and identifying number of the shareholder (or shareholders) filing the return, and the internal revenue district in which such shareholder filed his most recent United States income tax return;

(2) The name, business address, and employer identification number, if any, of the foreign corporation, the name of the country under the laws of which it is incorporated, and the name of the country in which is located its principal place of business;

(3) The date of organization and, if any, of each reorganization of the foreign corporation if such reorganization occurred on or after January 1, 1960, while the shareholder owned 5 percent or more in value of the outstanding stock of such corporation;

(4) The name and address of the foreign corporation's statutory or resident agent in the country of incorporation;

(5) The name, address, and identifying number of any branch office or agent of the foreign corporation located in the United States;

(6) If the foreign corporation has filed a United States income tax return, or participated in the filing of a consolidated return, for any of its last three calendar or fiscal years immediately preceding January 1, 1963, state each year for which a return was filed (including, in the case of a consolidated return, the name of the corporation filing such return), the type of form used, the internal revenue office to which it was sent, and the amount of tax, if any, paid;

(7) The name and address of the person (or persons) having custody of the books of account and records of the foreign corporation, and the location of such books and records if different from such address;

(8) The names, addresses, and identifying numbers of all United States persons who are principal officers (for example, president, vice president, secretary, treasurer, and comptroller) or members of the board of directors of the foreign corporation as of January 1, 1963;

(9) A complete description of the principal business activities in which the foreign corporation is actually engaged and, if the foreign corporation is a member of a group constituting a chain of ownership with respect to each unit of which the shareholder owns 5 percent or more in value of the outstanding stock, a chart showing the foreign corporation's position in the chain of ownership and the percentages of ownership;

(10) The following information prepared in accordance with generally accepted accounting principles and in such detail as is customary for the corporation's accounting records:

(i) The corporation's profit and loss statement for the most recent complete annual accounting period; and

(ii) The corporation's balance sheet as of the end of the most recent complete annual accounting period;

(11) A statement showing as of January 1, 1963, the amount and type of any indebtedness of the foreign corporation:

(i) To any United States person owning 5 percent or more in value of its stock, or

(ii) To any other foreign corporation owning 5 percent or more in value of the outstanding stock of the foreign corporation with respect to which the return is filed provided that the shareholder filing the return owns 5 percent or more in value of the outstanding stock of such other foreign corporation,

together with the name, address, and identifying number, if any, of each such shareholder or entity;

(12) A statement, as of January 1, 1963, showing the name, address, and identifying number, if any, of each person who is, on January 1, 1963, a subscriber to the stock of the foreign corporation, and the number of shares subscribed to by each;

(13) A statement showing the number of shares of each class of stock of the foreign corporation owned by each shareholder filing the return and:

(i) If such stock was acquired after December 31, 1953, the dates of acquisition, the amounts paid or value given therefor, the method of acquisition, i.e., by original issue, purchase on open market, direct purchase, gift, inheritance, etc., and from whom acquired; or

(ii) If such stock was acquired before Janaury 1, 1954, a statement that such stock was acquired before such date, and the value at which such stock is carried on the books of such shareholder;

(14) A statement showing as of January 1, 1963, the name, address, and identifying number of each United States person who owns 5 percent or more in value of the outstanding stock of the foreign corporation, the classes of stock held, the number of shares of each class held, including the name, address, and identifying number, if any, of each actual owner if such person is different from the shareholder of record and a statement of the nature and amount of the interests of each such actual owner; and

(15) The total number of shares of each class of outstanding stock of the foreign corporation (or other data indicating the shareholder's percentage of ownership).

(c) ***Returns required of United States persons when liability to file arises after January 1, 1963*** —

(1) ***United States persons required to file.*** A return on Form 5471, containing the information required by paragraph (c)(4) of this section, shall be made by each United States person when at any time after January 1, 1963:

(i) Such person acquires (whether in one or more transactions) outstanding stock of such foreign corporation which equals, or which when added to any such stock then owned by him equals, 10 percent or more of the total combined voting power of all classes of stock of the foreign corporation entitled to vote or the total value of the stock of the foreign corporation;

(ii) Such person, having already acquired the interest referred to in paragraph (b) of this section or in paragraph (c)(1)(i) of this section—

(*a*) Acquires (whether in one or more transactions) an additional 10 percent or more of the total combined voting power of all classes of stock of the foreign corporation entitled to vote or the total value of the stock of the foreign corporation;

(*b*) Owns 10 percent or more of the total combined voting power of all classes of stock of the foreign corporation entitled to vote or the total value of the stock of the foreign corporation when such foreign corporation is reorganized (as defined in paragraph (f)); or

(*c*) Disposes of sufficient stock in such foreign corporation to reduce his interest to less than 10 percent of the total combined voting power of all classes of stock of the foreign corporation entitled to vote or the total value of the stock of the foreign corporation; or

(iii) Such person is, at any time after January 1, 1987, treated as a United States shareholder under *section 953(c)* with respect to a foreign corporation.

(2) ***Examples.*** The provisions of paragraph (c)(1) of this section may be illustrated by the following examples:

> *Example 1.* (i) *Facts.* On January 15, 2014, A, a United States person, acquires 10% of the

outstanding stock of M, a foreign corporation.
(ii) *Results.* A must file a return under the provisions of paragraph (c)(1) of this section.

Example 2. (i) *Facts.* On January 1, 2014, B, a United States person, owns 4% of the outstanding stock of M, a foreign corporation. On February 1, 2015, B acquires an additional 6% of the outstanding stock of M Corporation.
(ii) *Results.* B is not required to file a return for 2014 under the provisions of this section because he does not own 10% or more of the outstanding stock of M Corporation. B must file a return for 2015 under the provisions of paragraph (c)(1) of this section.

Example 3. (i) *Facts.* On January 1, 2014, C, a United States person, owns 12% of the outstanding stock of M Corporation, a foreign corporation. On February 1, 2014, C acquires an additional 4% of the outstanding stock of M Corporation in a transaction not involving a reorganization.
(ii) *Results.* C is not required to file a return under the provisions of paragraph (c)(1) of this section with respect to the acquisition of the additional 4% of M Corporation.

Example 4. (i) *Facts.* The facts are the same as in *Example 3* except that, in addition, on April 1, 2014, C acquires 4% of the outstanding stock of M Corporation in a transaction not involving a reorganization. (C's total holdings are now 20%.) On May 1, 2014, C acquires 2% of the outstanding stock of M Corporation.
(ii) *Results.* C is not required to file a return under the provisions of paragraph (c)(1) of this section as a result of the April 1, 2014, acquisition because he has not acquired 10% or more of the outstanding stock of M Corporation since he last became liable to file a return. C must file a return under the provisions of paragraph (c)(1) of this section as a result of the May 1, 2014, acquisition because C acquired 10% of the outstanding stock of M Corporation during 2014.

Example 5. (i) *Facts.* On June 1, 2014, D, a United States person, owns 24% of the outstanding stock of M Corporation, a foreign corporation. Also, on June 1, 2014, M Corporation is reorganized and, as a result of such reorganization, D owns only 12% of the outstanding stock of such foreign corporation.
(ii) *Results.* D must file a return under the provisions of paragraph (c)(1) of this section.

Example 6. (i) *Facts.* The facts are the same as in *Example 5* except that, in addition, on November 1, 2015, D donates 4% of the outstanding stock of M Corporation to a charity.
(ii) *Results.* Since D has disposed of sufficient stock to reduce his interest in M Corporation to less than 10% of the outstanding stock of such corporation, D must file a return under the provisions of paragraph (c)(1) of this section.

(3) ***Shareholders who become United States persons.*** A return on Form 5471, containing the information required by paragraph (c)(4) of this section, shall be made by each person who at any time after January 1, 1963, becomes a United States person while owning 10 percent or more of the total combined voting power of all classes of stock of the foreign corporation entitled to vote or the total value of the stock of the foreign corporation.

(4) ***Information required to be shown on return*** —

(i) ***In general.*** The return on Form 5471, required to be filed by persons described in paragraph (c)(1) or (3) of this section, shall set forth the same information as is required by the provisions of paragraph (b) of this section except that where such provisions require information with respect to January 1, 1963, such information shall be furnished with respect to the date on which liability arises to file the return required under this paragraph.

(ii) ***Additional information.*** In addition to the information required under paragraph (c)(4)(i) of this section, the following information shall also be furnished in the return required under this paragraph:

(*a*) The date on or after January 1, 1963, if any, on which such shareholder (or shareholders) last filed a return under this section with respect to the corporation;

(*b*) If a return is filed by reason of becoming a United States person, the date the shareholder became a United States person;

(*c*) If a return is filed by reason of the disposition of stock, the date and method of such disposition and the person to whom such disposition was made; and

(*d*) If a return is filed by reason of the organization or reorganization of the foreign corporation on or after January 1, 1963, the following information with respect to such organization or reorganization:

(*1*) A statement showing a detailed list of the classes and kinds of assets transferred to the foreign corporation including a description of the assets (such as a list of patents, copyrights, stock, securities, etc.), the fair market value of each asset transferred (and, if such asset is transferred by a United States person, its adjusted basis), the date of transfer, the name, address, and identifying number, if any, of the owner immediately prior to the transfer, and the consideration paid by the foreign corporation for such transfer;

(*2*) A statement showing the assets transferred and the notes or securities issued by the foreign corporation, the name, address, and identifying number, if any, of each person to whom such transfer or issue was made, and the consideration paid to the foreign corporation for such transfer or issue; and

(*3*) An analysis of the changes in the corporation's surplus accounts occurring on or after January 1, 1963.

(iii) ***Exclusion of information previously furnished.*** In any case where any identical item of information required to be filed under this paragraph by a shareholder with respect to a foreign corporation has previously been furnished by such shareholder in any return made in accordance with the provisions of this section, such shareholder may satisfy the requirements of this paragraph by filing Form 5471, identifying such item of information, the date furnished, and stating that it is unchanged.

(d) ***Associations, etc.*** Returns are required to be filed in accordance with the provisions of this section with respect to any foreign association, foreign joint-stock company, or foreign insurance company, etc., which would be considered to be a corporation under § 301.7701-2 of this chapter (Regulations on Procedure and Administration). Persons who would qualify by the nature of their functions and ownership in such associations, etc., as officers, directors, or shareholders thereof will be treated as such for purposes of this section without regard to their designations under local law.

(e) ***Special provisions*** —

(1) ***Return jointly made.*** Any two or more persons required under paragraph (a) of this section to make a return with respect to one or more shareholders of the same corporation, or under paragraph (b) or (c) of this section to make a return with respect to the same corporation, may in lieu of making several returns, jointly make one return.

(2) ***Separate return for each corporation.*** When returns are required with respect to more than one foreign corporation, a separate return must be made for each corporation.

(3) ***Use of power of attorney by officers or directors*** —

(i) ***In general.*** Any two or more persons required under paragraph (a) of this section to make a return with respect to one or more shareholders of the same corporation may, by means of one or more duly executed powers of attorney, constitute one of their number as attorney in fact for the purpose of making such returns or for the purpose of making a joint return under subparagraph (1) of this paragraph.

(ii) ***Nature of power of attorney.*** The power of attorney referred to in subdivision (i) of this subparagraph shall be limited to the making of returns required under paragraph (a) of this section and shall be limited to a single calendar year with respect to which such returns are required.

(iii) ***Manner of execution of power of attorney.*** The use of technical language in the preparation of the power of attorney referred to in subdivision (i) of this subparagraph is not necessary. Such power of attorney shall be signed by the individual United States citizen or resident required to file a return or returns under paragraph (a) of this section. Such power of attorney must be acknowledged before a notary public or, in lieu thereof, witnessed by two disinterested persons. The notarial seal must be affixed unless such seal is not required under the laws of the state or country wherein such power of attorney is executed.

(iv) ***Manner of execution of return under authority of power of attorney.*** A return made under authority of one or more powers of attorney referred to in subdivision (i) of this subparagraph shall be signed by the attorney in fact for each principal for which such attorney in fact is acting. A copy of such one or more powers of attorney shall be kept at a convenient and safe location accessible to internal revenue officers, and shall at all times be available for inspection by such officers.

(v) ***Effect on penalties.*** The fact that a return is made under authority of a power of attorney referred to in subdivision (i) of this subparagraph shall not affect the principal's liability for penalties provided for failure to file a return required under paragraph (a) of this section or for filing a false or fraudulent return.

(4) ***Persons excepted from filing returns*** —

(i) ***Return required of officer or director under paragraph (a)(1).*** Notwithstanding paragraph (a)(1) of this section, any U.S. citizen or resident required to make a return under such paragraph with respect to shareholders of a foreign corporation, need not make such return if, on January 1, 1963, three or fewer U.S. persons own 95 percent or more in value of the outstanding stock of such foreign corporation and file a return or returns with respect to such corporation under paragraph (b) of this section.

(ii) ***Return required of officer or director under paragraph (a)(2).*** Notwithstanding paragraph (a)(2) of this section, any U.S. citizen or resident required to make a return under such paragraph with respect to a person acquiring stock of a foreign corporation in an acquisition described in subdivision (i)(*a*) or (*b*) of such paragraph need not make such return, if:

(*a*) As a result of such acquisition of stock of such foreign corporation, a U.S. person files a return as a shareholder under paragraph (c)(1) of this section, and

(*b*) Immediately after such acquisition of stock, three or fewer U.S. persons own 95 percent or more in value of the outstanding stock of such foreign corporation.

(iii) ***Return required by reason of attribution rules.*** Notwithstanding paragraph (b) or (c) of this section, any person required to make a return under such paragraph with respect to a foreign corporation need not make such return, if:

(*a*) Such person does not directly own an interest in the foreign corporation,

(*b*) Such person is required to furnish the information solely by reason of attribution of stock ownership from a U.S. person under paragraph (i) of this section, and

(*c*) The person from whom the stock ownership is attributed furnishes all of the information required under paragraph (b) or (c) of this section of the person to whom such stock ownership is attributed.

(iv) ***Return required of officer or director with respect to person described in subdivision (iii).*** Notwithstanding paragraph (a) of this section, any U.S citizen or resident required to make a return under such paragraph with respect to a person exempted under subdivision (iii) of this subparagraph from making a return need not make a return with respect to such person.

(5) ***Persons excepted from furnishing items of information.*** Any person required to furnish any item of information under paragraph (b) or (c) of this section with respect to a foreign corporation may, if such item of information is furnished by another person having an equal or greater stock interest (measured in terms of either the total combined voting power of all classes of stock of the foreign corporation entitled to vote or the total value of the stock of the foreign corporation) in such foreign corporation, satisfy such requirement by filing a statement with his return on Form 5471 indicating that such requirement has been satisfied and identifying the return in which such item of information was included. This paragraph (e)(5) does not apply to persons excepted from filing a return by reason of the provisions of paragraph (e)(4) of this section.

(f) ***Meaning of terms.*** For purposes of this section:

(1) ***Acquisition.*** Stock in a foreign corporation shall be considered acquired when a person has an unqualified right to receive such stock even though such stock is not actually issued. For example, when under the law of a foreign country, all the necessary steps for incorporation are completed but stock in the corporation will not be issued within 30 days, every United States citizen or resident who is an officer or a director of such corporation, provided a United States person has an interest of 10

percent or more in such corporation, and every such United States person shall, within 90 days of the date of incorporation, file the returns required under section 6046 and this section. In the case of a reorganization, new stock may be acquired, depending on the type of reorganization, whether or not any stock certificates are surrendered or exchanged or the designation of such stock is altered.

(2) ***Reorganization.*** With respect to a foreign corporation, the term "reorganization" shall mean not only a transaction described in section 368(a)(1) and the regulations thereunder but also any other transaction or series of transactions which has the same effect.

(3) ***U.S. person*** —

(i) ***In general.*** For purposes of section 6046 and this section, the term *United States person* has the meaning assigned to it by section 7701(a)(30), except as provided in paragraphs (f)(3)(ii) and (iii) of this section.

(ii) ***Special rule for individuals residing in certain possessions.*** (A) With respect to an individual who is a bona fide resident of Puerto Rico, the term *United States person* has the meaning assigned to it by § 1.957-3 except that the rules of § 1.937-2(g)(1) will apply.

(B) With respect to individuals who are bona fide residents of any section 931 possession, as defined in § 1.931-1(c)(1), the term *United States person* has the meaning assigned to it by § 1.957-3.

(iii) ***Special rule for certain nonresident aliens.*** An individual for whom an election under section 6013(g) or (h) is in effect will, subject to the exceptions contained in paragraph (f)(3)(ii) of this section, be considered a United States person for purposes of section 6046 and this section.

(4) [Reserved]

(5) ***Accounting period and taxable year.*** In the case of a specified foreign corporation (as defined in section 898), the taxable year of such corporation shall be treated as its annual accounting period.

(g) ***Method of reporting.*** All amounts furnished in returns prescribed under this section shall be expressed in United States currency with a statement of the exchange rates used. All statements required to be submitted on or with returns under this section shall be rendered in the English language. For taxable years ending after December 31, 1994, with respect to returns filed after December 31, 1995, all amounts furnished under paragraph (c) of this section shall be expressed in United States dollars computed and translated in conformity with United States generally accepted accounting principles. Amounts furnished under paragraph (c)(3)(i) of this section shall also be furnished in the foreign corporation's functional currency as required on the form. Information described in paragraphs (b)(10) and (c)(3) of this section shall be submitted in such form or manner as the form shall prescribe. If an individual who is a United States person required to make a return with respect to a foreign corporation under section 6046 is entitled under a treaty to be treated as a nonresident of the United States, and if the individual claims this treaty benefit, and if there are no other United States persons that are required to furnish information under section 6046 with respect to the foreign corporation, then the individual may satisfy the requirements of paragraphs (b)(10), (11) and (12), (c)(3)(ii)(*d*), and (g) of this section by filing the audited foreign financial statements of the foreign corporation with the individual's return required under section 6046.

(h) ***Actual ownership of stock.*** If any shareholder, referred to in this section, is not the actual owner of the stock of the foreign corporation, the information required under this section shall be furnished in the name of and by such actual owner. For example, in the case of stock held by a nominee, the information required under this section shall be furnished by the actual owner of such stock.

(i) ***Constructive ownership of stock*** —

(1) ***In general.*** Stock owned directly or indirectly by or for a foreign corporation or a foreign partnership shall be considered as being owned proportionately by its shareholders or partners. Thus, any United States person who is a member of a nonresident foreign partnership which becomes a shareholder in a foreign corporation shall be considered to be a shareholder in such foreign corporation to the extent of his proportionate share in such partnership.

(2) ***Members of family.*** An individual shall be considered as owning the stock owned directly or indirectly by or for his brothers and sisters (whether by the whole or half blood), his spouse, his ancestors, and his lineal descendants. However, when stock is treated as owned by an individual under the rule provided in this subparagraph, it shall not be treated as owned by him for the purpose of again applying such rule in order to make another the constructive owner of such stock. The provisions of this subparagraph may be illustrated by the following example:

Example. H, W, and HF are United States citizens. W, wife of H, owns 20 percent of the value of the outstanding stock of X, a foreign corporation. X Corporation owns 90 percent of the value of the outstanding stock of Y Corporation, a foreign corporation. Y Corporation becomes the owner of 50 percent of the value of the outstanding stock of each of two newly organized foreign corporations, M and N. In applying the “members of family” rule, H is considered to own 20 percent of the value of the outstanding stock of X Corporation, and 18 percent of the value of the outstanding stock of Y Corporation, and 9 percent of M Corporation and N Corporation. However, HF, the father of H, is not considered to own stock of X, Y, M, or N since his son, H, is not treated as the owner of such stock for purposes of again applying the “members of family” rule.

(j) ***Time and place for filing return*** —

(1) ***Time for filing.*** Any return required by section 6046 and this section shall be filed on or before the 90th day after the date on which a United States citizen, resident, or person becomes liable to file such return under any provision of section 6046(a) and of paragraph (a), (b), or (c) of this section. With respect to returns filed after September 3, 1982, such return shall be filed on or before such later date (if any) as may be authorized by the return form. The Director of the Internal Revenue Service Center where the return is required to be filed is authorized to grant reasonable extensions of time for filing returns under section 6046 and this section in accordance with the applicable provisions of section 6081(a) and § 1.6081-1.

(2) ***Place for filing.*** Returns required by section 6046 and this section shall be filed with the Internal Revenue Service Center designated in the instructions of the applicable form.

(k) ***Penalties.***

(1) For criminal penalties for failure to file a return and filing a false or fraudulent return, see sections 7203, 7206, and 7207.

(2) For civil penalty for failure to file return, or failure to show information required on a return, under this section, see section 6679.

(l)

(1) ***Effective/applicability date.*** Paragraph (f)(3) of this section applies to taxable years ending after April 9, 2008.

(2) Paragraph (c)(1)(iii) of this section applies to taxable years ending on or after December 31, 2013.

(3) Paragraph (e)(5) of this section applies to returns filed on or after December 31, 2013. See paragraph (e)(5) of § 1.6046-1, as contained in 26 CFR part 1 revised as of April 1, 2012, for returns filed before December 31, 2013.

(Approved by the Office of Management and Budget under control number 1545-0794)

[T.D. 6623, 27 FR 11882, Dec. 1, 1962, as amended by T.D. 6997, 34 FR 932, Jan. 22, 1969; T.D. 7322, 39 FR 30932, Aug. 27, 1974; T.D. 7925, 48 FR 55454, Dec. 13, 1983; T.D. 8573, 59 FR 64302, Dec. 14, 1994; T.D. 8733, 62 FR 53385, Oct. 14, 1997; T.D. 9194, 70 FR 18946, Apr. 11, 2005; T.D. 9391, 73 FR 19376, Apr. 9, 2008; T.D. 9650, 78 FR 79611, Dec. 31, 2013; 79 FR 26837, May 12, 2014; T.D. 9806, 81 FR 95470, Dec. 28, 2016]

§ 1.6046A-1 Return requirement for United States persons who acquire or dispose of an interest in a foreign partnership, or whose proportional interest in a foreign partnership changes substantially.

(a) ***Return requirement*** —

(1) ***General rule.*** If a United States person has a reportable event (as defined in paragraph (b)(1) of this section) during the person's tax year, then, except as provided in paragraph (f) of this section, the United States person is required to complete and file Form 8865, "Return of U.S. Persons With Respect to Certain Foreign Partnerships," containing the information described in paragraph (c) of this section.

(2) ***Separate return for each partnership.*** If a United States person has a reportable event with respect to an interest in more than one foreign partnership, the United States person must file a separate Form 8865 for each foreign partnership.

(b) ***Definitions*** —

(1) ***Reportable event.*** There are three categories of reportable events under section 6046A: acquisitions, dispositions, and changes in proportional interests.

(i) ***Acquisitions.*** A United States person that acquires a foreign partnership interest has a reportable event if—

(A) The person did not own a ten-percent or greater direct interest in the partnership and as a result of the acquisition the person owns a ten-percent or greater direct interest in the partnership. For purposes of this paragraph (b)(1)(i)(A), an acquisition includes an increase in a person's direct proportional interest; or

(B) Subject to paragraph (b)(2) of this section, compared to the person's direct interest when the person last had a reportable event, after the acquisition the person's direct interest has increased by at least a ten-percent interest.

(ii) ***Dispositions.*** A United States person that disposes of a foreign partnership interest has a reportable event if—

(A) The person owned a ten-percent or greater direct interest in the partnership before the disposition and as a result of the disposition the person owns less than a ten-percent direct interest. For purposes of this paragraph (b)(1)(ii)(A), a disposition includes a decrease in a person's direct proportional interest; or

(B) Subject to paragraph (b)(2) of this section, compared to the person's direct interest when the person last had a reportable event, after the disposition the person's direct interest has decreased by at least a ten-percent interest.

(iii) ***Changes in proportional interests not otherwise reportable as acquisitions or dispositions under paragraph (b)(1)(i)(A) or (b)(1)(ii)(A) of this section.*** A United States person has a reportable event if, subject to paragraph (b)(2) of this section, compared to the person's direct proportional interest the last time the person had a reportable event, the person's direct proportional interest has increased or decreased by at least the equivalent of a ten-percent interest.

(2) ***Special rule for foreign partnership interests owned on December 31, 1999.*** If a United States person owned a ten-percent or greater direct interest in a foreign partnership on December 31, 1999, then to determine whether the person has a reportable event under paragraph (b)(1)(i)(B), (b)(1)(ii)(B), or (b)(1)(iii) of this section, the comparison should be made to the person's direct interest on December 31, 1999. Once the person has a reportable event after December 31, 1999, future comparisons should be made by reference to the last reportable event.

(3) ***Change in a proportional interest.*** A partner's proportional interest in a foreign partnership may change for a number of reasons, for example, the change may be caused by changes in other partners' interests resulting from a partner withdrawing from the partnership. A proportional change may also occur by operation of the partnership agreement, for example, if the partnership agreement provides that a partner's interest in profits will change on a set date or when the partnership has earned a specified amount of profits and one of those events occurs.

(4) ***Ten-percent interest.*** Under section 6046A(d) and this section, a *ten-percent interest* in a foreign partnership, as described in section 6038(e)(3)(C) and the regulations thereunder, means an interest equal to ten percent of the capital interest in such partnership, an interest equal to ten percent of the profits interest in such partnership, or an interest to which ten percent of the deductions or losses of such partnership are allocated.

(5) ***United States person. United States person*** means a person described in section 7701(a)(30).

(6) ***Foreign partnership. Foreign partnership*** means any partnership that is a foreign partnership under sections 7701(a)(2) and (5).

(7) ***Examples.*** The rules of paragraph (a) of this section and this paragraph (b) are illustrated by the following examples:

Example 1. Acquisition of an indirect interest. FP, a foreign partnership, has two partners, *FC1* and *FC2,* both foreign corporations. *FC1* owns a 40% interest in *FP,* and *FC2* owns a 60% interest in *FP.* No United States person owns an interest in *FP,* either directly, or constructively under section 6038(e)(3)(C) and section 267(c). On January 1, 2001, *US,* a United States person and calendar year taxpayer, acquires by purchase 100% of *FC2's* stock. *US* has acquired an indirect interest of 60% in *FP.* See sections 6038(e)(3)(C) and 267(c)(1). However, *US* is not required to report the January 1, 2001 indirect acquisition under section 6046A. *US* did not own a 10% or greater direct interest in *FP* before the acquisition, and *US* does not own a 10% or greater direct

interest as a result of the acquisition. (*US* must, however, comply with the reporting requirements under section 6038 (controlled foreign corporation and controlled foreign partnership reporting) with respect to *FC2* and *FP*.)

Example 2. Acquisition of direct interests. (i) Assume the same facts as *Example 1*. In addition, on June 1, 2001, *US* purchases a 5% direct interest in *FP* from *FC1*. *US* did not own a 10% or greater direct interest in *FP* before the acquisition. After the acquisition, *US* does not own a direct interest of 10% or more. *US* owns a 10% or greater total interest (direct and indirect), but only a 5% direct interest. Therefore, *US* is not required to report the June 1, 2001, acquisition under section 6046A.
(ii) On September 1, 2001, *US* purchases a 7% direct interest in *FP* from *FC1*. The September 1, 2001 acquisition constitutes a reportable event under paragraph (b)(1)(i)(A) of this section. Before the September 1 acquisition, US did not own a 10% or greater direct interest in *FP*. After the September 1 acquisition, *US* owns a 12% direct interest, and therefore, as a result of the September 1 acquisition, *US* now owns a 10% or greater direct interest in *FP*. Consequently, *US* must report its September 1 acquisition under section 6046A on Form 8865 filed with *US's* 2001 income tax return.

(iii) On December 1, 2001, *US* acquires an additional 4% direct interest in *FP* from *FC1,* so that *US's* total direct interest has increased from 12% to 16%. This acquisition does not constitute a reportable event. Compared to *US's* direct interest when *US* last had a reportable event (12% on September 1, 2001), after acquiring the 4% interest *US's* direct interest has not increased by at least a 10% direct interest (i.e., its direct interest increased by only 4%). Therefore, *US* does not have to report the December 1, 2001, acquisition under section 6046A. On April 1, 2002, *FC2* distributes a 6% direct interest in *FP* to *US*. *US* now owns a 22% direct interest in *FP*. Compared to *US's* direct interest when *US* last had a reportable event (12% on September 1, 2001), after the April 1 acquisition *US's* direct interest has increased by at least a 10% interest (12% to 22%). *US* must report the April 1, 2002 acquisition on a Form 8865 attached to *US's* 2002 income tax return.

Example 3. Change in proportional interest resulting from withdrawal of a partner. Assume the same facts as *Example 3*. In addition, on January 5, 2003, *FC2* withdraws entirely from *FP*. As a result, the direct interests of *US* and *FC1* in *FP* each increase by at least the equivalent of 10% interests. Compared to *US's* direct interest the last time *US* had a reportable event (22% on April 1, 2002), *US's* direct interest has increased by at least the equivalent of a ten percent interest. Therefore, *US* has had a reportable event pursuant to paragraph (b)(1)(iii) of this section, and *US* must report the change in its interest resulting from *FC2's* withdrawal from the partnership on *US's* Form 8865 filed with *US's* 2003 tax year income tax return.

Example 4. Change in proportional interest constituting an acquisition. *FP* is a foreign partnership that has no United States persons as direct or constructive partners. *US* is a United States person and a calendar year taxpayer. On January 1, 2001, *US* purchases an 8% direct interest in *FP*. *US* is not required to report this acquisition. US did not own a 10% or greater direct interest in *FP*, and *US* does not own a 10% or greater direct interest as a result of the acquisition. On March 1,

2001, *FC,* a foreign partner of *FP,* withdraws from *FP,* and as result, *US's* direct interest in *FP* increases by a 7% interest. The increase in *US's* direct interest is considered an acquisition of an interest under paragraph (b)(1)(i)(A) of this section. *US* did not own a 10% or greater direct interest in *FP* before *FC* withdrew, and as a result of the increase in *US's* direct interest because of *FC's* withdrawal from *FP, US* now owns a 10% or greater direct interest in *FP.* Therefore, *US* must report under section 6046A the increase in *US's* direct interest resulting from the withdrawal of *FC* from *FP* on Form 8865 filed with *US's* tax return for *US's* 2001 tax year.

(c) ***Content of return.*** The Form 8865 that must be filed under paragraph (a)(1) of this section must contain the following information in such form and manner and to the extent that Form 8865 and its instructions prescribe—

(1) The name, address, and taxpayer identification number of the United States person required to file the return;

(2) Information about other persons (foreign or domestic) whose interests in the foreign partnership the person reporting under section 6046A is considered to own under section 6038(e)(3)(C) and section 267(c);

(3) Information about all foreign entities that were disregarded as entities separate from their owners under §§ 301.7701-2 and 301.7701-3 of this chapter that were owned by the foreign partnership during the partnership's tax year ending with or within the tax year of the person filing Form 8865 pursuant to section 6046A;

(4) For each reportable event, the date of the event, the type of event (acquisition, disposition, or change in proportional interest), and the United States person's direct percentage interest in the foreign partnership immediately before and immediately after the event;

(5) The fair market value of the interest acquired or disposed of;

(6) Information about partnerships (foreign and domestic) in which the foreign partnership owned a direct interest, or a constructive interest of ten percent or more under sections 267(c)(1) and (5) and the regulations thereunder, during the partnership's tax year ending with or within the tax year of the person filing Form 8865 pursuant to section 6046A; and

(7) Any other information required to be submitted by Form 8865 and its instructions.

(d) ***Time and manner for filing returns.*** The Form 8865 must be filed with the timely filed (including extensions) income tax return of the United States person for the tax year in which the reportable event occurs. If the United States person is not required to file an income tax return for its tax year in which the reportable event occurs, but is required to file an information return for that year (for example, Form 1065, “U.S. Partnership Return of Income,” or Form 990, “Return of Organization Exempt from Income Tax”), the United States person should attach the Form 8865 to its information return filed for that tax year.

(e) ***Duplicate returns.*** If required by the instructions to Form 8865, a duplicate Form 8865 (including attachments and schedules) must also be filed.

(f) ***Persons excepted from filing return*** —

(1) ***Section 6038B overlap.*** If a United States person acquires an interest in a foreign partnership as a result of a section 721 contribution required to be reported under section 6038B, and the person properly reports the contribution under section 6038B, then the United States person is not required to report the acquisition of the partnership interest under section 6046A(a) should it constitute a

reportable event under paragraph (b)(1) of this section. The acquisition will still constitute a reportable event for purposes of making future comparisons pursuant to paragraphs (b)(1)(i)(B), (b)(1)(ii)(B) and (b)(1)(iii) of this section. A person that fails to properly report the section 721 contribution under section 6038B and the regulations thereunder and that fails to properly report the acquisition of the partnership interest under section 6046A may be subject to the penalties applicable to a failure to comply with the requirements of section 6038B, as well as the penalties applicable for a failure to comply with the requirements of section 6046A. See paragraph (h) of this section for more information about the penalties for failure to comply with the requirements of section 6046A.

(2) ***Trusts relating to state and local government employee retirement plans.*** The return requirement of section 6046A does not apply to trusts relating to state and local government employee retirement plans, unless the instructions to Form 8865 provide otherwise.

(3) ***Reporting under this section not required of partnerships excluded from the application of subchapter K.*** The reporting requirements of this section will not apply to any United States person in respect of an eligible partnership as described in § 1.761-2(a) in which that United States person is a partner, if such partnership has validly elected to be excluded from all of the provisions of subchapter K of chapter 1 of the Internal Revenue Code in the manner specified in § 1.761-2(b)(2)(i), or is deemed to have elected to be excluded from all of the provisions of subchapter K of chapter 1 of the Internal Revenue Code in accordance with the provisions of § 1.761-2(b)(2)(ii).

(4) ***Exclusion for satellite organizations.*** The return requirement of section 6046A does not apply to the International Telecommunications Satellite Organization (or a successor organization) or the International Maritime Satellite Organization (or a successor organization).

(g) ***Method of reporting.*** Except as otherwise provided on Form 8865, or the accompanying instructions, any amounts required to be reported under section 6046A and this section must be expressed in United States dollars, with a statement of the exchange rates used. All statements required on or with Form 8865 pursuant to this section must be in English.

(h) ***Penalties for violating section 6046A.*** For penalties for violating section 6046A, see sections 6679 and 7203.

(i) ***Statute of limitations.*** For exceptions to the limitations on assessment in the event of a failure to provide information under section 6046A, see section 6501(c)(8).

(j) ***Effective date.*** This section applies to reportable events occurring after December 31, 1999. No reporting under section 6046A is required for reportable events occurring on or before December 31, 1999.

[T.D. 8851, 64 FR 72556, Dec. 28, 1999]

§ 1.6046-2 Returns as to foreign corporations which are created or organized, or reorganized, on or after September 15, 1960, and before January 1, 1963.

(a) ***Requirement of returns.*** In the case of any foreign corporation which is created or organized, or reorganized, on or after September 15, 1960, and before January 1, 1963:

(1) Each United States citizen or resident who was an officer or director of such corporation at any time within 60 days after such creation or organization, or reorganization, and

(2) Each United States shareholder of such corporation by or for whom, at any time within 60 days after such creation or organization, or reorganization, 5 percent or more in value of such corporation's then outstanding stock was owned directly or indirectly (including, in the case of an individual stock owned by members of his family),

shall file a return on Form 959 (Rev. Oct. 1960), United States Information Return With Respect to the Creation or Organization, or Reorganization, of a Foreign Corporation.

(b) ***Information required to be shown on return.*** The return required by section 6046, prior to its amendment by section 20(b) of the Revenue Act of 1962, and this section shall set forth the following information:

(1) The name and address of the person (or persons) filing the return, and an indication that he is a United States shareholder, officer, or director;

(2) The name and business address of the foreign corporation;

(3) The name of the country under the laws of which the foreign corporation was created or organized, or reorganized;

(4) The name and address of the foreign corporation's statutory or resident agent in the country of incorporation;

(5) The date of the foreign corporation's creation or organization, or reorganization;

(6) A statement of the manner in which the creation or organization, or reorganization, of the foreign corporation was effected;

(7) A complete statement of the reasons for, and the purposes sought to be accomplished by, the creation or organization, or reorganization, of the foreign corporation;

(8) A statement showing the classes and kinds of assets transferred to the foreign corporation in connection with its creation or organization, or reorganization, including a list completely describing each asset or group of assets, its value, date of transfer, and the name and address of person (or persons) owning such asset or group immediately prior to the transfer;

(9) A statement showing the assets transferred and the securities issued by the foreign corporation in its creation or organization or reorganization, as well as the name and address of each person to whom such a transfer or issuance was made;

(10) A statement specifying the amount and type of any indebtedness due from the foreign corporation to each of its shareholders and the name of each such shareholder;

(11) The names and addresses of the shareholders of the foreign corporation at the time of its creation or organization or reorganization, and the classes of stock and number of shares held by each;

(12) The names and addresses of subscribers to the stock of the foreign corporation, and the number of shares subscribed to by each; and

(13) The name and address of the person (or persons) having custody of the books of account and records of the foreign corporation, and the location of such books and records if different from such address.

(c) *Time and place for filing return.* The return required by section 6046, prior to its amendment by section 20(b) of the Revenue Act of 1962, and this section shall be filed with the Internal Revenue Service Center designated in the instructions of the applicable form. Such return shall be filed on or before the 90th day after the date such foreign corporation is created or organized, or reorganized.

[T.D. 6623, 27 FR 11882, Dec. 1, 1962, as amended by T.D. 7322, 39 FR 30932, Aug. 27, 1974]

§ 1.6046-3 Returns as to formation or reorganization of foreign corporations prior to September 15, 1960.

(a) *Requirement of returns.* Every attorney, accountant, fiduciary, bank, trust company, financial institution, or other person, who, on or before September 14, 1960, aids, assists, counsels, or advises in, or with respect to, the formation, organization, or reorganization of any foreign corporation shall file an information return on Form 959 (as in use prior to the October 1960 revision). The return must be filed in every such case regardless of:

(1) The nature of the counsel or advice given, whether for or against the formation, organization, or reorganization of the foreign corporation, or the nature of the aid or assistance rendered, and

(2) The action taken upon the advice or counsel, that is, whether the foreign corporation is actually formed, organized or reorganized.

(b) *Special provisions* —

(1) *Employers.* In the case of aid, assistance, counsel, or advice in, or with respect to, the formation, organization, or reorganization of a foreign corporation given by a person in whole or in part through the medium of employees (including, in the case of a corporation, the officers thereof), the return made by the employer must set forth in detail the information required by this section including that which, as an incident to such employment, is within the possession or knowledge or under the control of such employees.

(2) *Employees.* The obligation of an employee (including, in the case of a corporation, the officers thereof) to file a return with respect to any aid, assistance, counsel, or advice in or with respect to the formation, organization, or reorganization of a foreign corporation, given as an incident to his employment, will be satisfied if a return as prescribed by this section is duly filed by the employer. Clerks, stenographers, and other employees rendering aid or assistance solely of a clerical or mechanical character in or with respect to the formation, organization, or reorganization of a foreign corporation are not required to file returns by reason of such services.

(3) *Partners.* In the case of aid, assistance, counsel, or advice in, or with respect to, the formation, organization, or reorganization of a foreign corporation given by one or more members of a partnership in the course of its business, the obligation of each such individual member to file a return will be satisfied if a return as prescribed by this section is duly filed by the partnership executed by all the members of the firm who gave any such aid, assistance, counsel, or advice. If, however, the partnership has been dissolved at the time the return is due, individual returns must be filed by each member of the former partnership who gave any such aid, assistance, counsel, or advice.

(4) *Return jointly made.* If two or more persons aid, assist, counsel, or advise in, or with respect to, the formation, organization, or reorganization of a particular foreign corporation, any two or more of such persons may, in lieu of filing several returns, jointly execute and file one return.

(5) ***Separate return for each corporation.*** If a person aids, assists, counsels, or advises in, or with respect to, the formation, organization, or reorganization of more than one foreign corporation, a separate return must be filed with respect to each foreign corporation.

(c) ***Information required to be shown on return.*** The return required by section 6046, prior to its amendment by section 7(a) of the Act of September 14, 1960, and this section shall set forth the following information to the extent the information is within the possession or knowledge, or under the control, of the person filing the return:

(1) The name and address of the person (or persons) to whom, and the person (or persons) for whom, or on whose behalf, the aid, assistance, counsel, or advice was given;

(2) The name and address of the foreign corporation and the country under the laws of which it was formed, organized, or reorganized;

(3) The month and year when the foreign corporation was formed, organized, or reorganized;

(4) A statement of the manner in which the formation, organization, or reorganization of the foreign corporation was effected;

(5) A complete statement of the reasons for, and the purposes sought to be accomplished by, the formation, organization, or reorganization of the foreign corporation;

(6) A statement showing the classes and kinds of assets transferred to the foreign corporation in connection with its formation, organization, or reorganization, including a detailed list of any stock or securities included in such assets, and a statement showing the names and addresses of the persons who were the owners of such assets immediately prior to the transfer;

(7) The names and addresses of the shareholders of the foreign corporation at the time of the completion of its formation, organization, or reorganization, showing the classes of stock and number of shares held by each and, in the case of Forms 959 filed after December 31, 1958, the names and addresses of the subscribers to the stock of the foreign corporation and the number of shares subscribed to by each;

(8) The name and address of the person (or persons) having custody of the books of account and records of the foreign corporation; and

(9) Such other information as is required by the return form.

(d) ***Privileged communications.*** An attorney-at-law is not required to file a return with respect to any advice given or information obtained through the relationship of attorney and client.

(e) ***Time and place for filing return*** —

(1) ***Time for filing.*** Returns required by section 6046, prior to its amendment by section 7(a) of the Act of September 14, 1960, and this section shall be filed within 30 days after the first performance of any of the functions referred to in paragraph (a) of this section. If in a particular case, the aid, assistance, counsel, or advice given by any person extends over a period of more than one day, such person, to avoid multiple filing of returns, shall file a return within 30 days after either of the following events:

(i) The formation, organization, or reorganization of the foreign corporation, or

(ii) The termination of his aid, assistance, counsel, or advice in, or with respect to, the formation, organization, or reorganization of the foreign corporation.

(2) ***Place for filing.*** Returns required by section 6046 of the Internal Revenue Code of 1954 and this section shall be filed with the Internal Revenue Service Center designated in the instructions of the applicable form.

(f) ***Penalties.*** For criminal penalties for failure to file a return and filing a false or fraudulent return, see sections 7203, 7206, and 7207.

[T.D. 6500, 25 FR 12108, Nov. 26, 1960, as amended by T.D. 6623, 27 FR 11882, Dec. 1, 1962; T.D. 7322, 39 FR 30932, Aug. 27, 1974]

§ 1.6047-1 Information to be furnished with regard to employee retirement plan covering an owner-employee.

(a) ***Trustees and insurance companies*** —

(1) ***Requirement of return.***

(i) Every trustee of a trust described in section 401(a) and exempt from tax under section 501(a) which makes payments of amounts described in subparagraph (2) of this paragraph aggregating $10 or more during any calendar year to an individual (or his beneficiary) who was covered, within the meaning of paragraph (a)(2) of § 1.401-10, as an owner-employee under the plan of which such trust is a part shall make a return on Forms 1096 and 1099 for such year showing the name and address of the person to whom paid, the aggregate amount of such payments, specifically identified as an amount to which this paragraph applies, and such other information as is required by the forms. A separate Form 1099 shall be filed with respect to each payee. The term “owner-employee” means an owner-employee as defined in section 401(c)(3) and paragraph (d) of § 1.401-10. Any custodial account which satisfies the requirements of section 401(f) shall be treated as a qualified trust and the custodian of such a custodial account must comply with the requirements of this section as if he were the trustee.

(ii) Every issuer of a contract which is treated as an annuity contract under sections 401 through 404 purchased by a trust described in section 401(a) and exempt from tax under section 501(a) or under a plan described in section 403(a) which makes payments of amounts described in subparagraph (2) of this paragraph aggregating $10 or more during any calendar year to an individual (or his beneficiary) who was covered, within the meaning of paragraph (a)(2) of § 1.401-10, as an owner-employee under the plan of which such trust is a part or under which such contract was purchased shall make a return on Forms 1096 and 1099 for such year showing the name and address of the person to whom paid, the aggregate amount of such payments, specifically identified as an amount to which this paragraph applies, and such other information as is required by the form. A separate Form 1099 shall be filed with respect to each payee.

(2) ***Amounts subject to this section.*** The amounts subject to reporting under subparagraph (1) of this paragraph include all amounts distributed or made available to which section 402(a) (relating to employees' trusts) or section 403(a) (relating to employee annuity plans) applies, whether or not such amounts are includible in gross income and whether or not attributable to contributions made while the individual to whom they relate was an owner-employee. However, amounts subject to reporting do not include any amounts distributed or made available by the trustee of any trust or the issuer of any contract under any plan with respect to which he has not received the notification provided in either subparagraph (3) of this paragraph or paragraph (b) of this section. Amounts

distributed or made available under the plan include, for example, amounts received by the individual as loans on contracts purchased under the plan, and payments made to the individual by reason of the surrender of contracts purchased under the plan, whether or not prior to their maturity.

(3) ***Notification by trustee.*** The trustee of any trust described in section 401(a) and exempt from tax under section 501(a) who receives notification from any owner-employee that contributions have been made to the trust on behalf of that owner-employee as an owner-employee shall notify in writing the issuer of any contract which is treated as an annuity contract under sections 401 through 404 purchased by the trust for the benefit of that owner-employee that such contributions have been made to such trust. Such notification shall be delivered to such issuer at the time such contract is purchased or within 90 days after the notification required by paragraph (b) of this section is received by the trustee, whichever is later. Only one such notification must be made with respect to any contract.

(4) ***Record keeping.*** Any trustee, insurance company, or other person, which is referred to in subparagraph (1) of this paragraph and which is notified under section 6047(b) that contributions to the trust or under the plan have been made on behalf of an owner-employee shall maintain a record of such notification until all funds of the trust or under the plan on behalf of the owner-employee have been distributed.

(5) ***Inclusion of other payments.*** The Form 1099 filed under this section by any person with respect to payments to another person during a calendar year may, at the election of the maker, include other payments made by him to such other person during such year which are required to be reported on Form 1099.

(6) ***Time and place for filing.*** The return required under this section for any calendar year shall be filed after the close of that year and on or before February 28 (March 31 if filed electronically) of the following year with any of the Internal Revenue Service Centers, the addresses of which are listed in the instructions for Form 1096. For extensions of time for filing returns under this section, see § 1.6081-1.

(b) ***Notification by owner-employee.*** Any owner-employee on behalf of whom contributions are made to a trust described in section 401(a) and exempt under section 501(a) or under a plan described in section 403(a) shall notify in writing:

(1) The trustee of such a trust, or

(2) The issuer of any contract which is treated as an annuity contract under sections 401 through 404 under such plan,

that such contributions have been made to such trust or plan. Such notification shall be delivered to such trustee or such issuer during the first calendar year in which such contributions are made or on or before February 28 of the year following such year. Only one such notification must be made with respect to any contract or any trust.

(c) ***Penalties.*** For civil penalty for failure to file a return required by this section, and for criminal penalty for furnishing fraudulent information under this section, see §§ 301.6652-3 and 301.7207-1 respectively.

(d) ***Permission to submit information required by Form 1099 on magnetic tape.*** For rules relating to permission to submit the information required by Form 1099 on magnetic tape or other media, see § 1.9101-1.

[T.D. 6677, 28 FR 10147, Sept. 17, 1963, as amended by T.D. 6883, 31 FR 6589, May 3, 1966; T.D. 7551, 43 FR 29292, July 7, 1978; T.D. 8895, 65 FR 50407, Aug. 18, 2000]

§ 1.6047-2 Information relating to qualifying longevity annuity contracts.

(a) *Requirement and form of report* —

(1) ***In general.*** Any person issuing any contract that is intended to be a qualifying longevity annuity contract (QLAC), defined in § 1.401(a)(9)-6(q), shall make the report required by this section. This requirement applies only to contracts purchased or held under any plan, annuity, or account described in section 401(a), 403(a), 403(b), or 408 (other than a Roth IRA) or eligible governmental plan under section 457(b).

(2) ***Annual report.*** The issuer shall make annual calendar-year reports on the applicable form prescribed by the Commissioner for this purpose concerning the status of the contract. The report shall identify that the contract is intended to be a QLAC and shall contain the following information—

(i) The name, address, and identifying number of the issuer of the contract, along with information on how to contact the issuer for more information about the contract;

(ii) The name, address, and identifying number of the individual in whose name the contract has been purchased;

(iii) If the contract was purchased under a plan, the name of the plan, the plan number, and the Employer Identification Number (EIN) of the plan sponsor;

(iv) If payments have not yet commenced, the annuity starting date on which the annuity is scheduled to commence, the amount of the periodic annuity payable on that date, and whether that date may be accelerated;

(v) For the calendar year, the amount of each premium paid for the contract and the date of the premium payment;

(vi) The total amount of all premiums paid for the contract through the end of the calendar year;

(vii) The fair market value of the QLAC as of the close of the calendar year; and

(viii) Such other information as the Commissioner may require.

(b) *Manner and time for filing* —

(1) ***Timing.*** The report required by paragraph (a)(2) of this section shall be filed in accordance with the forms and instructions prescribed by the Commissioner. Such a report must be filed for each calendar year beginning with the year in which premiums for a contract are first paid and ending with the earlier of the year in which the individual in whose name the contract has been purchased attains age 85 (as adjusted pursuant to § 1.401(a)(9)-6(q)(4)(ii)(B)) or dies.

(2) ***Surviving spouse.*** If the individual dies and the sole beneficiary under the contract is the individual's spouse (in which case the spouse's annuity would not be required to commence until the individual would have commenced benefits under the contract had the individual survived), the report must continue to be filed for each calendar year until the calendar year in which the distributions to the spouse commence or in which the spouse dies, if earlier.

(c) ***Issuer statements.*** Each issuer required to file the annual report required by paragraph (a)(2) of this section shall furnish to the individual in whose name the contract has been purchased a statement containing the information required to be included in the report, except that such statement shall be furnished to a surviving spouse to the extent that the report is required to be filed under paragraph (b)(2) of this section. A copy of the required form may be used to satisfy the statement requirement of this

paragraph (c). If a copy of the required form is not used to satisfy the statement requirement of this paragraph (c), the statement shall contain the following language: "This information is being furnished to the Internal Revenue Service." The statement required by this paragraph (c) shall be furnished on or before January 31 following the calendar year for which the report required by paragraph (a)(2) of this section is required.

(d) ***Penalty for failure to file report.*** Section 6652(e) prescribes a penalty for failure to file the report required by paragraph (a)(2) of this section.

(e) ***Effective/applicability date.*** This section applies to contracts purchased on or after July 2, 2014.

[T.D. 9673, 79 FR 37643, July 2, 2014, as amended by T.D. 10001, 89 FR 58906, July 19, 2024]

§ 1.6049-1 Returns of information as to interest paid in calendar years before 1983 and original issue discount includible in gross income for calendar years before 1983.

(a) ***Requirement of reporting —***

(1) ***In general.***

(i) Every person who makes payments of interest (as defined in § 1.6049-2) aggregating $10 or more to any other person during a calendar year before 1983 shall make an information return on Forms 1096 and 1099 for such calendar year showing the aggregate amount of such payments, the name and address of the person to whom paid, the total of such payments for all persons, and such other information as is required by the forms. In the case of interest paid during calendar years beginning with 1963 and continuing until such time as the Commissioner determines that it is feasible to aggregate payments on two or more accounts, insurance contracts, or investment certificates and this subdivision is amended accordingly to provide for reporting on an aggregate basis, the requirement of this subdivision for the filing of Form 1099 will be met if a person making payments of interest to another person on two or more such accounts, insurance contracts, or investment certificates, files a separate Form 1099 with respect to each such account, contract, or certificate on which $10 or more of interest is paid to such other person during the calendar year. In the case of evidences of indebtedness described in section 6049(b)(1)(A), separate Forms 1099 may be filed as provided in the preceding sentence with respect to holdings in different issues. Thus, if a bank pays to a person interest totaling $15 on one account and $20 on a second account, it may file separate Forms 1099 with respect to the payments of $15 and $20. If the interest on the second account totaled $5 instead of $20, no return would be required with respect to the $5.

(ii)

(*a*) Every person which is a corporation that has outstanding any bond, debenture, note, or certificate or other evidence of indebtedness (referred to in this section and § 1.6049-2 as an obligation) in "registered form" (as defined in paragraph (d) of § 1.6049-2) issued after May 27, 1969 (other than an obligation issued by a corporation pursuant to a written commitment which was binding on May 27, 1969, and at all times thereafter) and on or before December 31, 1982, as to which there is during any calendar year before 1983 an amount of original issue discount (as defined in § 1.6049-2) aggregating $10 or more includible as interest in the gross income for such calendar year of any holder (determined, if semiannual record date reporting is being used under (*b*)(*1*) of this

subdivision, by treating each holder as holding the obligation on every day it was outstanding during the calendar year), shall make an information return on Forms 1096 and 1099-OID for such calendar year showing the following:

(*1*) The name and address of each record holder for whom such aggregate amount of original issue discount is $10 or more and, for calendar years subsequent to 1972, the account, serial, or other identifying number of each obligation for which a return is being made.

(*2*) The aggregate amount of original issue discount includible by each such holder for the period during the calendar year for which the return is made (or, if the aggregation rules of (*b*)(*2*) of this subdivision are being used, that he held the obligations). If however, the semiannual record date reporting rules are being used under (*b*)(*1*) of this subdivision, such aggregate amount shall be determined by treating each such record date holder as if he held each such obligation on every day it was outstanding during the calendar year. For purposes of this section, an obligation shall be considered to be outstanding from the date of original issue (as defined in paragraph (b)(3) of § 1.1232-3). In the case of a time deposit open account arrangement to which paragraph (e)(5) of § 1.1232-3A applies, for example, the amount to be shown under this subdivision (*2*) on the Forms 1096 and 1099-OID is the sum (computed under such paragraph (e)(5)) of the amounts separately computed for each deposit made pursuant to the arrangement.

(*3*) The issue price of the obligation (as defined in paragraph (b)(2) of § 1.1232-3).

(*4*) The stated redemption price of the obligation at maturity (as defined in paragraph (b)(1)(iii) of § 1.1232-3).

(*5*) The ratable monthly portion of original issue discount with respect to the obligation as defined in section 1232(a)(3)(A) (determined without regard to a reduction for a purchase allowance or whether the holder purchased at a premium).

(*6*) The name and address of the person filing the form.

(*7*) Such other information as is required by the form. And,

(*8*) The sum, for all such holders of the aggregate amounts of such original issue discount includible for such calendar year for each such holder.

(*b*) With respect to any obligation (other than an obligation to which paragraph (e) or (f) of § 1.1232-3A applies (relating respectively to deposits in banks and similar financial institutions and to face-amount certificates)), the issuing corporation (or an agent acting on its behalf):

(*1*) Shall be permitted (until this subdivision (*1*) is amended) to prepare a Form 1099-OID only for each person who is a holder of record of the obligation on the semiannual record date (if any) used by the corporation (or agent) for the payment of stated interest or, if there is no such date, the semiannual record dates shall be considered to be June 30, and December 31.

(*2*) Shall be permitted to aggregate all original issue discount with respect to 2 or more obligations of the same issue for which the amounts specified in (*a*)(*2*), (*a*)(*3*), (*a*)(*4*), and (*a*)(*5*) of this subdivision are proportional and, therefore, may file one Form

1099-OID for all such obligations being aggregated, except that for calendar year 1971 this aggregation rule shall apply only where such specified amounts are identical. For an illustration of proportional aggregation, see example (4) in (*d*) of this subdivision.

(*c*) In any case in which any one holder of a particular obligation for the calendar year held such obligation on more than one record date, only one Form 1099-OID shall be filed for that year with respect to that holder and that obligation. This provision applies only in the case in which any corporation prepares Forms 1099-OID in accordance with the record date reporting rule of (*b*)(*1*) of this subdivision.

(*d*) The requirements of (*a*)(*3*), (*a*)(*4*), and (*a*)(*5*) of this subdivision shall not apply to a time deposit open account arrangement to which paragraph (e)(5) of § 1.1232-3A applies, or to a face-amount certificate to which paragraph (f) of § 1.1232-3A applies.

(*e*) The provisions of this subdivision (ii) may be illustrated by the following examples:

Example 1. On January 1, 1971, a corporation issued a 10-year bond in registered form which pays stated interest to the holder of record on June 30 and December 31. The bond has an issue price (as defined in paragraph (b)(2) of § 1.1232-3) of $7,600, a stated redemption price (as defined in paragraph (b)(1) of § 1.1232-3) at maturity of $10,000, and a ratable monthly portion of original issue discount (as defined in section 1232(a)(3)(A)) of $20. The corporation's books indicate that A was the holder of record on June 30, 1971, and B was the holder on December 31, 1971. Under (*b*)(*1*) of this subdivision, the corporation is permitted to file separate Forms 1099-OID for both A and B showing, on each form, all items required by (*a*) of this subdivision, including the total original issue discount of $240 for the entire calendar year (which includes original issue discount for all holders), the issue price of $7,600, the stated redemption price at maturity of $10,000, and the ratable monthly portion of original issue discount of $20.

Example 2. Assume the facts stated in Example (1), except that A is recorded on the books of the corporation as holding the bond on June 30 and December 31, 1971. The corporation shall complete and file only one Form 1099-OID for A.

Example 3. Assume the facts stated in Example (1), except that the books of the corporation show that A held 2 of the bonds at all times in 1971. The amounts of the items listed in (*a*)(*2*), (*a*)(*3*), (*a*)(*4*), and (*a*)(*5*) of this subdivision are identical for the 2 bonds. Under (*b*)(*2*) of this subdivision, the corporation is permitted to treat the 2 bonds as one for purposes of completing and filing a Form 1099-OID for 1971 and aggregate the amounts being reported.

Example 4. On January 1, 1972, a corporation issued to C 3 bonds in registered form of the same issue with stated redemption prices of $1,000, $5,000, and $10,000. The aggregate amounts of original issue discount for each year, the issue prices, the stated redemption prices, and the monthly portions of original issue discount are the same for each $1,000 of stated redemption price. Thus, all relevant amounts for any one bond are proportional to such amounts for any other bond. Therefore, so long as C holds the bonds the corporation shall be permitted to aggregate on one Form 1099-OID all original issue discount with respect to such obligations in accordance with (*b*)(*2*) of this subdivision.

Example 5. On June 1, 1971, a corporation issues a 10-year bond to D, for which the ratable monthly portion of original issue discount is $10. For 1971, the corporation uses the record date reporting system permitted by (*b*)(*1*) of this subdivision. The corporation's books show that E held the bond on June 30, 1971, and that F held the bond on December 31, 1971, the dates on which the corporation pays stated interest on the bond. The corporation shall file a Form 1099-OID for both E and F showing on each form the aggregate amount of original issue discount includible for 1971 or $70 since E and F are each treated as if each held the bond every day it was outstanding and it was outstanding 7 months in 1971. As to D, the corporation is not required to file a Form 1099-OID since D did not hold the bond on either of the 2 record dates.

(iii) Every person who during a calendar year before 1983 receives payments of interest as a nominee on behalf of another person aggregating $10 or more shall make an information return on Forms 1096 and 1087 for such calendar year showing the aggregate amount of such interest, the name and address of the person on whose behalf received, the total of such interest received on behalf of all persons, and such other information as is required by the forms.

(iv) Except with respect to an obligation to which paragraph (e) or (f) of § 1.1232-3A applies (relating respectively to deposits in banks and similar financial institutions and to face-amount certificates), every person who is a nominee on behalf of the actual owner of an obligation as to which there is original issue discount aggregating $10 or more includible in the gross income of such owner during a calendar year before 1983, regardless of whether he receives a Form 1099-OID with respect to such discount, shall make an information return on Forms 1096 and 1087-OID for such calendar year showing in the manner prescribed on such forms the same information for the actual owner as is required or permitted in subdivision (ii) of this subparagraph for the record holder.

(v) Notwithstanding the provisions of subdivisions (iii) and (iv) of this subparagraph, the filing of Form 1087 or Form 1087-OID is not required if:

(*a*) The record owner is required to file a fiduciary return on Form 1041 disclosing the name, address, and identifying number of the actual owner;

(*b*) The record owner is a nominee of a banking institution or trust company exercising trust powers, and such banking institution or trust company is required to file a fiduciary return on Form 1041 disclosing the name, address, and identifying number of the actual owner; or

(*c*) The record owner is a banking institution or trust company exercising trust powers, or a nominee thereof, and the actual owner is an organization exempt from taxation under section 501(a) for which such banking institution or trust company files an annual return,

but only if the name, address, and identifying number of the record owner are included on or with the Form 1041 fiduciary return filed for the estate or trust or the annual return filed for the tax exempt organization.

(vi) Every person carrying on the banking business who makes payments of interest to another person (whether or not aggregating $10 or more) during a calendar year with respect to a certificate of deposit issued in bearer form (other than such a certificate issued in an amount of $100,000 or more) shall make an information return on Forms 1096 and 1099-BCD for such

calendar year. The preceding sentence applies whether such payments are made during the term of the certificate or at its redemption. The information return required by this subdivision for the calendar year shall show the following:

(*a*) The name, address, and taxpayer identification number of the person to whom the interest is paid;

(*b*) The aggregate amount of interest paid to such person during the calendar year with respect to the certificate of deposit;

(*c*) The name, address, and taxpayer identification number of the person to whom the certificate was originally issued;

(*d*) The portion of the interest with respect to the certificate reported under (*b*) that is attibutable to the current calendar year; and

(*e*) Such other information as is required by the form.

The application of this subdivision (vi) may be illustrated by the following examples:

Example 1. On June 1, 1978, X Bank issues a $1,000 bearer certificate of deposit to A. The certificate of deposit is not redeemable until May 31, 1979, and no interest is to be paid on the instrument until its redemption. On September 1, 1978. A transfers the bearer certificate to B and on May 31, 1979, B presents the certificate to X for payment and receives the $1,000 principal amount plus all the accrued interest. Under paragraph (a)(1)(vi) of this section, X is not required to make an information return for 1978 with respect to the bearer certificate of deposit because no interest is actually paid to a holder of the certificate during 1978. X is required to file an information return for 1979 with respect to the certificate, identifying B as the payee of the entire amount of the interest and A as the original purchaser of the certificate. (For rules relating to statements to be made to recipients of interest payments, see § 1.6049-3.)

Example 2. On July 1, 1978, Y Bank issues a $5,000 bearer certificate of deposit to C. The certificate of deposit is not redeemable until June 30, 1981, and no interest is to be paid on the instrument until its redemption. C holds the certificate for the entire term and on June 30, 1981, presents it to Y for payment and receives the $5,000 principal amount plus the accrued interest. Under paragraph (a)(1)(vi) of this section, Y is not required to file an information return for calendar years 1978, 1979, or 1980 with respect to this bearer certificate of deposit because no interest is acutally paid to C during those calendar years. Y is required to file an information return for 1981 with respect to the certificate identifying C as the payee of the entire amount of the interest and as the original purchaser. (Although Y is not required to file an information return for interest paid on the certificate until its redemption in 1981, C must report as income on his tax returns for 1978, 1979, 1980, and 1981 the ratable portion of such interest includible in income under section 1232.)

(2) ***Definitions.***

(i) The term “person” when used in this section does not include the United States, a State, the District of Columbia, a foreign government, a political subdivision of a State or of a foreign government, or an international organization. Therefore, interest paid by or to one of these entities need not be reported. Similarly, original issue discount in respect of an obligation issued by or to one of these entities need not be reported.

(ii) For purposes of this section, a person who receives interest shall be considered to have received it as a nominee if he is not the actual owner of such interest and if he was required under § 1.6109-1 to furnish his identifying number to the payer of the interest (or would have been so required if the total of such interest for the year had been $10 or more), and such number was (or would have been) required to be included on an information return filed by the payer with respect to the interest. However, a person shall not be considered to be a nominee as to any portion of an interest payment which is actually owned by another person whose name is also shown on the information return filed by the payer or nominee with respect to such interest payment. Thus, in the case of a savings account jointly owned by a husband and wife, the husband will not be considered as receiving any portion of the interest on that account as a nominee for his wife if his wife's name is included on the information return filed by the payer with respect to the interest.

(iii) For purposes of this section, in the case of a person who receives a Form 1099-OID, the determination of who is considered a nominee shall be made in a manner consistent with the principles of subdivision (ii) of this subparagraph.

(iv) For purposes of this section and § 1.6049-3, the term “Form 1099-OID” means the appropriate Form 1099 for original issue discount prescribed for the calendar year.

(3) ***Determination of person to whom interest is paid or for whom it is received.*** For purposes of applying the provisions of this section, the person whose identifying number is required to be included by the payer of interest on an information return with respect to such interest shall be considered the person to whom the interest is paid. In the case of interest received by a nominee on behalf of another person, the person whose identifying number is required to be included on an information return made by the nominee with respect to such interest shall be considered the person on whose behalf such interest is received by the nominee. Thus, in the case of interest made payable to a person other than the record owner of the obligation with respect to which the interest is paid, the record owner of the obligation shall be considered the person to whom the interest is paid for purposes of applying the reporting requirements of this section, since his identifying number is required to be included on the information return filed under such section by the payer of the interest. Similarly, if a stockbroker receives interest on a bond held in street name for the joint account of a husband and wife, the interest is considered as received on behalf of the husband since his identifying number should be shown on the information return filed by the nominee under this section. Thus, if the wife has a separate account with the same stockbroker, any interest received by the stockbroker for her separate account should not be aggregated with the interest received for the joint account for purposes of information reporting. For regulations relating to the use of identifying numbers, see § 1.6109-1.

(4) ***Determination of person by whom original issue discount is includible or for whom a Form 1099-OID showing original issue discount is received.*** For purposes of applying the provisions of this section, the determination of the person by whom original issue discount is includible or for whom a Form 1099-OID is received shall be made in a manner consistent with the principles of subparagraph (3) of this paragraph.

(5) ***Inclusion of other payments.*** The Form 1099 filed by any person with respect to payments of interest to another person during a calendar year prior to 1972 may, at the election of the maker, include payments other than interest made by him to such other person during such year which are required to be reported on Form 1099. Similarly, the Form 1087 filed by a nominee with respect to payments of interest received by him on behalf of any other person during a calendar year prior to 1972 may

include payments of dividends received by him on behalf of such person during such year which are required to be reported on Form 1087. However, except as provided in subparagraph (1)(ii)(*b*) of this paragraph, a separate Form 1087-OID or 1099-OID shall be filed for each obligation in respect of which original issue discount is required to be reported for any calendar year before 1983. In addition, any person required to report payments on both Forms 1087, 1087-OID, 1099, and 1099-OID, for any calendar year may use one Form 1096 to summarize and transmit such forms.

(b) ***When payment deemed made.*** For purposes of section 6049, interest is deemed to have been paid when it is credited or set apart to a person without any substantial limitation or restriction as to the time or manner of payment or condition upon which payment is to be made, and is made available to him so that it may be drawn at any time, and its receipt brought within his own control and disposition.

(c) ***Time and place for filing —***

(1) ***Payment of interest.*** The returns required under this section for any calendar year for the payment of interest shall be filed after September 30 of such year, but not before the payer's final payment for the year, and on or before February 28 of the following year with any of the Internal Revenue Service Centers, the addresses of which are listed in the instructions for Form 1096. For extensions of time for filing returns under this section, see § 1.6081-1.

(2) ***Original issue discount.***

(i) The returns required under this section for any calendar year for original issue discount shall be filed after December 31 of such year and on or before February 28 of the following year with any of the Internal Revenue Service Centers, the addresses of which are listed in the instructions for Form 1096. For extensions of time for filing returns under this section, see § 1.6081-1.

(ii) The time for filing returns for the calendar year 1971 required under this section for original issue discount in respect of obligations to which paragraph (e) of § 1.1232-3A applies (relating to deposits in banks and other similar financial institutions) is extended to April 15, 1972.

(d) ***Penalty.*** For penalty for failure to file the statements required by this section, see § 301.6652-1 of this chapter (Regulations on Procedure and Administration).

(e) ***Permission to submit information required by Form 1087 or 1099 on magnetic tape.*** For rules relating to permission to submit the information required by Form 1087 or 1099 on magnetic tape or other media, see § 1.9101-1.

(Secs. 6049 (a), (b), and (d) and 7805 of the Internal Revenue Code of 1954 (96 Stat. 592, 594; 26 U.S.C. 6049 (a), (b), and (d); 68A Stat. 917, 26 U.S.C. 7805), and in sec. 309 of the Tax Equity and Fiscal Responsibility Act of 1982 (96 Stat. 591)

[T.D. 6628, 27 FR 12800, Dec. 28, 1962, as amended by T.D. 6879, 31 FR 3494, Mar. 8, 1966; T.D. 6883, 31 FR 6589, May 8, 1966; T.D. 7000, 34 FR 996, Jan. 23, 1969, T.D. 7154, 36 FR 25009, Dec. 28, 1971; 37 FR 527, Jan. 13, 1972; T.D. 7311, 39 FR 11881, Apr. 1, 1974; T.D. 7584, 44 FR 1103, Jan. 4, 1979; T.D. 7881, 48 FR 12968, Mar. 28, 1983]

§ 1.6049-2 Interest and original issue discount subject to reporting in calendar years before 1983.

(a) ***Interest in general.*** Except as provided in paragraph (b) of this section, the term “interest” when used in this section and §§ 1.6049-1 and 1.6049-3 means:

(1) Interest on evidences of indebtedness issued by a corporation in "registered form" (as defined in paragraph (d) of this section). The phrase "evidences of indebtedness" includes bond, debentures, notes, certificates and other similar instruments regardless of how denominated.

(2) Interest on deposits (except deposits evidenced by negotiable time certificates of deposit issued in an amount of $100,000 or more) paid (or credited) by persons carrying on the banking business. In the case of a certificate of deposit issued in bearer form, the term "interest", as used in the preceding sentence and in paragraph (a)(1)(vi) of § 1.6049-1, has the same meaning as in § 1.61-7 (regardless of whether taxable to the payee in the year the information return is made).

(3) Amounts, whether or not designated as interest, paid (or credited) by mutual savings banks, savings and loan associations, building and loan associations, cooperative banks, homestead associations, credit unions, or similar organizations in respect of deposits, face amount certificates, investment certificates, or withdrawable or repurchasable shares. Thus, even though amounts paid or credited by such organizations with respect to deposits are designated as "dividends", such amounts are included in the definition of interest for purposes of section 6049.

(4) Interest on amounts held by insurance companies under agreements to pay interest thereon. This includes interest paid by insurance companies with respect to policy "dividend" accumulations (see sections 61 and 451 and the regulations thereunder for rules as to when such interest is considered paid), and interest paid with respect to the proceeds of insurance policies left with the insurer. The so-called "interest element" in the case of annuity or installment payments under life insurance or endowment contracts does not constitute interest for purposes of this section.

(5) Interest on deposits with stockbrokers, bondbrokers, and other persons engaged in the business of dealing in securities.

(b) ***Exceptions.*** The term "interest" when used in section 6049 does not include:

(1) Interest on obligations described in section 103(a) (1) or (3), relating to certain governmental obligations.

(2) Any payment by:

(i) A foreign corporation,

(ii) A nonresident alien individual, or

(iii) A partnership composed in whole or in part of nonresident aliens,

if such corporation, individual, or partnership is not engaged in trade or business within the United States and does not have an office or place of business or a fiscal or paying agent in the United States.

(3) Any interest which is subject to withholding under section 1441 or 1442 (relating to withholding of tax on nonresident aliens and foreign corporations, respectively) by the person making the payment, or which would be so subject to withholding but for the provisions of a treaty, or for the fact that under section 861(a)(1) it is not from sources within the United States, or for the fact that withholding is not required by reason of paragraph (a) or (f) of § 1.1441-4.

(4) In the case of a nominee, any interest which he receives and with respect to which he is required to withhold under section 1441 or 1442, or would be so required to withhold but for the provisions of a treaty, or for the fact that under section 861(a)(1) it is not from sources within the United States, or for the fact that withholding is not required by reason of paragraph (a) or (f) of § 1.1441-4.

(5) Any amount on which the person making the payment is required to deduct and withhold a tax under section 1451 (relating to tax-free covenant bonds), or would be so required but for section 1451(d) (relating to benefit of personal exemptions).

(6) Any amount which is subject to reporting as original issue discount.

(c) *Original issue discount* —

(1) ***In general.*** The term "original issue discount" when used in this section and §§ 1.6049-1 and 1.6049-3 means original issue discount subject to the ratable inclusion rules of paragraph (a) of § 1.1232-3A, determined without regard to any reduction by reason of a purchase allowance under paragraph (a)(2)(ii) of § 1.1232-3A or a purchase at a premium as defined in paragraph (d)(2) of § 1.1232-3.

(2) ***Coordination with interest reporting.*** In the case of an obligation issued after May 27, 1969 (other than an obligation issued pursuant to a written commitment which was binding on May 27, 1969, and at all times thereafter) and on or before December 31, 1982, original issue discount which is not subject to the reporting requirements of paragrah (a)(1)(ii) of § 1.6049-1 is interest within the meaning of pargraph (a) of this section. Original issue discount which is subject to the reporting requirements of paragraph (a)(1)(ii) of § 1.6049-1 is not interest within the meaning of paragraph (a) of this section.

(3) ***Exceptions.*** Reporting of original issue discount is not required in respect of an obligation which paragraph (b)(2) of this section except from interest reporting.

(d) ***Definition of "in registered form."*** For purposes of § 1.6049-1 and this section, an evidence of indebtedness is in registered form if it is registered as to both principal and interest (or, for purposes of reporting with respect to original issue discount, if it is registered as to principal) and if its transfer must be effected by the surrender of the old instrument and either the reissuance by the corporation of the old instrument to the new holder or the issuance by the corporation of a new instrument to the new holder.

(Secs. 6049 (a), (b), and (d) and 7805 of the Internal Revenue Code of 1954 (96 Stat. 592, 594; 26 U.S.C. 6049 (a), (b), and (d); 68A Stat. 917, 26 U.S.C. 7805), and in sec. 309 of the Tax Equity and Fiscal Responsibility Act of 1982 (96 Stat. 591)

[T.D. 6628, 27 FR 12801, Dec. 28, 1962, as amended by T.D. 6908, 31 FR 16774, Dec. 31, 1966; T.D. 6966, 33 FR 11262, Aug. 8, 1968; T.D. 7154, 36 FR 25011, Dec. 28, 1971; T.D. 7584, 44 FR 1104, Jan. 4, 1979; T.D. 7881, 48 FR 12968, Mar. 28, 1983]

§ 1.6049-3 Statements to recipients of interest payments and holders of obligations to which there is attributed original issue discount in calendar years before 1983.

(a) ***Requirement.*** Every person filing

(1) a Form 1099 or 1087 under section 6049(a)(1) and § 1.6049-1 with respect to payments of interest or

(2) a Form 1099-OID or 1087-OID with respect to original issue discount includible in gross income, shall furnish to the person whose identifying number is (or should be) shown on the form a written statement showing the information required by paragraph (b) of this section. With respect to interest, no statement is required to be furnished under section 6049(c) and this section to any person if the aggregate of the payments to (or received on behalf of) such person shown on the form would be less than $10. With respect to original issue discount, no statement is required to be

furnished under section 6049(c) and this section to any person if the aggregate amount of original issue discount on the statement to such person with respect to the obligation would be less than $10. References in this section to Form 1099 shall be construed to include Form 1099-BCD, except that in applying paragraph (b)(2) of this section no information relating to the person to whom the certificate of deposit was originally issued shall be disclosed to another person to whom the payment of interest is made.

(b) *Form of statement* —

(1) *In general.* The written statement required to be furnished to a person under paragraph (a) of this section shall show:

(i) With respect to payments of interest (as defined in § 1.6049-2) aggregating $10 or more to any person during a calendar year before 1983:

(*a*) The aggregate amount of payments shown on the Form 1099 or 1087 as having been made to (or received on behalf of) such person and a legend stating that such amount is being reported to the Internal Revenue Service, and

(*b*) The name and address of the person filing the form, and

(ii) With respect to original issue discount (as defined in § 1.6049-2) which would aggregate $10 or more on the statement to the holder during a calendar year after 1970 and prior to calendar year 1983:

(*a*) The aggregate amount or original issue discount includible by (or on behalf of) such person with respect to the obligation, as shown on Form 1099-OID or Form 1087-OID for such calendar year (determined by applying the rules of paragraph (a)(1)(ii) of § 1.6049-1 for purposes of completing either form),

(*b*) All other items shown on such Form 1099-OID or Form 1087-OID for such calendar year (so determined), and

(*c*) A legend stating that such amount and such items are being reported to the Internal Revenue Service.

(2) *Special rule.* The requirements of this section for the furnishing of a statement to any person, including the legend requirement of this paragraph, may be met by the furnishing to such person of a copy of the Form 1099, 1099-OID, 1087, or 1087-OID filed pursuant to § 1.6049-1, or a reasonable facsimile thereof, in respect of such person. However, in the case of Form 1087-OID or 1099-OID, a copy of the instructions must also be sent to such person. A statement shall be considered to be furnished to a person within the meaning of this section if it is mailed to such person at his last known address.

(c) *Time for furnishing statements* —

(1) *In general* —

(i) *Payment of interest.* Each statement required by this section to be furnished to any person for a calendar year for the payment of interest shall be furnished to such person after November 30 of the year and on or before January 31 of the following year, but no statement may be furnished before the final interest payment for the calendar year has been paid. However, the statement may be furnished at any time after April 30 if it is furnished with the final interest payment for the calendar year.

(ii) *Original issue discount.*

(*a*) Except as otherwise provided in this subdivision (ii), each statement required by this section to be furnished to any person for a calendar year for original issue discount shall be furnished to such person after December 31 of the year and on or before January 31 of the following year.

(*b*) The time for furnishing each statement required by this section to be furnished to any person for the calendar year 1971 for original issue discount in respect of obligations to which paragraph (e) of § 1.1232-3A applies (relating to deposits in banks and other similar financial institutions) is extended to March 15, 1972.

(*c*) The time for furnishing each statement required by this section to be furnished by a nominee to any person for the calendar year 1971 for original issue discount is extended to February 28, 1972.

(2) *Extensions of time.* For good cause shown upon written application of the person required to furnish statements under this section, the district director may grant an extension of time not exceeding 30 days in which to furnish such statements. The application shall be addressed to the district director with whom the income tax returns of the applicant are filed and shall contain a full recital of the reasons for requesting the extension to aid the district director in determining the period of the extension, if any, which will be granted. Such a request in the form of a letter to the district director signed by the applicant will suffice as an application. The application shall be filed on or before the date prescribed in subparagraph (1) of this paragraph for furnishing the statements required by this section.

(3) *Last day for furnishing statement.* For provisions relating to the time for performance of an act when the last day prescribed for performance falls on Saturday, Sunday, or a legal holiday, see § 301.7503-1 of this chapter (Regulations on Procedure and Administration).

(d) *Penalty.* For provisions relating to the penalty provided for failure to furnish a statement under this section see § 301.6678-1 of this chapter (Regulations on Procedure and Administration).

(Secs. 6049 (a), (b), and (d) and 7805 of the Internal Revenue Code of 1954 (96 Stat. 592, 594; 26 U.S.C. 6049 (a), (b), and (d); 68A Stat. 917, 26 U.S.C. 7805), and in sec. 309 of the Tax Equity and Fiscal Responsibility Act of 1982 (96 Stat. 591)

[T.D. 6628, 27 FR 12801, Dec. 28, 1962, as amended by T.D. 7154, 36 FR 25011, Dec. 28, 1971; 37 FR 527, Jan. 13, 1972; T.D. 7584, 44 FR 1104, Jan. 4, 1979; T.D. 7624, 44 FR 31012, May 30, 1979; T.D. 7881, 48 FR 12968, Mar. 28, 1983]

§ 1.6049-4 Return of information as to interest paid and original issue discount includible in gross income after December 31, 1982.

(a) *Requirement of reporting* —

(1) *In general.* Except as provided in paragraph (c) of this section, an information return shall be made by a payor, as defined in paragraph (a)(2) of this section, of amounts of interest and original issue discount paid after December 31, 1982. Such return shall contain the information described in paragraph (b) of this section.

(2) *Payor.* For payments made after December 31, 2002, a payor is a person described in paragraph (a)(2)(i) or (ii) of this section.

(i) Every person who makes a payment of the type and of the amount subject to reporting under this section (or under an applicable section under this chapter) to any other person during a calendar year.

(ii) Every person who collects on behalf of another person payments of the type and of the amount subject to reporting under this section (or under an applicable section under this chapter), or who otherwise acts as a middleman (as defined in paragraph (f)(4) of this section) with respect to such payment.

(b) ***Information to be reported*** —

(1) ***Interest payments.*** Except as provided in paragraphs (b)(3) and (5) of this section, in the case of interest other than original issue discount treated as interest under § 1.6049-5(f), an information return on Form 1099 shall be made for the calendar year showing the aggregate amount of the payments, the name, address, and taxpayer identification number of the person to whom paid, the amount of tax deducted and withheld under section 3406 from the payments, if any, and such other information as required by the forms. An information return is generally not required if the amount of interest paid to a person aggregates less than $10 or if the payment is made to a person who is an exempt recipient described in paragraph (c)(1)(ii) of this section, unless the payor backup withholds under section 3406 on such payment (because, for example, the payee (*i.e.,* exempt recipient) has failed to furnish a Form W-9 on request), in which case the payor must make a return under this section, unless the payor refunds the amount withheld pursuant to § 31.6413(a)-3 (Employment Tax Regulations). For reporting interest paid to certain nonresident alien individuals, see § 1.6049-8.

(2) ***Original issue discount.*** Except as provided in paragraph (b)(3) and (b)(5) of this section, in the case of original issue discount, an information return on Forms 1096 and 1099 shall be made for each calendar year of any holder of an obligation as to which there is original issue discount includible in gross income aggregating $10 or more. For calendar years before 1992, semiannual record date reporting under § 1.6049-1(a)(1)(ii)(*b*)(*1*) may be used, and if it is used, the original issue discount includible in gross income is determined by treating each holder as holding the obligation on every day it was outstanding during the calendar year. An information return shall be made, however, in any case in which an amount of tax is required to be deducted and withheld under section 3406. In such case, the amount required to be reported is the amount subject to withholding even if the amount of original issue discount includible in gross income is less than $10. With respect to an obligation described in § 1.1232-3A (e) or (f) (relating respectively to deposits in banks and similar financial institutions and to face-amount certificates), § 1.6049-1(a)(1)(ii)(*d*) and the last sentence of § 1.6049-1(a)(1)(ii)(*a*)(*2*) shall apply. The information return shall show:

(i) The name, address, and taxpayer identification number of each record holder for whom an amount of original issue discount is includible in gross income;

(ii) The account, serial, or other identifying number of each obligation with respect to which a return is being made;

(iii) The aggregate amount of original issue discount includible in the gross income of each holder for the period during the calendar year for which the return is made (or, if the aggregation rules of § 1.6049-1(a)(1)(ii)(*b*)(*2*) are being used, the aggregate amount or original issue discount for the period such holder held the obligations). For calendar years before 1992, semiannual record date reporting under § 1.6049-1(a)(1)(ii)(*b*)(*1*) may be used, and if it is used, the original issue discount includible in gross income is determined by treating each holder as holding the

obligation on every day it was outstanding during the calendar year. For purposes of this section, an obligation shall be considered to be outstanding from the date of original issue (as defined in § 1.1232-3(b)(3));

(iv) The amount of tax withheld under section 3406, if any;

(v) The name and address of the person filing the return: and

(vi) Such other information as is required by the forms.

Section 1. 6049-1(a)(1)(ii)(*b*)(*2*) and, for calendar years before 1992, § 1.6049-1(a)(1)(ii)(*b*)(*1*), and (*c*), apply for purposes of this paragraph.

(3) ***Returns made by middleman*** —

(i) ***In general.*** Except as provided in paragraph (b)(5) of this section, every person acting as a middleman (as defined in paragraph (f)(4) of this section) shall make an information return for the calendar year. In the case of interest payments (other than original issue discount and other than interest described in § 1.6049-8), the information return shall be made on Form 1099 and shall show the aggregate amount of the interest, the name, address, and taxpayer identification number of the person on whose behalf received, the amount of tax withheld under section 3406, if any, and such other information as required by the forms. In the case of original issue discount, the information return shall show the information required to be shown for the person on whose behalf received, as described in paragraph (b)(2) of this section. See § 1.6049-5(f) to determine whether a middleman is required to make an information return with respect to original issue discount. A middleman shall make an information return regardless of whether the middleman receives a Form 1099. A middleman shall not be required to make an information return if the payment of interest aggregates less than $10 or if the payment is made to an exempt recipient described in paragraph (c)(1)(ii) of this section, unless the payor backup withholds under section 3406 on such payment (because, for example, the payee has failed to furnish a Form W-9 on request), in which case the payor must make a return under this section, unless the payor refunds the amount withheld pursuant to § 31.6413(a)-3 of this chapter (Employment Tax Regulations).

(ii) ***Forwarding of interest coupons and original issue discount obligations.*** In the case of a middleman who, from within the United States, forwards an interest coupon or discount obligation on behalf of a payee for presentation, collection or payment outside the United States, the middleman shall make an information return on Form 1099 for the calendar year showing, in the case of an interest coupon, the information required under paragraph (b)(3)(i) of this section and, in the case of a discount obligation, information required under paragraph (b)(2) of this section. For purposes of this paragraph (b)(3)(ii), a middleman is considered to forward an interest coupon or discount obligation on behalf of a payee for presentation, collection or payment outside the United States if the middleman forwards the coupon or obligations outside the United States on or after the date when the payee is entitled to be paid or at an earlier date that is within 90 days of such date or if the middleman has actual knowledge that the coupon or obligation is being forwarded outside the United States for presentation, collection, or payment outside the United States. However, the transfer, although subject to information reporting under this section, is not subject to backup withholding under section 3406.

(iii) ***Example.*** The following example illustrates the provisions of paragraph (b)(3)(ii) of this section:

Example. Individual F, who is entitled to payment on an interest coupon, instructs an office of Bank M in the United States to forward the coupon to Bank N for collection by Bank N outside the United States. Bank M in the United States forwards the interest coupon to Bank N outside the United States. Bank M is required to make an information return for the calendar year under paragraph (b)(3)(ii) of this section showing the aggregate amount of the interest coupon forwarded, the name, address of the permanent residence, and the taxpayer identification number, if any, of Individual F and such other information as the form requires.

(4) ***Returns made with respect to payments on certificates of deposit issued in bearer form.*** Except as provided in paragraph (b)(5) of this section, every person carrying on the banking business who makes payments of interest to another person (whether or not aggregating $10 or more) during a calendar year with respect to a certificate of deposit issued in bearer form shall make an information return on Forms 1096 and 1099. The information return shall show the information required in § 1.6049-1(a)(1)(vi)

(*a*) through (*e*) inclusive and a statement as to the amount of tax withheld under section 3406, if any.

(5) ***Interest payments to certain nonresident alien individuals*** —

(i) ***General rule.*** In the case of interest aggregating $10 or more paid to a nonresident alien individual (as defined in section 7701(b)(1)(B)) that is reportable under § 1.6049-8(a), the payor shall make an information return on Form 1042-S, "Foreign Person's U.S. Source Income Subject to Withholding," for the calendar year in which the interest is paid. The payor or middleman shall prepare and file Form 1042-S at the time and in the manner prescribed by section 1461 and the regulations under that section and by the form and its accompanying instructions. See §§ 1.1461-1(b) (rules regarding the preparation of a Form 1042) and 1.6049-6(e)(4) (rules for furnishing a copy of the Form 1042-S to the recipient). To determine whether an information return is required for original issue discount, see §§ 1.6049-5(f) and 1.6049-8(a).

(ii) ***Effective/applicability date.*** Paragraph (b)(5)(i) of this section shall be applicable for payments made on or after January 1, 2013. (For interest paid to a Canadian nonresident alien individual on or before December 31, 2012, see paragraph (b)(5) of this section as in effect and contained in 26 CFR part 1 revised April 1, 2000.)

(c) ***Information returns not required*** —

(1) ***Payment to exempt recipient*** —

(i) ***In general.*** No information return is required with respect to any payment made to an exempt recipient described in paragraph (c)(1)(ii) of this section, except to the extent otherwise provided in § 1.6049-5(d)(3) (ii) and (iii). However, if the payor backup withholds under section 3406 on such payment (because, for example, the payee has failed to furnish a Form W-9 on request), then the payor is required to make a return under this section, unless the payor refunds the amount withheld in accordance with § 31.6413(a)-3 of this chapter (Employment Tax Regulations).

(ii) ***Exempt recipient defined.*** The term *exempt recipient* means any person described in paragraphs (c)(1)(ii)(A) through (Q) of this section. An exempt recipient is generally exempt from information reporting without filing a certificate claiming exempt status unless the provisions of this paragraph (c)(1)(ii) require a payee to file a certificate.

A payor may, in any case, require a payee that is a U.S. person not otherwise required to file a certificate under this paragraph (c)(1)(ii) to file a certificate in order to qualify as an exempt recipient. See § 31.3406(h)-3(a)(1)(iii) and (c)(2) of this chapter for the certificate that a payee that is a U.S. person must provide when a payor requires the certificate to treat the payee as an exempt recipient under this paragraph (c)(1)(ii). A payor may treat a payee as an exempt recipient based upon a properly completed form as described in § 31.3406(h)-3(e)(2) of this chapter, its actual knowledge that the payee is a person described in this paragraph (c)(1)(ii), or the indicators described in this paragraph (c)(1)(ii).

(A) ***Corporation.*** A corporation, as defined in section 7701(a)(3), whether domestic or foreign, is an exempt recipient. In addition, for purposes of this paragraph (c)(1), the term *corporation* includes a partnership all of whose members are corporations described in this paragraph (c)(1), but only if the partnership files with the payor a certificate stating that each member of the partnership meets one of the requirements of paragraph (c)(1)(ii)(A) (*1*) through (*4*) of this section. Absent actual knowledge otherwise, a payor may treat a payee as a corporation (and, therefore, as an exempt recipient) if one of the requirements of paragraph (c)(1)(ii)(A) (*1*), (*2*), (*3*), or (*4*), of this section are met before a payment is made.

(*1*) The name of the payee contains an unambiguous expression of corporate status that is Incorporated, Inc., Corporation, Corp., P.C., (but not Company or Co.) or contains the term *insurance company, indemnity company, reinsurance company,* or *assurance company,* or its name indicates that it is an entity listed as a per se corporation under § 301.7701-2(b)(8)(i) of this chapter.

(*2*) The payor has on file a corporate resolution or similar document clearly indicating corporate status. For this purpose, a similar document includes a copy of Form 8832, filed by the entity to elect classification as an association under § 301.7701-3(b) of this chapter.

(*3*) The payor receives a Form W-9 which includes an EIN and a statement from the payee that it is a domestic corporation.

(*4*) The payor receives a withholding certificate described in § 1.1441-1(e)(2)(i), that includes a certification that the person whose name is on the certificate is a foreign corporation.

(B) ***Tax exempt organization*** —

(*1*) ***In general.*** Any organization that is exempt from taxation under section 501(a) is an exempt recipient. A custodial account under section 403(b)(7) shall be considered an exempt recipient under this paragraph. A payor may treat an organization as an exempt recipient under this paragraph (c)(1)(ii)(B) without requiring a certificate if the organization's name is listed in the compilation by the Commissioner of organizations for which a deduction for charitable contributions is allowed, if the name of the organization contains an unambiguous indication that it is a tax-exempt organization, or if the organization is known to the payor to be a tax-exempt organization.

(*2*) ***Examples.*** The application of the provisions of this paragraph (c)(1)(ii)(B) may be illustrated by the following examples:

Example 1. The following persons maintain accounts at M Bank: N College, O University, and P Church. M may treat N, O, and P as exempt recipients even though such persons have not filed an exemption certificate with M because the names of the organizations contain an unambiguous indication that they are tax exempt organizations.

Example 2. Q is listed in the current edition of Internal Revenue Service Publication 78 as an organization for which deductions are permitted for charitable contributions under section 170(c). Such listing has not been revoked by an announcement published in the Internal Revenue Bulletin (see § 601.601(d)(2) of this chapter). A payor may treat Q as an exempt recipient even though Q has not filed an exemption certificate with the payor.

Example 3. Employer R maintains a section 403(b)(7) custodial account with Regulated Investment Company S on behalf of R's employees. S may treat the account as an exempt recipient even though R or its employees have not filed an exemption certificate with S.

(C) ***Individual retirement plan.*** An individual retirement plan as defined in section 7701(a)(37) is an exempt recipient. A payor may treat any such plan of which it is the trustee or custodian as an exempt recipient under this paragraph (c)(1) without requiring a certificate.

(D) ***United States.*** The United States Government and any wholly-owned agency or instrumentality thereof are exempt recipients. A payor may treat a person as an exempt recipient under this paragraph (c)(1) without requiring a certificate if the name of such person reasonably indicates it is described in this paragraph (c)(1).

(E) ***State.*** A State, the District of Columbia, a possession of the United States, a political subdivision of any of the foregoing, wholly-owned agency or instrumentality of any one or more of the foregoing, and a pool or partnership composed exclusively of any of the foregoing are exempt recipients. A payor may treat a person as an exempt recipient under this paragraph (c)(1) without requiring a certificate if the name of such person reasonably indicates it is described in this paragraph (c)(1) or if such person is known generally in the community to be a State, the District of Columbia, a possession of the United States or a political subdivision or a wholly-owned agency or instrumentality of any one or more of the foregoing (for example, an account held in the name of "Town of S" or "County of T" may be treated as held by an exempt recipient under this paragraph (c)(1)(ii)(E)).

(F) ***Foreign government.*** A foreign government, a political subdivision of a foreign government, and any wholly-owned agency or instrumentality of either of the foregoing are exempt recipients. A payor may treat a foreign government or a political subdivision thereof as an exempt recipient under this paragraph (c)(1) without requiring a certificate provided that its name reasonably indicates that it is a foreign government or provided that it is known to the payor to be a foreign government or a political subdivision thereof (for example, an account held in the name of the "Government of V" may be treated as held by a foreign government).

(G) ***International organization.*** An international organization and any wholly-owned agency or instrumentality thereof are exempt recipients. The term *international organization* shall have the meaning ascribed to it in section 7701(a)(18). A payor may treat a payee as an international organization without requiring a certificate if the payee is designated as an international organization by executive order (pursuant to 22 U.S.C. 288 through 288(f)).

(H) ***Foreign central bank of issue.*** A foreign central bank of issue is an exempt recipient. A foreign central bank of issue is a bank which is by law or government sanction the principal authority, other than the government itself, issuing instruments intended to circulate as currency. See § 1.895-1(b)(1). A payor may treat a person as a foreign central bank of issue (and, therefore, as an exempt recipient) without requiring a certificate provided that such person is known generally in the financial community as a foreign central bank of issue or if its name reasonably indicates that it is a foreign central bank of issue.

(I) ***Securities or commodities dealer.*** A dealer in securities, commodities, or notional principal contracts, that is registered as such under the laws of the United States or a State or under the laws of a foreign country is an exempt recipient. A payor may treat a dealer as an exempt recipient under this paragraph (c)(1) without requiring a certificate if the person is known generally in the investment community to be a dealer meeting the requirements set forth in this paragraph (c)(1) (for example, a registered broker-dealer or a person listed as a member firm in the most recent publication of members of the National Association of Securities Dealers, Inc.).

(J) ***Real estate investment trust.*** A real estate investment trust, as defined in section 856 and § 1.856-1, is an exempt recipient. A payor may treat a person as a real estate investment trust (and, therefore, as an exempt recipient) without requiring a certificate if the person is known generally in the investment community as a real estate investment trust.

(K) ***Entity registered under the Investment Company Act of 1940.*** An entity registered at all times during the taxable year under the Investment Company Act of 1940, as amended (15 U.S.C. 80a-1), (or during such portion of the taxable year that it is in existence), is an exempt recipient. An entity that is created during the taxable year will be treated as meeting the registration requirement of the preceding sentence provided that such entity is so registered at all times during the taxable year for which such entity is in existence. A payor may treat such an entity as an exempt recipient under this paragraph (c)(1) without requiring a certificate if the entity is known generally in the investment community to meet the requirements of the preceding sentence.

(L) ***Common trust fund.*** A common trust fund, as defined in section 584(a), is an exempt recipient. A payor may treat the fund as an exempt recipient without requiring a certificate provided that its name reasonably indicates that it is a common trust fund or provided that it is known to the payor to be a common trust fund.

(M) ***Financial institution.*** A financial institution such as a bank, mutual savings bank, savings and loan association, building and loan association, cooperative bank, homestead association, credit union, industrial loan association or bank, or other similar organization, whether organized in the United States or under the laws of a foreign country is an exempt recipient. A financial institution also includes a clearing organization defined in § 1.163-5(c)(2)(i)(D)(*8*) and the Bank for International Settlements. A payor may treat any person described in the preceding sentence as an exempt recipient without requiring a

certificate if the person's name (including a foreign name, such as “Banco” or “Banque”) reasonably indicates the payee is a financial institution described in the preceding sentence. In the case of a foreign person, a payor may also treat a person on such list as the Internal Revenue Service may publish or approve (such as in the Thomson Bank Directory or a list approved by the Federal Reserve Board).

(N) ***Trust.*** A trust which is exempt from tax under section 664(c) (i.e., a charitable remainder annuity trust or a charitable remainder unitrust) or is described in section 4947(a)(1) (relating to certain charitable trusts) is an exempt recipient. A payor which is a trustee of the trust may treat the trust as an exempt recipient without requiring a certificate.

(O) ***Nominees or custodians.*** A nominee or custodian.

(P) ***Brokers.*** A broker as defined in section 6045(c) and § 1.6045-1(a)(1).

(Q) ***Swap dealers.*** A dealer in notional principal contracts as defined in § 1.446-3(c)(4)(iii).

(iii) ***Exempt recipient no longer exempt.*** Any person who ceases to be an exempt recipient shall, no later than 10 days after such cessation, notify the payor in writing when it ceases to be an exempt recipient unless it reasonably appears that the person formerly qualifying as an exempt recipient will not thereafter receive a reportable payment from the payor. If a payor treats a person as an exempt recipient by requiring the exempt recipient to file a certificate claiming exempt status, that person shall revoke the certificate as provided in the preceding sentence. If the exempt recipient terminates its relationship with the payor prior to the time that the notice of change in status is otherwise required, the exempt recipient is not required to notify the payor. If, however, the person who formerly qualified as an exempt recipient later reinstates the relationship with the payor, the person must, prior to receiving a reportable payment from such relationship, notify the payor that it no longer qualifies as an exempt recipient in case the payor relies upon the previous treatment.

(2) ***Payments by certain middlemen.*** An information return shall not be required if:

(i) The record owner is required to file a fiduciary return on Form 1041 disclosing the name, address, and taxpayer identification number of the actual owner, and furnishes Form K-1 to each actual owner containing the information required to be shown on the form, including amounts withheld under section 3406;

(ii) The record owner is a nominee of a banking institution or trust company exercising trust powers, and such banking institution or trust company is required to file a fiduciary return on Form 1041 disclosing the name, address, and identifying number of the actual owner, and furnishes Form K-1 to each actual owner containing the information required to be shown on the form, including amounts withheld under section 3406;

(iii) The record owner is a banking institution or trust company exercising trust powers, or a nominee thereof, and the actual owner is an organization exempt from taxation under section 501(a) for which such banking institution or trust company files an annual return, but only if the name, address, and taxpayer identification number of the record owner is included on or with the Form 1041 fiduciary return filed for the estate or trust or the annual return filed for the tax exempt organization.

(3) ***Coordination with reporting rules for widely held fixed investment trusts under § 1.671-5 of this chapter.*** See § 1.671-5 for the reporting rules for widely held fixed investment trusts (as defined under that section).

(4) ***Coordination of reporting with chapter 4 reporting or an applicable IGA*** —

(i) ***U.S. accounts reported by FFIs that are non-U.S. payors.*** An information return shall not be required with respect to an interest payment made by a participating FFI (including a reporting Model 2 FFI), or registered deemed-compliant FFI (including a reporting Model 1 FFI), that is a non-U.S. payor (as defined in § 1.6049-5(c)(5)) to an account holder of an account maintained by the FFI, when the payment is not subject to withholding under chapter 4 or to backup withholding under section 3406, and the conditions of paragraphs (c)(4)(i)(A), (B), or (C) of this section, as applicable, are met. See paragraph (c)(4)(iii) of this section for circumstances in which an FFI may allocate a payment described in this paragraph (c)(4)(i) to a chapter 4 withholding rate pool of U.S. payees.

(A) The FFI is a participating FFI (including a reporting Model 2 FFI) reporting the account holder of the U.S. account (as defined in § 1.1471-1(b)(133)) pursuant to either § 1.1471-4(d)(3) or (5) for the year in which the payment is made (including reporting of the account holder's TIN).

(B) The FFI is a registered deemed-compliant FFI (other than a reporting Model 1 FFI) reporting the account holder of the U.S. account pursuant to the conditions of its applicable deemed-compliant status under § 1.1471-5(f)(1) for the year in which the payment is made (including reporting of the account holder's TIN).

(C) The FFI is a reporting Model 1 FFI reporting the account holder of the reportable U.S. account pursuant to an applicable Model 1 IGA for the year in which the payment is made (including reporting of the account holder's TIN).

(ii) ***Other accounts reported by FFIs under chapter 4.*** An information return shall not be required under this section with respect to a payment that is not subject to withholding under chapter 3 (as defined in § 1.1441-2(a)) or backup withholding under § 31.3406(g)-1(e) and that is made to a recalcitrant account holder of a participating FFI or registered deemed-compliant FFI (or non-consenting U.S. account of a reporting Model 2 FFI), provided that the FFI reports such account holder in accordance with the classes of account holders described in § 1.1471-4(d)(6) for the year in which the payment is made. See paragraph (c)(4)(iii) of this section for circumstances in which an FFI may allocate a payment described in this paragraph (c)(4)(ii) to a chapter 4 withholding rate pool of U.S. payees. In the case of a payment made by an FFI that is a reporting Model 1 FFI, an information return shall not be required with respect to a payment that is not subject to withholding under chapter 3 or backup withholding under § 31.3406(g)-1(e) and that is made to an account holder of the FFI if the account—

(A) Has U.S. indicia for which appropriate documentation sufficient to treat the account as held by other than a specified U.S. person has not been provided pursuant to the due diligence requirements described in an applicable Model 1 IGA, and

(B) Is therefore treated as a U.S. reportable account that the FFI is required to report pursuant to the applicable Model 1 IGA.

(iii) ***Coordination of reporting exceptions with reporting of chapter 4 withholding rate pools.*** For purposes of paragraphs (c)(4)(i) and (ii) of this section, a participating FFI (including a reporting Model 2 FFI) or registered deemed-compliant FFI (including a reporting Model 1 FFI) receiving a payment from another payor may provide a withholding statement to the payor allocating the payment to a chapter 4 withholding rate of pool of U.S. payees only if the payment is excepted from reporting under paragraph (c)(4)(i) of this section or if the payment is both excepted from reporting under paragraph (c)(4)(ii) of this section and not subject to withholding under chapter 4. See § 1.6049-5(b)(14) (providing an exception from reporting under section 6049 to a payor that has been furnished a withholding statement from an participating FFI (including a reporting Model 2 FFI) or registered deemed-compliant FFI (including a reporting Model 1 FFI) and that allocates the payment to a chapter 4 withholding rate pool). Thus, for example, a U.S. payor that is a participating FFI may not allocate a payment to a chapter 4 withholding rate pool of U.S. payees on a withholding statement described in § 1.6049-5(b)(14) when the payment is made to a U.S. account maintained by the FFI, regardless of whether the FFI reports the account in accordance with § 1.1471-4(d)(3) because the U.S. payor is not excepted from reporting under this section pursuant to paragraph (c)(4)(i) of this section.

(iv) ***Example.*** The application of the provisions of paragraphs (c)(4)(ii) and (iii) of this section may be illustrated by the following example:

Example. USP is a payor that makes an interest payment that is not a withholdable payment (as defined in paragraph (f)(15) of this section) to RM2, a U.S. payor and reporting Model 2 FFI. The payment is paid and received outside of the United States and is not an amount subject to withholding under chapter 3. RM2 receives the payment as an intermediary with respect to a preexisting account held by A. RM2 has account information with respect to A which includes U.S. indicia as described in § 1.1441-7(b)(5) or (8). A does not provide consent for RM2 to report A's account. Under the presumption rules described in § 1.6049-5(d)(2)(i), RM2 is required to treat A as a U.S. non-exempt recipient. Despite this presumption rule, and because backup withholding does not apply under § 31.3406(g)-1(e), no information return shall be required with respect to the payment under paragraph (c)(4)(ii) of this section if A is reported by RM2 consistent with § 1.1471-4(d)(6) as a non-consenting account holder. Additionally, RM2 may include A in the chapter 4 withholding rate pool of U.S. payees on the withholding statement provided to USP consistent with the requirements of paragraph (c)(4)(iii) of this section.

(d) ***Special rules*** —

(1) ***Aggregation of payments.*** For purposes of paragraph (b) of this section, until such time as the Commissioner determines that it is feasible to require aggregation of payments on two or more accounts, insurance contracts, or investment certificates, and, until this section is amended accordingly to provide for reporting on an aggregate basis, the requirement for filing Form 1099 under this section will be met if a person making payments of interest subject to reporting files a separate Form 1099 with respect to each account, insurance contract, or investment certificate. In the case of obligations described in section 6049(b)(1)(A), separate Forms 1099 may be filed as provided in the preceding sentence with respect to holdings in different issues.

(2) ***Treatment of original issue discount.*** The amount of original issue discount subject to reporting under section 6049 shall be the amount of original issue discount includible in the gross income of any holder that is treated as paid under § 1.6049-5(f).

(3) *Conversion into United States dollars of amounts paid in foreign currency* —

(i) ***Conversion rules.*** When a payment is made in foreign currency, the U.S. dollar amount of the payment shall be determined by converting such foreign currency into U.S. dollars on the date of payment at the spot rate (as defined in § 1.988-1(d)(1)) or pursuant to a reasonable spot rate convention. For example, a withholding agent may use a month-end spot rate or a monthly average spot rate. A spot rate convention must be used consistently with respect to all non-dollar amounts withheld and from year to year. Such convention cannot be changed without the consent of the Commissioner or the Commissioner's delegate.

(ii) *Special rule for § 1.988-5(a) transactions where the payor on both components of a qualified hedging transaction is the same person* —

(A) ***In general.*** Interest or original issue discount on a qualified debt instrument that is part of a qualified hedging transaction under § 1.988-5(a) shall be computed for section 6049 reporting purposes under the rules described in § 1.988-5(a)(9)(ii) if—

(*1*) The payor on the qualified debt instrument and the counterparty to the § 1.988-5(a) hedge are the same person; and

(*2*) The payee complies with the requirements of § 1.988-5(a) and so notifies its payor prior to the date required for filing Form 1099 as required by this section.

(B) ***Effective date.*** The provisions of this paragraph (d)(3)(ii) apply to transactions entered into after December 31, 2000.

(4) ***Determination of person to whom interest or original issue discount is paid or for whom it is received.*** Section 1.6049-1(a)(3) and (4) shall apply with respect to payments of interest and original issue discount after December 31, 1982.

(5) ***Payments by governmental units.*** In the case of payments made by any governmental unit or any agency or instrumentality thereof, the officer or employee having control of the payment of interest or original issue discount (or the person appropriately designated for purposes of this section) shall make the returns and statements required under section 6049.

(6) *When payment deemed made* —

(i) ***In general.*** Except as provided in paragraph (d)(6)(ii) of this section, for purposes of section 6049, interest is deemed to have been paid when it is credited or set apart to a person without any substantial limitation or restriction as to the time or manner of payment or condition upon which payment is to be made, and is made available to him so that it may be drawn at any time, and its receipt brought within his own control and disposition.

(ii) ***Instruments paid on presentment or demand.*** In the case of a payment made on an obligation described in paragraph (e)(2) of this section (relating to transactional reporting), interest is deemed to have been paid at the time the obligation is presented for payment. For example, interest represented by a coupon detached from a bond is considered paid for purposes of section 6049 when the coupon is presented for payment.

(7) ***Magnetic media requirement.*** For rules relating to permission to submit the information required by Form 1099 on magnetic tape or other media, see § 1.9101-1. For the requirement to submit the information required by Form 1099 on magnetic media for payments after December 31, 1983, see section 6011(e) and § 301.6011-2 of this chapter (Regulations on Procedure and Administration).

(8) ***Obligations that are not exempt from taxation.*** When an issuer of an obligation that is not exempt from taxation receives an envelope or "shell", signed by the payee, stating that interest on the obligation is exempt from taxation under section 103(a) (as described in § 1.6049-5(b)(2), the issuer shall make an information return under section 6049. The information return shall show the name, address, and taxpayer identification number of the person who signed the statement claiming that interest on the obligation is exempt from taxation, the amount of interest paid, and such other information as is required by the form. An information return is required regardless of the amount of interest. The issuer shall also furnish a written statement to such person showing the information required by § 1.6049-6(b).

(9) ***Savings bonds*** —

(i) ***In general.*** A person who makes payment on a United States savings bond when the bond is presented for payment shall report the difference between the amount to be paid and the amount paid for the bond. The amount subject to reporting shall not be reduced to take into account:

(A) Amounts previously included in the income of a holder as a result of an election under section 454 to include annually the increase in the redemption price of the bond; or

(B) Amounts accrued prior to transfer of the bond where the bond has been reissued in the name of the person presenting the bond for payment.

With respect to a savings bond that is reissued in another person's name, the amount subject to reporting when the bond is reissued is the amount of interest that has accrued. With respect to a savings bond that is exchanged in a tax-deferred transaction (as described in section 1037), the amount subject to reporting is the amount of cash paid to the holder at the time of the transaction.

(ii) ***Examples.*** The application of the provisions of paragraph (d)(9)(i) of this section may be illustrated by the following examples:

Example 1. On June 10, 1943, A purchases a $50 Series E savings bond. The amount paid for the savings bond is $37.50. A elects under section 454 to include the increase in the redemption price of the bond annually in income. A presents the bond to Bank M to be cashed on July 1, 1983. The amount to be paid on the bond on that date is $204.96. Bank M is required to make an information return under section 6049 showing that it paid $167.46 (the difference between $204.96 and $37.50) of interest, without regard to A's election to include annually the increase in the redemption price of the bond.

Example 2. On December 1, 1970, B purchases a $500 Series E savings bond. The amount paid for the bond is $375. On August 1, 1984, the bond is reissued by the Bureau of Public Debt by deleting B's name and inserting the name of B's child. At the time of reissue, the redemption value of the bond is $1,015.80. The accrued interest is $640.80 (the difference between $1,015.80 and $375). The reissue is a taxable transaction, and B must include in income the accrued interest at the time of reissue. The Bureau of Public Debt is required to make an information return under section 6049 showing that it paid $640.80 of interest to B.

Example 3. Assume the same facts as in example (2) except that B exchanges the bond for a Series HH savings bond in the amount of $1,000 issued in B's name. The exchange is tax-deferred under section 1037. The Bureau of Public Debt stamps a legend on the bond

stating that interest of $625 has been deferred. The amount of $15.80 is paid to B. The Bureau of the Public Debt must make an informatiion return showing that it paid $15.80 of interest to B.

Example 4. Assume the same facts as in example (3) except that the exchange is not a tax-deferred exchange. The Bureau of the Public Debt must make an information return showing that it paid $640.80 of interest to B.

(e) *Transactional reporting* —

(1) ***In general.*** An information return required to be made under paragraph (b) of this section may be made on a transaction-by-transaction basis, rather than on an annual aggregation basis, if payment described in paragraph (e)(2) of this section is made by a person described in paragraph (e)(3) of this section.

(2) ***Payments subject to transactional reporting.*** An information return may be made on a transactional basis if payment is made on:

(i) A United States savings bond,

(ii) An interest coupon (but see § 1.6049-5(b) which provides that no information return is required to be made with respect to an interest coupon that is exempt from taxation),

(iii) A discount obligation having a maturity at issue of 1 year or less, including commercial paper and short-term government obligations defined in section 1232(a)(3), and

(iv) Any obligation similar to those described in subdivisions (i) through (iii).

The information return with respect to payments on the types of obligations described in this paragraph shall be made on Form 1099-INT. A payor may include all interest paid in one transaction on one information return, irrespective of whether obligations of different issuers are paid as part of the transaction.

(3) ***Persons subject to transactional reporting.*** A person may make a return on a transactional basis if the person is:

(i) A middleman (as defined in paragraph (f)(4) of this section) who is required to make an information return under paragraph (b)(3) of this section with respect to any payment described in paragraph (e)(2) of this section, or

(ii) A Federal agency making payments on a United States savings bond.

(4) ***Transaction defined.*** For purposes of this paragraph (e), a transaction means a payment at one time on one or more obligations. For example, if an individual who is exempt from withholding under section 3406 presents at one time five Series EE bonds on each of which $3 of interest has accrued, $15 of interest will be paid as part of the transaction. Accordingly, an information return is required under § 1.6049-4 (a)(2)(iii) because the interest paid in the transaction exceeds $10. If only three of the savings bonds were presented, however, no return would be required even if the remaining two bonds were redeemed the following day. See paragraph (a)(2)(i) of this section for the requirement that an information return be made if any amount of tax is withheld under section 3406.

(5) ***Information required.*** The information return for any transaction under paragraph (e) of this section shall show the following:

(i) The name, address, and taxpayer identification number of the person to whom the interest is paid;

(ii) The name and address of the person filing the form;

(iii) The amount of interest paid;

(iv) The amount of tax withheld under section 3406, if any; and

(v) Such other information as is required by the form.

(f) ***Definitions.*** For purposes of section 6049, this section, and §§ 1.6049-5 and 1.6049-6:

(1) ***Person.*** The term *person* includes any governmental unit, international organization, and any agency or instrumentality thereof. Therefore, interest paid by one of these entities must be reported unless one of the exceptions under section 6049 applies.

(2) ***Natural person.*** The term *natural person* means any individual, but shall not include a partnership (whether of not composed entirely of individuals), a trust, or an estate.

(3) ***Obligation.*** The term *obligation* includes bonds, debentures, notes, certificates, and other evidences of indebtedness regardless of how denominated. For the definition of the term *offshore obligation,* see paragraph (f)(9) of this section.

(4) ***Middleman*** —

(i) ***In general.*** The term *middleman* means any person. including a financial institution as described in paragraph (c)(1)(ii)(M) of this section, a broker as defined in section 6045(c), or a nominee, who makes payment of interest for, or collects interest on behalf of, another person, or otherwise acts in a capacity as intermediary between a payor and a payee. For example, a person (other than an issuer of an obligation) who makes payment on an interest coupon of the obligation to another person is a middleman, irrespective of whether such person purchases the coupon for his own account, accepts the coupon as agent for the payee, or otherwise deals with the coupon. The term “middleman” also includes a trustee, including a corporate trustee of a trust where the trust is the payee. See § 1.6049-4(c)(2) providing that the trustee does not have to make an information return on Form 1099 to a beneficiary if the trustee is required to file Form 1041 and furnishes Form K-1 to the beneficiary showing the information required to be shown on the form, including amounts withheld under section 3406. A person shall be considered to be a middleman as to any portion of an interest payment made to such person which portion is actually owned by another person, whether or not the other person's name is also shown on the information return filed with respect to such interest payment, except that a husband or wife will not be considered as acting in the capacity of a middleman with respect to his or her spouse. A person who, from within the United States, forwards an interest coupon or discount obligation on behalf of a payee for presentation, collection or payment outside the United States is also a middleman for purposes of this section (but the transfer, although subject to information reporting under this section, does not make the payment subject to backup withholding under section 3406).

(ii) ***Example.*** The application of the provisions of paragraph (f)(4) of this section may be illustrated by the following example:

Example. In January 1984, Broker B, a U.S. payor, purchases on behalf of its customer, Individual A, an obligation issued by partnership in a public offering on that date. Broker B holds the obligation for A throughout 1984. Broker B is required to make an information return showing the amount of original issue discount treated as paid to A under § 1.6049-5(f).

(5) ***Chapter 4 withholding rate pool.*** The term *chapter 4 withholding rate pool* has the meaning set forth in § 1.1471-1(b)(20). However, for determining the U.S. payees included in a chapter 4 withholding rate pool for purposes of section 6049, see paragraph (c)(4)(iii) of this section.

(6) ***Foreign financial institution (or FFI).*** The term *foreign financial institution* or *FFI* means an entity described in § 1.1471-1(b)(47),

(7) ***Intergovernmental agreement (or IGA).*** The term *intergovernmental agreement* or *IGA* has the meaning set forth in § 1.1471-1(b)(67) (*i.e.,* either a *Model 1 IGA* described in § 1.1471-1(b)(78) or a *Model 2 IGA* described in § 1.1471-1(b)(79)).

(8) ***Non-consenting U.S. accounts.*** The term *non-consenting U.S. accounts* has the meaning set forth in an applicable Model 2 IGA.

(9) ***Offshore obligation.*** The term offshore obligation means an offshore obligation defined in § 1.6049-5(c)(1). For the definition of the term *obligation,* see paragraph (f)(3) of this section.

(10) ***Participating FFI.*** The term *participating FFI* means an FFI that is described in § 1.1471-1(b)(91).

(11) ***Recalcitrant account holder.*** The term *recalcitrant account holder* has the same meaning set forth in § 1.1471-1(b)(110).

(12) ***Registered deemed-compliant FFI.*** The term *registered deemed-compliant FFI* means an FFI that is described in § 1.1471-1(b)(111).

(13) ***Reporting Model 1 FFI.*** The term *reporting Model 1 FFI* means an FFI that is described in § 1.1471-1(b)(114).

(14) ***Reporting Model 2 FFI.*** The term *reporting Model 2 FFI* means a participating FFI that is described in § 1.1471-1(b)(91).

(15) ***Withholdable payment.*** The term *withholdable payment* means a payment described in § 1.1471-1(b)(145).

(16) ***Paid and received outside the United States*** —

(i) ***In general.*** Except as otherwise provided in paragraphs (f)(16)(ii) and (iii) of this section, the term *paid and received outside the United States* means an amount that is paid by a payor or middleman outside the United States as described in § 1.6049-5(e).

(ii) ***Transfers to the United States.*** Without regard to the location of the account from which the amount is drawn, an amount that is described in paragraph (f)(16)(ii)(A) or (B) of this section and paid by transfer to an account maintained by the payee in the United States or by mail to a United States address (including an amount paid with respect to a bond or a discount obligation described in § 1.6049-5(e)(4)) is not considered to be paid and received outside the United States.

(A) An amount is described in this paragraph (f)(16)(ii)(A) if it is paid by an issuer or the paying agent of the issuer with respect to an obligation that is—

(1) Issued by a U.S. payor, as defined in § 1.6049-5(c)(5);

(2) Registered under the Securities Act of 1933 (15 U.S.C. 77a); or

(3) Listed on an exchange that is registered as a national securities exchange in the United States or included in an interdealer quotation system in the United States.

(B) An amount is described in this paragraph (f)(16)(ii)(B) if it is paid by a U.S. middleman (as defined in § 1.6049-5(c)(5)) that, as a custodian, nominee, or other agent of a payee, collects the amount for or on behalf of the payee.

(iii) ***Deposits or accounts with banks and other financial institutions.*** In the case of an amount paid by a bank or other financial institution with respect to a deposit or an account that is considered paid at a branch or office outside the United States as described in § 1.6049-5(e)(2), the amount is not considered paid and received outside the United States if the institution has knowledge that the customer has transmitted instructions to an agent, branch, or office of the institution from inside the United States by mail, telephone, electronic transmission, or otherwise concerning the deposit or account (unless the transmission from the United States has taken place in isolated and infrequent circumstances).

(iv) ***Examples.*** The application of the provisions of paragraph (f)(16) of this section may be illustrated by the following examples:

Example 1. FC is a foreign corporation that is not a U.S. payor or U.S. middleman, as defined in § 1.6049-5(c)(5). A holds FC coupon bonds that are not in registered form under section 163(f) and the regulations . FB, a foreign branch of DC, a domestic corporation, is the designated paying agent with respect to the bonds issued by FC. A does not have an account with FB. A presents a coupon to FB at its office outside the United States with instructions to transfer funds to a bank account maintained by A in the United States. FB transfers the funds in accordance with A's instructions. Even though the amount is credited to an account in the United States, the interest on the FC bonds is paid and received outside the United States under paragraph (f)(16)(ii) of this section and § 1.6049-5(e)(3) because the coupon is presented for payment outside the United States; because FC is a foreign person that is not a U.S. payor or U.S. middleman, as defined in § 1.6049-5(d)(1); because FB is not acting as A's agent; and because the obligation is not registered under the Securities Act of 1933 (15 U.S.C. 77a), listed on a securities exchange that is registered as a national securities exchange in the United States, or included in an interdealer quotation system.

Example 2. FC is a foreign corporation that is not a U.S. payor or U.S. middleman, as defined in § 1.6049-5(d)(1). B, a United States citizen, holds a bond issued by FC in registered form under section 163(f) and the regulations thereunder and registered under the Securities Act of 1933 (15 U.S.C. 77a). The bond is not a foreign-targeted registered obligation as defined in § 1.871-14(e)(2). DB, a United States branch of a foreign corporation engaged in the commercial banking business, is the registrar of the bonds issued by FC. DB supplies FC with a list of the holders of the FC bonds. Interest on the FC bonds is paid to B and other bondholders by checks prepared by FC at its principal office outside the United States, and B's check is mailed from there to his designated address in the United States. The bond is described in paragraph (f)(16)(ii)(A)(2) of this section. The interest on the FC bonds paid to B by FC is not paid and received outside the United States under paragraph (f)(16) of this section.

Example 3. The facts are the same as in *Example 2* except that the checks are prepared and mailed in the United States by DC, a U.S. corporation engaged in the commercial banking business that is the designated paying agent with respect to the bonds issued by FC, and B's check is mailed to his designated address outside the United States. For purposes of section 6049, the interest on the FC bonds paid by DC is not paid and received outside the United States under paragraph (f)(16)(i) of this section.

(g) *Time and place for filling a return for the payment of interest* —

(1) *Annual return.* Except as provided in paragraph (g)(2) of this section, the returns required under this section for any calendar year for the payment of interest shall be filed after September 30 of such year, but not before the payor's final payment to the payee for the year, and on or before February 28 (March 31 if filed electronically) of the following year. Such returns shall be filed with the appropriate Internal Revenue Service Center, the address of which is listed in the instructions for Form 1096. For extensions of time for filing returns under this section, see § 1.6081-1.

(2) *Transactional return.* In the case of a return under paragraph (e) of this section, relating to returns on a transactional basis, such return shall be filed at any time but in no event later than February 28 (March 31 if filed electronically) of the year following the calendar year in which the interest was paid. The return shall be filed with the appropriate Internal Revenue Service Center, the address of which is listed in the instructions for Form 1096. For extensions of time for filing returns under this section, see § 1.6081-1.

(3) *Cross-reference to penalty.* For provisions relating to the penalty provided for failure to file timely a correct information return required under section 6049(a) and § 1.6049-4(a)(1), see § 301.6721-1 of this chapter (Procedure and Administration Regulations). See § 301.6724-1 of this chapter for the waiver of a penalty if the failure is due to reasonable cause and is not due to willful neglect.

(h) *Effective/applicability dates.* Except as otherwise provided in paragraphs (b)(5)(ii) and (d)(3)(ii)(B) of this section, this section applies to payments made on or after January 6, 2017. (For payments made after June 30, 2014, and before January 6, 2017, see this section as in effect and contained in 26 CFR part 1, as revised April 1, 2016.)

[T.D. 7881, 48 FR 12968, Mar. 28, 1983]

Editorial Note: For FEDERAL REGISTER citations affecting § 1.6049-4, see the List of CFR Sections Affected, which appears in the Finding Aids section of the printed volume and at *www.govinfo.gov*.

§ 1.6049-5 Interest and original issue discount subject to reporting after December 31, 1982.

(a) *Interest subject to reporting requirement.* For purposes of §§ 1.6049-4, 1.6049-6 and this section, except as provided in paragraph (b) of this section, the term "interest" means:

(1) Interest on an obligation:

(i) In registered form (as defined in § 5f.103-1(c)), or

(ii) Of a type offered to the public. Principles consistent with § 5f.163-1 shall be applied to determine whether an obligation is of a type offered to the public.

(2) Interest on deposits with persons carrying on the banking business. Such term shall include deposits evidenced by time certificates of deposit issued in any amount whether negotiable or non-negotiable. The term “interest” includes payments to a mortgage escrow account and amounts paid with respect to repurchase agreements and banker's acceptances. Property which the payee receives from the payor as interest (or in lieu of a cash payment of interest) shall be interest for purposes of section 6049. The amount subject to reporting is the fair market value of such property.

(3) Amounts, whether or not designated as interest, paid or credited by mutual savings banks, savings and loan associations, building and loan associations, cooperative banks, homestead associations, credit unions, industrial loan associations or banks, or similar organizations, in respect of deposits, face amount certificates, investment certificates, or withdrawable or repurchasable shares. Thus, even though amounts paid or credited by such organizations with respect to deposits are designated as “dividends”, such amounts are included in the definition of interest for purposes of section 6049. The term “interest” includes payments to a mortgage escrow account and amounts paid with respect to repurchase agreements. Property which the payee receives from the payor as interest (or in lieu of a cash payment of interest) is “interest” for purposes of section 6049. The fair market value of such property is the amount subject ot reporting.

(4) Interest on amounts held by insurance companies under an agreement to pay interest thereon. Any increment in value of “advance premiums”, “prepaid premiums”, or “premium deposit funds” which is applied to the payment of premiums due on insurance policies, or made available for withdrawal by the policyholder, shall be considered interest subject to reporting. Interest that an insurance company pays pursuant to an agreement with the policyholder to a beneficiary because he payment due has been delayed is interest subject to reporting. Interest subject to reporting also includes interest paid by insurance companies with respect to policy “dividend” accumulations (see sections 61 and 451 and the regulations thereunder for rules as to when such interest is considered paid), and interest paid with respect to the proceeds of insurance policies left with the insurer. The so-called “interest element” in the case of annuity or installment payments under life insurance or endowment contracts does not constitute interest for purposes of section 6049.

(5) Interest on deposits with brokers as defined in section 6045(c) and the regulations thereunder. Any payment made in lieu of interest to a person whose obligation has been borrowed in connection with a short sale or other similar transaction is subject to reporting under section 6049. See § 1.6045-2T for reporting requirements with respect to payments in lieu of tax-exempt interest. See § 1.6045-2 for reporting requirements with respect to payments in lieu of tax-exempt interest.

(6) Interest paid on amounts held by investment companies as defined in section 3 of the Investment Company Act (15 U.S.C. section 80-a) and on amounts paid on pooled funds or trusts. The interest to be reported with respect to a widely held fixed investment trust, as defined in § 1.671-5(b)(22), shall be the interest earned on the assets held by the trust. See § 1.671-5 for the reporting rules for widely held fixed investment trusts (as defined under that section).

(b) ***Interest excluded from reporting requirement.*** The term *interest* or *original issue discount* (OID) does not include—

(1) Interest on any obligation issued by a natural person as defined in § 1.6049-4(f)(2), irrespective of whether such interest is collected on behalf of the holder of the obligation by a middleman.

(2) Interest on any obligation if such interest is exempt from taxation under section 103(a), relating to certain governmental obligations, or interest which is exempt from taxation under any other provision of law without regard to the identity of the holder. The holder of a tax exempt obligation

that is not in registered form must provide written certification to the payor (other than the issuer of the obligation) that the obligation is exempt from taxation. A statement that interest coupons are tax exempt on the envelope or shell commonly used by financial institutions to process such coupons, signed by the payee, will be sufficient for this purpose if the envelope is properly completed (i.e., shows the name, address, and taxpayer identification number of the payee). A payor may rely on such written certification in treating such interest as tax exempt for purposes of section 6049. See § 1.6049-4(d)(8) with respect to the requirement that the issuer of a taxable obligation shall make an information return if such issuer receives an envelope which improperly claims that the interest coupons contained therein are tax exempt.

(3) Interest on amounts held in escrow to guarantee performance on a contract or to provide security. However, interest on amounts held in escrow with a person described in paragraph (a)(2) or (3) of this section is interest subject to reporting under section 6049.

(4) Interest that a governmental unit pays with respect to tax refunds.

(5) Interest on deposits for security, such as deposits posted with a public utility company. However, interest on deposits posted for security with a person described in paragraph (a)(2) or (3) of this section is interest subject to reporting under section 6049.

(6) Amounts from sources outside the United States (determined under the provisions of part I, subchapter N, chapter 1 of the Internal Revenue Code (Code) and the regulations under those provisions) paid by a non-U.S. payor or a non-U.S. middleman (as defined in paragraph (c)(5) of this section) and paid and received outside the United States. See § 1.6049-4(f)(16) for circumstances in which a payment is considered to be paid and received outside the United States.

(7) Portfolio interest, as defined in § 1.871-14(b)(1), paid with respect to obligations in bearer form described in section 871(h)(2)(A), as in effect prior to the amendment by section 502 of the Hiring Incentives to Restore Employment Act of 2010 (HIRE Act), Public Law 111-147, or section 881(c)(2)(A), as in effect prior to the amendment by section 502 of the HIRE Act, that were issued prior to March 19, 2012, or with respect to a foreign-targeted registered obligation described in § 1.871-14(e)(2) that was issued prior to January 1, 2016, and for which the documentation requirements described in § 1.871-14(e)(3) and (4) have been satisfied (other than by a U.S. middleman (as defined in paragraph (c)(5) of this section) that, as a custodian or nominee of the payee, collects the amount for, or on behalf of, the payee, regardless of whether the middleman is also acting as agent of the payor).

(8) Portfolio interest described in § 1.871-14(c)(1)(ii), paid with respect to obligations in registered form described in section 871(h)(2) or 881(c)(2) that is not described in paragraph (b)(7) of this section.

(9) Any amount paid by an international organization described in § 1.6049-4(c)(1)(ii)(G) (or its paying, transfer, or other agent that is not also a payee's agent) with respect to an obligation of which the international organization is the issuer.

(10)

(i) Amounts paid and received outside the United States under § 1.6049-4(f)(16) (other than by a U.S. middleman (as defined in paragraph (c)(5) of this section) that are paid by a custodian or nominee or other agent of the payee, of amounts that that it receives for, or on behalf of, the payee, regardless of whether the middleman is also acting as agent of the payor) with respect to an obligation that: Has a face amount or principal amount of not less than $500,000 (as determined based on the spot rate on the date of issuance if in foreign currency); has a

maturity (at issue) of 183 days or less; satisfies the requirements of sections 163(f)(2)(B)(i) and (ii)(I), as in effect prior to the amendment by section 502 of the HIRE Act, and the regulations thereunder (as if the obligation would otherwise be a registration-required obligation within the meaning of section 163(f)(2)(A)) (however, an original issue discount obligation with a maturity of 183 days or less from the date of issuance is not required to satisfy the certification requirement of § 1.163-5(c)(2)(i)(D)(*3*)) and is issued in accordance with the procedures of § 1.163-5(c)(2)(i)(D); and has on its face the following statement (or a similar statement having the same effect):

> By accepting this obligation, the holder represents and warrants that it is not a United States person (other than an exempt recipient described in section 6049(b)(4) of the Internal Revenue Code and regulations thereunder) and that it is not acting for or on behalf of a United States person (other than an exempt recipient described in section 6049(b)(4) of the Internal Revenue Code and the regulations thereunder).

(ii) If the obligation is in registered form, it must be registered in the name of an exempt recipient described in § 1.6049-4(c)(1)(ii). For purposes of this paragraph (b)(10), a middleman may treat an obligation as described in section 163(f)(2)(B)(i) and (f)(2)(B)(ii)(I), as in effect prior to the amendment by section 502 of the HIRE Act, and the regulations under that section if the obligation, or coupons detached therefrom, whichever is presented for payment, contains the statement described in this paragraph (b)(10). The exemption from reporting described in this paragraph (b)(10) shall not apply if the payor has actual knowledge that the payee is a U.S. person who is not an exempt recipient.

(11) Amounts paid with respect to an account or deposit with a U.S. or foreign branch of a domestic or foreign corporation or partnership that is paid with respect to an obligation described in either paragraph (b)(11)(i) or (ii) of this section, if the branch is engaged in the commercial banking business; and the interest or OID is paid and received outside the United States as defined in § 1.6049-4(f)(16) (other than by a U.S. middleman (as defined in paragraph (c)(5) of this section) that acts as a custodian, nominee, or other agent of the payee, and collects the amount for, or on behalf of, the payee, regardless of whether the middleman is also acting as agent of the payor). The exemption from reporting described in this paragraph (b)(11) shall not apply if the payor has actual knowledge that the payee is a U.S. person who is not an exempt recipient.

(i) An obligation is described in this paragraph (b)(11)(i) if it is not in registered form (within the meaning of section 163(f) and the regulations under that section), is described in section 163(f)(2)(B), as in effect prior to the amendment by section 502 of the HIRE Act, and issued in accordance with the procedures of § 1.163-5(c)(2)(i)(C) or (D), and, in the case of a U.S. branch, is part of a larger single public offering of securities. For purposes of this paragraph (b)(11)(i), a middleman may treat an obligation as described in section 163(f)(2)(B), as in effect prior to the amendment by section 502 of the HIRE Act, if the obligation, and any detachable coupons, contains the statement described in section 163(f)(2)(B)(ii)(II), as in effect prior to the amendment by section 502 of the HIRE Act, and the regulations under that section.

(ii)

(A) An obligation is described in this paragraph (b)(11)(ii) if it produces income described in section 871(i)(2)(A); has a face amount or principal amount of not less than $500,000 (as determined based on the spot rate on the date of issuance if in foreign currency); satisfies the requirements of sections 163(f)(2)(B)(i) and (ii)(I), as in effect prior to the amendment

by section 502 of the HIRE Act, and the regulations thereunder (as if the obligation would otherwise be a registration-required obligation within the meaning of section 163(f)(2)(A)) and is issued in accordance with the procedures of § 1.163-5(c)(2)(i)(C) or (D) (however, an original issue discount obligation with a maturity of 183 days or less from the date of issuance is not required to satisfy the certification requirement of § 1.163-5(c)(2)(i)(D)(*3*)). For purposes of this paragraph (b)(11)(ii), a middleman may treat an obligation as described in sections 163(f)(2)(B)(i) and (ii), as in effect prior to the amendment by section 502 of the HIRE Act, and the regulations under that section if the obligation, or any detachable coupon, contains the statement described in paragraph (b)(11)(ii)(B) of this section.

(B) The obligation must have on its face, and on any detachable coupons, the following statement (or a similar statement having the same effect):

> By accepting this obligation, the holder represents and warrants that it is not a United States person (other than an exempt recipient described in section 6049(b)(4) and regulations under that section) and that it is not acting for or on behalf of a United States person (other than an exempt recipient described in section 6049(b)(4) and the regulations under that section).

(C) If the obligation is in registered form, it must be registered in the name of an exempt recipient described in § 1.6049-4(c)(1)(ii).

(12) Payments that a payor can, prior to payment, reliably associate with documentation upon which it may rely to treat the payment as made to a foreign beneficial owner in accordance with § 1.1441-1(e)(1)(ii) or as made to a foreign payee in accordance with paragraph (d)(1) of this section or presumed to be made to a foreign payee under paragraph (d)(2) or (3) of this section. However, such payments may be reportable under § 1.1461-1(b) and (c) or under § 1.1474-1(d)(2) (for a chapter 4 reportable amount (as described in § 1.1471-1(b)(18)). The provisions of § 1.1441-1 shall apply by substituting the term “payor” for the term “withholding agent” and without regard to the fact that the provisions apply only to amounts subject to withholding under chapter 3 of the Code. In the event of a conflict between the provisions of § 1.1441-1 and paragraph (d) of this section in determining the foreign status of the payee, the provisions of § 1.1441-1 shall govern for payments of amounts subject to withholding under chapter 3 of the Code and the provisions of paragraph (d) of this section shall govern in other cases. This paragraph (b)(12) does not apply to interest paid on or after January 1, 2013, to a nonresident alien individual to the extent provided in § 1.6049-8.

(13) Amounts for the period that the debt obligation with respect to which the interest arises represents an asset blocked as described in § 1.1441-2(e)(3). Payment of such amounts, including interest that is past due and OID on obligations that mature on or before the date that the assets are no longer blocked, is deemed to occur in accordance with the rules of § 1.1441-2(e)(3).

(14) Payments that a payor or middleman can, prior to payment, reliably associate with documentation upon which it may rely to treat as made to a foreign intermediary or flow-through entity in accordance with § 1.1441-1(b) if it obtains from the foreign intermediary or flow-through entity a withholding statement under § 1.1471-3(c)(3)(iii)(B)(2) (describing an FFI withholding statement), § 1.1471-3(c)(3)(iii)(B)(3) (describing a chapter 4 withholding statement), § 1.1441-1(e)(3)(iv) (describing a withholding statement provided by a non-qualified intermediary), § 1.1441-1(e)(5)(v) (describing a withholding statement provided by a qualified intermediary), or under § 1.1441-5 (describing a withholding statement provided by a foreign partnership, foreign simple trust, or foreign grantor trust), that allocates the payment (or portion of a payment) to a chapter 4

withholding rate pool or specific payees to which withholding applies under chapter 4. The provisions of each of the foregoing sections shall apply by substituting the term "payor" for the term "withholding agent." A payor or middleman may rely on a withholding statement provided by a foreign intermediary or flow-through entity that identifies a chapter 4 withholding rate pool of U.S. payees (as described in § 1.6049-4(c)(4)) or, with respect to a withholdable payment, a chapter 4 withholding rate pool of recalcitrant account holders (as described in § 1.1471-4(d)(6)) provided that the payor or middleman identifies the foreign intermediary or flow-through entity that maintains the accounts (as described in § 1.1471-5(b)(5)) included in the chapter 4 withholding rate pool as a participating FFI (including a reporting Model 2 FFI) or registered deemed-compliant FFI (including a reporting Model 1 FFI) by applying the rules in § 1.1471-3(d)(4) or in § 1.1471-3(e)(4)(vi)(B), as applicable, for identifying the payee of a payment (by substituting the term "payor" for the term "withholding agent"). See, however, § 1.1441-1(e)(5)(v)(C)(*2*)(*i*) for when a qualified intermediary may provide a single pool of recalcitrant account holders (without the need to subdivide into the pools described in § 1.1471-4(d)(6)). Additionally, when a foreign intermediary or flow-through entity provides to a payor or middleman a withholding statement that allocates the payment (or portion of a payment) to a chapter 4 withholding rate pool of U.S. payees, the payor or middleman may also rely on the withholding statement if the payor or middleman identifies the intermediary or flow-through entity as a qualified intermediary (as defined in § 1.1441-1(c)(15) by applying the rules described in § 1.1441-1(b)(2)(vii)) that provides the certification described in § 1.1441-1(e)(3)(ii)(D) with respect to U.S. payees that hold accounts with a foreign intermediary or flow-through entity other than the qualified intermediary providing the certification.

(15) If a foreign intermediary, as described in § 1.1441-1(c)(13), or a U.S. branch that is not treated as a U.S. person receives a payment from a payor, which payment the payor can reliably associate with a valid withholding certificate described in § 1.1441-1(e)(3)(ii) or (iii), or § 1.1441-1(e)(3)(v), respectively, furnished by such intermediary or branch, then the intermediary or branch is not required to report such payment when it, in turn, pays the amount, unless, and to the extent, the intermediary or branch knows that the payment is required to be reported under this section and was not so reported. For example, if a U.S. branch described in § 1.1441-1(b)(2)(iv) fails to provide information regarding U.S. persons that are not exempt from reporting under § 1.6049-4(c)(1)(ii) to the person from whom the U.S. branch receives the payment, the amount paid by the U.S. branch to such person is interest or original issue discount. See, however, § 1.6049-4(c)(4) for when reporting under section 6049 is coordinated with reporting under chapter 4 or an applicable IGA (as defined in § 1.6049-4(f)(7)). The exception for payments described in this paragraph (b)(15) shall not apply to a qualified intermediary that assumes reporting responsibility under chapter 61 of the Code for the payment under the agreement described in § 1.1441-1(e)(5)(iii).

(16) Amounts of interest as determined under the provisions of § 1.446-3(g)(4) (dealing with interest in the case of a significant non-periodic payment with respect to a notional principal contract). Such amounts are governed by the provisions of section 6041. See § 1.6041-1(d)(5).

(c) ***Applicable rules*** —

(1) ***Documentary evidence for offshore obligations and certain other obligations*** —

(i) A payor may rely on documentary evidence described in § 1.1471-3(c)(5)(i) instead of a beneficial owner withholding certificate described in § 1.1441-1(e)(2)(i) in the case of an amount paid outside the United States (as described in paragraph (e) of this section) with

respect to an offshore obligation, or, in the case of broker proceeds described in § 1.6045-1(c)(2), to the extent provided in § 1.6045-1(g)(1)(i). For purposes of this section, the term *offshore obligation* means—

(A) An account maintained at an office or branch of a bank or other financial institution located outside the United States; or

(B) An obligation as defined in § 1.6049-4(f)(3) (other than an account described in paragraph (c)(1)(i)(A) of this section), contract, or other instrument with respect to which the payor is either engaged in business as a broker or dealer in securities or a financial institution (as defined in § 1.1471-5(e)) that engages in significant activities at an office or branch located outside the United States. For purposes of the preceding sentence, an office or branch of such payor shall be considered to engage in significant activities with respect to an obligation when it participates materially and actively in negotiating the obligation under the principles described in § 1.864-4(c)(5)(iii) (substituting the term “obligation” for the term “stock or security”).

(ii) A payor may rely on documentary evidence if the payor has established procedures to obtain, review, and maintain documentary evidence sufficient to establish the identity of the payee and the status of that person as a foreign person; and the payor obtains, reviews, and maintains such documentary evidence in accordance with those procedures. A payor maintains the documents reviewed for purposes of this paragraph (c)(1) by retaining an original, certified copy, or photocopy (including a microfiche, electronic scan, or similar means of electronic storage) of the documents reviewed for as long as it may be relevant to the determination of the payor's obligation to report under § 1.6049-4 and this section and noting in its records the date on which the document was received and reviewed. Documentary evidence furnished for a payment of an amount subject to withholding under chapter 3 of the Code or that is a chapter 4 reportable amount under § 1.1474-1(d)(2) must contain all of the information that is necessary to complete a Form 1042-S for that payment. See §§ 1.1471-3(c) and 1.1471-4(c) for additional documentation requirements to identify a payee or account holder for chapter 4 purposes that may apply in addition to the requirements under paragraph (c) of this section.

(iii) Even if an account or obligation (as defined in § 1.6049-4(f)(3)) is not maintained outside the United States (maintained in the United States), a payor may rely on documentary evidence associated with a withholding certificate described in § 1.1441-1(e)(3)(iii) with respect to the persons for whom an entity acting as an intermediary collects the payment. A payor may also rely on documentary evidence associated with a flow-through withholding certificate for payments treated as made to foreign partners of a nonwithholding foreign partnership, as defined in § 1.1441-1(c)(28), the foreign beneficiaries of a foreign simple trust, as defined in § 1.1441-1(c)(24), or foreign owners of a foreign grantor trust, as defined in § 1.1441-1(c)(26), even though the partnership or trust account is an obligation maintained in the United States.

(iv) For accounts opened on or after July 1, 2014, and before January 1, 2015, and for obligations entered into on or after July 1, 2014, and before January 1, 2015, a payor may continue to apply the rules of § 1.6049-5(c)(1) and (c)(4) as in effect and contained in 26 CFR part 1 revised April 1, 2013, rather than this paragraph (c)(1) and paragraph (c)(4) of this section. A payor that applies the rules of § 1.6049-5(c)(1) and (c)(4) as in effect and contained in 26 CFR part 1 revised April 1, 2013, to an account or obligation must also apply § 1.1441-6(c)(2) (to the extent applicable) and § 1.6049-5(e) both as in effect and contained in 26 CFR part 1 revised April, 2013, with respect to the account or obligation.

(2) ***Other applicable rules.*** The provisions of § 1.1441-1(e)(4)(i) through (xii) (regarding who may sign a certificate, validity period of certificates and documentary evidence, retention of certificates, reliance rules, etc.) shall apply (by substituting the term "payor" for the term "withholding agent" and disregarding the fact that the provisions under § 1.1441-1(e)(4) only apply to amounts subject to withholding under chapter 3 of the Code) to withholding certificates and documentary evidence furnished for purposes of this section. See § 1.1441-1(b)(2)(vii) for provisions dealing with reliable association of a payment with documentation.

(3) ***Standards of knowledge.*** A payor may not rely on a withholding certificate or documentary evidence described in paragraph (c)(1) or (4) of this section if it has actual knowledge or reason to know that any information or certification stated in the certificate or documentary evidence is unreliable. A payor has reason to know that information or certifications are unreliable only if the payor would have reason to know under the provisions of § 1.1441-7(b)(2) and (3) that the information and certifications provided on the certificate or in the documentary evidence are unreliable or, in the case of a Form W-9 (or an acceptable substitute), it cannot reasonably rely on the documentation as set forth in § 31.3406(h)-3(e) of this chapter (see the information and certification described in § 31.3406(h)-3(e)(2)(i) through (iv) of this chapter that are required in order for a payor reasonably to rely on a Form W-9). The provisions of § 1.1441-7(b)(2) and (3) shall apply for purposes of this paragraph (c)(3) irrespective of the type of income to which § 1.1441-7(b)(2) is otherwise limited. The exemptions from reporting described in paragraphs (b)(10) and (11) of this section shall not apply if the payor has actual knowledge that the payee is a U.S. person who is not an exempt recipient.

(4) ***Special documentation rules for certain payments.*** This paragraph (c)(4) modifies the provisions of paragraph (c)(1) of this section for payments of amounts that are not subject to withholding under chapter 3 of the Code, other than amounts described in paragraph (d)(3)(iii) of this section (dealing with U.S. short-term OID and U.S. source deposit interest described in section 871(i)(2)(A) or 881(d)(3)). Amounts are not subject to withholding under chapter 3 of the Code if they are not included in the definition of amounts subject to withholding under § 1.1441-2(a) (*e.g.,* deposit interest with foreign branches of U.S. banks, foreign source income, or broker proceeds). A payor may rely upon documentation in lieu of documentary evidence (as described in paragraph (c)(1) of this section) or a written statement (as defined in § 1.1471-1(b)(150)) or another statement to the extent permitted in paragraphs (c)(4)(i) through (iii) of this section, until the payor knows or has reason to know of a change in circumstance that makes the documentation unreliable or incorrect (as defined in § 1.1441-1(e)) when the payor does not have customer information for the payee that includes any of the U.S. indicia described in § 1.1471-3(c)(6)(ii)(C)(*1*). Further, a payor may maintain such documentation or documentary evidence as required in paragraph (c)(4)(iv) of this section.

(i) ***Statement in lieu of documentary evidence with respect to accounts.*** If under the local laws, regulations, or practices of a country in which an account is maintained, it is not customary to obtain documentary evidence described in paragraph (c)(1) of this section with respect to the type of account, the payor may, instead of obtaining a beneficial owner withholding certificate described in § 1.1441-1(e)(2)(i) or documentary evidence described in paragraph (c)(1) of this section, establish a payee's foreign status based on the statement described in this paragraph (c)(4)(i) (or such substitute statement as the Internal Revenue Service may prescribe) made on an account opening form. However, see, also § 1.1471-4(c) or an applicable IGA for additional documentation requirements that may apply to a participating FFI (including a reporting Model 2 FFI) for determining the status of its account holders for chapter 4 purposes. The statement referred to in this paragraph (c)(4)(i) must appear near the signature line and must state, "By

opening this account and signing below, the account owner represents and warrants that he/she/it is not a U.S. person for purposes of U.S. Federal income tax and that he/she/it is not acting for, or on behalf of, a U.S. person. A false statement or misrepresentation of tax status by a U.S. person could lead to penalties under U.S. law. If your tax status changes and you become a U.S. citizen or a resident, you must notify us within 30 days." Additionally, a payor may, instead of obtaining a beneficial owner withholding certificate described in § 1.1441-1(e)(2)(i) or § 1.1471-3(c)(3)(ii) or documentary evidence described in paragraph (c)(1) of this section, establish a payee's foreign status based on a written statement described in paragraph § 1.1471-1(b)(150) to the extent a payor uses such written statement to establish a payee's chapter 4 status and is permitted to use the written statement under § 1.1471-3(d) (by substituting the term "payor" for the term "withholding agent") without any other documentary evidence.

(ii) ***Documentation under IGA.*** A payor that is a reporting Model 1 FFI or reporting Model 2 FFI may rely upon documentation or information establishing a payee's status that is permitted under an applicable IGA for determining whether the account of the payee is other than a U.S. account and regardless of whether such documentation or certification is described in paragraph (c)(1) of this section or § 1.1441-1(e)(2).

(iii) ***Maintenance of documentation and written statement.*** A payor maintains documentation if it either maintains the documentary evidence as described in paragraph (c)(1) of this section or retains a record of the documentary evidence reviewed if the payor is not required to retain copies of the documentation pursuant to the payor's AML due diligence (as defined in § 1.1471-1(b)(4)). A payor retains a record of documentary evidence reviewed by noting in its records the type of documentation reviewed, the date the document was reviewed, the document's identification number (if any), and whether such documentation contained any U.S. indicia described in § 1.1441-7(b)(8). Any statement described in paragraph (c)(4)(i) of this section, must be retained in accordance with § 1.1471-3(c)(6)(iii).

(5) ***U.S. payor, U.S. middleman, non-U.S. payor, and non-U.S. middleman.*** The terms *payor* and *middleman* have the meanings ascribed to them under § 1.6049-4(a). A *non-U.S. payor* or *non-U.S. middleman* means a payor or middleman other than a U.S. payor or U.S. middleman. The term *U.S. payor* or *U.S. middleman* means—

(i) ***Definition.***

(A) A person described in section 7701(a)(30) (including a foreign branch or office of such person);

(B) The government of the United States or the government of any State or political subdivision thereof (or any agency or instrumentality of any of the foregoing);

(C) A controlled foreign corporation within the meaning of section 957, determined without applying section 318(a)(3)(A), (B), and (C) so as to consider a United States person as owning stock which is owned by a person who is not a United States person.

(D) A foreign partnership, if at any time during its tax year, one or more of its partners are U.S. persons (as defined in § 1.1441-1(c)(2)) who, in the aggregate hold more than 50 percent of the income or capital interest in the partnership or if, at any time during its tax year, it is engaged in the conduct of a trade or business in the United States;

(E) A foreign person 50 percent or more of the gross income of which, from all sources for the three-year period ending with the close of its taxable year preceding the collection or payment (or such part of such period as the person has been in existence), was effectively connected with the conduct of trade or business within the United States; or

(F) A U.S. branch or territory financial institution described in § 1.1441-1(b)(2)(iv) that is treated as a U.S. person.

(ii) ***Reporting by U.S. payors in U.S. possessions.*** U.S. payors are not required to report on Form 1099 income that is from sources within a possession of the United States and that is exempt from taxation under section 931, 932, or 933, each of which sections exempts certain income from sources within a possession of the United States paid to a bona fide resident of that possession. For purposes of this paragraph (c)(5)(ii), a U.S. payor may treat the beneficial owner as a bona fide resident of the possession of the United States from which the income is sourced if, prior to payment of the income, the U.S. payor can reliably associate the payment with valid documentation that supports the claim of residence in the possession of the United States from which the income is sourced. This paragraph (c)(5)(ii) shall not apply if the U.S. payor has actual knowledge or reason to know that the documentation is unreliable or incorrect or that the income does not satisfy the requirements for exemption under section 931, 932, or 933. For the rules determining whether income is from sources within a possession of the United States, see section 937(b) and the regulations thereunder.

(6) ***Examples.*** The following examples illustrate the provisions of paragraphs (b) and (c) of this section:

Example 1. FC is a foreign corporation that is not engaged in a trade or business in the United States during the current calendar year. D, an individual who is a resident and citizen of the United States, holds a registered obligation issued by FC in a public offering. Interest is paid on the obligation within the United States by DC, a U.S. corporation that is the designated paying agent of FC. D does not have an account with DC. Although interest paid on the obligation issued by FC is foreign source, the interest paid by DC to D is considered to be interest under paragraph (b)(6) of this section for purposes of information reporting under section 6049 because it is not paid and received outside the United States within the meaning of § 1.6049-4(f)(16).

Example 2. The facts are the same as in *Example 1* except that D is a nonresident alien individual who has furnished DC with a Form W-8 in accordance with the provisions of § 1.1441-1(e)(1)(ii). By reason of paragraph (b)(12) of this section, the payment of interest by DC to D is not considered to be a payment of interest for purposes of information reporting under section 6049. Therefore, DC is not required to make an information return under section 6049.

Example 3. The facts are the same as in *Example 2* except that the obligation of FC is held in a custodial account for D by FB, a foreign branch of a U.S. financial institution. By reason of paragraph (c)(5) of this section, FB is considered to be a U.S. middleman. Therefore, FB is required to make an information return unless FB may treat D as a beneficial owner that is a foreign person in accordance with the provisions of § 1.1441-1(e)(1)(ii).

Example 4. The facts are the same as in *Example 3* except that the FC obligation is held for D by NC, in a custodial account at NC's foreign branch. NC is a foreign corporation that is a non-U.S. middleman described in paragraph (c)(5) of this section. The payment by NC to D is paid and received outside of the United States under § 1.6049-4(f)(16) and therefore is not considered to

be a payment of interest for purposes of section 6049 pursuant to paragraph (b)(6) of this section. Therefore, NC is not required to make an information return under section 6049 with respect to the payment.

(d) ***Determination of status as U.S. or foreign payee and applicable presumptions in the absence of documentation*** —

(1) ***Identifying the payee.*** The provisions of §§ 1.1441-1(b)(2), 1.1441-5(c)(1) and (e)(2) and (3) shall apply (by substituting the term "payor" for the term "withholding agent") to identify the payee (other than a payee included in a chapter 4 withholding rate pool described in paragraph (b)(14) of this section) for purposes of this section (and other sections of the regulations under this chapter to which this paragraph (d)(1) applies), except to the extent provided in this paragraph (d)(1) in the case of a payment of an amount that is not subject to withholding under chapter 3 of the Code and that is not a withholdable payment (as defined in § 1.6049-4(f)(15)). Amounts are not subject to withholding under chapter 3 of the Code if they are not included in the definition of amounts subject to withholding under § 1.1441-2(a) (*e.g.,* deposit interest with foreign branches of U.S. banks, foreign source income, or broker proceeds). The exceptions to the application of § 1.1441-1(b)(2) to amounts that are not subject to withholding under chapter 3 of the Code and that are not withholdable payments are as follows:

(i) The provisions of § 1.1441-1(b)(2)(ii), dealing with payments to a U.S. agent or intermediary of a foreign person, shall not apply. Thus, a payment to a U.S. agent or intermediary of a foreign person is treated as a payment to a U.S. payee.

(ii) Payments to U.S. branches or territory financial institution described in § 1.1441-1(b)(2)(iv) shall be treated as payments to a foreign payee, irrespective of the fact that the U.S. branch or territory financial institution is otherwise treated as a U.S. person for payments of amounts subject to withholding under chapter 3 and withholdable payments, and irrespective of the fact that the branch or territory financial institution is treated as a U.S. payor for purposes of paragraph (c)(5) of this section.

(2) ***Presumptions of U.S. or foreign status in the absence of documentation*** —

(i) ***In general.*** Except as otherwise provided in this paragraph (d)(2)(i), for purposes of this section (and other sections of regulations under this chapter 61 to which this paragraph (d)(2) applies), the provisions of § 1.1441-1(b)(3)(i) through (ix) and § 1.1441-5(d) and (e)(6) shall apply (by substituting the term "payor" for the term "withholding agent") to determine the classification (*e.g.,* individual, corporation, partnership, trust), status (*i.e.,* a U.S. or a foreign person), and other relevant characteristics (*e.g.,* beneficial owner or intermediary) of a payee if a payment cannot be reliably associated with valid documentation under § 1.1441-1(b)(2)(vii) irrespective of whether the payments are subject to withholding under chapter 3 of the Code or are withholdable payments. The provisions of § 1.1441-1(b)(3)(iii)(D) and (vii)(B) (referencing presumption rules for payments with respect to offshore obligations) shall not apply to a payment of an amount not subject to withholding under chapter 3, unless it is an amount that is a withholdable payment made to a payee that is an entity. Thus, in the case of a withholdable payment made to an entity, the presumption rules of § 1.1441-1(b)(3)(iii)(D) and (vii)(B) shall apply regardless of whether the payment is an amount subject to withholding under chapter 3. Additionally, in the case of an amount paid outside the United States with respect to an offshore obligation described in § 1.1441-1(b)(3)(iii)(D) or (vii)(B) of an amount not subject to withholding under chapter 3 and that is treated as made to a payee that is an individual, the presumption rules of § 1.1441-1(b)(3)(iii) shall not apply, and the payee shall be presumed a

U.S. person only when the payee has any of the indicia of U.S. status that are described in § 1.1441-7(b)(5) or (8). In a case in which a withholding agent makes a withholdable payment that cannot reliably be associated with documentation, see § 1.1471-3(f)(4) and (5) for determining the status of the payee for chapter 4 purposes when the payment is treated as made to a foreign entity (by substituting the term "payor" for the term "withholding agent"). The rules of § 1.1441-1(b)(2)(vii) shall apply for purposes of determining when a payment can reliably be associated with documentation, by substituting the term "payor" for the term "withholding agent." For this purpose, the information, documentary evidence, statement, or other documentation described in paragraph (c)(4) of this section can be treated as documentation with which a payment can be associated.

(ii) ***Grace period in the case of indicia of a foreign payee.*** When the conditions of this paragraph (d)(2)(ii) are satisfied, the 30-day grace period provisions under section 3406(e) shall not apply and the provisions of this paragraph (d)(2)(ii) shall apply instead. A payor that, at any time during the grace period described in this paragraph (d)(2)(ii), credits an account with payments described in § 1.1441-6(c)(2) (or credits an account with broker proceeds from securities described in § 1.1441-6(c)(2)), that are reportable under section 6042, 6045, 6049, or 6050N may, instead of treating the account as owned by a U.S. person and applying backup withholding under section 3406, if applicable, choose to treat the account as owned by a foreign person (and apply the grace period described in § 1.1441-1(b)(3)(iv)) if, at the beginning of the grace period, the address that the payor has in its records for the account holder is in a foreign country, the payor has been furnished the information contained in a withholding certificate described in § 1.1441-1(e)(2), or the payor holds a withholding certificate that is no longer reliable other than because the validity period as described in § 1.1441-1(e)(4)(ii)(A) has expired. In the case of a newly opened account, the grace period begins on the date that the payor first credits the account. In the case of an existing account for which the payor holds a Form W-8 or documentary evidence of foreign status, the payor may apply the provisions of the grace period described in § 1.1441-1(b)(3)(iv), beginning on the date that the payor first credits the account after the existing documentation held with regard to the account can no longer be relied upon (other than because the validity period described in § 1.1441-1(e)(4)(ii)(A) has expired). A new account shall be treated as an existing account for purposes of this paragraph (d)(2)(ii) if the account holder already holds an account at the branch location at which the new account is opened, or if the account is treated as a consolidated obligation as defined in § 1.1471-(1)(b)(23) for purpose of chapter 4 to the extent the account does not receive any amounts subject to withholding under chapter 3. A new account shall also be treated as an existing account for purposes of this paragraph (d)(2)(ii) if an account is held at another branch location if the institution maintains an account information system described in § 1.1441-1(e)(4)(ix). The grace period terminates on the earlier of the close of the 90th day from the date on which the grace period begins or the date that valid documentation is provided. The grace period also terminates when the remaining balance in the account (due to withdrawals or otherwise) is equal to or less than 28 percent (or other statutory tax rate that is applicable to backup withholding) of the total amounts credited since the beginning of the grace period that would be subject to backup withholding if the provisions of this paragraph (d)(2)(ii) did not apply. At the end of the grace period, the payor shall treat the amounts credited to the account, or paid with respect to an account, during the grace period as paid to a U.S. or foreign payee depending upon whether documentation has been furnished and the nature of any such documentation furnished upon which the payor may rely to treat the account as owned by a U.S. or foreign payee. If the documentation has not been received on or before the date of

expiration of the grace period, the payor may also apply the presumptions described in this paragraph (d) to amounts credited to the account after the date on which the grace period expires (until such time as the payor can reliably associate the documentation with amounts credited). See § 31.6413(a)-3(a)(1)(iv) of this chapter for treating backup withheld amounts under section 3406 as erroneously withheld when the documentation establishing foreign status is furnished prior to the end of the calendar year in which backup withholding occurs. If the provisions of this paragraph (d)(2)(ii) apply, the provisions of § 31.3406(d)-3 of this chapter shall not apply. For purposes of this paragraph (d)(2)(ii), an account holder's reinvestment of gross proceeds of a sale into other instruments constitutes a withdrawal and a non-qualified electronic transmission of information on a withholding certificate is a transmission that is not in accordance with the provisions of § 1.1441-1(e)(4)(iv). See § 1.1092(d)-1 for a definition of the term actively traded for purposes of this paragraph (d)(2)(ii).

(iii) ***Joint owners.*** Amounts paid to accounts held jointly for which a certificate or documentation is required as a condition for being exempt from reporting under paragraph (b) of this section are presumed made to U.S. payees who are not exempt recipients if, prior to payment, the payor cannot reliably associate the payment either with a Form W-9 furnished by one of the joint owners in the manner required in §§ 31.3406(d)-1 through 31.3406(d)-5 of this chapter, or with documentation described in paragraph (b)(12) of this section furnished by each joint owner upon which it can rely to treat each joint owner as a foreign payee or foreign beneficial owner. In the case of an amount that is a withholdable payment made to a joint account, however, see § 1.1471-3(f)(7) for when the payment is treated as made to a foreign payee that is a nonparticipating FFI (as defined in § 1.1471-1(b)(82)). For purposes of applying this paragraph (d)(2)(iii), the grace period described in paragraph (d)(2)(ii) of this section shall apply only if each payee qualifies for such grace period.

(3) ***Payments to foreign intermediaries or flow-through entities —***

(i) ***Payments of amounts subject to withholding under chapter 3 of the Code or withholdable payments.*** In the case of payments of amounts that the payor may treat as made to a foreign intermediary or flow-through entity in accordance with §§ 1.1441-1(b)(3)(ii)(C) and (b)(3)(v)(A) and 1.1441-5(c) or (e) and that are subject to withholding under § 1.1441-2(a), the provisions of §§ 1.1441-1(b)(2)(v) and 1.1441-5(c)(1), (e)(2), and (3) shall apply (by substituting the term “payor” for the term “withholding agent”) to identify the payee. If a payment of an amount subject to withholding cannot be reliably associated with valid documentation from a payee in accordance with § 1.1441-1(b)(2)(vii), the presumption rules of §§ 1.1441-1(b)(3)(v) and 1.1441-5(d) and (e)(6) shall apply to determine the payee's status for purposes of this section (and other sections of regulations under this chapter to which this paragraph (d)(3) applies). In the case of an amount that is a withholdable payment, see § 1.1471-3(c)(3) for rules to identify the payee and see § 1.1471-3(f)(5) for the presumption rule that shall apply to amounts treated as made to a foreign intermediary or flow-through entity (by substituting the term “payor” for the term “withholding agent”). For example, where a withholdable payment is made to an intermediary under § 1.1471-3 that is treated as a nonparticipating FFI under § 1.1471-3(f)(5), the nonparticipating FFI shall be treated as the payee under § 1.1471-3(c)(3) and for purposes of this paragraph (d)(3)(i), therefore, no information return shall be required under this section.

(ii) ***Payments of amounts not subject to withholding under chapter 3 of the Code and that are not withholdable payments.*** Except as provided in paragraph (d)(3)(iii) of this section, amounts that are not subject to withholding under chapter 3 of the Code and that are not withholdable payments that the payor may treat as paid to a foreign intermediary or flow-through entity shall

be treated as made to an exempt recipient described in § 1.6049-4(c) except to the extent that the payor has actual knowledge that any person for whom the intermediary or flow-through entity is collecting the payment is a U.S. person who is not an exempt recipient. In the case of such actual knowledge, the payor shall treat the payment that it knows is allocable to such U.S. person as a payment to a U.S. payee who is not an exempt recipient and has actual knowledge of the amount allocable to such a person.

(iii) ***Special rule for payments of certain short-term original issue discount*** —

(A) ***General rule.*** A payment of U.S. source bank deposit interest not subject to chapter 4 withholding or U.S. source interest or original issue discount on the redemption of an obligation with a maturity from the date of issue of 183 days or less (short-term OID) described in section 871(g)(1)(B) or 881(e) that the payor may treat as paid to a foreign intermediary or flow-through entity in accordance with the provisions of § 1.1441-1(b)(3)(ii)(C), (b)(3)(v)(A), § 1.1441-5(d) or (e) (by substituting the term "payor" for the term "withholding agent"), shall be treated as paid to an undocumented U.S. payee that is not an exempt recipient under paragraph § 1.6049-4(c) unless the payor has documentation from the payees of the payment and the payment is allocated to foreign payees, as a group, and to each U.S. non-exempt recipient payee. See § 1.1441-1(e)(3)(iv)(C)(*2*). However, a payor may rely on a withholding statement provided by an intermediary described in § 1.1441-1(e)(3)(iv) (or similar withholding statement for a flow-through entity) that identifies a chapter 4 withholding rate pool of U.S. payees (as described in § 1.6049-4(c)(4)(iii)) only if it identifies the foreign intermediary or flow-through entity as a participating FFI (including a reporting Model 2 FFI) or registered deemed-compliant FFI (including a reporting Model 1 FFI) under § 1.1471-3(d)(4) (by substituting the term "payor" for the term "withholding agent"). See also § 1.6049-4(c)(4)(iii) for when an FFI may provide a chapter 4 withholding rate pool of U.S. payees on a withholding statement.

(B) ***Payee may be an intermediary.*** If a payment is made to a person described in § 1.6049-4(c)(1)(ii) that has not provided an intermediary withholding certificate under § 1.1441-1(e)(3)(i) but the payor knows or has reason to know that the payee may be an intermediary, the payor must apply the rules of paragraph (d)(3)(iii)(A) of this section. A payor has reason to know that such a person may be an intermediary if that person has provided documentation as an intermediary for another account with the same payor.

(iv) ***Short-term deposits and repurchase transactions.*** The provisions of paragraph (d)(3)(ii) of this section and not paragraph (d)(3)(iii) of this section shall apply to deposits with banks and other financial institutions that remain on deposit for a period of two weeks or less, to amounts of original issue discount arising from a sale and repurchase transaction that is completed within a period of two weeks or less, or to amounts described in paragraphs (b)(7), (10) and (11) of this section (relating to certain obligations issued in bearer form).

(4) ***Examples.*** The rules of paragraphs (d)(1) through (3) of this section are illustrated by the examples in this paragraph (d)(4). Unless otherwise specified in an example, the following facts apply: all FFIs, such as a nonqualified intermediary that is an FFI, are treated as participating FFIs; all payees have been identified with chapter 4 statuses that do not require withholding under chapter 4; and none of the payments are withholdable payments.

Example 1. (i) *Facts.* USP is a U.S. payor as defined in paragraph (c)(5) of this section. USP

pays interest from sources within the United States that is a withholdable payment to an account maintained in the United States by X. The interest is not deposit interest described in sections 871(i)(2)(A) or 881(d). USP does not have a Form W-9, or withholding certificate from X as defined in § 1.1441-1(c)(16). Moreover, USP cannot treat X as an exempt recipient, as defined in § 1.6049-4(c)(1)(ii), without documentation and there is no indication that X is an individual, trust, or estate.
(ii) *Analysis.* The U.S. source interest is an amount subject to withholding as defined in § 1.1441-2(a). Under paragraph (d)(1) of this section, USP must apply the provisions of §§ 1.1441-1(b)(2) and 1.1441-5(c) and (e) to determine the payee of the interest. Under § 1.1441-1(b)(2)(i), X, the person to whom the payment is made, is considered to be the payee, unless X is determined to be a flow-through entity, in which case the rules of § 1.1441-5 apply to determine the payee. Under paragraph (d)(2)(i) of this section, the rules of § 1.1441-1(b)(3)(ii) apply to determine the classification of a payee as an individual, trust, estate, corporation, or partnership. Under § 1.1441-1(b)(3)(ii)(B), X is presumed to be a partnership, since X does not appear to be an individual, trust or estate, and X cannot be presumed to be an exempt recipient in the absence of documentation. Paragraph (d)(2)(i) of this section requires USP to apply the provisions of §§ 1.1441-1(b)(3)(iii) and 1.1441-5(d) to determine whether X is presumed to be a U.S. or foreign partnership. Under §§ 1.1441-1(b)(3)(iii) and 1.1441-5(d)(2), X is presumed to be a U.S. partnership in absence of any indicia of foreign partnership status. The presumption of U.S. status applies even though the payment is a withholdable payment (see paragraph (d)(2) of this section and § 1.1471-3(f)(2) cross referencing the presumption rules of § 1.1441-1(b)(3)). The U.S. source interest paid to X is reportable under section 6049 on Form 1099 and the interest is subject to backup withholding under section 3406 because X has not provided its TIN on a valid Form W-9. No withholding or reporting applies to the payment under chapter 3 or 4 of the Code.

Example 2. (i) *Facts.* The facts are the same as in *Example 1,* except that the interest paid by USP is from sources outside the United States.
(ii) *Analysis.* Interest from sources outside the United States is not an amount subject to withholding, as defined in § 1.1441-2(a) or a withholdable payment. Under paragraph (d)(1) of this section, USP must apply the provisions of §§ 1.1441-1(b)(2) and 1.1441-5(c) and (e) to determine the payee. Under § 1.1441-1(b)(2)(i), X, the person to whom the payment is made, is considered to be the payee, unless X is determined to be a flow-through entity, in which case the rules of § 1.1441-5(c) or (e) apply to determine the payee. Under paragraph (d)(2)(i) of this section, the rules of § 1.1441-1(b)(3)(ii) apply to determine the classification of a payee as an individual, trust, estate, corporation, or partnership. These rules apply irrespective of whether the payment is an amount subject to withholding. Under § 1.1441-1(b)(3)(ii)(B), X is presumed to be a partnership, since X does not appear to be an individual, trust or estate, and X cannot be presumed to be an exempt recipient in the absence of documentation. Paragraph (d)(2)(i) of this section requires USP to apply the provisions of §§ 1.1441-1(b)(3)(iii) and 1.1441-5(d) to determine whether, X is presumed to be a U.S. or foreign

partnership. Under §§ 1.1441-1(b)(3)(iii) and 1.1441-5(d)(2), X is presumed to be a U.S. partnership in absence of any indicia of foreign partnership status. The foreign source interest is a payment subject to reporting on Form 1099 under § 1.6049-5(a). Further, because X is a non-exempt recipient that has failed to provide its TIN on a valid Form W-9, the foreign source interest is subject to backup withholding under section 3406.

Example 3. (i) *Facts.* USP is a U.S. payor as defined in paragraph (c)(5) of this section. USP makes a payment of U.S. source interest outside the United States to an offshore account of X. See paragraphs (c)(1) for a definition of offshore account and (e) for a payment outside the United States. USP does not have a withholding certificate from X as defined in § 1.1441-1(c)(16) nor does it have documentary evidence as described in § 1.1441-1(e)(1)(ii)(A)(2) and § 1.6049-5(c)(1).
(ii) *Analysis.* The interest is an amount subject to withholding as defined in § 1.1441-2(a). Under paragraph (d)(1) of this section, USP must apply the provisions of § 1.1441-1(b)(2) and § 1.1441-5(c) and (e) to determine the payee. Under § 1.1441-1(b)(2)(i), X, the person to whom the payment is made, is considered to be the payee, unless X is determined to be a flow-through entity, in which case the rules of § 1.1441-5(c) or (e) apply to determine the payee. Under paragraph (d)(2)(i) of this section, the rules of § 1.1441-1(b)(3)(ii) apply to determine the classification of a payee as an individual, trust, estate, corporation, or partnership. Under § 1.1441-1(b)(3)(ii)(B), X is presumed to be a partnership, since X does not appear to be an individual, trust or estate, and X cannot be presumed to be an exempt recipient in the absence of documentation. Paragraph (d)(2)(i) of this section requires USP to apply the provisions of §§ 1.1441-1(b)(3)(iii) and 1.1441-5(d) to determine whether, X is presumed to be a U.S. or foreign partnership. Under §§ 1.1441-1(b)(3)(iii)(D) and 1.1441-5(d)(2), X is presumed to be a foreign partnership. Therefore, under paragraph (d)(1) of this section and § 1.1441-5(c)(1)(i)(E), the payees of the interest are presumed to be the partners of X. Under § 1.1441-5(d)(3), the partners are presumed to be undocumented foreign persons. Therefore, USP must withhold 30% of the interest payment under § 1.1441-1(b)(1) and report the payment on Form 1042-S in accordance with § 1.1461-1(c).

Example 4. (i) *Facts.* The facts are the same as in *Example 3,* except that the interest is paid by F, a non-U.S. payor.
(ii) *Analysis.* The analysis and result are the same as in *Example 3.* F is a withholding agent under § 1.1441-7 and its status as a non-U.S. payor under paragraph (c)(5) of this section is irrelevant.

Example 5. (i) *Facts.* USP is a U.S. payor as defined in paragraph (c)(5) of this section that is not an FFI. USP makes a payment outside the United States of interest from sources outside the United States with respect to an offshore obligation held by X. USP does not have a withholding certificate from X as defined in § 1.1441-1(c)(16) nor does it have documentary evidence as described in §§ 1.1471-3(c)(5)(i) and 1.6049-5(c)(1). USP does not have actual

knowledge of an employer identification number for X. X does not appear to be an individual, trust, or estate and cannot be treated as an exempt recipient, as defined in § 1.6049-4(c)(1)(ii) in the absence of documentation.
(ii) *Analysis.* The interest is not an amount subject to withholding as defined in § 1.1441-2(a) and is not a withholdable payment. Under paragraph (d)(1) of this section, USP must apply the rules of §§ 1.1441-1(b)(2) and 1.1441-5(c) and (e) to determine the payee of the interest. Under § 1.1441-1(b)(2)(i), X, the person to whom the payment is made, is considered to be the payee, unless X is determined to be a flow-through entity, in which case the rules of § 1.1441-5(c) or (e) apply to determine the payee. Under paragraph (d)(2)(i) of this section, § 1.1441-1(b)(3)(ii) applies to determine X's classification as an individual, trust, estate, corporation or partnership. Under § 1.1441-1(b)(3)(ii)(B), X is treated as a partnership, since it does not appear to be an individual, trust, or estate and cannot be treated as an exempt recipient without documentation. Paragraph (d)(2)(i) of this section requires USP to apply the provisions of §§ 1.1441-1(b)(3)(iii) and 1.1441-5(d) to determine whether, X is presumed to be a U.S. or foreign partnership. Paragraph (d)(2)(i) of this section also states that the presumptions of foreign status for payments made with respect to offshore obligations contained in §§ 1.1441-1(b)(3)(iii)(D) and 1.1441-5(d)(2) do not apply to amounts that are not subject to withholding and that are not withholdable payments described in paragraph (d)(2)(i). Therefore, under §§ 1.1441-1(b)(3)(iii) and 1.1441-5(d)(2), X is presumed to be a U.S. partnership because it does not have actual knowledge that X's employer identification number begins with the digits “98.” Therefore, USP must treat X as a U.S. person that is not an exempt recipient and report the payment on Form 1099 under section 6049. Under § 31.3406(g)-1(e) of this chapter, however, USP is not required to backup withhold on the payment unless it has actual knowledge that X is a U.S. person that is not an exempt recipient.

Example 6. (i) *Facts.* The facts are the same as in *Example 5,* except that the interest is paid by F, a non-U.S. payor, as defined under paragraph (c)(5) of this section.
(ii) *Analysis.* The analysis is the same as under *Example 5.* However, F is a non-U.S. payor paying foreign source interest outside the United States, and there is no indication that the amount is received in the United States under § 1.6049-4(f)(16). Thus, paragraph (b)(6) of this section exempts the payment from reporting under section 6049.

Example 7. (i) *Facts.* USP, a U.S. payor as defined in paragraph (c)(5) of this section that is not an FFI, makes a payment of U.S. source interest that is a withholdable payment to NQI, a nonqualified intermediary as defined in § 1.1441-1(c)(14), that is a certified deemed-compliant FFI under § 1.1471-5(f)(2). The interest is paid inside the United States to an account of a bank or other financial institution maintained in the United States. NQI has provided USP with a nonqualified intermediary withholding certificate, as described in § 1.1441-1(e)(3)(iii) that includes its chapter 4 status, but has not attached any documentation from the persons on whose behalf it acts or a withholding statement as described in §

1.1441-1(e)(3)(iv).
(ii) *Analysis.* U.S. source interest is an amount subject to withholding under § 1.1441-2(a). USP may treat the payment as made to a foreign intermediary under § 1.1441-1(b)(3)(v)(A) because USP has received a nonqualified intermediary withholding certificate from NQI and may except NQI from withholding under chapter 4 of the Code given NQI's status for chapter 4 purposes as a deemed-compliant FFI. Under paragraph (d)(3)(i) of this section, USP must then apply § 1.1471-3(c)(3) to treat the persons on whose behalf NQI is acting as the payees. Paragraph (d)(3)(i) of this section also requires USP to apply the presumption rules of § 1.1441-1(b)(3)(v) if it cannot reliably associate the payment with valid documentation from a payee. See § 1.1441-1(b)(2)(vii). As the payment is a withholdable payment, the interest is treated as paid to a nonparticipating FFI under § 1.1471-3(f)(4). Therefore, the payment is not subject to reporting on Form 1099 under paragraph (b)(12) of this section. See § 1.1471-2(a) for the withholding requirement with respect to the payment and § 1.1474-1(d)(2) for the requirement to report the payment on Form 1042-S.

Example 8. (i) *Facts.* The facts are the same as in *Example 7,* except that the interest is paid outside the United States, as defined in paragraph (e) of this section to an offshore account, as defined in paragraph (c)(1) of this section and is not a withholdable payment.
(ii) *Analysis.* Under § 1.1441-1(b)(3)(v)(B), the interest is treated as paid to an unknown foreign payee because it cannot be reliably associated with documentation under § 1.1441-1(b)(2)(vii). Therefore, the payment is not subject to reporting on Form 1099 under paragraph (b)(12) of this section because the payment is presumed made to a foreign person. The payment is subject to withholding, however, under § 1.1441-1(b) at a rate of 30% and is subject to reporting on Form 1042-S under § 1.1461-1(c).

Example 9. (i) *Facts.* The facts are the same as in *Example 8,* except that the interest is paid by F, a non-U.S. payor, as defined in paragraph (c)(5) of this section.
(ii) *Analysis.* The analysis and results are the same as in *Example 8.*

Example 10. (i) *Facts.* USP, a U.S. payor as defined in paragraph (c)(5) of this section, makes a payment of foreign source interest (other than deposit interest) to NQI, a foreign corporation and a nonqualified intermediary as defined in § 1.1441-1(c)(14). NQI has provided USP with a nonqualified intermediary withholding certificate, as described in § 1.1441-1(e)(3)(iii), but has not attached any documentation from the persons on whose behalf it acts or a withholding statement as described in § 1.1441-1(e)(3)(iv).
(ii) *Analysis.* Foreign source interest is not an amount subject to withholding under chapter 3 of the Code and is not a withholdable payment. See §§ 1.1441-2(a) and 1.1473-1(a). Under paragraph (d)(3)(ii) of this section, amounts that are not subject to withholding under chapter 3 of the Code and that are not withholdable payments described in paragraph (d)(2)(i) of this section that a payor may treat as paid to a foreign intermediary are treated as made to an exempt recipient described in § 1.6049-4(c) absent actual knowledge that the payee is a U.S. person who is not an exempt recipient. Therefore, the foreign source interest is not subject to reporting on Form 1099.

Example 11. (i) *Facts.* USP is a U.S. payor as defined in paragraph (c)(5) of this section that is a bank. USP pays U.S. source original issue discount from the redemption of an obligation described in section 871(g)(1)(B) to NQI, a foreign corporation that is a nonqualified intermediary as defined in § 1.1441-1(c)(14). The redemption proceeds are not paid outside of the United States as they are paid with respect to an account NQI has with a branch of a bank in the United States. See § 1.6049-5(e)(2). NQI provides a nonqualified intermediary withholding certificate as described in § 1.1441-1(e)(3)(iii) that includes a certification of its status as a registered deemed-compliant FFI but does not attach any payee documentation or a withholding statement described in § 1.1441-1(e)(3)(iv).
(ii) *Analysis.* Under paragraph (d)(3)(ii)(A) of this section, USP must treat the payment as made to an undocumented U.S. payee that is not an exempt recipient and report the payment on Form 1099. Further, because the payment is made inside the United States, the exception to backup withholding with respect to offshore obligations contained in § 31.3406(g)-1(e) of this chapter does not apply, and the payment is subject to backup withholding.

Example 12. (i) *Facts.* P, a payor, makes a payment to NQI of U.S. source interest on debt obligations issued prior to July 18, 1984, that mature 30 years from their issuance dates. Therefore, the interest does not qualify as portfolio interest under section 871(h) or 881(d). Additionally, the interest is not a withholdable payment under § 1.1471-2(b) as the interest is a payment with respect to a grandfathered obligation for purposes of chapter 4 of the Code. NQI, a U.S. payor, is a nonqualified foreign intermediary, as defined in § 1.1441-1(c)(14), and has furnished P a valid nonqualified intermediary withholding certificate described in § 1.1441-1(e)(3)(iii) to which it has attached a valid Form W-9 for A, and two valid beneficial owner Forms W-8, one for B and one for C. A is not an exempt recipient under § 1.6049-4(c). NQI furnishes a withholding statement, described in § 1.1441-1(e)(3)(iv), in which it allocates 20% of the U.S. source interest to A, but does not allocate the remaining 80% of the interest between B and C. B's withholding certificate indicates that B is a foreign pension fund, exempt from U.S. tax under the U.S. income tax treaty with Country T. C's withholding certificate indicates that C is a foreign corporation not entitled to a reduced rate of withholding.
(ii) *Analysis.* As the interest is not a withholdable payment under paragraph (d)(3)(i) of this section, P applies the rules of § 1.1441-1(b)(2)(v) to determine the payees of the interest even though NQI has not certified its status for purposes of chapter 4 of the Code. Under that section, the payees are the persons on whose behalf NQI acts—A, B and C. Because P can reliably associate 20% of the payment with valid documentation provided by A, P must treat 20% of the interest as paid to A, a U.S. person not exempt from reporting, and report the payment on Form 1099. P cannot reliably associate the remaining 80% of the payment with valid documentation under § 1.1441-1(b)(2)(vii) and, therefore, under paragraph (d)(3)(i) of this section must apply the presumption rules of § 1.1441-1(b)(3)(v). Under that section, the interest is presumed paid to an unknown foreign payee. Under paragraph (b)(12) of this section, P is not required to report the interest presumed paid to a foreign person on Form 1099. Under § 1.1441-1(b), 80% of the interest is subject to 30% withholding, however, and the interest is reportable on Form 1042-S under § 1.1461-1(c).

Example 13. (i) *Facts.* The facts are the same as in *Example 12,* except that P can reliably associate 30% of the payment of interest to B, but cannot reliably associate the remaining 70 percent with A or C.
(ii) *Analysis.* Under paragraph (d)(3)(i) of this section, P applies the rules of § 1.1441-1(b)(2)(v) to determine the payees of the interest. Under that section, the payees are the persons on whose behalf NQI acts—A, B and C. Because P can reliably associate 30% of the payment with B, a foreign pensions fund exempt from withholding under an income tax treaty, P may treat that payment as paid to B and not subject to reporting on Form 1099 under paragraph (b)(12) of this section. P cannot reliably associate the remaining 70% of the payment with valid documentation under § 1.1441-1(b)(2)(vii) and, therefore, under paragraph (d)(3)(i) of this section must apply the presumption rules of § 1.1441-1(b)(3)(v). Under that section, the interest is presumed paid to an unknown foreign payee. Under paragraph (b)(12) of this section, P is not required to report the interest presumed paid to a foreign person on Form 1099. Under § 1.1441-1(b), 80% of the interest is subject to 30% withholding, however, and the interest is reportable on Form 1042-S under § 1.1461-1(c).

Example 14. (i) *Facts.* The facts are the same as in *Example 12,* except that P also makes a payment of foreign source interest to NQI.
(ii) *Analysis.* Under paragraph (d)(3)(ii), P may treat the foreign source interest as paid to an exempt recipient as defined in § 1.6049-4(c) and not subject to reporting on Form 1099 even though some or all of the foreign source interest may in fact be owned by A, the U.S. person that is not exempt from reporting.

Example 15. (i) *Facts.* The facts are the same as in *Example 12,* except that NQI is a non-U.S. payor.
(ii) *Analysis.* The analysis is the same as under *Example 12* with respect to B and C. However, because NQI is a non-U.S. payor, it may under § 1.6049-4(c)(4)(iii) allocate the portion of the payment to A to a chapter 4 withholding rate pool of U.S. payees on a withholding statement provided to P in lieu of furnishing the Form W-9 to P when NQI reports the payments in accordance with § 1.6049-4(c)(4)(i). In such a case, provided that P obtains a certification form confirming NQI's status as a participating FFI, P is excepted from reporting the payment under paragraph (b)(14) of this section because P can reliably associate the payment with the documentation provided by NQI.

(e) ***Determination of whether amounts are considered paid outside the United States*** —

(1) ***In general.*** For purposes of section 6049 and this section, an amount is considered to be paid by a payor or middleman outside the United States if the payor or middleman completes the acts necessary to effect payment outside the United States. See paragraphs (e)(2) through (5) of this section for further clarification of where amounts are considered paid. A payment shall not be considered to be made within the United States for purposes of section 6049 merely by reason of the fact that it is made on a draft drawn on a United States bank account or by a wire or other electronic transfer from a United States account.

(2) ***Amounts paid with respect to deposits or accounts with banks and other financial institutions.*** Notwithstanding paragraph (e)(1) of this section, an amount paid by a bank or other financial institution with respect to a deposit or with respect to an account with the institution is considered paid at the branch or office at which the amount is credited unless the amount is collected by the financial institution as the agent of the payee. However, an amount will not be considered to be paid

at the branch or office where the amount is considered to be credited unless the branch or office is a permanent place of business that is regularly maintained, occupied, and used to carry on a banking or similar financial business; the business is conducted by at least one employee of the branch or office who is regularly in attendance at such place of business during normal business hours; and the branch or office receives deposits and engages in one or more of the other activities described in § 1.864-4(c)(5)(i).

(3) ***Coupon bonds and discount obligations in bearer form.*** Notwithstanding paragraph (e)(1) of this section, an amount paid with respect to a bond with coupons attached (including a certificate of deposit with detachable interest coupons) or a discount obligation that is not in registered form (within the meaning of section 163(f) and the regulations thereunder) is considered to be paid where the coupon or the discount obligation is presented to the payor or its paying agent for payment.

(4) ***Foreign-targeted registered obligations.*** Notwithstanding paragraph (e)(1) of this section, where the payor is the issuer or the issuer's agent, an amount is considered paid outside the United States with respect to a foreign-targeted registered obligation issued before January 1, 2016, as described in § 1.871-14(e)(2), if either the amount is paid by transfer to an account maintained by the registered owner outside the United States, or by mail to an address of the registered owner outside the United States, or by credit to an international account. For purposes of this paragraph (e)(4), the term *international account* means the book-entry account of a financial institution (within the meaning of section 871(h)(4)(B)) or of an international financial organization with the Federal Reserve Bank of New York for which the Federal Reserve Bank of New York maintains records that specifically identify an international financial organization or a financial institution (within the meaning of section 871(h)(4)(B)) as either a non-United States person or a foreign branch of a United States person as registered owner. An international financial organization is a central bank or monetary authority of a foreign government or a public international organization of which the United States is a member to the extent that such central bank, authority, or organization holds obligations solely for its own account and is exempt from tax under section 892 or 895.

(5) ***Examples.*** The application of the provisions of this paragraph (e) is illustrated by the following examples:

Example 1. FC is a foreign corporation that is not a U.S. payor or U.S. middleman, as defined in paragraph (c)(5) of this section. A holds FC coupon bonds that are not in registered form under section 163(f) and the regulations thereunder. FB, a foreign branch of DC, is the designated paying agent with respect to the bonds issued by FC. A does not have an account with FB. A presents a coupon from a FC bond for payment to FB at its office outside the United States. FB pays A with a check drawn against a bank account maintained in the United States. For purposes of section 6049, the place of payment of interest on the FC bond by FB to A is considered to be outside the United States under paragraph (e)(3) of this section.

Example 2. Individual C deposits funds in an account with FB, a foreign country X branch of DB, a U.S. corporation engaged in the commercial banking business. FB maintains an office and employees in foreign country X, accepts deposits, and conducts one or more of the other activities listed in § 1.864-4(c)(5)(i). The terms of C's deposit provide that it will be payable with accrued interest. Under paragraph (e)(2) of this section, FB is considered to pay the interest on C's deposit outside the United States.

Example 3. DC, a U.S. corporation engaged in the commercial banking business, maintains FB, a branch in foreign country X. FB has an office and employees in foreign country X, accepts deposits, and engages in one or more of the other activities listed in § 1.864-4(c)(5)(i). D, a

United States citizen, purchases a certificate of deposit issued in 1980 by FB. The certificate of deposit has a maturity of 20 years and has detachable interest coupons payable at six-month intervals. D presents some of the coupons at the U.S. office of DC and receives payment in cash. Because the coupon is presented to DC for payment within the United States, DC is considered to have made the payment within the United States under paragraph (e)(3) of this section.

Example 4. FB is recognized by both foreign country X and by the Federal Reserve Bank as a foreign country X branch of DC, a U.S. corporation engaged in the commercial banking business. A local foreign country X bank serves as FB's resident agent in Country X. FB maintains no physical office or employees in foreign country X. All the records, accounts, and transactions of FB are handled at the United States office of DC. E deposits funds in an amount maintained with FB. Interest earned on the deposit is periodically credited to E's account with FB by employees of DC. For purposes of section 6049, the place of payment of the interest on E's deposit with FB is considered to be within the United States by reason of paragraphs (e)(1) and (e)(2) of this section.

Example 5. DC is a U.S. corporation. A holds bonds that were issued by DC in registered form under section 163(f), as in effect prior to the amendment by section 502 of the HIRE Act of 2010, and the regulations thereunder and that are foreign-targeted registered obligations as defined in § 1.871-14(e)(2). DB, a commercial banking business, is the registrar of bonds issued by DC. Interest on the DC bonds is paid to A and other bondholders by check prepared by DB at its principal office inside the United States and mailed from there to A's address outside the United States. The check is drawn on a United States account maintained by DC with DB within the United States. The place of payment to A by DB of the interest on the DC bonds is considered to be outside the United States under paragraph (e)(4) of this section.

(f) ***Original issue discount treated as payment of interest.*** In determining whether an obligation is one which was issued at a discount and the amount of discount which is includible in income of the holder, a payor (other than the issuer of the obligation) may rely on the Internal Revenue Service's publication of publicly traded original issue discount obligations. In the case of an obligation as to which there is during any calendar year an amount of original issue discount includible in the gross income of any holder (as determined under sections 1232 and 1232A and the regulations thereunder), the issuer of the obligation or a middleman (as defined in § 1.6049-4(f)(4)) shall be treated as having paid to such holder during such calendar year an amount of interest equal to the amount of original issue discount so includible without regard to any reduction by reason of a purchase allowance under sections 1232(a)(2)(C)(ii), 1232A (a)(6) or (b)(4) or a purchase at a premium under 1232A(c)(4)(A) or paragraph (d)(2) of § 1.1232-3. Thus, the determination of the amount of original issue discount includible in the gross income of any holder with respect to any obligation shall be determined as if any holder of the obligation were the original holder. However, see § 1.6049-9 for the reporting of premium for a debt instrument acquired on or after January 1, 2014. In the case of (1) an obligation to which section 1232A does not apply (for example, a short-term government obligation as defined in section 1232(a)(3)) and (2) an obligation issued on or before December 31, 1982, in bearer form, the amount of original issue discount includible in gross income shall be treated as if paid in the calendar year in which the date of maturity occurs or in which the date of redemption occurs if redemption occurs before maturity. The amount subject to reporting on an obligation issued in bearer form with a maturity at the date of issue of more than 1 year (a long term obligation) is the amount of original issue discount includible in the gross income of the holder during the calendar year of maturity or redemption if redemption occurs before maturity. The amount of original issue discount subject to reporting on a long term obligation shall not be reduced to reflect any purchase

allowance. Discount on short term government obligations as defined in section 1232(a)(3), such as Treasury bills, and discount on other obligations with a maturity at the date of issue of not more than 1 year (a short term obligation), including commercial paper, when paid at maturity or redemption if redemption occurs before maturity, shall constitute a payment of interest for purposes of section 6049. In general, the amount subject to reporting on short term obligations is the difference between the stated redemption price at maturity and the original issue price. The procedure set forth in section 3455(b)(2)(B) and § 31.3455(b)-1(b)(3) for establishing the price at which a holder purchased an obligation subsequent to the date of original issue shall apply for purposes of section 6049. Original issue discount on an obligation (including an obligation with a maturity of not more than six months from the date of original issue) held by a nonresident alien individual or foreign corporation is interest described in paragraph (b)(1)(vi)(A) or (B) of this section and, therefore is not interest subject to reporting under section 6049 unless it is described in § 1.6049-8(a) (relating to deposit interest paid on or after January 1, 2013, to certain nonresident alien individuals).

(g) ***Applicability dates.*** Except as otherwise provided in this paragraph (g), this section applies to payments made on or after January 6, 2017. For payments made after June 30, 2014, and before January 6, 2017, see this section as in effect and contained in 26 CFR part 1, as revised April 1, 2016. For payments made after December 31, 2000, and before July 1, 2014, see this section as in effect and contained in 26 CFR part 1, as revised April 1, 2013. Paragraph (c)(5)(i)(C) of this section applies to payments made on or after October 1, 2019. For payments made before October 1, 2019, a taxpayer may apply paragraph (c)(5)(i)(C) of this section for payments during the last taxable year of a foreign corporation beginning before January 1, 2018, and each subsequent taxable year of the foreign corporation, provided that the taxpayer and United States persons that are related (within the meaning of section 267 or 707) to the taxpayer consistently apply such paragraph with respect to all foreign corporations. For payments made before October 1, 2019, where the taxpayer does not apply the provisions of paragraph (c)(5)(i)(C) of this section, see paragraph (c)(5)(i)(C) of this section as in effect and contained in 26 CFR part 1, as revised April 1, 2020.

[T.D. 7881, 48 FR 12972, Mar. 28, 1983]

Editorial Note 1.: For FEDERAL REGISTER citations affecting § 1.6049-5, see the List of CFR Sections Affected, which appears in the Finding Aids section of the printed volume and at *www.govinfo.gov*.

§ 1.6049(d)-5T Reporting by brokers of interest and original issue discount on and after January 1, 1986 (temporary).

For purposes of § 1.6049-5 (c), relating to original issue discount treated as interest subject to reporting, on and after January 1, 1986, a payor who is a broker or middleman holding as a nominee—

(a) A bank certificate of deposit (without regard to whether the broker or middleman sold the certificate of deposit to the owner), or

(b) Any other original issue discount debt instrument that is specified by the Commissioner,

must determine whether that obligation is one that was issued at a discount and the amount of discount that is includible in the income of the owner. However, before January 1, 1987, reporting is required only with respect to certificates of deposit (or any such other obligations) held by a broker or middleman as a nominee on or after June 1, 1986, that were sold by the broker or middleman (whether for the broker's account or as an agent of the issuer) to the owner. The preceding two sentences do not apply to certificates of deposit (or any such other obligations) held

on or after January 1, 1986, but disposed of before June 1, 1986; reporting requirements with respect to such certificates of deposit (or any other such obligations) shall be determined under the provisions of § 1.6049-5 (c) as in effect immediately prior to publication of this § 1.6049-5T.

[T.D. 8109, 51 FR 45106, Dec. 17, 1986. Redesignated by T.D. 9658, 79 FR 12800, Mar. 6, 2014]

§ 1.6049-6 Statements to recipients of interest payments and holders of obligations for attributed original issue discount.

(a) ***Requirement of furnishing statement to recipient.*** Every person filing a Form 1099 under section 6049(a) and § 1.6049-4(e) shall furnish to the person whose identifying number is required to be shown on the form a written statement showing the information required by paragraph (b) of this section. With respect to interest other than interest reported on a transactional basis under § 1.6049-4(e), no statement is required to be furnished under section 6049(c) and this section if the aggregate of the payments for the calendar year is less than $10, unless such payment is subject to the tax imposed under section 3406. In the case of any payment that is subject to withholding under section 3406, a statement shall be furnished irrespective of the amount of the payment. With respect to payments which are reported on a transactional basis, no statement is required to be furnished under section 6049(c) and this section to a person if the payment of interest to (or received on behalf of) such person for the transaction is less than $10 unless the payment is subject to withholding under section 3406. Again, in the case of any payment that is subject to withholding under section 3406, a statement shall be furnished irrespective of the amount of the payment.

(b) ***Form of statement.*** The written statement required to be furnished to a person under paragraph (a) of this section shall show the following information:

(1) With respect to payments of interest (other than original issue discount) to any person during a calendar year, the statement shall show:

(i) The aggregate amount of payments shown on Form 1099 as having been made to (or received on behalf of) such person;

(ii) The amount of tax withheld under section 3406, if any;

(iii) The name and address of the person filing the form; and

(iv) A legend stating that such amount is being reported to the Internal Revenue Service.

(2) With respect to original issue discount includible in the gross income of a holder of an obligation during a calendar year, the statement shall show:

(i) The aggregate amount of original issue discount includible in the gross income by (or on behalf of) such person for the calendar year with respect to the obligation (determined by applying the rules of paragraph (b)(2) of § 1.6049-4);

(ii) The amount of tax withheld under section 3406, if any;

(iii) The account, serial, or other identifying number of each obligation with respect to which a return is being made;

(iv) All other items shown on Form 1099 for such calendar year; and

(v) A legend stating that such amount and such items are being reported to the Internal Revenue Service.

(3) With respect to both statements to persons receiving payments of interest and persons holding obligations, the statement shall include the name, address, and taxpayer identifying number of such person. An IRS truncated taxpayer identifying number (TTIN) may be used as the identifying number for the person. For provisions relating to the use of TTINs, see § 301.6109-4 of this chapter (Procedure and Administration Regulations).

(c) ***Time for furnishing statements.*** Each statement required by this section to be furnished to any person for a calendar year with respect to a payment of interest (other than interest where a middleman or a Federal agency makes a return on a transactional basis (as described in paragraph (e) of § 1.6049-4)) shall be furnished to such person after April 30 of the year of payment and on or before January 31 of the following year, but no statement may be furnished before the final interest payment for the calendar year. If a middleman or a Federal agency makes a return on a transactional basis, the statement shall be furnished at, or any time subsequent to, the time of payment, but in no event later than January 31 of the year following the calendar year of payment. However, for a statement required to be furnished after December 31, 2008, the February 15 due date under section 6045 applies to the statement if the statement is furnished in a consolidated reporting statement under section 6045. *See* §§ 1.6045-1(k)(3), 1.6045-2(d)(2), 1.6045-3(e)(2), 1.6045-4(m)(3), and 1.6045-5(a)(3)(ii).

(d) ***Special rule.*** The requirements of this section for the furnishing of a statement to any person, including the legend requirement of paragraph (b)(1)(iv) and (2)(v) of this section, may be met by the furnishing to such person a copy of the Form 1099 filed pursuant to § 1.6049-4, or an acceptable substitute, in respect of such person. However, in the case of Form 1099 with respect to original issue discount on obligations subject to section 1232A, a copy of the instructions must also be sent to such person. A statement shall be considered to be furnished to a person within the meaning of this section if it is mailed to such person at his last known address.

(e) ***Statements to recipients*** —

(1) ***Requirement.*** A person required to make an information return under section 6049(a) and § 1.6049-4 must furnish a statement to each recipient whose identifying number is required to be shown on the related information return for interest or original issue discount paid or accrued.

(2) ***Form, manner, and time for providing statements to recipients.*** The statement required by paragraph (e)(1) of this section must be either the official Form 1099 prescribed by the Internal Revenue Service for the respective calendar year or an acceptable substitute statement. The rules under § 1.6042-4 (relating to statements with respect to dividends) apply comparably in determining the form of an acceptable substitute statement permitted by this paragraph (e). Those rules also apply for purposes of determining the manner of and time for providing the Form 1099 or its acceptable substitute to a recipient under paragraph (e)(1) of this section. However, with respect to original issue discount, the Form 1099 or acceptable substitute statement required by paragraph (e)(1) of this section must show the aggregate amount of original issue discount includible in the gross income by the recipient for the calendar year with respect to the obligation (determined by applying the rules of § 1.6049-4(b)(2)), and the amount, serial number, or other identifying number of each obligation with respect to which a return is being made. With respect to interest or original issue discount, the Form 1099 or acceptable substitute statement required by paragraph (e)(1) of this section must be furnished to the recipient on or before January 31 of the year following the calendar year for which the return under section 6049(a)(1) was required to be made. However, for a statement required to be furnished after December 31, 2008, the February 15 due date under section

6045 applies to the statement if the statement is furnished in a consolidated reporting statement under section 6045. *See* §§ 1.6045-1(k)(3), 1.6045-2(d)(2), 1.6045-3(e)(2), 1.6045-4(m)(3), and 1.6045-5(a)(3)(ii).

(3) ***Cross-reference to penalty.*** For provisions relating to the penalty provided for failure to furnish timely a correct payee statement required under section 6049(c) and § 1.6049-6(a), see § 301.6722-1 of this chapter (Procedure and Administration Regulations). See § 301.6724-1 of this chapter for the waiver of a penalty if the failure is due to reasonable cause and is not due to willful neglect.

(4) ***Special rule for amounts described in § 1.6049-8(a).*** In the case of amounts described in § 1.6049-8(a) (relating to payments of deposit interest to certain nonresident alien individuals) paid on or after January 1, 2013, any person who makes a Form 1042-S, "Foreign Person's U.S. Source Income Subject to Withholding," under section 6049(a) and § 1.6049-4(b)(5) shall furnish a statement to the recipient either in person or by first class mail to the recipient's last known address. The statement shall include a copy of the Form 1042-S required to be prepared pursuant to § 1.6049-4(b)(5) and a statement to the effect that the information on the form is being furnished to the United States Internal Revenue Service. A person required by this paragraph (e)(4) to furnish a recipient copy of Form 1042-S may furnish such copy electronically by complying with the requirements provided in § 1.6050W-2(a)(2) through (5) applicable to statements required under section 6050W (substituting the phrase "Form 1042-S" for the phrases "statement required under section 6050W" or "statements required by section 6050W(f)" each place they appear).

(5) ***Effective/applicability date.*** Paragraph (b)(3) applies to payee statements due after December 31, 2014. Paragraph (e)(4) of this section applies to payee statements reporting payments of deposit interest to nonresident alien individuals paid on or after January 2, 2020, but it may be applied to payments made on or after January 1, 2016. For payee statements reporting payments of deposit interest to nonresident alien individuals paid on or after January 1, 2013 and before January 2, 2020, see paragraph (e)(4) of this section as in effect and contained in 26 CFR part 1 revised April 1, 2019. For the substantially similar statement mailing requirements that apply with respect to forms required to be filed after October 22, 1986, and before January 1, 1996, see Rev. Proc. 84-70 (1984-2 C.B. 716) (or successor revenue procedures). See § 601.601(d)(2) of this chapter. (For interest paid to a Canadian nonresident alien individual on or before December 31, 2012, see paragraph (e)(4) of this section as in effect and contained in 26 CFR part 1 revised April 1, 2000.)

[T.D. 7881, 48 FR 12976, Mar. 28, 1983, as amended by T.D. 8637, 60 FR 66111, Dec. 21, 1995; 61 FR 11307, Mar. 20, 1996; T.D. 8664, 61 FR 17574, Apr. 22, 1996; T.D. 8664, 61 FR 40993, Aug. 7, 1996; T.D. 8734, 62 FR 53491, Oct. 14, 1997; T.D. 9504, 75 FR 64103, Oct. 18, 2010; T.D. 9584, 77 FR 23394, Apr. 19, 2012; T.D. 9675, 79 FR 41130, July 15, 2014; T.D. 9890, 85 FR 206, Jan. 2, 2020]

§ 1.6049-7 Returns of information with respect to REMIC regular interests and collateralized debt obligations.

(a) ***Definition of interest*** —

(1) ***In general.*** For purposes of section 6049(a), for taxable years beginning after December 31, 1986, the term *interest* includes:

(i) Interest actually paid with respect to a collateralized debt obligation (as defined in paragraph (d)(2) of this section),

(ii) Interest accrued with respect to a REMIC regular interest (as defined in section 860G(a)(1)), or

(iii) Original issue discount accrued with respect to a REMIC regular interest or a collateralized debt obligation.

(2) ***Interest deemed paid.*** For purposes of this section and in determining who must make an information return under section 6049(a), interest as defined in paragraphs (a)(1) (ii) and (iii) of this section is deemed paid when includible in gross income under section 860B (b) or section 1272.

(b) ***Information required to be reported to the Internal Revenue Service*** —

(1) ***Requirement of filing Form 8811 by REMICs and other issuers*** —

(i) ***In general.*** Except in the case of a REMIC all of whose regular interests are owned by one other REMIC, every REMIC and every issuer of a collateralized debt obligation (as defined in paragraph (d)(2) of this section) must make an information return on Form 8811, Information Return for Real Estate Mortgage Investment Conduits (REMICs) and Issuers of Collateralized Debt Obligations. Form 8811 must be filed in the time and manner prescribed in paragraph (b)(1)(iii) of this section. The submission of Form 8811 to the Internal Revenue Service does not satisfy the election requirement specified in § 1.860D-1T(d) and does not require election of REMIC status.

(ii) ***Information required to be reported.*** The following information must be reported to the Internal Revenue Service on Form 8811—

(A) The name, address, and employer identification number of the REMIC or the issuer of a collateralized debt obligation (as defined in paragraph (d)(2) of this section);

(B) The name, title, and either the address or the address and telephone number of the official or representative of the REMIC or the issuer of a collateralized debt obligation who will provide to any person specified in paragraph (e)(4) of this section the interest and original issue discount information specified in paragraph (e)(2) of this section;

(C) The startup day (as defined in section 860G(a)(9)) of the REMIC or the issue date (as defined in section 1275(a)(2)) of the collateralized debt obligation;

(D) The Committee on Uniform Security Identification Procedure (CUSIP) number, aocount number, serial number, or other identifying number or information, of each class of REMIC regular interest or collateralized debt obligation;

(E) The name, title, address, and telephone number of the official or representative of the REMIC or the issuer of a collateralized debt obligation whom the Internal Revenue Service may contact, and

(F) Any other information required by Form 8811.

(iii) ***Time and manner of filing of information return—***

(A) ***Manner of filing.*** Form 8811 must be filed with the Internal Revenue Service at the address specified on the form. The information specified in paragraph (b(1)(ii) of this section must be provided on Form 8811 regardless of whether other information returns are filed by use of electronic media.

(B) ***Time for filing.*** Form 8811 must be filed by each REMIC or issuer of a collateralized debt obligation on or before the later of July 31, 1989, or the 30th day after—

(*1*) the startup day (as defined in section 860G(a)(9)) in the case of a REMIC, or

(2) the issue date (as defined in section 1275(a)(2)) in the case of a collateralized debt obligation.

Further, each REMIC or issuer of a collateralized debt obligation must file a new Form 8811 on or before the 30th day after any change in the information previously provided on Form 8811.

(2) ***Requirement of reporting by REMICs, issuers, and nominees*** —

(i) ***In general.*** Every person described in paragraph (b)(2)(ii) of this section who pays to another person $10 or more of interest (as defined in paragraph (a) of this section) during any calendar year must file an information return on Form 1099, unless the interest is paid to a person specified in paragraph (c) of this section.

(ii) ***Person required to make reports.*** The persons required to make an information return under section 6049(a) and this section are—

(A) REMICs or issuers of collateralized debt obligations (as defined in paragraph (d)(2) of this section), and

(B) Any broker who holds as a nominee or middleman who holds as a nominee any REMIC regular interest or any collateralized debt obligation.

(iii) ***Information to be reported*** —

(A) ***REMIC regular interests and collateralized debt obligations not issued with original issue discount.*** An information return on Form 1099 must be made for each holder of a REMIC regular interest or collateralized debt obligation not issued with original issue discount, but only if the holder has been paid interest (as defined in paragraph (a) of this section) of $10 or more for the calendar year. The information return must show—

(*1*) The name, address, and taxpayer identification number of the record holder,

(*2*) The CUSIP number, account number, serial number, or other identifying number or information, of each REMIC regular interest or collateralized debt obligation, with respect to which a return is being made,

(*3*) The aggregate amount of interest paid or deemed paid to the record holder for the period during the calendar year for which the return is made,

(*4*) The name, address, and taxpayer identification number of the person required to file this return, and

(*5*) Any other information required by the form.

(B) ***REMIC regular interests and collateralized debt obligations issued with original issue discount.*** An information return on Form 1099 must be made for each holder of a REMIC regular interest or a collateralized debt obligation issued with original issue discount, but only if the holder has been paid interest (as defined in paragraph (a) of this section) of $10 or more for the calendar year. The information return must show—

(*1*) The name, address, and taxpayer identification number of the record holder,

(2) The CUSIP number, account number, serial number, or other identifying number or information, of each REMIC regular interest or collateralized debt obligation, with respect to which a return is being made,

(3) The aggregate amount of original issue discount deemed paid to the record holder for the period during the calendar year for which the return is made,

(4) The aggregate amount of interest, other than original issue discount, paid or deemed paid to the record holder for the period during the calendar year for which the return is made,

(5) The name, address, and taxpayer identification number of the person required to file this return, and

(6) Any other information required by the form.

(C) ***Cross-reference.*** See § 1.67-3T(f)(3)(ii) for additional information required to be included on an information return on Form 1099 with respect to certain holders of regular interests in REMICs described in § 1.67-3T(a)(2)(ii).

(iv) ***Time and place for filing a return with respect to amounts includible as interest.*** The returns required under this paragraph (b)(2) for any calendar year must be filed after September 30 of that year, but not before the payor's final payment to the payee for the year, and on or before February 28 (March 31 if filed electronically) of the following year. These returns must be filed with the appropriate Internal Revenue Service Center, the address of which is listed in the instructions for Form 1099. For extensions of time for filing returns under this section, see § 1.6081-1. For magnetic media filing requirements, see § 301.6011-2 of this chapter.

(c) ***Information returns not required.*** An information return is not required under section 6049(a) and this section with respect to payments of interest on a REMIC regular interest or collateralized debt obligation, if the holder of the REMIC regular interest or the collateralized debt obligation is—

(1) An organization exempt from taxation under section 501(a) or an individual retirement plan;

(2) The United States or a State, the District of Columbia, a possession of the United States, or a political subdivision or a wholly-owned agency or instrumentality of any one or more of the foregoing;

(3) A foreign government, a political subdivision thereof, or an international organization;

(4) A foreign central bank of issue (as defined in § 1.895-1(b)(1)) or the Bank for International Settlements;

(5) A trust described in section 4947(a)(1) (relating to certain charitable trusts);

(6) For calendar quarters and calendar years after 1988, a broker (as defined in section 6045(c) and § 1.6045-1(a)(1));

(7) For calendar quarters and calendar years after 1988, a person who holds the REMIC regular interest or collateralized debt obligation as a middleman (as defined in § 1.6049-4(f)(4));

(8) For calendar quarters and calendar years after 1988, a corporation (as defined in section 7701(a)(3)), whether domestic or foreign;

(9) For calendar quarters and calendar years after 1988, a dealer in securities or commodities required to register as such under the laws of the United States or a State;

(10) For calendar quarters and calendar years after 1988, a real estate investment trust (as defined in section 856);

(11) For calendar quarters and calendar years after 1988, an entity registered at all times during the taxable year under the Investment Company Act of 1940;

(12) For calendar quarters and calendar years after 1988, a common trust fund (as defined in section 584 (a));

(13) For calendar quarters and calendar years after 1988, a financial institution such as a mutual savings bank, savings and loan association, building and loan association, cooperative bank, homestead association, credit union, industrial loan association or bank, or other similar organization;

(14) For calendar quarters and calendar years after 1988, any trust which is exempt from tax under section 664(c) (*i.e.,* a charitable remainder annuity trust or a charitable remainder unitrust); and

(15) For calendar quarters and calendar years after 1988, a REMIC.

(d) ***Special provisions and definitions*** —

(1) ***Incorporation of referenced rules.*** The special rules of § 1.6049-4(d) are incorporated in this section, as applicable, except that § 1.6049-4(d)(2) does not apply to any REMIC regular interest or any other debt instrument to which section 1272(a)(6) applies. Further, § 1.6049-5(c) does not apply to any REMIC regular interest or any other debt instrument to which section 1272(a)(6) applies.

(2) ***Collateralized debt obligation.*** For purposes of this section, the term "collateralized debt obligation" means any debt instrument (except a tax-exempt obligation) described in section 1272(a)(6)(C)(ii) that is issued after December 31, 1986.

(e) ***Requirement of furnishing information to certain nominees, corporations, and other specified persons*** —

(1) ***In general.*** For calendar quarters and calendar years after 1988, each REMIC or issuer of a collateralized debt obligation (as defined in paragraph (d)(2) of this section) must provide the information specified in paragraph (e)(2) of this section in the time and manner prescribed in paragraph (e)(3) of this section to any persons specified in paragraph (e)(4) of this section who request the information.

(2) ***Information required to be reported.*** For each class of REMIC regular interest or collateralized debt obligation and for each calendar quarter specified by the person requesting the information, the REMIC or issuer of a collateralized debt obligation must provide the following information—

(i) The name, address and Employer Identification Number of the REMIC or issuer of a collateralized debt obligation;

(ii) The CUSIP number, account number, serial number, or other identifying number or information, of each specified class of REMIC regular interest or collateralized debt obligation and, for calendar quarters and calendar years after 1991, whether the information being reported is with respect to a REMIC regular interest or a collateralized debt obligation;

(iii) Interest paid on a collateralized debt obligation in the specified class for each calendar quarter, and the aggregate amount for the calendar year if the request is made for the last quarter of the calendar year;

(iv) Interest accrued on a REMIC regular interest in the specified class for each accrual period any day of which is in the specified calendar quarter, and the aggregate amount for the calendar year if the request is made for the last quarter of the calendar year;

(v) Original issue discount accrued on a collateralized debt obligation or REMIC regular interest in the specified class for each accrual period any day of which is in that calendar quarter, and the aggregate amount for the calendar year if the request is made for the last quarter of the calendar year;

(vi) The daily portion of original issue discount per $1,000 of original principal amount (or for calendar quarters prior to 1992, per other specified unit) as determined under section 1272(a)(6) and the regulations thereunder for each accrual period any day of which is in the specified calendar quarter;

(vii) The length of the accrual period;

(viii) The adjusted issue price (as defined in section 1275(a)(4)(B)(ii)) of the REMIC regular interest or the collateralized debt obligation at the beginning of each accrual period any day of which is in the specified calendar quarter;

(ix) The information required by paragraph (f)(3) of this section;

(x) Information required to compute the accrual of market discount including, for calendar years after 1989, the information required by paragraphs (f)(2)(i)(G) or (f)(2)(ii)(K) of this section; and

(xi) For calendar quarters and calendar years after 1991, if the REMIC is a single class REMIC (as described in § 1.67-3T (a)(2)(ii)(B)), the information described in § 1.67-3T (f)(1) and (f)(3)(ii)(A) and (B).

(3) *Time and manner for providing information* —

(i) ***Manner of providing information.*** The information specified in paragraph (e)(2) of this section may be provided as follows—

(A) By telephone;

(B) By written statement sent by first class mail to the address provided by the requesting party;

(C) By causing it to be printed in a publication generally read by and available to persons specified in paragraph (e)(4) and by notifying the requesting persons in writing or by telephone of the publication in which it will appear, the date of its appearance, and, if possible, the page upon which it appears; or

(D) By any other method agreed to by the parties. If the information is published, then the publication should also specify the date and, if possible, the page on which corrections, if any, will be printed.

(ii) ***Time for furnishing the information.*** Each REMIC or issuer of a collateralized debt obligation must furnish the information specified in paragraph (e)(2) of this section on or before the later of—

(A) The 30th day after the close of the calendar quarter for which the information was requested, or

(B) The day that is two weeks after the receipt of the request.

(4) ***Persons entitled to request information.*** The following persons may request the information specified in paragraph (e)(2) of this section with respect to a specified class of REMIC regular interests or collateralized debt obligations from a REMIC or issuer of a collateralized debt obligation in the manner prescribed in paragraph (e)(5) of this section—

(i) Any broker who holds on its own behalf or as a nominee any REMIC regular interest or collateralized debt obligation in the specified class,

(ii) Any middleman who is required to make an information return under section 6049 (a) and paragraph (b)(2) of this section and who holds as a nominee any REMIC regular interest or collateralized debt obligation in the specified class,

(iii) Any corporation or non-calendar year taxpayer who holds a REMIC regular interest or collateralized debt obligation in the specified class directly, rather than through a nominee,

(iv) Any other person specified in paragraphs (c)(9) through (15) of this section who holds a REMIC regular interest or collateralized debt obligation in the specified class directly, rather than through a nominee, or

(v) A representative or agent for a person specified in paragraphs (e)(4)(i), (ii), (iii) or (iv) of this section.

(5) ***Manner of requesting information from the REMIC.*** A requesting person specified in paragraph (e)(4) of this section should obtain Internal Revenue Service Publication 938, Real Estate Mortgage Investment Conduit (REMIC) and Collateralized Debt Obligation Reporting Information (or other guidance published by the Internal Revenue Service). This publication contains a directory of REMICs and issuers of collateralized debt obligations. The requesting person can locate the REMIC or issuer from whom information is needed and request the information from the official or representative of the REMIC or issuer in the manner specified in the publication. The publication will specify either an address or an address and telephone number. If the publication provides only an address, the request must be made in writing and mailed to the specified address. Further, the request must specify the calendar quarters (e.g., all calendar quarters in 1989) and the classes of REMIC regular interests or collateralized debt obligations for which information is needed.

(f) ***Requirement of furnishing statement to recipient*** —

(1) ***In general.*** Every person filing a Form 1099 under section 6049 (a) and this section must furnish to the holder (the person whose identifying number is required to be shown on the form) a written statement showing the information required by paragraph (f)(2) of this section. The written statement provided by a REMIC must also contain the information specified in paragraph (f)(3) of this section.

(2) ***Form of statement*** —

(i) ***REMIC regular interests and collateralized debt obligations not issued with original issue discount.*** For a REMIC regular interest or collateralized debt obligation issued without original issue discount, the written statement must specify for the calendar year the following information—

(A) The aggregate amount shown on Form 1099 to be included in income by that person for the calendar year;

(B) The name, address, and taxpayer identification number of the person required to furnish this statement;

(C) The name, address, and taxpayer identification number of the person who must include the amount of interest in gross income;

(D) A legend, including a statement that the amount is being reported to the Internal Revenue Service, that conforms to the legend on Form 1099, Copy B, For Recipient;

(E) The CUSIP number, account number, serial number, or other identifying number or information, of each REMIC regular interest or collateralized debt obligation, with respect to which a return is being made;

(F) All other items shown on Form 1099 for the calendar year; and

(G) Information necessary to compute accrual of market discount. For calendar years after 1989, this requirement is satisfied by furnishing to the holder for each accrual period during the year a fraction computed in the manner described in either paragraph (f)(2)(i)(G)(*1*) or (f)(2)(i)(G)(*2*) of this section. For calendar years after December 31, 1991, the REMIC or the issuer of the collateralized debt obligation must be consistent in the method used to compute this fraction.

(*1*) The numerator of the fraction equals the interest, other than original issue discount, allocable to the accrual period. The denominator of the fraction equals the interest, other than original issue discount, allocable to the accrual period plus the remaining interest, other than original issue discount, as of the end of that accrual period. The interest allocable to each accrual period and the remaining interest are calculated by taking into account events which have occurred before the close of the accrual period and the prepayment assumption, if any, determined as of the startup day (as defined in section 860G(a)(9)) of the REMIC or the issue date (as defined in section 1275(a)(2)) of the collateralized debt obligaition that would be made in computing original issue discount if the debt instrument had been issued with original issue discount.

(*2*) If the REMIC regular interest or the collateralized debt obligation has de minimis original issue discount (as defined in section 1273(a)(3) and any regulations thereunder), then, at the option of the REMIC or the issuer of the collateralized debt obligation, the fraction may be computed in the manner specified in paragraph (f)(2)(ii)(K) of this section taking into account the de minimis original issue discount.

(ii) ***REMIC regular interests and collateralized debt obligations issued with original issue discount.*** For a REMIC regular interest or collateralized debt obligation issued with original issue discount, the written statement must specify for the calendar year the following information—

(A) The aggregate amount of original issue discount includible in the gross income of the holder for the calendar year with respect to the REMIC regular interest or the collateralized debt obligation;

(B) The aggregate amount of interest, other than original issue discount, includible in the gross income of the holder for the calendar year with respect to the REMIC regular interest or the collateralized debt obligation;

(C) The name, address, and taxpayer identification number of the person required to file this form;

(D) The name, address, and taxpayer identification number of the person who must include the amount of interest specified in paragraphs (f)(2)(ii) (A) and (B) of this section in gross income;

(E) For calendar years after 1987, the daily portion of original issue discount per $l,000 of original principal amount (or for calendar years prior to 1992, per other specified unit) as determined under section 1272(a)(6) and the regulations thereunder for each accrual period any day of which is in that calendar year;

(F) For calendar years after 1987, the length of the accrual period;

(G) All other items shown on Form 1099 for the calendar year;

(H) A legend, including a statement that the information required under paragraphs (f)(2)(ii) (A), (B), (C), (D) and (G) of this section is being reported to the Internal Revenue Service, that conforms to the legend on Form 1099, Copy B, For Recipient;

(I) For calendar years after 1987, the adjusted issue price (as defined in section 1275(a)(4)(B)(ii)) of the REMIC regular interest or the collateralized debt obligation at the beginning of each accrual period with respect to which interest income is required to be reported on Form 1099 for the calendar year;

(J) The CUSIP number, account number, serial number, or other identifying number or information, of each class of REMIC regular interest or collateralized debt obligation, with respect to which a return is being made; and

(K) Information necessary to compute accrual of market discount. For calendar years after 1989, this information includes:

(*1*) For each accrual period in the calendar year, a fraction, the numerator of which equals the original issue discount allocable to that accrual period, and the denominator of which equals the original issue discount allocable to that accrual period plus the remaining original issue discount as of the end of that accrual period, and

(*2*) [Reserved]

The original issue discount allocable to each accrual period and the remaining original issue discount are calculated by taking into account events which have occurred before the close of the accrual period and the prepayment assumption determined as of the startup day (as defined in section 860G (a)(9)) of the REMIC or the issue date (as defined in section 1275 (a)(2)) of the collateralized debt obligation.

(3) ***Information with respect to REMIC assets*** —

(i) ***95 percent asset test.*** For calendar years after 1988, the written statement provided by a REMIC must also contain the following information for each calendar quarter—

(A) The percentage of REMIC assets that are qualifying real property loans under section 593,

(B) The percentage of REMIC assets that are assets described in section 7701 (a)(19), and

(C) The percentage of REMIC assets that are real estate assets defined in section 856 (c)(6)(B), computed by reference to the average adjusted basis (as defined in section 1011) of the REMIC assets during the calendar quarter (as described in § 1.860F-4 (e)(1)(iii)). If for any calendar quarter the percentage of REMIC assets represented by a category is at least 95 percent, then the statement need only specify that the percentage for that category, for that calendar quarter, was at least 95 percent.

(ii) ***Additional information required if the 95 percent test not met.*** If, for any calendar quarter after 1988, less than 95 percent of the assets of the REMIC are real estate assets defined in section 856 (c)(6)(B), then, for that calendar quarter, the REMIC's written statement must also provide to any real estate investment trust (REIT) that holds a regular interest the following information—

(A) The percentage of REMIC assets described in section 856 (c)(5)(A), computed by reference to the average adjusted basis of the REMIC assets during the calendar quarter (as described in § 1.860F-4 (e)(1)(iii)),

(B) The percentage of REMIC gross income (other than gross income from prohibited transactions defined in section 860F (a)(2)) described in section 856 (c)(3)(A) through (E), computed as of the close of the calendar quarter, and

(C) The percentage of REMIC gross income (other than gross income from prohibited transactions defined in section 860F (a)(2)) described in section 856 (c)(3)(F), computed as of the close of the calendar quarter. For purposes of this paragraph (f)(3)(ii)(C), the term “foreclosure property” contained in section 856 (c)(3)(F) shall have the meaning specified in section 860G (a)(8).

In determining whether a REIT satisfies the limitations of section 856 (c)(2), all REMIC gross income is deemed to be derived from a source specified in section 856 (c)(2).

(iii) ***Calendar years 1988 and 1989.*** For calendar years 1988 and 1989, the percentage of assets required in paragraphs (f)(3)(i) and (ii) of this section may be computed by reference to the average fair market value of the assets of the REMIC during the calendar quarter (as described in § 1.860F-4 (e)(1)(iii)), instead of by reference to the average adjusted basis of the assets of the REMIC during the calendar quarter.

(4) ***Cross-reference.*** See § 1.67-3T (f)(2)(ii) for additional information that may be separately stated on the statement required by this paragraph (f) with respect to certain holders of regular interests in REMICs described in § 1.67-3T (a)(2)(ii).

(5) ***Time for furnishing statements*** —

(i) ***For calendar quarters and calendar years after 1988.*** For calendar quarters and calendar years after 1988, each statement required under this paragraph (f) to be furnished to any person for a calendar year with respect to amounts includible as interest must be furnished to that person after April 30 of that year and on or before March 15 of the following year, but not before the final interest payment (if any) for the calendar year.

(ii) ***For calendar quarters and calendar years prior to 1989*** —

(A) ***In general.*** For calendar quarters and calendar years prior to 1989, each statement required under this paragraph (f) to be furnished to any person for a calendar year with respect to amounts includible as interest must be furnished to that person after April 30 of that year and on or before January 31 of the following year, but not before the final interest payment (if any) for the calendar year.

(B) ***Nominee reporting.*** For calendar quarters and calendar years prior to 1989, each statement required under this paragraph (f) to be furnished by a nominee must be furnished to the actual owner of a REMIC regular interest or a collateralized debt obligation to which section 1272 (a)(6) applies on or before the later of—

(*1*) The 30th day after the nominee receives such information, or

(2) January 31 of the year following the calendar year to which the statement relates.

(6) ***Special rules*** —

(i) ***Copy of Form 1099 permissible.*** The requirements of this paragraph (f) for the furnishing of a statement to any person, including the legend requirement of paragraphs (f)(2)(i)(D) and (f)(2)(ii)(H) of this section, may be met by furnishing to that person—

(A) A copy of the Form 1099 filed pursuant to paragraph (b)(2) of this section in respect of that person, plus a separate statement (mailed with the Form 1099) that contains the information described in paragraphs (f)(2)(i)(E) and (G), (f)(2)(ii)(E), (F), (I), and (K), (f)(3), and (f)(4) of this section, if applicable, or

(B) A substitute form that contains all the information required under this paragraph (f) and that complies with any current revenue procedure concerning the reproduction of paper substitutes of Forms 1099 and the furnishing of substitute statements to forms recipients. The inclusion on the substitute form of the information specified in this paragraph (f) that is not required by the official Forms 1099 will not cause the substitute form to fail to meet any requirements that limit the information that may be provided with a substitute form.

(ii) ***Statement furnished by mail.*** A statement mailed to the last known address of any person shall be considered to be furnished to that person within the meaning of this section.

(7) ***Requirement that nominees furnish information to corporations and certain other specified persons*** —

(i) ***In general.*** For calendar quarters and calendar years after 1988, every broker or middleman must provide in writing or by telephone the information specified in paragraph (e)(2) of this section to—

(A) A corporation,

(B) A non-calendar year taxpayer, or

(C) Any other person specified in paragraphs (c)(9) through (15) of this section

who requests the information and for whom the broker or middleman holds as a nominee a REMIC regular interest or a collateralized debt obligation. A corporation, non-calendar year taxpayer, or any other person specified in paragraphs (c)(9) through (15) of this section may

request the information in writing or by telephone for any REMIC regular interest or collateralized debt obligation for calendar quarters any day of which the person held the interest or obligation.

(ii) ***Time for furnishing information.*** The statement required in paragraph (f)(7)(i) of this section must be furnished on or before the later of—

(A) The 45th day after receipt of the request,

(B) The 45th day after the close of the calendar quarter for which the information was requested, or

(C) If the request is made for the last calendar quarter in a year, March 15 of the year following the calendar quarter for which the information was requested.

[T.D. 8366, 56 FR 49518, Sept. 30, 1991; 57 FR 5054, Feb. 12, 1992, as amended by T.D. 8431, 57 FR 40322, Sept. 3, 1992; 57 FR 46243, Oct. 7, 1992; T.D. 8734, 62 FR 53491, Oct. 14, 1997; T.D. 8888, 65 FR 37702, June 16, 2000; T.D. 8895, 65 FR 50407, Aug. 18, 2000]

§ 1.6049-8 Interest and original issue discount paid to certain nonresident aliens.

(a) ***Interest subject to reporting requirement.*** For purposes of §§ 1.6049-4, 1.6049-6, and this section, and except as provided in paragraph (b) of this section, the term *interest* means interest described in section 871(i)(2)(A) that relates to a deposit maintained at an office within the United States, and that is paid to a nonresident alien individual who is a resident of a country that is identified, in an applicable revenue procedure (see § 601.601(d)(2) of this chapter) as of December 31 prior to the calendar year in which the interest is paid, as a country with which the United States has in effect an income tax or other convention or bilateral agreement relating to the exchange of tax information within the meaning of section 6103(k)(4), under which the competent authority is the Secretary of the Treasury or his delegate and the United States agrees to provide, as well as receive, information. Notwithstanding the foregoing, for purposes of §§ 1.6049-4, 1.6049-6, and this section, for any year for which the information return under § 1.6049-4(b)(5) is required, a payor may elect to treat interest as including all interest described in section 871(i)(2)(A) that relates to a deposit maintained at an office within the United States and that is paid to any nonresident alien individual. A payor shall make this election by reporting all such interest. For purposes of the regulations under section 6049 (§§ 1.6049-1 through 1.6049-8), a nonresident alien individual is a person described in section 7701(b)(1)(B). A payor or middleman may rely upon the permanent residence address provided on a valid Form W-8BEN, “Beneficial Owners Certificate of Foreign Status for U.S. Tax Withholding”, to determine the country in which a nonresident alien individual is resident unless such payor or middleman knows or has reason to know that such documentation of the country of residence is unreliable or incorrect. Amounts described in this paragraph (a) are not subject to backup withholding under section 3406 if the payor may treat the payee as a foreign beneficial owner or foreign payee under the rules of § 1.6049-5(b)(12). See § 31.3406(g)-1(d) of this chapter. However, if the payor or middleman does not have either a valid Form W-8BEN or valid Form W-9, “Request for Taxpayer Identification Number and Certification”, the payor or middleman must report the payment as made to a U.S. non-exempt recipient if it must so treat the payee under the presumption rules of § 1.6049-5(d)(2) and § 1.1441-1(b)(3)(iii), and the payor must also backup withhold under section 3406. (For interest paid to a Canadian nonresident alien individual on or before December 31, 2012, see paragraph (a) of this section as in effect and contained in 26 CFR part 1 revised April 1, 2000).

(b) ***Interest excluded from reporting requirement.*** The term *interest* does not include an amount that is paid by the issuer or its agent outside the United States with respect to an obligation that is described in paragraph (b) (1) or (2) of this section.

(1)

(i) The obligation is not in registered form (within the meaning of section 163(f) and the regulations thereunder); is part of a larger single public offering of securities; and is described in section 163(f)(2)(B).

(ii) Unless it has actual knowledge to the contrary, a middleman may treat an obligation as if it is described in section 163(f)(2)(B) if the obligation or coupon therefrom, whichever is presented for payment, contains the statement described in section 163(f)(2)(B)(ii)(II) and the regulations thereunder.

(2)

(i) The obligation has a face or principal amount of not less than $500,000, and satisfies the requirements described in paragraphs (b)(2)(i) (A), (B), and (C) of this section.

(A) The obligation satisfies the requirements of sections 163(f)(2)(B) (i) and (ii)(I) and the regulations thereunder (as if it were a registration-required obligation within the meaning of section 163(f)(2)(A)) and is issued in accordance with the procedures of § 1.163-5(c)(2)(i)(D)).

(B) If the obligation is in registered form, it is registered in the name of an exempt recipient described in § 1.6049-4(c)(1)(ii).

(C) The obligation has on its face and on any detachable coupons the following statement (or a similar statement having the same effect): "By accepting this obligation or coupon, the holder represents and warrants that it is not a United States person (other than an exempt recipient described in the regulations under section 6049(b)(4) of the Internal Revenue Code and the regulations thereunder) and that it is not acting for or on behalf of a United States person (other than an exempt recipient described in the regulations under section 6049(b)(4) of the Internal Revenue Code and the regulations thereunder)."

(ii) Unless the middleman has actual knowledge to the contrary, it may treat an obligation as satisfying the requirements of sections 163(f)(2)(B) (i) and (ii)(I) and the regulations thereunder if the obligation or a coupon therefrom, whichever is presented for payment, contains the statement in paragraph (b)(2)(i)(C) of this section.

[T.D. 8664, 61 FR 17574, Apr. 22, 1996, as amended by T.D. 8734, 62 FR 53491, Oct. 14, 1997; T.D. 9584, 77 FR 23395, Apr. 19, 2012]

§ 1.6049-9 Premium subject to reporting for a debt instrument acquired on or after January 1, 2014.

(a) ***General rule.*** Notwithstanding § 1.6049-5(f), for a debt instrument acquired on or after January 1, 2014, if a broker (as defined in § 1.6045-1(a)(1)) is required to file a statement for the debt instrument under § 1.6049-6, the broker generally must report any bond premium (as defined in § 1.171-1(d)) or acquisition premium (as defined in § 1.1272-2(b)(3)) for the calendar year. This section, however, only applies to a debt instrument that is a covered security as defined in § 1.6045-1(a)(15).

(b) ***Reporting of bond premium amortization.*** Unless a broker has been notified in writing in accordance with § 1.6045-1(n)(5) that a customer does not want to amortize bond premium under section 171, the broker must report the amount of any amortizable bond premium allocable to a stated interest payment made to the customer during the calendar year. See §§ 1.171-2 and 1.171-3 to determine the amount of amortizable bond premium allocable to a stated interest payment. Instead of reporting a gross amount for both stated interest and amortizable bond premium, a broker may report a net amount of stated interest that reflects the offset of the stated interest payment by the amount of amortizable bond premium allocable to the payment. In this case, the broker must not report the amortizable bond premium as a separate item. This paragraph (b) also applies to amortizable bond premium on a tax-exempt obligation, which is required to be amortized under section 171.

(c) ***Reporting of acquisition premium amortization.*** A broker must report the amount of any acquisition premium amortization that reduces the amount of original issue discount includible in income by the customer during a calendar year. For a debt instrument acquired on or after January 1, 2015, a broker must use the rules in § 1.1272-2(b)(4) to determine the amount of acquisition premium amortization. However, for a debt instrument acquired on or after January 1, 2014, and before January 1, 2015, if a customer timely notifies the broker in accordance with § 1.6045-1(n)(5), a broker may use the rules in § 1.1272-3 to determine the amount of acquisition premium amortization. Instead of reporting a gross amount for both original issue discount and acquisition premium amortization, a broker may report a net amount of original issue discount that reflects the offset of the original issue discount includible in income by the customer for the calendar year by the amount of acquisition premium allocable to the original issue discount. In this case, the broker must not report the acquisition premium amortization as a separate item. See § 1.6049-10 for the reporting of acquisition premium on a tax-exempt obligation.

[T.D. 9713, 80 FR 13239, Mar. 13, 2015; T.D. 9750, 81 FR 24702, Apr. 27, 2016]

§ 1.6049-10 Reporting of original issue discount on a tax-exempt obligation.

(a) ***In general.*** For purposes of section 6049, a payor (as defined in § 1.6049-4(a)(2)) of original issue discount (OID) on a tax-exempt obligation (as defined in section 1288(b)(2)) is required to report the daily portions of OID on the obligation as if the daily portions of OID that accrued during a calendar year were paid to the holder (or holders) of the obligation in the calendar year. The amount of the daily portions of OID that accrues during a calendar year is determined as if section 1272 and § 1.1272-1 applied to a tax-exempt obligation. Notwithstanding any other rule in section 6049 and the regulations thereunder, a payor must determine whether a tax-exempt obligation was issued with OID and the amount of OID that accrues for each relevant period. As prescribed by section 1288(b)(1), OID on a tax-exempt obligation is determined without regard to the de minimis rules in section 1273(a)(3) and § 1.1273-1(d).

(b) ***Acquisition premium.*** A payor is required to report acquisition premium amortization on a tax-exempt obligation in accordance with the rules in § 1.6049-9(c) as if section 1272 applied to a tax-exempt obligation. See paragraph (a) of this section to determine the amount of OID allocable to an accrual period.

(c) ***Effective/applicability date.*** This section applies to a tax-exempt obligation that is a covered security (within the meaning of § 1.6045-1(a)(15) and (n)(12)) acquired on or after January 1, 2017. For a taxable year beginning after December 31, 2016, a broker, however, may rely on this section to report OID and acquisition premium for a tax-exempt obligation that is a covered security acquired before January 1, 2017.

[T.D. 9750, 81 FR 8154, Feb. 18, 2016]

§ 1.6050A-1 Reporting requirements of certain fishing boat operators.

(a) ***Requirement of reporting.*** The operator of a boat on which one or more individuals during a calendar year performed services described in § 31.3121(b)(20)-1(a) shall make an information return on Form 1099-MISC for that calendar year. The return shall include the following information:

(1) The name and taxpayer identification number of each individual performing the services;

(2) The percentage of each individual's share of the catch of fish or other forms of aquatic life (hereinafter "fish");

(3) The percentage of the operator's share of the catch of fish;

(4) If the individual receives all or part of his share of the catch in kind, the type and weight of the share and, if it can be ascertained, the fair market value of his share;

(5) If the individual receives a share of the proceeds of the catch, the dollar amount received; and

(6) Any other information that is required by the form.

For purposes of this section, the term, "boat operator" means an employer (as defined in § 31.3121(d)-2) of an employee whose services are excepted from employment by section 3121(b)(20) and § 31.3121(b)(20)-1. The boat operator may make separate returns on Form 1099-MISC for each crew member for each voyage, or he may aggregate the information required by this paragraph for an individual for all or any part of a return period in which the type of catch (if required) and the percentage due the crew member remain the same.

(b) ***Time and place for filing.*** Returns required to be made under this section on Form 1099-MISC shall be filed with the Internal Revenue Service Center, designated in the instructions for Form 1099-MISC, on or before February 28 (March 31 if filed electronically) of the year following the calendar year in which the relevant services were performed.

(c) ***Requirement of and time for furnishing statement*** —

(1) ***requirement of furnishing statement.*** Every person filing a Form 1099-MISC under this section shall furnish to the individual whose identifying number is (or should be) shown on the form a written statement showing the information required by paragraph (a) of this section. The requirement of the preceding sentence may be met by furnishing to the individual copy B of Form 1099-MISC or a reasonable facsimile of Form 1099-MISC that was filed pursuant to this section. An IRS truncated taxpayer identifying number (TTIN) may be used as the identifying number for the individual in lieu of the identifying number appearing on the information return filed with the Internal Revenue Service. For provisions relating to the use of TTINs, see § 301.6109-4 of this chapter (Procedure and Administration Regulations).

(2) ***Time for furnishing statement.*** Each statement required by this paragraph to be furnished to any individual for a calendar year shall be furnished on or before January 31 of the year following the calendar year for which the return was made.

(d) ***Cross-reference to penalties.*** For provisions relating to the penalty provided for failure to file timely a correct information return required under section 6050A(a) and § 1.6050A-1(a), see § 301.6721-1 of this chapter (Procedure and Administration Regulations). For provisions relating to the penalty provided for

failure to furnish timely a correct payee statement required under section 6050A(b) and § 1.6050A-1(c), see § 301.6722-1 of this chapter. See § 301.6724-1 of this chapter for the waiver of a penalty if the failure is due to reasonable cause and is not due to willful neglect.

(e) ***Effective/applicability date.*** The rules in this section apply to information returns and payee statements due after December 31, 2014. For rules applicable for information returns and payee statements due before January 1, 2015, § 1.6050A-1(c)(1) (as contained in 26 CFR part 1, revised April 2013) shall apply.

[T.D. 7716, 45 FR 57123, Aug. 27, 1980, as amended by T.D. 8734, 62 FR 53492, Oct. 14, 1997; T.D. 8895, 65 FR 50407, Aug. 18, 2000; T.D. 9675, 79 FR 41130, July 15, 2014]

§ 1.6050B-1 Information returns by person making unemployment compensation payments.

For taxable years beginning after December 31, 1978, every person who makes payments of unemployment compensation (as defined in section 85 (c)) aggregating $10 or more to any individual during any calendar year shall file a Form 1099UC in accordance with the instructions to such form.

[T.D. 7705, 45 FR 46070, July 9, 1980]

§ 1.6050D-1 Information returns relating to energy grants and financing.

(a) ***Requirement of reporting.*** Every person who administers a Federal, State, or local program a principal purpose of which is to provide subsidized energy financing (as defined in section 23(c)(10)(C) and the regulations thereunder) or grants for projects designed to conserve or produce energy shall make an information return for each calendar year beginning after December 31, 1983. However, the preceding sentence shall not apply if none of the financing and grants provided under such program during the calendar year relate either to expenditures described in section 23(c)(1) or (2), relating to the residential energy credit, made by a taxpayer before January 1, 1986, with respect to a dwelling unit or to section 38 property (as defined in section 48 and the regulations thereunder). That return shall be made on Form 6497 or, in the case of taxable gants, on Form 1099-G. (The latter form is prescribed pursuant to section 6041 as well as section 6050D.) The return shall include the following information:

(1) The name, address, and taxpayer identification number of each taxpayer receiving financing or a grant made under such program during the calendar year with respect to either section 38 property or in the case of financing or a grant for energy conservation expenditures or renewable energy source expenditures made by the taxpayer before January 1, 1986, a dwelling unit that is located in the United States;

(2) The aggregate amount of financing and grants received by the taxpayer under the program during the calendar year,

(3) In the case of returns for financing or nontaxable grants, the name of the program under which the financing or grants are made; and

(4) Any other information that is required by the form.

For purposes of this section, the term “person” means the officer or employee having control of the program, or the person appropriately designated for purposes of section 6050D and this section.

(b) ***Time and place for filing.*** Returns required to be made under this section shall be filed with the Internal Revenue Service Center designated in the instructions for Form 6497 or 1099-G on or before the last day of February (March 31 if filed electronically) of the year following the calendar year for which the return is made.

(Secs. 6050D and 7805, Internal Revenue Code of 1954 (94 Stat. 259, 26 U.S.C. 6050D; 68A Stat. 917, 26 U.S.C. 7805))

[T.D. 8018, 50 FR 12532, Mar. 29, 1985, as amended by T.D. 8146, 52 FR 26673, July 16, 1987; T.D. 8895, 65 FR 50407, Aug. 18, 2000]

§ 1.6050E-1 Reporting of State and local income tax refunds.

(a) ***Applicability.*** Section 6050E and this section apply to any refund officer who, with respect to an individual, makes payments of refunds of State or local income taxes or allows credits or offsets with respect to such taxes aggregating $10 or more for such individual in any calendar year.

(b) ***Definitions.*** For purposes of this section—

(1) The term *refund officer* means the officer or employee of a State or local taxing jurisdiction having control of payments of refunds or the allowance of credits or offsets, or the person approporiately designated for purposes of this section.

(2) The term *State* shall include the District of Columbia but shall not include the Commonwealth of Puerto Rico or any possession of the United States.

(3) The term *individual* shall not include an estate or trust.

(4) The term *credit or offset* means an overpayment of tax which, in lieu of being refunded to the taxpayer, is:

(i) Applied against an existing liability of the taxpayer,

(ii) Available for application against a future liability of the taxpayer, or

(iii) Otherwise used or available for use for the taxpayer's benefit.

(c) ***Requirement of reporting.*** Every refund officer described in paragraph (a) of this section shall make an information return in accordance with this section for each calendar year. An information return must be made even if the refund officer is not required to furnish a statement to the applicable taxpayer under paragraph (k)(2) of this section.

(d) ***Prescribed Form.*** Except as otherwise provided in paragraph (i) of this section, the information return required by paragraph (c) of this section shall be made on Forms 1096 and 1099.

(e) ***Refunds involving different taxable years.*** In the case of refunds paid or credits or offsets allowed during a calendar year with respect to two or more taxable years of an individual, a separate Form 1099 shall be filed with respect to each taxable year of the individual. Thus, if during calendar year 1983 a refund officer pays to an individual a refund of $15 with respect to that individual's taxable year ending in 1982 and $20 with respect to that individual's taxable year ending in 1981, a separate Form 1099 shall be filed for each of the two payments. If, instead, the refund with respect to the individual's taxable year ending in 1982 were $5 instead of $15, no return would be required for the payment of $5.

(f) ***Information required.*** The information required to be reported on Forms 1096 and 1099 includes the aggregate amount of refunds, credits, and offsets made or allowed during the calendar year with respect to the taxable year of the individual covered by the return; the name, address and taxpayer identification number of the individual with respect to whom such payment, credit, or offset was made or allowed; the taxable year covered by the return; and such other information as may be required by the forms. In addition, the nature of the tax is required to be indicated on the Form 1099 in any case where the refund, credit or offset is made or allowed with respect to a payment attributable to an income tax that applies exclusively to income from a trade or business and is not a tax of general application.

(g) ***When credit or offset deemed allowed.*** For purposes of a return of information under this section, a credit or offset is deemed to be allowed when the liability to pay or credit such amount is admitted by the State or local taxing jurisdiction. Thus, if an amount with respect to a taxpayer's 1982 taxable year is credited in 1983 to reduce the liability of the taxpayer to make estimated tax payments in 1983, it is reportable as a credit allowed in 1983. It is not reportable in the taxable year that gives rise to the refund, credit or offset.

(h) ***Time and place for filing.*** The returns required under this section for any calendar year shall be filed after September 30 of that calendar year, but not before the refund officer's final payment (or allowance of credit or offset) for the year, and on or before February 28 (March 31 if filed electronically) of the following year. Returns shall be filed with the appropriate Internal Revenue Service Center, the addresses of which are listed in the instructions for Forms 1099. For extensions of time for filing returns under this section, see § 1.6081-1.

(i) ***Use of magnetic media and substitute forms*** —

(1) ***Magnetic media.*** A refund officer may be required to file the Forms 1099 required by this section on magnetic media or machine-readable paper forms. See section 6011(e) and applicable regulations and revenue procedures thereunder. If a refund officer is not required to file the Forms 1099 required by this section on magnetic media, the refund officer may request permission under applicable regulations and revenue procedures to submit the information required by this section on magnetic media.

(2) ***Substitute forms.*** A refund officer may prepare and use a form which contains provisions identical with those of Form 1096 if the refund officer complies with all revenue procedures relating to substitute Form 1096 in effect at that time. In addition, if a refund officer is not required to file the Forms 1099 required by this section on magnetic media or machine-readable paper forms, the refund officer may prepare and use a form which contains provisions identical with those of Form 1099 if the refund officer complies with all revenue procedures relating to substitute Form 1099 in effect at that time.

(j) ***Voluntary information exchange agreements.*** The requirements of reporting information to the Internal Revenue Service under this section may be satisfied for any calendar year by submission of the information required under paragraph (f) of this section in accordance with the terms of a voluntary information exchange agreement between the State and the United States in effect during such year.

(k) ***Requirement of furnishing statements to recipients*** —

(1) ***In general.*** Except as provided in paragraph (k)(2) of this section, every refund officer required to make a return of information under this section shall furnish to the individual whose identifying number is required to be shown on the return a written statement showing the aggregate amount shown on the information return of refunds, credits and offsets made or allowed to such individual with respect to each taxable year of the individual, the name of the State or local taxing jurisdiction paying such refund or allowing such credits or offsets, the taxable year giving rise to the refund,

credit or offset and a legend stating that such amount is being reported to the Internal Revenue Service. The requirement of this paragraph may be met by furnishing to the individual a copy of the Form 1099 filed with respect to that individual provided that the form bears a legend stating that such amount is being reported to the Internal Revenue Service. For purposes of this paragraph, a statement shall be considered to be furnished to an individual if it is mailed to the individual at the individual's last known address. An IRS truncated taxpayer identifying number (TTIN) may be used as the identifying number of the individual in lieu of the identifying number appearing on the information return filed with the Internal Revenue Service. For provisions relating to the use of TTINs, see § 301.6109-4 of this chapter (Procedure and Administration Regulations).

(2) ***Exception for nonitemizers.*** A refund officer need not furnish a statement to an individual under paragraph (k)(1) of this section if the refund officer verifies that the individual did not claim itemized deductions for Federal income tax purposes for the taxable year giving rise to the refund, credit, or offset. This exception shall not apply, however, if the refund, credit, or offset is made or allowed with respect to a payment attributable to an income tax that applies exclusively to income from a trade or business and is not a tax of general application. For purposes of this paragraph (k)(2), verification shall be made solely from—

(i) The State or local income tax return, or

(ii) Information obtained through a voluntary information exchange agreement with the United States for the applicable taxable year.

(3) ***Verification from the State or local income tax return.*** A refund officer shall verify from the State or local income tax return that an individual did not claim itemized deductions for Federal income tax purposes for the applicable taxable year only if—

(i)

(A) An individual who itemized deductions for Federal income tax purposes either must attach a copy of Schedule A of the individual's Federal income tax return to the State or local income tax return or must transcribe information from Schedule A of the individual's Federal income tax return on the State or local income tax return;

(B) The information contained on or transcribed from the Schedule A is required for the purpose of computing liability for the State or local income tax; and

(C) The omission of a copy of the Schedule A, or of the information required to be transcribed from the Schedule A, is consistent with the taxpayer's computation of tax on the State or local income tax return; or

(ii) Individuals are required to transcribe information from their Federal income tax return (other than from Schedule A) on the State or local income tax return for the purpose of computing liability for the State or local income tax and the information can be used to determine conclusively whether the taxpayer itemized deductions for Federal income tax purposes.

(4) ***Example.*** The provisions of paragraph (k)(3)(ii) of this section may be illustrated by the following example:

Example. State X asks for transcription of the following information on its 1983 income tax return from the taxpayer's 1983 Federal income tax return: Adjusted gross income; taxable income; and number of exemptions claimed. The amount of adjusted gross income and the number of exemptions claimed on the Federal income tax return are taken into account in computing the

liability for income tax under the laws of State X. The amount of taxable income transcribed from the Federal return, however, does not enter into the computation of liability for income tax under the laws of State X. Thus, this amount may not be taken into account by the refund officer of State X for purposes of verifying whether a taxpayer itemized deductions for Federal income tax purposes. Since the refund officer of State X will not be able to determine conclusively from the amount of adjusted gross income and the number of exemptions transcribed from the Federal return whether a taxpayer itemized deductions for Federal income tax purposes, the transcribed information does not meet the requirements of paragraph (k)(3)(ii) of this section.

(l) *Time for furnishing statements* —

(1) ***General rule.*** The statement required under paragraph (k) of this section shall be furnished after December 31 of the year in which the refund is paid or credit or offset is allowed, and on or before January 31 of the following year.

(2) ***Extensions of time.*** For good cause shown upon written application of the refund officer, the service center director may grant an extension of time not exceeding 30 days in which to furnish statements under this paragraph. The application shall be addressed to the Service Center with which the Forms 1099 required under this section are required to be filed and shall contain a concise statement of the reasons for requesting the extension to aid the service center director in determining the period of the extension, if any, which will be granted. The application shall state at the top of the first page that it is made under this section and shall be signed by the refund officer. In general, the application shall be filed after September 30 of the year in which the refund is paid or credit or offset is allowed, and before January 15 of the following year.

(m) ***Effective/applicability date.*** This section applies to payments of refunds and credits and offsets allowed after December 31, 1982. The amendments to paragraph (k)(1) apply to payee statements due after December 31, 2014. For payee statements due before January 1, 2015, § 1.6050E-5(k)(1) (as contained in 26 CFR part 1, revised April 2013) shall apply.

[T.D. 8052, 50 FR 37349, Sept. 13, 1985, as amended by T.D. 8895, 65 FR 50408, Aug. 18, 2000; T.D. 9675, 79 FR 41131, July 15, 2014]

§ 1.6050H-0 Table of contents.

This section lists the major captions that appear in §§ 1.6050H-1 and 1.6050H-2.

§ 1.6050H-1 Information reporting of mortgage interest received in a trade or business from an individual.

(a) Information reporting requirement.

(1) Overview.

(2) Reporting requirement.

(3) Optional reporting.

(b) Qualified mortgage.

(1) In general.

(2) Mortgage.

(i) In general.

(ii) Transitional rule for certain obligations existing on December 31, 1984.

(iii) Transitional rule for certain obligations existing on December 31, 1987.

(3) Payor of record.

(4) Lender of record.

(c) Interest recipient.

(1) Trade or business requirement.

(2) Interest received or collected on behalf of another person.

(i) General rule.

(ii) Exception.

(3) Interest received in the form of points.

(i) In general.

(ii) If designation agreement is in effect.

(4) Governmental unit.

(5) Examples.

(d) Additional rules.

(1) Reporting by foreign person.

(2) Reporting with respect to nonresident alien individual.

(i) In general.

(ii) Nonresident alien individual status.

(3) Reporting by cooperative housing corporations.

(e) Amount of interest received on mortgage for calendar year.

(1) In general.

(2) Calendar year.

(i) In general.

(ii) De minimis rule.

(iii) Applicability to points.

(3) Certain interest not received on mortgage.

(i) Interest received from seller on payor of record's mortgage.

(ii) Interest received from governmental unit.

(4) Interest calculated under Rule of 78s method of accounting.

(f) Points treated as interest.

(1) General rule.

(2) Limitations.

(3) Special rule.

(i) Amounts paid directly by payor of record.

(ii) Examples.

(4) Construction loans.

(i) In general.

(ii) Limitation on refinancing of construction loans.

(5) Amounts paid to mortgage brokers.

(6) Effect on deduction of points.

(g) Effective date.

(1) In general.

(2) Points.

§ 1.6050H-2 Time, form, and manner of reporting interest received on qualified mortgage.

(a) Requirement to file return.

(1) Form of return.

(2) Information included on return.

(3) Reimbursements of interest on a qualified mortgage.

(4) Time and place for filing return.

(5) Use of magnetic media.

(b) Requirement to furnish statement.

(1) In general.

(2) Information included on statement.

(3) Statement furnished pursuant to Federal mortgage program.

(4) Copy of Form 1098 to payor of record.

(5) Furnishing statement with other information reports.

(6) Time and place for furnishing statement.

(c) Notice requirement for use of Rule of 78s method of accounting.

(1) In general.

(2) Time and manner.

(d) Reporting under designation agreement.

(1) In general.

(2) Qualified person.

(3) Designation agreement.

(4) Penalties.

(e) Penalty provisions.

(1) Returns and statements the due date for which (determined without regard for extensions) is after December 31, 1987, and before December 31, 1989.

(i) Failure to file return or to furnish statement.

(ii) Failure to furnish TIN.

(iii) Failure to include correct information.

(2) Returns and statements the due date for which (determined without regard for extensions) is after December 31, 1989.

(i) Failure to file return or to furnish statement.

(ii) Failure to furnish TIN.

(iii) Failure to include correct information.

(f) Requirement to request and to obtain TIN.

(1) In general.

(2) Manner of requesting TIN.

(g) Effective date.

(1) In general.

(2) Points.

[T.D. 8571, 59 FR 63250, Dec. 8, 1994]

§ 1.6050H-1 Information reporting of mortgage interest received in a trade or business from an individual.

(a) ***Information reporting requirement*** —

(1) ***Overview.*** The information reporting requirements of section 6050H, this section, and § 1.6050H-2 apply to an interest recipient who receives at least $600 of interest on a qualified mortgage for a calendar year or who makes a reimbursement of interest described in § 1.6050H-2(a)(2)(iv). Paragraph (b) of this section defines qualified mortgage. Paragraph (c) of this section defines interest recipient. Paragraph (d) of this section contains additional rules relating to the reporting requirement for foreign persons, cooperative housing corporations, and nonresident alien individuals. Paragraph (e) of this section contains rules for determining the amount of interest

received on a mortgage for a calendar year. Paragraph (f) of this section provides rules for determining when prepaid interest in the form of points is taken into account as interest for purposes of section 6050H, this section, and § 1.6050H-2.

(2) ***Reporting requirement.*** Except as otherwise provided in this section and § 1.6050H-2, an interest recipient that either receives at least $600 of interest on a qualified mortgage for a calendar year or makes reimbursements of interest described in § 1.6050H-2(a)(2)(iv) must, with respect to that interest—

(i) File an information return with the Internal Revenue Service; and

(ii) Furnish a statement to the payor of record on the mortgage.

(3) ***Optional reporting.*** An interest recipient may, but is not required to, report its receipt of less than $600 of interest on a qualified mortgage for a calendar year. Similarly, an interest recipient also may report reimbursements of interest on a qualified mortgage even if the reimbursements are not required to be reported by § 1.6050H-2(a)(2)(iv). An interest recipient that chooses, but is not required, to file a return as provided in this section and § 1.6050H-2(a) or to furnish a statement as provided in this section and § 1.6050H-2(b) is subject to the requirements of this section and § 1.6050H-2.

(b) ***Qualified mortgage*** —

(1) ***In general.*** A mortgage is a qualified mortgage if the payor of record on the mortgage is an individual, including an individual acting in a capacity as a sole proprietor of a business. A mortgage is not a qualified mortgage if the payor of record on the mortgage is not an individual (such as a trust, estate, partnership, association, company, or corporation), even though an individual is a co-borrower on the mortgage and all the trustees, beneficiaries, partners, members, or shareholders of the payor of record are individuals.

(2) ***Mortgage*** —

(i) ***In general.*** Except as otherwise provided in paragraphs (b)(2)(ii) and (b)(2)(iii) of this section, an obligation is a mortgage if real property (regardless of where located) secures all or part of the obligation. An interest recipient must determine whether real property secures an obligation at the time the obligation is created or, if security is added or removed at a later time, at that later time. Real property includes a manufactured home as defined in section 25(e)(10). An obligation includes a line of credit or a credit card obligation. For purposes of this section and § 1.6050H-2, a borrower incurs a line of credit or credit card obligation when the borrower first has the right to borrow against the line of credit or credit card, whether the borrower actually borrows an amount at that time. An obligation will not fail to be treated as a mortgage solely because, under an applicable State or local homestead law or other debtor protection law in effect on August 16, 1986, the security interest is ineffective or the enforceability of the security interest is restricted.

(ii) ***Transitional rule for certain obligations existing on December 31, 1984*** —

(A) ***In general.*** An obligation that existed on December 31, 1984, is not a mortgage if, at the time the payor of record incurred the obligation, the interest recipient reasonably classified the obligation as other than a mortgage, real property loan, real estate loan, or other similar type of obligation. A reasonable classification of an obligation must be consistent with industry practices and determined according to the purpose of the obligation, the property securing the obligation, and any other reasonable factor. For purposes of this

paragraph (b)(2)(ii)(A), an obligation was not reasonably classified as other than a mortgage, real property loan, real estate loan, or other similar type of obligation if, at the time the payor of record incurred the obligation, more than one-half of the obligations in the particular class in which the obligation was classified were secured primarily by real property.

(B) ***Examples.*** The following examples illustrate the rules of paragraph (b)(2)(ii)(A) of this section:

Example 1. B offers an unsecured line of credit and a line of credit secured by real property. B separately markets the two credit lines, and they are governed by different terms and conditions. For accounting purposes, B classifies the two types of loans as a single class. For purposes of paragraph (b)(2)(ii)(A) of this section, the two types of loans are different classes of obligations.

Example 2. B operates a program to make loans to small businesses. Depending on the amount of the loan and the credit history of the borrower, B may or may not require security for the loan. If B requires security, it may consist of real or personal property. For accounting purposes, B classifies all of the loans within this program as a single class. For purposes of paragraph (b)(2)(ii)(A) of this section, all of the loans within this program may be classified as belonging to a single class.

(iii) ***Transitional rule for certain obligations existing on December 31, 1987.*** An obligation that was incurred after December 31, 1984, and that existed on December 31, 1987, is not a mortgage if the obligation is not primarily secured by real property.

(3) ***Payor of record.*** A payor of record on a mortgage is the person carried on the books and records of the interest recipient as the principal borrower on the mortgage. If the books and records of the interest recipient do not indicate which borrower is the principal borrower, the interest recipient must designate a borrower as the principal borrower.

(4) ***Lender of record.*** The lender of record is the person who, at the time the loan is made, is named as the lender on the loan documents and whose right to receive payment from the payor of record is secured by the payor of record's principal residence. An intention by the lender of record to sell or otherwise transfer the loan to a third party subsequent to the close of the transaction will not affect the determination of who is the lender of record.

(c) ***Interest recipient*** —

(1) ***Trade or business requirement.*** Except as provided in paragraph (c)(4) of this section, an interest recipient is a person that is engaged in a trade or business (whether or not the trade or business of lending money) and that, in the course of the trade or business, either receives interest on a mortgage or makes a reimbursement of interest on a qualified mortgage described in § 1.6050H-2(a)(3). For purposes of this paragraph (c)(1), if a person holds a mortgage which was originated or acquired in the course of a trade or business, the interest on the mortgage is considered to be received in the course of that trade or business. For example, if real estate developer A lends money to individual B to enable B to purchase a house in a subdivision owned and developed by A, and B gives a mortgage to A for the loan, A is an interest recipient for interest received on the mortgage. Alternatively, if C, a person engaged in the trade or business of being a physician, lends money to individual D to enable D to purchase C's home, and D gives a mortgage to C for the loan, C is not an interest recipient for interest received on the mortgage, because C will not receive the interest in the course of the trade or business of being a physician.

(2) ***Interest received or collected on behalf of another person*** —

(i) ***General rule.*** Except as otherwise provided in paragraph (c)(2)(ii) or (3) of this section, a person that, in the course of its trade or business, receives or collects interest on a mortgage on behalf of another person (e.g., the lender of record) is the interest recipient (the initial recipient) for the mortgage. In this case, the reporting requirement of paragraph (a) of this section does not apply to the transfer of interest from the initial recipient to the person for which the initial recipient receives or collects the interest. For example, if financial institution A collects interest on behalf of financial institution B, A is the initial recipient for the mortgage and is subject to the reporting requirements of section 6050H, and B is not required to report the interest received on the mortgage from A.

(ii) ***Exception*** —

(A) ***Scope of exception.*** Paragraph (c)(2)(i) of this section does not apply for any period for which—

(*1*) An initial recipient does not possess the information needed to comply with the reporting requirement of paragraph (a) of this section; and

(*2*) The person for which the interest is received or collected would receive the interest in the course of its trade or business if the interest were paid directly to that person. For purposes of this paragraph (c)(2)(ii)(A)(*2*), if interest is received or collected on behalf of a person other than an individual, that person is presumed to receive interest in a trade or business.

(B) ***Application of exception.*** If the exception provided by this paragraph (c)(2)(ii) applies, the person for which the interest is received or collected is the interest recipient with respect to interest received or collected on the mortgage during the period described in this paragraph (c)(2)(ii).

(3) ***Interest received in the form of points.*** For purposes of this section and § 1.6050H-2, in the case of prepaid interest received in the form of points (as defined in paragraph (f) of this section):

(i) ***In general.*** Except as provided in paragraph (c)(3)(ii) of this section, only the lender of record or a qualified person (as defined in § 1.6050H-2(d)(2)) is treated as receiving the points. The lender of record or qualified person is treated as receiving all points paid directly by the payor of record in connection with the purchase of the principal residence.

(ii) ***If designation agreement is in effect.*** If a designation agreement is executed pursuant to § 1.6050H-2(d) with respect to points, only the designated party under the agreement is treated as receiving points with respect to any mortgage to which the agreement applies. The designated party is treated as receiving all points with respect to any mortgage to which the agreement applies.

(4) ***Governmental unit.*** A governmental unit or an agency or instrumentality of a governmental unit that receives interest on a mortgage is an interest recipient without regard to the requirement of paragraph (c)(1) of this section that the interest be received in the course of a trade or business. A governmental unit or an agency or instrumentality of a governmental unit that is an interest recipient must designate an officer or employee to satisfy the reporting requirements of paragraph (a) of this section.

(5) ***Examples.*** The following examples illustrate the rules of paragraph (c) of this section:

Example 1. Financial institution F collects mortgage interest on behalf of financial institution G and deposits the amount collected into G's account held with F. F possesses the information needed to comply with the reporting requirement of paragraph (a) of this section. F is the interest recipient for the mortgage. G is not required to report.

Example 2. The facts are the same as in example (1), except that F does not possess the information needed to comply with the reporting requirement. G, the person for which F collects the interest, is the interest recipient for the mortgage. F is not required to report.

Example 3. S, an individual, sells real property to another individual, P, and takes back a mortgage from P to finance the sale. S does not receive the interest in the course of a trade or business. B, a bank, collects P's payments of principal and interest on behalf of S and deposits that amount into an account held at the bank in S's name. B does not possess the information needed to comply with the reporting requirement of paragraph (a) of this section. B is the interest recipient for P's mortgage without regard to paragraph (c)(2)(ii) of this section, because S would not receive the interest in the course of a trade or business. S is not required to report.

Example 4. X collects mortgage interest on behalf of Y, who would receive the interest in the course of a trade or business. X possesses the information needed to comply with the reporting requirement of paragraph (a) of this section. On July 1, 1988, Z assumes X's interest collection responsibilities. Z does not possess the information needed to comply with the reporting requirement of paragraph (a) of this section. X is the interest recipient for interest received from January 1, 1988, through June 30, 1988. Because Z does not possess the requisite information and Y would receive the interest in the course of a trade or business, Y is the interest recipient for interest received from July 1, 1988, through December 31, 1988.

Example 5. On December 1, Borrower obtains from Lender funds with which to purchase an existing structure to be used as Borrower's principal residence. In connection with the mortgage, Lender charges Borrower $300 as points. Borrower pays this amount to Lender at closing using unborrowed funds. In addition, Lender receives from Borrower with respect to the mortgage $300 as interest (as determined under paragraph (e) of this section) other than points. Because Lender has received at least $600 in interest, including points, with respect to Borrower's mortgage during the calendar year, Lender must report the payments in accordance with paragraph (a) of this section and § 1.6050H-2. Under those sections, Lender must separately state on the information return and the statement to Borrower the $300 received as interest (other than points) and the $300 received as points.

(d) ***Additional rules*** —

(1) ***Reporting by foreign person.*** An interest recipient that is not a United States person (as defined in section 7701(a)(30)) must report interest received on a qualified mortgage only if it receives the interest—

(i) At a location in the United States, or

(ii) At a location outside the United States if the interest recipient is—

(A) A controlled foreign corporation (within the meaning of section 957(a)), or

(B) A person, 50 percent or more of the gross income of which, from all sources for the three-year period ending with the close of the taxable year preceding the receipt of interest (or for such part of the period as the person was in existence), was effectively connected with the conduct of a trade or business within the United States.

(2) ***Reporting with respect to nonresident alien individual*** —

(i) ***In general.*** The reporting requirement of paragraph (a) of this section does not apply if—

(A) The payor of record is a nonresident alien individual, and

(B) Real property located in the United States does not secure the mortgage.

(ii) ***Nonresident alien individual status.*** For purposes of paragraph (d)(2)(i)(A) of this section, an interest recipient must apply the following documentary evidence rules to determine whether a payor of record is a nonresident alien individual:

(A) If interest is paid outside the United States, the interest recipient must satisfy the documentary evidence standard provided in § 1.6049-5(c) with respect to the payor of record; and

(B) If interest is paid within the United States, the interest recipient must secure from the payor of record a Form W-8 or a substantially similar statement signed by the payor under penalty of perjury as described in § 1.1441-1(e)(1).

For purposes of this paragraph (d)(2)(ii), the place of payment is the place where the payor of record completes the acts necessary to effect payment. An amount paid by transfer to an account maintained by an interest recipient in the United States or by mail to a United States address is considered to be paid within the United States.

(3) ***Reporting by cooperative housing corporations.*** For purposes of this section and § 1.6050H-2, an amount received by a cooperative housing corporation from an individual tenant-stockholder that represents the tenant-stockholder's proportionate share of interest described in section 216(a)(2) is interest received on a qualified mortgage in the course of the cooperative housing corporation's trade or business. A cooperative housing corporation is an interest recipient with respect to each tenant-stockholder's proportionate share of interest and must report $600 or more of interest received from an individual tenant-stockholder. The terms “cooperative housing corporation,” “tenant-stockholder,” and “tenant-stockholder's proportionate share” are defined in section 216 and the regulations thereunder.

(e) ***Amount of interest received on mortgage for calendar year*** —

(1) ***In general.*** For purposes of this section and § 1.6050H-2, interest includes mortgage prepayment penalties and late charges other than late charges for a specific mortgage service. Interest also includes prepaid interest in the form of points (as defined in paragraph (f) of this section). Whether an interest recipient receives $600 or more of interest on a mortgage for a calendar year is determined on a mortgage-by-mortgage basis. An interest recipient need not aggregate interest received on all of the mortgages of a payor of record held by the interest recipient to determine whether the $600 threshold is met. Therefore, an interest recipient need not report interest of less than $600 received on a mortgage, even though it receives a total of $600 or more of interest on all of the mortgages of the payor of record for a calendar year.

(2) ***Calendar year*** —

(i) ***In general.*** Except as otherwise provided in paragraph (e)(2)(ii) or (iii) of this section, the calendar year for which interest is received is the later of the calendar year in which the interest is received or the calendar year in which the interest properly accrues.

(ii) ***De minimis rule.*** An interest recipient may treat interest received during the current calendar year which properly accrues by January 15 of the subsequent calendar year as interest received for the current calendar year. For example, if an interest recipient receives a monthly interest payment on December 31, 1988, which includes interest accruing for the period December 5, 1988, to January 5, 1989, the interest recipient may treat the entire interest payment as received for 1988. If a portion of an interest payment received in a current calendar year accrues after January 15 of the subsequent calendar year, an interest recipient must report as interest received for the current calendar year only the portion that properly accrues by the end of the current calendar year. For example, if an interest recipient receives a monthly payment that includes interest accruing for the period December 20, 1988, through January 20, 1989, the interest recipient may not report as interest received for 1988 any interest accruing after December 31, 1988. The interest recipient must report the interest accruing after December 31, 1988, as received for calendar year 1989.

(iii) ***Applicability to points.*** Paragraphs (e)(2)(i) and (ii) of this section do not apply to prepaid interest in the form of points (as defined in paragraph (f) of this section). Points (as defined in paragraph (f) of this section) must be reported in the calendar year in which they are received.

(3) ***Certain interest not received on mortgage*** —

(i) ***Interest received from seller on payor of record's mortgage.*** Interest received from a seller or a person related to a seller within the meaning of section 267(b) or section 707(b)(1) on a payor of record's mortgage is not interest received on a mortgage. For example, interest is not received on a mortgage if a real estate developer deposits an amount in escrow with an interest recipient and advises it to draw on the account to pay interest on a payor of record's mortgage (e.g., a buy-down mortgage). Similarly, interest is not received on a mortgage if an interest recipient receives a lump sum from a real estatge developer for interest on a payor of record's mortgage.

(ii) ***Interest received from governmental unit.*** Interest received from a governmental unit or an agency or instrumentality of a governmental unit is not interest received on a mortgage. For example, interest is not received on a mortgage if received as a housing assistance payment from the Department of Housing and Urban Development on a mortgage insured under section 235 of the National Housing Act (12 U.S.C. 1701-1715z (1982 & Supp. 1983)). Except as otherwise provided in paragraph (e) (1) and (2) of this section, interest received on a mortgage is only the excess of interest received on the mortgage over interest received from a governmental unit or an agency or instrumentality of a governmental unit.

(4) ***Interest calculated under Rule of 78s method of accounting.*** An interest recipient permitted by Revenue Procedure 83-40, 1983-1, C.B. 774 (or other revenue procedure) to use the Rule of 78s method of accounting to calculate interest earned on a transaction may report as interest received on a mortgage interest earned on the transaction as calculated under the Rule of 78s method of accounting only if the interest recipient satisfies the notice requirement of § 1.6050H-2(c).

(f) ***Points treated as interest*** —

(1) ***General rule.*** Subject to the limitations of paragraph (f)(2) of this section, an amount is deemed to be points paid in respect of indebtedness incurred in connection with the purchase of the payor of record's principal residence (points) for purposes of this section and § 1.6050H-2 to the extent that the amount—

(i) Is clearly designated on the Uniform Settlement Statement prescribed under the Real Estate Settlement Procedures Act of 1974, 12 U.S.C. 2601 *et seq.,* (e.g., the Form HUD-1) as points incurred in connection with the indebtedness, for example *as loan origination fees* (including amounts so designated on Veterans Affairs (VA) and Federal Housing Administration (FHA) loans), *loan discount, discount points,* or *points*;

(ii) Is computed as a percentage of the stated principal amount of the indebtedness incurred by the payor of record;

(iii) Conforms to an established practice of charging points in the area in which the loan is issued and does not exceed the amount generally charged in the area;

(iv) Is paid in connection with the acquisition by the payor of record of a residence that is the principal residence of the payor of record and that secures the loan. For this purpose, the lender of record may rely on a signed written statement of the payor of record that states whether the proceeds of the loan are for the purchase of the mortgagor's principal residence; and

(v) Is paid directly by the payor of record.

(2) ***Limitations.*** An amount is not points for purposes of this section to the extent that the amount is—

(i) Paid in connection with indebtedness incurred for the improvement of a principal residence;

(ii) Paid in connection with indebtedness incurred to purchase or improve a residence that is not the payor of record's principal residence, such as a second home, vacation property, investment property, or trade or business property;

(iii) Paid in connection with a home equity loan or a line of credit, even though the loan is secured by the payor of record's principal residence;

(iv) Paid in connection with a refinancing loan (except as provided by paragraph (f)(4) of this section), including a loan incurred to refinance indebtedness owed by the borrower under the terms of a land contract, a contract for deed, or similar forms of seller financing;

(v) Paid in lieu of amounts that ordinarily are stated separately on the Form HUD-1, such as appraisal fees, inspection fees, title fees, attorney fees, and property taxes; or

(vi) Paid in connection with the acquisition of a principal residence, to the extent that the amount is allocable to indebtedness in excess of the aggregate amount that may be treated as acquisition indebtedness under section 163(h)(3)(B)(ii).

(3) ***Special rule*** —

(i) ***Amounts paid directly by payor of record.*** For purposes of this section, an amount is considered *paid directly* by the payor of record if it is—

(A) Provided by the payor of record from funds that have not been borrowed from the lender of record for this purpose as part of the overall transaction. The amount provided may include amounts designated as down payments, escrow deposits, earnest money applied at the closing, and other funds actually paid over by the payor of record at or before the time of closing; or

(B) Paid as points (within the meaning of this paragraph (f)) on behalf of the payor of record by the seller. For this purpose, an amount paid as points to an interest recipient by the seller on behalf of the payor of record is treated as paid to the payor of record and then paid directly by the payor of record to the interest recipient.

(ii) ***Examples.*** The provisions of this paragraph (f) are illustrated by the following examples:

Example 1. Financed payment of points. Buyer purchases a principal residence for $100,000. There is a total of $7,000 in closing costs (exclusive of down payment) charged in connection with the sale. Of this amount, $3,000 is charged as points (within the meaning of paragraph (f) of this section). At closing, Buyer makes a down payment of $20,000 and provides unborrowed funds in the amount of $4,000 for the payment of various closing costs other than points. Buyer finances payment of the points by increasing the principal amount of the loan by $3,000. Seller makes no payments on Buyer's behalf. Because Buyer has provided at closing funds that have not been borrowed from the lender of record for this purpose in an amount at least equal to the amount charged as points in the transaction, the lender of record (or a qualified person) must report $3,000 as points in accordance with this section and § 1.6050H-2.

Example 2. Seller-paid points. Buyer purchases a principal residence for $100,000. There is a total of $7,000 in closing costs (exclusive of down payment) charged in connection with the sale. Of this amount, $3,000 is charged as points (within the meaning of this paragraph (f)). Seller agrees to pay all closing costs on behalf of Buyer, including the amount charged as points. Accordingly, the amount paid by Seller as points is treated as paid directly by Buyer, and the lender of record (or a qualified person) must report the $3,000 as points in accordance with this section and § 1.6050H-2.

(4) ***Construction loans*** —

(i) ***In general.*** An amount paid in connection with indebtedness incurred to construct a residence, or to refinance indebtedness incurred to construct a residence, is deemed to be points for purposes of this section to the extent the amount—

(A) Is clearly designated on the loan documents as points incurred in connection with the indebtedness, for example, as *loan origination fees, loan discount, discount points,* or *points;*

(B) Is computed as a percentage of the stated principal amount of the indebtedness incurred by the payor of record;

(C) Conforms to an established practice of charging points in the area in which the loan is issued and does not exceed the amount generally charged in the area;

(D) Is paid in connection with indebtedness incurred by the payor of record to construct (or to refinance construction of) a residence that is to be used, when completed, as the principal residence of the payor of record;

(E) Is paid directly by the payor of record; and

(F) Is not allocable to indebtedness in excess of the aggregate amount that may be treated as acquisition indebtedness under section 163(h)(3)(B)(ii).

(ii) ***Limitation on refinancing of construction loans.*** Amounts paid in connection with refinancing indebtedness incurred to construct a residence are not treated as points to the extent they are allocable to indebtedness that exceeds the indebtedness incurred to construct the residence.

(5) ***Amounts paid to mortgage brokers.*** Amounts received directly or indirectly by a mortgage broker are treated as points under this paragraph (f) to the same extent the amounts would be so treated if they were paid to and retained by the lender of record, and must be reported by the lender of record in accordance with this section and § 1.6050H-2.

(6) ***Effect on deduction of points.*** This section and § 1.6050H-2 address only the information reporting requirements of section 6050H and do not affect a payor of record's deduction for any amount in accordance with applicable provisions of the Internal Revenue Code.

(g) ***Effective date*** —

(1) ***In general.*** Except as provided in paragraph (g)(2) of this section, this section is effective for mortgage interest received after December 31, 1987.

(2) ***Points.*** The reporting requirements of this section do not apply to prepaid interest received in the form of points before January 1, 1995. In addition, the inclusion of points in the determination of interest under paragraph (e)(1) of this section applies only to transactions occurring after December 31, 1994.

[T.D. 8191, 53 FR 12002, Apr. 12, 1988, as amended by T.D. 8571, 59 FR 63251, Dec. 8, 1994; T.D. 8734, 62 FR 53492, Oct. 14, 1997; T.D. 9849, 84 FR 9237, Mar. 14, 2019]

§ 1.6050H-2 Time, form, and manner of reporting interest received on qualified mortgage.

(a) ***Requirement to file return*** —

(1) ***Form of return.*** An interest recipient must file a return required by § 1.6050H-1(a) on Form 1098 (with Form 1096 as the transmittal form). An interest recipient may use forms containing provisions substantially similar to those in Forms 1098 and 1096 if it complies with applicable revenue procedures relating to substitute Forms 1098 and 1096. An interest recipient must file a separate return for each qualified mortgage for which it receives $600 or more of interest for a calendar year.

(2) ***Information included on return.*** An interest recipient must include on Form 1098:

(i) The name, address, and taxpayer identification number (TIN) (as defined in section 7701(a)(41)) of the payor of record;

(ii) The name, address, and TIN of the interest recipient;

(iii) The amount of interest (other than points) required to be reported with respect to the qualified mortgage for the calendar year;

(iv) With respect to reimbursements of interest on a qualified mortgage (as discussed in paragraph (a)(3) of this section) made to the payor of record in the calendar year—

(A) Reimbursements aggregating $600 or more; and

(B) Reimbursements aggregating less than $600, but only if $600 or more of interest on the qualified mortgage is received in the calendar year from the payor of record;

(v) The amount of points paid directly by the payor of record (within the meaning of § 1.6050H-1(f)(3)) required to be reported with respect to the qualified mortgage for the calendar year; and

(vi) Any other information required by Form 1098 or its instructions.

Section 1.6050H-1(e) contains rules to determine the amount of interest received on a mortgage for a calendar year.

(3) ***Reimbursements of interest on a qualified mortgage.*** For purposes of paragraph (a)(2)(iv) of this section, a reimbursement of interest on a qualified mortgage is a reimbursement of an amount received in a prior year that was required to be reported for that prior year under paragraph (a)(2)(iii) of this section by any interest recipient. Only the interest recipient that makes the reimbursement is required to report the reimbursement under this section. Form 1098 and the statement furnished to the payor of record under paragraph (b) of this section must not include any amount that constitutes interest on the reimbursement paid to the payor of record. Rules relating to the requirement to report interest on a reimbursement are, in the case of a person carrying on the banking business (or a middleman, as defined in § 1.6049-4(f)(4), of a person carrying on the banking business), provided in section 6049 and the regulations thereunder, and, for other persons, provided in section 6041 and the regulations thereunder. Reimbursements of interest on a qualified mortgage (as described in this section) made in 1993 and subsequent calendar years must be reported on Form 1098 and statements furnished to payors of record. Reimbursements made prior to 1993 are not required to be reported.

(4) ***Time and place for filing return.*** An interest recipient must file a return required by this paragraph (a) on or before February 28 (March 31 if filed electronically) of the year following the calendar year for which it receives the mortgage interest. If no interest is required to be reported for the calendar year, but a reimbursement of interest on a qualified mortgage is required to be reported for the calendar year, then a return required by this paragraph (a) must be filed on or before February 28 (March 31 if filed electronically) of the year following the calendar year in which the reimbursement was made. An interest recipient must file the return required by paragraph (a) of this section with the IRS office designated in the instructions for Form 1098.

(5) ***Use of magnetic media.*** An interest recipient must file the return required by paragraph (a) of this section on magnetic media only if required by section 6011(e) and the regulations thereunder. An interest recipient not required by section 6011(e) to file returns on magnetic media may request permission to do so. Section 301.6011-2 contains rules relating to the use of magnetic media. A failure to file on magnetic media when required constitutes a failure to file an information return under section 6721.

(b) ***Requirement to furnish statement*** —

(1) ***In general.*** An interest recipient that must file a return under paragraph (a) of this section must furnish a statement to the payor of record.

(2) ***Information included on statement.*** An interest recipient must include on the statement that it must furnish to a payor of record:

(i) The information required under paragraph (a)(2) of this section;

(ii) A legend that—

(A) Identifies the statement as important tax information that is being furnished to the IRS; and

(B) Notifies the payor of record that if the payor of record is required to file a return, a negligence penalty or other sanction may be imposed on the payor of record if the IRS determines that an underpayment of tax results because the payor of record overstated a deduction for this mortgage interest (if any) or understated income from this mortgage interest reimbursement (if any) on the payor of record's return;

(iii) A legend stating that the payor of record may be unable to deduct the full amount of mortgage interest reported on the statement; that limitations based on the cost and value of the property securing the mortgage may apply; and that the payor of record may only deduct mortgage interest to the extent it was incurred, actually paid by the payor of record, and not reimbursed by another person; and

(iv) With respect to any information required to be reported under paragraph (a)(2)(iv) of this section, an instruction providing that the amount of the reimbursement is not to be deducted and that the amount must be included in the gross income of the payor of record if the reimbursed interest was deducted by the payor of record in a prior year so as to reduce income tax.

(3) ***Statement furnished pursuant to Federal mortgage program.*** An interest recipient that furnishes a statement to a payor of record under a Federal mortgage program will satisfy the requirement of paragraph (b)(1) of this section if the statement contains all the information and legends required by paragraph (b)(2) of this section and is furnished by the time and at the place required by paragraph (b)(6) of this section.

(4) ***Copy of Form 1098 to payor of record.*** An interest recipient will satisfy the requirement of paragraph (b)(1) of this section by furnishing to a payor of record a copy of Form 1098 (or a substitute statement that complies with applicable revenue procedures) containing all the information filed with the Internal Revenue Service and all the legends required by paragraph (b)(2) of this section by the time and at the place required by paragraph (b)(6) of this section.

(5) ***Furnishing statement with other information reports.*** An interest recipient may transmit the statement required by paragraph (b)(1) of this section to the payor of record with other information, including other information returns, as permitted by applicable revenue procedures.

(6) ***Time and place for furnishing statement.*** An interest recipient must furnish a statement required by paragraph (b)(1) of this section to a payor of record on or before January 31 of the year following the calendar year for which it receives the mortgage interest. If no mortgage interest is required to be reported for the calendar year, but a reimbursement of interest on a qualified mortgage is required to be reported for the calendar year, then the statement required by paragraph (b)(1) of this section must be furnished on or before January 31 of the year following the calendar year in which the reimbursement was made. The interest recipient will be considered to have furnished the statement to the payor of record if it mails the statement to the payor of record's last known address.

(c) ***Notice requirement for use of Rule of 78s method of accounting*** —

(1) ***In general.*** An interest recipient seeking to report interest received on a mortgage under the Rule of 78s method of accounting as permitted under § 1.6050H-1(e)(4) must notify the payor of record that the Rule of 78s method of accounting was used to calculate interest received on the mortgage and that the payor of record may not deduct as interest the amount calculated under the Rule of 78s method of accounting unless the payor of record properly uses that method to determine interest deductions. The notice must state that the payor of record may use the Rule of 78s method of accounting to determine interest paid for Federal income tax purposes only for a self-amortizing consumer loan requiring level payments at regular intervals (at least annually) over no longer than a five-year period, with no balloon payment at the end of the loan term, and only when the loan agreement provides for use of the Rule of 78s method of accounting to determine interest earned. See Rev. Proc. 83-40, 1983-1 C.B. 774; Rev. Rul. 83-84, 1983-1 C.B. 97.

(2) ***Time and manner.*** An interest recipient must provide notice required by paragraph (c)(1) of this section to a payor of record on or with the statement required by paragraph (b) of this section. An interest recipient may provide notice on a separate paper or on the statement required by paragraph (b) of this section.

(d) ***Reporting under designation agreement*** —

(1) ***In general.*** An interest recipient that receives or collects interest (including points) on a mortgage may designate a qualified person to satisfy the reporting requirements of paragraphs (a), (b), and (c) of this section. If a designated qualified person reports as permitted under this paragraph (d), it will satisfy the requirement of paragraph (a)(2)(ii) of this section by including on Form 1098 (and Form 1096) the name, address, and TIN of the designated qualified person.

(2) ***Qualified person.*** A qualified person is either—

(i) A trade or business with respect to which the interest recipient is under common control within the meaning of § 1.414(c)-2; or

(ii) A person who is named as the designee by the lender of record or by a qualified person (under paragraph (d)(2) of this section) in a designation agreement entered into in accordance with paragraph (d)(3) of this section, and who either was involved in the original loan transaction or is a subsequent purchaser of the loan.

(3) ***Designation agreement.*** An interest recipient that designates a qualified person to satisfy the reporting requirements described in paragraphs (a), (b), and (c) of this section must make that designation in a written designation agreement. The designation agreement must identify the mortgage(s) and calendar years for which the designated qualified person must report, and must be signed by both the designator and designee. A designee may report an amount as having been paid directly by the payor of record (for purposes of paragraph (a)(2)(v) of this section) only if the designation agreement contains the designator's representation that it did not lend such amount to the payor of record as part of the overall transaction. The designator must retain a copy of the designation agreement for four years following the close of the calendar year in which the loan is made. The designation agreement need not be filed with the Internal Revenue Service.

(4) ***Penalties.*** A designated qualified person is subject to any applicable penalties provided in part II of subchapter B of chapter 68 of the Internal Revenue Code as if it were an interest recipient. A designator is relieved from liability for applicable penalties by designating a qualified person under the provisions of paragraph (d)(3) of this section. Paragraph (e) of this section describes applicable penalties.

(e) *Penalty provisions* —

(1) ***Returns and statements the due date for which (determined without regard for extensions) is after December 31, 1987, and before December 31, 1989.*** For purposes of this paragraph (e)(1) only, all references to sections of the Internal Revenue Code refer to sections of the Internal Revenue Code of 1986, as amended on or before December 31, 1987.

(i) ***Failure to file return or to furnish statement.*** The section 6721 penalty applies to an interest recipient that fails to file a return required by paragraph (a) of this section with respect to a payor of record. The section 6722 penalty applies to an interest recipient that fails to furnish a statement required by paragraph (b) of this section to a payor of record.

(ii) ***Failure to furnish TIN.*** The section 6676 penalty may apply to an interest recipient that fails to furnish the TIN of a payor of record on a return required by paragraph (a) of this section. The section 6676 penalty may apply to an interest recipient that fails to request and to obtain the TIN of a payor of record under paragraph (f) of this section.

(iii) ***Failure to include correct information.*** The section 6723 penalty may apply to an interest recipient that fails to include correct information on a return required by paragraph (a) of this section or on a statement required by paragraph (b) of this section to be furnished to a payor of record.

(2) ***Returns and statements the due date for which (determined without regard for extensions) is after December 31, 1989*** —

(i) ***Failure to file return or to furnish statement.*** The section 6721 penalty applies to an interest recipient that fails to file a return required by paragraph (a) of this section with respect to a payor of record. The section 6722 penalty applies to an interest recipient that fails to furnish a statement required by paragraph (b) of this section to a payor of record.

(ii) ***Failure to furnish TIN.*** The section 6721 penalty may apply to an interest recipient that fails to furnish the TIN of a payor of record on a return required by paragraph (a) of this section. The section 6721 penalty may apply to an interest recipient that fails to request and to obtain the TIN of a payor of record under paragraph (f) of this section.

(iii) ***Failure to include correct information.*** The section 6721 penalty may apply to an interest recipient that fails to include correct information on a return required by paragraph (a) of this section. The section 6722 penalty may apply to an interest recipient that fails to include correct information on a statement required by paragraph (b) of this section to be furnished to a payor record.

(f) *Requirement to request and to obtain TIN* —

(1) ***In general.*** For obligations incurred after December 31, 1987, an interest recipient must make all reasonable efforts to obtain the TIN of a payor of record when the payor of record incurs the obligation. For example, an interest recipient may require a borrower to furnish a TIN during the mortgage approval or application process. If an interest recipient does not maintain the TIN of a payor of record on a mortgage, whenever incurred, it must request the TIN at least annually and must process responses properly and promptly.

(2) ***Manner of requesting TIN.*** An interest recipient need not separately mail a request for a TIN. An interest recipient may include a request in its regular mailing of payment coupon booklets or annual statements. If an interest recipient makes no mailing to a payor of record during the year in which

the payor of record incurs the obligation, it must request the TIN in a separate mailing. No particular form is required to request a TIN. Nevertheless, an interest recipient must make the request on a separate paper and must clearly notify a payor of record that the Internal Revenue Service requires the payor of record to furnish a TIN in order to verify any mortgage interest deduction. An interest recipient must notify a payor of record that failure to furnish a TIN subjects the payor of record to a $50 penalty imposed by the Internal Revenue Service. A request for a TIN made on Form W-9 satisfies the requirement of this paragraph (f)(2).

(g) ***Effective date*** —

(1) ***In general.*** Except as provided in paragraph (g)(2) of this section, this section is effective for mortgage interest received after December 31, 1987.

(2) ***Points.*** The reporting requirement of this section does not apply to prepaid interest in the form of points received before January 1, 1995.

[T.D. 8191, 53 FR 12005, Apr. 12, 1988, as amended by T.D. 8507, 58 FR 68753, Dec. 29, 1993; T.D. 8571, 59 FR 63253, Dec. 8, 1994; T.D. 8895, 65 FR 50408, Aug. 18, 2000; T.D. 9849, 84 FR 9237, Mar. 14, 2019]

§ 1.6050H-3 Information reporting of mortgage insurance premiums.

(a) ***Information reporting requirements.*** Any person who, in the course of a trade or business, receives premiums, including prepaid premiums, for mortgage insurance (as described in paragraph (b) of this section) from any individual aggregating $600 or more for any calendar year, must make an information return setting forth the total amount received from that individual during the calendar year.

(b) ***Scope.*** Paragraph (a) of this section applies to mortgage insurance provided by the Federal Housing Administration, Department of Veterans Affairs, or the Rural Housing Service (or their successor organizations), or to private mortgage insurance (as defined by section 2 of the Homeowners Protection Act of 1998 (12 U.S.C. 4901) as in effect on December 20, 2006). The rule stated in paragraph (a) of this section applies to the receipt of all payments of mortgage insurance premiums, by cash or financing, without regard to source.

(c) ***Aggregation.*** Whether a person receives $600 or more of mortgage insurance premiums is determined on a mortgage-by-mortgage basis. A recipient need not aggregate mortgage insurance premiums received on all of the mortgages of an individual to determine whether the $600 threshold is met. Therefore, a recipient need not report mortgage insurance premiums of less than $600 received on a mortgage, even though it receives a total of $600 or more of mortgage insurance premiums on all of the mortgages for an individual for a calendar year.

(d) ***Time, form, and manner of reporting.*** Mortgage insurance premiums required to be reported under paragraph (a) of this section must be reported on the Form 1098 or successor form that is filed pursuant to § 1.6050H-2(a) with respect to the mortgage of the individual who paid the mortgage insurance premiums. For the requirements for furnishing statements with respect to Forms 1098 filed with the Internal Revenue Service, see § 1.6050H-2(b).

(e) ***Cross reference.*** For rules concerning the allocation of certain prepaid qualified mortgage insurance premiums, see § 1.163-11 of this chapter.

(f) ***Limitation on the reporting of mortgage insurance premiums.*** This section applies to mortgage insurance premiums described in paragraph (b) of this section that are paid or accrued on or after January 1, 2013, and during periods to which section 163(h)(3)(E) applies. This section does not apply to any amounts of mortgage insurance premiums that are allocable to any periods to which section 163(h)(3)(E) does not apply.

(g) ***Effective/applicability date.*** This section applies to mortgage insurance premiums received on or after January 1, 2013. For regulations applicable before May 5, 2012, see § 1.6050H-3T as contained in 26 CFR part 1 (revised as of April 1, 2012).

[T.D. 9642, 78 FR 70858, Nov. 27, 2013]

§ 1.6050I-0 Table of contents.

This section lists the major captions that appear in §§ 1.6050I-1 and 1.6050I-2.

§ 1.6050I-1 Returns relating to cash in excess of $10,000 received in a trade or business.

(a) Reporting requirement.

(1) Reportable transaction.

(i) In general.

(ii) Certain financial transactions.

(2) Cash received for the account of another.

(3) Cash received by agents.

(i) General rule.

(ii) Exception.

(iii) Example.

(b) Multiple payments.

(1) Initial payment in excess of $10,000.

(2) Initial payment of $10,000 or less.

(3) Subsequent payments.

(4) Example.

(c) Meaning of terms.

(1) Cash.

(i) Amounts received prior to February 3, 1992.

(ii) Amounts received on or after February 3, 1992.

(iii) Designated reporting transaction.

(iv) Exception for certain loans.

(v) Exception for certain installment sales.

(vi) Exception for certain down payment plans.

(vii) Examples.

(2) Consumer durable.

(3) Collectible.

(4) Travel or entertainment activity.

(5) Retail sale.

(6) Trade or business.

(7) Transaction.

(8) Recipient.

(d) Exceptions to the reporting requirements of section 6050I.

(1) Receipt of cash by certain financial institutions.

(2) Receipt of cash by certain casinos having gross annual gaming revenue in excess of $1,000,000.

(i) In general.

(ii) Casinos exempt under 31 CFR 1010.970(c).

(iii) Reporting of cash received in a nongaming business.

(iv) Example.

(3) Receipt of cash not in the course of the recipient's trade or business.

(4) Receipt is made with respect to a foreign cash transaction.

(i) In general.

(ii) Example.

(e) Time, manner, and form of reporting.

(1) Time of reporting.

(2) Form of reporting.

(3) Manner of reporting.

(i) Where to file.

(ii) Verification.

(iii) Retention of returns.

(f) Requirement of furnishing statements.

(1) In general.

(2) Form of statement.

(3) When statement is to be furnished.

(g) Cross-reference to penalty provisions.

(1) Failure to file correct information return.

(2) Failure to furnish correct statement.

(3) Criminal penalties.

§ 1.6050I-2 Returns relating to cash in excess of $10,000 received as bail by court clerks.

(a) Reporting requirement.

(b) Meaning of terms.

(c) Time, form, and manner of reporting.

(1) Time of reporting.

(i) In general.

(ii) Multiple payments.

(2) Form of reporting.

(3) Manner of reporting.

(i) Where to file.

(ii) Verification of identity.

(d) Requirement to furnish statements.

(1) Information to Federal prosecutors.

(i) In general.

(ii) Form of statement.

(2) Information to payors of bail.

(i) In general.

(ii) Form of statement.

(iii) Aggregate amount.

(e) Cross-reference to penalty provisions.

(f) Effective date.

[T.D. 8652, 61 FR 7, Jan. 2, 1996, as amended by T.D. 8974, 66 FR 67687, Dec. 31, 2001; T.D. 9972, 88 FR 11764, Feb. 23, 2023]

§ 1.6050I-1 Returns relating to cash in excess of $10,000 received in a trade or business.

(a) ***Reporting requirement*** —

(1) ***Reportable transaction*** —

(i) ***In general.*** Any person (as defined in section 7701(a)(1)) who, in the course of a trade or business in which such person is engaged, receives cash in excess of $10,000 in 1 transaction (or 2 or more related transactions) shall, except as otherwise provided, make a return of information with respect to the receipt of cash.

(ii) ***Certain financial transactions.*** Section 6050I of title 26 of the United States Code requires persons to report information about financial transactions to the Internal Revenue Service, and section 5331 of title 31 of the United States Code requires persons to report similar information about certain transactions to the Financial Crimes Enforcement Network. This information shall be reported on the same form as prescribed by the Secretary.

(2) ***Cash received for the account of another.*** Cash in excess of $10,000 received by a person for the account of another must be reported under this section. Thus, for example, a person who collects delinquent accounts receivable for an automobile dealer must report with respect to the receipt of cash in excess of $10,000 from the collection of a particular account even though the proceeds of the collection are credited to the account of the automobile dealer (*i.e.,* where the rights to the proceeds from the account are retained by the automobile dealer and the collection is made on a fee-for-service basis).

(3) ***Cash received by agents*** —

(i) ***General rule.*** Except as provided in paragraph (a)(3)(ii) of this section, a person who in the course of a trade or business acts as an agent (or in some other similar capacity) and receives cash in excess of $10,000 from a principal, must report the receipt of cash under this section.

(ii) ***Exception.*** An agent who receives cash from a principal and uses all of the cash within 15 days in a cash transaction (second cash transaction) which is reportable under section 6050I or section 5331 of title 31 of the United States Code and the corresponding regulations (31 CFR Chapter X), and who discloses the name, address, and taxpayer identification number of the principal to the recipient in the second cash transaction need not report the initial receipt of cash under this section. An agent will be deemed to have met the disclosure requirements of this paragraph (a)(3)(ii) if the agent discloses only the name of the principal and the agent knows that the recipient has the principal's address and taxpayer identification number.

(iii) ***Example.*** The following example illustrates the application of the rules in paragraphs (a)(3) (i) and (ii) of this section:

> ***Example.*** B, the principal, gives D, an attorney, $75,000 in cash to purchase real property on behalf of B. Within 15 days D purchases real property for cash from E, a real estate developer, and discloses to E, B's name, address, and taxpayer identification number. Because the transaction qualifies for the exception provided in paragraph (a)(3)(ii) of this section, D need not report with respect to the initial receipt of cash under this section. The exception does not apply, however, if D pays E by means other than cash, or effects the purchase more than 15 days following receipt of the cash from B, or fails to disclose B's name, address, and taxpayer identification number (assuming D does not know that E already has B's address and taxpayer identification number), or purchases the property from a person whose sale of the property is not in the course of that person's trade or business. In any such case, D is required to report the receipt of cash from B under this section.

(b) ***Multiple payments.*** The receipt of multiple cash deposits or cash installment payments (or other similar payments or prepayments) on or after January 1, 1990, relating to a single transaction (or two or more related transactions), is reported as set forth in paragraphs (b)(1) through (b)(3) of this section.

(1) ***Initial payment in excess of $10,000.*** If the initial payment exceeds $10,000, the recipient must report the initial payment within 15 days of its receipt.

(2) ***Initial payment of $10,000 or less.*** If the initial payment does not exceed $10,000, the recipient must aggregate the initial payment and subsequent payments made within one year of the initial payment until the aggregate amount exceeds $10,000, and report with respect to the aggregate amount within 15 days after receiving the payment that causes the aggregate amount to exceed $10,000.

(3) ***Subsequent payments.*** In addition to any other required report, a report must be made each time that previously unreportable payments made within a 12-month period with respect to a single transaction (or two or more related transactions), individually or in the aggregate, exceed $10,000. The report must be made within 15 days after receiving the payment in excess of $10,000 or the payment that causes the aggregate amount received in the 12- month period to exceed $10,000. (If more than one report would otherwise be required for multiple cash payments within a 15-day period that relate to a single transaction (or two or more related transactions), the recipient may make a single combined report with respect to the payments. The combined report must be made no later than the date by which the first of the separate reports would otherwise be required to be made.) A report with respect to payments of $10,000 or less that are reportable under this paragraph (b)(3) and are received after December 31, 1989, but before July 10, 1990, is due July 24, 1990.

(4) ***Example.*** The following example illustrates the application of the rules in paragraphs (b)(1) through (b)(3) of this section:

Example. On January 10, 1991, M receives an initial cash payment of $11,000 with respect to a transaction. M receives subsequent cash payments with respect to the same transaction of $4,000 on February 15, 1991, $6,000 on March 20, 1991, and $12,000 on May 15, 1991. M must make a report with respect to the payment received on January 10, 1991, by January 25, 1991. M must also make a report with respect to the payments totalling $22,000 received from February 15, 1991, through May 15, 1991. This report must be made by May 30, 1991, that is, within 15 days of the date that the subsequent payments, all of which were received within a 12-month period, exceeded $10,000.

(c) ***Meaning of terms.*** The following definitions apply for purposes of this section—

(1) ***Cash*** —

(i) ***Amounts received prior to February 3, 1992.*** For amounts received prior to February 3, 1992, the term *cash* means the coin and currency of the United States or of any other country, which circulate in and are customarily used and accepted as money in the country in which issued.

(ii) ***Amounts received on or after February 3, 1992.*** For amounts received on or after February 3, 1992, the term *cash* means—

(A) The coin and currency of the United States or of any other country, which circulate in and are customarily used and accepted as money in the country in which issued; and

(B) A cashier's check (by whatever name called, including “treasurer's check” and “bank check”), bank draft, traveler's check, or money order having a face amount of not more than $10,000—

(*1*) Received in a designated reporting transaction as defined in paragraph (c)(1)(iii) of this section (except as provided in paragraphs (c)(1)(iv), (v), and (vi) of this section), or

(2) Received in any transaction in which the recipient knows that such instrument is being used in an attempt to avoid the reporting of the transaction under section 6050I and this section.

(iii) ***Designated reporting transaction.*** A designated reporting transaction is a retail sale (or the receipt of funds by a broker or other intermediary in connection with a retail sale) of—

(A) A consumer durable,

(B) A collectible, or

(C) A travel or entertainment activity.

(iv) ***Exception for certain loans.*** A cashier's check, bank draft, traveler's check, or money order received in a designated reporting transaction is not treated as cash pursuant to paragraph (c)(1)(ii)(B)(*1*) of this section if the instrument constitutes the proceeds of a loan from a bank (as that term is defined in 31 CFR Chapter X). The recipient may rely on a copy of the loan document, a written statement from the bank, or similar documentation (such as a written lien instruction from the issuer of the instrument) to substantiate that the instrument constitutes loan proceeds.

(v) ***Exception for certain installment sales.*** A cashier's check, bank draft, traveler's check, or money order received in a designated reporting transaction is not treated as cash pursuant to paragraph (c)(1)(ii)(B)(*1*) of this section if the instrument is received in payment on a promissory note or an installment sales contract (including a lease that is considered to be a sale for Federal income tax purposes). However, the preceding sentence applies only if—

(A) Promissory notes or installment sales contracts with the same or substantially similar terms are used in the ordinary course of the recipient's trade or business in connection with sales to ultimate consumers; and

(B) The total amount of payments with respect to the sale that are received on or before the 60th day after the date of the sale does not exceed 50 percent of the purchase price of the sale.

(vi) ***Exception for certain down payment plans.*** A cashier's check, bank draft, traveler's check, or money order received in a designated reporting transaction is not treated as cash pursuant to paragraph (c)(1)(ii)(B)(*1*) of this section is the instrument is received pursuant to a payment plan requiring one or more down payments and the payment of the balance of the purchase price by a date no later than the date of the sale (in the case of an item of travel or entertainment, a date no later than the earliest date that any item of travel or entertainment pertaining to the same trip or event is furnished). However, the preceding sentence applies only if—

(A) The recipient uses payment plans with the same or substantially similar terms in the ordinary course of its trade or business in connection with sales to ultimate consumers; and

(B) The instrument is received more than 60 days prior to the date of the sale (in the case of an item of travel or entertainment, the date on which the final payment is due).

(vii) ***Examples.*** The following examples illustrate the definition of “cash” set forth in paragraphs (c)(l)(ii) through (vi) of this section.

Example 1. D, an individual, purchases gold coins from M, a coin dealer, for $13,200. D tenders to M in payment United States currency in the amount of $6,200 and a cashier's check in the face amount of $7,000 which D had purchased. Because the sale is a designated reporting transaction, the cashier's check is treated as cash for purposes of section 6050I and this section. Therefore, because M has received more than $10,000 in cash with respect to the transaction, M must make the report required by section 6050I and this section.

Example 2. E, an individual, purchases an automobile from Q, an automobile dealer, for $11,500. E tenders to Q in payment United States currency in the amount of $2,000 and a cashier's check payable to E and Q in the amount of $9,500. The cashier's check constitutes the proceeds of a loan from the bank issuing the check. The origin of the proceeds is evident from provisions inserted by the bank on the check that instruct the dealer to cause a lien to be placed on the vehicle as security for the loan. The sale of the automobile is a designated reporting transaction. However, under paragraph (c)(1)(iv) of this section, because E has furnished Q documentary information establishing that the cashier's check constitutes the proceeds of a loan from the bank issuing the check, the cashier's check is not treated as cash pursuant to paragraph (c)(1)(ii)(B)(*1*) of this section.

Example 3. F, an individual, purchases an item of jewelry from S, a retail jeweler, for $12,000. F gives S traveler's checks totalling $2,400 and pays the balance with a personal check payable to S in the amount of $9,600. Because the sale is a designated reporting transaction, the traveler's checks are treated as cash for purposes of section 6050I and this section. However, because the personal check is not treated as cash for purposes of section 6050I and this section, S has not received more than $10,000 in cash in the transaction and no report is required to be filed under section 6050I and this section.

Example 4. G, an individual, purchases a boat from T, a boat dealer, for $16,500. G pays T with a cashier's check payable to T in the amount of $16,500. The cashier's check is not treated as cash because the face amount of the check is more than $10,000. Thus, no report is required to be made by T under section 6050I and this section.

Example 5. H, an individual, arranges with W, a travel agent, for the chartering of a passenger aircraft to transport a group of individuals to a sports event in another city. H also arranges with W for hotel accommodations for the group and for admission tickets to the sports event. In payment, H tenders to W money orders which H had previously purchased. The total amount of the money orders, none of which individually exceeds $10,000 in face amount, exceeds $10,000. Because the transaction is a designated reporting transaction, the money orders are treated as cash for purposes of section 6050I and this section. Therefore, because W has received more than $10,000 in cash with respect to the transaction, W must make the report required by section 6050I and this section.

(2) ***Consumer durable.*** The term *consumer durable* means an item of tangible personal property of a type that is suitable under ordinary usage for personal consumption or use, that can reasonably be expected to be useful for at least 1 year under ordinary usage, and that has a sales price of more than $10,000. Thus, for example, a $20,000 automobile is a consumer durable (whether or not it is sold for business use), but a $20,000 dump truck or a $20,000 factory machine is not.

(3) ***Collectible.*** The term *collectible* means an item described in paragraphs (A) through (D) of section 408(m)(2) (determined without regard to section 408(m)(3)).

(4) ***Travel or entertainment activity.*** The term *travel or entertainment activity* means an item of travel or entertainment (within the meaning of § 1.274-2(b)(1)) pertaining to a single trip or event where the aggregate sales price of the item and all other items pertaining to the same trip or event that are sold in the same transaction (or related transactions) exceeds $10,000.

(5) ***Retail sale.*** The term *retail sale* means any sale (whether for resale or for any other purpose) made in the course of a trade or business if that trade or business principally consists of making sales to ultimate consumers.

(6) ***Trade or business.*** The term *trade or business* has the same meaning as under section 162 of the Internal Revenue Code of 1954.

(7) ***Transaction*** —

(i) The term *transaction* means the underlying event precipitating the payer's transfer of cash to the recipient. Transactions include (but are not limited to) a sale of goods or services; a sale of real property; a sale of intangible property; a rental of real or personal property; an exchange of cash for other cash; the establishment or maintenance of or contribution to a custodial, trust, or escrow arrangement; a payment of a preexisting debt; a conversion of cash to a negotiable instrument; a reimbursement for expenses paid; or the making or repayment of a loan. A transaction may not be divided into multiple transactions in order to avoid reporting under this section.

(ii) The term *related transactions* means any transaction conducted between a payer (or its agent) and a recipient of cash in a 24-hour period. Additionally, transactions conducted between a payer (or its agent) and a cash recipient during a period of more than 24 hours are related if the recipient knows or has reason to know that each transaction is one of a series of connected transactions.

(iii) The following examples illustrate the definition of paragraphs (c)(7) (i) and (ii).

Example 1. A person has a tacit agreement with a gold dealer to purchase $36,000 in gold bullion. The $36,000 purchase represents a single transaction under paragraph (c)(7)(i) of this section and the reporting requirements of this section cannot be avoided by recasting the single sales transaction into 4 separate $9,000 sales transactions.

Example 2. An attorney agrees to represent a client in a criminal case with the attorney's fee to be determined on an hourly basis. In the first month in which the attorney represents the client, the bill for the attorney's services comes to $8,000 which the client pays in cash. In the second month in which the attorney represents the client, the bill for the attorney's services comes to $4,000, which the client again pays in cash. The aggregate amount of cash paid ($12,000) relates to a single transaction as defined in paragraph (c)(7)(i) of this section, the sale of legal services relating to the criminal case, and the receipt of cash must be reported under this section.

Example 3. A person intends to contribute a total of $45,000 to a trust fund, and the trustee of the fund knows or has reason to know of that intention. The $45,000 contribution is a single transaction under paragraph (c)(7)(i) of this section and the reporting requirement of this section cannot be avoided by the grantor's making five separate $9,000 cash contributions to a single fund or by making five $9,000 cash contributions to five separate funds administered by a common trustee.

Example 4. K, an individual, attends a one day auction and purchases for cash two items, at a cost of $9,240 and $1,732.50 respectively (tax and buyer's premium included). Because the transactions are related transactions as defined in paragraph (c)(7)(ii) of this section, the auction house is required to report the aggregate amount of cash received from the related sales ($10,972.50), even though the auction house accounts separately on its books for each item sold and presents the purchaser with separate bills for each item purchased.

Example 5. F, a coin dealer, sells for cash $9,000 worth of gold coins to an individual on three successive days. Under paragraph (c)(7)(ii) of this section the three $9,000 transactions are related transactions aggregating $27,000 if F knows, or has reason to know, that each transaction is one of a series of connected transactions.

(8) ***Recipient.***

(i) The term *recipient* means the person receiving the cash. Except as provided in paragraph (c)(8)(ii) of this section, each store, division, branch, department, headquarters, or office ("branch") (regardless of physical location) comprising a portion of a person's trade or business shall for purposes of this section be deemed a separate recipient.

(ii) A branch that receives cash payments will not be deemed a separate recipient if the branch (or a central unit linking such branch with other branches) would in the ordinary course of business have reason to know the identity of payers making cash payments to other branches of such person.

(iii) ***Examples.*** The following examples illustrate the application of the rules in paragraphs (c)(8)(i) and (ii) of this section:

Example 1. N, an individual, purchases regulated futures contracts at a cost of $7,500 and $5,000, respectively, through two different branches of Commodities Broker X on the same day. N pays for each purchase with cash. Each branch of Commodities Broker X transmits the sales information regarding each of N's purchases to a central unit of Commodities Broker X (which settles the transactions against N's account). Under paragraph (c)(8)(ii) of this section the separate branches of Commodities Broker X are not deemed to be separate recipients; therefore. Commodities Broker X must report with respect to the two related regulated futures contracts sales in accordance with this section.

Example 2. P, a corporation, owns and operates a racetrack. P's racetrack contains 100 betting windows at which pari-mutuel wagers may be made. R, an individual, places cash wagers of $3,000 each at five separate betting windows. Assuming that in the ordinary course of business each betting window (or a central unit linking windows) does not have reason to know the identity of persons making wagers at other betting windows, each betting window would be deemed to be a separate cash recipient under paragraph (c)(8)(i) of this section. As no individual recipient received cash in excess of $10,000, no report need be made by P under this section.

(d) ***Exceptions to the reporting requirements of section 6050I —***

(1) ***Receipt of cash by certain financial institutions.*** A financial institution as defined in subparagraphs (A), (B), (C), (D), (E), (F), (G), (J), (K), (R), and (S) of section 5312 (a)(2) of title 31, United States Code is not required to report the receipt of cash exceeding $10,000 under section 6050I.

(2) ***Receipt of cash by certain casinos having gross annual gaming revenue in excess of $1,000,000 —***

(i) ***In general.*** If a casino receives cash in excess of $10,000 and is required to report the receipt of such cash directly to the Department of the Treasury (Treasury Department) under 31 CFR 1021.310 or 1010.360 and is subject to the recordkeeping requirements of 31 CFR 1021.400, then the casino is not required to make a return with respect to the receipt of such cash under section 6050I and these regulations.

(ii) ***Casinos exempt under 31 CFR 1010.970(c).*** Under the authority of section 6050I(c)(1)(A), the Secretary may exempt from the reporting requirements of section 6050I casinos with gross annual gaming revenue in excess of $1,000,000 that are exempt under 31 CFR 1010.970(c) from reporting certain cash transactions to the Treasury Department under 31 CFR 1021.310 or 1010.360. The determination whether a casino which is granted an exemption under 31 CFR 1010.970(c) will be required to report under section 6050I will be made on a case-by-case basis, concurrently with the granting of such an exemption.

(iii) ***Reporting of cash received in a nongaming business.*** Nongaming businesses (such as shops, restaurants, entertainment, and hotels) at casino hotels and resorts are separate trades or businesses in which the receipt of cash in excess of $10,000 is reportable under section 6050I and these regulations. Thus, a casino exempt under paragraph (d)(2) (i) or (ii) of this section must report with respect to cash in excess of $10,000 received in its nongaming businesses.

(iv) ***Example.*** The following example illustrates the application of the rules in paragraphs (d)(2) (i) and (iii) of this section:

(A) ***Example.*** A and B are casinos having gross annual gaming revenue in excess of $1,000,000. C is a casino with gross annual gaming revenue of less than $1,000,000. Casino A receives $15,000 in cash from a customer with respect to a gaming transaction which the casino reports to the Treasury Department under 31 CFR 1021.310 and 1010.360. Casino B's hotel division receives $15,000 in cash from a customer in payment for accommodations provided to that customer at Casino B's hotel. Casino C receives $15,000 in cash from a customer with respect to a gaming transaction. Casino A is not required to report the transaction under section 6050I or these regulations because the exception for certain casinos provided in paragraph (d)(2)(i) of this section (casino exception) applies. Casino B's hotel division is required to report under section 6050I and these regulations because the casino exception does not apply to the receipt of cash by a nongaming business division. Casino C is required to report under section 6050I and these regulations because the casino exception does not apply to casinos having gross annual gaming revenue of $1,000,000 or less which do not have to report to the Treasury Department under 31 CFR 1021.310 and 1010.360.

(B) [Reserved]

(3) ***Receipt of cash not in the course of the recipient's trade or business.*** The receipt of cash in excess of $10,000 by a person other than in the course of the person's trade or business is not reportable under section 6050I. Thus, for example, F, an individual in the trade or business of selling real estate, sells a motorboat for $12,000, the purchase price of which is paid in cash. F did not use the motorboat in any trade or business in which F was engaged. F is not required to report under section 6050I or these regulations because the exception provided in this paragraph (d)(3) applies.

(4) ***Receipt is made with respect to a foreign cash transaction*** —

(i) ***In general.*** Generally, there is no requirement to report with respect to a cash transaction if the entire transaction occurs outside the United States (the fifty states and the District of Columbia). An entire transaction consists of both the transaction as defined in paragraph (c)(7)(i) of this section and the receipt of cash by the recipient. If, however, any part of an entire transaction occurs in the Commonwealth of Puerto Rico or a possession or territory of the United States and the recipient of cash in that transaction is subject to the general jurisdiction of the Internal Revenue Service under title 26 of the United States Code, the recipient is required to report the transaction under this section.

(ii) ***Example.*** The following example illustrates the application of the rules in paragraph (d)(4)(i) of this section:

Example. W, an individual engaged in the trade or business of selling aircraft, reaches an agreement to sell an airplane to a U.S. citizen living in Mexico. The agreement, no portion of which is formulated in the United States, calls for a purchase price of $125,000 and requires delivery of and payment for the airplane to be made in Mexico. Upon delivery of the airplane in Mexico, W receives $125,000 in cash. W is not required to report under section 6050I or these regulations because the exception provided in paragraph (d)(4)(i) of this section ("foreign transaction exception") applies. If, however, any part of the agreement to sell had been formulated in the United States, the foreign transaction exception would not apply and W would be required to report the receipt of cash under section 6050I and these regulations.

(e) ***Time, manner, and form of reporting*** —

(1) ***Time of reporting.*** The reports required by this section must be filed in accordance with the Form 8300 instructions and related publications by the 15th day after the date the cash is received. However, in the case of multiple payments relating to a single transaction (or two or more related transactions), see paragraph (b) of this section.

(2) ***Form of reporting.*** A report required by paragraph (a) of this section must be made on Form 8300. A return of information made in compliance with this paragraph must contain the name, address, and taxpayer identification number of the person from whom the cash was received; the name, address, and taxpayer identification number of the person on whose behalf the transaction was conducted (if the recipient knows or has reason to know that the person from whom the cash was received conducted the transaction as an agent for another person); the amount of cash received; the date and nature of the transaction; and any other information required by Form 8300. Form 8300 can be obtained from any Internal Revenue Service Forms Distribution Center.

(3) ***Manner of reporting*** —

(i) ***Where to file.*** A person making a return of information under this section must file Form 8300 in accordance with the form instructions and related publications.

(ii) ***Verification.*** A person making a return of information under this section must verify the identity of the person from whom the reportable cash is received. Verification of the identity of a person who purports to be an alien must be made by examination of such person's passport, alien identification card, or other official document evidencing nationality or residence. Verification of the identity of any other person may be made by examination of a document normally acceptable as a means of identification when cashing or accepting checks (for example, a

driver's license or a credit card). In addition, a return will be considered incomplete if the person required to make a return knows (or has reason to know) that an agent is conducting the transaction for a principal, and the return does not identify both the principal and the agent.

(iii) ***Retention of returns.*** A person required to make an information return under this section must keep a copy of each return filed for five years from the date of filing.

(f) ***Requirement of furnishing statements*** —

(1) ***In general.*** Any person required to make an information return under this section must furnish a single, annual, written statement to each person whose name is set forth in a return ("identified person") filed with the Internal Revenue Service.

(2) ***Form of statement.*** The statement required by the preceding paragraph need not follow any particular format, but it must contain the following information:

(i) The name and address of the person making the return;

(ii) The aggregate amount of reportable cash received by the person who made the information return required by this section during the calendar year in all cash transactions relating to the identified person; and

(iii) A legend stating that the information contained in the statement is being reported to the Internal Revenue Service.

(3) ***When statement is to be furnished.*** Statements required under this paragraph (f) must be furnished to an identified person on or before January 31 of the year following the calendar year in which the cash is received. A statement shall be considered to be furnished to an identified person if it is mailed to the identified person at the identified person's last known address.

(g) ***Cross-reference to penalty provisions*** —

(1) ***Failure to file correct information return.*** See section 6721 for civil penalties relating to the failure to file a correct return under section 6050I(a) and paragraph (a) of this section.

(2) ***Failure to furnish correct statement.*** See section 6722 for civil penalties relating to the failure to furnish a correct statement to identified persons under section 6050I(e) and paragraph (f) of this section.

(3) ***Criminal penalties.*** Any person who willfully fails to make a return or makes a false return under section 6050I and this section may be subject to criminal prosecution.

(h) ***Applicability date.*** The rules of this section apply for returns required to be filed during calendar years beginning after December 31, 2023.

[T.D. 8098, 51 FR 31611, Sept. 4, 1986; 51 FR 33033, Sept. 18, 1986, as amended by T.D. 8373, 56 FR 57976, 57977, Nov. 15, 1991; 58 FR 16496, Mar. 29, 1993; T.D. 8479, 58 FR 33764, June 21, 1993; T.D. 8974, 66 FR 67687, Dec. 31, 2001; T.D. 9972, 88 FR 11764, Feb. 23, 2023; 88 FR 41500, June 27, 2023]

§ 1.6050I-2 Returns relating to cash in excess of $10,000 received as bail by court clerks.

(a) ***Reporting requirement.*** Any clerk of a Federal or State court who receives more than $10,000 in cash as bail for any individual charged with a specified criminal offense must make a return of information with respect to that cash receipt. For purposes of this section, a clerk is the clerk's office or the office,

department, division, branch, or unit of the court that is authorized to receive bail. If someone other than a clerk receives bail on behalf of a clerk, the clerk is treated as receiving the bail for purposes of this paragraph (a).

(b) ***Meaning of terms.*** The following definitions apply for purposes of this section—

Cash means—

(1) The coin and currency of the United States, or of any other country, that circulate in and are customarily used and accepted as money in the country in which issued; and

(2) A cashier's check (by whatever name called, including treasurer's check and bank check), bank draft, traveler's check, or money order having a face amount of not more than $10,000.

Specified criminal offense means—

(1) A Federal criminal offense involving a controlled substance (as defined in section 802 of title 21 of the United States Code), provided the offense is described in Part D of Subchapter I or Subchapter II of title 21 of the United States Code;

(2) Racketeering (as defined in section 1951, 1952, or 1955 of title 18 of the United States Code);

(3) Money laundering (as defined in section 1956 or 1957 of title 18 of the United States Code); and

(4) Any State criminal offense substantially similar to an offense described in this paragraph (b).

(c) ***Time, form, and manner of reporting*** —

(1) ***Time of reporting*** —

(i) ***In general.*** The information return required by this section must be filed in accordance with the Form 8300 instructions and related publications by the 15th day after the date the cash bail is received.

(ii) ***Multiple payments.*** If multiple payments are made to satisfy bail reportable under this section and the initial payment does not exceed $10,000, the initial payment and subsequent payments must be aggregated and the information return required by this section must be filed with the Internal Revenue Service by the 15th day after receipt of the payment that causes the aggregate amount to exceed $10,000. However, if payments are made to satisfy separate bail requirements, no aggregation is required. Thus, if in Month 1 a clerk receives $6,000 in bail for an individual charged with a specified criminal offense and later, in Month 2, receives $7,000 in bail for that same individual charged with another specified criminal offense, no aggregation is required.

(2) ***Form of reporting.*** The return of information required by paragraph (a) of this section must be made on Form 8300 and must contain the following information—

(i) The name, address, and taxpayer identification number (TIN) of the individual charged with the specified criminal offense;

(ii) The name, address, and TIN of each person posting the bail (payor of bail), other than a person posting bail who is licensed as a bail bondsman in the jurisdiction in which the bail is received;

(iii) The amount of cash received;

(iv) The date the cash was received; and

(v) Any other information required by Form 8300 or its instructions.

(3) *Manner of reporting* —

(i) ***Where to file.*** Returns required by this section must be filed in accordance with the Form 8300 instructions and related publications. A copy of the information return required to be filed under this section must be retained for five years from the date of filing.

(ii) ***Verification of identity.*** A clerk required to make an information return under this section must, in accordance with § 1.6050I-1(e)(3)(ii), verify the identity of each payor of bail listed in the return.

(d) *Requirement to furnish statements* —

(1) *Information to Federal prosecutors* —

(i) ***In general.*** A clerk required to make an information return under this section must furnish a written statement to the United States Attorney for the jurisdiction in which the individual charged with the specified crime resides and the United States Attorney for the jurisdiction in which the specified criminal offense occurred (applicable United States Attorney(s)). The written statement must be filed with the applicable United States Attorney(s) by the 15th day after the date the cash bail is received.

(ii) ***Form of statement.*** The written statement must include the information required by paragraph (c)(2) of this section. The requirement of this paragraph (d)(1)(ii) will be satisfied if the clerk provides to the applicable United States Attorney(s) a copy of the Form 8300 that is filed with the Internal Revenue Service pursuant to this section.

(2) *Information to payors of bail* —

(i) ***In general.*** A clerk required to make an information return under this section must furnish a written statement to each payor of bail whose name is set forth in a return required by this section. A statement required under this paragraph (d)(2) must be furnished to a payor of bail on or before January 31 of the year following the calendar year in which the cash is received. A statement will be considered furnished to a payor of bail if it is mailed to the payor's last known address.

(ii) ***Form of statement.*** The statement required by this paragraph (d)(2) need not follow any particular format, but must contain the following information—

(A) The name and address of the clerk's office making the return;

(B) The aggregate amount of reportable cash received during the calendar year by the clerk who made the information return required by this section in all cash transactions relating to the payor of bail; and

(C) A legend stating that the information contained in the statement has been reported to the Internal Revenue Service and the applicable United States Attorney(s).

(iii) ***Aggregate amount.*** The requirement of furnishing the aggregate amount in paragraph (d)(2)(ii)(B) of this section will be satisfied if the clerk provides to the payor of bail either a single written statement listing the aggregate amount, or a copy of each Form 8300 relating to that payor of bail.

(e) ***Cross-reference to penalty provisions.*** See sections 6721 through 6724 for penalties relating to the failure to comply with the provisions of this section.

(f) ***Applicability date.*** The rules of this section apply for returns required to be filed during calendar years beginning after December 31, 2023.

[T.D. 8652, 61 FR 7, Jan. 2, 1996, as amended by T.D. 9972, 88 FR 11764, Feb. 23, 2023]

§ 1.6050J-1T Questions and answers concerning information returns relating to foreclosures and abandonments of security (temporary).

The following questions and answers relate to the requirement of reporting foreclosures and abandonments of security under section 6050J of the Internal Revenue Code Act of 1954, as added by section 148 of the Tax Reform Act of 1984 (98 Stat. 687).

Requirement of Reporting

In General

Q-1: What does section 6050J provide with respect to the reporting of acquisitions and abandonments of property that secures indebtedness?

A-1: Section 6050J provides that an information return must be made by any person who, in connection with a trade or business conducted by the person (except as provided in A-13), lends money and, in full or partial satisfaction of the debt, acquires an interest in any property that is security for the debt, or has reason to know that the property has been abandoned. For purposes of these questions and answers, a person who lends money in connection with a trade or business is referred to as a “lender”.

Trade or Business Requirement

Q-2: Must a person be in the trade or business of lending money in order to be subject to the reporting requirement of this section?

A-2: No. A person does not have to be in the trade or business of lending money to be subject to this reporting requirement. Thus, if L sells automobiles and lends money to B to enable B to purchase an automobile from L for use in B's trade or business, and that automobile is security for the loan, L would be subject to this reporting requirement. Similarly, if P promotes interests in an oil well, and lends money to I to enable I to invest in the oil well which is security for the loan, P would be subject to this reporting requirement.

Q-3: How does the reporting requirement apply in the case of pools, fixed investment trusts, or other similar arrangements through which undivided beneficial interests or participations in indebtedness are offered?

A-3: In these cases, the owners of the undivided beneficial interests or participations are not subject to this reporting requirement. Instead, the trustee, record owner, or person acting in a similar capacity is treated as the lender for purposes of this reporting requirement and is the party required to report. For purposes of both section 6050J and the applicable penalty provisions, only one return and one statement must be filed with respect to each loan or other evidence of indebtedness. For situations when more than one return or statement must be filed, see A-29, A-31, and A-41. The trustee, record owner, or person acting in a similar capacity, rather than the owners of beneficial interests or participations, is subject to the applicable penalty provisions (see A-43).

Q-4: How does the reporting requirement apply in the case of corporate, tax-exempt, or other bond issues?

A-4: In these cases, the owners or holders of a bond issue are not required to report. Instead, the trustee or person acting in a similar capacity is treated as the lender for purposes of this reporting requirement and is the party required to report. For purposes of both section 6050J and the applicable penalty provisions, only one return and one statement must be filed with respect to a bond issue. For situations when more than one return or statement must be filed, see A-29, A-31, and A-41. The trustee or person acting in a similar capacity, rather than the owners or holders of a bond issue, is subject to the applicable penalty provisions (see A-43).

Property Subject to Reporting

Q-5: Does the reporting requirement apply to all types of property securing indebtedness?

A-5: No. The reporting requirement does not apply to any loan made to an individual and secured by an interest in tangible personal property which is neither held for investment nor used in a trade or business. For rules governing when the reporting requirment applies to tangible personal property of a type ordinarily used for personal purposes, see A-8.

Q-6: Does the reporting requirement apply when property securing indebtedness is held both for personal use and for use in a trade or business?

A-6: Yes. The reporting requirement applies when property securing indebtedness is held both for personal use and for use in a trade or business. Similarly, the reporting requirement applies when the borrower holds such property both for personal use and for investment purposes.

Q-7: Does the reporting requirement apply to indebtedness secured by a personal residence?

A-7: Yes. A lender is subject to the reporting requirement if the property that is security for the loan is real property, including a personal residence, whether or not held for investment or used in a trade or business.

Q-8: In the case of a loan made to an individual and secured by personal property of a type that is ordinarily used for personal purposes, how does a lender know whether such property is used in a trade or business or held for investment purposes?

A-8: In the case of a loan made to an individual and secured by personal property of a type that is ordinarily used for personal purposes, such as an automobile, computer, or boat, the lender is subject to the reporting requirement if the lender knows that the property will be used in a trade or business or held for investment purposes. For this purpose, a lender knows information if the information is included on the books and records of the lender or its agents pertaining to the loan, or is known by the lender or agent's officers, partners, principals or employees, but only if such information was acquired in the course of their ordinary business activities on behalf of the lender. For example, if a borrower indicates on the loan agreement or disclosure statement that the borrower intends to use the property securing the loan in the borrower's trade or business, the lender is subject to this reporting requirement. Similarly, if the borrower notifies the lender that the borrower intends to convert the property from personal use to use in a trade or business, the lender is subject to the reporting requirement.

Q-9: If a lender maintains a system under which the lender classifies loans according to the use of property that secures the loan (such as use in a trade or business or personal use), may the lender rely on this system in determining whether the reporting requirement applies?

A-9: Yes. A lender may rely on the classification system to determine whether the reporting requirement applies, provided that the classification system is designed and reasonably maintained to ensure accuracy in identifying the use of property.

Acquisition of an Interest

Q-10: For purposes of the reporting requirement, when is a lender treated as acquiring an interest in property that is security for indebtedness?

A-10: In general, an interest in property is acquired on the earlier of the date title is transferred to the lender or the date possession and the burdens and benefits of ownership are transferred to the lender. If State or other applicable law provides for an objection period within which the borrower and other appropriate parties may object to the lender's proposal to retain the property in satisfaction of the indebtedness, a lender is treated as acquiring an interest in the property on the date this objection period expires. If the lender purchases the property at a sale held to satisfy the indebtedness, such as at a foreclosure or execution sale, the lender is treated as acquiring an interest in the property on the later of the date of the sale or the date the borrower's right of redemption, if any, expires. See 4A-15 for rules governing reporting when a party other than the lender acquires property securing indebtedness at a foreclosure, execution or similar sale.

Q-11: If a lender takes possession of property that is security for a loan for a limited purpose, such as completing construction on or improvement to the property, is the lender treated as having acquired an interest in the property at that point?

A-11: No. The lender in these circumstances is not treated as acquiring an interest in the property. However, the lender must report if he later acquires an interest in the property in full or partial satisfaction of the indebtedness (see A-10 or A-15).

Indirect Acquisition

Q-12: If a lender acquires an interest in a partnership, trust, or other entity in full or partial satisfaction of a loan that is secured by the assets or property owned by the partnership, trust, or other entity, is the lender treated as acquiring an interest in the property securing the loan?

A-12: Yes. A lender in this case acquires an interest in the underlying assets or property and the reporting requirements of this section apply to the acquisition of that interest in a partnership, trust, or other entity.

Treatment of Governmental Units

Q-13: How does the reporting requirement apply to a governmental unit?

A-13: A governmental unit (or any agency or instrumentality thereof) which lends money secured by property is subject to the reporting requirement without regard to the requirement that the money be lent in connection with a trade or business. A governmental unit (or any agency or instrumentality thereof) subject to the reporting requirement must designate an officer or employee to make the return. The officer or employee appropriately designated must make the return in the form and manner prescribed by this section.

Notification of Sale Under Section 7425(b)

Q-14: Does a return filed as required under this section constitute a notification of sale under section 7425(b)?

A-14: No. A return filed under this section is not considered a notification of sale under section 7425(b).

Sale to Third Party

Q-15: If a party other than the lender purchases property securing a loan at a foreclosure, execution, or similar sale, must the lender report under this section?

A-15: Yes. The lender must report if a party other than the lender purchases property securing the lender's loan at a foreclosure, execution, or similar sale. If the proceeds of that sale are applied to satisfy all or any portion of the lender's loan, the lender must treat the property as having been abandoned. The lender will be treated as having reason to know that the property has been abandoned as of the date of the sale (see A-19). If no proceeds of such a sale are made available to satisfy any portion of the lender's loan but the lender's security interest foreclosed upon is terminated, reduced, or otherwise impaired by reason of the sale, the lender will be treated as having reason to know that the property has been abandoned as of the date of the sale (see A-19).

Treatment of Foreign Borrowers

Q-16: How does the reporting requirement apply in the case of foreign borrowers where the property securing the loan is located outside the United States?

A-16: No reporting is required where both of the following requirements are met: (a) The property securing the loan is located outside the United States, and (b) at any time before the lender is required to report, the borrower furnishes the lender with a statement, signed upon penalty of perjury, that he is an exempt foreign person (unless an employee or other agent of the lender who is responsible for receiving or reviewing these statements has actual knowledge that the statement is incorrect). For purposes of this section, the borrower is an exempt foreign person if he:

(1) Is not a citizen of the United States, a resident of the United States, a person treated as a resident of the United States by reason of an election under section 6013 (g) or (h) or a United States corporation or other United States entity;

(2) Is not subject to the provisions of section 877; and

(3) At the time the statement is furnished, is not, or reasonably expects not to be, engaged in a trade or business in the United States during the current year in connection with the loan or property securing the loan.

If, after providing the statement, the borrower ceases to be an exempt foreign person, he must so notify the lender in writing within 30 days of this change in status. If the lender is so notified, this exemption from the reporting requirement no longer applies.

Abandonments

Q-17: For purposes of this reporting requirement, when has an abandonment occurred?

A-17: An abandonment has occurred when the objective facts and circumstances indicate that the borrower intended to and has permanently discarded the property from use.

Q-18: Does the fact that a lender knows or has reason to know of an abandonment of property securing a loan mean that the borrower is entitled to an abandonment loss?

A-18: No. The definition of an abandonment of property securing a loan in A-17 applies only for purposes of this reporting requirement and is not intended to apply for other purposes, such as determining whether a borrower would be entitled to an abandonment loss.

Q-19: Under what circumstances will a lender be considered to have reason to know that property which is security for a loan has been abandoned?

A-19: Whether a lender has reason to know that property which is security for a loan has been abandoned is to be determined with reference to all the facts and circumstances concerning the status of the property. When the lender in the ordinary course of business becomes aware or should become aware of circumstances indicating that the property has been abandoned, the lender will be deemed to know all the information that would have been discovered through a reasonable inquiry. For example, if a borrower has failed (without adequate explanation) to make payments on the loan for a substantial period, the lender must make a reasonable inquiry to determine whether there has been an abandonment. If a reasonable inquiry would reveal objective facts and circumstances indicating that the borrower intended to and has permanently discarded the property from use, then the lender has reason to know that the property has been abandoned. If a lender knows or has reason to know that the property has been abandoned and reasonably expects to commence foreclosure, execution sale, or similar proceedings, see A-20.

Q-20: If a lender has reason to know that property that is security for a loan has been abandoned and reasonably expects to commence within three months foreclosure, execution sale, or similar proceedings, is reporting of the abandonment required?

A-20: In these circumstances, the lender need not report as of the date he knows or has reason to know that the property has been abandoned. Instead, the lender must report as of the date he acquires an interest in the property or a third party purchases the property at a foreclosure, execution or similar sale (see A-10 and A-15). In any other case, the lender must report as of the date the lender knows or has reason to know that the property has been abandoned (see A-18).

Q-21: If a lender has reason to know that property that is security for a loan has been abandoned and reasonably expects to commence within three months foreclosure, execution sale or similar proceedings but in fact does not commence such proceedings within the three month period, must the lender report?

A-21: Yes. In these circumstances, the lender's obligation to report the abandonment arises at the close of the three month period. For example, if on December 31, 1985, a lender first has reason to know that property securing his loan has been abandoned and reasonably expects to commence foreclosure proceedings within three months, the lender is not required to report as of December 31, 1985 (see A-20). However, if the lender does not in fact commence foreclosure proceedings by March 31, 1986, the lender's obligation to report arises on this date. The lender must provide information on the abandonment under A-27 as of the date the lender first had reason to know of the abandonment (December 31, 1985). The lender must file the return required under this section with the Internal Revenue Service on or before February 28, 1987, and furnish a statement to the borrower on or before January 31, 1987 (see A-33 and A-40).

Subsequent Holder of a Loan

Q-22: To whom does the reporting requirement apply when a person lends money secured by property and subsequently transfers his interest in the indebtedness to another person?

A-22: The subsequent holder of a loan is treated as the lender for purposes of this reporting requirement and is the party required to report with respect to events occurring after the date he acquires the loan. This rule applies to all subsequent holders of a secured loan, including governmental units or any agencies or instrumentalities thereof. For example, if the Federal National Mortgage Association purchases real property loans from a lender, it would be subject to the reporting requirement.

Multiple Lenders

Q-23: If more than one person lends money secured by the same property, and one lender forecloses upon or otherwise acquires an interest in the property, must the other lenders report under this section?

A-23: Yes. In these circumstances, other lenders must report if they know or have reason to know that the property securing their loans is foreclosed upon or otherwise acquired by another lender and the sale or other acquisition terminates, reduces, or otherwise impairs their security interests in the property (see A-15). For example, if there is a first and second mortgage on a building, and the second mortgagee knows or has reason to know that the first mortgagee has foreclosed upon the building, the second mortgagee is subject to the reporting requirement even if no part of the indebtedness owed to him is satisfied by the proceeds of the foreclosure sale. For a description of the reporting requirement applicable to the first mortgagee, see A-10 and A-15.

Q-24: If more than one person lends money secured by property, and one lender knows or has reason to know that the property has been abandoned, must each lender report under this section?

A-24: No. Each lender is required to report only when he knows or has reason to know that property has been abandoned (see A-19).

Form and Manner of Return

Form of Return

Q-25: What form shall be used to make a return required by section 6050J?

A-25: Except as provided in A-35, the return must be made on Forms 1096 and 1099. The person required to make the return, however, may prepare and use a form which contains provisions substantially similar with those of Forms 1096 and 1099 if the person complies with any revenue procedures relating to substitute Forms 1096 and 1099 in effect at that time.

Information Included on Return

Q-26: What information must be included on a return required by reason of an acquisition of an interest in property that is security for a loan?

A-26: The following information must be included on the return:

(a) The name and address of the borrower with respect to the secured indebtedness;

(b) The borrower's TIN, as defined in Section 7701(a);

(c) A general description of the property in which an interest is acquired;

(d) Whether the borrower is personally liable for repayment of the indebtedness;

(e) The date on which the person acquired an interest in the property (see A-10 or A-15);

(f) The amount of the indebtedness outstanding at the time the interest in property is acquired;

(g) If the borrower is personally liable for repayment of the indebtedness, the fair market value of the property at the time the interest is acquired;

(h) The amount of the indebtedness satisfied by the acquisition; and

(i) Any other information as may be required by Forms 1096 and 1099.

Q-27: What information must be included on a return required because a person knows or has reason to know that property which is security for a loan has been abandoned?

A-27: The following information must be included on the return:

(a) The information required in A-26 (a), (b), and (d);

(b) A general description of the property abandoned;

(c) The date on which the person first knows or has reason to know that the property has been abandoned;

(d) The amount of the indebtedness outstanding as of the date on which the person first knows or has reason to know that the property has been abandoned;

(e) If the borrower is personally liable for repayment of the indebtedness, the fair market value of the property at the time of abandonment; and

(f) Any other information as may be required by Forms 1096 and 1099.

Partnership Borrower

Q-28: If a borrower is a partnership, must the TIN of each partner be reported?

A-28: No. If a borrower is a partnership, only the TIN of the partnership must be reported.

Multiple Borrowers

Q-29: If there is more than one borrower on a single secured loan, must a person required to report under this section make a return with respect to each borrower on the loan?

A-29: Yes. Generally, a separate return must be made with respect to each borrower on a secured loan. However, only one report is required if the lender knows that the borrowers hold property as tenants by the entirety or that the property is held as community property.

General Description of Property

Q-30: What type of information constitutes a general description of the property?

A-30: A general description of the property consists of information that sufficiently identifies the property. In the case of real property, a general description consists of the property's address unless this information is not available or would not sufficiently identify the property, in which case a legal description (*i.e.,* section, lot, block) must be provided instead. A general description of personal property consists of the type, make and model (where applicable) of the property. For example, an automobile would be described as “Car—1983 Pontiac Firebird.” However, in the case of a single loan secured by more than one piece of personal property, a general description consists of the type or category of the pieces acquired or abandoned. For example, if the security for a single loan is six desks and seven typewriters, a general description of the property would be “Office Equipment.”

Multiple Acquisitions and Abandonments

Q-31: Must each acquisition and abandonment that occurs in a taxable year be reported on a separate return?

A-31: Generally, each acquisition and abandonment required to be reported by a person for a taxable year must be reported on a separate return. However, in the case of a single loan secured by more than one piece of property, separate returns will not be required when a person acquires an interest in, or knows or has reason to know of the abandonment of, more than one piece of property that is security for the single loan in a taxable year. Instead, the person shall make one return for all of the acquisitions and one return for all of the abandonments of property that are security for the loan for a taxable year.

Fair Market Value

Q-32: In the case of a foreclosure, execution, or similar sale, what is the fair market value of the property for purposes of the reporting requirement?

A-32: In general, in the absence of clear and convincing evidence to the contrary, the proceeds of the foreclosure, execution, or similar sale will be considered the fair market value of the property for purposes of this reporting requirement.

Time for Filing

Q-33: When must a person file the return or returns required by section 6050J with the Internal Revenue Service?

A-33: The return or returns must be filed on or before February 28 (March 31 if filed electronically) of the year following the calendar year in which the acquisition of an interest in the property occurs or in which the lender knows or has reason to know of the abandonment of the property.

Place for Filing

Q-34: Where must the return or returns be filed?

A-34: The return or returns must be filed with the appropriate Internal Revenue Service Center, the addresses of which are listed in the instructions for the Form 1099 series.

Use of Magnetic Media

Q-35: What rules apply with respect to the use of magnetic media?

A-35: Any return required under section 6050J must be filed on magnetic media to the extent required by section 6011(e). Any person not required by section 6011(e) to file returns under section 6050J on magnetic media may request permission to do so. See § 1.9101 for rules relating to permission to submit information on magnetic tape or other media. If a person required to file returns on magnetic media fails to do so, the penalty under section 6652 (failure to file an information return) applies.

Requirement of Furnishing Statements to Borrowers

In General

Q-36: What statements must be furnished to borrowers?

A-36: Any person required to make an information return under section 6050J must furnish a statement to each borrower whose name is required to be set forth in a return filed with the Internal Revenue Service. For the date when the statement must be furnished, see A-40.

Q-37: Is the statement considered to be furnished to the borrower if it is mailed to the borrower at the borrower's last known address?

A-37: Yes.

Information Included on Statement

Q-38: What information must be included on the statement?

A-38: The statement must include the following information:

(a) Except in the case where the return is made on behalf of a governmental unit (or any agency or instrumentality thereof), the name and address of the person required to make the information return;

(b) In the case where the return is made on behalf of a governmental unit or any agency or instrumentality thereof, the name and address of such unit, agency or instrumentality;

(c) The information required under A-26 or A-27, whichever is applicable; and

(d) A legend stating that the information is being reported to the Internal Revenue Service.

Copy of Form 1099 to Borrowers

Q-39: May the requirement of furnishing a statement be met by furnishing a copy of the Form 1099 filed with respect to that borrower?

A-39: Yes. The requirement of furnishing a statement may be met by furnishing to the borrower a copy of the Form 1099 containing the same information filed with the Service with respect to that borrower, or a reasonable facsimile thereof, provided that the form or the reasonable facsimile bears a legend stating that the information is being reported to the Internal Revenue Service.

Time of Furnishing Statement

Q-40: When is a statement required to be furnished to the borrower?

A-40: A statement is required to be furnished to the borrower on or before January 31 of the year following the calendar year in which the acquisition or abandonment of property occurs.

Multiple Borrowers

Q-41: If a person required to report under this section must make an information return with respect to more than one borrower on a single loan, of an interest in the property occurs or in which the lender knows or has reason to know of the abandonment of the property.

A-41: Yes. A separate statement must be furnished to each borrower with respect to which a separate return is required under section 6050J.

Extensions of Time

Q-42: Are there any circumstances under which an extension of time may be granted with respect to the requirement of furnishing statements to borrowers?

A-42: Yes. Upon written application of the person required to report, the service center director may, for good cause shown, grant that person an additional period (not to exceed 30 days) in which to furnish statements under section 6050J with respect to any calendar year. The application for an extension must be addressed to the director of the service center with which the returns must be filed. The application must contain a concise statement of the reasons for requesting the extension in order to aid the service center director in determining

the period of extension, if any, to be granted. The application must state at the top of the first page that it is made under section 1.6050J-1T and must be signed by the person required to report under section 6050J. In general, the application should be filed not earlier than September 30 of the year in which the acquisition of an interest in the property occurs or in which the lender knows or has reason to know of the abandonment of the property, and not later than January 15 of the following year.

Penalties

Q-43: Are there penalties for failing to comply with the requirements of section 6050J and the regulations thereunder?

A-43: Yes. The penalty for failing to make any information return with respect to any borrower under section 6050J is provided in section 6652. The penalty for failing to furnish a statement to any borrower is provided in section 6678.

Effective Date

Q-44: When is section 6050J effective?

A-44: Section 6050J is effective for acquisitions and abandonments of property after December 31, 1984.

(Approved by the Office of Management and Budget under control number 1545-0877)

(Secs. 6050J and 7805 of the Internal Revenue Code of 1954 (98 Stat. 687, 68A Stat. 917, 26 U.S.C. 6050J, 7805 respectively)

[T.D. 7971, 49 FR 34460, Aug. 31, 1984, as amended by T.D. 8895, 65 FR 50408, Aug. 18, 2000]

§ 1.6050K-1 Returns relating to sales or exchanges of certain partnership interests.

(a) ***Partnership return required*** —

(1) ***In general.*** Except as otherwise provided in this paragraph (a), a partnership shall make a separate return on Form 8308 with respect to each section 751(a) exchange (as defined in paragraph (a)(4)(i) of this section) of an interest in such partnership which occurs after December 31, 1984. A partnership that is in doubt as to whether partnership property constitutes section 751 property to any extent or as to whether a transfer of a partnership interest constitutes a section 751(a) exchange may file Form 8308 in order to avoid the risk of incurring a penalty under section 6721. The penalty under section 6721 will generally apply, however, to partnerships that do not file Form 8308 where in fact a section 751(a) exchange occurred, except as provided in paragraphs (a)(2) and (e) of this section.

(2) ***Return required under section 6045.*** No return shall be required under section 6050K(a) and paragraph (a)(1) of this section with respect to the sale or exchange of a partnership interest if a return is required to be filed under section 6045 with respect to such sale or exchange.

(3) ***Single or composite documents.*** The Commissioner may authorize the use, at the option of the partnership, of a single document which includes all of the partnership's returns for a calendar year in the case of partnerships required under paragraph (a)(1) of this section to make 25 or more

returns on Form 8308 for any calendar year. In addition, the Commissioner may authorize the use for this purpose, also at the option of such a partnership, of a composite document. These authorizations shall be subject to such conditions, limitations, and special rules governing the preparation, execution, filing, and correction thereof as the Commissioner may deem appropriate. Such composite document shall consist of a form prescribed by the Commissioner and an attachment or attachments of magnetic tape or other approved media. To the extent that the use of a single or composite document has been authorized by the Commissioner, references in this section to Form 8303 shall be deemed to refer also to returns included in a single or composite document under this paragraph (a)(3). Any single or composite document so authorized shall include the information required to be provided on Form 8308 under paragraph (b) of this section with respect to each section 751(a) exchange.

(4) ***Definitions.*** For purposes of section 6050K of the Code and this section—

(i) ***Section 751(a) exchange.*** The term *section 751(a) exchange* means any sale or exchange of a partnership interest (or portion thereof) in which any portion of any money or other property received by a transferor partner in exchange for all or a part of his or her interest in the partnership is attributable to section 751 property. The term does not include a distribution which is treated as a sale or exchange between the distributee and the partnership under section 751(b) of the Code.

(ii) ***Section 751 property.*** The term *section 751 property* means unrealized receivables, as defined in section 751(c) of the Code, and inventory items which have appreciated substantially in value ("substantially appreciated inventory items"), as defined in section 751(d) of the Code.

(iii) ***Transferor and transferee.*** The term *transferor* means the beneficial owner of a partnership interest immediately before the transfer of that interest. The term "transferee" means the beneficial owner of a partnership interest immediately after the transfer of that interest. However, if a partnership does not know the identity of the beneficial owner of an interest in the partnership, the record holder of such interest shall be treated as the transferor or transferee (as the case may be) for purposes of paragraphs (b) and (c) of this section.

(b) ***Contents of return.*** The return on Form 8308 shall include the following information:

(1) The names, addresses, and taxpayer identification numbers of the transferee and transferor in the exchange and of the partnership filing the return;

(2) The date of the exchange; and

(3) Such other information as may be required by Form 8308 or its instructions.

(c)

(1) ***In general.*** —*Statement to be furnished to transferor and transferee.* Every partnership required to file a return under paragraph (a) of this section must furnish to each person whose name is required to be set forth in such return a written statement on or before January 31 of the calendar year following the calendar year in which the section 751(a) exchange occurred to which the return under paragraph (a) relates (or, if later, 30 days after the partnership is notified of the exchange as defined in paragraph (e) of this section). The partnership shall use a copy of the completed Form 8308 as a statement unless the Form 8308 contains information with respect to more than one section 751(a) exchange (see paragraph (a)(3) of this section). If the partnership does not use a copy of Form 8308

as a statement, the statement shall include the information required to be shown on Form 8308 with respect to the section 751(a) exchange to which the person to whom the statement is furnished is a party. In addition, it shall state that—

(i) The information shown on the statement has been supplied to the Internal Revenue Service,

(ii) A transferor of a partnership interest in a sale or exchange described in section 751(a) of the Internal Revenue Code is required to treat a portion of any gain or loss resulting from the sale or exchange as ordinary income or loss, and

(iii) The transferor in a section 751(a) sale or exchange is required under paragraph (a)(3) of § 1.751-1 to attach a statement relating to the sale or exchange to his or her income tax return for the taxable year in which the sale or exchange occurred.

(2) ***Information to be provided to transferors.*** The statement a partnership must provide to a transferor partner pursuant to paragraph (c)(1) of this section must also include the information necessary for the transferor to make the transferor's required statement under § 1.751-1(a)(3).

(3) ***Transfers of partnership interests by foreign persons.*** For additional information required to be provided by the partnership if section 864(c)(8) applies to the transfer of a partnership interest by a foreign person, see § 1.864(c)(8)-2(b).

(d) ***Requirement that transferor notify partnership*** —

(1) ***In general.*** The transferor of any partnership interest in a section 751(a) exchange shall notify the partnership of such exchange in writing within 30 days of the exchange (or, if earlier, January 15 of the calendar year following the calendar year in which the exchange occurred). The written notification from the transferor shall include the following information:

(i) The names and addresses of the transferor and transferee in the section 751(a) exchange;

(ii) The taxpayer identification numbers of the transferor and, if known, of the transferee; and

(iii) The date of the exchange.

Any transferor who notified a partnership under section 6050K(c)(1) prior to January 22, 1986 by a notification that does not meet the requirements of this paragraph (d) shall furnish such partnership with the written notification described in this paragraph (d) on or before February 21, 1986.

(2) ***Return required under section 6045.*** No transferor shall be required to notify a partnership of the sale or exchange of a partnership interest under section 6050K(c)(1) or paragraph (d)(1) of this section if a return is required to be filed under section 6045 with respect to such sale or exchange.

(3) ***Transfers of partnership interests by foreign persons.*** For notifications required by foreign transferors of partnership interests, see § 1.864(c)(8)-2(a).

(e) ***Partnership not required to make a return or furnish statements under this section until it has notice of the exchange.*** A partnership shall not be required to make a return or furnish statements under section 6050K and this section with respect to any section 751(a) exchange until it has been notified of the exchange. For purposes of section 6050K(c)(2) and this section, a partnership is notified of a section 751(a) exchange when either:

(1) The partnership receives the written notification from the transferor required under paragraph (d) of this section; or

(2) The partnership has knowledge that there has been a transfer of a partnership interest or any portion thereof, and, at the time of the transfer, the partnership had any section 751 property. However, no return or statements are required under section 6050K if the transfer was not a section 751(a) exchange (e.g., a transfer which in its entirety constitutes a gift for federal income tax purposes). For purposes of this paragraph (e)(2), the partnership may rely on a written statement from the transferor that the transfer was not a section 751(a) exchange in the absence of knowledge to the contrary. For rules applicable where the partnership is in doubt as to whether partnership property constitutes section 751 property to any extent or as to whether a transfer of a partnership interest constitutes a section 751(a) exchange, see paragraph (a)(1) of this section.

(f) ***Partnership return is to be attached to Form 1065*** —

(1) ***In general.*** Any partnership return on Form 8308 required under this section shall be filed as an attachment to the partnership's Form 1065 for its taxable year in which the calendar year in which the section 751(a) exchange occurred ends and shall be filed at the time (determined with regard to any extension of time for filing) and place prescribed for filing of the partnership's Form 1065 for that taxable year (see paragraph (e) of § 1.6031-1 for the time and place for filing Form 1065).

(2) ***Notification after Form 1065 is filed.*** If a partnership is notified of an exchange (as defined in paragraph (e) of this section) after the partnership has filed Form 1065 for the taxable year with respect to which the exchange should have been reported, Form 8308 shall be filed with the service center or other Internal Revenue office with which the partnership's Form 1065 was filed, on or before the thirtieth day after the partnership is notified of the exchange.

(g) ***Penalties.*** For penalties for failure of:

(1) Transferors to furnish the notification required by paragraph (d) of this section see section 6722 (b);

(2) Partnerships to furnish any statement required under paragraph (c) of this section see section 6722 (a); and

(3) Partnerships to file the return on Form 8308 as required by paragraph (a) of this section see section 6721.

(h) ***Applicability date.*** Paragraphs (c)(2) and (3) of this section apply to returns filed on or after November 30, 2020. Paragraph (d)(3) of this section applies to transfers that occur on or after November 30, 2020.

[T.D. 8119, 52 FR 41, Jan. 2, 1987, as amended by T.D. 9926, 85 FR 76947, Nov. 30, 2020]

§ 1.6050L-1 Information return by donees relating to certain dispositions of donated property.

(a) ***Information returns*** —

(1) ***Disposition of charitable deduction property.*** If a donee of any charitable deduction property (as defined in paragraph (e) of this section), sells, exchanges, consumes, or otherwise disposes of (with or without consideration) such property (or any portion thereof) within 2 years after the date of the donor's contribution of such property, the donee shall make an information return on the form prescribed by the Internal Revenue Service. For special rules with respect to successor donees, see paragraph (c) of this section.

(2) ***Disposition of items appraised for $500 or less*** —

(i) ***In general.*** Paragraph (a)(1) of this section shall not apply with respect to an item of charitable deduction property disposed of by sale if the Form 8283 appraisal summary (as described in § 1.170A-13(c)(4) for contributions made on or before July 30, 2018 and § 1.170A-16(d)(3) for contributions made after July 30, 2018), or a successor form, signed by the donee with respect to the item contains, at the time of the donee's signature, a statement signed by the donor that the appraised value of the item does not exceed $500. In the case of a Form 8283 appraisal summary that describes more than one item, this exception shall apply only with respect to an item clearly identified as having an appraised value of $500 or less. For purposes of this paragraph (a)(2)(i), items that form a set (such as, for example, a collection of books written by the same author, components of a stereo system, or a group of place settings of a pattern of silverware) are considered one item. In addition, all nonpublicly traded stock is considered one item as are all nonpublicly traded securities other than nonpublicly traded stock.

(ii) ***Transitional rule.*** Paragraph (a)(2)(i) of this section is satisfied with respect to an appraisal summary submitted to the donee on or before January 31, 1986, if such donee obtained the required statement from the donor on or before March 31, 1986, on either an amended appraisal summary or an attachment to the original appraisal summary.

(3) ***Consumption for distribution of exempt purpose.*** Paragraph (a)(1) of this section shall not apply with respect to an item of charitable deduction property consumed or distributed by a donee without consideration if the consumption or distribution is in furtherance of a purpose or function constituting a basis for such donee's exemption under section 501 of the Code. For example, no reporting is required with respect to medical supplies consumed or distributed by a tax-exempt relief organization in aiding disaster victims.

(b) ***Information required to be provided on return.*** The information return required by paragraph (a)(1) of this section shall include the following:

(1) The name, address, and employer identification number of the donee making the information return;

(2) A description of the property (or portion disposed of) in sufficient detail to identify the charitable deduction property received by such donee;

(3) The name and taxpayer identification number of the donor (social security number if the donor is an individual or employer identification number if the donor is a corporation or partnership);

(4) The date of the contribution to such donee;

(5) Any amount received by such donee with respect to the disposition;

(6) The date of the disposition by such donee; and

(7) Such other information as may be specified by the form or its instructions.

(c) ***Successor donees*** —

(1) ***In general.*** Section 6050L and this section shall apply to successor donees that receive charitable deduction property (as defined in paragraph (e) of this section) that was transferred by the original donee after July 5, 1988, (whether the successor donee received the property from the original donee or another successor donee). For definitions of the terms “donor,” “donee,” “original donee,” and “successor donee,” see § 1.170A-13(c)(7)(iv)-(vii).

(2) ***Information required to be provided on return.*** With respect to charitable deduction property that is transferred to one or more successor donees to which this section applies, the information return required by paragraph (a)(1) of this section shall include, in addition to the information described in paragraph (b) of this section, the following:

(i) The name, address, and employer identification number of the immediately succeeding successor donee (if any) and the immediately preceding successor donee (if any);

(ii) The name, address, and employer identification number of the original donee if different from the information required by paragraph (b)(1) of this section;

(iii) The date of contribution to the original donee; and

(iv) Such other information as may be specified by the form or its instructions.

(3) ***Information to be provided to transferor.*** Every successor donee to which this section applies that receives any charitable deduction property within the 2-year period described in paragraph (a)(1) of this section shall provide its name, address, and employer identification number to that preceding donee on or before the 15th day after the later of—

(i) The date of transfer to such successor donee, or

(ii) The date such successor donee receives a copy of the appraisal summary from the preceding donee.

(4) ***Donees that transfer property to successor donees.*** In addition to complying with the requirements of paragraph (a)(1) of this section, every donee that transfers any charitable deduction property to a successor donee to which this section applies within the 2-year period described in paragraph (a)(1) of this section—

(i) Shall provide its name, address, and employer identification number and a copy of the Form 8283 appraisal summary (as described in § 1.170A-13(c)(4) for contributions made on or before July 30, 2018 and § 1.170A-16(d)(3) for contributions made after July 30, 2018) relating to the transferred property to the successor donee on or before the 15th day after the latest of—

(A) The date of such transfer, or

(B) The date the original donee signs the appraisal summary, or

(C) In a case in which the transferring donee is a successor donee, the date such donee receives a copy of the appraisal summary from such donee's transferor, and

(ii) Shall provide a copy of its information return required by paragraph (a)(1) this section to the successor donee on or before the 15th day after the transferring donee files the information return pursuant to paragraph (e)(2) of this section.

(5) ***Donee.*** In the case of charitable deduction property that is transferred to a successor donee to which this section applies, the term *donee* as used in paragraph (a)(2) and (e) of this section means only the original donee.

(d) ***Special rules*** —

(1) ***Statement to be furnished to donors.*** Every donee making a return under section 6050L and this section with respect to the disposition of charitable deduction property shall furnish a copy of the return to the donor of the property.

(2) ***Retention of Form 8283 appraisal summary.*** Every donee shall retain the Form 8283 appraisal summary (as described in § 1.170A-13(c)(4) for contributions made on or before July 30, 2018 and § 1.170A-16(d)(3) for contributions made after July 30, 2018) in the donee's records for so long as it may be relevant in the administration of any internal revenue law.

(e) ***Charitable deduction property.*** For purposes of this section, the term charitable deduction property means any property (other than money and publicly traded securities to which § 1.170A-13(c)(7)(xi)(B) does not apply) contributed after December 31, 1984, with respect to which the donee signs (or is presented with for signature in cases described in § 1.170A-13(c)(4)(iv)(C)(*2*)) a Form 8283 appraisal summary (as described in § 1.170A-13(c)(4) for contributions made on or before July 30, 2018 and § 1.170A-16(d)(3) for contributions made after July 30, 2018). For purposes of this section, if such donee signs (or is presented with for signature in cases described in § 1.170A-13(c)(4)(iv)(C)(*2*)) the appraisal summary after the date of contribution of the property, the property is deemed to be charitable deduction property from the date of contribution.

(f) ***Place and time for filing information returns*** —

(1) ***Place for filing.*** The donee information return required by section 6050L and this section shall be filed with the Internal Revenue Service center listed on the return form or its instructions.

(2) ***Time for filing*** —

(i) ***In general.*** Except as provided in paragraph (f)(2)(ii) of this section, the donee information return shall be filed on or before the 125th day after a donee sells, exchanges, consumes or otherwise disposes of the charitable deduction property. A donee information return filed pursuant to this paragraph (f)(2)(i) does not have to include the information required by paragraphs (b) (3), (4), (5), or (6), or (c)(2)(i)-(iii) of this section if such information is not available to the donee by the due date of the return.

(ii) ***Exception.*** Notwithstanding paragraph (f)(2)(i) of this section, in the case of a donee who, on the date of receipt of the transferred property, had no reason to believe that the substantiation requirements of § 1.170A-13(c) or § 1.170A-16(d) apply with respect to the property, the donee information return is not required to be filed until the 60th day after the date on which such donee has reason to believe that the substantiation requirements of § 1.170A-13(c) or § 1.170A-16(d) apply with respect to the property. A donee information return filed pursuant to this paragraph (f)(2)(ii) does not have to include the information required by paragraph (b) (3), (4), (5), or (6), or (c)(2)(i)-(iii) of this section if such information is not available to the donee by the due date of the return.

(g) ***Penalties.*** For penalties for failure to compy with the requirements of this section, see sections 6676, 6721, and 6723.

(h) ***Effective/applicability dates.*** The first two sentences of paragraph (a)(2)(i), paragraphs (c)(4)(i) and (d)(2), and the first sentences of paragraphs (e) and (f)(2)(ii) apply to contributions made after July 30, 2018.

[T.D. 8199, 53 FR 16085, May 5, 1988; T.D. 8199, 53 FR 18372, May 23, 1988; T.D. 9836, 83 FR 36427, July 30, 2018]

§ 1.6050L-2 Information returns by donees relating to qualified intellectual property contributions.

(a) ***In general.*** Each donee organization described in section 170(c), except a private foundation (as defined in section 509(a)), other than a private foundation described in section 170(b)(1)(F), that receives or accrues net income during a taxable year from any qualified intellectual property contribution (as defined in section 170(m)(8)) must make an annual information return on the form prescribed by the IRS. The information return is required for any taxable year of the donee that includes any portion of the 10-year period beginning on the date of the contribution, but not for taxable years beginning after the expiration of the legal life of the qualified intellectual property.

(b) ***Information required to be provided on return.*** The information return required by section 6050L and paragraph (a) of this section shall include the following—

(1) The name, address, taxable year, and employer identification number of the donee making the information return;

(2) The name, address, and taxpayer identification number of the donor;

(3) A description of the qualified intellectual property in sufficient detail to identify the qualified intellectual property received by such donee;

(4) The date of the contribution to the donee;

(5) The amount of net income of the donee for the taxable year that is properly allocable to the qualified intellectual property (determined without regard to paragraph (10)(B) of section 170(m) and with the modifications described in paragraphs (5) and (6) of such section); and

(6) Such other information as may be specified by the form or its instructions.

(c) ***Special rule—statement to be furnished to donors.*** Every donee making an information return under section 6050L and this section with respect to a qualified intellectual property contribution shall furnish a copy of the information return to the donor of the property. The information return required by section 6050L and this section shall be furnished to the donor on or before the date the donee is required to file the return with the IRS.

(d) ***Place and time for filing information return*** —

(1) ***Place for filing.*** The information return required by section 6050L and this section shall be filed with the IRS location listed on the prescribed form or in its instructions.

(2) ***Time for filing.*** A donee is required to file the return required by section 6050L and this section on or before the last day of the first full month following the close of the donee's taxable year to which net income from the qualified intellectual property is properly allocable.

(e) ***Penalties.*** For penalties for failure to comply with the requirements of this section, see sections 6721 through 6724.

(f) ***Effective/applicability date.*** The rules of this section apply to qualified intellectual property contributions made after June 3, 2004.

[T.D. 9392, 73 FR 18709, Apr. 7, 2008]

§ 1.6050M-1 Information returns relating to persons receiving contracts from certain Federal executive agencies.

(a) ***General rule.*** Except as otherwise provided in paragraph (c) of this section, the head of every Federal executive agency or his or her delegate shall make an information return to the Internal Revenue Service reporting the following information with respect to each contract entered into by that Federal executive agency—

(1) Name and address of the contractor;

(2) Contractor's TIN and, if the contractor is a member of an affiliated group of corporations that files its Federal income tax returns on a consolidated basis, the name and TIN of the common parent of the affiliated group;

(3) The date of the contract action;

(4) The expected date of completion of the contract as determined under any reasonable method, such as the expected contract delivery date under the contract schedule;

(5) The total amount obligated under the contract action; and

(6) Any other information required by Forms 8596 and 8596A and their instructions, or by any other administrative guidance issued by the Internal Revenue Service (such as a revenue procedure).

See paragraph (e) of this section relating to the manner in which to report increases in amounts obligated under existing contracts. See paragraph (d)(5) of this section for special rules for agencies that submit contract information to the Federal Procurement Data Center. For provisions concerning the requesting and furnishing of identifying numbers, see section 6109 and the regulations thereunder.

(b) ***Definitions.*** The following definitions apply for purposes of this section—

(1) ***Federal executive agency.*** The term "Federal executive agency" means—

(i) Any executive agency (as defined in 5 U.S.C. 105) other than the General Accounting Office;

(ii) Any military department (as defined in 5 U.S.C. 102); and

(iii) The United States Postal Service and the Postal Rate Commission.

(2) ***Contract*** —

(i) ***General rule.*** The term "contract" means an obligation of a Federal executive agency to make payment of money (or other property) to a person in return for the sale of property, the rendering of services, or other consideration. The term "contract" includes, for example, such an obligation arising from a written agreement executed by the agency and the contractor, an award or notice of award, a job order or task letter issued under a basic ordering agreement, a letter contract, an order that becomes effective only upon written acceptance or performance, or an action described in paragraph (e) of this section.

(ii) ***Exceptions.*** For purposes of this section, the term "contract" does not include—

(A) A license granted by a Federal executive agency;

(B) An obligation of a contractor (other than a Federal executive agency) to a subcontractor;

(C) A debt instrument of the United States Government or a Federal agency, such as a Treasury note, Treasury bond, Treasury bill, savings bond, or similar instrument; or

(D) An obligation of a Federal executive agency to lend money, lease property to a lessee, or sell property.

(iii) ***Special rule for certain contracts of the Small Business Administration.*** Any subcontract entered into by the Small Business Administration (SBA) under a prime contract between the SBA and a procuring Federal executive agency pursuant to section 8(a) of the Small Business Act (15 U.S.C. 637(a)) shall not be treated as a contract of the SBA but shall be treated as a contract of the procuring agency for purposes of this section.

(iv) ***Certain schedule contracts.*** For purposes of this section, any of the following contracts entered into on behalf of one or more Federal executive agencies is not a “contract” to be reported by the General Services Administration or the Department of Veteran's Affairs at the time of execution:

(A) A Federal Supply Schedule Contract entered into by the General Services Administration,

(B) An Automated Data Processing Schedule Contract entered into by the General Services Administration, or

(C) A schedule contract entered into by the Department of Veteran's Affairs.

Instead, an order placed by a Federal executive agency, including the General Services Administration or the Department of Veteran's Affairs, under such a schedule contract is a “contract” for purposes of this section.

(v) ***Blanket purchase agreements.*** For purposes of this section, the term *contract* does not include a blanket purchase agreement between one or more Federal executive agencies and one or more contractors. Instead, an order placed by a Federal executive agency under the terms of a blanket purchase agreement is a “contract” for purposes of this section.

(vi) ***Contracts entered into using non-appropriated funds.*** [Reserved]

(3) ***Contractor.*** The term *contractor* means any person who enters into a contract with a Federal executive agency.

(4) ***Person and TIN.*** The terms *person* and *TIN* are defined in sections 7701(a) (1) and (41), respectively.

(c) ***Exceptions to information reporting requirement*** —

(1) ***General exceptions.*** The following do not need to be reported pursuant to this section:

(i) Any contract or contract action for which the amount obligated is $25,000 or less;

(ii) Any contract with a contractor who, in making the agreement, is acting in his or her capacity as an employee of a Federal executive agency (e.g., any contract of employment under which the employee is paid wages subject to the withholding provisions contained in chapter 24 of subtitle C);

(iii) Any contract between a Federal executive agency and another Federal governmental unit (or any agency or instrumentality thereof);

(iv) Any contract with a foreign government (or any agency or instrumentality thereof);

(v) Any contract with a state or local governmental unit (or any agency or instrumentality thereof);

(vi) Any contract with a person who is not required to have a TIN (see, for example, § 301.6109-1(g));

(vii) Any contract the terms of which provide that all amounts payable under the contract by any Federal executive agency will be paid on or before the 120th day following the date of the contract action, and for which it is reasonable to except that all amounts will be so paid.

(viii) Any contract under which all money (or other property) that will be received by the contractor after the 120th day after the date of the contract action will come from persons other than a Federal executive agency or an agent of such an agency (e.g., a contract under which the contractor will collect amounts owed to a Federal executive agency by the agency's debtor and will remit to the agency the money collected less an amount that serves as the contractor's consideration under the contract).

(ix) Any contract for which the Commissioner determines that the information described in paragraph (a) of this section will not facilitate the collection of Federal tax liabilities because of the manner, method, or timing of payment by the agency under that contract.

(2) ***Special rule for certain classified or confidential contracts.*** Contracts described in section 6050M(e)(3), relating to certain classified or confidential contracts, are to be reported only in accordance with section 6050M(e)(2).

(d) ***Filing requirements*** —

(1) ***Frequency and time for filing.*** The information returns required by this section with respect to contracts of a Federal executive agency entered into on or after January 1, 1989, must be filed on a quarterly basis for the calendar quarters ending on the last day of March, June, September, and December. Except as provided in paragraph (d)(5) of this section, the returns for contracts entered into during a calendar quarter must be filed on or before the last day of the month following that quarter. Notwithstanding the preceding sentence, returns filed before May 7, 1990, will be considered timely filed.

(2) ***Form of reporting*** —

(i) ***General rule concerning electronic filing.*** The information returns required by this section with respect to contracts of a Federal executive agency for each calendar quarter must be made in one submission (or in multiple submissions if permitted by paragraph (d)(4) of this section). Except as provided in paragraph (d)(2)(ii) of this section, the required returns must be made in electronic form (within the meaning of § 301.6011-2(a)(1) of this chapter) in accordance with any applicable revenue procedure or other guidance promulgated by the Internal Revenue Service for the filing of such returns under section 6050M.

(ii) ***Exceptions from electronic filing.*** Any Federal executive agency that, on October 1, has a reasonable expectation of entering into, during the one-year period beginning on that date, fewer than 10 contracts subject to the reporting requirements under this section that are to be filed during the calendar years after 2023, may make the information returns required by this section for each quarter of that one-year period on the prescribed paper Form 8596 in accordance with the instructions accompanying such form.

(iii) ***Exclusions from electronic-filing requirements*** —

(A) ***Waivers.*** The Commissioner may grant waivers of the requirements of this section in cases of undue hardship. One principal factor in determining hardship will be the amount, if any, by which the cost of filing the return electronically in accordance with this section exceeds the cost of filing the return on paper. A request for a waiver must be made in accordance with applicable IRS revenue procedures, publications, forms, instructions, or other guidance, including postings to the *IRS.gov* website. The waiver request will specify the type of filing (that is, a return required under paragraph (a) of this section) and the period to which it applies.

(B) ***Exemptions.*** The Commissioner may provide exemptions from the requirements of this section to promote effective and efficient tax administration. A submission claiming an exemption must be made in accordance with applicable IRS revenue procedures, publications, forms, instructions, or other guidance, including postings to the *IRS.gov* website.

(3) ***Place of filing*** —

(i) ***Returns in electronic form.*** Information returns made under this section in electronic form must be filed with the Internal Revenue Service in accordance with any applicable revenue procedure or other guidance promulgated by the Internal Revenue Service relating to the filing of returns under section 6050M.

(ii) ***Form 8596.*** Information returns made on paper Form 8596 must be filed with the Internal Revenue Service at the location specified in the instructions for that form.

(4) ***Special rule concerning multiple returns.*** To the extent permitted in any revenue procedure or other guidance relating to the filing of information returns under this section, a Federal executive agency which files information returns under this section on magnetic media may make more than one magnetic media submission for any quarter, if each submission for that quarter contains all of the information required by paragraph (a) of this section with respect to contracts entered into by one or more departments, branches, bureaus, agencies, or other readily identifiable operating functions (such as a geographic region) of the Federal executive agency.

(5) ***Special rules for agencies reporting to the Federal Procurement Data Center*** —

(i) ***Election to have the Director of the Federal Procurement Data Center make returns on behalf of agency.*** If, in complying with the requirements of the Federal Procurement Data System (FPDS) (as established under the authority of the Office of Federal Procurement Policy Act, as amended, 41 U.S.C. 401 *et seq.*), a Federal executive agency is required to submit to the Federal Procurement Data Center (FPDC) all the information with respect to one or more contracts required to be reported by paragraph (a) of this section, that Federal executive agency may, in lieu of making returns directly to the Internal Revenue Service with respect to those contracts, elect to have the Director of the FPDC (or his or her delegate) make the required returns with respect to all of those contracts on its behalf. In order to make this election for such contracts entered into during a calendar quarter, the head of a Federal executive agency (or his or her delegate) shall attach to its submission to the FPDC for that quarter a signed statement to the effect that:

(A) The Director of the FPDC (or his or her delegate) is authorized, in accordance with an election made under 26 CFR 1.6050M-1(d)(5) to make, on the agency's behalf, the required returns for such contracts for that quarter, and

(B) Under the penalties of perjury, such official has examined the information to be submitted by the agency to the FPDC for making those returns and certifies that information to be, to the best of such official's knowledge and belief, a compilation of agency records maintained in the normal course of business for the purpose of providing the information necessary for making true, correct, and complete returns as required by section 6050M.

If the election is made, the Director of the FPDC (or his or her delegate) shall, on the electing agency's behalf, make the returns required by paragraph (a) of this section with respect to the contracts to which the election applies.

(ii) ***Time, manner, and place of filing.*** The Director of the FPDC (or his or her delegate) must—

(A) Make the required returns for a quarter on or before the earlier of;

(*1*) 45 days following the date that the contract information is required to be submitted to the FPDC, or

(*2*) 90 days following the end of the calendar quarter for which the election is made, except that, if that calendar quarter ends September 30, 105 days following the end of that quarter, and

(B) Comply with paragraph (d)(2)(i) and (3)(i) of this section, relating to form and place of filing.

Notwithstanding the preceding sentence, returns made before May 7, 1990, will be considered timely filed.

(iii) ***Contracts reported directly to the Internal Revenue Service.*** Even if the election is made, all information with respect to any particular contract required to be reported under paragraph (a) of this section must be reported directly to the Internal Revenue Service by the electing agency if the FPDS does not require that information to be submitted to the FPDC. An electing agency shall not, however, make direct returns to the Internal Revenue Service of contract information that is subject to the election.

(6) ***Certification of return*** —

(i) ***Returns made directly with the Internal Revenue Service.*** Each return made under this section by a Federal executive agency directly with the Internal Revenue Service on magnetic media or on Forms 8596 and 8596-A shall be signed by the head of the Federal executive agency (or his or her delegate) under the penalties of perjury, certifying that such official has examined the return, that it is prepared pursuant to the requirements of section 6050M and that, to the best of such official's knowledge and belief, it is compiled from agency records maintained in the normal course of business for the purpose of making a true, correct, and complete return as required by section 6050M.

(ii) ***Returns made by Director of FPDC on agency's behalf.*** Each return made under this section by the Director of the FPDC on behalf of a Federal executive agency shall be signed by the Director of the FPDC (or his or her delegate) under the penalties of perjury, certifying that such official has examined the return, that it is prepared pursuant to the requirements of section 6050M and that, to the best of such official's knowledge and belief, it is compiled from information submitted by the Federal executive agency to the FPDC pursuant to § 1.6050M-1(d)(5)(i) for the purpose of making a true, correct, and complete return as required by section 6050M.

(e) ***Special rules relating to increases in amount obligated.*** If, through the exercise of an option contained in a basic or initial contract or under any other rule of contract law, express or implied, the amount of money or other property obligated under the contract is increased by more than $25,000 in one contract action, then that action shall be treated as the entering into of a new contract with respect to which the information required by paragraph (a) of this section is to be reported to the Internal Revenue Service for the calendar quarter in which the increase occurs.

(f) ***Applicability date*** —

(1) ***Contracts required to be reported.*** Except as otherwise provided in this paragraph (f), this section applies to each Federal executive agency with respect to its contracts entered into on or after January 1, 1989 (including any increase in amount obligated on or after January 1, 1989, that is treated as a new contract under paragraph (e) of this section).

(2) ***Contracts not required to be reported.*** A Federal executive agency is not required to report—

(i) Any basic or initial contract entered into before January 1, 1989,

(ii) Any increase contract action occurring before January 1, 1989, that is treated as a new contract under paragraph (e) of this section, or

(iii) Any increase contract action that is treated as a new contract under paragraph (e) of this section if the basic or initial contract to which that contract action relates was entered into before January 1, 1989, and—

(A) The increase occurs before April 1, 1990, or

(B) The amount of the increase does not exceed $50,000.

(3) ***Illustration.***

(i) If a Federal executive agency enters into an initial contract on December 1, 1988, and the amount of money obligated under the contract is increased by $55,000 on April 15, 1990, then there is no reporting requirement with respect to the contract when entered into on December 1, 1988. However, the April 15, 1990, increase, which is treated as a new contract under paragraph (e) of this section, is subject to the reporting requirements of this section because it is considered to be a new contract entered into on April 15, 1990.

(ii) If the $55,000 increase had occurred before April 1, 1990, there would not have been a reporting requirement with respect to that increase.

(4) ***Filing requirements for contracts required to be reported.*** Section 1.6050M-1(d)(2) and (3) (as contained in 26 CFR part 1, revised *February 23, 2023*) applies to information returns required to be filed during calendar years beginning after December 31, 2023.

[T.D. 8275, 54 FR 50369, Dec. 6, 1989; 55 FR 13522, Apr. 11, 1990; T.D. 9972, 88 FR 11765, Feb. 23, 2023]

§ 1.6050N-1 Statements to recipients of royalties paid after December 31, 1986.

(a) ***Requirement.*** A person required to make an information return under section 6050N(a) must furnish a statement to each recipient whose name is required to be shown on the related information return for royalties paid.

(b) ***Form, manner, and time for providing statements to recipients.*** The statement required by paragraph (a) of this section must be either the official Form 1099 prescribed by the Internal Revenue Service for the respective calendar year or an acceptable substitute statement. The rules under § 1.6042-4 (relating to statements with respect to dividends) apply comparably in determining the form of the acceptable substitute statement permitted by this section. Those rules also apply for purposes of determining the manner of and time for providing the Form 1099 or its acceptable substitute statement to a recipient under this section. An IRS truncated taxpayer identifying number (TTIN) may be used as the identifying number of the recipient. For provisions relating to the use of TTINs, see § 301.6109-4 of this chapter (Procedure and Administration Regulations).

(c) ***Exempted foreign-related items*** —

(1) ***In general.*** No return shall be required under paragraph (a) of this section for payments of the items described in paragraphs (c)(1)(i) through (iv) of this section.

(i) Returns of information are not required for payments of royalties that a payor can, prior to payment, associate with documentation upon which it may rely to treat as made to a foreign beneficial owner in accordance with § 1.1441-1(e)(1)(ii) or as made to a foreign payee in accordance with § 1.6049-5(d)(1) or presumed to be made to a foreign payee under § 1.6049-5(d)(2), (3), (4), or (5). However, such payments may be reportable under § 1.1461-1(b) and (c).

For purposes of this paragraph (c)(1)(i), the provisions in § 1.6049-5(c) (regarding rules applicable to documentation of foreign status and definition of U.S. payor and non-U.S. payor) shall apply. See § 1.1441-1(b)(3)(iii)(B) and (C) for special payee rules regarding scholarships, grants, pensions, annuities, etc. The provisions of § 1.1441-1 shall apply by substituting the term *payor* for the term *withholding agent* and without regard to the fact that the provisions apply only to amounts subject to withholding under chapter 3 of the Internal Revenue Code.

(ii) Returns of information are not required for payments of royalties from sources outside the United States paid by a non-U.S. payor or non-U.S. middleman and that are paid and received outside the United States. For a definition of non-U.S. payor or non-U.S. middleman, see § 1.6049-5(c)(5). For circumstances in which a payment is considered to be paid and received outside the United States, see § 1.6049-4(f)(16).

(iii) Returns of information are not required for payments made by a foreign intermediary described in § 1.1441-1(e)(3)(i) that it has received in its capacity as an intermediary and that are associated with a valid withholding certificate described in § 1.1441-1(e)(3)(ii) or (iii) and payments made by a U.S. branch of a foreign bank or of a foreign insurance company described in § 1.1441-1(b)(2)(iv) that are associated with a valid withholding certificate described in § 1.1441-1(e)(3)(v), which certificate the intermediary or branch has furnished to the payor or middleman from whom it has received the payment, unless, and to the extent, the intermediary or branch knows that the payments are required to be reported and were not so reported.

(2) ***Definitions*** —

(i) ***Payor.*** For purposes of this section, the term *payor* shall have the meaning ascribed to it under § 1.6049-4(a).

(ii) ***Joint owners.*** Amounts paid to joint owners for which a certificate or documentation is required as a condition for being exempt from reporting under this paragraph (c) of this section are presumed made to U.S. payees who are not exempt recipients if, prior to payment, the payor cannot reliably associate the payment either with a Form W-9 furnished by one of the joint owners in the manner required in §§ 31.3406(d)-1 through 31.3406(d)-5 of this chapter, or with documentation described in paragraph (c)(1)(i) of this section furnished by each joint owner upon which it can rely to treat each joint owner as a foreign payee or foreign beneficial owner. For purposes of applying this paragraph (c)(2)(ii), the grace period described in § 1.6049-5(d)(2)(ii) shall apply only if each payee qualifies for such grace period.

(d) ***Cross-reference to penalties.*** For provisions relating to the penalty provided for failure to file timely a correct information return required under section 6050N(a), see § 301.6721-1 of this chapter (Procedure and Administration Regulations). For provisions relating to the penalty provided for failure to furnish timely a correct payee statement required under section 6050N(b) and § 1.6050N-1(a), see § 301.6722-1 of this chapter. See § 301.6724-1 of this chapter for the waiver of a penalty if the failure is due to reasonable cause and is not due to willful neglect.

(e) ***Effective/applicability date.*** This section applies to payee statements due after December 31, 2014, without regard to extensions. For payee statements due before January 1, 2015, § 1.6050N-1 (as contained in 26 CFR part 1, revised April 2013) shall apply.

[T.D. 8637, 60 FR 66111, Dec. 21, 1995, as amended by T.D. 8734, 62 FR 53492, Oct. 14, 1997; T.D. 8804, 63 FR 72188, Dec. 31, 1998; T.D. 8856, 64 FR 73412, Dec. 30, 1999; T.D. 9675, 79 FR 41131, July 15, 2014; T.D. 9808, 82 FR 2120, Jan. 6, 2017]

§ 1.6050N-2 Coordination with reporting rules for widely held fixed investment trusts under § 1.671-5.

See § 1.671-5 for the reporting rules for widely held fixed investment trusts (as defined under that section).

[T.D. 9241, 71 FR 4025, Jan. 24, 2006]

§ 1.6050P-0 Table of contents.

This section lists the major captions that appear in §§ 1.6050P-1 and 1.6050P-2.

§ 1.6050P-1 Information reporting for discharges of indebtedness by certain entities.

(a) Reporting requirement.

(1) In general.

(2) No aggregation.

(3) Amounts not includible in income.

(4) Time and place for reporting.

(i) In general.

(ii) Indebtedness discharged in bankruptcy.

(b) Date of discharge.

(1) In general.

(2) Identifiable events.

(i) In general.

(ii) Statute of limitations.

(iii) Decision to discontinue collection activity; creditor's defined policy.

(iv) Expiration of non-payment testing period.

(v) Special rule for certain entities required to file in a year prior to 2008.

(3) Permitted reporting.

(c) Indebtedness.

(d) Exceptions from reporting requirement.

(1) Certain bankruptcy discharges.

(i) In general.

(ii) Business or investment debt.

(2) Interest.

(3) Non-principal amounts in lending transactions.

(4) Indebtedness of foreign persons held by foreign branches of U.S. financial institutions.

(i) Reporting requirements.

(ii) Definition.

(5) Acquisition of indebtedness by related party.

(6) Releases.

(7) Guarantors and sureties.

(e) Additional rules.

(1) Multiple debtors.

(i) In general.

(ii) Amount to be reported.

(2) Multiple creditors.

(i) In general.

(ii) Partnerships.

(iii) Pass-through securitized indebtedness arrangement.

(A) Reporting requirements.

(B) Definition.

(iv) REMICs.

(v) No double reporting.

(3) Coordination with reporting under section 6050J.

(4) Direct or indirect subsidiary.

(5) Entity formed or availed of to hold indebtedness.

(6) Use of magnetic media.

(7) TIN solicitation requirement.

(i) In general.

(ii) Manner of soliciting TIN.

(8) Recordkeeping requirements.

(9) No multiple reporting.

(f) Requirement to furnish statement.

(1) In general.

(2) Furnishing copy of Form 1099-C.

(3) Time and place for furnishing statement.

(g) Penalties.

(h) Effective/applicability date.

§ 1.6050P-2 Organization a significant trade or business of which is the lending of money.

(a) In general.

(b) Safe harbors.

(1) Organizations not subject to section 6050P in the previous calendar year.

(2) Organizations that were subject to section 6050P in the previous calendar year.

(3) No test year.

(c) Seller financing.

(d) Gross income from lending of money.

(e) Acquisition of an indebtedness from a person other than the debtor included in lending money.

(f) Test year.

(g) Predecessor organization.

(h) Examples.

(i) Effective date.

[T.D. 8654, 61 FR 268, Jan. 4, 1996, as amended by T.D. 9160, 69 FR 62185, Oct. 25, 2004; T.D. 9430, 73 FR 66540, Nov. 10, 2008; T.D. 9461, 74 FR 47728, Sept. 17, 2009]

§ 1.6050P-1 Information reporting for discharges of indebtedness by certain entities.

(a) ***Reporting requirement*** —

(1) ***In general.*** Except as provided in paragraph (d) of this section, any applicable entity (as defined in section 6050P(c)(1)) that discharges an indebtedness of any person (within the meaning of section 7701(a)(1)) of at least $600 during a calendar year must file an information return on Form 1099-C with the Internal Revenue Service. Solely for purposes of the reporting requirements of section 6050P and this section, a discharge of indebtedness is deemed to have occurred, except as provided in paragraph (b)(3) of this section, if and only if there has occurred an identifiable event described in

paragraph (b)(2) of this section, whether or not an actual discharge of indebtedness has occurred on or before the date on which the identifiable event has occurred. The return must include the following information—

(i) The name, address, and taxpayer identification number (TIN), as defined in section 7701(a)(41), of each person for which there was an identifiable event during the calendar year;

(ii) The date on which the identifiable event occurred, as described in paragraph (b) of this section;

(iii) The amount of indebtedness discharged, as described in paragraph (c) of this section;

(iv) An indication whether the identifiable event was a discharge of indebtedness in a bankruptcy, if known; and

(v) Any other information required by Form 1099-C or its instructions, or current revenue procedures.

(2) ***No aggregation.*** For purposes of reporting under this section, multiple discharges of indebtedness of less than $600 are not required to be aggregated unless such separate discharges are pursuant to a plan to evade the reporting requirements of this section.

(3) ***Amounts not includible in income.*** Except as otherwise provided in this section, discharged indebtedness must be reported regardless of whether the debtor is subject to tax on the discharged debt under sections 61 and 108 or otherwise by applicable law.

(4) ***Time and place for reporting—***

(i) ***In general.*** Except as provided in paragraph (a)(4)(ii) of this section, returns required by this section must be filed with the Internal Revenue Service office designated in the instructions for Form 1099-C on or before February 28 (March 31 if filed electronically) of the year following the calendar year in which the identifiable event occurs.

(ii) ***Indebtedness discharged in bankruptcy.*** Indebtedness discharged in bankruptcy that is required to be reported under this section must be reported for the later of the calendar year in which the amount of discharged indebtedness first becomes ascertainable, or the calendar year in which the identifiable event occurs.

(b) ***Date of discharge*** —

(1) ***In general.*** Solely for purposes of this section, except as provided in paragraph (b)(3) of this section, indebtedness is discharged on the date of the occurrence of an identifiable event specified in paragraph (b)(2) of this section.

(2) ***Identifiable events*** —

(i) ***In general.*** An identifiable event is—

(A) A discharge of indebtedness under title 11 of the United States Code (bankruptcy);

(B) A cancellation or extinguishment of an indebtedness that renders a debt unenforceable in a receivership, foreclosure, or similar proceeding in a federal or State court, as described in section 368(a)(3)(A)(ii) (other than a discharge described in paragraph (b)(2)(i)(A) of this section);

(C) A cancellation or extinguishment of an indebtedness upon the expiration of the statute of limitations for collection of an indebtedness, subject to the limitations described in paragraph (b)(2)(ii) of this section, or upon the expiration of a statutory period for filing a claim or commencing a deficiency judgment proceeding;

(D) A cancellation or extinguishment of an indebtedness pursuant to an election of foreclosure remedies by a creditor that statutorily extinguishes or bars the creditor's right to pursue collection of the indebtedness;

(E) A cancellation or extinguishment of an indebtedness that renders a debt unenforceable pursuant to a probate or similar proceeding;

(F) A discharge of indebtedness pursuant to an agreement between an applicable entity and a debtor to discharge indebtedness at less than full consideration; or

(G) A discharge of indebtedness pursuant to a decision by the creditor, or the application of a defined policy of the creditor, to discontinue collection activity and discharge debt. or

(ii) ***Statute of limitations.*** In the case of an expiration of the statute of limitations for collection of an indebtedness, an identifiable event occurs under paragraph (b)(2)(i)(C) of this section only if, and at such time as, a debtor's affirmative statute of limitations defense is upheld in a final judgment or decision of a judicial proceeding, and the period for appealing the judgment or decision has expired.

(iii) ***Decision to discontinue collection activity; creditor's defined policy.*** For purposes of the identifiable event described in paragraph (b)(2)(i)(G) of this section, a creditor's defined policy includes both a written policy of the creditor and the creditor's established business practice. Thus, for example, a creditor's established practice to discontinue collection activity and abandon debts upon expiration of a particular non-payment period is considered a defined policy for purposes of paragraph (b)(2)(i)(G) of this section.

(3) ***Permitted reporting.*** If a discharge of indebtedness occurs before the date on which an identifiable event occurs, the discharge may, at the creditor's discretion, be reported under this section.

(c) ***Indebtedness.*** For purposes of this section and § 1.6050P-2, indebtedness means any amount owed to an applicable entity, including stated principal, fees, stated interest, penalties, administrative costs and fines. The amount of indebtedness discharged may represent all, or only a part, of the total amount owed to the applicable entity.

(d) ***Exceptions from reporting requirement*** —

(1) ***Certain bankruptcy discharges*** —

(i) ***In general.*** Reporting is required under this section in the case of a discharge of indebtedness in bankruptcy only if the creditor knows from information included in the reporting entity's books and records pertaining to the indebtedness that the debt was incurred for business or investment purposes as defined in paragraph (d)(1)(ii) of this section.

(ii) ***Business or investment debt.*** Indebtedness is considered incurred for business purposes if it is incurred in connection with the conduct of any trade or business other than the trade or business of performing services as an employee. Indebtedness is considered incurred for investment purposes if it is incurred to purchase property held for investment, as defined in section 163(d)(5).

(2) ***Interest.*** The discharge of an amount of indebtedness that is interest is not required to be reported under this section.

(3) ***Non-principal amounts in lending transactions.*** In the case of a lending transaction, the discharge of an amount other than stated principal is not required to be reported under this section. For this purpose, a lending transaction is any transaction in which a lender loans money to, or makes advances on behalf of, a borrower (including revolving credits and lines of credit).

(4) ***Indebtedness of foreign debtors held by foreign branches of U.S. financial institutions*** —

(i) ***Reporting requirements.*** [Reserved]

(ii) ***Definition.*** An indebtedness held by a foreign branch of a U.S. financial institution is described in this paragraph (d)(4) only if—

(A) The financial institution is engaged through a branch or office in the active conduct of a banking or similar business outside the United States;

(B) The branch or office is a permanent place of business that is regularly maintained, occupied, and used to carry on a banking or similar financial business;

(C) The business is conducted by at least one employee of the branch or office who is regularly in attendance at such place of business during normal working hours;

(D) The indebtedness is extended outside of the United States by the branch or office in connection with that trade or business; and

(E) The financial institution does not know or have reason to know that the debtor is a United States person.

(5) ***Acquisition of indebtedness by related party.*** No reporting is required under this section in the case of a deemed discharge of indebtedness under section 108(e)(4) (relating to the acquisition of an indebtedness by a person related to the debtor), unless the disposition of the indebtedness by the creditor was made with a view to avoiding the reporting requirements of this section.

(6) ***Releases.*** The release of a co-obligor is not required to be reported under this section if the remaining debtors remain liable for the full amount of any unpaid indebtedness.

(7) ***Guarantors and sureties.*** Solely for purposes of the reporting requirements of this section, a guarantor is not a debtor. Thus, in the case of guaranteed indebtedness, reporting under this section is not required with respect to a guarantor, whether or not there has been a default and demand for payment made upon the guarantor.

(e) ***Additional rules*** —

(1) ***Multiple debtors*** —

(i) ***In general.*** In the case of indebtedness of $10,000 or more incurred on or after January 1, 1995, that involves more than one debtor, a reporting entity is subject to the requirements of paragraph (a) of this section for each debtor discharged from such indebtedness. In the case of indebtedness incurred prior to January 1, 1995, and indebtedness of less than $10,000 incurred on or after January 1, 1995, involving multiple debtors, reporting under this section is required only with respect to the primary (or first-named) debtor. Additionally, only one return of information is required under this section if the reporting entity knows, or has reason to know, that co-obligors were husband and wife living at the same address when an indebtedness was

incurred, and does not know or have reason to know that such circumstances have changed at the date of a discharge of the indebtedness. This paragraph (e)(1) applies to discharges of indebtedness after December 31, 1994.

(ii) ***Amount to be reported.*** In the case of multiple debtors jointly and severally liable on an indebtedness, the amount of discharged indebtedness required to be reported under this section with respect to each debtor is the total amount of indebtedness discharged. For this purpose, multiple debtors are presumed to be jointly and severally liable on an indebtedness in the absence of clear and convincing evidence to the contrary.

(2) ***Multiple creditors*** —

(i) ***In general.*** Except as otherwise provided in this paragraph (e)(2), if indebtedness is owned (or treated as owned for federal income tax purposes) by more than one creditor, each creditor that is an applicable entity must comply with the reporting requirements of this section with respect to any discharge of indebtedness of $600 or more allocable to such creditor. A creditor will be considered to have complied with the requirements of this section if a lead bank, fund administrator, or other designee of the creditor complies on its behalf in any reasonable manner, such as by filing a single return reporting the aggregate amount of indebtedness discharged, or by filing a return with respect to the portion of the discharged indebtedness allocable to the creditor. For purposes of this paragraph (e)(2)(i), any reasonable method may be used to determine the portion of discharged indebtedness allocable to each creditor.

(ii) ***Partnerships.*** For purposes of paragraph (e)(2)(i) of this section, indebtedness owned by a partnership is treated as owned by the partners.

(iii) ***Pass-through securitized indebtedness arrangement*** —

(A) ***Reporting requirements.*** [Reserved]

(B) ***Definition.*** For purposes of this paragraph (e)(2)(iii), a pass-through securitized indebtedness arrangement is any arrangement whereby one or more debt obligations are pooled and held for twenty or more persons whose interests in the debt obligations are undivided co-ownership interests that are freely transferrable. Co-ownership interests that are actively traded personal property (as defined in § 1.1092(d)-1) are presumed to be freely transferrable and held by twenty or more persons.

(iv) ***REMICs.*** [Reserved]

(v) ***No double reporting.*** If multiple creditors are considered to hold interests in an indebtedness for purposes of this paragraph (e)(2) by virtue of holding ownership interests in an entity, and the entity is required to report a discharge of that indebtedness under paragraph (e)(5) of this section, then the multiple creditors are not required to report the discharge of indebtedness.

(3) ***Coordination with reporting under section 6050J.*** If, in the same calendar year, a discharge of indebtedness reportable under section 6050P occurs in connection with a transaction also reportable under section 6050J (relating to foreclosures and abandonments of secured property), an applicable entity need not file both a Form 1099-A and a Form 1099-C with respect to the same debtor. The filing requirements of section 6050J will be satisfied with respect to a borrower if, in lieu of filing Form 1099-A, a Form 1099-C is filed in accordance with the instructions for the filing of that form. This paragraph (e)(3) applies to discharges of indebtedness after December 31, 1994.

(4) ***Direct or indirect subsidiary.*** For purposes of section 6050P(c)(2)(C), the term direct or indirect subsidiary means a corporation in a chain of corporations beginning with an entity described in section 6050P(c)(2)(A), if at least 50 percent of the total combined voting power of all classes of stock entitled to vote, or at least 50 percent of the total value of all classes of stock, of such corporation is directly owned by the entity described in section 6050P(c)(2)(A), or by one or more other corporations in the chain.

(5) ***Entity formed or availed of to hold indebtedness.*** Notwithstanding § 1.6050P-2(b)(3), if an entity (the transferee entity) is formed or availed of by an applicable entity (within the meaning of section 6050P(c)(1)) for the principal purpose of holding indebtedness acquired (including originated) by the applicable entity, then, for purposes of section 6050P(c)(2)(D), the transferee entity has a significant trade or business of lending money.

(6) ***Use of magnetic media.*** Any return required under this section must be filed on magnetic media to the extent required by section 6011(e) and the regulations thereunder. A failure to file on magnetic media when required constitutes a failure to file an information return under section 6721. Any person not required by section 6011(e) to file returns on magnetic media may request permission to do so under applicable regulations and revenue procedures.

(7) ***TIN solicitation requirement*** —

(i) ***In general.*** For purposes of reporting under this section, a reasonable effort must be made to obtain the correct name/taxpayer identification number (TIN) combination of a person whose indebtedness is discharged. A TIN obtained at the time an indebtedness is incurred satisfies the requirement of this section, unless the entity required to file knows that such TIN is incorrect. If the TIN is not obtained prior to the occurrence of an identifiable event, it must be requested of the debtor for purposes of satisfying the requirement of this paragraph (e)(7).

(ii) ***Manner of soliciting TIN.*** Solicitations made in the manner described in § 301.6724-1(e)(1)(i) and (2) of this chapter will be deemed to have satisfied the reasonable effort requirement set forth in paragraph (e)(7)(i) of this section. A TIN solicitation made after the occurrence of an identifiable event must clearly notify the debtor that the Internal Revenue Service requires the debtor to furnish its TIN, and that failure to furnish such TIN may subject the debtor to a $50 penalty imposed by the Internal Revenue Service. A TIN provided under this section is not required to be certified under penalties of perjury.

(8) ***Recordkeeping requirements.*** Any applicable entity required to file a return with the Internal Revenue Service under this section must also retain a copy of the return, or have the ability to reconstruct the data required to be included on the return under paragraph (a)(1) of this section, for at least four years from the date such return is required to be filed under paragraph (a)(4) of this section.

(9) ***No multiple reporting.*** If discharged indebtedness is reported under this section, no further reporting under this section is required for the amount so reported, notwithstanding that a subsequent identifiable event occurs with respect to the same amount. Further, no additional reporting or Form 1099-C correction is required if a creditor receives a payment of all or a portion of a discharged indebtedness reported under this section for a prior calendar year.

(f) ***Requirement to furnish statement*** —

(1) ***In general.*** Any applicable entity required to file a return under this section must furnish to each person whose name is shown on such return a written statement that includes the following information—

(i) The information required by paragraph (a)(1) of this section. An IRS truncated taxpayer identifying number (TTIN) may be used as the TIN of the person for whom there was an identifiable event in lieu of the identifying number appearing on the information return filed with the Internal Revenue Service. For provisions relating to the use of TTINs, see § 301.6109-4 of this chapter (Procedure and Administration Regulations);

(ii) The name, address, and TIN of the applicable entity required to file a return under paragraph (a) of this section;

(iii) A legend identifying the statement as important tax information that is being furnished to the Internal Revenue Service; and

(iv) Any other information required by Form 1099-C or its instructions, or current revenue procedures.

(2) ***Furnishing copy of Form 1099-C.*** The requirement to provide a statement to the debtor will be satisfied if the applicable entity furnishes copy B of the Form 1099-C or a substitute statement that complies with the requirements of the current revenue procedure for substitute Forms 1099.

(3) ***Time and place for furnishing statement.*** The statement required by this paragraph (f) must be furnished to the debtor on or before January 31 of the year following the calendar year in which the identifiable event occurs. The statement will be considered furnished to the debtor if it is mailed to the debtor's last known address.

(g) ***Penalties.*** For penalties for failure to comply with the requirements of this section, see sections 6721 through 6724.

(h) ***Applicability dates.*** This section applies to information returns required to be filed, and payee statements required to be furnished, after December 31, 2016. Section 1.6050P-1 (as contained in 26 CFR part 1, revised April 2016) applies to information returns required to be filed, and payee statements required to be furnished, on or before December 31, 2016.

[T.D. 8654, 61 FR 268, Jan. 4, 1996, as amended by T.D. 8895, 65 FR 50408, Aug. 18, 2000; T.D. 9160, 69 FR 62186, Oct. 25, 2004; T.D. 9430, 73 FR 66540, Nov. 10, 2008; T.D. 9461, 74 FR 47728, Sept. 17, 2009; T.D. 9675, 79 FR 41131, July 15, 2014; T.D. 9793, 81 FR 78911, Nov. 10, 2016]

§ 1.6050P-2 Organization a significant trade or business of which is the lending of money.

(a) ***In general.*** For purposes of section 6050P(c)(2)(D), the lending of money is a significant trade or business of an organization in a calendar year if the organization lends money on a regular and continuing basis during the calendar year.

(b) ***Safe harbors*** —

(1) ***Organizations not subject to section 6050P in the previous calendar year.*** For an organization that was not required to report under section 6050P in the previous calendar year, the lending of money is not treated as a significant trade or business for the calendar year in which the lending occurs if gross income from lending money (as described in paragraph (d) of this section) in the organization's most recent test year (as defined in paragraph (f) of this section) is both less than $5 million and less than 15 percent of the organization's gross income for that test year.

(2) ***Organizations that were subject to section 6050P in the previous calendar year.*** For an organization that was required to report under section 6050P for the previous calendar year, the lending of money is not treated as a significant trade or business for the calendar year in which the lending occurs if gross income from lending money (as described in paragraph (d) of this section) in each of the organization's three most recent test years is both less than $3 million and less than 10 percent of the organization's gross income for that test year.

(3) ***No test year.*** The lending of money is not treated as a significant trade or business for an organization for the calendar year in which the lending occurs if the organization does not have a test year for that calendar year.

(c) ***Seller financing.*** If the principal trade or business of an organization is selling nonfinancial goods or providing nonfinancial services and if the organization extends credit to the purchasers of those goods or services to finance the purchases, then, for purposes of section 6050P(c)(2)(D), these extensions of credit are not a significant trade or business of lending money.

(d) ***Gross income from lending of money.*** For purposes of this section, gross income from lending of money includes—

(1) Income from interest, including qualified stated interest, original issue discount, and market discount;

(2) Gains arising from the sale or other disposition of indebtedness;

(3) Penalties with respect to indebtedness (whether or not the penalty is interest for Federal tax purposes); and

(4) Fees with respect to indebtedness, including merchant discount or interchange (whether or not the fee is interest for Federal tax purposes).

(e) ***Acquisition of an indebtedness from a person other than the debtor included in lending money.*** For purposes of this section, lending money includes acquiring an indebtedness not only from the debtor at origination but also from a prior holder of the indebtedness. Gross income arising from indebtedness is gross income from the lending of money without regard to who originated the indebtedness. If an organization acquires an indebtedness, the organization is required to report any cancellation of the indebtedness if the organization is engaged in a significant trade or business of lending money.

(f) ***Test year.*** For any calendar year, a *test year* is a taxable year of the organization that ends before July 1 of the previous calendar year.

(g) ***Predecessor organization.*** If an organization acquires substantially all of the property that was used in a trade or business of some other organization (the predecessor) (including when two or more corporations are parties to a merger agreement under which the surviving corporation becomes the owner of the assets and assumes the liabilities of the absorbed corporation(s)) or was used in a separate unit of the predecessor, then whether the organization at issue qualifies for one of the safe harbors in paragraph (b) of this section is determined by also taking into account the test years, reporting obligations, and gross income of the predecessor.

(h) ***Examples.*** The rules of this section are illustrated by the following examples:

> *Example 1.* (i) *Facts.* Finance Company A, a calendar year taxpayer, was formed in Year 1 as a non-bank subsidiary of Manufacturing Company and has no predecessor. A lends money to

purchasers of Manufacturing Company's products on a regular and continuing basis to finance the purchase of those products. A's gross income from stated interest in Year 1 is $4.7 million. In Year 1, A's gross income from fees and penalties with respect to the indebtedness is $0.5 million, and A has no other gross income from lending money within the meaning of paragraph (d) of this section.
(ii) *Results.* Section 6050P does not require A to report discharges of indebtedness occurring in Years 1 or 2, because A has no test year for those years. Notwithstanding that A lends money in those years on a regular and continuing basis, under paragraph (b)(3) of this section, A does not have a significant trade or business of lending money in those years for purposes of section 6050P(c)(2)(D). However, for Year 3, A's test year is Year 1. A's gross income from lending in Year 1 is not less than $5 million for purposes of the applicable safe harbor of paragraph (b)(1) of this section. Because A lends money on a regular and continuing basis and does not meet the applicable safe harbor, section 6050P requires A to report discharges of indebtedness occurring in Year 3.

Example 2. (i) *Facts.* The facts are the same as in *Example 1,* except that A is a division of Manufacturing Company, rather than a separate subsidiary. Manufacturing Company's principal activity is the manufacture and sale of non-financial products, and, other than financing the purchase of those products, Manufacturing Company does not extend credit or otherwise lend money.
(ii) *Results.* Under paragraph (c) of this section, that financing activity is not a significant trade or business of lending money for purposes of section 6050P(c)(2)(D), and section 6050P does not require Manufacturing Company to report discharges of indebtedness.

Example 3. (i) *Facts.* Company B, a calendar year taxpayer, is formed in Year 1. B has no predecessor and a part of its activities consists of the lending of money. B packages and sells part of the indebtedness it originates and holds the remainder. B is engaged in these activities on a regular and continuing basis. For Year 1, the sum of B's gross income from sales of the indebtedness, plus other income described in paragraph (d) of this section, is only $4.8 million, but it is 16% of B's gross income in Year 1.
(ii) *Results.* Because B lends money on a regular and continuing basis and does not meet the applicable safe harbor of paragraph (b)(1) of this section, section 6050P requires B to report discharges of indebtedness occurring in Year 3. B is not required to report discharges of indebtedness in Years 1 and 2 because B has no test year for Years 1 and 2.

Example 4. (i) *Facts.* The facts are the same as in *Example 3.* In addition, in each of Years 2, 3, and 4, the sum of B's gross income from sales of the indebtedness, plus other income described in paragraph (d) of this section, is less than both $3 million and 10% of B's gross income.

(ii) *Results.* (A) Because B was required to report under section 6050P for Year 3, the applicable safe harbor for Year 4 is paragraph (b)(2) of this section, which is satisfied only if B's gross income from lending activities for each of the three most recent test years is less than both $3 million and 10% of B's gross income. For Year 4, even though B has only two test years, B's gross income in one of those test years, Year 1, causes B to fail to meet this safe harbor. Accordingly, B is required to report discharges of indebtedness under section 6050P in Year 4. For Year 5, B's three most recent test years are Years 1, 2, and 3. However, B's gross income from lending activities in Year 1 is not less than $3 million and 10% of B's gross income. Accordingly, section 6050P requires B to report discharges of indebtedness in Year 5.

(B) For Year 6, B satisfies the applicable safe harbor requirements of paragraph (b)(2) of this section for each of the three most recent test years (Years 2, 3, and 4). Therefore, section 6050P does not require B to report discharges of indebtedness in Year 6. Because B is not required to report for Year 6, the applicable safe harbor for Year 7 is the one contained in paragraph (b)(1) of this section, and thus the only relevant test year is Year 5.

Example 5. (i) *Facts.* (A) Company C, a calendar year taxpayer, was formed in Year 1 and, on a regular and continuing basis, enters into the following transactions with its clients, all of whom are unrelated parties to C. C does not have any other income.
(B) C's clients sell goods to customers, frequently accepting as payment accounts receivable that are due in 30 to 90 days. Under a contract with each client, C investigates the creditworthiness of the client's customers with respect to the prospective sales, and, for each customer, C determines whether, and to what extent, C is willing to assume the risk of loss on accounts receivable to be issued by the customer. C's decision whether to assume risk of loss may be based on an evaluation of the credit quality of particular customers or on the aggregate credit quality of all of the client's prospective customers. If C is unwilling to assume the risk, the client either may refuse to extend any credit to the customer or may accept the account receivable and bear the risk of loss.

(C) Pursuant to some contracts between C's clients and C, C's clients assign legal title to the accounts receivable to C when the accounts receivable are issued by the customers. For these accounts receivable, C agrees to undertake collections and to remit the amounts collected to the client, less a fee of 0.70 percent of the face value of the accounts receivable. Pursuant to other contracts between C's clients and C, C's clients retain legal title to the accounts receivable and retain the initial collection responsibility. For these accounts receivable, C's fee is reduced to 0.35 percent. Both groups of accounts receivable include accounts receivable for which C has assumed the risk of loss and accounts receivable for which C has not assumed the risk of loss.

(D) Based on all the facts and circumstances, C acquires ownership for Federal tax purposes of some, but not all, of the accounts receivable that it has agreed to collect and of some, but not all, of the accounts receivable for which the client has retained collection responsibility.

(E) In Year 1, C's total fee income with respect to accounts receivable of which it acquired tax ownership was $2 million. C's fee income in Year 1 from accounts receivable of which it did not acquire tax ownership was $700,000. C does not have any other income for Year 1.

(F) In Year 3, there were discharges of $950,000, representing $100,000 of customer defaults on those accounts receivable of which C was the owner for Federal tax purposes at the time of the identifiable event marking the discharge and $850,000 of customer defaults on the accounts receivable of which the clients, and not C, were the owner. Whenever C determined the uncollectibility of an account receivable for which it had not assumed the risk of loss, C reassigned title to the account receivable to the appropriate client. Each defaulting customer defaulted on an account receivable with an outstanding balance of at least $600.

(ii) *Results.* (A) For Year 3, C's test year is Year 1. Under paragraph (e) of this section, C's $2 million fee income from the accounts receivable of which it acquired tax ownership is "gross income from lending money" for purposes of paragraph (b) of this section, because C was the owner of the accounts for Federal tax purposes. Under paragraph (e) of this section, C's $700,000 fee income from the accounts receivable of which it did not acquire tax ownership is not "gross income from lending money" for purposes of paragraph (b) of this section, because C was not the owner of the accounts receivable for Federal tax purposes. In Year 1, therefore, C's gross income from lending money is less than $5 million but is not less than 15% of C's gross income. Because C lends money on a regular and continuing basis and does not meet the applicable safe harbor, section 6050P requires C to report discharges of indebtedness occurring in Year 3.

(B) In Year 3, section 6050P requires C to report the $100,000 of discharges of the accounts receivable of which C was the owner for Federal tax purposes at the time of the identifiable event marking the discharge. Unless an exception to reporting under paragraph (b) or (c) of this section applies, section 6050P requires C's clients to report the $850,000 of discharges of the accounts receivable of which C did not become the owner.

(i) ***Effective date.*** This section applies to discharges of indebtedness occurring on or after January 1, 2005.

[T.D. 9160, 69 FR 62186, Oct. 25, 2004]

§ 1.6050S-0 Table of contents.

This section lists captions contained in §§ 1.6050S-1, 1.6050S-2T, 1.6050S-3, and 1.6050S-4T.

§ 1.6050S-1 Information reporting for qualified tuition and related expenses.

(a) Information reporting requirement.

(1) In general.

(2) Exceptions.

(i) No reporting by institutions or insurers for nonresident alien individuals.

(ii) No reporting by institutions for noncredit courses.

(A) In general.

(B) Academic credit defined.

(C) Example.

(iii) No reporting by institutions for individuals whose qualified tuition and related expenses are waived or are paid with scholarships.

(iv) No reporting by institutions for individuals whose qualified tuition and related expenses are covered by a formal billing arrangement.

(A) In general.

(B) Formal billing arrangement defined.

(b) Requirement to file return.

(1) In general.

(2) Information reporting requirements for institutions that elect to report payments received for qualified tuition and related expenses.

(i) In general.

(ii) Information included on return.

(iii) Reportable amount of payments received for qualified tuition and related expenses during calendar year determined.

(iv) Separate reporting of reimbursements or refunds of payments of qualified tuition and related expenses that were reported for a prior calendar year.

(v) Payments received for qualified tuition and related expenses determined.

(vi) Reimbursements or refunds of payments for qualified tuition and related expenses determined.

(vii) Examples.

(3) Information reporting requirements for institutions that elect to report amounts billed for qualified tuition and related expenses.

(i) In general.

(ii) Information included on return.

(iii) Reportable amounts billed for qualified tuition and related expenses during calendar year determined.

(iv) Separate reporting of reductions made to amounts billed for qualified tuition and related expenses that were reported for a prior calendar year.

(v) Examples.

(4) Requirements for insurers.

(i) In general.

(ii) Information included on return.

(5) Time and place for filing return.

(i) In general.

(ii) Return for nonresident alien individual.

(iii) Extensions of time.

(6) Use of magnetic media.

(c) Requirement to furnish statement.

(1) In general.

(2) Time and manner for furnishing statement.

(i) In general.

(ii) Statement to nonresident alien individual.

(iii) Extensions of time.

(3) Copy of Form 1098-T.

(d) Special rules.

(1) Enrollment determined.

(2) Payments of qualified tuition and related expenses received or collected by one or more persons.

(i) In general.

(ii) Exception.

(3) Governmental units.

(e) Penalty provisions.

(1) Failure to file correct returns.

(2) Failure to furnish correct information statements.

(3) Waiver of penalties for failures to include a correct TIN.

(i) In general.

(ii) Acting in a responsible manner.

(iii) Manner of soliciting TIN.

(4) Failure to furnish TIN.

(f) Effective date.

§ 1.6050S-2T Electronic furnishing of information statements for qualified tuition and related expenses.

(a) Electronic furnishing of statements.

(1) In general.

(2) Consent.

(i) In general.

(ii) Change in hardware or software requirements.

(iii) Example.

(3) Required disclosures.

(i) In general.

(ii) Paper statement.

(iii) Scope and duration of consent.

(iv) Post-consent request for a paper statement.

(v) Withdrawal of consent.

(vi) Notice of termination.

(vii) Updating information.

(viii) Hardware and software requirements.

(4) Format.

(5) Posting.

(6) Notice.

(i) In general.

(ii) Undeliverable electronic address.

(iii) Corrected statements.

(7) Retention.

(b) Effective date.

§ 1.6050S-3 Information reporting for payments of interest on qualified education loans.

(a) Information reporting requirement in general.

(b) Definitions.

(1) Interest.

(2) Payor.

(c) Requirement to file return.

(1) Form of return.

(2) Information included on return.

(3) Time and place for filing return.

(i) In general.

(ii) Extensions of time.

(4) Use of magnetic media.

(d) Requirement to furnish statement.

(1) In general.

(2) Time and manner for furnishing statement.

(i) In general.

(ii) Extensions of time.

(3) Copy of Form 1098-E.

(e) Special rules.

(1) Transitional rule for reporting of loan origination fees and capitalized interest.

(2) Qualified education loan certification.

(3) Payments of interest received or collected by one or more persons.

(i) In general.

(ii) Exception.

(4) Reporting by foreign persons.

(5) Governmental units.

(f) Penalty provisions.

(1) Failure to file correct returns.

(2) Failure to furnish correct information statements.

(3) Waiver of penalties for failures to include a correct TIN.

(i) In general.

(ii) Acting in a responsible manner.

(iii) Manner of soliciting TIN.

(4) Failure to furnish TIN.

(g) Effective date.

§ 1.6050S-4T Electronic furnishing of information statements for payments of interest on qualified education loans.

(a) Electronic furnishing of statements.

(1) In general.

(2) Consent.

(i) In general.

(ii) Change in hardware or software requirements.

(iii) Example.

(3) Required disclosures.

(i) In general.

(ii) Paper statement.

(iii) Scope and duration of consent.

(iv) Post-consent request for a paper statement.

(v) Withdrawal of consent.

(vi) Notice of termination.

(vii) Updating information.

(viii) Hardware and software requirements.

(4) Format.

(5) Posting.

(6) Notice.

(i) In general.

(ii) Undeliverable electronic address.

(iii) Corrected statements.

(7) Retention.

(b) Effective date.

[T.D. 8992, 67 FR 20904, Apr. 29, 2002, as amended by T.D. 9029, 67 FR 77681, Dec. 19, 2002]

§ 1.6050S-1 Information reporting for qualified tuition and related expenses.

(a) ***Information reporting requirement*** —

(1) ***In general.*** Except as provided in paragraph (a)(2) of this section, any eligible educational institution (as defined in section 25A(f)(2) and the regulations thereunder) (an institution) that enrolls (as determined under paragraph (d)(1) of this section) any individual for any academic period (as defined in the regulations under section 25A), and any person that is engaged in a trade or business of making payments under an insurance arrangement as reimbursements or refunds (or other similar amounts) of qualified tuition and related expenses (as defined in section 25A(f)(1) and the regulations thereunder) (an insurer) must—

(i) File an information return, as described in paragraph (b) of this section, with the Internal Revenue Service (IRS) with respect to each individual described in paragraph (b) of this section; and

(ii) Furnish a statement, as described in paragraph (c) of this section, to each individual described in paragraph (c) of this section.

(2) ***Exceptions*** —

(i) ***No reporting by institution or insurer for nonresident alien individuals.*** The information reporting requirements of this section do not apply with respect to any individual who is a nonresident alien (as defined in section 7701(b) and § 301.7701(b)-3 of this chapter) during the calendar year, unless the individual requests the institution or insurer to report. If a nonresident alien individual requests an institution or insurer to report, the institution or insurer must comply with the requirements of this section for the calendar year with respect to which the request is made.

(ii) ***No reporting by institutions for noncredit courses*** —

(A) ***In general.*** The information reporting requirements of this section do not apply with respect to any course for which no academic credit is offered by the institution.

(B) ***Academic credit defined. Academic credit*** means credit offered by an institution for the completion of course work leading toward a post-secondary degree, certificate, or other recognized post-secondary educational credential.

(C) ***Example.*** The following example illustrates the rules of this paragraph (a)(2)(ii):

Example. Student A, a medical doctor, takes a course at University X's medical school. Student A takes the course to fulfill State Y's licensing requirement that medical doctors attend continuing medical education courses each year. Student A is not enrolled in a degree program at University X and takes the medical course through University X's continuing professional education division. University X does not offer credit toward a post-secondary degree on an academic transcript for the completion of the course but gives Student A a certificate of attendance upon completion. Under

this paragraph (a)(2)(ii), University X is not subject to the information reporting requirements of section 6050S and this section for the medical education course taken by Student A.

(iii) ***No reporting by institutions for individuals whose qualified tuition and related expenses are waived or are paid with scholarships.*** The information reporting requirements of this section do not apply with respect to any individual whose qualified tuition and related expenses are waived in their entirety or are paid entirely with scholarships.

(iv) ***No reporting by institutions for individuals whose qualified tuition and related expenses are covered by a formal billing arrangement*** —

(A) ***In general.*** The information reporting requirements of this section do not apply with respect to any individual whose qualified tuition and related expenses are covered by a formal billing arrangement as defined in paragraph (a)(2)(iv)(B) of this section.

(B) ***Formal billing arrangement defined.*** A *formal billing arrangement* means—

(*1*) An arrangement in which the institution bills only an employer for education furnished by the institution to an individual who is the employer's employee and does not maintain a separate financial account for that individual;

(*2*) An arrangement in which the institution bills only a governmental entity for education furnished by the institution to an individual and does not maintain a separate financial account for that individual; or

(*3*) Any other similar arrangement in which the institution bills only an institutional third party for education furnished to an individual and does not maintain a separate financial account for that individual, but only if designated as a formal billing arrangement by the Commissioner in published guidance of general applicability or in guidance directed to participants in specific arrangements.

(b) ***Requirement to file return*** —

(1) ***In general.*** Institutions may elect to report either the information described in paragraph (b)(2) of this section, or the information described in paragraph (b)(3) of this section. Once an institution elects to report under either paragraph (b)(2) or (3) of this section, the institution must use the same reporting method for all calendar years in which it is required to file returns, unless permission is granted to change reporting methods. Paragraph (b)(2) of this section requires institutions to report, among other information, the amount of payments received during the calendar year for qualified tuition and related expenses. Institutions must report separately adjustments made during the calendar year that relate to payments received for qualified tuition and related expenses that were reported for a prior calendar year. For purposes of paragraph (b)(2) of this section, an adjustment made to payments received means a reimbursement or refund. Paragraph (b)(3) requires institutions to report, among other information, the amounts billed during the calendar year for qualified tuition and related expenses. Institutions must report separately adjustments made during the calendar year that relate to amounts billed for qualified tuition and related expenses that were reported for a prior calendar year. For purposes of paragraph (b)(3) of this section, an adjustment made to amounts billed means a reduction in charges. Insurers must report the information described in paragraph (b)(4) of this section.

(2) ***Information reporting requirements for institutions that elect to report payments received for qualified tuition and related expenses*** —

(i) ***In general.*** Except as provided in paragraph (a)(2) of this section, an institution reporting payments received for qualified tuition and related expenses must file an information return with the IRS on Form 1098-T, "Tuition Statement," with respect to each individual enrolled (as determined in paragraph (d)(1) of this section) for an academic period beginning during the calendar year or during a prior calendar year and for whom a transaction described in paragraphs (b)(2)(ii)(C), (E), (F) or (G) of this section is made during the calendar year. An institution may use a substitute Form 1098-T if the substitute form complies with applicable revenue procedures relating to substitute forms (*see* § 601.601(d)(2) of this chapter).

(ii) ***Information included on return.*** An institution reporting payments received for qualified tuition and related expenses must include on Form 1098-T—

(A) The name, address, and taxpayer identification number (TIN)(as defined in section 7701(a)(41)) of the institution;

(B) The name, address, and TIN of the individual who is, or has been, enrolled by the institution;

(C) The amount of payments of qualified tuition and related expenses that the institution received from any source with respect to the individual during the calendar year;

(D) An indication by the institution whether any payments received for qualified tuition and related expenses reported for the calendar year relate to an academic period that begins during the first three months of the next calendar year;

(E) The amount of any scholarships or grants for the payment of the individual's costs of attendance that the institution administered and processed during the calendar year;

(F) The amount of any reimbursements or refunds of qualified tuition and related expenses made during the calendar year with respect to the individual that relate to payments of qualified tuition and related expenses that were reported by the institution for a prior calendar year;

(G) The amount of any reductions to the amount of scholarships or grants for the payment of the individual's costs of attendance that were reported by the institution with respect to the individual for a prior calendar year;

(H) A statement or other indication showing whether the individual was enrolled for at least half of the normal full-time work load for the course of study the individual is pursuing for at least one academic period that begins during the calendar year (see section 25A and the regulations thereunder);

(I) A statement or other indication showing whether the individual was enrolled in a program leading to a graduate-level degree, graduate-level certificate, or other recognized graduate-level educational credential; and

(J) Any other information required by Form 1098-T and its instructions.

(iii) ***Reportable amount of payments received for qualified tuition and related expenses during calendar year determined.*** The amount of payments received for qualified tuition and related expenses with respect to an individual during the calendar year that is reportable on Form

1098-T is determined by netting the amount of payments received (as defined in paragraph (b)(2)(v) of this section) for qualified tuition and related expenses during the calendar year against any reimbursements or refunds (as defined in paragraph (b)(2)(vi) of this section) made during the calendar year that relate to payments received for qualified tuition and related expenses during the same calendar year.

(iv) ***Separate reporting of reimbursements or refunds of payments of qualified tuition and related expenses that were reported for a prior calendar year.*** An institution must separately report on Form 1098-T any reimbursements or refunds (as defined in paragraph (b)(2)(vi) of this section) made during the current calendar year that relate to payments of qualified tuition and related expenses that were reported by the institution for a prior calendar year. Such reimbursements or refunds shall not be netted against the payments received for qualified tuition and related expenses during the current calendar year.

(v) ***Payments received for qualified tuition and related expenses determined.*** For purposes of determining the amount of payments received for qualified tuition and related expenses during a calendar year, payments received with respect to an individual during the calendar year from any source (except for any scholarship or grant that, by its terms, must be applied to expenses other than qualified tuition and related expenses, such as room and board) are treated as payments of qualified tuition and related expenses up to the total amount billed by the institution for such expenses. For purposes of this section, a payment includes any positive account balance (such as any reimbursement or refund credited to an individual's account) that an institution applies toward current charges.

(vi) ***Reimbursements or refunds of payments for qualified tuition and related expenses determined.*** For purposes of determining the amount of reimbursements or refunds made of payments received for qualified tuition and related expenses, any reimbursement or refund made with respect to an individual during a calendar year (except for any refund of a scholarship or grant that, by its terms, was required to be applied to expenses other than qualified tuition and related expenses, such as room and board) is treated as a reimbursement or refund of payments for qualified tuition and related expenses up to the amount of any reduction in charges for such expenses. For purposes of this section, a reimbursement or refund includes amounts that an institution credits to an individual's account, as well as amounts disbursed to, or on behalf of, the individual.

(vii) ***Examples.*** The following examples illustrate the rules in this paragraph (b)(2):

> *Example 1.* (i) In early August 2003, University X bills enrolled Student A $10,000 for qualified tuition and related expenses and $6,000 for room and board for the 2003 Fall semester. In late August 2003, Student A pays $11,000 to University X. In early September 2003, Student A drops to half-time enrollment for the 2003 Fall semester. In late September 2003, University X credits $5,000 to Student A's account, reflecting a $5,000 reduction in charges for qualified tuition and related expenses. In late September 2003, University X applies the $5,000 positive account balance toward current charges. (ii) Under paragraph (b)(2)(v) of this section, the $11,000 payment is treated as a payment of qualified tuition and related expenses up to the $10,000 billed for qualified tuition and related expenses. Under paragraph (b)(2)(vi) of this section, the $5,000

credited to the student's account is treated as a reimbursement or refund of payments for qualified tuition and related expenses, because the current year charges for qualified tuition and related expenses were reduced by $5,000. Under paragraph (b)(2)(iii) of this section, University X is required to net the $10,000 payment received for qualified tuition and related expenses during 2003 against the $5,000 reimbursement or refund of payments received for qualified tuition and related expenses during 2003. Therefore, Institution X is required to report $5,000 of payments received for qualified tuition and related expenses during 2003.

Example 2. (i) The facts are the same as in Example 1, except that Student A pays the full $16,000 in late August 2003. In late September 2003, University X reduces the tuition charges by $5,000 and issues a $5,000 refund to Student A.
(ii) Under paragraph (b)(2)(v) of this section, the $16,000 payment is treated as a payment of qualified tuition and related expenses up to the $10,000 billed for qualified tuition and related expenses. Under paragraph (b)(2)(vi) of this section, the $5,000 refund is treated as reimbursement or refund of payments for qualified tuition and related expenses, because the current year charges for qualified tuition and related expenses were reduced by $5,000. Under paragraph (b)(2)(iii) of this section, University X is required to net the $10,000 payment received for qualified tuition and related expenses during 2003 against the $5,000 reimbursement or refund of payments received for qualified tuition and related expenses during 2003. Therefore, Institution X is required to report $5,000 of payments received for qualified tuition and related expenses during 2003.

Example 3. (i) The facts are the same as in *Example 1,* except that Student A is enrolled full-time, and, in early September 2003, Student A decides to live at home with her parents. In late September 2003, University X adjusts Student A's account to eliminate room and board charges and issues a $1,000 refund to Student A.
(ii) Under paragraph (b)(2)(v) of this section, the $11,000 payment is treated as a payment of qualified tuition and related expenses up to the $10,000 billed for qualified tuition and related expenses. Under paragraph (b)(2)(vi) of this section, the $1,000 refund is not treated as reimbursement or refund of payments for qualified tuition and related expenses, because there is no reduction in charges for qualified tuition and related expenses. Therefore, under paragraph (b)(2)(iii) of this section, University X is required to report $10,000 of payments received for qualified tuition and related expenses during 2003.

Example 4. (i) In early December 2003, College Y bills enrolled Student B $10,000 for qualified tuition and related expenses and $6,000 for room and board for the 2004 Spring semester. In late December 2003, Student B pays $16,000. In mid-January 2004, after the 2004 Spring semester classes begin, Student B drops to half-time enrollment.

In mid-January 2004, College Y credits Student B's account with $5,000, reflecting a $5,000 reduction in charges for qualified tuition and related expenses, but does not issue a refund to Student B. In early August 2004, College Y bills Student B $10,000 for qualified tuition and related expenses and $6,000 for room and board for the 2004 Fall semester. In early September 2004, College Y applies the $5,000 positive account balance toward Student B's $16,000 bill for the 2004 Fall semester. In late September 2004, Student B pays $6,000 towards the charges.
(ii) In the reporting for calendar year 2003, under paragraph (b)(2)(v) of this section, the $16,000 payment in December 2003 is treated as a payment of qualified tuition and related expenses up to the $10,000 billed for qualified tuition and related expenses. Under paragraph (b)(2)(iii) of this section, College Y is required to report $10,000 of payments received for qualified tuition and related expenses during 2003. In addition, College Y is required to indicate that the payments reported for 2003 relate to an academic period that begins during the first three months of the next calendar year.

(iii) In the reporting for calendar year 2004, under paragraph (b)(2)(vi) of this section, the $5,000 credited to Student B's account is treated as a reimbursement or refund of qualified tuition and related expenses, because the charges for qualified tuition and related expenses were reduced by $5,000. Under paragraph (b)(2)(iv) of this section, the $5,000 reimbursement or refund of qualified tuition and related expenses must be separately reported on Form 1098-T because it relates to payments of qualified tuition and related expenses reported by College Y for 2003. Under paragraph (b)(2)(v) of this section, the $5,000 positive account balance that is applied toward charges for the 2004 Fall semester is treated as a payment. Therefore, College Y received total payments of $11,000 during 2004 (the $5,000 credit plus the $6,000 payment). Under paragraph (b)(2)(v) of this section, the $11,000 of total payments are treated as a payment of qualified tuition and related expenses up to the $10,000 billed for such expenses. Therefore, for 2004, College Y is required to report $10,000 of payments received for qualified tuition and related expenses during 2004 and a $5,000 refund of payments of qualified tuition and related expenses reported for 2003.

(3) ***Information reporting requirements for institutions that elect to report amounts billed for qualified tuition and related expenses*** —

(i) ***In general.*** Except as provided in paragraph (a)(2) of this section, an institution reporting amounts billed for qualified tuition and related expenses must file an information return on Form 1098-T with respect to each individual enrolled (as determined in paragraph (d)(1) of this section) for an academic period beginning during the calendar year or during a prior calendar year and for whom a transaction described in paragraphs (b)(3)(ii)(C), (E), (F) or (G) of this section is made during the calendar year. An institution may use a substitute Form 1098-T if the substitute form complies with applicable revenue procedures relating to substitute forms (*see* § 601.601(d)(2) of this chapter).

(ii) ***Information included on return.*** An institution reporting amounts billed for qualified tuition and related expenses must include on Form 1098-T—

(A) The name, address, and taxpayer identification number (TIN)(as defined in section 7701(a)(41)) of the institution;

(B) The name, address, and TIN of the individual who is, or has been, enrolled by the institution;

(C) The amount billed for qualified tuition and related expenses with respect to the individual during the calendar year;

(D) An indication by the institution whether any amounts billed for qualified tuition and related expenses reported for the calendar year relate to an academic period that begins during the first three months of the next calendar year;

(E) The amount of any scholarships or grants for the payment of the individual's costs of attendance that the institution administered and processed during the calendar year;

(F) The amount of any reductions in charges made during the calendar year with respect to the individual that relate to amounts billed for qualified tuition and related expenses that were reported by the institution for a prior calendar year;

(G) The amount of any reductions to the amount of scholarships or grants for the payment of the individual's costs of attendance that were reported by the institution with respect to the individual for a prior calendar year;

(H) A statement or other indication showing whether the individual was enrolled for at least half of the normal full-time work load for the course of study the individual is pursuing for at least one academic period that begins during the calendar year (see section 25A and the regulations thereunder);

(I) A statement or other indication showing whether the individual was enrolled in a program leading to a graduate-level degree, graduate-level certificate, or other recognized graduate-level educational credential; and

(J) Any other information required by Form 1098-T and its instructions.

(iii) ***Reportable amounts billed for qualified tuition and related expenses during calendar year determined.*** The amount billed for qualified tuition and related expenses with respect to an individual during the calendar year that is reportable on Form 1098-T is determined by netting the amounts billed for qualified tuition and related expenses during the calendar year against any reductions in charges for qualified tuition and related expenses made during the calendar year that relate to amounts billed for qualified tuition and related expenses during the same calendar year.

(iv) ***Separate reporting of reductions made to amounts billed for qualified tuition and related expenses that were reported for a prior calendar year.*** An institution must separately report on Form 1098-T any reductions in charges made during the current calendar year that relate to amounts billed for qualified tuition and related expenses that were reported by the institution for a prior calendar year. Such reductions shall not be netted against amounts billed for qualified tuition and related expenses during the current calendar year.

(v) ***Examples.*** The following examples illustrate the rules in this paragraph (b)(3):

Example 1. (i) In early August 2003, University X bills enrolled Student A $10,000 for qualified tuition and related expenses and $6,000 for room and board for the 2003 Fall semester. In late August 2003, Student A pays $11,000 to University X. In early September 2003, Student A drops to half-time enrollment for the 2003 Fall semester. In late September 2003, University X adjusts Student A's account and reduces the charges for qualified tuition and related expenses by $5,000 to reflect half-time enrollment. In late September 2003, University X applies the $5,000 account balance toward current charges.
(ii) Under paragraph (b)(3)(iii) of this section, University X is required to net the $10,000 amount of qualified tuition and related expenses billed during 2003 against the $5,000 reduction in charges for qualified tuition and related expenses during 2003. Therefore, Institution X is required to report $5,000 in amounts billed for qualified tuition and related expenses during 2003.

Example 2. (i) The facts are the same as in Example 1, except that, in addition, in early December 2003, College X bills Student A $10,000 for qualified tuition and related expenses and $6,000 for room and board for the 2004 Spring semester. In early January 2004, Student A pays $16,000. In mid-January 2004, after the 2004 Spring semester classes begin, Student A drops to half-time enrollment. In mid-January 2004, College X credits $5,000 to Student A's account, reflecting a $5,000 reduction in charges for qualified tuition and related expenses, but does not issue a refund check to Student A. In early August 2004, College X bills Student A $10,000 for qualified tuition and related expenses and $6,000 for room and board for the 2004 Fall semester. In early September 2004, College X applies the $5,000 positive account balance toward Student A's $16,000 bill for the 2004 Fall semester. In late September 2004, Student A pays $6,000 toward the charges.
(ii) In the reporting for calendar year 2003, under paragraph (b)(3)(iii) of this section, College X is required to report $15,000 amounts billed for qualified tuition and related expenses during 2003 ($5,000 for the 2003 Fall semester and $10,000 for the 2004 Spring semester). In addition, College X is required to indicate that some of the amounts billed for qualified tuition and related expenses reported for 2003 relate to an academic period that begins during the first three months of the next calendar year.

(iii) In the reporting for calendar year 2004, under paragraph (b)(3)(iv) of this section, the $5,000 reduction in charges for qualified tuition and related expenses must be separately reported on Form 1098-T because it relates to amounts billed for qualified tuition and related expenses that were reported by College X for 2003. Under paragraph (b)(3)(iii) of this section, College X is required to report $10,000 in amounts billed for qualified tuition and related expenses during 2004.

(4) ***Requirements for insurers*** —

(i) ***In general.*** Except as otherwise provided in this section, an insurer must file an information return for each individual with respect to whom reimbursements or refunds of qualified tuition and related expenses are made during the calendar year on Form 1098-T. An insurer may use a substitute Form 1098-T if the substitute form complies with applicable revenue procedures relating to substitute forms (*see* § 601.601(d)(2) of this chapter).

(ii) ***Information included on return.*** An insurer must include on Form 1098-T—

(A) The name, address, and taxpayer identification number (TIN) (as defined in section 7701(a)(41)) of the insurer;

(B) The name, address, and TIN of the individual with respect to whom reimbursements or refunds of qualified tuition and related expenses were made;

(C) The aggregate amount of reimbursements or refunds of qualified tuition and related expenses that the insurer made with respect to the individual during the calendar year; and

(D) Any other information required by Form 1098-T and its instructions.

(5) ***Time and place for filing return*** —

(i) ***In general.*** Except as provided in paragraphs (b)(5)(ii) and (iii) of this section, Form 1098-T must be filed on or before February 28 (March 31 if filed electronically) of the year following the calendar year in which payments were received, or amounts were billed, for qualified tuition or related expenses, or reimbursements, refunds, or reductions of such amounts were made. An institution or insurer must file Form 1098-T with the IRS according to the instructions to Form 1098-T.

(ii) ***Return for nonresident alien individual.*** In general, an institution or insurer is not required to file a return on behalf of a nonresident alien individual. However, if a nonresident alien individual requests an institution or insurer to report, the institution or insurer must file a return described in paragraph (b) of this section with the IRS on or before the date prescribed in paragraph (b)(5)(i) of this section, or on or before the thirtieth day after the request, whichever is later.

(iii) ***Extensions of time.*** The IRS may grant an institution or insurer an extension of time to file returns required in this section upon a showing of good cause. See General Instructions for Forms 1099 series, 1098 series, 5498 series, and W-2G, "Certain Gambling Winnings," and applicable revenue procedures for rules relating to extensions of time to file (*see* § 601.601(d)(2) of this chapter).

(6) ***Use of magnetic media. See*** section 6011(e) and § 301.6011-2 of this chapter for rules relating to the requirement to file Forms 1098-T on magnetic media.

(c) ***Requirement to furnish statement*** —

(1) ***In general.*** An institution or insurer must furnish a statement to each individual for whom it is required to file a Form 1098-T. The statement must include—

(i) The information required under paragraph (b) of this section. An IRS truncated taxpayer identifying number (TTIN) may be used as the TIN of the individual in lieu of the identifying number appearing on the information return filed with the Internal Revenue Service. For provisions relating to the use of TTINs, see § 301.6109-4 of this chapter (Procedure and Administration Regulations);

(ii) A legend that identifies the statement as important tax information that is being furnished to the IRS;

(iii) Instructions that—

(A) State that the statement reports either total payments received by the institution for qualified tuition and related expenses during the calendar year, or total amounts billed by the institution for qualified tuition and related expenses during the calendar year, or the total reimbursements or refunds made by the insurer;

(B) State that, under section 25A and the regulations thereunder, the taxpayer may claim an education tax credit only with respect to qualified tuition and related expenses actually paid during the calendar year; and that the taxpayer may not be able to claim an education tax credit with respect to the entire amount of payments received, or amounts billed, for qualified tuition and related expenses reported for the calendar year;

(C) State that the amount of any scholarships or grants reported for the calendar year and other similar amounts not reported (because they are not administered and processed by the institution) may reduce the amount of any allowable education tax credit for the taxable year;

(D) State that the amount of any reimbursements or refunds of payments received, or reductions in charges, for qualified tuition and related expenses, or any reductions to the amount of scholarships or grants, reported by the institution with respect to the individual for a prior calendar year may affect the amount of any allowable education tax credit for the prior calendar year (and may result in an increase in tax liability for the year of the refund);

(E) State that the amount of any reimbursements or refunds of qualified tuition and related expenses reported by an insurer may reduce the amount of an allowable education tax credit for a taxable year (and may result in an increase in tax liability for the year of the refund);

(F) State that the taxpayer should refer to relevant IRS forms and publications, and should not refer to the institution or the insurer, for explanations relating to the eligibility requirements for, and calculation of, any allowable education tax credit; and

(G) Include the name, address, and phone number of the information contact of the institution or insurer that filed the Form 1098-T.

(2) *Time and manner for furnishing statement* —

(i) ***In general.*** Except as provided in paragraphs (c)(2)(ii) and (iii) of this section, an institution or insurer must furnish the statement described in paragraph (c)(1) of this section to each individual for whom it is required to file a return, on or before January 31 of the year following the calendar year in which payments were received, or amounts were billed, for qualified tuition and related expenses, or reimbursements, refunds, or reductions of such amounts were made.

If mailed, the statement must be sent to the individual's permanent address, or the individual's temporary address if the institution or insurer does not know the individual's permanent address. If furnished electronically, the statement must be furnished in accordance with the applicable regulations.

(ii) ***Statement to nonresident alien individual.*** If an information return is filed for a nonresident alien individual, the institution or insurer must furnish a statement described in paragraph (c)(1) of this section to the individual in the manner prescribed in paragraph (c)(2)(i) of this section. The statement must be furnished on or before the later of the date prescribed in paragraph (c)(2)(i) of this section or the thirtieth day after the nonresident alien's request to report.

(iii) ***Extensions of time.*** The IRS may grant an institution or insurer an extension of time to furnish the statements required in this section upon a showing of good cause. *See* General Instructions for Forms 1099 series, 1098 series, 5498 series, and W-2G, "Certain Gambling Winnings," and applicable revenue procedures for rules relating to extensions of time to furnish statements (*see* § 601.601(d)(2) of this chapter).

(3) Copy of Form 1098-T. An institution or insurer may satisfy the requirement of this paragraph (c) by furnishing either a copy of Form 1098-T and its instructions or another document that contains all of the information filed with the IRS and the information required by paragraph (c)(1) of this section if the document complies with applicable revenue procedures relating to substitute statements (*see* § 601.601(d)(2) of this chapter).

(d) ***Special rules*** —

(1) ***Enrollment determined.*** An institution may determine its enrollment for each academic period under its own rules and policies for determining enrollment or as of any of the following dates—

(i) 30 days after the first day of the academic period;

(ii) A date during the academic period on which enrollment data must be collected for purposes of the Integrated Post Secondary Education Data System administered by the Department of Education; or

(iii) A date during the academic period on which the institution must report enrollment data to the State, the institution's governing body, or some other external governing body.

(2) ***Payments of qualified tuition and related expenses received or collected by one or more persons*** —

(i) ***In general.*** Except as otherwise provided in paragraph (d)(2)(ii) of this section, if a person collects or receives payments of qualified tuition and related expenses on behalf of another person (e.g., an institution), the person collecting or receiving payments must satisfy the requirements of paragraphs (b) and (c) of this section. In this case, those requirements do not apply to the transfer of the payments to the institution.

(ii) ***Exception.*** If the person collecting or receiving payments of qualified tuition and related expenses on behalf of another person (e.g., an institution) does not possess the information needed to comply with the requirements of paragraphs (b) and (c) of this section, the other person must satisfy those requirements.

(3) ***Governmental units.*** An institution or insurer that is a governmental unit, or an agency or instrumentality of a governmental unit, is subject to the requirements of paragraphs (b) and (c) of this section and an appropriately designated officer or employee of the governmental entity must satisfy those requirements.

(e) ***Penalty provisions*** —

(1) ***Failure to file correct returns.*** The section 6721 penalty may apply to an institution or insurer that fails to file information returns required by section 6050S and this section on or before the required filing date; that fails to include all of the required information on the return; or that includes incorrect information on the return. *See* section 6721, and the regulations thereunder, for rules relating to penalties for failure to file correct returns. *See* section 6724, and the regulations thereunder, for rules relating to waivers of penalties for certain failures due to reasonable cause.

(2) ***Failure to furnish correct information statements.*** The section 6722 penalty may apply to an institution or insurer that fails to furnish statements required by section 6050S and this section on or before the prescribed date; that fails to include all the required information on the statement; or that includes incorrect information on the statement. *See* section 6722, and the regulations thereunder, for rules relating to penalties for failure to furnish correct statements. See section 6724, and the regulations thereunder, for rules relating to waivers of penalties for certain failures due to reasonable cause.

(3) ***Waiver of penalties for failures to include a correct TIN*** —

(i) ***In general.*** In the case of a failure to include a correct TIN on Form 1098-T or a related information statement, penalties may be waived if the failure is due to reasonable cause. Reasonable cause may be established if the failure arose from events beyond the institution's or insurer's control, such as a failure of the individual to furnish a correct TIN. However, the institution or insurer must establish that it acted in a responsible manner both before and after the failure.

(ii) ***Acting in a responsible manner.*** An institution or insurer must request the TIN of each individual for whom it is required to file a return if it does not already have a record of the individual's correct TIN. If the institution or insurer does not have a record of the individual's correct TIN, then it must solicit the TIN in the manner described in paragraph (e)(3)(iii) of this section on or before December 31 of each year during which it receives payments, or bills amounts, for qualified tuition and related expenses or makes reimbursements, refunds, or reductions of such amounts with respect to the individual. If an individual refuses to provide his or her TIN upon request, the institution or insurer must file the return and furnish the statement required by this section without the individual's TIN, but with all other required information. The specific solicitation requirements of paragraph (e)(3)(iii) of this section apply in lieu of the solicitation requirements of § 301.6724-1(e) and (f) of this chapter for the purpose of determining whether an institution or insurer acted in a responsible manner in attempting to obtain a correct TIN. An institution or insurer that complies with the requirements of this paragraph (e)(3) will be considered to have acted in a responsible manner within the meaning of § 301.6724-1(d) of this chapter with respect to any failure to include the correct TIN of an individual on a return or statement required by section 6050S and this section.

(iii) ***Manner of soliciting TIN.*** An institution or insurer must request the individual's TIN in writing and must clearly notify the individual that the law requires the individual to furnish a TIN so that it may be included on an information return filed by the institution or insurer. A request for a TIN

made on Form W-9S, "Request for Student's or Borrower's Taxpayer Identification Number and Certification," satisfies the requirements of this paragraph (e)(3)(iii). An institution or insurer may establish a system for individuals to submit Forms W-9S electronically as described in applicable forms and instructions. An institution or insurer may also develop a separate form to request the individual's TIN or incorporate the request into other forms customarily used by the institution or insurer, such as admission or enrollment forms or financial aid applications.

(4) ***Failure to furnish TIN.*** The section 6723 penalty may apply to any individual who is required (but fails) to furnish his or her TIN to an institution or insurer. *See* section 6723, and the regulations thereunder, for rules relating to the penalty for failure to furnish a TIN.

(f) ***Effective/applicability date.*** The rules in this section apply to information returns required to be filed, and information statements required to be furnished, after December 31, 2003. Paragraph (c)(1)(i) applies to payee statements due after December 31, 2014. For payee statements due before January 1, 2015, § 1.6050S-1 (as contained in 26 CFR part 1, revised April 2013) shall apply.

[T.D. 9029, 67 FR 77682, Dec. 19, 2002; 68 FR 6350, Feb. 7, 2003; T.D. 9675, 79 FR 41131, July 15, 2014]

§ 1.6050S-2 Information reporting for payments and reimbursements or refunds of qualified tuition and related expenses.

(a) ***Electronic furnishing of statements*** —

(1) ***In general.*** A person required by section 6050S(d) to furnish a written statement regarding payments and reimbursements or refunds of qualified tuition and related expenses (furnisher) to the individual to whom it is required to be furnished (recipient) may furnish the statement in an electronic format in lieu of a paper format. A furnisher who meets the requirements of paragraphs (a)(2) through (6) of this section is treated as furnishing the required statement.

(2) ***Consent*** —

(i) ***In general.*** The recipient must have affirmatively consented to receive the statement in an electronic format. The consent may be made electronically in any manner that reasonably demonstrates that the recipient can access the statement in the electronic format in which it will be furnished to the recipient. Alternatively, the consent may be made in a paper document if it is confirmed electronically.

(ii) ***Withdrawal of consent.*** The consent requirement of this paragraph (a)(2) is not satisfied if the recipient withdraws the consent and the withdrawal takes effect before the statement is furnished. The furnisher may provide that a withdrawal of consent takes effect either on the date it is received by the furnisher or on a subsequent date. The furnisher may also provide that a request for a paper statement will be treated as a withdrawal of consent.

(iii) ***Change in hardware or software requirements.*** If a change in the hardware or software required to access the statement creates a material risk that the recipient will not be able to access the statement, the furnisher must, prior to changing the hardware or software, provide the recipient with a notice. The notice must describe the revised hardware and software required to access the statement and inform the recipient that a new consent to receive the statement in the revised electronic format must be provided to the furnisher. After implementing the revised

hardware and software, the furnisher must obtain from the recipient, in the manner described in paragraph (a)(2)(i) of this section, a new consent or confirmation of consent to receive the statement electronically.

(iv) ***Examples.*** The following examples illustrate the rules of this paragraph (a)(2):

Example 1. Furnisher F sends Recipient R a letter stating that R may consent to receive statements required by section 6050S(d) electronically on a Web site instead of in a paper format. The letter contains instructions explaining how to consent to receive the statements electronically by accessing the Web site, downloading the consent document, completing the consent document and e-mailing the completed consent back to F. The consent document posted on the Web site uses the same electronic format that F will use for the electronically furnished statements. R reads the instructions and submits the consent in the manner provided in the instructions. R has consented to receive the statements electronically in the manner described in paragraph (a)(2)(i) of this section.

Example 2. Furnisher F sends Recipient R an e-mail stating that R may consent to receive statements required by section 6050S(d) electronically instead of in a paper format. The e-mail contains an attachment instructing R how to consent to receive the statements electronically. The e-mail attachment uses the same electronic format that F will use for the electronically furnished statements. R opens the attachment, reads the instructions, and submits the consent in the manner provided in the instructions. R has consented to receive the statements electronically in the manner described in paragraph (a)(2)(i) of this section.

Example 3. Furnisher F posts a notice on its Web site stating that Recipient R may receive statements required by section 6050S(d) electronically instead of in a paper format. The Web site contains instructions on how R may access a secure Web page and consent to receive the statements electronically. By accessing the secure Web page and giving consent, R has consented to receive the statements electronically in the manner described in paragraph (a)(2)(i) of this section.

(3) ***Required disclosures*** —

(i) ***In general.*** Prior to, or at the time of, a recipient's consent, the furnisher must provide to the recipient a clear and conspicuous disclosure statement containing each of the disclosures described in paragraphs (a)(3)(ii) through (viii) of this section.

(ii) ***Paper statement.*** The recipient must be informed that the statement will be furnished on paper if the recipient does not consent to receive it electronically.

(iii) ***Scope and duration of consent.*** The recipient must be informed of the scope and duration of the consent. For example, the recipient must be informed whether the consent applies to statements furnished every year after the consent is given until it is withdrawn in the manner described in paragraph (a)(3)(v)(A) of this section or only to the statement required to be furnished on or before the January 31 immediately following the date on which the consent is given.

(iv) ***Post-consent request for a paper statement.*** The recipient must be informed of any procedure for obtaining a paper copy of the recipient's statement after giving the consent described in paragraph (a)(2)(i) of this section and whether a request for a paper statement will be treated as a withdrawal of consent.

(v) ***Withdrawal of consent.*** The recipient must be informed that—

(A) The recipient may withdraw a consent by writing (electronically or on paper) to the person or department whose name, mailing address, telephone number, and e-mail address is provided in the disclosure statement;

(B) The furnisher will confirm the withdrawal and the date on which it takes effect in writing (either electronically or on paper); and

(C) A withdrawal of consent does not apply to a statement that was furnished electronically in the manner described in this paragraph (a) before the date on which the withdrawal of consent takes effect.

(vi) ***Notice of termination.*** The recipient must be informed of the conditions under which a furnisher will cease furnishing statements electronically to the recipient.

(vii) ***Updating information.*** The recipient must be informed of the procedures for updating the information needed by the furnisher to contact the recipient. The furnisher must inform the recipient of any change in the furnisher's contact information.

(viii) ***Hardware and software requirements.*** The recipient must be provided with a description of the hardware and software required to access, print, and retain the statement, and the date when the statement will no longer be available on the Web site.

(4) ***Format.*** The electronic version of the statement must contain all required information and comply with applicable revenue procedures relating to substitute statements to recipients.

(5) ***Notice*** —

(i) ***In general.*** If the statement is furnished on a Web site, the furnisher must notify the recipient that the statement is posted on a Web site. The notice may be delivered by mail, electronic mail, or in person. The notice must provide instructions on how to access and print the statement. The notice must include the following statement in capital letters, “IMPORTANT TAX RETURN DOCUMENT AVAILABLE.” If the notice is provided by electronic mail, the foregoing statement must be on the subject line of the electronic mail.

(ii) ***Undeliverable electronic address.*** If an electronic notice described in paragraph (a)(5)(i) of this section is returned as undeliverable, and the correct electronic address cannot be obtained from the furnisher's records or from the recipient, then the furnisher must furnish the notice by mail or in person within 30 days after the electronic notice is returned.

(iii) ***Corrected statements.*** If the furnisher has corrected a recipient's statement that was furnished electronically, the furnisher must furnish the corrected statement to the recipient electronically. If the recipient's statement was furnished through a Web site posting and the furnisher has corrected the statement, the furnisher must notify the recipient that it has posted the corrected statement on the Web site within 30 days of such posting in the manner described in paragraph (a)(5)(i) of this section. The corrected statement or the notice must be furnished by mail or in person if—

(A) An electronic notice of the Web site posting of an original statement was returned as undeliverable; and

(B) The recipient has not provided a new e-mail address.

(6) ***Access period.*** Statements furnished on a Web site must be retained on the Web site through October 15 of the year following the calendar year to which the statements relate (or the first business day after such October 15, if October 15 falls on a Saturday, Sunday, or legal holiday). The furnisher must maintain access to corrected statements that are posted on the Web site through October 15 of the year following the calendar year to which the statements relate (or the first business day after such October 15, if October 15 falls on a Saturday, Sunday, or legal holiday) or the date 90 days after the corrected statements are posted, whichever is later.

(b) ***Paper statements after withdrawal of consent.*** If a recipient withdraws consent to receive a statement electronically and the withdrawal takes effect before the statement is furnished electronically, a paper statement must be furnished. A paper statement furnished after the statement due date under this paragraph (b) will be considered timely if furnished within 30 days after the date the withdrawal of consent is received by the furnisher.

(c) ***Effective date.*** This section applies to statements required to be furnished after February 13, 2004. Paragraph (a)(6) of this section also applies to statements required to be furnished after December 31, 2004.

[T.D. 9114, 69 FR 7570, Feb. 18, 2004]

§ 1.6050S-3 Information reporting for payments of interest on qualified education loans.

(a) ***Information reporting requirement in general.*** Except as otherwise provided in this section, any person engaged in a trade or business that, in the course of that trade or business, receives from any payor (as defined in paragraph (b)(2) of this section) interest payments that aggregate $600 or more for any calendar year on one or more qualified education loans (as defined in section 221(e)(1) and the regulations thereunder) (a payee) must—

(1) File an information return, as described in paragraph (c) of this section, with the Internal Revenue Service with respect to the payor; and

(2) Furnish a statement, as described in paragraph (d) of this section, to the payor.

(b) ***Definitions.*** The following definitions apply for purposes of this section:

(1) ***Interest. Interest*** includes stated interest, loan origination fees (other than fees for services), and capitalized interest as described in the regulations under section 221. See paragraph (e)(1) of this section for a special transitional rule relating to reporting of loan origination fees and capitalized interest.

(2) ***Payor. Payor*** means the individual who is carried on the books and records of the payee as the borrower on a qualified education loan. If there are multiple borrowers, the principal borrower on the payee's books and records is treated as the payor for purposes of section 6050S and this section.

(c) ***Requirement to file return*** —

(1) ***Form of return.*** A payee must file an information return for the payor on Form 1098-E, “Student Loan Interest Statement.” A payee may use a substitute for Form 1098-E if the substitute form complies with the applicable revenue procedures relating to substitute forms.

(2) ***Information included on return.*** A payee must include on Form 1098-E—

(i) The name, address, and taxpayer identification number (TIN) (as defined in section 7701(a)(41)) of the payee;

(ii) The name, address, and TIN of the payor;

(iii) The aggregate amount of interest payments received during the calendar year from the payor; and

(iv) Any other information required by Form 1098-E and its instructions.

(3) ***Time and place for filing return*** —

(i) ***In general.*** Except as provided in paragraph (c)(3)(ii) of this section, the Form 1098-E must be filed on or before February 28 (March 31 if filed electronically) of the year following the calendar year in which interest payments were received. A payee must file Form 1098-E with the Internal Revenue Service according to the instructions to Form 1098-E.

(ii) ***Extensions of time.*** The Internal Revenue Service may grant a payee an extension of time to file returns required in this section upon a showing of good cause. See the instructions to Form 1098-E and applicable revenue procedures for rules relating to extensions of time to file.

(4) ***Use of magnetic media.*** See section 6011(e) and § 301.6011-2 of this chapter for rules relating to the requirement to file Forms 1098-E on magnetic media.

(d) ***Requirement to furnish statement*** —

(1) ***In general.*** A payee must furnish a statement to each payor for whom it is required to file a Form 1098-E. The statement must include—

(i) The information required under paragraph (c)(2) of this section. An IRS truncated taxpayer identifying number (TTIN) may be used as the TIN of the payor in lieu of the identifying number appearing on the information return filed with the Internal Revenue Service. For provisions relating to the use of TTINs, see § 301.6109-4 of this chapter (Procedure and Administration Regulations).

(ii) A legend that identifies the statement as important tax information that is being furnished to the Internal Revenue Service;

(iii) Instructions that—

(A) State that, under section 221 and the regulations thereunder, the payor may not be able to deduct the full amount of interest reported on the statement;

(B) In the case of qualified education loans made before September 1, 2004, for which the payee does not report payments of interest other than stated interest, state that the payor may be able to deduct additional amounts (such as certain loan origination fees and capitalized interest) not reported on the statement;

(C) State that the payor should refer to relevant Internal Revenue Service forms and publications, and should not refer to the payee, for explanations relating to the eligibility requirements for, and calculation of, any allowable deduction for interest paid on a qualified education loan; and

(D) Include the name, address, and phone number of the office or department of the payee that is the information contact for the payee that filed the Form 1098-E.

(2) *Time and manner for furnishing statement* —

(i) ***In general.*** Except as provided in paragraph (d)(2)(ii) of this section, a payee must furnish the statement described in paragraph (d)(1) of this section to the payor on or before January 31 of the year following the calendar year in which payments of interest on a qualified education loan were received. If mailed, the statement must be sent to the payor's last known address. If furnished electronically, the statement must be furnished in accordance with the applicable regulations.

(ii) ***Extensions of time.*** The Internal Revenue Service may grant a payee an extension of time to furnish statements required in this section upon a showing of good cause. See the instructions to Form 1098-E and applicable revenue procedures for rules relating to extensions of time to furnish statements.

(3) ***Copy of Form 1098-E.*** A payee may satisfy the requirement of this paragraph (d) by furnishing either a copy of Form 1098-E and its instructions or another document that contains all the information filed with the Internal Revenue Service and the information required by paragraph (d)(1) of this section if the document complies with applicable revenue procedures relating to substitute statements.

(e) *Special rules* —

(1) *Transitional rule for reporting of loan origination fees and capitalized interest* —

(i) ***Loans made before September 1, 2004.*** For qualified education loans made before September 1, 2004, a payee is not required to report payments of loan origination fees or capitalized interest or to take such payments into account in determining the $600 amount for purposes of paragraph (a)(1) of this section.

(ii) ***Loans made on or after September 1, 2004.*** For qualified education loans made on or after September 1, 2004, a payee is required to report payments of interest as described in § 1.221-1(f). Under § 1.221-1(f), interest includes loan origination fees that represent charges for the use or forbearance of money and capitalized interest. Under this paragraph (e)(1)(ii), a payee shall take such payments of interest into account in determining the $600 amount for purposes of paragraph (a)(1) of this section. For purposes of this section and section 6050S, interest (including capitalized interest and loan origination fees) is treated as received, and is reportable, in the year the interest is treated as paid under the allocation rules in § 1.221-1(f)(3). See § 1.221-1(f) for rules relating to capitalized interest, and § 1.221-1(f)(2)(ii) for rules relating to loan origination fees, on qualified education loans.

(2) ***Qualified education loan certification.*** If a loan is not subsidized, guaranteed, financed, or is not otherwise treated as a student loan under a program of the Federal, state, or local government or an eligible educational institution, a payee must request a certification from the payor that the loan will be used solely to pay for qualified higher education expenses. A payee may use Form W-9S, “Request for Student's or Borrower's Social Security Number and Certification,” to obtain the certification. A payee may establish an electronic system for payors to submit Forms W-9S electronically as described in applicable forms and instructions. A payee may also develop a separate form to obtain the payor certification or may incorporate the certification into other forms customarily used by the payee, such as loan applications, provided the certification is clearly set forth. If the certification is not received, the loan is not a qualified education loan for purposes of section 6050S and this section.

(3) *Payments of interest received or collected by one or more persons* —

(i) ***In general.*** Except as otherwise provided in paragraph (e)(3)(ii) of this section, if a person collects or receives payments of interest on a qualified education loan on behalf of another person (e.g., a lender), the person collecting or receiving the interest must satisfy the information reporting requirements of this section. In this case, the reporting requirements do not apply to the transfer of interest to the other person.

(ii) ***Exception.*** If the person collecting or receiving payments of interest on a qualified education loan on behalf of another person (e.g., a lender) does not possess the information needed to comply with the information reporting requirements of this section, the other person must satisfy the information reporting requirements of this section.

(4) ***Reporting by foreign persons.*** A payee that is not a United States person (as defined in section 7701(a)(30)) must report payments of interest it receives on a qualified education loan only if it receives the payment—

(i) At a location in the United States; or

(ii) At a location outside the United States if the payee is—

(A) A controlled foreign corporation (within the meaning of section 957(a)); or

(B) A person 50 percent or more of the gross income of which, from all sources for the three-year period ending with the close of the taxable year preceding the taxable year in which interest payments were received (or for such part of the period as the person was in existence), was effectively connected with the conduct of a trade or business within the United States.

(5) ***Governmental units.*** A governmental unit, or an agency or instrumentality of a governmental unit, that receives from any payor interest payments that aggregate $600 or more for any calendar year on one or more qualified education loans is a payee, without regard to the requirement of paragraph (a) of this section that the interest be received in the course of a trade or business.

(f) *Penalty provisions* —

(1) ***Failure to file correct returns.*** The section 6721 penalty may apply to a payee that fails to file information returns required by section 6050S and this section on or before the required filing date; that fails to include all of the required information on the return; or that includes incorrect information on the return. See section 6721, and the regulations thereunder, for rules relating to penalties for failure to file correct returns. See section 6724, and the regulations thereunder, for rules relating to waivers of penalties for certain failures due to reasonable cause.

(2) ***Failure to furnish correct information statements.*** The section 6722 penalty may apply to a payee that fails to furnish statements required by section 6050S and this section on or before the prescribed date; that fails to include all the required information on the statement; or that includes incorrect information on the statement. See section 6722, and the regulations thereunder, for rules relating to penalties for failure to furnish correct statements. See section 6724, and the regulations thereunder, for rules relating to waivers of penalties for certain failures due to reasonable cause.

(3) *Waiver of penalties for failures to include a correct TIN* —

(i) ***In general.*** In the case of a failure to include a correct TIN on Form 1098-E or a related information statement, penalties may be waived if the failure is due to reasonable cause. Reasonable cause may be established if the failure arose from events beyond the payee's control, such as a failure of the payor to furnish a correct TIN. However, the payee must establish that it acted in a responsible manner both before and after the failure.

(ii) ***Acting in a responsible manner.*** A payee must request the TIN of each payor if it does not already have a record of the payor's correct TIN. If the payee does not have a record of the payor's correct TIN, then it must solicit the TIN in the manner described in paragraph (f)(3)(iii) of this section on or before December 31 of each year during which it receives payments of interest. If a payor refuses to provide his or her TIN upon request, the payee must file the return and furnish the statement required by this section without the payor's TIN, but with all other required information. The specific solicitation requirements of paragraph (f)(3)(iii) of this section apply in lieu of the solicitation requirements of § 301.6724-1(e) and (f) of this chapter for the purpose of determining whether a payee acted in a responsible manner in attempting to obtain a correct TIN. A payee that complies with the requirements of this paragraph (f)(3) will be considered to have acted in a responsible manner within the meaning of § 301.6724-1(d) of this chapter with respect to any failure to include the correct TIN of a payor on a return or statement required by section 6050S and this section.

(iii) ***Manner of soliciting TIN.*** A payee must request the payor's TIN in writing and must clearly notify the payor that the law requires the payor to furnish a TIN so that it may be included on an information return filed by the payee. A request for a TIN made on Form W-9S, "Request for Student's or Borrower's Social Security Number and Certification," satisfies the requirements of this paragraph (f)(3)(iii). A payee may establish a system for payors to submit Forms W-9S electronically as described in applicable forms and instructions. A payee may also develop a separate form to request the payor's TIN or incorporate the request into other forms customarily used by the payee, such as loan applications.

(4) ***Failure to furnish TIN.*** The section 6723 penalty may apply to any payor who is required (but fails) to furnish his or her TIN to a payee. See section 6723, and the regulations thereunder, for rules relating to the penalty for failure to furnish a TIN.

(g) ***Effective/applicability date.*** The rules of this section apply to information returns required to be filed, and payee statements required to be furnished after December 31, 2014. For information returns required to be filed, and payee statements required to be furnished before January 1, 2015, § 1.6050S-3 (as contained in 26 CFR part 1, revised April 2013) shall apply.

[T.D. 8992, 67 FR 20904, Apr. 29, 2002, as amended by T.D. 9125, 69 FR 25499, May 7, 2004; T.D. 9675, 79 FR 41131, July 15, 2014]

§ 1.6050S-4 Information reporting for payments of interest on qualified education loans.

(a) ***Electronic furnishing of statements*** —

(1) ***In general.*** A person required by section 6050S(d) to furnish a written statement regarding payments of interest on qualified education loans (furnisher) to the individual to whom it is required to be furnished (recipient) may furnish the statement in an electronic format in lieu of a paper format. A furnisher who meets the requirements of paragraphs (a)(2) through (6) of this section is treated as furnishing the required statement.

(2) ***Consent*** —

(i) ***In general.*** The recipient must have affirmatively consented to receive the statement in an electronic format. The consent may be made electronically in any manner that reasonably demonstrates that the recipient can access the statement in the electronic format in which it will be furnished to the recipient. Alternatively, the consent may be made in a paper document if it is confirmed electronically.

(ii) ***Withdrawal of consent.*** The consent requirement of this paragraph (a)(2) is not satisfied if the recipient withdraws the consent and the withdrawal takes effect before the statement is furnished. The furnisher may provide that a withdrawal of consent takes effect either on the date it is received by the furnisher or on a subsequent date. The furnisher may also provide that a request for a paper statement will be treated as a withdrawal of consent.

(iii) ***Change in hardware or software requirements.*** If a change in the hardware or software required to access the statement creates a material risk that the recipient will not be able to access the statement, the furnisher must, prior to changing the hardware or software, provide the recipient with a notice. The notice must describe the revised hardware and software required to access the statement and inform the recipient that a new consent to receive the statement in the revised electronic format must be provided to the furnisher. After implementing the revised hardware and software, the furnisher must obtain from the recipient, in the manner described in paragraph (a)(2)(i) of this section, a new consent or confirmation of consent to receive the statement electronically.

(iv) ***Examples.*** The following examples illustrate the rules of this paragraph (a)(2):

Example 1. Furnisher F sends Recipient R a letter stating that R may consent to receive statements required by section 6050S(d) electronically on a Web site instead of in a paper format. The letter contains instructions explaining how to consent to receive the statements electronically by accessing the Web site, downloading the consent document, completing the consent document and e-mailing the completed consent back to F. The consent document posted on the Web site uses the same electronic format that F will use for the electronically furnished statements. R reads the instructions and submits the consent in the manner provided in the instructions. R has consented to receive the statements electronically in the manner described in paragraph (a)(2)(i) of this section.

Example 2. Furnisher F sends Recipient R an e-mail stating that R may consent to receive statements required by section 6050S(d) electronically instead of in a paper format. The e-mail contains an attachment instructing R how to consent to receive the statements electronically. The e-mail attachment uses the same electronic format that F will use for the electronically furnished statements. R opens the attachment, reads the instructions, and submits the consent in the manner provided in the instructions. R has consented to receive the statements electronically in the manner described in paragraph (a)(2)(i) of this section.

Example 3. Furnisher F posts a notice on its Web site stating that Recipient R may receive statements required by section 6050S(d) electronically instead of in a paper format. The Web site contains instructions on how R may access a secure Web page and consent to receive the statements electronically. By accessing the secure Web page and giving consent, R has consented to receive the statements electronically in the manner described in paragraph (a)(2)(i) of this section.

(3) ***Required disclosures*** —

(i) ***In general.*** Prior to, or at the time of, a recipient's consent, the furnisher must provide to the recipient a clear and conspicuous disclosure statement containing each of the disclosures described in paragraphs (a)(3)(ii) through (viii) of this section.

(ii) ***Paper statement.*** The recipient must be informed that the statement will be furnished on paper if the recipient does not consent to receive it electronically.

(iii) ***Scope and duration of consent.*** The recipient must be informed of the scope and duration of the consent. For example, the recipient must be informed whether the consent applies to statements furnished every year after the consent is given until it is withdrawn in the manner described in paragraph (a)(3)(v)(A) of this section or only to the statement required to be furnished on or before the January 31 immediately following the date on which the consent is given.

(iv) ***Post-consent request for a paper statement.*** The recipient must be informed of any procedure for obtaining a paper copy of the recipient's statement after giving the consent described in paragraph (a)(2)(i) of this section and whether a request for a paper statement will be treated as a withdrawal of consent.

(v) ***Withdrawal of consent.*** The recipient must be informed that—

(A) The recipient may withdraw a consent by writing (electronically or on paper) to the person or department whose name, mailing address, telephone number, and e-mail address is provided in the disclosure statement;

(B) The furnisher will confirm the withdrawal and the date on which it takes effect in writing (either electronically or on paper); and

(C) A withdrawal of consent does not apply to a statement that was furnished electronically in the manner described in this paragraph (a) before the date on which the withdrawal of consent takes effect.

(vi) ***Notice of termination.*** The recipient must be informed of the conditions under which a furnisher will cease furnishing statements electronically to the recipient.

(vii) ***Updating information.*** The recipient must be informed of the procedures for updating the information needed by the furnisher to contact the recipient. The furnisher must inform the recipient of any change in the furnisher's contact information.

(viii) ***Hardware and software requirements.*** The recipient must be provided with a description of the hardware and software required to access, print, and retain the statement, and the date when the statement will no longer be available on the Web site.

(4) ***Format.*** The electronic version of the statement must contain all required information and comply with applicable revenue procedures relating to substitute statements to recipients.

(5) ***Notice*** —

(i) ***In general.*** If the statement is furnished on a Web site, the furnisher must notify the recipient that the statement is posted on a Web site. The notice may be delivered by mail, electronic mail, or in person. The notice must provide instructions on how to access and print the statement. The notice must include the following statement in capital letters, “IMPORTANT TAX RETURN DOCUMENT AVAILABLE.” If the notice is provided by electronic mail, the foregoing statement must be on the subject line of the electronic mail.

(ii) ***Undeliverable electronic address.*** If an electronic notice described in paragraph (a)(5)(i) of this section is returned as undeliverable, and the correct electronic address cannot be obtained from the furnisher's records or from the recipient, then the furnisher must furnish the notice by mail or in person within 30 days after the electronic notice is returned.

(iii) ***Corrected statements.*** If the furnisher has corrected a recipient's statement that was furnished electronically, the furnisher must furnish the corrected statement to the recipient electronically. If the recipient's statement was furnished though a Web site posting and the furnisher has corrected the statement, the furnisher must notify the recipient that it has posted the corrected statement on the Web site within 30 days of such posting in the manner described in paragraph (a)(5)(i) of this section. The corrected statement or the notice must be furnished by mail or in person if—

(A) An electronic notice of the Web site posting of an original statement or the corrected statement was returned as undeliverable; and

(B) The recipient has not provided a new e-mail address.

(6) ***Access period.*** Statements furnished on a Web site must be retained on the Web site through October 15 of the year following the calendar year to which the statements relate (or the first business day after such October 15, if October 15 falls on a Saturday, Sunday, or legal holiday). The furnisher must maintain access to corrected statements that are posted on the Web site through October 15 of the year following the calendar year to which the statements relate (or the first business day after such October 15, if October 15 falls on a Saturday, Sunday, or legal holiday) or the date 90 days after the corrected statements are posted, whichever is later.

(b) ***Effective date.*** This section applies to statements required to be furnished after February 13, 2004. Paragraph (a)(6) of this section also applies to statements required to be furnished after December 31, 2003.

[T.D. 9114, 69 FR 7570, Feb. 18, 2004]

§ 1.6050W-1 Information reporting for payments made in settlement of payment card and third party network transactions.

(a) ***In general*** —

(1) ***General rule.*** Every payment settlement entity, as defined in paragraph (a)(4) of this section, must file an information return for each calendar year with respect to payments made in settlement of reportable payment transactions, as defined in paragraph (a)(3) of this section, setting forth the following information:

(i) The name, address, and taxpayer identification number (TIN) of each participating payee, as defined in paragraph (a)(5) of this section, to whom one or more payments in settlement of reportable payment transactions are made.

(ii) With respect to each participating payee, the gross amount, as defined in paragraph (a)(6) of this section, of—

(A) The aggregate reportable payment transactions for the calendar year; and

(B) The aggregate reportable payment transactions for each month of the calendar year.

(iii) Any other information required by the form, instructions or current revenue procedures.

(2) ***Payments in settlement of reportable payment transactions.*** A payment settlement entity, as defined in paragraph (a)(4) of this section (or an electronic payment facilitator, as defined in paragraph (d)(2) of this section), makes a payment in settlement of a reportable payment transaction if the payment settlement entity (or electronic payment facilitator) submits the instruction to transfer funds to the account of the participating payee for purposes of settling the reportable payment transaction. In the case of a third party settlement organization that has the contractual obligation to make payments to participating payees, a payment in settlement of a reportable payment transaction includes the submission of instructions to a purchaser to transfer funds directly to the account of the participating payee for purposes of settling the reportable payment transaction.

(3) ***Reportable payment transaction.*** The term *reportable payment transaction* means any payment card transaction (as defined in paragraph (b)(1) of this section) and any third party network transaction (as defined in paragraph (c)(1) of this section).

(4) ***Payment settlement entity*** —

(i) ***Definition.*** The term *payment settlement entity* means a domestic or foreign entity that is—

(A) In the case of a payment card transaction, a merchant acquiring entity (as defined in paragraph (b)(2) of this section); and

(B) In the case of a third party network transaction, a third party settlement organization (as defined in paragraph (c)(2) of this section).

(ii) ***Multiple payment settlement entities.*** If two or more persons qualify as payment settlement entities (as defined in paragraph (a)(4)(i) of this section) with respect to a reportable payment transaction, then only the payment settlement entity that in fact makes payment in settlement of the reportable payment transaction must file the information return required by paragraph (a)(1) of this section.

(5) ***Participating payee*** —

(i) ***Definition.*** In general, the term *participating payee* means any person, including any governmental unit (and any agency or instrumentality thereof), who:

(A) In the case of a payment card transaction, accepts a payment card (as defined in paragraph (b)(3) of this section) as payment; and

(B) In the case of a third party network transaction, accepts payment from a third party settlement organization (as defined in paragraph (c)(2) of this section) in settlement of such transaction.

(ii) ***Foreign payees*** —

(A) ***In general.*** For payments pursuant to contractual obligations entered into after December 31, 2010, a payment settlement entity that is a person described as a U.S. payor or U.S. middleman in § 1.6049-5(c)(5) is not required to make a return of information for payments to a participating payee with a foreign address as long as, prior to payment, the payment settlement entity has in its files documentation upon which the payment settlement entity may rely to treat the payment as made to a foreign person in accordance with § 1.1441-1(e)(1)(ii). For purposes of this paragraph (a)(5)(ii), the provisions of § 1.1441-1 shall apply by substituting the term payor for the term withholding agent and

without regard to the limitation to amounts subject to withholding under chapter 3 of the Internal Revenue Code and the regulations under that chapter. Such a payment settlement entity need not make a return of information for payments made outside the United States (within the meaning of § 1.6049-5(e)) to an offshore account (as defined in § 1.6049-5(c)(1)) to a participating payee with only a foreign address if the name of the participating payee indicates that it is an entity listed as a per se corporation under § 301.7701-2(b)(8)(i) and the payment settlement entity does not know or have reason to know that the participating payee is a United States person. A payment settlement entity may apply the grace period rules of § 1.6049-5(d)(2)(ii) of the regulations for payments to a participating payee with only a foreign address, without regard to whether the amounts paid are described in § 1.1441-6(c)(2) or are reportable under section 6042, 6045, 6049, or 6050N. For payments pursuant to contractual obligations entered into before January 1, 2011, a payment settlement entity that is a person described as a U.S. payor or U.S. middleman in § 1.6049-5(c)(5) is not required to make a return of information for payments to a participating payee with a foreign address as long as the payment settlement entity neither knows nor has reason to know that the participating payee is a United States person. For this purpose, a renewal of such a contractual obligation will not result in a new contractual obligation unless there is a material modification to the contractual obligation.

(B) ***Non-U.S. payor or middleman.*** A payment settlement entity that is not a person described as a U.S. payor or U.S middleman in § 1.6049-5(c)(5) is not required to make a return of information for a payment to a participating payee that does not have a United States address as long as the payment settlement entity neither knows nor has reason to know that the participating payee is a United States person. If the participating payee has any United States address, the payment settlement entity may treat the participating payee as a foreign person only if the payment settlement entity has in its files documentation upon which the payment settlement entity may rely to treat the payment as made to a foreign person in accordance with § 1.1441-1(e)(1)(ii).

(C) ***Foreign address; United States address.*** For purposes of this section, *foreign address* means any address that is not within the United States, as defined in section 7701(a)(9) of the Internal Revenue Code (the States and the District of Columbia). *United States address* means any address that is within the United States.

(6) ***Gross amount.*** For purposes of this section, *gross amount* means the total dollar amount of aggregate reportable payment transactions for each participating payee without regard to any adjustments for credits, cash equivalents, discount amounts, fees, refunded amounts or any other amounts. The dollar amount of each transaction is determined on the date of the transaction.

(b) ***Payment card transactions*** —

(1) ***Definition.*** The term *payment card transaction* means any transaction in which a payment card, or any account number or other indicia associated with a payment card, is accepted as payment.

(2) ***Merchant acquiring entity.*** The term *merchant acquiring entity* means the bank or other organization that has the contractual obligation to make payment to participating payees (as defined in paragraph (a)(5)(i)(A) of this section) in settlement of payment card transactions.

(3) ***Payment card*** —

(i) The term *payment card* means any card, including any stored-value card as defined in paragraph (b)(4) of this section, issued pursuant to an agreement or arrangement that provides for—

(A) One or more issuers of such cards;

(B) A network of persons unrelated to each other, and to the issuer, who agree to accept such cards as payment; and

(C) Standards and mechanisms for settling the transactions between the merchant acquiring entities and the persons who agree to accept the cards as payment.

(ii) Persons who agree to accept such cards as payment as described in this paragraph (b)(3) are participating payees within the meaning of paragraph (a)(5)(i)(A) of this section.

(4) ***Stored-value cards.*** The term *stored-value card* means any card with a prepaid value, including any gift card.

(5) ***Transactions for which no return of information is required under section 6050W*** —

(i) ***Withdrawals and cash advances.*** The use of a "payment card" as defined in paragraph (b)(3) of this section by a cardholder to withdraw funds at an automated teller machine, or to obtain a cash advance or loan against the cardholder's account, is not a payment card transaction under paragraph (b)(1) of this section because the card is not being accepted as payment by a merchant or other payee.

(ii) ***Convenience checks.*** The acceptance of a check issued in connection with a payment card account by a merchant or other payee is not a payment card transaction under paragraph (b)(1) of this section because the check is accepted and processed through the banking system in the same manner as a traditional check, not as a payment card.

(iii) ***Payee related to issuer.*** No return of information is required under this section for any transaction in which a payment card within the meaning of paragraph (b)(3) is accepted as payment by a merchant or other payee who is related to the issuer of the payment card.

(c) ***Third party network transactions*** —

(1) ***Definition.*** The term *third party network transaction* means any transaction that is settled through a third party payment network.

(2) ***Third party settlement organization.*** The term *third party settlement organization* means the central organization that has the contractual obligation to make payments to participating payees (as defined in paragraph (a)(5)(i)(B) of this section) of third party network transactions. A central organization is a third party settlement organization if it provides a third party payment network (as defined in paragraph (c)(3)(i) of this section) that enables purchasers to transfer funds to providers of goods and services.

(3) ***Third party payment network.***

(i) The term *third party payment network* means any agreement or arrangement that—

(A) Involves the establishment of accounts with a central organization by a substantial number of providers of goods or services who are unrelated to the organization and who have agreed to settle transactions for the provision of the goods or services to purchasers according to the terms of the agreement or arrangement;

(B) Provides standards and mechanisms for settling the transactions; and

(C) Guarantees payment to the persons providing goods or services in settlement of transactions with purchasers pursuant to the agreement or arrangement.

(ii) A third party payment network does not include any agreement or arrangement that provides for the issuance of payment cards.

(iii) Persons who are providers of goods and services as described in this paragraph (c)(3) are participating payees within the meaning of paragraph (a)(5)(i)(B) of this section.

(4) ***Exception for de minimis payments.*** A third party settlement organization is required to report any information under paragraph (a)(1) of this section with respect to third party network transactions of any participating payee only if—

(i) The amount that would otherwise be reported under paragraph (a)(1)(ii) of this section with respect to such transactions exceeds $20,000; and

(ii) The aggregate number of such transactions exceeds 200.

(5) ***Coordination with information returns required under section 6045 of the Code*** —

(i) ***Reporting on exchanges involving digital assets.*** Notwithstanding the provisions of this paragraph (c), the reporting of a payment made in settlement of a third party network transaction in which the payment by a payor is made using digital assets as defined in § 1.6045-1(a)(19) or the goods or services provided by a payee are digital assets must be as follows:

(A) ***Reporting on payors with respect to payments made using digital assets.*** If a payor makes a payment using digital assets and the exchange of the payor's digital assets for goods or services is a sale of digital assets by the payor under § 1.6045-1(a)(9)(ii), the amount paid to the payor in settlement of that exchange is subject to the rules as described in § 1.6045-1 (including any exemption from reporting under § 1.6045-1) and not this section.

(B) ***Reporting on payees with respect to the sale of goods or services that are digital assets.*** If the goods or services provided by a payee in an exchange are digital assets, the exchange is a sale of digital assets by the payee under § 1.6045-1(a)(9)(ii), and the payor is a broker under § 1.6045-1(a)(1) that effected the sale of such digital assets, the amount paid to the payee in settlement of that exchange is subject to the rules as described in § 1.6045-1 (including any exemption from reporting under § 1.6045-1) and not this section.

(ii) ***Examples.*** The following examples illustrate the rules of this paragraph (c)(5).

(A) ***Example 1*** —

(1) ***Facts.*** CRX is a *shared-service* organization that performs accounts payable services for numerous purchasers that are unrelated to CRX. A substantial number of sellers of goods and services, including Seller S, have established accounts with CRX and have agreed to accept payment from CRX in settlement of their transactions with purchasers. The agreement between sellers and CRX includes standards and mechanisms for settling the transactions and guarantees payment to the sellers, and the arrangement enables purchasers to transfer funds to providers. Pursuant to this seller agreement, CRX accepts cash from purchasers as payment as well as digital assets, which it exchanges into cash for payment to sellers. Additionally, CRX is a

processor of digital asset payments as defined in § 1.6045-1(a)(22) and a broker under § 1.6045-1(a)(1). P, an individual not otherwise exempt from reporting, purchases one month of services from S through CRX's organization. S is also an individual not otherwise exempt from reporting. S's services are not digital assets under § 1.6045-1(a)(19). To effect this transaction, P transfers 100 units of DE, a digital asset as defined in § 1.6045-1(a)(19), to CRX. CRX, in turn, exchanges the 100 units of DE for $1,000, based on the fair market value of the DE units, and pays $1,000 to S.

(2) ***Analysis with respect to CRX's status.*** CRX's arrangement constitutes a third party payment network under paragraph (c)(3) of this section because a substantial number of persons that are unrelated to CRX, including S, have established accounts with CRX, and CRX is contractually obligated to settle transactions for the provision of goods or services by these persons to purchasers, including P. Thus, under paragraph (c)(2) of this section, CRX is a third party settlement organization and the transaction involving P's purchase of S's services using 100 units of digital asset DE is a third party network transaction under paragraph (c)(1) of this section.

(3) ***Analysis with respect to the reporting on P.*** P's payment of 100 units of DE to CRX in return for the payment by CRX of $1,000 in cash to S is a sale of the DE units as defined in § 1.6045-1(a)(9)(ii)(D) that is effected by CRX, a processor of digital asset payments and broker under § 1.6045-1(a)(1). Accordingly, pursuant to the rules under paragraph (c)(5)(i)(A) of this section, CRX must file an information return under § 1.6045-1 with respect to P's sale of the DE units and is not required to file an information return under paragraph (a)(1) of this section with respect to P.

(4) ***Analysis with respect to the reporting on S.*** S's services are not digital assets as defined in § 1.6045-1(a)(19). Accordingly, pursuant to the rules under paragraph (c)(5)(i)(B) of this section, CRX's payment of $1,000 to S in settlement of the reportable payment transaction is subject to the reporting rules under paragraph (a)(1) of this section and not the reporting rules as described in § 1.6045-1.

(B) *Example 2 —*

(1) ***Facts.*** CRX is an entity that owns and operates a digital asset trading platform and provides digital asset custodial services and digital asset broker services under § 1.6045-1(a)(1). CRX also exchanges on behalf of customers digital assets under § 1.6045-1(a)(19), including nonfungible tokens, referred to as NFTs, representing ownership in unique digital artwork, video, or music. Exchange transactions undertaken by CRX on behalf of its customers are considered sales under § 1.6045-1(a)(9)(ii) that are effected by CRX and subject to reporting by CRX under § 1.6045-1. A substantial number of NFT sellers have accounts with CRX, into which their NFTs are deposited for sale. None of these sellers are related to CRX, and all have agreed to settle transactions for the sale of their NFTs in digital asset DE, or other forms of consideration, and according to the terms of their contracts with CRX. Buyers of NFTs also have accounts with CRX, into which digital assets are deposited for later use as consideration to acquire NFTs. Once a buyer decides to purchase an NFT for a price agreed to by the NFT seller, CRX effects the requested exchange of the buyer's consideration for the NFT, which allows CRX to guarantee delivery of the bargained for consideration to both buyer and seller. CRX charges a transaction fee

on every NFT sale, which is paid by the buyer in additional units of digital asset DE. Seller J, an individual not otherwise exempt from reporting, sells NFTs representing digital artwork on CRX's digital asset trading platform. J does not perform any other services with respect to these transactions. Buyer B, also an individual not otherwise exempt from reporting, seeks to purchase J's NFT-4 using units of DE. Using CRX's platform, buyer B and seller J agree to exchange J's NFT-4 for B's 100 units of DE (with a value of $1,000). At the direction of J and B, CRX executes this exchange, with B paying CRX's transaction fee using additional units of DE.

(2) ***Analysis with respect to CRX's status.*** CRX's arrangement with J and the other NFT sellers constitutes a third party payment network under paragraph (c)(3) of this section because a substantial number of providers of goods or services who are unrelated to CRX, including J, have established accounts with CRX, and CRX is contractually obligated to settle transactions for the provision of goods or services, such as NFTs representing goods or services, by these persons to purchasers. Thus, under paragraph (c)(2) of this section, CRX is a third party settlement organization and the sale of J's NFT-4 for 100 units of DE is a third party network transaction under paragraph (c)(1) of this section. Therefore, CRX is a payment settlement entity under paragraph (a)(4)(i)(B) of this section.

(3) ***Analysis with respect to the reporting on B.*** The exchange of B's 100 units of DE for J's NFT-4 is a sale under § 1.6045-1(a)(9)(ii)(A)(2) by B of the 100 DE units that was effected by CRX. Accordingly, under paragraph (c)(5)(i)(A) of this section, the amount paid to B in settlement of the exchange is subject to the rules as described in § 1.6045-1, and CRX must file an information return under § 1.6045-1 with respect to B's sale of the 100 DE units. CRX is not required to also file an information return under paragraph (a)(1) of this section with respect to the amount paid to B even though CRX is a third party settlement organization.

(4) ***Analysis with respect to the reporting on J.*** The exchange of J's NFT-4 for 100 units of DE is a sale under § 1.6045-1(a)(9)(ii) by J of a digital asset under § 1.6045-1(a)(19) that was effected by CRX. Accordingly, under paragraph (c)(5)(i)(B) of this section, the amount paid to J in settlement of the exchange is subject to the rules as described in § 1.6045-1, and CRX must file an information return under § 1.6045-1 with respect to J's sale of the NFT-4. CRX is not required to also file an information return under paragraph (a)(1) of this section with respect to the amount paid to J even though CRX is a third party settlement organization.

(d) ***Special rules —***

(1) ***Aggregated payees.*** If a person receives payments from a payment settlement entity (as defined in paragraph (a)(4) of this section) on behalf of one or more participating payees and distributes such payments to one or more participating payees (as defined in paragraph (a)(5) of this section), the person is treated as:

(i) The participating payee with respect to the payment settlement entity; and

(ii) The payment settlement entity with respect to the participating payees to whom the person distributes payments.

(2) ***Electronic payment facilitator.*** If a payment settlement entity (as defined in paragraph (a)(4) of this section) contracts with an electronic payment facilitator or other third party to make payments in settlement of reportable payment transactions on behalf of the payment settlement entity, the facilitator must file the annual information return under this section in lieu of the payment settlement entity. The facilitator need not have any agreement or arrangement with the participating payee. Also, the payment need not come from the facilitator's account. The facilitator need only submit instructions to transfer funds to the account of the participating payee in settlement of the reportable payment transaction. The facilitator is liable for any applicable penalties for failure to comply with the information reporting requirements of section 6050W.

(3) ***Designations.*** The party with the obligation to file the annual information return under this section may designate by written agreement any other person to satisfy the requirements of this section. Thus, notwithstanding the rule in paragraph (d)(2) of this section imposing the obligation to file the annual information return on the electronic payment facilitator in lieu of the payment settlement entity, the payment settlement entity may file the information return by designation if the parties agree in writing. However, a designation does not relieve the party with the reporting obligation from liability for any reporting failures. The party with the obligation to file the annual information return under this section remains liable for any applicable penalties under sections 6721 and 6722 if the requirements of this section are not satisfied.

(4) ***Conversion into United States dollars of amounts paid in foreign currency.*** When a payment is made or received in a foreign currency, the U.S. dollar amount shall be determined by converting such foreign currency into U.S. dollars on the date of the transaction at the spot rate (as defined in § 1.988-1(d)(1)) or pursuant to a reasonable spot rate convention. For example, a payor may use a month-end spot rate or a monthly average spot rate. A spot rate convention must be used consistently with respect to all non-dollar amounts reported and from year to year. Such convention cannot be changed without the consent of the Commissioner or his or her delegate.

(5) ***Unrelated persons.*** For purposes of this section, *unrelated* means any person who is not related to another person within the meaning of section 267(b) (providing a list of relationships), including the application of section 267(c) and (e)(3) (providing rules relating to constructive ownership), and section 707(b)(1) (relationships with partnerships).

(e) ***Examples.*** The following examples illustrate the provisions of this section:

Example 1. Merchant acquiring entity. Customer A purchases goods from merchant B using a credit card issued by Bank X. B is one of a network of unrelated persons that has agreed to accept credit cards issued by X as payment under an agreement that provides standards and mechanisms for settling the transaction between a merchant acquiring bank and the persons who accept the cards. Bank Z is the merchant acquiring bank with the contractual obligation to make payment to B for goods provided to A in this transaction. As defined in paragraph (b)(2) of this section, Z is the merchant acquiring entity that must file the annual information return required under paragraph (a)(1) of this section to report the payment made to settle the transaction for the sale of goods from B to A.

Example 2. Third party settlement organization. (i) Merchant B is one of a substantial number of persons selling goods or services over the Internet that have an account with X, an Internet payment service provider. None of these persons, including B, are related to X, and all have agreed to settle transactions for the sale of goods or services to customers according to the terms of their contracts with X. X has guaranteed payment to all of these persons,

including B, for the sale of goods or services to customers. Customer A purchases goods from B. A pays X for the goods purchased from B. X, in turn, makes payment to B in settlement of the transaction for the sale of goods from B to A.
(ii) X's arrangement constitutes a third party payment network as defined in paragraph (c)(3) of this section because a substantial number of persons that are unrelated to X, including B, have established accounts with X, and X is contractually obligated to settle transactions for the provision of goods or services by these persons to purchasers. Thus, under paragraph (c)(2) of this section, X is a third party settlement organization and the transaction discussed in this *Example* is a third party network transaction under paragraph (c)(1) of this section. Therefore, X must file the annual information return required under paragraph (a)(1) of this section to report the payment made to B in settlement of the transaction with A provided that X's aggregate payments to B from third party network transactions exceed $20,000 and the aggregate number of X's transactions with B exceeds 200 (as provided in paragraph (c)(4) of this section).

Example 3. Automated clearinghouse network. A operates an automated clearinghouse ("ACH") network that merely processes electronic payments (such as wire transfers, electronic checks, and direct deposit payments) between buyers and sellers. There are no contractual agreements between A and the sellers for the purpose of permitting the sellers to use the ACH network. Thus, A is not a third party settlement organization under paragraph (c)(2) of this section, the ACH network is not a third party payment network under paragraph (c)(3) of this section, and the electronic payment transactions are not third party network transactions under paragraph (c)(1) of this section. A is not required to file the annual information return required under paragraph (a)(1) of this section.

Example 4. ACH processor. B provides a variety of ACH payment processing services to a large number of merchants, such as converting checks received in payment of bills into ACH transactions. B groups payment transactions into an ACH file and transmits the ACH file into the ACH network on behalf of merchants in order to initiate payment to merchants through the ACH network. B makes payments to the merchants after the ACH network verifies that the customers' accounts have sufficient funds. Because the ACH network is not a third party payment network under paragraph (c)(3) of this section, B cannot be a third party settlement organization with respect to the ACH network. Similarly, because the ACH itself is not a third party settlement organization under paragraph (c)(2) of this section, B cannot be an electronic payment facilitator because B is not acting on behalf of a payment settlement entity. However, B may itself be operating third party payment network under paragraph (c)(3) of this section if B has a separate agreement or arrangement that: involves the establishment of accounts with B by a substantial number of unrelated merchants who provide goods or services and have agreed to settle transactions for the provision of the goods or services pursuant to the agreement or arrangement; provides for standards and mechanisms for settling the transactions; and guarantees persons providing goods or services pursuant to such agreement or arrangement that these persons will be paid for providing such goods or services.

Example 5. Gross amount. On Day 1, Customer A uses a payment card to purchase $100 worth of goods from merchant B. Bank X, the merchant acquiring entity for B, is the party with the contractual obligation to make payment to B in settlement of the transaction. On Day 2, X, after deducting fees of $2, makes payment of $98 to settle the transaction for the sale of goods from B to A. Under

paragraph (a)(6) of this section, X must report the amount of $100, the amount of the transaction on Day 1, without any reduction for fees or any other amount, as the gross amount of this reportable payment transaction on the annual information return filed under paragraph (a)(1) of this section.

Example 6. Gift card. (i) Customer A purchases a gift card from Merchant X that may be used only at X and its related network of stores. A purchases the gift card using cash. A gives the gift card to B. B uses the gift card to purchase goods at one of X's stores. The purchase of the gift card by A using cash is not a payment card transaction described in paragraph (b)(1) of this section and, thus, is not required to be reported in a return of information required under paragraph (a)(1) of this section. Under paragraph (b)(3) of this section, the gift card is not a payment card because the gift card is only accepted as payment by persons who are related to the issuer of the gift card and to each other. Therefore, the use of the gift card by B is not required to be reported in a return of information required under paragraph (a)(1) of this section.
(ii) The facts are the same as in paragraph (i), except that B adds value to the gift card using a credit card. The use of the credit card to add value to the gift card is a reportable payment transaction (as defined in paragraph (a)(3) of this section) and must be reported in a return of information under this section by the bank or other organization that has the contractual obligation to make payment to X in settlement of the transaction.

Example 7. Private label card. Bank B issues a card imprinted with Retailer C's logo to cardholder A. The "C-card" is accepted as payment only at C or at stores related (within the meaning of section 267(b), (c) and (e)(3) and, section 707(b)(1)) to C. A uses the card at C to purchase electronics equipment. Under paragraph (b)(3) of this section, the C-card is not a payment card because the card is accepted as payment only within a network of persons who are related to each other. Therefore, the use of the card by A at C is not required to be reported in a return of information required under paragraph (a)(1) of this section.

Example 8. Quasi-private label card. Bank B issues a card to cardholder A. The card, known as an "E-card," is issued by B pursuant to an agreement that provides that the E-card is accepted as payment only within a limited network of merchants that carry electronics equipment. The agreement provides for standards and mechanisms for settling the transactions between the merchants and the merchant acquiring entities. The merchants accepting the E-card as payment are not related (within the meaning of section 267(b), (c) and (e)(3) and section 707(b)(1)) to each other or to B. A uses the card to purchase electronics equipment at F Store, one of the stores within the network of merchants accepting the E-card. Under paragraph (b)(3) of this section, the E-card is a payment card because the card is issued pursuant to an agreement that provides for a network of persons unrelated to each other, and to the issuer, who agree to accept the card as payment. Therefore, the use of the E-card by A to purchase electronics equipment at F Store must be reported in a return of information required under paragraph (a)(1) of this section.

Example 9. Campus card. (i) University Y issues Student A a card that may be used on campus at various university-owned merchants and at various local merchants unrelated to Y. A uses the card in the university-owned cafeteria to purchase lunch. Under paragraph

(b)(5)(iii) of this section, no return of information is required because the card is being accepted as payment by a person who is related to the issuer of the card.
(ii) The facts are the same as in paragraph (i), except that A uses the campus card to purchase lunch at a local restaurant, unrelated to Y, that has agreed to accept the campus card as payment. Under paragraph (b)(3) of this section, the campus card is a payment card in this transaction because the card is accepted as payment by a person that is unrelated to this issuer of the card pursuant to an agreement. Therefore, the use of the card by A in the local restaurant for the purchase of lunch must be reported in a return of information required under paragraph (a)(1) of this section by the bank or other organization that has the contractual obligation to make payment to the restaurant in settlement of the transaction.

Example 10. Mall card. Customer B purchases a card that is issued by shopping mall A. Pursuant to an agreement or arrangement, the card is accepted as payment by various merchants located within the mall, who are unrelated to the issuer of the card and to each other. B uses the card in the mall to purchase goods from merchant C. Under paragraph (b)(3) of this section, the mall card is a payment card because the card is accepted as payment by a network of persons who are unrelated to the issuer of the card and to the other merchants who have agreed to accept the card as payment. Therefore, the use of the mall card by B to purchase goods from merchant C is required to be reported in a return of information required under paragraph (a)(1) of this section.

Example 11. Electronic benefit transactions card. Government Agency A issues benefits electronically to recipients by loading these benefits onto a payment card. Pursuant to an agreement, a network of merchants unrelated to A, and to each other, has agreed to accept the benefits card as payment. A issues a card to B, who uses the card to purchase goods from Merchant C. The card issued by A is a payment card (as defined in paragraph (b)(3) of this section) because the card is accepted as payment by a network of persons that are unrelated to the issuer of the card, and to each other. The use of the card by B to purchase goods from C must be reported in a return of information required under paragraph (a)(1) of this section.

Example 12. Prepaid telephone card. A purchases a prepaid telephone card from Company X that may be used to make telephone calls using various long-distance providers unrelated to X that have agreed to accept the card as payment. A places a telephone call using the prepaid card as payment for the telephone call. Under paragraph (b)(3) of this section, the prepaid telephone card is a payment card because the card is accepted as payment by a person that is unrelated to the issuer of the card pursuant to an agreement. Therefore, the use of the prepaid card to make payment for the telephone call must be reported in a return of information required under paragraph (a)(1) of this section by the bank or other organization that has the contractual obligation to make payment to the long distance provider in settlement of the transaction.

Example 13. Transit card. City Z accepts a transit card as payment for use of its mass transit system. The transit card is issued by B, an organization unrelated to Z. A network of persons, including Z, who are unrelated to each other and to B, have agreed to accept the transit card issued by B as payment for transit and for other goods and services. Transit rider X purchases a transit card and uses the card to pay for travel on Z's mass transit system. Under paragraph (b)(3) of this section, the transit card is a payment card because the card is accepted as payment by a person who is one of a network of persons that are unrelated to the issuer of the card, and to each other, and that have agreed to accept the card as payment. Therefore, the use of the transit card by X to pay for transit on Z's mass

transit system is a payment card transaction described in paragraph (b)(1) of this section that must be reported in a return of information required under paragraph (a)(1) of this section by the bank or other organization that has the contractual obligation to make payment to Z. Z is the participating payee, described in paragraph (a)(5)(i)(A) of this section, of the payment card transaction.

Example 14. Cash advance. Bank A issues Cardholder B a credit card that is a payment card under paragraph (b)(3) of this section. B uses the card at a local bank to obtain a cash advance. Under paragraph (b)(5)(i) of this section, B's use of the payment card to obtain a cash advance is not a payment card transaction (as defined in paragraph (b)(1) of this section) because the card is not being accepted as payment by a merchant.

Example 15. Withdrawals from automated teller machines. Bank A issues Cardholder B a credit card that is a payment card under paragraph (b)(3) of this section. B uses the card at an automated teller machine to obtain cash. Under paragraph (b)(5)(i) of this section, B's use of the payment card to obtain cash is not a payment card transaction (as defined in paragraph (b)(1) of this section) because the card is not being accepted as payment by a merchant.

Example 16. Convenience checks. Bank A issues Cardholder B a credit card that is a payment card under paragraph (b)(3) of this section. A sends B paper checks imprinted with the account number associated with the credit card. B uses one of the checks to purchase goods from Merchant S. The check is accepted by S and processed through the bank system in the same manner as a traditional check. Under paragraph (b)(5)(ii) of this section, B's use of the convenience check to purchase goods is not a payment card transaction (as defined in paragraph (b)(1) of this section) because the check is accepted and processed as a traditional check, not as a payment card.

Example 17. Healthcare network. Health carrier A operates healthcare network Y. A collects premiums from covered persons pursuant to a plan agreement between A and the covered persons for the cost of membership in Y. Separately, A pays healthcare providers pursuant to provider agreements to compensate these providers for services rendered to covered persons who are members of Y. A is not a third party settlement organization under paragraph (c)(2) of this section because A does not operate a third party payment network that enables purchasers to transfer funds to providers of goods and services. Therefore, A is not required to file the annual information return required under paragraph (a)(1) of this section.

Example 18. Third party accounts payable. X is a "shared-service" organization that performs accounts payable services for numerous purchasers that are unrelated to X. A substantial number of providers of goods and services have established accounts with X and have agreed to accept payment from X in settlement of their transactions with purchasers. The provider agreement with X includes standards and mechanisms for settling the transactions and guarantees payment to the providers, and the arrangement enables purchasers to transfer funds to providers. Under paragraph (c)(3) of this section, X's accounts payable services constitute a third party payment network, of which X is the third party settlement organization (as defined in paragraph (c)(2) of this section). For each payee, X must file the annual information return required under paragraph (a)(1) of this section to report payments made by X in settlement of accounts payable to that payee if X's aggregate payments to that payee exceed $20,000 and the aggregate number of transactions with that payee exceeds 200 (as provided in paragraph (c)(4) of this section).

Example 19. Toll collection network. State A charges a toll to vehicles that travel its state highways. The tolling agency for A contracted with organization X to perform its toll collection. X provides an electronic toll collection system that allows the toll facility to record the passage of a vehicle with a transponder affixed to the vehicle. The customer account associated with the transponder is

automatically debited for the amount of the toll. The customer funds a balance in the account, which is then depleted as the toll transactions occur. X periodically bills the customer to replenish the account. X then makes payment to A to settle the toll transactions that are recorded by the transponder. X also contracts with a substantial number of other entities unrelated to X that have established accounts with X and have agreed to accept payment using the electronic toll collection system provided by X. X guarantees payment to the entities for all toll transactions that are recorded by the transponders, and the arrangement enables customers to transfer funds to State A and other entities that charge tolls. Under paragraph (c)(3) of this section, X's electronic toll collection system constitutes a third party payment network, of which X is the third party settlement organization (as defined in paragraph (c)(2) of this section). For each payee, including A, X must file the annual information return required under paragraph (a)(1) of this section to report payments made by X in settlement of toll transactions if X's aggregate payments to that payee exceed $20,000 and the aggregate number of transactions with that payee exceeds 200 (as provided in paragraph (c)(4) of this section).

Example 20. Hotel kiosk. Under a "hotel kiosk" arrangement, Hotel B permits its customers to charge, to their room account, transactions for goods and services at a substantial number of sellers unrelated to B that operate on B's premises, or on the premises of hotels related to B, and that have established accounts in B's hotel kiosk system. Customers settle their room account with B when they check out, and B in turn settles the hotel kiosk transactions with the unrelated sellers. B guarantees payment to the sellers for these transactions and the arrangement enables customers to transfer funds to the sellers by means of one payment made to the hotel. Under paragraph (c)(3) of this section, B's hotel kiosk system constitutes a third party payment network, of which B is the third party settlement organization (as defined in paragraph (c)(2) of this section). For each payee, B must file the annual information return required under paragraph (a)(1) of this section to report payments made by B in settlement of the hotel kiosk transactions if B's aggregate payments to that payee exceed $20,000 and the aggregate number of transactions with that payee exceeds 200 (as provided in paragraph (c)(4) of this section).

Example 21. Aggregated payee. Corporation A, acting on behalf of A's independently-owned franchise stores, receives payment from Bank X for credit card sales effectuated at these franchise stores. X, the payment settlement entity (as defined in paragraph (a)(4)(i) of this section), is required under paragraph (d)(1)(i) of this section to report the gross amount of the reportable payment transactions distributed to A (notwithstanding the fact that A does not accept payment cards and would not otherwise be treated as a participating payee). In turn, under paragraph (d)(1)(ii) of this section, A is required to report the gross amount of the reportable payment transactions allocable to each franchise store. X has no reporting obligation under this section with respect to payments made by A to its franchise stores.

Example 22. Electronic payment facilitator. (i) Bank A is a merchant acquiring entity (as defined in paragraph (b)(2) of this section) with the contractual obligation to make payments to participating merchants to settle certain credit card transactions. A enters into a contract with Processor X. Pursuant to this contract, X prepares and submits instructions to move funds from A's account to the accounts of participating merchants to settle credit card transactions. X is making payment on A's behalf in settlement of payment card transactions pursuant to a contract between X and A. Therefore, under paragraph (d)(2) of this section, X is an electronic payment facilitator and must file the information return required under

paragraph (a)(1) of this section with respect to credit card transactions settled by X. A has no reporting obligation with respect to payments made by X on A's behalf.
(ii) The facts are the same as in paragraph (i) except that A and X state in their contract that A will file the information return required under paragraph (a)(1) of this section. A may file the information return pursuant to this designation. However, X is liable for any applicable penalties under sections 6721 and 6722 if the reporting requirements of this section are not satisfied.

(iii) The facts are the same as in paragraph (i) except that X merely prepares the instructions to move the funds to the accounts of participating merchants, and the instructions are actually submitted by A. A, not X, is making payment in settlement of payment card transactions. Therefore, A retains the obligation to file the information return required under paragraph (a)(1) of this section with respect to credit card transactions settled by A.

(f) ***Prescribed form.*** The return required by paragraph (a)(1) of this section must be made according to the forms and instructions published by the Internal Revenue Service.

(g) ***Time and place for filing.*** Returns made under this section for any calendar year must be filed on or before February 28th (March 31st if filing electronically) of the following year at the Internal Revenue Service Center location designated in the instructions to the relevant form.

(h) ***Time and place for furnishing statement*** —

(1) ***In general.*** Every payment settlement entity required to file a return under this section must also furnish to each participating payee a written statement with the same information (as described in paragraph (h)(2) of this section). The statement must be furnished to the payee on or before January 31st of the year following the calendar year in which the reportable payment is made. If the return of information is not made on magnetic media, this requirement may be satisfied by furnishing to such person a copy of all Forms 1099-K, “Merchant card and third-party payments,” or any successor form with respect to such person filed with the Internal Revenue Service Center. The statement will be considered furnished to the payee if it is mailed to the payee's last known address. The payment settlement entity may furnish the statement electronically in accordance with the rules provided in § 1.6050W-2.

(2) ***Information to be shown on statement furnished to payee.*** Each written statement furnished under paragraph (h)(1) of this section must include the following information—

(i) The name, address, and phone number (or email address if the statement is furnished electronically) of the information contact of the payment settlement entity.

(ii) With respect to the participating payee, the gross amount of—

(A) The aggregate reportable payment transactions for the calendar year; and

(B) The aggregate reportable payment transactions for each month of the calendar year.

(iii) Any other information required by the form, instructions, or current revenue procedures.

(i) ***Cross-reference to penalties.*** For provisions relating to the penalty for failure to file timely a correct information return required under section 6050W, see section 6721 and the associated regulations. For provisions relating to the penalty for failure to furnish timely a correct payee statement required under section 6050W(f), see section 6722 and the associated regulations. See section 6724 and the associated regulations for the waiver of a penalty if failure is due to reasonable cause and is not due to willful neglect.

(j) ***Applicability date.*** Except with respect to payments made using digital assets, the rules in this section apply to returns for calendar years beginning after December 31, 2010. For payments made using digital assets, this section applies on or after January 1, 2025.

[T.D. 9496, 75 FR 49828, Aug. 16, 2010, as amended by T.D. 10000, 89 FR 56580, July 9, 2024]

§ 1.6050W-2 Electronic furnishing of information statements for payments made in settlement of payment card and third party network transactions.

(a) ***Electronic furnishing of statements*** —

(1) ***In general.*** A person required by section 6050W to furnish a written statement (furnisher) regarding payments made in settlement of payment card and third party network transactions to the person to whom it is required to be furnished (recipient) may furnish the statement in an electronic format in lieu of a paper format. A furnisher who meets the requirements of paragraphs (a)(2) through (a)(5) of this section is treated as furnishing the required statement.

(2) ***Consent*** —

(i) ***In general.*** The recipient must have affirmatively consented to receive the statement required under section 6050W in an electronic format or, in the alternative, have previously consented to receive other federal tax statements in an electronic format from the furnisher. The consent may be made electronically in any manner that reasonably demonstrates that the recipient can access the statement in the electronic format in which it will be furnished to the recipient. Alternatively, the consent may be made in a paper document if it is confirmed electronically. Consents must be kept at all times available for inspection by the Internal Revenue Service. Recipients currently receiving electronic communications from the furnisher may elect to receive the statement required under section 6050W in a paper document in lieu of an electronic format. The election to receive a paper document may be made by notifying the furnisher electronically or in a paper document.

(ii) ***Withdrawal of consent.*** The consent requirement of paragraph (a)(2)(i) of this section is not satisfied if the recipient withdraws the consent to receive electronic statements and the withdrawal takes effect before the statement is furnished. The furnisher may provide that a withdrawal of consent takes effect either on the date it is received by the furnisher or on a subsequent date. The furnisher may also provide that a request for a paper statement will be treated as a withdrawal of consent.

(iii) ***Change in hardware or software requirements.*** If a change in the hardware or software required to access the statement creates a material risk that the recipient will not be able to access the statement, the furnisher must, prior to changing the hardware or software, provide notice to the recipient. The notice must describe the revised hardware and software required to access the statement and inform the recipient that a new consent to receive the statement in the revised electronic format must be provided to the furnisher. After implementing the revised hardware

and software, the furnisher must obtain from the recipient, in the manner described in paragraph (a)(2)(i) of this section, a new consent or confirmation of consent to receive the statement electronically.

(iv) ***Examples.*** The following examples illustrate the rules of this paragraph (a)(2):

Example 1. Recipient R has consented to receive the statements required under section 6041 in electronic format from Furnisher F. F has retained R's consent and keeps it available for inspection by the IRS. F may furnish to R the statement required under section 6050W in electronic format without securing an affirmative consent from R with respect to the statements required under section 6050W.

Example 2. Recipient R has not consented to receive any electronic federal income tax statements from Furnisher F. F may not furnish to R the statements required under section 6050W unless F first secures from R a consent to receive those statements in electronic format in accordance with the requirements of paragraphs (a)(2) through (a)(5) of this section.

Example 3. Furnisher F sends Recipient R a letter stating that R may consent to receive statements required by section 6050W(f) electronically on a website instead of in a paper format. The letter contains instructions explaining how to consent to receive the statements electronically by accessing the website, downloading the consent document, completing the consent document, and e-mailing the completed consent back to F. The consent document posted on the website uses the same electronic format that F uses to furnish statements electronically. R reads the instructions and submits the consent in the manner provided in the instructions. R has consented to receive the statements electronically in the manner described in paragraph (a)(2)(i) of this section.

Example 4. Furnisher F sends Recipient R an e-mail stating that R may consent to receive statements required by section 6050W(f) electronically instead of in a paper format. The e-mail contains an attachment instructing R how to consent to receive the statements electronically. The e-mail attachment uses the same electronic format that F uses to furnish statements electronically. R opens the attachment, reads the instructions, and submits the consent in the manner provided in the instructions. R has consented to receive the statements electronically in the manner described in paragraph (a)(2)(i) of this section.

Example 5. Furnisher F posts a notice on its website stating that Recipient R may receive statements required by section 6050W(f) electronically instead of in a paper format. The website contains instructions on how R may access a secure web page and consent to receive the statements electronically. By accessing the secure web page and giving consent, R has consented to receive the statements electronically in the manner described in paragraph (a)(2)(i) of this section.

(3) ***Required disclosures*** —

(i) ***In general.*** Prior to, or at the time of, a recipient's consent, the furnisher must provide to the recipient a clear and conspicuous disclosure statement containing each of the disclosures described in paragraphs (a)(3)(ii) through (a)(3)(viii) of this section.

(ii) ***Paper statement.*** The recipient must be informed that the statement will be furnished on paper if the recipient does not consent to receive it electronically.

(iii) ***Scope and duration of consent.*** The recipient must be informed of the scope and duration of the consent. For example, the recipient must be informed whether the consent applies to statements furnished every year after the consent is given until it is withdrawn in the manner described in paragraph (a)(3)(v)(A) of this section or only to the statement required to be furnished on or before the January 31st immediately following the date on which the consent is given.

(iv) ***Post-consent request for a paper statement.*** The recipient must be informed of any procedure for obtaining a paper copy of the recipient's statement after giving the consent described in paragraph (a)(2)(i) of this section and whether a request for a paper statement will be treated as a withdrawal of consent.

(v) ***Withdrawal of consent.*** The recipient must be informed that—

(A) The recipient may withdraw a consent by writing (electronically or on paper) to the person or department whose name, mailing address, telephone number, and e-mail address is provided in the disclosure statement;

(B) The furnisher will confirm the withdrawal and the date on which it takes effect in writing (either electronically or on paper); and

(C) A withdrawal of consent does not apply to a statement that was furnished electronically in the manner described in this paragraph (a) before the date on which the withdrawal of consent takes effect.

(vi) ***Notice of termination.*** The recipient must be informed of the conditions under which a furnisher will cease furnishing statements electronically to the recipient.

(vii) ***Updating information.*** The recipient must be informed of the procedures for updating the information needed by the furnisher to contact the recipient. The furnisher must inform the recipient of any change in the furnisher's contact information.

(viii) ***Hardware and software requirements.*** The recipient must be provided with a description of the hardware and software required to access, print, and retain the statement, and the date when the statement will no longer be available on the Web site.

(4) ***Format.*** The electronic version of the statement must contain all required information and comply with applicable revenue procedures relating to substitute statements to recipients.

(5) ***Notice*** —

(i) ***In general.*** If the statement is furnished on a website, the furnisher must notify the recipient that the statement is posted on a website. The notice may be delivered by mail, electronic mail, or in person. The notice must provide instructions on how to access and print the statement. The notice must include the following statement in capital letters, “IMPORTANT TAX RETURN DOCUMENT AVAILABLE.” If the notice is provided by electronic mail, the foregoing statement must be on the subject line of the electronic mail.

(ii) ***Undeliverable electronic address.*** If an electronic notice described in paragraph (a)(5)(i) of this section is returned as undeliverable, and the correct electronic address cannot be obtained from the furnisher's records or from the recipient, then the furnisher must furnish the notice by mail or in person within 30 days after the electronic notice is returned.

(b) ***Effective/applicability date.*** The rules in this section apply to returns for calendar years beginning after December 31, 2010.

[T.D. 9496, 75 FR 49833, Aug. 16, 2010]

§ 1.6050X-1 Information reporting for fines, penalties, and other amounts by governments, governmental entities, and nongovernmental entities treated as governmental entities.

(a) ***Information reporting requirement.*** The appropriate official, as defined in paragraph (f)(1) of this section, of a government, as defined in paragraph (f)(2) of this section, a governmental entity, as defined in paragraph (f)(3) of this section, or nongovernmental entity treated as a governmental entity, as defined in paragraph (f)(4) of this section, that is a party to a suit or agreement to which section 6050X(a)(1) and (a)(2) applies, must—

(1) File an information return, as described in paragraph (b) of this section, if the aggregate amount the payor, as defined in paragraph (f)(5) of this section, is required to pay pursuant to all court orders (orders) and settlement agreements (agreements), relating to the violation of any law, or the investigation or inquiry into the potential violation of any law, equals or exceeds the threshold amount provided in paragraph (f)(6) of this section;

(2) Furnish a written statement as described in paragraph (c) of this section to each payor; and

(3) Request the payor's taxpayer identification number (TIN) if it is not already known, and notify the payor that the law requires the payor to furnish a TIN for inclusion on the information return and that the payor may be subject to a penalty for failure to furnish the TIN. See sections 6723, 6724(d)(3), and § 301.6723-1 of this chapter. The TIN may be requested in any manner, and the payor may provide the TIN in any manner, including orally, in writing, or electronically. If the TIN is furnished in writing, no particular form is required. Form W-9, Request for Taxpayer Identification Number and Certification, may be used, or the request may be incorporated into documents related to the order or agreement.

(b) ***Requirement to file return*** —

(1) ***Content of information return.*** The information return must provide the following:

(i) The amount required to be paid to, or at the direction of, a government or governmental entity, pursuant to section 6050X(a)(1)(A), as a result of the orders and/or agreements;

(ii) The separate amounts required to be paid as restitution, remediation, or to come into compliance with a law, as described in section 6050X(a)(1)(B) and (C), as a result of the orders and/or agreements;

(iii) The payor's TIN; and

(iv) Any additional information required by the information return and the related instructions.

(2) ***Form and manner of reporting.*** The appropriate official required to file an information return, under paragraph (a)(1) of this section, must file Form 1098-F, Fines, Penalties, and Other Amounts, or any successor form, as provided by the instructions, with Form 1096, Annual Summary and Transmittal of U.S. Information Returns.

(3) ***Multiple orders and/or agreements.*** The appropriate official must file only one Form 1098-F for amounts required to be paid as a result of multiple orders and/or agreements with respect to the violation, investigation, or inquiry.

(4) ***Time of reporting.*** Returns required to be made under paragraph (a) of this section must be filed with the Internal Revenue Service (IRS) on or before February 28 (March 31 if filed electronically) of the year following the calendar year in which the orders and/or agreements become binding under applicable law, determined without regard to whether all appeals have been exhausted or the time for filing an appeal has expired.

(c) ***Requirement to furnish written statement*** —

(1) ***In general.*** The appropriate official must furnish a written statement to each payor for which it is required to file an information return under paragraphs (a)(1) and (b) of this section. The written statement must include:

(i) The information that was reported to the IRS relating to such payor; and

(ii) A legend that identifies the statement as important tax information that is being furnished to the IRS.

(2) ***Copy of the Form 1098-F.*** The appropriate official may satisfy the requirement of this paragraph (c) by furnishing a copy of the Form 1098-F, or any successor form, filed regarding the payor, or another document that contains the information required by paragraph (c)(1) of this section if the document conforms to applicable revenue procedures or other guidance relating to substitute statements. See § 601.601 of this chapter.

(3) ***Time for furnishing written statement.*** The appropriate official must furnish the written statement to the payor on or before January 31 of the year following the calendar year in which the order or agreement becomes binding under applicable law, determined without regard to whether all appeals have been exhausted or the time for filing an appeal has expired.

(d) ***Rules for multiple payors*** —

(1) ***Multiple payors—individual liability.*** If, pursuant to an order or agreement, multiple individually liable payors are liable to pay, for the violation of any law, or the investigation or inquiry into the potential violation of any law, an amount that, in the aggregate, equals, or exceeds, the threshold amount under paragraph (f)(6) of this section, the appropriate official must file an information return under paragraphs (a)(1) and (b) of this section to report the amount required to be paid by each payor, even if a payor's payment liability is less than the threshold amount. The appropriate official must furnish a written statement, under paragraph (c) of this section, to each payor. If more than one person, as defined in section 7701(a)(1), is a party to an order or agreement, there is no information reporting requirement, or requirement to furnish a written statement, with respect to any person who does not have a payment obligation or obligation for costs to provide services or to provide property.

(2) ***Multiple payors—joint and several liability.*** If, pursuant to an order or agreement, multiple payors are jointly and severally liable to pay, for the violation of any law, or the investigation or inquiry into the potential violation of any law, an amount that, in the aggregate, equals or exceeds the threshold amount under paragraph (f)(6) of this section, the appropriate official must file an information return, under paragraphs (a)(1) and (b) of this section for each of the jointly and severally liable payors.

Each information return must report all amounts required to be paid by all of the payors pursuant to the order or agreement. The appropriate official must furnish a written statement, under paragraph (c) of this section, to each of the jointly and severally liable payors.

(e) ***Payment amount not identified.*** If some or all of the payment amount is not identified, as described in § 1.162-21(b)(2)(iii), for paragraphs (a), (b), and (c) of this section, the appropriate official must file an information return, and furnish the written statement to the payor, as provided by the instructions to Form 1098-F, or any successor form, including instructions as to the amounts (if any) to include on Form 1098-F, only if the government or governmental entity reasonably expects that the aggregate amount required to be paid or incurred pursuant to the order or agreement, relating to the violation of any law, or the investigation or inquiry into the potential violation of any law, will equal or exceed the threshold amount under paragraph (f)(6) of this section.

(f) ***Definitions.*** The following definitions apply under this section:

(1) ***Appropriate official*** —

(i) ***One government or governmental entity.*** If the government or governmental entity has not assigned one of its officers or employees to comply with the reporting requirements of paragraph (a), (b), and (c) of this section, the term *appropriate official* means the officer or employee of a government or governmental entity having control of the suit, investigation, or inquiry. If the government or governmental entity has assigned one of its officers or employees to comply with the reporting requirements of paragraph (a), (b), and (c) of this section, such officer or employee is the appropriate official.

(ii) ***More than one government or governmental entity*** —

(A) ***In general.*** If more than one government or governmental entity is a party to an order or agreement, only the appropriate official of the government or governmental entity listed first on the most recently executed order or agreement is responsible for complying with all reporting requirements under paragraphs (a), (b), and (c) of this section, unless another appropriate official is appointed by agreement under paragraph (f)(1)(ii)(B) of this section.

(B) ***By agreement.*** The governments or governmental entities that are parties to an order or agreement may agree to appoint one or more other appropriate officials to be responsible for complying with the information reporting requirements of paragraphs (a), (b), and (c) of this section.

(2) ***Government.*** For purposes of this section, *government* means the government of the United States, a State, the District of Columbia, or a political subdivision (such as a local government unit) of any of the foregoing.

(3) ***Governmental entity.*** For purposes of this section, *governmental entity* means—

(i) A corporation or other entity serving as an agency or instrumentality of a government (as defined in paragraph (f)(2) of this section), or

(ii) A nongovernmental entity treated as a governmental entity as described in paragraph (f)(4) of this section.

(4) ***Nongovernmental entity treated as governmental entity.*** For purposes of this section, the definition of nongovernmental entity treated as a governmental entity as set forth in § 1.162-21(e)(3) applies but does not include a nongovernmental entity of a territory of the United States, including American Samoa, Guam, the Northern Mariana Islands, Puerto Rico, or the U.S. Virgin Islands, a foreign country, or an Indian tribe.

(5) ***Payor.*** The payor is the person, as defined in section 7701(a)(1), which, pursuant to an order or agreement, has paid or incurred, or is liable to pay or incur, an amount to, or at the direction of, a government or governmental entity in relation to the violation or potential violation of any law. In general, the payor will be the person to which section 162(f) and § 1.162-21 of the regulations apply.

(6) ***Threshold amount.*** The *threshold amount* is $50,000.

(g) ***Applicability date.*** The rules of this section apply only to orders and agreements, pursuant to suits and agreements, which become binding under applicable law on or after January 1, 2022, determined without regard to whether all appeals have been exhausted or the time for filing an appeal has expired.

[T.D. 9946, 86 FR 4989, Jan. 19, 2021]

§ 1.6050Y-1 Information reporting for reportable policy sales, transfers of life insurance contracts to foreign persons, and reportable death benefits.

(a) ***Definitions.*** The following definitions apply for purposes of this section and §§ 1.6050Y-2 through 1.6050Y-4:

(1) ***Acquirer.*** The term *acquirer* means any person that acquires an interest in a life insurance contract (through a direct acquisition or indirect acquisition of the interest) in a reportable policy sale.

(2) ***Buyer.*** The term *buyer* means, with respect to any interest in a life insurance contract that has been transferred in a reportable policy sale, the person that was the most recent acquirer of that interest in a reportable policy sale as of the date reportable death benefits are paid under the contract.

(3) ***Direct acquisition of an interest in a life insurance contract.*** The term *direct acquisition of an interest in a life insurance contract* has the meaning given to it in § 1.101-1(e)(3)(i).

(4) ***Foreign person.*** The term *foreign person* means a person that is not a United States person, as defined in section 7701(a)(30).

(5) ***Indirect acquisition of an interest in a life insurance contract.*** The term *indirect acquisition of an interest in a life insurance contract* has the meaning given to it in § 1.101-1(e)(3)(ii).

(6) ***Interest in a life insurance contract.*** The term *interest in a life insurance contract* has the meaning given to it in § 1.101-1(e)(1).

(7) ***Investment in the contract*** —

(i) ***Definition of investment in the contract.*** With respect to the original policyholder of a life insurance contract, the term *investment in the contract* on any date means that person's investment in the contract under section 72(e)(6) on that date. With respect to any other person, the term *investment in the contract* on any date means the *estimate of investment in the contract* on that date.

(ii) ***Definition of estimate of investment in the contract.*** The term *estimate of investment in the contract* with respect to any person, other than the original policyholder, means, on any date, the aggregate amount of premiums paid for the contract by that person before that date, less the aggregate amount received under the contract by that person before that date to the extent such information is known to or can reasonably be estimated by the issuer or payor.

(8) ***Issuer*** —

(i) ***In general.*** Except as provided in paragraph (a)(8)(ii) or (iii) of this section, the term *issuer* generally means, on any date, with respect to any interest in a life insurance contract, any person that bears any part of the risk with respect to the contract on that date and any person responsible on that date for administering the contract, including collecting premiums and paying death benefits. For instance, if a reinsurer reinsures on an indemnity basis all or a portion of the risks that the original issuer (and continuing contract administrator) of the contract might otherwise have incurred with respect to the contract, both the reinsurer and the original issuer of the contract are issuers of the contract for purposes of this paragraph (a)(8)(i). Any designee of an issuer of a contract is also considered an issuer of the contract for purposes of this paragraph (a)(8)(i).

(ii) ***6050Y(a) issuer.*** For purposes of information reporting under section 6050Y(a) and § 1.6050Y-2, the 6050Y(a) issuer is the issuer that is responsible for administering the life insurance contract, including collecting premiums and paying death benefits under the contract, on the date of the reportable policy sale. In the case of the issuance of a life insurance contract to a policyholder in an exchange pursuant to section 1035, the 6050Y(a) issuer is the issuer that issues the new contract.

(iii) ***6050Y(b) issuer.*** For purposes of information reporting under section 6050Y(b) and § 1.6050Y-3, a 6050Y(b) issuer is:

(A) Any person that receives an RPSS with respect to a life insurance contract or interest therein (or, in the case of a designee, receives notice that the issuer for whom it serves as designee received an RPSS), and is or was, on or before the date of receipt of the RPSS, an issuer with respect to the contract; or

(B) Any person that receives notice of a transfer to a foreign person of a life insurance contract, provided that the person is or was, on the date of transfer or on the date of receipt of the notice, an issuer with respect to the contract, and provided that the information is not received from the issuer responsible for administering the contract (or its designee), unless:

(*1*) That person (or, in the case of a designee, the issuer for whom it serves as designee) is not responsible for administering the contract, including collecting premiums and paying death benefits under the contract, on the date the notice of a transfer to a foreign person is received; and

(*2*) That person, or its designee, provides the issuer that is responsible on that date for administering the contract, including collecting premiums and paying death benefits under the contract, with such notice and with any available information necessary to accomplish reporting under section 6050Y(b) and § 1.6050Y-3.

(iv) ***Designee.*** A person is treated as the designee of an issuer for purposes of this paragraph (a)(8) only if so designated in writing, including electronically. The designation must be signed and acknowledged, in writing or electronically, by the person named as designee, or that person's representative, and by the issuer making the designation, or its representative.

(9) ***Life insurance contract.*** The term *life insurance contract* has the meaning given to it in section 7702(a). A life insurance contract may also be referred to as a life insurance policy.

(10) ***Notice of a transfer to a foreign person.*** The term *notice of a transfer to a foreign person* means any notice of a transfer of title to, possession of, or legal ownership of a life insurance contract received by a 6050Y(b) issuer that includes foreign indicia, including information provided for nontax purposes such as a change of address notice for purposes of sending statements or for other purposes, and information relating to loans, premiums, or death benefits with respect to the contract, unless the 6050Y(b) issuer knows that no transfer of the contract has occurred or knows that the transferee is a United States person. For this purpose, a 6050Y(b) issuer may rely on a Form W-9, Request for Taxpayer Identification Number and Certification, or a valid substitute form that meets the requirements of § 1.1441-1(d)(2) (substituting "6050Y(b) issuer" for "withholding agent"), that indicates the transferee is a United States person. For instance, a change of address notice that changes the address to a foreign address or other updates to the information relating to the payment of premiums that includes foreign banking or other foreign financial institution information is notice of a transfer to a foreign person unless the 6050Y(b) issuer knows that no transfer has occurred or the transferee is a United States person.

(11) ***Payor.*** The term *payor* means any person making a payment of reportable death benefits.

(12) ***Reportable death benefits.*** The term *reportable death benefits* means amounts paid by reason of the death of the insured under a life insurance contract that are attributable to an interest in the contract that was transferred in a reportable policy sale.

(13) ***Reportable death benefits payment recipient.*** The term *reportable death benefits payment recipient* means any person that receives reportable death benefits as a beneficiary under a life insurance contract or as the holder of an interest in a life insurance contract.

(14) ***Reportable policy sale.*** The term *reportable policy sale* has the meaning given to it in § 1.101-1(c).

(15) ***Reportable policy sale payment.*** The term *reportable policy sale payment* generally means the total amount of cash and the fair market value of any other consideration reducible to a money value transferred, or to be transferred, in a reportable policy sale, including any amount of a reportable policy sale payment recipient's debt assumed by the acquirer in a reportable policy sale. In the case of an indirect acquisition of an interest in a life insurance contract that is a reportable policy sale, the reportable policy sale payment is the total amount of cash and the fair market value of any other consideration reducible to a money value transferred, or to be transferred, for the ownership interest in the entity, including the amount of any debt assumed by the acquirer, that is appropriately allocable to the interest in the life insurance contract held by the entity.

(16) ***Reportable policy sale payment recipient*** —

(i) Except as provided in paragraph (a)(16)(ii) of this section, the term *reportable policy sale payment recipient* means any person that receives a reportable policy sale payment in a reportable policy sale. A broker or other intermediary that retains a portion of the cash or other consideration transferred in a reportable policy sale is also a reportable policy sale payment recipient.

(ii) A person other than the seller is not a reportable policy sale payment recipient with respect to a reportable policy sale if that person receives aggregate payments of less than $600 with respect to that reportable policy sale.

(17) ***Reportable policy sale statement.*** The term *reportable policy sale statement (RPSS)* means a statement furnished by an acquirer to an issuer under section 6050Y(a)(2) and § 1.6050Y-2(d)(2)(i).

(18) ***Seller.*** The term *seller* means any person that—

(i) Holds an interest in a life insurance contract and transfers that interest, or any part of that interest, to an acquirer in a reportable policy sale; or

(ii) Owns a life insurance contract and transfers title to, possession of, or legal ownership of that contract to a foreign person.

(19) ***Transfer of an interest in a life insurance contract.*** The term *transfer of an interest in a life insurance contract* has the meaning given to it in § 1.101-1(e)(2).

(20) ***United States person.*** The term *United States person* has the meaning given to it in section 7701(a)(30).

(b) ***Applicability date.*** This section and §§ 1.6050Y-2 through 1.6050Y-3 apply to reportable policy sales made after December 31, 2018. This section and § 1.6050Y-4 apply to reportable death benefits paid after December 31, 2018. This section and § 1.6050Y-3 apply to any notice of a transfer to a foreign person received after December 31, 2018. However, for reportable policy sales and payments of reportable death benefits occurring after December 31, 2018, and on or before December 31, 2019, and any notice of a transfer to a foreign person received after December 31, 2018, and on or before December 31, 2019, transition relief is provided as follows:

(1) Statements required to be furnished to issuers under section 6050Y(a)(2) and § 1.6050Y-2(d)(2)(i) must be furnished by the later of the applicable deadline set forth in § 1.6050Y-2(d)(2)(ii) or December 30, 2019.

(2) Statements required to be furnished to reportable policy sale payment recipients under section 6050Y(a)(2) and § 1.6050Y-2(d)(1)(i) must be furnished by the later of the applicable deadline set forth in § 1.6050Y-2(d)(1)(ii) or February 28, 2020.

(3) Statements required to be furnished to sellers under section 6050Y(b)(2) and § 1.6050Y-3(d)(1) must be furnished by the later of the applicable deadline set forth in § 1.6050Y-3(d)(2) or February 28, 2020.

(4) Statements required to be furnished to reportable death benefits payment recipients under section 6050Y(c)(2) and § 1.6050Y-4(c)(1) must be furnished by the later of the applicable deadline set forth in § 1.6050Y-4(c)(2) or February 28, 2020.

(5) Returns required to be filed under section 6050Y(a)(1) and § 1.6050Y-2(a), section 6050Y(b)(1) and § 1.6050Y-3(a), and section 6050Y(c)(1) and § 1.6050Y-4 must be filed by the later of the applicable deadline set forth in § 1.6050Y-2(c), § 1.6050Y-3(c), and § 1.6050Y-4(b) or February 28, 2020.

[T.D. 9879, 84 FR 58484, Oct. 31, 2019, as amended by T.D. 9879, 84 FR 68043, Dec. 13, 2019]

§ 1.6050Y-2 Information reporting by acquirers for reportable policy sale payments.

(a) ***Requirement of reporting.*** Except as provided in paragraph (f) of this section, every person that is an acquirer in a reportable policy sale during any calendar year must file a separate information return with the Internal Revenue Service (IRS) in the form and manner as required by the IRS for each reportable policy sale payment recipient, including any seller that is a reportable policy sale payment recipient. Each return must include the following information with respect to the seller or other reportable policy sale payment recipient to which the return relates:

(1) The name, address, and taxpayer identification number (TIN) of the acquirer;

(2) The name, address, and TIN of the seller or other reportable policy sale payment recipient to which the return relates;

(3) The date of the reportable policy sale;

(4) The name of the 6050Y(a) issuer of the life insurance contract acquired and the policy number of the life insurance contract;

(5) The aggregate amount of reportable policy sale payments made, or to be made, to the seller or other reportable policy sale payment recipient to which the return relates with respect to the reportable policy sale; and

(6) Any other information that is required by the form or its instructions.

(b) ***Unified reporting.*** The information reporting requirement of paragraph (a) of this section applies to each acquirer in a series of prearranged transfers of an interest in a life insurance contract, as well as each acquirer in a simultaneous transfer of different interests in a single life insurance contract. In either case, an acquirer's reporting obligation is deemed satisfied if the information required by paragraph (a) of this section with respect to that acquirer is timely reported on behalf of that acquirer in a manner that is consistent with forms, instructions, and other IRS guidance by one or more other acquirers or by a third party information reporting contractor.

(c) ***Time and place for filing.*** Returns required to be made under paragraph (a) of this section must be filed with the Internal Revenue Service Center designated on the prescribed form or in its instructions on or before February 28 (March 31 if filed electronically) of the year following the calendar year in which the reportable policy sale occurred. However, see § 1.6050Y-1(b)(5) for transition rules.

(d) ***Requirement of and time for furnishing statements*** —

(1) ***Statements to reportable policy sale payment recipients*** —

(i) ***Requirement of furnishing statement.*** Every person required to file an information return under paragraph (a) of this section with respect to a reportable policy sale payment recipient must furnish in the form and manner prescribed by the IRS to the reportable policy sale payment recipient whose name is set forth in that return a written statement showing the information required by paragraph (a) of this section with respect to the reportable policy sale payment recipient and the name, address, and phone number of the information contact of the person furnishing the written statement. The contact information of the person furnishing the written statement must provide direct access to a person that can answer questions about the statement. The statement is not required to include information with respect to any other reportable policy sale payment recipient in the reportable policy sale or information about reportable policy sale payments to any other reportable policy sale payment recipient.

(ii) *Time for furnishing statement.* Each statement required by paragraph (d)(1)(i) of this section to be furnished to any reportable policy sale payment recipient must be furnished on or before February 15 of the year following the calendar year in which the reportable policy sale occurred. However, see § 1.6050Y-1(b)(2) for transition rules.

(2) *Statements to 6050Y(a) issuers* —

(i) *Requirement of furnishing RPSS* —

(A) *In general.* Except as provided in paragraph (d)(2)(i)(B) of this section, every person required to file a return under paragraph (a) of this section must furnish in the form and manner prescribed by the IRS to the 6050Y(a) issuer whose name is required to be set forth in the return an RPSS with respect to each reportable policy sale payment recipient that is also a seller. Each RPSS must show the information required by paragraph (a) of this section with respect to the seller named therein, except that the RPSS is not required to set forth the amount of any reportable policy sale payment. Each RPSS must also show the name, address, and phone number of the information contact of the person furnishing the RPSS. This contact information must provide direct access to a person that can answer questions about the RPSS.

(B) *Exception from reporting.* An RPSS is not required to be furnished to the 6050Y(a) issuer by an acquirer acquiring an interest in a life insurance contract in an indirect acquisition.

(ii) *Time for furnishing RPSS.* Except as provided in this paragraph (d)(2)(ii), each RPSS required by paragraph (d)(2)(i) of this section to be furnished to a 6050Y(a) issuer must be furnished by the later of 20 calendar days after the reportable policy sale, or 5 calendar days after the end of the applicable state law rescission period. However, if the later date is after January 15 of the year following the calendar year in which the reportable policy sale occurred, the RPSS must be furnished by January 15 of the year following the calendar year in which the reportable policy sale occurred. However, see § 1.6050Y-1(b)(1) for transition rules.

(3) *Unified reporting.* The information reporting requirements of paragraphs (d)(1)(i) and (d)(2)(i) of this section apply to each acquirer in a series of prearranged transfers of an interest in a life insurance contract, as well as each acquirer in a simultaneous transfer of different interests in a single life insurance contract, as described in paragraph (b) of this section. In either case, an acquirer's obligation to furnish statements is deemed satisfied if the information required by paragraphs (d)(1)(i) and (d)(2)(i) of this section with respect to that acquirer is timely reported on behalf of that acquirer consistent with forms, instructions, and other IRS guidance by one or more other acquirers or by a third party information reporting contractor.

(e) *Notice of rescission of a reportable policy sale.* Any person that has filed a return required by section 6050Y(a)(1) and this section with respect to a reportable policy sale must file a corrected return within 15 calendar days of the receipt of notice of the rescission of the reportable policy sale. Any person that has furnished a written statement under section 6050Y(a)(2) and this section with respect to the reportable policy sale must furnish the recipient of that statement with a corrected statement within 15 calendar days of the receipt of notice of the rescission of the reportable policy sale.

(f) *Exceptions to requirement to file* —

(1) An acquirer that is a foreign person is not required to file an information return under paragraph (a) of this section with respect to a reportable policy sale unless—

(i) The life insurance contract (or interest therein) transferred in the sale is on the life of an insured who is a United States person at the time of the sale; or

(ii) The sale is subject to the laws of one or more States of the United States that pertain to acquisitions or sales of life insurance contracts (or interests therein).

(2) An acquirer is not required to file an information return under paragraph (a) of this section with respect to a reportable policy sale payment to a reportable policy sale payment recipient other than the seller if the reportable policy sale payment is reported by the acquirer under section 6041 or 6041A.

(3) An acquirer is not required to file an information return under paragraph (a) of this section with respect to the issuance of a life insurance contract in an exchange pursuant to section 1035. However, the acquirer is required to furnish the 6050Y(a) issuer with the statement required under paragraph (d)(2) of this section as if the acquirer were required to file an information return under paragraph (a) of this section.

(g) *Cross-reference to penalty provisions* —

(1) ***Failure to file correct information return.*** For provisions relating to the penalty provided for failure to file timely a correct information return required under section 6050Y(a)(1) and this section, see section 6721 and § 301.6721-1 of this chapter. See section 6724(a) and § 301.6724-1 of this chapter for the waiver of a penalty if the failure is due to reasonable cause and is not due to willful neglect.

(2) ***Failure to furnish correct statement.*** For provisions relating to the penalty provided for failure to furnish timely a correct statement to identified persons under section 6050Y(a)(2) and this section, see section 6722 and § 301.6722-1 of this chapter. See section 6724(a) and § 301.6724-1 of this chapter for the waiver of a penalty if the failure is due to reasonable cause and is not due to willful neglect.

[T.D. 9879, 84 FR 58486, Oct. 31, 2019]

§ 1.6050Y-3 Information reporting by 6050Y(b) issuers for reportable policy sales and transfers of life insurance contracts to foreign persons.

(a) ***Requirement of reporting.*** Except as provided in paragraph (f) of this section, each 6050Y(b) issuer that receives an RPSS or any notice of a transfer to a foreign person must file an information return with the Internal Revenue Service (IRS) with respect to each seller in the form and manner prescribed by the IRS. The return must include the following information with respect to the seller:

(1) The name, address, and taxpayer identification number (TIN) of the seller;

(2) The investment in the contract with respect to the seller;

(3) The amount the seller would have received if the seller had surrendered the life insurance contract on the date of the reportable policy sale or the transfer of the contract to a foreign person, or if the date of the transfer to a foreign person is not known to the 6050Y(b) issuer, the date the 6050Y(b) issuer received notice of the transfer; and

(4) Any other information that is required by the form or its instructions.

(b) ***Unified reporting.*** Each 6050Y(b) issuer subject to the information reporting requirement of paragraph (a) of this section must satisfy that requirement, but a 6050Y(b) issuer's reporting obligation is deemed satisfied if the information required by paragraph (a) of this section with respect to that 6050Y(b) issuer is timely reported on behalf of that 6050Y(b) issuer in a manner that is consistent with forms, instructions, and other IRS guidance by one or more other 6050Y(b) issuers or by a third party information reporting contractor.

(c) ***Time and place for filing.*** Except as provided in this paragraph (c), returns required to be made under paragraph (a) of this section must be filed with the Internal Revenue Service Center designated on the prescribed form or in its instructions on or before February 28 (March 31 if filed electronically) of the year following the calendar year in which the reportable policy sale or the transfer to a foreign person occurred. If the 6050Y(b) issuer does not receive notice of a transfer to a foreign person until after January 31 of the calendar year following the year in which the transfer occurred, returns required to be made under paragraph (a) of this section must be filed by the later of February 28 (March 31 if filed electronically) of the calendar year following the year in which the transfer occurred or thirty days after the date notice is received. However, see § 1.6050Y-1(b)(5) for transition rules.

(d) ***Requirement of and time for furnishing statements*** —

(1) ***Requirement of furnishing statement.*** Every 6050Y(b) issuer filing a return required by paragraph (a) of this section must furnish to each seller that is a reportable policy sale payment recipient or makes a transfer to a foreign person and whose name is required to be set forth in the return a written statement showing the information required by paragraph (a) of this section with respect to that seller and the name, address, and phone number of the information contact of the person filing the return. This contact information must provide direct access to a person that can answer questions about the statement.

(2) ***Time for furnishing statement.*** Except as provided in this paragraph (d)(2), each statement required by paragraph (d)(1) of this section to be furnished to any seller must be furnished on or before February 15 of the year following the calendar year in which the reportable policy sale or transfer to a foreign person occurred. If a 6050Y(b) issuer does not receive notice of a transfer to a foreign person until after January 31 of the calendar year following the year in which the transfer occurred, each statement required to be made under paragraph (d) of this section must be furnished by the date thirty days after the date notice is received. However, see § 1.6050Y-1(b)(3) for transition rules.

(3) ***Unified reporting.*** Each 6050Y(b) issuer subject to the information reporting requirement of paragraph (d)(1) of this section must satisfy that requirement, but a 6050Y(b) issuer's reporting obligation is deemed satisfied if the information required by paragraph (d)(1) of this section with respect to that 6050Y(b) issuer is timely reported on behalf of that 6050Y(b) issuer consistent with forms, instructions, and other IRS guidance by one or more other 6050Y(b) issuers or by a third party information reporting contractor.

(e) ***Notice of rescission of a reportable policy sale or transfer of an insurance contract to a foreign person.*** Any 6050Y(b) issuer that has filed a return required by section 6050Y(b)(1) and this section with respect to a reportable policy sale or transfer of an insurance contract to a foreign person must file a corrected return within 15 calendar days of the receipt of notice of the rescission of the reportable policy sale or transfer of the insurance contract to a foreign person. Any 6050Y(b) issuer that has furnished a written statement under section 6050Y(b)(2) and this section with respect to the reportable policy sale or transfer of the insurance contract to a foreign person must furnish the recipient of that statement with a corrected statement within 15 calendar days of the receipt of notice of the rescission of the reportable policy sale or transfer of the insurance contract to a foreign person.

(f) ***Exceptions to requirement to file.*** A 6050Y(b) issuer is not required to file an information return under paragraph (a) of this section if paragraph (f)(1), (2), or (3) of this section applies.

(1) Except as provided in this paragraph (f)(1), the 6050Y(b) issuer obtains documentation upon which it may rely to treat a seller of a life insurance contract or interest therein as a foreign beneficial owner in accordance with § 1.1441-1(e)(1)(ii), applying in such case the provisions of § 1.1441-1 by substituting the term "6050Y(b) issuer" for the term "withholding agent" and without regard to the fact that that these provisions apply only to amounts subject to withholding under chapter 3 of subtitle A of the Internal Revenue Code. A 6050Y(b) issuer may also obtain from a seller that is a partnership or trust, in addition to documentation establishing the entity's foreign status, a written certification from the entity that no beneficial owner of any portion of the proceeds of the sale is a United States person. In such a case, the issuer may rely upon the written certification to treat the partnership or trust as a foreign beneficial owner for purposes of this paragraph (f)(1) provided that the seller does not have actual knowledge that a United States person is the beneficial owner of all or a portion of the proceeds of the sale. See § 1.1441-1(c)(6)(ii) for the definition of beneficial owner that applies for purposes of this paragraph (f)(1). Additionally, for certifying its status as a foreign beneficial owner (as applicable) for purposes of this paragraph (f)(1), a seller that is required to report any of the income from the sale as effectively connected with the conduct of a trade or business in the United States under section 864(b) is required to provide to the 6050Y(b) issuer a Form W-8ECI, Certificate of Foreign Person's Claim that Income is Effectively Connected with the Conduct of a Trade or Business in the United States. If a 6050Y(b) issuer obtains a Form W-8ECI from a seller with respect to the sale or has reason to know that income from the sale is effectively connected with the conduct of a trade or business in the United States under section 864(b), the exception to reporting described in this paragraph (f)(1) does not apply.

(2) The 6050Y(b) issuer receives notice of a transfer to a foreign person, but does not receive an RPSS with respect to the transfer, provided that, at the time the notice is received—

(i) The 6050Y(b) issuer is not a United States person;

(ii) The life insurance contract (or interest therein) transferred is not on the life of a United States person; and

(iii) The 6050Y(b) issuer has not classified the seller as a United States person in its books and records.

(3) The RPSS received by the 6050Y(b) issuer is with respect to the 6050Y(b) issuer's issuance of a life insurance contract to a policyholder in an exchange pursuant to section 1035.

(g) ***Cross-reference to penalty provisions*** —

(1) ***Failure to file correct information return.*** For provisions relating to the penalty provided for failure to file timely a correct information return required under section 6050Y(b)(1) and this section, see section 6721 and § 301.6721-1 of this chapter. See section 6724(a) and § 301.6724-1 of this chapter for the waiver of a penalty if the failure is due to reasonable cause and is not due to willful neglect.

(2) ***Failure to furnish correct statement.*** For provisions relating to the penalty provided for failure to furnish timely a correct statement to identified persons under section 6050Y(b)(2) and this section, see section 6722 and § 301.6722-1 of this chapter. See section 6724(a) and § 301.6724-1 of this chapter for the waiver of a penalty if the failure is due to reasonable cause and is not due to willful neglect.

[T.D. 9879, 84 FR 58487, Oct. 31, 2019]

§ 1.6050Y-4 Information reporting by payors for reportable death benefits.

(a) ***Requirement of reporting.*** Except as provided in paragraph (e) of this section, every person that is a payor of reportable death benefits during any calendar year must file a separate information return for such calendar year with the Internal Revenue Service (IRS) for each reportable death benefits payment recipient in the form and manner prescribed by the IRS. The return must include the following information with respect to the reportable death benefits payment recipient to which the return relates:

(1) The name, address, and taxpayer identification number (TIN) of the payor;

(2) The name, address, and TIN of the reportable death benefits payment recipient;

(3) The date of the payment;

(4) The gross amount of reportable death benefits paid to the reportable death benefits payment recipient during the taxable year;

(5) The payor's estimate of investment in the contract with respect to the buyer, limited to the payor's estimate of the buyer's investment in the contract with respect to the interest for which the reportable death benefits payment recipient was paid; and

(6) Any other information that is required by the form or its instructions.

(b) ***Time and place for filing.*** Returns required to be made under this section must be filed with the Internal Revenue Service Center designated in the instructions for the form on or before February 28 (March 31 if filed electronically) of the year following the calendar year in which the payment of reportable death benefits was made. However, see § 1.6050Y-1(b)(5) for transition rules.

(c) ***Requirement of and time for furnishing statements*** —

(1) ***Requirement of furnishing statement.*** Every person required to file an information return under paragraph (a) of this section must furnish to each reportable death benefits payment recipient whose name is required to be set forth in that return a written statement showing the information required by paragraph (a) of this section with respect to that reportable death benefits payment recipient and the name, address, and phone number of the information contact of the payor. This contact information must provide direct access to a person that can answer questions about the statement.

(2) ***Time for furnishing statement.*** Each statement required by paragraph (c)(1) of this section to be furnished to any reportable death benefits payment recipient must be furnished on or before January 31 of the year following the calendar year in which the payment of reportable death benefits was made. However, see § 1.6050Y-1(b)(4) for transition rules.

(d) ***Notice of rescission of a reportable policy sale.*** Any person that has filed a return required by section 6050Y(c) and this section with respect to a payment of reportable death benefits must file a corrected return within 15 calendar days of recovering any portion of the reportable death benefits payment from the reportable death benefits payment recipient as a result of the rescission of the reportable policy sale. Any person that has furnished a written statement under section 6050Y(c)(2) and this section with respect to a payment of reportable death benefits must furnish the recipient of that statement with a

corrected statement within 15 calendar days of recovering any portion of the reportable death benefits payment from the reportable death benefits payment recipient as a result of the rescission of the reportable policy sale.

(e) ***Exceptions to requirement to file.*** A payor is not required to file an information return under paragraph (a) of this section with respect to a payment of reportable death benefits if paragraph (e)(1), (2), or (3) of this section applies.

(1) Except as provided in this paragraph (e)(1), the payor obtains documentation in accordance with § 1.1441-1(e)(1)(ii) upon which it may rely to treat the reportable death benefits payment recipient as a foreign beneficial owner of the reportable death benefits, applying in such case the provisions of § 1.1441-1 by substituting the term "payor" for the term "withholding agent" and without regard to the fact that the provisions apply only to amounts subject to withholding under chapter 3 of subtitle A of the Internal Revenue Code. A payor may also obtain from a partnership or trust that is a reportable death benefits recipient, in addition to documentation establishing the entity's foreign status, a written certification from the entity that no beneficial owner of any portion of the reportable death benefits payment is a United States person. In such a case, a payor may rely upon the written certification to treat the partnership or trust as a foreign beneficial owner for purposes of this paragraph (e)(1) provided that the payor does not have actual knowledge that a United States person is the beneficial owner of all or a portion of the reportable death benefits payment. See § 1.1441-1(c)(6)(ii) for the definition of beneficial owner that applies for purposes of this paragraph (e)(1). Other due diligence or reporting requirements may, however, apply to a payor that relies on the exception set forth in this paragraph (e)(1). See § 1.1441-5(c) and (e) (determination of payees of foreign partnerships and certain foreign trusts for amounts subject to withholding under § 1.1441-2(a)) and § 1.1461-1(b) and (c) (amounts subject to reporting for chapter 3 purposes).

(2) The buyer obtained the life insurance contract (or interest therein) under which reportable death benefits are paid in a reportable policy sale to which the exception to reporting described in § 1.6050Y-3(f)(2) applies.

(3) The payor never received, and has no knowledge of any issuer having received, an RPSS with respect to the interest in a life insurance contract with respect to which the reportable death benefits are paid.

(f) ***Cross-reference to penalty provisions*** —

(1) ***Failure to file correct information return.*** For provisions relating to the penalty provided for failure to file timely a correct information return required under section 6050Y(c)(1) and this section, see section 6721 and § 301.6721-1 of this chapter. See section 6724(a) and § 301.6724-1 of this chapter for the waiver of a penalty if the failure is due to reasonable cause and is not due to willful neglect.

(2) ***Failure to furnish correct statement.*** For provisions relating to the penalty provided for failure to furnish timely a correct statement to identified persons under section 6050Y(c)(2) and this section, see section 6722 and § 301.6722-1 of this chapter. See section 6724(a) and § 301.6724-1 of this chapter for the waiver of a penalty if the failure is due to reasonable cause and is not due to willful neglect.

[T.D. 9879, 84 FR 58488, Oct. 31, 2019]

§ 1.6052-1 Information returns regarding payment of wages in the form of group-term life insurance.

(a) *Requirement of reporting* —

(1) ***In general.*** Every employer, who during any calendar year provides any one of his employees remuneration for services in the form of group-term life insurance on the life of such employee any part of the cost of which is to be included in such employee's gross income as provided in section 79(a), shall make a separate return on Form W-2 with respect to each such employee for such year which includes the following information:

(i) Name, address, and identifying number of the employer;

(ii) Name, address, and social security number of the employee; and

(iii) Total amount includible in the employee's gross income by reason of the provisions of section 79(a), computed as if each employee reported his income on the basis of a calendar year (determined as if the employer making such return is the only employer paying the employee remuneration in the form of group-term life insurance on his life which is includible in his gross income under section 79(a)).

Returns on Form W-2 required to be filed pursuant to the provisions of this section shall be transmitted by Form W-3. In a case where, with respect to the same employee, an employer must make a return on Form W-2 under this section and also under § 31.6011(a)-4 or § 31.6011(a)-5 of this chapter (Employment Tax Regulations), or under § 1.6041-2 (relating to return of information as to payments to employees), such employer may make such returns on the same Form W-2 or on separate Forms W-2. In a case where an employer must file a Form W-3 under this section and also under § 31.6011(a)-4 or § 31.6011(a)-5 of this chapter (Employment Tax Regulations), the Form W-3 filed under such § 31.6011(a)-4 or § 31.6011(a)-5 shall also be used as the transmittal form for a return on Form W-2 made pursuant to the provisions of this section.

(2) ***Definitions.*** Terms used in subparagraph (a)(1) of this section and in section 79 and the regulations thereunder have the meaning ascribed to them in section 79 and the regulations thereunder.

(b) *Time and place for filing* —

(1) *Time for filing* —

(i) ***General rule.*** In a case where an employer must file Forms W-3 and W-2 under this section and also under § 31.6011(a)-4 or § 31.6011(a)-5 of this chapter (Employment Tax Regulations), the time for filing such forms under this section shall be the same as the time (including extensions thereof) for filing such forms under § 31.6011(a)-4 or § 31.6011(a)-5.

(ii) ***Exception.*** In a case where an employer is not required to file Forms W-3 and W-2 under § 31.6011(a)-4 or § 31.6011(a)-5 of this chapter, returns on Forms W-3 and W-2 required under paragraph (a) of this section for any calendar year shall be filed on or before February 28 (March 31 if filed electronically) of the following year.

(iii) ***Cross reference.*** For extensions of time for filing returns, see section 6081 and the regulations thereunder.

(2) ***Place for filing.*** The returns on Forms W-3 and W-2 required under paragraph (a) of this section shall be filed pursuant to the rules contained in § 31.6091-1 of this chapter (Employment Tax Regulations), relating to the place for filing certain returns.

(c) ***Special rule for calendar years before 1972.*** For calendar years before 1972, the provisions of this section will be deemed to have been complied with if the returns for such years were filed in accordance with the provisions of this section in effect prior to August 3, 1973, or with the instructions applicable to the appropriate forms.

(d) ***Last day for filing return.*** For provisions relating to the time for performance of an act when the last day prescribed for performance falls on Saturday, Sunday, or a legal holiday, see § 301.7503-1 of this chapter (Regulations on Procedure and Administration).

(e) ***Penalty.*** For provisions relating to the penalty provided for failure to file the information returns required by this section, see section 6652 and the regulations thereunder.

[T.D. 6888, 31 FR 9205, July 6, 1966, as amended by T.D. 7284, 38 FR 20828, Aug. 3, 1973; T.D. 7580, 43 FR 60160, Dec. 26, 1978; T.D. 7623, 44 FR 28800, May 17, 1979; T.D. 8895, 65 FR 50408, Aug. 18, 2000]

§ 1.6052-2 Statements to be furnished employees with respect to wages paid in the form of group-term life insurance.

(a) ***Requirement.*** Every employer filing a return under section 6052(a) and § 1.6052-1, with respect to group-term life insurance on the life of an employee, shall furnish to the employee whose name is set forth in such return the tax return copy and the employee's copy of Form W-2. Each copy of Form W-2 must show the information required to be shown on the Form W-2 filed under § 1.6052-1. An employer may truncate an employee's social security number to appear in the form of an IRS truncated taxpayer identification number (TTIN) on copies of Forms W-2 furnished to the employee. For provisions relating to the use of TTINs, see § 301.6109-4 of this chapter (Procedure and Administration Regulations). The rules in § 31.6051-1 of this chapter (Employment Taxes and Collection of Income Tax at Source Regulations) shall apply with respect to the means and time (including extensions thereof) for furnishing the employee's copy of Form W-2 required by this section to the employee and making corrections to such form.

(b) ***Definitions.*** Terms used in this section and in section 79 and the regulations thereunder have the meaning ascribed to them in section 79 and the regulations thereunder.

(c) ***Penalty.*** For provisions relating to the penalty provided for failure to furnish a statement under this section, see section 6722 and the regulations in part 301 under section 6722.

(d) ***Applicability date.*** This section is applicable for statements required to be furnished under section 6052 after December 31, 2020.

[T.D. 6888, 31 FR 9205, July 6, 1966, as amended by T.D. 7284, 38 FR 20828, Aug. 3, 1973; T.D. 7580, 43 FR 60160, Dec. 26, 1978; T.D. 7623, 44 FR 28800, May 17, 1979; T.D. 9861, 84 FR 31719, July 3, 2019]

§ 1.6055-1 Information reporting for minimum essential coverage.

(a) ***Information reporting requirement.*** Every person that provides minimum essential coverage to an individual during a calendar year must file an information return and transmittal and furnish statements to responsible individuals on forms prescribed by the Internal Revenue Service.

(b) ***Definitions*** —

(1) ***In general.*** The definitions in this paragraph (b) apply for purposes of this section.

(2) ***Affordable Care Act.*** The term *Affordable Care Act* refers to the Patient Protection and Affordable Care Act, Public Law 111-148 (124 Stat. 119 (2010)), and the Health Care and Education Reconciliation Act of 2010, Public Law 111-152 (124 Stat. 1029 (2010)), and amendments to those acts.

(3) ***ERISA.*** The term *ERISA* means the Employee Retirement Income Security Act of 1974, as amended (29 U.S.C. 1001 et seq.).

(4) ***Exchange. Exchange*** has the same meaning as in 45 CFR 155.20.

(5) ***Government employer.*** The term *government employer* means an employer that is a governmental unit or an agency or instrumentality of a governmental unit.

(6) ***Governmental unit.*** The term *governmental unit* refers to the government of the United States, any State or political subdivision of a State, or any Indian tribal government (as defined in section 7701(a)(40)) or subdivision of an Indian tribal government (as defined in section 7871(d)).

(7) ***Agency or instrumentality of a governmental unit.*** [Reserved]

(8) ***Minimum essential coverage. Minimum essential coverage*** is defined in section 5000A(f) and regulations issued under that section.

(9) ***Qualified health plan.*** The term *qualified health plan* has the same meaning as in section 1301(a) of the Affordable Care Act (42 U.S.C. 18021(a)).

(10) ***Reporting entity.*** A *reporting entity* is any person that must report, under section 6055 and this section, minimum essential coverage provided to an individual.

(11) ***Responsible individual.*** The term *responsible individual* includes a primary insured, employee, former employee, uniformed services sponsor, parent, or other related person named on an application who enrolls one or more individuals, including him or herself, in minimum essential coverage.

(12) ***Taxpayer identification number.*** The term *taxpayer identification number* (TIN) has the same meaning as in section 7701(a)(41).

(c) ***Persons required to report*** —

(1) ***In general.*** The following persons must file the information return and transmittal form required under paragraph (a) of this section to report minimum essential coverage—

(i) Health insurance issuers, or carriers (as used in 5 U.S.C. 8901), for all insured coverage, except as provided in paragraph (c)(3)(ii) of this section;

(ii) Plan sponsors of self-insured group health plan coverage;

(iii) The executive department or agency of a governmental unit that provides coverage under a government-sponsored program (within the meaning of section 5000A(f)(1)(A)); and

(iv) Any other person that provides minimum essential coverage to an individual.

(2) ***Plan sponsors of self-insured group health plan coverage*** —

(i) ***In general.*** For purposes of this section, a plan sponsor of self-insured group health plan coverage is—

(A) The employer for a self-insured group health plan or arrangement established or maintained by a single employer (determined without application of section 414(b), (c), (m) or (o) in the case of an employer described in paragraph (f)(2)(i) of this section), including each participating employer with respect to a self-insured group health plan or arrangement established or maintained by more than one employer (and not including a multiemployer plan as defined in section 3(37) of ERISA or a Multiple Employer Welfare Arrangement as defined in section 3(40) of ERISA);

(B) The association, committee, joint board of trustees, or other similar group of representatives of the parties who establish or maintain the plan for a self-insured group health plan or arrangement that is a multiemployer plan (as defined in section 3(37) of ERISA).

(C) The employee organization for a self-insured group health plan or arrangement maintained solely by an employee organization;

(D) Each participating employer for a self-insured group health plan or arrangement maintained by a Multiple Employer Welfare Arrangement (as defined in section 3(40) of ERISA) with respect to the participating employer's own employees; and

(E) For a self-insured group health plan or arrangement for which a plan sponsor is not otherwise identified in paragraphs (c)(2)(i)(A) through (c)(2)(i)(D) of this section, the person designated by plan terms as the plan sponsor or plan administrator or, if no person is designated as the administrator and a plan sponsor cannot be identified, each entity that maintains the plan or arrangement.

(ii) ***Government employers.*** Unless otherwise provided by statute or regulation, a government employer that maintains a self-insured group health plan or arrangement may enter into a written agreement with another governmental unit, or an agency or instrumentality of a governmental unit, that designates the other governmental unit, agency, or instrumentality as the person required to file the returns and to furnish the statements required by this section for some or all of the individuals receiving minimum essential coverage under that plan or arrangement. The designated governmental unit, agency, or instrumentality must be part of or related to the same governmental unit as the government employer (for example, a political subdivision of a State may designate the State or another political subdivision of the state) and agree to the designation. The government employer must make or revoke the designation before the earlier of the deadline for filing the returns or furnishing the statements required by this section and must retain a copy of the designation in its books and records. If the requirements of this paragraph (c)(2)(ii) are met, the designated governmental unit, agency, or instrumentality is the sponsor under paragraph (c)(2)(i) of this section. If no entity is designated, the government employer that maintains the self-insured group health plan or arrangement is the sponsor under paragraph (c)(2)(i) of this section.

(3) ***Special rules for government-sponsored programs*** —

(i) ***Medicaid and Children's Health Insurance Program (CHIP) coverage.*** The State agency that administers the Medicaid program under title XIX of the Social Security Act (42 U.S.C. 1396 and following sections) or the CHIP program under title XXI of the Social Security Act (42 U.S.C. 1396 and following sections) must file the returns and furnish the statements required by this section for those programs.

(ii) ***Government-sponsored coverage provided through health insurance issuers.*** An executive department or agency of a governmental unit that provides coverage under a government-sponsored program through a health insurance issuer (such as Medicaid, CHIP, or Medicare, including Medicare Advantage) must file the returns and furnish the statements required by this section.

(iii) ***Nonappropriated Fund Health Benefits Program.*** The Secretary of Defense may designate the Department of Defense components (as used in DoD Directive 5100.01, Functions of the Department of Defense and Its Major Components (December 21, 2010)) that must file the returns and furnish the statements required by this section for the Nonappropriated Fund Health Benefits Program.

(4) ***Other arrangements recognized as minimum essential coverage.*** The Commissioner may designate in published guidance, see § 601.601(d) of this chapter, the reporting entity for arrangements the Secretary of Health and Human Services, in coordination with the Secretary of the Treasury, recognizes under section 5000A(f)(1)(E) as minimum essential coverage.

(d) ***Reporting not required*** —

(1) ***Qualified health plans.*** A health insurance issuer is not required to file a return or furnish a report under this section for coverage in a qualified health plan in the individual market enrolled in through an Exchange.

(2) ***Additional health benefits.*** No reporting is required under paragraph (a) of this section for minimum essential coverage that provides benefits in addition or as a supplement to a health plan or arrangement that constitutes minimum essential coverage if—

(i) The primary and supplemental coverages have the same plan sponsor; or

(ii) The coverage supplements government-sponsored coverage (as defined in section 5000A(f)(1)(A) and the regulations under that section) such as Medicare.

(3) ***Individuals not enrolled in coverage.*** No reporting is required under this section for coverage offered to individuals who do not enroll.

(e) ***Information required to be reported to the Internal Revenue Service*** —

(1) ***In general.*** All information returns required by this section must report the following information for the calendar year of coverage—

(i) The name, address, and employer identification number (EIN) of the reporting entity required to file the return;

(ii) The name, address, and TIN, or date of birth if a TIN is not available, of the responsible individual, except that reporting entities may but are not required to report the TIN of a responsible individual not enrolled in the coverage;

(iii) The name and TIN, or date of birth if a TIN is not available, of each individual who is covered under the policy or program;

(iv) For each covered individual, the months for which, for at least one day, the individual was enrolled in coverage and entitled to receive benefits; and

(v) Any other information specified in forms, instructions, or published guidance, see §§ 601.601(d) and 601.602 of this chapter.

(2) ***Information relating to employer-provided coverage.*** In addition to the information described in paragraph (e)(1) of this section, information returns reporting minimum essential coverage provided to an individual that is coverage provided by a health insurance issuer through a group health plan must report—

(i) The name, address, and EIN of the employer sponsoring the plan;

(ii) Whether the coverage is a qualified health plan enrolled in through the Small Business Health Options Program (SHOP) and the SHOP's unique identifier; and

(iii) Other information specified in forms, instructions, or published guidance, see §§ 601.601(d) and 601.602 of this chapter.

(f) ***Time and manner for filing return*** —

(1) ***In general.*** A reporting entity must file the return and transmittal form required under paragraph (a) of this section on or before February 28 (March 31 if filed electronically) of the year following the calendar year in which it provided minimum essential coverage to an individual. A reporting entity must file the return and transmittal form as specified in forms or instructions. For extensions of time for filing returns under this section see §§ 1.6081-1 and 1.6081-8. See § 301.6011-2 of this chapter for rules relating to electronic filing.

(2) ***Form of return*** —

(i) ***Applicable large employer members.*** A reporting entity that is reporting under section 6055 as an applicable large employer member (as defined in § 54.4980H-1(a)(5) of this chapter) makes the return required under this paragraph (f) on Form 1094-C and Form 1095-C or other form designated by the Internal Revenue Service.

(ii) ***Reporting entities not reporting as applicable large employer members.*** Entities reporting as health insurance issuers or carriers, sponsors of self-insured group health plans that are not reporting as applicable large employer members, sponsors of multiemployer plans, and providers of government-sponsored coverage, will report under section 6055 on Form 1094-B and Form 1095-B or other form designated by the Internal Revenue Service.

(iii) ***Substitute forms.*** Reporting entities may make the return required under this paragraph (f) on a substitute form. A substitute form must comply with revenue procedures or other published guidance (see § 601.601(d)(2) of this chapter) that apply to substitute forms.

(g) ***Statements to be furnished to responsible individuals*** —

(1) ***In general.*** Except as otherwise provided in paragraph (g)(4)(ii)(B) of this section, every person required to file a return under this section must furnish to the responsible individual identified on the return a written statement. For purposes of the penalty under section 6722, furnishing a statement to the responsible individual is treated as furnishing a statement to the payee. The statement must show—

(i) The phone number for a person designated as the reporting entity's contact person and policy number, if any; and

(ii) Information described in paragraph (e) of this section required to be shown on the section 6055 return for the responsible individual and each covered individual listed on the return.

(2) ***Statements for individuals other than the responsible individual.*** A reporting entity is not required to provide a statement described in paragraph (g)(1) of this section to an individual who is not the responsible individual.

(3) ***Form of the statement.*** A statement required under this paragraph (g) may be made either by furnishing to the responsible individual a copy of the return filed with the Internal Revenue Service or on a substitute statement. A substitute statement must include the information required to be shown on the return filed with the Internal Revenue Service and must comply with requirements in published guidance (see § 601.601(d)(2) of this chapter) relating to substitute statements. An Internal Revenue Service truncated taxpayer identification number may be used as the identification number for an individual in lieu of the identification number appearing on the corresponding information return filed with the Internal Revenue Service.

(4) ***Time and manner for furnishing statements*** —

(i) ***Time for furnishing.*** Except as otherwise provided in this paragraph (g)(4)(i), a reporting entity must furnish the statements required under paragraph (g)(1) of this section on or before January 31 of the year following the calendar year in which the minimum essential coverage is provided. Reporting entities are granted an automatic, 30-day extension of time in which to furnish these statements.

(ii) ***Manner of furnishing*** —

(A) ***In general.*** Except as otherwise provided in paragraph (g)(4)(ii)(B) of this section, if mailed, the statement must be sent to the responsible individual's last known permanent address or, if no permanent address is known, to the individual's temporary address. For purposes of this paragraph (g)(4)(ii)(A), a reporting entity's first class mailing to the last known permanent address, or if no permanent address is known, the temporary address, discharges the requirement to furnish the statement. A reporting entity may furnish the statement electronically if the requirements of § 1.6055-2 are satisfied.

(B) ***Alternative manner of furnishing.*** A reporting entity shall be treated as furnishing the statement in a timely manner under this paragraph (g)(4) if the individual shared responsibility payment amount under section 5000A(c) for the calendar year in which the minimum essential coverage is provided is zero and the reporting entity satisfies the requirements in this paragraph (g)(4)(ii)(B). If the reporting entity is an applicable large employer member that sponsors a self-insured group health plan and makes a return in accordance with paragraph (f)(2)(i) of this section related to that plan, the applicable large employer member may use the alternative manner of furnishing described in this paragraph (g)(4)(ii)(B) for statements to non-full-time employees and non-employees who are enrolled in the applicable large employer's self-insured group health plan. The reporting entity satisfies the requirements of this paragraph (g)(4)(ii)(B) only if the reporting entity:

(*1*) Provides clear and conspicuous notice, in a location on its website that is reasonably accessible to all responsible individuals, stating that responsible individuals may receive a copy of their statement upon request. The notice must include an email address, a physical address to which a request for a statement may be sent, and a telephone number that responsible individuals may use to contact the reporting entity with any questions. A notice posted on a reporting entity's website satisfies the requirements of this paragraph (g)(4)(ii)(B)(*1*) if it is written in plain, non-technical

terms and with letters of a font size large enough, including any visual clues or graphical figures, to call to a viewer's attention that the information pertains to tax statements reporting that individuals had health coverage. For example, a reporting entity's website provides a clear and conspicuous notice if it includes a statement on the main page—or a link on the main page, reading "Tax Information", to a secondary page that includes a statement—in capital letters, "IMPORTANT HEALTH COVERAGE TAX DOCUMENTS"; explains how responsible individuals may request a copy of Form 1095-B, Health Coverage (or, for an applicable large employer member that sponsors a self-insured group health plan and makes a return in accordance with paragraph (f)(2)(i) of this section, explains how non-full-time employees and non-employees who are enrolled in the plan may request a copy of Form 1095-C, Employer-Provided Health Insurance Offer and Coverage); and includes the reporting entity's email address, mailing address, and telephone number;

(2) Posts the notice on its website by the date specified in paragraph (g)(4)(i) of this section and retains the notice in the same location on its website through October 15 of the year following the calendar year to which the statements relate (or the first business day after October 15, if October 15 falls on a Saturday, Sunday or legal holiday); and

(3) Furnishes the statement to a requesting responsible individual within 30 days of the date the request is received. To satisfy the requirement of this paragraph (g)(4)(ii)(B)(3), a reporting entity may furnish the statement electronically pursuant to § 1.6055-2(a)(2) through (6).

(h) ***Penalties*** —

(1) ***In general.*** For provisions relating to the penalty for failure to file timely a correct information return required under section 6055, see section 6721 and the regulations under that section. For provisions relating to the penalty for failure to furnish timely a correct statement to responsible individuals required under section 6055, see section 6722 and the regulations under that section. See section 6724 and the regulations under that section for rules relating to the waiver of penalties if a failure to file timely or accurately is due to reasonable cause and is not due to willful neglect.

(2) ***Application of section 6721 and 6722 penalties to section 6055 reporting.*** For purposes of section 6055 reporting, if the information reported on a return (including a transmittal) or a statement required by this section is incomplete or incorrect as a result of a change in circumstances (such as a retroactive change in coverage), a failure to timely file or furnish a corrected document is a failure to file or furnish a correct return or statement under sections 6721 and 6722.

(i) [Reserved]

(j) ***Applicability date.*** Except as otherwise provided in this paragraph (j), this section applies for calendar years beginning after December 31, 2014. Paragraphs (g)(1) and (g)(4)(i) and (ii) of this section apply for calendar years beginning after December 31, 2021, but reporting entities may choose to apply paragraphs (g)(1) and (g)(4)(i) and (ii) of this section for calendar years beginning after December 31, 2020. Except as otherwise provided in this paragraph (j), paragraph (g)(4), as contained in 26 CFR part 1 edition revised as of April 1, 2021, applies to calendar years ending after December 31, 2014, and beginning before January 1, 2022.

[T.D. 9660, 79 FR 13227, Mar. 10, 2014; 79 FR 24331, Apr. 30, 2014, as amended by T.D. 9970, 87 FR 76575, Dec. 15, 2022]

§ 1.6055-2 Electronic furnishing of statements.

(a) *Electronic furnishing of statements* —

(1) ***In general.*** A person required by section 6055 to furnish a statement (furnisher) to a responsible individual (a recipient) may furnish the statement in an electronic format in lieu of a paper format. A furnisher who meets the requirements of paragraphs (a)(2) through (a)(6) of this section is treated as furnishing the statement in a timely manner.

(2) *Consent* —

(i) ***In general.*** The recipient must have affirmatively consented to receive the statement in an electronic format. The consent may be made electronically in any manner that reasonably demonstrates that the recipient can access the statement in the electronic format in which it will be furnished. Alternatively, the consent may be made in a paper document that is confirmed electronically.

(ii) ***Withdrawal of consent.*** The consent requirement of this paragraph (a)(2) is not satisfied if the recipient withdraws the consent and the withdrawal takes effect before the statement is furnished. The furnisher may provide that a withdrawal of consent takes effect either on the date the furnisher receives it or on another date no more than 60 days later. The furnisher also may provide that a recipient's request for a paper statement will be treated as a withdrawal of the recipient's consent.

(iii) ***Change in hardware or software requirements.*** If a change in the hardware or software required to access the statement creates a material risk that the recipient will not be able to access a statement, a furnisher must, prior to changing the hardware or software, notify the recipient. The notice must describe the revised hardware and software required to access the statement and inform the recipient that a new consent to receive the statement in the revised electronic format must be provided to the furnisher. After implementing the revised hardware or software, the furnisher must obtain from the recipient, in the manner described in paragraph (a)(2)(ii) of this section, a new consent or confirmation of consent to receive the statement electronically.

(iv) ***Examples.*** The following examples illustrate the rules of this paragraph (a)(2):

Example 1. Furnisher F sends Recipient R a letter stating that R may consent to receive the statement required under section 6055 electronically on a Web site instead of in a paper format. The letter contains instructions explaining how to consent to receive the statement electronically by accessing the Web site, downloading and completing the consent document, and emailing the completed consent back to F. The consent document posted on the Web site uses the same electronic format that F will use for the electronically furnished statement. R reads the instructions and submits the consent in the manner provided in the instructions. R has consented to receive the statement required under section 6055 electronically in the manner described in paragraph (a)(2)(i) of this section.

Example 2. Furnisher F sends Recipient R an email stating that R may consent to receive the statement required under section 6055 electronically instead of in a paper format. The email contains an attachment instructing R how to consent to receive the statement electronically. The email attachment uses the same electronic format that F will use for the electronically furnished statement. R opens the attachment, reads the instructions,

and submits the consent in the manner provided in the instructions. R has consented to receive the statement required under section 6055 electronically in the manner described in paragraph (a)(2)(i) of this section.

Example 3. Furnisher F posts a notice on its Web site stating that Recipient R may receive the statement required under section 6055 electronically instead of in a paper format. The Web site contains instructions on how R may access a secure Web page and consent to receive the statement electronically. The consent via the secure Web page uses the same electronic format that F will use for electronically furnishing the statement. R accesses the secure Web page and follows the instructions for giving consent. R has consented to receive the statement required under section 6055 electronically in the manner described in paragraph (a)(2)(i) of this section.

(3) ***Required disclosures*** —

(i) ***In general.*** Prior to, or at the time of, a recipient's consent, a furnisher must provide to the recipient a clear and conspicuous disclosure statement containing each of the disclosures described in this paragraph (a)(3).

(ii) ***Paper statement.*** The furnisher must inform the recipient that the statement will be furnished on paper if the recipient does not consent to receive it electronically.

(iii) ***Scope and duration of consent.*** The furnisher must inform the recipient of the scope and duration of the consent. For example, the recipient must be informed whether the consent applies to each statement required to be furnished after the consent is given until it is withdrawn or only to the first statement required to be furnished following the date of the consent.

(iv) ***Post-consent request for a paper statement.*** The furnisher must inform the recipient of any procedure for obtaining a paper copy of the recipient's statement after giving the consent described in paragraph (a)(2)(i) of this section and whether a request for a paper statement will be treated as a withdrawal of consent.

(v) ***Withdrawal of consent.*** The furnisher must inform the recipient that—

(A) The recipient may withdraw a consent by writing (electronically or on paper) to the person or department whose name, mailing address, telephone number, and email address is provided in the disclosure statement;

(B) The furnisher will confirm the withdrawal and the date on which it takes effect in writing (either electronically or on paper); and

(C) A withdrawal of consent does not apply to a statement that was furnished electronically in the manner described in this paragraph (a) before the date on which the withdrawal of consent takes effect.

(vi) ***Notice of termination.*** The furnisher must inform the recipient of the conditions under which the furnisher will cease furnishing statements electronically to the recipient (for example, termination of the recipient's employment with a furnisher who is the recipient's employer).

(vii) ***Updating information.*** The furnisher must inform the recipient of the procedures for updating the information needed to contact the recipient. The furnisher must inform the recipient of any change in the furnisher's contact information.

(viii) ***Hardware and software requirements.*** The furnisher must provide the recipient with a description of the hardware and software required to access, print, and retain the statement, and the date when the statement will no longer be available on the Web site. The furnisher must advise the recipient that the statement may be required to be printed and attached to a Federal, State, or local income tax return.

(4) ***Format.*** The electronic version of the statement must contain all required information and comply with applicable published guidance (see § 601.601(d) of this chapter) relating to substitute statements to recipients.

(5) ***Notice*** —

(i) ***In general.*** If a statement is furnished on a Web site, the furnisher must notify the recipient. The notice may be delivered by mail, electronic mail, or in person. The notice must provide instructions on how to access and print the statement and include the following statement in capital letters, "IMPORTANT TAX RETURN DOCUMENT AVAILABLE." If the notice is provided by electronic mail, this statement must be on the subject line of the electronic mail.

(ii) ***Undeliverable electronic address.*** If an electronic notice described in paragraph (a)(5)(i) of this section is returned as undeliverable, and the furnisher cannot obtain the correct electronic address from the furnisher's records or from the recipient, the furnisher must furnish the notice by mail or in person within 30 days after the electronic notice is returned.

(iii) ***Corrected statement.*** If the furnisher has corrected a recipient's statement and the original statement was furnished electronically, the furnisher must furnish a corrected statement to the recipient electronically. If the original statement was furnished through a Web site posting, the furnisher must notify the recipient that it has posted the corrected statement on the Web site in the manner described in paragraph (a)(5)(i) of this section within 30 days of the posting. The corrected statement or the notice must be furnished by mail or in person if—

(A) An electronic notice of the Web site posting of an original statement or the corrected statement was returned as undeliverable; and

(B) The recipient has not provided a new email address.

(6) ***Access period.*** Statements furnished on a Web site must be retained on the Web site through October 15 of the year following the calendar year to which the statements relate (or the first business day after October 15, if October 15 falls on a Saturday, Sunday, or legal holiday). The furnisher must maintain access to corrected statements that are posted on the Web site through October 15 of the year following the calendar year to which the statements relate (or the first business day after such October 15, if October 15 falls on a Saturday, Sunday, or legal holiday) or the date 90 days after the corrected forms are posted, whichever is later.

(7) ***Paper statements after withdrawal of consent.*** A furnisher must furnish a paper statement if a recipient withdraws consent to receive a statement electronically and the withdrawal takes effect before the statement is furnished. A paper statement furnished after the statement due date under this paragraph (a)(7) is timely if furnished within 30 days after the date the furnisher receives the withdrawal of consent.

(b) ***Effective/applicability date.*** This section applies for calendar years beginning after December 31, 2014. Reporting entities will not be subject to penalties under section 6722 with respect to the reporting requirements for 2014 (for statements furnished in 2015).

[T.D. 9660, 79 FR 13227, Mar. 10, 2014]

§ 1.6060-1 Reporting requirements for tax return preparers.

(a) ***In general.***

(1) Each person who employs one or more signing tax return preparers to prepare any return of tax or claim for refund of tax, other than for the person, at any time during a return period shall satisfy the requirements of section 6060 of the Internal Revenue Code by—

(i) Retaining a record of the name, taxpayer identification number, and principal place of work during the return period of each tax return preparer employed by the person at any time during that period; and

(ii) Making that record available for inspection upon request by the Commissioner.

(2) The record described in this paragraph (a) must be retained and kept available for inspection for the 3-year period following the close of the return period to which that record relates.

(3) The person may choose any form of documentation to be used under this section as a record of the signing tax return preparers employed during a return period. The record, however, must disclose on its face which individuals were employed as tax return preparers during that period.

(4) For the definition of the term "signing tax return preparer", see § 301.7701-15(b)(1) of this chapter. For the definition of the term "return period", see paragraph (b) of this section.

(5)

(i) For purposes of this section, any individual who, in acting as a signing tax return preparer, is not employed by another tax return preparer shall be treated as his or her own employer. Thus, a sole proprietor shall retain and make available a record with respect to himself (or herself) as provided in this section.

(ii) A partnership shall, for purposes of this section, be treated as the employer of the partners of the partnership and shall retain and make available a record with respect to the partners and others employed by the partnership as provided in this section.

(b) ***Return period defined.*** For purposes of this section, the term *return period* means the 12-month period beginning on July 1 of each year.

(c) ***Penalty.*** For the civil penalty for failure to retain and make available a record of the tax return preparers employed during a return period as required under this section, or for failure to include an item in the record required to be retained and made available under this section, see § 1.6695-1(e).

(d) ***Effective/applicability date.*** This section is applicable to returns and claims for refund filed after December 31, 2008.

[T.D. 7640, 44 FR 49451, Aug. 23, 1979, as amended by T.D. 9436, 73 FR 78437, Dec. 22, 2008]

SIGNING AND VERIFYING OF RETURNS AND OTHER DOCUMENTS

§ 1.6061-1 Signing of returns and other documents by individuals.

(a) ***Requirement.*** Each individual (including a fiduciary) shall sign the income tax return required to be made by him, except that the return may be signed for the taxpayer by an agent who is duly authorized in accordance with paragraph (a)(5) or (b) of § 1.6012-1 to make such return. Other returns, statements, or documents required under the provisions of subtitle A or F of the Code or of the regulations thereunder to be made by any person with respect to any tax imposed by subtitle A of the Code shall be signed in accordance with any regulations contained in this chapter, or any instructions, issued with respect to such returns, statements, or other documents.

(b) ***Cross references.*** For provisions relating to the signing of returns, statements, or other documents required to be made by corporations and partnerships with respect to any tax imposed by subtitle A of the Code, see §§ 1.6062-1 and 1.6063-1, respectively. For provisions relating to the making of returns by agents, see paragraphs (a)(5) and (b) of § 1.6012-1; and to the making of returns for minors and persons under a disability, see paragraph (a)(4) of § 1.6012-1 and paragraph (b) of § 1.6012-3.

[T.D. 7332, 39 FR 44232, Dec. 23, 1974]

§ 1.6062-1 Signing of returns, statements, and other documents made by corporations.

(a) ***Returns —***

(1) ***In general.*** Returns required to be made by corporations under the provisions of subtitle A or F of the Code, or the regulations thereunder, with respect to any tax imposed by subtitle A of the Code, shall be signed for the corporation by the president, vice-president, treasurer, assistant treasurer, chief accounting officer, or any other officer duly authorized to sign such returns. It is not necessary that the corporate seal be affixed to the return. Spaces provided on return forms for affixing the corporate seal are for the convenience of corporations required by charter, or by law of the jurisdiction in which they are incorporated, to affix their corporate seals in the execution of instruments.

(2) ***By fiduciaries.*** A return with respect to income required to be made for a corporation by a fiduciary, pursuant to the provisions of section 6012(b)(3), shall be signed by such fiduciary. See paragraph (b)(4) of § 1.6012-3.

(3) ***By agents.*** A return with respect to income required to be made by an agent for a foreign corporation shall be signed by such agent. See paragraph (g) of § 1.6012-2.

(b) ***Statements and other documents.*** Statements and other documents required to be made by or for corporations under the provisions of subtitle A or F of the Code, or the regulations thereunder, with respect to any tax imposed by subtitle A, shall be signed in accordance with the regulations contained in this chapter, or the forms and instructions, issued with respect to such statements or other documents.

(c) ***Evidence of authority to sign.*** An individual's signature on a return, statement, or other document made by or for a corporation shall be prima facie evidence that such individual is authorized to sign such return, statement, or other document.

(d) ***Related provisions.*** For the rules realating to the verification of returns, see § 1.6065-1.

[T.D. 6500, 25 FR 12108, Nov. 26, 1960, as amended by T.D. 7293, 38 FR 32804, Nov. 28, 1973]

§ 1.6063-1 Signing of returns, statements, and other documents made by partnerships.

(a) ***In general.*** Returns, statements, and other documents required to be made by partnerships under the provisions of subtitle A or F of the Code, or the regulations thereunder, with respect to any tax imposed by subtitle A of the Code shall be signed by any one of the partners. However, with respect to the signing of powers of attorney, see paragraph (a)(2) of § 601.504 of this chapter (Statement of Procedural Rules).

(b) ***Evidence of authority to sign.*** A partner's signature on a return, statement, or other document made by or for a partnership of which he is a member shall be prima facie evidence that such partner is authorized to sign such return, statement, or other document.

(c) ***Certain partnership elections*** —

(1) ***In general.*** For rules regarding the authority of a partner to sign a partnership return filed solely for the purpose of making certain partnership level elections, see § 1.6031(a)-1(b)(5)(ii).

(2) ***Effective date.*** Paragraph (c) of this section applies to taxable years of a partnership beginning after December 31, 1999.

[T.D. 6500, 25 FR 12108, Nov. 26, 1960, as amended by T.D. 8841, 64 FR 61502, Nov. 12, 1999]

§ 1.6065-1 Verification of returns.

(a) ***Persons signing returns.*** If a return, declaration, statement, or other document made under the provisions of subtitle A or F of the Code, or the regulation thereunder, with respect to any tax imposed by subtitle A of the Code is required by the regulations contained in this chapter, or the form and instructions, issued with respect to such return, declaration, statement, or other document, to contain or be verified by a written declaration that it is made under the penalties of perjury, such return, declaration, statement, or other document shall be so verified by the person signing it.

(b) ***Persons preparing returns*** —

(1) ***In general.*** Except as provided in subparagraph (2) of this paragraph, if a return, declaration, statement, or other document is prepared for a taxpayer by another person for compensation or as an incident to the performance of other services for which such person receives compensation, and the return, declaration, statement, or other document requires that it shall contain or be verified by a written declaration that it is prepared under the penalties of perjury, the preparer must so verify the return, declaration, statement, or other document. A person who renders mere mechanical assistance in the preparation of a return, declaration, statement, or other document as, for example, a stenographer or typist, is not considered as preparing the return, declaration, statement, or other document.

(2) ***Exception.*** The verification required by subparagraph (1) of this paragraph is not required on returns, declarations, statements, or other documents which are prepared:

(i) For an employee either by his employer or by an employee designated for such purpose by the employer, or

(ii) For an employer as a usual incident of the employment of one regularly or continuously employed by such employer.

[T.D. 6364, 24 FR 1196, Feb. 17, 1959]

TIME FOR FILING RETURNS AND OTHER DOCUMENTS

§ 1.6071-1 Time for filing returns and other documents.

(a) ***In general.*** Whenever a return, statement, or other document is required to be made under the provisions of subtitle A or F of the Code, or the regulations thereunder, with respect to any tax imposed by subtitle A of the Code, and the time for filing such return, statement, or other document is not provided for by the Code, it shall be filed at the time prescribed by the regulations contained in this chapter with respect to such return, statement, or other document.

(b) ***Return for a short period.*** In the case of a return with respect to tax under subtitle A of the Code for a short period (as defined in section 443), the district director or director of the Internal Revenue Service Center may, upon a showing by the taxpayer of unusual circumstances, prescribe a time for filing the return for such period later than the time when such return would otherwise be due. However, the district director or director of the Internal Revenue Service Center may not extend the time when the return for a DISC (as defined in section 992(a)(1)) must be filed, as specified in section 6072(b).

(c) ***Time for filing certain information returns.***

(1) For provisions relating to the time for filing returns of partnership income, see paragraph (e)(2) of § 1.6031-1.

(2) For provisions relating to the time for filing information returns by banks with respect to common trust funds, see § 1.6032-1.

(3) For provisions relating to the time for filing information returns by certain organizations exempt from taxation under section 501(a), see paragraph (e) of § 1.6033-1.

(4) For provisions relating to the time for filing returns by trusts claiming charitable deductions under section 642(c), see paragraph (c) of § 1.6034-1.

(5) [Reserved}

(6) For provisions relating to the time for filing information returns with respect to certain stock option transactions, see paragraph (c) of § 1.6039-1.

(7) For provisions relating to the time for filing information returns by persons making certain payments, see § 1.6041-2(a)(3) and § 1.6041-6.

(8) For provisions relating to the time for filing information returns regarding payments of dividends, see § 1.6042-2(c).

(9) For provisions relating to the time for filing information returns by corporations with respect to contemplated dissolution or liquidations, see paragraph (a) of § 1.6043-1.

(10) For provisions relating to the time for filing information returns by corporations with respect to distributions in liquidation, see paragraph (a) of § 1.6043-2.

(11) For provisions relating to the time for filing information returns with respect to payments of patronage dividends, see § 1.6044-2(d).

(12) For provisions relating to the time for filing information returns with respect to formation or reorganization of foreign corporations, see § 1.6046-1.

(13) For provisions relating to the time for filing information returns regarding certain payments of interest, see § 1.6049-4(g).

(14) For provisions relating to the time for filing information returns with respect to payment of wages in the form of group-term life insurance, see paragraph (b) of § 1.6052-1.

(15) For provisions relating to the time for filing an annual information return on Form 1042-S, "Foreign Person's U.S. Source Income subject to Withholding," or Form 8805, "Foreign Partner's Information Statement of Section 1446 Withholding Tax," for any tax withheld under chapter 3 of the Internal Revenue Code (relating to withholding of tax on nonresident aliens and foreign corporations and tax-free covenant bonds), see § 1.1461-1(c) and § 1.1446-3(d).

(16) For provisions relating to the time for filing the annual information return on Form 1042S of the tax withheld under chapter 3 of the Code (relating to withholding of tax on nonresident aliens and foreign corporations and tax-free covenant bonds), see paragraph (c) of § 1.1461-2.

(d) ***Effective/Applicability date.*** The references to Form 8805 and § 1.1446-3(d) in paragraph (c)(15) of this section shall apply to partnership taxable years beginning after *April 29, 2008*.

[T.D. 6500, 25 FR 12108, Nov. 26, 1960, as amended by T.D. 6887, 31 FR 8814, June 24, 1966; T.D. 6908, 31 FR 16775, Dec. 31, 1966; T.D. 7284, 38 FR 20829, Aug. 3, 1973; T.D. 7533, 43 FR 6604, Feb. 15, 1978; T.D. 8734, 62 FR 53492, Oct. 14, 1997; T.D. 9394, 73 FR 23085, Apr. 29, 2008; T.D. 9849, 84 FR 9237, Mar. 14, 2019]

§ 1.6072-1 Time for filing returns of individuals, estates, and trusts.

(a) ***In general*** —

(1) ***Returns of income for individuals, estates and trusts.*** Except as provided in paragraphs (b) and (c) of this section, returns of income required under sections 6012, 6013, 6014, and 6017 of individuals, estates, domestic trusts, and foreign trusts having an office or place of business in the United States (including unrelated business tax returns of such trusts referred to in section 511(b)(2)) shall be filed on or before the fifteenth day of the fourth month following the close of the taxable year.

(2) ***Return of trust, or portion of a trust, treated as owned by a decedent*** —

(i) ***In general.*** In the case of a return of a trust, or portion of a trust, that was treated as owned by a decedent under subpart E (section 671 and following), part I, subchapter J, chapter 1 of the Internal Revenue Code as of the date of the decedent's death that is filed in accordance with § 1.671-4(a) for the fractional part of the year ending with the date of the decedent's death, the due date of such return shall be the fifteenth day of the fourth month following the close of the 12-month period which began with the first day of the decedent's taxable year.

(ii) ***Effective date.*** This paragraph (a)(2) applies to taxable years ending on or after December 24, 2002.

(b) ***Decedents.*** In the case of a final return of a decedent for a fractional part of a year, the due date of such return shall be the fifteenth day of the fourth month following the close of the 12-month period which began with the first day of such fractional part of the year.

(c) ***Nonresident alien individuals and foreign trusts.*** The income tax return of a nonresident alien individual (other than one treated as a resident under section 6013 (g) or (h)) and of a foreign trust which does not have an office or place of business in the United States (including unrelated business tax returns of such trusts referred to in section 511(b)(2)0 shall be filed on or before the fifteenth day of the sixth month

following the close of the taxable year. However, a nonresident alien individual who for the taxable year has wages subject to withholding under chapter 24 of the Code shall file his income tax return on or before the fifteenth day of the fourth month following the close of the taxable year.

(d) ***Last day for filing return.*** For provisions relating to the time for filing a return where the last day for filing falls on Saturday, Sunday, or a legal holiday, see section 7503 and § 301.7503-1 of this chapter (Regulations on Procedure and Administration).

[T.D. 6500, 25 FR 12108, Nov. 26, 1960, as amended by T.D. 7426, 41 FR 33263, Aug. 9, 1976; T.D. 7670, 45 FR 6931, Jan. 31, 1980; T.D. 9032, 67 FR 78382, Dec. 24, 2002]

§ 1.6072-2 Time for filing returns of corporations.

(a) ***Domestic and certain foreign corporations*** —

(1) ***In general*** —

(i) ***C corporations.*** Except as provided in paragraph (a)(2) of this section, the income tax return required under section 6012 of a domestic C corporation (as defined in section 1361(a)(2)) or of a foreign C corporation having an office or place of business in the United States shall be filed on or before the fifteenth day of the fourth month following the close of the taxable year.

(ii) ***S corporations.*** The income tax return required under sections 6012 and 6037 of an S corporation (as defined in section 1361(a)(1)) shall be filed on or before the fifteenth day of the third month following the close of the taxable year.

(2) ***Exception.*** For taxable years beginning before January 1, 2026, the income tax return of a C corporation described in paragraph (a)(1)(i) of this section that has a taxable year that ends on June 30 shall be filed on or before the fifteenth day of the third month following the close of the taxable year. For purposes of this paragraph (a)(2), the return for a short period (within the meaning of section 443) that ends on any day in June shall be treated as the return for a taxable year that ends on June 30.

(b) ***Foreign corporations not having an office or place of business in the United States.*** The income tax return of a foreign corporation which does not have an office or place of business in the United States shall be filed on or before the fifteenth day of the sixth month following the close of the taxable year.

(c) ***Exempt organizations.*** For taxable years beginning after November 10, 1978, the income tax return required under section 6012 and § 1.6012-2(e) of an organization exempt from taxation under section 501(a) (other than an employee's trust under section 401(a)) shall be filed on or before the fifteenth day of the fifth month following the close of the organization's taxable year.

(d) ***Cooperative organizations.*** The income tax return of the following cooperative organizations shall be filed on or before the fifteenth day of the ninth month following the close of the taxable year:

(1) ***Section 521 associations.*** A farmers', fruit growers', or like association, organized and operated in compliance with the requirements of section 521 and § 1.521-1; and

(2) ***Section 1381 corporations.*** For a taxable year beginning after December 31, 1962, a corporation described in section 1381(a)(2), which is under a valid enforceable written obligation to pay patronage dividends (as defined in section 1388(a) and § 1.1388-1(a)) in an amount equal to at least 50 percent of its net earnings from business done with or for its patrons, or which paid patronage dividends in such an amount out of the net earnings from business done with or for patrons during

the most recent taxable year for which it had such net earnings. Net earnings for purposes of this paragraph (d)(2) shall not be reduced by any taxes imposed by subtitle A of the Internal Revenue Code and shall not be reduced by dividends paid on capital stock or other proprietary interest.

(e) ***DISC's and former DISC's.*** The return required under section 6011(c)(2) of a corporation which is a DISC (as defined in section 992(a) shall be filed on or before the 15th day of the 9th month following the close of the taxable year. For the rule that a DISC may not have an extension of time in which to file such return, see §§ 1.6071-1(b), 1.6081-1(a), and 1.6081-3(e). The return required under § 1.6011-2(b)(1) by a former DISC shall be filed at the time it is required to file its income tax return.

(f) ***Cross references.*** For provisions relating to the time for filing a return where the last day for filing falls on Saturday, Sunday, or a legal holiday, see section 7503 and § 301.7503-1 of this chapter (Regulations on Procedure and Administration). For provisions relating to the fixing of a later time for filing in the case of a return for a short period, see paragraph (b) of § 1.6071-1. For provisions relating to time for filing consolidated returns and separate returns for short periods not included in consolidated returns, see §§ 1.1502-75 and 1.1502-76.

(g) ***Applicability date.*** This section applies to returns filed on or after January 30, 2020. Section 1.6072-2T (as contained in 26 CFR part 1, revised April 2019) applies to returns before January 30, 2020.

[T.D. 6500, 25 FR 12133, Nov. 26, 1960, as amended by T.D. 6643, 28 FR 3163, Apr. 2, 1963; T.D. 7244, 37 FR 28897, Dec. 30, 1972; T.D. 7533, 43 FR 6604, Feb. 15, 1978; T.D. 7896, 48 FR 23818, May 27, 1983; T.D. 9821, 82 FR 33445, July 20, 2017; T.D. 9892, 85 FR 5326, Jan. 30, 2020]

§ 1.6072-3 Income tax due dates postponed in case of China Trade Act corporations.

(a) With respect to a taxable year beginning after December 31, 1948, and ending before October 1, 1956, the income tax return of any corporation organized under the China Trade Act of 1922 (15 U.S.C. ch. 4), as amended, shall not become due until December 31, 1956, provided that during any such taxable year conditions in China have been generally so unsettled as to militate against the normal commercial operations and corporate activities of such corporation. However, the postponement of the due date shall not apply to an income tax return for any such taxable year if:

(1) The books of account and business records are available so as to permit the filing of a proper return, and the corporation has otherwise been in a position to carry on its commercial operations and corporate activities and to make a proper distribution of its earnings or profits, if any, so as to permit the certification required by section 941(b); or

(2) All the commercial operations and corporate activities of such corporation have been carried on in Hong Kong, Macao, or Taiwan (Formosa).

(b) Notwithstanding the provisions of paragraph (a) (1) or (2) of this section, the postponed due date referred to in this section will apply if a corporation satisfies the Commissioner that special circumstances exist, related to the unsettled conditions in China, which warrant such postponement.

(c) The postponed due date provided for in this section is expressly subject to the power of the Commissioner to extend, as in other cases, the time for filing the income tax return. See section 6081 and the regulations thereunder.

§ 1.6072-4 Time for filing other returns of income.

(a) ***Reports for recovery of excessive profits on Government contracts.*** For the time for filing annual reports by persons completing Government contracts, see 26 CFR (1939) 17.16 (Treasury Decision 4906, approved June 23, 1939), and 26 CFR (1939) 16.15 (Treasury Decision 4909, approved June 28, 1939), as made applicable to section 1471 of the Internal Revenue Code of 1954 by Treasury Decision 6091, approved August 16, 1954 (19 FR 5167, C.B. 1954-2, 47).

(b) [Reserved]

[T.D. 6908, 31 FR 16775, Dec. 31, 1966, as amended by T.D. 9849, 84 FR 9237, Mar. 14, 2019]

§ 1.6073-1 Time and place for filing declarations of estimated income tax by individuals.

(a) ***Individuals other than farmers or fishermen.*** Declarations of estimated tax for the calendar year shall be made on or before April 15th of such calendar year by every individual whose anticipated income for the year meets the requirements of section 6015(a). If, however, the requirements necessitating the filing of the declaration are first met, in the case of an individual on the calendar year basis, after April 1st, but before June 2d of the calendar year, the declaration must be filed on or before June 15th; if such requirements are first met after June 1st and before September 2d, the declaration must be filed on or before September 15th; and if such requirements are first met after September 1st, the declaration must be filed on or before January 15th of the succeeding calendar year. In the case of an individual on the fiscal year basis, see § 1.6073-2. A special rule applies to nonresident aliens who do not have wages subject to withholding under Chapter 24 of the code and are not treated as residents under section 6013 (g) or (h) of the code. For taxable years beginning after December 31, 1976, these aliens are not required to file a declaration of estimated tax before June 15th.

(b) ***Farmers or fishermen*** —

(1) ***In general.*** In the case of an individual on a calendar year basis:

(i) If at least two-thirds of the individual's total estimated gross income from all sources for the calendar year is from farming or fishing (including oyster farming), or

(ii) If at least two-thirds of the individual's total gross income from all sources shown on the return for the preceding taxable year was from farming or fishing (including oyster farming) (with respect to declarations of estimated tax for taxable years beginning after November 10, 1978),

He may file a declaration of estimated tax on or before the 15th day of January of the succeeding calendar year in lieu of the time prescribed in paragraph (a) of this section. For the filing of a return in lieu of a declaration, see paragraph (a) of § 1.6015-1.

(2) ***Farmers.*** The estimated gross income from farming is the estimated income resulting from oyster farming, the cultivation of the soil, the raising or harvesting of any agricultural or horticultural commodities, and the raising of livestock, bees, or poultry. In other words, the requisite gross income must be derived from the operations of a stock, dairy, poultry, fruit, or truck farm, or plantation, ranch, nursery, range, orchard, or oyster bed. If an individual receives for the use of his land income in the form of a share of the crops produced thereon such income is from farming. As to determination of income of farmers, see sections 61 and 162 and the regulations thereunder.

(3) ***Fishermen.*** The estimated gross income from fishing is the estimated income resulting from the catching, taking, harvesting, cultivating or farming of any kind of fish, shellfish (for example, clams and mussels), crustacea (for example, lobsters, crabs, and shrimps), sponges, seaweeds, or other aquatic forms of animal and vegetable life. The estimated gross income from fishing includes the income expected to be received by an officer or member of the crew of a vessel while the vessel is engaged in any such activity, whether or not the officer or member of the crew is himself so engaged, and, in the case of an individual who is engaged in any such activity in the employ of any person, the income expected to be received by such individual from such employment. In addition, income expected to be received for services performed as an ordinary incident to any such activity is estimated gross income from fishing. Similarly, for example, the estimated gross income from fishing includes income expected to be received from the shore services of an officer or member of the crew of a vessel engaged in any such activity, if such services are an ordinary incident to any such activity. Services performed as an ordinary incident to such activities include, for example, services performed in such cleaning, icing, and packing of fish as are necessary for the immediate preservation of the catch.

(c) ***Nonresident aliens.*** Notwithstanding the provisions of paragraph (a) of this section, for taxable years beginning after December 31, 1976, in the case of a nonresident alien described in section 6072(c) (relating to returns of nonresident aliens whose wages are not subject to withholding) whose estimated gross income for the calendar year meets the requirements of section 6015(a), a declaration of estimated tax for the calendar year need not be made before June 15th of such calendar year.

(d) ***Place for filing declaration.*** Except as provided in paragraph (b) of § 301.6091-1 (relating to hand-carried documents), the declaration of estimated tax shall be filed at the place prescribed by the instructions applicable to such declaration. For example, if the instructions applicable to a declaration provide that the declaration of a taxpayer located in North Carolina be filed with the Director, Internal Revenue Service Center, Chamblee, Ga., such declaration shall be filed with the service center.

(e) ***Amendment of declaration.*** An amended declaration of estimated tax may be filed during any interval between installment dates prescribed for the taxable year. However, no amended declaration may be filed until after the installment date on or before which the original declaration was filed and only one amended declaration may be filed during each interval between installment dates. Except as provided in paragraph (b) of § 301.6091-1 (relating to hand-carried documents), an amended declaration shall be filed with the internal revenue officer with whom the original declaration was filed.

[T.D. 6678, 28 FR 10516, Oct. 1, 1963, as amended by T.D. 6950, 33 FR 5355, Apr. 4, 1968; T.D. 7670, 45 FR 6931, Jan. 31, 1980; T.D. 7719, 45 FR 60902, Sept. 15, 1980]

§ 1.6073-2 Fiscal years.

(a) ***Individuals other than farmers or fishermen.*** In the case of an individual on the fiscal year basis, the declaration must be filed on or before the 15th day of the 4th month of the taxable year. If, however, the requirements of section 6015(a) are first met after the 1st day of the 4th month and before the 2d day of the 6th month, the declaration must be filed on or before the 15th day of the 6th month of the taxable year. If such requirements are first met after the 1st day of the 6th month, and before the 2d day of the 9th month, the declaration must be filed on or before the 15th day of the 9th month of the taxable year. If such requirements are first met after the 1st day of the 9th month, the declaration must be filed on or before the 15th day of the 1st month of the succeeding fiscal year. Thus, if an individual taxpayer has a fiscal year ending on June 30, 1956, his declaration must be filed on or before October 15, 1955, if the

requirements of section 6015(a) are met on or before October 1, 1955. If, however, such requirements are not met until after October 1, 1955, and before December 2, 1955, the declaration need not be filed until December 15, 1955.

(b) ***Farmers or fishermen.*** In the case of an individual on a fiscal year basis:

(1) If at least two-thirds of the individual's total estimated gross income from all sources for the fiscal year is from farming or fishing (including oyster farming), or

(2) If at least two-thirds of the individual's total gross income from all sources shown on the return for the preceding taxable year was from farming or fishing (including oyster farming) (with respect to declarations of estimated tax for taxable years beginning after November 10, 1978),

he may file a declaration on or before the 15th day of the month immediately following the close of his taxable year, in lieu of the time prescribed in paragraph (a) of this section.

(c) ***Nonresident aliens.*** Notwithstanding the provisions of paragraph (a) of this section, in the case of a nonresident alien described in section 6072(c) (relating to returns of nonresident aliens whose wages are not subject to withholding) whose anticipated income for the fiscal year meets the requirements of section 6015(a), § 1.6015(a)-1, and § 1.6015(i)-1, the declaration of estimated tax for the fiscal year need not be filed before the 15th day of the 6th month of such fiscal year.

[T.D. 6678, 28 FR 10516, Oct. 1, 1963, as amended by T.D. 7719, 45 FR 60903, Sept. 15, 1980]

§ 1.6073-3 Short taxable years.

(a) ***Individuals other than farmers or fishermen.*** In the case of short taxable years the declaration shall be filed on or before the 15th day of the 4th month of such taxable year if the requirements of section 6015(a) are met on or before the 1st day of the 4th month of such year. If such requirements are first met after the 1st day of the 4th month but before the 2d day of the 6th month, the declaration must be filed on or before the 15th day of the 6th month. If such requirements are first met after the 1st day of the 6th month but before the 2d day of the 9th month, the declaration must be filed on or before the 15th day of the 9th month. If, however, the period for which the declaration is filed is one of 4 months, or one of 6 months and the requirements of section 6015(a) are not met until after the 1st day of the 4th month, or one of 9 months and such requirements are not met until after the 1st day of the 6th month, the declaration may be filed on or before the 15th day of the succeeding taxable year.

(b) ***Farmers or fishermen.*** In the case of an individual:

(1) Whose current taxable year is a short taxable year and whose estimated gross income from farming or fishing (including oyster farming) is at least two-thirds of his total estimated gross income from all sources for such current taxable year, or

(2) Whose taxable year preceding the current taxable year was a short taxable year and whose gross income from farming or fishing (including oyster farming) was at least two-thirds of the total gross income from all sources shown on the return for such preceding short taxable year (with respect to declarations of estimated tax for taxable years beginning after November 10, 1978),

he may file a declaration of estimated tax on or before the 15th day of the month immediately following the close of the current taxable year, in lieu of the time prescribed in paragraph (a) of this section.

(c) ***Nonresident aliens.*** Notwithstanding the provisions of paragraph (a) of this section, in the case of a short taxable year, a nonresident alien described in section 6072(c) (relating to returns of nonresident aliens whose wages are not subject to withholding) whose anticipated income for the short taxable year meets the requirements of section 6015(a). Sections 1.6015(a)-1, 1.6015(g)-1, and 1.6015(i)-1 on or before the 1st day of the 6th month following the beginning of such year need not file a declaration of estimated tax before the 15th day of the 6th month following the beginning of such year.

[T.D. 6678, 28 FR 10516, Oct. 1, 1963, as amended by T.D. 7719, 45 FR 60903, Sept. 15, 1980]

§ 1.6073-4 Extension of time for filing declarations by individuals.

(a) ***In general.*** District directors and directors of service centers are authorized to grant a reasonable extension of time for filing a declaration or an amended declaration. Except as provided in paragraph (b) of § 301.6091-1 (relating to hand-carried documents), an application for an extension of time for filing such a declaration shall be addressed to the internal revenue officer with whom the taxpayer is required to file his declaration, and must contain a full recital of the causes for the delay. Except in the case of taxpayers who are abroad, no extension for filing declarations may be granted for more than 6 months.

(b) ***Citizens outside of the United States.*** In the case of a United States citizen outside the United States and Puerto Rico on the 15th day of the 4th month of his taxable year, an extension of time for filing his declaration of estimated tax otherwise due on or before the 15th day of the 4th month of the taxable year is granted to and including the 15th day of the 6th month of the taxable year. For purposes of applying this paragraph to taxable years beginning prior to January 1, 1964, Alaska shall be considered outside the United States.

(c) ***Residents outside the United States.*** In the case of a U.S. resident living or traveling outside the United States and Puerto Rico on the 15th day of the 4th month of a taxable year beginning after December 31, 1978, an extension of time for filing the declaration of estimated tax otherwise due on or before the 15th day of the 4th month of the taxable year is granted to and including the 15th day of the 6th month of the taxable year.

(d) ***Addition to tax applicable.*** An extension of time for filing the declaration of estimated tax automatically extends the time for paying the estimated tax (without interest) for the same period. However, such extension does not relieve the taxpayer from the addition to the tax imposed by section 6654, and the period of the underpayment will be determined under section 6654(c) without regard to such extension.

[T.D. 6500, 25 FR 12008, Nov. 26, 1960, as amended by T.D. 6638, 28 FR 1765, Feb. 26, 1963; T.D. 6950, 33 FR 5355, Apr. 4, 1968; T.D. 7736, 45 FR 76143, Nov. 18, 1980]

§ 1.6074-1 Time and place for filing declarations of estimated income tax by corporations.

(a) ***Taxable years beginning on or before December 31, 1963.*** For taxable years ending on or after December 31, 1955, and beginning on or before December 31, 1963, declarations of estimated tax for the taxable year shall be filed on or before the 15th day of the 9th month of such year by every corporation whose then anticipated income tax liability under section 11 or 1201(a), or subchapter L, chapter 1 of the Code, for the year meets the requirements of section 6016(a). If, however, the requirements necessitating the filing of a declaration are first met after the last day of the 8th month and before the first day of the 12th month of the taxable year the declaration shall be filed on or before the 15th day of the 12th month of the taxable year. If, however, the requirements of section 6016(a) are not met before the first day of the 12th month of the taxable year, no declaration need be filed for such year.

(b) ***Taxable years beginning after December 31, 1963.*** A declaration of estimated tax for a taxable year beginning after December 31, 1963, required of a corporation by section 6016 shall be filed as follows:

If the requirements of section 6016 are first met—	The declaration shall be filed on or before—
before the 1st day of the 4th month of the taxable year	the 15th day of the 4th month of the taxable year
after the last day of the 3d month and before the 1st day of the 6th month of the taxable year	the 15th day of the 67th month of the taxable year
after the last day of the 5th month and before the 1st day of the 9th month of the taxable year	the 15th day of the 9th month of the taxable year
after the last day of the 8th month and before the 1st day of the 12th month of the taxable year	the 15th day of the 12th month of the taxable year

(c) ***Place for filing declaration.*** Except as provided in paragraph (b) of § 301.6091-1 (relating to hand-carried documents), the declaration of estimated tax shall be filed at the place prescribed by the instructions applicable to such declaration. For example, if the instructions applicable to a declaration provide that the declaration of a corporation located in North Carolina be filed with the Director, Internal Revenue Service Center, Chamblee, Ga., such declaration shall be filed with the service center.

(d) ***Amendment of declaration*** —

(1) ***Taxable years beginning on or before December 31, 1963.*** A declaration of estimated tax for a taxable year beginning on or before December 31, 1963, which is filed by a corporation prior to the 15th day of the 12th month of the taxable year may be amended in the manner prescribed in § 1.6016-3, at any time on or before such 15th day. An amended declaration shall be filed with the internal revenue officer with whom the original declaration was filed.

(2) ***Taxable years beginning after December 31, 1963.*** In any case where a declaration of estimated tax for a taxable year beginning after December 31, 1963, has been filed, an amended declaration of estimated tax may be filed during any interval between installment dates prescribed for the taxable year. However, no amended declaration may be filed until after the installment date on or before which the original declaration was filed and only one amended declaration may be filed during each interval between installment dates. See § 1.6016-3 for the manner of making an amended declaration. Except as provided in paragraph (b) of § 301.6091-1 (relating to hand-carried documents), an amended declaration shall be filed with the internal revenue officer with whom the original declaration was filed.

[T.D. 6768, 29 FR 14922, Nov. 4, 1964, as amended by T.D. 6950, 33 FR 5355, Apr. 4, 1968]

§ 1.6074-2 Time for filing declarations by corporations in case of a short taxable year.

(a) ***Taxable years beginning on or before December 31, 1963*** —

(1) ***In general.*** In the case of a short taxable year of 9 months or more beginning on or before December 31, 1963, where the requirements of section 6016(a) are met before the 1st day of the 9th month of the short taxable year, the declaration shall be filed on or before the 15th day of the 9th month of such short year. In the case of a short taxable year of more than 9 months, where the requirements of section 6016(a) are first met after the last day of the 8th month, but before the 1st day of the last month of the short taxable year, the declaration shall be filed on or before the 15th day of the last month of such short year. See § 1.6016-4, relating to the requirement of a declaration in the case of a short taxable year, and paragraph (a) of § 1.6154-2, relating to the time for payment of the estimated tax in case of a short taxable year.

(2) ***Example.*** The application of the provisions of this paragraph may be illustrated by the following example:

Example. A corporation which changes from a calendar year basis to a fiscal year basis beginning November 1, 1960, will have a short taxable year beginning January 1, 1960, and ending October 31, 1960. If the requirements of section 6016(a) are met before September 1, 1960 (the 1st day of the 9th month), the corporation is required to file its declaration on or before September 15, 1960 (the 15th day of the 9th month). However, if the requirements of section 6016(a) are first met after August 31, 1960 (the last day of the 8th month), but before October 1, 1960 (the 1st day of the last month of the short year), the corporation is required to file its declaration on or before October 15, 1960 (the 15th day of the last month of the short year).

(b) ***Taxable years beginning after December 31, 1963*** —

(1) ***In general.*** In the case of a short taxable year of 4 or more months which begins after December 31, 1963, the declaration shall be filed on or before the applicable date specified in paragraph (b) of § 1.6074-1, except that in the case of a short taxable year ending after November 30, 1964, the declaration shall be filed on or before the 15th day of the last month of the short taxable year if the requirements of section 6016(a) are first met before the first day of such last month and the date specified in such paragraph (b) as applicable is not within the short taxable year. See § 1.6016-4, relating to the requirement of a declaration in the case of a short taxable year, and paragraph (b) of § 1.6154-2, relating to the time for payment of the estimated tax in case of a short taxable year.

(2) ***Examples.*** The application of the provisions of this paragraph may be illustrated by the following examples:

Example 1. A corporation filing on a calendar year basis which changes to a fiscal year beginning September 1, 1965, will have a short taxable year beginning January 1, 1965, and ending August 31, 1965. If the requirements of section 6016(a) are met before April 1, 1965 (the 1st day of the 4th month), the declaration of estimated tax must be filed on or before April 15, 1965 (the 15th day of the 4th month).

Example 2. If, in the first example, the corporation first meets the requirements of section 6016(a) during July 1965, then the requirements of section 6016(a) were met before the first day of the last month of the short taxable year, and a declaration of estimated tax is required to be filed on or before August 15, 1965, for the short taxable year. However, if the corporation does not meet the requirements of section 6016(a) until August 1, 1965, then the requirements of section 6016(a) were not met before the first day of the last month of the short taxable year, and no declaration of estimated tax is required to be filed for the short taxable year.

(c) ***Amendment of declaration*** —

(1) ***Taxable years beginning on or before December 31, 1963.*** Where a declaration of estimated tax for a short taxable year of more than 9 months beginning on or before December 31, 1963, is filed before the 15th day of the last month of the short taxable year, an amended declaration may be filed any time on or before such 15th day.

(2) ***Taxable years beginning after December 31, 1963.*** Where a declaration of estimated tax for a short taxable year beginning after December 31, 1963, has been filed, an amended declaration may be filed during any interval between installment dates. However, no amended declaration for a short taxable year may be filed until after the installment date on or before which the original declaration was filed and only one amended declaration may be filed during each interval between installment dates. For purposes of this subparagraph the term "installment date" includes the 15th day of the last month of a short taxable year if such 15th day does not fall on a prescribed installment date.

[T.D. 6768, 29 FR 14923, Nov. 4, 1964]

§ 1.6074-3 Extension of time for filing declarations by corporations.

(a) ***In general.*** District directors and directors of service centers are authorized to grant a reasonable extension of time for filing a declaration or an amended declaration. Except as provided in paragraph (b) of § 301.6091-1 (relating to hand-carried documents), an application by a corporation for an extension of time for filing such a declaration shall be addressed to the internal revenue officer with whom the corporation is required to file its declaration and must contain a full recital of the causes for the delay.

(b) ***Addition to tax applicable.*** An extension of time granted to a corporation for filing a declaration of estimated tax automatically extends the time for paying the estimated tax (without interest) for the same period. However, such extension does not relieve the corporation from the addition to the tax imposed by section 6655, and the period of the underpayment will be determined under section 6655(c) without regard to such extension.

[T.D. 6500, 25 FR 12108, Nov. 26, 1960, as amended by T.D. 6950, 33 FR 5355, Apr. 4, 1968]

EXTENSION OF TIME FOR FILING RETURNS

§ 1.6081-1 Extension of time for filing returns.

(a) ***In general.*** The Commissioner is authorized to grant a reasonable extension of time for filing any return, declaration, statement, or other document that relates to any tax imposed by subtitle A of the Internal Revenue Code (Code) and that is required under the provisions of subtitle A or F of the Code. However, other than in the case of taxpayers who are abroad or as specified in section 6081(b), such extensions of time shall not be granted for more than six months, and the extension of time for filing the return of a DISC (as defined in section 992(a)), as specified in section 6072(b), shall not be granted. Except in the case of an extension of time pursuant to § 1.6081-5, an extension of time for filing an income tax return shall not operate to extend the time for the payment of the tax unless specified to the contrary in the extension. For rules relating to extensions of time for paying tax, see § 1.6161-1.

(b) ***Application for extension of time*** —

(1) ***In general.*** Under other sections in this chapter, certain taxpayers may request an automatic extension of time to file certain returns. Except in undue hardship cases, no extension of time to file a return will be allowed under this section until an automatic extension of time to file the return has

been allowed under the applicable section. No extension of time to file a return will be granted under this section for a period of time greater than that provided for by automatic extension. A taxpayer desiring an extension of the time for filing a return, statement, or other document shall submit an application for extension on or before the due date of such return, statement, or other document. If a form exists for the application for an extension, the taxpayer should use the form; however, taxpayers may apply for an extension in a letter that includes the information required by this paragraph. Except as provided in § 301.6091-1(b) of this chapter (relating to hand-carried documents), the taxpayer should make the application for extension to the Internal Revenue Service office where such return, statement, or other document is required to be filed. Except for requests for automatic extensions of time to file certain returns provided for elsewhere in this chapter, the application must be in writing, signed by the taxpayer or his duly authorized agent, and must clearly set forth—

(i) The particular tax return, information return, statement, or other document, including the taxable year or period thereof, for which the taxpayer requests an extension; and

(ii) An explanation of the reasons for requesting the extension to aid the internal revenue officer in determining whether to grant the request.

(2) ***Taxpayer unable to sign.*** In any case in which a taxpayer is unable, by reason of illness, absence, or other good cause, to sign a request for an extension, any person standing in close personal or business relationship to the taxpayer may sign the request on his behalf, and shall be considered as a duly authorized agent for this purpose, provided the request sets forth the reasons for a signature other than the taxpayer's and the relationship existing between the taxpayer and the signer.

(c) ***Applicability date.*** This section applies to requests for extension of time to file returns on or after January 30, 2020. Section 1.6081-1T (as contained in 26 CFR part 1, revised April 2019) applies to requests for extension of time to file returns before January 30, 2020.

[T.D. 6500, 25 FR 12108, Nov. 26, 1960, as amended by T.D. 6581, 26 FR 11678, Dec. 6, 1961; T.D. 6950, 33 FR 5355, Apr. 4, 1968; T.D. 7260, 38 FR 4258, Feb. 12, 1973; T.D. 7533, 43 FR 6604, Feb. 15, 1978; T.D. 7651, 44 FR 61597, Oct. 26, 1979; T.D. 8241, 54 FR 7762, Feb. 23, 1989; T.D. 9163, 69 FR 70548, Dec. 7, 2004; T.D. 9407, 73 FR 37365, July 1, 2008; T.D. 9821, 82 FR 33446, July 20, 2017; T.D. 9892, 85 FR 5326, Jan. 30, 2020]

§ 1.6081-2 Automatic extension of time to file certain returns filed by partnerships.

(a) ***In general.*** A partnership required to file Form 1065, "U.S. Partnership Return of Income," or Form 8804, "Annual Return for Partnership Withholding Tax," for any taxable year will be allowed an automatic six-month extension of time to file the return after the date prescribed for filing the return if the partnership files an application under this section in accordance with paragraph (b) of this section. No additional extension will be allowed pursuant to § 1.6081-1(b) beyond the automatic six-month extension provided by this section. In the case of a partnership described in § 1.6081-5(a)(1), the automatic extension of time to file allowed under this section runs concurrently with an extension of time to file granted pursuant to § 1.6081-5.

(b) ***Requirements.*** To satisfy this paragraph (b), the partnership must—

(1) Submit a complete application on Form 7004, "Application for Automatic Extension of Time to File Certain Business Income Tax, Information, and Other Returns," or in any other manner prescribed by the Commissioner;

(2) File the application on or before the later of—

(i) The date prescribed for filing the return of the partnership; or

(ii) The expiration of any extension of time to file granted under § 1.6081-5(a); and

(3) File the application with the Internal Revenue Service office designated in the application's instructions.

(c) ***Payment of section 7519 amount.*** An automatic extension of time for filing a partnership return of income granted under paragraph (a) of this section does not extend the time for payment of any amount due under section 7519, relating to required payments for entities electing not to have a required taxable year.

(d) ***Section 444 election.*** An automatic extension of time for filing a partnership return of income will run concurrently with any extension of time for filing a return allowed because of section 444, relating to the election of a taxable year other than a required taxable year.

(e) ***Effect of extension on partner.*** An automatic extension of time for filing a partnership return of income under this section does not extend the time for filing a partner's income tax return or the time for the payment of any tax due on a partner's income tax return.

(f) ***Termination of automatic extension.*** The Commissioner may terminate an automatic extension at any time by mailing to the partnership a notice of termination at least 10 days prior to the termination date designated in such notice. The Commissioner must mail the notice of termination to the address shown on the Form 7004 or to the partnership's last known address. For further guidance regarding the definition of last known address, *see* § 301.6212-2 of this chapter.

(g) ***Penalties.*** See section 6698 for failure to file a partnership return.

(h) ***Applicability date.*** This section applies to applications for an automatic extension of time to file the partnership returns listed in paragraph (a) of this section on or after January 30, 2020. Section 1.6081-2T (as contained in 26 CFR part 1, revised April 2019) applies to applications for an automatic extension of time to file before January 30, 2020.

[T.D. 9531, 76 FR 36998, June 24, 2011; T.D. 9821, 82 FR 33446, July 20, 2017; T.D. 9892, 85 FR 5326, Jan. 30, 2020]

§ 1.6081-3 Automatic extension of time for filing corporation income tax returns.

(a) ***In general.*** Except as provided in paragraphs (e) and (f) of this section, a corporation or an affiliated group of corporations filing a consolidated return will be allowed an automatic 6-month extension of time to file its income tax return after the date prescribed for filing the return if the following requirements are met.

(1) An application must be submitted on Form 7004, “Application for Automatic Extension of Time to File Certain Business Income Tax, Information, and Other Returns,” or in any other manner prescribed by the Commissioner.

(2) The application must be filed on or before the date prescribed for the filing of the return of the corporation (or the consolidated return of the affiliated group of corporations) with the Internal Revenue Service office designated in the application's instructions.

(3) The corporation (or affiliated group of corporations filing a consolidated return) must remit the amount of the properly estimated unpaid tax liability on or before the date prescribed for payment.

(4) The application must include a statement listing the name and address of each member of the affiliated group if the affiliated group will file a consolidated return. Upon the timely filing of Form 7004, the 6-month extension of time to file shall be considered as granted to the affiliated group for the filing of its consolidated return or for the filing of each member's separate return.

(b) ***No extension of time for the payment of tax.*** Any automatic extension of time for filing a corporation income tax return granted under paragraph (a) of this section shall not operate to extend the time for payment of any tax due on such return.

(c) ***Termination of automatic extension.*** The Commissioner may terminate an automatic extension at any time by mailing a notice of termination to the corporation (parent corporation in the case of an affiliated group of corporations filing a consolidated return). The notice shall be mailed at least 10 days prior to the termination date designated in such notice. The notice of termination shall be sufficient for all purposes when mailed to the corporation at the address shown on Form 7004 or to the corporation's last known address. For further guidance regarding the definition of last known address, see § 301.6212-2 of this chapter.

(d) ***No extension for DISCs.*** Paragraphs (a) through (c) of this section shall not apply to returns filed by a DISC pursuant to section 6011(c)(2).

(e) ***Exception.*** In the case of any return for a taxable year of a C corporation that ends on June 30 and begins before January 1, 2026, the first sentence of paragraph (a) of this section shall be applied by substituting "7-month" for "6-month." For purposes of this paragraph (e), the return for a short period (within the meaning of section 443) that ends on any day in June shall be treated as the return for a taxable year that ends on June 30.

(f) ***Cross reference.*** For provisions relating to extensions of time to file Form 1120-POL, "U.S. Income Tax Return for Certain Political Organizations," see § 1.6081-9.

(g) ***Applicability date.*** This section applies to requests for extension of time to file corporation income tax returns on or after January 30, 2020. Section 1.6081-3T (as contained in 26 CFR part 1, revised April 2019) applies to applications for an automatic extension of time to file before January 30, 2020.

[T.D. 9163, 69 FR 70548, Dec. 7, 2004, as amended by T.D. 9229, 70 FR 67359, Nov. 7, 2005; T.D. 9407, 73 FR 37366, July 1, 2008; T.D. 9821, 82 FR 33446, July 20, 2017; T.D. 9892, 85 FR 5326, Jan. 30, 2020]

§ 1.6081-4 Automatic extension of time for filing individual income tax return.

(a) ***In general.*** An individual who is required to file an individual income tax return will be allowed an automatic 6-month extension of time to file the return after the date prescribed for filing the return if the individual files an application under this section in accordance with paragraph (b) of this section. In the case of an individual described in § 1.6081-5(a)(5) or (6), the automatic 6-month extension will run concurrently with the extension of time to file granted pursuant to § 1.6081-5.

(b) ***Requirements.*** To satisfy this paragraph (b), an individual must—

(1) Submit a complete application on Form 4868, "Application for Automatic Extension of Time To File U.S. Individual Income Tax Return," or in any other manner prescribed by the Commissioner;

(2) File the application on or before the later of—

(i) The date prescribed for filing the return; or

(ii) The expiration of any extension of time to file granted pursuant to § 1.6081-5;

(3) File the application with the Internal Revenue Service office designated in the application's instructions; and

(4) Show the full amount properly estimated as tax for the taxable year.

(c) ***No extension of time for the payment of tax.*** An automatic extension of time for filing a return granted under paragraph (a) of this section will not extend the time for payment of any tax due on such return.

(d) ***Termination of automatic extension.*** The Commissioner may terminate an automatic extension at any time by mailing to the individual a notice of termination at least 10 days prior to the termination date designated in such notice. The Commissioner must mail the notice of termination to the address shown on the Form 4868 or to the individual's last known address. For further guidance regarding the definition of last known address, see § 301.6212-2 of this chapter.

(e) ***Penalties.*** See section 6651 for failure to file an individual income tax return or failure to pay the amount shown as tax on the return. In particular, see § 301.6651-1(c)(3) of this chapter (relating to a presumption of reasonable cause in certain circumstances involving an automatic extension of time for filing an individual income tax return).

(f) ***Effective/applicability dates.*** This section is applicable for applications for an automatic extension of time to file an individual income tax return filed after July 1, 2008.

[T.D. 9407, 73 FR 37366, July 1, 2008]

§ 1.6081-5 Extensions of time in the case of certain partnerships, corporations and U.S. citizens and residents.

(a) An extension of time for filing returns of income and for paying any tax shown on the return is hereby granted to and including the fifteenth day of the sixth month following the close of the taxable year in the case of—

(1) Partnerships, which are required under section 6072(b) to file returns on the fifteenth day of the third month following the close of the taxable year of the partnership, that keep their records and books of account outside the United States and Puerto Rico;

(2) Domestic corporations which transact their business and keep their records and books of account outside the United States and Puerto Rico;

(3) Foreign corporations which maintain an office or place of business within the United States;

(4) Domestic corporations whose principal income is from sources within the possessions of the United States;

(5) United States citizens or residents whose tax homes and abodes, in a real and substantial sense, are outside the United States and Puerto Rico; and

(6) United States citizens and residents in military or naval service on duty, including non-permanent or short term duty, outside the United States and Puerto Rico.

(b) In order to qualify for the extension under this section—

(1) A statement must be attached to the return showing that the person for whom the return is made is a person described in paragraph (a) of this section; or

(2) If a person described in paragraph (a) of this section requests additional time to file, the person must request the extension on or before the fifteenth day of the sixth month following the close of the taxable year and check the appropriate box on Form 4868, "Application for Automatic Extension of Time To File a U.S. Individual Income Tax Return," or Form 7004, "Application for Automatic Extension of Time to File Certain Business Income Tax, Information, and Other Returns," whichever is applicable, or in any other manner prescribed by the Commissioner.

(c) For purposes of paragraph (a)(5) of this section, whether a person is a United States resident will be determined in accordance with section 7701(b) of the Code. The term "tax home," as used in paragraph (a)(5), will have the same meaning which it has for purposes of section 162(a)(2) (relating to travel expenses away from home). If a person does not have a regular or principal place of business, that person's tax home will be considered to be his regular place of abode in a real and substantial sense.

(d) In order to qualify for the extension under paragraph (a)(6), the assigned tour of duty outside the United States and Puerto Rico must be for a period that includes the entire due date of the return.

(e) A person otherwise qualifying for the extension under paragraph (a)(5) or paragraph (a)(6) shall not be disqualified because he is physically present in the United States or Puerto Rico at any time, including the due date of the return.

(f) This section applies to returns filed on or after January 30, 2020. Section 1.6081-5T (as contained in 26 CFR part 1, revised April 2019) applies to applications for an automatic extension of time to file returns before January 30, 2020.

[T.D. 8312, 55 FR 37227, Sept. 10, 1990; 55 FR 41310, Oct. 10, 1990, as amended by T.D. 9163, 69 FR 70550, Dec. 7, 2004; T.D. 9229, 70 FR 67359, Nov. 7, 2005; T.D. 9407, 73 FR 37366, July 1, 2008; T.D. 9821, 82 FR 33447, July 20, 2017; T.D. 9892, 85 FR 5326, Jan. 30, 2020]

§ 1.6081-6 Automatic extension of time to file estate or trust income tax return.

(a) ***In general.***

(1) Except as provided in paragraph (a)(2) of this section, any estate, including but not limited to an estate defined in section 2031, or trust required to file an income tax return on Form 1041, "U.S. Income Tax Return for Estates and Trusts," will be allowed an automatic five and one-half month extension of time to file the return after the date prescribed for filing the return if the estate or trust files an application under this section in accordance with paragraph (b) of this section. No additional extension will be allowed pursuant to § 1.6081-1(b) beyond the automatic five and one-half month extension provided by this section.

(2) A bankruptcy estate that is created when an individual debtor files a petition under either chapter 7 or chapter 11 of title 11 of the U.S. Code that is required to file an income tax return on Form 1041, "U.S. Income Tax Return for Estates and Trusts," and an estate or trust required to file an income tax return on Form 1041-N, "U.S. Income Tax Return for Electing Alaska Native Settlement," or Form 1041-QFT, "U.S. Income Tax Return for Qualified Funeral Trusts" for any taxable year will be allowed an automatic 6-month extension of time to file the return after the date prescribed for filing the return if the estate files an application under this section in accordance with paragraph (b) of this section.

(b) ***Requirements.*** To satisfy this paragraph (b), an estate or trust must—

(1) Submit a complete application on Form 7004, "Application for Automatic Extension of Time to File Certain Business Income Tax, Information, and Other Returns," or in any other manner prescribed by the Commissioner;

(2) File the application on or before the date prescribed for filing the return with the Internal Revenue Service office designated in the application's instructions; and

(3) Show the amount properly estimated as tax for the estate or trust for the taxable year.

(c) ***No extension of time for the payment of tax.*** An automatic extension of time for filing a return granted under paragraph (a) of this section will not extend the time for payment of any tax due on such return.

(d) ***Effect of extension on beneficiary.*** An automatic extension of time to file an estate or trust income tax return under this section will not extend the time for filing the income tax return of a beneficiary of the estate or trust or the time for the payment of any tax due on the beneficiary's income tax return.

(e) ***Termination of automatic extension.*** The Commissioner may terminate an automatic extension at any time by mailing to the estate or trust a notice of termination at least 10 days prior to the termination date designated in such notice. The Commissioner must mail the notice of termination to the address shown on the Form 7004 or to the estate or trust's last known address. For further guidance regarding the definition of last known address, *see* § 301.6212-2 of this chapter.

(f) ***Penalties.*** See section 6651 for failure to file an estate or trust income tax return or failure to pay the amount shown as tax on the return.

(g) ***Applicability date.*** This section applies to applications for an automatic extension of time to file an estate or trust income tax return on or after January 30, 2020. Section 1.6081-6T (as contained in 26 CFR part 1, revised April 2019) applies to applications for an automatic extension of time to file a return before January 30, 2020.

[T.D. 9531, 76 FR 36999, June 24, 2011, as amended by T.D. 9821, 82 FR 33447, July 20, 2017; T.D. 9892, 5326, Jan. 30, 2020]

§ 1.6081-7 Automatic extension of time to file Real Estate Mortgage Investment Conduit (REMIC) income tax return.

(a) ***In general.*** A Real Estate Mortgage Investment Conduit (REMIC) required to file an income tax return on Form 1066, "U.S. Real Estate Mortgage Investment Conduit Income Tax Return," or Form 8831, "Excise Tax on Excess Inclusions of REMIC Residual Interests," for any taxable year will be allowed an automatic 6-month extension of time to file the return after the date prescribed for filing the return if the REMIC files an application under this section in accordance with paragraph (b) of this section.

(b) ***Requirements.*** To satisfy this paragraph (b), a REMIC must—

(1) Submit a complete application on Form 7004, "Application for Automatic Extension of Time to File Certain Business Income Tax, Information, and Other Returns," or in any other manner prescribed by the Commissioner;

(2) File the application on or before the date prescribed for filing the return with the Internal Revenue Service office designated in the application's instructions; and

(3) Show the full amount properly estimated as tax for the REMIC for the taxable year.

(c) ***No extension of time for the payment of tax.*** An automatic extension of time for filing a return granted under paragraph (a) of this section will not extend the time for payment of any tax due on such return.

(d) ***Effect of extension on residual or regular interest holders.*** An automatic extension of time to file a REMIC income tax return under this section will not extend the time for filing the income tax return of a residual or regular interest holder of the REMIC or the time for the payment of any tax due on the residual or regular interest holder's income tax return. An automatic extension will also not extend the time for payment of any excise tax on excess inclusions of REMIC residual interests.

(e) ***Termination of automatic extension.*** The Commissioner may terminate an automatic extension at any time by mailing to the REMIC a notice of termination at least 10 days prior to the termination date designated in such notice. The Commissioner must mail the notice of termination to the address shown on the Form 7004 or to the REMIC's last known address. For further guidance regarding the definition of last known address, see § 301.6212-2 of this chapter.

(f) ***Penalties.*** See sections 6698 and 6651 for failure to file a REMIC income tax return or failure to pay an amount shown as tax on the return.

(g) ***Effective/applicability dates.*** This section applies to applications for an automatic extension of time to file REMIC income and excise tax returns listed in paragraph (a) of this section filed after July 1, 2008.

[T.D. 9407, 73 FR 37367, July 1, 2008]

§ 1.6081-8 Extension of time to file certain information returns.

(a) ***Certain information returns eligible for an automatic extension of time to file*** —

(1) ***Automatic extension of time to file.*** A person required to file an information return (the filer) on the forms or form series listed in Table 1 will be allowed one automatic 30-day extension of time to file the information return beyond the due date for filing, if the filer or the person transmitting the information return for the filer (the transmitter) files an application in accordance with paragraph (c)(1) of this section.

TABLE 1 TO PARAGRAPH (a)(1)

Form or form series	Name of form
Form W-2G	“Certain Gambling Winnings”.
Form 1042-S	“Foreign Person's U.S. Source Income Subject to Withholding”.
Form 1094-C	“Transmittal of Employer-Provided Health Insurance Offer and Coverage Information Returns”.
Form 1095-B	“Health Coverage”.
Form 1095-C	“Employer-Provided Health Insurance Offer and Coverage”.
Form 3921	“Exercise of an Incentive Stock Option Under Section 422(b)”.
Form 3922	“Transfer of Stock Acquired Through an Employee Stock Purchase Plan Under Section 423(c)”.

Form or form series	Name of form
Form 8027	"Employer's Annual Information Return of Tip Income and Allocated Tips".
Form 1097 series	
Form 1098 series	
Form 1099 series (except forms reporting nonemployee compensation)	
Form 5498 series	

(2) ***Non-automatic extension of time to file.*** One additional 30-day extension of time to file an information return on a form listed in paragraph (a)(1) of this section may be allowed if the filer or transmitter submits a request for the additional extension of time to file before the expiration of the automatic 30-day extension of time to file. No extension of time to file will be granted under this paragraph (a)(2) unless the filer or transmitter has first obtained an automatic extension of time to file under paragraph (a)(1) of this section. To request the additional 30-day extension of time to file, the filer or transmitter must satisfy the requirements of paragraph (c)(2) of this section. No additional extension of time to file will be allowed for an information return on a form listed in paragraph (a)(1) of this section under § 1.6081-1 beyond the extensions of time to file provided by paragraph (a)(1) of this section and this paragraph (a)(2).

(b) ***The Form W-2 series (except Form W-2G) or forms reporting nonemployee compensation.*** Except as provided in paragraph (f) of this section, the filer or transmitter of an information return on the Form W-2 series (except Form W-2G) or a form reporting nonemployee compensation may only request one non-automatic 30-day extension of time to file the information return beyond the due date for filing it. To make such a request, the filer or transmitter must submit an application for an extension of time to file in accordance with paragraph (c)(2) of this section. No additional extension of time to file will be allowed for an information return on a form listed in this paragraph (b) under § 1.6081-1 beyond the 30-day extension of time to file provided by this paragraph (b).

(c) ***Requirements*** —

(1) ***Automatic extension of time to file.*** To satisfy this paragraph (c)(1), an application must—

(i) Be submitted on Form 8809, "Request for Extension of Time to File Information Returns," or in any other manner as may be prescribed by the Commissioner; and

(ii) Be filed with the Internal Revenue Service office designated in the application's instructions on or before the due date for filing the information return.

(2) ***Non-automatic extension of time to file.*** To satisfy this paragraph (c)(2), a filer or transmitter must—

(i) Submit a complete application on Form 8809, or in any other manner prescribed by the Commissioner, indicating that at least one of the criteria set forth in the forms, instructions, or other guidance for granting an extension applies;

(ii) File the application with the Internal Revenue Service in accordance with forms, instructions, or other appropriate guidance on or before the due date for filing the information return (for purposes of paragraph (a)(2) of this section, determined with regard to the extension of time to file under paragraph (a)(1) of this section); and

(iii) Sign the application under penalties of perjury.

(d) ***Penalties.*** See sections 6652, 6693, and 6721 through 6724 of the Code for failure to comply with information reporting requirements on information returns described in this section.

(e) ***No effect on time to furnish statements.*** An extension of time to file an information return under this section does not extend the time for furnishing a statement to the person with respect to whom the information is required to be reported.

(f) ***Form W-2 filed on expedited basis.*** This section does not apply to an information return on a form in the W-2 series if the procedures authorized in Rev. Proc. 96-57 (1996-2 CB 389) (or a successor revenue procedure) allow an automatic extension of time to file the information return. See § 601.601(d)(2)(ii)(*b*) of this chapter.

(g) ***Applicability date.*** This section applies to requests for extensions of time to file information returns required to be filed after December 31, 2018. Section 1.6081-8T (as contained in 26 CFR part 1, revised April 1, 2018) applies to extensions of time to file information returns required to be filed before January 1, 2019.

[T.D. 9838, 83 FR 38028, Aug. 3, 2018]

§ 1.6081-9 Automatic extension of time to file exempt or political organization returns.

(a) ***In general.*** An entity required to file a return on a form in the Form 990 series (Form 990, "Return of Organization Exempt From Income Tax," Form 990-BL, "Information and Initial Excise Tax Return for Black Lung Benefit Trusts and Certain Related Persons," Form 990-EZ, "Short Form Return of Organization Exempt From Income Tax," Form 990-PF, "Return of Private Foundation," and Form 990-T, "Exempt Organization Business Tax Return"), Form 1041-A, "U.S. Information Return-Trust Accumulation of Charitable Amounts," Form 1120-POL, "U.S. Income Tax Return for Certain Political Organizations," Form 4720, "Return of Certain Excise Taxes Under Chapters 41 and 42 of the Internal Revenue Code," Form 5227, "Split-Interest Trust Information Return," Form 6069, "Return of Excise Tax on Excess Contributions to Black Lung Benefit Trust Under Section 4953 and Computation of Section 192 Deduction," and Form 8870, "Information Return for Transfers Associated With Certain Personal Benefit Contracts," will be allowed an automatic six-month extension of time to file the return after the date prescribed for filing if the entity files an application in accordance with paragraph (b) of this section.

(b) ***Requirements.*** To satisfy this paragraph (b), an application for an automatic extension under this section must—

(1) Be submitted on Form 7004, "Application for Automatic Extension of Time to File Certain Business Income Tax, Information, and Other Returns" (in the case of an extension of time to file Form 1120-POL), Form 8868, "Application for Automatic Extension of Time to File an Exempt Organization Return" (in the case of an extension of time to file any other return listed in paragraph (a) of this section), or in any other manner as may be prescribed by the Commissioner;

(2) Be filed with the Internal Revenue Service office designated in the application's instructions on or before the date prescribed for filing the return;

(3) Show the full amount properly estimated as tentative tax for the entity for the taxable year; and

(4) Be accompanied by the full remittance of the amount properly estimated as tentative tax which is unpaid as of the date prescribed for the filing of the return.

(c) ***Termination of automatic extension.*** The Commissioner may terminate an automatic extension at any time by mailing to the entity a notice of termination. The notice must be mailed at least 10 days prior to the termination date designated in such notice. The notice of termination must be mailed to the address shown on the application for extension or to the entity's last known address. For further guidance regarding the definition of last known address, see § 301.6212-2 of this chapter.

(d) ***Penalties.*** See sections 6651 and 6652(c) for failure to file a return or failure to pay the amount shown as tax on the return.

(e) ***Coordination with § 1.6081-1.*** No extension of time will be granted under § 1.6081-1 for filing a return listed in paragraph (a) of this section until an automatic extension has been allowed pursuant to this section.

(f) ***Applicability date.*** This section applies to requests for extensions of time to file returns listed in paragraph (a) of this section on or after January 30, 2020. Sections 1.6081-3T and 1.6081-9T (as contained in 26 CFR part 1, revised April 2019) apply to requests for extensions before January 30, 2020.

[T.D. 9163, 69 FR 70549, Dec. 7, 2004, as amended by T.D. 9821, 82 FR 33447, July 20, 2017; T.D. 9892, 85 FR 5327, Jan. 30, 2020]

§ 1.6081-10 Automatic extension of time to file withholding tax return for U.S. source income of foreign persons.

(a) ***In general.*** A withholding agent or intermediary required to file a return on Form 1042, “Annual Withholding Tax Return for U.S. Source Income of Foreign Persons,” for any taxable year will be allowed an automatic 6-month extension of time to file the return after the date prescribed for filing the return if the withholding agent or intermediary files an application under this section in accordance with paragraph (b) of this section.

(b) ***Requirements.*** To satisfy this paragraph (b), a withholding agent or intermediary must—

(1) Submit a complete application on Form 7004, “Application for Automatic Extension of Time to File Certain Business Income Tax, Information, and Other Returns,” or in any other manner prescribed by the Commissioner;

(2) File the application on or before the date prescribed for filing the return with the Internal Revenue Service office designated in the application's instructions; and

(3) Remit the amount of the properly estimated unpaid tax liability on or before the date prescribed for payment.

(c) ***No extension of time for the payment of tax.*** An automatic extension of time for filing a return granted under paragraph (a) of this section will not extend the time for payment of any tax due on such return.

(d) ***Termination of automatic extension.*** The Commissioner may terminate an automatic extension at any time by mailing to the withholding agent or intermediary a notice of termination at least 10 days prior to the termination date designated in such notice. The Commissioner must mail the notice of termination to the address shown on the Form 7004 or to the withholding agent or intermediary's last known address. For further guidance regarding the definition of last known address, see § 301.6212-2 of this chapter.

(e) ***Penalties.*** See section 6651 for failure to file a return or failure to pay an amount shown as tax on the return.

(f) ***Effective/applicability dates.*** This section is applicable for applications for an automatic extension of time to file the withholding tax return for U.S. source income of foreign persons return filed after July 1, 2008.

[T.D. 9407, 73 FR 37367, July 1, 2008]

§ 1.6081-11 Automatic extension of time for filing certain employee plan returns.

(a) ***In general.*** An administrator or sponsor of an employee benefit plan required to file a return under the provisions of chapter 61 or the regulations under that chapter on Form 5500 (series), "Annual Return/Report of Employee Benefit Plan," will be allowed an automatic extension of time to file the return until the 15th day of the third month following the date prescribed for filing the return if the administrator or sponsor files an application under this section in accordance with paragraph (b) of this section.

(b) ***Requirements.*** To satisfy this paragraph (b), an administrator or sponsor must—

(1) Submit a complete application on Form 5558, "Application for Extension of Time To File Certain Employee Plan Returns," or in any other manner as may be prescribed by the Commissioner; and

(2) File the application with the Internal Revenue Service office designated in the application's instructions on or before the date prescribed for filing the information return.

(c) ***Termination of automatic extension.*** The Commissioner may terminate an automatic extension at any time by mailing to the administrator or sponsor a notice of termination at least 10 days prior to the termination date designated in such notice. The Commissioner must mail the notice of termination to the address shown on the Form 5558 or to the administrator or sponsor's last known address. For further guidance regarding the definition of last known address, see § 301.6212-2 of this chapter.

(d) ***Penalties.*** See sections 6652, 6692, and the Employee Retirement Income Security Act of 1974 for penalties for failure to file a timely and complete Form 5500.

(e) ***Effective/applicability dates.*** This section is applicable for applications for an automatic extension of time to file Forms 5500 for plan years ending after July 1, 2008.

[T.D. 9407, 73 FR 37368, July 1, 2008]

PLACE FOR FILING RETURNS OR OTHER DOCUMENTS

§ 1.6091-1 Place for filing returns or other documents.

(a) ***In general.*** Except as provided in § 1.6091-4, whenever a return, statement, or other document is required to be made under the provisions of subtitle A or F of the Code, or the regulations thereunder, with respect to any tax imposed by subtitle A of the Code, and the place for filing such return, statement, or other document is not provided for by the Code, it shall be filed at the place prescribed by the regulations contained in this chapter.

(b) ***Place for filing certain information returns.***

(1) For the place for filing returns of partnership income, see paragraph (e)(1) of § 1.6031(a)-1.

(2) For the place for filing information returns by banks with respect to common trust funds, see § 1.6032-1.

(3) For the place for filing information returns by certain organizations exempt from taxation under section 501(a), see paragraph (e) of § 1.6033-1.

(4) For the place for filing information returns by trusts claiming charitable deductions under section 642(c), see paragraph (c) of § 1.6034-1.

(5) [Reserved]

(6) For the place for filing information returns relating to certain stock option transactions, see paragraph (c) of § 1.6039-1.

(7) For the place for filing returns of information reporting certain payments, see paragraph (a)(5) of § 1.6041-2 and § 1.6041-6.

(8) For the place for filing returns of information regarding payments of dividends, see paragraph (c) of § 1.6042-2 (relating to returns for calendar years after 1962).

(9) For the place for filing information returns by corporations relating to contemplated dissolution or liquidation, see paragraph (a) of § 1.6043-1.

(10) For the place for filing information returns by corporations relating to distributions in liquidation, see paragraph (a) of § 1.6043-2.

(11) For the place for filing returns of information regarding payments of patronage dividends, see paragraph (d) of § 1.6044-2.

(12) For the place for filing information returns relating to formation or reorganization of foreign corporations, see paragraph (j)(2) of § 1.6046-1.

(13) For the place for filing information returns regarding certain payments of interest, see paragraph (c) of § 1.6049-1.

(14) For the place for filing information returns with respect to payment of wages in the form of group-term life insurance, see paragraph (b) of § 1.6052-1.

(15) For the place for filing information returns on Forms 1042-S with respect to certain amounts paid to foreign persons, see instructions to the form.

(16) For the place for filing information returns on Form 5074 with respect to the allocation of individual income tax to Guam, see paragraph (b)(3) of § 1.935-1 and paragraph (d) of § 301.7654-1 of this chapter (Regulations on Procedure and Administration).

(17) For the place for filing information returns on Form 8805, “Foreign Partner's Information Statement of Section 1446 Withholding Tax,” with respect to certain amounts paid on behalf of foreign partners, see the instructions to the form.

(c) ***Effective/Applicability date.*** Paragraph (b)(17) of this section shall apply to partnership taxable years beginning after *April 29, 2008*.

[T.D. 6500, 25 FR 12108, Nov. 26, 1960, as amended by T.D. 6887, 31 FR 8814, June 24, 1966; T.D. 6922, 32 FR 8713, June 17, 1967; T.D. 7284, 38 FR 20829, Aug. 3, 1973; T.D. 7385, 40 FR 50264, Oct. 29, 1975; T.D. 8734, 62 FR 53493, Oct. 14, 1997; T.D. 9156, 69 FR 55744, Sept. 16, 2004; T.D. 9394, 73 FR 23085, Apr. 29, 2008; T.D. 9849, 84 FR 9237, Mar. 14, 2019]

§ 1.6091-2 Place for filing income tax returns.

Except as provided in § 1.6091-3 (relating to certain international income tax returns) and § 1.6091-4 (relating to exceptional cases):

(a) ***Individuals, estates, and trusts.***

(1) Except as provided in paragraph (c) of this section, income tax returns of individuals, estates, and trusts shall be filed with any person assigned the responsibility to receive returns at the local Internal Revenue Service office that serves the legal residence or principal place of business of the person required to make the return.

(2) An individual employed on a salary or commission basis who is not also engaged in conducting a commercial or professional enterprise for profit on his own account does not have a "principal place of business" within the meaning of this section.

(b) ***Corporations.*** Except as provided in paragraph (c) of this section, income tax returns of corporations shall be filed with any person assigned the responsibility to receive returns in the local Internal Revenue Service office that serves the principal place of business or principal office or agency of the corporation.

(c) ***Returns filed with service centers.*** Notwithstanding paragraphs (a) and (b) of this section, whenever instructions applicable to income tax returns provide that the returns be filed with a service center, the returns must be so filed in accordance with the instructions.

(d) ***Hand-carried returns.*** Notwithstanding paragraphs (1) and (2) of section 6091(b) and paragraph (c) of this section:

(1) ***Persons other than corporations.*** Returns of persons other than corporations which are filed by hand carrying shall be filed with any person assigned the responsibility to receive hand-carried returns in the local Internal Revenue Service office as provided in paragraph (a) of this section.

(2) ***Corporations.*** Returns of corporations which are filed by hand carrying shall be filed with any person assigned the responsibility to receive hand-carried returns in the local Internal Revenue Service office as provided in paragraph (b) of this section.

See § 301.6091-1 of this chapter (Regulations on Procedure and Administration) for provisions relating to the definition of hand carried.

(e) ***Amended returns.*** In the case of amended returns filed after April 14, 1968, except as provided in paragraph (d) of this section:

(1) ***Persons other than corporations.*** Amended returns of persons other than corporations shall be filed with the service center serving the legal residence or principal place of business of the person required to make the return.

(2) ***Corporations.*** Amended returns of corporations shall be filed with the service center serving the principal place of business or principal office or agency of the corporation.

(f) ***Returns of persons subject to a termination assessment.*** Notwithstanding paragraph (c) of this section:

(1) ***Persons other than corporations.*** Returns of persons other than corporations with respect to whom an assessment was made under section 6851(a) with respect to the taxable year shall be filed with any person assigned the responsibility to receive returns in the local Internal Revenue Service office as provided in paragraph (a) of this section.

(2) ***Corporations.*** Returns of corporations with respect to whom an assessment was made under section 6851(a) with respect to the taxable year shall be filed with any person assigned the responsibility to receive returns in the local Internal Revenue Service office as provided in paragraph (b) of this section.

(g) ***Returns of persons subject to a termination assessment.*** Notwithstanding paragraph (c) of this section, income tax returns of persons with respect to whom an income tax assessment was made under section 6852(a) with respect to the taxable year must be filed with any person assigned the responsibility to receive returns in the local Internal Revenue Service office as provided in paragraphs (a) and (b) of this section.

[T.D. 6950, 33 FR 5356, Apr. 4, 1968, as amended by T.D. 7012, 34 FR 7690, May 15, 1969; T.D. 7495, 42 FR 33726, July 1, 1977; T.D. 7575, 43 FR 58816, Dec. 18, 1978; T.D. 8628, 60 FR 62210, Dec. 5, 1995; T.D. 9156, 69 FR 55744, Sept. 16, 2004; 69 FR 60222, Oct. 7, 2004]

§ 1.6091-3 Filing certain international income tax returns.

The following income tax returns shall be filed as directed in the applicable forms and instructions:

(a) Income tax returns on which all, or a portion, of the tax is to be paid in foreign currency. See §§ 301.6316-1 to 301.6316-6 inclusive, and §§ 301.6316-8 and 301.6316-9 of this chapter (Regulations on Procedure and Administration).

(b) Income tax returns on an individual citizen of the United States whose principal place of abode for the period with respect to which the return is filed is outside the United States. A taxpayer's principal place of abode will be considered to be outside the United States if his legal residence is outside the United States or if his return bears a foreign address.

(c) Income tax returns of an individual citizen of a possession of the United States (whether or not a citizen of the United States) who has no legal residence or principal place of business in any internal revenue district in the United States.

(d) Except in the case of any departing alien return under section 6851 and § 1.6851-2, the income tax return of any nonresident alien (other than one treated as a resident under section 6013 (g) or (h)).

(e) The income tax return of an estate or trust the fiduciary of which is outside the United States and has no legal residence or principal place of business in any internal revenue district in the United States.

(f) Income tax returns of foreign corporations.

(g) The return by a withholding agent of the income tax required to be withheld at source under chapter 3 of the Code on nonresident aliens and foreign corporations and tax-free covenant bonds, as provided in § 1.1461-2.

(h) Income tax returns of persons who claim the benefits of section 911 (relating to earned income from sources without the United States).

(i) Income tax returns of corporations which claim the benefits of section 922 (relating to special deduction for Western Hemisphere trade corporations) except in the case of consolidated returns filed pursuant to the regulations under section 1502.

(j) Income tax returns of persons who claim the benefits of section 931 (relating to income from sources within possessions of the United States).

(k) Income tax returns of persons who claim the benefits of section 933 (relating to income from sources within Puerto Rico).

(l) Income tax returns of corporations which claim the benefits of section 941 (relating to the special deduction for China Trade Act corporations).

[T.D. 6950, 33 FR 5357, Apr. 4, 1968, as amended by T.D. 7012, 34 FR 7690, May 15, 1969; T.D. 7670, 45 FR 6931, Jan. 31, 1980; T.D. 9156, 69 FR 55744, Sept. 16, 2004]

§ 1.6091-4 Exceptional cases.

(a) ***Permission to file in office other than required office.***

(1) The Commissioner may permit the filing of any income tax return required to be made under the provisions of subtitle A or F of the Code, or the regulations in this part, in any Internal Revenue Service office, notwithstanding the provisions of paragraphs (1) and (2) of section 6091(b) and §§ 1.6091-1 to 1.6091-3, inclusive.

(2) In cases where the Commissioner authorizes (for all purposes except venue) an internal revenue service center to receive returns, such returns pursuant to instructions issued with respect thereto, may be sent directly to that service center and are thereby filed there for all purposes except as a factor in determining venue. However, after initial processing all such returns shall be forwarded by the service center to the office with which such returns are, without regard to this subparagraph, required to be filed. For the sole purpose of determining venue, such returns are filed only with such office.

(3) Notwithstanding the provisions of other sections of this chapter or any rule issued under this chapter:

(i) In cases where, in accordance with subparagraph (2) of this paragraph, a return is filed with a service center, the authority of the members of the office with whom such return would, without regard to such subparagraph, be required to be filed shall remain the same as if the return had been so filed;

(ii) Unless a return or other document is a proper attachment to, or is, a return which the service center is expressly authorized to receive, such return or other document shall be filed as if all returns sent directly to the service centers, in accordance with subparagraph (2) of this paragraph, were filed in the office where such returns are, without regard to such subparagraph, required to be filed; and

(iii) Unless the performance of an act is directly related to the sending of a return directly to the service center, such act shall be performed as if all returns sent directly to the service centers, in accordance with subparagraph (2) of this paragraph, were filed in the office where such returns are, without regard to such subparagraph, required to be filed.

(4) The application of paragraphs (a)(2) and (3) of this section may be illustrated by the following example:

Example. The Commissioner has authorized the Internal Revenue Service Center, Philadelphia, Pennsylvania (for all purposes except venue), to receive Form 1120. Except for that authorization, A, a corporation with its principal place of business in Greensboro, North Carolina, is required to file its Form 1120 for Year X with the Internal Revenue Service Center, Atlanta, Georgia. In addition, A may

file an election to defer development expenditures paid or incurred in Year X. Under § 1.616-2(e)(2) and applicable published guidance (in this case Notice 2003-19 (2003-1 C.B. 703)) that statement of election must be filed with the service center that serves A's principal place of business where A filed its income tax return. A may make that election on its income tax return or by filing it separately. Under paragraph (a)(2) of this section, A may send its Form 1120 to either the Internal Revenue Service Center, Philadelphia, Pennsylvania, or to the Internal Revenue Service Center, Atlanta, Georgia. If A files its statement of election separately from its income tax return for Year X, then the statement of election is not a proper attachment to A's income tax return and A should send the statement of election to the Internal Revenue Service Center, Atlanta, Georgia (with which A must, without regard to paragraph (a)(2) of this section, file its income tax return), no later than the time prescribed for filing Form 1120 for Year X (including extensions).

(b) ***Returns of officers and employees of the Internal Revenue Service.*** The Commissioner may require any officer or employee of the Internal Revenue Service to file his income tax return in any Internal Revenue Service office selected by the Commissioner.

(c) ***Residents of Guam.*** Income tax returns of an individual citizen of the United States who is a resident of Guam shall be filed with Guam, as provided in paragraph (b)(1) of § 1.935-1.

[T.D. 6500, 25 FR 12108, Nov. 26, 1960, as amended by T.D. 6793, 30 FR 704, Jan. 22, 1965; T.D. 7385, 40 FR 50264, Oct. 29, 1975; T.D. 9156, 69 FR 55744, Sept. 16, 2004]

MISCELLANEOUS PROVISIONS

§ 1.6102-1 Computations on returns or other documents.

For provisions with respect to the rounding off to whole-dollar amounts of money items on returns and accompanying schedules, see § 301.6102-1 of this chapter (Regulations on Procedure and Administration).

[T.D. 6500, 25 FR 12137, Nov. 26, 1960]

§ 1.6107-1 Tax return preparer must furnish copy of return or claim for refund to taxpayer and must retain a copy or record.

(a) ***Furnishing copy to taxpayer*** —

(1) A person who is a signing tax return preparer of any return of tax or claim for refund of tax under the Internal Revenue Code shall furnish a completed copy of the return or claim for refund to the taxpayer (or nontaxable entity) not later than the time the return or claim for refund is presented for the signature of the taxpayer (or nontaxable entity). The signing tax return preparer may, at its option, request a receipt or other evidence from the taxpayer (or nontaxable entity) sufficient to show satisfaction of the requirement of this paragraph (a).

(2) The tax return preparer must provide a complete copy of the return or claim for refund filed with the IRS to the taxpayer in any media, including electronic media, that is acceptable to both the taxpayer and the tax return preparer. In the case of an electronically filed return, a complete copy of a taxpayer's return or claim for refund consists of the electronic portion of the return or claim for refund, including all schedules, forms, pdf attachments, and jurats, that was filed with the IRS. The copy provided to the taxpayer must include all information submitted to the IRS to enable the taxpayer to determine what schedules, forms, electronic files, and other supporting materials have

been filed with the return. The copy, however, need not contain the identification number of the paid tax return preparer. The electronic portion of the return or claim for refund may be contained on a replica of an official form or on an unofficial form. On an unofficial form, however, data entries must reference the line numbers or descriptions on an official form.

(3) For electronically filed Forms 1040EZ, "Income Tax Return for Single Filers and Joint Filers With No Dependents," and Form 1040A, "U.S. Individual Income Tax Return," filed for the 2009, 2010 and 2011 taxable years, the information may be provided on a replica of a Form 1040, "U.S. Individual Income Tax Return", that provides all of the information. For other electronically filed returns, the information may be provided on a replica of an official form that provides all of the information.

(b) ***Copy or record to be retained.***

(1) A person who is a signing tax return preparer of any return or claim for refund shall—

(i)

(A) Retain a completed copy of the return or claim for refund; or

(B) Retain a record, by list, card file, or otherwise of the name, taxpayer identification number, and taxable year of the taxpayer (or nontaxable entity) for whom the return or claim for refund was prepared, and the type of return or claim for refund prepared;

(ii) Retain a record, by retention of a copy of the return or claim for refund, maintenance of a list, card file, or otherwise, for each return or claim for refund presented to the taxpayer (or nontaxable entity), of the name of the individual tax return preparer required to sign the return or claim for refund pursuant to § 1.6695-1(b); and

(iii) Make the copy or record of returns and claims for refund and record of the individuals required to sign available for inspection upon request by the Commissioner.

(2) The material described in this paragraph (b) shall be retained and kept available for inspection for the 3-year period following the close of the return period during which the return or claim for refund was presented for signature to the taxpayer (or nontaxable entity). In the case of a return that becomes due (with extensions, if any) during a return period following the return period during which the return was presented for signature, the material shall be retained and kept available for inspection for the 3-year period following the close of the later return period in which the return became due. For the definition of "return period," see section 6060(c). If the person subject to the record retention requirement of this paragraph (b) is a corporation or a partnership that is dissolved before completion of the 3-year period, then all persons who are responsible for the winding up of the affairs of the corporation or partnership under state law shall be subject, on behalf of the corporation or partnership, to these record retention requirements until completion of the 3-year period. If state law does not specify any person or persons as responsible for winding up, then, collectively, the directors or general partners shall be subject, on behalf of the corporation or partnership, to the record retention requirements of this paragraph (b). For purposes of the penalty imposed by section 6695(d), such designated persons shall be deemed to be the tax return preparer and will be jointly and severally liable for each failure.

(c) ***Tax return preparer.*** For the definition of "signing tax return preparer," see § 301.7701-15(b)(1) of this chapter. For purposes of applying this section, a corporation, partnership or other organization that employs a signing tax return preparer to prepare for compensation (or in which a signing tax return preparer is compensated as a partner or member to prepare) a return of tax or claim for refund shall be treated as the sole signing tax return preparer.

(d) ***Penalties.***

(1) For the civil penalty for failure to furnish a copy of the return or claim for refund to the taxpayers (or nontaxable entity) as required under paragraph (a) of this section, see section 6695(a) and § 1.6695-1(a).

(2) For the civil penalty for failure to retain a copy of the return or claim for refund, or to retain a record as required under paragraph (b) of this section, see section 6695(d) and § 1.6695-1(d).

(e) ***Effective/applicability date.*** This section is applicable to returns and claims for refund filed after December 31, 2008.

[T.D. 9436, 73 FR 78438, Dec. 22, 2008, as amended at 74 FR 5104, Jan. 29, 2009]

§ 1.6107-2 Form and manner of furnishing copy of return and retaining copy or record.

(a) ***In general.*** The Commissioner may prescribe the form and manner of satisfying the requirements imposed by section 6107(a) and (b) and § 1.6107-1(a) and (b) in forms, instructions, or other appropriate guidance (*see* § 601.601(d)(2) of this chapter).

(b) ***Effective date.*** To the extent this section relates to section 6107(a) and § 1.6107-1(a), it applies to income tax returns and claims for refund presented to a taxpayer for signature after December 31, 2002. To the extent this section relates to section 6107(b) and § 1.6107-1(b), it applies after December 31, 2002, to returns and claims for refund for which the 3-year period described in section 6107(b) expires after December 31, 2002.

[T.D. 9119, 69 FR 15249, Mar. 25, 2004]

§ 1.6109-1 Identifying numbers.

(a) ***Information to be furnished after April 15, 1974.*** For provisions concerning the requesting and furnishing of identifying numbers with respect to returns, statements, and other documents which must be filed after April 15, 1974, see § 301.6109-1 of this chapter (Regulations on Procedure and Administration).

(b) ***Information to be furnished before April 15, 1974.*** For provisions concerning the requesting and furnishing of identifying numbers with respect to returns, statements, and other documents which must be filed before April 16, 1974, see 26 CFR § 1.6109-1 (revised as of April 1, 1973).

[T.D. 7306, 39 FR 9946, Mar. 15, 1974; 39 FR 11080, Mar. 25, 1974]

§ 1.6109-2 Tax return preparers furnishing identifying numbers for returns or claims for refund and related requirements.

(a) ***Furnishing identifying number.***

(1) Each filed return of tax or claim for refund of tax under the Internal Revenue Code prepared by one or more tax return preparers must include the identifying number of the tax return preparer required by § 1.6695-1(b) to sign the return or claim for refund. In addition, if there is an employment arrangement or association between the individual tax return preparer and another person (except to the extent the return prepared is for the person), the identifying number of the other person must also appear on the filed return or claim for refund. For the definition of the term "tax return preparer," see section 7701(a)(36) and § 301.7701-15 of this chapter.

(2)

(i) For tax returns or claims for refund filed on or before December 31, 2010, the identifying number of an individual tax return preparer is that individual's social security number or such alternative number as may be prescribed by the Internal Revenue Service in forms, instructions, or other appropriate guidance.

(ii) For tax returns or claims for refund filed after December 31, 2010, the identifying number of a tax return preparer is the individual's preparer tax identification number or such other number prescribed by the Internal Revenue Service in forms, instructions, or other appropriate guidance.

(3) The identifying number of a person (whether an individual or entity) who employs or associates with an individual tax return preparer described in paragraph (a)(2) of this section to prepare the return or claim for refund (other than a return prepared for the person) is the person's employer identification number.

(b) and

(c) [Reserved]. For further guidance, see § 1.6109-2A(b) and (c).

(d) Beginning after December 31, 2010, all tax return preparers must have a preparer tax identification number or other prescribed identifying number that was applied for and received at the time and in the manner, including the payment of a user fee, as may be prescribed by the Internal Revenue Service in forms, instructions, or other appropriate guidance. Except as provided in paragraph (h) of this section, beginning after December 31, 2010, to obtain a preparer tax identification number or other prescribed identifying number, a tax return preparer must be an attorney, certified public accountant, enrolled agent, or registered tax return preparer authorized to practice before the Internal Revenue Service under 31 U.S.C. 330 and the regulations thereunder.

(e) The Internal Revenue Service may designate an expiration date for any preparer tax identification number or other prescribed identifying number and may further prescribe the time and manner for renewing a preparer tax identification number or other prescribed identifying number, including the payment of a user fee, as set forth in forms, instructions, or other appropriate guidance. The Internal Revenue Service may provide that any identifying number issued by the Internal Revenue Service prior to the effective date of this regulation will expire on December 31, 2010, unless properly renewed as set forth in forms, instructions, or other appropriate guidance, including these regulations.

(f) As may be prescribed in forms, instructions, or other appropriate guidance, the IRS may conduct a Federal tax compliance check on a tax return preparer who applies for or renews a preparer tax identification number or other prescribed identifying number.

(g) Only for purposes of paragraphs (d), (e), and (f) of this section, the term *tax return preparer* means any individual who is compensated for preparing, or assisting in the preparation of, all or substantially all of a tax return or claim for refund of tax. Factors to consider in determining whether an individual is a tax

return preparer under this paragraph (g) include, but are not limited to, the complexity of the work performed by the individual relative to the overall complexity of the tax return or claim for refund of tax; the amount of the items of income, deductions, or losses attributable to the work performed by the individual relative to the total amount of income, deductions, or losses required to be correctly reported on the tax return or claim for refund of tax; and the amount of tax or credit attributable to the work performed by the individual relative to the total tax liability required to be correctly reported on the tax return or claim for refund of tax. The preparation of a form, statement, or schedule, such as Schedule EIC (Form 1040), "Earned Income Credit," may constitute the preparation of all or substantially all of a tax return or claim for refund based on the application of the foregoing factors. A tax return preparer does not include an individual who is not otherwise a tax return preparer as that term is defined in § 301.7701-15(b)(2), or who is an individual described in § 301.7701-15(f). The provisions of this paragraph (g) are illustrated by the following examples:

Example 1. Employee A, an individual employed by Tax Return Preparer B, assists Tax Return Preparer B in answering telephone calls, making copies, inputting client tax information gathered by B into the data fields of tax preparation software on a computer, and using the computer to file electronic returns of tax prepared by B. Although Employee A must exercise judgment regarding which data fields in the tax preparation software to use, A does not exercise any discretion or independent judgment as to the clients' underlying tax positions. Employee A, therefore, merely provides clerical assistance or incidental services and is not a tax return preparer required to apply for a PTIN or other identifying number as the Internal Revenue Service may prescribe in forms, instructions, or other appropriate guidance.

Example 2. The facts are the same as in *Example 1,* except that Employee A also interviews B's clients and obtains from them information needed for the preparation of tax returns. Employee A determines the amount and character of entries on the returns and whether the information provided is sufficient for purposes of preparing the returns. For at least some of B's clients, A obtains information and makes determinations that constitute all or substantially all of the tax return. Employee A is a tax return preparer required to apply for a PTIN or other identifying number as the Internal Revenue Service may prescribe in forms, instructions, or other appropriate guidance. Employee A is a tax return preparer even if Employee A relies on tax preparation software to prepare the return.

Example 3. C is an employee of a firm that prepares tax returns and claims for refund of tax for compensation. C is responsible for preparing a Form 1040, "U.S. Individual Income Tax Return," for a client. C obtains the information necessary for the preparation of the tax return during a meeting with the client, and makes determinations with respect to the proper application of the tax laws to the information in order to determine the client's tax liability. C completes the tax return and sends the completed return to employee D, who reviews the return for accuracy before signing it. Both C and D are tax return preparers required to apply for a PTIN or other identifying number as the Internal Revenue Service may prescribe in forms, instructions, or other appropriate guidance.

Example 4. E is an employee at a firm which prepares tax returns and claims for refund of tax for compensation. The firm is engaged by a corporation to prepare its Federal income tax return on Form 1120, "U.S. Corporation Income Tax Return." Among the documentation that the corporation provides to E in connection with the preparation of the tax return is documentation relating to the corporation's potential eligibility to claim a recently enacted tax credit for the taxable year. In preparing the return, and specifically for purposes of the new tax credit, E (with the corporation's consent) obtains advice from F, a subject matter expert on this and similar credits. F advises E as to the corporation's entitlement to the credit and provides his calculation of the amount of the credit. Based on this advice from F, E prepares the corporation's Form 1120 claiming the tax credit in the

amount recommended by F. The additional credit is one of many tax credits and deductions claimed on the tax return, and determining the credit amount does not constitute preparation of all or substantially all of the corporation's tax return under this paragraph (g). F will not be considered to have prepared all or substantially all of the corporation's tax return, and F is not a tax return preparer required to apply for a PTIN or other identifying number as the Internal Revenue Service may prescribe in forms, instructions, or other appropriate guidance. The analysis is the same whether or not the tax credit is a substantial portion of the return under § 301.7701-15 of this chapter (as opposed to substantially all of the return), and whether or not F is in the same firm with E. E is a tax return preparer required to apply for a PTIN or other identifying number as the Internal Revenue Service may prescribe in forms, instructions, or other appropriate guidance.

(h) The Internal Revenue Service, through forms, instructions, or other appropriate guidance, may prescribe exceptions to the requirements of this section, including the requirement that an individual be authorized to practice before the Internal Revenue Service before receiving a preparer tax identification number or other prescribed identifying number, as necessary in the interest of effective tax administration. The Internal Revenue Service, through other appropriate guidance, may also specify specific returns, schedules, and other forms that qualify as tax returns or claims for refund for purposes of these regulations.

(i) ***Effective/applicability date.*** Paragraph (a)(1) of this section is applicable to tax returns and claims for refund filed after December 31, 2008. Paragraph (a)(2)(i) of this section is applicable to tax returns and claims for refund filed on or before December 31, 2010. Paragraph (a)(2)(ii) of this section is applicable to tax returns and claims for refund filed after December 31, 2010. Paragraph (d) of this section is applicable to tax return preparers after December 31, 2010. Paragraphs (e) through (h) of this section are effective after September 30, 2010.

[T.D. 9014, 67 FR 52863, Aug. 14, 2002, as amended by T.D. 9436, 73 FR 78439, Dec. 22, 2008; T.D. 9501, 75 FR 60315, Sept. 30, 2010]

§ 1.6115-1 Disclosure requirements for quid pro quo contributions.

(a) ***Good faith estimate defined*** —

(1) ***In general.*** A good faith estimate of the value of goods or services provided by an organization described in section 170(c) in consideration for a taxpayer's payment to that organization is an estimate of the fair market value, within the meaning of § 1.170A-1(c)(2), of the goods or services. The organization may use any reasonable methodology in making a good faith estimate, provided it applies the methodology in good faith. If the organization fails to apply the methodology in good faith, the organization will be treated as not having met the requirements of section 6115. See section 6714 for the penalties that apply for failure to meet the requirements of section 6115.

(2) ***Good faith estimate for goods or services that are not commercially available.*** A good faith estimate of the value of goods or services that are not generally available in a commercial transaction may be determined by reference to the fair market value of similar or comparable goods or services. Goods or services may be similar or comparable even though they do not have the unique qualities of the goods or services that are being valued.

(3) ***Examples.*** The following examples illustrate the rules of this paragraph (a).

Example 1. Facility not available on a commercial basis. Museum *M,* an organization described in section 170(c), is located in Community *N.* In return for a payment of $50,000 or more, *M* allows a donor to hold a private event in a room located in *M.* Private events other than those held by such donors are not permitted to be held in *M.* In Community *N,* there are four hotels, *O, P, Q,* and *R,* that have ballrooms with the same capacity as the room in *M.* Of these hotels, only *O* and *P* have ballrooms that offer amenities and atmosphere that are similar to the amenities and atmosphere of the room in *M* (although *O* and *P* lack the unique collection of art that is displayed in the room in *M*). Because the capacity, amenities, and atmosphere of ballrooms in *O* and *P* are comparable to the capacity, amenities, and atmosphere of the room in *M,* a good faith estimate of the benefits received from *M* may be determined by reference to the cost of renting either the ballroom in *O* or the ballroom in *P.* The cost of renting the ballroom in *O* is $2500 and, therefore, a good faith estimate of the fair market value of the right to host a private event in the room at *M* is $2500. In this example, the ballrooms in *O* and *P* are considered similar and comparable facilities to the room in *M* for valuation purposes, notwithstanding the fact that the room in *M* displays a unique collection of art.

Example 2. Services available on a commercial basis. Charity *S* is an organization described in section 170(c). *S* offers to provide a one-hour tennis lesson with Tennis Professional *T* in return for the first payment of $500 or more that it receives. *T* provides one-hour tennis lessons on a commercial basis for $100. Taxpayer pays $500 to *S* and in return receives the tennis lesson with *T.* A good faith estimate of the fair market value of the lesson provided in exchange for Taxpayer's payment is $100.

Example 3. Celebrity presence. Charity *U* is an organization described in section 170(c). In return for the first payment of $1000 or more that it receives, *U* will provide a dinner for two followed by an evening tour of Museum *V* conducted by Artist *W,* whose most recent works are on display at *V. W* does not provide tours of *V* on a commercial basis. Typically, tours of *V* are free to the public. Taxpayer pays $1000 to *U* and in return receives a dinner valued at $100 and an evening tour of *V* conducted by *W.* Because tours of *V* are typically free to the public, a good faith estimate of the value of the evening tour conducted by *W* is $0. In this example, the fact that Taxpayer's tour of *V* is conducted by *W* rather than *V*'s regular tour guides does not render the tours dissimilar or incomparable for valuation purposes.

(b) ***Certain goods or services disregarded.*** For purposes of section 6115, an organization described in section 170(c) may disregard goods or services described in § 1.170A-13(f)(8)(i).

(c) ***Value of the right to purchase tickets to college or university athletic events.*** For purposes of section 6115, the right to purchase tickets for seating at an athletic event in exchange for a payment described in section 170(l) is treated as having a value equal to twenty percent of such payment.

(d) ***Goods or services provided to employees or partners of donors*** —

(1) ***Certain goods or services disregarded.*** For purposes of section 6115, goods or services provided by an organization described in section 170(c) to employees of a donor or to partners of a partnership that is a donor in return for a payment to the donee organization may be disregarded to the extent that the goods or services provided to each employee or partner are the same as those described in § 1.170A-13(f)(8)(i).

(2) ***Description permitted in lieu of good faith estimate for other goods or services.*** The written disclosure statement required by section 6115 may include a description of goods or services, in lieu of a good faith estimate of their value, if the donor is—

(i) An employer and, in return for the donor's quid pro quo contribution, an organization described in section 170(c) provides the donor's employees with goods or services other than those described in paragraph (d)(1) of this section; or

(ii) A partnership and, in return for its quid pro quo contribution, the organization provides partners in the partnership with goods or services other than those described in paragraph (d)(1) of this section.

(e) ***Effective date.*** This section applies to contributions made on or after December 16, 1996. However, taxpayers may rely on the rules of this section for contributions made on or after January 1, 1994.

[T.D. 8690, 61 FR 65954, Dec. 16, 1996]

REGULATIONS APPLICABLE TO RETURNS OR CLAIMS FOR REFUND FILED PRIOR TO JANUARY 1, 2000

§ 1.6109-2A Furnishing identifying number of income tax return preparer.

(a) ***Furnishing identifying number.*** For returns or claims for refund filed prior to January 1, 2000, each return of tax under subtitle A of the Internal Revenue Code or claim for refund of tax under subtitle A of the Internal Revenue Code prepared by one or more income tax return preparers must bear the identifying number of the preparer required by § 1.6695-1(b) to sign the return or claim for refund. In addition, it there is a partnership or employment arrangement between two or more preparers, the identifying number of the partnership or the person who employs (or engages) one or more other persons to prepare for compensation the return or claim for refund shall also appear on the return or claim for refund. If the preparer is:

(1) An individual (not described in subparagraph (2) of this paragraph (a) who is a citizen or resident of the United States such preparer's social security account number shall be affixed; and

(2) A person (whether an individual, corporation, or partnership) who employs (or engages) one or more persons to prepare the return or claim for refund (other than for the person), or who is not a citizen or resident of the United States and also is not employed or engaged by another preparer, such preparer's employer identification number shall be affixed.

For the definition of the term “income tax return preparer” (or “preparer”) see section 7701(a)(36) and § 301.7701-15.

(b) ***Furnishing address.***

(1) Each return or claim for refund which is prepared by one or more income tax return preparers shall bear the street address, city, State, and postal ZIP code of that preparer's place of business where the preparation of the return or claim for refund was completed. However, if this place of business is not maintained on a year-round basis, the return or claim for refund shall bear the street address, city, State, and postal ZIP code of such preparer's principal office or business location which is maintained on a yearround basis, or it none, that preparer's residence.

(2) For purposes of satisfying the requirement of the first sentence of paragraph (b)(1) of this section, and income tax return preparer, may, on returns and claims for refund, disclose only the postal ZIP code of the described place of business as a satisfactory address, but only if the preparer first by written notice advises each affected Internal Revenue Service Center that he intends to follow this practice.

(c) ***Penalty.*** For the civil penalty for failure to furnish an identifying number as required under paragraph (a) of this section, see section 6695(c) and § 1.6695-1(c).

(d) ***Effective date.*** Paragraph (a) of this section and this paragraph (d) apply to returns or claims for refund filed prior to January 1, 2000. For returns or claims for refund filed after December 31, 1999, see § 1.6109-2(a).

[T.D. 7519, 42 FR 59967, Nov. 23, 1977, as amended by T.D. 8835, 64 FR 43911, Aug. 12, 1999. Redesignated and amended by T.D. 9014, 67 FR 52863, Aug. 14, 2002]

TIME AND PLACE FOR PAYING TAX

Place and Due Date for Payment of Tax

§ 1.6151-1 Time and place for paying tax shown on returns.

(a) ***In general.*** Except as provided in section 6152 and paragraph (b) of this section, the tax shown on any income tax return shall, without assessment or notice and demand, be paid to the internal revenue officer with whom the return is filed at the time fixed for filing the return (determined without regard to any extension of time for filing the return). For provisions relating to the time for filing income tax returns, see section 6072 and §§ 1.6072-1 to 1.6072-4, inclusive. For provisions relating to the place for filing income tax returns, see section 6091 and §§ 1.6091-1 to 1.6091-4, inclusive.

(b)

(1) ***Returns on which tax is not shown.*** If a taxpayer files a return and in accordance with section 6014 and the regulations thereunder, elects not to show the tax on the return, the amount of tax determined to be due shall be paid within 30 days after the date of mailing to the taxpayer a notice stating the amount payable and making demand upon the taxpayer therefor. However, if the notice is mailed to the taxpayer more than 30 days before the due date of the return, payment of the tax shall not be required prior to such due date.

(2) ***Where tax is shown on the return.*** In any case in which a taxpayer files a return on Form 1040A pursuant to paragraph (a)(7) of § 1.6012-1 and shows the amount of tax on the return, the unpaid balance of the tax shall, without assessment or notice and demand, be paid not later than the date fixed for filing the return.

(c) ***Date fixed for payment of tax.*** In any case in which a tax imposed by subtitle A of the Code is required to be paid on or before a certain date, or within a certain period, any reference in subtitle A or F of the Code to the date fixed for payment of such tax shall be deemed a reference to the last day fixed for such payment (determined without regard to any extension of time for paying the tax).

(d) ***Use of Government depositaries.***

(1) For provisions relating to the use of authorized financial institutions in depositing income and estimated income taxes of certain corporations, see § 1.6302-1.

(2) For provisions relating to the use of such financial institutions for the deposit of taxes required to be withheld under chapter 3 of the Code on nonresident aliens and foreign corporations and tax-free covenant bonds, see § 1.6302-2. With respect to section 1446, the previous sentence shall apply only to a publicly traded partnership described in § 1.1446-4.

(e) ***Effective/Applicability date.*** Paragraph (d)(2) of this section shall apply to publicly traded partnerships described in § 1.1446-4 for partnership taxable years beginning after April 29, 2008.

(Approved by the Office of Management and Budget under control number 1545-0257)

[T.D. 6500, 25 FR 12137, Nov. 26, 1960, as amended by T.D. 6922, 32 FR 8713, June 17, 1967; T.D. 6950, 33 FR 5357, Apr. 4, 1968; T.D. 7102, 36 FR 5498, Mar. 24, 1971; T.D. 7953, 49 FR 19644, May 9, 1984; T.D. 8952, 66 FR 33831, June 26, 2001; T.D. 9394, 73 FR 23085, Apr. 29, 2008; T.D. 9394, 74 FR 14932, Apr. 2, 2009]

§ 1.6153-1 Payment of estimated tax by individuals.

(a) ***In general.***

(1) The time for payment of the estimated tax by individuals for calendar years shall be as follows:

Date of filing declaration	Dates of payment of estimated tax
(i) On or before April 15	In 4 equal installments—one at time of filing declaration, one on or before June 15, one on or before September 15, and one on or before January 15 of the succeeding taxable year
(ii) After April 15 and before June 16 if not required to be filed on or before April 15	In 3 equal installments—one at time of filing declaration, one on or before September 15, and one on or before January 15 of the succeeding taxable year
(iii) After June 15 and before September 16 if not required to be filed on or before June 15	In 2 equal installments—one at time of filing declaration, and the other on or before January 15 of the succeeding taxable year
(iv) After September 15 if not required to be filed on or before September 15	In full at time of filing declaration

(2) If, for example, due to the nature and amount of his gross income for 1955, the taxpayer is not required to file his declaration as of April 15, but is required to file the declaration on or before June 15, 1955, the case comes within the scope of subparagraph (1)(ii) of this paragraph and the estimated tax is payable in 3 equal installments, the 1st on the date of filing, the 2d on or before September 15, 1955, and the 3d installment on or before January 15, 1956.

(3) If a declaration is filed after the time prescribed in section 6073(a) (including any extension of time granted for filing the declaration), there shall be paid at such time all installments of the estimated tax which would have been payable on or before such date of filing if the declaration had been timely filed in accordance with the provisions of section 6073(a). The remaining installments shall be paid at the times and in the amounts in which they would have been payable if the declaration had been timely filed. Thus, for example, B, a single man who makes his return on the calendar year basis, was employed from the beginning of 1955 and for several years prior thereto at an annual salary of $6,000, thus meeting the requirements of section 6015(a). B filed his declaration for 1955 on September 16, 1955. In such case, B should have filed a declaration on or before April 15, 1955, and

at the time of filing his declaration he was delinquent in the payment of three installments of his estimated tax for the taxable year 1955. Hence, upon his filing the declaration on September 16, 1955, three-fourths of the estimated tax shown thereon must be paid.

(4) In the case of a decedent, payments of estimated tax are not required subsequent to the date of death. See, however, paragraph (c) of § 1.6015(b)-1, relating to the making of an amended declaration by a surviving spouse if a joint declaration was made before the death of the decedent.

(5) The payment of any installment of the estimated tax shall be considered payment on account of the tax for such taxable year. Hence, upon the return for such taxable year, the aggregate amount of the payments of estimated tax should be entered as payments to be applied against the tax shown on such return.

(b) ***Farmers or fishermen.*** Special provisions are made with respect to the filing of the declaration and the payment of the tax by an individual whose estimated gross income from farming or, with respect to taxable years beginning after December 31, 1962, from fishing is at least two-thirds of his total gross income from all sources for the taxable year. As to what constitutes income from farming or fishing within the meaning of this paragraph, see paragraph (b) of § 1.6073-1. The declaration of such an individual may be filed on or before January 15 of the succeeding taxable year in lieu of the time prescribed for individuals generally. Where such an individual makes a declaration of estimated tax after September 15 of the taxable year, the estimated tax shall be paid in full at the time of the filing of the declaration.

(c) ***Amendment of declaration.*** If any amendment of a declaration is filed, the remaining installments, if any, shall be ratably increased or decreased, as the case may be, to reflect the increase or decrease in the estimated tax by reason of the amendment. If any amendment is made after September 15 of the taxable year, any increase in the estimated tax by reason thereof shall be paid at the time of making the amendment.

(d) ***Installments paid in advance.*** At the election of the taxpayer any installment of the estimated tax may be paid prior to the date prescribed for its payment.

[T.D. 6500, 25 FR 12139, Nov. 26, 1960, as amended by T.D. 6678, 28 FR 10517, Oct. 1, 1963]

§ 1.6153-2 Fiscal years.

In the case of an individual on the fiscal year basis, the dates prescribed for payment of the estimated tax shall be the 15th day of the 4th month, the 15th day of the 6th month, and the 15th day of the 9th month of the taxable year and the 15th day of the 1st month of the succeeding taxable year. For example, if an individual having a fiscal year ending on June 30, 1956, first meets the requirements of section 6015(a) on January 15, 1956, and the declaration is filed on or before March 15, 1956, the estimated tax shall be paid in 2 equal installments, one at the time of filing of such declaration and the other on or before July 15, 1956.

[T.D. 6500, 25 FR 12139, Nov. 26, 1960]

§ 1.6153-3 Short taxable years.

In the case of a short taxable year of an individual for which a declaration is required to be filed the estimated tax shall be paid in equal installments, one at the time of filing the declaration, one on the 15th day of the 6th month of the taxable year and another on the 15th day of the 9th month of such year unless the short taxable year closed during or prior to such 6th or 9th month, and one on the 15th day of the 1st month of the succeeding taxable year. For example, if the short taxable year is the period of 10 months from January 1, 1955, to October 31, 1955, and the

declaration is required to be filed on or before April 15, 1955, the estimated tax is payable in 4 equal installments, one on the date of filing the declaration, and one each on June 15, September 15, and November 15, 1955. If in such case the declaration is required to be filed after April 15 but on or before June 15, the tax will be payable in 3 equal installments, one on the date of filing the declaration, and one each on September 15, and November 15, 1955. The provisions of paragraph (a)(3) of § 1.6153-1, relating to payment of estimated tax in any case in which the declaration is filed after the time prescribed in section 6073 and §§ 1.6073-1 to 1.6073-4, inclusive, are equally applicable to the payment of the estimated tax for short taxable years.

[T.D. 6500, 25 FR 12139, Nov. 26, 1960]

§ 1.6153-4 Extension of time for paying the estimated tax.

An extension of time granted an individual under section 6081 for filing the declaration of estimated tax automatically extends the time for paying the estimated tax (without interest) for the same period. See § 1.6073-4 for rules relating to extensions of time for filing declarations of estimated tax by individuals. Except as provided in paragraph (b) of § 301.6091-1 (relating to hand-carried documents), an application for an extension of time for paying a particular installment of the estimated tax shall be addressed to the internal revenue officer with whom the taxpayer files his declaration. Each application must contain a full recital of the causes for the delay. Such extension may be for a reasonable period not to exceed 6 months from the date fixed for payment thereof except in the case of a taxpayer who is abroad. Such extension does not relieve the taxpayer from the addition to the tax imposed by section 6654, and the period of the underpayment will be determined under section 6654(c) without regard to such extension.

[T.D. 6950, 33 FR 5357, Apr. 4, 1968]

EXTENSIONS OF TIME FOR PAYMENT

Source: Sections 1.6161-1 through 1.6165-1 contained in T.D. 6500, 25 FR 12140, Nov. 26, 1960, unless otherwise noted.

§ 1.6161-1 Extension of time for paying tax or deficiency.

(a) ***In general*** —

(1) ***Tax shown or required to be shown on return.*** A reasonable extension of the time for payment of the amount of any tax imposed by subtitle A of the Code and shown or required to be shown on any return, or for payment of the amount of any installment of such tax, may be granted by the district directors (including the Director of International Operations) at the request of the taxpayer. The period of such extension shall not be in excess of six months from the date fixed for payment of such tax or installment, except that if the taxpayer is abroad the period of the extension may be in excess of six months.

(2) ***Deficiency.*** The time for payment of any amount determined as a deficiency in respect of tax imposed by chapter 1 of the Code, or for the payment of any part thereof, may, at the request of the taxpayer, be extended by the internal revenue officer to whom the tax is required to be paid for a period not to exceed 18 months from the date fixed for payment of the deficiency, as shown on the

notice and demand, and, in exceptional cases, for a further period not in excess of 12 months. No extension of the time for payment of a deficiency shall be granted if the deficiency is due to negligence, to intentional disregard of rules and regulations, or to fraud with intent to evade tax.

(b) ***Undue hardship required for extension.*** An extension of the time for payment shall be granted only upon a satisfactory showing that payment on the due date of the amount with respect to which the extension is desired will result in an undue hardship. The extension will not be granted upon a general statement of hardship. The term "undue hardship" means more than an inconvenience to the taxpayer. It must appear that substantial financial loss, for example, loss due to the sale of property at a sacrifice price, will result to the taxpayer for making payment on the due date of the amount with respect to which the extension is desired. If a market exists, the sale of property at the current market price is not ordinarily considered as resulting in an undue hardship.

(c) ***Application for extension.*** An application for an extension of the time for payment of the tax shown or required to be shown on any return, or for the payment of any installment thereof, or for the payment of any amount determined as a deficiency shall be made on Form 1127 and shall be accompanied by evidence showing the undue hardship that would result to the taxpayer if the extension were refused. Such application shall also be accompanied by a statement of the assets and liabilities of the taxpayer and an itemized statement showing all receipts and disbursements for each of the 3 months immediately preceding the due date of the amount to which the application relates. The application, with supporting documents, must be filed on or before the date prescribed for payment of the amount with respect to which the extension is desired. If the tax is required to be paid to the Director of International Operations, such application must be filed with him, otherwise, the application must be filed with the applicable district director referred to in paragraph (a) or (b) of § 1.6091-2, regardless of whether the return is to be filed with, or tax is to be paid to, such district director. The application will be examined, and within 30 days, if possible, will be denied, granted, or tentatively granted subject to certain conditions of which the taxpayer will be notified. If an additional extension is desired, the request therefor must be made on or before the expiration of the period for which the prior extension is granted.

(d) ***Payment pursuant to extension.*** If an extension of time for payment is granted, the amount the time for payment of which is so extended shall be paid on or before the expiration of the period of the extension without the necessity of notice and demand. The granting of an extension of the time for payment of the tax or deficiency does not relieve the taxpayer from liability for the payment of interest thereon during the period of the extension. See section 6601 and § 301.6601-1 of this chapter (Regulations on Procedure and Administration). Further, the granting of an extension of the time for payment of one installment of the tax does not extend the time for payment of subsequent installments.

(e) ***Cross reference.*** For extensions of time for payment of estimated tax, see §§ 1.6073-4 and 1.6074-3.

[T.D. 6500, 25 FR 12140, Nov. 26, 1960, as amended by T.D. 6950, 33 FR 5357, Apr. 4, 1968; T.D. 7260, 38 FR 4259, Feb. 12, 1973]

§ 1.6162-1 Extension of time for payment of tax on gain attributable to liquidation of personal holding companies.

(a) ***In general.***

(1) If it is shown to the satisfaction of the district director that undue hardship to the taxpayer will result from the payment of such portion of the amount determined as the tax under chapter 1 of the Code by the taxpayer as is attributable to the short-term or long-term capital gain derived by the taxpayer from the receipt by him of property other than money on a complete liquidation of a corporation to

which section 331(a)(1) or 342 applies, the district director may grant an extension of time for the payment of such portion of the tax. For the meaning of the term "undue hardship", see paragraph (b) of § 1.6161-1.

(2) The extension of time for payment shall be for a period not in excess of five years. The extension shall only be granted for a taxable year beginning before January 1, 1956, and shall apply only if the corporation, for its taxable year preceding the year in which occurred the complete liquidation (or the first of the series of distributions in complete liquidation), was, under the law applicable to such taxable year, a personal holding company or a foreign personal holding company.

(b) ***Requirement of bond.*** As a condition to the granting of an extension of time for payment, the taxpayer will usually be required by the district director to furnish a bond as provided in section 6165 and the regulations thereunder. For other provisions with respect to bonds, see section 7101 and the regulations in part 301 of this chapter (Regulations on Procedure and Administration).

§ 1.6164-1 Extensions of time for payment of taxes by corporations expecting carrybacks.

(a) ***In general.*** If a corporation in any taxable year files a statement with respect to an expected net operating loss carryback from such taxable year, such corporation may extend the time for the payment of all or part of any tax imposed by subtitle A of the Code for the taxable year immediately preceding such taxable year to the extent and subject to the limitations provided in section 6164. A corporation may extend the time for payment with respect to only such taxes as meet the following requirements:

(1) The tax must be one imposed by subtitle A of the Code;

(2) The tax must be for the taxable year immediately preceding the taxable year of the expected net operating loss;

(3) The tax must be shown on the return or must be assessed within the taxable year of the expected net operating loss; and

(4) The tax must not have been paid or required to have been paid prior to the filing of the statement.

(b) ***Statement for purpose of extending time for payment.***

(1) The time for payment of the tax is automatically extended upon the filing of a statement on Form 1138 by the corporation with the district director for the district where the tax is payable. The statement on Form 1138 must be filled out in accordance with the instructions accompanying the form, and all information required by the form and the instructions must be furnished by the taxpayer. The district director, upon request, will furnish a receipt for any statement filed. Such receipt will show the date the statement was filed.

(2) The period of extension is that provided in section 6164(d) and § 1.6164-5 unless sooner terminated by action of either the district director or the corporation.

§ 1.6164-2 Amount of tax the time for payment of which may be extended.

(a) ***Total amount to which extension may relate.*** The total amount of tax the time for payment of which may be extended under section 6164 may not exceed the amount of the reduction of the taxes previously determined attributable to the expected carryback.

(b) ***Amount of tax to which extension may relate.***

(1) The taxpayer shall specify on Form 1138 the kind of tax and the amount thereof the time for payment of which is to be extended. The amount of tax to which an extension may relate shall not exceed the amount of such tax shown on the return as filed, increased by any amount assessed as a deficiency (or as interest or addition to the tax) prior to the date of filing the statement and decreased by any amount paid or required to be paid prior to such date. In determining the amount of tax required to be paid prior to the date of filing the statement, only the following amounts shall be taken into consideration:

(i) The amount of the tax shown on the return as filed; and

(ii) Any amount assessed as a deficiency (or as interest or addition to the tax) if the tenth day after notice and demand for its payment occurs prior to the date of the filing of the statement.

(2) Delinquent installments are to be considered amounts required to be paid prior to the date of filing the statement. In the case of any authorized extension of time under sections 6161 and 6162, the amount of tax the time for payment of which is so extended is not to be considered required to be paid prior to the end of such extension. Similarly, any amount assessed as a deficiency (or as interest or addition to the tax) is not to be considered required to be paid prior to the date of the filing of the statement unless the tenth day after notice and demand for its payment falls prior to the date of the filing of the statement.

(3) The taxpayer may choose to extend the time for payment of all of one or more taxes, or it may choose to extend the time for payment of portions of several taxes. The taxes chosen by the taxpayer need not be those taxes which are affected by the carryback.

§ 1.6164-3 Computation of the amount of reduction of the tax previously determined.

(a) ***Tax previously determined.*** The taxpayer is to determine the amount of the reduction, attributable to the expected carryback, in the aggregate of the taxes previously determined for taxable years prior to the taxable year of the expected net operating loss. The tax previously determined is to be ascertained in accordance with the method prescribed in section 1314(a). Thus, the tax previously determined will be the tax shown on the return as filed, increased by any amounts assessed (or collected without assessment) as deficiencies prior to the date of the filing of the statement, and decreased by any amounts abated, credited, refunded, or otherwise repaid prior to such date. Any items as to which the Internal Revenue Service and the taxpayer are in disagreement at the time of the filing of the statement shall be taken into account in ascertaining the tax previously determined only if, and to the extent that, they were reported in the return, or were reflected in any amounts assessed (or collected without assessment) as deficiencies, or in any amounts abated, credited, refunded, or otherwise repaid, prior to the date of the filing of the statement. The tax previously determined will reflect the foreign tax credit and the credit for tax withheld at source provided in section 32.

(b) ***Reduction attributable to the expected carryback.*** The reduction, attributable to the expected carryback or related adjustments, in any tax previously determined is to be ascertained by applying the expected carryback as if it were a determined net operating loss carryback, in accordance with the provisions of section 172 and the regulations thereunder. Items must be taken into account only to the extent that such items were included in the return, or were reflected in amounts assessed (or collected without assessment) as deficiencies, or in amounts abated, credited, refunded, or otherwise repaid, prior to the date of the filing of the statement. Thus, for example, if the taxpayer claims a deduction for depreciation of $10,000 in its return and the Internal Revenue Service asserts that only $4,000 is properly deductible, no change is to be made in the $10,000 depreciation deduction as shown by the taxpayer on his return unless a deficiency has been assessed, or an amount collected without assessment, prior to the date of

filing of the statement as a result of a change in the depreciation deduction, or unless such change in the depreciation deduction was reflected in an amount abated, credited, refunded, or otherwise repaid prior to such date.

[T.D. 6500, 25 FR 12140, Nov. 26, 1960, as amended by T.D. 6862, 30 FR 14432, Nov. 18, 1965]

§ 1.6164-4 Payment of remainder of tax where extension relates to only part of the tax.

(a) ***Time for payment.*** If an extension of time relates to only part of the tax, the time for payment of the remainder of the tax shall be considered to be the dates on which payments would have been required if such remainder had been the tax and the taxpayer had elected to pay the tax in installments as provided in section 6152(a).

(b) ***Example.*** The provisions of this section may be illustrated by the following example:

Example. Corporation X, which keeps its books and makes its tax returns on the calendar year basis, filed its income tax return for 1956 on March 15, 1957. The corporation showed a tax of $1,000 on its return and paid 50 percent of such tax, or $500 on March 15, 1957. On June 3, 1957, Corporation X, pursuant to the provisions of section 6164, extended the time for payment of $400 of such tax. The remainder of the tax the time for payment of which was not so extended, i.e., $600, is to be considered the tax for purposes of determining when it is to be paid. The remainder is considered to be due on the dates on which payment would have been required if such remainder had been the tax. Since the taxable year ended on December 31, 1956, the tax is payable in two equal installments of $300 each on March 15, 1957, and June 17, 1957. The taxpayer, having paid $500 on March 15, 1957, will have $100 to pay on June 17, 1957.

§ 1.6164-5 Period of extension.

If the time for the payment of any tax has been extended pursuant to section 6164, such extension shall expire:

(a) On the last day of the month in which falls the last date prescribed by law (including any extension of time granted the taxpayer) for the filing of the return for the taxable year of the expected net operating loss; or

(b) If an application for a tentative carryback adjustment provided in section 6411 with respect to such loss is filed before the expiration of the period specified in paragraph (a) of this section, on the date on which notice is mailed by registered mail prior to September 3, 1958, and by either registered or certified mail on and after September 3, 1958, to the taxpayer that such application is allowed or disallowed in whole or in part.

§ 1.6164-6 Revised statements.

(a) ***Requirements and effect.*** A corporation may file more than one statement under section 6164 with respect to any one taxable year. Each statement is to be considered a new statement and not an amendment of any prior statement. Each such new statement is to be in lieu of the last statement previously filed with respect to the taxable year. The new statement may extend the time for payment of a greater or lesser amount of tax than was extended under the prior statement or may change the kind of tax the time for payment of which is to be extended. The extension may not relate to any amount of tax which was paid or required to be paid prior to the date of filing the new statement. Any amount of tax the time for payment of which was extended under a prior statement, however, may continue to be extended under the new statement. If the amount the time for payment of which is extended under the new statement is less than the amount so extended under the last statement previously filed, the extension of time shall be

terminated on the date the new statement is filed as to the difference between the two amounts. See § 1.6164-8 for the dates on which such difference must be paid. If a corporation pays any amount of tax, the time for payment of which was extended, prior to the date the extension would otherwise terminate, the extension with respect to such amount shall be deemed terminated, without regard to whether a new statement is filed, on the date such amount is paid. The corporation shall indicate on each new statement filed that it has already filed one or more prior statements with respect to the taxable year. The corporation shall likewise indicate the date each prior statement was filed and the amount of each tax the time for payment of which was extended under each prior statement.

(b) ***Example.*** The provisions of this section may be illustrated by the following example:

Example. Corporation Y, which keeps its books and makes its tax returns on the calendar year basis, filed its income tax return for 1956 on March 15, 1957, showing a tax of $100,000. At the same time it filed a statement under section 6164 in which it stated that it expected to have a net operating loss of $75,000 in 1957 and that the reduction in the tax previously determined for 1955 (the second taxable year preceding the year of the expected net operating loss) attributable to the expected net operating loss carryback resulting from such expected loss, would be $39,000. The corporation accordingly extended the time for payment of $39,000 of its income tax for 1956, and paid $30,500 (50 percent of the excess of $100,000 over $39,000) of such tax on March 15, 1957 (see section 6164(c) and § 1.6164-4). As a result of its operations during the next several months, the corporation filed a second statement on June 3, 1957, in which it stated that its expected net operating loss for 1957 would amount to $150,000 and that the corresponding reduction in the tax for 1955 would amount to $78,000. Corporation Y under the new statement may extend the time for payment of $30,500, the installment due on June 17, 1957, and the time for payment of the $39,000 extended under the first statement filed on March 15, 1957, may continue to be extended under the second statement. The $30,500 which was paid on March 15, 1957, will not be affected by the second statement filed on June 3, 1957.

§ 1.6164-7 Termination by district director.

(a) ***After an examination of the statement filed by the corporation is made.*** The district director is authorized to make such examination of the statements filed as he deems necessary and practicable. If, upon such examination as he may make, the district director believes that, as of the time he makes the examination, all or any part of the statement is in a material respect erroneous or unreasonable, he will terminate the extension as to any part of the amount to which such extension relates which he deems should be terminated.

(b) ***Jeopardy.*** If the district director believes that the collection of any amount to which an extension under section 6164 relates is in jeopardy, he will immediately terminate the extension. In the case of such a termination, notice and demand shall be made by the district director for payment of such amount, and there may be no further extension of time under section 6164 with respect to such amount.

§ 1.6164-8 Payments on termination.

(a) ***In general.*** If an extension of time under section 6164 is terminated with respect to any amount either

(1) by the filing of a new statement by the taxpayer under section 6164(e) extending the time for payment of a lesser amount than was extended in a prior statement, or

(2) by action of the district director under section 6164(f) after making an examination of the statement filed by the corporation, no further extension of time may be made under section 6164 with respect to such amount. The time for payment of such amount shall be the dates on which payments would have been required if there had been no extension with respect to such amount and the taxpayer had elected under section 6152(a) to pay the tax in installments.

(b) ***Example.*** The provisions of this section may be illustrated by the following example:

Example. Corporation Z, which keeps its books and makes its tax returns on the calendar year basis, filed its income tax return for 1956 on March 15, 1957, showing a tax of $100,000. At the same time it filed a statement under section 6164 extending the time for payment of the entire $100,000 on the basis of an expected net operating loss carryback from 1957. On April 10, 1957, the corporation filed a new statement indicating that the reduction, attributable to the carryback from 1957, in its income tax for 1956, would only be $80,000, and thus terminated the above extension of $20,000. The time for payment of such $20,000 may not be extended again, and such $20,000 is payable as if it were the tax for 1956 and Corporation Z had elected to pay such tax in installments. That is, $10,000 is payable on March 15, 1957, and $10,000 payable on June 17, 1957. Inasmuch as the March 15 date had already passed when the Corporation Z terminated the extension with respect to the $20,000, $10,000 is payable immediately upon such termination, and the other installment of $10,000 is payable on June 17, 1957. This example would also apply if the extension of time for payment of the $20,000 were terminated instead by the district director on April 10, 1957.

§ 1.6164-9 Cross references.

For provisions with respect to interest due on amounts the payment of which is extended under section 6164, see section 6601 and paragraph (e) of § 301.6601-1 of this chapter (Regulations on Procedure and Administration). For extensions of time under section 6164 in the case of corporations making or required to make consolidated returns, see § 1.1502-77(a).

[T.D. 6500, 25 FR 12140, Nov. 26, 1960, as amended by T.D. 7244, 37 FR 28897, Dec. 30, 1972]

§ 1.6165-1 Bonds where time to pay the tax or deficiency has been extended.

The district director, including the Director of International Operations, may, as a condition to the granting of an extension of time within which to pay any tax or any deficiency therein, require the taxpayer to furnish a bond in an amount not exceeding double the amount of the tax with respect to which the extension is granted. Such bond shall be furnished in accordance with the provisions contained in section 7101 and the regulations in part 301 of this chapter (Regulations on Procedure and Administration).

COLLECTION

General Provisions

§ 1.6302-1 Deposit rules for corporation income and estimated income taxes and certain taxes of tax-exempt organizations.

(a) ***Requirement.*** A corporation, any organization subject to the tax imposed by section 511, and any private foundation subject to the tax imposed by section 4940, shall deposit all payments of tax imposed by chapter 1 of the Internal Revenue Code (or treated as so imposed by section 6154(h)), including any

payments of estimated tax, on or before the date otherwise prescribed for paying such tax. This paragraph (a) does not apply to a foreign corporation or entity that has no office or place of business in the United States.

(b) ***Deposits by electronic funds transfer.*** For the requirement to deposit corporation income and estimated income taxes and certain taxes of tax-exempt organizations by electronic funds transfer, see § 31.6302-1(h) of this chapter. A taxpayer not required to deposit by electronic funds transfer pursuant to § 31.6302-1(h) of this chapter remains subject to the rules of paragraph (b)(1) of this section.

(c) ***Failure to deposit.*** For provisions relating to the penalty for failure to make a deposit within the prescribed time, see section 6656.

(d) ***Effective/applicability date.*** This section applies to deposits and payments made after December 31, 2010.

[T.D. 6914, 32 FR 3820, Mar. 8, 1967, as amended by T.D. 6941, 32 FR 18040, Dec. 16, 1967; T.D. 7293, 38 FR 32804, Nov. 28, 1973; T.D. 7953, 49 FR 19644, May 9, 1984; T.D. 8157, 52 FR 33809, Sept. 9, 1987; T.D. 8723, 62 FR 37492, July 14, 1997, T.D. 8947, 66 FR 32542, June 15, 2001; T.D. 8952, 66 FR 33831, June 26, 2001; T.D. 9239, 71 FR 13, Jan. 3, 2006; T.D. 9507, 75 FR 75899, Dec. 7, 2010]

§ 1.6302-2 Deposit rules for tax withheld on nonresident aliens and foreign corporations.

(a) ***Time for making deposits —***

(1) ***Deposits —***

(i) ***Monthly deposits.*** Except as provided in paragraphs (a)(1)(ii) and (iv) of this section, every withholding agent that, pursuant to chapter 3 of the Internal Revenue Code, has accumulated at the close of any calendar month an aggregate amount of undeposited taxes of $200 or more shall deposit such aggregate amount by the 15th day of the following month. However, the preceding sentence shall not apply if the withholding agent has made a deposit of taxes pursuant to paragraph (a)(1)(ii) of this section to a quarter-monthly period that occurred during such month. If the 15th day of the following month is a Saturday, Sunday, or legal holiday in the District of Columbia under section 7503, taxes will be treated as timely deposited if deposited on the next succeeding day which is not a Saturday, Sunday, or legal holiday. With respect to section 1446(a), this section applies only to a publicly traded partnership or nominee described in § 1.1446-4 and, with respect to section 1446(f), only to a publicly traded partnership or broker described in § 1.1446(f)-4.

(ii) ***Quarter-monthly deposits.*** If at the close of any quarter-monthly period within a calendar month, the aggregate amount of undeposited taxes required to be withheld pursuant to chapter 3 of the Internal Revenue Code is $2,000 or more, the withholding agent shall deposit such aggregate amount within 3 business days after the close of such quarter-monthly period. Business days include every calendar day other than Saturdays, Sundays, or legal holidays in the District of Columbia under section 7503. If any of the three weekdays following the close of a quarter-monthly period is a legal holiday under section 7503, the withholding agent has an additional day for each day that is a legal holiday by which to make the required deposit. For example, if the Monday following the close of a quarter-monthly period is New Year's Day, a legal holiday, the required deposit for the quarter-monthly period is not due until the following Thursday rather than the following Wednesday.

(iii) ***Excess deposits.*** The excess (if any) of a deposit over the actual taxes for a monthly or quarter-monthly deposit period shall be applied in order of time to each of the withholding agent's succeeding deposits with respect to the same calendar year, until exhausted, to the extent that the amount by which the taxes for a subsequent deposit period exceed the deposit for such subsequent deposit period.

(iv) ***Annual deposits.*** If at the close of December of each calendar year, the aggregate amount of undeposited taxes required to be withheld pursuant to chapter 3 of the Internal Revenue Code is less than $200, the withholding agent may deposit such aggregate amount by March 15 of the following calendar year. If such aggregate amount is not so deposited, it shall be remitted in accordance with paragraph (a)(1) of § 1.1461-1.

(2) ***Cross reference.*** For rules relating to the adjustment of deposits, see §§ 1.1461-2(b) and 1.6414-1. For rules requiring payment of any undeposited tax, see § 1.1461-1.

(b) ***Manner of payment*** —

(1) ***Payments not required by electronic funds transfer.*** A payment that is not required to be deposited by this section shall be made separately from a payment required by any other section. The payment may be submitted with the filed return. The timeliness of the payment will be determined by the date payment is received by the Internal Revenue Service at the place prescribed for filing by regulations or forms and instructions, or if section 7502(a) applies, by the date the payment is treated as received under section 7502(a), or on the last day prescribed for filing the return (determined without regard to any extension of time for filing the return), whichever is later. Each withholding agent making payments under this section shall report on the return, for the period to which such payments are made, information regarding such payments according to the instructions that apply to such return.

(2) ***Voluntary deposits.*** An amount of tax which is not required to be deposited may nevertheless be deposited if the withholding agent so desires.

(3) ***Separation of deposits.*** A deposit required by paragraph (a) of this section for any period occurring in one calendar year shall be made separately from any deposit for any period occurring in another calendar year. In addition, a deposit required to be made by paragraph (a) of this section shall be made separately from a deposit required by any other section.

(4) ***Multiple remittances.*** A withholding agent may make one, or more than one, remittance of the amount required to be deposited if each remittance is accompanied by the applicable deposit form.

(5) ***Time deemed paid.*** In general amounts deposited under this section shall be considered as paid on the last day prescribed for filing the return (Form 1042) in respect of such tax (determined without regard to any extension of time for filing such return), or at the time deposited, whichever is later. For purposes of section 6511 and the regulations thereunder, relating to period of limitation on credit or refund, if an amount is so deposited prior to April 15th of a calendar year immediately succeeding the calendar year in which occurs the period for which such amount was so deposited, such amount shall be considered as paid on such April 15th.

(c) ***Deposits by electronic funds transfer.*** For the requirement to deposit taxes withheld on nonresident aliens and foreign corporations by electronic funds transfer, see § 31.6302-1(h) of this chapter. A taxpayer not required to deposit by electronic funds transfer pursuant to § 31.6302-1(h) of this chapter remains subject to the rules of paragraph (b) of this section.

(d) ***Penalties for failure to make deposits.*** For provisions relating to the penalty for failure to make a deposit within the prescribed time, see section 6656.

(e) ***Saturday, Sunday, or legal holidays.*** For provisions relating to the time for performance of acts where the last day falls on Saturday, Sunday, or a legal holiday, see § 301.7503-1 of this chapter (Procedure and Administration Regulations).

(f) ***Employer identification number.*** For the definition of the term "employer identification number", see § 301.7701-12 of this chapter (Procedure and Administration Regulations). For provisions relating to the penalty for failure to include the employer identification number in a return, statement, or other document, see § 301.6676-1 of such chapter.

(g) ***Applicability dates.*** Except as otherwise provided, this section shall apply to tax required to be withheld under chapter 3 of the Internal Revenue Code after 1966. With respect to section 1446(a), this section applies only to a publicly traded partnership or nominee described in § 1.1446-4 and, with respect to section 1446(f), only to a publicly traded partnership or broker described in § 1.1446(f)-4. Paragraph (b)(1) of this section applies to deposits and payments made after December 31, 2010.

[T.D. 6922, 32 FR 8713, June 17, 1967, as amended by T.D. 6941, 32 FR 18040, Dec. 16, 1967; T.D. 7243, 38 FR 22, Jan. 3, 1973; T.D. 7953, 49 FR 19644, May 9, 1984; T.D. 8723, 62 FR 37492, July 14, 1997; T.D. 8947, 66 FR 32542, June 15, 2001; T.D. 8952, 66 FR 33831, June 26, 2001; T.D. 9239, 71 FR 13, Jan. 3, 2006; T.D. 9394, 73 FR 23085, Apr. 29, 2008; T.D. 9507, 75 FR 75899, Dec. 7, 2010; T.D. 9926, 85 FR 76947, Nov. 30, 2020]

§ 1.6302-3 Deposit rules for estimated taxes of certain trusts.

(a) ***Requirement.*** A bank or other financial institution described in paragraph (b) of this section shall deposit all payments of estimated tax under section 6654(l) with respect to trusts for which such institution acts as a fiduciary by the date otherwise prescribed for paying such tax in the manner set forth in published guidance, publications, forms and instructions.

(b) ***Banks and financial institutions subject to this requirement.*** The requirement of paragraph (a) of this section applies to banks and other financial institutions described in sections 581 and 591 that have been designated as authorized Federal tax depositaries described in section 6302(c) and that act as fiduciaries for at least 200 trusts to which section 6654(l) applies that during the calendar year are required to make installment payments of estimated tax with respect to such trusts. For purposes of this section, a fiduciary is the person responsible for filing the tax returns and paying the taxes with respect to a trust.

(c) ***Cross-references.*** For the requirement to deposit estimated tax payments of taxable trusts by electronic funds transfer, see § 31.6302-1(h) of this chapter.

(d) ***Effective/applicability date.*** This section applies to deposits and payments made after December 31, 2010.

[T.D. 8192, 53 FR 12008, Apr. 12, 1988; T.D. 8192, 53 FR 13464, Apr. 25, 1988, as amended by T.D. 8723, 62 FR 37492, July 14, 1997; T.D. 8952, 66 FR 33831, June 26, 2001; T.D. 9507, 75 FR 75900, Dec. 7, 2010]

§ 1.6302-4 Voluntary payments by electronic funds transfer.

(a) ***Electronic funds transfer.*** Any person may voluntarily remit by electronic funds transfer any payment of tax imposed by subtitle A of the Internal Revenue Code, including any payment of estimated tax. Such payment must be made in the manner set forth in published guidance, publications, forms and instructions.

(b) ***Effective/applicability date.*** This section applies to deposits and payments made after December 31, 2010.

[T.D. 9507, 75 FR 75900, Dec. 7, 2010]

§ 1.6361-1 Collection and administration of qualified State individual income taxes.

Except as otherwise provided in §§ 301.6361-1 to 301.6365-2, inclusive, of this chapter (Regulations on Procedure and Administration), the provisions of this part under subtitle F of the Internal Revenue Code of 1954 relating to the collection and administration of the taxes imposed by chapter 1 of such Code on the incomes of individuals (or relating to civil or criminal sanctions with respect to such collection and administration) shall apply to the collection and administration of qualified State individual income taxes (as defined in section 6362 of such Code and the regulations thereunder) as if such taxes were imposed by chapter 1.

[T.D. 7577, 43 FR 59358, Dec. 20, 1978]

ABATEMENTS, CREDITS, AND REFUNDS

§ 1.6411-1 Tentative carryback adjustments.

(a) ***In general.*** Any taypayer who has a net operating loss under section 172, a net capital loss under section 1211(a) which is a carryback under section 1212, an unused investment credit under section 46, or an unused work incentive program (WIN) credit under section 50A, may file an application under section 6411 for a tentative carryback adjustment of the taxes for taxable years prior to the taxable year of the net operating or capital loss or the unused credit, whichever is applicable, which are affected by the net operating loss carryback, the capital loss carryback, the unused investment credit carryback, or the unused WIN credit carryback, resulting from such loss or unused credit. The regulations under section 6411 shall apply with respect to investment credit carrybacks for taxable years ending after December 31, 1961, but only with respect to applications for tentative carryback adjustments for investment credit carrybacks filed after November 2, 1966. The regulations under section 6411 shall apply with respect to WIN credit carrybacks for taxable years beginning after December 31, 1971. The right to file an application for a tentative carryback adjustment is not limited to corporations, but is available to any taxpayer otherwise entitled to carryback a loss or unused credit. A corporation may file an application for a tentative carryback adjustment even though it has not extended the time for payment of tax under section 6164. In determining any decrease in tax under §§ 1.6411-1 through 1.6411-4, the decrease in tax is determined net of any increase in the tax imposed by section 56 (relating to the minimum tax for tax preferences).

(b) ***Contents of application.***

(1) The application for a tentative carryback adjustment shall be filed, in the case of a corporation, on Form 1139, and in the case of taxpayers other than corporations, on Form 1045. The application shall be filled out in accordance with the instructions accompanying the form, and all information required by the form and the instructions must be furnished by the taxpayer.

(2) An application for a tentative carryback adjustment does not constitute a claim for credit or refund. If such application is disallowed by the district director or director of a service center in whole or in part, no suit may be maintained in any court for the recovery of any tax based on such application. The filing of an application for a tentative carryback adjustment will not constitute the filing of a claim for credit or refund within the meaning of section 6511 for purposes of determining whether a claim for credit or refund was filed prior to the expiration of the applicable period of limitation. The

taxpayer, however, may file a claim for credit or refund under section 6402 at any time prior to the expiration of the applicable period of limitation, and may maintain a suit based on such claim if it is disallowed or if the district director or director of a service center does not act on the claim within 6 months from the date it is filed. Such claim may be filed before, simultaneously with, or after the filing of the application for a tentative carryback adjustment. A claim for credit or refund under section 6402 filed after the filing of an application for a tentative carryback adjustment is not to be considered an amendment of such application. Such claim, however, in proper cases may constitute an amendment to a prior claim filed under section 6402.

(c) ***Time and place for filing application.*** Except as otherwise provided in this paragraph the application for a tentative carryback adjustment shall be filed on or after the date of the filing of the return for the taxable year of the net operating loss, net capital loss, unused investment credit, or unused WIN credit and shall be filed within a period of twelve months from the end of such taxable year. With respect to any portion of an investment credit carryback or a WIN credit carryback from a taxable year attributable to a net operating loss carryback or a capital loss carryback from a subsequent taxable year, the twelve-month period shall be measured from the end of such subsequent taxable year. In the case of an application for a tentative carryback adjustment attributable to the carryback of an unused investment credit, the twelve-month period for filing shall not expire before the close of December 31, 1966. Any application filed prior to the date on which the return for the taxable year of the loss or unused credit is filed shall be considered to have been filed on the date such return is filed. In the case of an application filed before April 15, 1968, the application shall be filed with the internal revenue officer to whom the tax was paid or by whom the assessment was made. Except as provided in paragraph (b) of § 301.6091-1 (relating to hand-carried documents), in the case of an application filed after April 14, 1968, if the tax was paid to the Director of International Operations, the application shall be filed with him; otherwise the application shall be filed with the internal revenue office with which the return was filed.

[T.D. 6500, 25 FR 12144, Nov. 26, 1960, as amended by T.D. 6862, 30 FR 14432, Nov. 18, 1965; T.D. 6950, 33 FR 5357, Apr. 4, 1968; T.D. 7301, 39 FR 973, Jan. 4, 1974; T.D. 7564, 43 FR 40498, Sept. 12, 1978; T.D. 8107, 51 FR 43347, Dec. 2, 1986]

§ 1.6411-2 Computation of tentative carryback adjustment.

(a) ***Tax previously determined.*** The taxpayer is to determine the amount of decrease, attributable to the carryback, in tax previously determined for each taxable year before the taxable year of the net operating loss, net capital loss, or unused investment credit. The tax previously determined is to be ascertained in accordance with the method prescribed in section 1314(a). Thus, the tax previously determined will be the tax shown on the return as filed, increased by any amounts assessed (or collected without assessment) as deficiencies before the date of the filing of the application for a tentative carryback adjustment, and decreased by any amounts abated, credited, refunded, or otherwise repaid prior to that date. Any items as to which the Commissioner and the taxpayer are in disagreement at the time of the filing of the application shall, for purposes of § 1.6411-2, be taken into account in ascertaining the tax previously determined only if, and to the extent that, they were reported on the return, or were reflected in any amounts assessed (or collected without assessment) as deficiencies, or in any amounts abated, credited, refunded, or otherwise repaid, before the date of filing the application. The tax previously determined, therefore, will reflect the foreign tax credit and the credit for tax withheld at source provided in section 33.

(b) ***Decrease attributable to carryback.*** After ascertaining the tax previously determined in the manner described in paragraph (a) of this section, the taxpayer shall determine the decrease in tax previously determined attributable to the carryback and any related adjustments on the basis of the items of tax taken into account in computing the tax previously determined. In determining any decrease attributable

to the carryback or any related adjustment, items shall be taken into account under this subsection only to the extent that they were reported on the return, or were reflected in amounts assessed (or collected without assessment) as deficiencies, or in amounts abated, credited, refunded, or otherwise repaid, before the date of filing the application for a tentative carryback adjustment. If the Commissioner and the taxpayer are in disagreement as to the proper treatment of any item, it shall be assumed, for purposes of determining the decrease in the tax previously determined, that the item was reported correctly by the taxpayer unless, and to the extent that, the disagreement has resulted in the assessment of a deficiency (or the collection of an amount without an assessment), or the allowing or making of an abatement, credit, refund, or other repayment, before the date of filing the application. Thus, if the taxpayer claimed a deduction on its return of $50,000 for salaries paid its officers but the Commissioner proposes that the deduction should not exceed $20,000, and the Commissioner and the taxpayer have not agreed on the amount properly deductible before the date the application for a tentative carryback adjustment is filed, $50,000 shall be considered as the amount properly deductible for purposes of determining the decrease in tax previously determined in respect of the application for a tentative carryback adjustment. In determining the decrease in tax previously determined, any items that are affected by the carryback must be adjusted to reflect the carryback. Thus, unless otherwise provided, any deduction limited, for example, by adjusted gross income, such as the deduction for medical, dental, etc., expenses, is to be recomputed on the basis of the adjusted gross income as affected by the carryback. See § 1.6411-3(d) for rules on the application of the decrease in tax to any tax liability.

(c) ***Effective/applicability date.*** These regulations apply with respect to applications for tentative refund filed on or after August 27, 2007.

[T.D. 6500, 25 FR 12144, Nov. 26, 1960, as amended by T.D. 7301, 39 FR 973, Jan. 4, 1974; T.D. 9355, 72 FR 48933, Aug. 27, 2007; 72 FR 56619, Oct. 4, 2007; T.D. 9499, 75 FR 51934, Aug. 24, 2010]

§ 1.6411-3 Allowance of adjustments.

(a) ***Time prescribed.*** The Commissioner shall act upon any application for a tentative carryback adjustment filed under section 6411(a) within a period of 90 days from whichever of the following two dates is the later:

(1) The date the application is filed; or

(2) The last day of the month in which falls the last date prescribed by law (including any extension of time granted the taxpayer) for filing the return for the taxable year of the net operating loss, net capital loss, or unused investment credit from which the carryback results.

(b) ***Examination.*** Within the 90-day period described in paragraph (a) of this section, the Commissioner shall make, to the extent deemed practicable within this period, an examination of the application to discover omissions and errors of computation. The Commissioner shall determine within this period the decrease in tax previously determined, affected by the carryback or any related adjustments, upon the basis of the application and examination. The decrease shall be determined in the same manner as that provided in section 1314(a) for the determination by the taxpayer of the decrease in taxes previously determined, which must be set forth in the application for a tentative carryback adjustment. The Commissioner may correct any errors of computation or omissions discovered upon examination of the application. In determining the decrease in tax previously determined which is affected by the carryback or any related adjustment, the Commissioner may correct any mathematical error appearing on the application and may correct any modification required by the law and incorrectly made by the taxpayer in computing the net operating loss, net capital loss, or unused investment credit, the resulting carrybacks, or the net operating

loss deduction, capital loss deduction, or investment credit allowable. If the required modification has not been made by the taxpayer and the Commissioner has the necessary information to make the modification within the 90-day period, the Commissioner may, in the Commissioner's discretion, make the modification. In determining the decrease, the Commissioner will not, for example, change the amount claimed on the return as a deduction for depreciation because the Commissioner believes that the taxpayer has claimed an excessive amount; and the Commissioner will not include in gross income any amount not so included by the taxpayer, even though the Commissioner believes that the amount is subject to tax and properly should be included in gross income.

(c) ***Disallowance in whole or in part.*** If the Commissioner finds that an application for a tentative carryback adjustment contains material omissions or errors of computation, the Commissioner may disallow the application in whole or in part without further action. If the Commissioner deems that any error of computation can be corrected within the 90-day period, the Commissioner may do so and allow the application in whole or in part. The Commissioner's determination as to whether the Commissioner can correct any error of computation within the 90-day period shall be conclusive. The Commissioner's action in disallowing, in whole or in part, any application for a tentative carryback adjustment shall be final and may not be challenged in any proceeding. The taxpayer may, however, file a claim for credit or refund under section 6402, and may maintain a suit based on the claim if the claim is disallowed or if the Commissioner does not act upon the claim within 6 months from the date it is filed.

(d) ***Application of decrease.***

(1) Each decrease determined by the Commissioner in any previously determined tax that is affected by the carryback or any related adjustments shall first be applied against any unpaid amount of the tax with respect to which such decrease was determined. The unpaid amount of tax may include one or more of the following:

(i) An amount with respect to which the taxpayer is delinquent;

(ii) An amount the time for payment of which has been extended under section 6164 and which is due and payable on or after the date of the allowance of the decrease.

(iii) An amount (not including an amount the time for payment of which has been extended under section 6164) which is due and payable on or after the date of the allowance of the decrease, including any assessed liabilities, unassessed liabilities determined in a statutory notice of deficiency, unassessed liabilities identified in a proof of claim filed in a bankruptcy proceeding, and other unassessed liabilities in rare and unusual circumstances.

(2) If the unpaid amount of tax includes more than one unpaid amount, the Commissioner may determine against which amount or amounts, and in what proportion, the decrease is to be applied. In general, however, the decrease will be applied against any amounts described in paragraphs (d)(1)(i) through (iii) of this section in the order named. If there are several amounts of the type described in paragraph (d)(1)(iii) of this section, any amount of the decrease that is to be applied against the amount will be applied by assuming that the tax previously determined minus the amount of the decrease to be so applied is “the tax” and that the taxpayer had elected to pay the tax in installments. The unpaid amount of tax against which a decrease may be applied under paragraph (d)(1) of this section may not include any amount of tax for any taxable year other than the year of the decrease. After making the application, the Commissioner will credit any remainder of the decrease against any unsatisfied amount of any tax for the taxable year immediately preceding the taxable year of the net operating loss, capital loss, or unused investment credit, the time for payment of which has been extended under section 6164.

(3) Any remainder of the decrease after the application and credits may, within the 90-day period, in the discretion of the Commissioner, be credited against any tax liability or installment thereof then due from the taxpayer (including assessed liabilities, unassessed liabilities determined in a statutory notice of deficiency, unassessed liabilities identified in a proof of claim filed in a bankruptcy proceeding, and other unassessed liabilities in rare and unusual circumstances), and, if not so credited, shall be refunded to the taxpayer within the 90-day period.

(e) ***Effective/applicability date.*** These regulations apply with respect to applications for tentative refund filed on or after August 27, 2007.

[T.D. 6950, 33 FR 5358, Apr. 4, 1968, as amended by T.D. 7301, 39 FR 973, Jan. 4, 1974; T.D. 9355, 72 FR 48934, 48934, Aug. 27, 2007; 72 FR 56619, Oct. 4, 2007; T.D. 9499, 75 FR 51934, Aug. 24, 2010]

§ 1.6411-4 Consolidated groups.

For further rules applicable to consolidated groups, see § 1.1502-78. For further rules applicable to consolidated groups that include insolvent financial institutions, see § 301.6402-7 of this chapter.

[T.D. 8446, 57 FR 53034, Nov. 6, 1992]

§ 1.6414-1 Credit or refund of tax withheld on nonresident aliens and foreign corporations.

(a) ***In general.*** Any withholding agent who for the calendar year pays more than the correct amount of:

(1) Tax required to be withheld under chapter 3 of the Code, or

(2) Interest, addition to the tax, additional amount, or penalty with respect to such tax,

may file a claim for credit or refund of the overpayment in the manner and subject to the conditions stated in the Procedure and Administration Regulations (Part 301 of this chapter) under section 6402, or may claim credit for the overpayment as provided in paragraph (b) of this section. With respect to the payment of withholding tax under section 1446, this section shall only apply to a publicly traded partnership described in § 1.1446-4. See § 1.1446-3(d)(2)(iv) for rules regarding refunds to a withholding agent under section 1446.

(b) ***Claim for credit on Form 1042.*** The withholding agent may claim credit of an overpayment described in paragraph (a) of this section for any calendar year by showing the amount of overpayment on the return on Form 1042 for such calendar year, which shall constitute a claim for credit under this paragraph. The claim for credit shall be evidenced by a statement on the return setting forth the amount determined as an overpayment and showing such other information as may be required by the instructions relating to the return. The amount claimed as a credit may be applied, to the extent it has not been applied under § 1.1461-2(b), by the withholding agent to reduce the amount of a payment or deposit of tax required by § 1.1461-1 or § 1.6302-2(a) for any payment period occurring in the calendar year following the calendar year of overwithholding. The amount so claimed as a credit shall also be entered on the annual return on Form 1042 for the calendar year following the calendar year of overwithholding and shall be applied as a payment on account of the tax shown on such form. If the withholding agent files a claim for credit or refund of the overpayment on Form 843 in accordance with § 301.6402-2 of this chapter (Procedure and Administration Regulations), or a claim for refund of the overpayment on Form 1042 in accordance with § 301.6402-3 of such chapter, he may not claim credit for the overpayment under this paragraph.

(c) ***Overpayment of amounts actually withheld.*** No credit or refund to the withholding agent shall be allowed for the amount of any overpayment of tax which, after taking into account paragraph (b) of § 1.1464-1, the withholding agent has actually withheld from an item of income under chapter 3 of the Code.

(d) ***Effective/Applicability date.*** The last two sentences of paragraph (a) of this section shall apply to partnership taxable years beginning after April 29, 2008.

[T.D. 6922, 32 FR 8714, June 17, 1967, as amended by T.D. 9394, 73 FR 23085, Apr. 29, 2008]

§ 1.6417-0 Table of Contents.

This section lists the table of contents for §§ 1.6417-1 through 1.6417-6.

§ 1.6417-1 Elective payment election of applicable credits.

(a) In general.

(b) Annual tax return.

(c) Applicable entity.

(d) Applicable credit.

(e) Applicable credit property.

(f) Disregarded entity.

(g) Electing taxpayer.

(h) Elective payment amount.

(i) Elective payment election.

(j) Guidance.

(k) Indian tribal government.

(l) Partnership.

(m) S corporation.

(n) Section 6417 regulations.

(o) Statutory references.

(p) U.S. territory.

(q) Applicability date.

§ 1.6417-2 Rules for making elective payment elections.

(a) Elective payment elections.

(b) Manner of making election.

(c) Determination of applicable credit.

(d) Timing of payment.

(e) Denial of double benefit.

(f) Applicability date.

§ 1.6417-3 Special rules for electing taxpayers.

(a) In general.

(b) Elections with respect to the credit for production of clean hydrogen.

(c) Election with respect to the credit for carbon oxide sequestration.

(d) Election with respect to the advanced manufacturing production credit.

(e) Election for electing taxpayers.

(f) Applicability date.

§ 1.6417-4 Elective payment election for electing taxpayers that are partnerships or S corporations.

(a) In general.

(b) Elections.

(c) Effect of election.

(d) Determination of amount of the credit.

(e) Partnerships subject to subchapter C of chapter 63.

(f) Applicability date.

§ 1.6417-5 Additional information and registration.

(a) Pre-filing registration and election.

(b) Pre-filing registration requirements.

(c) Registration number.

(d) Applicability date.

§ 1.6417-6 Special rules.

(a) Excessive payment.

(b) Basis reduction and recapture.

(c) Mirror code territories.

(d) Partnerships subject to subchapter C of chapter 63 of the Code.

(e) Applicability date.

[T.D. 9988, 89 FR 17584, Mar. 11, 2024; 89 FR 66562, Aug. 16, 2024]

§ 1.6417-1 Elective payment election of applicable credits.

(a) ***In general.*** An applicable entity may make an elective payment election with respect to any applicable credit determined with respect to such applicable entity in accordance with section 6417 of the Code and the section 6417 regulations. Paragraphs (b) through (p) of this section provide definitions applicable to the section 6417 regulations. *See* § 1.6417-2 for rules and procedures under which all elective payment elections must be made, rules for determining the amount and the timing of payments, and statutory rules denying double benefits. *See* § 1.6417-3 for special rules pertaining to electing taxpayers. *See* § 1.6417-4 for special rules pertaining to electing taxpayers that are partnerships or S corporations. *See* § 1.6417-5 for pre-filing registration requirements and other information required to make any elective payment election effective. *See* § 1.6417-6 for special rules related to excessive payments, basis reduction and recapture, any U.S. territory with a mirror code tax system, and payments made to partnerships subject to subchapter C of chapter 63 of the Code.

(b) ***Annual tax return.*** The term *annual tax return* means the following returns (and for each, any successor return)—

(1) For any taxpayer normally required to file a tax return with the IRS on an annual basis, such return (including the Form 1040 for individuals; the Form 1120 for corporations, certain rural electric cooperatives, and certain agencies and instrumentalities; the Form 1120-S for S corporations; the Form 1065 for partnerships; and the Form 990-T for organizations subject to tax imposed by section 511 of the Code or a proxy tax under section 6033(e) or that are required to file a Form 990 pursuant to section 6033(a));

(2) For any taxpayer that is not normally required to file a tax return with the IRS on an annual basis (such as taxpayers located in the U.S. territories), the return they would be required to file if they were located in the United States, or, if no such return is required (such as for governmental entities), the Form 990-T; and

(3) For taxpayers filing a return for a taxable year of less than 12 months (short year), the short year tax return.

(c) ***Applicable entity.*** The term *applicable entity* means any entity described in paragraphs (c)(1) through (7) of this section.

(1) Any organization exempt from the tax imposed by subtitle A of the Code—

(i) By reason of subchapter F of chapter 1 of subtitle A; or

(ii) Because it is the government of any U.S. territory or a political subdivision thereof.

(2) Any State, the District of Columbia, or political subdivision thereof.

(3) An Indian Tribal government or a subdivision thereof.

(4) Any Alaska Native Corporation (as defined in section 3 of the Alaska Native Claims Settlement Act, 43 U.S.C. 1602(m)).

(5) The Tennessee Valley Authority.

(6) Any corporation operating on a cooperative basis that is engaged in furnishing electric energy to persons in rural areas as described in section 1381(a)(2)(C) of the Code.

(7) An agency or instrumentality of any applicable entity described in paragraph (c)(1)(ii) or (c)(2) or (3) of this section. For purposes of making an elective payment election under section 6417 (including determining eligibility for and the consequences of such election), an entity described in § 301.7701-1(a)(4)(i) of this chapter is treated as an instrumentality of the Indian Tribal government(s) or subdivision(s) thereof that own(s) it.

(d) ***Applicable credit.*** The term a*pplicable credit* means each of the following:

(1) So much of the credit for alternative fuel vehicle refueling property determined under section 30C of the Code that, pursuant to section 30C(d)(1), is treated as a credit listed in section 38(b) of the Code (section 30C credit).

(2) So much of the renewable electricity production credit determined under section 45(a) of the Code as is attributable to qualified facilities that are originally placed in service after December 31, 2022 (section 45 credit).

(3) So much of the credit for carbon oxide sequestration determined under section 45Q(a) of the Code as is attributable to carbon capture equipment that is originally placed in service after December 31, 2022 (section 45Q credit).

(4) The zero-emission nuclear power production credit determined under section 45U(a) of the Code (section 45U credit).

(5) So much of the credit for production of clean hydrogen determined under section 45V(a) of the Code as is attributable to qualified clean hydrogen production facilities that are originally placed in service after December 31, 2012 (section 45V credit).

(6) In the case of a tax-exempt entity described in section 168(h)(2)(A)(i), (ii), or (iv) of the Code, the credit for qualified commercial vehicles determined under section 45W of the Code by reason of section 45W(d)(2) (section 45W credit).

(7) The credit for advanced manufacturing production determined under section 45X(a) of the Code (section 45X credit).

(8) The clean electricity production credit determined under section 45Y(a) of the Code (section 45Y credit).

(9) The clean fuel production credit determined under section 45Z(a) of the Code (section 45Z credit).

(10) The energy credit determined under section 48 of the Code (section 48 credit).

(11) The qualifying advanced energy project credit determined under section 48C of the Code (section 48C credit).

(12) The clean electricity investment credit determined under section 48E of the Code (section 48E credit).

(e) ***Applicable credit property.*** The term *applicable credit property* means each of the following units of property with respect to which the amount of an applicable credit is determined:

(1) In the case of a section 30C credit, a *qualified alternative fuel vehicle refueling property* described in section 30C(c).

(2) In the case of a section 45 credit, a *qualified facility* described in section 45(d).

(3) In the case of a section 45Q credit, a component of carbon capture equipment within a *single process train* described in § 1.45Q-2(c)(3).

(4) In the case of a section 45U credit, a *qualified nuclear power facility* described in section 45U(b)(1).

(5) In the case of a section 45V credit, a *qualified clean hydrogen production facility* described in section 45V(c)(3).

(6) In the case of a section 45W credit, a *qualified commercial clean vehicle* described in section 45W(c).

(7) In the case of a section 45X credit, a facility that produces eligible components, as described in guidance under sections 48C and 45X.

(8) In the case of a section 45Y credit, a *qualified facility* described in section 45Y(b)(1).

(9) In the case of a section 45Z credit, a *qualified facility* described in section 45Z(d)(4).

(10) ***Section 48 credit property*** —

(i) ***In general.*** In the case of a section 48 credit and except as provided in paragraph (d)(10)(ii) of this section, an *energy property* described in section 48.

(ii) ***Pre-filing registration and elections.*** At the option of an applicable entity or electing taxpayer, and to the extent consistently applied for purposes of the pre-filing registration requirements of § 1.6417-5 and the elective payment election requirements of §§ 1.6417-2 through 1.6417-4, an *energy project* as described in section 48(a)(9)(A)(ii) and defined in guidance.

(11) In the case of a section 48C credit, an *eligible property* described in section 48C(c)(2).

(12) In the case of a section 48E credit, a *qualified facility* described in section 48E(b)(3) or, in the case of a section 48E credit relating to a qualified investment with respect to energy storage technology, an *energy storage technology* described in section 48E(c)(2).

(f) ***Disregarded entity.*** The term *disregarded entity* means an entity that is disregarded as, or not recognized as, an entity separate from its owner for Federal income tax purposes under § 301.7701-1(a)(3) or §§ 301.7701-2 and 301.7701-3 of this chapter. *See* paragraph (c)(7) of this section regarding entities described in § 301.7701-1(a)(4)(i) of this chapter.

(g) ***Electing taxpayer.*** The term *electing taxpayer* means any taxpayer that is not an applicable entity described in paragraph (c) of this section but makes an election in accordance with §§ 1.6417-2(b), 1.6417-3, and, if applicable, 1.6417-4, to be treated as an applicable entity for a taxable year with respect to applicable credits determined with respect to an applicable credit property described in paragraph (e)(3), (5), or (7) of this section.

(h) ***Elective payment amount*** —

(1) ***In general.*** The term *elective payment amount* means, with respect to an applicable entity or an electing taxpayer that is not a partnership or an S corporation, the applicable credit(s) for which an applicable entity or electing taxpayer makes an elective payment election to be treated as making a payment against the tax imposed by subtitle A for the taxable year, which is equal to the sum of—

(i) The amount (if any) of the current year applicable credit(s) allowed as a general business credit under section 38 for the taxable year, as provided in § 1.6417-2(e)(2)(iii), and

(ii) The amount (if any) of unused current year applicable credits that would otherwise be carried back or carried forward from the unused credit year under section 39 and that are treated as a payment against tax, as provided in § 1.6417-2(e)(2)(iv).

(2) ***Elective payment amount with respect to partnerships and S corporations.*** With respect to an electing taxpayer that is a partnership or an S corporation, the term *elective payment amount* means the sum of the applicable credit(s) for which the partnership or S corporation makes an elective payment election and that results in a payment to such partnership or S corporation equal to the amount of such credit(s) (unless the partnership owes a Federal tax liability, in which case the payment may be reduced by such tax liability).

(i) ***Elective payment election.*** The term *elective payment election* means an election made in accordance with § 1.6417-2(b) for applicable credit(s) determined with respect to an applicable entity or electing taxpayer.

(j) ***Guidance.*** The term *guidance* means guidance published in the FEDERAL REGISTER or Internal Revenue Bulletin, as well as administrative guidance such as forms, instructions, publications, or other guidance on the *IRS.gov* website. *See* §§ 601.601 and 601.602 of this chapter.

(k) ***Indian Tribal government.*** The term *Indian Tribal government* means the recognized governing body of any Indian or Alaska Native Tribe, band, nation, pueblo, village, community, component band, or component reservation, individually identified (including parenthetically) in the most recent list published by the Department of the Interior in the FEDERAL REGISTER pursuant to section 104 of the Federally Recognized Indian Tribe List Act of 1994 (25 U.S.C. 5131) prior to the date on which a relevant elective payment election is made.

(l) ***Partnership.*** The term *partnership* has the meaning provided in section 761 of the Code.

(m) ***S corporation.*** The term *S corporation* has the meaning provided in section 1361(a)(1) of the Code.

(n) ***Section 6417 regulations.*** The term *section 6417 regulations* means §§ 1.6417-1 through 1.6417-6.

(o) ***Statutory references*** —

(1) ***Chapter 1.*** The term *chapter 1* means chapter 1 of the Code.

(2) ***Code.*** The term *Code* means the Internal Revenue Code.

(3) ***Subchapter K.*** The term *subchapter K* means subchapter K of chapter 1.

(4) ***Subtitle A.*** The term *subtitle A* means subtitle A of the Code.

(p) ***U.S. territory.*** The term *U.S. territory* means the Commonwealth of Puerto Rico, Guam, the U.S. Virgin Islands, American Samoa, and the Commonwealth of the Northern Mariana Islands.

(q) ***Applicability dates*** —

(1) ***In general.*** Except as provided in paragraph (q)(2) of this section, this section applies to taxable years ending on or after March 11, 2024. For taxable years ending before March 11, 2024, taxpayers may choose to apply the rules of this section and §§ 1.6417-2 through 1.6417-4 and 1.6417-6, provided the taxpayers apply the rules in their entirety and in a consistent manner.

(2) ***Paragraphs (c)(7) and (f) of this section.*** Paragraphs (c)(7) and (f) of this section apply to taxable years beginning on or after January 1, 2026. For taxable years beginning before January 1, 2026, an entity described in § 301.7701-1(a)(4)(i) of this chapter may choose to apply paragraphs (c)(7) and (f) of this section, but only if the Indian Tribal government(s) that own the entity also apply paragraphs (c)(7) and (f) of this section consistently with such entity for all such taxable years. For the rules that apply to entities that do not choose to apply paragraphs (c)(7) and (f) of this section in accordance with the preceding sentence for taxable years beginning before January 1, 2026, see § 1.6417-1 as contained in 26 CFR part 1, revised April 1, 2025.

[T.D. 9988, 89 FR 17584, Mar. 11, 2024, as amended by T.D. 10039, 90 FR 58161, Dec. 16, 2025]

§ 1.6417-2 Rules for making elective payment elections.

(a) ***Elective payment elections*** —

(1) ***Elections by applicable entities*** —

(i) ***In general.*** An applicable entity that makes an elective payment election in the manner provided in paragraph (b) of this section will be treated as making a payment against the Federal income taxes imposed by subtitle A for the taxable year with respect to which an applicable credit is determined in the amount determined under paragraph (c) of this section.

(ii) ***Disregarded entities.*** If an applicable entity is the owner (directly or indirectly) of a disregarded entity that directly holds an applicable credit property, the applicable entity may make an elective payment election in the manner provided in paragraph (b) of this section for applicable credits determined with respect to the applicable credit property held directly by the disregarded entity.

(iii) ***Undivided ownership interests.*** If an applicable entity is a co-owner in an applicable credit property through an arrangement properly treated as a tenancy-in-common for Federal income tax purposes, or through an organization that has made a valid election under section 761(a) of the Code to be excluded from the application of subchapter K of the Code, then the applicable entity's undivided ownership share of the applicable credit property will be treated as a separate

applicable credit property owned by such applicable entity, and the applicable entity may make an elective payment election in the manner provided in paragraph (b) of this section for the applicable credits determined with respect to such applicable credit property.

(iv) ***Partnerships and S corporations not applicable entities.*** Partnerships and S corporations are not applicable entities described in § 1.6417-1(c), and thus are not eligible to make any election under paragraph (b) of this section, unless the partnership or S corporation is an electing taxpayer. This is the case no matter how many of the partners of a partnership are described in § 1.6417-1(c), including if all of a partnership's partners are so described.

(v) ***Members of a consolidated group of which an applicable entity is the common parent.*** In the case of a consolidated group (as defined in § 1.1502-1) the common parent of which is an applicable entity, any member that is an electing taxpayer may make an elective payment election with respect to applicable credits determined with respect to the member. See § 1.1502-77 (providing rules regarding the status of the common parent as agent for its members).

(2) ***Electing taxpayers —***

(i) ***Electing taxpayers that are not partnerships or S corporations.*** An electing taxpayer other than a partnership or an S corporation that has made an elective payment election in accordance with § 1.6417-3 and paragraph (b) of this section will be treated as making a payment against the Federal income taxes imposed by subtitle A of the Code for the taxable year with respect to which the applicable credit is determined, in the amount determined under paragraph (c) of this section.

(ii) ***Electing taxpayers that are partnerships or S corporations.*** In the case of an electing taxpayer that is a partnership or S corporation that has made an elective payment election in accordance with §§ 1.6417-3 and 1.6417-4 and paragraph (b) of this section, the Internal Revenue Service will make a payment to such partnership or S corporation equal to the amount of such credit determined under paragraph (c) of this section and § 1.6417-4(d) (unless the partnership owes any Federal income tax liability, in which case the payment may be reduced by such tax liability).

(iii) ***Partners and S corporation shareholders prohibited from making any elective payment election.*** Under section 6417(c)(1) of the Code, any elective payment election with respect to applicable credit property held directly by a partnership or S corporation must be made by the partnership or S corporation. As provided under section 6417(c)(2), no partner in a partnership, or shareholder of an S corporation, may make an elective payment election with respect to any applicable credit determined with respect to such applicable credit property.

(iv) ***Disregarded entities.*** If an electing taxpayer is the owner (directly or indirectly) of a disregarded entity that directly holds any applicable credit property, the electing taxpayer may make an elective payment election in the manner provided in paragraph (b) of this section for applicable credits determined with respect to the applicable credit property held directly by the disregarded entity.

(v) ***Undivided ownership interests.*** If an electing taxpayer is a co-owner in an applicable credit property through an arrangement properly treated as a tenancy-in-common for Federal income tax purposes, or through an organization that has made a valid election under section 761(a) to be excluded from the application of subchapter K of the Code, then the electing taxpayer's undivided ownership interest in or share of the applicable credit property will be treated as a

separate applicable credit property owned by such electing taxpayer, and the electing taxpayer may make an elective payment election in the manner provided in paragraph (b) of this section for the applicable credits determined with respect to such applicable credit property.

(vi) ***Members of a consolidated group.*** A member of a consolidated group may make an elective payment election with respect to applicable credits determined with respect to the member. *See* § 1.1502-77 (providing rules regarding the status of the common parent as agent for its members).

(3) ***Special rules for certain credits*** —

(i) ***Renewable electricity production credit.*** Any election under this paragraph (a) with respect to a section 45 credit—

(A) Applies separately with respect to each qualified facility;

(B) Must be made in the manner provided in paragraph (b) of this section for the taxable year in which such qualified facility is originally placed in service; and

(C) Applies to such taxable year and to any subsequent taxable year that is within the period described in section 45(a)(2)(A)(ii) with respect to such qualified facility.

(ii) ***Credit for carbon oxide sequestration.*** Except as provided in § 1.6417-3(c), which provides a special rule for electing taxpayers, any election under this paragraph (a) with respect to a section 45Q credit—

(A) Applies separately with respect to the carbon capture equipment originally placed in service by the applicable entity during a taxable year;

(B) Must be made in the manner provided in paragraph (b) of this section for the taxable year in which such carbon capture equipment is originally placed in service; and

(C) Applies to such taxable year and to any subsequent taxable year that is within the period described in section 45Q(3)(A) or (4)(A) with respect to such equipment.

(iii) ***Credit for production of clean hydrogen.*** Except as provided in § 1.6417-3(b), which provides a special rule for electing taxpayers, any election under this paragraph (a) with respect to a section 45V credit—

(A) Applies separately with respect to each qualified clean hydrogen production facility;

(B) Must be made in the manner provided in paragraph (b) of this section for the taxable year in which such facility is placed in service (or within the 1-year period after August 16, 2022, for facilities placed in service before December 31, 2022); and

(C) Applies to such taxable year and all subsequent taxable years with respect to such facility.

(iv) ***Clean electricity production credit.*** Any elective payment election with respect to a section 45Y credit—

(A) Applies separately with respect to each qualified facility;

(B) Must be made in the manner provided in paragraph (b) of this section for the taxable year in which such facility is placed in service; and

(C) Applies to such taxable year and to any subsequent taxable year that is within the period described in section 45Y(b)(1)(B) with respect to such facility.

(v) *Advanced manufacturing production credit.* Any elective payment election with respect to a section 45X credit applies separately with respect to each facility (whether the facility existed on or before, or after, December 31, 2022) at which a taxpayer produces, after December 31, 2022, eligible components (as defined in section 45X(c)(1)) during the taxable year.

(b) ***Manner of making election*** —

(1) ***In general*** —

(i) ***Election is made on the annual tax return.*** An elective payment election is made on the annual tax return, as defined in § 1.6417-1(b), in the manner prescribed by the IRS in guidance, along with any required completed source credit form(s) with respect to the applicable credit property, a completed Form 3800, *General Business Credit,* (or its successor), and any additional information, including supporting calculations, required in instructions.

(ii) ***Election must be made on original return.*** An election must be made on an original return (including any revisions on a superseding return) filed not later than the due date (including extensions of time) for the original return for the taxable year for which the applicable credit is determined. No elective payment election may be made for the first time on an amended return, withdrawn on an amended return, or made or withdrawn by filing an administrative adjustment request under section 6227 of the Code. A numerical error with respect to a properly claimed elective payment election may be corrected on an amended return or by filing an administrative adjustment request under section 6227 if necessary; however, the applicable entity or electing taxpayer's original return, which must be signed under penalties of perjury, must contain all of the information, including a registration number, required by these final regulations. To properly correct an error on an amended return or administrative adjustment request under section 6227, an applicable entity or electing taxpayer must have made an error in the information included on the original return such that there is a substantive item to correct; an applicable entity or electing taxpayer may not correct a blank item or an item that is described as being "available upon request." There is no relief available under § 301.9100-1 or § 301.9100-3 of this chapter for an elective payment election that is not timely filed; however, relief under § 301.9100-2(b) may apply if the applicable entity or electing taxpayer has not received an extension of time to file a return after the original due date, has timely filed a return, takes corrective action under § 301.9100-2(c) within the six-month extension period, and meets the procedural requirements outlined in § 301.9100-2(d).

(2) ***Pre-filing registration required.*** Pre-filing registration in accordance with § 1.6417-5 is a condition for making an elective payment election. An elective payment election will not be effective with respect to credits determined with respect to an applicable credit property unless the applicable entity or electing taxpayer received a valid registration number for the applicable credit property in accordance with § 1.6417-5(c) and provided the registration number for each applicable credit property on its Form 3800 (or its successor), and on any required completed source form(s) with respect to the applicable credit property, attached to the tax return, in accordance with guidance.

(3) ***Due date for making the election.*** To be effective, an elective payment election must be made no later than:

(i) In the case of any taxpayer for which no Federal income tax return is required under sections 6011 or no Federal return is required under 6033(a) of the Code (such as a State; the District of Columbia; an Indian Tribal government; any U.S. territory; a political subdivision of a State, the District of Columbia, or a U.S. territory, or a subdivision of an Indian Tribal government; certain agencies or instrumentalities of a State, the District of Columbia, an Indian Tribal government, or a U.S. territory; or a taxpayer excluded from filing pursuant to section 6033(a)(3)), the 15th day of the fifth month after the end of the taxable year. For purposes of section 6417, an applicable entity that is not required to file a Federal income tax return pursuant to sections 6011 or a Federal return pursuant to 6033(a), but is filing solely to make an elective payment election, may choose whether to file its first return (and thus adopt a taxable year for purposes of section 6417) based upon a calendar or fiscal year, provided that such entity maintains adequate books and records, including a reconciliation of any difference between its regular books of account and its chosen taxable year, to support making an elective payment election on the basis of its chosen taxable year. Subject to issuance of guidance that specifies the manner in which an entity for which no Federal income tax return is required under sections 6011 or no Federal return is required pursuant to 6033(a) could request an extension of time to file and make the elective payment election, an automatic paperless six-month extension from the 15th day of the fifth month after the end of the taxable year is deemed to be allowed.

(ii) In the case of any taxpayer located in a U.S. territory, the due date (including extensions of time) that would apply if the taxpayer were located in the United States.

(iii) In any other case, the due date (including extensions of time) for the original return for the taxable year for which the election is made, but in no event earlier than February 13, 2023.

(4) *Election is not revocable* —

(i) ***In general.*** Except as provided in paragraphs (b)(4)(ii) and (iii) of this section, any elective payment election, once made, is irrevocable and applies with respect to any applicable credit for the taxable year for which the election is made.

(ii) ***Election lasts for a period of years for certain credits.*** For applicable entities making elective payment elections with respect to section 45 credits described in § 1.6417-1(d)(2) or section 45Y credits described in § 1.6417-1(d)(8), the election applies to each taxable year in the 10-year period provided in section 45(a)(2)(A)(ii) or 45Y(b)(1)(B), respectively, beginning on the date the facility was originally placed in service. For applicable entities making elective payment elections with respect to section 45Q credits described in § 1.6417-1(d)(3), the election applies to each taxable year in the 12-year period provided in section 45Q(a)(3)(A) or (4)(A) beginning on the date the carbon capture equipment was originally placed in service. For applicable entities making elective payment elections with respect to section 45V credits described in § 1.6417-1(d)(5), the election applies to the taxable year in which the qualified clean hydrogen production facility was originally placed in service and all subsequent taxable years.

(iii) ***Electing taxpayers.*** For electing taxpayers who make an elective payment election, the election applies for one five-year period per applicable credit property, but such election may be revoked once per applicable credit property, as provided in § 1.6417-3.

(5) ***Scope of election.*** An elective payment election applies to the entire amount of applicable credit(s) determined with respect to each applicable credit property that was properly registered for the taxable year, resulting in an elective payment amount that is the entire amount of applicable credit(s) determined with respect to the applicable entity or electing taxpayer for a taxable year.

(c) ***Determination of applicable credit*** —

(1) ***In general.*** In the case of any applicable entity making an elective payment election, any applicable credit is determined—

(i) Without regard to section 50(b)(3) and (4)(A)(i) of the Code, and

(ii) By treating any property with respect to which such credit is determined as used in a trade or business of the applicable entity.

(2) ***Effect of trade or business rule.*** The trade or business rule in paragraph (c)(1)(ii) of this section—

(i) Allows the applicable entity to treat an item of property as if it is: of a character subject to an allowance of depreciation (such as under sections 30C and 45W); one for which depreciation (or amortization in lieu of depreciation) is allowable (such as in sections 48, 48C, and 48E); and used to produce items in the ordinary course of a trade or business of the taxpayer (such as in sections 45V and 45X);

(ii) Allows the applicable entity to apply the capitalization and accelerated depreciation rules (such as sections 167, 168, 263, 263A, and 266 of the Code) that apply to determining the basis and the depreciation allowance for property used in a trade or business;

(iii) Makes applicable those credit limitations generally applicable to persons engaged in the conduct of a trade or business, such as section 49 of the Code in the context of investment tax credits and section 469 of the Code for all applicable credits;

(iv) Does not create any presumption that the trade or business is related (or unrelated) to a tax-exempt entity's exempt purpose; and

(v) Subjects the applicable entity to the credit limitation in paragraph (c)(3)(ii) of this section.

(3) ***Special rule for investment-related credit property acquired with amounts, including income from certain grants and forgivable loans, that are exempt from taxation*** —

(i) ***Amounts included in basis.*** Subject to paragraph (c)(3)(ii) of this section, for purposes of section 6417, amounts that are exempt from taxation under subtitle A or otherwise excluded from taxation (such as income from certain grants and forgivable loans), and used to purchase, construct, reconstruct, erect, or otherwise acquire an applicable credit property described in section 30C, 45W, 48, 48C, or 48E (investment-related credit property) are included in basis for purposes of computing the applicable credit amount determined with respect to the applicable credit property, regardless of whether basis is required to be reduced (in whole or in part) by such amounts under general tax principles.

(ii) ***No excess benefit from restricted tax exempt amounts.*** If an applicable entity receives a grant, forgivable loan, or other income exempt from taxation under subtitle A or otherwise excluded from taxation (tax exempt amount) for the specific purpose of purchasing, constructing, reconstructing, erecting, or otherwise acquiring an investment-related credit property (restricted tax exempt amount), and the sum of any restricted tax exempt amounts plus the applicable credit otherwise determined with respect to that investment-related credit property exceeds the

cost of the investment-related credit property, then the amount of the applicable credit is reduced so that the total amount of applicable credit plus the amount of any restricted tax exempt amounts equals the cost of investment-related credit property. The determination of whether a tax exempt grant is made for the specific purpose of purchasing, constructing, reconstructing, erecting, or otherwise acquiring an investment-related credit property is made at the time the grant is awarded to the applicable entity. A tax exempt grant awarded after the investment-related credit property is purchased, constructed, reconstructed, erected, or otherwise acquired is generally not a restricted tax exempt amount unless approval of the grant was perfunctory and the amount of the grant was virtually assured at the time of application. The determination of whether a loan is made for the specific purpose of purchasing, constructing, reconstructing, erecting, or otherwise acquiring an investment-related credit property and whether forgiveness of that loan is dependent on satisfying that specific purpose is made at the time the loan is approved. This paragraph does not apply if a tax exempt amount is not received for the specific purpose of purchasing, constructing, reconstructing, erecting, or otherwise acquiring a property eligible for an investment-related credit; for example, if the tax exempt amount is from the organization's general funds or if such amount's use is not restricted to the purpose of purchasing, constructing, reconstructing, erecting, or otherwise acquiring an investment-related credit property (such as purchasing an electric vehicle) and could be used for any of several different applicable credit properties (such as purchasing an electric vehicle or purchasing solar panels) or can be put to other purposes (such as purchasing an electric vehicle or making a building more energy efficient).

(4) ***Credits must be determined with respect to the applicable entity or electing taxpayer.*** Any credits for which an elective payment election is made must have been determined with respect to the applicable entity or electing taxpayer. An applicable credit is determined with respect to an applicable entity or electing taxpayer if the applicable entity or electing taxpayer owns the underlying applicable credit property and conducts the activities giving rise to the credit or, in the case of section 45X (under which ownership of applicable credit property is not required), to be considered (under the section 45X regulations) the taxpayer with respect to which the section 45X credit is determined. Thus, no election may be made under this section for any credits transferred pursuant to section 6418, allowed pursuant to section 45Q(f)(3), acquired by a lessee from a lessor by means of an election to pass through the credit to a lessee under former section 48(d) (pursuant to section 50(d)(5)), owned by a third party, or otherwise not determined with respect to the applicable entity or electing taxpayer.

(5) ***Examples.*** The following examples illustrate the rules of this paragraph (c).

(i) ***Example 1.*** School district A receives a tax exempt grant in the amount of $400,000 from the Environmental Protection Agency to purchase electric school bus B. The grant is a restricted tax exempt amount described in paragraph (c)(3)(ii) of this section. A purchases B for $400,000. Pursuant to paragraph (c)(3)(i) of this section, A's basis in B is $400,000. B qualifies for the maximum section 45W credit, $40,000. However, because the amount of the restricted tax exempt grant plus the amount of the section 45W credit exceeds the cost of B, the no excess benefit rule found in paragraph (c)(3)(ii) of this section applies. A's section 45W credit is reduced by the amount necessary so that the total amount of the section 45W credit plus the restricted tax exempt amount equals the cost of B. A's section 45W credit is therefore reduced by $40,000 to zero.

(ii) *Example 2.* Assume the same facts as in paragraph (c)(5)(i) of this section (*Example 1*), except that the grant is in the amount of $300,000. This grant is still a restricted tax exempt amount described in paragraph (c)(3)(ii) of this section. A purchases B using the grant and $100,000 of A's unrestricted funds. A's basis in B is still $400,000 and A's section 45W credit is $40,000. Since the amount of the restricted tax exempt amount plus the amount of the section 45W credit ($340,000) is less than the cost of B, A's 45W credit under section 6417(b)(6) is not subject to the no excess benefit rule found in paragraph (c)(3)(ii) of this section.

(iii) *Example 3.* Public charity B receives a $60,000 grant from a private foundation to build energy property, P, a qualified investment credit property that costs $80,000. The $60,000 grant is a restricted tax exempt amount described in paragraph (c)(3)(ii) of this section. B uses $20,000 of its own funds plus the $60,000 grant to build P. Pursuant to paragraph (c)(3)(i) of this section, B's basis in P is $80,000. Assume that, based upon acquisition cost, B can earn a section 48 investment credit (with bonus credit amounts) of $40,000 (50% of basis). However, because the amount of the restricted tax exempt amount ($60,000) plus the section 48 credit ($40,000) exceeds P's cost by $20,000, the no excess benefit rule found in paragraph (c)(3)(ii) of this section applies to reduce B's section 48 applicable credit by $20,000 so that the total amount of the section 48 investment credit plus the restricted tax exempt amount equals the cost of P.

(iv) *Example 4.* The U.S. Department of Housing and Urban Development annually provides Capital Funds to Public Housing Agencies (PHAs) for the development, financing, and modernization of public housing developments and for management improvements. Public Housing Authority H uses its annual allotment of Capital Funds to purchase rooftop solar panels for its property and to pay for the related equipment and labor to install the panels. These purchases are considered among the list of eligible uses, but are not the exclusive uses, of H's Capital Funds. Although the Capital Funds are exempt from taxation under subtitle A and used to purchase, construct, reconstruct, erect, or otherwise acquire an investment-related credit property, pursuant to paragraph (c)(3)(i) of this section, they are included in basis for purposes of computing the applicable credit amount determined with respect to the applicable credit property. In addition, because the Capital Funds were not given for the specific purpose of purchasing, constructing, reconstructing, erecting, or otherwise acquiring an investment-related credit property, they are not considered restricted tax exempt amounts and the no excess benefit rule found in paragraph (c)(3)(ii) of this section does not apply.

(v) *Example 5.* Taxpayer Q is engaged in the business of capturing carbon oxide. Q properly elects to be treated as an applicable entity with respect to the section 45Q credit determined with respect to single process trains A, B, and C for 2024. In the same year, Q also purchases section 45Q credits under section 6418 from an unrelated taxpayer and has section 45Q credits allowed to itself pursuant to section 45Q(f)(3). Q can make an elective payment election only with respect to section 45Q applicable credits determined with respect to A, B, and C. Q cannot make an elective payment election with respect to any credits transferred to Q pursuant to section 6418 or allowed to Q pursuant to section 45Q(f)(3).

(d) *Timing of payment.* Except as provided in § 1.6417-4(d) (relating to payments to partnerships and S corporations), the elective payment amount will be treated as made—

(1) In the case of any taxpayer for which no Federal income tax return is required under section 6011 or no Federal return is required under 6033(a), on the later of—

(i) The date that is the 15th day of the fifth month after the end of the taxable year, or

(ii) The date on which such taxpayer submits a claim for credit or refund in accordance with paragraph (b) of this section.

(2) In any other case, on the later of—

(i) The due date (determined without regard to extensions) of the return for the taxable year, or

(ii) The date on which such return is filed.

(e) ***Denial of double benefit*** —

(1) ***In general.*** Under section 6417(e), in the case of an applicable entity or electing taxpayer making an elective payment election with respect to an applicable credit, such credit is reduced to zero and is, for any other purposes of the Code, deemed to have been allowed as a credit to such entity or taxpayer for such taxable year. Paragraph (e)(2) and (3) of this section explain the application of the section 6417(e) denial of double benefit rule to an applicable entity or electing taxpayer (other than a partnership or S corporation). The application of section 6417(e) for an electing taxpayer that is a partnership or S corporation is provided in § 1.6417-4(c)(1)(ii).

(2) ***Application of the denial of double benefit rule.*** An applicable entity or electing taxpayer (other than an electing taxpayer that is a partnership or S corporation) making an elective payment election applies section 6417(e) by taking the following steps:

(i) Compute the amount of the Federal income tax liability (if any) for the taxable year, without regard to the general business credit allowed by section 38 of the Code (GBC), that is payable on the due date of the return (without regard to extensions), and the amount of the Federal income tax liability that may be offset by GBCs pursuant to the limitation based on amount of tax under section 38.

(ii) Compute the allowed amount of GBC carryforwards carried to the taxable year under section 38(a)(1) plus the amount of current year GBCs (including current applicable credits) for the taxable year under section 38(a)(2) and (b). Because the election is made on an original return for the taxable year for which the applicable credit is determined, any business credit carrybacks are not considered in determining the elective payment amount for the taxable year.

(iii) Calculate the net elective payment amount for all applicable credits, which equals the lesser of the sum of all applicable credits for which an elective payment election is made or the excess (if any, otherwise the excess is zero) of the total GBC credits described in paragraph (e)(2)(ii) of this section over the amount of the Federal income tax liability that may be offset by GBCs pursuant to the limitation based on amount of tax under section 38 computed in paragraph (e)(2)(i) of this section. Treat the net elective payment amount of all applicable credits for which an elective payment election is made as a payment against the tax imposed by subtitle A for the taxable year with respect to which such credits are determined.

(iv) Excluding the net elective payment amount determined under paragraph (e)(2)(iii) of this section, but including any applicable credits that are not part of the net elective payment amount, compute the allowed amount of GBC carryforwards carried to the taxable year plus the amount of current year GBCs allowed for the taxable year under section 38 (including, for clarity purposes, the ordering rules in section 38(d)). Apply these GBCs against the tax liability computed in paragraph (e)(2)(i) of this section.

(v) Reduce the applicable credits for which an elective payment election is made by the net elective payment amount, as provided in paragraph (e)(2)(iii) of this section, and by the amount (if any) allowed as a GBC under section 38 for the taxable year, as provided in paragraph (e)(2)(iv) of this section, which results in the applicable credits being reduced to zero.

(3) ***Use of applicable credit for other purposes.*** The full amount of the applicable credits for which an elective payment election is made is deemed to have been allowed for all other purposes of the Code, including, but not limited to, the basis reduction and recapture rules imposed by section 50 and calculation of tax, calculation of the amount of any underpayment of estimated tax under sections 6654 and 6655 of the Code, and the addition to tax for the failure to pay under section 6651(a)(2) of the Code (if any).

(4) ***Examples.*** The following examples illustrate the rules of this paragraph (e).

(i) ***Example 1.*** U is a tax-exempt university that is not a trust subject to section 469 and is described in section 501(c)(3). U's fiscal year runs from July 1 to June 30. U places in service P, energy property eligible for a section 48 credit, in June 2024. P is an asset used in connection with its unrelated business. U completes the pre-filing registration in accordance with § 1.6417-5 as an applicable entity that has placed P into service and intends to make an elective payment election with respect to section 48 credits determined with respect to P. U timely files its 2024 Form 990-T on November 15, 2024. On its return, U properly determines that it has $500,000 of Unrelated Business Income Tax (UBIT) under section 512. On its Form 3800 attached to its return, U calculates its limitation of GBC under section 38(c) (simplified) is $375,000 (paragraph (e)(2)(i) of this section). U attaches Form 3468 to claim a section 48 credit of $100,000 with respect to P (its GBC for the taxable year) (paragraph (e)(2)(ii) of this section). Under paragraph (e)(2)(iii) of this section, the net elective payment amount is $0, so the section 48 credit is considered a credit that reduces U's UBIT liability to $400,000 under paragraph (e)(2)(iv) of this section. U pays its $400,000 tax liability on November 15, 2024. Under paragraph (e)(2)(v) of this section, the $100,000 of section 48 credit is reduced by the $100,000 of applicable credits claimed as GBCs for the taxable year, which results in the applicable credits being reduced to zero. However, the $100,000 of current year section 48 credit is deemed to have been allowed to U for 2024 for all other purposes of the Code (paragraph (e)(3) of this section).

(ii) ***Example 2.*** Assume the same facts as in paragraph (e)(4)(i) of this section (*Example 1),* except that U has $80,000 of Unrelated Business Income Tax (UBIT) under section 512 and calculates its limitation of GBC under section 38(c) (simplified) is $60,000 (paragraph (e)(2)(i) of this section). Under paragraph (e)(2)(iii) of this section, the net elective payment amount is $40,000 (lesser of $100,000 applicable section 48 credit or $100,000 of total GBC credits described in paragraph (e)(2)(ii) of this section minus $60,000 of section 38(c) limitation). Under paragraph (e)(2)(iv) of this section, U uses $60,000 of its $100,000 of section 48 credit against its tax liability. U reduces its applicable credit by the $40,000 net elective payment amount determined in paragraph (e)(2)(iii) of this section and by the $60,000 section 48 credit claimed against tax in paragraph (e)(2)(iv) of this section, resulting in the applicable credit being reduced to zero (paragraph (e)(2)(v) of this section). When the IRS processes U's 2024 Form 990-T, the net elective payment amount results in a $20,000 refund to U (after applying $20,000 of the $40,000 net elective payment amount to cover U's tax shown on the return). However, for other purposes of the Code, the $100,000 section 48 credit is deemed to have been allowed to U for 2024 (paragraph (e)(3) of this section).

(iii) *Example 3.* V is a city located in the United States that never has Federal income tax liability, so paragraph (e)(2)(i) of this section does not apply. V timely completes pre-filing registration in accordance with § 1.6417-5 as an applicable entity that will be eligible to make an elective payment election, with regard to its annual accounting period ending in 2024, for the credit determined under section 30C(a) from properties A, B, and C; the credit determined under section 45(a) for facility D; the credit determined under section 45U(a) for facility E; the credit determined under section 45W(a) with respect to vehicles F, G, and H; and the credit determined under section 48(a) with respect to property I and J. V timely files its 2024 Form 990-T. V properly completes and attaches the relevant source credit forms and Form 3800 with registration numbers and all required information in the instructions, properly making the elective payment election for all of the credits, and properly determining that the amount of applicable credits determined with respect to A, B, C, D, E, F, G, H, I, and J is $500,000 (its GBC for the taxable year) (paragraph (e)(2)(ii) of this section). Under paragraph (e)(2)(iii) of this section, the net elective payment amount is $500,000. Under paragraph (e)(2)(iii) of this section, the entire $500,000 net elective payment amount is a payment against the tax imposed by subtitle A for the taxable year with respect to which such credits are determined. When the IRS processes V's 2024 Form 990-T, the net elective payment amount results in a $500,000 refund to V. V's elective payment amount is reduced by the net elective payment amount, so all applicable credits for 2024 are reduced to zero (paragraph (e)(2)(v) of this section). However, for other purposes of the Code, the $500,000 of applicable credits are deemed to have been allowed to V for its annual accounting period ending in 2024 (paragraph (e)(3) of this section).

(iv) *Example 4.* W is a business taxpayer engaged in the manufacturing of components, including eligible components as defined in section 45X(c)(1) at facility F. W completes pre-filing registration in accordance with § 1.6417-5 stating that it intends to elect to be treated as an applicable entity with respect to eligible components produced at F in 2024. In 2025, W timely files its 2024 return electing to be treated as an applicable entity, calculating its Federal income tax before GBCs of $125,000 and that its limitation of GBC under section 38(c) (simplified) is $100,000 (paragraph (e)(2)(i) of this section). W attaches Form 7207 to claim a current section 45X credit of $50,000 with respect to eligible components produced at F (its applicable credits). W also attaches Form 5884 to claim a current work opportunity tax credit (WOTC) of $50,000 (WOTC is not an applicable credit). W also has business credit carryforwards of $25,000, which together with the 45X credit and WOTC results in a total of $125,000 of GBC for the taxable year (paragraph (e)(2)(ii) of this section). Under paragraph (e)(2)(iii) of this section, the net elective payment amount is $25,000. Under paragraph (e)(2)(iv) of this section, including using the ordering rules in section 38(d), W is allowed $25,000 of the carryforwards, $50,000 of WOTC plus only $25,000 of section 45X credit against net income tax, as defined under section 38(c)(1)(B). The $25,000 of unused section 45X credit is the net elective payment amount that results in a $25,000 payment against tax by W (paragraph (e)(2)(iii) of this section). On its return, W shows net tax liability of $25,000 ($125,000-$100,000 allowed GBC) and the net elective payment of $25,000 that W applied to net tax liability, resulting in zero tax owed on the return. Under paragraph (e)(2)(v) of this section, W's applicable credit is reduced by the $25,000 of the net elective payment amount, as well as by the $25,000 of section 45X credit claimed as a GBC for the taxable year, resulting in the $50,000 of applicable credit being reduced to zero. However, for all other purposes of the Code, the $50,000 of 45X applicable credits are deemed to have been allowed to W for 2024 (paragraph (e)(3) of this section). Even though W did not owe tax after applying the net elective payment amount against its net tax

liability, W may be subject to the section 6655 penalty for failure to pay estimated income tax. The net elective payment is not an estimated tax installment, rather, it is treated as a payment made at the filing of the return.

(v) ***Example 5.*** Assume the same facts as in paragraph (e)(4)(iv) of this section (*Example 4),* except W filed the return on a timely filed extension after the due date of the return (excluding extensions). Even though the net elective payment amount is sufficient to cover W's tax liability, W may also be subject to the section 6651(a)(2) penalty for failure to pay tax.

(vi) ***Example*** 6. Assume the same facts as in paragraph (e)(4)(iv) of this section (*Example 4),* except W's activities gave rise to a $100,000 section 45Q credit and W filed a Form 8933, *Carbon Oxide Sequestration Tax Credit,* instead of a $50,000 section 45X credit and Form 7207. Assume also that W's activities gave rise to a $50,000 small employer health insurance credit under section 45R (section 45R credit) and W filed Form 8941, *Credit for Small Employer Health Insurance Premiums,* instead of a $50,000 WOTC and Form 5884. Under paragraph (e)(2)(iii) of this section, the net elective payment amount is $75,000. Under paragraph (e)(2)(iv) of this section, including using the ordering rules in section 38(d), W is allowed $25,000 of the carryforwards, $25,000 of the section 45Q credit, plus its $50,000 of section 45R credit against net income tax, as defined under section 38(c)(1)(B). The $75,000 of unused section 45Q credit that is the net elective payment amount results in a $75,000 payment against tax by W (paragraph (e)(2)(iii) of this section). On its return, W shows net tax liability of $25,000 ($125,000-$100,000 allowed GBC) and the net elective payment amount of $75,000 that W applied to net tax liability, resulting in a refund of $50,000. Under paragraph (e)(2)(v) of this section, W's applicable credit is reduced by the $75,000 of the net elective payment amount, as well as by the $25,000 of section 45Q credit claimed as a GBC for the taxable year, resulting in the $100,000 of applicable credit being reduced to zero. However, for all other purposes of the Code, the $100,000 of section 45Q applicable credits are deemed to have been allowed to W for 2024 (paragraph (e)(3) of this section).

(f) ***Applicability date.*** This section applies to taxable years ending on or after March 11, 2024. For taxable years ending before March 11, 2024, taxpayers, however, may choose to apply the rules of §§ 1.6417-1 through 1.6417-4 and 1.6417-6, provided the taxpayers apply the rules in their entirety and in a consistent manner.

[T.D. 9988, 89 FR 17584, Mar. 11, 2024; 89 FR 66563, Aug. 16, 2024]

§ 1.6417-3 Special rules for electing taxpayers.

(a) ***In general.*** This section relates to the election available to electing taxpayers. An electing taxpayer that makes an elective payment election in accordance with this section is treated as an applicable entity for the duration of the election period, but only with respect to the applicable credit property described in proposed § 1.6417-1(e)(3), (5), or (7), respectively, that is the subject of the election. *See* paragraphs (b), (c), and (d) of this section for the specific rules regarding taxpayers making an election under section 6417(d)(1)(B), (C), or (D), respectively. *See* paragraph (e) of this section for rules relating to the making the election. *See* § 1.6417-4 for special rules related to electing taxpayers that are partnerships or S corporations.

(b) ***Elections with respect to the credit for production of clean hydrogen.*** An electing taxpayer that has placed in service applicable credit property described in § 1.6417-1(e)(5) (in other words, a qualified clean hydrogen production facility as defined in section 45V(c)(3)) during the taxable year may make an elective

payment election for such taxable year (or by August 16, 2023, in the case of facilities placed in service before December 31, 2022), but only with respect to the qualified clean hydrogen production facility, only with respect to the applicable credit described in § 1.6417-1(d)(5) (in other words, the section 45V credit), and only if the pre-filing registration required by § 1.6417-5 was properly completed. An electing taxpayer that elects to treat qualified property that is part of a specified clean hydrogen production facility as energy property under section 48(a)(15) may not make an elective payment election with respect to such facility.

(c) ***Election with respect to the credit for carbon oxide sequestration.*** An electing taxpayer that has, after December 31, 2022, placed in service applicable credit property described in § 1.6417-1(e)(3) (in other words, a single process train described in § 1.45Q-2(c)(3) at a qualified facility (as defined in section 45Q(d)) during the taxable year may make an elective payment election for such taxable year, but only with respect to the single process train, only with respect to the applicable credit described in § 1.6417-1(d)(3) (in other words, the section 45Q credit), and only if the pre-filing registration required by § 1.6417-5 was properly completed.

(d) ***Election with respect to the advanced manufacturing production credit.*** An electing taxpayer that produces, after December 31, 2022, eligible components (as defined in section 45X(c)(1)) at an applicable credit property described in § 1.6417-1(e)(7) during the taxable year (whether the facility existed on or before, or after, December 31, 2022) may make an elective payment election for such taxable year, but only with respect to the facility at which the eligible components are produced by the electing taxpayer in that year, only with respect to the applicable credit described in § 1.6417-1(d)(7) (in other words, the section 45X credit), and only if the pre-filing registration required by § 1.6417-5 was properly completed.

(e) ***Election for electing taxpayers*** —

(1) ***In general.*** If an electing taxpayer makes an elective payment election under § 1.6417-2(b) with respect to any taxable year in which the electing taxpayer places in service a qualified clean hydrogen production facility for which a section 45V credit is determined, places in service a single process train at a qualified facility for which a section 45Q credit is determined, or produces, after December 31, 2022, eligible components (as defined in section 45X(c)(1)) at a facility, respectively, the electing taxpayer will be treated as an applicable entity for purposes of making an elective payment election for such taxable year and during the election period described in paragraph (e)(3) of this section, but only with respect to the applicable credit property described in § 1.6417-1(e)(3), (5), or (7), as applicable, that is the subject of the election. The taxpayer must otherwise meet all requirements to earn the credit in the electing year and in each succeeding year during the election period described in paragraph (e)(3) of this section.

(2) ***Election is per applicable credit property.*** An elective payment election under § 1.6417-2(b) is made separately for each applicable credit property, which is, respectively, a qualified clean hydrogen production facility placed in service for which a section 45V credit is determined, a single process train placed in service at a qualified facility for which a section 45Q credit is determined, or a facility at which eligible components are produced for which a section 45X credit is determined. An electing taxpayer may only make one election with respect to any specific applicable credit property.

(3) ***Election period*** —

(i) ***In general.*** Except as provided in paragraph (e)(3)(ii) of this section, if an electing taxpayer makes an elective payment election under § 1.6417-2(b) with respect to applicable credit property described in § 1.6417-1(e)(3), (5), or (7) for which an applicable credit is determined under § 1.6417-1(d)(3), (5), or (7), the election period during which such election applies

includes the taxable year for which the election is made and each of the four subsequent taxable years that end before January 1, 2033. The election period cannot be less than a taxable year but may be made for a taxable period of less than 12 months within the meaning of section 443 of the Code.

(ii) ***Revocation of election.*** An electing taxpayer may, during a subsequent year of the election period described in paragraph (e)(3)(i) of this section, revoke the elective payment election with respect to an applicable credit property described in § 1.6417-1(e)(3), (5), or (7), in accordance with forms and instructions. *See* § 601.602 of this chapter. Any such revocation, if made, applies to the taxable year for which the revocation is made (which cannot be less than a taxable year but may be made for a taxable period of less than 12 months as described in section 443 of the Code) and each subsequent taxable year within the election period. Any such revocation may not be subsequently revoked.

(4) ***No transfer election under section 6418(a) permitted while an elective payment election is in effect.*** No transfer election under section 6418(a) may be made by an electing taxpayer with respect to any applicable credit under § 1.6417-1(d)(3), (5), or (7) determined with respect to applicable credit property described in § 1.6417-1(e)(3), (5), or (7) during the election period for that applicable credit property. However, if the election period is no longer in effect with respect to an applicable credit property, any credit determined with respect to such applicable credit property can be transferred pursuant to a transfer election under section 6418(a), as long as the taxpayer meets the requirements of section 6418 and the 6418 regulations.

(f) ***Applicability date.*** This section applies to taxable years ending on or after March 11, 2024. For taxable years ending before March 11, 2024, taxpayers, however, may choose to apply the rules of §§ 1.6417-1 through 1.6417-4 and 1.6417-6, provided the taxpayers apply the rules in their entirety and in a consistent manner.

[T.D. 9988, 89 FR 17584, Mar. 11, 2024]

§ 1.6417-4 Elective payment election for electing taxpayers that are partnerships or S corporations.

(a) ***In general.*** In the case of any applicable credit determined with respect to any applicable credit property described in § 1.6417-1(e)(3), (5), or (7) that is held directly (or treated as held directly because it is held by a disregarded entity) by an electing taxpayer that is a partnership or S corporation, any elective payment election under § 1.6417-2(b) must be made by the partnership or S corporation.

(b) ***Elections.*** If an electing taxpayer that is a partnership or S corporation makes an elective payment election under § 1.6417-2(b) with respect to any taxable year in which the electing taxpayer places in service applicable credit property described in § 1.6417-1(e)(3) or (5), or produces, after December 31, 2022, eligible components (as defined in section 45X(c)(1)) at an applicable credit property described in § 1.6417-1(e)(7), the electing taxpayer will be treated as an applicable entity for purposes of making an elective payment election for such taxable year and during the election period described in § 1.6417-3(e)(3), but only with respect to the applicable credit property described in § 1.6417-1(e)(3), (5), or (7), respectively, that is the subject of the election. In addition, the taxpayer must otherwise meet all requirements to earn the credit in the electing year and in each succeeding year during the election period described in § 1.6417-3(e)(3).

(c) ***Effect of election*** —

(1) ***In general.*** If a partnership or S corporation electing taxpayer makes an elective payment election, with respect to the section 45V, 45Q, or 45X credit—

(i) The Internal Revenue Service will make a payment to such partnership or S corporation equal to the amount of such credit, determined in accordance with paragraph (d) of this section (unless the partnership or S corporation owes a Federal tax liability, in which case the payment may be reduced by such tax liability);

(ii) Before determining any partner's distributive share, or S corporation shareholder's pro rata share, of such credit, such credit is reduced to zero and is, for any other purposes under the Code, deemed to have been allowed solely to such entity (and not allocated or otherwise allowed to its partners or shareholders) for such taxable year;

(iii) Any amount with respect to which such election is made is treated as tax exempt income for purposes of sections 705 and 1366 of the Code;

(iv) A partner's distributive share of such tax exempt income is equal to such partner's distributive share of the otherwise applicable credit for each taxable year, as determined under § 1.704-1(b)(4)(ii);

(v) An S corporation shareholder's pro rata share (as determined under section 1377(a) of the Code) of such tax exempt income for each taxable year (as determined under sections 444 and 1378(b) of the Code) is equal to the S corporation shareholder's pro rata share (as determined under section 1377(a)) of the otherwise applicable credit for each taxable year; and

(vi) Such tax exempt income resulting from such election is treated as received or accrued, including for purposes of sections 705 and 1366, as of the date the applicable credit is determined with respect to the partnership or S corporation (such as, for investment credit property, the date the property is placed in service).

(2) ***Electing partnerships in tiered structures.*** If a partnership (upper-tier partnership) is a direct or indirect partner of a partnership that makes an elective payment election (electing partnership) and directly or indirectly receives an allocation of tax exempt income resulting from the elective payment election made by the electing partnership, the upper-tier partnership must determine its partners' distributive shares of such tax exempt income in proportion to the partners' distributive shares of the otherwise applicable credit as provided in paragraph (c)(1)(iv) of this section.

(3) ***Character of tax exempt income.*** Tax exempt income resulting from an elective payment election by an S corporation or a partnership is treated as arising from an investment activity and not from the conduct of a trade or business within the meaning of section 469(c)(1)(A) of the Code. As such, the tax exempt income is not treated as passive income to any partners or shareholders who do not materially participate within the meaning of section 469(c)(1)(B).

(d) ***Determination of amount of the credit*** —

(1) ***In general.*** In determining the amount of an applicable credit that will result in a payment under paragraph (c)(1)(i) of this section, the partnership or S corporation must compute the amount of the applicable credit allowable as if an elective payment election were not made. Because a partnership or S corporation is not subject to sections 38(b) and (c) and 469 (that is, those sections apply at the partner or S corporation shareholder level), the amount of applicable credit determined by a partnership or S corporation is not subject to limitation by those sections. In addition, because the

only applicable credits with respect to which a partnership or S corporation may make an elective payment election are not investment credits under section 46 of the Code, sections 49 and 50 of the code do not apply to limit the amount of the applicable credits.

(2) ***Example.*** The rules of this paragraph (d) are illustrated in the following example. A and B each contributed cash to P, a calendar-year partnership, for the purpose of manufacturing clean hydrogen at V, a qualified clean hydrogen facility that meets the definition of section 45V(c)(3). The partnership agreement provides that A and B share equally in all items of income, gain, loss, deduction and credit of P. P completes the pre-filing registration process with respect to the section 45V credit at V for 2023 in accordance § 1.6417-5. P places V in service in 2023. P timely files its 2023 Form 1065 and properly makes the elective payment election in accordance with §§ 1.6417-2(b),1.6417-3, and 1.6417-4. On its Form 1065, P properly determined that the amount of the section 45V credit with respect to the clean hydrogen produced at V for 2023 is $100,000. The IRS processes P's return and makes a $100,000 payment to P. Before determining A's and B's distributive shares, P reduces the credit to zero. While the $100,000 section 45V credit is deemed to have been allowed to P for 2023 for any other purpose under this title, the credit is not allocated or otherwise allowed to its partners. The $100,000 is treated as tax exempt income for purposes of section 705 and is treated as arising from an investment activity and not from the conduct of a trade or business within the meaning of section 469(c)(1)(A). P allocates the tax exempt income from the elective payment election proportionately among the partners based on each partner's distributive share of the otherwise eligible section 45V credit as determined under § 1.704-1(b)(4)(ii). Under that section, if partnership receipts or expenditures give rise to a credit, the partner's interest in the partnership with respect to such credit is in the same proportion as such partners' distributive shares of such receipt, loss, or deduction. Section 45V credits arise based on the amount of clean hydrogen produced at a facility. Under the partnership agreement, A and B share all items equally. Thus, A and B will each be allocated $50,000 of tax exempt income for 2023. P will continue to be treated as an applicable entity with respect to V for taxable years 2024-2027 unless P revokes its election in accordance with § 1.6417-3(e)(3)(ii). At the end of 2023, A and B increase their respective tax bases in their partnership interest and capital accounts by $50,000 each (that is, their share of the $100,000 of tax exempt income).

(e) ***Partnerships subject to subchapter C of chapter 63.*** For the application of subchapter C of chapter 63 of the Code to section 6417, *see* § 301.6241-7 of this chapter.

(f) ***Applicability date.*** This section applies to taxable years ending on or after March 11, 2024. For taxable years ending before March 11, 2024, taxpayers, however, may choose to apply the rules of §§ 1.6417-1 through 1.6417-4 and 1.6417-6, provided the taxpayers apply the rules in their entirety and in a consistent manner.

[T.D. 9988, 89 FR 17584, Mar. 11, 2024; 89 FR 66563, Aug. 16, 2024]

§ 1.6417-5 Additional information and registration.

(a) ***Pre-filing registration and election.*** An applicable entity or electing taxpayer is required to satisfy the pre-filing registration requirements in paragraph (b) of this section as a condition of, and prior to, making an elective payment election. An applicable entity or electing taxpayer must use the pre-filing registration process to register itself as intending to make the elective payment election, to list all applicable credits it intends to claim, and to list each applicable credit property that contributed to the determination of such credits as part of the pre-filing submission (or amended submission). An applicable entity or electing

taxpayer that does not obtain a registration number under paragraph (c)(1) of this section or report the registration number on its annual tax return, as defined in § 1.6417-1(b), pursuant to paragraph (c)(5) of this section with respect to an otherwise applicable credit property, is ineligible to receive any elective payment amount with respect to the amount of any credit determined with respect to that applicable credit property. However, completion of the pre-filing registration requirements and receipt of a registration number does not, by itself, mean the applicable entity or electing taxpayer is eligible to receive a payment with respect to the applicable credits determined with respect to the applicable credit property.

(b) *Pre-filing registration requirements* —

(1) ***Manner of pre-filing registration.*** Unless otherwise provided in guidance, an applicable entity or electing taxpayer must complete the pre-filing registration process electronically through the IRS electronic portal and in accordance with the instructions provided therein.

(2) ***Pre-filing registration and election for members of a consolidated group.*** A member of a consolidated group is required to complete pre-filing registration as a condition of, and prior to, making an elective payment election. *See* § 1.1502-77 (providing rules regarding the status of the common parent as agent for its members).

(3) ***Timing of pre-filing registration.*** An applicable entity or electing taxpayer must satisfy the pre-filing registration requirements of this paragraph (b) and receive a registration number under paragraph (c) of this section prior to making an elective payment election under § 1.6417-2(b) on the applicable entity's or electing taxpayer's annual tax return for the taxable year at issue.

(4) ***Each applicable credit property must have its own registration number.*** An applicable entity or electing taxpayer must obtain a registration number for each applicable credit property with respect to which it intends to make an elective payment election.

(5) ***Information required to complete the pre-filing registration process.*** Unless modified in future guidance, an applicable entity or electing taxpayer must provide the following information to the IRS to complete the pre-filing registration process:

(i) The applicable entity's or electing taxpayer's general information, including its name, address, taxpayer identification number, and type of legal entity.

(ii) Any additional information required by the IRS electronic portal, such as information regarding the taxpayer's exempt status under section 501(a) of the Code; that the applicable entity is a political subdivision of a State, the District of Columbia, or a U.S. territory, or subdivision of an Indian tribal government; or that the applicable entity is an agency or instrumentality of a State, the District of Columbia, an Indian tribal government, or a U.S. territory.

(iii) The taxpayer's taxable year.

(iv) The type of annual tax return(s) normally filed by the applicable entity or electing taxpayer, or that the applicable entity or electing taxpayer does not normally file an annual tax return with the IRS.

(v) The type of applicable credit(s) for which the applicable entity or electing taxpayer intends to make an elective payment election.

(vi) For each applicable credit, each applicable credit property that the applicable entity or electing taxpayer intends to use to determine the credit for which the applicable entity or electing taxpayer intends to make an elective payment election.

(vii) For each applicable credit property listed in paragraph (b)(4)(vi) of this section, any further information required by the IRS electronic portal, such as—

(A) The type of applicable credit property;

(B) Physical location (that is, address and coordinates (longitude and latitude) of the applicable credit property);

(C) Supporting documentation relating to the construction or acquisition of the applicable credit property (such as State, District of Columbia, Indian tribal, U.S. territorial, or local government permits to operate the applicable credit property; certifications; evidence of ownership that ties to a land deed, lease, or other documented right to use and access any land or facility upon which the applicable credit property is constructed or housed; U.S. Coast Guard registration numbers for offshore wind vessels; and the vehicle identification number of an eligible clean vehicle with respect to which a section 45W credit is determined);

(D) The beginning of construction date and the placed in service date of the applicable credit property,

(E) If an investment-related credit property (as defined § 1.6417-2(c)(3)), the source of funds the taxpayer used to acquire the property; and

(F) Any other information that the applicable entity or electing taxpayer believes will help the IRS evaluate the registration request.

(viii) The name of a contact person for the applicable entity or electing taxpayer. The contact person is the person whom the IRS may contact if there is an issue with the registration. The contact person must either possess legal authority to bind the applicable entity or electing taxpayer or must provide a properly executed power of attorney on Form 2848, *Power of Attorney and Declaration of Representative*.

(ix) A penalties of perjury statement, effective for all information submitted as a complete application, and signed by a person with personal knowledge of the relevant facts that is authorized to bind the registrant.

(x) Any other information the IRS deems necessary for purposes of preventing duplication, fraud, improper payments, or excessive payments under this section that is provided in guidance.

(c) ***Registration number*** —

(1) ***In general.*** The IRS will review the information provided and will issue a separate registration number for each applicable credit property for which the applicable entity or electing taxpayer provided sufficient verifiable information.

(2) ***Registration number is only valid for one taxable year.*** A registration number is valid only with respect to the applicable entity or electing taxpayer that obtained the registration number under this section and only for the taxable year for which it is obtained.

(3) ***Renewing registration numbers.*** If an elective payment election will be made with respect to an applicable credit property for a taxable year after a registration number under this section has been obtained, the applicable entity or electing taxpayer must renew the registration for that subsequent taxable year in accordance with applicable guidance, including attesting that all the facts previously provided are still correct or updating any facts.

(4) ***Amendment of previously submitted registration information if a change occurs before the registration number is used.*** As provided in instructions to the pre-filing registration portal, if specified changes occur with respect to one or more applicable credit properties for which a registration number has been previously obtained but not yet used, an applicable entity or electing taxpayer must amend the registration (or may need to submit a new registration) to reflect these new facts. For example, if the owner of a facility previously registered for an elective payment election for applicable credits determined with respect to that facility and the facility undergoes a change of ownership (incident to a corporate reorganization or an asset sale) such that the new owner has a different employer identification number (EIN) than the owner who obtained the original registration, the original owner of the facility must amend the original registration to disassociate its EIN from the applicable credit property and the new owner must submit separately an original registration (or if the new owner previously registered other credit properties, must amend its original registration) to associate the new owner's EIN with the previously registered applicable credit property. If the change of ownership is with respect to an electing taxpayer, then the 5-year election period will continue despite the change in ownership.

(5) ***Registration number is required to be reported on the return for the taxable year of the elective payment election.*** The applicable entity or electing taxpayer must include the registration number of the applicable credit property on its annual tax return as provided in § 1.6417-2(b) for the taxable year. The IRS will treat an elective payment election as ineffective with respect to an applicable credit determined with respect to an applicable credit property for which the applicable entity or electing taxpayer does not include a valid registration number that was assigned to that particular taxpayer during the pre-registration process on the annual tax return.

(d) ***Applicability date.*** This section applies to taxable years ending on or after March 11, 2024.

[T.D. 9988, 89 FR 17584, Mar. 11, 2024]

§ 1.6417-6 Special rules.

(a) ***Excessive payment*** —

(1) ***In general.*** In the case of any elective payment amount that the IRS determines constitutes an excessive payment, the tax imposed on such entity by chapter 1, regardless of whether such entity or taxpayer would otherwise be subject to chapter 1 tax, for the taxable year in which such determination is made will be increased by an amount equal to the sum of—

(i) The amount of such excessive payment, plus

(ii) An amount equal to 20 percent of such excessive payment.

(2) ***Reasonable cause.*** The amount described in paragraph (a)(1)(ii) of this section will not apply to an applicable entity or electing taxpayer if the applicable entity or electing taxpayer demonstrates to the satisfaction of the IRS that the excessive payment resulted from reasonable cause.

(3) ***Excessive payment defined.*** For purposes of this section, the term *excessive payment* means, with respect to an applicable credit property for which an elective payment election is made under § 1.6417-2(b) for any taxable year, an amount equal to the excess of—

(i) The amount treated as a payment under § 1.6417-2(a)(1)(i) or (a)(2)(i), or the amount of the payment made pursuant to § 1.6417-2(a)(2)(ii), with respect to such applicable credit property for such taxable year, over

(ii) The amount of the credit that, without application of this section, would be otherwise allowable under the Code (as determined pursuant to § 1.6417-2(c) and (e) or § 1.6417-4(d)(1) and (3), and without regard to the limitation based on tax in section 38(c)) with respect to such applicable credit property for such taxable year. For purposes of this section, the amount of such credit that would be otherwise allowable is the amount claimed on an original or amended return, including any administrative adjustment request under section 6227.

(4) ***Example.*** This example illustrates the principles of this paragraph (a). B, an instrumentality of State M, places in service in 2023 facility F, which is eligible for the energy credit determined under section 48. B properly completes the pre-filing registration as an applicable entity that will earn the energy credit from F in accordance with § 1.6417-5, and receives a registration number for F. B timely files its 2023 Form 990-T, properly providing the registration number for F and otherwise complying with § 1.6417-2(b). On its Form 990-T, B calculates that the amount of energy credit determined with respect to F is $100,000 and that the net elective payment amount is $100,000. B receives a refund in the amount of $100,000. In 2025, the IRS determines that the amount of energy credit properly allowable to B in 2023 with respect to F (as determined pursuant to § 1.6417-2(c) and (e) and without regard to the limitation based on tax in section 38(c)) was $60,000. B is unable to show reasonable cause for the difference. The excessive payment amount is $40,000 ($100,000 treated as a payment−$60,000 allowable amount). In 2025, the tax imposed under chapter 1 on B is increased in the amount of $48,000 ($40,000 + (20% * $40,000).)

(b) ***Basis reduction and recapture*** —

(1) ***In general.*** Rules similar to the rules of section 50 (without regard to section 50(b)(3) and (4)(A)(i)) apply for purposes of this section.

(2) ***Reporting recapture.*** Any reporting of recapture is made on the annual tax return of the applicable entity or electing taxpayer in the manner prescribed by the IRS in any guidance, along with supplemental forms such as Form 4255, *Recapture of Investment Credit*.

(3) ***Example.*** This example illustrates the principles of this paragraph (b). In December 2023, G, a government entity, places in service P, which is energy property eligible for the energy credit determined under section 48 (section 48 credit). G properly completes the pre-filing registration in accordance with § 1.6417-5 as an applicable entity to make an election under section 6417 for 2023. G timely files its 2023 Form 990-T in 2024, properly making the elective payment election in accordance with § 1.6417-2 for a section 48 energy credit determined with respect to P. On its Form 990-T, G properly determines that the amount of section 48 credit determined with respect P is $100,000 and that its net elective payment amount is $100,000. The IRS sends G a $100,000 refund. Pursuant to section 50(c), G reduces its basis in P by $50,000. In July 2025, P ceases to be investment credit property with respect to G. Because this occurs before the close of the recapture period set forth in section 50, section 50(a)(1)(A) provides that the tax under chapter 1 for 2025 is increased by the recapture percentage of the aggregate decrease in the credits allowed under section 38 for all prior taxable years that would have resulted solely from reducing to zero any credit determined under subpart E of part IV of subchapter A of chapter 1 with respect to such property. Because P ceased to be investment credit property within 2 full years after P was placed in service, section 50(a)(1)(B) provides that the recapture percentage is 80%. G must properly report the recapture event in 2025, paying an $80,000 tax. Because G is a government entity, G reports the recapture event on a Form 990-T or any Form provided in further guidance, along with supplemental forms such as Form 4255, *Recapture of Investment Credit.* G's basis in P is increased by $40,000.

(c) ***Mirror code territories.*** Pursuant to section 6417(f) of the Code, section 6417 and the section 6417 regulations are not treated as part of the income tax laws of the United States for purposes of determining the income tax law of any U.S. territory with a mirror code tax system (as defined in section 24(k) of the Code), unless such U.S. territory elects to have section 6417 and the section 6417 regulations be so treated. The applicable territory tax authority for a U.S. territory determines whether such an election has been made.

(d) ***Partnerships subject to subchapter C of chapter 63 of the Code. See*** § 301.6241-7(j) of this chapter for rules applicable to payments made to partnerships subject to subchapter C of chapter 63 of the Code for a partnership taxable year.

(e) ***Applicability date.*** This section applies to taxable years ending on or after March 11, 2024. For taxable years ending before March 11, 2024, taxpayers, however, may choose to apply the rules of §§ 1.6417-1 through 1.6417-4 and 1.6417-6, provided the taxpayers apply the rules in their entirety and in a consistent manner.

[T.D. 9988, 89 FR 17584, Mar. 11, 2024]

§ 1.6418-0 Table of contents.

This section lists the captions contained in §§ 1.6418-1 through 1.6418-5.

§ 1.6418-1 Transfer of eligible credits.

(a) Transfer of eligible credits.

(b) Eligible taxpayer.

(c) Eligible credit.

(d) Eligible credit property.

(e) Guidance.

(f) Paid in cash.

(g) Section 6418 regulations.

(h) Specified credit portion.

(i) Statutory references.

(j) Transfer election.

(k) Transferee partnership.

(l) Transferee S corporation.

(m) Transferee taxpayer.

(n) Transferor partnership.

(o) Transferor S corporation.

(p) Transferred specified credit portion.

(q) U.S. territory.

(r) Applicability date.

§ 1.6418-2 Rules for making transfer elections.

(a) Transfer election.

(b) Manner and due date of making a transfer election.

(c) Limitations after a transfer election is made.

(d) Determining the eligible credit.

(e) Treatment of payments made in connection with a transfer election.

(f) Transferee taxpayer's treatment of eligible credit.

(g) Applicability date.

§ 1.6418-3 Additional rules for partnerships and S corporations.

(a) Rules applicable to both partnerships and S corporations.

(b) Rules applicable to partnerships.

(c) Rules applicable to S corporations.

(d) Transfer election by a partnership or an S corporation.

(e) Examples.

(f) Applicability date.

§ 1.6418-4 Additional information and registration.

(a) Pre-filing registration and election.

(b) Pre-filing registration requirements.

(c) Registration number.

(d) Applicability date.

§ 1.6418-5 Special rules.

(a) Excessive credit transfer tax imposed.

(b) Excessive credit transfer defined.

(c) Basis reduction under section 50(c).

(d) Notification and impact of recapture under section 50(a) or 49(b).

(e) Notification and impact of recapture under section 45Q(f)(4).

(f) Notification and impact of recapture under section 48(a)(10)(C).

(g) Impact of an ineffective transfer election by an eligible taxpayer.

(h) Carryback and carryforward.

(i) Rules applicable to real estate investment trusts.

(j) Applicability date.

[T.D. 9993, 89 FR 34800, Apr. 30, 2024]

§ 1.6418-1 Transfer of eligible credits.

(a) ***Transfer of eligible credits.*** An eligible taxpayer may make a transfer election under § 1.6418-2(a) to transfer any specified portion of an eligible credit determined with respect to any eligible credit property of such eligible taxpayer for any taxable year to a transferee taxpayer in accordance with section 6418 of the Code and the section 6418 regulations (defined in paragraph (g) of this section). Paragraphs (b) through (q) of this section provide definitions of terms for purposes of applying section 6418 and the section 6418 regulations. *See* § 1.6418-2 for rules and procedures under which all transfer elections must be made, limitations to making transfer elections, the treatment of payments made in connection with transfer elections, and the treatment of eligible credits transferred to transferee taxpayers. *See* § 1.6418-3 for special rules pertaining to transfer elections made by partnerships or S corporations. See § 1.6418-4 for pre-filing registration requirements and other information required to make any transfer election effective. *See* § 1.6418-5 for special rules related to the imposition of tax on excessive credit transfers, basis reductions, required notifications and impacts of the recapture of transferred credits, and rules regarding carrybacks and carryforwards.

(b) ***Eligible taxpayer.*** The term *eligible taxpayer* means any taxpayer (as defined in section 7701(a)(14) of the Code), other than one described in section 6417(d)(1)(A) and § 1.6417-1(c).

(c) ***Eligible credit —***

(1) ***In general.*** The term *eligible credit* is a credit described in paragraph (c)(2) of this section determined for a taxable year with respect to a single eligible credit property of an eligible taxpayer but does not include any business credit carryforward or business credit carryback determined under section 39 of the Code.

(2) ***Separately determined credit amounts.*** The amount of any credit described in this paragraph (c)(2) is the entire amount of the credit separately determined with respect to each single eligible credit property of the eligible taxpayer and includes any bonus credit amounts described in paragraph (c)(3) of this section determined with respect to that single eligible credit property. The eligible credits described in this paragraph (c)(2) are:

(i) ***Alternative fuel vehicle refueling property.*** So much of the credit for alternative fuel vehicle refueling property allowed under section 30C of the Code that, pursuant to section 30C(d)(1), is treated as a credit listed in section 38(b) of the Code (section 30C credit).

(ii) ***Renewable electricity production.*** The renewable electricity production credit determined under section 45(a) of the Code (section 45 credit).

(iii) ***Carbon oxide sequestration.*** The credit for carbon oxide sequestration determined under section 45Q(a) of the Code (section 45Q credit).

(iv) ***Zero-emission nuclear power production.*** The zero-emission nuclear power production credit determined under section 45U(a) of the Code (section 45U credit).

(v) ***Clean hydrogen production.*** The clean hydrogen production credit determined under section 45V(a) of the Code (section 45V credit).

(vi) ***Advanced manufacturing production.*** The advanced manufacturing production credit determined under section 45X(a) of the Code (section 45X credit).

(vii) ***Clean electricity production.*** The clean electricity production credit determined under section 45Y(a) of the Code (section 45Y credit).

(viii) ***Clean fuel production.*** The clean fuel production credit determined under section 45Z(a) of the Code (section 45Z credit).

(ix) ***Energy.*** The energy credit determined under section 48 of the Code (section 48 credit).

(x) ***Qualifying advance energy project.*** The qualifying advanced energy project credit determined under section 48C of the Code (section 48C credit).

(xi) ***Clean electricity.*** The clean electricity investment credit determined under section 48E of the Code (section 48E credit).

(3) ***Bonus credit amounts.*** The bonus credit amounts described in this paragraph (c)(3) are:

(i) In the case of a section 30C credit, the increased credit amounts for which the requirements under section 30C(g)(2)(A) and (3) are satisfied.

(ii) In the case of a section 45 credit, the increased credit amounts for which the requirements under section 45(b)(7)(A)(8), (9), and (11) are satisfied.

(iii) In the case of a section 45Q credit, the increased credit amounts for which the requirements under section 45Q(h)(3) and (4) are satisfied.

(iv) In the case of a section 45U credit, the increased credit amount for which the requirements under section 45U(d)(2) are satisfied.

(v) In the case of a section 45V credit, the increased credit amounts for which the requirements under section 45V(e)(3) and (4) are satisfied.

(vi) In the case of a section 45Y credit, the increased credit amounts for which the requirements under section 45Y(g)(7), (9), (10), and (11) are satisfied.

(vii) In the case of a section 45Z credit, the increased credit amounts for which the requirements under section 45Z(f)(6) and (7) are satisfied.

(viii) In the case of a section 48 credit, the increased credit amounts for which the requirements under section 48(a)(10), (11), (12), (14), and (e) are satisfied.

(ix) In the case of a section 48C credit, the increased credit amounts for which the requirements under section 48C(e)(5) and (6) are satisfied.

(x) In the case of a section 48E credit, the increased credit amounts for which the requirements under section 48E(a)(3)(A), (B), (d)(3), (d)(4), and (h) are satisfied.

(d) ***Eligible credit property.*** The term *eligible credit property* means each of the units of property of an eligible taxpayer described in paragraphs (d)(1) through (11) of this section with respect to which the amount of an eligible credit is determined:

(1) In the case of a section 30C credit, a *qualified alternative fuel vehicle refueling property* described in section 30C(c).

(2) In the case of a section 45 credit, a *qualified facility* described in section 45(d).

(3) In the case of a section 45Q credit, a component of carbon capture equipment within a *single process train* described in § 1.45Q-2(c)(3).

(4) In the case of a section 45U credit, a *qualified nuclear power facility* described in section 45U(b)(1).

(5) In the case of a section 45V credit, a *qualified clean hydrogen production facility* described in section 45V(c)(3).

(6) In the case of a section 45X credit, a *facility* that produces eligible components, as described in guidance under sections 48C and 45X.

(7) In the case of a section 45Y credit, a *qualified facility* described in section 45Y(b)(1).

(8) In the case of a section 45Z credit, a *qualified facility* described in section 45Z(d)(4).

(9) ***Section 48 property*** —

(i) ***In general.*** In the case of a section 48 credit and except as provided in paragraph (d)(9)(ii) of this section, an *energy property* described in section 48.

(ii) ***Pre-filing registration and elections.*** At the option of an eligible taxpayer, and to the extent consistently applied for purposes of the pre-filing registration requirements of § 1.6418-4 and the election requirements of §§ 1.6418-2 through 1.6418-3, an *energy project* as described in section 48(a)(9)(A)(ii) and defined in guidance.

(10) In the case of a section 48C credit, an *eligible property* described in section 48C(c)(2).

(11) In the case of a section 48E credit, a *qualified facility* as defined in section 48E(b)(3) or, in the case of a section 48E credit relating to a qualified investment with respect to energy storage technology, an *energy storage technology* described in section 48E(c)(2).

(e) ***Guidance.*** The term *guidance* means guidance published in the FEDERAL REGISTER or Internal Revenue Bulletin, as well as administrative guidance such as forms, instructions, publications, or other guidance on the IRS.gov website. *See* §§ 601.601 and 601.602 of this chapter.

(f) ***Paid in cash.*** The term *paid in cash* means a payment in United States dollars that—

(1) Is made by cash, check, cashier's check, money order, wire transfer, automated clearing house (ACH) transfer, or other bank transfer of immediately available funds;

(2) Is made within the period beginning on the first day of the eligible taxpayer's taxable year during which a specified credit portion is determined and ending on the due date for completing a transfer election statement (as provided in § 1.6418-2(b)(5)(iii)); and

(3) May include a transferee taxpayer's contractual commitment to purchase eligible credits with United States dollars in advance of the date a specified credit portion is transferred to such transferee taxpayer if all payments of United States dollars are made in a manner described in paragraph (f)(1) of this section during the time period described in paragraph (f)(2) of this section.

(g) ***Section 6418 regulations.*** The term *section 6418 regulations* means §§ 1.6418-1 through 1.6418-5.

(h) ***Specified credit portion.*** The term *specified credit portion* means a proportionate share (including all) of an eligible credit determined with respect to a single eligible credit property of the eligible taxpayer that is specified in a transfer election. A specified credit portion of an eligible credit must reflect a proportionate share of each bonus credit amount that is taken into account in calculating the entire amount of eligible credit determined with respect to a single eligible credit property.

(i) ***Statutory references*** —

(1) ***Chapter 1.*** The term *chapter 1* means chapter 1 of the Code.

(2) ***Code.*** The term *Code* means the Internal Revenue Code.

(3) ***Subchapter K.*** The term *subchapter K* means subchapter K of chapter 1.

(j) ***Transfer election.*** The term *transfer election* means an election under section 6418(a) of the Code to transfer to a transferee taxpayer a specified portion of an eligible credit determined with respect to an eligible credit property in accordance with the section 6418 regulations.

(k) ***Transferee partnership.*** The term *transferee partnership* means a partnership for Federal tax purposes that is a transferee taxpayer.

(l) ***Transferee S corporation.*** The term *transferee S corporation* means an S corporation within the meaning of section 1361(a) that is a transferee taxpayer.

(m) ***Transferee taxpayer.*** The term *transferee taxpayer* means any taxpayer that is not related (within the meaning of section 267(b) or 707(b)(1) of the Code) to the eligible taxpayer making the transfer election to which an eligible taxpayer transfers a specified credit portion of an eligible credit.

(n) ***Transferor partnership.*** The term *transferor partnership* means a partnership for Federal tax purposes that is an eligible taxpayer that makes a transfer election.

(o) ***Transferor S corporation.*** The term *transferor S corporation* means an S corporation within the meaning of section 1361(a) that is an eligible taxpayer that makes a transfer election.

(p) ***Transferred specified credit portion.*** The term *transferred specified credit portion* means the specified credit portion that is transferred from an eligible taxpayer to a transferee taxpayer pursuant to a transfer election.

(q) ***U.S. territory.*** The term *U.S. territory* means the Commonwealth of Puerto Rico, Guam, the U.S. Virgin Islands, American Samoa, and the Commonwealth of the Northern Mariana Islands.

(r) ***Applicability date.*** This section applies to taxable years ending on or after April 30, 2024. For taxable years ending before April 30, 2024, taxpayers, however, may choose to apply the rules of this section and §§ 1.6418-2, -3, and -5, provided the taxpayers apply the rules in their entirety and in a consistent manner.

[T.D. 9993, 89 FR 34800, Apr. 30, 2024; 89 FR 67860, Aug. 22, 2024]

§ 1.6418-2 Rules for making transfer elections.

(a) ***Transfer election*** —

(1) ***In general.*** An eligible taxpayer can make a transfer election as provided in this section. If a valid transfer election is made by an eligible taxpayer for any taxable year, the transferee taxpayer specified in such election (and not the eligible taxpayer) is treated as the taxpayer for purposes of the Code with respect to the specified credit portion. This paragraph (a) provides rules on the number of transfers permitted, rules for determining the eligible taxpayer in certain ownership situations, and rules describing circumstances under which no transfer election is allowed. Paragraph (b) of this section provides specific rules regarding the scope, manner, and timing of a transfer election. Paragraph (c) of this section provides rules regarding limitations applicable to transfer elections. Paragraph (d) of this section provides rules regarding an eligible taxpayer's

determination of an eligible credit. Paragraph (e) of this section provides the treatment of payments in connection with a transfer election. Paragraph (f) of this section provides rules regarding a transferee taxpayer's treatment of an eligible credit following a transfer.

(2) ***Multiple transfer elections permitted.*** An eligible taxpayer may make multiple transfer elections to transfer one or more specified credit portion(s) to multiple transferee taxpayers, provided that the aggregate amount of specified credit portions transferred with respect to any single eligible credit property does not exceed the amount of the eligible credit determined with respect to the eligible credit property.

(3) ***Transfer election in certain ownership situations*** —

(i) ***Disregarded entities.*** If an eligible taxpayer is the sole owner (directly or indirectly) of an entity that is disregarded as separate from such eligible taxpayer for Federal income tax purposes and such entity directly holds an eligible credit property, the eligible taxpayer may make a transfer election in the manner provided in this section with respect to any eligible credit determined with respect to such eligible credit property.

(ii) ***Undivided ownership interests.*** If an eligible taxpayer is a co-owner of an eligible credit property through an arrangement properly treated as a tenancy-in-common for Federal income tax purposes, or through an organization that has made a valid election under section 761(a) of the Code, then the eligible taxpayer's undivided ownership share of the eligible credit property will be treated for purposes of section 6418 as a separate eligible credit property owned by such eligible taxpayer, and the eligible taxpayer may make a transfer election in the manner provided in this section for any eligible credit(s) determined with respect to such eligible credit property.

(iii) ***Members of a consolidated group.*** A member of a consolidated group (as defined in § 1.1502-1) is required to make a transfer election in the manner provided in this section to transfer any eligible credit determined with respect to the member. *See* § 1.1502-77 (providing rules regarding the status of the common parent as agent for its members).

(iv) ***Partnerships and S corporations.*** A partnership or an S corporation that determines an eligible credit with respect to any eligible credit property held directly by such partnership or S corporation may make a transfer election in the manner provided in § 1.6418-3(d) with respect to eligible credits determined with respect to such eligible credit property.

(v) ***Grantors or others treated as owners of a trust.*** If an eligible taxpayer is a grantor or any other person that is treated as the owner of any portion of a trust as described in section 671 of the Code, then the eligible taxpayer may make a transfer election in the manner provided in this section for eligible credits determined with respect to any eligible credit property held directly by the portion of the trust that the eligible taxpayer is treated as owning under section 671.

(4) ***Circumstances under which no transfer election can be made*** —

(i) ***Prohibition on election or transfer with respect to progress expenditures.*** No transfer election can be made with respect to any amount of an eligible credit that is allowed for progress expenditures pursuant to rules similar to the rules of section 46(c)(4) and (d) (as in effect on the day before the enactment of the Revenue Reconciliation Act of 1990).

(ii) ***No election allowed if eligible credit transferred for non-cash consideration.*** No transfer election is allowed if an eligible taxpayer receives any consideration other than cash (as defined in § 1.6418-1(f)) in connection with the transfer of a specified credit portion.

(iii) ***No election allowed if eligible credits not determined with respect to taxpayer.*** No transfer election is allowed for eligible credits that are not determined with respect to an eligible taxpayer as described in paragraph (d) of this section. For example, a section 45Q credit allowable to an eligible taxpayer because of an election made under section 45Q(f)(3)(B), or a section 48 credit allowable to an eligible taxpayer because of an election made under section 50(d)(5) and § 1.48-4, although described in § 1.6418-1(c)(2), is not an eligible credit that can be transferred by the taxpayer because such credit is not determined with respect to the eligible taxpayer.

(b) ***Manner and due date of making a transfer election*** —

(1) ***In general.*** An eligible taxpayer must make a transfer election to transfer a specified credit portion of an eligible credit on the basis of a single eligible credit property. For example, an eligible taxpayer that determines eligible credits with respect to two eligible credit properties would need to make a separate transfer election with respect to any specified credit portion of the eligible credit determined with respect to each eligible credit property. Any transfer election must be consistent with the eligible taxpayer's pre-filing registration under § 1.6418-4.

(2) ***Specific rules for certain eligible credits.*** In the case of any section 45 credit, section 45Q credit, section 45V credit, or section 45Y credit that is an eligible credit, the rules in paragraph (b)(2)(i) and (ii) of this section apply.

(i) ***Separate eligible credit property.*** A transfer election must be made separately with respect to each eligible credit property described in § 1.6418-1(d)(2), (3), (5), and (7), as applicable, for which an eligible credit is determined.

(ii) ***Time period.*** A transfer election must be made for each taxable year an eligible taxpayer elects to transfer specified credit portions with respect to such an eligible credit property during the 10-year period beginning on the date such eligible credit property was originally placed in service (or, in the case of a section 45Q credit, for each taxable year during the 12-year period beginning on the date the single process train of carbon capture equipment was originally placed in service).

(3) ***Manner of making a valid transfer election.*** A transfer election is made by an eligible taxpayer on the basis of each specified credit portion with respect to a single eligible credit property that is transferred to a transferee taxpayer. To make a valid transfer election, an eligible taxpayer, as part of filing an annual tax return (or a return for a short year within the meaning of section 443 of the Code (short year return)), must include the following—

(i) A properly completed relevant source credit form for the eligible credit (such as Form 7207, *Advanced Manufacturing Production Credit,* if making a transfer election for a section 45X credit) for the taxable year that the eligible credit was determined, including the registration number received during the required pre-filing registration (as described in § 1.6418-4) related to the eligible credit property with respect to which a transferred eligible credit was determined;

(ii) A properly completed Form 3800, *General Business Credit* (or its successor), including reductions necessary because of the transferred eligible credit as required by the form and instructions and the registration number received during the required pre-filing registration (as described in § 1.6418-4) related to the eligible credit property with respect to which a transferred eligible credit was determined;

(iii) A schedule attached to the Form 3800 (or its successor) showing the amount of eligible credit transferred for each eligible credit property (such as for a section 45X election, the relevant lines that include the eligible credit property reported on Form 7207), except as otherwise provided in guidance;

(iv) A transfer election statement as described in paragraph (b)(5) of this section; and

(v) Any other information related to the election specified in guidance.

(4) ***Due date and original return requirement of a transfer election.***

(i) ***In general.*** A transfer election by an eligible taxpayer with respect to a specified portion of an eligible credit must be made on an original return (including a superseding return or any revisions made on a superseding return) not later than the due date (including extensions of time) for the original return of the eligible taxpayer for the taxable year for which the eligible credit is determined. No transfer election may be made for the first time on an amended return, withdrawn on an amended return, or made or withdrawn by filing an administrative adjustment request under section 6227 of the Code. A numerical error with respect to a properly claimed transfer election may be corrected on an amended return or by filing an administrative adjustment request under section 6227 if necessary; however, the eligible taxpayer's original return, which must be signed under penalties of perjury, must contain all of the information, including a registration number, required by the section 6418 regulations. In order to correct an error on an amended return or administrative adjustment request under section 6227, an eligible taxpayer must have made an error in the information included on the original return such that there is a substantive item to correct; an eligible taxpayer cannot correct a blank item or an item that is described as being "available upon request." There is no late-election relief available under §§ 301.9100-1 or 301.9100-3 of this chapter for a transfer election that is not timely filed; however, relief under § 301.9100-2(b) may apply if the eligible taxpayer has not received an extension of time to file a return after the original due date, has timely filed a return, takes corrective action under § 301.9100-2(c) within the six-month extension period, and meets the procedural requirements outlined in § 301.9100-2(d).

(ii) ***Amending the amount of the eligible credit reported*** —

(A) ***In general.*** If an eligible taxpayer, after making a transfer election in accordance with paragraph (b)(3) of this section on an original return in accordance with this paragraph (b)(4)(i) of this section, determines that the amount of the eligible credit reported on the eligible taxpayer's original return is incorrect, the eligible taxpayer may timely file an amended return, or administrative adjustment request under section 6227, if applicable, adjusting the amount of eligible credit.

(B) ***Amending the amount of the credit determined to reflect an increased amount.*** To the extent an eligible taxpayer corrects the amount of an eligible credit to reflect an increase in the amount of the eligible credit reported, such amount must be reflected on the credit source forms filed with the amended return, or administrative adjustment request under section 6227, if applicable, but cannot be reflected by either the eligible taxpayer or any transferee taxpayer as a transferred specified credit portion on the transfer election statement.

(C) ***Amending the amount of the credit determined to reflect a decreased amount.*** To the extent an eligible taxpayer corrects the amount of the eligible credit to reflect a decrease in the amount of the eligible credit reported, such amount must be reflected on the credit source

forms filed with the amended return or administrative adjustment request, if applicable, and the transfer election statement reducing the amount of the credit reported in accordance with the following—

(I) The amount of such decrease first reduces the amount if any, of the eligible credit not transferred by the eligible taxpayer; and

(II) Any portion of the amount of such decrease that remains after applying the reduction described in paragraph (b)(4)(ii)(C)(I) of this section, reduces the amount reported by the transferee taxpayer, or if the eligible credit was transferred to more than one transferee taxpayer, reduces the amount of each transferee taxpayer's specified credit portion on a pro rata basis.

(D) ***Treatment of cash consideration.*** In the case of a decrease in the amount of the credit determined by the eligible taxpayer, any amount of the cash consideration retained by the eligible taxpayer after making an adjustment in accordance with paragraph (b)(4)(ii)(C) of this section that does not directly relate to the remaining specified credit portion must not be excluded from gross income as described in paragraph (e)(2) of this section.

(iii) ***Examples.*** The examples in this paragraph (b)(4)(iii) illustrate the application of paragraphs (b)(6)(i) and (ii) of this section.

(A) ***Example 1.*** A, a U.S. C corporation for Federal income tax purposes (as defined in section 1361(a)(2) of the Code), qualifies as an eligible taxpayer and determines a section 45V clean hydrogen tax credit of $100X in year 1. At the end of year 1, A transfers the entire $100X of the section 45V credit to B. A timely makes a transfer election and properly reports the transaction in accordance with § 1.6418-2(b) on its original return. In year 2, A concludes that the amount of section 45V credit determined in year 1 was $120X. A may file an amended return increasing the amount of the credit reported by $20X on the appropriate credit source forms. A cannot increase the amount of the credit reported on the transfer election statement, and B cannot increase the amount of credit claimed on its return.

(B) ***Example 2.*** Same facts as *Example 1* except that, in year 2, A concludes that the amount of section 45V credit determined in year 1 was $80X. On an amended return, A decreases the amount of the credit reported by $20X on the appropriate credit source forms. A should then reduce the amount of the credit reported on the transfer election statement. To avoid a determination of an excessive credit transfer, B should file a qualified amended return pursuant to § 1.6664-2(c)(3) reducing the amount of credit claimed on its return by $20X.

(C) ***Example 3.*** C, a U.S. C corporation for Federal income tax purposes (as defined in section 1361(a)(2) of the Code), qualifies as an eligible taxpayer and determines a section 45Y clean electricity production tax credit of $100X in year 1. At the end of year 1, C transfers $80X of the 45Y credit determined to D, E, and F, with D receiving $40X, E receiving $32X, and F receiving $80X. C timely makes the transfer election and properly reports the transaction in accordance with § 1.6418-2(b) on its original return. In year 2, C concludes that the amount of section 45Y credit determined in year 1 was $60X. C files an amended return decreasing the amount of the credit reported by $40X on the appropriate credit source forms to reflect $60X of section 45Y credit on its credit source forms. As a result of the $40X decrease in the credit determined, C reduces the $20X of section 45Y credit retained by C to $0X, and reduces the amount of section 45Y credit transferred to D, E, and

F to $30X, $24X, and $6X, respectively (their respective pro rata shares of the reduced amount). Each of D, E, and F should file a qualified amended return under § 1.6664-2(c)(3) reducing the amount of the credit claimed on their returns to avoid a determination of an excessive credit transfer.

(5) ***Transfer election statement*** —

(i) ***In general.*** A transfer election statement is a written document that describes the transfer of a specified credit portion between an eligible taxpayer and transferee taxpayer. Unless otherwise provided in guidance, an eligible taxpayer and transferee taxpayer must each attach a transfer election statement to their respective return as required under paragraphs (b)(3)(iv) and (f)(4)(ii) of this section. Unless otherwise provided in guidance, an eligible taxpayer and transferee taxpayer can use any document (such as a purchase and sale agreement) that meets the conditions in paragraph (b)(5)(ii) of this section but must label the document a "Transfer Election Statement" before attaching such labeled document to their respective returns. The information required in paragraph (b)(5)(ii) of this section does not otherwise limit any other information that the eligible taxpayer and transferee taxpayer may agree to provide in connection with the transfer of any specified credit portion. The statement must be signed under penalties of perjury by an individual with authority to legally bind the eligible taxpayer. The statement must also include the written consent of an individual with authority to legally bind the transferee taxpayer.

(ii) ***Information required in transfer election statement.*** A transfer election statement must, at a minimum, include each of the following:

(A) Name, address, and taxpayer identification number of the transferee taxpayer and the eligible taxpayer. If the transferee taxpayer or eligible taxpayer is a member of a consolidated group, then only include information for the group member that is the transferee taxpayer or eligible taxpayer (if different from the return filer).

(B) A statement that provides the necessary information and amounts to allow the transferee taxpayer to take into account the specified credit portion with respect to the eligible credit property, including—

(*1*) A description of the eligible credit (for example, advanced manufacturing production credit for a section 45X transfer election), the total amount of the credit determined with respect to the eligible credit property, and the amount of the specified credit portion;

(*2*) The taxable year of the eligible taxpayer and the first taxable year in which the specified credit portion will be taken into account by the transferee taxpayer;

(*3*) The amount(s) of the cash consideration and date(s) on which paid by the transferee taxpayer; and

(*4*) The registration number related to the eligible credit property.

(C) Attestation that the eligible taxpayer (or any member of its consolidated group) is not related to the transferee taxpayer (or any member of its consolidated group) within the meaning of section 267(b) or 707(b)(1).

(D) A statement or representation from the eligible taxpayer that it has or will comply with all requirements of section 6418, the section 6418 regulations, and the provisions of the Code applicable to the eligible credit, including, for example, any requirements for bonus credit amounts described in § 1.6418-1(c)(3) (if applicable).

(E) A statement or representation from the eligible taxpayer and the transferee taxpayer acknowledging the notification of recapture requirements under section 6418(g)(3) and the section 6418 regulations (if applicable).

(F) A statement or representation from the eligible taxpayer that the eligible taxpayer has provided the required minimum documentation (as described in paragraph (b)(5)(iv) of this section) to the transferee taxpayer.

(iii) ***Timing of transfer election statement.*** A transfer election statement can be completed at any time after the eligible taxpayer and transferee taxpayer have sufficient information to meet the requirements of paragraph (b)(5)(ii) of this section, but the transfer election statement cannot be completed for any year after the earlier of:

(A) The filing of the eligible taxpayer's return for the taxable year for which the specified credit portion is determined with respect to the eligible taxpayer; or

(B) The filing of the return of the transferee taxpayer for the year in which the specified credit portion is taken into account.

(iv) ***Required minimum documentation.*** The eligible taxpayer must provide to a transferee taxpayer the following minimum documentation—

(A) Information that validates the existence of the eligible credit property, which could include evidence prepared by a third party (such as a county board or other governmental entity, a utility, or an insurance provider);

(B) If applicable, documentation substantiating that the eligible taxpayer has satisfied the requirements to include any bonus credit amounts (as defined in § 1.6418-1(c)(3)) in the eligible credit that was part of the transferred specified credit portion; and

(C) Evidence of the eligible taxpayer's qualifying costs in the case of a transfer of an eligible credit that is part of the investment credit or the amount of qualifying production activities and sales amounts, as relevant, in the case of a transfer of an eligible credit that is a production credit.

(v) ***Transferee recordkeeping requirement.*** Consistent with § 1.6001-1(e), the transferee taxpayer must retain the required minimum documentation provided by the eligible taxpayer as long as the contents thereof may become material in the administration of any internal revenue law.

(c) ***Limitations after a transfer election is made*** —

(1) ***Irrevocable.*** A transfer election with respect to a specified credit portion is irrevocable.

(2) ***No additional transfers.*** A specified credit portion may only be transferred pursuant to a transfer election once. A transferee taxpayer cannot make a transfer election of any specified credit portion transferred to the transferee taxpayer.

(d) ***Determining the eligible credit*** —

(1) ***In general.*** An eligible taxpayer may only transfer eligible credits determined with respect to the eligible taxpayer (paragraph (a)(4) of this section disallows transfer elections in other situations). An eligible credit is determined with respect to an eligible taxpayer if the eligible taxpayer owns the underlying eligible credit property and conducts the activities giving rise to the credit or, in the case of section 45X (under which ownership of eligible credit property is not required), is considered (under the regulations under section 45X) the taxpayer with respect to which the section 45X credit is determined. All rules that relate to the determination of the eligible credit, such as the rules in sections 49 and 50(b) of the Code, apply to the eligible taxpayer and therefore can limit the amount of eligible credit determined with respect to an eligible credit property that can be transferred. Rules relating to the amount of an eligible credit that is allowed to be claimed by an eligible taxpayer, such as the rules in sections 38(c) or 469 of the Code, do not limit the eligible credit determined, but do apply to a transferee taxpayer as described in paragraph (f)(3) of this section.

(2) ***Application of section 49 at-risk rules to determination of eligible credits for partnerships and S corporations.*** Any amount of eligible credit determined with respect to investment credit property held directly by a transferor partnership or transferor S corporation that is eligible credit property (eligible investment credit property) must be determined by the partnership or S corporation taking into account the section 49 at-risk rules at the partner or shareholder level as of the close of the taxable year in which the eligible investment credit property is placed in service. Thus, if the credit base of an eligible investment credit property is limited to a partner or an S corporation shareholder by section 49, then the amount of the eligible credit determined by the transferor partnership or transferor S corporation is also limited. A transferor partnership or transferor S corporation that transfers any specified credit portion with respect to an eligible investment credit property must request from each of its partners or shareholders, respectively, that is subject to section 49, the amount of such partner's or shareholder's nonqualified nonrecourse financing with respect to the eligible investment credit property as of the close of the taxable year in which the property is placed in service. Additionally, the transferor partnership or transferor S corporation must attach to its tax return for the taxable year in which the eligible investment credit property is placed in service, the amount of each partner's or shareholder's section 49 limitation with respect to any specified credit portion transferred with respect to the eligible investment credit property. Changes to at-risk amounts under section 49 for partners or S corporation shareholders after the close of the taxable year in which the eligible investment credit property is placed in service do not impact the eligible credit determined by the transferor partnership or transferor S corporation, but do impact the partner(s) or S corporation shareholder(s) as described in § 1.6418-3(a)(6)(ii).

(e) ***Treatment of payments made in connection with a transfer election —***

(1) ***In general.*** An amount paid by a transferee taxpayer to an eligible taxpayer is in connection with a transfer election with respect to a specified credit portion only if it is paid in cash (as defined in § 1.6418-1(f)), directly relates to the specified credit portion, and is not described in § 1.6418-5(a)(3) (describing payments related to an excessive credit transfer).

(2) ***Not includible in gross income.*** Any amount paid to an eligible taxpayer that is described in paragraph (e)(1) of this section is not includible in the gross income of the eligible taxpayer.

(3) ***Not deductible.*** No deduction is allowed under any provision of the Code with respect to any amount paid by a transferee taxpayer that is described in paragraph (e)(1) of this section.

(4) ***Anti-abuse rule —***

(i) ***In general.*** A transfer election of any specified credit portion, and therefore the transfer of that specified credit portion to a transferee taxpayer, may be disallowed, or the Federal income tax consequences of any transaction(s) effecting such a transfer may be recharacterized, when the parties to the transaction have engaged in the transaction or a series of transactions with a principal purpose of avoiding any Federal tax liability beyond the intent of section 6418. For example, an amount of cash paid by a transferee taxpayer will not be considered as paid in connection with the transfer of a specified credit portion under paragraph (e)(1) of this section if a principal purpose of a transaction or series of transactions is to allow an eligible taxpayer to avoid gross income. Conversely, an amount of cash paid by a transferee taxpayer will be considered paid in connection with the transfer of a specified credit portion under paragraph (e)(1) of this section if a principal purpose of a transaction or series of transactions is to increase a Federal income tax deduction of a transferee taxpayer.

(ii) ***Example 1.*** Taxpayer A, an eligible taxpayer, generates $100 of an eligible credit with respect to an eligible credit property in the course of its trade or business. Taxpayer A also provides services to customers. Taxpayer A offers Customer B, a transferee taxpayer that cannot deduct the cost of the services, the opportunity to be transferred $100 of eligible credit for $100 while receiving Taxpayer A's services for free. Taxpayer A normally charges $20 for the same services without the purchase of the eligible credit, and an arm's length price of the eligible credit without regard to other commercial relationships is $80 paid in cash for $100 of the eligible credit. Taxpayer A is engaged in a transaction in which it is undercharging for services to Customer B to avoid recognizing $20 of gross income. This transaction is subject to recharacterization under the anti-abuse rule in paragraph (e)(4) of this section, and Taxpayer A will be treated as transferring $100 of the eligible credit for $80, and have $20 of gross income from the services provided to Customer B.

(iii) ***Example 2.*** Taxpayer C, an eligible taxpayer, generates $100 of an eligible credit with respect to an eligible credit property in the course of its trade or business. Taxpayer C also sells property to customers. Taxpayer C offers Customer D, a transferee taxpayer that can deduct the purchase of property, the opportunity to receive the $100 of eligible credit for $20 while purchasing Taxpayer C's property for $80. Taxpayer C normally charges $20 for the same property without the transfer of the eligible credit, and an arm's length price of the eligible credit without regard to other commercial relationships is $80 paid in cash for $100 of the eligible credit. Taxpayer C is willing to accept the higher price for the property because Taxpayer C has a net operating loss carryover to offset any taxable income from the transaction. This transaction is subject to recharacterization under the anti-abuse rule under paragraph (e)(4) of this section, and Taxpayer C will be treated as selling the property for $20 and transferring $100 of the eligible credit for $80, and Customer D will have a $20 deduction related to the purchase of the property instead of $80.

(f) ***Transferee taxpayer's treatment of eligible credit*** —

(1) ***Taxable year in which credit taken into account*** —

(i) ***In general.*** In the case of any specified credit portion transferred to a transferee taxpayer pursuant to a transfer election under this section, the transferee taxpayer takes the specified credit portion into account in the transferee taxpayer's first taxable year ending with or ending after the taxable year of the eligible taxpayer with respect to which the eligible credit was determined. Thus, to the extent the taxable years of an eligible taxpayer and a transferee taxpayer end on the same date, the transferee taxpayer will take the specified credit portion into

account in that taxable year. To the extent the taxable years of an eligible taxpayer and a transferee taxpayer end on different dates, the transferee taxpayer will take the specified credit portion into account in the transferee taxpayer's first taxable year that ends after the taxable year of the eligible taxpayer.

(ii) ***Rule for 52 -53-week taxable years.*** For purposes of determining the taxable year in which a credit is taken into account under section 6418(d) and paragraph (f)(1)(i) of this section, a 52-53-week taxable year of an eligible taxpayer and transferee taxpayer is deemed to end on or close on the last day of the calendar month nearest to the last day of the 52-53-week taxable year, as the case may be.

(2) ***No gross income for a transferee taxpayer upon claiming a transferred specified credit portion.*** A transferee taxpayer does not have gross income upon claiming a transferred specified credit portion even if the amount of cash paid to the eligible taxpayer was less than the amount of the transferred specified credit portion, assuming all other requirements of section 6418 are met. For example, a transferee taxpayer who paid $9X for $10X of a specified credit portion that the transferee taxpayer then claims on its return does not result in the $1X difference being included in the gross income of the transferee taxpayer.

(3) ***Transferee treated as the eligible taxpayer*** —

(i) ***In general.*** A transferee taxpayer (and not the eligible taxpayer) is treated as the taxpayer for purposes of the Code with respect to the transferred specified credit portion. An eligible taxpayer must apply the rules necessary to determine the amount of an eligible credit prior to making the transfer election for a specified credit portion, and therefore a transferee taxpayer does not re-apply rules that relate to a determination of an eligible credit, such as the rules in sections 49 or 50(b). However, a transferee taxpayer must apply rules that relate to computing the amount of the specified credit portion that is allowed to be claimed in the taxable year by the transferee taxpayer, such as the rules in section 38 or 469, as applicable.

(ii) ***Application of section 469.*** A specified credit portion transferred to a transferee taxpayer is treated as determined in connection with the conduct of a trade or business and, if applicable, such transferred specified credit portion is subject to the rules in section 469. In applying section 469, unless a transferee taxpayer owns an interest in the eligible taxpayer's trade or business at the time the work was done, the fact that the specified credit portion is treated as determined in connection with the conduct of a trade or business does not cause the transferee taxpayer to be considered to own an interest in the eligible taxpayer's trade or business at the time the work was done and does not change the characterization of the transferee taxpayer's participation (or lack thereof) in the eligible taxpayer's trade or business by using any of the grouping rules under § 1.469-4(c).

(4) ***Transferee taxpayer requirements to take into account a transferred specified credit portion.*** In order for a transferee taxpayer to take into account in a taxable year (as described in paragraph (f)(1) of this section) a specified credit portion that was transferred by an eligible taxpayer, as part of filing a return (or short year return), an amended return, or a request for an administrative adjustment under section 6227 of the Code, the transferee taxpayer must include the following—

(i) A properly completed Form 3800, *General Business Credit* (or its successor), to take into account the transferred specified credit portion as a current general business credit, and including all registration number(s) related to the transferred specified credit portion;

(ii) The transfer election statement described in paragraph (b)(5) of this section attached to the return; and

(iii) Any other information related to the transfer election specified in guidance.

(g) ***Applicability date.*** This section applies to taxable years ending on or after April 30, 2024. For taxable years ending before April 30, 2024, taxpayers, however, may choose to apply the rules of this section and §§ 1.6418-1, -3, and -5, provided the taxpayers apply the rules in their entirety and in a consistent manner.

[T.D. 9993, 89 FR 34800, Apr. 30, 2024; 89 FR 67860, Aug. 22, 2024]

§ 1.6418-3 Additional rules for partnerships and S corporations.

(a) ***Rules applicable to both partnerships and S corporations*** —

(1) ***Partnerships and S corporations as eligible taxpayers and transferee taxpayers.*** Under section 6418, a partnership or an S corporation may qualify as a transferor partnership or a transferor S corporation and may elect to make a transfer election to transfer a specified credit portion to a transferee taxpayer. A partnership or an S corporation may also qualify as a transferee partnership or a transferee S corporation. This section provides rules applicable to transferor partnerships and transferor S corporations and transferee partnerships and transferee S corporations. Paragraph (b) of this section provides rules applicable solely to partnerships. Paragraph (c) of this section provides rules applicable solely to S corporations. Paragraph (d) of this section provides guidelines for the manner and due date for which a partnership or an S corporation makes an election under section 6418(a). Paragraph (e) of this section contains examples illustrating the operation of the provisions of this section. Except as provided in this section, the general rules under section 6418 and the section 6418 regulations apply to partnerships and S corporations.

(2) ***Treatment of cash received for a specified credit portion.*** In the case of any specified credit portion determined with respect to any eligible credit property held directly by a partnership or an S corporation, if such partnership or S corporation makes a transfer election with respect to such specified credit portion—

(i) Any amount of cash payment received as consideration for the transferred specified credit portion will be treated as tax exempt income for purposes of sections 705 and 1366 of the Code; and

(ii) A partner's distributive share of such tax exempt income will be as described in paragraphs (b)(1) and (2) of this section.

(3) ***No partner or shareholder level transfers.*** In the case of an eligible credit property held directly by a partnership or an S corporation, no transfer election by any partner or S corporation shareholder is allowed under § 1.6418-2 or this section with respect to any specified credit portion determined with respect to such eligible credit property.

(4) ***Disregarded entity ownership.*** In the case of an eligible credit property held directly by an entity disregarded as separate from a partnership or an S corporation for Federal income tax purposes, such eligible credit property will be treated as held directly by the partnership or S corporation for purposes of making a transfer election.

(5) ***Treatment of tax exempt income.*** Tax exempt income resulting from the receipt of consideration for the transfer of a specified credit portion by a transferor partnership or transferor S corporation is treated as arising from an investment activity and not from the conduct of a trade or business within the meaning of section 469(c)(1)(A). As such, any tax exempt income is not treated as passive income to any direct or indirect partners or shareholders who do not materially participate within the meaning of section 469(c)(1)(B).

(6) ***Certain recapture events not requiring notice*** —

(i) ***Indirect dispositions under section 50*** —

(A) ***Treatment of transferor partnership or transferor S corporation and transferee taxpayer.*** For purposes of section 6418(g)(3)(B) only, the disposition of a partner's interest under § 1.47-6(a)(2) or an S corporation shareholder's interest under § 1.47-4(a)(2) in an eligible taxpayer that is treated as a transferor partnership or transferor S corporation is disregarded. As such, provided the investment credit property that is eligible credit property owned by the transferor partnership or transferor S corporation is not disposed of, and continues to be investment credit property with respect to such transferor partnership or transferor S corporation, a transferor partnership or transferor S corporation is not required to provide notice to a transferee taxpayer of an interest disposition by the partner or shareholder because the disposition does not result in recapture under section 6418(g)(3)(B) to which the transferee taxpayer is liable, and thus, the transferee taxpayer does not have to calculate a recapture amount.

(B) ***Treatment of partner or shareholder.*** A partner or an S corporation shareholder that has disposed of an interest in a transferor partnership or transferor S corporation is subject to the rules relating to such disposition under § 1.47-6(a)(2) or § 1.47-4(a)(2), respectively. Any recapture to a disposing partner is calculated based on the partner's share of the basis (or cost) of the section 38 property to which the specified credit portion was determined in accordance with § 1.46-3(f). Any recapture to a disposing shareholder is calculated based on the shareholder's pro rata share of the basis (or cost) of the section 38 property to which the specified credit portion was determined in accordance with § 1.48-5.

(ii) ***Changes in at-risk amounts under section 49*** —

(A) ***Treatment of transferor partnership or transferor S corporation and transferee taxpayer.*** For purposes of section 6418 only, a change in the nonqualified nonrecourse financing (as defined in section 49(a)(1)(D)) amount of any partner or shareholder of a transferor partnership or transferor S corporation, respectively, after the close of the taxable year in which the investment credit property is placed in service and the specified credit portion is determined, is disregarded. A transferor partnership or transferor S corporation is not required to provide notice to a transferee taxpayer of the change because the change does not cause recapture under section 6418(g)(3)(B) to which the transferee taxpayer is liable, and thus, the transferee taxpayer does not have to calculate a recapture amount.

(B) ***Treatment of partner or shareholder.*** A partner or shareholder in a transferor partnership or transferor S corporation, respectively, must apply the rules under section 49 at the partner or shareholder level if there is a change in nonqualified nonrecourse financing with respect to the partner or shareholder after the close of the taxable year in which the investment credit property is placed in service and the specified credit portion is determined. If there

is an increase in nonqualified nonrecourse financing to a partner, any adjustment under the rules of section 49(b) is calculated based on the partner's share of the basis (or cost) of the section 38 property to which the specified credit portion was determined in accordance with § 1.46-3(f). If there is an increase in nonqualified nonrecourse financing to a shareholder, any adjustment under the rules of section 49(b) is calculated based on the shareholder's pro rata share of the basis (or cost) of the section 38 property to which the specified credit portion was determined in accordance with § 1.48-5. If there is a decrease in nonqualified nonrecourse financing, any increase in the credit base is taken into account by the partner or shareholder as provided under section 49, and any resulting credit is not eligible for transfer under section 6418.

(b) ***Rules applicable to partnerships*** —

(1) ***Allocations of tax exempt income amounts generally.*** A transferor partnership must generally determine a partner's distributive share of any tax exempt income resulting from the receipt of consideration for the transfer based on such partner's proportionate distributive share of the eligible credit that would otherwise have been allocated to such partner absent the transfer of the specified credit portion (otherwise eligible credit). A partner's distributive share of an otherwise eligible credit is determined under §§ 1.46-3(f) and 1.704-1(b)(4)(ii). Tax exempt income resulting from the receipt of consideration for the transfer of a specified credit portion by a transferor partnership is treated as received or accrued, including for purposes of section 705 of the Code, as of the date the specified credit portion is determined with respect to the transferor partnership (such as, for investment credit property, the date the property is placed in service).

(2) ***Special rule for allocations of tax exempt income amounts and eligible credits for an election to transfer less than all eligible credits determined with respect to an eligible credit property.*** In the event a transferor partnership elects to transfer one or more specified credit portions of less than all eligible credits determined with respect to an eligible credit property held directly by the partnership, the partnership may allocate any tax exempt income resulting from the receipt of consideration for the specified credit portion(s) in accordance with the rules in this paragraph (b)(2).

(i) First, the partnership must determine each partner's distributive share of the otherwise eligible credits with respect to such eligible credit property in accordance with paragraph (b)(1) of this section (partner's eligible credit amount).

(ii) Thereafter, the transferor partnership may determine, in any manner described in the partnership agreement, or as the partners may agree, the portion of each partner's eligible credit amount to be transferred, and the portion of each partner's eligible credit amount to be retained and allocated to such partner. The partnership may allocate to each partner its agreed upon share of eligible credits, tax exempt income resulting from the receipt of consideration for the specified credit portion(s), or both, as the case may be, provided that—

(A) The amount of eligible credits allocated to each partner cannot exceed such partner's eligible credit amount; and

(B) Each partner is allocated its proportionate share of tax exempt income resulting from the transfer(s).

(iii) Each partner's proportionate share of tax exempt income resulting from the transfer(s) is equal to the total amount of tax exempt income resulting from the transfer(s) of the specified credit portion(s) by the partnership multiplied by a fraction—

(A) The numerator of which is such partner's eligible credit amount minus the amount of eligible credits actually allocated to such partner with respect to the eligible credit property for the taxable year; and

(B) The denominator of which is the specified credit portion(s) transferred by the partnership with respect to the eligible credit property for the taxable year.

(3) ***Transferor partnerships in tiered structures.*** If a partnership (upper-tier partnership) is a direct or indirect partner of a transferor partnership and directly or indirectly receives—

(i) An allocation of an eligible credit, the upper-tier partnership is not an eligible taxpayer under section 6418 with respect to any eligible credit allocated by a transferor partnership; or

(ii) An allocation of tax exempt income resulting from the receipt of consideration for the transfer of a specified credit portion by a transferor partnership, the upper-tier partnership must determine its partners' distributive shares of such tax exempt income in proportion to the partners' distributive shares of the otherwise eligible credit as provided in paragraph (b)(1) of this section.

(4) ***Partnership as a transferee taxpayer*** —

(i) ***Eligibility under section 6418.*** A partnership may qualify as a transferee partnership to the extent it is not related (within the meaning of section 267(b) or 707(b)(1)) to an eligible taxpayer. A transferee partnership is subject to the no additional transfer rule in § 1.6418-2(c)(2), however, an allocation of a transferred specified credit portion to a direct or indirect partner of a transferee partnership under section 704(b) is not a transfer for purposes of section 6418.

(ii) ***Treatment of a cash payment for a transferred specified credit portion.*** A cash payment by a transferee partnership as consideration for a transferred specified credit portion is treated as an expenditure described in section 705(a)(2)(B).

(iii) ***Allocations of transferred specified credit portions.*** A transferee partnership must determine each partner's distributive share of any transferred specified credit portion based on such partner's distributive share of the nondeductible expenses for the taxable year used to fund the purchase of such transferred specified credit portion. Each partner's distributive share of the nondeductible expenses used to fund the purchase of any transferred specified credit portion is determined by the partnership agreement, or, if the partnership agreement does not provide for the allocation of nondeductible expenses paid pursuant to section 6418, then the allocation of the specified credit portion is based on the transferee partnership's general allocation of nondeductible expenses.

(iv) ***Transferred specified credit portion treated as an extraordinary item.*** A transferred specified credit portion is treated as an extraordinary item and must be allocated among the partners of a transferee partnership as of the time the transfer of the specified credit portion to the transferee partnership is treated as occurring in accordance with this paragraph (b)(4)(iv) and § 1.706-4(e)(1) and (e)(2)(ix). If the transferee partnership and eligible taxpayer have the same taxable years, the transfer of a specified credit portion to a transferee partnership is treated as occurring on the first date that the transferee partnership makes a cash payment to the eligible taxpayer as consideration for the specified credit portion. If the transferee partnership and eligible taxpayer have different taxable years, the transfer of a specified credit portion to a transferee partnership is treated as occurring on the later of—

(A) The first date of the taxable year that the transferee partnership takes the specified credit portion into account under section 6418(d); or

(B) The first date that the transferee partnership makes a cash payment to the eligible taxpayer for the specified credit portion.

(v) ***Transferee partnerships in tiered structures.*** If an upper-tier partnership is a direct or indirect partner of a transferee partnership and directly or indirectly receives an allocation of a transferred specified credit portion, the upper-tier partnership is not an eligible taxpayer under section 6418 with respect to the transferred specified credit portion. The upper-tier partnership's distributive share of the transferred specified credit portion is treated as an extraordinary item to the upper-tier partnership and must be allocated among the partners of the upper-tier partnership as of the time the transfer of the specified credit portion to the transferee partnership is treated as occurring in accordance with paragraph (b)(4)(iv) of this section and § 1.706-4(e)(1) and (e)(2)(ix), regardless of whether the transferee partnership and upper-tier partnership have different taxable years under section 706(b). The upper-tier partnership must report the credits to its partners in accordance with guidance.

(c) ***Rules applicable to S corporations*** —

(1) ***Pro rata shares of tax exempt income amounts.*** Each shareholder of a transferor S corporation must take into account such shareholder's pro rata share (as determined under section 1377(a) of the Code) of any tax exempt income resulting from the receipt of consideration for the transfer. Tax exempt income resulting from the receipt of consideration for the transfer of a specified credit portion by a transferor S corporation is treated as received or accrued, including for purposes of section 1366, as of the date the specified credit portion is determined with respect to the transferor S corporation (such as, for investment credit property, the date the property is placed in service).

(2) ***S corporation as a transferee taxpayer*** —

(i) ***Eligibility under section 6418.*** An S corporation may qualify as a transferee taxpayer to the extent it is not related (within the meaning of section 267(b) or 707(b)(1)) to an eligible taxpayer (transferee S corporation). A transferee S corporation is subject to the no additional transfer rule in § 1.6418-2(c)(2), however, an allocation of a transferred specified credit portion to a direct or indirect shareholder of a transferee S corporation is not a transfer for purposes of section 6418.

(ii) ***Treatment of a cash payment for a transferred specified credit portion.*** A cash payment by a transferee S corporation as consideration for a transferred specified credit portion is treated as an expenditure described in section 1367(a)(2)(D) of the Code.

(iii) ***Pro rata shares of transferred specified credit portions.*** Each shareholder of a transferee S corporation must take into account such shareholder's pro rata share (as determined under section 1377(a)) of any transferred specified credit portion. If the transferee S corporation and eligible taxpayer have the same taxable years, the transfer of a specified credit portion is treated as occurring to a transferee S corporation during the transferee S corporation's permitted year (as defined under sections 444 and 1378(b)) that the transferee S corporation first makes a cash payment as consideration to the eligible taxpayer for the specified credit portion. If the transferee S corporation and eligible taxpayer have different taxable years, then the transfer of a specified credit portion is treated as occurring to a transferee S corporation

during the transferee S corporation's first permitted year (as defined under sections 444 and 1378(b)) ending with or after, the taxable year of the eligible taxpayer to which the transferred specified credit portion was determined.

(d) ***Transfer election by a partnership or an S corporation*** —

(1) ***In general.*** A partnership or an S corporation may make a transfer election to transfer a specified credit portion under section 6418 if it files an election in accordance with the rules set forth in this paragraph (d). A transfer election is made on the basis of an eligible credit property and only applies to the specified credit portion identified in the transfer election by such partnership or S corporation in the taxable year for which the election is made.

(2) ***Manner and due date of making a transfer election.*** A transfer election for a specified credit portion must be made in the manner provided in § 1.6418-2(b)(1) through (3). All documents required in § 1.6418-2(b)(1) through (3) must be attached to the partnership or S corporation return for the taxable year during which the transferred specified credit portion was determined. For the transfer election to be valid, the return must be filed not later than the time prescribed by §§ 1.6031(a)-1(e) and 1.6037-1(b) (including extensions of time) for filing the return for such taxable year. No transfer election may be made for the first time on an amended return, withdrawn on an amended return, or made or withdrawn by filing an administrative adjustment request under section 6227 of the Code. A numerical error with respect to a properly claimed transfer election may be corrected on an amended return or by filing an administrative adjustment request under section 6227 if necessary; however, the partnership or S corporation's original return, which must be signed under penalties of perjury, must contain all of the information, including a registration number, required by these final regulations. In order to correct an error on an amended return or administrative adjustment request under section 6227, a partnership or an S corporation must have made an error in the information included on the original return such that there is a substantive item to correct; a partnership or an S corporation cannot correct a blank item or an item that is described as being “available upon request.” There is no late-election relief available under §§ 301.9100-1 or 301.9100-3 of this chapter for a transfer election that is not timely filed; however, relief under § 301.9100-2(b) may apply if the partnership or S corporation has not received an extension of time to file a return after the original due date, has timely filed a return, takes corrective action under § 301.9100-2(c) within the six-month extension period, and meets the procedural requirements outlined in § 301.9100-2(d).

(3) ***Irrevocable election.*** A transfer election by a partnership or an S corporation is irrevocable.

(e) ***Examples.*** The examples in this paragraph (e) illustrate the application of paragraphs (a)(6), (b), and (c) of this section.

(1) ***Example 1. Transfer of all eligible credits by a transferor partnership*** —

(i) ***Facts.*** A and B each contributed $150X of cash to AB partnership for the purpose of investing in energy property. The partnership agreement provides that A and B share equally in all items of income, gain, loss, deduction, and credit of AB partnership. AB partnership invests $300X in an energy property in accordance with section 48 and places the energy property in service on date X in year 1. As of the end of year 1, AB partnership has $90X of eligible credits under section 48 with respect to the energy property. Before AB partnership files its tax return for year 1, AB partnership transfers the $90X of eligible credits to an unrelated transferee taxpayer, Transferee Taxpayer X for $80X and executes a transfer election statement with Transferee Taxpayer X.

(ii) ***Analysis.*** Under § 1.6418-3(b)(1), AB partnership allocates the tax exempt income resulting from the transfer of the specified credit portion proportionately among the partners based on each partner's distributive share of the otherwise eligible section 48 credit as determined under §§ 1.46-3(f) and 1.704-1(b)(4)(ii). Under § 1.46-3(f)(2), each partner's share of the basis of the energy property is determined in accordance with the ratio in which the partners divide the general profits (or taxable income) of the partnership. Under the AB partnership agreement, A and B share partnership profits equally. Thus, each partner's share of the basis of the energy property under § 1.46-3(f) and distributive share of the otherwise eligible credits under § 1.704-1(b)(4)(ii) is 50 percent. The transfer made pursuant to section 6418(a) causes AB partnership's eligible credits under section 48 with respect to the energy property to be reduced to zero, and the consideration of $80X received by AB partnership for the transferred specified credit portion is treated as tax exempt income. Because the tax exempt income is allocated in the same proportion as the otherwise eligible credit would have been allocated, A and B will each be allocated $40X of tax exempt income. Each of partner A's and partner B's basis in its partnership interest and capital account will be increased by $40X. Also in year 1, the basis in the energy property held by AB partnership and with respect to which the credit is calculated is reduced under section 50(c)(3) by 50 percent of the amount of the credit so determined, or $45X. A's and B's basis in their partnership interests and capital accounts will be appropriately adjusted to take into account adjustments made to the energy property under section 50(c)(5) and § 1.704-1(b)(2)(iv)(*j*). The tax exempt income received or accrued by AB partnership as a result of the transferred specified credit portion is treated as received or accrued, including for purposes of section 705, as of date X in year 1, which is the date the transferred specified credit portion was determined with respect to AB partnership.

(2) ***Example 2. Recapture to a transferor partnership*** —

(i) ***Facts.*** Assume the same facts as in paragraph (e)(1)(i) of this section (*Example 1*), except in year 3, within the recapture period related to the energy property, A reduces its proportionate interest in the general profits of the partnership by 50 percent causing a recapture event to A under § 1.47-6(a)(2). The energy property is not disposed of by AB partnership and continues to be energy property with respect to AB partnership.

(ii) ***Analysis.*** AB partnership should not provide notice of recapture to Transferee Taxpayer X as a result of the recapture event under § 1.47-6(a)(2) with respect to A. Transferee Taxpayer X is not liable for any recapture amount. A, however, is subject to recapture as provided in § 1.47-6(a)(2) and based on its share of the basis (or cost) of the energy property to which the eligible credits were determined under § 1.46-3(f)(2).

(3) ***Example 3. Transfer of a portion of eligible credits by a transferor partnership*** —

(i) ***Facts.*** C and D each contributed cash to CD partnership for the purpose of investing in a qualified wind facility. The partnership agreement provides that until a flip point, C is allocated 99 percent of all items of income, gain, loss, deduction and credit of CD partnership and D is allocated the remaining 1 percent of such items. After the flip point, C is allocated 5 percent of all items of income, gain, loss, deduction and credit of CD Partnership and D is allocated 95 percent of such items. CD partnership invests in a qualified wind facility and places the facility in service in year 1. CD partnership generates $100X of credit under section 45(a) for year 1. Before the due date for CD partnership's year 1 tax return (with extension), C and D agree that

D's share of the eligible credit will be transferred, and C will be allocated its share of eligible credit. CD partnership transfers $1X of the eligible credit to an unrelated transferee taxpayer for $1X. The flip point has not been reached by the end of year 1.

(ii) ***Analysis.*** Under paragraph (b)(2) of this section, CD partnership must first determine each partner's eligible credit amount, which is equal to such partner's distributive share of the otherwise eligible section 45(a) credit as determined under § 1.704-1(b)(4)(ii). Under § 1.704-1(b)(4)(ii), for an eligible credit that is not an investment tax credit and that arises from receipts of a partnership, allocations of credit are deemed to be in accordance with the partners' interests in the partnership if the credit is allocated in the same proportion as the partners' distributive shares of the receipts that give rise to the credit. The CD partnership agreement provides that until the flip point, C is allocated 99 percent of all items of income, gain, loss, deduction and credit of CD partnership and D is allocated the remaining 1 percent of such items. Assuming all requirements of the safe harbor provided for in Revenue Procedure 2007-65, 2007-2 CB 967 are met, CD partnership's allocations of the otherwise eligible credits would be respected as in accordance with section 704(b). Thus, partner C's and partner D's distributive share of the otherwise eligible credit is 99 percent and 1 percent, respectively. C and D have agreed to sell D's eligible credit amount of $1X for full value and to allocate to C its eligible credit amount of $99X. The transfer made pursuant to section 6418(a) causes CD partnership's eligible credits under section 45(a) with respect to the wind facility to be reduced to $99X, and the consideration of $1X received by CD partnership is treated as tax exempt income. D is allocated $1X of tax exempt income from the transfer of the eligible credits, and C is allocated $99X of eligible credits under section 45(a) with respect to the wind facility. Neither C nor D is allocated more eligible credits than its eligible credit amount. Additionally, D is allocated an amount of tax exempt income equal to $1X × (1 − 0)/1 and C is allocated none of the tax exempt income. The allocations of eligible credits and tax exempt income are permissible allocations under paragraph (b)(2) of this section.

(4) ***Example 4. Upper-tier partnership of a transferor partnership*** —

(i) ***Facts.*** E, F, and G each contributed $100X of cash to EFG partnership for the purpose of investing in an energy property. E, F, and G are partnerships for Federal income tax purposes. The partnership agreement provides that E, F and G share equally in all items of income, gain, loss, and deduction of EFG partnership. EFG partnership invests $300X in an energy property in accordance with section 48 and places the energy property in service in year 1. As of the end of year 1, EFG partnership has $90X of eligible credits under section 48 with respect to the energy property. Before the due date for EFG partnership's year 1 tax return (with extension), E, F and G agree that E's share of the eligible credits will be transferred, and F and G will each be allocated their shares of eligible credits (or basis). EFG partnership transfers $30X of the eligible credits to an unrelated transferee taxpayer for $25X. Assuming the allocations to E, F and G of the eligible credits and tax exempt income resulting from the receipt of cash for the transferred specified credit portion are permissible allocations under paragraph (b)(2) of this section, E is allocated $25X of tax exempt income from the transfer of the eligible credits and F and G are each allocated $30X of eligible credits with respect to the energy property.

(ii) ***Analysis.*** E must allocate the $25X of tax exempt income to its partners as if it had retained its share of the eligible credits. Under § 1.46-3(f)(2), each partner's share of the basis of the section 48 energy property is determined in accordance with the ratio in which the partners divide the general profits (or taxable income) of the partnership. The E partnership agreement provides for equal allocations of income, gain, deduction, and loss to its partners, and thus, E

partnership must allocate the otherwise eligible credits in the same manner. Therefore, E partnership must allocate the $25X of tax exempt income equally among its partners. In accordance with paragraph (b)(3)(i) of this section, F and G do not qualify as an eligible taxpayer for purposes of section 6418 and thus, are not permitted to make a transfer election for any portion of the $30X of eligible credit allocated to them by EFG partnership. Under § 1.46-3(f)(2), each partner's share of the basis of the section 48 energy property is determined in accordance with the ratio in which the partners divide the general profits (or taxable income) of the partnership. The F and G partnership agreements provide for equal allocations of income, gain, deduction, and loss to its partners, and F and G must allocate the basis from the energy property to their partners in the same manner.

(5) *Example 5. Transferee partnership* —

(i) ***Facts.*** Y and Z each contributed $50X of cash to YZ partnership for the purpose of purchasing eligible section 45 credits under section 6418. The partnership agreement provides that all items of income, gain, loss, deduction, and credit are shared equally among Y and Z. The partnership agreement also provides that any nondeductible expenses used to fund the purchase of any transferred specified credit portion will be shared equally among Y and Z. On date X in year 1, YZ partnership qualifies as a transferee taxpayer and makes a cash payment of $80X to an eligible taxpayer for $100X of a transferred specified credit portion. The eligible credits will be determined with respect to the eligible taxpayer as of the end of year 1. Both YZ partnership and the eligible taxpayer are calendar year taxpayers.

(ii) ***Analysis.*** The cash payment of $80X made by YZ partnership for the transferred specified credit portion is treated as a nondeductible expenditure under section 705(a)(2)(B). Under paragraph (b)(4)(iii) of this section, YZ partnership must determine each partner's distributive share of the transferred specified credit portion based on such partner's distributive share of the nondeductible expenses for the taxable year used to fund the purchase of such transferred specified credit portion. The YZ partnership agreement provides that nondeductible expenses used to fund the purchase of any transferred specified credit portion will be shared equally among Y and Z and thus, the transferred specified credit portion is also shared equally among Y and Z. The transferred specified credit portion is treated as an extraordinary item under § 1.706-4(e)(2)(ix) that is deemed to occur on date X in year 1. As of date X in year 1, each of Y and Z are allocated $40X of a section 705(a)(2)(B) expenditure with respect to the cash payment for the transferred specified credit portion and $50X of transferred section 45 credits.

(6) *Example 6. Upper-tier partnership of a transferee partnership* —

(i) ***Facts.*** Assume the same facts as in paragraph (e)(5)(i) of this section (*Example 5*), except Y is a partnership for Federal tax purposes, and Z is a U.S. C corporation for Federal tax purposes (as defined in section 1361(a)(2) of the Code).

(ii) ***Analysis.*** In accordance with paragraph (b)(4)(v) of this section, Y does not qualify as an eligible taxpayer for purposes of section 6418 for that portion of the transferred specified credit portion allocated to it by YZ partnership. Under paragraph (b)(4)(iii) of this section, Y must determine each partner's distributive share of the transferred specified credit portion based on such partner's distributive share of the nondeductible expenses for the taxable year used to fund the purchase of such transferred specified credit portion. The Y partnership agreement provides that all items of income, gain, loss, deduction, and credit are shared equally. The partnership agreement also provides that any nondeductible expenses used to fund the purchase of any specified credit portion are shared equally. Thus, the transferred specified credit portion must

be shared equally among the partners of Y. Y's distributive share of the transferred specified credit portion is treated as an extraordinary item to Y and must be allocated among the partners of Y as of date X in year 1, which is when the item is deemed to occur to YZ partnership, regardless of whether Y and YZ partnership have the same taxable years under section 706(b).

(7) *Example 7. Transferor S corporation* —

(i) ***Facts.*** V and W each contributed $150X of cash to an S corporation for the purpose of investing in energy property. The S corporation invests $300X in an energy property in accordance with section 48 and places the energy property in service on date X in year 1. As of the end of year 1, the S corporation has $90X of eligible credits under section 48 with respect to the energy property. Before the due date for the S corporation's year 1 tax return (with extension), the S corporation transfers the $90X of eligible credits to an unrelated transferee taxpayer for $80X.

(ii) ***Analysis.*** The transfer made pursuant to section 6418(a) causes the S corporation's eligible credits under section 48 with respect to the energy property to be reduced to zero, and the consideration of $80X received by the S corporation for the transferred specified credit portion is treated as tax exempt income. Under paragraph (c)(1) of this section, each of V and W must take into account its pro rata share (as determined under section 1377(a)) of any tax exempt income resulting from the receipt of consideration for the transfer of the eligible credit, or $40X. Under section 1367(a)(1)(A), each of the shareholder's basis in its stock will be increased by $40X. Also in year 1, the basis in the energy property with respect to which the credit is calculated is reduced under section 50(c)(3) by 50 percent of the amount of the credit so determined, or $45X. The tax exempt income received or accrued by the S corporation as a result of the transfer of the specified credit portion is treated as received or accrued, including for purposes of section 1366, as of date X in year 1, which is the date the transferred specified credit portion was determined with respect to the transferor S corporation.

(8) *Example 8. Transferee S corporation* —

(i) ***Facts.*** J and K each contributed $50X of cash to an S corporation for the purpose of purchasing eligible section 48 credits under section 6418. At the beginning of year 2, the S corporation qualifies as a transferee taxpayer and makes a cash payment of $80X to an eligible taxpayer for $100X of a transferred specified credit portion. The transferred specified credit portion was determined with respect to the eligible taxpayer for energy property placed in service in year 1. Both the S corporation and the eligible taxpayer are calendar year taxpayers.

(ii) ***Analysis.*** The cash payment of $80X made by the S corporation for the transferred specified credit portion is treated as an expenditure described in section 1367(a)(2)(D). Each of J and K must take into account its pro rata share (as determined under section 1377(a)) of the transferred specified credit portion. The transferred specified credit portion is deemed to arise for purposes of sections 1366 and 1377 during year 2 of the S corporation. For year 2, each of J and K take into account $40X of a section 1367(a)(2)(D) expenditure with respect to the cash payment for the transferred specified credit portion and $50X of transferred section 48 credits.

(f) ***Applicability date.*** This section applies to taxable years ending on or after April 30, 2024. For taxable years ending before April 30, 2024, taxpayers, however, may choose to apply the rules of this section and §§ 1.6418-1, -2, and -5, provided the taxpayers apply the rules in their entirety and in a consistent manner.

[T.D. 9993, 89 FR 34800, Apr. 30, 2024; 89 FR 67860, Aug. 22, 2024]

§ 1.6418-4 Additional information and registration.

(a) ***Pre-filing registration and election.*** As a condition of, and prior to, any specified credit portion being transferred by an eligible taxpayer to a transferee taxpayer pursuant to an election under § 1.6418-2, or a specified credit portion being transferred by a partnership or an S corporation pursuant to § 1.6418-3, the eligible taxpayer is required to satisfy the pre-filing registration requirements in paragraph (b) of this section. An eligible taxpayer that does not obtain a registration number under paragraph (c)(1) of this section, and report the registration number on its return pursuant to paragraph (c)(5) of this section, is ineligible to make a transfer election for a specified credit portion under § 1.6418-2 or § 1.6418-3, with respect to the eligible credit determined with respect to the specific eligible credit property for which the eligible taxpayer has failed to obtain and report a registration number. However, completion of the pre-filing registration requirements and receipt of a registration number does not, by itself, mean the eligible taxpayer is eligible to transfer any specified credit portion determined with respect to the eligible credit property.

(b) ***Pre-filing registration requirements*** —

(1) ***Manner of pre-filing registration.*** Unless otherwise provided in guidance, eligible taxpayers must complete the pre-filing registration process electronically through an IRS electronic portal and in accordance with the instructions provided therein.

(2) ***Pre-filing registration and election for members of a consolidated group.*** A member of a consolidated group (as defined in § 1.1502-1) is required to complete pre-filing registration to transfer any eligible credit determined with respect to the member. *See* § 1.1502-77 (providing rules regarding the status of the common parent as agent for its members).

(3) ***Timing of pre-filing registration.*** An eligible taxpayer must satisfy the pre-filing registration requirements of this paragraph (b) and receive a registration number under paragraph (c) of this section prior to making a transfer election under § 1.6418-2 or § 1.6418-3 for a specified credit portion on the taxpayer's return for the taxable year at issue.

(4) ***Each eligible credit property must have its own registration number.*** An eligible taxpayer must obtain a registration number for each eligible credit property with respect to which a transfer election of a specified credit portion is made.

(5) ***Information required to complete the pre-filing registration process.*** Unless modified in future guidance, an eligible taxpayer is required to provide the following information to the IRS to complete the pre-filing registration process:

(i) The eligible taxpayer's general information, including its name, address, taxpayer identification number, and type of legal entity;

(ii) Any additional information required by the IRS electronic portal, such as information establishing that the entity is an eligible taxpayer;

(iii) The taxpayer's taxable year, as determined under section 441;

(iv) The type of annual tax return(s) normally filed by the eligible taxpayer, or that the eligible taxpayer does not normally file an annual tax return with the IRS;

(v) The type of eligible credit(s) for which the eligible taxpayer intends to make a transfer election;

(vi) Each eligible credit property that the eligible taxpayer intends to use to determine a specified credit portion for which the eligible taxpayer intends to make a transfer election;

(vii) For each eligible credit property listed in paragraph (b)(5)(vi) of this section, any further information required by the IRS electronic portal, such as—

(A) The type of eligible credit property;

(B) Physical location (that is, address and coordinates (longitude and latitude) of the eligible credit property);

(C) Supporting documentation relating to the construction or acquisition of the eligible credit property (such as State, Indian Tribal, or local government permits to operate the eligible credit property, certifications, evidence of ownership that ties to a land deed, lease, or other documented right to use and access any land or facility upon which the eligible credit property is constructed or housed, and U.S. Coast Guard registration numbers for offshore wind vessels);

(D) The beginning of construction date, and the placed in service date of the eligible credit property; and

(E) Any other information that the eligible taxpayer believes will help the IRS evaluate the registration request;

(viii) The name of a contact person for the eligible taxpayer. The contact person is the person whom the IRS may contact if there is an issue with the registration. The contact person must either:

(A) Possess legal authority to bind the eligible taxpayer; or

(B) Must provide a properly executed power of attorney on Form 2848, *Power of Attorney and Declaration of Representative;*

(ix) A penalties of perjury statement, effective for all information submitted as a complete application, and signed by a person with personal knowledge of the relevant facts that is authorized to bind the registrant; and

(x) Any other information the IRS deems necessary for purposes of preventing duplication, fraud, improper payments, or excessive payments under this section that is provided in guidance.

(c) ***Registration number*** —

(1) ***In general.*** The IRS will review the registration information provided and will issue a separate registration number for each eligible credit property for which the eligible taxpayer provided sufficient verifiable information.

(2) ***Registration number is only valid for one taxable year.*** A registration number is valid with respect to an eligible taxpayer only for the taxable year in which the credit is determined for the eligible credit property for which the registration is completed, and for a transferee taxpayer's taxable year in which the eligible credit is taken into account under § 1.6418-2(f).

(3) ***Renewing registration numbers.*** If an election to transfer an eligible credit will be made with respect to an eligible credit property for a taxable year after a registration number under this section has been obtained, the eligible taxpayer must renew the registration for that subsequent taxable year in accordance with applicable guidance, including attesting that all the facts previously provided are still correct or updating any facts.

(4) ***Amendment of previously submitted registration information if a change occurs before the registration number is used.*** As provided in instructions to the pre-filing registration portal, if specified changes occur with respect to one or more eligible credit properties for which a registration number has been previously obtained, but not yet used, an eligible taxpayer must amend the registration (or may need to submit a new registration) to reflect these new facts. For example, if the owner of a facility previously registered for a transfer election under § 1.6418-2 or § 1.6418-3 for eligible credits determined with respect to that facility and the facility undergoes a change of ownership (incident to a corporate reorganization or an asset sale) such that the new owner has a different employer identification number (EIN) than the owner who obtained the original registration, the original owner of the facility must amend the original registration to disassociate its EIN from the eligible credit property and the new owner must submit separately an original registration (or if the new owner previously registered other credit properties, must amend its original registration) to associate the new owner's EIN with the previously registered eligible credit property.

(5) ***Reporting of registration number by an eligible taxpayer and a transferee taxpayer*** —

(i) ***Eligible taxpayer reporting.*** As part of making a valid transfer election under § 1.6418-2 or § 1.6418-3, an eligible taxpayer must include the registration number of the eligible credit property on the eligible taxpayer's return (as provided in § 1.6418-2(b) or § 1.6418-3(d)) for the taxable year the specified credit portion was determined. The IRS will treat a transfer election as ineffective if an eligible taxpayer fails to include the registration number of the eligible credit property on the eligible taxpayer's return.

(ii) ***Transferee taxpayer reporting.*** A transferee taxpayer must report the registration number received (as part of the transfer election statement as described in § 1.6418-2(b) or otherwise) from a transferor taxpayer on the Form 3800, *General Business Credit,* as part of the return for the taxable year that the transferee taxpayer takes the transferred specified credit portion into account. The specified credit portion will be disallowed to the transferee taxpayer if the transferee taxpayer does not include the registration number on the return.

(d) ***Applicability date.*** This section applies to taxable years ending on or after April 30, 2024.

[T.D. 9993, 89 FR 34800, Apr. 30, 2024; 89 FR 67860, Aug. 22, 2024]

§ 1.6418-5 Special rules.

(a) ***Excessive credit transfer tax imposed*** —

(1) ***In general.*** If any specified credit portion that is transferred to a transferee taxpayer pursuant to an election in § 1.6418-2(a) or § 1.6418-3 is determined to be an excessive credit transfer (as defined in paragraph (b) of this section), the tax imposed on the transferee taxpayer by chapter 1 (regardless of whether such entity would otherwise be subject to chapter 1 tax) for the taxable year in which such determination is made will be increased by an amount equal to the sum of—

(i) The amount of such excessive credit transfer; and

(ii) An amount equal to 20 percent of such excessive credit transfer.

(2) ***Taxable year of the determination.*** The taxable year of the determination for purposes of paragraph (a)(1) of this section is the taxable year during which the excessive credit transfer determination is made and not the taxable year during which the eligible credit was originally determined by the eligible taxpayer, unless those are the same taxable years.

(3) ***Payments related to excessive credit transfer.*** Any payments made by a transferee taxpayer to an eligible taxpayer that directly relate to the excessive credit transfer (as defined in paragraph (b) of this section) are not subject to section 6418(b)(2), section 6418(b)(3), or § 1.6418-2(e). The amount of a payment that directly relates to the excessive credit transfer is equal to the total consideration paid in cash by the transferee taxpayer for the specified credit portion multiplied by the ratio of the amount of the excessive credit transferred to the transferee taxpayer to the amount of the transferred specified credit portion claimed by the transferee taxpayer.

(4) ***Reasonable cause.*** Paragraph (a)(1)(ii) of this section does not apply if the transferee taxpayer demonstrates to the satisfaction of the IRS that the excessive credit transfer resulted from reasonable cause. Determination of reasonable cause is made based on the relevant facts and circumstances. Generally, the most important factor is the extent of the transferee taxpayer's efforts to determine that the amount of specified credit portion transferred by the eligible taxpayer to the transferee taxpayer is not more than the amount of the eligible credit determined with respect to the eligible credit property for the taxable year in which the eligible credit was determined and has not been transferred to any other taxpayer. Circumstances that may indicate reasonable cause can include, but are not limited to, review of the eligible taxpayer's records with respect to the determination of the eligible credit (including documentation evidencing eligibility for bonus credit amounts), reasonable reliance on third party expert reports, reasonable reliance on representations from the eligible taxpayer that the total specified credit portion transferred (including portions transferred to other transferee taxpayers if an eligible taxpayer makes multiple transfer elections with respect to a single credit property) does not exceed the total eligible credit determined with respect to the eligible credit property for the taxable year, and review of audited financial statements provided to the Securities and Exchange Commission (and underlying information), if applicable.

(5) ***Recapture events.*** A recapture event under section 45Q(f)(4), 49(b), or 50(a) is not an excessive credit transfer.

(b) ***Excessive credit transfer defined*** —

(1) ***In general.*** The term *excessive credit transfer* means, with respect to an eligible credit property for which a transfer election is made under § 1.6418-2 or § 1.6418-3 for any taxable year, an amount equal to the excess of—

(i) The amount of the transferred specified credit portion claimed by the transferee taxpayer with respect to such eligible credit property for such taxable year; over

(ii) The amount of the eligible credit that, without the application of section 6418, would be otherwise allowable under the Code with respect to such eligible credit property for such taxable year.

(2) ***Multiple transferees treated as one.*** All transferee taxpayers are considered as one transferee for calculating whether there was an excessive credit transfer and the amount of the excessive credit transfer. If there was an excessive credit transfer, then the amount of excessive credit transferred to a specific transferee taxpayer is equal to the total excessive credit transferred multiplied by the ratio of the transferee taxpayer's portion of the total specified credit to the total specified credit portions transferred to all transferees. The rule in this paragraph (b)(2) is applied on an eligible credit property basis, as applicable.

(3) ***Examples.*** The following examples illustrate the rules of this paragraph (b):

(i) ***Example 1—No excessive credit transfer.*** Taxpayer A claims $40x of an eligible credit and transfers $60x of an eligible credit to Transferee Taxpayer B related to a single facility that was expected to generate $100x of such eligible credit. In a subsequent year it is determined that the facility only generated $60x of such eligible credit. There is no excessive credit transfer in this case because the amount of the eligible credit claimed by Transferee Taxpayer B of $60x is equal to the amount of the credit that would be otherwise allowable with respect to such facility for the taxable year the transfer occurred. Taxpayer A is disallowed the $40x of the eligible credit claimed.

(ii) ***Example 2—Excessive credit transfer.*** Same facts as in paragraph (b)(3)(i) of this section (*Example 1*) except that Taxpayer A transfers $75x of the $100x of eligible credit to Transferee Taxpayer B in exchange for a cash payment of $67.5x. Taxpayer A claims $25x of the eligible credit and Transferee Taxpayer B claims $75x of the eligible credit. In this situation, a $40x reduction in credit results in a $15x excessive credit transfer to Transferee Taxpayer B because the amount of the credit claimed by Transferee Taxpayer B ($75x) exceeds the amount of credit otherwise allowable with respect to the facility ($60x) by $15x. Therefore, Transferee Taxpayer B's tax is increased for the determination year by $18x, which is equal to the amount of the excessive credit transfer plus 20 percent of the excessive credit transfer as provided in paragraph (a) of this section and section 6418(g)(2)(A). If Transferee Taxpayer B can show reasonable cause as provided in paragraph (a)(4) of this section and section 6418(g)(2)(B), then Transferee Taxpayer B will only have a tax increase of $15x. Taxpayer A is disallowed the $25x of the eligible credit claimed. Under paragraph (a)(3) of this section, the portion of the cash payment of $67.5x made by Transferee Taxpayer B that is attributable to the excessive credit transfer is $13.5x and is equal to Transferee Taxpayer B's cash payment of $67.5x multiplied by the ratio of the excessive credit transfer ($15x) to the transferred specified credit portion claimed by Transferee Taxpayer B ($75x). Pursuant to paragraph (a)(3) of this section, the payment of $13.5x made to Taxpayer A from Transferee Taxpayer B that directly relate to the excessive credit transfer are not subject to section 6418(b)(2), 6418(b)(3), or § 1.6418-2(e).

(iii) ***Example 3*** *—Excessive credit with multiple transferees.* Same facts as in paragraph (b)(3)(i) of this section (*Example 1*) except that Taxpayer A transfers $50x of the eligible credit to Transferee Taxpayer B and $30x of the eligible credit to Transferee Taxpayer C. In exchange for transfer of the credit, Transferee Taxpayer B made a cash payment of $45x and Transferee Taxpayer C made a cash payment of $27x. Taxpayer A claims $20x of the eligible credit, Transferee Taxpayer B claims $50x of the eligible credit, and Transferee Taxpayer C claims $30x of the eligible credit. In this situation, because there are multiple transferees, all transferees are treated as one transferee for determining the excessive credit transfer amount under paragraph (b)(2) of this section. There is a total excessive credit transfer of $20x because the amount of the credit claimed by the transferees in total ($80x) exceeds the amount of credit otherwise allowable with respect to the facility ($60x) by $20x. The excessive credit transfer to Taxpayer B is equal to ($50x/$80x * $20x) = $12.5x, and the excessive credit transfer to Taxpayer C is equal to ($30x/$80x * $20x) = $7.5x. Therefore, Transferee Taxpayer B and Transferee Taxpayer C are subject to the provisions in paragraph (a) of this section. Transferee Taxpayer B's and Transferee Taxpayer C's tax is increased for the determination year by the respective excessive credit transfer amount and 20 percent of the excessive credit transfer amount ($15x for Transferee Taxpayer B and $9x for Transferee Taxpayer C) as provided in paragraph (a) of this section and section 6418(g)(2)(A). If Transferee Taxpayer B or Transferee Taxpayer C can show reasonable cause as provided in paragraph (a)(4) of this section and section 6418(g)(2)(B), then the tax increase will only be $12.5x or $7.5x,

respectively. Taxpayer A is disallowed the $20x of eligible credit claimed. Under paragraph (a)(3) of this section, the portion of the cash payment of $45x made by Transferee Taxpayer B that is attributable to its portion of the excessive credit transfer is $11.25x and is equal to Transferee Taxpayer B's cash payment of $45x multiplied by the ratio of the excessive credit transfer ($12.5x) to the transferred specified credit portion claimed by Transferee Taxpayer B ($50x). Similarly, the portion of the cash payment of $27x made by Transferee Taxpayer C that is attributable to its portion of the excessive credit transfer is $6.75x and is equal to Transferee Taxpayer C's cash payment of $27x multiplied by the ratio of the excessive credit transfer ($7.5x) to the transferred specified credit portion claimed by Transferee Taxpayer B ($30x). Pursuant to paragraph (a)(3) of this section, the payments made to Taxpayer A by Transferee Taxpayer B ($11.25x) and Transferee Taxpayer C ($6.75x) that directly relate to the excessive credit transfer are not subject to section 6418(b)(2), 6418(b)(3), or § 1.6418-2(e).

(c) ***Basis reduction under section 50(c).*** In the case of any transfer election under § 1.6418-2 or § 1.6418-3 with respect to any specified credit portion described in § 1.6418-1(c)(2)(ix) through (xi), section 50(c) will apply to the applicable investment credit property (as defined in section 50(a)(6)(A)) as if such credit was allowed to the eligible taxpayer.

(d) ***Notification and impact of recapture under section 50(a)*** —

(1) ***In general.*** In the case of any election under § 1.6418-2 or § 1.6418-3 with respect to any specified credit portion described in § 1.6418-1(c)(2)(ix) through (xi), if, during any taxable year, the applicable investment credit property (as defined in section 50(a)(6)(A)) is disposed of, or otherwise ceases to be investment credit property with respect to the eligible taxpayer, before the close of the recapture period (as described in section 50(a)(1)(A)), other than as described in § 1.6418-3(a)(6), such eligible taxpayer and the transferee taxpayer must follow the notification process in paragraph (d)(2) of this section, with recapture impacting the transferee taxpayer and eligible taxpayer as described in paragraph (d)(3) of this section. Rules similar to the rules of this paragraph (d) apply in determining the amount of and liability for any section 49(b) recapture as between an eligible taxpayer and the transferee taxpayer.

(2) ***Notification requirements*** —

(i) ***Eligible taxpayer.*** The eligible taxpayer must provide notice of the occurrence of recapture to the transferee taxpayer. This notice must provide all information necessary for a transferee taxpayer to correctly compute the recapture amount (as defined under section 50(c)(2)), and the notification must occur in sufficient time to allow the transferee taxpayer to compute the recapture amount by the due date of the transferee taxpayer's return (without extensions) for the taxable year in which the recapture event occurs. The eligible taxpayer and transferee taxpayer can contract with respect to the form of the notice and any specific time periods that must be met, so long as the terms of the contractual arrangement do not conflict with the requirements of this paragraph (d)(2)(i). Any additional information that is required or other specific time periods that must be met may be prescribed by the IRS in guidance issued with respect to this notification requirement.

(ii) ***Transferee taxpayer.*** The transferee taxpayer must provide notice of the recapture amount (as defined in section 50(c)(2)), if any, to the eligible taxpayer. This must occur in sufficient time to allow the eligible taxpayer to calculate any basis adjustment with respect to the investment credit property by the due date of the eligible taxpayer's return (without extensions) for the taxable year in which the recapture event occurs. The eligible taxpayer and transferee taxpayer can contract with respect to the form of the notice and any specific time periods that must be

met, so long as the terms of the contractual arrangement do not conflict with the requirements of this paragraph (d)(2)(ii). Any additional information that is required or other specific time periods that must be met may be provided in guidance prescribed by the IRS issued with respect to this notification requirement.

(3) *Impact of recapture* —

(i) ***Section 50(a) recapture event.*** Except as provided in paragraph (d)(3)(iii) of this section, the transferee taxpayer is responsible for any amount of tax increase under section 50(a) upon the occurrence of a recapture event, provided that if an eligible taxpayer retains any amount of an eligible credit determined with respect to an investment credit property directly held by the eligible taxpayer, the amount of the tax increase under section 50(a) that the eligible taxpayer is responsible for is equal to the recapture amount multiplied by a fraction, the numerator of which is the total credit amount that the eligible taxpayer retained, and the denominator of which is the total credit amount determined for the eligible credit property. The amount of the tax increase under section 50(a) that the transferee taxpayer is responsible for is equal to the recapture amount multiplied by a fraction, the numerator of which is the specified credit portion transferred to the transferee taxpayer, and the denominator of which is the total credit amount determined for the eligible credit property.

(ii) ***Impact of section 50(a) recapture event on basis of investment credit property held by eligible taxpayer.*** The eligible taxpayer must increase the basis of the investment credit property (immediately before the event resulting in such recapture) by an amount equal to the recapture amount provided to the eligible taxpayer by the transferee taxpayer under paragraph (d)(2)(ii) of this section and the recapture amount on any credit amounts retained by the eligible taxpayer in accordance with section 50.

(iii) ***Impact of partner or shareholder recapture under § 1.6418-3(a)(6).*** To the extent that a partner in a transferor partnership or a shareholder in a transferor S corporation recognizes an amount of tax increase under section 50(a) or section 49(b) (that is, a recapture amount) for an investment tax credit determined with respect to investment credit property held directly by the transferor partnership or transferor S corporation that does not result in recapture liability to a transferee taxpayer pursuant to § 1.6418-3(a)(6), that amount reduces the remaining recapture amount under paragraph (d)(3)(i) of this section with respect to the investment credit property, and thus reduces the remaining recapture amounts to which a transferee taxpayer and eligible taxpayer (to the extent of retained credit amounts that have not been previously recaptured) is liable. The amount of the reduction to the transferee taxpayer is proportionate to the amount of the tax increase for the transferred specified credit portion (based on the partner's or shareholder's distributive share or pro rata share of tax exempt income, respectively, resulting from the transfer).

(iv) ***Example (1). Impact of transferor partner recapture event to transferee taxpayer*** —

(A) ***Facts.*** A, B, C, and D are equal partners in ABCD partnership, a partnership for Federal tax purposes that accounts for tax items on a calendar year basis. The partnership agreement provides that A, B, C and D share equally in all items of income, gain, loss, deduction, and credit of ABCD partnership. ABCD partnership invests $1,000x in an energy property in accordance with section 48 and places the energy property in service on September 30, 2024. As of the end of 2024, ABCD partnership has $300x of eligible credits under section 48 with respect to energy property. Under § 1.6418-3(b)(2)(iv), each of A's, B's, C's, and D's distributive shares of the otherwise eligible section 48 credits is determined under §§

1.46-3(f) and 1.704-1(b)(4)(ii) and is equal to $75x (based on each of A, B, C and D being allocated $250x of basis). Before the due date for ABCD partnership's 2024 tax return (with extension), A, B, C, and D agree that with respect to A's $75x distributive share of the otherwise eligible section 48 credits, $60x of eligible credits will be transferred and $15x of eligible credits (or $50x basis) will be allocated to A. A, B, C and D also agree that B, C, and D will each be allocated their respective $75x of the $250x of section 48 eligible credits (or basis). On November 15, 2024, ABCD partnership transfers $60x of its eligible section 48 investment credits to Y, an unrelated taxpayer. On January 1, 2025, A sells 50 percent of its interest in ABCD partnership, which results in recapture under § 1.47-6(a)(2).

(B) ***Analysis—recapture from partner A's disposition.*** Pursuant to § 1.6418-3(a)(6)(i), A is subject to the rules relating to recapture caused by the disposition of its interest under § 1.47-6(a)(2), and A calculates recapture based on half of its share of the basis of the investment credit property ($125x of basis) because A disposed of 50 percent of its interest in ABCD partnership. This results in a recapture amount of $37.5x to A (that is, the amount of the tax increase that A is responsible for due to the recapture event). Of the $37.5x recapture amount, $7.5x relates to $15x of credits retained by A, and $30x relates to the $60x of A's distributive share of the otherwise eligible section 48 credits that were transferred. This recapture event reduces the total potential recapture with respect to the investment credit property from $300x to $262.5x. Y is not subject to recapture because of partner A's disposition, but, if a recapture event with respect to the energy property takes place at a later date, the rules in § 1.6418-5(d)(3)(i) will take partner A's disposition and recapture amount into account when determining Y's recapture amount at that date.

(v) ***Example (2). Impact of recapture from ABCD partnership's disposition of the investment credit property —***

(A) ***Facts.*** Same facts as Example (1), except that on October 15, 2025, ABCD partnership sells the investment credit property to an unrelated third party.

(B) ***Analysis—recapture event from ABCD partnership's disposition.*** As a result of ABCD partnership's disposition of the energy property to a third party after one year, but before two years after placing the energy property into service, under section 50(a)(1)(B), the recapture percentage is 80 percent. This means that 80 percent of the remaining $262.5x of eligible section 48 credits (or $210x) is subject to recapture. Because ABCD partnership retained eligible credits related to the energy property, the $210x recapture amount, which is the amount of the tax increase under section 50(a), must be split between ABCD partnership and Y. Under § 1.6418-5(d)(3)(i), ABCD partnership must recapture $186x of the $210x credit amount, which is determined by multiplying the $210x by a fraction, the numerator of which is $232.5x ($240x of retained eligible credits less $7.5x of retained eligible credits already recaptured by A) and the denominator of which is $262.5x ($300x of total credits determined for the energy property less $37.5x credits recaptured with respect to A's distributive share of the otherwise eligible section 48 credits transferred by ABCD partnership to Y and A's distributive share of the eligible credits retained by A). Also under § 1.6418-5(d)(3)(i), Y has a $24x recapture amount determined by multiplying the $210x recapture amount by a fraction, the numerator of which is $30x ($60x specified credit portion transferred to Y less the $30x recaptured by A that relates to A's distributive share of the otherwise eligible section 48 credits transferred by ABCD partnership to Y), and the denominator of which is $262.5x ($300x of total credits determined for the energy

property less $37.5x credits recaptured with respect to A's distributive share of the otherwise eligible section 48 credits transferred by ABCD partnership to Y and A's distributive share of the eligible credits retained by A).

(e) ***Notification and impact of recapture under section 45Q(f)(4)*** —

(1) ***In general.*** In the case of any election under § 1.6418-2 or § 1.6418-3 with respect to any specified credit portion described in § 1.6418-1(c)(2)(iii), if, during any taxable year, there is recapture of any section 45Q credit allowable with respect to any qualified carbon oxide that ceases to be captured, disposed of, or used as a tertiary injectant in a manner consistent with section 45Q, before the close of the recapture period (as described in § 1.45Q-5(f)), such eligible taxpayer and the transferee taxpayer must follow the notification process in paragraph (e)(2) of this section with recapture impacting the transferee taxpayer as described in paragraph (e)(3) of this section.

(2) ***Notification requirements.*** The notification requirements for the eligible taxpayer are the same as for an eligible taxpayer that must report a recapture event as described in paragraph (d)(2)(i) of this section, except that the recapture amount that must be computed is defined in § 1.45Q-5(e).

(3) ***Impact of recapture.*** The transferee taxpayer is responsible for any amount of tax increase under section 45Q(f)(4) and § 1.45Q-5 upon the occurrence of a recapture event, provided that if an eligible taxpayer retains any amount of an eligible credit determined with respect to a component of carbon capture equipment owned by the eligible taxpayer within a single process train described in § 1.45Q-2(c)(3), the amount of the tax increase under section 45Q(f)(4) that the eligible taxpayer is responsible for is equal to the recapture amount multiplied by a fraction, the numerator of which is the total credit amount that the eligible taxpayer retained, and the denominator of which is the total credit amount determined for the eligible credit property. The amount of the tax increase under section 45Q(f)(4) that the transferee taxpayer is responsible for is equal to the recapture amount multiplied by a fraction, the numerator of which is the specified credit portion transferred to the transferee taxpayer, and the denominator of which is the total credit amount determined for the eligible credit property.

(f) ***Notification and impact of recapture under section 48(a)(10)(C)*** —

(1) ***In general.*** In the case of any election under § 1.6418-2 or § 1.6418-3 with respect to any specified credit portion described in § 1.6418-1(c)(2)(ix), if, during any taxable year, there is recapture under section 48(a)(10)(C) of the Code and § 1.48-13(c)(4) of any increased credit amount under section 48(a)(9)(B)(iii) before the close of the recapture period (as described in § 1.48-13(c)(6)), such eligible taxpayer and the transferee taxpayer must follow the notification process in paragraph (f)(2) of this section with the Federal income tax consequences of recapture impacting the transferee taxpayer as described in paragraph (f)(3) of this section.

(2) ***Notification requirements.*** The notification requirements for the eligible taxpayer are the same as for an eligible taxpayer that must report a recapture event as described in paragraph (d)(2)(i) of this section, except that the recapture amount that must be computed is defined in § 1.48-13(c)(5).

(3) ***Impact of recapture*** —

(i) ***Section 48(a)(10)(C) recapture event.*** The transferee taxpayer is responsible for any amount of tax increase under section 48(a)(10)(C) and § 1.48-13(c)(5) upon the occurrence of a recapture event under § 1.48-13(c)(4), provided that if an eligible taxpayer retains any amount of an eligible credit determined with respect to an energy property directly held by the eligible taxpayer, the amount of the tax increase under section 48(a)(10)(C) and § 1.48-13(c)(5) that the

eligible taxpayer is responsible for is equal to the recapture amount multiplied by a fraction, the numerator of which is the total credit amount that the eligible taxpayer retained, and the denominator of which is the total credit amount determined for the energy property. The amount of the tax increase under section 48(a)(10)(C) that the transferee taxpayer is responsible for is equal to the recapture amount multiplied by a fraction, the numerator of which is the specified credit portion transferred to the transferee taxpayer, and the denominator of which is the total credit amount determined for the energy property.

(ii) ***Impact of section 48(a)(10)(C) recapture event on basis of energy property held by eligible taxpayer.*** The eligible taxpayer must increase the basis of the energy property (as of the first day of the taxable year in which the recapture event occurs) by an amount equal to the recapture amount provided to the eligible taxpayer by the transferee taxpayer pursuant to the notification required under paragraph (f)(2) of this section and the recapture amount on any credit amounts retained by the eligible taxpayer in accordance with section 48(a)(10)(C) and § 1.48-13(c)(4).

(g) ***Impact of an ineffective transfer election by an eligible taxpayer.*** An ineffective transfer election means that no transfer of an eligible credit has occurred for purposes of section 6418, including section 6418(b). Section 6418 does not apply to the transaction and the tax consequences are determined under any other relevant provisions of the Code. For example, an ineffective election results if an eligible taxpayer tries to elect to transfer a specified credit portion, but the eligible taxpayer did not register and receive a registration number with respect to the eligible credit property (or otherwise satisfy the requirements for making a transfer election under the section 6418 regulations) with respect to which the specified credit portion was determined.

(h) ***Carryback and carryforward.*** A transferee taxpayer can apply the rules in section 39(a)(4) of the Code (regarding the carryback and carryforward period for applicable credits) to a specified credit portion to the extent the specified credit portion is described in section 6417(b) (list of applicable credits, taking into account any placed in service requirements in section 6417(b)(2), (3), and (5)).

(i) ***Rules applicable to real estate investment trusts*** —

(1) ***Treatment of eligible credits prior to transfer.*** If a real estate investment trust has eligible credits that it may transfer, the value of those credits is not included in either the numerator or denominator in determining the value of the REIT's total assets in section 856(c)(4) of the Code.

(2) ***Treatment of eligible credit transfer for purposes of section 857 safe harbor rules.*** The transfer of a specified credit portion pursuant to a valid transfer election under section 6418 is not a sale for purposes of section 857(b)(6)(C)(iii) and section 857(b)(6)(D)(iv) of the Code.

(j) ***Applicability dates*** —

(1) ***In general.*** Except as provided in paragraph (j)(2) of this section, this section applies to taxable years ending on or after April 30, 2024. For taxable years ending before April 30, 2024, taxpayers, however, may choose to apply the rules of this section and §§ 1.6418-1 through 1.6418-3 provided the taxpayers apply the rules in their entirety and in a consistent manner.

(2) ***Paragraph (f) of this section.*** Paragraph (f) of this section applies to taxable years ending on or after December 12, 2024.

[T.D. 9993, 89 FR 34800, Apr. 30, 2024; 89 FR 67860, Aug. 22, 2024, as amended by T.D. 10015, 89 FR 100660, Dec. 12, 2024]

§ 1.6425-1 Adjustment of overpayment of estimated income tax by corporation.

(a) ***In general.*** Any corporation which has made an overpayment of estimated income tax for a taxable year beginning after December 31, 1967, may file an application for an adjustment of such overpayment. The right to file an application for an adjustment of overpayment of estimated income tax is limited to corporations.

(b) ***Contents of application.***

(1) The application for an adjustment of overpayment of estimated income tax shall be filed on Form 4466. The application shall be filled out in accordance with the instructions accompanying the form, and all information required by the form and instructions must be furnished by the corporation. The application shall be verified in the manner prescribed by section 6065 as in the case of a return of the corporation.

(2) An application for an adjustment of overpayment of estimated income tax does not constitute a claim for credit or refund. If such application is disallowed by the district director, or director of a service center, in whole or in part, no suit may be maintained in any court for the recovery of any tax based on such application. The filing of an application for an adjustment of overpayment of estimated income tax will not constitute the filing of a claim for credit or refund within the meaning of section 6511 for the purpose of determining whether a claim for refund was filed prior to the expiration of the applicable period of limitation. The corporation, however, may file a claim for credit or refund under section 6402 at any time prior to the expiration of the applicable period of limitation and may maintain a suit based on such claim if it is disallowed or if the district director, or director of a service center, does not act on the claim within 6 months from the date it is filed. Such claim may be filed before, simultaneously with, or after the filing of the application for the adjustment of overpayment of estimated tax. A claim for credit or refund under section 6402 filed after the filing of an application for an adjustment of overpayment of estimated income tax is not to be considered an amendment of such application. Such claim, however, in proper cases, may constitute an amendment to a prior claim filed under section 6402.

(c) ***Time and place for filing application.***

(1) The application for an adjustment of overpayment of estimated income tax shall be filed after the last day of the taxable year and on or before the 15th day of the third month thereafter, or before the date on which the corporation first files its income tax return for such taxable year (whether or not it subsequently amends the return), whichever is earlier.

(2) Except as provided in paragraph (b)(2) of § 301.6091-1 of this chapter (relating to hand-carried documents), the application on Form 4466 shall be filed with the internal revenue officer designated in instructions applicable to such form.

[T.D. 7059, 35 FR 14546, Sept. 17, 1970]

§ 1.6425-2 Computation of adjustment of overpayment of estimated tax.

(a) ***Income tax liability defined.*** For purposes of § 1.6425-1, this section, §§ 1.6425-3 and 1.6655-7, relating to excessive adjustment, the term *income tax liability* means the excess of—

(1) The sum of—

(i) The tax imposed by section 11 or 1201(a), or subchapter L of chapter 1 of the Internal Revenue Code, whichever is applicable; plus

(ii) The tax imposed by section 55; over

(2) The credits against tax provided by part IV of subchapter A of chapter 1 of the Internal Revenue Code.

(b) ***Computation of adjustment.*** The amount of an adjustment under section 6425 is an amount equal to the excess of the estimated income tax paid by the corporation during the taxable year over the amount which, at the time of filing Form 4466, the corporation estimates as its income tax liability for the taxable year.

(c) ***Effective/applicability date.*** Paragraph (a) of this section is applicable to applications for adjustments of overpayments of estimated income tax that are filed in taxable years beginning after September 6, 2007.

[T.D. 7059, 35 FR 14547, Sept. 17, 1970, as amended by T.D. 9347, 72 FR 44348, Aug. 7, 2007]

§ 1.6425-3 Allowance of adjustments.

(a) ***Limitation.*** No application under section 6425 shall be allowed unless the amount of the adjustment is

(1) at least 10 percent of the amount which, at the time of filing Form 4466 the corporation estimates as its income tax liability for the taxable year, and

(2) at least $500.

(b) ***Time prescribed.*** The Internal Revenue Service shall act upon an application for an adjustment of overpayment of estimated income tax within a period of 45 days from the date on which such application is filed.

(c) ***Examination.*** Within the 45-day period described in paragraph (b) of this section, the Internal Revenue Service shall make, to the extent it deems practicable in such period, a limited examination of the application to discover omissions and errors therein. The Service shall calculate the adjustment, which calculation must be set forth in the application for such adjustment, in the manner provided in section 6425(c)(2) for the determination by the corporation of such adjustment. The Service, however, may correct any material error or omission that is discovered upon examination of the application. In determining the adjustment, the Service may correct any mathematical error appearing on the application, and it may likewise make any modification required by the law to correct the corporation's computation of the adjustment. If the required modification has not been made by the corporation and the Service has available the necessary information to make such modification within the 45- day period, it may make such modification. The examination of the application and the allowance of the adjustment shall not prejudice any right of the Service to claim later that the adjustment was improper.

(d) ***Disallowance in whole or in part.*** If the Internal Revenue Service finds that an application for an adjustment of overpayment of estimated tax contains material omissions or errors, the Service may disallow such application in whole or in part without further action. If, however, the Service deems that any omission or error can be corrected by it within the 45-day period, it may do so and allow the application in whole or in part. In the case of a disallowance or modification, the Service shall notify the corporation of such action. The Service's determination as to whether it can correct any omission or error shall be conclusive. Similarly, its action in disallowing, in whole or in part, any application for an adjustment of overpayment of estimated income tax shall be final and may not be challenged in any proceeding. The corporation in such

case, however, may file a claim for credit or refund under section 6402, and may maintain a suit based on such claim if it is disallowed or if the Service does not act upon the claim within 6 months from the date it is filed.

(e) ***Application of adjustment.*** If the Internal Revenue Service allows the adjustment, it may first credit the amount of the adjustment against any liability in respect of an internal revenue tax on the part of the corporation which is due and payable on the date of the allowance of the adjustment before making payment of the balance to the corporation. In such a case, the Service shall notify the corporation of the credit, and refund the balance of the adjustment.

(f) ***Effect of adjustment.***

(1) For purposes of all sections of the Internal Revenue Code except section 6655, relating to additions to tax for failure to pay estimated income tax, any adjustment under section 6425 is to be treated as a reduction of prior estimated tax payments as of the date the credit is allowed or the refund is paid. For the purpose of sections 6655(a) through (g), (i), and (j), credit or refund of an adjustment is to be treated as if not made in determining whether there has been any underpayment of estimated income tax and, if there is an underpayment, the period during which the underpayment existed. However, an excessive adjustment under section 6425 is taken into account in applying the addition to tax under section 6655(h).

(2) For the effect of an excessive adjustment under section 6425, see § 1.6655-7.

(3) ***Effective/applicability date:*** This paragraph (f) is applicable to applications for adjustments of overpayments of estimated income tax that are filed in taxable years beginning after September 6, 2007.

[T.D. 7059, 35 FR 14547, Sept. 17, 1970, as amended by T.D. 9347, 72 FR 44348, Aug. 7, 2007]

ADDITIONS TO THE TAX, ADDITIONAL AMOUNTS, AND ASSESSABLE PENALTIES

§ 1.6654-1 Addition to the tax in the case of an individual.

(a) ***In general.***

(1) Section 6654 imposes an addition to the taxes under chapters 1 and 2 of the Code in the case of any underpayment of estimated tax by an individual (with certain exceptions described in section 6654(d)), including any underpayment of estimated qualified State individual income taxes which are treated pursuant to section 6361(a) as if they were imposed by chapter 1. This addition to the tax is in addition to any applicable criminal penalties and is imposed whether or not there was reasonable cause for the underpayment. The amount of the underpayment for any installment date is the excess of:

(i) The following percentages of the tax shown on the return for the taxable year or, if no return was filed, of the tax for such year, divided by the number of installment dates prescribed for such taxable year:

(A) 80 percent in the case of taxable years beginning after December 31, 1966, of individuals not referred to in section 6073(b) (relating to income from farming or fishing);

(B) 70 percent in the case of taxable years beginning before January 1, 1967, of such individuals; and

(C) $66^{2}/_{3}$ percent in the case of individuals referred to in section 6073(b); over

(ii) The amount, if any, of the installment paid on or before the last day prescribed for such payment.

(2) The amount of the addition is determinated at the annual rate referred to in the regulations under section 6621 upon the underpayment of any installment of estimated tax for the period from the date such installment is required to be paid until the 15th day of the fourth month following the close of the taxable year, or the date such underpayment is paid, whichever is earlier. For purposes of determining the period of the underpayment

(i) the date prescribed for the payment of any installment of estimated tax shall be determined without regard to any extension of time, and

(ii) a payment of estimated tax on any installment date, to the extent that it exceeds the amount of the installment determined under subparagraph (1)(i) of this paragraph for such installment date, shall be considered a payment of any previous underpayment.

(3) In determining the amount of the installment paid on or before the last day prescribed for payment thereof, the estimated tax shall be computed without any reduction for the amount which the taxpayer estimates as his credit under section 31 (relating to tax withheld at source on wages), and the amount of such credit shall be deemed a payment of estimated tax. An equal part of the amount of such credit shall be deemed paid on each installment date (determined under section 6153) for the taxable year unless the taxpayer establishes the dates on which all amounts were actually withheld. In the latter case, all amounts withheld shall be considered as payments of estimated tax on the dates such amounts were actually withheld. Under section 31 the entire amount withheld during a calendar year is allowed as a credit against the tax for the taxable year which begins in such calendar year. However, where more than one taxable year begins in any calendar year no portion of the amount withheld during the calendar year will be treated as a payment of estimated tax for any taxable year other than the last taxable year beginning in such calendar year. The rules prescribed in this subparagraph for determining the time as of which the amount withheld shall be deemed paid are applicable even though such amount was withheld during a taxable year preceding that for which the credit is allowed.

(4) The term *tax* when used in subparagraph (1)(i) of this paragraph shall mean:

(i) The tax imposed by chapter 1 of the Code (other than by section 56 or, for taxable years ending before September 30, 1968, the tax surcharge imposed by section 51), including any qualified State individual income taxes which are treated pursuant to section 6361(a) as if they were imposed by chapter 1, plus—

(ii) For taxable years beginning after December 31, 1966, the tax imposed by chapter 2 of the Code, minus

(iii) All credits allowed by part IV, subchapter A of chapter 1, except the credit provided by section 31, relating to tax withheld at source on wages, minus

(iv) In the case of an individual who is subject to one or more qualified State individual incomes taxes, the sum of the credits allowed against such taxes pursuant to section 6362(b)(2) (B) or (C) or section 6362(c)(4) and paragraph (c) of § 301.6362-4 of this chapter (Regulations on

Procedure and Administration) (relating to the credit for income taxes of other States or political subdivisions thereof) and paragraph (c)(2) of § 301.6361-1 (relating to the credit for tax withheld from wages on account of qualified State individual income taxes), and minus

(v) For taxable years ending after February 29, 1980, the individual's overpayment of windfall profit tax imposed by section 4986 of the Code for the taxable year. For this purpose, the amount of such overpayment is the sum of

(A) the amount by which such individual's aggregate windfall profit tax liability for the taxable year as a producer of crude oil is exceeded by withholding of windfall profit tax for the taxable year, and

(B) any amount treated under section 6429 or 6430 as an overpayment of windfall profit tax for crude oil removed during the taxable year. The deemed payment date in section 4995(a)(4)(B) for the amount of windfall profit tax withheld with respect to payments for crude oil shall have no effect in the determination of the overpayment of windfall profit tax.

(b) ***Statement relating to underpayment.*** If there has been an underpayment of estimated tax as of any installment date prescribed for its payment and the taxpayer believes that one or more of the exceptions described in § 1.6654-2 precludes the assertion of the addition to the tax under section 6654, he should attach to his income tax return for the taxable year a Form 2210 showing the applicability of any exception upon which he relies.

(c) ***Examples.*** The method prescribed in paragraph (a) of this section for computing the addition to the tax may be illustrated by the following examples:

Example 1. An individual taxpayer files his return for the calendar year 1972 on April 15, 1973, showing a tax (income and self-employment tax) of $30,000. He had paid a total of $20,000 of estimated tax in four installments of $5,000 on each of the four installment dates prescribed for such year. No other payments were made prior to the date the return was filed. Since the amount of each installment paid by the last date prescribed for payment thereof is less than one-quarter of 80 percent of the tax shown on the return, the addition to the tax is applicable in respect of the underpayment existing as of each installment date and is computed as follows:

(1) Amount of tax shown on return	$30,000
(2) 80 percent of item (1)	24,000
(3) One-fourth of item (2)	6,000
(4) Deduct amount paid on each installment date	5,000
(5) Amount of underpayment for each installment date (item (3) minus item (4))	1,000
(6) Addition to the tax:	
1st installment—period 4-15-72 to 4-15-73	60
2nd installment—period 6-15-72 to 4-15-73	50
3rd installment—period 9-15-72 to 4-15-73	35

4th installment—period 1-15-73 to 4-15-73	15
Total	$160

Example 2. An individual taxpayer files his return for the calendar year 1955 on April 15, 1956, showing a tax of $30,000. The requirements of section 6015(a) were first met after April 1 and before June 2, 1955, and a total of $18,000 of estimated tax was paid in three equal installments of $6,000 on each of the three installment dates prescribed for such year. Since the amount of each installment paid by the last date prescribed for payment thereof is less than one-third of 70 percent of the tax shown on the return, the addition to the tax is existing as of each installment date and is applicable in respect of the underpayment computed as follows:

(1) Amount of tax shown on return		$30,000
(2) 70 percent of item (1)		21,000
(3) One-third of item (2)		7,000
(4) Deduct amount paid on each installment date		6,000
(5) Amount of underpayment for each installment date (item (3) minus item (4))		1,000
(6) Addition to the tax:		
1st installment—period 6-15-55 to 4-15-56	$50	
2d installment—period 9-15-55 to 4-15-56	35	
3d installment—period 1-15-56 to 4-15-56	15	
Total	100	

(Secs. 6015, 6154, 6654, 6655, and 7805, Internal Revenue Code of 1954 (96 Stat. 2395 and 2396, 68A Stat. 917; 26 U.S.C. 6015, 6154, 6654, 6655, and 7805))

[T.D. 6500, 25 FR 12146, Nov. 26, 1960, as amended by T.D. 7384, 40 FR 49322, Oct. 22, 1975; T.D. 7427, 41 FR 34029, Aug. 12, 1976; T.D. 7577, 43 FR 59358, Dec. 20, 1978; T.D. 8016, 50 FR 11855, Mar. 26, 1985]

§ 1.6654-2 Exceptions to imposition of the addition to the tax in the case of individuals.

(a) ***In general.*** The addition to the tax under section 6654 will not be imposed for any underpayment of any installment of estimated tax if, on or before the date prescribed for payment of the installment, the total amount of all payments of estimated tax made equals or exceeds the lesser of the amount in § 1.6654-2(a)(1) or the amount in § 1.6654-2(a)(2).

(1)

(i) The amount which would have been required to be paid on or before the date prescribed for payment if the estimated tax were the tax shown on the return for the preceding taxable year, provided that the preceding taxable year was a year of 12 months and a return showing a

liability for tax was filed for such year. However, this subparagraph shall not apply with respect to any taxable year which ends on or after September 30, 1968, for which a tax is imposed by section 51 (relating to tax surcharge), in the case of a payment of estimated tax the time prescribed for payment of which is on or after September 15, 1968.

(ii) ***Special rule for taxable years beginning in 2009.*** For any taxable year beginning in 2009, for a qualified individual, the amount described in paragraph (a)(1)(i) of this section is reduced to 90 percent of that amount.

(A) ***Qualified individual*** means any individual whose adjusted gross income shown on the individual's return for the preceding taxable year is less than $500,000 and who certifies, as prescribed in paragraph (a)(1)(ii)(D) of this section, that more than 50 percent of the gross income shown on the return for the preceding taxable year was income from a small business.

(B) ***Income from a small business*** means income from the operation of a bona fide trade or business of which the individual was an owner during calendar year 2009, and that on average had fewer than 500 employees in calendar year 2008.

(C) The trade or business may be organized as, or take the legal form of, a corporation, partnership, limited liability company, or sole proprietorship.

(D) A qualified individual shall file a certification of the individual's qualification in the manner and at the time prescribed by the Internal Revenue Service in forms, publications, or other guidance.

(2) The amount which would have been required to be paid on or before the date prescribed for payment if the estimated tax were an amount equal to a percentage of the tax computed by placing on an annual basis the taxable income for the calendar months in the taxable year ending before the month in which the installment is required to be paid. That percentage is 80 percent in the case of taxable years beginning after December 31, 1966, of individuals not referred to in section 6073(b) (relating to income from farming or fishing), 70 percent in the case of taxable years beginning before January 1, 1967, of such individuals, and $66^{2}/_{3}$ percent in the case of individuals referred to inferred to in section 6073(b). With respect to taxable years beginning after December 31, 1966, the adjusted self-employment income shall be taken into account in determining the amount referred to in this subparagraph if net earnings from self-employment (as defined in section 1402(a)) for the taxable year equal or exceed $400. For purposes of this subparagraph:

(i) Taxable income shall be placed on an annualized basis:

(A) For taxable years beginning after 1976, by:

(*1*) Multiplying by 12 (or the number of months in the taxable year if less than 12) the adjusted gross income and the itemized deductions for the calendar months in the taxable year ending before the month in which the installment is required to be paid,

(*2*) Dividing the resulting amounts by the number of such calendar months,

(*3*) Increasing the amount of the annualized adjusted gross income by the unused zero bracket amount, if any, determined by reference to the annualized itemized deductions, or decreasing the amount of the annualized adjusted gross income by

the excess itemized deductions, if any, determined by reference to the annualized itemized deductions (the amount resulting under this step is annualized tax table income), and

(*4*) Deducting from the annualized tax table income the deduction for personal exemptions (such personal exemptions being determined as of the date prescribed for payment of the installment).

If the taxpayer would be eligible to use the tax tables on the basis of annualized tax table income, the amount which would have been required to be paid for purposes of this subparagraph may be determined by applying the tax tables to annualized tax table income. the amount resulting under (3).

(B) For taxable years beginning before 1977, by:

(*1*) Multiplying by 12 (or the number of months in the taxable year if less than 12) the taxable income (computed without the standard deduction and without the deduction for personal exemptions), or the adjusted gross income if the standard deduction is to be used for the calendar months in the taxable year ending before the month in which the installment is required to be paid,

(*2*) Dividing the resulting amount by the number of such calendar months, and

(*3*) Deducting from such amount the standard deduction, if applicable, and the deduction for personal exemptions (such personal exemptions being determined as of the date prescribed for payment of the installment).

(ii) The term “adjusted self-employment income” means:

(A) The net earnings from self-employment (as defined in section 1402(a)) for the calendar months in the taxable year ending before the month in which the installment is required to be paid, computed as if such months constituted the taxable year, but not more than

(B) The excess of:

(*1*) For taxable years beginning after 1966, $6,600

(*2*) For taxable years beginning after 1971, $9,000,

(*3*) For taxable years beginning after 1972, $10,800,

(*4*) For taxable years beginning after 1973, $13,200, and

(*5*) For taxable years beginning after 1974, an amount equal to the contribution and benefit base (as determined under section 230 of the Social Security Act) which is effective for the calendar year in which the taxable year begins, over the amount of the wages (within the meaning of section 1402(b)) for such calendar months placed on an annual basis. For this purpose, wages are annualized by multiplying by 12 (or the number of months in the taxable year in the case of a taxable year of less than 12 months) the wages for such calendar months and dividing the resulting amount by the number of such months.

(3) An amount equal to 90 percent of the tax computed, at the rates applicable to the taxable year, on the basis of the actual taxable income for the calendar months in the taxable year ending before the month in which the installment is required to be paid, as if such months constituted the entire

taxable year. For taxable years beginning after December 31, 1966, such computation shall include the tax imposed by chapter 2 on the actual self-employment income for such months. For purposes of this subparagraph, the term “actual self-employment income” means:

(i) The net earnings from self-employment (as defined in section 1402(a))for such calendar months, computed as if such months constituted the taxable year, but not more than

(ii) The excess of:

(A) For taxable years beginning after 1966, $6,600,

(B) For taxable years beginning after 1971, $9,000,

(C) For taxable years beginning after 1972, $10,800,

(D) For taxable years beginning after 1973, $13,200, and

(E) For taxable years beginning after 1974, an amount equal to the contribution and benefit base (as determined under section 230 of the Social Security Act) which is effective for the calendar year in which the taxable year begins, over the amount of wages (within the meaning of section 1402(b)) for such months.

(4) The amount which would have been required to be paid on or before the date prescribed for payment if the estimated tax were an amount equal to a tax determined on the basis of the tax rates and the taxpayer's status with respect to personal exemptions under section 151 for the taxable year, but otherwise on the basis of the facts shown on the return for the preceding taxable year and the law applicable to such year, in the case of an individual required to file a return for such preceding taxable year.

In the case of a taxpayer whose taxable year consists of 52 or 53 weeks in accordance with section 441(f), the rules prescribed by § 1.441-2(c) shall be applicable in determining, for purposes of subparagraph (1) of this paragraph, whether a taxable year was a year of 12 months and, for purposes of subparagraphs (2) and (3) of this paragraph, the number of calendar months in a taxable year preceding the date prescribed for payment of an installment of estimated tax. For the rules to be applied in determining taxable income for any period described in subparagraphs (2) and (3) of this paragraph in the case of a taxpayer who employs accounting periods (e.g., thirteen 4-week periods or four 13-week periods) none of which terminates with the end of the applicable period described in subparagraph (2) or (3) of this paragraph, see paragraph (a)(5) of § 1.6655-2.

(b) ***Meaning of terms.*** As used in this section and § 1.6654-3:

(1) The term “tax” means:

(i) The tax imposed by chapter 1 of the Code (other than by section 56), including any qualified State individual income taxes which are treated pursuant to section 6361(a) as if they were imposed by chapter 1, plus

(ii) For taxable years beginning after December 31, 1966, the tax imposed by chapter 2 of the Code, minus

(iii) The credits against tax allowed by part iv, subchapter A, chapter 1 of the Code, other than the credit against tax provided by section 31 (relating to tax withheld on wages), and without reduction for any payments of estimated tax, minus

(iv) In the case of an individual who is subject to one or more qualified State individual income taxes, the sum of the credits allowed against such taxes pursuant to section 6262(b)(2) (B) or (C) or section 6262(c)(4) and paragraph (c) of § 301.6362-4 of this chapter (Regulations on Procedure and Administration) (relating to the credit for income taxes of other States or political subdivisions thereof) and paragraph (c)(2) of § 301.6361-1 (relating to the credit for tax withheld from wages on account of qualified State individual income taxes), and minus

(v) For taxable years ending after February 29, 1980, the individual's overpayment of windfall profit tax imposed by section 4986 of the Code for the taxable year. For this purpose, the amount of such overpayment is the sum of

(A) the amount by which such individual's aggregate windfall profit tax liability for the taxable year as producer of crude oil is exceeded by withholding of windfall profit tax for the taxable year, and

(B) any amount treated under section 6429 or 6430 as an overpayment of windfall profit tax for crude oil removed during the taxable year. The deemed payment date in section 4995(a)(4)(B) for the amount of windfall profit tax withheld with respect to payments for crude oil shall have no effect in the determination of the overpayment of windfall profit tax.

(2) The credits against tax allowed by part IV, subchapter A, chapter 1 of the Code, are:

(i) In the case of the exception described in paragraph (a)(1) of this section, the credits shown on the return for the preceding taxable year,

(ii) In the case of the exceptions described in paragraph (a)(2) and (3) of this section, the credits computed under the law and rates applicable to the current taxable year, and

(iii) In the case of the exception described in paragraph (a)(4) of this section, the credits shown on the return for the preceding taxable year, except that if the amount of any such credit would be affected by any change in rates or status with respect to personal exemptions, the credits shall be determined by reference to the rates and status applicable to the current taxable year.

A change in rate may be either a change in the rate of tax, such as a change in the rate of the tax imposed by section 1 or section 1401, or a change in a percentage affecting the computation of the credit, such as a change in the rate of withholding under chapter 3 of the Code or a change in the percentage of a qualified investment which is specified in section 46 for use in determining the amount of the investment credit allowed by section 38.

(3) The term “return for the preceding taxable year” means the income tax return for such year which is required by section 6012(a)(1) and, in the case of taxable years beginning after December 31, 1966, the self-employment tax return for such year which is required by section 607.

(c) ***Examples.*** The following examples illustrate the application of the exceptions to the imposition of the addition to the tax for an underpayment of estimated tax, in the case of an individual whose taxable year is the calendar year:

Example 1. A, a married man with one child and a dependent parent, files a joint return with his spouse, B, for 1955 on April 15, 1956, showing taxable income of $44,000 and a tax of $16,760. A and B had filed a joint declaration of estimated tax on April 15, 1955, showing an estimated tax of $10,000 which was paid in four equal installments of $2,500 each on April 15, June 15, and September 15, 1955, and January 15, 1956. The balance of $6,760 was paid with the return. A and B have an

underpayment of estimated tax of $433 (1/4 of 70 percent of $16,760, less $2,500) for each installment date. The 1954 calendar year return of A and B showed a liability of $10,000. Since the total amount of estimated tax paid by each installment date equalled the amount that would have been required to be paid on or before each of such dates if the estimated tax were the tax shown on the return for the preceding year, the exception described in paragraph (a)(1) of this section applies and no addition to the tax will be imposed.

Example 2. Assume the same facts as in example (1), except that the joint return of A and B for 1954 showed taxable income of $32,000 and a tax liability of $10,400. Assume further that only two personal exemptions under section 151 appeared on the 1954 return. The exception described in paragraph (a)(1) of this section would not apply. However, A and B are entitled to four exemptions under section 151 for 1955. Taxable income for 1954 based on four exemptions, but otherwise on the basis of the facts shown on the 1954 return, would be $30,800. The tax on such amount in the case of a joint return would be $9,836. Since the total amount of estimated tax paid by each installment date exceeds the amount which would have been required to be paid on or before each of such dates if the estimated tax were $9,836, the exception described in paragraph (a)(4) of this section applies and no addition to the tax will be imposed.

Example 3. C, who is self-employed (other than as a farmer or fisherman), has annualized taxable income of $6,900 for the period January 1, 1967, through August 31, 1967, the income tax on which is $1,171. For the same period his net earnings from self-employment are $5,000 and his wages are $2,000. The estimated tax payments made by C for 1967 on or before September 15, 1967, total $1,200. For the purposes of the exception described in paragraph (a)(2) of this section, the adjusted self-employment income is $3,600, computed as follows:

(1) Net earnings from self-employment	$5,000
(2) $6,600 minus annualized wages ($6,600−3,000 ($2,000 × 12 ÷ 8))	3,600
(3) Lesser of (1) or (2)	3,600

The tax on C's adjusted self-employment income would be $230.40 ($3,600 × 6.4 percent). Since the total amount of estimated tax paid on or before September 15, 1967, exceeds $1,121.12, that is, 80 percent of $1,401.40 ($1,171 + 230.40), the exception described in paragraph (a)(2) of this section applies and no addition to tax will be imposed.

Example 4. D, who is self-employed (other than as a farmer or fisherman), has actual taxable income of $3,800 for the period January 1, 1967, through August 31, 1967, the income tax on which is $586. For the same period his net earnings from self-employment are $5,000 and his wages are $2,000. The estimated tax payments made by D for 1967 on or before September 15, 1967, total $840. For the purposes of the exception described in paragraph (a)(3) of this section, the actual self-employment income for this period is $4,600,

computed as follows:

(1) Net earnings from self-employment	$5,000
(2) $6,600 minus wages ($6,600−2,000)	4,600
(3) Lesser of (1) or (2)	4,600

The tax on D's actual self-employment income would be $294.40 ($4,600 × 6.4 percent). Since the total amount of estimated tax paid by September 15, 1967, exceeds $792.36, that is, 90 percent of $880.40 ($586 + 294.40), the exception described in paragraph (a)(3) of this section applies and no addition to tax will be imposed.

Example 5. E and F, his spouse, filed a joint return for the calendar year 1967, showing a tax liability of $10,000. The liability, attributable primarily to income received during the last quarter of the year, included both income and self-employment tax. Their aggregate payments of estimated tax on or before September 15, 1967, total $1,350, representing three installments of $450 paid on each of the first three installment dates prescribed for the taxable year. Since each installment paid, $450, was less then $2,000 (1/4 of 80 percent of $10,000), there was an underpayment on each of the installment dates. Assume that the exceptions described in paragraph (a) (1) and (4) of this section do not apply. Actual taxable income for the three months ending March 31, 1967, was $2,000 and for the five months ending May 31, 1967, was $4,500. Actual self-employment income, for the same periods, was $2,000 and $4,000, respectively. Since the amounts paid by the April 15 and June 15 installment dates, $450 and $900, respectively, exceed $376.20 and $873.90, respectively (90 percent of the income tax on the actual taxable income of $2,000 and $4,500, respectively, determined on the basis of a joint return, and the self-employment tax on the actual self-employment income of $2,000 and $4,000, respectively), the exception described in paragraph (a)(3) of this section applies and no addition to the tax will be imposed for the underpayments on the April 15 and June 15 installment dates. For the eight months ending August 31, 1967, actual taxable income, assuming E and F did not elect to use the standard deduction, was $7,500; net earnings from self-employment were $6,000 and wages were $2,700. Since the total amount paid by the September 15 installment date, $1,350, was less than $1,381.14 (90 percent of the income tax on the actual taxable income of $7,500 determined on the basis of a joint return and the self-employment tax on actual self-employment income of $3,900 ($6,600−2,700)), the exception described in paragraph (a)(3) of this section does not apply to the September 15 installment. Furthermore, the exception described in paragraph (a)(2) of this section does not apply, as illustrated by the following

computation:

(1) Income tax:	
Taxable income for the period ending Aug. 31, 1967 (without deduction for personal exemptions) on an annual basis ($8,700 × 12 ÷ 8)	$13,050.00
Deduction for two personal exemptions	1,200.00
	11,850.00
Tax on $11,850 (on the basis of a joint return)	2,227.00
(2) Self-employment tax:	
Net earnings from self-employment	6,000.00
Adjusted self-employment income ($6,600−4,050 annualized wages ($2,700 × 12 ÷ 8))	2,550.00
Tax on adjusted self-employment income ($2,550 × 6.4 percent)	163.20
(3) Total tax ($2,227.00 + 163.20)	2,390.20
(4) $^{3}/_{4}$ of 80 percent of $2,390.20	1,434.12
Amount paid by Sept. 15, 1967	1,350.00

An addition to the tax will thus be imposed for the underpayment of $1,550 ($2,000−450) on the September 15 installment.

Example 6. Assume the same facts as in example (5) and assume further that adjusted gross income for the eight months ending August 31, 1967, was $9,200 and the amount of deductions (other than the deduction for personal exemptions) not allowable in determining adjusted gross income aggregate only $500. If E and F elect, they may use the standard deduction in computing the tax for purposes of the exceptions described in paragraph (a) (2) and (3) of this section. Taxable income for purposes of the exception described in paragraph (a)(3) of this section would be reduced to $7,080 ($9,200 less $1,200 for two personal exemptions and $920 for the standard deduction). The income tax thereon is $1,205.20; income tax and self-employment tax total $454.80 ($1,205.20 + 249.60 ($3,900 × 6.4 percent)). Since the amount paid by the September 15 installment date, $1,350, exceeds $1,309.32 (90 percent of $1,454.80), the exception described in paragraph (a)(3) of this section applies. However, the exception described in paragraph (a)(2) of this section does not apply, as illustrated by the following computation:

Adjusted gross income for period ending Aug. 31, 1967	$9,200.00
Adjusted gross income annualized ($9,200 × 12 ÷ 8)	13,800.00

Taxable income annualized ($13,800 minus $1,200 for two personal exemptions and $1,000 for the standard deduction)	11,600.00
Tax on $11,600 (on basis of joint return)	2,172.00
Self-employment tax on adjusted self-employment income ($2,550 × 6.4 percent)	163.20
Total tax ($2,172.00 + 163.20	2,335.20
$^{3}/_{4}$ of 80 percent of $2,335.20	1,401.12
Amount paid by Sept. 15, 1967	1,350.00

Example 7. G was a married individual, 73 years of age, who filed a joint return with his wife, H, for the calendar year 1956. H, who was 70 years of age, had no income during the year. G had taxable income in the amount of $7,000 for the eight-month period ending on August 31, 1956, which included $2,000 of dividend income (after excluding $50 under section 116) and $900 of rental income. The $7,000 figure also reflected a deduction of $2,400 for personal exemptions ($600 × 4), since G and H are both over 65 years of age. The application of the exception described in paragraph (a)(2) of this section to an underpayment of estimated tax on the September 15 installment date may be illustrated by the following computation:

Taxable income for the period ending Aug. 31, 1956 (without deduction for personal exemptions) on an annual basis ($9,400 × 12 ÷ 8)	$14,100.00
Deduction for personal exemptions	2,400.00
Taxable income on an annual basis	11,700.00
Tax (on the basis of a joint return)	2,642.00
Dividends received for 8-month period	2,050.00
Less: Amount excluded from gross income under section 116	50.00
Dividends included in gross income	2,000.00
Dividend income annualized ($2,000 × 12 ÷ 8)	3,000.00
Dividends received credit under section 34 (4 percent of $3,000)	120.00
Tax less dividends received credit	2,522.00
Retirement income (as defined in section 37(c)) includes:	
Dividend income (to extent included in gross income)	2,000.00
Rental income	900.00
Total retirement income	2,900.00
Limit on amount of retirement income under section 37(d)	1,200.00
Retirement income credit under section 37 (20 percent of $1,200)	240.00
Tax less credits under section 34 and section 37	2,282.00
Amount determined under the exception described in paragraph (a)(2) of	1,198.05

this section ($^{3}/_{4}$ of 70 percent of $2,282)

Example 8. C, an unmarried individual for whom another taxpayer is entitled to a deduction under section 151(e), has adjusted gross income of $4,000 for the period January 1, 1977, through August 31, 1977. All of C's income is non-exempt interest. For the same period C, who is entitled to one personal exemption, has itemized deductions amounting to $300. C is entitled to no credits other than the general tax credit. C filed a declaration of estimated tax on April 15, 1977, and on or before September 15, 1977, makes estimated tax payments for 1977 which total $460. For purposes of determining whether the exception described in paragraph (a)(2) of this section applies, the following computations are necessary:

Adjusted gross income for the period ending Aug. 31, 1977, on an annual basis ($4,000 × 12 ÷ 8)		$6,000.00
Itemized deductions for the period ending Aug. 31, 1977, on an annual basis ($300 × 12 ÷ 8)		450.00
Unused zero bracket amount computation required under sec. 63(e)(1)(D):		
Zero bracket amount	$2,200.00	
Annualized itemized deductions	450.00	
Unused zero bracket amount	1,750.00	
Annualized adjusted gross income		6,000.00
Plus: unused zero bracket amount		1,750.00
Annualized tax table income		7,750.00
Tax from tables		757.00
Amount specified in paragraph (a)(2) of this section ($^{3}/_{4}$ × 80 pct. × $757)		$454.20

The exception described in paragraph (a)(2) applies, and no addition to tax will be imposed.

Example 9. An unmarried taxpayer entitled to one exemption, has adjusted gross income of $16,000 and itemized deductions of $2,000 for the period for the period January 1, 1977, through August 31, 1977. D has no net earnings from self-employment and is entitled to no credits other than the general tax credit. D files a declaration of estimated tax on April 15, 1977, and on or before September 15, 1977, makes estimated tax payments for 1977 which total $3,000. For purposes of determining whether the exception in paragraph (a)(2) of this

section applies, the following computations are necessary:

Adjusted gross income for the period ending Aug. 31, 1977, on an annual basis ($16,000 × 12 ÷ 8)		$24,000
Itemized deductions for the period ending Aug. 31, 1977, on an annual basis ($2,000 × 12 ÷ 8)		3,000
Annualized itemized deductions	$3,000	
Minus zero bracket amount	2,200	
Excess itemized deductions	800	
Annualized adjusted gross income		24,000
Minus excess itemized deductions		800
Annualized tax table income		23,200
Minus: Personal exemption		750
Annualized taxable income		22,450
Tax under sec. 1(c) on annualized taxable income		5,325
Minus: general tax credit		180
Total		5,145
Amount specified in paragraph (a)(2) of this section ($^{3}/_{4}$ × 80 pct. × $5,145)		3,087

The exception described in paragraph (a)(2) does not apply.

(d) ***Determination of taxable income for installment periods*** —

(1) ***In general.***

(i) In determining the applicability of the exceptions described in paragraph (a) (2) and (3) of this section, there must be an accurate determination of the amount of income and deductions for the calendar months in the taxable year preceding the installment date as of which the determination is made, that is, for the period terminating with the last day of the third, fifth, or eighth month of the taxable year. For example, a taxpayer distributes year-end bonuses to his employees but does not determine the amount of the bonuses until the last month of the taxable year. He may not deduct any portion of such year-end bonuses in determining his taxable income for any installment period other than the final installment period for the taxable year, since deductions are not allowable until paid or accrued, depending on the taxpayer's method of accounting.

(ii) If a taxpayer on an accrual method of accounting wishes to use either of the exceptions described in paragraphs (a) (2) and (3) of this section, he must establish the amount of income and deductions for each applicable period. If his income is derived from a business in which the production, purchase, or sale of merchandise is an income-producing factor requiring the use of inventories, he will be unable to determine accurately the amount of his taxable income for the applicable period unless he can establish, with reasonable accuracy, his cost of goods sold for the applicable installment period. The cost of goods sold for such period shall be

considered, unless a more exact determination is available, as such part of the cost of goods sold during the entire taxable year as the gross receipts from sales for such installment period is of gross receipts from sales for the entire taxable year.

(2) ***Members of partnerships.*** The provisions of this subparagraph shall apply in determining the applicability of the exceptions described in paragraphs (a) (2) and (3) of this section to an underpayment of estimated tax by a taxpayer who is a member of a partnership.

(i) For purposes of determining taxable income, there shall be taken into account:

(A) The partner's distributive share of partnership items set forth under section 702,

(B) The amount of any guaranteed payments under section 707(c), and

(C) Gains or losses on partnership distributions which are treated as gains or losses on sales of property.

(ii) For purposes of determining net earnings from self-employment (for taxable years beginning after December 31, 1966) there shall be taken into account:

(A) The partner's distributive share of income or loss, described in section 702(a)(9), subject to the special rules set forth in section 1402(a) and §§ 1.1402(a)-1 to 1.1402(a)-16, inclusive, and

(B) The amount of any guaranteed payments under section 707(c), except for payments received from a partnership not engaged in a trade or business within the meaning of section 1402(c) and § 1.1402(c)-1.

In determining a partner's taxable income and, for taxable years beginning after December 31, 1966, net earnings from self-employment, for the months in his taxable year which precede the month in which the installment date falls, the partner shall take into account items set forth in sections 702 and 1402(a) for any partnership taxable year ending with or within his taxable year to the extent that such items are attributable to months in such partnership taxable year which precede the month in which the installment date falls. For special rules used in computing a partner's net earnings from self-employment in the case of the termination of his taxable year as a result of death, see section 1402(f) and § 1.1402(f)-1. In addition, a partner shall include in his taxable income and, for taxable years beginning after December 31, 1966, net earnings from self-employment, for the months in his taxable year which precede the month in which the installment date falls guaranteed payments from the partnership to the extent that such guaranteed payments are includible in his taxable income for such months. See section 706(a), section 707(c), paragraph (c) of § 1.707-1 and section 1402(a).

(iii) The provisions of subdivision (i) (A) and (B) of this subdivision (ii) of this subparagraph may be illustrated by the following examples:

Example 1. A, whose taxable year is the calendar year, is a member of a partnership whose taxable year ends on January 31. A must take into account, in determining his taxable income for the installment due on April 15, 1973, all of his distributive share of partnership items described in section 702 and the amount of any guaranteed payments made to him which were deductible by the partnership in the partnership taxable year beginning on February 1, 1972, and ending on January 31, 1973. A must take into account, in determining his net earnings from self-

employment, his distributive share of partnership income or loss described in section 702(a)(9), subject to the special rules set forth in section 1402(a) and §§ 1.1402(a)-1 to 1.1402(a)-16, inclusive.

Example 2. Assume that the taxable year of the partnership of which A, a calendar year taxpayer, is a member ends on June 30. A must take into account in the determination of his taxable income and net earnings from self-employment for the installment due on April 15, 1973, his distributive share of partnership items for the period July 1, 1972, through March 31, 1973; for the installment due on June 15, 1973, he must take into account such amounts for the period July 1, 1972, through May 31, 1973; and for the installment due on September 15, 1973, he must take into account such amounts for the entire partnership taxable year of July 1, 1972, through June 30, 1973 (the date on which the partnership taxable year ends).

(3) ***Beneficiaries of estates and trusts.*** In determining the applicability of the exceptions described in paragraph (a) (2) and (3) of this section as of any installment date, the beneficiary of an estate or trust must take into account his distributable share of income from the estate or trust for the applicable period (whether or not actually distributed) if the trust or estate is required to distribute income to him currently. If the estate or trust is not required to distribute income currently, only the amounts actually distributed to the beneficiary during such period must be taken into account. If the taxable year of the beneficiary and the taxable year of the estate or trust are different, there shall be taken into account the beneficiary's distributable share of income, or the amount actually distributed to him as the case may be, during the months in the taxable year of the estate or trust ending within the taxable year of the beneficiary which precede the month in which the installment date falls. See subparagraph (2) of this paragraph for examples of a similar rule which is applied when a partner and the partnership of which he is a member have different taxable years.

(e) ***Special rule in case of change from joint return or separate return for the preceding taxable year*** —

(1) ***Joint return to separate returns.*** In determining the applicability of the exceptions described in paragraph (a) (1) and (4) of this section to an underpayment of estimated tax, a taxpayer filing a separate return who filed a joint return for the preceding taxable year shall be subject to the following rule: The tax:

(i) Shown on the return for the preceding taxable year, or

(ii) Based on the tax rates and personal exemptions for the current taxable year but otherwise determined on the basis of the facts shown on the return for the preceding taxable year, and the law applicable to such year,

shall be that portion of the tax which bears the same ratio to the whole of the tax as the amount of the tax for which the taxpayer would have been liable bears to the sum of the taxes for which the taxpayer and his spouse would have been liable had each spouse filed a separate return for the preceding taxable year. For rules with respect to the allocation of joint payments of estimated tax, see § 1.6654-2(e)(5).

(2) ***Examples.*** The rule in paragraph (i) of this paragraph may be illustrated by the following examples:

> *Example 1.* H and W filed a joint return for the calendar year 1955 showing taxable income of $20,000 and a tax of $5,280. Of the $20,000 taxable income, $18,000 was attributable to H, and $2,000 was attributable to W. H and W filed separate returns for 1956. The tax shown on the return for the preceding taxable year, for purposes of determining the applicability of the

exception described in paragraph (a)(1) of this section to an underpayment of estimated tax by H for 1956, is determined as follows:

Taxable income of H for 1955	$18,000
Tax on $18,000 (on basis of separate return)	6,200
Taxable income of W for 1955	2,000
Tax on $2,000 (on basis of separate return)	400
Aggregate tax of H and W (on basis of separate returns)	6,600
Portion of 1955 tax shown on joint return attributable to H (6200/6600 × 5280)	4,960

Example 2. Assume the same facts as in example (1) and that H and W file a joint declaration of estimated tax for 1956 and pay estimated tax in amounts determined on the basis of their eligibility for three rather than two exemptions for 1956. H and W ultimately file separate income tax returns for 1956. Assume further that the exception described in paragraph (a)(1) of this section does not apply. The tax based on the tax rates and personal exemptions for 1956 but otherwise determined on the basis of the facts shown on the return for 1955 and the law applicable to 1955, for purposes of determining the applicability of the exception described in paragraph (a)(4) of this section to an underpayment of estimated tax by H for 1956, is determined as follows:

Taxable income of H and W for 1955 based on additional personal exemption for 1956	$19,400
Tax on 1955 income based on joint return rate for 1956	5,076
Portion of 1955 tax attributable to H (computed as in example (1) but allowing benefit of additional exemption to H)	5900/6300
Portion of tax attributable to H based on tax rates and personal exemptions for 1956 but otherwise on facts on 1955 return ($5900/6300 × $5,076)	$4,754

Example 3. Assume that H and W had the same taxable income in 1972 as in 1955, and that they filed a joint return for 1972 and separate returns for 1973. Assume further that H's taxable income for 1972 included net earnings from self-employment in excess of the $9,000 maximum base for the self-employment tax for 1972, and that the joint return filed by H and W for 1972 showed tax under Chapter 1 (other than section 56) and tax under Chapter 2 totaling $5,055. The tax shown on the return for 1972, for purposes of determining the applicability of the exception described in paragraph (a)(1) of this section to an

underpayment of estimated tax by H for 1973, is determined as follows:

Taxable income of H for 1972	$18,000
Chapter 1 tax (other than section 56 tax) on $18,000 (on basis of separate return)	5,170
Self-employment income of H for 1972	9,000
Chapter 2 tax on $9,000	$675
Total of such taxes	$5,845
Taxable income of W for 1972	2,000
Chapter 1 tax (other than section 56 tax) on $2,000 (on basis of separate return)	310
Aggregate tax on H and W (on basis of separate returns)	$6,155
Portion of 1972 tax shown on joint return attributable to H (5845/6155 × $5,055)	$4,800.40

(3) ***Separate return to joint return.*** In the case of a taxpayer who files a joint return for the taxable year with respect to which there is an underpayment of estimated tax and who filed a separate return for the preceding taxable year:

(i) The tax shown on the return for the preceding taxable year, for purposes of determining the applicability of the exception described in paragraph (a)(1) of this section, shall be the sum of both the tax shown on the return of the taxpayer and the tax shown on the return of the taxpayer's spouse for such preceding year, and

(ii) The facts shown on both the taxpayer's return and the return of his spouse for the preceding taxable year shall be taken into account for purposes of determining the applicability of the exception described in paragraph (a)(4) of this section.

(4) ***Example.*** The rules described in subparagraph (3) of this paragraph may be illustrated by the following example:

Example. H and W filed separate income tax returns for the calendar year 1954 showing tax liabilities of $2,640 and $350, respectively. In 1956 they married and participated in the filing of a joint return for that year. In the filing of a joint return for that year. Thus, for the purpose of determining the applicability of the exceptions described in paragraph (a)(1) and (4) of this section to an underpayment of estimated tax for the year 1955, the tax shown on the return for the preceding taxable year is $2,990 ($2,640 plus $350).

(Secs. 6015, 6154, 6654, 6655, and 7805, Internal Revenue Code of 1954 (96 Stat. 2395 and 2396, 68A Stat. 917; 26 U.S.C. 6015, 6154, 6654, 6655, and 7805))

(5) ***Joint payments of estimated tax*** —

(i) ***In general.*** A husband and wife may make a joint payment of estimated tax even though they are not living together. However, a joint payment of estimated tax may not be made if the husband and wife are separated under a decree of divorce or of separate maintenance. A joint

payment of estimated tax may not be made if the taxpayer's spouse is a nonresident alien (including a nonresident alien who is a bona fide resident of Puerto Rico or a possession to which section 931 applies during the entire taxable year), unless an election is in effect for the taxable year under section 6013(g) or (h) and the regulations. In addition, a joint payment of estimated tax may not be made if the taxpayer's spouse has a taxable year different from that of the taxpayer. If a joint payment of estimated tax is made, the amount estimated as the income tax imposed by chapter 1 of the Internal Revenue Code must be computed on the aggregate estimated taxable income of the spouses (see section 6013(d)(3) and § 1.2-1), whereas, if applicable, the amount estimated as the self-employment tax imposed by chapter 2 of the Internal Revenue Code must be computed on the separate estimated self-employment income of each spouse. See sections 1401 and 1402 and § 1.6017-1(b)(1). The liability with respect to the estimated tax, in the case of a joint payment, shall be joint and several.

(ii) ***Application to separate returns.***

(A) Although a husband and wife may make a joint payment of estimated tax, they, nevertheless, can file separate returns. If they make a joint payment of estimated tax and file separate returns for the same taxable year with respect to which the joint payment was made, the payment made on account of the estimated tax for that taxable year may be treated as a payment on account of the tax liability of either the husband or wife for the taxable year, or may be divided between them in such manner as they may agree.

(B) In the event the husband and wife fail to agree to a division of the estimated tax payment, such payment shall be allocated between them in accordance with the following rule. The portion of such payment to be allocated to a taxpayer shall be that portion of the aggregate of all such payments as the amount of tax imposed by chapter 1 of the Internal Revenue Code shown on the separate return of the taxpayer (plus, if applicable, the amount of tax imposed by chapter 2 of the Internal Revenue Code shown on the return of the taxpayer) bears to the sum of the taxes imposed by chapter 1 of the Internal Revenue Code shown on the separate returns of the taxpayer and the spouse (plus, if applicable, the sum of the taxes imposed by chapter 2 of the Internal Revenue Code shown on the separate returns of the taxpayer and the spouse).

(6) ***Example.*** The rule described in paragraph (e)(5) of this section may be illustrated by the following example:

Example. (i) H and W make a joint payment of estimated tax of $19,500 for the taxable year. H and W subsequently file separate returns for the taxable year showing tax imposed by chapter 1 of the Internal Revenue Code in the amount of $11,500 and $8,000, respectively. In addition, H's return shows a tax imposed by chapter 2 of the Internal Revenue Code in the amount of $500. H and W fail to agree to a division of the estimated tax paid. The amount of the aggregate estimated tax payments allocated to H is determined as follows:
(A) Chapter 1 tax shown on H's return—$11,500

(B) Plus: Amount of tax imposed by chapter 2 shown on H's return—$500

(C) Total taxes imposed by chapter 1 and by chapter 2 shown on H's return—$12,000

(D) Amount of tax imposed by chapter 1 shown on W's return—$8,000

(E) Total taxes imposed by chapter 1 and by chapter 2 on both H's and W's—$20,000 returns

(F) Proportion of taxes shown on H's return to total amount—($12,000/$20,000) 60% of taxes shown on both H's and W's returns

(G) Amount of estimated tax payments allocated to H (60% of $19,500)—$11,700

(ii) Accordingly, H's return would show a balance due in the amount of $300 ($12,000 taxes shown less $11,700 estimated tax allocated).

(7) ***Death of spouse.***

(i) A joint payment of estimated tax may not be made after the death of either the husband or wife. However, if it is reasonable for a surviving spouse to assume that there will be filed a joint return for himself and the deceased spouse for his taxable year and the last taxable year of the deceased spouse, he may, in making a separate payment of estimated tax for his taxable year which includes the period comprising such last taxable year of his spouse, estimate the amount of the tax imposed by chapter 1 of the Internal Revenue Code on his and his spouse's taxable income on an aggregate basis and compute his estimated tax with respect to chapter 1 tax in the same manner as though a joint return had been filed.

(ii) If a husband and wife make a joint payment of estimated tax and thereafter one spouse dies, no further payments of joint estimated tax liability are required from the estate of the decedent. The surviving spouse, however, shall be liable for the payment of any subsequent installments of the joint estimated tax. For the purpose of making an amended payment of estimated tax by the surviving spouse, and the allocation of payments made pursuant to a joint payment of estimated tax between the surviving spouse and the legal representative of the decedent in the event a joint return is not filed, the payment of estimated tax may be divided between the decedent and the surviving spouse in such proportion as the surviving spouse and the legal representative of the decedent may agree.

(iii) If the surviving spouse and the legal representative of the decedent fail to agree to a division of a payment, such payment shall be allocated in accordance with the following rule. The portion of such payment to be allocated to the surviving spouse shall be that portion of the aggregate amount of such payments as the amount of tax imposed by chapter 1 of the Internal Revenue Code shown on the separate return of the surviving spouse (plus, if applicable, the amount of tax imposed by chapter 2 of the Internal Revenue Code shown on the return of the surviving spouse) bears to the sum imposed by chapter 1 of the Internal Revenue Code shown on the separate returns of the surviving spouse and of the decedent (plus, if applicable, the sum of the taxes imposed by chapter 2 of the Internal Revenue Code shown on the returns of the surviving spouse and of the decedent); and the balance of such payments shall be allocated to the decedent. This rule may be illustrated by analogizing the surviving spouse described in this rule to H in the example contained in paragraph (e)(6) of this section and the decedent in this rule to W in that example.

(f) ***Effective/applicability date.*** Paragraph (a)(1)(ii) of this section applies to any taxable year beginning in 2009 and does not apply to any taxable years beginning before or after 2009.

[T.D. 7427, 41 FR 34029, Aug. 12, 1976, as amended by T.D. 7577, 43 FR 59359, Dec. 20, 1978; T.D. 7585, 44 FR 1105, Jan. 4, 1979; T.D. 8016, 50 FR 11855, Mar. 26, 1985; 50 FR 18244, Apr. 30, 1985; T.D. 8996, 67 FR 35012, May 17, 2002; T.D. 9224, 70 FR 52300, Sept. 2, 2005; T.D. 9480, 75 FR 9102, Mar. 1, 2010; T.D. 9613, 78 FR 13222, Feb. 27, 2013]

§ 1.6654-3 Short taxable years of individuals.

(a) ***In general.*** The provisions of section 6654, with certain modifications relating to the application of section 6654(d), which are explained in paragraph (b) of this section, are applicable in the case of a short taxable year.

(b) ***Rules as to application of section 6654(d).***

(1) In any case in which the taxable year for which an underpayment of estimated tax exists is a short taxable year due to a change in annual accounting periods, in determining the tax:

(i) Shown on the return for the preceding taxable year (for purposes of section 6654(d)(1)), or

(ii) Based on the personal exemptions and rates for the current taxable year but otherwise on the basis of the facts shown on the return for the preceding taxable year, and the law applicable to such year (for purposes of section 6654(d)(4)),

the tax will be reduced by multiplying it by the number of months in the short taxable year and dividing the resulting amount by 12.

(2) If the taxable year for which an underpayment of estimated tax exists is a short taxable year due to a change in annual accounting periods, in annualizing the taxable income for the months in the taxable year preceding an installment date, for purposes of section 6654(d)(1)(C), the personal exemptions allowed as deductions under section 151 shall be reduced to the same extent that they are reduced under section 443(c) in computing the tax for a short taxable year.

(3) If “the preceding taxable year” referred to in section 6654(d)(4) was a short taxable year, for purposes of determining the applicability of the exception described in section 6654(d)(4), the tax, computed on the basis in the facts shown on the return for the preceding year, shall be the tax computed on the annual basis in the manner described in section 443(b)(1) (prior to its reduction in the manner described in the last sentence thereof). If the tax rates or the taxpayer's status with respect to personal exemptions for the taxable year with respect to which the underpayment occurs differ from such rates or status applicable to the preceding taxable year, the tax determined in accordance with this subparagraph shall be recomputed to reflect the rates and status applicable to the year with respect to which the underpayment occurs.

[T.D. 6500, 25 FR 12149, Nov. 26, 1960, as amended by T.D. 7427, 41 FR 34033, Aug. 12, 1976; T.D. 9224, 70 FR 52301, Sept. 2, 2005]

§ 1.6654-4 [Reserved]

§ 1.6654-5 Payments of estimated tax.

(a) ***In general.*** A payment of estimated tax by an individual shall be determined on Form 1040-ES. For the purpose of determining the estimated tax, the amount of gross income which the taxpayer can reasonably expect to receive or accrue, depending upon the method of accounting upon which taxable income is computed, and the amount of the estimated allowable deductions and credits to be taken into account in computing the amount of estimated tax, shall be determined upon the basis of the facts and circumstances existing at the time prescribed for determining the estimated tax, as well as those reasonably to be anticipated for the taxable year. If, therefore, the taxpayer is employed at the date prescribed for making an estimated tax payment at a given wage or salary, the taxpayer should presume, in the absence of circumstances indicating the contrary, for the purpose of the estimated tax payment that such employment will continue to the end of the taxable year at the wage or salary received by the taxpayer as of such date. In the case of income other than wages and salary, the regularity in the payment of income, such as dividends, interest, rents, royalties, and income arising from estates and trusts is a factor to be taken into consideration. Thus, if the taxpayer owns shares of stock in a corporation, and dividends have been paid regularly for several years upon the stock, the taxpayer should, in the absence of information indicating a change in the dividend policy, include the prospective dividends from the corporation for the taxable year as well as those actually received in such year prior to determining the estimated tax. In the case of a taxpayer engaged in business on his own account, there shall be made an estimate of gross income and deductions and credits in the light of the best available information affecting the trade, business, or profession.

(b) ***Computation of estimated tax.*** In computing the estimated tax the taxpayer should take into account the taxes, credits, and other amounts listed in § 1.6654-1(a)(4).

[T.D. 9224, 70 FR 52301, Sept. 2, 2005]

§ 1.6654-6 Nonresident alien individuals.

(a) ***In general.*** A nonresident alien individual is required to make a payment of estimated tax if that individual's gross income meets the requirements of section 6654 and § 1.6654-1. In making the determination under section 6654 as to whether the amount of the gross income of a nonresident alien individual is such as to require making a payment of estimated income tax, only the filing status relating to a single individual (other than a head of household) or to a married individual not entitled to file a joint return shall apply, unless an election is in effect 1 for the taxable year under section 6013(g) or (h) and the regulations.

(b) ***Determination of gross income.*** To determine the gross income of a nonresident alien individual who is not, or does not expect to be, a bona fide resident of Puerto Rico or a possession to which section 931 applies during the entire taxable year, see section 872 and §§ 1.872-1 and 1.872-2. To determine the gross income of a nonresident alien individual who is, or expects to be, a bona fide resident of Puerto Rico or a possession to which section 931 applies during the entire taxable year, see section 876 and the regulations. For rules for determining whether an individual is a bona fide resident of a United States possession (including Puerto Rico), see section 937 and the regulations.

[T.D. 9224, 70 FR 52301, Sept. 2, 2005]

§ 1.6654-7 Applicability.

Section 6654 is applicable only with respect to taxable years beginning after December 31, 1954. Section 294(d) of the Internal Revenue Code of 1939 shall continue in force with respect to taxable years beginning before January 1, 1955.

[T.D. 6500, 25 FR 12150, Nov. 26, 1960. Redesignated by T.D. 7282, 38 FR 19028, July 17, 1973. Redesignated by T.D. 9224, 70 FR 52301, Sept. 2, 2005]

§ 1.6655-0 Table of contents.

This section lists the table of contents for §§ 1.6655-1 through 1.6655-7.

§ 1.6655-1 Addition to the tax in the case of a corporation.

(a) In general.

(b) Amount of underpayment.

(c) Period of the underpayment.

(d) Amount of required installment.

(1) In general.

(2) Exception.

(e) Large corporation required to pay 100 percent of current year tax.

(1) In general.

(2) May use last year's tax for first installment.

(f) Required installment due dates.

(1) Number of required installments.

(2) Time for payment of installments.

(i) Calendar year.

(ii) Fiscal year.

(iii) Short taxable year.

(iv) Partial month.

(g) Definitions.

(h) Special rules for consolidated returns.

(i) Overpayments applied to subsequent taxable year's estimated tax.

(1) In general.

(2) Subsequent examinations.

(j) Examples.

(k) Effective/applicability date.

§ 1.6655-2 Annualized income installment method.

(a) In general.

(b) Determination of annualized income installment—in general.

(c) Special rules.

(1) Applicable percentage.

(2) Partial month.

(3) Annualization period not a short taxable year.

(d) Election of different annualization periods.

(e) 52-53 week taxable year.

(f) Determination of taxable income for an annualization period.

(1) In general.

(i) Items of income.

(ii) Items of deduction.

(iii) Losses.

(2) Certain deductions required to be allocated in a reasonably accurate manner.

(i) In general.

(ii) Application of the reasonably accurate manner requirement to certain charitable contributions, recurring items, and 12-month rule items.

(iii) Reasonably accurate manner defined.

(iv) Special rule for certain real property tax liabilities.

(v) Examples.

(3) Special rules.

(i) Advance payments under Rev. Proc. 2004-34.

(ii) Extraordinary items.

(A) In general.

(B) De minimis extraordinary items.

(C) Special rules for net operating loss deductions and section 481(a) adjustments.

(iii) Credits.

(A) Current year credits.

(B) Credit carryovers.

(iv) Depreciation and amortization.

(A) Estimated annual depreciation and amortization.

(B) Safe harbors.

(*1*) Proportionate depreciation allowance.

(*2*) 90 percent of preceding year's depreciation.

(*3*) Safe harbor operational rules.

(C) Short taxable years.

(v) Distributive share of items

(A) Member of partnership.

(B) Treatment of subpart F income and income under section 936(h).

(*1*) General rule.

(*2*) Prior year safe harbor.

(*i*) General rule.

(*ii*) Special rule for noncontrolling shareholder.

(C) Dividends from closely held real estate investment trust.

(*1*) General rule.

(*2*) Closely held real estate investment trust.

(D) Other passthrough entities.

(vi) Alternative minimum taxable income exemption amount.

(vii) Examples.

(g) Items that substantially affect taxable income but cannot be determined accurately by the installment due date.

(1) In general.

(2) Example.

(h) Effective/applicability date.

§ 1.6655-3 Adjusted seasonal installment method.

(a) In general.

(b) Limitation on application of section.

(c) Determination of amount.

(d) Special rules.

(1) Base period percentage.

(2) Filing month.

(3) Application of the rules related to the annualized income installment method to the adjusted seasonal installment method.

(4) Alternative minimum tax.

(e) Example.

(f) Effective/applicability date.

§ 1.6655-4 Large corporations.

(a) Large corporation defined.

(b) Testing period.

(c) Computation of taxable income during testing period.

(1) Short taxable year.

(2) Computation of taxable income in taxable year when there occurs a transaction to which section 381 applies.

(d) Members of controlled group.

(1) In general.

(2) Aggregation.

(3) Allocation rule.

(4) Controlled group members.

(e) Effect on a corporation's taxable income of items that may be carried back or carried over from any other taxable year.

(f) Consolidated returns. [Reserved]

(g) Example.

(h) Effective/applicability date.

§ 1.6655-5 Short taxable year.

(a) In general.

(b) Exception to payment of estimated tax.

(c) Installment due dates.

(1) In general.

(i) Taxable year of at least four months but less than twelve months.

(ii) Exceptions.

(2) Early termination of taxable year.

(i) In general.

(ii) Exception.

(d) Amount due for required installment.

(1) In general.

(2) Tax shown on the return for the preceding taxable year.

(3) Applicable percentage.

(4) Applicable percentage for installment period in which taxpayer does not reasonably expect that the taxable year will be an early termination year.

(e) Examples.

(f) 52 or 53 week taxable year.

(g) Use of annualized income or seasonal installment method.

(1) In general.

(2) Computation of annualized income installment.

(3) Annualization period for final required installment.

(4) Examples.

(h) Effective/applicability date.

§ 1.6655-6 Methods of accounting.

(a) In general.

(b) Accounting method changes.

(c) Examples.

(d) Effective/applicability date.

§ 1.6655-7 Addition to tax on account of excessive adjustment under section 6425.

[T.D. 9347, 72 FR 44348, Aug. 7, 2007, as amended by T.D. 9870, 84 FR 33692, July 15, 2019]

§ 1.6655-1 Addition to the tax in the case of a corporation.

(a) ***In general.*** Section 6655 imposes an addition to the tax under chapter 1 of the Internal Revenue Code in the case of any underpayment of estimated tax by a corporation. An addition to tax due to the underpayment of estimated taxes is determined by applying the underpayment rate established under section 6621 to the amount of the underpayment, for the period of the underpayment. This addition to the tax is in addition to any applicable criminal penalties and is imposed whether or not there was reasonable cause for the underpayment.

(b) ***Amount of underpayment.*** The amount of the underpayment for any required installment is the excess of—

(1) The required installment; over

(2) The amount, if any, of the installment paid on or before the last date prescribed for such payment.

(c) ***Period of the underpayment.*** The period of the underpayment of any required installment runs from the date the installment was required to be paid to the 15th day of the 3rd month following the close of the taxable year, or to the date such underpayment is paid, whichever is earlier. For purposes of determining the period of the underpayment a payment of estimated tax will be credited against unpaid required installments in the order in which such installments are required to be paid.

(d) ***Amount of required installment*** —

(1) ***In general.*** Except as otherwise provided in this section and §§ 1.6655-2 through 1.6655-7, the amount of any required installment is 25 percent of the lesser of—

(i) 100 percent of the tax shown on the return for the taxable year (or, if no return is filed, 100 percent of the tax for such year); or

(ii) 100 percent of the tax shown on the return for the preceding taxable year.

(2) ***Exception.*** This paragraph (d)(1)(ii) does not apply if the preceding taxable year was not a taxable year of 12 months or the corporation did not file a return for the preceding taxable year showing a liability for tax.

(e) ***Large corporation required to pay 100 percent of current year tax*** —

(1) ***In general.*** Except as provided in paragraph (e)(2) of this section, paragraph (d)(1)(ii) of this section does not apply in the case of a large corporation (as defined in § 1.6655-4).

(2) ***May use last year's tax for first installment.*** Paragraph (e)(1) of this section does not apply for purposes of determining the amount of the 1st required installment for any taxable year. Any reduction in such 1st installment by reason of the preceding sentence is recaptured by increasing the amount of the next required installment determined under paragraph (d)(1)(i) of this section by the amount of such reduction and, if the next required installment is reduced by use of the annualized income installment method under § 1.6655-2 or the adjusted seasonal installment method under § 1.6655-3, by increasing subsequent required installments determined under paragraph (d)(1)(i) of this section to the extent that the reduction has not previously been recaptured.

(f) ***Required installment due dates*** —

(1) ***Number of required installments.*** Unless otherwise provided, corporations must make 4 required installments for each taxable year.

(2) *Time for payment of installments* —

(i) ***Calendar year.*** Unless otherwise provided, in the case of a calendar year taxpayer, the due dates of the required installments are as follows:

1st April 15

2nd June 15

3rd September 15

4th December 15

(ii) ***Fiscal year.*** In the case of a taxpayer other than a calendar year taxpayer, the due dates of the required installments are as follows:

1st 15th day of 4th month of the taxable year

2nd 15th day of 6th month of the taxable year

3rd 15th day of 9th month of the taxable year

4th 15th day of 12th month of the taxable year

(iii) ***Short taxable year.*** See § 1.6655-5 for rules regarding required installments for corporations with a short taxable year.

(iv) ***Partial month.*** Except as otherwise provided, for purposes of determining the due date of any required installment, a partial month is treated as a full month.

(g) ***Definitions.***

(1) The term *tax* as used in this section and §§ 1.6655-2 through 1.6655-7 means the excess of—

(i) The sum of—

(A) The tax imposed by section 11, section 1201(a), or subchapter L of chapter 1 of the Internal Revenue Code, whichever is applicable;

(B) The tax imposed by section 55; plus

(C) The tax imposed by section 887; over

(ii) The credits against tax provided by part IV of subchapter A of chapter 1 of the Internal Revenue Code.

(2)

(i) In the case of a foreign corporation subject to taxation under section 11, section 1201(a), or subchapter L of chapter 1 of the Internal Revenue Code, the tax imposed by section 881 is treated as a tax imposed by section 11.

(ii) In the case of a partnership that is treated, pursuant to regulations issued under section 1446(f)(2), as a corporation for purposes of this section, the tax imposed by section 1446 is treated as a tax imposed by section 11.

(iii) Unless otherwise provided in the Internal Revenue Code or Treasury regulations, for purposes of the definition of "tax" as used in this section, a recapture of tax, such as a recapture provided by section 50(a)(1)(A), and any other similar provision, is not considered to be a tax imposed by section 11.

(iv) For the purposes of paragraph (d) of this section, the return for the preceding taxable year is the Federal income tax return for such taxable year that is required by section 6012(a)(2). However, if an amended Federal income tax return has been filed before the due date of an installment, then the return for the preceding taxable year is the Federal income tax return as amended. If an amended Federal income tax return has been filed on or after the due date for an installment, then the return for the preceding taxable year does not include for such installment period the Federal income tax return as amended subsequent to the due date for such installment. Paragraph (d) of this section will apply without regard to whether the taxpayer's Federal income tax return for the preceding taxable year is filed in a timely manner.

(h) ***Special rules for consolidated returns*** For special rules relating to the determination of the amount of the underpayment in the case of a corporation whose income is included in a consolidated return, see § 1.1502-5(b).

(i) ***Overpayments applied to subsequent taxable year's estimated tax*** —

(1) ***In general.*** If a taxpayer elects under the provisions of sections 6402(b) and 6513(d) and the regulations to apply an overpayment in year one against the estimated tax liability for year two, the overpayment will be applied to the required installment payments for year two in the order due and to the extent necessary to satisfy such installments, similar to the manner in which an actual overpayment of one installment is carried forward to the next installment. No interest is accrued or paid on an overpayment if the election to apply the overpayment against estimated tax is made.

(2) ***Subsequent examinations.*** If a deficiency is determined in an examination of a return for a taxable year that originally reflected an overpayment that was applied against estimated tax for the succeeding taxable year, interest on the deficiency will not begin to accrue on an amount applied until that amount is used to satisfy a required estimated tax payment in such taxable year. Regardless of whether the taxpayer anticipated the application of such overpayment from the prior taxable year in calculating and paying its required estimated tax installment liabilities for the current taxable year, the subsequently determined underpayment and interest computation thereon will not change the taxpayer's original election to apply the overpayment against the estimated tax liability of the succeeding taxable year. Any changes to the usage of the original overpayment from the prior taxable year are hypothetical only and solely for the purpose of computing deficiency interest. Overpayment interest will not be impacted. For further guidance, see Rev. Rul. 99-40 (1999-2 CB 441), (see § 601.601(d)(2)(ii)(*b*) of this chapter).

(j) ***Examples.*** The method prescribed in paragraphs (d) through (g) of this section is illustrated by the following examples:

> *Example 1.* (i) X, a calendar year corporation, estimates its tax liability for its taxable year ending December 31, 2009, will be $85,000. X is not a large corporation as defined in section 6655(g)(2) and § 1.6655-4. X reported a liability of $74,900 on its return for the taxable year ended December 31, 2008, with no credits against tax. X paid four installments of estimated tax, each in the amount of $18,725 (25 percent of $74,900), on April 15, 2009, June 15, 2009, September 15, 2009, and

December 15, 2009, respectively. X reported a tax liability of $88,900 on its return due March 15, 2010. X had a $5,000 credit against tax for tax year 2009 as provided by part IV of subchapter A of chapter 1 of the Internal Revenue Code. X did not underpay its estimated tax for tax year 2009 for any of the four installments, determined as follows:
(A) Tax as defined in paragraph (g) of this section for 2009 ($88,900−$5,000) = $83,900

(B) Tax as defined in paragraph (g) of this section for 2008 = $74,900

(C) 100% of the lesser of this paragraph (j), *Example 1* (i)(A) or (i)(B) = $74,900

(D) Amount of estimated tax required to be paid on or before each installment date (25% of $74,900) = $18,725

(E) Deduct amount paid on or before each installment date = $18,725

(F) Amount of underpayment for each installment date = $0

(ii) [Reserved]

Example 2. (i) *Facts.* Y, a calendar year corporation, estimates its tax liability for its taxable year ending December 31, 2009, will be $70,000. Y is not a large corporation as defined in section 6655(g)(2) and § 1.6655-4. Y reported a Federal income tax liability of $90,000 for its taxable year ending December 31, 2008. Y paid no installment of estimated tax on or before April 15, 2009, June 15, 2009, or September 15, 2009, but made a payment of $63,000 on December 15, 2009. On March 15, 2010, Y filed its income tax return showing a tax of $70,000. Y had no credits against tax for tax year 2009. Of the $63,000 paid by Y on December 15, 2009, $17,500 is applied to each of the first three installments due on April 15, June 15, and September 15, 2009, and the remaining $10,500 is applied to the fourth installment. Y has an underpayment of estimated tax for each of the first three installments of $17,500 and for the fourth installment of $7,000. The addition to tax under section 6655(a) is computed as follows:
(A) Tax as defined in paragraph (g) of this section for 2009 = $70,000

(B) Tax as defined in paragraph (g) of this section for 2008 = $90,000

(C) 100% of the lesser of this paragraph (j), *Example 2* (i)(A) or (i)(B) = $70,000

(D) Amount of estimated tax required to be paid on or before each installment date (25% of $70,000) = $17,500

(E) Amount paid on or before the first, second, and third installment dates = $0

(F) Amount paid on or before the fourth installment date = $63,000

(G) Amount of underpayment for each of the first, second, and third installment dates = $17,500

(H) Amount of underpayment for the fourth installment date = $7,000

(ii) *Addition to tax.* Assuming that neither the annualized income installment method nor the adjusted seasonal installment method described in §§ 1.6655-2 and 1.6655-3 would result in a lower payment for any installment period, and the addition to tax is computed under section 6621(a)(2) at the rate of 8 percent per annum for the applicable periods of underpayment, the addition to tax is determined as follows:

(A) First installment (underpayment period 4-16-09 through 12-15-09), computed as 244/365 × $17,500 × 8% = $936

(B) Second installment (underpayment period 6-16-09 through 12-15-09), computed as 183/365 × $17,500 × 8% = $702

(C) Third installment (underpayment period 9-16-09 through 12-15-09), computed as 91/365 × $17,500 × 8% = $349

(D) Fourth installment (underpayment period 12-16-09 through 3-15-10), computed as 90/365 × $7,000 × 8% = $138

(E) Total of this paragraph (j), *Example 2* (ii)(A) through (D) = $2,125

(k) ***Effective/applicability date.*** This section applies to taxable years beginning after September 6, 2007.

[T.D. 9347, 72 FR 44349, Aug. 7, 2007]

§ 1.6655-2 Annualized income installment method.

(a) ***In general.*** In the case of any required installment, if the corporation establishes that the annualized income installment determined under this section, or the adjusted seasonal installment determined under § 1.6655-3, is less than the amount determined under § 1.6655-1—

(1) The amount of such required installment is the annualized income installment (or, if less, the adjusted seasonal installment); and

(2) Any reduction in a required installment resulting from the application of this section will be recaptured by increasing the amount of the next required installment determined under § 1.6655-1 by the amount of such reduction (and, if the next required installment is similarly reduced, by increasing subsequent required installments to the extent that the reduction has not previously been recaptured).

(b) ***Determination of annualized income installment—in general.*** In the case of any required installment, the annualized income installment is the excess (if any) of—

(1) The product of the applicable percentage and the tax (after reducing the annualized tax by the amount of any allowable credits) for the taxable year computed by annualizing the taxable income and alternative minimum taxable income—

(i) For the first 3 months of the taxable year, in the case of the first required installment;

(ii) For the first 3 months of the taxable year, in the case of the second required installment;

(iii) For the first 6 months of the taxable year, in the case of the third required installment; and

(iv) For the first 9 months of the taxable year, in the case of the fourth required installment; over

(2) The aggregate amount of any prior required installments for the taxable year.

(c) ***Special rules*** —

(1) ***Applicable percentage.*** Except as otherwise provided in § 1.6655-5(d) with respect to short taxable years—

In the case of the following required installments	The applicable percentage is
1st	25
2nd	50
3rd	75
4th	100

(2) ***Partial month.*** Except as otherwise provided, for purposes of paragraph (b) of this section a partial month is treated as a month.

(3) ***Annualization period not a short taxable year.*** An annualization period is not treated as a short taxable year for purposes of determining the taxable income of an annualization period.

(d) ***Election of different annualization periods.***

(1) If the taxpayer timely files Form 8842, “Election to Use Different Annualization Periods for Corporate Estimated Tax,” in accordance with section 6655(e)(2)(C)(iii), and elects Option 1—

(i) Paragraph (b)(1)(i) of this section will be applied by using the language “2 months” instead of “3 months”;

(ii) Paragraph (b)(1)(ii) of this section will be applied by using the language “4 months” instead of “3 months”;

(iii) Paragraph (b)(1)(iii) of this section will be applied by using the language “7 months” instead of “6 months”; and

(iv) Paragraph (b)(1)(iv) of this section will be applied by using the language “10 months” instead of “9 months”.

(2) If the taxpayer timely files Form 8842, in accordance with section 6655(e)(2)(C)(iii), and elects Option 2—

(i) Paragraph (b)(1)(ii) of this section will be applied by using the language “5 months” instead of “3 months”;

(ii) Paragraph (b)(1)(iii) of this section will be applied by using the language “8 months” instead of “6 months”; and

(iii) Paragraph (b)(1)(iv) of this section will be applied by using the language “11 months” instead of “9 months”.

(3) The application of the annualized income installment method is illustrated by the following example:

Example. (i) ABC, a calendar year corporation, had a taxable year of less than twelve months for tax year 2008 and no credits against tax for tax year 2009. ABC made an estimated tax payment of $15,000 on the installment dates of April 15, 2009, June 15, 2009, September 15, 2009, and December 15, 2009, respectively. Assume that, under paragraph (d)(1) of this section, ABC elected Option 1 by timely filing Form 8842, in accordance with section 6655(e)(2)(C)(iii), and determined that its taxable income for the first 2, 4, 7 and 10 months was $25,000, $64,000, $125,000, and $175,000 respectively. The income for each period is annualized as follows:
$25,000 × 12/2 = $150,000

$64,000 × 12/4 = $192,000

$125,000 × 12/7 = $214,286

$175,000 × 12/10 = $210,000

(ii)(A) To determine whether the installment payment made on April 15, 2009, equals or exceeds the amount that would have been required to have been paid if the estimated tax were equal to 100 percent of the tax computed on the annualized income for the 2-month period, the following computation is necessary:
(*1*) Annualized income for the 2 month period = $150,000

(*2*) Tax on this paragraph (d)(3), *Example* (ii)(A)(*1*) = $41,750

(*3*) 100% of this paragraph (d)(3), *Example* (ii)(A)(*2*) = $41,750

(*4*) 25% of this paragraph (d)(3), *Example* (ii)(A)(*3*) = $10,438

(B) Because the total amount of estimated tax that was timely paid on or before the first installment date ($15,000) exceeds the amount required to be paid on or before this date if the estimated tax were 100 percent of the tax determined by placing on an annualized basis the taxable income for the first 2-month period ($10,438), the exception described in paragraphs (a) and (b) of this section applies, and no addition to tax will be imposed for the installment due on April 15, 2009.

(iii)(A) To determine whether the installment payments made on or before June 15, 2009, equal or exceed the amount that would have been required to have been paid if the estimated tax were equal to 100 percent of the tax computed on the annualized income for the 4-month period, the following computation is necessary:

(*1*) Annualized income for the 4 month period = $192,000

(*2*) Tax on this paragraph (d)(3), *Example* (iii)(A)(*1*) = $58,130

(*3*) 100% of this paragraph (d)(3), *Example* (iii)(A)(*2*) = $58,130

(*4*) 50% of this paragraph (d)(3), *Example* (iii)(A)(*3*) less $10,438 (amount due with the first installment) = $18,627

(B) Because the total amount of estimated tax actually paid on or before the second installment date ($19,562 ($15,000 second required installment payment plus $4,562 overpayment of first required installment)) exceeds the amount required to be paid on or before this date if the estimated tax were 100 percent of the tax determined by placing on an annualized basis the taxable income for the first 4-month period ($18,627), the exception described in paragraphs (a) and (b) of this section applies, and no addition to tax will be imposed for the installment due on June 15, 2009.

(iv)(A) To determine whether the installment payments made on or before September 15, 2009, equal or exceed the amount that would have been required to have been paid if the estimated tax were equal to 100 percent of the tax computed on the annualized income for the 7-month period, the following computation is necessary:

(*1*) Annualized income for the 7 month period = $214,286

(*2*) Tax on this paragraph (d)(3), *Example* (iv)(A)(*1*) = $66,821

(*3*) 100% of this paragraph (d)(3), *Example* (iv)(A)(*2*) = $66,821

(*4*) 75% of this paragraph (d)(3), *Example* (iv)(A)(*3*) less $29,065 (amount due with the first and second installment) = $21,051

(B) Because the total amount of estimated tax actually paid on or before the third installment date ($15,935 ($15,000 third required installment payment plus $935 overpayment of second required installment)) does not equal or exceed the amount required to be paid on or before this date if the estimated tax were 100 percent of the tax determined by placing on an annualized basis the taxable income for the first 7-month period ($21,051), the exception described in paragraphs (a) and (b) of this section does not apply, and an addition to tax will be imposed with respect to the underpayment of the September 15, 2009, installment unless another exception applies to this installment payment.

(v)(A) To determine whether the installment payments made on or before December 15, 2009, equal or exceed the amount that would have been required to have been paid if the estimated tax were equal to 100 percent of the tax computed on the annualized income for the 10-month period, the following computation is necessary:

(*1*) Annualized income for the 10 month period = $210,000

(*2*) Tax on this paragraph (d)(3), *Example* (v)(A)(*1*) = $65,150

(*3*) 100% of this paragraph (d)(3), *Example* (v)(A)(*2*) = $65,150

(*4*) 100% of this paragraph (d)(3), *Example* (v)(A)(*3*) less $50,116 (amount due with the first, second and third installment) = $15,034

(B) Because the total amount of estimated tax payments made on or before the fourth installment date that is available to be applied to the estimated tax due for the fourth installment ($9,884 ($15,000 fourth required installment payment less $5,116 underpayment for the third installment of estimated tax ($21,051 third installment of estimated tax due less $15,935 payments available to be applied to the third installment of estimated tax))) does not equal or exceed the amount required to be paid on or before this date if the estimated tax were 100 percent of the tax determined by placing on an annualized basis the taxable income for the first 10-month period ($15,034), the exception described in paragraphs (a) and (b) of this section does not apply, and an addition to tax will be imposed with respect to the underpayment of the December 15, 2009, installment unless another exception applies to this installment payment.

(vi) Assuming that no other exceptions apply and the addition to tax is computed under section 6621(a)(2) at the rate of 8 percent per annum for the applicable periods of underpayment, the amount of the addition to tax is as follows:

(A) First installment (no underpayment) = $0

(B) Second installment (no underpayment) = $0

(C) Third installment (underpayment period 9-16-09 through 12-15-09), computed as $^{91}/_{365}$ × $5,116 × 8% = $102

(D) Fourth installment (underpayment period 12-16-09 through 3-15-10), computed as $^{90}/_{365}$ × $5,150 × 8% = $102

(E) Total of this paragraph (d)(3), *Example* (vi)(A) through (D) = $204

(e) ***52-53 week taxable year.***

(1) Generally, except as provided in the alternative rule in paragraph (e)(4) of this section, in the case of a taxpayer whose taxable year constitutes 52 or 53 weeks in accordance with section 441(f), the rules prescribed by § 1.441-2 are applicable in determining—

(i) Whether a taxable year is a taxable year of 12 months; and

(ii) When the 2-, 3-, 4-, 5-, 6-, 7-, 8-, 9-, 10-, or 11-month period (whichever is applicable) commences and ends for purposes of paragraphs (b)(1), (d)(1) and (d)(2) of this section.

(2) If a taxpayer employs four 13-week periods or thirteen 4-week accounting periods and the end of any accounting period employed by the taxpayer does not correspond to the end of the 2-, 3-, 4-, 5-, 6-, 7-, 8-, 9-, 10-, or 11-month period (whichever is applicable), then, provided the taxpayer has at least one full 4-week or 13-week accounting period, as appropriate, within the applicable period, annualized taxable income for the applicable period is—

(i) [(x/(y*13))*z], in the case of a taxpayer using four 13-week periods, if—

(A) x = Taxable income for the number of full 13-week periods in the applicable period;

(B) y = The number of full 13-week periods in the applicable period; and

(C) z = The number of weeks in the taxable year; or

(ii) [(x/(y*4))*z], in the case of a taxpayer using thirteen 4-week periods, if—

(A) x = Taxable income for the number of full 4-week periods in the applicable period;

(B) y = The number of full 4-week periods in the applicable period; and

(C) z = The number of weeks in the taxable year.

(3) If a taxpayer employs four 13-week periods and the taxpayer does not have at least one 13-week period within the applicable 2-, 3-, 4-, 5-, 6-, 7-, 8-, 9-, 10-, or 11-month period, the taxpayer is permitted to determine annualized taxable income for the applicable period based upon—

(i) The taxable income for the number of weeks in the applicable period; or

(ii) The taxable income for the full 13-week periods that end before the due date of the required installment.

(4) As an alternative to using the 52/53 week taxable year rules provided in paragraphs (e)(1), (e)(2), and (e)(3) of this section, a taxpayer whose taxable year constitutes 52 or 53 weeks in accordance with section 441(f) may base its annualization period on the month that ends closest to the end of its

applicable 4-week period or 13-week period that ends within the applicable annualization period. This alternative may only be used if it is used for determining annualization periods for all required installments for the taxable year.

(5) The following examples illustrate the rules of this paragraph (e):

Example 1. Corporation ABC, an accrual method taxpayer, uses a 52/53 week year-end ending on the last Friday in December and uses four thirteen-week periods. For its year beginning December 28, 2007, ABC uses the annualized income installment method under section 6655(e)(2)(A)(i) to calculate all of its required installments. For purposes of computing its first and second required installments, the first 3 months of A's taxable year under paragraph (b)(1)(i) of this section will end on March 28th, the thirteenth Friday of ABC's taxable year. For purposes of its third required installment, the first 6 months of ABC's taxable year will end on June 27th, the twenty-sixth Friday of ABC's taxable year. For purposes of its fourth required installment, the first 9 months of ABC's taxable year will end on September 26th, the thirty-ninth Friday of ABC's taxable year.

Example 2. Same facts as *Example 1* except that ABC uses thirteen four-week periods and there are 52 weeks during ABC's taxable year beginning December 28, 2007, and ending December 26, 2008. For purposes of computing ABC's first and second required installments, ABC's annualized taxable income for the first three months will be the taxable income for the first three four-week periods of ABC's taxable year (December 28, 2007, through March 21, 2008) divided by 12 (number of full four-week periods in the first three months (3) multiplied by 4) and multiplied by 52 (the number of weeks in the taxable year). For purposes of computing ABC's third required installment, ABC's annualized taxable income for the first six months will be the taxable income for the first six four-week periods of ABC's taxable year (December 28, 2007, through June 13, 2008) divided by 24 and multiplied by 52. For purposes of computing ABC's fourth required installment, ABC's annualized taxable income for the first nine months will be the taxable income for the first nine four-week periods of ABC's taxable year (December 28, 2007, through September 5, 2008) divided by 36 and multiplied by 52.

Example 3. Same facts as *Example 1* except that ABC uses the alternative method under paragraph (e)(4) of this section for computing its required installments for 2008. For purposes of computing its first and second required installments, the first three months of ABC's taxable year under paragraph (b)(1)(i) of this section will end on March 31, 2008, the month that ends closest to the end of ABC's applicable thirteen-week period for the first and second required installments. For purposes of ABC's third required installment, the first six months of ABC's taxable year will end on June 30, 2008, the month that ends closest to the end of ABC's applicable thirteen-week period for the third required installment. For purposes of ABC's fourth required installment, the first nine months of ABC's taxable year will end on September 30, 2008, the month that ends closest to the end of ABC's applicable thirteen-week period for the fourth required installment.

(f) ***Determination of taxable income for an annualization period*** —

(1) ***In general.*** This paragraph (f) applies for purposes of determining the applicability of the exception described in paragraphs (a) and (b) of this section (relating to the annualization of income) and the exception described in § 1.6655-3 (relating to annualization of income for corporations with seasonal income). An item of income, deduction, gain or loss is to be taken into account in determining the taxable income and alternative minimum taxable income (and applicable tax and alternative minimum tax) for an annualization period in the manner provided in this paragraph (f). An item may not be taken into account in determining taxable income for any annualization period unless the item is properly taken into account by the last day of that annualization period and the

item is properly taken into account in determining the taxpayer's taxable income and alternative minimum taxable income (and applicable tax and alternative minimum tax) for the taxable year that includes the annualization period.

(i) ***Items of income.*** An item of income is taken into account in the annualization period in which the item is properly includible under the method of accounting employed by the taxpayer with respect to the item and in accordance with the appropriate provision of the Internal Revenue Code (for example, section 451 for accrual method taxpayers, section 453 for installment sales or section 460 for long-term contracts).

(ii) ***Items of deduction.*** An item of deduction is taken into account in the annualization period in which the item is properly deductible under the method of accounting employed by the taxpayer with respect to the item and in accordance with the appropriate provision of the Internal Revenue Code (for example, under the cash receipts and disbursements method of accounting, the deduction must be paid under § 1.461-1(a)(1) and be otherwise deductible in computing taxable income; under an accrual method of accounting, the deduction must be incurred under § 1.461-1(a)(2) and be otherwise deductible in computing taxable income). Section 170(a)(2) and § 1.170A-11(b) (charitable contributions by accrual method corporations) and § 1.461-5 (recurring item exception) may not be taken into consideration by an accrual method taxpayer in any annualization period in determining whether an item of deduction has been incurred under § 1.461-1(a)(2) during that annualization period.

(iii) ***Losses.*** An item of loss is to be taken into account during the annualization period in which events have occurred that permit the loss to be taken into account under the appropriate provision of the Internal Revenue Code.

(2) ***Certain deductions required to be allocated in a reasonably accurate manner*** —

(i) ***In general.*** The following deductions allowed for a taxable year must be allocated throughout the taxable year in a reasonably accurate manner (as defined in paragraph (f)(2)(iii) of this section), regardless of the annualization period in which the item is paid or incurred:

(A) Real property tax deductions.

(B) Employee and independent contractor bonus compensation deductions (including the employer's share of employment taxes related to such compensation).

(C) Deductions under sections 404 (deferred compensation) and 419 (welfare benefit funds).

(D) Items allowed as a deduction for the taxable year by reason of section 170(a)(2) and § 1.170A-11(b) (certain charitable contributions by accrual method corporations), § 1.461-5 (recurring item exception) or § 1.263(a)-4(f) (12-month rule).

(E) Items of deduction designated by the Secretary by publication in the Internal Revenue Bulletin (see § 601.601(d)(2)(ii)(*b*) of this chapter).

(ii) ***Application of the reasonably accurate manner requirement to certain charitable contributions, recurring items, and 12-month rule items.*** For purposes of paragraph (f)(2)(i)(D) of this section, the total amount of the item deducted in the computation of taxable income for the taxable year must be allocated in a reasonably accurate manner, notwithstanding the fact that section 170(a)(2) and § 1.170A-11(b), § 1.461-5, or § 1.263(a)-4(f) applies to only a portion of the total amount of the item deducted for the taxable year. For example, if a portion of a taxpayer's

rebate liabilities are deducted in the computation of taxable income under the recurring item exception, all rebate liabilities deducted in the computation of taxable income for the taxable year must be allocated in a reasonably accurate manner.

(iii) ***Reasonably accurate manner defined.***

(A) An item is allocated throughout the taxable year in a reasonably accurate manner if the item is allocated ratably throughout the taxable year or if the allocation provides a reasonably accurate estimate of taxable income for the taxable year based upon the facts known as of the end of the annualization period. In determining that an allocation of an item provides a reasonably accurate estimate of taxable income for the taxable year, relevant considerations include—

(*1*) The extent to which the allocation is consistent with the taxpayer's accounting for the item on its non-tax books and records;

(*2*) The extent to which the allocable portion of the item becomes fixed and determinable (under § 1.461-1(a)(2)) during the applicable annualization period; and

(*3*) The extent to which the allocation, if compared to the ratable allocation of the item, results in a better matching of the item of deduction to revenue, earnings, the use of property or the provision of services occurring during the annualization period.

(B) None of the relevant considerations above override the general requirement that the allocation must be done in a reasonably accurate manner based upon the facts known as of the end of the annualization period. For example, the fact that a liability for an annual expense becomes fixed and determinable during an annualization period will not establish that allocating all of the expense to that annualization period has been done in a reasonably accurate manner if the facts known as of the end of the annualization period indicate otherwise.

(iv) ***Special rule for certain real property tax liabilities.*** Notwithstanding paragraph (f)(2)(iii) of this section, real property tax liabilities for which an election under section 461(c) is in effect must be allocated ratably throughout the taxable year for purposes of this section.

(v) ***Examples.*** Unless otherwise stated, the following examples assume that the taxpayer uses the 3-3-6-9 annualization period:

> *Example 1.* (i) Corporation ABC, a calendar year taxpayer, uses an accrual method of accounting and the annualized income installment method under section 6655(e)(2)(A)(i) to calculate all of its required installment payments for its 2008 taxable year. ABC has adopted a plan under which ABC pays an annual bonus to its employees. As of March 31, 2008, ABC estimates that it will pay a year-end bonus of $500,000 to its employees if earnings remain constant throughout the tax year. ABC does not pay any of the estimated bonus liability as of March 31, 2008. On October 31, 2008, ABC declares a $600,000 bonus to its employees which is paid out on November 15, 2008, and properly deducted in ABC's December 31, 2008, tax year. No other bonus liabilities are incurred by ABC during the tax year.

(ii) Under the general rule provided in paragraph (f)(2)(i) of this section, ABC is required to allocate its employee bonus liability in a reasonably accurate manner for annualization purposes. Under paragraph (f)(2)(iii) of this section, ABC's employee bonus liability will be deemed to be allocated in a reasonably accurate manner if the item is allocated ratably throughout the taxable year. Therefore, ABC is permitted to recognize a $150,000 bonus deduction (one quarter of the $600,000 bonus liability properly recognized by ABC in the tax year ending December 31, 2008) in the first annualization period ending March 31, 2008.

Example 2. (i) Corporation ABC, a calendar year taxpayer, uses an accrual method of accounting and the annualized income installment method under section 6655(e)(2)(A)(i) to calculate all of its required installment payments for its 2008 taxable year. ABC has adopted a plan under which ABC pays an annual bonus to its employees. ABC's employee bonus plan generally calls for an annual bonus equal to 2% of earnings. A bonus reserve for this amount is reported each quarter in ABC's non-tax books and records. ABC's quarterly revenues throughout the year are $10,000,000; $6,000,000; $7,000,000; and $7,000,000 respectively. As of March 31, 2008, ABC estimates that it will pay a year-end bonus of $800,000 ($10,000,000 × 4 × 2%) to its employees if earnings remain constant throughout the year. ABC does not pay any of the estimated bonus payment as of March 31, 2008. On December 31, 2008, ABC declares a $600,000 bonus to its employees which is paid out on January 15, 2009, and properly deducted in ABC's December 31, 2008, tax year.
(ii) Under the general rule provided in paragraph (f)(2)(i) of this section, ABC must allocate its employee bonus liability in a reasonably accurate manner for annualization purposes. Under paragraph (f)(2)(iii) of this section, ABC's employee bonus liability will be deemed to be allocated in a reasonably accurate manner if the allocation provides a reasonable estimate of taxable income based upon the facts known as of the end of the annualization period. Based upon its earnings activities and other information available as of March 31, 2008, ABC estimated that its total deduction for employee bonuses for the taxable year ending December 31, 2008, would be $800,000 ($10,000,000 first quarter earnings × 4 × 2%). Allocating $200,000 ($10,000,000 × 2%) of ABC's annual bonus liability of $600,000 to ABC's first quarter based upon earnings during the quarter represents a better matching of ABC's bonus expense to earnings in the quarter as compared to allocating $150,000 to ABC's first quarter under a ratable accrual method and is consistent with the allocation provided in ABC's non-tax books and records. Accordingly, allocating ABC's employee bonus deductions based upon ABC's earnings will be considered allocated in a reasonably accurate manner.

Example 3. (i) Corporation ABC, a calendar year taxpayer, uses an accrual method of accounting and the annualized income installment method under section

6655(e)(2)(A)(i) to calculate all of its required installment payments for its 2008 taxable year. ABC has adopted a plan under which ABC pays a bonus to its employees each quarter based upon earnings for that quarter. On March 31, 2008, ABC pays out $2,000,000 to its employees as a quarterly bonus based upon the earnings of ABC for the period January 1, 2008, through March 31, 2008. The $2,000,000 bonus is recognized as an expense on ABC's audited financial statements in the quarter ending March 31, 2008. As of March 31, 2008, ABC anticipates that its earnings will continue throughout the year resulting in future quarterly bonus payments in 2008 similar to the $2,000,000 first quarter payment.
(ii) Under the general rule provided in paragraph (f)(2)(i) of this section, ABC is required to allocate its employee bonus liability in a reasonably accurate manner for annualization purposes. Under paragraph (f)(2)(iii) of this section , ABC's employee bonus liability will be deemed to be allocated in a reasonably accurate manner if the item is allocated ratably throughout the taxable year. Therefore, ABC may recognize a $500,000 bonus deduction (one quarter of the $2,000,000 bonus liability properly recognized by ABC in the tax year ending December 31, 2008) in the first annualization period ending March 31, 2008 (as well as one quarter of any additional bonus liability properly recognized by ABC in the tax year ending December 31, 2008).

(iii) In addition, paragraph (f)(2)(iii) of this section provides that an allocation will be considered reasonable if the allocation provides an accurate estimate of taxable income for the taxable year based upon the facts known as of the end of the annualization period. Based upon its earnings activities and other information available as of March 31, 2008, ABC estimates that its total deduction for employee bonuses for the taxable year ending December 31, 2008, would be $8,000,000. In addition, the $2,000,000 bonus liability became fixed and determinable during the first quarter. Allocating $2,000,000 to ABC's first quarter earnings is also consistent with ABC's non-tax books and records and represents a better matching of ABC's bonus expense to earnings in the quarter as compared to a ratable accrual. Accordingly, allocating ABC's bonus liability based upon earnings will be considered a reasonably accurate manner for estimated tax purposes.

Example 4. (i) Corporation ABC, a calendar year taxpayer, uses an accrual method of accounting with the recurring item exception and the annualized income installment method under section 6655(e)(2)(A)(i) to calculate all of its required installment payments for its 2009 taxable year. ABC regularly incurs rebate obligations related to the sale of its products. Rebate coupons that are received and validated by ABC are generally paid in the following month. During the tax year ending December 31, 2009, ABC received, validated and paid $400,000 in rebates. In addition, as of the end of December 31, 2009, ABC had received and validated $100,000 in rebate claims that were paid in January of 2010 and deducted in ABC's December 31, 2009, tax year under the

recurring item exception. Therefore, ABC properly recognized a $500,000 rebate liability deduction on ABC's December 31, 2009, tax return.
(ii) Under the rule provided in paragraph (f)(2)(ii) of this section, an item must be allocated in a reasonably accurate manner if any portion of the item is deducted under the recurring item exception. Therefore, ABC will be required to allocate its entire $500,000 rebate liability deduction in a reasonably accurate manner as defined in paragraph (f)(2)(iii) of this section.

(3) *Special rules* —

(i) ***Advance payments under Rev. Proc. 2004-34.*** An advance payment for which the taxpayer uses the Deferral Method provided in section 5.02 of Rev. Proc. 2004-34 (2004-1 CB 991), (see § 601.601(d)(2)(ii)(*b*) of this chapter) is includible in computing taxable income for an annualization period in accordance with that method of accounting, except that any amount not included in computing taxable income by the end of the taxable year succeeding the taxable year of receipt is includible in computing taxable income on the last day of such succeeding taxable year.

(ii) *Extraordinary items* —

(A) ***In general.*** In general, extraordinary items must be taken into account after annualizing the taxable income for the annualization period. For purposes of the preceding sentence an extraordinary item is any item identified in § 1.1502-76(b)(2)(ii)(C)(1), (2), (3), (4), (7), and (8), a net operating loss carryover, a section 481(a) adjustment, net gain or loss from the disposition of 25 percent or more of the fair market value of a taxpayer's business assets during a taxable year, and any other item designated by the Secretary by publication in the Internal Revenue Bulletin (see § 601.601(d)(2)(ii)(b) of this chapter).

(B) ***De minimis extraordinary items.*** A taxpayer may treat any *de minimis* extraordinary item, other than a net operating loss carryover or section 481(a) adjustment, as an item under the general rule of paragraph (f)(1) of this section rather than an extraordinary item as provided for in paragraph (f)(3)(ii) of this section. A *de minimis* extraordinary item is any item identified in paragraph (f)(3)(ii)(A) of this section resulting from a transaction in which the total extraordinary items resulting from such transaction is less than $1,000,000.

(C) ***Special rule for net operating loss deductions and section 481(a) adjustments.*** For purposes of paragraph (f)(3)(ii) of this section, a taxpayer must treat a net operating loss deduction and section 481(a) adjustment as extraordinary items arising on the first day of the tax year in which the item is taken into account in determining taxable income. Notwithstanding the preceding sentence, a taxpayer may choose to treat the portion of a section 481(a) adjustment recognized during the tax year of the accounting method change as an extraordinary item arising on the date the Form 3115, “Application for Change in Accounting Method,” requesting the change was filed with the national office of the Internal Revenue Service.

(iii) *Credits* —

(A) ***Current year credits.*** With respect to a current year credit, the items upon which the credit is computed are annualized, the amount of the credit is computed based on the annualized items, and the amount of the credit is deducted from the annualized tax. For example, for an annualization period consisting of three months in a full 12-month taxable year, the items upon which the credit is based that are taken into account for the three month period are multiplied by four, the credit is determined based on the annualized amount of the items, and the credit reduces the annualized tax.

(B) ***Credit carryovers.*** Any credit carryover to the current taxable year is taken into account in computing an annualized income installment only after annualizing the taxable income for the annualization period and computing the applicable tax, and before applying the applicable percentage.

(iv) ***Depreciation and amortization*** —

(A) ***Estimated annual depreciation and amortization.*** In general, in determining taxable income for any annualization period, a proportionate amount of the taxpayer's estimated annual depreciation and amortization (depreciation) expense may be taken into account. For purposes of the preceding sentence, estimated annual depreciation expense is the estimated depreciation expense to be properly taken into account in determining the taxpayer's taxable income for the taxable year. In determining the estimated annual depreciation expense, a taxpayer may take into account purchases, sales or other dispositions, changes in use, additional first-year depreciation and expense deductions and section 179 or any similar provision, and other events that, based on all the relevant information available as of the last day of the annualization period (such as capital spending budgets, financial statement data and projections, or similar reports that provide evidence of the taxpayer's capital spending plans for the current taxable year), are reasonably expected to occur or apply during the taxable year.

(B) ***Safe harbors*** —(*1*) *Proportionate depreciation allowance.* In determining taxable income for any annualization period, in lieu of the rule provided in paragraph (f)(3)(iv)(A) of this section a taxpayer may take into account a proportionate amount of the depreciation and amortization (depreciation) expense, including special depreciation and expense deductions such as those provided for in section 168(k) and section 179 or any similar provision, allowed for the taxable year from—

(*i*) Assets that were in service on the last day of the prior taxable year, are in service on the first day of the current taxable year, and that have not been disposed of during the annualization period;

(*ii*) Assets placed in service during the annualization period and have not been disposed of during that period; and

(*iii*) Assets that were in service on the last day of the prior taxable year and that are disposed of during the annualization period.

(*2*) *90 percent of preceding year's depreciation.* In determining taxable income for any annualization period, in lieu of the general rule provided in paragraph (f)(3)(iv)(A) of this section, a proportionate amount of 90 percent of the amount of depreciation and amortization (depreciation) expense taken on the taxpayer's Federal income tax return for the preceding taxable year may be taken into account. If the taxpayer's preceding taxable year is less than 12 months (a short taxable year), the amount of

depreciation expense taken into account is annualized by multiplying the depreciation and amortization for the short taxable year by 12, and dividing the result by the number of months in the short taxable year.

(*3*) *Safe harbor operational rules.* If a taxpayer selects one of the two safe harbors provided in paragraph (f)(3)(iv)(B)(*1*) or paragraph (f)(3)(iv)(B)(*2*) of this section, the taxpayer must use that safe harbor for all depreciation expenses within the annualization period for the annualized income installment. However, a taxpayer may use either the method provided for in paragraph (f)(3)(iv)(A) of this section or a method provided for in this paragraph (f)(3)(iv)(B) of this section for each annualized income installment during the taxable year. For example, a taxpayer may use the safe harbor provided in paragraph (f)(3)(iv)(B)(*1*) of this section for its first annualized income installment and may use the general rule provided in paragraph (f)(3)(iv)(A) of this section for its second annualized income installment.

(C) ***Short taxable years.*** If the taxable year is, or will be, a short taxable year (based on all relevant information available as of the last day of the annualization period), annual depreciation expense is computed using the rules applicable for computing depreciation during a short taxable year for purposes of determining the annual depreciation expense to be allocated to an annualization period. For this purpose, the rules applicable for computing depreciation during a short taxable year are applied on the basis of the date the taxable year is expected to end based on all relevant information available as of the last day of the annualization period. See Rev. Proc. 89-15 (1989-1 CB 816) for computing depreciation expense under section 168 (see § 601.601(d)(2)(ii)(*b*) of this chapter). An annualization period is not treated as a short taxable year for purposes of determining the depreciation expense for an annualization period. See paragraph (c)(3) of this section.

(v) ***Distributive share of items*** —

(A) ***Member of partnership.*** In determining a partner's distributive share of partnership items that must be taken into account during an annualization period, the rules set forth in § 1.6654-2(d)(2) are applicable.

(B) ***Treatment of subpart F income and income under section 936(h)*** —(*1*) *General rule.* Any amounts required to be included in gross income under section 936(h) or section 951(a), and credits properly allocable thereto, are taken into account in computing any annualized income installment in a manner similar to the manner under which partnership inclusions, and credits properly allocable thereto, are taken into account in accordance with paragraph (f)(3)(v)(A) of this section.

(*2*) *Prior year safe harbor*—(i) *General rule.* If a taxpayer elects to have the safe harbor in this paragraph (f)(3)(v)(B)(2) apply for any taxable year, then paragraph (f)(3)(v)(B)(*1*) of this section does not apply; and, for purposes of computing any annualized income installment for the taxable year, the taxpayer is treated as having received ratably during the taxable year items of income and credit described in paragraph (f)(3)(v)(B)(*1*) of this section in an amount equal to 115 percent of the amount of such items shown on the return of the taxpayer for the preceding taxable year (the second preceding taxable year in the case of the first and second required installments for such taxable year).

(ii) *Special rule for noncontrolling shareholder.* If a taxpayer making the election under paragraph (f)(3)(v)(B)(*2*)(*i*) of this section is a noncontrolling shareholder of a corporation, paragraph (f)(3)(v)(B)(*2*)(*i*) of this section is applied with respect to items of such corporation by substituting "100 percent" for "115 percent". For purposes of paragraph (f)(3)(v)(B)(*2*)(*ii*) of this section, the term *noncontrolling shareholder* means, with respect to any corporation, a shareholder that, as of the beginning of the taxable year for which the installment is being made, does not own within the meaning of section 958(a), and is not treated as owning within the meaning of section 958(b), more than 50 percent by vote or value of the stock in the corporation.

(C) ***Dividends from closely held real estate investment trust*** —(*1*) *General rule.* Any dividend received from a closely held real estate investment trust by any person that owns, after the application of section 856(d)(5), 10 percent or more by vote or value of the stock or beneficial interests in the trust is taken into account in computing annualized income installments in a manner similar to the manner under which partnership income inclusions are taken into account.

(*2*) *Closely held real estate investment trust.* For purposes of paragraph (f)(3)(v)(C)(*1*) of this section, the term *closely held real estate investment trust* means a real estate investment trust with respect to which 5 or fewer persons own, after the application of section 856(d)(5), 50 percent or more by vote or value of the stock or beneficial interests in the trust.

(D) ***Other passthrough entities.*** A taxpayer's distributive share of items from a passthrough entity, other than those described in paragraphs (f)(3)(v)(A) and (f)(3)(v)(C) of this section, is taken into account in computing any annualized income installment in a manner similar to the manner under which partnership items are taken into account under paragraph (f)(3)(v)(A) of this section.

(vi) ***Alternative minimum taxable income exemption amount.*** The alternative minimum taxable income exemption amount provided by section 55(d)(2) is applied after the alternative minimum taxable income for the annualization period is annualized.

(vii) ***Examples.*** The provisions of this paragraph (f) are illustrated by the following examples. Unless otherwise stated, the following examples assume that the taxpayer uses the 3-3-6-9 annualization period.

Example 1. Expense paid or incurred in the installment period. Corporation ABC, a calendar year taxpayer, uses an accrual method of accounting and the annualized income installment method under section 6655(e)(2)(A)(i) to calculate all of its required installment payments for its 2008 taxable year. ABC has licensed technology from Corporation XYZ. Pursuant to the license agreement, ABC pays a license fee to XYZ equal to $.01 for every dollar of gross receipts earned by ABC. For 2008, ABC projects gross receipts of $200,000,000, of which $100,000,000 is earned by March 31, 2008. Pursuant to paragraph (f)(1) of this section, a license fee expense of $1,000,000 ($100,000,000 × $.01) is incurred by March 31, 2008, and may be taken into account for purposes of determining the taxable income to be annualized in computing ABC's first annualized income installment.

Example 2. Expense not paid or incurred in the installment period. Same facts as *Example 1* except that ABC does not earn any gross receipts by March 31, 2008. In accordance with paragraph (f)(1) of this section, because the license fee expense was not incurred under §

1.461-1(a)(2) by the last day of the annualization period, no license fee expense is taken into account for purposes of determining the taxable income to be annualized in computing ABC's first annualized income installment, which is based on the income and deductions from the first three months of the taxable year.

Example 3. Bad debt expense. Corporation ABC, a calendar year taxpayer, uses an accrual method of accounting and the annualized income installment method under section 6655(e)(2)(A)(i) to calculate all of its required installment payments for its 2008 taxable year. As of December 31, 2007, ABC had a $100,000 account receivable due from XYZ related to the sale of goods from ABC to XYZ during 2007. On March 30, 2008, ABC determined that its receivable from XYZ was worthless under section 166 and the regulations. No other receivables were determined to be worthless between January 1, 2008, and March 31, 2008. In accordance with paragraph (f)(1) of this section, a $100,000 bad debt write-off is taken into account for purposes of determining the taxable income to be annualized in computing ABC's first annualized income installment.

Example 4. Bad debt expense. Same facts as *Example 3* except that ABC determines that the receivable from XYZ was worthless under section 166 and the regulations on April 10, 2008. As of March 31, 2008, ABC had not determined that any receivables were worthless under section 166 and the regulations. In accordance with paragraph (f)(1) of this section, the $100,000 bad debt expense attributable to the receivable from XYZ is not taken into account for purposes of determining the taxable income to be annualized in computing ABC's first annualized income installment, which is based on the income and deductions from the first three months of the taxable year, because the receivable from XYZ became worthless after the last day of the annualization period.

Example 5. Employer deductions under section 404 and 419. (i) Corporation ABC, a calendar year taxpayer, uses an accrual method of accounting and uses the annualized income installment method under section 6655(e)(2)(A)(i) to calculate all of its required installment payments for its 2008 taxable year. On March 1, 2008, the board of directors of ABC makes a binding, irrevocable commitment to fund a minimum contribution of $10,000,000 to ABC's qualified retirement plan by March 14, 2009. ABC remits a $1,000,000 payment to the retirement plan on March 1, 2008, and a $9,000,000 payment on March 3, 2009. ABC does not incur any other related retirement plan deductions during its 2008 taxable year.
(ii) Under the rule provided in paragraph (f)(2)(i) of this section, ABC's employer deduction for payment made to the qualified plan must be allocated throughout the tax year for estimated tax purposes in a reasonably accurate manner. Therefore, ABC will not be permitted to allocate the $10,000,000 deduction to its first installment period. Under paragraph (f)(2)(iii) of this section, ABC's qualified plan deduction will be deemed to be allocated in a reasonably accurate manner if the item is allocated ratably throughout the taxable year. Therefore, ABC will be permitted to allocate $2,500,000 of its qualified plan deduction in its first installment period.

Example 6. Prepaid expense. (i) Corporation ABC, a calendar year taxpayer, uses an accrual method of accounting and does not capitalize qualifying costs under the exception provided for in § 1.263(a)-4(f). ABC uses the annualized income installment method under section 6655(e)(2)(A)(i) to calculate all of its required installment payments for its 2008 taxable year. On July 1, 2008, ABC purchases an annual business license from State X which permits ABC to operate its business in State X from July 1, 2008, through June 30, 2009. An annual payment of $12,000 is due on July 1, 2008, and ABC pays the fee on this date. ABC has not elected out of the 12-month rule provided by § 1.263(a)-4(f) and therefore ABC is not required to capitalize any amount paid for the license and will recognize a $12,000 deduction for the tax year ending December 31, 2008, with respect to this license.
(ii) Under the rule provided in paragraph (f)(2)(ii) of this section, ABC's $12,000 business license expense must be allocated in a reasonably accurate manner because ABC utilizes the 12-month rule exception provided for in the § 1.263(a)-4(f). Under paragraph (f)(2)(iii) of this section, ABC's deduction will be deemed to be allocated in a reasonably accurate manner if the item is allocated ratably throughout the taxable year. Therefore, ABC will be permitted to allocate $3,000 of its business license deduction in its first installment period.

Example 7. Real property tax liability. (i) Corporation ABC, a calendar year taxpayer, uses an accrual method of accounting and the annualized income installment method under section 6655(e)(2)(A)(i) to calculate all of its required installment payments for its 2008 taxable year. ABC owns real property in State Y and uses the real property in its trade or business. ABC incurs a $400,000 deduction for State Y real estate taxes during ABC's December 31, 2008, taxable year. ABC has elected to recognize its real property taxes ratably under section 461(c).
(ii) Under the rule provided in paragraph (f)(2)(i) of this section, ABC's $400,000 real property tax liabilities must be allocated in a reasonably accurate manner. However, paragraph (f)(2)(iv) of this section provides that with respect to real property taxes for which an election has been made under section 461(c), ratable accrual is the only method which will be considered a reasonably accurate method. Therefore, ABC will be required to allocate its $400,000 real property taxes ratably for estimated tax purposes and thus $100,000 will be allocated to the ABC's first annualized income installment.

Example 8. NOL (Net Operating Loss) deduction. Corporation ABC, a calendar year taxpayer, uses an accrual method of accounting and the annualized income installment method under section 6655(e)(2)(A)(i) to calculate all of its required installment payments for its 2008 taxable year. ABC has a net operating loss carryover to 2008 of $2,000,000. ABC's taxable income from January 1, 2008, through March 31, 2008, without regard to any net operating

loss deduction, is $1,500,000 (pre-NOL taxable income). Under the special rule for net operating loss deductions provided in paragraph (f)(3)(ii) of this section, the NOL deduction is treated as an extraordinary item incurred on the first day of ABC's December 31, 2008, tax year. Therefore, the NOL deduction is taken into account after annualization for purposes of determining ABC's first annualized income installment.

Example 9. Advance payment. (i) Corporation ABC, a calendar year taxpayer, uses an accrual method of accounting and the annualized income installment method under section 6655(e)(2)(A)(i) to calculate all of its required installment payments for its 2008 and 2009 taxable years. ABC is in the business of giving dancing lessons and receives advance payments. For Federal income tax purposes, ABC uses the Deferral Method provided in section 5.02 of Rev. Proc. 2004-34 for the advance payments it receives for dance lessons. On November 1, 2008, ABC receives an advance payment of $2,400 for a 2-year contract commencing on November 1, 2008, and providing for up to 24 individual, 1-hour lessons. ABC provides 2 lessons in 2008, 12 lessons in 2009, and 10 lessons in 2010. ABC recognizes $200 in revenues in its financial statements for the last quarter of 2008. ABC recognizes $300 in revenues in its financial statements for each quarter of 2009 for a total of $1,200 in 2009. ABC recognizes the remaining $1,000 in revenues in its financial statements during 2010. For tax purposes, ABC recognizes $200 into revenue in 2008 and $2,200 into revenue in 2009 under Rev. Proc. 2004-34. See § 601.601(d)(2)(ii)(*b*).
(ii) Pursuant to paragraph (f)(3)(i)(B) of this section, ABC is not required to take into account any of the advance payment for purposes of computing any required installment payment for ABC's 2008 taxable year because no part of the $2,400 advance payment was recognized as income in ABC's financial statements during the first nine months of ABC's 2008 taxable year. In 2009, ABC must take into account $300 of revenue for purposes of computing its first and second required installment payments, $600 of revenue for purposes of computing its third required installment payment and $900 for purposes of computing its fourth required installment payment. Pursuant to paragraph (f)(3)(i)(B) of this section, the remaining deferred revenue is recognized on December 31, 2009, for purposes of computing ABC's annualized income installments for 2009.

Example 10. Section 481(a) adjustment. Corporation ABC, a calendar year taxpayer, uses an accrual method of accounting and the annualized income installment method under section 6655(e)(2)(A)(i) to calculate all of its required installment payments for its 2008 taxable year. On December 20, 2008, ABC files a Form 3115 requesting permission to change its method of accounting. The requested change results in a negative section 481(a) adjustment of $80,000. ABC subsequently receives the consent of the Commissioner to make the change and therefore, the negative $80,000 section 481(a) adjustment is properly recognized in ABC's tax return for the year ending December 31,

2008. Under paragraph (f)(3)(ii) of this section ABC is permitted to recognize the negative $80,000 section 481(a) adjustment as an extraordinary item occurring on January 1, 2008 (the first day of ABC's December 31, 2008, tax year), or December 20, 2008 (the date ABC filed the Form 3115). ABC chooses to recognize the negative $80,000 section 481(a) adjustment as an extraordinary item occurring in January 1, 2008. Accordingly, $80,000 of the negative section 481(a) adjustment is taken into account after annualization for purposes of determining ABC's first annualized income installment. In addition, under § 1.6655-6(b), ABC is required to use its new method of accounting as of January 1, 2008 for estimated tax purposes, consistent with the recognition of the section 481(a) adjustment for estimated tax purposes. Therefore, ABC will be required to use the new method of accounting in determining taxable income to be annualized in computing ABC's first annualized income installment.

Example 11. Section 481(a) adjustment. Corporation ABC, a calendar year taxpayer, uses an accrual method of accounting and uses the annualized income installment method under section 6655(e)(2)(A)(i) to calculate all of its required installment payments for its 2008 taxable year. On June 15, 2008, ABC files a Form 3115 requesting permission to change its method of accounting. The requested change results in a positive section 481(a) adjustment of $240,000. ABC subsequently receives the consent of the Commissioner to make the change and therefore, $60,000 of the section 481(a) adjustment (one quarter of the positive $240,000 section 481(a) adjustment) is properly recognized in ABC's tax return for the year ending December 31, 2008. Under paragraph (f)(3)(ii) of this section, ABC is permitted to recognize the positive $60,000 section 481(a) adjustment as an extraordinary item occurring on January 1, 2008 (the first day of ABC's December 31, 2008, tax year), or June 15, 2008 (the date ABC filed the Form 3115). ABC chooses to recognize the positive $60,000 section 481(a) adjustment as an extraordinary item occurring on June 15, 2008. Accordingly, the $60,000 positive section 481(a) adjustment is not taken into account for purposes of determining ABC's first annualized income installment. However, in all futures years any portion of the section 481(a) adjustment related to this change in method of accounting will be treated as an extraordinary item occurring on the first day of the tax year under paragraph (f)(3)(ii) of this section. In addition, under § 1.6655-6(b), ABC is required to use its new method of accounting as of June 15, 2008 for estimated tax purposes, consistent with the recognition of the section 481(a) adjustment for estimated tax purposes. Therefore, ABC will be required to use the new method of accounting (as of the beginning of the tax year) for purposes of determining taxable income to be annualized in computing ABC's third and fourth annualized income installments (which are based upon annualization periods that include June 15, 2008.)

Example 12. Extraordinary item. Corporation ABC, a calendar year taxpayer, uses an accrual method of accounting and the annualized income installment method under section 6655(e)(2)(A)(i) to calculate all of its required installment payments for its 2008 taxable year. On May 10, 2008, ABC reaches a settlement agreement with XYZ over a tort action filed by ABC. As a result, ABC receives a payment of $10,000,000 on June 15, 2006, that is recognized as income by ABC. The settlement of a tort action is an extraordinary item defined in paragraph (f)(3)(ii)(A) of this section. Accordingly, the $10,000,000 of income will be taken into account by ABC on May 10, 2008, for purposes of computing ABC's annualized income installments for 2008. Therefore, the $10,000,000 settlement will only be taken into account in computing ABC's third and fourth annualized income installments

(which are based upon annualization periods that include May 10, 2008). In addition, the $10,000,000 settlement income will be taken into account as an extraordinary item of income after annualization for purposes of determining ABC's third and fourth annualized installment payments.

Example 13. Credit carryover. Corporation ABC, a calendar year taxpayer, uses an accrual method of accounting and the annualized income installment method under section 6655(e)(2)(A)(i) to calculate all of its required installment payments for its 2008 taxable year. ABC projects its annualized tax for its 2008 taxable year, based on annualizing ABC's taxable income for its first annualization period from January 1, 2008, through March 31, 2008, to be $1,500,000 before reduction for any credits. ABC has an unused section 38 credit from 2007 for increasing research activities from 2007 of $500,000 that is carried over to 2008. For purposes of determining ABC's first annualized income installment, ABC's annualized tax for 2008 is $1,000,000, determined as the tax for the taxable year computed by placing on an annualized basis ABC's taxable income from its first annualization period from January 1, 2008, through March 31, 2008 ($1,500,000) reduced by the $500,000 credit carryover from 2007. Therefore, ABC's first required installment payment for 2008 is $250,000 ($1,000,000 × 25%).

Example 14. Current year credit. Corporation ABC, a calendar year taxpayer, uses an accrual method of accounting and the annualized income installment method under section 6655(e)(2)(A)(i) to calculate all of its required installment payments for its 2008 taxable year. ABC projects its annualized tax for its 2008 taxable year, based on annualizing ABC's taxable income for its first annualization period from January 1, 2008, through March 31, 2008, to be $2,000,000 before reduction for any credits. ABC has historically earned a section 41 credit for increasing research activities and, for 2008, ABC estimates that it will earn a credit for increasing research activities under section 41 of $1,200,000. However, pursuant to paragraph (f)(3)(iii) of this section, if ABC were to annualize all components involved in computing the current year credit based on ABC's activity from January 1, 2008, through March 31, 2008, ABC would generate a credit of $1,600,000 for 2008. For purposes of determining ABC's first annualized income installment, ABC's annualized tax for 2008 is $400,000, determined as the tax for the 2008 taxable year ($2,000,000) computed by placing on an annualized basis ABC's taxable income from its first annualization period January 1, 2008, through March 31, 2008, reduced by a $1,600,000 current year section 41 credit from increasing research activities. Therefore, ABC's first required installment payment for 2008 is $100,000 ($400,000 × 25%).

Example 15. Current year credit. Same facts as *Example 14* except that ABC does not begin any research activities until April 3, 2008, and will not incur any research expenses described in paragraph (f)(1)(ii) of this section. As a result, if ABC were to annualize all components involved in computing the current year credit based on ABC's activity from January 1, 2008, through March 31, 2008, ABC would generate no section 41 research credit for purposes of determining its first annualized income installment. Pursuant to paragraph (f)(3)(iii) of this section, ABC cannot take into account any credit for its first annualization period because ABC did not incur any qualified research expenses by the last day of the first annualization period. Accordingly, for purposes of determining ABC's first annualized income installment, ABC's annualized tax for its first annualization period January 1, 2008, through March 31, 2008, is $2,000,000. Therefore, ABC's first required installment payment for 2008 is $500,000 ($2,000,000 × 25%).

Example 16. Depreciation and amortization expense. Corporation ABC, a calendar year taxpayer that began business on January 2, 2007, adopted an accrual method of accounting and will use the annualized income installment method under section 6655(e)(2)(A)(i) to calculate all of its required installment payments for its 2008 taxable year. On January 2, 2007, ABC purchased and placed in service a tangible depreciable asset that costs $50,000 and is 5-year property under section 168(e). ABC depreciates its 5-year property placed in service in 2007 under the general depreciation system using the 200-percent declining balance method, a 5-year recovery period, and the half year convention. On January 2, 2008, ABC purchased and placed in service qualified Gulf Opportunity Zone property (GO Zone property) that costs $30,000 and is 5-year property under section 168(e). ABC will depreciate its 5-year property placed in service in 2008 under the general depreciation system using the 200-percent declining balance method, a 5-year recovery period, and the half-year convention. ABC will deduct the 50% additional first year depreciation deduction under section 1400N(d) with respect to the GO Zone property. For tax year 2007, ABC takes a depreciation deduction under section 168 of $10,000 ($50,000 × 20% = $10,000). ABC does not anticipate being subject to the mid-quarter convention for the 2008 taxable year, does not anticipate making any depreciation elections for any class of property, does not anticipate making a section 179 election, does not anticipate any sales or other dispositions of depreciable property, and no events have occurred, nor does ABC know, based on all relevant information available as of the due date of ABC's first required installment for 2008, of any event that will occur to cause ABC's 2008 taxable year to be a short taxable year. The optional amounts of depreciation expense ABC may take into account for its first annualized income installment for its 2008 taxable year are determined as follows:

(i) *General rule—Estimated annual depreciation.* In accordance with the general rule provided in paragraph (f)(3)(iv)(A) of this section, ABC may take a depreciation expense of $8,500 ($34,000 × $^{3}/_{12}$ = $8,500) into account in computing ABC's January 1, 2008, through March 31, 2008, taxable income. ABC's estimated annual depreciation expense for 2008 of $34,000 is computed as follows: $15,000 for the 50% additional first year depreciation deduction under section 1400N(d) ($30,000 × 50% = $15,000) plus annual depreciation of $16,000 ($40,000 × 40% = $16,000) and $3,000 ($15,000 × 20% = $3,000). Under paragraphs (c)(3) and (f)(3)(iv)(C) of this section, ABC may not consider its first annualization period to be a short taxable year for purposes of determining the depreciation allowance for such annualization period.

(ii) *Safe Harbor—Proportionate depreciation allowance.* In accordance with the safe harbor provided in paragraph (f)(3)(iv)(B)(1) of this section, ABC may take a depreciation expense of $8,500 ($34,000 × $^{3}/_{12}$ = $8,500) into account in computing ABC's January 1, 2008, through March 31, 2008, taxable income based on annual depreciation expense for 2008 of $34,000, computed as follows: $15,000 for the 50% additional first year depreciation deduction under section 1400N(d) ($30,000 × 50% = $15,000) plus annual depreciation of $16,000 ($40,000 × 40% = $16,000) and $3,000 ($15,000 × 20% = $3,000). Under paragraphs (c)(3) and (f)(3)(iv)(C) of this section, ABC may not consider its first annualization period to be a short taxable year for purposes of determining the depreciation allowance for such annualization period.

(iii) *Safe Harbor—90 percent of preceding year's depreciation.* In accordance with the safe harbor in paragraph (f)(3)(iv)(B)(*2*) of this section, ABC may take a depreciation expense of $2,250 ($10,000 prior year's depreciation × 90% = $9,000 × $^{3}/_{12}$ = $2,250) into account in computing ABC's January 1, 2008, through March 31, 2008, taxable income. Under paragraphs (c)(3) and (f)(3)(iv)(C) of this section, ABC may not consider its first annualization period to be a short taxable year for purposes of determining the depreciation allowance for such annualization period.

(g) ***Items that substantially affect taxable income but cannot be determined accurately by the installment due date*** —

(1) ***In general.*** In determining the applicability of the annualization exceptions described in paragraphs (a) and (b) of this section and § 1.6655-3, reasonable estimates may be made from existing data for items that substantially affect income if the amount of such items cannot be determined accurately by the installment due date. This paragraph (g) applies only to the inflation index for taxpayers using the dollar-value LIFO (last-in, first-out) inventory method, adjustments required under section 263A, the computation of a taxpayer's section 199 deduction, intercompany adjustments for taxpayers that file consolidated returns, the liquidation of a LIFO layer at the installment date that the taxpayer reasonably believes will be replaced at the end of the year, deferred gain on a qualifying conversion or exchange of property under sections 1031 and 1033 that the taxpayer reasonably believes will be replaced with qualifying replacement property, and any other item designated by the Secretary by publication in the Internal Revenue Bulletin (see § 601.601(d)(2)(ii)(*b*) of this chapter).

(2) ***Example.*** The following example illustrates the rules of this paragraph (g):

Example. Section 199 deduction. Corporation ABC, a calendar year taxpayer, uses an accrual method of accounting and the annualized income installment method under section 6655(e)(2)(A)(i) to calculate all of its required installment payments for its 2008 taxable year. ABC engages in production activities that generate qualified production activities income (QPAI), as defined in § 1.199-1(c), and projects taxable income of $50,000 for its first annualization period from January 1, 2008, through March 31, 2008, without taking into account the section 199 deduction. During its first annualization period from January 1, 2008, through March 31, 2008, ABC incurs W-2 wages allocable to domestic production gross receipts pursuant to section

199(b)(2) of $10,000. Pursuant to paragraph (g)(1) of this section, ABC is permitted to take into account its estimated section 199 deduction before annualizing taxable income based on the lesser of its estimated QPAI or taxable income and W-2 wages for its first installment period for 2008. For the first installment period in 2008, ABC is permitted to recognize a deduction under section 199 of $3,000 ($50,000 × .06 = $3,000) subject to the wage limitation of $5,000 (50 percent of $10,000 of W-2 wages incurred during the first installment period). Accordingly, ABC's annualized income for the first installment for 2008 is $188,000 (($50,000-$3,000) × $1^{2}/_{3}$ = $188,000). The tax on $188,000 is $56,570 and ABC's first required installment for 2008 is $14,143 ($56,570 × .25 = $14,143).

(h) ***Effective/applicability date.*** This section applies to taxable years beginning after September 6, 2007.

[T.D. 9347, 72 FR 44349, Aug. 7, 2007; 72 FR 53684, Sept. 20, 2007; 72 FR 54350, Sept. 25, 2007, as amended by T.D. 9870, 84 FR 33692, July 15, 2019]

§ 1.6655-2T Safe harbor for certain installments of tax due before July 1, 1987 (temporary).

(a) ***Applicability*** —

(1) ***Safe harbor.*** The safe harbor provided by paragraph (b) of this section applies only to installment payments of corporate estimated tax required to be made before July 1, 1987, for taxable years beginning in 1987.

(2) ***Subsequent payment.*** The requirement that a corporation using the safe harbor provided by this section make a timely subsequent installment payment in accordance with paragraph (c) of this section applies with respect to the corporation's first installment payment ("the subsequent installment payment") of estimated tax required to be made after the last payment computed under the safe harbor rule.

(3) ***Section inapplicable to new corporation.*** This section shall not apply in the case of any corporation whose first taxable year began after December 31, 1986.

(b) ***Safe harbor for use of annualization exception*** —

(1) ***In general.*** A corporation computing an installment payment of estimated tax using the annualization exception provided in section 6655(d)(3) will not be subject to an addition to tax under section 6655 with respect to an installment payment of estimated tax that satisfies the requirements of this paragraph (b), except as provided in paragraph (c) of this section. For purposes of this paragraph (b)—

(i) A corporation shall assume that its annualized taxable income for the current year equals or exceeds 120 percent of the taxable income shown on its return for the preceding taxable year, and

(ii) The term "tax" as used in section 6655(d)(3) shall be defined by reference to section 6655(f) without regard to section 6655(f)(1) (B) and (C) (that is, without regard to the alternative minimum tax imposed by section 55 or the environmental tax imposed by section 59A).

(2) ***Special rules for determining taxable income for preceding year.*** For purposes of paragraph (b)(1)(i) of this section, the taxable income shown on the return of the corporation for its preceding taxable year shall be—

(i) Adjusted to eliminate any net operating loss deduction taken into account in that preceding year, and

(ii) Annualized, if that preceding year was of less than 12 months.

(3) *Credits taken into account* —

(i) ***In general.*** In computing the amount of an installment payment under paragraph (b)(1) of this section, the corporation may take into account any credits against tax that are permitted to be taken into account under section 6655(d)(3) for the current taxable year.

(ii) ***Foreign tax credit.*** For purposes of paragraph (b)(3)(i) of this section, the amount of foreign tax credit that is permitted to be taken into account for the current taxable year is equal to the foreign tax credit allowed for the preceding taxable year multiplied by the fraction specified in the following sentence. The numerator of the fraction is the highest tax rate applicable for the taxable year under section 11, as adjusted under section 15, and the denominator is 46 percent. This alternative computation of the foreign tax credit is applicable only for purposes of computing a safe harbor installment payment under paragraph (b) of this section and cannot be applied for other estimated tax purposes.

(4) ***Net operating loss carryover.*** A corporation that has a net operating loss carryover as of the first day of the taxable year for which the estimated tax is being paid may use that carryover to reduce the annualized taxable income referred to in paragraph (b)(1)(i) of this section. For example, if a corporation with a net operating loss carryover of $3,000 had taxable income of $10,000 in 1986, it may use the carryover to reduce its annualized taxable income to $9,000, (($10,000 × 120%) − 3,000).

(c) *Corporation must bring aggregate payments to required level through timely subsequent installment* —

(1) ***In general.*** A corporation using the safe harbor provided by paragraph (b) of this section shall make a timely subsequent installment payment of estimated tax in an amount sufficient to satisfy the requirements of either paragraph (c)(3) or paragraph (c)(4) of this section.

(2) ***Applicable percentage.*** For purposes of this paragraph (c), the applicable percentage is—

(i) 45 percent (50 percent × 90 percent), if the subsequent installment payment is the second installment payment for the taxable year, or

(ii) 67.5 percent (75 percent × 90 percent), if the subsequent installment payment is the third installment payment for the taxable year.

(3) ***Annualization exception.*** The subsequent installment payment of a corporation satisfies the requirements of this paragraph (c)(3) if the amount of the payment is sufficient to satisfy the requirements of section 6655(d)(3) with respect to all applicable taxes specified in section 6655(f). Thus, the corporation must determine its annualized taxable income under section 6655(d)(3)(A) (ii) or (iii), whichever is applicable, and compute the resulting tax. The resulting tax shall include the alternative minimum tax under section 55 and the environmental tax under section 59A and may take credits into account to the extent permitted under section 6655(d)(3). The sum of this subsequent installment payment and the earlier installment payment or payments of the corporation must equal or exceed the applicable percentage of the tax so computed. In determining whether the corporation has satisfied the requirements of section 6655(d)(3)(A) (ii) or (iii) with respect to the subsequent installment, the safe harbor provided in paragraph (b)(1) of this section shall not apply.

(4) ***Installment payments equal to applicable percentage of tax shown on return.*** The subsequent installment payment of a corporation satisfies the requirement of this paragraph (c)(4) if the sum of that payment and the earlier installment payment or payments of the corporation equals or exceeds the applicable percentage of the tax shown on the return of the corporation for the taxable year to which the installment payments relate. The tax shown on the return includes all taxes specified in section 6655(f).

(5) ***Consequence of corporation's failure to satisfy requirements for subsequent installment*** —

(i) ***In general.*** If a corporation fails to satisfy the requirements set out in this paragraph (c), the corporation shall lose the benefit of the safe harbor provided by paragraph (b)(1) of this section.

(ii) ***Limit on penalty.*** The aggregate underpayment penalty with respect to any installment payment or payments for which a corporation loses the benefit of the safe harbor under paragraph (c)(5)(i) of this section shall be limited to the "shortfall penalty amount." The shortfall penalty amount is the penalty that would be imposed under section 6655(a) if there were an underpayment of the subsequent installment payment equal to the excess of—

(A) The amount required to be paid, as determined under this paragraph (c), on or before the due date of the subsequent installment payment, over

(B) The amount actually paid on or before such date with respect to the subsequent installment payment.

For purposes of this determination, the period of the underpayment shall run from the due date of the subsequent installment payment until the earlier of the dates specified in section 6655(c)(1) or (2).

(iii) ***Example.*** The provisions of this paragraph (c)(5) may be illustrated by the following example:

Example. Corporation M, which uses the calendar year as its taxable year, relies on the safe harbor provided by paragraph (b) of this section for its first two installment payments of estimated tax for 1987. M is required by this paragraph (c) to make a timely subsequent installment payment of $1,000,000 by September 15, 1987, but M's actual installment payment by that date is only $990,000. Because of this shortfall, M loses the benefit of the safe harbor and is subject to underpayment penalties with respect to the first two installments. The aggregate penalties with respect to those two installments, however, cannot exceed the amount of the underpayment penalty to which M would be subject if there were an underpayment of $10,000 with respect to the September 15, 1987, installment payment. Such penalties are independent of any penalty that may apply with respect to M's third installment payment under the normal rules of section 6655.

(d) ***Example.*** The provisions of this section may be illustrated by the following example:

> *Example.* (i) Corporation X (which is not a life insurance company) uses as its taxable year a fiscal year ending on January 31 and is required to pay an installment of estimated income tax by May 15, 1987, for its taxable year beginning on February 1, 1987. On its return for the taxable year ending January 31, 1987, which was a year of 12 months, X reported taxable income of $10,000,000 ($9,000,000 of which was ordinary income and $1,000,000 of which was net capital gain) and did not claim any net operating loss deduction. As of February 1, 1987, X has no net operating loss carryforwards and no credit carryforwards.

X has no credits against tax that are permitted to be taken into account under section 6655(d)(3) for 1987. If X uses the safe harbor provided in paragraph (b)(1) of this section, X must make by May 15, 1987, an installment payment of estimated tax of at least $1,037,836, computed as follows:

(1) Taxable income shown on return for taxable year ending on January 31, 1987	$10,000,000
(2) Annualized taxable income for taxable year ending January 31, 1988, determined pursuant to paragraph (b)(1) of this section (Item (1)x120%)	$12,000,000
(Note: 120%xordinary income of $9,000,000 = $10,800,000;	
120%xnet capital gain of $1,000,000 = $1,200,000)	
(3) Tax on annualized taxable income (Item 2) using rates under section 11 and 1201, taking into account section 15, applicable to the taxable year ending January 31, 1988	$4,612,603
(4) Amount described in section 6655(d)(3)(A)(i) (Item (3)x22.5%)	$1,037,836

(ii) To preclude imposition of an addition to tax under section 6655 with respect to its May 15, 1987, installment payment, X must make by July 15, 1987, a second installment payment of estimated tax sufficient to bring its aggregate payments to the minimum level required under paragraph (c) of this section.

(iii) X may satisfy the requirements of paragraph (c)(3) of this section by making a second installment payment sufficient to bring X within the exception provided in section 6655(d)(3). Thus, if X determines under that section that the aggregate of X's installment payments of estimated tax by July 15, 1987, must equal at least $3,000,000, X may obtain the benefit of the safe harbor provided in paragraph (b)(1) of this section with respect to the May 15, 1987, installment payment by making a timely second installment payment of $1,962,164 ($3,000,000—$1,037,836).

(iv) Even if X fails to satisfy the requirements of paragraph (c)(3) of this section, X may obtain the benefit of the safe harbor for the May 15, 1987, installment payment if X's second installment payment, when aggregated with the first payment, equals at least 45 percent of the tax (including the alternative minimum tax under section 55 and the environmental tax under section 59A) shown on X's return for X's taxable year beginning on February 1, 1987. Thus, if the tax shown on that return is $6,000,000, X's second installment payment under paragraph (c)(4) of this section must be at least $1,662,164, computed as follows:

45 percent of $6,000,000	$2,700,000
less first payment	1,037,836
Minimum second installment	$1,662,164

[T.D. 8132, 52 FR 10051, Mar. 30, 1987]

§ 1.6655-3 Adjusted seasonal installment method.

(a) ***In general.*** In the case of any required installment, the amount of the adjusted seasonal installment is the excess (if any) of—

(1) 100 percent of the amount determined under paragraph (c) of this section; over

(2) The aggregate amount of all prior required installments for the taxable year.

(b) ***Limitation on application of section.*** This section applies only if the base period percentage (as defined in section 6655(e)(3)(D)(i) and paragraph (d)(1) of this section) for any six consecutive months of the taxable year equals or exceeds seventy percent.

(c) ***Determination of amount.*** The amount determined under this paragraph (c) for any installment will be determined in the following manner—

(1) Take the taxable income for all months during the taxable year preceding the filing month;

(2) Divide such amount by the base period percentage for all months during the taxable year preceding the filing month;

(3) Determine the tax on the amount determined under paragraph (c)(2) of this section; and

(4) Multiply the tax computed under paragraph (c)(3) of this section by the base period percentage for the filing month and all months during the taxable year preceding the filing month.

(d) ***Special rules*** —

(1) ***Base period percentage.*** The base period percentage for any period of months is the average percent that the taxable income for the corresponding months in each of the three preceding taxable years bears to the taxable income for the three preceding taxable years. If there is no taxable income for the corresponding months, taxable income for this purpose is zero.

(2) ***Filing month.*** The term *filing month* means the month in which the installment is required to be paid.

(3) ***Application of the rules related to the annualized income installment method to the adjusted seasonal installment method.*** The rules governing the computation of taxable income (and resulting tax) for purposes of determining any required installment payment of estimated tax under the annualized income installment method under § 1.6655-2 apply to the computation of taxable income (and resulting tax) for purposes of determining any required installment payment of estimated tax under the adjusted seasonal installment method.

(4) ***Alternative minimum tax.*** The amount determined under paragraph (c) of this section must properly take into account the amount of any alternative minimum tax under section 55 that would apply for the period of the computation. The amount of any alternative minimum tax that would apply is determined by applying to alternative minimum taxable income, tentative minimum tax, and alternative minimum tax, the rules described in paragraph (c) of this section for taxable income and tax.

(e) ***Example.*** The provisions of this section may be illustrated by the following example:

> *Example.* (i) X, a corporation that reports on a calendar year basis, expects to have an estimated tax liability of $1,200,000 for its taxable year ending December 31, 2009. On its 2008 tax return, X reports a tax liability of $652,800. X pays four installments of estimated tax, each in the amount of

$250,000, $250,000, $250,000, and $450,000 on April 15, 2009, June 15, 2009, September 15, 2009, and December 15, 2009, respectively. X reports a tax liability of $1,152,600 on its return due March 15, 2010, with no credits against tax. Under the general provision of section 6655(b) and section 6655(d), there was an underpayment in the amount of $76,300 for the second installment through September 15, 2009, and $114,450 for the third installment through December 15, 2009, determined as follows:
(A) Tax as defined in section 6655(g) = $1,152,600

(B) 100% of this paragraph (e), Example (i)(A) = $1,152,600

(C) Amount of estimated tax required to be paid on or before the first installment (25% of $652,800) = $163,200

(D) Deduction of amount timely paid on or before the first installment due date under the general rule of section 6655(b) = $250,000

(E) Amount of overpaid estimated tax for the first installment date = $86,800

(F) Amount of estimated tax required to be paid on or before the second installment (25% of $1,152,600 plus the recapture amount under section 6655(d)(2)(B) of $124,950 (25% of $1,152,600 less $163,200)) = $413,100

(G) Deduction of amount paid on or before the due date of the second installment less amount applied towards the first installment under the general rule of section 6655(b) ($250,000 paid in each of the first and second installments less this paragraph (e), Example (i)(C)) = $336,800

(H) Amount of underpayment for the second installment date = $76,300

(I) Amount of estimated tax required to be paid on or before the third installment (25% of $1,152,600) = $288,150

(J) Deduction of amount paid on or before the due date of the third installment less amount applied towards the first and second installments under the general rule of section 6655(b) ($250,000 paid in each of the first, second, and third installments less this paragraph (e), *Example* (i)(C) less this paragraph (e), *Example* (i)(F)) = $173,700

(K) Amount of underpayment for the third installment date = $114,450

(L) Amount of estimated tax required to be paid on or before the fourth installment (25% of $1,152,600) = $288,150

(M) Deduction of amount paid on or before the due date of the fourth installment less amount applied towards the first, second, and third installments under the general rule of section 6655(b) ($250,000 paid in each of the first, second, and third installments plus $450,000 paid in the fourth installment less this paragraph (e), *Example* (i)(C) less this paragraph (e), *Example* (i)(F) less this paragraph (e), *Example* (i)(I)) = $335,550

(N) Amount of overpaid estimated tax for the fourth installment date = $47,400

(ii) X wants to determine if it qualifies for the adjusted seasonal installment method. X determines that its monthly taxable income for the preceding three taxable years and for the current taxable year 2009 is as follows:

January	February	March	April	May	June	July	August	September	October	November	December
2006:											
$100,000	$90,000	$80,000	$70,000	$60,000	$20,000	$10,000	$10,000	$10,000	$10,000	$10,000	$10,000
2007:											
200,000	170,000	170,000	130,000	125,000	45,000	21,000	19,000	20,000	20,000	20,000	20,000
2008:											
410,000	350,000	330,000	270,000	240,000	80,000	40,000	40,000	40,000	40,000	40,000	40,000
2009:											
600,000	680,000	650,000	560,000	460,000	170,000	70,000	60,000	50,000	40,000	30,000	20,000

(iii) X must initially determine if its base period percentage for the same 6 consecutive months of the 3 preceding taxable years equals or exceeds 70 percent (see section 6655(e)(3) and paragraphs (b) and (c) of this section). By using its taxable income for the first 6 months of 2006, 2007, and 2008, X qualifies for the adjusted seasonal installment method because its base period percentage is 87.5 percent (which exceeds 70 percent) computed as follows:
(A) Taxable income for first 6 months of 2006 = $420,000

(B) Total taxable income for 2006 = $480,000

(C) Divide this paragraph (e), *Example* (iii)(A) by this paragraph (e), *Example* (iii)(B) = .875

(D) Taxable income for first 6 months of 2007 = $840,000

(E) Total taxable income for 2007 = $960,000

(F) Divide this paragraph (e), *Example* (iii)(D) by this paragraph (e), *Example* (iii)(E) = .875

(G) Taxable income for first 6 months of 2008 = $1,680,000

(H) Total taxable income for 2008 = $1,920,000

(I) Divide this paragraph (e), *Example* (iii)(G) by this paragraph (e), *Example* (iii)(H) = .875

(J) Add this paragraph (e), *Example* (iii)(C), (F), and (I) = $2.625

(K) Divide this paragraph (e), *Example* (iii)(J) by 3 = .875

(iv) To determine the amount of the first installment under the rules of section 6655(e)(3) and paragraph (a) of this section, the following computation is necessary:

(A) Taxable income for first 3 months of 2009 = $1,930,000

(B) Taxable income for first 3 months of 2006 ($270,000) divided by total taxable income for 2006 ($480,000) = .5625

(C) Taxable income for first 3 months of 2007 ($540,000) divided by total taxable income for 2007 ($960,000) = .5625

(D) Taxable income for first 3 months of 2008 ($1,090,000) divided by total taxable income for 2008 ($1,920,000) = .5677

(E) Add this paragraph (e), *Example* (iv)(B), (C), and (D) and divide by 3 = .5642

(F) Divide this paragraph (e), *Example* (iv)(A) by this paragraph (e), *Example* (iv)(E) = $3,420,773

(G) Determine the tax on this paragraph (e), *Example* (iv)(F) = $1,163,049

(H) Taxable income for first 4 months of 2006 ($340,000) divided by total taxable income for 2006 ($480,000) = .7083

(I) Taxable income for first 4 months of 2007 ($670,000) divided by total taxable income for 2007 ($960,000) = .6979

(J) Taxable income for first 4 months of 2008 ($1,360,000) divided by total taxable income for 2008 (1,920,000) = .7083

(K) Add this paragraph (e), *Example* (iv)(H), (I), and (J) and divide by 3 = .7048

(L) Multiply this paragraph (e), *Example* (iv)(G) by this paragraph (e), *Example* (iv)(K) = $819,717

(M) 100% of this paragraph (e), *Example* (iv)(L) = $819,717

(N) Amount of all prior required installments for 2009 = $0

(O) Amount of adjusted seasonal installment for the first installment payment (this paragraph (e), *Example* (iv)(M) less this paragraph (e), *Example* (iv)(N)) = $819,717

(v) To determine the amount of the second installment under the rules of section 6655(e)(3) and paragraph (a) of this section, the following computation is necessary:

(A) Taxable income for first 5 months of 2009 = $2,950,000

(B) Taxable income for first 5 months of 2006 ($400,000) divided by total taxable income for 2006 ($480,000) = .8333

(C) Taxable income for first 5 months of 2007 ($795,000) divided by total taxable income for 2007 ($960,000) = .8281

(D) Taxable income for first 5 months of 2008 ($1,600,000) divided by total taxable income for 2008 ($1,920,000) = .8333

(E) Add this paragraph (e), *Example* (v)(B), (C), and (D) and divide by 3 = .8316

(F) Divide this paragraph (e), *Example* (v)(A) by this paragraph (e), *Example* (v)(E) = $3,547,379

(G) Determine the tax on this paragraph (e), *Example* (v)(F) = $1,206,109

(H) Taxable income for first 6 months of 2006 ($420,000) divided by total taxable income for 2006 ($480,000) = .875

(I) Taxable income for first 6 months of 2007 ($840,000) divided by total taxable income for 2007 ($960,000) = .875

(J) Taxable income for first 6 months of 2008 ($1,680,000) divided by total taxable income for 2008 ($1,920,000) = .875

(K) Add this paragraph (e), *Example* (v)(H), (I), and (J) and divide by 3 = .875

(L) Multiply this paragraph (e), *Example* (v)(G) by this paragraph (e), *Example* (v)(K) = $1,055,345

(M) 100% of this paragraph (e), *Example* (v)(L) = $1,055,345

(N) Amount of all prior required installments for 2009 = $163,200

(O) Amount of adjusted seasonal installment for the second installment payment (this paragraph (e), *Example* (v)(M) less this paragraph (e), *Example* (v)(N)) = $892,145

(vi) To determine the amount of the third installment under the rules of section 6655(e)(3) and paragraph (a) of this section, the following computation is necessary:

(A) Taxable income for first 8 months of 2009 = $3,250,000

(B) Taxable income for first 8 months of 2006 ($440,000) divided by total taxable income for 2006 ($480,000) = .9167

(C) Taxable income for first 8 months of 2007 ($880,000) divided by total taxable income for 2007 ($960,000) = .9167

(D) Taxable income for first 8 months of 2008 ($1,760,000) divided by total taxable income for 2008 ($1,920,000) = .9167

(E) Add this paragraph (e), *Example* (vi)(B), (C), and (D) and divide by 3 = .9167

(F) Divide this paragraph (e), *Example* (vi)(A) by this paragraph (e), *Example* (vi)(E) = $3,545,326

(G) Determine the tax on this paragraph (e), *Example* (vi)(F) = $1,205,411

(H) Taxable income for first 9 months of 2006 ($450,000) divided by total taxable income for 2006 ($480,000) = .9375

(I) Taxable income for first 9 months of 2007 ($900,000) divided by total taxable income for 2007 ($960,000) = .9375

(J) Taxable income for first 9 months of 2008 ($1,800,000) divided by total taxable income for 2008 ($1,920,000) = .9375

(K) Add this paragraph (e), *Example* (vi)(H), (I), and (J) and divide by 3 = .9375

(L) Multiply this paragraph (e), *Example* (vi)(G) by this paragraph (e), *Example* (vi)(K) = $1,130,073

(M) 100% of this paragraph (e), *Example* (vi)(L) = $1,130,073

(N) Amount of all prior required installments for 2009 = $576,300

(O) Amount of adjusted seasonal installment for the third installment payment (this paragraph (e), *Example* (vi)(M) less this paragraph (e), *Example* (vi)(N)) = $553,773

(vii) To determine the amount of the fourth installment under the rules of section 6655(e)(3) and paragraph (a) of this section, the following computation is necessary:

(A) Taxable income for first 11 months of 2009 = $3,370,000

(B) Taxable income for first 11 months of 2006 ($470,000) divided by total taxable income for 2006 ($480,000) = .9792

(C) Taxable income for first 11 months of 2007 ($940,000) divided by total taxable income for 2007 ($960,000) = .9792

(D) Taxable income for first 11 months of 2008 ($1,880,000) divided by total taxable income for 2008 ($1,920,000) = .9792

(E) Add this paragraph (e), *Example* (vii)(B), (C), and (D) and divide by 3 = .9792

(F) Divide this paragraph (e), *Example* (vii)(A) by this paragraph (e), *Example* (vii)(E) = $3,441,585

(G) Determine the tax on this paragraph (e), *Example* (vii)(F) = $1,170,139

(H) Taxable income for first 12 months of 2006 ($480,000) divided by total taxable income for 2006 ($480,000) = 1.0000

(I) Taxable income for first 12 months of 2007 ($960,000) divided by total taxable income for 2007 ($960,000) = 1.0000

(J) Taxable income for first 12 months of 2008 ($1,920,000) divided by total taxable income for 2008 ($1,920,000) = 1.0000

(K) Add this paragraph (e), *Example* (vii)(H), (I), and (J) and divide by 3 = 1.0000

(L) Multiply this paragraph (e), *Example* (vii)(G) by this paragraph (e), *Example* (vi)(K) = $1,170,139

(M) 100% of this paragraph (e), *Example* (vii)(L) = $1,170,139

(N) Amount of all prior required installments for 2009 = $864,450

(O) Amount of adjusted seasonal installment for the fourth installment payment (this paragraph (e), *Example* (vii)(M) less this paragraph (e), *Example* (vii)(N)) = $305,689

(viii) Because the total amount of each required estimated tax payment determined under section 6655(e)(3) and paragraph (a) of this section exceeds the amount of each required estimated tax payment determined under section 6655(d) and § 1.6655-1(d) and (e), the exception described in section 6655(e) and this section does not apply and the addition to the tax with respect to the underpayment for the June 15, 2009, and September 15, 2009, installments will be imposed unless another exception (for example, see section 6655(e)(2)) applies with respect to these installments.

(f) ***Effective/applicability date.*** This section applies to taxable years beginning after September 6, 2007.

[T.D. 9347, 72 FR 44358, Aug. 7, 2007]

§ 1.6655-4 Large corporations.

(a) ***Large corporation defined.*** The term *large corporation* means any corporation (or a predecessor corporation) that had taxable income of at least $1,000,000 for any taxable year during the testing period. For purposes of this section, a predecessor corporation is the distributor or transferor corporation in a transaction to which section 381 (relating to carryovers in certain corporate acquisitions) applies.

(b) ***Testing period.*** For purposes of paragraph (a) of this section, the term *testing period* means the 3 taxable years immediately preceding the taxable year for which estimated tax is being determined (the current taxable year) or, if less, the number of taxable years the taxpayer has been in existence.

(c) ***Computation of taxable income during testing period*** —

(1) ***Short taxable year.*** In the case of a corporation (or predecessor corporation) that had a short taxable year during the testing period, for purposes of determining whether the $1,000,000 amount referred to in paragraph (a) of this section is equaled or exceeded, the taxable income for the short taxable year is computed by—

(i) Multiplying the taxable income for the short taxable year by 12; and

(ii) Dividing the resulting amount by the number of months in the short taxable year.

(2) ***Computation of taxable income in taxable year when there occurs a transaction to which section 381 applies.***

(i) For purposes of determining whether an acquiring corporation had taxable income of $1,000,000 or more for a taxable year in which a section 381 transaction occurs, the acquiring corporation's taxable income will be the sum of—

(A) The taxable income of the acquiring corporation for its taxable year; plus

(B) The taxable income (or loss) of the distributor or transferor corporation for that portion of its taxable year corresponding to the acquiring corporation's taxable year up to and including the date of distribution or transfer (as defined in § 1.381(b)-1(b)).

(ii) For purposes of determining whether a transferor or distributor corporation had taxable income of $1,000,000 or more for a taxable year in which a section 381 transaction occurs, the distributor or transferor corporation's taxable income (or loss) is reduced by the amount of taxable income (or loss) that is included in the acquiring corporation's taxable income for the taxable year in which the distribution or transfer (as defined in § 1.381(b)-1(b)) occurs, as described in paragraph (c)(2)(i)(B) of this section.

(d) ***Members of controlled group*** —

(1) ***In general.*** For purposes of applying paragraph (a) of this section, the taxable income of members of a controlled group of corporations (as defined in section 1563(a)) must be aggregated for each year of the testing period. The provisions of this section do not apply to a controlled group for any taxable year in which the aggregate taxable income of the members of the controlled group is less than $1,000,000.

(2) ***Aggregation.*** For purposes of paragraph (d)(1) of this section, a taxable loss of any member of the controlled group for a taxable year during the testing period is not taken into account.

(3) ***Allocation rule.*** If the aggregate taxable income of members of a controlled group computed pursuant to paragraph (d)(1) of this section exceeds $1,000,000 during the testing period, the $1,000,000 amount that is relevant for purposes of determining, under paragraph (a)(1) of this section, whether a corporation is a large corporation is divided equally among the component members of such group (including component members excluded pursuant to paragraph (d)(2) of this section) unless all of such component members consent to an apportionment plan providing for an alternative allocation of such amount. The procedure for making and filing this plan will be the same as the procedure used for making and filing an apportionment plan under section 1561. See section 1561 and the regulations.

(4) ***Controlled group members.***

(i) In the case of any corporation that was a member of a controlled group of corporations at any time during the testing period but is not a member of such group during the taxable year involved, the taxable income of the former member for the testing period is determined as if such corporation were not a member of a group at any time during that period. With respect to the controlled group, the taxable income of its former member will not be taken into account in determining such group's taxable income for any taxable year during the testing period for purposes of applying paragraph (a)(1) of this section.

(ii) For purposes of paragraph (d)(4)(i) of this section, the determination of whether a corporation is a member of a controlled group during the testing period is based on whether the corporation was a member of the controlled group on the last day of the month preceding the due date of the required installment.

(e) ***Effect on a corporation's taxable income of items that may be carried back or carried over from any other taxable year.*** In determining whether a corporation (or predecessor corporation) is a large corporation for its current taxable year, items that could offset taxable income during a taxable year included in the testing period (for example, those described in sections 172 and 1212) are not to be taken into account and the taxable income of a corporation for any taxable year during the testing period is determined without regard to items carried back or carried over from any other taxable year.

(f) ***Consolidated returns.*** [Reserved]

(g) ***Example.*** The provisions of this section may be illustrated by the following example:

Example. Y Corporation and Z Corporation are calendar year taxpayers. In 2008, Z acquires all of the assets of Y in a transaction to which section 381 applies. Z's taxable income for both 2006 and 2007 was less than $1,000,000. Y's taxable income for 2008 is determined under paragraph (c)(2) of this section to be $300,000 for that portion of Y's taxable year corresponding to Z's taxable year up to and including the date of transfer. Z's taxable income for 2008 is $800,000. Under the provisions of paragraph (c)(2) of this section, Z's 2008 taxable income for purposes of determining whether it is a large corporation for taxable year 2009 is $1,100,000 ($800,000 + $300,000). Thus, Z is a large corporation for the 2009 taxable year. In addition, if Z's 2008 taxable income, as determined under paragraph (c)(2) of this section, had been less than $1,000,000 but Y's taxable income in 2006 or 2007 had been $1,000,000 or more, Z would be a large corporation for taxable year 2009 because Y is a predecessor corporation.

(h) ***Effective/applicability date.*** This section applies to taxable years beginning after September 6, 2007.

[T.D. 9347, 72 FR 44360, Aug. 7, 2007]

§ 1.6655-5 Short taxable year.

(a) ***In general.*** Except as otherwise provided in this section, the provisions of section 6655 and these regulations are applicable in the case of a short taxable year (including an initial taxable year) for which a payment of estimated tax is required to be made.

(b) ***Exception to payment of estimated tax.*** In the case of a short taxable year, no payment of estimated tax is required if—

(1) The short taxable year is a period of less than 4 full calendar months; or

(2) The tax shown on the return for such taxable year (or, if no return is filed, the tax) is less than $500.

(c) *Installment due dates* —

(1) *In general* —

(i) ***Taxable year of at least four months but less than twelve months.*** Except as otherwise provided, in the case of a short taxable year, if such year results in a taxable year of four or more full calendar months but less than twelve full calendar months, the due dates prescribed in § 1.6655-1(f)(2) apply.

(ii) ***Exceptions.***

(A) If the date determined under paragraph (c)(1)(i) of this section for the first required installment due during the taxpayer's short taxable year is earlier than the 15th day of the fourth month of the taxpayer's short taxable year, the taxpayer's first required installment is due on the first due date otherwise determined under paragraph (c)(1)(i) of this section that is on or after the 15th day of the fourth month of the short taxable year.

(B) A taxpayer with an initial short taxable year may make estimated tax payments as though it were a calendar year taxpayer until it files its tax return for its initial taxable year and will not be subject to an addition to tax under section 6655 for making estimated tax payments as though it were a calendar year taxpayer for the period beginning with its initial short taxable year to the time it files its tax return for its initial short taxable year if, when filing its tax return for its initial short taxable year, the taxpayer chooses to be a fiscal year taxpayer.

(2) *Early termination of taxable year* —

(i) ***In general.*** Except as provided in paragraph (c)(2)(ii) of this section, if a taxable year ends early (for example, as a result of an acquisition or a change in taxable year), the due date for the final required installment is the date that would have been the due date of the next required installment if the event that gave rise to the short taxable year had not occurred.

(ii) ***Exception.*** If the date determined under paragraph (c)(2)(i) of this section is within thirty days of the last day of the short taxable year, the due date for the final required installment is the fifteenth day of the second month following the month that includes the last day of the short taxable year.

(d) *Amount due for required installment* —

(1) ***In general.*** The amount due for any required installment determined under section 6655(d)(1)(B)(i) for a short taxable year is 100% of the required annual payment for the short taxable year divided by the number of required installments due (as determined under this section) for the short taxable year.

(2) ***Tax shown on the return for the preceding taxable year.*** If the current taxable year is a short taxable year, the amount due for any required installment determined under section 6655(d)(1)(B)(ii) is determined in the following manner—

(i) Take 100% of the tax shown on the return of the corporation for the preceding taxable year;

(ii) Multiply such amount by the number of full calendar months in the current short taxable year and divide by 12; and

(iii) Divide the amount determined under paragraph (d)(2)(ii) of this section by the number of required installments due (as determined under this section) for the current short taxable year.

(3) ***Applicable percentage.*** In the case of any required installment determined under section 6655(e), the applicable percentage under section 6655(e)(2)(B)(ii) is—

(i) 25%, 50%, 75%, and 100% for the first, second, third, and fourth (last) required installments, respectively, if the taxpayer will have four required installments due for the short taxable year;

(ii) 33.33%, 66.67%, and 100% for the first, second, and third (last) required installments, respectively, if the taxpayer will have three required installments due for the short taxable year;

(iii) 50% and 100% for the first and second (last) required installments, respectively, if the taxpayer will have two required installments due for the short taxable year; or

(iv) 100% for the first (and last) required installment if the taxpayer will have one required installment for the short taxable year.

(4) ***Applicable percentage for installment period in which taxpayer does not reasonably expect that the taxable year will be an early termination year.*** In the case of any required installment determined under section 6655(e) in which the taxpayer does not reasonably expect that the taxable year will be an early termination year, the applicable percentage under section 6655(e)(2)(B)(ii) is the applicable percentage provided by paragraph (d)(3)(i) of this section with the remaining balance of the estimated tax payment for the year due with the final installment.

(e) ***Examples.*** The following examples illustrate the rules of this section:

(1) ***Example 1.*** Short year of less than 4 months.

Corporation A is a calendar year taxpayer that was acquired by corporation B, a member of a consolidated group (as defined in § 1.1502-1(h)) on April 16, 2009, resulting in A having a short taxable year from January 1, 2009, through April 16, 2009. Because A has a taxable year of less than four full calendar months, no estimated tax payments are required by A for the short taxable year.

(2) ***Example 2.*** Initial short year with four required installments.

Corporation B began business on January 9, 2009, and adopted a calendar year as its taxable year. B computes its required installments based on 100 percent of the tax shown on the return for the taxable year in accordance with section 6655(d)(1)(B)(i). Pursuant to § 1.6655-1(f)(2)(i), the due dates of B's required installments for B's initial taxable year from January 9, 2009, through December 31, 2009, are April 15, 2009, June 15, 2009, September 15, 2009, and December 15, 2009. Pursuant to paragraph (d)(1) of this section, the amount due with each required installment is 25% of the required annual payment for B's first required installment, 50% of the required annual payment for B's second required installment, 75% of the required annual payment for B's third required installment, and 100% of the required annual payment for B's fourth required installment.

(3) ***Example 3.*** Initial short year with three required installments.

Corporation C began business on February 12, 2009, and adopted a calendar year as its taxable year. C computes its required installments based on 100 percent of the tax shown on the return for the taxable year in accordance with section 6655(d)(1)(B)(i). Pursuant to § 1.6655-1(f)(2)(i), the due dates of C's required installments for C's initial taxable year from February 12, 2009, through December 31, 2009, are April 15, 2009, June 15, 2009, September 15, 2009, and December 15, 2009. However, in accordance with paragraph (c)(1)(ii)(A) of this section, C's first required installment is

due June 15, 2009, because April 15, 2009, is earlier than the fifteenth day of the fourth month of C's taxable year. As a result, C's second required installment is due September 15, 2009, and C's third (and last) installment is due December 15, 2009. Pursuant to paragraph (d)(1) of this section, the amount due with each required installment is 33.33% of the required annual payment for C's first required installment, 66.67% of the required annual payment for C's second required installment, and 100% of the required annual payment for C's third (and last) required installment.

(4) ***Example 4.*** Initial short year with two required installments.

Same facts as *Example 3* except C began business on April 10, 2009. In accordance with paragraph (c)(1)(ii)(A) of this section, C's first required installment is due September 15, 2009, because April 15, 2009, and June 15, 2009, are earlier than the fifteenth day of the fourth month of C's taxable year. As a result, C's second (and last) required installment is due December 15, 2009. Pursuant to paragraph (d)(1) of this section, the amount due with each required installment is 50% of the required annual payment for C's first required installment, and 100% of the required annual payment for C's second (and last) required installment.

(5) ***Example 5.*** Initial short year for fiscal year taxpayer with two required installments.

Corporation D began business on February 12, 2009, and adopted a fiscal year ending October 31 as its taxable year. D computes its required installments based on 100 percent of the tax shown on the return for the taxable year in accordance with section 6655(d)(1)(B)(i). Pursuant to § 1.6655-1(f)(2)(ii), the due dates of D's required installments for D's initial taxable year from February 12, 2009, through October 31, 2009, are February 15, 2009, April 15, 2009, July 15, 2009, and October 15, 2009. However, in accordance with paragraph (c)(1)(ii)(A) of this section, D's first required installment is due July 15, 2009, because February 15, 2009, and April 15, 2009, are earlier than the fifteenth day of the fourth month of D's taxable year. As a result, D's second (and last) installment is due October 15, 2009. Pursuant to paragraph (d)(1) of this section, the amount due with each required installment is 50% of the required annual payment for D's first required installment, and 100% of the required annual payment for D's second (and last) required installment.

(6) ***Example 6.*** Initial short year for fiscal year taxpayer with one required installment.

Same facts as *Example 5* except D corporation began business on May 11, 2009. In accordance with paragraph (c)(1)(ii)(A) of this section, D's first (and last) installment is due October 15, 2009, because July 15, 2009, is earlier than the fifteenth day of the fourth month of D's taxable year. Pursuant to paragraph (d)(1) of this section, the amount due with D's required installment is 100% of the required annual payment, computed as 100% divided by the number of required installments due for the short taxable year.

(7) ***Example 7.*** Short termination year with three required installments.

Corporation E is a calendar year taxpayer that computes its required installments based on 100 percent of the tax shown on the return for the taxable year in accordance with section 6655(d)(1)(B)(i). E computes its 2009 required installments based on a projected 2009 total tax liability of $600,000. On July 31, 2009, E is acquired by corporation F, a member of a consolidated group (as defined in § 1.1502-1(h)), resulting in E having a short taxable year from January 1, 2009, through July 31, 2009. E determines that its total tax liability for the short period is $350,000. The due dates for E's first and second required installments are April 15, 2009, and June 15, 2009, respectively. Pursuant to section 6655(d)(1)(A), E paid $150,000 with each required installment. Pursuant to paragraph (c)(2) of this section, E's third (and last) required installment of estimated tax is due on September 15, 2009, and the percentage of the required annual payment due with such

installment is 100% pursuant to paragraph (d)(1) of this section. Accordingly, E is required to pay $50,000 with its final required installment on September 15, 2009 ($350,000 total tax liability for the short taxable year less prior installment payments of $300,000).

(8) ***Example 8.*** Unexpected short termination year with three required installments using the annualization method.

Same facts as *Example 7* except that E uses the annualized income installment method under section 6655(e)(2)(A)(i) to calculate all of its required installment payments for its 2009 taxable year. In addition, E does not reasonably expect until July 28, 2009, that it will have a short termination year caused by E being acquired by F on July 31, 2009. Had E known about its acquisition by F in the first quarter of 2009, E's applicable percentages for computing the amount of its three required installments would be 33.33%, 66.67%, and 100% for the first, second, and third (last) required installments, respectively, pursuant to paragraph (d)(3)(ii) of this section. However, because E had an unexpected short termination year that E was not aware of until after its second required installment payment, E's applicable percentages for computing the amount of its three required installment are 25%, 50%, and 100% for the first, second, and third (last) required installments, respectively, pursuant to paragraph (d)(4) of this section.

(9) ***Example 9.*** Short termination year ending within 30 days of the regular final installment due date.

Same facts as *Example 7* except that E is acquired by F on August 31, 2009. Pursuant to paragraph (c)(2)(ii) of this section, E's third (and last) required installment of estimated tax is due on October 15, 2009, because September 15, 2009, the date that would have been the due date of E's next required installment if F's acquisition of E had not occurred, is within thirty days of the last day of E's short taxable year, and 100% of the required annual payment is due with such installment.

(10) ***Example 10.*** Short termination year ending within 30 days of the regular final installment due date.

Corporation F is a calendar year taxpayer that computes its required installments based on 100 percent of the tax shown on the return for the taxable year in accordance with section 6655(d)(1)(B)(i). F computes its 2009 estimated tax payments based on a projected 2009 total tax liability of $900,000. On December 3, 2009, F is acquired by corporation G, a member of a consolidated group (as defined in § 1.1502-1(h)), resulting in F having a short taxable year from January 1, 2009, through December 3, 2009. F determined its total tax liability for the short period to be $800,000. The due dates for F's first, second, and third required installments are April 15, 2009, June 15, 2009, and September 15, 2009, respectively. Pursuant to section 6655(d)(1)(A), F paid $225,000 with each required installment. Pursuant to paragraph (c)(2)(ii) of this section, F's fourth (and last) required installment of estimated tax is due on February 15, 2010, and the percentage of the required annual payment due with such installment is 100% pursuant to paragraph (d)(1) of this section. However, because the due date for the fourth required installment falls on a legal holiday, F's required installment payment will be timely if paid on or before the first business day following the actual due date of the fourth required installment, that is, February 16, 2010. Accordingly, F is required to pay $125,000 with its final required installment on February 16, 2010 ($800,000 total tax liability for the short taxable year less prior installment payments of $675,000).

(11) ***Example 11.*** Short termination year using the tax shown on the return for the preceding taxable year.

Corporation G, a calendar year taxpayer, reported a tax liability of $75,000 on its return for the taxable year ending December 31, 2008, and is not a large corporation as defined in section 6655(g). On July 31, 2009, G makes a final distribution of its assets, in connection with a plan of complete liquidation, resulting in a short taxable year from January 1, 2009, through July 31, 2009. To satisfy

the requirements of the exception described in section 6655(d)(1)(B)(ii) for payments determined by reference to the tax shown on the return of the corporation for the preceding taxable year, pursuant to paragraph (d)(2) of this section, G must pay in a proportionate amount of its 2008 tax liability based on the number of months in the current taxable year. Accordingly, G must pay $43,750 ($75,000 × $^{7}/_{12}$) through payments of estimated tax payments in 2009, with $14,583 due on April 15, 2009, June 15, 2009, and September 15, 2009.

(12) ***Example 12.*** Short termination year using the tax shown on the return for the preceding taxable year.

Same facts as *Example 11* except that G makes a final distribution of its assets, in connection with a plan of complete liquidation, on October 1, 2009, resulting in a short taxable year from January 1, 2009, through October 1, 2009. To satisfy the requirements of the exception described in section 6655(d)(1)(B)(ii), G must pay $56,250 ($75,000 × $^{9}/_{12}$) through payments of estimated tax in 2009, with $14,063 due on April 15, 2009, June 15, 2009, September 15, 2009, and December 15, 2009, respectively.

(13) ***Example 13.*** Short initial year with three required installments resulting in an underpayment.

(i) Corporation H began business on February 17, 2009, and adopted a calendar year. H computes its required installments based on 100 percent of the tax shown on the return for the taxable year in accordance with section 6655(d)(1)(B)(i). H estimated at the beginning of its short taxable year that its estimated tax liability for short taxable year February 17, 2009, through December 31, 2009, would be $180,000. H paid its first required installment of estimated tax of $60,000 on June 15, 2009, its second required installment of estimated tax of $60,000 on September 15, 2009, and its third (and last) required installment of estimated tax of $60,000 on December 15, 2009 ($180,000 total estimated tax liability for the short taxable year less prior installment payments of $120,000). H reported a tax liability of $240,000 on its return for the short period February 17, 2009, through December 31, 2009, with no credits against tax. There was an underpayment in the amount of $20,000 on the first installment date through September 15, 2009, $40,000 on the second installment date through December 15, 2009, and $60,000 on the third (and last) installment date through March 15, 2010, determined as follows:

(A) Tax as defined in section 6655(d)(1)(B)(i) = $240,000

(B) 100% of this paragraph (e), *Example 13* (A) = $240,000

(C) Amount of estimated tax required to be paid by the first installment date (33.33% of $240,000) = $80,000

(D) Amount of estimated tax required to be paid by the second installment date (66.67% of $240,000 less $80,000 (amount due with first installment)) = $80,000

(E) Amount of estimated tax required to be paid by the third installment date (100% of $240,000 less $160,000 (amount due with first and second installment)) = $80,000

(F) Deduction of amount paid on or before the first installment date = $60,000

(G) Amount of underpayment for the first installment date (this paragraph (e), *Example 13* (i)(C) minus this paragraph (e), *Example 13* (i)(F)) = $20,000

(H) Deduction of amount available for the second installment date ($60,000 second installment payment less this paragraph (e), *Example 13* (i)(G) applied towards the first installment underpayment) = $40,000

(I) Amount of underpayment for the second installment date (this paragraph (e), *Example 13* (i)(D) minus this paragraph (e), *Example 13* (i)(H)) = $40,000

(J) Deduction of amount available for the third installment date ($60,000 third installment payment less this paragraph (e), *Example 13* (i)(I) applied towards the second installment underpayment) = $20,000

(K) Amount of underpayment for the third installment date (this paragraph (e), *Example 1* (i)(E) minus this paragraph (e), *Example 13* (i)(J)) = $60,000

(ii) [Reserved]

(f) ***52 or 53 week taxable year.*** For purposes of this section a taxable year of 52 or 53 weeks is deemed a period of 12 months in the case of a corporation that computes its taxable income in accordance with the election permitted by section 441(f).

(g) ***Use of annualized income or seasonal installment method*** —

(1) ***In general.*** Regardless of the annual accounting period used by a corporation (for example, calendar year, fiscal year) the taxpayer may use the method described in § 1.6655-2 (annualized income installment method) or § 1.6655-3 (adjusted seasonal installment method) to compute its required installments of estimated tax when the current taxable year is a short taxable year.

(2) ***Computation of annualized income installment.*** To the extent a short taxable year includes an annualization period elected by the taxpayer, the taxpayer computes its annualized income installment by determining the tax on the basis of such annualized income for the annualization period, divided by 12, multiplied by the number of months in the short taxable year, and multiplied by the applicable percentage for the required installment.

(3) ***Annualization period for final required installment.*** For purposes of determining the final required installment (as described in paragraph (c)(2) of this section) for a short taxable year, annualized taxable income is determined by placing on an annualized basis the taxable income for the last complete annualization period that occurs within the short taxable year.

(4) ***Examples.*** The provisions of paragraph (g) of this section may be illustrated by the following examples:

Example 1. Corporation X began business on February 12, 2009, and adopted a calendar year as its taxable year. X adopts an accrual method of accounting and uses the annualized income installment method under section 6655(e)(2)(A)(i) to calculate all of its required installment payments for its 2009 taxable year. Pursuant to § 1.6655-1(f)(2)(i), the due dates of X's required installments for X's initial taxable year from February 12, 2009, through December 31, 2009, are April 15, 2009, June 15, 2009, September 15, 2009, and December 15, 2009. However, in accordance with paragraph (c)(1)(ii)(A) of this section, X's first required installment is due June 15, 2009. As a result, X's second required installment is due September 15, 2009, and X's third (and last) required installment is due December 15, 2009. The amount of X's first and second required installments are each based on annualizing X's taxable income from February 12, 2009, through April 30, 2009, (the first three months of X's taxable year) and X's third (and last) required installment is based on annualizing X's taxable income from February 12, 2009, through July 31, 2009 (the first six months of X's taxable year). Because X will have three

required installments due for its short taxable year, pursuant to paragraph (d)(3)(ii) of this section, the applicable percentage is 33.33% for X's first required installment, 66.67% for X's second required installment, and 100% for X's third (and last) required installment.

Example 2. (i) Y, a calendar year corporation, made a final distribution of its assets, in connection with a plan of complete liquidation, on August 3, 2009. Y filed a timely election to use the alternative annualization periods described under section 6655(e)(2)(C)(i) and determined that its taxable income for the first 2, 4 and 7 months of the taxable year was $25,000, $50,000 and $140,000. The due dates for Y's required installments for its short taxable year January 1, 2009, through August 3, 2009, are April 15, 2009, June 15, 2009, and September 15, 2009. Y made installment payments of $10,000, $10,000, and $20,000, respectively, on April 15, 2009, June 15, 2009, and September 15, 2009. The taxable income for each period is annualized as follows:
$25,000 × 12/2 = $150,000

$50,000 × 12/4 = $150,000

$140,000 × 12/7 = $240,000

(ii)(A) To determine whether the first required installment equals or exceeds the amount that would have been required to have been paid if the estimated tax were equal to one hundred percent of the tax computed on the annualized income for the 2-month period taking into account the number of months in the short taxable year, the following computation is necessary:
(*1*) Annualized income for the 2 month period = $150,000

(*2*) Tax on this paragraph (g)(4), *Example 2* (ii)(A)(*1*) = $41,750

(*3*) Tax determined under this paragraph (g)(4), *Example 2* (ii)(A)(*2*) divided by 12 multiplied by 7 (the number of months in the short taxable year) = $24,354

(*4*) 100% of this paragraph (g)(4), *Example 2* (ii)(A)(*3*) = $24,354

(*5*) 33.33% of this paragraph (g)(4), *Example 2* (ii)(A)(*4*) = $ 8,117

(B) Because the total amount of estimated tax that is timely paid on or before the first installment date ($10,000) exceeds the amount required to be paid on or before this date if the estimated tax were one hundred percent of the tax determined by placing on an annualized basis the taxable income for the first 2-month period taking into account the number of months in the short taxable year, the exception described in § 1.6655-2(a) applies and no addition to tax will be imposed for the installment due on April 15, 2009.

(iii)(A) To determine whether the required installments made on or before June 15, 2009, equal or exceed the amount that would have been required to have been paid if the estimated tax were equal to one hundred percent of the tax computed on the annualized income for the 4-month period taking into account the number of months in the short taxable year, the following computation is necessary:

(*1*) Annualized income for the 4 month period = $150,000

(*2*) Tax on this paragraph (g)(4), *Example 2* (iii)(A)(*1*) = $41,750

(*3*) Tax determined under this paragraph (g)(4), *Example 2* (iii)(A)(*2*) divided by 12 multiplied by 7 (the number of months in the short taxable year) = $24,354

(*4*) 100% of this paragraph (g)(4), *Example 2* (iii)(A)(*3*) = $24,354

(*5*) 66.67% of this paragraph (g)(4), *Example 2* (iii)(A)(*4*) less $8,117 (amount due with first installment) = $8,120

(B) Because the total amount of estimated tax available to apply towards the amount due for the second installment ($11,883 ($10,000 paid on the second installment date plus $1,883 overpayment of the first installment)) exceeds the amount required to be paid on or before this date if the estimated tax were one hundred percent of the tax determined by placing on an annualized basis the taxable income for the first 4-month period for the taxable year taking into account the number of months in the short taxable year, the exception described in § 1.6655-2(a) applies and no addition to tax will be imposed for the installment due on June 15, 2009.

(iv)(A) Pursuant to paragraph (c) and (d) of this section, the final required installment is due by September 15, 2009, and the applicable percentage due for the final required installment is 100%. To determine whether the installment payments made on or before September 15, 2009, equal or exceed the amount that would have been required to have been paid if the estimated tax were equal to one hundred percent of the tax computed on the annualized income for the 7-month period taking into account the number of months in the short taxable year, the following computation is necessary:

(*1*) Annualized income for the 7 month period = $240,000

(*2*) Tax on this paragraph (g)(4), *Example 2* (iv)(A)(*1*) = $76,850

(*3*) Tax determined under this paragraph (g)(4), *Example 2* (iv)(A)(*2*) divided by 12 multiplied by 7 (the number of months in the short taxable year) = $44,829

(*4*) 100% of this paragraph (g)(4), *Example 2* (iv)(A)(*3*) = $44,829

(*5*) 100% of this paragraph (g)(4), *Example 2* (iv)(A)(*4*) less $16,237 (amount due with first and second installment) = $28,592

(B) Because the total amount of estimated tax available to apply towards the amount due for the final installment ($23,763 ($20,000 that is timely paid on the third installment date plus $3,763 overpayment of the second installment)) does not exceed the amount required to be paid on or before this date if the estimated tax were one hundred percent of the tax determined by placing on an annualized basis the taxable income for the first 7-month period for the taxable year taking into account the number of months in the short taxable year, the exception described in § 1.6655-2(a) does not apply and an addition to tax will be imposed for the final installment due on September 15, 2009, unless another exception (for example, see section 6655(e)(3)) applies with respect to these installments.

(h) ***Effective/applicability date.*** This section applies to taxable years beginning after September 6, 2007.

[T.D. 9347, 72 FR 44361, Aug. 7, 2007, as amended by T.D. 9885, 84 FR 67045, Dec. 6, 2019]

§ 1.6655-6 Methods of accounting.

(a) ***In general.*** In computing any required installment, a corporation must use the methods of accounting used in computing taxable income for the taxable year for which estimated tax is being determined (the current taxable year).

(b) ***Accounting method changes.*** A taxpayer that changes its method of accounting with the consent of the Commissioner for the current taxable year must use the new method of accounting (as of the beginning of the taxable year) in the determination of taxable income for annualization periods ending on or after the date the related section 481(a) adjustment is treated as arising. See § 1.6655-2(f)(3)(ii)(C) for the date a section 481(a) adjustment is treated as arising. If the change in method of accounting does not result in a section 481(a) adjustment, the taxpayer may choose to use the new method of accounting (as of the beginning of the taxable year) in the determination of taxable income for all annualization periods during the year of change or only those annualization periods ending on or after the date the Form 3115 "Application for Change in Accounting Method" was filed with the national office of the Internal Revenue Service. This paragraph (b) only applies to the extent a taxpayer changes a method of accounting for the taxable year with the consent of the Commissioner. Therefore, a taxpayer may be subject to a section 6655 addition to tax for an underpayment of estimated tax if an underpayment results from a change in a method of accounting the taxpayer anticipates making for the taxable year but for which the consent of the Commissioner is not subsequently received.

(c) ***Example.*** The following example illustrates the rules of this section:

(1) ***Example.*** Change of accounting method. Corporation ABC, a calendar year taxpayer, uses an accrual method of accounting and the annualization method under section 6655(e)(2)(A)(i) to calculate all of its 2008 required installments. On June 15, 2008, ABC files a Form 3115 requesting permission to change its method of accounting for future litigation reserves for the tax year ending December 31,

2008. On February 15, 2009, ABC receives consent from the Commissioner to make the change for the tax year ending December 31, 2008. The change results in a positive section 481(a) adjustment of $100,000. Under the provisions of § 1.6655-2(f)(3)(ii) ABC chooses to treat the section 481(a) adjustment as arising on the date the Form 3115 is filed with the national office of the Internal Revenue Service. Therefore, ABC is required to use the new method of accounting (as of the beginning of the year) in the determination of taxable income for annualization periods ending on or after June 15, 2008.

(2) [Reserved]

(d) ***Effective/applicability date.*** This section applies to taxable years beginning after September 6, 2007.

[T.D. 9347, 72 FR 44361, Aug. 7, 2007, as amended by T.D. 9870, 84 FR 33692, July 15, 2019]

§ 1.6655-7 Addition to tax on account of excessive adjustment under section 6425.

(a) Section 6655(h) imposes an addition to the tax under chapter 1 of the Internal Revenue Code in the case of any excessive amount (as defined in paragraph (c) of this section) of an adjustment under section 6425 that is made before the 15th day of the third month following the close of a taxable year beginning after December 31, 1967. This addition to tax is imposed whether or not there was reasonable cause for an excessive adjustment.

(b) If the amount of an adjustment under section 6425 is excessive, there shall be added to the tax under chapter 1 of the Internal Revenue Code for the taxable year an amount determined at the annual rate referred to in the regulations under section 6621 upon the excessive amount from the date on which the credit is allowed or refund paid to the 15th day of the third month following the close of the taxable year. A refund is paid on the date it is allowed under section 6407.

(c) The excessive amount is equal to the lesser of the amount of the adjustment or the amount by which—

(1) The income tax liability (as defined in section 6425(c)) for the taxable year, as shown on the return for the taxable year; exceeds

(2) The estimated income tax paid during the taxable year, reduced by the amount of the adjustment.

(d) The computation of the addition to the tax imposed by section 6425 is made independent of, and does not affect the computation of, any addition to the tax that a corporation may otherwise owe for an underpayment of an installment of estimated tax.

(e) The following example illustrates the rules of this section:

> *Example.* (i) Corporation X, a calendar year taxpayer, had an underpayment as defined in section 6655(b), for its fourth installment of estimated tax that was due on December 15, 2009, in the amount of $10,000. On January 4, 2010, X filed an application for adjustment of overpayment of estimated income tax for 2009 in the amount of $20,000.
> (ii) On February 16, 2010, the Internal Revenue Service, in response to the application, refunded $20,000 to X. On March 15, 2010, X filed its 2009 tax return and made a payment in settlement of its total tax liability. Assuming that the addition to tax is computed under section 6621(a)(2) at a rate of 8% per annum for the applicable periods of underpayment, under section 6655(a), X is subject to an addition to tax in the amount of $197 (90/365 × $10,000 × 8%) on account of X's

> December 15, 2009, underpayment. Under section 6655(h), X is subject to an addition to tax in the amount of $118 (27/365 × $20,000 × 8%) on account of X's excessive adjustment under section 6425. In determining the amount of the addition to tax under section 6655(a) for failure to pay estimated income tax, the excessive adjustment under section 6425 is not taken into account.

(f) An adjustment is generally to be treated as a reduction of estimated income tax paid as of the date of the adjustment. However, for purposes of §§ 1.6655-1 through 1.6655-6, the adjustment is to be treated as if not made in determining whether there has been any underpayment of estimated income tax and, if there is an underpayment, the period during which the underpayment existed.

(g) ***Effective/applicability date:*** This section applies to taxable years beginning after September 6, 2007.

[T.D. 9347, 72 FR 44365, Aug. 7, 2007]

§ 1.6655(e)-1 Time and manner for making election under the Omnibus Budget Reconciliation Act of 1993.

(a) ***Description.*** Section 6655(e)(2)(C), as added by section 13225 of the Omnibus Budget Reconciliation Act of 1993 (Pub. L. 103-66, 107 Stat. 486), allows a corporate taxpayer to make an annual election to use a different annualization period to determine annualized income for purposes of paying any required installment of estimated income tax for a taxable year beginning after December 31, 1993.

(b) ***Time and manner for making the election.*** An election under section 6655(e)(2)(C) must be made on or before the date required for the payment of the first required installment for the taxable year. For a calendar or fiscal year corporation, Form 8842, Election to Use Different Annualization Periods for Corporate Estimated Tax, must be filed by the 15th day of the 4th month of the taxable year for which the election is to apply. Form 8842 must be filed with the Internal Revenue Service Center where the corporation files its income tax return.

(c) ***Revocability of election.*** The election described in this section is irrevocable.

(d) ***Effective date.*** The rules set forth in this section are effective December 12, 1996.

[T.D. 8688, 61 FR 65322, Dec. 12, 1996]

§ 1.6662-0 Table of contents.

This section lists the captions that appear in §§ 1.6662-1 through 1.6662-7.

§ 1.6662-1 Overview of the accuracy-related penalty.

§ 1.6662-2 Accuracy-related penalty.

(a) In general.

(b) Amount of penalty.

(1) In general.

(2) Increase in penalty for gross valuation misstatement.

(c) No stacking of accuracy-related penalty components.

(d) Effective dates.

(1) Returns due before January 1, 1994.

(2) Returns due after December 31, 1993.

(3) Special rules for tax shelter items.

(4) Special rule for reasonable basis.

(5) Returns filed after December 31, 2002.

§ 1.6662-3 Negligence or disregard of rules or regulations.

(a) In general.

(b) Definitions and rules.

(1) Negligence.

(2) Disregard of rules or regulations.

(3) Reasonable basis.

(c) Exception for adequate disclosure.

(1) In general.

(2) Method of disclosure.

(d) Special rules in the case of carrybacks and carryovers.

(1) In general.

(2) Transition rule for carrybacks to pre-1990 years.

(3) Example.

§ 1.6662-4 Substantial understatement of income tax.

(a) In general.

(b) Definitions and computational rules.

(1) Substantial.

(2) Understatement.

(3) Amount of the tax required to be shown on the return.

(4) Amount of the tax imposed which is shown on the return.

(5) Rebate.

(6) Examples.

(c) Special rules in the case of carrybacks and carryovers.

(1) In general.

(2) Understatements for carryback years not reduced by amount of carrybacks.

(3) Tainted items defined.

(i) In general.

(ii) Tax shelter items.

(4) Transition rule for carrybacks to pre-1990 years.

(5) Examples.

(d) Substantial authority.

(1) Effect of having substantial authority.

(2) Substantial authority standard.

(3) Determination of whether substantial authority is present.

(i) Evaluation of authorities.

(ii) Nature of analysis.

(iii) Types of authority.

(iv) Special rules.

(A) Written determinations.

(B) Taxpayer's jurisdiction.

(C) When substantial authority determined.

(v) Substantial authority for tax returns due before January 1, 1990.

(e) Disclosure of certain information.

(1) Effect of adequate disclosure.

(2) Circumstances where disclosure will not have an effect.

(3) Restriction for corporations.

(f) Method of making adequate disclosure.

(1) Disclosure statement.

(2) Disclosure on return.

(3) Recurring item.

(4) Carrybacks and carryovers.

(5) Pass-through entities.

(g) Items relating to tax shelters.

(1) In general.

(i) Noncorporate taxpayers.

(ii) Corporate taxpayers.

(A) In general.

(B) Special rule for transactions occurring prior to December 9, 1994.

(iii) Disclosure irrelevant.

(iv) Cross-reference.

(2) Tax shelter.

(i) In general.

(ii) Principal purpose.

(3) Tax shelter item.

(4) Reasonable belief.

(i) In general.

(ii) Facts and circumstances; reliance on professional tax advisor.

(5) Pass-through entities.

§ 1.6662-5 Substantial and gross valuation misstatements under chapter 1.

(a) In general.

(b) Dollar limitation.

(c) Special rules in the case of carrybacks and carryovers.

(1) In general.

(2) Transition rule for carrybacks to pre-1990 years.

(d) Examples.

(e) Definitions.

(1) Substantial valuation misstatement.

(2) Gross valuation misstatement.

(3) Property.

(f) Multiple valuation misstatements on a return.

(1) Determination of whether valuation misstatements are substantial or gross.

(2) Application of dollar limitation.

(g) Property with a value or adjusted basis of zero.

(h) Pass-through entities.

(1) In general.

(2) Example.

(i) [Reserved]

(j) Transactions between persons described in section 482 and net section 482 transfer price adjustments. [Reserved]

(k) Returns affected.

§ 1.6662-5T Substantial and gross valuation misstatements under chapter 1 (temporary).

(a) through (e)(3) [Reserved]

(e)(4) Tests related to section 482.

(i) Substantial valuation misstatement.

(ii) Gross valuation misstatement.

(iii) Property.

(f) through (i) [Reserved]

(j) Transactions between persons described in section 482 and net section 482 transfer price adjustments.

§ 1.6662-6 Transactions between persons described in section 482 and net section 482 transfer price adjustments.

(a) In general.

(1) Purpose and scope.

(2) Reported results.

(3) Identical terms used in the section 482 regulations.

(b) The transactional penalty.

(1) Substantial valuation misstatement.

(2) Gross valuation misstatement.

(3) Reasonable cause and good faith.

(c) Net adjustment penalty.

(1) Net section 482 adjustment.

(2) Substantial valuation misstatement.

(3) Gross valuation misstatement.

(4) Setoff allocation rule.

(5) Gross receipts.

(6) Coordination with reasonable cause exception under section 6664(c).

(7) Examples.

(d) Amounts excluded from net section 482 adjustments.

(1) In general.

(2) Application of a specified section 482 method.

(i) In general.

(ii) Specified method requirement.

(iii) Documentation requirement.

(A) In general.

(B) Principal documents.

(C) Background documents.

(3) Application of an unspecified method.

(i) In general.

(ii) Unspecified method requirement.

(A) In general.

(B) Specified method potentially applicable.

(C) No specified method applicable.

(iii) Documentation requirement.

(A) In general.

(B) Principal and background documents.

(4) Certain foreign to foreign transactions.

(5) Special rule.

(6) Examples.

(e) Special rules in the case of carrybacks and carryovers.

(f) Rules for coordinating between the transactional penalty and the net adjustment penalty.

(1) Coordination of a net section 482 adjustment subject to the net adjustment penalty and a gross valuation misstatement subject to the transactional penalty.

(2) Coordination of net section 482 adjustment subject to the net adjustment penalty and substantial valuation misstatements subject to the transactional penalty.

(3) Examples.

(g) Effective date.

§ 1.6662-7 Omnibus Budget Reconciliation Act of 1993 changes to the accuracy-related penalty.

(a) Scope.

(b) No disclosure exception for negligence penalty.

(c) Disclosure standard for other penalties is reasonable basis.

(d) Reasonable basis.

[T.D. 8381, 56 FR 67497, Dec. 31, 1991; T.D. 8381, 57 FR 6165, Feb. 20, 1992, as amended by T.D. 8519, 59 FR 4794, Feb. 2, 1994; T.D. 8533, 59 FR 12548, Mar. 17, 1994; T.D. 8551, 59 FR 35031, July 8, 1994; T.D. 8617, 60 FR 45663, Sept. 1, 1995; T.D. 8656, 61 FR 4879, Feb. 9, 1996; T.D. 8656, 61 FR 14248, Apr. 1, 1996; T.D. 8790, 63 FR 66434, Dec. 2, 1998; T.D. 9109, 68 FR 75127, Dec. 30, 2003]

§ 1.6662-1 Overview of the accuracy-related penalty.

Section 6662 imposes an accuracy-related penalty on any portion of an underpayment of tax required to be shown on a return that is attributable to one or more of the following:

(a) Negligence or disregard of rules or regulations;

(b) Any substantial understatement of income tax;

(c) Any substantial valuation misstatement under chapter 1;

(d) Any substantial overstatement of pension liabilities; or

(e) Any substantial estate or gift tax valuation understatement.

Sections 1.6662-1 through 1.6662-5 address only the first three components of the accuracy-related penalty, *i.e.,* the penalties for negligence or disregard of rules or regulations, substantial understatements of income tax, and substantial (or gross) valuation misstatements under chapter 1. The penalties for disregard of rules or regulations and for a substantial understatement of income tax may be avoided by adequately disclosing certain information as provided in § 1.6662-3(c) and §§ 1.6662-4(e) and (f), respectively. The penalties for negligence and for a substantial (or gross) valuation misstatement under chapter 1 may not be avoided by disclosure. No accuracy-related penalty may be imposed on any portion of an underpayment if there was reasonable cause for, and the taxpayer acted in good faith with respect to, such portion. The reasonable cause and good faith exception to the accuracy-related penalty is set forth in § 1.6664-4.

[T.D. 8381, 56 FR 67498, Dec. 31, 1991, as amended by T.D. 8617, 60 FR 45664, Sept. 1, 1995]

§ 1.6662-2 Accuracy-related penalty.

(a) ***In general.*** Section 6662(a) imposes an accuracy-related penalty on any portion of an underpayment of tax (as defined in section 6664(a) and § 1.6664-2) required to be shown on a return if such portion is attributable to one or more of the following types of misconduct:

(1) Negligence or disregard of rules or regulations (see § 1.6662-3);

(2) Any substantial understatement of income tax (see § 1.6662-4); or

(3) Any substantial (or gross) valuation misstatement under chapter 1 ("substantial valuation misstatement" or "gross valuation misstatement"), provided the applicable dollar limitation set forth in section 6662(e)(2) is satisfied (see § 1.6662-5).

The accuracy-related penalty applies only in cases in which a return of tax is filed, except that the penalty does not apply in the case of a return prepared by the Secretary under the authority of section 6020(b). The accuracy-related penalty under section 6662 and the penalty under section 6651 for failure to timely file a return of tax may both be imposed on the same portion of an underpayment if a return is filed, but is filed late. The fact that a return is filed late, however, is not taken into account in determining whether an accuracy-related penalty should be imposed. No accuracy-related penalty may be imposed on any portion of an underpayment of tax on which the fraud penalty set forth in section 6663 is imposed.

(b) ***Amount of penalty*** —

(1) ***In general.*** The amount of the accuracy-related penalty is 20 percent of the portion of an underpayment of tax required to be shown on a return that is attributable to any of the types of misconduct listed in paragraphs (a)(1) through (a)(3) of this section, except as provided in paragraph (b)(2) of this section.

(2) ***Increase in penalty for gross valuation misstatement.*** In the case of a gross valuation misstatement, as defined in section 6662(h)(2) and § 1.6662-5(e)(2), the amount of the accuracy-related penalty is 40 percent of the portion of an underpayment of tax required to be shown on a return that is attributable to the gross valuation misstatement, provided the applicable dollar limitation set forth in section 6662(e)(2) is satisfied.

(c) ***No stacking of accuracy-related penalty components.*** The maximum accuracy-related penalty imposed on a portion of an underpayment may not exceed 20 percent of such portion (40 percent of the portion attributable to a gross valuation misstatement), notwithstanding that such portion is attributable to more than one of the types of misconduct described in paragraph (a) of this section. For example, if a portion of an underpayment of tax required to be shown on a return is attributable both to negligence and a substantial understatement of income tax, the maximum accuracy-related penalty is 20 percent of such portion. Similarly, the maximum accuracy-related penalty imposed on any portion of an underpayment that is attributable both to negligence and a gross valuation misstatement is 40 percent of such portion.

(d) ***Effective dates*** —

(1) ***Returns due before January 1, 1994.*** Section 1.6662-3(c) and §§ 1.6662-4 (e) and (f) (relating to methods of making adequate disclosure) (as contained in 26 CFR part 1 revised April 1, 1995) apply to returns the due date of which (determined without regard to extensions of time for filing) is after December 31, 1991, but before January 1, 1994. Except as provided in the preceding sentence and in paragraphs (d)(2), (3), and (4) of this section, §§ 1.6662-1 through 1.6662-5 apply to returns the due date of which (determined without regard to extensions of time for filing) is after December 31, 1989, but before January 1, 1994. To the extent the provisions of these regulations were not reflected in the statute as amended by the Omnibus Budget Reconciliation Act of 1989 (OBRA 1989), in Notice 90-20, 1990-1 C.B. 328, or in rules and regulations in effect prior to March 4, 1991 (to the extent not inconsistent with the statute as amended by OBRA 1989), these regulations will not be adversely applied to a taxpayer who took a position based upon such prior rules on a return filed before January 1, 1992.

(2) ***Returns due after December 31, 1993.*** Except as provided in paragraphs (d)(3), (4) and (5) of this section and the last sentence of this paragraph (d)(2), the provisions of §§ 1.6662-1 through 1.6662-4 and § 1.6662-7 (as revised to reflect the changes made to the accuracy-related penalty by the Omnibus Budget Reconciliation Act of 1993) and of § 1.6662-5 apply to returns the due date of which (determined without regard to extensions of time for filing) is after December 31, 1993. These changes include raising the disclosure standard for the penalties for disregarding rules or regulations and for a substantial understatement of income tax from not frivolous to reasonable basis, eliminating the disclosure exception for the negligence penalty, and providing guidance on the meaning of reasonable basis. The Omnibus Budget Reconciliation Act of 1993 changes relating to the penalties for negligence or disregard of rules or regulations will not apply to returns (including qualified amended returns) that are filed on or before March 14, 1994, but the provisions of §§ 1.6662-1 through 1.6662-3 (as contained in 26 CFR part 1 revised April 1, 1995) relating to those penalties will apply to such returns.

(3) ***Special rules for tax shelter items.*** Sections 1.6662-4(g)(1) and 1.6662-4(g)(4) apply to returns the due date of which (determined without regard to extensions of time for filing) is after September 1, 1995. Except as provided in the last sentence of this paragraph (d)(3), §§ 1.6662-4(g)(1) and 1.6662-4(g)(4) (as contained in 26 CFR part 1 revised April 1, 1995) apply to returns the due date of which (determined without regard to extensions of time for filing) is on or before September 1, 1995 and after December 31, 1989. For transactions occurring after December 8, 1994, §§ 1.6662-4(g)(1) and 1.6662-4(g)(2) (as contained in 26 CFR part 1 revised April 1, 1995) are applied taking into account the changes made to section 6662(d)(2)(C) (relating to the substantial understatement penalty for tax shelter items of corporations) by section 744 of title VII of the Uruguay Round Agreements Act, Pub. L. 103-465 (108 Stat. 4809).

(4) ***Special rules for reasonable basis.*** Section 1.6662-3(b)(3) applies to returns filed on or after December 2, 1998.

(5) ***For returns filed after December 31, 2002.*** Sections 1.6662-3(a), 1.6662-3(b)(2) and 1.6662-3(c)(1) (relating to adequate disclosure) apply to returns filed after December 31, 2002, with respect to transactions entered into on or after January 1, 2003. Except as provided in paragraph (d)(1) of this section, §§ 1.6662-3(a), 1.6662-3(b)(2) and 1.6662-3(c)(1) (as contained in 26 CFR part 1 revised April 1, 2003) apply to returns filed with respect to transactions entered into prior to January 1, 2003.

[T.D. 8381, 56 FR 67498, Dec. 31, 1991, as amended by T.D. 8617, 60 FR 45664, Sept. 1, 1995; T.D. 8790, 63 FR 66434, Dec. 2, 1998; T.D. 9109, 68 FR 75127, Dec. 30, 2003]

§ 1.6662-3 Negligence or disregard of rules or regulations.

(a) ***In general.*** If any portion of an underpayment, as defined in section 6664(a) and § 1.6664-2, of any income tax imposed under subtitle A of the Internal Revenue Code that is required to be shown on a return is attributable to negligence or disregard of rules or regulations, there is added to the tax an amount equal to 20 percent of such portion. The penalty for disregarding rules or regulations does not apply, however, if the requirements of paragraph (c)(1) of this section are satisfied and the position in question is adequately disclosed as provided in paragraph (c)(2) of this section (and, if the position relates to a reportable transaction as defined in § 1.6011-4(b) (or § 1.6011-4T(b), as applicable), the transaction is disclosed in accordance with § 1.6011-4 (or § 1.6011-4T, as applicable)), or to the extent that the reasonable cause and good faith exception to this penalty set forth in § 1.6664-4 applies. In addition, if a position with respect to an item (other than with respect to a reportable transaction, as defined in § 1.6011-4(b) or § 1.6011-4T(b), as applicable) is contrary to a revenue ruling or notice (other than a notice of proposed rulemaking) issued by the Internal Revenue Service and published in the Internal Revenue Bulletin (see § 601.601(d)(2) of this chapter), this penalty does not apply if the position has a realistic possibility of being sustained on its merits. See § 1.6694-2(b) of the income tax return preparer penalty regulations for a description of the realistic possibility standard.

(b) ***Definitions and rules*** —

(1) ***Negligence.*** The term *negligence* includes any failure to make a reasonable attempt to comply with the provisions of the internal revenue laws or to exercise ordinary and reasonable care in the preparation of a tax return. “Negligence” also includes any failure by the taxpayer to keep adequate books and records or to substantiate items properly. A return position that has a reasonable basis as defined in paragraph (b)(3) of this section is not attributable to negligence. Negligence is strongly indicated where—

(i) A taxpayer fails to include on an income tax return an amount of income shown on an information return, as defined in section 6724(d)(1);

(ii) A taxpayer fails to make a reasonable attempt to ascertain the correctness of a deduction, credit or exclusion on a return which would seem to a reasonable and prudent person to be “too good to be true” under the circumstances;

(iii) A partner fails to comply with the requirements of section 6222, which requires that a partner treat partnership items on its return in a manner that is consistent with the treatment of such items on the partnership return (or notify the Secretary of the inconsistency); or

(iv) A shareholder fails to comply with the requirements of section 6242, which requires that an S corporation shareholder treat subchapter S items on its return in a manner that is consistent with the treatment of such items on the corporation's return (or notify the Secretary of the inconsistency).

(2) ***Disregard of rules or regulations.*** The term *disregard* includes any careless, reckless or intentional disregard of rules or regulations. The term "rules or regulations" includes the provisions of the Internal Revenue Code, temporary or final Treasury regulations issued under the Code, and revenue rulings or notices (other than notices of proposed rulemaking) issued by the Internal Revenue Service and published in the Internal Revenue Bulletin. A disregard of rules or regulations is "careless" if the taxpayer does not exercise reasonable diligence to determine the correctness of a return position that is contrary to the rule or regulation. A disregard is "reckless" if the taxpayer makes little or no effort to determine whether a rule or regulation exists, under circumstances which demonstrate a substantial deviation from the standard of conduct that a reasonable person would observe. A disregard is "intentional" if the taxpayer knows of the rule or regulation that is disregarded. Nevertheless, a taxpayer who takes a position (other than with respect to a reportable transaction, as defined in § 1.6011-4(b) or § 1.6011-4T(b), as applicable) contrary to a revenue ruling or notice has not disregarded the ruling or notice if the contrary position has a realistic possibility of being sustained on its merits.

(3) ***Reasonable basis.*** Reasonable basis is a relatively high standard of tax reporting, that is, significantly higher than not frivolous or not patently improper. The reasonable basis standard is not satisfied by a return position that is merely arguable or that is merely a colorable claim. If a return position is reasonably based on one or more of the authorities set forth in § 1.6662-4(d)(3)(iii) (taking into account the relevance and persuasiveness of the authorities, and subsequent developments), the return position will generally satisfy the reasonable basis standard even though it may not satisfy the substantial authority standard as defined in § 1.6662-4(d)(2). (See § 1.6662-4(d)(3)(ii) for rules with respect to relevance, persuasiveness, subsequent developments, and use of a well-reasoned construction of an applicable statutory provision for purposes of the substantial understatement penalty.) In addition, the reasonable cause and good faith exception in § 1.6664-4 may provide relief from the penalty for negligence or disregard of rules or regulations, even if a return position does not satisfy the reasonable basis standard.

(c) ***Exception for adequate disclosure*** —

(1) ***In general.*** No penalty under section 6662(b)(1) may be imposed on any portion of an underpayment that is attributable to a position contrary to a rule or regulation if the position is disclosed in accordance with the rules of paragraph (c)(2) of this section (and, if the position relates to a reportable transaction as defined in § 1.6011-4(b) (or § 1.6011-4T(b), as applicable), the transaction is disclosed in accordance with § 1.6011-4 (or § 1.6011-4T, as applicable)) and, in case of a position contrary to a regulation, the position represents a good faith challenge to the validity of the regulation. This disclosure exception does not apply, however, in the case of a position that does not have a reasonable basis or where the taxpayer fails to keep adequate books and records or to substantiate items properly.

(2) ***Method of disclosure.*** Disclosure is adequate for purposes of the penalty for disregarding rules or regulations if made in accordance with the provisions of §§ 1.6662-4(f)(1), (3), (4), and (5), which permit disclosure on a properly completed and filed Form 8275 or 8275-R, as appropriate. In addition, the statutory or regulatory provision or ruling in question must be adequately identified on

the Form 8275 or 8275-R, as appropriate. The provisions of § 1.6662-4(f)(2), which permit disclosure in accordance with an annual revenue procedure for purposes of the substantial understatement penalty, do not apply for purposes of this section.

(d) ***Special rules in the case of carrybacks and carryovers*** —

(1) ***In general.*** The penalty for negligence or disregard of rules or regulations applies to any portion of an underpayment for a year to which a loss, deduction or credit is carried, which portion is attributable to negligence or disregard of rules or regulations in the year in which the carryback or carryover of the loss, deduction or credit arises (the "loss or credit year").

(2) ***Transition rule for carrybacks to pre-1990 years.*** A 20 percent penalty under section 6662(b)(1) is imposed on any portion of an underpayment for a carryback year, the return for which is due (without regard to extensions) before January 1, 1990, if—

(i) That portion is attributable to negligence or disregard of rules or regulations in a loss or credit year; and

(ii) The return for the loss or credit year is due (without regard to extensions) after December 31, 1989.

(3) ***Example.*** The following example illustrates the provisions of paragraph (d) of this section. This example does not take into account the reasonable cause exception under § 1.6664-4.

Example. Corporation M is a C corporation. In 1990, M had a loss of $200,000 before taking into account a deduction of $350,000 that M claimed as an expense in careless disregard of the capitalization requirements of section 263 of the Code. M failed to make adequate disclosure of the item for 1990. M reported a $550,000 loss for 1990 and carried back the loss to 1987 and 1988. M had reported taxable income of $400,000 for 1987 and $200,000 for 1988, before application of the carryback. The carryback eliminated all of M's taxable income for 1987 and $150,000 of taxable income for 1988. After disallowance of the $350,000 expense deduction and allowance of a $35,000 depreciation deduction with respect to the capitalized amount, the correct loss for 1990 was determined to be $235,000. Because there is no underpayment for 1990, the penalty for negligence or disregard of rules or regulations does not apply for 1990. However, as a result of the 1990 adjustments, the loss carried back to 1987 is reduced from $550,000 to $235,000. After application of the $235,000 carryback, M has taxable income of $165,000 for 1987 and $200,000 for 1988. This adjustment results in underpayments for 1987 and 1988 that are attributable to the disregard of rules or regulations on the 1990 return. Therefore, the 20 percent penalty rate applies to the 1987 and 1988 underpayments attributable to the disallowed carryback.

[T.D. 8381, 56 FR 67498, Dec. 31, 1991, as amended by T.D. 8617, 60 FR 45664, Sept. 1, 1995; T.D. 8790, 63 FR 66434, Dec. 2, 1998; T.D. 9109, 68 FR 75127, Dec. 30, 2003]

§ 1.6662-4 Substantial understatement of income tax.

(a) ***In general.*** If any portion of an underpayment, as defined in section 6664(a) and § 1.6664-2, of any income tax imposed under subtitle A of the Code that is required to be shown on a return is attributable to a substantial understatement of such income tax, there is added to the tax an amount equal to 20 percent of such portion. Except in the case of any item attributable to a tax shelter (as defined in paragraph (g)(2) of this section), an understatement is reduced by the portion of the understatement that is attributable to

the tax treatment of an item for which there is substantial authority, or with respect to which there is adequate disclosure. General rules for determining the amount of an understatement are set forth in paragraph (b) of this section and more specific rules in the case of carrybacks and carryovers are set forth in paragraph (c) of this section. The rules for determining when substantial authority exists are set forth in § 1.6662-4(d). The rules for determining when there is adequate disclosure are set forth in § 1.6662-4 (e) and (f). This penalty does not apply to the extent that the reasonable cause and good faith exception to this penalty set forth in § 1.6664-4 applies.

(b) ***Definitions and computational rules*** —

(1) ***Substantial.*** An understatement (as defined in paragraph (b)(2) of this section) is "substantial" if it exceeds the greater of—

(i) 10 percent of the tax required to be shown on the return for the taxable year (as defined in paragraph (b)(3) of this section); or

(ii) $5,000 ($10,000 in the case of a corporation other than an S corporation (as defined in section 1361(a)(1)) or a personal holding company (as defined in section 542)).

(2) ***Understatement.*** Except as provided in paragraph (c)(2) of this section (relating to special rules for carrybacks), the term "understatement" means the excess of—

(i) The amount of the tax required to be shown on the return for the taxable year (as defined in paragraph (b)(3) of this section), over

(ii) The amount of the tax imposed which is shown on the return for the taxable year (as defined in paragraph (b)(4) of this section), reduced by any rebate (as defined in paragraph (b)(5) of this section).

The definition of understatement also may be expressed as—

Understatement = X − (Y − Z)

where *X* = the amount of the tax required to be shown on the return; *Y* = the amount of the tax imposed which is shown on the return; and *Z* = any rebate.

(3) ***Amount of the tax required to be shown on the return.*** The "amount of the tax required to be shown on the return" for the taxable year has the same meaning as the "amount of income tax imposed" as defined in § 1.6664-2(b).

(4) ***Amount of the tax imposed which is shown on the return.*** The "amount of the tax imposed which is shown on the return" for the taxable year has the same meaning as the "amount shown as the tax by the taxpayer on his return," as defined in § 1.6664-2(c), except that—

(i) There is no reduction for the excess of the amount described in § 1.6664-2(c)(1)(i) over the amount described in § 1.6664-2(c)(1)(ii), and

(ii) The tax liability shown by the taxpayer on his return is recomputed as if the following items had been reported properly:

(A) Items (other than tax shelter items as defined in § 1.6662-4(g)(3)) for which there is substantial authority for the treatment claimed (as provided in § 1.6662-4(d)).

(B) Items (other than tax shelter items as defined in § 1.6662-4(g)(3)) with respect to which there is adequate disclosure (as provided in § 1.6662-4 (e) and (f)).

(C) Tax shelter items (as defined in § 1.6662-4(g)(3)) for which there is substantial authority for the treatment claimed (as provided in § 1.6662-4(d)), and with respect to which the taxpayer reasonably believed that the tax treatment of the items was more likely than not the proper tax treatment (as provided in § 1.6662-4(g)(4)).

(5) ***Rebate.*** The term *rebate* has the meaning set forth in § 1.6664-2(e), except that—

(i) "Amounts not so shown previously assessed (or collected without assessment)" includes only amounts not so shown previously assessed (or collected without assessment) as a deficiency, and

(ii) The amount of the rebate is determined as if any items to which the rebate is attributable that are described in paragraph (b)(4) of this section had received the proper tax treatment.

(6) ***Examples.*** The following examples illustrate the provisions of paragraph (b) of this section. These examples do not take into account the reasonable cause exception under § 1.6664-4:

Example 1. In 1990, Individual A, a calendar year taxpayer, files a return for 1989, which shows taxable income of $18,200 and tax liability of $2,734. Subsequent adjustments on audit for 1989 increase taxable income to $51,500 and tax liability to $12,339. There was substantial authority for an item resulting in an adjustment that increases taxable income by $5,300. The item is not a tax shelter item. In computing the amount of the understatement, the amount of tax shown on A's return is determined as if the item for which there was substantial authority had been given the proper tax treatment. Thus, the amount of tax that is treated as shown on A's return is $4,176, i.e., the tax on $23,500 ($18,200 taxable income actually shown on A's return plus $5,300, the amount of the adjustment for which there was substantial authority). The amount of the understatement is $8,163, i.e., $12,339 (the amount of tax required to be shown) less $4,176 (the amount of tax treated as shown on A's return after adjustment for the item for which there was substantial authority). Because the $8,163 understatement exceeds the greater of 10 percent of the tax required to be shown on the return for the year, i.e., $1,234 ($12,339 × .10) or $5,000, A has a substantial understatement of income tax for the year.

Example 2. Individual B, a calendar year taxpayer, files a return for 1990 that fails to include income reported on an information return, Form 1099, that was furnished to B. The Service detects this omission through its document matching program and assesses $3,000 in unreported tax liability. B's return is later examined and as a result of the examination the Service makes an adjustment to B's return of $4,000 in additional tax liability. Assuming there was neither substantial authority nor adequate disclosure with respect to the items adjusted, there is an understatement of $7,000 with respect to B's return. There is also an underpayment of $7,000. (See § 1.6664-2.) The amount of the understatement is not reduced by imposition of a negligence penalty on the $3,000 portion of the underpayment that is attributable to the unreported income. However, if the Services does impose the negligence penalty on this $3,000 portion, the Service may only impose the substantial understatement penalty on the remaining $4,000 portion of the underpayment. (See § 1.6662-2(c), which prohibits stacking of accuracy-related penalty components.)

(c) ***Special rules in the case of carrybacks and carryovers*** —

(1) ***In general.*** The penalty for a substantial understatement of income tax applies to any portion of an underpayment for a year to which a loss, deduction or credit is carried that is attributable to a "tainted item" for the year in which the carryback or carryover of the loss, deduction or credit arises (the "loss or credit year"). The determination of whether an understatement is substantial for a

carryback or carryover year is made with respect to the return of the carryback or carryover year. "Tainted items" are taken into account with items arising in a carryback or carryover year to determine whether the understatement is substantial for that year.

(2) ***Understatements for carryback years not reduced by amount of carrybacks.*** The amount of an understatement for a carryback year is not reduced on account of a carryback of a loss, deduction or credit to that year.

(3) ***Tainted items defined*** —

(i) ***In general.*** Except in the case of a tax shelter item (as defined in paragraph (g)(3) of this section), a "tainted item" is any item for which there is neither substantial authority nor adequate disclosure with respect to the loss or credit year.

(ii) ***Tax shelter items.*** In the case of a tax shelter item (as defined in paragraph (g)(3) of this section), a "tainted item" is any item for which there is not, with respect to the loss or credit year, both substantial authority and a reasonable belief that the tax treatment is more likely than not the proper treatment.

(4) ***Transition rule for carrybacks to pre-1990 years.*** A 20 percent penalty under section 6662(b)(2) is imposed on any portion of an underpayment for a carryback year, the return for which is due (without regard to extensions) before January 1, 1990, if—

(i) That portion is attributable to one or more "tainted items" (as defined in paragraph (c)(3) of this section) arising in a loss or credit year; and

(ii) The return for the loss or credit year is due (without regard to extensions) after December 31, 1989.

The preceding sentence applies only if the understatement in the carryback year is substantial. See *Example 2* in paragraph (c)(5) of this section.

(5) ***Examples.*** The following examples illustrate the rules of paragraph (c) of this section regarding carrybacks and carryovers. These examples do not take into account the reasonable cause exception under § 1.6664-4.

Example 1. (i) Corporation N, a calendar year taxpayer, is a C corporation. N was formed on January 1, 1987, and timely filed the following income tax returns:

[IN DOLLARS]

	Tax Year			
	1987	**1988**	**1989**	**1990 (before NOLCO)**
Taxable income	30,000	100,000	(300,000)	50,000
Tax liability	4,575	22,250		7,500

(ii) During 1990, N files Form 1139, Corporation Application for Tentative Refund, to carry

back the NOL generated in 1989 (NOLCB). N received refunds of $4,575 for 1987 and $22,250 for 1988.
(iii) For tax year 1990, N carries over $50,000 of the 1989 loss to offset $50,000 of income earned in 1990 and reduce taxable income to zero. N would have reported $7,500 of tax liability for 1990 if it were not for use of the net operating loss carryover (NOLCO). N assumes there is a remaining NOLCO of $120,000 to be applied for tax year 1991.

(iv) In June 1991, the Service completes its examination of the 1989 loss year return and makes the following adjustment:

Taxable income per 1989 return	($300,000)
Adjustment: Unreported income	310,000
Corrected taxable income	$10,000
Corrected tax liability	$1,500

(v) There was not substantial authority for N's treatment of the items comprising the 1989 adjustment and N did not make adequate disclosure.
(vi) As a result of the adjustment to the 1989 return, N had an understatement of $4,575 for tax year 1987; an understatement of $22,250 for tax year 1988; an understatement of $1,500 for tax year 1989; and an understatement of $7,500 for tax year 1990. Only the $22,250 understatement for 1988 is a substantial understatement, i.e., it exceeds the greater of (a) $2,225 (10 percent of the tax required to be shown on the return for the taxable year (.10 × $22,250)) or (b) $10,000. The underpayment for 1988 is subject to a penalty rate of 20 percent.

Example 2. The facts are the same as in *Example 1,* except that in addition to examining the 1989 return, the Service also examines the 1987 return and makes an adjustment that results in an understatement. (This adjustment is unrelated to the adjustment on the 1987 return for the disallowance of the NOLCB from 1989.) If the understatement resulting from the adjustment to the 1987 return, when combined with the understatement resulting from the disallowance of the NOLCB from 1989, exceeds the greater of (a) 10 percent of the tax required to be shown on the return for 1987 or (b) $10,000, the underpayment for 1987 will also be subject to a substantial understatement penalty. The portion of the underpayment attributable to the adjustment unrelated to the disallowance of the NOLCB will be subject to a penalty rate of 25 percent under former section 6661. The portion of the underpayment attributable to the disallowance of the NOLCB will be subject to a penalty rate of 20 percent under section 6662.

Example 3. Individual P, a calendar year single taxpayer, files his 1990 return reporting taxable income of $10,000 and a tax liability of $1,504. An examination of the 1990 return results in an adjustment for unreported income of $25,000. There was not substantial authority for P's failure to report the income, and P did not make adequate disclosure with respect to the

unreported income. P's correct tax liability for 1990 is determined to be $7,279, resulting in an understatement of $5,775 (the difference between the amount of tax required to be shown on the return ($7,279) and the tax shown on the return ($1,504)). Because the understatement exceeds the greater of (a) $728 (10 percent of the tax required to be shown on the return (.10 × $7,279)) or (b) $5,000, the understatement is substantial. Subsequently, P files his 1993 return showing a net operating loss. The loss is carried back to his 1990 return, reducing his taxable income for 1990 to zero. However, the amount of the understatement for 1990 is not reduced on account of the NOLCB to that year. P is subject to the 20 percent penalty rate under section 6662 on the underpayment attributable to the substantial understatement for 1990, notwithstanding that the tax required to be shown on the return for that year, after application of the NOLCB, is zero.

(d) *Substantial authority* —

(1) ***Effect of having substantial authority.*** If there is substantial authority for the tax treatment of an item, the item is treated as if it were shown properly on the return for the taxable year in computing the amount of the tax shown on the return. Thus, for purposes of section 6662(d), the tax attributable to the item is not included in the understatement for that year. (For special rules relating to tax shelter items see § 1.6662-4(g).)

(2) ***Substantial authority standard.*** The substantial authority standard is an objective standard involving an analysis of the law and application of the law to relevant facts. The substantial authority standard is less stringent than the more likely than not standard (the standard that is met when there is a greater than 50-percent likelihood of the position being upheld), but more stringent than the reasonable basis standard as defined in § 1.6662-3(b)(3). The possibility that a return will not be audited or, if audited, that an item will not be raised on audit, is not relevant in determining whether the substantial authority standard (or the reasonable basis standard) is satisfied.

(3) *Determination of whether substantial authority is present* —

(i) ***Evaluation of authorities.*** There is substantial authority for the tax treatment of an item only if the weight of the authorities supporting the treatment is substantial in relation to the weight of authorities supporting contrary treatment. All authorities relevant to the tax treatment of an item, including the authorities contrary to the treatment, are taken into account in determining whether substantial authority exists. The weight of authorities is determined in light of the pertinent facts and circumstances in the manner prescribed by paragraph (d)(3)(ii) of this section. There may be substantial authority for more than one position with respect to the same item. Because the substantial authority standard is an objective standard, the taxpayer's belief that there is substantial authority for the tax treatment of an item is not relevant in determining whether there is substantial authority for that treatment.

(ii) ***Nature of analysis.*** The weight accorded an authority depends on its relevance and persuasiveness, and the type of document providing the authority. For example, a case or revenue ruling having some facts in common with the tax treatment at issue is not particularly relevant if the authority is materially distinguishable on its facts, or is otherwise inapplicable to the tax treatment at issue. An authority that merely states a conclusion ordinarily is less persuasive than one that reaches its conclusion by cogently relating the applicable law to pertinent facts. The weight of an authority from which information has been deleted, such as a private letter ruling, is diminished to the extent that the deleted information may have affected the authority's conclusions. The type of document also must be considered. For example, a revenue ruling is accorded greater weight than a private letter ruling addressing the same issue.

An older private letter ruling, technical advice memorandum, general counsel memorandum or action on decision generally must be accorded less weight than a more recent one. Any document described in the preceding sentence that is more than 10 years old generally is accorded very little weight. However, the persuasiveness and relevance of a document, viewed in light of subsequent developments, should be taken into account along with the age of the document. There may be substantial authority for the tax treatment of an item despite the absence of certain types of authority. Thus, a taxpayer may have substantial authority for a position that is supported only by a well-reasoned construction of the applicable statutory provision.

(iii) ***Types of authority.*** Except in cases described in paragraph (d)(3)(iv) of this section concerning written determinations, only the following are authority for purposes of determining whether there is substantial authority for the tax treatment of an item: Applicable provisions of the Internal Revenue Code and other statutory provisions; proposed, temporary and final regulations construing such statutes; revenue rulings and revenue procedures; tax treaties and regulations thereunder, and Treasury Department and other official explanations of such treaties; court cases; congressional intent as reflected in committee reports, joint explanatory statements of managers included in conference committee reports, and floor statements made prior to enactment by one of a bill's managers; General Explanations of tax legislation prepared by the Joint Committee on Taxation (the Blue Book); private letter rulings and technical advice memoranda issued after October 31, 1976; actions on decisions and general counsel memoranda issued after March 12, 1981 (as well as general counsel memoranda published in pre-1955 volumes of the Cumulative Bulletin); Internal Revenue Service information or press releases; and notices, announcements and other administrative pronouncements published by the Service in the Internal Revenue Bulletin. Conclusions reached in treatises, legal periodicals, legal opinions or opinions rendered by tax professionals are not authority. The authorities underlying such expressions of opinion where applicable to the facts of a particular case, however, may give rise to substantial authority for the tax treatment of an item. Notwithstanding the preceding list of authorities, an authority does not continue to be an authority to the extent it is overruled or modified, implicitly or explicitly, by a body with the power to overrule or modify the earlier authority. In the case of court decisions, for example, a district court opinion on an issue is not an authority if overruled or reversed by the United States Court of Appeals for such district. However, a Tax Court opinion is not considered to be overruled or modified by a court of appeals to which a taxpayer does not have a right of appeal, unless the Tax Court adopts the holding of the court of appeals. Similarly, a private letter ruling is not authority if revoked or if inconsistent with a subsequent proposed regulation, revenue ruling or other administrative pronouncement published in the Internal Revenue Bulletin.

(iv) ***Special rules*** —

(A) ***Written determinations.*** There is substantial authority for the tax treatment of an item by a taxpayer if the treatment is supported by the conclusion of a ruling or a determination letter (as defined in § 301.6110-2 (d) and (e)) issued to the taxpayer, by the conclusion of a technical advice memorandum in which the taxpayer is named, or by an affirmative statement in a revenue agent's report with respect to a prior taxable year of the taxpayer ("written determinations"). The preceding sentence does not apply, however, if—

(*1*) There was a misstatement or omission of a material fact or the facts that subsequently develop are materially different from the facts on which the written determination was based, or

(2) The written determination was modified or revoked after the date of issuance by—

(*i*) A notice to the taxpayer to whom the written determination was issued,

(*ii*) The enactment of legislation or ratification of a tax treaty,

(*iii*) A decision of the United States Supreme Court,

(*iv*) The issuance of temporary or final regulations, or

(*v*) The issuance of a revenue ruling, revenue procedure, or other statement published in the Internal Revenue Bulletin.

Except in the case of a written determination that is modified or revoked on account of § 1.6662-4(d)(3)(iv)(A)(*1*), a written determination that is modified or revoked as described in § 1.6662-4(d)(3)(iv)(A)(*2*) ceases to be authority on the date, and to the extent, it is so modified or revoked. See section 6404(f) for rules which require the Secretary to abate a penalty that is attributable to erroneous written advice furnished to a taxpayer by an officer or employee of the Internal Revenue Service.

(B) ***Taxpayer's jurisdiction.*** The applicability of court cases to the taxpayer by reason of the taxpayer's residence in a particular jurisdiction is not taken into account in determining whether there is substantial authority for the tax treatment of an item. Notwithstanding the preceding sentence, there is substantial authority for the tax treatment of an item if the treatment is supported by controlling precedent of a United States Court of Appeals to which the taxpayer has a right of appeal with respect to the item.

(C) ***When substantial authority determined.*** There is substantial authority for the tax treatment of an item if there is substantial authority at the time the return containing the item is filed or there was substantial authority on the last day of the taxable year to which the return relates.

(v) ***Substantial authority for tax returns due before January 1, 1990.*** There is substantial authority for the tax treatment of an item on a return that is due (without regard to extensions) after December 31, 1982 and before January 1, 1990, if there is substantial authority for such treatment under either the provisions of paragraph (d)(3)(iii) of this section (which set forth an expanded list of authorities) or of § 1.6661-3(b)(2) (which set forth a narrower list of authorities). Under either list of authorities, authorities both for and against the position must be taken into account.

(e) ***Disclosure of certain information*** —

(1) ***Effect of adequate disclosure.*** Items for which there is adequate disclosure as provided in this paragraph (e) and in paragraph (f) of this section are treated as if such items were shown properly on the return for the taxable year in computing the amount of the tax shown on the return. Thus, for purposes of section 6662(d), the tax attributable to such items is not included in the understatement for that year.

(2) ***Circumstances where disclosure will not have an effect.*** The rules of paragraph (e)(1) of this section do not apply where the item or position on the return—

(i) Does not have a reasonable basis (as defined in § 1.6662-3(b)(3));

(ii) Is attributable to a tax shelter (as defined in section 6662(d)(2)(C)(iii) and paragraph (g)(2) of this section); or

(iii) Is not properly substantiated, or the taxpayer failed to keep adequate books and records with respect to the item or position.

(3) ***Restriction for corporations.*** For purposes of paragraph (e)(2)(i) of this section, a corporation will not be treated as having a reasonable basis for its tax treatment of an item attributable to a multi-party financing transaction entered into after August 5, 1997, if the treatment does not clearly reflect the income of the corporation.

(f) ***Method of making adequate disclosure*** —

(1) ***Disclosure statement.*** Disclosure is adequate with respect to an item (or group of similar items, such as amounts paid or incurred for supplies by a taxpayer engaged in business) or a position on a return if the disclosure is made on a properly completed form attached to the return or to a qualified amended return (as defined in § 1.6664-2(c)(3)) for the taxable year. In the case of an item or position other than one that is contrary to a regulation, disclosure must be made on Form 8275 (Disclosure Statement); in the case of a position contrary to a regulation, disclosure must be made on Form 8275-R (Regulation Disclosure Statement).

(2) ***Disclosure on return.*** The Commissioner may by annual revenue procedure (or otherwise) prescribe the circumstances under which disclosure of information on a return (or qualified amended return) in accordance with applicable forms and instructions is adequate. If the revenue procedure does not include an item, disclosure is adequate with respect to that item only if made on a properly completed Form 8275 or 8275-R, as appropriate, attached to the return for the year or to a qualified amended return.

(3) ***Recurring item.*** Disclosure with respect to a recurring item, such as the basis of recovery property, must be made for each taxable year in which the item is taken into account.

(4) ***Carrybacks and carryovers.*** Disclosure is adequate with respect to an item which is included in any loss, deduction or credit that is carried to another year only if made in connection with the return (or qualified amended return) for the taxable year in which the carryback or carryover arises (the “loss or credit year”). Disclosure is not also required in connection with the return for the taxable year in which the carryback or carryover is taken into account.

(5) ***Pass-through entities.*** Disclosure in the case of items attributable to a pass-through entity (pass-through items) is made with respect to the return of the entity, except as provided in this paragraph (f)(5). Thus, disclosure in the case of pass-through items must be made on a Form 8275 or 8275-R, as appropriate, attached to the return (or qualified amended return) of the entity, or on the entity's return in accordance with the revenue procedure described in paragraph (f)(2) of this section, if applicable. A taxpayer (i.e., partner, shareholder, beneficiary, or holder of a residual interest in a REMIC) also may make adequate disclosure with respect to a pass-through item, however, if the taxpayer files a properly completed Form 8275 or 8275-R, as appropriate, in duplicate, one copy attached to the taxpayer's return (or qualified amended return) and the other copy filed with the Internal Revenue Service Center with which the return of the entity is required to be filed. Each Form 8275 or 8275-R, as appropriate, filed by the taxpayer should relate to the pass-through items of only one entity. For purposes of this paragraph (f)(5), a pass-through entity is a partnership, S corporation (as defined in section 1361(a)(1)), estate, trust, regulated investment company (as defined in section 851(a)), real estate investment trust (as defined in section 856(a)), or real estate mortgage investment conduit (“REMIC”) (as defined in section 860D(a)).

(g) *Items relating to tax shelters* —

(1) *In general* —

(i) ***Noncorporate taxpayers.*** Tax shelter items (as defined in paragraph (g)(3) of this section) of a taxpayer other than a corporation are treated for purposes of this section as if such items were shown properly on the return for a taxable year in computing the amount of tax shown on the return, and thus the tax attributable to such items is not included in the understatement for the year, if—

(A) There is substantial authority (as provided in paragraph (d) of this section) for the tax treatment of that item; and

(B) The taxpayer reasonably believed at the time the return was filed that the tax treatment of that item was more likely than not the proper treatment.

(ii) *Corporate taxpayers* —

(A) ***In general.*** Except as provided in paragraph (g)(1)(ii)(B) of this section, all tax shelter items (as defined in paragraph (g)(3) of this section) of a corporation are taken into account in computing the amount of any understatement.

(B) ***Special rule for transactions occurring prior to December 9, 1994.*** The tax shelter items of a corporation arising in connection with transactions occurring prior to December 9, 1994 are treated for purposes of this section as if such items were shown properly on the return if the requirements of paragraph (g)(1)(i) are satisfied with respect to such items.

(iii) ***Disclosure irrelevant.*** Disclosure made with respect to a tax shelter item of either a corporate or noncorporate taxpayer does not affect the amount of an understatement.

(iv) ***Cross-reference.*** See § 1.6664-4(f) for certain rules regarding the availability of the reasonable cause and good faith exception to the substantial understatement penalty with respect to tax shelter items of corporations.

(2) *Tax shelter* —

(i) ***In general.*** For purposes of section 6662(d), the term “tax shelter” means—

(A) A partnership or other entity (such as a corporation or trust),

(B) An investment plan or arrangement, or

(C) Any other plan or arrangement,

if the principal purpose of the entity, plan or arrangement, based on objective evidence, is to avoid or evade Federal income tax. The principal purpose of an entity, plan or arrangement is to avoid or evade Federal income tax if that purpose exceeds any other purpose. Typical of tax shelters are transactions structured with little or no motive for the realization of economic gain, and transactions that utilize the mismatching of income and deductions, overvalued assets or assets with values subject to substantial uncertainty, certain nonrecourse financing, financing techniques that do not conform to standard commercial business practices, or the mischaracterization of the substance of the transaction. The existence of economic substance does not of itself establish that a transaction is not a tax shelter if the transaction includes other characteristics that indicate it is a tax shelter.

(ii) ***Principal purpose.*** The principal purpose of an entity, plan or arrangement is not to avoid or evade Federal income tax if the entity, plan or arrangement has as its purpose the claiming of exclusions from income, accelerated deductions or other tax benefits in a manner consistent with the statute and Congressional purpose. For example, an entity, plan or arrangement does not have as its principal purpose the avoidance or evasion of Federal income tax solely as a result of the following uses of tax benefits provided by the Internal Revenue Code: the purchasing or holding of an obligation bearing interest that is excluded from gross income under section 103; taking an accelerated depreciation allowance under section 168; taking the percentage depletion allowance under section 613 or section 613A; deducting intangible drilling and development costs as expenses under section 263(c); establishing a qualified retirement plan under sections 401-409; claiming the possession tax credit under section 936; or claiming tax benefits available by reason of an election under 992 to be taxed as a domestic international sales corporation ("DISC"), under section 927(f)(1) to be taxed as a foreign sales corporation ("FSC"), or under section 1362 to be taxed as an S corporation.

(3) ***Tax shelter item.*** An item of income, gain, loss, deduction or credit is a "tax shelter item" if the item is directly or indirectly attributable to the principal purpose of a tax shelter to avoid or evade Federal income tax. Thus, if a partnership is established for the principal purpose of avoiding or evading Federal income tax by acquiring and overstating the basis of property for purposes of claiming accelerated depreciation, the depreciation with respect to the property is a tax shelter item. However, a deduction claimed in connection with a separate transaction carried on by the same partnership is not a tax shelter item if the transaction does not constitute a plan or arrangement the principal purpose of which is to avoid or evade tax.

(4) ***Reasonable belief*** —

(i) ***In general.*** For purposes of section 6662(d) and paragraph (g)(1)(i)(B) of this section (pertaining to tax shelter items of noncorporate taxpayers), a taxpayer is considered reasonably to believe that the tax treatment of an item is more likely than not the proper tax treatment if (without taking into account the possibility that a return will not be audited, that an issue will not be raised on audit, or that an issue will be settled)—

(A) The taxpayer analyzes the pertinent facts and authorities in the manner described in paragraph (d)(3)(ii) of this section, and in reliance upon that analysis, reasonably concludes in good faith that there is a greater than 50-percent likelihood that the tax treatment of the item will be upheld if challenged by the Internal Revenue Service; or

(B) The taxpayer reasonably relies in good faith on the opinion of a professional tax advisor, if the opinion is based on the tax advisor's analysis of the pertinent facts and authorities in the manner described in paragraph (d)(3)(ii) of this section and unambiguously states that the tax advisor concludes that there is a greater than 50-percent likelihood that the tax treatment of the item will be upheld if challenged by the Internal Revenue Service.

(ii) ***Facts and circumstances; reliance on professional tax advisor.*** All facts and circumstances must be taken into account in determining whether a taxpayer satisfies the requirements of paragraph (g)(4)(i) of this section. However, in no event will a taxpayer be considered to have reasonably relied in good faith on the opinion of a professional tax advisor for purposes of paragraph (g)(4)(i)(B) of this section unless the requirements of § 1.6664-4(c)(1) are met. The fact that the requirements of § 1.6664-4(c)(1) are satisfied will not necessarily establish that

the taxpayer reasonably relied on the opinion in good faith. For example, reliance may not be reasonable or in good faith if the taxpayer knew, or should have known, that the advisor lacked knowledge in the relevant aspects of Federal tax law.

(5) ***Pass-through entities.*** In the case of tax shelter items attributable to a pass-through entity, the actions described in paragraphs (g)(4)(i)(A) and (B) of this section, if taken by the entity, are deemed to have been taken by the taxpayer and are considered in determining whether the taxpayer reasonably believed that the tax treatment of an item was more likely than not the proper tax treatment.

[T.D. 8381, 56 FR 67499, Dec. 31, 1991; T.D. 8381, 57 FR 6165, Feb. 20, 1992, as amended by T.D. 8617, 60 FR 45665, Sept. 1, 1995; T.D. 8790, 63 FR 66435, Dec. 2, 1998; T.D. 9109, 68 FR 75128, Dec. 30, 2003]

§ 1.6662-5 Substantial and gross valuation misstatements under chapter 1.

(a) ***In general.*** If any portion of an underpayment, as defined in section 6664(a) and § 1.6664-2, of any income tax imposed under chapter 1 of subtitle A of the Code that is required to be shown on a return is attributable to a substantial valuation misstatement under chapter 1 ("substantial valuation misstatement"), there is added to the tax an amount equal to 20 percent of such portion. Section 6662(h) increases the penalty to 40 percent in the case of a gross valuation misstatement under chapter 1 ("gross valuation misstatement"). No penalty under section 6662(b)(3) is imposed, however, on a portion of an underpayment that is attributable to a substantial or gross valuation misstatement unless the aggregate of all portions of the underpayment attributable to substantial or gross valuation misstatements exceeds the applicable dollar limitation ($5,000 or $10,000), as provided in section 6662(e)(2) and paragraphs (b) and (f)(2) of this section. This penalty also does not apply to the extent that the reasonable cause and good faith exception to this penalty set forth in § 1.6664-4 applies. There is no disclosure exception to this penalty.

(b) ***Dollar limitation.*** No penalty may be imposed under section 6662(b)(3) for a taxable year unless the portion of the underpayment for that year that is attributable to substantial or gross valuation misstatements exceeds $5,000 ($10,000 in the case of a corporation other than an S corporation (as defined in section 1361(a)(1)) or a personal holding company (as defined in section 542)). This limitation is applied separately to each taxable year for which there is a substantial or gross valuation misstatement.

(c) ***Special rules in the case of carrybacks and carryovers*** —

(1) ***In general.*** The penalty for a substantial or gross valuation misstatement applies to any portion of an underpayment for a year to which a loss, deduction or credit is carried that is attributable to a substantial or gross valuation misstatement for the year in which the carryback or carryover of the loss, deduction or credit arises (the "loss or credit year"), provided that the applicable dollar limitation set forth in section 6662(e)(2) is satisfied in the carryback or carryover year.

(2) ***Transition rule for carrybacks to pre-1990 years.*** The penalty under section 6662(b)(3) is imposed on any portion of an underpayment for a carryback year, the return for which is due (without regard to extensions) before January 1, 1990, if—

(i) That portion is attributable to a substantial or gross valuation misstatement for a loss or credit year; and

(ii) The return for the loss or credit year is due (without regard to extensions) after December 31, 1989.

The preceding sentence applies only if the underpayment for the carryback year exceeds the applicable dollar limitation ($5,000, or $10,000 for most corporations). See *Example 3* in paragraph (d) of this section.

(d) ***Examples.*** The following examples illustrate the provisions of paragraphs (b) and (c) of this section. These examples do not take into account the reasonable cause exception under § 1.6664-4.

Example 1. Corporation Q is a C corporation. In 1990, the first year of its existence, Q had taxable income of $200,000 without considering depreciation of a particular asset. On its calendar year 1990 return, Q overstated its basis in this asset by an amount that caused a substantial valuation misstatement. The overstated basis resulted in depreciation claimed of $350,000, which was $250,000 more than the $100,000 allowable. Thus, on its 1990 return, Q showed a loss of $150,000. In 1991, Q had taxable income of $450,000 before application of the loss carryover, and Q claimed a carryover loss deduction under section 172 of $150,000, resulting in taxable income of $300,000 for 1991. Upon audit of the 1990 return, the basis of the asset was corrected, resulting in an adjustment of $250,000. For 1990, the underpayment resulting from the $100,000 taxable income (−$150,000 + $250,000) is attributable to the valuation misstatement. Assuming the underpayment resulting from the $100,000 taxable income exceeds the $10,000 limitation, the penalty will be imposed in 1990. For 1991, the elimination of the loss carryover results in additional taxable income of $150,000. The underpayment for 1991 resulting from that adjustment is also attributable to the substantial valuation misstatement on the 1990 return. Assuming the underpayment resulting from the $150,000 additional taxable income for 1991 exceeds the $10,000 limitation, the substantial valuation misstatement penalty also will be imposed for that year.

Example 2. (i) Corporation T is a C corporation. In 1990, the first year of its existence, T had a loss of $3,000,000 without considering depreciation of its major asset. On its calendar year 1990 return, T overstated its basis in this asset in an amount that caused a substantial valuation misstatement. This overstatement resulted in depreciation claimed of $3,500,000, which was $2,500,000 more than the $1,000,000 allowable. Thus, on its 1990 return, T showed a loss of $6,500,000. In 1991, T had taxable income of $4,500,000 before application of the carryover loss, but claimed a carryover loss deduction under section 172 in the amount of $4,500,000, resulting in taxable income of zero for that year and leaving a $2,000,000 carryover available. Upon audit of the 1990 return, the basis of the asset was corrected, resulting in an adjustment of $2,500,000.
(ii) For 1990, the underpayment is still zero (−$6,500,000 + $2,500,000=−$4,000,000). Thus, the penalty does not apply in 1990. The loss for 1990 is reduced to $4,000,000.

(iii) For 1991, there is additional taxable income of $500,000 as a result of the reduction of the carryover loss ($4,500,000 reported income before carryover loss minus corrected carryover loss of $4,000,000 = $500,000). The underpayment for 1991 resulting from reduction of the carryover loss is attributable to the valuation misstatement on the 1990

return. Assuming the underpayment resulting from the $500,000 additional taxable income exceeds the $10,000 limitation, the substantial valuation misstatement penalty will be imposed in 1991.

Example 3. Corporation V is a C corporation. In 1990, V had a loss of $100,000 without considering depreciation of a particular asset which it had fully depreciated in earlier years. V had a depreciable basis in the asset of zero, but on its 1990 calendar year return erroneously claimed a basis in the asset of $1,250,000 and depreciation of $250,000. V reported a $350,000 loss for the year 1990, and carried back the loss to the 1987 and 1988 tax years. V had reported taxable income of $300,000 in 1987 and $200,000 in 1988, before application of the carryback. The $350,000 carryback eliminated all taxable income for 1987, and $50,000 of the taxable income for 1988. After disallowance of the $250,000 depreciation deduction for 1990, V still had a loss of $100,000. Because there is no underpayment for 1990, no valuation misstatement penalty is imposed for 1990. However, as a result of the 1990 depreciation adjustment, the carryback to 1987 is reduced from $350,000 to $100,000. After absorption of the $100,000 carryback, V has taxable income of $200,000 for 1987. This adjustment results in an underpayment for 1987 that is attributable to the valuation misstatement on the 1990 return. The valuation misstatement for 1990 is a gross valuation misstatement because the correct adjusted basis of the depreciated asset was zero. (See paragraph (e)(2) of this section.) Therefore, the 40 percent penalty rate applies to the 1987 underpayment attributable to the 1990 misstatement, provided that this underpayment exceeds $10,000. The adjustment also results in the elimination of any loss carryback to 1988 resulting in an increase in taxable income for 1988 of $50,000. Assuming the underpayment resulting from this additional $50,000 of income exceeds $10,000, the gross valuation misstatement penalty is imposed on the underpayment for 1988.

(e) ***Definitions*** —

(1) ***Substantial valuation misstatement.*** There is a substantial valuation misstatement if the value or adjusted basis of any property claimed on a return of tax imposed under chapter 1 is 200 percent or more of the correct amount.

(2) ***Gross valuation misstatement.*** There is a gross valuation misstatement if the value or adjusted basis of any property claimed on a return of tax imposed under chapter 1 is 400 percent or more of the correct amount.

(3) ***Property.*** For purposes of this section, the term "property" refers to both tangible and intangible property. Tangible property includes property such as land, buildings, fixtures and inventory. Intangible property includes property such as goodwill, covenants not to compete, leaseholds, patents, contract rights, debts and choses in action.

(f) ***Multiple valuation misstatements on a return*** —

(1) ***Determination of whether valuation misstatements are substantial or gross.*** The determination of whether there is a substantial or gross valuation misstatement on a return is made on a property-by-property basis. Assume, for example, that property A has a value of 60 but a taxpayer claims a value of 110, and that property B has a value of 40 but the taxpayer claims a value of 100. Because the claimed and correct values are compared on a property-by-property basis, there is a substantial valuation misstatement with respect to property B, but not with respect to property A, even though the claimed values (210) are 200 percent or more of the correct values (100) when compared on an aggregate basis.

(2) ***Application of dollar limitation.*** For purposes of applying the dollar limitation set forth in section 6662(e)(2), the determination of the portion of an underpayment that is attributable to a substantial or gross valuation misstatement is made by aggregating all portions of the underpayment attributable to substantial or gross valuation misstatements. Assume, for example, that the value claimed for property C on a return is 250 percent of the correct value, and that the value claimed for property D on the return is 400 percent of the correct value. Because the portions of an underpayment that are attributable to a substantial or gross valuation misstatement on a return are aggregated in applying the dollar limitation, the dollar limitation is satisfied if the portion of the underpayment that is attributable to the misstatement of the value of property C, when aggregated with the portion of the underpayment that is attributable to the misstatement of the value of property D, exceeds $5,000 ($10,000 in the case of most corporations).

(g) ***Property with a value or adjusted basis of zero.*** The value or adjusted basis claimed on a return of any property with a correct value or adjusted basis of zero is considered to be 400 percent or more of the correct amount. There is a gross valuation misstatement with respect to such property, therefore, and the applicable penalty rate is 40 percent.

(h) ***Pass-through entities*** —

(1) ***In general.*** The determination of whether there is a substantial or gross valuation misstatement in the case of a return of a pass-through entity (as defined in § 1.6662-4(f)(5)) is made at the entity level. However, the dollar limitation ($5,000 or $10,000, as the case may be) is applied at the taxpayer level (*i.e.,* with respect to the return of the shareholder, partner, beneficiary, or holder of a residual interest in a REMIC).

(2) ***Example.*** The rules of paragraph (h)(1) of this section may be illustrated by the following example.

Example. Partnership P has two partners, individuals A and B. P claims a $40,000 basis in a depreciable asset which, in fact, has a basis of $15,000. The determination that there is a substantial valuation misstatement is made solely with reference to P by comparing the $40,000 basis claimed by P with P's correct basis of $15,000. However, the determination of whether the $5,000 threshold for application of the penalty has been reached is made separately for each partner. With respect to partner A, the penalty will apply if the portion of A's underpayment attributable to the passthrough of the depreciation deduction, when aggregated with any other portions of A's underpayment also attributable to substantial or gross valuation misstatements, exceeds $5,000 (assuming there is not reasonable cause for the misstatements (*see* § 1.6664-4(c)).

(i) [Reserved]

(j) ***Transactions between persons described in section 482 and net section 482 transfer price adjustments.*** [Reserved]

(k) ***Returns affected.*** Except in the case of rules relating to transactions between persons described in section 482 and net sections 482 transfer price adjustments, the provisions of section 6662(b)(3) apply to returns due (without regard to extensions of time to file) after December 31, 1989, notwithstanding that the original substantial or gross valuation misstatement occurred on a return that was due (without regard to extensions) before January 1, 1990. Assume, for example, that a calendar year corporation claimed a deduction on its 1990 return for depreciation of an asset with a basis of X. Also assume that it had reported the same basis for computing depreciation on its returns for the preceding 5 years and that the

basis shown on the return each year was 200 percent or more of the correct basis. The corporation may be subject to a penalty for substantial valuation misstatements on its 1989 and 1990 returns, even though the original misstatement occurred prior to the effective date of sections 6662(b)(3) and (e).

[T.D. 8381, 56 FR 67504, Dec. 31, 1991; T.D. 8381, 57 FR 6165, Feb. 20, 1992]

§ 1.6662-5T Substantial and gross valuation misstatements under chapter 1 (temporary).

(a)-(e) (3) [Reserved]. For further information, see § 1.6662-5(a) through (e)(3).

(e) (4) *Tests related to section 482—*

(i) ***Substantial valuation misstatement.*** There is a substantial valuation misstatement if there is a misstatement described in § 1.6662-6 (b)(1) or (c)(1) (concerning substantial valuation misstatements pertaining to transactions between related persons).

(ii) ***Gross valuation misstatement.*** There is a gross valuation misstatement if there is a misstatement described in § 1.6662-6 (b)(2) or (c)(2) (concerning gross valuation misstatements pertaining to transactions between related persons).

(iii) ***Property.*** For purposes of this section, the term *property* refers to both tangible and intangible property. Tangible property includes property such as money, land, buildings, fixtures and inventory. Intangible property includes property such as goodwill, covenants not to compete, leaseholds, patents, contract rights, debts, choses in action, and any other item of intangible property described in § 1.482-4(b).

(f)-(h) [Reserved]. For further information, see § 1.6662-5 (f) through (h).

(i) [Reserved]

(j) ***Transactions between persons described in section 482 and net section 482 transfer price adjustments.*** For rules relating to the penalty imposed with respect to a substantial or gross valuation misstatement arising from a section 482 allocation, see § 1.6662-6.

[T.D. 8656, 61 FR 4879, Feb. 9, 1996; T.D. 8656, 61 FR 14248, Apr. 1, 1996]

§ 1.6662-6 Transactions between persons described in section 482 and net section 482 transfer price adjustments.

(a) ***In general —***

(1) ***Purpose and scope.*** Pursuant to section 6662(e) a penalty is imposed on any underpayment attributable to a substantial valuation misstatement pertaining to either a transaction between persons described in section 482 (the transactional penalty) or a net section 482 transfer price adjustment (the net adjustment penalty). The penalty is equal to 20 percent of the underpayment of tax attributable to that substantial valuation misstatement. Pursuant to section 6662(h) the penalty is increased to 40 percent of the underpayment in the case of a gross valuation misstatement with respect to either penalty. Paragraph (b) of this section provides specific rules related to the transactional penalty. Paragraph (c) of this section provides specific rules related to the net adjustment penalty, and paragraph (d) of this section describes amounts that will be excluded for

purposes of calculating the net adjustment penalty. Paragraph (e) of this section sets forth special rules in the case of carrybacks and carryovers. Paragraph (f) of this section provides coordination rules between penalties. Paragraph (g) of this section provides the effective date of this section.

(2) ***Reported results.*** Whether an underpayment is attributable to a substantial or gross valuation misstatement must be determined from the results of controlled transactions that are reported on an income tax return, regardless of whether the amount reported differs from the transaction price initially reflected in the taxpayer's books and records. The results of controlled transactions that are reported on an amended return will be used only if the amended return is filed before the Internal Revenue Service has contacted the taxpayer regarding the corresponding original return. A written statement furnished by a taxpayer subject to the Coordinated Examination Program or a written statement furnished by the taxpayer when electing Accelerated Issue Resolution or similar procedures will be considered an amended return for purposes of this section if it satisfies either the requirements of a qualified amended return for purposes of § 1.6664-2(c)(3) or such requirements as the Commissioner may prescribe by revenue procedure. In the case of a taxpayer that is a member of a consolidated group, the rules of this paragraph (a)(2) apply to the consolidated income tax return of the group.

(3) ***Identical terms used in the section 482 regulations.*** For purposes of this section, the terms used in this section shall have the same meaning as identical terms used in regulations under section 482.

(b) ***The transactional penalty*** —

(1) ***Substantial valuation misstatement.*** In the case of any transaction between related persons, there is a substantial valuation misstatement if the price for any property or services (or for the use of property) claimed on any return is 200 percent or more (or 50 percent or less) of the amount determined under section 482 to be the correct price.

(2) ***Gross valuation misstatement.*** In the case of any transaction between related persons, there is a gross valuation misstatement if the price for any property or services (or for the use of property) claimed on any return is 400 percent or more (or 25 percent or less) of the amount determined under section 482 to be the correct price.

(3) ***Reasonable cause and good faith.*** Pursuant to section 6664(c), the transactional penalty will not be imposed on any portion of an underpayment with respect to which the requirements of § 1.6664-4 are met. In applying the provisions of § 1.6664-4 in a case in which the taxpayer has relied on professional analysis in determining its transfer pricing, whether the professional is an employee of, or related to, the taxpayer is not determinative in evaluating whether the taxpayer reasonably relied in good faith on advice. A taxpayer that meets the requirements of paragraph (d) of this section with respect to an allocation under section 482 will be treated as having established that there was reasonable cause and good faith with respect to that item for purposes of § 1.6664-4. If a substantial or gross valuation misstatement under the transactional penalty also constitutes (or is part of) a substantial or gross valuation misstatement under the net adjustment penalty, then the rules of paragraph (d) of this section (and not the rules of § 1.6664-4) will be applied to determine whether the adjustment is excluded from calculation of the net section 482 adjustment.

(c) ***Net adjustment penalty*** —

(1) ***Net section 482 adjustment.*** For purposes of this section, the term *net section 482 adjustment* means the sum of all increases in the taxable income of a taxpayer for a taxable year resulting from allocations under section 482 (determined without regard to any amount carried to such taxable year from another taxable year) less any decreases in taxable income attributable to collateral

adjustments as described in § 1.482-1(g). For purposes of this section, amounts that meet the requirements of paragraph (d) of this section will be excluded from the calculation of the net section 482 adjustment. Substantial and gross valuation misstatements that are subject to the transactional penalty under paragraph (b) (1) or (2) of this section are included in determining the amount of the net section 482 adjustment. See paragraph (f) of this section for coordination rules between penalties.

(2) ***Substantial valuation misstatement.*** There is a substantial valuation misstatement if a net section 482 adjustment is greater than the lesser of 5 million dollars or ten percent of gross receipts.

(3) ***Gross valuation misstatement.*** There is a gross valuation misstatement if a net section 482 adjustment is greater than the lesser of 20 million dollars or twenty percent of gross receipts.

(4) ***Setoff allocation rule.*** If a taxpayer meets the requirements of paragraph (d) of this section with respect to some, but not all of the allocations made under section 482, then for purposes of determining the net section 482 adjustment, setoffs, as taken into account under § 1.482-1(g)(4), must be applied ratably against all such allocations. The following example illustrates the principle of this paragraph (c)(4):

Example. (i) The Internal Revenue Service makes the following section 482 adjustments for the taxable year:

(1) Attributable to an increase in gross income because of an increase in royalty payments	$9,000,000
(2) Attributable to an increase in sales proceeds due to a decrease in the profit margin of a related buyer	6,000,000
(3) Because of a setoff under § 1.482-1(g)(4)	(5,000,000)
Total section 482 adjustments	10,000,000

(ii) The taxpayer meets the requirements of paragraph (d) with respect to adjustment number one, but not with respect to adjustment number two. The five million dollar setoff will be allocated ratably against the nine million dollar adjustment ($9,000,000/$15,000,000 × $5,000,000 = $3,000,000) and the six million dollar adjustment ($6,000,000/$15,000,000 × $5,000,000 = $2,000,000). Accordingly, in determining the net section 482 adjustment, the nine million dollar adjustment is reduced to six million dollars ($9,000,000-$3,000,000) and the six million dollar adjustment is reduced to four million dollars ($6,000,000-$2,000,000). Therefore, the net section 482 adjustment equals four million dollars.

(5) ***Gross receipts.*** For purposes of this section, gross receipts must be computed pursuant to the rules contained in § 1.448-1T(f)(2)(iv), as adjusted to reflect allocations under section 482.

(6) ***Coordination with reasonable cause exception under section 6664(c).*** Pursuant to section 6662(e)(3)(D), a taxpayer will be treated as having reasonable cause under section 6664(c) for any portion of an underpayment attributable to a net section 482 adjustment only if the taxpayer meets the requirements of paragraph (d) of this section with respect to that portion.

(7) ***Examples.*** The principles of this paragraph (c) are illustrated by the following examples:

Example 1. (i) The Internal Revenue Service makes the following section 482 adjustments for the taxable year:

(1) Attributable to an increase in gross income because of an increase in royalty payments	$2,000,000
(2) Attributable to an increase in sales proceeds due to a decrease in the profit margin of a related buyer	2,500,000
(3) Attributable to a decrease in the cost of goods sold because of a decrease in the cost plus mark-up of a related seller	2,000,000
Total section 482 adjustments	6,500,000

(ii) None of the adjustments are excluded under paragraph (d) of this section. The net section 482 adjustment ($6.5 million) is greater than five million dollars. Therefore, there is a substantial valuation misstatement.

Example 2. (i) The Internal Revenue Service makes the following section 482 adjustments for the taxable year:

(1) Attributable to an increase in gross income because of an increase in royalty payments	$11,000,000
(2) Attributable to an increase in sales proceeds due to a decrease in the profit margin of a related buyer	2,000,000
(3) Because of a setoff under § 1.482-1(g)(4)	(9,000,000)
Total section 482 adjustments	4,000,000

(ii) The taxpayer has gross receipts of sixty million dollars after taking into account all section 482 adjustments. None of the adjustments are excluded under paragraph (d) of this section. The net section 482 adjustment ($4 million) is less than the lesser of five million dollars or ten percent of gross receipts ($60 million × 10% = $6 million). Therefore, there is no substantial valuation misstatement.

Example 3. (i) The Internal Revenue Service makes the following section 482 adjustments to the income of an affiliated group that files a consolidated return for the taxable year:

(1) Attributable to Member A	$1,500,000
(2) Attributable to Member B	1,000,000
(3) Attributable to Member C	2,000,000
Total section 482 adjustments	4,500,000

(ii) Members A, B, and C have gross receipts of 20 million dollars, 12 million dollars, and 11 million dollars, respectively. Thus, the total gross receipts are 43 million dollars. None of the adjustments are excluded under paragraph (d) of this section. The net section 482 adjustment ($4.5 million) is greater than the lesser of five million dollars or ten percent of gross receipts ($43 million × 10% = $4.3 million). Therefore, there is a substantial valuation misstatement.

Example 4. (i) The Internal Revenue Service makes the following section 482 adjustments to the income of an affiliated group that files a consolidated return for the taxable year:

(1) Attributable to Member A	$1,500,000
(2) Attributable to Member B	3,000,000
(3) Attributable to Member C	2,500,000
Total section 482 adjustments	7,000,000

(ii) Members A, B, and C have gross receipts of 20 million dollars, 35 million dollars, and 40 million dollars, respectively. Thus, the total gross receipts are 95 million dollars. None of the adjustments are excluded under paragraph (d) of this section. The net section 482 adjustment (7 million dollars) is greater than the lesser of five million dollars or ten percent of gross receipts ($95 million × 10% = $9.5 million). Therefore, there is a substantial valuation misstatement.

Example 5. (i) The Internal Revenue Service makes the following section 482 adjustments to

the income of an affiliated group that files a consolidated return for the taxable year:

(1) Attributable to Member A	$2,000,000
(2) Attributable to Member B	1,000,000
(3) Attributable to Member C	1,500,000
Total section 482 adjustments	4,500,000

(ii) Members A, B, and C have gross receipts of 10 million dollars, 35 million dollars, and 40 million dollars, respectively. Thus, the total gross receipts are 85 million dollars. None of the adjustments are excluded under paragraph (d) of this section. The net section 482 adjustment ($4.5 million) is less than the lesser of five million dollars or ten percent of gross receipts ($85 million × 10% = $8.5 million). Therefore, there is no substantial valuation misstatement even though individual member A's adjustment ($2 million) is greater than ten percent of its individual gross receipts ($10 million × 10% = $1 million).

(d) ***Amounts excluded from net section 482 adjustments*** —

(1) ***In general.*** An amount is excluded from the calculation of a net section 482 adjustment if the requirements of paragraph (d) (2), (3), or (4) of this section are met with respect to that amount.

(2) ***Application of a specified section 482 method*** —

(i) ***In general.*** An amount is excluded from the calculation of a net section 482 adjustment if the taxpayer establishes that both the specified method and documentation requirements of this paragraph (d)(2) are met with respect to that amount. For purposes of this paragraph (d), a method will be considered a specified method if it is described in the regulations under section 482 and the method applies to transactions of the type under review. An unspecified method is not considered a specified method. See §§ 1.482-3(e) and 1.482-4(d).

(ii) ***Specified method requirement.***

(A) The specified method requirement is met if the taxpayer selects and applies a specified method in a reasonable manner. The taxpayer's selection and application of a specified method is reasonable only if, given the available data and the applicable pricing methods, the taxpayer reasonably concluded that the method (and its application of that method) provided the most reliable measure of an arm's length result under the principles of the best method rule of § 1.482-1(c). A taxpayer can reasonably conclude that a specified method provided the most reliable measure of an arm's length result only if it has made a reasonable effort to evaluate the potential applicability of the other specified methods in a manner consistent with the principles of the best method rule. The extent of this evaluation generally will depend on the nature of the available data, and it may vary from case to case and from method to method. This evaluation may not entail an exhaustive analysis or detailed application of each method. Rather, after a reasonably thorough search for relevant data, the taxpayer should consider which method would provide the most reliable measure of an arm's length result given that data. The nature of the available

data may enable the taxpayer to conclude reasonably that a particular specified method provides a more reliable measure of an arm's length result than one or more of the other specified methods, and accordingly no further consideration of such other specified methods is needed. Further, it is not necessary for a taxpayer to conclude that the selected specified method provides a more reliable measure of an arm's length result than any unspecified method. For examples illustrating the selection of a specified method consistent with this paragraph (d)(2)(ii), see § 1.482-8. Whether the taxpayer's conclusion was reasonable must be determined from all the facts and circumstances. The factors relevant to this determination include the following:

(*1*) The experience and knowledge of the taxpayer, including all members of the taxpayer's controlled group.

(*2*) The extent to which reliable data was available and the data was analyzed in a reasonable manner. A taxpayer must engage in a reasonably thorough search for the data necessary to determine which method should be selected and how it should be applied. In determining the scope of a reasonably thorough search for data, the expense of additional efforts to locate new data may be weighed against the likelihood of finding additional data that would improve the reliability of the results and the amount by which any new data would change the taxpayer's taxable income. Furthermore, a taxpayer must use the most current reliable data that is available before the end of the taxable year in question. Although the taxpayer is not required to search for relevant data after the end of the taxable year, the taxpayer must maintain as a principal document described in paragraph (d)(2)(iii)(B)(*9*) of this section any relevant data it obtains after the end of the taxable year but before the return is filed, if that data would help determine whether the taxpayer has reported its true taxable income.

(*3*) The extent to which the taxpayer followed the relevant requirements set forth in regulations under section 482 with respect to the application of the method.

(*4*) The extent to which the taxpayer reasonably relied on a study or other analysis performed by a professional qualified to conduct such a study or analysis, including an attorney, accountant, or economist. Whether the professional is an employee of, or related to, the taxpayer is not determinative in evaluating the reliability of that study or analysis, as long as the study or analysis is objective, thorough, and well reasoned. Such reliance is reasonable only if the taxpayer disclosed to the professional all relevant information regarding the controlled transactions at issue. A study or analysis that was reasonably relied upon in a prior year may reasonably be relied upon in the current year if the relevant facts and circumstances have not changed or if the study or analysis has been appropriately modified to reflect any change in facts and circumstances.

(*5*) If the taxpayer attempted to determine an arm's length result by using more than one uncontrolled comparable, whether the taxpayer arbitrarily selected a result that corresponds to an extreme point in the range of results derived from the uncontrolled comparables. Such a result generally would not likely be closest to an arm's length result. If the uncontrolled comparables that the taxpayer uses to determine an arm's length result are described in § 1.482-1(e)(2)(iii)(B), one reasonable method of selecting a point in the range would be that provided in § 1.482-1(e)(3).

(*6*) The extent to which the taxpayer relied on a transfer pricing methodology developed and applied pursuant to an Advance Pricing Agreement for a prior taxable year, or specifically approved by the Internal Revenue Service pursuant to a transfer pricing audit of the transactions at issue for a prior

taxable year, provided that the taxpayer applied the approved method reasonably and consistently with its prior application, and the facts and circumstances surrounding the use of the method have not materially changed since the time of the IRS's action, or if the facts and circumstances have changed in a way that materially affects the reliability of the results, the taxpayer makes appropriate adjustments to reflect such changes.

(*7*) The size of a net transfer pricing adjustment in relation to the size of the controlled transaction out of which the adjustment arose.

(B) *Services cost method.* A taxpayer's selection of the services cost method for certain services, described in § 1.482-9(b), and its application of that method to a controlled services transaction will be considered reasonable for purposes of the specified method requirement only if the taxpayer reasonably allocated and apportioned costs in accordance with § 1.482-9(k), and reasonably concluded that the controlled services transaction satisfies the requirements described in § 1.482-9(b)(2). Whether the taxpayer's conclusion was reasonable must be determined from all the facts and circumstances. The factors relevant to this determination include those described in paragraph (d)(2)(ii)(A) of this section, to the extent applicable.

(iii) ***Documentation requirement*** —(A) *In general.* The documentation requirement of this paragraph (d)(2)(iii) is met if the taxpayer maintains sufficient documentation to establish that the taxpayer reasonably concluded that, given the available data and the applicable pricing methods, the method (and its application of that method) provided the most reliable measure of an arm's length result under the principles of the best method rule in § 1.482-1(c), and provides that documentation to the Internal Revenue Service within 30 days of a request for it in connection with an examination of the taxable year to which the documentation relates. With the exception of the documentation described in paragraphs (d)(2)(iii)(B) (*9*) and (*10*) of this section, that documentation must be in existence when the return is filed. The district director may, in his discretion, excuse a minor or inadvertent failure to provide required documents, but only if the taxpayer has made a good faith effort to comply, and the taxpayer promptly remedies the failure when it becomes known. The required documentation is divided into two categories, principal documents and background documents as described in paragraphs (d)(2)(iii) (B) and (C) of this section.

(B) ***Principal documents.*** The principal documents should accurately and completely describe the basic transfer pricing analysis conducted by the taxpayer. The documentation must include the following—

(*1*) An overview of the taxpayer's business, including an analysis of the economic and legal factors that affect the pricing of its property or services;

(*2*) A description of the taxpayer's organizational structure (including an organization chart) covering all related parties engaged in transactions potentially relevant under section 482, including foreign affiliates whose transactions directly or indirectly affect the pricing of property or services in the United States;

(*3*) Any documentation explicitly required by the regulations under section 482;

(*4*) A description of the method selected and an explanation of why that method was selected, including an evaluation of whether the regulatory conditions and requirements for application of that method, if any, were met;

(5) A description of the alternative methods that were considered and an explanation of why they were not selected;

(6) A description of the controlled transactions (including the terms of sale) and any internal data used to analyze those transactions. For example, if a profit split method is applied, the documentation must include a schedule providing the total income, costs, and assets (with adjustments for different accounting practices and currencies) for each controlled taxpayer participating in the relevant business activity and detailing the allocations of such items to that activity. Similarly, if a cost-based method (such as the cost plus method, the services cost method for certain services, or a comparable profits method with a cost-based profit level indicator) is applied, the documentation must include a description of the manner in which relevant costs are determined and are allocated and apportioned to the relevant controlled transaction.

(7) A description of the comparables that were used, how comparability was evaluated, and what (if any) adjustments were made;

(8) An explanation of the economic analysis and projections relied upon in developing the method. For example, if a profit split method is applied, the taxpayer must provide an explanation of the analysis undertaken to determine how the profits would be split;

(9) A description or summary of any relevant data that the taxpayer obtains after the end of the tax year and before filing a tax return, which would help determine if a taxpayer selected and applied a specified method in a reasonable manner; and

(10) A general index of the principal and background documents and a description of the recordkeeping system used for cataloging and accessing those documents.

(C) ***Background documents.*** The assumptions, conclusions, and positions contained in principal documents ordinarily will be based on, and supported by, additional background documents. Documents that support the principal documentation may include the documents listed in § 1.6038A-3(c) that are not otherwise described in paragraph (d)(2)(iii)(B) of this section. Every document listed in those regulations may not be relevant to pricing determinations under the taxpayer's specific facts and circumstances and, therefore, each of those documents need not be maintained in all circumstances. Moreover, other documents not listed in those regulations may be necessary to establish that the taxpayer's method was selected and applied in the way that provided the most reliable measure of an arm's length result under the principles of the best method rule in § 1.482-1(c). Background documents need not be provided to the Internal Revenue Service in response to a request for principal documents. If the Internal Revenue Service subsequently requests background documents, a taxpayer must provide that documentation to the Internal Revenue Service within 30 days of the request. However, the district director may, in his discretion, extend the period for producing the background documentation.

(D) Satisfaction of the documentation requirements described in § 1.482-7(k)(2) for the purpose of complying with the rules for CSAs under § 1.482-7 also satisfies all of the documentation requirements listed in paragraph (d)(2)(iii)(B) of this section, except the

requirements listed in paragraphs (d)(2)(iii)(B)(*2*) and (*10*) of this section, with respect to CSTs and PCTs described in § 1.482-7(b)(1)(i) and (ii), provided that the documentation also satisfies the requirements of paragraph (d)(2)(iii)(A) of this section.

(3) ***Application of an unspecified method*** —

(i) ***In general.*** An adjustment is excluded from the calculation of a net section 482 adjustment if the taxpayer establishes that both the unspecified method and documentation requirements of this paragraph (d)(3) are met with respect to that amount.

(ii) ***Unspecified method requirement*** —

(A) ***In general.*** If a method other than a specified method was applied, the unspecified method requirement is met if the requirements of paragraph (d)(3)(ii) (B) or (C) of this section, as appropriate, are met.

(B) ***Specified method potentially applicable.*** If the transaction is of a type for which methods are specified in the regulations under section 482, then a taxpayer will be considered to have met the unspecified method requirement if the taxpayer reasonably concludes, given the available data, that none of the specified methods was likely to provide a reliable measure of an arm's length result, and that it selected and applied an unspecified method in a way that would likely provide a reliable measure of an arm's length result. A taxpayer can reasonably conclude that no specified method was likely to provide a reliable measure of an arm's length result only if it has made a reasonable effort to evaluate the potential applicability of the specified methods in a manner consistent with the principles of the best method rule. However, it is not necessary for a taxpayer to conclude that the selected method provides a more reliable measure of an arm's length result than any other unspecified method. Whether the taxpayer's conclusion was reasonable must be determined from all the facts and circumstances. The factors relevant to this conclusion include those set forth in paragraph (d)(2)(ii) of this section.

(C) ***No specified method applicable.*** If the transaction is of a type for which no methods are specified in the regulations under section 482, then a taxpayer will be considered to have met the unspecified method requirement if it selected and applied an unspecified method in a reasonable manner. For purposes of this paragraph (d)(3)(ii)(C), a taxpayer's selection and application is reasonable if the taxpayer reasonably concludes that the method (and its application of that method) provided the most reliable measure of an arm's length result under the principles of the best method rule in § 1.482-1(c). However, it is not necessary for a taxpayer to conclude that the selected method provides a more reliable measure of an arm's length result than any other unspecified method. Whether the taxpayer's conclusion was reasonable must be determined from all the facts and circumstances. The factors relevant to this conclusion include those set forth in paragraph (d)(2)(ii) of this section.

(iii) ***Documentation requirement*** —

(A) ***In general.*** The documentation requirement of this paragraph (d)(3) is met if the taxpayer maintains sufficient documentation to establish that the unspecified method requirement of paragraph (d)(3)(ii) of this section is met and provides that documentation to the Internal Revenue Service within 30 days of a request for it. That documentation must be in existence when the return is filed. The district director may, in his discretion, excuse a

minor or inadvertent failure to provide required documents, but only if the taxpayer has made a good faith effort to comply, and the taxpayer promptly remedies the failure when it becomes known.

(B) ***Principal and background documents.*** See paragraphs (d)(2)(iii) (B) and (C) of this section for rules regarding these two categories of required documentation.

(4) ***Certain foreign to foreign transactions.*** For purposes of calculating a net section 482 adjustment, any increase in taxable income resulting from an allocation under section 482 that is attributable to any controlled transaction solely between foreign corporations will be excluded unless the treatment of that transaction affects the determination of either corporation's income from sources within the United States or taxable income effectively connected with the conduct of a trade or business within the United States.

(5) ***Special rule.*** If the regular tax (as defined in section 55(c)) imposed on the taxpayer is determined by reference to an amount other than taxable income, that amount shall be treated as the taxable income of the taxpayer for purposes of section 6662(e)(3). Accordingly, for taxpayers whose regular tax is determined by reference to an amount other than taxable income, the increase in that amount resulting from section 482 allocations is the taxpayer's net section 482 adjustment.

(6) ***Examples.*** The principles of this paragraph (d) are illustrated by the following examples:

Example 1. (i) The Internal Revenue Service makes the following section 482 adjustments for the taxable year:

(1) Attributable to an increase in gross income because of an increase in royalty payments	$9,000,000
(2) Not a 200 percent or 400 percent adjustment	2,000,000
(3) Attributable to a decrease in the cost of goods sold because of a decrease in the cost plus mark-up of a related seller	9,000,000
Total section 482 adjustments	20,000,000

(ii) The taxpayer has gross receipts of 75 million dollars after all section 482 adjustments. The taxpayer establishes that for adjustments number one and three, it applied a transfer pricing method specified in section 482, the selection and application of the method was reasonable, it documented the pricing analysis, and turned that documentation over to the IRS within 30 days of a request. Accordingly, eighteen million dollars is excluded from the calculation of the net section 482 adjustment. Because the net section 482 adjustment is two million dollars, there is no substantial valuation misstatement.

Example 2. (i) The Internal Revenue Service makes the following section 482 adjustments

for the taxable year:

(1) Attributable to an increase in gross income because of an increase in royalty payments	$9,000,000
(2) Attributable to an adjustment that is 200 percent or more of the correct section 482 price	2,000,000
(3) Attributable to a decrease in the cost of goods sold because of a decrease in the cost plus mark-up of a related seller	9,000,000
Total section 482 adjustments	20,000,000

(ii) The taxpayer has gross receipts of 75 million dollars after all section 482 adjustments. The taxpayer establishes that for adjustments number one and three, it applied a transfer pricing method specified in section 482, the selection and application of the method was reasonable, it documented that analysis, and turned the documentation over to the IRS within 30 days. Accordingly, eighteen million dollars is excluded from the calculation of the section 482 transfer pricing adjustments for purposes of applying the five million dollar or 10% of gross receipts test. Because the net section 482 adjustment is only two million dollars, the taxpayer is not subject to the net adjustment penalty. However, the taxpayer may be subject to the transactional penalty on the underpayment of tax attributable to the two million dollar adjustment.

Example 3. CFC1 and CFC2 are controlled foreign corporations within the meaning of section 957. Applying section 482, the IRS disallows a deduction for 25 million dollars of the interest that CFC1 paid to CFC2, which results in CFC1's U.S. shareholder having a subpart F inclusion in excess of five million dollars. No other adjustments under section 482 are made with respect to the controlled taxpayers. However, the increase has no effect upon the determination of CFC1's or CFC2's income from sources within the United States or taxable income effectively connected with the conduct of a trade or business within the United States. Accordingly, there is no substantial valuation misstatement.

(e) ***Special rules in the case of carrybacks and carryovers.*** If there is a substantial or gross valuation misstatement for a taxable year that gives rise to a loss, deduction or credit that is carried to another taxable year, the transactional penalty and the net adjustment penalty will be imposed on any resulting underpayment of tax in that other taxable year. In determining whether there is a substantial or gross valuation misstatement for a taxable year, no amount carried from another taxable year shall be included. The following example illustrates the principle of this paragraph (e):

Example. The Internal Revenue Service makes a section 482 adjustment of six million dollars in taxable year 1, no portion of which is excluded under paragraph (d) of this section. The taxpayer's income tax return for year 1 reported a loss of three million dollars, which was carried to taxpayer's year 2 income tax return and used to reduce income taxes otherwise due with respect to year 2. A determination is made that the six million dollar allocation constitutes a substantial valuation misstatement, and a penalty is imposed on the underpayment of tax in year 1 attributable to the

substantial valuation misstatement and on the underpayment of tax in year 2 attributable to the disallowance of the net operating loss in year 2. For purposes of determining whether there is a substantial or gross valuation misstatement for year 2, the three million dollar reduction of the net operating loss will not be added to any section 482 adjustments made with respect to year 2.

(f) ***Rules for coordinating between the transactional penalty and the net adjustment penalty*** —

(1) ***Coordination of a net section 482 adjustment subject to the net adjustment penalty and a gross valuation misstatement subject to the transactional penalty.*** In determining whether a net section 482 adjustment exceeds five million dollars or 10 percent of gross receipts, an adjustment attributable to a substantial or gross valuation misstatement that is subject to the transactional penalty will be taken into account. If the net section 482 adjustment exceeds five million dollars or ten percent of gross receipts, any portion of such amount that is attributable to a gross valuation misstatement will be subject to the transactional penalty at the forty percent rate, but will not also be subject to net adjustment penalty at a twenty percent rate. The remaining amount is subject to the net adjustment penalty at the twenty percent rate, even if such amount is less than the lesser of five million dollars or ten percent of gross receipts.

(2) ***Coordination of net section 482 adjustment subject to the net adjustment penalty and substantial valuation misstatements subject to the transactional penalty.*** If the net section 482 adjustment exceeds twenty million dollars or 20 percent of gross receipts, the entire amount of the adjustment is subject to the net adjustment penalty at a forty percent rate. No portion of the adjustment is subject to the transactional penalty at a twenty percent rate.

(3) ***Examples.*** The following examples illustrate the principles of this paragraph (f):

Example 1. (i) Applying section 482, the Internal Revenue Service makes the following adjustments for the taxable year:

(1) Attributable to an adjustment that is 400 percent or more of the correct section 482 arm's length result	$2,000,000
(2) Not a 200 or 400 percent adjustment	2,500,000
Total	4,500,000

(ii) The taxpayer has gross receipts of 75 million dollars after all section 482 adjustments. None of the adjustments is excluded under paragraph (d) (Amounts excluded from net section 482 adjustments) of this section, in determining the five million dollar or 10% of gross receipts test under section 6662(e)(1)(B)(ii). The net section 482 adjustment (4.5 million dollars) is less than the lesser of five million dollars or ten percent of gross receipts ($75 million × 10% = $7.5 million). Thus, there is no substantial valuation misstatement. However, the two million dollar adjustment is attributable to a gross valuation misstatement. Accordingly, the taxpayer may be subject to a penalty, under section 6662(h), equal to 40 percent of the underpayment of tax attributable to the gross valuation misstatement of two

million dollars. The 2.5 million dollar adjustment is not subject to a penalty under section 6662(b)(3).

Example 2. The facts are the same as in *Example 1*, except the taxpayer has gross receipts of 40 million dollars. The net section 482 adjustment ($4.5 million) is greater than the lesser of five million dollars or ten percent of gross receipts ($40 million × 10% = $4 million). Thus, the five million dollar or 10% of gross receipts test has been met. The two million dollar adjustment is attributable to a gross valuation misstatement. Accordingly, the taxpayer is subject to a penalty, under section 6662(h), equal to 40 percent of the underpayment of tax attributable to the gross valuation misstatement of two million dollars. The 2.5 million dollar adjustment is subject to a penalty under sections 6662(a) and 6662(b)(3), equal to 20 percent of the underpayment of tax attributable to the substantial valuation misstatement.

Example 3. (i) Applying section 482, the Internal Revenue Service makes the following transfer pricing adjustments for the taxable year:

(1) Attributable to an adjustment that is 400 percent or more of the correct section 482 arm's length result	$6,000,000
(2) Not a 200 or 400 percent adjustment	15,000,000
Total	21,000,000

(ii) None of the adjustments are excluded under paragraph (d) (Amounts excluded from net section 482 adjustments) in determining the twenty million dollar or 20% of gross receipts test under section 6662(h). The net section 482 adjustment (21 million dollars) is greater than twenty million dollars and thus constitutes a gross valuation misstatement. Accordingly, the total adjustment is subject to the net adjustment penalty equal to 40 percent of the underpayment of tax attributable to the 21 million dollar gross valuation misstatement. The six million dollar adjustment will not be separately included for purposes of any additional penalty under section 6662.

(g) ***Effective/applicability date*** —

(1) ***In general.*** This section is generally applicable on February 9, 1996. However, taxpayers may elect to apply this section to all open taxable years beginning after December 31, 1993.

(2) ***Special rules.*** The provisions of paragraphs (d)(2)(ii)(B), (d)(2)(iii)(B)(*4*) and (d)(2)(iii)(B)(*6*) of this section are applicable for taxable years beginning after July 31, 2009. However, taxpayers may elect to apply the provisions of paragraphs (d)(2)(ii)(B), (d)(2)(iii)(B)(*4*) and (d)(2)(iii)(B)(*6*) of this section to earlier taxable years in accordance with the rules set forth in § 1.482-9(n)(2).

[T.D. 8656, 61 FR 4880, Feb. 9, 1996; T.D. 8656, 61 FR 14248, Apr. 1, 1996; 62 FR 46877, Sept. 5, 1997, as amended by T.D. 9278, 71 FR 44518, Aug. 4, 2006; T.D. 9441, 74 FR 390, Jan. 5, 2009; T.D. 9456, 74 FR 38875, Aug. 4, 2009; T.D. 9568, 76 FR 80136, Dec. 22, 2011]

§ 1.6662-7 Omnibus Budget Reconciliation Act of 1993 changes to the accuracy-related penalty.

(a) ***Scope.*** The Omnibus Budget Reconciliation Act of 1993 made certain changes to the accuracy-related penalty in section 6662. This section provides rules reflecting those changes.

(b) ***No disclosure exception for negligence penalty.*** The penalty for negligence in section 6662(b)(1) may not be avoided by disclosure of a return position.

(c) ***Disclosure standard for other penalties is reasonable basis.*** The penalties for disregarding rules or regulations in section 6662(b)(1) and for a substantial understatement of income tax in section 6662(b)(2) may be avoided by adequate disclosure of a return position only if the position has at least a reasonable basis. See § 1.6662-3(c) and §§ 1.6662-4(e) and (f) for other applicable disclosure rules.

(d) ***Reasonable basis.*** For purposes of §§ 1.6662-3(c) and 1.6662-4(e) and (f) (relating to methods of making adequate disclosure), the provisions of § 1.6662-3(b)(3) apply in determining whether a return position has a reasonable basis.

[T.D. 8617, 60 FR 45665, Sept. 1, 1995, as amended by T.D. 8790, 63 FR 66435, Dec. 2, 1998]

§ 1.6662-9 Inconsistent estate basis reporting.

(a) ***In general.*** Section 6662(a) and (b)(8) impose an accuracy-related penalty on the portion of any underpayment of tax required to be shown on an income tax return that is attributable to an inconsistent estate basis.

(b) ***Inconsistent estate basis*** —

(1) ***In general.*** There is an *inconsistent estate basis* in property under section 6662(k) to the extent that a taxpayer claims a basis that was determined by using an initial basis as defined in § 1.1014-10(a)(2) that exceeds the property's final value as determined under § 1.1014-10(b)(1). The property to which this section applies is the property described in § 1.1014-10(c)(1).

(2) ***Example.*** The following example illustrates the provisions of paragraph (b)(1) of this section. In year 1, taxpayer (T), a citizen of the United States, inherited a house, property described in § 1.1014-10(c)(1) and not described in § 1.1014-10(c)(2). The final value and thus initial basis of the house as determined under § 1.1014-10(b) was $300,000. In year 5, T spent $85,000 on an addition to the house, which is added to T's initial basis in the house under section 1016(a). In year 11, T sold the house to an unrelated third party for $650,000. On T's return, T claims an initial basis of $400,000 and the $85,000 spent on the addition to the house, for a total claimed basis of $485,000. T's claimed initial basis exceeds the allowable basis by $100,000. Because this amount is due to T claiming an initial basis as defined in § 1.1014-10(a)(2) that exceeds the property's final value as determined under § 1.1014-10(b), T is liable for the 20% accuracy-related penalty for the portion of any underpayment that is attributable to the reporting of an inconsistent basis.

(c) ***Applicability date.*** This section applies to property described in § 1.1014-10(c)(1) that is reported on an estate tax return required under section 6018 that is filed after September 17, 2024.

[T.D. 9991, 89 FR 76386, Sept. 17, 2024]

§ 1.6664-0 Table of contents.

This section lists the captions in §§ 1.6664-1 through 1.6664-4T.

§ 1.6664-1 Accuracy-related and fraud penalties; definitions and special rules.

(a) In general.

(b) Effective date.

(1) In general.

(2) Reasonable cause and good faith exception to section 6662 penalties.

(i) For returns due after September 1, 1995.

(ii) For returns filed after December 31, 2002.

(3) Qualified amended returns.

§ 1.6664-2 Underpayment.

(a) Underpayment defined.

(b) Amount of income tax imposed.

(c) Amount shown as the tax by the taxpayer on his return.

(1) Defined.

(2) Effect of qualified amended return.

(3) Qualified amended return defined.

(i) General rule.

(ii) Undisclosed listed transactions.

(4) Special rules.

(5) Examples.

(d) Amounts not so shown previously assessed (or collected without assessment).

(e) Rebates.

(f) Underpayments for certain carryback years not reduced by amount of carrybacks.

(g) Examples.

§ 1.6664-3 Ordering rules for determining the total amount of penalties imposed.

(a) In general.

(b) Order in which adjustments are taken into account.

(c) Manner in which unclaimed prepayment credits are allocated.

(d) Examples.

§ 1.6664-4 Reasonable cause and good faith exception to section 6662 penalties.

(a) In general.

(b) Facts and circumstances taken into account.

(1) In general.

(2) Examples.

(c) Reliance on opinion or advice.

(1) Fact and circumstances; minimum requirements.

(i) All facts and circumstances considered.

(ii) No unreasonable assumptions.

(iii) Reliance on the invalidity of a regulation.

(2) Advice defined.

(3) Cross-reference.

(d) Underpayments attributable to reportable transactions.

(e) Pass-through items.

(f) Special rules for substantial understatement penalty attributable to tax shelter items of corporations.

(1) In general; facts and circumstances.

(2) Reasonable cause based on legal justification.

(i) Minimum requirements.

(A) Authority requirement.

(B) Belief requirement.

(ii) Legal justification defined.

(3) Minimum requirements not dispositive.

(4) Other factors.

(g) Transactions between persons described in section 482 and net section 482 transfer price adjustments. [Reserved]

(h) Valuation misstatements of charitable deduction property.

(1) In general.

(2) Definitions.

(i) Charitable deduction property.

(ii) Qualified appraisal.

(iii) Qualified appraiser.

(3) Special rules.

§ 1.6664-4T Reasonable cause and good faith exception to section 6662 penalties

(a)-(c) [Reserved]

(d) Transactions between persons described in section 482 and net section 482 transfer price adjustments.

[T.D. 8381, 56 FR 67505, Dec. 31, 1991, as amended by T.D. 8519, 59 FR 4799, Feb. 2, 1994; T.D. 8617, 60 FR 45666, Sept. 1, 1995; T.D. 8656, 61 FR 4885, Feb. 9, 1996; T.D. 8790, 63 FR 66435, Dec. 2, 1998; T.D. 9109, 68 FR 75128, Dec. 30, 2003; T.D. 9309, 72 FR 903, Jan. 9, 2007]

§ 1.6664-1 Accuracy-related and fraud penalties; definitions, effective date and special rules.

(a) ***In general.*** Section 6664(a) defines the term “underpayment” for purposes of the accuracy-related penalty under section 6662 and the fraud penalty under section 6663. The definition of “underpayment” of income taxes imposed under subtitle A is set forth in § 1.6664-2. Ordering rules for computing the total amount of accuracy-related and fraud penalties imposed with respect to a return are set forth in § 1.6664-3. Section 6664(c) provides a reasonable cause and good faith exception to the accuracy-related penalty. Rules relating to the reasonable cause and good faith exception are set forth in § 1.6664-4.

(b) ***Effective date*** —

(1) ***In general.*** Sections 1.6664-1 through 1.6664-3 apply to returns the due date of which (determined without regard to extensions of time for filing) is after December 31, 1989.

(2) ***Reasonable cause and good faith exception to section 6662 penalties.***

(i) ***For returns due after September 1, 1995.*** Section 1.6664-4 applies to returns the due date of which (determined without regard to extensions of time for filing) is after September 1, 1995. Except as provided in the last sentence of this paragraph (b)(2), § 1.6664-4 (as contained in 26 CFR part 1 revised April 1, 1995) applies to returns the due date of which (determined without regard to extensions of time for filing) is on or before September 1, 1995 and after December 31, 1989. For transactions occurring after December 8, 1994, § 1.6664-4 (as contained in 26 CFR part 1 revised April 1, 1995) is applied taking into account the changes made to section 6662(d)(2)(C) (relating to the substantial understatement penalty for tax shelter items of corporations) by section 744 of title VII of the Uruguay Round Agreements Act, Pub. L. 103-465 (108 Stat. 4809).

(ii) ***For returns filed after December 31, 2002.*** Sections 1.6664-4(c) (relating to relying on opinion or advice) and (d) (relating to underpayments attributable to reportable transactions) apply to returns filed after December 31, 2002, with respect to transactions entered into on or after January 1, 2003. Except as provided in paragraph (b)(2)(i) of this section, § 1.6664-4 (as contained in 26 CFR part 1 revised April 1, 2003) applies to returns filed with respect to transactions entered into before January 1, 2003.

(3) ***Qualified amended returns.*** Sections 1.6664-2(c)(1), (c)(2), (c)(3)(i)(A), (c)(3)(i)(B), (c)(3)(i)(C), (c)(3)(i)(D)(*2*), (c)(3)(i)(E), and (c)(4) are applicable for amended returns and requests for administrative adjustment filed on or after March 2, 2005. Sections 1.6664-2(c)(3)(i)(D)(*1*) and (c)(3)(ii)(B) and (C) are applicable for amended returns and requests for administrative adjustment filed on or after April 30, 2004. The applicability date for § 1.6664-2(c)(3)(ii)(A) varies depending upon which event occurs under § 1.6664-2(c)(3)(i). For purposes of § 1.6664-2(c)(3)(ii)(A), the date described in § 1.6664-2(c)(3)(i)(D)(*1*) is applicable for amended returns and requests for administrative adjustment filed on or after April 30, 2004. For purposes of § 1.6664-2(c)(3)(ii)(A), the dates described in § 1.6664-2(c)(3)(i)(A), (B), (C), (D)(*2*), and (E) are applicable for amended returns and requests for administrative adjustment filed on or after March 2, 2005. Section 1.6664-2(c)(1) through (c)(3), as contained in 26 CFR part 1 revised as of April 1, 2004 and as modified by Notice 2004-38, 2004-1 C.B. 949, applies with respect to returns and requests for administrative adjustment filed on or after April 30, 2004 and before March 2, 2005. Section 1.6664-2(c)(1) through (3), as contained in 26 CFR part 1 revised as of April 30, 2004, applies with respect to returns and requests for administrative adjustment filed before April 30, 2004.

[T.D. 8381, 56 FR 67506, Dec. 31, 1991, as amended by T.D. 8617, 60 FR 45666, Sept. 1, 1995; T.D. 9109, 68 FR 75128, Dec. 30, 2003; T.D. 9309, 72 FR 903, Jan. 9, 2007]

§ 1.6664-2 Underpayment.

(a) ***Underpayment defined.*** In the case of income taxes imposed under subtitle A, an underpayment for purposes of section 6662, relating to the accuracy-related penalty, and section 6663, relating to the fraud penalty, means the amount by which any income tax imposed under this subtitle (as defined in paragraph (b) of the section) exceeds the excess of—

(1) The sum of—

(i) The amount shown as the tax by the taxpayer on his return (as defined in paragraph (c) of this section), plus

(ii) Amounts not so shown previously assessed (or collected without assessment) (as defined in paragraph (d) of this section), over

(2) The amount of rebates made (as defined in paragraph (e) of this section).

The definition of underpayment also may be expressed as—

Underpayment = W − (X + Y − Z),

where *W* = the amount of income tax imposed; *X* = the amount shown as the tax by the taxpayer on his return; *Y* = amounts not so shown previously assessed (or collected without assessment); and *Z* = the amount of rebates made.

(b) ***Amount of income tax imposed.*** For purposes of paragraph (a) of this section, the "amount of income tax imposed" is the amount of tax imposed on the taxpayer under subtitle A for the taxable year, determined without regard to—

(1) The credits for tax withheld under sections 31 (relating to tax withheld on wages) and 33 (relating to tax withheld at source on nonresident aliens and foreign corporations);

(2) Payments of tax or estimated tax by the taxpayer;

(3) Any credit resulting from the collection of amounts assessed under section 6851 as the result of a termination assessment, or section 6861 as the result of a jeopardy assessment; and

(4) Any tax that the taxpayer is not required to assess on the return (such as the tax imposed by section 531 on the accumulated taxable income of a corporation).

(c) ***Amount shown as the tax by the taxpayer on his return*** —

(1) ***Defined.*** For purposes of paragraph (a) of this section, the *amount shown as the tax by the taxpayer on his return* is the tax liability shown by the taxpayer on his return, determined without regard to the items listed in paragraphs (b)(1), (2), and (3) of this section, except that it is reduced by the excess of—

(i) The amounts shown by the taxpayer on his return as credits for tax withheld under section 31 (relating to tax withheld on wages) and section 33 (relating to tax withheld at source on nonresident aliens and foreign corporations), as payments of estimated tax, or as any other payments made by the taxpayer with respect to a taxable year before filing the return for such taxable year, over

(ii) The amounts actually withheld, actually paid as estimated tax, or actually paid with respect to a taxable year before the return is filed for such taxable year.

(2) ***Effect of qualified amended return.*** The *amount shown as the tax by the taxpayer on his return* includes an amount shown as additional tax on a qualified amended return (as defined in paragraph (c)(3) of this section), except that such amount is not included if it relates to a fraudulent position on the original return.

(3) ***Qualified amended return defined*** —

(i) ***General rule.*** A *qualified amended return* is an amended return, or a timely request for an administrative adjustment under section 6227, filed after the due date of the return for the taxable year (determined with regard to extensions of time to file) and before the earliest of—

(A) The date the taxpayer is first contacted by the Internal Revenue Service (IRS) concerning any examination (including a criminal investigation) with respect to the return;

(B) The date any person is first contacted by the IRS concerning an examination of that person under section 6700 (relating to the penalty for promoting abusive tax shelters) for an activity with respect to which the taxpayer claimed any tax benefit on the return directly or indirectly through the entity, plan or arrangement described in section 6700(a)(1)(A);

(C) In the case of a pass-through item (as defined in § 1.6662-4(f)(5)), the date the pass-through entity (as defined in § 1.6662-4(f)(5)) is first contacted by the IRS in connection with an examination of the return to which the pass-through item relates;

(D)

(*1*) The date on which the IRS serves a summons described in section 7609(f) relating to the tax liability of a person, group, or class that includes the taxpayer (or pass-through entity of which the taxpayer is a partner, shareholder, beneficiary, or holder of a residual interest in a REMIC) with respect to an activity for which the taxpayer claimed any tax benefit on the return directly or indirectly.

(*2*) The rule in paragraph (c)(3)(i)(D)(*1*) of this section applies to any return on which the taxpayer claimed a direct or indirect tax benefit from the type of activity that is the subject of the summons, regardless of whether the summons seeks the production of information for the taxable period covered by such return; and

(E) The date on which the Commissioner announces by revenue ruling, revenue procedure, notice, or announcement, to be published in the Internal Revenue Bulletin (see § 601.601(d)(2) of this chapter), a settlement initiative to compromise or waive penalties, in whole or in part, with respect to a listed transaction. This rule applies only to a taxpayer who participated in the listed transaction and for the taxable year(s) in which the taxpayer claimed any direct or indirect tax benefits from the listed transaction. The Commissioner may waive the requirements of this paragraph or identify a later date by which a taxpayer who participated in the listed transaction must file a qualified amended return in the published guidance announcing the listed transaction settlement initiative.

(ii) ***Undisclosed listed transactions.*** An *undisclosed listed transaction* is a transaction that is the same as, or substantially similar to, a listed transaction within the meaning of § 1.6011-4(b)(2) (regardless of whether § 1.6011-4 requires the taxpayer to disclose the transaction) and was neither previously disclosed by the taxpayer within the meaning of § 1.6011-4 or § 1.6011-4T, nor disclosed under Announcement 2002-2 (2002-1 C.B. 304), (see § 601.601(d)(2)(ii) of this chapter) by the deadline therein. In the case of an *undisclosed listed transaction* for which a taxpayer claims any direct or indirect tax benefits on its return (regardless of whether the transaction was a listed transaction at the time the return was filed), an amended return or request for administrative adjustment under section 6227 will not be a *qualified amended return* if filed on or after the earliest of—

(A) The dates described in paragraph (c)(3)(i) of this section;

(B) The date on which the IRS first contacts any person regarding an examination of that person's liability under section 6707(a) with respect to the undisclosed listed transaction of the taxpayer; or

(C) The date on which the IRS requests, from any person who made a tax statement to or for the benefit of the taxpayer or from any person who gave the taxpayer material aid, assistance, or advice as described in section 6111(b)(1)(A)(i) with respect to the taxpayer, the information required to be included on a list under section 6112 relating to a transaction that was the same as, or substantially similar to, the undisclosed listed transaction, regardless of whether the taxpayer's information is required to be included on that list.

(4) ***Special rules.***

(i) A qualified amended return includes an amended return that is filed to disclose information pursuant to § 1.6662-3(c) or § 1.6662-4(e) and (f) even though it does not report any additional tax liability. See § 1.6662-3(c), § 1.6662-4(f), and § 1.6664-4(c) for rules relating to adequate disclosure.

(ii) The Commissioner may by revenue procedure prescribe the manner in which the rules of paragraph (c) of this section regarding qualified amended returns apply to particular classes of taxpayers.

(5) ***Examples.*** The following examples illustrate the provisions of paragraphs (c)(3) and (c)(4) of this section:

Example 1. T, an individual taxpayer, claimed tax benefits on its 2002 Federal income tax return from a transaction that is substantially similar to the transaction identified as a listed transaction in Notice 2002-65, 2002-2 C.B. 690 (Partnership Entity Straddle Tax Shelter). T did not disclose his participation in this transaction on a Form 8886, "Reportable Transaction Disclosure Statement," as required by § 1.6011-4. On June 30, 2004, the IRS requested from P, T's material advisor, an investor list required to be maintained under section 6112. The section 6112 request, however, related to the type of transaction described in Notice 2003-81, 2003-2 C.B. 1223 (Tax Avoidance Using Offsetting Foreign Currency Option Contracts). T did not participate in (within the meaning of § 1.6011-4(c)) a transaction described in Notice 2003-81. T may file a qualified amended return relating to the transaction described in Notice 2002-65 because T did not claim a tax benefit with respect to the listed transaction described in Notice 2003-81, which is the subject of the section 6112 request.

Example 2. The facts are the same as in *Example 1,* except that T's 2002 Federal income tax return reflected T's participation in the transaction described in Notice 2003-81. As of June 30, 2004, T may not file a qualified amended return for the 2002 tax year.

Example 3. (i) Corporation X claimed tax benefits from a transaction on its 2002 Federal income tax return. In October 2004, the IRS and Treasury Department identified the transaction as a listed transaction. In December 2004, the IRS contacted P concerning an examination of P's liability under section 6707(a) (as in effect prior to the amendment to section 6707 by section 816 of the American Jobs Creation Act of 2004 (the Jobs Act), Public Law 108-357 (118 Stat. 1418)). P is the organizer of a section 6111 tax shelter (as in effect prior to the amendment to section 6111 by section 815 of the Jobs Act) who provided representations to X regarding tax benefits from the transaction, and the IRS has contacted P about the failure to register that transaction.

Three days later, X filed an amended return.
(ii) X's amended return is not a qualified amended return, because X did not disclose the transaction before the IRS contacted P. X's amended return would have been a qualified amended return if it was submitted prior to the date on which the IRS contacted P.

Example 4. The facts are the same as in *Example 3* except that, instead of contacting P concerning an examination under section 6707(a), in December 2004, the IRS served P with a John Doe summons described in section 7609(f) relating to the tax liability of participants in the type of transaction for which X claimed tax benefits on its return. X cannot file a qualified amended return after the John Doe summons has been served regardless of when, or whether, the transaction becomes a listed transaction.

Example 5. On November 30, 2003, the IRS served a John Doe summons described in section 7609(f) on Corporation Y, a credit card company. The summons requested the identity of, and information concerning, United States taxpayers who, during the taxable years 2001 and 2002, had signature authority over Corporation Y's credit cards issued by, through, or on behalf of certain offshore financial institutions. Corporation Y complied with the summons, and identified, among others, Taxpayer B. On May 31, 2004, before the IRS first contacted Taxpayer B concerning an examination of Taxpayer B's Federal income tax return for the taxable year 2002, Taxpayer B filed an amended return for that taxable year, that showed an increase in Taxpayer B's Federal income tax liability. Under paragraph (c)(3)(i)(D) of this section, the amended return is not a qualified amended return because it was not filed before the John Doe summons was served on Corporation Y.

Example 6. The facts are the same as in *Example 5.* Taxpayer B continued to maintain the offshore credit card account through 2003 and filed an original tax return for the 2003 taxable year claiming tax benefits attributable to the existence of the account. On March 21, 2005, Taxpayer B filed an amended return for the taxable year 2003, that showed an increase in Taxpayer B's Federal income tax liability. Under paragraph (c)(3)(i)(D) of this section, the amended return is not a qualified amended return because it was not filed before the John Doe summons for 2001 and 2002 was served on Corporation Y, and the return reflects benefits from the type of activity that is the subject of the John Doe summons.

Example 7. (i) On November 30, 2003, the IRS served a John Doe summons described in section 7609(f) on Corporation Y, a credit card company. The summons requested the identity of, and information concerning, United States taxpayers who, during the taxable years 2001 and 2002, had signature authority over Corporation Y's credit cards issued by, through, or on behalf of certain offshore financial institutions. Taxpayer C did not have signature authority over any of Corporation Y's credit cards during either 2001 or 2002 and, therefore, was not a person described in the John Doe summons.
(ii) In 2003, Taxpayer C first acquired signature authority over a Corporation Y credit card issued by an offshore financial institution. Because Taxpayer C did not have signature authority during 2001 or 2002 over a Corporation Y credit card issued by an offshore

> financial institution, and was therefore not covered by the John Doe summons served on November 30, 2003, Taxpayer C's ability to file a qualified amended return for the 2003 taxable year is not limited by paragraph (c)(3)(i)(D) of this section.

(d) ***Amounts not so shown previously assessed (or collected without assessment).*** For purposes of paragraph (a) of this section, "amounts not so shown previously assessed" means only amounts assessed before the return is filed that were not shown on the return, such as termination assessments under section 6851 and jeopardy assessments under section 6861 made prior to the filing of the return for the taxable year. For purposes of paragraph (a) of this section, the amount "collected without assessment" is the amount by which the total of the credits allowable under section 31 (relating to tax withheld on wages) and section 33 (relating to tax withheld at source on nonresident aliens and foreign corporations), estimated tax payments, and other payments in satisfaction of tax liability made before the return is filed, exceed the tax shown on the return (provided such excess has not been refunded or allowed as a credit to the taxpayer).

(e) ***Rebates.*** The term "rebate" means so much of an abatement credit, refund or other repayment, as was made on the ground that the tax imposed was less than the excess of—

(1) The sum of—

(i) The amount shown as the tax by the taxpayer on his return, plus

(ii) Amounts not so shown previously assessed (or collected without assessment), over

(2) Rebates previously made.

(f) ***Underpayments for certain carryback years not reduced by amount of carrybacks.*** The amount of an underpayment for a taxable year that is attributable to conduct proscribed by sections 6662 or 6663 is not reduced on account of a carryback of a loss, deduction or credit to that year. Such conduct includes negligence or disregard of rules or regulations; a substantial understatement of income tax; and a substantial (or gross) valuation misstatement under chapter 1, provided that the applicable dollar limitation is satisfied for the carryback year.

(g) ***Examples.*** The following examples illustrate this section:

Example 1. Taxpayer's 1990 return showed a tax liability of $18,000. Taxpayer had no amounts previously assessed (or collected without assessment) and received no rebates of tax. Taxpayer claimed a credit in the amount of $23,000 for income tax withheld under section 3402, which resulted in a refund received of $5,000. It is later determined that the taxpayer should have reported additional income and that the correct tax for the taxable year is $25,500. There is an underpayment of $7,500, determined as follows:

Tax imposed under subtitle A		$25,500
Tax shown on return	$18,000	
Tax previously assessed (or collected without assessment)	None	
Amount of rebates made	None	
Balance		$18,000

Underpayment		$7,500

Example 2. The facts are the same as in *Example 1* except that the taxpayer failed to claim on the return a credit of $1,500 for income tax withheld. This $1,500 constitutes an amount collected without assessment as defined in paragraph (d) of this section. The underpayment is $6,000, determined as follows:

Tax imposed under subtitle A		$25,500
Tax shown on return	$18,000	
Tax previously assessed (or collected without assessment)	1,500	
Amount of rebates made	None	
Balance		$19,500
Underpayment		$6,000

Example 3. On Form 1040 filed for tax year 1990, taxpayer reported a tax liability of $10,000, estimated tax payments of $15,000, and received a refund of $5,000. Estimated tax payments actually made with respect to tax year 1990 were only $7,000. For purposes of determining the amount of underpayment subject to a penalty under section 6662 or section 6663, the tax shown on the return is $2,000 (reported tax liability of $10,000 reduced by the overstated estimated tax of $8,000 ($15,000-$7,000)). The underpayment is $8,000, determined as follows:

Tax imposed under subtitle A		$10,000
Tax shown on return	$2,000	
Tax previously assessed (or collected without assessment)	None	
Amount of rebates made	None	
Balance		$2,000
Underpayment		$8,000

[T.D. 8381, 56 FR 67506, Dec. 31, 1991; T.D. 8381, 57 FR 6165, Feb. 20, 1992, as amended by T.D. 9186, 70 FR 10039, Mar. 2, 2005; T.D. 9309, 72 FR 903, Jan. 9, 2007]

§ 1.6664-3 Ordering rules for determining the total amount of penalties imposed.

(a) ***In general.*** This section provides rules for determining the order in which adjustments to a return are taken into account for the purpose of computing the total amount of penalties imposed under sections 6662 and 6663, where—

(1) There is at least one adjustment with respect to which no penalty has been imposed and at least one with respect to which a penalty has been imposed, or

(2) There are at least two adjustments with respect to which penalties have been imposed and they have been imposed at different rates.

This section also provides rules for allocating unclaimed prepayment credits to adjustments to a return.

(b) ***Order in which adjustments are taken into account.*** In computing the portions of an underpayment subject to penalties imposed under sections 6662 and 6663, adjustments to a return are considered made in the following order:

(1) Those with respect to which no penalties have been imposed.

(2) Those with respect to which a penalty has been imposed at a 20 percent rate (*i.e.,* a penalty for negligence or disregard of rules or regulations, substantial understatement of income tax, or substantial valuation misstatement, under sections 6662(b)(1) through 6662(b)(3), respectively).

(3) Those with respect to which a penalty has been imposed at a 40 percent rate (*i.e.,* a penalty for a gross valuation misstatement under sections 6662 (b)(3) and (h)).

(4) Those with respect to which a penalty has been imposed at a 75 percent rate (*i.e.,* a penalty for fraud under section 6663).

(c) ***Manner in which unclaimed prepayment credits are allocated.*** Any income tax withholding or other payment made before a return was filed, that was neither claimed on the return nor previously allowed as a credit against the tax liability for the taxable year (an "unclaimed prepayment credit"), is allocated as follows—

(1) If an unclaimed prepayment credit is allocable to a particular adjustment, such credit is applied in full in determining the amount of the underpayment resulting from such adjustment.

(2) If an unclaimed prepayment credit is not allocable to a particular adjustment, such credit is applied in accordance with the ordering rules set forth in paragraph (b) of this section.

(d) ***Examples.*** The following examples illustrate the rules of this § 1.6664-3. These examples do not take into account the reasonable cause exception to the accuracy-related penalty under § 1.6664-4.

Example 1. A and B, husband and wife, filed a joint federal income tax return for calendar year 1989, reporting taxable income of $15,800 and a tax liability of $2,374. A and B had no amounts previously assessed (or collected without assessment) and no rebates had been made. Subsequently, the return was examined and the following adjustments and penalties were agreed to:

Adjustment #1 (No penalty imposed)	$1,000
Adjustment #2 (Substantial understatement penalty imposed)	40,000
Adjustment #3 (Civil fraud penalty imposed)	45,000
Total adjustments	$86,000

Taxable income shown on return		15,800
Taxable income as corrected		$101,800
Computation of underpayment:		
Tax imposed by subtitle A		$25,828
Tax shown on return	$2,374	
Previous assessments	None	
Rebates	None	
Balance		$2,374
Underpayment		$23,454

Computation of the portions of the underpayment on which penalties under section 6662(b)(2) and section 6663 are imposed:

Step 1 Determine the portion, if any, of the underpayment on which no accuracy-related or fraud penalty is imposed:

Taxable income shown on return	$15,800
Adjustment #1	1,000
"Adjusted" taxable income	$16,800
Tax on "adjusted" taxable income	$2,524
Tax shown on return	2,374
Portion of underpayment on which no penalty is imposed	$150

Step 2 Determine the portion, if any, of the underpayment on which a penalty of 20 percent is imposed:

"Adjusted" taxable income from step 1	$16,800
Adjustment #2	40,000
"Adjusted" taxable income	56,800
Tax on "adjusted" taxable income	$11,880
Tax on "adjusted" taxable income from step 1	$2,524
Portion of underpayment on which 20 percent penalty is imposed	$9,356

Step 3 Determine the portion, if any, of the underpayment on which a penalty of 75 percent is

imposed:

Total underpayment		$23,454
Less the sum of the portions of such underpayment determined in:		
Step 1	$150	
Step 2	9,356	
Total		$9,506
Portion of underpayment on which 75 percent penalty is imposed		$13,948

Example 2. The facts are the same as in *Example 1* except that the taxpayers failed to claim on their return a credit of $1,500 for income tax withheld on unreported additional income that resulted in Adjustment #2. Because the unclaimed prepayment credit is allocable to Adjustment #2, the portion of the underpayment attributable to that adjustment is $7,856 ($9,356—$1,500). The portions of the underpayment attributable to Adjustments #1 and #3 remain the same.

Example 3. The facts are the same as in *Example 1* except that the taxpayers made a timely estimated tax payment of $1,500 for 1989 which they failed to claim (and which the Service had not previously allowed). This unclaimed prepayment credit is not allocable to any particular adjustment. Therefore, the credit is allocated first to the portion of the underpayment on which no penalty is imposed ($150). The remaining amount ($1,350) is allocated next to the 20 percent penalty portion of the underpayment ($9,356). Thus, the portion of the underpayment that is not penalized is zero ($150—$150), the portion subject to a 20 percent penalty is $8,006 ($9,356—$1,350) and the portion subject to a 75 percent penalty is unchanged at $13,948.

[T.D. 8381, 56 FR 67507, Dec. 31, 1991; T.D. 8381, 57 FR 6165, Feb. 20, 1992]

§ 1.6664-4 Reasonable cause and good faith exception to section 6662 penalties.

(a) ***In general.*** No penalty may be imposed under section 6662 with respect to any portion of an underpayment upon a showing by the taxpayer that there was reasonable cause for, and the taxpayer acted in good faith with respect to, such portion. Rules for determining whether the reasonable cause and good faith exception applies are set forth in paragraphs (b) through (h) of this section.

(b) ***Facts and circumstances taken into account*** —

(1) ***In general.*** The determination of whether a taxpayer acted with reasonable cause and in good faith is made on a case-by-case basis, taking into account all pertinent facts and circumstances. (See paragraph (e) of this section for certain rules relating to a substantial understatement penalty attributable to tax shelter items of corporations.) Generally, the most important factor is the extent of the taxpayer's effort to assess the taxpayer's proper tax liability. Circumstances that may indicate reasonable cause and good faith include an honest misunderstanding of fact or law that is reasonable in light of all of the facts and circumstances, including the experience, knowledge, and education of the taxpayer. An isolated computational or transcriptional error generally is not inconsistent with reasonable cause and good faith. Reliance on an information return or on the advice of a professional tax advisor or an appraiser does not necessarily demonstrate reasonable

cause and good faith. Similarly, reasonable cause and good faith is not necessarily indicated by reliance on facts that, unknown to the taxpayer, are incorrect. Reliance on an information return, professional advice, or other facts, however, constitutes reasonable cause and good faith if, under all the circumstances, such reliance was reasonable and the taxpayer acted in good faith. (See paragraph (c) of this section for certain rules relating to reliance on the advice of others.) For example, reliance on erroneous information (such as an error relating to the cost or adjusted basis of property, the date property was placed in service, or the amount of opening or closing inventory) inadvertently included in data compiled by the various divisions of a multidivisional corporation or in financial books and records prepared by those divisions generally indicates reasonable cause and good faith, provided the corporation employed internal controls and procedures, reasonable under the circumstances, that were designed to identify such factual errors. Reasonable cause and good faith ordinarily is not indicated by the mere fact that there is an appraisal of the value of property. Other factors to consider include the methodology and assumptions underlying the appraisal, the appraised value, the relationship between appraised value and purchase price, the circumstances under which the appraisal was obtained, and the appraiser's relationship to the taxpayer or to the activity in which the property is used. (See paragraph (g) of this section for certain rules relating to appraisals for charitable deduction property.) A taxpayer's reliance on erroneous information reported on a Form W-2, Form 1099, or other information return indicates reasonable cause and good faith, provided the taxpayer did not know or have reason to know that the information was incorrect. Generally, a taxpayer knows, or has reason to know, that the information on an information return is incorrect if such information is inconsistent with other information reported or otherwise furnished to the taxpayer, or with the taxpayer's knowledge of the transaction. This knowledge includes, for example, the taxpayer's knowledge of the terms of his employment relationship or of the rate of return on a payor's obligation.

(2) ***Examples.*** The following examples illustrate this paragraph (b). They do not involve tax shelter items. (See paragraph (e) of this section for certain rules relating to the substantial understatement penalty attributable to the tax shelter items of corporations.)

Example 1. A, an individual calendar year taxpayer, engages B, a professional tax advisor, to give A advice concerning the deductibility of certain state and local taxes. A provides B with full details concerning the taxes at issue. B advises A that the taxes are fully deductible. A, in preparing his own tax return, claims a deduction for the taxes. Absent other facts, and assuming the facts and circumstances surrounding B's advice and A's reliance on such advice satisfy the requirements of paragraph (c) of this section, A is considered to have demonstrated good faith by seeking the advice of a professional tax advisor, and to have shown reasonable cause for any underpayment attributable to the deduction claimed for the taxes. However, if A had sought advice from someone that A knew, or should have known, lacked knowledge in the relevant aspects of Federal tax law, or if other facts demonstrate that A failed to act reasonably or in good faith, A would not be considered to have shown reasonable cause or to have acted in good faith.

Example 2. C, an individual, sought advice from D, a friend who was not a tax professional, as to how C might reduce his Federal tax obligations. D advised C that, for a nominal investment in Corporation X, D had received certain tax benefits which virtually eliminated D's Federal tax liability. D also named other investors who had received similar benefits. Without further inquiry, C invested in X and claimed the benefits that he had been assured by D were due him. In this

case, C did not make any good faith attempt to ascertain the correctness of what D had advised him concerning his tax matters, and is not considered to have reasonable cause for the underpayment attributable to the benefits claimed.

Example 3. E, an individual, worked for Company X doing odd jobs and filling in for other employees when necessary. E worked irregular hours and was paid by the hour. The amount of E's pay check differed from week to week. The Form W-2 furnished to E reflected wages for 1990 in the amount of $29,729. It did not, however, include compensation of $1,467 paid for some hours E worked. Relying on the Form W-2, E filed a return reporting wages of $29,729. E had no reason to know that the amount reported on the Form W-2 was incorrect. Under the circumstances, E is considered to have acted in good faith in relying on the Form W-2 and to have reasonable cause for the underpayment attributable to the unreported wages.

Example 4. H, an individual, did not enjoy preparing his tax returns and procrastinated in doing so until April 15th. On April 15th, H hurriedly gathered together his tax records and materials, prepared a return, and mailed it before midnight. The return contained numerous errors, some of which were in H's favor and some of which were not. The net result of all the adjustments, however, was an underpayment of tax by H. Under these circumstances, H is not considered to have reasonable cause for the underpayment or to have acted in good faith in attempting to file an accurate return.

(c) ***Reliance on opinion or advice*** —

(1) ***Facts and circumstances; minimum requirements.*** All facts and circumstances must be taken into account in determining whether a taxpayer has reasonably relied in good faith on advice (including the opinion of a professional tax advisor) as to the treatment of the taxpayer (or any entity, plan, or arrangement) under Federal tax law. For example, the taxpayer's education, sophistication and business experience will be relevant in determining whether the taxpayer's reliance on tax advice was reasonable and made in good faith. In no event will a taxpayer be considered to have reasonably relied in good faith on advice (including an opinion) unless the requirements of this paragraph (c)(1) are satisfied. The fact that these requirements are satisfied, however, will not necessarily establish that the taxpayer reasonably relied on the advice (including the opinion of a tax advisor) in good faith. For example, reliance may not be reasonable or in good faith if the taxpayer knew, or reasonably should have known, that the advisor lacked knowledge in the relevant aspects of Federal tax law.

(i) ***All facts and circumstances considered.*** The advice must be based upon all pertinent facts and circumstances and the law as it relates to those facts and circumstances. For example, the advice must take into account the taxpayer's purposes (and the relative weight of such purposes) for entering into a transaction and for structuring a transaction in a particular manner. In addition, the requirements of this paragraph (c)(1) are not satisfied if the taxpayer fails to disclose a fact that it knows, or reasonably should know, to be relevant to the proper tax treatment of an item.

(ii) ***No unreasonable assumptions.*** The advice must not be based on unreasonable factual or legal assumptions (including assumptions as to future events) and must not unreasonably rely on the representations, statements, findings, or agreements of the taxpayer or any other person. For example, the advice must not be based upon a representation or assumption which the taxpayer knows, or has reason to know, is unlikely to be true, such as an inaccurate representation or assumption as to the taxpayer's purposes for entering into a transaction or for structuring a transaction in a particular manner.

(iii) ***Reliance on the invalidity of a regulation.*** A taxpayer may not rely on an opinion or advice that a regulation is invalid to establish that the taxpayer acted with reasonable cause and good faith unless the taxpayer adequately disclosed, in accordance with § 1.6662-3(c)(2), the position that the regulation in question is invalid.

(2) ***Advice defined.*** Advice is any communication, including the opinion of a professional tax advisor, setting forth the analysis or conclusion of a person, other than the taxpayer, provided to (or for the benefit of) the taxpayer and on which the taxpayer relies, directly or indirectly, with respect to the imposition of the section 6662 accuracy-related penalty. Advice does not have to be in any particular form.

(3) ***Cross-reference.*** For rules applicable to advisors, see e.g., §§ 1.6694-1 through 1.6694-3 (regarding preparer penalties), 31 CFR 10.22 (regarding diligence as to accuracy), 31 CFR 10.33 (regarding tax shelter opinions), and 31 CFR 10.34 (regarding standards for advising with respect to tax return positions and for preparing or signing returns).

(d) ***Underpayments attributable to reportable transactions.*** If any portion of an underpayment is attributable to a reportable transaction, as defined in § 1.6011-4(b) (or § 1.6011-4T(b), as applicable), then failure by the taxpayer to disclose the transaction in accordance with § 1.6011-4 (or § 1.6011-4T, as applicable) is a strong indication that the taxpayer did not act in good faith with respect to the portion of the underpayment attributable to the reportable transaction.

(e) ***Pass-through items.*** The determination of whether a taxpayer acted with reasonable cause and in good faith with respect to an underpayment that is related to an item reflected on the return of a pass-through entity is made on the basis of all pertinent facts and circumstances, including the taxpayer's own actions, as well as the actions of the pass-through entity.

(f) ***Special rules for substantial understatement penalty attributable to tax shelter items of corporations*** —

(1) ***In general; facts and circumstances.*** The determination of whether a corporation acted with reasonable cause and in good faith in its treatment of a tax shelter item (as defined in § 1.6662-4(g)(3)) is based on all pertinent facts and circumstances. Paragraphs (f)(2), (3), and (4) of this section set forth rules that apply, in the case of a penalty attributable to a substantial understatement of income tax (within the meaning of section 6662(d)), in determining whether a corporation acted with reasonable cause and in good faith with respect to a tax shelter item.

(2) ***Reasonable cause based on legal justification*** —

(i) ***Minimum requirements.*** A corporation's legal justification (as defined in paragraph (f)(2)(ii) of this section) may be taken into account, as appropriate, in establishing that the corporation acted with reasonable cause and in good faith in its treatment of a tax shelter item only if the authority requirement of paragraph (f)(2)(i)(A) of this section and the belief requirement of paragraph (f)(2)(i)(B) of this section are satisfied (the minimum requirements). Thus, a failure to satisfy the minimum requirements will preclude a finding of reasonable cause and good faith based (in whole or in part) on the corporation's legal justification.

(A) ***Authority requirement.*** The authority requirement is satisfied only if there is substantial authority (within the meaning of § 1.6662-4(d)) for the tax treatment of the item.

(B) ***Belief requirement.*** The belief requirement is satisfied only if, based on all facts and circumstances, the corporation reasonably believed, at the time the return was filed, that the tax treatment of the item was more likely than not the proper treatment. For purposes

of the preceding sentence, a corporation is considered reasonably to believe that the tax treatment of an item is more likely than not the proper tax treatment if (without taking into account the possibility that a return will not be audited, that an issue will not be raised on audit, or that an issue will be settled)—

(1) The corporation analyzes the pertinent facts and authorities in the manner described in § 1.6662-4(d)(3)(ii), and in reliance upon that analysis, reasonably concludes in good faith that there is a greater than 50-percent likelihood that the tax treatment of the item will be upheld if challenged by the Internal Revenue Service; or

(2) The corporation reasonably relies in good faith on the opinion of a professional tax advisor, if the opinion is based on the tax advisor's analysis of the pertinent facts and authorities in the manner described in § 1.6662-4(d)(3)(ii) and unambiguously states that the tax advisor concludes that there is a greater than 50-percent likelihood that the tax treatment of the item will be upheld if challenged by the Internal Revenue Service. (For this purpose, the requirements of paragraph (c) of this section must be met with respect to the opinion of a professional tax advisor.)

(ii) ***Legal justification defined.*** For purposes of this paragraph (e), *legal justification* includes any justification relating to the treatment or characterization under the Federal tax law of the tax shelter item or of the entity, plan, or arrangement that gave rise to the item. Thus, a taxpayer's belief (whether independently formed or based on the advice of others) as to the merits of the taxpayer's underlying position is a legal justification.

(3) ***Minimum requirements not dispositive.*** Satisfaction of the minimum requirements of paragraph (f)(2) of this section is an important factor to be considered in determining whether a corporate taxpayer acted with reasonable cause and in good faith, but is not necessarily dispositive. For example, depending on the circumstances, satisfaction of the minimum requirements may not be dispositive if the taxpayer's participation in the tax shelter lacked significant business purpose, if the taxpayer claimed tax benefits that are unreasonable in comparison to the taxpayer's investment in the tax shelter, or if the taxpayer agreed with the organizer or promoter of the tax shelter that the taxpayer would protect the confidentiality of the tax aspects of the structure of the tax shelter.

(4) ***Other factors.*** Facts and circumstances other than a corporation's legal justification may be taken into account, as appropriate, in determining whether the corporation acted with reasonable cause and in good faith with respect to a tax shelter item regardless of whether the minimum requirements of paragraph (f)(2) of this section are satisfied.

(g) ***Tranactions between persons described in section 482 and net section 482 transfer price adjustments.*** [Reserved]

(h) ***Valuation misstatements of charitable deduction property*** —

(1) ***In general.*** There may be reasonable cause and good faith with respect to a portion of an underpayment that is attributable to a substantial (or gross) valuation misstatement of charitable deduction property (as defined in paragraph (h)(2) of this section) only if—

(i) The claimed value of the property was based on a qualified appraisal (as defined in paragraph (h)(2) of this section) by a qualified appraiser (as defined in paragraph (h)(2) of this section); and

(ii) In addition to obtaining a qualified appraisal, the taxpayer made a good faith investigation of the value of the contributed property.

(2) ***Definitions.*** For purposes of this paragraph (h):

Charitable deduction property means any property (other than money or publicly traded securities, as defined in § 1.170A-13(c)(7)(xi)) contributed by the taxpayer in a contribution for which a deduction was claimed under section 170.

Qualified appraisal means a qualified appraisal as defined in § 1.170A-13(c)(3).

Qualified appraiser means a qualified appraiser as defined in § 1.170A-13(c)(5).

(3) ***Special rules.*** The rules of this paragraph (h) apply regardless of whether § 1.170A-13 permits a taxpayer to claim a charitable contribution deduction for the property without obtaining a qualified appraisal. The rules of this paragraph (h) apply in addition to the generally applicable rules concerning reasonable cause and good faith.

[T.D. 8381, 56 FR 67508, Dec. 31, 1991; T.D. 8381, 57 FR 6166, Feb. 20, 1992, as amended by T.D. 8617, 60 FR 45666, Sept. 1, 1995; T.D. 8790, 63 FR 66435, Dec. 2, 1998; T.D. 9109, 68 FR 75128, Dec. 30, 2003]

§ 1.6664-4T Reasonable cause and good faith exception to section 6662 penalties.

(a)-(e) [Reserved]

(f) ***Transactions between persons described in section 482 and net section 482 transfer price adjustments.*** For purposes of applying the reasonable cause and good faith exception of section 6664(c) to net section 482 adjustments, the rules of § 1.6662-6(d) apply. A taxpayer that does not satisfy the rules of § 1.6662-6(d) for a net section 482 adjustment cannot satisfy the reasonable cause and good faith exception under section 6664(c). The rules of this section apply to underpayments subject to the transactional penalty in § 1.6662-6(b). If the standards of the net section 482 penalty exclusion provisions under § 1.6662-6(d) are met with respect to such underpayments, then the taxpayer will be considered to have acted with reasonable cause and good faith for purposes of this section.

[T.D. 8656, 61 FR 4885, Feb. 9, 1996]

§ 1.6694-0 Table of contents.

This section lists the captions that appear in §§ 1.6694-1 through 1.6694-4.

§ 1.6694-1 Section 6694 penalties applicable to tax return preparers.

(a) Overview.

(1) In general.

(2) Date return is deemed prepared.

(b) Tax return preparer.

(1) In general.

(2) Responsibility of signing tax return preparer.

(3) Responsibility of nonsigning tax return preparer.

(4) Responsibility of signing and nonsigning tax return preparer.

(5) Tax return preparer and firm responsibility.

(6) Examples.

(c) Understatement of liability.

(d) Abatement of penalty where taxpayer's liability not understated.

(e) Verification of information furnished by taxpayer or other third party.

(1) In general.

(2) Verification of information on previously filed returns.

(3) Examples.

(f) Income derived (or to be derived) with respect to the return or claim for refund.

(1) In general.

(2) Compensation.

(i) Multiple engagements.

(ii) Reasonable allocation.

(iii) Fee refunds.

(iv) Reduction of compensation.

(3) Individual and firm allocation.

(4) Examples.

(g) Effective/applicability date.

§ 1.6694-2 Penalty for understatement due to an unreasonable position.

(a) In general.

(1) Proscribed conduct.

(2) Special rule for corporations, partnerships, and other firms.

(b) Reasonable to believe that the position would more likely than not be sustained on its merits.

(1) In general.

(2) Authorities.

(3) Written determinations.

(4) Taxpayer's jurisdiction.

(5) When “more likely than not” standard must be satisfied.

(c) Substantial authority.

(d) Exception for adequate disclosure of positions with a reasonable basis.

(1) In general.

(2) Reasonable basis.

(3) Adequate disclosure.

(i) Signing tax return preparers.

(ii) Nonsigning tax return preparers.

(A) Advice to taxpayers.

(B) Advice to another tax return preparer.

(iii) Requirements for advice.

(iv) Pass-through entities.

(v) Examples.

(e) Exception for reasonable cause and good faith.

(1) Nature of the error causing the understatement.

(2) Frequency of errors.

(3) Materiality of errors.

(4) Tax return preparer's normal office practice.

(5) Reliance on advice of others.

(6) Reliance on generally accepted administrative or industry practice.

(f) Effective/applicability date.

§ 1.6694-3 Penalty for understatement due to willful, reckless, or intentional conduct.

(a) In general.

(1) Proscribed conduct.

(2) Special rule for corporations, partnerships, and other firms.

(b) Willful attempt to understate liability.

(c) Reckless or intentional disregard.

(d) Examples.

(e) Rules or regulations.

(f) Section 6694(b) penalty reduced by section 6694(a) penalty.

(g) Effective/applicability date.

§ 1.6694-4 Extension of period of collection when tax return preparer pays 15 percent of a penalty for understatement of taxpayer's liability and certain other procedural matters.

(a) In general.

(b) Tax return preparer must bring suit in district court to determine liability for penalty.

(c) Suspension of running of period of limitations on collection.

(d) Effective/applicability date.

[T.D. 9436, 73 FR 78439, Dec. 22, 2008]

§ 1.6694-1 Section 6694 penalties applicable to tax return preparers.

(a) ***Overview*** —

(1) ***In general.*** Sections 6694(a) and (b) impose penalties on tax return preparers for conduct giving rise to certain understatements of liability on a return (including an amended or adjusted return) or claim for refund. For positions other than those with respect to tax shelters (as defined in section 6662(d)(2)(C)(ii)) and reportable transactions to which section 6662A applies, the section 6694(a) penalty is imposed in an amount equal to the greater of $1,000 or 50 percent of the income derived (or to be derived) by the tax return preparer for an understatement of tax liability that is due to an undisclosed position for which the tax return preparer did not have substantial authority or due to a disclosed position for which there is no reasonable basis. For positions with respect to tax shelters (as defined in section 6662(d)(2)(C)(ii)) or reportable transactions to which section 6662A applies, the section 6694(a) penalty is imposed in an amount equal to the greater of $1,000 or 50 percent of the income derived (or to be derived) by the tax return preparer for an understatement of tax liability for which it is not reasonable to believe that the position would more likely than not be sustained on its merits. The section 6694(b) penalty is imposed in an amount equal to the greater of $5,000 or 50 percent of the income derived (or to be derived) by the tax return preparer for an understatement of liability with respect to tax that is due to a willful attempt to understate tax liability or that is due to reckless or intentional disregard of rules or regulations. Refer to § 1.6694-2 for rules relating to the penalty under section 6694(a). Refer to § 1.6694-3 for rules relating to the penalty under section 6694(b).

(2) ***Date return is deemed prepared.*** For purposes of the penalties under section 6694, a return or claim for refund is deemed prepared on the date it is signed by the tax return preparer. If a signing tax return preparer within the meaning of § 301.7701-15(b)(1) of this chapter fails to sign the return, the return or claim for refund is deemed prepared on the date the return or claim is filed. See § 1.6695-1 of this section. In the case of a nonsigning tax return preparer within the meaning of § 301.7701-15(b)(2) of this chapter, the relevant date is the date the nonsigning tax return preparer provides the tax advice with respect to the position giving rise to the understatement. This date will be determined based on all the facts and circumstances.

(b) ***Tax return preparer —***

(1) ***In general.*** For purposes of this section, “tax return preparer” means any person who is a tax return preparer within the meaning of section 7701(a)(36) and § 301.7701-15 of this chapter. An individual is a tax return preparer subject to section 6694 if the individual is primarily responsible for the position(s) on the return or claim for refund giving rise to an understatement. See § 301.7701-15(b)(3). There is only one individual within a firm who is primarily responsible for each position on the return or claim for refund giving rise to an understatement. In the course of identifying the individual who is primarily responsible for the position, the Internal Revenue Service (IRS) may advise multiple individuals within the firm that it may be concluded that they are the individual within the firm who is primarily responsible. In some circumstances, there may be more than one tax return preparer who is primarily responsible for the position(s) giving rise to an understatement if multiple tax return preparers are employed by, or associated with, different firms.

(2) ***Responsibility of signing tax return preparer.*** If there is a signing tax return preparer within the meaning of § 301.7701-15(b)(1) of this chapter within a firm, the signing tax return preparer generally will be considered the person who is primarily responsible for all of the positions on the return or claim for refund giving rise to an understatement unless, based upon credible information from any source, it is concluded that the signing tax return preparer is not primarily responsible for the position(s) on the return or claim for refund giving rise to an understatement. In that case, a

nonsigning tax return preparer within the signing tax return preparer's firm (as determined in paragraph (b)(3) of this section) will be considered the tax return preparer who is primarily responsible for the position(s) on the return or claim for refund giving rise to an understatement.

(3) ***Responsibility of nonsigning tax return preparer.*** If there is no signing tax return preparer within the meaning of § 301.7701-15(b)(1) of this chapter for the return or claim for refund within the firm or if, after the application of paragraph (b)(2) of this section, it is concluded that the signing tax return preparer is not primarily responsible for the position, the nonsigning tax return preparer within the meaning of § 301.7701-15(b)(2) of this chapter within the firm with overall supervisory responsibility for the position(s) giving rise to the understatement generally will be considered the tax return preparer who is primarily responsible for the position for purposes of section 6694 unless, based upon credible information from any source, it is concluded that another nonsigning tax return preparer within that firm is primarily responsible for the position(s) on the return or claim for refund giving rise to the understatement.

(4) ***Responsibility of signing and nonsigning tax return preparer.*** If the information presented would support a finding that, within a firm, either the signing tax return preparer or a nonsigning tax return preparer is primarily responsible for the position(s) giving rise to the understatement, the penalty may be assessed against either one of the individuals, but not both, as the primarily responsible tax return preparer.

(5) ***Tax return preparer and firm responsibility.*** To the extent provided in §§ 1.6694-2(a)(2) and 1.6694-3(a)(2), an individual and the firm that employs the individual, or the firm of which the individual is a partner, member, shareholder, or other equity holder, both may be subject to penalty under section 6694 with respect to the position(s) on the return or claim for refund giving rise to an understatement. If an individual (other than the sole proprietor) who is employed by a sole proprietorship is subject to penalty under section 6694, the sole proprietorship is considered a “firm” for purposes of this paragraph (b).

(6) ***Examples.*** The provisions of paragraph (b) of this section are illustrated by the following examples:

Example 1. Attorney A provides advice to Client C concerning the proper treatment of an item with respect to which all events have occurred on C's tax return. In preparation for providing that advice, A seeks advice regarding the proper treatment of the item from Attorney B, who is within the same firm as A, but A is the attorney who signs C's return as a tax return preparer. B provides advice on the treatment of the item upon which A relies. B's advice is reflected on C's tax return but no disclosure was made in accordance with § 1.6694-2(d)(3). The advice constitutes preparation of a substantial portion of the return within the meaning of § 301.7701-15(b)(3). The IRS later challenges the position taken on the tax return, giving rise to an understatement of liability. For purposes of the regulations under section 6694, A is initially considered the tax return preparer with respect to C's return, and the IRS advises A that A may be subject to the penalty under section 6694 with respect to C's return. Based upon information received from A or another source, it may be concluded that B, rather than A, had primary responsibility for the position taken on the return that gave rise to the understatement and may be subject to penalty under section 6694 instead of A.

Example 2. Same as *Example 1,* except that neither Attorney A nor any other source produce credible information that Attorney B had primary responsibility for the position on the return giving rise to an understatement. Attorney A is the tax return preparer who may be subject to penalty under section 6694 with respect to C's return.

Example 3. Same as *Example 1,* except that neither Attorney A nor any other attorney within A's firm signs Client C's return as a tax return preparer. Attorney B is the nonsigning tax return preparer within the firm with overall supervisory responsibility for the position giving rise to an understatement. Accordingly, B is the tax return preparer who is primarily responsible for the position on C's return giving rise to an understatement and may be subject to penalty under section 6694.

Example 4. Same as *Example 1,* except Attorney D, who works for a different firm than A, also provides advice on the same position upon which A relies. It may be concluded that D is also primarily responsible for the position on the return and may be subject to penalty under section 6694.

Example 5. Same as *Example 1,* except Attorney B is able to present credible information that A is also responsible for the position on C's return giving rise to an understatement. The IRS may conclude between A and B, the two responsible persons for the position, who is primarily responsible and may assess a section 6694 penalty against A or B, but not both, as the primarily responsible tax return preparer.

(c) ***Understatement of liability.*** For purposes of this section, an "understatement of liability" exists if, viewing the return or claim for refund as a whole, there is an understatement of the net amount payable with respect to any tax imposed by the Internal Revenue Code (Code), or an overstatement of the net amount creditable or refundable with respect to any tax imposed by the Code. The net amount payable in a taxable year with respect to the return for which the tax return preparer engaged in conduct proscribed by section 6694 is not reduced by any carryback. Tax imposed by the Code does not include additions to the tax, additional amounts, and assessable penalties imposed by subchapter 68 of the Code. Except as provided in paragraph (d) of this section, the determination of whether an understatement of liability exists may be made in a proceeding involving the tax return preparer that is separate and apart from any proceeding involving the taxpayer.

(d) ***Abatement of penalty where taxpayer's liability not understated.*** If a penalty under section 6694(a) or (b) concerning a return or claim for refund has been assessed against one or more tax return preparers, and if it is established at any time in a final administrative determination or a final judicial decision that there was no understatement of liability relating to the position(s) on the return or claim for refund, then—

(1) The assessment shall be abated; and

(2) If any amount of the penalty was paid, that amount shall be refunded to the person or persons who so paid, as if the payment were an overpayment of tax, without consideration of any period of limitations.

(e) ***Verification of information furnished by taxpayer or other party*** —

(1) ***In general.*** For purposes of sections 6694(a) and (b) (including demonstrating that a position complied with relevant standards under section 6694(a) and demonstrating reasonable cause and good faith under § 1.6694-2(e)), the tax return preparer generally may rely in good faith without verification upon information furnished by the taxpayer. A tax return preparer also may rely in good faith and without verification upon information and advice furnished by another advisor, another tax return preparer or other party (including another advisor or tax return preparer at the tax return preparer's firm). The tax return preparer is not required to audit, examine or review books and records, business operations, documents, or other evidence to verify independently information provided by the taxpayer, advisor, other tax return preparer, or other party. The tax return preparer, however, may not ignore the implications of information furnished to the tax return preparer or actually known by the tax return preparer. The tax return preparer must make reasonable inquiries if

the information as furnished appears to be incorrect or incomplete. Additionally, some provisions of the Code or regulations require that specific facts and circumstances exist (for example, that the taxpayer maintain specific documents) before a deduction or credit may be claimed. The tax return preparer must make appropriate inquiries to determine the existence of facts and circumstances required by a Code section or regulation as a condition of the claiming of a deduction or credit.

(2) ***Verification of information on previously filed returns.*** For purposes of section 6694(a) and (b) (including meeting the reasonable to believe that the position would more likely than not be sustained on its merits and reasonable basis standards in §§ 1.6694-2(b) and (d)(2), and demonstrating reasonable cause and good faith under § 1.6694-2(e)), a tax return preparer may rely in good faith without verification upon a tax return that has been previously prepared by a taxpayer or another tax return preparer and filed with the IRS. For example, a tax return preparer who prepares an amended return (including a claim for refund) need not verify the positions on the original return. The tax return preparer, however, may not ignore the implications of information furnished to the tax return preparer or actually known by the tax return preparer. The tax return preparer must make reasonable inquiries if the information as furnished appears to be incorrect or incomplete. The tax return preparer must confirm that the position being relied upon has not been adjusted by examination or otherwise.

(3) ***Examples.*** The provisions of this paragraph (e) are illustrated by the following examples:

Example 1. During an interview conducted by Preparer E, a taxpayer stated that he had made a charitable contribution of real estate in the amount of $50,000 during the tax year, when in fact he had not made this charitable contribution. E did not inquire about the existence of a qualified appraisal or complete a Form 8283, Noncash Charitable Contributions, in accordance with the reporting and substantiation requirements under section 170(f)(11). E reported a deduction on the tax return for the charitable contribution, which resulted in an understatement of liability for tax, and signed the tax return as the tax return preparer. E is subject to a penalty under section 6694.

Example 2. While preparing the 2008 tax return for an individual taxpayer, Preparer F realizes that the taxpayer did not provide a Form 1099-INT, “Interest Income”, for a bank account that produced significant taxable income in 2007. When F inquired about any other income, the taxpayer furnished the Form 1099-INT to F for use in preparation of the 2008 tax return. F did not know that the taxpayer owned an additional bank account that generated taxable income for 2008, and the taxpayer did not reveal this information to the tax return preparer notwithstanding F's general inquiry about any other income. F signed the taxpayer's return as the tax return preparer. F is not subject to a penalty under section 6694.

Example 3. In preparing a tax return, for purposes of determining the deductibility of a contribution by an employer for a qualified pension plan, Accountant G relies on a computation of the section 404 limit on deductible amounts made by the enrolled actuary for the plan. On the basis of this calculation, G completed and signed the tax return. It is later determined that there is an understatement of liability for tax that resulted from the overstatement of the section 404 limit on deductible amounts made by the actuary. G had no reason to believe that the actuary's calculation of the limit on deductible contributions was incorrect or incomplete, and the calculation appeared reasonable on its face. G was also not aware at the time the return was prepared of any reason why the actuary did not know all of the relevant facts or that the calculation of the limit on deductible contributions was no longer reliable due to developments in the law since the time the calculation was given. G is not subject to a penalty under section

6694. The actuary, however, may be subject to penalty under section 6694 if the calculation provided by the actuary constitutes a substantial portion of the tax return within the meaning of § 301.7701-15(b)(3) of this chapter.

(f) ***Income derived (or to be derived) with respect to the return or claim for refund*** —

(1) ***In general.*** For purposes of sections 6694(a) and (b), *income derived (or to be derived)* means all compensation the tax return preparer receives or expects to receive with respect to the engagement of preparing the return or claim for refund or providing tax advice (including research and consultation) with respect to the position(s) taken on the return or claim for refund that gave rise to the understatement. In the situation of a tax return preparer who is not compensated directly by the taxpayer, but rather by a firm that employs the tax return preparer or with which the tax return preparer is associated, *income derived (or to be derived)* means all compensation the tax return preparer receives from the firm that can be reasonably allocated to the engagement of preparing the return or claim for refund or providing tax advice (including research and consultation) with respect to the position(s) taken on the return or claim for refund that gave rise to the understatement. In the situation where a firm that employs the individual tax return preparer (or the firm of which the individual tax return preparer is a partner, member, shareholder, or other equity holder) is subject to a penalty under section 6694(a) or (b) pursuant to the provisions in §§ 1.6694-2(a)(2) or 1.6694-3(a)(2), *income derived (or to be derived)* means all compensation the firm receives or expects to receive with respect to the engagement of preparing the return or claim for refund or providing tax advice (including research and consultation) with respect to the position(s) taken on the return or claim for refund that gave rise to the understatement.

(2) ***Compensation*** —

(i) ***Multiple engagements.*** For purposes of applying paragraph (f)(1) of this section, if the tax return preparer or the tax return preparer's firm has multiple engagements related to the same return or claim for refund, only those engagements relating to the position(s) taken on the return or claim for refund that gave rise to the understatement are considered for purposes of calculating the income derived (or to be derived) with respect to the return or claim for refund.

(ii) ***Reasonable allocation.*** For purposes of applying paragraph (f)(1) of this section, only compensation for tax advice that is given with respect to events that have occurred at the time the advice is rendered and that relates to the position(s) giving rise to the understatement will be taken into account for purposes of calculating the section 6694(a) and (b) penalties. If a lump sum fee is received that includes amounts not taken into account under the preceding sentence, the amount of income derived will be based on a reasonable allocation of the lump sum fee between the tax advice giving rise to the penalty and the advice that does not give rise to the penalty.

(iii) ***Fee refunds.*** For purposes of applying paragraph (f)(1) of this section, a refund to the taxpayer of all or part of the amount paid to the tax return preparer or the tax return preparer's firm will not reduce the amount of the section 6694 penalty assessed. A refund in this context does not include a discounted fee or alternative billing arrangement for the services provided.

(iv) ***Reduction of compensation.*** For purposes of applying paragraph (f)(1) of this section, it may be concluded based upon information provided by the tax return preparer or the tax return preparer's firm that an appropriate allocation of compensation attributable to the position(s) giving rise to the understatement on the return or claim for refund is less than the total amount of compensation associated with the engagement. For example, the number of hours of the

engagement spent on the position(s) giving rise to the understatement may be less than the total hours associated with the engagement. If this is concluded, the amount of the penalty will be calculated based upon the compensation attributable to the position(s) giving rise to the understatement. Otherwise, the total amount of compensation from the engagement will be the amount of income derived for purposes of calculating the penalty under section 6694.

(3) ***Individual and firm allocation.*** If both an individual within a firm and a firm that employs the individual (or the firm of which the individual is a partner, member, shareholder, or other equity holder) are subject to a penalty under section 6694(a) or (b) pursuant to the provisions in §§ 1.6694-2(a)(2) or 1.6694-3(a)(2), the amount of penalties assessed against the individual and the firm shall not exceed 50 percent of the income derived (or to be derived) by the firm from the engagement of preparing the return or claim for refund or providing tax advice (including research and consultation) with respect to the position(s) taken on the return or claim for refund that gave rise to the understatement. The portion of the total amount of the penalty assessed against the individual tax return preparer shall not exceed 50 percent of the individual's compensation as determined under paragraphs (f)(1) and (2) of this section.

(4) ***Examples.*** The provisions of this paragraph (f) are illustrated by the following examples:

Example 1. Signing Tax Return Preparer H is engaged by a taxpayer and paid a total of $21,000. Of this amount, $20,000 relates to research and consultation regarding a transaction that is later reported on a return, and $1,000 is for the activities relating to the preparation of the return. Based on H's hourly rates, a reasonable allocation of the amount of compensation related to the advice rendered prior to the occurrence of events that are the subject of the advice is $5,000. The remaining compensation of $16,000 is considered to be compensation related to the advice rendered after the occurrence of events that are the subject of the advice and return preparation. The income derived by H with respect to the return for purposes of computing the penalty under section 6694(a) is $16,000, and the amount of the penalty imposed under section 6694(a) is $8,000.

Example 2. Accountants I, J, and K are employed by Firm L. I is a principal manager of Firm L and provides corporate tax advice for the taxpayer after all events have occurred subject to an engagement for corporate tax advice. J provides international tax advice for the taxpayer after all events have occurred subject to a different engagement for international tax advice. K prepares and signs the taxpayer's return under a general tax services engagement. I's advice is the source of an understatement on the return and the advice constitutes preparation of a substantial portion of the return within the meaning of § 301.7701-15(b) of this chapter. I is the nonsigning tax return preparer within the firm with overall supervisory responsibility for the position on the taxpayer's return giving rise to an understatement. Thus, I is the tax return preparer who is primarily responsible for the position on the taxpayer's return giving rise to the understatement. Because K's signature as the signing tax return preparer is on the return, the IRS advises K that K may be subject to the section 6694(a) penalty. K provides credible information that I is the tax return preparer with primary responsibility for the position that gave rise to the understatement. The IRS, therefore, assesses the section 6694 penalty against I. The portion of the total amount of the penalty allocable to I does not exceed 50 percent of that part of I's compensation that is attributable to the corporate tax advice engagement. In the event that Firm L is also liable under the provisions in § 1.6694-2(a)(2), the IRS assesses the section 6694 penalty in an amount not exceeding 50 percent of Firm L's firm compensation based on the engagement relating to the corporate tax advice services provided by I where there is no applicable reduction in compensation pursuant to § 1.6694-1(f)(2)(iii).

Example 3. Same facts as *Example 2,* except that I provides the advice on the corporate matter when the events have not yet occurred. I's advice is the cause of an understatement position on the return, but I is not a tax return preparer pursuant to § 301.7701-15(b)(2) or (3) of this chapter. K is not limited to reliance on persons who provide post-transactional advice if such reliance is reasonable and in good faith. Further, K has reasonable cause because K relied on I for the advice on the corporate tax matter. I, K and Firm L are not liable for the section 6694 penalty.

Example 4. Attorney M is an employee of Firm N with a salary of $75,000 per year. M performs tax preparation work for Client O. Client O's return contains a position that results in an understatement subject to the section 6694 penalty. M spent 100 hours on the position (out of a total 2,000 billed during the year). The total fees earned by Firm N with respect to the position reflected on Client O's return are $50,000. If M is subject to the penalty, the penalty amount computed under the 50 percent of income standard is .5 × (100/2,000) × $75,000 = $1,875. If Firm N is subject to the penalty, the penalty amount computed under the 50% of income standard is .5 × $50,000 = $25,000, less any penalty amount imposed against M. If a penalty of $1,875 was assessed against M and Firm N was subject to the penalty, a penalty of $23,125 would be the amount of penalty assessed against Firm N.

(g) ***Effective/applicability date.*** This section is applicable to returns and claims for refund filed, and advice provided, after December 31, 2008.

[T.D. 9436, 73 FR 78439, Dec. 22, 2008, as amended at 74 FR 5104, Jan. 29, 2009]

§ 1.6694-2 Penalty for understatement due to an unreasonable position.

(a) ***In general*** —

(1) ***Proscribed conduct.*** Except as otherwise provided in this section, a tax return preparer is liable for a penalty under section 6694(a) equal to the greater of $1,000 or 50 percent of the income derived (or to be derived) by the tax return preparer for any return or claim for refund that it prepares that results in an understatement of liability due to a position if the tax return preparer knew (or reasonably should have known) of the position and either—

(i) The position is with respect to a tax shelter (as defined in section 6662(d)(2)(C)(ii)) or a reportable transaction to which section 6662A applies, and it was not reasonable to believe that the position would more likely than not be sustained on its merits;

(ii) The position was not disclosed as provided in this section, the position is not with respect to a tax shelter (as defined in section 6662(d)(2)(C)(ii)) or a reportable transaction to which section 6662A applies, and there was not substantial authority for the position; or

(iii) The position (other than a position with respect to a tax shelter or a reportable transaction to which section 6662A applies) was disclosed as provided in this section but there was no reasonable basis for the position.

(2) ***Special rule for corporations, partnerships, and other firms.*** A firm that employs a tax return preparer subject to a penalty under section 6694(a) (or a firm of which the individual tax return preparer is a partner, member, shareholder or other equity holder) is also subject to penalty if, and only if—

(i) One or more members of the principal management (or principal officers) of the firm or a branch office participated in or knew of the conduct proscribed by section 6694(a);

(ii) The corporation, partnership, or other firm entity failed to provide reasonable and appropriate procedures for review of the position for which the penalty is imposed; or

(iii) The corporation, partnership, or other firm entity disregarded its reasonable and appropriate review procedures through willfulness, recklessness, or gross indifference (including ignoring facts that would lead a person of reasonable prudence and competence to investigate or ascertain) in the formulation of the advice, or the preparation of the return or claim for refund, that included the position for which the penalty is imposed.

(b) ***Reasonable to believe that the position would more likely than not be sustained on its merits*** —

(1) ***In general.*** If a position is with respect to a tax shelter (as defined in section 6662(d)(2)(C)(ii)) or a reportable transaction to which section 6662A applies, it is "reasonable to believe that a position would more likely than not be sustained on its merits" if the tax return preparer analyzes the pertinent facts and authorities and, in reliance upon that analysis, reasonably concludes in good faith that the position has a greater than 50 percent likelihood of being sustained on its merits. In reaching this conclusion, the possibility that the position will not be challenged by the Internal Revenue Service (IRS) (for example, because the taxpayer's return may not be audited or because the issue may not be raised on audit) is not to be taken into account. The analysis prescribed by § 1.6662-4(d)(3)(ii) (or any successor provision) for purposes of determining whether substantial authority is present applies for purposes of determining whether the more likely than not standard is satisfied. Whether a tax return preparer meets this standard will be determined based upon all facts and circumstances, including the tax return preparer's diligence. In determining the level of diligence in a particular situation, the tax return preparer's experience with the area of Federal tax law and familiarity with the taxpayer's affairs, as well as the complexity of the issues and facts, will be taken into account. A tax return preparer may reasonably believe that a position more likely than not would be sustained on its merits despite the absence of other types of authority if the position is supported by a well-reasoned construction of the applicable statutory provision. For purposes of determining whether it is reasonable to believe that the position would more likely than not be sustained on the merits, a tax return preparer may rely in good faith without verification upon information furnished by the taxpayer and information and advice furnished by another advisor, another tax return preparer, or other party (including another advisor or tax return preparer at the tax return preparer's firm), as provided in §§ 1.6694-1(e) and 1.6694-2(e)(5).

(2) ***Authorities.*** The authorities considered in determining whether a position satisfies the more likely than not standard are those authorities provided in § 1.6662-4(d)(3)(iii) (or any successor provision).

(3) ***Written determinations.*** The tax return preparer may avoid the section 6694(a) penalty by taking the position that the tax return preparer reasonably believed that the taxpayer's position satisfies the "more likely than not" standard if the taxpayer is the subject of a "written determination" as provided in § 1.6662-4(d)(3)(iv)(A).

(4) ***Taxpayer's jurisdiction.*** The applicability of court cases to the taxpayer by reason of the taxpayer's residence in a particular jurisdiction is not taken into account in determining whether it is reasonable to believe that the position would more likely than not be sustained on the merits. Notwithstanding the preceding sentence, the tax return preparer may reasonably believe that the position would more likely than not be sustained on the merits if the position is supported by controlling precedent of a United States Court of Appeals to which the taxpayer has a right of appeal with respect to the item.

(5) ***When "more likely than not" standard must be satisfied.*** For purposes of this section, the requirement that a position satisfies the "more likely than not" standard must be satisfied on the date the return is deemed prepared, as prescribed by § 1.6694-1(a)(2).

(c) [Reserved]

(d) ***Exception for adequate disclosure of positions with a reasonable basis*** —

(1) ***In general.*** The section 6694(a) penalty will not be imposed on a tax return preparer if the position taken (other than a position with respect to a tax shelter or a reportable transaction to which section 6662A applies) has a reasonable basis and is adequately disclosed within the meaning of paragraph (c)(3) of this section. For an exception to the section 6694(a) penalty for reasonable cause and good faith, see paragraph (e) of this section.

(2) ***Reasonable basis.*** For purposes of this section, "reasonable basis" has the same meaning as in § 1.6662-3(b)(3) or any successor provision of the accuracy-related penalty regulations. For purposes of determining whether the tax return preparer has a reasonable basis for a position, a tax return preparer may rely in good faith without verification upon information furnished by the taxpayer and information and advice furnished by another advisor, another tax return preparer, or other party (including another advisor or tax return preparer at the tax return preparer's firm), as provided in §§ 1.6694-1(e) and 1.6694-2(e)(5).

(3) ***Adequate disclosure*** —

(i) ***Signing tax return preparers.*** In the case of a signing tax return preparer within the meaning of § 301.7701-15(b)(1) of this chapter, disclosure of a position (other than a position with respect to a tax shelter or a reportable transaction to which section 6662A applies) for which there is a reasonable basis but for which there is not substantial authority is adequate if the tax return preparer meets any of the following standards:

(A) The position is disclosed in accordance with § 1.6662-4(f) (which permits disclosure on a properly completed and filed Form 8275, "Disclosure Statement," or Form 8275-R, "Regulation Disclosure Statement," as appropriate, or on the tax return in accordance with the annual revenue procedure described in § 1.6662-4(f)(2));

(B) The tax return preparer provides the taxpayer with the prepared tax return that includes the disclosure in accordance with § 1.6662-4(f); or

(C) For returns or claims for refund that are subject to penalties pursuant to section 6662 other than the accuracy-related penalty attributable to a substantial understatement of income tax under section 6662(b)(2) and (d), the tax return preparer advises the taxpayer of the penalty standards applicable to the taxpayer under section 6662. The tax return preparer must also contemporaneously document the advice in the tax return preparer's files.

(ii) ***Nonsigning tax return preparers.*** In the case of a nonsigning tax return preparer within the meaning of § 301.7701-15(b)(2) of this chapter, disclosure of a position (other than a position with respect to a tax shelter or a reportable transaction to which section 6662A applies) that satisfies the reasonable basis standard but does not satisfy the substantial authority standard is adequate if the position is disclosed in accordance with § 1.6662-4(f) (which permits disclosure on a properly completed and filed Form 8275 or Form 8275-R, as applicable, or on the return in accordance with an annual revenue procedure described in § 1.6662-4(f)(2)). In

addition, disclosure of a position is adequate in the case of a nonsigning tax return preparer if, with respect to that position, the tax return preparer complies with the provisions of paragraph (c)(3)(ii)(A) or (B) of this section, whichever is applicable.

(A) ***Advice to taxpayers.*** If a nonsigning tax return preparer provides advice to the taxpayer with respect to a position (other than a position with respect to a tax shelter or a reportable transaction to which section 6662A applies) for which there is a reasonable basis but for which there is not substantial authority, disclosure of that position is adequate if the tax return preparer advises the taxpayer of any opportunity to avoid penalties under section 6662 that could apply to the position, if relevant, and of the standards for disclosure to the extent applicable. The tax return preparer must also contemporaneously document the advice in the tax return preparer's files. The contemporaneous documentation should reflect that the affected taxpayer has been advised by a tax return preparer in the firm of the potential penalties and the opportunity to avoid penalty through disclosure.

(B) ***Advice to another tax return preparer.*** If a nonsigning tax return preparer provides advice to another tax return preparer with respect to a position (other than a position with respect to a tax shelter or a reportable transaction to which section 6662A applies) for which there is a reasonable basis but for which there is not substantial authority, disclosure of that position is adequate if the tax return preparer advises the other tax return preparer that disclosure under section 6694(a) may be required. The tax return preparer must also contemporaneously document the advice in the tax return preparer's files. The contemporaneous documentation should reflect that the tax return preparer outside the firm has been advised that disclosure under section 6694(a) may be required. In addition, disclosure of a position is adequate in the case of a nonsigning tax return preparer if, with respect to that position, the tax return preparer complies with the provisions of paragraph (d)(3)(ii)(A) or (B) of this section, whichever is applicable.

(iii) ***Requirements for advice.*** For purposes of satisfying the disclosure standards of paragraphs (d)(3)(i)(C) and (ii) of this section, each return position for which there is a reasonable basis but for which there is not substantial authority must be addressed by the tax return preparer. The advice to the taxpayer with respect to each position, therefore, must be particular to the taxpayer and tailored to the taxpayer's facts and circumstances. The tax return preparer is required to contemporaneously document the fact that the advice was provided. There is no general pro forma language or special format required for a tax return preparer to comply with these rules. A general disclaimer will not satisfy the requirement that the tax return preparer provide and contemporaneously document advice regarding the likelihood that a position will be sustained on the merits and the potential application of penalties as a result of that position. Tax return preparers, however, may rely on established forms or templates in advising clients regarding the operation of the penalty provisions of the Internal Revenue Code. A tax return preparer may choose to comply with the documentation standard in one document addressing each position or in multiple documents addressing all of the positions.

(iv) ***Pass-through entities.*** Disclosure in the case of items attributable to a pass-through entity is adequate if made at the entity level in accordance with the rules in § 1.6662-4(f)(5) or at the entity level in accordance with the rules in paragraphs (d)(3)(i) or (ii) of this section.

(v) ***Examples.*** The provisions of paragraph (d)(3) of this section are illustrated by the following examples:

Example 1. An individual taxpayer hires Accountant R to prepare its income tax return. A particular position taken on the tax return does not have substantial authority although there is a reasonable basis for the position. The position is not with respect to a tax shelter or a reportable transaction to which section 6662A applies. R prepares and signs the tax return and provides the taxpayer with the prepared tax return that includes the Form 8275, "Disclosure Statement," disclosing the position taken on the tax return. The individual taxpayer signs and files the tax return without disclosing the position. The IRS later challenges the position taken on the tax return, resulting in an understatement of liability. R is not subject to a penalty under section 6694.

Example 2. Attorney S advises a large corporate taxpayer concerning the proper treatment of complex entries on the corporate taxpayer's tax return. S has reason to know that the tax attributable to the entries is a substantial portion of the tax required to be shown on the tax return within the meaning of § 301.7701-15(b)(3). When providing the advice, S concludes that one position does not have substantial authority, although the position meets the reasonable basis standard. The position is not with respect to a tax shelter or a reportable transaction to which section 6662A applies. S advises the corporate taxpayer that the position lacks substantial authority and the taxpayer may be subject to an accuracy-related penalty under section 6662 unless the position is disclosed in a disclosure statement included in the return. S also documents the fact that this advice was contemporaneously provided to the corporate taxpayer at the time the advice was provided. Neither S nor any other attorney within S's firm signs the corporate taxpayer's return as a tax return preparer, but the advice by S constitutes preparation of a substantial portion of the tax return, and S is the individual with overall supervisory responsibility for the position giving rise to the understatement. Thus, S is a tax return preparer for purposes of section 6694. S, however, will not be subject to a penalty under section 6694.

(e) ***Exception for reasonable cause and good faith.*** The penalty under section 6694(a) will not be imposed if, considering all the facts and circumstances, it is determined that the understatement was due to reasonable cause and that the tax return preparer acted in good faith. Factors to consider include:

(1) ***Nature of the error causing the understatement.*** The error resulted from a provision that was complex, uncommon, or highly technical, and a competent tax return preparer of tax returns or claims for refund of the type at issue reasonably could have made the error. The reasonable cause and good faith exception, however, does not apply to an error that would have been apparent from a general review of the return or claim for refund by the tax return preparer.

(2) ***Frequency of errors.*** The understatement was the result of an isolated error (such as an inadvertent mathematical or clerical error) rather than a number of errors. Although the reasonable cause and good faith exception generally applies to an isolated error, it does not apply if the isolated error is so obvious, flagrant, or material that it should have been discovered during a review of the return or claim for refund. Furthermore, the reasonable cause and good faith exception does not apply if there is a pattern of errors on a return or claim for refund even though any one error, in isolation, would have qualified for the reasonable cause and good faith exception.

(3) ***Materiality of errors.*** The understatement was not material in relation to the correct tax liability. The reasonable cause and good faith exception generally applies if the understatement is of a relatively immaterial amount. Nevertheless, even an immaterial understatement may not qualify for the reasonable cause and good faith exception if the error or errors creating the understatement are sufficiently obvious or numerous.

(4) ***Tax return preparer's normal office practice.*** The tax return preparer's normal office practice, when considered together with other facts and circumstances, such as the knowledge of the tax return preparer, indicates that the error in question would occur rarely and the normal office practice was followed in preparing the return or claim for refund in question. Such a normal office practice must be a system for promoting accuracy and consistency in the preparation of returns or claims for refund and generally would include, in the case of a signing tax return preparer, checklists, methods for obtaining necessary information from the taxpayer, a review of the prior year's return, and review procedures. Notwithstanding these rules, the reasonable cause and good faith exception does not apply if there is a flagrant error on a return or claim for refund, a pattern of errors on a return or claim for refund, or a repetition of the same or similar errors on numerous returns or claims for refund.

(5) ***Reliance on advice of others.*** For purposes of demonstrating reasonable cause and good faith, a tax return preparer may rely without verification upon advice and information furnished by the taxpayer and information and advice furnished by another advisor, another tax return preparer or other party, as provided in § 1.6694-1(e). The tax return preparer may rely in good faith on the advice of, or schedules or other documents prepared by, the taxpayer, another advisor, another tax return preparer, or other party (including another advisor or tax return preparer at the tax return preparer's firm), who the tax return preparer had reason to believe was competent to render the advice or other information. The advice or information may be written or oral, but in either case the burden of establishing that the advice or information was received is on the tax return preparer. A tax return preparer is not considered to have relied in good faith if—

(i) The advice or information is unreasonable on its face;

(ii) The tax return preparer knew or should have known that the other party providing the advice or information was not aware of all relevant facts; or

(iii) The tax return preparer knew or should have known (given the nature of the tax return preparer's practice), at the time the return or claim for refund was prepared, that the advice or information was no longer reliable due to developments in the law since the time the advice was given.

(6) ***Reliance on generally accepted administrative or industry practice.*** The tax return preparer reasonably relied in good faith on generally accepted administrative or industry practice in taking the position that resulted in the understatement. A tax return preparer is not considered to have relied in good faith if the tax return preparer knew or should have known (given the nature of the tax return preparer's practice), at the time the return or claim for refund was prepared, that the administrative or industry practice was no longer reliable due to developments in the law or IRS administrative practice since the time the practice was developed.

(f) ***Effective/applicability date.*** This section is applicable to returns and claims for refund filed, and advice provided, after December 31, 2008.

[T.D. 9436, 73 FR 78442, Dec. 22, 2008, as amended at 74 FR 5104, Jan. 29, 2009]

§ 1.6694-3 Penalty for understatement due to willful, reckless, or intentional conduct.

(a) ***In general*** —

(1) ***Proscribed conduct.*** A tax return preparer is liable for a penalty under section 6694(b) equal to the greater of $5,000 or 50 percent of the income derived (or to be derived) by the tax return preparer if any part of an understatement of liability for a return or claim for refund that is prepared is due to—

(i) A willful attempt by a tax return preparer to understate in any manner the liability for tax on the return or claim for refund; or

(ii) Any reckless or intentional disregard of rules or regulations by a tax return preparer.

(2) ***Special rule for corporations, partnerships, and other firms.*** A firm that employs a tax return preparer subject to a penalty under section 6694(b) (or a firm of which the individual tax return preparer is a partner, member, shareholder or other equity holder) is also subject to penalty if, and only if—

(i) One or more members of the principal management (or principal officers) of the firm or a branch office participated in or knew of the conduct proscribed by section 6694(b);

(ii) The corporation, partnership, or other firm entity failed to provide reasonable and appropriate procedures for review of the position for which the penalty is imposed; or

(iii) The corporation, partnership, or other firm entity disregarded its reasonable and appropriate review procedures through willfulness, recklessness, or gross indifference (including ignoring facts that would lead a person of reasonable prudence and competence to investigate or ascertain) in the formulation of the advice, or the preparation of the return or claim for refund, that included the position for which the penalty is imposed.

(b) ***Willful attempt to understate liability.*** A preparer is considered to have willfully attempted to understate liability if the preparer disregards, in an attempt wrongfully to reduce the tax liability of the taxpayer, information furnished by the taxpayer or other persons. For example, if a preparer disregards information concerning certain items of taxable income furnished by the taxpayer or other persons, the preparer is subject to the penalty. Similarly, if a taxpayer states to a preparer that the taxpayer has only two dependents, and the preparer reports six dependents on the return, the preparer is subject to the penalty.

(c) ***Reckless or intentional disregard.***

(1) Except as provided in paragraphs (c)(2) and (c)(3) of this section, a preparer is considered to have recklessly or intentionally disregarded a rule or regulation if the preparer takes a position on the return or claim for refund that is contrary to a rule or regulation (as defined in paragraph (f) of this section) and the preparer knows of, or is reckless in not knowing of, the rule or regulation in question. A preparer is reckless in not knowing of a rule or regulation if the preparer makes little or no effort to determine whether a rule or regulation exists, under circumstances which demonstrate a substantial deviation from the standard of conduct that a reasonable preparer would observe in the situation.

(2) A tax return preparer is not considered to have recklessly or intentionally disregarded a rule or regulation if the position contrary to the rule or regulation has a reasonable basis as defined in § 1.6694-2(d)(2) and is adequately disclosed in accordance with §§ 1.6694-2(d)(3)(i)(A) or (C) or 1.6694-2(d)(3)(ii). In the case of a position contrary to a regulation, the position must represent a good faith challenge to the validity of the regulation and, when disclosed in accordance with §§ 1.6694-2(d)(3)(i)(A) or (C) or 1.6694-2(d)(3)(ii), the tax return preparer must identify the regulation being challenged. For purposes of this section, disclosure on the return in accordance with an annual revenue procedure under § 1.6662-4(f)(2) is not applicable.

(3) In the case of a position contrary to a revenue ruling or notice (other than a notice of proposed rulemaking) published by the Internal Revenue Service in the Internal Revenue Bulletin, a tax return preparer also is not considered to have recklessly or intentionally disregarded the ruling or notice if the position meets the substantial authority standard described in § 1.6662-4(d) and is not with respect to a reportable transaction to which section 6662A applies.

(d) ***Examples.*** The provisions of paragraphs (b) and (c) of this section are illustrated by the following examples:

Example 1. A taxpayer provided Preparer T with detailed check registers reflecting personal and business expenses. One of the expenses was for domestic help, and this expense was identified as personal on the check register. T knowingly deducted the expenses of the taxpayer's domestic help as wages paid in the taxpayer's business. T is subject to the penalty under section 6694(b).

Example 2. A taxpayer provided Preparer U with detailed check registers to compute the taxpayer's expenses. U, however, knowingly overstated the expenses on the return. After adjustments by the examiner, the tax liability increased significantly. Because U disregarded information provided in the check registers, U is subject to the penalty under section 6694(b).

Example 3. Preparer V prepares a taxpayer's return in 2009 and encounters certain expenses incurred in the purchase of a business. Final regulations provide that such expenses incurred in the purchase of a business must be capitalized. One U.S. Tax Court case decided in 2006 has expressly invalidated that portion of the regulations. There are no courts that ruled favorably with respect to the validity of that portion of the regulations and there are no other authorities existing on the issue. Under these facts, V will have a reasonable basis for the position as defined in § 1.6694-2(d)(2) and will not be subject to the section 6694(b) penalty if the position is adequately disclosed in accordance with paragraph (c)(2) of this section because the position represents a good faith challenge to the validity of the regulations.

(e) ***Rules or regulations.*** The term *rules or regulations* includes the provisions of the Internal Revenue Code (Code), temporary or final Treasury regulations issued under the Code, and revenue rulings or notices (other than notices of proposed rulemaking) issued by the Internal Revenue Service and published in the Internal Revenue Bulletin.

(f) ***Section 6694(b) penalty reduced by section 6694(a) penalty.*** The amount of any penalty to which a tax return preparer may be subject under section 6694(b) for a return or claim for refund is reduced by any amount assessed and collected against the tax return preparer under section 6694(a) for the same position on a return or claim for refund.

(g) ***Effective/applicability date.*** This section is applicable to returns and claims for refund filed, and advice provided, after December 31, 2008.

(h) ***Burden of proof.*** In any proceeding with respect to the penalty imposed by section 6694(b), the Government bears the burden of proof on the issue of whether the preparer willfully attempted to understate the liability for tax. See section 7427. The preparer bears the burden of proof on such other issues as whether—

(1) The preparer recklessly or intentionally disregarded a rule or regulation;

(2) A position contrary to a regulation represents a good faith challenge to the validity of the regulation; and

(3) Disclosure was adequately made in accordance with paragraph (e) of this section.

[T.D. 8382, 56 FR 67518, Dec. 31, 1991, as amended by T.D. 9436, 73 FR 78445, Dec. 22, 2008; 74 FR 5104, Jan. 29, 2009]

§ 1.6694-4 Extension of period of collection when tax return preparer pays 15 percent of a penalty for understatement of taxpayer's liability and certain other procedural matters.

(a) ***In general.***

(1) The Internal Revenue Service (IRS) will investigate the preparation by a tax return preparer of a return of tax under the Internal Revenue Code (Code) or claim for refund of tax under the Code as described in § 301.7701-15(b)(4) of this chapter, and will send a report of the examination to the tax return preparer before the assessment of either—

(i) A penalty for understating tax liability due to a position for which either it was not reasonable to believe that the position would more likely than not be sustained on its merits under section 6694(a) or no substantial authority, as applicable (or not a reasonable basis for disclosed positions); or

(ii) A penalty for willful understatement of liability or reckless or intentional disregard of rules or regulations under section 6694(b).

(2) Unless the period of limitations (if any) under section 6696(d) may expire without adequate opportunity for assessment, the IRS will also send, before assessment of either penalty, a 30-day letter to the tax return preparer notifying him of the proposed penalty or penalties and offering an opportunity to the tax return preparer to request further administrative consideration and a final administrative determination by the IRS concerning the assessment. If the tax return preparer then makes a timely request, assessment may not be made until the IRS makes a final administrative determination adverse to the tax return preparer.

(3) If the IRS assesses either of the two penalties described in section 6694(a) and section 6694(b), it will send to the tax return preparer a statement of notice and demand, separate from any notice of a tax deficiency, for payment of the amount assessed.

(4) Within 30 days after the day on which notice and demand of either of the two penalties described in section 6694(a) and section 6694(b) is made against the tax return preparer, the tax return preparer must either—

(i) Pay the entire amount assessed (and may file a claim for refund of the amount paid at any time not later than 3 years after the date of payment); or

(ii) Pay an amount which is not less than 15 percent of the entire amount assessed with respect to each return or claim for refund and file a claim for refund of the amount paid.

(5) If the tax return preparer pays an amount and files a claim for refund under paragraph (a)(4)(ii) of this section, the IRS may not make, begin, or prosecute a levy or proceeding in court for collection of the unpaid remainder of the amount assessed until the later of—

(i) A date which is more than 30 days after the earlier of—

(A) The day on which the tax return preparer's claim for refund is denied; or

(B) The expiration of 6 months after the day on which the tax return preparer filed the claim for refund; and

(ii) Final resolution of any proceeding begun as provided in paragraph (b) of this section.

(6) The IRS may counterclaim in any proceeding begun as provided in paragraph (b) of this section for the unpaid remainder of the amount assessed. Final resolution of a proceeding includes any settlement between the IRS and the tax return preparer, any final determination by a court (for which the period for appeal, if any, has expired) and, generally, the types of determinations provided under section 1313(a) (relating to taxpayer deficiencies). Notwithstanding section 7421(a) (relating to suits to restrain assessment or collection), the beginning of a levy or proceeding in court by the IRS in contravention of paragraph (a)(5) of this section may be enjoined by a proceeding in the proper court.

(b) ***Preparer must bring suit in district court to determine liability for penalty.*** The IRS may proceed with collection of the amount of the penalty not paid under paragraph (a)(4)(ii) of this section if the preparer fails to begin a proceeding for refund in the appropriate United States district court within 30 days after the earlier of—

(1) The day on which the preparer's claim for refund filed under paragraph (a)(4)(ii) of this section is denied; or

(2) The expiration of 6 months after the day on which the preparer filed the claim for refund.

(c) ***Suspension of running of period of limitations on collection.*** The running of the period of limitations provided in section 6502 on the collection by levy or by a proceeding in court of the unpaid amount of a penalty or penalties described in section 6694(a) or section 6694(b) is suspended for the period during which the IRS, under paragraph (a)(5) of this section, may not collect the unpaid amount of the penalty or penalties by levy or a proceeding in court.

(d) ***Effective/applicability date.*** This section is applicable to returns and claims for refund filed, and advice provided, after December 31, 2008.

[T.D. 9436, 73 FR 78446, Dec. 22, 2008]

§ 1.6695-1 Other assessable penalties with respect to the preparation of tax returns for other persons.

(a) ***Failure to furnish copy to taxpayer.***

(1) A person who is a signing tax return preparer as described in § 301.7701-15(b)(1) of this chapter of any return of tax or claim for refund of tax under the Internal Revenue Code (Code), and who fails to satisfy the requirements imposed by section 6107(a) and § 1.6107-1(a) to furnish a copy of the return or claim for refund to the taxpayer (or nontaxable entity), shall be subject to a penalty of $50 for such failure, with a maximum penalty of $25,000 per person imposed with respect to each calendar year, unless it is shown that the failure is due to reasonable cause and not due to willful neglect.

(2) No penalty may be imposed under section 6695(a) and paragraph (a)(1) of this section upon a tax return preparer who furnishes a copy of the return or claim for refund to taxpayers who—

(i) Hold an elected or politically appointed position with the government of the United States or a state or political subdivision thereof; and

(ii) In order faithfully to carry out their official duties, have so arranged their affairs that they have less than full knowledge of the property that they hold or of the debts for which they are responsible, if information is deleted from the copy in order to preserve or maintain this arrangement.

(b) ***Failure to sign return.***

(1) An individual who is a signing tax return preparer as described in § 301.7701-15(b)(1) of this chapter with respect to a return of tax or claim for refund of tax under the Code as described in § 301.7701-15(b)(4) that is not signed electronically shall sign the return or claim for refund after it is completed and before it is presented to the taxpayer (or nontaxable entity) for signature. For rules covering electronically signed returns, see paragraph (b)(2) of this section. If the signing tax return preparer is unavailable for signature, another tax return preparer shall review the entire preparation of the return or claim for refund, and then shall sign the return or claim for refund. The tax return preparer shall sign the return in the manner prescribed by the Commissioner in forms, instructions, or other appropriate guidance.

(2) In the case of electronically signed tax returns, the signing tax return preparer need not sign the return prior to presenting a completed copy of the return to the taxpayer. The signing tax return preparer, however, must furnish all of the information that will be transmitted as the electronically signed tax return to the taxpayer contemporaneously with furnishing the Form 8879, “IRS e-file Signature Authorization,” or other similar Internal Revenue Service (IRS) e-file signature form. The information may be furnished on a replica of an official form. The signing tax return preparer shall electronically sign the return in the manner prescribed by the Commissioner in forms, instructions, or other appropriate guidance.

(3) An individual required by this paragraph (b) to sign a return or claim for refund shall be subject to a penalty of $50 for each failure to sign, with a maximum of $25,000 per person imposed with respect to each calendar year, unless it is shown that the failure is due to reasonable cause and not due to willful neglect. If the tax return preparer asserts reasonable cause for failure to sign, the IRS will require a written statement to substantiate the tax return preparer's claim of reasonable cause. For purposes of this paragraph (b), reasonable cause is a cause that arises despite ordinary care and prudence exercised by the individual tax return preparer.

(4) ***Examples.*** The application of this paragraph (b) is illustrated by the following examples:

Example 1. Law Firm A employs B, a lawyer, to prepare for compensation estate tax returns and claims for refund of taxes. Firm A is engaged by C to prepare a Federal estate tax return. Firm A assigns B to prepare the return. B obtains the information necessary for completing the return from C and makes determinations with respect to the proper application of the tax laws to such information in order to determine the estate's tax liability. B then forwards such information to D, a computer tax service that performs the mathematical computations and prints the return by means of computer processing. D then sends the completed estate tax return to B who reviews the accuracy of the return. B is the individual tax return preparer who is primarily responsible for the overall accuracy of the estate tax return. B must sign the return as tax return preparer in order to not be subject to the section 6695(b) penalty.

Example 2. Partnership E is a national accounting firm that prepares returns and claims for refund of taxes for compensation. F and G, employees of Partnership E, are involved in preparing the Form 990-T, Exempt Organization Business Income Tax Return, for H, a tax exempt organization. After they complete the return, including the gathering of the necessary

information, analyzing the proper application of the tax laws to such information, and the performance of the necessary mathematical computations, I, a supervisory employee of Partnership E, reviews the return. As part of this review, I reviews the information provided and the application of the tax laws to this information. The mathematical computations and carried-forward amounts are reviewed by J, an employee of Partnership E. The policies and practices of Partnership E require that K, a partner, finally review the return. The scope of K's review includes reviewing the information provided and applying to this information his knowledge of H's affairs, observing that Partnership E's policies and practices have been followed, and making the final determination with respect to the proper application of the tax laws to determine H's tax liability. K may or may not exercise these responsibilities, or may exercise them to a greater or lesser extent, depending on the degree of complexity of the return, his confidence in I (or F and G), and other factors. K is the individual tax return preparer who is primarily responsible for the overall accuracy of H's return. K must sign the return as tax return preparer in order to not be subject to the section 6695(b) penalty.

Example 3. L corporation maintains an office in Seattle, Washington, for the purpose of preparing partnership returns for compensation. L makes compensatory arrangements with individuals (but provides no working facilities) in several states to collect information from partners of a partnership and to make decisions with respect to the proper application of the tax laws to the information in order to prepare the partnership return and calculate the partnership's distributive items. M, an individual, who has such an arrangement in Los Angeles with L, collects information from N, the general partner of a partnership, and completes a worksheet kit supplied by L that is stamped with M's name and an identification number assigned to M by L. In this process, M classifies this information in appropriate categories for the preparation of the partnership return. The completed worksheet kit signed by M is then mailed to L. O, an employee in L's office, reviews the worksheet kit to make sure it was properly completed. O does not review the information obtained from N for its validity or accuracy. O may, but did not, make the final decision with respect to the proper application of tax laws to the information provided. The data from the worksheet is entered into a computer and the return form is completed. The return is prepared for submission to N with filing instructions. M is the individual tax return preparer primarily responsible for the overall accuracy of the partnership return. M must sign the return as tax return preparer in order to not be subject to the section 6695(b) penalty.

Example 4. P employs R, S, and T to prepare gift tax returns for taxpayers. After R and S have collected the information from a taxpayer and applied the tax laws to the information, the return form is completed by a computer service. On the day the returns prepared by R and S are ready for their signatures, R is away from the city for 1 week on another assignment and S is on detail to another office in the same city for the day. T may sign the gift tax returns prepared by R, provided that T reviews the information obtained by R relative to the taxpayer, and T reviews the preparation of each return prepared by R. T may not sign the returns prepared by S because S is available.

(5) ***Effective/applicability date.*** This paragraph (b) is applicable to returns and claims for refund filed after December 31, 2008.

(c) ***Failure to furnish identifying number.***

(1) A person who is a signing tax return preparer as described in § 301.7701-15(b)(1) of this chapter of any return of tax under the Code or claim for refund of tax under the Code, and who fails to satisfy the requirement of section 6109(a)(4) and § 1.6109-2(a) to furnish one or more identifying numbers of signing tax return preparers or persons employing the signing tax return preparer (or with which the signing tax return preparer is associated) on a return or claim for refund after it is completed and before it is presented to the taxpayer (or nontaxable entity) for signature shall be subject to a penalty of $50 for each failure, with a maximum of $25,000 per person imposed with respect to each calendar year, unless it is shown that the failure is due to reasonable cause and not due to willful neglect.

(2) No more than one penalty of $50 may be imposed under section 6695(c) and paragraph (c)(1) of this section with respect to a single return or claim for refund.

(d) ***Failure to retain copy or record.***

(1) A person who is a signing tax return preparer as described in § 301.7701-15(b)(1) of this chapter of any return of tax under the Code or claim for refund of tax under the Code, and who fails to satisfy the requirements imposed upon him or her by section 6107(b) and § 1.6107-1(b) and (c) (other than the record requirement described in both § 1.6107-1(b)(2) and (3)) to retain and make available for inspection a copy of the return or claim for refund, or to include the return or claim for refund in a record of returns and claims for refund and make the record available for inspection, shall be subject to a penalty of $50 for the failure, unless it is shown that the failure is due to reasonable cause and not due to willful neglect.

(2) A person may not, for returns or claims for refund presented to the taxpayers (or nontaxable entities) during each calendar year, be subject to more than $25,000 in penalties under section 6695(d) and paragraph (d)(1) of this section.

(e) ***Failure to file correct information returns.*** A person who is subject to the reporting requirements of section 6060 and § 1.6060-1 and who fails to satisfy these requirements shall pay a penalty of $50 for each such failure, with a maximum of $25,000 per person imposed for each calendar year, unless such failure was due to reasonable cause and not due to willful neglect.

(f) ***Negotiation of check.***

(1) No person who is a tax return preparer as described in § 301.7701-15 of this chapter may endorse or otherwise negotiate, directly or through an agent, a check (including an electronic version of a check) for the refund of tax under the Code that is issued to a taxpayer other than the tax return preparer if the person was a tax return preparer of the return or claim for refund which gave rise to the refund check. A tax return preparer will not be considered to have endorsed or otherwise negotiated a check for purposes of this paragraph (f)(1) solely as a result of having affixed the taxpayer's name to a refund check for the purpose of depositing the check into an account in the name of the taxpayer or in the joint names of the taxpayer and one or more other persons (excluding the tax return preparer) if authorized by the taxpayer or the taxpayer's recognized representative.

(2) Section 6695(f) and paragraphs (f)(1) and (3) of this section do not apply to a tax return preparer-bank that—

(i) Cashes a refund check and remits all of the cash to the taxpayer or accepts a refund check for deposit in full to a taxpayer's account, so long as the bank does not initially endorse or negotiate the check (unless the bank has made a loan to the taxpayer on the basis of the anticipated refund); or

(ii) Endorses a refund check for deposit in full to a taxpayer's account pursuant to a written authorization of the taxpayer (unless the bank has made a loan to the taxpayer on the basis of the anticipated refund).

(3) A tax return preparer-bank may also subsequently endorse or negotiate a refund check as a part of the check-clearing process through the financial system after initial endorsement or negotiation.

(4) The tax return preparer shall be subject to a penalty of $500 for each endorsement or negotiation of a check prohibited under section 6695(f) and paragraph (f)(1) of this section.

(g) ***Effective/applicability date.*** This section is applicable to returns and claims for refund filed after December 31, 2008.

[T.D. 9436, 73 FR 78447, Dec. 22, 2008, as amended at 74 FR 5104, Jan. 29, 2009]

§ 1.6695-2 Tax return preparer due diligence requirements for certain tax returns and claims.

(a) ***Penalty for failure to meet due diligence requirements*** —

(1) ***In general.*** A person who is a tax return preparer (as defined in section 7701(a)(36)) of a tax return or claim for refund under the Internal Revenue Code who determines the taxpayer's eligibility to file as head of household under section 2(b), or who determines the taxpayer's eligibility for, or the amount of, the child tax credit (CTC)/additional child tax credit (ACTC) under section 24, the American opportunity tax credit (AOTC) under section 25A(i), or the earned income credit (EIC) under section 32, and who fails to satisfy the due diligence requirements of paragraph (b) of this section will be subject to a penalty as prescribed in section 6695(g) (indexed for inflation under section 6695(h)) for each failure. A separate penalty applies to a tax return preparer with respect to the head of household filing status determination and to each applicable credit claimed on a return or claim for refund for which the due diligence requirements of this section are not satisfied and for which the exception to penalty provided by paragraph (d) of this section does not apply.

(2) ***Examples.*** The provisions of paragraph (a)(1) of this section are illustrated by the following examples:

(i) ***Example 1.*** Preparer A prepares a federal income tax return for a taxpayer claiming the CTC and the AOTC. Preparer A did not meet the due diligence requirements under this section with respect to the CTC or the AOTC claimed on the taxpayer's return. Unless the exception to penalty provided by paragraph (d) of this section applies, Preparer A is subject to two penalties under section 6695(g): One for failure to meet the due diligence requirements for the CTC and a second penalty for failure to meet the due diligence requirements for the AOTC.

(ii) ***Example 2.*** Preparer B prepares a federal income tax return for a taxpayer claiming the CTC and the AOTC. Preparer B did not meet the due diligence requirements under this section with respect to the CTC claimed on the taxpayer's return, but Preparer B did meet the due diligence requirements under this section with respect to the AOTC claimed on the taxpayer's return. Unless the exception to penalty provided by paragraph (d) of this section applies, Preparer B is subject to one penalty under section 6695(g) for the failure to meet the due diligence requirements for the CTC. Preparer B is not subject to a penalty under section 6695(g) for failure to meet the due diligence requirements for the AOTC.

(iii) *Example 3.* Preparer C prepares a federal income tax return for a taxpayer using the head of household filing status and claiming the CTC and the AOTC. Preparer C did not meet the due diligence requirements under this section with respect to the head of household filing status and the CTC claimed on the taxpayer's return. Preparer C did meet the due diligence requirements under this section with respect to the AOTC claimed on the taxpayer's return. Unless the exception to penalty provided by paragraph (d) of this section applies, Preparer C is subject to two penalties under section 6695(g) for the failure to meet the due diligence requirements: One for the head of household filing status and one for the CTC. Preparer C is not subject to a penalty under section 6695(g) for failure to meet the due diligence requirements for the AOTC.

(b) ***Due diligence requirements.*** A preparer must satisfy the following due diligence requirements:

(1) ***Completion and submission of Form 8867*** —

(i) The tax return preparer must complete Form 8867, "Paid Preparer's Due Diligence Checklist," or complete such other form and provide such other information as may be prescribed by the Internal Revenue Service (IRS), and—

(A) In the case of a signing tax return preparer electronically filing the tax return or claim for refund, must electronically file the completed Form 8867 (or successor form) with the tax return or claim for refund;

(B) In the case of a signing tax return preparer not electronically filing the tax return or claim for refund, must provide the taxpayer with the completed Form 8867 (or successor form) for inclusion with the filed tax return or claim for refund; or

(C) In the case of a nonsigning tax return preparer, must provide the signing tax return preparer with the completed Form 8867 (or successor form), in either electronic or non-electronic format, for inclusion with the filed tax return or claim for refund.

(ii) The tax return preparer's completion of Form 8867 must be based on information provided by the taxpayer to the tax return preparer or otherwise reasonably obtained or known by the tax return preparer.

(2) ***Computation of credit or credits.***

(i) When computing the amount of a credit or credits described in paragraph (a) of this section to be claimed on a return or claim for refund, the tax return preparer must either—

(A) Complete the worksheet in the Form 1040, 1040A, 1040EZ, and/or Form 8863 instructions or such other form including such other information as may be prescribed by the IRS applicable to each credit described in paragraph (a) of this section claimed on the return or claim for refund; or

(B) Otherwise record in one or more documents in the tax return preparer's paper or electronic files the tax return preparer's computation of the credit or credits claimed on the return or claim for refund, including the method and information used to make the computations.

(ii) The tax return preparer's completion of an applicable worksheet described in paragraph (b)(2)(i)(A) of this section (or other record of the tax return preparer's computation of the credit or credits permitted under paragraph (b)(2)(i)(B) of this section) must be based on information provided by the taxpayer to the tax return preparer or otherwise reasonably obtained or known by the tax return preparer.

(3) *Knowledge* —

(i) ***In general.*** The tax return preparer must not know, or have reason to know, that any information used by the tax return preparer in determining the taxpayer's eligibility to file as head of household or in determining the taxpayer's eligibility for, or the amount of, any credit described in paragraph (a) of this section and claimed on the return or claim for refund is incorrect. The tax return preparer may not ignore the implications of information furnished to, or known by, the tax return preparer, and must make reasonable inquiries if a reasonable and well-informed tax return preparer knowledgeable in the law would conclude that the information furnished to the tax return preparer appears to be incorrect, inconsistent, or incomplete. The tax return preparer must also contemporaneously document in the preparer's paper or electronic files any inquiries made and the responses to those inquiries.

(ii) ***Examples.*** The provisions of paragraph (b)(3)(i) of this section are illustrated by the following examples:

(A) ***Example 1.*** In 2018, Q, a 22-year-old taxpayer, engages Preparer C to prepare Q's 2017 federal income tax return. Q completes Preparer C's standard intake questionnaire and states that Q has never been married and has two sons, ages 10 and 11. Based on the intake sheet and other information that Q provides, including information that shows that the boys lived with Q throughout 2017, Preparer C believes that Q may be eligible to claim each boy as a qualifying child for purposes of the EIC and the CTC. However, Q provides no information to Preparer C, and Preparer C does not have any information from other sources, to verify the relationship between Q and the boys. To meet the knowledge requirement in paragraph (b)(3) of this section, Preparer C must make reasonable inquiries to determine whether each boy is a qualifying child of Q for purposes of the EIC and the CTC, including reasonable inquiries to verify Q's relationship to the boys, and Preparer C must contemporaneously document these inquiries and the responses.

(B) ***Example 2.*** Assume the same facts as in *Example 1* of paragraph (b)(3)(ii)(A) of this section. In addition, as part of preparing Q's 2017 federal income tax return, Preparer C made sufficient reasonable inquiries to verify that the boys were Q's legally adopted children. In 2019, Q engages Preparer C to prepare Q's 2018 federal income tax return. When preparing Q's 2018 federal income tax return, Preparer C is not required to make additional inquiries to determine each boy's relationship to Q for purposes of the knowledge requirement in paragraph (b)(3) of this section.

(C) ***Example 3.*** In 2018, R, an 18-year-old taxpayer, engages Preparer D to prepare R's 2017 federal income tax return. R completes Preparer D's standard intake questionnaire and states that R has never been married, has one child, an infant, and that R and R's infant lived with R's parents during part of the 2017 tax year. R also provides Preparer D with a Form W-2 showing that R earned $10,000 during 2017. R provides no other documents or information showing that R earned any other income during the tax year. Based on the intake sheet and other information that R provides, Preparer D believes that R may be eligible to claim the infant as a qualifying child for the EIC and the CTC. To meet the

knowledge requirement in paragraph (b)(3) of this section, Preparer D must make reasonable inquiries to determine whether R is eligible to claim these credits, including reasonable inquiries to verify that R is not a qualifying child of R's parents (which would make R ineligible to claim the EIC) or a dependent of R's parents (which would make R ineligible to claim the CTC), and Preparer D must contemporaneously document these inquiries and the responses.

(D) ***Example 4.*** Assume the same facts as the facts in *Example 3* of paragraph (b)(3)(ii)(C) of this section. In addition, Preparer D previously prepared the 2017 joint federal income tax return for R's parents. Based on information provided by R's parents, Preparer D has determined that R is not eligible to be claimed as a dependent or as a qualifying child for purposes of the EIC or the CTC on R's parents' return. Therefore, for purposes of the knowledge requirement in paragraph (b)(3) of this section, Preparer D is not required to make additional inquiries to determine that R is not R's parents' qualifying child or dependent.

(E) ***Example 5.*** In 2019, S engages Preparer E to prepare S's 2018 federal income tax return. During Preparer E's standard intake interview, S states that S has never been married and that S's niece and nephew lived with S for part of the 2018 tax year. Preparer E believes S may be eligible to file as head of household and claim each of these children as a qualifying child for purposes of the EIC and the CTC, but the information furnished to Preparer E is incomplete. To meet the knowledge requirement in paragraph (b)(3) of this section, Preparer E must make reasonable inquiries to determine whether S is eligible to file as head of household and whether each child is a qualifying child for purposes of the EIC and the CTC, including reasonable inquiries about the children's residency, S's relationship to the children, the children's income, the sources of support for the children, and S's contribution to the payment of costs related to operating the household, and Preparer E must contemporaneously document these inquiries and the responses.

(F) ***Example 6.*** Assume the same facts as the facts in *Example 5* of paragraph (b)(3)(ii)(E) of this section. In addition, Preparer E knows from prior social interactions with S that the children resided with S for more than one-half of the 2018 tax year and that the children did not provide over one-half of their own support for the 2018 tax year. To meet the knowledge requirement in paragraph (b)(3) of this section, Preparer E must make the same reasonable inquiries to determine whether S is eligible to file as head of household and whether each child is a qualifying child for purposes of the EIC and the CTC as discussed in *Example 5* of this section, and Preparer E must contemporaneously document these inquiries and the responses.

(G) ***Example 7.*** W engages Preparer F to prepare W's federal income tax return. During Preparer F's standard intake interview, W states that W is 50 years old, has never been married, and has no children. W further states to Preparer F that during the tax year W was self-employed, earned $10,000 from W's business, and had no business expenses or other income. Preparer F believes W may be eligible for the EIC. To meet the knowledge requirement in paragraph (b)(3) of this section, Preparer F must make reasonable inquiries to determine whether W is eligible for the EIC, including reasonable inquiries to determine whether W's business income and expenses are correct, and Preparer F must contemporaneously document these inquiries and the responses.

(H) ***Example 8.*** Y, who is 32 years old, engages Preparer G to prepare Y's federal income tax return. Y completes Preparer G's standard intake questionnaire and states that Y has never been married. As part of Preparer G's client intake process, Y provides Preparer G with a copy of the Form 1098-T Y received showing that University M billed $4,000 of qualified tuition and related expenses for Y's enrollment or attendance at the university and that Y was at least a half-time undergraduate student. Preparer G believes that Y may be eligible for the AOTC. To meet the knowledge requirement in paragraph (b)(3) of this section, Preparer G must make reasonable inquiries to determine whether Y is eligible for the AOTC, as Form 1098-T does not contain all the information needed to determine eligibility for the AOTC or to calculate the amount of the credit if Y is eligible, and contemporaneously document these inquiries and the responses.

(4) ***Retention of records*** —

(i) The tax return preparer must retain—

(A) A copy of the completed Form 8867 (or successor form);

(B) A copy of each completed worksheet required under paragraph (b)(2)(i)(A) of this section (or other record of the tax return preparer's computation permitted under paragraph (b)(2)(i)(B) of this section); and

(C) A record of how and when the information used to complete Form 8867 and the applicable worksheets required under paragraph (b)(2)(i)(A) of this section (or other record of the tax return preparer's computation permitted under paragraph (b)(2)(i)(B) of this section) was obtained by the tax return preparer, including the identity of any person furnishing the information, as well as a copy of any document that was provided by the taxpayer and on which the tax return preparer relied to complete Form 8867 and/or an applicable worksheet required under paragraph (b)(2)(i)(A) of this section (or other record of the tax return preparer's computation permitted under paragraph (b)(2)(i)(B) of this section).

(ii) The items in paragraph (b)(4)(i) of this section must be retained for three years from the latest of the following dates, as applicable:

(A) The due date of the tax return (determined without regard to any extension of time for filing);

(B) In the case of a signing tax return preparer electronically filing the tax return or claim for refund, the date the tax return or claim for refund was filed;

(C) In the case of a signing tax return preparer not electronically filing the tax return or claim for refund, the date the tax return or claim for refund was presented to the taxpayer for signature; or

(D) In the case of a nonsigning tax return preparer, the date the nonsigning tax return preparer submitted to the signing tax return preparer that portion of the tax return or claim for refund for which the nonsigning tax return preparer was responsible.

(iii) The items in paragraph (b)(4)(i) of this section may be retained on paper or electronically in the manner prescribed in applicable regulations, revenue rulings, revenue procedures, or other appropriate guidance (see § 601.601(d)(2) of this chapter).

(c) ***Special rule for firms.*** A firm that employs a tax return preparer subject to a penalty under section 6695(g) is also subject to penalty if, and only if—

(1) One or more members of the principal management (or principal officers) of the firm or a branch office participated in or, prior to the time the return was filed, knew of the failure to comply with the due diligence requirements of this section;

(2) The firm failed to establish reasonable and appropriate procedures to ensure compliance with the due diligence requirements of this section; or

(3) The firm disregarded its reasonable and appropriate compliance procedures through willfulness, recklessness, or gross indifference (including ignoring facts that would lead a person of reasonable prudence and competence to investigate) in the preparation of the tax return or claim for refund with respect to which the penalty is imposed.

(d) ***Exception to penalty.*** The section 6695(g) penalty will not be applied with respect to a particular tax return or claim for refund if the tax return preparer can demonstrate to the satisfaction of the IRS that, considering all the facts and circumstances, the tax return preparer's normal office procedures are reasonably designed and routinely followed to ensure compliance with the due diligence requirements of paragraph (b) of this section, and the failure to meet the due diligence requirements of paragraph (b) of this section with respect to the particular tax return or claim for refund was isolated and inadvertent. The preceding sentence does not apply to a firm that is subject to the penalty as a result of paragraph (c) of this section.

(e) ***Applicability date.*** The rules of this section apply to tax returns and claims for refund for tax years beginning after December 31, 2015, that are prepared on or after December 5, 2016. However, the rules relating to the determination of a taxpayer's eligibility to file as head of household under section 2(b) apply to tax returns and claims for refund for tax years beginning after December 31, 2017, that are prepared on or after November 7, 2018.

[T.D. 8905, 65 FR 61269, Oct. 17, 2000, as amended by T.D. 9436, 73 FR 78448, Dec. 22, 2008; T.D. 9570, 76 FR 78819, Dec. 20, 2011; T.D. 9799, 81 FR 87446, Dec. 5, 2016; T.D. 9842, 83 FR 55635, Nov. 7, 2018; 83 FR 64459, Dec. 17, 2018]

§ 1.6696-1 Claims for credit or refund by tax return preparers or appraisers.

(a) ***Notice and demand.***

(1) The Internal Revenue Service (IRS) shall issue to each tax return preparer or appraiser one or more statements of notice and demand for payment for all penalties assessed against the tax return preparer or appraiser under section 6694 and § 1.6694-1, under section 6695 and § 1.6695-1, or under section 6695A (and any subsequently issued regulations).

(2) For the definition of the term “tax return preparer”, see section 7701(a)(36) and § 301.7701-15 of this chapter. A person who prepares a claim for credit or refund under this section for another person, however, is not, with respect to that preparation, a tax return preparer as defined in section 7701(a)(36) and § 301.7701-15 of this chapter.

(b) ***Claim filed by tax return preparer or appraiser.*** A claim for credit or refund of a penalty (or penalties) assessed against a tax return preparer or appraiser under section 6694 and § 1.6694-1, under section 6695 and § 1.6695-1, or under section 6695A (and any subsequently issued regulations) may be filed under this section only by the tax return preparer or the appraiser (or the tax return preparer's or appraiser's estate) against whom the penalty (or penalties) is assessed and not by, for example, the tax

return preparer's or appraiser's employer. This paragraph (b) is not intended, however, to impose any restrictions on the preparation of this claim for credit or refund. The claim may be prepared by the tax return preparer's or appraiser's employer or by other persons. In all cases, however, the claim for credit or refund shall contain the information specified in paragraph (d) of this section and, as required by paragraph (d) of this section, shall be verified by a written declaration by the tax return preparer or appraiser that the information is provided under penalty of perjury.

(c) ***Separation and consolidation of claims.***

(1) Unless paragraph (c)(2) of this section applies, a tax return preparer shall file a separate claim for each penalty assessed in each statement of notice and demand issued to the tax return preparer.

(2) A tax return preparer may file one or more consolidated claims for any or all penalties imposed on the tax return preparer by a single IRS campus or office under section 6695(a) and § 1.6695-1(a) (relating to failure to furnish copy of return to taxpayer), section 6695(b) and § 1.6695-1(b) (relating to failure to sign), section 6695(c) and § 1.6695-1(c) (relating to failure to furnish identifying number), or under section 6695(d) and § 1.6695-1(d) (relating to failure to retain copy of return or record), whether the penalties are asserted on a single or on separate statements of notice and demand. In addition, a tax return preparer may file one consolidated claim for any or all penalties imposed on the tax return preparer by a single IRS campus or office under section 6695(e) and § 1.6695-1(e) (relating to failure to file correct information return), which are asserted on a single statement of notice and demand.

(d) ***Content of claim.*** Each claim for credit or refund for any penalty (or penalties) paid by a tax return preparer under section 6694 and § 1.6694-1, or under section 6695 and § 1.6695-1, or paid by an appraiser under section 6695A (and any subsequently issued regulations) shall include the following information, verified by a written declaration by the tax return preparer or appraiser that the information is provided under penalty of perjury:

(1) The tax return preparer's or appraiser's name.

(2) The tax return preparer's or appraiser's identification number. If the tax return preparer or appraiser is—

(i) An individual (not described in paragraph (d)(2)(iii) of this section) who is a citizen or resident of the United States, the tax return preparer's or appraiser's social security account number (or such alternative number as may be prescribed by the IRS in forms, instructions, or other appropriate guidance) shall be provided;

(ii) An individual who is not a citizen or resident of the United States and also was not employed by another tax return preparer or appraiser to prepare the document (or documents) with respect to which the penalty (or penalties) was assessed, the tax return preparer's or appraiser's employer identification number shall be provided; or

(iii) A person (whether an individual, corporation, or partnership) that employed one or more persons to prepare the document (or documents) with respect to which the penalty (or penalties) was assessed, the tax return preparer's or appraiser's employer identification number shall be provided.

(3) The tax return preparer's or appraiser's address where the IRS mailed the statement (or statements) of notice and demand and, if different, the tax return preparer's or appraiser's address shown on the document (or documents) with respect to which the penalty (or penalties) was assessed.

(4)

(i) The address of the IRS campus or office that issued the statement (or statements) of notice and demand for payment of the penalty (or penalties).

(ii) The date (or dates) and identifying number (or numbers) of the statement (or statements) of notice and demand.

(5)

(i) The identification, by amount, type, and document to which related, of each penalty included in the claim. Each document referred to in the preceding sentence shall be identified by the form title or number, by the taxpayer's (or nontaxable entity's) name and taxpayer identification number, and by the taxable year to which the document relates.

(ii) The date (or dates) of payment of the amount (or amounts) of the penalty (or penalties) included in the claim.

(iii) The total amount claimed.

(6) A statement setting forth in detail—

(i) Each ground upon which each penalty overpayment claim is based; and

(ii) Facts sufficient to apprise the IRS of the exact basis of each such claim.

(e) ***Form for filing claim.*** Notwithstanding § 301.6402-2(c) of this chapter, Form 6118, "Claim for Refund of Tax Return Preparer and Promoter Penalties," is the form prescribed for making a claim as provided in this section with respect to penalties under sections 6694 and 6695. Form 843, Claim for Refund and Request for Abatement, is the form prescribed for making a claim as provided in this section with respect to a penalty under section 6695A.

(f) ***Place for filing claim.*** A claim filed under this section shall be filed with the IRS campus or office that issued to the tax return preparer or appraiser the statement (or statements) of notice and demand for payment of the penalty (or penalties) included in the claim.

(g) ***Time for filing claim.***

(1)

(i) Except as provided in section 6694(c)(1) and § 1.6694-4(a)(4)(ii) and (5), and in section 6694(d) and § 1.6694-1(d):

(A) A claim for a penalty paid by a tax return preparer under section 6694 and § 1.6694-1, or under section 6695 and § 1.6695-1, or by an appraiser under section 6695A (and any subsequently issued regulations) shall be filed within three years from the date the payment was made.

(B) A consolidated claim, permitted under paragraph (c)(2) of this section, shall be filed within three years from the first date of payment of any penalty included in the claim.

(ii) For purposes of this paragraph (g)(1), payment is considered made on the date payment is received by the IRS or, if applicable, on the date an amount is credited in satisfaction of the penalty.

(2) For purposes of determining whether a claim is timely filed, the rules under sections 7502 and 7503 and the provisions of §§ 1.7502-1, 1.7502-2, and 1.7503-1 apply.

(h) ***Application of refund to outstanding liability of tax return preparer or appraiser.*** The IRS may, within the applicable period of limitations, credit any amount of an overpayment by a tax return preparer or appraiser of a penalty (or penalties) paid under section 6694 and § 1.6694-1, under section 6695 and § 1.6695-1, or under section 6695A (and any subsequently issued regulations) against any outstanding liability for any tax (or for any interest, additional amount, addition to the tax, or assessable penalty) owed by the tax return preparer or appraiser making the overpayment. If a portion of an overpayment is so credited, only the balance will be refunded to the tax return preparer or appraiser.

(i) ***Interest.***

(1) Section 6611 and § 301.6611-1 of this chapter apply to the payment by the IRS of interest on an overpayment by a tax return preparer or appraiser of a penalty (or penalties) paid under section 6694 and § 1.6694-1, under section 6695 and § 1.6695-1, or under section 6695A (and any subsequently issued regulations).

(2) Section 6601 and § 301.6601-1 of this chapter apply to the payment of interest by a tax return preparer or appraiser to the IRS on any penalty (or penalties) assessed against the tax return preparer under section 6694 and § 1.6694-1, under section 6695 and § 1.6695-1, or under section 6695A (and any subsequently issued regulations).

(j) ***Suits for refund of penalty.***

(1) A tax return preparer or appraiser may not maintain a civil action for the recovery of any penalty paid under section 6694 and § 1.6694-1, under section 6695 and § 1.6695-1, or under section 6695A (and any subsequently issued regulations), unless the tax return preparer or appraiser has previously filed a claim for credit or refund of the penalty as provided in this section (and the court has jurisdiction of the proceeding). See sections 6694(c) and 7422.

(2)

(i) Except as provided in section 6694(c)(2) and § 1.6694-4(b), the periods of limitation contained in section 6532 and § 301.6532-1 of this chapter apply to a tax return preparer's or appraiser's suit for the recovery of any penalty paid under section 6694 and § 1.6694-1, under section 6695 and § 1.6695-1, or under section 6695A (and any subsequently issued regulations).

(ii) The rules under section 7503 and § 301.7503-1 of this chapter apply to the timely commencement by a tax return preparer or appraiser of a suit for the recovery of any penalty paid under section 6694 and § 1.6694-1, under section 6695 and § 1.6695-1, or under section 6695A (and any subsequently issued regulations).

(k) ***Effective/applicability date.*** This section is applicable to returns and claims for refund filed, and advice provided, after December 31, 2008.

[T.D. 9436, 73 FR 78449, Dec. 22, 2008, as amended at 74 FR 5105, Jan. 29, 2009]

§ 1.6709-1T Penalties with respect to mortgage credit certificates (temporary).

(a) ***Material misstatement*** —

(1) ***Negligence.*** If any person makes a material misstatement in any affidavit or other statement under a penalty of perjury made with respect to the issuance of a mortgage credit certificate and such misstatement is due to the negligence of that person, that person shall pay a penalty of $1,000 for each mortgage credti certificate with respect to which that misstatement was made.

(2) ***Fraud.*** If a misstatement described in subparagraph (1) is due to fraud on the part of the person making the misstatement, that person shall pay a penalty of $10,000 for each mortgage credit certificate with respect to which the fraudulent misstatement was made. The penalty imposed by this paragraph (a)(2) is in addition to any criminal penalty.

(b) ***Reports.***

(1) Any person required by § 1.25-8T to file a report with respect to any mortgage credit certificate who fails to file the report at the time and in the manner required by § 1.25-8T shall pay a penalty of $200 for each mortgage credit certificate with respect to which that failure occurred. The preceding sentence shall not apply if it is shown that such failure is due to reasonable cause and not to willful neglect.

(2) In the case of any report required under § 1.25-8T(b), the aggregate amount of the penalty imposed by this paragraph shall not exceed $2,000.

[T.D. 8023, 50 FR 19355, May 8, 1985]

JEOPARDY, BANKRUPTCY, AND RECEIVERSHIPS

§ 1.6851-1 Termination assessments of income tax.

(a) ***Authority for making —***

(1) ***In general.*** This section applies to assessments authorized by a district director under section 6851(a) (hereinafter referred to as termination assessments). The district director shall immediately authorize a termination assessment of the income tax for the current or preceding taxable year if the district director finds that a taxpayer designs to do an act which would tend to prejudice proceedings to collect the income tax for such year or years unless such proceedings are brought without delay. In addition, the district director shall immediately authorize such a termination assessment if the district director determines that the taxpayer designs to do any act which would tend to render such proceedings wholly or partially ineffective unless brought without delay. A termination assessment will be made if collection is determined to be in jeopardy because at least one of the following conditions exists.

(i) The taxpayer is or appears to be designing quickly to depart from the United States or to conceal himself or herself.

(ii) The taxpayer is or appears to be designing quickly to place his, her, or its property beyond the reach of the Government either by removing it from the United States, by concealing it, by dissipating it, or by transferring it to other persons.

(iii) The taxpayer's financial solvency is or appears to be imperiled.

Paragraph (a)(1)(iii) of this section does not include cases where the taxpayer becomes insolvent by virtue of the accrual of the proposed assessment of tax, and penalty, if any. A tax assessed under this section shall become immediately due and payable and the district director shall serve upon such taxpayer notice and demand for immediate payment of such tax.

(2) ***Computation of tax.*** If a termination assessment of the income tax for the current year is made, the income tax for such year shall be computed for the period beginning on the first day of such year and ending on the day of the assessment. A credit shall be allowed for any tax for the taxable year previously assessed under section 6851. The taxpayer is entitled to a deduction for the personal exemptions (as limited in the case of certain non-resident aliens) without any proration for or because of the short taxable period.

(3) ***Taxable year not affected by termination.*** Notwithstanding any termination assessment a taxpayer shall file a return in accordance with section 6012 and the regulations thereunder for the taxpayer's full taxable year. The term “full taxable year” means the taxpayer's usual annual accounting period determined without regard to any action under section 6851 and this section. The return shall show all items of gross income, deductions, and credits for such taxable year. Any tax collected as a result of a termination assessment will be applied against the tax due for the taxpayer's full taxable year. Except as provided in § 1.6851-2 (relating to departing aliens), no return is required to be filed for a terminated period other than a full taxable year.

(4) ***Evidence of compliance with income tax obligations.*** Citizens of the United States or of possessions of the United States departing from the United States or its possessions will not be required to procure certificates of compliance or to present any other evidence of compliance with income tax obligations. However, for the rules relating to the furnishing of evidence of compliance with the income tax obligations by certain departing aliens, see § 1.6851-2.

(5) ***Section 6851 inapplicable where section 6861 applies.*** No termination assessment for the preceding taxable year shall be made after the due date of the taxpayer's return for such year (determined with regard to extensions of time to file such return).

(b) ***Notice of deficiency.*** Where notice and demand for payment (following a termination assessment) takes place after February 28, 1977, the district director shall, within 60 days after the later of:

(1) The date the taxpayer files a return for the full taxable year; or

(2) The due date of such return (determined with regard to extensions); send the taxpayer a notice of deficiency under section 6212(a). The amount of the deficiency shall be computed in accordance with section 6211 and the regulations thereunder. In applying section 6211, the tax imposed and the amount shown upon the return shall be determined on the basis of the taxpayer's full taxable year. Thus, for example assume that on November 1, 1979, a termination assessment against A, a calendar year taxpayer, is made in the amount of $18,000. The termination assessment is for the period from January 1, 1979 through November 1, 1979. Further assume that on or before April 15, 1980, A files a form 1040 showing an income tax liability for the full year 1979 of $10,000. If the district director determines A's liability for tax for 1979 is $16,000, a notice of deficiency for $6,000 shall be sent to A on or before June 14, 1980. Assuming that the district director had collected the $18,000 assessed, $2,000 shall be refunded.

(c) ***Immediate payment.*** The district director shall make demand for immediate payment of the amount of the termination assessment, and the taxpayer shall immediately pay such amount or shall immediately file the bond provided in section 6863.

(d) ***Abatement.*** The provisions of §§ 301.6861-1(e) and 301.6861-1(f) relating to the abatement of jeopardy assessments, shall apply to assessments made under section 6851.

[T.D. 7575, 43 FR 58816, Dec. 18, 1978]

§ 1.6851-2 Certificates of compliance with income tax laws by departing aliens.

(a) ***In general*** —

(1) ***Requirement.*** The rules of this section are applicable, except as otherwise expressly provided, to any alien who departs from the United States or any of its possessions after January 20, 1961. Except as provided in subparagraph (2) of this paragraph, no such alien, whether resident or nonresident, may depart from the United States unless he first procures a certificate that he has complied with all of the obligations imposed upon him by the income tax laws. In order to procure such a certificate, an alien who intends to depart from the United States

(i) must file with the district director for the internal revenue district in which he is located the statements or returns required by paragraph (b) of this section to be filed before obtaining such certificate,

(ii) must appear before such district director if the district director deems it necessary, and

(iii) must pay any taxes required under paragraph (b) of this section to be paid before obtaining the certificate. Either such certificate of compliance, properly executed, or evidence that the alien is excepted under subparagraph (2) of this paragraph from obtaining the certificate must be presented at the point of departure. An alien who presents himself at the point of departure without a certificate of compliance, or evidence establishing that such a certificate is not required, will be subject at such departure point to examination by an internal revenue officer or employee and to the completion of returns and statements and payment of taxes as required by paragraph (b) of this section.

(2) ***Exceptions*** —

(i) ***Employees of foreign governments or international organizations—***

(a) ***Diplomatic representatives, their families and servants.***

(*1*) Representatives of foreign governments bearing diplomatic passports, whether accredited to the United States or other countries, and members of their households shall not, upon departure from the United States or any of its possessions, be examined as to their liability for United States income tax or be required to obtain a certificate of compliance. If a foreign government does not issue diplomatic passports but merely indicates on passports issued to members of its diplomatic service the status of the bearer as a member of such service, such passports are considered as diplomatic passports for income tax purposes.

(*2*) Likewise, the servant of a diplomatic representative who accompanies any individual bearing a diplomatic passport upon departure from the United States or any of its possessions shall not be required, upon such departure, to obtain a certificate of compliance or to submit to examination as to his liability for United States income tax. If the departure of such a servant from the United States or any of its possessions is not made in the company of an individual bearing a diplomatic

passport, the servant is required to obtain a certificate of compliance. However, such certificate will be issued to him on Form 2063 without examination as to his income tax liability upon presentation to the district director for the internal revenue district in which the servant is located of a letter from the chief of the diplomatic mission to which the servant is attached certifying

(*i*) that the name of the servant appears on the "White List", a list of employees of diplomatic missions, and

(*ii*) that the servant is not obligated to the United States for any income tax, and will not be so obligated up to and including the intended date of departure.

(*b*) ***Other employees.*** Any employee of an international organization or of a foreign government (other than a diplomatic representative to whom (*a*) of this subdivision applies) whose compensation for official services rendered to such organization or government is excluded from gross income under section 893 and who has received no gross income from sources within the United States, and any member of his household who has received no gross income from sources within the United States, shall not, upon departure from the United States or any of its possessions after November 30, 1962, be examined as to his liability for United States income tax or be required to obtain a certificate of compliance.

(*c*) ***Effect of waiver.*** An alien who has filed with the Attorney General the waiver provided for under section 247(b) of the Immigration and Nationality Act (8 U.S.C. 1257(b)) is not entitled to the exception provided by this subdivision.

(ii) ***Alien students, industrial trainees, and exchange visitors.*** A certificate of compliance shall not be required, and examination as to United States income tax liability shall not be made, upon the departure from the United States or any of its possessions of—

(A) An alien student, industrial trainee, or exchange visitor, and any spouse and children of that alien, admitted solely on an F-1, F-2, H-3, H-4, J-1 or J-2 visa, who has received no gross income from sources inside the United States other than—

(*1*) Allowances to cover expenses incident to study or training in the United States (including expenses for travel, maintenance, and tuition);

(*2*) The value of any services or accommodations furnished incident to such study or training;

(*3*) Income derived in accordance with the employment authorizations in 8 CFR 274a.12(b) and (c) that apply to the alien's visa; or

(*4*) Interest on deposits described in section 871(i)(2)(A); or

(B) An alien student, and any spouse or children of that alien admitted solely on an M-1 or M-2 visa, who has received no gross income from sources inside the United States other than income derived in accordance with the employment authorization in 8 CFR 274a.12(c)(6) or interest on deposits described in section 871(i)(2)(A).

(iii) ***Other aliens temporarily in the United States.*** A certificate of compliance shall not be required, and examination as to United States income tax liability shall not be made, upon the departure from the United States or any of its possessions of an alien hereinafter described in this

subdivision, unless the district director has reason to believe that such alien has received taxable income during the taxable year up to and including the date of departure or during the preceding taxable year and that collection of income tax from such alien will be jeopardized by his departure from the United States:

(*a*) An alien visitor for pleasure admitted solely on a B-2 visa;

(*b*) An alien visitor for business admitted on a B-1 visa, or on both a B-1 visa and a B-2 visa, who does not remain in the United States or a possession thereof for a period or periods exceeding a total of 90 days during the taxable year;

(*c*) An alien in transit through the United States or any of its possessions on a C-1 visa or under a contract, including a bond agreement, between a transportation line and the Attorney General pursuant to section 238(d) of the Immigration and Nationality Act (8 U.S.C. 1228(d));

(*d*) An alien who is admitted to the United States on a border-crossing identification card or with respect to whom passports, visas, and border-crossing identification cards are not required, if such alien is a visitor for pleasure, or if such alien is a visitor for business who does not remain in the United States or a possession thereof for a period or periods exceeding a total of 90 days during the taxable year, or if such alien is in transit through the United States or any of its possessions;

(*e*) An alien military trainee admitted to the United States to pursue a course of instruction under the auspices of the Department of Defense who departs from the United States on official military travel orders; or

(*f*) An alien resident of Canada or Mexico who commutes between such country and the United States at frequent intervals for the purpose of employment and whose wages are subject to the withholding of tax.

(b) ***Issuance of certificate of compliance*** —

(1) ***In general.***

(i) Upon the departure of an alien required to secure a certificate of compliance under paragraph (a) of this section, the district director shall determine whether the departure of such alien jeopardizes the collection of any income tax for the current or the preceding taxable year, but the district director may determine that jeopardy does not exist in some cases. If the district director finds that the departure of such an alien results in jeopardy, the taxable period of the alien will be terminated, and the alien will be required to file returns and make payment of tax in accordance with subparagraph (3)(iii) of this paragraph. On the other hand, if the district director finds that the departure of the alien does not result in jeopardy, the alien will be required to file the statement or returns required by subparagraph (2) or (3)(ii) of this paragraph, but will not be required to pay income tax before the usual time for payment.

(ii) The departure of an alien who is a resident of the United States or a possession thereof (or treated as a resident under section 6013 (g) or (h)) and who intends to continue such residence (or treatment as a resident) shall be treated as not resulting in jeopardy, and thus not requiring termination of his taxable period, except when the district director has information indicating that the alien intends by such departure to avoid the payment of his income tax. In the case of a nonresident alien (including a resident alien discontinuing residence), the fact that the alien

intends to depart from the United States will justify termination of his taxable period unless the alien establishes to the satisfaction of the district director that he intends to return to the United States and that his departure will not jeopardize collection of the tax. The determination of whether the departure of the alien results in jeopardy will be made on examination of all the facts in the case. Evidence tending to establish that jeopardy does not result from the departure of the alien may be provided, for example, by information showing that the alien is engaged in trade or business in the United States or that he leaves sufficient property in the United States to secure payment of his income tax for the taxable year and of any income tax for the preceding year which remains unpaid.

(2) ***Alien having no taxable income and resident alien whose taxable period is not terminated.*** A statement on Form 2063 shall be filed with the district director by every alien required to obtain a certificate of compliance:

(i) Who is a resident of the United States and whose taxable period is not terminated either because he has had no taxable income for the taxable year up to and including the date of his departure (and for the preceding taxable year where the period for making the income tax return for such year has not expired) or because, although he has had taxable income for such period or periods, the district director has not found that this departure jeopardizes collection of the tax on such income; or

(ii) Who is not a resident of the United States and who has had no taxable income for the taxable year up to and including the date of his departure (and for the preceding taxable year where the period for making the income tax return for such year has not expired).

Any alien described in subdivision (i) or (ii) of this subparagraph who is in default in making return of, or paying, income tax for any taxable year shall, in addition, file with the district director any returns which have not been made as required and pay to the district director the amount of any tax for which he is in default. Upon compliance by an alien with the foregoing requirements of this subparagraph, the district director shall execute and issue to the alien the certificate of compliance attached to Form 2063. The certificate of compliance so issued shall be effective for all departures of the alien during his current taxable year, subject to revocation upon any subsequent departure should the district director have reason to believe that such subsequent departure would result in jeopardy. The statement required of a resident alien under this subparagraph, if made before January 21, 1961, with respect to a departure after January 20, 1961, may be made on a Form 1040C in lieu of a Form 2063.

(3) ***Nonresident alien having taxable income and resident alien whose taxable period is terminated*** —

(i) ***Nonresident alien having taxable income.*** Every nonresident alien required to obtain a certificate of compliance (but not described in subparagraph (2) of this paragraph) who wishes to establish that his departure does not result in jeopardy shall furnish to the district director such information as may be required for the purpose of determining whether the departure of the alien jeopardizes collection of the income tax and thus requires termination of his taxable period.

(ii) ***Nonresident alien whose taxable period is not terminated.*** Every nonresident alien described in subdivision (i) of this subparagraph whose taxable period is not terminated upon departure shall file with the district director:

(*a*) A return in duplicate on Form 1040C for the taxable year of his intended departure, showing income received, and reasonably expected to be received, during the entire taxable year within which the departure occurs; and

(*b*) Any income tax returns which have not been filed as required.

Upon compliance by the alien with the foregoing requirements of this subdivision, and the payment of any income tax for which he is in default, the district director shall execute and issue to the alien the certificate of compliance on the duplicate copy of Form 1040C. The certificate of compliance so issued shall be effective for all departures of the alien during his current taxable year, subject to revocation by the district director upon any subsequent departure if the taxable period of the alien is terminated on such subsequent departure.

(iii) ***Alien (whether resident or nonresident) whose taxable period is terminated.*** Every alien required to obtain a certificate of compliance, whether resident or nonresident, whose taxable period is terminated upon departure shall file with the district director:

(*a*) A return in duplicate on Form 1040C for the short taxable period resulting from such termination, showing income received, and reasonably expected to be received, during the taxable year up to and including the date of departure;

(*b*) Where the period for filing has not expired, the return required under section 6012 and § 1.6012-1 for the preceding taxable year; and

(*c*) Any other income tax returns which have not been filed as required.

Upon compliance with the foregoing requirements of this subdivision, and payment of the income tax required to be shown on the returns filed pursuant to (*a*) and (*b*) of this subdivision and of any income tax due and owing for prior years, the departing alien will be issued the certificate of compliance on the duplicate copy of Form 1040C. The certificate of compliance so issued shall be effective only for the specific departure with respect to which it is issued. A departing alien may postpone payment of the tax required to be shown on the returns filed in accordance with (*a*) and (*b*) of this subdivision until the usual time of payment by furnishing a bond as provided in § 301.6863-1.

(4) ***Joint return on Form 1040C.*** A departing alien may not file a joint return on Form 1040C unless:

(i) Such alien and his spouse may reasonably be expected to be eligible to file a joint return at the normal close of their taxable periods for which the return is made; and

(ii) If the taxable period of such alien is terminated, the taxable periods of both spouses are so terminated as to end at the same time.

(5) ***Annual return.*** Notwithstanding that Form 1040C has been filed for either the entire taxable year of departure or for a terminated period, the return required under section 6012 and § 1.6012-1 for such taxable year shall be filed. Any income tax paid on income shown on the return on Form 1040C shall be applied against the tax determined to be due on the income required to be shown on the subsequent return under section 6012 and § 1.6012-1.

[T.D. 6537, 26 FR 547, Jan. 20, 1961, as amended by T.D. 6620, 27 FR 11803, Nov. 30, 1962; T.D. 7575, 43 FR 58817, Dec. 18, 1978; T.D. 7670, 45 FR 6931, Jan. 31, 1980; T.D. 8332, 56 FR 3034, Jan. 28, 1991; T.D. 8526, 59 FR 10067, Mar. 3, 1994]

§ 1.6851-3 Furnishing of bond to insure payment; cross reference.

See section 6863 and § 301.6863-1 of this chapter (regulations on procedure and administration) for rules relating to the furnishing of bond to stay collection.

[T.D. 7575, 43 FR 58817, Dec. 18, 1978]

DECLARATORY JUDGMENTS RELATING TO QUALIFICATION OF CERTAIN RETIREMENT PLANS

§ 1.7476-1 Interested parties.

(a) ***In general*** —

(1) ***Notice requirement.*** Before the Internal Revenue Service can issue an advance determination as to the qualified status of certain retirement plans, the applicant must provide the Internal Revenue Service with satisfactory evidence that such applicant has notified the persons who qualify as interested parties, under regulations prescribed under section 7476(b)(1) of the Code, of the application for such determination. See section 3001(a) of the Employee Retirement Income Security Act of 1974 (88 Stat. 995). For the rules for giving notice to interested parties, see § 1.7476-2 and paragraph (o) of § 601.201 of this chapter (Statement of Procedural Rules).

(2) ***Declaratory judgments.*** Section 7476 provides a procedure for obtaining a declaratory judgment by the Tax Court with respect to the initial or continuing qualification under subchapter D of chapter 1 of the Code of a retirement plan defined in section 7476(d), in the case of an actual controversy involving:

(i) A determination by the Internal Revenue Service with respect to the initial qualification or continuing qualification under such subchapter of such a plan, or

(ii) A failure by the Internal Revenue Service to make a determination with respect to:

(A) Such initial qualification of such a plan, or

(B) Such continuing qualification of such a plan, if the controversy arises from a plan amendment or plan termination.

Under section 7476(d) the term “retirement plan” means a pension profitsharing, or stock bonus plan described in section 401(a), or a trust which is part of such a plan, an annuity plan described in section 403(a), or a bond purchase plan described in section 405(a). This procedure is available only to the employer, the plan administrator as defined in section 414(g), an employee who qualifies as an interested party as defined in this section, or the Pension Benefit Guaranty Corporation, where such person has an actual controversy involving a determination described in paragraph (a)(2)(ii) of this section. In the case of an application for such a determination, this procedure is available only if such determination or failure to make such determination is with respect to an application described in paragraph (b)(7) of this section. In addition, in the case of such an application, if a petitioner was the applicant for the determination, the Tax Court may hold, under section 7476(b)(2), the filing of a pleading for a declaratory judgment to be premature unless the petitioner establishes to the satisfaction of the Tax Court that such petitioner has caused the interested parties to be notified in accordance with this section and § 1.7476.2

(b) ***Interested parties*** —

(1) ***In general.*** If paragraphs (b) (2), (3), (4), and (5) of this section do not apply, then, except as otherwise provided in paragraphs (b)(6) (i), (ii), and (iii) of this section, the following persons shall be interested parties with respect to an application for an advance determination as to the qualified status of a retirement plan:

(i) All present employees of the employer who are eligible to participate in the plan (as defined in paragraph (d)(2) of this section), and

(ii) All other present employees of the employer whose principal place of employment (as defined in paragraph (d)(3) of this section) is the same as the principal place of employment of any employee described in paragraph (b)(1)(i) of this section.

(2) ***Certain plans covering a principal owner.*** Notwithstanding paragraph (b)(1) of this section, where:

(i) A principal owner (within the meaning of paragraph (d)(2) of § 1.414(c)-3) of the employer or of a common parent of the employer (where the employer is a member of a parent-subsidiary group of trades or businesses under common control under section 414 (b) or (c)) is eligible to participate in the plan, and

(ii) The number of employees employed by such employer (including all employees who by reason of section 414 (b) or (c) are treated as employees of such employer) is 100 or less then except as otherwise provided in paragraphs (b)(6) (i), (ii), and (iv) of this section, all present employees of the employer shall be interested parties with respect to an application for an advance determinations as to the qualified status of the retirement plan.

(3) ***Certain plan amendments.*** In the case of an application for an advance determination as to whether a plan amendment affects the continuing qualification of a plan, if:

(i) There is outstanding a favorable determination letter for a plan year to which section 410 applies, and

(ii) The amendment does not alter the participation provisions of the plan, then paragraphs (b) (1) and (2) of this section shall not apply, and all present employees of the employer who are eligible to participate in the plan (as defined in paragraph (d)(2) of this section), shall be interested parties. For the purpose of this paragraph (b)(3), if qualification of the plan is dependent upon benefits under the plan integrating with those benefits provided under the Social Security Act or a similar program, and if such integration results in excluding any employee or could possibly result in any participant's benefit being reduced to zero and the amendment alters contributions to or the amount of benefits payable under the plan, then the amendment shall be considered to alter the participation provisions of the plan.

(4) ***Collectively bargained plans.*** In the case of an application with respect to a plan described in section 413(a) (relating to collectively bargained plans), paragraphs (b) (1), (2) and (3) of this section shall not apply and all present employees covered by a collective-bargaining agreement pursuant to which the plan is maintained shall be interested parties.

(5) ***Plan terminations.*** In the case of an application for an advance determination with respect to whether a plan termination affects the continuing qualification of a retirement plan, paragraphs (b) (1), (2), (3) and (4) of this section shall not apply, and all present employees with accrued benefits under the plan, all former employees with vested benefits under the plan, and all beneficiaries of decreased former employees currently receiving benefits under the plan, shall be interested parties.

(6) ***Exceptions.***

(i) In the case of an application to which paragraph (b) (1) or (2) of this section applies, an employee who is not eligible to participate in the plan shall not be an interested party if such employee is excluded from consideration for purposes of section 410(b)(1) by reason of section 410(b)(2) (B) or (C).

(ii) In the case of an application to which paragraph (b) (1) or (2) of this section applies, an application to which paragraph (b) (1) or (2) of this section applies, an employee who is not eligible to participate in the plan shall not be an interested party if such plan meets the eligibility standards of section 410(b)(1)(A).

(iii) In the case of an application to which paragraph (b)(1) of this section applies, an employee who is not eligible to participate in the plan shall not be an interested party with respect to such plan if such employee is eligible to participate in any other plan of the employer with respect to which a favorable determination letter is outstanding (whether or not issued pursuant to an application to which this section applies), or in such a plan of another employer whose employees, by reason of section 414 (b) or (c), are treated as employees of the employer making the application.

(iv) In the case of an application to which paragraph (b)(2) of this section applies, an employee who is not eligible to participate in the plan shall not be an interested party with respect to such plan if such employee is eligible to participate in a plan described in section 413(a) (relating to collectively bargained plans) maintained by the employer with respect to which a favorable determination letter is outstanding (whether or not issued pursuant to an application to which this section applies), or in such a plan of another employer whose employees by reason of section 414 (b) or (c), are treated as employees of the employer making the application.

(7) ***Applicability.*** Paragraph (b) of this section shall only apply in the case of an application made to the internal Revenue Service requesting an advance determination that a retirement plan as defined in section 7476(d) and paragraph (a) of this section meets the requirements for qualification for a plan year or years to which section 410 applies to such plan. See paragraphs (c) (4) and (5) of this section for special rules in respect of years to which section 410 applies.

(c) ***Special rules.*** For purposes of paragraph (b) of this section and § 1.7476-2:

(1) ***Time of determination.*** The status of an individual as an interested party and as a present employee or former employee shall be determined as of a date determined by the applicant, which date shall not be earlier than five business days before the first date on which the notice of the application is given to interested parties pursuant to § 1.7476-2 nor later than the date on which such notice is given.

(2) ***Controlled groups, etc.*** An individual shall be considered to be an employee of an employer if such employee is treated as that employer's employee under section 414 (b) or (c).

(3) ***Self-employed individuals.*** A self-employed individual shall be considered an employee.

(4) ***Years to which section 410 relates.*** For purposes of paragraph (b)(7) of this section, section 410 shall be considered to apply to a plan year if an election has been made under section 1017(d) of the Employee Retirement Income Security Act of 1974 to have section 410 apply to such plan year, whether or not the election is conditioned upon the issuance by the Commissioner of a favorable determination letter.

(5) ***Government, church plans, etc.*** In the case of an organization described in section 410(c)(1), section 410 will be considered to apply to a plan year of such organization for any plan year to which section 410(c)(2) applies to such plan.

(d) ***Definitions.*** For the purposes of paragraph (b) of this section and § 1.7476-2:

(1) ***Employer.*** The term "employer" includes all employers who maintain the plan with respect to which an advance determination applies. A sole proprietor shall be considered such person's own employer and a partnership is considered to be the employer of each of the partners.

(2) ***Eligible to participate.*** For purposes of this section, an employee is eligible to participate in a plan if such employee:

(i) Is a participant in the plan,

(ii) Would be a participant in the plan if such employee met the minimum age and service requirements of the plan or

(iii) Would be a participant in the plan upon making mandatory employee contributions.

In applying this paragraph (d)(2), plan provisions (with respect to which the determination regarding qualification is to be based) not in effect on the first date on which notice is given to interested parties shall be treated as though they were in effect on such date.

(3) ***Place of employment.*** A place of employment includes all worksites within a plant, installation, store, office, or similar facility. Any employee who has no principal place of employment shall be treated as though such employee's principal place of employment is that place to which such employee regularly reports to the employer.

(e) ***Effective date.*** The provisions of this section apply to applications referred to in paragraph (a) of this section made on or after June 21, 1976.

[T.D. 7421, 41 FR 20876, May 21, 1976; 41 FR 22561, June 4, 1976, as amended by T.D. 8179, 53 FR 6613, Mar. 2, 1988; T.D. 9006, 67 FR 47456, July 19, 2002]

§ 1.7476-2 Notice to interested parties.

(a) ***In general.*** Any person applying to a district director for a determination described in paragraph (b)(7) of § 1.7476-1 shall cause notice of the application to be given to persons who qualify as interested parties under § 1.7476-1 with respect to the application, whether or not such application is received by the Internal Revenue Service before the date on which section 410 applies to the plan.

(b) ***Nature of notice.*** The notice required by this section shall—

(1) Contain the information and be given within the time period prescribed in § 601.201(o)(3) of this chapter; and

(2) Be given in a manner prescribed in paragraph (c) of this section.

(c) ***Method of giving notice.***

(1) In the case of a present employee, former employee, or beneficiary who is an interested party, the notice may be provided by any method reasonably calculated to ensure that each interested party is notified of the application for a determination. If an interested party who is a present employee is in a unit of employees covered by a collective-bargaining agreement between employee

representatives and one or more employers, notice shall also be given to the collective-bargaining representative of such interested party by any method that satisfies this paragraph. Whether the notice is provided in a manner that satisfies the requirements of this paragraph is determined on the basis of all the relevant facts and circumstances. Because the facts and circumstances differ depending on the interested party, it may be necessary to use more than one method of delivery in order to ensure timely and adequate notice to all interested parties.

(2) If the notice to interested parties is delivered using an electronic medium under an electronic system that satisfies the applicable notice requirements of § 1.401(a)-21 of this chapter, the notice is deemed to be provided in a manner that satisfies the requirements of paragraph (c)(1) of this section.

(d) ***Examples.*** The principles of this section are illustrated by the following examples:

Example 1. (i) Employer A is amending Plan C and applying for a determination letter. Plan C is not maintained pursuant to one or more collective bargaining agreements and is not being terminated. As part of the determination letter application process, Employer A provides the notice required under this section to interested parties. For present employees, Employer A provides the notice by posting the notice at those locations within the principal places of employment of the interested parties which are customarily used for employer notices to employees with regard to employment and employee benefit matters.
(ii) In this *Example 1,* Employer A satisfies the notice to interested parties requirement described in this section.

Example 2. (i) Employer B is amending Plan D and applying for a determination letter. As part of the determination letter application process, Employer B provides the notice required under this section to interested parties.
(ii) Employer B has multiple worksites. Employer B's employees located at worksites 1 through 4 have reasonable access to computers at their workplace. However, Employer B's employees located at worksite 5 do not have access to computers.

(iii) For present employees with reasonable access to computers (worksites 1 through 4), Employer B provides the notice by posting the notice on Employer B's web site (Internet or intranet). Employees at worksites 1 through 4 customarily receive employer notification with regard to employment and employee benefit matters from the Employer B's web site. For present employees without access to computers (worksite 5), Employer B provides the notice by posting the notice at worksite 5 in a location that is customarily used for employer notices to employees with regard to employment and employee benefit matters.

(iv) Employer B also sends the notice by e-mail to each collective-bargaining representative of interested parties who are present employees of Employer B covered by a collective-bargaining agreement between employee representatives and Employer B, using the e-mail address previously provided to Employer B by such collective-bargaining representative.

(v) In this *Example 2,* Employer B satisfies the notice to interested parties requirement described in this section.

Example 3. (i) Employer C is terminating Plan E and applying for a determination letter as to whether the plan termination affects the continuing qualification of Plan E. As part of the determination letter application process, Employer C provides the notice required under this section to interested parties.
(ii) All of Employer C's employees have reasonable access to computers. Each employee has an e-mail address where he or she can receive messages from Employer C. Employees of Employer C customarily receive employer notices regarding employment and employee benefit matters by e-mail.

(iii) For present employees, Employer C provides the notice by sending the notice by e-mail.

(iv) Employer C also sends the notice by e-mail to each collective-bargaining representative of interested parties who are present employees of Employer C covered by a collective-bargaining agreement between employee representatives and Employer C, using the e-mail address previously provided to Employer C by such collective-bargaining representative.

(v) In addition, Employer C sends the notice by e-mail to each interested party who is a former employee or beneficiary, using the e-mail address previously provided to Employer C by such interested party. For any former employee or beneficiary who did not provide an e-mail address, Employer C sends the notice by regular mail to the last known address of such former employee or beneficiary.

(vi) In this *Example 3,* Employer C satisfies the notice to interested parties requirement described in this section.

(e) ***Effective date.***

(1) The provisions of this section shall apply to applications referred to in § 1.7476-1(a) made on or after January 1, 2003.

(2) For applications made on or after June 21, 1976 and before January 1, 2003, § 1.7476-2 (as it appeared in the April 1, 2002 edition of 26 CFR part 1) applies.

[T.D. 7421, 41 FR 20876, May 21, 1976, as amended at T.D. 9006, 67 FR 47456, July 19, 2002; T.D. 9294, 71 FR 61888, Oct. 20, 2006]

§ 1.7476-3 Notice of determination.

(a) ***In general.*** Under section 7476(b)(5) if a district director sends to the employer, the plan administrator, an interested party with respect to the plan, or the Pension Benefit Guaranty Corporation (or in the case of certain individuals who qualify as interested parties under paragraph (b) of § 1.7476-1, to the person described under paragraph (c) of this section as the representative of such individuals) by certified or

registered mail a notice of determination with respect to the qualification of a retirement plan described in section 7476(d), no proceeding for a declaratory judgment by the United States Tax Court with respect to the qualification of such plan may be initiated by such person unless the pleading initiating such proceeding is filed by such person with such Court before the ninety-first day after the day after such notice is mailed.

(b) ***Address for notice of determination*** —

(1) ***Applicant.*** In the case of the applicant for a determination, a notice of determination referred to in section 7476(b)(5) shall be sufficient if mailed to such person at the address set forth on the application for the determination.

(2) ***Interested party.*** In the case of an interested party or parties who, pursuant to section 3001(b) of the Employee Retirement Income Security Act of 1974 (88 Stat. 995), submitted a comment to a district director with respect to the qualification of the plan, a notice of determination referred to in section 7476(b)(5) shall be sufficient if mailed to the address designated in the comment as the address to which correspondence should be sent.

(c) ***Representative of interested parties.***

(1) In the case of an interested party who, in accordance with section 3001(b) of the Employee Retirement Income Security Act of 1974 (88 Stat. 995), requests the Secretary of Labor to submit a comment to a district director on matters respecting the qualification of the plan, where pursuant to such request such Secretary does in fact submit such a comment, the Administrator of Pension and Welfare Benefit Programs, Department of Labor, shall be the representative of such interested party for purposes of receiving the notice referred to in section 7476(b)(5) with respect to those matters on which the Secretary of Labor commented.

(2) In the event a single comment with respect to the qualification of the plan is submitted to a district director by two or more interested parties, the representative designated in the comment for receipt of correspondence shall be the representative of all the interested parties submitting the comment for purposes of receiving the notice referred to in section 7476(b)(5) on behalf of all of them. Such designated representative must be either one of the interested parties who submitted the comment or a person described in paragraph (e)(6) (i), (ii) or (iii) of § 601.201 of this chapter (Statement of Procedural Rules). If one person is not designated in the comment as the representative for receipt of correspondence, a notice of determination mailed to any interested party who submitted the comment shall be notice to all the interested parties who submitted the comment for purposes of section 7476(b)(5).

[T.D. 7421, 41 FR 20877, May 21, 1976]

§ 1.7519-0T Table of contents (temporary).

This section lists the captions that appear in the temporary regulations under section 7519.

§ 1.7519-1T Required payments for entities electing not to have required year (temporary).

(a) In general.

(1) Applicability.

(2) Returns and required payments.

(3) Required payment.

(4) Examples.

(b) Definitions and special rules.

(1) Applicable percentage.

(i) In general.

(ii) Exception for certain applicable election years beginning after 1987.

(iii) Example.

(2) Adjusted highest section 1 rate.

(i) General rule.

(ii) Period for determining highest section rate.

Base year.

(4) Special rules for certain applicable election years.

(i) First applicable election year of new entities.

(ii) Applicable election years ending prior to the required taxable year.

(5) Net base year income.

(i) In general.

(ii) Partnership net income.

(A) In general.

(B) Treatment of deductions and losses.

(C) Partner limitations disregarded.

(iii) S corporation net income.

(A) In general.

(B) Treatment of deductions and losses.

(C) Shareholder limitations disregarded.

(iv) Applicable payments.

(A) In general.

(B) Exceptions.

(C) Special rule for corporation electing S status.

(D) Special rules for certain payments.

(*1*) Certain indirect payments.

(*2*) Payments by a downstream controlled partnership.

(*i*) In general.

(*ii*) Definition of a downstream controlled partnership.

(*3*) Examples.

(v) Special rule for base year of less than twelve months.

(A) In general.

(B) Annualized short base year income.

(vi) Examples.

(c) Refunds of required payments.

(d) Examples.

§ 1.7519-2T Required payments—procedures and administration (temporary).

(a) Payment and return required.

(1) In general.

(2) Return required.

(i) In general.

(ii) Procedure if amount for applicable election year (and all preceding years) is not greater than $500.

(3) Time and place for filing return.

(i) Applicable election years beginning in 1987.

(A) Taxpayers that would otherwise file Form 720 for the second quarter of 1988.

(B) Other taxpayers.

(ii) Applicable election years beginning after 1987.

(A) Return made on Form 720.

(B) Return made on form other than Form 720.

(iii) Special rule for back-up section 444 election.

(4) Time and place for making required payment.

(i) Applicable election years beginning in 1987.

(ii) Applicable election years beginning after 1987.

(iii) Special rule for back-up section 444 election.

(5) Penalties for failure to pay.

(6) Refund of required payment.

(i) In general.

(ii) Procedures for claiming refund.

(iii) Interest on refund.

(b) Assessment and collection of payment.

(c) Termination due to willful failure.

(d) Negligence and fraud penalties made applicable.

§ 1.7519.3T Effective date (temporary).

§ 1.7519-1T Required payments for entities electing not to have required year (temporary).

(a) *In general* —

(1) *Applicability.* This section applies to any taxable year that a partnership or S corporation has an election under section 444 in effect (an “applicable election year”).

(2) ***Returns and required payments.*** For each applicable election year, a partnership or S corporation must—

(i) File a return as provided in § 1.7519-2T(a)(2), and

(ii) Make a required payment (as defined in paragraph (a)(3) of this section) as provided in § 1.7519-2T.

However, if the required payment for an applicable election year is not more than $500 and the partnership or S corporation has not been required to make a required payment for a prior year, the partnership or S corporation should not make a required payment for such applicable election year.

(3) ***Required payment.*** The term "required payment" means, with respect to any applicable election year, an amount equal to the excess of—

(i) The product of the applicable percentage of the adjusted highest section 1 rate, multiplied by the net base year income (as defined in paragraph (b)(5) of this section) of the entity over

(ii) The cumulative amount of required payments actually made for all preceding applicable election years (reduced by the cumulative amount of such payments refundable under section 7519(c) for all such preceding years).

Furthermore, the amount of the required payment is determined without regard to the required payment of any other partnership or S corporation. See example (3) in paragraph (d) of this section.

(4) ***Examples.*** The provisions of paragraph (a) of this section may be illustrated by the following examples.

Example 1. A, a partnership, makes a section 444 election to retain its taxable year ending September 30. For A's first applicable election year, A's required payment, as defined in paragraph (a)(3) of this section, is $400. Thus, A does not have to make a required payment for that year. However, A is required to file the return prescribed by § 1.7519-2T(a)(2).

Example 2. The facts are the same as in example (1), and, in addition to those facts, for A's second applicable election year, the amount determined under paragraph (a)(3)(i) of this section is $800. Because A did not actually make a required payment for A's first applicable election year, A's required payment is $800 for its second applicable election year. Since the required payment is greater than $500, A must make a required payment for its second applicable election year. Furthermore, A must file the return prescribed by § 1.7519-2T(a)(2).

Example 3. The facts are the same as in example (2), and, in addition to those facts, for A's third applicable election year, the amount determined under paragraph (a)(3)(i) of this section is $1,200. Thus, A's required payment is $400 ($1,200 determined under paragraph (a)(3)(i) of this section less $800 determined under paragraph (a)(3)(ii) of this section). Although A's required payment for its third applicable election year is not more than $500, A must make its required payment for such year because the required payment for a preceding applicable election year exceeded $500. A must also file the return prescribed by § 1.7519-2T(a)(2) for its third applicable election year.

(b) ***Definitions and special rules*** —

(1) ***Applicable percentage*** —

(i) ***In general.*** Except as provided in paragraph (b)(1)(ii) of this section, the term "applicable percentage" means the percentage determined in accordance with the following table:

If the applicable election year of the partnership or S corporation begins during—	The applicable percentage is—
1987	.25
1988	.50
1989	.75
1990 or thereafter	100

(ii) ***Exception for certain applicable election years beginning after 1987.*** [Reserved]

(iii) ***Example.*** The provisions of paragraph (b)(1) of this section may be illustrated by the following example.

Example. B is a corporation that has historically used a June 30 taxable year. For its taxable year beginning July 1, 1987, B elects to be an S corporation and elects under § 1.444-1T(b)(3) to retain its June 30 taxable year. Had B changed to a calendar year, its required year under section 1378, B's shareholders would not have been entitled to the 4-year spread under section 806(e)(2)(C) of the Tax Reform Act of 1986 because B was not an S corporation for its taxable year beginning in 1986. Nevertheless, for purposes of determining the required payment for B's applicable election year beginning July 1, 1987, the applicable percentage is 25 percent.

(2) ***Adjusted highest section 1 rate*** —

(i) ***General rule.*** For any applicable election year, the term "adjusted highest section 1 rate" means the highest rate of tax under section 1 applicable to the period defined in paragraph (b)(2)(ii) of this section, plus 1 percentage point. Notwithstanding the preceding sentence, the adjusted highest section 1 rate is 36 percent for applicable election years beginning in 1987. For purposes of this section, the highest rate of tax is determined without regard to the effect of section 1(g), relating to the phaseout of the 15-percent rate and personal exemptions.

(ii) ***Period for determining highest section 1 rate.*** For purposes of paragraph (b)(2)(i) of this section, the period for determining the highest rate of tax under section 1 is the 12 month period that—

(A) Ends with the required taxable year for the applicable election year, and

(B) Includes the end of the base year.

For example, assume that a partnership's applicable election year begins on October 1, 1988 and that the required taxable year for such applicable election year is December 31. Based upon these facts, the period for determining the highest section 1 rate is the 12-month period ending December 31, 1988.

(3) ***Base year.*** The term "base year" means, with respect to any applicable election year, the taxable year of the partnership or S corporation preceding such applicable election year.

(4) ***Special rules for certain applicable election years*** —

(i) ***First applicable election year of new entities.*** If an applicable election year is a partnership's or S corporation's first year in existence (*i.e.,* the partnership or S corporation is newly formed and therefore does not have a base year), the required payment for such applicable election year is zero.

(ii) ***Applicable election years ending prior to the required taxable year.*** If a partnership or S corporation makes a section 444 election and the resulting applicable election year (the "first applicable election year") of the partnership or S corporation ends prior to the last day of the required year, the required payment for the first applicable election year is zero. See example (5) in paragraph (b)(5)(vi) of this section.

(5) ***Net base year income*** —

(i) ***In general.*** Except as provided in paragraph (b)(5)(v) of this section (relating to short base years), the net base year income of a partnership or S corporation is the sum of—

(A) The deferral ratio multiplied by the partnership's or S corporation's net income for the base year, plus

(B) The excess (if any) of—

(*1*) The deferral ratio multiplied by the aggregate amount of applicable payments made by the partnership or S corporation during the base year, over

(*2*) The aggregate amount of such applicable payments made during the deferral period of the base year.

The term "deferral ratio" means the ratio which the number of months in the deferral period (as defined in § 1.444-1T (b)(4)) of the applicable election year bears to 12 months.

(ii) ***Partnership net income.*** For purposes of paragraph (b)(5)(i) of this section—

(A) ***In general.*** The net income of the partnership is the amount (not below zero) determined by taking into account the aggregate amount of the partnership's items described in section 702(a), except for—

(*1*) Credits,

(*2*) Tax-exempt income, and

(*3*) Guaranteed payments under section 707(c).

(B) ***Treatment of deductions and losses.*** For purposes of determining the aggregate amount of partnership items, deductions and losses are treated as negative income. Thus, for example, if under section 702(a) a partnership has $1,000 of ordinary taxable income, $500 of specially allocated deductions, and $300 of capital loss, the net income of the partnership is $200 ($1,000-$500-$300).

(C) ***Partner limitations disregarded.*** Any limitation on the amount of a partnership item described in section 702(a) which may be taken into account for purposes of computing the taxable income of a partner shall be disregarded in computing the net income of the partnership.

(iii) ***S corporation net income.*** For purposes of paragraph (b)(5)(i) of this section—

(A) ***In general.*** The net income of an S corporation is the amount (not below zero) determined by taking into account the aggregate amount of the S corporation's items described in section 1366(a) (other than credits and tax-exempt income). If the S corporation was a C corporation for the base year, the taxable income of the C corporation shall be treated as the net income of the S corporation for such year.

(B) ***Treatment of deductions and losses.*** For purposes of determining the aggregate amount of S corporation items, deductions and losses are treated as negative income. Thus, for example, if under section 1366(a) an S corporation has $2,000 of ordinary taxable income, $1,000 of deductions described in section 1366(a)(1)(A) of the Code, and $500 of capital loss, the net income of the S corporation is $500 ($2,000-$1,000-$500).

(C) ***Shareholder limitations disregarded.*** Any limitation on any amount described in section 1366(a) which may be taken into account for purposes of computing the taxable income of a shareholder shall be disregarded in computing the net income of the S corporation.

(iv) ***Applicable payments*** —

(A) ***In general.*** The term *applicable payment* means any amount deductible in the base year that is includable at any time, directly or indirectly, in the gross income of a taxpayer that during the base year is a partner or shareholder.

(B) ***Exceptions.*** The term *applicable payment* does not include any guaranteed payments under section 707(c).

(C) ***Special rule for corporation electing S status.*** If an S corporation was a C corporation for the base year, the corporation shall be treated as if it were an S corporation for the base year for purposes of determining the amount of applicable payments under this section. Thus, amounts deductible by the C corporation in the base year that are includable at any time in the gross income of a taxpayer that is a shareholder during the base year are treated as if from an S corporation, and therefore within the meaning of the term "applicable payments."

(D) ***Special rules for certain payments*** —(*1*) *Certain indirect payments.* For purposes of paragraph (b)(5)(iv)(A) of this section, an amount is indirectly includable in the gross income of a partner or shareholder of a partnership or S corporation that has a section 444 election in effect (an electing partnership or S corporation) if the amount is includable in the gross income of—

(*i*) The spouse (other than a spouse who is legally separated from the partner or shareholder under a decree of divorce or separate maintenance) or child (under age 14) of such partner or shareholder, or

(*ii*) A corporation more than 50 percent (measured by fair market value) of which is owned in the aggregate by partners or shareholders (and individuals related under paragraph (b)(5)(iv)(D)(*1*)(*i*) of this section to any such partners or shareholders), of the electing partnership or S corporation, or

(*iii*) A partnership more than 50 percent of the profits and capital of which is owned in the aggregate by partners or shareholders (and individuals related under paragraph (b)(5)(iv)(D)(*1*)(*i*) of this section to any such partners or shareholders) of the electing partnership or S corporation, or

(*iv*) A trust more than 50 percent of the beneficial ownership of which is owned in the aggregate by partners or shareholders (and individuals related under paragraph (b)(5)(iv)(D)(*1*)(*i*) of this section to any such partners or shareholders), of the electing partnership or S corporation.

For purposes of this paragraph (b)(5)(iv)(D)(*1*), ownership by any person described in this paragraph (b)(5)(iv)(D)(*1*) shall be treated as ownership by the partners or shareholders of the electing partnership or S corporation. This paragraph (b)(5)(iv)(D)(*1*) does not apply to amounts deductible by a partnership or S corporation that has made a section 444 election (the "deducting partnership") and included in the gross income of a partnership or S corporation defined in paragraphs (b)(5)(iv)(D)(*1*) (*ii*) or (*iii*) of this section (the "including partnership"), if the including partnership has the same taxable year as the deducting partnership and the including partnership has a section 444 election in effect. Furthermore, notwithstanding the general effective date provided in § 1.7519-3T, this paragraph (b)(5)(iv)(D)(*1*) is effective for amounts deductible on or after June 1, 1988.

(*2*) *Payments by a downstream controlled partnership*—(*i*) *In general.* If a partnership or S corporation has made a section 444 election, any amounts deducted by a downstream controlled partnership will be considered deducted by the partnership or S corporation that has made the section 444 election for purposes of determining the applicable payments of the partnership or S corporation that has made the section 444 election.

(*ii*) *Definition of a downstream controlled partnership.* If a partnership or S corporation that has made a section 444 election owns more than 50 percent of a partnership's profits and capital, such owned partnership is considered a downstream controlled partnership for purposes of paragraph (b)(5)(iv)(D)(*2*)(*i*) of this section. Furthermore, if more than 50 percent of a partnership's profits and capital are owned by a downstream controlled partnership, such owned partnership is considered a downstream controlled partnership for purposes of paragraph (b)(5)(iv)(D)(*2*)(*i*) of this section.

(*3*) *Examples.* The provisions of this paragraph (b)(5)(iv)(D) may be illustrated by the following examples.

Example 1. I1 and I2, calendar year individuals, own 100 percent of the profits and capital of C1, a partnership. In addition to owning C1, I1 and I2 also own 100 percent of the profits and capital of C2, a calendar year partnership. For its taxable years beginning February 1, 1987, 1988, and 1989, C1 has a section 444 election in effect to use a January 31 taxable year. During its base years beginning February 1, 1986, 1987, and 1988, C1 deducted $10,000, $11,000, and $12,000, respectively that was included in C2's gross income. Furthermore, of the $12,000 deducted by C1 for its taxable year beginning February 1, 1988, $7,000 was deducted during the period June 1, 1988 to January 31, 1989. Pursuant to paragraph (b)(5)(iv)(D)(*1*) of this section, the $7,000 deducted by C1 on or after June 1, 1988, and included in C2's gross income is considered an applicable payment for C1's base year beginning February 1, 1988. Amounts deducted by C1 prior to June 1, 1988, are not subject to paragraph (b)(5)(iv)(D)(*1*) of this section.

Example 2. The facts are the same as in example (1), except that I1 and I2 own only 51 percent of C2's profits and capital. Since the two partners in C1 (*i.e.,* I1 and I2) own more than 50 percent of C2's profits and capital, C2 is considered controlled by the partners of C1

pursuant to paragraph (b)(5)(iv)(D)(*1*)(*iii*) of this section. Thus, the conclusions in example (1) are unchanged. Furthermore, if the $7,000 deducted by C1 was included in the income of a partnership more than 50 percent of the profits and capital of which is owned by C2, such $7,000 would be considered an applicable payment for its base year beginning February 1, 1988.

Example 3. The facts are the same as in example (1), except that for its taxable years beginning February 1, 1987, 1988, and 1989, C2 has a section 444 election in effect to use a January 31 taxable year. Since both C1 and C2 have the same taxable year and both have section 444 elections in effect, paragraph (b)(5)(iv)(D)(*1*) of this section does not apply to the $7,000 deducted by C1 for its base year beginning February 1, 1988.

Example 4. I3 and I4, calendar year individuals, own 100 percent of the profits and capital of C3, a partnership. C3 has made a section 444 election to retain a year ending June 30 for its taxable year beginning July 1, 1987. Furthermore, C3 owns more than 50 percent of the profits and capital of C4, a partnership that historically used a June 30 taxable year. Pursuant to § 1.706-3T(b), C4 retains its year ending June 30 for its taxable year beginning July 1, 1987. For its taxable year beginning July 1, 1986, C4 deducted $20,000 that was included in I3's gross income. Pursuant to paragraph (b)(5)(iv)(D)(*2*) of this section, the $20,000 deducted by C4 is considered an applicable payment by C3 for its base year beginning July 1, 1986.

Example 5. The facts are the same as in example (4), except that the $20,000 deducted by C4 is included in the gross income of a calendar year partnership 100 percent owned by I3 and I4. Pursuant to paragraphs (b)(5)(v)(D) (*1*) and (*2*) of this section, the $20,000 deducted by C4 is considered an applicable payment by C3 for its base year beginning July 1, 1986.

Example 6. The facts are the same as in example (4), except that instead of directly owning a portion of C4, C3 owns more than 50 percent of the profits and capital of C5. Furthermore, C5 owns more than 50 percent of the profits and capital of C4. Pursuant to paragraph (b)(5)(iv)(D)(*2*)(*ii*) of this section, both C5 and C4 are considered downstream controlled partnerships of C3. Thus, pursuant to paragraph (b)(5)(iv)(D)(*2*)(*i*) of this section, the $20,000 deducted by C4 is considered an applicable payment by C3 for its base year beginning July 1, 1986.

(v) ***Special rule for base year of less than twelve months*** —

(A) ***In general.*** If a base year is a taxable year of less than twelve months (a "short base year"), net base year income for such year is an amount equal to the excess, if any, of—

(*1*) The deferral ratio multiplied by the annualized short base year income, over

(*2*) Applicable payments made during the deferral period of the applicable election year following the base year.

(B) ***Annualized short base year income.*** The annualized short base year income is determined by—

(*1*) Increasing the net income for the short base year by applicable payments deductible in the short base year, and

(*2*) Multiplying the short base year income as increased in paragraph (b)(5)(v)(B)(*1*) of this section by twelve, and dividing the result by the number of months in the short base year.

(vi) ***Examples.*** The provisions of paragraph (b)(5) of this section may be illustrated by the following examples.

Example 1. D, a partnership, is owned 10 percent by a C corporation with a September 30 taxable year and 90 percent by calendar year individuals. D has historically used a September 30 taxable year. For its taxable year beginning October 1, 1987, D makes a section 444 election to retain its September 30 taxable year. For the base year from October 1, 1986 to September 30, 1987, D has net income of $200,000 and no applicable payments. D's deferral ratio is $^{3}/_{12}$ (the ratio of the number of months in the deferral period to 12 months). Based upon these facts, D has net base year income of $50,000 ($200,000 × $^{3}/_{12}$).

Example 2. The facts are the same as in example (1) except that D's net income for the base year is $140,000, after applicable payments of $60,000. Of the applicable payments $15,000 were deductible during the deferral period of the base year. Based upon these facts, D has net base year income of $35,000, determined as follows:

Net income multiplied by deferral ratio	$140,000 × $^{3}/_{12}$		$35,000
Plus the excess, if any, of applicable payments multiplied by deferral ratio	$60,000 × $^{3}/_{12}$		
		$15,000	
Over aggregate amount of applicable payments deductible during deferral period of base year		$15,000	0
Net base year income			$35,000

Example 3. The facts are the same as in example (2) except that of the $60,000 applicable payments only $10,000 are deductible during the deferral period of the base year. Based on these facts, D has net base year income of $40,000,

determined as follows:

Net income multiplied by deferral ratio	$140,000		
	x 3/12		
			$35,000
Plus the excess, if any, of applicable payments multiplied by deferral ratio	$60,000		
	x 3/12		
		$15,000	
Over aggregate amount of applicable payments deductible during deferral period of base year		$10,000	
			$5,000
Net base year income			$40,000

Example 4. E is a C corporation that has historically used a January 31 taxable year. For its taxable year beginning February 1, 1987, E makes an election to be an S corporation and also makes a section 444 election to retain its January 31 taxable year. E's taxable income for the taxable year beginning February 1, 1986 to January 31, 1987 is $120,000. Pursuant to paragraph (b)(5)(iii)(A) of this section, the base year for X's first applicable election year is the taxable year beginning February 1, 1986 and ending January 31, 1987. Thus, E's net income for the base year is $120,000. During the base year, E pays its sole shareholder, A, a salary of $5,000 a month plus a $30,000 bonus on January 15, 1987. Thus, under paragraph (b)(5)(iv)(C) of this section, E's applicable payments for the base year are $90,000, of which $55,000 are applicable payments deductible during the deferral period of the base year (February 1 to December 31, 1986). Based upon these facts, E's net base year income is $137,500, determined as follows:

Net income multiplied by deferral ratio	$120,000		
	x 11/12		
			$110,000
Plus the excess, if any, of applicable payments multiplied by the deferral ratio	$90,000		
	x11/12		
		$82,500	

Over aggregate amount of applicable payments deductible during deferral period of base year		$55,000	$27,500
Net base year income			$137,500

Example 5. E, a corporation that has historically used a taxable year ending July 31, makes an election to be an S corporation for its taxable year beginning August 1, 1987. For that year, E also makes a section 444 election to use a taxable year ending September 30. Thus, E has two applicable election years beginning in 1987, the first beginning August 1, 1987 and ending September 30, 1987, and the second beginning October 1, 1987 and ending September 30, 1988. E's required year under section 1378 is the calendar year. Because E's first applicable election year ends prior to the last day of E's required year (*i.e.,* December 31, 1987), the required payment for E's first applicable election year is zero. However, E is required to file a return for such year as provided in § 1.7519-2T.

Example 6. The facts are the same as in example (5). E's second applicable election year is the year from October 1, 1987 to September 30, 1988, and the base year for the second applicable election year is a period of less than 12 months (i.e., August 1, 1987 to September 30, 1987). Thus, E must compute its net base year income using the special rule for short base years provided in paragraph (b)(5)(v) of this section. Assume E's net income for the short base year is $50,000, and E's applicable payments for the short base year are $15,000. Pursuant to paragraph (b)(5)(v)(B) of this section, E's annualized short base year net income is $390,000 ($65,000 × 12/2). Furthermore, assume E's applicable payments for the deferral period of its second applicable election year are $20,000. Based on these facts, the net base year income for the applicable election year beginning October 1, 1987 is $77,500, computed as follows:

Annualized short base year income multiplied by deferral ratio	$390,000	
	x 3/12	
		$97,500
Less:		
Applicable payments for deferral period		$20,000
Net base year income		$77,500

(c) ***Refunds of required payments.*** A partnership of S corporation is entitled to make a claim for refund, in accordance with the procedures provided in § 1.7519-2T(a)(6), if—

(1) The amount specified in paragraph (a)(3)(i) of this section is less than the amount specified in paragraph (a)(3)(ii) of this section; or

(2) The partnership or S corporation terminates its section 444 election, within the meaning of § 1.444-1T(a)(5).

(d) ***Example.*** The provisions of this section may be illustrated by the following examples.

Example 1. G, a partnership, is owned 10 percent by a C corporation with a June 30 taxable year, and 90 percent by calendar year individuals. G has historically used a June 30 taxable year. For its taxable year beginning July 1, 1987, G makes a section 444 election to retain its June 30 taxable year. For the base year from July 1, 1986 to June 30, 1987, G has net income of $300,000 and no applicable payments. G's deferral ratio is 6/12 (the ratio of the number of months in the deferral period to 12 months). Based on these facts, G's net base year income is $150,000 ($300,000 × 6/12). Thus, G's required payment for its first applicable election year is $13,500 ($150,000 of net base year income multiplied by 9 percent (the product of the applicable percentage for 1987, 25 percent, and the highest section 1 rate for 1987, 36 percent)).

Example 2. The facts are the same as in example (1). In addition, G continues its section 444 election for the taxable year beginning July 1, 1988, and G's net base year income for the year beginning July 1, 1987 is $150,000. The required payment for G's second applicable election year is $8,250 ($150,000 of net base year income multiplied by 14.5 percent (the product of the applicable percentage for 1988 applicable election years, 50 percent, and the adjusted highest section 1 rate for 1988, 29 percent) less G's $13,500 required payment for the first applicable election year).

Example 3. H, a partnership with a taxable year ending September 30, desires to make a section 444 election for its taxable year beginning October 1, 1987. H is 15 percent owned by I, a partnership with a taxable year ending September 30, and 85 percent owned by calendar year individuals. Assume H and I are qualified to make section 444 elections as a result of the “same taxable year exception” provided in § 1.444-2T(e). If H and I make section 444 elections, they must each make a required payment (assuming the amount computed under paragraph (a)(3) of this section is greater than $500). Pursuant to paragraph (a)(3) of this section, the required payments of H and I are calculated independent of each other. Thus, in determining the amount of its required payment, I may not exclude its income attributable to H, even though H must also make a required payment on the same income.

Example 4. The facts are the same as in example (1) except that H is 90 percent owned by I and 10 percent owned by calendar year individuals. Pursuant to § 1.706-3T, if I makes a section 444 election to retain its taxable year ending September 30, H's required year will be September 30, because H's majority interest partner will have a September 30 taxable year. Thus, H is not required to make a section 444 election and a required payment in order to use a September 30 taxable year. I, however, must make a required payment.

[T.D. 8205, 53 FR 19706, May 27, 1988]

§ 1.7519-2T Required payments—procedures and administration (temporary).

(a) ***Payment and return required*** —

(1) ***In general.*** With respect to any taxable year for which a partnership or S corporation has a section 444 election in effect (an "applicable election year"), the partnership or S corporation shall file a return as provided in paragraphs (a) (2) and (3) of this section and make a payment, if required, as provided in paragraph (a)(4) of this section.

(2) ***Return required*** —

(i) ***In general.*** A return showing the required payment shall be made, even if the required payment for the applicable election year is zero. For an applicable election year beginning in 1987, the return shall be made on Form 720, "Quarterly Federal Excise Tax Return." For an applicable election year beginning after 1987, the return shall also be made on Form 720 unless another form is prescribed by the Commissioner.

(ii) ***Procedure if amount for applicable election year (and all proceeding years) is not greater than $500.*** If a partnership or S corporation is not required to make a payment under section 7519 for an applicable election year, the partnership or S corporation should type or legibly print "zero" on the appropriate line of the prescribed form.

(3) ***Time and place for filing return*** —

(i) ***Applicable election years beginning in 1987.*** For an applicable election year beginning in 1987, the Form 720 must be filed with the Service Center indicated by the instructions for the Form 720. The date for filing such form is as follows—

(A) ***Taxpayers that would otherwise file Form 720 for the second quarter of 1988.*** Taxpayers that are required, without regard to this section, to file Form 720 for the second quarter of 1988 (e.g., taxpayers reporting liability for manufacturers excise tax) must file Form 720 by the normal due date of such form for the second quarter of 1988. Thus, such taxpayers must generally file Form 720 on or before July 31, 1988. However, if such taxpayers must also report tax imposed by section 4251 (relating to communications services tax), sections 4261 and 4271 (relating to air transportation tax), or section 4986 (relating to windfall profits tax) for the second quarter of 1988, they must file Form 720 on or before August 31, 1988.

(B) ***Other taxpayers.*** Taxpayers that are not described in paragraph (a)(3)(i)(A) of this section (*i.e.,* taxpayers that but for this section would not be required to file Form 720 for the second quarter of 1988) must file Form 720 on or before July 31, 1988.

(ii) ***Applicable election years beginning after 1987*** —

(A) ***Return made on Form 720.*** [Reserved]

(B) ***Return made on form other than Form 720.*** For an applicable election year beginning after 1987, the return showing the required payment is to be filed with the Service Center indicated by the instructions for the form prescribed for payment. The return must be filed on or before the date prescribed by the instructions to the form.

(iii) ***Special rule for back-up section 444 election.*** See § 1.444-3T(b)(4)(iii) for a special rule that may extend the due date for filing a return required by paragraph (a)(2) of this section.

(4) ***Time and place for making required payment*** —

(i) ***Applicable election years beginning in 1987.*** For an applicable election year beginning in 1987, the required payment is due and payable without assessment and notice on or before the date the taxpayer's Form 720 for the second quarter is due (as specified in paragraph (a)(3) of this section). The required payment must be paid by check or money order, and such check or money order must indicate the partnership's or S corporation's taxpayer identification number and must include the statement: "IRS NO. 11 PAYMENT." The check or money order must be sent, together with Form 720, to the Service Center indicated by the instructions for the Form 720.

(ii) ***Applicable election years beginning after 1987.*** For an applicable election year beginning after 1987, the required payment is due and payable without assessment or notice, on or before May 15 of the calendar year following the calendar year in which the applicable election year begins.

(iii) ***Special rule for back-up section 444 election.*** See § 1.444-3T(b)(4)(iii) for a special rule that may extend the due date for making a required payment.

(5) ***Penalties for failure to pay.*** In the case of any failure by a partnership or S corporation to pay the required payment on or before the date prescribed in paragraph (a)(4) of this section, there shall be assessed on such partnership or S corporation a penalty of 10 percent of the underpayment. For purposes of this section, the term "underpayment" means the excess of the amount of the payment required under this section over the amount (if any) of such payment paid on or before the date prescribed in paragraph (a)(4) of this section.

(6) ***Refund of required payment*** —

(i) ***In general.*** If a partnership or S corporation is entitled to make a claim for refund pursuant to § 1.7519-1T(c), such partnership or S corporation should file a claim for refund, as provided in paragraph (a)(6)(ii) of this section. However, in no event shall a refund be made prior to April 15 of the second calendar year that follows the calendar year in which an applicable election year begins. For example, assume a partnership made a section 444 election to retain its taxable year for its taxable year beginning October 1, 1987, and as a result made a required payment for such year. Further assume that the partnership terminates its election for its taxable year beginning October 1, 1988. Based on these facts, the partnership will be entitled to a refund, but no earlier than April 15, 1989.

(ii) ***Procedures for claiming refund.*** [Reserved]

(iii) ***Interest on refund.*** No interest shall be allowed with respect to any refund of a required payment under § 1.7519-1T(C).

(b) ***Assessment and collection of payment.*** A required payment shall be assessed and collected in the same manner as if it were a tax imposed by subtitle C. Furthermore, no deduction shall be allowable to a partnership or S corporation (or their owners) with respect to the required payment.

(c) ***Termination due to willful failure.*** See § 1.444-1T(a)(5)(i)(C), which provides that willful failure to comply with the requirements of this section will result in the termination of the section 444 election.

(d) ***Negligence and fraud penalties made applicable.*** For purposes of section 6653, relating to additions to tax for negligence and fraud, any payment required by this section shall be treated as a tax.

[T.D. 8205, 53 FR 19709, May 27, 1988]

§ 1.7519-3T Effective date (temporary).

The provisions of §§ 1.7519-1T through § 1.7519-3T are effective for taxable years beginning after December 31, 1986.

[T.D. 8205, 53 FR 19710, May 27, 1988]

GENERAL ACTUARIAL VALUATIONS

§ 1.7520-1 Valuation of annuities, unitrust interests, interests for life or terms of years, and remainder or reversionary interests.

(a) ***General actuarial valuations.***

(1) Except as otherwise provided in this section and in § 1.7520-3 (relating to exceptions to the use of prescribed tables under certain circumstances), in the case of certain transactions after April 30, 1989, subject to income tax, the fair market value of annuities, interests for life or a term of years (including unitrust interests), and remainder or reversionary interests is their present value determined under this section. See § 20.2031-7(d) of this chapter (and, for periods prior to June 1, 2023, §§ 20.2031-7(d)(3) and 20.2031-7A of this chapter) for the computation of the value of annuities, interests for life or a term of years, and remainder or reversionary interests other than interests described in paragraphs (a)(2) and (3) of this section.

(2) For a transfer to a pooled income fund, see § 1.642(c)-6(e) (or, for periods prior to June 1, 2023, § 1.642(c)-6A) with respect to the valuation of the remainder interest.

(3) For a transfer to a charitable remainder annuity trust after April 30, 1989, see § 1.664-2 with respect to the valuation of the remainder interest. See § 1.664-4 with respect to the valuation of the remainder interest in property transferred to a charitable remainder unitrust.

(b) ***Components of valuation*** —

(1) ***Interest rate component*** —

(i) ***Section 7520 Interest rate.*** The section 7520 interest rate is the rate of return, rounded to the nearest two-tenths of one percent, that is equal to 120 percent of the applicable Federal mid-term rate, compounded annually, for purposes of section 1274(d)(1), for the month in which the valuation date falls. In rounding the rate to the nearest two-tenths of a percent, any rate that is midway between one two-tenths of a percent and another is rounded up to the higher of those two rates. For example, if 120 percent of the applicable Federal mid-term rate is 10.30, the section 7520 interest rate component is 10.4. The section 7520 interest rate is published monthly by the Internal Revenue Service in the Internal Revenue Bulletin (see § 601.601(d)(2)(ii)(*b*) of this chapter).

(ii) ***Valuation date.*** Except as provided in § 1.7520-2, the valuation date is the date on which the transaction takes place.

(2) ***Mortality component.*** The mortality component reflects the mortality data in the most recently available decennial mortality report based on the United States census. As the appropriate new decennial mortality report becomes available after each decennial census, the Treasury Department and the IRS will revise the mortality component described in this section and will update the appropriate regulations to adopt the revised mortality component tables. For transactions with

valuation dates on or after June 1, 2023, the mortality component table (Table 2010CM) is in § 20.2031-7(d)(7)(ii) of this chapter, is referenced by IRS Publication 1457, *Actuarial Valuations Version 4A,* and can be found on the IRS website at *https://www.irs.gov/retirement-plans/actuarial-tables* (or a corresponding URL as may be updated from time to time). See § 20.2031-7A of this chapter for mortality component tables applicable to transactions for which the valuation date falls before June 1, 2023.

(c) ***Actuarial factors.*** The present value on the valuation date of an annuity, an interest for life or a term of years, and a remainder or reversionary interest is computed by using the section 7520 interest rate component that is described in paragraph (b)(1) of this section and the mortality component that is described in paragraph (b)(2) of this section. Actuarial factors for determining these present values may be calculated by taxpayers using the actuarial formulas in § 20.2031-7(d)(2) of this chapter but, for the convenience of taxpayers, are included in tables that are referenced and explained by publications of the Internal Revenue Service. If a factor for a particular situation is required in order to value an interest, that factor may be calculated by taxpayers using the actuarial formulas in § 20.2031-7(d)(2) of this chapter or the taxpayer may request a ruling to obtain the factor from the Internal Revenue Service. The request for a ruling must be accompanied by a recitation of the facts, including the date of birth for each measuring life and copies of relevant instruments. A request for a ruling must comply with the instructions for requesting a ruling published periodically in the Internal Revenue Bulletin (see Rev. Proc. 2023-1, 2023-1 I.R.B. 1, or successor revenue procedure(s), and §§ 601.201 and 601.601(d)(2)(ii)(*b*) of this chapter) and must include payment of the required user fee.

(d) ***IRS publications referencing and explaining actuarial tables with rates from 0.2 to 20 percent, inclusive, at intervals of two-tenths of one percent, for valuation dates on or after June 1, 2023.*** The publications listed in paragraphs (d)(1) through (3) of this section will be available within a reasonable time after June 1, 2023. The underlying actuarial tables referenced and explained by these publications currently are available, at no charge, electronically via the IRS website at *https://www.irs.gov/retirement-plans/actuarial-tables:*

(1) IRS Publication 1457, *Actuarial Valuations Version 4A* (2023). This publication references tables of valuation factors and provides examples that show how to compute other valuation factors, for determining the present value of annuities, interests for life or a term of years, and remainder or reversionary interests, measured by one or two lives. These factors may also be used in the valuation of interests in a charitable remainder annuity trust as defined in § 1.664-2 and a pooled income fund as defined in § 1.642(c)-5. This publication references and explains Table S (single life remainder factors), Table R(2) (two-life last-to-die remainder factors), Table B (actuarial factors used in determining the present value of an interest for a term of years), Table H (commutation factors), Table J (term certain annuity beginning-of-interval adjustment factors), and Table K (annuity end-of-interval adjustment factors). See earlier versions of the publication, § 1.642(c)-6A, or § 20.2031-7A of this chapter for Table S applicable to valuation dates before June 1, 2023. Earlier versions of the publication also contain earlier versions of Tables H and R(2). Tables B, J, and K also can be found in § 20.2031-7(d)(6) of this chapter, but only for interest rates from 4.2 to 14 percent, inclusive.

(2) IRS Publication 1458, *Actuarial Valuations Version 4B* (2023). This publication references and explains term certain tables and tables of one and two life valuation factors for determining the present value of remainder interests in a charitable remainder unitrust as defined in § 1.664-3. This publication references Table U(1) (unitrust single life remainder factors), Table U(2) (unitrust two-life last-to-die remainder factors), Table D (actuarial factors used in determining the present value of a remainder interest postponed for a term of years), Table F (adjustment payout rate factors), and Table Z (unitrust commutation factors). See earlier versions of the publication or § 1.664-4A for

Table U(1) applicable to valuation dates before June 1, 2023. Earlier versions of the publication also contain earlier versions of Tables U(2) and Z. Table D also can be found in § 1.664-4(e)(6)(iii), but only for adjusted payout rates from 4.2 to 14 percent, inclusive. Table F also can be found in § 1.664-4(e)(6)(iii), but only for interest rates from 4.2 to 14 percent, inclusive.

(3) IRS Publication 1459, *Actuarial Valuations Version 4C* (2023). This publication references and explains Table C, which provides factors for making adjustments to the standard remainder factor for valuing gifts of depreciable property. See § 1.170A-12.

(4) The publications identified in paragraphs (d)(1) through (3) of this section also reference Table 2010CM, the mortality component table.

(e) ***Use of approximation methods for obtaining factors when the required valuation rate falls between two listed rates.*** For certain cases, this part and IRS publications provide approximation methods (for example, interpolation) for obtaining factors when the required valuation rate falls between two listed rates (such as in the case of a pooled income fund's rate of return or a unitrust's adjusted payout rate). In general, exact methods of obtaining the applicable factors are allowed, such as through software using the applicable interest rate and the proper actuarial formula, provided such direct methods are applied consistently in valuing all interests in the same property. The actuarial formula in § 20.2031-7(d)(2)(ii)(B) of this chapter is used to determine the remainder factor for pooled income funds and the actuarial formula in § 1.664-4(e)(5)(i) is used to determine the remainder factor for unitrusts. The approximation method provided in this part, computed to at minimum the same number of decimal places as provided in this part, must be used if more exact methods are not available.

(f) ***Applicability date.*** This section applies on and after June 1, 2023.

[T.D. 8540, 59 FR 30149, June 10, 1994, as amended by T.D. 8819, 64 FR 23210, 23229, Apr. 30, 1999; T.D. 8886, 65 FR 36928, 36943, June 12, 2000; T.D. 9448, 74 FR 21483, May 7, 2009; T.D. 9540, 76 FR 49611, Aug. 10, 2011; T.D. 9974, 88 FR 37438, June 7, 2023]

§ 1.7520-2 Valuation of charitable interests.

(a) ***In general*** —

(1) ***Valuation.*** Except as otherwise provided in this section and in § 1.7520-3 (relating to exceptions to the use of prescribed tables under certain circumstances), the fair market value of annuities, interests for life or for a term of years, remainders, and reversions for which an income tax charitable deduction is allowable is the present value of such interests determined under § 1.7520-1.

(2) ***Prior-month election rule.*** If any part of the property interest transferred qualifies for an income tax charitable deduction under section 170(c), the taxpayer may elect (under paragraph (b) of this section) to compute the present value of the interest transferred by use of the section 7520 interest rate for the month during which the interest is transferred or the section 7520 interest rate component for either of the 2 months preceding the month during which the interest is transferred. Paragraph (b) of this section explains how a prior-month election is made. The interest rate for the month so elected is the applicable section 7520 interest rate. If the actuarial factor for either or both of the 2 months preceding the month during which the interest is transferred is based on a mortality experience that is different from the mortality experience at the date of the transfer and if the taxpayer elects to use the section 7520 rate for a prior month with the different mortality experience, the taxpayer must use the actuarial factor derived from the mortality experience in effect during the

month of the section 7520 rate elected. All actuarial computations relating to the transfer must be made by applying the interest rate component and the mortality component of the month elected by the taxpayer.

(3) ***Transfers of more than one interest in the same property.*** If a taxpayer transfers more than one interest in the same property at the same time, for purposes of valuing the transferred interests, the taxpayer must use the same interest rate and mortality component for each interest in the property transferred. If more than one interest in the same property is transferred in two or more separate transfers at different times, the value of each interest is determined by the use of the interest rate component and mortality component in effect during the month of the transfer of that interest or, if applicable under paragraph (a)(2) of this section, either of the two months preceding the month of the transfer.

(4) ***Information required with tax return.*** The following information must be attached to the income tax return (or to the amended return) if the taxpayer claims a charitable deduction for the present value of a temporary or remainder interest in property—

(i) A complete description of the interest that is transferred, including a copy of the instrument of transfer;

(ii) The valuation date of the transfer;

(iii) The names and identification numbers of the beneficiaries of the transferred interest;

(iv) The names and birthdates of any measuring lives, a description of any relevant terminal illness condition of any measuring life, and (if applicable) an explanation of how any terminal illness condition was taken into account in valuing the interest; and

(v) A computation of the deduction showing the applicable section 7520 interest rate that is used to value the transferred interest.

(5) ***Place for filing returns.*** See section 6091 of the Internal Revenue Code and the regulations thereunder for the place for filing the return or other document required by this section.

(b) ***Election of interest rate component*** —

(1) ***Time for making election.*** A taxpayer makes a prior-month election under paragraph (a)(2) of this section by attaching the information described in paragraph (b)(2) of this section to the taxpayer's income tax return or to an amended return for that year that is filed within 24 months after the later of the date the original return for the year was filed or the due date for filing the return.

(2) ***Manner of making election.*** A statement that the prior-month election under section 7520(a) of the Internal Revenue Code is being made and that identifies the elected month must be attached to the income tax return (or to the amended return).

(3) ***Revocability.*** The prior-month election may be revoked by filing an amended return within 24 months after the later of the date the original return of tax for the year was filed or the due date for filing the return. The revocation must be filed in the place referred to in paragraph (a)(5) of this section.

(c) ***Effective dates.*** Paragraph (a) of this section is effective as of May 1, 1989. Paragraph (b) of this section is effective for elections made after June 10, 1994.

[T.D. 8540, 59 FR 30149, June 10, 1994]

§ 1.7520-3 Limitation on the application of section 7520.

(a) ***Internal Revenue Code sections to which section 7520 does not apply.*** Section 7520 of the Internal Revenue Code does not apply for purposes of—

(1) Part I, subchapter D of subtitle A (section 401 et. seq.), relating to the income tax treatment of certain qualified plans. (However, section 7520 does apply to the estate and gift tax treatment of certain qualified plans and for purposes of determining excess accumulations under section 4980A);

(2) Sections 72 and 101(b), relating to the income taxation of life insurance, endowment, and annuity contracts, unless otherwise provided for in the regulations under sections 72, 101, and 1011 (see, particularly, §§ 1.101-2(e)(1)(iii)(*b*)(*2*), and 1.1011-2(c), *Example 8*);

(3) Sections 83 and 451, unless otherwise provided for in the regulations under those sections;

(4) Section 457, relating to the valuation of deferred compensation, unless otherwise provided for in the regulations under section 457;

(5) Sections 3121(v) and 3306(r), relating to the valuation of deferred amounts, unless otherwise provided for in the regulations under those sections;

(6) Section 6058, relating to valuation statements evidencing compliance with qualified plan requirements, unless otherwise provided for in the regulations under section 6058;

(7) Section 7872, relating to income and gift taxation of interest-free loans and loans with below-market interest rates, unless otherwise provided for in the regulations under section 7872; or

(8) Section 2702(a)(2)(A), relating to the value of a nonqualified retained interest upon a transfer of an interest in trust to or for the benefit of a member of the transferor's family; and

(9) Any other sections of the Internal Revenue Code to the extent provided by the Internal Revenue Service in revenue rulings or revenue procedures. (See §§ 601.201 and 601.601 of this chapter).

(b) ***Other limitations on the application of section 7520*** —

(1) ***In general*** —

(i) ***Ordinary beneficial interests.*** For purposes of this section:

(A) An *ordinary annuity interest* is the right to receive a fixed dollar amount at the end of each year during one or more measuring lives or for some other defined period. A standard section 7520 annuity factor for an ordinary annuity interest represents the present worth of the right to receive $1.00 per year for a defined period, using the interest rate prescribed under section 7520 for the appropriate month. If an annuity interest is payable more often than annually or is payable at the beginning of each period, a special adjustment must be made in any computation with a standard section 7520 annuity factor.

(B) An *ordinary income interest* is the right to receive the income from, or the use of, property during one or more measuring lives or for some other defined period. A standard section 7520 income factor for an ordinary income interest represents the present worth of the right to receive the use of $1.00 for a defined period, using the interest rate prescribed under section 7520 for the appropriate month.

(C) An *ordinary remainder or reversionary interest* is the right to receive an interest in property at the end of one or more measuring lives or some other defined period. A standard section 7520 remainder factor for an ordinary remainder or reversionary interest represents the present worth of the right to receive $1.00 at the end of a defined period, using the interest rate prescribed under section 7520 for the appropriate month.

(ii) ***Certain restricted beneficial interests.*** A *restricted beneficial interest* is an annuity, income, remainder, or reversionary interest that is subject to a contingency, power, or other restriction, whether the restriction is provided for by the terms of the trust, will, or other governing instrument or is caused by other circumstances. In general, a standard section 7520 annuity, income, or remainder factor may not be used to value a restricted beneficial interest. However, a special section 7520 annuity, income, or remainder factor may be used to value a restricted beneficial interest under some circumstances. See paragraph (b)(4) *Example 2* of this section, which illustrates a situation where a special section 7520 actuarial factor is needed to take into account the shorter life expectancy of the terminally ill measuring life. See § 1.7520-1(c) for requesting a special factor from the Internal Revenue Service.

(iii) ***Other beneficial interests.*** If, under the provisions of this paragraph (b), the interest rate and mortality components prescribed under section 7520 are not applicable in determining the value of any annuity, income, remainder, or reversionary interest, the actual fair market value of the interest (determined without regard to section 7520) is based on all of the facts and circumstances if and to the extent permitted by the Internal Revenue Code provision applicable to the property interest.

(2) ***Provisions of governing instrument and other limitations on source of payment*** —

(i) ***Annuities.*** A standard section 7520 annuity factor may not be used to determine the present value of an annuity for a specified term of years or the life of one or more individuals unless the effect of the trust, will, or other governing instrument is to ensure that the annuity will be paid for the entire defined period. In the case of an annuity payable from a trust or other limited fund, the annuity is not considered payable for the entire defined period if, considering the applicable section 7520 interest rate at the valuation date of the transfer, the annuity is expected to exhaust the fund before the last possible annuity payment is made in full. For this purpose, it must be assumed that it is possible for each measuring life to survive until age 110. For example, for a fixed annuity payable annually at the end of each year, if the amount of the annuity payment (expressed as a percentage of the initial corpus) is less than or equal to the applicable section 7520 interest rate at the date of the transfer, the corpus is assumed to be sufficient to make all payments. If the percentage exceeds the applicable section 7520 interest rate and the annuity is for a definite term of years, multiply the annual annuity amount by the Table B term certain annuity factor, as described in § 1.7520-1(c)(1), for the number of years of the defined period. If the percentage exceeds the applicable section 7520 interest rate and the annuity is payable for the life of one or more individuals, multiply the annual annuity amount by the Table B annuity factor for 110 years minus the age of the youngest individual. If the result exceeds the limited fund, the annuity may exhaust the fund, and it will be necessary to calculate a special section 7520 annuity factor that takes into account the exhaustion of the trust or fund. This computation would be modified, if appropriate, to take into account annuities with different payment terms. See § 25.7520-3(b)(2)(v) *Example 5* of this chapter, which provides an illustration involving an annuity trust that is subject to exhaustion.

(ii) ***Income and similar interests*** —

(A) ***Beneficial enjoyment.*** A standard section 7520 income factor for an ordinary income interest may not be used to determine the present value of an income or similar interest in trust for a term of years or for the life of one or more individuals unless the effect of the trust, will, or other governing instrument is to provide the income beneficiary with that degree of beneficial enjoyment of the property during the term of the income interest that the principles of the law of trusts accord to a person who is unqualifiedly designated as the income beneficiary of a trust for a similar period of time. This degree of beneficial enjoyment is provided only if it was the transferor's intent, as manifested by the provisions of the governing instrument and the surrounding circumstances, that the trust provide an income interest for the income beneficiary during the specified period of time that is consistent with the value of the trust corpus and with its preservation. In determining whether a trust arrangement evidences that intention, the treatment required or permitted with respect to individual items must be considered in relation to the entire system provided for in the administration of the subject trust. Similarly, in determining the present value of the right to use tangible property (whether or not in trust) for one or more measuring lives or for some other specified period of time, the interest rate component prescribed under section 7520 and § 1.7520-1 may not be used unless, during the specified period, the effect of the trust, will or other governing instrument is to provide the beneficiary with that degree of use, possession, and enjoyment of the property during the term of interest that applicable state law accords to a person who is unqualifiedly designated as a life tenant or term holder for a similar period of time.

(B) ***Diversions of income and corpus.*** A standard section 7520 income factor for an ordinary income interest may not be used to value an income interest or similar interest in property for a term of years or for one or more measuring lives if—

(*1*) The trust, will, or other governing instrument requires or permits the beneficiary's income or other enjoyment to be withheld, diverted, or accumulated for another person's benefit without the consent of the income beneficiary; or

(*2*) The governing instrument requires or permits trust corpus to be withdrawn from the trust for another person's benefit during the income beneficiary's term of enjoyment without the consent of and accountability to the income beneficiary for such diversion.

(iii) ***Remainder and reversionary interests.*** A standard section 7520 remainder interest factor for an ordinary remainder or reversionary interest may not be used to determine the present value of a remainder or reversionary interest (whether in trust or otherwise) unless, consistent with the preservation and protection that the law of trusts would provide for a person who is unqualifiedly designated as the remainder beneficiary of a trust for a similar duration, the effect of the administrative and dispositive provisions for the interest or interests that precede the remainder or reversionary interest is to assure that the property will be adequately preserved and protected (e.g., from erosion, invasion, depletion, or damage) until the remainder or reversionary interest takes effect in possession and enjoyment. This degree of preservation and protection is provided only if it was the transferor's intent, as manifested by the provisions of the arrangement and the surrounding circumstances, that the entire disposition provide the remainder or reversionary beneficiary with an undiminished interest in the property transferred at the time of the termination of the prior interest.

(iv) ***Pooled income fund interests.*** In general, pooled income funds are created and administered to achieve a special rate of return. A beneficial interest in a pooled income fund is not ordinarily valued using a standard section 7520 income or remainder interest factor. The present value of a beneficial interest in a pooled income fund is determined according to rules and special remainder factors prescribed in § 1.642(c)-6 and, when applicable, the rules set forth in paragraph (b)(3) of this section, if the individual who is the measuring life is terminally ill at the time of the transfer.

(3) ***Mortality component.*** The mortality component prescribed under section 7520 may not be used to determine the present value of an annuity, income interest, remainder interest, or reversionary interest if an individual who is a measuring life is terminally ill at the time of the transaction. For purposes of this paragraph (b)(3), an individual who is known to have an incurable illness or other deteriorating physical condition is considered terminally ill if there is at least a 50 percent probability that the individual will die within 1 year. However, if the individual survives for eighteen months or longer after the date of the transaction, that individual shall be presumed to have not been terminally ill at the time of the transaction unless the contrary is established by clear and convincing evidence.

(4) ***Examples.*** The provisions of this paragraph (b) are illustrated by the following examples:

Example 1. Annuity funded with unproductive property. The taxpayer transfers corporation stock worth $1,000,000 to a trust. The trust provides for a 6 percent ($60,000 per year) annuity in cash or other property to be paid to a charitable organization for 25 years and for the remainder to be distributed to the donor's child. The trust specifically authorizes, but does not require, the trustee to retain the shares of stock. The section 7520 interest rate for the month of the transfer is 8.2 percent. The corporation has paid no dividends on this stock during the past 5 years, and there is no indication that this policy will change in the near future. Under applicable state law, the corporation is considered to be a sound investment that satisfies fiduciary standards. Therefore, the trust's sole investment in this corporation is not expected to adversely affect the interest of either the annuitant or the remainder beneficiary. Considering the 6 percent annuity payout rate and the 8.2 percent section 7520 interest rate, the trust corpus is considered sufficient to pay this annuity for the entire 25-year term of the trust, or even indefinitely. Although it appears that neither beneficiary would be able to compel the trustee to make the trust corpus produce investment income, the annuity interest in this case is considered to be an ordinary annuity interest, and the standard section 7520 annuity factor may be used to determine the present value of the annuity. In this case, the section 7520 annuity factor would represent the right to receive $1.00 per year for a term of 25 years.

Example 2. Terminal illness. The taxpayer transfers property worth $1,000,000 to a charitable remainder unitrust described in section 664(d)(2) and § 1.664-3. The trust provides for a fixed-percentage 7 percent unitrust benefit (each annual payment is equal to 7 percent of the trust assets as valued at the beginning of each year) to be paid quarterly to an individual beneficiary for life and for the remainder to be distributed to a charitable organization. At the time the trust is created, the individual beneficiary is age 60 and has been diagnosed with an incurable illness and there is at least a 50 percent probability of the individual dying within 1 year. Assuming the presumption in paragraph (b)(3) of this section does not apply, because there is at least a 50 percent probability that this beneficiary will die within 1 year, the standard section 7520 unitrust remainder factor for a person age 60 from the valuation tables may not be used to determine the present value of the charitable remainder interest. Instead, a special unitrust remainder factor must be computed that is based on the section 7520 interest rate and that takes into account the projection of the individual beneficiary's actual life expectancy.

(5) ***Additional limitations.*** Section 7520 does not apply to the extent as may otherwise be provided by the Commissioner.

(c) ***Effective date.*** Section 1.7520-3(a) is effective as of May 1, 1989. The provisions of paragraph (b) of this section are effective with respect to transactions after December 13, 1995.

[T.D. 8540, 59 FR 30150, June 10, 1994, as amended by T.D. 8630, 60 FR 63915, Dec. 13, 1995]

§ 1.7520-4 Transitional rules.

(a) ***Reliance.*** If the valuation date is after April 30, 1989, and before June 10, 1994, a taxpayer can rely on Notice 89-24, 1989-1 C.B. 660, or Notice 89-60, 1989-1 C.B. 700 (See § 601.601(d)(2)(ii)(*b*) of this chapter), in valuing the transferred interest.

(b) ***Effective date.*** This section is effective as of May 1, 1989.

[T.D. 8540, 59 FR 30150, June 10, 1994]

§ 1.7701-1 Definitions; spouse, husband and wife, husband, wife, marriage.

(a) ***In general.*** For the definition of the terms spouse, husband and wife, husband, wife, and marriage, see § 301.7701-18 of this chapter.

(b) ***Applicability date.*** The rules of this section apply to taxable years ending on or after September 2, 2016.

[T.D. 9785, 81 FR 60616, Sept. 2, 2016]

§ 1.7701(l)-0 Table of contents.

This section lists captions that appear in §§ 1.7701(l)-1 and 1.7701(l)-3:

§ 1.7701(l)-1 Conduit financing arrangements.

§ 1.7701(l)-3 Recharacterizing financing arrangements involving fast-pay stock.

(a) Purpose and scope.

(b) Definitions.

(1) Fast-pay arrangement.

(2) Fast-pay stock.

(i) Defined.

(ii) Determination.

(3) Benefited stock.

(c) Recharacterization of certain fast-pay arrangements.

(1) Scope.

(2) Recharacterization.

(i) Relationship between benefited shareholders and fast-pay shareholders.

(ii) Relationship between benefited shareholders and corporation.

(iii) Relationship between fast-pay shareholders and corporation.

(3) Other rules.

(i) Character of the financing instruments.

(ii) Multiple types of benefited stock.

(iii) Transactions affecting benefited stock.

(A) Sale of benefited stock.

(B) Transactions other than sales.

(iv) Adjustment to basis for amounts accrued or paid in taxable years ending before February 27, 1997.

(d) Prohibition against affirmative use of recharacterization by taxpayers.

(e) Examples.

(f) Reporting requirement.

(1) Filing requirements.

(i) In general.

(ii) Controlled foreign corporation.

(iii) Foreign personal holding company.

(iv) Passive foreign investment company.

(2) Statement.

(g) Effective date.

(1) In general.

(2) Election to limit taxable income attributable to a recharacterized fast-pay arrangement for periods before April 1, 2000.

(i) Limit.

(ii) Adjustment and statement.

(iii) Examples.

(3) Rule to comply with this section.

(4) Reporting requirements.

[T.D. 8853, 65 FR 1313, Jan. 10, 2000]

§ 1.7701(l)-1 Conduit financing arrangements.

Section 7701(l) authorizes the issuance of regulations that recharacterize any multiple-party financing transaction as a transaction directly among any two or more of such parties where the Secretary determines that such recharacterization is appropriate to prevent avoidance of any tax imposed by title 26 of the United States Code.

[T.D. 8611, 60 FR 41015, Aug. 11, 1995, as amended by T.D. 8735, 62 FR 53502, Oct. 14, 1997]

§ 1.7701(l)-3 Recharacterizing financing arrangements involving fast-pay stock.

(a) ***Purpose and scope.*** This section is intended to prevent the avoidance of tax by persons participating in fast-pay arrangements (as defined in paragraph (b)(1) of this section) and should be interpreted in a manner consistent with this purpose. This section applies to all fast-pay arrangements. Paragraph (c) of this section recharacterizes certain fast-pay arrangements to ensure the participants are taxed in a manner reflecting the economic substance of the arrangements. Paragraph (f) of this section imposes reporting requirements on certain participants.

(b) ***Definitions*** —

(1) ***Fast-pay arrangement.*** A fast-pay arrangement is any arrangement in which a corporation has fast-pay stock outstanding for any part of its taxable year.

(2) ***Fast-pay stock*** —

(i) ***Defined.*** Stock is fast-pay stock if it is structured so that dividends (as defined in section 316) paid by the corporation with respect to the stock are economically (in whole or in part) a return of the holder's investment (as opposed to only a return on the holder's investment). Unless clearly demonstrated otherwise, stock is presumed to be fast-pay stock if—

(A) It is structured to have a dividend rate that is reasonably expected to decline (as opposed to a dividend rate that is reasonably expected to fluctuate or remain constant); or

(B) It is issued for an amount that exceeds (by more than a de minimis amount, as determined under the principles of § 1.1273-1(d)) the amount at which the holder can be compelled to dispose of the stock.

(ii) ***Determination.*** The determination of whether stock is fast-pay stock is based on all the facts and circumstances, including any related agreements such as options or forward contracts. A related agreement includes any direct or indirect agreement or understanding, oral or written, between the holder of the stock and the issuing corporation, or between the holder of the stock and one or more other shareholders in the corporation. To determine if it is fast-pay stock, stock is examined when issued, and, for stock that is not fast-pay stock when issued, when there is a significant modification in the terms of the stock or the related agreements or a significant change in the relevant facts and circumstances. Stock is not fast-pay stock solely because a redemption is treated as a dividend as a result of section 302(d) unless there is a principal purpose of achieving the same economic and tax effect as a fast-pay arrangement. See § 1.1001-6(e) for additional rules that may apply to stock that provides for a rate referencing a discontinued IBOR, as defined in § 1.1001-6(h)(4).

(3) ***Benefited stock.*** With respect to any fast-pay stock, all other stock in the corporation (including other fast-pay stock having any significantly different characteristics) is benefited stock.

(c) ***Recharacterization of certain fast-pay arrangements*** —

(1) ***Scope.*** This paragraph (c) applies to any fast-pay arrangement—

(i) In which the corporation that has outstanding fast-pay stock is a regulated investment company (RIC) (as defined in section 851) or a real estate investment trust (REIT) (as defined in section 856); or

(ii) If the Commissioner determines that a principal purpose for the structure of the fast-pay arrangement is the avoidance of any tax imposed by the Internal Revenue Code. Application of this paragraph (c)(1)(ii) is at the Commissioner's discretion, and a determination under this paragraph (c)(1)(ii) applies to all parties to the fast-pay arrangement, including transferees.

(2) ***Recharacterization.*** A fast-pay arrangement described in paragraph (c)(1) of this section is recharacterized as an arrangement directly between the benefited shareholders and the fast-pay shareholders. The inception and resulting relationships of the recharacterized arrangement are deemed to be as follows:

(i) ***Relationship between benefited shareholders and fast-pay shareholders.*** The benefited shareholders issue financial instruments (the financing instruments) directly to the fast-pay shareholders in exchange for cash equal to the fair market value of the fast-pay stock at the time of issuance (taking into account any related agreements). The financing instruments have the same terms (other than issuer) as the fast-pay stock. Thus, for example, the timing and amount of the payments made with respect to the financing instruments always match the timing and amount of the distributions made with respect to the fast-pay stock.

(ii) ***Relationship between benefited shareholders and corporation.*** The benefited shareholders contribute to the corporation the cash they receive for issuing the financing instruments. Distributions made with respect to the fast-pay stock are distributions made by the corporation with respect to the benefited shareholders' benefited stock.

(iii) ***Relationship between fast-pay shareholders and corporation.*** For purposes of determining the relationship between the fast-pay shareholders and the corporation, the fast-pay stock is ignored. The corporation is the paying agent of the benefited shareholders with respect to the financing instruments.

(3) *Other rules* —

(i) ***Character of the financing instruments.*** The character of a financing instrument (for example, stock or debt) is determined under general tax principles and depends on all the facts and circumstances.

(ii) ***Multiple types of benefited stock.*** If any benefited stock has any significantly different characteristics from any other benefited stock, the recharacterization rules of this paragraph (c) apply among the different types of benefited stock as appropriate to match the economic substance of the fast-pay arrangement.

(iii) Transactions affecting benefited stock—

(A) Sale of benefited stock. If one person sells benefited stock to another—

(*1*) In addition to any consideration actually paid and received for the benefited stock, the buyer is deemed to pay and the seller is deemed to receive the amount necessary to terminate the seller's position in the financing instruments at fair market value; and

(*2*) The buyer is deemed to issue financing instruments to the fast-pay shareholders in exchange for the amount necessary to terminate the seller's position in the financing instruments.

(B) ***Transactions other than sales.*** Except for transactions subject to paragraph (c)(3)(iii)(A) of this section, in the case of any transaction affecting benefited stock, the parties to the transaction must make appropriate adjustments to properly take into account the fast-pay arrangement as characterized under paragraph (c)(2) of this section.

(iv) ***Adjustment to basis for amounts accrued or paid in taxable years ending before February 27, 1997.*** In the case of a fast-pay arrangement involving amounts accrued or paid in taxable years ending before February 27, 1997, and recharacterized under this paragraph (c), a benefited shareholder must decrease its basis in any benefited stock (as determined under paragraph (c)(2)(ii) of this section) by the amount (if any) that—

(A) Its income attributable to the benefited stock (reduced by deductions attributable to the financing instruments) for taxable years ending before February 27, 1997, computed by recharacterizing the fast-pay arrangement under this paragraph (c) and by treating the financing instruments as debt; exceeds

(B) Its income attributable to such stock for taxable years ending before February 27, 1997, computed without applying the rules of this paragraph (c).

(d) ***Prohibition against affirmative use of recharacterization by taxpayers.*** A taxpayer may not use the rules of paragraph (c) of this section if a principal purpose for using such rules is the avoidance of any tax imposed by the Internal Revenue Code. Thus, with respect to such taxpayer, the Commissioner may depart from the rules of this section and recharacterize (for all purposes of the Internal Revenue Code) the fast-pay arrangement in accordance with its form or its economic substance. For example, if a foreign person acquires fast-pay stock in a REIT and a principal purpose for acquiring such stock is to reduce

United States withholding taxes by applying the rules of paragraph (c) of this section, the Commissioner may, for purposes of determining the foreign person's United States tax consequences (including withholding tax), depart from the rules of paragraph (c) of this section and treat the foreign person as holding fast-pay stock in the REIT.

(e) ***Examples.*** The following examples illustrate the rules of paragraph (c) of this section:

Example 1. Decline in dividend rate. (i) *Facts.* Corporation X issues 100 shares of A Stock and 100 shares of B Stock for $1,000 per share. By its terms, a share of B Stock is reasonably expected to pay a $110 dividend in years 1 through 10 and a $30 dividend each year thereafter. If X liquidates, the holder of a share of B Stock is entitled to a preference equal to the share's issue price. Otherwise, the B Stock cannot be redeemed at either X's or the shareholder's option.
(ii) *Analysis.* When issued, the B Stock has a dividend rate that is reasonably expected to decline from an annual rate of 11 percent of its issue price to an annual rate of 3 percent of its issue price. Since the B Stock is structured to have a declining dividend rate, the B Stock is fast-pay stock, and the A Stock is benefited stock.

Example 2. Issued at a premium. (i) *Facts.* The facts are the same as in *Example 1* of this paragraph (e) except that a share of B Stock is reasonably expected to pay an annual $110 dividend as long as it is outstanding, and Corporation X has the right to redeem the B Stock for $400 a share at the end of year 10.
(ii) *Analysis.* The B Stock is structured so that the issue price of the B Stock ($1,000) exceeds (by more than a de minimis amount) the price at which the holder can be compelled to dispose of the stock ($400). Thus, the B Stock is fast-pay stock, and the A Stock is benefited stock.

Example 3. Planned section 302(d) redemptions. (i) *Facts.* Corporation L, a subchapter C corporation, issues 220 shares of common stock for $1,000 per share. No other stock is authorized, but L can issue warrants entitling the holder to acquire L common stock for $3,000 per share until such time as L adopts a plan of liquidation. L can adopt a plan of liquidation if approved by 90 percent of its shareholders. Half of L's stock is purchased by Corporation M, and half by Organization N, which is tax exempt. At the time of purchase, M and N agree that for a period of ten years L will annually redeem (and N will tender) ten shares of stock in exchange for $12,100 and ten warrants. It is anticipated that, under sections 302 and 301, the annual payment to N will be a distribution of property that is a dividend.
(ii) *Analysis.* Considering all the facts and circumstances, including the agreement between M and N, L's redemption of N's stock is undertaken with a principal purpose of achieving the same economic and tax effect as a fast-pay arrangement. Thus, N's stock is fast-pay stock, M's stock is benefited stock, and the parties have entered into a fast-pay arrangement. Because L is neither a RIC nor a REIT, whether this fast-pay arrangement is recharacterized under paragraph (c) of this section depends on whether the Commissioner determines, under paragraph (c)(1)(ii) of this section, that a principal purpose for the structure of the fast-pay arrangement is the avoidance of any tax imposed by the Internal Revenue Code.

Example 4. Recharacterization illustrated. (i) *Facts.* On formation, REIT Y issues 100 shares of C Stock and 100 shares of D Stock for $1,000 per share. By its terms, a share of D Stock is reasonably expected to pay a $110 dividend in years 1 through 10 and a $30 dividend each year thereafter. In years 1 through 10, persons holding a majority of the D Stock must consent before Y may take any action that would result in Y liquidating or dissolving, merging or consolidating, losing its REIT status, or selling substantially all of its assets. Thereafter, Y may take these actions without consent so long as the D Stock shareholders receive $400 in exchange for their D Stock.
(ii) *Analysis.* When issued, the D Stock has a dividend rate that is reasonably expected to decline from an annual rate of 11 percent of its issue price to an annual rate of 3 percent of its issue price. In addition, the $1,000 issue price of a share of D Stock exceeds the price at which the shareholder can be compelled to dispose of the stock ($400). Thus, the D Stock is fast-pay stock, and the C Stock is benefited stock. Because Y is a REIT, the fast-pay arrangement is recharacterized under paragraph (c) of this section.

(iii) *Recharacterization.* The fast-pay arrangement is recharacterized as follows:

(A) Under paragraph (c)(2)(i) of this section, the C Stock shareholders are treated as issuing financing instruments to the D Stock shareholders in exchange for $100,000 ($1,000, the fair market value of each share of D Stock, multiplied by 100, the number of shares).

(B) Under paragraph (c)(2)(ii) of this section, the C Stock shareholders are treated as contributing $200,000 to Y (the $100,000 received for the financing instruments, plus the $100,000 actually paid for the C Stock) in exchange for the C Stock.

(C) Under paragraph (c)(2)(ii) of this section, each distribution with respect to the D Stock is treated as a distribution with respect to the C Stock.

(D) Under paragraph (c)(2)(iii) of this section, the C Stock shareholders are treated as making payments with respect to the financing instruments, and Y is treated as the paying agent of the financing instruments for the C Stock shareholders.

Example 5. Transfer of benefited stock illustrated. (i) *Facts.* The facts are the same as in Example 4 of this paragraph (e). Near the end of year 5, a person holding one share of C Stock sells it for $1,300. The buyer is unrelated to REIT Y or to any of the D Stock shareholders. At the time of the sale, the amount needed to terminate the seller's position in the financing instruments at fair market value is $747.
(ii) *Benefited shareholder's treatment on sale.* Under paragraph (c)(3)(iii)(A) of this section, the seller's amount realized is $2,047 ($1,300, the amount actually received, plus $747, the amount necessary to terminate the seller's position in the financing instruments at fair market value). The

seller's gain on the sale of the common stock is $47 ($2,047, the amount realized, minus $2,000, the seller's basis in the common stock). The seller has no income or deduction with respect to terminating its position in the financing instruments.

(iii) *Buyer's treatment on purchase.* Under paragraph (c)(3)(iii)(A) of this section, the buyer's basis in the share of D Stock is $2,047 ($1,300, the amount actually paid, plus $747, the amount needed to terminate the seller's position in the financing instruments at fair market value). Under paragraph (c)(3)(iii)(B) of this section, simultaneous with the sale, the buyer is treated as issuing financing instruments to the fast-pay shareholders in exchange for $747, the amount necessary to terminate the seller's position in the financing instruments at fair market value.

Example 6. Fast-pay arrangement involving amounts accrued or paid in a taxable year ending before February 27, 1997. (i) *Facts.* Y is a calendar year taxpayer. In June 1996, Y acquires shares of REIT T benefited stock for $15,000. In December 1996, Y receives dividends of $100. Under the recharacterization rules of paragraph (c)(2) of this section, Y's 1996 income attributable to the benefited stock is $1,200, Y's 1996 deduction attributable to the financing instruments is $500, and Y's basis in the benefited stock is $25,000.
(ii) *Analysis.* Under paragraph (c)(3)(iv) of this section, Y's basis in the benefited stock is reduced by $600. This is the amount by which Y's 1996 income from the fast-pay arrangement as recharacterized under this section ($1,200 of income attributable to the benefited stock less $500 of deductions attributable to the financing instruments), exceeds Y's 1996 income from the fast-pay arrangement as not recharacterized under this section ($100 of income attributable to the benefited stock). Thus, in 1997 when the fast-pay arrangement is recharacterized, Y's basis in the benefited stock is $24,400.

(f) ***Reporting requirement*** —

(1) ***Filing requirements*** —

(i) ***In general.*** A corporation that has fast-pay stock outstanding at any time during the taxable year must attach the statement described in paragraph (f)(2) of this section to its federal income tax return for such taxable year. This paragraph (f)(1)(i) does not apply to a corporation described in paragraphs (f)(1)(ii), (iii), or (iv) of this section.

(ii) ***Controlled foreign corporation.*** In the case of a controlled foreign corporation (CFC), as defined in section 957, that has fast-pay stock outstanding at any time during its taxable year (during which time it was a CFC), each controlling United States shareholder (within the meaning of § 1.964-1(c)(5)) must attach the statement described in paragraph (f)(2) of this section to the shareholder's Form 5471 for the CFC's taxable year. The provisions of section 6038 and the regulations under section 6038 apply to any statement required by this paragraph (f)(1)(ii).

(iii) ***Foreign personal holding company.*** In the case of a foreign personal holding company (FPHC), as defined in section 552, that has fast-pay stock outstanding at any time during its taxable year (during which time it was a FPHC), each United States citizen or resident who is an officer, director, or 10-percent shareholder (within the meaning of section 6035(e)(1)) of such FPHC

must attach the statement described in paragraph (f)(2) of this section to his or her Form 5471 for the FPHC's taxable year. The provisions of sections 6035 and 6679 and the regulations under sections 6035 and 6679 apply to any statement required by this paragraph (f)(1)(iii).

(iv) ***Passive foreign investment company.*** In the case of a passive foreign investment company (PFIC), as defined in section 1297, that has fast-pay stock outstanding at any time during its taxable year (during which time it was a PFIC), each shareholder that has elected (under section 1295) to treat the PFIC as a qualified electing fund and knows or has reason to know that the PFIC has outstanding fast-pay stock must attach the statement described in paragraph (f)(2) of this section to the shareholder's Form 8621 for the PFIC's taxable year. Each shareholder owning 10 percent or more of the shares of the PFIC (by vote or value) is presumed to know that the PFIC has issued fast-pay stock. The provisions of sections 1295(a)(2) and 1298(f) and the regulations under those sections (including § 1.1295-1T(f)(2)) apply to any statement required by this paragraph (f)(1)(iv).

(2) ***Statement.*** The statement required under this paragraph (f) must say, "This fast-pay stock disclosure statement is required by § 1.7701(l)-3(f) of the income tax regulations." The statement must also identify the corporation that has outstanding fast-pay stock and must contain the date on which the fast-pay stock was issued, the terms of the fast-pay stock, and (to the extent the filing person knows or has reason to know such information) the names and taxpayer identification numbers of the shareholders of any stock that is not traded on an established securities market (as described in § 1.7704-1(b)).

(g) ***Effective date*** —

(1) ***In general.*** Except as provided in paragraph (g)(4) of this section (relating to reporting requirements), this section applies to taxable years ending after February 26, 1997. Thus, all amounts accrued or paid during the first taxable year ending after February 26, 1997, are subject to this section.

(2) ***Election to limit taxable income attributable to a recharacterized fast-pay arrangement for periods before April 1, 2000*** —

(i) ***Limit.*** For periods before April 1, 2000, provided the shareholder recharacterizes the fast-pay arrangement consistently for all such periods, a shareholder may limit its taxable income attributable to a fast-pay arrangement recharacterized under paragraph (c) of this section to the taxable income that results if the fast-pay arrangement is recharacterized under either—

(A) Notice 97-21, 1997-1 C.B. 407, see § 601.601(d)(2) of this chapter; or

(B) Paragraph (c) of this section, computed by assuming the financing instruments are debt.

(ii) ***Adjustment and statement.*** A shareholder that limits its taxable income to the amount determined under paragraph (g)(2)(i)(A) of this section must include as an adjustment to taxable income the excess, if any, of the amount determined under paragraph (g)(2)(i)(B) of this section, over the amount determined under paragraph (g)(2)(i)(A) of this section. This adjustment to taxable income must be made in the shareholder's first taxable year that includes April 1, 2000. A shareholder to which this paragraph (g)(2)(ii) applies must include a statement in its books and records identifying each fast-pay arrangement for which an adjustment must be made and providing the amount of the adjustment for each such fast-pay arrangement.

(iii) ***Examples.*** The following examples illustrate the rules of this paragraph (g)(2). For purposes of these examples, assume that a shareholder may limit its taxable income under this paragraph (g)(2) for periods before January 1, 2000.

Example 1. Fast-pay arrangement recharacterized under Notice 97-21; REIT holds third-party debt. (i) *Facts.* (A) REIT Y is formed on January 1, 1997, at which time it issues 1,000 shares of fast-pay stock and 1,000 shares of benefited stock for $100 per share. Y and all of its shareholders are U.S. persons and have calendar taxable years. All shareholders of Y have elected to accrue market discount based on a constant interest rate, to include the market discount in income as it accrues, and to amortize bond premium.
(B) For years 1 through 5, the fast-pay stock has an annual dividend rate of $17 per share ($17,000 for all fast-pay stock); in later years, the fast-pay stock has an annual dividend rate of $1 per share ($1,000 for all fast-pay stock). At the end of year 5, and thereafter, a share of fast-pay stock can be acquired by Y in exchange for $50 ($50,000 for all fast-pay stock).

(C) On the day Y is formed, it acquires a five-year mortgage note (the note) issued by an unrelated third party for $200,000. The note provides for annual interest payments on December 31 of $18,000 (a coupon interest rate of 9.00 percent, compounded annually), and one payment of principal at the end of 5 years. The note can be prepaid, in whole or in part, at any time.

(ii) *Recharacterization under Notice 97-21*—(A) *In general.* One way to recharacterize the fast-pay arrangement under Notice 97-21 is to treat the fast-pay shareholders and the benefited shareholders as if they jointly purchased the note from the issuer with the understanding that over the five-year term of the note the benefited shareholders would use their share of the interest to buy (on a dollar-for-dollar basis) the fast-pay shareholders' portion of the note. The benefited shareholders' and the fast-pay shareholders' yearly taxable income under Notice 97-21 can then be calculated after determining their initial portions of the note and whether those initial portions are purchased at a discount or premium.

(B) *Determining initial portions of the debt instrument.* The fast-pay shareholders' and the benefited shareholders' initial portions of the note can be determined by comparing the present values of their expected cash flows. As a group, the fast-pay shareholders expect to receive cash flows of $135,000 (five annual payments of $17,000, plus a final payment of $50,000). As a group, the benefited shareholders expect to receive cash flows of $155,000 (five annual payments of $1,000, plus a final payment of $150,000). Using a discount rate equal to the yield to maturity (as determined under § 1.1272-1(b)(1)(i)) of the mortgage note (9.00 percent, compounded annually), the

present value of the fast-pay shareholders' cash flows is $98,620, and the present value of the benefited shareholders' cash flows is $101,380. Thus, the fast-pay shareholders initially acquire 49 percent of the note at a $1,380 premium (that is, they paid $100,000 for $98,620 of principal in the note). The benefited shareholders initially acquire 51 percent of the note at a $1,380 discount (that is, they paid $100,000 for $101,380 of principal in the note). Under section 171, the fast-pay shareholders' premium is amortizable based on their yield in their initial portion of the note (8.574 percent, compounded annually). The benefited shareholders' discount accrues based on the yield in their initial portion of the note (9.353 percent, compounded annually).

(C) *Taxable income under Notice 97-21—(1) Fast-pay shareholders.* Under Notice 97-21, the fast-pay shareholders compute their taxable income attributable to the fast-pay arrangement for periods before January 1, 2000, by subtracting the amortizable premium from the accrued interest on the fast-pay shareholders' portion of the note. For purposes of paragraph (g)(2)(i)(A) of this section, the fast-pay shareholders' taxable income as a group is as follows:

Taxable period	Interest income	Amortizable premium	Taxable income
1/1/97-12/31/97	$8,876	($302)	$8,574
1/1/98-12/31/98	8,145	(293)	7,852
1/1/99-12/31/99	7,348	(281)	7,067
Total	24,369	(876)	23,493

(*2*) *Benefited shareholders.* Under Notice 97-21, the benefited shareholders compute their taxable income attributable to the fast-pay arrangement for periods before January 1, 2000, by adding the accrued discount to the accrued interest on the benefited shareholders' portion of the note. For purposes of paragraph (g)(2)(i)(A) of this section, the benefited shareholders' taxable income as a group is as follows:

Taxable period	Interest income	Accrued discount	Taxable income
1/1/97-12/31/97	$9,124	$229	$9,353
1/1/98-12/31/98	9,855	251	10,106
1/1/99-12/31/99	10,652	274	10,926

Taxable period	Interest income	Accrued discount	Taxable income
Total	29,631	754	30,385

(iii) *Taxable income under the recharacterization of this section*—(A) *Fast-pay shareholders.* Under paragraphs (c) and (g)(2)(i)(B) of this section, the fast-pay shareholders' taxable income attributable to the fast-pay arrangement for periods before January 1, 2000, is the interest deemed paid on the financing instruments. For purposes of paragraph (g)(2)(i)(B) of this section, the fast-pay shareholders' taxable income as a group is as follows:

Taxable period	Taxable income
1/1/97-12/31/97	$8,574
1/1/98-12/31/98	7,852
1/1/99-12/31/99	7,067
Total	23,493

(B) *Benefited shareholders.* Under paragraphs (c) and (g)(2)(i)(B) of this section, the benefited shareholders compute their taxable income attributable to the fast-pay arrangement for periods before January 1, 2000, by subtracting the interest deemed paid on the financing instruments from the dividends actually and deemed paid on the benefited stock. For purposes of paragraph (g)(2)(i)(B) of this section, the benefited shareholders' taxable income as a group is as follows:

Taxable period	Dividends paid on benefited stock	Interest paid on financing instruments	Taxable income
1/1/97-12/31/97	$18,000	($8,574)	$9,426
1/1/98-12/31/98	18,000	(7,852)	10,148
1/1/99-12/31/99	18,000	(7,067)	10,933

Taxable period	Dividends paid on benefited stock	Interest paid on financing instruments	Taxable income
Total	54,000	(23,493)	30,507

(iv) *Limit on taxable income under paragraph (g)(2)(i) of this section*—(A) *Fast-pay shareholders.* For periods before January 1, 2000, the fast-pay shareholders have the same taxable income under the recharacterization of Notice 97-21 and paragraph (g)(2)(i)(A) of this section ($23,493) as they have under the recharacterization of paragraphs (c) and (g)(2)(i)(B) of this section ($23,493). Thus, under paragraph (g)(2)(i) of this section, the fast-pay shareholders may limit their taxable income attributable to the fast-pay arrangement for periods before January 1, 2000, to $23,493 (as a group).
(B) *Benefited shareholders.* For periods before January 1, 2000, the benefited shareholders have taxable income attributable to the fast-pay arrangement of $30,385 under the recharacterization of Notice 97-21 and paragraph (g)(2)(i)(A) of this section, and taxable income of $30,507 under the recharacterization of paragraphs (c) and (g)(2)(i)(B) of this section. Thus, under paragraph (g)(2)(i) of this section, the benefited shareholders may limit their taxable income attributable to the fast-pay arrangement for periods before January 1, 2000, to either $30,385 (as a group) or $30,507 (as a group).

(v) *Adjustment to taxable income under paragraph (g)(2)(ii) of this section.* Under paragraph (g)(2)(ii) of this section, any benefited shareholder that limited its taxable income to the amount determined under paragraph (g)(2)(i)(A) of this section must include as an adjustment to taxable income the excess, if any, of the amount determined under paragraph (g)(2)(i)(B) of this section, over the amount determined under paragraph (g)(2)(i)(A) of this section. If all benefited shareholders limited their taxable income to the amount determined under paragraph (g)(2)(i)(A) of this section, then as a group their adjustment to income is $122 ($30,507, minus $30,385). Each shareholder must include its adjustment in income for the taxable year that includes January 1, 2000.

Example 2. REIT holds debt issued by a benefited shareholder. (i) *Facts.* The facts are the same as in *Example 1* of this paragraph (g)(2) except that corporation Z holds 800 shares (80 percent) of the benefited stock, and Z, instead of a third party, issues the mortgage note acquired by Y.
(ii) *Recharacterization under Notice 97-21.* Because Y holds a debt instrument issued by Z, the fast-pay arrangement is recharacterized under Notice 97-21 as an arrangement in which Z issued one or more instruments directly to the fast-pay shareholders and the other benefited shareholders.

(A) *Fast-pay shareholders.* Consistent with this recharacterization, Z is treated as issuing a debt instrument to the fast-pay shareholders for $100,000. The debt instrument provides for five annual payments of $17,000 and an additional payment of $50,000 in year five. Thus, the debt instrument's yield to maturity is 8.574 percent per annum, compounded annually.

(B) *Benefited shareholders.* Z is also treated as issuing a debt instrument to the other benefited shareholders for $20,000 (200 shares multiplied by $100, or 20 percent of the $100,000 paid to Y by the benefited shareholders as a group). This debt instrument provides for five annual payments of $200 and an additional payment of $30,000 in year five. The debt instrument's yield to maturity is 9.304 percent per annum, compounded annually.

(C) *Issuer's interest expense under Notice 97-21.* Under Notice 97-21, Z's interest expense attributable to the fast-pay arrangement for periods before January 1, 2000, equals the interest accrued on the debt instrument held by the fast-pay shareholders, plus the interest accrued on the debt instrument held by the benefited shareholders other than Z. For purposes of paragraph (g)(2)(i)(A) of this section, Z's interest expense is as follows:

Taxable period	Accrued interest fast-pay shareholders	Accrued interest other benefited shareholders	Total interest expense
1/1/97-12/31/97	($8,574)	($1,861)	($10,435)
1/1/98-12/31/98	(7,852)	(2,015)	(9,867)
1/1/99-12/31/99	(7,067)	(2,184)	(9,251)
Total	(23,493)	(6,060)	(29,553)

(iii) *Recharacterization under this section.* Under paragraphs (c) and (g)(2)(i)(B) of this section, Z's taxable income attributable to the fast-pay arrangement for periods before January 1, 2000, equals Z's share of the dividends actually and deemed paid on the benefited stock (80 percent of the outstanding benefited stock), reduced by the sum of the interest accrued on the note held by Y and the interest accrued on the financing instruments deemed to have been issued by Z. For purposes of paragraph (g)(2)(i)(B) of

this section, Z's taxable income is as follows:

Taxable period	Dividends benefited stock	Accrued interest on debt held by Y	Accrued interest financing instruments	Taxable expense
1/1/97-12/31/97	$14,400	($18,000)	($6,859)	($10,459)
1/1/98-12/31/98	14,400	(18,000)	(6,281)	(9,881)
1/1/99-12/31/99	14,400	(18,000)	(5,654)	(9,254)
Total	43,200	(54,000)	(18,794)	(29,594)

(iv) *Limit on taxable income under this paragraph (g)(2).* For periods before January 1, 2000, Z has a taxable loss attributable to the fast-pay arrangement of $29,553 under the recharacterization of Notice 97-21 and paragraph (g)(2)(i)(A) of this section, and a taxable loss of $29,594 under the recharacterization of paragraphs (c) and (g)(2)(i)(B) of this section. Thus, under paragraph (g)(2)(i) of this section, Z may report a taxable loss attributable to the fast-pay arrangement for periods before January 1, 2000, of either $29,553 or $29,594. Under paragraph (g)(2)(ii), Z has no adjustment to its taxable income for its taxable year that includes January 1, 2000.

(3) ***Rule to comply with this section.*** To comply with this section for each taxable year in which it failed to do so, a taxpayer should file an amended return. For taxable years ending before Janaury 10, 2000, a taxpayer that has complied with Notice 97-21, 1997-1 C.B. 407 (see § 601.601(d)(2) of this chapter), for all such taxable years is considered to have complied with this section and limited its taxable income under paragraph (g)(2)(i)(A) of this section.

(4) ***Reporting requirements.*** The reporting requirements of paragraph (f) of this section apply to taxable years (of the person required to file the statement) ending after January 10, 2000.

[T.D. 8853, 65 FR 1313, Jan. 10, 2000; 65 FR 16317, Mar. 28, 2000; T.D. 9961, 87 FR 182, Jan. 4, 2022]

§ 1.7701(l)-4 Rules regarding inversion transactions.

(a) ***Overview.*** This section provides rules applicable to United States shareholders of controlled foreign corporations after certain inversion transactions. Paragraph (b) of this section defines specified transactions and provides the scope of the rules in this section. Paragraph (c) of this section provides rules recharacterizing certain specified transactions. Paragraph (d) of this section sets forth rules governing transactions that affect the stock of an expatriated foreign subsidiary following a recharacterized specified transaction. Paragraph (e) of this section sets forth a rule concerning the treatment of amounts included in income as a result of a specified transaction as foreign personal holding company income. Paragraph (f) of this section sets forth definitions that apply for purposes of

this section. Paragraph (g) of this section sets forth examples illustrating these rules. Paragraph (h) of this section provides applicability dates. See § 1.367(b)-4(e) and (f) for rules concerning certain other exchanges after an inversion transaction. See also § 1.956-2(a)(4), (c)(5), and (d)(2) for additional rules applicable to United States property held by controlled foreign corporations after an inversion transaction.

(b) ***Specified transaction*** —

(1) ***In general.*** Except as provided in paragraph (b)(2) of this section, paragraph (c) of this section applies to specified transactions. For purposes of this section, a *specified transaction* is, with respect to an expatriated foreign subsidiary, a transaction in which stock of the expatriated foreign subsidiary is issued or transferred to a person that immediately before the issuance or transfer is a specified related person, provided the transaction occurs during the applicable period. However, a specified transaction does not include a transaction in which stock of the expatriated foreign subsidiary is deemed issued pursuant to section 304.

(2) ***Exceptions.*** Paragraph (c) of this section does not apply to a specified transaction—

(i) That is a fast-pay arrangement that is recharacterized under § 1.7701(l)-3(c)(2);

(ii) In which the specified stock was transferred by a shareholder of the expatriated foreign subsidiary, and the shareholder either—

(A) Pursuant to § 1.367(b)-4(e)(1), both—

(*1*) Included in gross income as a deemed dividend the section 1248 amount attributable to the specified stock; and

(*2*) After taking into account the increase in basis provided in § 1.367(b)-2(e)(3)(ii) resulting from the deemed dividend (if any), recognized all realized gain with respect to the stock that otherwise would not have been recognized; or

(B) Included in gross income all of the gain recognized on the transfer of the specified stock (including gain included in gross income as a dividend pursuant to section 964(e), section 1248(a), or section 356(a)(2)); or

(iii) In which—

(A) Immediately after the specified transaction and any related transaction, the expatriated foreign subsidiary is a controlled foreign corporation;

(B) The post-transaction ownership percentage with respect to the expatriated foreign subsidiary is at least 90 percent of the pre-transaction ownership percentage with respect to the expatriated foreign subsidiary; and

(C) The post-transaction ownership percentage with respect to any lower-tier expatriated foreign subsidiary is at least 90 percent of the pre-transaction ownership percentage with respect to the lower-tier expatriated foreign subsidiary. See *Example 3* and *Example 4* of paragraph (g) of this section.

(c) ***Recharacterization of specified transactions*** —

(1) ***In general.*** Except as otherwise provided, a specified transaction that is recharacterized under this paragraph (c) is recharacterized for all purposes of the Internal Revenue Code as of the date on which the specified transaction occurs, unless and until the rules of paragraph (d) of this section

apply to alter or terminate the recharacterization. For purposes of paragraphs (c)(2) and (3) and (d) of this section, stock is considered owned by a section 958(a) U.S. shareholder if it is owned within the meaning of section 958(a) by the section 958(a) U.S. shareholder.

(2) ***Specified transactions through stock issuance.*** A specified transaction in which the specified stock is issued by an expatriated foreign subsidiary to a specified related person is recharacterized as follows—

(i) The transferred property is treated as having been transferred by the specified related person to the persons that were section 958(a) U.S. shareholders of the expatriated foreign subsidiary immediately before the specified transaction, in proportion to the stock of the expatriated foreign subsidiary owned by each section 958(a) U.S. shareholder, in exchange for deemed instruments in the section 958(a) U.S. shareholders; and

(ii) The transferred property treated as transferred to the section 958(a) U.S. shareholders pursuant to paragraph (c)(2)(i) of this section is treated as having been contributed by the section 958(a) U.S. shareholders (through intermediate entities, if any, in exchange for equity in the intermediate entities) to the expatriated foreign subsidiary in exchange for deemed issued stock in the expatriated foreign subsidiary. See *Example 1, Example 2,* and *Example 6* of paragraph (g) of this section.

(3) ***Specified transactions through shareholder transfer.*** A specified transaction in which specified stock is transferred by shareholders of the expatriated foreign subsidiary to a specified related person is recharacterized as follows—

(i) The transferred property is treated as having been transferred by the specified related person to the persons that were section 958(a) U.S. shareholders of the expatriated foreign subsidiary immediately before the specified transaction, in proportion to the specified stock owned by each section 958(a) U.S. shareholder, in exchange for deemed instruments in the section 958(a) U.S. shareholders; and

(ii) To the extent the section 958(a) U.S. shareholders are not the transferring shareholders, the transferred property treated as transferred to the section 958(a) U.S. shareholders pursuant to paragraph (c)(3)(i) of this section is treated as having been contributed by the section 958(a) U.S. shareholders (through intermediate entities, if any, in exchange for equity in the intermediate entities) to the transferring shareholder in exchange for equity in the transferring shareholder. See *Example 5* of paragraph (g) of this section.

(4) ***Treatment of deemed instruments following a recharacterized specified transaction*** —

(i) ***Deemed instruments.*** The deemed instruments described in paragraphs (c)(2) and (3) of this section have the same terms as the specified stock issued or transferred pursuant to the specified transaction (that is, the disregarded specified stock), other than the issuer. When a distribution is made with respect to the disregarded specified stock, matching seriatim distributions with respect to the deemed issued stock are treated as made by the expatriated foreign subsidiary, through intermediate entities, if any, to the section 958(a) U.S. shareholders, which, in turn, then are treated as making corresponding payments with respect to the deemed instruments to the specified related person.

(ii) ***Paying agent.*** The expatriated foreign subsidiary is treated as the paying agent of the section 958(a) U.S. shareholder with respect to the deemed instruments treated as issued by the section 958(a) U.S. shareholder to the specified related person.

(d) ***Transactions affecting ownership of stock of an expatriated foreign subsidiary following a recharacterized specified transaction*** —

(1) ***Transfers of stock other than specified stock.*** When, after a specified transaction with respect to an expatriated foreign subsidiary that is recharacterized under paragraph (c)(2) or (3) of this section, stock of the expatriated foreign subsidiary, other than disregarded specified stock, that is owned by a section 958(a) U.S. shareholder is transferred, the deemed issued stock treated as owned by the section 958(a) U.S. shareholder as a result of the specified transaction continues to be treated as directly owned by the holder, as are the deemed instruments treated as issued to the specified related person as a result of the specified transaction.

(2) ***Transactions in which the expatriated foreign subsidiary ceases to be a foreign related person.*** When, after a specified transaction with respect to an expatriated foreign subsidiary that is recharacterized under paragraph (c)(2) or (3) of this section, there is a transaction that affects the ownership of the stock (including disregarded specified stock) of the expatriated foreign subsidiary, and, immediately after the transaction, the expatriated foreign subsidiary is not a foreign related person (determined without taking into account the recharacterization under paragraph (c)(2) or (3) of this section), then, immediately before the transaction—

(i) Each section 958(a) U.S. shareholder that is treated as owning deemed issued stock in the expatriated foreign subsidiary under paragraph (c)(2) or (3) of this section is treated as transferring the deemed issued stock (after the deemed issued stock is deemed to be transferred to the section 958(a) U.S. shareholder through intermediate entities, if any, in redemption of equity deemed issued by the intermediate entities pursuant to paragraph (c)(2) or (3) of this section) to the specified related person that is treated as holding the deemed instruments issued by the section 958(a) U.S. shareholder under paragraph (c)(2) or (3) of this section, in redemption of the deemed instruments; and

(ii) The deemed issued stock that is treated as transferred pursuant to paragraph (d)(2)(i) of this section is treated as recapitalized into the disregarded specified stock actually held by the specified related person, which immediately thereafter is treated as specified stock owned by the specified related person for all purposes of the Internal Revenue Code. See *Example 8, Example 9,* and *Example 12* of paragraph (g) of this section.

(3) ***Transfers in which disregarded specified stock ceases to be held by a foreign related person, specified related person, or expatriated entity.*** When, after a specified transaction with respect to an expatriated foreign subsidiary that is recharacterized under paragraph (c)(2) or (3) of this section, there is a direct or indirect transfer of the disregarded specified stock in the expatriated foreign subsidiary, and immediately after the transfer, the expatriated foreign subsidiary is a foreign related person, then, to the extent that, as a result of the transfer, the disregarded specified stock is actually held (determined without taking into account the recharacterization under paragraph (c)(2) or (3) of this section) by a person that is not a foreign related person, a specified related person, or an expatriated entity, immediately before the transfer—

(i) Each section 958(a) U.S. shareholder that is treated as owning all or a portion of the deemed issued stock in the expatriated foreign subsidiary is treated as transferring the deemed issued stock that is allocable to the transferred disregarded specified stock that is out-of-group transferred disregarded specified stock (after the deemed issued stock is deemed to be transferred to the section 958(a) U.S. shareholder through intermediate entities, if any, in redemption of equity deemed issued by the intermediate entities pursuant to paragraph (c)(2) or (3) of this section) to the specified related person that is treated as holding the deemed

instruments allocable to the out-of-group transferred disregarded specified stock, in redemption of the deemed instruments that are allocable to the out-of-group transferred disregarded specified stock; and

(ii) The deemed issued stock that is treated as transferred pursuant to paragraph (d)(3)(i) of this section is treated as recapitalized into the disregarded specified stock actually held by the specified related person, which immediately thereafter is treated as specified stock owned by the specified related person for all purposes of the Internal Revenue Code. See *Example 7* and *Example 11* of paragraph (g) of this section.

(4) ***Certain direct transfers of disregarded specified stock to which unwind rules do not apply.*** When a specified related person directly transfers the disregarded specified stock of the expatriated foreign subsidiary and paragraphs (d)(2) and (3) of this section do not apply with respect to the transfer, the specified related person is deemed to transfer the deemed instruments allocable to the transferred disregarded specified stock, whether it is in-group transferred disregarded specified stock or out-of-group transferred disregarded specified stock, to the transferee of the specified stock, in lieu of the disregarded specified stock, in exchange for the consideration provided by the transferee for the disregarded specified stock. See *Example 10* of paragraph (g) of this section.

(5) ***Determination of deemed issued stock and deemed instruments allocable to transferred disregarded specified stock*** —

(i) ***Out-of-group transfers of disregarded specified stock.*** For purposes of paragraphs (d)(3) and (4) of this section, the portion of the deemed issued stock treated as owned, and of the deemed instruments treated as issued, by each section 958(a) U.S. shareholder as a result of the specified transaction that is allocable to out-of-group transferred disregarded specified stock is the amount that is proportionate to the ratio of the amount of the out-of-group transferred disregarded specified stock to the amount of disregarded specified stock of the expatriated foreign subsidiary that is actually held by the specified related person immediately before the transfer referred to in paragraph (d)(3) or (4) of this section as a result of the specified transaction.

(ii) ***In-group direct transfers of disregarded specified stock.*** For purposes of paragraph (d)(4) of this section, the portion of the deemed issued stock treated as owned by each section 958(a) U.S. shareholder as a result of the specified transaction that is allocable to in-group transferred disregarded specified stock is the amount that is proportionate to the ratio of the amount of the in-group transferred disregarded specified stock to the amount of disregarded specified stock of the expatriated foreign subsidiary that is actually held by the specified related person immediately before the transfer described in paragraph (d)(4) of this section as a result of the specified transaction.

(e) ***Certain exception from foreign personal holding company income not available.*** An amount included in the gross income of a controlled foreign corporation as a dividend with respect to stock transferred in a specified transaction does not qualify for the exception from foreign personal holding company income provided by section 954(c)(6) (to the extent in effect).

(f) ***Definitions.*** In addition to the definitions in § 1.7874-12, the following definitions and special rules apply for purposes of this section:

(1) ***Deemed instruments*** mean, with respect to a specified transaction, instruments deemed issued by a section 958(a) U.S. shareholder in exchange for transferred property in the specified transaction.

(2) ***Deemed issued stock*** means, with respect to a specified transaction, stock of an expatriated foreign subsidiary deemed issued to a section 958(a) U.S. shareholder (or an intermediate entity) in the specified transaction.

(3) ***Disregarded specified stock*** means, with respect to a specified transaction, specified stock that is actually held by a specified related person but that is disregarded for all purposes of the Internal Revenue Code pursuant to paragraph (c)(2) or (3) of this section.

(4) ***Indirect ownership.*** To determine indirect ownership of the stock of a corporation for purposes of calculating a pre-transaction ownership percentage or post-transaction ownership percentage with respect to that corporation, the principles of section 958(a) apply without regard to whether an intermediate entity is foreign or domestic. For this purpose, stock of the corporation that is directly or indirectly (applying the principles of section 958(a) without regard to whether an intermediate entity is foreign or domestic) owned by a domestic corporation that is an expatriated entity is not treated as indirectly owned by a non-EFS foreign related person.

(5) ***In-group transferred disregarded specified stock*** means disregarded specified stock that is directly transferred to a foreign related person, a specified related person, or an expatriated entity.

(6) A *lower-tier expatriated foreign subsidiary* means an expatriated foreign subsidiary, stock of which is directly or indirectly owned by an expatriated foreign subsidiary.

(7) ***Out-of-group transferred disregarded specified stock*** means disregarded specified stock that, as a result of a transfer of disregarded specified stock, is actually held by a person that is not a foreign related person, a specified related person, or an expatriated entity.

(8) ***Pre-transaction ownership percentage*** means, with respect to a corporation, 100 percent less the percentage of stock (by value) in the corporation that, immediately before a specified transaction and any related transaction, is owned, in the aggregate, directly or indirectly by non-EFS foreign related persons.

(9) ***Post-transaction ownership percentage*** means, with respect to a corporation, 100 percent less the percentage of stock (by value) in the corporation that, immediately after the specified transaction and any related transaction, is owned, in the aggregate, directly or indirectly by non-EFS foreign related persons.

(10) A *section 958(a) U.S. shareholder* means, with respect to an expatriated foreign subsidiary, a United States shareholder with respect to the expatriated foreign subsidiary that owns (within the meaning of section 958(a)) stock of the expatriated foreign subsidiary and that is an expatriated entity.

(11) ***Specified stock*** means the stock of the expatriated foreign subsidiary that is issued or transferred to a specified related person in a specified transaction.

(12) ***Transferred property*** means the property transferred by the specified related person in exchange for specified stock in a specified transaction.

(g) ***Examples.*** The following examples illustrate the regulations described in this section. Except as otherwise provided, FA, a foreign corporation, wholly owns DT, a domestic corporation, which, in turn, wholly owns FT, a foreign corporation that is a controlled foreign corporation. FA also wholly owns FS, a foreign corporation that is a controlled foreign corporation for its taxable year beginning January 1, 2017, but not for prior taxable years. FA acquired DT in an inversion transaction that was completed on January 1, 2015.

Accordingly, DT is the domestic entity and a section 958(a) U.S. shareholder with respect to FT, FT is an expatriated foreign subsidiary, and FA and FS are non-EFS foreign related persons and specified related persons. All entities have a calendar year tax year for U.S. tax purposes.

Example 1. (i) *Facts.* On February 1, 2015, FA acquires $6x of FT stock, representing 60% of the total voting power and value of the stock of FT, from FT in a stock issuance, in exchange for $6x of cash.
(ii) *Analysis.* (A) Under paragraph (b) of this section, FA's acquisition of the FT specified stock from FT is a specified transaction because stock of an expatriated foreign subsidiary was issued to a specified related person (FA) during the applicable period. Furthermore, the exceptions to recharacterization in paragraph (b)(2) of this section do not apply to the transaction.

(B) FA's acquisition of the FT specified stock is recharacterized under paragraphs (c)(1) and (2) of this section as follows, with the result that FT continues to be a CFC even before its taxable year beginning January 1, 2017:

(*1*) DT is treated as having issued deemed instruments to FA in exchange for $6x of cash.

(*2*) DT is treated as having contributed the $6x of cash to FT in exchange for deemed issued stock of FT.

(C) Under paragraph (c)(4)(i) of this section, any distribution with respect to the FT specified stock issued to FA will be treated as a distribution to DT, which, in turn, will be treated as making a matching distribution with respect to the deemed instruments that DT is treated as having issued to FA. Under paragraph (c)(4)(ii) of this section, FT is treated as the paying agent of DT with respect to the deemed instruments issued by DT to FA.

Example 2. (i) *Facts.* DT owns stock of FT representing 60% of the total voting power and value of the stock of FT, and the remaining stock of FT, representing 40% of the total voting power and value, is owned by USP, a domestic corporation that is not an expatriated entity. On February 1, 2015, FA acquires $6x of FT stock, representing 60% of the total voting power and value of the stock of FT, from FT in a stock issuance, in exchange for $6x of cash.
(ii) *Analysis.* (A) Under paragraph (b) of this section, FA's acquisition of the FT specified stock from FT is a specified transaction because stock of an expatriated foreign subsidiary was issued to a specified related person (FA) during the applicable period. Furthermore, the exceptions to recharacterization in paragraph (b)(2) of this section do not apply to the transaction.

(B) FA's acquisition of the FT specified stock is recharacterized under paragraphs (c)(1) and (2) of this section as follows, with the result that FT continues to be a CFC even before its taxable year beginning January 1, 2017:

(*1*) DT is treated as having issued deemed instruments to FA in exchange for $6x of cash.

(*2*) DT is treated as having contributed the $6x of cash to FT in exchange for deemed issued stock of FT.

(*3*) DT is treated as owning $8.40x of the stock of FT, representing 84% of the total voting power and value of the stock of FT. USP owns $1.60x of the stock of FT, representing 16% of the total voting power and value of the stock of FT.

(C) Under paragraph (c)(4)(i) of this section, any distribution with respect to the FT specified stock issued to FA will be treated as a distribution to DT, which, in turn, will be treated as making a matching distribution with respect to the deemed instruments that DT is treated as having issued to FA. Under paragraph (c)(4)(ii) of this section, FT is treated as the paying agent of DT with respect to the deemed instruments issued by DT to FA.

Example 3. (i) *Facts.* DT owns stock of FT representing 50% of the total voting power and value of the $8x of stock of FT outstanding, and the remaining stock of FT, representing 50% of the total voting power and value, is owned by USP, a domestic corporation that is not an expatriated entity. On April 30, 2016, FA and USP each simultaneously acquire $1x of FT stock from FT in a stock issuance, in exchange for $1x of cash each.
(ii) *Analysis.* (A) Under paragraph (b) of this section, FA's acquisition of the FT specified stock from FT is a specified transaction because stock of an expatriated foreign subsidiary was issued to a specified related person (FA) during the applicable period.

(B) However, the specified transaction is not recharacterized under paragraphs (c)(1) and (2) of this section because the exception in paragraph (b)(2)(iii) of this section applies. The exception applies because FT remains a controlled foreign corporation immediately after the specified transaction and any related transaction, and the post-transaction ownership percentage with respect to FT is 90% (90%/100%), or at least 90%, of the pre-transaction ownership percentage with respect to FT. The rule in paragraph (b)(2)(iii)(C) of this section does not apply because there is no lower-tier expatriated foreign subsidiary. Although FA (a non-EFS foreign related person) indirectly owns $4x of FT stock both immediately before and after the specified transaction and any related transaction, all of that stock is directly owned by DT (a domestic corporation), and as a result, under paragraph (f)(4) of this section, none of that stock is treated as directly or indirectly owned by FA for purposes of calculating the pre-transaction ownership percentage and the post-transaction ownership percentage with respect to FT. Accordingly, under paragraph (f)(8) of this section, the pre-transaction ownership percentage with respect to FT (100% less the percentage of stock (by value) in FT that, immediately before the specified transaction with respect to FT and any related transaction, is owned by non-EFS foreign related persons) is 100 (100%−0%). Under paragraph (f)(9) of this section, the post-transaction ownership percentage with respect to FT (100% less the percentage of stock (by value) in FT that, immediately after the specified transaction with respect to FT and any related transaction, is owned by non-EFS foreign related persons) is 90 (100%−10% ($1x/$10x)).

Example 4. (i) *Facts.* On February 1, 2015, FA acquires 60% of the FT stock owned by DT in exchange for $2.40x of cash in a fully taxable transaction. DT recognizes and includes in income all of the gain (including any gain treated as a deemed dividend pursuant to section 1248(a)) with respect to the FT stock transferred to FA.
(ii) *Analysis.* (A) Under paragraph (b) of this section, FA's acquisition of the FT specified stock is a specified transaction because stock of an expatriated foreign subsidiary was transferred to a specified related person (FA) during the applicable period.

(B) However, the specified transaction is not recharacterized under paragraphs (c)(1) and (c)(3) of this section because the exception in paragraph (b)(2)(ii) of this section applies. The exception applies because DT recognizes and includes in income all of the gain (including any gain treated as a deemed dividend pursuant to section 1248(a)) with respect to the FT specified stock transferred to FA.

Example 5. (i) *Facts.* On February 1, 2015, DT and FA organize FPRS, a foreign partnership, with nominal capital. DT transfers all of the stock of FT to FPRS in exchange for 40% of the capital and profits interests in the partnership. Furthermore, FA contributes property to FPRS in exchange for the other 60% of the capital and profits interests.
(ii) *Analysis.* (A) Under paragraph (b) of this section, DT's transfer of the FT specified stock is a specified transaction, because stock of an expatriated foreign subsidiary was transferred to a specified related person (FPRS) during the applicable period. The exceptions to recharacterization in paragraph (b)(2) of this section do not apply to the transaction.

(B) DT's transfer of the FT specified stock is recharacterized under paragraphs (c)(1) and (c)(3) of this section as follows, with the result that FT continues to be a CFC even before its taxable year beginning January 1, 2017:

(*1*) FPRS is treated as having issued 40% of its capital and profits interests to DT in exchange for deemed instruments treated as having been issued by DT.

(*2*) DT is treated as continuing to own all of the stock of FT, as well as the FPRS interests.

(C) Under paragraph (c)(4)(i) of this section, any distribution with respect to the FT specified stock transferred to FPRS will be treated as a distribution to DT, which, in turn, will be treated as making a matching distribution with respect to the deemed instruments that DT is treated as having issued to FPRS. Under paragraph (c)(4)(ii) of this section, FT is treated as the paying agent of DT with respect to the deemed instruments issued by DT to FPRS.

Example 6. (i) *Facts.* DT wholly owns FT2, a foreign corporation that is a controlled foreign corporation. FT and FT2 each own 50% of the capital and profits interests in DPRS, a domestic partnership. DPRS wholly owns FT3, a foreign corporation that is a controlled foreign corporation.

FT2 and FT3 are expatriated foreign subsidiaries. On April 30, 2016, FS acquires $9x of the stock of each of FT and FT2, representing 9% of the total voting power and value of the stock of FT and FT2, from FT and FT2, respectively, in a stock issuance, in exchange for cash of $9x each. Also on April 30, 2016, in a related transaction, FS acquires $9x of the stock of FT3, representing 9% of the total voting power and value of the stock of FT3, from FT3 in a stock issuance, in exchange for cash of $9x.
(ii) *Analysis.* (A) Under paragraph (b) of this section, the acquisitions by FS of the specified stock of each of FT, FT2, and FT3 from FT, FT2, and FT3 are specified transactions with respect to each of FT, FT2, and FT3, respectively, because stock of an expatriated foreign subsidiary was issued to a specified related person (FS) during the applicable period.

(B) If FS had acquired only stock of FT and FT2, and had not acquired stock of FT3 in a related transaction, the specified transactions resulting from the acquisitions with respect to FT and FT2 would not have been recharacterized under paragraphs (c)(1) and (2) of this section, because the exception from recharacterization in paragraph (b)(2)(iii) of this section would have applied. FT and FT2 remain controlled foreign corporations immediately after each specified transaction and any related transaction. Under paragraph (f)(9) of this section, the post-transaction ownership percentage with respect to each of FT, FT2, and FT3 (a lower-tier expatriated foreign subsidiary of FT and FT2) would have been 91% ((100%−9%)/(100%−0%)), or at least 90%, of the pre-transaction ownership percentage determined under paragraph (f)(8) of this section with respect to each of FT, FT2, and FT3 (100%).

(C) However, for the specified transactions with respect to FT, FT2, and FT3, the post-transaction ownership percentage determined under paragraph (f)(9) of this section with respect to FT3 (the lower-tier expatriated foreign subsidiary of FT and FT2), 100% less the percentage of stock (by value) in FT3 that, immediately after each of the specified transactions with respect to each of FT and FT2 and any related transaction, is owned by the non-EFS foreign related persons, is 82.81 (100% − (9% × 50% × 91%)−(9% × 50% × 91%)−9%). Accordingly, the post-transaction ownership percentage with respect to FT3 is 82.81% (82.81/(100%−0%)), which is less than 90%, of the pre-transaction ownership percentage determined under paragraph (f)(8) of this section with respect to FT3. Thus, the exception from recharacterization in paragraph (b)(2)(iii) of this section does not apply with respect to the specified transactions with respect to FT, FT2, or FT3.

(D) The specified transactions with respect to FT and FT2 are recharacterized under paragraphs (c)(1) and (2) of this section as follows:

(*1*) DT is treated as having issued 2 deemed instruments worth $9x each to FA in exchange for $18x ($9x + $9x) of cash.

(*2*) DT is treated as having contributed $9x of cash to each of FT and FT2 in exchange for deemed issued stock of FT and FT2.

(*3*) DT is treated as continuing to own all of the stock of FT and FT2.

(E) Under paragraph (c)(4)(i) of this section, any distribution with respect to the FT and FT2 specified stock issued to FS will be treated as a distribution to DT, which, in turn, will be treated as making a matching distribution with respect to the deemed instruments that DT is treated as having issued to FS. Under paragraph (c)(4)(ii) of this section, FT and FT2 are treated as the paying agents of DT with respect to the deemed instruments issued by DT to FS.

(F) The specified transaction with respect to FT3 is recharacterized under paragraphs (c)(1) and (2) of this section as follows:

(*1*) DPRS is treated as having issued a deemed instrument worth $9x to FA in exchange for $9x of cash.

(*2*) DPRS is treated as having contributed $9x of cash to FT3 in exchange for deemed issued stock of FT3.

(*3*) DPRS is treated as continuing to own all of the stock of FT3.

(G) Under paragraph (c)(4)(i) of this section, any distribution with respect to the FT3 specified stock issued to FS will be treated as a distribution to DPRS, which, in turn, will be treated as making a matching distribution with respect to the deemed instruments that DPRS is treated as having issued to FS. Under paragraph (c)(4)(ii) of this section, FT3 is treated as the paying agent of DPRS with respect to the deemed instrument issued by DPRS to FS.

Example 7. (i) *Facts.* The facts are the same as in *Example 1* of this paragraph (g). On April 30, 2016, FA transfers $4x of the FT disregarded specified stock that it acquired on February 1, 2015 to USP, a domestic corporation that is not an expatriated entity, in exchange for $4x of cash.
(ii) *Results.* After the transfer, FT remains a foreign related person. Therefore, paragraph (d)(2) of this section does not apply. However, the $4x of FT disregarded specified stock transferred to USP ceases to be held by a foreign related person, a specified related person, or an expatriated entity (determined without taking into account paragraph (c)(2) or (3) of this section). Therefore, under paragraph (d)(3) of this section, immediately before the transfer of the disregarded specified stock, DT is deemed to transfer $4x ($6x × ($4x/$6x)) of the FT deemed issued stock that it is treated as owning to FA, the specified related person, in redemption of $4x ($6x × ($4x/$6x)) of the DT deemed instruments that FA is treated as owning, and the $4x of FT deemed issued stock deemed transferred to FA is deemed recapitalized into disregarded specified stock actually held by FA, which is thereafter treated as owned by FA for all purposes of the Code until the transfer to USP.

Example 8. (i) *Facts.* The facts are the same as in *Example 7* of this paragraph (g), except that on

April 30, 2016, FA transfers all $6x of the FT disregarded specified stock to USP in exchange for $6x of cash.
(ii) *Results.* After the transfer, FT ceases to be a foreign related person (determined without taking into account paragraph (c)(2) or (3) of this section). Therefore, under paragraph (d)(2) of this section, immediately before the transfer of the disregarded specified stock, DT is deemed to transfer the $6x of FT deemed issued stock that it is treated as owning to FA, the specified related person, in redemption of the $6x of DT deemed instruments that FA is treated as owning, and the $6x of FT deemed issued stock deemed transferred to FA is deemed recapitalized into disregarded specified stock actually held by FA, which is thereafter treated as owned by FA for all purposes of the Code until the transfer to USP.

Example 9. (i) *Facts.* The facts are the same as in *Example 7* of this paragraph (g), except that on April 30, 2016, FA transfers $5.5x of the FT disregarded specified stock to USP in exchange for $5.5x of cash.
(ii) *Results.* After the transfer, FT ceases to be a foreign related person (determined without taking into account paragraph (c)(2) or (3) of this section). Therefore, under paragraph (d)(2) of this section, immediately before the transfer of the disregarded specified stock, DT is deemed to transfer the $6x of FT deemed issued stock that it is treated as owning to FA, the specified related person, in redemption of the $6x of DT deemed instruments that FA is treated as owning, and the $6x of FT deemed issued stock deemed transferred to FA is deemed recapitalized into disregarded specified stock actually held by FA, which is thereafter treated as owned by FA for all purposes of the Code and $5.5x of which is transferred to USP. The remaining $0.5x of the specified stock continues to be treated as owned by FA for all purposes of the Code.

Example 10. (i) *Facts.* The facts are the same as in *Example 1* of this paragraph (g). On April 30, 2016, FA transfers $5x of the FT disregarded specified stock that it acquired on February 1, 2015 to DS, a domestic corporation wholly owned by DT, in exchange for $5x of cash.
(ii) *Results.* After the transfer, FT remains a foreign related person because DS is wholly owned by DT. Therefore, paragraph (d)(2) of this section does not apply. Furthermore, the $5x of FT disregarded specified stock is not, as a result of the transfer, held by a person that is not a foreign related person, a specified related person, or an expatriated entity. Therefore, paragraph (d)(3) of this section does not apply. Because FA, a specified related person, directly transferred disregarded specified stock of FT in a transaction to which paragraphs (d)(2) and (3) of this section do not apply, under paragraph (d)(4) of this section, FA is treated as transferring the $5x of deemed instruments of DT allocable to the $5x of in-group transferred disregarded specified stock ($6x × ($5x/$6x)) to DS.

Example 11. (i) *Facts.* On February 1, 2015, FS acquires $6x of FT stock, representing 60% of the total voting power and value of the stock of FT, from FT in a stock issuance, in exchange for $6x of cash. The $6x of FT stock is specified stock, and the transaction is recharacterized under paragraph (c)(2) of this section. See *Example 1* of this paragraph (g). On April 30, 2016, FA transfers stock of FS representing 60% of the total voting power and value of the stock of FS to USP, a domestic corporation that is not an

expatriated entity. As a result of the transfer, FS ceases to be a foreign related person.
(ii) *Results.* After the February 1, 2015 transfer, FT remains a foreign related person because the FT stock is acquired by FS, a foreign related person with respect to DT at that time. Therefore, paragraph (d)(2) of this section does not apply. However, after the April 30, 2016 transfer, because FS ceases to be a foreign related person, it ceases to be a specified related person. Furthermore, the $6x of disregarded specified stock held before the transaction continues to be held by FS after the transaction, and therefore is not held by a foreign related person, a specified related person, or an expatriated entity after the transaction. Accordingly, under paragraph (d)(3) of this section, immediately before the transfer of FS disregarded specified stock, DT is deemed to transfer $6x ($6x × ($6x/$6x)) of the FT deemed issued stock that it is treated as owning to FS, the specified related person, in redemption of $6x ($6x × ($6x/$6x)) of the DT deemed instruments that FS is treated as owning, and the $6x of FT deemed issued stock deemed transferred to FS is deemed recapitalized into disregarded specified stock actually held by FS, which thereafter is treated as owned by FS for all purposes of the Code, including after the transfer of 60% of the FS stock to USP.

Example 12. (i) *Facts.* The facts are the same as in *Example 1* of this paragraph (g). On April 30, 2016, FP, a foreign corporation that is not a foreign related person acquires $15x of FT stock, representing 60% of the total voting power and value of the stock of FT, from FT in a stock issuance, in exchange for $15x of cash.
(ii) *Results.* After the transaction, FT ceases to be a foreign related person. Therefore, under paragraph (d)(2) of this section, immediately before the issuance of FT stock to FP, DT is deemed to transfer the $6x of FT deemed issued stock that it is treated as owning to FA, the specified related person, in redemption of the $6x of DT deemed instruments that FA is treated as owning, and the $6x of FT deemed issued stock deemed transferred to FA is deemed recapitalized into disregarded specified stock actually held by FA, which thereafter is treated as owned by FA for all purposes of the Code.

Example 13. (i) *Facts.* The facts are the same as in *Example 1* of this paragraph (g). On April 30, 2016, FS acquires $4x of the FT stock owned by DT in exchange for $4x of cash in a fully taxable transaction. DT recognizes and includes in income all of the gain (including any gain treated as a deemed dividend pursuant to section 1248(a)) with respect to the FT stock transferred to FS.
(ii) *Results.* (A) The transfer of FT stock by DT to FS is a specified transaction, but it is not recharacterized under paragraphs (c)(1) and (3) of this section because the exception in paragraph (b)(2)(ii) of this section applies. See *Example 4* of this paragraph (g).

(B) After the transfer, FT remains a foreign related person. Therefore, paragraph (d)(2) of this section does not apply. The disregarded specified stock of FT is not, as a result of the transfer, held by a person that is not a foreign related person, a specified related person, or an expatriated entity. Therefore, paragraph (d)(3) of this section does not apply. There has been no direct transfer of specified stock. Therefore, paragraph (d)(4) of this section also does not apply.

(C) Under paragraph (d)(1) of this section, the $6x of deemed issued stock treated as owned by DT as a result of the specified transaction in which FA acquired FT stock continues to be treated as owned by DT, and the $6x of deemed instruments treated as issued by DT to FA continue to be treated as owned by FA.

(h) ***Applicability date.*** Except as otherwise provided in this paragraph (h), this section applies to specified transactions completed on or after September 22, 2014, but only if the inversion transaction was completed on or after September 22, 2014. Paragraph (b)(2)(ii)(A)(2) of this section applies to specified transactions completed on or after November 19, 2015, but only if the inversion transaction was completed on or after September 22, 2014. Paragraphs (d) and (f)(5), (7), and (10) of this section apply to specified transactions completed on or after April 4, 2016, but only if the inversion transaction was completed on or after September 22, 2014. For inversion transactions completed on or after September 22, 2014, however, taxpayers may elect to apply paragraphs (d) and (f)(5), (7), and (10) of this section to specified transactions completed before April 4, 2016. In addition, for inversion transactions completed on or after September 22, 2014, in lieu of applying paragraphs (d) and (f)(5) and (7) of this section to specified transactions completed on or after September 22, 2014, and before April 4, 2016, taxpayers may elect to apply the principles of § 1.7701(l)-3(c)(3)(iii). Furthermore, for inversion transactions completed on or after September 22, 2014, in lieu of applying paragraph (f)(10) of this section to specified transactions completed on or after September 22, 2014, and before April 4, 2016, taxpayers may elect to define a section 958(a) U.S. shareholder as a United States shareholder with respect to the expatriated foreign subsidiary that owns (within the meaning of section 958(a)) stock in the expatriated foreign subsidiary, but only if such United States shareholder is related (within the meaning of section 267(b) or 707(b)(1)) to the specified related person or is under the same common control (within the meaning of section 482) as the specified related person.

[T.D. 9834, 83 FR 32538, July 12, 2018]

§ 1.7702-0 Table of contents.

This section lists the captions that appear in §§ 1.7702-1, 1.7702-2, and 1.7702-3.

§ 1.7702-1 Mortality charges.

(a) General rule.

(b) Reasonable mortality charges.

(1) Actually expected to be imposed.

(2) Limit on charges.

(c) Safe harbors.

(1) 1980 C.S.O. Basic Mortality Tables.

(2) Unisex tables and smoker/nonsmoker tables.

(3) Certain contracts based on 1958 C.S.O. table.

(d) Definitions.

(1) Prevailing commissioners' standard tables.

(2) Substandard risk.

(3) Nonparticipating contract.

(4) Charge reduction mechanism.

(5) Plan of insurance.

(e) Effective date.

§ 1.7702-2 Attained age of the insured under a life insurance contract.

(a) In general.

(b) Contract insuring a single life.

(c) Contract insuring multiple lives on a last-to-die basis.

(1) In general.

(2) Modifications to cash value and future mortality charges upon the death of insured.

(d) Contract insuring multiple lives on a first-to-die basis.

(e) Examples.

(f) Effective dates.

(1) In general.

(2) Contracts issued before the general effective date.

§ 1.7702-3 Definitions.

(a) In general.

(b) Cash value.

(1) In general.

(2) Amounts excluded from cash value.

(c) Death benefit.

(1) In general.

(2) Qualified accelerated death benefit treated as death benefit.

(d) Qualified accelerated death benefit.

(1) In general.

(2) Determination of present value of the reduction in death benefit.

(3) Examples.

(e) Terminally ill defined.

(f) Certain other additional benefits.

(1) In general.

(2) Examples.

(g) Adjustments under section 7702(f)(7).

(h) Cash surrender value.

(1) In general.

(2) For purposes of section 7702(f)(7).

(i) Net surrender value.

(j) Effective date and special rules.

(1) In general.

(2) Provision of certain benefits before July 1, 1993.

(i) Not treated as cash value.

(ii) No effect on date of issuance.

(iii) Special rule for addition of benefit or loan provision after December 15, 1992.

(3) Addition of qualified accelerated death benefit.

(4) Addition of other additional benefits.

[T.D. 9287, 71 FR 53970, Sept. 13, 2006]

§ 1.7702-2 Attained age of the insured under a life insurance contract.

(a) ***In general.*** This section provides guidance on determining the attained age of an insured under a contract that is a life insurance contract under the applicable law, for purposes of determining the guideline level premium of the contract under section 7702(c)(4), applying the cash value corridor of section 7702(d) or applying the computational rules of section 7702(e), as applicable.

(b) ***Contract insuring a single life.***

(1) If a contract insures the life of a single individual, either of the following two ages may be treated as the attained age of the insured with respect to that contract—

(i) The insured's age determined by reference to the individual's actual birthday as of the date of determination (actual age); or

(ii) The insured's age determined by reference to contract anniversary (rather than the individual's actual birthday), so long as the age assumed under the contract (contract age) is within 12 months of the actual age as of that date.

(2) Once determined under paragraph (b)(1) of this section, the attained age with respect to an individual insured under a contract changes annually. Moreover, the same attained age must be used for purposes of applying sections 7702(c)(4), 7702(d), and 7702(e), as applicable.

(c) ***Contract insuring multiple lives on a last-to-die basis*** —

(1) ***In general.*** Except as provided in paragraph (c)(2) of this section, if a contract insures the lives of more than one individual on a last-to-die basis, the attained age of the insured is determined by applying paragraph (b) of this section as if the youngest individual were the only insured under the contract for purposes of sections 7702(c)(4), 7702(d), and 7702(e), as applicable.

(2) ***Modifications to cash value and future mortality charges upon the death of insured.*** If both the cash value and future mortality charges under a contract change by reason of the death of one or more insureds to no longer take into account the attained age of the deceased insured or insureds, the youngest surviving insured shall thereafter be treated as the only insured under the contract.

(d) ***Contract insuring multiple lives on a first-to-die basis.*** If a contract insures the lives of more than one individual on a first-to-die basis, the attained age of the insured is determined by applying paragraph (b) of this section as if the oldest individual were the only insured under the contract for purposes of sections 7702(c)(4), 7702(d), and 7702(e), as applicable.

(e) ***Examples.*** The following examples illustrate the determination of the attained age of the insured for purposes of sections 7702(c)(4), 7702(d), and 7702(e), as applicable. The examples are as follows:

> *Example 1.* (i) X was born on May 1, 1947. X became 60 years old on May 1, 2007. On January 1, 2008, X purchases from IC a contract insuring X's life. January 1 is the contract anniversary date for all future years. IC determines X's annual premiums on an age-last-birthday basis. Based on the method used by IC to determine age, X has an attained age of 60 for the first contract year, 61 for the second contract year, and so on.
> (ii) Section 1.7702-2(b)(1) permits the determination of attained age under either of two alternative approaches. Section 1.7702-2(b)(1)(i) provides that, if a contract insures the life of a single insured individual, the attained age may be determined by reference to the individual's

actual birthday as of the date of determination. Under this provision, X has an attained age of 60 for the first contract year, 61 for the second contract year, and so on. Alternatively, § 1.7702-2(b)(1)(ii) provides that the insured's age may be determined by reference to contract anniversary (rather than the individual's actual birthday), so long as the age assumed under the contract is within 12 months of the actual age as of that date. If IC determines X's attained age under § 1.7702-2(b)(1)(ii), X likewise has an attained age of 60 for the first contract year, 61 for the second contract year, and so on. Whichever provision IC uses to determine X's attained age must be used consistently from year to year for purposes of sections 7702(c)(4), 7702(d), and 7702(e), as applicable.

Example 2. (i) The facts are the same as in *Example 1* except that, under the contract, X's annual premiums are determined on an age-nearest-birthday basis. X's nearest birthday to January 1, 2008, is May 1, 2008, when X will become 61 years old. Based on the method used by IC to determine age, X has an attained age of 61 for the first contract year, 62 for the second contract year, and so on.
(ii) Section 1.7702-2(b)(1) permits the determination of attained age under either of two alternative approaches. Section 1.7702-2(b)(1)(i) provides that, if a contract insures the life of a single insured individual, the attained age may be determined by reference to the individual's actual birthday as of the date of determination. Under this provision, X has an attained age of 60 for the first contract year, 61 for the second contract year, and so on. Alternatively, § 1.7702-2(b)(1)(ii) provides that the insured's age may be determined by reference to contract anniversary (rather than the individual's actual birthday), so long as the age assumed under the contract is within 12 months of the actual age as of that date. If IC determines X's attained age under § 1.7702-2(b)(1)(ii), X has an attained age of 61 for the first contract year, 62 for the second contract year, and so on. Whichever provision IC uses to determine X's attained age must be used consistently from year to year for purposes of sections 7702(c)(4), 7702(d), and 7702(e), as applicable.

Example 3. (i) The facts are the same as in *Example 1* except that the face amount of the contract is increased on May 15, 2011. During the contract year beginning January 1, 2011, the age assumed under the contract on an age-last-birthday basis is 63 years. However, X has an actual age of 64 as of the date the face amount of the contract is increased.
(ii) Section 1.7702-2(b)(1)(ii) provides that the insured's age may be determined by reference to contract anniversary (rather than the individual's actual birthday), so long as the age assumed under the contract is within 12 months of the actual age. Section 1.7702-2(b)(2) provides that, once determined under paragraph (b)(1) of this section, the attained age with respect to an individual insured under a contract changes annually. Accordingly, X continues to be 63 years old throughout the contract year beginning January 1, 2011, for purposes of sections 7702(c)(4), 7702(d), and 7702(e), as applicable.

Example 4. (i) The facts are the same as in *Example 1* except that in addition to X (born in 1947),

the insurance contract also insures the life of Y, born on September 1, 1942. The death benefit will be paid when the second of the two insureds dies.
(ii) Section 1.7702-2(c)(1) provides that if a life insurance contract insures the lives of more than one individual on a last-to-die basis, the attained age of the insured is determined by applying § 1.7702-2(b) as if the youngest individual were the only insured under the contract. Because X is younger than Y, the attained age of X must be used for purposes of sections 7702(c)(4), 7702(d), and 7702(e), as applicable.

Example 5. (i) The facts are the same as *Example 4* except that X (the younger of the two insureds) dies in 2012. After X's death, both the cash value and mortality charges of the life insurance contract are adjusted to take into account only the life of Y.
(ii) Section 1.7702-2(c)(1) provides that if a life insurance contract insures the lives of more than one individual on a last-to-die basis, the attained age of the insured is determined by applying § 1.7702-2(b) as if the youngest individual were the only insured under the contract. Paragraph (c)(2) of this section provides that if both the cash value and future mortality charges under a contract change by reason of the death of an insured to no longer take into account the attained age of the deceased insured, the youngest surviving insured is thereafter treated as the only insured under the contract. Because both the cash value and mortality charges are adjusted after X's death to take into account only the life of Y, only the attained age of Y is taken into account after X's death for purposes of sections 7702(c)(4), 7702(d), and 7702(e), as applicable.

Example 6. (i) The facts are the same as *Example 1* except that in addition to X (born in 1947), the insurance contract also insures the life of Z, born on September 1, 1952. The death benefit will be paid when the first of the two insureds dies.
(ii) Section 1.7702-2(d) provides that if a life insurance contract insures the lives of more than one individual on a first-to-die basis, the attained age of the insured is determined by applying § 1.7702-2(b) as if the oldest individual were the only insured under the contract. Because X is older than Z, the attained age of X must be used for purposes of sections 7702(c)(4), 7702(d), and 7702(e), as applicable.

(f) ***Effective dates*** —

(1) ***In general.*** Except as provided in paragraph (f)(2) of this section, these regulations apply to all life insurance contracts that are either—

(i) Issued after December 31, 2008; or

(ii) Issued on or after October 1, 2007 and based upon the 2001 CSO tables.

(2) ***Contracts issued before the general effective date.*** Pursuant to section 7805(b)(7), a taxpayer may apply these regulations retroactively for contracts issued before October 1, 2007, provided that the taxpayer does not later determine qualification of those contracts in a manner that is inconsistent with these regulations.

[T.D. 9287, 71 FR 53970, Sept. 13, 2006]

§ 1.7702B-1 Consumer protection provisions.

(a) ***In general.*** Under sections 7702B(b)(1)(F), 7702B(g), and 4980C, qualified long-term care insurance contracts and issuers of those contracts are required to satisfy certain provisions of the Long-Term Care Insurance Model Act (Model Act) and Long-Term Care Insurance Model Regulation (Model Regulation) promulgated by the National Association of Insurance Commissioners (NAIC), as adopted as of January 1993. The requirements for qualified long-term care insurance contracts under section 7702B(b)(1)(F) and (g) relate to guaranteed renewal or noncancellability, prohibitions on limitations and exclusions, extension of benefits, continuation or conversion of coverage, discontinuance and replacement of policies, unintentional lapse, disclosure, prohibitions against post-claims underwriting, minimum standards, inflation protection, prohibitions against pre-existing conditions exclusions and probationary periods, and prior hospitalization. The requirements for qualified long-term care insurance contracts under section 4980C relate to application forms and replacement coverage, reporting requirements, filing requirements for marketing, standards for marketing, appropriateness of recommended purchase, standard format outline of coverage, delivery of a shopper's guide, right to return, outline of coverage, certificates under group plans, policy summary, monthly reports on accelerated death benefits, and incontestability period.

(b) ***Coordination with State requirements*** —

(1) ***Contracts issued in a State that imposes more stringent requirements.*** If a State imposes a requirement that is more stringent than the analogous requirement imposed by section 7702B(g) or 4980C, then, under section 4980C(f), compliance with the more stringent requirement of State law is considered compliance with the parallel requirement of section 7702B(g) or 4980C. The principles of paragraph (b)(3) of this section apply to any case in which a State imposes a requirement that is more stringent than the analogous requirement imposed by section 7702B(g) or 4980C (as described in this paragraph (b)(1)), but in which there has been a failure to comply with that State requirement.

(2) ***Contracts issued in a State that has adopted the model provisions.*** If a State imposes a requirement that is the same as the parallel requirement imposed by section 7702B(g) or 4980C, compliance with that requirement of State law is considered compliance with the parallel requirement of section 7702B(g) or 4980C, and failure to comply with that requirement of State law is considered failure to comply with the parallel requirement of section 7702B(g) or 4980C.

(3) ***Contracts issued in a State that has not adopted the model provisions or more stringent requirements.*** If a State has not adopted the Model Act, the Model Regulation, or a requirement that is the same as or more stringent than the analogous requirement imposed by section 7702B(g) or 4980C, then the language, caption, format, and content requirements imposed by sections 7702B(g) and 4980C with respect to contracts, applications, outlines of coverage, policy summaries, and notices will be considered satisfied for a contract subject to the law of that State if the language, caption, format, and content are substantially similar to those required under the parallel provision of the Model Act or Model Regulation. Only nonsubstantive deviations are permitted in order for language, caption, format, and content to be considered substantially similar to the requirements of the Model Act or Model Regulation.

(c) ***Effective date.*** This section applies with respect to contracts issued after December 10, 1999.

[T.D. 8792, 63 FR 68186, Dec. 10, 1998]

§ 1.7702B-2 Special rules for pre-1997 long-term care insurance contracts.

(a) ***Scope.*** The definitions and special provisions of this section apply solely for purposes of determining whether an insurance contract (other than a qualified long-term care insurance contract described in section 7702B(b) and any regulations issued thereunder) is treated as a qualified long-term care insurance contract for purposes of the Internal Revenue Code under section 321(f)(2) of the Health Insurance Portability and Accountability Act of 1996 (Public Law 104-191).

(b) ***Pre-1997 long-term care insurance contracts*** —

(1) ***In general.*** A pre-1997 long-term care insurance contract is treated as a qualified long-term care insurance contract, regardless of whether the contract satisfies section 7702B(b) and any regulations issued thereunder.

(2) ***Pre-1997 long-term care insurance contract defined.*** A pre-1997 long-term care insurance contract is any insurance contract with an issue date before January 1, 1997, that met the long-term care insurance requirements of the State in which the contract was sitused on the issue date. For this purpose, the long-term care insurance requirements of the State are the State laws (including statutory and administrative law) that are intended to regulate insurance coverage that constitutes "long-term care insurance" (as defined in section 4 of the National Association of Insurance Commissioners (NAIC) Long-Term Care Insurance Model Act, as in effect on August 21, 1996), regardless of the terminology used by the State in describing the insurance coverage.

(3) ***Issue date of a contract*** —

(i) ***In general.*** Except as otherwise provided in this paragraph (b)(3), the issue date of a contract is the issue date assigned to the contract by the insurance company. In no event is the issue date earlier than the date the policyholder submitted a signed application for coverage to the insurance company. If the period between the date the signed application is submitted to the insurance company and the date coverage under which the contract actually becomes effective is substantially longer than under the insurance company's usual business practice, then the issue date is the later of the date coverage under which the contract becomes effective or the issue date assigned to the contract by the insurance company. A policyholder's right to return a contract within a free-look period following delivery for a full refund of any premiums paid is not taken into account in determining the contract's issue date.

(ii) ***Special rule for group contracts.*** The issue date of a group contract (including any certificate issued thereunder) is the date on which coverage under the group contract becomes effective.

(iii) ***Exchange of contract or certain changes in a contract treated as a new issuance.*** For purposes of this paragraph (b)(3)—

(A) A contract issued in exchange for an existing contract after December 31, 1996, is considered a contract issued after that date;

(B) Any change described in paragraph (b)(4) of this section is treated as the issuance of a new contract with an issue date no earlier than the date the change goes into effect; and

(C) If a change described in paragraph (b)(4) of this section occurs with regard to one or more, but fewer than all, of the certificates evidencing coverage under a group contract, then the insurance coverage under the changed certificates is treated as coverage under a newly issued group contract (and the insurance coverage provided by any unchanged certificate continues to be treated as coverage under the original group contract).

(4) *Changes treated as the issuance of a new contract* —

(i) ***In general.*** For purposes of paragraph (b)(3) of this section, except as provided in paragraph (b)(4)(ii) of this section, the following changes are treated as the issuance of a new contract—

(A) A change in the terms of a contract that alters the amount or timing of an item payable by either the policyholder (or certificate holder), the insured, or the insurance company;

(B) A substitution of the insured under an individual contract; or

(C) A change (other than an immaterial change) in the contractual terms, or in the plan under which the contract was issued, relating to eligibility for membership in the group covered under a group contract.

(ii) ***Exceptions.*** For purposes of this paragraph (b)(4), the following changes are not treated as the issuance of a new contract—

(A) A policyholder's exercise of any right provided under the terms of the contract as in effect on December 31, 1996, or a right required by applicable State law to be provided to the policyholder;

(B) A change in the mode of premium payment (for example, a change from monthly to quarterly premiums);

(C) In the case of a policy that is guaranteed renewable or noncancellable, a classwide increase or decrease in premiums;

(D) A reduction in premiums due to the purchase of a long-term care insurance contract by a family member of the policyholder;

(E) A reduction in coverage (with a corresponding reduction in premiums) made at the request of a policyholder;

(F) A reduction in premiums as a result of extending to an individual policyholder a discount applicable to similar categories of individuals pursuant to a premium rate structure that was in effect on December 31, 1996, for the issuer's pre-1997 long-term care insurance contracts of the same type;

(G) The addition, without an increase in premiums, of alternative forms of benefits that may be selected by the policyholder;

(H) The addition of a rider (including any similarly identifiable amendment) to a pre-1997 long-term care insurance contract in any case in which the rider, if issued as a separate contract of insurance, would itself be a qualified long-term care insurance contract under section 7702B and any regulations issued thereunder (including the consumer protection provisions in section 7702B(g) to the extent applicable to the addition of a rider);

(I) The deletion of a rider or provision of a contract that prohibited coordination of benefits with Medicare (often referred to as an HHS (Health and Human Services) rider);

(J) The effectuation of a continuation or conversion of coverage right that is provided under a pre-1997 group contract and that, in accordance with the terms of the contract as in effect on December 31, 1996, provides for coverage under an individual contract following an individual's ineligibility for continued coverage under the group contract; and

(K) The substitution of one insurer for another insurer in an assumption reinsurance transaction.

(5) ***Examples.*** The following examples illustrate the principles of this paragraph (b):

Example 1. (i) On December 3, 1996, A, an individual, submits a signed application to an insurance company to purchase a nursing home contract that meets the long-term care insurance requirements of the State in which the contract is sitused. The insurance company decides on December 20, 1996, that it will issue the contract, and assigns December 20, 1996, as the issue date for the contract. Under the terms of the contract, A's insurance coverage becomes effective on January 1, 1997. The company delivers the contract to A on January 3, 1997. A has the right to return the contract within 15 days following delivery for a refund of all premiums paid.
(ii) Under paragraph (b)(3)(i) of this section, the issue date of the contract is December 20, 1996. Thus, the contract is a pre-1997 long-term care insurance contract that is treated as a qualified long-term care insurance contract.

Example 2. (i) The facts are the same as in *Example 1,* except that the insurance coverage under the contract does not become effective until March 1, 1997. Under the insurance company's usual business practice, the period between the date of the application and the date the contract becomes effective is 30 days or less.
(ii) Under paragraph (b)(3)(i) of this section, the issue date of the contract is March 1, 1997. Thus, the contract is not a pre-1997 long-term care insurance contract, and, accordingly, the contract must meet the requirements of section 7702B(b) and any regulations issued thereunder to be a qualified long-term care insurance contract.

Example 3. (i) B, an individual, is the policyholder under a long-term care insurance contract purchased in 1995. On June 15, 2000, the insurance coverage and premiums under the contract are increased by agreement between B and the insurance company.
(ii) Under paragraph (b)(4)(i)(A) of this section, a change in the terms of a contract that alters the amount or timing of an item payable by the policyholder or the insurance company is treated as the issuance of a new contract. Thus, B's coverage is treated as coverage under a contract issued on June 15, 2000, and, accordingly, the contract must meet the requirements of section 7702B(b) and any regulations issued thereunder in order to be a qualified long-term care insurance contract.

Example 4. (i) C, an individual, is the policyholder under a long-term care insurance contract purchased in 1994. At that time and through December 31, 1996, the contract met the long-term care insurance requirements of the State in which the contract was sitused. In 1996, the policy was amended to add a provision requiring the policyholder to be offered the right to increase dollar limits for inflation every three years (without the policyholder being required to

pass a physical or satisfy any other underwriting requirements). During 2002, C elects to increase the amount of insurance coverage (with a resulting premium increase) pursuant to the inflation provision.

(ii) Under paragraph (b)(4)(ii)(A) of this section, an increase in the amount of insurance coverage at the election of the policyholder (without the insurance company's consent and without underwriting or other limitations on the policyholder's rights) pursuant to a pre-1997 inflation provision is not treated as the issuance of a new contract. Thus, C's contract continues to be a pre-1997 long-term care insurance contract that is treated as a qualified long-term care insurance contract.

(c) ***Effective date.*** This section is applicable January 1, 1999.

[T.D. 8792, 63 FR 68187, Dec. 10, 1998]

§ 1.7703-1 Determination of marital status.

(a) ***General rule.*** The determination of whether an individual is married shall be made as of the close of his taxable year unless his spouse dies during his taxable year, in which case such determination shall be made as of the time of such death; and, except as provided in paragraph (b) of this section, an individual shall be considered as married even though living apart from his spouse unless legally separated under a decree of divorce or separate maintenance. The provisions of this paragraph may be illustrated by the following examples:

Example 1. Taxpayer A and his wife B both make their returns on a calendar year basis. In July 1954, they enter into a separation agreement and thereafter live apart, but no decree of divorce or separate maintenance is issued until March 1955. If A itemizes and claims his actual deductions on his return for the calendar year 1954, B may not elect the standard deduction on her return since B is considered as married to A (although permanently separated by agreement) on the last day of 1954.

Example 2. Taxpayer A makes his returns on the basis of a fiscal year ending June 30. His wife B makes her returns on the calendar year basis. A died in October 1954. In such case, since A and B were married as of the date of death, B may not elect the standard deduction for the calendar year 1954 if the income of A for the short taxable year ending with the date of his death is determined without regard to the standard deduction.

(b) ***Certain married individuals living apart.***

(1) For purposes of Part IV of Subchapter B of Chapter 1 of the Code, an individual is not considered as married for taxable years beginning after December 31, 1969, if

(i) such individual is married (within the meaning of paragraph (a) of this section) but files a separate return;

(ii) such individual maintains as his home a household which constitutes for more than one-half of the taxable year the principal place of abode of a dependent (*a*) who (within the meaning of section 152 and the regulations thereunder) is a son, stepson, daughter, or stepdaughter of the individual, and (*b*) with respect to whom such individual is entitled to a deduction for the

taxable year under section 151; (iii) such individual furnishes over half of the cost of maintaining such household during the taxable year; and (iv) during the entire taxable year such individual's spouse is not a member of such household.

(2) For purposes of subparagraph (1)(ii)(*a*) of this paragraph, a legally adopted son or daughter of an individual, a child (described in paragraph (c)(2) of § 1.152-2) who is a member of an individual's household if placed with such individual by an authorized placement agency (as defined in paragraph (c)(2) of § 1.152-2) for legal adoption by such individual, or a foster child (described in paragraph (c)(4) of § 1.152-2) of an individual if such child satisfies the requirements of section 152(a)(9) of the Code and paragraph (b) of § 1.152-1 with respect to such individual, shall be treated as a son or daughter of such individual by blood.

(3) For purposes of subparagraph (1)(ii) of this paragraph, the household must actually constitute the home of the individual for his taxable year. However, a physical change in the location of such home will not prevent an individual from qualifying for the treatment provided in subparagraph (1) of this paragraph. It is not sufficient that the individual maintain the household without being its occupant. The individual and the dependent described in subparagraph (1)(ii)(*a*) of this paragraph must occupy the household for more than one-half of the taxable year of the individual. However, the fact that such dependent is born or dies within the taxable year will not prevent an individual from qualifying for such treatment if the household constitutes the principal place of abode of such dependent for the remaining or preceding part of such taxable year. The individual and such dependent will be considered as occupying the household during temporary absences from the household due to special circumstances. A nonpermanent failure to occupy the common abode by reason of illness, education, business, vacation, military service, or a custody agreement under which a child or stepchild is absent for less than 6 months in the taxable year of the taxpayer, shall be considered a temporary absence due to special circumstances. Such absence will not prevent an individual from qualifying for the treatment provided in subparagraph (1) of this paragraph if

(i) it is reasonable to assume that such individual or the dependent will return to the household and

(ii) such individual continues to maintain such household or a substantially equivalent household in anticipation of such return.

(4) An individual shall be considered as maintaining a household only if he pays more than one-half of the cost thereof for his taxable year. The cost of maintaining a household shall be the expenses incurred for the mutual benefit of the occupants thereof by reason of its operation as the principal place of abode of such occupants for such taxable year. The cost of maintaining a household shall not include expenses otherwise incurred. The expenses of maintaining a household include property taxes, mortgage interest, rent, utility charges, upkeep and repairs, property insurance, and food consumed on the premises. Such expenses do not include the cost of clothing, education, medical treatment, vacations, life insurance, and transportation. In addition, the cost of maintaining a household shall not include any amount which represents the value of services rendered in the household by the taxpayer or by a dependent described in subparagraph (1)(ii)(*a*) of this paragraph.

(5) For purposes of subparagraph (1)(iv) of this paragraph, an individual's spouse is not a member of the household during a taxable year if such household does not constitute such spouse's place of abode at any time during such year. An individual's spouse will be considered to be a member of the household during temporary absences from the household due to special circumstances. A

nonpermanent failure to occupy such household as his abode by reason of illness, education, business, vacation, or military service shall be considered a mere temporary absence due to special circumstances.

(6) The provisions of this paragraph may be illustrated by the following example:

Example. Taxpayer A, married to B at the close of the calendar year 1971, his taxable year, is living apart from B, but A is not legally separated from B under a decree of divorce or separate maintenance. A maintains a household as his home which is for 7 months of 1971 the principal place of abode of C, his son, with respect to whom A is entitled to a deduction under section 151. A pays for more than one-half the cost of maintaining that household. At no time during 1971 was B a member of the household occupied by A and C. A files a separate return for 1971. Under these circumstances, A is considered as not married under section 143(b) for purposes of the standard deduction. Even though A is married and files a separate return A may claim for 1971 as his standard deduction the larger of the low income allowance up to a maximum of $1,050 consisting of both the basic allowance and additional allowance (rather than the basic allowance only subject to the $500 limitation applicable to a separate return of a married individual) or the percentage standard deduction subject to the $1,500 limitation (rather than the $750 limitation applicable to a separate return of a married individual). See § 1.141-1. For purposes of the provisions of part IV of subchapter B of chapter 1 of the Code and the regulations thereunder, A is treated as unmarried.

[T.D. 7123, 36 FR 11086, June 9, 1971. Redesignated by T.D. 8712, 62 FR 2283, Jan. 16, 1997]

§ 1.7704-1 Publicly traded partnerships.

(a) ***In general*** —

(1) ***Publicly traded partnership.*** A domestic or foreign partnership is a publicly traded partnership for purposes of section 7704(b) and this section if—

(i) Interests in the partnership are traded on an established securities market; or

(ii) Interests in the partnership are readily tradable on a secondary market or the substantial equivalent thereof.

(2) ***Partnership interest*** —

(i) ***In general.*** For purposes of section 7704(b) and this section, an interest in a partnership includes—

(A) Any interest in the capital or profits of the partnership (including the right to partnership distributions); and

(B) Any financial instrument or contract the value of which is determined in whole or in part by reference to the partnership (including the amount of partnership distributions, the value of partnership assets, or the results of partnership operations).

(ii) ***Exception for non-convertible debt.*** For purposes of section 7704(b) and this section, an interest in a partnership does not include any financial instrument or contract that—

(A) Is treated as debt for federal tax purposes; and

(B) Is not convertible into or exchangeable for an interest in the capital or profits of the partnership and does not provide for a payment of equivalent value.

(iii) ***Exception for tiered entities.*** For purposes of section 7704(b) and this section, an interest in a partnership or a corporation (including a regulated investment company as defined in section 851 or a real estate investment trust as defined in section 856) that holds an interest in a partnership (lower-tier partnership) is not considered an interest in the lower-tier partnership.

(3) ***Definition of transfer.*** For purposes of section 7704(b) and this section, a transfer of an interest in a partnership means a transfer in any form, including a redemption by the partnership or the entering into of a financial instrument or contract described in paragraph (a)(2)(i)(B) of this section.

(b) ***Established securities market.*** For purposes of section 7704(b) and this section, an established securities market includes—

(1) A national securities exchange registered under section 6 of the Securities Exchange Act of 1934 (15 U.S.C. 78f);

(2) A national securities exchange exempt from registration under section 6 of the Securities Exchange Act of 1934 (15 U.S.C. 78f) because of the limited volume of transactions;

(3) A foreign securities exchange that, under the law of the jurisdiction where it is organized, satisfies regulatory requirements that are analogous to the regulatory requirements under the Securities Exchange Act of 1934 described in paragraph (b) (1) or (2) of this section (such as the London International Financial Futures Exchange; the Marche a Terme International de France; the International Stock Exchange of the United Kingdom and the Republic of Ireland, Limited; the Frankfurt Stock Exchange; and the Tokyo Stock Exchange);

(4) A regional or local exchange; and

(5) An interdealer quotation system that regularly disseminates firm buy or sell quotations by identified brokers or dealers by electronic means or otherwise.

(c) ***Readily tradable on a secondary market or the substantial equivalent thereof*** —

(1) ***In general.*** For purposes of section 7704(b) and this section, interests in a partnership that are not traded on an established securities market (within the meaning of section 7704(b) and paragraph (b) of this section) are readily tradable on a secondary market or the substantial equivalent thereof if, taking into account all of the facts and circumstances, the partners are readily able to buy, sell, or exchange their partnership interests in a manner that is comparable, economically, to trading on an established securities market.

(2) ***Secondary market or the substantial equivalent thereof.*** For purposes of paragraph (c)(1) of this section, interests in a partnership are readily tradable on a secondary market or the substantial equivalent thereof if—

(i) Interests in the partnership are regularly quoted by any person, such as a broker or dealer, making a market in the interests;

(ii) Any person regularly makes available to the public (including customers or subscribers) bid or offer quotes with respect to interests in the partnership and stands ready to effect buy or sell transactions at the quoted prices for itself or on behalf of others;

(iii) The holder of an interest in the partnership has a readily available, regular, and ongoing opportunity to sell or exchange the interest through a public means of obtaining or providing information of offers to buy, sell, or exchange interests in the partnership; or

(iv) Prospective buyers and sellers otherwise have the opportunity to buy, sell, or exchange interests in the partnership in a time frame and with the regularity and continuity that is comparable to that described in the other provisions of this paragraph (c)(2).

(3) ***Secondary market safe harbors.*** The fact that a transfer of a partnership interest is not within one or more of the safe harbors described in paragraph (e), (f), (g), (h), or (j) of this section is disregarded in determining whether interests in the partnership are readily tradable on a secondary market or the substantial equivalent thereof.

(d) ***Involvement of the partnership required.*** For purposes of section 7704(b) and this section, interests in a partnership are not traded on an established securities market within the meaning of paragraph (b)(5) of this section and are not readily tradable on a secondary market or the substantial equivalent thereof within the meaning of paragraph (c) of this section (even if interests in the partnership are traded or readily tradable in a manner described in paragraph (b)(5) or (c) of this section) unless—

(1) The partnership participates in the establishment of the market or the inclusion of its interests thereon; or

(2) The partnership recognizes any transfers made on the market by—

(i) Redeeming the transferor partner (in the case of a redemption or repurchase by the partnership); or

(ii) Admitting the transferee as a partner or otherwise recognizing any rights of the transferee, such as a right of the transferee to receive partnership distributions (directly or indirectly) or to acquire an interest in the capital or profits of the partnership.

(e) ***Transfers not involving trading*** —

(1) ***In general.*** For purposes of section 7704(b) and this section, the following transfers (private transfers) are disregarded in determining whether interests in a partnership are readily tradable on a secondary market or the substantial equivalent thereof—

(i) Transfers in which the basis of the partnership interest in the hands of the transferee is determined, in whole or in part, by reference to its basis in the hands of the transferor or is determined under section 732;

(ii) Transfers at death, including transfers from an estate or testamentary trust;

(iii) Transfers between members of a family (as defined in section 267(c)(4));

(iv) Transfers involving the issuance of interests by (or on behalf of) the partnership in exchange for cash, property, or services;

(v) Transfers involving distributions from a retirement plan qualified under section 401(a) or an individual retirement account;

(vi) Block transfers (as defined in paragraph (e)(2) of this section);

(vii) Transfers pursuant to a right under a redemption or repurchase agreement (as defined in paragraph (e)(3) of this section) that is exercisable only—

(A) Upon the death, disability, or mental incompetence of the partner; or

(B) Upon the retirement or termination of the performance of services of an individual who actively participated in the management of, or performed services on a full-time basis for, the partnership;

(viii) Transfers pursuant to a closed end redemption plan (as defined in paragraph (e)(4) of this section);

(ix) Transfers by one or more partners of interests representing in the aggregate 50 percent or more of the total interests in partnership capital and profits in one transaction or a series of related transactions; and

(x) Transfers not recognized by the partnership (within the meaning of paragraph (d)(2) of this section).

(2) ***Block transfers.*** For purposes of paragraph (e)(1)(vi) of this section, a block transfer means the transfer by a partner and any related persons (within the meaning of section 267(b) or 707(b)(1)) in one or more transactions during any 30 calendar day period of partnership interests representing in the aggregate more than 2 percent of the total interests in partnership capital or profits.

(3) ***Redemption or repurchase agreement.*** For purposes of section 7704(b) and this section, a redemption or repurchase agreement means a plan of redemption or repurchase maintained by a partnership whereby the partners may tender their partnership interests for purchase by the partnership, another partner, or a person related to another partner (within the meaning of section 267(b) or 707(b)(1)).

(4) ***Closed end redemption plan.*** For purposes of paragraph (e)(1)(viii) of this section, a redemption or repurchase agreement (as defined in paragraph (e)(3) of this section) is a closed end redemption plan only if—

(i) The partnership does not issue any interest after the initial offering (other than the issuance of additional interests prior to August 5, 1988); and

(ii) No partner or person related to any partner (within the meaning of section 267(b) or 707(b)(1)) provides contemporaneous opportunities to acquire interests in similar or related partnerships which represent substantially identical investments.

(f) ***Redemption and repurchase agreements.*** For purposes of section 7704(b) and this section, the transfer of an interest in a partnership pursuant to a redemption or repurchase agreement (as defined in paragraph (e)(3) of this section) that is not described in paragraph (e)(1) (vii) or (viii) of this section is disregarded in determining whether interests in the partnership are readily tradable on a secondary market or the substantial equivalent thereof only if—

(1) The redemption or repurchase agreement provides that the redemption or repurchase cannot occur until at least 60 calendar days after the partner notifies the partnership in writing of the partner's intention to exercise the redemption or repurchase right;

(2) Either—

(i) The redemption or repurchase agreement requires that the redemption or repurchase price not be established until at least 60 calendar days after receipt of such notification by the partnership or the partner; or

(ii) The redemption or repurchase price is established not more than four times during the partnership's taxable year; and

(3) The sum of the percentage interests in partnership capital or profits transferred during the taxable year of the partnership (other than in private transfers described in paragraph (e) of this section) does not exceed 10 percent of the total interests in partnership capital or profits.

(g) *Qualified matching services* —

(1) ***In general.*** For purposes of section 7704(b) and this section, the transfer of an interest in a partnership through a qualified matching service is disregarded in determining whether interests in the partnership are readily tradable on a secondary market or the substantial equivalent thereof.

(2) ***Requirements.*** A matching service is a qualified matching service only if—

(i) The matching service consists of a computerized or printed listing system that lists customers' bid and/or ask quotes in order to match partners who want to sell their interests in a partnership (the selling partner) with persons who want to buy those interests;

(ii) Matching occurs either by matching the list of interested buyers with the list of interested sellers or through a bid and ask process that allows interested buyers to bid on the listed interest;

(iii) The selling partner cannot enter into a binding agreement to sell the interest until the 15th calendar day after the date information regarding the offering of the interest for sale is made available to potential buyers and such time period is evidenced by contemporaneous records ordinarily maintained by the operator at a central location;

(iv) The closing of the sale effected by virtue of the matching service does not occur prior to the 45th calendar day after the date information regarding the offering of the interest for sale is made available to potential buyers and such time period is evidenced by contemporaneous records ordinarily maintained by the operator at a central location;

(v) The matching service displays only quotes that do not commit any person to buy or sell a partnership interest at the quoted price (nonfirm price quotes) or quotes that express interest in a partnership interest without an accompanying price (nonbinding indications of interest) and does not display quotes at which any person is committed to buy or sell a partnership interest at the quoted price (firm quotes);

(vi) The selling partner's information is removed from the matching service within 120 calendar days after the date information regarding the offering of the interest for sale is made available to potential buyers and, following any removal (other than removal by reason of a sale of any part of such interest) of the selling partner's information from the matching service, no offer to sell an interest in the partnership is entered into the matching service by the selling partner for at least 60 calendar days; and

(vii) The sum of the percentage interests in partnership capital or profits transferred during the taxable year of the partnership (other than in private transfers described in paragraph (e) of this section) does not exceed 10 percent of the total interests in partnership capital or profits.

(3) ***Closing.*** For purposes of paragraph (g)(2)(iv) of this section, the closing of a sale occurs no later than the earlier of—

(i) The passage of title to the partnership interest;

(ii) The payment of the purchase price (which does not include the delivery of funds to the operator of the matching service or other closing agent to hold on behalf of the seller pending closing); or

(iii) The date, if any, that the operator of the matching service (or any person related to the operator within the meaning of section 267(b) or 707(b)(1)) loans, advances, or otherwise arranges for funds to be available to the seller in anticipation of the payment of the purchase price.

(4) ***Optional features.*** A qualified matching service may be sponsored or operated by a partner of the partnership (either formally or informally), the underwriter that handled the issuance of the partnership interests, or an unrelated third party. In addition, a qualified matching service may offer the following features—

(i) The matching service may provide prior pricing information, including information regarding resales of interests and actual prices paid for interests; a description of the business of the partnership; financial and reporting information from the partnership's financial statements and reports; and information regarding material events involving the partnership, including special distributions, capital distributions, and refinancings or sales of significant portions of partnership assets;

(ii) The operator may assist with the transfer documentation necessary to transfer the partnership interest;

(iii) The operator may receive and deliver funds for completed transactions; and

(iv) The operator's fee may consist of a flat fee for use of the service, a fee or commission based on completed transactions, or any combination thereof.

(h) ***Private placements*** —

(1) ***In general.*** For purposes of section 7704(b) and this section, except as otherwise provided in paragraph (h)(2) of this section, interests in a partnership are not readily tradable on a secondary market or the substantial equivalent thereof if—

(i) All interests in the partnership were issued in a transaction (or transactions) that was not required to be registered under the Securities Act of 1933 (15 U.S.C. 77a *et seq.*); and

(ii) The partnership does not have more than 100 partners at any time during the taxable year of the partnership.

(2) ***Exception for certain offerings outside of the United States.*** Paragraph (h)(1) of this section does not apply to the offering and sale of interests in a partnership that was not required to be registered under the Securities Act of 1933 by reason of Regulation S (17 CFR 230.901 through 230.904) unless the offering and sale of the interests would not have been required to be registered under the Securities Act of 1933 if the interests had been offered and sold within the United States.

(3) ***Anti-avoidance rule.*** For purposes of determining the number of partners in the partnership under paragraph (h)(1)(ii) of this section, a person (beneficial owner) owning an interest in a partnership, grantor trust, or S corporation (flow-through entity), that owns, directly or through other flow-through entities, an interest in the partnership, is treated as a partner in the partnership only if—

(i) Substantially all of the value of the beneficial owner's interest in the flow-through entity is attributable to the flow-through entity's interest (direct or indirect) in the partnership; and

(ii) A principal purpose of the use of the tiered arrangement is to permit the partnership to satisfy the 100-partner limitation in paragraph (h)(1)(ii) of this section.

(i) [Reserved]

(j) *Lack of actual trading* —

(1) ***General rule.*** For purposes of section 7704(b) and this section, interests in a partnership are not readily tradable on a secondary market or the substantial equivalent thereof if the sum of the percentage interests in partnership capital or profits transferred during the taxable year of the partnership (other than in transfers described in paragraph (e), (f), or (g) of this section) does not exceed 2 percent of the total interests in partnership capital or profits.

(2) ***Examples.*** The following examples illustrate the rules of this paragraph (j):

Example 1. Calculation of percentage interest transferred. (i) ABC, a calendar year limited partnership formed in 1996, has 9,000 units of limited partnership interests outstanding at all times during 1997, representing in the aggregate 95 percent of the total interests in capital and profits of ABC. The remaining 5 percent is held by the general partner.
(ii) During 1997, the following transactions occur with respect to the units of ABC's limited partnership interests—

(A) 800 units are sold through the use of a qualified matching service that meets the requirements of paragraph (g) of this section;

(B) 50 units are sold through the use of a matching service that does not meet the requirements of paragraph (g) of this section; and

(C) 500 units are transferred as a result of private transfers described in paragraph (e) of this section.

(iii) The private transfers of 500 units and the sale of 800 units through a qualified matching service are disregarded under paragraph (j)(1) of this section for purposes of applying the 2 percent rule. As a result, the total percentage interests in partnership capital and profits transferred for purposes of the 2 percent rule is .528 percent, determined by—

(A) Dividing the number of units sold through a matching service that did not meet the requirements of paragraph (g) of this section (50) by the total number of outstanding limited partnership units (9,000); and

(B) Multiplying the result by the percentage of total interests represented by limited partnership units (95 percent)

([50 / 9,000] × .95 = .528 percent).

Example 2. Application of the 2 percent rule. (i) ABC operates a service consisting of computerized video display screens on which subscribers view and publish nonfirm price quotes that do not commit any person to buy or sell a partnership interest and unpriced indications of interest in a partnership interest without an accompanying price. The ABC service does not provide firm quotes at which any person (including the operator of the service) is committed to buy or sell a partnership interest. The service may provide prior pricing information, including information regarding resales of interests and actual prices paid for interests; transactional volume information; and information on special or capital distributions by a partnership. The operator's fee may consist of a flat fee for use of the service; a fee based on completed transactions, including, for example, the number of nonfirm quotes or unpriced indications of interest entered by users of the service; or any combination thereof.
(ii) The ABC service is not an established securities market for purposes of section 7704(b) and this section. The service is not an interdealer quotation system as defined in paragraph (b)(5) of this section because it does not disseminate firm buy or sell quotations. Therefore, partnerships whose interests are listed and transferred on the ABC service are not publicly traded for purposes of section 7704(b) and this section as a result of such listing or transfers if the sum of the percentage interests in partnership capital or profits transferred during the taxable year of the partnership (other than in transfers described in paragraph (e), (f), or (g) of this section) does not exceed 2 percent of the total interests in partnership capital or profits. In addition, assuming the ABC service complies with the necessary requirements, the service may qualify as a matching service described in paragraph (g) of this section.

(k) ***Percentage interests in partnership capital or profits*** —

(1) ***Interests considered*** —

(i) ***General rule.*** Except as otherwise provided in this paragraph (k), for purposes of this section, the total interests in partnership capital or profits are determined by reference to all outstanding interests in the partnership.

(ii) ***Exceptions*** —

(A) ***General partner with greater than 10 percent interest.*** If the general partners and any person related to the general partners (within the meaning of section 267(b) or 707(b)(1)) own, in the aggregate, more than 10 percent of the outstanding interests in partnership capital or profits at any one time during the taxable year of the partnership, the total interests in partnership capital or profits are determined without reference to the interests owned by such persons.

(B) ***Derivative interests.*** Any partnership interests described in paragraph (a)(2)(i)(B) of this section are taken into account for purposes of determining the total interests in partnership capital or profits only if and to the extent that the partnership satisfies paragraph (d) (1) or (2) of this section.

(2) ***Monthly determination.*** For purposes of this section, except in the case of block transfers (as defined in paragraph (e)(2) of this section), the percentage interests in partnership capital or profits represented by partnership interests that are transferred during a taxable year of the partnership is equal to the sum of the percentage interests transferred for each calendar month during the taxable year of the partnership in which a transfer of a partnership interest occurs (other than a private transfer as described in paragraph (e) of this section). The percentage interests in capital or profits of interests transferred during a calendar month is determined by reference to the partnership interests outstanding during that month.

(3) ***Monthly conventions.*** For purposes of paragraph (k)(2) of this section, a partnership may use any reasonable convention in determining the interests outstanding for a month, provided the convention is consistently used by the partnership from month to month during a taxable year and from year to year. Reasonable conventions include, but are not limited to, a determination by reference to the interests outstanding at the beginning of the month, on the 15th day of the month, or at the end of the month.

(4) ***Block transfers.*** For purposes of paragraph (e)(2) of this section (defining block transfers), the partnership must determine the percentage interests in capital or profits for each transfer of an interest during the 30 calendar day period by reference to the partnership interests outstanding immediately prior to such transfer.

(5) ***Example.*** The following example illustrates the rules of this paragraph (k):

Example. Conventions. (i) ABC limited partnership, a calendar year partnership formed in 1996, has 1,000 units of limited partnership interests outstanding on January 1, 1997, representing in the aggregate 95 percent of the total interests in capital and profits of ABC. The remaining 5 percent is held by the general partner.
(ii) The following transfers take place during 1997—

(A) On January 15, 10 units of limited partnership interests are sold in a transaction that is not a private transfer;

(B) On July 10, 1,000 additional units of limited partnership interests are issued by the partnership (the general partner's percentage interest is unchanged); and

(C) On July 20, 15 units of limited partnership interests are sold in a transaction that is not a private transfer.

(iii) For purposes of determining the sum of the percentage interests in partnership capital or profits transferred, ABC chooses to use the end of the month convention. The percentage interests in partnership capital and profits transferred during January is .95 percent, determined by dividing the number of transferred units (10) by the total number of limited partnership units (1,000) and multiplying the result by the percentage of total interests represented by limited partnership units ([10/1,000] × .95). The percentage interests in partnership capital and profits transferred during July is .7125 percent ([15/2,000] × .95). ABC is not required to make determinations for the other months during the year because no

transfers of partnership interests occurred during such months. ABC may qualify for the 2 percent rule for its 1997 taxable year because less than 2 percent (.95 percent + .7125 percent = 1.6625 percent) of its total interests in partnership capital and profits was transferred during that year.

(iv) If ABC had chosen to use the beginning of the month convention, the interests in capital or profits sold during July would have been 1.425 percent ([15/1,000] × .95) and ABC would not have satisfied the 2 percent rule for its 1997 taxable year because 2.375 percent (.95 + 1.425) of ABC's interests in partnership capital and profits was transferred during that year.

(l) *Effective date* —

(1) ***In general.*** Except as provided in paragraph (l)(2) of this section, this section applies to taxable years of a partnership beginning after December 31, 1995.

(2) ***Transition period.*** For partnerships that were actively engaged in an activity before December 4, 1995, this section applies to taxable years beginning after December 31, 2005, unless the partnership adds a substantial new line of business after December 4, 1995, in which case this section applies to taxable years beginning on or after the addition of the new line of business. Partnerships that qualify for this transition period may continue to rely on the provisions of Notice 88-75 (1988-2 C.B. 386) (see § 601.601(d)(2) of this chapter) for guidance regarding the definition of readily tradable on a secondary market or the substantial equivalent thereof for purposes of section 7704(b).

(3) ***Substantial new line of business.*** For purposes of paragraph (l)(2) of this section—

(i) Substantial is defined in § 1.7704-2(c); and

(ii) A new line of business is defined in § 1.7704-2(d), except that the applicable date is “December 4, 1995” instead of “December 17, 1987”.

(4) ***Termination under section 708(b)(1)(B).*** The termination of a partnership under section 708(b)(1)(B) due to the sale or exchange of 50 percent or more of the total interests in partnership capital and profits is disregarded in determining whether a partnership qualifies for the transition period provided in paragraph (l)(2) of this section.

[T.D. 8629, 60 FR 62029, Dec. 4, 1995]

§ 1.7704-2 Transition provisions.

(a) *Transition rule* —

(1) ***Statutory dates.*** Section 7704 generally applies to taxable years beginning after December 31, 1987. In the case of an existing partnership, however, section 7704 and the regulations thereunder apply to taxable years beginning after December 31, 1997.

(2) ***Effective date of regulations.*** These regulations are effective for taxable years beginning after December 31, 1991.

(b) *Existing partnership* —

(1) ***In general.*** For purposes of § 1.7704-2, the term “existing partnership” means any partnership if—

(i) The partnership was a publicly traded partnership (within the meaning of section 7704(b)) on December 17, 1987;

(ii) A registration statement indicating that the partnership was to be a publicly traded partnership was filed with the Securities and Exchange Commission (SEC) with respect to the partnership on or before December 17, 1987; or

(iii) With respect to the partnership, an application was filed with a state regulatory commission on or before December 17, 1987, seeking permission to restructure a portion of a corporation as a publicly traded partnership.

(2) ***Changed status of an existing partnership.*** A partnership will not qualify as an existing partnership after a new line of business is substantial.

(c) ***Substantial*** —

(1) ***In general.*** A new line of business is substantial as of the earlier of—

(i) The taxable year in which the partnership derives more than 15 percent of its gross income from that line of business; or

(ii) The taxable year in which the partnership directly uses in that line of business more than 15 percent (by value) of its total assets.

(2) ***Timing rule.*** If a substantial new line of business is added during the taxable year (e.g., by acquisition), the line of business is treated as substantial as of the date it is added; otherwise a substantial new line of business is treated as substantial as of the first day of the taxable year in which it becomes substantial.

(d) ***New line of business*** —

(1) ***In general.*** A new line of business is any business activity of the partnership not closely related to a pre-existing business of the partnership to the extent that the activity generates income other than "qualifying income" within the meaning of section 7704 and the regulations thereunder.

(2) ***Pre-existing business.*** A business activity is a pre-existing business of the partnership if—

(i) The partnership was actively engaged in the activity on or before December 17, 1987; or

(ii) The partnership is actively engaged in the business activity that was specifically described as a proposed business activity of the partnership in a registration statement or amendment thereto filed on behalf of the partnership with the SEC on or before December 17, 1987. For this purpose, a specific description does not include a general grant of authority to conduct any business.

(3) ***Closely related.*** All of the facts and circumstances will determine whether a new business activity is closely related to a pre-existing business of the partnership. The following factors, among others, will help to establish that a new business activity is closely related to a pre-existing business of the partnership and therefore is not a new line of business:

(i) The activity provides products or services very similar to the products or services provided by the pre-existing business.

(ii) The activity markets products and services to the same class of customers as that of the pre-existing business.

(iii) The activity is of a type that is normally conducted in the same business location as the pre-existing business.

(iv) The activity requires the use of similar operating assets as those used in the pre-existing business.

(v) The activity's economic success depends on the success of the pre-existing business.

(vi) The activity is of a type that would normally be treated as a unit with the pre-existing business in the business' accounting records.

(vii) If the activity and the pre-existing business are regulated or licensed, they are regulated or licensed by the same or similar governmental authority.

(viii) The United States Bureau of the Census assigns the activity the same four-digit Industry Number Standard Identification Code (Industry SIC Code) as the pre-existing business. Such codes are set forth in the Executive Office of the President, Office of Management and Budget, Standard Industrial Classification Manual, prepared, and from time to time revised, by the Statistical Policy Division of the United States Office of Management and Budget. For example, if a partnership's pre-existing business is manufacturing steam turbines and then the partnership begins an activity manufacturing hydraulic turbines, both activities would be assigned the same Industry SIC Code, 3511—Steam, Gas, and Hydraulic Turbines, and Turbine Generator Set Units. In the case of a pre-existing business or activity that is listed under the Industry SIC Code, 9999—Nonclassifiable Establishments—or under a miscellaneous category (e.g., most Industry SIC Codes ending in a “9” are miscellaneous categories), the similarity of the SIC Codes is ignored as a factor in determining whether the activity is closely related to the pre-existing business. The dissimilarity of the SIC Codes is considered in determining whether the business activity is closely related to the pre-existing line of business.

(e) ***Activities conducted through controlled corporations*** —

(1) ***In general.*** An activity conducted by a corporation controlled by an existing partnership may be treated as an activity of the existing partnership if the effect of the arrangement is to permit the partnership to engage in an activity the income from which is not subject to a corporate-level tax and which would be a new line of business if conducted directly by the partnership. This determination is based upon all facts and circumstances.

(2) ***Safe harbor*** —

(i) ***In general.*** This paragraph (e)(2) provides a safe harbor for activities of a corporation controlled by an existing partnership. An activity conducted by a corporation controlled by an existing partnership is not deemed to be an activity of the partnership for purposes of determining whether an existing partnership has added a new line of business if no more than 10% of the gross income that the partnership derives from the corporation during the taxable year is section 7704(d) qualifying income that is recharacterized as nonqualifying income under paragraphs (e)(2) (ii) and (iii) of this section. The Internal Revenue Service will not presume that an activity conducted through a corporation controlled by an existing partnership is an activity of the partnership solely because the partnership fails to satisfy the requirements of this paragraph (e)(2)(i).

(ii) ***Recharacterization of qualifying income.*** Gross income received by a partnership from a controlled corporation that would be qualifying income under section 7704(d) is subject to recharacterization as nonqualifying income if the amount is deductible in computing the income of the controlled corporation.

(iii) ***Extent of recharacterization.*** The amount of income described in paragraph (e)(2)(ii) of this section that is recharacterized as nonqualifying income is—

(A) The amount described in paragraph (e)(2)(ii) of this section; multiplied by

(B) The controlled corporation's taxable income (determined without regard to deductions for amounts paid to the partnership) that would not be qualifying income within the meaning of section 7704(d) if earned directly by the partnership; divided by

(C) The controlled corporation's taxable income (determined without regard to deductions for amounts paid to the partnership).

(3) ***Control.*** For purposes of paragraphs (e) (1) and (2) of this section, control of a corporation is determined generally under the rules of section 304(c). However, the application of section 304(c) is modified to apply only to partners who own five percent or more by value (directly or indirectly) of the existing partnership unless a principal purpose of the arrangement is to avoid tax at the corporate level.

(4) ***Example.*** The following example illustrates the application of the this paragraph (e):

> *Example.* (i) PTP, an existing partnership, acquired all the stock of X corporation on January 1, 1993. During PTP's 1993 taxable year it received $185,000 of dividends and $15,000 of interest from X. Determined without regard to interest paid to PTP, X's taxable income during that period was $500,000 none of which was “qualifying income” within the meaning of section 7704 and the regulations thereunder. In computing the income of X, the $15,000 of interest paid to PTP is deductible.
> (ii) Under paragraph (e)(2)(ii) of section, all $15,000 of PTP's interest income was nonqualifying income ($15,000 × 500,000/500,000). Under paragraph (e)(2) of this section, however, the activities of X will not be considered to be activities of PTP for the 1993 taxable year because no more than 10 percent of the gross income that PTP derived from X would be treated as other than qualifying income (15,000 / 200,000 = 7.5%).

(f) ***Activities conducted through tiered partnerships.*** An activity conducted by a partnership in which an existing partnership holds an interest (directly or through another partnership) will be considered an activity of the existing partnership.

(g) ***Exceptions*** —

(1) ***Coordination with gross income requirements of section 7704(c)(2).*** A partnership that is either an existing partnership as of December 31, 1997, or an existing partnership that ceases to qualify as an existing partnership is subject to section 7704 and the regulations thereunder. Section 7704(a) does not apply to these partnerships, however, if these partnerships meet the gross income requirements

of paragraphs (c) (1) and (2) of section 7704. For purposes of applying section 7704(c) (1) and (2) to these partnerships, the only taxable years that must be tested are those beginning on and after the earlier of—

(i) January 1, 1998; or

(ii) The day on which the partnership ceases to qualify as an existing partnership because of the addition of a new line of business; or

(iii) The first day of the first taxable year in which a new line of business becomes substantial (if the new line of business becomes substantial after the year in which it is added).

(2) ***Specific exceptions.*** In determining whether a partnership is an existing partnership for purposes of section 7704, the following events do not in themselves terminate the status of existing partnerships—

(i) Termination of the partnership under section 708(b)(1)(B) due to the sale or exchange of 50 percent or more of the total interests in partnership capital and profits;

(ii) Issuance of additional partnership units; and

(iii) Dropping a line of business. This event, however, could affect an existing partnership's status indirectly. For example, dropping one line of business could change the composition of the partnership's gross income. The change in composition could make a new line of business "substantial," under paragraph (c) of this section, and terminate the partnership's status. See paragraph (b)(2) of this section.

(h) ***Examples.*** The following examples illustrate the application of this section:

Example 1. (i) On December 17, 1987, PTP, a calendar-year publicly traded partnership, owned and operated citrus groves. On March 1, 1993, PTP purchased a processing business involving frozen citrus products. In the partnership's 1993 taxable year, the partnership directly used in the processing business more than 15 percent (by value) of its total assets.
(ii) The citrus grove activities provide different products from the processing activities, are marketed to customers different from the customers of the processing activities, require different types of operating assets, are not commonly conducted at the same location, are not commonly treated as a unit in accounting records, do not depend upon one another for economic success, and do not have the same Industry SIC Code. Under the facts and circumstances, the processing business is not closely related to the citrus grove operation and is a new line of business under paragraph (d)(1) of this section.

(iii) The assets of the partnership used in the new line of business are substantial under paragraph (c)(2) of this section. Because PTP added a substantial new line of business after December 17, 1987, paragraph (b)(2) of this section terminates PTP's status as an existing partnership on March 1, 1993.

Example 2. (i) On December 17, 1987, PTP, a calendar-year publicly traded partnership, owned and operated retirement centers that serve the elderly. Each center contains three sections—
(A) A residential section, which includes suites of rooms, dining facilities, lounges, and gamerooms;

(B) An assisted-living section, which provides laundry and housekeeping services, health monitoring, and emergency care; and

(C) A nursing section, which provides private and semiprivate rooms, dining facilities, examination and treatment rooms, drugs, medical equipment, and physical, speech, and occupational therapy.

(ii) The business activities of each section constitute pre-existing businesses of PTP under paragraph (d)(2) of this section, because PTP was actively engaged in the activities on or before December 17, 1987.

(iii) The nursing sections primarily furnish health care. They employ nurses and therapists, are subject to federal, state, and local licensing requirements, and may change certain costs to government programs like Medicare and Medicaid.

(iv) In 1993, PTP acquired new nursing homes that treat inpatient adults of all ages. The nursing homes provide private and semiprivate rooms, dining facilities, examination and treatment rooms, drugs, medical equipment, and physical, speech, and occupational therapy. The nursing homes primarily furnish health care. They employ nurses and therapists, are subject to federal, state, and local licensing requirements, and may charge certain costs to government programs like Medicare and Medicaid.

(v) PTP's new nursing homes and old nursing sections provide very similar services, market to very similar customers, use similar types of property and personnel, and are licensed by the same regulatory agencies. The nursing homes and old nursing sections have the same Industry SIC Code. Under these facts and circumstances, the new nursing homes are closely related to a pre-existing business of the partnership. Accordingly, under paragraph (d)(1) of this section, the acquisition of the new nursing homes is not the addition of a new line of business.

(vi) PTP was a publicly traded partnership on December 17, 1987, and was an existing partnership under paragraph (b)(1)(i) of this section. Because PTP has added no substantial new line of business after December 17, 1987, paragraph (b)(2) of this section does not terminate PTP's status as an existing partnership.

Example 3. (i) On December 17, 1987, PTP, a calendar-year publicly traded partnership, owned and operated cable television systems in the northeastern United States. PTP's registration statement described as its proposed business activities the ownership and operation of cable television systems, any ancillary operations, and any business permitted by the laws of the state in which PTP was formed.
(ii) PTP's cable systems include cables strung along telephone lines, converter boxes in subscribers' homes, other types of cable equipment, satellite dishes that receive programs broadcast by various television networks, and channels that carry public service announcements of local interest. Subscribers pay the systems a fee for the right to receive both the local announcements and the network signals relayed through the cables. Those fees constitute PTP's primary revenue. The systems operate under franchise agreements negotiated with each municipality in which they do business.

(iii) On September 1, 1993, PTP purchased a television station in the northwestern United States. The station owns broadcasting facilities, satellite dishes that receive programs broadcast by the station's network, and a studio that produces programs of interest to the area that receives the station's broadcasts. Fees from advertisers constitute the station's primary revenue. The station operates under a license from the Federal Communications Commission.

(iv) In the partnership's 1993 taxable year, the station generated less than 15 percent of PTP's gross income and constituted less than 15 percent of its total assets (by value). In PTP's 1994 taxable year, the station generated more than 15 percent of PTP's gross income.

(v) The cable systems relay signals through cables to subscribers and earn revenue from subscriber fees; the station broadcasts signals to the general public and earns revenue by selling air time for commercials. Despite certain similarities, the two types of activities generally require different operating assets and earn income from different sources. They are regulated by different agencies. They are not commonly conducted at the same location and do not generally depend upon one another for their economic success. They have different Industry SIC Codes. Under the facts and circumstances, the television station activities are not closely related to PTP's pre-existing business, the cable system activities.

(vi) As of December 17, 1987, PTP did not own and operate any television station. PTP's registration statement specifically described as its proposed business activities only the ownership and operation of cable television systems and any ancillary operations. For purposes of paragraph (d)(2) of this section, a specific description does not include PTP's general authority to carry on any business permitted by the state of its formation. Therefore, the television station line of business was not specifically described as a proposed business activity of PTP in its registration statement. PTP's acquisition of the television station business activity constitutes a new line of business under paragraph (d)(1) of this section.

(vii) PTP was a publicly traded partnership on December 17, 1987, and was an existing partnership under paragraph (b)(1)(i) of this section. PTP added a new line of business in 1993, but that line of business was not substantial under paragraph (c) of this section, and thus PTP remained an existing partnership for its 1993 taxable year. In 1994, the new line of business became substantial because it generated more than 15 percent of PTP's gross income. Paragraph (b)(2) of this section therefore terminates PTP's existing partnership status as of January 1, 1994, the first day of the first taxable year beginning after December 31, 1987, in which PTP's new line of business became substantial.

[T.D. 8450, 57 FR 58708, Dec. 11, 1992]

§ 1.7704-3 Qualifying income.

(a) ***Certain investment income*** —

(1) ***In general.*** For purposes of section 7704(d)(1), qualifying income includes capital gain from the sale of stock, income from holding annuities, income from notional principal contracts (as defined in § 1.446-3), and other substantially similar income from ordinary and routine investments to the extent

determined by the Commissioner. Income from a notional principal contract is included in qualifying income only if the property, income, or cash flow that measures the amounts to which the partnership is entitled under the contract would give rise to qualifying income if held or received directly by the partnership.

(2) ***Limitations.*** Qualifying income described in paragraph (a)(1) of this section does not include income derived in the ordinary course of a trade or business. For purposes of the preceding sentence, income derived from an asset with respect to which the partnership is a broker, market maker, or dealer is income derived in the ordinary course of a trade or business; income derived from an asset with respect to which the taxpayer is a trader or investor is not income derived in the ordinary course of a trade or business.

(b) ***Calculation of gross income and qualifying income*** —

(1) ***Treatment of losses.*** Except as otherwise provided in this section, in computing the gross income and qualifying income of a partnership for purposes of section 7704(c)(2) and this section, losses do not enter into the computation.

(2) ***Certain positions that are marked to market.*** Gain recognized with respect to a position that is marked to market (for example, under section 475(f), 1256, 1259, or 1296) shall not fail to be qualifying income solely because there is no sale or disposition of the position.

(3) ***Certain items of ordinary income.*** Gain recognized with respect to a capital asset shall not fail to be qualifying income solely because it is characterized as ordinary income under section 475(f), 988, 1258, or 1296.

(4) ***Straddles.*** In computing the gross income and qualifying income of a partnership for purposes of section 7704(c)(2) and this section, a straddle (as defined in section 1092(c)) shall be treated as set forth in this paragraph (b)(4). For purposes of the preceding sentence, two or more straddles that are part of a larger straddle shall be treated as a single straddle. The amount of the gain from any straddle to be taken into account shall be computed as follows:

(i) ***Straddles other than mixed straddle accounts.*** With respect to each straddle (whether or not a straddle during the taxable year) other than a mixed straddle account, the amount of gain taken into account shall be the excess, if any, of gain recognized during the taxable year with respect to property that was at any time a position in that straddle over any loss recognized during the taxable year with respect to property that was at any time a position in that straddle (including loss realized in an earlier taxable year).

(ii) ***Mixed straddle accounts.*** With respect to each mixed straddle account (as defined in § 1.1092(b)-4T(b)), the amount of gain taken into account shall be the annual account gain for that mixed straddle account, computed pursuant to § 1.1092(b)-4T(c)(2).

(5) ***Certain transactions similar to straddles.*** In computing the gross income and qualifying income of a partnership for purposes of section 7704(c)(2) and this section, related interests in property (whether or not personal property as defined in section 1092(d)(1)) that produce a substantial diminution of the partnership's risk of loss similar to that of a straddle (as defined in section 1092(c)) shall be combined so that the amount of gain taken into account by the partnership in computing its gross income shall be the excess, if any, of gain recognized during the taxable year with respect to such interests over any loss recognized during the taxable year with respect to such interests.

(6) *Wash sale rule* —

(i) *Gain not taken into account.* Solely for purposes of section 7704(c)(2) and this section, if a partnership recognizes gain in a section 7704 wash sale transaction with respect to one or more positions in either a straddle (as defined in section 1092(c)) or an arrangement described in paragraph (b)(5) of this section, then the gain shall not be taken into account to the extent of the amount of unrecognized loss (as of the close of the taxable year) in one or more offsetting positions of the straddle or arrangement described in paragraph (b)(5) of this section.

(ii) *Section 7704 wash sale transaction.* For purposes of this paragraph (b)(6), a section 7704 wash sale transaction is a transaction in which—

(A) A partnership disposes of one or more positions of a straddle (as defined in section 1092(c)) or one or more related positions described in paragraph (b)(5) of this section; and

(B) The partnership acquires a substantially similar position or positions within a period beginning 30 days before the date of the disposition and ending 30 days after such date.

(c) *Effective date.* This section applies to taxable years of a partnership beginning on or after December 17, 1998. However, a partnership may apply this section in its entirety for all of the partnership's open taxable years beginning after any earlier date selected by the partnership.

[T.D. 8799, 63 FR 69553, Dec. 17, 1998]

§ 1.7704-4 Qualifying income—mineral and natural resources.

(a) *In general.* For purposes of section 7704(d)(1)(E), qualifying income is income and gains from qualifying activities with respect to minerals or natural resources as defined in paragraph (b) of this section. Qualifying activities are section 7704(d)(1)(E) activities (as described in paragraph (c) of this section) and intrinsic activities (as described in paragraph (d) of this section).

(b) *Mineral or natural resource.* The term mineral or natural resource (including fertilizer, geothermal energy, and timber) means any product of a character with respect to which a deduction for depletion is allowable under section 611, except that such term does not include any product described in section 613(b)(7)(A) or (B) (soil, sod, dirt, turf, water, mosses, or minerals from sea water, the air, or other similar inexhaustible sources). For purposes of this section, the term mineral or natural resource does not include industrial source carbon dioxide, fuels described in section 6426(b) through (e), any alcohol fuel defined in section 6426(b)(4)(A), or any biodiesel fuel as defined in section 40A(d)(1).

(c) *Section 7704(d)(1)(E) activities* —

(1) *Definition.* Section 7704(d)(1)(E) activities include the exploration, development, mining or production, processing, refining, transportation, or marketing of any mineral or natural resource. Solely for purposes of section 7704(d), such terms are defined as provided in this paragraph (c).

(2) *Exploration.* An activity constitutes exploration if it is performed to ascertain the existence, location, extent, or quality of any deposit of mineral or natural resource before the beginning of the development stage of the natural deposit including by—

(i) Drilling an exploratory or stratigraphic type test well;

(ii) Conducting drill stem and production flow tests to verify commerciality of the deposit;

(iii) Conducting geological or geophysical surveys;

(iv) Interpreting data obtained from geological or geophysical surveys; or

(v) For minerals, testpitting, trenching, drilling, driving of exploration tunnels and adits, and similar types of activities described in Rev. Rul. 70-287 (1970-1 CB 146), (see § 601.601(d)(2)(ii)(*b*) of this chapter) if conducted prior to development activities with respect to the minerals.

(3) ***Development.*** An activity constitutes development if it is performed to make accessible minerals or natural resources, including by—

(i) Drilling wells to access deposits of minerals or natural resources;

(ii) Constructing and installing drilling, production, or dual purpose platforms in marine locations, or any similar supporting structures necessary for extraordinary non-marine terrain (such as swamps or tundra);

(iii) Completing wells, including by installing lease and well equipment, such as pumps, flow lines, separators, and storage tanks, so that wells are capable of producing oil and gas, and the production can be removed from the premises;

(iv) Performing a development technique such as, for minerals other than oil and natural gas, stripping, benching and terracing, dredging by dragline, stoping, and caving or room-and-pillar excavation, and for oil and natural gas, fracturing; or

(v) Constructing and installing gathering systems and custody transfer stations.

(4) ***Mining or production.*** An activity constitutes mining or production if it is performed to extract minerals or natural resources from the ground including by operating equipment to extract minerals or natural resources from mines and wells, or to extract minerals or natural resources from the waste or residue of prior mining or production allowable under this section. The recycling of scrap or salvaged metals or minerals from previously manufactured products or manufacturing processes is not considered to be the extraction of ores or minerals from waste or residue.

(5) ***Processing.*** An activity constitutes processing if it is performed to convert raw mined or harvested products or raw well effluent to substances that can be readily transported or stored, as described in this paragraph (c)(5).

(i) ***Natural gas.*** An activity constitutes processing of natural gas if it is performed to—

(A) Purify natural gas, including by removal of oil or condensate, water, or non-hydrocarbon gases (such as carbon dioxide, hydrogen sulfide, nitrogen, and helium); and

(B) Separate natural gas into its constituents which are normally recovered in a gaseous phase (methane and ethane) and those which are normally recovered in a liquid phase (propane, butane, pentane, and heavier streams).

(ii) ***Crude oil.*** An activity constitutes processing of crude oil if it is performed to separate produced fluids by passing crude oil through mechanical separators to remove gas, placing crude oil in settling tanks to recover basic sediment and water, dehydrating crude oil, and operating heater-treaters that separate raw oil well effluent into crude oil, natural gas, and salt water.

(iii) ***Ores and minerals other than natural gas or crude oil.*** An activity constitutes processing of ores and minerals other than natural gas or crude oil if it meets the definition of mining processes under § 1.613-4(f)(1)(ii), without regard to § 1.613-4(f)(2)(iv).

(iv) ***Timber.*** An activity constitutes processing of timber if it is performed to modify the physical form of timber, including by the application of heat or pressure to timber, without adding any foreign substances. Processing of timber does not include activities that add chemicals or other foreign substances to timber to manipulate its physical or chemical properties, such as using a digester to produce pulp. Products that result from timber processing include wood chips, sawdust, rough lumber, kiln-dried lumber, veneers, wood pellets, wood bark, and rough poles. Products that are not the result of timber processing include pulp, paper, paper products, treated lumber, oriented strand board/plywood, and treated poles.

(6) ***Refining.*** An activity constitutes refining if the activity is set forth in this paragraph (c)(6).

(i) ***Natural gas and crude oil.***

(A) The refining of natural gas and crude oil includes the further physical or chemical conversion or separation processes of products resulting from activities listed in paragraph (c)(5)(i) and (ii) of this section, and the blending of petroleum hydrocarbons, to the extent they give rise to a product listed in paragraph (c)(5)(i) or (ii) of this section or to the products of a type produced in a petroleum refinery or natural gas processing plant listed in this paragraph (c)(6)(i)(A). Refining of natural gas and crude oil also includes the further physical or chemical conversion or separation processes and blending of the products listed in this paragraph (c)(6)(i)(A), to the extent that the resulting product is also listed in this paragraph (c)(6)(i)(A). The following products are of a type produced in a petroleum refinery or natural gas processing plant:

(*1*) Ethane.

(*2*) Ethylene.

(*3*) Propane.

(*4*) Propylene.

(*5*) Normal butane.

(*6*) Butylene.

(*7*) Isobutane.

(*8*) Isobutene.

(*9*) Isobutylene.

(*10*) Pentanes plus.

(*11*) Unfinished naphtha.

(*12*) Unfinished kerosene and light gas oils.

(*13*) Unfinished heavy gas oils.

(*14*) Unfinished residuum.

(*15*) Reformulated gasoline with fuel ethanol.

(*16*) Reformulated other motor gasoline.

(*17*) Conventional gasoline with fuel ethanol—Ed55 and lower gasoline.

(*18*) Conventional gasoline with fuel ethanol—greater than Ed55 gasoline.

(*19*) Conventional gasoline with fuel ethanol—other conventional finished gasoline.

(*20*) Reformulated blendstock for oxygenate (RBOB).

(*21*) Conventional blendstock for oxygenate (CBOB).

(*22*) Gasoline treated as blendstock (GTAB).

(*23*) Other motor gasoline blending components defined as gasoline blendstocks as provided in § 48.4081-1(c)(3) of this chapter.

(*24*) Finished aviation gasoline and blending components.

(*25*) Special naphthas (solvents).

(*26*) Kerosene-type jet fuel.

(*27*) Kerosene.

(*28*) Distillate fuel oil (heating oils, diesel fuel, and ultra-low sulfur diesel fuel).

(*29*) Residual fuel oil.

(*30*) Lubricants (lubricating base oils).

(*31*) Asphalt and road oil (atmospheric or vacuum tower bottom).

(*32*) Waxes.

(*33*) Petroleum coke.

(*34*) Still gas.

(*35*) Naphtha less than 401 °F end-point.

(*36*) Other products of a refinery that the Commissioner may identify through published guidance.

(B) For purposes of this section, the products listed in this paragraph (c)(6)(i)(B) are not products of refining:

(*1*) Heat, steam, or electricity produced by processing or refining.

(*2*) Products that are obtained from third parties or produced onsite for use in the refinery, such as hydrogen, if excess amounts are sold.

(*3*) Any product that results from further chemical change of a product listed in paragraph (c)(6)(i)(A) of this section that does not result in the same or another product listed in paragraph (c)(6)(i)(A) of this section (for example, production of petroleum coke from heavy (refinery) residuum qualifies, but any upgrading of petroleum coke (such as to calcined coke) does not qualify because it is further chemically changed and does not result in the same or another product listed in paragraph (c)(6)(i)(A) of this section).

(*4*) Plastics or similar petroleum derivatives.

(ii) ***Ores and minerals other than natural gas or crude oil.***

(A) An activity constitutes refining of ores and minerals other than natural gas or crude oil if it is one of the various processes performed subsequent to mining processes (as defined in paragraph (c)(5)(iii) of this section) to eliminate impurities or foreign matter and which are necessary steps in achieving a high degree of purity from metallic ores and minerals which are not customarily sold in the form of the crude mineral product, as specified in paragraph (c)(6)(ii)(B) of this section. Refining processes include: fine pulverization, electrowinning, electrolytic deposition, roasting, thermal or electric smelting, or substantially equivalent processes or combinations of processes used to separate or extract the specified metals listed in paragraph (c)(6)(ii)(B) of this section from the ore for the primary purpose of producing a purer form of the metal, as for example the smelting of concentrates to produce Doré bars or refining of blister copper.

(B) For purposes of this section, the specified metallic ores or minerals which are not customarily sold in the form of the crude mineral product are—

(*1*) Lead;

(*2*) Zinc;

(*3*) Copper;

(*4*) Gold;

(*5*) Silver; and

(*6*) Any other ores or minerals that the Commissioner may identify through published guidance.

(C) Refining does not include the introduction of additives that remain in the metal, for example, in the manufacture of alloys of gold. Also, the application of nonmining processes as defined in § 1.613-4(g) in order to produce a specified metal that is considered a waste or by-product of production from a non-specified mineral deposit is not considered refining for purposes of this section.

(7) ***Transportation*** —

(i) ***General rule.*** An activity constitutes transportation if it is performed to move minerals or natural resources, and products under paragraph (c)(4), (5), or (6) of this section, including by pipeline, marine vessel, rail, or truck. Except as provided in paragraph (c)(7)(ii) of this section, transportation does not include the movement of minerals or natural resources, and products produced under paragraph (c)(4), (5), or (6) of this section, directly to retail customers or to a place that sells or dispenses to retail customers. Retail customers do not include a person who acquires oil or gas for refining or processing, or a utility. Transportation includes the following activities:

(A) Providing storage services.

(B) Providing terminalling services, including the following: Receiving products from pipelines, marine vessels, railcars, or trucks; storing products; loading products to pipelines, marine vessels, railcars, or trucks for distribution; testing and treating, as well as blending and additization, if income from such activities would be qualifying income pursuant to

paragraph (c)(10)(iv) and (v) of this section; and separating and selling excess renewable identification numbers acquired as part of additization services to comply with environmental regulations.

(C) Moving or carrying (whether by owner or operator) products via pipelines, gathering systems, and custody transfer stations.

(D) Operating marine vessels (including time charters), railcars, or trucks.

(E) Providing compression services to a pipeline.

(F) Liquefying or regasifying natural gas.

(ii) ***Transportation to retail customers or to a place that sells to retail customers.*** Transportation includes the movement of minerals or natural resources, and products under paragraph (c)(4), (5), or (6) of this section, via pipeline to a place that sells to retail customers. Transportation also includes the movement of liquefied petroleum gas via trucks, rail cars, or pipeline to a place that sells to retail customers or directly to retail customers.

(8) ***Marketing*** —

(i) ***General rule.*** An activity constitutes marketing if it is the bulk sale of minerals or natural resources, and products under paragraph (c)(4), (5), or (6) of this section. Except as provided in paragraph (c)(8)(ii) of this section, marketing does not include retail sales (sales made in small quantities directly to end users), which includes the operation of gasoline service stations, home heating oil delivery services, and local natural gas delivery services.

(ii) ***Retail sales of liquefied petroleum gas.*** Retail sales of liquefied petroleum gas are included in marketing.

(iii) ***Certain activities that facilitate sale.*** Marketing also includes certain activities that facilitate sales that constitute marketing under paragraphs (c)(8)(i) and (ii) of this section, including packaging, as well as blending and additization, if income from blending and additization would be qualifying income pursuant to paragraph (c)(10)(iv) and (v) of this section.

(9) ***Fertilizer.*** [Reserved]

(10) ***Additional activities.*** The following types of income as described in paragraph (c)(10)(i) through (v) of this section will be considered derived from a section 7704(d)(1)(E) activity.

(i) ***Cost reimbursements.*** If the partnership is in the trade or business of performing a section 7704(d)(1)(E) activity, qualifying income includes income received to reimburse the partnership for its costs in performing that section 7704(d)(1)(E) activity, whether imbedded in the rate the partnership charges or separately itemized. Reimbursable costs may include the cost of designing, constructing, installing, inspecting, maintaining, metering, monitoring, or relocating an asset used in that section 7704(d)(1)(E) activity, or providing office functions necessary to the operation of that section 7704(d)(1)(E) activity (such as staffing, purchasing supplies, billing, accounting, and financial reporting). For example, a pipeline operator that charges a customer for its cost to build, repair, or schedule flow on the pipelines that it operates will have qualifying income from such activity whether or not it itemizes those costs when it bills the customer.

(ii) ***Hedging.*** [Reserved]

(iii) ***Passive Interests.*** Qualifying income includes income and gains from a passive interest or non-operating interest, including production royalties, minimum annual royalties, net profits interests, delay rentals, and lease-bonus payments, if the interest is in a mineral or natural resource as defined in paragraph (b) of this section. Payments received on a production payment will not be qualifying income if they are properly treated as loan payments under section 636.

(iv) ***Blending.*** Qualifying income includes income and gains from performing blending activities or services with respect to products under paragraph (c)(4), (5), or (6) of this section, so long as the products being blended are component parts of the same mineral or natural resource. For purposes of this paragraph (c)(10)(iv), products of oil and natural gas will be considered as from the same natural resource. Blending does not include combining different minerals or natural resources or products thereof together. However, see paragraph (c)(10)(v) of this section for rules concerning additization.

(v) ***Additization.*** Qualifying income includes income and gains from providing additization services with respect to products under paragraph (c)(4), (5), or (6) of this section to the extent specifically permitted in this paragraph (c)(10)(v). The addition of additives described in paragraph (c)(10)(v)(A) through (C) of this section is permissible if the additives aid in the transportation of a product, enhance or protect the intrinsic properties of a product, or are necessary as required by federal, state, or local law (for example, to meet environmental standards), but only if such additives do not create a new product.

(A) The addition of additives to products of natural gas and crude oil is permissible, provided that such additives constitute less than 5 percent (except that ethanol or biodiesel may be up to 20 percent) of the total volume for products of natural gas and crude oil and are added into the product by the terminal operator or upstream of the terminal operator.

(B) In the case of ores and minerals other than natural gas or crude oil, the addition of incidental amounts of material such as paper dots to identify shipments, anti-freeze to aid in shipping, or compounds to allay dust as required by law or reduce losses during shipping is permissible.

(C) In the case of timber, additization of incidental amounts to comply with government regulations is permissible, to the extent such additization does not create a new product. For example, the pressure treatment of wood is impermissible because it creates a new product.

(d) ***Intrinsic activities*** —

(1) ***General requirements.*** An activity is an intrinsic activity only if the activity is specialized to support a section 7704(d)(1)(E) activity, is essential to the completion of the section 7704(d)(1)(E) activity, and requires the provision of significant services to support the section 7704(d)(1)(E) activity. Whether an activity is an intrinsic activity is determined on an activity-by-activity basis.

(2) ***Specialization.*** An activity is a specialized activity if—

(i) The partnership provides personnel (including employees of the partnership, an affiliate, subcontractor, or independent contractor performing work on behalf of the partnership) to support a section 7704(d)(1)(E) activity and those personnel have received training in order to support the section 7704(d)(1)(E) activity that is unique to the mineral or natural resource industry and of limited utility other than to perform or support a section 7704(d)(1)(E) activity; and

(ii) To the extent that the activity involves the sale, provision, or use of specific property, either—

(A) The property is primarily tangible property that is dedicated to, and has limited utility outside of, section 7704(d)(1)(E) activities and is not easily converted (as determined based on all the facts and circumstances, including the cost to convert the property) to another use other than supporting or performing the section 7704(d)(1)(E) activities (except that the use of non-specialized property typically used incidentally in operating a business will not cause a partnership to fail this paragraph (d)(2)(ii)(A)); or

(B) If the property is used as an injectant to perform a section 7704(d)(1)(E) activity that is also commonly used outside of section 7704(d)(1)(E) activities (such as water and lubricants), the partnership provides the injectants exclusively to those engaged in section 7704(d)(1)(E) activities; the partnership is also in the trade or business of collecting, cleaning, recycling, or otherwise disposing of injectants after use in accordance with Federal, state, or local regulations concerning waste products from mining or production activities; and the partnership operates its injectant delivery and disposal services within the same geographic area.

(3) *Essential.*

(i) An activity is essential to the section 7704(d)(1)(E) activity if it is required to—

(A) Physically complete a section 7704(d)(1)(E) activity (including in a cost-effective manner, such as by making the activity economically viable), or

(B) Comply with Federal, state, or local law regulating the section 7704(d)(1)(E) activity.

(ii) Legal, financial, consulting, accounting, insurance, and other similar services do not qualify as essential to a section 7704(d)(1)(E) activity.

(4) *Significant services.*

(i) An activity requires significant services to support the section 7704(d)(1)(E) activity if those services must be conducted on an ongoing or frequent basis by the partnership's personnel at the site or sites of the section 7704(d)(1)(E) activities. Alternatively, those services may be conducted offsite if the services are performed on an ongoing or frequent basis and are offered to those engaged in one or more section 7704(d)(1)(E) activities. If the services are monitoring, those services must be offered exclusively to those engaged in one or more section 7704(d)(1)(E) activities. Whether services are conducted on an ongoing or frequent basis is determined based on all the facts and circumstances, including recognized best practices in the relevant industry.

(ii) Personnel perform significant services only if those services are necessary for the partnership to perform an activity that is essential to the section 7704(d)(1)(E) activity, or to support the section 7704(d)(1)(E) activity. Personnel include employees of the partnership, an affiliate, subcontractor, or independent contractor performing work on behalf of the partnership.

(iii) Services are not significant services with respect to a section 7704(d)(1)(E) activity if the services principally involve the design, construction, manufacturing, repair, maintenance, lease, rent, or temporary provision of property.

(e) ***Interpretations of section 611 and section 613.*** This section and interpretations of this section have no effect on interpretations of sections 611 and 613, or other sections of the Code, or the regulations thereunder; however, this section incorporates some of the interpretations under section 611 and 613 and the regulations thereunder as provided in this section.

(f) ***Examples.*** The following examples illustrate the provisions of this section:

Example 1. Petrochemical products sourced from an oil and gas well. (i) Z, a publicly traded partnership, chemically converts a mixture of ethane and propane (obtained from physical separation of natural gas) into ethylene and propylene through use of a steam cracker. Z sells the ethylene and propylene in bulk to a third party.
(ii) Ethylene and propylene are products of refining as provided in paragraph (c)(6)(i) of this section; therefore, Z is engaged in a section 7704(d)(1)(E) activity. The income Z receives from the sale of ethylene and propylene is qualifying income for purposes of section 7704(d)(1)(E).

Example 2. Petroleum streams chemically converted into refinery grade olefins byproducts. (i) Y, a publicly traded partnership, owns a petroleum refinery. The refinery physically separates crude oil, obtaining heavy gas oil. The refinery then uses a catalytic cracking unit to chemically convert the heavy gas oil into a liquid stream suitable for gasoline blending and a gas stream containing ethane, ethylene, and other gases. The refinery also further physically separates the gas stream, resulting in refinery-grade ethylene. Y sells the ethylene in bulk to a third party.
(ii) Y's activities give rise to products of refining as provided in paragraph (c)(6)(i) of this section; therefore, Y is engaged in a section 7704(d)(1)(E) activity. The income Y receives from the sales of ethylene is qualifying income for purposes of section 7704(d)(1)(E).

Example 3. Converting methane gas into synthetic fuels through chemical change. (i) Y, a publicly traded partnership, chemically converts methane into methanol and synthesis gas, and further chemically converts those products into gasoline and diesel fuel. Y receives income from bulk sales of gasoline and diesel created during the conversion processes, as well as from sales of methanol.
(ii) With respect to the production of gasoline or diesel from methane, gasoline and diesel are products of refining as provided in paragraph (c)(6)(i) of this section; therefore, Y is engaged in a section 7704(d)(1)(E) activity. Y's income from the sale of gasoline and diesel is qualifying income for purposes of section 7704(d)(1)(E).

(iii) The income from the sale of methanol, an intermediate product in the conversion process, is not qualifying income for purposes of section 7704(d)(1)(E) because methanol is not a product of processing or refining as defined in paragraph (c)(5) and (6) of this section.

Example 4. Converting methanol into gasoline and diesel. (i) Assume the same facts as in *Example 3* of this paragraph (f), except Y purchases methanol and synthesis gas and chemically converts the methanol and synthesis gas into gasoline and diesel.
(ii) The chemical conversion of methanol and synthesis gas into gasoline and diesel is not refining as provided in paragraph (c)(6)(i) of this section because it is not the physical or chemical conversion or the separation or blending of products listed in paragraph (c)(6)(i)(A) of this section. Accordingly, the income from the sales of the gasoline and diesel is not qualifying income for purposes of section 7704(d)(1)(E).

Example 5. Delivery of refined products. (i) X, a publicly traded partnership, sells diesel to a government entity at wholesale prices and delivers those goods in bulk.
(ii) X's sale of a refined product to the government entity is a section 7704(d)(1)(E) activity because it is a bulk transportation and sale as described in paragraph (c)(7) and (8) of this section and is not a retail sale.

Example 6. Constructing a pipeline. (i) X, a publicly traded partnership, operates interstate and intrastate natural gas pipelines. Y, a corporation, is a construction firm. X pays Y to build a pipeline. X later seeks reimbursement for its cost to build the pipeline from A, a refiner who contracts with X to transport gasoline.
(ii) X, as an operator of pipelines, is engaged in transportation pursuant to paragraph (c)(7)(i)(C) of this section. The reimbursement X receives from A for X's cost to build the pipeline is qualifying income pursuant to paragraph (c)(10)(i) of this section because X receives the income to reimburse X for its costs in performing X's transportation activity and reimbursable costs may include construction costs. In contrast, Y is not in the trade or business of performing a 7704(d)(1)(E) activity, thus income Y received from X for building the pipeline is not qualifying income to Y.

Example 7. Delivery of water. (i) X, a publicly traded partnership, owns interstate and intrastate natural gas pipelines. X built a water delivery pipeline along the existing right of way for its natural gas pipeline to deliver water to A for use in A's fracturing activity. A uses the delivered water in fracturing to develop A's natural gas reserve in a cost-efficient manner. X earns income for transporting natural gas in the pipelines and for delivery of water.
(ii) X's income from transporting natural gas in its interstate and intrastate pipelines is qualifying income for purposes of section 7704(c) because transportation of natural gas is a section 7704(d)(1)(E) activity as provided in paragraph (c)(7)(i)(C) of this section.

(iii) The income X obtains from its water delivery services is not a section 7704(d)(1)(E) activity as provided in paragraph (c) of this section. However, because X's water delivery supports A's development of natural gas, a section 7704(d)(1)(E) activity, X's income from water delivery services may be qualifying income for purposes of section 7704(c) if the water delivery service is an intrinsic activity as provided in paragraph (d) of this section. An activity is an intrinsic activity if

the activity is specialized to support the section 7704(d)(1)(E) activity, is essential to the completion of the section 7704(d)(1)(E) activity, and requires the provision of significant services to support the section 7704(d)(1)(E) activity. Under paragraph (d)(2)(ii)(B) of this section, the provision of water for use as an injectant in a section 7704(d)(1)(E) activity is specialized to that activity only if the partnership (1) provides the water exclusively to those engaged in section 7704(d)(1)(E) activities, (2) is also in the trade or business of cleaning, recycling, or otherwise disposing of water after use in accordance with Federal, state, or local regulations concerning waste products from mining or production activities, and (3) operates these disposal services within the same geographic area as that in which it delivers water. Because X does not perform such disposal services, X's water delivery activities are not specialized to support the section 7704(d)(1)(E) activity. Thus, X's water delivery is not an intrinsic activity. Accordingly, X's income from the delivery of water is not qualifying income for purposes of section 7704(c).

Example 8. Delivery of water and recovery and recycling of flowback. (i) Assume the same facts as in *Example 7* of this paragraph (f), except that X also collects and treats flowback at the drilling site in accordance with state regulations as part of its water delivery services and transports the treated flowback away from the site. In connection with these services, X provides personnel to perform these services on an ongoing or frequent basis that is consistent with best industry practices. X has provided these personnel with specialized training regarding the recovery and recycling of flowback produced during the development of natural gas, and this training is of limited utility other than to perform or support the development of natural gas.
(ii) The income X obtains from its water delivery services is not a section 7704(d)(1)(E) activity as provided in paragraph (c) of this section. However, because X's water delivery supports A's development of natural gas, a section 7704(d)(1)(E) activity, X's income from water delivery services may be qualifying income for purposes of section 7704(c) if the water delivery service is an intrinsic activity as provided in paragraph (d) of this section.

(iii) An activity is an intrinsic activity if the activity is specialized to support the section 7704(d)(1)(E) activity, is essential to the completion of the section 7704(d)(1)(E) activity, and requires the provision of significant services to support the section 7704(d)(1)(E) activity. Under paragraph (d)(2)(ii)(B) of this section, the provision of water for use as an injectant in a section 7704(d)(1)(E) activity is specialized to that activity only if the partnership (1) provides the water exclusively to those engaged in section 7704(d)(1)(E) activities, (2) is also in the trade or business of cleaning, recycling, or otherwise disposing of water after use in accordance with Federal, state, or local regulations concerning waste products from mining or production activities, and (3) operates these disposal services within the same geographical area as where it delivers water. X's provision of personnel is specialized because those personnel received training regarding the recovery and recycling of flowback produced during the development of natural gas, and this training is of limited utility other than to perform or support the development of natural gas. The provision of water is also specialized because water is an injectant used to perform a section 7704(d)(1)(E) activity, and X also collects and treats flowback in accordance with state regulations

as part of its water delivery services. Therefore, X meets the specialization requirement. The delivery of water is essential to support A's development activity because the water is needed for use in fracturing to develop A's natural gas reserve in a cost-efficient manner. Finally, the water delivery and recovery and recycling activities require significant services to support the development activity because X's personnel provide services necessary for the partnership to perform the support activity at the development site on an ongoing or frequent basis that is consistent with best industry practices. Because X's delivery of water and X's collection, transport, and treatment of flowback is a specialized activity, is essential to the completion of a section 7704(d)(1)(E) activity, and requires significant services, the delivery of water and the transport and treatment of flowback is an intrinsic activity. X's income from the delivery of water and the collection, treatment, and transport of flowback is qualifying income for purposes of section 7704(c).

(g) ***Effective/applicability date and transition rule.***

(1) ***In general.*** Except as provided in paragraph (g)(2) of this section, this section applies to income earned by a partnership in a taxable year beginning on or after January 19, 2017. Paragraph (g)(2) of this section applies during the period that ends on the last day of the partnership's taxable year that includes January 19, 2027 (Transition Period).

(2) ***Income during Transition Period.*** A partnership may treat income from an activity as qualifying income during the Transition Period if—

(i) The partnership received a private letter ruling from the IRS holding that the income from that activity is qualifying income;

(ii) Prior to May 6, 2015, the partnership was publicly traded, engaged in the activity, and treated the activity as giving rise to qualifying income under section 7704(d)(1)(E), and that income was qualifying income under the statute as reasonably interpreted prior to May 6, 2015;

(iii) Prior to May 6, 2015, the partnership was publicly traded and had entered into a binding agreement for construction of assets to be used in such activity that would give rise to income that was qualifying income under the statute as reasonably interpreted prior to May 6, 2015; or

(iv) The partnership is publicly traded and engages in the activity after May 6, 2015 but before January 19, 2017, and the income from that activity is qualifying income under the proposed regulations (REG-132634-14) contained in the Internal Revenue Bulletin (IRB) 2015-21 (see *https://www.irs.gov/pub/irs-irbs/irb15-21.pdf*).

(3) ***Relief from technical termination.*** In the event of a technical termination under section 708(b)(1)(B) of a partnership that satisfies the requirements of paragraph (g)(2) of this section without regard to the technical termination, the resulting partnership will be treated as the partnership that satisfies the requirements of paragraph (g)(2) of this section for purposes of applying the Transition Period.

[T.D. 9817, 82 FR 8338, Jan. 24, 2017]

§§ 1.7872-1-1.7872-4 [Reserved]

§ 1.7872-5 Exempted loans.

(a) *In general* —

(1) ***General rule.*** Except as provided in paragraph (a)(2) of this section, notwithstanding any other provision of section 7872 and the regulations under that section, section 7872 does not apply to the loans listed in paragraph (b) of this section because the interest arrangements do not have a significant effect on the Federal tax liability of the borrower or the lender.

(2) ***No exemption for tax avoidance loans.*** If a taxpayer structures a transaction to be a loan described in paragraph (b) of this section and one of the principal purposes of so structuring the transaction is the avoidance of Federal tax, then the transaction will be recharacterized as a tax avoidance loan as defined in section 7872(c)(1)(D).

(b) ***List of exemptions.*** Except as provided in paragraph (a) of this section, the following transactions are exempt from section 7872:

(1) through (15) [Reserved] For further guidance, see § 1.7872-5T(b)(1) through (15).

(16) An exchange facilitator loan (within the meaning of § 1.468B-6(c)(1)) if the amount of the exchange funds (as defined in § 1.468B-6(b)(2)) treated as loaned does not exceed $2,000,000 and the duration of the loan is 6 months or less. The Commissioner may increase this $2,000,000 loan exemption amount in published guidance of general applicability, see § 601.601(d)(2) of this chapter.

(17) ***See*** § 1.139E-1(d)(6) for rules for a loan from an Indian Tribal Government to a Tribal Program Participant pursuant to an Indian Tribal Government Program within the meaning of § 1.139E-1(c). *See* § 1.139E-1(h) for the applicability date of this paragraph (b)(17).

(c) [Reserved] For further guidance, see § 1.7872-5T(c).

(d) ***Effective/applicability date.*** This section applies to exchange facilitator loans issued on or after October 8, 2008.

[T.D. 9413, 73 FR 39622, July 10, 2008, as amended by T.D. 10040, 90 FR 58405, Dec. 16, 2025]

§ 1.7872-5T Exempted loans (temporary).

(a) *In general* —

(1) ***General rule.*** Except as provided in paragraph (a)(2) of this section, notwithstanding any other provision of section 7872 and the regulations thereunder, section 7872 does not apply to the loans listed in paragraph (b) of this section because the interest arrangements do not have a significant effect on the Federal tax liability of the borrower or the lender.

(2) ***No exemption for tax avoidance loans.*** If a taxpayer structures a transaction to be a loan described in paragraph (b) of this section and one of the principal purposes of so structuring the transaction is the avoidance of Federal tax, then the transaction will be recharacterized as a tax avoidance loan as defined in section 7872 (c)(1)(D).

(b) ***List of exemptions.*** Except as provided in paragraph (a) of this section, the following transactions are exempt from section 7872:

(1) Loans which are made available by the lender to the general public on the same terms and conditions and which are consistent with the lender's customary business practice;

(2) Accounts or withdrawable shares with a bank (as defined in section 581), or an institution to which section 591 applies, or a credit union, made in the ordinary course of its business;

(3) Acquisitions of publicly traded debt obligations for an amount equal to the public trading price at the time of acquisition;

(4) Loans made by a life insurance company (as defined in section 816 (a)), in the ordinary course of its business, to an insured, under a loan right contained in a life insurance policy and in which the cash surrender values are used as collateral for the loans;

(5) Loans subsidized by the Federal, State (including the District of Columbia), or Municipal government (or any agency or instrumentality thereof), and which are made available under a program of general application to the public;

(6) Employee-relocation loans that meet the requirements of paragraph (c)(1) of this section;

(7) Obligations the interest on which is excluded from gross income under section 103;

(8) Obligations of the United States government;

(9) Gift loans to a charitable organization (described in section 170(c)), but only if at no time during the taxable year will the aggregate outstanding amount of gift loans by the lender to that organization exceed $250,000. Charitable organizations which are effectively controlled, within the meaning of § 1.482-1(a)(1), by the same person or persons shall be considered one charitable organization for purposes of this limitation.

(10) Loans made to or from a foreign person that meet the requirements of paragraph (c)(2) of this section;

(11) Loans made by a private foundation or other organization described in section 170(c), the primary purpose of which is to accomplish one or more of the purposes described in section 170(c)(2)(B);

(12) Indebtedness subject to section 482, but such indebtedness is exempt from the application of section 7872 only during the interest-free period, if any, determined under § 1.482-2(a)(1)(iii) with respect to intercompany trade receivables described in § 1.482-2(a)(1)(ii)(A)(*ii*). See also § 1.482-2(a)(3);

(13) All money, securities, and property—

(i) Received by a futures commission merchant or registered broker/dealer or by a clearing organization

(A) to margin, guarantee or secure contracts for future delivery on or subject to the rules of a qualified board or exchange (as defined in section 1256(g)(7)), or

(B) to purchase, margin, guarantee or secure options contracts traded on or subject to the rules of a qualified board or exchange, so long as the amounts so received to purchase, margin, guarantee or secure such contracts for future delivery or such options contracts are reasonably necessary for such purposes and so long as any commissions received by the futures commission merchant, registered broker-dealer, or clearing organization are not reduced for those making deposits of money, and all money accruing to account holders as the result of such futures and options contacts or

(ii) Received by a clearing organization from a member thereof as a required deposit to a clearing fund, guaranty fund, or similar fund maintained by the clearing organization to protect it against defaults by members.

(14) Loans the interest arrangements of which the taxpayer is able to show have no significant effect on any Federal tax liability of the lender or the borrower, as described in paragraph (c)(3) of this section; and

(15) Loans, described in revenue rulings or revenue procedures issued under section 7872(g)(1)(C), if the Commissioner finds that the factors justifying an exemption for such loans are sufficiently similar to the factors justifying the exemptions contained in this section.

(c) *Special rules* —

(1) *Employee-relocation loans* —

(i) ***Mortgage loans.*** In the case of a compensation-related loan to an employee, where such loan is secured by a mortgage on the new principal residence (within the meaning of section 217 and the regulations thereunder) of the employee, acquired in connection with the transfer of that employee to a new principal place of work (which meets the requirements in section 217(c) and the regulations thereunder), the loan will be exempt from section 7872 if the following conditions are satisfied:

(A) The loan is a demand loan or is a term loan the benefits of the interest arrangements of which are not transferable by the employee and are conditioned on the future performance of substantial services by the employee;

(B) The employee certifies to the employer that the employee reasonably expects to be entitled to and will itemize deductions for each year the loan is outstanding; and

(C) The loan agreement requires that the loan proceeds be used only to purchase the new principal residence of the employee.

(ii) ***Bridge loans.*** In the case of a compensation-related loan to an employee which is not described in paragraph (c)(1)(i) of this section, and which is used to purchase a new principal residence (within the meaning of section 217 and the regulations thereunder) of the employee acquired in connection with the transfer of that employee to a new principal place of work (which meets the requirements in section 217(c) and the regulations thereunder), the loan will be exempt from section 7872 if the following conditions are satisfied:

(A) The conditions contained in paragraphs (c)(1)(i) (A), (B), and (C) of this section;

(B) The loan agreement provides that the loan is payable in full within 15 days after the date of the sale of the employee's immediately former principal residence;

(C) The aggregate principal amount of all outstanding loans described in this paragraph (c)(1)(ii) to an employee is no greater than the employer's reasonable estimate of the amount of the equity of the employee and the employee's spouse in the employee's immediately former principal residence, and

(D) The employee's immediately former principal residence is not converted to business or investment use.

(2) *Below-market loans involving foreign persons.*

(i) Section 7872 shall not apply to a below-market loan (other than a compensation-related loan or a corporation-shareholder loan where the borrower is a shareholder that is not a C corporation as defined in section 1361(a)(2)) if the lender is a foreign person and the borrower is a U.S. person unless the interest income imputed to the foreign lender (without regard to this paragraph) would be effectively connected with the conduct of a U.S. trade or business within the meaning of section 864(c) and the regulations thereunder and not exempt from U.S. income taxation under an applicable income tax treaty.

(ii) Section 7872 shall not apply to a below-market loan where both the lender and the borrower are foreign persons unless the interest income imputed to the lender (without regard to this paragraph) would be effectively connected with the conduct of a U.S. trade or business within the meaning of section 864(c) and the regulations thereunder and not exempt from U.S. income taxation under an applicable income tax treaty.

(iii) For purposes of this section, the term "foreign person" means any person that is not a U.S. person.

(3) ***Loans without significant tax effect.*** Whether a loan will be considered to be a loan the interest arrangements of which have a significant effect on any Federal tax liability of the lender or the borrower will be determined according to all of the facts and circumstances. Among the factors to be considered are—

(i) Whether items of income and deduction generated by the loan offset each other;

(ii) The amount of such items;

(iii) The cost to the taxpayer of complying with the provisions of section 7872 if such section were applied; and

(iv) Any non-tax reasons for deciding to structure the transaction as a below-market loan rather than a loan with interest at a rate equal to or greater than the applicable Federal rate and a payment by the lender to the borrower.

(26 U.S.C. 7872)

[T.D. 8045, 50 FR 33520, Aug. 20, 1985, as amended by T.D. 8093, 51 FR 25033, July 10, 1986; 51 FR 28553, Aug. 8, 1986; T.D. 8204, 53 FR 18282, May 23, 1988]

§ 1.7872-15 Split-dollar loans.

(a) ***General rules*** —

(1) ***Introduction.*** This section applies to split-dollar loans as defined in paragraph (b)(1) of this section. If a split-dollar loan is not a below-market loan, then, except as provided in this section, the loan is governed by the general rules for debt instruments (including the rules for original issue discount (OID) under sections 1271 through 1275 and the regulations thereunder). If a split-dollar loan is a below-market loan, then, except as provided in this section, the loan is governed by section 7872. The timing, amount, and characterization of the imputed transfers between the lender and borrower of a below-market split-dollar loan depend upon the relationship between the parties and upon whether the loan is a demand loan or a term loan. For additional rules relating to the treatment of split-dollar life insurance arrangements, *see* § 1.61-22.

(2) ***Loan treatment*** —

(i) ***General rule.*** A payment made pursuant to a split-dollar life insurance arrangement is treated as a loan for Federal tax purposes, and the owner and non-owner are treated, respectively, as the borrower and the lender, if—

(A) The payment is made either directly or indirectly by the non-owner to the owner (including a premium payment made by the non-owner directly or indirectly to the insurance company with respect to the policy held by the owner);

(B) The payment is a loan under general principles of Federal tax law or, if it is not a loan under general principles of Federal tax law (for example, because of the nonrecourse nature of the obligation or otherwise), a reasonable person nevertheless would expect the payment to be repaid in full to the non-owner (whether with or without interest); and

(C) The repayment is to be made from, or is secured by, the policy's death benefit proceeds, the policy's cash surrender value, or both.

(ii) ***Payments that are only partially repayable.*** For purposes of § 1.61-22 and this section, if a non-owner makes a payment pursuant to a split-dollar life insurance arrangement and the non-owner is entitled to repayment of some but not all of the payment, the payment is treated as two payments: One that is repayable and one that is not. Thus, paragraph (a)(2)(i) of this section refers to the repayable payment.

(iii) ***Treatment of payments that are not split-dollar loans. See*** § 1.61-22(b)(5) for the treatment of payments by a non-owner that are not split-dollar loans.

(iv) ***Examples.*** The provisions of this paragraph (a)(2) are illustrated by the following examples:

Example 1. Assume an employee owns a life insurance policy under a split-dollar life insurance arrangement, the employer makes premium payments on this policy, there is a reasonable expectation that the payments will be repaid, and the repayments are secured by the policy. Under paragraph (a)(2)(i) of this section, each premium payment is a loan for Federal tax purposes.

> *Example 2.* (i) Assume an employee owns a life insurance policy under a split-dollar life insurance arrangement and the employer makes premium payments on this policy. The employer is entitled to be repaid 80 percent of each premium payment, and the repayments are secured by the policy. Under paragraph (a)(2)(ii) of this section, the taxation of 20 percent of each premium payment is governed by § 1.61-22(b)(5). If there is a reasonable expectation that the remaining 80 percent of a payment will be repaid in full, then, under paragraph (a)(2)(i) of this section, the 80 percent is a loan for Federal tax purposes.
> (ii) If less than 80 percent of a premium payment is reasonably expected to be repaid, then this paragraph (a)(2) does not cause any of the payment to be a loan for Federal tax purposes. If the payment is not a loan under general principles of Federal tax law, the taxation of the entire premium payment is governed by § 1.61-22(b)(5).

(3) ***No de minimis exceptions.*** For purposes of this section, section 7872 is applied to a split-dollar loan without regard to the *de minimis* exceptions in section 7872(c)(2) and (3).

(4) ***Certain interest provisions disregarded*** —

(i) ***In general.*** If a split-dollar loan provides for the payment of interest and all or a portion of the interest is to be paid directly or indirectly by the lender (or a person related to the lender), then the requirement to pay the interest (or portion thereof) is disregarded for purposes of this section. All of the facts and circumstances determine whether a payment to be made by the lender (or a person related to the lender) is sufficiently independent from the split-dollar loan for the payment to not be an indirect payment of the interest (or a portion thereof) by the lender (or a person related to the lender).

(ii) ***Examples.*** The provisions of this paragraph (a)(4) are illustrated by the following examples:

> *Example 1.* (i) On January 1, 2009, Employee *B* issues a split-dollar term loan to Employer *Y*. The split-dollar term loan provides for five percent interest, compounded annually. Interest and principal on the split-dollar term loan are due at maturity. On January 1, 2009, *B* and *Y* also enter into a fully vested non-qualified deferred compensation arrangement that will provide a payment to *B* in an amount equal to the accrued but unpaid interest due at the maturity of the split-dollar term loan.
> (ii) Under paragraph (a)(4)(i) of this section, *B*'s requirement to pay interest on the split-dollar term loan is disregarded for purposes of this section, and the split-dollar term loan is treated as a loan that does not provide for interest for purposes of this section.

> *Example 2.* (i) On January 1, 2004, Employee *B* and Employer *Y* enter into a fully vested non-qualified deferred compensation arrangement that will provide a payment to *B* equal to *B*'s salary in the three years preceding the retirement of *B*. On January 1, 2009, *B* and *Y* enter into a split-dollar life insurance arrangement and, under the arrangement, *B* issues a split-dollar term loan to *Y* on that date. The split-dollar term loan provides for five percent interest, compounded annually. Interest and principal on the split-dollar term loan are due at maturity. Over the period in which the non-qualified deferred compensation arrangement is effective, the terms and conditions of *B*'s non-qualified deferred compensation arrangement do not change in a way that indicates that the payment of the non-qualified deferred compensation is related to *B*'s requirement to pay interest on the split-dollar term loan. No other facts and circumstances exist to indicate that the payment of the non-qualified deferred compensation is related to *B*'s requirement to pay interest on the split-dollar term loan.
> (ii) The facts and circumstances indicate that the payment by *Y* of non-qualified deferred compensation is independent from *B*'s requirement to pay interest under the split-dollar term loan. Under paragraph (a)(4)(i) of this section, the fully vested non-qualified deferred compensation does not cause *B*'s requirement to pay interest on the split-dollar

> term loan to be disregarded for purposes of this section. For purposes of this section, the split-dollar term loan is treated as a loan that provides for stated interest of five percent, compounded annually.

(b) ***Definitions.*** For purposes of this section, the terms *split-dollar life insurance arrangement, owner,* and *non-owner* have the same meanings as provided in § 1.61-22(b) and (c). In addition, the following definitions apply for purposes of this section:

(1) A *split-dollar loan* is a loan described in paragraph (a)(2)(i) of this section.

(2) A *split-dollar demand loan* is any split-dollar loan that is payable in full at any time on the demand of the lender (or within a reasonable time after the lender's demand).

(3) A *split-dollar term loan* is any split-dollar loan other than a split-dollar demand loan. See paragraph (e)(5) of this section for special rules regarding certain split-dollar term loans payable on the death of an individual, certain split-dollar term loans conditioned on the future performance of substantial services by an individual, and gift split-dollar term loans.

(c) ***Interest deductions for split-dollar loans.*** The borrower may not deduct any qualified stated interest, OID, or imputed interest on a split-dollar loan. *See* sections 163(h) and 264(a). In certain circumstances, an indirect participant may be allowed to deduct qualified stated interest, OID, or imputed interest on a deemed loan. See paragraph (e)(2)(iii) of this section (relating to indirect loans).

(d) ***Treatment of split-dollar loans providing for nonrecourse payments*** —

(1) ***In general.*** Except as provided in paragraph (d)(2) of this section, if a payment on a split-dollar loan is nonrecourse to the borrower, the payment is a contingent payment for purposes of this section. *See* paragraph (j) of this section for the treatment of a split-dollar loan that provides for one or more contingent payments.

(2) ***Exception for certain loans with respect to which the parties to the split-dollar life insurance arrangement make a representation*** —

(i) ***Requirement.*** An otherwise noncontingent payment on a split-dollar loan that is nonrecourse to the borrower is not a contingent payment under this section if the parties to the split-dollar life insurance arrangement represent in writing that a reasonable person would expect that all payments under the loan will be made.

(ii) ***Time and manner for providing written representation.*** The Commissioner may prescribe the time and manner for providing the written representation required by paragraph (d)(2)(i) of this section. Until the Commissioner prescribes otherwise, the written representation that is required by paragraph (d)(2)(i) of this section must meet the requirements of this paragraph (d)(2)(ii). Both the borrower and the lender must sign the representation not later than the last day (including extensions) for filing the Federal income tax return of the borrower or lender, whichever is earlier, for the taxable year in which the lender makes the first split-dollar loan under the split-dollar life insurance arrangement. This representation must include the names, addresses, and taxpayer identification numbers of the borrower, lender, and any indirect participants. Unless otherwise stated therein, this representation applies to all subsequent split-dollar loans made pursuant to the split-dollar life insurance arrangement. Each party

should retain an original of the representation as part of its books and records and should attach a copy of this representation to its Federal income tax return for any taxable year in which the lender makes a loan to which the representation applies.

(e) ***Below-market split-dollar loans*** —

(1) ***Scope*** —

(i) ***In general.*** This paragraph (e) applies to below-market split-dollar loans enumerated under section 7872(c)(1), which include gift loans, compensation-related loans, and corporation-shareholder loans. The characterization of a split-dollar loan under section 7872(c)(1) and of the imputed transfers under section 7872(a)(1) and (b)(1) depends upon the relationship between the lender and the borrower or the lender, borrower, and any indirect participant. For example, if the lender is the borrower's employer, the split-dollar loan is generally a compensation-related loan, and any imputed transfer from the lender to the borrower is generally a payment of compensation. The loans covered by this paragraph (e) include indirect loans between the parties. *See* paragraph (e)(2) of this section for the treatment of certain indirect split-dollar loans. *See* paragraph (f) of this section for the treatment of any stated interest or OID on split-dollar loans. *See* paragraph (j) of this section for additional rules that apply to a split-dollar loan that provides for one or more contingent payments.

(ii) ***Significant-effect split-dollar loans.*** If a direct or indirect below-market split-dollar loan is not enumerated in section 7872(c)(1)(A), (B), or (C), the loan is a significant-effect loan under section 7872(c)(1)(E).

(2) ***Indirect split-dollar loans*** —

(i) ***In general.*** If, based on all the facts and circumstances, including the relationship between the borrower or lender and some third person (the indirect participant), the effect of a below-market split-dollar loan is to transfer value from the lender to the indirect participant and from the indirect participant to the borrower, then the below-market split-dollar loan is restructured as two or more successive below-market loans (the deemed loans) as provided in this paragraph (e)(2). The transfers of value described in the preceding sentence include (but are not limited to) a gift, compensation, a capital contribution, and a distribution under section 301 (or, in the case of an S corporation, under section 1368). The deemed loans are—

(A) A deemed below-market split-dollar loan made by the lender to the indirect participant; and

(B) A deemed below-market split-dollar loan made by the indirect participant to the borrower.

(ii) ***Application.*** Each deemed loan is treated as having the same provisions as the original loan between the lender and borrower, and section 7872 is applied to each deemed loan. Thus, for example, if, under a split-dollar life insurance arrangement, an employer (lender) makes an interest-free split-dollar loan to an employee's child (borrower), the loan is restructured as a deemed compensation-related below-market split-dollar loan from the lender to the employee (the indirect participant) and a second deemed gift below-market split-dollar loan from the employee to the employee's child. In appropriate circumstances, section 7872(d)(1) may limit the interest that accrues on a deemed loan for Federal income tax purposes. For loan arrangements between husband and wife, *see* section 7872(f)(7).

(iii) ***Limitations on investment interest for purposes of section 163(d).*** For purposes of section 163(d), the imputed interest from the indirect participant to the lender that is taken into account by the indirect participant under this paragraph (e)(2) is not investment interest to the extent of the excess, if any, of—

(A) The imputed interest from the indirect participant to the lender that is taken into account by the indirect participant; over

(B) The imputed interest to the indirect participant from the borrower that is recognized by the indirect participant.

(iv) ***Examples.*** The provisions of this paragraph (e)(2) are illustrated by the following examples:

> *Example 1.* (i) On January 1, 2009, Employer *X* and Individual *A* enter into a split-dollar life insurance arrangement under which *A* is named as the policy owner. *A* is the child of *B,* an employee of *X.* On January 1, 2009, *X* makes a $30,000 premium payment, repayable upon demand without interest. Repayment of the premium payment is fully recourse to *A.* The payment is a below-market split-dollar demand loan. *A*'s net investment income for 2009 is $1,100, and there are no other outstanding loans between *A* and *B.* Assume that the blended annual rate for 2009 is 5 percent, compounded annually.
> (ii) Based on the relationships among the parties, the effect of the below-market split-dollar loan from *X* to *A* is to transfer value from *X* to *B* and then to transfer value from *B* to *A.* Under paragraph (e)(2) of this section, the below-market split-dollar loan from *X* to *A* is restructured as two deemed below-market split-dollar demand loans: a compensation-related below-market split-dollar loan between *X* and *B* and a gift below-market split-dollar loan between *B* and *A.* Each of the deemed loans has the same terms and conditions as the original loan.
>
> (iii) Under paragraph (e)(3) of this section, the amount of forgone interest deemed paid to *B* by *A* in 2009 is $1,500 ([$30,000 × 0.05]—0). Under section 7872(d)(1), however, the amount of forgone interest deemed paid to *B* by *A* is limited to $1,100 (*A*'s net investment income for the year). Under paragraph (e)(2)(iii) of this section, *B*'s deduction under section 163(d) in 2009 for interest deemed paid on *B*'s deemed loan from *X* is limited to $1,100 (the interest deemed received from *A*).

> *Example 2.* (i) The facts are the same as the facts in *Example 1,* except that *T,* an irrevocable life insurance trust established for the benefit of *A* (*B*'s child), is named as the policy owner. *T* is not a grantor trust.
> (ii) Based on the relationships among the parties, the effect of the below-market split-dollar loan from *X* to *T* is to transfer value from *X* to *B* and then to transfer value from *B* to *T.* Under paragraph (e)(2) of this section, the below-market split-dollar loan from *X* to *T* is restructured as two deemed below-market split-dollar demand loans: a compensation-

related below-market split-dollar loan between *X* and *B* and a gift below-market split-dollar loan between *B* and *T*. Each of the deemed loans has the same terms and conditions as the original loan.

(iii) Under paragraph (e)(3) of this section, the amount of forgone interest deemed paid to *B* by *T* in 2009 is $1,500 ([$30,000 × 0.05]—0). Section 7872(d)(1) does not apply because *T* is not an individual. The amount of forgone interest deemed paid to *B* by *T* is $1,500. Under paragraph (e)(2)(iii) of this section, *B*'s deduction under section 163(d) in 2009 for interest deemed paid on *B*'s deemed loan from *X* is $1,500 (the interest deemed received from *T*).

(3) ***Split-dollar demand loans*** —

(i) ***In general.*** This paragraph (e)(3) provides rules for testing split-dollar demand loans for sufficient interest, and, if the loans do not provide for sufficient interest, rules for the calculation and treatment of forgone interest on these loans. *See* paragraph (g) of this section for additional rules that apply to a split-dollar loan providing for certain variable rates of interest.

(ii) ***Testing for sufficient interest.*** Each calendar year that a split-dollar demand loan is outstanding, the loan is tested to determine if the loan provides for sufficient interest. A split-dollar demand loan provides for sufficient interest for the calendar year if the rate (based on annual compounding) at which interest accrues on the loan's adjusted issue price during the year is no lower than the blended annual rate for the year. (The Internal Revenue Service publishes the blended annual rate in the Internal Revenue Bulletin in July of each year (*see* § 601.601(d)(2)(ii) of this chapter).) If the loan does not provide for sufficient interest, the loan is a below-market split-dollar demand loan for that calendar year. *See* paragraph (e)(3)(iii) of this section to determine the amount and treatment of forgone interest for each calendar year the loan is below-market.

(iii) ***Imputations*** —

(A) ***Amount of forgone interest.*** For each calendar year, the amount of forgone interest on a split-dollar demand loan is treated as transferred by the lender to the borrower and as retransferred as interest by the borrower to the lender. This amount is the excess of—

(*1*) The amount of interest that would have been payable on the loan for the calendar year if interest accrued on the loan's adjusted issue price at the blended annual rate (determined in paragraph (e)(3)(ii) of this section) and were payable annually on the day referred to in paragraph (e)(3)(iii)(B) of this section; over

(*2*) Any interest that accrues on the loan during the year.

(B) ***Timing of transfers of forgone interest*** —

(*1*) ***In general.*** Except as provided in paragraphs (e)(3)(iii)(B)(*2*) and (*3*) of this section, the forgone interest (as determined under paragraph (e)(3)(iii)(A) of this section) that is attributable to a calendar year is treated as transferred by the lender to the borrower (and retransferred as interest by the borrower to the lender) on the last day of the calendar year and is accounted for by each party to the split-dollar loan in a manner consistent with that party's method of accounting.

(2) ***Exception for death, liquidation, or termination of the borrower.*** In the taxable year in which the borrower dies (in the case of a borrower who is a natural person) or is liquidated or otherwise terminated (in the case of a borrower other than a natural person), any forgone interest is treated, for both the lender and the borrower, as transferred and retransferred on the last day of the borrower's final taxable year.

(3) ***Exception for repayment of below-market split-dollar loan.*** Any forgone interest is treated, for both the lender and the borrower, as transferred and retransferred on the day the split-dollar loan is repaid in full.

(4) *Split-dollar term loans* —

(i) ***In general.*** Except as provided in paragraph (e)(5) of this section, this paragraph (e)(4) provides rules for testing split-dollar term loans for sufficient interest and, if the loans do not provide for sufficient interest, rules for imputing payments on these loans. *See* paragraph (g) of this section for additional rules that apply to a split-dollar loan providing for certain variable rates of interest.

(ii) ***Testing a split-dollar term loan for sufficient interest.*** A split-dollar term loan is tested on the day the loan is made to determine if the loan provides for sufficient interest. A split-dollar term loan provides for sufficient interest if the imputed loan amount equals or exceeds the amount loaned. The imputed loan amount is the present value of all payments due under the loan, determined as of the date the loan is made, using a discount rate equal to the AFR in effect on that date. The AFR used for purposes of the preceding sentence must be appropriate for the loan's term (short-term, mid-term, or long-term) and for the compounding period used in computing the present value. *See* section 1274(d)(1). If the split-dollar loan does not provide for sufficient interest, the loan is a below-market split-dollar term loan subject to paragraph (e)(4)(iv) of this section.

(iii) ***Determining loan term.*** This paragraph (e)(4)(iii) provides rules to determine the term of a split-dollar term loan for purposes of paragraph (e)(4)(ii) of this section. The term of the loan determined under this paragraph (e)(4)(iii) (other than paragraph (e)(4)(iii)(C) of this section) applies to determine the split-dollar loan's term, payment schedule, and yield for all purposes of this section.

(A) ***In general.*** Except as provided in paragraph (e)(4)(iii)(B), (C), (D) or (E) of this section, the term of a split-dollar term loan is based on the period from the date the loan is made until the loan's stated maturity date.

(B) *Special rules for certain options* —

(*1*) ***Payment schedule that minimizes yield.*** If a split-dollar term loan is subject to one or more unconditional options that are exercisable at one or more times during the term of the loan and that, if exercised, require payments to be made on the split-dollar loan on an alternative payment schedule (for example, an option to extend or an option to call a split-dollar loan), then the rules of this paragraph (e)(4)(iii)(B)(*1*) determine the term of the loan. However, this paragraph (e)(4)(iii)(B)(*1*) applies only if the timing and amounts of the payments that comprise each payment schedule are known as of the issue date. For purposes of determining a split-dollar loan's term, the borrower is projected to exercise or not exercise an option or combination of options in a manner that minimizes the loan's overall yield. Similarly, the lender is projected to exercise or not exercise an option or combination of options in a manner that

minimizes the loan's overall yield. If different projected patterns of exercise or non-exercise produce the same minimum yield, the parties are projected to exercise or not exercise an option or combination of options in a manner that produces the longest term.

(*2*) ***Change in circumstances.*** If the borrower (or lender) does or does not exercise the option as projected under paragraph (e)(4)(iii)(B)(*1*) of this section, the split-dollar loan is treated for purposes of this section as retired and reissued on the date the option is or is not exercised for an amount of cash equal to the loan's adjusted issue price on that date. The reissued loan must be retested using the appropriate AFR in effect on the date of reissuance to determine whether it is a below-market loan.

(*3*) ***Examples.*** The following examples illustrate the rules of this paragraph (e)(4)(iii)(B):

Example 1. Employee *B* issues a 10-year split-dollar term loan to Employer *Y*. *B* has the right to prepay the loan at the end of year 5. Interest is payable on the split-dollar loan at 1 percent for the first 5 years and at 10 percent for the remaining 5 years. Under paragraph (e)(4)(iii)(B)(*1*) of this section, this arrangement is treated as a 5-year split-dollar term loan from *Y* to *B*, with interest payable at 1 percent.

Example 2. The facts are the same as the facts in *Example 1*, except that B does not in fact prepay the split-dollar loan at the end of year 5. Under paragraph (e)(4)(iii)(B)(*2*) of this section, the first loan is treated as retired at the end of year 5 and a new 5-year split-dollar term loan is issued at that time, with interest payable at 10 percent.

Example 3. Employee *A* issues a 10-year split-dollar term loan on which the lender, Employer *X*, has the right to demand payment at the end of year 2. Interest is payable on the split-dollar loan at 7 percent each year that the loan is outstanding. Under paragraph (e)(4)(iii)(B)(*1*) of this section, this arrangement is treated as a 10-year split-dollar term loan because the exercise of *X*'s put option would not reduce the yield of the loan (the yield of the loan is 7 percent, compounded annually, whether or not *X* demands payment).

(C) ***Split-dollar term loans providing for certain variable rates of interest.*** If a split-dollar term loan is subject to paragraph (g) of this section (a split-dollar loan that provides for certain variable rates of interest), the term of the loan for purposes of paragraph (e)(4)(ii) of this section is determined under paragraph (g)(3)(ii) of this section.

(D) ***Split-dollar loans payable upon the death of an individual.*** If a split-dollar term loan is described in paragraph (e)(5)(ii)(A) or (v)(A) of this section, the term of the loan for purposes of paragraph (e)(4)(ii) of this section is determined under paragraph (e)(5)(ii)(C) or (v)(B)(*2*) of this section, whichever is applicable.

(E) ***Split-dollar loans conditioned on the future performance of substantial services by an individual.*** If a split-dollar term loan is described in paragraph (e)(5)(iii)(A)(*1*) or (v)(A) of this section, the term of the loan for purposes of paragraph (e)(4)(ii) of this section is determined under paragraph (e)(5)(iii)(C) or (v)(B)(*2*) of this section, whichever is applicable.

(iv) ***Timing and amount of imputed transfer in connection with below-market split-dollar term loans.*** If a split-dollar term loan is a below-market loan, then the rules applicable to below-market term loans under section 7872 apply. In general, the loan is recharacterized as consisting of two portions: an imputed loan amount (as defined in paragraph (e)(4)(ii) of this section) and an imputed transfer from the lender to the borrower. The imputed transfer occurs at the time the loan is made (for example, when the lender makes a premium payment on a life insurance policy) and is equal to the excess of the amount loaned over the imputed loan amount.

(v) ***Amount treated as OID.*** In the case of any below-market split-dollar term loan described in this paragraph (e)(4), for purposes of applying sections 1271 through 1275 and the regulations thereunder, the issue price of the loan is the amount determined under § 1.1273-2, reduced by the amount of the imputed transfer described in paragraph (e)(4)(iv) of this section. Thus, the loan is generally treated as having OID in an amount equal to the amount of the imputed transfer described in paragraph (e)(4)(iv) of this section, in addition to any other OID on the loan (determined without regard to section 7872(b)(2)(A) or this paragraph (e)(4)).

(vi) ***Example.*** The provisions of this paragraph (e)(4) are illustrated by the following example:

> *Example.* (i) On July 1, 2009, Corporation *Z* and Shareholder *A* enter into a split-dollar life insurance arrangement under which *A* is named as the policy owner. On July 1, 2009, *Z* makes a $100,000 premium payment, repayable without interest in 15 years. Repayment of the premium payment is fully recourse to *A*. The premium payment is a split-dollar term loan. Assume the long-term AFR (based on annual compounding) at the time the loan is made is 7 percent.
> (ii) Based on a 15-year term and a discount rate of 7 percent, compounded annually (the long-term AFR), the present value of the payments under the loan is $36,244.60, determined as follows: $100,000/[1 + (0.07/1)]^{15}. This loan is a below-market split-dollar term loan because the imputed loan amount of $36,244.60 (the present value of the amount required to be repaid to *Z*) is less than the amount loaned ($100,000).
>
> (iii) In accordance with section 7872(b)(1) and paragraph (e)(4)(iv) of this section, on the date that the loan is made, *Z* is treated as transferring to *A* $63,755.40 (the excess of $100,000 (amount loaned) over $36,244.60 (imputed loan amount)). Under section 7872 and paragraph (e)(1)(i) of this section, *Z* is treated as making a section 301 distribution to *A* on July 1, 2009, of $63,755.40. *Z* must take into account as OID an amount equal to the imputed transfer. See § 1.1272-1 for the treatment of OID.

(5) ***Special rules for certain split-dollar term loans*** —

(i) ***In general.*** This paragraph (e)(5) provides rules for split-dollar loans payable on the death of an individual, split-dollar loans conditioned on the future performance of substantial services by an individual, and gift term loans. These split-dollar loans are split-dollar term loans for purposes of determining whether the loan provides for sufficient interest. If, however, the loan is a below-market split-dollar loan, then, except as provided in paragraph (e)(5)(v) of this section, forgone interest is determined annually, similar to a demand loan, but using an AFR that is appropriate for the loan's term and that is determined when the loan is issued.

(ii) *Split-dollar loans payable not later than the death of an individual* —

(A) *Applicability.* This paragraph (e)(5)(ii) applies to a split-dollar term loan payable not later than the death of an individual.

(B) *Treatment of loan.* A split-dollar loan described in paragraph (e)(5)(ii)(A) of this section is tested under paragraph (e)(4)(ii) of this section to determine if the loan provides for sufficient interest. If the loan provides for sufficient interest, then section 7872 does not apply to the loan, and the interest on the loan is taken into account under paragraph (f) of this section. If the loan does not provide for sufficient interest, then section 7872 applies to the loan, and the loan is treated as a below-market demand loan subject to paragraph (e)(3)(iii) of this section. For each year that the loan is outstanding, however, the rate used in the determination of forgone interest under paragraph (e)(3)(iii) of this section is not the blended annual rate but rather is the AFR (based on annual compounding) appropriate for the loan's term as of the month in which the loan is made. *See* paragraph (e)(5)(ii)(C) of this section to determine the loan's term.

(C) *Term of loan.* For purposes of paragraph (e)(5)(ii)(B) of this section, the term of a split-dollar loan payable on the death of an individual (including the death of the last survivor of a group of individuals) is the individual's life expectancy as determined under the appropriate table in § 1.72-9 on the day the loan is made. If a split-dollar loan is payable on the earlier of the individual's death or another term determined under paragraph (e)(4)(iii) of this section, the term of the loan is whichever term is shorter.

(D) *Retirement and reissuance of loan.* If a split-dollar loan described in paragraph (e)(5)(ii)(A) of this section remains outstanding longer than the term determined under paragraph (e)(5)(ii)(C) of this section because the individual outlived his or her life expectancy, the split-dollar loan is treated for purposes of this section as retired and reissued as a split-dollar demand loan at that time for an amount of cash equal to the loan's adjusted issue price on that date. However, the loan is not retested at that time to determine whether the loan provides for sufficient interest. For purposes of determining forgone interest under paragraph (e)(5)(ii)(B) of this section, the appropriate AFR for the reissued loan is the AFR determined under paragraph (e)(5)(ii)(B) of this section on the day the loan was originally made.

(iii) *Split-dollar loans conditioned on the future performance of substantial services by an individual* —

(A) *Applicability* —

(*1*) *In general.* This paragraph (e)(5)(iii) applies to a split-dollar term loan if the benefits of the interest arrangements of the loan are not transferable and are conditioned on the future performance of substantial services (within the meaning of section 83) by an individual.

(*2*) *Exception.* Notwithstanding paragraph (e)(5)(iii)(A)(*1*) of this section, this paragraph (e)(5)(iii) does not apply to a split-dollar loan described in paragraph (e)(5)(v)(A) of this section (regarding a split-dollar loan that is payable on the later of a term certain and the date on which the condition to perform substantial future services by an individual ends).

(B) ***Treatment of loan.*** A split-dollar loan described in paragraph (e)(5)(iii)(A)(*1*) of this section is tested under paragraph (e)(4)(ii) of this section to determine if the loan provides for sufficient interest. Except as provided in paragraph (e)(5)(iii)(D) of this section, if the loan provides for sufficient interest, then section 7872 does not apply to the loan and the interest on the loan is taken into account under paragraph (f) of this section. If the loan does not provide for sufficient interest, then section 7872 applies to the loan and the loan is treated as a below-market demand loan subject to paragraph (e)(3)(iii) of this section. For each year that the loan is outstanding, however, the rate used in the determination of forgone interest under paragraph (e)(3)(iii) of this section is not the blended annual rate but rather is the AFR (based on annual compounding) appropriate for the loan's term as of the month in which the loan is made. *See* paragraph (e)(5)(iii)(C) of this section to determine the loan's term.

(C) ***Term of loan.*** The term of a split-dollar loan described in paragraph (e)(5)(iii)(A)(*1*) of this section is based on the period from the date the loan is made until the loan's stated maturity date. However, if a split-dollar loan described in paragraph (e)(5)(iii)(A)(*1*) of this section does not have a stated maturity date, the term of the loan is presumed to be seven years.

(D) ***Retirement and reissuance of loan.*** If a split-dollar loan described in paragraph (e)(5)(iii)(A)(*1*) of this section remains outstanding longer than the term determined under paragraph (e)(5)(iii)(C) of this section because of the continued performance of substantial services, the split-dollar loan is treated for purposes of this section as retired and reissued as a split-dollar demand loan at that time for an amount of cash equal to the loan's adjusted issue price on that date. The loan is retested at that time to determine whether the loan provides for sufficient interest.

(iv) ***Gift split-dollar term loans*** —

(A) ***Applicability.*** This paragraph (e)(5)(iv) applies to gift split-dollar term loans.

(B) ***Treatment of loan.*** A split-dollar loan described in paragraph (e)(5)(iv)(A) of this section is tested under paragraph (e)(4)(ii) of this section to determine if the loan provides for sufficient interest. If the loan provides for sufficient interest, then section 7872 does not apply to the loan and the interest on the loan is taken into account under paragraph (f) of this section. If the loan does not provide for sufficient interest, then section 7872 applies to the loan and the loan is treated as a below-market demand loan subject to paragraph (e)(3)(iii) of this section. For each year that the loan is outstanding, however, the rate used in the determination of forgone interest under paragraph (e)(3)(iii) of this section is not the blended annual rate but rather is the AFR (based on annual compounding) appropriate for the loan's term as of the month in which the loan is made. *See* paragraph (e)(5)(iv)(C) of this section to determine the loan's term.

(C) ***Term of loan.*** For purposes of paragraph (e)(5)(iv)(B) of this section, the term of a gift split-dollar term loan is the term determined under paragraph (e)(4)(iii) of this section.

(D) ***Limited application for gift split-dollar term loans.*** The rules of paragraph (e)(5)(iv)(B) of this section apply to a gift split-dollar term loan only for Federal income tax purposes. For purposes of Chapter 12 of the Internal Revenue Code (relating to the gift tax), gift below-market split-dollar term loans are treated as term loans under section 7872(b) and paragraph (e)(4) of this section. *See* section 7872(d)(2).

(v) ***Split-dollar loans payable on the later of a term certain and another specified date*** —

(A) ***Applicability.*** This paragraph (e)(5)(v) applies to any split-dollar term loan payable upon the later of a term certain or—

(*1*) The death of an individual; or

(*2*) For a loan described in paragraph (e)(5)(iii)(A)(*1*) of this section, the date on which the condition to perform substantial future services by an individual ends.

(B) ***Treatment of loan*** —

(*1*) ***In general.*** A split-dollar loan described in paragraph (e)(5)(v)(A) of this section is a split-dollar term loan, subject to paragraph (e)(4) of this section.

(*2*) ***Term of the loan.*** The term of a split-dollar loan described in paragraph (e)(5)(v)(A) of this section is the term certain.

(*3*) ***Appropriate AFR.*** The appropriate AFR for a split-dollar loan described in paragraph (e)(5)(v)(A) of this section is based on a term of the longer of the term certain or the loan's expected term as determined under either paragraph (e)(5) (ii) or (iii) of this section, whichever is applicable.

(C) ***Retirement and reissuance.*** If a split-dollar loan described in paragraph (e)(5)(v)(A) of this section remains outstanding longer than the term certain, the split-dollar loan is treated for purposes of this section as retired and reissued at the end of the term certain for an amount of cash equal to the loan's adjusted issue price on that date. The reissued loan is subject to paragraph (e)(5) (ii) or (iii) of this section, whichever is applicable. However, the loan is not retested at that time to determine whether the loan provides for sufficient interest. For purposes of paragraph (e)(3)(iii) of this section, the appropriate AFR for the reissued loan is the AFR determined under paragraph (e)(5)(v)(B)(*3*) of this section on the day the loan was originally made.

(vi) ***Example.*** The provisions of this paragraph (e)(5) are illustrated by the following example:

> *Example.* (i) On January 1, 2009, Corporation *Y* and Shareholder *B,* a 65 year-old male, enter into a split-dollar life insurance arrangement under which *B* is named as the policy owner. On January 1, 2009, *Y* makes a $100,000 premium payment, repayable, without interest, from the death benefits of the underlying contract upon *B*'s death. The premium payment is a split-dollar term loan. Repayment of the premium payment is fully recourse to *B.* Assume the long-term AFR (based on annual compounding) at the time of the loan is 7 percent. Both *Y* and *B* use the calendar year as their taxable years.
> (ii) Based on Table 1 in § 1.72-9, the expected term of the loan is 15 years. Under paragraph (e)(5)(ii)(C) of this section, the long-term AFR (based on annual compounding) is the appropriate test rate. Based on a 15-year term and a discount rate of 7 percent, compounded annually (the long-term AFR), the present value of the payments under the loan is $36,244.60, determined as follows: $100,000/[1 + (0.07/

1)][15]. Under paragraph (e)(5)(ii)(B) of this section, this loan is a below-market split-dollar term loan because the imputed loan amount of $36,244.60 (the present value of the amount required to be repaid to *Y*) is less than the amount loaned ($100,000).

(iii) Under paragraph (e)(5)(ii)(B) of this section, the amount of forgone interest for 2009 (and each subsequent full calendar year that the loan remains outstanding) is $7,000, which is the amount of interest that would have been payable on the loan for the calendar year if interest accrued on the loan's adjusted issue price ($100,000) at the long-term AFR (7 percent, compounded annually). Under section 7872 and paragraph (e)(1)(i) of this section, on December 31, 2009, *Y* is treated as making a section 301 distribution to *B* of $7,000. In addition, *Y* has $7,000 of imputed interest income for 2009.

(f) ***Treatment of stated interest and OID for split-dollar loans*** —

(1) ***In general.*** If a split-dollar loan provides for stated interest or OID, the loan is subject to this paragraph (f), regardless of whether the split-dollar loan has sufficient interest. Except as otherwise provided in this section, split-dollar loans are subject to the same Internal Revenue Code and regulatory provisions for stated interest and OID as other loans. For example, the lender of a split-dollar loan that provides for stated interest must account for any qualified stated interest (as defined in § 1.1273-1(c)) under its regular method of accounting (for example, an accrual method or the cash receipts and disbursements method). *See* § 1.446-2 to determine the amount of qualified stated interest that accrues during an accrual period. In addition, the lender must account under § 1.1272-1 for any OID on a split-dollar loan. However, § 1.1272-1(c) does not apply to any split-dollar loan. *See* paragraph (h) of this section for a subsequent waiver, cancellation, or forgiveness of stated interest on a split-dollar loan.

(2) ***Term, payment schedule, and yield.*** The term of a split-dollar term loan determined under paragraph (e)(4)(iii) of this section (other than paragraph (e)(4)(iii)(C) of this section) applies to determine the split-dollar loan's term, payment schedule, and yield for all purposes of this section.

(g) ***Certain variable rates of interest*** —

(1) ***In general.*** This paragraph (g) provides rules for a split-dollar loan that provides for certain variable rates of interest. If this paragraph (g) does not apply to a variable rate split-dollar loan, the loan is subject to the rules in paragraph (j) of this section for split-dollar loans that provide for one or more contingent payments.

(2) ***Applicability*** —

(i) ***In general.*** Except as provided in paragraph (g)(2)(ii) of this section, this paragraph (g) applies to a split-dollar loan that is a variable rate debt instrument (within the meaning of § 1.1275-5) and that provides for stated interest at a qualified floating rate (or rates).

(ii) ***Interest rate restrictions.*** This paragraph (g) does not apply to a split-dollar loan if, as a result of interest rate restrictions (such as an interest rate cap), the expected yield of the loan taking the restrictions into account is significantly less than the expected yield of the loan without regard to the restrictions. Conversely, if reasonably symmetric interest rate caps and floors or reasonably symmetric governors are fixed throughout the term of the loan, these restrictions generally do not prevent this paragraph (g) from applying to the loan.

(3) ***Testing for sufficient interest*** —

(i) ***Demand loan.*** For purposes of paragraph (e)(3)(ii) of this section (regarding testing a split-dollar demand loan for sufficient interest), a split-dollar demand loan is treated as if it provided for a fixed rate of interest for each accrual period to which a qualified floating rate applies. The projected fixed rate for each accrual period is the value of the qualified floating rate as of the beginning of the calendar year that contains the last day of the accrual period.

(ii) ***Term loan.*** For purposes of paragraph (e)(4)(ii) of this section (regarding testing a split-dollar term loan for sufficient interest), a split-dollar term loan subject to this paragraph (g) is treated as if it provided for a fixed rate of interest for each accrual period to which a qualified floating rate applies. The projected fixed rate for each accrual period is the value of the qualified floating rate on the date the split-dollar term loan is made. The term of a split-dollar loan that is subject to this paragraph (g)(3)(ii) is determined using the rules in § 1.1274-4(c)(2). For example, if the loan provides for interest at a qualified floating rate that adjusts at varying intervals, the term of the loan is determined by reference to the longest interval between interest adjustment dates. *See* paragraph (e)(5) of this section for special rules relating to certain split-dollar term loans, such as a split-dollar term loan payable not later than the death of an individual.

(4) ***Interest accruals and imputed transfers.*** For purposes of paragraphs (e) and (f) of this section, the projected fixed rate or rates determined under paragraph (g)(3) of this section are used for purposes of determining the accrual of interest each period and the amount of any imputed transfers. Appropriate adjustments are made to the interest accruals and any imputed transfers to take into account any difference between the projected fixed rate and the actual rate.

(5) ***Example.*** The provisions of this paragraph (g) are illustrated by the following example:

> *Example.* (i) On January 1, 2010, Employer *V* and Employee *F* enter into a split-dollar life insurance arrangement under which *F* is named as the policy owner. On January 1, 2010, *V* makes a $100,000 premium payment, repayable in 15 years. The premium payment is a split-dollar term loan. Under the arrangement between the parties, interest is payable on the split-dollar loan each year on January 1, starting January 1, 2011, at a rate equal to the value of 1-year LIBOR as of the payment date. The short-term AFR (based on annual compounding) at the time of the loan is 7 percent. Repayment of both the premium payment and the interest due thereon is nonrecourse to *F.* However, the parties made a representation under paragraph (d)(2) of this section. Assume that the value of 1-year LIBOR on January 1, 2010, is 8 percent, compounded annually.
> (ii) The loan is subject to this paragraph (g) because the loan is a variable rate debt instrument that bears interest at a qualified floating rate. Because the interest rate is reset each year, under paragraph (g)(3)(ii) of this section, the short-term AFR (based on annual compounding) is the appropriate test rate used to determine whether the loan provides for sufficient interest. Moreover, under paragraph (g)(3)(ii) of this section, to determine whether the loan provides for sufficient interest, the loan is treated as if it provided for a fixed rate of interest equal to 8 percent, compounded annually. Based on a discount rate of 7 percent, compounded annually (the short-term AFR), the present value of the payments under the loan

is $109,107.91. The loan provides for sufficient interest because the loan's imputed loan amount of $109,107.91 (the present value of the payments) is more than the amount loaned of $100,000. Therefore, the loan is not a below-market split-dollar term loan, and interest on the loan is taken into account under paragraph (f) of this section.

(h) ***Adjustments for interest paid at less than the stated rate*** —

(1) ***Application*** —

(i) ***In general.*** To the extent required by this paragraph (h), if accrued but unpaid interest on a split-dollar loan is subsequently waived, cancelled, or forgiven by the lender, then the waiver, cancellation, or forgiveness is treated as if, on that date, the interest had in fact been paid to the lender and retransferred by the lender to the borrower. The amount deemed transferred and retransferred is determined under paragraph (h) (2) or (3) of this section. Except as provided in paragraph (h)(1)(iv) of this section, the amount treated as retransferred by the lender to the borrower under paragraph (h) (2) or (3) of this section is increased by the deferral charge determined under paragraph (h)(4) of this section. To determine the character of any retransferred amount, *see* paragraph (e)(1)(i) of this section. *See* § 1.61-22(b)(6) for the treatment of amounts other than interest on a split-dollar loan that are waived, cancelled, or forgiven by the lender.

(ii) ***Certain split-dollar term loans.*** For purposes of this paragraph (h), a split-dollar term loan described in paragraph (e)(5) of this section (for example, a split-dollar term loan payable not later than the death of an individual) is subject to the rules of paragraph (h)(3) of this section.

(iii) ***Payments treated as a waiver, cancellation, or forgiveness.*** For purposes of this paragraph (h), if a payment by the lender (or a person related to the lender) to the borrower is, in substance, a waiver, cancellation, or forgiveness of accrued but unpaid interest, the payment by the lender (or person related to the lender) is treated as an amount retransferred to the borrower by the lender under this paragraph (h) and is subject to the deferral charge in paragraph (h)(4) of this section to the extent that the payment is, in substance, a waiver, cancellation, or forgiveness of accrued but unpaid interest.

(iv) ***Treatment of certain nonrecourse split-dollar loans.*** For purposes of this paragraph (h), if the parties to a split-dollar life insurance arrangement make the representation described in paragraph (d)(2) of this section and the interest actually paid on the split-dollar loan is less than the interest required to be accrued on the split-dollar loan, the excess of the interest required to be accrued over the interest actually paid is treated as waived, cancelled, or forgiven by the lender under this paragraph (h). However, the amount treated as retransferred under paragraph (h)(1)(i) of this section is not increased by the deferral charge in paragraph (h)(4) of this section.

(2) ***Split-dollar term loans.*** In the case of a split-dollar term loan, the amount of interest deemed transferred and retransferred for purposes of paragraph (h)(1) of this section is determined as follows:

(i) If the loan's stated rate is less than or equal to the appropriate AFR (the AFR used to test the loan for sufficient interest under paragraph (e) of this section), the amount of interest deemed transferred and retransferred pursuant to this paragraph (h) is the excess of the amount of interest payable at the stated rate over the interest actually paid.

(ii) If the loan's stated rate is greater than the appropriate AFR (the AFR used to test the loan for sufficient interest under paragraph (e) of this section), the amount of interest deemed transferred and retransferred pursuant to this paragraph (h) is the excess, if any, of the amount of interest payable at the AFR over the interest actually paid.

(3) ***Split-dollar demand loans.*** In the case of a split-dollar demand loan, the amount of interest deemed transferred and retransferred for purposes of paragraph (h)(1) of this section is equal to the aggregate of—

(i) For each year that the split-dollar demand loan was outstanding in which the loan was a below-market split-dollar demand loan, the excess of the amount of interest payable at the stated rate over the interest actually paid allocable to that year; plus

(ii) For each year that the split-dollar demand loan was outstanding in which the loan was not a below-market split-dollar demand loan, the excess, if any, of the amount of interest payable at the appropriate rate used for purposes of imputation for that year over the interest actually paid allocable to that year.

(4) ***Deferral charge.*** The Commissioner may prescribe the method for determining the deferral charge treated as retransferred by the lender to the borrower under paragraph (h)(1) of this section. Until the Commissioner prescribes otherwise, the deferral charge is determined under paragraph (h)(4)(i) of this section for a split-dollar term loan subject to paragraph (h)(2) of this section and under paragraph (h)(4)(ii) of this section for a split-dollar demand loan subject to paragraph (h)(3) of this section.

(i) ***Split-dollar term loan.*** The deferral charge for a split-dollar term loan subject to paragraph (h)(2) of this section is determined by multiplying the hypothetical underpayment by the applicable underpayment rate, compounded daily, for the period from the date the split-dollar loan was made to the date the interest is waived, cancelled, or forgiven. The hypothetical underpayment is equal to the amount determined under paragraph (h)(2) of this section, multiplied by the highest rate of income tax applicable to the borrower (for example, the highest rate in effect under section 1 for individuals) for the taxable year in which the split-dollar term loan was made. The applicable underpayment rate is the average of the quarterly underpayment rates in effect under section 6621(a)(2) for the period from the date the split-dollar loan was made to the date the interest is waived, cancelled, or forgiven.

(ii) ***Split-dollar demand loan.*** The deferral charge for a split-dollar demand loan subject to paragraph (h)(3) of this section is the sum of the following amounts determined for each year the loan was outstanding (other than the year in which the waiver, cancellation, or forgiveness occurs): For each year the loan was outstanding, multiply the hypothetical underpayment for the year by the applicable underpayment rate, compounded daily, for the applicable period. The hypothetical underpayment is equal to the amount determined under paragraph (h)(3) of this section for each year, multiplied by the highest rate of income tax applicable to the borrower for that year (for example, the highest rate in effect under section 1 for individuals). The applicable underpayment rate is the average of the quarterly underpayment rates in effect under section 6621(a)(2) for the applicable period. The applicable period for a year is the period of time from the last day of that year until the date the interest is waived, cancelled, or forgiven.

(5) ***Examples.*** The provisions of this paragraph (h) are illustrated by the following examples:

> *Example 1.* (i) On January 1, 2009, Employer *Y* and Employee *B* entered into a split-dollar life

insurance arrangement under which *B* is named as the policy owner. On January 1, 2009, *Y* made a $100,000 premium payment, repayable on December 31, 2011, with interest of 5 percent, compounded annually. The premium payment is a split-dollar term loan. Assume the short-term AFR (based on annual compounding) at the time the loan was made was 5 percent. Repayment of both the premium payment and the interest due thereon was fully recourse to *B*. On December 31, 2011, *Y* is repaid $100,000 but *Y* waives the remainder due on the loan ($15,762.50). Both *Y* and *B* use the calendar year as their taxable years.
(ii) When the split-dollar term loan was made, the loan was not a below-market loan under paragraph (e)(4)(ii) of this section. Under paragraph (f) of this section, *Y* was required to accrue compound interest of 5 percent each year the loan remained outstanding. *B,* however, was not entitled to any deduction for this interest under paragraph (c) of this section.

(iii) Under paragraph (h)(1) of this section, the waived amount is treated as if, on December 31, 2011, it had in fact been paid to *Y* and was then retransferred by *Y* to *B*. The amount deemed transferred to *Y* and retransferred to *B* equals the excess of the amount of interest payable at the stated rate ($15,762.50) over the interest actually paid ($0), or $15,762.50. In addition, the amount deemed retransferred to *B* is increased by the deferral charge determined under paragraph (h)(4) of this section. Because of the employment relationship between *Y* and *B,* the total retransferred amount is treated as compensation paid by *Y* to *B*.

Example 2. (i) On January 1, 2009, Employer *Y* and Employee *B* entered into a split-dollar life insurance arrangement under which *B* is named as the policy owner. On January 1, 2009, *Y* made a $100,000 premium payment, repayable on the demand of *Y,* with interest of 7 percent, compounded annually. The premium payment is a split-dollar demand loan. Assume the blended annual rate (based on annual compounding) in 2009 was 5 percent and in 2010 was 6 percent. Repayment of both the premium payment and the interest due thereon was fully recourse to *B*. On December 31, 2010, *Y* demands repayment and is repaid its $100,000 premium payment in full; however, *Y* waives all interest due on the loan. Both *Y* and *B* use the calendar year as their taxable years.
(ii) For each year that the split-dollar demand loan was outstanding, the loan was not a below-market loan under paragraph (e)(3)(ii) of this section. Under paragraph (f) of this section, *Y* was required to accrue compound interest of 7 percent each year the loan remained outstanding. *B,* however, was not entitled to any deduction for this interest under paragraph (c) of this section.

(iii) Under paragraph (h)(1) of this section, a portion of the waived interest is treated as if, on December 31, 2010, it had in fact been paid to *Y* and was then retransferred by *Y* to *B*. The amount of interest deemed transferred to *Y* and retransferred to *B* equals the excess, if any, of the amount of interest payable at the blended annual rate for each year the loan is outstanding over the interest actually paid with respect to that year. For 2009, the interest

payable at the blended annual rate is $5,000 ($100,000 × 0.05). For 2010, the interest payable at the blended annual rate is $6,000 ($100,000 × 0.06). Therefore, the amount of interest deemed transferred to *Y* and retransferred to *B* equals $11,000. In addition, the amount deemed retransferred to *B* is increased by the deferral charge determined under paragraph (h)(4) of this section. Because of the employment relationship between *Y* and *B,* the total retransferred amount is treated as compensation paid by *Y* to *B*.

(i) [Reserved]

(j) ***Split-dollar loans that provide for contingent payments*** —

(1) ***In general.*** Except as provided in paragraph (j)(2) of this section, this paragraph (j) provides rules for a split-dollar loan that provides for one or more contingent payments. This paragraph (j), rather than § 1.1275-4, applies to split-dollar loans that provide for one or more contingent payments.

(2) ***Exceptions*** —

(i) ***Certain contingencies.*** For purposes of this section, a split-dollar loan does not provide for contingent payments merely because—

(A) The loan provides for options described in paragraph (e)(4)(iii)(B) of this section (for example, certain call options, put options, and options to extend); or

(B) The loan is described in paragraph (e)(5) of this section (relating to certain split-dollar term loans, such as a split-dollar term loan payable not later than the death of an individual).

(ii) ***Insolvency and default.*** For purposes of this section, a payment is not contingent merely because of the possibility of impairment by insolvency, default, or similar circumstances. However, if any payment on a split-dollar loan is nonrecourse to the borrower, the payment is a contingent payment for purposes of this paragraph (j) unless the parties to the arrangement make the written representation provided for in paragraph (d)(2) of this section.

(iii) ***Remote and incidental contingencies.*** For purposes of this section, a payment is not a contingent payment merely because of a contingency that, as of the date the split-dollar loan is made, is either remote or incidental (within the meaning of § 1.1275-2(h)).

(iv) ***Exceptions for certain split-dollar loans.*** This paragraph (j) does not apply to a split-dollar loan described in § 1.1272-1(d) (certain debt instruments that provide for a fixed yield) or a split-dollar loan described in paragraph (g) of this section (relating to split-dollar loans providing for certain variable rates of interest).

(3) ***Contingent split-dollar method*** —

(i) ***In general.*** If a split-dollar loan provides for one or more contingent payments, then the parties account for the loan under the contingent split-dollar method. In general, except as provided in this paragraph (j), this method is the same as the noncontingent bond method described in § 1.1275-4(b).

(ii) ***Projected payment schedule*** —

(A) ***Determination of schedule.*** No comparable yield is required to be determined. The projected payment schedule for the loan includes all noncontingent payments and a projected payment for each contingent payment. The projected payment for a contingent payment is the lowest possible value of the payment. The projected payment schedule, however, must produce a yield that is not less than zero. If the projected payment schedule produces a negative yield, the schedule must be reasonably adjusted to produce a yield of zero.

(B) ***Split-dollar term loans payable upon the death of an individual.*** If a split-dollar term loan described in paragraph (e)(5)(ii)(A) or (v)(A)(*1*) of this section provides for one or more contingent payments, the projected payment schedule is determined based on the term of the loan as determined under paragraph (e)(5)(ii)(C) or (v)(B)(*2*) of this section, whichever is applicable.

(C) ***Certain split-dollar term loans conditioned on the future performance of substantial services by an individual.*** If a split-dollar term loan described in paragraph (e)(5)(iii)(A)(*1*) or (v)(A)(*2*) of this section provides for one or more contingent payments, the projected payment schedule is determined based on the term of the loan as determined under paragraph (e)(5)(iii)(C) or (v)(B)(*2*) of this section, whichever is applicable.

(D) ***Demand loans.*** If a split-dollar demand loan provides for one or more contingent payments, the projected payment schedule is determined based on a reasonable assumption as to when the lender will demand repayment.

(E) ***Borrower/lender consistency.*** Contrary to § 1.1275-4(b)(4)(iv), the lender rather than the borrower is required to determine the projected payment schedule and to provide the schedule to the borrower and to any indirect participant as described in paragraph (e)(2) of this section. The lender's projected payment schedule is used by the lender, the borrower, and any indirect participant to compute interest accruals and adjustments.

(iii) ***Negative adjustments.*** If the issuer of a split-dollar loan is not allowed to deduct interest or OID (for example, because of section 163(h) or 264), then the issuer is not required to include in income any negative adjustment carryforward determined under § 1.1275-4(b)(6)(iii)(C) on the loan, except to the extent that at maturity the total payments made over the life of the loan are less than the issue price of the loan.

(4) ***Application of section 7872 —***

(i) ***Determination of below-market status.*** The yield based on the projected payment schedule determined under paragraph (j)(3) of this section is used to determine whether the loan is a below-market split-dollar loan under paragraph (e) of this section.

(ii) ***Adjustment upon the resolution of a contingent payment.*** To the extent that interest has accrued under section 7872 on a split-dollar loan and the interest would not have accrued under this paragraph (j) in the absence of section 7872, the lender is not required to recognize income under § 1.1275-4(b) for a positive adjustment and the borrower is not treated as having interest expense for a positive adjustment. To the same extent, there is a reversal of the tax consequences imposed under paragraph (e) of this section for the prior imputed transfer from the lender to the borrower. This reversal is taken into account in determining adjusted gross income.

(5) ***Examples.*** The following examples illustrate the rules of this paragraph (j). For purposes of this paragraph (j)(5), assume that the contingent payments are neither remote nor incidental. The examples are as follows:

Example 1. (i) On January 1, 2010, Employer *T* and Employee *G* enter into a split-dollar life insurance arrangement under which *G* is named as the policy owner. On January 1, 2010, *T* makes a $100,000 premium payment. On December 31, 2013, *T* will be repaid an amount equal to the premium payment plus an amount based on the increase, if any, in the price of a specified commodity for the period the loan is outstanding. The premium payment is a split-dollar term loan. Repayment of both the premium payment and the interest due thereon is recourse to *G.* Assume that the appropriate AFR for this loan, based on annual compounding, is 7 percent. Both *T* and *G* use the calendar year as their taxable years.
(ii) Under this paragraph (j), the split-dollar term loan between *T* and *G* provides for a contingent payment. Therefore, the loan is subject to the contingent split-dollar method. Under this method, the projected payment schedule for the loan provides for a noncontingent payment of $100,000 and a projected payment of $0 for the contingent payment (because it is the lowest possible value of the payment) on December 31, 2013.

(iii) Based on the projected payment schedule and a discount rate of 7 percent, compounded annually (the appropriate AFR), the present value of the payments under the loan is $76,289.52. Under paragraphs (e)(4) and (j)(4)(i) of this section, the loan does not provide for sufficient interest because the loan's imputed loan amount of $76,289.52 (the present value of the payments) is less than the amount loaned of $100,000. Therefore, the loan is a below-market split-dollar term loan and the loan is recharacterized as consisting of two portions: an imputed loan amount of $76,289.52 and an imputed transfer of $23,710.48 (amount loaned of $100,000 minus the imputed loan amount of $76,289.52).

(iv) In accordance with section 7872(b)(1) and paragraph (e)(4)(iv) of this section, on the date the loan is made, *T* is treated as transferring to *G* $23,710.48 (the imputed transfer) as compensation. In addition, *T* must take into account as OID an amount equal to the imputed transfer. See § 1.1272-1 for the treatment of OID.

Example 2. (i) Assume, in addition to the facts in *Example 1,* that on December 31, 2013, *T* receives $115,000 (its premium payment of $100,000 plus $15,000).
(ii) Under the contingent split-dollar method, when the loan is repaid, there is a $15,000 positive adjustment ($15,000 actual payment minus $0 projected payment). Under paragraph (j)(4) of this section, because *T* accrued imputed interest under section 7872 on this split-dollar loan to *G* and this interest would not have accrued in the absence of section 7872, *T* is not required to include the positive adjustment in income, and *G* is not treated as having interest expense for the positive adjustment. To the same extent, *T* must include in income, and *G* is entitled to deduct, $15,000 to reverse their respective prior tax consequences

imposed under paragraph (e) of this section (*T*'s prior deduction for imputed compensation deemed paid to *G* and *G*'s prior inclusion of this amount). *G* takes the reversal into account in determining adjusted gross income. That is, the $15,000 is an "above-the-line" deduction, whether or not *G* itemizes deductions.

Example 3. (i) Assume the same facts as in *Example 2,* except that on December 31, 2013, *T* receives $127,000 (its premium payment of $100,000 plus $27,000).
(ii) Under the contingent split-dollar method, when the loan is repaid, there is a $27,000 positive adjustment ($27,000 actual payment minus $0 projected payment). Under paragraph (j)(4) of this section, because *T* accrued imputed interest of $23,710.48 under section 7872 on this split-dollar loan to *G* and this interest would not have accrued in the absence of section 7872, *T* is not required to include $23,710.48 of the positive adjustment in income, and *G* is not treated as having interest expense for the positive adjustment. To the same extent, in 2013, *T* must include in income, and *G* is entitled to deduct, $23,710.48 to reverse their respective prior tax consequences imposed under paragraph (e) of this section (*T*'s prior deduction for imputed compensation deemed paid to *G* and *G*'s prior inclusion of this amount). *G* and *T* take these reversals into account in determining adjusted gross income. Under the contingent split-dollar method, *T* must include in income $3,289.52 upon resolution of the contingency ($27,000 positive adjustment minus $23,710.48).

(k) ***Payment ordering rule.*** For purposes of this section, a payment made by the borrower to or for the benefit of the lender pursuant to a split-dollar life insurance arrangement is applied to all direct and indirect split-dollar loans in the following order—

(1) A payment of interest to the extent of accrued but unpaid interest (including any OID) on all outstanding split-dollar loans in the order the interest accrued;

(2) A payment of principal on the outstanding split-dollar loans in the order in which the loans were made;

(3) A payment of amounts previously paid by a non-owner pursuant to a split-dollar life insurance arrangement that were not reasonably expected to be repaid by the owner; and

(4) Any other payment with respect to a split-dollar life insurance arrangement, other than a payment taken into account under paragraphs (k)(1), (2), and (3) of this section.

(l) [Reserved]

(m) ***Repayments received by a lender.*** Any amount received by a lender under a life insurance contract that is part of a split-dollar life insurance arrangement is treated as though the amount had been paid to the borrower and then paid by the borrower to the lender. Any amount treated as received by the borrower under this paragraph (m) is subject to other provisions of the Internal Revenue Code as applicable (for example, sections 72 and 101(a)). The lender must take the amount into account as a payment received with respect to a split-dollar loan, in accordance with paragraph (k) of this section. No amount received by a lender with respect to a split-dollar loan is treated as an amount received by reason of the death of the insured.

(n) ***Effective date*** —

(1) ***General rule.*** This section applies to any split-dollar life insurance arrangement entered into after September 17, 2003. For purposes of this section, an arrangement is entered into as determined under § 1.61-22(j)(1)(ii).

(2) ***Modified arrangements treated as new arrangements.*** If an arrangement entered into on or before September 17, 2003 is materially modified (within the meaning of § 1.61-22(j)(2)) after September 17, 2003, the arrangement is treated as a new arrangement entered into on the date of the modification.

[T.D. 9092, 68 FR 54352, Sept. 17, 2003]

§ 1.7872-16 Loans to an exchange facilitator under § 1.468B-6.

(a) ***Exchange facilitator loans.*** This section provides rules in applying section 7872 to an exchange facilitator loan (within the meaning of § 1.468B-6(c)(1)). For purposes of this section, the terms *deferred exchange, exchange agreement, exchange facilitator, exchange funds, qualified intermediary, replacement property*, and *taxpayer* have the same meanings as in § 1.468B-6(b).

(b) ***Treatment as demand loans.*** For purposes of section 7872, except as provided in paragraph (d) of this section, an exchange facilitator loan is a demand loan.

(c) ***Treatment as compensation-related loans.*** If an exchange facilitator loan is a below-market loan, the loan is a compensation-related loan under section 7872(c)(1)(B).

(d) ***Applicable Federal rate (AFR) for exchange facilitator loans.*** For purposes of section 7872, in the case of an exchange facilitator loan, the applicable Federal rate is the lower of the short-term AFR in effect under section 1274(d)(1) (as of the day on which the loan is made), compounded semiannually, or the 91-day rate. For purposes of the preceding sentence, the 91-day rate is equal to the investment rate on a 13-week (generally 91-day) Treasury bill with an issue date that is the same as the date that the exchange facilitator loan is made or, if the two dates are not the same, with an issue date that most closely precedes the date that the exchange facilitator loan is made.

(e) ***Use of approximate method permitted.*** The taxpayer and exchange facilitator may use the approximate method to determine the amount of forgone interest on any exchange facilitator loan.

(f) ***Exemption for certain below-market exchange facilitator loans.*** If an exchange facilitator loan is a below-market loan, the loan is not eligible for the exemptions from section 7872 listed under § 1.7872-5T. However, the loan may be eligible for the exemption from section 7872 under § 1.7872-5(b)(16) (relating to exchange facilitator loans in which the amount treated as loaned does not exceed $2,000,000).

(g) ***Effective/applicability date.*** This section applies to exchange facilitator loans issued on or after October 8, 2008.

(h) ***Example.*** The provisions of this section are illustrated by the following example:

> *Example.* (i) T enters into a deferred exchange with QI, a qualified intermediary. The exchange is governed by an exchange agreement. The exchange funds held by QI pursuant to the exchange agreement are treated as loaned to QI under § 1.468B-6(c)(1). The loan between T and QI is an exchange facilitator loan. The exchange agreement between T and QI provides that no earnings will be paid to T. On December 1, 2008, T transfers property to QI, QI transfers the property to a purchaser for $2,100,000, and QI deposits

$2,100,000 in a money market account. On March 1, 2009, QI uses $2,100,000 of the funds in the account to purchase replacement property identified by T, and transfers the replacement property to T. The amount loaned for purposes of section 7872 is $2,100,000 and the loan is outstanding for three months. For purposes of section 7872, under paragraph (d) of this section, T uses the 91-day rate, which is 4 percent, compounded semi-annually. T uses the approximate method for purposes of section 7872.
(ii) Under paragraphs (b) and (c) of this section, the loan from T to QI is a compensation-related demand loan. Because there is no interest payable on the loan from T to QI, the loan is a below-market loan under section 7872. The loan is not exempt under § 1.7872-5(b)(16) because the amount treated as loaned exceeds $2,000,000. Under section 7872(e)(2), the amount of forgone interest on the loan for 2008 is $7000 ($2,100,000*.04/2*1/6). Under section 7872(e)(2), the amount of forgone interest for 2009 is $14,000 ($2,100,000*.04/2*2/6). The $7000 for 2008 is deemed transferred as compensation by T to QI and retransferred as interest by QI to T on December 31, 2008. The $14,000 for 2009 is deemed transferred as compensation by T to QI and retransferred as interest by QI to T on March 1, 2009.

[T.D. 9413, 73 FR 39622, July 10, 2008]

§ 1.7874-1 Disregard of affiliate-owned stock.

(a) ***Scope.*** Section 7874(c)(2)(A) provides that stock of the foreign acquiring corporation held by members of the expanded affiliated group shall not be taken into account in determining ownership for purposes of section 7874(a)(2)(B)(ii). This section provides rules under section 7874(c)(2)(A). The rules provided in this section are also subject to section 7874(c)(4). For definitions that apply for purposes of this section, see 1.7874-12.

(b) ***General rule.*** Except as provided in paragraph (c) of this section, for purposes of determining the ownership percentage described in section 7874(a)(2)(B)(ii), stock held by one or more members of the EAG is not included in either the numerator or the denominator of the ownership fraction.

(c) ***Exceptions to general rule*** —

(1) ***Overview.*** Stock held by one or more members of the EAG shall be included in the denominator, but not in the numerator, of the ownership fraction, if the domestic entity acquisition qualifies as an *internal group restructuring* or results in a *loss of control*, as described in paragraph (c)(2) and (c)(3) of this section. For rules addressing the interaction of this section and other rules, see paragraph (d) of this section.

(2) ***Internal group restructuring.*** For purposes of paragraph (c)(1) of this section, a domestic entity acquisition qualifies as an internal group restructuring if:

(i) Before the domestic entity acquisition, 80 percent or more of the stock (by vote and value) or the capital and profits interest, as applicable, of the domestic entity was held directly or indirectly by the corporation that is the common parent of the EAG after the acquisition; and

(ii) After the domestic entity acquisition, 80 percent or more of the stock (by vote and value) of the foreign acquiring corporation is held directly or indirectly by such common parent.

(iii) ***Special rule.*** If § 1.7874-6(c)(2) applies for purposes of applying section 7874(c)(2)(A) and this section, then, for purposes of paragraph (c)(2) of this section (and so much of paragraph (c)(1) of this section as relates to paragraph (c)(2) of this section), the determination of the EAG after

the domestic entity acquisition, as well as the determination of stock held by one or more members of the EAG after the domestic entity acquisition, is made without regard to one or more transfers (other than by issuance), in a transaction (or series of transactions) after and related to the acquisition, of stock of the acquiring foreign corporation by one or more members of the foreign-parented group described in § 1.7874-6(c)(2)(i).

(3) ***Loss of control.*** For purposes of paragraph (c)(1) of this section, the domestic entity acquisition results in a loss of control if after the acquisition, the former domestic entity shareholders or former domestic entity partners do not hold, in the aggregate, directly or indirectly, more than 50 percent of the stock (by vote or value) of any member of the EAG.

(d) ***Interaction of expanded affiliated group rules with other rules*** —

(1) ***Exclusion rules.*** Stock that is excluded from the denominator of the ownership fraction pursuant to § 1.7874-4(b), 1.7874-7(b), 1.7874-8(b), 1.7874-9(b), or section 7874(c)(4) is taken into account for purposes of determining whether an entity is a member of the expanded affiliated group for purposes of applying section 7874(c)(2)(A) and paragraph (b) of this section and determining whether a domestic entity acquisition qualifies as an internal group restructuring or results in a loss of control, as described in paragraphs (c)(2) and (3) of this section, respectively. However, such stock is excluded from the denominator of the ownership fraction regardless of whether it otherwise would be included in the denominator of the ownership fraction as a result of the application of paragraph (c) of this section. See *Example 8* and *Example 9* of § 1.7874-4(i) for illustrations of the application of this paragraph (d)(1).

(2) ***NOCD rule.*** Stock of the foreign acquiring corporation treated as received by former domestic entity shareholders or former domestic entity partners, as applicable, under § 1.7874-10(b) is not taken into account for purposes of determining whether an entity is a member of the expanded affiliated group for purposes of applying section 7874(c)(2)(A) and paragraph (b) of this section and determining whether a domestic entity acquisition qualifies as an internal group restructuring or results in a loss of control, as described in paragraphs (c)(2) and (3) of this section, respectively. However, such stock is included in the numerator and denominator of the ownership fraction, except to the extent that it is treated as held by a member of the EAG and is excluded from the numerator or both the numerator and the denominator, as applicable, under section 7874(c)(2)(A) or paragraphs (b) or (c) of this section.

(e) ***Treatment of certain hook stock.*** This paragraph applies to stock of a corporation that is held by an entity in which at least 50 percent of the stock (by vote or value) or at least 50 percent of the capital or profits interest, as applicable, in such entity, is held directly or indirectly by the corporation. The stock to which this paragraph applies shall not be included in either the numerator or denominator of any fraction for the following purposes:

(1) For applying paragraph (c)(1) of this section; and

(2) For determining whether the domestic entity acquisition qualifies as an internal group restructuring (described in paragraph (c)(2) of this section) or results in a loss of control (described in paragraph (c)(3) of this section).

(f) ***Stock held by a partnership.*** For purposes of this section, each partner in a partnership shall be treated as holding its proportionate share of stock held by the partnership, as determined under the rules and principles of sections 701 through 777.

(g) ***Treatment of transactions related to the acquisition.*** Except as provided in paragraph (c)(2)(iii) of this section, all transactions that are related to an acquisition are taken into account in applying this section.

(h) ***Examples.*** The application of this section is illustrated by the following examples. It is assumed that all transactions in the examples occur after March 4, 2003. In all the examples, if an entity or other person is not described as either domestic or foreign, it may be either domestic or foreign. In addition, each entity has only a single class of equity outstanding. Finally, the analysis of the following examples is limited to a discussion of issues under section 7874, even though the examples may raise other issues (for example, under section 367).

Example 1. Disregard of hook stock. (i) *Facts.* USS, a domestic corporation, has 100 shares of stock outstanding. USS's stock is held by a group of individuals. Pursuant to a plan, USS forms FS, a foreign corporation, and transfers to FS the stock of several wholly owned foreign corporations, in exchange for 90 shares of FS stock. FS then forms Merger Sub, a domestic corporation. Under a merger agreement and state law, Merger Sub merges into USS, with USS surviving the merger. In exchange for their USS stock, the former shareholders of USS receive, in the aggregate, 100 shares of newly issued FS stock. As a result of the merger FS holds 100 percent of the USS stock. USS continues to hold 90 shares of FS stock.
(ii) *Analysis.* FS has indirectly acquired substantially all the properties held directly or indirectly by USS pursuant to a plan. After the acquisition, the former shareholders of USS hold 100 shares of FS stock by reason of holding stock in USS, and USS holds 90 shares of FS stock. Under paragraph (b) of this section, the 90 shares of FS stock held by USS, a member of the EAG, are not included in either the numerator or the denominator of the ownership fraction. Accordingly, the ownership fraction is 100/100. If the condition in section 7874(a)(2)(B)(iii) is satisfied, FS is a surrogate foreign corporation which is treated as a domestic corporation under section 7874(b).

Example 2. Internal group restructuring; wholly owned corporation. (i) *Facts.* P, a corporation, owns all 100 outstanding shares of USS, a domestic corporation. USS forms FS, a foreign corporation, and transfers all its assets to FS in exchange for all 100 shares of the stock of FS, in a reorganization described in section 368(a)(1). P exchanges its USS stock for FS stock under section 354.
(ii) *Analysis.* FS has directly acquired substantially all the properties held directly or indirectly by USS pursuant to a plan. The acquisition is an internal group restructuring described in paragraph (c)(2) of this section because P, the common parent of the EAG after the acquisition, held directly or indirectly 80 percent or more of the stock (by vote and value) of USS before the acquisition, and after the acquisition, P holds directly or indirectly 80 percent or more of the stock (by vote and value) of FS. Accordingly, under paragraph (c)(1) of this section, the FS stock held by P is included in the denominator, but not in the numerator of the ownership fraction. Therefore, the ownership fraction is 0/100. FS is not a surrogate foreign corporation.

Example 3. Internal group restructuring; wholly owned corporation. (i) *Facts.* The facts are the same as in *Example 2*, except that USS does not transfer any of its assets to FS. Instead, P

transfers all 100 shares of USS stock to FS in exchange for all 100 shares of FS stock.
(ii) *Analysis.* FS has indirectly acquired substantially all the properties held directly or indirectly by USS pursuant to a plan. The acquisition is an internal group restructuring described in paragraph (c)(2) of this section because P, the common parent of the EAG after the acquisition, held directly or indirectly 80 percent or more of the stock (by vote and value) of USS before the acquisition, and after the acquisition, P holds directly or indirectly 80 percent or more of the stock (by vote and value) of FS. Accordingly, under paragraph (c)(1) of this section, the FS stock held by P is included in the denominator, but not in the numerator of the ownership fraction. Accordingly, the ownership fraction is 0/100. FS is not a surrogate foreign corporation.

Example 4. Internal group restructuring; less than wholly owned corporation. (i) *Facts.* The facts are the same as in *Example 3*, except that P holds 85 shares of USS stock. The remaining 15 shares of USS stock are held by A, a person unrelated to P. P and A transfer their shares of USS stock to FS in exchange for 85 and 15 shares of FS stock, respectively.
(ii) *Analysis.* FS has indirectly acquired substantially all the properties held directly or indirectly by USS pursuant to a plan. The acquisition is an internal group restructuring described in paragraph (c)(2) of this section because P, the common parent of the EAG after the acquisition, held directly or indirectly 80 percent or more of the stock (by vote and value) of USS before the acquisition, and after the acquisition P holds directly or indirectly 80 percent or more of the stock (by vote and value) of FS. Therefore, under paragraph (c)(1) of this section, the FS stock held by P is included in the denominator, but not in the numerator of the ownership fraction. Accordingly, the ownership fraction is 15/100. FS is not a surrogate foreign corporation.

Example 5. Internal group restructuring exception not applicable; less than 80 percent owned corporation. (i) *Facts.* The facts are the same as in Example 2, except that P owns 55 shares of USS stock, and A, a person unrelated to P, holds 45 shares of USS stock. P and A exchange their shares of USS stock for 55 shares and 45 shares of FS stock, respectively.
(ii) *Analysis.* FS has acquired substantially all the properties held directly or indirectly by USS pursuant to a plan. P, the common parent of the EAG after the acquisition, did not hold directly or indirectly 80 percent or more of the stock (by vote and value) of USS before the acquisition, and after the acquisition P does not hold directly or indirectly 80 percent or more of the stock (by vote and value) of FS. Thus, the acquisition is not an internal group restructuring described in paragraph (c)(1) of this section, and the general rule of paragraph (b) of this section applies. Under paragraph (b) of this section, the FS stock held by P, a member of the EAG, is not included in either the numerator or the denominator of the ownership fraction. Accordingly, the ownership fraction is 45/45. If the condition in section 7874(a)(2)(B)(iii) is satisfied, FS is a surrogate foreign corporation which is treated as a domestic corporation under section 7874(b).

Example 6. Internal group restructuring; hook stock. (i) *Facts.* USS, a domestic corporation, has 100 shares of stock outstanding. P, a corporation, holds 80 shares of USS stock. The remaining 20 shares of USS stock are held by A, a person unrelated to P. USS owns all 30 outstanding shares of

FS, a foreign corporation. Pursuant to a plan, FS forms Merger Sub, a domestic corporation. Under a merger agreement and state law, Merger Sub merges into USS, with USS surviving the merger as a subsidiary of FS. In exchange for their USS stock, P and A, the former shareholders of USS, respectively receive 56 and 14 shares of FS stock. USS continues to hold 30 shares of FS stock.
(ii) *Analysis.* FS has indirectly acquired substantially all the properties held directly or indirectly by USS pursuant to a plan. Under paragraph (b) of this section, the shares of FS stock held by P and USS, both of which are members of the EAG, are not included in either the numerator or denominator of the ownership fraction, unless the acquisition results in an internal group restructuring or loss of control of USS such that the exception of paragraph (c)(1) of this section applies. In determining whether the acquisition of USS is an internal group restructuring, under paragraph (e)(2) of this section, the FS stock held by USS is disregarded. Because P held directly or indirectly 80 percent or more of the stock (by vote and value) of USS before the acquisition, and after the acquisition P holds directly or indirectly 80 percent or more of the stock (by vote and value) of FS (when disregarding the FS stock held by USS), the acquisition is an internal group restructuring and the exception of paragraph (c)(1) of this section applies. Accordingly, when determining whether FS is a surrogate foreign corporation, the FS stock held by P is included in the denominator, but not the numerator of the ownership fraction. However, under paragraph (b) of this section, the FS stock held by USS is not included in either the numerator or denominator of the ownership fraction. Accordingly, the ownership fraction is 14/70, or 20 percent, since only the stock held by A is included in the numerator, and the stock held by both P and A is included in the denominator. Accordingly, FS is not a surrogate foreign corporation.

Example 7. Loss of control. (i) *Facts.* P, a corporation, holds all the outstanding stock of USS, a domestic corporation. B, a corporation unrelated to P, holds all 60 outstanding shares of FS, a foreign corporation. P transfers to FS all the outstanding stock of USS in exchange for 40 newly issued shares of FS.
(ii) *Analysis.* FS has indirectly acquired substantially all the properties held directly or indirectly by USS pursuant to a plan. After the acquisition, B holds 60 percent of the outstanding shares of the FS stock. Accordingly, B, FS and USS are members of an EAG. After the acquisition, P does not hold directly or indirectly more than 50 percent of the stock (by vote or value) of any member of the EAG and, thus, the acquisition results in a loss of control described in paragraph (c)(3) of this section. Accordingly, under paragraph (c)(1) of this section, the FS stock owned by B is included in the denominator, but not in the numerator, of the ownership fraction. Therefore, the ownership fraction is 40/100. FS is not a surrogate foreign corporation.

Example 8. Internal group restructuring; partnership. (i) *Facts.* LLC, a Delaware limited liability company, is engaged in the conduct of a trade or business. P, a corporation, holds 90 percent of the interests of LLC. A, a person unrelated to P, holds 10 percent of the interests of LLC. LLC has not elected to be treated as an association taxable as a corporation. P and A transfer their interests in LLC to FS, a newly formed foreign corporation, in exchange for 90 shares and 10

shares, respectively, of FS's stock, which are all of the outstanding shares of FS. Accordingly, LLC becomes a disregarded entity.

(ii) *Analysis.* Prior to the FS's acquisition of the interests of LLC, LLC was a domestic partnership for Federal income tax purposes. FS has acquired substantially all the properties constituting a trade or business of LLC pursuant to a plan. After the acquisition, P holds 90 percent of FS's stock (by vote and value) by reason of holding a capital and profits interest in LLC, and A holds 10 percent of FS's stock (by vote and value) by reason of holding a capital and profits interest in LLC. The internal group restructuring exception under paragraph (c)(2) of this section applies, because before the acquisition, P held 80 percent or more of the capital and profits interest in LLC, and after the acquisition, P holds 80 percent or more of the stock (by vote and value) of FS. Under paragraph (c)(1) of this section, the FS stock held by P is included in the denominator, but not the numerator, of the ownership fraction. Accordingly, the ownership fraction is 10/100. FS is not a surrogate foreign corporation.

(i) ***Applicability dates*** —

(1) ***In general.*** Except as otherwise provided, this section shall apply to domestic entity acquisitions completed on or after May 20, 2008. This section shall not, however, apply to a domestic entity acquisition that was completed on or after May 20, 2008, provided such acquisition was entered into pursuant to a written agreement which was (subject to customary conditions) binding prior to May 20, 2008, and at all times thereafter (binding commitment). For purposes of the preceding sentence, a binding commitment shall include entering into options and similar interests in connection with one or more written agreements described in the preceding sentence. Notwithstanding the general application of this paragraph, taxpayers may elect to apply this section to domestic entity acquisitions completed before May 20, 2008, but must apply it consistently to all acquisitions within its scope. Paragraph (f) of this section shall apply to domestic entity acquisitions completed on or after June 7, 2012. See § 1.7874-1T(e), as contained in 26 CFR part 1 revised as of April 1, 2012, for completed before June 7, 2012.

(2) ***Applicability date of certain provisions of this section.*** Except as provided in this paragraph (i)(2), paragraph (c)(2)(iii) of this section applies to domestic entity acquisitions completed on or after April 4, 2016. Except as provided in this paragraph (i)(2), paragraph (d) of this section (interaction of EAG rules with other rules) applies to domestic entity acquisitions completed on or after July 12, 2018. See §§ 1.7874-4(h) and 1.7874-7T(e), as contained in 26 CFR part 1 revised as of April 1, 2017, for certain coordination rules for domestic entity acquisitions completed before July 12, 2018. Except as provided in this paragraph (i)(2), paragraph (g) of this section applies to domestic entity acquisitions completed on or after September 22, 2014. For domestic entity acquisitions completed before April 4, 2016, however, taxpayers may elect to consistently apply paragraphs (c)(2)(iii) and (g) of this section, and § 1.7874-6(c)(2), (d)(2), and (f)(2)(ii). In addition, for domestic entity acquisitions completed before July 12, 2018, taxpayers may elect to consistently apply paragraph (d) of this section.

[T.D. 9399, 73 FR 29057, May 20, 2008, as amended by T.D. 9453, 74 FR 27926, June 12, 2009; T.D. 9591, 77 FR 34791, June 12, 2012; T.D. 9654, 79 FR 3100, Jan. 17, 2014; T.D. 9761, 81 FR 20894, Apr. 8, 2016; T.D. 9812, 82 FR 5401, Jan. 18, 2017; T.D. 9834, 83 FR 32543, July 12, 2018]

§ 1.7874-2 Surrogate foreign corporation.

(a) ***Scope.*** This section provides rules for determining whether a foreign corporation is treated as a surrogate foreign corporation under section 7874(a)(2)(B). Paragraph (b) of this section provides definitions and special rules. Paragraph (c) of this section provides rules to determine whether a foreign corporation has acquired properties held by a domestic corporation (or a partnership). Paragraph (d) of this section provides rules that apply when two or more foreign corporations complete, in the aggregate, a domestic entity acquisition. Paragraph (e) of this section provides rules that apply when, pursuant to a plan, a single foreign corporation completes more than one domestic entity acquisition. Paragraph (f) of this section provides rules to identify the stock of a foreign corporation that is held by reason of holding stock in a domestic corporation (or an interest in a domestic partnership). Paragraph (g) of this section provides rules that treat certain publicly traded foreign partnerships as foreign corporations for purposes of section 7874. Paragraph (h) of this section provides rules concerning the treatment of certain options (or similar interests) for purposes of section 7874. Paragraph (i) of this section provides rules that treat certain interests (including debt, stock, or a partnership interest) as stock of a foreign corporation for purposes of section 7874. Paragraph (j) of this section provides rules concerning the conversion of a foreign corporation to a domestic corporation by reason of section 7874(b). Paragraph (k) of this section provides examples that illustrate the rules of this section. Paragraph (l) of this section provides the applicability dates of this section. For additional definitions that apply for purposes of this section, see § 1.7874-12.

(b) ***Definitions and special rules.*** In addition to the definitions in § 1.7874-12, the following definitions and special rules apply for purposes of this section.

(1) The rules of this section are subject to section 7874(c)(4).

(2) References to *properties held* by a domestic corporation include properties held directly or indirectly by the domestic corporation.

(3) The rules and principles of sections 701 through 777 shall be applied for purposes of determining a proportionate amount (or share) of properties held by a partnership (such as stock).

(4) Any reference to the acquisition of properties held by a domestic corporation (or a partnership) includes a direct or indirect acquisition of such properties.

(5) In the case of an acquisition of stock of a domestic corporation or an interest in a partnership, the proportionate amount of properties held by the domestic corporation (or the partnership) that is treated as indirectly acquired shall, as applicable, be determined at the time of the acquisition based on the relative value of—

(i) The stock acquired compared to all outstanding stock of the domestic corporation; or

(ii) The interest acquired compared to all interests in the partnership.

(6) The determination of whether a foreign corporation is a surrogate foreign corporation is made after the domestic entity acquisition. A foreign corporation that is treated as a surrogate foreign corporation (including a surrogate foreign corporation treated as a domestic corporation described in section 7874(b)) shall continue to be treated as a surrogate foreign corporation (or a domestic corporation), even if the conditions of section 7874(a)(2)(B)(ii) and (iii) are not satisfied at a later date.

(7) A *former initial acquiring corporation shareholder* of an initial acquiring corporation means any person that held stock in the initial acquiring corporation before the subsequent acquisition, including any person that holds stock in the initial acquiring corporation both before and after the subsequent acquisition.

(8) An *initial acquisition* means, with respect to a subsequent acquisition, a domestic entity acquisition occurring, pursuant to a plan that includes the subsequent acquisition (or a series of related transactions), before the subsequent acquisition.

(9) An *initial acquiring corporation* means, with respect to an initial acquisition, the foreign acquiring corporation.

(10) A *subsequent acquisition* means, with respect to an initial acquisition, a transaction occurring, pursuant to a plan that includes the initial acquisition (or a series of related transactions), after the initial acquisition in which a foreign corporation directly or indirectly acquires (within the meaning of paragraph (c)(4)(ii) of this section) substantially all of the properties held directly or indirectly by the initial acquiring corporation.

(11) A *subsequent acquiring corporation* means, with respect to a subsequent acquisition, the foreign corporation that directly or indirectly acquires substantially all of the properties held directly or indirectly by the initial acquiring corporation.

(12) ***Special rule regarding initial acquisitions.*** With respect to an initial acquisition, the determination of the ownership percentage described in section 7874(a)(2)(B)(ii) is made without regard to the subsequent acquisition and all related transactions occurring after the subsequent acquisition.

(13) ***Special rule regarding subsequent acquisitions.*** With respect to a subsequent acquisition (or a similar acquisition under the principles of paragraph (c)(4)(i) of this section) that is an inversion transaction, the applicable period begins on the first date that properties are acquired as part of the initial acquisition.

(c) ***Acquisition of properties*** —

(1) ***Indirect acquisition of properties.*** For purposes of section 7874(a)(2)(B)(i), an indirect acquisition of properties held by a domestic corporation (or a partnership) includes, but is not limited to, the acquisitions described in paragraphs (c)(1)(i) through (iv) of this section. An acquisition of less than all of the stock of a domestic corporation (or interests in a partnership) shall constitute an indirect acquisition of a proportionate amount of the properties held by the domestic corporation or the partnership. See paragraph (b)(8) of this section for rules determining the proportionate amount of properties indirectly acquired.

(i) An acquisition of stock of a domestic corporation. See *Example 1* of paragraph (k) of this section for an illustration of the rules of this paragraph (c)(1)(i).

(ii) An acquisition of an interest in a partnership. See *Example 2* of paragraph (k) of this section for an illustration of the rules of this paragraph (c)(1)(ii).

(iii) An acquisition by a corporation (acquiring corporation) of properties held by a domestic corporation (or a partnership) in exchange for stock of a foreign corporation (foreign issuing corporation) that is part of the expanded affiliated group that includes the acquiring corporation after the acquisition shall be treated as an acquisition by the foreign issuing corporation. See *Example 3* of paragraph (k) of this section for an illustration of the rules of this paragraph (c)(1)(iii).

(iv) An acquisition by a partnership (acquiring partnership) of properties held by a domestic corporation (or a partnership) in exchange for stock of a foreign corporation that is part of the expanded affiliated group that would include the acquiring partnership after the acquisition (if the partnership were a corporation) shall be treated as an acquisition by the foreign issuing corporation.

(2) ***Acquisition of stock of a foreign corporation.*** Except as provided in paragraph (c)(4) of this section, an acquisition of stock of a foreign corporation that owns directly or indirectly stock of a domestic corporation (or an interest in a partnership) shall not constitute an indirect acquisition of any properties held by the domestic corporation (or the partnership). See *Example 4* of paragraph (k) of this section for an illustration of the rules of this paragraph (c)(2).

(3) ***Downstream transactions.*** An acquisition by a corporation of its stock from another corporation or a partnership (for example, as a result of a downstream merger) is an acquisition of the other corporation's or partnership's properties for purposes of section 7874(a)(2)(B)(i).

(4) ***Multiple-step acquisitions*** —

(i) ***Rule.*** A subsequent acquisition is treated as a domestic entity acquisition, and the subsequent acquiring corporation is treated as a foreign acquiring corporation. See *Example 21* of paragraph (k) of this section for an illustration of this rule. See also paragraph (f)(1)(iv) of this section (treating certain stock of the subsequent acquiring corporation as stock of a foreign corporation that is held by reason of holding stock of, or a partnership interest in, the domestic entity).

(ii) ***Acquisition of property pursuant to a subsequent acquisition.*** In determining whether a foreign corporation directly or indirectly acquires substantially all of the properties held directly or indirectly by an initial acquiring corporation, the principles of section 7874(a)(2)(B)(i) apply, including paragraph (c) of this section other than paragraph (c)(2) of this section. For this purpose, the principles of paragraph (c)(1) of this section, including paragraph (b)(5) of this section, apply by substituting the term “foreign” for “domestic” wherever it appears.

(iii) ***Additional related transactions.*** If, pursuant to the same plan (or a series of related transactions), a foreign corporation directly or indirectly acquires (under the principles of paragraph (c)(4)(ii) of this section) substantially all of the properties directly or indirectly held by a subsequent acquiring corporation in a transaction occurring after the subsequent acquisition, then the principles of paragraph (c)(4)(i) of this section apply to such transaction (and any subsequent transaction or transactions occurring pursuant to the plan (or the series of related transactions)).

(d) ***Acquisitions by multiple foreign corporations.*** If, pursuant to a plan (or a series of related transactions), two or more foreign corporations complete, in the aggregate, a domestic entity acquisition, then each foreign corporation shall be treated as completing the acquisition for purposes of determining whether such foreign corporation is treated as a surrogate foreign corporation. See *Examples 5* and *6* of paragraph (k) of this section for illustrations of the rules of this paragraph (d).

(e) ***Acquisitions of multiple domestic entities.*** If, pursuant to a plan (or a series of related transactions), a foreign corporation completes two or more domestic entity acquisitions involving domestic corporations and/or domestic partnerships (domestic entities), then, for purposes of section 7874(a)(2)(B)(ii), the acquisitions shall be treated as a single acquisition and the domestic entities shall be treated as a single domestic entity. If the transaction involves one or more domestic corporations and one or more domestic partnerships, the stock of the foreign corporation held by former domestic entity shareholders and former

domestic entity partners by reason of holding stock or a partnership interest in the domestic entities shall be aggregated for purposes of determining whether the ownership condition of section 7874(a)(2)(B)(ii) is satisfied. See *Example 7* of paragraph (k) of this section for an illustration of the rules of this paragraph (e).

(f) ***Stock held by reason of holding stock in a domestic corporation or an interest in a domestic partnership*** —

(1) ***Certain transactions.*** For purposes of section 7874(a)(2)(B)(ii), stock of a foreign corporation that is held by reason of holding stock in a domestic corporation (or an interest in a domestic partnership) includes, but is not limited to, the stock described in paragraphs (f)(1)(i) through (iv) of this section.

(i) Stock of a foreign corporation received in exchange for, or with respect to, stock of a domestic corporation.

(ii) Stock of a foreign corporation received in exchange for, or with respect to, an interest in a domestic partnership.

(iii) To the extent that paragraph (f)(1)(ii) of this section does not apply, stock of a foreign corporation received by a domestic partnership in exchange for all or part of its properties. In such a case, each partner in the domestic partnership shall be treated as holding its proportionate share of the stock of the foreign corporation by reason of holding an interest in the domestic partnership.

(iv) Stock of a subsequent acquiring corporation received by a former initial acquiring corporation shareholder pursuant to a subsequent acquisition in exchange for, or with respect to, stock of an initial acquiring corporation that is held by reason of holding stock of, or a partnership interest in, a domestic entity.

(2) ***Transactions involving other property*** —

(i) ***Stock of a domestic corporation.*** If, pursuant to the same transaction, stock of a foreign corporation is received in exchange for, or with respect to, stock of a domestic corporation and other property, the stock of the foreign corporation that was received in exchange for, or with respect to, the stock of the domestic corporation shall be determined based on the relative value of the stock of the domestic corporation compared to the aggregate value of such stock and the other property.

(ii) ***Interest in a domestic partnership.*** If, pursuant to the same transaction, stock of a foreign corporation is received in exchange for, or with respect to, an interest in a domestic partnership and other property, the stock of the foreign corporation that was received in exchange for, or with respect to, the interest in the domestic partnership shall be determined based on the relative value of the interest in the domestic partnership compared to the aggregate value of such interest and the other property.

(3) See *Examples 8* through *10* of paragraph (k) of this section for illustrations of the rules of this paragraph (f).

(g) ***Publicly traded foreign partnerships*** —

(1) ***Treatment as a foreign corporation.*** For purposes of section 7874, a publicly traded foreign partnership described in paragraph (g)(2) of this section shall be treated as a foreign corporation that is organized in the foreign country in which, or under the law of which, the publicly traded foreign partnership was created or organized, and the partnership interests in the publicly traded foreign

partnership shall be treated as stock of the foreign corporation. For purposes of determining whether the foreign corporation shall be treated as a surrogate foreign corporation, a deemed acquisition of assets and liabilities by reason of § 1.708-1(b)(4) shall not constitute an acquisition described in section 7874(a)(2)(B)(i).

(2) ***Publicly traded foreign partnership.*** A publicly traded foreign partnership described in this paragraph (g)(2) is any foreign partnership that would, but for section 7704(c), be treated as a corporation under section 7704(a)—

(i) At the time of the domestic entity acquisition; or

(ii) At any time after the domestic entity acquisition pursuant to a plan that existed at the time of the domestic entity acquisition. For this purpose, a plan shall be deemed to exist at the time of the domestic entity acquisition if the foreign partnership would, but for section 7704(c), be treated as a corporation under section 7704(a) at any time during the two-year period following the completion of the domestic entity acquisition.

(3) ***Surrogate foreign corporation to which section 7874(b) applies.*** If paragraph (g)(1) of this section applies to a publicly traded foreign partnership and the foreign corporation is a surrogate foreign corporation to which section 7874(b) applies, the publicly traded foreign partnership shall be treated as a domestic corporation for purposes of the Internal Revenue Code (Code). See paragraph (g)(6) of this section for the timing and treatment of the conversion of the publicly traded foreign partnership to a domestic corporation. See *Example 11* of paragraph (k) of this section for an illustration of the rules of this paragraph (g)(3).

(4) ***Surrogate foreign corporation to which section 7874(b) does not apply.*** If paragraph (g)(1) of this section applies to a publicly traded foreign partnership and the foreign corporation is a surrogate foreign corporation to which section 7874(b) does not apply, the publicly traded foreign partnership shall continue to be treated as a foreign partnership for purposes of the Code, but section 7874(a)(1) shall apply to any expatriated entity (as defined in section 7874(a)(2)(A)). See *Example 13* of paragraph (k) of this section for an illustration of the rules of this paragraph (g)(4).

(5) ***Foreign corporation not treated as a surrogate foreign corporation.*** If paragraph (g)(1) of this section applies to a publicly traded foreign partnership and the foreign corporation is not treated as a surrogate foreign corporation, the status of the publicly traded foreign partnership as a foreign partnership shall not be affected by section 7874. See *Example 12* of paragraph (k) of this section for an illustration of the rules of this paragraph (g)(5).

(6) ***Conversion to a domestic corporation.*** Except for purposes of determining whether the publicly traded foreign partnership is a surrogate foreign corporation, if paragraph (g)(1) of this section applies to a publicly traded foreign partnership and the foreign corporation is a surrogate foreign corporation to which section 7874(b) applies, then at the later of the end of the day immediately preceding the first date properties are acquired as part of the domestic entity acquisition or immediately after the formation of the publicly traded foreign partnership, the publicly traded foreign partnership shall be treated as transferring all of its assets and liabilities to a newly formed domestic corporation in exchange solely for stock of the domestic corporation, and then distributing such stock to its partners in proportion to their partnership interests in liquidation of the partnership. The treatment of the transfer of assets and liabilities to the domestic corporation and the distribution of the stock of the domestic corporation to the partners in liquidation of the partnership shall be determined under all relevant provisions of the Code and general tax principles.

(h) ***Options*** —

(1) ***Value.*** Except to the extent otherwise provided in this paragraph (h), for purposes of section 7874, including for purposes of determining the membership of an expanded affiliated group under section 7874(c)(1), an option with respect to a corporation or partnership will be treated as stock in the corporation, or an interest in the partnership, as applicable, with a value equal to the holder's claim on the equity of the corporation or partnership. For this purpose, claim on the equity equals the value of the stock or partnership interest that may be acquired pursuant to the option, less the exercise price (but in no case is a claim on the equity less than zero). Also for this purpose, the equity of the corporation or partnership shall not include the amount of any property the holder of the option would be required to provide to the corporation or partnership under the terms of the option if such option were exercised. See *Example 14* and *Example 16* of paragraph (k) of this section for illustrations of the rules of this paragraph (h)(1).

(2) ***Voting power.*** Except to the extent otherwise provided in this paragraph (h), for purposes of determining the voting power of a foreign corporation under section 7874, including for purposes of determining the membership of an expanded affiliated group under section 7874(c)(1), an option will be treated as exercised only if a principal purpose of the issuance or transfer of the option is to avoid the foreign corporation being treated as a surrogate foreign corporation.

(3) ***Timing.*** For purposes of this paragraph (h), the value of the holder's claim on the equity is determined—

(i) In the case of a domestic corporation or a domestic partnership, immediately before the domestic entity acquisition.

(ii) In the case of a foreign corporation or foreign partnership, immediately after the domestic entity acquisition.

(4) ***Certain options disregarded.*** The rules of paragraph (h)(1) of this section shall not apply to an option if—

(i) A principal purpose of the issuance or acquisition of the option is to avoid the foreign corporation being treated as a surrogate foreign corporation, or

(ii) At the time of the domestic entity acquisition, the probability of the option being exercised is remote.

(5) ***Options and interests similar to an option.*** For purposes of this paragraph (h), an option includes an interest similar to an option. Examples of options (including interests similar to options) include, but are not limited to, a warrant, a convertible debt instrument, an instrument other than debt that is convertible into stock or a partnership interest, a put, stock or a partnership interest subject to risk of forfeiture, a contract to acquire or sell stock or a partnership interest, and an exchangeable share or exchangeable partnership interest.

(6) ***Multiple claims on equity.*** Paragraph (h)(1) of this section shall not apply to an option to the extent treating the option as stock or a partnership interest would duplicate a shareholder's or partner's claim on the equity of the corporation or partnership by reason of holding stock in the corporation or an interest in the partnership. See *Example 15* of paragraph (k) of this section for an illustration of the rules of this paragraph (h)(6).

(i) ***Interests treated as stock of a foreign corporation*** —

(1) ***Stock or other interests.*** If the conditions of paragraphs (i)(1)(i) and (ii) of this section are satisfied, then, for purposes of section 7874, any interest (including stock or a partnership interest) that is not otherwise treated as stock of a foreign corporation (including under paragraph (h) of this section) shall be treated as stock of the foreign corporation. See *Examples 17* and *18* of paragraph (k) of this section for illustrations of the rules of this paragraph (i)(1).

(i) The interest provides the holder distribution rights that are substantially similar in all material respects to the distribution rights provided by stock in the foreign corporation. For this purpose, distribution rights include rights to dividends (or partnership distributions), distributions in redemption of the interest (in whole or in part), distributions in liquidation, or other similar distributions that represent a return on, or of, the holder's investment in the interest.

(ii) Treating the interest as stock of the foreign corporation has the effect of treating the foreign corporation as a surrogate foreign corporation under section 7874(a)(2)(B).

(2) ***Creditor claims*** —

(i) ***Domestic corporation.*** For purposes of section 7874, if, immediately prior to the first date properties are acquired as part of a domestic entity acquisition, a domestic corporation is in a title 11 or similar case (as defined in section 368(a)(3)), or the liabilities of the domestic corporation exceed the value of its assets, then each creditor of the domestic corporation shall be treated as a shareholder of the domestic corporation and any claim of the creditor against the domestic corporation shall be treated as stock of the domestic corporation. See *Example 19* of paragraph (k) of this section for an illustration of the rules of this paragraph (i)(2)(i).

(ii) ***Domestic or foreign partnership.*** For purposes of section 7874, if, immediately prior to the first date properties are acquired as part of a domestic entity acquisition, a partnership (foreign or domestic) is in a title 11 or similar case (as defined in section 368(a)(3)), or the liabilities of the partnership exceed the value of its assets, then each creditor of the partnership shall be treated as a partner in the partnership and any claim of the creditor against the partnership shall be treated as an interest in the partnership.

(iii) ***Treatment of creditor as shareholder or partner.*** A creditor that is treated as a shareholder or partner under paragraph (i)(2)(i) or (ii) of this section shall be treated as a shareholder or partner for all purposes of section 7874. See, for example, § 1.7874-1(c) and paragraph (f) of this section. See *Example 19* of paragraph (k) of this section for an illustration of the rules of this paragraph (i)(2)(iii).

(j) ***Application of section 7874(b)*** —

(1) ***Conversion to a domestic corporation.*** Except for purposes of determining whether a foreign corporation is treated as a surrogate foreign corporation, the conversion of a foreign corporation to a domestic corporation by reason of section 7874(b) shall constitute a reorganization described in section 368(a)(1)(F) that occurs at the later of the end of the day immediately preceding the first date properties are acquired as part of the domestic entity acquisition or immediately after the formation of the foreign corporation. See, for example, §§ 1.367(b)-2 and 1.367(b)-3 for certain consequences of the reorganization. The treatment of all other aspects of the conversion shall be determined under the relevant provisions of the Code and general tax principles. See *Example 20* of paragraph (k) of this section for an illustration of the rules of this paragraph (j)(1).

(2) ***Entity classification.*** A foreign corporation that is treated as a domestic corporation under section 7874(b) is not an eligible entity as defined in § 301.7701-3(a), and therefore may not elect to be classified as other than an association (and thus cannot be treated as other than a corporation) for Federal tax purposes.

(3) ***Application of section 367.*** If a foreign corporation is treated as a domestic corporation under section 7874(b), section 367 shall not apply to any transfer of property by a United States person to such foreign corporation as part of the domestic entity acquisition. However, section 367 shall apply to the conversion of the foreign corporation to a domestic corporation. See paragraph (j)(1) of this section. See *Example 20* of paragraph (k) of this section for an illustration of the rules of this paragraph (j)(3).

(k) ***Examples*** —

(1) ***Assumed facts.*** Except as otherwise stated, assume the following for purposes of the examples included in paragraph (k)(2) of this section.

(i) DC1 and DC2 are domestic corporations.

(ii) FA, FP, F1, F2, F3, and F4 are foreign corporations organized in Country A.

(iii) DPS is a domestic partnership that conducts a trade or business.

(iv) FPS is a foreign partnership that is not publicly traded.

(v) Under the terms of the partnership agreements of DPS and FPS, each partner's share in the partnership's items of income, gain, deduction, and loss is determined in accordance with the partner's partnership interest percentage in the partnership, as stated in the examples.

(vi) A, B, and C are unrelated individuals.

(vii) Each entity has a single class of equity outstanding and is unrelated to all other entities.

(viii) All transactions are completed pursuant to a plan.

(ix) All acquisitions of properties are completed after March 4, 2003.

(x) Section 7874(c)(4) does not apply, and no option is issued or acquired with a principal purpose to avoid a foreign corporation being treated as a surrogate foreign corporation.

(2) ***Examples.*** The following examples illustrate the rules of this section.

> *Example 1. Acquisition of stock of a domestic corporation.* (i) *Facts.* FA acquires 25% of the outstanding stock of DC1.
> (ii) *Analysis.* Under paragraph (c)(1)(i) of this section, for purposes of section 7874(a)(2)(B)(i), FA is treated as acquiring 25% of the properties held by DC1 on the date of the stock acquisition.

> *Example 2. Acquisition of a partnership interest.* (i) *Facts.* DPS wholly owns DC1. FA acquires a 40% interest in DPS.

(ii) *Analysis.* Under paragraph (c)(1)(ii) of this section, for purposes of section 7874(a)(2)(B)(i), FA is treated as acquiring 40 percent of the DC1 stock held by DPS on the date of the acquisition of the partnership interest. Further, under paragraph (c)(1)(i) of this section, for purposes of section 7874(a)(2)(B)(i), FA is treated as acquiring 40% of the properties held by DC1 on the date of the acquisition of the partnership interest.

Example 3. Acquisition of stock by a subsidiary. (i) *Facts.* FP wholly owns FA. FA acquires all the outstanding stock of DC1 in exchange solely for FP stock. FP and FA are members of the same expanded affiliated group after the acquisition.
(ii) *Analysis.* Under paragraph (c)(1)(i) of this section, for purposes of section 7874(a)(2)(B)(i), FA is treated as acquiring 100% of the properties held by DC1 on the date of the stock acquisition. Further, under paragraph (c)(1)(iii) of this section, for purposes of section 7874(a)(2)(B)(i), FP is also treated as acquiring 100% of the properties held by DC1 on the date of the stock acquisition. The result would be the same if instead FA had directly acquired all the properties held by DC1 in exchange for FP stock.

Example 4. Acquisition of stock of a foreign corporation. (i) *Facts.* FP wholly owns DC1. FA acquires all of the outstanding stock of FP.
(ii) *Analysis.* Under paragraph (c)(2) of this section, for purposes of section 7874(a)(2)(B)(i), FA is not treated as acquiring any properties held by DC1 on the date of the acquisition of the FP stock.

Example 5. Acquisition of stock by multiple foreign corporations. (i) *Facts.* Pursuant to the same plan, the shareholders of DC1 transfer all of their DC1 stock equally to F1, F2, F3, and F4 in exchange solely for stock of each foreign corporation.
(ii) *Analysis.* Under paragraph (c)(1)(i) of this section, in the aggregate F1, F2, F3, and F4 are treated as acquiring substantially all of the properties held by DC1. Because the acquisition was pursuant to the same plan, under paragraph (d) of this section, F1, F2, F3, and F4 are each treated as acquiring substantially all of the properties held by DC1 for purposes of determining whether each foreign corporation shall be treated as a surrogate foreign corporation.

Example 6. Acquisition of assets by multiple foreign corporations. (i) *Facts.* Individual A wholly owns DC1. DC1 forms F1, F2, F3, and F4, and transfers an equal portion of its properties to each corporation in exchange solely for stock of the corporation. Pursuant to the same plan DC1 then distributes the stock of each foreign corporation to individual A.
(ii) *Analysis.* Because pursuant to the same plan F1, F2, F3, and F4 acquired, in the aggregate, substantially all of the properties held by DC1, under paragraph (d) of this section, F1, F2, F3, and F4 are each treated as acquiring substantially all of the properties held by DC1 for purposes of determining whether each foreign corporation shall be treated as a surrogate foreign corporation.

Example 7. Acquisition of multiple domestic corporations. (i) *Facts.* Individual A wholly owns DC1, and individual B wholly owns DC2. Pursuant to the same plan, individuals A and B transfer all of their DC1 stock and DC2 stock to FA, a newly formed corporation, in exchange solely for all 100 shares of FA stock outstanding.
(ii) *Analysis.* Under paragraph (c)(1)(i) of this section, for purposes of section 7874(a)(2)(B)(i), FA is treated as acquiring all of the properties held by DC1 and DC2 on the date of the stock acquisition. Under paragraph (e) of this section, because pursuant to the same plan FA acquired substantially all of the properties held by DC1 and DC2, for purposes of determining whether FA shall be treated as a surrogate foreign corporation, DC1 and DC2 shall be treated as a single domestic corporation, of which individuals A and B are former domestic entity shareholders. Thus, individuals A and B are treated as holding all 100 shares of the FA stock by reason of holding stock of such domestic corporation, and the ownership fraction under section 7874(a)(2)(B)(ii) is 100/100, or 100%.

Example 8. Exchange of stock and other property. (i) *Facts.* Individual A wholly owns DC1 and F1. DC1 has a $40x value and F1 has a $60x value. Individual A transfers all of the DC1 stock and F1 stock to FA, a newly formed corporation, in exchange solely for FA stock.
(ii) *Analysis.* Under paragraphs (f)(1)(i) and (f)(2)(i) of this section, for purposes of section 7874(a)(2)(B)(ii), individual A is considered to hold 40% of the FA stock by reason of holding stock in DC1 ($100x FA stock multiplied by $40x/$100x, the relative value of the DC1 stock to all the property transferred by A to FA).

Example 9. Stock received as a distribution. (i) *Facts.* Pursuant to a divisive reorganization described in section 368(a)(1)(D), DC1 contributes substantially all of its properties to FA, a newly formed corporation, in exchange solely for FA stock and then distributes the FA stock to its shareholders in a transaction qualifying under section 355.
(ii) *Analysis.* Under paragraph (f)(1)(i) of this section, for purposes of section 7874(a)(2)(B)(ii), the FA stock received by the DC1 shareholders as a distribution with respect to the DC1 stock is considered held by reason of holding stock in DC1. The result would be the same if the transaction did not qualify as a reorganization (for example, if the distribution were subject to sections 301 and 311(b)).

Example 10. Incorporation of a partnership trade or business. (i) *Facts.* Individuals A and B equally own DPS. DPS transfers substantially all of its properties constituting a trade or business to FA, a newly formed corporation, solely in exchange for FA stock. DPS retains the FA stock after the transaction.
(ii) *Analysis.* Under paragraph (f)(1)(iii) of this section, for purposes of section 7874(a)(2)(B)(ii), individuals A and B are treated as holding a proportionate amount (that is, an equal amount) of the FA stock held by DPS by reason of holding an interest in DPS.

Example 11. Publicly traded foreign partnership treated as domestic corporation. (i) *Facts.* Pursuant to a plan, DC1 and individual B organize a limited liability company (HPS) under the law of Country A. DC1 owns

90% of the membership interests in HPS, and B owns 10% of the membership interests in HPS. HPS is a foreign eligible entity under § 301.7701-2, and DC1 and B make an election under § 301.7701-3 to treat HPS as a partnership for Federal tax purposes as of the date of the formation of HPS. HPS forms DC2. One day after the formation of HPS, DC2 merges with and into DC1. Pursuant to the merger agreement, the DC1 shareholders exchange their DC1 stock solely for membership interests in HPS. After the merger HPS wholly owns DC1, and the former domestic entity shareholders of DC1 own a greater than 80% interest in HPS by reason of holding stock of DC1. Public trading of the HPS ownership interests begins the day after the date on which the merger is completed. HPS is not treated as a corporation under section 7704(a) by reason of section 7704(c). If HPS were a corporation, the condition of section 7874(a)(2)(B)(iii) would be satisfied.

(ii) *Analysis.* HPS is a publicly traded foreign partnership that is described in paragraph (g)(2) of this section. Therefore, under paragraph (g)(1) of this section, for purposes of section 7874, HPS is treated as a foreign corporation organized under the law of Country A and the membership interests in HPS are treated as stock of the foreign corporation. The foreign corporation is treated as a surrogate foreign corporation under section 7874(a)(2)(B) because, pursuant to the merger, HPS acquired substantially all of the properties held by DC1, the former domestic entity shareholders of DC1 hold at least 60% of the stock of the foreign corporation by reason of holding stock of DC1, and the expanded affiliated group that includes the foreign corporation does not have substantial business activities in Country A when compared to the total business activities of the expanded affiliated group. Further, because the former domestic entity shareholders of DC1 hold at least 80% of the stock of the foreign corporation by reason of holding stock of DC1, section 7874(b) applies to the surrogate foreign corporation, and therefore HPS is treated as a domestic corporation for purposes of the Code. Under paragraph (g)(6) of this section, except for purposes of determining whether HPS is a surrogate foreign corporation, at the end of the day immediately preceding the date of the merger of DC2 with and into DC1, HPS is treated as transferring all of its assets and liabilities to a new domestic corporation in exchange solely for stock of the domestic corporation. HPS is then treated as proportionately distributing such stock to its membership interest holders in liquidation of the partnership. In addition, as a result of the merger of DC2 with and into DC1, the former domestic entity shareholders of DC1 shall be treated as receiving stock of a domestic corporation in exchange for their DC1 stock.

Example 12. Publicly traded foreign partnership not treated as a surrogate foreign corporation. (i) *Facts.* The facts are the same as in *Example 11* of this section, except that, after the domestic entity acquisition, the expanded affiliated group that includes HPS (treated as a foreign corporation for this purpose) has substantial business activities in Country A when compared to the total business activities of the expanded affiliated group.

(ii) *Analysis.* Under paragraph (g)(1) of this section, for purposes of section 7874, HPS is treated as a foreign corporation and the membership interests in HPS are treated as stock of the foreign corporation. However, the foreign corporation is not treated as a surrogate foreign corporation under section 7874(a)(2)(B) because, after the domestic entity acquisition, the expanded affiliated group that includes HPS has substantial business activities in Country A when compared to the total business activities of the

expanded affiliated group. Therefore, under paragraph (g)(5) of this section, section 7874 does not apply and the status of HPS as a foreign partnership is not affected. In addition, DC1 is not treated as an expatriated entity under section 7874(a) by reason of the acquisition.

Example 13. Publicly traded foreign partnership treated as a surrogate foreign corporation but not as a domestic corporation. (i) *Facts.* FPS is a publicly traded foreign partnership organized in Country A that, by reason of section 7704(c), is not treated as a corporation under section 7704(a). FPS acquires all the stock of DC1 in exchange for partnership interests in FPS. After the acquisition, the former domestic entity shareholders of DC1 hold a 75%-interest in FPS by reason of holding DC1 stock. After the acquisition, the expanded affiliated group that includes FPS (treated as a foreign corporation for this purpose) does not have substantial business activities in Country A when compared to the total business activities of the expanded affiliated group.
(ii) *Analysis.* Under paragraph (g)(1) of this section, for purposes of section 7874, FPS is treated as a foreign corporation and the partnership interests in FPS are treated as stock of the foreign corporation. FPS is treated as a surrogate foreign corporation because the conditions of section 7874(a)(2)(B) are satisfied. However, because the former domestic entity shareholders of DC1 hold less than an 80%-interest in FPS by reason of holding DC1 stock, section 7874(b) does not apply to FPS. Therefore, under paragraph (g)(4) of this section FPS continues to be treated as a foreign partnership for purposes of the Code, but section 7874(a)(1) applies to DC1 and any other expatriated entity.

Example 14. Warrant to acquire stock from the foreign corporation. (i) *Facts.* Individual A wholly owns DC1. DC1 has a $200x value. Individual B wholly owns FA. The value of B's FA stock is $400x. Individual C holds a warrant to acquire FA stock from FA at an exercise price of $20x. Individual A transfers all of its DC1 stock to FA in exchange solely for FA stock with a value of $200x. At the time of the transfer, the FA stock that individual C can acquire pursuant to the warrant has a $70x value.
(ii) *Analysis.* Under paragraphs (h)(1) of this section, for purposes of section 7874, individual C is treated as owning FA stock with a $50x value. This amount represents individual C's claim on the equity of FA after the domestic entity acquisition ($70x value of FA stock that may be acquired pursuant to the warrant, less the $20x exercise price), without taking into account the $20x individual C would be required to provide to FA upon the exercise of the warrant. Thus, for purposes of section 7874, the value of the stock of FA immediately after the transaction is $650x ($600x of FA stock, plus C's $50x claim on the equity of FA). C's warrant is not taken into account for purposes of determining the voting power of FA under section 7874.

Example 15. Option to acquire stock from another shareholder. (i) *Facts.* The facts are the same as in *Example 14* except that, instead of holding a warrant issued by FA, individual C holds an option to acquire FA stock from individual B for an exercise price of $20x. At the time of the acquisition, the FA stock that individual C can acquire under the option has a $70x value.
(ii) *Analysis.* Under paragraph (h)(6) of this section, for purposes of section 7874, individual C is not treated as owning FA stock by reason of holding the option because treating the option as FA stock would have the effect of partially duplicating individual B's claim on the equity of FA at the time of the domestic entity

acquisition by reason of holding FA stock. However, all of the FA stock owned by individual B will be taken into account for purposes of section 7874. C's warrant is not taken into account for purposes of determining voting power of FA under section 7874.

Example 16. Warrant to acquire stock from the domestic corporation. (i) *Facts.* A DC1 employee holds a warrant to acquire DC1 stock from DC1. In connection with the domestic entity acquisition by FA of substantially all of the properties held by DC1, the DC1 employee receives a warrant from FA to acquire 15 shares of FA stock in exchange for the warrant to acquire DC1 stock.
(ii) *Analysis.* Under paragraphs (h)(1) of this section, for purposes of section 7874, the warrant held by the DC1 employee is treated as DC1 stock with a value equal to the employee's claim on the equity of DC1 immediately before the domestic entity acquisition. Further, for purposes of section 7874, the DC1 employee is treated as holding FA stock with a value equal to the employee's claim on the equity of FA after the domestic entity acquisition by reason of holding the warrant to acquire DC1 stock (treated as DC1 stock for this purpose). The option held by the DC1 employee is not taken into account for purposes of determining the voting power of FA under section 7874.

Example 17. Stock in a subsidiary treated as stock of a foreign parent corporation. (i) *Facts.* (A) Individuals A and B equally own DC1. FA, a newly formed corporation, issues stock in a public offering for cash. FA contributes part of the cash from the public offering to DC2, a newly formed corporation, in exchange for all the stock of DC2. DC2 merges with and into DC1 with DC1 surviving. Pursuant to the merger agreement, individuals A and B exchange their DC1 stock for cash and shares of class B stock of DC1. Following the merger FA owns all the class A stock of DC1. FA does not hold significant assets other than the class A stock of DC1. Individuals A and B own all the class B stock of DC1. DC1 has no other class of stock outstanding.
(B) The class B stock entitles individuals A and B to dividend distributions approximately equal to any dividend distributions made by FA with respect to its publicly traded stock. In certain circumstances, the class B stock also permits individuals A and B to require DC1 to redeem the stock at fair market value. The class B stock does not provide individuals A and B voting rights with respect to FA.

(ii) *Analysis.* The dividend rights provided by the class B stock are substantially similar in all material respects to the dividend rights provided by the FA stock. In addition, because FA does not hold significant assets other than the class A stock, the value of the class B stock held by individuals A and B is approximately equal to the value of a corresponding amount of publicly traded FA stock. The distribution rights on liquidation (or redemption) provided by the class B stock, therefore, are substantially similar in all material respects to the distribution rights on liquidation (or redemption) provided by the FA stock. As a result, the distribution rights provided by the class B stock are substantially similar in all material respects to the distribution rights provided by the publicly traded FA stock. Thus, if treating the class B stock as FA stock would have the effect of treating FA as a surrogate foreign corporation, under paragraph (i)(1) of this section the class B stock will be treated as FA stock for purposes of section 7874.

Example 18. Partnership interest treated as stock of foreign acquiring corporation. (i) *Facts.* (A)

Individuals A and B equally own DC1. FA, a newly formed corporation, issues stock in a public offering for cash. Individuals A and B and FA organize FPS. FA transfers part of the cash from the public offering to FPS in exchange for a class A partnership interest. FA does not hold any significant assets other than the class A partnership interest. Individuals A and B transfer their DC1 stock to FPS in exchange for class B partnership interests.
(B) The class B partnership interests entitle individuals A and B to cash distributions from FPS approximately equal to any dividend distributions made by FA with respect to its publicly traded stock. In certain circumstances, the class B partnership interests also permit individuals A and B to require FPS to redeem the interests in exchange for cash equal to the value of an amount of FA stock as determined on the redemption date. The class B partnership interests do not provide individuals A or B voting rights with respect to FA.

(ii) *Analysis.* The non-liquidating distribution rights provided by the class B partnership interests are substantially similar in all material respects to the dividend rights provided by the FA stock. Because FA does not hold any significant assets other than the class A partnership interest, the value of the class B partnership interests held by individuals A and B is approximately equal to a corresponding amount of FA stock. The distribution rights on liquidation (or redemption) provided by the class B partnership interests, therefore, are substantially similar in all material respects to distribution rights on liquidation (or redemption) provided by the FA stock. Thus, the distribution rights provided by the class B partnership interests are substantially similar in all material respects to the distribution rights provided by the publicly traded FA stock. As a result, if treating the class B partnership interests as FA stock would have the effect of treating FA as a surrogate foreign corporation, under paragraph (i)(1) of this section the class B partnership interests will be treated as FA stock for purposes of section 7874.

Example 19. Creditor treated as a shareholder. (i) *Facts.* Individuals A and B equally own DC1. The liabilities of DC1 exceed the value of its assets. Pursuant to a plan, FA, a newly formed corporation, acquires substantially all of the properties held by DC1 in exchange solely for FA stock. Pursuant to the plan, the DC1 stock held by individuals A and B is cancelled, and the creditors of DC1 receive all the FA stock in exchange for their claims against DC1.
(ii) *Analysis.* Because immediately before the first date on which properties are acquired as part of the domestic entity acquisition the liabilities of DC1 exceed the value of its assets, under paragraph (i)(2)(i) of this section, for purposes of section 7874, the creditors of DC1 are treated as shareholders of DC1 and the creditors' claims against DC1 are treated as DC1 stock. Therefore, for purposes of section 7874(a)(2)(B)(ii), the FA stock received by the creditors of DC1 by reason of their claims against DC1 is considered held by former domestic entity shareholders of DC1 by reason of holding DC1 stock.

Example 20. Conversion to a domestic corporation and application of section 367. (i) *Facts.* Individuals A and B are United States persons and equally own DC1. Pursuant to a plan, individuals A and B transfer their DC1 stock to FA in exchange solely for 80% of the outstanding FA stock. After the acquisition, the expanded affiliated group that includes FA does not have substantial business activities in Country A when compared to the total business activities of the expanded affiliated group.

(ii) *Analysis.* Under paragraph (c)(1)(i) of this section, for purposes of section 7874(a)(2)(B)(i), FA is treated as acquiring all of the properties held by DC1 on the date of the stock acquisition. After the acquisition, the former domestic entity shareholders of DC1 own 80% of the stock of FA by reason of holding DC1 stock. Therefore, FA is a surrogate foreign corporation that is treated as a domestic corporation under section 7874(b). Under paragraph (j)(1) of this section, except for purposes of determining whether FA is treated as a surrogate foreign corporation, the conversion of FA to a domestic corporation constitutes a reorganization described in section 368(a)(1)(F) that occurs at the end of the day immediately preceding the date of the stock acquisition. Section 367 applies to the conversion of FA to a domestic corporation. See, for example, §§ 1.367(b)-2 and 1.367(b)-3 for the consequences of the conversion. Under paragraph (j)(3) of this section, section 367 does not apply to the transfers of DC1 stock by individuals A and B to FA.

Example 21, Application of multiple-step acquisition rule. (i) *Facts.* Individual A owns all 70 shares of stock of DC1, a domestic corporation. Individual B owns all 30 shares of stock of F1, a foreign corporation that is a tax resident (as described in § 1.7874-3(d)(11)) of Country X. Pursuant to a reorganization described in section 368(a)(1)(D), DC1 transfers all of its properties to F1 solely in exchange for 70 newly issued voting shares of F1 stock (DC1 acquisition) and distributes the F1 stock to Individual A in liquidation pursuant to section 361(c)(1). Pursuant to a plan that includes the DC1 acquisition, F2, a newly formed foreign corporation that is also a tax resident of Country X, acquires 100 percent of the stock of F1 solely in exchange for 100 newly issued shares of F2 stock (F1 acquisition). After the F1 acquisition, Individual A owns 70 shares of F2 stock, Individual B owns 30 shares of F2 stock, F2 owns all 100 shares of F1 stock, and F1 owns all the properties held by DC1 immediately before the DC1 acquisition. In addition, the form of the transaction is respected for U.S. federal income tax purposes.
(ii) *Analysis*—(A) The DC1 acquisition is a domestic entity acquisition, and F1 is a foreign acquiring corporation, because F1 directly acquires 100 percent of the properties of DC1. In addition, the 70 shares of F1 stock received by A pursuant to the DC1 acquisition in exchange for Individual A's DC1 stock are stock of a foreign corporation that is held by reason of holding stock in DC1. As a result, those 70 shares are included in both the numerator and the denominator of the ownership fraction when applying section 7874 to the DC1 acquisition.

(B) The DC1 acquisition is also an initial acquisition because it is a domestic entity acquisition that, pursuant to a plan that includes the F1 acquisition, occurs before the F1 acquisition (which, as described in paragraph (ii)(C) of this *Example 21,* is a subsequent acquisition). Thus, F1 is the initial acquiring corporation.

(C) The F1 acquisition is a subsequent acquisition because it occurs, pursuant to a plan that includes the DC1 acquisition, after the DC1 acquisition and, pursuant to the F1 acquisition, F2 acquires 100 percent of the stock of F1 and therefore is treated under paragraph (c)(4)(ii) of this section (which applies the principles of section 7874(a)(2)(B)(i) with certain modifications) as indirectly acquiring substantially all of the properties held directly or indirectly by F1. Thus, F2 is the subsequent acquiring corporation.

(D) Under paragraph (c)(4)(i) of this section, the F1 acquisition is treated as a domestic entity acquisition, and F2 is treated as a foreign acquiring corporation. In addition, under paragraph (f)(1)(iv) of this section, the 70 shares of F2 stock received by Individual A (a former initial acquiring corporation shareholder) pursuant to the F1 acquisition in exchange for Individual A's F1 stock are stock of a foreign corporation that is held by reason of holding stock in DC1. As a result, those 70 shares are included in both the numerator and the denominator of the ownership fraction when applying section 7874 to the F1 acquisition.

(l) *Applicability date* —

(1) ***In general.*** This section applies to domestic entity acquisitions completed on or after June 7, 2012. For domestic entity acquisitions completed prior to June 7, 2012, see § 1.7874-2T(o), as contained in 26 CFR part 1, revised as of April 1, 2012.

(2) ***Applicability date of certain provisions of this section.*** Paragraphs (a), (b)(7) through (13), (c)(2) and (4), and (f)(1)(iv) of this section, as well as the introductory text of paragraph (f)(1) and *Example 21* of paragraph (k)(2), apply to domestic entity acquisitions completed on or after April 4, 2016.

[T.D. 9591, 77 FR 34791, June 12, 2012, as amended by T.D. 9761, 81 FR 20894, Apr. 8, 2016; T.D. 9834, 83 FR 32544, July 12, 2018]

§ 1.7874-3 Substantial business activities.

(a) ***Scope.*** This section provides rules regarding when an expanded affiliated group will be considered to have substantial business activities in the relevant foreign country when compared to the total business activities of the expanded affiliated group for purposes of section 7874(a)(2)(B)(iii). Paragraph (b) of this section describes the general rule for determining whether the expanded affiliated group has substantial business activities in the relevant foreign country when compared to its total business activities. Paragraph (c) of this section describes certain items that are not taken into account as located or derived in the relevant foreign country. Paragraph (d) of this section provides definitions and certain rules of application. Paragraph (e) of this section provides rules regarding the treatment of partnerships for purposes of this section. Paragraph (f) of this section provides the effective/applicability dates.

(b) ***General rule.*** The expanded affiliated group will be considered to have substantial business activities in the relevant foreign country on the completion date when compared to the total business activities of the expanded affiliated group only if, subject to paragraph (c) of this section, each of the requirements of this paragraph (b) are satisfied.

(1) *Group employees* —

(i) ***Number of employees.*** The number of group employees based in the relevant foreign country is at least 25 percent of the total number of group employees on the applicable date.

(ii) ***Employee compensation.*** The employee compensation incurred with respect to group employees based in the relevant foreign country is at least 25 percent of the total employee compensation incurred with respect to all group employees during the testing period.

(2) ***Group assets.*** The value of the group assets located in the relevant foreign country is at least 25 percent of the total value of all group assets on the applicable date.

(3) ***Group income.*** The group income derived in the relevant foreign country is at least 25 percent of the total group income during the testing period.

(4) ***Tax residence of foreign acquiring corporation.*** The foreign acquiring corporation is a tax resident of the relevant foreign country. However, this paragraph (b)(4) does not apply if the relevant foreign country does not impose corporate income tax.

(c) ***Items not to be considered*** —

(1) ***General rule.*** Except to the extent provided in paragraph (c)(2) of this section, the following items are not taken into account in the numerator, but are taken into account in the denominator, for each of the tests described in paragraphs (b)(1) through (3) of this section:

(i) Any group assets, group employees, or group income attributable to business activities that are associated with properties or liabilities the transfer of which is disregarded under section 7874(c)(4).

(ii) Any group assets or group employees located in, or group income derived in, the relevant foreign country as part of a plan with a principal purpose of avoiding the purposes of section 7874.

(iii) Any group assets or group employees located in, or group income derived in, the relevant foreign country if such group assets or group employees, or the business activities to which such group income is attributable, are subsequently transferred to another country in connection with a plan that existed at the time of the domestic entity acquisition .

(2) ***Transfers of properties to the expanded affiliated group.*** Any group assets, group employees, or group income attributable to business activities that are associated with property that is transferred to the expanded affiliated group in a transfer that is disregarded under section 7874(c)(4) are not taken into account in the numerator or the denominator for each of the tests described in paragraphs (b)(1) through (3) of this section.

(d) ***Definitions and special rules.*** In addition to the definitions in § 1.7874-12, the following definitions and special rules apply for purposes of this section.

(1) The term *applicable date* means either of the following dates, applied consistently for all purposes of this section:

(i) The completion date; or

(ii) The last day of the month immediately preceding the month that includes the completion date.

(2) The term *employee compensation* means all amounts incurred by members of the expanded affiliated group that directly relate to services performed by group employees (including, for example, wages, salaries, deferred compensation, employee benefits, and employer payroll taxes). Employee compensation with respect to a particular group employee is treated as incurred when it would be deductible by the employer as compensation, and the amount of employee compensation equals the amount that would be deductible by the employer as compensation. Both the timing and the amount of the deduction for employee compensation must be determined for all group employees under U.S. federal income tax principles or for all group employees based on the relevant tax laws. Employee compensation is determined in U.S. dollars, translated, if necessary, using the weighted average exchange rate (as defined in § 1.989(b)-1) for the testing period.

(3) The term *group assets* means tangible personal property or real property used or held for use in the active conduct of a trade or business by members of the expanded affiliated group, provided such property is either owned or, in the circumstances described below, rented by members of the

expanded affiliated group at the close of the completion date. A group asset is considered to be located in the relevant foreign country only if the asset was physically present in such country at the close of the completion date and the asset was physically present in such country for more time than in any other country during the testing period. Notwithstanding the foregoing, a group asset that is mobile in nature and is used in a transportation activity, such as a vessel, an aircraft, or a motor vehicle, is considered to be located in the relevant foreign country if the asset was physically present in such country for more time than in any other country during the testing period, regardless of whether the asset was physically present in such country at the close of the completion date. Group assets must be valued on a gross basis (that is, not reduced by liabilities) by consistently using for all group assets of the expanded affiliated group either the adjusted tax basis or fair market value determined in U.S. dollars, translated, if necessary, at the spot rate determined under the principles of § 1.988-1(d)(1), (2), and (4). Tangible personal property or real property that is rented by members of the expanded affiliated group from a person other than a member of the expanded affiliated group is also treated as a group asset, provided such property is used in the active conduct of a trade or business and is being rented by members of the expanded affiliated group at the close of the completion date. For purposes of this section, a group asset that is rented is valued at eight times the net annual rent paid or accrued with respect to the property by members of the expanded affiliated group.

(4) The term *group employees* means all individuals who are employees of members of the expanded affiliated group. Whether individuals are employees must be determined for all members of the expanded affiliated group under U.S. federal tax principles or for all members of the expanded affiliated group based on the relevant tax laws. A group employee is considered to be based in the relevant foreign country only if the employee spent more time providing services in such country than in any other single country during the testing period.

(5) The term *group income* means gross income of members of the expanded affiliated group from transactions occurring in the ordinary course of business with customers that are not related persons. Group income must be determined consistently for all members of the expanded affiliated group either under U.S. federal income tax principles or as reflected in the relevant financial statements. Group income is translated into U.S. dollars, if necessary, using the weighted average exchange rate (as defined in § 1.989(b)-1) for the testing period. Group income is considered derived in the relevant foreign country only if it is derived from a transaction with a customer located in such country.

(6) The term *net annual rent* means the annual rent paid or accrued with respect to property, less any payments received or accrued from subleasing such property (or other similar arrangement).

(7) The term *related person* has the meaning specified in section 954(d)(3), except that section 954(d)(3) is applied by substituting “one or more members of the expanded affiliated group” for “a controlled foreign corporation” and “the controlled foreign corporation” each place they appear.

(8) The term *relevant financial statements* means financial statements prepared consistently for all members of the expanded affiliated group in accordance with either U.S. Generally Accepted Accounting Principles (U.S. GAAP) or the International Financial Reporting Standards (IFRS) used for the expanded affiliated group's consolidated financial statements, but, if, after the domestic entity acquisition, financial statements will not be prepared consistently for all members of the expanded affiliated group in accordance with either U.S. GAAP or IFRS, then, for each member, financial

statements prepared in accordance with either U.S. GAAP or IFRS. The relevant financial statements must take into account all items of income generated by all members of the expanded affiliated group for the entire testing period.

(9) The term *relevant foreign country* means the foreign country in which, or under the law of which, the foreign acquiring corporation was created or organized.

(10) The term *relevant tax law* means, for purposes of determining whether a particular individual who performs services for a member of the expanded affiliated group is an employee for purposes of paragraph (d)(6) of this section and the timing and amount of employee compensation for a particular employee of a member of the expanded affiliated group for purposes of paragraph (d)(3) of this section, the tax law to which the member is subject. Notwithstanding the foregoing, if the tax law to which a member is subject does not distinguish between whether an individual is an employee, or, for example, an independent contractor, then for this purpose the relevant tax law is considered to be U.S. federal tax law.

(11) The term *tax resident* means, with respect to a foreign country, a body corporate liable to tax under the laws of the country as a resident.

(12) The term *testing period* means the one-year period ending on the applicable date.

(e) ***Treatment of partnerships*** —

(1) ***Stock held by a partnership.*** In determining the members of the expanded affiliated group for purposes of this section, each partner in a partnership, as determined without regard to the application of paragraph (e)(2) of this section, shall be treated as holding its proportionate share of the stock held by the partnership, as determined under the rules and principles of sections 701 through 777.

(2) ***Business activities of a partnership.*** For purposes of this section, if one or more members of the expanded affiliated group, as determined after the application of paragraph (e)(1) of this section, own, in the aggregate, more than 50 percent (by value) of the interests in a partnership, the partnership will be treated as a corporation that is a member of the expanded affiliated group. Thus, all items of such a partnership are taken into account for purposes of this section. No items of a partnership are taken into account for purposes of this section unless the partnership is treated as a member of the expanded affiliated group pursuant to this paragraph (e)(2).

(f) ***Applicability dates*** —

(1) ***General rule.*** Except as otherwise provided in paragraph (f)(2) of this section, this section applies to domestic entity acquisitions that are completed on or after June 3, 2015. For acquisitions completed before June 3, 2015, see § 1.7874-3T as contained in 26 CFR part 1 revised as of April 1, 2016.

(2) ***Paragraphs (b)(4), (d)(8), and (d)(11) of this section.*** The first sentence of paragraph (b)(4) of this section applies to domestic entity acquisitions completed on or after November 19, 2015, and the second sentence applies to domestic entity acquisitions completed on or after July 12, 2018. Paragraph (d)(8) of this section applies to domestic entity acquisitions completed on or after April 4, 2016. Paragraph (d)(11) of this section applies to domestic entity acquisitions completed on or after July 12, 2018. For domestic entity acquisitions completed on or after June 3, 2015, and before April 4, 2016, however, taxpayers may elect to apply paragraph (d)(8) of this section. For domestic entity acquisitions completed on or after November 19, 2015, and before July 12, 2018, taxpayers may elect to apply the second sentence of paragraph (b)(4) and paragraph (d)(11) of this section.

[T.D. 9720, 80 FR 31841, June 4, 2015, as amended by T.D. 9761, 81 FR 20896, Apr. 8, 2016; T.D. 9834, 83 FR 32546, July 12, 2018]

§ 1.7874-4 Disregard of certain stock related to the domestic entity acquisition.

(a) ***Scope.*** This section identifies certain stock of the foreign acquiring corporation that is disregarded in determining the ownership fraction and modifies the scope of section 7874(c)(2)(B). Paragraph (b) of this section sets forth the general rule that certain stock of the foreign acquiring corporation, and only such stock, is treated as stock described in section 7874(c)(2)(B) and therefore is excluded from the denominator of the ownership fraction. Paragraph (c) of this section identifies the stock of the foreign acquiring corporation that is subject to paragraph (b) of this section. Paragraph (d) of this section provides a de minimis exception to the application of the general exclusion rule of paragraph (b) of this section. Paragraph (e) of this section provides rules for transfers of stock of the foreign acquiring corporation in satisfaction of, or in exchange for the assumption of, one or more obligations of the transferor. Paragraph (f) of this section provides rules for certain transfers of stock of the foreign acquiring corporation involving multiple properties or obligations. Paragraph (g) of this section provides rules for the treatment of partnerships, and paragraph (h) of this section provides definitions. Paragraph (h) of this section provides definitions. Paragraph (i) of this section provides examples illustrating the application of the rules of this section. Paragraph (j) of this section provides dates of applicability. See § 1.7874-1(d)(1) for rules addressing the interaction of this section with the expanded affiliated group rules of section 7874(c)(2)(A) and § 1.7874-1.

(b) ***Exclusion of disqualified stock under section 7874(c)(2)(B).*** Except as provided in paragraph (d) of this section, disqualified stock (as determined under paragraph (c) of this section) is treated as stock described in section 7874(c)(2)(B) and therefore is not included in the denominator of the ownership fraction. Section 7874(c)(2)(B) shall not apply to exclude stock from the denominator of the ownership fraction that is not disqualified stock.

(c) ***Disqualified stock*** —

(1) ***General rule.*** Except as provided in paragraph (c)(2) of this section, disqualified stock is stock of the foreign acquiring corporation (other than stock described in § 1.7874-2(f)) that is transferred in an exchange described in paragraph (c)(1)(i) or (ii) of this section that is related to the domestic entity acquisition. This paragraph (c) applies without regard to whether the stock of the foreign acquiring corporation is publicly traded at the time of the transfer or at any other time.

(i) ***Exchanged for nonqualified property.*** The stock is transferred to a person other than the domestic entity in exchange for nonqualified property. See *Example 1, Example 2, Example 6, Example 8,* and *Example 9* of paragraph (i) of this section for illustrations of the application of this paragraph (c)(1)(i).

(ii) ***Exchanged for property with associated obligations*** —

(A) ***General rule.*** Subject to the limitation provided in in paragraph (c)(1)(ii)(B) of this section, the stock is transferred by a person (transferor) to another person (transferee) in exchange for property (exchanged property) and, pursuant to the same plan (or series of related transactions), the transferee subsequently transfers such stock (or, if the transferee exchanges such stock for other property, such other property) in satisfaction of, or in exchange for the assumption of, one or more obligations of the transferee or a person related (within the meaning of section 267 or 707(b)) to the transferee. See *Example 6* and *Example 10* of paragraph (i) of this section for illustrations of the application of paragraph (c)(1)(ii) of this section.

(B) ***Limitation.*** The amount of stock treated as transferred in an exchange described in paragraph (c)(2)(ii)(A) of this section shall not exceed—

(*1*) With respect to a transferee that is the domestic entity, the proportionate share of obligations associated with the exchanged property (determined based on the fair market value of the exchanged property relative to the fair market value of all properties with which the obligations are associated) that, pursuant to the same plan (or series of related transactions), is not assumed by the transferor.

(*2*) With respect to any other transferee, the proportionate share of obligations associated with the exchanged property (determined based on the fair market value of the exchanged property relative to the fair market value of all properties with which the obligations are associated) that, pursuant to the same plan (or series of related transactions), is not assumed by the transferor, multiplied by a fraction, the numerator of which is the amount of exchanged property that is qualified property, and the denominator of which is the total amount of exchanged property.

(C) ***Associated obligations.*** For purposes of paragraph (c)(1)(ii) of this section, an obligation is associated with property if, for example, the obligation arose from the conduct of a trade or business in which the property has been used, regardless of whether the obligation is a non-recourse obligation.

(2) ***Stock transferred in an exchange that does not increase the fair market value of the assets or decrease the amount of liabilities of the foreign acquiring corporation.*** Stock is disqualified stock only to the extent that the transfer of the stock in the exchange increases the fair market value of the assets of the foreign acquiring corporation or decreases the amount of its liabilities. This paragraph (c)(2) is applied to an exchange without regard to any other exchange described in paragraph (c)(1)(i) or (ii) of this section or any other transaction related to the domestic entity acquisition. See *Example 4* and *Example 7* of paragraph (i) of this section for illustrations of the application of this paragraph (c)(2).

(d) ***Exception to exclusion of disqualified stock*** —

(1) ***De minimis ownership.*** Except as provided in paragraph (d)(2) of this section, paragraph (b) of this section does not apply if both:

(i) The ownership percentage described in section 7874(a)(2)(B)(ii), determined without regard to the application of paragraph (b) of this section and §§ 1.7874-7(b) and 1.7874-10(b), is less than five (by vote and value); and

(ii) On the completion date, each five percent former domestic entity shareholder or five percent former domestic entity partner, as applicable, owns (applying the attribution rules of section 318(a) with the modifications described in section 304(c)(3)(B)) less than five percent (by vote and value) of the stock of (or a partnership interest in) each member of the expanded affiliated group. For this purpose, a five percent former domestic entity shareholder (or five percent former domestic entity partner) is a former domestic entity shareholder (or former domestic entity partner) that, before the domestic entity acquisition, owned (applying the attribution rules of section 318(a) with the modifications described in section 304(c)(3)(B)) at least five percent (by vote and value) of the stock of (or a partnership interest in) the domestic entity. See *Example 5* of this paragraph (i) for an illustration of this paragraph (d).

(2) ***Stock issued to avoid the purposes of section 7874.*** The exception in paragraph (d)(1) of this section does not apply to disqualified stock that is transferred in a transaction (or series of transactions) related to the domestic entity acquisition with a principal purpose of avoiding the purposes of section 7874.

(e) ***Satisfaction or assumption of obligations.*** Except to the extent stock is treated as disqualified stock as a result of being described in paragraph (c)(1)(ii) of this section, this paragraph (e) applies if, in a transaction related to the domestic entity acquisition, stock of the foreign acquiring corporation is transferred to a person other than the domestic entity in exchange for the satisfaction or the assumption of one or more obligations of the transferor. In such a case, solely for purposes of this section, the stock of the foreign acquiring corporation is treated as if it is transferred in exchange for an amount of cash equal to the fair market value of such stock.

(f) ***Transactions involving multiple properties.*** For purposes of this section, if stock and other property are exchanged for qualified property and nonqualified property, the stock is treated as transferred in exchange for the qualified property or nonqualified property, respectively, based on the relative fair market value of the property. See also § 1.7874-2(f)(2) (allocating stock of a foreign acquiring corporation between an interest in the domestic entity and other property).

(g) ***Treatment of partnerships.*** For purposes of this section, if one or more members of the expanded affiliated group own, in the aggregate, more than 50 percent (by value) of the interests in a partnership, such partnership is treated as a corporation that is a member of the expanded affiliated group.

(h) ***Definitions.*** In addition to the definitions in § 1.7874-12, the following definitions apply for purposes of this section:

(1) ***Marketable securities*** has the meaning set forth in section 453(f)(2), except that the term marketable securities does not include stock of a corporation or an interest in a partnership that becomes a member of the expanded affiliated group in a transaction (or series of transactions) related to the domestic entity acquisition. See *Example 4* of paragraph (i) of this section for an illustration of this paragraph (h)(1).

(2) ***Nonqualified property*** is property described in paragraphs (h)(2)(i) through (iv) of this section. Thus, stock in a corporation or an interest in a partnership is nonqualified property to the extent provided in paragraph (h)(2)(ii) or (iv) of this section. Qualified property is property other than nonqualified property.

(i) Cash or cash equivalents.

(ii) Marketable securities, within the meaning of paragraph (h)(1) of this section.

(iii) An obligation owed by any of the following:

(A) A member of the expanded affiliated group, unless the holder of the obligation immediately before the domestic entity acquisition and any related transaction (or its successor) is a member of the expanded affiliated group after the domestic entity acquisition and all related transactions. See *Example 6* of paragraph (i) of this section for an illustration of this paragraph (h)(2)(iii)(A).

(B) A former domestic entity shareholder or former domestic entity partner of the domestic entity that owns (applying the attribution rules of section 318(a) with the modifications described in section 304(c)(3)(B)) at least five percent (by vote or value) of the stock of, or partnership interests in, the domestic entity before the domestic entity acquisition.

(C) A person, other than a member of the expanded affiliated group, that, before or after the domestic entity acquisition, either owns (applying the attribution rules of section 318(a) with the modifications described in section 304(c)(3)(B)) at least five percent (by vote or value) of the stock of (or partnership interests in) or is related (within the meaning of section 267 or 707(b)) to—

(*1*) A member of the expanded affiliated group; or

(*2*) A person described in paragraph (h)(2)(iii)(B) of this section.

(iv) Any other property acquired with a principal purpose of avoiding the purposes of section 7874, regardless of whether the transaction involves an indirect transfer of property described in paragraph (h)(2)(i), (ii), or (iii) of this section. See *Example 2* and *Example 3* of paragraph (i) of this section for illustrations of the application of this paragraph (h)(2)(iv).

(3) An *obligation* means any fixed or contingent obligation to make a payment or provide value without regard to whether the obligation is otherwise taken into account for purposes of the Internal Revenue Code. An obligation includes, but is not limited to, a debt obligation, an environmental obligation, a tort obligation, a contract obligation (including an obligation to provide goods or services), a pension obligation, an obligation under a short sale, and an obligation under derivative financial instruments such as options, forward contracts, futures contracts, and swaps. An obligation does not include any obligation treated as stock for purposes of section 7874 (see, for example, § 1.7874-2(i), which treats certain interests, including certain creditor claims, as stock).

(4) A *transfer* is, with respect to stock of the foreign acquiring corporation, an issuance, sale, distribution, exchange, or any other disposition of such stock.

(i) ***Examples.*** The following examples illustrate the application of the rules of this section. For purposes of the examples, unless otherwise indicated, assume the following facts in addition to the facts stated in the examples:

(1) FA, FMS, FS, and FT are foreign corporations, all of which have only one class of stock issued and outstanding;

(2) DMS and DT are domestic corporations;

(3) P and R are corporations that may be either domestic or foreign;

(4) PRS is a partnership with individual partners;

(5) The de minimis ownership exception in paragraph (d)(1) of this section does not apply;

(6) None of the shareholders or partners in the entities described in the examples are related persons with respect to each other;

(7) All transactions described in each example occur pursuant to the same plan;

(8) No property is acquired with a principal purpose of avoiding the purposes of section 7874;

(9) FA, FMS, FS, and FT are tax residents in the same foreign country;

(10) For purposes of determining the ownership fraction, no shares of FA stock are excluded from the denominator pursuant to § 1.7874-7(b) (which disregards stock attributable to passive assets); and

(11) For purposes of determining the ownership fraction, no shares of FA stock are treated as received by former shareholders of DT pursuant to § 1.7874-10(b) (which disregards certain distributions).

Example 1. Stock transferred in exchange for marketable securities—(i) *Facts.* Individual A wholly owns DT. PRS transfers marketable securities (within the meaning of paragraph (h)(1) of this section) to FA, a newly formed corporation, in exchange solely for 25 shares of FA stock. Then Individual A transfers all the DT stock to FA in exchange solely for 75 shares of FA stock.
(ii) *Analysis.* Under paragraph (h)(2)(ii) of this section, the marketable securities constitute nonqualified property. Accordingly, the 25 shares of FA stock transferred by FA to PRS in exchange for the marketable securities constitute disqualified stock described in paragraph (c)(1) of this section by reason of paragraph (c)(1)(i) of this section. Paragraph (c)(2) of this section does not reduce the amount of disqualified stock described in paragraph (c)(1)(i) of this section because the transfer of FA stock in exchange for the marketable securities increases the fair market value of the assets of FA by the fair market value of the marketable securities transferred. Under paragraph (b) of this section, the 25 shares of FA stock transferred to PRS are not included in the denominator of the ownership fraction. See also section 7874(c)(4). Accordingly, the only FA stock included in the ownership fraction is the FA stock transferred to Individual A in exchange for the DT stock, and that FA stock is included in both the numerator and the denominator of the ownership fraction. Thus, the ownership fraction is 75/75.

Example 2. Stock transferred in exchange for property acquired with a principal purpose of avoiding the purposes of section 7874—(i) *Facts.* Individual A wholly owns DT. PRS transfers marketable securities (within the meaning of paragraph (h)(1) of this section) to FT, a newly formed corporation, in exchange solely for all the FT stock. Then PRS transfers the FT stock to FA, a newly formed corporation, in exchange solely for 25 shares of FA stock. Finally, Individual A transfers all the DT stock to FA in exchange solely for 75 shares of FA stock. FA acquires the FT stock with a principal purpose of avoiding the purposes of section 7874.
(ii) *Analysis.* Under paragraph (h)(2)(iv) of this section, the FT stock constitutes nonqualified property because a principal purpose of FA acquiring the FT stock is to avoid the purposes of section 7874. Accordingly, the 25 shares of FA stock transferred by FA to PRS in exchange for the FT stock constitute disqualified stock described in paragraph (c)(1) of this section by reason of paragraph (c)(1)(i) of this section. Paragraph (c)(2) of this section does not reduce the amount of disqualified stock described in paragraph (c)(1)(i) of this section because the transfer of FA stock in exchange for the FT stock increases the fair market value of FA's assets by the fair market value of the FT stock. Under paragraph (b) of this section, the 25 shares of FA stock transferred to PRS are not included in the denominator of the ownership fraction. Furthermore, even in the absence of paragraph (h)(2)(iv) of this section, the transfer of marketable securities to FT would be disregarded pursuant to section 7874(c)(4). Accordingly, the only FA stock included in the ownership fraction is the FA stock transferred to Individual A in exchange for the DT stock, and that FA stock is included in both the numerator and the denominator of the ownership fraction. Thus, the ownership fraction is 75/75.

Example 3. Stock transferred in exchange for property acquired with a principal purpose of avoiding the purposes of section 7874—(i) *Facts.* DT is a publicly traded corporation. PRS is a foreign partnership that is unrelated to DT. PRS transfers certain business assets (PRS properties) to FA, a newly formed foreign corporation, in exchange solely for 25 shares of FA stock. The shareholders of DT transfer all of their DT stock to FA in exchange solely for the remaining 75 shares of FA stock (DT acquisition). None of the PRS properties is property described in paragraph (h)(2)(i) through (iii) of this section, but FA acquires the PRS properties with a principal purpose of avoiding the purposes of section 7874.
(ii) *Analysis.* Under paragraph (h)(2)(iv) of this section, the PRS properties transferred to FA constitute nonqualified property, because FA acquires the PRS properties in a transaction related to the DT acquisition with a principal purpose of avoiding the purposes of section 7874. Accordingly, the 25 shares of FA stock transferred by FA to PRS in exchange for the PRS properties constitute disqualified stock described in paragraph (c)(1) of this section by reason of paragraph (c)(1)(i) of this section. Paragraph (c)(2) of this section does not apply to reduce the amount of disqualified stock described in paragraph (c)(1)(i) of this section because the transfer of FA stock in exchange for the PRS properties increases the fair market value of FA's assets by the fair market value of the PRS properties. Accordingly, pursuant to paragraph (b) of this section, the 25 shares of FA stock transferred to PRS in exchange for the PRS properties are not included in the denominator of the ownership fraction. Furthermore, even in the absence of paragraph (h)(2)(iv) of this section, the transfer of the PRS properties to FA would be disregarded pursuant to section 7874(c)(4). Therefore, the only FA stock included in the ownership fraction is the FA stock transferred to the former domestic entity shareholders of DT in exchange for their DT stock, and that FA stock is included in both the numerator and the denominator of the ownership fraction. Thus, the ownership fraction is 75/75.

Example 4. Stock transferred in exchange for stock of a foreign corporation that becomes a member of the expanded affiliated group—(i) *Facts.* FT, a publicly traded corporation, forms FA, and then FA forms DMS and FMS. FMS merges with and into FT, with FT surviving the merger (FMS-FT merger). Pursuant to the FMS-FT merger, the FT shareholders exchange their FT stock solely for 100 shares of FA stock and FT becomes a wholly owned subsidiary of FA. Following the FMS-FT merger, DMS merges with and into DT, also a publicly traded corporation, with DT surviving the merger (DT acquisition). Pursuant to the DT acquisition, the DT shareholders exchange their DT stock solely for the remaining 100 shares of FA stock, and DT becomes a wholly owned subsidiary of FA. After the completion of the plan, FA wholly owns FT and DT, DMS and FMS cease to exist, and the stock of FA is publicly traded.
(ii) *Analysis.* Because FT becomes a member of the expanded affiliated group that includes FA in a transaction related to the DT acquisition, the FT stock does not constitute marketable securities (within the meaning of paragraph (h)(1) of this section) and therefore does not constitute nonqualified property pursuant to paragraph (h)(2)(ii) of this section. Accordingly,

no FA stock is disqualified stock described in paragraph (c)(1) of this section and therefore the FA stock transferred in exchange for the FT stock and DT stock is included in the denominator of the ownership fraction. Thus, the ownership fraction is 100/200.

(iii) *Alternative facts.* The facts are the same as in paragraph (i) of this *Example 4,* except that, instead of undertaking the FMS-FT merger, FT merges with and into FA with FA surviving the merger (FT-FA merger). Pursuant to the FT-FA merger, the FT shareholders exchange their FT stock solely for 100 shares of FA stock. At the time of the FT-FA merger, FT does not hold nonqualified property and has no obligations. Accordingly, FA stock transferred by FA to FT in exchange for the property of FT is not disqualified stock described in paragraph (c)(1) of this section. Furthermore, pursuant to paragraph (c)(2) of this section, the 100 shares of FA stock transferred by FT to the shareholders of FT in exchange for their FT stock do not constitute disqualified stock described in paragraph (c)(1) of this section. Although the FT stock is nonqualified property (the FT stock constitutes marketable securities within the meaning of paragraph (h)(2)(ii) of this section because the stock of FT is publicly traded and FT is not a member of the expanded affiliated group that includes FA after the DT acquisition), under paragraph (c)(2) of this section, the transfer of FA stock by FT to the shareholders of FT neither increases the fair market value of the assets of FA nor decreases the liabilities of FA. Accordingly, no FA stock is disqualified stock described in paragraph (c)(1) of this section and, therefore, the FA stock transferred in exchange for the assets of FT and the DT stock is included in the denominator of the ownership fraction. Thus, the ownership fraction is 100/200.

Example 5. De minimis exception—(i) *Facts.* Individual A wholly owns DT. The fair market value of the DT stock is $100x. PRS transfers $96x of cash to FA, a newly formed corporation, in exchange solely for 96 shares of FA stock. Then Individual A transfers the DT stock to FA in exchange for $96x of cash and 4 shares of FA stock (DT acquisition).
(ii) *Analysis.* Under paragraph (h)(2)(i) of this section, cash constitutes nonqualified property. Accordingly, the 96 shares of FA stock transferred by FA to PRS in exchange for $96x of cash constitute disqualified stock described in paragraph (c)(1) of this section by reason of paragraph (c)(1)(i) of this section. Furthermore, paragraph (c)(2) of this section does not reduce the amount of disqualified stock described in paragraph (c)(1)(i) of this section because the transfer of FA stock in exchange for $96x of cash increases the fair market value of the assets of FA by $96x. However, without regard to the application of paragraph (b) of this section and §§ 1.7874-7(b) and 1.7874-10(b), the ownership percentage described in section 7874(a)(2)(B)(ii) would be less than 5 (by vote and value), or 4 (4/100, or 4 shares of FA stock held by Individual A by reason of owning the DT stock, determined under § 1.7874-2(f)(2), over 100 shares of FA stock outstanding after the DT acquisition). Furthermore, after the DT acquisition and all related transactions, Individual A owns less than 5% (by vote and value, applying the attribution rules of section 318(a) with the modifications described in section 304(c)(3)(B)) of the stock of FA and DT (the members of the expanded

affiliated group that includes FA). Accordingly, the de minimis exception in paragraph (d)(1) of this section applies and therefore paragraph (b) of this section does not apply to exclude the FA stock transferred to PRS from the denominator of the ownership fraction. Therefore, the FA stock transferred to Individual A and PRS is included in the denominator of the ownership fraction. Thus, the ownership fraction is 4/100.

Example 6. Obligation of the expanded affiliated group satisfied with stock—(i) *Facts.* Individual A wholly owns DT. The stock of DT held by Individual A has a fair market value of $75x. Individual A also holds an obligation of DT with a value and face amount of $25x. DT holds property with a value of $100x, and the $25x obligation is associated with the property. FA, a newly formed corporation, transfers 100 shares of FA stock to Individual A in exchange for all the DT stock and the $25x obligation of DT.
(ii) *Analysis.* Under paragraph (h)(2)(iii)(A) of this section, the $25x obligation of DT constitutes nonqualified property because DT is a member of the expanded affiliated group that includes FA, and Individual A (the holder of the obligation immediately before the domestic entity acquisition and any related transaction) is not a member of the EAG after the domestic entity acquisition and all related transactions. Thus, the shares of FA stock transferred by FA to Individual A in exchange for the obligation of DT constitute disqualified stock described in paragraph (c)(1) of this section by reason of paragraph (c)(1)(i) of this section. Under § 1.7874-2(f)(2), Individual A is treated as receiving 75 shares of FA stock in exchange for the DT stock (100 x $75x/$100x) and 25 shares of FA stock in exchange for the obligation of DT (100 x $25x/$100x). Thus, 25 shares of FA stock constitute disqualified stock described in paragraph (c)(1) of this section by reason of paragraph (c)(1)(i) of this section. Paragraph (c)(2) of this section does not reduce the amount of disqualified stock described in paragraph (c)(1)(i) of this section because the transfer of FA stock for the $25x obligation increases the fair market value of FA's assets by $25x. Therefore, under paragraph (b) of this section, the 25 shares of FA stock transferred to Individual A in exchange for the obligation of DT are not included in the denominator of the ownership fraction. Accordingly, the only FA stock included in the ownership fraction is the 75 shares of FA stock transferred to Individual A in exchange for the DT stock, and that FA stock is included in both the numerator and the denominator of the ownership fraction. Thus, the ownership fraction is 75/75.

(iii) *Alternative facts.* The facts are the same as in paragraph (i) of this *Example 6,* except that instead of acquiring the stock of DT and the $25x obligation of DT, FA acquires the $100x of property from DT in exchange solely for 100 shares of FA stock. DT distributes 75 shares of FA stock to Individual A in exchange for Individual A's DT stock and transfers 25 shares of FA stock to Individual A in satisfaction of DT's obligation to Individual A, and liquidates. The 25 shares of FA stock transferred by FA to DT in exchange for the property of DT and then transferred by DT in satisfaction of DT's obligation to Individual A constitute disqualified stock described in paragraph (c)(1) of this section by reason of paragraph (c)(1)(ii) of this

section. Paragraph (c)(2) of this section does not reduce the amount of disqualified stock described in paragraph (c)(1)(ii) of this section because the transfer of FA stock in exchange for the property of DT increases the fair market value of FA's assets by $100x (although the amount of disqualified stock is limited to 25 shares of FA stock in this case). Therefore, under paragraph (b) of this section, the 25 shares of FA stock that constitute disqualified stock are not included in the denominator of the ownership fraction. Accordingly, only 75 shares of FA stock are included in the ownership fraction, and that FA stock is included in both the numerator and the denominator of the ownership fraction. Thus, the ownership fraction is 75/75.

Example 7. "Over-the-top" stock transfer—(i) *Facts.* Individual A wholly owns DT. Individual B holds all 100 outstanding shares of FA stock. Individual C acquires 20 shares of FA stock from Individual B for cash, and then FA acquires all of the stock of DT from Individual A in exchange solely for 100 shares of FA stock.
(ii) *Analysis.* Under paragraph (h)(2)(i) of this section, cash constitutes nonqualified property. Accordingly, absent the application of paragraph (c)(2) of this section, the 20 shares of FA stock transferred by Individual B to Individual C in exchange for cash would constitute disqualified stock described in paragraph (c)(1) of this section by reason of paragraph (c)(1)(i) of this section. Nevertheless, because Individual B's sale of FA stock neither increases the assets of FA nor decreases the liabilities of FA, such FA stock is not disqualified stock by reason of paragraph (c)(2) of this section. Accordingly, paragraph (b) of this section does not apply to exclude the 20 shares of FA stock sold by Individual B to Individual C, and that FA stock is included in the denominator of the ownership fraction. The 100 shares of FA stock received by Individual A are the only shares included in the numerator of the ownership fraction. Thus, the ownership fraction is 100/200.

Example 8. Interaction with internal group restructuring rule—(i) *Facts.* P holds 85 shares of DT stock. The remaining 15 shares of DT stock are held by Individual A. P and Individual A transfer their shares of DT stock to FA, a newly formed corporation, in exchange for 85 and 15 shares of FA stock, respectively (DT acquisition), and PRS transfers $75x of cash to FA in exchange for the remaining 75 shares of FA stock.
(ii) *Analysis.* Under paragraph (h)(2)(i) of this section, cash constitutes nonqualified property. Accordingly, the 75 shares of FA stock transferred by FA to PRS in exchange for $75x of cash constitute disqualified stock described in paragraph (c)(1) of this section by reason of paragraph (c)(1)(i) of this section. Furthermore, paragraph (c)(2) of this section does not reduce the amount of disqualified stock described in paragraph (c)(1)(i) of this section because the transfer of FA stock in exchange for $75x of cash increases the fair market value of the assets of FA by $75x. Therefore, under paragraph (b) of this section, the 75 shares of FA stock transferred to PRS are not included in the denominator of the ownership fraction. Although PRS's shares of FA stock are excluded from the denominator of the ownership fraction under paragraph (b) of this section, under 1.7874-1(d)(1), such shares of FA stock

nonetheless are taken into account for purposes of determining whether P is a member of the expanded affiliated group that includes FA and for purposes of determining whether the DT acquisition qualifies as an internal group restructuring. Because P holds 48.6% of the FA stock (85/175) after the DT acquisition and all transactions related to the DT acquisition, it is not a member of the expanded affiliated group that includes FA. In addition, the DT acquisition does not qualify as an internal group restructuring described in § 1.7874-1(c)(2) because P does not hold, directly or indirectly, 80% or more of the shares of FA stock (by vote and value) after the DT acquisition and all transactions related to the DT acquisition. Therefore, the FA stock held by P (along with the FA stock held by Individual A) is included in the numerator and the denominator of the ownership fraction. Thus, the ownership fraction is 100/100.

Example 9. Interaction with loss of control rule—(i) *Facts.* P wholly owns DT. P transfers all of its shares of DT stock to FA, a newly formed corporation, in exchange for 49 shares of FA stock (DT acquisition), and R transfers marketable securities (within the meaning of paragraph (h)(1) of this section) to FA in exchange for the remaining 51 shares of FA stock. (ii) *Analysis.* Under paragraph (h)(2)(ii) of this section, the marketable securities constitute nonqualified property. Accordingly, the shares of FA stock transferred by FA to R in exchange for the marketable securities constitute disqualified stock described in paragraph (c)(1) of this section by reason of paragraph (c)(1)(i) of this section. Paragraph (c)(2) of this section does not reduce the amount of disqualified stock described in paragraph (c)(1)(i) of this section because the transfer of FA stock in exchange for the marketable securities increases the fair market value of the assets of FA by the fair market value of the marketable securities transferred. Therefore, under paragraph (b) of this section, the shares of FA stock transferred to R are not included in the denominator of the ownership fraction. Although under paragraph (b) of this section R's shares of FA stock are excluded from the denominator of the ownership fraction, under 1.7874-1(d)(1), such stock is taken into account for purposes of determining whether P or R is a member of the expanded affiliated group that includes FA. Because P holds 49% of the shares of FA stock (49/100), P is not a member of the expanded affiliated group that includes FA, and P's FA stock is included in both the numerator and the denominator of the ownership fraction. Because R holds 51% of the shares of FA stock (51/100), R is a member of the expanded affiliated group that includes FA and, before taking into account § 1.7874-1(c), R's FA stock would be excluded from the numerator and denominator of the ownership fraction under section 7874(c)(2)(A) and § 1.7874-1(b). However, the DT acquisition results in a loss of control described in § 1.7874-1(c)(3) because P does not hold, in the aggregate, directly or indirectly, more than 50% of the shares of stock (by vote or value) of R, FA, or DT after the acquisition. Accordingly, the FA stock held by R would be included in the denominator of the ownership fraction under § 1.7874-1(c)(1). Nevertheless, the FA stock held by R is excluded from the denominator of the ownership fraction under paragraph (b) of this section and § 1.7874-1(d)(1). Thus, the ownership fraction is 49/49.

(iii) *Alternative facts.* The facts are the same as in paragraph (i) of this *Example 9,* except that, in exchange for 51 shares of FA stock, R transfers marketable securities (within the meaning of paragraph (h)(1) of this section) with a value equal to that of 16 shares of FA stock and qualified property (within the meaning of paragraph (h)(2) of this section) with a value equal to that of 35 shares of FA stock. Accordingly, 16 of the 51 shares of FA stock transferred to R constitute disqualified stock described in paragraph (c)(1) of this section by reason of paragraph (c)(1)(i) of this section, and 35 of such shares do not constitute disqualified stock. Paragraph (c)(2) of this section does not reduce the amount of disqualified stock described in paragraph (c)(1)(i) of this section because the transfer of FA stock in exchange for the marketable securities increases the fair market value of the assets of FA by the fair market value of the marketable securities transferred. Therefore, under paragraph (b) of this section, 16 of the 51 shares of FA stock transferred to R are not included in the denominator of the ownership fraction. Although 16 of the 51 shares of FA stock that are transferred to R are excluded from the denominator of the ownership fraction, under§ 1.7874-1(d)(1), all 51 of R's shares of FA stock are taken into account for purposes of determining whether P or R is a member of the expanded affiliated group that includes FA. Because P holds 49% of the shares of FA stock (49/100), it is not a member of the expanded affiliated group that includes FA, and its FA stock is included in both the numerator and the denominator of the ownership fraction. Because R holds 51% of the shares of FA stock (51/100), it is a member of the expanded affiliated group that includes FA and, before taking into account § 1.7874-1(c), its FA stock is excluded from the numerator and denominator of the ownership fraction under section 7874(c)(2)(A) and § 1.7874-1(b). However, the DT acquisition results in a loss of control described in § 1.7874-1(c)(3) because P does not hold, in the aggregate, directly or indirectly, more than 50% of the shares of stock (by vote or value) of R, FA, or DT after the acquisition. Accordingly, the 51 shares of FA stock held by R would be included in the denominator of the ownership fraction under § 1.7874-1(c)(1). Nevertheless, the 16 shares of FA stock that constitute disqualified stock are excluded from the denominator of the ownership fraction under paragraph (b) of this section and § 1.7874-1(d)(1). In addition, the 35 shares of FA stock received by R that do not constitute disqualified stock are included in the denominator. Thus, the ownership fraction is 49/84.

Example 10. Stock issued in lieu of assuming associated obligation—(i) *Facts.* Individual A wholly owns DT. The stock of DT has a fair market value of $100x. Individual B wholly owns FT, a foreign corporation, which conducts two businesses, Business C and Business D. Business C comprises property with a gross fair market value of $70x and $20x of associated obligations. Business D comprises property with a gross fair market value of $45x and $35x of associated obligations. Individual A transfers all of the shares of DT stock to FA, a newly formed corporation, in exchange for $100x of FA stock (DT acquisition). In transactions related to the DT acquisition, FA acquires all of the Business C property from FT in exchange for $70x of FA stock and then FT transfers $30x of the FA stock to its creditors in satisfaction of $30x of its obligations. None of the Business C property is nonqualified property.

(ii) *Analysis.* Under paragraph (c)(1) of this section by reason of paragraph (c)(1)(ii) of this section, the $30x of FA stock transferred to FT (the transferee) in exchange for the Business C property (the exchanged property) and then transferred by FT in satisfaction of $30x of its obligations is disqualified stock, except to the extent limited by paragraph (c)(1)(ii)(B) of this section. Under paragraph (c)(1)(ii)(B)(*1*) of this section, the proportionate share of obligations associated with the exchanged property that is not assumed by FA must be determined. The proportionate share of obligations associated with the exchanged property is $20x, calculated as $20x (the obligations associated with the Business C properties) multiplied by $70x/$70x (the fair market value of the exchanged property, $70x, relative to the fair market value of all the Business C property, $70x). The proportionate share of obligations associated with the exchanged property that is not assumed by FA is $20x, calculated as the proportionate share of obligations associated with the exchanged property ($20x) less the obligations assumed by FA ($0x). Under paragraph (c)(1)(ii)(B)(*2*) of this section, the amount of disqualified stock is limited to the proportionate share of obligations associated with the exchanged property that is not assumed ($20x) multiplied by a fraction, which in this case is $70x/$70x (the amount of exchanged property that is qualified property, $70x, divided by the total amount of exchanged property, $70x). Accordingly, $20x of FA stock is disqualified stock under paragraph (c)(1) of this section by reason of paragraph (c)(1)(ii) of this section. Paragraph (c)(2) of this section does not reduce the amount of disqualified stock described in paragraph (c)(1)(ii) of this section because the transfer of the FA stock in exchange for the exchanged property increases the fair market value of FA's assets by $70x (although the amount of disqualified stock is limited to $20x of FA stock in this case). Therefore, under paragraph (b) of this section, the $20x of FA stock that constitutes disqualified stock is not included in the denominator of the ownership fraction. Accordingly, only $150x of FA stock is included in the denominator of the ownership fraction, calculated as the $100x of FA stock received by Individual A plus the $70x of FA stock received by FT less the $20x of FA stock that is disqualified stock. Thus, the ownership fraction is $100x/$150x. The result would be the same if, in transactions related to the DT acquisition, FT instead sold the $30x of FA stock for $30x cash and then transferred the cash in satisfaction of $30x of its obligations.

(iii) *Alternative facts.* The facts are the same as in paragraph (i) of this *Example 10,* except that FA acquires only $42x of the Business C property in exchange for $30x of FA stock and the assumption of $12x of the obligations associated with the Business C property. Under paragraph (c)(1) of this section by reason of paragraph (c)(1)(ii) of this section, the $30x of FA stock transferred to FT (the transferee) in exchange for the Business C property (the exchanged property) and then transferred by FT in satisfaction of $30x of its obligations is disqualified stock, except to the extent limited by paragraph (c)(1)(ii)(B) of this section. Under paragraph (c)(1)(ii)(B)(*1*) of this section, the proportionate share of obligations associated with the exchanged property that is not assumed by FA must be determined. The proportionate share of obligations associated with the exchanged property is $12x, calculated as $20x (the obligations associated with the Business C property) multiplied by $42x/$70x (the fair market value of the exchanged property, $42x, relative to the fair market value of all the Business C property, $70x). The proportionate share of obligations associated with the exchanged property that is not assumed by FA is $0, calculated as the proportionate share of obligations associated with the exchanged property ($12x) less the obligations assumed by FA ($12x). Accordingly, as a result of the application of paragraph (c)(1)(ii)(B)(*2*) of this

section, no FA stock is disqualified stock under paragraph (c)(1) of this section by reason of paragraph (c)(1)(ii) of this section. As a result, $130x of FA stock is included in the denominator of the ownership fraction, calculated as the $100x of FA stock received by Individual A plus the $30x of FA stock received by FT. Thus, the ownership fraction is $100x/$130x.

(j) ***Applicability dates*** —

(1) ***General rule.*** Except to the extent otherwise provided in paragraph (j) of this section, this section applies to domestic entity acquisitions completed on or after September 17, 2009. Paragraphs (h)(1) and (h)(2)(iv) of this section apply to domestic entity acquisitions completed on or after November 19, 2015. Paragraph (d)(1)(i) of this section applies to domestic entity acquisitions completed on or after April 4, 2016. Paragraphs (c)(1)(ii), (h)(2)(iii), and (h)(3) of this section apply to domestic entity acquisitions completed on or after January 13, 2017. For domestic entity acquisitions completed before November 19, 2015, see § 1.7874-4T(i)(6) and (i)(7)(iv) (the predecessors of paragraphs (h)(1) and (h)(2)(iv) of this section) as contained in 26 CFR part 1 revised as of April 1, 2016. For domestic entity acquisitions completed on or after September 22, 2014, and before April 4, 2016, see § 1.7874-4T(d)(1)(i) as contained in 26 CFR part 1 revised as of April 1, 2016. For domestic entity acquisitions completed before January 13, 2017, see § 1.7874-4T(c)(1)(ii), (i)(7)(iii) (the predecessor of paragraph (h)(2)(iii) of this section), and (i)(8) (the predecessor of paragraph (h)(3) of this section) as contained in 26 CFR part 1 revised as of April 1, 2016. Paragraph (d)(1)(ii) of this section applies to domestic entity acquisitions completed on or after July 12, 2018, though taxpayers may elect to consistently apply paragraph (d)(1)(ii) of this section to domestic entity acquisitions completed before July 12, 2018. For domestic entity acquisitions completed before July 12, 2018, see § 1.7874-4(d)(1)(ii) as contained in 26 CFR part 1 revised as of April 1, 2017.

(2) ***Transitional rules for domestic entity acquisitions completed on or after September 17, 2009, but before January 16, 2014.*** For domestic entity acquisitions completed on or after September 17, 2009, but before January 16, 2014, except as provided in paragraph (j)(3) of this section, this section shall be applied with the following modifications:

(i) Nonqualified property does not include property described in paragraph (h)(2)(iii) of this section.

(ii) A transfer is limited to an issuance of stock of the foreign acquiring corporation.

(iii) The determination of whether stock of the foreign acquiring corporation is described in paragraph (c)(1) of this section is made without regard to paragraphs (c)(1)(ii), (c)(2), and (e) of this section.

(iv) Paragraph (d) of this section and § 1.7874-1(d)(1)do not apply.

(3) ***Election for domestic entity acquisitions completed on or after September 17, 2009, and before January 13, 2017.*** If, pursuant to paragraph (j)(1) or (2) of this section, a paragraph of this section would not otherwise apply to a domestic entity acquisition completed on or after September 17, 2009, and before January 13, 2017 (transition period), a taxpayer may elect to apply the paragraph if the taxpayer applies the paragraph consistently to all acquisitions completed during the transition period. The election is made by applying the paragraph to all such acquisitions on a timely filed original return (including extensions) or an amended return filed no later than six months after January 13, 2017. A separate statement or form evidencing the election need not be filed.

[T.D. 9812, 82 FR 5394, Jan. 18, 2017; 82 FR 42233, Sept. 7, 2017; T.D. 9834, 83 FR 32547, July 12, 2018]

§ 1.7874-5 Effect of certain transfers of stock related to the acquisition.

(a) ***General rule.*** Stock of a foreign acquiring corporation that is described in section 7874(a)(2)(B)(ii) shall not cease to be so described as a result of any subsequent transfer of the stock by the former domestic entity shareholder or former domestic entity partner that received such stock, even if the subsequent transfer is related to the domestic entity acquisition.

(b) ***Example.*** The rule of this section is illustrated by the following example:

> *Example.* (i) *Facts.* Individual A wholly owns DT, a domestic corporation. FA, a newly formed foreign corporation, acquires all of the stock of DT from Individual A in exchange solely for 100 shares of FA stock. Pursuant to a binding commitment that was entered into in connection with FA's acquisition of the DT stock, Individual A sells 25 shares of FA stock to B, an unrelated person, in exchange for cash. For federal income tax purposes, the form of the steps of the transaction is respected.
> (ii) *Analysis.* Under § 1.7874-2(f)(1), the 100 shares of FA stock received by Individual A are stock of a foreign corporation (FA) that is held by reason of holding stock in a domestic corporation (DT). Accordingly, such stock is described in section 7874(a)(2)(B)(ii). Under paragraph (a) of this section, all 100 shares of FA stock retain their status as being described in section 7874(a)(2)(B)(ii), even though Individual A sells 25 of the 100 shares in connection with the acquisition described in section 7874(a)(2)(B)(i) pursuant to the binding commitment. Therefore, all 100 of the shares of FA stock are included in both the numerator and denominator of the ownership fraction.

(c) ***Certain transfers involving expanded affiliated group members.*** For rules addressing whether certain stock is treated as held by members of the expanded affiliated group for purposes of applying section 7874(c)(2)(A) and § 1.7874-1, see § 1.7874-6.

(d) ***Definitions.*** The definitions provided in § 1.7874-12 apply for purposes of this section.

(e) ***Applicability dates.*** This section applies to domestic entity acquisitions that are completed on or after January 16, 2014.

[T.D. 9812, 82 FR 5400, Jan. 18, 2017, as amended by T.D. 9834, 83 FR 32548, July 12, 2018]

§ 1.7874-6 Stock transferred by members of the EAG.

(a) ***Scope.*** This section provides rules regarding whether transferred stock is treated as held by members of the EAG for purposes of applying section 7874(c)(2)(A) and § 1.7874-1. Paragraph (b) of this section sets forth the general rule under which transferred stock is not treated as held by members of the EAG for purposes of applying section 7874(c)(2)(A) and § 1.7874-1. Paragraph (c) of this section provides exceptions to the general rule. Paragraph (d) of this section provides rules regarding the treatment of partnerships, and paragraph (e) of this section provides rules regarding transactions related to the

acquisition. Paragraph (f) of this section provides definitions. Paragraph (g) of this section provides examples illustrating the application of the rules of this section. Paragraph (h) of this section provides dates of applicability.

(b) ***General rule.*** Except as provided in paragraph (c) of this section, transferred stock is not treated as held by members of the EAG for purposes of applying section 7874(c)(2)(A) and § 1.7874-1. Transferred stock that is not treated as held by members of the EAG for purposes of applying section 7874(c)(2)(A) and § 1.7874-1 is included in the numerator and the denominator of the ownership fraction. See § 1.7874-5(a).

(c) ***Exceptions.*** Transferred stock is treated as held by members of the EAG for purposes of applying section 7874(c)(2)(A) and § 1.7874-1 if paragraph (c)(1) or (2) of this section applies. Transferred stock that is treated as held by members of the EAG for purposes of applying section 7874(c)(2)(A) and § 1.7874-1 is excluded from the numerator of the ownership fraction and, depending upon the application of § 1.7874-1(c), may be excluded from the denominator of the ownership fraction. See § 1.7874-1(b) and (c).

(1) ***Transfers involving a U.S.-parented group.*** This paragraph (c)(1) applies if the following conditions are satisfied:

(i) Before the domestic entity acquisition, the transferring corporation is a member of a U.S.-parented group.

(ii) After the domestic entity acquisition, each of the transferring corporation (or its successor), any person that holds transferred stock, and the foreign acquiring corporation are members of a U.S.-parented group the common parent of which—

(A) Before the domestic entity acquisition, was a member of the U.S.-parented group described in paragraph (c)(1)(i) of this section; or

(B) Is a corporation that was formed in a transaction related to the domestic entity acquisition, provided that, immediately after the corporation was formed (and without regard to any related transactions), the corporation was a member of the U.S.-parented group described in paragraph (c)(1)(i) of this section.

(2) ***Transfers involving a foreign-parented group.*** This paragraph (c)(2) applies if the following conditions are satisfied:

(i) Before the domestic entity acquisition, the transferring corporation and the domestic entity are members of the same foreign-parented group.

(ii) After the domestic entity acquisition, the transferring corporation—

(A) Is a member of the EAG; or

(B) Would be a member of the EAG absent one or more transfers (other than by issuance), in a transaction (or series of transactions) after and related to the domestic entity acquisition, of stock of the foreign acquiring corporation by one or more members of the foreign-parented group described in paragraph (c)(2)(i) of this section.

(d) ***Treatment of partnerships*** —

(1) ***Stock held by a partnership.*** For purposes of this section, each partner in a partnership, as determined without regard to the application of paragraph (d)(2) of this section, is treated as holding its proportionate share of the stock held by the partnership, as determined under the rules and principles of sections 701 through 777.

(2) ***Partnership treated as corporation.*** For purposes of this section, if one or more members of an affiliated group, as determined after the application of paragraph (d)(1) of this section, own, in the aggregate, more than 50 percent (by value) of the interests in a partnership, the partnership will be treated as a corporation that is a member of the affiliated group.

(e) ***Treatment of transactions related to the acquisition.*** Except as provided in paragraphs (c)(1)(ii)(B) and (c)(2)(ii)(B) of this section, all transactions that are related to a domestic entity acquisition are taken into account in applying this section.

(f) ***Definitions.*** In addition to the definitions provided in § 1.7874-12, the following definitions apply for purposes of this section.

(1) A *foreign-parented group* means an affiliated group that has a foreign corporation as the common parent corporation. A *member of the foreign-parented group* is an entity included in the foreign-parented group.

(2) ***Transferred stock*** —

(i) ***In general.*** Transferred stock means stock of the foreign acquiring corporation described in section 7874(a)(2)(B)(ii) that is received by a transferring corporation and, in a transaction (or series of transactions) related to the domestic entity acquisition, is subsequently transferred.

(ii) ***Special rule.*** This paragraph (f)(2)(ii) applies in certain cases in which a transferring corporation receives stock of the foreign acquiring corporation described in section 7874(a)(2)(B)(ii) that has the same terms as other stock of the foreign acquiring corporation that is received by the transferring corporation in a transaction (or series of transactions) related to the domestic entity acquisition or that is owned by the transferring corporation prior to the domestic entity acquisition (the stock described in this sentence, collectively, *fungible stock*). Pursuant to this paragraph (f)(2)(ii), if, in a transaction (or series of transactions) related to the domestic entity acquisition, the transferring corporation subsequently transfers less than all of the fungible stock, a pro rata portion of the stock subsequently transferred is treated as consisting of stock of the foreign acquiring corporation described in section 7874(a)(2)(B)(ii). The pro rata portion is based, at the time of the subsequent transfer, on the relative fair market value of the fungible stock that is stock of the foreign acquiring corporation described in section 7874(a)(2)(B)(ii) to the fair market value of all the fungible stock.

(3) A *transferring corporation* means a corporation that is a former domestic entity shareholder or former domestic entity partner.

(4) A *U.S.-parented group* means an affiliated group that has a domestic corporation as the common parent corporation. A *member of the U.S.-parented group* is an entity included in the U.S.-parented group, including the common parent corporation.

(g) ***Examples.*** The following examples illustrate the application of this section.

> *Example 1. U.S.-parented group exception not available*—(i) *Facts.* USP, a domestic corporation wholly owned by Individual A, owns all the stock of DT, a domestic corporation, as well as other property. The DT stock does not represent substantially all of the property of USP for purposes of section 7874. Pursuant to a reorganization described in section 368(a)(1)(D), USP transfers all the DT stock to FA, a newly formed foreign corporation, in exchange for 100 shares of FA stock (DT acquisition) and distributes the FA stock to Individual A pursuant to section 361(c)(1).

(ii) *Analysis.* The 100 FA shares received by USP are stock of a foreign acquiring corporation described in section 7874(a)(2)(B)(ii) and, under § 1.7874-5(a), the shares retain their status as such even though USP subsequently distributes the shares to Individual A pursuant to section 361(c)(1). Thus, the 100 FA shares are included in the ownership fraction, unless the shares are treated as held by members of the EAG for purposes of applying section 7874(c)(2)(A) and § 1.7874-1 and are excluded from the ownership fraction under those rules. For purposes of applying section 7874(c)(2)(A) and § 1.7874-1, the 100 FA shares, which constitute transferred stock under paragraph (f)(2) of this section, are treated as held by members of the EAG only if an exception in paragraph (c) of this section applies. See paragraph (b) of this section. The U.S.-parented group exception described in paragraph (c)(1) of this section does not apply. Although before the DT acquisition, USP (the transferring corporation) is a member of a U.S.-parented group of which USP is the common parent, after the DT acquisition, and taking into account all transactions related to the acquisition, each of USP, Individual A (the person that holds the transferred stock), and FA (the foreign acquiring corporation) are not members of a U.S.-parented group described in paragraph (c)(1)(ii)(A) or (B) of this section. Accordingly, because the 100 FA shares are not treated as held by members of the EAG, those shares are included in the numerator and the denominator of the ownership fraction. Therefore, the ownership fraction is 100/100.

Example 2. U.S.-parented group exception available—(i) *Facts.* USP, a domestic corporation wholly owned by Individual A, owns all the stock of USS, a domestic corporation, and USS owns all the stock of FT, a foreign corporation. FT owns all the stock of DT, a domestic corporation. FT does not own any other property and has no liabilities. Pursuant to a reorganization described in section 368(a)(1)(F), FT transfers all of its DT stock to FA, a newly formed foreign corporation, in exchange for 100 shares of FA stock (DT acquisition) and distributes the FA stock to USS in liquidation pursuant to section 361(c)(1). In a transaction after and related to the DT acquisition, USP sells 60 percent of the stock of USS (by vote and value) to Individual B.
(ii) *Analysis.* The 100 FA shares received by FT are stock of a foreign acquiring corporation described in section 7874(a)(2)(B)(ii) and, under § 1.7874-5(a), the shares retain their status as such even though FT subsequently distributes the shares to USS pursuant to section 361(c)(1). Thus, the 100 FA shares are included in the ownership fraction, unless the shares are treated as held by members of the EAG for purposes of applying section 7874(c)(2)(A) and § 1.7874-1 and are excluded from the ownership fraction under those rules. For purposes of applying section 7874(c)(2)(A) and § 1.7874-1, the 100 FA shares, which constitute transferred stock under paragraph (f)(2) of this section, are treated as held by members of the EAG only if an exception in paragraph (c) of this section applies. See paragraph (b) of this section. The U.S.-parented group exception described in paragraph (c)(1) of this section applies. The requirement set forth in paragraph (c)(1)(i) of this section is satisfied because before the DT acquisition, FT (the transferring corporation) is a member of a U.S.-parented group of which USP is the common parent (the USP group). The requirement set forth in paragraph (c)(1)(ii) of this section is satisfied because after the DT acquisition, and taking into account all transactions related to the acquisition, each of FA (which is both the successor to FT, the transferring corporation, and the

foreign acquiring corporation) and USS (the person that holds the transferred stock) are members of a U.S.-parented group of which USS (a member of the USP group before the DT acquisition) is the common parent. Moreover, the DT acquisition qualifies as an internal group restructuring under § 1.7874-1(c)(2). The requirement set forth in § 1.7874-1(c)(2)(i) is satisfied because before the DT acquisition, 80 percent or more of the stock (by vote and value) of DT was held directly or indirectly by USS (the corporation that after the acquisition, and taking into account all transactions related to the acquisition, is the common parent of the EAG). The requirement set forth in § 1.7874-1(c)(2)(ii) is satisfied because after the acquisition, and taking into account all transactions related to the acquisition, 80 percent or more of the stock (by vote and value) of FA (the foreign acquiring corporation) is held directly or indirectly by USS. Therefore, the 100 FA shares are excluded from the numerator, but included in the denominator, of the ownership fraction. Accordingly, the ownership fraction is 0/100.

Example 3. U.S.-parented group exception available—(i) *Facts.* USP, a domestic corporation wholly owned by Individual A, owns all the stock of USS, a domestic corporation, and USS owns all the stock of DT, also a domestic corporation. DT owns all the stock of FT, a foreign corporation. The FT stock represents substantially all of the property of DT for purposes of section 7874. Pursuant to a reorganization described in section 368(a)(1)(D), DT transfers all the FT stock to FA, a newly formed foreign corporation, in exchange for 100 shares of FA stock (DT acquisition) and distributes the FA stock to USS pursuant to section 361(c)(1). In a related transaction, USS distributes all the FA stock to USP under section 355(c)(1). Lastly, in another related transaction and pursuant to a divisive reorganization described in section 368(a)(1)(D), USP transfers all the stock of USS and FA to DP, a newly formed domestic corporation, in exchange for all the stock of DP and distributes the DP stock to Individual A pursuant to section 361(c)(1).
(ii) *Analysis.* The 100 FA shares received by USS are stock of a foreign acquiring corporation described in section 7874(a)(2)(B)(ii) and, under § 1.7874-5(a), the shares retain their status as such even though USS subsequently transfers the shares to USP. Thus, the 100 FA shares are included in the ownership fraction, unless the shares are treated as held by members of the EAG for purposes of applying section 7874(c)(2)(A) and § 1.7874-1 and are excluded from the ownership fraction under those rules. For purposes of applying section 7874(c)(2)(A) and § 1.7874-1, the 100 FA shares, which constitute transferred stock under paragraph (f)(2) of this section, are treated as held by members of the EAG only if an exception in paragraph (c) of this section applies. See paragraph (b) of this section. The U.S.-parented group exception described in paragraph (c)(1) of this section applies. The requirement set forth in paragraph (c)(1)(i) of this section is satisfied because before the DT acquisition, USS (the transferring corporation) is a member of a U.S.-parented group of which USP is the common parent (the USP group). The requirement set forth in paragraph (c)(1)(ii) of this section is satisfied because after the DT acquisition, and taking into account all transactions related to the acquisition, each of USS, DP (the person that holds the transferred stock), and FA (the foreign acquiring corporation) are members of a U.S.-parented group of which DP (a corporation that was formed in a transaction

related to the DT acquisition and that, immediately after it was formed (but without regard to any related transactions) was a member of the USP group) is the common parent. Therefore, the 100 FA shares are excluded from the numerator and the denominator of the ownership fraction. Accordingly, the ownership fraction is 0/0.

Example 4. *Foreign-parented group exception*—(i) *Facts.* Individual A owns all the stock of FT, a foreign corporation, and FT owns all the stock of DT, a domestic corporation. FT does not own any other property and has no liabilities. Pursuant to a reorganization described in section 368(a)(1)(F), FT transfers all the stock of DT to FA, a newly formed foreign corporation, in exchange for 100 shares of FA stock (DT acquisition) and distributes the FA stock to Individual A in liquidation pursuant to section 361(c)(1).
(ii) *Analysis.* The 100 FA shares received by FT are stock of a foreign acquiring corporation described in section 7874(a)(2)(B)(ii) and, under § 1.7874-5(a), the shares retain their status as such even though FT subsequently distributes the shares to Individual A pursuant to section 361(c)(1). Thus, the 100 FA shares are included in the ownership fraction, unless the shares are treated as held by members of the EAG of purposes of applying section 7874(a)(2)(A) and § 1.7874-1 and are excluded from the ownership fraction under those rules. For purposes of applying section 7874(c)(2)(A) and § 1.7874-1, the 100 FA shares, which constitute transferred stock under paragraph (f)(2) of this section, are treated as held by members of the EAG only if an exception in paragraph (c) of this section applies. See paragraph (b) of this section. The foreign-parented group exception described in paragraph (c)(2) of this section applies. The requirement set forth in paragraph (c)(2)(i) of this section is satisfied because before the DT acquisition, FT (the transferring corporation) and DT are members of the foreign-parented group of which FT is the common parent. The requirement set forth in paragraph (c)(2)(ii) of this section is satisfied because after the acquisition, and taking into account all transactions related to the acquisition, FT would be a member of the EAG absent the distribution of the FA shares pursuant to section 361(c)(1). Moreover, the DT acquisition qualifies as an internal group restructuring under § 1.7874-1(c)(2). The requirement set forth in § 1.7874-1(c)(2)(i) is satisfied because before the acquisition, 80 percent or more of the stock (by vote and value) of DT was held directly or indirectly by FT, the corporation that, without regard to the distribution of the FA shares pursuant to section 361(c)(1), would be common parent of the EAG after the acquisition. See § 1.7874-1(c)(2)(iii). The requirement set forth in § 1.7874-1(c)(2)(ii) is satisfied because after the acquisition, but without regard to the distribution of the FA shares pursuant to the section 361(c)(1) distribution, FT would directly or indirectly hold 80 percent or more of the stock (by vote and value) of FA (the foreign acquiring corporation). See § 1.7874-1(c)(2)(iii). Therefore, the 100 FA shares are excluded from the numerator, but included in the denominator, of the ownership fraction. Accordingly, the ownership fraction is 0/100.

(iii) *Alternative facts.* The facts are the same as in paragraph (i) of this *Example 4,* except that in a transaction after and related to the DT acquisition, FA issues 200 shares of FA stock to Individual B in exchange for qualified property (within the meaning of § 1.7874-4(h)(2)). The foreign-parented

group exception does not apply because after the acquisition, and taking into account FA's issuance of the 200 FA shares to Individual B, FT would not be a member of the EAG absent FT's distribution of the 100 FA shares pursuant to section 361(c)(1). Accordingly, the 100 FA shares received by FT are not treated as held by a member of the EAG for purposes of applying section 7874(c)(2)(A) and § 1.7874-1. As a result, the ownership fraction is 100/300.

(h) ***Applicability dates.*** Except as otherwise provided in this paragraph (h), this section applies to domestic entity acquisitions completed on or after September 22, 2014. Paragraphs (d)(2) and (f)(2)(ii) of this section apply to domestic entity acquisitions completed on or after April 4, 2016. Taxpayers, however, may elect either to apply paragraph (c)(2) of this section to domestic entity acquisitions completed before September 22, 2014, or to consistently apply paragraphs (c)(2), (d)(2), and (f)(2)(ii) of this section and § 1.7874-1(c)(2)(iii) and (g) to domestic entity acquisitions completed before April 4, 2016.

[T.D. 9834, 83 FR 32548, July 12, 2018]

§ 1.7874-7 Disregard of certain stock attributable to passive assets.

(a) ***Scope.*** This section identifies certain stock of a foreign acquiring corporation that is attributable to passive assets and that is disregarded in determining the ownership fraction by value. Paragraph (b) of this section sets forth the general rule regarding when stock of a foreign acquiring corporation is excluded from the denominator of the ownership fraction under this section. Paragraph (c) of this section provides a de minimis exception to the application of the general rule of paragraph (b) of this section. Paragraph (d) of this section provides rules for the treatment of partnerships, and paragraph (e) of this section provides definitions. Paragraph (f) of this section provides examples illustrating the application of the rules of this section. Paragraph (g) of this section provides dates of applicability. The rules provided in this section are also subject to section 7874(c)(4). See § 1.7874-1(d)(1) for rules addressing the interaction of this section with the expanded affiliated group rules of section 7874(c)(2)(A) and § 1.7874-1.

(b) ***General rule.*** If, on the completion date, more than fifty percent of the gross value of all foreign group property constitutes foreign group nonqualified property, then, for purposes of determining the ownership percentage by value (but not vote) described in section 7874(a)(2)(B)(ii), stock of the foreign acquiring corporation is excluded from the denominator of the ownership fraction in an amount equal to the product of—

(1) The value of the stock of the foreign acquiring corporation, other than stock that is described in section 7874(a)(2)(B)(ii) and stock that is excluded from the denominator of the ownership fraction under § 1.7874-1(b), § 1.7874-4(b), § 1.7874-8(b), § 1.7874-9(b), or section § 7874(c)(4); and

(2) The foreign group nonqualified property fraction.

(c) ***De minimis ownership.*** Paragraph (b) of this section does not apply if—

(1) The ownership percentage described in section 7874(a)(2)(B)(ii), determined without regard to the application of paragraph (b) of this section and §§ 1.7874-4(b) and 1.7874-10(b), is less than five (by vote and value); and

(2) On the completion date, each five percent former domestic entity shareholder or five percent former domestic entity partner, as applicable, owns (applying the attribution rules of section 318(a) with the modifications described in section 304(c)(3)(B)) less than five percent (by vote and value) of the

stock of (or a partnership interest in) each member of the expanded affiliated group. For this purpose, a five percent former domestic entity shareholder (or five percent former domestic entity partner) is a former domestic entity shareholder (or former domestic entity partner) that, before the domestic entity acquisition, owned (applying the attribution rules of section 318(a) with the modifications described in section 304(c)(3)(B)) at least five percent (by vote and value) of the stock of (or a partnership interest in) the domestic entity.

(d) ***Treatment of partnerships.*** For purposes of this section, if one or more members of the modified expanded affiliated group own, in the aggregate, more than 50 percent (by value) of the interests in a partnership, the partnership is treated as a corporation that is a member of the modified expanded affiliated group.

(e) ***Definitions.*** In addition to the definitions provided in § 1.7874-12, the following definitions apply for purposes of this section.

(1) ***Foreign group nonqualified property*** —

(i) ***General rule.*** Foreign group nonqualified property means foreign group property described in § 1.7874-4(h)(2), other than the following:

(A) Property that gives rise to income described in section 954(h), determined—

(*1*) In the case of property held by a foreign corporation, by substituting the term "foreign corporation" for the term "controlled foreign corporation;" and

(2) In the case of property held by a domestic corporation, by substituting the term "domestic corporation" for the term "controlled foreign corporation," without regard to the phrase "other than the United States" in section 954(h)(3)(A)(ii)(I), and without regard to any inference that the tests in section 954(h) should be calculated or determined without taking transactions with customers located in the United States into account.

(B) Property that gives rise to income described in section 954(i), determined by substituting the term "foreign corporation" for the term "controlled foreign corporation."

(C) Property that gives rise to income described in section 1297(b)(2)(A) or (B) (determined without regard to other passive foreign investment company rules).

(D) Property held by a domestic corporation that is subject to tax as an insurance company under subchapter L of chapter 1 of subtitle A of the Internal Revenue Code, provided that the property is required to support, or is substantially related to, the active conduct of an insurance business.

(ii) ***Special rule.*** Foreign group nonqualified property also means any foreign group property that, in a transaction related to the domestic entity acquisition, is acquired in exchange for other property, including cash, if such other property would be described in paragraph (e)(1)(i) of this section had the transaction not occurred.

(2) ***Foreign group property*** means any property (including excluded property, as described in paragraph (e)(3)(ii) of this section)) held on the completion date by the modified expanded affiliated group, other than—

(i) Property that is directly or indirectly acquired in the domestic entity acquisition;

(ii) Stock or a partnership interest in a member of the modified expanded affiliated group; and

(iii) An obligation of a member of the modified expanded affiliated group.

(3) ***Foreign group nonqualified property fraction*** —

(i) ***In general.*** Foreign group nonqualified property fraction means a fraction calculated with the following numerator and denominator:

(A) The numerator of the fraction is the gross value of all foreign group nonqualified property, other than excluded property (as described in paragraph (e)(3)(ii) of this section).

(B) The denominator of the fraction is the gross value of all foreign group property, other than excluded property (as described in paragraph (e)(3)(ii) of this section)

(ii) ***Excluded property.*** For purposes of paragraph (e)(3) of this section, excluded property means property that gives rise to stock that is excluded from the ownership fraction with respect to the domestic entity acquisition under § 1.7874-4(b), § 1.7874-8(b), § 1.7874-9(b), or section 7874(c)(4). For this purpose, only property that was directly or indirectly acquired in a prior domestic entity acquisition (as described in § 1.7874-8(g)(4)) or covered foreign acquisition (as described in § 1.7874-9(d)(4)) with respect to the domestic entity acquisition may be considered to give rise to stock that is excluded from the ownership fraction with respect to the domestic entity acquisition under § 1.7874-8(b) or § 1.7874-9(b). If only a portion of the consideration provided in a prior domestic entity acquisition or covered foreign acquisition consisted of stock of the foreign acquiring corporation, then only a pro rata portion of a property directly or indirectly acquired in the prior domestic entity acquisition or covered foreign acquisition may be considered excluded property, based on a fraction the numerator of which is the amount of the consideration that consisted of stock of the foreign acquiring corporation and the denominator of which is the total amount of consideration.

(4) ***Modified expanded affiliated group*** means, with respect to a domestic entity acquisition, the group described in either paragraph (e)(4)(i) of this section or paragraph (e)(4)(ii) of this section. A *member of the modified expanded affiliated group* is an entity included in the modified expanded affiliated group.

(i) When the foreign acquiring corporation is not the common parent corporation of the expanded affiliated group, the expanded affiliated group determined as if the foreign acquiring corporation was the common parent corporation.

(ii) When the foreign acquiring corporation is the common parent corporation of the expanded affiliated group, the expanded affiliated group.

(f) ***Examples.*** The following examples illustrate the rules of this section.

> *Example 1. Application of general rule*—(i) *Facts.* Individual A owns all 20 shares of the sole class of stock of FA, a foreign corporation. FA acquires all the stock of DT, a domestic corporation, solely in exchange for 76 shares of newly issued FA stock (DT acquisition). In a transaction related to the DT acquisition, FA issues 4 shares of stock to Individual A in exchange for Asset A, which has a gross value of $50x. On the completion date, in addition to the DT stock and Asset A, FA holds Asset B, which has a gross value of $150x, and Asset C, which has a gross value of $100x. Assets A and B, but not Asset C, are nonqualified property (within the meaning of § 1.7874-4(h)(2)).

Further, Asset C was not acquired in a transaction related to the DT acquisition.
(ii) *Analysis.* The 4 shares of FA stock issued to Individual A in exchange for Asset A are disqualified stock under § 1.7874-4(c) and are excluded from the denominator of the ownership fraction pursuant to § 1.7874-4(b). Furthermore, additional shares of FA stock are excluded from the denominator of the ownership fraction pursuant to paragraph (b) of this section. This is because on the completion date, the gross value of all foreign group property is $300x (the sum of the gross values of Assets A, B, and C), the gross value of all foreign group nonqualified property is $200x (the sum of the gross values of Assets A and B), and thus 66.67% of the gross value of all foreign group property constitutes foreign group nonqualified property ($200x/$300x). Because FA has only one class of stock outstanding, the shares of FA stock that are excluded from the denominator of the ownership fraction pursuant to paragraph (b) of this section are calculated by multiplying 20 shares of FA stock (100 shares less the 76 shares described in section 7874(a)(2)(B)(ii) and the 4 shares of disqualified stock) by the foreign group nonqualified property fraction. The numerator of the foreign group nonqualified property fraction is $150x (the gross value of Asset B) and the denominator is $250x (the sum of the gross values of Assets B and C). Asset A is not taken into account for purposes of the foreign group nonqualified property fraction because it gives rise to FA stock that is excluded under § 1.7874-4(b) (4 shares) and, as a result, is excluded property. Accordingly, 12 shares of FA stock are excluded from the denominator of the ownership fraction pursuant to paragraph (b) of this section (20 shares multiplied by $150x/$250x). Thus, a total of 16 shares are excluded from the denominator of the ownership fraction (4 + 12). As a result, the ownership fraction by value is 76/84.

Example 2. Application of de minimis exception—(i) *Facts.* Individual A owns all 96 shares of the sole class of stock of FA, a foreign corporation. Individual B wholly owns DT, a domestic corporation. Individuals A and B are not related. FA acquires all the stock of DT solely in exchange for 4 shares of newly issued FA stock (DT acquisition). On the completion date, in addition to all of the stock of DT, FA holds Asset A, which is nonqualified property (within the meaning of § 1.7874-4(h)(2)).
(ii) *Analysis.* Without regard to the application of §§ 1.7874-4(b) and 1.7874-10(b) as well as paragraph (b) of this section, the ownership percentage described in section 7874(a)(2)(B)(ii) would be less than 5 (by vote and value), or 4 (4/100, or 4 shares of FA stock held by Individual B by reason of owning the DT stock, determined under § 1.7874-2(f)(2), over 100 shares of FA stock outstanding after the DT acquisition). Furthermore, on the completion date, Individual B owns less than 5% (by vote and value) of the stock of FA and DT (the members of the expanded affiliated group). Accordingly, the de minimis exception in paragraph (c) of this section applies. Therefore, paragraph (b) of this section does not apply and the ownership fraction is 4/100.

Example 3. Foreign acquiring corporation not common parent of EAG—(i) *Facts.* FP, a foreign corporation, owns all 85 shares of the sole class of stock of FA, a foreign corporation. FA acquires all the stock of DT, a domestic corporation, solely in exchange for 65 shares of newly issued FA stock (DT acquisition). On the completion date, FA, in addition to all of the stock of DT, owns Asset

A, which has a gross value of $40x, and Asset B, which has a gross value of $45x. Moreover, on the completion date, in addition to the 85 shares of FA stock, FP owns Asset C, which has a gross value of $10x. Assets A and C, but not Asset B, are nonqualified property (within the meaning of § 1.7874-4(h)(2)). Further, Asset B was not acquired in a transaction related to the DT acquisition in exchange for nonqualified property.

(ii) *Analysis.* Under paragraph (e)(2) of this section, Assets A and B, but not Asset C, are foreign group property. Although Asset C is held on the completion date by FP, a member of the expanded affiliated group, Asset C is not foreign group property because FP is not a member of the modified expanded affiliated group. This is the case because if the expanded affiliated group were determined based on FA as the common parent corporation, FP would not be a member of such expanded affiliated group (see paragraph (e)(4)(i) of this section). Under paragraph (e)(1) of this section, Asset A, but not Asset B, is foreign group nonqualified property. Therefore, on the completion date, the gross value of all foreign group property is $85x (the sum of the gross values of Assets A and B), and the gross value of all foreign group nonqualified property is $40x (the gross value of Asset A). Accordingly, on the completion date, only 47.06% of the gross value of all foreign group property constitutes foreign group nonqualified property ($40x/$85x). Consequently, paragraph (b) of this section does not apply to exclude any FA stock from the denominator of the ownership fraction.

Example 4. *Coordination with serial acquisition rule*—(i) *Facts.* Individual A owns all 30 shares of the sole class of stock of FA, a foreign corporation. In Year 1, FA acquires all the stock of DT1, a domestic corporation, solely in exchange for 40 shares of newly issued FA stock (DT1 acquisition). In Year 2, FA acquires all the stock of DT2, a domestic corporation, solely in exchange for 50 shares of newly issued FA stock (DT2 acquisition). On the completion date for the DT2 acquisition, in addition to the DT2 stock, FA holds Asset A, which has a gross value of $15x, Asset B, which has a gross value of $15x, and all the stock of DT1, which has a gross value of $40x. At all times, DT1 holds only Asset C, which has a gross value of $30x, and Asset D, which has a gross value of $10x. Assets A and C, but not Assets B and D, are nonqualified property (within the meaning of § 1.7874-4(h)(2)). In addition, at all times, the fair market value of each share of FA stock is $1x. Further, there have been no redemptions of FA stock subsequent to the DT1 acquisition. Lastly, under § 1.7874-8, the DT1 acquisition is a prior domestic entity acquisition with respect to the DT2 acquisition and $40x of FA stock is excluded from the denominator of the ownership fraction with respect to the DT2 acquisition.

(ii) *Analysis.* Shares of FA stock are excluded from the denominator of the ownership fraction pursuant to paragraph (b) of this section. This is because on the completion date, the gross value of all foreign group property is $70x (the sum of the gross values of Assets A, B, C, and D), the gross value of all foreign group nonqualified property is $45x (the sum of the gross values of Assets A and C), and thus 64.29% of the gross value of all foreign group property constitutes foreign group nonqualified property ($45x/$70x). The shares of FA stock that are excluded from the denominator of the ownership fraction pursuant to paragraph (b) of this section are calculated

by multiplying $30x ($120x, the value of all the shares of FA stock, less $50x, the value of the stock described in section 7874(a)(2)(B)(ii), less $40x, the value of the stock excluded under § 1.7874-8(b)) by the foreign group nonqualified property fraction. The property taken into account for purposes of determining the foreign group nonqualified property fraction is Asset A and Asset B. Asset C and Asset D are not taken into account for purposes of the foreign group nonqualified property fraction because they are excluded property. This is because FA indirectly acquired the Assets in the DT1 acquisition (a prior domestic entity acquisition with respect to the DT2 acquisition) and, as a result of that acquisition, $40x of FA stock is excluded from the denominator of the ownership fraction with respect to the DT2 acquisition under § 1.7874-8(b). Thus, the numerator of the foreign group nonqualified property fraction is $15x (the gross value of Asset A) and the denominator is $30x (the sum of the gross values of Asset A, $15x, and Asset B, $15x). Accordingly, $15x of FA stock is excluded from the denominator of the ownership fraction pursuant to paragraph (b) of this section ($30x multiplied by $15x/$30x). Thus, a total of $55x of FA stock is excluded from the denominator of the ownership fraction ($40x + $15x), making the denominator $65x ($120x − $55x). As a result, the ownership percentage with respect to the DT2 acquisition by value is 76.92 ($50x/$65x).

(ii) *Alternative facts*. The facts are the same as in paragraph (i) of this *Example 4,* except as follows. Initially, there are 40 shares of FA stock outstanding, all of which are owned by Individual A. At all times, the gross value of asset D is $20x. In the DT1 acquisition, FA acquires all the stock of DT1 ($50x fair market value) solely in exchange for 40 shares of newly issued FA stock and $10x of other property. As in paragraph (i) of this Example 4, shares of FA stock are excluded from the denominator of the ownership fraction pursuant to paragraph (b) of this section. This is because on the completion date, the gross value of all foreign group property is $80x (the sum of the gross values of Assets A, B, C, and D), the gross value of all foreign group nonqualified property is $45x (the sum of the gross values of Assets A and C), and thus 56.25% of the gross value of all foreign group property constitutes foreign group nonqualified property ($45x/$80x). The shares of FA stock that are excluded from the denominator of the ownership fraction pursuant to paragraph (b) of this section are calculated by multiplying $40x ($130x, the value of all the shares of FA stock, less $50x, the value of the stock described in section 7874(a)(2)(B)(ii), less $40x, the value of the stock excluded under § 1.7874-8(b)) by the foreign group nonqualified property fraction. The property taken into account for purposes of determining the foreign group nonqualified property fraction is Asset A, Asset B, and the portion of Asset C and Asset D that is not excluded property. Eighty percent of each of Asset C and Asset D are considered excluded property because FA indirectly acquired Asset C and Asset D in the DT1 acquisition (a prior domestic entity acquisition with respect to the DT2 acquisition); as a result of that acquisition, $40x of FA stock is excluded from the denominator of the ownership fraction with respect to the DT2 acquisition under § 1.7874-8(b); and 80% of the consideration provided in the DT1 acquisition consisted of stock of FA ($40x/$50x). Thus, the numerator of the foreign group nonqualified property fraction is $21x (the sum of the gross values of Asset A, $15x, and the portion of Asset C that is not excluded property, $6x) and the denominator is $40x (the sum of the gross values of

Asset A, $15x, Asset B, $15x, and the portion of Asset C and Asset D that is not excluded property, $6x and $4x, respectively). Accordingly, $21x of FA stock is excluded from the denominator of the ownership fraction pursuant to paragraph (b) of this section ($40x multiplied by $21x/$40x). Thus, a total of $61x of FA stock is excluded from the denominator of the ownership fraction pursuant to paragraph (b) of this section ($40x + $21x), making the denominator $69x ($130x − $61x). As a result, the ownership percentage with respect to D2 acquisition by value is 72.46 ($50x/$69x).

(g) ***Applicability dates.*** This section applies to domestic entity acquisitions completed on or after July 12, 2018. For domestic entity acquisitions completed before July 12, 2018, see § 1.7874-7T, as contained in 26 CFR part 1 revised as of April 1, 2017. However, to the extent this section differs from § 1.7874-7T, as contained in 26 CFR part 1 revised as of April 1, 2017, taxpayers may elect to consistently apply the differences to domestic entity acquisitions completed before July 12, 2018.

[T.D. 9834, 83 FR 32551, July 12, 2018]

§ 1.7874-8 Disregard of certain stock attributable to serial acquisitions.

(a) ***Scope.*** This section identifies stock of a foreign acquiring corporation that is disregarded in determining an ownership fraction by value because it is attributable to certain prior domestic entity acquisitions. Paragraph (b) of this section sets forth the general rule regarding the amount of stock of a foreign acquiring corporation that is excluded from the denominator of the ownership fraction by value under this section, and paragraphs (c) through (f) of this section provide rules for determining this amount. Paragraph (g) provides definitions. Paragraph (h) of this section provides examples illustrating the application of the rules of this section. Paragraph (i) of this section provides dates of applicability. This section applies after taking into account § 1.7874-2(e). See § 1.7874-1(d)(1) for rules addressing the interaction of this section with the expanded affiliated group rules of section 7874(c)(2)(A) and § 1.7874-1.

(b) ***General rule.*** This paragraph (b) applies to a domestic entity acquisition (relevant domestic entity acquisition) when the foreign acquiring corporation (including a predecessor, as defined in § 1.7874-10(f)(1)) has completed one or more prior domestic entity acquisitions. When this paragraph (b) applies, then, for purposes of determining the ownership percentage by value (but not vote) described in section 7874(a)(2)(B)(ii), stock of the foreign acquiring corporation is excluded from the denominator of the ownership fraction in an amount equal to the sum of the excluded amounts computed separately with respect to each prior domestic entity acquisition and each relevant share class.

(c) ***Computation of excluded amounts.*** With respect to each prior domestic entity acquisition and each relevant share class, the excluded amount is the product of—

(1) The total number of prior acquisition shares, reduced by the sum of the number of allocable redeemed shares for all redemption testing periods; and

(2) The fair market value of a single share of stock of the relevant share class on the completion date of the relevant domestic entity acquisition.

(d) ***Computation of allocable redeemed shares*** —

(1) ***In general.*** With respect to each prior domestic entity acquisition and each relevant share class, the allocable redeemed shares, determined separately for each redemption testing period, is the product of the number of redeemed shares during the redemption testing period and the redemption fraction.

(2) ***Redemption fraction.*** The redemption fraction is determined separately with respect to each prior domestic entity acquisition, each relevant share class, and each redemption testing period, as follows:

(i) The numerator is the total number of prior acquisition shares, reduced by the sum of the number of allocable redeemed shares for all prior redemption testing periods.

(ii) The denominator is the sum of—

(A) The number of outstanding shares of the foreign acquiring corporation stock as of the end of the last day of the redemption testing period; and

(B) The number of redeemed shares during the redemption testing period.

(e) ***Rules for determining redemption testing periods*** —

(1) ***In general.*** Except as provided in paragraph (e)(2) of this section, a redemption testing period with respect to a prior domestic entity acquisition is the period beginning on the day after the completion date of the prior domestic entity acquisition and ending on the day prior to the completion date of the relevant domestic entity acquisition.

(2) ***Election to use multiple redemption testing periods.*** A foreign acquiring corporation may establish a reasonable method for dividing the period described in paragraph (e)(1) of this section into shorter periods (each such shorter period, a redemption testing period). A reasonable method would include a method based on a calendar convention (for example, daily, monthly, quarterly, or yearly), or on a convention that triggers the start of a new redemption testing period whenever a share issuance occurs that exceeds a certain threshold. In order to be reasonable, the method must be consistently applied with respect to all prior domestic entity acquisitions and all relevant share classes.

(f) ***Appropriate adjustments required to take into account share splits and similar transactions.*** For purposes of this section, appropriate adjustments must be made to take into account changes in a foreign acquiring corporation's capital structure, including, for example, stock splits, reverse stock splits, stock distributions, recapitalizations, and similar transactions. Thus, for example, in determining the total number of prior acquisition shares with respect to a relevant share class, appropriate adjustments must be made to take into account a stock split with respect to that relevant share class that occurs after the completion date with respect to a prior domestic entity acquisition.

(g) ***Definitions.*** In addition to the definitions provided in § 1.7874-12, the following definitions apply for purposes of this section.

(1) A *binding contract* means an instrument enforceable under applicable law against the parties to the instrument. The presence of a condition outside the control of the parties (including, for example, regulatory agency approval) does not prevent an instrument from being a binding contract. Further, the fact that insubstantial terms remain to be negotiated by the parties to the contract, or that customary conditions remain to be satisfied, does not prevent an instrument from being a binding contract. A tender offer that is subject to section 14(d) of the Securities and Exchange Act of 1934, (15 U.S.C. 78n(d)(1)), and Regulation 14D (17 CFR 240.14d-1 through 240.14d-103) and that is not

pursuant to a binding contract, is treated as a binding contract made on the date of its announcement, notwithstanding that it may be modified by the offeror or that it is not enforceable against the offerees.

(2) A *relevant share class* means, with respect to a prior domestic entity acquisition, each separate legal class of shares in the foreign acquiring corporation from which prior acquisition shares were issued. See also paragraph (f) of this section (requiring appropriate adjustments in certain cases).

(3) ***Total number of prior acquisition shares*** means, with respect to a prior domestic entity acquisition and each relevant share class, the total number of shares of stock of the foreign acquiring corporation that were described in section 7874(a)(2)(B)(ii) as a result of that acquisition (without regard to whether the 60 percent test of section 7874(a)(2)(B)(ii) was satisfied), other than stock treated as received by former domestic entity shareholders or former domestic entity partners under § 1.7874-10(b) or section 7874(c)(4), adjusted as appropriate under paragraph (f) of this section.

(4) A *prior domestic entity acquisition*—

(i) ***General rule.*** Except as provided in this paragraph (g)(4), a prior domestic entity acquisition means, with respect to a relevant domestic entity acquisition, a domestic entity acquisition that occurred within the 36-month period ending on the signing date of the relevant domestic entity acquisition.

(ii) ***Exception.*** A domestic entity acquisition is not a prior domestic entity acquisition if it is described in paragraph (g)(4)(ii)(A) or (B) of this section.

(A) ***De minimis.*** A domestic entity acquisition is described in this paragraph (g)(4)(ii)(A) if—

(*1*) The ownership percentage described in section 7874(a)(2)(B)(ii) with respect to the domestic entity acquisition was less than five (by vote and value); and

(*2*) The fair market value of the stock of the foreign acquiring corporation described in section 7874(a)(2)(B)(ii) as a result of the domestic entity acquisition (without regard to whether the 60 percent test of section 7874(a)(2)(B)(ii) was satisfied) did not exceed $50 million, as determined on the completion date with respect to the domestic entity acquisition.

(B) ***Foreign-parented group.*** A domestic entity acquisition is described in this paragraph (g)(4)(ii)(B) if—

(*1*) Before the domestic entity acquisition and any related transaction, the domestic entity was a member of a foreign-parented group (as described in § 1.7874-6(f)(1)); and

(*2*) The domestic entity acquisition qualified for the internal group restructuring exception under § 1.7874-1(c)(2).

(5) A *redeemed share* means a share of stock in a relevant share class that was redeemed (within the meaning of section 317(b)).

(6) A *signing date* means the first date on which the contract to effect the relevant domestic entity acquisition is a binding contract, or if another binding contract to effect a substantially similar acquisition was terminated with a principal purpose of avoiding section 7874, the first date on which such other contract was a binding contract.

(h) ***Examples.*** The following examples illustrate the rules of this section.

Example 1. *Application of general rule*—(i) *Facts.* Individual A wholly owns DT1, a domestic corporation. Individual B owns all 100 shares of the sole class of stock of FA, a foreign corporation. In Year 1, FA acquires all the stock of DT1 solely in exchange for 100 shares of newly issued FA stock (DT1 acquisition). On the completion date with respect to the DT1 acquisition, the fair market value of each share of FA stock is $1x. In Year 3, FA enters into a binding contract to acquire all the stock of DT2, a domestic corporation wholly owned by Individual C. Thereafter, FA acquires all the stock of DT2 solely in exchange for 150 shares of newly issued FA stock (DT2 acquisition). On the completion date with respect to the DT2 acquisition, the fair market value of each share of FA stock is $1.50x. FA did not complete the DT1 acquisition and DT2 acquisition pursuant to a plan (or series of related transactions) for purposes of applying § 1.7874-2(e). In addition, there have been no redemptions of FA stock subsequent to the DT1 acquisition.
(ii) *Analysis.* The DT1 acquisition is a prior domestic entity acquisition with respect to the DT2 acquisition (the relevant domestic entity acquisition) because the DT1 acquisition occurred within the 36-month period ending on the signing date with respect to the DT2 acquisition. Accordingly, paragraph (b) of this section applies to the DT2 acquisition. As a result, and because there were no redemptions of FA stock, the excluded amount is $150x, calculated as 100 (the total number of prior acquisition shares) multiplied by $1.50x (the fair market value of a single share of FA stock on the completion date with respect to the DT2 acquisition). Accordingly, the numerator of the ownership fraction by value is $225x (the fair market value of the stock of FA that, with respect to the DT2 acquisition, is described in section 7874(a)(2)(B)(ii)) (150 shares x $1.50x per share). In addition, the denominator of the ownership fraction is $375x (calculated as $525x, the fair market value of all 350 shares of FA stock as of the completion date with respect to the DT2 acquisition, less $150x, the excluded amount). Therefore, the ownership percentage by value is 60 ($225x divided by $375x).

Example 2. *Effect of certain redemptions*—(i) *Facts.* The facts are the same as in paragraph (i) of *Example 1* of this paragraph (h), except that in Year 2 FA redeems 50 shares of its stock (the Year 2 redemption).
(ii) *Analysis.* As is the case in paragraph (ii) of *Example 1* of this paragraph (h), the DT1 acquisition is a prior domestic entity acquisition with respect to the DT2 acquisition (the relevant domestic entity acquisition), and paragraph (b) of this section thus applies to the DT2 acquisition. Because of the Year 2 redemption, the allocable redeemed shares, and thus the redemption fraction, must be calculated. For this purpose, the redemption testing period is the period beginning on the day after the completion date with respect to the DT1 acquisition and ending on the day prior to the completion date with respect to the DT2 acquisition. The redemption fraction for the redemption testing period is thus 100/200, calculated as 100 (the total number of prior acquisition shares) divided by 200 (150, the number of outstanding shares of FA stock on the last day of the redemption testing period, plus 50, the number of redeemed shares during the redemption testing period), and the allocable redeemed shares for the redemption testing period is 25, calculated as

50 (the number of redeemed shares during the redemption testing period) multiplied by 100/200 (the redemption fraction for the redemption testing period). As a result, the excluded amount is $112.50x, calculated as 75 (100, the total number of prior acquisition shares, less 25, the allocable redeemed shares) multiplied by $1.50x (the fair market value of a single share of FA stock on the completion date with respect to the DT2 acquisition). Accordingly, the numerator of the ownership fraction by value is $225x (the fair market value of the stock of FA that, with respect to the DT2 acquisition, is described in section 7874(a)(2)(B)(ii)) (150 shares × $1.50x per share), and the denominator of the ownership fraction is $337.50x (calculated as $450x, the fair market value of all 300 shares of FA stock as of the completion date with respect to the DT2 acquisition, less $112.50x, the excluded amount). Therefore, the ownership percentage by value is 66.67 ($225x divided by $337.50x).

Example 3. *Stock split*—(i) *Facts.* The facts are the same as in paragraph (i) of *Example 2* of this paragraph (h), except as follows. After the Year 2 redemption, but before the DT2 acquisition, FA undergoes a stock split and, as a result, each of the 150 shares of FA stock outstanding are converted into two shares (Year 2 stock split). Further, pursuant to the DT2 acquisition, FA acquires all the stock of DT2 solely in exchange for 300 shares of newly issued FA stock. Moreover, on the completion date with respect to the DT2 acquisition, the fair market value of each share of FA stock is $0.75x.
(ii) *Analysis.* As is the case in paragraph (ii) of *Example 1* of this paragraph (h), the DT1 acquisition is a prior domestic entity acquisition with respect to the DT2 acquisition (the relevant domestic entity acquisition), and paragraph (b) of this section thus applies to the DT2 acquisition. In addition, as is the case in paragraph (ii) of *Example 2* of this paragraph (h), the redemption testing period is the period beginning on the day after the completion date with respect to the DT1 acquisition and ending on the day prior to the completion date with respect to the DT2 acquisition. To calculate the redemption fraction, the total number of prior acquisition shares and the number of redeemed shares during the redemption testing period must be appropriately adjusted to take into account the Year 2 stock split. See paragraph (f) of this section. In this case, the appropriate adjustment is to increase the total number of prior acquisition shares from 100 to 200 and to increase the number of redeemed shares during the redemption testing period from 50 to 100. Thus, the redemption fraction for the redemption testing period is 200/400, calculated as 200 (the total number of prior acquisition shares) divided by 400 (300, the number of outstanding shares of FA stock on the last day of the redemption testing period, plus 100, the number of redeemed shares during the redemption testing period), and the allocable redeemed shares for the redemption testing period is 50, calculated as 100 (the number of redeemed shares during the redemption testing period) multiplied by 200/400 (the redemption fraction for the redemption testing period). In addition, for purposes of calculating the excluded amount, the total number of prior acquisition shares must be adjusted from 100 to 200. See paragraph (f) of this section. Accordingly, the excluded amount is $112.50x, calculated as 150 (200, the total number of prior acquisition shares, less 50, the allocable redeemed shares) multiplied by $0.75x (the fair market value of a single share of FA stock on the completion date with respect to the DT2 acquisition).

> Consequently, the numerator of the ownership fraction by value is $225x (the fair market value of the stock of FA that, with respect to the DT2 acquisition, is described in section 7874(a)(2)(B)(ii)) (300 shares × $0.75x per share), and the denominator of the ownership fraction is $337.50x (calculated as $450x, the fair market value of all 600 shares of FA stock as of the completion date with respect to the DT2 acquisition, less $112.50x, the excluded amount). Therefore, the ownership percentage by value is 66.67 ($225 divided by $337.50x).

(i) ***Applicability dates.*** Except as provided in this paragraph (i), this section applies to domestic entity acquisitions completed on or after April 4, 2016, regardless of when a prior domestic entity acquisition was completed. Paragraphs (g)(3) and (g)(4)(ii) of this section apply to domestic entity acquisitions completed on or after July 12, 2018. However, taxpayers may elect to consistently apply paragraphs (g)(3) and (g)(4)(ii) of this section to domestic entity acquisitions completed on or after April 4, 2016, and before July 12, 2018. For domestic entity acquisitions completed on or after April 4, 2016, and before July 12, 2018, see § 1.7874-8T(g)(3) and (g)(4)(ii) as contained in 26 CFR part 1 revised as of April 1, 2017.

[T.D. 9834, 83 FR 32553, July 12, 2018]

§ 1.7874-9 Disregard of certain stock in third-country transactions.

(a) ***Scope.*** This section identifies certain stock of a foreign acquiring corporation that is disregarded in determining the ownership fraction. Paragraph (b) of this section provides a rule that, in a third-country transaction, excludes from the denominator of the ownership fraction stock in the foreign acquiring corporation held by former shareholders of an acquired foreign corporation by reason of holding certain stock in that foreign corporation. Paragraph (c) of this section defines a third-country transaction, and paragraph (d) of this section provides other definitions. Paragraph (e) of this section provides operating rules. Paragraph (f) of this section provides an example illustrating the application of the rules of this section. Paragraph (g) of this section provides the dates of applicability. See § 1.7874-1(d)(1) for rules addressing the interaction of this section with the expanded affiliated group rules of section 7874(c)(2)(A) and § 1.7874-1.

(b) ***Exclusion of certain stock of a foreign acquiring corporation from the ownership fraction.*** When a domestic entity acquisition is a third-country transaction, stock of the foreign acquiring corporation held by reason of holding stock in the acquired foreign corporation (within the meaning of paragraph (e)(4) of this section) is, to the extent the stock otherwise would be included in the denominator of the ownership fraction, excluded from the denominator of the ownership fraction pursuant to this paragraph.

(c) ***Third-country transaction.*** A domestic entity acquisition is a third-country transaction if the following requirements are satisfied:

(1) The foreign acquiring corporation completes a covered foreign acquisition pursuant to a plan (or series of related transactions) that includes the domestic entity acquisition.

(2) After the covered foreign acquisition and all related transactions are complete, the foreign acquiring corporation is not a tax resident of the foreign country in which the acquired foreign corporation was a tax resident before the covered foreign acquisition and all related transactions.

(3) The ownership percentage described in section 7874(a)(2)(B)(ii), determined without regard to the application of paragraph (b) of this section, is at least 60.

(d) ***Definitions.*** In addition to the definitions provided in § 1.7874-12, the following definitions apply for purposes of this section.

(1) A *foreign acquisition* means a transaction in which a foreign acquiring corporation directly or indirectly acquires substantially all of the properties held directly or indirectly by an acquired foreign corporation (within the meaning of paragraph (e)(2) of this section).

(2) An *acquired foreign corporation* means a foreign corporation whose properties are acquired in a foreign acquisition.

(3) ***Foreign ownership percentage*** means, with respect to a foreign acquisition, the percentage of stock (by vote or value) of the foreign acquiring corporation held by reason of holding stock in the acquired foreign corporation (within the meaning of paragraph (e)(3) of this section).

(4) ***Covered foreign acquisition*** —

(i) ***In general.*** Except as provided in paragraphs (d)(4)(ii) and (iii) of this section, a covered foreign acquisition means a foreign acquisition in which, after the acquisition and all related transactions are complete, the foreign ownership percentage is at least 60.

(ii) ***Substantial business activities exception.*** A foreign acquisition is not a covered foreign acquisition if, on the completion date, the following requirements are satisfied:

(A) The foreign acquiring corporation is a tax resident of a foreign country.

(B) The expanded affiliated group has substantial business activities in the country in which the foreign acquiring corporation is a tax resident when compared to the total business activities of the expanded affiliated group. For this purpose, the principles of § 1.7874-3 apply and the determination of whether there are substantial business activities is made without regard to the domestic entity acquisition.

(iii) ***No income tax exception.*** A foreign acquisition is not a covered foreign acquisition if—

(A) Before the acquisition and all related transactions, the acquired foreign corporation was created or organized in, or under the law of, a foreign country that does not impose corporate income tax and was not a tax resident of any other foreign country; and

(B) After the acquisition and all related transactions are complete, the foreign acquiring corporation is created or organized in, or under the law of, a foreign country that does not impose corporate income tax and is not a tax resident of any other foreign country.

(5) A *tax resident* of a foreign country has the meaning set forth in § 1.7874-3(d)(11).

(e) ***Operating rules.*** The following rules apply for purposes of this section.

(1) ***Acquisition of multiple foreign corporations that are tax residents of the same foreign country.*** When multiple foreign acquisitions occur pursuant to the same plan (or a series of related transactions) and two or more of the acquired foreign corporations were tax residents of the same foreign country before the foreign acquisitions and all related transactions, then those foreign acquisitions are treated as a single foreign acquisition and those acquired foreign corporations are treated as a single acquired foreign corporation for purposes of this section.

(2) ***Acquisition of properties of an acquired foreign corporation.*** For purposes of determining whether a foreign acquisition occurs, the principles of section 7874(a)(2)(B)(i) and § 1.7874-2(c) and (d) (regarding acquisitions of properties of a domestic entity and acquisitions by multiple foreign corporations) apply with the following modifications:

(i) The principles of § 1.7874-2(c)(1) (providing rules for determining whether there is an indirect acquisition of properties of a domestic entity), including § 1.7874-2(b)(5) (providing rules for determining the proportionate amount of properties indirectly acquired), apply by substituting the term "foreign" for "domestic" wherever it appears.

(ii) The principles of § 1.7874-2(c)(2) (regarding acquisitions of stock of a foreign corporation that owns a domestic entity) apply by substituting the term "domestic" for "foreign" wherever it appears.

(3) ***Computation of foreign ownership percentage.*** For purposes of determining a foreign ownership percentage, the principles of all rules applicable to calculating an ownership percentage apply (including §§ 1.7874-2, 1.7874-4, 1.7874-5, 1.7874-7, and section 7874(c)(4)) with the following modifications:

(i) Stock of a foreign acquiring corporation described in section 7874(a)(2)(B)(ii) is not taken into account.

(ii) The principles of this section, section 7874(c)(2)(A), and §§ 1.7874-1, 1.7874-6, 1.7874-8, and 1.7874-10 do not apply.

(iii) The principles of § 1.7874-7 apply by, in addition to the exclusions listed in § 1.7874-7(e)(2)(i) through (iii), also excluding from the definition of foreign group property any property held directly or indirectly by the acquired foreign corporation immediately before the foreign acquisition and directly or indirectly acquired in the foreign acquisition.

(4) ***Stock held by reason of holding stock in an acquired foreign corporation.*** For purposes of determining stock of a foreign acquiring corporation held by reason of holding stock in an acquired foreign corporation, the principles of section 7874(a)(2)(B)(ii) and §§ 1.7874-2(f) and 1.7874-5 apply.

(5) ***Change in the tax residency of a foreign corporation.*** For purposes of this section, a change in a country in which a foreign corporation is a tax resident is treated as a transaction. Further, for purposes of this section, if a foreign acquiring corporation changes the country in which it is a tax resident in a manner that would not otherwise be considered to result in a foreign acquisition (for example, by changing where it is managed and controlled), then the foreign acquiring corporation is treated as—

(i) Both an acquired foreign corporation and a foreign acquiring corporation; and

(ii) Directly or indirectly acquiring all of the properties held directly or indirectly by the acquired foreign corporation solely in exchange for stock of the foreign acquiring corporation.

(f) ***Example.*** The following example illustrates the rules of this section.

> *Example.* *Third-country transaction*—(i) *Facts.* FA, a newly formed foreign corporation that is a tax resident of Country Y, acquires all the stock of DT, a domestic corporation that is wholly owned by Individual A, solely in exchange for 65 shares of newly issued FA stock (DT acquisition). Pursuant to a plan that includes the DT acquisition, FA acquires all the stock of FT, a foreign corporation that

is a tax resident of Country X and wholly owned by Individual B, solely in exchange for the remaining 35 shares of newly issued FA stock (FT acquisition). After the FT acquisition and all related transactions, the expanded affiliated group does not have substantial business activities in Country Y when compared to the total business activities of the expanded affiliated group, as determined under the principles of § 1.7874-3 and without regard to the DT acquisition.
(ii) *Analysis.* As described in paragraphs (A) through (C) of this *Example,* the requirements set forth in paragraphs (c)(1) through (3) of this section are satisfied and, as result, the DT acquisition is a third-country transaction.

(A) The FT acquisition is a foreign acquisition because, pursuant to the FT acquisition, FA (a foreign acquiring corporation) acquires 100 percent of the stock of FT and is thus treated as indirectly acquiring 100 percent of the properties held by FT (an acquired foreign corporation). See § 1.7874-2(c)(1) and paragraph (e)(2) of this section. Moreover, Individual B is treated as receiving 35 shares of FA stock by reason of holding stock in FT. See § 1.7874-2(f)(1)(i) and paragraph (e)(4) of this section. As a result, not taking into account the 65 shares of FA stock held by Individual A (a former domestic entity shareholder), 100 percent (35/35) of the stock of FA is held by reason of holding stock in FT and, thus, the foreign ownership percentage is 100. See paragraph (e)(3) of this section. Accordingly, the FT acquisition is a covered foreign acquisition. Therefore, because the FT acquisition occurs pursuant to a plan that includes the DT acquisition, the requirement set forth in paragraph (c)(1) of this section is satisfied.

(B) The requirement set forth in paragraph (c)(2) of this section is satisfied because, after the FT acquisition and all related transactions, the foreign country in which FA is a tax resident (Country Y) is different than the foreign country in which FT was a resident (Country X) before the FT acquisition and all related transactions.

(C) The requirement set forth in paragraph (c)(3) of this section is satisfied because, not taking into account paragraph (b) of this section, the ownership fraction is 65/100 and the ownership percentage is 65.

(D) Because the DT acquisition is a third-country transaction, the 35 shares of FA stock held by reason of holding stock in FT are excluded from the denominator of the ownership fraction. See paragraph (b) of this section. As a result, the ownership fraction is 65/65 and the ownership percentage is 100. The result would be the same if instead FA had directly acquired all of the properties held by FT in exchange for FA stock, for example, in a transaction that would qualify for U.S. federal income tax purposes as an asset reorganization under section 368.

(iii) *Alternative facts.* The facts are the same as in paragraph (i) of this example, except that before the FT acquisition, but in a transaction related to the FT acquisition, FT becomes a tax resident of Country Y by reincorporating in Country Y. As is the case in paragraph (ii) of this *Example,* the requirements set forth in paragraphs (c)(1) and (3) of this section are satisfied. The requirement

set forth in paragraph (c)(2) of this section is satisfied because, after the FT acquisition and any related transactions, the foreign country of which FA is a tax resident (Country Y) is different than the foreign country of which FT was a tax resident (Country X) before the FT acquisition and the reincorporation. See paragraph (e)(5) of this section. Accordingly, the DT acquisition is a third-country transaction and the consequences are the same as in paragraph (ii)(D) of this *Example*.

(iv) *Alternative facts.* The facts are the same as in paragraph (i) of this *Example,* except that, instead of FA acquiring all of the stock of FT, FS, a newly formed foreign corporation that is wholly owned by FA and that is a tax resident of Country X, acquires all the stock of FT solely in exchange for 35 shares of newly issued FA stock (FT acquisition). As a result of the FT acquisition, FS and FA are each treated as indirectly acquiring 100 percent of the properties held by FT. See § 1.7874-2(c)(1)(i) and (iii) and paragraph (e)(2) of this section. Accordingly, each of FS's and FA's indirect acquisition of properties of FT (an acquired foreign corporation) is a foreign acquisition. However, FS's indirect acquisition of FT's properties is not a covered foreign acquisition because no shares of FS stock are held by reason of holding stock in FT; thus, with respect to this foreign acquisition, the foreign ownership percentage is zero. See § 1.7874-2(f) and paragraphs (e)(3) and (4) of this section. FA's indirect acquisition of FT's properties is a covered foreign acquisition because 35 shares of FA stock (the shares received by Individual B) are held by reason of holding stock in FT; thus, the foreign ownership percentage is 100 percent (35/35). See § 1.7874-2(f)(1)(i) and paragraphs (e)(3) and (4) of this section. Accordingly, because the FT acquisition occurs pursuant to a plan that includes the DT acquisition, the requirement set forth in paragraph (c)(1) of this section is satisfied. Further, as is the case in paragraphs (ii)(B) through (C) of this *Example,* the requirements set forth in paragraphs (c)(2) and (3) of this section are satisfied. Therefore, the DT acquisition is a third-country transaction and the consequences are the same as in paragraph (ii)(D) of this *Example*.

(g) ***Applicability dates.*** This section applies to domestic entity acquisitions completed on or after July 12, 2018. For domestic entity acquisitions completed before July 12, 2018, see § 1.7874-9T, as contained in 26 CFR part 1 revised as of April 1, 2017. However, to the extent this section differs from § 1.7874-9T, as contained in 26 CFR part 1 revised as of April 1, 2017, taxpayers may elect to consistently apply the differences to domestic entity acquisitions completed before July 12, 2018.

[T.D. 9834, 83 FR 32555, July 12, 2018]

§ 1.7874-10 Disregard of certain distributions.

(a) ***Scope.*** This section identifies distributions made by a domestic entity that are disregarded in determining an ownership fraction. Paragraph (b) of this section provides the general rule that former domestic entity shareholders or former domestic entity partners are treated as receiving additional stock of the foreign acquiring corporation when the domestic entity has made non-ordinary course distributions (NOCDs). Paragraph (c) of this section identifies distributions that, in whole or in part, are outside the scope of this section. Paragraph (d) of this section provides a de minimis exception to the application of the general rule in paragraph (b) of this section. Paragraph (e) of this section provides rules concerning the treatment of distributions made by a predecessor, and paragraph (f) of this section provides rules for identifying a

predecessor. Paragraph (g) of this section provides a special rule for certain distributions described in section 355. Paragraph (h) of this section provides rules regarding the allocation of NOCD stock. Paragraph (i) of this section addresses cases in which there are multiple foreign acquiring corporations, and paragraph (j) of this section addresses cases in which multiple domestic entities are treated as a single domestic entity. Paragraph (k) of this section provides definitions. Paragraph (l) of this section provides dates of applicability. See § 1.7874-1(d)(2) for rules addressing the interaction of this section with the expanded affiliated group rules of section 7874(c)(2)(A) and § 1.7874-1.

(b) ***General rule regarding NOCDs.*** Except as provided in paragraph (d) of this section, for purposes of determining the ownership percentage by value (but not vote) described in section 7874(a)(2)(B)(ii), former domestic entity shareholders or former domestic entity partners, as applicable, are treated as receiving, by reason of holding stock or partnership interests in a domestic entity, stock of the foreign acquiring corporation with a fair market value equal to the amount of the non-ordinary course distributions (NOCDs), determined as of the date of the distributions, made by the domestic entity during the look-back period. The stock of the foreign acquiring corporation treated as received under this paragraph (b) (NOCD stock) is in addition to stock of the foreign acquiring corporation otherwise treated as received by the former domestic entity shareholders or former domestic entity partners by reason of holding stock or partnership interests in the domestic entity.

(c) ***Distributions that are not NOCDs.*** If only a portion of a distribution is an NOCD, section 7874(c)(4) may apply to the remainder of the distribution. This section does not, however, create a presumption that section 7874(c)(4) applies to the remainder of the distribution.

(d) ***De minimis exception to the general rule.*** Paragraph (b) of this section does not apply if—

(1) The ownership percentage described in section 7874(a)(2)(B)(ii), determined without regard to the application of paragraph (b) of this section and §§ 1.7874-4(b) and 1.7874-7(b), is less than five (by vote and value); and

(2) On the completion date, each five percent former domestic entity shareholder or five percent former domestic entity partner, as applicable, owns (applying the attribution rules of section 318(a) with the modifications described in section 304(c)(3)(B)) less than five percent (by vote and value) of the stock of (or a partnership interest in) each member of the expanded affiliated group. For this purpose, a five percent former domestic entity shareholder (or five percent former domestic entity partner) is a former domestic entity shareholder (or former domestic entity partner) that, before the domestic entity acquisition, owned (applying the attribution rules of section 318(a) with the modifications described in section 304(c)(3)(B)) at least five percent (by vote and value) of the stock of (or a partnership interest in) the domestic entity.

(e) ***Treatment of distributions made by a predecessor.*** For purposes of this section, a corporation or a partnership (relevant entity), including a domestic entity, is treated as making the following distributions made by a predecessor with respect to the relevant entity:

(1) A distribution made before the predecessor acquisition with respect to the predecessor; and

(2) A distribution made in connection with the predecessor acquisition to the extent the property distributed is directly or indirectly provided by the predecessor. See paragraph (k)(1)(iv) of this section.

(f) ***Rules for identifying a predecessor*** —

(1) ***Definition of predecessor.*** A corporation or a partnership (tentative predecessor) is a predecessor with respect to a relevant entity if—

(i) The relevant entity completes a predecessor acquisition; and

(ii) After the predecessor acquisition and all related transactions are complete, the tentative predecessor ownership percentage is at least 10.

(2) ***Definition of predecessor acquisition*** —

(i) ***In general.*** Predecessor acquisition means a transaction in which a relevant entity directly or indirectly acquires substantially all of the properties held directly or indirectly by a tentative predecessor.

(ii) ***Acquisition of properties of a tentative predecessor.*** For purposes of determining whether a predecessor acquisition occurs, the principles of section 7874(a)(2)(B)(i) apply, including § 1.7874-2(c) other than § 1.7874-2(c)(2) and (4) (regarding acquisitions of properties of a domestic entity), without regard to whether the tentative predecessor is domestic or foreign.

(iii) ***Lower-tier entities of a predecessor.*** If, before a predecessor acquisition and all related transactions, the predecessor held directly or indirectly stock in a corporation or an interest in a partnership, then, for purposes of this section, the relevant entity is not considered to directly or indirectly acquire the properties held directly or indirectly by the corporation or partnership.

(3) ***Definition of tentative predecessor ownership percentage.*** Tentative predecessor ownership percentage means, with respect to a predecessor acquisition, the percentage of stock or partnership interests (by value) in a relevant entity held by reason of holding stock or partnership interests in the tentative predecessor. For purposes of computing the tentative predecessor ownership percentage, the following rules apply:

(i) For purposes of determining the stock or partnership interests in a relevant entity held by reason of holding stock or partnership interests in the tentative predecessor, the principles of section 7874(a)(2)(B)(ii) and §§ 1.7874-2(f)(1)(i) through (iii) and 1.7874-5 apply.

(ii) For purposes of determining the stock or partnership interests in a relevant entity included in the numerator of the fraction used to compute the tentative predecessor ownership percentage, the rules of paragraph (f)(3)(i) of this section apply, and all the rules applicable to calculating the numerator of an ownership fraction with respect to a domestic entity acquisition apply, except that—

(A) The principles of section 7874(c)(2)(A) and §§ 1.7874-1 and 1.7874-6 do not apply; and

(B) The principles of paragraph (b) of this section do not apply.

(iii) For purposes of determining stock or partnership interests in a relevant entity included in the denominator of the fraction used to compute the tentative predecessor ownership percentage, the principles of section 7874(a)(2)(B)(ii) and all rules applicable to calculating the denominator of an ownership fraction with respect to a domestic entity acquisition apply, except that—

(A) The principles of section 7874(c)(2)(A) and §§ 1.7874-1 and 1.7874-6 do not apply; and

(B) The principles of §§ 1.7874-4 and 1.7874-7 through 1.7874-9 do not apply.

(g) ***Rule regarding direction of a section 355 distribution.*** For purposes of this section, if a domestic corporation (distributing corporation) distributes the stock of another domestic corporation (controlled corporation) pursuant to a transaction described in section 355, and, immediately before the distribution, the fair market value of the stock of the controlled corporation owned by the distributing corporation and any related person (determined under section 7874(d)(3), without regard to whether the person is foreign) represents more than 50 percent of the fair market value of the stock of the distributing corporation, then, the controlled corporation is deemed, on the date of the distribution, to have distributed the stock of the distributing corporation. The deemed distribution is equal to the fair market value of the stock of the distributing corporation (but not taking into account the fair market value of the stock of the controlled corporation) on the date of the distribution.

(h) ***Allocation of NOCD stock.*** NOCD stock is allocated among the former domestic entity shareholders or former domestic entity partners, as applicable, based on the amount of NOCDs that the former domestic entity shareholders or former domestic entity partners, as applicable, are treated as having received under this paragraph (h). Under this paragraph (h), a pro rata portion of each distribution during a look-back year is treated as comprising an NOCD with respect to the look-back year, based on a fraction the numerator of which is the amount of NOCDs during the look-back year and the denominator of which is the amount of distributions during the look-back year. Thus, each former domestic entity shareholder or former domestic entity partner, as applicable, is treated as receiving an amount of NOCD stock equal to the amount of NOCDs treated as received by the former domestic entity shareholder or former domestic entity partner, as applicable.

(i) ***Multiple foreign acquiring corporations.*** If there are multiple foreign acquiring corporations with respect to a domestic entity acquisition, then the foreign acquiring corporation or corporations as to which NOCD stock is considered comprised is based on the proportion of consideration directly or indirectly provided by a foreign acquiring corporation in the domestic entity acquisition relative to the total amount of consideration directly or indirectly provided by the foreign acquiring corporations in the domestic entity acquisition. For purposes of this paragraph (i), consideration is not considered directly provided by a foreign acquiring corporation if it was indirectly provided by another foreign acquiring corporation. In addition, for purposes of this paragraph (i), consideration provided in the domestic entity acquisition does not include money or other property described in paragraph (k)(1)(iii) of this section.

(j) ***Multiple domestic entities.*** If pursuant to § 1.7874-2(e) two or more domestic entities are treated as a single domestic entity, then the determination of the amount of NOCDs made by the single domestic entity is made by—

(1) Applying the rules of this section to each domestic entity on a separate basis, with the result that the amount of NOCDs made by each domestic entity is separately computed; and

(2) Treating the amount of NOCDs made by the single domestic entity as the sum of the separately computed NOCDs made by each domestic entity.

(k) ***Definitions.*** In addition to the definitions provided in § 1.7874-12, the following definitions apply for purposes of this section.

(1) A *distribution* means the following:

(i) Any distribution made by a corporation with respect to its stock other than—

(A) A distribution to which section 305 applies;

(B) A distribution to which section 304(a)(1) applies; and

(C) Except as provided in paragraphs (k)(1)(iii) and (iv) of this section, a distribution pursuant to section 361(c)(1) (other than a distribution to which section 355 applies).

(ii) Any distribution by a partnership (other than a distribution pursuant to section 752(b) to the extent that the transaction giving rise to such distribution does not reduce the partnership's value).

(iii) In the case of a domestic entity, a transfer of money or other property to the former domestic entity shareholders or former domestic entity partners that is made in connection with the domestic entity acquisition to the extent the money or other property is directly or indirectly provided by the domestic entity.

(iv) In the case of a predecessor, a transfer of money or other property to the former owners of the predecessor that is made in connection with the predecessor acquisition to the extent the money or other property is directly or indirectly provided by the predecessor.

(2) ***Distribution history period*** —

(i) ***In general.*** Except as provided in paragraph (k)(2)(ii) or (iii) of this section, a distribution history period means, with respect to a look-back year, the 36-month period preceding the start of the look-back year.

(ii) ***Formation date less than 36 months but at least 12 months before look-back year.*** If the formation date is less than 36 months, but at least 12 months, before the start of a look-back year, then the distribution history period with respect to that look-back year means the entire period, starting with the formation date, that precedes the start of the look-back year.

(iii) ***Formation date less than 12 months before look-back year.*** If the formation date is less than 12 months before the start of a look-back year, then there is no distribution history period with respect to that look-back year.

(3) ***Formation date*** means, with respect to a domestic entity, the date that the domestic entity was created or organized, or, if earlier, the earliest date that any predecessor of the domestic entity was created or organized.

(4) ***Look-back period*** means, with respect to a domestic acquisition, the 36-month period ending on the completion date or, if shorter, the entire period, starting with the formation date, that ends on the completion date.

(5) ***Look-back year*** means, with respect to a look-back period, the following:

(i) If the look-back period is 36 months, the three consecutive 12-month periods that comprise the look-back period.

(ii) If the look-back period is less than 36 months, but at least 24 months—

(A) The 12-month period that ends on the completion date;

(B) The 12-month period that immediately precedes the period described in paragraph (k)(5)(ii)(A) of this section; and

(C) The period, if any, that immediately precedes the period described in paragraph (k)(5)(ii)(B) of this section.

(iii) If the look-back period is less than 24 months, but at least 12 months—

(A) The 12-month period that ends on the completion date; and

(B) The period, if any, that immediately precedes the period described in paragraph (k)(5)(iii)(A) of this section.

(iv) If the look-back period is less than 12 months, the entire period, starting with the formation date, that ends on the completion date.

(6) ***NOCDs*** mean, with respect to a look-back year, the excess of all distributions made during the look-back year over the NOCD threshold for the look-back year.

(7) ***NOCD threshold*** means, with respect to a look-back year, the following:

(i) If the look-back year has at least a 12-month distribution history period, 110 percent of the sum of all distributions made during the distribution history period multiplied by a fraction. The numerator of the fraction is the number of days in the look-back year and the denominator is the number of days in the distribution history period with respect to the look-back year.

(ii) If the look-back year has no distribution history period, zero.

(l) ***Applicability date.*** This section applies to domestic entity acquisitions completed on or after July 12, 2018. For domestic entity acquisitions completed before July 12, 2018, see § 1.7874-10T, as contained in 26 CFR part 1 revised as of April 1, 2017. However, to the extent this section differs from § 1.7874-10T, as contained in 26 CFR part 1 revised as of April 1, 2017, taxpayers may elect to consistently apply the differences to domestic entity acquisitions completed before July 12, 2018.

[T.D. 9834, 83 FR 32557, July 12, 2018]

§ 1.7874-11 Rules regarding inversion gain.

(a) ***Scope.*** This section provides rules for determining the inversion gain of an expatriated entity for purposes of section 7874. Paragraph (b) of this section provides rules for determining the inversion gain of an expatriated entity. Paragraph (c) of this section provides special rules with respect to certain foreign partnerships in which an expatriated entity owns an interest. Paragraph (d) of this section provides additional definitions. Paragraph (e) of this section provides an example that illustrates the rules of this section. Paragraph (f) of this section provides the applicability dates.

(b) ***Inversion gain —***

(1) ***General rule.*** Except as provided in paragraphs (b)(2) and (3) of this section, inversion gain includes income (including an amount treated as a dividend under section 78) or gain recognized by an expatriated entity for any taxable year that includes any portion of the applicable period by reason of a direct or indirect transfer of stock or other properties or license of any property either as part of the domestic entity acquisition, or after such acquisition if the transfer or license is to a specified related person.

(2) ***Exception for property described in section 1221(a)(1).*** Inversion gain does not include income or gain recognized by reason of the transfer or license, after the domestic entity acquisition, of property that is described in section 1221(a)(1) in the hands of the transferor or licensor.

(3) ***Treatment of partnerships.*** Except to the extent provided in paragraph (c) of this section and section 7874(e)(2), inversion gain does not include income or gain recognized by reason of the transfer or license of property by a partnership.

(c) ***Transfers and licenses by partnerships.*** If a partnership that is a foreign related person transfers or licenses property, a partner of the partnership shall be treated as having transferred or licensed its proportionate share of that property, as determined under the rules and principles of sections 701 through 777, for purposes of determining the inversion gain of an expatriated entity. See section 7874(e)(2) for rules regarding the treatment of transfers and licenses by domestic partnerships and transfers of interests in certain domestic partnerships.

(d) ***Definitions.*** The definitions provided in § 1.7874-12 apply for purposes of this section.

(e) ***Example.*** The following example illustrates the rules of this section.

> *Example.* —(i) *Facts.* On July 1, 2016, FA, a foreign corporation, acquires all the stock of DT, a domestic corporation, in an inversion transaction. When the inversion transaction occurred, DT wholly owned FS, a foreign corporation that is a controlled foreign corporation (within the meaning of section 957(a)). During the applicable period, FS sells to FA property that is not described in section 1221(a)(1) in the hands of FS. Under section 951(a)(1)(A), DT has a $80x gross income inclusion that is attributable to FS's gain from the sale of the property. Under section 960(a)(1), DT is deemed to have paid $20x of the post-1986 foreign income taxes of FS by reason of this income inclusion and includes $20x in gross income as a deemed dividend under section 78. Accordingly, DT recognizes $100x ($80x + $20x) of gross income because of FS's sale of property to FA.
> (ii) *Analysis.* Pursuant to section 7874(a)(2)(A), DT is an expatriated entity. Under paragraph (b)(1) of this section, DT's $100x gross income recognized under sections 951(a)(1)(A) and 78 is inversion gain, because it is income recognized by an expatriated entity during the applicable period by reason of an indirect transfer of property by DT (through its wholly-owned CFC, FS) after the inversion transaction to a specified related person (FA). Sections 7874(a)(1) and (e) therefore prevent the use of certain tax attributes (such as net operating losses) to reduce the U.S. tax owed with respect to DT's $100x gross income recognized under sections 951(a)(1)(A) and 78.

(f) ***Applicability dates.*** Except as otherwise provided in this paragraph (f), this section applies to transfers and licenses of property completed on or after November 19, 2015, but only if the inversion transaction was completed on or after September 22, 2014. For inversion transactions completed on or after September 22, 2014, however, taxpayers may elect to apply paragraph (b) of this section by excluding the phrase "(including an amount treated as a dividend under section 78)" for transfers and licenses of property completed on or after November 19, 2015, and before April 4, 2016.

[T.D. 9834, 83 FR 32559, July 12, 2018]

§ 1.7874-12 Definitions.

(a) ***Definitions.*** Except as otherwise provided, the following definitions apply for purposes of this section and §§ 1.367(b)-4, 1.956-2, 1.7701(l)-4, and 1.7874-1 through 1.7874-11.

(1) An *affiliated group* has the meaning set forth in section 1504(a) but without regard to section 1504(b)(3), except that section 1504(a) is applied by substituting "more than 50 percent" for "at least 80 percent" each place it appears. A *member of the affiliated group* is an entity included in the affiliated group.

(2) The *applicable period* means, with respect to an inversion transaction, the period described in section 7874(d)(1). However, see also § 1.7874-2(b)(13) in the case of a subsequent acquisition (or a similar acquisition under the principles of § 1.7874-2(c)(4)(i)) that is an inversion transaction.

(3) The *completion date* means, with respect to a domestic entity acquisition, the date that the domestic entity acquisition and all transactions related to the domestic entity acquisition are complete.

(4) A *controlled foreign corporation* (or *CFC*) has the meaning provided in section 957.

(5) A *domestic entity acquisition* means an acquisition described in section 7874(a)(2)(B)(i).

(6) A *domestic entity* means, with respect to a domestic entity acquisition, a domestic corporation or domestic partnership described in section 7874(a)(2)(B)(i). A reference to a domestic entity includes a successor to such domestic corporation or domestic partnership, including a corporation that succeeds to and takes into account amounts with respect to the domestic entity pursuant to section 381.

(7) An *expanded affiliated group* (or *EAG*) means, with respect to a domestic entity acquisition, an affiliated group that includes the foreign acquiring corporation, determined as of the completion date. A *member of the EAG* is an entity included in the EAG, and a reference to a member of the EAG includes a predecessor with respect to such member.

(8) An *expatriated entity* means, with respect to an inversion transaction—

(i) The domestic entity; and

(ii) A United States person that, on any date on or after the completion date, is or was related (within the meaning of section 267(b) or 707(b)(1)) to the domestic entity.

(9) ***Expatriated foreign subsidiary*** —

(i) ***General rule.*** Except as provided in paragraph (a)(9)(ii) of this section, an expatriated foreign subsidiary means a foreign corporation that is a CFC (determined without applying subparagraphs (A), (B), and (C) of section 318(a)(3) so as to consider a United States person as owning stock which is owned by a person who is not a United States person) and in which an expatriated entity is a United States shareholder (determined without applying subparagraphs (A), (B), and (C) of section 318(a)(3) so as to consider a United States person as owning stock which is owned by a person who is not a United States person).

(ii) ***Exception to the general rule.*** A foreign corporation is not an expatriated foreign subsidiary if, with respect to the inversion transaction as a result of which the foreign corporation otherwise would be an expatriated foreign subsidiary—

(A) On the completion date, the foreign corporation was both a CFC (determined without applying subparagraphs (A), (B), and (C) of section 318(a)(3) so as to consider a United States person as owning stock which is owned by a person who is not a United States person) and a member of the EAG; and

(B) On or before the completion date, the domestic entity was not a United States shareholder (determined without applying subparagraphs (A), (B), and

(C) of section 318(a)(3) so as to consider a United States person as owning stock which is owned by a person who is not a United States person) with respect to the foreign corporation.

(10) A *foreign acquiring corporation* means, with respect to a domestic entity acquisition, the foreign corporation described in section 7874(a)(2)(B). A reference to a foreign acquiring corporation includes a successor to the foreign acquiring corporation, including a corporation that succeeds to and takes into account amounts with respect to the foreign acquiring corporation pursuant to section 381.

(11) A *foreign related person* means, with respect to an inversion transaction, a foreign person that is related (within the meaning of section 267(b) or 707(b)(1)) to, or under the same common control as (within the meaning of section 482), a person that is an expatriated entity with respect to the inversion transaction.

(12) A *former domestic entity partner* of a domestic entity that is a domestic partnership is any person that held an interest in the partnership before the domestic entity acquisition, including any person that holds an interest in the partnership both before and after the domestic entity acquisition.

(13) A *former domestic entity shareholder* of a domestic entity that is a domestic corporation is any person that held stock in the domestic corporation before the domestic entity acquisition, including any person that holds stock in the domestic corporation both before and after the domestic entity acquisition.

(14) An *interest in a partnership* includes a capital or profits interest.

(15) An *inversion transaction* means a domestic entity acquisition in which the foreign acquiring corporation is treated as a surrogate foreign corporation under section 7874(a)(2)(B), taking into account section 7874(a)(3).

(16) A *non-EFS foreign related person* means, with respect to an inversion transaction, a foreign related person that is not an expatriated foreign subsidiary.

(17) The *ownership fraction* means, with respect to a domestic entity acquisition, the ownership percentage described in section 7874(a)(2)(B)(ii), expressed as a fraction.

(18) A *specified related person* means, with respect to an inversion transaction—

(i) A non-EFS foreign related person;

(ii) A domestic partnership in which a non-EFS foreign related person is a partner; and

(iii) A domestic trust of which a non-EFS foreign related person is a beneficiary.

(19) A *United States person* means a person described in section 7701(a)(30).

(20) A *United States shareholder* has the meaning provided in section 951(b).

(b) ***Applicability dates.*** Except as otherwise provided in this paragraph (b), this section applies to domestic entity acquisitions completed on or after September 22, 2014. The following apply to domestic entity acquisitions completed on or after April 4, 2016: paragraph (a)(8) of this section; in paragraph (a)(6) of this section, the phrase “, including a corporation that succeeds to and takes into account amounts with respect to the domestic entity pursuant to section 381”; and the second sentence of paragraph (a)(10) of this section. For domestic entity acquisitions completed on or after September 22, 2014, and before April 4, 2016, however, taxpayers, may elect to apply the provisions in the immediately prior sentence.

[T.D. 9834, 83 FR 32560, July 12, 2018]

PUBLIC LAW 74, 84TH CONGRESS

Source: Sections 1.9000-1 through 1.9000-8 contained in T.D. 6500, 25 FR 12155, Nov. 26, 1960, unless otherwise noted.

§ 1.9000-1 Statutory provisions.

The Act of June 15, 1955 (Pub. L. 74, 84th Cong., 69 Stat. 134), provides as follows:

> *Be it enacted by the Senate and House of Representatives of the United States of America in Congress assembled,*
>
> Section 1. *Repeal of sections 452 and 462*—(a) *Prepaid income.* Section 452 of the Internal Revenue Code of 1954 is hereby repealed.
>
> (b) Reserves for estimated expenses, etc. Section 462 of the Internal Revenue Code of 1954 is hereby repealed.
>
> Sec. 2. *Technical amendments.* The following provisions of the Internal Revenue Code of 1954 are hereby amended as follows:
>
> (1) Subsection (c) of section 381 is amended by striking out paragraph (7) (relating to carryover of prepaid income in certain corporate acquisitions).
>
> (2) The table of sections for subpart B of part II of subchapter E of chapter 1 (relating to taxable year for which items of gross income included) is amended by striking out
>
> "Sec. 452. Prepaid income."
>
> (3) The table of sections for subpart C of such part II (relating to taxable year for which deductions are taken) is amended by striking out:
>
> "Sec. 462. Reserves for estimated expenses, etc."
>
> Sec. 3. *Effective date.* The amendments made by this act shall apply with respect to taxable years beginning after December 31, 1953, and ending after August 16, 1954.
>
> Sec. 4. *Saving provisions*—(a) *Filing of statement.* If:
>
> (1) the amount of any tax required to be paid for any taxable year ending on or before the date of the enactment of this act is increased by reason of the enactment of this act, and
>
> (2) the last date prescribed for payment of such tax (or any installment thereof) is before December 15, 1955,
>
> then the taxpayer shall, on or before December 15, 1955, file a statement which shows the increase in the amount of such tax required to be paid by reason of the enactment of this act.

(b) *Form and effect of statement*—(1) *Form of statement, etc.* The statement required by subsection (a) shall be filed at the place fixed for filing the return. Such statement shall be in such form, and shall include such information necessary or appropriate to show the increase in the amount of the tax required to be paid for the taxable year by reason of the enactment of this act, as the Secretary of the Treasury or his delegate shall by regulations prescribe.

(2) *Treatment as amount shown on return.* The amount shown on a statement filed under subsection (a) as the increase in the amount of the tax required to be paid for the taxable year by reason of the enactment of this act shall, for all purposes of the internal revenue laws, be treated as tax shown on the return. Notwithstanding the preceding sentence, that portion of the amount of increase in tax for any taxable year which is attributable to a decrease (by reason of the enactment of this act) in the net operating loss for a succeeding taxable year shall not be treated as tax shown on the return.

(3) *Waiver of interest in case of payment on or before December 15, 1955.* If the taxpayer, on or before December 15, 1955, files the statement referred to in subsection (a) and pays in full that portion of the amount shown thereon for which the last date prescribed for payment is before December 15, 1955, then for purposes of computing interest (other than interest on overpayments) such portion shall be treated as having been paid on the last date prescribed for payment. This paragraph shall not apply if the amount shown on the statement as the increase in the amount of the tax required to be paid for the taxable year by reason of the enactment of this act is greater than the actual increase unless the taxpayer establishes, to the satisfaction of the Secretary of the Treasury or his delegate, that his computation of the greater amount was based upon a reasonable interpretation and application of sections 452 and 462 of the Internal Revenue Code of 1954, as those sections existed before the enactment of this act.

(c) *Special rules*—(1) *Interest for period before enactment.* Interest shall not be imposed on the amount of any increase in tax resulting from the enactment of this act for any period before the day after the date of the enactment of this act.

(2) *Estimated tax.* Any addition to the tax under section 294(d) of the Internal Revenue Code of 1939 shall be computed as if this act had not been enacted. In the case of any installment for which the last date prescribed for payment is before December 15, 1955, any addition to the tax under section 6654 of the Internal Revenue Code of 1954 shall be computed as if this act had not been enacted.

(3) *Treatment of certain payments which taxpayer is required to make.* If:

(A) The taxpayer is required to make a payment (or an additional payment) to another person by reason of the enactment of this act, and

(B) The Internal Revenue Code of 1954 prescribes a period, which expires after the close of the taxable year, within which the taxpayer must make such payment (or additional payment) if the amount thereof is to be taken into account (as a deduction or otherwise) in computing taxable income for such taxable year,

then, subject to such regulations as the Secretary of the Treasury or his delegate may prescribe, if such payment (or additional payment) is made on or before December 15, 1955, it shall be treated as having been made within the period prescribed by such Code.

(4) *Treatment of certain dividends.* Subject to such regulations as the Secretary of the Treasury or his delegate may prescribe, for purposes of section 561(a)(1) of the Internal Revenue Code of 1954, dividends paid after the 15th day of the third month following the close of the taxable year and on or before December 15, 1955, may be treated as having been paid on the last day of the taxable year, but only to the extent (A) that such dividends are attributable to an increase in taxable income for the taxable year resulting from the enactment of this act, and (B) elected by the taxpayer.

(5) *Determination of date prescribed.* For purposes of this section, the determination of the last date prescribed for payment or for filing a return shall be made without regard to any extension of time therefor and without regard to any provision of this section.

(6) *Regulations.* For requirement that the Secretary of the Treasury or his delegate shall prescribe all rules and regulations as may be necessary by reason of the enactment of this act, see section 7805(a) of the Internal Revenue Code of 1954.

§ 1.9000-2 Effect of repeal in general.

(a) Section 452 (relating to prepaid income) and section 462 (relating to reserves for estimated expenses) of the Internal Revenue Code of 1954 were repealed by the Act of June 15, 1955 (Pub. L. 74, 84th Cong., 69 Stat. 134), with respect to all years subject to such Code. The effect of the repeal will generally be to increase the tax liability of taxpayers who elected to adopt the methods of accounting provided by sections 452 and 462. References to sections of law in §§ 1.9000-2 to 1.9000-8, inclusive, are references to the Internal Revenue Code of 1954 unless otherwise specified.

(b) The Act of June 15, 1955, provides that if the amount of any tax is increased by the repeal of sections 452 and 462 and if the last date prescribed for the payment of such tax (or any installment thereof) is before December 15, 1955, then the taxpayer shall on or before such date file a statement as prescribed in § 1.9000-3. The last date prescribed for payment for this purpose shall be determined without regard to any extensions of time and without regard to the provisions of the Act of June 15, 1955.

§ 1.9000-3 Requirement of statement showing increase in tax liability.

(a) ***Returns filed before June 15, 1955.*** Where a return reflecting an election under section 452 or 462 was filed before June 15, 1955, the taxpayer must file on or before December 15, 1955, a statement on Form 2175 showing the increase in tax liability resulting from the repeal of sections 452 and 462. The provisions of this paragraph may be illustrated by the following example:

Example. Corporation X filed its income tax return for the calendar year 1954 on March 15, 1955, and elected under section 6152 to pay the unpaid amount of the tax shown thereon in two equal installments. Such installment payments are due on March 15, 1955, and June 15, 1955, respectively. The corporation elected to compute its tax for such taxable year under the methods of accounting provided by sections 452 and 462. Corporation X's tax liability is increased by reason of the enactment of Public Law 74, and since the last date prescribed for paying its tax expires before December 15, 1955, it is required to submit the prescribed statement on or before December 15, 1955, showing its increase in tax liability.

(b) ***Returns filed on or after June 15, 1955.*** A taxpayer filing a return on or after June 15, 1955, for a taxable year ending on or before such date, may elect to apply the accounting methods provided in sections 452 and 462. The election may be exercised by either of the following methods:

(1) By computing the tax liability shown on such return as though the provisions of sections 452 and 462 had not been repealed. In such a case, the taxpayer must file on or before December 15, 1955, a statement on Form 2175 showing the increase in tax liability resulting from the repeal of sections 452 and 462.

(2) By computing his tax liability without regard to sections 452 and 462. In this case, Form 2175 must be filed with the return. However, taxable income and the tax liability computed with the application of sections 452 and 462 shall be shown on lines 8 and 14, respectively, of the form in lieu of the amounts otherwise called for on those lines.

If a taxpayer does not make an election to have the provisions of sections 452 and 462 apply, the savings provisions of section 4 of the Act of June 15, 1955, are not applicable.

(c) ***Taxable years ending after June 15, 1955.*** A taxpayer having a taxable year ending after June 15, 1955, may not elect to apply the methods of accounting prescribed in sections 452 and 462 in computing taxable income for such taxable year. Such a taxpayer must file his return and pay the tax as if such sections had not been enacted.

(d) ***Other situations requiring statements.***

(1) A person who made an election under section 452 or 462 but whose tax liability was not increased by reason of the enactment of the Act of June 15, 1955, is nevertheless required to file a statement on Form 2175 if his gross income is increased or his deductions are decreased as the result of the repeal of sections 452 and 462. A partnership which makes an election under such sections must file such a statement. In addition, a partner, stockholder, distributee, etc. (whether or not such person made an election under section 452 or 462), shall file a statement showing any increase in his tax liability resulting from the effects of the repeal on the gross income or deductions of any person mentioned in the previous sentences of this subparagraph.

(2) A statement shall also be filed for a taxable year, other than a year to which an election under section 452 or 462 is applicable, if the repeal of such sections increases the tax liability of such year. Thus, a statement must be filed for any taxable year to which a net operating loss is carried from a year to which an election under section 452 or 462 is applicable, provided that the repeal of such sections affects the amount of the tax liability for the year to which such loss is carried. A separate statement must also be filed for a year in which there is a net operating loss which is changed by reason of the repeal of sections 452 and 462. Where there is a short taxable year involved, a taxpayer may have two taxable years to which elections under sections 452 and 462 are applicable and, in such a case, a statement, on Form 2175, must be filed for each such year.

§ 1.9000-4 Form and content of statement.

(a) ***Information to be shown.*** The statement shall be filed on Form 2175 which may be obtained from district directors. It shall be filed with the district director for the internal revenue district in which the return was filed. The statement shall be prepared in accordance with the instructions contained thereon and shall show the following information:

(1) The name and address of the taxpayer,

(2) The amounts of each type of income deferred under section 452,

(3) The amount of the addition to each reserve deducted under section 462,

(4) The taxable income and the tax liability of the taxpayer computed with the application of sections 452 and 462,

(5) The taxable income and the tax liability of the taxpayer computed without the application of sections 452 and 462,

(6) The details of the recomputation of taxable income and tax liability, including any changes in other items of income, deductions, and credits resulting from the repeal of sections 452 and 462, and

(7) If self-employment tax is increased, the computations and information required on page 3 of Schedule C, Form 1040.

(b) ***Procedure for recomputing tax liability.*** In determining the taxable income and the tax liability computed without the application of sections 452 and 462, such items as vacation pay and prepaid subscription income shall be reported under the law and regulations applicable to the taxable year as if such sections had not been enacted. The tax liability for the year shall be recomputed by restoring to taxable income the amount of income deferred under section 452 and the amount of the deduction taken under section 462. Other deductions or credits affected by such changes in taxable income shall be adjusted. For example, if the deduction for contributions allowed for the taxable year was limited under section 170(b), the amount of such deduction shall be recomputed, giving effect to the increase in adjusted gross income or taxable income, as the case may be, by reason of the adjustments required by the repeal of sections 452 and 462.

§ 1.9000-5 Effect of filing statement.

(a) ***Years other than years affected by a net operating loss carryback.*** If the taxpayer files a timely statement in accordance with the provisions of § 1.9000-3, the amount of the increase in tax shown on such statement for a taxable year shall, except as provided in paragraph (b) of this section, be considered for all purposes of the Code, as tax shown on the return for such year. In general, such increase shall be assessed and collected in the same manner as if it had been tax shown on the return as originally filed. The provisions of this paragraph may be illustrated by the following example:

Example. A taxpayer filed his return showing a tax liability computed under the methods of accounting provided by sections 452 and 462 as $1,000 and filed the statement in accordance with § 1.9000-3 showing an increase in tax liability of $200. The tax computed as though sections 452 and 462 had not been enacted is $1,200, and the difference of $200 is the increase in the tax attributable to the repeal of sections 452 and 462. This increase is considered to be tax shown on the return for such taxable year. Additions to the tax for fraud or negligence under section 6653 will be determined by reference to $1,200 (that is, $1,000 plus $200) as the tax shown on the return.

(b) ***Years affected by a net operating loss carryback.*** In the case of a year which is affected by a net operating loss carryback from a year to which an election under section 452 or 462 applies, that portion of the amount of increase in tax shown on the statement for the year to which the loss is carried back which is attributable to a decrease in such net operating loss shall not be treated as tax shown on the return.

§ 1.9000-6 Provisions for the waiver of interest.

(a) ***In general.*** If the statement is filed in accordance with § 1.9000-3 and if that portion of the increase in tax which is due before December 15, 1955 (without regard to any extension of time for payment and without regard to the provisions of §§ 1.9000-2 to 1.9000-8, inclusive), is paid in full on or before such date, then no interest shall be due with respect to that amount. The provisions of this paragraph may be illustrated by the following example:

Example. Corporation M's return for the calendar year 1954 was filed on March 15, 1955, and the tax liability shown thereon was paid in equal installments on March 15, 1955, and June 15, 1955. M filed a statement on December 15, 1955, showing the increase in its tax liability resulting from the repeal of sections 452 and 462 and paid at that time the increase in tax shown thereon. No interest will be imposed with respect to the amount of such payment.

Interest shall be computed under the applicable provisions of the internal revenue laws on any portion of the increase in tax shown on the statement which is due after December 15, 1955, and which is not paid when due.

(b) ***Limitation on application of waiver.*** The provisions of paragraph (a) of this section shall not apply to any portion of the increase in tax shown on the statement if such increase reflects an amount in excess of that attributable solely to the repeal of sections 452 and 462, i. e., is attributable in whole or in part to excessive or unwarranted deferrals or accruals under section 452 or 462, as the case may be, in computing the tax liability with the application of such sections. Notwithstanding the preceding sentence, paragraph (a) of this section shall be applicable if the taxpayer can show that the tax liability as computed with the application of sections 452 and 462 is based upon a reasonable interpretation and application of such sections as they existed prior to repeal. If the taxpayer complied with the provisions of the regulations under sections 452 and 462 in computing the tax liability with the application of such sections, he will be regarded as having reasonably interpreted and applied sections 452 and 462. In this regard, it is not essential that the taxpayer submit with his return the detailed information required by such regulations in support of the deduction claimed under section 462, but such information shall be supplied at the request of the Commissioner.

(c) ***Interest for periods prior to June 16, 1955.*** No interest shall be imposed with respect to any increase in tax resulting solely from the repeal of sections 452 and 462 for any period prior to June 16, 1955 (the day after the date of the enactment of the Act of June 15, 1955). The preceding sentence does not apply to that part of any increase in tax which is due to the improper application of sections 452 and 462. The provisions of this paragraph shall not apply to interest imposed under section 3779 of the Internal Revenue Code of 1939. (See paragraph (d) of this section.)

(d) ***Amounts deferred by corporations expecting carrybacks.*** Interest shall be imposed at the rate of 6 percent on so much of the amount of tax deferred under section 3779 of the Internal Revenue Code of 1939 as is not satisfied within the meaning of section 3779(i)(1), notwithstanding the fact that a greater amount would have been satisfied, had sections 452 and 462 not been repealed. Interest will be imposed at such rate until the amount not so satisfied is paid.

§ 1.9000-7 Provisions for estimated tax.

(a) ***Additions to tax under section 294(d) of the Internal Revenue Code of 1939.*** Any addition to the tax under section 294(d) (relating to estimated tax) of the Internal Revenue Code of 1939 shall be computed as if the tax for the year for which the estimate was made were computed with sections 452 and 462 still applicable to such taxable year. For the purpose of the preceding sentence, it is not necessary for the taxpayer actually to have made an election under section 452 or 462; it is only necessary for the taxpayer to have taken such sections into account in estimating its tax liability for the year. Thus, if in determining the amount of estimated tax, the taxpayer computed his estimated tax liability by applying those sections, that portion of any additions to tax under section 294(d) resulting from the repeal of sections 452 and 462 shall be disregarded.

(b) ***Additions to tax under section 6654.*** In the case of an underpayment of estimated tax, any additions to the tax under section 6654, with respect to installments due before December 15, 1955, shall be computed without regard to any increase in tax resulting from the repeal of sections 452 and 462. Any additions to

the tax with respect to installments due on or after December 15, 1955, shall be imposed in accordance with the applicable provisions of the Code, and as though sections 452 and 462 had not been enacted. Thus, a taxpayer whose declaration of estimated tax was based upon an estimate of his taxable income for the year of the estimate which was determined by taking sections 452 and 462 into account, must file an amended declaration on or before the due date of the next installment of estimated tax due on or after December 15, 1955. Such amended declaration shall reflect an estimate of the tax without the application of such sections. If the taxpayer bases his estimate on the tax for the preceding taxable year under section 6654(d)(1)(A), an amended declaration must be filed on or before the due date of the next installment due on or after December 15, 1955, if the tax for the preceding taxable year is increased as the result of the repeal of sections 452 and 462. Similarly, if the taxpayer bases his estimate on the tax computed under section 6654(d)(1)(B), he must file an amended declaration on or before the due date of the next installment due on or after December 15, 1955, taking into account the repeal of sections 452 and 462 with respect to the preceding taxable year. Any increase in estimated tax shown on an amended declaration filed in accordance with this paragraph must be paid in accordance with section 6153(c).

(c) ***Estimated tax of corporations.*** Corporations required to file a declaration of estimated tax under section 6016 for taxable years ending on and after December 31, 1955, shall estimate their tax liability for such year as if sections 452 and 462 had not been enacted. Thus, if the corporation bases its estimated tax liability under section 6655(d) (1) or (2) on its operations for the preceding taxable year, the effect of the repeal of sections 452 and 462 with respect to such year must be taken into account.

§ 1.9000-8 Extension of time for making certain payments.

(a) ***Time for payment specified in Code.***

(1) If the treatment of any payment (including its allowance as a deduction or otherwise) is dependent upon the making of a payment within a period of time specified in the Code the period within which the payment is to be made is extended where the amount to be paid is increased by reason of the repeal of sections 452 and 462: *Provided,* That:

(i) The taxpayer, because of a pre-existing obligation, is required to make a payment or an additional payment to another person by reason of such repeal;

(ii) The deductibility of the payment or additional payment is contingent upon its being made within a period prescribed by the Code, which period expires after the close of the taxable year; and

(iii) The payment or additional payment is made on or before December 15, 1955.

If the foregoing conditions are met, the payment or additional payment will be treated as having been made within the time specified in the Code, and, subject to any other conditions in the Code, it shall be deductible for the year to which it relates. The provision of this paragraph may be illustrated by the following examples:

Example 1. Section 267 (relating to losses, expenses and interest between related taxpayers) applies to amounts accrued by taxpayer A for salary payable to B. For the calendar year 1954, A is obligated to pay B a salary equal to 5 percent of A's taxable income for the taxable year. The amount accrued as salary payable to B for 1954 is $5,000 with the taxable income reflecting the application of section 462. As a result of the repeal of section 462 the salary payable to B for 1954 is increased to $6,000. The additional $1,000 is paid to B on December 15, 1955. In recomputing A's tax liability for 1954 the additional deduction of $1,000 for salary payable to B will be treated as having been made within two and one-half months after the close of the taxable year and will be deductible in that year.

Example 2. On March 1, 1955, Corporation X, a calendar year taxpayer using the accrual method of accounting, makes a payment described in section 404(a)(6) (relating to contributions to an employees' trust) of $10,000 which is accrued for 1954 and is determined on the basis of the amount of taxable income for that year. The taxpayer filed its return on March 15, 1955. By reason of the repeal of section 462, X's taxable income is increased so that it is required to make an additional contribution of $2,000 to the employees' trust. The additional payment is made on December 15, 1955. For purposes of recomputing X's tax liability for 1954, this additional payment is deemed to have been made on the last day of 1954.

(2) The time for inclusion in the taxable income of the payee of any additional payment of the type described in subparagraph (1) of this paragraph, shall be determined without regard to section 4(c)(3) of the Act of June 15, 1955, and §§ 1.9000-2 to 1.9000-8, inclusive.

(b) ***Dividends paid under section 561.*** under section 4(c)(4) of the Act of June 15, 1955, the period during which distributions may be recognized as dividends paid under section 561 for a taxable year to which section 452 or 462 apply may be extended under the conditions set forth below.

(1) ***Accumulated earnings tax or personal holding company tax.*** In the case of the accumulated earnings tax or the personal holding company tax, if:

(i) The income of a corporation is increased for a taxable year by reason of the repeal of sections 452 and 462 so that it would become liable for the tax (or an increase in the tax) imposed on accumulated earnings or personal holding companies unless additional dividends are distributed;

(ii) The corporation distributes dividends to its stockholders after the 15th day of the 3d month following the close of its taxable year and on or before December 15, 1955, which dividends are attributable to an increase in its accumulated taxable income or undistributed personal holding company income, as the case may be, resulting from the repeal of sections 452 and 462, and

(iii) The corporation elects in its statement, submitted under § 1.9000-3, to have the provisions of section 4(c)(4) of the Act of June 15, 1955, apply:

Then such dividends shall be treated as having been paid on the last day of the taxable year to which the statement applies.

(2) ***Regulated investment companies.*** In the case of a regulated investment company taxable under section 852, if:

(i) The taxable income of the regulated investment company is increased by reason of the repeal of sections 452 and 462 (without regard to any deduction for dividends paid as provided for in this subparagraph);

(ii) The company distributes dividends to its stockholders after the 15th day of the 3d month following the close of its taxable year and on or before December 15, 1955, which dividends are attributable to an increase in its investment company income resulting from the repeal of sections 452 and 462; and

(iii) The company elects in its statement, submitted under § 1.9000-3, to have the provisions of section 4(c)(4) of the Act of June 15, 1955, apply:

then such dividends are to be treated as having been paid on the last day of the taxable year to which the statement applies. The dividends paid are to be determined under this subparagraph without regard to the provisions of section 855.

(3) ***Related provisions.*** An election made under subparagraph (1) or (2) of this paragraph is irrevocable. The time for inclusion in the taxable income of the distributees of any distributions of the type described in subparagraph (1) or (2) of this paragraph shall be determined without regard to section 4(c)(4) of the Act of June 15, 1955, and §§ 1.9000-2 to 1.9000-8, inclusive.

RETIREMENT-STRAIGHT LINE ADJUSTMENT ACT OF 1958

Source: Sections 1.9001 through 1.9001-4 contained in T.D. 6500, 25 FR 12158, Nov. 26, 1960, unless otherwise noted.

§ 1.9001 Statutory provisions; Retirement-Straight Line Adjustment Act of 1958.

Section 94 of the Technical Amendments Act of 1958 (72 Stat. 1669) provides as follows:

> Sec. 94. *Change from retirement to straight line method of computing depreciation in certain cases*—(a) *Short title.* This section may be cited as the "Retirement-Straight Line Adjustment Act of 1958".
>
> (b) *Making of election.* Any taxpayer who held retirement-straight line property on his 1956 adjustment date may elect to have this section apply. Such an election shall be made at such time and in such manner as the Secretary shall prescribe. Any election under this section shall be irrevocable and shall apply to all retirement-straight line property as hereinafter provided in this section (including such property for periods when held by predecessors of the taxpayer).
>
> (c) *Retirement-straight line property defined.* For purposes of this section, the term "retirement-straight line property" means any property of a kind or class with respect to which the taxpayer or a predecessor (under the terms and conditions prescribed for him by the Commissioner) for any taxable year beginning after December 31, 1940, and before January 1, 1956, changed from the retirement to the straight line method of computing the allowance of deductions for depreciation.
>
> (d) *Basis adjustments as of 1956 adjustment date.* If the taxpayer has made an election under this section, then in determining the adjusted basis on his 1956 adjustment date of all retirement-straight line property held by the taxpayer, in lieu of the adjustments for depreciation provided in section 1016(a) (2) and (3) of the Internal Revenue Code of 1954, the following adjustments shall be made (effective as of his 1956 adjustment date) in respect of all periods before the 1956 adjustment date:
>
> (1) *Depreciation sustained before March 1, 1913.* For depreciation sustained before March 1, 1913, on retirement-straight line property held by the taxpayer or a predecessor on such date for which cost was or is claimed as basis and which either:
>
> (A) *Retired before changeover.* Was retired by the taxpayer or a predecessor before the changeover date, but only if (i) a deduction was allowed in computing net income by reason of such retirement, and (ii) such deduction was computed on the basis of cost without adjustment for depreciation sustained before March 1, 1913. In the case of any such property retired during any taxable year beginning after December 31, 1929, the

adjustment under this subparagraph shall not exceed that portion of the amount attributable to depreciation sustained before March 1, 1913, which resulted (by reason of the deduction so allowed) in a reduction in taxes under the Internal Revenue Code of 1954 or prior income, war-profits, or excess-profits tax laws.

(B) *Held on changeover date.* Was held by the taxpayer or a predecessor on the changeover date. This subparagraph shall not apply to property to which paragraph (2) applies.

The adjustment determined under this paragraph shall be allocated (in the manner prescribed by the Secretary) among all retirement-straight line property held by the taxpayer on his 1956 adjustment date.

(2) *Property disposed of after changeover and before 1956 adjustment date.* For that portion of the reserve prescribed by the Commissioner in connection with the changeover which was applicable to property:

(A) Sold, or

(B) With respect to which a deduction was allowed for Federal income tax purposes by reason of casualty or “abnormal” retirement in the nature of special obsolescence, if such sale occurred in, or such deduction was allowed for, a period on or after the changeover date and before the taxpayer's 1956 adjustment date.

(3) *Depreciation allowable from changeover to 1956 adjustment date.* For depreciation allowable, under the terms and conditions prescribed by the Commissioner in connection with the changeover, for all periods on and after the changeover date and before the taxpayer's 1956 adjustment date.

This subsection shall apply only with respect to taxable years beginning after December 31, 1955.

(e) *Effect on period from changeover to 1956 adjustment date.* If the taxpayer has made an election under this section, then in determining the adjusted basis of any retirement-straight line property as of any time on or after the changeover date and before the taxpayer's 1956 adjustment date, in lieu of the adjustments for depreciation provided in section 1016(a) (2) and (3) of the Internal Revenue Code of 1954 and the corresponding provisions of prior revenue laws, the following adjustments shall be made:

(1) *For prescribed reserve.* For the amount of the reserve prescribed by the Commissioner in connection with the changeover.

(2) *For allowable depreciation.* For the depreciation allowable under the terms and conditions prescribed by the Commissioner in connection with the changeover.

This subsection shall not apply in determining adjusted basis for purposes of section 437(c) of the Internal Revenue Code of 1939. This subsection shall apply only with respect to taxable years beginning on or after the changeover date and before the taxpayer's 1956 adjustment date.

(f) *Equity invested capital, etc.* If an election is made under this section, then (notwithstanding the terms and conditions prescribed by the Commissioner in connection with the changeover):

(1) *Equity invested capital.* In determining equity invested capital under sections 458 and 718 of the Internal Revenue Code of 1939, accumulated earnings and profits as of the changeover date, and as of the beginning of each taxable year thereafter, shall be reduced by the depreciation sustained before March 1, 1913, as computed under subsection (d)(1)(B); and

(2) *Definition of equity capital.* In determining the adjusted basis of assets for the purpose of section 437(c) of the Internal Revenue Code of 1939 (and in addition to any other adjustments required by such Code), the basis shall be reduced by depreciation sustained before March 1, 1913 (as computed under subsection (d)), together with any depreciation allowable under subsection (e)(2) for any period before the year for which the excess profits credit is being computed.

(g) *Definitions.* For purposes of this section:

(1) *Depreciation.* The term "depreciation" means exhaustion, wear and tear, and obsolescence.

(2) *Changeover.* The term "changeover" means a change from the retirement to the straight line method of computing the allowance of deductions for depreciation.

(3) *Changeover date.* The term "changeover date" means the first day of the first taxable year for which the changeover was effective.

(4) *1956 adjustment date.* The term "1956 adjustment date" means, in the case of any taxpayer, the first day of his first taxable year beginning after December 31, 1955.

(5) *Predecessor.* The term "predecessor" means any person from whom property of a kind or class to which this section refers was acquired, if the basis of such property is determined by reference to its basis in the hands of such person. Where a series of transfers of property has occurred and where in each instance the basis of the property was determined by reference to its basis in the hands of the prior holder, the term includes each such prior holder.

(6) The term "Secretary" means the Secretary of the Treasury or his delegate.

(7) The term "Commissioner" means the Commissioner of Internal Revenue.

§ 1.9001-1 Change from retirement to straight-line method of computing depreciation.

(a) ***In general.*** The Retirement-Straight Line Adjustment Act of 1958 (72 Stat. 1669), which is contained in section 94 of the Technical Amendments Act of 1958, approved September 2, 1958, provides various adjustments to be made by certain railroads which changed from the retirement to the straight-line method of computing the allowance of deductions for the depreciation of those roadway assets which are defined in this section as retirement-straight line property. The adjustments are available to all eligible taxpayers who make an irrevocable election to have the provisions of the Retirement-Straight Line Adjustment Act of 1958 apply. This election shall be made at the time and in the manner prescribed by this section. If an election is made in accordance with this section, then the provisions of the Act and of §§ 1.9001 to 1.9001-4, inclusive, shall apply. An election made in accordance with this section shall not be considered a change in accounting method for purposes of section 481 of the Code.

(b) ***Making of election.***

(1) Subsection (b) of the Act provides that any taxpayer who held retirement-straight line property on its 1956 adjustment date may elect to have the provisions of the Act apply. The election shall be irrevocable and shall apply to all retirement-straight line property, including such property for periods when held by predecessors of the taxpayer.

(2) An election may be made in accordance with the provisions of this section even though the taxpayer has, at the time of election, litigated some or all of the issues covered by the provisions of the Act and has received from the courts a determination which is less favorable to the taxpayer than the treatment provided by the Act. Once an election has been made in accordance with the provisions of this section, the taxpayer may not receive the benefit of more favorable treatment, as a result of litigation, than that provided by the Act on the issues involved.

(3) The election to have the provisions of the Act apply shall be made by filing a statement to that effect, on or before January 11, 1960, with the district director for the internal revenue district in which the taxpayer's income tax return for its first taxable year beginning after December 31, 1955, was filed. A copy of this statement shall be filed with any amended return, or claim for refund, made under the Act.

(c) ***Definitions.*** For purposes of the Act and §§ 1.9001 to 1.9001-4, inclusive:

(1) ***The Act.*** The term *the Act* means the Retirement-Straight Line Adjustment Act of 1958, as contained in section 94 of the Technical Amendments Act of 1958 (72 Stat. 1669).

(2) ***Commissioner.*** The term *Commissioner* means the Commissioner of Internal Revenue.

(3) ***Retirement-straight line property.*** The term *retirement-straight line property* means any property of a kind or class with respect to which the taxpayer (or a predecessor of the taxpayer) changed, pursuant to the terms and conditions prescribed for it by the Commissioner, from the retirement to the straight-line method of computing the allowance for any taxable year beginning after December 31, 1940, and before January 1, 1956, of deductions for depreciation. The term does not include any specific property which has always been properly accounted for in accordance with the straight-line method of computing the depreciation allowances or which, under the terms-letter, was permitted or required to be accounted for under the retirement method.

(4) ***Depreciation.*** The term *depreciation* means exhaustion, wear and tear, and obsolescence.

(5) ***Predecessor.*** The term *predecessor* means any person from whom property of a kind or class to which the Act refers was acquired, if the basis of such property is determined by reference to its basis in the hands of such person. Where a series of transfers of property has occurred and where in each instance the basis of the property was determined by reference to its basis in the hands of the prior holder, the term includes each such prior holder.

(6) ***Changeover.*** The term *changeover* means a change from the retirement to the straight-line method of computing the allowance of deductions for depreciation.

(7) ***Changeover date.*** The term *changeover date* means the first day of the first taxable year for which the changeover was effective.

(8) ***1956 adjustment date.*** The term *1956 adjustment date* means, in the case of any taxpayer, the first day of its first taxable year beginning after December 31, 1955.

(9) ***Terms-letter.*** The term *terms-letter* means the terms and conditions prescribed by the Commissioner in connection with the changeover.

(10) ***Terms-letter reserve.*** The term *terms-letter reserve* means the reserve for depreciation prescribed by the Commissioner in connection with the changeover.

(11) ***Depreciation sustained before March 1, 1913.*** The term *depreciation sustained before March 1, 1913* may be construed to mean, to the extent that it is impossible to determine the actual amount of such depreciation from the books and records, that amount which is obtained by

(i) deducting the "cost of reproduction new less depreciation" from the "cost of reproduction new", as ascertained as of the valuation date by the Interstate Commerce Commission under the provisions of section 19a of part I of the Interstate Commerce Act (49 U.S.C. 19a), and then

(ii) making such retroactive adjustments to the remainder as are required, in the opinion of the Commissioner of Internal Revenue, to properly reflect the depreciation sustained before March 1, 1913. For this purpose, any retirement-straight line property held on March 1, 1913, and retired on or before the valuation date shall be taken into account.

§ 1.9001-2 Basis adjustments for taxable years beginning on or after 1956 adjustment date.

(a) ***In general.*** Subsection (d) of the Act provides the basis adjustments required to be made by the taxpayer as of the 1956 adjustment date in respect of all periods before that date in order to determine the adjusted basis of all retirement-straight line property held by the taxpayer on that date. This adjusted basis on the 1956 adjustment date shall be used by the taxpayer for all purposes of the Code for any taxable year beginning after December 31, 1955. In order to arrive at the adjusted basis on the 1956 adjustment date, the taxpayer shall start with the unadjusted basis of all retirement-straight line property held on the changeover date by the taxpayer or a predecessor and shall, with respect to both the asset and reserve accounts,

(1) make the adjustments prescribed by this section and subsection (d) of the Act and

(2) also make those adjustments required, in accordance with the method of accounting regularly used, for those additions, retirements, and other dispositions of property which occurred on or after the changeover date and before the taxpayer's 1956 adjustment date. For an illustration of adjustments required in accordance with the method of accounting regularly used, see paragraph (e)(3) of this section. The adjustments required by subsection (d) of the Act shall be made in lieu of the adjustments for depreciation otherwise required by section 1016(a) (2) and (3) of the Code. The adjustments required by subsection (d) of the Act are set forth in paragraphs (b), (c), and (d) of this section.

(b) ***Adjustment for depreciation sustained before March 1, 1913*** —

(1) ***In general.*** Subsection (d)(1) of the Act requires an adjustment to be made as of the 1956 adjustment date for depreciation sustained before March 1, 1913, on all retirement-straight line property held on March 1, 1913, by the taxpayer or a predecessor for which cost was or is claimed as basis and which was either

(i) retired before the changeover date by the taxpayer or a predecessor or

(ii) held on the changeover date by the taxpayer or a predecessor. This adjustment for depreciation sustained before March 1, 1913, shall be made in accordance with the conditions and limitations described in subparagraphs (2) and (3) of this paragraph and shall be allocated, in the manner prescribed in subparagraph (4) of this paragraph, among all retirement-straight line property held by the taxpayer on its 1956 adjustment date. The term "cost", when used in this

paragraph with reference to the basis of property, shall be construed to mean the amount paid for the property or, if that amount could not be determined, then such other amount as was accepted by the Commissioner as "cost" for basis purposes.

(2) ***Depreciation sustained on property retired before the changeover date.*** Pursuant to subsection (d)(1)(A) of the Act, an adjustment to the basis of retirement-straight line property held by the taxpayer on its 1956 adjustment date shall be made as of that date for depreciation sustained before March 1, 1913, on all retirement-straight line property held on March 1, 1913, by the taxpayer or a predecessor for which cost was claimed as the basis and which was retired before the changeover date by the taxpayer or a predecessor, except that:

(i) The adjustment shall be made only if a deduction was allowed in computing net income by reason of the retirement and the deduction so allowed was computed on the basis of the cost of the property unadjusted for depreciation sustained before March 1, 1913, and

(ii) In the case of any such property retired during any taxable year beginning after December 31, 1929, the adjustment shall not exceed that portion of the amount attributable to depreciation sustained before March 1, 1913, which resulted, by reason of the deduction so allowed, in a reduction of taxes under the Code or under prior income, war-profits or excess-profits tax laws.

(3) ***Depreciation sustained on property held on the changeover date.*** Pursuant to subsection (d)(1)(B) of the Act, an adjustment to the basis of retirement-straight line property held by the taxpayer on its 1956 adjustment date shall be made as of that date for depreciation sustained before March 1, 1913, on all retirement-straight line property held on March 1, 1913, by the taxpayer or a predecessor for which cost was or is claimed as basis and which was held on the changeover date by the taxpayer or a predecessor. This subparagraph shall not apply, however, to any such property which

(i) was disposed of on or after the changeover date by reason of sale, casualty, or abnormal retirement in the nature of special obsolescence, and

(ii) is property to which paragraph (c) of this section and subsection (d)(2) of the Act apply.

(4) ***Manner of allocating adjustment.*** Pursuant to subsection (d)(1) of the Act, the amount of the adjustment required under this paragraph for depreciation sustained before March 1, 1913, which is attributable to a particular kind or class of retirement-straight line property held by the taxpayer on its 1956 adjustment date shall be made with respect to that kind or class of such property. If the adjustment required under this paragraph for depreciation sustained before March 1, 1913, is attributable to retirement-straight property of a particular kind or class no longer held by the taxpayer on its 1956 adjustment date, then the part of the adjustment to be allocated to any retirement-straight line property held by the taxpayer on its 1956 adjustment date shall be that amount which bears the same ratio to the adjustment as the unadjusted basis of the property so held bears to the entire unadjusted basis of all retirement-straight line property held by the taxpayer on its 1956 adjustment date.

(c) ***Adjustment for part of terms-letter reserve applicable to property disposed of on or after changeover date and before 1956 adjustment date.*** Pursuant to subsection (d)(2) of the Act, an adjustment to the basis of retirement-straight line property held by the taxpayer on its 1956 adjustment date shall be made as of that date for that part of the terms-letter reserve which was applicable to any retirement-straight line property disposed of by sale, casualty, or abnormal retirement in the nature of special obsolescence, but only if the sale occurred in, or a deduction by reason of such casualty or abnormal retirement was allowed for Federal income-tax purposes for a period on or after the changeover date and before the taxpayer's 1956 adjustment date. This paragraph shall apply even though, in computing the adjusted basis of the property

for purposes of determining gain or loss on the sale, casualty, or abnormal retirement, the basis of the retirement-straight line property was not reduced by the part of the terms-letter reserve applicable to the property. If necessary, the adjustment required by this paragraph shall be allocated, in the manner prescribed in paragraph (b)(4) of this section, among all retirement-straight line property held by the taxpayer on its 1956 adjustment date.

(d) ***Adjustment for depreciation allowable under the terms-letter for periods on and after the changeover date and before the 1956 adjustment date.*** Pursuant to subsection (d)(3) of the Act, an adjustment to the basis of retirement-straight line property held by the taxpayer on its 1956 adjustment date shall be made as of that date for the entire amount of depreciation allowable under the terms-letter for all periods on and after the changeover date and before the taxpayer's 1956 adjustment date. This adjustment shall include all such depreciation allowable with respect to any retirement-straight line property which was disposed of on or after the changeover date and before the 1956 adjustment date.

(e) ***Illustration of basis adjustments required for taxable years beginning on or after the 1956 adjustment date.*** The application of this section may be illustrated by the following example, which is based upon the assumption that multiple asset accounts are used:

Example. (1) Assume that on its changeover date, January 1, 1943, the taxpayer or its predecessor held retirement-straight line property with an unadjusted cost basis of $10,000. The terms-letter reserve established as of January 1, 1943, with respect to such property was $3,000. Depreciation sustained before March 1, 1913, on retirement-straight line property held on that date by the taxpayer or its predecessor, for which cost was or is claimed as basis, amounts to $800. Of this total depreciation sustained before March 1, 1913, $200 is attributable to retirement-straight line property retired before January 1, 1943, under circumstances requiring the adjustment under paragraph (b)(2) of this section, and $600 is attributable to retirement-straight line property held on January 1, 1943, by the taxpayer or its predecessor. On December 31, 1954, retirement-straight line property costing $1,500 was permanently retired under circumstances giving rise to an abnormal retirement in the nature of special obsolescence. The terms-letter reserve applicable to this retired property was $450, of which $120 represents depreciation sustained before March 1, 1913. On December 31, 1954, retirement-straight line property costing $1,000 was also permanently retired under circumstances giving rise to a normal retirement. None of the property retired on December 31, 1954, had any market or salvage value on that date. Depreciation allowable under the terms-letter on retirement-straight line property for all periods on and after January 1, 1943, and before January 1, 1956 (the taxpayer's 1956 adjustment date), amounts to $2,155, of which $345 is applicable to the property retired as an abnormal retirement.
(2) The reserve for depreciation as of January 1, 1956, contains a credit balance of $3,360, determined as follows but without regard to the Act:

(i) Credits to reserve:

Terms-letter reserve as of January 1, 1943	$3,000
Depreciation allowable under terms-letter from January 1, 1943, to December 31, 1955	2,155

Balance		5,155
(ii) Charges to reserve:		
Part of terms-letter reserve applicable to property abnormally retired	$450	
Depreciation applicable to property abnormally retired and allowable from January 1, 1943, to December 31, 1954	345	
Adjustment for normal retirement	1,000	
		$1,795
(iii) Balance as of January 1, 1956		3,360

(3) The adjusted basis on January 1, 1956, of the retirement-straight line property held by the taxpayer on that date is $6,010, determined as follows and in accordance with this section:

(i) Asset account:		
Unadjusted cost on January 1, 1943		$10,000
Less:		
Adjustment for abnormal retirement	$1,500	
Adjustment for normal retirement	1,000	
		2,500
Balance as of January 1, 1956		7,500
(ii) Credits to reserve for depreciation:		
Depreciation sustained before March 1, 1913, on—		
Property retired before January 1, 1943		200
Property held on January 1, 1943	$600	
Less part of such depreciation sustained on property abnormally retired on December 31, 1954	120	
		480
Part of terms-letter reserve applicable to property abnormally retired on December 31, 1954 (including $120 depreciation sustained before March 1, 1913)		450
Depreciation allowable under terms-letter from January 1, 1943, to December 31, 1955		2,155
Total Credits		3,285
(iii) Charges to reserve for depreciation:		
Part of terms-letter reserve applicable to property abnormally retired		450
Depreciation applicable to property abnormally retired and allowable from January 1, 1943, to December 31, 1954		345
Adjustment for normal retirement		1,000
Total charges		1,795
(iv) Balance in reserve for depreciation:		
Total credits		3,285

Total charges	1,795
Balance as of January 1, 1956	1,490
(v) Adjusted basis of property:	
Balance in asset account	7,500
Balance in reserve for depreciation	1,490
Adjusted basis as of January 1, 1956	6,010

(4) The following adjustments to the reserve determined under subparagraph (2) of this paragraph may be made in order to arrive at the reserve determined under subparagraph (3)(iv) of this paragraph:

(i) Credit balance in reserve, as determined under subparagraph (2) of this paragraph		$3,360
(ii) Credit adjustments:		
Depreciation sustained before March 1, 1913, on—		
Property retired before January 1, 1943	$200	
Property held on January 1, 1943	480	
Part of terms-letter reserve applicable to property abnormally retired on December 31, 1954	450	
		1,130
Balance		4,490
(iii) Debit adjustment:		
Terms-letter reserve as of January 1, 1943		3,000
(iv) Credit Balance in reserve, as determined under subparagraph (3)(iv) of this paragraph		1,490

(5) The $6,010 adjusted basis as of January 1, 1956, of the retirement-straight line property held by the taxpayer on that date is to be recovered over the estimated remaining useful life of that property. The remaining useful life of the property will be reviewed regularly, and appropriate adjustments in the rates will be made as necessary in order to spread the remaining cost less estimated salvage over the estimated remaining useful life of the property. See § 1.167(a)-1.

§ 1.9001-3 Basis adjustments for taxable years between changeover date and 1956 adjustment date.

(a) *In general.*

(1) Subsection (e) of the Act provides the adjustments required to be made in determining the adjusted basis of any retirement-straight line property as of any time on or after the changeover date and before the taxpayer's 1956 adjustment date. This adjusted basis shall be used for all purposes of the Internal Revenue Code of 1939 and the Internal Revenue Code of 1954 for taxable years beginning on or after the changeover date and before the taxpayer's 1956 adjustment date, except as provided

in subparagraph (4) of this paragraph. The adjustments so required, which are set forth in paragraphs (b) and (c) of this section, shall not be used in determining the adjusted basis of property for taxable years beginning before the changeover date or on or after the taxpayer's 1956 adjustment date.

(2) In order to arrive at the adjusted basis as of any specific date occurring on or after the changeover date and before the 1956 adjustment date, the taxpayer shall start with the unadjusted basis of all retirement-straight line property held on the changeover date by the taxpayer or its predecessor and shall, as of that specific date and with respect to both the asset and reserve accounts,

(i) make the adjustments prescribed by this section and subsection (e) of the Act and

(ii) also make those adjustments required, in accordance with the method of accounting regularly used, for additions, retirements, and other dispositions of property. For an illustration of adjustments required in accordance with the method of accounting regularly used, see the example in paragraph (d) of this section.

(3) The adjustments required by subsection (e) of the Act shall be made in lieu of the adjustments for depreciation otherwise required by section 1016(a) (2) and (3) of the Code and by the corresponding provisions of prior revenue laws.

(4) Although this section, and subsection (e) of the Act, shall apply in determining the excess-profits tax, they shall not apply in determining adjusted basis for the purpose of computing equity capital for any day under section 437(c) (relating to the Excess Profits Tax Act of 1950) (64 Stat. 1137) of the Internal Revenue Code of 1939. For the adjustments to be made in computing equity capital under such section, see paragraph (c) of § 1.9001-4.

(b) ***Adjustment for terms-letter reserve.*** Pursuant to subsection (e)(1) of the Act, the basis of any retirement-straight line property shall be adjusted, as of any specific applicable date occurring on or after the changeover date and before the 1956 adjustment date, for the amount of the terms-letter reserve applicable to such property.

(c) ***Adjustment for depreciation allowable under the terms-letter.*** Pursuant to subsection (e)(2) of the Act, the basis of any retirement-straight line property shall be adjusted, as of any specific applicable date occurring on or after the changeover date and before the 1956 adjustment date, for depreciation applicable to such property and allowable under the terms-letter.

(d) ***Illustration of basis adjustments required for taxable years beginning on or after the changeover date and before the 1956 adjustment date.*** The application of this section may be illustrated by the following example, which is based upon the assumption that multiple asset accounts are used:

> *Example.* (1) The facts are assumed to be the same as those in the example under paragraph (e) of § 1.9001-2, except that the adjusted basis of retirement-straight line property is determined as of January 1, 1955, and the depreciation allowable under the terms-letter from the changeover date to December 31, 1954, is $2,100.

(2) The adjusted basis on January 1, 1955, of the retirement-straight line property held by the taxpayer on that date is $4,195, determined as follows and in accordance with this section:

(i) Asset account:		
Unadjusted cost on January 1, 1943		$10,000
Less:		
Adjustment for abnormal retirement	$1,500	
Adjustment for normal retirement	1,000	
		2,500
Balance as of January 1, 1955		7,500
(ii) Credits to reserve for depreciation:		
Entire terms-letter reserve as of January 1, 1943		3,000
Depreciation allowable under terms-letter from January 1, 1943, to December 31, 1954		2,100
Total credits		5,100
(iii) Charges to reserve for depreciation:		
Part of terms-letter reserve applicable to property abnormally retired on December 31, 1954		450
Depreciation applicable to property abnormally retired and allowable from January 1, 1943, to December 31, 1954		345
Adjustment for normal retirement		1,000
Total charges		1,795
(iv) Balance in reserve for depreciation:		
Total credits		5,100
Total charges		1,795
Balance as of January 1, 1955		3,305
(v) Adjusted basis of property:		
Balance in asset account		7,500
Balance in reserve for depreciation		3,305
Adjusted basis as of January 1, 1955		4,195

§ 1.9001-4 Adjustments required in computing excess-profits credit.

(a) ***In general.*** Subsection (f) of the Act provides adjustments required to be made in computing the excess-profits credit for any taxable year under the Excess Profits Tax Act of 1940 (54 Stat. 975) or under the Excess Profits Tax Act of 1950 (64 Stat. 1137). These adjustments are set forth in paragraphs (b) and (c) of this section, and they shall apply notwithstanding the terms-letter.

(b) ***Equity invested capital.***

(1) Pursuant to subsection (f)(1) of the Act, in determining equity invested capital for any day of any taxable year under section 458 (relating to the Excess Profits Tax Act of 1950) or section 718 (relating to the Excess Profits Tax Act of 1940) of the Internal Revenue Code of 1939, the accumulated earnings and profits as of the changeover date, and as of the beginning of each taxable year thereafter, shall be reduced by the depreciation sustained before March 1, 1913, on all

retirement-straight line property held on March 1, 1913, by the taxpayer or a predecessor for which cost was or is claimed as basis and which was held on the changeover date by the taxpayer or a predecessor.

(2) For the computation of accumulated earnings and profits in determining equity invested capital, see 26 CFR (1941 Supp.) 30.718-2, as amended by Treasury Decision 5299, approved October 1, 1943, 8 FR 13451, C.B. 1943, 747 (Regulations 109); 26 CFR (1943 Cum. Supp.) 35.718-2 (Regulations 112); and 26 CFR (1939) 41.458-4 (Regulations 130).

(c) ***Equity capital.***

(1) Pursuant to subsection (f)(2) of the Act, in determining the adjusted basis of assets for the purpose of computing equity capital for any day under section 437(c) (relating to the Excess Profits Tax Act of 1950) of the Internal Revenue Code of 1939, the basis of the assets which enter into the computation shall also be reduced by:

(i) Depreciation sustained before March 1, 1913, on all retirement-straight line property held on March 1, 1913, by the taxpayer or a predecessor for which cost was or is claimed as basis and which was:

(*a*) Retired before the changeover date by the taxpayer or a predecessor, or

(*b*) Held on the changeover date by the taxpayer or a predecessor and also held as of the beginning of the day for which the equity capital is being determined; and

(ii) All depreciation applicable to the assets which enter into the computation and allowable under the terms-letter for all periods on and after the changeover date and before the taxable year for which the excess-profits credit is being computed.

(2) The adjustment required to be made by subparagraph (1)(i)(*a*) of this paragraph as of the beginning of the day for which the equity capital is being determined shall be made in accordance with the conditions and limitation described in paragraph (b)(2) of § 1.9001-2.

(3) For the determination of equity capital under section 437(c) of the Internal Revenue Code of 1939, see 26 CFR (1939) 40.437-5 (Regulations 130).

DEALER RESERVE INCOME ADJUSTMENT ACT OF 1960

§ 1.9002 Statutory provisions; Dealer Reserve Income Adjustment Act of 1960 (74 Stat. 124).

Section 1. *Short title.* This Act may be cited as the “Dealer Reserve Income Adjustment Act of 1960”.

Sec. 2. *Persons to whom this Act applies.* This Act shall apply to any person who, for his most recent taxable year ending on or before June 22, 1959:

(1) Computed, or was required to compute, taxable income under an accrual method of accounting.

(2) Treated any dealer reserve income, which should have been taken into account (under the accrual method of accounting) for such taxable year, as accruable for a subsequent taxable year, and

(3) Before September 1, 1960, makes an election under section 3(a) or 4(a) of this Act.

Sec. 3. *Election to have section 481 apply—(a) General rule.* If:

(1) For the year of the change (determined under subsection (b)), the treatment of dealer reserve income by any person to whom this Act applies is changed to a method proper under the accrual method of accounting (whether or not such person initiated the change),

(2) Such person makes an election under this subsection, and

(3) Such person does not make the election provided by section 4(a),

then, for purposes of section 481 of the Internal Revenue Code of 1954, the change described in paragraph (1) shall be treated as a change in method of accounting not initiated by the taxpayer.

(b) *Year of change, etc.* In applying section 481 of the Internal Revenue Code of 1954 for purposes of this section, the "year of the change" in the case of any person is:

(1) Except as provided in paragraph (2), the first taxable year ending after June 22, 1959, or

(2) The earliest taxable year (whether the Internal Revenue Code of 1954 or the Internal Revenue Code of 1939 applies to such year) for which:

(A) On or before June 22, 1959:

(i) The Secretary of the Treasury or his delegate issued a notice of deficiency, or a written notice of a proposed deficiency, with respect to dealer reserve income, or

(ii) Such person filed with the Secretary or his delegate a claim for refund or credit with respect to dealer reserve income, and

(B) The assessment of any deficiency, or the refund or credit of any overpayment, whichever is applicable, was not, on June 21, 1959, prevented by the operation of any law or rule of law.

For purposes of this section, section 481 of such Code shall be treated as applying to any year of the change to which the Internal Revenue Code of 1939 applies.

Sec. 4. *Election to have section 481 not apply; payment in installments*—(a) *General rule.* If a person to whom this Act applies makes an election under this subsection, then for purposes of Chapter 1 of the Internal Revenue Code of 1954 (and the corresponding provisions of prior law) a change in the treatment of dealer reserve income to a method proper under the accrual method of accounting shall be treated as not a change in method of accounting in respect of which section 481 of the Internal Revenue Code of 1954 applies. Any election under this subsection shall apply to all taxable years ending on or before June 22, 1959 (whether the provisions of the Internal Revenue Code of 1954 or the corresponding provisions of prior law apply), for which the assessment of any deficiency, or for which refund or credit of any overpayment, whichever is applicable, was not, on June 21, 1959, prevented by the operation of any law or rule of law.

(b) *Election to pay tax in installments*—(1) *Eligibility.* If the net increase in tax (as defined in paragraph (2)) which results solely from the effect of the election provided by subsection (a) exceeds $2,500, then the taxpayer may elect (at the time the election is made under subsection (a)) to pay in two or more (but not to exceed 10) equal annual installments any portion of such net increase which (on the date of such election) is unpaid.

(2) *Net increase in tax defined.* For purposes of this section, the term "net increase in tax" means the amount (if any) by which:

(A) The sum of the increases in tax (including interest) for all taxable years to which the election applies and which is attributable to the election, exceeds

(B) The sum of the decreases in tax (including interest) for all taxable years to which the election applies and which is attributable to the election.

For purposes of this paragraph, interest for the period before the date of the election shall be computed as provided in Chapter 67 of the Internal Revenue Code of 1954 (or the corresponding provisions of prior revenue laws).

(c) *Due date for installments.* If an election is made under subsection (b), the first installment shall be paid on or before the date prescribed by section 6151(a) of the Internal Revenue Code of 1954 for payment of the tax for the taxable year in which the election was made, and each succeeding installment shall be paid on or before the date which is one year after the date prescribed by this subsection for payment of the preceding installment.

(d) *Effect of subsequent redetermination of tax*—(1) *Redetermination.* If:

(A) The taxpayer makes an election under subsection (b), and

(B) There is a redetermination of the taxpayer's tax for any taxable year to which the election provided by subsection (a) applies,

then the net increase in tax (as defined in subsection (b)(2) shall be redetermined.

(2) *Effect of increase.* If the redetermination described in paragraph (1)(B) results in an increase in the net increase in tax (as defined in subsection (b)(2)), the resulting increase shall be prorated to all the installments. The part of such resulting increase so prorated to any installment the date for payment of which has not arrived shall be collected at the same time as, and as a part of, such installment. The part of such resulting increase so prorated to any installment the date for payment of which has arrived shall be paid upon notice and demand from the Secretary of the Treasury or his delegate.

(3) *Effect of decrease.* For treatment of a decrease in the net increase in tax as the result of a redetermination described in paragraph (1)(B), see section 6403 of the Internal Revenue Code of 1954 (relating to overpayment of installment).

(e) *Suspension of interest*—(1) *In general.* If an election under subsection (a) applies and there is a net increase in tax (as defined in subsection (b)(2)), no interest shall be imposed on any underpayment (and no interest shall be paid on any overpayment) attributable to such election for the period beginning on the date of such election and ending on the date prescribed by section 6151(a) of the Internal Revenue Code of 1954 for payment of the tax for the taxable year in which the election was made.

(2) *No interest during installment period.* If an election under subsection (b) applies, no interest shall be imposed for the period on or after the date fixed for payment of the first installment unless payment of unpaid installments is accelerated under subsection (f) or (g).

(3) *Interest where payment is accelerated.* If payment is accelerated under subsection (f) or (g), interest determined in accordance with the provisions of section 6601 of the Internal Revenue Code of 1954 on the entire unpaid tax shall be payable:

(A) If payment is accelerated under subsection (f), from the date of notice and demand provided by such subsection to the date such tax is paid, or

(B) If payment is accelerated under subsection (g), from the date fixed for paying the unpaid installment to the date such tax is paid.

(f) *Termination of installment payment privilege.* The extension of time provided by this section for payment of tax shall cease to apply, and any unpaid installments shall be paid upon notice and demand from the Secretary of the Treasury or his delegate, if:

(1) In the case of a taxpayer who is an individual, he dies or ceases to engage in a trade or business,

(2) In the case of a taxpayer who is a partner, the entire interest of such partner is transferred or liquidated or the partnership terminates, or

(3) In the case of a taxpayer which is a corporation, the taxpayer ceases to engage in a trade or business, unless the unpaid portion of the tax payable in installments is required to be taken into account by the acquiring corporation under section 5(d).

(g) *Failure to pay installment.* If any installment under this section is not paid on or before the date fixed for its payment by this section (including any extension of time for payment of such installment), the unpaid installments shall be paid upon notice and demand from the Secretary of the Treasury or his delegate.

(h) *Suspension of running of periods of limitation.* The running of the periods of limitation provided by section 6502 of the Internal Revenue Code of 1954 (or corresponding provision of prior law) for the collection of any amount of tax payable in installments under this section shall be suspended for the period of any extension of time for payment granted under this section.

Sec. 5. *Definitions; special rules*—(a) *Dealer reserve income.* For purposes of this Act, the term “dealer reserve income” means:

(1) That part of the consideration derived by any person from the sale or other disposition of customers' sales contracts, notes, and other evidences of indebtedness (or derived from customers' finance charges connected with such sales or other dispositions) which is:

(A) Attributable to the sale by such person to such customers, in the ordinary course of his trade or business, of real property or tangible personal property, and

(B) Held in a reserve account, by the financial institution to which such person disposed of such evidences of indebtedness, for the purpose of securing obligations of such person or of such customers, or both; and

(2) That part of the consideration:

(A) Derived by any person from a sale described in paragraph (1)(A) in respect of which part or all of the purchase price of the property sold is provided by a financial institution to or for the customer to whom such property is sold, or

(B) Derived by such person from finance charges connected with the financing of such sale,

which is held in a reserve account by such financial institution for the purpose of securing obligations of such person or of such customer, or both.

(b) *Financial institution.* For purposes of this Act, the term “financial institution” means any person regularly engaged in the business of acquiring evidences of indebtedness of the kind described in subsection (a)(1), or of financing sales of the kind described in subsection (a)(2), or both.

(c) *Other terms; application of other laws.* Except where otherwise distinctly expressed or manifestly intended, terms used in this Act shall have the same meaning as when used in the Internal Revenue Code of 1954 and all provisions of law shall apply with respect to this Act as if this Act were a part of such Code.

(d) *Acquiring corporation.* In the case of the acquisition of assets of a corporation by another corporation in a distribution or transfer described in section 381(a) of the Internal Revenue Code of 1954, the acquiring corporation shall, for purposes of this Act, be treated as if it were the distributor or transferor corporation.

(e) *Statutes of limitations*—(1) *Extension of period for assessment and refund or credit.* For purposes of applying sections 3 and 4 of this Act, if the assessment of any deficiency, or the refund or credit of any overpayment, for any taxable year was not prevented on June 21, 1959, by the operation of any law or rule of law, but would be so prevented prior to September 1, 1961, the period within which such assessment, or such refund or credit, may be made shall not expire prior to September 1, 1961. An election by a taxpayer under section 3 or 4 of this Act shall be considered as a consent to the application of the provisions of this subsection.

(2) *Years closed by closing agreement or compromise.* For purposes of this Act, if the assessment of any deficiency, or the refund or credit of any overpayment, for any taxable year is prevented on the date of an election under section 3 or 4 of this Act by the operation of the provisions of Chapter 74 of the Internal Revenue Code of 1954 (relating to closing agreements and compromises) or by the corresponding provisions of the Internal Revenue Code of 1939, such assessment, or such refund or credit, shall be considered as having been prevented on June 21, 1959.

(f) *Regulations.* The Secretary of the Treasury or his delegate shall prescribe such regulations as may be necessary to carry out the purposes of this Act, including regulations relating to:

(1) The application of the provisions of this Act in the case of partnerships, and

(2) The manner in which the elections provided by this Act are to be made.

[T.D. 6490, 25 FR 8369, Sept. 1, 1960]

§ 1.9002-1 Purpose, applicability, and definitions.

(a) ***In general.*** The Dealer Reserve Income Adjustment Act of 1960 (74 Stat. 124) contains transitional provisions relating to adjustments to income resulting from a change in the income tax treatment of dealer reserve income. The purpose of the Act is to provide eligible taxpayers who elect to have its provisions apply with two alternatives for accounting for the adjustments to income resulting from a change to a proper method of reporting dealer reserve income. The Act also provides certain taxpayers with an election to pay in installments any net increase in tax. Eligible taxpayers must make any election under the provisions of the Act prior to September 1, 1960. If any election is made, then the applicable provisions of the Act and §§ 1.9002-1 to 1.9002-8, inclusive, shall apply.

(b) ***Eligibility to elect.*** In order to be eligible to make any of the elections provided by the Act, a taxpayer must have, for his most recent taxable year ending on or before June 22, 1959,

(1) computed, or been required to compute, taxable income under an accrual method of accounting, and

(2) treated dealer reserve income (or portions thereof) which should have been taken into account (under the accrual method of accounting) for such most recent taxable year as accruable for a subsequent taxable year. Thus, the elections provided by the Act are not available to a person who, for his most recent taxable year ending on or before June 22, 1959, reported dealer reserve income under a method proper under the accrual method of accounting or who was not required to compute taxable income under the accrual method of accounting. An election may be made even though the taxpayer is litigating his liability for income tax based upon his treatment of dealer reserve income, whether in The Tax Court of the United States or any other court, and an election filed by a taxpayer who is litigating his liability for income tax based upon his treatment of dealer reserve income does not constitute a waiver of his right to continue pending litigation until final judicial determination. He must, however, comply with the provisions of the Act and the regulations thereunder.

(c) ***Definitions.*** For purposes of the Act and §§ 1.9002-1 to 1.9002-8, inclusive:

(1) ***The Act.*** The term *the Act* means the Dealer Reserve Income Adjustment Act of 1960 (74 Stat. 124).

(2) ***Dealer reserve income.*** The term *dealer reserve income* means:

(i) That part of the consideration derived by any person from the sale or other disposition of customers' sales contracts, notes, and other evidences of indebtedness (or derived from customers' finance charges connected with such sales or other dispositions) which is:

(*a*) Attributable to the sale by such person to such customers, in the ordinary course of his trade or business, of real property or tangible personal property, and

(*b*) Held in a reserve account, by the financial institution to which such person disposed of such evidences of indebtedness, for the purpose of securing obligations of such person or of such customers, or both; and

(ii) That part of the consideration:

(*a*) Derived by any person from a sale described in subdivision (i)(*a*) of this subparagraph in respect of which part or all of the purchase price of the property sold is provided by a financial institution to or for the customer to whom such property is sold, or

(*b*) Derived by such person from finance charges connected with the financing of such sale, which is held in a reserve account by such financial institution for the purpose of securing obligations of such person or of such customer, or both. Thus, the term includes amounts held in a reserve account by a financial institution in transactions in which the customer becomes obligated to the institution as well as such amounts so held by a financial institution in transactions in which the taxpayer is the obligee on the contract, note, or other evidence of indebtedness. For purposes of the definition of the term "dealer reserve income" it is immaterial whether or not the taxpayer guarantees the customer's obligation in excess of the reserve retained by the financial institution. The term does not include the consideration derived from transactions relating to the sale of intangible property such as stocks, bonds, copyrights, patents, etc. Further, the term does not include consideration derived by the taxpayer from transactions relating to the sale of property by a person not the taxpayer or to casual sales of property not in the ordinary course of the taxpayer's trade or business.

(3) ***Financial institution.*** The term *financial institution* means any person regularly engaged in the business of acquiring evidences of indebtedness of the kind described in section 5(a)(1) of the Act, or of financing sales of the kind described in section 5(a)(2) of the Act, or both. It thus includes banking institutions, finance companies, building and loan associations, and other similar type organizations, as well as an individual or partnership regularly engaged in the described business.

(4) ***Taxpayer.*** The term *taxpayer* means any person to whom the Act applies.

(5) ***Other terms.*** All other terms which are not specifically defined shall have the same meaning as when used in the Code except where otherwise distinctly expressed or manifestly intended.

[T.D. 6490, 25 FR 8371, Sept. 1, 1960]

§ 1.9002-2 Election to have the provisions of section 481 of the Internal Revenue Code of 1954 apply.

(a) ***In general.*** Section 3(a) of the Act provides that if the income tax treatment of dealer reserve income by the taxpayer is changed (whether or not such change is initiated by the taxpayer) to a proper method under the accrual method of accounting, then the taxpayer may elect to have such change treated as a change in method of accounting not initiated by the taxpayer to which the provisions of section 481 of the Code apply. This election may be made only when the alternative election under section 4(a) of the Act has not been exercised.

(b) ***Year of change.*** Where an election has been made under section 3(a) of the Act to have section 481 of the Code apply, then for purposes of applying section 481 of the Code the year of change shall be determined in accordance with the provisions of section 3(b) of the Act. Section 3(b) provides that the year of change is the earlier of

(1) the first taxable year ending after June 22, 1959, or

(2) the earliest taxable year for which, on or before June 22, 1959,

(i) There was issued a notice of deficiency or written notice of a proposed deficiency attributable to the erroneous treatment of dealer reserve income, or

(ii) The taxpayer filed a claim for refund or credit with respect to the treatment of such income,

and in respect of which the assessment of any deficiency, or the refund or credit of any overpayment, was not prevented on June 21, 1959, by the operation of any law or rule of law. The written notice of proposed deficiency includes a 15- or 30-day letter issued under established procedure or other similar written notification.

(c) ***Application to pre-1954 Code years.*** If the earliest year described in paragraph (b) of this section is a year subject to the Internal Revenue Code of 1939 in respect of which assessment of any deficiency or refund or credit of any overpayment was not prevented on June 21, 1959, by the operation of any law or rule of law, section 481 of the Internal Revenue Code of 1954 shall be treated as applying in the same manner it would have applied had it been enacted as part of the Internal Revenue Code of 1939.

(d) ***Examples.*** The operation of this section in determining the year of change may be illustrated by the following examples:

Example 1. D, a taxpayer on the calendar year basis who employs the accrual method of accounting, voluntarily changed to the proper method of accounting for dealer reserve income for the taxable year 1959. A statutory notice of deficiency, however, was issued prior to June 23, 1959, relating to the erroneous treatment of such income for the taxable year 1956, which was the earliest taxable year in respect of which assessment of a deficiency or credit or refund of an overpayment was not prevented on June 21, 1959. Prior to September 1, 1960, D properly exercises his election under section 3 of the Act to have the change in the treatment of dealer reserve income treated as a change in method of accounting not initiated by the taxpayer to which section 481 of the Code applies. Under these facts, 1956 is the year of the change for purposes of applying section 481. Accordingly, the net amount of any adjustment found necessary as a result of the change in the treatment of dealer reserve income which is attributable to taxable years subject to the 1954 Code shall be taken into account for the year of change in accordance with section 481. The net amount of the adjustments attributable to pre-1954 Code years is to be disregarded. The income of each taxable year succeeding the year of change in respect of which the assessment of any deficiency or refund or credit of any overpayment is not prevented will be recomputed under the proper method of accounting initiated by the change.

Example 2. Assume the same facts as set forth in example (1), except that no notice of a proposed deficiency of any type has been issued, and assume further that no claim for refund has been filed. Since there was no earlier year open on June 21, 1959, for which the taxpayer either was notified of a proposed deficiency attributable to the erroneous treatment of dealer reserve income or for which he had filed a claim for refund or credit with respect to the treatment of such income, the year of change is 1959, the first taxable year ending after June 22, 1959. Accordingly, the net amount of any adjustment found necessary as a result of the change in the treatment of dealer reserve income

which is attributable to taxable years subject to the 1954 Code shall be taken into account for the year of the change in accordance with section 481. The net amount of the adjustments attributable to pre-1954 Code years is to be disregarded.

Example 3. Assume the same facts as set forth in example (1), except that a refund claim specifying adjustments relative to dealer reserve income was timely filed for the taxable year 1951, which was the earliest taxable year for which a refund or credit of an overpayment or assessment of a deficiency was not prevented on June 21, 1959. Under this factual situation, the year of change for purposes of applying section 481 would be 1951. Section 481 would be applied to 1951 and be given effect for that year in the same manner as it would have applied had it been enacted as a part of the 1939 Code and as if the change to the proper method of accounting had not been initiated by the taxpayer. Any adjustment with regard to dealer reserve income attributable to pre-1951 years is disregarded. The income of each taxable year succeeding the year of change in respect of which the assessment of any deficiency or refund or credit of any overpayment is not prevented will be recomputed under the proper method of accounting initiated by the change.

[T.D. 6490, 25 FR 8371, Sept. 1, 1960]

§ 1.9002-3 Election to have the provisions of section 481 of the Internal Revenue Code of 1954 not apply.

Section 4(a) of the Act provides that in the treatment of dealer reserve income by the taxpayer is changed to a method proper under the accrual method of accounting, then the taxpayer may elect to have such change treated as not a change in method of accounting to which the provisions of section 481 of the Internal Revenue Code of 1954 apply. This election shall apply to all taxable years ending on or before June 22, 1959, for which the assessment of any deficiency, or for which refund or credit of any overpayment, was not prevented on June 21, 1959, by the operation of any law or rule of law. This election may be made only if the alternative election under section 3(a) of the Act has not been exercised. If an election is made under section 4(a) of the Act, taxable income (or net income in the case of a taxable year to which the Internal Revenue Code of 1939 applies) shall be recomputed under a proper method of accounting for dealer reserve income for each taxable year to which the election applies, without regard to section 481.

[T.D. 6490, 25 FR 8372, Sept. 1, 1960]

§ 1.9002-4 Election to pay net increase in tax in installments.

(a) ***Election.*** If an election is made under section 4(a) of the Act and if the net increase in tax determined in accordance with paragraph (b) of this section exceeds $2,500, the taxpayer may also make an election under section 4(b) of the Act prior to September 1, 1960, to pay any portion of such net increase in tax, unpaid on the date of the election, in 2 or more, but not to exceed 10, equal annual installments. If the taxpayer making the election under section 4(a) of the Act is a partnership or a small business corporation electing under Subchapter S, Chapter 1 of the Code, the determination as to whether the net increase in tax exceeds $2,500 shall be made separately as to each partner or shareholder, respectively, with regard to his individual liability. Thus, if a partnership makes an election under section 4(a) of the Act, and partners A and B had a net increase in tax of $3,000 and $2,000, respectively, as a result of dealer reserve income adjustments to partnership income, partner A may elect under section 4(b) of the Act to pay the net increase in 2 or more, but not exceeding 10, equal annual installments to the extent that such tax was unpaid on the date of the election. Partner B may not make the election since his net increase in tax does not exceed $2,500.

(b) *Net increase in tax.*

(1) The term "net increase in tax" means the amount by which the sum of the increases in tax (including interest) for all taxable years to which the election under section 4(a) of the Act applies and which is attributable to the election exceeds the sum of the decreases in tax (including interest) for all taxable years to which the election under such section applies and which is attributable to the election.

(2) In determining the net increase in tax, the tax and interest for each taxable year to which the election applies is computed by taking into account all adjustments necessary to reflect the change to the proper treatment of dealer reserve income. If the computation results in additional tax for a taxable year, then interest is computed under section 6601 of the Code (or corresponding provisions of prior law) on such additional tax for the taxable year involved from the last date prescribed for payment of the tax for such taxable year to the date the election is made. The interest so computed is then added to the additional tax determined for such taxable year. The sum of these two items (tax plus interest) represents the increase in tax for such taxable year. If the computation of the tax after taking into account the appropriate dealer reserve income adjustments results in a reduction in tax for any taxable year to which the election applies, interest under section 6611 of the Code (or corresponding provisions of prior law) is computed from the date of the overpayment of the tax for such year to the date of the election. The amount of the interest so computed is then added to the reduction in tax to determine the total decrease in tax for such year. The net increase in tax is then determined by adding together the total increases in tax for each year to which the election applies and from the resulting total subtracting the sum of the total decreases in tax for each year. If the total increases in tax for all such years do not exceed the total decreases in tax, there is no net increase in tax for purposes of section 4(b) of the Act. For purposes of determining the net increase in tax, net operating losses affecting the computation of tax for any prior taxable year not otherwise affected shall be taken into account.

(c) *Time for paying installments.* If the election under this section is made to pay the unpaid portion of the net increase in tax in installments, the first installment shall be paid on or before the date prescribed by section 6151(a) of the Code for payment of the tax for the taxable year in which such election is made. Each succeeding installment shall be paid on or before the date which is one year after the date prescribed for the payment of the preceding installment.

(d) *Termination of installment privilege* —

(1) *For nonpayment of installment.* The extension of time provided by section 4(b) of the Act for payment of the net increase in tax in installments shall terminate, and any unpaid installments shall be paid upon notice and demand from the district director if any installment under such section is not paid by the taxpayer on or before the date fixed for its payment, including any extension of time for payment of any such installment.

(2) *For other reasons.* The extension of time provided by section 4(b) of the Act for payment of the net increase in tax in installments shall terminate, and any unpaid installments shall be paid upon notice and demand from the district director if:

(i) In the case of an individual, he dies or ceases to engage in any trade or business,

(ii) In the case of a partner, his entire interest in the partnership is transferred or liquidated or the partnership terminates, or

(iii) In the case of a corporation, it ceases to engage in a trade or business, unless the unpaid portion of the tax payable in installments is required to be taken into account by an acquiring corporation under section 5(d) of the Act.

The installment privilege is not terminated under this subparagraph even though the taxpayer terminates the trade or business in respect of which the dealer reserve income is attributable provided the taxpayer continues in a trade or business. Further, the privilege is not terminated by a transfer of a part of a partnership interest so long as the partner retains any interest in the partnership. Also, the privilege is not terminated by a transaction falling within the provisions of section 381(a) of the Code if, under section 5(d) of the Act, the acquiring corporation is required to take into account the unpaid portion of the net increase in tax. In such a case the privilege may be continued by the acquiring corporation in the same manner and under the same conditions as though it were the distributor or transferor corporation.

(e) ***Redetermination of tax subsequent to exercise of installment election.*** Section 4(d) of the Act provides that where a taxpayer has elected to pay the net increase in tax in installments and thereafter it becomes necessary to redetermine the taxpayer's tax for any taxable year to which the election provided by section 4(a) of the Act applies, then the net increase in tax shall be redetermined. Where the redetermination does not involve adjustments affecting the treatment of dealer reserve income, then the net increase in tax previously computed will not be disturbed. The net increase in tax is limited to the amount of tax computed under section 4(b)(2) of the Act as a result of the change in treatment accorded dealer reserve income. If the redetermination of tax for any taxable year to which the election applies results in an addition to the net increase in tax previously computed, then such addition shall be prorated to all of the installments whether paid or unpaid. The part of the addition, prorated to installments which are not yet due, shall be collected at the same time as, and as a part of, such installments. The part of the addition prorated to installments, the time for payment of which has arrived, shall be paid upon notice and demand from the district director. Under section 4(g) of the Act, failure to make such payment within 10 days after issuance of notice and demand will terminate the installment privilege. The imposition of interest on the addition to the net increase in tax as a result of the redetermination will be determined in the same manner as interest on the previously computed net increase in tax. Thus, no interest will be imposed on the amount of the addition to the net increase in tax prorated to installments not yet due unless the installment privilege is terminated under subsection (f) or (g) of section 4 of the Act. If a reduction in the net increase in tax results from a redetermination of tax for any taxable year to which the election applies, the entire amount of such reduction shall, in accordance with the provisions of section 6403 of the Code (relating to overpayment of installments), be prorated to the installments which are not yet due, resulting in a pro rata reduction in each of such installments. Where the redetermination does not involve adjustments pertaining to dealer reserve income, then any resulting deficiency pertaining to the year to which the election applies will be assessed and collected, in accordance with the applicable provisions of the Code (or corresponding provisions of prior law) without regard to any election made under the Act.

(f) ***Periods of limitation.*** Section 4(h) of the Act provides that where there is an extension of time for payment of tax under the provisions of section 4(b) of the Act, the running of the periods of limitation provided by section 6502 of the Code (or corresponding provisions of prior law) for collection of such tax is suspended for the period of time for which the extension is granted.

[T.D. 6490, 25 FR 8372, Sept. 1, 1960]

§ 1.9002-5 Special rules relating to interest.

(a) ***In general.*** Where an election is made under section 4(a) of the Act interest is computed under section 6601 of the Code (or corresponding provisions of prior law) on any increase in tax attributable to such election for each taxable year involved for the period from the last date prescribed for payment of the tax for such year (determined without regard to any extensions of time for filing the return) through the date preceding the date on which the election is made. Where the election under section 4(a) of the Act results in a decrease in tax for any year to which the election applies, interest is computed in accordance with section 6611 of the Code (or corresponding provisions of prior law) from the date of overpayment through the date preceding the date on which the election is made. Where there is a net increase in tax as a result of the election under section 4(a) of the Act, no interest shall be imposed on any underpayment (and no interest shall be paid on any overpayment) attributable to the dealer reserve income adjustment for any year to which the election applies for the period commencing with the date such election is made and ending on the date prescribed for filing the return (determined without regard to extensions of time) for the taxable year in which the election is made. This rule applies regardless of whether the election under section 4(b) of the Act is made. If there is no net increase in tax, interest on any underpayment or overpayment attributable to the dealer reserve income adjustment for any taxable year to which the election applies for the period commencing with the date of the election shall be determined in accordance with §§ 301.6601-1 and 301.6611-1 of this chapter (Regulations on Procedure and Administration).

(b) ***Installment period*** —

(1) ***Where payment is not accelerated.*** If the election under section 4(b) of the Act is made to pay the net increase in tax in installments, no interest will be imposed on such net increase in tax for the period beginning with the due date fixed under section 4(c) of the Act for the first installment payment and ending with the date fixed under such section for the last installment payment unless payment of the unpaid installments is accelerated under other provisions of the Act. See subsections (f) and (g) of section 4 of the Act.

(2) ***Where payment is accelerated.*** Where payment of the unpaid installments is accelerated because of the termination of the installment privilege, interest will be computed under section 6601 of the Code on the entire unpaid net increase in tax for the applicable period set forth below:

(i) In the case of acceleration under section 4(f) of the Act for reasons other than nonpayment of an installment, from the date of the notice and demand for payment of the unpaid tax to the date of payment; or

(ii) In the case of acceleration under section 4(g) of the Act for nonpayment of an installment, from the date fixed for payment of the installment to the date of payment.

When payment is accelerated under section 4(f) of the Act, however, no interest will be charged where payment of the unpaid installments is made within 10 days of issuance of the notice and demand for such payment.

[T.D. 6490, 25 FR 8373, Sept. 1, 1960]

§ 1.9002-6 Acquiring corporation.

Section 5(d) of the Act provides that for purposes of such Act in the case of the acquisition of the assets of a corporation by another corporation in a distribution or transfer described in section 381(a) of the Code the acquiring corporation shall be treated as if it were the distributor or transferor corporation.

[T.D. 6490, 25 FR 8373, Sept. 1, 1960]

§ 1.9002-7 Statute of limitations.

(a) ***Extension of period for assessment and refund or credit.*** Under section 5(e) of the Act, if an election is made to have the Act apply, and if the assessment of any deficiency, or the refund or credit of any overpayment attributable to the election, for any taxable year to which the Act applies was not prevented on June 21, 1959, by the operation of any law or rule of law (except as provided in paragraph (b) of this section, relating to closing agreements and compromises), but would be so prevented prior to September 1, 1961, the period within which such assessment, or such refund or credit, may be made with respect to such taxable year shall not expire prior to September 1, 1961. An election under either section 3 or 4 of the Act will be considered to be a consent to the extension of the period of limitation for purposes of assessment for any year to which the Act applies. Thus, for example, if, as the result of an election under section 4(a) of the Act, assessment of a deficiency for the taxable year 1955 was not prevented by the statute of limitations, a judicial decision that had become final, or otherwise, on June 21, 1959, but would (except for section 5(e) of the Act) be prevented on a later date, as for instance September 1, 1959, then for purposes of applying section 4 of the Act, assessment may be made at any time prior to September 1, 1961, with respect to such year if the taxpayer made an election under the Act prior to September 1, 1960. Section 5(e) of the Act will, in no event, operate to shorten the period of limitation otherwise applicable with respect to any taxable year.

(b) ***Years closed by closing agreement or compromise.*** For purposes of the Act, if the assessment of any deficiency or a refund or credit of any overpayment for any taxable year was not prevented on June 21, 1959, but is prevented on the date of an election under section 3 or 4 of the Act by the operation of the provisions of chapter 74 of the Code (relating to closing agreements and compromises), assessment, refund, or credit will, nevertheless, be considered as being prevented on June 21, 1959.

[T.D. 6490, 25 FR 8373, Sept. 1, 1960]

§ 1.9002-8 Manner of exercising elections.

(a) ***By whom election is to be made*** —

(1) ***In general.*** Generally, the taxpayer to whom the Act applies will exercise the elections provided therein. In the case of a partnership or a corporation electing under the provisions of subchapter S, chapter 1 of the Code, the election shall be exercised by the persons specified in subparagraphs (2) and (3) of this paragraph, respectively.

(2) ***Partnerships.*** In the case of a partnership, the election under section 3 or 4(a) of the Act shall be exercised by the partnership. If an election is made by the partnership under section 4(a) of the Act, any election under section 4(b) of the Act to pay the net increase in tax in installments shall be made by each partner separately. The determination as to whether the net increase in tax resulting from the election under section 4(a) of the Act exceeds $2,500 shall be made with reference to the increase or decrease in the tax of each partner attributable to the adjustment to his distributive share of the partnership income resulting from the election.

(3) ***Subchapter S corporations.*** In the case of an electing small business corporation under subchapter S, chapter 1 of the Code, the election under section 3 or 4(a) of the Act shall be made by such corporation. An election under section 4(b) of the Act to pay the net increase in tax in installments shall, to the extent the net increase in tax resulting from the election is attributable to adjustments to

income for taxable years for which the corporation was not an electing small business corporation, be made by the corporation. The determination as to whether the net increase in tax for such taxable years exceeds $2,500 shall be made with reference to the increase or decrease in tax of the corporation. Any election under section 4(b) of the Act to pay the net increase in tax in installments shall, to the extent the increase in tax is attributable to years for which the corporation was an electing small business corporation, be made by the shareholders separately. The determination in such a case as to whether the net increase in tax for such taxable years exceeds $2,500 shall be made with reference to the increases or decreases in the tax of each shareholder attributable to the adjustments to taxable income of the electing small business corporation resulting from the election.

(b) *Time and manner of making elections* —

(1) ***In general.*** Any election made under the Act shall be made by the taxpayers described in paragraph (a) of this section before September 1, 1960, by filing a statement with the district director with whom such taxpayer's income tax return for the taxable year in which the election is made is required to be filed. A copy of the statement of election shall be attached to and filed with such taxpayer's income tax return for such taxable year.

(2) ***Election to have section 481 apply.*** An election under section 3 of the Act shall be made in the form of a statement which shall include the following:

(i) A clear indication that an election is being made under section 3 of the Act;

(ii) Information sufficient to establish eligibility to make the election; and

(iii) The year of change as defined in section 3(b) of the Act.

An amended income tax return reflecting the increase or decrease in tax attributable to the election shall be filed for the year of change together with schedules showing how the tax was recomputed under section 481 of the Code. If income tax returns have been filed for any taxable years subsequent to the year of change, amended returns reflecting the proper treatment of dealer reserve income for such years shall also be filed. In the case of partnerships and electing small business corporations under subchapter S, chapter 1 of the Code, amended returns shall be filed by the partnership or electing small business corporation, as well as by the partners or shareholders, as the case may be. Any amended return shall be filed with the office of the district director with whom the taxpayer files his income tax return for the taxable year in which the election is made and, if practicable, on the same date the statement of election is filed, but amended returns shall be filed in no event later than November 30, 1960, unless an extension of time is granted under section 6081 of the Code. Whenever the amended returns do not accompany the statement of election, a copy of the statement shall be submitted with the amended returns.

(3) ***Election not to have section 481 apply.*** An election under section 4(a) of the Act shall be made in the form of a statement which shall include the following:

(i) A clear indication that an election is being made under section 4(a) of the Act;

(ii) Information sufficient to establish eligibility to make the election; and

(iii) The taxable years to which the election applies.

Amended income tax returns reflecting the increase or decrease in tax attributable to the election shall be filed for the taxable years to which the election applies. If income tax returns have been filed for any subsequent taxable years, amended returns reflecting the proper treatment of dealer reserve income for such years shall also be filed. In the case of partnerships and electing small business corporations under subchapter S, chapter 1 of the Code, amended returns shall be filed by the partnership or electing small business corporation, as well as by the partners or shareholders, as the case may be. Any amended return shall be filed with the office of the district director with whom the taxpayer files his income tax return for the taxable year in which the election is made and, if practicable, on the same date the statement of election is filed, but amended returns shall be filed in no event later than November 30, 1960, unless an extension of time is granted under section 6081 of the Code. Whenever the amended returns do not accompany the statement of election, a copy of the statement shall be submitted with the amended return.

(4) ***Election to pay tax in installments.***

(i) Except as otherwise provided in subdivision (ii) of this subparagraph, if the taxpayer making the election under section 4(a) of the Act also desires to make the election under section 4(b) of the Act to pay the increase in tax in installments, then the statement of election shall include the following additional information:

(*a*) A clear indication that an election is also being made under section 4(b) of the Act;

(*b*) A summary of the total increases and decreases in tax, together with interest thereon, in sufficient detail to establish eligibility to make the election; and

(*c*) The number of annual installments in which the taxpayer elects to pay the net increase in tax.

(ii) Where a partnership or electing small business corporation under subchapter S, chapter 1 of the Code, has made an election under section 4(a) of the Act, and any partner or shareholder, as the case may be, desires to make an election under section 4(b) of the Act, a statement of election shall be filed by such partner or shareholder containing the following information:

(*a*) A clear indication that an election is being made under section 4(b) of the Act;

(*b*) A summary of the total increases and decreases in tax, together with interest thereon, of such partner or shareholder in sufficient detail to establish eligibility to make the election;

(*c*) The number of annual installments in which the partner or shareholder elects to pay the net increase in tax; and

(*d*) The office of the district director and the date on which the election under section 4(a) of the Act was filed by such partnership or corporation.

The statement of election under section 4(b) of the Act shall be accompanied by a copy of the statement of election under section 4(a) of the Act made by the partnership or electing small business corporation under subchapter S, chapter 1 of the Code, as the case may be.

(c) ***Effect of election.*** An election made under section 3 or 4 of the Act shall become irrevocable on September 1, 1960, and shall be binding on the taxpayer for all taxable years to which it applies.

[T.D. 6490, 25 FR 8373, Sept. 1, 1960]

PUBLIC DEBT AND TAX RATE EXTENSION ACT OF 1960

Authority: Sections 1.9003 to 1.9003-5 issued under sec. 302(c), 74 Stat. 292, as amended; 26 U.S.C. 613 note.

§ 1.9003 Statutory provisions; section 4 of the Act of September 14, 1960 (Pub. L. 86-781, 74 Stat. 1017).

Sec. 4. Subsection (c) of section 302 of the Public Debt and Tax Rate Extension Act of 1960 (Pub. L. 86-564; 74 Stat. 293) is amended to read as follows:

(c) *Effective date*—(1) *In general.* Except as provided in paragraph (2), the amendments made by subsections (a) and (b) shall be applicable only with respect to taxable years beginning after December 31, 1960.

(2) *Calcium carbonates, etc.*—(A) *Election for past years.* In the case of calcium carbonates or other minerals when used in making cement, if an election is made by the taxpayer under subparagraph (C):

(i) The amendments made by subsection (b) shall apply to taxable years with respect to which such election is effective, and

(ii) Provisions having the same effect as the amendments made by subsection (b) shall be deemed to be included in the Internal Revenue Code of 1939 and shall apply to taxable years with respect to which such election is effective in lieu of the corresponding provisions of such Code.

(B) *Years to which applicable.* An election made under subparagraph (C) to have the provisions of this paragraph apply shall be effective for all taxable years beginning before January 1, 1961, in respect of which:

(i) The assessment of a deficiency,

(ii) The refund or credit of an overpayment, or

(iii) The commencement of a suit for recovery of a refund under section 7405 of the Internal Revenue Code of 1954,

is not prevented on the date of the enactment of this paragraph by the operation of any law or rule of law. Such election shall also be effective for any taxable year beginning before January 1, 1961, in respect of which an assessment of a deficiency has been made but not collected on or before the date of the enactment of this paragraph.

(C) *Time and manner of election.* An election to have the provisions of this paragraph apply shall be made by the taxpayer on or before the 60th day after the date of publication in the FEDERAL REGISTER of final regulations issued under authority of subparagraph (F), and shall be made in such form and manner as the Secretary of the Treasury or his delegate shall prescribe by regulations. Such election, if made, may not be revoked.

(D) *Statutes of limitation.* Notwithstanding any other law, the period within which an assessment of a deficiency attributable to the application of the amendments made by subsection (b) may be made with respect to any taxable year to which such amendments apply under an election made under subparagraph (C), and the period within which a claim for refund or credit of an overpayment attributable to the application of such amendments may be made with respect to any such taxable year, shall not expire prior to one year after the last day for making an election under subparagraph (C). An election by a taxpayer under subparagraph (C) shall be considered as a consent to the application of the provisions of this subparagraph.

(E) *Terms; applicability of other laws.* Except where otherwise distinctly expressed or manifestly intended, terms used in this paragraph shall have the same meaning as when used in the Internal Revenue Code of 1954 (or corresponding provisions of the Internal Revenue Code of 1939) and all provisions of law shall apply with respect to this paragraph as if this paragraph were a part of such Code (or corresponding provisions of the Internal Revenue Code of 1939).

(F) *Regulations.* The Secretary of the Treasury or his delegate shall prescribe such regulations as may be necessary to carry out the provisions of this paragraph.

[T.D. 6492, 25 FR 8904, Sept. 16, 1960]

§ 1.9003-1 Election to have the provisions of section 613(c) (2) and (4) of the 1954 Code, as amended, apply for past years.

(a) ***In general.*** Section 4 of the Act of September 14, 1960 (Pub. L. 86-781, 74 Stat. 1017), amended section 302(c) of the Public Debt and Tax Rate Extension Act of 1960 to permit certain taxpayers for taxable years beginning before January 1, 1961, to apply the provisions of section 302(b) of that Act. Section 302(b) of the Act amended section 613(c) (2) and (4) of the Internal Revenue Code of 1954 to read in part as follows:

Sec. 613. *Percentage Depletion.* * * *

(c) *Definition of gross income from property.* For purposes of this section:

* * * * *

(2) *Mining.* The term “mining” includes not merely the extraction of the ores or minerals from the ground but also the treatment processes considered as mining described in paragraph (4) (and the treatment processes necessary or incidental thereto), and so much of the transportation of ores or minerals (whether or not by common carrier) from the point of extraction from the ground to the plants or mills in which such treatment processes are applied thereto as is not in excess of 50 miles unless the Secretary or his delegate finds that the physical and other requirements are such that the ore or mineral must be transported a greater distance to such plants or mills.

* * * * *

(4) *Treatment processes considered as mining.* The following treatment processes where applied by the mine owner or operator shall be considered as mining to the extent they are applied to the ore or mineral in respect of which he is entitled to a deduction for depletion under section 611:

* * * * *

(F) In the case of calcium carbonates and other minerals when used in making cement—all processes (other than preheating of the kiln feed) applied prior to the introduction of the kiln feed into the kiln, but not including any subsequent process;

(b) *Election.* Under section 302(c)(2) of the Act, the taxpayer, in the case of calcium carbonates or other minerals when used by him in making cement, may elect to apply the provisions of section 613(c) (2) and (4) of the 1954 Code as amended in lieu of the corresponding provisions of prior law. The taxpayer must make the election in accordance with § 1.9003-4 on or before November 15, 1960, and the election shall become irrevocable on November 15, 1960.

(c) *Years to which the election is applicable.* If the election described in paragraph (b) of this section is made by the taxpayer, the provisions of section 613(c) (2) and (4) as amended by section 302(b) of the Act apply to all taxable years beginning before January 1, 1961, in respect of which:

(1) The assessment of any deficiency,

(2) Refund or credit of any overpayment,

(3) Commencement of a suit for recovery of a refund under section 7405 of the Internal Revenue Code of 1954,

is not prevented on September 14, 1960, by the operation of any law or rule of law. The election also applies to taxable years beginning before January 1, 1961, in respect of which an assessment of a deficiency has been made but not collected on or before September 14, 1960.

[T.D. 6492, 25 FR 8905, Sept. 16, 1960]

§ 1.9003-2 Effect of election.

(a) ***In general.*** If a taxpayer makes the election described in paragraph (b) of § 1.9003-1, he shall be deemed to have consented to the application of section 302(b) of the Act with respect to all taxable years to which the election applies. Thus, subparagraph (F) of section 613(c)(4) of the Internal Revenue Code of 1954 as amended must be applied in determining gross income from mining for the taxable years to which the election applies (including years subject to the Internal Revenue Code of 1939) whether or not the taxpayer is litigating the issue. Further, the election shall apply to all calcium carbonates or other minerals mined and used by the taxpayer in making cement.

(b) ***Effect on gross income from mining.*** The election is only determinative of what constitutes “mining” for purposes of computing percentage depletion and has no effect on the method employed in determining the amount of gross income from mining. In applying the election to the years affected there shall be taken into account the effect that any adjustments resulting from the election shall have on other items affected thereby, such as charitable contributions, foreign tax credit, net operating loss, and the effect that adjustments to any such items shall have on other taxable years. The provisions of section 302(b) of the Act are applicable with respect to taxable years subject to the Internal Revenue Code of 1939 for purposes of applying sections 450 and 453 of that Code.

[T.D. 6492, 25 FR 8905, Sept. 16, 1960]

§ 1.9003-3 Statutes of limitation.

Under section 302(c)(2) of the Act, the period within which the assessment of any deficiency or the credit or refund of any overpayment attributable to the election may be made shall not expire sooner than 1 year after November 15, 1960. Thus, if assessment of a deficiency or credit or refund of an overpayment, whichever is applicable, is not prevented on September 14, 1960, the time for making assessment or credit or refund shall not expire for at least 1 year after November 15, 1960, notwithstanding any other provision of law to the contrary. Even though assessment of a deficiency is prevented on September 14, 1960, if commencement of a suit for recovery of a refund under section 7405 of the Code may be made on such date, then any deficiency resulting from the election may be assessed at any time within 1 year after November 15, 1960. If the taxpayer makes the election he shall be deemed to have consented to the application of the provisions of section 302(c)(2) of the Act extending the time for assessing a deficiency attributable to the election. Section 302(c)(2) of the Act does not shorten the period of limitations otherwise applicable. An agreement may be entered into under section 6501(c)(4) of the Code and corresponding provisions of prior law to extend the period for assessment.

[T.D. 6492, 25 FR 8905, Sept. 16, 1960]

§ 1.9003-4 Manner of exercising election.

(a) ***By whom election is to be made.*** Generally, the taxpayer whose tax liability is affected by the election shall make the election. In the case of a partnership, or a corporation electing under the provisions of subchapter S, chapter 1 of the Code, the election shall be exercised by the partnership or such corporation, as the case may be.

(b) ***Time and manner of making election.*** The election shall be made on or before November 15, 1960, by filing a statement with the district director with whom the taxpayer's income tax return for the taxable year in which the election is made is required to be filed. The statement shall include the following:

(1) A clear indication that an election is being made under section 302(c)(2) of the Act, and

(2) The taxable years to which the election applies.

Amended income tax returns reflecting any increase or decrease in tax attributable to the election shall be filed for the taxable years to which the election applies. In the case of partnerships and electing small business corporations under subchapter S, chapter 1 of the Code, amended returns shall be filed by the partnership or electing small business corporations, as well as by the partners or shareholders, as the case may be. Any amended return shall be filed with the office of the district director with whom the taxpayer files his income tax return for the taxable year in which the election is made and, if practicable, on the same date the statement of election is filed, but amended returns shall be filed in no event later than February 28, 1961, unless an extension of time is granted under section 6081 of the Code. Whenever the amended returns do not accompany the statement of election, a copy of the statement shall be submitted with the amended returns. The amended returns shall be accompanied by payment of the additional tax (together with interest thereon) resulting from the election.

[T.D. 6492, 25 FR 8905, Sept. 16, 1960]

§ 1.9003-5 Terms; applicability of other laws.

All other terms which are not otherwise specifically defined shall have the same meaning as when used in the Code (or the corresponding provisions of prior law) except where otherwise distinctly expressed or manifestly intended to the contrary. Further, all provisions of law contained in the Code (or the corresponding provisions of prior law) shall apply to the extent that they can apply. Thus, all of the provisions of subtitle F of the Code and the corresponding

provisions of prior law shall apply to the extent they can apply, including the provisions of law relating to assessment, collection, credit or refund, and limitations. For purposes of this section and §§ 1.9003-1 to 1.9003-4, inclusive, the term "Act" means the Public Debt and Tax Rate Extension Act of 1960 as amended (74 Stat. 293, 1018).

[T.D. 6492, 25 FR 8905, Sept. 16, 1960]

CERTAIN BRICK AND TILE CLAY, FIRE CLAY, AND SHALE; REGULATIONS UNDER THE ACT OF SEPTEMBER 26, 1961

§ 1.9004 Statutory provisions; the Act of September 26, 1961 (Pub. L. 87-312, 75 Stat. 674).

Be it enacted by the Senate and House of Representatives of the United States of America in Congress assembled, That (a) *Election for past years.* In the case of brick and tile clay, fire clay, or shale used by the mineowner or operator in the manufacture of building or paving brick, drainage and roofing tile, sewer pipe, flower pots, and kindred products (without regard to the applicable rate of percentage depletion), if an election is made under subsection (c), for the purpose of applying section 613(c) of the Internal Revenue Code of 1954 (and corresponding provision of the Internal Revenue Code of 1939) for each of the taxable years with respect to which the election is effective:

(1) Gross income from the property shall be 50 per centum of the amount for which the manufactured products are sold during the taxable year except that with respect to such manufactured products, gross income from the property shall not exceed an amount equal to $12.50 multiplied by the number of short tons used in the manufactured products sold during the taxable year, and

(2) For purposes of computing the 50 per centum limitation under section 613(a) of the Internal Revenue Code of 1954 (or the corresponding provision of the Internal Revenue Code of 1939), the taxable income from the property (computed without allowance for depletion) shall be 50 per centum of the taxable income from the manufactured products sold during the taxable year (computed without allowance for depletion).

(b) *Years to which applicable.* An election made under subsection (c) to have the provisions of this section apply shall be effective for all taxable years beginning before January 1, 1961, in respect of which:

(1) The assessment of a deficiency,

(2) The refund or credit of an overpayment, or

(3) The commencement of a suit for recovery of a refund under section 7405 of the Internal Revenue Code of 1954, is not prevented on the date of the enactment of this Act by the operation of any law or rule of law. Such election shall also be effective for any taxable year beginning before January 1, 1961, in respect of which an assessment of a deficiency has been made but not collected on or before the date of the enactment of this Act.

(c) *Time and manner of election.* An election to have the provisions of this section apply shall be made by the taxpayer on or before the sixtieth day after the date of publication in the FEDERAL REGISTER of final regulations issued under authority of subsection (f), and shall be made in such form and manner as the Secretary of the Treasury or his delegate shall prescribe by regulations. Such election, if made, may not be revoked.

(d) *Statutes of limitation.* Notwithstanding any other law, the period within which an assessment of a deficiency attributable to the election under subsection (c) may be made with respect to any taxable year for which such election is effective, and the period within which a claim for refund or credit of an overpayment attributable to the election under such subsection may be made with respect to any such taxable year, shall not expire prior to one year after the last day for making an election under subsection (c). An election by a taxpayer under subsection (c) shall be considered as a consent to the application of the provisions of this subsection.

(e) *Terms; applicability of other laws.* Except where otherwise distinctly expressed or manifestly intended, terms used in this section shall have the same meaning as when used in the Internal Revenue Code of 1954 (or corresponding provisions of the Internal Revenue Code of 1939) and all provisions of law shall apply with respect to this section as if this section were a part of such Code (or corresponding provisions of the Internal Revenue Code of 1939).

(f) *Regulations.* The Secretary of the Treasury or his delegate shall prescribe such regulations as may be necessary to carry out the provisions of this section.

(75 Stat. 674; 26 U.S.C. 613 note)

[T.D. 6575, 26 FR 9632, Oct. 12, 1961]

§ 1.9004-1 Election relating to the determination of gross income from the property for taxable years beginning prior to 1961 in the case of certain clays and shale.

(a) ***In general.*** The Act of September 26, 1961 (Pub. L. 87-312, 75 Stat. 674), provides that certain taxpayers may elect to apply the provisions thereof to all taxable years beginning before January 1, 1961, with respect to which the election is effective. The Act prescribes special rules for the application of section 613 (a) and (c) of the Internal Revenue Code of 1954 (and corresponding provisions of the Internal Revenue Code of 1939) in the case of shale and certain clays used by the mine owner or operator in the manufacture of certain clay and shale products.

(b) ***Election.*** The election to apply the provisions of the Act may be made only by a mine owner or operator with respect to brick and tile clay, fire clay, or shale which he mined and used in the manufacture of building or paving brick, drainage and roofing tile, sewer pipe, flower pots, and kindred products. The election must be made in accordance with § 1.9004-4 on or before December 11, 1961, and the election shall become irrevocable on December 11, 1961.

(c) ***Years to which the election is applicable.*** If the election described in paragraph (b) of this section is made by the taxpayer, the provisions of the Act shall be effective for all taxable years beginning before January 1, 1961, in respect of which the:

(1) Assessment of a deficiency,

(2) Refund or credit of an overpayment, or

(3) Commencement of a suit for recovery of a refund under section 7405 of the Internal Revenue Code of 1954,

is not prevented on September 26, 1961, by the operation of any law or rule of law. The election is also effective for any taxable year beginning before January 1, 1961, in respect of which an assessment of a deficiency has been made but not collected on or before September 26, 1961.

(75 Stat. 674; 26 U.S.C. 613 note)

[T.D. 6575, 26 FR 9632, Oct. 12, 1961]

§ 1.9004-2 Effect of election.

(a) ***In general.*** If a taxpayer makes the election described in paragraph (b) of § 1.9004-1, he shall be deemed to have consented to the application of the Act with respect to all the clay and shale described in that paragraph for all taxable years for which the election is effective whether or not the taxpayer is litigating the issue for any of such years. Thus, in applying section 613 of the Internal Revenue Code of 1954 (and corresponding provisions of the Internal Revenue Code of 1939) to those years:

(1) The "gross income from the property" for purposes of section 613(c) of the Internal Revenue Code of 1954 (and corresponding provisions of the Internal Revenue Code of 1939) shall be 50 percent of the amount for which the mineowner or operator sold, during the taxable year, the building or paving brick, drainage and roofing tile, sewer pipe, flower pots, and kindred products manufactured from the clay and shale described in paragraph (b) of § 1.9004-1, but shall not exceed an amount equal to $12.50 multiplied by the number of short tons of all such clay or shale mined and used by the mineowner or operator in the manufacture of the products sold during the taxable year; and

(2) The "taxable income from the property" (computed without allowance for depletion) for purposes of section 613(a) of the Internal Revenue Code of 1954 (and corresponding provisions of the Internal Revenue Code of 1939) shall be 50 percent of the taxable income from the manufactured products sold during the taxable year (computed without allowance for depletion).

(b) ***Effect on depletion rates and other items.*** The election shall have no effect on the applicable rate of percentage depletion for the taxable years to which the election is effective. In applying the election to the years affected there shall be taken into account the effect that any adjustments resulting from the election shall have on other items affected thereby, such as charitable contributions, foreign tax credit, net operating loss, and the effect that adjustments to any such items shall have on other taxable years. The provisions of the Act are applicable with respect to taxable years subject to the Internal Revenue Code of 1939 for purposes of applying sections 450 and 453 of that Code.

(75 Stat. 674; 26 U.S.C. 613 note)

[T.D. 6575, 26 FR 9632, Oct. 12, 1961]

§ 1.9004-3 Statutes of limitation.

The period within which the assessment of any deficiency or the credit or refund of any overpayment attributable to the election may be made shall not expire sooner than one year after December 11, 1961. Thus, if assessment of a deficiency or credit or refund of an overpayment, whichever is applicable, is not prevented on September 26, 1961, the time for making assessment or credit or refund shall not expire for at least one year after December 11, 1961, notwithstanding any other provision of law to the contrary. Even though assessment of a deficiency is prevented on September 26, 1961, if commencement of a suit for recovery of a refund under section 7405 of the Internal Revenue Code of 1954 may be made on such date, then any deficiency resulting from the election may be assessed at any time within 1 year after December 11, 1961. If a taxpayer makes the election, he shall be deemed to have consented to the application of the provisions of the Act extending the time for assessing a deficiency attributable to the

election. The Act does not shorten the periods of limitation otherwise applicable. An agreement may be entered into under section 6501(c)(4) of the Internal Revenue Code of 1954 and corresponding provisions of prior law to extend the period for assessment.

(75 Stat. 674; 26 U.S.C. 613 note)

[T.D. 6575, 26 FR 9632, Oct. 12, 1961]

§ 1.9004-4 Manner of exercising election.

(a) ***By whom election is to be made.*** Generally, the taxpayer whose tax liability is affected by the election shall make the election. In the case of a partnership, or a corporation electing under the provisions of subchapter S, chapter 1 of the Internal Revenue Code of 1954, the election shall be exercised by the partnership or such corporation, as the case may be.

(b) ***Time and manner of making election.*** The election shall be made on or before December 11, 1961, by filing a statement with the district director with whom the taxpayer's income tax return for the taxable year in which the election is made is required to be filed. The statement shall include the following:

(1) A clear indication that an election is being made under the Act, and

(2) The taxable years to which the election applies.

Amended income tax returns reflecting any increase or decrease in tax attributable to the election shall be filed for the taxable years to which the election applies. In the case of partnerships and electing small business corporations under subchapter S, chapter 1 of the Internal Revenue Code of 1954, amended returns shall be filed by the partnership or electing small business corporation, as well as by the partners or shareholders, as the case may be. Any amended return shall be filed with the office of the district director with whom the taxpayer files his income tax return for the taxable year in which the election is made and, if practicable, on the same date the statement of election is filed, but amended returns shall be filed in no event later than March 31, 1962, unless an extension of time is granted under section 6081 of the Internal Revenue Code of 1954. Whenever the amended returns do not accompany the statement of election, a copy of the statement shall be submitted with the amended returns. The amended returns shall be accompanied by payment of the additional tax (together with interest thereon) resulting from the election.

(75 Stat. 674, 26 U.S.C. 613 note)

[T.D. 6575, 26 FR 9633, Oct. 12, 1961]

§ 1.9004-5 Terms; applicability of other laws.

All other terms which are not otherwise specifically defined shall have the same meaning as when used in the Internal Revenue Code of 1954 (or the corresponding provisions of prior law) except where otherwise distinctly expressed or manifestly intended to the contrary. Further, all provisions of law contained in the Code (or the corresponding provisions of prior law) shall apply to the extent that they can apply. Thus, all the provisions of subtitle F of the Code (and the corresponding provisions of prior law) shall apply to the extent they can apply, including the provisions of law relating to assessment, collection, credit or refund, and limitations. For purposes of this section and §§ 1.9004-1 to 1.9004-4, inclusive, the term “Act” means the Act of September 26, 1961 (Pub. L. 87-312, 75 Stat. 674).

(75 Stat. 674, 26 U.S.C. 613 note)

[T.D. 6575, 26 FR 9633, Oct. 12, 1961]

QUARTZITE AND CLAY USED IN PRODUCTION OF REFRACTORY PRODUCTS; ELECTION FOR PRIOR TAXABLE YEARS

§ 1.9005 Statutory provisions; section 2 of the Act of September 26, 1961 (Pub. L. 87-321, 75 Stat. 683).

Sec. 2. *Election for quartzite and clay used in the production of refractory products*—(a) *Election for past years.* If an election is made under subsection (c), in the case of quartzite and clay used by the mine owner or operator in the production of refractory products, for the purpose of applying section 613(c) of the Internal Revenue Code of 1954 (and corresponding provisions of the Internal Revenue Code of 1939) for each of the taxable years with respect to which the election is effective:

(1) The term “ordinary treatment processes” shall include crushing, grinding, and separating the mineral from waste, but shall not include any subsequent process; and

(2) The gross income from mining for each short ton of such quartzite or clay used in the production of all refractory products sold during the taxable year shall be equal to $87^{1}/_{2}$ percent of the lesser of:

(A) The average lowest published or advertised price, or

(B) The average lowest actual selling price, at which, during the taxable year, the mine owner or operator offered to sell, or sold, such quartzite or clay (in the form and condition of such products after the application of only the processes described in paragraph (1) and before transportation from the plant in which such processes were applied). For purposes of this paragraph, exceptional, unusual, or nominal sales or selling prices shall be disregraded. If the mine owner or operator makes no sales of, or makes only exceptional, unusual, or nominal sales of, such quartzite or clay after application of only the processes described in paragraph (1), then in lieu of the price provided for in subparagraph (A) or (B) there shall be used the average lowest recognized selling price for the taxable year for such quartzite or clay in the marketing area of the mine owner or operator published in a trade journal or other industry publication.

(b) *Years to which applicable.* An election made under subsection (c) to have the provisions of this section apply shall be effective on and after January 1, 1951, for all taxable years beginning before January 1, 1961, in respect of which:

(1) The assessment of a deficiency,

(2) The refund or credit of an overpayment, or

(3) The commencement of a suit for recovery of a refund under section 7405 of the Internal Revenue Code of 1954,

is not prevented on the date of the enactment of this Act by the operation of any law or rule of law. Such election shall also be effective on and after January 1, 1951, for any taxable year beginning before January 1, 1961, in respect of which an assessment of a deficiency has been made but not collected on or before the date of the enactment of this Act.

(c) *Time and manner of election.* An election to have the provisions of this section apply shall be made by the taxpayer on or before the 60th day after the date of publication in the FEDERAL REGISTER of final regulations issued under authority of subsection (f), and shall be made in such form and manner as the Secretary of the Treasury or his delegate shall prescribe by regulations. Such election, if made, may not be revoked.

(d) *Statutes of limitations.* Notwithstanding any other law, the period within which an assessment of a deficiency attributable to the election under subsection (c) may be made with respect to any taxable year for which such election is effective, and the period within which a claim for refund or credit of an overpayment attributable to the election under such subsection may be made with respect to any such taxable year, shall not expire prior to one year after the last day for making an election under subsection (c). An election by a taxpayer under subsection (c) shall be considered as a consent to the application of the provisions of this subsection.

(e) *Terms; applicability of other laws.* Except where otherwise distinctly expressed or manifestly intended, terms used in this section shall have the same meaning as when used in the Internal Revenue Code of 1954 (or corresponding provisions of the Internal Revenue Code of 1939) and all provisions of law shall apply with respect to this section as if this section were a part of such Code (or corresponding provisions of the Internal Revenue Code of 1939).

(f) *Regulations.* The Secretary of the Treasury or his delegate shall prescribe such regulations as may be necessary to carry out the provisions of this section.

(Sec. 2(f), 75 Stat. 683; 26 U.S.C. 613 note)

[T.D. 6583, 26 FR 12077, Dec. 16, 1961]

§ 1.9005-1 Election relating to the determination of gross income from the property for taxable years beginning prior to 1961 in the case of clay and quartzite used in making refractory products.

(a) ***In general.*** Section 2 of the Act of September 26, 1961 (Pub. L. 87-321, 75 Stat. 683), provides that certain taxpayers may elect to apply the provisions of such section to all taxable years beginning before January 1, 1961, with respect to which the election is effective. Section 2 of the Act prescribes special rules for the application of section 613(c) of the Internal Revenue Code of 1954 (and corresponding provisions of the Internal Revenue Code of 1939) in the case of quartzite and clay used by the mine owner or operator in the production of refractory products.

(b) ***Election.*** The election to apply the provisions of section 2 of the Act may be made only in the case of quartzite and clay used in the production of products generally recognized as refractory products by the refractories industry. Examples of such products are clay firebrick, silica brick, and refractory bonding mortars. The election may be made only by a taxpayer who both mined the clay or quartzite and used it in the production of refractory products. The election must be made in accordance with § 1.9005-4 on or before February 14, 1962, and the election shall become irrevocable on that date.

(c) ***Years to which the election is applicable.*** If the election described in paragraph (b) of this section is made by the taxpayer, the provisions of section 2 of the Act shall be effective on and after January 1, 1951, for all taxable years beginning before January 1, 1961, in respect of which the:

(1) Assessment of a deficiency,

(2) Refund or credit of an overpayment, or

(3) Commencement of a suit for recovery of a refund under section 7405 of the Internal Revenue Code of 1954,

was not prevented on September 26, 1961, by the operation of any law or rule of law. The election is also effective on and after January 1, 1951, for any taxable year beginning before January 1, 1961, in respect of which an assessment of a deficiency has been made but not collected on or before September 26, 1961.

(Sec. 2(f), 76 Stat. 683, 26 U.S.C. 613 note)

[T.D. 6583, 26 FR 12078, Dec. 16, 1961]

§ 1.9005-2 Effect of election.

(a) ***In general.*** If a taxpayer makes the election described in paragraph (b) of § 1.9005-1, he shall be deemed to have consented to the application of section 2 of the Act with respect to all the clay and quartzite described in that paragraph for all taxable years for which the election is effective whether or not the taxpayer is litigating the issue for any of such years. Thus, in applying section 613(c) of the Internal Revenue Code of 1954 (and corresponding provisions of the Internal Revenue Code of 1939) to those years:

(1) The term “ordinary treatment processes” shall include crushing, grinding, and separating the mineral from waste, but shall not include any subsequent process; and

(2) The gross income from mining for each short ton of quartzite or clay mined by the taxpayer and used by him in the production of all refractory products sold during the taxable year shall be equal to $87^{1}/_{2}$ percent of the lesser of:

(i) The average lowest published or advertised price, or

(ii) The average lowest actual selling price at which the mine owner or operator offered to sell or sold any such quartzite or clay during the taxable year.

(b) ***Rules for applying paragraph (a) of this section.***

(1) The price described in paragraph (a)(2) of this section and any price described in this paragraph shall be determined with reference to quartzite or clay in the form and condition of such products after the application of only the processes described in paragraph (a)(1) of this section and before transportation from the plant in which such processes were applied.

(2) If quartzite and clay were mined and used by the taxpayer in the production of refractory products, a separate price shall be used with respect to each mineral.

(3) There shall be used for each mineral the lowest price at which it was sold or offered for sale by the taxpayer during the taxable year. Thus, only one price shall be used with respect to each mineral regardless of variations in type or grade.

(4) For purposes of this paragraph, exceptional, unusual, or nominal sales of quartzite or clay shall be disregarded. Thus, for example, if the taxpayer made an accommodation sale during the taxable year at other than the regular price, such sale is to be disregarded.

(5) If the taxpayer made no sales during the taxable year of quartzite or clay in the form and condition described in subparagraph (1) of this paragraph, or if his sales were exceptional, unusual, or nominal, there shall be used the lowest recognized selling price for the taxpayer's marketing area for quartzite or clay (of the same grade and type as that used by him) which was published for the taxable year in a trade journal or other industry publication.

(6) If subparagraph (5) of this paragraph does not apply for the reason that there is no recognized selling price published in a trade journal or other industry publication for the taxpayer's marketing area, there shall be used the lowest price at which quartzite or clay comparable to that used by the taxpayer was sold or offered for sale during the taxable year in that area by other producers similarly circumstanced as the taxpayer or, if appropriate, the lowest price paid by the taxpayer for purchased quartzite or clay.

(7) If the lowest selling price otherwise applicable under the preceding provisions of this paragraph fluctuated during the taxable year, the two or more lowest selling prices shall be averaged according to the number of days during the taxable year that each such price was in effect.

(c) The provisions of paragraphs (a) and (b) of this section may be illustrated by the following examples:

Example 1. (i) *Facts.* Taxpayer A, a calendar year taxpayer, mined quartzite and clay and used them in the production of recognized refractory products. During the taxable year, the lowest price for which A sold clay after the application of crushing and grinding was $13.75 per short ton. He also sold some ground clay of a different type at $20.00 per short ton. A sold quartzite after the application of crushing and grinding for various prices, depending upon type, ranging from $14.00 per short ton to $20.00 per short ton. During the taxable year, the prices for the various types of ground clay and quartzite did not change. None of the sales by A of ground clay or quartzite were exceptional, unusual, or nominal.
(ii) *Determination of gross income from mining.* If A makes the election described in paragraph (b) of § 1.9005-1, the gross income from mining per short ton of clay mined by A and used in the production of refractory products sold during the taxable year is $12.03 ($87^1/_2$ percent of $13.75), and the gross income from mining per short ton of quartzite mined by A and used in the production of refractory products sold during the taxable year is $12.25 ($87^1/_2$ percent of $14.00). To determine his gross income from mining, A must compute the sum of:

(a) $12.03 multiplied by the number of short tons of clay which were mined by A (whether or not during the taxable year) and which were used by A in the production of refractory products (refractory bonding mortar, fire brick, etc.) sold during the taxable year; plus

(b) $12.25 multiplied by the number of short tons of quartzite which were mined by A (whether or not during the taxable year) and which were used by A in the production of refractory products sold during the taxable year.

Example 2. Assume the same facts as in example (1) except that on October 1 of the taxable year A's lowest price for clay after the application of crushing and grinding increased to $14.40 per short ton. In this case, the average lowest price for which A sold ground clay during the taxable year must be determined by taking into account the price adjustment of October 1. Under these circumstances, the average lowest price for the ground clay would be $13.91, that is $13.75 × 273/365 plus $14.40 × 92/365.

(d) ***Effect on depletion rates and other items.*** The election shall have no effect on the applicable rate of percentage depletion for the taxable years for which the election is effective. In applying the election to the years affected there shall be taken into account the effect that any adjustments resulting from the election shall have on other items affected thereby, such as charitable contributions, foreign tax credit, net operating loss, and the effect that adjustments to any such items shall have on other taxable years. The provisions of section 2 of the Act are applicable with respect to taxable years subject to the Internal Revenue Code of 1939 for purposes of applying sections 450 and 453 of that Code. The election shall have no effect on the determination of the treatment processes which are to be considered as mining or on the determination of gross income from mining for any taxable year beginning after December 31, 1960.

(Sec. 2(f), 75 Stat. 683; 26 U.S.C. 613 note)

[T.D. 6583, 26 FR 12078, Dec. 16, 1961]

§ 1.9005-3 Statutes of limitation.

Notwithstanding any provision of law to the contrary, the period within which the assessment of any deficiency attributable to the election may be made, or within which the credit or refund of any overpayment attributable to the election may be made, shall not expire sooner than one year after the last day for making the election. Thus, if assessment of a deficiency or credit or refund of an overpayment, whichever is applicable, was not prevented on September 26, 1961, the time for making assessment or credit or refund shall not expire for at least one year after the last day for making the election. Even though assessment of a deficiency was prevented on September 26, 1961, if commencement of a suit for recovery of a refund under section 7405 of the Internal Revenue Code of 1954 may have been made on such date, then any deficiency resulting from the election may be assessed at any time within one year after the last day for making the election. If a taxpayer makes the election, he shall be deemed to have consented to the application of the provisions of section 2 of the Act extending the time for assessing a deficiency attributable to the election. Section 2 of the Act does not shorten the period of limitations otherwise applicable. An agreement may be entered into under section 6501(c)(4) of the Internal Revenue Code of 1954 and corresponding provisions of prior law to extend the period for assessment.

(Sec. 2(f), 75 Stat. 683; 26 U.S.C. 613 note)

[T.D. 6583, 26 FR 12079, Dec. 16, 1961]

§ 1.9005-4 Manner of exercising election.

(a) ***By whom election is to be made.*** Generally, the taxpayer whose tax liability is affected by the election shall make the election. In the case of a partnership, or a corporation electing under the provisions of subchapter S, chapter 1 of the Internal Revenue Code of 1954, the election shall be exercised by the partnership or such corporation, as the case may be.

(b) *Time and manner of making election.* The election shall be made on or before February 14, 1962, by filing a statement with the district director with whom the taxpayer's income tax return for the taxable year in which the election is made is required to be filed. The statement shall include the following:

(1) A clear indication that an election is being made under section 2 of the Act, and

(2) The taxable years to which the election applies.

Amended income tax returns reflecting any increase or decrease in tax attributable to the election shall be filed for the taxable years to which the election applies. In the case of partnerships and electing small business corporations under subchapter S, chapter 1 of the Internal Revenue Code of 1954, amended returns shall be filed by the partnership or electing small business corporation, as well as by the partners or shareholders, as the case may be. Any amended return shall be filed with the office of the district director with whom the taxpayer files his income tax return for the taxable year in which the election is made, and, if practicable, on the same date the statement of election is filed, but amended returns shall be filed in no event later than May 31, 1962, unless an extension of time is granted under section 6081 of the Internal Revenue Code of 1954. Whenever the amended returns do not accompany the statement of election, a copy of the statement shall be submitted with the amended returns. The amended returns shall be accompanied by payment of the additional tax (together with interest thereon) resulting from the election.

(Sec. 2(f), 75 Stat. 683; 26 U.S.C. 613 note)

[T.D. 6583, 26 FR 12079, Dec. 16, 1961]

§ 1.9005-5 Terms; applicability of other laws.

All other terms which are not otherwise specifically defined shall have the same meaning as when used in the Internal Revenue Code of 1954 (or the corresponding provisions of prior law) except where otherwise distinctly expressed or manifestly intended to the contrary. Further, all provisions of law contained in the Code (or the corresponding provisions of prior law) shall apply to the extent that they can apply. Thus, all the provisions of subtitle F of the Code (and the corresponding provisions of prior law) shall apply to the extent they can apply, including the provisions of law relating to assessment, collection, credit or refund, and limitations. For purposes of this section and §§ 1.9005-1 to 1.9005-4, inclusive, the term “Act” means the Act of September 26, 1961 (Pub. L. 87-321, 75 Stat. 683).

(Sec. 2(f), 75 Stat. 683; 26 U.S.C. 613 note)

[T.D. 6583, 26 FR 12079, Dec. 16, 1961]

Tax Reform Act of 1969

§ 1.9006 Statutory provisions; Tax Reform Act of 1969.

Section 946 of the Tax Reform Act of 1969 (83 Stat. 729) provides as follows:

Sec. 946. *Interest and penalties in case of certain taxable years*—(a) *Interest on underpayment.* Notwithstanding section 6601 of the Internal Revenue Code of 1954, in the case of any taxable year ending before the date of the enactment of this Act, no interest on any underpayment of tax, to the extent such underpayment is attributable to the amendments made by this Act, shall be assessed or collected for any period before the 90th day after such date.

(b) *Declarations of estimated tax.* In the case of a taxable year beginning before the date of the enactment of this Act, if any taxpayer is required to make a declaration or amended declaration of estimated tax, or to pay any amount or additional amount of estimated tax, by reason of the amendments made by this Act, such amount or additional amount shall be paid ratably on or before each of the remaining installment dates for the taxable year beginning with the first installment date on or after the 30th day after such date of enactment. With respect to any declaration or payment of estimated tax before such first installment date, sections 6015, 6154, 6654, and 6655 of the Internal Revenue Code of 1954 shall be applied without regard to the amendments made by this Act. For purposes of this subsection, the term "installment date" means any date on which, under section 6153 or 6154 of such Code (whichever is applicable), an installment payment of estimated tax is required to be made by the taxpayer.

[T.D. 7088, 36 FR 3052, Feb. 17, 1971]

§ 1.9006-1 Interest and penalties in case of certain taxable years.

(a) ***Interest on underpayment.*** The Internal Revenue Code of 1954 was amended in many important respects by the Tax Reform Act of 1969. Certain of these amendments affect taxable years ending prior to December 30, 1969 (the date of enactment of the Act) and thereby may cause underpayments of tax by a number of taxpayers for those years. Under section 6601(a) of the Code, interest at the rate of 6 percent per annum is imposed upon the amount of any such underpayment. The effect of section 946(a) of the Act is to prevent the assessment or collection of interest on an underpayment of tax for any taxable year ending before December 30, 1969, if such underpayment is attributable to any amendment made by such Act, for the period from the due date for payment until March 30, 1970. Thus, the taxpayer is afforded an interest-free period of 90 days from the date of enactment of such Act within which to account for the changes in the law affecting him and to remit the amount of such underpayment. If, on or after March 30, 1970, the amount of any underpayment (or portion thereof) attributable to an amendment made by the Act remains unpaid, then, as of such date, such underpayment (or portion thereof) shall be subject to interest as provided by section 6601 of the Code, to be computed from such date. However, if a corporation or farmers' cooperative elects to pay its final tax in two installments under section 6152 of the Code and if the second installment is due after March 30, 1970, then, in order to escape the imposition of interest under section 6601, such corporation or cooperative need pay only one-half of the additional tax arising from an amendment made by the Act before March 30, 1970, with the remaining one-half payable as part of the second installment on the regular due date for that installment. In the case of an underpayment of tax which is only partly attributable to an amendment made by the Act, section 946(a) of such Act shall apply only to the extent that such underpayment is so attributable.

(b) ***Declarations and payments of estimated tax.***

(1) In the case of a taxable year beginning before December 30, 1969, section 946(b) of the Tax Reform Act of 1969 provides transitional rules with respect to the payment of estimated tax and, in the case of an individual, the filing of a declaration of estimated tax. Under such section 946(b) in the case of such a year, if any taxpayer is required to make a declaration or amended declaration of estimated tax, or to pay any amount or additional amount of estimated tax, by reason of the amendments

made by the Act, such amount or additional amount shall be paid ratably on or before each of the remaining installment dates for the taxable year beginning with the first installment date on or after February 15, 1970. For purposes of section 946(b) of such Act and this section, the term "installment date" means any date on which, under section 6153 or 6154 of the Code (whichever is applicable), an installment payment of estimated tax is required to be made by the taxpayer.

(2) With respect to any declaration or payment of estimated tax before February 15, 1970, sections 6015, 6153, 6154, 6654, and 6655 of the Code shall be applied without regard to the amendments made by such Act. Therefore, any underpayment which occurs solely by reason of the amendments made by such Act shall not be treated as an underpayment in the case of installment dates before February 15, 1970. Similarly, in the case of a taxpayer all of whose installment dates occur prior to February 15, 1970, no payment of estimated tax need be made to reflect the amendments made by such Act.

(3) The following example illustrates the application of the provisions of subparagraphs (1) and (2) of this paragraph:

Example. A, a fiscal year taxpayer with a taxable year from July 1, 1969, through June 30, 1970, had, without regard to the enactment of the Tax Reform Act of 1969, a total tax liability, which would have been shown on his return, of $500. A is not a farmer or fisherman described in section 6037(b). A's tax liability is increased by $20 to $520, attributable to an amendment made by such Act. A makes an installment payment of estimated tax of $90 on each of the following four installment dates: October 15, 1969; December 15, 1969; March 15, 1970; and July 15, 1970. Assume that A is unaffected by the exceptions provided in section 6654(d). Therefore, A is underpaid by $10 on both October 15 and December 15, and by $18 on both March 15 and July 15. Such underpayments are computed as follows:

(a) October 15 and December 15 installment dates:	
(1) Tax without regard to Tax Reform Act of 1969	$500
(2) 80% of item (1)	400
(3) Minimum payment to avoid underpayment, determined without regard to Act:	
October 15, 1969 (25% of item (2))	100
December 15, 1969 (25% of item (2))	100
(4) Actual payment:	
October 15, 1969	90
December 15, 1969	90
(5) Amount of underpayment:	
October 15, 1969 ($100−$90)	10
December 15, 1969 ($100−$90)	10
(b) March 15 and July 15 installment dates:	
(1) Tax with regard to Act	520
(2) 80% of item (1)	416

(3) Less total of minimum payments to avoid underpayment, determined without regard to Act for October 15, 1969 and December 15, 1969 ($100 + $100)	200
(4) Difference of items (2) and (3)	216
(5) Minimum payment to avoid underpayment, determined with regard to Act:	
March 15 (50% of $216)	108
July 15 (50% of $216)	108
(6) Actual payment:	
March 15	90
July 15	90
(7) Amount of underpayment:	
March 15 ($108−$90)	18
July 15 ($108−$90)	18

(c) *Cross references.*

(1) Taxpayers affected by the following sections, among others, of the Tax Reform Act of 1969 may be subject to the provisions of section 946 (a) or (b) (whichever is applicable) of such Act:

(i) Act section 201(a), which adds section 170(f)(2) to the Code and which applies to gifts made after July 31, 1969.

(ii) Act section 201(c), which repeals section 673(b) of the Code and which applies to transfers in trust made after April 22, 1969.

(iii) Act section 212(c), which amends section 1031 of the Code and which applies to taxable years to which the 1954 Code applies.

(iv) Act section 332, which amends section 677 of the Code and which applies to property transferred in trust after October 9, 1969.

(v) Act section 411(a), which adds section 279 to the Code and which applies to interest paid or incurred on an indebtedness incurred after October 9, 1969.

(vi) Act sections 412 (a) and (b), which adds section 453(b)(3) to the Code and which apply to sales or other dispositions occurring after May 27, 1969, which are not made pursuant to a contract entered into on or before that date.

(vii) Act section 413, which amends sections 1232(a), 1232(b)(2), and 6049 of the Code and which applies to bonds and other evidences of indebtedness issued after May 27, 1969.

(viii) Act section 414, which adds section 249 to the Code and which applies to convertible bonds or other convertible evidences of indebtedness repurchased after April 22, 1969.

(ix) Act section 421(a), which amends section 305 of the Code and which applies to distributions made after January 10, 1969.

(x) Act sections 516 (a) and (d), which add section 1001(e) to the Code and which apply to sales of life estates made after October 9, 1969.

(xi) Act section 601, which amends section 103 of the Code and which applies to obligations issued after October 9, 1969.

(xii) Act section 703 which amends sections 46(b) and 47(a) of the Code and which applies to section 38 property built or acquired after April 18, 1969.

(xiii) Act section 905, which adds section 311(d) to the Code and which applies to distributions made after November 30, 1969.

(2) In addition to the references in subparagraph (1) of this paragraph, section 946(b) of the Tax Reform Act of 1969 may apply to taxpayers affected by the following sections, among others, of such Act:

(i) Act section 201(a), which adds section 170(e) to the Code and which applies to contributions paid after December 31, 1969.

(ii) Act sections 501 (a) and (b), which amend section 613 of the Code and which apply to taxable years beginning after October 9, 1969.

(iii) Act sections 516 (c) and (d) which add section 1253 to the Code and which apply to transfers after December 31, 1969.

(iv) Act section 701(a), which amends section 51 of the Code and which applies to taxable years ending after December 31, 1969, and beginning before July 1, 1970.

[T.D. 7088, 36 FR 3053, Feb. 17, 1971]

MISCELLANEOUS PROVISIONS

§ 1.9101-1 Permission to submit information required by certain returns and statements on magnetic tape.

In any case where the use of a Form 1087 or 1099 is required by the regulations under this part for the purpose of making a return or reporting information, such requirement may be satisfied by submitting the information required by such form on magnetic tape or by other media, provided that the prior consent of the Commissioner or other authorized officer or employee of the Internal Revenue Service has been obtained. Applications for such consent must be filed in accordance with procedures established by the Internal Revenue Service. In any case where the use of Form W-2 is required for the purpose of making a return or reporting information, such requirement may be satisfied by submitting the information required by such form on magnetic tape or other approved media, provided that the prior consent of the Commissioner of Social Security (or other authorized officer or employee thereof) has been obtained.

[T.D. 6883, 31 FR 6589, May 3, 1966, as amended by T.D. 7580, 43 FR 60159, Dec. 26, 1978]

§ 1.9200-1 Deduction for motor carrier operating authority.

(a) ***In general.*** Section 266 of the Economic Recovery Tax Act of 1981 (Pub. L. 97-34, 95 Stat. 265) provides that, for purposes of chapter 1 of the Internal Revenue Code of 1954, an ordinary deduction shall be allowed in computing the taxable income of all taxpayers who either held one or more motor carrier operating authorities on July 1, 1980, or later acquired a motor carrier operating authority pursuant to a binding contract in effect on July 1, 1980. The deduction for each motor carrier operating authority is to be allowed ratably over a 60-month period and is equal to the adjusted basis of the motor carrier

operating authority on July 1, 1980. Except as provided in this section, no deduction is allowable for any diminution in value of any motor carrier operating authority caused by administrative or legislative actions to decrease restrictions on entry into the interstate motor carrier business.

(b) ***Person entitled to claim deduction.*** In general, the deduction provided by this section for a particular motor carrier operating authority may be claimed only by the taxpayer which held the authority on July 1, 1980. However, if another person acquired the motor carrier operating authority after July 1, 1980, pursuant to a binding contract in effect on that date, the deduction for such authority may be claimed only by the acquirer and may not be claimed by the taxpayer which held the authority on July 1, 1980. A taxpayer, otherwise entitled to claim a deduction under this section, who sells a motor carrier operating authority after July 1, 1980 may not claim an amortization deduction for such authority for any month which begins after the date of such sale. In addition, acquisition of a motor carrier operating authority after July 1, 1980, if not pursuant to a binding contract in effect on July 1, 1980, will not entitle the acquirer to a deduction under this section, unless the operating authority is acquired pursuant to a transaction to which section 381 applies.

(c) ***Allowance of deduction*** —

(1) ***Determination of period for deduction*** —

(i) ***General rule.*** Except as provided in paragraph (c)(1)(ii) of this section, the 60-month period for taking the deduction provided by this section for a particular motor carrier operating authority begins with the month of July 1980, or, if later, the month in which the motor carrier operating authority was acquired pursuant to a binding contract in effect on July 1, 1980.

(ii) ***Election.*** In lieu of beginning the 60-month period as provided in paragraph (c)(1)(i) of this section, the taxpayer may elect to begin the 60-month period with the first month of the taxpayer's first taxable year beginning after July 1, 1980. This election, if made, shall apply to the deduction for all motor carrier operating authorities either held by the taxpayer on July 1, 1980, or later acquired by the taxpayer by the end of the first month of the first taxable year beginning after July 1, 1980, pursuant to a binding contract in effect on July 1, 1980. Any such election will not apply to the determination of the period for amortizing the bases of authorities acquired by the taxpayer after the end of the first month of the first taxable year beginning after July 1, 1980.

(2) ***Amount of monthly deduction.*** In the case of each motor carrier operating authority for which the taxpayer is entitled (under paragraph (b) of this section) to claim a deduction, the deduction for each month during the 60-month period relating to the motor carrier operating authority is equal to the adjusted basis (determined under paragraph (e) of this section) of the motor carrier operating authority divided by 60.

(d) ***Definition of motor carrier-operating authority.*** For purposes of § 1.9200-2 and this section, the term “motor carrier operating authority” means a certificate or permit held by a motor common carrier or motor contract carrier of property and issued pursuant to the Revised Interstate Commerce Act, 49 U.S.C. 10921-10933 (Supp. III 1979). The terms “motor common carrier” and “motor contract carrier” shall be defined as in 49 U.S.C. 10102 (Supp. III 1979) and do not include persons meeting the definition of freight forwarder contained in 49 U.S.C. 10102 (Supp. III 1979).

(e) ***Adjusted basis of motor carrier operating authority*** —

(1) ***In general.*** Except as provided in paragraph (e)(2) of this section, the adjusted basis of a motor carrier operating authority for which a deduction is allowed under this section is the adjusted basis of the motor carrier operating authority as determined under sections 1012 and 1016 in the hands of the taxpayer who is entitled to claim the deduction under paragraph (b) of this section.

(2) ***Special rule in case of certain stock acquisitions*** —

(i) ***Election by holder.*** A corporation entitled to claim a deduction under paragraph (b) of this section for a motor carrier operating authority may elect to allocate a portion of the cost basis of a qualified acquiring party in the stock of an acquired corporation, to the basis of the authority. A qualified acquiring party is a corporation (or a noncorporate person or group of noncorporate persons described in paragraph (e)(2)(ii) of this section) that after June 21, 1952, and on or before July 1, 1980 (or after July 1, 1980 under a binding contract in effect on such date) acquired by purchase, within the meaning of section 334(b)(3) and during a period of not more than 12 months, 80 percent or more of the stock (as described in section 334(b)(2)(B)) of a corporation (the acquired corporation) which held the authority directly or indirectly on the date which is the end of the period of 12 months or less within which such 80 percent of the acquired corporation's stock was purchased. The election to allocate basis in an acquired corporation's stock to the basis in an authority may be made only if 80 percent of all classes of the acquired corporation's stock (other than nonvoting stock which is limited and preferred as to dividends) was acquired by purchase (within the meaning of section 334(b)(3)) during a period of not more than 12 months, as described in section 334(b)(2)(B). If the qualified acquiring party is a corporation, the taxpayer holding the authority on July 1, 1980, may elect the basis allocation of this paragraph only if it is a member of the affiliated group (as defined in section 1504(a)) of which the qualified acquiring party is a member. If there is more than one acquisition of stock that might permit an election to allocate basis under this paragraph (e)(2)(i), the taxpayer may elect to allocate to the authority only the basis in the acquired corporation's stock held by the qualified acquiring party which became a qualified acquiring party as a result of the last of such acquisitions.

(ii) ***Certain noncorporate persons treated as qualified parties.*** For purposes of paragraphs (e)(2) (i) through (vi) of this section, the term “qualified acquiring party” shall include a noncorporate person or group of noncorporate persons which, after June 21, 1952 and on or before July 1, 1980, acquired in one purchase, stock in a corporation (the acquired corporation) which at the time of acquisition held, directly or indirectly, a motor carrier operating authority. In order to be treated as a qualified acquiring party under this paragraph, a noncorporate person or group of noncorporate persons must have held stock constituting control (within the meaning of section 368(c)) of the acquired corporation on July 1, 1980. A group of noncorporate persons consists of two or more noncorporate persons who, acting together on the same date, made the required purchase of stock in the acquired corporation.

(iii) ***Portion of stock basis allocable to basis of authority when stock of direct holder of authority is acquired.*** If the qualified acquiring party acquired the stock of a corporation directly holding the authority, the portion of the stock basis allocable to the basis of the authority is the amount that would have been properly allocable under section 334(b)(2) if the qualified acquiring party were a corporation that had received the authority in a distribution of all the acquired corporation's assets in a complete liquidation of the acquired corporation immediately after the acquisition of the acquired corporation's stock. If the acquired corporation's stock was acquired

on more than one date, the date on which the liquidation is deemed to have occurred shall be the date which is the date of the last acquisition by purchase of stock of the acquired corporation within the 12-month period described in section 334(b)(2)(B).

(iv) ***Portion of stock basis allocable to basis of authority when stock of indirect holder of authority is acquired.*** If the qualified acquiring party acquired the stock of a corporation indirectly holding the authority (such as by owning all of the stock of a subsidiary that directly holds the authority), a portion of the qualified acquiring party's cost basis in the stock of the acquired corporation may be allocated to the basis in the operating authority. The portion allocable is the amount that would have been properly allocable under section 334(b)(2) if, immediately before the liquidation of the acquired corporation on the date of the last acquisition by purchase of stock of the acquired corporation within the 12-month period described in section 334(b)(2)(B), the authority had been transferred in such a way (such as by liquidating the subsidiary that directly holds the authority) that the qualified acquiring party would have received direct ownership of the authority upon the liquidation of the acquired corporation immediately after the acquisition.

(v) ***Other assets to be accounted for.*** For purposes of paragraphs (e)(2) (iii) or (iv) of this section, in determining the portion of stock basis properly allocable to the operating authority under section 334(b)(2), the portion of the qualified acquiring party's basis in the acquired corporation's stock that would have been allocable following the liquidation to other assets of the acquired corporation, including intangible assets such as goodwill and going concern value, must be taken into account.

(vi) ***Adjustments to basis in acquired corporation's stock and other assets.*** If a taxpayer makes the election provided by paragraph (e)(2)(i) of this section, the qualified acquiring party's basis in the stock of the acquired corporation shall be decreased, effective as of July 1, 1980, by the amount determined by the following formula:

$$\frac{\text{Basis in acquired corporation's stock}}{\text{Basis in acquired corporation's stock plus un-secured liabilities of acquired corporation}} \times \text{Amount allocated to basis in authority under section 334(b)(2) minus acquired corporation's basis in authority.}$$

In addition, if the aggregate basis of the assets of the acquired corporation other than the authority as of July 1, 1980 (reduced by the liabilities secured by such assets) exceeds the qualified acquiring party's basis in the stock of the acquired corporation remaining after application of the preceding sentence, then the bases of such assets shall be reduced proportionately so that their aggregate basis as of such date (minus secured liabilities) is equal to such remaining stock basis. If the acquired corporation held the authority indirectly, appropriate basis reductions shall be made to reflect the transfers deemed to have occurred under paragraph (e)(iv) of this section.

(vii) ***Pre-TEFRA law applies.*** References made in this section to section 334 of the Code relate to such section as it existed before amendment by the Tax Equity and Fiscal Responsibility Act of 1982.

(f) ***Adjustment to basis of motor carrier operating authority.*** A taxpayer's basis in a motor carrier operating authority must be reduced by the amount of any amortization deductions allowable to the taxpayer under this section.

(g) ***Examples.*** The principles of this section may be illustrated by the following examples:

Example 1. (i) Corporation X acquired all the stock of corporation Y for $130,000 in 1970. Y's assets at the time of acquisition consisted of a motor carrier operating authority valued at $180,000 in which it has a basis of $60,000, trucks with a fair market value of $70,000 and an aggregate basis of $30,000, and goodwill valued at $30,000. Y has $50,000 of liabilities secured by the trucks and $100,000 of unsecured liabilities. Both X and Y use a June 30 fiscal year for tax purposes.
(ii) Y is the only taxpayer eligible to claim a deduction under § 1.9200-1(b). If X sold its Y stock to Z in October 1980 (other than pursuant to a binding contract in effect on July 1, 1980), Y would continue to be the only taxpayer eligible to claim the deduction. However, if Y sold the operating authority to W in February 1981, neither Y nor W would be eligible to claim the monthly deduction for the remainder of the 60-month period. Also, Y would realize gain or loss on the sale after reducing its basis in the authority by any amortization claimed for the period prior to the sale.

(iii) Y must begin the 60-month period in July 1980 unless it elects under paragraph (c)(1)(ii) of this section to begin the 60-month period with the first month of the first taxable year beginning after July 1, 1980, which in Y's case would be July 1981.

(iv) Y's allowable monthly deduction is equal to its adjusted basis in the operating authority of $60,000, divided by 60, or $1,000. However, Y may elect under § 1.9200-1(e)(2) to allocate to its basis in the authority a portion of X's basis in Y stock, since X is a qualified acquiring party under paragraph (e)(2)(i) of this section and Y is a member of an affiliated group of which X is a member. Assuming Y makes the election, Y may allocate to the basis of the authority the amount of X's basis in Y stock that would have been allocable under section 334(b)(2) if X had received the authority in a distribution of all of Y's assets in a complete liquidation of Y immediately after X acquired Y's stock.

Therefore, for purposes of the allocation, X's $130,000 cost basis in Y stock is deemed to be increased by Y's $100,000 of unsecured liabilities to $230,000. Of the $230,000 deemed basis, $180,000 is allocated to the authority, $30,000 to goodwill, and $20,000 to the trucks. Y's allowable monthly amortization deduction would be $180,000 divided by 60, or $3,000. X's $130,000 cost basis in its Y stock must be decreased to $62,174 as provided in paragraph (e)(2)(vi) of this section. Y's $30,000 aggregate basis in its trucks remains unchanged.

Example 2. Assume the same facts as in Example (1), except that Y's aggregate basis in the trucks is $120,000. If Y makes the election under § 1.9200-1(e)(2), the same allocation as in Example (1) would occur. However, in addition to the decrease in X's basis in its Y stock to $62,174, the $120,000 aggregate basis in the trucks must be reduced to $112,174 (so that the $112,174 basis minus secured liabilities of $50,000 is equal to X's $62,174 remaining stock basis).

Example 3. Assume the same facts as in Example (1), except that X pays a negotiated purchase price of $120,000 for the Y stock, in order to take into account an anticipated tax liability of $10,000, relating to potential section 1245 recapture. If Y makes the election under § 1.9200-1(e)(2), then for purposes of allocating X's basis in Y stock, X's cost basis is deemed to be increased by Y's $100,000 of unsecured liabilities as well as the $10,000 of potential tax liability resulting from section 1245 recapture, to $230,000. The $10,000 of potential recapture tax is treated as a general liability and the deemed basis is allocated among Y's assets as in Example (1). In order to take into account the potential recapture tax liability, such amount must be based on the same fair market values that are used to determine the amount of the stock basis allocable to the operating authority.

(Sec. 266, Economic Recovery Tax Act of 1981 (Pub. L. 97-34; 95 Stat. 265); sec. 517, Highway Revenue Act of 1982 (Pub. L. 97-424; 96 Stat. 2097); and sec. 7805, Internal Revenue Code of 1954 (68A Stat. 917; 26 U.S.C. 7805)

[T.D. 7947, 49 FR 8247, Mar. 6, 1984; 49 FR 12244, Mar. 29, 1984]

§ 1.9200-2 Manner of taking deduction.

(a) ***In general.*** The deduction provided by § 1.9200-1 shall be taken by multiplying the amount of the monthly deduction determined under § 1.9200-1 (c)(2) for each motor carrier operating authority by the number of months in the taxable year for which the deduction is allowable, and entering the resulting amount at the appropriate place on the taxpayer's return for each year in which the deduction is properly claimed. Additionally, any taxpayer who has claimed the deduction provided by § 1.9200-1 must (unless it has already filed a statement containing the required information) attach a statement to the next income tax return of the taxpayer which has a filing due date on or after June 4, 1984. The statement shall provide, in addition to the taxpayer's name, address, and taxpayer identification number, the following information for each motor carrier operating authority for which a deduction was claimed:

(1) The taxable year of the taxpayer for which the deduction was first claimed;

(2) Whether the taxpayer's deduction was determined using the adjusted basis of the authority under section 1012 or an allocated stock basis under § 1.9200-1(e)(2); and

(3) If an allocation of stock basis has been made under § 1.9200-1(e)(2), the calculations made in determining the amount of basis to be allocated to the authority.

(b) ***Filing and amendment of returns.*** A taxpayer who has filed its return for the taxable year that includes July 1, 1980, claiming the deduction allowed under § 1.9200-1, may amend its return for such year in order to elect under § 1.9200-1(c)(1)(ii) to begin the 60-month period in the subsequent taxable year. A taxpayer eligible to take the deduction under § 1.9200-1 who has filed its returns for both the taxable year that includes July 1, 1980, and the following taxable year without claiming the deduction, may claim the deduction by filing amended returns or claims for refund for the taxable year in which the taxpayer elects to begin the 60-month period, and for subsequent taxable years. If a taxpayer first claims the deduction on an amended return under the preceding sentence, the statement required by paragraph (a) of this section must be attached to such amended return.

(c) ***Deduction taken for operating authority other than under § 1.9200-1.*** If a deduction other than the deduction allowed under § 1.9200-1 was taken in any taxable year for the reduction in value of a motor carrier operating authority caused by administrative or legislative actions to decrease restrictions on entry into the interstate motor carrier business, the taxpayer should file an amended return for such taxable year which computes taxable income without regard to such deduction.

(Approved by the Office of Management and Budget under control number 1545-0767)

(Sec. 266, Economic Recovery Tax Act of 1981 (Pub. L. 97-34; 95 Stat. 265); sec. 517, Highway Revenue Act of 1982 (Pub. L. 97-424; 96 Stat. 2097); and sec. 7805, Internal Revenue Code of 1954 (68A Stat. 917; 26 U.S.C. 7805)

[T.D. 7947, 49 FR 8249, Mar. 6, 1984]

§ 1.9300-1 Reduction in taxable income for housing displaced individuals.

(a) ***In general.*** For a taxable year beginning in the applicable taxable year (as defined in paragraph (f)(1) of this section), a taxpayer who is a natural person may reduce taxable income by $500 for each displaced individual (as defined in paragraph (f)(2) of this section) to whom the taxpayer provides housing free of charge in, or on the site of, the taxpayer's principal residence for a period of at least 60 consecutive days. A taxpayer may claim the reduction in taxable income for any applicable taxable year in which a consecutive 60-day period ends. A taxpayer may not claim the reduction in taxable income unless the taxpayer includes the taxpayer identification number of the displaced individual on the taxpayer's income tax return.

(b) ***Provision of housing*** —

(1) ***Principal residence.*** For purposes of this section, the term principal residence has the same meaning as in section 121 and the associated regulations. *See* § 1.121-1(b)(1) and (b)(2).

(2) ***Legal interest required.*** A taxpayer is treated as providing housing for purposes of this section only if the taxpayer is an owner or lessee (including a co-owner or co-lessee) of the principal residence.

(3) ***Compensation for providing housing.*** No reduction in taxable income is allowed under this section to a taxpayer who receives rent or any reimbursement or compensation (whether in cash, services, or property) from any source for providing housing to the displaced individual. For this purpose, lodging, utilities, and other similar items are treated as housing, but telephone calls, food, clothing, transportation, and other similar items are not treated as housing.

(c) ***Limitations*** —

(1) ***Dollar limitation*** —

(i) ***In general.*** The reduction in taxable income under paragraph (a) of this section may not exceed the maximum dollar limitation, and must be reduced by the total amount of all reductions under this section for all prior taxable years (except as provided in paragraph (c)(5) of this section). The maximum dollar limitation is—

(A) $2,000 in the case of an unmarried individual; or

(B) $2,000 in the case of a husband and wife, whether the husband and wife file a joint income tax return or separate income tax returns; married taxpayers filing separate income tax returns may allocate this amount in $500 increments between their respective returns, provided that each spouse is otherwise eligible to claim that reduction in taxable income.

(ii) ***Married individuals with separate principal residences.*** The limitation in paragraph (c)(1)(i)(B) of this section applies whether or not the married individuals occupy the same principal residence. A person is treated as married for purposes of this section if the individual is treated as married under section 7703.

(2) ***Spouse or dependent of the taxpayer.*** No reduction of taxable income is allowed for a displaced individual who is the spouse or a dependent of the taxpayer.

(3) ***One reduction per displaced individual.*** Except as provided in paragraph (c)(5) of this section, a taxpayer may not reduce taxable income under paragraph (a) of this section for a displaced individual for whom the taxpayer or any taxpayer residing in the same principal residence has reduced taxable income under this section for any prior taxable year.

(4) ***Taxpayers occupying the same principal residence.*** Except as provided in paragraph (c)(5) of this section, for all taxable years, only one taxpayer occupying the same principal residence may reduce taxable income for a particular displaced individual.

(5) ***Limitations applied separately to each disaster.*** The limitations of this paragraph (c) apply separately to each disaster area. Thus, a taxpayer may reduce taxable income by $2,000 for providing housing to Midwestern disaster displaced individuals even though the taxpayer reduced taxable income for providing housing to one or more Hurricane Katrina displaced individuals. For this purpose, all areas within the Midwestern disaster area are treated as one disaster area.

(d) ***Substantiation.*** A taxpayer claiming a reduction of taxable income under this section must maintain records sufficient to show entitlement to the reduction as provided in forms, instructions, publications or other guidance published by the IRS.

(e) The Commissioner may apply this section in additional guidance of general applicability, see § 601.601(d)(2) of this chapter, to other disaster areas to which Congress extends relief under section 302 of the Katrina Emergency Tax Relief Act of 2005.

(f) ***In general.*** The following definitions apply for all purposes of this section.

(1) ***Applicable taxable year.*** The term *applicable taxable year* means—

(i) A taxable year beginning in 2005 or 2006, in the case of housing provided to a Hurricane Katrina displaced individual (as defined in paragraph (f)(2)(ii) of this section); and

(ii) A taxable year beginning in 2008 or 2009, in the case of housing provided to a Midwestern disaster displaced individual (as defined in paragraph (f)(2)(iii) of this section).

(2) ***Displaced individual*** —

(i) ***Scope.*** The term *displaced individual* means a Hurricane Katrina displaced individual as defined in paragraph (f)(2)(ii) of this section and a Midwestern disaster displaced individual as defined in paragraph (f)(2)(iii) of this section.

(ii) ***Hurricane Katrina displaced individual.*** The term *Hurricane Katrina displaced individual* means any natural person (other than the spouse or a dependent of the taxpayer) if the following requirements are met—

(A) The person's principal place of abode on August 28, 2005, was in the Hurricane Katrina disaster area (as defined in paragraph (f)(4)(ii) of this section);

(B) The person was displaced from that abode; and

(C) If the abode was located outside the Hurricane Katrina core disaster area (as defined in paragraph (f)(5)(ii) of this section)—

(*1*) The abode was damaged by Hurricane Katrina; or

(*2*) The person was evacuated from that abode by reason of Hurricane Katrina.

(iii) ***Midwestern disaster displaced individual.*** The term *Midwestern disaster displaced individual* means any natural person (other than the spouse or a dependent of the taxpayer) if the following requirements are met—

(A) The person's principal place of abode on the Midwestern disaster date (as defined in paragraph (f)(3) of this section), was in any Midwestern disaster area (as defined in paragraph (f)(4)(iii) of this section);

(B) The person was displaced from that abode; and

(C) If the abode was located outside the Midwestern core disaster area (as defined in paragraph (f)(5)(iii) of this section)—

(*1*) The abode was damaged by any Midwestern disaster; or

(*2*) The person was evacuated from that abode by reason of any Midwestern disaster.

(3) ***Midwestern disaster date.*** The term *Midwestern disaster date* means—

(i) In Arkansas, May 2 through May 12, 2008;

(ii) In Illinois, June 1 through July 22, 2008;

(iii) In Indiana, May 30 through June 27, 2008;

(iv) In Iowa, May 25 through August 13, 2008;

(v) In Kansas, May 22 through June 16, 2008;

(vi) In Michigan, June 6 through June 13, 2008;

(vii) In Minnesota, June 6 through June 12, 2008;

(viii) In Missouri, May 10 through May 11, 2008, and June 1 through August 13, 2008;

(ix) In Nebraska, April 23 through April 26, 2008, May 22 through June 24, 2008, and June 27, 2008; or

(x) In Wisconsin, June 5 through July 25, 2008.

(4) ***Disaster area*** —

(i) ***Scope.*** The term *disaster area* means the Hurricane Katrina disaster area as defined in paragraph (f)(4)(ii) of this section and the Midwestern disaster area as defined in paragraph (f)(4)(iii) of this section.

(ii) ***Hurricane Katrina disaster area.*** The term *Hurricane Katrina disaster area* means the states of Alabama, Florida, Louisiana, and Mississippi.

(iii) ***Midwestern disaster area.*** The term *Midwestern disaster area* means an area for which the President declared a major disaster on or after May 20, 2008, and before August 1, 2008, under section 401 of the Robert T. Stafford Disaster Relief and Emergency Assistance Act (42 U.S.C. 5170) (Stafford Act) by reason of severe storms, tornados, or flooding occurring in any of the states of Arkansas, Illinois, Indiana, Iowa, Kansas, Michigan, Minnesota, Missouri, Nebraska, and Wisconsin.

(5) ***Core disaster area*** —

(i) ***Scope.*** The term *core disaster area* means the Hurricane Katrina core disaster area as defined in paragraph (f)(5)(ii) of this section and the Midwestern core disaster area as defined in paragraph (f)(5)(iii) of this section.

(ii) ***Hurricane Katrina core disaster area.*** The term *Hurricane Katrina core disaster area* means the portion of the Hurricane Katrina disaster area designated by the President to warrant individual or individual and public assistance from the federal government under the Stafford Act.

(iii) ***Midwestern core disaster area.*** The term *Midwestern core disaster area* means the portion of the Midwestern disaster area designated by the President to warrant individual or individual and public assistance from the federal government under the Stafford Act for damages attributable to the severe storms, tornados, or flooding in the Midwestern disaster area.

(g) ***Examples.*** The provisions of this section are illustrated by the following examples. In each example, a taxpayer provides housing within the meaning of paragraph (b) of this section in, or on the site of, the taxpayer's principal residence for a period of at least 60 consecutive days (the 60th day being in the applicable taxable year) for each displaced individual, none of whom is a spouse or dependent of the taxpayer. The examples are as follows:

Example 1. Taxpayer A provides housing to N, a Hurricane Katrina displaced individual, from September 1, 2005, until March 10, 2006. Under paragraphs (a) and (c)(3) of this section, A may reduce A's taxable income by $500 on A's income tax return for calendar year 2005 or 2006 (but not both) for providing housing to N.

Example 2. The facts are the same as in *Example 1,* except that A and A's unmarried roommate B are co-lessees of their principal residence. Both A and B provide housing to N. Under paragraphs (a) and (c)(4) of this section, either A or B, but not both, may reduce taxable income by $500 for 2005 or 2006 for providing housing to N. If A or B reduces taxable income for 2005 for providing housing to N, neither A nor B may reduce taxable income for 2006 for providing housing to N.

Example 3. The facts are the same as in *Example 2,* except that in 2009 A and B provide housing to N, who in 2009 is a Midwestern disaster displaced individual. Under paragraph (c)(5) of this section, the limitation of paragraph (c)(4) of this section applies separately to each disaster. Therefore, either A or B may reduce taxable income by $500 for 2009 for providing housing to N.

Example 4. During 2008, unmarried roommates and co-lessees C and D provide housing to eight Midwestern disaster displaced individuals. Under paragraphs (a) and (c)(1)(i)(A) of this section, C may reduce taxable income by $2,000 on C's 2008 income tax return for providing housing to any four of these displaced individuals and D may reduce taxable income by $2,000 on D's 2008 income tax return for providing housing to the other four displaced individuals.

> *Example 5.* (i) In 2008, a married couple, H and W, provide housing to a Midwestern disaster displaced individual, O. H and W file their 2008 income tax return as married filing jointly. Under paragraphs (a) and (c)(4) of this section, H and W may reduce taxable income by $500 on their 2008 income tax return for providing housing to O.
> (ii) In 2009, H and W provide housing to O and to another Midwestern disaster displaced individual, P. H and W file their 2009 income tax returns as married filing separately. Because H and W reduced their 2008 taxable income for providing housing to O, under paragraph (c)(3) of this section, neither H nor W may reduce taxable income on their 2009 income tax returns for providing housing to O. Under paragraphs (a) and (c)(4) of this section, either H or W but not both, may reduce taxable income by $500 on his or her 2009 income tax return for providing housing to P.

Example 6. The facts are the same as in *Example 5,* except that in 2009 H and W provide housing to five Midwestern disaster displaced individuals in addition to O. H and W together may reduce taxable income on their 2009 income tax returns by a total of $2,000 for the Midwestern disaster displaced individuals (other than O). Under paragraph (c)(1)(i)(B) of this section, H and W may allocate the $2,000 in increments of $500 between their separate returns. For example, either one may reduce taxable income by $500 and the other may reduce taxable income by $1,500, or H and W each may reduce taxable income by $1,000.

(h) ***Effective/applicability date.*** This section applies for taxable years ending after December 11, 2006.

[T.D. 9474, 74 FR 66049, Dec. 14, 2009]